Definitive Interconnection System Impact Study for Generation Interconnection Requests

(DISIS-2015-002)

April 2016

Generator Interconnection

SPP Southwest Power Pool

Revision History

Date	Author	Change Description
2/5/2016	SPP	Draft issued to Transmission Owners for review
2/12/2016	SPP	Report Issued (DISIS-2015-002). Some stability analysis still pending. Group 2, 6, 7, 15 and 16 Interconnection Request Results not included in this issue.
2/22/2016	SPP	Draft issued to Transmission Owners for Group 2, 6, and 7 review
2/29/2016	SPP	Report Issued (DISIS-2015-002) to include Group 2, 6, and 7 Results. Some stability analysis still pending. 15 and 16 Interconnection Request Results not included in this issue.
3/17/2016	SPP	Draft issued to Transmission Owners for Group 15, and 16 review
3/29/2016	SPP	Report Issued (DISIS-2015-002) to include Group 15 and 16 Results. Group 16 stability analysis still pending.
4/29/2016	SPP	Report Issued to include Group 16 stability analysis

Executive Summary

Pursuant to the Generator Interconnection Procedures (GIP) of the Southwest Power Pool (SPP) Open Access Transmission Tariff (OATT), SPP has conducted this Definitive Interconnection System Impact Study (DISIS). The Interconnection Customers' requests have been clustered together for the following System Impact Cluster Study window which closed September 30, 2015. The Interconnection Customers will be referred to in this study as the DISIS-2015-002 Interconnection Customers. This System Impact Study analyzes the interconnecting of multiple generation interconnection requests associated with new generation totaling approximately 10,036.9 MW of new generation which would be located within the transmission systems of American Electric Power – Western (AEPW), Basin Electric Power Cooperative (BPEC) Midwest Energy, Inc. (MIDW), Nebraska Public Power District (NPPD), Oklahoma Gas and Electric (OKGE), Southwestern Public Service (SPS), Southwestern Power Administration (SWPA), Sunflower Electric Power Corporation\Mid-Kansas Electric Company, LLC (SUNC\MKEC), Western Area Power Administration (WAPA), Westar Energy, Inc. (WERE), and Western Farmers Electric Cooperative (WFEC). The various generation interconnection requests have differing proposed in-service dates[1]. The generation interconnection requests included in this System Impact Cluster Study are listed in Appendix A by their queue number, amount, requested interconnection service, area, requested interconnection point, proposed interconnection point, and the requested in-service date. This study represents the "Stand-Alone" analysis for remaining Interconnection Requests in the DISIS-2015-002 analysis.

Power flow analysis has indicated that for the power flow cases studied, 10,036.9 MW of nameplate generation may be interconnected with transmission system reinforcements within the SPP transmission system. For the analyses that has been completed, dynamic stability and power factor analysis has determined the need for reactive compensation in accordance with SPP stability and voltage recovery requirements including FERC Order #661A for wind farm interconnection requests. Those reactive requirements are listed for each interconnection request within this report. Dynamic stability analysis has determined that the transmission system will remain stable with the assigned Network Upgrades and necessary reactive compensation requirements. A short circuit analysis has been performed with available short circuit values given in the stability study for

[1] The generation interconnection requests in-service dates may need to be deferred based on the required lead time for the Network Upgrades necessary. The Interconnection Customers that proceed to the Facility Study will be provided a new in-service date based on the Facility Study's time for completion of the Network Upgrades necessary or as otherwise provided for in the GIP.

each group in the appendices of this report. A short circuit analysis has been performed with available short circuit values given in the stability study for each group in the appendices of this report.

In no way does this study guarantee operation for all periods of time. This interconnection study identifies and assigns transmission reinforcements for Energy Resource Interconnection Service (ERIS) interconnection injection constraints (defined as a 20% or greater distribution factor impact for outage based constraints and 3% or greater distribution factor impact for system intact constraints) and Network Resource Interconnection Service (NRIS) constraints (defined as 3% or greater distribution factor impact), if requested by the Customer. These constraints are listed in Appendix G-T (Thermal) and Appendix G-V (Voltage). This interconnection study does not assign transmission reinforcements for all potential transmission constraints. It should be noted that although this study analyzed many of the most probable contingencies, it is not an all-inclusive list and cannot account for every operational situation. Because of this, it is likely that the Interconnection Customer(s) may be required to reduce their generation output to 0 MW, also known as curtailment, under certain system conditions to allow system operators to maintain the reliability of the transmission network.

The total estimated minimum cost for interconnecting the DISIS-2015-002 Interconnection Customers is estimated at $1,962,852,644. The following costs are not included in this total –

- **Costs Not Included** – Additional upgrades needed to review the Gerald Gentleman Station (GGS) stability interface in western Nebraska that will be completed by Nebraska Public Power District in the Interconnection Facilities Study phase.
- **Costs Not Included** – Costs on Affected Systems for particularly Associated Electric Cooperative Inc. (AECI), Mid-Continent Independent System Operator (MISO), and Minnkota Power Cooperative, Inc (MPC).

These costs determined at this time are shown in Appendix E and F. For Interconnection Requests that result in an interconnection to, or modification to, the transmission facilities of the Western-UGP (WAPA), a National Environmental Policy Act (NEPA) Environmental Review will be required. The Interconnection Customer will be required to execute and Environmental Review Agreement per Section 8.6.1 of the GIP.

Interconnection Service to DISIS-2015-002 Interconnection Customers is also contingent upon higher queued customers paying for certain required network upgrades. **The in-service date for the DISIS customers will be deferred until the construction of these network upgrades can be completed.** These costs also do not include the Interconnection Customer Interconnection Facilities as defined by the SPP Open Access Transmission Tariff (OATT) or the additional SPP transmission network constraints identified through this study and shown in Appendix H.

Constraints listed in Appendix H do not require transmission reinforcement for Interconnection Service, but could require Interconnection Customer to reduce generation in operational conditions. These transmission constraints occur when this study's generation is dispatched into

the SPP footprint for Energy Resource Interconnection Service (ERIS) or when this study's generation is dispatched into the interconnecting Transmission Owner's (T.O.) area for Network Resource Interconnection Service (NRIS).

It should be noted that the additional network constraints identified in Appendix H may also be identified by a Transmission Service Request (TSR) and may need to be verified by associated studies. With a defined source and sink in a TSR, the list of network constraints will be refined and expanded to account for all Network Upgrade requirements. The required interconnection costs listed in Appendix E and F do not include costs associated with the deliverability of the energy to load or other customers. These costs are determined by separate studies should the Customer decide to submit a Transmission Service Request through SPP's Open Access Same Time Information System (OASIS) as required by Attachment Z1 of the SPP OATT. Furthermore, this DISIS neither guarantees transmission service or deliverability of the requested resource.

When applicable, affected system thermal and voltage constraints are listed in Appendix H-T-AS and Appendix H-V-AS. Affected System constraints could require an affects system impact study review by the affected party or affected system parties. The affected system impact study could result in identifying additional affected transmission system reinforcement network upgrades required for interconnection.

NERC FAC-002-2 Compliance Statement

SPP, as Planning Coordinator has studied the reliability impact of interconnecting new or materially modified generation requesting interconnection to the Transmission System of SPP and any affected systems as requested by those entities. Affected systems include both the systems of SPP Transmission Owners and systems not included in the SPP Tariff footprint. The impact of the generation interconnection on affected systems will be further coordinated with the following systems as part of the coordinated planning procedures as described in Section 6 of this report and summarized below.

- Impacts on Associated Electric Cooperative Inc. (AECI) – For any observed violations of thermal overloads on AECI facilities, AECI has been notified by SPP to evaluate the violations for impacts on its transmission system.
- Impacts on Mid Continent Independent System Operation (MISO) – MISO will be contacted and provided a list of interconnection requests that proceed to move forward into the Interconnection Facilities Study Queue. MISO will then evaluate the Interconnection Requests for impacts.
- Impacts on Minnkota Power Cooperative, Inc (MPC) – MPC will be contacted and provided a list of interconnection requests that proceed to move forward into the Interconnection Facilities Study Queue. MP will then evaluate the Interconnection Requests for impacts.

This analysis adheres to NERC standards, regional, and Transmission Owner planning criteria, as related to generator interconnections. Facility interconnection requirements will be fully evaluated by the Transmission Owners during the Interconnection Facilities Study.

This analysis evaluates steady-state (Section 8), short-circuit (Section 9), and dynamic studies (Section 9) to evaluate system performance under both normal and contingency conditions. Study

assumptions (Section 2) and system performance (Section 3) are documented in this report. Alternatives considered and coordinated recommendations are documented in Section 8 and Section 9.

Table of Contents

1 Introduction 1

2 Model Development (Study Assumptions) 2

2.2 Development of Base Cases 2
2.3 Development of Analysis Cases 6

3 Identification of Network Constraints (System Performance) 7

4 Determination of Cost Allocated Network Upgrades 10

5 Required Interconnection Facilities 11

6 Affected Systems Coordination 12

7 Power Flow Analysis 13

8 Power Flow Results 13

8.1 Cluster Group 1 (Woodward Area) 13
8.2 Cluster Group 2 (Hitchland Area) 16
8.3 Cluster Group 3 (Spearville Area) 23
8.4 Cluster Group 4 (Northwest Kansas Area) 23
8.5 Cluster Group 6 (South Texas Panhandle/New Mexico Area) 24
8.6 Cluster Group 7 (Southwestern Oklahoma Area) 36
8.7 Cluster Group 8 (North Oklahoma/South Central Kansas Area) 39
8.8 Cluster Group 9 (Nebraska Area) 41
8.9 Cluster Group 10 (Southeast Oklahoma/Northeast Texas Area) 45
8.10 Cluster Group 12 (Northwest Arkansas Area) 45
8.11 Cluster Group 13 (Northeast Kansas/Northwest Missouri Area) 45
8.12 Cluster Group 14 (South Central Oklahoma Area) 46
8.13 Group 15 (Eastern South Dakota) 47
8.14 Group 16 (Western North Dakota) 48
8.15 Curtailment and System Reliability 51

9 Stability & Short Circuit Analysis 52

9.1 Cluster Group 1 (Woodward Area) 52
9.2 Cluster Group 2 (Hitchland Area) 53
9.3 Cluster Group 3 (Spearville Area) 54
9.4 Cluster Group 4 (Northwest Kansas) 54
9.5 Cluster Group 6 (South Texas Panhandle/New Mexico) 54
9.6 Cluster Group 7 (Southwest Oklahoma) 55
9.7 Cluster Group 8 (South Central Kansas/North Oklahoma) 56
9.8 Cluster Group 9 (Nebraska) 58
9.9 Cluster Group 10 (Southeast Oklahoma/Northeast Texas Area) 59
9.10 Cluster Group 12 (Northwest Arkansas Area) 59
9.11 Cluster Group 13 (Northeast Kansas/Northwest Missouri Area) 59
9.12 Cluster Group 14 (South Central Oklahoma) 60
9.13 Cluster Group 15 (Eastern South Dakota) 60
9.14 Cluster Group 16 (Western North Dakota) 61

10 Conclusion 62

11 Appendices 63

11.1 A: Generation Interconnection Requests Considered for Impact Study A-0
11.2 B: Prior Queued Interconnection Requests B-0
11.3 C: Study Groupings C-0
11.4 D: Proposed Point of Interconnection One Line Diagrams D-1
11.5 E: Cost Allocation per Interconnection Request (Including Prior Queued Upgrades) E-0
11.6 E1: Stand Alone Cost Allocation per Interconnection Request (Including Prior Queued Upgrades) E1-0
11.7 F: Cost Allocation per Proposed Study Network Upgrade F-0
11.8 G-T: Thermal Power Flow Analysis (Constraints Requiring Transmission Reinforcement) G-T-0
11.9 G1-T: Stand Alone Thermal Power Flow Analysis (Constraints Requiring Transmission Reinforcement) G1-T-0
11.10 G-V: Voltage Power Flow Analysis (Constraints Requiring Transmission Reinforcement) G-V-0
11.11 G1-V: Stand Alone Voltage Power Flow Analysis (Constraints Requiring Transmission Reinforcement) G1-V-0
11.12 H-T: Thermal Power Flow Analysis (Other Constraints Not Requiring Transmission Reinforcement) H-T-0
11.13 H-T-AS: Affected System Thermal Power Flow Analysis (Constraints for Potential Upgrades) H-T-AS-0
11.14 H-V-AS: Affected System Voltage Power Flow Analysis (Constraints for Potential Upgrades) H-V-AS-0
11.15 H1-T: Stand Alone Thermal Power Flow Analysis (Other Constraints Not Requiring Transmission Reinforcement) H1-T-0
11.16 I: Power Flow Analysis (Constraints from Multi-Contingencies) I-0
11.17 J: Group 1 Dynamic Stability Analysis Report J-0
11.18 K: Group 2 Dynamic Stability Analysis Report K-0
11.19 L: Group 4 Dynamic Stability Analysis Report L-0
11.20 M: Group 6 Dynamic Stability Analysis Report M-0
11.21 N: Group 7 Dynamic Stability Analysis Report N-0
11.22 O: Group 8 Dynamic Stability Analysis Report O-0
11.23 P: Group 9 Dynamic Stability Analysis Report P-0
11.24 Q: Group 13 Dynamic Stability Analysis Report Q-0
11.25 R: Group 14 Dynamic Stability Analysis Report R-0
11.26 S: Group 15 Dynamic Stability Analysis Report S-0
11.27 T: Group 16 Dynamic Stability Analysis Report T-0

1 Introduction

Pursuant to the Southwest Power Pool (SPP) Open Access Transmission Tariff (OATT), SPP has conducted this Definitive Interconnection System Impact Study (DISIS) for certain generation interconnection requests in the SPP Generation Interconnection Queue. These interconnection requests have been clustered together for the following System Impact Study window which closed September 30, 2015. The customers will be referred to in this study as the DISIS-2015-001 Interconnection Customers. This DISIS analyzes the interconnecting of multiple generation interconnection requests associated with new generation totaling 10,036.9 MW of new generation which would be located within the transmission systems of American Electric Power – Western (AEPW), Basin Electric Power Cooperative (BPEC) Midwest Energy, Inc. (MIDW), Nebraska Public Power District (NPPD), Oklahoma Gas and Electric (OKGE), Southwestern Public Service (SPS), Southwestern Power Administration (SWPA), Sunflower Electric Power Corporation\Mid-Kansas Electric Company, LLC (SUNC\MKEC), Western Area Power Administration (WAPA), Westar Energy, Inc. (WERE), and Western Farmers Electric Cooperative (WFEC). The various generation interconnection requests have differing proposed in-service dates[2]. The generation interconnection requests included in this System Impact Study are listed in Appendix A by their queue number, amount, requested interconnection service, area, requested interconnection point, proposed interconnection point, and the requested in-service date. A separate analysis for each Interconnection Request for "Stand-Alone" operation has also been performed. This study represents the "Stand-Alone" analysis for remaining Interconnection Requests in the DISIS-2015-002 analysis

The primary objective of this DISIS is to identify the system constraints, transient instabilities, and over-dutied equipment associated with connecting the generation to the area transmission system. The Impact Study and other subsequent Interconnection Studies are designed to identify required Transmission Owner Interconnection Facilities, Network Upgrades and other Direct Assignment Facilities needed to inject power into the grid at each specific point of interconnection.

[2] The generation interconnection requests in-service dates may need to be deferred based on the required lead time for the Network Upgrades necessary. The Interconnection Customers that proceed to the Facility Study will be provided a new in-service date based on the completion of the Facility Study or as otherwise provided for in the GIP.

2 Model Development (Study Assumptions)

2.1.1 Interconnection Requests Included in the Cluster

SPP included all interconnection requests that submitted a Definitive Interconnection System Impact Study Agreement no later than September 30, 2015 and were subsequently accepted by Southwest Power Pool under the terms of the Generator Interconnection Procedures (GIP) that were in effect at the time this study commenced on April 1, 2015. The interconnection requests that are included in this study are listed in Appendix A.

2.1.2 Affected System Interconnection Request

Also included in this Definitive Interconnection System Impact Study are one (1) Affected System Studies. The Affected System Interconnection Requests have been given the designations with the "ASGI" prefix. These requests are listed in Appendix A. Affected System Interconnection Requests were only studied in "cluster" scenarios.

2.1.3 Previously Queued Interconnection Requests

The previous queued requests included in this study are listed in Appendix B. In addition to the Base Case Upgrades, the previous queued requests and associated upgrades were assumed to be in-service and added to the Base Case models. These projects were dispatched as Energy Resources Interconnection Service (ERIS) with equal distribution across the SPP footprint. Prior queued projects that requested Network Resource Interconnection Service (NRIS) were also dispatched in separate NRIS scenarios into the balancing authority of the interconnecting transmission owner.

2.2 Development of Base Cases

2.2.1 Power Flow

The 2015 series Integrated Transmission Planning models (used in the 2016 ITPNT) including the 2016 winter peak (16WP) season, the 2017 spring (17G) and 2017 summer peak (17SP) seasons, the 2020 summer (20SP) and winter peak (20WP) seasons, and the 2025 summer peak (25SP) season were the starting seasonal models for this study.

2.2.2 Dynamic Stability

The 2015 series SPP Model Development Working Group (MDWG) Models for 2016 winter peak (16WP) season, 2017 summer peak (17SP) season, and the 2025 summer peak (25SP) season cases were used as starting points for this study.

2.2.3 Short Circuit

The 2017 and 2025 summer peak stability cases are used for this analysis.

2.2.4 Base Case Upgrades

The following facilities are part of the SPP Transmission Expansion Plan, the Balanced Portfolio or recently approved Priority Projects. These facilities have an approved Notification to Construct (NTC) or are in construction stages and were assumed to be in-service at the time of dispatch and added to the base case models. The DISIS-2015-002 Interconnection Customers have not been assigned advancement costs for the below listed projects. The DISIS-2015-002 Interconnection

Customers Generation Facilities in service dates may need to be delayed until the completion of the following upgrades. In some cases, the in-service date is beyond the allowable time a customer can delay. In this case, the Interconnection Customer may move forward with Limited Operation or remain in the DISIS Queue for additional study cycles. If for some reason, construction on these projects is discontinued, additional restudies will be needed to determine the interconnection needs of the DISIS Interconnection Customers.

- 2012 Integrated Transmission Plan (2012 ITP10) Projects
  - Woodward-Tatonga-Mathewson-Cimarron 345kV transmission line circuit #2, scheduled for 2021 in-service[3]
  - Chisholm – Gracemont 345kV transmission line, and Chisholm 345/230kV transformer circuit #1, scheduled for 3/1/2018 in-service[4]
- 2015 Integrated Transmission Plan Near Term (2015 ITPNT) Projects
  - China Draw 115kV Reactive Power Support
    - 200Mvar Capacitive and 50Mvar Inductive Static Var Compensator (SVC)
  - Road Runner 115kV Reactive Power Support
    - 200Mvar Capacitive and 50Mvar Inductive Static Var Compensator (SVC)
  - Potash Junction – Intrepid – IMC #1 – Livingston Ridge 115kV rebuild
  - National Enrichment Plant – Targa – Cardinal 115kV circuit #1 rebuild
- Gentleman – Thedford (Cherry County) – Holt County 345kV circuit #1 scheduled for 2018 in-service[5]
- Hoskins – Neligh East 345/115 kV Project[6]
  - Neligh East 345/115 kV substation and transformer
  - Neligh East Area 115 kV upgrades to support new station
  - Hoskins – Neligh East 345 kV circuit #1
- High Priority Incremental Loads (HPILs) Projects[7]:
  - TUCO Interchange – Yoakum – Hobbs Interchange 345/230 kV Project
    - TUCO Interchange – Yoakum – Hobbs Interchange 345 kV circuit #1 and associated terminal equipment upgrades
    - Hobbs 345/230/13 kV transformer circuit #1
    - Yoakum 345/230/13 kV transformer circuit #1
  - Battle Axe – Road Runner 115 kV circuit #1
  - Chaves County – Price – CV Pines – Capitan 115 kV circuit #1
  - China Draw – Yeso Hills 115 kV circuit #1
  - Dollarhide – Toboso Flats 115 kV circuit #1
  - Hobbs Interchange – Kiowa 345 kV circuit #1
  - Kiowa – North Loving – China Draw 345/115 kV Projects

[3] SPP Notification to Construct (NTC) 200223
[4] SPP Notification to Construct (NTC) 200240 and 200255
[5] SPP Notification to Construct (NTC) 200220
[6] SPP Regional Reliability 2012 ITP 10 Project Per SPP-NTC-200220
[7] Per Network Upgrades assigned in High Priority Incremental Loads (HPILs) study, Including Direct Assigned Upgrades, Projects in SPP-NTC-200256 and SPP-NTC-200283.

        - Kiowa – North Loving – China Draw circuit #1 and associated terminal equipment upgrades
        - China Draw 345/115/13 kV transformer circuit #1
        - North Loving 345/115/13 kV transformer circuit #1
    - Kiowa – Road Runner 345/230/115 kV Projects
        - Kiowa 345/230 kV transformer circuit #1
        - Road Runner 345/115/13 kV transformer circuit #1
    - Livingston Ridge – Sage Brush – Lagarto – Cardinal 115 kV circuit #1
    - North Loving – South Loving 115 kV circuit #1
    - Ponderosa – Ponderosa Tap 115 kV circuit #1
    - Potash 230/115/13kV Transformer circuit #1 replacement
- Nebraska City – Mullin Creek – Sibley 345kV circuit #1 build, scheduled for 12/31/2016 in-service[8]
- Viola 345/138kV Project[9]
    - Clearwater – Viola 138kV circuit #1
    - Gill – Viola 138kV circuit #1
    - Sumner County – Viola 138kV circuit #1
    - Viola 345/138/13kV transformer circuit #1

2.2.5 Contingent Upgrades

The following facilities do not yet have approval. These facilities have been assigned to higher queued interconnection customers. These facilities have been included in the models for the DISIS-2015-002 study and are assumed to be in service. This list may not be all inclusive. The DISIS-2015-002 Interconnection Customers, at this time, do not have responsibility for these facilities but may later be assigned the cost of these facilities if higher queued customers terminate their Generation Interconnection Agreement or withdraw from the interconnection queue. The DISIS-2015-002 Interconnection Customer Generation Facilities in-service dates may need to be delayed until the completion of the following upgrades.

- Upgrades assigned to DISIS-2010-002 Interconnection Customers:
    - Twin Church – Dixon County 230 kV circuit #1 rerate (320 MVA)
    - Buckner – Spearville 345 kV circuit #1 terminal equipment
- Upgrades assigned to DISIS-2011-001 Interconnection Customers:
    - Hoskins – Dixon County – Twin Church 230 kV circuit #1 conductor clearance increase
    - (NRIS only) Woodward District EHV Phase Shifting Transformer
- Upgrades assigned to DISIS-2012-002 Interconnection Customers:
    - Associated Electric Cooperatives Inc. (AECI) Fairfax 138/69 kV transformer replacement
    - Lake Creek – Lone Wolf 69 kV circuit #1 reset CT

[8] SPP Notification to Construct (NTC) 20097 and 20098
[9] SPP Notification to Construct (NTC) 200228 and 200296

  - Remington – Fairfax 138 kV circuit #1 conductor clearance increase
  - (NRIS only) Arkansas City – Paris –Creswell – Oak – Rainbow – City of Winfield 69kV circuit #1 rebuild
  - (NRIS only) Creswell 138/69/13kV Transformer circuit #1 and #2, replacements
- Upgrades assigned to DISIS-2013-002 Interconnection Customers:
  - Battle Creek – County Line – Neligh East 115kV circuit #1 rebuild
- Upgrades assigned to DISIS-2014-002 Interconnection Customers:
  - Arnold – Ransom 115kV circuit #1, terminal equipment replacement
  - Tolk – Plant X 230kV circuit #1 and circuit #2 re-conductor
  - Crawfish Draw Substation 345/230kV
    - Build new 345/230kV substation along TUCO – Border 345kV and TUCO – Swisher 230kV. Tie in and Terminate TUCO 345kV, Border 345kV, TUCO 230kV, and Swisher 230kV at Crawfish Draw (TUCO 2).
    - Build 345/230/13kV transformer
- Upgrades assigned to DISIS-2015-001 Interconnection Customers:
  - Altus SW – Navajo – Snyder 69kV circuit #1 rebuild
  - Anadarko – Sequoyah – Cornville Tap – Naples Tap – Payne 138kV circuit #1 rebuild
  - Beach – GEN-2010-048 Tap 115kV circuit #1 replace terminal equipment
  - Cimarron River Tap – Kismet – Cudahy – Crooked Creek 115kV circuit #1 rebuild
  - Elk City 230/138/13kV Transformer replace terminal equipment
  - Nichols – Grapevine – Wheeler – Sweetwater 230kV circuit #1 replace terminal equipment
  - Greenburg – Shooting Star 115kV circuit #1 rebuild
  - Kress Interchange – Swisher 115kV circuit #1 replace terminal equipment
  - Oklaunion 345kV Reactive Power Support
    - Install two (2) 130Mvar Capacitor Bank(s)
  - (NRIS Only) Carlisle – LP Doug 115kV circuit #1 replace terminal equipment
  - (NRIS only) Cox Interchange – Hale County 115kV circuit #1 rebuild
  - (NRIS Only) Potter County Interchange 345/230/13kV Transformer circuit #2 build
  - (NRIS Only) Renfrow – Renfrow 138kV circuit #1 rebuild
  - (NRIS Only) TUCO Interchange – Jones 230kV circuit #1 replace terminal equipment
  - (NRIS Only) Wolfforth – Sundown 230kV circuit #1 replace terminal equipment
  - (NRIS Only) Wolfforth – Terry County 115kV circuit #1 replace terminal equipment

2.2.6 Potential Upgrades Not in the Base Case

Any potential upgrades that do not have a Notification to Construct (NTC) and are not explicitly listed within this report have not been included in the base case. These upgrades include any identified in the SPP Extra-High Voltage (EHV) overlay plan, or any other SPP planning study other than the upgrades listed above in the previous section.

2.2.7 Regional Groupings

The interconnection requests listed in Appendix A are grouped together into eleven (11) active regional groups based on geographical and electrical impacts. These groupings are shown in Appendix C.

To determine interconnection impacts, eleven (11) different generation dispatch scenarios of the spring, summer, and winter base case models are developed to accommodate the regional groupings.

2.3 Development of Analysis Cases

2.3.1 Power Flow

For Variable Energy Resources (VER) (solar/wind) in each power flow case, Energy Resource Interconnection Service (ERIS), is evaluated for the generating plants within a geographical area of the interconnection request(s) for the VERs dispatched at 100% nameplate of maximum generation. The VERs in the remote areas are dispatched at 20% nameplate of maximum generation. These projects are dispatched across the SPP footprint using load factor ratios.

Peaking units are not dispatched in the 2017 spring, or in the "High VER" summer and winter peaks. To study peaking units' impacts, the 2016 winter peak and 2017 summer peak, 2020 summer and winter peaks, and 2025 summer peak models are developed with peaking units dispatched at 100% of the nameplate rating and VERs dispatched at 20% of the nameplate rating. Each interconnection request is also modeled separately at 100% nameplate for certain analyses.

All generators (VER and peaking) that requested Network Resource Interconnection Service (NRIS) are dispatched in an additional analysis into the interconnecting Transmission Owner's (T.O.) area at 100% nameplate with Energy Resource Interconnection Service (ERIS) only requests at 80% nameplate. This method allows for identification of network constraints that are common between regional groupings to have affecting requests share the mitigating upgrade costs throughout the cluster.

2.3.1.1 Additional Sensitivities Considered – The following sensitivities were run for situations prevalent to the local area for which they were considered

- North Dakota – Canadian border – The phase shifting transformer to Saskatchewan Power (also known as B-10T) and Miles City DC Tie were dispatched at the following levels
  - 2016 Winter Peak –
    - Miles City DC Tie– 200MW East to West transfer
    - B-10T – 65MW South to North transfer
  - 2017 Summer Peak –
    - Miles City DC Tie – 200MW East to West transfer
    - B-10T – 200MW North to South transfer
  - Other Seasons
    - Miles City DC Tie – 140MW East to West transfer (20WP)
    - Miles City DC Ties – 92MW East to West transfer (17G & 20L)
    - B-10T – 0MW

2.3.2 Dynamic Stability

For each group, all interconnection requests are dispatched at 100% nameplate output while the other groups are dispatched at 20% output for VERs and 100% output for thermal requests.

2.3.2.1 Additional Sensitivities Considered

- North Dakota – Canadian border – The phase shifting transformer to Saskatchewan Power (also known as B-10T) and Miles City DC Tie were dispatched at the following levels
  - 2016 Winter Peak –
    - Miles City DC Tie– 200MW East to West transfer
    - B-10T – 65MW South to North transfer
  - 2017 Summer Peak –
    - Miles City DC Tie – 200MW East to West transfer
    - B-10T – 200MW North to South transfer

2.3.3 Short Circuit

The dynamic stability models (2017 SP and 2025 SP) are used for this analysis.

3 Identification of Network Constraints (System Performance)

3.1.1 Thermal Overloads

Network constraints are found by using PSS/E AC Contingency Calculation (ACCC) analysis with PSS/E MUST First Contingency Incremental Transfer Capability (FCITC) analysis on the entire cluster grouping dispatched at the various levels previously mentioned.

For Energy Resource Interconnection Service (ERIS), thermal overloads are determined for system intact (n-0) (greater than 100% of Rate A - normal) and for contingency (n-1) (greater than 100% of Rate B – emergency) conditions.

The overloads are then screened to determine which of generator interconnection requests have at least

- 3% Distribution Factor (DF) for system intact conditions (n-0),
- 20% DF upon outage based conditions (n-1),
- or 3% DF on contingent elements that resulted in a non-converged solution.

Appropriate transmission support is then determined to mitigate the constraints.

Interconnection Requests that requested Network Resource Interconnection Service (NRIS) are also studied in a separate NRIS analysis to determine if any constraint measured greater than or equal to a 3% DF. If so, these constraints are also considered for transmission reinforcement under NRIS.

3.1.2 Voltage

For non-converged power flow solutions that are determined to be caused by lack of voltage support, appropriate transmission support will be determined to mitigate the constraint.

After all thermal overload and voltage support mitigations are determined; a full ACCC analysis is then performed to determine voltage constraints. The following voltage performance guidelines are used in accordance with the Transmission Owner local planning criteria.

SPP Areas (69kV+):

Transmission Owner	Voltage Criteria (System Intact)	Voltage Criteria (Contingency)
AEPW	0.95 – 1.05 pu	0.92 – 1.05 pu
GRDA	0.95 – 1.05 pu	0.90 – 1.05 pu
SWPA	0.95 – 1.05 pu	0.90 – 1.05 pu
OKGE	0.95 – 1.05 pu	0.90 – 1.05 pu
OMPA	0.95 – 1.05 pu	0.90 – 1.05 pu
SWPS	0.95 – 1.05 pu	0.90 – 1.05 pu
MIDW	0.95 – 1.05 pu	0.90 – 1.05 pu
SUNC	0.95 – 1.05 pu	0.90 – 1.05 pu
KCPL	0.95 – 1.05 pu	0.90 – 1.05 pu
INDN	0.95 – 1.05 pu	0.90 – 1.05 pu
SPRM	0.95 – 1.05 pu	0.90 – 1.05 pu
NPPD	0.95 – 1.05 pu	0.90 – 1.05 pu
WAPA	0.95 – 1.05 pu	0.90 – 1.05 pu
WERE L-V	0.95 – 1.05 pu	0.93 – 1.05 pu
WERE H-V	0.95 – 1.05 pu	0.95 – 1.05 pu
EMDE L-V	0.95 – 1.05 pu	0.90 – 1.05 pu
EMDE H-V	0.95 – 1.05 pu	0.92 – 1.05 pu
LES	0.95 – 1.05 pu	0.90 – 1.05 pu
OPPD	0.95 – 1.05 pu	0.90 – 1.05 pu

SPP Buses with more stringent voltage criteria:

Bus Name/Number	Voltage Criteria (System Intact)	Voltage Criteria (Contingency)
TUCO 230kV 525830	0.925 – 1.05 pu	0.925 – 1.05 pu
Wolf Creek 230kV 532797	0.985 – 1.03 pu	0.985 – 1.03 pu
FCS 646251	1.001 – 1.047 pu	1.001 – 1.047 pu

Affected System Areas (115kV+):

Transmission Owner	Voltage Criteria (System Intact)	Voltage Criteria (Contingency)
EES-EAI	0.95 – 1.05 pu	0.90 – 1.05 pu
LAGN	0.95 – 1.05 pu	0.90 – 1.05 pu
EES	0.95 – 1.05 pu	0.90 – 1.05 pu
AMMO	0.95 – 1.05 pu	0.90 – 1.05 pu

CLEC	0.95 – 1.05 pu	0.90 – 1.05 pu
LAFA	0.95 – 1.05 pu	0.90 – 1.05 pu
LEPA	0.95 – 1.05 pu	0.90 – 1.05 pu
XEL	0.95 – 1.05 pu	0.90 – 1.05 pu
MP	0.95 – 1.05 pu	0.90 – 1.05 pu
SMMPA	0.95 – 1.05 pu	0.90 – 1.05 pu
GRE	0.95 – 1.05 pu	0.90 – 1.05 pu
OTP	0.95 – 1.05 pu	0.90 – 1.05 pu
OTP-H (115kV+)	0.97 – 1.05 pu	0.92 – 1.10 pu
ALTW	0.95 – 1.05 pu	0.90 – 1.05 pu
MEC	0.95 – 1.05 pu	0.90 – 1.05 pu
MDU	0.95 – 1.05 pu	0.90 – 1.05 pu
SPC	0.95 – 1.05 pu	0.95 – 1.05 pu
DPC	0.95 – 1.05 pu	0.90 – 1.05 pu
ALTE	0.95 – 1.05 pu	0.90 – 1.05 pu

The constraints identified through the voltage scan are then screened for the following for each interconnection request. 1) 3% DF on the contingent element and 2) 2% change in pu voltage. In certain conditions, engineering judgement was used to determine whether or not a generator had impacts to voltage constraints.

3.1.3 Dynamic Stability

Stability issues considered for transmission reinforcement under ERIS. Generators that fail to meet low voltage ride-through requirements (FERC Order #661-A) or SPP's stability criteria for damping or dynamic voltage recovery are assigned upgrades such that these requirements can be met.

3.1.4 Upgrades Assigned

Thermal overloads that require transmission support to mitigate are discussed in Section 8 and listed in Appendix G-T. Voltage constraints that may require transmission support are discussed in Section 8 and listed in Appendix G-V (Cluster Analysis) and Appendix G1-V (Stand Alone). Constraints that are identified solely through the stability analysis are discussed in Section 8 and the appropriate appendix for the detailed stability study of that Interconnection Request. All of these upgrades are cost assigned in Appendix E and Appendix F.

Other network constraints not requiring transmission reinforcements are shown in Appendix H (Cluster Analysis) and Appendix H1 (Stand Alone). With a defined source and sink in a Transmission Service Request, this list of network constraints can be refined and expanded to account for all Network Upgrade requirements for firm transmission service. Additional constraints identified by multi-element contingencies are listed in Appendix I.

In no way does the list of constraints in Appendix G (Cluster Analysis) or Appendix G1 (Stand Alone identify all potential constraints that guarantee operation for all periods of time. It should be noted that although this study analyzed many of the most probable contingencies, it is not an all-inclusive list and cannot account for every operational situation. Because of this, it is likely that the Customer(s) may be required to reduce their generation output to 0 MW, also known as

curtailment, under certain system conditions to allow system operators to maintain the reliability of the transmission network.

4 Determination of Cost Allocated Network Upgrades

Cost Allocated Network Upgrades of Variable Energy Resources (VER) (solar/wind) generation interconnection requests are determined using the 2017 spring model. Cost Allocated Network Upgrades of peaking units is determined using the 2020 summer peak model. A PSS/E and MUST sensitivity analysis is performed to determine the Distribution Factors (DF), a distribution factor with no contingency that each generation interconnection request has on each new upgrade. The impact each generation interconnection request has on each upgrade project is weighted by the size of each request. Finally the costs due by each request for a particular project are then determined by allocating the portion of each request's impact over the impact of all affecting requests.

For example, assume that there are three Generation Interconnection requests, X, Y, and Z that are responsible for the costs of Upgrade Project '1'. Given that their respective PTDF for the project have been determined, the cost allocation for Generation Interconnection request 'X' for Upgrade Project 1 is found by the following set of steps and formulas:

- Determine an Impact Factor on a given project for all responsible GI requests:

$$\text{Request X Impact Factor on Upgrade Project 1} = \text{PTDF(\%)(X)} * \text{MW(X)} = \text{X1}$$

$$\text{Request Y Impact Factor on Upgrade Project 1} = \text{PTDF(\%)(Y)} * \text{MW(Y)} = \text{Y1}$$

$$\text{Request Z Impact Factor on Upgrade Project 1} = \text{PTDF(\%)(Z)} * \text{MW(Z)} = \text{Z1}$$

- Determine each request's Allocation of Cost for that particular project:

$$\text{Request X's Project 1 Cost Allocation (\$)} = \frac{\text{Network Upgrade Project 1 Cost(\$)} * \text{X1}}{\text{X1} + \text{Y1} + \text{Z1}}$$

- Repeat previous for each responsible GI request for each Project

The cost allocation of each needed Network Upgrade is determined by the size of each request and its impact on the given project. This allows for the most efficient and reasonable mechanism for sharing the costs of upgrades.

4.1.1 Credits/Compensation for Amounts Advanced for Network Upgrades

Interconnection Customer shall be entitled to either credits or potentially Long Term Congestion Rights (LTCR), otherwise known as compensation, in accordance with Attachment Z2 of the SPP Tariff for any Network Upgrades, including any tax gross-up or any other tax-related payments associated with the Network Upgrades, and not refunded to the Interconnection Customer.

5 Required Interconnection Facilities

The requirement to interconnect the 10,036.9 MW of generation into the existing and proposed transmission systems in the affected areas of the SPP transmission footprint consist of the necessary cost allocated shared facilities listed in Appendix F by upgrade. The interconnection requirements for the cluster total an estimated $1,962,852,644 not including the following costs.

- **Costs Not Included** – Additional upgrades needed to review the Gerald Gentleman Station (GGS) stability interface in western Nebraska that will be completed by Nebraska Public Power District in the Interconnection Facilities Study phase.
- **Costs Not Included** – Costs on Affected Systems for particularly Associated Electric Cooperative Inc. (AECI), Mid-Continent Independent System Operator (MISO), and Minnkota Power Cooperative, Inc (MPC).

Interconnection Facilities specific to each generation interconnection request are listed in Appendix E. A preliminary one-line drawing for each generation interconnection request are listed in Appendix D. The interconnection requirements for the interconnection request studied for the "stand-alone" scenario total an estimated $TBD[10]. These costs can be found in Appendix E1.

For an explanation of how required Network Upgrades and Interconnection Facilities were determined, refer to the section on "Identification of Network Constraints."

5.1.1 Facilities Analysis

The interconnecting Transmission Owner for each Interconnection Request has provided its preliminary analysis of required Transmission Owner Interconnection Facilities and the associated Network Upgrades, shown in Appendix D. This analysis was limited only to the expected facilities to be constructed by the Transmission Owner at the Point of Interconnection. These costs are included within one-line diagrams in Appendix D and also listed in Appendix E and F as combined "Interconnection Costs". If the one-lines and costs in Appendix D have been updated by the Transmission Owner's Interconnection Facilities Study, those costs will be noted in the appendix. These costs will be further refined by the Transmission Owner as part of the Interconnection Facilities Study. Any additional Network Upgrades identified by this DISIS beyond the Point of Interconnection are defined and estimated by either the Transmission Owner or by SPP. These additional Network Upgrade costs will also be refined further by the Transmission Owner within the Interconnection Facilities Study.

[10] The given total of the stand-alone interconnection costs is not a clear indication of system costs as many Interconnection Requests have been assigned the same upgrade costs.

5.1.2 Environmental Review

For Interconnection Requests that result in an interconnection to, or modification to, the transmission facilities of the Western-UGP, a National Environmental Policy Act (NEPA) Environmental Review will be required. The Interconnection Customer will be required to execute and Environmental Review Agreement per Section 8.6.1 of the GIP.

6 Affected Systems Coordination

The following procedures are in place to coordinate with Affected Systems.

- Impacts on Associated Electric Cooperative Inc. (AECI) – For any observed violations of thermal overloads on AECI facilities, AECI has been notified by SPP to evaluate the violations for impacts on its transmission system. AECI has instructed SPP to notify the affected Interconnection Customers after posting of this study to contact AECI for an Affected System Study Agreement to further study the impacts on the AECI system.
- Impacts on Mid Continent Independent System Operation (MISO) – Per SPP's agreement with MISO, MISO will be contacted and provided a list of interconnection requests that proceed to move forward into the Interconnection Facilities Study Queue. MISO will then evaluate the Interconnection Requests for impacts and will be in contact with affected Interconnection Customers.
    - For potential impacts see Appendix H-T – Affected System and Appendix H-V – Affected System
- Impacts on Minnkota Power Cooperative, Inc (MPC) – MPC will be contacted and provided a list of interconnection requests that proceed to move forward into the Interconnection Facilities Study Queue. MP will then evaluate the Interconnection Requests for impacts.
    - For potential impacts see Appendix H-T – Affected System and Appendix H-V – Affected System
- Impacts to other affected systems – For any observed violations of thermal overloads or voltage constraints, SPP will contact the owner of the facility for further information.

7 Power Flow Analysis

7.1.1 Power Flow Analysis Methodology

The ACCC function of PSS/E is used to simulate single element and special (i.e., breaker-to-breaker, multi-element, etc.) contingencies in portions or all of the modeled control areas of SPP, as well as, other control areas external to SPP and the resulting scenarios analyzed. Single element and multi-element contingencies are evaluated.

7.1.2 Power Flow Analysis

A power flow analysis is conducted for each Interconnection Customer's facility using modified versions of the 2016 winter peak (16WP) season, the 2017 spring (17G) and 2017 summer peak (17SP) seasons, the 2020 summer (20SP) and winter peak (20WP) seasons, and the 2025 summer peak (25SP) seasonal models.. The output of the Interconnection Customer's facility is offset in each model by a reduction in output of existing online SPP generation. This method allows the request to be studied as an Energy Resource Interconnection Service request (ERIS). Certain requests that are also pursuing Network Resource Interconnection Service (NRIS) have an additional analysis conducted for displacing resources in the interconnecting Transmission Owner's balancing area.

8 Power Flow Results

8.1 Cluster Group 1 (Woodward Area)

In addition to the 4,377.5 MW of previously queued generation in the area, 1,482.4 MW of new interconnection service was studied. For the addition of group 1 ERIS Interconnection Requests, potential voltage collapse(s) were observed for the single element outages (N-1) of Border – Tuco 345kV and Mathewson – Tatonga 345kV transmission circuits. Woodward – Tatonga – Mathewson 345kV second circuit would be required to mitigate the voltage collapse(s). The Woodward – Tatonga – Mathewson – Cimarron 345kV transmission circuit #2 has been previously cost allocated as a regional upgrade per SPP-NTC-200223 from the 2012 SPP Integrated Transmission Plan 10-Year (2012 ITP 10) with a current anticipated in-service date of June, 2021. The in-service date for this project is well beyond the in-service date of majority of Interconnection Request(s) in Group 1. In accordance with the SPP Generator Interconnection Procedure (GIP), Interconnection Request(s) can delay their in-service dates no more than three (3) years, therefore Group 1 requests will not be able to move forward into the Interconnection Facilities Study Queued unless they execute a Limited Operation Interconnection Facilities Study Agreement (Appendix 4A to the SPP GIP).

Several ERIS thermal constraints were observed for system intact and N-1 conditions including Cleo Corner – Cleo Corner Tap 138kV circuit #1, Cimarron – Draper 345kV circuit #1, GEN-2015-095 Tap – Rose Valley – Noel SW 138kV circuit #1, Woodward 345/138/13kV circuit #1 and circuit #2. To alleviate the thermal violations, terminal equipment upgrades will be required for Cleo Corner – Cleo Corner Tap 138kV circuit #1 and Cimarron – Draper Lake 345kV circuit #1. Cimarron – Draper Lake 345kV circuit #1 terminal equipment upgrade is currently assigned per SPP-NTC-200329. GEN-2015-095 Tap – Rose Valley – Noel SW 138kV will be required to be rebuilt and Woodward

345/138/13kV circuit #1 and circuit #2 transformers will need to be replaced with larger capacity transformers.

In additional to the ERIS constraints mitigations, NRIS constraints mitigation by means of upgrading terminal equipment are needed for Cimarron – Minco 345kV circuit #1, Pittsburg – Seminole 345kV circuit #1, and Swissvale – West Gardner 345kV circuit #1. NRIS mitigations that require new transmission 2016 ITPNT Network Upgrades for thermal and voltage constraints, GEN-2014-057 Tap – Sunnyside 345kV rebuild/re-conductor, Stillwater 138/69kV Project per SPP-NTC-200319, and Tupelo – Tupelo 138kV circuit #2.

For Group 1 Cluster Analysis cost allocation, please refer to Appendix E and F.

Cluster ERIS Constraints			
MONITORED ELEMENT	**Limiting Rate A/B (MVA)**	**TC%LOADING (% MVA)**	**CONTINGENCY**
Non-Converged Contingency	N/A	N/A	BORDER 7345.00 - TUCO_2 345.00 345KV CKT 1
Non-Converged Contingency	N/A	N/A	MATHWSN7 345.00 - TATONGA7 345.00 345KV CKT 1
	Mitigation		**Woodward – Tatonga – Mathewson 345kV circuit #2**
CIMARRON - DRAPER LAKE 345KV CKT 1	717	104.4341	System Intact
CIMARRON - DRAPER LAKE 345KV CKT 1	717	113.4336	ARCADIA - NORTHWEST 345KV CKT 1
	Mitigation		**Replace terminal equipment**
CLEO CORNER - CLEOPLT4 138.00 138KV CKT 1	191	112.3589	System Intact
CLEO CORNER - CLEOPLT4 138.00 138KV CKT 1	191	134.667	MATHWSN7 345.00 - TATONGA7 345.00 345KV CKT 1
	Mitigation		**Replace terminal equipment and Woodward – Tatonga – Mathewson 345kV circuit #2**
G15095_T 138.00 - ROSE_VALLEY 138.00 138KV CKT 1	183	120.54	System Intact
G15095_T 138.00 - ROSE_VALLEY 138.00 138KV CKT 1	228	120.54	MATHWSN7 345.00 - TATONGA7 345.00 345KV CKT 1
NOEL_SW 138.00 - ROSE_VALLEY 138.00 138KV CKT 1	183	112.442	System Intact
NOEL_SW 138.00 - ROSE_VALLEY 138.00 138KV CKT 1	228	106.1661	MATHWSN7 345.00 - TATONGA7 345.00 345KV CKT 1
	Mitigation		**Rebuild GEN-2015-095 Tap – Rose Valley – Noel 138kV circuit #1**
MATHWSN7 345.00 - TATONGA7 345.00 345KV CKT 1	1195	107.9199	System Intact
MATHWSN7 345.00 - TATONGA7 345.00 345KV CKT 1	1195	120.7669	THISTLE7 345.00 - WOODWARD DISTRICT EHV 345KV CKT 1
	Mitigation		**Model Correction to 1792MVA and Woodward – Tatonga – Mathewson 345kV circuit #2**
ROMAN NOSE - SOUTHARD 138KV CKT 1	153	103.6561	MATHWSN7 345.00 - TATONGA7 345.00 345KV CKT 1
	Mitigation		**Woodward – Tatonga – Mathewson 345kV circuit #2**
WOODWARD DISTRICT EHV (WWDEHV) 345/138/13.8KV TRANSFORMER CKT 1	493	110.7659	WOODWARD DISTRICT EHV (WWDEHV-T2) 345/138/13.8KV TRANSFORMER CKT 2
WOODWARD DISTRICT EHV (WWDEHV-T2) 345/138/13.8KV TRANSFORMER CKT 2	493	111.2109	WOODWARD DISTRICT EHV (WWDEHV) 345/138/13.8KV TRANSFORMER CKT 1
	Mitigation		**Replace Woodward 345/138/13kV transformer circuit #1 and #2**

Cluster NRIS Constraints			
MONITORED ELEMENT	**Limiting Rate A/B (MVA)**	**TC%LOADING (% MVA)**	**CONTINGENCY**
ALVA - KNOBHILL 69KV CKT 1	76	103.9521	FAIRVIEW - OKEENE 69KV CKT 1
	Mitigation		**2016 ITPNT Upgrade**

CHISHOLM6 230.00 - SWEETWATER 230KV CKT 1	439	106.0142	G14-074T 345.00 - OKLAUNION 345KV CKT 1
	Mitigation		**Woodward – Tatonga – Mathewson 345kV circuit #2**
CIMARRON - DRAPER LAKE 345KV CKT 1	717	109.0896	System Intact
CIMARRON - DRAPER LAKE 345KV CKT 1	717	138.5163	G14-057T 345.00 - SUNNYSIDE 345KV CKT 1
	Mitigation		**Replace Switches and Terminal Equipment**
CIMARRON - MINCO 345KV CKT 1	956	113.1031	G14-057T 345.00 - SUNNYSIDE 345KV CKT 1
	Mitigation		**Replace Switches and Terminal Equipment**
CLEARWATER - MILAN TAP 138KV CKT 1	110	125.164	MATHWSN7 345.00 - TATONGA7 345.00 345KV CKT 1
CLEO CORNER - CLEOPLT4 138.00 138KV CKT 1	191	99.5	System Intact
CLEO CORNER - CLEOPLT4 138.00 138KV CKT 1	191	120.3357	MATHWSN7 345.00 - TATONGA7 345.00 345KV CKT 1
	Mitigation		**Replace terminal equipment and Woodward – Tatonga – Mathewson 345kV circuit #2**
DEWEY - IODINE 138KV CKT 1	270	104.196	MATHWSN7 345.00 - TATONGA7 345.00 345KV CKT 1
FPL SWITCH - WOODWARD 138KV CKT 1	185	131.8709	MATHWSN7 345.00 - TATONGA7 345.00 345KV CKT 1
	Mitigation		**Woodward – Tatonga – Mathewson 345kV circuit #2, and Higher Queued Woodward Phase Shifting Transformer Upgrade**
G14-057T 345.00 - SUNNYSIDE 345KV CKT 1	717	125.7317	System Intact
G14-057T 345.00 - SUNNYSIDE 345KV CKT 1	789	141.3261	CIMARRON - MINCO 345KV CKT 1
	Mitigation		**GEN-2014-057 Tap – Sunnyside 345kV rebuild/recondcutor**
KINZE - STILLWATER KINZIE 138KV CKT 1	287	100.1398	CLEVELAND - G15066_T 345.00 345KV CKT 1
	Mitigation		**Stillwater 138/69kV Project**
MATHWSN7 345.00 - TATONGA7 345.00 345KV CKT 1	1195	110.9769	G14-074T 345.00 - OKLAUNION 345KV CKT 1
			Model Correction to 1792MVA
NORGE ROAD - SOUTHWESTERN STATION 138KV CKT 1	136	101.5889	CIMARRON - MINCO 345KV CKT 1
	Mitigation		**Woodward – Tatonga – Mathewson 345kV circuit #2**
PITTSBURG - SEMINOLE 345KV CKT 1	717	104.2823	G14-057T 345.00 - SUNNYSIDE 345KV CKT 1
	Mitigation		**Replace terminal equipment**
ROMAN NOSE - SOUTHARD 138KV CKT 1	153	122.4038	MATHWSN7 345.00 - TATONGA7 345.00 345KV CKT 1
	Mitigation		**Woodward – Tatonga – Mathewson 345kV circuit #2**
SWISSVALE - WEST GARDNER 345KV CKT 1	717	105.8268	HOYT - STRANGER CREEK 345KV CKT 1
	Mitigation		**Replace terminal equipment**
TUPELO - TUPELO TAP 138KV CKT 1	143	107.5628	PITTSBURG - SEMINOLE 345KV CKT 1
	Mitigation		**Tupelo – Tupelo Tap 138kV circuit #2**
WOODWARD EHV - WWPAR4 138.00 138KV CKT 1	287		104.4323
	Mitigation		**Woodward – Tatonga – Mathewson 345kV circuit #2**

8.1.1 Group 1 (Stand Alone)

The Interconnection Requests was also studied as a Stand Alone Interconnection Request in addition to the Cluster Analysis. GEN-2015-038, GEN-2015-044, and GEN-205-059 currently do not have stand alone ERIS constraints requiring additional transmission reinforcement upgrades. GEN-2015-057 and GEN-2015-093 currently do not have stand alone ERIS or NRIS constraints requiring additional transmission reinforcement upgrades. GEN-2015-048 ERIS and NRIS stand alone analysis observed thermal constraints on the Cleo Corner – Cleo Corner Tap 138kV transmission circuit. Additional the second Woodward – Tatonga – Mathewson 345kV circuit will be required for NRIS thermal overload mitigations on Roman Nose – Southard 138kV. Terminal equipment upgrades will be required for Cleo Corner – Cleo Corner Tap 138kV circuit #1 constraint. GEN-2015-060 and GEN-2015-081 ERIS stand-alone analysis requires the model rating correction for Mathewson – Tatonga 345kV transmission circuit to be rated at 3000 amps. GEN-2015-060 and GEN-2015-081 NRIS stand-alone analysis requires the second 345kV transmission circuit from Woodward – Tatonga –

Mathewson to mitigate thermal constraints on various 138kV overloads including Mooreland - FPL Switch – Woodward 138kV and Roman Nose – Southard 138kV. Also, GEN-2015-060 NRIS stand-alone analysis identified overloads on the TUCO – Swisher 230kV transmission circuit, in which has a higher rating now with recent upgrades to terminal equipment. GEN-2015-095 ERIS and NRIS stand-alone analysis observed thermal overloads on the GEN-2015-095 Tap – Rose Valley – Noel 138kV transmission circuit. The mitigation for the overloads on GEN-2015-095 Tap – Rose Valley – Noel 138kV will require rebuilding/re-conducting the circuits. In addition, GEN-2015-095 NRIS analysis observed thermal overloads in the Glass Mountain, Roman Nose, and Knob Hill areas that will require the second Woodward – Tatonga – Mathewson 345kV circuit and 2016 Integrated Transmission Plan Near Term (ITPNT) upgrades. Appendix G1 and Appendix H1 contain the Stand Alone Analysis power flow thermal violations.

For Group 1 Stand Alone Analysis cost allocation, please refer to Appendix E1.

8.1.2 Group 1 (Limited Operation)

Limited Operation results are listed below. While these results are based on the criteria listed in GIP 8.4.3, the Interconnection Customer may request additional scenarios for Limited Operation based on higher queued Interconnection Requests not being placed in service. All of these amounts listed are based on the assumption that the Woodward District Phase Shifting Transformer goes into service no later than June 1, 2017.

Limited Operation Analysis		
Interconnection Request	**MW**	**Constraint that most limits LOIS**
GEN-2015-038	303.6	None
GEN-2015-044	20	None
GEN-2015-048	200 (ERIS)	No ERIS
	170 (NRIS)	Several NRIS constraints
GEN-2015-057	100	None
GEN-2015-057	50	Generator Lead
GEN-2015-059	6	none
GEN-2015-060	250 (ERIS)	None for ERIS
	0 (NRIS)	Several NRIS constraints
GEN-2015-081	180	Several NRIS constraints
	0 (NRIS)	Several NRIS constraints
GEN-2015-093	250	None
GEN-2015-095	50 (ERIS)	Noel - Rose Valley – Mooreland 138kV
	0 (NRIS)	Several NRIS constraints

8.2 Cluster Group 2 (Hitchland Area)

In addition to the 3,616.20 MW of previously queued generation in the area, 600.0 MW of new interconnection service was studied. With the addition of the Group 2 Interconnection Requests, system intact conditions results in low voltages for the Hitchland – Optima - Beaver County – Badger – Woodward 345kV Corridor causing numerous non-converged N-1 contingencies. A 5Mvar fictitious reactive support device at Woodward 345kV was placed in some Group 2 seasonal study cases to bring system intact voltage to at least 0.90 per-unit. This fictitious reactive support device was then removed from upgrade scenario study cases as the following transmission reinforcements were then added to the seasonal study cases to meet the study generation in service requirements under system intact conditions –

- Woodward – Tatonga – Mathewson – Cimarron 345kV transmission circuit #2
- Walkemeyer 345/115kV project

The Woodward – Tatonga – Mathewson – Cimarron 345kV transmission circuit #2 has been previously cost allocated as a regional upgrade per SPP-NTC-200223 from the 2012 SPP Integrated Transmission Plan 10-Year (2012 ITP 10) with a current anticipated in-service date of June, 2021. The in-service date for this project is beyond the in-service date of majority of Interconnection Request(s) in Group 2. In accordance with the SPP Generator Interconnection Procedure (GIP), Interconnection Request(s) can delay their in-service dates no more than three (3) years, therefore Group 2 requests will not be able to move forward into the Interconnection Facilities Study Queued unless they execute a Limited Operation Interconnection Facilities Study Agreement (Appendix 4A to the SPP GIP).

Contingency analysis revealed several more non-converged contingencies that required the following additional upgrades

- A new 345kV line from Beaver County to a new 345kV Grapevine Interchange. From the Grapevine 345kV Interchange, a new line east to the proposed Chisolm 345kV substation will need to be built.
- A new 345kV line/tie from the proposed Chisolm 345kV substation to a substation near Chisolm that would tap into the Border-Woodward 345kV line with a five terminal 345kV breaker-and-a-half substation.

These projects are also assigned to Group 6 Interconnection Customers which are sharing the costs.

Once the non-converged contingencies were solved, additional critical constraints requiring transmission reinforcements are listed below while the complete list of individual constraints requiring additional transmission reinforcements displayed in Appendix G-T.

Cluster ERIS Constraints			
MONITORED ELEMENT	Limiting Rate A/B (MVA)	TC%LOADING (% MVA)	CONTINGENCY
Non-Converged Contingency	N/A	N/A	AMARILLO SOUTH INTERCHANGE - G15031_T 230.00 230KV CKT 1
Non-Converged Contingency	N/A	N/A	ARCADIA - NORTHWEST 345KV CKT 1
Non-Converged Contingency	N/A	N/A	AXTELL - PAULINE 345KV CKT 1
Non-Converged Contingency	N/A	N/A	AXTELL - POST ROCK 345KV CKT 1
Non-Converged Contingency	N/A	N/A	BENTON - ROSE HILL 345KV CKT 1
Non-Converged Contingency	N/A	N/A	BENTON - WICHITA 345KV CKT 1
Non-Converged Contingency	N/A	N/A	BORDER 7345.00 - TUCO_2 345.00 345KV CKT 1
Non-Converged Contingency	N/A	N/A	BUCKNER7 345.00 - HOLCOMB 345KV CKT 1
Non-Converged Contingency	N/A	N/A	BUCKNER7 345.00 - SPEARVILLE 345KV CKT 1
Non-Converged Contingency	N/A	N/A	BUSHLAND INTERCHANGE - DEAF SMITH COUNTY INTERCHANGE 230KV CKT 1
Non-Converged Contingency	N/A	N/A	BUSHLAND INTERCHANGE - POTTER COUNTY INTERCHANGE 230KV CKT 1
Non-Converged Contingency	N/A	N/A	BVRCNTY7 345.00 - G11-14T 345.00 345KV CKT 1
Non-Converged Contingency	N/A	N/A	BVRCNTY7 345.00 - G11-14T 345.00 345KV CKT 2
Non-Converged Contingency	N/A	N/A	BVRCNTY7 345.00 - OPTIMA 345.00 345KV CKT 1
Non-Converged Contingency	N/A	N/A	BVRCNTY7 345.00 - OPTIMA 345.00 345KV CKT 2

Non-Converged Contingency	N/A	N/A	CHERRY1 - POTTER COUNTY INTERCHANGE 230KV CKT 1
Non-Converged Contingency	N/A	N/A	CHISHOLM6 230.00 - SWEETWATER 230KV CKT 1
Non-Converged Contingency	N/A	N/A	CHISHOLM7 345.00 - GRACEMONT 345KV CKT 1
Non-Converged Contingency	N/A	N/A	CHISHOLM7 345.00 () 345/230/13.2KV TRANSFORMER CKT 1
Non-Converged Contingency	N/A	N/A	CIMARRON - DRAPER LAKE 345KV CKT 1
Non-Converged Contingency	N/A	N/A	CIMARRON - MINCO 345KV CKT 1
Non-Converged Contingency	N/A	N/A	CLEVELAND - G15066_T 345.00 345KV CKT 1
Non-Converged Contingency	N/A	N/A	DEAF SMITH COUNTY INTERCHANGE - G15039_T 230.00 230KV CKT 1
Non-Converged Contingency	N/A	N/A	DEWEY - IODINE 138KV CKT 1
Non-Converged Contingency	N/A	N/A	EMPORIA ENERGY CENTER - G14_001T 345.00 345KV CKT 1
Non-Converged Contingency	N/A	N/A	FINNEY SWITCHING STATION - HOLCOMB 345KV CKT 1
Non-Converged Contingency	N/A	N/A	FINNEY SWITCHING STATION - WALKTAP7 345.00 345KV CKT 1
Non-Converged Contingency	N/A	N/A	FPL SWITCH - MOORELAND 138KV CKT 1
Non-Converged Contingency	N/A	N/A	FPL SWITCH - WOODWARD 138KV CKT 1
Non-Converged Contingency	N/A	N/A	FT THOMPSON - FTTHOM2-LNX3345.00 345KV CKT Z
Non-Converged Contingency	N/A	N/A	FTTHOM2-LNX3345.00 - GRPRAR2-LNX3345.00 345KV CKT 1
Non-Converged Contingency	N/A	N/A	G11_051T 345.00 - TATONGA7 345.00 345KV CKT 1
Non-Converged Contingency	N/A	N/A	G11_051T 345.00 - WOODWARD DISTRICT EHV 345KV CKT 1
Non-Converged Contingency	N/A	N/A	G11-14T 345.00 - WOODWARD DISTRICT EHV 345KV CKT 1
Non-Converged Contingency	N/A	N/A	G11-14T 345.00 - WOODWARD DISTRICT EHV 345KV CKT 2
Non-Converged Contingency	N/A	N/A	G13-010T 345.00 - POST ROCK 345KV CKT 1
Non-Converged Contingency	N/A	N/A	G13-010T 345.00 - SPEARVILLE 345KV CKT 1
Non-Converged Contingency	N/A	N/A	G14_001T 345.00 - WICHITA 345KV CKT 1
Non-Converged Contingency	N/A	N/A	G14_038T 345.00 - Hitchland Interchange 345KV CKT 1
Non-Converged Contingency	N/A	N/A	G14_038T 345.00 - POTTER COUNTY INTERCHANGE 345KV CKT 1
Non-Converged Contingency	N/A	N/A	G14-057T 345.00 - LAWTON EASTSIDE 345KV CKT 1
Non-Converged Contingency	N/A	N/A	G14-057T 345.00 - SUNNYSIDE 345KV CKT 1
Non-Converged Contingency	N/A	N/A	G14-074T 345.00 - OKLAUNION 345KV CKT 1
Non-Converged Contingency	N/A	N/A	G14-074T 345.00 - TUCO INTERCHANGE 345KV CKT 1
Non-Converged Contingency	N/A	N/A	G15031_T 230.00 - SWISHER COUNTY INTERCHANGE 230KV CKT 1
Non-Converged Contingency	N/A	N/A	G15039_T 230.00 - PLANT X STATION 230KV CKT 1
Non-Converged Contingency	N/A	N/A	G15066_T 345.00 - SOONER 345KV CKT 1
Non-Converged Contingency	N/A	N/A	G15088_T 345.00 - MOORE 345KV CKT 1
Non-Converged Contingency	N/A	N/A	G15088_T 345.00 - PAULINE 345KV CKT 1
Non-Converged Contingency	N/A	N/A	G1524G1525 345.00 - THISTLE7 345.00 345KV CKT 1
Non-Converged Contingency	N/A	N/A	G1524G1525 345.00 - THISTLE7 345.00 345KV CKT 2
Non-Converged Contingency	N/A	N/A	G1524G1525 345.00 - WICHITA 345KV CKT 1
Non-Converged Contingency	N/A	N/A	G1524G1525 345.00 - WICHITA 345KV CKT 2
Non-Converged Contingency	N/A	N/A	Various Generator Outage (G-1) Contingencies
Non-Converged Contingency	N/A	N/A	GERALD GENTLEMAN STATION - RED WILLOW 345KV CKT 1
Non-Converged Contingency	N/A	N/A	GRACEMONT - MINCO 345KV CKT 1
Non-Converged Contingency	N/A	N/A	GRAND ISLAND - SWEETWATER 345KV CKT 1
Non-Converged Contingency	N/A	N/A	GRAPEVINE INTERCHANGE - NICHOLS STATION 230KV CKT 1
Non-Converged Contingency	N/A	N/A	GRAPEVINE INTERCHANGE - STATELINE INTERCHANGE 230KV CKT 1
Non-Converged Contingency	N/A	N/A	GRPRAR1-LNX3345.00 - HOLT.CO3 345.00 345KV CKT 1
Non-Converged Contingency	N/A	N/A	GRPRAR1-LNX3345.00 - GRPRAR1345KV CKT Z
Non-Converged Contingency	N/A	N/A	Harrington Station East Bus - Harrington Station Mid Bus 230KV CKT @1
Non-Converged Contingency	N/A	N/A	HITCHLAND INTERCHANGE - MOORE COUNTY INTERCHANGE 230KV CKT 1

Non-Converged Contingency	N/A	N/A	Hitchland Interchange - WALKTAP7 345.00 345KV CKT 1
Non-Converged Contingency	N/A	N/A	Hitchland Interchange (H TB80155502) 345/230/13.2KV TRANSFORMER CKT 1
Non-Converged Contingency	N/A	N/A	Hitchland Interchange (SIEM 8743067) 345/230/13.2KV TRANSFORMER CKT 2
Non-Converged Contingency	N/A	N/A	HOLCOMB - SETAB 345KV CKT 1
Non-Converged Contingency	N/A	N/A	HUGO - SUNNYSIDE 345KV CKT 1
Non-Converged Contingency	N/A	N/A	IODINE - WOODWARD EHV 138KV CKT 1
Non-Converged Contingency	N/A	N/A	LACYGNE - WAVERLY7 345.00 345KV CKT 1
Non-Converged Contingency	N/A	N/A	MATHWSN7 345.00 - NORTHWEST 345KV CKT 1
Non-Converged Contingency	N/A	N/A	MATHWSN7 345.00 - TATONGA7 345.00 345KV CKT 1
Non-Converged Contingency	N/A	N/A	MINGO - RED WILLOW 345KV CKT 1
Non-Converged Contingency	N/A	N/A	MINGO - SETAB 345KV CKT 1
Non-Converged Contingency	N/A	N/A	MOORE COUNTY INTERCHANGE - POTTER COUNTY INTERCHANGE 230KV CKT 1
Non-Converged Contingency	N/A	N/A	NEWHART 230 - PLANT X STATION 230KV CKT 1
Non-Converged Contingency	N/A	N/A	NEWHART 230 - POTTER COUNTY INTERCHANGE 230KV CKT 1
Non-Converged Contingency	N/A	N/A	P12:230:AEPW:ELKCITY6:SWEETWT6
Non-Converged Contingency	N/A	N/A	P12:230:AEPW-SPS:SWEETWT6:WHEELER 6
Non-Converged Contingency	N/A	N/A	P12:345:SPS:J07.1.FINN.HITCH
Non-Converged Contingency	N/A	N/A	PITTSBURG - VALLIANT 345KV CKT 1
Non-Converged Contingency	N/A	N/A	POTTER COUNTY INTERCHANGE (WAUK 90343-A) 345/230/13.2KV TRANSFORMER CKT 1
Non-Converged Contingency	N/A	N/A	RENO COUNTY - SUMMIT 345KV CKT 1
Non-Converged Contingency	N/A	N/A	RENO COUNTY - WICHITA 345KV CKT 1
Non-Converged Contingency	N/A	N/A	STATELINE INTERCHANGE - STLN-DEMARC6 230KV CKT 1
Non-Converged Contingency	N/A	N/A	STLN-DEMARC6 - SWEETWATER 230KV CKT 1
Non-Converged Contingency	N/A	N/A	SWISHER COUNTY INTERCHANGE - TUCO_2 230.00 230KV CKT 1
Non-Converged Contingency	N/A	N/A	THISTLE7 345.00 - WOODWARD DISTRICT EHV 345KV CKT 1
Non-Converged Contingency	N/A	N/A	THISTLE7 345.00 - WOODWARD DISTRICT EHV 345KV CKT 2
Non-Converged Contingency	N/A	N/A	TUCO INTERCHANGE - TUCO_2 345.00 345KV CKT 1
Non-Converged Contingency	N/A	N/A	WALKEMEYER - WALKTAP3 115.00 115KV CKT 1
Non-Converged Contingency	N/A	N/A	WALKTAP7 345.00 (WALKE345) 345/115/13.8KV TRANSFORMER CKT 1
Non-Converged Contingency	N/A	N/A	WAVERLY7 345.00 - WOLF CREEK 345KV CKT 1
Non-Converged Contingency	N/A	N/A	WOODWARD - WWPAR4 138.00 138KV CKT 1
Non-Converged Contingency	N/A	N/A	WOODWARD DISTRICT EHV (WWDEHV) 345/138/13.8KV TRANSFORMER CKT 1
Non-Converged Contingency	N/A	N/A	WOODWARD DISTRICT EHV (WWDEHV-T2) 345/138/13.8KV TRANSFORMER CKT 2
Non-Converged Contingency	N/A	N/A	WOODWARD EHV - WWPAR4 138.00 138KV CKT 1
CHISHOLM6 230.00 - SWEETWATER 230KV CKT 1	421	105.5627	System Intact
DEWEY - IODINE 138KV CKT 1	194	100.246	System Intact
FINNEY SWITCHING STATION - Hitchland Interchange 345KV CKT 1	956.09	100.1109	System Intact
FINNEY SWITCHING STATION - HOLCOMB 345KV CKT 1	956.09	103.2028	System Intact
FPL SWITCH - WOODWARD 138KV CKT 1	133	113.3	System Intact
Hitchland Interchange - WALKTAP7 345.00 345KV CKT 1	956.09	107.9071	System Intact
Hitchland Interchange - WALKTAP7 345.00 345KV CKT 1	1082.77	105.0657	GEN531447 1-HOLCOMB GENERATOR
MATHWSN7 345.00 - TATONGA7 345.00 345KV CKT 1	1195	104.915	IODINE - WOODWARD EHV 138KV CKT 1
MATHWSN7 345.00 - TATONGA7 345.00 345KV CKT 1	1195	100.4599	System Intact
SPSNORTH_STH	1160	122.1	System Intact
STATELINE INTERCHANGE - STLN-DEMARC6 230KV CKT 1	348.58	113.5339	System Intact
STLN-DEMARC6 - SWEETWATER 230KV CKT 1	353	111.7044	System Intact

	Mitigation		**Woodward – GEN-2011-051 – Tatonga – Mathewson 345kV circuit #2, Woodward – GEN-2011-051 – Tatonga – Mathewson 345kV circuit #1 rating update to 3000amps, Walkemeyer Project, Beaver Co – Grapevine – Chisholm 345kV circuit #1 build, Potter County – Grapevine circuit #1 build, and Grapevine Reactive Power Support.**
POTTER COUNTY INTERCHANGE (WAUK 90343-A) 345/230/13.2KV TRANSFORMER CKT 1	560	138.0385	System Intact
	Mitigation		**Second Potter County Interchange 345/230/13kV Transformer**

Cluster NRIS Constraints			
MONITORED ELEMENT	**Limiting Rate A/B (MVA)**	**TC%LOADING (% MVA)**	**CONTINGENCY**
Non-Converged Contingency	N/A	N/A	FINNEY SWITCHING STATION - Hitchland Interchange 345KV CKT 1
Non-Converged Contingency	N/A	N/A	FINNEY SWITCHING STATION - HOLCOMB 345KV CKT 1
Non-Converged Contingency	N/A	N/A	Hitchland Interchange - WALKTAP7 345.00 345KV CKT 1
Non-Converged Contingency	N/A	N/A	P12:345:SPS:J07.1.FINN.HITCH
Non-Converged Contingency	N/A	N/A	VIOLA 7 345.00 - WICHITA 345KV CKT 1
Non-Converged Contingency	N/A	N/A	WOODWARD EHV - WWPAR4 138.00 138KV CKT 1
CHISHOLM6 230.00 - SWEETWATER 230KV CKT 1	439	108.7187	MATHWSN7 345.00 - TATONGA7 345.00 345KV CKT 1
CIMARRON RIVER PLANT - WALKEMEYER 115KV CKT 1	148.2	117.0432	FINNEY SWITCHING STATION - HOLCOMB 345KV CKT 1
CLEARWATER - MILAN TAP 138KV CKT 1	110	125.3133	MATHWSN7 345.00 - TATONGA7 345.00 345KV CKT 1
CLEO CORNER - CLEOPLT4 138.00 138KV CKT 1	191	118.1252	MATHWSN7 345.00 - TATONGA7 345.00 345KV CKT 1
CONWAY SUB - KIRBY SWITCHING STATION 115KV CKT 1	160	104.9602	GRAPEVINE INTERCHANGE - NICHOLS STATION 230KV CKT 1
CONWAY SUB - NICHOLS STATION 115KV CKT 1	175	100.2542	GRAPEVINE INTERCHANGE - NICHOLS STATION 230KV CKT 1
DEWEY - IODINE 138KV CKT 1	222	116.4708	MATHWSN7 345.00 - TATONGA7 345.00 345KV CKT 1
EVANS ENERGY CENTER NORTH - MAIZEW 4 138.00 138KV CKT 1	382	100.625	BENTON - WICHITA 345KV CKT 1
FPL SWITCH - WOODWARD 138KV CKT 1	133	107.6009	System Intact
FPL SWITCH - WOODWARD 138KV CKT 1	153	173.4102	MATHWSN7 345.00 - TATONGA7 345.00 345KV CKT 1
Hitchland Interchange (H TB80155502) 345/230/13.2KV TRANSFORMER CKT 1	644	100.3295	Hitchland Interchange (SIEM 8743067) 345/230/13.2KV TRANSFORMER CKT 2
Hitchland Interchange (SIEM 8743067) 345/230/13.2KV TRANSFORMER CKT 2	644	102.6679	Hitchland Interchange (H TB80155502) 345/230/13.2KV TRANSFORMER CKT 1
MATHWSN7 345.00 - TATONGA7 345.00 345KV CKT 1	1195	111.0527	G14-074T 345.00 - OKLAUNION 345KV CKT 1
ROMAN NOSE - SOUTHARD 138KV CKT 1	153	111.1002	MATHWSN7 345.00 - TATONGA7 345.00 345KV CKT 1
STATELINE INTERCHANGE - STLN-DEMARC6 230KV CKT 1	381.24	110.7293	MATHWSN7 345.00 - TATONGA7 345.00 345KV CKT 1
STLN-DEMARC6 - SWEETWATER 230KV CKT 1	353	119.2277	MATHWSN7 345.00 - TATONGA7 345.00 345KV CKT 1
WOODWARD - WWPAR4 138.00 138KV CKT 1	300	103.3667	MATHWSN7 345.00 - TATONGA7 345.00 345KV CKT 1
WOODWARD EHV - WWPAR4 138.00 138KV CKT 1	287	109.8882	MATHWSN7 345.00 - TATONGA7 345.00 345KV CKT 1

	Mitigation		**Mitigation by ERIS upgrades: Woodward – GEN-2011-051 – Tatonga – Mathewson 345kV circuit #2, Woodward – GEN-2011-051 – Tatonga – Mathewson 345kV circuit #1 rating update to 3000amps, Walkemeyer Project, Beaver Co – Grapevine – Chisholm 345kV circuit #1 build, Potter County – Grapevine circuit #1 build,woodward phase shifting transformer, and Grapevine Reactive Power Support.**
POTTER COUNTY INTERCHANGE (WAUK 90343-A) 345/230/13.2KV TRANSFORMER CKT 1	560	103.4549	System Intact
POTTER COUNTY INTERCHANGE (WAUK 90343-A) 345/230/13.2KV TRANSFORMER CKT 1	644	127.2985	G14-074T 345.00 - TUCO INTERCHANGE 345KV CKT 1
	Mitigation		**Mitigation by ERIS Upgrade: Second Potter County Interchange 345/230/13kV Transformer**
CIMARRON - DRAPER LAKE 345KV CKT 1	717	110.5448	System Intact
CIMARRON - DRAPER LAKE 345KV CKT 1	717	141.1775	G14-057T 345.00 - SUNNYSIDE 345KV CKT 1
	Mitigation		**Replace Switches and Terminal Equipment**
CIMARRON - MINCO 345KV CKT 1	956	122.5696	G14-057T 345.00 - SUNNYSIDE 345KV CKT 1
	Mitigation		**Replace Switches and Terminal Equipment**
G14-057T 345.00 - LAWTON EASTSIDE 345KV CKT 1	789	102.2388	CIMARRON - MINCO 345KV CKT 1
	Mitigation		**Replace Terminal Equipment**
G14-057T 345.00 - SUNNYSIDE 345KV CKT 1	789	144.5105	CIMARRON - MINCO 345KV CKT 1
	Mitigation		**GEN-2014-057 Tap – Sunnyside 345kV rebuild/recondcutor**
SWISSVALE - WEST GARDNER 345KV CKT 1	717	110.6347	HOYT - STRANGER CREEK 345KV CKT 1
	Mitigation		**Replace Terminal Equipment**
CIMARRON RIVER PLANT - WALKEMEYER 115KV CKT 1	148.2	117.0432	FINNEY SWITCHING STATION - HOLCOMB 345KV CKT 1
WALKEMEYER - WALKTAP3 115.00 115KV CKT 1	303.8	128.266	FINNEY SWITCHING STATION - HOLCOMB 345KV CKT 1
WALKTAP7 345.00 (WALKE345) 345/115/13.8KV TRANSFORMER CKT 1	280	134.1017	FINNEY SWITCHING STATION - HOLCOMB 345KV CKT 1
	Mitigation		Build second Walkemeyer – Walkemeyer Tap 115kV circuit, Walkemeyber Tap 345/115/13kV transformer circuit #2, and requires Walkemeyer – North Liberal 115kV transmission line.

8.2.1 Group 2 (Stand Alone)

Each Interconnection Request was also studied as a Stand Alone Interconnection Request in addition to the Cluster Analysis.

ERIS stand alone analysis for GEN-2014-037 observed possible voltage collapse during contingency along the Hitchland – Finney – Holcomb 345kV transmission circuit, Grapevine – Stateline 230kV, and Woodward – Tatonga – Mathewson 345kV transmission circuit. For mitigation, current study assigned upgrade Beaver County – Grapevine – Chisholm and Chisholm tie in and re-termination of Border – Woodward 345kV circuit #1 will be required along with previously assigned Walkemeyer Project and Woodward – GEN-2011-051 Tap – Tatonga – Mathewson circuit #2 build. In addition, Bushland Interchange – Potter County Interchange 230kV will require terminal equipment upgrade to mitigate the system intact violation on the circuit. Potter County 345/230/13kV transformer thermal constraint will require a second Potter County 345/230/13kV transformer.

ERIS stand alone analysis for GEN-2104-038 observed possible voltage collapse during contingency along the Hitchland – Finney – Holcomb 345kV transmission circuit, Grapevine – Stateline 230kV, and Woodward – Tatonga – Mathewson 345kV transmission circuit. For mitigation, current study assigned upgrade Beaver County – Grapevine – Chisholm and Chisholm tie in and re-termination of

Border – Woodward 345kV circuit #1 will be required along with previously assigned Walkemeyer Project and Woodward – GEN-2011-051 Tap – Tatonga – Mathewson circuit #2 build. Bushland Interchange – Potter County Interchange 230kV will require terminal equipment upgrade to mitigate the system intact violation on the circuit. Potter County 345/230/13kV transformer thermal constraint will require a second Potter County 345/230/13kV transformer.

ERIS stand alone analysis for GEN-2015-082 observed possible voltage collapse during contingency along the Hitchland – Finney – Holcomb 345kV transmission circuit, Grapevine – Stateline 230kV, and Woodward – Tatonga – Mathewson 345kV transmission circuit. For mitigation, previously assigned Walkemeyer Project and Woodward – GEN-2011-051 Tap – Tatonga – Mathewson circuit #2 build. Tatonga – Mathewson 345kV circuit #1 is mitigated by model rating update to 3000 amps. Potter County 345/230/13kV transformer thermal constraint will require a second Potter County 345/230/13kV transformer.

8.2.2 Group 2 (Limited Operation)

Limited Operation results are listed below. While these results are based on the criteria listed in GIP 8.4.3, the Interconnection Customer may request additional scenarios for Limited Operation based on higher queued Interconnection Requests not being placed in service.

Limited Operation Analysis		
Interconnection Request	**MW**	**Constraint that most limits LOIS**
GEN-2014-037	0	Voltage Collapse for Finney-Hitchland 345kV System Intact – Bushland Interchange – Potter 345kV and Potter County 345/230/15V Transformer CKT 1
	100	Voltage Collapse for Finney-Hitchland 345kV (assuming Bushland Interchange – Potter 345kV and Potter 345/230/13kV transformer are mitigated before 2025)
GEN-2014-038	0	Voltage Collapse for Finney-Hitchland 345kV System Intact – Bushland Interchange – Potter 345kV and Potter County 345/230/15V Transformer CKT 1
	100	Voltage Collapse for Finney-Hitchland 345kV (assuming Bushland Interchange – Potter 345kV and Potter 345/230/13kV transformer are mitigated before 2025)
GEN-2015-082	0(ERIS)	Voltage Collapse for Finney-Hitchland 345kV or Tatonga – Mathewson 345kV Potter 345kV and Potter County 345/230/15V Transformer CKT 1
	150 (ERIS)	(assuming Potter 345/230/13kV transformer is mitigated before 2025)
	0 (NRIS)	FPL Switch – Woodward, System intact - Potter County 345/230/15V Transformer CKT 1, Hitchland 345/230/13 Transformer, and Hitchland 230/115/13 Transformer
	150 (NRIS)	Hitchland 345/230/13 Transformer, and Hitchland 230/115/13 Transformer (assuming Woodward Phase Shifting transformer is installed by 2020 and Potter 345/230/13kV transformer, Hitchland 345/230/13 Transformer, and Hitchland 230/115/13 Transformer are mitigated before 2025)

8.3 Cluster Group 3 (Spearville Area)

In addition to the 3,235.83 MW of previously queued generation in the area, 0.0 MW of new interconnection service was studied. No current study DISIS-2015-002 Interconnection Customer(s) are located in this geographical group.

8.4 Cluster Group 4 (Northwest Kansas Area)

In addition to the 1,532.2 MW of previously queued generation in the area, 621.1 MW of new interconnection service was studied. Thermal constraints for the Group 4 ERIS analysis were observed on the Smokey Hills – Summit 230kV transmission circuit. Smokey Hills – Summit would require a rebuild/re-conductor to alleviate the thermal overload.

For Group 4 Cluster Analysis cost allocation, please refer to Appendix E and F.

Cluster ERIS Constraints			
MONITORED ELEMENT	**Limiting Rate A/B (MVA)**	**TC%LOADING (% MVA)**	**CONTINGENCY**
SMOKYHL6 230.00 - SUMMIT 230KV CKT 1	350	110.2265	POST ROCK (POSTROCK T1) 345/230/13.8KV TRANSFORMER CKT 1
	Mitigation		**Rebuild 230kV line**

Cluster NRIS Constraints			
MONITORED ELEMENT	**Limiting Rate A/B (MVA)**	**TC%LOADING (% MVA)**	**CONTINGENCY**
CLEARWATER - MILAN TAP 138KV CKT 1	110	104.3973	G1524G1525 345.00 - THISTLE7 345.00 345KV CKT 1
	Mitigation		**Rebuild 138kV line**
GR ISLD-LNX3345.00 - GRAND ISLAND 345KV CKT Z	720	110.312	MINGO - SETAB 345KV CKT 1
GR ISLD-LNX3345.00 - HOLT.CO3 345.00 345KV CKT 1	720	109.4375	MINGO - SETAB 345KV CKT 1
	Mitigation		**Rebuild 345kV**
MATHWSN7 345.00 - TATONGA7 345.00 345KV CKT 1	1195	110.9769	G14-074T 345.00 - OKLAUNION 345KV CKT 1
	Mitigation		**Model Correction to 1792MVA**
KNOLL - N HAYS3 115.00 115KV CKT 1	99	99.9	KNOLL 230 - POSTROCK6 230.00 230KV CKT 1
N HAYS3 115.00 - VINETAP3 115.00 115KV CKT 1	99	109.0963	KNOLL 230 - POSTROCK6 230.00 230KV CKT 1
SOUTH HAYS (S HAYS T1) 230/115/12.47KV TRANSFORMER CKT 1	166.7	101.5676	KNOLL 230 - POSTROCK6 230.00 230KV CKT 1
	Mitigation		**Add 2nd Knoll – Post Rock 230kV tie and replace South Hays 230/115/13kV transformer**

8.4.1 Group 4 (Stand Alone)

The Interconnection Requests was also studied as a Stand Alone Interconnection Request in addition to the Cluster Analysis. GEN-2015-061 and GEN-2015-065 Stand Alone ERIS currently do not result constraints identified as requiring additional transmission reinforcements. GEN-2015-061 NRIS Stand Alone shows thermal constraints on Holt County – Grand Island 345kV transmission circuit. Relay setting upgrades will be required to mitigate the thermal constraint on Holt County – Grand Island 345kV transmission circuit. GEN-2015-064 analysis shows a dependency on the previously assigned Mino 345/115/13kV transformer being in-service before GEN-2015-064's full Interconnection Service injection. GEN-2015-072 Stand Alone analysis observed the need to increase structure clearance to achieve a 363MVA rating on Smokey Hills – Summit 230kV for

mitigation of the thermal constraint during contingency on the circuit. Appendix G1 and Appendix H1 contain the Stand Alone Analysis power flow thermal violations.

For Group 4 Stand Alone Analysis cost allocation, please refer to Appendix E1.

8.4.2 Group 4 (Limited Operation)

Limited Operation results are listed below. While these results are based on the criteria listed in GIP 8.4.3, the Interconnection Customer may request additional scenarios for Limited Operation based on higher queued Interconnection Requests not being placed in service.

Limited Operation Analysis		
Interconnection Request	**MW**	**Constraint that most limits LOIS**
GEN-2015-061	200 (ERIS)	None for ERIS
	190 (NRIS)	Hitchland 345/230/13kV Transformer CKT 1 & 2
GEN-2015-064	198	None for ERIS
GEN-2015-065	202	None of ERIS
GEN-2015-072	0	Smoky Hills – Summit 230kV

8.5 Cluster Group 6 (South Texas Panhandle/New Mexico Area)

In addition to the 4,650.37 MW of previously queued generation in the area, 1,753.68 MW of new interconnection service was studied. The massive amount of new generation under study in addition to the previous generation already in the queue in this area resulted in potential voltage collapse throughout the entire study area and in all 345kV lines connecting the study area to the rest of the SPP footprint. In order to build the initial models to begin the evaluation of the new generation, the following Network Upgrades had to added to the study models –

- New 345kV line from Tuco area to the proposed Chisolm 345kV substation near Sweetwater, OK. This is a second 345kV line that runs parallel to the existing Tuco-Woodward 345kV line. This project includes tapping the 345kV line into the existing Border 345kV station.
    - This project also includes the Crawfish Draw 345kV substation that includes a 3rd Tuco 345/230kV autotransformer. The Crawfish Draw 345kV substation has been assigned to DISIS-2015-001 Interconnection Customers.
- A new 345kV line/tie from the proposed Chisolm 345kV substation to a substation near Chisolm that would tap into the Border-Woodward 345kV line with a five terminal 345kV breaker-and-a-half substation.
- Add 550MVars of reactive compensation at Border 345kV substation. This reactive compensation includes 300MVars of capacitor banks (6 – 50 Mvar banks) and a 250Mvar Static Var Compensator (SVC).
- Add 500Mvars of reactive compensation at Oklaunion 345kV substation. This reactive compensation includes 200Mvars of capacitor banks (4 – 50Mvar banks) and a 300Mvar SVC.

  - Also included were the 2 x 130Mvar capacitor banks assigned to DISIS-2015-001 Interconnection Customers
- Advancement of the Hobbs-Yoakum-Tuco 345kV line to meet the in-service dates of the study generation.

Once these upgrades were added to the models, contingency analysis could then take place. Additional non-converged contingencies on lines leading to the north of the study area were encountered. To mitigate these non-converged contingencies, the following Network Upgrades were required.

- A new 345kV line from Crawfish Draw to Tolk.
- A new 345kV line from Tolk to Potter County
- A new 345kV line from Potter County to a new 345kV Grapevine Interchange to the proposed Chisolm substation
- A new 345kV line from Beaver County to a new 345kV Grapevine Interchange
  - This line is also assigned to Group 2 Interconnection Customers which are sharing the cost of this line.
- Grapevine 345kV reactive compensation including 200MVars of capacitor banks and a 300Mvar SVC.

Once the non-converged solutions were mitigated, additional overloads were observed and mitigated as described in the table below.

Cluster ERIS Constraints			
MONITORED ELEMENT	**Limiting Rate A/B (MVA)**	**TC%LOADING (% MVA)**	**CONTINGENCY**
Non-Converged Contingency	N/A	N/A	AMARILLO SOUTH INTERCHANGE - G15031_T 230.00 230KV CKT 1
Non-Converged Contingency	N/A	N/A	AMARILLO SOUTH INTERCHANGE - NICHOLS STATION 230KV CKT 1
Non-Converged Contingency	N/A	N/A	AMARILLO SOUTH INTERCHANGE - RANDALL COUNTY INTERCHANGE 230KV CKT 1
Non-Converged Contingency	N/A	N/A	AMOCO SWITCHING STATION - YOAKUM COUNTY INTERCHANGE 230KV CKT 1
Non-Converged Contingency	N/A	N/A	ARCADIA - NORTHWEST 345KV CKT 1
Non-Converged Contingency	N/A	N/A	AXTELL - POST ROCK 345KV CKT 1
Non-Converged Contingency	N/A	N/A	BAILEY COUNTY INTERCHANGE - G15-018T 115.00 115KV CKT 1
Non-Converged Contingency	N/A	N/A	BENTON - ROSE HILL 345KV CKT 1
Non-Converged Contingency	N/A	N/A	BENTON - WICHITA 345KV CKT 1
Non-Converged Contingency	N/A	N/A	BORDER 7345.00 - CHISHOLM7 345.00 345KV CKT 1
Non-Converged Contingency	N/A	N/A	BORDER 7345.00 - CHISHOLM7 345.00 345KV CKT 2
Non-Converged Contingency	N/A	N/A	BORDER 7345.00 - TUCO_2 345.00 345KV CKT 1
Non-Converged Contingency	N/A	N/A	BORDER 7345.00 - TUCO_2 345.00 345KV CKT 2
Non-Converged Contingency	N/A	N/A	BORDER 7345.00 345KV SWITCHED SHUNT
Non-Converged Contingency	N/A	N/A	BUCKNER7 345.00 - HOLCOMB 345KV CKT 1
Non-Converged Contingency	N/A	N/A	BUCKNER7 345.00 - SPEARVILLE 345KV CKT 1
Non-Converged Contingency	N/A	N/A	BUSHLAND INTERCHANGE - DEAF SMITH COUNTY INTERCHANGE 230KV CKT 1
Non-Converged Contingency	N/A	N/A	BUSHLAND INTERCHANGE - HILLSIDE 115KV CKT 1
Non-Converged Contingency	N/A	N/A	BUSHLAND INTERCHANGE - POTTER COUNTY INTERCHANGE 230KV CKT 1
Non-Converged Contingency	N/A	N/A	BUSHLAND INTERCHANGE 230KV SWITCHED SHUNT
Non-Converged Contingency	N/A	N/A	BVRCNTY7 345.00 - G11-14T 345.00 345KV CKT 1
Non-Converged Contingency	N/A	N/A	BVRCNTY7 345.00 - G11-14T 345.00 345KV CKT 2
Non-Converged Contingency	N/A	N/A	BVRCNTY7 345.00 - OPTIMA 345.00 345KV CKT 1

Non-Converged Contingency	N/A	N/A	BVRCNTY7 345.00 - OPTIMA 345.00 345KV CKT 2
Non-Converged Contingency	N/A	N/A	CANYON E_TP3115.00 - CANYON WEST SUB 115KV CKT 1
Non-Converged Contingency	N/A	N/A	CANYON E_TP3115.00 - RANDALL COUNTY INTERCHANGE 115KV CKT 1
Non-Converged Contingency	N/A	N/A	CANYON WEST SUB - DAWN SUB 115KV CKT 1
Non-Converged Contingency	N/A	N/A	CARGILL SUB - DEAF SMITH REC-#24 115KV CKT 1
Non-Converged Contingency	N/A	N/A	CARGILL SUB - FRIONA SUB 115KV CKT 1
Non-Converged Contingency	N/A	N/A	CARLISLE INTERCHANGE - TUCO INTERCHANGE 230KV CKT 1
Non-Converged Contingency	N/A	N/A	CARLISLE INTERCHANGE - WOLFFORTH INTERCHANGE 230KV CKT 1
Non-Converged Contingency	N/A	N/A	CASTRO COUNTY INTERCHANGE - NEWHART 115KV CKT 1
Non-Converged Contingency	N/A	N/A	CHAVES COUNTY INTERCHANGE - EDDY_NORTH 6230.00 230KV CKT 1
Non-Converged Contingency	N/A	N/A	CHAVES COUNTY INTERCHANGE - SAN JUAN MESA TAP 230KV CKT 1
Non-Converged Contingency	N/A	N/A	CHERRY1 - HARRINGTON STATION 230KV CKT 1
Non-Converged Contingency	N/A	N/A	CHERRY1 - POTTER COUNTY INTERCHANGE 230KV CKT 1
Non-Converged Contingency	N/A	N/A	CHISHOLM6 230.00 - ELK CITY 230KV 230KV CKT 1
Non-Converged Contingency	N/A	N/A	CHISHOLM6 230.00 - SWEETWATER 230KV CKT 1
Non-Converged Contingency	N/A	N/A	CHISHOLM7 345.00 - GRACEMONT 345KV CKT 1
Non-Converged Contingency	N/A	N/A	CHISHOLM7 345.00 - WOODWARD DISTRICT EHV 345KV CKT 1
Non-Converged Contingency	N/A	N/A	CHISHOLM7 345.00 () 345/230/13.2KV TRANSFORMER CKT 1
Non-Converged Contingency	N/A	N/A	CIMARRON - DRAPER LAKE 345KV CKT 1
Non-Converged Contingency	N/A	N/A	CIMARRON - MINCO 345KV CKT 1
Non-Converged Contingency	N/A	N/A	CIMARRON - NORTHWEST 345KV CKT 1
Non-Converged Contingency	N/A	N/A	COCHRAN INTERCHANGE - G15-014T 115.00 115KV CKT 1
Non-Converged Contingency	N/A	N/A	COCHRAN INTERCHANGE - PACIFIC SUB 115KV CKT 1
Non-Converged Contingency	N/A	N/A	CROSSROADS 7345.00 - EDDY COUNTY INTERCHANGE 345KV CKT 1
Non-Converged Contingency	N/A	N/A	CROSSROADS 7345.00 - TOLK STATION 345KV CKT 1
Non-Converged Contingency	N/A	N/A	CUNNINGHAM STATION - EDDY COUNTY INTERCHANGE 230KV CKT 1
Non-Converged Contingency	N/A	N/A	CURRY COUNTY INTERCHANGE - DEAF SMITH REC-#20 115KV CKT 1
Non-Converged Contingency	N/A	N/A	DAWN SUB - Panda Energy Substation Hereford 115KV CKT 1
Non-Converged Contingency	N/A	N/A	DEAF SMITH COUNTY INTERCHANGE - G15039_T 230.00 230KV CKT 1
Non-Converged Contingency	N/A	N/A	DEAF SMITH COUNTY INTERCHANGE - Panda Energy Substation Hereford 115KV CKT 1
Non-Converged Contingency	N/A	N/A	DEAF SMITH REC-#20 - PARMER COUNTY SUB 115KV CKT 1
Non-Converged Contingency	N/A	N/A	DEAF SMITH REC-#24 - PARMER COUNTY SUB 115KV CKT 1
Non-Converged Contingency	N/A	N/A	DEAF SMITH REC-#6 - FRIONA SUB 115KV CKT 1
Non-Converged Contingency	N/A	N/A	DEAF SMITH REC-#6 - HEREFORD INTERCHANGE 115KV CKT 1
Non-Converged Contingency	N/A	N/A	DWS FRISCO - HITCHLAND INTERCHANGE 115KV CKT 1
Non-Converged Contingency	N/A	N/A	DWS FRISCO - SHERMAN COUNTY TAP 115KV CKT 1
Non-Converged Contingency	N/A	N/A	EDDY COUNTY INTERCHANGE - EDDY_NORTH 6230.00 230KV CKT @1
Non-Converged Contingency	N/A	N/A	EDDY COUNTY INTERCHANGE - SEVEN RIVERS INTERCHANGE 230KV CKT 1
Non-Converged Contingency	N/A	N/A	EDDY COUNTY INTERCHANGE (ABB AEM30711) 345/230/13.2KV TRANSFORMER CKT 1
Non-Converged Contingency	N/A	N/A	ELK CITY 230KV (ELKCTY-6) 230/138/13.8KV TRANSFORMER CKT 1
Non-Converged Contingency	N/A	N/A	EMPORIA ENERGY CENTER - G14_001T 345.00 345KV CKT 1
Non-Converged Contingency	N/A	N/A	EMPORIA ENERGY CENTER - SWISSVALE 345KV CKT 1

Non-Converged Contingency	N/A	N/A	FINNEY SWITCHING STATION - Hitchland Interchange 345KV CKT 1
Non-Converged Contingency	N/A	N/A	FINNEY SWITCHING STATION - HOLCOMB 345KV CKT 1
Non-Converged Contingency	N/A	N/A	FINNEY SWITCHING STATION - WALKTAP7 345.00 345KV CKT 1
Non-Converged Contingency	N/A	N/A	G11_051T 345.00 - TATONGA7 345.00 345KV CKT 1
Non-Converged Contingency	N/A	N/A	G11_051T 345.00 - WOODWARD DISTRICT EHV 345KV CKT 1
Non-Converged Contingency	N/A	N/A	G11-14T 345.00 - WOODWARD DISTRICT EHV 345KV CKT 1
Non-Converged Contingency	N/A	N/A	G11-14T 345.00 - WOODWARD DISTRICT EHV 345KV CKT 2
Non-Converged Contingency	N/A	N/A	G13_027T 230.00 - YOAKUM COUNTY INTERCHANGE 230KV CKT 1
Non-Converged Contingency	N/A	N/A	G13-010T 345.00 - POST ROCK 345KV CKT 1
Non-Converged Contingency	N/A	N/A	G13-010T 345.00 - SPEARVILLE 345KV CKT 1
Non-Converged Contingency	N/A	N/A	G14_001T 345.00 - WICHITA 345KV CKT 1
Non-Converged Contingency	N/A	N/A	G14_038T 345.00 - Hitchland Interchange 345KV CKT 1
Non-Converged Contingency	N/A	N/A	G14_038T 345.00 - POTTER COUNTY INTERCHANGE 345KV CKT 1
Non-Converged Contingency	N/A	N/A	G14-057T 345.00 - LAWTON EASTSIDE 345KV CKT 1
Non-Converged Contingency	N/A	N/A	G14-057T 345.00 - SUNNYSIDE 345KV CKT 1
Non-Converged Contingency	N/A	N/A	G14-074T 345.00 - OKLAUNION 345KV CKT 1
Non-Converged Contingency	N/A	N/A	G14-074T 345.00 - TUCO INTERCHANGE 345KV CKT 1
Non-Converged Contingency	N/A	N/A	G15-014T 115.00 - LEHMAN SUB 115KV CKT 1
Non-Converged Contingency	N/A	N/A	G15039_T 230.00 - PLANT X STATION 230KV CKT 1
Non-Converged Contingency	N/A	N/A	G15063_T 345.00 - MATHWSN7 345.00 345KV CKT 1
Non-Converged Contingency	N/A	N/A	G15063_T 345.00 - WOODRING 345KV CKT 1
Non-Converged Contingency	N/A	N/A	G15074_T 345.00 - HOYT 345KV CKT 1
Non-Converged Contingency	N/A	N/A	G15074_T 345.00 - JEFFREY ENERGY CENTER 345KV CKT 1
Non-Converged Contingency	N/A	N/A	G15079_T 230.00 - YOAKUM COUNTY INTERCHANGE 230KV CKT 1
Non-Converged Contingency	N/A	N/A	G1524G1525 345.00 - THISTLE7 345.00 345KV CKT 1
Non-Converged Contingency	N/A	N/A	G1524G1525 345.00 - THISTLE7 345.00 345KV CKT 2
Non-Converged Contingency	N/A	N/A	G1524G1525 345.00 - WICHITA 345KV CKT 1
Non-Converged Contingency	N/A	N/A	G1524G1525 345.00 - WICHITA 345KV CKT 2
Non-Converged Contingency	N/A	N/A	Various Generator Outage (G-1) Contingencies
Non-Converged Contingency	N/A	N/A	GERALD GENTLEMAN STATION - RED WILLOW 345KV CKT 1
Non-Converged Contingency	N/A	N/A	GRACEMONT - LAWTON EASTSIDE 345KV CKT 1
Non-Converged Contingency	N/A	N/A	GRACEMONT - MINCO 345KV CKT 1
Non-Converged Contingency	N/A	N/A	GRAPEVINE INTERCHANGE - NICHOLS STATION 230KV CKT 1
Non-Converged Contingency	N/A	N/A	GRAPEVINE INTERCHANGE - STATELINE INTERCHANGE 230KV CKT 1
Non-Converged Contingency	N/A	N/A	Hansford County Switch Station - SPEARMAN INTERCHANGE 115KV CKT 1
Non-Converged Contingency	N/A	N/A	HAPPY INTERCHANGE - PALO DURO SUB 115KV CKT 1
Non-Converged Contingency	N/A	N/A	HAPPY INTERCHANGE - TULIA TAP 115KV CKT 1
Non-Converged Contingency	N/A	N/A	Harrington Station East Bus - POTTER COUNTY INTERCHANGE 230KV CKT 1
Non-Converged Contingency	N/A	N/A	Harrington Station Mid Bus - RANDALL COUNTY INTERCHANGE 230KV CKT 1
Non-Converged Contingency	N/A	N/A	HITCHLAND INTERCHANGE - Hansford County Switch Station 115KV CKT 1
Non-Converged Contingency	N/A	N/A	HITCHLAND INTERCHANGE - MOORE COUNTY INTERCHANGE 230KV CKT 1
Non-Converged Contingency	N/A	N/A	Hitchland Interchange - OPTIMA 345.00 345KV CKT 1
Non-Converged Contingency	N/A	N/A	Hitchland Interchange - OPTIMA 345.00 345KV CKT 2
Non-Converged Contingency	N/A	N/A	Hitchland Interchange - WALKTAP7 345.00 345KV CKT 1
Non-Converged Contingency	N/A	N/A	Hitchland Interchange (H TB80155502) 345/230/13.2KV TRANSFORMER CKT 1
Non-Converged Contingency	N/A	N/A	Hitchland Interchange (SIEM 8743067) 345/230/13.2KV TRANSFORMER CKT 2
Non-Converged Contingency	N/A	N/A	HOBBS - YOAKUM_345 345.00 345KV CKT 1

Non-Converged Contingency	N/A	N/A	HOBBS (UPDATE DATA) 345/230/13.2KV TRANSFORMER CKT 1
Non-Converged Contingency	N/A	N/A	HOLCOMB - SETAB 345KV CKT 1
Non-Converged Contingency	N/A	N/A	HOYT - STRANGER CREEK 345KV CKT 1
Non-Converged Contingency	N/A	N/A	HUGO - SUNNYSIDE 345KV CKT 1
Non-Converged Contingency	N/A	N/A	JOHNSON COUNTY - PITTSBURG 345KV CKT 1
Non-Converged Contingency	N/A	N/A	JOHNSON COUNTY - SUNNYSIDE 345KV CKT 1
Non-Converged Contingency	N/A	N/A	JOHNSON DRAW - TAYLOR SWITCHING STATION 115KV CKT 1
Non-Converged Contingency	N/A	N/A	JONES STATION - TUCO INTERCHANGE 230KV CKT 1
Non-Converged Contingency	N/A	N/A	KRESS INTERCHANGE - SWISHER COUNTY INTERCHANGE 115KV CKT 1
Non-Converged Contingency	N/A	N/A	KRESS INTERCHANGE - TULIA TAP 115KV CKT 1
Non-Converged Contingency	N/A	N/A	LACYGNE - WAVERLY7 345.00 345KV CKT 1
Non-Converged Contingency	N/A	N/A	LAMB COUNTY INTERCHANGE - TOLK STATION WEST 230KV CKT 1
Non-Converged Contingency	N/A	N/A	LAWTON EASTSIDE (LES 5) 345/138/13.8KV TRANSFORMER CKT 2
Non-Converged Contingency	N/A	N/A	LEHMAN SUB - LYNTEGAR REC-PLAINS 115KV CKT 1
Non-Converged Contingency	N/A	N/A	LUBBOCK SOUTH INTERCHANGE - WOLFFORTH INTERCHANGE 230KV CKT 1
Non-Converged Contingency	N/A	N/A	LUBBOCK SOUTH INTERCHANGE 230KV SWITCHED SHUNT
Non-Converged Contingency	N/A	N/A	MATHWSN7 345.00 - NORTHWEST 345KV CKT 1
Non-Converged Contingency	N/A	N/A	MATHWSN7 345.00 - TATONGA7 345.00 345KV CKT 1
Non-Converged Contingency	N/A	N/A	MINGO - RED WILLOW 345KV CKT 1
Non-Converged Contingency	N/A	N/A	MINGO - SETAB 345KV CKT 1
Non-Converged Contingency	N/A	N/A	MOORE COUNTY INTERCHANGE - POTTER COUNTY INTERCHANGE 230KV CKT 1
Non-Converged Contingency	N/A	N/A	MUSKOGEE - SEMINOLE 345KV CKT 1
Non-Converged Contingency	N/A	N/A	NEWHART 230 - PLANT X STATION 230KV CKT 1
Non-Converged Contingency	N/A	N/A	NEWHART 230 - POTTER COUNTY INTERCHANGE 230KV CKT 1
Non-Converged Contingency	N/A	N/A	NORTHWEST - SPRING CREEK 345KV CKT 1
Non-Converged Contingency	N/A	N/A	OASIS INTERCHANGE 115KV SWITCHED SHUNT
Non-Converged Contingency	N/A	N/A	OKLAUNION 345KV SWITCHED SHUNT
Non-Converged Contingency	N/A	N/A	P12:115:LCEC:W56.1.HOBBG.LE-LVN
Non-Converged Contingency	N/A	N/A	P12:115:SPS:T04.1.DFSMTH.CASTRO
Non-Converged Contingency	N/A	N/A	P12:115:SPS:T13.1.TAYLOR.WHOBBS
Non-Converged Contingency	N/A	N/A	P12:115:SPS:T14.1.MADDOX.WBENDR
Non-Converged Contingency	N/A	N/A	P12:115:SPS:T27.1.NICHLS.DUMAS19
Non-Converged Contingency	N/A	N/A	P12:115:SPS:T28.1.LAMTON.PLANTX
Non-Converged Contingency	N/A	N/A	P12:115:SPS:T38.1.POTJCT.WIPP
Non-Converged Contingency	N/A	N/A	P12:115:SPS:T43.1.SEVEN.EDDY_S
Non-Converged Contingency	N/A	N/A	P12:115:SPS:T45.1.NORRIS.OASIS
Non-Converged Contingency	N/A	N/A	P12:115:SPS:T53.1.NICHLS.KIRBY
Non-Converged Contingency	N/A	N/A	P12:115:SPS:T54.1.KIRBY.SHM(520)
Non-Converged Contingency	N/A	N/A	P12:115:SPS:T58.1.HERFRD.CARGIL
Non-Converged Contingency	N/A	N/A	P12:115:SPS:T59.1.CARGIL.CURRY
Non-Converged Contingency	N/A	N/A	P12:115:SPS:T62.1.SEVEN.PECOS
Non-Converged Contingency	N/A	N/A	P12:115:SPS:T66.1.RNDALL.HAPPY
Non-Converged Contingency	N/A	N/A	P12:115:SPS:T67.1.HAPPY.KRESS
Non-Converged Contingency	N/A	N/A	P12:115:SPS:T71.1.CRLSLE.YUMA
Non-Converged Contingency	N/A	N/A	P12:115:SPS:T85.1.WHITT.NEF
Non-Converged Contingency	N/A	N/A	P12:115:SPS:T89.1.DC_N.HIGG
Non-Converged Contingency	N/A	N/A	P12:115:SPS:T97.1.TAYLOR.HOBBG
Non-Converged Contingency	N/A	N/A	P12:115:SPS:T98.1.HIGG.HOBBG
Non-Converged Contingency	N/A	N/A	P12:115:SPS:V03.1.NICHLS.EPLANT
Non-Converged Contingency	N/A	N/A	P12:115:SPS:V05.1.OSAGE.WCANYON
Non-Converged Contingency	N/A	N/A	P12:115:SPS:V15.1.TUCO.INDANA
Non-Converged Contingency	N/A	N/A	P12:115:SPS:V26.1.RSWLL.EDDY_N
Non-Converged Contingency	N/A	N/A	P12:115:SPS:V29.1.NICHLS.KNGSMLL
Non-Converged Contingency	N/A	N/A	P12:115:SPS:V37.1.CASTRO.PLANTX
Non-Converged Contingency	N/A	N/A	P12:115:SPS:V80.1.DC_STH.LE-WAIT
Non-Converged Contingency	N/A	N/A	P12:115:SPS:V95.1.DC_N.SHLCO2
Non-Converged Contingency	N/A	N/A	P12:115:SPS:W08.1.HITCH.LASLEY

Non-Converged Contingency	N/A	N/A	P12:115:SPS:W11.1.DC_S.SMINLE
Non-Converged Contingency	N/A	N/A	P12:115:SPS:W24.1.MOOREE.LASLEY
Non-Converged Contingency	N/A	N/A	P12:115:SPS:W29.1.OCLTRE.SPRMN
Non-Converged Contingency	N/A	N/A	P12:115:SPS:W32.1.PRMTR.FE-CLSIN
Non-Converged Contingency	N/A	N/A	P12:115:SPS:W35.1.GAINES.JNSDRW
Non-Converged Contingency	N/A	N/A	P12:115:SPS:W37.1.WIPP.RDBLUFF
Non-Converged Contingency	N/A	N/A	P12:115:SPS:W40.1.WCANYON.DFSMTH
Non-Converged Contingency	N/A	N/A	P12:138:AEPW:CORNVIL4:S.W.S.-4
Non-Converged Contingency	N/A	N/A	P12:138:AEPW:DUNCAN-4:L.E.S.-4
Non-Converged Contingency	N/A	N/A	P12:138:AEPW:REDROCKRD4:WTH_JCT4
Non-Converged Contingency	N/A	N/A	P12:138:AEPW:S.W.S.-4:L.E.S.-4
Non-Converged Contingency	N/A	N/A	P12:138:AEPW:SHAM4WT:CHILD4WT
Non-Converged Contingency	N/A	N/A	P12:138:AEPW-OGE:CORNVIL4:CIMARON4
Non-Converged Contingency	N/A	N/A	P12:138:AEPW-OGE:WTH_JCT4:JENSEN4
Non-Converged Contingency	N/A	N/A	P12:138:OKGE:3TERM10
Non-Converged Contingency	N/A	N/A	P12:138:OKGE-AEPW:JENSEN4:REDROCKRD4
Non-Converged Contingency	N/A	N/A	P12:138:WFEC-AEPW:WASHITA4:CLINTJC4
Non-Converged Contingency	N/A	N/A	P12:230:AEPW:ELKCITY6:SWEETWT6
Non-Converged Contingency	N/A	N/A	P12:230:AEPW-SPS:SWEETWT6:WHEELER 6
Non-Converged Contingency	N/A	N/A	P12:230:SPS:K37.1.TOLK.LAMB
Non-Converged Contingency	N/A	N/A	P12:230:SPS:K43.1.PRNGLE.HARR_E
Non-Converged Contingency	N/A	N/A	P12:230:SPS:K51.1.OASIS.RSVLT
Non-Converged Contingency	N/A	N/A	P12:345:SPS:J02.1.TOLK.EDDY
Non-Converged Contingency	N/A	N/A	P12:345:SPS:J07.1.FINN.HITCH
Non-Converged Contingency	N/A	N/A	P12:345:SPS:J14.1.EDDY.XRDS
Non-Converged Contingency	N/A	N/A	P12:345:SPS:J15.1.XRDS.TOLK
Non-Converged Contingency	N/A	N/A	P12:69:AEPW:NWMEMPH2:CHLDR2WT
Non-Converged Contingency	N/A	N/A	PACIFIC SUB - SUNDOWN INTERCHANGE 115KV CKT 1
Non-Converged Contingency	N/A	N/A	PALO DURO SUB - RANDALL COUNTY INTERCHANGE 115KV CKT 1
Non-Converged Contingency	N/A	N/A	PARMER COUNTY SUB 115KV SWITCHED SHUNT
Non-Converged Contingency	N/A	N/A	PECOS INTERCHANGE - SEVEN RIVERS INTERCHANGE 230KV CKT 1
Non-Converged Contingency	N/A	N/A	PLANT X STATION - SUNDOWN INTERCHANGE 230KV CKT 1
Non-Converged Contingency	N/A	N/A	PLANT X STATION - TOLK STATION EAST 230KV CKT 2
Non-Converged Contingency	N/A	N/A	PLANT X STATION - TOLK STATION WEST 230KV CKT 1
Non-Converged Contingency	N/A	N/A	POTTER COUNTY INTERCHANGE (WAUK 90343-A) 345/230/13.2KV TRANSFORMER CKT 1
Non-Converged Contingency	N/A	N/A	PRINGLE INTERCHANGE - SPEARMAN INTERCHANGE 115KV CKT 1
Non-Converged Contingency	N/A	N/A	REDBUD - RIVERSIDE STATION 345KV CKT 1
Non-Converged Contingency	N/A	N/A	ROOSEVELT COUNTY INTERCHANGE - TOLK STATION WEST 230KV CKT 2
Non-Converged Contingency	N/A	N/A	Roosevelt County Interchange SOUTH - TOLK STATION EAST 230KV CKT 1
Non-Converged Contingency	N/A	N/A	SOONER - SPRING CREEK 345KV CKT 1
Non-Converged Contingency	N/A	N/A	SOONER - WOODRING 345KV CKT 1
Non-Converged Contingency	N/A	N/A	STATELINE INTERCHANGE - STLN-DEMARC6 230KV CKT 1
Non-Converged Contingency	N/A	N/A	STLN-DEMARC6 - SWEETWATER 230KV CKT 1
Non-Converged Contingency	N/A	N/A	SUNDOWN INTERCHANGE 115KV SWITCHED SHUNT
Non-Converged Contingency	N/A	N/A	SWISHER COUNTY INTERCHANGE 230KV SWITCHED SHUNT
Non-Converged Contingency	N/A	N/A	SWISSVALE - WEST GARDNER 345KV CKT 1
Non-Converged Contingency	N/A	N/A	THISTLE7 345.00 - WOODWARD DISTRICT EHV 345KV CKT 1
Non-Converged Contingency	N/A	N/A	THISTLE7 345.00 - WOODWARD DISTRICT EHV 345KV CKT 2
Non-Converged Contingency	N/A	N/A	TOLK STATION (ABBXNL844501) 345/230/13.2KV TRANSFORMER CKT 1
Non-Converged Contingency	N/A	N/A	TOLK STATION EAST - TUCO INTERCHANGE 230KV CKT 1
Non-Converged Contingency	N/A	N/A	TOLK STATION TAP - TOLK STATION WEST 230KV CKT @1
Non-Converged Contingency	N/A	N/A	TUCO INTERCHANGE - TUCO_2 230.00 230KV CKT 1

Non-Converged Contingency	N/A	N/A	TUCO INTERCHANGE - TUCO_2 345.00 345KV CKT 1
Non-Converged Contingency	N/A	N/A	TUCO INTERCHANGE - YOAKUM_345 345.00 345KV CKT 1
Non-Converged Contingency	N/A	N/A	TUCO INTERCHANGE (GE M1022338) 345/230/13.2KV TRANSFORMER CKT 1
Non-Converged Contingency	N/A	N/A	TUCO INTERCHANGE (SIEM 8743066) 345/230/13.2KV TRANSFORMER CKT 2
Non-Converged Contingency	N/A	N/A	TUCO_2 345.00 (TUCO_2 XFMR) 345/230/13.2KV TRANSFORMER CKT 1
Non-Converged Contingency	N/A	N/A	WAVERLY7 345.00 - WOLF CREEK 345KV CKT 1
Non-Converged Contingency	N/A	N/A	WOLFFORTH INTERCHANGE - YUMA INTERCHANGE 115KV CKT 1
BUSHLAND INTERCHANGE - HILLSIDE 115KV CKT 1	177	116.434	BUSHLAND INTERCHANGE - POTTER COUNTY INTERCHANGE 230KV CKT 1
BUSHLAND INTERCHANGE - POTTER COUNTY INTERCHANGE 230KV CKT 1	329.05	103.4995	SYSTEM INTACT
BUSHLAND INTERCHANGE - POTTER COUNTY INTERCHANGE 230KV CKT 1	360.92	110.3031	BUSHLAND INTERCHANGE - HILLSIDE 115KV CKT 1
BUSHLAND INTERCHANGE (WH 7001795) 230/115/13.2KV TRANSFORMER CKT 1	168	132.1613	BUSHLAND INTERCHANGE - POTTER COUNTY INTERCHANGE 230KV CKT 1
COULTER INTERCHANGE - HILLSIDE 115KV CKT 1	159	123.8723	BUSHLAND INTERCHANGE - POTTER COUNTY INTERCHANGE 230KV CKT 1
G15039_T 230.00 - PLANT X STATION 230KV CKT 1	350.57	105.7964	NEWHART 230 - PLANT X STATION 230KV CKT 1
GRACEMONT - MINCO 345KV CKT 1	1195	101.53	G14-057T 345.00 - SUNNYSIDE 345KV CKT 1
SUNDOWN INTERCHANGE - WOLFFORTH INTERCHANGE 230KV CKT 1	350.57	101.6908	TOLK STATION EAST - TUCO INTERCHANGE 230KV CKT 1
WOLFFORTH INTERCHANGE - YUMA INTERCHANGE 115KV CKT 1	153.97	103.3037	LUBBOCK SOUTH INTERCHANGE - WOLFFORTH INTERCHANGE 230KV CKT 1
	Mitigation		**Build TUCO 2 – Border – Chisholm, Chisholm tie into Border – Woodward, build TUCO 2 – Tolk – Potter – Grapevine – Chisholm, Build Grapevine – Beaver County, Build Beaver County, Grapevine, Oklaunion reactive power support devices**
CARLISLE INTERCHANGE (WH RLP38371) 115/69/13.2KV TRANSFORMER CKT 1	44.37	112.3845	SYSTEM INTACT
	Mitigation		**Replace transformer**
CHISHOLM6 230.00 - ELK CITY 230KV 230KV CKT 1	353	107.7212	BASE CASE
	Mitigation		**Rebuild/reconductor line**
CIMARRON - MINCO 345KV CKT 1	956	140.6921	G14-057T 345.00 - SUNNYSIDE 345KV CKT 1
	Mitigation		**Replace terminal equipment**
DEAF SMITH COUNTY INTERCHANGE - G15039_T 230.00 230KV CKT 1	318.7	110.3343	SYSTEM INTACT
DEAF SMITH COUNTY INTERCHANGE - G15039_T 230.00 230KV CKT 1	350.57	121.4644	G14-074T 345.00 - TUCO INTERCHANGE 345KV CKT 1
	Mitigation		**Replace terminal equipment**
EDDY COUNTY INTERCHANGE - EDDY_NORTH 6230.00 230KV CKT @1	478	103.965	P12:345:SPS:J15.1.XRDS.TOLK
	Mitigation		**Build second bus tie**
G14-057T 345.00 - LAWTON EASTSIDE 345KV CKT 1	717	108.0268	BASE CASE
G14-057T 345.00 - LAWTON EASTSIDE 345KV CKT 1	789	131.3199	CIMARRON - MINCO 345KV CKT 1
	Mitigation		**New TUCO 2 – Border –Chisholm, TUCO 2 – Tolk – Potter-Grapevine – Chisholm lines, and Replace terminal equipment on GEN-2014-057 Tap – LES.**
G14-057T 345.00 - SUNNYSIDE 345KV CKT 1	717	120.8788	SYSTEM INTACT
G14-057T 345.00 - SUNNYSIDE 345KV CKT 1	789	144.5024	CIMARRON - MINCO 345KV CKT 1
	Mitigation		**New TUCO 2 – Border –Chisholm, TUCO 2 – Tolk – Potter-Grapevine – Chisholm lines, and Rebuild/ reconductor GEN-2014-057 Tap - Sunnyside**
POTTER COUNTY INTERCHANGE (WAUK 90343-A) 345/230/13.2KV TRANSFORMER CKT 1	560	101.9937	SYSTEM INTACT
POTTER COUNTY INTERCHANGE (WAUK 90343-A) 345/230/13.2KV TRANSFORMER CKT 1	560	145.2357	P12:345:SPS:J15.1.XRDS.TOLK
	Mitigation		**TUCO 2 – Tolk – Potter-Grapevine – Chisholm lines and second Potter County 345/230/13kV Transformer**
TOLK STATION (ABBXNL844501) 345/230/13.2KV TRANSFORMER CKT 1	560	113.0515	CROSSROADS 7345.00 - TOLK STATION 345KV CKT 1

	Mitigation		TUCO 2 – Tolk – Potter-Grapevine – Chisholm lines and second Tolk Station 345/230/13kV Transformer
TUCO INTERCHANGE - TUCO_2 230.00 230KV CKT 1	547	181.2199	TUCO INTERCHANGE - TUCO_2 345.00 345KV CKT 1
TUCO_2 345.00 (TUCO_2 XFMR) 345/230/13.2KV TRANSFORMER CKT 1	560	190.1451	TUCO INTERCHANGE - TUCO_2 345.00 345KV CKT 1
	Mitigation		New TUCO 2 – Border –Chisholm, TUCO 2 – Tolk – Potter-Grapevine – Chisholm lines and reterminat Hobbs – Yoakum from TUCO to TUCO 2
TUCO INTERCHANGE (GE M1022338) 345/230/13.2KV TRANSFORMER CKT 1	560	120.5418	TUCO INTERCHANGE (SIEM 8743066) 345/230/13.2KV TRANSFORMER CKT 2
	Mitigation		Network upgrade assigned to higher queued restudy DISIS-2014-002-6.

Cluster NRIS Constraints			
MONITORED ELEMENT	Limiting Rate A/B (MVA)	TC%LOADING (% MVA)	CONTINGENCY
Non-Converged Contingency	N/A	N/A	AMARILLO SOUTH INTERCHANGE - G15031_T 230.00 230KV CKT 1
Non-Converged Contingency	N/A	N/A	BORDER 7345.00 - TUCO_2 345.00 345KV CKT 1
Non-Converged Contingency	N/A	N/A	BORDER 7345.00 - WOODWARD DISTRICT EHV 345KV CKT 1
Non-Converged Contingency	N/A	N/A	BORDER 7345.00 345KV SWITCHED SHUNT
Non-Converged Contingency	N/A	N/A	BUSHLAND INTERCHANGE - DEAF SMITH COUNTY INTERCHANGE 230KV CKT 1
Non-Converged Contingency	N/A	N/A	BUSHLAND INTERCHANGE - POTTER COUNTY INTERCHANGE 230KV CKT 1
Non-Converged Contingency	N/A	N/A	DEAF SMITH COUNTY INTERCHANGE - G15039_T 230.00 230KV CKT 1
Non-Converged Contingency	N/A	N/A	G14-074T 345.00 - OKLAUNION 345KV CKT 1
Non-Converged Contingency	N/A	N/A	G14-074T 345.00 - TUCO INTERCHANGE 345KV CKT 1
Non-Converged Contingency	N/A	N/A	G15039_T 230.00 - PLANT X STATION 230KV CKT 1
Non-Converged Contingency	N/A	N/A	NEWHART 230 - POTTER COUNTY INTERCHANGE 230KV CKT 1
Non-Converged Contingency	N/A	N/A	OKLAUNION 345KV SWITCHED SHUNT
AMARILLO SOUTH INTERCHANGE - G15031_T 230.00 230KV CKT 1	350.57	103.4449	NEWHART 230 - POTTER COUNTY INTERCHANGE 230KV CKT 1
BUSHLAND INTERCHANGE - HILLSIDE 115KV CKT 1	160	118.1849	BUSHLAND INTERCHANGE - POTTER COUNTY INTERCHANGE 230KV CKT 1
BUSHLAND INTERCHANGE - POTTER COUNTY INTERCHANGE 230KV CKT 1	350.57	103.6906	NEWHART 230 - POTTER COUNTY INTERCHANGE 230KV CKT 1
BUSHLAND INTERCHANGE (WH 7001795) 230/115/13.2KV TRANSFORMER CKT 1	168	116.5462	BUSHLAND INTERCHANGE - POTTER COUNTY INTERCHANGE 230KV CKT 1
CANYON E_TP3115.00 - RANDALL COUNTY INTERCHANGE 115KV CKT 1	96	100.8119	BUSHLAND INTERCHANGE - DEAF SMITH COUNTY INTERCHANGE 230KV CKT 1
CANYON WEST SUB - DAWN SUB 115KV CKT 1	96	127.5172	BUSHLAND INTERCHANGE - DEAF SMITH COUNTY INTERCHANGE 230KV CKT 1
CARGILL SUB - DEAF SMITH REC-#24 115KV CKT 1	96	107.5549	DEAF SMITH COUNTY INTERCHANGE - G15039_T 230.00 230KV CKT 1
CARGILL SUB - FRIONA SUB 115KV CKT 1	96	100.202	DEAF SMITH COUNTY INTERCHANGE - G15039_T 230.00 230KV CKT 1
CASTRO COUNTY INTERCHANGE - DEAF SMITH REC-#21 115KV CKT 1	174	106.0645	DEAF SMITH COUNTY INTERCHANGE - G15039_T 230.00 230KV CKT 1
CHISHOLM6 230.00 - SWEETWATER 230KV CKT 1	439	113.3716	G15031_T 230.00 - SWISHER COUNTY INTERCHANGE 230KV CKT 1
CIMARRON - MINCO 345KV CKT 1	956	124.6843	G14-057T 345.00 - SUNNYSIDE 345KV CKT 1
COULTER INTERCHANGE - HILLSIDE 115KV CKT 1	159	113.2181	BUSHLAND INTERCHANGE - POTTER COUNTY INTERCHANGE 230KV CKT 1
CURRY COUNTY INTERCHANGE - DEAF SMITH REC-#20 115KV CKT 1	96	129.1509	DEAF SMITH COUNTY INTERCHANGE - G15039_T 230.00 230KV CKT 1
DAWN SUB - Panda Energy Substation Hereford 115KV CKT 1	96	130.9313	BUSHLAND INTERCHANGE - DEAF SMITH COUNTY INTERCHANGE 230KV CKT 1

DEAF SMITH COUNTY INTERCHANGE - DEAF SMITH REC-#21 115KV CKT 1	174	100.9586	DEAF SMITH COUNTY INTERCHANGE - G15039_T 230.00 230KV CKT 1
DEAF SMITH COUNTY INTERCHANGE - G15039_T 230.00 230KV CKT 1	350.57	110.3216	NEWHART 230 - PLANT X STATION 230KV CKT 1
DEAF SMITH COUNTY INTERCHANGE - Panda Energy Substation Hereford 115KV CKT 1	96	136.0663	BUSHLAND INTERCHANGE - DEAF SMITH COUNTY INTERCHANGE 230KV CKT 1
DEAF SMITH REC-#20 - PARMER COUNTY SUB 115KV CKT 1	96	121.0569	DEAF SMITH COUNTY INTERCHANGE - G15039_T 230.00 230KV CKT 1
DEAF SMITH REC-#24 - PARMER COUNTY SUB 115KV CKT 1	96	114.1557	DEAF SMITH COUNTY INTERCHANGE - G15039_T 230.00 230KV CKT 1
G14-057T 345.00 - LAWTON EASTSIDE 345KV CKT 1	789	122.5952	CIMARRON - MINCO 345KV CKT 1
G14-057T 345.00 - SUNNYSIDE 345KV CKT 1	717	129.2325	SYSTEM INTACT
G14-057T 345.00 - SUNNYSIDE 345KV CKT 1	789	146.4623	CIMARRON - MINCO 345KV CKT 1
G14-074T 345.00 - OKLAUNION 345KV CKT 1	1022	108.2612	SYSTEM INTACT
G14-074T 345.00 - OKLAUNION 345KV CKT 1	1124	106.9843	G11_051T 345.00 - WOODWARD DISTRICT EHV 345KV CKT 1
Hitchland Interchange (H TB80155502) 345/230/13.2KV TRANSFORMER CKT 1	644	100	Hitchland Interchange (SIEM 8743067) 345/230/13.2KV TRANSFORMER CKT 2
Hitchland Interchange (SIEM 8743067) 345/230/13.2KV TRANSFORMER CKT 2	644	102.3531	Hitchland Interchange (H TB80155502) 345/230/13.2KV TRANSFORMER CKT 1
POTTER COUNTY INTERCHANGE (WAUK 90343-A) 345/230/13.2KV TRANSFORMER CKT 1	560	147.5976	P12:345:SPS:J15.1.XRDS.TOLK
STATELINE INTERCHANGE - STLN-DEMARC6 230KV CKT 1	381.24	127.0717	G15031_T 230.00 - SWISHER COUNTY INTERCHANGE 230KV CKT 1
STLN-DEMARC6 - SWEETWATER 230KV CKT 1	353	136.8203	G15031_T 230.00 - SWISHER COUNTY INTERCHANGE 230KV CKT 1
SUNDOWN INTERCHANGE (WH XDS70381) 230/115/13.8KV TRANSFORMER CKT 1	187	100.4435	AMOCO SWITCHING STATION - SUNDOWN INTERCHANGE 230KV CKT 1
TUCO INTERCHANGE - TUCO_2 230.00 230KV CKT 1	547	120.0923	TUCO INTERCHANGE - TUCO_2 345.00 345KV CKT 1
TUCO INTERCHANGE (GE M102345) 230/115/13.2KV TRANSFORMER CKT 1	252	103.022	TUCO INTERCHANGE (ENRCO 136401) 230/115/13.2KV TRANSFORMER CKT 2
TUCO_2 345.00 (TUCO_2 XFMR) 345/230/13.2KV TRANSFORMER CKT 1	560	114.7643	TUCO INTERCHANGE - TUCO_2 345.00 345KV CKT 1
	Mitigation		**ERIS Upgrades**
CARLISLE INTERCHANGE - LP-DOUD_TP 3115.00 115KV CKT 1	160	110.2252	WOLFFORTH INTERCHANGE (WH 7001668) 230/115/13.2KV TRANSFORMER CKT 1
	Mitigation		**Higher queued assigned NRIS Upgrade for replacing terminal equipment**
CARLISLE INTERCHANGE (WH RLP38371) 115/69/13.2KV TRANSFORMER CKT 1	44.37	111.9302	SYSTEM INTACT
	Mitigation		**Replace transformer**
DENVER CITY INTERCHANGE S. - SAN_ANDS_TP3115.00 115KV CKT 1	160	132.1826	MUSTANG STATION - SEMINOLE 230KV CKT 1
DENVER CITY INTERCHANGE S. - SHELL C2 SUB 115KV CKT 1	175	110.8234	P12:115:LCEC:W56.1.HOBBG.LE-LVN
SAN_ANDS_TP3115.00 - SEMINOLE 115KV CKT 1	160	112.2508	MUSTANG STATION - SEMINOLE 230KV CKT 1
SHELL C2 SUB - SHELL C3 TAP 115KV CKT 1	179	101.4057	P12:115:LCEC:W56.1.HOBBG.LE-LVN
	Mitigation		**Mustang – Shell C02 115kV build assigned from SPP-2011-AG3-AFS-11 and 2016 ITPNT proposed network upgrades in the mustang area**
JONES STATION - TUCO INTERCHANGE 230KV CKT 1	343.79	139.3518	CARLISLE INTERCHANGE - TUCO INTERCHANGE 230KV CKT 1
	Mitigation		**Higher queued assigned NRIS Upgrade for replacing terminal equipment**
KRESS INTERCHANGE - SWISHER COUNTY INTERCHANGE 115KV CKT 1	239	118.9572	NEWHART 230 - SWISHER COUNTY INTERCHANGE 230KV CKT 1
	Mitigation		**ERIS Upgrades and higher queued terminal equipment for Kress Interchange – Swisher Interchange 115kV**
LUBBOCK POWER & LIGHT-HOLLY PLANT (SHIH T101039) 230/69/13.5KV TRANSFORMER CKT 1	224	104.8294	LUBBOCK POWER & LIGHT-SOUTHEAST - LUBBOCK SOUTH INTERCHANGE 230KV CKT 1
	Mitigation		**Replace transformer**
MUSTANG STATION (ENRCO 136161) 230/115/13.2KV TRANSFORMER CKT 1	288	103.5181	MUSTANG STATION - SEMINOLE 230KV CKT 1

	Mitigation		**Build second transformer**
TUCO INTERCHANGE (ENRCO 136401) 230/115/13.2KV TRANSFORMER CKT 1	288	123.8204	TUCO INTERCHANGE (ENRCO 136401) 230/115/13.2KV TRANSFORMER CKT 2
	Mitigation		**In addition to ERIS upgrades, TUCO – New Deal 345/115kV Project will be needed**
WOLFFORTH INTERCHANGE (WH 7001668) 230/115/13.2KV TRANSFORMER CKT 1	168	110.0903	CARLISLE INTERCHANGE - LP-DOUD_TP 3115.00 115KV CKT 1
	Mitigation		**Replace transformer**

After constraints for transmission reinforcement upgrades were mitigated, the following steady-state voltage violations require mitigation. A second step of 9.6Mvars at the Shamrock 115kV capacitor bank(s) will be required to mitigate the steady state voltage observed after contingency.

Cluster ERIS Voltage Constraints				
MONITORED ELEMENT	**TC Voltage (PU)**	**VMIN (PU)**	**VMAX (PU)**	**CONTINGENCY**
SHAMROCK 115KV	0.902515	0.92	1.05	G14-074T 345.00 - OKLAUNION 345KV CKT 1
	Mitigation			**Add additional 9.6Mvars at Shamrock 115kV**

8.5.1 Group 6 (Stand Alone)

Each Interconnection Request was also studied as a Stand Alone Interconnection Request in addition to the Cluster Analysis.

GEN-2014-046 ERIS stand alone analysis observed possible voltage collapse during contingency along the TUCO Interchange – Oklaunion 345kV transmission circuit, so therefore will require capacitor bank(s) totaling to 200Mvars at Border 345kV for mitigation. NRIS analysis indicates the need for Chaves County – Price – CV Pines – Capitan 69kV to 115kV voltage conversion per SPP-NTC-200256 and higher queued assigned NRIS upgrade for TUCO Interchange – Jones 230kV transmission circuit #1 terminal equipment.

GEN-2015-018 ERIS stand alone analysis as this time does not currently result in any additional constraints requiring transmission reinforcements. NRIS analysis observed the current study need for Hockley County – Lamb County Interchange 115kV terminal equipment replacement to achieve conductor limit. In addition to current study mitigations, 2016 ITPNT upgrades and higher queued assigned NRIS upgrade for TUCO Interchange – Jones 230kV transmission circuit #1 terminal equipment are required for mitigation for thermal constraints.

GEN-2015-020 ERIS stand alone analysis as this time does not currently result in any additional constraints requiring transmission reinforcements. NRIS analysis observed the need for 2016 ITPNT upgrades and higher queued assigned NRIS upgrade for TUCO Interchange – Jones 230kV transmission circuit #1 terminal equipment are required for mitigation for thermal constraints.

GEN-2015-031 ERIS stand alone analysis observed convergence issues indicating possible voltage collapse(s) during N-1 contingency for TUCO Interchange – Oklaunion 345kV or Border – Woodward 345kV. For mitigation, a second 345kV circuit from TUCO 2 (Crawfish Draw) – Border – Chisholm will be required for mitigation. Chisholm will also tie into and re-terminate both ends of the Border – Woodward 345kV circuit # 1. System intact thermal constraints were observed on Stateline – Sweetwater – Chisholm 230kV transmission circuit that will require rebuild/re-conductors. In

additional for 2016 ITPNT assigned upgrades mitigations, NRIS analysis observed the need for the higher queued assigned upgrades including Kress Interchange – Swisher 115kV circuit #1 terminal equipment replacement, NRIS assigned Carlisle Interchange – LP Doud Tap 115kV terminal equipment upgrade, Jones Station – TUCO Interchange 230kV terminal equipment upgrade, and Terry County – Wolfforth – Sundown 115kV terminal equipment upgrade. Wolfforth 230/115/13kV transformer replacement and LP-Doud – SP-Wolf – Yuma Interchange – Wolfforth 115k circuit #2 build are current study cost allocation NRIS only required upgrade for mitigation.

GEN-2015-033 ERIS stand alone analysis observed possible voltage collapse during contingency along the TUCO Interchange – Oklaunion 345kV transmission circuit, so therefore will require capacitor bank(s)_ totaling to 200Mvars at Border 345kV for mitigation. In additional for 2016 ITPNT assigned upgrades mitigations, NRIS analysis observed the need for the higher queued assigned upgrades including NRIS assigned Carlisle Interchange – LP Doud Tap 115kV terminal equipment upgrade, Jones Station – TUCO Interchange 230kV terminal equipment upgrade, Terry County – Wolfforth – Sundown 115kV terminal equipment upgrade, and TUCO Interchange – Hale County 115kV tie into TUCO 2 (Crawfish) 115kV and TUCO 2 (Crawfish) 230/115/13kV transformer. Carlisle 230/115/13kV transformer replacement, Wolfforth 230/115/13kV transformer replacement, TUCO – New Deal – Station 345/115kV Project, and LP-Doud – SP-Wolf – Yuma Interchange – Wolfforth 115k circuit #2 build are current study cost allocation NRIS only required upgrades for mitigation.

GEN-2015-039 ERIS stand alone analysis observed thermal constraints on Deaf Smith County Interchange – GEN-2015-039 Tap 230kV transmission circuit #1. For mitigation, GEN-2015-039 will be assigned terminal equipment upgrades for Deaf Smith County Interchange – GEN-2015-039 Tap 230kV transmission circuit. In additional for 2016 ITPNT assigned upgrades mitigations, NRIS analysis observed the need for higher queued NRIS assigned upgrades Jones Station – TUCO Interchange 230kV terminal equipment upgrade.

GEN-2015-040 ERIS stand alone analysis as this time does not currently result in any additional constraints requiring transmission reinforcements. In additional for 2016 ITPNT assigned upgrades mitigations, NRIS analysis observed the need for current study cost allocated Mustang 230/115/13kV transformer circuit #2 build and Seminole – Gaines 115kV circuit #2 build.

GEN-2015-041 ERIS stand alone analysis as this time does not currently show any additional constraints requiring transmission reinforcements. In additional for 2016 ITPNT assigned upgrades mitigations, NRIS analysis observed the need for the higher queued assigned upgrades including NRIS assigned Carlisle Interchange – LP Doud Tap 115kV terminal equipment upgrade, Jones Station – TUCO Interchange 230kV terminal equipment upgrade, and Terry County – Wolfforth – Sundown 115kV terminal equipment upgrade. Carlisle 230/115/13kV transformer replacement, Wolfforth 230/115/13kV transformer replacement, TUCO – New Deal – Station 345/115kV Project, and LP-Doud – SP-Wolf – Yuma Interchange – Wolfforth 115k circuit #2 build are current study cost allocation NRIS only required upgrades for mitigation.

GEN-2015-056 ERIS stand alone analysis observed thermal constraint on the Deaf Smith County Interchange – Plant X 230kV transmission circuit after the GEN_2014-074 Tap – Oklaunion 345kV circuit #1 contingency. GEN-2015-056 will be assigned terminal equipment upgrades for Deaf Smith

County Interchange – Plant X 230kV transmission circuit. In the ERIS analysis, the TPL P12 level contingency, P12:345:SPS:J02.1.TOLK.EDDY, resulted in a non-converged solution. Part of this contingency outages both Tolk and Eddy terminals from Crossroads substation which would island and reduce generation at Crossroads to 0MW.

GEN-2015-058 ERIS analysis as this time does not currently result in any additional constraints requiring transmission reinforcements.

GEN-2015-068 ERIS stand alone analysis observed convergence issues indicating possible voltage collapse(s) during N-1 contingency for TUCO Interchange – Oklaunion 345kV or Border – Woodward 345kV. For mitigation, a second 345kV circuit from TUCO 2 (Crawfish Draw) – Border – Chisholm will be required for mitigation. Chisholm will also tie into and re-terminate both ends of the Border – Woodward 345kV circuit # 1. System intact thermal constraints were observed on Stateline – Sweetwater – Chisholm 230kV transmission circuit that will require rebuild/re-conductors. In additional for 2016 ITPNT assigned upgrades mitigations, NRIS analysis observed the need for the higher queued assigned upgrades including NRIS assigned Carlisle Interchange – LP Doud Tap 115kV terminal equipment upgrade, Jones Station – TUCO Interchange 230kV terminal equipment upgrade, and Terry County – Wolfforth – Sundown 115kV terminal equipment upgrade. Carlisle 230/115/13kV transformer replacement, Wolfforth 230/115/13kV transformer replacement, TUCO – New Deal – Station 345/115kV Project, and LP-Doud – SP-Wolf – Yuma Interchange – Wolfforth 115k circuit #2 build are current study cost allocation NRIS only required upgrades for mitigation.

GEN-2015-075 ERIS stand alone analysis observed a system intact thermal constraint on the Carlisle 115/69/13kV transformer, which requires a transformer replacement for mitigation. In additional for 2016 ITPNT assigned upgrades mitigations, NRIS analysis observed the need for the higher queued assigned upgrades including NRIS assigned Carlisle Interchange – LP Doud Tap 115kV terminal equipment upgrade, Jones Station – TUCO Interchange 230kV terminal equipment upgrade, and Terry County – Wolfforth – Sundown 115kV terminal equipment upgrade. CWolfforth 230/115/13kV transformer replacement, TUCO – New Deal – Station 345/115kV Project, and LP-Doud – SP-Wolf – Yuma Interchange – Wolfforth 115k circuit #2 build are current study cost allocation NRIS only required upgrades for mitigation.

GEN-2015-077 ERIS and NRIS stand alone analysis as this time does not currently result in any additional constraints requiring transmission reinforcements.

GEN-2015-078 ERIS stand alone analysis as this time does not currently result in any additional constraints requiring transmission reinforcements. In additional for 2016 ITPNT assigned upgrades mitigations, NRIS analysis observed the need for previously assigned Mustang – CO2 115kV transmission circuit #1 per SPP-NTC-200262.

GEN-2015-079 ERIS stand alone analysis observed possible voltage collapse during contingency along the TUCO Interchange – Oklaunion 345kV transmission circuit, so therefore will require capacitor bank(s) totaling to 200Mvars at Border 345kV for mitigation. NRIS analysis indicates the need higher queued NRIS assigned Jones Station – TUCO Interchange 230kV terminal equipment upgrade. GEN-2015-079 will be current study cost allocated Mustang 230/115/13kV transformer circuit #2 build.

GEN-2015-080 ERIS stand alone analysis observed possible voltage collapse during contingency along the TUCO Interchange – Oklaunion 345kV transmission circuit, so therefore will require capacitor bank(s) totaling to 200Mvars at Border 345kV for mitigation. NRIS analysis indicates the need higher queued NRIS assigned Jones Station – TUCO Interchange 230kV terminal equipment upgrade. GEN-2015-080 will be current study cost allocated Mustang 230/115/13kV transformer circuit #2 build.

For Group 6 Stand Alone Analysis cost allocation, please refer to Appendix E1.

8.5.2 Group 6 (Limited Operation)

Limited Operation results are listed below. While these results are based on the criteria listed in GIP 8.4.3, the Interconnection Customer may request additional scenarios for Limited Operation based on higher queued Interconnection Requests not being placed in service.

Limited Operation Analysis		
Interconnection Request	**MW**	**Constraint that most limits LOIS**
GEN-2014-046	0	Multiple
GEN-2015-018	0	Multiple
GEN-2015-020	0	Multiple
GEN-2015-031	0	Multiple
GEN-2015-033	0	Multiple
GEN-2015-039	0	Multiple
GEN-2015-040	0	Multiple
GEN-2015-041	0	Multiple
GEN-2015-056	0	Multiple
GEN-2015-058	0	Multiple
GEN-2015-068	0	Multiple
GEN-2015-075	0	Multiple
GEN-2015-077	0	Multiple
GEN-2015-078	0	Multiple
GEN-2015-079	0	Multiple
GEN-2015-080	0	Multiple

8.6 Cluster Group 7 (Southwestern Oklahoma Area)

In addition to the 1,923.90 MW of previously queued generation in the area, 413.70 MW of new interconnection service was studied. Critical constraints requiring additional transmission reinforcements are listed below while the complete list of individual constraints requiring additional transmission reinforcements displayed in Appendix G-T. For ERIS transmission reinforcements, Group 07 Interconnection Requests required new GEN-2015-085 Tap – Altus Junction 138kV transmission circuit and GEN-2015-085 Tap – Russell 138kV terminal equipment upgrades.

Cluster ERIS Constraints

MONITORED ELEMENT	Limiting Rate A/B (MVA)	TC%LOADING (% MVA)	CONTINGENCY
ELDORADO - ELDORADO JCT 69KV CKT 1	27	218.3703	G15085_T 138.00 - RUSSELL 138KV CKT 1
ELDORADO - LAKE PAULINE 69KV CKT 1	33	185.9825	G15085_T 138.00 - RUSSELL 138KV CKT 1
ELDORADO JCT - GYPSUM 69KV CKT 1	27	214.8687	G15085_T 138.00 - RUSSELL 138KV CKT 1
G15085_T 138.00 - LAKE PAULINE 138KV CKT 1	108	109.5073	System Intact
G15085_T 138.00 - LAKE PAULINE 138KV CKT 1	118	102.006	G15085_T 138.00 - RUSSELL 138KV CKT 1
G15085_T 138.00 - RUSSELL 138KV CKT 1	118	122.6475	CHISHOLM6 230.00 - SWEETWATER 230KV CKT 1
GYPSUM - RUSSELL 69KV CKT 1	27	210.4587	G15085_T 138.00 - RUSSELL 138KV CKT 1
SHAMROCK (SHAMRCK2) 138/69/14.4KV TRANSFORMER CKT 1	69	99.5	G15085_T 138.00 - RUSSELL 138KV CKT 1
	Mitigation		**Build GEN-2015-085 Tap – Altus Junction 138kV circuit #1**
NORGE ROAD - SOUTHWESTERN STATION 138KV CKT 1	136	103.2647	System Intact
	Mitigation		**Rebuild Norge Road – Southwestern Station 138kV**

Cluster NRIS Constraints			
MONITORED ELEMENT	Limiting Rate A/B (MVA)	TC%LOADING (% MVA)	CONTINGENCY
ELDORADO - ELDORADO JCT 69KV CKT 1	32	235.3612	G15085_T 138.00 - RUSSELL 138KV CKT 1
ELDORADO - LAKE PAULINE 69KV CKT 1	33	232.3957	G15085_T 138.00 - RUSSELL 138KV CKT 1
ELDORADO JCT - GYPSUM 69KV CKT 1	32	231.5083	G15085_T 138.00 - RUSSELL 138KV CKT 1
G15085_T 138.00 - LAKE PAULINE 138KV CKT 1	118	101.8311	G15085_T 138.00 - RUSSELL 138KV CKT 1
G15085_T 138.00 - RUSSELL 138KV CKT 1	118	145.7007	P12:230:AEPW:ELKCITY6:SWEETWT6
G15085_T 138.00 - RUSSELL 138KV CKT 1	108	130.3142	System Intact
GYPSUM - RUSSELL 69KV CKT 1	29	226.0391	G15085_T 138.00 - RUSSELL 138KV CKT 1
LAKE PAULINE (LAKEPAUL) 138/69/14.4KV TRANSFORMER CKT 1	69	112.9373	G15085_T 138.00 - RUSSELL 138KV CKT 1
RUSSELL (RUSSELL) 138/69/13.8KV TRANSFORMER CKT 1	70	105.8368	ALTUS JUNCTION - RUSSELL 138KV CKT 1
	Mitigation		**Mitigation by ERIS upgrade: Build GEN-2015-085 Tap – Altus Junction 138kV circuit #1**
MATHWSN7 345.00 - TATONGA7 345.00 345KV CKT 1	1195	110.9769	G14-074T 345.00 - OKLAUNION 345KV CKT 1
	Mitigation		**Woodward – GEN-2011-051 – Tatonga – Mathewson 345kV circuit #1 rating update to 3000amps**
NORGE ROAD - SOUTHWESTERN STATION 138KV CKT 1	136	101.5889	SOUTHWESTERN STATION - VERDEN 138KV CKT 1
	Mitigation		**Mitigation by ERIS upgrade: Rebuild Norge Road – Southwestern Station 138kV**
CHISHOLM6 230.00 - SWEETWATER 230KV CKT 1	439	106.0142	G14-074T 345.00 - OKLAUNION 345KV CKT 1
	Mitigation		**Rebuild circuit**
CIMARRON - DRAPER LAKE 345KV CKT 1	717	132.6508	G14-057T 345.00 - SUNNYSIDE 345KV CKT 1
	Mitigation		**Replace terminal equipment**
CIMARRON - MINCO 345KV CKT 1	956	113.1031	G14-057T 345.00 - SUNNYSIDE 345KV CKT 1
	Mitigation		**Replace terminal equipment**
CLEAVELAND - CLEVLND 4 138.00 138KV CKT Z1	371	110.1318	CLEVELAND - TULSA NORTH 345KV CKT 1
	Mitigation		**AECI Affected System Study**
G14-057T 345.00 - SUNNYSIDE 345KV CKT 1	717	125.7317	System intact
G14-057T 345.00 - SUNNYSIDE 345KV CKT 1	789	141.3261	CIMARRON - MINCO 345KV CKT 1
	Mitigation		**GEN-2014-057 Tap – Sunnyside 345kV rebuild/recondcutor**
OMPA-MANGUM - RUSSELL 69KV CKT 1	48	107.8828	ELK CITY (ELKCTY-4) 138/69/13.8KV TRANSFORMER CKT 1
	Mitigation		**2016 ITPNT Upgrades**
PITTSBURG - SEMINOLE 345KV CKT 1	717	101.4368	G14-057T 345.00 - SUNNYSIDE 345KV CKT 1
	Mitigation		**Replace terminal equipment**
SWISSVALE - WEST GARDNER 345KV CKT 1	717	105.8319	HOYT - STRANGER CREEK 345KV CKT 1
	Mitigation		**Replace terminal equipment**
TUPELO - TUPELO TAP 138KV CKT 1	143	123.3524	PITTSBURG - VALLIANT 345KV CKT 1
	Mitigation		**Replace terminal equipment**

8.6.1 Group 7 (Stand Alone)

The Interconnection Requests were also studied as a Stand Alone Interconnection Request in addition to the Cluster Analysis.

GEN-2015-055 ERIS stand alone analysis shows thermal overloads on Clinton Junction – Elky City 138kV and Stateline – Sweetwater 230kV. Non-convergence is observed in the 25SP seasonal case for the loss of the Elk City 138/69/13kV transformer. 2016 Integrated Transmission Plan – Near Term (2016 ITPNT) local area upgrades are required. Clinton Junction – Elk City 138kV thermal overload is alleviated by the adding Chisholm – Gracemont 345kV project into seasonal cases before its in-service date.

GEN-2015-071 ERIS stand alone analysis observed thermal violations on the Stateline – Sweetwater 230kV transmission circuit. Stateline – Sweetwater will require a rebuild/re-condcutor for mitingation of the thermal violations.

GEN-2015-084 ERIS stand alone analysis currently results in no new thermal constraints requiring transmission reinforcement upgrades. NRIS stand alone analysis results in thermal overloads on the OMPA Mangum – Russell 69kV transmission circuit for the loss of Elk City 138/69/13kV transformer and Bowers Interchange 115/69/13kV transformers circuit #1 and #2 for the loss of the other transformer. For NRIS mitigation, 2016 ITPNT local area upgrades are required and third Bowers interchange transformer will be required.

GEN-2015-085 ERIS stand alone analysis observed thermal constraints on the Lake Pauline – GEN-2015-085 Tap – Russell 138kV and Lake Pauline – El Dorado – El Dorado Junction - Gypsum – Russell 69kV transmission circuits for the loss of GEN-2015-085 Tap – Lake Pauline or GEN-2015-085 Tap – Russell 138kV line segments. GEN-2015-085 Tap – Altus Junction 138kV transmission line is the mitigation for the ERIS thermal constraints. NRIS stand alone analysis observed similar thermal constraints as the ERIS, but also an additional thermal overload on the OMPA Mangum – Russell 69kV transmission circuit for the loss of Elk City 138/69/13kV transformer. 2016 ITPNT local area upgrades are the mitigations for the additional NRIS constraint.

For Group 7 Stand Alone Analysis cost allocation, please refer to Appendix E1.

8.6.2 Group 7 (Limited Operation)

Limited Operation results are listed below. While these results are based on the criteria listed in GIP 8.4.3, the Interconnection Customer may request additional scenarios for Limited Operation based on higher queued Interconnection Requests not being placed in service.

Limited Operation Analysis		
Interconnection Request	**MW**	**Constraint that most limits LOIS**
GEN-2015-055	0	Stateline – Sweetwater 230kV CKT 1 and Clinton Junction – Elk City 138kV CKT 1
	0	Clinton Junction – Elk City 138kV CKT 1 (assuming State line – Sweetwater is mitigated before 2025)
GEN-2015-071	0	Stateline – Sweetwater 230kV CKT 1

Limited Operation Analysis		
Interconnection Request	**MW**	**Constraint that most limits LOIS**
	200	Clinton Junction – Elk City 138kV CKT 1 (assuming State line – Sweetwater is mitigated before 2025)
GEN-2015-084	51.3 (ERIS)	None of ERIS
	24 (NRIS)	OMPA Mangum – Russell 69kV CKT 1
GEN-2015-085	70 (ERIS)	El Dorado – El Dorado Jct 69kV
	0 (NRIS)	Gypsum – Russell 69kV

8.7 Cluster Group 8 (North Oklahoma/South Central Kansas Area)

In addition to the 5,365.76 MW of previously queued generation in the area, 2,368.00 MW of new interconnection service was studied. ERIS constraints were observed along the Mathewson – GEN-2015-063 Tap transmission circuit. The emergency rating for Mathewson – GEN-2015-063 Tap 345kV is planned to be 2000 amps (1195MVA) after Mathewson Substation is in-service. Mathewson Substation is currently planned to be in-service by June 2016. The 2000 amp emergency rating would alleviate the thermal overload on this transmission circuit.

In addition to ERIS constraints, NRIS constraints were observed for Cimarron – Draper Lake 345kV circuit #1, Cleveland – Cleveland 138kV bus tie breaker, Cleveland – Silver City 138kV circuit #1, Emporia Energy Center – Swissvale – West Gardner 345kV circuit #1, Evans Energy Center North – Maize 138kV circuit #1, GEN-2014-057 Tap (Terry Road) – Sunnyside 345kV circuit #1, McElroy – Kinze – Stillwater 138kV circuit #1, and Mathewson – Tatonga 345kV circuit #1. Cimarron – Draper Lake 345kV circuit #1 terminal equipment upgrade is currently assigned per SPP-NTC-200329. The Cleveland – Cleveland 138kV bus tie breaker will likely be required to be upgrade to a larger ampacity breaker, but Associated Electric Cooperative Inc. (AECI) will be asked to perform and Affected System Study to determine the mitigations. Emporia Energy Center – Swissvale – West Gardner 345kV circuit #1 would require terminal equipment upgrades to alleviate the current study thermal overloads. Evans Energy Center North – Maize 138kV overload is alleviated with the Viola Projects in-service per SPP-NTC-200228/200296. GEN-2014-057 Tap (Terry Road) – Sunnyside 345kV circuit #1 would require a rebuild or re-conductor to at least 2000 amps. McElroy – Kinze – Stillwater 138kV circuit #1 thermal overload will be mitigated by the Stillwater 138/69kV Project per SPP-NTC-200319 to be in-service. Mathewson – Tatonga 345kV circuit#1 will be at 3000 amps emergency rating, which should relieve the thermal constraint for this study.

In addition to the Interconnection Requests with cost allocation in Appendix E for Associated Electric Cooperative Inc. (AECI) upgrades, the requests listed below were also identified as having a potential impact on AECI facilities for Interconnection Service. These Interconnection Customers will need to contract with AECI for Affected System Studies to determine whether AECI facilities are impacted.

- GEN-2015-034
- GEN-2015-043
- GEN-2015-047
- GEN-2015-052
- GEN-2015-062
- GEN-2015-063
- GEN-2015-066
- GEN-2015-067
- GEN-2015-083
- GEN-2015-090

For Group 8 Cluster Analysis cost allocation, please refer to Appendix E and F.

Cluster ERIS Constraints			
MONITORED ELEMENT	Limiting Rate A/B (MVA)	TC%LOADING (% MVA)	CONTINGENCY
G15063_T 345.00 - MATHWSN7 345.00 345KV CKT 1	956	122.7751	NORTHWEST - SPRING CREEK 345KV CKT 1
	Mitigation		**After the installation of Mathewson, the line will have an 1195 MVA rating**
SWISSVALE - WEST GARDNER 345KV CKT 1	717	124	HOYT - STRANGER CREEK 345KV CKT 1
	Mitigation		**Replace terminal equipment**
EMPORIA ENERGY CENTER - SWISSVALE 345KV CKT 1	717	122	HOYT - STRANGER CREEK 345KV CKT 1
	Mitigation		**Replace terminal equipment**

Cluster NRIS Constraints			
MONITORED ELEMENT	Limiting Rate A/B (MVA)	TC%LOADING (% MVA)	CONTINGENCY
CIMARRON - DRAPER LAKE 345KV CKT 1	717	104.5287	System intact
CIMARRON - DRAPER LAKE 345KV CKT 1	717	134.3506	G14-057T 345.00 - SUNNYSIDE 345KV CKT 1
	Mitigation		**Replace terminal equipment**
CLEAVELAND - CLEVLND 4 138.00 138KV CKT Z1	371	115.3548	CLEVELAND - TULSA NORTH 345KV CKT 1
CLEAVELAND - SILVER CITY 138KV CKT 1	174	116.3987	CLEVELAND - TULSA NORTH 345KV CKT 1
	Mitigation		**AECI Affected Study**
EMPORIA ENERGY CENTER - SWISSVALE 345KV CKT 1	717	122.053	G15074_T 345.00 - HOYT 345KV CKT 1
	Mitigation		**Replace terminal equipment**
EVANS ENERGY CENTER NORTH - MAIZEW 4 138.00 138KV CKT 1	382	100.625	BENTON - WICHITA 345KV CKT 1
	Mitigation		**Viola 345/138kV project**
G14-057T 345.00 - SUNNYSIDE 345KV CKT 1	717	126.8401	System intact
G14-057T 345.00 - SUNNYSIDE 345KV CKT 1	789	127.2961	PITTSBURG - SEMINOLE 345KV CKT 1
	Mitigation		**Rebuild 45 miles of 345kV line**
G15063_T 345.00 - MATHWSN7 345.00 345KV CKT 1	956	101.6468	SOONER - SPRING CREEK 345KV CKT 1
	Mitigation		**After the installation of Mathewson, the line will have an 1195 MVA rating**
KINZE - MCELROY 138KV CKT 1	222	100.5685	CLEVELAND - G15066_T 345.00 345KV CKT 1
KINZE - STILLWATER KINZIE 138KV CKT 1	287	99.8	CLEVELAND - G15066_T 345.00 345KV CKT 1
	Mitigation		**Stillwater 138/69kV Project**
MATHWSN7 345.00 - TATONGA7 345.00 345KV CKT 1	1195	100.2834	System Intact
MATHWSN7 345.00 - TATONGA7 345.00 345KV CKT 1	1195	111.0527	G14-074T 345.00 - OKLAUNION 345KV CKT 1
	Mitigation		**Model correction to 1792MVA**
SWISSVALE - WEST GARDNER 345KV CKT 1	717	124.2998	HOYT - STRANGER CREEK 345KV CKT 1
	Mitigation		**Replace terminal equipment**

8.7.1 Group 8 (Stand Alone)

The Interconnection Requests was also studied as a Stand Alone Interconnection Request in addition to the Cluster Analysis. GEN-2015-034, GEN-2015-043, GEN-2015-047, GEN-2015-052 and GEN-2015-083 ERIS or NRIS Stand Alone analysis currently do not have constraints requiring additional transmission reinforcements upgrades. GEN-2015-062 and GEN-2015-066 ERIS Stand Alone analysis currently does not have constraints requiring additional transmission reinforcement upgrades.

GEN-2015-063 Stand Alone analysis observed thermal constraints on the GEN-2015-063 Tap – Mathewson 345kV transmission circuit. Once Mathewson Substation is in-service, the rating on of this line segment will be 2000 amps, which will mitigate the thermal constraint observed. GEN-2015-069 and GEN-2015-073 Stand Alone analysis observed thermal constraints on the Emporia – Swissvale – West Gardner 345kV transmission circuit. Terminal equipment upgrades will be required to mitigate the constraints. GEN-2015-090 NRIS analysis will require the replacement of Wichita 345/13/13kV transformer circuit #1 for constraint observed the loss of the second transformer.

Appendix G1 and Appendix H1 contain the Stand Alone Analysis power flow thermal violations. For Group 1 Stand Alone Analysis cost allocation, please refer to Appendix E1.

8.7.2 Group 8 (Limited Operation)

Limited Operation results are listed below. While these results are based on the criteria listed in GIP 8.4.3, the Interconnection Customer may request additional scenarios for Limited Operation based on higher queued Interconnection Requests not being placed in service.

Limited Operation Analysis		
Interconnection Request	**MW**	**Constraint that most limits LOIS**
GEN-2015-034	200	None
GEN-2015-043	20	None (Several NRIS constraints)
GEN-2015-047	300	None
GEN-2015-052	300	None
GEN-2015-062	4.5	None
GEN-2015-063	300	None
GEN-2015-066	248	None
GEN-2015-067	150	None
GEN-2015-069	275	Swissvale – W Gardner 345kV
GEN-2015-073	175	Swissvale – W Gardner 345kV
GEN-2015-083	125	None
GEN-2015-090	220 (ERIS)	None for ERIS
	210 (NRIS)	Wichita 345/138/13kV Transformer CKT

8.8 Cluster Group 9 (Nebraska Area)

In addition to the 2,953.2 MW of previously queued generation in the area, 1,290.20 MW of new interconnection service was studied. Numerous overloads on the 115kV and 230kV transmission systems were observed as can be seen in the table below. Mitigations for the overloads included the advancement of the "R" Plan (SPP NTC 200277), and additional 345kV and 230kV lines in the NPPD area and WAPA/I.S. area. These facilities include a new Dixon County – Belden – Rasmussen 230kV line to alleviate overloads on the 115kV system, a new 345kV line from Antelope to Holt County, and a new 345/115kV autotransformer at Antelope. The Gentleman Stability interface constraints will require further review during the Interconnection Facilities Study by the Transmission Owner (NPPD). Transmission facilities on the WAPA system will require National Environmental Policy Act (NEPA) review. For more information on the NEPA Environmental Review, please refer to Section 8.6.1 of the GIP.

Cluster ERIS Constraints

MONITORED ELEMENT	Limiting Rate A/B (MVA)	TC%LOADING (% MVA)	CONTINGENCY
ALBION - PETERSBURG 115KV CKT 1	137	109.1085	ANTELOPE 3345.00 (ANTELOPE T1) 345/115/13.8KV TRANSFORMER CKT 1
PETERSBRG.N7115.00 - PETERSBURG 115KV CKT Z1	137	113.2153	ANTELOPE 3345.00 (ANTELOPE T1) 345/115/13.8KV TRANSFORMER CKT 1
ANTELOPE 7115.00 - COUNTY LINE 115KV CKT 1	193	105.3379	ANTELOPE 3345.00 (ANTELOPE T1) 345/115/13.8KV TRANSFORMER CKT 1'
BATTLE CREEK - COUNTY LINE 115KV CKT 1	193	104.9576	ANTELOPE 3345.00 (ANTELOPE T1) 345/115/13.8KV TRANSFORMER CKT 1
BATTLE CREEK - NORTH NORFOLK 115KV CKT 1	193	101.5599	ANTELOPE 3345.00 (ANTELOPE T1) 345/115/13.8KV TRANSFORMER CKT 1
BLOOMFIELD - GAVINS POINT 115KV CKT 1	120	116.8792	ANTELOPE 3345.00 (ANTELOPE T1) 345/115/13.8KV TRANSFORMER CKT 1
GAVINS POINT - YANKON JCT 115KV CKT 1	120	123.3843	GAVINS POINT - SPIRIT MOUND 115KV CKT 1
	Mitigation		**Antelope – Hoskins Project, Construct Holt County – Antelope 345kV; Add 2nd 345/115kV transformer at Antelope; reconductor Albion – Petersburg – North Petersburg 115kV**
BEATRICE - HARBINE 115KV CKT 1	99	101.7082	KNOB HILL - STEELE CITY 115KV CKT 1
	Mitigation		**Rebuild Beatrice - Harbine**
DIXONCO 230.00 - HOSKINS 230KV CKT 1	320	207.8772	DIXONCO 230.00 - TWIN CHURCH 230KV CKT 1
DIXONCO 230.00 - TWIN CHURCH 230KV CKT 1	320	118.9865	System intact
DIXONCO 230.00 - TWIN CHURCH 230KV CKT 1	320	203.759	DIXONCO 230.00 - HOSKINS 230KV CKT 1
SIOUX CITY - TWIN CHURCH 230KV CKT 1	320	106.8954	System intact
SIOUX CITY - TWIN CHURCH 230KV CKT 1	320	171.7926	DIXONCO 230.00 - HOSKINS 230KV CKT 1
HOSKINS (HOSKINS T2) 345/230/13.8KV TRANSFORMER CKT 1	336	122.9569	DIXONCO 230.00 - TWIN CHURCH 230KV CKT 1
	Mitigation		**Build Dixon County – Belden – Rasmussen 230kV with 230/115kV stepdown at Belden. Build Dixon County – Twin Church – Sioux City 345kV with Dixon County 345/230/13kV transformers ckt 1& 2 and Twin Church 345/230/13kV transformer**
G14-059T 230.00 - OGALLALA 230KV CKT 1	320	149.5499	KEYSTONE - SIDNEY1-LNX3345.00 345KV CKT 1
	Mitigation		**Build Sidney – GEN-2014-059-Ogallalah 230kV ckt 2**
GERALD GENTLEMAN STATION - OGALLALA 230KV CKT 1	320	124.87	GERALD GENTLEMAN STATION - KEYSTONE 345KV CKT 1
	Mitigation		**Replace terminal equipment**
GGS	1635	100.5842	System Intact
	Mitigation		**NPPD Facility Study to determine mitigations for GGS**
SIDNEY - SIDNEY TRANSFORMER 230KV CKT 1	400	102.4243	KEYSTONE - SIDNEY1-LNX3345.00 345KV CKT 1
	Mitigation		**Model Correction to rerate Sidney - Sydney transformer**

Cluster NRIS Constraints			
MONITORED ELEMENT	**Limiting Rate A/B (MVA)**	**TC%LOADING (% MVA)**	**CONTINGENCY**
Non-Converged Contingency	720	-	GR ISLD-LNX3345.00 - GRAND ISLAND 345KV CKT Z
Non-Converged Contingency	720	-	GR ISLD-LNX3345.00 - HOLT.CO3 345.00 345KV CKT 1
Non-Converged Contingency	720	-	GRPRAR1-LNX3345.00 - YANKTON 345KV CKT Z
	Mitigation		**Advance Gentlemen-Thedford-Holt County 345kV**
BELDEN - HOSKINS 115KV CKT 1	115	123.538	DIXONCO 230.00 - HOSKINS 230KV CKT 1
	Mitigation		**Build Dixon County – Belden – Rasmussen 230kV with 230/115kV stepdown at Belden**
CHAPPEL - COLTON 7 115.00 115KV CKT 1	109	105.2351	P12:115:TSGT:GRANTNB7-OGALALA7_2
COLTON 7 115.00 - SIDNEY 115KV CKT 1	109	108.3799	P12:115:TSGT:GRANTNB7-OGALALA7_2
	Mitigation		**Conductor clearance increase**

Cluster NRIS Constraints			
MONITORED ELEMENT	Limiting Rate A/B (MVA)	TC%LOADING (% MVA)	CONTINGENCY
COLUMEAST (COL.EAST T3) 230/115/13.8KV TRANSFORMER CKT 1	187	109.627	COLUMEAST - SHELL CREEK 345KV CKT 1
	Mitigation		**Replace Columbus East 230/115/13kV Transformer**
DIXONCO 230.00 - HOSKINS 230KV CKT 1	320	191.2563	DIXONCO 230.00 - TWIN CHURCH 230KV CKT 1
DIXONCO 230.00 - TWIN CHURCH 230KV CKT 1	320	109.7729	System intact
DIXONCO 230.00 - TWIN CHURCH 230KV CKT 1	320	189.1004	DIXONCO 230.00 - HOSKINS 230KV CKT 1
	Mitigation		**Build Dixon County – Belden – Rasmussen 230kV with 230/115kV stepdown at Belden. Build Dixon County – Twin Church – Sioux City 345kV with Dixon County 345/230/13kV transformers ckt 1& 2 and Twin Church 345/230/13kV transformer**
G14-059T 230.00 - OGALLALA 230KV CKT 1	320	169.9091	SIDNEY - SIDNEY1-LNX3345.00 345KV CKT Z
G14-059T 230.00 - SIDNEY 230KV CKT 1	320	118.9239	SIDNEY - SIDNEY1-LNX3345.00 345KV CKT Z
	Mitigation		**Build Sidney – GEN-2014-059-Ogallalah 230kV ckt 2**
GAVINS POINT - YANKON JCT 115KV CKT 1	120	107.6803	GAVINS POINT - SPIRIT MOUND 115KV CKT 1
	Mitigation		**Construct Holt County – Antelope 345kV**
GERALD GENTLEMAN STATION - OGALLALA 230KV CKT 1	320	124.668	GERALD GENTLEMAN STATION - KEYSTONE 345KV CKT 1
	Mitigation		**Replace terminal equipment**
GR ISLD-LNX3345.00 - GRAND ISLAND 345KV CKT Z	720	138.3945	G09_001IST 345.00 - WATERTOWN 345KV CKT 1
GR ISLD-LNX3345.00 - HOLT.CO3 345.00 345KV CKT 1	720	137.4927	G09_001IST 345.00 - WATERTOWN 345KV CKT 1
GRPRAR1-LNX3345.00 - HOLT.CO3 345.00 345KV CKT 1	720	111.2355	System intact
GRPRAR1-LNX3345.00 - HOLT.CO3 345.00 345KV CKT 1	720	120.0575	P12:230:UMZB:# 116 #: ST IN SD. WSG-ST-VH
GRPRAR1-LNX3345.00 - YANKTON 345KV CKT Z	720	120.0575	P12:230:UMZB:# 116 #: ST IN SD. WSG-ST-VH
	Mitigation		**Rebuild 345kV line**
HOSKINS (HOSKINS T1) 230/115/13.8KV TRANSFORMER CKT 1	187	109.1151	P13:230-345:NPPD:NUCOR-1
	Mitigation		**Antelope – Hoskins Project, Build Dixon County – Belden – Rasmussen 230kV with 230/115kV stepdown at Belden Build Dixon County – Twin Church – Sioux City 345kV with Dixon County 345/230/13kV transformers ckt 1& 2 and Twin Church 345/230/13kV transformer**
SIDNEY (SD KV1A) 230/115/13.8KV TRANSFORMER CKT 1	112	107.638	P12:115:TSGT:GRANTNB7-OGALALA7_2
	Mitigation		**New Transformer**
SIDNEY (SDQ KV2A) 345/230/13.8KV TRSFORMER CKT 1	480	112.1568	KEYSTONE - SIDNEY1-LNX3345.00 345KV CKT 1
	Mitigation		**New Transformer**
SIOUX CITY - TWIN CHURCH 230KV CKT 1	320	158.5556	DIXONCO 230.00 - HOSKINS 230KV CKT 1
	Mitigation		**Build Dixon County – Belden – Rasmussen 230kV with 230/115kV stepdown at Belden Build Dixon County – Twin Church – Sioux City 345kV with Dixon County 345/230/13kV transformers ckt 1& 2 and Twin Church 345/230/13kV transformer**
SWISSVALE - WEST GARDNER 345KV CKT 1	717	107.2621	HOYT - STRANGER CREEK 345KV CKT 1
	Mitigation		**Replace terminal equipment**

8.8.1 Group 9 (Stand Alone)

The Interconnection Requests was also studied as a Stand Alone Interconnection Request in addition to the Cluster Analysis. GEN-2015-087 and GEN-2015-088 ERIS and NRIS Stand Alone analysis currently do not have constraints requiring additional transmission reinforcement.

GEN-2014-059 Stand Alone analysis shows constraints on the Gentleman stability interface. A 2nd circuit from GEN-2014-059 Tap – Ogallala 230kV and terminal equipment replacement on the

Ogallala – Gentleman Generation Station 230kV line will be required ERIS and NRIS upgrades for thermal overloads on Gen-2014-059 Tap – Ogallala 230kV circuit #1 and Ogallala – Gentleman Generation Station 230kV. Various NRIS Stand Alone upgrades will be required and can be seen in Appendix E1.

GEN-2015-042 ERIS Stand Alone analysis determined the need for Dixon County – Rasmussen 230kV transmission circuit and Dixon County – Thurston 230kV with a new Thurston 345/230kV substation and transformer tapping and looping in the exiting Raun – Hoskins 345kV transmission circuit. These Network Upgrades are mitigations for severe thermal overloads observed on the Hoskins – Dixon County – Twin Church – Sioux City 230kV circuit. Additionally, Holt County – Grand Island 345kV rebuild mitigation will be required for NRIS service for GEN-2015-042.

GEN-2015-053 ERIS and NRIS Stand Alone analysis observed thermal constraints on the Bloomfield – Gavins 115kV circuit, which will require a rebuild for mitigation. Additionally, for NRIS Stand Alone analysis, the Holt County – Grand Island rebuild and the construction of the 2nd Sidney – Ogallala 230kV circuit will be required for mitigation. GEN-2015-054 ERIS and NRIS Stand Alone analyses observed thermal constraints on the Bloomfield – Gavins 115kV circuit and Albion – Petersburg - North Petersburg 115kV, which will both require rebuilds for mitigation. Additionally, for NRIS Stand Alone analysis, the Holt County – Grand Island rebuild, and the construction of the 2nd Sidney – Ogallala 230kV circuit will be required for mitigation.

GEN-2015-076 ERIS and NRIS Stand Alone analyses observed thermal constraints on the Gavins – Yankton 115kV transmission circuit, which will require a rebuild. Additionally for NRIS, a new Belden – Rasmussen 230kV line and Belden 230/115kV transformer, the Holt County – Grand Island rebuild, a new Meadow Grove 230/115kV transformer, Meadow Grove – North Petersburg 115kV, Sidney – Ogallala 230kV circuit #2 builds will be required for mitigation.

GEN-2015-094 ERIS and NRIS Stand Alone analyses show constraints on the Gentleman stability interface. The 2nd Sidney – Ogallala 230kV circuit and Ogallala – Gentleman Generation Station 230kV terminal equipment will be required ERIS and NRIS upgrades for thermal overloads on Sidney – Ogallala 230kV circuit #1 and Ogallala – Gentleman Generation Station 230kV. Various NRIS Stand Alone upgrades will be required and can be seen in Appendix E1.

8.8.2 Group 9 (Limited Operation)

Limited Operation results are listed below. While these results are based on the criteria listed in GIP 8.4.3, the Interconnection Customer may request additional scenarios for Limited Operation based on higher queued Interconnection Requests not being placed in service.

Limited Operation Analysis		
Interconnection Request	**MW**	**Constraint that most limits LOIS**
GEN-2014-059	0	GGS Stability Limits
GEN-2015-042	0	Dixon County – Hoskins 230kV
GEN-2015-053	20	Bloomfield – Gavins 115kV
GEN-2015-054	20	Bloomfield – Gavins 115kV
GEN-2015-076	75	Gavins – Yankton 115kV
GEN-2015-087	76	None
GEN-2015-088	300	None

Limited Operation Analysis		
Interconnection Request	**MW**	**Constraint that most limits LOIS**
GEN-2015-094	0	GGS Stability Limits

8.9 Cluster Group 10 (Southeast Oklahoma/Northeast Texas Area)

There is no current study Interconnection Request(s) in the Group 10 geographical region.

8.10 Cluster Group 12 (Northwest Arkansas Area)

There is no current study Interconnection Request(s) in the Group 12 geographical region.

8.11 Cluster Group 13 (Northeast Kansas/Northwest Missouri Area)

In addition to the 634.70 MW of previously queued generation in the area, 174.00 MW of new interconnection service was studied. Currently, no new ERIS constraints were found in this area.

NRIS constraints were observed on Swissvale – West Gardner 345kV circuit #1, which will be mitigated by terminal equipment upgrades.

For Group 13 Cluster Analysis cost allocation, please refer to Appendix E and F.

Cluster ERIS Constraints			
MONITORED ELEMENT	**Limiting Rate A/B (MVA)**	**TC%LOADING (% MVA)**	**CONTINGENCY**
Currently, No ERIS Group 13 constraints			

Cluster NRIS Constraints			
MONITORED ELEMENT	**Limiting Rate A/B (MVA)**	**TC%LOADING (% MVA)**	**CONTINGENCY**
SWISSVALE - WEST GARDNER 345KV CKT 1	717	107.2621	HOYT - STRANGER CREEK 345KV CKT 1
	Mitigation		**Replace terminal equipment**

8.11.1 Group 13 (Stand Alone)

The Interconnection Requests was also studied as a Stand Alone Interconnection Request in addition to the Cluster Analysis. GEN-2015-074 ERIS and NRIS Stand Alone analysis currently do not have constraints requiring additional transmission reinforcement.

8.11.2 Group 13 (Limited Operation)

Limited Operation results are listed below. While these results are based on the criteria listed in GIP 8.4.3, the Interconnection Customer may request additional scenarios for Limited Operation based on higher queued Interconnection Requests not being placed in service.

Limited Operation Analysis		
Interconnection Request	**MW**	**Constraint that most limits LOIS**
GEN-2015-074	174	None

8.12 Cluster Group 14 (South Central Oklahoma Area)

In addition to the 612.50 MW of previously queued generation in the area, 582.60 MW of new interconnection service was studied. Currently, no new ERIS constraints were found in this area.

NRIS constraints were observed for Minco – Cimarron – Draper Lake 345kV circuit #1, Cleveland – Cleveland 138kV bus tie breaker, GEN-2014-057 Tap (Terry Road) – Sunnyside 345kV circuit #1, Lawton Eastside - Gracemont 345kV circuit #1, Pittsburg – Seminole 345kV circuit #1, and Tupelo – Tupelo Tap 138kV circuit #1. NRIS constraints mitigation by means of upgrading terminal equipment are needed for Cimarron – Minco 345kV circuit #1, and Pittsburg – Seminole 345kV circuit #1. NRIS mitigations that require new transmission or the rebuild/re-conductor of existing transmission include GEN-2014-057 Tap – Sunnyside 345kV rebuild/re-conductor, Stillwater 138/69kV Project per SPP-NTC-200319, and Tupelo – Tupelo 138kV circuit #2.

Cluster ERIS Constraints			
MONITORED ELEMENT	Limiting Rate A/B (MVA)	TC%LOADING (% MVA)	CONTINGENCY
Currently, No ERIS Group 14 constraints			

Cluster NRIS Constraints			
MONITORED ELEMENT	Limiting Rate A/B (MVA)	TC%LOADING (% MVA)	CONTINGENCY
CIMARRON - DRAPER LAKE 345KV CKT 1	717	102.3242	System Intact
CIMARRON - DRAPER LAKE 345KV CKT 1	717	132.4253	G14-057T 345.00 - SUNNYSIDE 345KV CKT 1
	Mitigation		**Replace terminal equipment**
CIMARRON - MINCO 345KV CKT 1	956	112.2203	G14-057T 345.00 - SUNNYSIDE 345KV CKT 1
	Mitigation		**Replace terminal equipment**
CLEAVELAND - CLEVLND 4 138.00 138KV CKT Z1	371	110.1441	CLEVELAND - TULSA NORTH 345KV CKT 1
	Mitigation		**AECI Affected System Study**
G14-057T 345.00 - SUNNYSIDE 345KV CKT 1	717	127.3974	System Intact
G14-057T 345.00 - SUNNYSIDE 345KV CKT 1	789	142.1854	CIMARRON - MINCO 345KV CKT 1
	Mitigation		**Replace terminal equipment**
Lawton Eastside 345.00 - GRACEMONT 345KV CKT 1	789	103.6293	G14-057T 345.00 - SUNNYSIDE 345KV CKT 1
	Mitigation		**Replace terminal equipment**
PITTSBURG - SEMINOLE 345KV CKT 1	717	101.5386	G14-057T 345.00 - SUNNYSIDE 345KV CKT 1
TUPELO - TUPELO TAP 138KV CKT 1	143	118.6093	G14-057T 345.00 - SUNNYSIDE 345KV CKT 1
	Mitigation		**Replace terminal equipment**

8.12.1 Group 14 (Stand Alone)

The Interconnection Requests were also studied as a Stand Alone Interconnection Request in addition to the Cluster Analysis. The Group 14 Interconnection Requests ERIS and NRIS Stand Alone analysis currently do not have constraints requiring additional transmission reinforcement upgrades.

8.12.2 Group 14 (Limited Operation)

Limited Operation results are listed below. While these results are based on the criteria listed in GIP 8.4.3, the Interconnection Customer may request additional scenarios for Limited Operation based on higher queued Interconnection Requests not being placed in service.

Limited Operation Analysis		
Interconnection Request	**MW**	**Constraint that most limits LOIS**
GEN-2015-036	303.6	None
GEN-2015-045	20	None
GEN-2015-092	250	None

8.13 Group 15 (Eastern South Dakota)

In addition to approximately 1,765.7MW of previously queued generation in the area, 100 MW of new interconnection service was studied. ERIS upgrades required for the interconnection of GEN-2015-097 include the rebuild of 26 miles of 115kV line from G13-001 –Watertown for an outage of the Groton 345/115kV transformer. Several constraints were identified for NRIS including some constraints that may be relieved by the addition of a transmission project being built by MISO Transmission Owners (Ellendale MVP – Big Stone South 345kV). MISO will need to perform an Affected System Study to determine potential impacts on their system.

Cluster ERIS Constraints			
MONITORED ELEMENT	**Limiting Rate A/B (MVA)**	**TC%LOADING (% MVA)**	**CONTINGENCY**
G13_001IST 115.00 - WATERTOWN 115KV CKT 1'	132	112%	Groton 345/115kV transformer
	Mitigation		**Rebuild 26 miles of 115kV line**

Cluster NRIS Constraints			
MONITORED ELEMENT	**Limiting Rate A/B (MVA)**	**TC%LOADING (% MVA)**	**CONTINGENCY**
Non-converged contingency	n/a	n/a	'G09_001IST 345.00 - GROTON 345KV CKT 1'
Non-converged contingency	n/a	n/a	'G09_001IST 345.00 - WATERTOWN 345KV CKT 1'
Non-converged contingency	n/a	n/a	'WATERTN-LNX3345.00 - WATERTOWN 345KV CKT Z'
Non-converged contingency	n/a	n/a	'WATERTN-LNX3345.00 - WHITE 345KV CKT 1'
'ABERDEEN SIEBRECHT - GROTON 115KV CKT 1'	129	114	'G09_001IST 345.00 - WATERTOWN 345KV CKT 1'
'BRISTOL - GROTON 115KV CKT 1'	111	126	'G09_001IST 345.00 - WATERTOWN 345KV CKT 1'
'BRISTOL - SUMMIT 115KV CKT 1'	111	121	'G09_001IST 345.00 - WATERTOWN 345KV CKT 1'
'G13_001IST 115.00 - SUMMIT 115KV CKT 1'	121	119	'G09_001IST 345.00 - WATERTOWN 345KV CKT 1'
'G13_001IST 115.00 - WATERTOWN 115KV CKT 1'	121	133	'G09_001IST 345.00 - WATERTOWN 345KV CKT 1'
	Mitigation		**GEN-2009-001 Tap – Watertown 345kV CKT 2**
'ELLENDALE - OAKES 230KV CKT 1'	351	103	'G09_001IST 345.00 - GROTON 345KV CKT 1'
'SPLIT ROCK - WHITE 345KV CKT 1'	707	103	'BROOKING COUNTY - LYON COUNTY 345KV CKT 1'
APPLEDORN 4 230.00 - WATERTOWN 230KV CKT 1	341	100.6	P12:345:UMZW:# 1747 #: WT2 IN SD. WT2-WHT LINE FAULT
BLAIR - GRANITE FALLS 230KV CKT 1	410	103	P12:345:UMZW:# 1747 #: WT2 IN SD. WT2-WHT LINE FAULT
BRISTOL - GROTON 115KV CKT 1	111	115	G09_001IST 345.00 - GROTON 345KV CKT 1
BRISTOL - SUMMIT 115KV CKT 1	111	111	G09_001IST 345.00 - GROTON 345KV CKT 1
BROOKINGS - WATERTOWN 115KV CKT 1	122	107	P12:345:UMZW:# 1747 #: WT2 IN SD. WT2-WHT LINE FAULT

Cluster NRIS Constraints			
MONITORED ELEMENT	Limiting Rate A/B (MVA)	TC%LOADING (% MVA)	CONTINGENCY
	Mitigation		**MISO MVP project – MISO review, current study rebuilds and terminal equipmen upgrades**
G13_001IST 115.00 - SUMMIT 115KV CKT 1	121	138	G09_001IST 345.00 - GROTON 345KV CKT 1
	Mitigation		**Rebuild 4 miles of 115kV line**
WATERTN-LNX3345.00 - WHITE 345KV CKT 1	792	103	CHISAGO COUNTY - CHISAGO COUNTY 500KV CKT 1
	Mitigation		**Replace terminal equipment**
WATERTOWN (WT2 KU1A) 345/230/13.8KV TRANSFORMER CKT 1	500	113	P12:345:UMZW:# 1747 #: WT2 IN SD. WT2-WHT LINE FAULT
	Mitigation		**Replace 345/230kV transformer**

After constraints for transmission reinforcement upgrades were mitigated, the following steady-state voltage violations require mitigation. One step of 5.0Mvars at the Ordway 115kV capacitor bank(s) will be required to mitigate the steady state voltage observed after contingency.

Cluster ERIS Voltage Constraints				
MONITORED ELEMENT	TC Voltage (PU)	VMIN (PU)	VMAX (PU)	CONTINGENCY
ORDWAY 115KV	0.861697	0.9	1.05	GROTON - ORDWAY 115KV CKT 1
ORDWAY 69KV	0.868673	0.9	1.05	GROTON - ORDWAY 115KV CKT 1
	Mitigation			Groton – Ordway 115kV CKT 2

8.13.1 Group 15 (Limited Operation)

Limited Operation results are listed below. While these results are based on the criteria listed in GIP 8.4.3, the Interconnection Customer may request additional scenarios for Limited Operation based on higher queued Interconnection Requests not being placed in service. Limited Operation amounts are calculated based on constraints with the SPP transmission system. Once the Affected System Impact studies are completed, these Limited Operation amounts could be further restricted by affected systems constraints.

Limited Operation Analysis		
Interconnection Request	MW	Constraint that most limits LOIS
GEN-2015-097	45 (ERIS)	GI13_001-Watertown 115kV
	0(NRIS)	GI13_001-Watertown 115kV

8.14 Group 16 (Western North Dakota)

In addition to approximately 2,997.81 MW of previously queued generation in the area, 651.2 MW of new interconnection service was studied. With the addition of 250MW of wind generation at the Daglum substation (currently under construction) on the Belfield – Rhame 230kV line, potential voltage collapse was observed for the outage of the Daglum – Belfield line. This will require a new 230kV line, approximately 28 miles long to be constructed from Daglum to Dickinson. The Dickinson 230/115kV auto was also shown to overload. This transformer replacement is cost assigned to current study requests. Due to the amount of generation being interconnected in this

group, large flows were observed on the Holt County – Grand Island 345kV line and potential voltage collapse was observed for the outage of that line. The mitigation is for Group 16 Interconnection Requests –to advance Holt – Thedford – Gentleman 345kV line that is also assigned to Group 9 Interconnection Requests. Also, certain constraints were found to be relieved in the short term by the MISO project, Ellendale MVP – Big Stone South 345kV line. MISO will need to perform an Affected System Study to determine potential impacts on their system.

Cluster ERIS Constraints			
MONITORED ELEMENT	**Limiting Rate A/B (MVA)**	**TC%LOADING (% MVA)**	**CONTINGENCY**
Non-converged contingency	n/a	n/a	BELFIELD - DAGLUM 4230.00 230KV CKT 1
	Mitigation		**Build new 28 mile line from Daglum – Dickinson 230kV**
Non-converged contingency	n/a	n/a	HESKETT - WISHEK 230KV CKT 1
Non-converged contingency	n/a	n/a	MERRCRT4 230.00 - WISHEK 230KV CKT 1
Non-converged contingency	n/a	n/a	RIEL - ROSEAU 500KV CKT 1
Non-converged contingency	n/a	n/a	ROSEAU - ROSEAUM 2 500.00 500KV CKT 1
Non-converged contingency	n/a	n/a	CENTER - CNTSHNT3 345.00 345KV CKT Z1
Non-converged contingency	n/a	n/a	ELLENDALE - OAKES 230KV CKT 1
Non-converged contingency	n/a	n/a	FORBES - ROSEAU 500KV CKT 1
BUFFALO - JAMESTOWN 345KV CKT 1	705	109	System Intact
ELLENDALE - OAKES 230KV CKT 1			System Intact
ELLENDLMVP4 230.00 - J316_SUB 230.00 230KV CKT 1			System Intact
	Mitigation		**MISO / MH Review**
DICKINSON (KW1A 100) 230/115/13.8KV TRANSFORMER CKT 1	100	102	System Intact
	Mitigation		**build second Dickinson 230/115/13kV transformer**
NESET 4 230.00 - TIOGA 230KV CKT 1	200	136	JUDSON 3345.00 - TANDE-LNX 345.00 345KV CKT 1
	Mitigation		**New rating available**
BROADLAND - HURON 230KV CKT 1	400	100.6	System Intact
	Mitigation		**New rating available**

Cluster NRIS Constraints			
MONITORED ELEMENT	**Limiting Rate A/B (MVA)**	**TC%LOADING (% MVA)**	**CONTINGENCY**
Non-converged contingency	n/a	n/a	BELFIELD - DAGLUM 4230.00 230KV CKT 1
	Mitigation		**Build new 28 mile line from Daglum – Dickinson 230kV**
Non-converged contingency	n/a	n/a	BISON - MAURINE 230KV CKT 1
	Mitigation		**Advance GGS-Thedford 345kV project**
Non-converged contingency	n/a	n/a	CENTER - JAMESTOWN 345KV CKT 1
Non-converged contingency	n/a	n/a	FORBES - ROSEAU 500KV CKT 1
Non-converged contingency	n/a	n/a	RIEL - ROSEAU 500KV CKT 1
Non-converged contingency	n/a	n/a	ROSEAU - ROSEAUM 2 500.00 500KV CKT 1
BEULAH - COYOTE 115KV CKT 1'	102	297	CENTER - COYOTE 345KV CKT 1
BUFFALO - JAMESTOWN 345KV CKT 1'	705	115	CNTSHNT3 345.00 - PRAIRIE3 345.00 345KV CKT 1
ELLENDLMVP4 230.00 - J316_SUB 230.00 230KV CKT 1	343	138	ELLENDLMVP4 230.00 - MERRCRT4 230.00 230KV CKT 1
ELLENDLMVP4 230.00 - MERRCRT4 230.00 230KV CKT 1	383	118	ELLENDLMVP4 230.00 - J316_SUB 230.00 230KV CKT 1
	Mitigation		**MISO / MH Review**
GR ISLD-LNX3345.00 - HOLT.CO3 345.00 345KV CKT 1	720	105	NUNDRWD - WAYSIDE 230KV CKT 1
	Mitigation		**Terminal Equipment**

Cluster NRIS Constraints			
MONITORED ELEMENT	Limiting Rate A/B (MVA)	TC%LOADING (% MVA)	CONTINGENCY
HURON (BD KU2A) 345/230/13.8KV TRANSFORMER CKT 1	400	114	LELAND OLDS - LELAND2-LNX3345.00 345KV CKT Z
	Mitigation		**New Rating available**
GARRISON - STANTONTAP 7115.00 115KV CKT 1	121	100	CENTER - COYOTE 345KV CKT 1
	Mitigation		**Review with MISO**
GLENHAM - L3 HAWDON 230KV CKT 1	210	118	FT THOMPSON - FTTHOM1-LNX3345.00 345KV CKT Z
	Mitigation		**New Rating available**
DICKINSON (KW1A 100) 230/115/13.8KV TRANSFORMER CKT 1	100	100	System Intact
	Mitigation		**build second Dickinson 230/115/13kV transformer**

Cluster ERIS Voltage Constraints				
MONITORED ELEMENT	TC Voltage (PU)	VMIN (PU)	VMAX (PU)	CONTINGENCY
HANLON 69KV	0.889064	0.9	1.05	GR ISLD-LNX3345.00 - HOLT.CO3 345.00 345KV CKT 1
	Mitigation			**Two (2) steps of 5Mvars totaling to 10Mvars at Hanlon 69kV**

8.14.1 Group 16 (Stand Alone)

The Interconnection Requests were also studied as a Stand Alone Interconnection Request in addition to the Cluster Analysis.

For ERIS, GEN-2015-046 does not require additional transmission reinforcement after the new rating for the Neset-Tioga 230kV line is applied. ERIS and NRIS Stand Alone analysis currently do not have constraints requiring additional transmission reinforcement. For NRIS, constraints were observed for the Blaisdell 230/115kV transformer, on the Groton-Watertown 345kV line, terminal equipment at Split Rock, and low voltage at Hanlon.

For ERIS, GEN-2015-091, GEN-2015-096, and GEN-2015-098 did not require additional transmission reinforcement. For NRIS, constraints were observed on the Dickinson 230/115kV transformer and the Groton-Watertown 345kV line for GEN-2015-096. GEN-2015-098 had NRIS constraints for the Dickinson 230/115kV transformer and the Dawson Creek-Fallon 115kV line and low voltage at Hanlon.

8.14.2 Group 16 (Limited Operation)

Limited Operation results are listed below. While these results are based on the criteria listed in GIP 8.4.3, the Interconnection Customer may request additional scenarios for Limited Operation based on higher queued Interconnection Requests not being placed in service. Limited Operation amounts are calculated based on constraints with the SPP transmission system. Once the Affected System Impact studies are completed, these Limited Operation amounts could be further restricted by affected systems constraints.

Limited Operation Analysis		
Interconnection Request	MW	Constraint that most limits LOIS

Limited Operation Analysis		
Interconnection Request	**MW**	**Constraint that most limits LOIS**
GEN-2015-046	300 (ERIS)	
	0 (NRIS)	Glenham – Mound City 115kV
GEN-2015-091	100	
GEN-2015-096	150(ERIS)	
	0 (NRIS)	Watertown 345/230kV transformer
GEN-2015-098	100 (ERIS)	
	0 (NRIS)	Dawson Creek – Fallon 115kV

8.15 Curtailment and System Reliability

In no way does this study guarantee operation for all periods of time. It should be noted that although this study analyzed many of the most probable contingencies, it is not an all-inclusive list and cannot account for every operational situation. Because of this, it is likely that the Customer(s) may be required to reduce their generation output to 0 MW, also known as curtailment, under certain system conditions to allow system operators to maintain the reliability of the transmission network.

9 Stability & Short Circuit Analysis

A stability and short circuit analysis is conducted for each Interconnection Customer using modified versions of the 2015 series SPP Model Development Working Group (MDWG) Models 2016 winter (16WP), 2017 summer (17SP), and 2025 summer peak (25SP) dynamic cases[11]. The stability analysis is conducted with all upgrades in service that are identified in the power flow analysis unless otherwise noted in the individual group stability study. For each group, the interconnection requests are studied at 100% nameplate output while the other groups are dispatched at 20% output for Variable Energy Resource (VER) requests and 100% output for other requests. The output of the Interconnection Customer's facility is offset in each model by a reduction in output of existing online SPP generation. Each Interconnection Request is studied in a Stand Alone scenario in addition to the cluster scenario. A synopsis is included for each group. The entire stability study for each group can be found in the Appendices.

Short-circuit analysis is performed but verification of over-dutied equipment is performed by the Transmission Owner within the Interconnection Facilities Study. Results of that analysis may require additional costs to replace circuit breakers and associated equipment.

9.1 Cluster Group 1 (Woodward Area)

The Group 1 stability analysis for this area is being performed by S&C Electric (S&C). Stability analysis has determined that with all previously assigned and currently assigned Network Upgrades placed in service the transmission system will remain stable and low voltage ride through requirements are satisfied for the probable contingencies studied. Power Factor requirements are listed in the table below. In addition, some Interconnection Requests may have requirements for reactors under low wind conditions as identified in the S&C Group 1 report.

Power Factor Requirements:

Request	Size (MW)	Generator Model	Point of Interconnection	Power Factor Requirement at POI*	
				Lagging (supplying)	Leading (absorbing)
GEN-2015-038	303.6	Siemens 2.3MW	Cimarron 345kV	0.95	0.95
GEN-2015-044	20	WT4 (generic)	Minco 345kV	0.95	0.95
GEN-2015-048	200	Vestas V110	Cleo Corner 138kV	0.95	0.95
GEN-2015-057	100	G.E. 2.3MW	Minco 345kV	0.95	0.95
GEN-2015-059	6.3	G.E. 1.79MW	Minco 345kV	0.95	0.95

[11] Short Circuit analysis performed only on the 2017 and 2025 Summer Peak seasonal model. Group 6 Stability Analysis also includes 2020 Summer and Winter Peak seasons.

Request	Size (MW)	Generator Model	Point of Interconnection	Power Factor Requirement at POI*	
				Lagging (supplying)	Leading (absorbing)
GEN-2015-060	250	G.E. 1.79MW	Woodward EHV District 138kV	0.95	0.95
GEN-2015-081	180	Vestes V110	Tap on the Woodward - Tatonga 345kV line (G11_051-TAP)	0.95	0.95
GEN-2015-093	250	G.E. 2MW	Gracemont 345kV	0.95	0.95
GEN-2015-095	176	Vestes V110	Tap on Mooreland-Noel Switch 138kV	0.95	0.95

*As reactive power is required for all projects, the final requirement in the GIA will be the pro-forma 95% lagging to 95% leading at the point of interconnection.
** Requirement for reactors for low wind conditions

9.2 Cluster Group 2 (Hitchland Area)

The Group 2 stability analysis for this area was performed by ABB. Power Factor requirements are listed in the table below. Stability analysis has determined that with all previously assigned and currently assigned Network Upgrades placed in service the transmission system will remain stable and low voltage ride through requirements are satisfied for the probable contingencies studied. It was determined for prior outage conditions that Network Upgrades assigned in the powerflow analysis were required for a steady state solution prior to stability analysis. These prior outage conditions determined a need for curtailment of studied generation in the case of certain transmission outages. In addition, some Interconnection Requests may have requirements for reactors under low wind conditions as identified in the ABB Group 2 report.

Power Factor Requirements:

Request	Size (MW)	Generator Model	Point of Interconnection	Power Factor Requirement at POI*	
				Lagging (supplying)	Leading (absorbing)
GEN-2014-037	200.0	Vestas V110 2.0 MW	Tap Hitchland – Beaver County 345kV (Optima 345kV)	0.95	0.95
GEN-2014-038	200.0	Vestas V110 2.0MW	Tap Hitchland – Potter 345kV	0.95	0.95
GEN-2015-082	200.0	GE 2.0MW	Tap on Beaver – Woodward 345kV (Badger 345kV)	0.95	0.95

*As reactive power is required for all projects, the final requirement in the GIA will be the pro-forma 95% lagging to 95% leading at the point of interconnection.
** Requirement for reactors for low wind conditions

9.3 Cluster Group 3 (Spearville Area)

In addition to the 3,235.83 MW of previously queued generation in the area, 0.0 MW of new interconnection service was studied. No current study DISIS-2015-002 Interconnection Customer(s) are located in this geographical group.

9.4 Cluster Group 4 (Northwest Kansas)

The Group 4 stability analysis for this area was performed by Power-tek Global (Power-tek). Power Factor requirements are listed in the table below. Stability analysis has determined that with all previously assigned and currently assigned Network Upgrades placed in service the transmission system will remain stable and low voltage ride through requirements are satisfied for the probable contingencies studied. Prior outage conditions did determine a need for curtailment of studied generation in the case of certain transmission outages. In addition, some Interconnection Requests may have requirements for reactors under low wind conditions as identified in the Power-tek Group 4 report.

Power Factor Requirements:

Request	Size (MW)	Generator Model	Point of Interconnection	Power Factor Requirement at POI*	
				Lagging (supplying)	Leading (absorbing)
GEN-2015-061	200.0	GE 2.0MW	Mingo 345kV	0.95	0.95
GEN-2015-064	197.8	Siemens 2.3MW	Mingo 115kV	0.95	0.95
GEN-2015-065	202.4	Siemens 2.3MW	Mingo 345kV	0.95	0.95
GEN-2015-072	20.9	GE 1.9MW solar inverter	South Hays 230kV	0.95	0.95

*As reactive power is required for all projects, the final requirement in the GIA will be the pro-forma 95% lagging to 95% leading at the point of interconnection.
** Requirement for reactors for low wind conditions

9.5 Cluster Group 6 (South Texas Panhandle/New Mexico)

The Group 6 stability analysis for this area was performed by Mitsubishi Electric Power Products Inc. (MEPPI). Power Factor requirements are listed in the table below. Stability analysis has determined that with all previously assigned and currently assigned Network Upgrades placed in service the transmission system will remain stable and low voltage ride through requirements are satisfied for the probable contingencies studied. It was determined for prior outage conditions that Network Upgrades assigned in the powerflow analysis were required for a steady state solution prior to stability analysis. These prior outage conditions determined a need for curtailment of studied generation in the case of certain transmission outages. In addition, some Interconnection Requests may have requirements for reactors under low wind conditions as identified in the MEPPI Group 6 report.

Power Factor Requirements:

Request	Size (MW)	Generator Model	Point of Interconnection	Power Factor Requirement at POI*	
				Lagging (supplying)	Leading (absorbing)
GEN-2014-046	125.40	SMA SC 825CP Inverter	Chaves 115kV	0.95	0.95
GEN-2015-018	80	GE 2.0MW	Tap Curry County – Bailey 115kV	0.95	0.95
GEN-2015-020	100	Eaton Power Xpert Solar 1.67MW	Oasis 115kV	0.95	0.95
GEN-2015-031	300	GE 1.79 MW	Tap Amarillo – Swisher 230kV	0.95	0.95
GEN-2015-033	152	Vestes V110 2.0 MW	Tap Tuco-Oklaunion 345kV (GEN-2014-074)	0.95	0.95
GEN-2015-039	50	Eaton Power Xpert Solar 1.67MW	Tap Deaf Smith – Plant X 230kV	0.95	0.95
GEN-2015-040	50.1	Eaton Power Xpert Solar 1.67MW	Mustang 230kV	0.95	0.95
GEN-2015-041	5	GENROU	Tuco 345kV	0.95	0.95
GEN-2015-056	101.2	GE 2.3 MW	Crossroads 345kV	0.95	0.95
GEN-2015-058	50	Power Electronics Solar 1.667 MW	Atoka 115kV	0.95	0.95
GEN-2015-068	300	GE 2.0 MW	Tuco 345kV	0.95	0.95
GEN-2015-075	51.48	GE 3.96 MW	Carlisle 69kV	0.95	0.95
GEN-2015-077	80	Sunny Central SMA SC2200 2.0 MW	Tap Terry – Clauene 115kV	0.95	0.95
GEN-2015-078	50.1	Eaton Power Xpert Solar 1.67 MW	Mustang 115kV	0.95	0.95
GEN-2015-079	129.2	GE LV5 3.8 MW	Tap Yoakum-Hobbs 230kV	0.95	0.95
GEN-2015-080	129.2	GE LV5 3.8 MW	Tap Yoakum-Hobbs 230kV	0.95	0.95

*As reactive power is required for all projects, the final requirement in the GIA will be the pro-forma 95% lagging to 95% leading at the point of interconnection.
** Requirement for reactors for low wind conditions

9.6 Cluster Group 7 (Southwest Oklahoma)

The Group 7 stability analysis for this area was performed by S&C Electric (S&C). Power Factor requirements are listed in the table below. Stability analysis has determined that GEN-2015-085 will require an additional reactive compensation device in order to meet low voltage ride through

requirements. With the additional 2MVA Statcon deveice, and with all previously assigned and currently assigned Network Upgrades placed in service the transmission system will remain stable and low voltage ride through requirements are satisfied for the probable contingencies studied. In addition, some Interconnection Requests may have requirements for reactors under low wind conditions as identified in the S&C Group 7 report.

Power Factor Requirements:

Request	Size (MW)	Generator Model	Point of Interconnection	Power Factor Requirement at POI*	
				Lagging (supplying)	Leading (absorbing)
GEN-2015-055	40	Advanced Energy AE 500NX 0.5MW solar inverters	Erick 138kV	0.95	0.95
GEN-2015-071	200	Vestas V110 2.0MW	Chisolm 345kV	0.95	0.95
GEN-2015-084	51.3	GE 1.9MW solar inverter	Hollis 138kV	0.95	0.95
GEN-2015-085	122.4	GE 1.9MW solar inverter	Tap Lake Pauline – Russell 138kV	0.95	0.95

9.7 Cluster Group 8 (South Central Kansas/North Oklahoma)

The Group 8 stability analysis for this area was performed by Mitsubishi Electric Power Products Inc. (MEPPI). Power Factor requirements are listed in the table below. Stability analysis has determined that with all previously assigned and currently assigned Network Upgrades placed in service the transmission system will remain stable and low voltage ride through requirements are satisfied for the probable contingencies studied. One short circuit violation was determined by the affected Transmission Owner. In addition, some Interconnection Requests may have requirements for reactors under low wind conditions as identified in the Group 8 MEPPI report.

Power Factor Requirements:

Request	Size (MW)	Generator Model	Point of Interconnection	Power Factor Requirement at POI*	
				Lagging (supplying)	Leading (absorbing)
GEN-2015-034	200	Vestas V112-2MW	Ranch Road 345kV	0.95	0.95
GEN-2015-043	20	PV inverter user model (WT4)	Wichita -Thistle 345kV Tap (GEN-2015-024 34.5 kV)	0.95	0.95
GEN-2015-047	300	Vestas V110-2MW	Sooner 345kV Tap	0.95	0.95
GEN-2015-052	300	Vestas V110-2MW	Tap on Open Sky to Rose Hill 345 kV	0.95	0.95
GEN-2015-062	4.5	G.E. 1.79MW	Breckenridge 138kV (514815)	0.95	0.95

Request	Size (MW)	Generator Model	Point of Interconnection	Power Factor Requirement at POI*	
				Lagging (supplying)	Leading (absorbing)
GEN-2015-063	300	Vestas V110-2MW	Tap on Woodring to Mathewson 345 kV	0.95	0.95
GEN-2015-069	300	Vestas V110-2MW	Union Ridge 230kV	0.95	0.95
GEN-2015-073	200.1	Siemens 2.3MW	Emporia/Lang 345kV	0.95	0.95
GEN-2015-066	248	G.E. 2.3MW	Tap on Cleveland to Sooner 345 kV	0.95	0.95
GEN-2015-067	150	PV inverter user model	Sooner 138kV	0.95	0.95
GEN-2015-083	125	G.E. 2.3MW	Belle Plain 138kV	0.95	0.95
GEN-2015-090	220	G.E. 2MW	Wichita -Thistle 345kV Tap	0.95	0.95

*As reactive power is required for all projects, the final requirement in the GIA will be the pro-forma 95% lagging to 95% leading at the point of interconnection.
** Requirement for reactors for low wind conditions

9.7.1 Short Circuit Violations –

The following short circuit violations were observed.

Short Circuit Requirements:

Station	Mitigation
Northwest 138kV Circuit Breaker Overdutied	Replace Circuit Breaker

9.7.2 Additional Contingencies for Group 8 studied by SPP Staff

The following contingencies were evaluated by SPP Staff in addition to the contingencies listed in the Group 8 report.

Cont. #	Contingency Name	Description	2016 winter Results	2017 summer Results	2025 Summer Results
1	FLT01-3PH	3 phase fault on Wolf Creek – Waverly Wind Farm 345kV line, near Wolf Creek a. Apply fault at the Wolf Creek 345kV bus b. Clear fault after 5 cycles by tripping the faulted line.	Stable	Stable	Stable

Cont. #	Contingency Name	Description	2016 winter Results	2017 summer Results	2025 Summer Results
2	FLT02-3PH	3 phase fault on Waverly Wind Farm - LaCygne 345kV line, near Waverly a. Apply fault at the Waverly 345kV bus b. Clear fault after 5 cycles by tripping the faulted line.	Stable	Stable	Stable

9.8 Cluster Group 9 (Nebraska)

The Group 9 stability analysis for this area was performed by Mitsubishi Electric Power Products Inc. (MEPPI). Several violations of stability damping criteria and voltage recovery criteria were observed. Upgrades identified in the powerflow analysis were tested in the stability analysis. Stability analysis has determined that with all previously assigned and currently assigned Network Upgrades placed in service the transmission system will remain stable and low voltage ride through requirements are satisfied for the probable contingencies studied. Additional analysis for the GGS stability limit and needs in the Gavins plant area will need to be addressed by the Transmission Owners, NPPD and WAPA, during the Interconnection Facilities Study. In addition, some Interconnection Requests may have requirements for reactors under low wind conditions as identified in the Group 9 report.

Power Factor Requirements:

Request	Size (MW)	Generator Model	Point of Interconnection	Power Factor Requirement at POI*	
				Lagging (supplying)	Leading (absorbing)
GEN-2014-059	160.0	Vestas V110 2.0MW	Tap Sidney-Ogallala 230kV	0.95	0.95
GEN-2015-042	320	Vestas V110 2.0 MW	Dixon County (GEN-2010-051 230kV)	0.95	0.95
GEN-2015-053	50	GE 1.79 MW	Antelope 115kV	0.95	0.95
GEN-2015-054	74	GE 1.79 MW	Antelope 115kV	0.95	0.95
GEN-2015-076	158.4	Vestas 3.3-117 3.3 MW	Belden 115kV	0.95	0.95
GEN-2015-087	76	Vestas V100 2.0 MW	Tap on Fairbury to Hebron 115kV	0.95	0.95
GEN-2015-088	300	Vestas V100 2.0 MW	Tap on Moore to Pauline 345kV	0.95	0.95
GEN-2015-094	151.8	Siemens 2.3 MW	Laramie River Station to (to Sidney 345kV	0.95	0.95

*As reactive power is required for all projects, the final requirement in the GIA will be the pro-forma 95% lagging to 95% leading at the point of interconnection.
** Requirement for reactors for low wind conditions

9.9 Cluster Group 10 (Southeast Oklahoma/Northeast Texas Area)

There is no current study Interconnection Request(s) in the Group 10 geographical region.

9.10 Cluster Group 12 (Northwest Arkansas Area)

There is no current study Interconnection Request(s) in the Group 12 geographical region.

9.11 Cluster Group 13 (Northeast Kansas/Northwest Missouri Area)

The Group 13 stability analysis for this area was performed by ABB. Stability analysis has determined that with all previously assigned and currently assigned Network Upgrades placed in service the transmission system will remain stable and low voltage ride through requirements are satisfied for the (n-1) and breaker failure contingencies studied. Prior outage fault analysis to deal with n-1-1 contingencies in the area have determined that for any 345kV outage at the outlet of Jeffrey Energy Center, the GEN-2015-074 generating facility will need to be curtailed to 0MW. Power Factor requirements are listed in the table below. In addition, some Interconnection Requests may have requirements for reactors under low wind conditions as identified in the ABB report.

Power Factor Requirements:

Request	Size (MW)	Generator Model	Point of Interconnection	Power Factor Requirement at POI*	
				Lagging (supplying)	Leading (absorbing)
GEN-2015-074**	174	G.E. 2.0 MW	Tap JEC – Hoyt 345kV	0.95	0.95

*As reactive power is required for all projects, the final requirement in the GIA will be the pro-forma 95% lagging to 95% leading at the point of interconnection.
** Requirement for reactors for low wind conditions

9.12 Cluster Group 14 (South Central Oklahoma)

The Group 14 stability analysis for this area was performed by Power-tek Global (Power-tek). Power Factor requirements are listed in the table below. Stability analysis has determined that with all previously assigned and currently assigned Network Upgrades placed in service the transmission system will remain stable and low voltage ride through requirements are satisfied for the probable contingencies studied. In addition, some Interconnection Requests may have requirements for reactors under low wind conditions as identified in the Power-tek Group 14 report.

Request	Size (MW)	Generator Model	Point of Interconnection	Power Factor Requirement at POI*	
				Lagging (supplying)	Leading (absorbing)
ASGI-2015-006	9.0	Eaton Xpert Solar 1500kW Inverter (solar)	SWPA Tupelo 138 kV (505600)	0.95	0.95
GEN-2015-036	303.6	Siemens 2.3 MW (wind)	PSO Johnston County 345kV (514809)	0.95	0.95
GEN-2015-045	20.0	Parker 890GT-B 2.0MW inverters (battery storage)	LES (511468) to Sunnyside (515136) 345kV (Proposed AEP Terry Road 345kV, 560013)	0.95	0.95
GEN-2015-092	250.0	GE 2.0MW (wind)	LES (511468) to Sunnyside (515136) 345kV (Proposed AEP Terry Road 345kV, 560013)	0.95	0.95

9.13 Cluster Group 15 (Eastern South Dakota)

The Group 15 stability analysis was performed by Mitsubishi Electric Power Products (MEPPI). Power Factor requirements are listed below. Stability analysis has determined that with all previously assigned and currently assigned Network Upgrades placed in service the transmission system will remain stable and low voltage ride through requirements are satisfied for the probable contingencies studied. In addition, some Interconnection Requests may have requirements for reactors under low wind conditions as identified in the MEPPI Group 15 report.

Request	Size (MW)	Generator Model	Point of Interconnection	Power Factor Requirement at POI*	
				Lagging (supplying)	Leading (absorbing)
GEN-2015-097	100	GE 2.0MW	Groton 115kV	0.95	0.95

9.14 Cluster Group 16 (Western North Dakota)

The Group 16 stability analysis was performed by Mitsubishi Electric Power Products (MEPPI). Power Factor requirements are listed below. Stability analysis has determined that with all previously assigned and currently assigned Network Upgrades placed in service the transmission system will remain stable and low voltage ride through requirements are satisfied for the probable contingencies studied. In addition, some Interconnection Requests may have requirements for reactors under low wind conditions as identified in the MEPPI Group 16 report.

Request	Size (MW)	Generator Model	Point of Interconnection	Power Factor Requirement at POI*	
				Lagging (supplying)	Leading (absorbing)
GEN-2015-046	300	Vestes V110 2.0MW	Tande 345kV	0.95	0.95
GEN-2015-091	101.2	Siemens 2.3MW	Daglum 230kV	0.95	0.95
GEN-2015-096	150	G.E. 2.0MW	Daglum 230kV	0.95	0.95
GEN-2015-098	100	G.E. 2.0MW	Mingusville 230kV	0.95	0.95

10 Conclusion

The minimum cost of interconnecting 10,036.9 MW of new generation interconnection requests included in this Definitive Interconnection System Impact Study is estimated at $1,962,852,644 not including the following costs.

- **Costs Not Included** – Additional upgrades needed to review the Gerald Gentleman Station (GGS) stability interface in western Nebraska that will be completed by Nebraska Public Power District in the Interconnection Facilities Study phase.
- **Costs Not Included** – Costs on Affected Systems for particularly Associated Electric Cooperative Inc. (AECI) , Mid-Continent Independent System Operator (MISO), and Minnkota Power Cooperative, Inc (MPC).

Interconnection Requests allocated Network Upgrades and Transmission Owner Interconnection Facilities listed in Appendix E and F. For Interconnection Requests that result in an interconnection to, or modification to, the transmission facilities of the Western-UGP (WAPA), a National Environmental Policy Act (NEPA) Environmental Review will be required. The Interconnection Customer will be required to execute and Environmental Review Agreement per Section 8.6.1 of the GIP.

These costs do not include the cost of upgrades of other transmission facilities listed in Appendix H which are Network Constraints. These interconnection costs do not include any cost of any Network Upgrades that are identified as required through the short circuit analysis. Potential over-duty circuit breakers capability will be identified by the Transmission Owner in the Interconnection Facilities Study.

Further refinement of total estimated interconnection costs will be provided, should the Interconnection Customer meet the requirements for acceptance and choose to move into the Interconnection Facilities Study following the posting of this DISIS. The Interconnection Facilities Study may include additional study analysis, additional facility upgrades not yet identified by this DISIS, such as circuit breaker replacements and affected system facilities, and further refinement of existing cost estimates.

The required interconnection costs listed in Appendices E, and F, and other upgrades associated with Network Constraints do not include all costs associated with the deliverability of the energy to final customers. These costs are determined by separate studies if the Customer submits a Transmission Service Request (TSR) through SPP's Open Access Same Time Information System (OASIS) as required by Attachment Z1 of the SPP Open Access Transmission Tariff (OATT).

11 Appendices

11.1 A: Generation Interconnection Requests Considered for Impact Study

See next page.

A: Generation Interconnection Requests Considered for Study

Request	Amount	Service	Area	Requested Point of Interconnection	Proposed Point of Interconnection	Requested In-Service Date	In Service Date Delayed Until no earlier than*
ASGI-2015-006	9.00	ER	SWPA	Tupelo 138kV	Tupelo 138kV		TBD
GEN-2014-037	200.00	ER	SPS	Tap Hitchland - Beaver County Dbl Ckt (Optima) 345kV	Tap Hitchland - Beaver County Dbl Ckt (Optima) 345kV	9/30/2017	TBD
GEN-2014-038	200.00	ER	SPS	Tap Hitchland - Potter County 345kV	Tap Hitchland - Potter County 345kV	9/30/2017	TBD
GEN-2014-046	125.40	ER/NR	SPS	Chaves County 115kV	Chaves County 115kV	5/1/2016	TBD
GEN-2014-059	160.00	ER/NR	NPPD	Tap Sidney - Ogallala 230kV	Tap Sidney - Ogallala 230kV	9/1/2016	TBD
GEN-2015-018	80.00	ER/NR	SPS	Tap Curry County - Bailey 115kV	Tap Curry County - Bailey 115kV	12/31/2016	TBD
GEN-2015-020	100.00	ER/NR	SPS	Oasis 115kV	Oasis 115kV	12/1/2016	TBD
GEN-2015-031	300.00	ER/NR	SPS	Tap Amarillo South - Swisher 230kV	Tap Amarillo South - Swisher 230kV	9/1/2017	TBD
GEN-2015-033	152.00	ER/NR	SPS	Tap TUCO Interchange - Oklaunion (GEN-2014-074 Tap) 345kV	Tap TUCO Interchange - Oklaunion (GEN-2014-074 Tap) 345kV	12/31/2017	TBD
GEN-2015-034	200.00	ER/NR	OKGE	Ranch Road 345kV	Ranch Road 345kV	10/31/2017	TBD
GEN-2015-036	303.60	ER	OKGE	Johnston County 345kV	Johnston County 345kV	12/31/2017	TBD
GEN-2015-038	303.60	ER	OKGE	Cimarron 345kV	Cimarron 345kV	12/31/2017	TBD
GEN-2015-039	50.00	ER/NR	SPS	Tap Deaf Smith - Plant X 230kV	Tap Deaf Smith - Plant X 230kV	12/31/2016	TBD
GEN-2015-040	50.10	ER/NR	SPS	Mustang 230kV	Mustang 230kV	12/31/2016	TBD
GEN-2015-041	5.00	ER/NR	SPS	TUCO Interchange 345kV	TUCO Interchange 345kV	7/1/2015	TBD
GEN-2015-042	320.00	ER/NR	NPPD	Tap Hoskins - Twin Church (Dixon County) 230kV	Tap Hoskins - Twin Church (Dixon County) 230kV	12/1/2017	TBD
GEN-2015-043	20.00	ER/NR	WERE	Tap Thistle - Wichita 345kV Dbl CKT	Tap Thistle - Wichita 345kV Dbl CKT	12/1/2017	TBD
GEN-2015-044	20.00	ER/NR	OKGE	Minco 345kV	Minco 345kV	12/1/2017	TBD
GEN-2015-045	20.00	ER/NR	AEPW	Tap Lawton - Sunnyside (Terry Road) 345kV	Tap Lawton - Sunnyside (Terry Road) 345kV	12/1/2017	TBD
GEN-2015-046	300.00	ER/NR	WAPA	Tande 345kV	Tande 345kV	12/1/2017	TBD
GEN-2015-047	300.00	ER/NR	OKGE	Sooner 345kV	Sooner 345kV	12/1/2017	TBD
GEN-2015-048	200.00	ER/NR	OKGE	Cleo Corner 138kV	Cleo Corner 138kV	12/1/2017	TBD
GEN-2015-052	300.00	ER/NR	WERE	Tap Open Sky - Rose Hill 345kV	Tap Open Sky - Rose Hill 345kV	12/1/2017	TBD
GEN-2015-053	50.00	ER/NR	NPPD	Antelope 115kV	Antelope 115kV	12/31/2017	TBD
GEN-2015-054	74.00	ER/NR	NPPD	Antelope 115kV	Antelope 115kV	12/31/2017	TBD
GEN-2015-055	40.00	ER	WFEC	Erick 138kV	Erick 138kV	10/30/2016	TBD
GEN-2015-056	101.20	ER	SPS	Crossroads 345kV	Crossroads 345kV	12/1/2017	TBD
GEN-2015-057	100.00	ER/NR	OKGE	Minco 345kV	Minco 345kV	12/1/2016	TBD
GEN-2015-058	50.00	ER	SPS	Atoka 115kV	Atoka 115kV	10/1/2017	TBD
GEN-2015-059	6.30	ER	OKGE	Minco 345kV	Minco 345kV	2/1/2016	TBD
GEN-2015-060	250.50	ER/NR	OKGE	Woodward EHV 138kV	Woodward EHV 138kV	12/31/2021	TBD
GEN-2015-061	200.00	ER/NR	SUNCMKEC	Tap Mingo - Setab 345kV	Mingo 345kV	12/31/2018	TBD
GEN-2015-062	4.50	ER	OKGE	Tap and Tie South 4th - Bunch Creek & Enid Tap - Fairmont (GEN-2012-033T) 138kV	Tap and Tie South 4th - Bunch Creek & Enid Tap - Fairmont (GEN-2012-033T) 138kV	3/1/2016	TBD
GEN-2015-063	300.00	ER/NR	OKGE	Tap Woodring - Mathewson 345kV	Tap Woodring - Mathewson 345kV	12/1/2017	TBD
GEN-2015-064	197.80	ER	SUNCMKEC	Mingo 115kV	Mingo 115kV	11/1/2017	TBD
GEN-2015-065	202.40	ER	SUNCMKEC	Mingo 345kV	Mingo 345kV	11/1/2017	TBD
GEN-2015-066	248.40	ER	OKGE	Tap Cleveland - Sooner 345kV	Tap Cleveland - Sooner 345kV	12/1/2017	TBD
GEN-2015-067	150.00	ER	OKGE	Sooner 138kV	Sooner 138kV	10/1/2017	TBD

Request	Amount	Service	Area	Requested Point of Interconnection	Proposed Point of Interconnection	Requested In-Service Date	In Service Date Delayed Until no earlier than*
GEN-2015-068	300.00	ER/NR	SPS	TUCO Interchange 345kV	TUCO Interchange 345kV	12/1/2017	TBD
GEN-2015-069	300.00	ER/NR	WERE	Union Ridge 230kV	Union Ridge 230kV	12/1/2017	TBD
GEN-2015-071	200.00	ER	AEPW	Chisholm 345kV	Chisholm 345kV	9/30/2017	TBD
GEN-2015-072	20.90	ER/NR	MIDW	South Hays 230kV	South Hays 230kV	12/1/2018	TBD
GEN-2015-073	200.10	ER/NR	WERE	Emporia Energy Center 345kV	Emporia Energy Center 345kV	12/31/2018	TBD
GEN-2015-074	174.00	ER/NR	WERE	Tap Hoyt - Jeffrey Energy Center 345kV	Tap Hoyt - Jeffrey Energy Center 345kV	12/1/2017	TBD
GEN-2015-075	51.48	ER/NR	SPS	Carlisle 69kV	Carlisle 69kV	12/1/2018	TBD
GEN-2015-076	158.40	ER/NR	NPPD	Belden 115kV	Belden 115kV	7/31/2017	TBD
GEN-2015-077	80.00	ER/NR	SPS	Tap Terry - Clauene 115kV	Tap Terry - Clauene 115kV	12/1/2017	TBD
GEN-2015-078	50.10	ER/NR	SPS	Mustang 115kV	Mustang 115kV	12/31/2016	TBD
GEN-2015-079	129.20	ER/NR	SPS	Tap Yoakum - Hobbs Interchange 230kV	Tap Yoakum - Hobbs Interchange 230kV	10/1/2018	TBD
GEN-2015-080	129.20	ER/NR	SPS	Tap Yoakum - Hobbs Interchange 230kV	Tap Yoakum - Hobbs Interchange 230kV	5/1/2019	TBD
GEN-2015-081	180.00	ER/NR	OKGE	Tap Woodward - Tatonga (GEN-2011-051 Tap) 345kV	Tap Woodward - Tatonga (GEN-2011-051 Tap) 345kV	7/1/2018	TBD
GEN-2015-082	200.00	ER/NR	OKGE	Tap Hitchland - Woodward Dbl Ckt (GEN-2011-014 Tap) 345kV	Tap Hitchland - Woodward Dbl Ckt (GEN-2011-014 Tap) 345kV	12/1/2017	TBD
GEN-2015-083	125.00	ER/NR	WERE	Belle Plain 138kV	Belle Plain 138kV	12/31/2017	TBD
GEN-2015-084	51.30	ER/NR	AEPW	Hollis 138kV	Hollis 138kV	12/10/2018	TBD
GEN-2015-085	122.40	ER/NR	AEPW	Tap Lake Pauline - Russell 138kV	Tap Lake Pauline - Russell 138kV	12/10/2018	TBD
GEN-2015-087	76.00	ER/NR	NPPD	Tap Fairbury - Hebron 115kV	Tap Fairbury - Hebron 115kV	1/1/2019	TBD
GEN-2015-088	300.00	ER/NR	NPPD	Tap Moore - Pauline 345kV	Tap Moore - Pauline 345kV	1/1/2019	TBD
GEN-2015-090	220.00	ER/NR	WERE	Tap Thistle - Wichita 345kV Dbl CKT	Tap Thistle - Wichita 345kV Dbl CKT	12/1/2017	TBD
GEN-2015-091	101.20	ER	WAPA	Daglum 230kV	Daglum 230kV	12/1/2017	TBD
GEN-2015-092	250.00	ER/NR	AEPW	Tap Lawton - Sunnyside (Terry Road) 345kV	Tap Lawton - Sunnyside (Terry Road) 345kV	12/1/2017	TBD
GEN-2015-093	250.00	ER/NR	OKGE	Tap Lawton East Side - Gracemont 345kV	Gracemont 345kV	12/1/2017	TBD
GEN-2015-094	151.80	ER/NR	WAPA	Tap Larmine River Station - Sidney 345kV	Tap Larmine River Station - Sidney 345kV		TBD
GEN-2015-095	172.00	ER/NR	WFEC	Tap Rose Valley - Mooreland 138kV	Tap Rose Valley - Mooreland 138kV	12/1/2017	TBD
GEN-2015-096	150.00	ER/NR	WAPA	Tap Belfied - Rhame 230kV	Tap Belfied - Rhame 230kV	12/31/2017	TBD
GEN-2015-097	100.00	ER/NR	WAPA	Groton 115kV	Groton 115kV	12/31/2016	TBD
GEN-2015-098	100.00	ER/NR	WAPA	Mingusville 230kV	Mingusville 230kV	12/15/2017	TBD
Total:	**10,036.88**						

*In-Service Date for each request is to be determined after the Interconnection Facility Study is completed.

11.2 B: Prior Queued Interconnection Requests

See next page.

B: Prior Queued Interconnection Requests

Request	Amount	Area	Requested/Proposed Point of Interconnection	Status or In-Service Date
ASGI-2010-006	150.00	AECI	Remington 138kV	AECI queue Affected Study
ASGI-2010-010	42.20	SPS	Lovington 115kV	Lea County Affected Study
ASGI-2010-020	30.00	SPS	Tap LE-Tatum - LE-Crossroads 69kV	Lea County Affected Study
ASGI-2010-021	15.00	SPS	Tap LE-Saunders Tap - LE-Anderson 69kV	Lea County Affected Study
ASGI-2011-001	27.30	SPS	Lovington 115kV	On-Line
ASGI-2011-002	20.00	SPS	Herring 115kV	On-Line
ASGI-2011-003	10.00	SPS	Hendricks 69kV	On-Line
ASGI-2011-004	20.00	SPS	Pleasant Hill 69kV	Under Study (DISIS-2011-002)
ASGI-2012-002	18.15	SPS	FE-Clovis Interchange 115kV	Under Study (DISIS-2012-002)
ASGI-2012-006	22.50	SUNCMKEC	Tap Hugoton - Rolla 69kV	Under Study (DISIS-2012-001)
ASGI-2013-001	11.50	SPS	PanTex South 115kV	Under Study (DISIS-2013-001)
ASGI-2013-002	18.40	SPS	FE Tucumcari 115kV	Under Study (DISIS-2013-001)
ASGI-2013-003	18.40	SPS	FE Clovis 115kV	Under Study (DISIS-2013-001)
ASGI-2013-004	36.60	SUNCMKEC	Morris 115kV	Under Study (DISIS-2013-002)
ASGI-2013-005	1.65	SPS	FE Clovis 115kV	Under Study (DISIS-2013-002)
ASGI-2013-006	2.00	SPS	SP-Erskine 115kV	
ASGI-2014-001	2.50	SPS	SP-Erskine 115kV	Under Study (DISIS-2014-001)
ASGI-2014-002	49.60	SPS	Tap Tucumcari - Santa Rosa 115kV	Under Study (DISIS-2014-001)
ASGI-2014-005	10.00	SPS	Strata 69kV	Under Study (DISIS-2014-002)
ASGI-2014-008	10.00	SPS	South Loving 69kV	Under Study (DISIS-2014-002)
ASGI-2014-009	10.00	SPS	Wood Draw 115kV	Under Study (DISIS-2014-002)
ASGI-2014-010	10.00	SPS	Ochoa 115kV	Under Study (DISIS-2014-002)
ASGI-2014-012	10.00	SPS	Cooper Ranch 115kV	Under Study (DISIS-2014-002)
ASGI-2014-014	56.40	GRDA	Ferguson 69kV	Under Study (DISIS-2014-002)
ASGI-2015-001	6.13	SUNCMKEC	Ninnescah 115kV	Under Study (DISIS-2015-001)
ASGI-2015-002	2.00	SPS	SP-Yuma 69kV	Under Study (DISIS-2015-001)
ASGI-2015-004	56.36	GRDA	Coffeyville City 69kV	Under Study (DISIS-2015-001)
G255	100.00	XEL	Yankee 115kV	MISO Queued Request
G359	150.00	MDU	MDU 230 kV system near Ellendale	MISO Queued Request
G380	150.00	OTP	Rugby 115kV	MISO Queued Request
G408	12.00	XEL	Tap McHenry - Souris 115kV	MISO Queued Request
G502	50.60	MP	Milton Young 230kV	MISO Queued Request
G645	50.00	OTP	Ladish 115kV	MISO Queued Request
G723	10.00	MDU	Haskett 115kV	MISO Queued Request
G736	200.00	OTP	Big Stone South 230kV	MISO Queued Request
G752	150.00	MDU	Tap Bison - Hettinger 230kV	MISO Queued Request
G788	49.00	GRE	Ladish 115kV	MISO Queued Request
G830	99.00	GRE	GRE McHenry 115kV	MISO Queued Request
GEN-2001-014	96.00	WFEC	Ft Supply 138kV	On-Line
GEN-2001-026	74.30	WFEC	Washita 138kV	On-Line
GEN-2001-033	180.00	SPS	San Juan Tap 230kV	On-Line at 120MW
GEN-2001-036	80.00	SPS	Norton 115kV	On-Line
GEN-2001-037	100.00	OKGE	FPL Moreland Tap 138kV	On-Line
GEN-2001-039A	105.00	SUNCMKEC	Shooting Star Tap 115kV	On-Line
GEN-2001-039M	100.00	SUNCMKEC	Central Plains Tap 115kV	On-Line
GEN-2002-004	200.00	WERE	Latham 345kV	On-Line at 150MW

Request	Amount	Area	Requested/Proposed Point of Interconnection	Status or In-Service Date
GEN-2002-005	120.00	WFEC	Red Hills Tap 138kV	On-Line
GEN-2002-008	240.00	SPS	Hitchland 345kV	On-Line at 120MW
GEN-2002-008IS	40.50	WAPA	Edgeley 115kV [Pomona 115kV]	Commercial Operation
GEN-2002-009	80.00	SPS	Hansford 115kV	On-Line
GEN-2002-022	240.00	SPS	Bushland 230kV	On-Line
GEN-2002-023N	0.80	NPPD	Harmony 115kV	On-Line
GEN-2002-025A	150.00	SUNCMKEC	Spearville 230kV	On-Line
GEN-2003-004	100.00	WFEC	Washita 138kV	On-Line
GEN-2003-005	100.00	WFEC	Anadarko - Paradise (Blue Canyon) 138kV	On-Line
GEN-2003-006A	200.00	SUNCMKEC	Elm Creek 230kV	On-Line
GEN-2003-019	250.00	MIDW	Smoky Hills Tap 230kV	On-Line
GEN-2003-020	160.00	SPS	Martin 115kV	On-Line
GEN-2003-021N	75.00	NPPD	Ainsworth Wind Tap 115kV	On-Line
GEN-2003-022	120.00	AEPW	Weatherford 138kV	On-Line
GEN-2004-014	154.50	SUNCMKEC	Spearville 230kV	On-Line at 100MW
GEN-2004-020	27.00	AEPW	Weatherford 138kV	On-Line
GEN-2004-023	20.60	WFEC	Washita 138kV	On-Line
GEN-2004-023N	75.00	NPPD	Columbus Co 115kV	On-Line
GEN-2005-003	30.60	WFEC	Washita 138kV	On-Line
GEN-2005-003IS	100.00	WAPA	Nelson 115kV	Commercial Operation
GEN-2005-008	120.00	OKGE	Woodward 138kV	On-Line
GEN-2005-008IS	50.00	WAPA	Hilken 230kV [Ecklund 230kV]	Commercial Operation
GEN-2005-012	250.00	SUNCMKEC	Ironwood 345kV	On-Line at 160MW
GEN-2005-013	201.00	WERE	Caney River 345kV	On-Line
GEN-2006-001IS	10.00	XEL	Marshall 115kV	Commercial Operation
GEN-2006-002	101.00	AEPW	Sweetwater 230kV	On-Line
GEN-2006-002IS	51.00	WAPA	Wessington Springs 230kV	Commercial Operation
GEN-2006-006IS	10.00	XEL	Marshall 115kV	Commercial Operation
GEN-2006-015IS	50.00	WAPA	Hilken 230kV [Ecklund 230kV]	Commercial Operation
GEN-2006-018	170.00	SPS	TUCO Interchange 230kV	On-Line
GEN-2006-020N	42.00	NPPD	Bloomfield 115kV	On-Line
GEN-2006-020S	18.90	SPS	DWS Frisco 115kV	On-Line
GEN-2006-021	101.00	SUNCMKEC	Flat Ridge Tap 138kV	On-Line
GEN-2006-024S	19.80	WFEC	Buffalo Bear Tap 69kV	On-Line
GEN-2006-026	502.00	SPS	Hobbs 230kV & Hobbs 115kV	On-Line
GEN-2006-031	75.00	MIDW	Knoll 115kV	On-Line
GEN-2006-035	225.00	AEPW	Sweetwater 230kV	On-Line at 132MW
GEN-2006-037N1	75.00	NPPD	Broken Bow 115kV	On-Line
GEN-2006-038N005	80.00	NPPD	Broken Bow 115kV	On-Line
GEN-2006-038N019	80.00	NPPD	Petersburg North 115kV	On-Line
GEN-2006-043	99.00	AEPW	Sweetwater 230kV	On-Line
GEN-2006-044	370.00	SPS	Hitchland 345kV	On-Line at 120MW
GEN-2006-044N	40.50	NPPD	North Petersburg 115kV	On-Line
GEN-2006-046	131.00	OKGE	Dewey 138kV	On-Line
GEN-2007-011N08	81.00	NPPD	Bloomfield 115kV	On-Line
GEN-2007-013IS	50.00	WAPA	Wessington Springs 230kV	Commercial Operation
GEN-2007-014IS	100.00	WAPA	Wessington Springs 230kV	Commercial Operation
GEN-2007-017IS	166.00	WAPA	Ft Thompson-Grand Island 345kV	On Schedule
GEN-2007-018IS	234.00	WAPA	Ft Thompson-Grand Island 345kV	On Schedule

Request	Amount	Area	Requested/Proposed Point of Interconnection	Status or In-Service Date
GEN-2007-020IS	16.00	WAPA	Nelson 115kV	Commercial Operation
GEN-2007-021	201.00	OKGE	Tatonga 345kV	On-Line
GEN-2007-023IS	50.00	WAPA	Formit-Summit 115kV	On Suspension
GEN-2007-025	300.00	WERE	Viola 345kV	On-Line
GEN-2007-027IS	99.00	WAPA	Bismarck-Garrison 230kV #1	On Suspension
GEN-2007-040	200.00	SUNCMKEC	Buckner 345kV	On-Line at 132MW
GEN-2007-043	200.00	OKGE	Minco 345kV	On-Line
GEN-2007-044	300.00	OKGE	Tatonga 345kV	On-Line at 199MW
GEN-2007-046	200.00	SPS	Hitchland 115kV	On Schedule for 2015
GEN-2007-050	170.00	OKGE	Woodward EHV 138kV	On-Line at 150MW
GEN-2007-052	150.00	WFEC	Anadarko 138kV	On-Line
GEN-2007-062	765.00	OKGE	Woodward EHV 345kV	On Schedule for 2016 and 2017
GEN-2008-003	101.00	OKGE	Woodward EHV 138kV	On-Line
GEN-2008-008IS	5.00	WAPA	Nelson 115kV	Commercial Operation
GEN-2008-013	300.00	OKGE	Hunter 345kV	On-Line at 235MW
GEN-2008-018	250.00	SPS	Finney 345kV	On-Line
GEN-2008-021	42.00	WERE	Wolf Creek 345kV	On-Line
GEN-2008-022	300.00	SPS	Crossroads 345kV	On-Line
GEN-2008-023	150.00	AEPW	Hobart Junction 138kV	On-Line
GEN-2008-037	101.00	WFEC	Slick Hills 138kV	On-Line
GEN-2008-044	197.80	OKGE	Tatonga 345kV	On-Line
GEN-2008-047	300.00	OKGE	Beaver County 345kV	On-Line
GEN-2008-051	322.00	SPS	Potter County 345kV	On-Line at 161MW
GEN-2008-079	99.20	SUNCMKEC	Crooked Creek 115kV	On-Line
GEN-2008-086N02	201.00	NPPD	Meadow Grove 230kV	On-Line
GEN-2008-092	200.60	MIDW	Post Rock 230kV	On-Line
GEN-2008-098	100.80	WERE	Waverly 345kV	On-Line
GEN-2008-119O	60.00	OPPD	S1399 161kV	On-Line
GEN-2008-123N	89.70	NPPD	Tap Pauline - Hildreth (Rosemont) 115kV	On Schedule for 2016
GEN-2008-124	200.10	SUNCMKEC	Ironwood 345kV	On Schedule for 2016
GEN-2008-129	80.00	KCPL	Pleasant Hill 161kV	On-Line
GEN-2009-001IS	200.00	WAPA	Groton-Watertown 345kV	On Schedule
GEN-2009-006IS	90.00	WAPA	Mission 115kV	On Suspension
GEN-2009-007IS	100.00	WAPA	Mission 115kV	On Suspension
GEN-2009-008	199.50	MIDW	South Hays 230kV	On-Line
GEN-2009-018IS	100.00	WAPA	Groton 115kV	Commercial Operation
GEN-2009-020	48.30	MIDW	Walnut Creek 69kV	On-Line
GEN-2009-020AIS	150.00	WAPA	Tripp Junction 115kV	Commercial Operation
GEN-2009-025	59.80	OKGE	Nardins 69kV	On-Line
GEN-2009-026IS	110.00	WAPA	Dickenson-Heskett 230kV	On Schedule
GEN-2009-040	73.80	WERE	Marshall 115kV	On Schedule for 2016
GEN-2010-001	300.00	OKGE	Beaver County 345kV	On-Line
GEN-2010-001IS	99.00	WAPA	Bismarck-Glenham 230kV	On Schedule
GEN-2010-003	100.80	WERE	Waverly 345kV	On-Line
GEN-2010-003IS	34.00	WAPA	Wessington Springs 230kV	Commercial Operation
GEN-2010-005	299.20	WERE	Viola 345kV	On-Line at 170MW
GEN-2010-006	205.00	SPS	Jones 230kV	On-Line
GEN-2010-007IS	172.50	WAPA	Antelope Valley 345kV	On Suspension
GEN-2010-009	165.60	SUNCMKEC	Buckner 345kV	On-Line

Request	Amount	Area	Requested/Proposed Point of Interconnection	Status or In-Service Date
GEN-2010-011	29.70	OKGE	Tatonga 345kV	On-Line
GEN-2010-014	358.80	SPS	Hitchland 345kV	On Suspension
GEN-2010-036	4.60	WERE	6th Street 115kV	On-Line
GEN-2010-040	300.00	OKGE	Cimarron 345kV	On-Line
GEN-2010-041	10.50	OPPD	S1399 161kV	On Schedule for 2015
GEN-2010-045	197.80	SUNCMKEC	Buckner 345kV	On Schedule for 2017
GEN-2010-046	56.00	SPS	TUCO Interchange 230kV	On Schedule for 2016
GEN-2010-048	70.00	MIDW	Tap Beach Station - Redline 115kV	FACILITY STUDY STAGE
GEN-2010-051	200.00	NPPD	Tap Hoskins - Twin Church (Dixon County) 230kV	On Suspension
GEN-2010-055	4.50	AEPW	Wekiwa 138kV	On-Line
GEN-2010-057	201.00	MIDW	Rice County 230kV	On-Line
GEN-2011-008	600.00	SUNCMKEC	Clark County 345kV	On Schedule for 2016
GEN-2011-010	100.80	OKGE	Minco 345kV	On-Line
GEN-2011-011	50.00	KCPL	Iatan 345kV	On-Line
GEN-2011-014	201.00	OKGE	Tap Hitchland - Woodward Dbl Ckt (GEN-2011-014 Tap) 345kV	On Schedule for 2016
GEN-2011-016	200.10	SUNCMKEC	Ironwood 345kV	On Schedule for 2017
GEN-2011-018	73.60	NPPD	Steele City 115kV	On-Line
GEN-2011-019	299.00	OKGE	Woodward 345kV	On Suspension
GEN-2011-020	299.00	OKGE	Woodward 345kV	On Suspension
GEN-2011-022	299.00	SPS	Hitchland 345kV	On Suspension
GEN-2011-025	80.00	SPS	Tap Floyd County - Crosby County 115kV	On Schedule for 2016
GEN-2011-027	120.00	NPPD	Tap Hoskins - Twin Church (Dixon County) 230kV	On Suspension
GEN-2011-037	7.00	WFEC	Blue Canyon 5 138kV	On-Line
GEN-2011-040	111.00	OKGE	Carter County 138kV	On-Line
GEN-2011-045	205.00	SPS	Jones 230kV	On-Line
GEN-2011-046	27.00	SPS	Lopez 115kV	On-Line
GEN-2011-048	175.00	SPS	Mustang 230kV	On-Line
GEN-2011-049	250.70	OKGE	Border 345kV	On Schedule for 2016
GEN-2011-050	109.80	AEPW	Santa Fe Tap 138kV	On Schedule for 2016
GEN-2011-051	104.40	OKGE	Tap Woodward - Tatonga 345kV (GEN-2011-051 Tap)	On Schedule for 2017
GEN-2011-054	300.00	OKGE	Cimarron 345kV	On-Line
GEN-2011-056	3.60	NPPD	Jeffrey 115kV	On-Line
GEN-2011-056A	3.60	NPPD	John 1 115kV	On-Line
GEN-2011-056B	4.50	NPPD	John 2 115kV	On-Line
GEN-2011-057	150.40	WERE	Creswell 138kV	On-Line
GEN-2012-001	61.20	SPS	Cirrus Tap 230kV	On-Line
GEN-2012-004	41.40	OKGE	Carter County 138kV	On-Line
GEN-2012-006IS	125.01	WAPA	Williston-Ch. Creek 230kV	On Schedule
GEN-2012-007	120.00	SUNCMKEC	Rubart 115kV	On-Line
GEN-2012-009IS	99.00	WAPA	Tap Fort Randall - Lake Platte 230kV	On Suspension
GEN-2012-012IS	75.00	WAPA	Wolf Point-Circle 115kV	On Suspension
GEN-2012-014IS	99.50	WAPA	Groton 115kV	On Schedule
GEN-2012-020	478.00	SPS	TUCO 230kV	On Schedule for 2016
GEN-2012-021	4.80	LES	Terry Bundy Generating Station 115kV	On-Line
GEN-2012-024	180.00	SUNCMKEC	Clark County 345kV	On Schedule for 2016
GEN-2012-027	136.00	AEPW	Shidler 138kV	On Suspension
GEN-2012-028	74.80	WFEC	Gotebo 69kV	On-Line
GEN-2012-032	300.00	OKGE	Open Sky 345kV	On-Line

Request	Amount	Area	Requested/Proposed Point of Interconnection	Status or In-Service Date
GEN-2012-033	98.80	OKGE	Tap and Tie South 4th - Bunch Creek & Enid Tap - Fairmont (GEN-2012-033T) 138kV	On-Line
GEN-2012-034	7.00	SPS	Mustang 230kV	On-Line
GEN-2012-035	7.00	SPS	Mustang 230kV	On-Line
GEN-2012-036	7.00	SPS	Mustang 230kV	On-Line
GEN-2012-037	203.00	SPS	TUCO 345kV	On-Line
GEN-2012-041	121.50	OKGE	Ranch Road 345kV	On-Line
GEN-2013-001IS	90.00	WAPA	Summit-Watertown 115kV	On Suspension
GEN-2013-002	50.60	LES	Tap Sheldon - Folsom & Pleasant Hill (GEN-2013-002 Tap) 115kV CKT 2	On Schedule for 2016
GEN-2013-007	100.30	OKGE	Tap Prices Falls - Carter 138kV	On-Line
GEN-2013-008	1.20	NPPD	Steele City 115kV	On-Line
GEN-2013-009IS	19.50	WAPA	Redfield NW 115kV	Commercial Operation
GEN-2013-010	99.00	SUNCMKEC	Tap Spearville - Post Rock (North of GEN-2011-017 Tap) 345kV	IA Pending
GEN-2013-011	30.00	AEPW	Turk 138kV	On-Line
GEN-2013-012	147.00	OKGE	Redbud 345kV	On-Line
GEN-2013-014	25.50	NPPD	Tap Pauline - Hildreth (Rosemont) 115kV	On Suspension
GEN-2013-016	203.00	SPS	TUCO 345kV	On Schedule for 2017
GEN-2013-019	73.60	LES	Tap Sheldon - Folsom & Pleasant Hill (GEN-2013-002 Tap) 115kV CKT 2	On Schedule for 2016
GEN-2013-022	25.00	SPS	Norton 115kV	On Schedule for 2016
GEN-2013-027	150.00	SPS	Tap Tolk - Yoakum 230kV	IA Pending
GEN-2013-028	559.50	GRDA	Tap N Tulsa - GRDA 1 345kV	On Schedule for 2017
GEN-2013-029	300.00	OKGE	Renfrow 345kV	On Schedule for 2016 (150MW) and 2016 (150MW)
GEN-2013-030	300.00	OKGE	Beaver County 345kV	On Schedule for 2016 (200MW) and 2017 (100MW)
GEN-2013-032	204.00	NPPD	Antelope 115kV	On Schedule for 2017
GEN-2013-033	28.00	MIDW	Knoll 115kV	On Schedule for 2016
GEN-2014-001	200.60	WERE	Tap Wichita - Emporia Energy Center (GEN-2014-001 Tap) 345kV	On Suspension
GEN-2014-001IS	103.70	WAPA	Newell-Maurine 115kV	IA Pending
GEN-2014-002	10.50	OKGE	Tatonga 345kV (GEN-2007-021 POI)	On Schedule for 2015
GEN-2014-003	15.80	OKGE	Tatonga 345kV (GEN-2007-044 POI)	On Schedule for 2015
GEN-2014-003IS	91.00	WAPA	Culbertson 115kV	On Schedule
GEN-2014-004	4.00	NPPD	Steele City 115kV (GEN-2011-018 POI)	On-Line
GEN-2014-004IS	384.20	WAPA	Charlie Creek 345kV	IA Pending
GEN-2014-005	5.70	OKGE	Minco 345kV (GEN-2011-010 POI)	On-Line
GEN-2014-006IS	125.00	WAPA	Williston 115kV	On Schedule
GEN-2014-010IS	150.00	WAPA	Neset 115kV	On Schedule
GEN-2014-012	225.00	SPS	Tap Hobbs Interchange - Andrews 230kV	On Schedule for 2018
GEN-2014-013	73.50	NPPD	Meadow Grove (GEN-2008-086N2 Sub) 230kV	On-Line
GEN-2014-014IS	151.50	WAPA	Belfield-Rhame 230kV	On Schedule
GEN-2014-020	100.00	AEPW	Tuttle 138kV	On Schedule for 2017
GEN-2014-021	300.00	KCPL	Tap Nebraska City - Mullin Creek 345kV	On Schedule for 2016
GEN-2014-025	2.40	MIDW	Walnut Creek 69kV	On-Line
GEN-2014-028	35.00	EMDE	Riverton 161kV	On Schedule for 2016
GEN-2014-031	35.80	NPPD	Meadow Grove 230kV	On Schedule for 2016
GEN-2014-032	10.20	NPPD	Meadow Grove 230kV	IA Pending
GEN-2014-033	70.00	SPS	Chaves County 115kV	On Schedule for 2016
GEN-2014-034	70.00	SPS	Chaves County 115kV	IA Pending

Request	Amount	Area	Requested/Proposed Point of Interconnection	Status or In-Service Date
GEN-2014-035	30.00	SPS	Chaves County 115kV	IA Pending
GEN-2014-039	73.40	NPPD	Friend 115kV	On Schedule for 2017
GEN-2014-040	320.40	SPS	Castro 115kV	On Schedule for 2016
GEN-2014-041	120.80	SUNCMKEC	Arnold 115kV	FACILITY STUDY STAGE
GEN-2014-047	40.00	SPS	Crossroads 345kV	IA Pending
GEN-2014-056	250.00	OKGE	Minco 345kV	On Schedule for 2016
GEN-2014-057	250.00	AEPW	Tap Lawton - Sunnyside (Terry Road) 345kV	On Schedule for 2016
GEN-2014-064	248.40	OKGE	Otter 138kV	On Schedule for 2016
GEN-2014-074	152.00	SPS	Tap TUCO Interchange - Oklaunion (GEN-2014-074 Tap) 345kV	FACILITY STUDY STAGE
GEN-2015-001	200.00	OKGE	Ranch Road 345kV	FACILITY STUDY STAGE
GEN-2015-004	52.90	OKGE	Border 345kV	FACILITY STUDY STAGE
GEN-2015-005	200.10	KCPL	Tap Nebraska City - Sibley 345kV	FACILITY STUDY STAGE
GEN-2015-007	160.00	NPPD	Hoskins 345kV	FACILITY STUDY STAGE
GEN-2015-013	120.00	WFEC	Synder 138kV	FACILITY STUDY STAGE
GEN-2015-014	150.00	SPS	Tap Cochran - Lehman 115kV	FACILITY STUDY STAGE
GEN-2015-015	154.60	OKGE	Tap Medford Tap - Coyote 138kV	FACILITY STUDY STAGE
GEN-2015-016	200.00	KCPL	Tap Marmaton - Centerville 161kV	FACILITY STUDY STAGE
GEN-2015-021	20.00	SUNCMKEC	Johnson Corner 115kV	FACILITY STUDY STAGE
GEN-2015-022	112.00	SPS	Swisher 115kV	FACILITY STUDY STAGE
GEN-2015-023	300.70	NPPD	Holt County 345kV	FACILITY STUDY STAGE
GEN-2015-024	220.00	WERE	Tap Thistle - Wichita 345kV Dbl CKT	FACILITY STUDY STAGE
GEN-2015-025	220.00	WERE	Tap Thistle - Wichita 345kV Dbl CKT	FACILITY STUDY STAGE
GEN-2015-027	4.90	SUNCMKEC	Crooked Creek 115kV	FACILITY STUDY STAGE
GEN-2015-028	3.00	OKGE	Nardins 69kV	FACILITY STUDY STAGE
GEN-2015-029	161.00	OKGE	Tatonga 345kV	FACILITY STUDY STAGE
GEN-2015-030	200.10	OKGE	Sooner 345kV	FACILITY STUDY STAGE
Gray County Wind (Montezuma)	110.00	SUNCMKEC	Gray County Tap 115kV	On-Line
J003	20.00	MDU	Baker 115kV	MISO Queued Request
J249	180.00	MDU	MDU Tatanka 230kV	MISO Queued Request
J262	100.00	OTP	Jamestown 345	MISO Queued Request
J263	100.00	OTP	Jamestown 345	MISO Queued Request
J316	150.00	MDU	MDU 230 kV Tatanka-Ellendale line	MISO Queued Request
J436	150.00	OTP	Big Stone South 345kV	MISO Queued Request
J437	150.00	OTP	Big Stone South 345kV	MISO Queued Request
J442	200.00	OTP	Big Stone 230 kV	MISO Queued Request
Llano Estacado (White Deer)	80.00	SPS	Llano Wind 115kV	On-Line
MPC01200	44.00	OTP	Sidney 230kV	Under OTP Study
MPC02100	100.00	OTP	Sidney 230kV	Under OTP Study
NPPD Distributed (Broken Bow)	8.30	NPPD	Broken Bow 115kV	On-Line
NPPD Distributed (Buffalo County Solar)	10.00	NPPD	Kearney Northeast	On-Line
NPPD Distributed (Burt County Wind)	12.00	NPPD	Tekamah & Oakland 115kV	On-Line
NPPD Distributed (Burwell)	3.00	NPPD	Ord 115kV	On-Line
NPPD Distributed (Columbus Hydro)	45.00	NPPD	Columbus 115kV	On-Line
NPPD Distributed (North Platte - Lexington)	54.00	NPPD	Multiple: Jeffrey 115kV, John_1 115kV, John_2 115kV	On-Line
NPPD Distributed (Ord)	11.90	NPPD	Ord 115kV	On-Line
NPPD Distributed (Stuart)	2.10	NPPD	Ainsworth 115kV	On-Line
SPS Distributed (Dumas 19th St)	20.00	SPS	Dumas 19th Street 115kV	On-Line

Request	Amount	Area	Requested/Proposed Point of Interconnection	Status or In-Service Date
SPS Distributed (Etter)	20.00	SPS	Etter 115kV	On-Line
SPS Distributed (Hopi)	10.00	SPS	Hopi 115kV	On-Line
SPS Distributed (Jal)	10.00	SPS	S Jal 115kV	On-Line
SPS Distributed (Lea Road)	10.00	SPS	Lea Road 115kV	On-Line
SPS Distributed (Monument)	10.00	SPS	Monument 115kV	On-Line
SPS Distributed (Moore E)	25.00	SPS	Moore East 115kV	On-Line
SPS Distributed (Ocotillo)	10.00	SPS	S_Jal 115kV	On-Line
SPS Distributed (Sherman)	20.00	SPS	Sherman 115kV	On-Line
SPS Distributed (Spearman)	10.00	SPS	Spearman 69kV	On-Line
SPS Distributed (TC-Texas County)	20.00	SPS	Texas County 115kV	On-Line
SPS Distributed (Yuma)	2.57	SPS	SP-Yuma 69kV	On-Line
Total:	**34,347.2**			

11.3 C: Study Groupings

See next page

C. Study Groups

GROUP 1: WOODWARD AREA			
Request	Capacity	Area	Proposed Point of Interconnection
GEN-2001-014	96.00	WFEC	Ft Supply 138kV
GEN-2001-037	100.00	OKGE	FPL Moreland Tap 138kV
GEN-2005-008	120.00	OKGE	Woodward 138kV
GEN-2006-024S	19.80	WFEC	Buffalo Bear Tap 69kV
GEN-2006-046	131.00	OKGE	Dewey 138kV
GEN-2007-021	201.00	OKGE	Tatonga 345kV
GEN-2007-043	200.00	OKGE	Minco 345kV
GEN-2007-044	300.00	OKGE	Tatonga 345kV
GEN-2007-050	170.00	OKGE	Woodward EHV 138kV
GEN-2007-062	765.00	OKGE	Woodward EHV 345kV
GEN-2008-003	101.00	OKGE	Woodward EHV 138kV
GEN-2008-044	197.80	OKGE	Tatonga 345kV
GEN-2010-011	29.70	OKGE	Tatonga 345kV
GEN-2010-040	300.00	OKGE	Cimarron 345kV
GEN-2011-010	100.80	OKGE	Minco 345kV
GEN-2011-019	299.00	OKGE	Woodward 345kV
GEN-2011-020	299.00	OKGE	Woodward 345kV
GEN-2011-051	104.40	OKGE	Tap Woodward - Tatonga 345kV (GEN-2011-051 Tap)
GEN-2011-054	300.00	OKGE	Cimarron 345kV
GEN-2014-002	10.50	OKGE	Tatonga 345kV (GEN-2007-021 POI)
GEN-2014-003	15.80	OKGE	Tatonga 345kV (GEN-2007-044 POI)
GEN-2014-005	5.70	OKGE	Minco 345kV (GEN-2011-010 POI)
GEN-2014-020	100.00	AEPW	Tuttle 138kV
GEN-2014-056	250.00	OKGE	Minco 345kV
GEN-2015-029	161.00	OKGE	Tatonga 345kV
PRIOR QUEUED SUBTOTAL	4,377.50		
GEN-2015-038	303.60	OKGE	Cimarron 345kV
GEN-2015-044	20.00	OKGE	Minco 345kV
GEN-2015-048	200.00	OKGE	Cleo Corner 138kV
GEN-2015-057	100.00	OKGE	Minco 345kV
GEN-2015-059	6.30	OKGE	Minco 345kV
GEN-2015-060	250.50	OKGE	Woodward EHV 138kV
GEN-2015-081	180.00	OKGE	Tap Woodward - Tatonga (GEN-2011-051 Tap) 345kV
GEN-2015-093	250.00	OKGE	Gracemont 345kV
GEN-2015-095	172.00	WFEC	Tap Rose Valley - Mooreland 138kV
CURRENT CLUSTER SUBTOTAL	1,482.40		
AREA TOTAL	5,859.90		

GROUP 2: HITCHLAND AREA

Request	Capacity	Area	Proposed Point of Interconnection
ASGI-2011-002	20.00	SPS	Herring 115kV
ASGI-2013-001	11.50	SPS	PanTex South 115kV
GEN-2002-008	240.00	SPS	Hitchland 345kV
GEN-2002-009	80.00	SPS	Hansford 115kV
GEN-2002-022	240.00	SPS	Bushland 230kV
GEN-2003-020	160.00	SPS	Martin 115kV
GEN-2006-020S	18.90	SPS	DWS Frisco 115kV
GEN-2006-044	370.00	SPS	Hitchland 345kV
GEN-2007-046	200.00	SPS	Hitchland 115kV
GEN-2008-047	300.00	OKGE	Beaver County 345kV
GEN-2008-051	322.00	SPS	Potter County 345kV
GEN-2010-001	300.00	OKGE	Beaver County 345kV
GEN-2010-014	358.80	SPS	Hitchland 345kV
GEN-2011-014	201.00	OKGE	Tap Hitchland - Woodward Dbl Ckt (GEN-2011-014 Tap) 345kV
GEN-2011-022	299.00	SPS	Hitchland 345kV
GEN-2013-030	300.00	OKGE	Beaver County 345kV
Llano Estacado (White Deer)	80.00	SPS	Llano Wind 115kV
SPS Distributed (Dumas 19th St)	20.00	SPS	Dumas 19th Street 115kV
SPS Distributed (Etter)	20.00	SPS	Etter 115kV
SPS Distributed (Moore E)	25.00	SPS	Moore East 115kV
SPS Distributed (Sherman)	20.00	SPS	Sherman 115kV
SPS Distributed (Spearman)	10.00	SPS	Spearman 69kV
SPS Distributed (TC-Texas County)	20.00	SPS	Texas County 115kV
PRIOR QUEUED SUBTOTAL	**3,616.20**		
GEN-2014-037	200.00	SPS	Tap Hitchland - Beaver County Dbl Ckt (Optima) 345kV
GEN-2014-038	200.00	SPS	Tap Hitchland - Potter County 345kV
GEN-2015-082	200.00	OKGE	Tap Hitchland - Woodward Dbl Ckt (GEN-2011-014 Tap) 345kV
CURRENT CLUSTER SUBTOTAL	**600.00**		
AREA TOTAL	**4,216.20**		

GROUP 3: SPEARVILLE AREA

Request	Capacity	Area	Proposed Point of Interconnection
ASGI-2012-006	22.50	SUNCMKEC	Tap Hugoton - Rolla 69kV
ASGI-2015-001	6.13	SUNCMKEC	Ninnescah 115kV
GEN-2001-039A	105.00	SUNCMKEC	Shooting Star Tap 115kV
GEN-2002-025A	150.00	SUNCMKEC	Spearville 230kV
GEN-2004-014	154.50	SUNCMKEC	Spearville 230kV
GEN-2005-012	250.00	SUNCMKEC	Ironwood 345kV
GEN-2006-021	101.00	SUNCMKEC	Flat Ridge Tap 138kV
GEN-2007-040	200.00	SUNCMKEC	Buckner 345kV
GEN-2008-018	250.00	SPS	Finney 345kV
GEN-2008-079	99.20	SUNCMKEC	Crooked Creek 115kV
GEN-2008-124	200.10	SUNCMKEC	Ironwood 345kV
GEN-2010-009	165.60	SUNCMKEC	Buckner 345kV
GEN-2010-045	197.80	SUNCMKEC	Buckner 345kV
GEN-2011-008	600.00	SUNCMKEC	Clark County 345kV
GEN-2011-016	200.10	SUNCMKEC	Ironwood 345kV
GEN-2012-007	120.00	SUNCMKEC	Rubart 115kV
GEN-2012-024	180.00	SUNCMKEC	Clark County 345kV
GEN-2013-010	99.00	SUNCMKEC	Tap Spearville - Post Rock (North of GEN-2011-017 Tap) 345kV
GEN-2015-021	20.00	SUNCMKEC	Johnson Corner 115kV
GEN-2015-027	4.90	SUNCMKEC	Crooked Creek 115kV
Gray County Wind (Montezuma)	110.00	SUNCMKEC	Gray County Tap 115kV
PRIOR QUEUED SUBTOTAL	**3,235.83**		
AREA TOTAL	**3,235.83**		

GROUP 4: NORTHWEST KANSAS AREA

Request	Capacity	Area	Proposed Point of Interconnection
ASGI-2013-004	36.60	SUNCMKEC	Morris 115kV
GEN-2001-039M	100.00	SUNCMKEC	Central Plains Tap 115kV
GEN-2003-006A	200.00	SUNCMKEC	Elm Creek 230kV
GEN-2003-019	250.00	MIDW	Smoky Hills Tap 230kV
GEN-2006-031	75.00	MIDW	Knoll 115kV
GEN-2008-092	200.60	MIDW	Post Rock 230kV
GEN-2009-008	199.50	MIDW	South Hays 230kV
GEN-2009-020	48.30	MIDW	Walnut Creek 69kV
GEN-2010-048	70.00	MIDW	Tap Beach Station - Redline 115kV
GEN-2010-057	201.00	MIDW	Rice County 230kV
GEN-2013-033	28.00	MIDW	Knoll 115kV
GEN-2014-025	2.40	MIDW	Walnut Creek 69kV
GEN-2014-041	120.80	SUNCMKEC	Arnold 115kV
PRIOR QUEUED SUBTOTAL	**1,532.20**		
GEN-2015-061	200.00	SUNCMKEC	Mingo 345kV
GEN-2015-064	197.80	SUNCMKEC	Mingo 115kV
GEN-2015-065	202.40	SUNCMKEC	Mingo 345kV
GEN-2015-072	20.90	MIDW	South Hays 230kV
CURRENT CLUSTER SUBTOTAL	**621.10**		
AREA TOTAL	**2,153.30**		

GROUP 6: SOUTH TEXAS PANHANDLE/NEW MEXICO AREA

Request	Capacity	Area	Proposed Point of Interconnection
ASGI-2010-010	42.20	SPS	Lovington 115kV
ASGI-2010-020	30.00	SPS	Tap LE-Tatum - LE-Crossroads 69kV
ASGI-2010-021	15.00	SPS	Tap LE-Saunders Tap - LE-Anderson 69kV
ASGI-2011-001	27.30	SPS	Lovington 115kV
ASGI-2011-003	10.00	SPS	Hendricks 69kV
ASGI-2011-004	20.00	SPS	Pleasant Hill 69kV
ASGI-2012-002	18.15	SPS	FE-Clovis Interchange 115kV
ASGI-2013-002	18.40	SPS	FE Tucumcari 115kV
ASGI-2013-003	18.40	SPS	FE Clovis 115kV
ASGI-2013-005	1.65	SPS	FE Clovis 115kV
ASGI-2013-006	2.00	SPS	SP-Erskine 115kV
ASGI-2014-001	2.50	SPS	SP-Erskine 115kV
ASGI-2014-002	49.60	SPS	Tap Tucumcari - Santa Rosa 115kV
ASGI-2014-005	10.00	SPS	Strata 69kV
ASGI-2014-008	10.00	SPS	South Loving 69kV
ASGI-2014-009	10.00	SPS	Wood Draw 115kV
ASGI-2014-010	10.00	SPS	Ochoa 115kV
ASGI-2014-012	10.00	SPS	Cooper Ranch 115kV
ASGI-2015-002	2.00	SPS	SP-Yuma 69kV
GEN-2001-033	180.00	SPS	San Juan Tap 230kV
GEN-2001-036	80.00	SPS	Norton 115kV
GEN-2006-018	170.00	SPS	TUCO Interchange 230kV
GEN-2006-026	502.00	SPS	Hobbs 230kV & Hobbs 115kV
GEN-2008-022	300.00	SPS	Crossroads 345kV
GEN-2010-006	205.00	SPS	Jones 230kV
GEN-2010-046	56.00	SPS	TUCO Interchange 230kV
GEN-2011-025	80.00	SPS	Tap Floyd County - Crosby County 115kV
GEN-2011-045	205.00	SPS	Jones 230kV
GEN-2011-046	27.00	SPS	Lopez 115kV
GEN-2011-048	175.00	SPS	Mustang 230kV
GEN-2012-001	61.20	SPS	Cirrus Tap 230kV
GEN-2012-020	478.00	SPS	TUCO 230kV
GEN-2012-034	7.00	SPS	Mustang 230kV
GEN-2012-035	7.00	SPS	Mustang 230kV
GEN-2012-036	7.00	SPS	Mustang 230kV
GEN-2012-037	203.00	SPS	TUCO 345kV
GEN-2013-016	203.00	SPS	TUCO 345kV
GEN-2013-022	25.00	SPS	Norton 115kV
GEN-2013-027	150.00	SPS	Tap Tolk - Yoakum 230kV
GEN-2014-012	225.00	SPS	Tap Hobbs Interchange - Andrews 230kV
GEN-2014-033	70.00	SPS	Chaves County 115kV
GEN-2014-034	70.00	SPS	Chaves County 115kV
GEN-2014-035	30.00	SPS	Chaves County 115kV
GEN-2014-040	320.40	SPS	Castro 115kV
GEN-2014-047	40.00	SPS	Crossroads 345kV
GEN-2014-074	152.00	SPS	Tap TUCO Interchange - Oklaunion (GEN-2014-074 Tap) 345kV
GEN-2015-014	150.00	SPS	Tap Cochran - Lehman 115kV
GEN-2015-022	112.00	SPS	Swisher 115kV
SPS Distributed (Hopi)	10.00	SPS	Hopi 115kV

SPS Distributed (Jal)	10.00	SPS	S Jal 115kV
SPS Distributed (Lea Road)	10.00	SPS	Lea Road 115kV
SPS Distributed (Monument)	10.00	SPS	Monument 115kV
SPS Distributed (Ocotillo)	10.00	SPS	S_Jal 115kV
SPS Distributed (Yuma)	2.57	SPS	SP-Yuma 69kV
PRIOR QUEUED SUBTOTAL	**4,650.37**		
GEN-2014-046	125.40	SPS	Chaves County 115kV
GEN-2015-018	80.00	SPS	Tap Curry County - Bailey 115kV
GEN-2015-020	100.00	SPS	Oasis 115kV
GEN-2015-031	300.00	SPS	Tap Amarillo South - Swisher 230kV
GEN-2015-033	152.00	SPS	Tap TUCO Interchange - Oklaunion (GEN-2014-074 Tap) 345kV
GEN-2015-039	50.00	SPS	Tap Deaf Smith - Plant X 230kV
GEN-2015-040	50.10	SPS	Mustang 230kV
GEN-2015-041	5.00	SPS	TUCO Interchange 345kV
GEN-2015-056	101.20	SPS	Crossroads 345kV
GEN-2015-058	50.00	SPS	Atoka 115kV
GEN-2015-068	300.00	SPS	TUCO Interchange 345kV
GEN-2015-075	51.48	SPS	Carlisle 69kV
GEN-2015-077	80.00	SPS	Tap Terry - Clauene 115kV
GEN-2015-078	50.10	SPS	Mustang 115kV
GEN-2015-079	129.20	SPS	Tap Yoakum - Hobbs Interchange 230kV
GEN-2015-080	129.20	SPS	Tap Yoakum - Hobbs Interchange 230kV
CURRENT CLUSTER SUBTOTAL	**1,753.68**		
AREA TOTAL	**6,404.05**		

GROUP 7: SOUTHWEST OKLAHOMA AREA

Request	Capacity	Area	Proposed Point of Interconnection
GEN-2001-026	74.30	WFEC	Washita 138kV
GEN-2002-005	120.00	WFEC	Red Hills Tap 138kV
GEN-2003-004	100.00	WFEC	Washita 138kV
GEN-2003-005	100.00	WFEC	Anadarko - Paradise (Blue Canyon) 138kV
GEN-2003-022	120.00	AEPW	Weatherford 138kV
GEN-2004-020	27.00	AEPW	Weatherford 138kV
GEN-2004-023	20.60	WFEC	Washita 138kV
GEN-2005-003	30.60	WFEC	Washita 138kV
GEN-2006-002	101.00	AEPW	Sweetwater 230kV
GEN-2006-035	225.00	AEPW	Sweetwater 230kV
GEN-2006-043	99.00	AEPW	Sweetwater 230kV
GEN-2007-052	150.00	WFEC	Anadarko 138kV
GEN-2008-023	150.00	AEPW	Hobart Junction 138kV
GEN-2008-037	101.00	WFEC	Slick Hills 138kV
GEN-2011-037	7.00	WFEC	Blue Canyon 5 138kV
GEN-2011-049	250.70	OKGE	Border 345kV
GEN-2012-028	74.80	WFEC	Gotebo 69kV
GEN-2015-004	52.90	OKGE	Border 345kV
GEN-2015-013	120.00	WFEC	Synder 138kV
PRIOR QUEUED SUBTOTAL	**1,923.90**		
GEN-2015-055	40.00	WFEC	Erick 138kV
GEN-2015-071	200.00	AEPW	Chisholm 345kV
GEN-2015-084	51.30	AEPW	Hollis 138kV
GEN-2015-085	122.40	AEPW	Tap Lake Pauline - Russell 138kV
CURRENT CLUSTER SUBTOTAL	**413.70**		
AREA TOTAL	**2,337.60**		

GROUP 8: NORTH OKLAHOMA/SOUTH CENTRAL KANSAS AREA

Request	Capacity	Area	Proposed Point of Interconnection
ASGI-2010-006	150.00	AECI	Remington 138kV
ASGI-2014-014	56.40	GRDA	Ferguson 69kV
ASGI-2015-004	56.36	GRDA	Coffeyville City 69kV
GEN-2002-004	200.00	WERE	Latham 345kV
GEN-2005-013	201.00	WERE	Caney River 345kV
GEN-2007-025	300.00	WERE	Viola 345kV
GEN-2008-013	300.00	OKGE	Hunter 345kV
GEN-2008-021	42.00	WERE	Wolf Creek 345kV
GEN-2008-098	100.80	WERE	Waverly 345kV
GEN-2009-025	59.80	OKGE	Nardins 69kV
GEN-2010-003	100.80	WERE	Waverly 345kV
GEN-2010-005	299.20	WERE	Viola 345kV
GEN-2010-055	4.50	AEPW	Wekiwa 138kV
GEN-2011-057	150.40	WERE	Creswell 138kV
GEN-2012-027	136.00	AEPW	Shidler 138kV
GEN-2012-032	300.00	OKGE	Open Sky 345kV
GEN-2012-033	98.80	OKGE	Tap and Tie South 4th - Bunch Creek & Enid Tap - Fairmont (GEN-2012-033T) 138kV
GEN-2012-041	121.50	OKGE	Ranch Road 345kV
GEN-2013-012	147.00	OKGE	Redbud 345kV
GEN-2013-028	559.50	GRDA	Tap N Tulsa - GRDA 1 345kV
GEN-2013-029	300.00	OKGE	Renfrow 345kV

GEN-2014-001	200.60	WERE	Tap Wichita - Emporia Energy Center (GEN-2014-001 Tap) 345kV
GEN-2014-028	35.00	EMDE	Riverton 161kV
GEN-2014-064	248.40	OKGE	Otter 138kV
GEN-2015-001	200.00	OKGE	Ranch Road 345kV
GEN-2015-015	154.60	OKGE	Tap Medford Tap - Coyote 138kV
GEN-2015-016	200.00	KCPL	Tap Marmaton - Centerville 161kV
GEN-2015-024	220.00	WERE	Tap Thistle - Wichita 345kV Dbl CKT
GEN-2015-025	220.00	WERE	Tap Thistle - Wichita 345kV Dbl CKT
GEN-2015-028	3.00	OKGE	Nardins 69kV
GEN-2015-030	200.10	OKGE	Sooner 345kV
PRIOR QUEUED SUBTOTAL	**5,365.76**		
GEN-2015-034	200.00	OKGE	Ranch Road 345kV
GEN-2015-043	20.00	WERE	Tap Thistle - Wichita 345kV Dbl CKT
GEN-2015-047	300.00	OKGE	Sooner 345kV
GEN-2015-052	300.00	WERE	Tap Open Sky - Rose Hill 345kV
GEN-2015-062	4.50	OKGE	Tap and Tie South 4th - Bunch Creek & Enid Tap - Fairmont (GEN-2012-033T) 138kV
GEN-2015-063	300.00	OKGE	Tap Woodring - Mathewson 345kV
GEN-2015-066	248.40	OKGE	Tap Cleveland - Sooner 345kV
GEN-2015-067	150.00	OKGE	Sooner 138kV
GEN-2015-069	300.00	WERE	Union Ridge 230kV
GEN-2015-073	200.10	WERE	Emporia Energy Center 345kV
GEN-2015-083	125.00	WERE	Belle Plain 138kV
GEN-2015-090	220.00	WERE	Tap Thistle - Wichita 345kV Dbl CKT
CURRENT CLUSTER SUBTOTAL	**2,368.00**		
AREA TOTAL	**7,733.76**		

GROUP 9: NEBRASKA AREA

Request	Capacity	Area	Proposed Point of Interconnection
GEN-2002-023N	0.80	NPPD	Harmony 115kV
GEN-2003-021N	75.00	NPPD	Ainsworth Wind Tap 115kV
GEN-2004-023N	75.00	NPPD	Columbus Co 115kV
GEN-2006-020N	42.00	NPPD	Bloomfield 115kV
GEN-2006-037N1	75.00	NPPD	Broken Bow 115kV
GEN-2006-038N005	80.00	NPPD	Broken Bow 115kV
GEN-2006-038N019	80.00	NPPD	Petersburg North 115kV
GEN-2006-044N	40.50	NPPD	North Petersburg 115kV
GEN-2007-011N08	81.00	NPPD	Bloomfield 115kV
GEN-2007-017IS	166.00	WAPA	Ft Thompson-Grand Island 345kV
GEN-2007-018IS	234.00	WAPA	Ft Thompson-Grand Island 345kV
GEN-2008-086N02	201.00	NPPD	Meadow Grove 230kV
GEN-2008-119O	60.00	OPPD	S1399 161kV
GEN-2008-123N	89.70	NPPD	Tap Pauline - Hildreth (Rosemont) 115kV
GEN-2009-040	73.80	WERE	Marshall 115kV
GEN-2010-041	10.50	OPPD	S1399 161kV
GEN-2010-051	200.00	NPPD	Tap Hoskins - Twin Church (Dixon County) 230kV
GEN-2011-018	73.60	NPPD	Steele City 115kV
GEN-2011-027	120.00	NPPD	Tap Hoskins - Twin Church (Dixon County) 230kV
GEN-2011-056	3.60	NPPD	Jeffrey 115kV
GEN-2011-056A	3.60	NPPD	John 1 115kV
GEN-2011-056B	4.50	NPPD	John 2 115kV
GEN-2012-021	4.80	LES	Terry Bundy Generating Station 115kV
GEN-2013-002	50.60	LES	Tap Sheldon - Folsom & Pleasant Hill (GEN-2013-002 Tap) 115kV CKT 2
GEN-2013-008	1.20	NPPD	Steele City 115kV

GEN-2013-014	25.50	NPPD	Tap Pauline - Hildreth (Rosemont) 115kV
GEN-2013-019	73.60	LES	Tap Sheldon - Folsom & Pleasant Hill (GEN-2013-002 Tap) 115kV CKT 2
GEN-2013-032	204.00	NPPD	Antelope 115kV
GEN-2014-004	4.00	NPPD	Steele City 115kV (GEN-2011-018 POI)
GEN-2014-013	73.50	NPPD	Meadow Grove (GEN-2008-086N2 Sub) 230kV
GEN-2014-031	35.80	NPPD	Meadow Grove 230kV
GEN-2014-032	10.20	NPPD	Meadow Grove 230kV
GEN-2014-039	73.40	NPPD	Friend 115kV
GEN-2015-007	160.00	NPPD	Hoskins 345kV
GEN-2015-023	300.70	NPPD	Holt County 345kV
NPPD Distributed (Broken Bow)	8.30	NPPD	Broken Bow 115kV
NPPD Distributed (Buffalo County Solar)	10.00	NPPD	Kearney Northeast
NPPD Distributed (Burt County Wind)	12.00	NPPD	Tekamah & Oakland 115kV
NPPD Distributed (Burwell)	3.00	NPPD	Ord 115kV
NPPD Distributed (Columbus Hydro)	45.00	NPPD	Columbus 115kV
NPPD Distributed (North Platte - Lexington)	54.00	NPPD	Multiple: Jeffrey 115kV, John_1 115kV, John_2 115kV
NPPD Distributed (Ord)	11.90	NPPD	Ord 115kV
NPPD Distributed (Stuart)	2.10	NPPD	Ainsworth 115kV
PRIOR QUEUED SUBTOTAL	**2,953.20**		
GEN-2014-059	160.00	NPPD	Tap Sidney - Ogallala 230kV
GEN-2015-042	320.00	NPPD	Tap Hoskins - Twin Church (Dixon County) 230kV
GEN-2015-053	50.00	NPPD	Antelope 115kV
GEN-2015-054	74.00	NPPD	Antelope 115kV
GEN-2015-076	158.40	NPPD	Belden 115kV
GEN-2015-087	76.00	NPPD	Tap Fairbury - Hebron 115kV
GEN-2015-088	300.00	NPPD	Tap Moore - Pauline 345kV
GEN-2015-094	151.80	WAPA	Tap Larmine River Station - Sidney 345kV
CURRENT CLUSTER SUBTOTAL	**1,290.20**		
AREA TOTAL	**4,243.40**		

GROUP 10: SOUTHEAST OKLAHOMA/NORTHEAST TEXAS AREA

Request	Capacity	Area	Proposed Point of Interconnection
AREA TOTAL	0.00		

GROUP 12: NORTHWEST ARKANSAS AREA

Request	Capacity	Area	Proposed Point of Interconnection
GEN-2013-011	30.00	AEPW	Turk 138kV
PRIOR QUEUED SUBTOTAL	30.00		
AREA TOTAL	30.00		

GROUP 13: NORTHWEST MISSOURI AREA

Request	Capacity	Area	Proposed Point of Interconnection
GEN-2008-129	80.00	KCPL	Pleasant Hill 161kV
GEN-2010-036	4.60	WERE	6th Street 115kV
GEN-2011-011	50.00	KCPL	Iatan 345kV
GEN-2014-021	300.00	KCPL	Tap Nebraska City - Mullin Creek 345kV
GEN-2015-005	200.10	KCPL	Tap Nebraska City - Sibley 345kV
PRIOR QUEUED SUBTOTAL	634.70		
GEN-2015-074	174.00	WERE	Tap Hoyt - Jeffrey Energy Center 345kV
CURRENT CLUSTER SUBTOTAL	174.00		
AREA TOTAL	808.70		

GROUP 14: SOUTH CENTRAL OKLAHOMA AREA

Request	Capacity	Area	Proposed Point of Interconnection
GEN-2011-040	111.00	OKGE	Carter County 138kV
GEN-2011-050	109.80	AEPW	Santa Fe Tap 138kV
GEN-2012-004	41.40	OKGE	Carter County 138kV
GEN-2013-007	100.30	OKGE	Tap Prices Falls - Carter 138kV
GEN-2014-057	250.00	AEPW	Tap Lawton - Sunnyside (Terry Road) 345kV
PRIOR QUEUED SUBTOTAL	612.50		
ASGI-2015-006	9.00	SWPA	Tupelo 138kV
GEN-2015-036	303.60	OKGE	Johnston County 345kV
GEN-2015-045	20.00	AEPW	Tap Lawton - Sunnyside (Terry Road) 345kV
GEN-2015-092	250.00	AEPW	Tap Lawton - Sunnyside (Terry Road) 345kV
CURRENT CLUSTER SUBTOTAL	582.60		
AREA TOTAL	1,195.10		

GROUP 15: E-SOUTH DAKOTA AREA

Request	Capacity	Area	Proposed Point of Interconnection
G255	100.00	XEL	Yankee 115kV
G736	200.00	OTP	Big Stone South 230kV
GEN-2006-001IS	10.00	XEL	Marshall 115kV
GEN-2006-006IS	10.00	XEL	Marshall 115kV
GEN-2007-013IS	50.00	WAPA	Wessington Springs 230kV
GEN-2007-014IS	100.00	WAPA	Wessington Springs 230kV
GEN-2007-023IS	50.00	WAPA	Formit-Summit 115kV
GEN-2009-001IS	200.00	WAPA	Groton-Watertown 345kV
GEN-2009-018IS	100.00	WAPA	Groton 115kV
GEN-2010-001IS	99.00	WAPA	Bismarck-Glenham 230kV
GEN-2010-003IS	34.00	WAPA	Wessington Springs 230kV
GEN-2012-014IS	99.50	WAPA	Groton 115kV
GEN-2013-001IS	90.00	WAPA	Summit-Watertown 115kV
GEN-2013-009IS	19.50	WAPA	Redfield NW 115kV
GEN-2014-001IS	103.70	WAPA	Newell-Maurine 115kV
J436	150.00	OTP	Big Stone South 345kV
J437	150.00	OTP	Big Stone South 345kV
J442	200.00	OTP	Big Stone 230 kV
PRIOR QUEUED SUBTOTAL	**1,765.70**		
GEN-2015-097	100.00	WAPA	Groton 115kV
CURRENT CLUSTER SUBTOTAL	**100.00**		
AREA TOTAL	**1,865.70**		

GROUP 16: W-NORTH DAKOTA AREA

Request	Capacity	Area	Proposed Point of Interconnection
G359	150.00	MDU	MDU 230 kV system near Ellendale
G380	150.00	OTP	Rugby 115kV
G408	12.00	XEL	Tap McHenry - Souris 115kV
G502	50.60	MP	Milton Young 230kV
G645	50.00	OTP	Ladish 115kV
G723	10.00	MDU	Haskett 115kV
G752	150.00	MDU	Tap Bison - Hettinger 230kV
G788	49.00	GRE	Ladish 115kV
G830	99.00	GRE	GRE McHenry 115kV
GEN-2005-008IS	50.00	WAPA	Hilken 230kV [Ecklund 230kV]
GEN-2006-015IS	50.00	WAPA	Hilken 230kV [Ecklund 230kV]
GEN-2007-027IS	99.00	WAPA	Bismarck-Garrison 230kV #1
GEN-2009-026IS	110.00	WAPA	Dickenson-Heskett 230kV
GEN-2010-007IS	172.50	WAPA	Antelope Valley 345kV
GEN-2012-006IS	125.01	WAPA	Williston-Ch. Creek 230kV
GEN-2012-012IS	75.00	WAPA	Wolf Point-Circle 115kV
GEN-2014-003IS	91.00	WAPA	Culbertson 115kV
GEN-2014-004IS	384.20	WAPA	Charlie Creek 345kV
GEN-2014-006IS	125.00	WAPA	Williston 115kV
GEN-2014-010IS	150.00	WAPA	Neset 115kV
GEN-2014-014IS	151.50	WAPA	Belfield-Rhame 230kV
J003	20.00	MDU	Baker 115kV
J249	180.00	MDU	MDU Tatanka 230kV
J262	100.00	OTP	Jamestown 345
J263	100.00	OTP	Jamestown 345
J316	150.00	MDU	MDU 230 kV Tatanka-Ellendale line
MPC01200	44.00	OTP	Sidney 230kV
MPC02100	100.00	OTP	Sidney 230kV
PRIOR QUEUED SUBTOTAL	**2,997.81**		
GEN-2015-046	300.00	WAPA	Tande 345kV
GEN-2015-091	101.20	WAPA	Daglum 230kV
GEN-2015-096	150.00	WAPA	Tap Belfied - Rhame 230kV
GEN-2015-098	100.00	WAPA	Mingusville 230kV
CURRENT CLUSTER SUBTOTAL	**651.20**		
AREA TOTAL	**0.00**		

GROUP 17: W-SOUTH DAKOTA AREA

Request	Capacity	Area	Proposed Point of Interconnection
GEN-2006-002IS	51.00	WAPA	Wessington Springs 230kV
GEN-2009-006IS	90.00	WAPA	Mission 115kV
GEN-2009-007IS	100.00	WAPA	Mission 115kV
GEN-2009-020AIS	150.00	WAPA	Tripp Junction 115kV
GEN-2012-009IS	99.00	WAPA	Tap Fort Randall - Lake Platte 230kV
PRIOR QUEUED SUBTOTAL	**490.00**		
AREA TOTAL	**0.00**		

GROUP 18: E-NORTH DAKOTA AREA

Request	Capacity	Area	Proposed Point of Interconnection
GEN-2002-008IS	40.50	WAPA	Edgeley 115kV [Pomona 115kV]
GEN-2005-003IS	100.00	WAPA	Nelson 115kV
GEN-2007-020IS	16.00	WAPA	Nelson 115kV
GEN-2008-008IS	5.00	WAPA	Nelson 115kV
PRIOR QUEUED SUBTOTAL	**161.50**		
AREA TOTAL	**0.00**		

CLUSTER TOTAL (CURRENT STUDY)	**10,036.9**	**MW**
PQ TOTAL (PRIOR QUEUED)	**34,347.2**	**MW**
CLUSTER TOTAL (INCLUDING PRIOR QUEUED)	**44,384.1**	**MW**

11.4 D: Proposed Point of Interconnection One Line Diagrams

See next page

*Note: If not denoted otherwise for Affected System Generator Interconnection Requests (ASGI) interconnection cost estimate could include distribution system or third party system network upgrades and costs estimates.

ASGI-2015-006
Estimated Cluster Analysis Interconnection Cost: $
Estimated Stand Alone Analysis Interconnection Cost: $

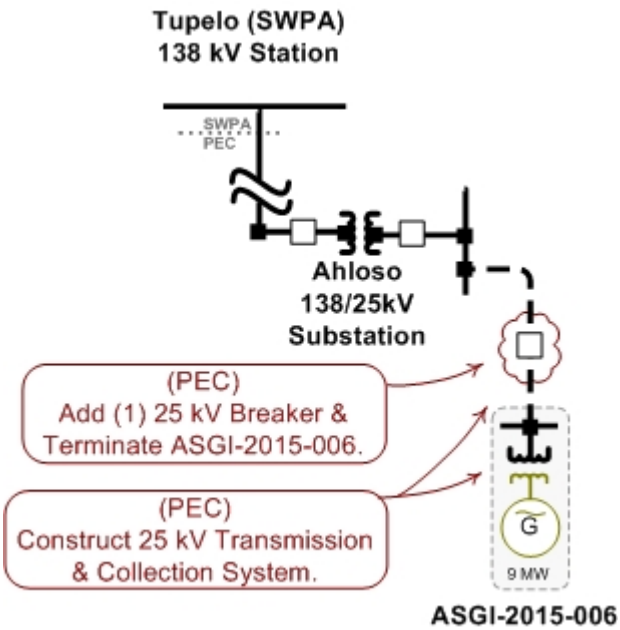

*** Interconnection Cost Estimate(s) only include Affected System Interconnection costs**

GEN-2014-037
Estimated Cluster Analysis Interconnection Cost: $20,334,923
Estimated Stand Alone Analysis Interconnection Cost: $20,334,923

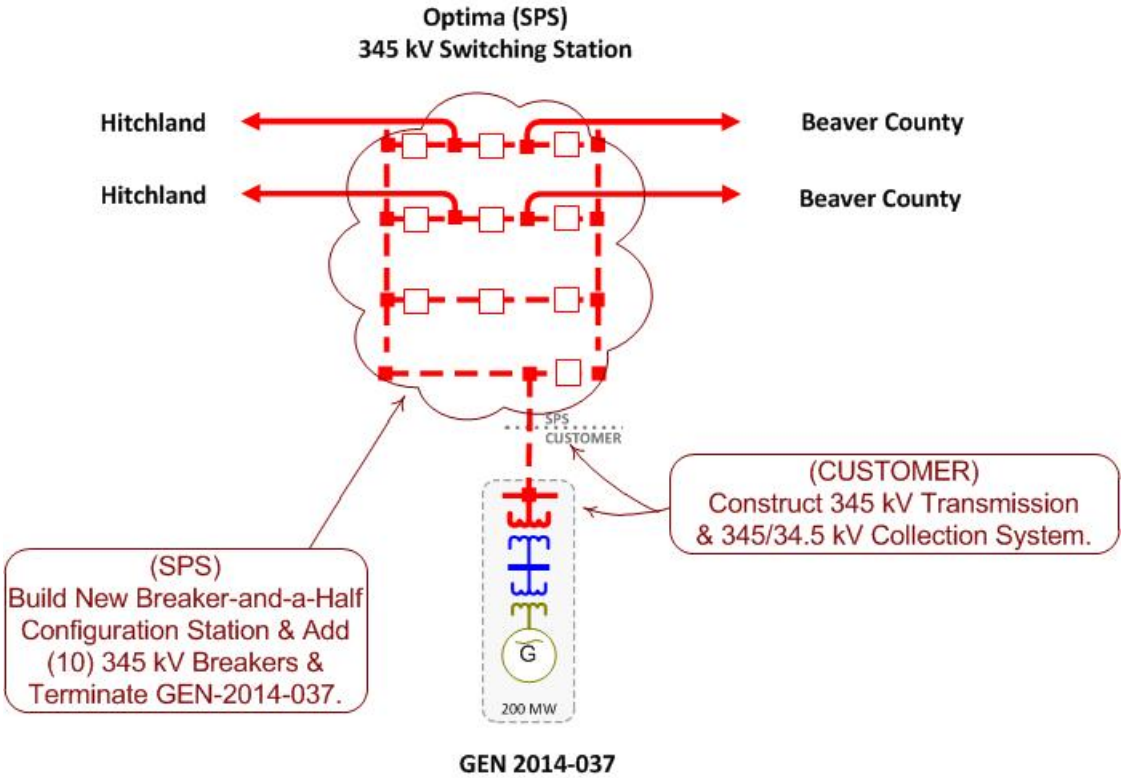

GEN-2014-038
Estimated Cluster Analysis Interconnection Cost: $13,403,168
Estimated Stand Alone Analysis Interconnection Cost: $13,403,168

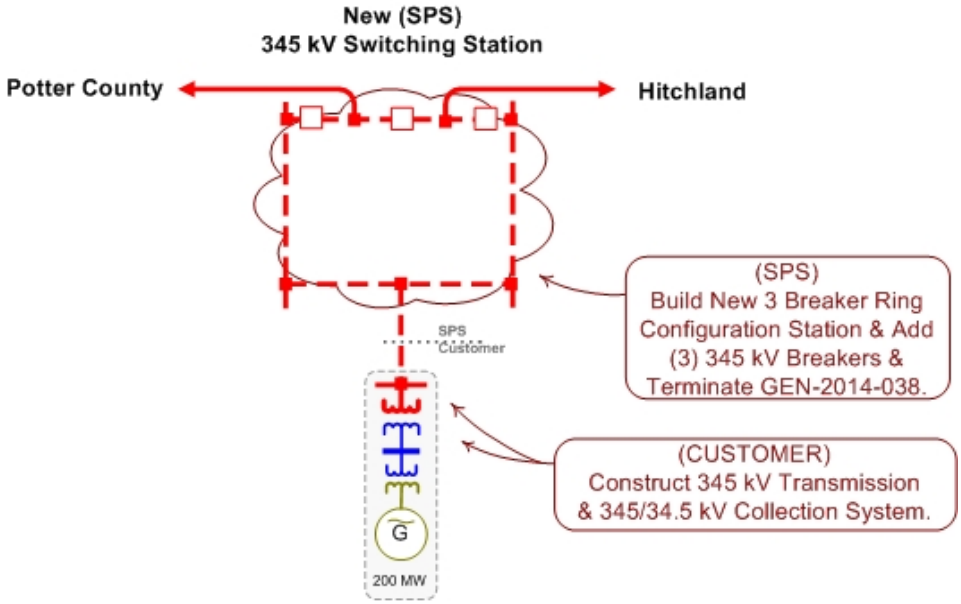

GEN-2014-038

GEN-2014-046
Estimated Cluster Analysis Interconnection Cost: $2,456,266
Estimated Stand Alone Analysis Interconnection Cost: $2,456,266

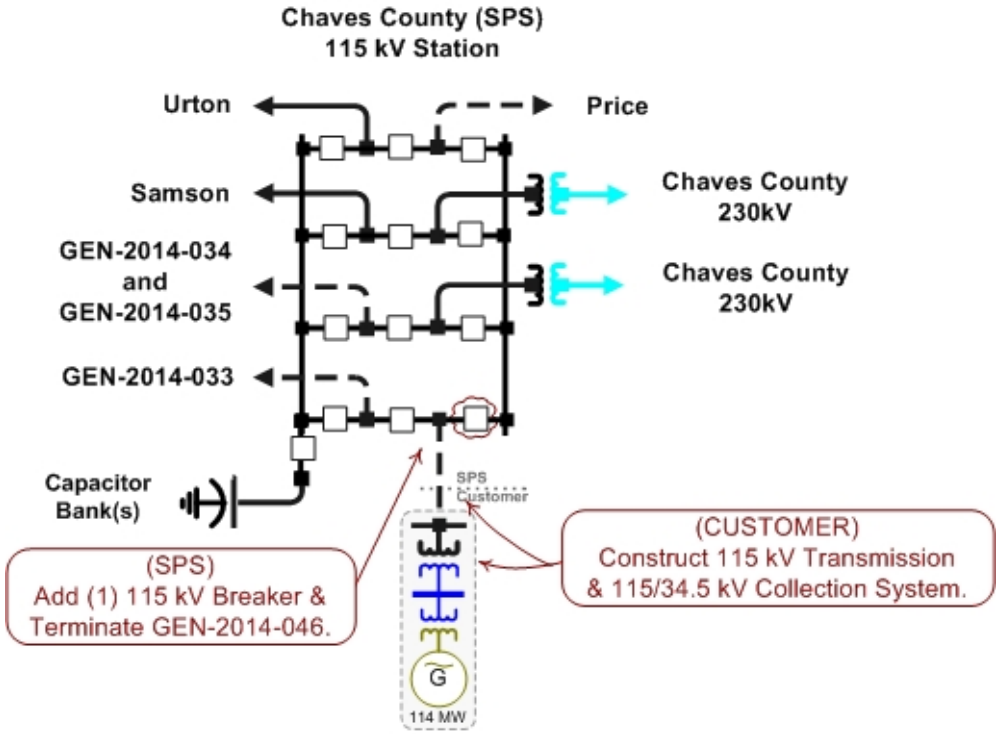

GEN-2014-046

GEN-2014-059
Estimated Cluster Analysis Interconnection Cost: $9,200,000
Estimated Stand Alone Analysis Interconnection Cost: $9,200,000

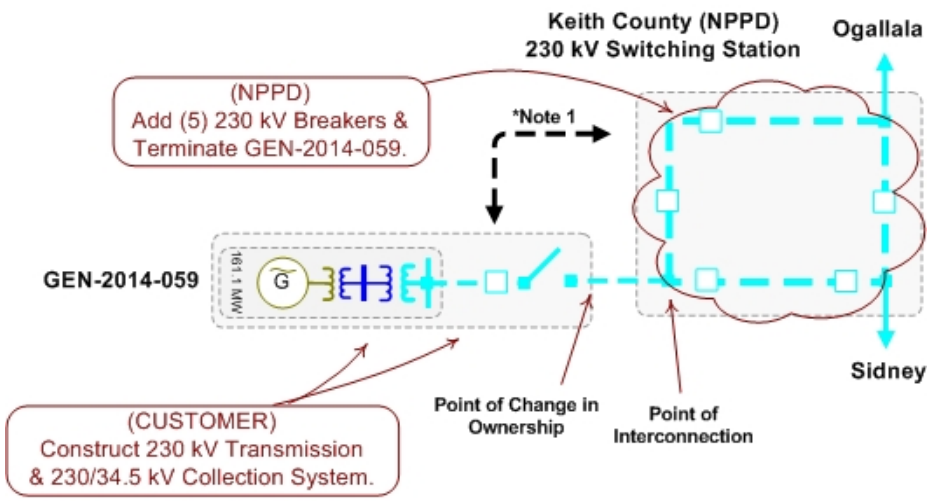

*Note 1: Breaker status & control signal to Transmission Owner to allow operation by Transmission Owner of 230kV breaker during Emergency Condition. Breaker operation will need coordination to ensure safe operation of the transmission line.

GEN-2015-018
Estimated Cluster Analysis Interconnection Cost: $5,121,512
Estimated Stand Alone Analysis Interconnection Cost: $5,121,512

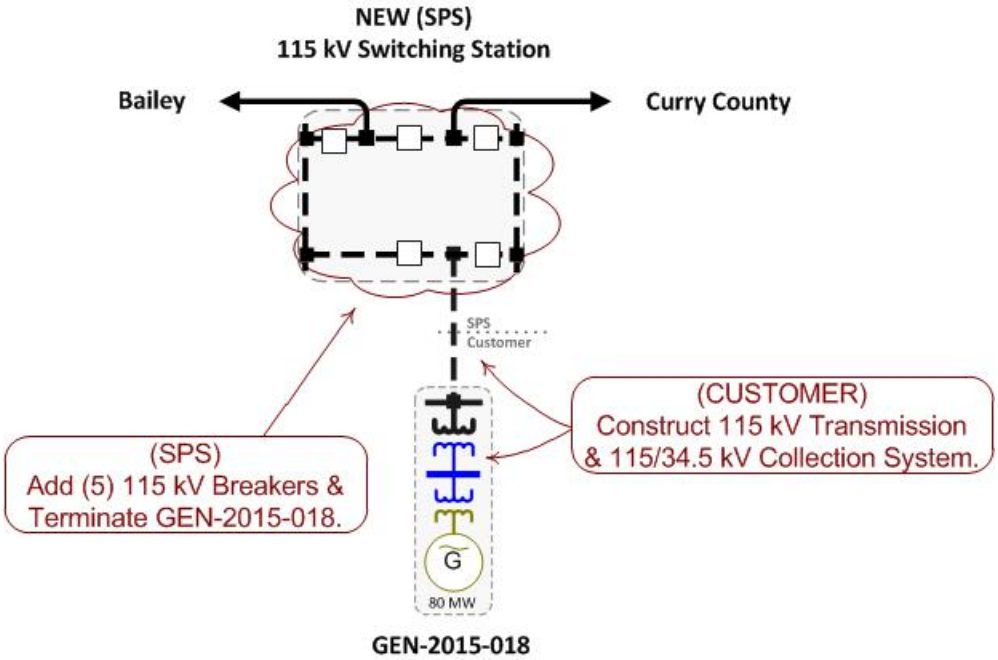

GEN-2015-020
Estimated Cluster Analysis Interconnection Cost: $9,984,058
Estimated Stand Alone Analysis Interconnection Cost: $9,984,058

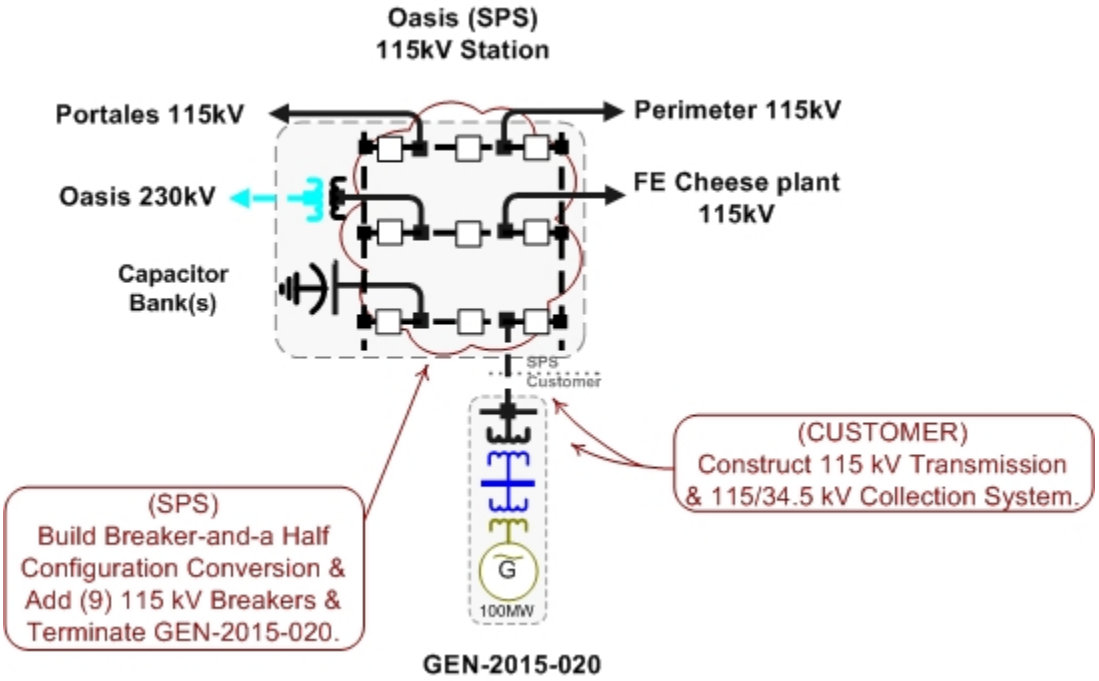

GEN-2015-031
Estimated Cluster Analysis Interconnection Cost: $7,567,148
Estimated Stand Alone Analysis Interconnection Cost: $7,567,148

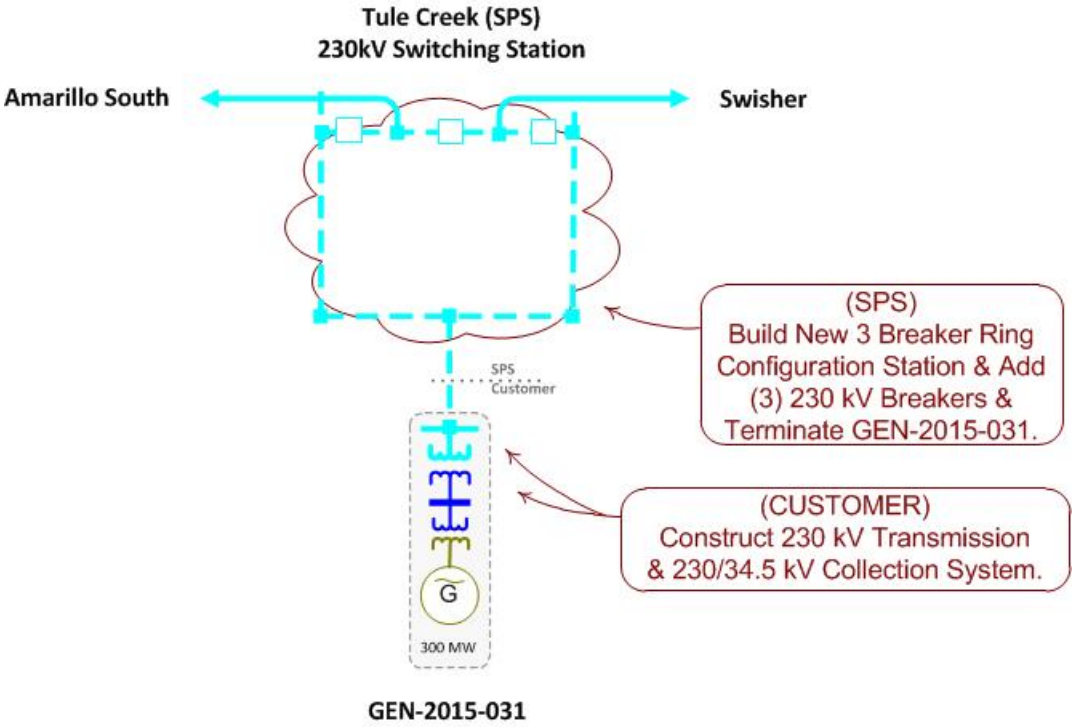

GEN-2015-033
Estimated Cluster Analysis Interconnection Cost: $0*
Estimated Stand Alone Analysis Interconnection Cost: $0*

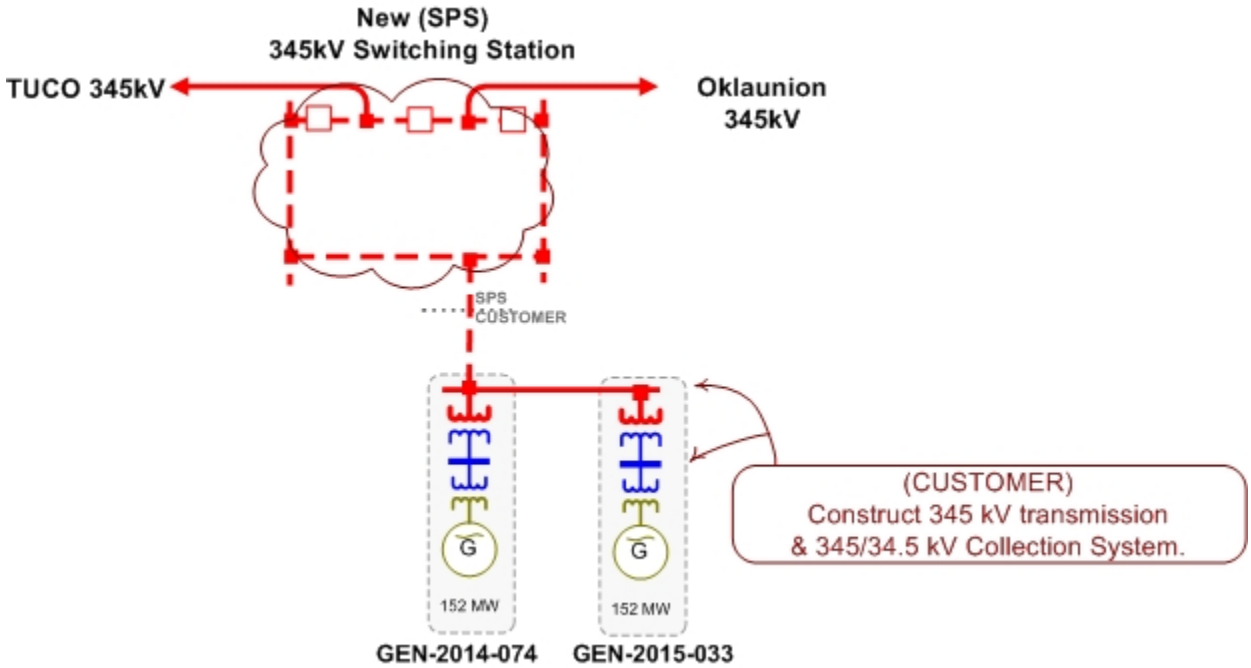

***If GEN-2014-074 withdrawals from the SPP GIP, then GEN-2015-033 would be cost assigned $17,727,346**

GEN-2015-034
Estimated Cluster Analysis Interconnection Cost: $2,112,500
Estimated Stand Alone Analysis Interconnection Cost: $2,112,500

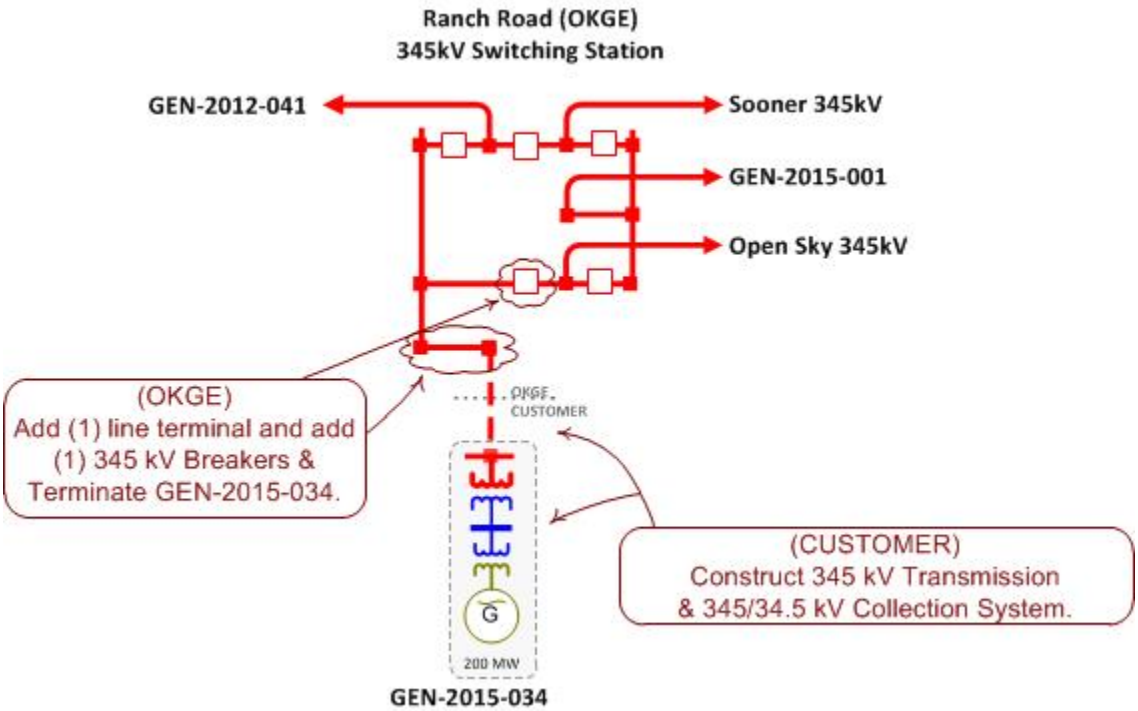

GEN-2015-036
Estimated Cluster Analysis Interconnection Cost: $2,025,000
Estimated Stand Alone Analysis Interconnection Cost: $2,025,000

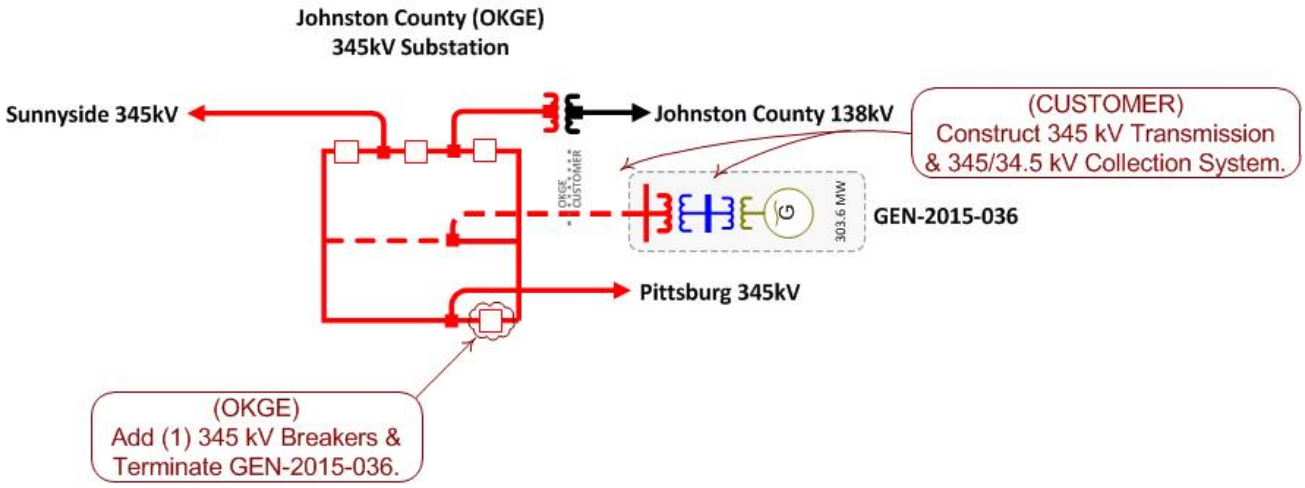

GEN-2015-038
Estimated Cluster Analysis Interconnection Cost: $20,000
Estimated Stand Alone Analysis Interconnection Cost: $20,000

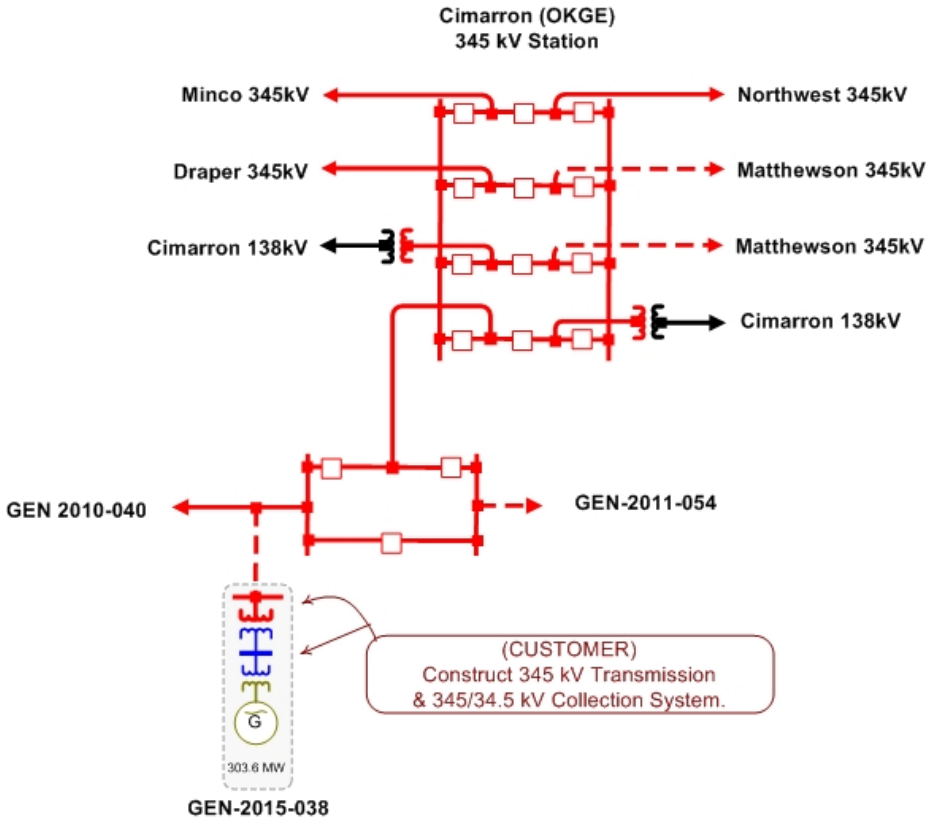

GEN-2015-039
Estimated Cluster Analysis Interconnection Cost: $8,869,623
Estimated Stand Alone Analysis Interconnection Cost: $8,869,623

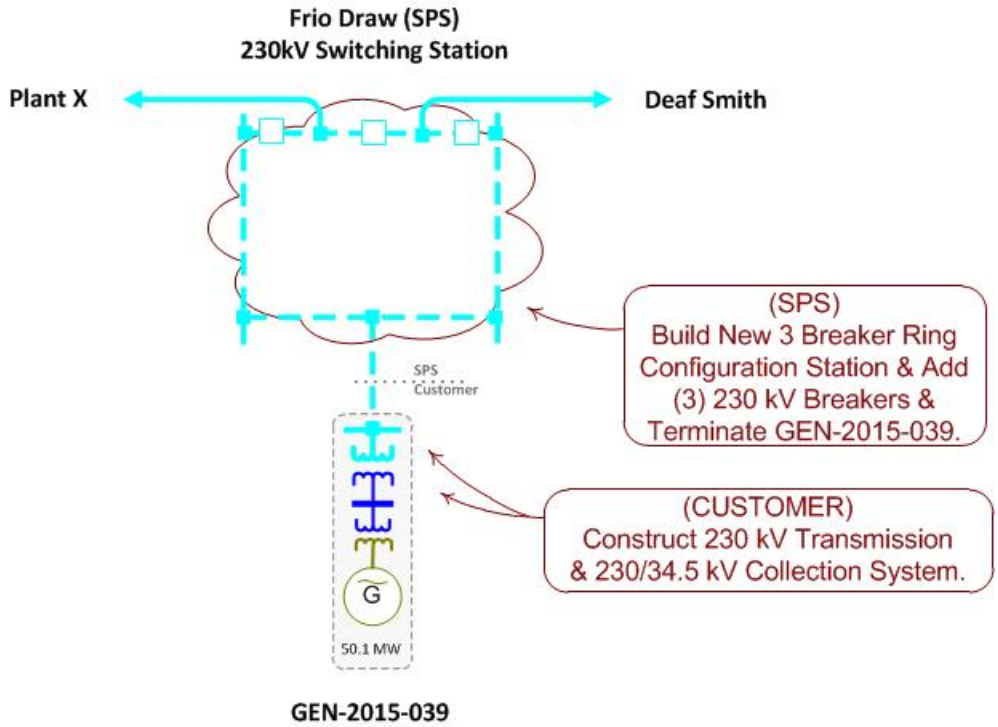

GEN-2015-040
Estimated Cluster Analysis Interconnection Cost: $1,497,460
Estimated Stand Alone Analysis Interconnection Cost: $1,497,460

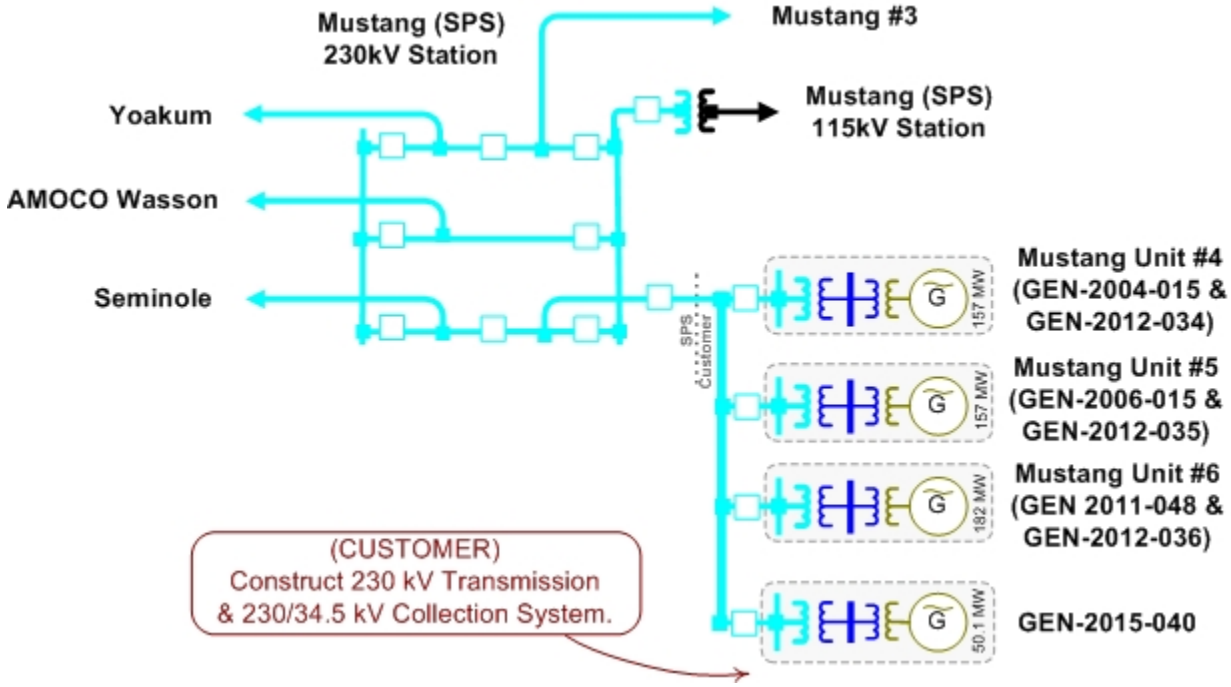

GEN-2015-041
Estimated Cluster Analysis Interconnection Cost: $0
Estimated Stand Alone Analysis Interconnection Cost: $0

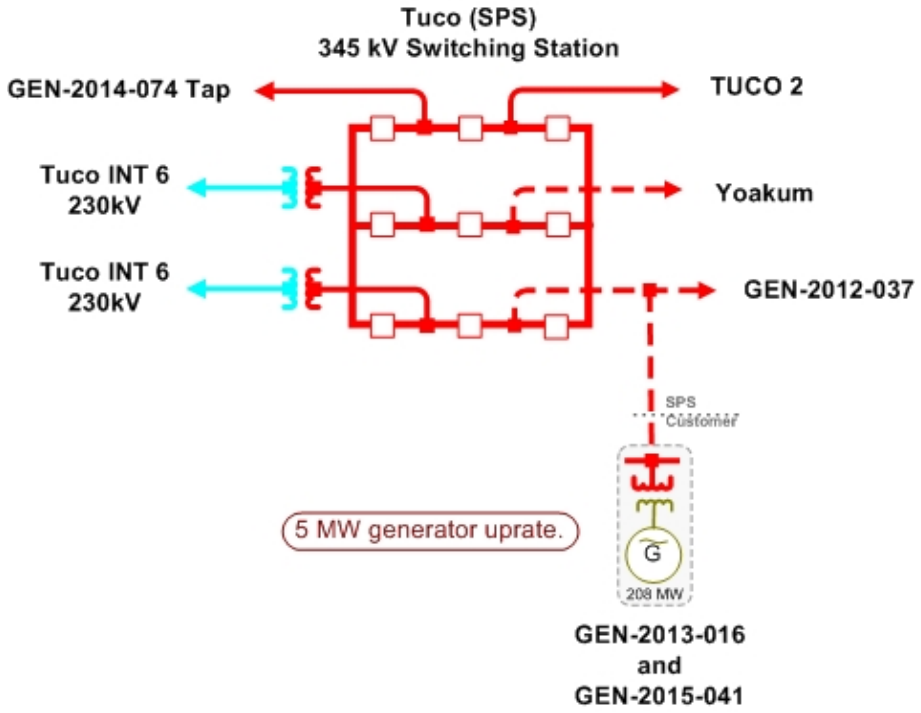

GEN-2015-042
Estimated Cluster Analysis Interconnection Cost: $3,000,000
Estimated Stand Alone Analysis Interconnection Cost: $3,000,000

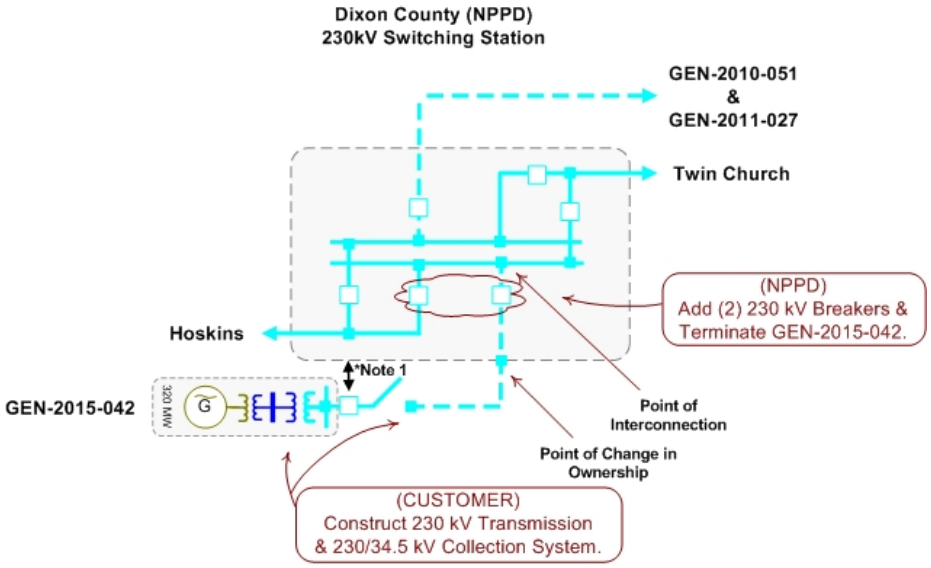

*Note 1: Breaker status & control signal to Transmission Owner to allow operation by Transmission Owner of 230kV breaker during Emergency Condition. Breaker operation will need coordination to ensure safe operation of the transmission line.

GEN-2015-043

Estimated Cluster Analysis Interconnection Cost: $0
Estimated Stand Alone Analysis Interconnection Cost: $0

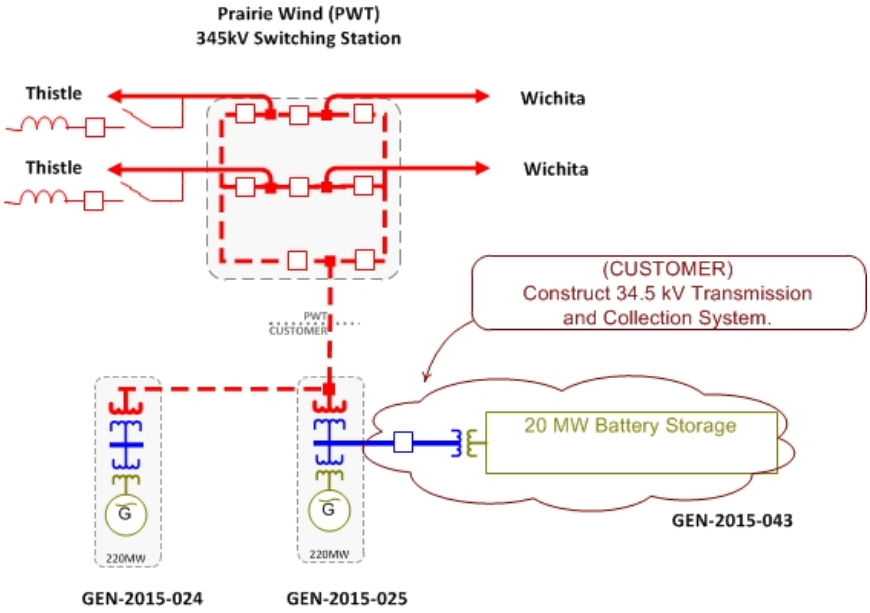

GEN-2015-044
Estimated Cluster Analysis Interconnection Cost: $20,000
Estimated Stand Alone Analysis Interconnection Cost: $20,000

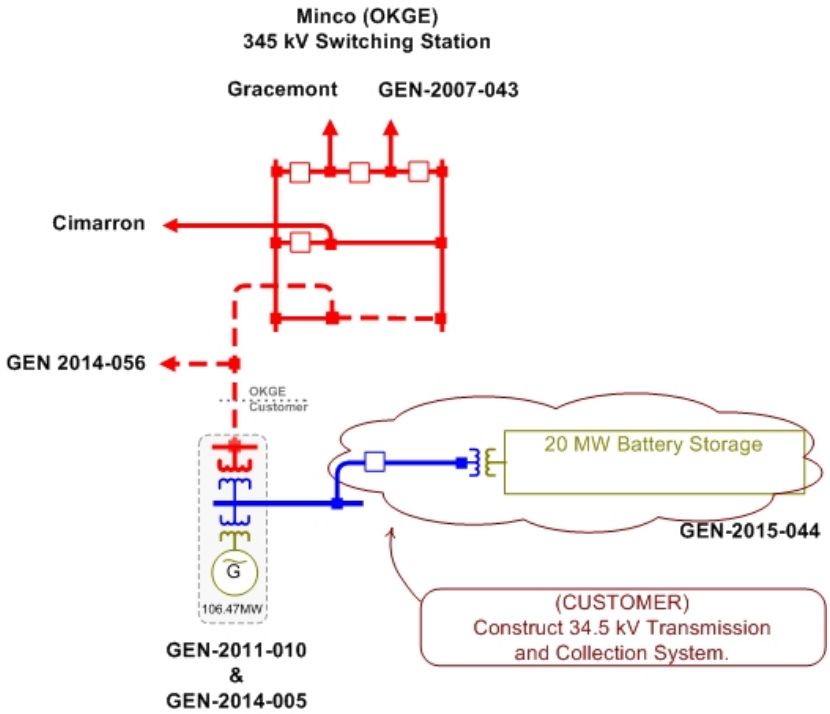

GEN-2015-045
Estimated Cluster Analysis Interconnection Cost: $

Estimated Stand Alone Analysis Interconnection Cost: $

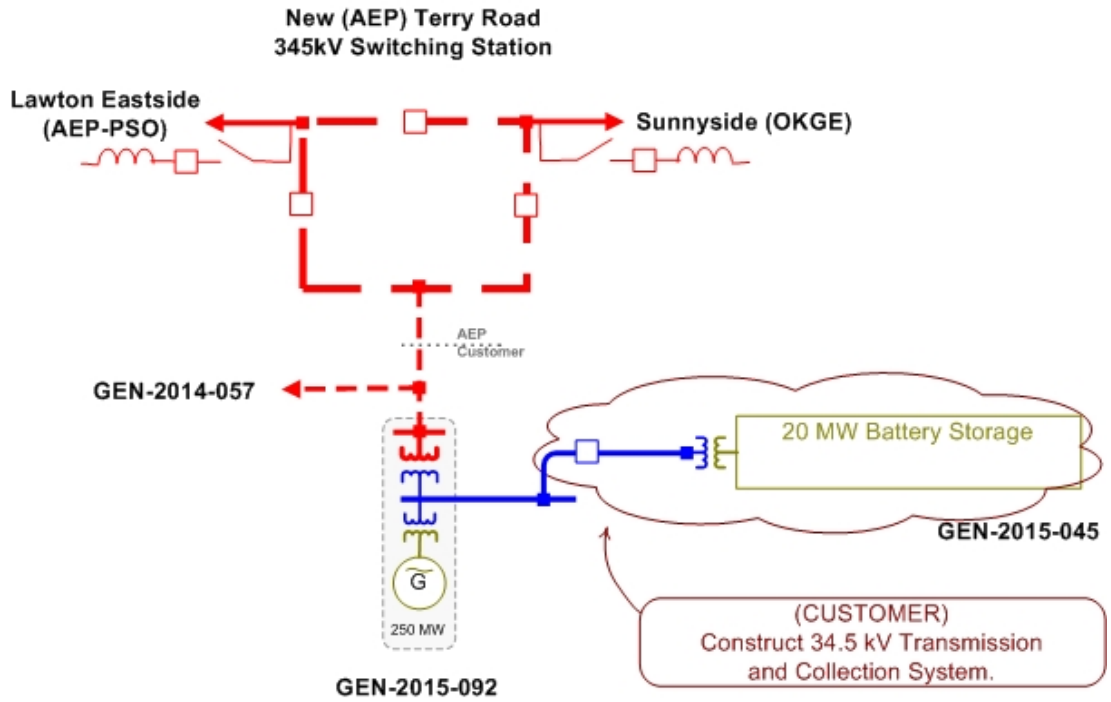

GEN-2015-046
Estimated Cluster Analysis Interconnection Cost: $3,759,097
Estimated Stand Alone Analysis Interconnection Cost: $3,759,097

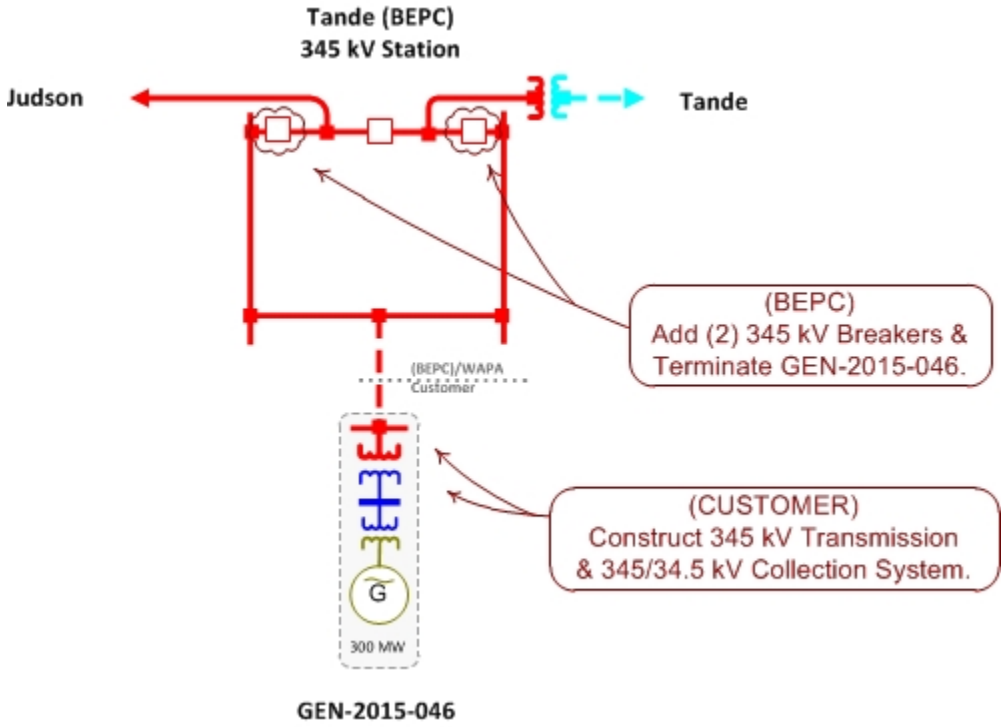

GEN-2015-047
Estimated Cluster Analysis Interconnection Cost: $2,540,000

Estimated Stand Alone Analysis Interconnection Cost: $2,540,000

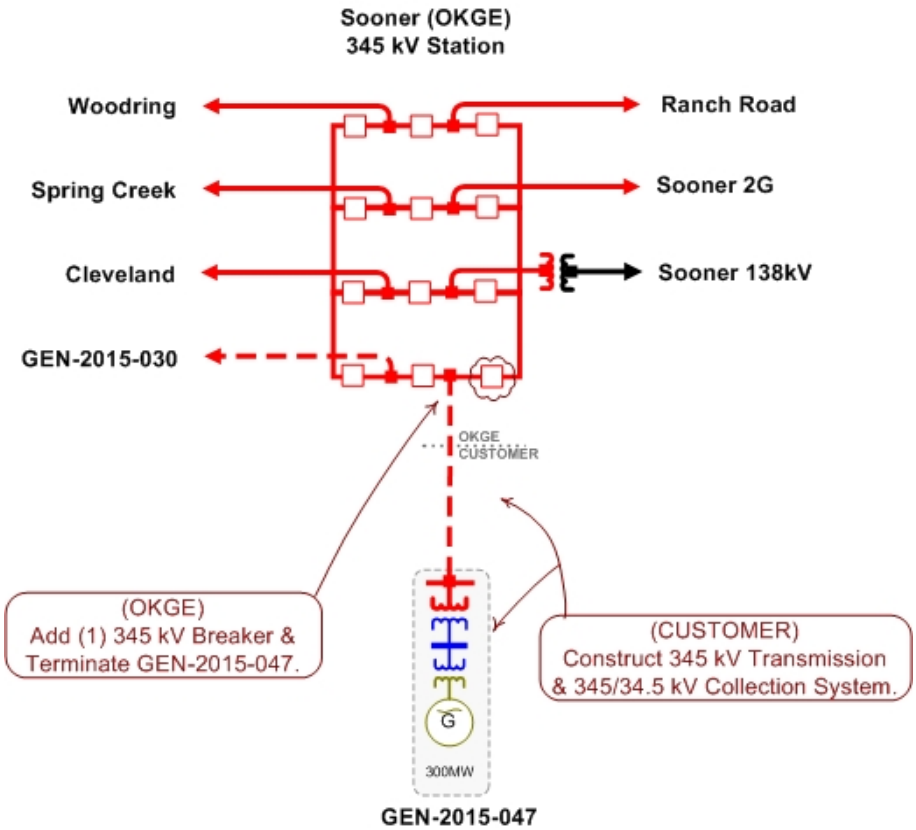

GEN-2015-048
Estimated Cluster Analysis Interconnection Cost: $2,968,000
Estimated Stand Alone Analysis Interconnection Cost: $2,968,000

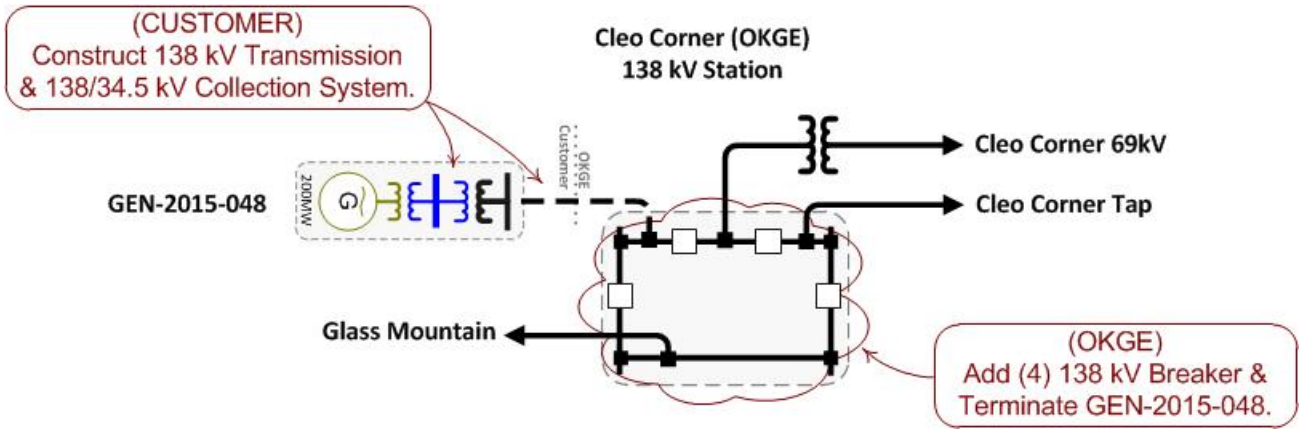

GEN-2015-052
Estimated Cluster Analysis Interconnection Cost: $15,582,434

Estimated Stand Alone Analysis Interconnection Cost: $15,582,434

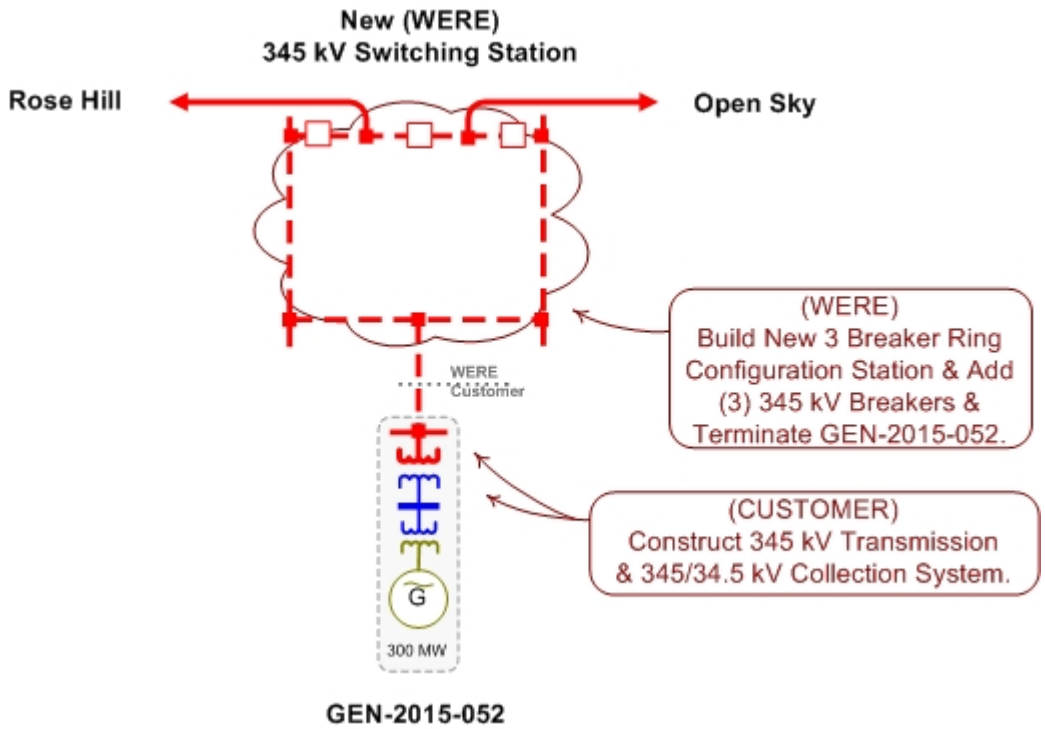

GEN-2015-053
Estimated Cluster Analysis Interconnection Cost: $500,000
Estimated Stand Alone Analysis Interconnection Cost: $1,000,000

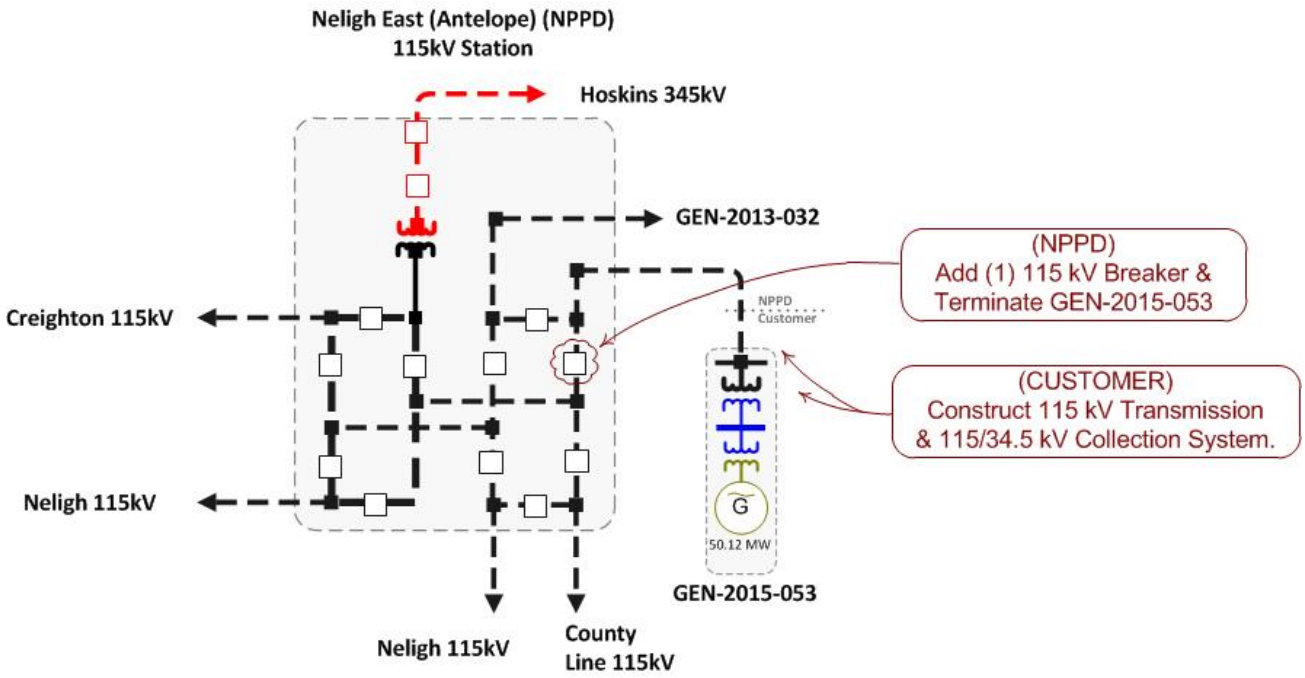

GEN-2015-054
Estimated Cluster Analysis Interconnection Cost: $500,000

Estimated Stand Alone Analysis Interconnection Cost: $1,000,000

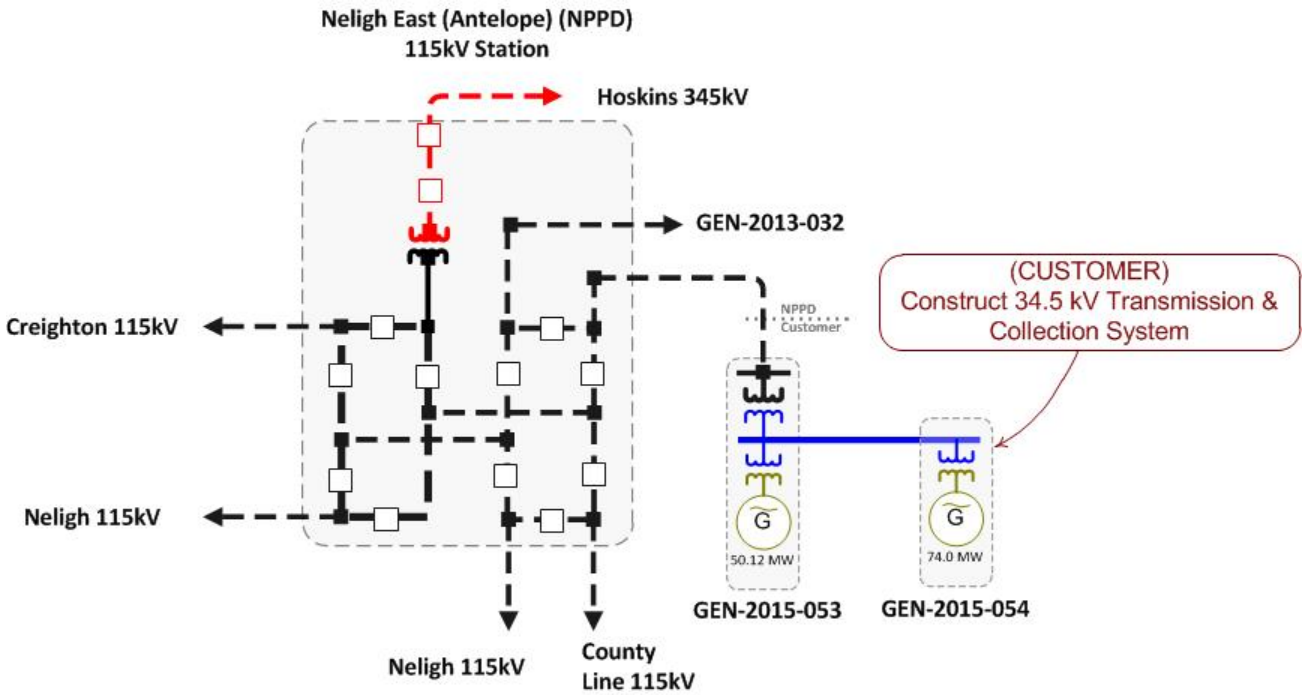

GEN-2015-055
Estimated Cluster Analysis Interconnection Cost: $1,900,000
Estimated Stand Alone Analysis Interconnection Cost: $1,900,000

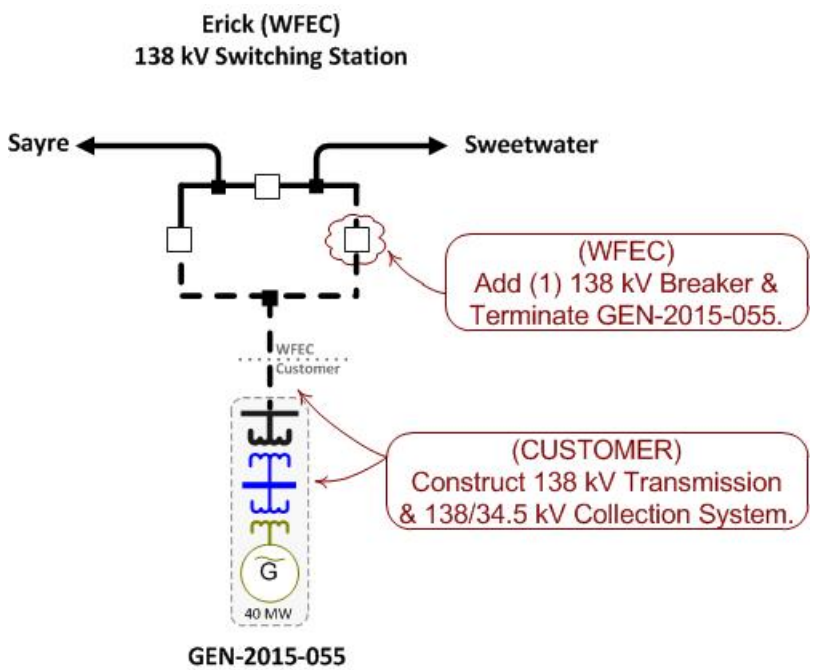

GEN-2015-056
Estimated Cluster Analysis Interconnection Cost: $5,080,273

Estimated Stand Alone Analysis Interconnection Cost: $5,080,273

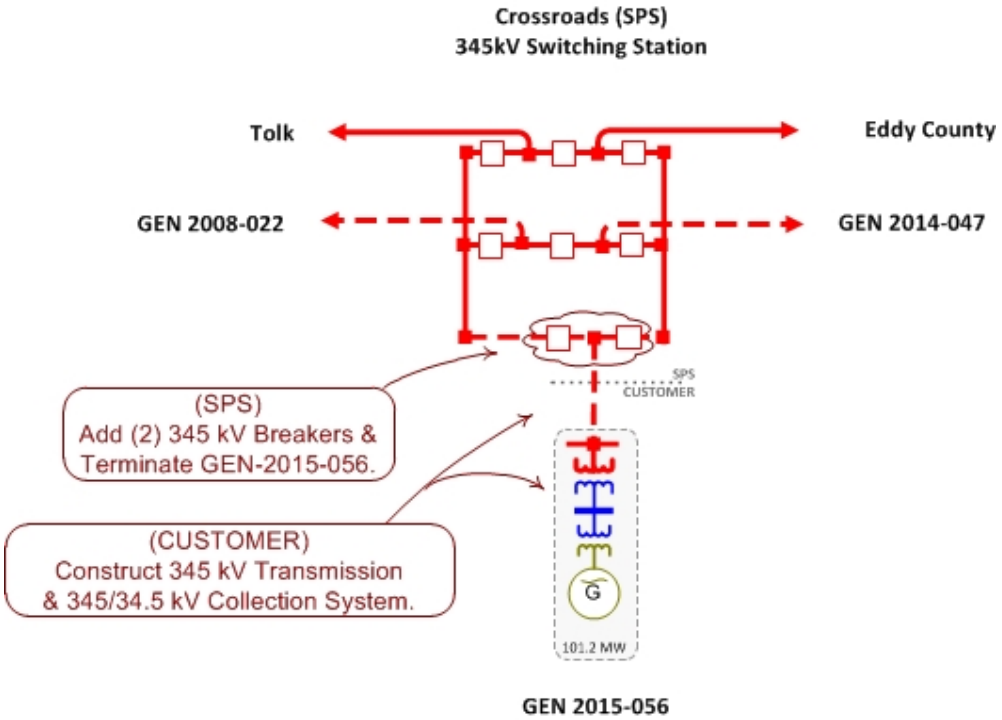

GEN-2015-057
Estimated Cluster Analysis Interconnection Cost: $20,000
Estimated Stand Alone Analysis Interconnection Cost: $20,000

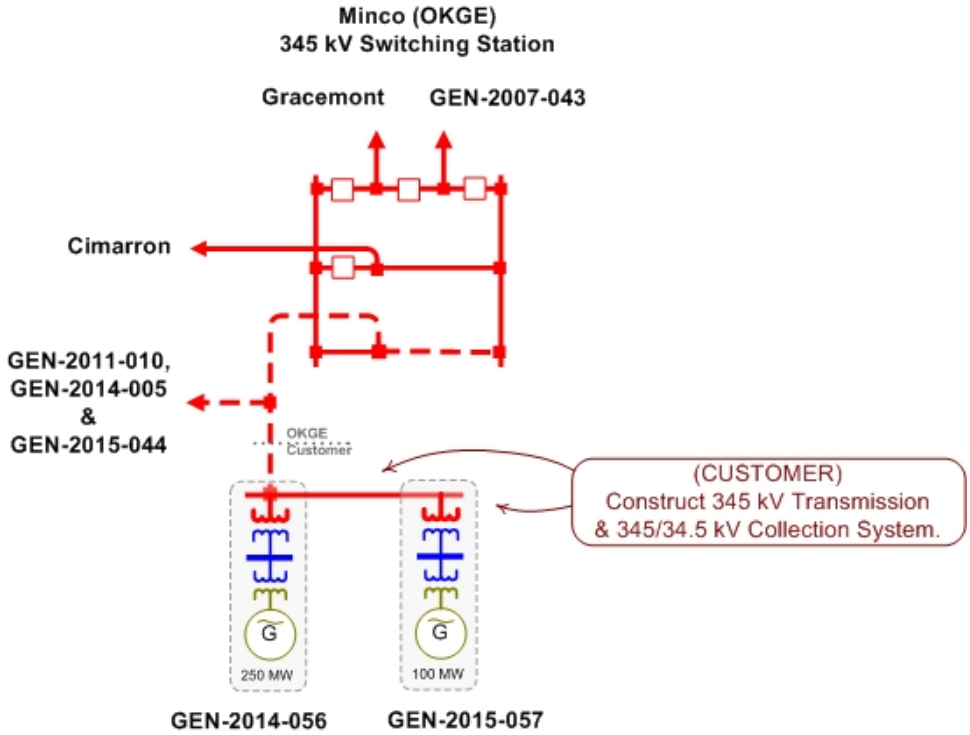

GEN-2015-058
Estimated Cluster Analysis Interconnection Cost: $2,751,641

Estimated Stand Alone Analysis Interconnection Cost: $2,751,641

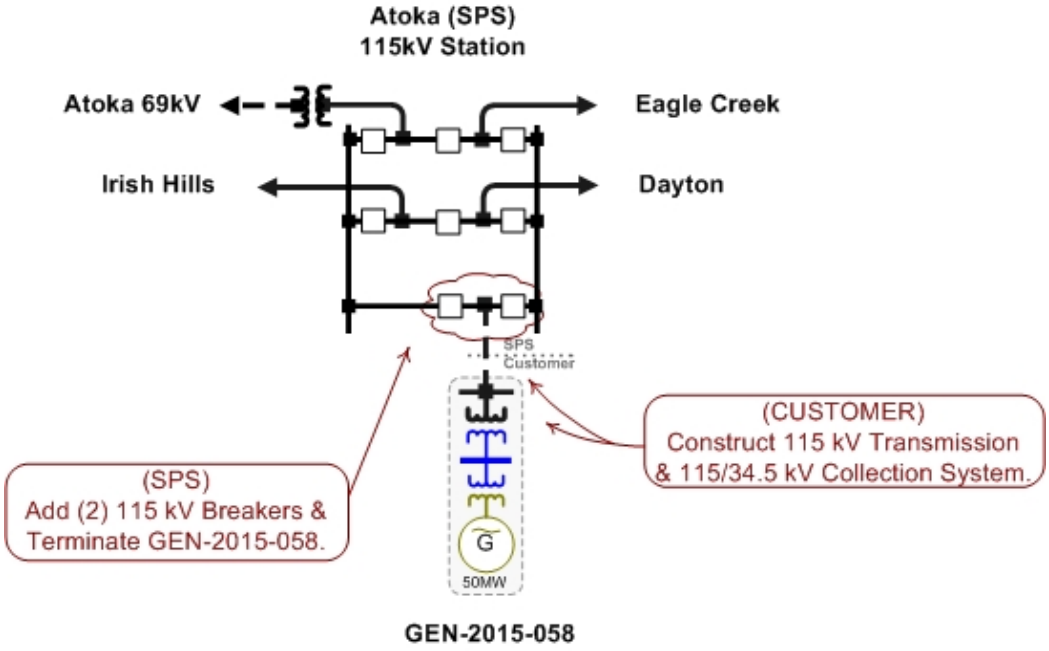

GEN-2015-059
Estimated Cluster Analysis Interconnection Cost: $
Estimated Stand Alone Analysis Interconnection Cost: $

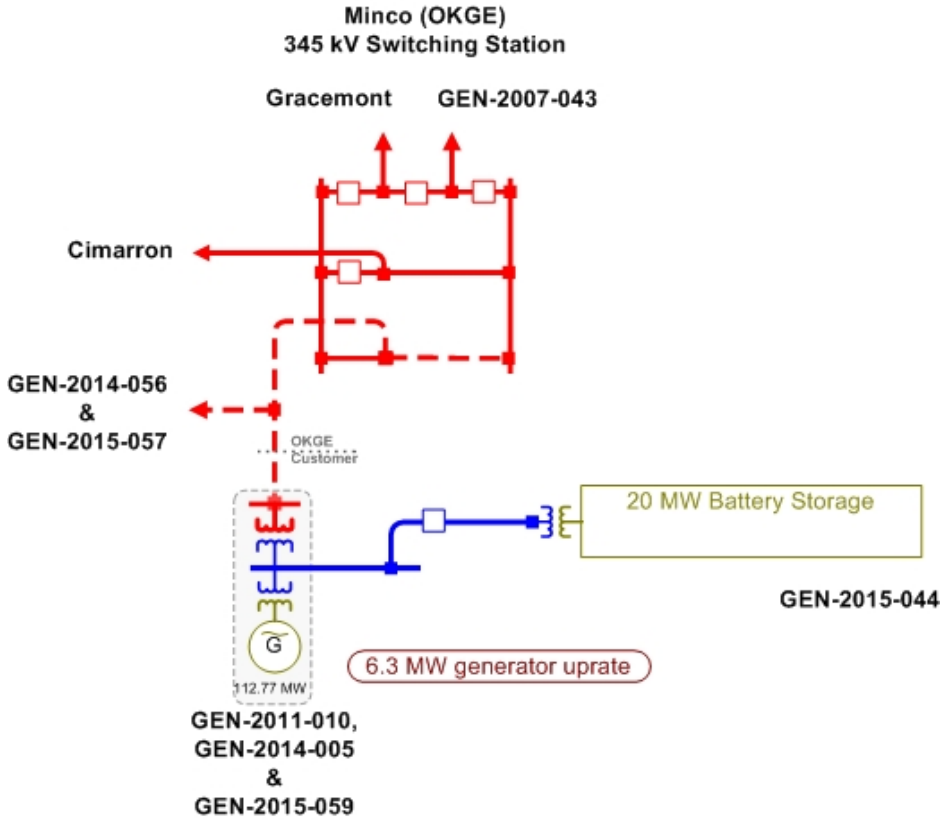

GEN-2015-060
Estimated Cluster Analysis Interconnection Cost: $943,000

Estimated Stand Alone Analysis Interconnection Cost: $943,000

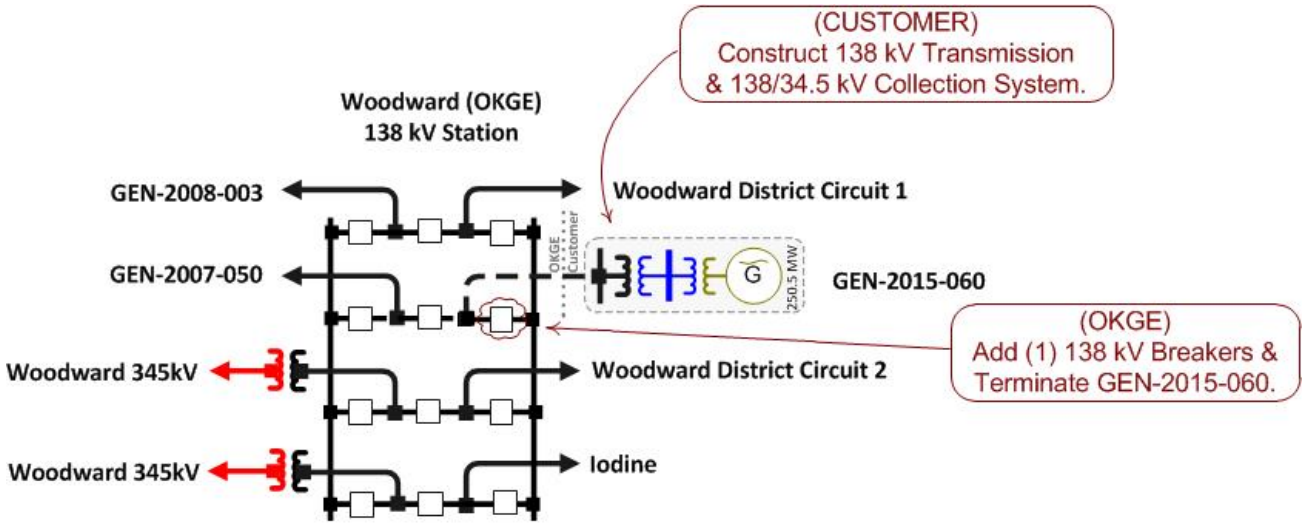

GEN-2015-061
Estimated Cluster Analysis Interconnection Cost: $13,311,356
Estimated Stand Alone Analysis Interconnection Cost: $13,311,356

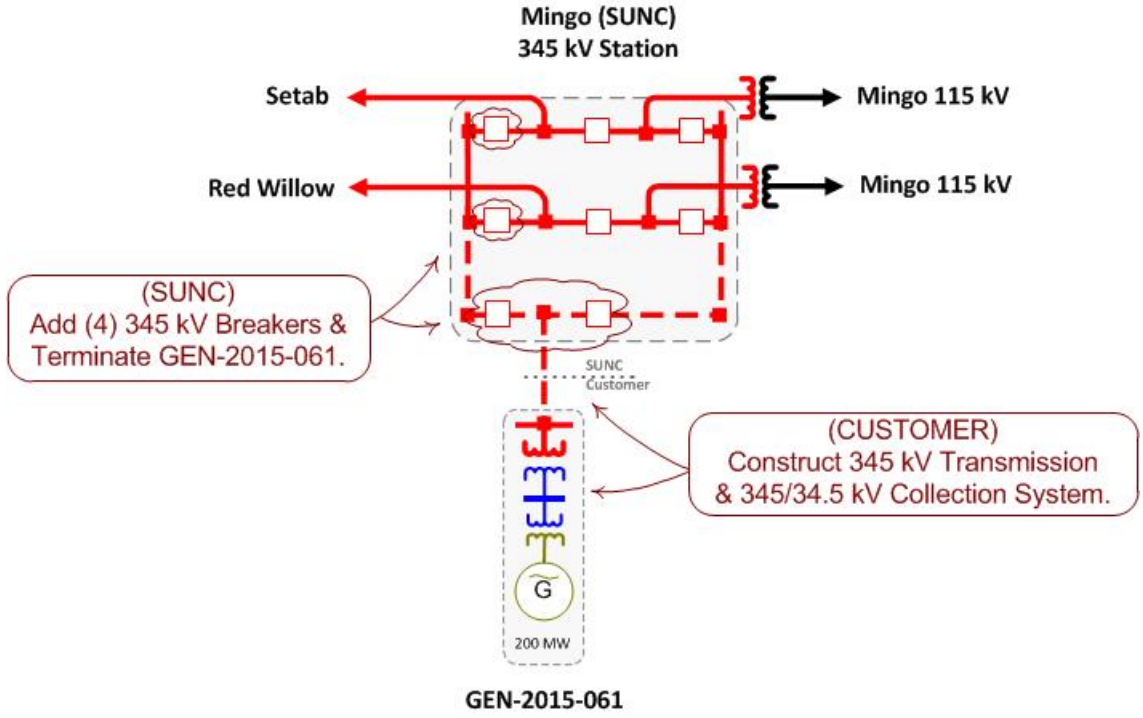

GEN-2015-062
Estimated Cluster Analysis Interconnection Cost: $0

Estimated Stand Alone Analysis Interconnection Cost: $0

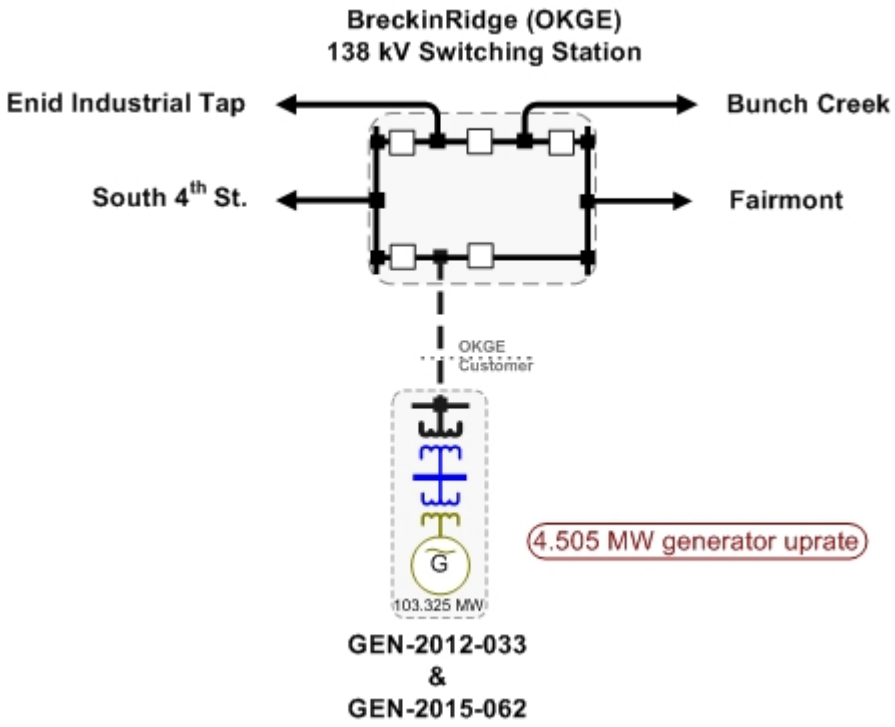

GEN-2015-063
Estimated Cluster Analysis Interconnection Cost: $10,613,000
Estimated Stand Alone Analysis Interconnection Cost: $10,613,000

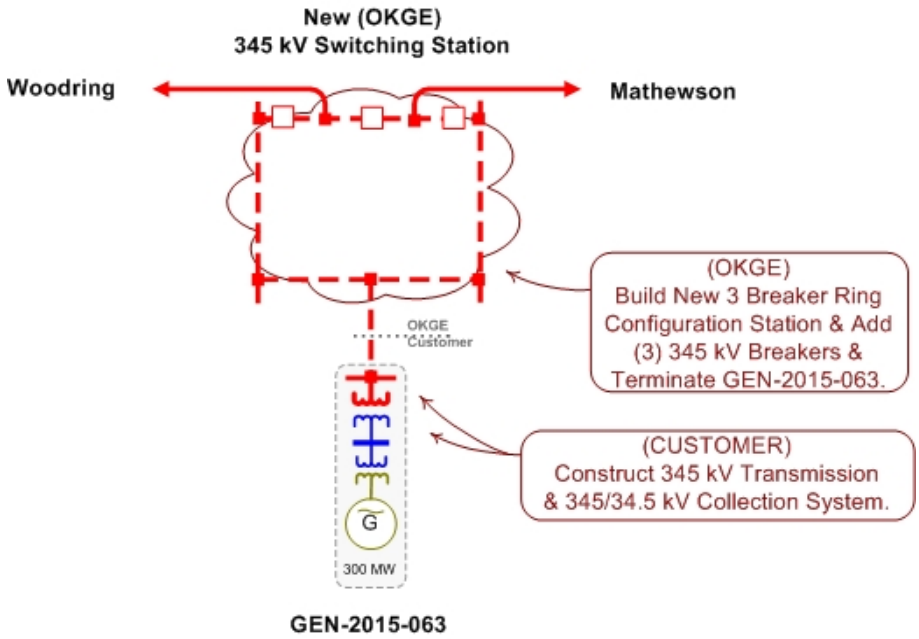

GEN-2015-064
Estimated Cluster Analysis Interconnection Cost: $4,624,000

Estimated Stand Alone Analysis Interconnection Cost: $4,624,000

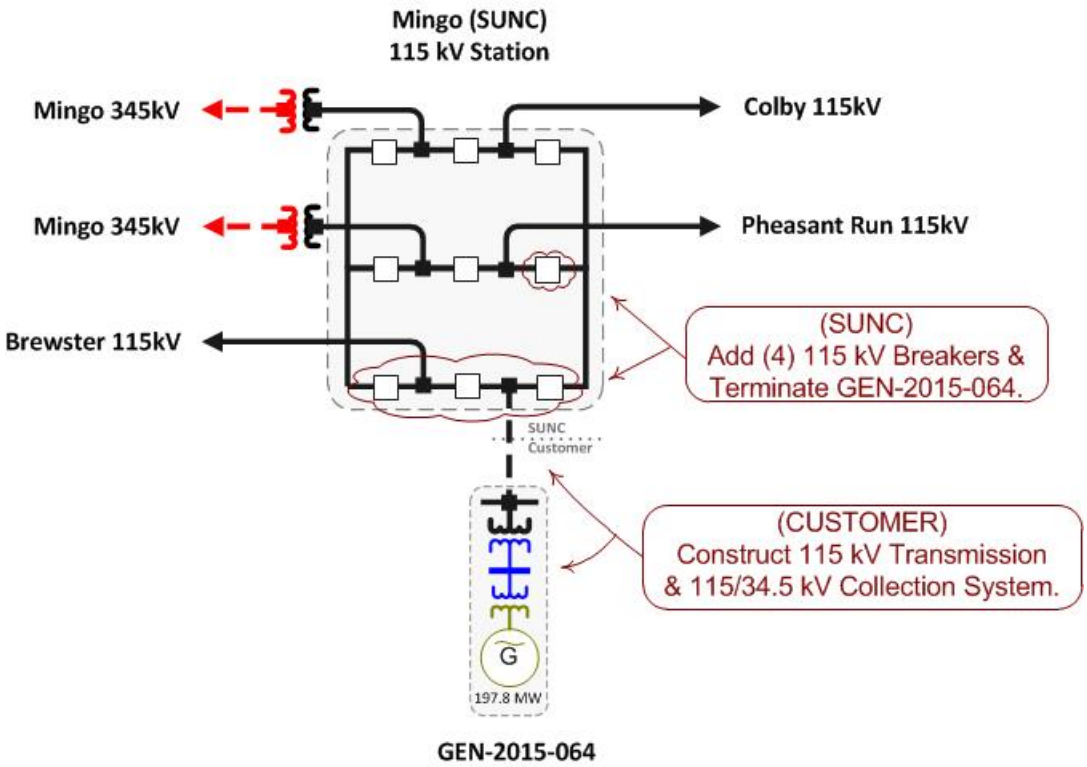

GEN-2015-065
Estimated Cluster Analysis Interconnection Cost: $7,937,928
Estimated Stand Alone Analysis Interconnection Cost: $13,311,356

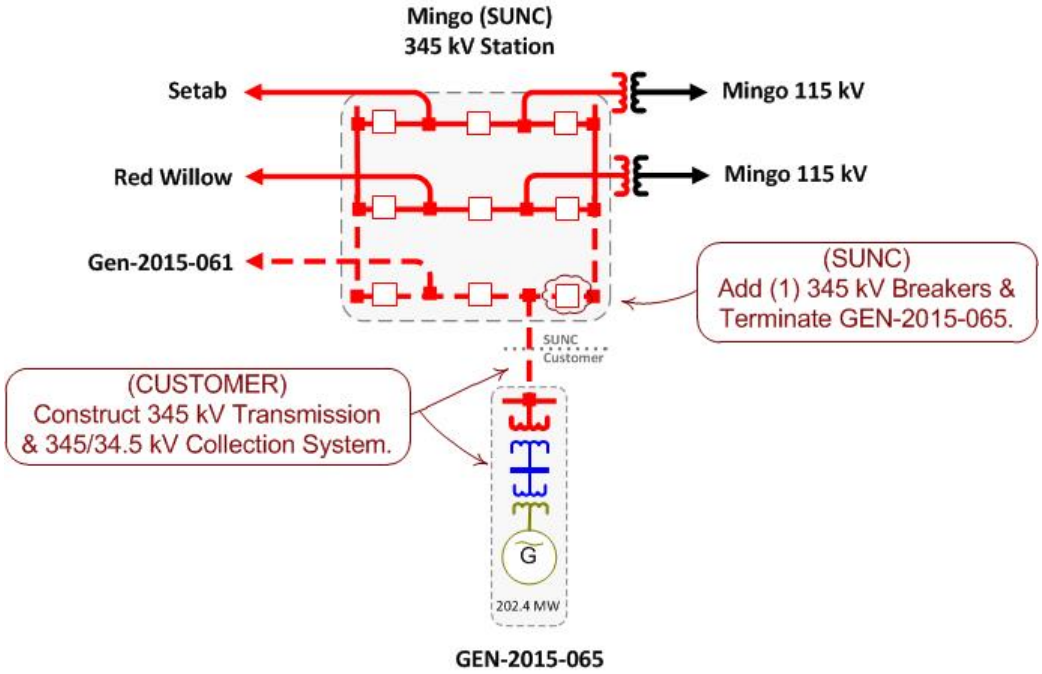

GEN-2015-066

Estimated Cluster Analysis Interconnection Cost: $10,613,000
Estimated Stand Alone Analysis Interconnection Cost: $10,613,000

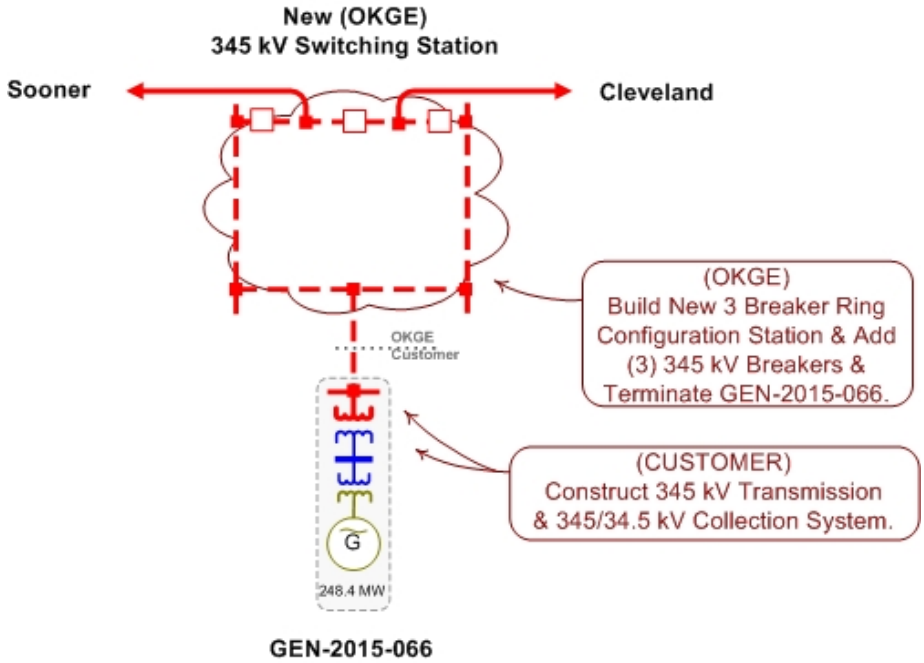

GEN-2015-067
Estimated Cluster Analysis Interconnection Cost: $3,521,000
Estimated Stand Alone Analysis Interconnection Cost: $3,521,000

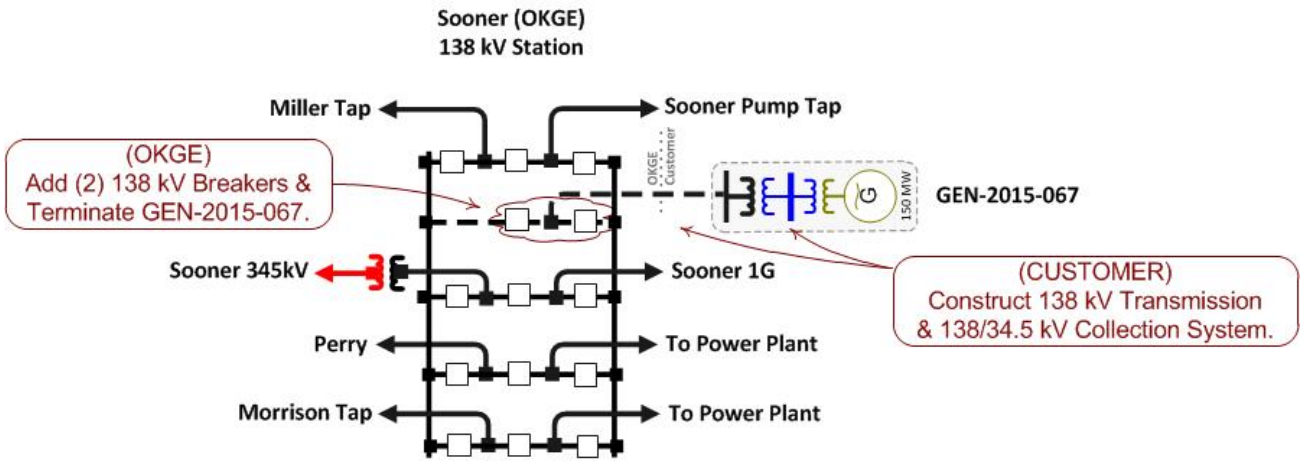

GEN-2015-068
Estimated Cluster Analysis Interconnection Cost: $3,303,965
Estimated Stand Alone Analysis Interconnection Cost: $3,303,965

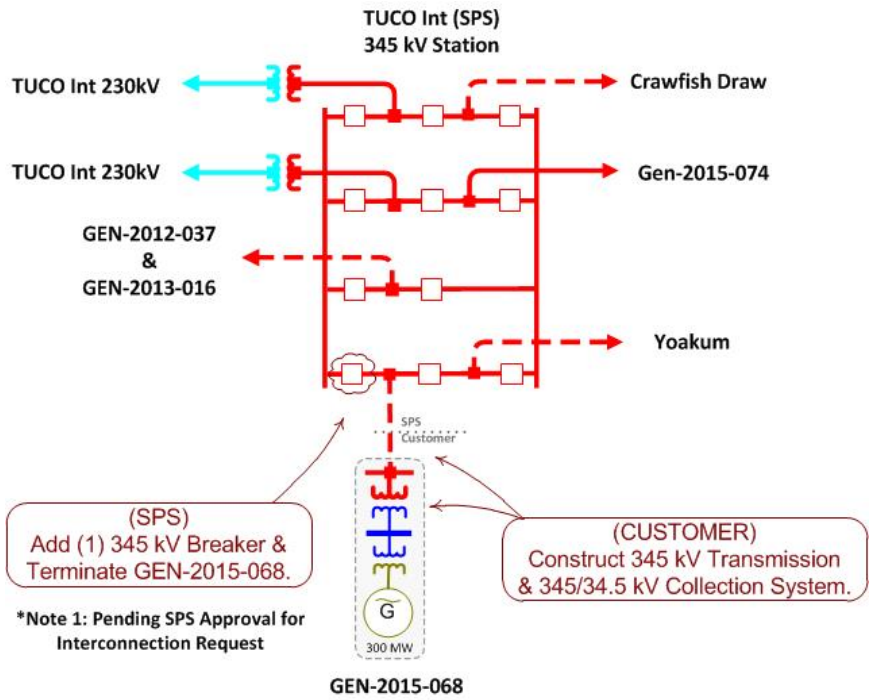

GEN-2015-069
Estimated Cluster Analysis Interconnection Cost: $2,755,752

Estimated Stand Alone Analysis Interconnection Cost: $2,755,752

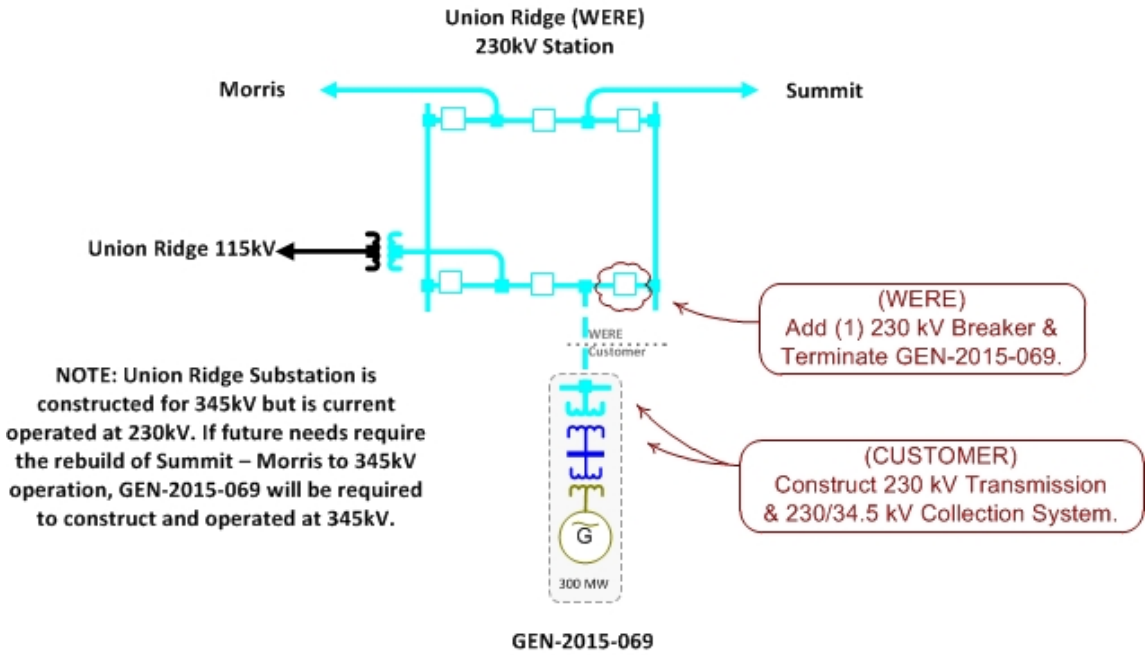

GEN-2015-071
Estimated Cluster Analysis Interconnection Cost: $14,623,541
Estimated Stand Alone Analysis Interconnection Cost: $14,623,541

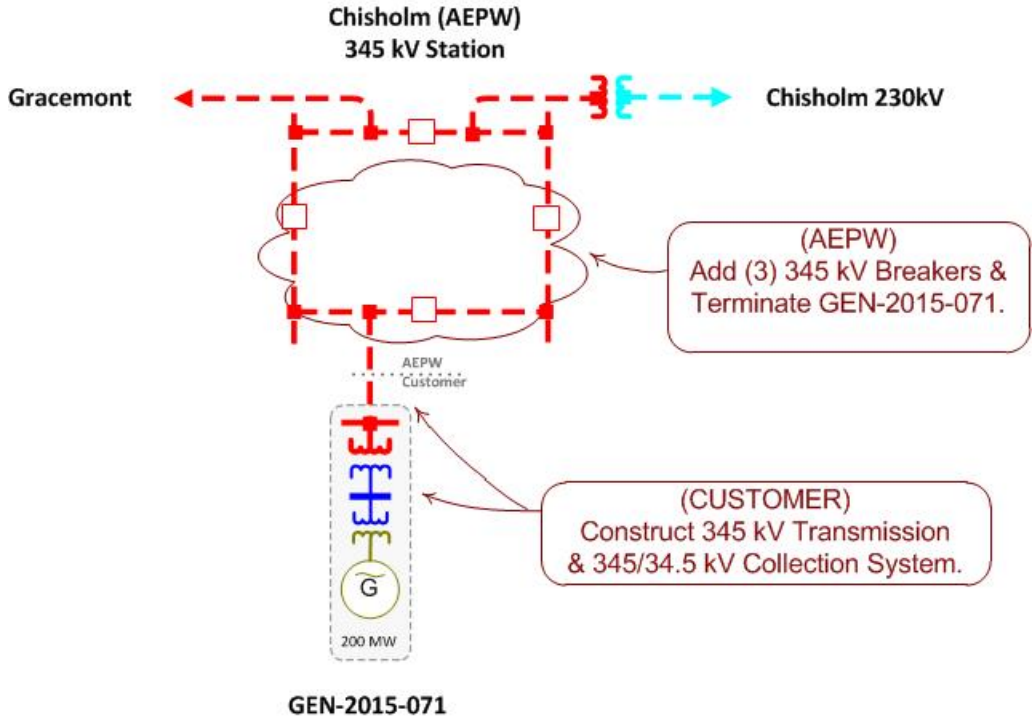

GEN-2015-072
Estimated Cluster Analysis Interconnection Cost: $0

Estimated Stand Alone Analysis Interconnection Cost: $0

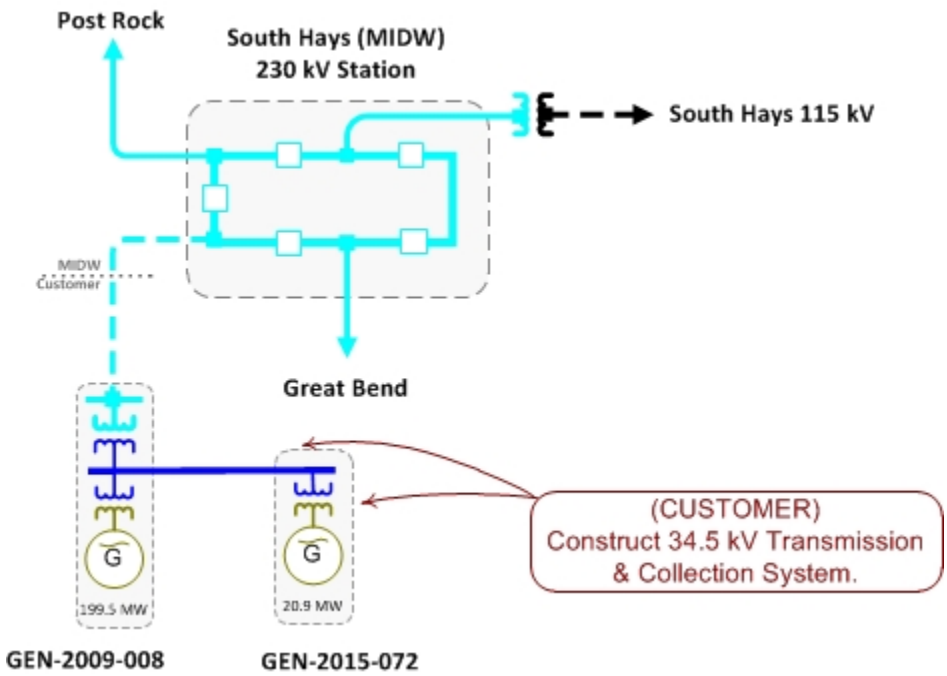

GEN-2015-073
Estimated Cluster Analysis Interconnection Cost: $2,576,628
Estimated Stand Alone Analysis Interconnection Cost: $2,576,628

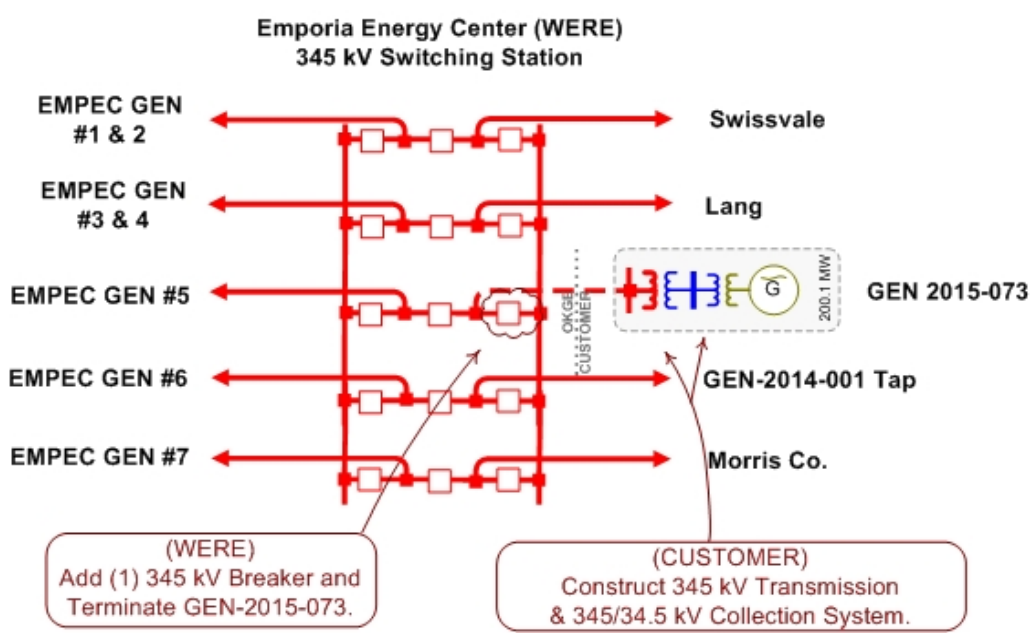

GEN-2015-074

Estimated Cluster Analysis Interconnection Cost: $15,551,378
Estimated Stand Alone Analysis Interconnection Cost: $15,551,378

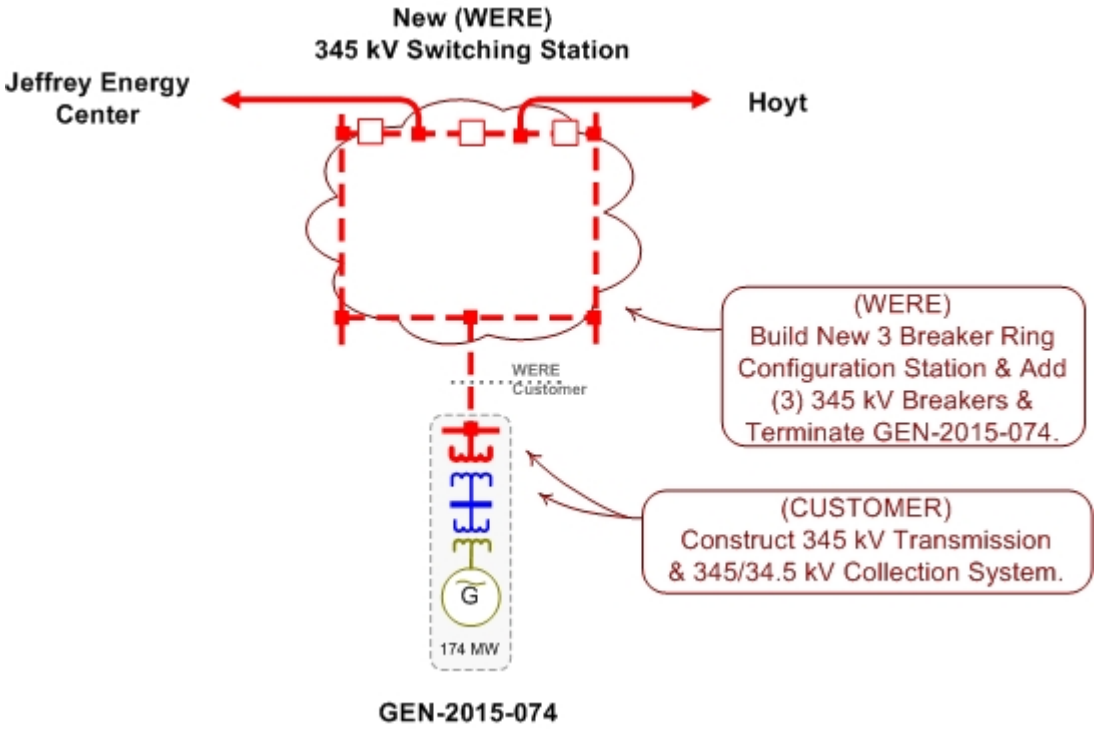

GEN-2015-075
Estimated Cluster Analysis Interconnection Cost: $
Estimated Stand Alone Analysis Interconnection Cost: $

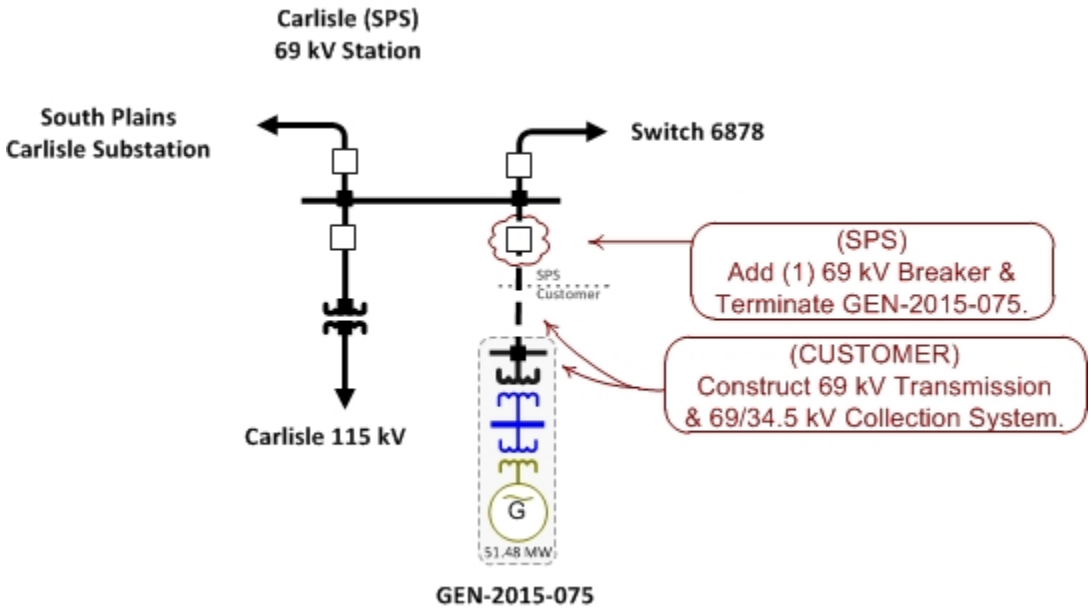

GEN-2015-076
Estimated Cluster Analysis Interconnection Cost: $2,600,000

Estimated Stand Alone Analysis Interconnection Cost: $2,600,000

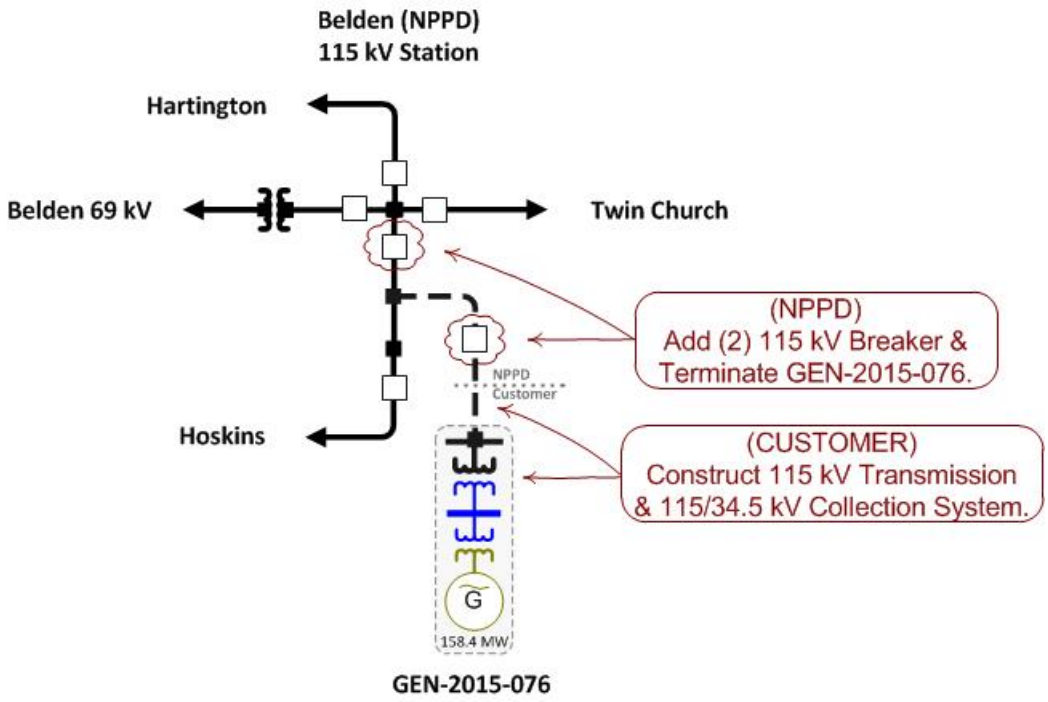

GEN-2015-077
Estimated Cluster Analysis Interconnection Cost: $5,640,294
Estimated Stand Alone Analysis Interconnection Cost: $5,640,294

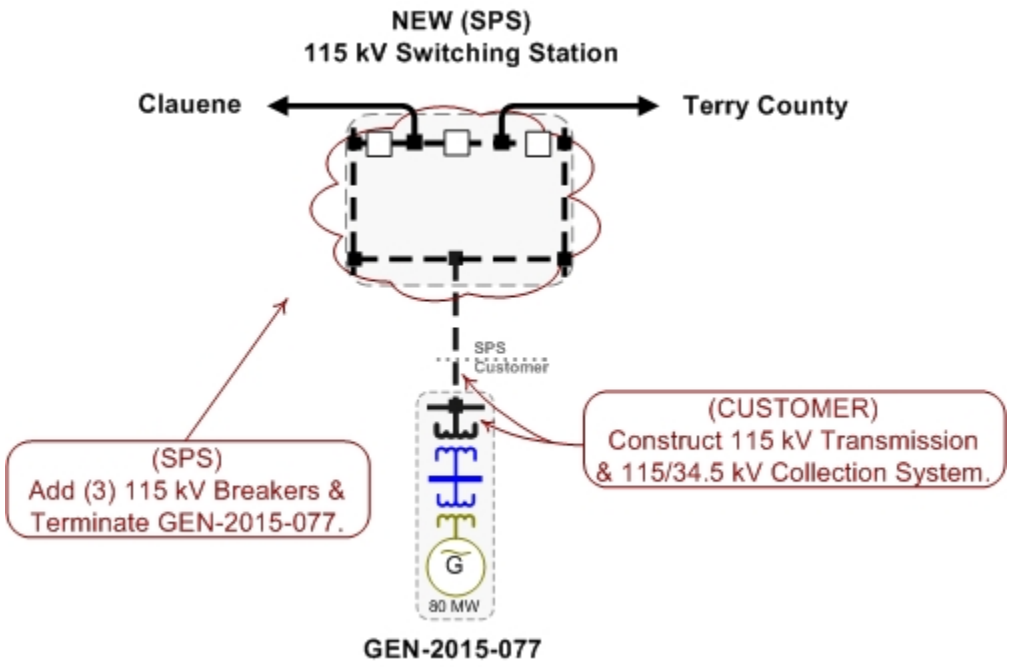

GEN-2015-078

Estimated Cluster Analysis Interconnection Cost: $1,082,325
Estimated Stand Alone Analysis Interconnection Cost: $1,082,325

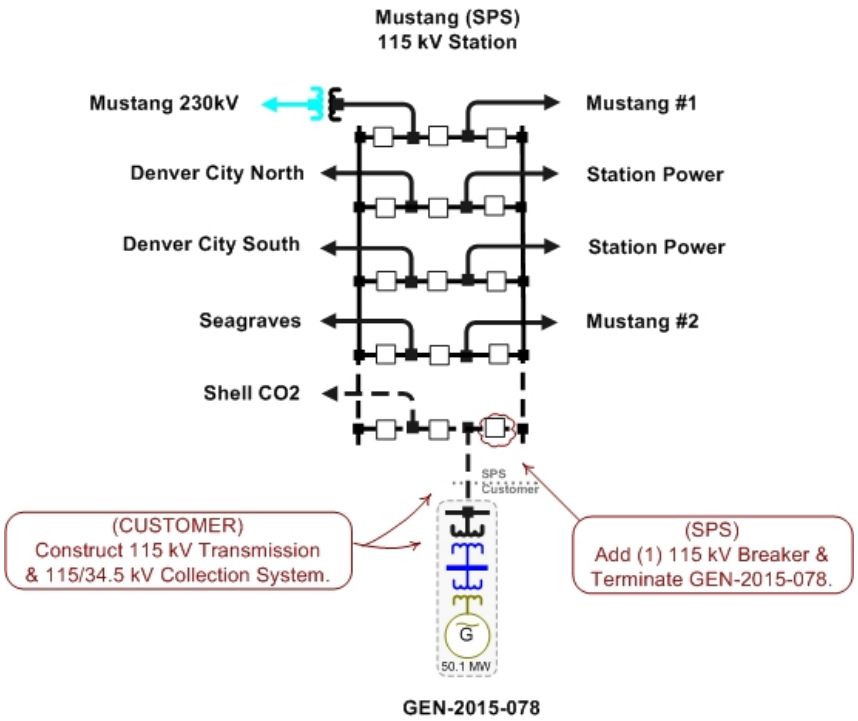

GEN-2015-079
Estimated Cluster Analysis Interconnection Cost: $7,374,768
Estimated Stand Alone Analysis Interconnection Cost: $7,374,768

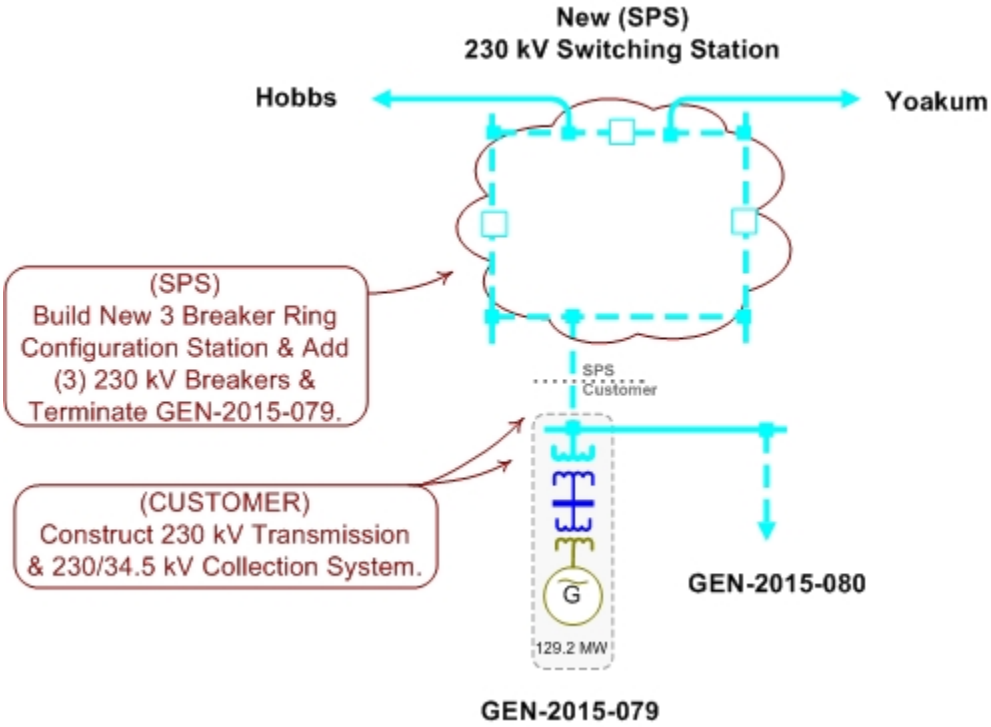

GEN-2015-080
Estimated Cluster Analysis Interconnection Cost: $0
Estimated Stand Alone Analysis Interconnection Cost: $7,374,768

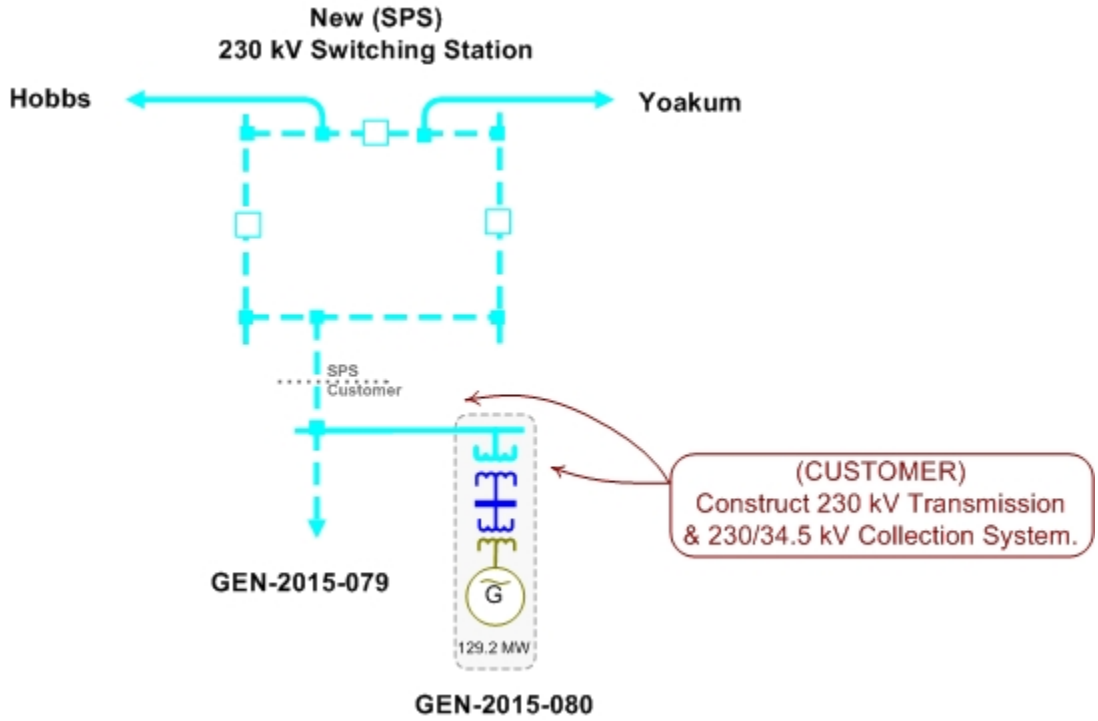

GEN-2015-081
Estimated Cluster Analysis Interconnection Cost: $3,005,000
Estimated Stand Alone Analysis Interconnection Cost: $3,005,000

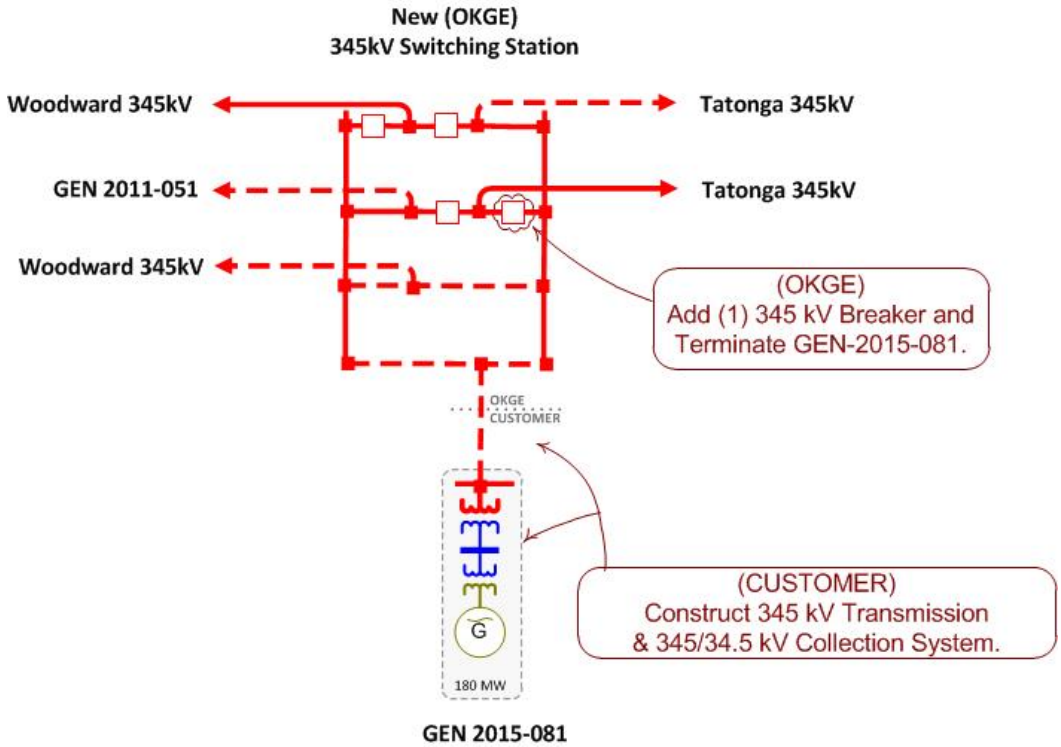

GEN-2015-082
Estimated Cluster Analysis Interconnection Cost: $1,930,000
Estimated Stand Alone Analysis Interconnection Cost: $1,930,000

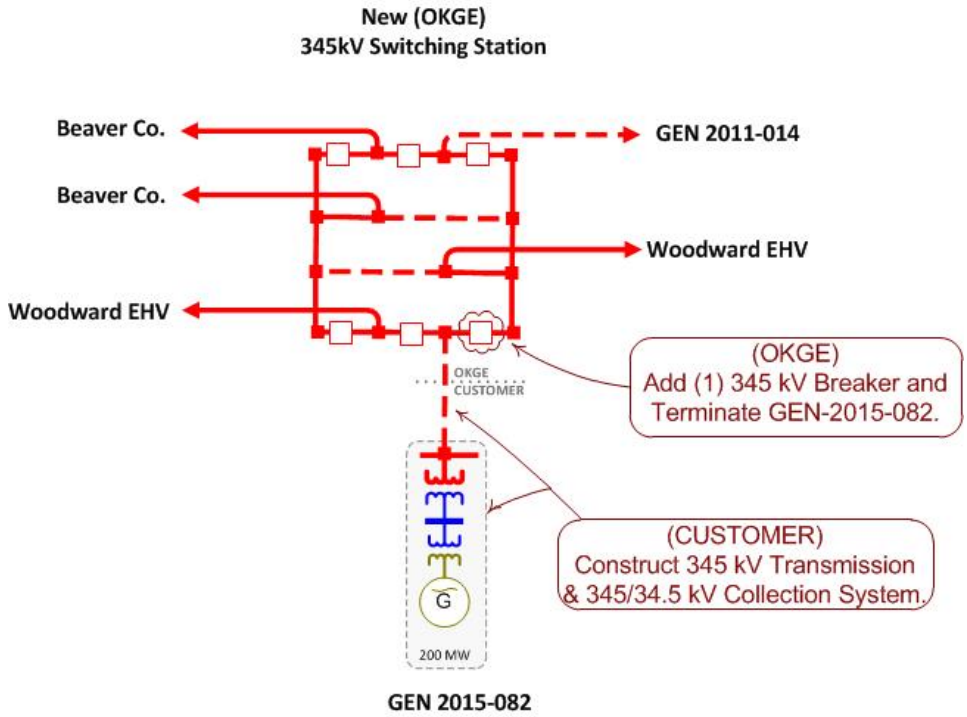

GEN-2015-083
Estimated Cluster Analysis Interconnection Cost: $6,713,963
Estimated Stand Alone Analysis Interconnection Cost: $6,713,963

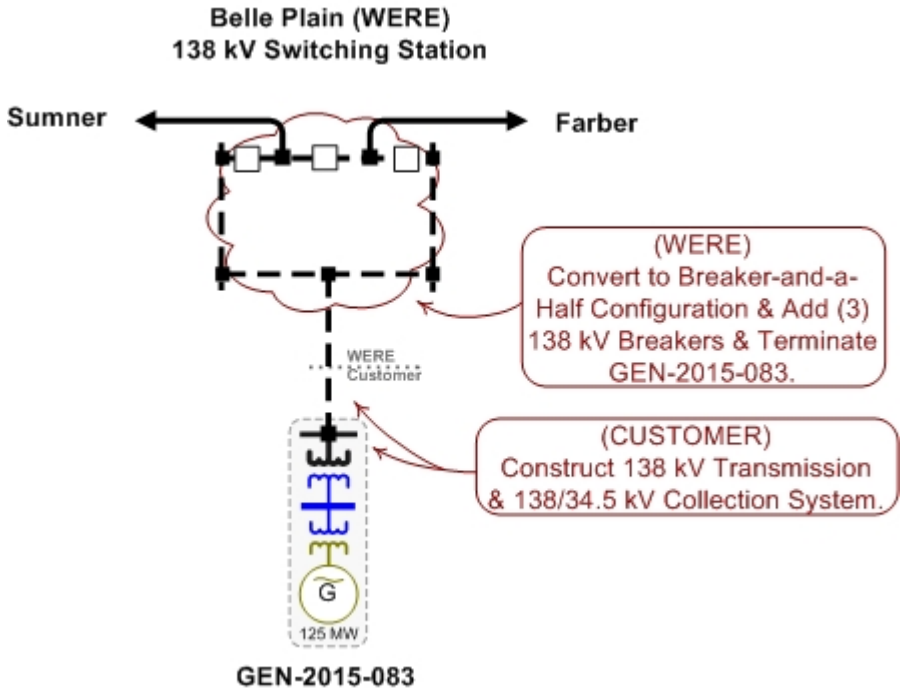

GEN-2015-084
Estimated Cluster Analysis Interconnection Cost: $14,665,056
Estimated Stand Alone Analysis Interconnection Cost: $14,665,056

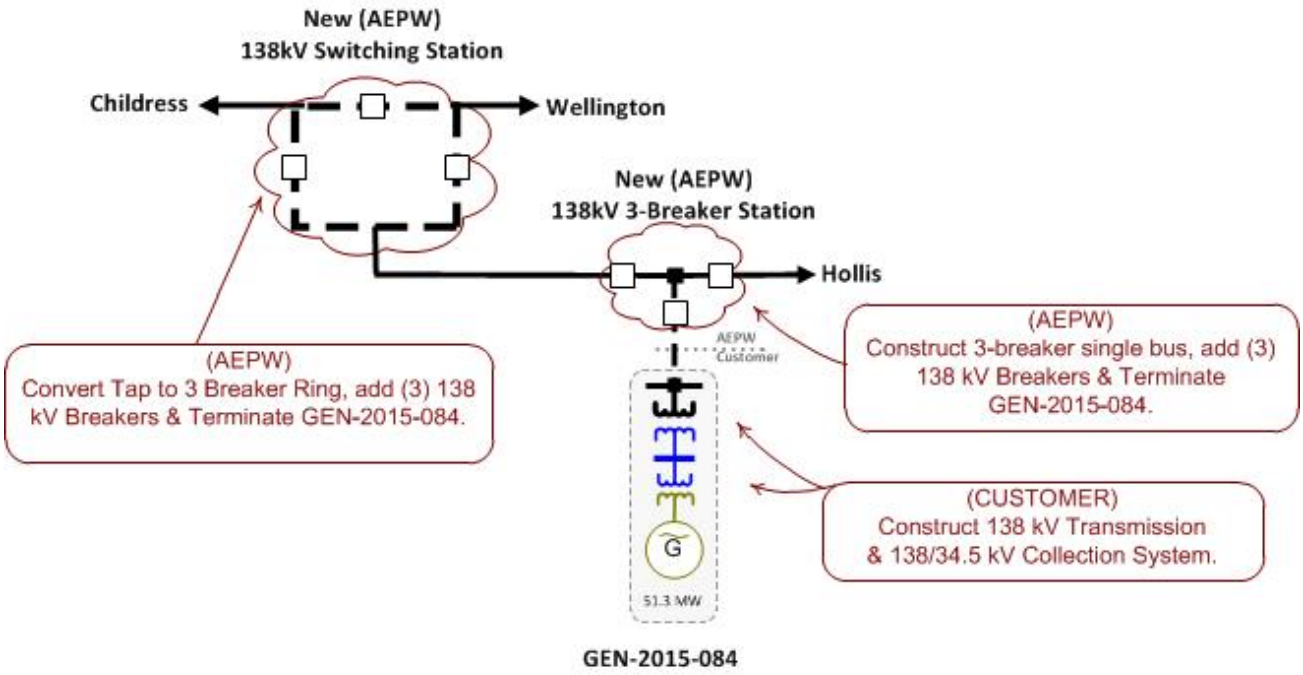

*Remote end work is required at Sharmack and Childress substations for the addition of GEN-2015-084

GEN-2015-085
Estimated Cluster Analysis Interconnection Cost: $8,406,414
Estimated Stand Alone Analysis Interconnection Cost: $8,406,414

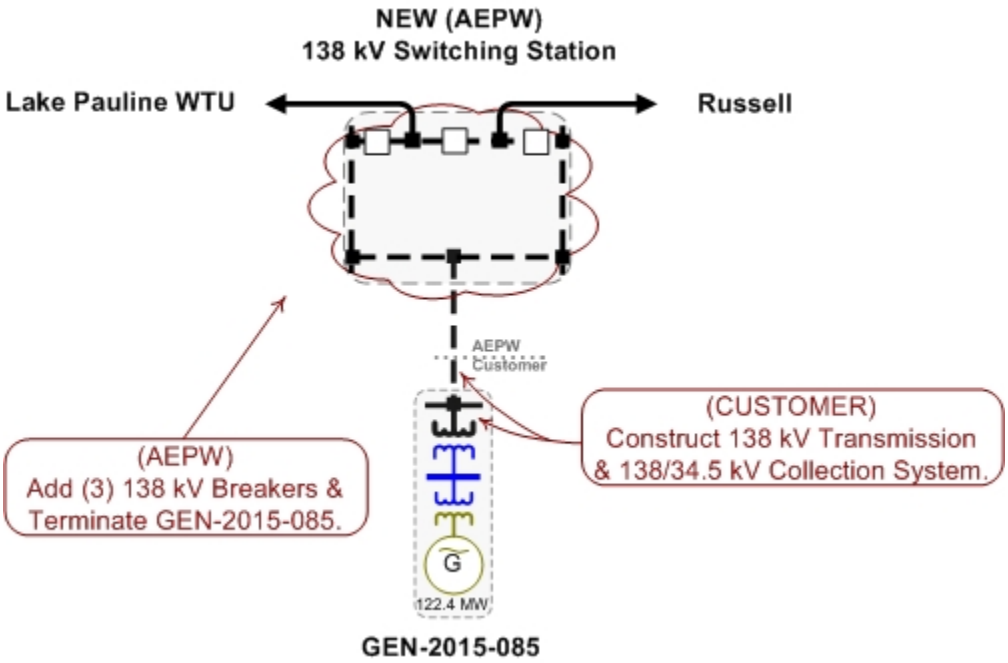

GEN-2015-087
Estimated Cluster Analysis Interconnection Cost: $5,300,000
Estimated Stand Alone Analysis Interconnection Cost: $5,300,000

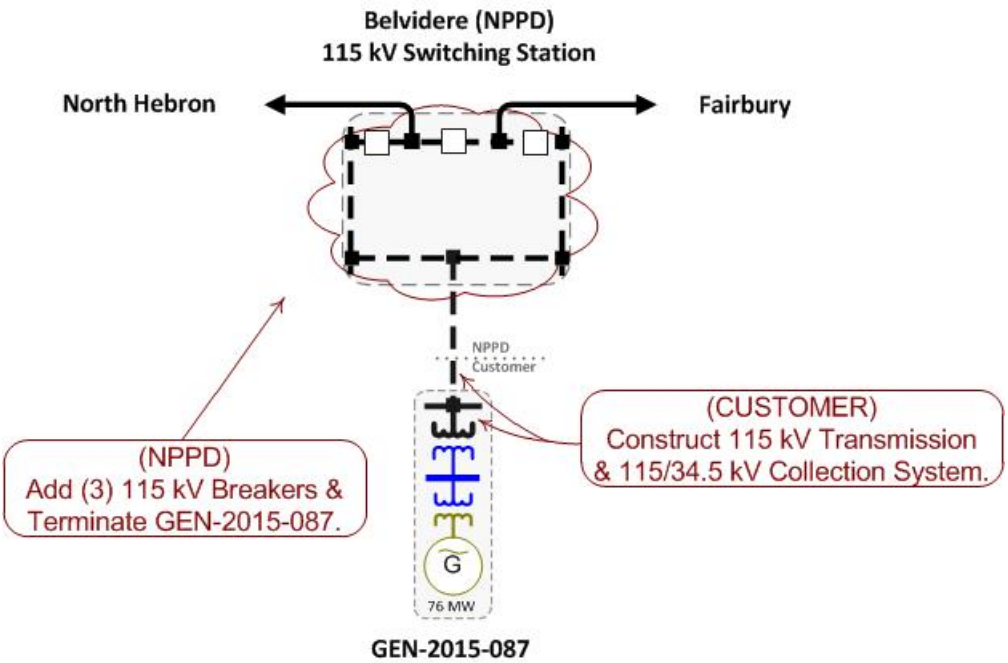

GEN-2015-088
Estimated Cluster Analysis Interconnection Cost: $15,000,000
Estimated Stand Alone Analysis Interconnection Cost: $15,000,000

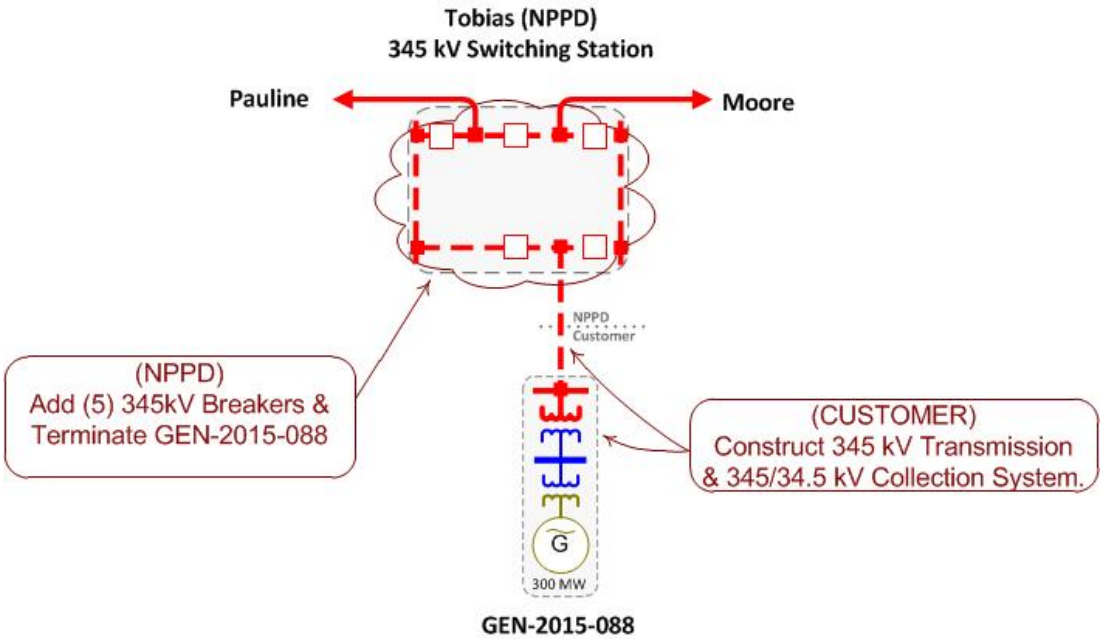

GEN-2015-090
Estimated Cluster Analysis Interconnection Cost: $10,000
Estimated Stand Alone Analysis Interconnection Cost: $10,000

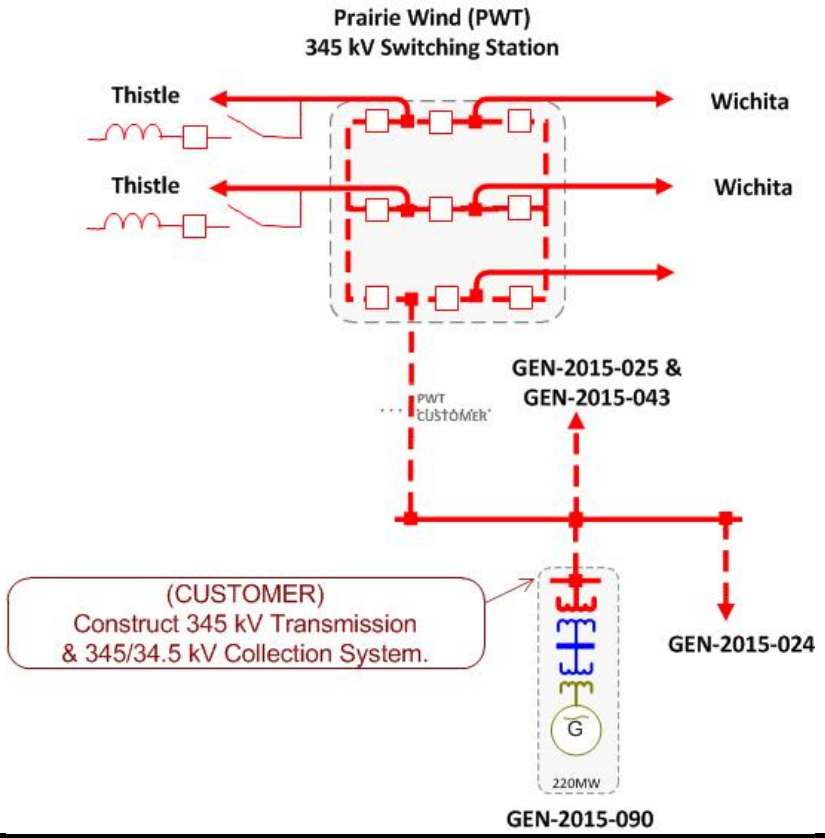

GEN-2015-091
Estimated Cluster Analysis Interconnection Cost: $3,224,682
Estimated Stand Alone Analysis Interconnection Cost: $3,224,682

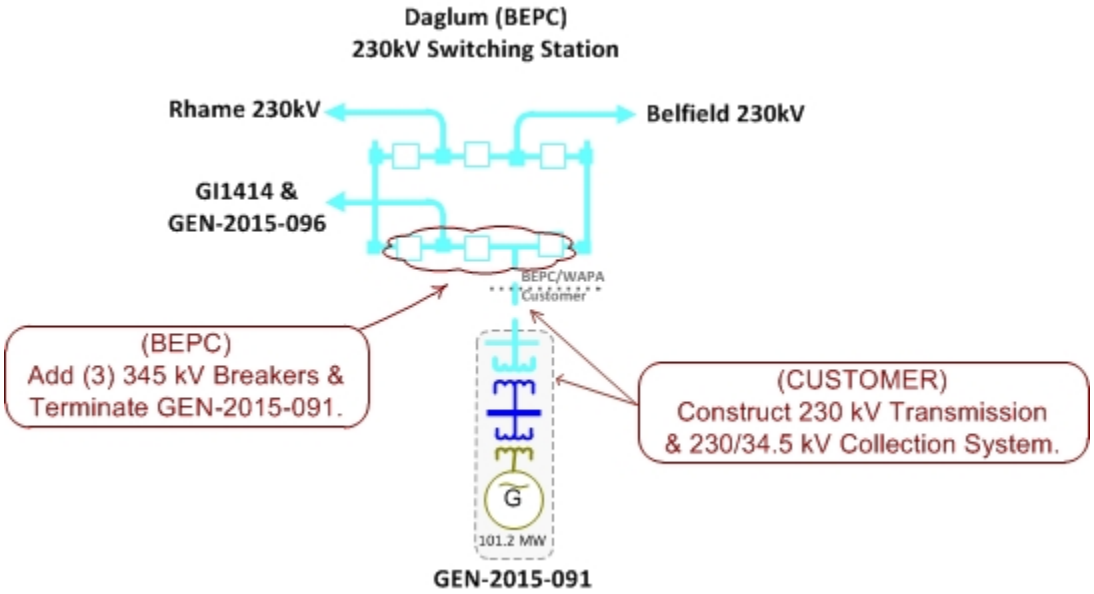

GEN-2015-092
Estimated Cluster Analysis Interconnection Cost: $1,110,612
Estimated Stand Alone Analysis Interconnection Cost: $1,110,612

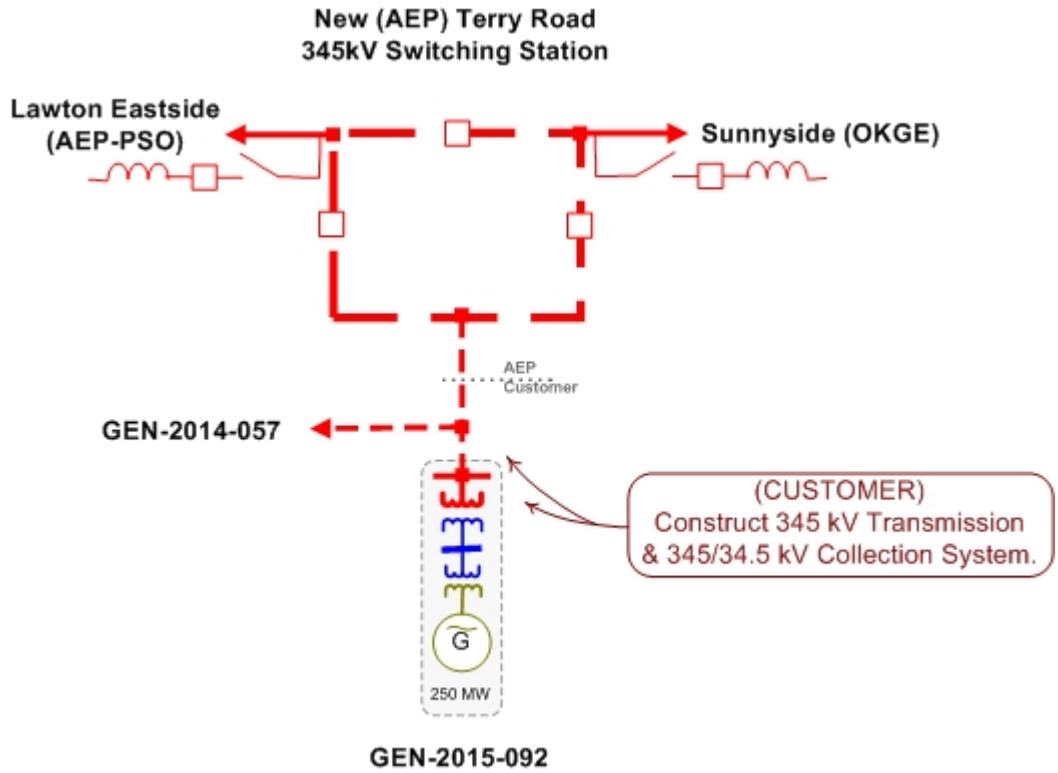

GEN-2015-093
Estimated Cluster Analysis Interconnection Cost: $2,125,000
Estimated Stand Alone Analysis Interconnection Cost: $2,125,000

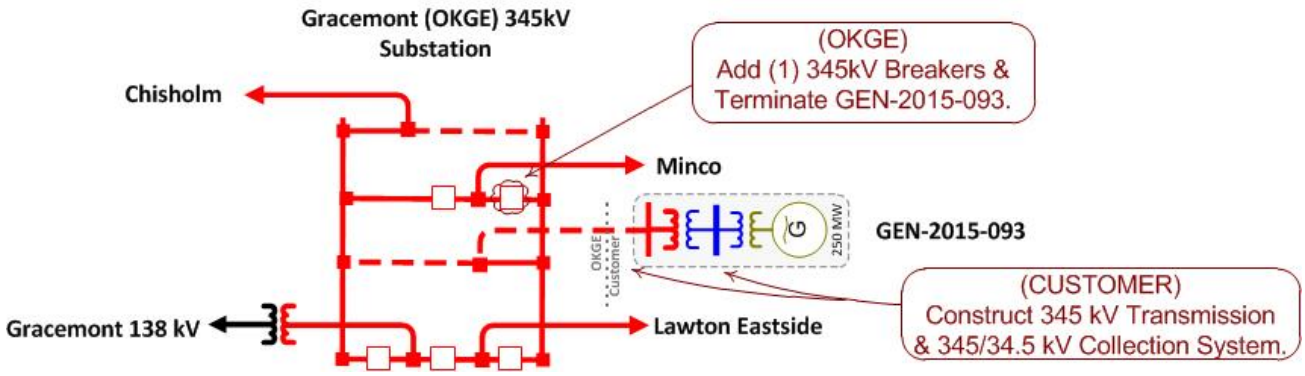

GEN-2015-094
Estimated Cluster Analysis Interconnection Cost: $ 7,916,350
Estimated Stand Alone Analysis Interconnection Cost: $ 7,916,350

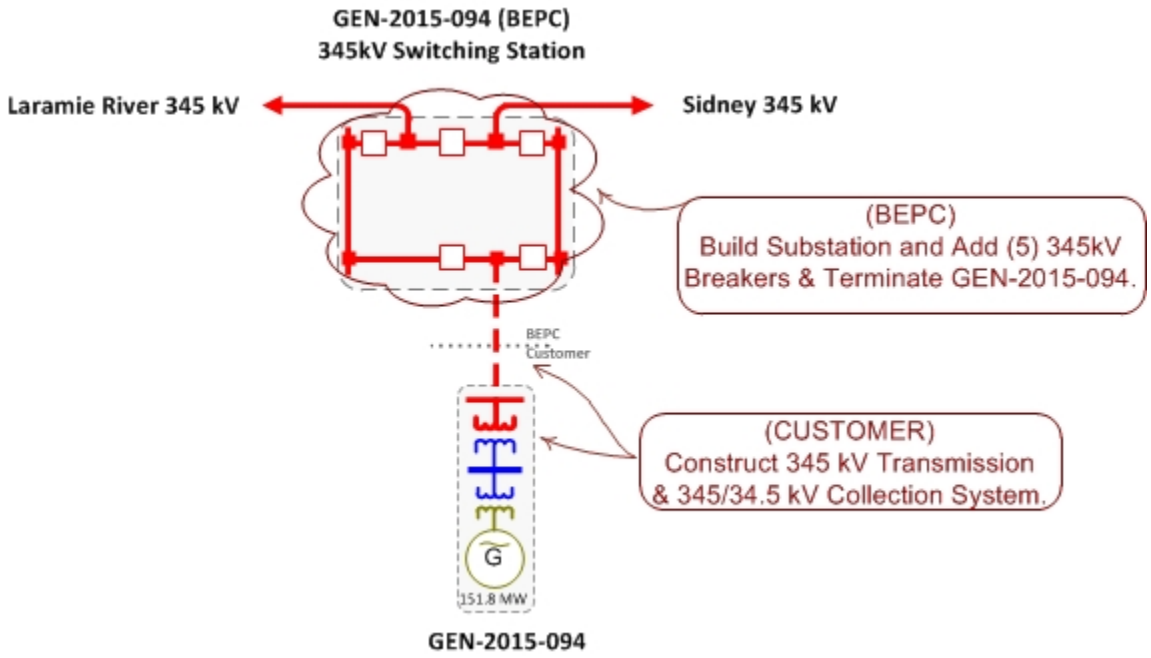

GEN-2015-095
Estimated Cluster Analysis Interconnection Cost: $4,400,000
Estimated Stand Alone Analysis Interconnection Cost: $4,400,000

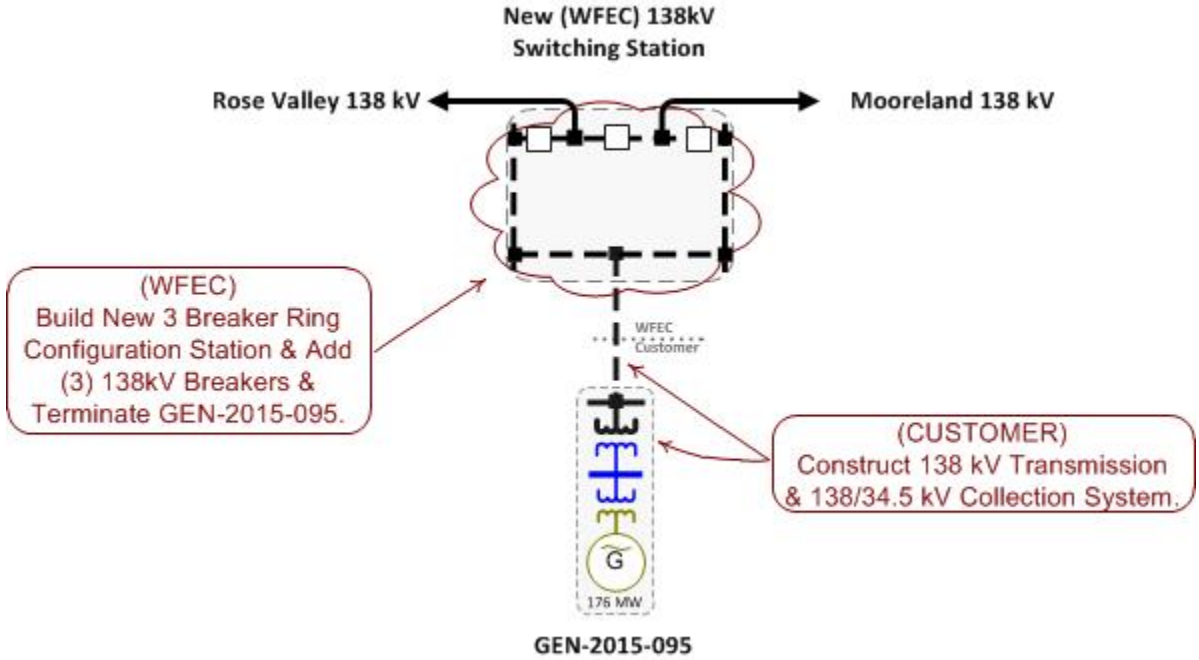

GEN-2015-096
Estimated Cluster Analysis Interconnection Cost: $0
Estimated Stand Alone Analysis Interconnection Cost: $0

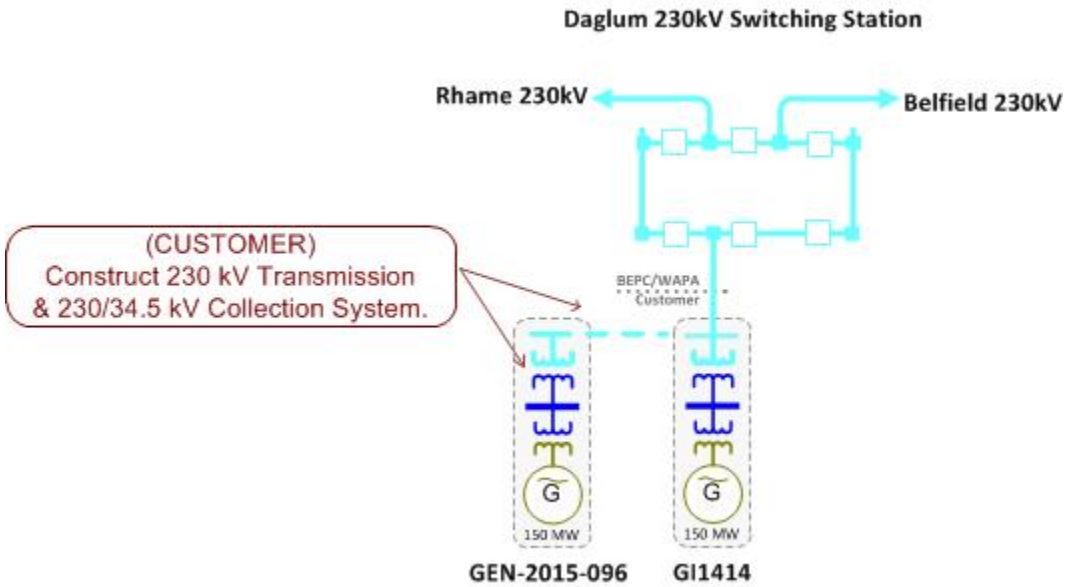

GEN-2015-097
Estimated Cluster Analysis Interconnection Cost: $3,000,000
Estimated Stand Alone Analysis Interconnection Cost: $3,000,000

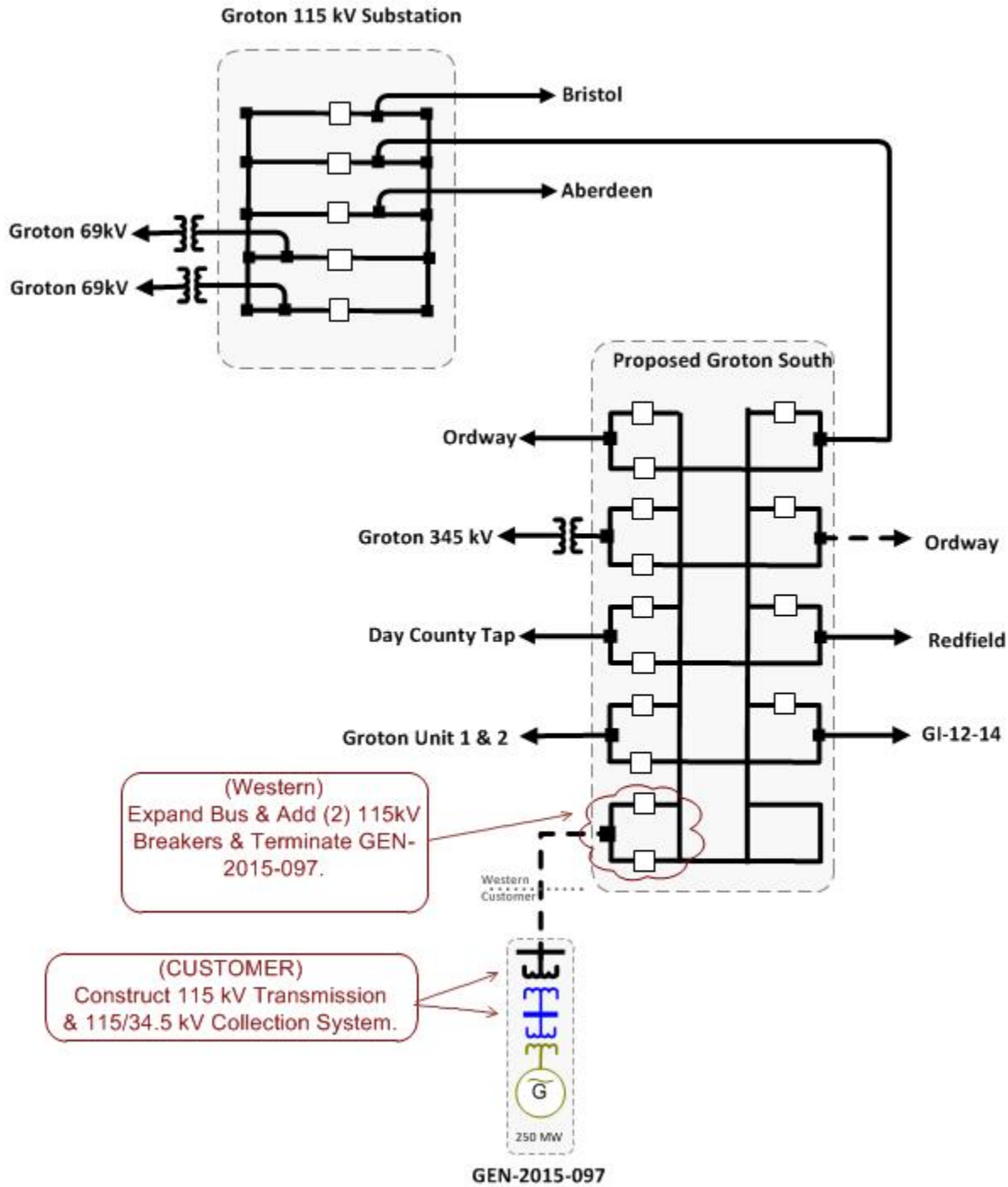

GEN-2015-098
Estimated Cluster Analysis Interconnection Cost: $3,000,000
Estimated Stand Alone Analysis Interconnection Cost: $3,000,000

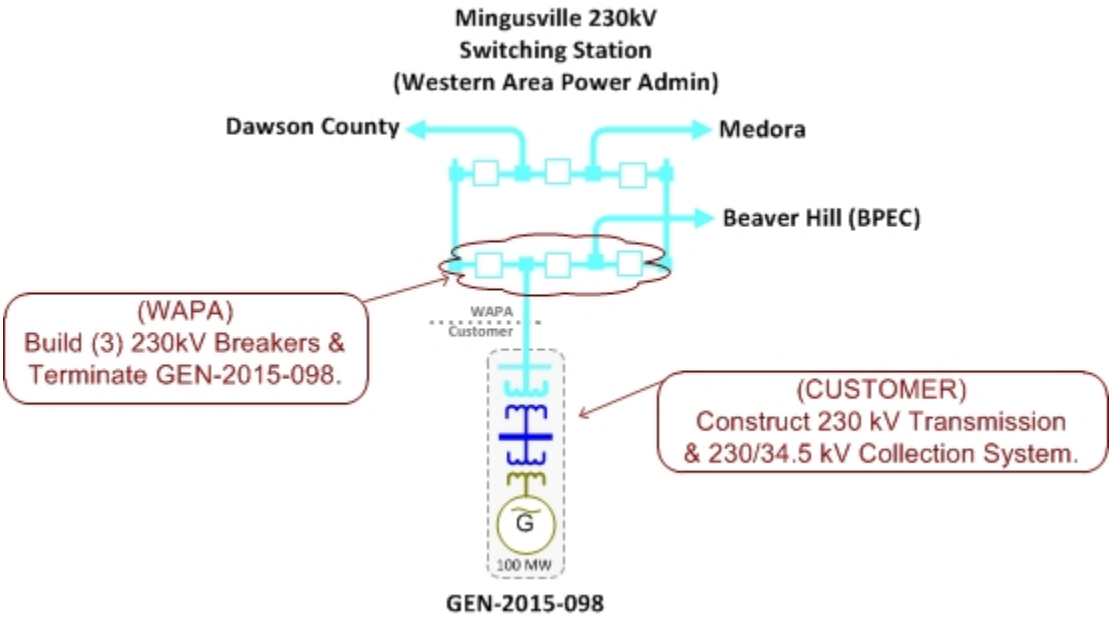

11.5 E: Cost Allocation per Interconnection Request (Including Prior Queued Upgrades)

Important Note:

****WITHDRAWAL OF HIGHER QUEUED PROJECTS WILL CAUSE A RESTUDY AND MAY RESULT IN HIGHER INTERCONNECTION COSTS****

This section shows each Generation Interconnection Request Customer, their current study impacted Network Upgrades, and the previously allocated upgrades upon which they rely to accommodate their interconnection to the transmission system.

The costs associated with the current study Network Upgrades are allocated to the Customers shown in this report.

In addition should a higher queued request, defined as one this study includes as a prior queued request, withdraw, the Network Upgrades assigned to the withdrawn request may be reallocated to the remaining requests that have an impact on the Network Upgrade under a restudy. Also, should an Interconnection Request choose to go into service prior to the operation date of any necessary Network Upgrades, the costs associated with those upgrades may be reallocated to the impacted Interconnection Request. The actual costs allocated to each Generation Interconnection Request Customer will be determined at the time of a restudy.

The required interconnection costs listed do not include all costs associated with the deliverability of the energy to final customers. These costs are determined by separate studies if the Customer submits a Transmission Service Request through SPP's Open Access Same Time Information System (OASIS) as required by Attachment Z1 of the SPP OATT. In addition, costs associated with a short circuit analysis will be allocated should the Interconnection Request Customer choose to execute a Facility Study Agreement.

There may be additional costs allocated to each Customer. See Appendix F for more details.

Appendix E. Cost Allocation Per Request

(Including Previously Allocated Network Upgrades*)

Interconnection Request and Upgrades	Upgrade Type	Allocated Cost	Upgrade Cost
ASGI-2015-006			
ASGI-2015-006 Interconnection Costs See One-Line Diagram.	Current Study	$0	$0
	Current Study Total	$0	
GEN-2014-037			
Beaver County - Grapevine 345kV CKT 1 Build approximately 75 miles of new 345kV from Beaver County - Grapevine	Current Study	$8,502,848	$75,000,000
Chisholm Substation Upgrade 345kV Expand planned Chisholm Substation to tap and terminate Woodward - Border 345kV into the Chisholm Substation	Current Study	$59,740	$12,000,000
GEN-2014-037 Interconnection Costs See One-Line Diagram.	Current Study	$20,334,923	$20,334,923
Grapevine - Chisholm 345kV CKT 1 Build approximately 75 miles of new 345kV from Grapevine - Chisholm	Current Study	$12,529,372	$75,000,000
Grapevine Substation Upgrade 345kV Build Grapevine Substation and terminate Beaver Co - Grapevine, Potter Co - Grapevine, Grapevine - Chisholm 345kV into the Grapevine Substation	Current Study	$2,004,699	$12,000,000
Elk City 230/138/13kV Transformer CKT 1 Replace terminal equipment for Elk City Transformer to achieve transformer limit of 450MVA.	Previously Allocated		$15,000,000
Mathewson - Cimarron 345kV CKT 2 Build second 345kV circuit from Matthewson - Cimarron @ 3000 amps per ITP10.	Previously Allocated		$42,903,753
Tatonga - Mathewson 345kV CKT 2 Build second 345kV circuit from Tatonga - Matthewson @ 3000 amps per ITP10.	Previously Allocated		$104,260,473
Walkemeyer Tap - Walkemeyer 345/115kV Project Per SPP-NTC-200343 and SPP-NTC-200344 (Total Project E&C Cost Shown).	Previously Allocated		$17,838,846
Woodward - GEN-2011-051 Tap - Tatonga 345kV CKT 2 Build second 345kV circuit from Woodward - Tatonga @ 3000 amps per ITP10.	Previously Allocated		$71,876,622
Woodward EHV Phase Shifting Transformer CKT 1 Install one phase shifting transformer at Woodward	Previously Allocated		$7,200,000
	Current Study Total	$43,431,582	

* Withdrawal of higher queued projects will cause a restudy and may result in higher costs

Interconnection Request and Upgrades	Upgrade Type	Allocated Cost	Upgrade Cost
GEN-2014-038			
Beaver County - Grapevine 345kV CKT 1 Build approximately 75 miles of new 345kV from Beaver County - Grapevine	Current Study	$4,568,038	$75,000,000
Chisholm Substation Upgrade 345kV Expand planned Chisholm Substation to tap and terminate Woodward - Border 345kV into the Chisholm Substation	Current Study	$21,109	$12,000,000
GEN-2014-038 Interconnection Costs See One-Line Diagram.	Current Study	$13,403,168	$13,403,168
Grapevine - Chisholm 345kV CKT 1 Build approximately 75 miles of new 345kV from Grapevine - Chisholm	Current Study	$13,636,210	$75,000,000
Grapevine Substation Upgrade 345kV Build Grapevine Substation and terminate Beaver Co - Grapevine, Potter Co - Grapevine, Grapevine - Chisholm 345kV into the Grapevine Substation	Current Study	$2,181,794	$12,000,000
Elk City 230/138/13kV Transformer CKT 1 Replace terminal equipment for Elk City Transformer to achieve transformer limit of 450MVA.	Previously Allocated		$15,000,000
Mathewson - Cimarron 345kV CKT 2 Build second 345kV circuit from Matthewson - Cimarron @ 3000 amps per ITP10.	Previously Allocated		$42,903,753
Tatonga - Mathewson 345kV CKT 2 Build second 345kV circuit from Tatonga - Matthewson @ 3000 amps per ITP10.	Previously Allocated		$104,260,473
Walkemeyer Tap - Walkemeyer 345/115kV Project Per SPP-NTC-200343 and SPP-NTC-200344 (Total Project E&C Cost Shown).	Previously Allocated		$17,838,846
Woodward - GEN-2011-051 Tap - Tatonga 345kV CKT 2 Build second 345kV circuit from Woodward - Tatonga @ 3000 amps per ITP10.	Previously Allocated		$71,876,622
Woodward EHV Phase Shifting Transformer CKT 1 Install one phase shifting transformer at Woodward	Previously Allocated		$7,200,000
	Current Study Total	$33,810,318	
GEN-2014-046			
Beaver County - Grapevine 345kV CKT 1 Build approximately 75 miles of new 345kV from Beaver County - Grapevine	Current Study	$3,853,462	$75,000,000
Border - Chisholm 345kV CKT 2 Build approximately 25 miles of second circuit 345kV from Border - Chisholm	Current Study	$1,704,423	$25,000,000
Border 345kV Reactive Power Support Install (6)-50Mvar Capacitor Bank(s) and +250Mvar SVC at Border Substation	Current Study	$1,908,618	$30,000,000
Chisholm - Elk City 230kV CKT 1 Rebuild approximately 15 miles of 230kV from Chisholm - Elk City.	Current Study	$1,099,342	$15,000,000

* Withdrawal of higher queued projects will cause a restudy and may result in higher costs

Interconnection Request and Upgrades	Upgrade Type	Allocated Cost	Upgrade Cost
Chisholm Substation Upgrade 345kV Expand planned Chisholm Substation to tap and terminate Woodward - Border 345kV into the Chisholm Substation	Current Study	$801,627	$12,000,000
Cimarron - Minco 345kV CKT 1 Replace 1600 amp switches.	Current Study	$33,788	$1,000,000
GEN-2014-046 Interconnection Costs See One-Line Diagram.	Current Study	$2,456,266	$2,456,266
GEN-2014-057 - Lawton Eastside 345kV CKT 1 Replace terminal equipmen to atleast 1600 amps	Current Study	$28,153	$500,000
GEN-2014-057 - Sunnyside 345kV CKT 1 Rebuild approximately 45 miles of 345kV	Current Study	$1,885,531	$65,000,000
Grapevine - Chisholm 345kV CKT 1 Build approximately 75 miles of new 345kV from Grapevine - Chisholm	Current Study	$3,446,929	$75,000,000
Grapevine Substation Upgrade 345kV Build Grapevine Substation and terminate Beaver Co - Grapevine, Potter Co - Grapevine, Grapevine - Chisholm 345kV into the Grapevine Substation	Current Study	$551,509	$12,000,000
LP-Wadsworth 230/69/13kV Transformer CKT 1 NRIS only required upgrade: Replace existing LP-Wadsworth 230/69kV Transformer	Current Study	$474,695	$6,000,000
Oklaunion 345kV Reactive Power Support Incremental Upgrade Install (4)-50Mvar Capacitor Bank(s) and +300Mvar SVC at Oklaunion	Current Study	$2,727,089	$40,000,000
Potter County - Grapevine 345kV CKT 1 Build approximately 65 miles of new 345kV from Potter County - Grapevine	Current Study	$5,170,884	$65,000,000
Shamrock 115kV Capacitor Bank Add 2nd step of 9.6Mvars to Shamrock 115kV Capacitor Bank(s)	Current Study	$37,457	$500,000
Tolk - Potter County 345kV CKT 1 Build approximately 115 miles of 345kV from Tolk - Potter County	Current Study	$10,011,732	$105,000,000
Tolk - TUCO 2 345kV CKT 1 Build approximately 64 miles of 345kV from Tolk - TUCO 2.	Current Study	$10,862,068	$64,000,000
Tolk 345/230/13kV Transformer CKT 2 Build second 345/230/13kV transformer at Tolk	Current Study	$1,096,966	$15,000,000
TUCO 2 - Border 345kV CKT 2 Build approximately 194 miles of second circuit 345kV from TUCO 2 - Border	Current Study	$13,226,384	$194,000,000
TUCO 2 - Yoakum 345kV Retermination Incremental Upgrade for SPP-NTC-200283 to reterminate TUCO terminal to TUCO 2 terminal by adding approximately 3 miles of 345kV	Current Study	$547,841	$5,000,000

* Withdrawal of higher queued projects will cause a restudy and may result in higher costs

Interconnection Request and Upgrades	Upgrade Type	Allocated Cost	Upgrade Cost
Amoco Wasson - Oxy Tap 230kV CKT 1 Replace line traps at both terminals	Previously Allocated		$200,000
Chisholm - Gracemont 345kV CKT 1 Per SPP-NTC-200255 and 200240 (Total Project E&C Cost Shown)	Previously Allocated		$162,952,357
Elk City 230/138/13kV Transformer CKT 1 Replace terminal equipment for Elk City Transformer to achieve transformer limit of 450MVA.	Previously Allocated		$15,000,000
Grapevine - Nichols 230kV CKT 1 Replace terminal equipment	Previously Allocated		$400,000
Grapevine - Wheeler 230kV CKT 1 Replace terminal equipment	Previously Allocated		$400,000
Potash Junction 230kV Reactive Power Support Build Potash Junction 100Mvar Capacitor bank per 2015 ITPNT.	Previously Allocated		$6,465,875
Tolk - Plant X 230kV CKT 1 & 2 Rebuild circuit 1 and 2 betweek Tolk - Plant X 230kV to 1200 amps each.	Previously Allocated		$9,921,693
TUCO 2 (Crawfish Draw) Substation Upgrade 345/230kV Tap Border-TUCO approximately 2 miles from TUCO and build TUCO 2 (Crawfish Draw) 345kV substation and add 345/230/13.2kV transformer and tie on TUCO-Swisher 230kV.	Previously Allocated		$24,764,205
TUCO 345/230/13.2kV Transformer CKT 1 Replace existing TUCO 345/230/13.2kV Transformer circuit #1 with 640MVA.	Previously Allocated		$3,347,036
TUCO Interchange - Jones 230kV CKT 1 NRIS only required upgrade: Replace line traps at both terminals	Previously Allocated		$400,000
Woodward EHV Phase Shifting Transformer CKT 1 Install one phase shifting transformer at Woodward	Previously Allocated		$7,200,000
	Current Study Total	$61,924,764	
GEN-2014-059			
Chappel - Colton 115kV CKT 1 NRIS only require upgrade to achieve at least 115MVA	Current Study	$1,994,926	$6,000,000
Colton - Sidney 115kV CKT 1 NRIS only require upgrade to achieve at least 115MVA	Current Study	$831,219	$2,500,000
GEN-2014-059 Interconnection Costs See One-Line Diagram.	Current Study	$9,200,000	$9,200,000
GEN-2014-059 Tap - Ogallala 230kV CKT 2 Build approximately 18 miles of new 230kV	Current Study	$11,937,281	$16,200,000

* Withdrawal of higher queued projects will cause a restudy and may result in higher costs

Interconnection Request and Upgrades	Upgrade Type	Allocated Cost	Upgrade Cost
Gerald Gentleman Station Flowgate Stability Limit Mitigation Mitigation for GGS Flowgate Stability Limit. TBD in the Facilities Study with NPPD.	Current Study	$TBD	$TBD
Holt County - Grand Island 345kV CKT 1 NRIS only required upgrade	Current Study	$710,350	$60,000,000
MISO Affected System Study See section 4 power flow analysis.	Current Study	$TBD	$TBD
Ogallala - Gerald Gentleman Station 230kV CKT 1 Replace terminal equipment and increase line clearance.	Current Study	$333,249	$500,000
Sidney 230/115/13kV Transformer CKT 1 Replace Sidney 230/115/13kV Transformer circuit #1 to at least 150MVA	Current Study	$1,196,719	$3,276,500
Battle Creek-County Line 115kV CKT 1 Rebuild approximately 11 miles of 115kV from Battle Creek to County Line.	Previously Allocated		$4,000,000
County Line-Neligh East 115kV CKT 1 Rebuild approximately 12 miles of 115kV from County Line to Neligh East.	Previously Allocated		$8,050,000
Gentleman - Thedford 345kV CKT 1 Build approximately 76 Miles of 345kV from Gentleman to Thedford per SPP-NTC-200220 (Total Project E&C Cost Shown).	Previously Allocated		$311,717,040
Hoskins - Neligh 345/115kV Projects Per SPP 2014 ITP NT and NTC 200253 for 6/1/2016 in-service.	Previously Allocated		$98,697,720
Nebraska City - Sibley 345kV CKT 1 Priority Project: Nebraska City - Mullin Creek - Sibley 345kV circuit 1 per SPP-NTC-20097 and SPP-NTC-20098 (Total Project E&C Cost Shown).	Previously Allocated		$336,433,874
Thedford - Holt County 345kV CKT 1 Build approximately 146 Miles of 345kV from Thedford to Holt County per SPP-NTC-200220 (Total Project E&C Cost Shown).	Previously Allocated		$311,717,040
Twin Church - Dixon County 230kV Increase conductor clearances to accommodate 320MVA facility rating	Previously Allocated		$100,000
	Current Study Total	$26,203,744	
GEN-2015-018			
Beaver County - Grapevine 345kV CKT 1 Build approximately 75 miles of new 345kV from Beaver County - Grapevine	Current Study	$2,421,207	$75,000,000
Border - Chisholm 345kV CKT 2 Build approximately 25 miles of second circuit 345kV from Border - Chisholm	Current Study	$1,028,701	$25,000,000
Border 345kV Reactive Power Support Install (6)-50Mvar Capacitor Bank(s) and +250Mvar SVC at Border Substation	Current Study	$1,176,600	$30,000,000

* Withdrawal of higher queued projects will cause a restudy and may result in higher costs

Interconnection Request and Upgrades	Upgrade Type	Allocated Cost	Upgrade Cost
Chisholm - Elk City 230kV CKT 1 Rebuild approximately 15 miles of 230kV from Chisholm - Elk City.	Current Study	$705,629	$15,000,000
Chisholm Substation Upgrade 345kV Expand planned Chisholm Substation to tap and terminate Woodward - Border 345kV into the Chisholm Substation	Current Study	$483,820	$12,000,000
Cimarron - Minco 345kV CKT 1 Replace 1600 amp switches.	Current Study	$21,014	$1,000,000
GEN-2014-057 - Lawton Eastside 345kV CKT 1 Replace terminal equipmen to atleast 1600 amps	Current Study	$17,573	$500,000
GEN-2014-057 - Sunnyside 345kV CKT 1 Rebuild approximately 45 miles of 345kV	Current Study	$1,176,908	$65,000,000
GEN-2015-018 Interconnection Costs See One-Line Diagram.	Current Study	$5,121,512	$5,121,512
Grapevine - Chisholm 345kV CKT 1 Build approximately 75 miles of new 345kV from Grapevine - Chisholm	Current Study	$2,365,237	$75,000,000
Grapevine Substation Upgrade 345kV Build Grapevine Substation and terminate Beaver Co - Grapevine, Potter Co - Grapevine, Grapevine - Chisholm 345kV into the Grapevine Substation	Current Study	$378,438	$12,000,000
LP-Wadsworth 230/69/13kV Transformer CKT 1 NRIS only required upgrade: Replace existing LP-Wadsworth 230/69kV Transformer	Current Study	$306,057	$6,000,000
Oklaunion 345kV Reactive Power Support Incremental Upgrade Install (4)-50Mvar Capacitor Bank(s) and +300Mvar SVC at Oklaunion	Current Study	$1,645,928	$40,000,000
Potter County - Grapevine 345kV CKT 1 Build approximately 65 miles of new 345kV from Potter County - Grapevine	Current Study	$3,375,410	$65,000,000
Shamrock 115kV Capacitor Bank Add 2nd step of 9.6Mvars to Shamrock 115kV Capacitor Bank(s)	Current Study	$26,096	$500,000
Tolk - Potter County 345kV CKT 1 Build approximately 115 miles of 345kV from Tolk - Potter County	Current Study	$5,483,554	$105,000,000
Tolk - TUCO 2 345kV CKT 1 Build approximately 64 miles of 345kV from Tolk - TUCO 2.	Current Study	$7,087,432	$64,000,000
Tolk 345/230/13kV Transformer CKT 2 Build second 345/230/13kV transformer at Tolk	Current Study	$1,988,143	$15,000,000
TUCO 2 - Border 345kV CKT 2 Build approximately 194 miles of second circuit 345kV from TUCO 2 - Border	Current Study	$7,982,751	$194,000,000

* Withdrawal of higher queued projects will cause a restudy and may result in higher costs

Interconnection Request and Upgrades	Upgrade Type	Allocated Cost	Upgrade Cost
TUCO 2 - Yoakum 345kV Retermination Incremental Upgrade for SPP-NTC-200283 to reterminate TUCO terminal to TUCO 2 terminal by adding approximately 3 miles of 345kV	Current Study	$132,486	$5,000,000
Chisholm - Gracemont 345kV CKT 1 Per SPP-NTC-200255 and 200240 (Total Project E&C Cost Shown)	Previously Allocated		$162,952,357
Curry County - Bailey County 115kV CKT 1 Per 2012 ITP NT SPP-NTC-200166	Previously Allocated		$35,099,588
Elk City 230/138/13kV Transformer CKT 1 Replace terminal equipment for Elk City Transformer to achieve transformer limit of 450MVA.	Previously Allocated		$15,000,000
Grapevine - Nichols 230kV CKT 1 Replace terminal equipment	Previously Allocated		$400,000
Grapevine - Wheeler 230kV CKT 1 Replace terminal equipment	Previously Allocated		$400,000
Potash Junction 230kV Reactive Power Support Build Potash Junction 100Mvar Capacitor bank per 2015 ITPNT.	Previously Allocated		$6,465,875
Tolk - Plant X 230kV CKT 1 & 2 Rebuild circuit 1 and 2 betweek Tolk - Plant X 230kV to 1200 amps each.	Previously Allocated		$9,921,693
TUCO 2 (Crawfish Draw) Substation Upgrade 345/230kV Tap Border-TUCO approximately 2 miles from TUCO and build TUCO 2 (Crawfish Draw) 345kV substation and add 345/230/13.2kV transformer and tie on TUCO-Swisher 230kV.	Previously Allocated		$24,764,205
TUCO 345/230/13.2kV Transformer CKT 1 Replace existing TUCO 345/230/13.2kV Transformer circuit #1 with 640MVA.	Previously Allocated		$3,347,036
TUCO Interchange - Jones 230kV CKT 1 NRIS only required upgrade: Replace line traps at both terminals	Previously Allocated		$400,000
Woodward EHV Phase Shifting Transformer CKT 1 Install one phase shifting transformer at Woodward	Previously Allocated		$7,200,000
	Current Study Total	$42,924,495	
GEN-2015-020			
Beaver County - Grapevine 345kV CKT 1 Build approximately 75 miles of new 345kV from Beaver County - Grapevine	Current Study	$3,019,527	$75,000,000
Border - Chisholm 345kV CKT 2 Build approximately 25 miles of second circuit 345kV from Border - Chisholm	Current Study	$1,301,998	$25,000,000
Border 345kV Reactive Power Support Install (6)-50Mvar Capacitor Bank(s) and +250Mvar SVC at Border Substation	Current Study	$1,481,421	$30,000,000

* Withdrawal of higher queued projects will cause a restudy and may result in higher costs

Interconnection Request and Upgrades	Upgrade Type	Allocated Cost	Upgrade Cost
Chisholm - Elk City 230kV CKT 1 Rebuild approximately 15 miles of 230kV from Chisholm - Elk City.	Current Study	$881,576	$15,000,000
Chisholm Substation Upgrade 345kV Expand planned Chisholm Substation to tap and terminate Woodward - Border 345kV into the Chisholm Substation	Current Study	$612,307	$12,000,000
Cimarron - Minco 345kV CKT 1 Replace 1600 amp switches.	Current Study	$26,374	$1,000,000
GEN-2014-057 - Lawton Eastside 345kV CKT 1 Replace terminal equipmen to atleast 1600 amps	Current Study	$22,043	$500,000
GEN-2014-057 - Sunnyside 345kV CKT 1 Rebuild approximately 45 miles of 345kV	Current Study	$1,476,316	$65,000,000
GEN-2015-020 Interconnection Costs See One-Line Diagram.	Current Study	$9,984,058	$9,984,058
Grapevine - Chisholm 345kV CKT 1 Build approximately 75 miles of new 345kV from Grapevine - Chisholm	Current Study	$2,888,702	$75,000,000
Grapevine Substation Upgrade 345kV Build Grapevine Substation and terminate Beaver Co - Grapevine, Potter Co - Grapevine, Grapevine - Chisholm 345kV into the Grapevine Substation	Current Study	$462,192	$12,000,000
LP-Wadsworth 230/69/13kV Transformer CKT 1 NRIS only required upgrade: Replace existing LP-Wadsworth 230/69kV Transformer	Current Study	$379,983	$6,000,000
Oklaunion 345kV Reactive Power Support Incremental Upgrade Install (4)-50Mvar Capacitor Bank(s) and +300Mvar SVC at Oklaunion	Current Study	$2,083,032	$40,000,000
Potter County - Grapevine 345kV CKT 1 Build approximately 65 miles of new 345kV from Potter County - Grapevine	Current Study	$4,170,846	$65,000,000
Shamrock 115kV Capacitor Bank Add 2nd step of 9.6Mvars to Shamrock 115kV Capacitor Bank(s)	Current Study	$32,281	$500,000
Tolk - Potter County 345kV CKT 1 Build approximately 115 miles of 345kV from Tolk - Potter County	Current Study	$7,415,146	$105,000,000
Tolk - TUCO 2 345kV CKT 1 Build approximately 64 miles of 345kV from Tolk - TUCO 2.	Current Study	$9,800,600	$64,000,000
Tolk 345/230/13kV Transformer CKT 2 Build second 345/230/13kV transformer at Tolk	Current Study	$2,626,962	$15,000,000
TUCO 2 - Border 345kV CKT 2 Build approximately 194 miles of second circuit 345kV from TUCO 2 - Border	Current Study	$10,102,704	$194,000,000

* Withdrawal of higher queued projects will cause a restudy and may result in higher costs

Interconnection Request and Upgrades	Upgrade Type	Allocated Cost	Upgrade Cost
TUCO 2 - Yoakum 345kV Retermination Incremental Upgrade for SPP-NTC-200283 to reterminate TUCO terminal to TUCO 2 terminal by adding approximately 3 miles of 345kV	Current Study	$186,075	$5,000,000
Chisholm - Gracemont 345kV CKT 1 Per SPP-NTC-200255 and 200240 (Total Project E&C Cost Shown)	Previously Allocated		$162,952,357
Elk City 230/138/13kV Transformer CKT 1 Replace terminal equipment for Elk City Transformer to achieve transformer limit of 450MVA.	Previously Allocated		$15,000,000
Grapevine - Nichols 230kV CKT 1 Replace terminal equipment	Previously Allocated		$400,000
Grapevine - Wheeler 230kV CKT 1 Replace terminal equipment	Previously Allocated		$400,000
Potash Junction 230kV Reactive Power Support Build Potash Junction 100Mvar Capacitor bank per 2015 ITPNT.	Previously Allocated		$6,465,875
Tolk - Plant X 230kV CKT 1 & 2 Rebuild circuit 1 and 2 betweek Tolk - Plant X 230kV to 1200 amps each.	Previously Allocated		$9,921,693
TUCO 2 (Crawfish Draw) Substation Upgrade 345/230kV Tap Border-TUCO approximately 2 miles from TUCO and build TUCO 2 (Crawfish Draw) 345kV substation and add 345/230/13.2kV transformer and tie on TUCO-Swisher 230kV.	Previously Allocated		$24,764,205
TUCO 345/230/13.2kV Transformer CKT 1 Replace existing TUCO 345/230/13.2kV Transformer circuit #1 with 640MVA.	Previously Allocated		$3,347,036
TUCO Interchange - Jones 230kV CKT 1 NRIS only required upgrade: Replace line traps at both terminals	Previously Allocated		$400,000
Woodward EHV Phase Shifting Transformer CKT 1 Install one phase shifting transformer at Woodward	Previously Allocated		$7,200,000
	Current Study Total	$58,954,143	
GEN-2015-031			
Beaver County - Grapevine 345kV CKT 1 Build approximately 75 miles of new 345kV from Beaver County - Grapevine	Current Study	$8,949,668	$75,000,000
Border - Chisholm 345kV CKT 2 Build approximately 25 miles of second circuit 345kV from Border - Chisholm	Current Study	$3,514,807	$25,000,000
Border 345kV Reactive Power Support Install (6)-50Mvar Capacitor Bank(s) and +250Mvar SVC at Border Substation	Current Study	$4,181,111	$30,000,000
Chisholm - Elk City 230kV CKT 1 Rebuild approximately 15 miles of 230kV from Chisholm - Elk City.	Current Study	$2,683,378	$15,000,000

* Withdrawal of higher queued projects will cause a restudy and may result in higher costs

Interconnection Request and Upgrades	Upgrade Type	Allocated Cost	Upgrade Cost
Chisholm Substation Upgrade 345kV Expand planned Chisholm Substation to tap and terminate Woodward - Border 345kV into the Chisholm Substation	Current Study	$1,653,090	$12,000,000
Cimarron - Minco 345kV CKT 1 Replace 1600 amp switches.	Current Study	$76,701	$1,000,000
GEN-2014-057 - Lawton Eastside 345kV CKT 1 Replace terminal equipmen to atleast 1600 amps	Current Study	$64,341	$500,000
GEN-2014-057 - Sunnyside 345kV CKT 1 Rebuild approximately 45 miles of 345kV	Current Study	$4,309,145	$65,000,000
GEN-2015-031 Interconnection Costs See One-Line Diagram.	Current Study	$7,567,148	$7,567,148
Grapevine - Chisholm 345kV CKT 1 Build approximately 75 miles of new 345kV from Grapevine - Chisholm	Current Study	$9,758,010	$75,000,000
Grapevine Substation Upgrade 345kV Build Grapevine Substation and terminate Beaver Co - Grapevine, Potter Co - Grapevine, Grapevine - Chisholm 345kV into the Grapevine Substation	Current Study	$1,561,282	$12,000,000
LP-Wadsworth 230/69/13kV Transformer CKT 1 NRIS only required upgrade: Replace existing LP-Wadsworth 230/69kV Transformer	Current Study	$1,153,756	$6,000,000
Oklaunion 345kV Reactive Power Support Incremental Upgrade Install (4)-50Mvar Capacitor Bank(s) and +300Mvar SVC at Oklaunion	Current Study	$5,623,715	$40,000,000
Potter County - Grapevine 345kV CKT 1 Build approximately 65 miles of new 345kV from Potter County - Grapevine	Current Study	$13,121,126	$65,000,000
Shamrock 115kV Capacitor Bank Add 2nd step of 9.6Mvars to Shamrock 115kV Capacitor Bank(s)	Current Study	$110,177	$500,000
Tolk - Potter County 345kV CKT 1 Build approximately 115 miles of 345kV from Tolk - Potter County	Current Study	$8,515,125	$105,000,000
Tolk - TUCO 2 345kV CKT 1 Build approximately 64 miles of 345kV from Tolk - TUCO 2.	Current Study	$4,227,579	$64,000,000
Tolk 345/230/13kV Transformer CKT 2 Build second 345/230/13kV transformer at Tolk	Current Study	$2,370,254	$15,000,000
TUCO 2 - Border 345kV CKT 2 Build approximately 194 miles of second circuit 345kV from TUCO 2 - Border	Current Study	$27,275,020	$194,000,000
TUCO 2 - Yoakum 345kV Retermination Incremental Upgrade for SPP-NTC-200283 to reterminate TUCO terminal to TUCO 2 terminal by adding approximately 3 miles of 345kV	Current Study	$44,002	$5,000,000

* Withdrawal of higher queued projects will cause a restudy and may result in higher costs

Interconnection Request and Upgrades	Upgrade Type	Allocated Cost	Upgrade Cost
Chisholm - Gracemont 345kV CKT 1 Per SPP-NTC-200255 and 200240 (Total Project E&C Cost Shown)	Previously Allocated		$162,952,357
Elk City 230/138/13kV Transformer CKT 1 Replace terminal equipment for Elk City Transformer to achieve transformer limit of 450MVA.	Previously Allocated		$15,000,000
Grapevine - Nichols 230kV CKT 1 Replace terminal equipment	Previously Allocated		$400,000
Grapevine - Wheeler 230kV CKT 1 Replace terminal equipment	Previously Allocated		$400,000
Kress Interchange - Swisher 115kV CKT 1 Replace terminal equipment	Previously Allocated		$500,000
Norton - Pleasant Hill 230kV CKT 1 Build approximately 60 miles of new 230kV line. Modify Norton substation to add 230kV bus and autotransformer.	Previously Allocated		$49,592,501
Potash Junction 230/115 kV Ckt 1 Per HPILs SPP-NTC-200282 (Total Project E&C Cost Shown)	Previously Allocated		$3,508,346
Potash Junction 230kV Reactive Power Support Build Potash Junction 100Mvar Capacitor bank per 2015 ITPNT.	Previously Allocated		$6,465,875
TUCO 2 (Crawfish Draw) Substation Upgrade 345/230kV Tap Border-TUCO approximately 2 miles from TUCO and build TUCO 2 (Crawfish Draw) 345kV substation and add 345/230/13.2kV transformer and tie on TUCO-Swisher 230kV.	Previously Allocated		$24,764,205
TUCO 345/230/13.2kV Transformer CKT 1 Replace existing TUCO 345/230/13.2kV Transformer circuit #1 with 640MVA.	Previously Allocated		$3,347,036
TUCO Interchange - Jones 230kV CKT 1 NRIS only required upgrade: Replace line traps at both terminals	Previously Allocated		$400,000
Woodward EHV Phase Shifting Transformer CKT 1 Install one phase shifting transformer at Woodward	Previously Allocated		$7,200,000
	Current Study Total	$106,759,433	
GEN-2015-033			
Beaver County - Grapevine 345kV CKT 1 Build approximately 75 miles of new 345kV from Beaver County - Grapevine	Current Study	$3,912,637	$75,000,000
Border - Chisholm 345kV CKT 2 Build approximately 25 miles of second circuit 345kV from Border - Chisholm	Current Study	$2,267,481	$25,000,000
Border 345kV Reactive Power Support Install (6)-50Mvar Capacitor Bank(s) and +250Mvar SVC at Border Substation	Current Study	$4,686,606	$30,000,000

* Withdrawal of higher queued projects will cause a restudy and may result in higher costs

Interconnection Request and Upgrades	Upgrade Type	Allocated Cost	Upgrade Cost
Chisholm - Elk City 230kV CKT 1 Rebuild approximately 15 miles of 230kV from Chisholm - Elk City.	Current Study	$983,549	$15,000,000
Chisholm Substation Upgrade 345kV Expand planned Chisholm Substation to tap and terminate Woodward - Border 345kV into the Chisholm Substation	Current Study	$1,066,446	$12,000,000
Cimarron - Minco 345kV CKT 1 Replace 1600 amp switches.	Current Study	$51,432	$1,000,000
GEN-2014-057 - Lawton Eastside 345kV CKT 1 Replace terminal equipmen to atleast 1600 amps	Current Study	$45,013	$500,000
GEN-2014-057 - Sunnyside 345kV CKT 1 Rebuild approximately 45 miles of 345kV	Current Study	$3,014,667	$65,000,000
GEN-2015-033 Interconnection Costs See One-Line Diagram.	Current Study	$0	$0
Grapevine - Chisholm 345kV CKT 1 Build approximately 75 miles of new 345kV from Grapevine - Chisholm	Current Study	$250,997	$75,000,000
Grapevine Substation Upgrade 345kV Build Grapevine Substation and terminate Beaver Co - Grapevine, Potter Co - Grapevine, Grapevine - Chisholm 345kV into the Grapevine Substation	Current Study	$40,160	$12,000,000
LP-Wadsworth 230/69/13kV Transformer CKT 1 NRIS only required upgrade: Replace existing LP-Wadsworth 230/69kV Transformer	Current Study	$562,271	$6,000,000
Oklaunion 345kV Reactive Power Support Incremental Upgrade Install (4)-50Mvar Capacitor Bank(s) and +300Mvar SVC at Oklaunion	Current Study	$3,627,986	$40,000,000
Potter County - Grapevine 345kV CKT 1 Build approximately 65 miles of new 345kV from Potter County - Grapevine	Current Study	$3,190,811	$65,000,000
Shamrock 115kV Capacitor Bank Add 2nd step of 9.6Mvars to Shamrock 115kV Capacitor Bank(s)	Current Study	$23,589	$500,000
Tolk - Potter County 345kV CKT 1 Build approximately 115 miles of 345kV from Tolk - Potter County	Current Study	$7,175,830	$105,000,000
TUCO - New Deal - Stanton 345/115kV Project NRIS only required upgrade: Build TUCO - New Deal 345kV, New Deal - Stanton 115kV and New Deal 345/115kV tranformer CKT 1. Total project E&C costs shown.	Current Study	$11,897,951	$37,490,796
TUCO 2 - Border 345kV CKT 2 Build approximately 194 miles of second circuit 345kV from TUCO 2 - Border	Current Study	$17,595,731	$194,000,000
Chisholm - Gracemont 345kV CKT 1 Per SPP-NTC-200255 and 200240 (Total Project E&C Cost Shown)	Previously Allocated		$162,952,357

* Withdrawal of higher queued projects will cause a restudy and may result in higher costs

Interconnection Request and Upgrades	Upgrade Type	Allocated Cost	Upgrade Cost
Crawfish Draw (TUCO 2) 230/115/13kV Transformer CKT 1 NRIS only required upgrade: Build 115kV yard at TUCO 2, re-route Hale County - TUCO 115kV into TUCO 2 115kV, build TUC0 2 230/115/13kV Transformer 1	Previously Allocated		$12,000,000
Elk City 230/138/13kV Transformer CKT 1 Replace terminal equipment for Elk City Transformer to achieve transformer limit of 450MVA.	Previously Allocated		$15,000,000
Grapevine - Nichols 230kV CKT 1 Replace terminal equipment	Previously Allocated		$400,000
Grapevine - Wheeler 230kV CKT 1 Replace terminal equipment	Previously Allocated		$400,000
Kress Interchange - Swisher 115kV CKT 1 Replace terminal equipment	Previously Allocated		$500,000
National Enrichment Plant-Targa 115kV CKT 1 Rebuild approximately 4 miles of 115kV from National Enrichment Plant to Targa per 2015 ITPNT.	Previously Allocated		$2,909,669
Potash Junction 230/115 kV Ckt 1 Per HPILs SPP-NTC-200282 (Total Project E&C Cost Shown)	Previously Allocated		$3,508,346
Targa-Cardinal 115kV CKT 1 Rebuild approximately 3 miles of 115kV from Targa to Cardinal per 2015 ITPNT.	Previously Allocated		$2,049,062
Tolk - Plant X 230kV CKT 1 & 2 Rebuild circuit 1 and 2 betweek Tolk - Plant X 230kV to 1200 amps each.	Previously Allocated		$9,921,693
TUCO Interchange - Jones 230kV CKT 1 NRIS only required upgrade: Replace line traps at both terminals	Previously Allocated		$400,000
Woodward EHV Phase Shifting Transformer CKT 1 Install one phase shifting transformer at Woodward	Previously Allocated		$7,200,000
	Current Study Total	$60,393,156	
GEN-2015-034			
Cleveland - Cleveland 138kV CKT Z1 Replace Cleveland - Cleveland bus tie terminal equipment to at least 1800 amps. AECI Affected System Study is required	Current Study	$54,623	$250,000
Cleveland - Silver City 138kV CKT 1 Rebuild approximately 22 miles of 138kV from Cleveland to Silver City. AECI Affected System Study is required	Current Study	$2,281,032	$10,560,000
Emporia Energy Center - Swissvale 345kV CKT 1 Replace terminal equipment to at least 1600 amps (Cost included in Swissvale - West Gardner 345kV Line Item)	Current Study	$0	$0
GEN-2015-034 Interconnection Costs See One-Line Diagram.	Current Study	$2,112,500	$2,112,500

* Withdrawal of higher queued projects will cause a restudy and may result in higher costs

Interconnection Request and Upgrades	Upgrade Type	Allocated Cost	Upgrade Cost
Northwest 138kV Circuit Breaker Replace Northwest 138kV Circuit Breaker for short circuit requirements	Current Study	$31,171	$750,000
Swissvale - West Gardner 345kV CKT 1 Replace terminal equipment to at least 1600 amps	Current Study	$25,314	$1,000,000
Cimarron - Draper Lake 345kV CKT 1 Replace terminal equipment to at least 2000A assigned in 2015 ITP10 per SPP-NTC-200329	Previously Allocated		$1,500,000
Cornville Tap - Naples Tap 138kV CKT 1 Rebuild approximately 11 miles of 138kV from Cornville Tap to Naples Tap	Previously Allocated		$7,700,000
Fairfax 138/69kV CKT 1 Per AECI Affected System Study for DISIS-2012-002	Previously Allocated		$2,200,000
Naples Tap - Payne 138kV CKT 1 Rebuild approximately 8 miles of 138kV from Naples Tap to Payne	Previously Allocated		$5,600,000
Remington - Fairfax 138KV CKT 1 Increase conductor clearance	Previously Allocated		$400,000
Renfrow - Renfrow 138kV CKT 1 NRIS only required upgrade: Rebuild approximately 2 miles of 138kV from Renfrow to Renfrow.	Previously Allocated		$1,400,000
	Current Study Total	$4,504,641	
GEN-2015-036			
GEN-2015-036 Interconnection Costs See One-Line Diagram.	Current Study	$2,025,000	$2,025,000
	Current Study Total	$2,025,000	
GEN-2015-038			
GEN-2015-038 Interconnection Costs See One-Line Diagram.	Current Study	$20,000	$20,000
Northwest 138kV Circuit Breaker Replace Northwest 138kV Circuit Breaker for short circuit requirements	Current Study	$263,140	$750,000
Altus SW - Navajo 69kV CKT 1 Rebuild approximately 2.5 miles of 69kV from Atlus SW to Navajo	Previously Allocated		$1,250,000
Cimarron - Draper Lake 345kV CKT 1 Replace terminal equipment to at least 2000A assigned in 2015 ITP10 per SPP-NTC-200329	Previously Allocated		$1,500,000
Cornville Tap - Naples Tap 138kV CKT 1 Rebuild approximately 11 miles of 138kV from Cornville Tap to Naples Tap	Previously Allocated		$7,700,000

* Withdrawal of higher queued projects will cause a restudy and may result in higher costs

Interconnection Request and Upgrades	Upgrade Type	Allocated Cost	Upgrade Cost
Naples Tap - Payne 138kV CKT 1 Rebuild approximately 8 miles of 138kV from Naples Tap to Payne	Previously Allocated		$5,600,000
Navajo - Snyder 69kV CKT 1 Rebuild approximately 15 miles of 69kV from Navajo to Snyder	Previously Allocated		$7,500,000
Woodward EHV Phase Shifting Transformer CKT 1 Install one phase shifting transformer at Woodward	Previously Allocated		$7,200,000
	Current Study Total	$283,140	
GEN-2015-039			
Beaver County - Grapevine 345kV CKT 1 Build approximately 75 miles of new 345kV from Beaver County - Grapevine	Current Study	$1,532,454	$75,000,000
Border - Chisholm 345kV CKT 2 Build approximately 25 miles of second circuit 345kV from Border - Chisholm	Current Study	$500,559	$25,000,000
Border 345kV Reactive Power Support Install (6)-50Mvar Capacitor Bank(s) and +250Mvar SVC at Border Substation	Current Study	$634,862	$30,000,000
Chisholm - Elk City 230kV CKT 1 Rebuild approximately 15 miles of 230kV from Chisholm - Elk City.	Current Study	$445,543	$15,000,000
Chisholm Substation Upgrade 345kV Expand planned Chisholm Substation to tap and terminate Woodward - Border 345kV into the Chisholm Substation	Current Study	$235,424	$12,000,000
Cimarron - Minco 345kV CKT 1 Replace 1600 amp switches.	Current Study	$12,288	$1,000,000
Deaf Smith - GEN-2015-039 Tap 230kV CKT 1 Replace terminal equipment	Current Study	$1,000,000	$1,000,000
GEN-2014-057 - Lawton Eastside 345kV CKT 1 Replace terminal equipmen to atleast 1600 amps	Current Study	$10,376	$500,000
GEN-2014-057 - Sunnyside 345kV CKT 1 Rebuild approximately 45 miles of 345kV	Current Study	$694,938	$65,000,000
GEN-2015-039 Interconnection Costs See One-Line Diagram.	Current Study	$8,869,623	$8,869,623
Grapevine - Chisholm 345kV CKT 1 Build approximately 75 miles of new 345kV from Grapevine - Chisholm	Current Study	$2,058,147	$75,000,000
Grapevine Substation Upgrade 345kV Build Grapevine Substation and terminate Beaver Co - Grapevine, Potter Co - Grapevine, Grapevine - Chisholm 345kV into the Grapevine Substation	Current Study	$329,304	$12,000,000

* Withdrawal of higher queued projects will cause a restudy and may result in higher costs

Interconnection Request and Upgrades	Upgrade Type	Allocated Cost	Upgrade Cost
LP-Wadsworth 230/69/13kV Transformer CKT 1 NRIS only required upgrade: Replace existing LP-Wadsworth 230/69kV Transformer	Current Study	$190,998	$6,000,000
Oklaunion 345kV Reactive Power Support Incremental Upgrade Install (4)-50Mvar Capacitor Bank(s) and +300Mvar SVC at Oklaunion	Current Study	$800,898	$40,000,000
Potter County - Grapevine 345kV CKT 1 Build approximately 65 miles of new 345kV from Potter County - Grapevine	Current Study	$2,492,094	$65,000,000
Shamrock 115kV Capacitor Bank Add 2nd step of 9.6Mvars to Shamrock 115kV Capacitor Bank(s)	Current Study	$18,815	$500,000
Tolk - Potter County 345kV CKT 1 Build approximately 115 miles of 345kV from Tolk - Potter County	Current Study	$1,467,486	$105,000,000
Tolk - TUCO 2 345kV CKT 1 Build approximately 64 miles of 345kV from Tolk - TUCO 2.	Current Study	$3,387,718	$64,000,000
Tolk 345/230/13kV Transformer CKT 2 Build second 345/230/13kV transformer at Tolk	Current Study	$794,415	$15,000,000
TUCO 2 - Border 345kV CKT 2 Build approximately 194 miles of second circuit 345kV from TUCO 2 - Border	Current Study	$3,884,355	$194,000,000
TUCO 2 - Yoakum 345kV Retermination Incremental Upgrade for SPP-NTC-200283 to reterminate TUCO terminal to TUCO 2 terminal by adding approximately 3 miles of 345kV	Current Study	$49,202	$5,000,000
Chisholm - Gracemont 345kV CKT 1 Per SPP-NTC-200255 and 200240 (Total Project E&C Cost Shown)	Previously Allocated		$162,952,357
Elk City 230/138/13kV Transformer CKT 1 Replace terminal equipment for Elk City Transformer to achieve transformer limit of 450MVA.	Previously Allocated		$15,000,000
Grapevine - Nichols 230kV CKT 1 Replace terminal equipment	Previously Allocated		$400,000
Grapevine - Wheeler 230kV CKT 1 Replace terminal equipment	Previously Allocated		$400,000
Norton - Pleasant Hill 230kV CKT 1 Build approximately 60 miles of new 230kV line. Modify Norton substation to add 230kV bus and autotransformer.	Previously Allocated		$49,592,501
Potash Junction 230kV Reactive Power Support Build Potash Junction 100Mvar Capacitor bank per 2015 ITPNT.	Previously Allocated		$6,465,875
TUCO 2 (Crawfish Draw) Substation Upgrade 345/230kV Tap Border-TUCO approximately 2 miles from TUCO and build TUCO 2 (Crawfish Draw) 345kV substation and add 345/230/13.2kV transformer and tie on TUCO-Swisher 230kV.	Previously Allocated		$24,764,205

* Withdrawal of higher queued projects will cause a restudy and may result in higher costs

Interconnection Request and Upgrades	Upgrade Type	Allocated Cost	Upgrade Cost
TUCO 345/230/13.2kV Transformer CKT 1 Replace existing TUCO 345/230/13.2kV Transformer circuit #1 with 640MVA.	Previously Allocated		$3,347,036
TUCO Interchange - Jones 230kV CKT 1 NRIS only required upgrade: Replace line traps at both terminals	Previously Allocated		$400,000
Woodward EHV Phase Shifting Transformer CKT 1 Install one phase shifting transformer at Woodward	Previously Allocated		$7,200,000
	Current Study Total	$29,409,497	
GEN-2015-040			
Beaver County - Grapevine 345kV CKT 1 Build approximately 75 miles of new 345kV from Beaver County - Grapevine	Current Study	$1,536,393	$75,000,000
Border - Chisholm 345kV CKT 2 Build approximately 25 miles of second circuit 345kV from Border - Chisholm	Current Study	$711,953	$25,000,000
Border 345kV Reactive Power Support Install (6)-50Mvar Capacitor Bank(s) and +250Mvar SVC at Border Substation	Current Study	$786,183	$30,000,000
Chisholm - Elk City 230kV CKT 1 Rebuild approximately 15 miles of 230kV from Chisholm - Elk City.	Current Study	$438,058	$15,000,000
Chisholm Substation Upgrade 345kV Expand planned Chisholm Substation to tap and terminate Woodward - Border 345kV into the Chisholm Substation	Current Study	$334,822	$12,000,000
Cimarron - Minco 345kV CKT 1 Replace 1600 amp switches.	Current Study	$13,898	$1,000,000
GEN-2014-057 - Lawton Eastside 345kV CKT 1 Replace terminal equipmen to atleast 1600 amps	Current Study	$11,532	$500,000
GEN-2014-057 - Sunnyside 345kV CKT 1 Rebuild approximately 45 miles of 345kV	Current Study	$772,368	$65,000,000
GEN-2015-040 Interconnection Costs See One-Line Diagram.	Current Study	$1,497,460	$1,497,460
Grapevine - Chisholm 345kV CKT 1 Build approximately 75 miles of new 345kV from Grapevine - Chisholm	Current Study	$1,248,218	$75,000,000
Grapevine Substation Upgrade 345kV Build Grapevine Substation and terminate Beaver Co - Grapevine, Potter Co - Grapevine, Grapevine - Chisholm 345kV into the Grapevine Substation	Current Study	$199,715	$12,000,000
LP-Wadsworth 230/69/13kV Transformer CKT 1 NRIS only required upgrade: Replace existing LP-Wadsworth 230/69kV Transformer	Current Study	$189,507	$6,000,000

* Withdrawal of higher queued projects will cause a restudy and may result in higher costs

Interconnection Request and Upgrades	Upgrade Type	Allocated Cost	Upgrade Cost
Oklaunion 345kV Reactive Power Support Incremental Upgrade Install (4)-50Mvar Capacitor Bank(s) and +300Mvar SVC at Oklaunion	Current Study	$1,139,130	$40,000,000
Potter County - Grapevine 345kV CKT 1 Build approximately 65 miles of new 345kV from Potter County - Grapevine	Current Study	$1,981,727	$65,000,000
Shamrock 115kV Capacitor Bank Add 2nd step of 9.6Mvars to Shamrock 115kV Capacitor Bank(s)	Current Study	$13,870	$500,000
Tolk - Potter County 345kV CKT 1 Build approximately 115 miles of 345kV from Tolk - Potter County	Current Study	$3,453,361	$105,000,000
Tolk - TUCO 2 345kV CKT 1 Build approximately 64 miles of 345kV from Tolk - TUCO 2.	Current Study	$792,382	$64,000,000
Tolk 345/230/13kV Transformer CKT 2 Build second 345/230/13kV transformer at Tolk	Current Study	$741,000	$15,000,000
TUCO 2 - Border 345kV CKT 2 Build approximately 194 miles of second circuit 345kV from TUCO 2 - Border	Current Study	$5,524,783	$194,000,000
TUCO 2 - Yoakum 345kV Retermination Incremental Upgrade for SPP-NTC-200283 to reterminate TUCO terminal to TUCO 2 terminal by adding approximately 3 miles of 345kV	Current Study	$446,313	$5,000,000
Amoco Wasson - Oxy Tap 230kV CKT 1 Replace line traps at both terminals	Previously Allocated		$200,000
Chisholm - Gracemont 345kV CKT 1 Per SPP-NTC-200255 and 200240 (Total Project E&C Cost Shown)	Previously Allocated		$162,952,357
Elk City 230/138/13kV Transformer CKT 1 Replace terminal equipment for Elk City Transformer to achieve transformer limit of 450MVA.	Previously Allocated		$15,000,000
Grapevine - Nichols 230kV CKT 1 Replace terminal equipment	Previously Allocated		$400,000
Grapevine - Wheeler 230kV CKT 1 Replace terminal equipment	Previously Allocated		$400,000
National Enrichment Plant-Targa 115kV CKT 1 Rebuild approximately 4 miles of 115kV from National Enrichment Plant to Targa per 2015 ITPNT.	Previously Allocated		$2,909,669
Targa-Cardinal 115kV CKT 1 Rebuild approximately 3 miles of 115kV from Targa to Cardinal per 2015 ITPNT.	Previously Allocated		$2,049,062
Tolk - Plant X 230kV CKT 1 & 2 Rebuild circuit 1 and 2 betweek Tolk - Plant X 230kV to 1200 amps each.	Previously Allocated		$9,921,693

* Withdrawal of higher queued projects will cause a restudy and may result in higher costs

Interconnection Request and Upgrades	Upgrade Type	Allocated Cost	Upgrade Cost
TUCO 2 (Crawfish Draw) Substation Upgrade 345/230kV Tap Border-TUCO approximately 2 miles from TUCO and build TUCO 2 (Crawfish Draw) 345kV substation and add 345/230/13.2kV transformer and tie on TUCO-Swisher 230kV.	Previously Allocated		$24,764,205
TUCO 345/230/13.2kV Transformer CKT 1 Replace existing TUCO 345/230/13.2kV Transformer circuit #1 with 640MVA.	Previously Allocated		$3,347,036
TUCO Interchange - Jones 230kV CKT 1 NRIS only required upgrade: Replace line traps at both terminals	Previously Allocated		$400,000
Woodward EHV Phase Shifting Transformer CKT 1 Install one phase shifting transformer at Woodward	Previously Allocated		$7,200,000
	Current Study Total	$21,832,673	
GEN-2015-041			
Border 345kV Reactive Power Support Install (6)-50Mvar Capacitor Bank(s) and +250Mvar SVC at Border Substation	Current Study	$142,346	$30,000,000
Chisholm - Elk City 230kV CKT 1 Rebuild approximately 15 miles of 230kV from Chisholm - Elk City.	Current Study	$22,730	$15,000,000
Cimarron - Minco 345kV CKT 1 Replace 1600 amp switches.	Current Study	$1,466	$1,000,000
GEN-2014-057 - Lawton Eastside 345kV CKT 1 Replace terminal equipmen to atleast 1600 amps	Current Study	$1,211	$500,000
GEN-2014-057 - Sunnyside 345kV CKT 1 Rebuild approximately 45 miles of 345kV	Current Study	$81,082	$65,000,000
GEN-2015-041 Interconnection Costs See One-Line Diagram.	Current Study	$0	$0
LP-Wadsworth 230/69/13kV Transformer CKT 1 NRIS only required upgrade: Replace existing LP-Wadsworth 230/69kV Transformer	Current Study	$18,424	$6,000,000
Tolk - Potter County 345kV CKT 1 Build approximately 115 miles of 345kV from Tolk - Potter County	Current Study	$286,361	$105,000,000
TUCO - New Deal - Stanton 345/115kV Project NRIS only required upgrade: Build TUCO - New Deal 345kV, New Deal - Stanton 115kV and New Deal 345/115kV tranformer CKT 1. Total project E&C costs shown.	Current Study	$419,555	$37,490,796
Crawfish Draw (TUCO 2) 230/115/13kV Transformer CKT 1 NRIS only required upgrade: Build 115kV yard at TUCO 2, re-route Hale County - TUCO 115kV into TUCO 2 115kV, build TUC0 2 230/115/13kV Transformer 1	Previously Allocated		$12,000,000
TUCO 2 (Crawfish Draw) Substation Upgrade 345/230kV Tap Border-TUCO approximately 2 miles from TUCO and build TUCO 2 (Crawfish Draw) 345kV substation and add 345/230/13.2kV transformer and tie on TUCO-Swisher 230kV.	Previously Allocated		$24,764,205

* Withdrawal of higher queued projects will cause a restudy and may result in higher costs

Interconnection Request and Upgrades	Upgrade Type	Allocated Cost	Upgrade Cost
TUCO Interchange - Jones 230kV CKT 1 NRIS only required upgrade: Replace line traps at both terminals	Previously Allocated		$400,000
	Current Study Total	$973,174	
GEN-2015-042			
Albion - Petersburg - North Petersburg 115kV CKT 1 Reconductor 115kV lines and replace all terminal equipment for at least a 193MVA rate.	Current Study	$792,860	$3,500,000
Antelope 345/115/13kV Transformer CKT 2 Build and install Antelope 345/115/13kV Transformer circuit #2	Current Study	$652,841	$12,000,000
Belden - Rasmussen 230kV CKT 1 Build approximately 25 miles of new 230kV	Current Study	$13,930,273	$25,000,000
Belden 230/115/13kV Transformer CKT 1 Build Belden 230kV yard and install Belden 230/115/13kV Transformer circuit #1	Current Study	$2,544,881	$10,000,000
Columbus East 230/115/13kV Transformer CKT 1 NRIS only rquired upgrade: Replace Columbus East 230/115/13kV Transformer circuit #1	Current Study	$4,278,888	$10,000,000
Dixon County - Belden 230kV CKT 1 Build approximately 50 miles of new 230kV	Current Study	$25,397,415	$50,000,000
Dixon County - Twin Church 345kV CKT1 Voltage Conversion Convert Dixon Co - Twin Church 230kV circuit to 345kV. Further evaluated in NPPD facility study	Current Study	$25,753,611	$33,000,000
GEN-2015-042 Interconnection Costs See One-Line Diagram.	Current Study	$3,000,000	$3,000,000
Holt County - Antelope 345kV CKT 1 Build approximately 30 miles of new 345kV	Current Study	$12,361,049	$36,000,000
Holt County - Grand Island 345kV CKT 1 NRIS only required upgrade	Current Study	$21,316,390	$60,000,000
MISO Affected System Study See section 4 power flow analysis.	Current Study	$TBD	$TBD
Twin Church - Sioux City 345kV CKT1 Voltage Conversion Convert Twin Church - Sioux City 230kV circuit to 345kV. Further evaluated in NPPD & WAPA facility study	Current Study	$18,806,346	$27,000,000
Hoskins - Dixon County - Twin Church 230kV Rerate per NPPD Facility Study	Previously Allocated		$500,000
Nebraska City - Sibley 345kV CKT 1 Priority Project: Nebraska City - Mullin Creek - Sibley 345kV circuit 1 per SPP-NTC-20097 and SPP-NTC-20098 (Total Project E&C Cost Shown).	Previously Allocated		$336,433,874

* Withdrawal of higher queued projects will cause a restudy and may result in higher costs

Interconnection Request and Upgrades	Upgrade Type	Allocated Cost	Upgrade Cost
Thedford 345/115kV Transformer CKT 1 Install Thedford 345/115kV transformer per SPP-NTC-200277 (Total Project E&C Cost Shown).	Previously Allocated		$311,717,040
Twin Church - Dixon County 230kV Increase conductor clearances to accommodate 320MVA facility rating	Previously Allocated		$100,000
	Current Study Total	$128,834,554	
GEN-2015-043			
GEN-2015-043 Interconnection Costs See One-Line Diagram.	Current Study	$0	$0
Cimarron - Draper Lake 345kV CKT 1 Replace terminal equipment to at least 2000A assigned in 2015 ITP10 per SPP-NTC-200329	Previously Allocated		$1,500,000
Viola 345/138 kV Transformer CKT 1 SPP 2013 ITP NT assigned upgrade per SPP-NTC-200288 for 6/1/2019 in-service.	Previously Allocated		$19,339,327
	Current Study Total	$0	
GEN-2015-044			
Cimarron - Minco 345kV CKT 1 Replace 1600 amp switches.	Current Study	$24,485	$1,000,000
GEN-2014-057 - Sunnyside 345kV CKT 1 Rebuild approximately 45 miles of 345kV	Current Study	$296,931	$65,000,000
GEN-2015-044 Interconnection Costs See One-Line Diagram.	Current Study	$20,000	$20,000
Cimarron - Draper Lake 345kV CKT 1 Replace terminal equipment to at least 2000A assigned in 2015 ITP10 per SPP-NTC-200329	Previously Allocated		$1,500,000
	Current Study Total	$341,416	
GEN-2015-045			
Cleveland - Cleveland 138kV CKT Z1 Replace Cleveland - Cleveland bus tie terminal equipment to at least 1800 amps. AECI Affected System Study is required	Current Study	$1,174	$250,000
Cleveland - Silver City 138kV CKT 1 Rebuild approximately 22 miles of 138kV from Cleveland to Silver City. AECI Affected System Study is required	Current Study	$92,418	$10,560,000
GEN-2014-057 - Sunnyside 345kV CKT 1 Rebuild approximately 45 miles of 345kV	Current Study	$1,204,079	$65,000,000
GEN-2015-045 Interconnection Costs See One-Line Diagram.	Current Study	$0	$0

* Withdrawal of higher queued projects will cause a restudy and may result in higher costs

Interconnection Request and Upgrades	Upgrade Type	Allocated Cost	Upgrade Cost
Tupelo - Tupleo Tap 138kV CKT 1 NRIS only required upgrade: Build approximately 1 mile of second circuit 138kV from Tupelo to Tupelo Tap	Current Study	$19,189	$700,000
	Current Study Total	$1,316,859	
GEN-2015-046			
Blaisdell 230/115/13.8kV CKT 1 NRIS only required upgrade: Replace Blaisdell 230/115/13.8kV Transformer circuit #1.	Current Study	$5,000,000	$5,000,000
Dickinson 230/115/13.8kV CKT 2 Build new 230/115/13.8kV Transformer circuit #2 at Dickinson.	Current Study	$936,251	$3,500,000
GEN-2015-046 Interconnection Costs See One-Line Diagram.	Current Study	$3,759,097	$3,759,097
Hanlon 69kV Reactive Support Install (1) 10Mvar Capacitor Bank at Hanlon 69kV.	Current Study	$234,560	$500,000
MISO Affected System Study See section 4 power flow analysis.	Current Study	$TBD	$TBD
Split Rock - White 345kV CKT 1 NRIS only required upgrade: Replace terminal equipment.	Current Study	$226,781	$500,000
Judson - Tande 345kV CKT 1 Build new 345kV line from Judson - Tande.	Previously Allocated		$86,000,000
Judson - Williston 230kV CKT 1 Build new 230kV line from Judson Substation to Williston.	Previously Allocated		$2,400,000
Judson 345/230kV Substation Construct new 345kV Judson Substation adjacent to the existing 230kV Williston Substation and install new 345/230/13.8kV Transformer at Judson.	Previously Allocated		$19,000,000
Neset - Tande 230kV CKT 1 Build new 230kV line from Neset - Tande.	Previously Allocated		$3,000,000
Neset 230kV Terminal Upgrades Install necessary terminal upgrades at Neset 230kV to accommodate new 230kV line from new Tande substation.	Previously Allocated		$4,000,000
Tande 345/230 Substation Construct new 345kV Tande Substation adjacent to the existing 230kV Neset Substation and install new 345/230/13.8kV Transformer at Tande.	Previously Allocated		$18,000,000
Williston 230kV Terminal Upgrades Install necessary terminal upgrades at Williston 230kV to accommodate new 230kV line from new Judson substation.	Previously Allocated		$2,000,000
	Current Study Total	$10,156,689	

* Withdrawal of higher queued projects will cause a restudy and may result in higher costs

Interconnection Request and Upgrades	Upgrade Type	Allocated Cost	Upgrade Cost
GEN-2015-047			
Cleveland - Cleveland 138kV CKT Z1 Replace Cleveland - Cleveland bus tie terminal equipment to at least 1800 amps. AECI Affected System Study is required	Current Study	$105,345	$250,000
Cleveland - Silver City 138kV CKT 1 Rebuild approximately 22 miles of 138kV from Cleveland to Silver City. AECI Affected System Study is required	Current Study	$4,158,798	$10,560,000
GEN-2015-047 Interconnection Costs See One-Line Diagram.	Current Study	$2,540,000	$2,540,000
Northwest 138kV Circuit Breaker Replace Northwest 138kV Circuit Breaker for short circuit requirements	Current Study	$61,745	$750,000
Altus SW - Navajo 69kV CKT 1 Rebuild approximately 2.5 miles of 69kV from Atlus SW to Navajo	Previously Allocated		$1,250,000
Cimarron - Draper Lake 345kV CKT 1 Replace terminal equipment to at least 2000A assigned in 2015 ITP10 per SPP-NTC-200329	Previously Allocated		$1,500,000
Fairfax 138/69kV CKT 1 Per AECI Affected System Study for DISIS-2012-002	Previously Allocated		$2,200,000
Navajo - Snyder 69kV CKT 1 Rebuild approximately 15 miles of 69kV from Navajo to Snyder	Previously Allocated		$7,500,000
Remington - Fairfax 138KV CKT 1 Increase conductor clearance	Previously Allocated		$400,000
Renfrow - Renfrow 138kV CKT 1 NRIS only required upgrade: Rebuild approximately 2 miles of 138kV from Renfrow to Renfrow.	Previously Allocated		$1,400,000
Viola 345/138 kV Transformer CKT 1 SPP 2013 ITP NT assigned upgrade per SPP-NTC-200288 for 6/1/2019 in-service.	Previously Allocated		$19,339,327
	Current Study Total	$6,865,888	
GEN-2015-048			
Cimarron - Minco 345kV CKT 1 Replace 1600 amp switches.	Current Study	$8,319	$1,000,000
Cleo Corner - Cleo Plant Tap 138kV CKT 1 Replace terminal equipment to at least 1200 amps	Current Study	$403,112	$500,000
GEN-2014-057 - Sunnyside 345kV CKT 1 Rebuild approximately 45 miles of 345kV	Current Study	$1,240,500	$65,000,000
GEN-2015-048 Interconnection Costs See One-Line Diagram.	Current Study	$2,968,000	$2,968,000

* Withdrawal of higher queued projects will cause a restudy and may result in higher costs

Interconnection Request and Upgrades	Upgrade Type	Allocated Cost	Upgrade Cost
Northwest 138kV Circuit Breaker Replace Northwest 138kV Circuit Breaker for short circuit requirements	Current Study	$1,845	$750,000
Anadarko - Sequoyah 138KV CKT 1 Rebuild approximately 1 mile of 138kV from Anadarko to Sequoyah	Previously Allocated		$700,000
Cimarron - Draper Lake 345kV CKT 1 Replace terminal equipment to at least 2000A assigned in 2015 ITP10 per SPP-NTC-200329	Previously Allocated		$1,500,000
Cornville Tap - Naples Tap 138kV CKT 1 Rebuild approximately 11 miles of 138kV from Cornville Tap to Naples Tap	Previously Allocated		$7,700,000
Mathewson - Cimarron 345kV CKT 2 Build second 345kV circuit from Matthewson - Cimarron @ 3000 amps per ITP10.	Previously Allocated		$42,903,753
Naples Tap - Payne 138kV CKT 1 Rebuild approximately 8 miles of 138kV from Naples Tap to Payne	Previously Allocated		$5,600,000
Sequoyah - Cornville Tap 138kV CKT 1 Rebuild approximately 20 miles of 138kV from Sequoyah to Cornville Tap	Previously Allocated		$1,000,000
Stillwater 138/69kV Project NRIS only required upgrade: Build Stillwater 138/69kV Transformer circuit # 1 and upgrade terminal equipment (Total Project E&C Cost Shown)	Previously Allocated		$3,398,023
Tatonga - Mathewson 345kV CKT 2 Build second 345kV circuit from Tatonga - Matthewson @ 3000 amps per ITP10.	Previously Allocated		$104,260,473
Woodward - GEN-2011-051 Tap - Tatonga 345kV CKT 2 Build second 345kV circuit from Woodward - Tatonga @ 3000 amps per ITP10.	Previously Allocated		$71,876,622
Woodward EHV Phase Shifting Transformer CKT 1 Install one phase shifting transformer at Woodward	Previously Allocated		$7,200,000
	Current Study Total	$4,621,776	
GEN-2015-052			
Cleveland - Cleveland 138kV CKT Z1 Replace Cleveland - Cleveland bus tie terminal equipment to at least 1800 amps. AECI Affected System Study is required	Current Study	$38,004	$250,000
Cleveland - Silver City 138kV CKT 1 Rebuild approximately 22 miles of 138kV from Cleveland to Silver City. AECI Affected System Study is required	Current Study	$1,349,011	$10,560,000
GEN-2015-052 Interconnection Costs See One-Line Diagram.	Current Study	$15,582,434	$15,582,434
Northwest 138kV Circuit Breaker Replace Northwest 138kV Circuit Breaker for short circuit requirements	Current Study	$28,608	$750,000

* Withdrawal of higher queued projects will cause a restudy and may result in higher costs

Interconnection Request and Upgrades	Upgrade Type	Allocated Cost	Upgrade Cost
Cimarron - Draper Lake 345kV CKT 1 Replace terminal equipment to at least 2000A assigned in 2015 ITP10 per SPP-NTC-200329	Previously Allocated		$1,500,000
Cornville Tap - Naples Tap 138kV CKT 1 Rebuild approximately 11 miles of 138kV from Cornville Tap to Naples Tap	Previously Allocated		$7,700,000
Fairfax 138/69kV CKT 1 Per AECI Affected System Study for DISIS-2012-002	Previously Allocated		$2,200,000
Naples Tap - Payne 138kV CKT 1 Rebuild approximately 8 miles of 138kV from Naples Tap to Payne	Previously Allocated		$5,600,000
Remington - Fairfax 138KV CKT 1 Increase conductor clearance	Previously Allocated		$400,000
Renfrow - Renfrow 138kV CKT 1 NRIS only required upgrade: Rebuild approximately 2 miles of 138kV from Renfrow to Renfrow.	Previously Allocated		$1,400,000
	Current Study Total	$16,998,057	
GEN-2015-053			
Albion - Petersburg - North Petersburg 115kV CKT 1 Reconductor 115kV lines and replace all terminal equipment for at least a 193MVA rate.	Current Study	$901,611	$3,500,000
Antelope 345/115/13kV Transformer CKT 2 Build and install Antelope 345/115/13kV Transformer circuit #2	Current Study	$4,218,136	$12,000,000
Belden 230/115/13kV Transformer CKT 1 Build Belden 230kV yard and install Belden 230/115/13kV Transformer circuit #1	Current Study	$99,070	$10,000,000
Columbus East 230/115/13kV Transformer CKT 1 NRIS only rquired upgrade: Replace Columbus East 230/115/13kV Transformer circuit #1	Current Study	$1,434,993	$10,000,000
Dixon County - Belden 230kV CKT 1 Build approximately 50 miles of new 230kV	Current Study	$794,578	$50,000,000
Dixon County - Twin Church 345kV CKT1 Voltage Conversion Convert Dixon Co - Twin Church 230kV circuit to 345kV. Further evaluated in NPPD facility study	Current Study	$562,292	$33,000,000
GEN-2015-053 Interconnection Costs See One-Line Diagram.	Current Study	$500,000	$500,000
Holt County - Antelope 345kV CKT 1 Build approximately 30 miles of new 345kV	Current Study	$5,102,596	$36,000,000
Holt County - Grand Island 345kV CKT 1 NRIS only required upgrade	Current Study	$6,273,512	$60,000,000

* Withdrawal of higher queued projects will cause a restudy and may result in higher costs

Interconnection Request and Upgrades	Upgrade Type	Allocated Cost	Upgrade Cost
MISO Affected System Study See section 4 power flow analysis.	Current Study	$TBD	$TBD
Sidney 345/230/13kV Transformer CKT 2 NRIS only required upgrade: Build and Install Sidney 345/230/13kV Transformer circuit #2	Current Study	$215,233	$12,000,000
Twin Church - Sioux City 345kV CKT1 Voltage Conversion Convert Twin Church - Sioux City 230kV circuit to 345kV. Further evaluated in NPPD & WAPA facility study	Current Study	$470,365	$27,000,000
Battle Creek-County Line 115kV CKT 1 Rebuild approximately 11 miles of 115kV from Battle Creek to County Line.	Previously Allocated		$4,000,000
County Line-Neligh East 115kV CKT 1 Rebuild approximately 12 miles of 115kV from County Line to Neligh East.	Previously Allocated		$8,050,000
Hoskins - Neligh 345/115kV Projects Per SPP 2014 ITP NT and NTC 200253 for 6/1/2016 in-service.	Previously Allocated		$98,697,720
Nebraska City - Sibley 345kV CKT 1 Priority Project: Nebraska City - Mullin Creek - Sibley 345kV circuit 1 per SPP-NTC-20097 and SPP-NTC-20098 (Total Project E&C Cost Shown).	Previously Allocated		$336,433,874
Thedford 345/115kV Transformer CKT 1 Install Thedford 345/115kV transformer per SPP-NTC-200277 (Total Project E&C Cost Shown).	Previously Allocated		$311,717,040
Twin Church - Dixon County 230kV Increase conductor clearances to accommodate 320MVA facility rating	Previously Allocated		$100,000
	Current Study Total	$20,572,387	

GEN-2015-054

Albion - Petersburg - North Petersburg 115kV CKT 1 Reconductor 115kV lines and replace all terminal equipment for at least a 193MVA rate.	Current Study	$1,334,385	$3,500,000
Antelope 345/115/13kV Transformer CKT 2 Build and install Antelope 345/115/13kV Transformer circuit #2	Current Study	$6,242,841	$12,000,000
Belden 230/115/13kV Transformer CKT 1 Build Belden 230kV yard and install Belden 230/115/13kV Transformer circuit #1	Current Study	$146,624	$10,000,000
Columbus East 230/115/13kV Transformer CKT 1 NRIS only rquired upgrade: Replace Columbus East 230/115/13kV Transformer circuit #1	Current Study	$2,123,790	$10,000,000
Dixon County - Belden 230kV CKT 1 Build approximately 50 miles of new 230kV	Current Study	$1,175,976	$50,000,000
Dixon County - Twin Church 345kV CKT1 Voltage Conversion Convert Dixon Co - Twin Church 230kV circuit to 345kV. Further evaluated in NPPD facility study	Current Study	$832,192	$33,000,000

* Withdrawal of higher queued projects will cause a restudy and may result in higher costs

Interconnection Request and Upgrades	Upgrade Type	Allocated Cost	Upgrade Cost
GEN-2015-054 Interconnection Costs See One-Line Diagram.	Current Study	$500,000	$500,000
Holt County - Antelope 345kV CKT 1 Build approximately 30 miles of new 345kV	Current Study	$7,551,842	$36,000,000
Holt County - Grand Island 345kV CKT 1 NRIS only required upgrade	Current Study	$9,284,798	$60,000,000
MISO Affected System Study See section 4 power flow analysis.	Current Study	$TBD	$TBD
Sidney 345/230/13kV Transformer CKT 2 NRIS only required upgrade: Build and Install Sidney 345/230/13kV Transformer circuit #2	Current Study	$318,545	$12,000,000
Twin Church - Sioux City 345kV CKT1 Voltage Conversion Convert Twin Church - Sioux City 230kV circuit to 345kV. Further evaluated in NPPD & WAPA facility study	Current Study	$696,140	$27,000,000
Battle Creek-County Line 115kV CKT 1 Rebuild approximately 11 miles of 115kV from Battle Creek to County Line.	Previously Allocated		$4,000,000
County Line-Neligh East 115kV CKT 1 Rebuild approximately 12 miles of 115kV from County Line to Neligh East.	Previously Allocated		$8,050,000
Hoskins - Neligh 345/115kV Projects Per SPP 2014 ITP NT and NTC 200253 for 6/1/2016 in-service.	Previously Allocated		$98,697,720
Nebraska City - Sibley 345kV CKT 1 Priority Project: Nebraska City - Mullin Creek - Sibley 345kV circuit 1 per SPP-NTC-20097 and SPP-NTC-20098 (Total Project E&C Cost Shown).	Previously Allocated		$336,433,874
Thedford 345/115kV Transformer CKT 1 Install Thedford 345/115kV transformer per SPP-NTC-200277 (Total Project E&C Cost Shown).	Previously Allocated		$311,717,040
Twin Church - Dixon County 230kV Increase conductor clearances to accommodate 320MVA facility rating	Previously Allocated		$100,000
	Current Study Total	$30,207,133	
GEN-2015-055			
GEN-2015-055 Interconnection Costs See One-Line Diagram.	Current Study	$1,900,000	$1,900,000
Norge - Southwest Station 138kV CKT 1 Rebuild approximately 23 miles of 138kV from Norge to Southwest Station	Current Study	$2,149,568	$23,000,000
Anadarko - Sequoyah 138KV CKT 1 Rebuild approximately 1 mile of 138kV from Anadarko to Sequoyah	Previously Allocated		$700,000

* Withdrawal of higher queued projects will cause a restudy and may result in higher costs

Interconnection Request and Upgrades	Upgrade Type	Allocated Cost	Upgrade Cost
Cornville Tap - Naples Tap 138kV CKT 1 Rebuild approximately 11 miles of 138kV from Cornville Tap to Naples Tap	Previously Allocated		$7,700,000
Naples Tap - Payne 138kV CKT 1 Rebuild approximately 8 miles of 138kV from Naples Tap to Payne	Previously Allocated		$5,600,000
Oklaunion 345kV Reactive Power Install (2)-130Mvar Capacitor Bank(s) at Oklaunion	Previously Allocated		$10,000,000
Sequoyah - Cornville Tap 138kV CKT 1 Rebuild approximately 20 miles of 138kV from Sequoyah to Cornville Tap	Previously Allocated		$1,000,000
	Current Study Total	$4,049,568	
GEN-2015-056			
Beaver County - Grapevine 345kV CKT 1 Build approximately 75 miles of new 345kV from Beaver County - Grapevine	Current Study	$3,179,758	$75,000,000
Border - Chisholm 345kV CKT 2 Build approximately 25 miles of second circuit 345kV from Border - Chisholm	Current Study	$1,376,271	$25,000,000
Border 345kV Reactive Power Support Install (6)-50Mvar Capacitor Bank(s) and +250Mvar SVC at Border Substation	Current Study	$1,538,000	$30,000,000
Chisholm - Elk City 230kV CKT 1 Rebuild approximately 15 miles of 230kV from Chisholm - Elk City.	Current Study	$883,929	$15,000,000
Chisholm Substation Upgrade 345kV Expand planned Chisholm Substation to tap and terminate Woodward - Border 345kV into the Chisholm Substation	Current Study	$647,290	$12,000,000
Cimarron - Minco 345kV CKT 1 Replace 1600 amp switches.	Current Study	$26,992	$1,000,000
GEN-2014-057 - Lawton Eastside 345kV CKT 1 Replace terminal equipmen to atleast 1600 amps	Current Study	$22,525	$500,000
GEN-2014-057 - Sunnyside 345kV CKT 1 Rebuild approximately 45 miles of 345kV	Current Study	$1,508,612	$65,000,000
GEN-2015-056 Interconnection Costs See One-Line Diagram.	Current Study	$5,080,273	$5,080,273
Grapevine - Chisholm 345kV CKT 1 Build approximately 75 miles of new 345kV from Grapevine - Chisholm	Current Study	$2,892,708	$75,000,000
Grapevine Substation Upgrade 345kV Build Grapevine Substation and terminate Beaver Co - Grapevine, Potter Co - Grapevine, Grapevine - Chisholm 345kV into the Grapevine Substation	Current Study	$462,833	$12,000,000

* Withdrawal of higher queued projects will cause a restudy and may result in higher costs

Interconnection Request and Upgrades	Upgrade Type	Allocated Cost	Upgrade Cost
Oklaunion 345kV Reactive Power Support Incremental Upgrade Install (4)-50Mvar Capacitor Bank(s) and +300Mvar SVC at Oklaunion	Current Study	$2,202,044	$40,000,000
Potter County - Grapevine 345kV CKT 1 Build approximately 65 miles of new 345kV from Potter County - Grapevine	Current Study	$4,297,541	$65,000,000
Shamrock 115kV Capacitor Bank Add 2nd step of 9.6Mvars to Shamrock 115kV Capacitor Bank(s)	Current Study	$29,885	$500,000
Tolk - Potter County 345kV CKT 1 Build approximately 115 miles of 345kV from Tolk - Potter County	Current Study	$9,859,113	$105,000,000
Tolk - TUCO 2 345kV CKT 1 Build approximately 64 miles of 345kV from Tolk - TUCO 2.	Current Study	$15,360,626	$64,000,000
TUCO 2 - Border 345kV CKT 2 Build approximately 194 miles of second circuit 345kV from TUCO 2 - Border	Current Study	$10,679,912	$194,000,000
TUCO 2 - Yoakum 345kV Retermination Incremental Upgrade for SPP-NTC-200283 to reterminate TUCO terminal to TUCO 2 terminal by adding approximately 3 miles of 345kV	Current Study	$205,504	$5,000,000
Chisholm - Gracemont 345kV CKT 1 Per SPP-NTC-200255 and 200240 (Total Project E&C Cost Shown)	Previously Allocated		$162,952,357
Elk City 230/138/13kV Transformer CKT 1 Replace terminal equipment for Elk City Transformer to achieve transformer limit of 450MVA.	Previously Allocated		$15,000,000
Grapevine - Nichols 230kV CKT 1 Replace terminal equipment	Previously Allocated		$400,000
Grapevine - Wheeler 230kV CKT 1 Replace terminal equipment	Previously Allocated		$400,000
Potash Junction 230kV Reactive Power Support Build Potash Junction 100Mvar Capacitor bank per 2015 ITPNT.	Previously Allocated		$6,465,875
Tolk - Plant X 230kV CKT 1 & 2 Rebuild circuit 1 and 2 betweek Tolk - Plant X 230kV to 1200 amps each.	Previously Allocated		$9,921,693
TUCO 2 (Crawfish Draw) Substation Upgrade 345/230kV Tap Border-TUCO approximately 2 miles from TUCO and build TUCO 2 (Crawfish Draw) 345kV substation and add 345/230/13.2kV transformer and tie on TUCO-Swisher 230kV.	Previously Allocated		$24,764,205
TUCO 345/230/13.2kV Transformer CKT 1 Replace existing TUCO 345/230/13.2kV Transformer circuit #1 with 640MVA.	Previously Allocated		$3,347,036
Woodward EHV Phase Shifting Transformer CKT 1 Install one phase shifting transformer at Woodward	Previously Allocated		$7,200,000
	Current Study Total	$60,253,817	

* Withdrawal of higher queued projects will cause a restudy and may result in higher costs

Interconnection Request and Upgrades	Upgrade Type	Allocated Cost	Upgrade Cost
GEN-2015-057			
Cimarron - Minco 345kV CKT 1 Replace 1600 amp switches.	Current Study	$122,423	$1,000,000
GEN-2014-057 - Sunnyside 345kV CKT 1 Rebuild approximately 45 miles of 345kV	Current Study	$1,484,657	$65,000,000
GEN-2015-057 Interconnection Costs See One-Line Diagram.	Current Study	$20,000	$20,000
Northwest 138kV Circuit Breaker Replace Northwest 138kV Circuit Breaker for short circuit requirements	Current Study	$72,820	$750,000
Woodward 345/138/13kV Transformer CKT 1 Replace Woodward 345/138/13kV Transformer circuit #1	Current Study	$78,522	$15,000,000
Woodward 345/138/13kV Transformer CKT 2 Replace Woodward 345/138/13kV Transformer circuit #2	Current Study	$78,522	$15,000,000
Altus SW - Navajo 69kV CKT 1 Rebuild approximately 2.5 miles of 69kV from Atlus SW to Navajo	Previously Allocated		$1,250,000
Anadarko - Sequoyah 138KV CKT 1 Rebuild approximately 1 mile of 138kV from Anadarko to Sequoyah	Previously Allocated		$700,000
Bucker - Spearville 345V CKT 1 Replace Terminal equipment	Previously Allocated		$1,480,238
Cimarron - Draper Lake 345kV CKT 1 Replace terminal equipment to at least 2000A assigned in 2015 ITP10 per SPP-NTC-200329	Previously Allocated		$1,500,000
Cornville Tap - Naples Tap 138kV CKT 1 Rebuild approximately 11 miles of 138kV from Cornville Tap to Naples Tap	Previously Allocated		$7,700,000
Naples Tap - Payne 138kV CKT 1 Rebuild approximately 8 miles of 138kV from Naples Tap to Payne	Previously Allocated		$5,600,000
Navajo - Snyder 69kV CKT 1 Rebuild approximately 15 miles of 69kV from Navajo to Snyder	Previously Allocated		$7,500,000
Sequoyah - Cornville Tap 138kV CKT 1 Rebuild approximately 20 miles of 138kV from Sequoyah to Cornville Tap	Previously Allocated		$1,000,000
Woodward EHV Phase Shifting Transformer CKT 1 Install one phase shifting transformer at Woodward	Previously Allocated		$7,200,000
	Current Study Total	$1,856,944	

* Withdrawal of higher queued projects will cause a restudy and may result in higher costs

Interconnection Request and Upgrades	Upgrade Type	Allocated Cost	Upgrade Cost
GEN-2015-058			
Beaver County - Grapevine 345kV CKT 1 Build approximately 75 miles of new 345kV from Beaver County - Grapevine	Current Study	$1,545,020	$75,000,000
Border - Chisholm 345kV CKT 2 Build approximately 25 miles of second circuit 345kV from Border - Chisholm	Current Study	$689,835	$25,000,000
Border 345kV Reactive Power Support Install (6)-50Mvar Capacitor Bank(s) and +250Mvar SVC at Border Substation	Current Study	$768,427	$30,000,000
Chisholm - Elk City 230kV CKT 1 Rebuild approximately 15 miles of 230kV from Chisholm - Elk City.	Current Study	$437,491	$15,000,000
Chisholm Substation Upgrade 345kV Expand planned Chisholm Substation to tap and terminate Woodward - Border 345kV into the Chisholm Substation	Current Study	$324,444	$12,000,000
Cimarron - Minco 345kV CKT 1 Replace 1600 amp switches.	Current Study	$13,592	$1,000,000
GEN-2014-057 - Lawton Eastside 345kV CKT 1 Replace terminal equipmen to atleast 1600 amps	Current Study	$11,311	$500,000
GEN-2014-057 - Sunnyside 345kV CKT 1 Rebuild approximately 45 miles of 345kV	Current Study	$757,557	$65,000,000
GEN-2015-058 Interconnection Costs See One-Line Diagram.	Current Study	$2,751,641	$2,751,641
Grapevine - Chisholm 345kV CKT 1 Build approximately 75 miles of new 345kV from Grapevine - Chisholm	Current Study	$1,347,492	$75,000,000
Grapevine Substation Upgrade 345kV Build Grapevine Substation and terminate Beaver Co - Grapevine, Potter Co - Grapevine, Grapevine - Chisholm 345kV into the Grapevine Substation	Current Study	$215,599	$12,000,000
Oklaunion 345kV Reactive Power Support Incremental Upgrade Install (4)-50Mvar Capacitor Bank(s) and +300Mvar SVC at Oklaunion	Current Study	$1,103,740	$40,000,000
Potter County - Grapevine 345kV CKT 1 Build approximately 65 miles of new 345kV from Potter County - Grapevine	Current Study	$2,051,342	$65,000,000
Shamrock 115kV Capacitor Bank Add 2nd step of 9.6Mvars to Shamrock 115kV Capacitor Bank(s)	Current Study	$14,464	$500,000
Tolk - Potter County 345kV CKT 1 Build approximately 115 miles of 345kV from Tolk - Potter County	Current Study	$4,008,442	$105,000,000
Tolk - TUCO 2 345kV CKT 1 Build approximately 64 miles of 345kV from Tolk - TUCO 2.	Current Study	$3,794,067	$64,000,000

* Withdrawal of higher queued projects will cause a restudy and may result in higher costs

Interconnection Request and Upgrades	Upgrade Type	Allocated Cost	Upgrade Cost
Tolk 345/230/13kV Transformer CKT 2 Build second 345/230/13kV transformer at Tolk	Current Study	$153,819	$15,000,000
TUCO 2 - Border 345kV CKT 2 Build approximately 194 miles of second circuit 345kV from TUCO 2 - Border	Current Study	$5,353,140	$194,000,000
TUCO 2 - Yoakum 345kV Retermination Incremental Upgrade for SPP-NTC-200283 to reterminate TUCO terminal to TUCO 2 terminal by adding approximately 3 miles of 345kV	Current Study	$280,198	$5,000,000
Amoco Wasson - Oxy Tap 230kV CKT 1 Replace line traps at both terminals	Previously Allocated		$200,000
Chisholm - Gracemont 345kV CKT 1 Per SPP-NTC-200255 and 200240 (Total Project E&C Cost Shown)	Previously Allocated		$162,952,357
Elk City 230/138/13kV Transformer CKT 1 Replace terminal equipment for Elk City Transformer to achieve transformer limit of 450MVA.	Previously Allocated		$15,000,000
Grapevine - Nichols 230kV CKT 1 Replace terminal equipment	Previously Allocated		$400,000
Grapevine - Wheeler 230kV CKT 1 Replace terminal equipment	Previously Allocated		$400,000
Potash Junction 230kV Reactive Power Support Build Potash Junction 100Mvar Capacitor bank per 2015 ITPNT.	Previously Allocated		$6,465,875
Tolk - Plant X 230kV CKT 1 & 2 Rebuild circuit 1 and 2 betweek Tolk - Plant X 230kV to 1200 amps each.	Previously Allocated		$9,921,693
TUCO 2 (Crawfish Draw) Substation Upgrade 345/230kV Tap Border-TUCO approximately 2 miles from TUCO and build TUCO 2 (Crawfish Draw) 345kV substation and add 345/230/13.2kV transformer and tie on TUCO-Swisher 230kV.	Previously Allocated		$24,764,205
TUCO 345/230/13.2kV Transformer CKT 1 Replace existing TUCO 345/230/13.2kV Transformer circuit #1 with 640MVA.	Previously Allocated		$3,347,036
Woodward EHV Phase Shifting Transformer CKT 1 Install one phase shifting transformer at Woodward	Previously Allocated		$7,200,000
	Current Study Total	$25,621,622	

GEN-2015-059

Cimarron - Minco 345kV CKT 1 Replace 1600 amp switches.	Current Study	$7,713	$1,000,000
GEN-2015-059 Interconnection Costs See One-Line Diagram.	Current Study	$0	$0

* Withdrawal of higher queued projects will cause a restudy and may result in higher costs

Interconnection Request and Upgrades	Upgrade Type	Allocated Cost	Upgrade Cost
Northwest 138kV Circuit Breaker Replace Northwest 138kV Circuit Breaker for short circuit requirements	Current Study	$4,588	$750,000
Woodward 345/138/13kV Transformer CKT 1 Replace Woodward 345/138/13kV Transformer circuit #1	Current Study	$4,947	$15,000,000
Woodward 345/138/13kV Transformer CKT 2 Replace Woodward 345/138/13kV Transformer circuit #2	Current Study	$4,947	$15,000,000
Altus SW - Navajo 69kV CKT 1 Rebuild approximately 2.5 miles of 69kV from Atlus SW to Navajo	Previously Allocated		$1,250,000
Anadarko - Sequoyah 138KV CKT 1 Rebuild approximately 1 mile of 138kV from Anadarko to Sequoyah	Previously Allocated		$700,000
Bucker - Spearville 345V CKT 1 Replace Terminal equipment	Previously Allocated		$1,480,238
Cimarron - Draper Lake 345kV CKT 1 Replace terminal equipment to at least 2000A assigned in 2015 ITP10 per SPP-NTC-200329	Previously Allocated		$1,500,000
Cornville Tap - Naples Tap 138kV CKT 1 Rebuild approximately 11 miles of 138kV from Cornville Tap to Naples Tap	Previously Allocated		$7,700,000
Naples Tap - Payne 138kV CKT 1 Rebuild approximately 8 miles of 138kV from Naples Tap to Payne	Previously Allocated		$5,600,000
Navajo - Snyder 69kV CKT 1 Rebuild approximately 15 miles of 69kV from Navajo to Snyder	Previously Allocated		$7,500,000
Sequoyah - Cornville Tap 138kV CKT 1 Rebuild approximately 20 miles of 138kV from Sequoyah to Cornville Tap	Previously Allocated		$1,000,000
Woodward EHV Phase Shifting Transformer CKT 1 Install one phase shifting transformer at Woodward	Previously Allocated		$7,200,000
	Current Study Total	$22,194	
GEN-2015-060			
Cimarron - Minco 345kV CKT 1 Replace 1600 amp switches.	Current Study	$5,612	$1,000,000
Cleo Corner - Cleo Plant Tap 138kV CKT 1 Replace terminal equipment to at least 1200 amps	Current Study	$22,146	$500,000
GEN-2014-057 - Sunnyside 345kV CKT 1 Rebuild approximately 45 miles of 345kV	Current Study	$1,994,708	$65,000,000

* Withdrawal of higher queued projects will cause a restudy and may result in higher costs

Interconnection Request and Upgrades	Upgrade Type	Allocated Cost	Upgrade Cost
GEN-2015-060 Interconnection Costs See One-Line Diagram.	Current Study	$943,000	$943,000
Northwest 138kV Circuit Breaker Replace Northwest 138kV Circuit Breaker for short circuit requirements	Current Study	$30,638	$750,000
Woodward 345/138/13kV Transformer CKT 1 Replace Woodward 345/138/13kV Transformer circuit #1	Current Study	$11,492,053	$15,000,000
Woodward 345/138/13kV Transformer CKT 2 Replace Woodward 345/138/13kV Transformer circuit #2	Current Study	$11,492,053	$15,000,000
Anadarko - Sequoyah 138KV CKT 1 Rebuild approximately 1 mile of 138kV from Anadarko to Sequoyah	Previously Allocated		$700,000
Bucker - Spearville 345V CKT 1 Replace Terminal equipment	Previously Allocated		$1,480,238
Cimarron - Draper Lake 345kV CKT 1 Replace terminal equipment to at least 2000A assigned in 2015 ITP10 per SPP-NTC-200329	Previously Allocated		$1,500,000
Cornville Tap - Naples Tap 138kV CKT 1 Rebuild approximately 11 miles of 138kV from Cornville Tap to Naples Tap	Previously Allocated		$7,700,000
Mathewson - Cimarron 345kV CKT 2 Build second 345kV circuit from Matthewson - Cimarron @ 3000 amps per ITP10.	Previously Allocated		$42,903,753
Naples Tap - Payne 138kV CKT 1 Rebuild approximately 8 miles of 138kV from Naples Tap to Payne	Previously Allocated		$5,600,000
Sequoyah - Cornville Tap 138kV CKT 1 Rebuild approximately 20 miles of 138kV from Sequoyah to Cornville Tap	Previously Allocated		$1,000,000
Tatonga - Mathewson 345kV CKT 2 Build second 345kV circuit from Tatonga - Matthewson @ 3000 amps per ITP10.	Previously Allocated		$104,260,473
Woodward - GEN-2011-051 Tap - Tatonga 345kV CKT 2 Build second 345kV circuit from Woodward - Tatonga @ 3000 amps per ITP10.	Previously Allocated		$71,876,622
	Current Study Total	$25,980,212	

GEN-2015-061

GEN-2015-061 Interconnection Costs See One-Line Diagram.	Current Study	$13,311,356	$13,311,356
Holt County - Grand Island 345kV CKT 1 NRIS only required upgrade	Current Study	$1,163,885	$60,000,000

* Withdrawal of higher queued projects will cause a restudy and may result in higher costs

Interconnection Request and Upgrades	Upgrade Type	Allocated Cost	Upgrade Cost
Arnold - Ransom 115kV CKT 1 Replace terminal equipment and relay panels at Ransom Substation	Previously Allocated		$268,321
Bucker - Spearville 345V CKT 1 Replace Terminal equipment	Previously Allocated		$1,480,238
	Current Study Total	$14,475,241	
GEN-2015-062			
Emporia Energy Center - Swissvale 345kV CKT 1 Replace terminal equipment to at least 1600 amps (Cost included in Swissvale - West Gardner 345kV Line Item)	Current Study	$0	$0
GEN-2015-062 Interconnection Costs See One-Line Diagram.	Current Study	$0	$0
Northwest 138kV Circuit Breaker Replace Northwest 138kV Circuit Breaker for short circuit requirements	Current Study	$278	$750,000
Swissvale - West Gardner 345kV CKT 1 Replace terminal equipment to at least 1600 amps	Current Study	$645	$1,000,000
Cornville Tap - Naples Tap 138kV CKT 1 Rebuild approximately 11 miles of 138kV from Cornville Tap to Naples Tap	Previously Allocated		$7,700,000
Fairfax 138/69kV CKT 1 Per AECI Affected System Study for DISIS-2012-002	Previously Allocated		$2,200,000
Naples Tap - Payne 138kV CKT 1 Rebuild approximately 8 miles of 138kV from Naples Tap to Payne	Previously Allocated		$5,600,000
Remington - Fairfax 138KV CKT 1 Increase conductor clearance	Previously Allocated		$400,000
	Current Study Total	$922	
GEN-2015-063			
Cleveland - Cleveland 138kV CKT Z1 Replace Cleveland - Cleveland bus tie terminal equipment to at least 1800 amps. AECI Affected System Study is required	Current Study	$29,935	$250,000
Cleveland - Silver City 138kV CKT 1 Rebuild approximately 22 miles of 138kV from Cleveland to Silver City. AECI Affected System Study is required	Current Study	$1,523,520	$10,560,000
Emporia Energy Center - Swissvale 345kV CKT 1 Replace terminal equipment to at least 1600 amps (Cost included in Swissvale - West Gardner 345kV Line Item)	Current Study	$0	$0
GEN-2015-063 Interconnection Costs See One-Line Diagram.	Current Study	$10,613,000	$10,613,000

* Withdrawal of higher queued projects will cause a restudy and may result in higher costs

Interconnection Request and Upgrades	Upgrade Type	Allocated Cost	Upgrade Cost
Swissvale - West Gardner 345kV CKT 1 Replace terminal equipment to at least 1600 amps	Current Study	$41,208	$1,000,000
Altus SW - Navajo 69kV CKT 1 Rebuild approximately 2.5 miles of 69kV from Atlus SW to Navajo	Previously Allocated		$1,250,000
Cimarron - Draper Lake 345kV CKT 1 Replace terminal equipment to at least 2000A assigned in 2015 ITP10 per SPP-NTC-200329	Previously Allocated		$1,500,000
Cornville Tap - Naples Tap 138kV CKT 1 Rebuild approximately 11 miles of 138kV from Cornville Tap to Naples Tap	Previously Allocated		$7,700,000
Fairfax 138/69kV CKT 1 Per AECI Affected System Study for DISIS-2012-002	Previously Allocated		$2,200,000
Naples Tap - Payne 138kV CKT 1 Rebuild approximately 8 miles of 138kV from Naples Tap to Payne	Previously Allocated		$5,600,000
Navajo - Snyder 69kV CKT 1 Rebuild approximately 15 miles of 69kV from Navajo to Snyder	Previously Allocated		$7,500,000
Remington - Fairfax 138KV CKT 1 Increase conductor clearance	Previously Allocated		$400,000
Renfrow - Renfrow 138kV CKT 1 NRIS only required upgrade: Rebuild approximately 2 miles of 138kV from Renfrow to Renfrow.	Previously Allocated		$1,400,000
Viola 345/138 kV Transformer CKT 1 SPP 2013 ITP NT assigned upgrade per SPP-NTC-200288 for 6/1/2019 in-service.	Previously Allocated		$19,339,327
	Current Study Total	$12,207,663	
GEN-2015-064			
GEN-2015-064 Interconnection Costs See One-Line Diagram.	Current Study	$4,626,785	$4,626,785
Arnold - Ransom 115kV CKT 1 Replace terminal equipment and relay panels at Ransom Substation	Previously Allocated		$268,321
Bucker - Spearville 345V CKT 1 Replace Terminal equipment	Previously Allocated		$1,480,238
Mingo 345/115kV Transformer CKT 2 Build second 345/115/13.8kV transformer at Mingo per 2015 NT SPP-NTC-200325 (Total Project E&C Cost Shown)..	Previously Allocated		$10,696,692
	Current Study Total	$4,626,785	

* Withdrawal of higher queued projects will cause a restudy and may result in higher costs

Interconnection Request and Upgrades	Upgrade Type	Allocated Cost	Upgrade Cost
GEN-2015-065			
GEN-2015-065 Interconnection Costs See One-Line Diagram.	Current Study	$7,937,928	$7,937,928
Arnold - Ransom 115kV CKT 1 Replace terminal equipment and relay panels at Ransom Substation	Previously Allocated		$268,321
Bucker - Spearville 345V CKT 1 Replace Terminal equipment	Previously Allocated		$1,480,238
	Current Study Total	$7,937,928	
GEN-2015-066			
Emporia Energy Center - Swissvale 345kV CKT 1 Replace terminal equipment to at least 1600 amps (Cost included in Swissvale - West Gardner 345kV Line Item)	Current Study	$0	$0
GEN-2015-066 Interconnection Costs See One-Line Diagram.	Current Study	$10,613,000	$10,613,000
Northwest 138kV Circuit Breaker Replace Northwest 138kV Circuit Breaker for short circuit requirements	Current Study	$46,414	$750,000
Altus SW - Navajo 69kV CKT 1 Rebuild approximately 2.5 miles of 69kV from Atlus SW to Navajo	Previously Allocated		$1,250,000
Fairfax 138/69kV CKT 1 Per AECI Affected System Study for DISIS-2012-002	Previously Allocated		$2,200,000
Navajo - Snyder 69kV CKT 1 Rebuild approximately 15 miles of 69kV from Navajo to Snyder	Previously Allocated		$7,500,000
Renfrow - Renfrow 138kV CKT 1 NRIS only required upgrade: Rebuild approximately 2 miles of 138kV from Renfrow to Renfrow.	Previously Allocated		$1,400,000
	Current Study Total	$10,659,414	
GEN-2015-067			
Emporia Energy Center - Swissvale 345kV CKT 1 Replace terminal equipment to at least 1600 amps (Cost included in Swissvale - West Gardner 345kV Line Item)	Current Study	$0	$0
GEN-2015-067 Interconnection Costs See One-Line Diagram.	Current Study	$3,521,000	$3,521,000
Northwest 138kV Circuit Breaker Replace Northwest 138kV Circuit Breaker for short circuit requirements	Current Study	$23,537	$750,000

* Withdrawal of higher queued projects will cause a restudy and may result in higher costs

Interconnection Request and Upgrades	Upgrade Type	Allocated Cost	Upgrade Cost
Fairfax 138/69kV CKT 1 Per AECI Affected System Study for DISIS-2012-002	Previously Allocated		$2,200,000
Remington - Fairfax 138KV CKT 1 Increase conductor clearance	Previously Allocated		$400,000
Renfrow - Renfrow 138kV CKT 1 NRIS only required upgrade: Rebuild approximately 2 miles of 138kV from Renfrow to Renfrow.	Previously Allocated		$1,400,000
	Current Study Total	$3,544,537	
GEN-2015-068			
Beaver County - Grapevine 345kV CKT 1 Build approximately 75 miles of new 345kV from Beaver County - Grapevine	Current Study	$8,862,748	$75,000,000
Border - Chisholm 345kV CKT 2 Build approximately 25 miles of second circuit 345kV from Border - Chisholm	Current Study	$5,543,296	$25,000,000
Border 345kV Reactive Power Support Install (6)-50Mvar Capacitor Bank(s) and +250Mvar SVC at Border Substation	Current Study	$5,710,912	$30,000,000
Chisholm - Elk City 230kV CKT 1 Rebuild approximately 15 miles of 230kV from Chisholm - Elk City.	Current Study	$2,574,791	$15,000,000
Chisholm Substation Upgrade 345kV Expand planned Chisholm Substation to tap and terminate Woodward - Border 345kV into the Chisholm Substation	Current Study	$2,607,133	$12,000,000
Cimarron - Minco 345kV CKT 1 Replace 1600 amp switches.	Current Study	$87,958	$1,000,000
GEN-2014-057 - Lawton Eastside 345kV CKT 1 Replace terminal equipmen to atleast 1600 amps	Current Study	$72,639	$500,000
GEN-2014-057 - Sunnyside 345kV CKT 1 Rebuild approximately 45 miles of 345kV	Current Study	$4,864,943	$65,000,000
GEN-2015-068 Interconnection Costs See One-Line Diagram.	Current Study	$3,303,965	$3,303,965
Grapevine - Chisholm 345kV CKT 1 Build approximately 75 miles of new 345kV from Grapevine - Chisholm	Current Study	$1,894,511	$75,000,000
Grapevine Substation Upgrade 345kV Build Grapevine Substation and terminate Beaver Co - Grapevine, Potter Co - Grapevine, Grapevine - Chisholm 345kV into the Grapevine Substation	Current Study	$303,122	$12,000,000
LP-Wadsworth 230/69/13kV Transformer CKT 1 NRIS only required upgrade: Replace existing LP-Wadsworth 230/69kV Transformer	Current Study	$1,105,431	$6,000,000

* Withdrawal of higher queued projects will cause a restudy and may result in higher costs

Interconnection Request and Upgrades	Upgrade Type	Allocated Cost	Upgrade Cost
Oklaunion 345kV Reactive Power Support Incremental Upgrade Install (4)-50Mvar Capacitor Bank(s) and +300Mvar SVC at Oklaunion	Current Study	$8,869,313	$40,000,000
Potter County - Grapevine 345kV CKT 1 Build approximately 65 miles of new 345kV from Potter County - Grapevine	Current Study	$8,068,235	$65,000,000
Shamrock 115kV Capacitor Bank Add 2nd step of 9.6Mvars to Shamrock 115kV Capacitor Bank(s)	Current Study	$71,078	$500,000
Tolk - Potter County 345kV CKT 1 Build approximately 115 miles of 345kV from Tolk - Potter County	Current Study	$17,181,683	$105,000,000
TUCO - New Deal - Stanton 345/115kV Project NRIS only required upgrade: Build TUCO - New Deal 345kV, New Deal - Stanton 115kV and New Deal 345/115kV tranformer CKT 1. Total project E&C costs shown.	Current Study	$25,173,291	$37,490,796
TUCO 2 - Border 345kV CKT 2 Build approximately 194 miles of second circuit 345kV from TUCO 2 - Border	Current Study	$43,016,168	$194,000,000
Chisholm - Gracemont 345kV CKT 1 Per SPP-NTC-200255 and 200240 (Total Project E&C Cost Shown)	Previously Allocated		$162,952,357
Crawfish Draw (TUCO 2) 230/115/13kV Transformer CKT 1 NRIS only required upgrade: Build 115kV yard at TUCO 2, re-route Hale County - TUCO 115kV into TUCO 2 115kV, build TUC0 2 230/115/13kV Transformer 1	Previously Allocated		$12,000,000
Elk City 230/138/13kV Transformer CKT 1 Replace terminal equipment for Elk City Transformer to achieve transformer limit of 450MVA.	Previously Allocated		$15,000,000
Grapevine - Nichols 230kV CKT 1 Replace terminal equipment	Previously Allocated		$400,000
Grapevine - Wheeler 230kV CKT 1 Replace terminal equipment	Previously Allocated		$400,000
Kress Interchange - Swisher 115kV CKT 1 Replace terminal equipment	Previously Allocated		$500,000
National Enrichment Plant-Targa 115kV CKT 1 Rebuild approximately 4 miles of 115kV from National Enrichment Plant to Targa per 2015 ITPNT.	Previously Allocated		$2,909,669
Potash Junction 230/115 kV Ckt 1 Per HPILs SPP-NTC-200282 (Total Project E&C Cost Shown)	Previously Allocated		$3,508,346
Targa-Cardinal 115kV CKT 1 Rebuild approximately 3 miles of 115kV from Targa to Cardinal per 2015 ITPNT.	Previously Allocated		$2,049,062
Tolk - Plant X 230kV CKT 1 & 2 Rebuild circuit 1 and 2 betweek Tolk - Plant X 230kV to 1200 amps each.	Previously Allocated		$9,921,693

* Withdrawal of higher queued projects will cause a restudy and may result in higher costs

Interconnection Request and Upgrades	Upgrade Type	Allocated Cost	Upgrade Cost
TUCO Interchange - Jones 230kV CKT 1 NRIS only required upgrade: Replace line traps at both terminals	Previously Allocated		$400,000
Woodward EHV Phase Shifting Transformer CKT 1 Install one phase shifting transformer at Woodward	Previously Allocated		$7,200,000
	Current Study Total	$139,311,216	
GEN-2015-069			
Emporia Energy Center - Swissvale 345kV CKT 1 Replace terminal equipment to at least 1600 amps (Cost included in Swissvale - West Gardner 345kV Line Item)	Current Study	$0	$0
GEN-2015-069 Interconnection Costs See One-Line Diagram.	Current Study	$2,755,752	$2,755,752
Northwest 138kV Circuit Breaker Replace Northwest 138kV Circuit Breaker for short circuit requirements	Current Study	$2,046	$750,000
Swissvale - West Gardner 345kV CKT 1 Replace terminal equipment to at least 1600 amps	Current Study	$349,206	$1,000,000
Cimarron - Draper Lake 345kV CKT 1 Replace terminal equipment to at least 2000A assigned in 2015 ITP10 per SPP-NTC-200329	Previously Allocated		$1,500,000
Cornville Tap - Naples Tap 138kV CKT 1 Rebuild approximately 11 miles of 138kV from Cornville Tap to Naples Tap	Previously Allocated		$7,700,000
Fairfax 138/69kV CKT 1 Per AECI Affected System Study for DISIS-2012-002	Previously Allocated		$2,200,000
Naples Tap - Payne 138kV CKT 1 Rebuild approximately 8 miles of 138kV from Naples Tap to Payne	Previously Allocated		$5,600,000
Remington - Fairfax 138KV CKT 1 Increase conductor clearance	Previously Allocated		$400,000
Renfrow - Renfrow 138kV CKT 1 NRIS only required upgrade: Rebuild approximately 2 miles of 138kV from Renfrow to Renfrow.	Previously Allocated		$1,400,000
Viola 345/138 kV Transformer CKT 1 SPP 2013 ITP NT assigned upgrade per SPP-NTC-200288 for 6/1/2019 in-service.	Previously Allocated		$19,339,327
	Current Study Total	$3,107,004	
GEN-2015-071			
GEN-2015-071 Interconnection Costs See One-Line Diagram.	Current Study	$14,623,541	$14,623,541

* Withdrawal of higher queued projects will cause a restudy and may result in higher costs

Interconnection Request and Upgrades	Upgrade Type	Allocated Cost	Upgrade Cost
GEN-2015-085 Tap - Altus Junction 138kV CKT 1 Build approximately 15 miles of new 138kV from GEN-2015-085 Tap to Altus Junction	Current Study	$39,868	$15,000,000
GEN-2015-085 Tap - Russell 138kV CKT 1 Replace terminal equipment	Current Study	$879	$400,000
Norge - Southwest Station 138kV CKT 1 Rebuild approximately 23 miles of 138kV from Norge to Southwest Station	Current Study	$9,020,967	$23,000,000
Anadarko - Sequoyah 138KV CKT 1 Rebuild approximately 1 mile of 138kV from Anadarko to Sequoyah	Previously Allocated		$700,000
Cornville Tap - Naples Tap 138kV CKT 1 Rebuild approximately 11 miles of 138kV from Cornville Tap to Naples Tap	Previously Allocated		$7,700,000
Naples Tap - Payne 138kV CKT 1 Rebuild approximately 8 miles of 138kV from Naples Tap to Payne	Previously Allocated		$5,600,000
Oklaunion 345kV Reactive Power Install (2)-130Mvar Capacitor Bank(s) at Oklaunion	Previously Allocated		$10,000,000
Sequoyah - Cornville Tap 138kV CKT 1 Rebuild approximately 20 miles of 138kV from Sequoyah to Cornville Tap	Previously Allocated		$1,000,000
	Current Study Total	$23,685,255	
GEN-2015-072			
GEN-2015-072 Interconnection Costs See One-Line Diagram.	Current Study	$0	$0
Knoll - Post Rock 230kV CKT 2 NRIS only required upgrade: Build second 230kV circuit between Knoll - Post Rock	Current Study	$2,000,000	$2,000,000
Milan Tap - Clearwater 138kV CKT 1 NRIS only required upgrade: Rebuild approximately 5.7 miles (MKEC) and 6.1 miles (WERE) of 138kV transmission.	Current Study	$12,459,248	$12,459,248
Smokey Hills - Summit 230kV CKT 1 Rebuild approximately 39 miles of 230kV from Smokey Hills to Summit	Current Study	$36,000,000	$36,000,000
South Hays 230/115/13kV Transformer CKT 1 NRIS only required upgrade: Replace South Hays 230/115/13kV Transformer	Current Study	$4,000,000	$4,000,000
Beach - GEN-2010-048 Tap CKT 1 Replace terminal equipment	Previously Allocated		$250,000
Mingo 345/115kV Transformer CKT 2 Build second 345/115/13.8kV transformer at Mingo per 2015 NT SPP-NTC-200325 (Total Project E&C Cost Shown)..	Previously Allocated		$10,696,692

* Withdrawal of higher queued projects will cause a restudy and may result in higher costs

Interconnection Request and Upgrades	Upgrade Type	Allocated Cost	Upgrade Cost
	Current Study Total	$54,459,248	
GEN-2015-073			
Emporia Energy Center - Swissvale 345kV CKT 1 Replace terminal equipment to at least 1600 amps (Cost included in Swissvale - West Gardner 345kV Line Item)	Current Study	$0	$0
GEN-2015-073 Interconnection Costs See One-Line Diagram.	Current Study	$2,576,628	$2,576,628
Northwest 138kV Circuit Breaker Replace Northwest 138kV Circuit Breaker for short circuit requirements	Current Study	$2,620	$750,000
Swissvale - West Gardner 345kV CKT 1 Replace terminal equipment to at least 1600 amps	Current Study	$363,453	$1,000,000
Cimarron - Draper Lake 345kV CKT 1 Replace terminal equipment to at least 2000A assigned in 2015 ITP10 per SPP-NTC-200329	Previously Allocated		$1,500,000
Cornville Tap - Naples Tap 138kV CKT 1 Rebuild approximately 11 miles of 138kV from Cornville Tap to Naples Tap	Previously Allocated		$7,700,000
Fairfax 138/69kV CKT 1 Per AECI Affected System Study for DISIS-2012-002	Previously Allocated		$2,200,000
Naples Tap - Payne 138kV CKT 1 Rebuild approximately 8 miles of 138kV from Naples Tap to Payne	Previously Allocated		$5,600,000
Remington - Fairfax 138KV CKT 1 Increase conductor clearance	Previously Allocated		$400,000
Renfrow - Renfrow 138kV CKT 1 NRIS only required upgrade: Rebuild approximately 2 miles of 138kV from Renfrow to Renfrow.	Previously Allocated		$1,400,000
Viola 345/138 kV Transformer CKT 1 SPP 2013 ITP NT assigned upgrade per SPP-NTC-200288 for 6/1/2019 in-service.	Previously Allocated		$19,339,327
	Current Study Total	$2,942,701	
GEN-2015-074			
GEN-2015-074 Interconnection Costs See One-Line Diagram.	Current Study	$15,551,378	$15,551,378
Swissvale - West Gardner 345kV CKT 1 Replace terminal equipment to at least 1600 amps	Current Study	$36,570	$1,000,000
	Current Study Total	$15,587,948	

* Withdrawal of higher queued projects will cause a restudy and may result in higher costs

Interconnection Request and Upgrades	Upgrade Type	Allocated Cost	Upgrade Cost
GEN-2015-075			
Beaver County - Grapevine 345kV CKT 1 Build approximately 75 miles of new 345kV from Beaver County - Grapevine	Current Study	$1,545,467	$75,000,000
Border - Chisholm 345kV CKT 2 Build approximately 25 miles of second circuit 345kV from Border - Chisholm	Current Study	$835,873	$25,000,000
Border 345kV Reactive Power Support Install (6)-50Mvar Capacitor Bank(s) and +250Mvar SVC at Border Substation	Current Study	$886,095	$30,000,000
Carlisle 115/69/13kV Transformer CKT 1 Replace existing Carlisle 115/69/13kV Transformer circuit #1	Current Study	$4,000,000	$4,000,000
Chisholm - Elk City 230kV CKT 1 Rebuild approximately 15 miles of 230kV from Chisholm - Elk City.	Current Study	$447,361	$15,000,000
Chisholm Substation Upgrade 345kV Expand planned Chisholm Substation to tap and terminate Woodward - Border 345kV into the Chisholm Substation	Current Study	$393,129	$12,000,000
Cimarron - Minco 345kV CKT 1 Replace 1600 amp switches.	Current Study	$14,512	$1,000,000
GEN-2014-057 - Lawton Eastside 345kV CKT 1 Replace terminal equipmen to atleast 1600 amps	Current Study	$12,027	$500,000
GEN-2014-057 - Sunnyside 345kV CKT 1 Rebuild approximately 45 miles of 345kV	Current Study	$805,483	$65,000,000
GEN-2015-075 Interconnection Costs See One-Line Diagram.	Current Study	$5,000,000	$5,000,000
Grapevine - Chisholm 345kV CKT 1 Build approximately 75 miles of new 345kV from Grapevine - Chisholm	Current Study	$818,896	$75,000,000
Grapevine Substation Upgrade 345kV Build Grapevine Substation and terminate Beaver Co - Grapevine, Potter Co - Grapevine, Grapevine - Chisholm 345kV into the Grapevine Substation	Current Study	$131,023	$12,000,000
LP-Wadsworth 230/69/13kV Transformer CKT 1 NRIS only required upgrade: Replace existing LP-Wadsworth 230/69kV Transformer	Current Study	$153,412	$6,000,000
Oklaunion 345kV Reactive Power Support Incremental Upgrade Install (4)-50Mvar Capacitor Bank(s) and +300Mvar SVC at Oklaunion	Current Study	$1,337,403	$40,000,000
Potter County - Grapevine 345kV CKT 1 Build approximately 65 miles of new 345kV from Potter County - Grapevine	Current Study	$1,716,607	$65,000,000
Shamrock 115kV Capacitor Bank Add 2nd step of 9.6Mvars to Shamrock 115kV Capacitor Bank(s)	Current Study	$13,826	$500,000

* Withdrawal of higher queued projects will cause a restudy and may result in higher costs

Interconnection Request and Upgrades	Upgrade Type	Allocated Cost	Upgrade Cost
Tolk - Potter County 345kV CKT 1 Build approximately 115 miles of 345kV from Tolk - Potter County	Current Study	$3,056,433	$105,000,000
Tolk 345/230/13kV Transformer CKT 2 Build second 345/230/13kV transformer at Tolk	Current Study	$366,236	$15,000,000
TUCO 2 - Border 345kV CKT 2 Build approximately 194 miles of second circuit 345kV from TUCO 2 - Border	Current Study	$6,486,403	$194,000,000
TUCO 2 - Yoakum 345kV Retermination Incremental Upgrade for SPP-NTC-200283 to reterminate TUCO terminal to TUCO 2 terminal by adding approximately 3 miles of 345kV	Current Study	$54,355	$5,000,000
Wolfforth Interchange 230/115/13.2kV Transformer CKT 1 NRIS only required upgrade: Replace existing Wolfforth Interchange Transformer	Current Study	$743,252	$6,000,000
Wolfforth Interchange 230/115/13.2kV Transformer CKT 1 NRIS only required upgrade: Replace existing Wolfforth Interchange Transformer	Current Study	$5,256,748	$6,000,000
Wolfforth Interchange 230/115/13.2kV Transformer CKT 1 NRIS only required upgrade: Replace existing Wolfforth Interchange Transformer	Current Study	$5,256,748	$6,000,000
Wolfforth Interchange 230/115/13.2kV Transformer CKT 1 NRIS only required upgrade: Replace existing Wolfforth Interchange Transformer	Current Study	$743,252	$6,000,000
Amoco Wasson - Oxy Tap 230kV CKT 1 Replace line traps at both terminals	Previously Allocated		$200,000
Carlisle - LP-Doug 115kV CKT 1 NRIS only required upgrade: Replace line traps	Previously Allocated		$400,000
Chisholm - Gracemont 345kV CKT 1 Per SPP-NTC-200255 and 200240 (Total Project E&C Cost Shown)	Previously Allocated		$162,952,357
Elk City 230/138/13kV Transformer CKT 1 Replace terminal equipment for Elk City Transformer to achieve transformer limit of 450MVA.	Previously Allocated		$15,000,000
Grapevine - Nichols 230kV CKT 1 Replace terminal equipment	Previously Allocated		$400,000
Grapevine - Wheeler 230kV CKT 1 Replace terminal equipment	Previously Allocated		$400,000
National Enrichment Plant-Targa 115kV CKT 1 Rebuild approximately 4 miles of 115kV from National Enrichment Plant to Targa per 2015 ITPNT.	Previously Allocated		$2,909,669
Targa-Cardinal 115kV CKT 1 Rebuild approximately 3 miles of 115kV from Targa to Cardinal per 2015 ITPNT.	Previously Allocated		$2,049,062

* Withdrawal of higher queued projects will cause a restudy and may result in higher costs

Interconnection Request and Upgrades	Upgrade Type	Allocated Cost	Upgrade Cost
TUCO 2 (Crawfish Draw) Substation Upgrade 345/230kV Tap Border-TUCO approximately 2 miles from TUCO and build TUCO 2 (Crawfish Draw) 345kV substation and add 345/230/13.2kV transformer and tie on TUCO-Swisher 230kV.	Previously Allocated		$24,764,205
TUCO 345/230/13.2kV Transformer CKT 1 Replace existing TUCO 345/230/13.2kV Transformer circuit #1 with 640MVA.	Previously Allocated		$3,347,036
TUCO Interchange - Jones 230kV CKT 1 NRIS only required upgrade: Replace line traps at both terminals	Previously Allocated		$400,000
Woodward EHV Phase Shifting Transformer CKT 1 Install one phase shifting transformer at Woodward	Previously Allocated		$7,200,000
	Current Study Total	$34,074,541	
GEN-2015-076			
Albion - Petersburg - North Petersburg 115kV CKT 1 Reconductor 115kV lines and replace all terminal equipment for at least a 193MVA rate.	Current Study	$471,143	$3,500,000
Antelope 345/115/13kV Transformer CKT 2 Build and install Antelope 345/115/13kV Transformer circuit #2	Current Study	$886,182	$12,000,000
Belden - Rasmussen 230kV CKT 1 Build approximately 25 miles of new 230kV	Current Study	$11,061,119	$25,000,000
Belden 230/115/13kV Transformer CKT 1 Build Belden 230kV yard and install Belden 230/115/13kV Transformer circuit #1	Current Study	$7,148,781	$10,000,000
Columbus East 230/115/13kV Transformer CKT 1 NRIS only rquired upgrade: Replace Columbus East 230/115/13kV Transformer circuit #1	Current Study	$2,162,329	$10,000,000
Dixon County - Belden 230kV CKT 1 Build approximately 50 miles of new 230kV	Current Study	$22,103,503	$50,000,000
Dixon County - Twin Church 345kV CKT1 Voltage Conversion Convert Dixon Co - Twin Church 230kV circuit to 345kV. Further evaluated in NPPD facility study	Current Study	$5,281,052	$33,000,000
GEN-2015-076 Interconnection Costs See One-Line Diagram.	Current Study	$2,600,000	$2,600,000
Holt County - Antelope 345kV CKT 1 Build approximately 30 miles of new 345kV	Current Study	$6,055,444	$36,000,000
Holt County - Grand Island 345kV CKT 1 NRIS only required upgrade	Current Study	$10,775,020	$60,000,000
MISO Affected System Study See section 4 power flow analysis.	Current Study	$TBD	$TBD

* Withdrawal of higher queued projects will cause a restudy and may result in higher costs

Interconnection Request and Upgrades	Upgrade Type	Allocated Cost	Upgrade Cost
Sidney 345/230/13kV Transformer CKT 2 NRIS only required upgrade: Build and Install Sidney 345/230/13kV Transformer circuit #2	Current Study	$776,561	$12,000,000
Twin Church - Sioux City 345kV CKT1 Voltage Conversion Convert Twin Church - Sioux City 230kV circuit to 345kV. Further evaluated in NPPD & WAPA facility study	Current Study	$5,847,906	$27,000,000
Hoskins - Dixon County - Twin Church 230kV Rerate per NPPD Facility Study	Previously Allocated		$500,000
Nebraska City - Sibley 345kV CKT 1 Priority Project: Nebraska City - Mullin Creek - Sibley 345kV circuit 1 per SPP-NTC-20097 and SPP-NTC-20098 (Total Project E&C Cost Shown).	Previously Allocated		$336,433,874
Thedford 345/115kV Transformer CKT 1 Install Thedford 345/115kV transformer per SPP-NTC-200277 (Total Project E&C Cost Shown).	Previously Allocated		$311,717,040
Twin Church - Dixon County 230kV Increase conductor clearances to accommodate 320MVA facility rating	Previously Allocated		$100,000
	Current Study Total	$75,169,040	
GEN-2015-077			
Beaver County - Grapevine 345kV CKT 1 Build approximately 75 miles of new 345kV from Beaver County - Grapevine	Current Study	$2,440,476	$75,000,000
Border - Chisholm 345kV CKT 2 Build approximately 25 miles of second circuit 345kV from Border - Chisholm	Current Study	$1,166,918	$25,000,000
Border 345kV Reactive Power Support Install (6)-50Mvar Capacitor Bank(s) and +250Mvar SVC at Border Substation	Current Study	$1,278,243	$30,000,000
Chisholm - Elk City 230kV CKT 1 Rebuild approximately 15 miles of 230kV from Chisholm - Elk City.	Current Study	$698,881	$15,000,000
Chisholm Substation Upgrade 345kV Expand planned Chisholm Substation to tap and terminate Woodward - Border 345kV into the Chisholm Substation	Current Study	$548,827	$12,000,000
Cimarron - Minco 345kV CKT 1 Replace 1600 amp switches.	Current Study	$22,097	$1,000,000
GEN-2014-057 - Lawton Eastside 345kV CKT 1 Replace terminal equipmen to atleast 1600 amps	Current Study	$18,353	$500,000
GEN-2014-057 - Sunnyside 345kV CKT 1 Rebuild approximately 45 miles of 345kV	Current Study	$1,229,177	$65,000,000
GEN-2015-077 Interconnection Costs See One-Line Diagram.	Current Study	$5,640,294	$5,640,294

* Withdrawal of higher queued projects will cause a restudy and may result in higher costs

Interconnection Request and Upgrades	Upgrade Type	Allocated Cost	Upgrade Cost
Grapevine - Chisholm 345kV CKT 1 Build approximately 75 miles of new 345kV from Grapevine - Chisholm	Current Study	$1,853,207	$75,000,000
Grapevine Substation Upgrade 345kV Build Grapevine Substation and terminate Beaver Co - Grapevine, Potter Co - Grapevine, Grapevine - Chisholm 345kV into the Grapevine Substation	Current Study	$296,513	$12,000,000
LP-Wadsworth 230/69/13kV Transformer CKT 1 NRIS only required upgrade: Replace existing LP-Wadsworth 230/69kV Transformer	Current Study	$298,233	$6,000,000
Oklaunion 345kV Reactive Power Support Incremental Upgrade Install (4)-50Mvar Capacitor Bank(s) and +300Mvar SVC at Oklaunion	Current Study	$1,867,077	$40,000,000
Potter County - Grapevine 345kV CKT 1 Build approximately 65 miles of new 345kV from Potter County - Grapevine	Current Study	$3,065,761	$65,000,000
Shamrock 115kV Capacitor Bank Add 2nd step of 9.6Mvars to Shamrock 115kV Capacitor Bank(s)	Current Study	$22,510	$500,000
Tolk - Potter County 345kV CKT 1 Build approximately 115 miles of 345kV from Tolk - Potter County	Current Study	$5,320,283	$105,000,000
Tolk - TUCO 2 345kV CKT 1 Build approximately 64 miles of 345kV from Tolk - TUCO 2.	Current Study	$1,285,681	$64,000,000
Tolk 345/230/13kV Transformer CKT 2 Build second 345/230/13kV transformer at Tolk	Current Study	$1,157,989	$15,000,000
TUCO 2 - Border 345kV CKT 2 Build approximately 194 miles of second circuit 345kV from TUCO 2 - Border	Current Study	$9,055,323	$194,000,000
TUCO 2 - Yoakum 345kV Retermination Incremental Upgrade for SPP-NTC-200283 to reterminate TUCO terminal to TUCO 2 terminal by adding approximately 3 miles of 345kV	Current Study	$425,586	$5,000,000
Amoco Wasson - Oxy Tap 230kV CKT 1 Replace line traps at both terminals	Previously Allocated		$200,000
Chisholm - Gracemont 345kV CKT 1 Per SPP-NTC-200255 and 200240 (Total Project E&C Cost Shown)	Previously Allocated		$162,952,357
Elk City 230/138/13kV Transformer CKT 1 Replace terminal equipment for Elk City Transformer to achieve transformer limit of 450MVA.	Previously Allocated		$15,000,000
Grapevine - Nichols 230kV CKT 1 Replace terminal equipment	Previously Allocated		$400,000
Grapevine - Wheeler 230kV CKT 1 Replace terminal equipment	Previously Allocated		$400,000

* Withdrawal of higher queued projects will cause a restudy and may result in higher costs

Interconnection Request and Upgrades	Upgrade Type	Allocated Cost	Upgrade Cost
National Enrichment Plant-Targa 115kV CKT 1 Rebuild approximately 4 miles of 115kV from National Enrichment Plant to Targa per 2015 ITPNT.	Previously Allocated		$2,909,669
Targa-Cardinal 115kV CKT 1 Rebuild approximately 3 miles of 115kV from Targa to Cardinal per 2015 ITPNT.	Previously Allocated		$2,049,062
TUCO 2 (Crawfish Draw) Substation Upgrade 345/230kV Tap Border-TUCO approximately 2 miles from TUCO and build TUCO 2 (Crawfish Draw) 345kV substation and add 345/230/13.2kV transformer and tie on TUCO-Swisher 230kV.	Previously Allocated		$24,764,205
TUCO 345/230/13.2kV Transformer CKT 1 Replace existing TUCO 345/230/13.2kV Transformer circuit #1 with 640MVA.	Previously Allocated		$3,347,036
TUCO Interchange - Jones 230kV CKT 1 NRIS only required upgrade: Replace line traps at both terminals	Previously Allocated		$400,000
Woodward EHV Phase Shifting Transformer CKT 1 Install one phase shifting transformer at Woodward	Previously Allocated		$7,200,000
	Current Study Total	$37,691,428	
GEN-2015-078			
Beaver County - Grapevine 345kV CKT 1 Build approximately 75 miles of new 345kV from Beaver County - Grapevine	Current Study	$1,535,518	$75,000,000
Border - Chisholm 345kV CKT 2 Build approximately 25 miles of second circuit 345kV from Border - Chisholm	Current Study	$714,846	$25,000,000
Border 345kV Reactive Power Support Install (6)-50Mvar Capacitor Bank(s) and +250Mvar SVC at Border Substation	Current Study	$788,358	$30,000,000
Chisholm - Elk City 230kV CKT 1 Rebuild approximately 15 miles of 230kV from Chisholm - Elk City.	Current Study	$437,981	$15,000,000
Chisholm Substation Upgrade 345kV Expand planned Chisholm Substation to tap and terminate Woodward - Border 345kV into the Chisholm Substation	Current Study	$336,208	$12,000,000
Cimarron - Minco 345kV CKT 1 Replace 1600 amp switches.	Current Study	$13,880	$1,000,000
GEN-2014-057 - Lawton Eastside 345kV CKT 1 Replace terminal equipmen to atleast 1600 amps	Current Study	$11,520	$500,000
GEN-2014-057 - Sunnyside 345kV CKT 1 Rebuild approximately 45 miles of 345kV	Current Study	$771,545	$65,000,000
GEN-2015-078 Interconnection Costs See One-Line Diagram.	Current Study	$1,082,325	$1,082,325

* Withdrawal of higher queued projects will cause a restudy and may result in higher costs

Interconnection Request and Upgrades	Upgrade Type	Allocated Cost	Upgrade Cost
Grapevine - Chisholm 345kV CKT 1 Build approximately 75 miles of new 345kV from Grapevine - Chisholm	Current Study	$1,235,605	$75,000,000
Grapevine Substation Upgrade 345kV Build Grapevine Substation and terminate Beaver Co - Grapevine, Potter Co - Grapevine, Grapevine - Chisholm 345kV into the Grapevine Substation	Current Study	$197,697	$12,000,000
LP-Wadsworth 230/69/13kV Transformer CKT 1 NRIS only required upgrade: Replace existing LP-Wadsworth 230/69kV Transformer	Current Study	$189,074	$6,000,000
Oklaunion 345kV Reactive Power Support Incremental Upgrade Install (4)-50Mvar Capacitor Bank(s) and +300Mvar SVC at Oklaunion	Current Study	$1,143,759	$40,000,000
Potter County - Grapevine 345kV CKT 1 Build approximately 65 miles of new 345kV from Potter County - Grapevine	Current Study	$1,973,054	$65,000,000
Shamrock 115kV Capacitor Bank Add 2nd step of 9.6Mvars to Shamrock 115kV Capacitor Bank(s)	Current Study	$13,927	$500,000
Tolk - Potter County 345kV CKT 1 Build approximately 115 miles of 345kV from Tolk - Potter County	Current Study	$3,458,638	$105,000,000
Tolk - TUCO 2 345kV CKT 1 Build approximately 64 miles of 345kV from Tolk - TUCO 2.	Current Study	$909,864	$64,000,000
Tolk 345/230/13kV Transformer CKT 2 Build second 345/230/13kV transformer at Tolk	Current Study	$684,894	$15,000,000
TUCO 2 - Border 345kV CKT 2 Build approximately 194 miles of second circuit 345kV from TUCO 2 - Border	Current Study	$5,547,229	$194,000,000
TUCO 2 - Yoakum 345kV Retermination Incremental Upgrade for SPP-NTC-200283 to reterminate TUCO terminal to TUCO 2 terminal by adding approximately 3 miles of 345kV	Current Study	$406,589	$5,000,000
Amoco Wasson - Oxy Tap 230kV CKT 1 Replace line traps at both terminals	Previously Allocated		$200,000
Chisholm - Gracemont 345kV CKT 1 Per SPP-NTC-200255 and 200240 (Total Project E&C Cost Shown)	Previously Allocated		$162,952,357
Elk City 230/138/13kV Transformer CKT 1 Replace terminal equipment for Elk City Transformer to achieve transformer limit of 450MVA.	Previously Allocated		$15,000,000
Grapevine - Nichols 230kV CKT 1 Replace terminal equipment	Previously Allocated		$400,000
Grapevine - Wheeler 230kV CKT 1 Replace terminal equipment	Previously Allocated		$400,000

* Withdrawal of higher queued projects will cause a restudy and may result in higher costs

Interconnection Request and Upgrades	Upgrade Type	Allocated Cost	Upgrade Cost
Mustang - Shell C02 115kV CKT 1 NRIS only required upgrade: Build approximately 7.7 miles of new 115kV from Mustang - Shell C02 per SPP-NTC-200262	Previously Allocated		$15,473,119
National Enrichment Plant-Targa 115kV CKT 1 Rebuild approximately 4 miles of 115kV from National Enrichment Plant to Targa per 2015 ITPNT.	Previously Allocated		$2,909,669
Targa-Cardinal 115kV CKT 1 Rebuild approximately 3 miles of 115kV from Targa to Cardinal per 2015 ITPNT.	Previously Allocated		$2,049,062
Tolk - Plant X 230kV CKT 1 & 2 Rebuild circuit 1 and 2 betweek Tolk - Plant X 230kV to 1200 amps each.	Previously Allocated		$9,921,693
TUCO 2 (Crawfish Draw) Substation Upgrade 345/230kV Tap Border-TUCO approximately 2 miles from TUCO and build TUCO 2 (Crawfish Draw) 345kV substation and add 345/230/13.2kV transformer and tie on TUCO-Swisher 230kV.	Previously Allocated		$24,764,205
TUCO 345/230/13.2kV Transformer CKT 1 Replace existing TUCO 345/230/13.2kV Transformer circuit #1 with 640MVA.	Previously Allocated		$3,347,036
TUCO Interchange - Jones 230kV CKT 1 NRIS only required upgrade: Replace line traps at both terminals	Previously Allocated		$400,000
Woodward EHV Phase Shifting Transformer CKT 1 Install one phase shifting transformer at Woodward	Previously Allocated		$7,200,000
	Current Study Total	$21,452,510	
GEN-2015-079			
Beaver County - Grapevine 345kV CKT 1 Build approximately 75 miles of new 345kV from Beaver County - Grapevine	Current Study	$3,970,684	$75,000,000
Border - Chisholm 345kV CKT 2 Build approximately 25 miles of second circuit 345kV from Border - Chisholm	Current Study	$1,821,519	$25,000,000
Border 345kV Reactive Power Support Install (6)-50Mvar Capacitor Bank(s) and +250Mvar SVC at Border Substation	Current Study	$2,016,109	$30,000,000
Chisholm - Elk City 230kV CKT 1 Rebuild approximately 15 miles of 230kV from Chisholm - Elk City.	Current Study	$1,129,881	$15,000,000
Chisholm Substation Upgrade 345kV Expand planned Chisholm Substation to tap and terminate Woodward - Border 345kV into the Chisholm Substation	Current Study	$856,700	$12,000,000
Cimarron - Minco 345kV CKT 1 Replace 1600 amp switches.	Current Study	$35,741	$1,000,000
GEN-2014-057 - Lawton Eastside 345kV CKT 1 Replace terminal equipmen to atleast 1600 amps	Current Study	$29,667	$500,000

* Withdrawal of higher queued projects will cause a restudy and may result in higher costs

Interconnection Request and Upgrades	Upgrade Type	Allocated Cost	Upgrade Cost
GEN-2014-057 - Sunnyside 345kV CKT 1 Rebuild approximately 45 miles of 345kV	Current Study	$1,986,916	$65,000,000
GEN-2015-079 Interconnection Costs See One-Line Diagram.	Current Study	$7,374,768	$7,374,768
Grapevine - Chisholm 345kV CKT 1 Build approximately 75 miles of new 345kV from Grapevine - Chisholm	Current Study	$3,290,623	$75,000,000
Grapevine Substation Upgrade 345kV Build Grapevine Substation and terminate Beaver Co - Grapevine, Potter Co - Grapevine, Grapevine - Chisholm 345kV into the Grapevine Substation	Current Study	$526,500	$12,000,000
LP-Wadsworth 230/69/13kV Transformer CKT 1 NRIS only required upgrade: Replace existing LP-Wadsworth 230/69kV Transformer	Current Study	$489,080	$6,000,000
Mustang 230/115/13.2KV Transformer CKT 2 NRIS only required upgrade: Build second Mustang 230/115 Transformer	Current Study	$3,000,000	$6,000,000
Oklaunion 345kV Reactive Power Support Incremental Upgrade Install (4)-50Mvar Capacitor Bank(s) and +300Mvar SVC at Oklaunion	Current Study	$2,914,443	$40,000,000
Potter County - Grapevine 345kV CKT 1 Build approximately 65 miles of new 345kV from Potter County - Grapevine	Current Study	$5,162,281	$65,000,000
Shamrock 115kV Capacitor Bank Add 2nd step of 9.6Mvars to Shamrock 115kV Capacitor Bank(s)	Current Study	$36,013	$500,000
Tolk - Potter County 345kV CKT 1 Build approximately 115 miles of 345kV from Tolk - Potter County	Current Study	$9,153,406	$105,000,000
Tolk - TUCO 2 345kV CKT 1 Build approximately 64 miles of 345kV from Tolk - TUCO 2.	Current Study	$3,245,992	$64,000,000
Tolk 345/230/13kV Transformer CKT 2 Build second 345/230/13kV transformer at Tolk	Current Study	$1,509,661	$15,000,000
TUCO 2 - Border 345kV CKT 2 Build approximately 194 miles of second circuit 345kV from TUCO 2 - Border	Current Study	$14,135,049	$194,000,000
TUCO 2 - Yoakum 345kV Retermination Incremental Upgrade for SPP-NTC-200283 to reterminate TUCO terminal to TUCO 2 terminal by adding approximately 3 miles of 345kV	Current Study	$1,110,925	$5,000,000
Chisholm - Gracemont 345kV CKT 1 Per SPP-NTC-200255 and 200240 (Total Project E&C Cost Shown)	Previously Allocated		$162,952,357
Elk City 230/138/13kV Transformer CKT 1 Replace terminal equipment for Elk City Transformer to achieve transformer limit of 450MVA.	Previously Allocated		$15,000,000

* Withdrawal of higher queued projects will cause a restudy and may result in higher costs

Interconnection Request and Upgrades	Upgrade Type	Allocated Cost	Upgrade Cost
Grapevine - Nichols 230kV CKT 1 Replace terminal equipment	Previously Allocated		$400,000
Grapevine - Wheeler 230kV CKT 1 Replace terminal equipment	Previously Allocated		$400,000
National Enrichment Plant-Targa 115kV CKT 1 Rebuild approximately 4 miles of 115kV from National Enrichment Plant to Targa per 2015 ITPNT.	Previously Allocated		$2,909,669
Potash Junction 230/115 kV Ckt 1 Per HPILs SPP-NTC-200282 (Total Project E&C Cost Shown)	Previously Allocated		$3,508,346
Targa-Cardinal 115kV CKT 1 Rebuild approximately 3 miles of 115kV from Targa to Cardinal per 2015 ITPNT.	Previously Allocated		$2,049,062
Tolk - Plant X 230kV CKT 1 & 2 Rebuild circuit 1 and 2 betweek Tolk - Plant X 230kV to 1200 amps each.	Previously Allocated		$9,921,693
TUCO 2 (Crawfish Draw) Substation Upgrade 345/230kV Tap Border-TUCO approximately 2 miles from TUCO and build TUCO 2 (Crawfish Draw) 345kV substation and add 345/230/13.2kV transformer and tie on TUCO-Swisher 230kV.	Previously Allocated		$24,764,205
TUCO 345/230/13.2kV Transformer CKT 1 Replace existing TUCO 345/230/13.2kV Transformer circuit #1 with 640MVA.	Previously Allocated		$3,347,036
TUCO Interchange - Jones 230kV CKT 1 NRIS only required upgrade: Replace line traps at both terminals	Previously Allocated		$400,000
Woodward EHV Phase Shifting Transformer CKT 1 Install one phase shifting transformer at Woodward	Previously Allocated		$7,200,000
	Current Study Total	$63,795,958	

GEN-2015-080

Beaver County - Grapevine 345kV CKT 1 Build approximately 75 miles of new 345kV from Beaver County - Grapevine	Current Study	$3,970,684	$75,000,000
Border - Chisholm 345kV CKT 2 Build approximately 25 miles of second circuit 345kV from Border - Chisholm	Current Study	$1,821,519	$25,000,000
Border 345kV Reactive Power Support Install (6)-50Mvar Capacitor Bank(s) and +250Mvar SVC at Border Substation	Current Study	$2,016,109	$30,000,000
Chisholm - Elk City 230kV CKT 1 Rebuild approximately 15 miles of 230kV from Chisholm - Elk City.	Current Study	$1,129,881	$15,000,000
Chisholm Substation Upgrade 345kV Expand planned Chisholm Substation to tap and terminate Woodward - Border 345kV into the Chisholm Substation	Current Study	$856,700	$12,000,000

* Withdrawal of higher queued projects will cause a restudy and may result in higher costs

Interconnection Request and Upgrades	Upgrade Type	Allocated Cost	Upgrade Cost
Cimarron - Minco 345kV CKT 1 Replace 1600 amp switches.	Current Study	$35,741	$1,000,000
GEN-2014-057 - Lawton Eastside 345kV CKT 1 Replace terminal equipmen to atleast 1600 amps	Current Study	$29,667	$500,000
GEN-2014-057 - Sunnyside 345kV CKT 1 Rebuild approximately 45 miles of 345kV	Current Study	$1,986,916	$65,000,000
GEN-2015-080 Interconnection Costs See One-Line Diagram.	Current Study	$0	$0
Grapevine - Chisholm 345kV CKT 1 Build approximately 75 miles of new 345kV from Grapevine - Chisholm	Current Study	$3,290,623	$75,000,000
Grapevine Substation Upgrade 345kV Build Grapevine Substation and terminate Beaver Co - Grapevine, Potter Co - Grapevine, Grapevine - Chisholm 345kV into the Grapevine Substation	Current Study	$526,500	$12,000,000
LP-Wadsworth 230/69/13kV Transformer CKT 1 NRIS only required upgrade: Replace existing LP-Wadsworth 230/69kV Transformer	Current Study	$489,080	$6,000,000
Mustang 230/115/13.2KV Transformer CKT 2 NRIS only required upgrade: Build second Mustang 230/115 Transformer	Current Study	$3,000,000	$6,000,000
Oklaunion 345kV Reactive Power Support Incremental Upgrade Install (4)-50Mvar Capacitor Bank(s) and +300Mvar SVC at Oklaunion	Current Study	$2,914,443	$40,000,000
Potter County - Grapevine 345kV CKT 1 Build approximately 65 miles of new 345kV from Potter County - Grapevine	Current Study	$5,162,281	$65,000,000
Shamrock 115kV Capacitor Bank Add 2nd step of 9.6Mvars to Shamrock 115kV Capacitor Bank(s)	Current Study	$36,013	$500,000
Tolk - Potter County 345kV CKT 1 Build approximately 115 miles of 345kV from Tolk - Potter County	Current Study	$9,153,406	$105,000,000
Tolk - TUCO 2 345kV CKT 1 Build approximately 64 miles of 345kV from Tolk - TUCO 2.	Current Study	$3,245,992	$64,000,000
Tolk 345/230/13kV Transformer CKT 2 Build second 345/230/13kV transformer at Tolk	Current Study	$1,509,661	$15,000,000
TUCO 2 - Border 345kV CKT 2 Build approximately 194 miles of second circuit 345kV from TUCO 2 - Border	Current Study	$14,135,049	$194,000,000
TUCO 2 - Yoakum 345kV Retermination Incremental Upgrade for SPP-NTC-200283 to reterminate TUCO terminal to TUCO 2 terminal by adding approximately 3 miles of 345kV	Current Study	$1,110,925	$5,000,000

* Withdrawal of higher queued projects will cause a restudy and may result in higher costs

Interconnection Request and Upgrades	Upgrade Type	Allocated Cost	Upgrade Cost
Chisholm - Gracemont 345kV CKT 1 Per SPP-NTC-200255 and 200240 (Total Project E&C Cost Shown)	Previously Allocated		$162,952,357
Elk City 230/138/13kV Transformer CKT 1 Replace terminal equipment for Elk City Transformer to achieve transformer limit of 450MVA.	Previously Allocated		$15,000,000
Grapevine - Nichols 230kV CKT 1 Replace terminal equipment	Previously Allocated		$400,000
Grapevine - Wheeler 230kV CKT 1 Replace terminal equipment	Previously Allocated		$400,000
National Enrichment Plant-Targa 115kV CKT 1 Rebuild approximately 4 miles of 115kV from National Enrichment Plant to Targa per 2015 ITPNT.	Previously Allocated		$2,909,669
Potash Junction 230/115 kV Ckt 1 Per HPILs SPP-NTC-200282 (Total Project E&C Cost Shown)	Previously Allocated		$3,508,346
Targa-Cardinal 115kV CKT 1 Rebuild approximately 3 miles of 115kV from Targa to Cardinal per 2015 ITPNT.	Previously Allocated		$2,049,062
Tolk - Plant X 230kV CKT 1 & 2 Rebuild circuit 1 and 2 betweek Tolk - Plant X 230kV to 1200 amps each.	Previously Allocated		$9,921,693
TUCO 2 (Crawfish Draw) Substation Upgrade 345/230kV Tap Border-TUCO approximately 2 miles from TUCO and build TUCO 2 (Crawfish Draw) 345kV substation and add 345/230/13.2kV transformer and tie on TUCO-Swisher 230kV.	Previously Allocated		$24,764,205
TUCO 345/230/13.2kV Transformer CKT 1 Replace existing TUCO 345/230/13.2kV Transformer circuit #1 with 640MVA.	Previously Allocated		$3,347,036
TUCO Interchange - Jones 230kV CKT 1 NRIS only required upgrade: Replace line traps at both terminals	Previously Allocated		$400,000
Woodward EHV Phase Shifting Transformer CKT 1 Install one phase shifting transformer at Woodward	Previously Allocated		$7,200,000
	Current Study Total	$56,421,190	
GEN-2015-081			
Cimarron - Minco 345kV CKT 1 Replace 1600 amp switches.	Current Study	$11,112	$1,000,000
Cleo Corner - Cleo Plant Tap 138kV CKT 1 Replace terminal equipment to at least 1200 amps	Current Study	$7,647	$500,000
GEN-2014-057 - Sunnyside 345kV CKT 1 Rebuild approximately 45 miles of 345kV	Current Study	$1,369,175	$65,000,000

* Withdrawal of higher queued projects will cause a restudy and may result in higher costs

Interconnection Request and Upgrades	Upgrade Type	Allocated Cost	Upgrade Cost
GEN-2015-081 Interconnection Costs See One-Line Diagram.	Current Study	$3,005,000	$3,005,000
Northwest 138kV Circuit Breaker Replace Northwest 138kV Circuit Breaker for short circuit requirements	Current Study	$22,180	$750,000
Swissvale - West Gardner 345kV CKT 1 Replace terminal equipment to at least 1600 amps	Current Study	$29,892	$1,000,000
Anadarko - Sequoyah 138KV CKT 1 Rebuild approximately 1 mile of 138kV from Anadarko to Sequoyah	Previously Allocated		$700,000
Cimarron - Draper Lake 345kV CKT 1 Replace terminal equipment to at least 2000A assigned in 2015 ITP10 per SPP-NTC-200329	Previously Allocated		$1,500,000
Cornville Tap - Naples Tap 138kV CKT 1 Rebuild approximately 11 miles of 138kV from Cornville Tap to Naples Tap	Previously Allocated		$7,700,000
Mathewson - Cimarron 345kV CKT 2 Build second 345kV circuit from Matthewson - Cimarron @ 3000 amps per ITP10.	Previously Allocated		$42,903,753
Naples Tap - Payne 138kV CKT 1 Rebuild approximately 8 miles of 138kV from Naples Tap to Payne	Previously Allocated		$5,600,000
Sequoyah - Cornville Tap 138kV CKT 1 Rebuild approximately 20 miles of 138kV from Sequoyah to Cornville Tap	Previously Allocated		$1,000,000
Tatonga - Mathewson 345kV CKT 2 Build second 345kV circuit from Tatonga - Matthewson @ 3000 amps per ITP10.	Previously Allocated		$104,260,473
	Current Study Total	$4,445,006	
GEN-2015-082			
Beaver County - Grapevine 345kV CKT 1 Build approximately 75 miles of new 345kV from Beaver County - Grapevine	Current Study	$9,653,410	$75,000,000
Chisholm Substation Upgrade 345kV Expand planned Chisholm Substation to tap and terminate Woodward - Border 345kV into the Chisholm Substation	Current Study	$161,185	$12,000,000
Cimarron - Minco 345kV CKT 1 Replace 1600 amp switches.	Current Study	$39,138	$1,000,000
GEN-2014-057 - Lawton Eastside 345kV CKT 1 Replace terminal equipmen to atleast 1600 amps	Current Study	$32,002	$500,000
GEN-2014-057 - Sunnyside 345kV CKT 1 Rebuild approximately 45 miles of 345kV	Current Study	$2,143,325	$65,000,000

* Withdrawal of higher queued projects will cause a restudy and may result in higher costs

Interconnection Request and Upgrades	Upgrade Type	Allocated Cost	Upgrade Cost
GEN-2015-082 Interconnection Costs See One-Line Diagram.	Current Study	$1,930,000	$1,930,000
Grapevine - Chisholm 345kV CKT 1 Build approximately 75 miles of new 345kV from Grapevine - Chisholm	Current Study	$10,194,515	$75,000,000
Grapevine Substation Upgrade 345kV Build Grapevine Substation and terminate Beaver Co - Grapevine, Potter Co - Grapevine, Grapevine - Chisholm 345kV into the Grapevine Substation	Current Study	$1,631,122	$12,000,000
Swissvale - West Gardner 345kV CKT 1 Replace terminal equipment to at least 1600 amps	Current Study	$34,783	$1,000,000
Walkemeyer 345/115/13kV Transformer CKT 2 NRIS only required upgarde: Build a second Walkemeyer 345/115/13kV transformer	Current Study	$12,000,000	$12,000,000
Cimarron - Draper Lake 345kV CKT 1 Replace terminal equipment to at least 2000A assigned in 2015 ITP10 per SPP-NTC-200329	Previously Allocated		$1,500,000
Elk City 230/138/13kV Transformer CKT 1 Replace terminal equipment for Elk City Transformer to achieve transformer limit of 450MVA.	Previously Allocated		$15,000,000
Mathewson - Cimarron 345kV CKT 2 Build second 345kV circuit from Matthewson - Cimarron @ 3000 amps per ITP10.	Previously Allocated		$42,903,753
Tatonga - Mathewson 345kV CKT 2 Build second 345kV circuit from Tatonga - Matthewson @ 3000 amps per ITP10.	Previously Allocated		$104,260,473
Walkemeyer Tap - Walkemeyer 345/115kV Project Per SPP-NTC-200343 and SPP-NTC-200344 (Total Project E&C Cost Shown).	Previously Allocated		$17,838,846
Woodward - GEN-2011-051 Tap - Tatonga 345kV CKT 2 Build second 345kV circuit from Woodward - Tatonga @ 3000 amps per ITP10.	Previously Allocated		$71,876,622
Woodward EHV Phase Shifting Transformer CKT 1 Install one phase shifting transformer at Woodward	Previously Allocated		$7,200,000
	Current Study Total	$37,819,481	
GEN-2015-083			
Emporia Energy Center - Swissvale 345kV CKT 1 Replace terminal equipment to at least 1600 amps (Cost included in Swissvale - West Gardner 345kV Line Item)	Current Study	$0	$0
GEN-2015-083 Interconnection Costs See One-Line Diagram.	Current Study	$6,713,963	$6,713,963
Northwest 138kV Circuit Breaker Replace Northwest 138kV Circuit Breaker for short circuit requirements	Current Study	$6,546	$750,000

* Withdrawal of higher queued projects will cause a restudy and may result in higher costs

Interconnection Request and Upgrades	Upgrade Type	Allocated Cost	Upgrade Cost
Cimarron - Draper Lake 345kV CKT 1 Replace terminal equipment to at least 2000A assigned in 2015 ITP10 per SPP-NTC-200329	Previously Allocated		$1,500,000
Cornville Tap - Naples Tap 138kV CKT 1 Rebuild approximately 11 miles of 138kV from Cornville Tap to Naples Tap	Previously Allocated		$7,700,000
Fairfax 138/69kV CKT 1 Per AECI Affected System Study for DISIS-2012-002	Previously Allocated		$2,200,000
Naples Tap - Payne 138kV CKT 1 Rebuild approximately 8 miles of 138kV from Naples Tap to Payne	Previously Allocated		$5,600,000
Remington - Fairfax 138KV CKT 1 Increase conductor clearance	Previously Allocated		$400,000
Renfrow - Renfrow 138kV CKT 1 NRIS only required upgrade: Rebuild approximately 2 miles of 138kV from Renfrow to Renfrow.	Previously Allocated		$1,400,000
	Current Study Total	$6,720,509	
GEN-2015-084			
Chisholm - Sweetwater 230kV CKT 1 NRIS only required: Rebuild approximately 15 miles of 230kV from Chisholm - Sweetwater.	Current Study	$15,000,000	$15,000,000
Cimarron - Minco 345kV CKT 1 Replace 1600 amp switches.	Current Study	$21,601	$1,000,000
Cleveland - Cleveland 138kV CKT Z1 Replace Cleveland - Cleveland bus tie terminal equipment to at least 1800 amps. AECI Affected System Study is required	Current Study	$4,254	$250,000
GEN-2014-057 - Lawton Eastside 345kV CKT 1 Replace terminal equipmen to atleast 1600 amps	Current Study	$18,207	$500,000
GEN-2014-057 - Sunnyside 345kV CKT 1 Rebuild approximately 45 miles of 345kV	Current Study	$1,219,397	$65,000,000
GEN-2015-084 Interconnection Costs See One-Line Diagram.	Current Study	$14,665,056	$14,665,056
GEN-2015-085 Tap - Altus Junction 138kV CKT 1 Build approximately 15 miles of new 138kV from GEN-2015-085 Tap to Altus Junction	Current Study	$3,043,596	$15,000,000
GEN-2015-085 Tap - Russell 138kV CKT 1 Replace terminal equipment	Current Study	$78,303	$400,000
Norge - Southwest Station 138kV CKT 1 Rebuild approximately 23 miles of 138kV from Norge to Southwest Station	Current Study	$2,919,894	$23,000,000

* Withdrawal of higher queued projects will cause a restudy and may result in higher costs

Interconnection Request and Upgrades	Upgrade Type	Allocated Cost	Upgrade Cost
Pittsburg - Seminole 345kV CKT 1 NRIS only required upgrade: replacement terminal equipment to at least 1600 amps	Current Study	$59,077	$500,000
Swissvale - West Gardner 345kV CKT 1 Replace terminal equipment to at least 1600 amps	Current Study	$9,454	$1,000,000
Tupelo - Tupleo Tap 138kV CKT 1 NRIS only required upgrade: Build approximately 1 mile of second circuit 138kV from Tupelo to Tupelo Tap	Current Study	$78,341	$700,000
Anadarko - Sequoyah 138KV CKT 1 Rebuild approximately 1 mile of 138kV from Anadarko to Sequoyah	Previously Allocated		$700,000
Cimarron - Draper Lake 345kV CKT 1 Replace terminal equipment to at least 2000A assigned in 2015 ITP10 per SPP-NTC-200329	Previously Allocated		$1,500,000
Cornville Tap - Naples Tap 138kV CKT 1 Rebuild approximately 11 miles of 138kV from Cornville Tap to Naples Tap	Previously Allocated		$7,700,000
Naples Tap - Payne 138kV CKT 1 Rebuild approximately 8 miles of 138kV from Naples Tap to Payne	Previously Allocated		$5,600,000
Oklaunion 345kV Reactive Power Install (2)-130Mvar Capacitor Bank(s) at Oklaunion	Previously Allocated		$10,000,000
Sequoyah - Cornville Tap 138kV CKT 1 Rebuild approximately 20 miles of 138kV from Sequoyah to Cornville Tap	Previously Allocated		$1,000,000
	Current Study Total	$37,117,182	
GEN-2015-085			
Cimarron - Minco 345kV CKT 1 Replace 1600 amp switches.	Current Study	$70,245	$1,000,000
Cleveland - Cleveland 138kV CKT Z1 Replace Cleveland - Cleveland bus tie terminal equipment to at least 1800 amps. AECI Affected System Study is required	Current Study	$1,992	$250,000
GEN-2014-057 - Lawton Eastside 345kV CKT 1 Replace terminal equipmen to atleast 1600 amps	Current Study	$41,839	$500,000
GEN-2014-057 - Sunnyside 345kV CKT 1 Rebuild approximately 45 miles of 345kV	Current Study	$2,802,089	$65,000,000
GEN-2015-085 Interconnection Costs See One-Line Diagram.	Current Study	$8,406,414	$8,406,414
GEN-2015-085 Tap - Altus Junction 138kV CKT 1 Build approximately 15 miles of new 138kV from GEN-2015-085 Tap to Altus Junction	Current Study	$11,916,536	$15,000,000

* Withdrawal of higher queued projects will cause a restudy and may result in higher costs

Interconnection Request and Upgrades	Upgrade Type	Allocated Cost	Upgrade Cost
GEN-2015-085 Tap - Russell 138kV CKT 1 Replace terminal equipment	Current Study	$320,818	$400,000
Norge - Southwest Station 138kV CKT 1 Rebuild approximately 23 miles of 138kV from Norge to Southwest Station	Current Study	$8,909,571	$23,000,000
Pittsburg - Seminole 345kV CKT 1 NRIS only required upgrade: replacement terminal equipment to at least 1600 amps	Current Study	$82,064	$500,000
Swissvale - West Gardner 345kV CKT 1 Replace terminal equipment to at least 1600 amps	Current Study	$9,587	$1,000,000
Tupelo - Tupleo Tap 138kV CKT 1 NRIS only required upgrade: Build approximately 1 mile of second circuit 138kV from Tupelo to Tupelo Tap	Current Study	$68,505	$700,000
Anadarko - Sequoyah 138KV CKT 1 Rebuild approximately 1 mile of 138kV from Anadarko to Sequoyah	Previously Allocated		$700,000
Cimarron - Draper Lake 345kV CKT 1 Replace terminal equipment to at least 2000A assigned in 2015 ITP10 per SPP-NTC-200329	Previously Allocated		$1,500,000
Cornville Tap - Naples Tap 138kV CKT 1 Rebuild approximately 11 miles of 138kV from Cornville Tap to Naples Tap	Previously Allocated		$7,700,000
Naples Tap - Payne 138kV CKT 1 Rebuild approximately 8 miles of 138kV from Naples Tap to Payne	Previously Allocated		$5,600,000
Oklaunion 345kV Reactive Power Install (2)-130Mvar Capacitor Bank(s) at Oklaunion	Previously Allocated		$10,000,000
Sequoyah - Cornville Tap 138kV CKT 1 Rebuild approximately 20 miles of 138kV from Sequoyah to Cornville Tap	Previously Allocated		$1,000,000
	Current Study Total	$32,629,660	

GEN-2015-087

GEN-2015-087 Interconnection Costs See One-Line Diagram.	Current Study	$5,300,000	$5,300,000
Harbine - Beatrice 115kV CKT 1 Rebuild approximately 15 miles of 115kV line	Current Study	$9,000,000	$9,000,000
MISO Affected System Study See section 4 power flow analysis.	Current Study	$TBD	$TBD
Sidney 345/230/13kV Transformer CKT 2 NRIS only required upgrade: Build and Install Sidney 345/230/13kV Transformer circuit #2	Current Study	$233,249	$12,000,000

* Withdrawal of higher queued projects will cause a restudy and may result in higher costs

Interconnection Request and Upgrades	Upgrade Type	Allocated Cost	Upgrade Cost
Battle Creek-County Line 115kV CKT 1 Rebuild approximately 11 miles of 115kV from Battle Creek to County Line.	Previously Allocated		$4,000,000
County Line-Neligh East 115kV CKT 1 Rebuild approximately 12 miles of 115kV from County Line to Neligh East.	Previously Allocated		$8,050,000
Hoskins - Neligh 345/115kV Projects Per SPP 2014 ITP NT and NTC 200253 for 6/1/2016 in-service.	Previously Allocated		$98,697,720
Nebraska City - Sibley 345kV CKT 1 Priority Project: Nebraska City - Mullin Creek - Sibley 345kV circuit 1 per SPP-NTC-20097 and SPP-NTC-20098 (Total Project E&C Cost Shown).	Previously Allocated		$336,433,874
Twin Church - Dixon County 230kV Increase conductor clearances to accommodate 320MVA facility rating	Previously Allocated		$100,000
	Current Study Total	$14,533,249	
GEN-2015-088			
GEN-2015-088 Interconnection Costs See One-Line Diagram.	Current Study	$15,000,000	$15,000,000
MISO Affected System Study See section 4 power flow analysis.	Current Study	$TBD	$TBD
Ogallala - Gerald Gentleman Station 230kV CKT 1 Replace terminal equipment and increase line clearance.	Current Study	$11,450	$500,000
Sidney 345/230/13kV Transformer CKT 2 NRIS only required upgrade: Build and Install Sidney 345/230/13kV Transformer circuit #2	Current Study	$967,054	$12,000,000
Twin Church - Sioux City 345kV CKT1 Voltage Conversion Convert Twin Church - Sioux City 230kV circuit to 345kV. Further evaluated in NPPD & WAPA facility study	Current Study	$702,844	$27,000,000
Hoskins - Neligh 345/115kV Projects Per SPP 2014 ITP NT and NTC 200253 for 6/1/2016 in-service.	Previously Allocated		$98,697,720
Nebraska City - Sibley 345kV CKT 1 Priority Project: Nebraska City - Mullin Creek - Sibley 345kV circuit 1 per SPP-NTC-20097 and SPP-NTC-20098 (Total Project E&C Cost Shown).	Previously Allocated		$336,433,874
Twin Church - Dixon County 230kV Increase conductor clearances to accommodate 320MVA facility rating	Previously Allocated		$100,000
	Current Study Total	$16,681,348	
GEN-2015-090			
GEN-2015-090 Interconnection Costs See One-Line Diagram.	Current Study	$10,000	$10,000

* Withdrawal of higher queued projects will cause a restudy and may result in higher costs

Interconnection Request and Upgrades	Upgrade Type	Allocated Cost	Upgrade Cost
Northwest 138kV Circuit Breaker Replace Northwest 138kV Circuit Breaker for short circuit requirements	Current Study	$939	$750,000
Swissvale - West Gardner 345kV CKT 1 Replace terminal equipment to at least 1600 amps	Current Study	$99,887	$1,000,000
Cimarron - Draper Lake 345kV CKT 1 Replace terminal equipment to at least 2000A assigned in 2015 ITP10 per SPP-NTC-200329	Previously Allocated		$1,500,000
Cornville Tap - Naples Tap 138kV CKT 1 Rebuild approximately 11 miles of 138kV from Cornville Tap to Naples Tap	Previously Allocated		$7,700,000
Fairfax 138/69kV CKT 1 Per AECI Affected System Study for DISIS-2012-002	Previously Allocated		$2,200,000
Naples Tap - Payne 138kV CKT 1 Rebuild approximately 8 miles of 138kV from Naples Tap to Payne	Previously Allocated		$5,600,000
Remington - Fairfax 138KV CKT 1 Increase conductor clearance	Previously Allocated		$400,000
Renfrow - Renfrow 138kV CKT 1 NRIS only required upgrade: Rebuild approximately 2 miles of 138kV from Renfrow to Renfrow.	Previously Allocated		$1,400,000
Viola 345/138 kV Transformer CKT 1 SPP 2013 ITP NT assigned upgrade per SPP-NTC-200288 for 6/1/2019 in-service.	Previously Allocated		$19,339,327
	Current Study Total	$110,825	
GEN-2015-091			
Daglum - Dickinson 230kV CKT 1 Build new 230kV line from Daglum - Dickinson.	Current Study	$10,215,062	$28,000,000
Dickinson 230/115/13.8kV CKT 2 Build new 230/115/13.8kV Transformer circuit #2 at Dickinson.	Current Study	$798,345	$3,500,000
GEN-2015-091 Interconnection Costs See One-Line Diagram.	Current Study	$3,224,682	$3,224,682
Hanlon 69kV Reactive Support Install (1) 10Mvar Capacitor Bank at Hanlon 69kV.	Current Study	$76,429	$500,000
MISO Affected System Study See section 4 power flow analysis.	Current Study	$TBD	$TBD
Charlie Creek - Judson 345kV CKT 1 Build new 345kV line from Charlie Creek - Judson.	Previously Allocated		$103,000,000

* Withdrawal of higher queued projects will cause a restudy and may result in higher costs

Interconnection Request and Upgrades	Upgrade Type	Allocated Cost	Upgrade Cost
Judson - Williston 230kV CKT 1 Build new 230kV line from Judson Substation to Williston.	Previously Allocated		$2,400,000
Judson 345/230kV Substation Construct new 345kV Judson Substation adjacent to the existing 230kV Williston Substation and install new 345/230/13.8kV Transformer at Judson.	Previously Allocated		$19,000,000
Neset - Tande 230kV CKT 1 Build new 230kV line from Neset - Tande.	Previously Allocated		$3,000,000
Neset 230kV Terminal Upgrades Install necessary terminal upgrades at Neset 230kV to accommodate new 230kV line from new Tande substation.	Previously Allocated		$4,000,000
Tande 345/230 Substation Construct new 345kV Tande Substation adjacent to the existing 230kV Neset Substation and install new 345/230/13.8kV Transformer at Tande.	Previously Allocated		$18,000,000
Williston 230kV Terminal Upgrades Install necessary terminal upgrades at Williston 230kV to accommodate new 230kV line from new Judson substation.	Previously Allocated		$2,000,000
	Current Study Total	$14,314,518	
GEN-2015-092			
Cleveland - Cleveland 138kV CKT Z1 Replace Cleveland - Cleveland bus tie terminal equipment to at least 1800 amps. AECI Affected System Study is required	Current Study	$14,673	$250,000
Cleveland - Silver City 138kV CKT 1 Rebuild approximately 22 miles of 138kV from Cleveland to Silver City. AECI Affected System Study is required	Current Study	$1,155,222	$10,560,000
GEN-2014-057 - Sunnyside 345kV CKT 1 Rebuild approximately 45 miles of 345kV	Current Study	$15,050,981	$65,000,000
GEN-2015-092 Interconnection Costs See One-Line Diagram.	Current Study	$1,110,612	$1,110,612
Tupelo - Tupleo Tap 138kV CKT 1 NRIS only required upgrade: Build approximately 1 mile of second circuit 138kV from Tupelo to Tupelo Tap	Current Study	$239,862	$700,000
	Current Study Total	$17,571,350	
GEN-2015-093			
Cimarron - Minco 345kV CKT 1 Replace 1600 amp switches.	Current Study	$200,182	$1,000,000
GEN-2014-057 - Sunnyside 345kV CKT 1 Rebuild approximately 45 miles of 345kV	Current Study	$7,053,321	$65,000,000
GEN-2015-093 Interconnection Costs See One-Line Diagram.	Current Study	$2,125,000	$2,125,000

* Withdrawal of higher queued projects will cause a restudy and may result in higher costs

Interconnection Request and Upgrades	Upgrade Type	Allocated Cost	Upgrade Cost
Northwest 138kV Circuit Breaker Replace Northwest 138kV Circuit Breaker for short circuit requirements	Current Study	$135,117	$750,000
Woodward 345/138/13kV Transformer CKT 1 Replace Woodward 345/138/13kV Transformer circuit #1	Current Study	$237,181	$15,000,000
Woodward 345/138/13kV Transformer CKT 2 Replace Woodward 345/138/13kV Transformer circuit #2	Current Study	$237,181	$15,000,000
Altus SW - Navajo 69kV CKT 1 Rebuild approximately 2.5 miles of 69kV from Atlus SW to Navajo	Previously Allocated		$1,250,000
Anadarko - Sequoyah 138KV CKT 1 Rebuild approximately 1 mile of 138kV from Anadarko to Sequoyah	Previously Allocated		$700,000
Bucker - Spearville 345V CKT 1 Replace Terminal equipment	Previously Allocated		$1,480,238
Cimarron - Draper Lake 345kV CKT 1 Replace terminal equipment to at least 2000A assigned in 2015 ITP10 per SPP-NTC-200329	Previously Allocated		$1,500,000
Cornville Tap - Naples Tap 138kV CKT 1 Rebuild approximately 11 miles of 138kV from Cornville Tap to Naples Tap	Previously Allocated		$7,700,000
Naples Tap - Payne 138kV CKT 1 Rebuild approximately 8 miles of 138kV from Naples Tap to Payne	Previously Allocated		$5,600,000
Navajo - Snyder 69kV CKT 1 Rebuild approximately 15 miles of 69kV from Navajo to Snyder	Previously Allocated		$7,500,000
Sequoyah - Cornville Tap 138kV CKT 1 Rebuild approximately 20 miles of 138kV from Sequoyah to Cornville Tap	Previously Allocated		$1,000,000
Woodward EHV Phase Shifting Transformer CKT 1 Install one phase shifting transformer at Woodward	Previously Allocated		$7,200,000
	Current Study Total	$9,987,981	
GEN-2015-094			
Belden - Rasmussen 230kV CKT 1 Build approximately 25 miles of new 230kV	Current Study	$8,608	$25,000,000
Belden 230/115/13kV Transformer CKT 1 Build Belden 230kV yard and install Belden 230/115/13kV Transformer circuit #1	Current Study	$60,645	$10,000,000
Chappel - Colton 115kV CKT 1 NRIS only require upgrade to achieve at least 115MVA	Current Study	$4,005,074	$6,000,000

* Withdrawal of higher queued projects will cause a restudy and may result in higher costs

Interconnection Request and Upgrades	Upgrade Type	Allocated Cost	Upgrade Cost
Colton - Sidney 115kV CKT 1 NRIS only require upgrade to achieve at least 115MVA	Current Study	$1,668,781	$2,500,000
Dixon County - Belden 230kV CKT 1 Build approximately 50 miles of new 230kV	Current Study	$528,528	$50,000,000
Dixon County - Twin Church 345kV CKT1 Voltage Conversion Convert Dixon Co - Twin Church 230kV circuit to 345kV. Further evaluated in NPPD facility study	Current Study	$570,853	$33,000,000
GEN-2014-059 Tap - Ogallala 230kV CKT 2 Build approximately 18 miles of new 230kV	Current Study	$4,262,719	$16,200,000
GEN-2015-094 Interconnection Costs See One-Line Diagram.	Current Study	$7,916,350	$7,916,350
Gerald Gentleman Station Flowgate Stability Limit Mitigation Mitigation for GGS Flowgate Stability Limit. TBD in the Facilities Study with NPPD.	Current Study	$TBD	$TBD
Holt County - Antelope 345kV CKT 1 Build approximately 30 miles of new 345kV	Current Study	$4,929,069	$36,000,000
Holt County - Grand Island 345kV CKT 1 NRIS only required upgrade	Current Study	$8,080,820	$60,000,000
MISO Affected System Study See section 4 power flow analysis.	Current Study	$TBD	$TBD
Ogallala - Gerald Gentleman Station 230kV CKT 1 Replace terminal equipment and increase line clearance.	Current Study	$155,301	$500,000
Sidney - GEN-2014-059 Tap 230kV CKT 2 Build approximately 51 miles of new 230kV	Current Study	$46,000,000	$46,000,000
Sidney 230/115/13kV Transformer CKT 1 Replace Sidney 230/115/13kV Transformer circuit #1 to at least 150MVA	Current Study	$2,079,781	$3,276,500
Sidney 345/230/13kV Transformer CKT 2 NRIS only required upgrade: Build and Install Sidney 345/230/13kV Transformer circuit #2	Current Study	$9,489,358	$12,000,000
Twin Church - Sioux City 345kV CKT1 Voltage Conversion Convert Twin Church - Sioux City 230kV circuit to 345kV. Further evaluated in NPPD & WAPA facility study	Current Study	$476,400	$27,000,000
Battle Creek-County Line 115kV CKT 1 Rebuild approximately 11 miles of 115kV from Battle Creek to County Line.	Previously Allocated		$4,000,000
County Line-Neligh East 115kV CKT 1 Rebuild approximately 12 miles of 115kV from County Line to Neligh East.	Previously Allocated		$8,050,000

* Withdrawal of higher queued projects will cause a restudy and may result in higher costs

Interconnection Request and Upgrades	Upgrade Type	Allocated Cost	Upgrade Cost
Gentleman - Thedford 345kV CKT 1 Build approximately 76 Miles of 345kV from Gentleman to Thedford per SPP-NTC-200220 (Total Project E&C Cost Shown).	Previously Allocated		$311,717,040
Hoskins - Neligh 345/115kV Projects Per SPP 2014 ITP NT and NTC 200253 for 6/1/2016 in-service.	Previously Allocated		$98,697,720
Nebraska City - Sibley 345kV CKT 1 Priority Project: Nebraska City - Mullin Creek - Sibley 345kV circuit 1 per SPP-NTC-20097 and SPP-NTC-20098 (Total Project E&C Cost Shown).	Previously Allocated		$336,433,874
Thedford - Holt County 345kV CKT 1 Build approximately 146 Miles of 345kV from Thedford to Holt County per SPP-NTC-200220 (Total Project E&C Cost Shown).	Previously Allocated		$311,717,040
Twin Church - Dixon County 230kV Increase conductor clearances to accommodate 320MVA facility rating	Previously Allocated		$100,000
	Current Study Total	$90,232,287	
GEN-2015-095			
Cimarron - Minco 345kV CKT 1 Replace 1600 amp switches.	Current Study	$1,698	$1,000,000
Cleo Corner - Cleo Plant Tap 138kV CKT 1 Replace terminal equipment to at least 1200 amps	Current Study	$67,095	$500,000
GEN-2014-057 - Sunnyside 345kV CKT 1 Rebuild approximately 45 miles of 345kV	Current Study	$1,818,733	$65,000,000
GEN-2015-095 Interconnection Costs See One-Line Diagram.	Current Study	$4,400,000	$4,400,000
GEN-2015-095 Tap - Rose Valley 138kV CKT 1 Rebuild approximately 14 miles of 138kV from Rose Valley to GEN-2015-095 Tap	Current Study	$10,000,000	$10,000,000
Noel SW - Rose Valley 138kV CKT 1 Rebuild approximately 7 miles of 138kV from Noel SW to Rose Valley	Current Study	$5,000,000	$5,000,000
Northwest 138kV Circuit Breaker Replace Northwest 138kV Circuit Breaker for short circuit requirements	Current Study	$15,769	$750,000
Pittsburg - Seminole 345kV CKT 1 NRIS only required upgrade: replacement terminal equipment to at least 1600 amps	Current Study	$358,858	$500,000
Tupelo - Tupleo Tap 138kV CKT 1 NRIS only required upgrade: Build approximately 1 mile of second circuit 138kV from Tupelo to Tupelo Tap	Current Study	$294,103	$700,000
Woodward 345/138/13kV Transformer CKT 1 Replace Woodward 345/138/13kV Transformer circuit #1	Current Study	$3,187,296	$15,000,000

* Withdrawal of higher queued projects will cause a restudy and may result in higher costs

Interconnection Request and Upgrades	Upgrade Type	Allocated Cost	Upgrade Cost
Woodward 345/138/13kV Transformer CKT 2 Replace Woodward 345/138/13kV Transformer circuit #2	Current Study	$3,187,296	$15,000,000
Anadarko - Sequoyah 138KV CKT 1 Rebuild approximately 1 mile of 138kV from Anadarko to Sequoyah	Previously Allocated		$700,000
Bucker - Spearville 345V CKT 1 Replace Terminal equipment	Previously Allocated		$1,480,238
Cimarron - Draper Lake 345kV CKT 1 Replace terminal equipment to at least 2000A assigned in 2015 ITP10 per SPP-NTC-200329	Previously Allocated		$1,500,000
Cornville Tap - Naples Tap 138kV CKT 1 Rebuild approximately 11 miles of 138kV from Cornville Tap to Naples Tap	Previously Allocated		$7,700,000
Mathewson - Cimarron 345kV CKT 2 Build second 345kV circuit from Matthewson - Cimarron @ 3000 amps per ITP10.	Previously Allocated		$42,903,753
Naples Tap - Payne 138kV CKT 1 Rebuild approximately 8 miles of 138kV from Naples Tap to Payne	Previously Allocated		$5,600,000
Sequoyah - Cornville Tap 138kV CKT 1 Rebuild approximately 20 miles of 138kV from Sequoyah to Cornville Tap	Previously Allocated		$1,000,000
Stillwater 138/69kV Project NRIS only required upgrade: Build Stillwater 138/69kV Transformer circuit # 1 and upgrade terminal equipment (Total Project E&C Cost Shown)	Previously Allocated		$3,398,023
Tatonga - Mathewson 345kV CKT 2 Build second 345kV circuit from Tatonga - Matthewson @ 3000 amps per ITP10.	Previously Allocated		$104,260,473
Woodward - GEN-2011-051 Tap - Tatonga 345kV CKT 2 Build second 345kV circuit from Woodward - Tatonga @ 3000 amps per ITP10.	Previously Allocated		$71,876,622
Woodward EHV Phase Shifting Transformer CKT 1 Install one phase shifting transformer at Woodward	Previously Allocated		$7,200,000
	Current Study Total	$28,330,849	
GEN-2015-096			
Beulah - Stanton Tap 115kV CKT 1 NRIS only required upgrade: Rebuild approximately 22 miles of 115kV.	Current Study	$11,348,583	$17,910,400
Daglum - Dickinson 230kV CKT 1 Build new 230kV line from Daglum - Dickinson.	Current Study	$15,140,902	$28,000,000
Dickinson 230/115/13.8kV CKT 2 Build new 230/115/13.8kV Transformer circuit #2 at Dickinson.	Current Study	$1,183,317	$3,500,000

* Withdrawal of higher queued projects will cause a restudy and may result in higher costs

Interconnection Request and Upgrades	Upgrade Type	Allocated Cost	Upgrade Cost
GEN-2015-096 Interconnection Costs See One-Line Diagram.	Current Study	$0	$0
Hanlon 69kV Reactive Support Install (1) 10Mvar Capacitor Bank at Hanlon 69kV.	Current Study	$113,284	$500,000
Holt County - Grand Island 345kV CKT 1 NRIS only required upgrade	Current Study	$1,427,568	$60,000,000
MISO Affected System Study See section 4 power flow analysis.	Current Study	$TBD	$TBD
Stanton Tap - Garrison 115kV CKT 1 NRIS only required upgrade: Rebuild approximately 21 miles of 115kV.	Current Study	$10,585,185	$16,705,600
Charlie Creek - Judson 345kV CKT 1 Build new 345kV line from Charlie Creek - Judson.	Previously Allocated		$103,000,000
Gentleman - Thedford 345kV CKT 1 Build approximately 76 Miles of 345kV from Gentleman to Thedford per SPP-NTC-200220 (Total Project E&C Cost Shown).	Previously Allocated		$311,717,040
Judson - Williston 230kV CKT 1 Build new 230kV line from Judson Substation to Williston.	Previously Allocated		$2,400,000
Judson 345/230kV Substation Construct new 345kV Judson Substation adjacent to the existing 230kV Williston Substation and install new 345/230/13.8kV Transformer at Judson.	Previously Allocated		$19,000,000
Neset - Tande 230kV CKT 1 Build new 230kV line from Neset - Tande.	Previously Allocated		$3,000,000
Neset 230kV Terminal Upgrades Install necessary terminal upgrades at Neset 230kV to accommodate new 230kV line from new Tande substation.	Previously Allocated		$4,000,000
Tande 345/230 Substation Construct new 345kV Tande Substation adjacent to the existing 230kV Neset Substation and install new 345/230/13.8kV Transformer at Tande.	Previously Allocated		$18,000,000
Thedford - Holt County 345kV CKT 1 Build approximately 146 Miles of 345kV from Thedford to Holt County per SPP-NTC-200220 (Total Project E&C Cost Shown).	Previously Allocated		$311,717,040
Thedford 345/115kV Transformer CKT 1 Install Thedford 345/115kV transformer per SPP-NTC-200277 (Total Project E&C Cost Shown).	Previously Allocated		$311,717,040
Williston 230kV Terminal Upgrades Install necessary terminal upgrades at Williston 230kV to accommodate new 230kV line from new Judson substation.	Previously Allocated		$2,000,000
	Current Study Total	$39,798,840	

* Withdrawal of higher queued projects will cause a restudy and may result in higher costs

Interconnection Request and Upgrades	Upgrade Type	Allocated Cost	Upgrade Cost
GEN-2015-097			
Appledorn - Watertown 230kV CKT 1 NRIS only required upgrade: Replace terminal equipment.	Current Study	$500,000	$500,000
Blair - Granite Falls 230kV CKT 1 NRIS only required upgrade: Replace terminal equipment.	Current Study	$500,000	$500,000
Bristol - Summit 115kV CKT 1 NRIS only required upgrade: Rebuild approximately 32 miles of 115kV.	Current Study	$26,048,000	$26,048,000
Brookings - Watertown 115kV CKT 1 NRIS only required upgrade: Rebuild approximately 50 miles of 115kV.	Current Study	$40,336,000	$40,336,000
GEN-2015-097 Interconnection Costs See One-Line Diagram.	Current Study	$3,000,000	$3,000,000
GI-2009-001 Tap - Watertown 345kV CKT 1 NRIS only required upgrade: Build a second GI-2009-001 Tap - Watertown 345kV circuit.	Current Study	$53,071,200	$53,071,200
GI-2013-009 Tap - Summit 115kV CKT 1 NRIS only required upgrade: Rebuild approximately 4 miles of 115kV from GI-2013-009 Tap - Summit.	Current Study	$3,200,000	$3,200,000
GI-2013-009 Tap - Watertown 115kV CKT 1 Rebuild approximately 26 miles of 115kV from GI-2013-009 Tap - Watertown.	Current Study	$21,360,000	$21,360,000
Groton - Bristol 115kV CKT 1 NRIS only required upgrade: Rebuild approximately 21 miles of 115kV.	Current Study	$17,040,000	$17,040,000
MISO Affected System Study See section 4 power flow analysis.	Current Study	$TBD	$TBD
Split Rock - White 345kV CKT 1 NRIS only required upgrade: Replace terminal equipment.	Current Study	$273,219	$500,000
Watertown - White 345kV CKT 1 NRIS only required upgrade: Replace terminal equipment.	Current Study	$500,000	$500,000
Watertown 345/230/13.8kV CKT 1 NRIS only required upgrade: Replace Watertown 345/230/13.8kV Transformer circuit #1.	Current Study	$14,000,000	$14,000,000
	Current Study Total	$179,828,419	
GEN-2015-098			
Beulah - Stanton Tap 115kV CKT 1 NRIS only required upgrade: Rebuild approximately 22 miles of 115kV.	Current Study	$6,561,817	$17,910,400
Daglum - Dickinson 230kV CKT 1 Build new 230kV line from Daglum - Dickinson.	Current Study	$2,644,037	$28,000,000

* Withdrawal of higher queued projects will cause a restudy and may result in higher costs

Interconnection Request and Upgrades	Upgrade Type	Allocated Cost	Upgrade Cost
Dawson Creek - Fallon 115kV CKT 1 NRIS only required upgrade: Replace terminal equipment.	Current Study	$500,000	$500,000
Dickinson 230/115/13.8kV CKT 2 Build new 230/115/13.8kV Transformer circuit #2 at Dickinson.	Current Study	$582,087	$3,500,000
GEN-2015-098 Interconnection Costs See One-Line Diagram.	Current Study	$3,000,000	$3,000,000
Hanlon 69kV Reactive Support Install (1) 10Mvar Capacitor Bank at Hanlon 69kV.	Current Study	$75,727	$500,000
Holt County - Grand Island 345kV CKT 1 NRIS only required upgrade	Current Study	$967,656	$60,000,000
MISO Affected System Study See section 4 power flow analysis.	Current Study	$TBD	$TBD
Stanton Tap - Garrison 115kV CKT 1 NRIS only required upgrade: Rebuild approximately 21 miles of 115kV.	Current Study	$6,120,415	$16,705,600
Gentleman - Thedford 345kV CKT 1 Build approximately 76 Miles of 345kV from Gentleman to Thedford per SPP-NTC-200220 (Total Project E&C Cost Shown).	Previously Allocated		$311,717,040
Neset - Tande 230kV CKT 1 Build new 230kV line from Neset - Tande.	Previously Allocated		$3,000,000
Neset 230kV Terminal Upgrades Install necessary terminal upgrades at Neset 230kV to accommodate new 230kV line from new Tande substation.	Previously Allocated		$4,000,000
Tande 345/230 Substation Construct new 345kV Tande Substation adjacent to the existing 230kV Neset Substation and install new 345/230/13.8kV Transformer at Tande.	Previously Allocated		$18,000,000
Thedford - Holt County 345kV CKT 1 Build approximately 146 Miles of 345kV from Thedford to Holt County per SPP-NTC-200220 (Total Project E&C Cost Shown).	Previously Allocated		$311,717,040
Thedford 345/115kV Transformer CKT 1 Install Thedford 345/115kV transformer per SPP-NTC-200277 (Total Project E&C Cost Shown).	Previously Allocated		$311,717,040
	Current Study Total	$20,451,738	

TOTAL CURRENT STUDY COSTS: $1,962,852,644*

* Does not include cost to mitigate GGS Stability Flowgate Limitation Network Upgrade and possible AECI and MISO Affected System Upgrades cost estimates

* Withdrawal of higher queued projects will cause a restudy and may result in higher costs

11.6 E1: Stand Alone Cost Allocation per Interconnection Request (Including Prior Queued Upgrades)

Important Note:

****WITHDRAWAL OF HIGHER QUEUED PROJECTS WILL CAUSE A RESTUDY AND MAY RESULT IN HIGHER INTERCONNECTION COSTS****

This section shows each Generation Interconnection Request Customer, their current study impacted Network Upgrades, and the previously allocated upgrades upon which they rely to accommodate their interconnection to the transmission system UNDER A STAND ALONE SCENARIO ONLY.

The costs associated with the current study Network Upgrades are allocated to the Customers shown in this report.

In addition should a higher queued request, defined as one this study includes as a prior queued request, withdraw, the Network Upgrades assigned to the withdrawn request may be reallocated to the remaining requests that have an impact on the Network Upgrade under a restudy. Also, should an Interconnection Request choose to go into service prior to the operation date of any necessary Network Upgrades, the costs associated with those upgrades may be reallocated to the impacted Interconnection Request. The actual costs allocated to each Generation Interconnection Request Customer will be determined at the time of a restudy.

The required interconnection costs listed do not include all costs associated with the deliverability of the energy to final customers. These costs are determined by separate studies if the Customer submits a Transmission Service Request through SPP's Open Access Same Time Information System (OASIS) as required by Attachment Z1 of the SPP OATT. In addition, costs associated with a short circuit analysis will be allocated should the Interconnection Request Customer choose to execute a Facility Study Agreement.

Appendix E1. Cost Allocation Per Stand-Alone Request

(Including Previously Allocated Network Upgrades*)

Interconnection Request and Upgrades	Upgrade Type	Allocated Cost	Upgrade Cost
ASGI-2015-006			
ASGI-2015-006 Interconnection Costs See One-Line Diagram.	Current Study	$0	$0
	Current Study Total	$0	
GEN-2014-037			
Beaver County - Grapevine 345kV CKT 1 Build approximately 75 miles of new 345kV from Beaver County - Grapevine	Current Study	$75,000,000	$75,000,000
Bushland Interchange - Potter County 230kV CKT 1 Replace terminal equipment	Current Study	$1,000,000	$1,000,000
Chisholm Substation Upgrade 345kV Expand planned Chisholm Substation to tap and terminate Woodward - Border 345kV into the Chisholm Substation	Current Study	$12,000,000	$12,000,000
GEN-2014-037 Interconnection Costs See One-Line Diagram.	Current Study	$20,334,923	$20,334,923
Grapevine - Chisholm 345kV CKT 1 Build approximately 75 miles of new 345kV from Grapevine - Chisholm	Current Study	$75,000,000	$75,000,000
Potter County Interchange 345/230/13kV Transformer CKT 2 Build second 345/230/13kV transformer at Potter County	Current Study	$15,000,000	$15,000,000
Elk City 230/138/13kV Transformer CKT 1 Replace terminal equipment for Elk City Transformer to achieve transformer limit of 450MVA.	Previously Allocated		$15,000,000
Mathewson - Cimarron 345kV CKT 2 Build second 345kV circuit from Matthewson - Cimarron @ 3000 amps per ITP10.	Previously Allocated		$42,903,753
Tatonga - Mathewson 345kV CKT 2 NRIS only required upgrade: Build second 345kV circuit from Tatonga - Matthewson @ 3000 amps per ITP10.	Previously Allocated		$104,260,473
Woodward EHV Phase Shifting Transformer CKT 1 Install one phase shifting transformer at Woodward	Previously Allocated		$7,200,000
	Current Study Total	$198,334,923	
GEN-2014-038			
Beaver County - Grapevine 345kV CKT 1 Build approximately 75 miles of new 345kV from Beaver County - Grapevine	Current Study	$75,000,000	$75,000,000

* Withdrawal of higher queued projects will cause a restudy and may result in higher costs

Interconnection Request and Upgrades	Upgrade Type	Allocated Cost	Upgrade Cost
Bushland Interchange - Potter County 230kV CKT 1 Replace terminal equipment	Current Study	$1,000,000	$1,000,000
Chisholm Substation Upgrade 345kV Expand planned Chisholm Substation to tap and terminate Woodward - Border 345kV into the Chisholm Substation	Current Study	$12,000,000	$12,000,000
GEN-2014-038 Interconnection Costs See One-Line Diagram.	Current Study	$13,403,168	$13,403,168
Grapevine - Chisholm 345kV CKT 1 Build approximately 75 miles of new 345kV from Grapevine - Chisholm	Current Study	$75,000,000	$75,000,000
Potter County Interchange 345/230/13kV Transformer CKT 2 Build second 345/230/13kV transformer at Potter County	Current Study	$15,000,000	$15,000,000
Elk City 230/138/13kV Transformer CKT 1 Replace terminal equipment for Elk City Transformer to achieve transformer limit of 450MVA.	Previously Allocated		$15,000,000
Mathewson - Cimarron 345kV CKT 2 Build second 345kV circuit from Matthewson - Cimarron @ 3000 amps per ITP10.	Previously Allocated		$42,903,753
Tatonga - Mathewson 345kV CKT 2 NRIS only required upgrade: Build second 345kV circuit from Tatonga - Matthewson @ 3000 amps per ITP10.	Previously Allocated		$104,260,473
Woodward EHV Phase Shifting Transformer CKT 1 Install one phase shifting transformer at Woodward	Previously Allocated		$7,200,000
	Current Study Total	$191,403,168	

GEN-2014-046

Border Capacitor Bank(s) 345kV Build (4)-25Mvar steps of capacitor bank(s) for a total of 200Mvars at Border	Current Study	$8,000,000	$8,000,000
GEN-2014-046 Interconnection Costs See One-Line Diagram.	Current Study	$2,456,266	$2,456,266
Amoco Wasson - Oxy Tap 230kV CKT 1 Replace line traps at both terminals	Previously Allocated		$200,000
Chaves County - Price - CV Pines - Capitan 115kV CKT 1 NRIS only required upgrade: Per HPILs SPP-NTC-200256 (Total Project E&C Cost Shown)	Previously Allocated		$14,275,000
Curry County - Bailey County 115kV CKT 1 Per 2012 ITP NT SPP-NTC-200166	Previously Allocated		$35,099,588
Elk City 230/138/13kV Transformer CKT 1 Replace terminal equipment for Elk City Transformer to achieve transformer limit of 450MVA.	Previously Allocated		$15,000,000

* Withdrawal of higher queued projects will cause a restudy and may result in higher costs

Interconnection Request and Upgrades	Upgrade Type	Allocated Cost	Upgrade Cost
Kress Interchange - Swisher 115kV CKT 1 Replace terminal equipment	Previously Allocated		$500,000
National Enrichment Plant-Targa 115kV CKT 1 Rebuild approximately 4 miles of 115kV from National Enrichment Plant to Targa per 2015 ITPNT.	Previously Allocated		$2,909,669
Oklaunion 345kV Reactive Power Install (2)-130Mvar Capacitor Bank(s) at Oklaunion	Previously Allocated		$10,000,000
Potash Junction 230/115 kV Ckt 1 Per HPILs SPP-NTC-200282 (Total Project E&C Cost Shown)	Previously Allocated		$3,508,346
Potash Junction 230kV Reactive Power Support Build Potash Junction 100Mvar Capacitor bank per 2015 ITPNT.	Previously Allocated		$6,465,875
Targa-Cardinal 115kV CKT 1 Rebuild approximately 3 miles of 115kV from Targa to Cardinal per 2015 ITPNT.	Previously Allocated		$2,049,062
Tolk - Plant X 230kV CKT 1 & 2 Rebuild circuit 1 and 2 betweek Tolk - Plant X 230kV to 1200 amps each.	Previously Allocated		$9,921,693
TUCO Interchange - Jones 230kV CKT 1 NRIS only required upgrade: Replace line traps at both terminals	Previously Allocated		$400,000
	Current Study Total	$10,456,266	
GEN-2014-059			
Chappel - Colton 115kV CKT 1 NRIS only require upgrade to achieve at least 115MVA	Current Study	$6,000,000	$6,000,000
Colton - Sidney 115kV CKT 1 NRIS only require upgrade to achieve at least 115MVA	Current Study	$2,500,000	$2,500,000
GEN-2014-059 Interconnection Costs See One-Line Diagram.	Current Study	$9,200,000	$9,200,000
GEN-2014-059 Tap - Ogallala 230kV CKT 2 Build approximately 18 miles of new 230kV	Current Study	$16,200,000	$16,200,000
Gerald Gentleman Station Flowgate Stability Limit Mitigation Mitigation for GGS Flowgate Stability Limit. TBD in the Facilities Study with NPPD.	Current Study	$TBD	$TBD
Holt County - Grand Island 345kV CKT 1 NRIS only required upgrade: Reset Cts to achieve at least 844MVA	Current Study	$100,000	$100,000
Ogalalla - Ogalalla 115kV CKT 2 NRIS only required upgrade: Build second bus tie between Ogalalla and Ogallala 115kV	Current Study	$2,000,000	$2,000,000

* Withdrawal of higher queued projects will cause a restudy and may result in higher costs

Interconnection Request and Upgrades	Upgrade Type	Allocated Cost	Upgrade Cost
Ogallala - Gerald Gentleman Station 230kV CKT 1 Replace terminal equipment and increase line clearance.	Current Study	$500,000	$500,000
Sidney 230/115/13kV Transformer CKT 1 NRIS only required upgrade: Replace Sidney 230/115/13kV Transformer circuit #1 to at least 150MVA	Current Study	$3,276,500	$3,276,500
Battle Creek-County Line 115kV CKT 1 Rebuild approximately 11 miles of 115kV from Battle Creek to County Line.	Previously Allocated		$4,000,000
County Line-Neligh East 115kV CKT 1 Rebuild approximately 12 miles of 115kV from County Line to Neligh East.	Previously Allocated		$8,050,000
Gentleman - Thedford 345kV CKT 1 Build approximately 76 Miles of 345kV from Gentleman to Thedford per SPP-NTC-200220 (Total Project E&C Cost Shown).	Previously Allocated		$311,717,040
Hoskins - Dixon County - Twin Church 230kV Rerate per NPPD Facility Study	Previously Allocated		$500,000
Hoskins - Neligh 345/115kV Projects Per SPP 2014 ITP NT and NTC 200253 for 6/1/2016 in-service.	Previously Allocated		$98,697,720
Nebraska City - Sibley 345kV CKT 1 Priority Project: Nebraska City - Mullin Creek - Sibley 345kV circuit 1 per SPP-NTC-20097 and SPP-NTC-20098 (Total Project E&C Cost Shown).	Previously Allocated		$336,433,874
Thedford - Holt County 345kV CKT 1 Build approximately 146 Miles of 345kV from Thedford to Holt County per SPP-NTC-200220 (Total Project E&C Cost Shown).	Previously Allocated		$311,717,040
Thedford 345/115kV Transformer CKT 1 Install Thedford 345/115kV transformer per SPP-NTC-200277 (Total Project E&C Cost Shown).	Previously Allocated		$311,717,040
Twin Church - Dixon County 230kV Increase conductor clearances to accommodate 320MVA facility rating	Previously Allocated		$100,000
	Current Study Total	$39,776,500	
GEN-2015-018			
GEN-2015-018 Interconnection Costs See One-Line Diagram.	Current Study	$5,121,512	$5,121,512
Hockley Interchange - Lamb County Interchange 115kV CKT 1 NRIS only required upgrade: Upgrade termainl equipment to conductor limit	Current Study	$500,000	$500,000
2016 ITPNT Upgrades 2016 ITPNT Upgrades	Previously Allocated		$0
Amoco Switching Station - Sundown Interchange 230kV CKT 1 NRIS only required upgrade: Per SPP-NTC-200332	Previously Allocated		$411,000

* Withdrawal of higher queued projects will cause a restudy and may result in higher costs

Interconnection Request and Upgrades	Upgrade Type	Allocated Cost	Upgrade Cost
Amoco Wasson - Oxy Tap 230kV CKT 1 Replace line traps at both terminals	Previously Allocated		$200,000
Curry County - Bailey County 115kV CKT 1 Per 2012 ITP NT SPP-NTC-200166	Previously Allocated		$35,099,588
Elk City 230/138/13kV Transformer CKT 1 Replace terminal equipment for Elk City Transformer to achieve transformer limit of 450MVA.	Previously Allocated		$15,000,000
Kress Interchange - Swisher 115kV CKT 1 Replace terminal equipment	Previously Allocated		$500,000
National Enrichment Plant-Targa 115kV CKT 1 Rebuild approximately 4 miles of 115kV from National Enrichment Plant to Targa per 2015 ITPNT.	Previously Allocated		$2,909,669
Oklaunion 345kV Reactive Power Install (2)-130Mvar Capacitor Bank(s) at Oklaunion	Previously Allocated		$10,000,000
Potash Junction 230kV Reactive Power Support Build Potash Junction 100Mvar Capacitor bank per 2015 ITPNT.	Previously Allocated		$6,465,875
Targa-Cardinal 115kV CKT 1 Rebuild approximately 3 miles of 115kV from Targa to Cardinal per 2015 ITPNT.	Previously Allocated		$2,049,062
Tolk - Plant X 230kV CKT 1 & 2 Rebuild circuit 1 and 2 betweek Tolk - Plant X 230kV to 1200 amps each.	Previously Allocated		$9,921,693
TUCO Interchange - Jones 230kV CKT 1 NRIS only required upgrade: Replace line traps at both terminals	Previously Allocated		$400,000
	Current Study Total	$5,621,512	
GEN-2015-020			
GEN-2015-020 Interconnection Costs See One-Line Diagram.	Current Study	$9,984,058	$9,984,058
2016 ITPNT Upgrades 2016 ITPNT Upgrades	Previously Allocated		$0
Amoco Switching Station - Sundown Interchange 230kV CKT 1 NRIS only required upgrade: Per SPP-NTC-200332	Previously Allocated		$411,000
Amoco Wasson - Oxy Tap 230kV CKT 1 Replace line traps at both terminals	Previously Allocated		$200,000
Curry County - Bailey County 115kV CKT 1 Per 2012 ITP NT SPP-NTC-200166	Previously Allocated		$35,099,588

* Withdrawal of higher queued projects will cause a restudy and may result in higher costs

Interconnection Request and Upgrades	Upgrade Type	Allocated Cost	Upgrade Cost
Elk City 230/138/13kV Transformer CKT 1 Replace terminal equipment for Elk City Transformer to achieve transformer limit of 450MVA.	Previously Allocated		$15,000,000
Kress Interchange - Swisher 115kV CKT 1 Replace terminal equipment	Previously Allocated		$500,000
National Enrichment Plant-Targa 115kV CKT 1 Rebuild approximately 4 miles of 115kV from National Enrichment Plant to Targa per 2015 ITPNT.	Previously Allocated		$2,909,669
Oklaunion 345kV Reactive Power Install (2)-130Mvar Capacitor Bank(s) at Oklaunion	Previously Allocated		$10,000,000
Potash Junction 230/115 kV Ckt 1 Per HPILs SPP-NTC-200282 (Total Project E&C Cost Shown)	Previously Allocated		$3,508,346
Potash Junction 230kV Reactive Power Support Build Potash Junction 100Mvar Capacitor bank per 2015 ITPNT.	Previously Allocated		$6,465,875
Targa-Cardinal 115kV CKT 1 Rebuild approximately 3 miles of 115kV from Targa to Cardinal per 2015 ITPNT.	Previously Allocated		$2,049,062
Tolk - Plant X 230kV CKT 1 & 2 Rebuild circuit 1 and 2 betweek Tolk - Plant X 230kV to 1200 amps each.	Previously Allocated		$9,921,693
TUCO Interchange - Jones 230kV CKT 1 NRIS only required upgrade: Replace line traps at both terminals	Previously Allocated		$400,000
	Current Study Total	$9,984,058	
GEN-2015-031			
Border - Chisholm 345kV CKT 2 Build approximately 25 miles of second circuit 345kV from Border - Chisholm	Current Study	$25,000,000	$25,000,000
Chisholm - Sweetwater 230kV CKT 1 Rebuild approximately 15 miles of 230kV from Chisholm - Sweetwater.	Current Study	$15,000,000	$15,000,000
Chisholm Substation Upgrade 345kV Expand planned Chisholm Substation to tap and terminate Woodward - Border 345kV into the Chisholm Substation	Current Study	$12,000,000	$12,000,000
GEN-2015-031 Interconnection Costs See One-Line Diagram.	Current Study	$7,567,148	$7,567,148
SP-Wolf Tap - LP-Doud Tap 115kV CKT 2 NRIS only required upgrade: Build apprioxmately 1.4 miles of sceond 115kV from SP-Wolf to LP-Doud. Affected System study required.	Current Study	$1,000,000	$1,000,000
SP-Wolf Tap - Yuma Interchange 115kV CKT 2 NRIS only required upgrade: Build apprioxmately 1 miles of sceond 115kV from SP-Wolf to Yuma. Affected System study required.	Current Study	$800,000	$800,000

* Withdrawal of higher queued projects will cause a restudy and may result in higher costs

Interconnection Request and Upgrades	Upgrade Type	Allocated Cost	Upgrade Cost
TUCO 2 - Border 345kV CKT 2 Build approximately 194 miles of second circuit 345kV from TUCO 2 - Border	Current Study	$194,000,000	$194,000,000
Wolfforth Interchange 230/115/13.2kV Transformer CKT 1 NRIS only required upgrade: Replace existing Wolfforth Interchange Transformer	Current Study	$6,000,000	$6,000,000
Yuma Interchange - Wolfforth 115kV CKT 2 NRIS only required upgrade: Build apprioxmately 5 miles of sceond 115kV from Yuma - Wolfforth.	Current Study	$4,000,000	$4,000,000
2016 ITPNT Upgrades 2016 ITPNT Upgrades	Previously Allocated		$0
Amoco Switching Station - Sundown Interchange 230kV CKT 1 NRIS only required upgrade: Per SPP-NTC-200332	Previously Allocated		$411,000
Amoco Wasson - Oxy Tap 230kV CKT 1 Replace line traps at both terminals	Previously Allocated		$200,000
Chisholm - Gracemont 345kV CKT 1 Per SPP-NTC-200255 and 200240 (Total Project E&C Cost Shown)	Previously Allocated		$162,952,357
Curry County - Bailey County 115kV CKT 1 Per 2012 ITP NT SPP-NTC-200166	Previously Allocated		$35,099,588
Elk City 230/138/13kV Transformer CKT 1 Replace terminal equipment for Elk City Transformer to achieve transformer limit of 450MVA.	Previously Allocated		$15,000,000
Kress Interchange - Swisher 115kV CKT 1 Replace terminal equipment	Previously Allocated		$500,000
Kress Interchange - Swisher 115kV CKT 1 Replace terminal equipment	Previously Allocated		$500,000
National Enrichment Plant-Targa 115kV CKT 1 Rebuild approximately 4 miles of 115kV from National Enrichment Plant to Targa per 2015 ITPNT.	Previously Allocated		$2,909,669
Oklaunion 345kV Reactive Power Install (2)-130Mvar Capacitor Bank(s) at Oklaunion	Previously Allocated		$10,000,000
Potash Junction 230/115 kV Ckt 1 Per HPILs SPP-NTC-200282 (Total Project E&C Cost Shown)	Previously Allocated		$3,508,346
Potash Junction 230kV Reactive Power Support Build Potash Junction 100Mvar Capacitor bank per 2015 ITPNT.	Previously Allocated		$6,465,875
Stateline - Sweetwater 230kV CKT 1 Replace terminal equipment	Previously Allocated		$1,000,000

* Withdrawal of higher queued projects will cause a restudy and may result in higher costs

Interconnection Request and Upgrades	Upgrade Type	Allocated Cost	Upgrade Cost
Targa-Cardinal 115kV CKT 1 Rebuild approximately 3 miles of 115kV from Targa to Cardinal per 2015 ITPNT.	Previously Allocated		$2,049,062
Tolk - Plant X 230kV CKT 1 & 2 Rebuild circuit 1 and 2 betweek Tolk - Plant X 230kV to 1200 amps each.	Previously Allocated		$9,921,693
TUCO Interchange - Jones 230kV CKT 1 NRIS only required upgrade: Replace line traps at both terminals	Previously Allocated		$400,000
Wolfforth - Sundown 230kV CKT 1 NRIS only required upgrade: Replace line traps at both terminals	Previously Allocated		$400,000
Wolfforth - Terry County 115kV CKT 1 NRIS only required upgrade: Replace terminal equipment to achieving conductor limit	Previously Allocated		$1,000,000
	Current Study Total	$265,367,148	
GEN-2015-033			
Border Capacitor Bank(s) 345kV Build (4)-25Mvar steps of capacitor bank(s) for a total of 200Mvars at Border	Current Study	$8,000,000	$8,000,000
Carlisle 230/115/13kV Transformer CKT 1 Replace existing Carlisle 230/115/13kV Transformer circuit #1 with 250 MVA.	Current Study	$4,192,913	$4,192,913
GEN-2015-033 Interconnection Costs See One-Line Diagram.	Current Study	$0	$0
Oklaunion 345kV Reactive Power Support Install (1) 150Mvar SVC at Oklaunion	Current Study	$25,000,000	$25,000,000
SP-Wolf Tap - LP-Doud Tap 115kV CKT 2 NRIS only required upgrade: Build apprioxmately 1.4 miles of sceond 115kV from SP-Wolf to LP-Doud. Affected System study required.	Current Study	$1,000,000	$1,000,000
SP-Wolf Tap - Yuma Interchange 115kV CKT 2 NRIS only required upgrade: Build apprioxmately 1 miles of sceond 115kV from SP-Wolf to Yuma. Affected System study required.	Current Study	$800,000	$800,000
TUCO - New Deal - Stanton 345/115kV Project NRIS only required upgrade: Build TUCO - New Deal 345kV, New Deal - Stanton 115kV and New Deal 345/115kV tranformer CKT 1. Total project E&C costs shown.	Current Study	$37,490,796	$37,490,796
Yuma Interchange - Wolfforth 115kV CKT 2 NRIS only required upgrade: Build apprioxmately 5 miles of sceond 115kV from Yuma - Wolfforth.	Current Study	$4,000,000	$4,000,000
Carlisle 230/115/13kV Transformer CKT 1 Replace existing Carlisle 230/115/13kV Transformer circuit #1 with 250 MVA.	Not Active		$4,192,913
2016 ITPNT Upgrades 2016 ITPNT Upgrades	Previously Allocated		$0

* Withdrawal of higher queued projects will cause a restudy and may result in higher costs

Interconnection Request and Upgrades	Upgrade Type	Allocated Cost	Upgrade Cost
Amoco Wasson - Oxy Tap 230kV CKT 1 Replace line traps at both terminals	Previously Allocated		$200,000
Crawfish Draw (TUCO 2) 230/115/13kV Transformer CKT 1 NRIS only required upgrade: Build 115kV yard at TUCO 2, re-route Hale County - TUCO 115kV into TUCO 2 115kV, build TUC0 2 230/115/13kV Transformer 1	Previously Allocated		$12,000,000
Curry County - Bailey County 115kV CKT 1 Per 2012 ITP NT SPP-NTC-200166	Previously Allocated		$35,099,588
Elk City 230/138/13kV Transformer CKT 1 Replace terminal equipment for Elk City Transformer to achieve transformer limit of 450MVA.	Previously Allocated		$15,000,000
Kress Interchange - Swisher 115kV CKT 1 Replace terminal equipment	Previously Allocated		$500,000
National Enrichment Plant-Targa 115kV CKT 1 Rebuild approximately 4 miles of 115kV from National Enrichment Plant to Targa per 2015 ITPNT.	Previously Allocated		$2,909,669
Oklaunion 345kV Reactive Power Install (2)-130Mvar Capacitor Bank(s) at Oklaunion	Previously Allocated		$10,000,000
Potash Junction 230/115 kV Ckt 1 Per HPILs SPP-NTC-200282 (Total Project E&C Cost Shown)	Previously Allocated		$3,508,346
Potash Junction 230kV Reactive Power Support Build Potash Junction 100Mvar Capacitor bank per 2015 ITPNT.	Previously Allocated		$6,465,875
Targa-Cardinal 115kV CKT 1 Rebuild approximately 3 miles of 115kV from Targa to Cardinal per 2015 ITPNT.	Previously Allocated		$2,049,062
Tolk - Plant X 230kV CKT 1 & 2 Rebuild circuit 1 and 2 betweek Tolk - Plant X 230kV to 1200 amps each.	Previously Allocated		$9,921,693
TUCO 230/115kV CKT 1 Transformer NRIS only required upgrade: Replace TUCO 230/115kV transformer per SPP-2012-AG3-AFS9 SPP-NTC-200297	Previously Allocated		$3,800,415
	Current Study Total	$80,483,709	
GEN-2015-034			
GEN-2015-034 Interconnection Costs See One-Line Diagram.	Current Study	$2,112,500	$2,112,500
Fairfax 138/69kV CKT 1 Per AECI Affected System Study for DISIS-2012-002	Previously Allocated		$2,200,000
Remington - Fairfax 138KV CKT 1 Increase conductor clearance	Previously Allocated		$400,000
	Current Study Total	$2,112,500	

* Withdrawal of higher queued projects will cause a restudy and may result in higher costs

Interconnection Request and Upgrades	Upgrade Type	Allocated Cost	Upgrade Cost
GEN-2015-036			
GEN-2015-036 Interconnection Costs See One-Line Diagram.	Current Study	$2,025,000	$2,025,000
	Current Study Total	$2,025,000	
GEN-2015-038			
GEN-2015-038 Interconnection Costs See One-Line Diagram.	Current Study	$20,000	$20,000
Bucker - Spearville 345V CKT 1 Replace Terminal equipment	Previously Allocated		$1,480,238
Mathewson - Cimarron 345kV CKT 2 Build second 345kV circuit from Matthewson - Cimarron @ 3000 amps per ITP10.	Previously Allocated		$42,903,753
Stateline - Sweetwater 230kV CKT 1 Replace terminal equipment	Previously Allocated		$1,000,000
Woodward EHV Phase Shifting Transformer CKT 1 Install one phase shifting transformer at Woodward	Previously Allocated		$7,200,000
	Current Study Total	$20,000	
GEN-2015-039			
Deaf Smith - GEN-2015-039 Tap 230kV CKT 1 Replace terminal equipment	Current Study	$1,000,000	$1,000,000
GEN-2015-039 Interconnection Costs See One-Line Diagram.	Current Study	$8,869,623	$8,869,623
2016 ITPNT Upgrades 2016 ITPNT Upgrades	Previously Allocated		$0
Amoco Switching Station - Sundown Interchange 230kV CKT 1 NRIS only required upgrade: Per SPP-NTC-200332	Previously Allocated		$411,000
Amoco Wasson - Oxy Tap 230kV CKT 1 Replace line traps at both terminals	Previously Allocated		$200,000
Curry County - Bailey County 115kV CKT 1 Per 2012 ITP NT SPP-NTC-200166	Previously Allocated		$35,099,588
Elk City 230/138/13kV Transformer CKT 1 Replace terminal equipment for Elk City Transformer to achieve transformer limit of 450MVA.	Previously Allocated		$15,000,000

* Withdrawal of higher queued projects will cause a restudy and may result in higher costs

Interconnection Request and Upgrades	Upgrade Type	Allocated Cost	Upgrade Cost
Kress Interchange - Swisher 115kV CKT 1 Replace terminal equipment	Previously Allocated		$500,000
National Enrichment Plant-Targa 115kV CKT 1 Rebuild approximately 4 miles of 115kV from National Enrichment Plant to Targa per 2015 ITPNT.	Previously Allocated		$2,909,669
Oklaunion 345kV Reactive Power Install (2)-130Mvar Capacitor Bank(s) at Oklaunion	Previously Allocated		$10,000,000
Potash Junction 230/115 kV Ckt 1 Per HPILs SPP-NTC-200282 (Total Project E&C Cost Shown)	Previously Allocated		$3,508,346
Potash Junction 230kV Reactive Power Support Build Potash Junction 100Mvar Capacitor bank per 2015 ITPNT.	Previously Allocated		$6,465,875
Targa-Cardinal 115kV CKT 1 Rebuild approximately 3 miles of 115kV from Targa to Cardinal per 2015 ITPNT.	Previously Allocated		$2,049,062
Tolk - Plant X 230kV CKT 1 & 2 Rebuild circuit 1 and 2 betweek Tolk - Plant X 230kV to 1200 amps each.	Previously Allocated		$9,921,693
TUCO Interchange - Jones 230kV CKT 1 NRIS only required upgrade: Replace line traps at both terminals	Previously Allocated		$400,000
	Current Study Total	$9,869,623	
GEN-2015-040			
GEN-2015-040 Interconnection Costs See One-Line Diagram.	Current Study	$1,497,460	$1,497,460
Mustang 230/115/13.2KV Transformer CKT 2 NRIS only required upgrade: Build second Mustang 230/115 Transformer	Current Study	$6,000,000	$6,000,000
Seminole - Gaines County 115kV CKT 2 NRIS only required upgrade: Build approximately 10.5 miles of second 115kV from Seminole - Gaines County	Current Study	$8,500,000	$8,500,000
2016 ITPNT Upgrades 2016 ITPNT Upgrades	Previously Allocated		$0
Amoco Wasson - Oxy Tap 230kV CKT 1 Replace line traps at both terminals	Previously Allocated		$200,000
Curry County - Bailey County 115kV CKT 1 Per 2012 ITP NT SPP-NTC-200166	Previously Allocated		$35,099,588
Elk City 230/138/13kV Transformer CKT 1 Replace terminal equipment for Elk City Transformer to achieve transformer limit of 450MVA.	Previously Allocated		$15,000,000

* Withdrawal of higher queued projects will cause a restudy and may result in higher costs

Interconnection Request and Upgrades	Upgrade Type	Allocated Cost	Upgrade Cost
Kress Interchange - Swisher 115kV CKT 1 Replace terminal equipment	Previously Allocated		$500,000
National Enrichment Plant-Targa 115kV CKT 1 Rebuild approximately 4 miles of 115kV from National Enrichment Plant to Targa per 2015 ITPNT.	Previously Allocated		$2,909,669
Oklaunion 345kV Reactive Power Install (2)-130Mvar Capacitor Bank(s) at Oklaunion	Previously Allocated		$10,000,000
Potash Junction 230/115 kV Ckt 1 Per HPILs SPP-NTC-200282 (Total Project E&C Cost Shown)	Previously Allocated		$3,508,346
Potash Junction 230kV Reactive Power Support Build Potash Junction 100Mvar Capacitor bank per 2015 ITPNT.	Previously Allocated		$6,465,875
Targa-Cardinal 115kV CKT 1 Rebuild approximately 3 miles of 115kV from Targa to Cardinal per 2015 ITPNT.	Previously Allocated		$2,049,062
Tolk - Plant X 230kV CKT 1 & 2 Rebuild circuit 1 and 2 betweek Tolk - Plant X 230kV to 1200 amps each.	Previously Allocated		$9,921,693
	Current Study Total	$15,997,460	
GEN-2015-041			
GEN-2015-041 Interconnection Costs See One-Line Diagram.	Current Study	$0	$0
SP-Wolf Tap - LP-Doud Tap 115kV CKT 2 NRIS only required upgrade: Build apprioxmately 1.4 miles of sceond 115kV from SP-Wolf to LP-Doud. Affected System study required.	Current Study	$1,000,000	$1,000,000
SP-Wolf Tap - Yuma Interchange 115kV CKT 2 NRIS only required upgrade: Build apprioxmately 1 miles of sceond 115kV from SP-Wolf to Yuma. Affected System study required.	Current Study	$800,000	$800,000
Yuma Interchange - Wolfforth 115kV CKT 2 NRIS only required upgrade: Build apprioxmately 5 miles of sceond 115kV from Yuma - Wolfforth.	Current Study	$4,000,000	$4,000,000
TUCO Interchange - Jones 230kV CKT 1 NRIS only required upgrade: Replace line traps at both terminals	Previously Allocated		$400,000
	Current Study Total	$5,800,000	
GEN-2015-042			
Dixon County - Rasmussen 230kV CKT 1 Build approximately 40 miles of new 230kV	Current Study	$40,000,000	$40,000,000
Dixon County - Thurston 230kV CKT 1 Build approximately 15 miles of new 230kV	Current Study	$15,000,000	$15,000,000

* Withdrawal of higher queued projects will cause a restudy and may result in higher costs

Interconnection Request and Upgrades	Upgrade Type	Allocated Cost	Upgrade Cost
GEN-2015-042 Interconnection Costs See One-Line Diagram.	Current Study	$3,000,000	$3,000,000
Holt County - Grand Island 345kV CKT 1 NRIS only required upgrade	Current Study	$60,000,000	$60,000,000
Thurston 345/230/13kV Transformer CKT 1 Build Thurston 345/230kV substation and install 345/230/13kV Substation	Current Study	$18,000,000	$18,000,000
Battle Creek-County Line 115kV CKT 1 Rebuild approximately 11 miles of 115kV from Battle Creek to County Line.	Previously Allocated		$4,000,000
County Line-Neligh East 115kV CKT 1 Rebuild approximately 12 miles of 115kV from County Line to Neligh East.	Previously Allocated		$8,050,000
Gentleman - Thedford 345kV CKT 1 Build approximately 76 Miles of 345kV from Gentleman to Thedford per SPP-NTC-200220 (Total Project E&C Cost Shown).	Previously Allocated		$311,717,040
Hoskins - Dixon County - Twin Church 230kV Rerate per NPPD Facility Study	Previously Allocated		$500,000
Hoskins - Neligh 345/115kV Projects Per SPP 2014 ITP NT and NTC 200253 for 6/1/2016 in-service.	Previously Allocated		$98,697,720
Nebraska City - Sibley 345kV CKT 1 Priority Project: Nebraska City - Mullin Creek - Sibley 345kV circuit 1 per SPP-NTC-20097 and SPP-NTC-20098 (Total Project E&C Cost Shown).	Previously Allocated		$336,433,874
Thedford - Holt County 345kV CKT 1 Build approximately 146 Miles of 345kV from Thedford to Holt County per SPP-NTC-200220 (Total Project E&C Cost Shown).	Previously Allocated		$311,717,040
Thedford 345/115kV Transformer CKT 1 Install Thedford 345/115kV transformer per SPP-NTC-200277 (Total Project E&C Cost Shown).	Previously Allocated		$311,717,040
Twin Church - Dixon County 230kV Increase conductor clearances to accommodate 320MVA facility rating	Previously Allocated		$100,000
	Current Study Total	$136,000,000	
GEN-2015-043			
GEN-2015-043 Interconnection Costs See One-Line Diagram.	Current Study	$0	$0
	Current Study Total	$0	
GEN-2015-044			
GEN-2015-044 Interconnection Costs See One-Line Diagram.	Current Study	$20,000	$20,000

* Withdrawal of higher queued projects will cause a restudy and may result in higher costs

Interconnection Request and Upgrades	Upgrade Type	Allocated Cost	Upgrade Cost
	Current Study Total	$20,000	
GEN-2015-045			
GEN-2015-045 Interconnection Costs See One-Line Diagram.	Current Study	$0	$0
	Current Study Total	$0	
GEN-2015-046			
Blaisdell 230/115/13.8kV CKT 1 NRIS only required upgrade: Replace Blaisdell 230/115/13.8kV Transformer circuit #1.	Current Study	$5,000,000	$5,000,000
GEN-2015-046 Interconnection Costs See One-Line Diagram.	Current Study	$3,759,097	$3,759,097
GI-2009-001 Tap - Watertown 345kV CKT 1 NRIS only required upgrade: Build a second GI-2009-001 Tap - Watertown 345kV circuit.	Current Study	$53,071,200	$53,071,200
Hanlon 69kV Reactive Support Install (1) 10Mvar Capacitor Bank at Hanlon 69kV.	Current Study	$500,000	$500,000
MISO Affected System Study See section 4 power flow analysis.	Current Study	$TBD	$TBD
Split Rock - White 345kV CKT 1 NRIS only required upgrade: Replace terminal equipment.	Current Study	$500,000	$500,000
Judson - Tande 345kV CKT 1 Build new 345kV line from Judson - Tande.	Previously Allocated		$86,000,000
Judson - Williston 230kV CKT 1 Build new 230kV line from Judson Substation to Williston.	Previously Allocated		$2,400,000
Judson 345/230kV Substation Construct new 345kV Judson Substation adjacent to the existing 230kV Williston Substation and install new 345/230/13.8kV Transformer at Judson.	Previously Allocated		$19,000,000
Neset - Tande 230kV CKT 1 Build new 230kV line from Neset - Tande.	Previously Allocated		$3,000,000
Neset 230kV Terminal Upgrades Install necessary terminal upgrades at Neset 230kV to accommodate new 230kV line from new Tande substation.	Previously Allocated		$4,000,000
Tande 345/230 Substation Construct new 345kV Tande Substation adjacent to the existing 230kV Neset Substation and install new 345/230/13.8kV Transformer at Tande.	Previously Allocated		$18,000,000
Williston 230kV Terminal Upgrades Install necessary terminal upgrades at Williston 230kV to accommodate new 230kV line from new Judson substation.	Previously Allocated		$2,000,000

* Withdrawal of higher queued projects will cause a restudy and may result in higher costs

Interconnection Request and Upgrades	Upgrade Type	Allocated Cost	Upgrade Cost
	Current Study Total	$62,830,297	
GEN-2015-047			
GEN-2015-047 Interconnection Costs See One-Line Diagram.	Current Study	$2,540,000	$2,540,000
Fairfax 138/69kV CKT 1 Per AECI Affected System Study for DISIS-2012-002	Previously Allocated		$2,200,000
Remington - Fairfax 138KV CKT 1 Increase conductor clearance	Previously Allocated		$400,000
	Current Study Total	$2,540,000	
GEN-2015-048			
Cleo Corner - Cleo Plant Tap 138kV CKT 1 Replace terminal equipment to at least 1200 amps	Current Study	$500,000	$500,000
GEN-2015-048 Interconnection Costs See One-Line Diagram.	Current Study	$2,968,000	$2,968,000
Bucker - Spearville 345V CKT 1 Replace Terminal equipment	Previously Allocated		$1,480,238
Mathewson - Cimarron 345kV CKT 2 Build second 345kV circuit from Matthewson - Cimarron @ 3000 amps per ITP10.	Previously Allocated		$42,903,753
Stateline - Sweetwater 230kV CKT 1 Replace terminal equipment	Previously Allocated		$1,000,000
Tatonga - Mathewson 345kV CKT 2 NRIS only required upgrade: Build second 345kV circuit from Tatonga - Matthewson @ 3000 amps per ITP10.	Previously Allocated		$104,260,473
Woodward EHV Phase Shifting Transformer CKT 1 Install one phase shifting transformer at Woodward	Previously Allocated		$7,200,000
	Current Study Total	$3,468,000	
GEN-2015-052			
GEN-2015-052 Interconnection Costs See One-Line Diagram.	Current Study	$15,582,434	$15,582,434
Fairfax 138/69kV CKT 1 Per AECI Affected System Study for DISIS-2012-002	Previously Allocated		$2,200,000
Remington - Fairfax 138KV CKT 1 Increase conductor clearance	Previously Allocated		$400,000

* Withdrawal of higher queued projects will cause a restudy and may result in higher costs

Interconnection Request and Upgrades	Upgrade Type	Allocated Cost	Upgrade Cost
	Current Study Total	$15,582,434	
GEN-2015-053			
Bloomfield-Gavins 115kV CKT 1 Rebuild approximately 17 miles of 115kV from Gavins - Bloomfield.	Current Study	$20,000,000	$20,000,000
GEN-2015-053 Interconnection Costs See One-Line Diagram.	Current Study	$1,000,000	$1,000,000
Holt County - Grand Island 345kV CKT 1 NRIS only required upgrade	Current Study	$60,000,000	$60,000,000
Sidney - Ogallala 230kV CKT 2 Build 70 miles of second circuit 230kV from Sidney to Ogallala	Current Study	$62,000,000	$62,000,000
Battle Creek-County Line 115kV CKT 1 Rebuild approximately 11 miles of 115kV from Battle Creek to County Line.	Previously Allocated		$4,000,000
County Line-Neligh East 115kV CKT 1 Rebuild approximately 12 miles of 115kV from County Line to Neligh East.	Previously Allocated		$8,050,000
Gentleman - Thedford 345kV CKT 1 Build approximately 76 Miles of 345kV from Gentleman to Thedford per SPP-NTC-200220 (Total Project E&C Cost Shown).	Previously Allocated		$311,717,040
Hoskins - Dixon County - Twin Church 230kV Rerate per NPPD Facility Study	Previously Allocated		$500,000
Hoskins - Neligh 345/115kV Projects Per SPP 2014 ITP NT and NTC 200253 for 6/1/2016 in-service.	Previously Allocated		$98,697,720
Nebraska City - Sibley 345kV CKT 1 Priority Project: Nebraska City - Mullin Creek - Sibley 345kV circuit 1 per SPP-NTC-20097 and SPP-NTC-20098 (Total Project E&C Cost Shown).	Previously Allocated		$336,433,874
Thedford - Holt County 345kV CKT 1 Build approximately 146 Miles of 345kV from Thedford to Holt County per SPP-NTC-200220 (Total Project E&C Cost Shown).	Previously Allocated		$311,717,040
Thedford 345/115kV Transformer CKT 1 Install Thedford 345/115kV transformer per SPP-NTC-200277 (Total Project E&C Cost Shown).	Previously Allocated		$311,717,040
Twin Church - Dixon County 230kV Increase conductor clearances to accommodate 320MVA facility rating	Previously Allocated		$100,000
	Current Study Total	$143,000,000	
GEN-2015-054			
Albion - Petersburg - North Petersburg 115kV CKT 1 Reconductor 115kV lines and replace all terminal equipment for at least a 193MVA rate.	Current Study	$3,500,000	$3,500,000

* Withdrawal of higher queued projects will cause a restudy and may result in higher costs

Interconnection Request and Upgrades	Upgrade Type	Allocated Cost	Upgrade Cost
Bloomfield-Gavins 115kV CKT 1 Rebuild approximately 17 miles of 115kV from Gavins - Bloomfield.	Current Study	$20,000,000	$20,000,000
GEN-2015-054 Interconnection Costs See One-Line Diagram.	Current Study	$1,000,000	$1,000,000
Holt County - Grand Island 345kV CKT 1 NRIS only required upgrade	Current Study	$60,000,000	$60,000,000
Meadow Grove - North Petersburg 115kV CKT 1 NRIS only required upgrade: Build approx. 25 miles of new 115kV circuit from Meadow Grove - N. Petersburg, expand N. Petersburg 115kV Sub and replace equip. at Neligh 115kV Sub.	Current Study	$16,200,000	$16,200,000
Sidney - Ogallala 230kV CKT 2 Build 70 miles of second circuit 230kV from Sidney to Ogallala	Current Study	$62,000,000	$62,000,000
Battle Creek-County Line 115kV CKT 1 Rebuild approximately 11 miles of 115kV from Battle Creek to County Line.	Previously Allocated		$4,000,000
County Line-Neligh East 115kV CKT 1 Rebuild approximately 12 miles of 115kV from County Line to Neligh East.	Previously Allocated		$8,050,000
Gentleman - Thedford 345kV CKT 1 Build approximately 76 Miles of 345kV from Gentleman to Thedford per SPP-NTC-200220 (Total Project E&C Cost Shown).	Previously Allocated		$311,717,040
Hoskins - Dixon County - Twin Church 230kV Rerate per NPPD Facility Study	Previously Allocated		$500,000
Hoskins - Neligh 345/115kV Projects Per SPP 2014 ITP NT and NTC 200253 for 6/1/2016 in-service.	Previously Allocated		$98,697,720
Nebraska City - Sibley 345kV CKT 1 Priority Project: Nebraska City - Mullin Creek - Sibley 345kV circuit 1 per SPP-NTC-20097 and SPP-NTC-20098 (Total Project E&C Cost Shown).	Previously Allocated		$336,433,874
Thedford - Holt County 345kV CKT 1 Build approximately 146 Miles of 345kV from Thedford to Holt County per SPP-NTC-200220 (Total Project E&C Cost Shown).	Previously Allocated		$311,717,040
Thedford 345/115kV Transformer CKT 1 Install Thedford 345/115kV transformer per SPP-NTC-200277 (Total Project E&C Cost Shown).	Previously Allocated		$311,717,040
Twin Church - Dixon County 230kV Increase conductor clearances to accommodate 320MVA facility rating	Previously Allocated		$100,000
	Current Study Total	$162,700,000	

GEN-2015-055

GEN-2015-055 Interconnection Costs See One-Line Diagram.	Current Study	$1,900,000	$1,900,000

* Withdrawal of higher queued projects will cause a restudy and may result in higher costs

Interconnection Request and Upgrades	Upgrade Type	Allocated Cost	Upgrade Cost
Anadarko - Sequoyah 138KV CKT 1 Rebuild approximately 1 mile of 138kV from Anadarko to Sequoyah	Previously Allocated		$700,000
Chisholm - Gracemont 345kV CKT 1 Per SPP-NTC-200255 and 200240 (Total Project E&C Cost Shown)	Previously Allocated		$162,952,357
Cornville Tap - Naples Tap 138kV CKT 1 Rebuild approximately 11 miles of 138kV from Cornville Tap to Naples Tap	Previously Allocated		$7,700,000
Naples Tap - Payne 138kV CKT 1 Rebuild approximately 8 miles of 138kV from Naples Tap to Payne	Previously Allocated		$5,600,000
Navajo - Snyder 69kV CKT 1 Rebuild approximately 15 miles of 69kV from Navajo to Snyder	Previously Allocated		$7,500,000
Oklaunion 345kV Reactive Power Install (2)-130Mvar Capacitor Bank(s) at Oklaunion	Previously Allocated		$10,000,000
Sequoyah - Cornville Tap 138kV CKT 1 Rebuild approximately 20 miles of 138kV from Sequoyah to Cornville Tap	Previously Allocated		$1,000,000
	Current Study Total	$1,900,000	
GEN-2015-056			
Deaf Smith - Plant X 230kV CKT 1 Replace wave trap at Deaf Smith	Current Study	$1,000,000	$1,000,000
GEN-2015-056 Interconnection Costs See One-Line Diagram.	Current Study	$5,080,273	$5,080,273
Amoco Wasson - Oxy Tap 230kV CKT 1 Replace line traps at both terminals	Previously Allocated		$200,000
Curry County - Bailey County 115kV CKT 1 Per 2012 ITP NT SPP-NTC-200166	Previously Allocated		$35,099,588
Elk City 230/138/13kV Transformer CKT 1 Replace terminal equipment for Elk City Transformer to achieve transformer limit of 450MVA.	Previously Allocated		$15,000,000
Kress Interchange - Swisher 115kV CKT 1 Replace terminal equipment	Previously Allocated		$500,000
National Enrichment Plant-Targa 115kV CKT 1 Rebuild approximately 4 miles of 115kV from National Enrichment Plant to Targa per 2015 ITPNT.	Previously Allocated		$2,909,669
Oklaunion 345kV Reactive Power Install (2)-130Mvar Capacitor Bank(s) at Oklaunion	Previously Allocated		$10,000,000

* Withdrawal of higher queued projects will cause a restudy and may result in higher costs

Interconnection Request and Upgrades	Upgrade Type	Allocated Cost	Upgrade Cost
Potash Junction 230/115 kV Ckt 1 Per HPILs SPP-NTC-200282 (Total Project E&C Cost Shown)	Previously Allocated		$3,508,346
Potash Junction 230kV Reactive Power Support Build Potash Junction 100Mvar Capacitor bank per 2015 ITPNT.	Previously Allocated		$6,465,875
Targa-Cardinal 115kV CKT 1 Rebuild approximately 3 miles of 115kV from Targa to Cardinal per 2015 ITPNT.	Previously Allocated		$2,049,062
Tolk - Plant X 230kV CKT 1 & 2 Rebuild circuit 1 and 2 betweek Tolk - Plant X 230kV to 1200 amps each.	Previously Allocated		$9,921,693
	Current Study Total	$6,080,273	
GEN-2015-057			
GEN-2015-057 Interconnection Costs See One-Line Diagram.	Current Study	$20,000	$20,000
Bucker - Spearville 345V CKT 1 Replace Terminal equipment	Previously Allocated		$1,480,238
Mathewson - Cimarron 345kV CKT 2 Build second 345kV circuit from Matthewson - Cimarron @ 3000 amps per ITP10.	Previously Allocated		$42,903,753
Stateline - Sweetwater 230kV CKT 1 Replace terminal equipment	Previously Allocated		$1,000,000
Woodward EHV Phase Shifting Transformer CKT 1 Install one phase shifting transformer at Woodward	Previously Allocated		$7,200,000
	Current Study Total	$20,000	
GEN-2015-058			
GEN-2015-058 Interconnection Costs See One-Line Diagram.	Current Study	$2,751,641	$2,751,641
Amoco Wasson - Oxy Tap 230kV CKT 1 Replace line traps at both terminals	Previously Allocated		$200,000
Curry County - Bailey County 115kV CKT 1 Per 2012 ITP NT SPP-NTC-200166	Previously Allocated		$35,099,588
Elk City 230/138/13kV Transformer CKT 1 Replace terminal equipment for Elk City Transformer to achieve transformer limit of 450MVA.	Previously Allocated		$15,000,000
Kress Interchange - Swisher 115kV CKT 1 Replace terminal equipment	Previously Allocated		$500,000

* Withdrawal of higher queued projects will cause a restudy and may result in higher costs

Interconnection Request and Upgrades	Upgrade Type	Allocated Cost	Upgrade Cost
National Enrichment Plant-Targa 115kV CKT 1 Rebuild approximately 4 miles of 115kV from National Enrichment Plant to Targa per 2015 ITPNT.	Previously Allocated		$2,909,669
Oklaunion 345kV Reactive Power Install (2)-130Mvar Capacitor Bank(s) at Oklaunion	Previously Allocated		$10,000,000
Potash Junction 230/115 kV Ckt 1 Per HPILs SPP-NTC-200282 (Total Project E&C Cost Shown)	Previously Allocated		$3,508,346
Potash Junction 230kV Reactive Power Support Build Potash Junction 100Mvar Capacitor bank per 2015 ITPNT.	Previously Allocated		$6,465,875
Targa-Cardinal 115kV CKT 1 Rebuild approximately 3 miles of 115kV from Targa to Cardinal per 2015 ITPNT.	Previously Allocated		$2,049,062
Tolk - Plant X 230kV CKT 1 & 2 Rebuild circuit 1 and 2 betweek Tolk - Plant X 230kV to 1200 amps each.	Previously Allocated		$9,921,693
	Current Study Total	$2,751,641	
GEN-2015-059			
GEN-2015-059 Interconnection Costs See One-Line Diagram.	Current Study	$0	$0
Bucker - Spearville 345V CKT 1 Replace Terminal equipment	Previously Allocated		$1,480,238
Mathewson - Cimarron 345kV CKT 2 Build second 345kV circuit from Matthewson - Cimarron @ 3000 amps per ITP10.	Previously Allocated		$42,903,753
Stateline - Sweetwater 230kV CKT 1 Replace terminal equipment	Previously Allocated		$1,000,000
Woodward EHV Phase Shifting Transformer CKT 1 Install one phase shifting transformer at Woodward	Previously Allocated		$7,200,000
	Current Study Total	$0	
GEN-2015-060			
GEN-2015-060 Interconnection Costs See One-Line Diagram.	Current Study	$943,000	$943,000
Bucker - Spearville 345V CKT 1 Replace Terminal equipment	Previously Allocated		$1,480,238
Mathewson - Cimarron 345kV CKT 2 Build second 345kV circuit from Matthewson - Cimarron @ 3000 amps per ITP10.	Previously Allocated		$42,903,753

* Withdrawal of higher queued projects will cause a restudy and may result in higher costs

Interconnection Request and Upgrades	Upgrade Type	Allocated Cost	Upgrade Cost
Stateline - Sweetwater 230kV CKT 1 Replace terminal equipment	Previously Allocated		$1,000,000
Tatonga - Mathewson 345kV CKT 2 NRIS only required upgrade: Build second 345kV circuit from Tatonga - Matthewson @ 3000 amps per ITP10.	Previously Allocated		$104,260,473
Woodward EHV Phase Shifting Transformer CKT 1 Install one phase shifting transformer at Woodward	Previously Allocated		$7,200,000
	Current Study Total	$943,000	
GEN-2015-061			
GEN-2015-061 Interconnection Costs See One-Line Diagram.	Current Study	$13,311,356	$13,311,356
Hitchland 345/230/13kV Tranformer CKT 3 NRIS only required upgrade: Build third 345/230/13kV Transformer	Current Study	$15,000,000	$15,000,000
Holt County - Grand Island 345kV CKT 1 NRIS only required upgrade: Reset Cts to achieve at least 844MVA	Current Study	$100,000	$100,000
Arnold - Ransom 115kV CKT 1 Replace terminal equipment and relay panels at Ransom Substation	Previously Allocated		$268,321
Bucker - Spearville 345V CKT 1 Replace Terminal equipment	Previously Allocated		$1,480,238
Mingo 345/115kV Transformer CKT 2 Build second 345/115/13.8kV transformer at Mingo per 2015 NT SPP-NTC-200325 (Total Project E&C Cost Shown)..	Previously Allocated		$10,696,692
	Current Study Total	$28,411,356	
GEN-2015-062			
GEN-2015-062 Interconnection Costs See One-Line Diagram.	Current Study	$0	$0
Fairfax 138/69kV CKT 1 Per AECI Affected System Study for DISIS-2012-002	Previously Allocated		$2,200,000
Remington - Fairfax 138KV CKT 1 Increase conductor clearance	Previously Allocated		$400,000
	Current Study Total	$0	
GEN-2015-063			
GEN-2015-063 Interconnection Costs See One-Line Diagram.	Current Study	$10,613,000	$10,613,000

* Withdrawal of higher queued projects will cause a restudy and may result in higher costs

Interconnection Request and Upgrades	Upgrade Type	Allocated Cost	Upgrade Cost
Fairfax 138/69kV CKT 1 Per AECI Affected System Study for DISIS-2012-002	Previously Allocated		$2,200,000
Remington - Fairfax 138KV CKT 1 Increase conductor clearance	Previously Allocated		$400,000
	Current Study Total	$10,613,000	
GEN-2015-064			
GEN-2015-064 Interconnection Costs See One-Line Diagram.	Current Study	$4,626,785	$4,626,785
Arnold - Ransom 115kV CKT 1 Replace terminal equipment and relay panels at Ransom Substation	Previously Allocated		$268,321
Bucker - Spearville 345V CKT 1 Replace Terminal equipment	Previously Allocated		$1,480,238
Mingo 345/115kV Transformer CKT 2 Build second 345/115/13.8kV transformer at Mingo per 2015 NT SPP-NTC-200325 (Total Project E&C Cost Shown)..	Previously Allocated		$10,696,692
	Current Study Total	$4,626,785	
GEN-2015-065			
GEN-2015-065 Interconnection Costs See One-Line Diagram.	Current Study	$13,311,356	$13,311,356
Arnold - Ransom 115kV CKT 1 Replace terminal equipment and relay panels at Ransom Substation	Previously Allocated		$268,321
Bucker - Spearville 345V CKT 1 Replace Terminal equipment	Previously Allocated		$1,480,238
Mingo 345/115kV Transformer CKT 2 Build second 345/115/13.8kV transformer at Mingo per 2015 NT SPP-NTC-200325 (Total Project E&C Cost Shown)..	Previously Allocated		$10,696,692
	Current Study Total	$13,311,356	
GEN-2015-066			
GEN-2015-066 Interconnection Costs See One-Line Diagram.	Current Study	$10,613,000	$10,613,000
Fairfax 138/69kV CKT 1 Per AECI Affected System Study for DISIS-2012-002	Previously Allocated		$2,200,000
Remington - Fairfax 138KV CKT 1 Increase conductor clearance	Previously Allocated		$400,000

* Withdrawal of higher queued projects will cause a restudy and may result in higher costs

Interconnection Request and Upgrades	Upgrade Type	Allocated Cost	Upgrade Cost
	Current Study Total	$10,613,000	
GEN-2015-067			
GEN-2015-067 Interconnection Costs See One-Line Diagram.	Current Study	$3,521,000	$3,521,000
Fairfax 138/69kV CKT 1 Per AECI Affected System Study for DISIS-2012-002	Previously Allocated		$2,200,000
Remington - Fairfax 138KV CKT 1 Increase conductor clearance	Previously Allocated		$400,000
	Current Study Total	$3,521,000	
GEN-2015-068			
Border - Chisholm 345kV CKT 2 Build approximately 25 miles of second circuit 345kV from Border - Chisholm	Current Study	$25,000,000	$25,000,000
Chisholm - Sweetwater 230kV CKT 1 Rebuild approximately 15 miles of 230kV from Chisholm - Sweetwater.	Current Study	$15,000,000	$15,000,000
Chisholm Substation Upgrade 345kV Expand planned Chisholm Substation to tap and terminate Woodward - Border 345kV into the Chisholm Substation	Current Study	$12,000,000	$12,000,000
GEN-2015-068 Interconnection Costs See One-Line Diagram.	Current Study	$3,303,965	$3,303,965
SP-Wolf Tap - LP-Doud Tap 115kV CKT 2 NRIS only required upgrade: Build apprioxmately 1.4 miles of sceond 115kV from SP-Wolf to LP-Doud. Affected System study required.	Current Study	$1,000,000	$1,000,000
SP-Wolf Tap - Yuma Interchange 115kV CKT 2 NRIS only required upgrade: Build apprioxmately 1 miles of sceond 115kV from SP-Wolf to Yuma. Affected System study required.	Current Study	$800,000	$800,000
TUCO 2 - Border 345kV CKT 2 Build approximately 194 miles of second circuit 345kV from TUCO 2 - Border	Current Study	$194,000,000	$194,000,000
Wolfforth Interchange 230/115/13.2kV Transformer CKT 1 NRIS only required upgrade: Replace existing Wolfforth Interchange Transformer	Current Study	$6,000,000	$6,000,000
Yuma Interchange - Wolfforth 115kV CKT 2 NRIS only required upgrade: Build apprioxmately 5 miles of sceond 115kV from Yuma - Wolfforth.	Current Study	$4,000,000	$4,000,000
2016 ITPNT Upgrades 2016 ITPNT Upgrades	Previously Allocated		$0
Amoco Switching Station - Sundown Interchange 230kV CKT 1 NRIS only required upgrade: Per SPP-NTC-200332	Previously Allocated		$411,000

* Withdrawal of higher queued projects will cause a restudy and may result in higher costs

Interconnection Request and Upgrades	Upgrade Type	Allocated Cost	Upgrade Cost
Amoco Wasson - Oxy Tap 230kV CKT 1 Replace line traps at both terminals	Previously Allocated		$200,000
Chisholm - Gracemont 345kV CKT 1 Per SPP-NTC-200255 and 200240 (Total Project E&C Cost Shown)	Previously Allocated		$162,952,357
Curry County - Bailey County 115kV CKT 1 Per 2012 ITP NT SPP-NTC-200166	Previously Allocated		$35,099,588
Elk City 230/138/13kV Transformer CKT 1 Replace terminal equipment for Elk City Transformer to achieve transformer limit of 450MVA.	Previously Allocated		$15,000,000
Kress Interchange - Swisher 115kV CKT 1 Replace terminal equipment	Previously Allocated		$500,000
National Enrichment Plant-Targa 115kV CKT 1 Rebuild approximately 4 miles of 115kV from National Enrichment Plant to Targa per 2015 ITPNT.	Previously Allocated		$2,909,669
Oklaunion 345kV Reactive Power Install (2)-130Mvar Capacitor Bank(s) at Oklaunion	Previously Allocated		$10,000,000
Potash Junction 230/115 kV Ckt 1 Per HPILs SPP-NTC-200282 (Total Project E&C Cost Shown)	Previously Allocated		$3,508,346
Potash Junction 230kV Reactive Power Support Build Potash Junction 100Mvar Capacitor bank per 2015 ITPNT.	Previously Allocated		$6,465,875
Stateline - Sweetwater 230kV CKT 1 Replace terminal equipment	Previously Allocated		$1,000,000
Targa-Cardinal 115kV CKT 1 Rebuild approximately 3 miles of 115kV from Targa to Cardinal per 2015 ITPNT.	Previously Allocated		$2,049,062
Tolk - Plant X 230kV CKT 1 & 2 Rebuild circuit 1 and 2 betweek Tolk - Plant X 230kV to 1200 amps each.	Previously Allocated		$9,921,693
TUCO Interchange - Jones 230kV CKT 1 NRIS only required upgrade: Replace line traps at both terminals	Previously Allocated		$400,000
Wolfforth - Sundown 230kV CKT 1 NRIS only required upgrade: Replace line traps at both terminals	Previously Allocated		$400,000
Wolfforth - Terry County 115kV CKT 1 NRIS only required upgrade: Replace terminal equipment to achieving conductor limit	Previously Allocated		$1,000,000
	Current Study Total	$261,103,965	

* Withdrawal of higher queued projects will cause a restudy and may result in higher costs

Interconnection Request and Upgrades	Upgrade Type	Allocated Cost	Upgrade Cost
GEN-2015-069			
Emporia Energy Center - Swissvale 345kV CKT 1 Replace terminal equipment to at least 1600 amps (Cost included in Swissvale - West Gardner 345kV Line Item)	Current Study	$0	$0
GEN-2015-069 Interconnection Costs See One-Line Diagram.	Current Study	$2,755,752	$2,755,752
Swissvale - West Gardner 345kV CKT 1 Replace terminal equipment to at least 1600 amps	Current Study	$1,000,000	$1,000,000
Fairfax 138/69kV CKT 1 Per AECI Affected System Study for DISIS-2012-002	Previously Allocated		$2,200,000
Remington - Fairfax 138KV CKT 1 Increase conductor clearance	Previously Allocated		$400,000
	Current Study Total	$3,755,752	
GEN-2015-071			
GEN-2015-071 Interconnection Costs See One-Line Diagram.	Current Study	$14,623,541	$14,623,541
Altus SW - Navajo 69kV CKT 1 Rebuild approximately 2.5 miles of 69kV from Atlus SW to Navajo	Previously Allocated		$1,250,000
Anadarko - Sequoyah 138KV CKT 1 Rebuild approximately 1 mile of 138kV from Anadarko to Sequoyah	Previously Allocated		$700,000
Chisholm - Gracemont 345kV CKT 1 Per SPP-NTC-200255 and 200240 (Total Project E&C Cost Shown)	Previously Allocated		$162,952,357
Cornville Tap - Naples Tap 138kV CKT 1 Rebuild approximately 11 miles of 138kV from Cornville Tap to Naples Tap	Previously Allocated		$7,700,000
Naples Tap - Payne 138kV CKT 1 Rebuild approximately 8 miles of 138kV from Naples Tap to Payne	Previously Allocated		$5,600,000
Navajo - Snyder 69kV CKT 1 Rebuild approximately 15 miles of 69kV from Navajo to Snyder	Previously Allocated		$7,500,000
Oklaunion 345kV Reactive Power Install (2)-130Mvar Capacitor Bank(s) at Oklaunion	Previously Allocated		$10,000,000
Sequoyah - Cornville Tap 138kV CKT 1 Rebuild approximately 20 miles of 138kV from Sequoyah to Cornville Tap	Previously Allocated		$1,000,000
	Current Study Total	$14,623,541	

* Withdrawal of higher queued projects will cause a restudy and may result in higher costs

Interconnection Request and Upgrades	Upgrade Type	Allocated Cost	Upgrade Cost
GEN-2015-072			
GEN-2015-072 Interconnection Costs See One-Line Diagram.	Current Study	$0	$0
Smokey Hills - Summit 230kV CKT 1 Rebuild approximately 39 miles of 230kV from Smokey Hills to Summit	Current Study	$36,000,000	$36,000,000
Smokey Hills - Summit 230kV CKT 1 Replace strutures to achieve at least 363MVA	Current Study	$400,000	$400,000
Arnold - Ransom 115kV CKT 1 Replace terminal equipment and relay panels at Ransom Substation	Previously Allocated		$268,321
Bucker - Spearville 345V CKT 1 Replace Terminal equipment	Previously Allocated		$1,480,238
Mingo 345/115kV Transformer CKT 2 Build second 345/115/13.8kV transformer at Mingo per 2015 NT SPP-NTC-200325 (Total Project E&C Cost Shown)..	Previously Allocated		$10,696,692
	Current Study Total	$36,400,000	
GEN-2015-073			
GEN-2015-073 Interconnection Costs See One-Line Diagram.	Current Study	$2,576,628	$2,576,628
Fairfax 138/69kV CKT 1 Per AECI Affected System Study for DISIS-2012-002	Previously Allocated		$2,200,000
Remington - Fairfax 138KV CKT 1 Increase conductor clearance	Previously Allocated		$400,000
	Current Study Total	$2,576,628	
GEN-2015-074			
GEN-2015-074 Interconnection Costs See One-Line Diagram.	Current Study	$15,551,378	$15,551,378
Nebraska City - Sibley 345kV CKT 1 Priority Project: Nebraska City - Mullin Creek - Sibley 345kV circuit 1 per SPP-NTC-20097 and SPP-NTC-20098 (Total Project E&C Cost Shown).	Previously Allocated		$336,433,874
	Current Study Total	$15,551,378	
GEN-2015-075			
Carlisle 115/69/13kV Transformer CKT 1 Replace existing Carlisle 115/69/13kV Transformer circuit #1	Current Study	$4,000,000	$4,000,000

* Withdrawal of higher queued projects will cause a restudy and may result in higher costs

Interconnection Request and Upgrades	Upgrade Type	Allocated Cost	Upgrade Cost
GEN-2015-075 Interconnection Costs See One-Line Diagram.	Current Study	$5,000,000	$5,000,000
SP-Wolf Tap - LP-Doud Tap 115kV CKT 2 NRIS only required upgrade: Build apprioxmately 1.4 miles of sceond 115kV from SP-Wolf to LP-Doud. Affected System study required.	Current Study	$1,000,000	$1,000,000
SP-Wolf Tap - Yuma Interchange 115kV CKT 2 NRIS only required upgrade: Build apprioxmately 1 miles of sceond 115kV from SP-Wolf to Yuma. Affected System study required.	Current Study	$800,000	$800,000
Wolfforth Interchange 230/115/13.2kV Transformer CKT 1 NRIS only required upgrade: Replace existing Wolfforth Interchange Transformer	Current Study	$6,000,000	$6,000,000
Yuma Interchange - Wolfforth 115kV CKT 2 NRIS only required upgrade: Build apprioxmately 5 miles of sceond 115kV from Yuma - Wolfforth.	Current Study	$4,000,000	$4,000,000
Amoco Switching Station - Sundown Interchange 230kV CKT 1 NRIS only required upgrade: Per SPP-NTC-200332	Previously Allocated		$411,000
TUCO Interchange - Jones 230kV CKT 1 NRIS only required upgrade: Replace line traps at both terminals	Previously Allocated		$400,000
Wolfforth - Sundown 230kV CKT 1 NRIS only required upgrade: Replace line traps at both terminals	Previously Allocated		$400,000
Wolfforth - Terry County 115kV CKT 1 NRIS only required upgrade: Replace terminal equipment to achieving conductor limit	Previously Allocated		$1,000,000
	Current Study Total	$20,800,000	

GEN-2015-076

Belden - Rasmussen 230kV CKT 1 NRIS only required upgrade: Build approximately 25 miles of new 230kV	Current Study	$25,000,000	$25,000,000
Belden 230/115/13kV Transformer CKT 1 NRIS only required upgrade: Build Belden 230kV yard and install Belden 230/115/13kV Transformer circuit #1	Current Study	$10,000,000	$10,000,000
Gavins Point - Yankon Junction 115kV CKT 1 Rebuild approximately 5 miles of 115kV from Gavins - Yankton.	Current Study	$2,500,000	$2,500,000
GEN-2015-076 Interconnection Costs See One-Line Diagram.	Current Study	$2,600,000	$2,600,000
Holt County - Grand Island 345kV CKT 1 NRIS only required upgrade	Current Study	$60,000,000	$60,000,000
Meadow Grove - North Petersburg 115kV CKT 1 NRIS only required upgrade: Build approx. 25 miles of new 115kV circuit from Meadow Grove - N. Petersburg, expand N. Petersburg 115kV Sub and replace equip. at Neligh 115kV Sub.	Current Study	$16,200,000	$16,200,000

* Withdrawal of higher queued projects will cause a restudy and may result in higher costs

Interconnection Request and Upgrades	Upgrade Type	Allocated Cost	Upgrade Cost
Sidney - Ogallala 230kV CKT 2 Build 70 miles of second circuit 230kV from Sidney to Ogallala	Current Study	$62,000,000	$62,000,000
Battle Creek-County Line 115kV CKT 1 Rebuild approximately 11 miles of 115kV from Battle Creek to County Line.	Previously Allocated		$4,000,000
County Line-Neligh East 115kV CKT 1 Rebuild approximately 12 miles of 115kV from County Line to Neligh East.	Previously Allocated		$8,050,000
Gentleman - Thedford 345kV CKT 1 Build approximately 76 Miles of 345kV from Gentleman to Thedford per SPP-NTC-200220 (Total Project E&C Cost Shown).	Previously Allocated		$311,717,040
Hoskins - Dixon County - Twin Church 230kV Rerate per NPPD Facility Study	Previously Allocated		$500,000
Hoskins - Neligh 345/115kV Projects Per SPP 2014 ITP NT and NTC 200253 for 6/1/2016 in-service.	Previously Allocated		$98,697,720
Nebraska City - Sibley 345kV CKT 1 Priority Project: Nebraska City - Mullin Creek - Sibley 345kV circuit 1 per SPP-NTC-20097 and SPP-NTC-20098 (Total Project E&C Cost Shown).	Previously Allocated		$336,433,874
Thedford - Holt County 345kV CKT 1 Build approximately 146 Miles of 345kV from Thedford to Holt County per SPP-NTC-200220 (Total Project E&C Cost Shown).	Previously Allocated		$311,717,040
Thedford 345/115kV Transformer CKT 1 Install Thedford 345/115kV transformer per SPP-NTC-200277 (Total Project E&C Cost Shown).	Previously Allocated		$311,717,040
Twin Church - Dixon County 230kV Increase conductor clearances to accommodate 320MVA facility rating	Previously Allocated		$100,000
	Current Study Total	$178,300,000	

GEN-2015-077

GEN-2015-077 Interconnection Costs See One-Line Diagram.	Current Study	$5,640,294	$5,640,294
Amoco Wasson - Oxy Tap 230kV CKT 1 Replace line traps at both terminals	Previously Allocated		$200,000
Curry County - Bailey County 115kV CKT 1 Per 2012 ITP NT SPP-NTC-200166	Previously Allocated		$35,099,588
Elk City 230/138/13kV Transformer CKT 1 Replace terminal equipment for Elk City Transformer to achieve transformer limit of 450MVA.	Previously Allocated		$15,000,000
Kress Interchange - Swisher 115kV CKT 1 Replace terminal equipment	Previously Allocated		$500,000

* Withdrawal of higher queued projects will cause a restudy and may result in higher costs

Interconnection Request and Upgrades	Upgrade Type	Allocated Cost	Upgrade Cost
National Enrichment Plant-Targa 115kV CKT 1 Rebuild approximately 4 miles of 115kV from National Enrichment Plant to Targa per 2015 ITPNT.	Previously Allocated		$2,909,669
Oklaunion 345kV Reactive Power Install (2)-130Mvar Capacitor Bank(s) at Oklaunion	Previously Allocated		$10,000,000
Potash Junction 230/115 kV Ckt 1 Per HPILs SPP-NTC-200282 (Total Project E&C Cost Shown)	Previously Allocated		$3,508,346
Potash Junction 230kV Reactive Power Support Build Potash Junction 100Mvar Capacitor bank per 2015 ITPNT.	Previously Allocated		$6,465,875
Targa-Cardinal 115kV CKT 1 Rebuild approximately 3 miles of 115kV from Targa to Cardinal per 2015 ITPNT.	Previously Allocated		$2,049,062
Tolk - Plant X 230kV CKT 1 & 2 Rebuild circuit 1 and 2 betweek Tolk - Plant X 230kV to 1200 amps each.	Previously Allocated		$9,921,693
	Current Study Total	$5,640,294	
GEN-2015-078			
GEN-2015-078 Interconnection Costs See One-Line Diagram.	Current Study	$1,082,325	$1,082,325
2016 ITPNT Upgrades 2016 ITPNT Upgrades	Previously Allocated		$0
Amoco Wasson - Oxy Tap 230kV CKT 1 Replace line traps at both terminals	Previously Allocated		$200,000
Curry County - Bailey County 115kV CKT 1 Per 2012 ITP NT SPP-NTC-200166	Previously Allocated		$35,099,588
Elk City 230/138/13kV Transformer CKT 1 Replace terminal equipment for Elk City Transformer to achieve transformer limit of 450MVA.	Previously Allocated		$15,000,000
Kress Interchange - Swisher 115kV CKT 1 Replace terminal equipment	Previously Allocated		$500,000
National Enrichment Plant-Targa 115kV CKT 1 Rebuild approximately 4 miles of 115kV from National Enrichment Plant to Targa per 2015 ITPNT.	Previously Allocated		$2,909,669
Oklaunion 345kV Reactive Power Install (2)-130Mvar Capacitor Bank(s) at Oklaunion	Previously Allocated		$10,000,000
Potash Junction 230/115 kV Ckt 1 Per HPILs SPP-NTC-200282 (Total Project E&C Cost Shown)	Previously Allocated		$3,508,346

* Withdrawal of higher queued projects will cause a restudy and may result in higher costs

Interconnection Request and Upgrades	Upgrade Type	Allocated Cost	Upgrade Cost
Potash Junction 230kV Reactive Power Support Build Potash Junction 100Mvar Capacitor bank per 2015 ITPNT.	Previously Allocated		$6,465,875
Targa-Cardinal 115kV CKT 1 Rebuild approximately 3 miles of 115kV from Targa to Cardinal per 2015 ITPNT.	Previously Allocated		$2,049,062
Tolk - Plant X 230kV CKT 1 & 2 Rebuild circuit 1 and 2 betweek Tolk - Plant X 230kV to 1200 amps each.	Previously Allocated		$9,921,693
	Current Study Total	$1,082,325	
GEN-2015-079			
Border Capacitor Bank(s) 345kV Build (4)-25Mvar steps of capacitor bank(s) for a total of 200Mvars at Border	Current Study	$8,000,000	$8,000,000
GEN-2015-079 Interconnection Costs See One-Line Diagram.	Current Study	$7,374,768	$7,374,768
Mustang 230/115/13.2KV Transformer CKT 2 NRIS only required upgrade: Build second Mustang 230/115 Transformer	Current Study	$6,000,000	$6,000,000
Amoco Wasson - Oxy Tap 230kV CKT 1 Replace line traps at both terminals	Previously Allocated		$200,000
Curry County - Bailey County 115kV CKT 1 Per 2012 ITP NT SPP-NTC-200166	Previously Allocated		$35,099,588
Elk City 230/138/13kV Transformer CKT 1 Replace terminal equipment for Elk City Transformer to achieve transformer limit of 450MVA.	Previously Allocated		$15,000,000
Kress Interchange - Swisher 115kV CKT 1 Replace terminal equipment	Previously Allocated		$500,000
National Enrichment Plant-Targa 115kV CKT 1 Rebuild approximately 4 miles of 115kV from National Enrichment Plant to Targa per 2015 ITPNT.	Previously Allocated		$2,909,669
Oklaunion 345kV Reactive Power Install (2)-130Mvar Capacitor Bank(s) at Oklaunion	Previously Allocated		$10,000,000
Potash Junction 230/115 kV Ckt 1 Per HPILs SPP-NTC-200282 (Total Project E&C Cost Shown)	Previously Allocated		$3,508,346
Potash Junction 230kV Reactive Power Support Build Potash Junction 100Mvar Capacitor bank per 2015 ITPNT.	Previously Allocated		$6,465,875
Targa-Cardinal 115kV CKT 1 Rebuild approximately 3 miles of 115kV from Targa to Cardinal per 2015 ITPNT.	Previously Allocated		$2,049,062

* Withdrawal of higher queued projects will cause a restudy and may result in higher costs

Interconnection Request and Upgrades	Upgrade Type	Allocated Cost	Upgrade Cost
Tolk - Plant X 230kV CKT 1 & 2 Rebuild circuit 1 and 2 betweek Tolk - Plant X 230kV to 1200 amps each.	Previously Allocated		$9,921,693
TUCO Interchange - Jones 230kV CKT 1 NRIS only required upgrade: Replace line traps at both terminals	Previously Allocated		$400,000
	Current Study Total	$21,374,768	
GEN-2015-080			
Border Capacitor Bank(s) 345kV Build (4)-25Mvar steps of capacitor bank(s) for a total of 200Mvars at Border	Current Study	$8,000,000	$8,000,000
GEN-2015-080 Interconnection Costs See One-Line Diagram.	Current Study	$7,374,768	$7,374,768
Mustang 230/115/13.2KV Transformer CKT 2 NRIS only required upgrade: Build second Mustang 230/115 Transformer	Current Study	$6,000,000	$6,000,000
Amoco Wasson - Oxy Tap 230kV CKT 1 Replace line traps at both terminals	Previously Allocated		$200,000
Curry County - Bailey County 115kV CKT 1 Per 2012 ITP NT SPP-NTC-200166	Previously Allocated		$35,099,588
Elk City 230/138/13kV Transformer CKT 1 Replace terminal equipment for Elk City Transformer to achieve transformer limit of 450MVA.	Previously Allocated		$15,000,000
Kress Interchange - Swisher 115kV CKT 1 Replace terminal equipment	Previously Allocated		$500,000
National Enrichment Plant-Targa 115kV CKT 1 Rebuild approximately 4 miles of 115kV from National Enrichment Plant to Targa per 2015 ITPNT.	Previously Allocated		$2,909,669
Oklaunion 345kV Reactive Power Install (2)-130Mvar Capacitor Bank(s) at Oklaunion	Previously Allocated		$10,000,000
Potash Junction 230/115 kV Ckt 1 Per HPILs SPP-NTC-200282 (Total Project E&C Cost Shown)	Previously Allocated		$3,508,346
Potash Junction 230kV Reactive Power Support Build Potash Junction 100Mvar Capacitor bank per 2015 ITPNT.	Previously Allocated		$6,465,875
Targa-Cardinal 115kV CKT 1 Rebuild approximately 3 miles of 115kV from Targa to Cardinal per 2015 ITPNT.	Previously Allocated		$2,049,062
Tolk - Plant X 230kV CKT 1 & 2 Rebuild circuit 1 and 2 betweek Tolk - Plant X 230kV to 1200 amps each.	Previously Allocated		$9,921,693

* Withdrawal of higher queued projects will cause a restudy and may result in higher costs

Interconnection Request and Upgrades	Upgrade Type	Allocated Cost	Upgrade Cost
TUCO Interchange - Jones 230kV CKT 1 NRIS only required upgrade: Replace line traps at both terminals	Previously Allocated		$400,000
	Current Study Total	$21,374,768	
GEN-2015-081			
GEN-2015-081 Interconnection Costs See One-Line Diagram.	Current Study	$3,005,000	$3,005,000
Bucker - Spearville 345V CKT 1 Replace Terminal equipment	Previously Allocated		$1,480,238
Mathewson - Cimarron 345kV CKT 2 Build second 345kV circuit from Matthewson - Cimarron @ 3000 amps per ITP10.	Previously Allocated		$42,903,753
Stateline - Sweetwater 230kV CKT 1 Replace terminal equipment	Previously Allocated		$1,000,000
Tatonga - Mathewson 345kV CKT 2 NRIS only required upgrade: Build second 345kV circuit from Tatonga - Matthewson @ 3000 amps per ITP10.	Previously Allocated		$104,260,473
Woodward EHV Phase Shifting Transformer CKT 1 Install one phase shifting transformer at Woodward	Previously Allocated		$7,200,000
	Current Study Total	$3,005,000	
GEN-2015-082			
GEN-2015-082 Interconnection Costs See One-Line Diagram.	Current Study	$1,930,000	$1,930,000
Hitchland 345/230/13kV Tranformer CKT 3 NRIS only required upgrade: Build third 345/230/13kV Transformer	Current Study	$15,000,000	$15,000,000
Potter County Interchange 345/230/13kV Transformer CKT 2 Build second 345/230/13kV transformer at Potter County	Current Study	$15,000,000	$15,000,000
Elk City 230/138/13kV Transformer CKT 1 Replace terminal equipment for Elk City Transformer to achieve transformer limit of 450MVA.	Previously Allocated		$15,000,000
Mathewson - Cimarron 345kV CKT 2 Build second 345kV circuit from Matthewson - Cimarron @ 3000 amps per ITP10.	Previously Allocated		$42,903,753
Tatonga - Mathewson 345kV CKT 2 NRIS only required upgrade: Build second 345kV circuit from Tatonga - Matthewson @ 3000 amps per ITP10.	Previously Allocated		$104,260,473
Woodward EHV Phase Shifting Transformer CKT 1 Install one phase shifting transformer at Woodward	Previously Allocated		$7,200,000

* Withdrawal of higher queued projects will cause a restudy and may result in higher costs

Interconnection Request and Upgrades	Upgrade Type	Allocated Cost	Upgrade Cost
	Current Study Total	$31,930,000	
GEN-2015-083			
GEN-2015-083 Interconnection Costs See One-Line Diagram.	Current Study	$6,713,963	$6,713,963
Fairfax 138/69kV CKT 1 Per AECI Affected System Study for DISIS-2012-002	Previously Allocated		$2,200,000
Remington - Fairfax 138KV CKT 1 Increase conductor clearance	Previously Allocated		$400,000
	Current Study Total	$6,713,963	
GEN-2015-084			
Bowers 115/69/13kV Transformer CKT 3 NRIS only required upgrade: Build third Elky City 115/69/13kV transformer	Current Study	$5,000,000	$5,000,000
GEN-2015-084 Interconnection Costs See One-Line Diagram.	Current Study	$14,665,056	$14,665,056
2016 ITPNT Upgrades 2016 ITPNT Upgrades	Previously Allocated		$0
Anadarko - Sequoyah 138KV CKT 1 Rebuild approximately 1 mile of 138kV from Anadarko to Sequoyah	Previously Allocated		$700,000
Cornville Tap - Naples Tap 138kV CKT 1 Rebuild approximately 11 miles of 138kV from Cornville Tap to Naples Tap	Previously Allocated		$7,700,000
Naples Tap - Payne 138kV CKT 1 Rebuild approximately 8 miles of 138kV from Naples Tap to Payne	Previously Allocated		$5,600,000
Navajo - Snyder 69kV CKT 1 Rebuild approximately 15 miles of 69kV from Navajo to Snyder	Previously Allocated		$7,500,000
Oklaunion 345kV Reactive Power Install (2)-130Mvar Capacitor Bank(s) at Oklaunion	Previously Allocated		$10,000,000
Sequoyah - Cornville Tap 138kV CKT 1 Rebuild approximately 20 miles of 138kV from Sequoyah to Cornville Tap	Previously Allocated		$1,000,000
	Current Study Total	$19,665,056	
GEN-2015-085			
GEN-2015-085 Interconnection Costs See One-Line Diagram.	Current Study	$8,406,414	$8,406,414

* Withdrawal of higher queued projects will cause a restudy and may result in higher costs

Interconnection Request and Upgrades	Upgrade Type	Allocated Cost	Upgrade Cost
GEN-2015-085 Tap - Altus Junction 138kV CKT 1 Build approximately 15 miles of new 138kV from GEN-2015-085 Tap to Altus Junction	Current Study	$15,000,000	$15,000,000
2016 ITPNT Upgrades 2016 ITPNT Upgrades	Previously Allocated		$0
Anadarko - Sequoyah 138KV CKT 1 Rebuild approximately 1 mile of 138kV from Anadarko to Sequoyah	Previously Allocated		$700,000
Cornville Tap - Naples Tap 138kV CKT 1 Rebuild approximately 11 miles of 138kV from Cornville Tap to Naples Tap	Previously Allocated		$7,700,000
Naples Tap - Payne 138kV CKT 1 Rebuild approximately 8 miles of 138kV from Naples Tap to Payne	Previously Allocated		$5,600,000
Navajo - Snyder 69kV CKT 1 Rebuild approximately 15 miles of 69kV from Navajo to Snyder	Previously Allocated		$7,500,000
Oklaunion 345kV Reactive Power Install (2)-130Mvar Capacitor Bank(s) at Oklaunion	Previously Allocated		$10,000,000
Sequoyah - Cornville Tap 138kV CKT 1 Rebuild approximately 20 miles of 138kV from Sequoyah to Cornville Tap	Previously Allocated		$1,000,000
	Current Study Total	$23,406,414	
GEN-2015-087			
GEN-2015-087 Interconnection Costs See One-Line Diagram.	Current Study	$5,300,000	$5,300,000
Battle Creek-County Line 115kV CKT 1 Rebuild approximately 11 miles of 115kV from Battle Creek to County Line.	Previously Allocated		$4,000,000
County Line-Neligh East 115kV CKT 1 Rebuild approximately 12 miles of 115kV from County Line to Neligh East.	Previously Allocated		$8,050,000
Gentleman - Thedford 345kV CKT 1 Build approximately 76 Miles of 345kV from Gentleman to Thedford per SPP-NTC-200220 (Total Project E&C Cost Shown).	Previously Allocated		$311,717,040
Hoskins - Dixon County - Twin Church 230kV Rerate per NPPD Facility Study	Previously Allocated		$500,000
Hoskins - Neligh 345/115kV Projects Per SPP 2014 ITP NT and NTC 200253 for 6/1/2016 in-service.	Previously Allocated		$98,697,720
Nebraska City - Sibley 345kV CKT 1 Priority Project: Nebraska City - Mullin Creek - Sibley 345kV circuit 1 per SPP-NTC-20097 and SPP-NTC-20098 (Total Project E&C Cost Shown).	Previously Allocated		$336,433,874

* Withdrawal of higher queued projects will cause a restudy and may result in higher costs

Interconnection Request and Upgrades	Upgrade Type	Allocated Cost	Upgrade Cost
Thedford - Holt County 345kV CKT 1 Build approximately 146 Miles of 345kV from Thedford to Holt County per SPP-NTC-200220 (Total Project E&C Cost Shown).	Previously Allocated		$311,717,040
Thedford 345/115kV Transformer CKT 1 Install Thedford 345/115kV transformer per SPP-NTC-200277 (Total Project E&C Cost Shown).	Previously Allocated		$311,717,040
Twin Church - Dixon County 230kV Increase conductor clearances to accommodate 320MVA facility rating	Previously Allocated		$100,000
	Current Study Total	$5,300,000	
GEN-2015-088			
GEN-2015-088 Interconnection Costs See One-Line Diagram.	Current Study	$15,000,000	$15,000,000
Battle Creek-County Line 115kV CKT 1 Rebuild approximately 11 miles of 115kV from Battle Creek to County Line.	Previously Allocated		$4,000,000
County Line-Neligh East 115kV CKT 1 Rebuild approximately 12 miles of 115kV from County Line to Neligh East.	Previously Allocated		$8,050,000
Gentleman - Thedford 345kV CKT 1 Build approximately 76 Miles of 345kV from Gentleman to Thedford per SPP-NTC-200220 (Total Project E&C Cost Shown).	Previously Allocated		$311,717,040
Hoskins - Dixon County - Twin Church 230kV Rerate per NPPD Facility Study	Previously Allocated		$500,000
Hoskins - Neligh 345/115kV Projects Per SPP 2014 ITP NT and NTC 200253 for 6/1/2016 in-service.	Previously Allocated		$98,697,720
Nebraska City - Sibley 345kV CKT 1 Priority Project: Nebraska City - Mullin Creek - Sibley 345kV circuit 1 per SPP-NTC-20097 and SPP-NTC-20098 (Total Project E&C Cost Shown).	Previously Allocated		$336,433,874
Thedford - Holt County 345kV CKT 1 Build approximately 146 Miles of 345kV from Thedford to Holt County per SPP-NTC-200220 (Total Project E&C Cost Shown).	Previously Allocated		$311,717,040
Thedford 345/115kV Transformer CKT 1 Install Thedford 345/115kV transformer per SPP-NTC-200277 (Total Project E&C Cost Shown).	Previously Allocated		$311,717,040
Twin Church - Dixon County 230kV Increase conductor clearances to accommodate 320MVA facility rating	Previously Allocated		$100,000
	Current Study Total	$15,000,000	
GEN-2015-090			
GEN-2015-090 Interconnection Costs See One-Line Diagram.	Current Study	$10,000	$10,000

* Withdrawal of higher queued projects will cause a restudy and may result in higher costs

Interconnection Request and Upgrades	Upgrade Type	Allocated Cost	Upgrade Cost
Wichita 345/13/13kV Transformer CKT 1 NRIS only required upgrade: Replace Wichita 345/138/13kV transformer circuit #1	Current Study	$18,000,000	$18,000,000
Fairfax 138/69kV CKT 1 Per AECI Affected System Study for DISIS-2012-002	Previously Allocated		$2,200,000
Remington - Fairfax 138KV CKT 1 Increase conductor clearance	Previously Allocated		$400,000
	Current Study Total	$18,010,000	
GEN-2015-091			
GEN-2015-091 Interconnection Costs See One-Line Diagram.	Current Study	$3,224,682	$3,224,682
MISO Affected System Study See section 4 power flow analysis.	Current Study	$TBD	$TBD
	Current Study Total	$3,224,682	
GEN-2015-092			
GEN-2015-092 Interconnection Costs See One-Line Diagram.	Current Study	$1,110,612	$1,110,612
	Current Study Total	$1,110,612	
GEN-2015-093			
GEN-2015-093 Interconnection Costs See One-Line Diagram.	Current Study	$2,125,000	$2,125,000
Bucker - Spearville 345V CKT 1 Replace Terminal equipment	Previously Allocated		$1,480,238
Mathewson - Cimarron 345kV CKT 2 Build second 345kV circuit from Matthewson - Cimarron @ 3000 amps per ITP10.	Previously Allocated		$42,903,753
Stateline - Sweetwater 230kV CKT 1 Replace terminal equipment	Previously Allocated		$1,000,000
Woodward EHV Phase Shifting Transformer CKT 1 Install one phase shifting transformer at Woodward	Previously Allocated		$7,200,000
	Current Study Total	$2,125,000	
GEN-2015-094			
Chappel - Colton 115kV CKT 1 NRIS only require upgrade to achieve at least 115MVA	Current Study	$6,000,000	$6,000,000

* Withdrawal of higher queued projects will cause a restudy and may result in higher costs

Interconnection Request and Upgrades	Upgrade Type	Allocated Cost	Upgrade Cost
Colton - Sidney 115kV CKT 1 NRIS only require upgrade to achieve at least 115MVA	Current Study	$2,500,000	$2,500,000
GEN-2015-094 Interconnection Costs See One-Line Diagram.	Current Study	$7,916,350	$7,916,350
Gerald Gentleman Station Flowgate Stability Limit Mitigation Mitigation for GGS Flowgate Stability Limit. TBD in the Facilities Study with NPPD.	Current Study	$TBD	$TBD
Holt County - Grand Island 345kV CKT 1 NRIS only required upgrade: Reset Cts to achieve at least 844MVA	Current Study	$100,000	$100,000
Ogallala - Gerald Gentleman Station 230kV CKT 1 Replace terminal equipment and increase line clearance.	Current Study	$500,000	$500,000
Sidney - Ogallala 230kV CKT 2 Build 70 miles of second circuit 230kV from Sidney to Ogallala	Current Study	$62,000,000	$62,000,000
Sidney 230/115/13kV Transformer CKT 1 NRIS only required upgrade: Replace Sidney 230/115/13kV Transformer circuit #1 to at least 150MVA	Current Study	$3,276,500	$3,276,500
Battle Creek-County Line 115kV CKT 1 Rebuild approximately 11 miles of 115kV from Battle Creek to County Line.	Previously Allocated		$4,000,000
County Line-Neligh East 115kV CKT 1 Rebuild approximately 12 miles of 115kV from County Line to Neligh East.	Previously Allocated		$8,050,000
Gentleman - Thedford 345kV CKT 1 Build approximately 76 Miles of 345kV from Gentleman to Thedford per SPP-NTC-200220 (Total Project E&C Cost Shown).	Previously Allocated		$311,717,040
Hoskins - Dixon County - Twin Church 230kV Rerate per NPPD Facility Study	Previously Allocated		$500,000
Hoskins - Neligh 345/115kV Projects Per SPP 2014 ITP NT and NTC 200253 for 6/1/2016 in-service.	Previously Allocated		$98,697,720
Nebraska City - Sibley 345kV CKT 1 Priority Project: Nebraska City - Mullin Creek - Sibley 345kV circuit 1 per SPP-NTC-20097 and SPP-NTC-20098 (Total Project E&C Cost Shown).	Previously Allocated		$336,433,874
Thedford - Holt County 345kV CKT 1 Build approximately 146 Miles of 345kV from Thedford to Holt County per SPP-NTC-200220 (Total Project E&C Cost Shown).	Previously Allocated		$311,717,040
Thedford 345/115kV Transformer CKT 1 Install Thedford 345/115kV transformer per SPP-NTC-200277 (Total Project E&C Cost Shown).	Previously Allocated		$311,717,040
Twin Church - Dixon County 230kV Increase conductor clearances to accommodate 320MVA facility rating	Previously Allocated		$100,000
	Current Study Total	$82,292,850	

* Withdrawal of higher queued projects will cause a restudy and may result in higher costs

Interconnection Request and Upgrades	Upgrade Type	Allocated Cost	Upgrade Cost
GEN-2015-095			
GEN-2015-095 Interconnection Costs See One-Line Diagram.	Current Study	$4,400,000	$4,400,000
GEN-2015-095 Tap - Rose Valley 138kV CKT 1 Rebuild approximately 14 miles of 138kV from Rose Valley to GEN-2015-095 Tap	Current Study	$10,000,000	$10,000,000
Noel SW - Rose Valley 138kV CKT 1 Rebuild approximately 7 miles of 138kV from Noel SW to Rose Valley	Current Study	$5,000,000	$5,000,000
Bucker - Spearville 345V CKT 1 Replace Terminal equipment	Previously Allocated		$1,480,238
Mathewson - Cimarron 345kV CKT 2 Build second 345kV circuit from Matthewson - Cimarron @ 3000 amps per ITP10.	Previously Allocated		$42,903,753
Stateline - Sweetwater 230kV CKT 1 Replace terminal equipment	Previously Allocated		$1,000,000
Woodward EHV Phase Shifting Transformer CKT 1 Install one phase shifting transformer at Woodward	Previously Allocated		$7,200,000
	Current Study Total	$19,400,000	
GEN-2015-096			
Dickinson 230/115/13.8kV CKT 2 NRIS only required upgrade: Build new 230/115/13.8kV Transformer circuit #2 at Dickinson.	Current Study	$3,500,000	$3,500,000
GEN-2015-096 Interconnection Costs See One-Line Diagram.	Current Study	$0	$0
GI-2009-001 Tap - Watertown 345kV CKT 1 NRIS only required upgrade: Build a second GI-2009-001 Tap - Watertown 345kV circuit.	Current Study	$53,071,200	$53,071,200
MISO Affected System Study See section 4 power flow analysis.	Current Study	$TBD	$TBD
	Current Study Total	$56,571,200	
GEN-2015-097			
Bristol - Summit 115kV CKT 1 NRIS only required upgrade: Rebuild approximately 32 miles of 115kV.	Current Study	$26,048,000	$26,048,000
Brookings - Watertown 115kV CKT 1 NRIS only required upgrade: Rebuild approximately 50 miles of 115kV.	Current Study	$40,336,000	$40,336,000

* Withdrawal of higher queued projects will cause a restudy and may result in higher costs

Interconnection Request and Upgrades	Upgrade Type	Allocated Cost	Upgrade Cost
GEN-2015-097 Interconnection Costs See One-Line Diagram.	Current Study	$3,000,000	$3,000,000
GI-2013-009 Tap - Summit 115kV CKT 1 NRIS only required upgrade: Rebuild approximately 4 miles of 115kV from GI-2013-009 Tap - Summit.	Current Study	$3,200,000	$3,200,000
GI-2013-009 Tap - Watertown 115kV CKT 1 Rebuild approximately 26 miles of 115kV from GI-2013-009 Tap - Watertown.	Current Study	$21,360,000	$21,360,000
Groton - Bristol 115kV CKT 1 NRIS only required upgrade: Rebuild approximately 21 miles of 115kV.	Current Study	$17,040,000	$17,040,000
Hanlon 69kV Reactive Support Install (1) 10Mvar Capacitor Bank at Hanlon 69kV.	Current Study	$500,000	$500,000
MISO Affected System Study See section 4 power flow analysis.	Current Study	$TBD	$TBD
Split Rock - White 345kV CKT 1 NRIS only required upgrade: Replace terminal equipment.	Current Study	$500,000	$500,000
Watertown 345/230/13.8kV CKT 1 NRIS only required upgrade: Replace Watertown 345/230/13.8kV Transformer circuit #1.	Current Study	$14,000,000	$14,000,000
	Current Study Total	$125,984,000	
GEN-2015-098			
Dawson Creek - Fallon 115kV CKT 1 NRIS only required upgrade: Replace terminal equipment.	Current Study	$500,000	$500,000
Dickinson 230/115/13.8kV CKT 2 NRIS only required upgrade: Build new 230/115/13.8kV Transformer circuit #2 at Dickinson.	Current Study	$3,500,000	$3,500,000
GEN-2015-098 Interconnection Costs See One-Line Diagram.	Current Study	$3,000,000	$3,000,000
Hanlon 69kV Reactive Support Install (1) 10Mvar Capacitor Bank at Hanlon 69kV.	Current Study	$500,000	$500,000
MISO Affected System Study See section 4 power flow analysis.	Current Study	$TBD	$TBD
	Current Study Total	$7,500,000	

TOTAL CURRENT STUDY COSTS: $2,450,006,205*

* Does not include cost to mitigate GGS Stability Flowgate Limitation Network Upgrade and possible AECI and MISO Affected System Upgrades cost estimates

* Withdrawal of higher queued projects will cause a restudy and may result in higher costs

11.7 F: Cost Allocation per Proposed Study Network Upgrade

Important Note:

****WITHDRAWAL OF HIGHER QUEUED PROJECTS WILL CAUSE A RESTUDY AND MAY RESULT IN HIGHER INTERCONNECTION COSTS****

This section shows each Direct Assigned Facility and Network Upgrade and the Generation Interconnection Request Customer(s) which have an impact in this study assuming all higher queued projects remain in the queue and achieve commercial operation.

The required interconnection costs listed do not include all costs associated with the deliverability of the energy to final customers. These costs are determined by separate studies if the Customer submits a Transmission Service Request through SPP's Open Access Same Time Information System (OASIS) as required by Attachment Z1 of the SPP OATT. In addition, costs associated with a short circuit analysis will be allocated should the Interconnection Request Customer choose to execute a Facility Study Agreement.

There may be additional costs allocated to each Customer. See Appendix E for more details.

Appendix F. Cost Allocation by Upgrade

Antelope 345/115/13kV Transformer CKT 2			**$12,000,000**
Build and install Antelope 345/115/13kV Transformer circuit #2			
	GEN-2015-042	$652,841	
	GEN-2015-053	$4,218,136	
	GEN-2015-054	$6,242,841	
	GEN-2015-076	$886,182	
	Total Allocated Costs	**$12,000,000**	
Appledorn - Watertown 230kV CKT 1			**$500,000**
NRIS only required upgrade: Replace terminal equipment.			
	GEN-2015-097	$500,000	
	Total Allocated Costs	**$500,000**	
ASGI-2015-006 Interconnection Costs			**$0**
See One-Line Diagram.			
	ASGI-2015-006	$0	
	Total Allocated Costs	**$0**	

* Withdrawal of higher queued projects will cause a restudy and may result in higher costs

Beaver County - Grapevine 345kV CKT 1		**$75,000,000**
Build approximately 75 miles of new 345kV from Beaver County - Grapevine		
	GEN-2014-037	$8,502,848
	GEN-2014-038	$4,568,038
	GEN-2014-046	$3,853,462
	GEN-2015-018	$2,421,207
	GEN-2015-020	$3,019,527
	GEN-2015-031	$8,949,668
	GEN-2015-033	$3,912,637
	GEN-2015-039	$1,532,454
	GEN-2015-040	$1,536,393
	GEN-2015-056	$3,179,758
	GEN-2015-058	$1,545,020
	GEN-2015-068	$8,862,748
	GEN-2015-075	$1,545,467
	GEN-2015-077	$2,440,476
	GEN-2015-078	$1,535,518
	GEN-2015-079	$3,970,684
	GEN-2015-080	$3,970,684
	GEN-2015-082	$9,653,410
	Total Allocated Costs	**$75,000,000**
Belden - Rasmussen 230kV CKT 1		**$25,000,000**
Build approximately 25 miles of new 230kV		
	GEN-2015-042	$13,930,273
	GEN-2015-076	$11,061,119
	GEN-2015-094	$8,608
	Total Allocated Costs	**$25,000,000**
Belden 230/115/13kV Transformer CKT 1		**$10,000,000**
Build Belden 230kV yard and install Belden 230/115/13kV Transformer circuit #1		
	GEN-2015-042	$2,544,881
	GEN-2015-053	$99,070
	GEN-2015-054	$146,624
	GEN-2015-076	$7,148,781
	GEN-2015-094	$60,645
	Total Allocated Costs	**$10,000,000**

* Withdrawal of higher queued projects will cause a restudy and may result in higher costs

Beulah - Stanton Tap 115kV CKT 1		**$17,910,400**
NRIS only required upgrade: Rebuild approximately 22 miles of 115kV.		
GEN-2015-096	$11,348,583	
GEN-2015-098	$6,561,817	
Total Allocated Costs	**$17,910,400**	
Blair - Granite Falls 230kV CKT 1		**$500,000**
NRIS only required upgrade: Replace terminal equipment.		
GEN-2015-097	$500,000	
Total Allocated Costs	**$500,000**	
Blaisdell 230/115/13.8kV CKT 1		**$5,000,000**
NRIS only required upgrade: Replace Blaisdell 230/115/13.8kV Transformer circuit #1.		
GEN-2015-046	$5,000,000	
Total Allocated Costs	**$5,000,000**	
Border - Chisholm 345kV CKT 2		**$25,000,000**
Build approximately 25 miles of second circuit 345kV from Border - Chisholm		
GEN-2014-046	$1,704,423	
GEN-2015-018	$1,028,701	
GEN-2015-020	$1,301,998	
GEN-2015-031	$3,514,807	
GEN-2015-033	$2,267,481	
GEN-2015-039	$500,559	
GEN-2015-040	$711,953	
GEN-2015-056	$1,376,271	
GEN-2015-058	$689,835	
GEN-2015-068	$5,543,296	
GEN-2015-075	$835,873	
GEN-2015-077	$1,166,918	
GEN-2015-078	$714,846	
GEN-2015-079	$1,821,519	
GEN-2015-080	$1,821,519	
Total Allocated Costs	**$25,000,000**	

* Withdrawal of higher queued projects will cause a restudy and may result in higher costs

Border 345kV Reactive Power Support			**$30,000,000**
Install (6)-50Mvar Capacitor Bank(s) and +250Mvar SVC at Border Substation			
	GEN-2014-046	$1,908,618	
	GEN-2015-018	$1,176,600	
	GEN-2015-020	$1,481,421	
	GEN-2015-031	$4,181,111	
	GEN-2015-033	$4,686,606	
	GEN-2015-039	$634,862	
	GEN-2015-040	$786,183	
	GEN-2015-041	$142,346	
	GEN-2015-056	$1,538,000	
	GEN-2015-058	$768,427	
	GEN-2015-068	$5,710,912	
	GEN-2015-075	$886,095	
	GEN-2015-077	$1,278,243	
	GEN-2015-078	$788,358	
	GEN-2015-079	$2,016,109	
	GEN-2015-080	$2,016,109	
	Total Allocated Costs	**$30,000,000**	
Bristol - Summit 115kV CKT 1			**$26,048,000**
NRIS only required upgrade: Rebuild approximately 32 miles of 115kV.			
	GEN-2015-097	$26,048,000	
	Total Allocated Costs	**$26,048,000**	
Brookings - Watertown 115kV CKT 1			**$40,336,000**
NRIS only required upgrade: Rebuild approximately 50 miles of 115kV.			
	GEN-2015-097	$40,336,000	
	Total Allocated Costs	**$40,336,000**	
Carlisle 115/69/13kV Transformer CKT 1			**$4,000,000**
Replace existing Carlisle 115/69/13kV Transformer circuit #1			
	GEN-2015-075	$4,000,000	
	Total Allocated Costs	**$4,000,000**	

* Withdrawal of higher queued projects will cause a restudy and may result in higher costs

Chappel - Colton 115kV CKT 1		**$6,000,000**
NRIS only require upgrade to achieve at least 115MVA		
GEN-2014-059	$1,994,926	
GEN-2015-094	$4,005,074	
Total Allocated Costs	**$6,000,000**	
Chisholm - Sweetwater 230kV CKT 1		**$15,000,000**
NRIS only required: Rebuild approximately 15 miles of 230kV from Chisholm - Sweetwater.		
GEN-2015-084	$15,000,000	
Total Allocated Costs	**$15,000,000**	
Chisholm Substation Upgrade 345kV		**$12,000,000**
Expand planned Chisholm Substation to tap and terminate Woodward - Border 345kV into the Chisholm Substation		
GEN-2014-037	$59,740	
GEN-2014-038	$21,109	
GEN-2014-046	$801,627	
GEN-2015-018	$483,820	
GEN-2015-020	$612,307	
GEN-2015-031	$1,653,090	
GEN-2015-033	$1,066,446	
GEN-2015-039	$235,424	
GEN-2015-040	$334,822	
GEN-2015-056	$647,290	
GEN-2015-058	$324,444	
GEN-2015-068	$2,607,133	
GEN-2015-075	$393,129	
GEN-2015-077	$548,827	
GEN-2015-078	$336,208	
GEN-2015-079	$856,700	
GEN-2015-080	$856,700	
GEN-2015-082	$161,185	
Total Allocated Costs	**$12,000,000**	

* Withdrawal of higher queued projects will cause a restudy and may result in higher costs

Chisholm - Elk City 230kV CKT 1 **$15,000,000**

Rebuild approximately 15 miles of 230kV from Chisholm - Elk City.

GEN-2014-046	$1,099,342
GEN-2015-018	$705,629
GEN-2015-020	$881,576
GEN-2015-031	$2,683,378
GEN-2015-033	$983,549
GEN-2015-039	$445,543
GEN-2015-040	$438,058
GEN-2015-041	$22,730
GEN-2015-056	$883,929
GEN-2015-058	$437,491
GEN-2015-068	$2,574,791
GEN-2015-075	$447,361
GEN-2015-077	$698,881
GEN-2015-078	$437,981
GEN-2015-079	$1,129,881
GEN-2015-080	$1,129,881
Total Allocated Costs	**$15,000,000**

* Withdrawal of higher queued projects will cause a restudy and may result in higher costs

Cimarron - Minco 345kV CKT 1 **$1,000,000**

Replace 1600 amp switches.

GEN-2014-046	$33,788
GEN-2015-018	$21,014
GEN-2015-020	$26,374
GEN-2015-031	$76,701
GEN-2015-033	$51,432
GEN-2015-039	$12,288
GEN-2015-040	$13,898
GEN-2015-041	$1,466
GEN-2015-044	$24,485
GEN-2015-048	$8,319
GEN-2015-056	$26,992
GEN-2015-057	$122,423
GEN-2015-058	$13,592
GEN-2015-059	$7,713
GEN-2015-060	$5,612
GEN-2015-068	$87,958
GEN-2015-075	$14,512
GEN-2015-077	$22,097
GEN-2015-078	$13,880
GEN-2015-079	$35,741
GEN-2015-080	$35,741
GEN-2015-081	$11,112
GEN-2015-082	$39,138
GEN-2015-084	$21,601
GEN-2015-085	$70,245
GEN-2015-093	$200,182
GEN-2015-095	$1,698
Total Allocated Costs	**$1,000,000**

* Withdrawal of higher queued projects will cause a restudy and may result in higher costs

Cleo Corner - Cleo Plant Tap 138kV CKT 1		**$500,000**
Replace terminal equipment to at least 1200 amps		
GEN-2015-048	$403,112	
GEN-2015-060	$22,146	
GEN-2015-081	$7,647	
GEN-2015-095	$67,095	
Total Allocated Costs	**$500,000**	
Cleveland - Cleveland 138kV CKT Z1		**$250,000**
Replace Cleveland - Cleveland bus tie terminal equipment to at least 1800 amps. AECI Affected System Study is required		
GEN-2015-034	$54,623	
GEN-2015-045	$1,174	
GEN-2015-047	$105,345	
GEN-2015-052	$38,004	
GEN-2015-063	$29,935	
GEN-2015-084	$4,254	
GEN-2015-085	$1,992	
GEN-2015-092	$14,673	
Total Allocated Costs	**$250,000**	
Cleveland - Silver City 138kV CKT 1		**$10,560,000**
Rebuild approximately 22 miles of 138kV from Cleveland to Silver City. AECI Affected System Study is required		
GEN-2015-034	$2,281,032	
GEN-2015-045	$92,418	
GEN-2015-047	$4,158,798	
GEN-2015-052	$1,349,011	
GEN-2015-063	$1,523,520	
GEN-2015-092	$1,155,222	
Total Allocated Costs	**$10,560,000**	
Colton - Sidney 115kV CKT 1		**$2,500,000**
NRIS only require upgrade to achieve at least 115MVA		
GEN-2014-059	$831,219	
GEN-2015-094	$1,668,781	
Total Allocated Costs	**$2,500,000**	

* Withdrawal of higher queued projects will cause a restudy and may result in higher costs

Columbus East 230/115/13kV Transformer CKT 1		**$10,000,000**
NRIS only rquired upgrade: Replace Columbus East 230/115/13kV Transformer circuit #1		
GEN-2015-042	$4,278,888	
GEN-2015-053	$1,434,993	
GEN-2015-054	$2,123,790	
GEN-2015-076	$2,162,329	
Total Allocated Costs	**$10,000,000**	
Daglum - Dickinson 230kV CKT 1		**$28,000,000**
Build new 230kV line from Daglum - Dickinson.		
GEN-2015-091	$10,215,062	
GEN-2015-096	$15,140,902	
GEN-2015-098	$2,644,037	
Total Allocated Costs	**$28,000,000**	
Dawson Creek - Fallon 115kV CKT 1		**$500,000**
NRIS only required upgrade: Replace terminal equipment.		
GEN-2015-098	$500,000	
Total Allocated Costs	**$500,000**	
Deaf Smith - GEN-2015-039 Tap 230kV CKT 1		**$1,000,000**
Replace terminal equipment		
GEN-2015-039	$1,000,000	
Total Allocated Costs	**$1,000,000**	
Dickinson 230/115/13.8kV CKT 2		**$3,500,000**
Build new 230/115/13.8kV Transformer circuit #2 at Dickinson.		
GEN-2015-046	$936,251	
GEN-2015-091	$798,345	
GEN-2015-096	$1,183,317	
GEN-2015-098	$582,087	
Total Allocated Costs	**$3,500,000**	

* Withdrawal of higher queued projects will cause a restudy and may result in higher costs

Dixon County - Belden 230kV CKT 1		**$50,000,000**
Build approximately 50 miles of new 230kV		
GEN-2015-042	$25,397,415	
GEN-2015-053	$794,578	
GEN-2015-054	$1,175,976	
GEN-2015-076	$22,103,503	
GEN-2015-094	$528,528	
Total Allocated Costs	**$50,000,000**	
Dixon County - Twin Church 345kV CKT1 Voltage Conversion		**$33,000,000**
Convert Dixon Co - Twin Church 230kV circuit to 345kV. Further evaluated in NPPD facility study		
GEN-2015-042	$25,753,611	
GEN-2015-053	$562,292	
GEN-2015-054	$832,192	
GEN-2015-076	$5,281,052	
GEN-2015-094	$570,853	
Total Allocated Costs	**$33,000,000**	
Emporia Energy Center - Swissvale 345kV CKT 1		**$0**
Replace terminal equipment to at least 1600 amps (Cost included in Swissvale - West Gardner 345kV Line Item)		
GEN-2015-034	$0	
GEN-2015-062	$0	
GEN-2015-063	$0	
GEN-2015-066	$0	
GEN-2015-067	$0	
GEN-2015-069	$0	
GEN-2015-073	$0	
GEN-2015-083	$0	
Total Allocated Costs	**$0**	
GEN-2014-037 Interconnection Costs		**$20,334,923**
See One-Line Diagram.		
GEN-2014-037	$20,334,923	
Total Allocated Costs	**$20,334,923**	
GEN-2014-038 Interconnection Costs		**$13,403,168**
See One-Line Diagram.		
GEN-2014-038	$13,403,168	
Total Allocated Costs	**$13,403,168**	

* Withdrawal of higher queued projects will cause a restudy and may result in higher costs

GEN-2014-046 Interconnection Costs		**$2,456,266**
See One-Line Diagram.		
	GEN-2014-046	$2,456,266
	Total Allocated Costs	**$2,456,266**
GEN-2014-057 - Lawton Eastside 345kV CKT 1		**$500,000**
Replace terminal equipmen to atleast 1600 amps		
	GEN-2014-046	$28,153
	GEN-2015-018	$17,573
	GEN-2015-020	$22,043
	GEN-2015-031	$64,341
	GEN-2015-033	$45,013
	GEN-2015-039	$10,376
	GEN-2015-040	$11,532
	GEN-2015-041	$1,211
	GEN-2015-056	$22,525
	GEN-2015-058	$11,311
	GEN-2015-068	$72,639
	GEN-2015-075	$12,027
	GEN-2015-077	$18,353
	GEN-2015-078	$11,520
	GEN-2015-079	$29,667
	GEN-2015-080	$29,667
	GEN-2015-082	$32,002
	GEN-2015-084	$18,207
	GEN-2015-085	$41,839
	Total Allocated Costs	**$500,000**

* Withdrawal of higher queued projects will cause a restudy and may result in higher costs

GEN-2014-057 - Sunnyside 345kV CKT 1 **$65,000,000**

Rebuild approximately 45 miles of 345kV

GEN-2014-046	$1,885,531
GEN-2015-018	$1,176,908
GEN-2015-020	$1,476,316
GEN-2015-031	$4,309,145
GEN-2015-033	$3,014,667
GEN-2015-039	$694,938
GEN-2015-040	$772,368
GEN-2015-041	$81,082
GEN-2015-044	$296,931
GEN-2015-045	$1,204,079
GEN-2015-048	$1,240,500
GEN-2015-056	$1,508,612
GEN-2015-057	$1,484,657
GEN-2015-058	$757,557
GEN-2015-060	$1,994,708
GEN-2015-068	$4,864,943
GEN-2015-075	$805,483
GEN-2015-077	$1,229,177
GEN-2015-078	$771,545
GEN-2015-079	$1,986,916
GEN-2015-080	$1,986,916
GEN-2015-081	$1,369,175
GEN-2015-082	$2,143,325
GEN-2015-084	$1,219,397
GEN-2015-085	$2,802,089
GEN-2015-092	$15,050,981
GEN-2015-093	$7,053,321
GEN-2015-095	$1,818,733
Total Allocated Costs	**$65,000,000**

GEN-2014-059 Interconnection Costs **$9,200,000**

See One-Line Diagram.

GEN-2014-059	$9,200,000
Total Allocated Costs	**$9,200,000**

* Withdrawal of higher queued projects will cause a restudy and may result in higher costs

GEN-2014-059 Tap - Ogallala 230kV CKT 2			**$16,200,000**
Build approximately 18 miles of new 230kV			
	GEN-2014-059	$11,937,281	
	GEN-2015-094	$4,262,719	
	Total Allocated Costs	**$16,200,000**	
GEN-2015-018 Interconnection Costs			**$5,121,512**
See One-Line Diagram.			
	GEN-2015-018	$5,121,512	
	Total Allocated Costs	**$5,121,512**	
GEN-2015-020 Interconnection Costs			**$9,984,058**
See One-Line Diagram.			
	GEN-2015-020	$9,984,058	
	Total Allocated Costs	**$9,984,058**	
GEN-2015-031 Interconnection Costs			**$7,567,148**
See One-Line Diagram.			
	GEN-2015-031	$7,567,148	
	Total Allocated Costs	**$7,567,148**	
GEN-2015-033 Interconnection Costs			**$0**
See One-Line Diagram.			
	GEN-2015-033	$0	
	Total Allocated Costs	**$0**	
GEN-2015-034 Interconnection Costs			**$2,112,500**
See One-Line Diagram.			
	GEN-2015-034	$2,112,500	
	Total Allocated Costs	**$2,112,500**	
GEN-2015-036 Interconnection Costs			**$2,025,000**
See One-Line Diagram.			
	GEN-2015-036	$2,025,000	
	Total Allocated Costs	**$2,025,000**	
GEN-2015-038 Interconnection Costs			**$20,000**
See One-Line Diagram.			
	GEN-2015-038	$20,000	
	Total Allocated Costs	**$20,000**	

* Withdrawal of higher queued projects will cause a restudy and may result in higher costs

GEN-2015-039 Interconnection Costs			**$8,869,623**
See One-Line Diagram.			
	GEN-2015-039	$8,869,623	
	Total Allocated Costs	**$8,869,623**	
GEN-2015-040 Interconnection Costs			**$1,497,460**
See One-Line Diagram.			
	GEN-2015-040	$1,497,460	
	Total Allocated Costs	**$1,497,460**	
GEN-2015-041 Interconnection Costs			**$0**
See One-Line Diagram.			
	GEN-2015-041	$0	
	Total Allocated Costs	**$0**	
GEN-2015-042 Interconnection Costs			**$3,000,000**
See One-Line Diagram.			
	GEN-2015-042	$3,000,000	
	Total Allocated Costs	**$3,000,000**	
GEN-2015-043 Interconnection Costs			**$0**
See One-Line Diagram.			
	GEN-2015-043	$0	
	Total Allocated Costs	**$0**	
GEN-2015-044 Interconnection Costs			**$20,000**
See One-Line Diagram.			
	GEN-2015-044	$20,000	
	Total Allocated Costs	**$20,000**	
GEN-2015-045 Interconnection Costs			**$0**
See One-Line Diagram.			
	GEN-2015-045	$0	
	Total Allocated Costs	**$0**	
GEN-2015-046 Interconnection Costs			**$3,759,097**
See One-Line Diagram.			
	GEN-2015-046	$3,759,097	
	Total Allocated Costs	**$3,759,097**	

* Withdrawal of higher queued projects will cause a restudy and may result in higher costs

GEN-2015-047 Interconnection Costs			**$2,540,000**
See One-Line Diagram.			
	GEN-2015-047	$2,540,000	
	Total Allocated Costs	**$2,540,000**	
GEN-2015-048 Interconnection Costs			**$2,968,000**
See One-Line Diagram.			
	GEN-2015-048	$2,968,000	
	Total Allocated Costs	**$2,968,000**	
GEN-2015-052 Interconnection Costs			**$15,582,434**
See One-Line Diagram.			
	GEN-2015-052	$15,582,434	
	Total Allocated Costs	**$15,582,434**	
GEN-2015-053 Interconnection Costs			**$500,000**
See One-Line Diagram.			
	GEN-2015-053	$500,000	
	Total Allocated Costs	**$500,000**	
GEN-2015-054 Interconnection Costs			**$500,000**
See One-Line Diagram.			
	GEN-2015-054	$500,000	
	Total Allocated Costs	**$500,000**	
GEN-2015-055 Interconnection Costs			**$1,900,000**
See One-Line Diagram.			
	GEN-2015-055	$1,900,000	
	Total Allocated Costs	**$1,900,000**	
GEN-2015-056 Interconnection Costs			**$5,080,273**
See One-Line Diagram.			
	GEN-2015-056	$5,080,273	
	Total Allocated Costs	**$5,080,273**	
GEN-2015-057 Interconnection Costs			**$20,000**
See One-Line Diagram.			
	GEN-2015-057	$20,000	
	Total Allocated Costs	**$20,000**	

* Withdrawal of higher queued projects will cause a restudy and may result in higher costs

GEN-2015-058 Interconnection Costs			**$2,751,641**
See One-Line Diagram.			
	GEN-2015-058	$2,751,641	
	Total Allocated Costs	**$2,751,641**	
GEN-2015-059 Interconnection Costs			**$0**
See One-Line Diagram.			
	GEN-2015-059	$0	
	Total Allocated Costs	**$0**	
GEN-2015-060 Interconnection Costs			**$943,000**
See One-Line Diagram.			
	GEN-2015-060	$943,000	
	Total Allocated Costs	**$943,000**	
GEN-2015-061 Interconnection Costs			**$13,311,356**
See One-Line Diagram.			
	GEN-2015-061	$13,311,356	
	Total Allocated Costs	**$13,311,356**	
GEN-2015-062 Interconnection Costs			**$0**
See One-Line Diagram.			
	GEN-2015-062	$0	
	Total Allocated Costs	**$0**	
GEN-2015-063 Interconnection Costs			**$10,613,000**
See One-Line Diagram.			
	GEN-2015-063	$10,613,000	
	Total Allocated Costs	**$10,613,000**	
GEN-2015-064 Interconnection Costs			**$4,626,785**
See One-Line Diagram.			
	GEN-2015-064	$4,626,785	
	Total Allocated Costs	**$4,626,785**	
GEN-2015-065 Interconnection Costs			**$7,937,928**
See One-Line Diagram.			
	GEN-2015-065	$7,937,928	
	Total Allocated Costs	**$7,937,928**	

* Withdrawal of higher queued projects will cause a restudy and may result in higher costs

GEN-2015-066 Interconnection Costs			**$10,613,000**
See One-Line Diagram.			
	GEN-2015-066	$10,613,000	
	Total Allocated Costs	**$10,613,000**	
GEN-2015-067 Interconnection Costs			**$3,521,000**
See One-Line Diagram.			
	GEN-2015-067	$3,521,000	
	Total Allocated Costs	**$3,521,000**	
GEN-2015-068 Interconnection Costs			**$3,303,965**
See One-Line Diagram.			
	GEN-2015-068	$3,303,965	
	Total Allocated Costs	**$3,303,965**	
GEN-2015-069 Interconnection Costs			**$2,755,752**
See One-Line Diagram.			
	GEN-2015-069	$2,755,752	
	Total Allocated Costs	**$2,755,752**	
GEN-2015-071 Interconnection Costs			**$14,623,541**
See One-Line Diagram.			
	GEN-2015-071	$14,623,541	
	Total Allocated Costs	**$14,623,541**	
GEN-2015-072 Interconnection Costs			**$0**
See One-Line Diagram.			
	GEN-2015-072	$0	
	Total Allocated Costs	**$0**	
GEN-2015-073 Interconnection Costs			**$2,576,628**
See One-Line Diagram.			
	GEN-2015-073	$2,576,628	
	Total Allocated Costs	**$2,576,628**	
GEN-2015-074 Interconnection Costs			**$15,551,378**
See One-Line Diagram.			
	GEN-2015-074	$15,551,378	
	Total Allocated Costs	**$15,551,378**	

* Withdrawal of higher queued projects will cause a restudy and may result in higher costs

GEN-2015-075 Interconnection Costs			**$5,000,000**
See One-Line Diagram.			
	GEN-2015-075	$5,000,000	
	Total Allocated Costs	**$5,000,000**	
GEN-2015-076 Interconnection Costs			**$2,600,000**
See One-Line Diagram.			
	GEN-2015-076	$2,600,000	
	Total Allocated Costs	**$2,600,000**	
GEN-2015-077 Interconnection Costs			**$5,640,294**
See One-Line Diagram.			
	GEN-2015-077	$5,640,294	
	Total Allocated Costs	**$5,640,294**	
GEN-2015-078 Interconnection Costs			**$1,082,325**
See One-Line Diagram.			
	GEN-2015-078	$1,082,325	
	Total Allocated Costs	**$1,082,325**	
GEN-2015-079 Interconnection Costs			**$7,374,768**
See One-Line Diagram.			
	GEN-2015-079	$7,374,768	
	Total Allocated Costs	**$7,374,768**	
GEN-2015-080 Interconnection Costs			**$0**
See One-Line Diagram.			
	GEN-2015-080	$0	
	Total Allocated Costs	**$0**	
GEN-2015-081 Interconnection Costs			**$3,005,000**
See One-Line Diagram.			
	GEN-2015-081	$3,005,000	
	Total Allocated Costs	**$3,005,000**	
GEN-2015-082 Interconnection Costs			**$1,930,000**
See One-Line Diagram.			
	GEN-2015-082	$1,930,000	
	Total Allocated Costs	**$1,930,000**	

* Withdrawal of higher queued projects will cause a restudy and may result in higher costs

GEN-2015-083 Interconnection Costs			**$6,713,963**
See One-Line Diagram.			
	GEN-2015-083	$6,713,963	
	Total Allocated Costs	**$6,713,963**	
GEN-2015-084 Interconnection Costs			**$14,665,056**
See One-Line Diagram.			
	GEN-2015-084	$14,665,056	
	Total Allocated Costs	**$14,665,056**	
GEN-2015-085 Interconnection Costs			**$8,406,414**
See One-Line Diagram.			
	GEN-2015-085	$8,406,414	
	Total Allocated Costs	**$8,406,414**	
GEN-2015-085 Tap - Altus Junction 138kV CKT 1			**$15,000,000**
Build approximately 15 miles of new 138kV from GEN-2015-085 Tap to Altus Junction			
	GEN-2015-071	$39,868	
	GEN-2015-084	$3,043,596	
	GEN-2015-085	$11,916,536	
	Total Allocated Costs	**$15,000,000**	
GEN-2015-085 Tap - Russell 138kV CKT 1			**$400,000**
Replace terminal equipment			
	GEN-2015-071	$879	
	GEN-2015-084	$78,303	
	GEN-2015-085	$320,818	
	Total Allocated Costs	**$400,000**	
GEN-2015-087 Interconnection Costs			**$5,300,000**
See One-Line Diagram.			
	GEN-2015-087	$5,300,000	
	Total Allocated Costs	**$5,300,000**	
GEN-2015-088 Interconnection Costs			**$15,000,000**
See One-Line Diagram.			
	GEN-2015-088	$15,000,000	
	Total Allocated Costs	**$15,000,000**	

* Withdrawal of higher queued projects will cause a restudy and may result in higher costs

GEN-2015-090 Interconnection Costs			**$10,000**
See One-Line Diagram.			
	GEN-2015-090	$10,000	
	Total Allocated Costs	**$10,000**	
GEN-2015-091 Interconnection Costs			**$3,224,682**
See One-Line Diagram.			
	GEN-2015-091	$3,224,682	
	Total Allocated Costs	**$3,224,682**	
GEN-2015-092 Interconnection Costs			**$1,110,612**
See One-Line Diagram.			
	GEN-2015-092	$1,110,612	
	Total Allocated Costs	**$1,110,612**	
GEN-2015-093 Interconnection Costs			**$2,125,000**
See One-Line Diagram.			
	GEN-2015-093	$2,125,000	
	Total Allocated Costs	**$2,125,000**	
GEN-2015-094 Interconnection Costs			**$7,916,350**
See One-Line Diagram.			
	GEN-2015-094	$7,916,350	
	Total Allocated Costs	**$7,916,350**	
GEN-2015-095 Interconnection Costs			**$4,400,000**
See One-Line Diagram.			
	GEN-2015-095	$4,400,000	
	Total Allocated Costs	**$4,400,000**	
GEN-2015-095 Tap - Rose Valley 138kV CKT 1			**$10,000,000**
Rebuild approximately 14 miles of 138kV from Rose Valley to GEN-2015-095 Tap			
	GEN-2015-095	$10,000,000	
	Total Allocated Costs	**$10,000,000**	
GEN-2015-096 Interconnection Costs			**$0**
See One-Line Diagram.			
	GEN-2015-096	$0	
	Total Allocated Costs	**$0**	

* Withdrawal of higher queued projects will cause a restudy and may result in higher costs

GEN-2015-097 Interconnection Costs		**$3,000,000**
See One-Line Diagram.		
GEN-2015-097	$3,000,000	
Total Allocated Costs	**$3,000,000**	
GEN-2015-098 Interconnection Costs		**$3,000,000**
See One-Line Diagram.		
GEN-2015-098	$3,000,000	
Total Allocated Costs	**$3,000,000**	
Gerald Gentleman Station Flowgate Stability Limit Mitigation		**$TBD**
Mitigation for GGS Flowgate Stability Limit. TBD in the Facilities Study with NPPD.		
GEN-2014-059	$TBD	
GEN-2015-094	$TBD	
Total Allocated Costs	**$TBD**	
GI-2009-001 Tap - Watertown 345kV CKT 1		**$53,071,200**
NRIS only required upgrade: Build a second GI-2009-001 Tap - Watertown 345kV circuit.		
GEN-2015-097	$53,071,200	
Total Allocated Costs	**$53,071,200**	
GI-2013-009 Tap - Summit 115kV CKT 1		**$3,200,000**
NRIS only required upgrade: Rebuild approximately 4 miles of 115kV from GI-2013-009 Tap - Summit.		
GEN-2015-097	$3,200,000	
Total Allocated Costs	**$3,200,000**	
GI-2013-009 Tap - Watertown 115kV CKT 1		**$21,360,000**
Rebuild approximately 26 miles of 115kV from GI-2013-009 Tap - Watertown.		
GEN-2015-097	$21,360,000	
Total Allocated Costs	**$21,360,000**	

* Withdrawal of higher queued projects will cause a restudy and may result in higher costs

Grapevine - Chisholm 345kV CKT 1 **$75,000,000**

Build approximately 75 miles of new 345kV from Grapevine - Chisholm

GEN-2014-037	$12,529,372
GEN-2014-038	$13,636,210
GEN-2014-046	$3,446,929
GEN-2015-018	$2,365,237
GEN-2015-020	$2,888,702
GEN-2015-031	$9,758,010
GEN-2015-033	$250,997
GEN-2015-039	$2,058,147
GEN-2015-040	$1,248,218
GEN-2015-056	$2,892,708
GEN-2015-058	$1,347,492
GEN-2015-068	$1,894,511
GEN-2015-075	$818,896
GEN-2015-077	$1,853,207
GEN-2015-078	$1,235,605
GEN-2015-079	$3,290,623
GEN-2015-080	$3,290,623
GEN-2015-082	$10,194,515
Total Allocated Costs	**$75,000,000**

* Withdrawal of higher queued projects will cause a restudy and may result in higher costs

Grapevine Substation Upgrade 345kV **$12,000,000**

Build Grapevine Substation and terminate Beaver Co - Grapevine, Potter Co - Grapevine, Grapevine - Chisholm 345kV into the Grapevine Substation

GEN-2014-037	$2,004,699
GEN-2014-038	$2,181,794
GEN-2014-046	$551,509
GEN-2015-018	$378,438
GEN-2015-020	$462,192
GEN-2015-031	$1,561,282
GEN-2015-033	$40,160
GEN-2015-039	$329,304
GEN-2015-040	$199,715
GEN-2015-056	$462,833
GEN-2015-058	$215,599
GEN-2015-068	$303,122
GEN-2015-075	$131,023
GEN-2015-077	$296,513
GEN-2015-078	$197,697
GEN-2015-079	$526,500
GEN-2015-080	$526,500
GEN-2015-082	$1,631,122
Total Allocated Costs	**$12,000,000**

Groton - Bristol 115kV CKT 1 **$17,040,000**

NRIS only required upgrade: Rebuild approximately 21 miles of 115kV.

GEN-2015-097	$17,040,000
Total Allocated Costs	**$17,040,000**

Hanlon 69kV Reactive Support **$500,000**

Install (1) 10Mvar Capacitor Bank at Hanlon 69kV.

GEN-2015-046	$234,560
GEN-2015-091	$76,429
GEN-2015-096	$113,284
GEN-2015-098	$75,727
Total Allocated Costs	**$500,000**

* Withdrawal of higher queued projects will cause a restudy and may result in higher costs

Harbine - Beatrice 115kV CKT 1			**$9,000,000**
Rebuild approximately 15 miles of 115kV line			
	GEN-2015-087	$9,000,000	
	Total Allocated Costs	**$9,000,000**	
Holt County - Antelope 345kV CKT 1			**$36,000,000**
Build approximately 30 miles of new 345kV			
	GEN-2015-042	$12,361,049	
	GEN-2015-053	$5,102,596	
	GEN-2015-054	$7,551,842	
	GEN-2015-076	$6,055,444	
	GEN-2015-094	$4,929,069	
	Total Allocated Costs	**$36,000,000**	
Holt County - Grand Island 345kV CKT 1			**$60,000,000**
NRIS only required upgrade			
	GEN-2014-059	$710,350	
	GEN-2015-042	$21,316,390	
	GEN-2015-053	$6,273,512	
	GEN-2015-054	$9,284,798	
	GEN-2015-061	$1,163,885	
	GEN-2015-076	$10,775,020	
	GEN-2015-094	$8,080,820	
	GEN-2015-096	$1,427,568	
	GEN-2015-098	$967,656	
	Total Allocated Costs	**$60,000,000**	
Knoll - Post Rock 230kV CKT 2			**$2,000,000**
NRIS only required upgrade: Build second 230kV circuit between Knoll - Post Rock			
	GEN-2015-072	$2,000,000	
	Total Allocated Costs	**$2,000,000**	

* Withdrawal of higher queued projects will cause a restudy and may result in higher costs

LP-Wadsworth 230/69/13kV Transformer CKT 1 **$6,000,000**

NRIS only required upgrade: Replace existing LP-Wadsworth 230/69kV Transformer

GEN-2014-046	$474,695
GEN-2015-018	$306,057
GEN-2015-020	$379,983
GEN-2015-031	$1,153,756
GEN-2015-033	$562,271
GEN-2015-039	$190,998
GEN-2015-040	$189,507
GEN-2015-041	$18,424
GEN-2015-068	$1,105,431
GEN-2015-075	$153,412
GEN-2015-077	$298,233
GEN-2015-078	$189,074
GEN-2015-079	$489,080
GEN-2015-080	$489,080
Total Allocated Costs	**$6,000,000**

Milan Tap - Clearwater 138kV CKT 1 **$12,459,248**

NRIS only required upgrade: Rebuild approximately 5.7 miles (MKEC) and 6.1 miles (WERE) of 138kV transmission.

GEN-2015-072	$12,459,248
Total Allocated Costs	**$12,459,248**

* Withdrawal of higher queued projects will cause a restudy and may result in higher costs

MISO Affected System Study		**$TBD**
See section 4 power flow analysis.		
GEN-2014-059	$TBD	
GEN-2015-042	$TBD	
GEN-2015-046	$TBD	
GEN-2015-053	$TBD	
GEN-2015-054	$TBD	
GEN-2015-076	$TBD	
GEN-2015-087	$TBD	
GEN-2015-088	$TBD	
GEN-2015-091	$TBD	
GEN-2015-094	$TBD	
GEN-2015-096	$TBD	
GEN-2015-097	$TBD	
GEN-2015-098	$TBD	
Total Allocated Costs	**$TBD**	
Mustang 230/115/13.2KV Transformer CKT 2		**$6,000,000**
NRIS only required upgrade: Build second Mustang 230/115 Transformer		
GEN-2015-079	$3,000,000	
GEN-2015-080	$3,000,000	
Total Allocated Costs	**$6,000,000**	
Noel SW - Rose Valley 138kV CKT 1		**$5,000,000**
Rebuild approximately 7 miles of 138kV from Noel SW to Rose Valley		
GEN-2015-095	$5,000,000	
Total Allocated Costs	**$5,000,000**	
Norge - Southwest Station 138kV CKT 1		**$23,000,000**
Rebuild approximately 23 miles of 138kV from Norge to Southwest Station		
GEN-2015-055	$2,149,568	
GEN-2015-071	$9,020,967	
GEN-2015-084	$2,919,894	
GEN-2015-085	$8,909,571	
Total Allocated Costs	**$23,000,000**	

* Withdrawal of higher queued projects will cause a restudy and may result in higher costs

Northwest 138kV Circuit Breaker **$750,000**

Replace Northwest 138kV Circuit Breaker for short circuit requirements

GEN-2015-034	$31,171
GEN-2015-038	$263,140
GEN-2015-047	$61,745
GEN-2015-048	$1,845
GEN-2015-052	$28,608
GEN-2015-057	$72,820
GEN-2015-059	$4,588
GEN-2015-060	$30,638
GEN-2015-062	$278
GEN-2015-066	$46,414
GEN-2015-067	$23,537
GEN-2015-069	$2,046
GEN-2015-073	$2,620
GEN-2015-081	$22,180
GEN-2015-083	$6,546
GEN-2015-090	$939
GEN-2015-093	$135,117
GEN-2015-095	$15,769
Total Allocated Costs	**$750,000**

Ogallala - Gerald Gentleman Station 230kV CKT 1 **$500,000**

Replace terminal equipment and increase line clearance.

GEN-2014-059	$333,249
GEN-2015-088	$11,450
GEN-2015-094	$155,301
Total Allocated Costs	**$500,000**

* Withdrawal of higher queued projects will cause a restudy and may result in higher costs

Oklaunion 345kV Reactive Power Support Incremental Upgrade		**$40,000,000**
Install (4)-50Mvar Capacitor Bank(s) and +300Mvar SVC at Oklaunion		
GEN-2014-046	$2,727,089	
GEN-2015-018	$1,645,928	
GEN-2015-020	$2,083,032	
GEN-2015-031	$5,623,715	
GEN-2015-033	$3,627,986	
GEN-2015-039	$800,898	
GEN-2015-040	$1,139,130	
GEN-2015-056	$2,202,044	
GEN-2015-058	$1,103,740	
GEN-2015-068	$8,869,313	
GEN-2015-075	$1,337,403	
GEN-2015-077	$1,867,077	
GEN-2015-078	$1,143,759	
GEN-2015-079	$2,914,443	
GEN-2015-080	$2,914,443	
Total Allocated Costs	**$40,000,000**	
Albion - Petersburg - North Petersburg 115kV CKT 1		**$3,500,000**
Reconductor 115kV lines and replace all terminal equipment for at least a 193MVA rate.		
GEN-2015-042	$792,860	
GEN-2015-053	$901,611	
GEN-2015-054	$1,334,385	
GEN-2015-076	$471,143	
Total Allocated Costs	**$3,500,000**	
Pittsburg - Seminole 345kV CKT 1		**$500,000**
NRIS only required upgrade: replacement terminal equipment to at least 1600 amps		
GEN-2015-084	$59,077	
GEN-2015-085	$82,064	
GEN-2015-095	$358,858	
Total Allocated Costs	**$500,000**	

* Withdrawal of higher queued projects will cause a restudy and may result in higher costs

Potter County - Grapevine 345kV CKT 1 **$65,000,000**

Build approximately 65 miles of new 345kV from Potter County - Grapevine

GEN-2014-046	$5,170,884
GEN-2015-018	$3,375,410
GEN-2015-020	$4,170,846
GEN-2015-031	$13,121,126
GEN-2015-033	$3,190,811
GEN-2015-039	$2,492,094
GEN-2015-040	$1,981,727
GEN-2015-056	$4,297,541
GEN-2015-058	$2,051,342
GEN-2015-068	$8,068,235
GEN-2015-075	$1,716,607
GEN-2015-077	$3,065,761
GEN-2015-078	$1,973,054
GEN-2015-079	$5,162,281
GEN-2015-080	$5,162,281
Total Allocated Costs	**$65,000,000**

Shamrock 115kV Capacitor Bank **$500,000**

Add 2nd step of 9.6Mvars to Shamrock 115kV Capacitor Bank(s)

GEN-2014-046	$37,457
GEN-2015-018	$26,096
GEN-2015-020	$32,281
GEN-2015-031	$110,177
GEN-2015-033	$23,589
GEN-2015-039	$18,815
GEN-2015-040	$13,870
GEN-2015-056	$29,885
GEN-2015-058	$14,464
GEN-2015-068	$71,078
GEN-2015-075	$13,826
GEN-2015-077	$22,510
GEN-2015-078	$13,927
GEN-2015-079	$36,013
GEN-2015-080	$36,013
Total Allocated Costs	**$500,000**

* Withdrawal of higher queued projects will cause a restudy and may result in higher costs

Sidney - GEN-2014-059 Tap 230kV CKT 2		**$46,000,000**
Build approximately 51 miles of new 230kV		
GEN-2015-094	$46,000,000	
Total Allocated Costs	**$46,000,000**	
Sidney 230/115/13kV Transformer CKT 1		**$3,276,500**
Replace Sidney 230/115/13kV Transformer circuit #1 to at least 150MVA		
GEN-2014-059	$1,196,719	
GEN-2015-094	$2,079,781	
Total Allocated Costs	**$3,276,500**	
Sidney 345/230/13kV Transformer CKT 2		**$12,000,000**
NRIS only required upgrade: Build and Install Sidney 345/230/13kV Transformer circuit #2		
GEN-2015-053	$215,233	
GEN-2015-054	$318,545	
GEN-2015-076	$776,561	
GEN-2015-087	$233,249	
GEN-2015-088	$967,054	
GEN-2015-094	$9,489,358	
Total Allocated Costs	**$12,000,000**	
Smokey Hills - Summit 230kV CKT 1		**$36,000,000**
Rebuild approximately 39 miles of 230kV from Smokey Hills to Summit		
GEN-2015-072	$36,000,000	
Total Allocated Costs	**$36,000,000**	
South Hays 230/115/13kV Transformer CKT 1		**$4,000,000**
NRIS only required upgrade: Replace South Hays 230/115/13kV Transformer		
GEN-2015-072	$4,000,000	
Total Allocated Costs	**$4,000,000**	
Split Rock - White 345kV CKT 1		**$500,000**
NRIS only required upgrade: Replace terminal equipment.		
GEN-2015-046	$226,781	
GEN-2015-097	$273,219	
Total Allocated Costs	**$500,000**	

* Withdrawal of higher queued projects will cause a restudy and may result in higher costs

Stanton Tap - Garrison 115kV CKT 1		**$16,705,600**
NRIS only required upgrade: Rebuild approximately 21 miles of 115kV.		
GEN-2015-096	$10,585,185	
GEN-2015-098	$6,120,415	
Total Allocated Costs	**$16,705,600**	
Swissvale - West Gardner 345kV CKT 1		**$1,000,000**
Replace terminal equipment to at least 1600 amps		
GEN-2015-034	$25,314	
GEN-2015-062	$645	
GEN-2015-063	$41,208	
GEN-2015-069	$349,206	
GEN-2015-073	$363,453	
GEN-2015-074	$36,570	
GEN-2015-081	$29,892	
GEN-2015-082	$34,783	
GEN-2015-084	$9,454	
GEN-2015-085	$9,587	
GEN-2015-090	$99,887	
Total Allocated Costs	**$1,000,000**	
Tolk 345/230/13kV Transformer CKT 2		**$15,000,000**
Build second 345/230/13kV transformer at Tolk		
GEN-2014-046	$1,096,966	
GEN-2015-018	$1,988,143	
GEN-2015-020	$2,626,962	
GEN-2015-031	$2,370,254	
GEN-2015-039	$794,415	
GEN-2015-040	$741,000	
GEN-2015-058	$153,819	
GEN-2015-075	$366,236	
GEN-2015-077	$1,157,989	
GEN-2015-078	$684,894	
GEN-2015-079	$1,509,661	
GEN-2015-080	$1,509,661	
Total Allocated Costs	**$15,000,000**	

* Withdrawal of higher queued projects will cause a restudy and may result in higher costs

Tolk - Potter County 345kV CKT 1 **$105,000,000**

Build approximately 115 miles of 345kV from Tolk - Potter County

GEN-2014-046	$10,011,732
GEN-2015-018	$5,483,554
GEN-2015-020	$7,415,146
GEN-2015-031	$8,515,125
GEN-2015-033	$7,175,830
GEN-2015-039	$1,467,486
GEN-2015-040	$3,453,361
GEN-2015-041	$286,361
GEN-2015-056	$9,859,113
GEN-2015-058	$4,008,442
GEN-2015-068	$17,181,683
GEN-2015-075	$3,056,433
GEN-2015-077	$5,320,283
GEN-2015-078	$3,458,638
GEN-2015-079	$9,153,406
GEN-2015-080	$9,153,406
Total Allocated Costs	**$105,000,000**

Tolk - TUCO 2 345kV CKT 1 **$64,000,000**

Build approximately 64 miles of 345kV from Tolk - TUCO 2.

GEN-2014-046	$10,862,068
GEN-2015-018	$7,087,432
GEN-2015-020	$9,800,600
GEN-2015-031	$4,227,579
GEN-2015-039	$3,387,718
GEN-2015-040	$792,382
GEN-2015-056	$15,360,626
GEN-2015-058	$3,794,067
GEN-2015-077	$1,285,681
GEN-2015-078	$909,864
GEN-2015-079	$3,245,992
GEN-2015-080	$3,245,992
Total Allocated Costs	**$64,000,000**

* Withdrawal of higher queued projects will cause a restudy and may result in higher costs

TUCO - New Deal - Stanton 345/115kV Project **$37,490,796**

NRIS only required upgrade: Build TUCO - New Deal 345kV, New Deal - Stanton 115kV and New Deal 345/115kV tranformer CKT 1. Total project E&C cos

GEN-2015-033	$11,897,951
GEN-2015-041	$419,555
GEN-2015-068	$25,173,291
Total Allocated Costs	**$37,490,796**

TUCO 2 - Border 345kV CKT 2 **$194,000,000**

Build approximately 194 miles of second circuit 345kV from TUCO 2 - Border

GEN-2014-046	$13,226,384
GEN-2015-018	$7,982,751
GEN-2015-020	$10,102,704
GEN-2015-031	$27,275,020
GEN-2015-033	$17,595,731
GEN-2015-039	$3,884,355
GEN-2015-040	$5,524,783
GEN-2015-056	$10,679,912
GEN-2015-058	$5,353,140
GEN-2015-068	$43,016,168
GEN-2015-075	$6,486,403
GEN-2015-077	$9,055,323
GEN-2015-078	$5,547,229
GEN-2015-079	$14,135,049
GEN-2015-080	$14,135,049
Total Allocated Costs	**$194,000,000**

* Withdrawal of higher queued projects will cause a restudy and may result in higher costs

TUCO 2 - Yoakum 345kV Retermination **$5,000,000**

Incremental Upgrade for SPP-NTC-200283 to reterminate TUCO terminal to TUCO 2 terminal by adding approximately 3 miles of 345kV

GEN-2014-046	$547,841
GEN-2015-018	$132,486
GEN-2015-020	$186,075
GEN-2015-031	$44,002
GEN-2015-039	$49,202
GEN-2015-040	$446,313
GEN-2015-056	$205,504
GEN-2015-058	$280,198
GEN-2015-075	$54,355
GEN-2015-077	$425,586
GEN-2015-078	$406,589
GEN-2015-079	$1,110,925
GEN-2015-080	$1,110,925
Total Allocated Costs	**$5,000,000**

Tupelo - Tupleo Tap 138kV CKT 1 **$700,000**

NRIS only required upgrade: Build approximately 1 mile of second circuit 138kV from Tupelo to Tupelo Tap

GEN-2015-045	$19,189
GEN-2015-084	$78,341
GEN-2015-085	$68,505
GEN-2015-092	$239,862
GEN-2015-095	$294,103
Total Allocated Costs	**$700,000**

Twin Church - Sioux City 345kV CKT1 Voltage Conversion **$27,000,000**

Convert Twin Church - Sioux City 230kV circuit to 345kV. Further evaluated in NPPD & WAPA facility study

GEN-2015-042	$18,806,346
GEN-2015-053	$470,365
GEN-2015-054	$696,140
GEN-2015-076	$5,847,906
GEN-2015-088	$702,844
GEN-2015-094	$476,400
Total Allocated Costs	**$27,000,000**

* Withdrawal of higher queued projects will cause a restudy and may result in higher costs

Walkemeyer 345/115/13kV Transformer CKT 2		**$12,000,000**
NRIS only required upgarde: Build a second Walkemeyer 345/115/13kV transformer		
GEN-2015-082	$12,000,000	
Total Allocated Costs	**$12,000,000**	
Watertown 345/230/13.8kV CKT 1		**$14,000,000**
NRIS only required upgrade: Replace Watertown 345/230/13.8kV Transformer circuit #1.		
GEN-2015-097	$14,000,000	
Total Allocated Costs	**$14,000,000**	
Watertown - White 345kV CKT 1		**$500,000**
NRIS only required upgrade: Replace terminal equipment.		
GEN-2015-097	$500,000	
Total Allocated Costs	**$500,000**	
Wolfforth Interchange 230/115/13.2kV Transformer CKT 1		**$6,000,000**
NRIS only required upgrade: Replace existing Wolfforth Interchange Transformer		
GEN-2015-075	$743,252	
GEN-2015-075	$5,256,748	
Total Allocated Costs	**$6,000,000**	
Woodward 345/138/13kV Transformer CKT 1		**$15,000,000**
Replace Woodward 345/138/13kV Transformer circuit #1		
GEN-2015-057	$78,522	
GEN-2015-059	$4,947	
GEN-2015-060	$11,492,053	
GEN-2015-093	$237,181	
GEN-2015-095	$3,187,296	
Total Allocated Costs	**$15,000,000**	
Woodward 345/138/13kV Transformer CKT 2		**$15,000,000**
Replace Woodward 345/138/13kV Transformer circuit #2		
GEN-2015-057	$78,522	
GEN-2015-059	$4,947	
GEN-2015-060	$11,492,053	
GEN-2015-093	$237,181	
GEN-2015-095	$3,187,296	
Total Allocated Costs	**$15,000,000**	

* Withdrawal of higher queued projects will cause a restudy and may result in higher costs

11.8 G-T: Thermal Power Flow Analysis (Constraints Requiring Transmission Reinforcement)

See next page.

SOLUTION	GROUP	SCENARIO	SEASON	SOURCE	DIRECTION	MONITORED ELEMENT	RATEA (MVA)	RATEB(MVA)	TDF	TC%LOADING (% MVA)	CONTINGENCY
FDNSLock-Blown up	02ALL	0	16WP	G14_037		Non-Converged Contingency	1793	1793	0.25908	-	G11-14T 345.00 - WOODWARD DISTRICT EHV 345KV CKT 1
FDNSLock-Blown up	02ALL	0	16WP	G14_037		Non-Converged Contingency	1716	1793	0.25908	-	G11-14T 345.00 - WOODWARD DISTRICT EHV 345KV CKT 2
FDNSLock-Blown up	02ALL	0	16WP	G14_037		Non-Converged Contingency	987.16	1082.8	0.25468	-	FINNEY SWITCHING STATION - Hitchland Interchange 345KV CKT 1
FDNSLock-Blown up	02ALL	0	16WP	G14_037		Non-Converged Contingency	956.09	1051.7	0.25468	-	FINNEY SWITCHING STATION - HOLCOMB 345KV CKT 1
FDNSLock-Blown up	02ALL	0	17G	G14_037		Non-Converged Contingency	1793	1793	0.25685	-	G11-14T 345.00 - WOODWARD DISTRICT EHV 345KV CKT 1
FDNSLock-Blown up	02ALL	0	17G	G14_037		Non-Converged Contingency	1716	1793	0.25685	-	G11-14T 345.00 - WOODWARD DISTRICT EHV 345KV CKT 2
FDNSLock-Blown up	02ALL	0	17G	G14_037		Non-Converged Contingency	956.09	1051.7	0.24749	-	FINNEY SWITCHING STATION - Hitchland Interchange 345KV CKT 1
FDNSLock-Blown up	02ALL	0	17G	G14_037		Non-Converged Contingency	956.09	1051.7	0.24749	-	FINNEY SWITCHING STATION - HOLCOMB 345KV CKT 1
FDNSLock-Blown up	02ALL	0	17G	G14_037		Non-Converged Contingency	1420	1775	0.19773	-	G11_051T 345.00 - TATONGA7 345.00 345KV CKT 1
FDNSLock-Blown up	02ALL	0	17G	G14_037		Non-Converged Contingency	1420	1775	0.19773	-	G11_051T 345.00 - WOODWARD DISTRICT EHV 345KV CKT 1
FDNSLock-Blown up	02ALL	0	17G	G14_037		Non-Converged Contingency	1195	1195	0.19773	-	MATHWSN7 345.00 - TATONGA7 345.00 345KV CKT 1
FDNSLock-Blown up	02ALL	0	17G	G14_037		Non-Converged Contingency	560	560	0.12699	-	POTTER COUNTY INTERCHANGE (WAUK 90343-A) 345/230/13.2KV TRANSFORMER CKT 1
FDNSLock-Blown up	02ALL	0	17G	G14_037		Non-Converged Contingency	439	439	0.07021	-	CHISHOLM6 230.00 - SWEETWATER 230KV CKT 1
FDNSLock-Blown up	02ALL	0	17SP	G14_037		Non-Converged Contingency	956.09	1051.7	0.26932	-	Hitchland Interchange - WALKTAP7 345.00 345KV CKT 1
FDNSLock-Blown up	02ALL	0	20L	G14_037		Non-Converged Contingency	0	0	0.46393	-	P12:345:SPS:J07.1.FINN.HITCH
FDNSLock-Blown up	02ALL	0	20L	G14_037		Non-Converged Contingency	956.09	1051.7	0.24763	-	Hitchland Interchange - WALKTAP7 345.00 345KV CKT 1
FDNSLock-Blown up	02ALL	0	20L	G14_037		Non-Converged Contingency	956.09	1051.7	0.24763	-	Hitchland Interchange - WALKTAP7 345.00 345KV CKT 1
FDNSLock-Blown up	02ALL	0	20L	G14_037		Non-Converged Contingency	1793	1793	0.24411	-	G11-14T 345.00 - WOODWARD DISTRICT EHV 345KV CKT 1
FDNSLock-Blown up	02ALL	0	20L	G14_037		Non-Converged Contingency	1716	1793	0.24411	-	G11-14T 345.00 - WOODWARD DISTRICT EHV 345KV CKT 2
FDNSLock-Blown up	02ALL	0	20L	G14_037		Non-Converged Contingency	956.09	1051.7	0.2163	-	FINNEY SWITCHING STATION - HOLCOMB 345KV CKT 1
FDNSLock-Blown up	02ALL	0	20L	G14_037		Non-Converged Contingency	956.09	1051.7	0.2163	-	FINNEY SWITCHING STATION - HOLCOMB 345KV CKT 1
FDNSLock-Blown up	02ALL	0	20L	G14_037		Non-Converged Contingency	956.09	1051.7	0.2163	-	FINNEY SWITCHING STATION - WALKTAP7 345.00 345KV CKT 1
FDNSLock-Blown up	02ALL	0	20L	G14_037		Non-Converged Contingency	956.09	1051.7	0.2163	-	FINNEY SWITCHING STATION - WALKTAP7 345.00 345KV CKT 1
FDNSLock-Blown up	02ALL	0	20L	G14_037		Non-Converged Contingency	1420	1775	0.18131	-	G11_051T 345.00 - TATONGA7 345.00 345KV CKT 1
FDNSLock-Blown up	02ALL	0	20L	G14_037		Non-Converged Contingency	1195	1195	0.18131	-	MATHWSN7 345.00 - TATONGA7 345.00 345KV CKT 1
FDNSLock-Blown up	02ALL	0	20L	G14_037		Non-Converged Contingency	560	560	0.14071	-	POTTER COUNTY INTERCHANGE (WAUK 90343-A) 345/230/13.2KV TRANSFORMER CKT 1
FDNSLock-Blown up	02ALL	0	20L	G14_037		Non-Converged Contingency	560	560	0.14071	-	POTTER COUNTY INTERCHANGE (WAUK 90343-A) 345/230/13.2KV TRANSFORMER CKT 1
FDNSLock-Blown up	02ALL	0	20L	G14_037		Non-Converged Contingency	0	0	0.06983	-	P12:230:AEPW:ELKCITY6:SWEETWT6
FDNSLock-Blown up	02ALL	0	20L	G14_037		Non-Converged Contingency	421	439	0.05746	-	CHISHOLM6 230.00 - SWEETWATER 230KV CKT 1
FDNSLock-Blown up	02ALL	0	20L	G14_037		Non-Converged Contingency	717	789	0.04428	-	GEN515591 1-PALDRW11 0.6900
FDNSLock-Blown up	02ALL	0	20L	G14_037		Non-Converged Contingency	1792	1972	0.03575	-	GEN525561 1-TOLK GEN #1 24 KV
FDNSLock-Blown up	02ALL	0	20L	G14_037		Non-Converged Contingency	1792	1972	0.03575	-	GEN562017 1-G11_022_3 0.6900
FDNSLock-Blown up	02ALL	0	20SP	G14_037		Non-Converged Contingency	956.09	1051.7	0.26412	-	Hitchland Interchange - WALKTAP7 345.00 345KV CKT 1
FDNSLock-Blown up	02ALL	0	20WP	G14_037		Non-Converged Contingency	0	0	0.48335	-	P12:345:SPS:J07.1.FINN.HITCH
FDNSLock-Blown up	02ALL	0	20WP	G14_037		Non-Converged Contingency	987.16	1082.8	0.25767	-	Hitchland Interchange - WALKTAP7 345.00 345KV CKT 1
FDNSLock-Blown up	02ALL	0	20WP	G14_037		Non-Converged Contingency	987.16	1082.8	0.25767	-	Hitchland Interchange - WALKTAP7 345.00 345KV CKT 1
FDNSLock-Blown up	02ALL	0	20WP	G14_037		Non-Converged Contingency	1793	1793	0.24951	-	G11-14T 345.00 - WOODWARD DISTRICT EHV 345KV CKT 1
FDNSLock-Blown up	02ALL	0	20WP	G14_037		Non-Converged Contingency	1716	1793	0.24951	-	G11-14T 345.00 - WOODWARD DISTRICT EHV 345KV CKT 2
FDNSLock-Blown up	02ALL	0	20WP	G14_037		Non-Converged Contingency	956.09	1051.7	0.22568	-	FINNEY SWITCHING STATION - HOLCOMB 345KV CKT 1
FDNSLock-Blown up	02ALL	0	20WP	G14_037		Non-Converged Contingency	956.09	1051.7	0.22568	-	FINNEY SWITCHING STATION - HOLCOMB 345KV CKT 1
FDNSLock-Blown up	02ALL	0	20WP	G14_037		Non-Converged Contingency	987.16	1082.8	0.22568	-	FINNEY SWITCHING STATION - WALKTAP7 345.00 345KV CKT 1
FDNSLock-Blown up	02ALL	0	20WP	G14_037		Non-Converged Contingency	987.16	1082.8	0.22568	-	FINNEY SWITCHING STATION - WALKTAP7 345.00 345KV CKT 1
FDNSLock-Blown up	02ALL	0	20WP	G14_037		Non-Converged Contingency	1420	1775	0.18497	-	G11_051T 345.00 - TATONGA7 345.00 345KV CKT 1
FDNSLock-Blown up	02ALL	0	20WP	G14_037		Non-Converged Contingency	1420	1775	0.18497	-	G11_051T 345.00 - WOODWARD DISTRICT EHV 345KV CKT 1
FDNSLock-Blown up	02ALL	0	20WP	G14_037		Non-Converged Contingency	1195	1195	0.18497	-	MATHWSN7 345.00 - TATONGA7 345.00 345KV CKT 1
FDNSLock-Blown up	02ALL	0	20WP	G14_037		Non-Converged Contingency	0	0	0.12946	-	P12:230:AEPW-SPS:SWEETWT6:WHEELER 6
FDNSLock-Blown up	02ALL	0	20WP	G14_037		Non-Converged Contingency	560	560	0.12938	-	POTTER COUNTY INTERCHANGE (WAUK 90343-A) 345/230/13.2KV TRANSFORMER CKT 1
FDNSLock-Blown up	02ALL	0	20WP	G14_037		Non-Converged Contingency	560	560	0.12938	-	POTTER COUNTY INTERCHANGE (WAUK 90343-A) 345/230/13.2KV TRANSFORMER CKT 1
FDNSLock-Blown up	02ALL	0	20WP	G14_037		Non-Converged Contingency	0	0	0.08064	-	P12:230:AEPW:ELKCITY6:SWEETWT6
FDNSLock-Blown up	02ALL	0	20WP	G14_037		Non-Converged Contingency	421	439	0.06473	-	CHISHOLM6 230.00 - SWEETWATER 230KV CKT 1
FDNSLock-Blown up	02ALL	0	20WP	G14_037		Non-Converged Contingency	435.02	457.73	0.06473	-	STATELINE INTERCHANGE - STLN-DEMARC6 230KV CKT 1
FDNSLock-Blown up	02ALL	0	20WP	G14_037		Non-Converged Contingency	439	439	0.06473	-	STLN-DEMARC6 - SWEETWATER 230KV CKT 1
FDNSLock-Blown up	02ALL	0	20WP	G14_037		Non-Converged Contingency	1022	1124	0.062	-	G14-074T 345.00 - OKLAUNION 345KV CKT 1
FDNSLock-Blown up	02ALL	2	16WP	G14_037		Non-Converged Contingency	987.2	1082.8	0.26157	-	Hitchland Interchange - WALKTAP7 345.00 345KV CKT 1
FDNSLock-Blown up	02ALL	2	17G	G14_037		Non-Converged Contingency	956.09	1051.7	0.2541	-	Hitchland Interchange - WALKTAP7 345.00 345KV CKT 1
FDNSLock-Blown up	02ALL	2	20L	G14_037		Non-Converged Contingency	0	0	0.44952	-	P12:345:SPS:J07.1.FINN.HITCH
FDNSLock-Blown up	02ALL	2	20L	G14_037		Non-Converged Contingency	956.09	1051.7	0.23993	-	Hitchland Interchange - WALKTAP7 345.00 345KV CKT 1
FDNSLock-Blown up	02ALL	2	20WP	G14_037		Non-Converged Contingency	0	0	0.46822	-	P12:345:SPS:J07.1.FINN.HITCH
FDNSLock-Blown up	02ALL	2	20WP	G14_037		Non-Converged Contingency	1793	1793	0.25856	-	G11-14T 345.00 - WOODWARD DISTRICT EHV 345KV CKT 1
FDNSLock-Blown up	02ALL	2	20WP	G14_037		Non-Converged Contingency	1716	1793	0.25856	-	G11-14T 345.00 - WOODWARD DISTRICT EHV 345KV CKT 2
FDNSLock-Blown up	02ALL	2	20WP	G14_037		Non-Converged Contingency	987.16	1082.8	0.24963	-	Hitchland Interchange - WALKTAP7 345.00 345KV CKT 1
FDNSLock-Blown up	02ALL	2	20WP	G14_037		Non-Converged Contingency	987.16	1082.8	0.24963	-	Hitchland Interchange - WALKTAP7 345.00 345KV CKT 1
FDNSLock-Blown up	02ALL	2	20WP	G14_037		Non-Converged Contingency	956.09	1051.7	0.2186	-	FINNEY SWITCHING STATION - HOLCOMB 345KV CKT 1
FDNSLock-Blown up	02ALL	2	20WP	G14_037		Non-Converged Contingency	956.09	1051.7	0.2186	-	FINNEY SWITCHING STATION - HOLCOMB 345KV CKT 1
FDNSLock-Blown up	02ALL	2	20WP	G14_037		Non-Converged Contingency	987.16	1082.8	0.2186	-	FINNEY SWITCHING STATION - WALKTAP7 345.00 345KV CKT 1
FDNSLock-Blown up	02ALL	2	20WP	G14_037		Non-Converged Contingency	987.16	1082.8	0.2186	-	FINNEY SWITCHING STATION - WALKTAP7 345.00 345KV CKT 1
FDNS	02ALL	0	25SP	G14_037	TO->FROM	BUSHLAND INTERCHANGE - POTTER COUNTY INTERCHANGE 230KV CKT 1	318.7	350.57	0.03593	115.2012	BASE CASE
FDNS	02ALL	0	20L	G14_037	TO->FROM	FPL SWITCH - WOODWARD 138KV CKT 1	133	153	0.03636	117.7715	BASE CASE
FDNS	02ALL	0	17G	G14_037	TO->FROM	FPL SWITCH - WOODWARD 138KV CKT 1	133	153	0.03925	107.3742	BASE CASE
FDNS	02ALL	0	20L	G14_037	TO->FROM	MATHWSN7 345.00 - TATONGA7 345.00 345KV CKT 1	1195	1195	0.2014	103.39	THISTLE7 345.00 - WOODWARD DISTRICT EHV 345KV CKT 1
FDNS	02ALL	0	20L	G14_037	TO->FROM	MATHWSN7 345.00 - TATONGA7 345.00 345KV CKT 1	1195	1195	0.2014	103.39	THISTLE7 345.00 - WOODWARD DISTRICT EHV 345KV CKT 1
FDNS	02ALL	0	20L	G14_037	TO->FROM	MATHWSN7 345.00 - TATONGA7 345.00 345KV CKT 1	1195	1195	0.2014	103.39	THISTLE7 345.00 - WOODWARD DISTRICT EHV 345KV CKT 2
FDNS	02ALL	0	20L	G14_037	TO->FROM	MATHWSN7 345.00 - TATONGA7 345.00 345KV CKT 1	1195	1195	0.2014	103.39	THISTLE7 345.00 - WOODWARD DISTRICT EHV 345KV CKT 2
FDNS	02ALL	0	20WP	G14_037	TO->FROM	MATHWSN7 345.00 - TATONGA7 345.00 345KV CKT 1	1195	1195	0.20679	99.9	THISTLE7 345.00 - WOODWARD DISTRICT EHV 345KV CKT 1
FDNS	02ALL	0	20WP	G14_037	TO->FROM	MATHWSN7 345.00 - TATONGA7 345.00 345KV CKT 1	1195	1195	0.20679	99.9	THISTLE7 345.00 - WOODWARD DISTRICT EHV 345KV CKT 1
FDNS	02ALL	0	20WP	G14_037	TO->FROM	MATHWSN7 345.00 - TATONGA7 345.00 345KV CKT 1	1195	1195	0.20679	99.9	THISTLE7 345.00 - WOODWARD DISTRICT EHV 345KV CKT 2
FDNS	02ALL	0	20WP	G14_037	TO->FROM	MATHWSN7 345.00 - TATONGA7 345.00 345KV CKT 1	1195	1195	0.20679	99.9	THISTLE7 345.00 - WOODWARD DISTRICT EHV 345KV CKT 2
FDNS	02ALL	0	25SP	G14_037	FROM->TO	POTTER COUNTY INTERCHANGE (WAUK 90343-A) 345/230/13.2KV TRANSFORMER CKT 1	560	560	0.11129	121.3761	BASE CASE
FDNS	02ALL	0	25SP	G14_037	FROM->TO	POTTER COUNTY INTERCHANGE (WAUK 90343-A) 345/230/13.2KV TRANSFORMER CKT 1	560	560	0.11129	118.254	BASE CASE

SOLUTION	GROUP	SCENARIO	SEASON	SOURCE	DIRECTION	MONITORED ELEMENT	RATEA (MVA)	RATEB(MVA)	TDF	TC%LOADING (% MVA)	CONTINGENCY
FDNS	02ALL	2	25SP	G14_037	TO->FROM	BUSHLAND INTERCHANGE - POTTER COUNTY INTERCHANGE 230KV CKT 1	318.7	350.57	0.03593	115.1531	BASE CASE
FDNS	02ALL	2	20L	G14_037	FROM->TO	Hitchland Interchange - WALKTAP7 345.00 345KV CKT 1	956.09	1051.7	0.28547	99.5	G11-14T 345.00 - WOODWARD DISTRICT EHV 345KV CKT 1
FDNS	02ALL	2	20L	G14_037	FROM->TO	Hitchland Interchange - WALKTAP7 345.00 345KV CKT 1	956.09	1051.7	0.28547	99.5	G11-14T 345.00 - WOODWARD DISTRICT EHV 345KV CKT 2
FDNS	02ALL	2	25SP	G14_037	FROM->TO	POTTER COUNTY INTERCHANGE (WAUK 90343-A) 345/230/13.2KV TRANSFORMER CKT 1	560	560	0.11134	121.4654	BASE CASE
FDNS	02ALL	2	25SP	G14_037	FROM->TO	POTTER COUNTY INTERCHANGE (WAUK 90343-A) 345/230/13.2KV TRANSFORMER CKT 1	560	560	0.11134	118.3664	BASE CASE
FDNS	02ALL	3	25SP	G14_037	TO->FROM	BUSHLAND INTERCHANGE - POTTER COUNTY INTERCHANGE 230KV CKT 1	318.7	350.57	0.03234	112.4955	BASE CASE
FDNS	02ALL	3	25SP	G14_037	FROM->TO	POTTER COUNTY INTERCHANGE (WAUK 90343-A) 345/230/13.2KV TRANSFORMER CKT 1	560	560	0.0906	110.0696	BASE CASE
FDNS	02ALL	3	25SP	G14_037	FROM->TO	POTTER COUNTY INTERCHANGE (WAUK 90343-A) 345/230/13.2KV TRANSFORMER CKT 1	560	560	0.0906	108.0209	BASE CASE
FDNSLock-Blown up	02ALL	0	16WP	G14_038		Non-Converged Contingency	987.16	1082.8	0.25119	-	FINNEY SWITCHING STATION - Hitchland Interchange 345KV CKT 1
FDNSLock-Blown up	02ALL	0	16WP	G14_038		Non-Converged Contingency	956.09	1051.7	0.25119	-	FINNEY SWITCHING STATION - HOLCOMB 345KV CKT 1
FDNSLock-Blown up	02ALL	0	16WP	G14_038		Non-Converged Contingency	1793	1793	0.23915	-	G11-14T 345.00 - WOODWARD DISTRICT EHV 345KV CKT 1
FDNSLock-Blown up	02ALL	0	16WP	G14_038		Non-Converged Contingency	1716	1793	0.23915	-	G11-14T 345.00 - WOODWARD DISTRICT EHV 345KV CKT 2
FDNSLock-Blown up	02ALL	0	17G	G14_038		Non-Converged Contingency	956.09	1051.7	0.244	-	FINNEY SWITCHING STATION - Hitchland Interchange 345KV CKT 1
FDNSLock-Blown up	02ALL	0	17G	G14_038		Non-Converged Contingency	956.09	1051.7	0.244	-	FINNEY SWITCHING STATION - HOLCOMB 345KV CKT 1
FDNSLock-Blown up	02ALL	0	17G	G14_038		Non-Converged Contingency	1793	1793	0.23692	-	G11-14T 345.00 - WOODWARD DISTRICT EHV 345KV CKT 1
FDNSLock-Blown up	02ALL	0	17G	G14_038		Non-Converged Contingency	1716	1793	0.23692	-	G11-14T 345.00 - WOODWARD DISTRICT EHV 345KV CKT 2
FDNSLock-Blown up	02ALL	0	17G	G14_038		Non-Converged Contingency	560	560	0.21537	-	POTTER COUNTY INTERCHANGE (WAUK 90343-A) 345/230/13.2KV TRANSFORMER CKT 1
FDNSLock-Blown up	02ALL	0	17G	G14_038		Non-Converged Contingency	1420	1775	0.18734	-	G11_051T 345.00 - TATONGA7 345.00 345KV CKT 1
FDNSLock-Blown up	02ALL	0	17G	G14_038		Non-Converged Contingency	1420	1775	0.18734	-	G11_051T 345.00 - WOODWARD DISTRICT EHV 345KV CKT 1
FDNSLock-Blown up	02ALL	0	17G	G14_038		Non-Converged Contingency	1195	1195	0.18734	-	MATHWSN7 345.00 - TATONGA7 345.00 345KV CKT 1
FDNSLock-Blown up	02ALL	0	17G	G14_038		Non-Converged Contingency	439	439	0.0845	-	CHISHOLM6 230.00 - SWEETWATER 230KV CKT 1
FDNSLock-Blown up	02ALL	0	17SP	G14_038		Non-Converged Contingency	956.09	1051.7	0.26562	-	Hitchland Interchange - WALKTAP7 345.00 345KV CKT 1
FDNSLock-Blown up	02ALL	0	20L	G14_038		Non-Converged Contingency	0	0	0.45689	-	P12:345:SPS:J07.1.FINN.HITCH
FDNSLock-Blown up	02ALL	0	20L	G14_038		Non-Converged Contingency	956.09	1051.7	0.24388	-	Hitchland Interchange - WALKTAP7 345.00 345KV CKT 1
FDNSLock-Blown up	02ALL	0	20L	G14_038		Non-Converged Contingency	956.09	1051.7	0.24388	-	Hitchland Interchange - WALKTAP7 345.00 345KV CKT 1
FDNSLock-Blown up	02ALL	0	20L	G14_038		Non-Converged Contingency	560	560	0.22937	-	POTTER COUNTY INTERCHANGE (WAUK 90343-A) 345/230/13.2KV TRANSFORMER CKT 1
FDNSLock-Blown up	02ALL	0	20L	G14_038		Non-Converged Contingency	560	560	0.22937	-	POTTER COUNTY INTERCHANGE (WAUK 90343-A) 345/230/13.2KV TRANSFORMER CKT 1
FDNSLock-Blown up	02ALL	0	20L	G14_038		Non-Converged Contingency	1793	1793	0.22405	-	G11-14T 345.00 - WOODWARD DISTRICT EHV 345KV CKT 1
FDNSLock-Blown up	02ALL	0	20L	G14_038		Non-Converged Contingency	1716	1793	0.22405	-	G11-14T 345.00 - WOODWARD DISTRICT EHV 345KV CKT 2
FDNSLock-Blown up	02ALL	0	20L	G14_038		Non-Converged Contingency	956.09	1051.7	0.213	-	FINNEY SWITCHING STATION - HOLCOMB 345KV CKT 1
FDNSLock-Blown up	02ALL	0	20L	G14_038		Non-Converged Contingency	956.09	1051.7	0.213	-	FINNEY SWITCHING STATION - HOLCOMB 345KV CKT 1
FDNSLock-Blown up	02ALL	0	20L	G14_038		Non-Converged Contingency	956.09	1051.7	0.213	-	FINNEY SWITCHING STATION - WALKTAP7 345.00 345KV CKT 1
FDNSLock-Blown up	02ALL	0	20L	G14_038		Non-Converged Contingency	956.09	1051.7	0.213	-	FINNEY SWITCHING STATION - WALKTAP7 345.00 345KV CKT 1
FDNSLock-Blown up	02ALL	0	20L	G14_038		Non-Converged Contingency	1420	1775	0.17095	-	G11_051T 345.00 - TATONGA7 345.00 345KV CKT 1
FDNSLock-Blown up	02ALL	0	20L	G14_038		Non-Converged Contingency	1195	1195	0.17095	-	MATHWSN7 345.00 - TATONGA7 345.00 345KV CKT 1
FDNSLock-Blown up	02ALL	0	20L	G14_038		Non-Converged Contingency	0	0	0.08942	-	P12:230:AEPW:ELKCITY6:SWEETWT6
FDNSLock-Blown up	02ALL	0	20L	G14_038		Non-Converged Contingency	421	439	0.07162	-	CHISHOLM6 230.00 - SWEETWATER 230KV CKT 1
FDNSLock-Blown up	02ALL	0	20L	G14_038		Non-Converged Contingency	717	789	0.04998	-	GEN515591 1-PALDRW11 0.6900
FDNSLock-Blown up	02ALL	0	20SP	G14_038		Non-Converged Contingency	956.09	1051.7	0.26037	-	Hitchland Interchange - WALKTAP7 345.00 345KV CKT 1
FDNSLock-Blown up	02ALL	0	20WP	G14_038		Non-Converged Contingency	0	0	0.47631	-	P12:345:SPS:J07.1.FINN.HITCH
FDNSLock-Blown up	02ALL	0	20WP	G14_038		Non-Converged Contingency	987.16	1082.8	0.25393	-	Hitchland Interchange - WALKTAP7 345.00 345KV CKT 1
FDNSLock-Blown up	02ALL	0	20WP	G14_038		Non-Converged Contingency	987.16	1082.8	0.25393	-	Hitchland Interchange - WALKTAP7 345.00 345KV CKT 1
FDNSLock-Blown up	02ALL	0	20WP	G14_038		Non-Converged Contingency	1793	1793	0.22945	-	G11-14T 345.00 - WOODWARD DISTRICT EHV 345KV CKT 1
FDNSLock-Blown up	02ALL	0	20WP	G14_038		Non-Converged Contingency	1716	1793	0.22945	-	G11-14T 345.00 - WOODWARD DISTRICT EHV 345KV CKT 2
FDNSLock-Blown up	02ALL	0	20WP	G14_038		Non-Converged Contingency	956.09	1051.7	0.22238	-	FINNEY SWITCHING STATION - HOLCOMB 345KV CKT 1
FDNSLock-Blown up	02ALL	0	20WP	G14_038		Non-Converged Contingency	956.09	1051.7	0.22238	-	FINNEY SWITCHING STATION - HOLCOMB 345KV CKT 1
FDNSLock-Blown up	02ALL	0	20WP	G14_038		Non-Converged Contingency	987.16	1082.8	0.22238	-	FINNEY SWITCHING STATION - WALKTAP7 345.00 345KV CKT 1
FDNSLock-Blown up	02ALL	0	20WP	G14_038		Non-Converged Contingency	987.16	1082.8	0.22238	-	FINNEY SWITCHING STATION - WALKTAP7 345.00 345KV CKT 1
FDNSLock-Blown up	02ALL	0	20WP	G14_038		Non-Converged Contingency	560	560	0.21804	-	POTTER COUNTY INTERCHANGE (WAUK 90343-A) 345/230/13.2KV TRANSFORMER CKT 1
FDNSLock-Blown up	02ALL	0	20WP	G14_038		Non-Converged Contingency	560	560	0.21804	-	POTTER COUNTY INTERCHANGE (WAUK 90343-A) 345/230/13.2KV TRANSFORMER CKT 1
FDNSLock-Blown up	02ALL	0	20WP	G14_038		Non-Converged Contingency	1420	1775	0.17461	-	G11_051T 345.00 - TATONGA7 345.00 345KV CKT 1
FDNSLock-Blown up	02ALL	0	20WP	G14_038		Non-Converged Contingency	1420	1775	0.17461	-	G11_051T 345.00 - WOODWARD DISTRICT EHV 345KV CKT 1
FDNSLock-Blown up	02ALL	0	20WP	G14_038		Non-Converged Contingency	1195	1195	0.17461	-	MATHWSN7 345.00 - TATONGA7 345.00 345KV CKT 1
FDNSLock-Blown up	02ALL	0	20WP	G14_038		Non-Converged Contingency	0	0	0.15778	-	P12:230:AEPW-SPS:SWEETWT6:WHEELER 6
FDNSLock-Blown up	02ALL	0	20WP	G14_038		Non-Converged Contingency	0	0	0.10023	-	P12:230:AEPW:ELKCITY6:SWEETWT6
FDNSLock-Blown up	02ALL	0	20WP	G14_038		Non-Converged Contingency	421	439	0.07889	-	CHISHOLM6 230.00 - SWEETWATER 230KV CKT 1
FDNSLock-Blown up	02ALL	0	20WP	G14_038		Non-Converged Contingency	435.02	457.73	0.07889	-	STATELINE INTERCHANGE - STLN-DEMARC6 230KV CKT 1
FDNSLock-Blown up	02ALL	0	20WP	G14_038		Non-Converged Contingency	439	439	0.07889	-	STLN-DEMARC6 - SWEETWATER 230KV CKT 1
FDNSLock-Blown up	02ALL	0	20WP	G14_038		Non-Converged Contingency	1022	1124	0.07348	-	G14-074T 345.00 - OKLAUNION 345KV CKT 1
FDNSLock-Blown up	02ALL	2	16WP	G14_038		Non-Converged Contingency	987.2	1082.8	0.25833	-	Hitchland Interchange - WALKTAP7 345.00 345KV CKT 1
FDNSLock-Blown up	02ALL	2	17G	G14_038		Non-Converged Contingency	956.09	1051.7	0.25086	-	Hitchland Interchange - WALKTAP7 345.00 345KV CKT 1
FDNSLock-Blown up	02ALL	2	20L	G14_038		Non-Converged Contingency	0	0	0.44334	-	P12:345:SPS:J07.1.FINN.HITCH
FDNSLock-Blown up	02ALL	2	20L	G14_038		Non-Converged Contingency	956.09	1051.7	0.23664	-	Hitchland Interchange - WALKTAP7 345.00 345KV CKT 1
FDNSLock-Blown up	02ALL	2	20WP	G14_038		Non-Converged Contingency	0	0	0.46204	-	P12:345:SPS:J07.1.FINN.HITCH
FDNSLock-Blown up	02ALL	2	20WP	G14_038		Non-Converged Contingency	987.16	1082.8	0.24634	-	Hitchland Interchange - WALKTAP7 345.00 345KV CKT 1
FDNSLock-Blown up	02ALL	2	20WP	G14_038		Non-Converged Contingency	987.16	1082.8	0.24634	-	Hitchland Interchange - WALKTAP7 345.00 345KV CKT 1
FDNSLock-Blown up	02ALL	2	20WP	G14_038		Non-Converged Contingency	1793	1793	0.238	-	G11-14T 345.00 - WOODWARD DISTRICT EHV 345KV CKT 1
FDNSLock-Blown up	02ALL	2	20WP	G14_038		Non-Converged Contingency	1716	1793	0.238	-	G11-14T 345.00 - WOODWARD DISTRICT EHV 345KV CKT 2
FDNSLock-Blown up	02ALL	2	20WP	G14_038		Non-Converged Contingency	956.09	1051.7	0.21571	-	FINNEY SWITCHING STATION - HOLCOMB 345KV CKT 1
FDNSLock-Blown up	02ALL	2	20WP	G14_038		Non-Converged Contingency	956.09	1051.7	0.21571	-	FINNEY SWITCHING STATION - HOLCOMB 345KV CKT 1
FDNSLock-Blown up	02ALL	2	20WP	G14_038		Non-Converged Contingency	987.16	1082.8	0.21571	-	FINNEY SWITCHING STATION - WALKTAP7 345.00 345KV CKT 1
FDNSLock-Blown up	02ALL	2	20WP	G14_038		Non-Converged Contingency	987.16	1082.8	0.21571	-	FINNEY SWITCHING STATION - WALKTAP7 345.00 345KV CKT 1
FDNS	02ALL	0	25SP	G14_038	TO->FROM	BUSHLAND INTERCHANGE - POTTER COUNTY INTERCHANGE 230KV CKT 1	318.7	350.57	0.04566	115.2012	BASE CASE
FDNS	02ALL	0	20L	G14_038	TO->FROM	FPL SWITCH - WOODWARD 138KV CKT 1	133	153	0.03365	117.7715	BASE CASE
FDNS	02ALL	0	17G	G14_038	TO->FROM	FPL SWITCH - WOODWARD 138KV CKT 1	133	153	0.03654	107.3742	BASE CASE
FDNS	02ALL	0	20WP	G14_038	TO->FROM	MATHWSN7 345.00 - TATONGA7 345.00 345KV CKT 1	1195	1195	0.19559	99.9	THISTLE7 345.00 - WOODWARD DISTRICT EHV 345KV CKT 1
FDNS	02ALL	0	20WP	G14_038	TO->FROM	MATHWSN7 345.00 - TATONGA7 345.00 345KV CKT 1	1195	1195	0.19559	99.9	THISTLE7 345.00 - WOODWARD DISTRICT EHV 345KV CKT 1
FDNS	02ALL	0	20WP	G14_038	TO->FROM	MATHWSN7 345.00 - TATONGA7 345.00 345KV CKT 1	1195	1195	0.19559	99.9	THISTLE7 345.00 - WOODWARD DISTRICT EHV 345KV CKT 2
FDNS	02ALL	0	20WP	G14_038	TO->FROM	MATHWSN7 345.00 - TATONGA7 345.00 345KV CKT 1	1195	1195	0.19559	99.9	THISTLE7 345.00 - WOODWARD DISTRICT EHV 345KV CKT 2

SOLUTION	GROUP	SCENARIO	SEASON	SOURCE	DIRECTION	MONITORED ELEMENT	RATEA (MVA)	RATEB(MVA)	TDF	TC%LOADING (% MVA)	CONTINGENCY
FDNS	02ALL	0	25SP	G14_038	FROM->TO	POTTER COUNTY INTERCHANGE (WAUK 90343-A) 345/230/13.2KV TRANSFORMER CKT 1	560	560	0.21011	141.9243	HITCHLAND INTERCHANGE - MOORE COUNTY INTERCHANGE 230KV CKT 1
FDNS	02ALL	0	25SP	G14_038	FROM->TO	POTTER COUNTY INTERCHANGE (WAUK 90343-A) 345/230/13.2KV TRANSFORMER CKT 1	560	560	0.21011	141.9243	HITCHLAND INTERCHANGE - MOORE COUNTY INTERCHANGE 230KV CKT 1
FDNS	02ALL	0	25SP	G14_038	FROM->TO	POTTER COUNTY INTERCHANGE (WAUK 90343-A) 345/230/13.2KV TRANSFORMER CKT 1	560	560	0.21011	136.3927	HITCHLAND INTERCHANGE - MOORE COUNTY INTERCHANGE 230KV CKT 1
FDNS	02ALL	0	25SP	G14_038	FROM->TO	POTTER COUNTY INTERCHANGE (WAUK 90343-A) 345/230/13.2KV TRANSFORMER CKT 1	560	560	0.21011	136.3927	HITCHLAND INTERCHANGE - MOORE COUNTY INTERCHANGE 230KV CKT 1
FDNS	02ALL	0	25SP	G14_038	FROM->TO	POTTER COUNTY INTERCHANGE (WAUK 90343-A) 345/230/13.2KV TRANSFORMER CKT 1	560	560	0.20025	133.8799	GEN525561 1-TOLK GEN #1 24 KV
FDNS	02ALL	0	25SP	G14_038	FROM->TO	POTTER COUNTY INTERCHANGE (WAUK 90343-A) 345/230/13.2KV TRANSFORMER CKT 1	560	560	0.20025	133.2268	GEN525562 1-TOLK GEN #2 24 KV
FDNS	02ALL	0	25SP	G14_038	FROM->TO	POTTER COUNTY INTERCHANGE (WAUK 90343-A) 345/230/13.2KV TRANSFORMER CKT 1	560	560	0.20025	131.1568	GEN523971 1-HARRINGTON GEN #1 24 KV
FDNS	02ALL	0	25SP	G14_038	FROM->TO	POTTER COUNTY INTERCHANGE (WAUK 90343-A) 345/230/13.2KV TRANSFORMER CKT 1	560	560	0.20025	131.1542	GEN523973 1-HARRINGTON GEN #3 24 KV
FDNS	02ALL	0	25SP	G14_038	FROM->TO	POTTER COUNTY INTERCHANGE (WAUK 90343-A) 345/230/13.2KV TRANSFORMER CKT 1	560	560	0.20025	131.1122	GEN523972 1-HARRINGTON GEN #2 24 KV
FDNS	02ALL	0	25SP	G14_038	FROM->TO	POTTER COUNTY INTERCHANGE (WAUK 90343-A) 345/230/13.2KV TRANSFORMER CKT 1	560	560	0.23155	130.3246	P12:345:SPS:J07.1.FINN.HITCH
FDNS	02ALL	0	25SP	G14_038	FROM->TO	POTTER COUNTY INTERCHANGE (WAUK 90343-A) 345/230/13.2KV TRANSFORMER CKT 1	560	560	0.23155	130.2546	Hitchland Interchange - WALKTAP7 345.00 345KV CKT 1
FDNS	02ALL	0	25SP	G14_038	FROM->TO	POTTER COUNTY INTERCHANGE (WAUK 90343-A) 345/230/13.2KV TRANSFORMER CKT 1	560	560	0.23155	130.2546	Hitchland Interchange - WALKTAP7 345.00 345KV CKT 1
FDNS	02ALL	0	25SP	G14_038	FROM->TO	POTTER COUNTY INTERCHANGE (WAUK 90343-A) 345/230/13.2KV TRANSFORMER CKT 1	560	560	0.20025	129.8274	GEN525561 1-TOLK GEN #1 24 KV
FDNS	02ALL	0	25SP	G14_038	FROM->TO	POTTER COUNTY INTERCHANGE (WAUK 90343-A) 345/230/13.2KV TRANSFORMER CKT 1	560	560	0.20528	129.3152	MOORE COUNTY INTERCHANGE - POTTER COUNTY INTERCHANGE 230KV CKT 1
FDNS	02ALL	0	25SP	G14_038	FROM->TO	POTTER COUNTY INTERCHANGE (WAUK 90343-A) 345/230/13.2KV TRANSFORMER CKT 1	560	560	0.20528	129.3152	MOORE COUNTY INTERCHANGE - POTTER COUNTY INTERCHANGE 230KV CKT 1
FDNS	02ALL	0	25SP	G14_038	FROM->TO	POTTER COUNTY INTERCHANGE (WAUK 90343-A) 345/230/13.2KV TRANSFORMER CKT 1	560	560	0.20025	129.1418	GEN525562 1-TOLK GEN #2 24 KV
FDNS	02ALL	0	25SP	G14_038	FROM->TO	POTTER COUNTY INTERCHANGE (WAUK 90343-A) 345/230/13.2KV TRANSFORMER CKT 1	560	560	0.20315	128.8864	Hansford County Switch Station - SPEARMAN INTERCHANGE 115KV CKT 1
FDNS	02ALL	0	25SP	G14_038	FROM->TO	POTTER COUNTY INTERCHANGE (WAUK 90343-A) 345/230/13.2KV TRANSFORMER CKT 1	560	560	0.20025	128.4397	GEN524023 1-NICHOLS GEN #3 22 KV
FDNS	02ALL	0	25SP	G14_038	FROM->TO	POTTER COUNTY INTERCHANGE (WAUK 90343-A) 345/230/13.2KV TRANSFORMER CKT 1	560	560	0.20025	128.1675	GEN527903 1-HOBBS PLANT #3 (ST)
FDNS	02ALL	0	25SP	G14_038	FROM->TO	POTTER COUNTY INTERCHANGE (WAUK 90343-A) 345/230/13.2KV TRANSFORMER CKT 1	560	560	0.20235	127.7947	DWS FRISCO - SHERMAN COUNTY TAP 115KV CKT 1
FDNS	02ALL	0	25SP	G14_038	FROM->TO	POTTER COUNTY INTERCHANGE (WAUK 90343-A) 345/230/13.2KV TRANSFORMER CKT 1	560	560	0.20025	127.5417	GEN528501 1-G14_012 24.000
FDNS	02ALL	0	25SP	G14_038	FROM->TO	POTTER COUNTY INTERCHANGE (WAUK 90343-A) 345/230/13.2KV TRANSFORMER CKT 1	560	560	0.2189	127.3784	FINNEY SWITCHING STATION - HOLCOMB 345KV CKT 1
FDNS	02ALL	0	25SP	G14_038	FROM->TO	POTTER COUNTY INTERCHANGE (WAUK 90343-A) 345/230/13.2KV TRANSFORMER CKT 1	560	560	0.2189	127.3784	FINNEY SWITCHING STATION - HOLCOMB 345KV CKT 1
FDNS	02ALL	0	25SP	G14_038	FROM->TO	POTTER COUNTY INTERCHANGE (WAUK 90343-A) 345/230/13.2KV TRANSFORMER CKT 1	560	560	0.20025	127.0897	GEN523971 1-HARRINGTON GEN #1 24 KV
FDNS	02ALL	0	25SP	G14_038	FROM->TO	POTTER COUNTY INTERCHANGE (WAUK 90343-A) 345/230/13.2KV TRANSFORMER CKT 1	560	560	0.20025	127.0878	GEN523973 1-HARRINGTON GEN #3 24 KV
FDNS	02ALL	0	25SP	G14_038	FROM->TO	POTTER COUNTY INTERCHANGE (WAUK 90343-A) 345/230/13.2KV TRANSFORMER CKT 1	560	560	0.20025	127.056	GEN523972 1-HARRINGTON GEN #2 24 KV
FDNS	02ALL	0	25SP	G14_038	FROM->TO	POTTER COUNTY INTERCHANGE (WAUK 90343-A) 345/230/13.2KV TRANSFORMER CKT 1	560	560	0.20235	127.038	P12:115:SPS:W08.1.HITCH.LASLEY
FDNS	02ALL	0	25SP	G14_038	FROM->TO	POTTER COUNTY INTERCHANGE (WAUK 90343-A) 345/230/13.2KV TRANSFORMER CKT 1	560	560	0.20284	126.936	Hitchland Interchange (SIEM 8743067) 345/230/13.2KV TRANSFORMER CKT 2
FDNS	02ALL	0	25SP	G14_038	FROM->TO	POTTER COUNTY INTERCHANGE (WAUK 90343-A) 345/230/13.2KV TRANSFORMER CKT 1	560	560	0.20284	126.936	Hitchland Interchange (SIEM 8743067) 345/230/13.2KV TRANSFORMER CKT 2
FDNS	02ALL	0	25SP	G14_038	FROM->TO	POTTER COUNTY INTERCHANGE (WAUK 90343-A) 345/230/13.2KV TRANSFORMER CKT 1	560	560	0.20235	126.8866	DWS FRISCO - HITCHLAND INTERCHANGE 115KV CKT 1
FDNS	02ALL	0	25SP	G14_038	FROM->TO	POTTER COUNTY INTERCHANGE (WAUK 90343-A) 345/230/13.2KV TRANSFORMER CKT 1	560	560	0.20025	126.7155	GEN527166 1-MUSTANG_6 118.000
FDNS	02ALL	0	25SP	G14_038	FROM->TO	POTTER COUNTY INTERCHANGE (WAUK 90343-A) 345/230/13.2KV TRANSFORMER CKT 1	560	560	0.20025	126.4848	GEN526333 1-JONES GEN #3 21 KV
FDNS	02ALL	0	25SP	G14_038	FROM->TO	POTTER COUNTY INTERCHANGE (WAUK 90343-A) 345/230/13.2KV TRANSFORMER CKT 1	560	560	0.20025	126.39	GEN526334 1-JONES_4 116.500
FDNS	02ALL	0	25SP	G14_038	FROM->TO	POTTER COUNTY INTERCHANGE (WAUK 90343-A) 345/230/13.2KV TRANSFORMER CKT 1	560	560	0.20025	126.3294	GEN525844 1-ELK_1 118.000
FDNS	02ALL	0	25SP	G14_038	FROM->TO	POTTER COUNTY INTERCHANGE (WAUK 90343-A) 345/230/13.2KV TRANSFORMER CKT 1	560	560	0.20025	126.3286	GEN525845 1-ELK_2 1 18.000
FDNS	02ALL	0	25SP	G14_038	FROM->TO	POTTER COUNTY INTERCHANGE (WAUK 90343-A) 345/230/13.2KV TRANSFORMER CKT 1	560	560	0.20025	126.2486	GEN526331 1-JONES GEN #1 22 KV
FDNS	02ALL	0	25SP	G14_038	FROM->TO	POTTER COUNTY INTERCHANGE (WAUK 90343-A) 345/230/13.2KV TRANSFORMER CKT 1	560	560	0.20025	126.2467	GEN526332 1-JONES GEN #2 21 KV
FDNS	02ALL	0	25SP	G14_038	FROM->TO	POTTER COUNTY INTERCHANGE (WAUK 90343-A) 345/230/13.2KV TRANSFORMER CKT 1	560	560	0.20025	126.1075	GEN527901 1-HOBBS PLANT #1 (CT)
FDNS	02ALL	0	25SP	G14_038	FROM->TO	POTTER COUNTY INTERCHANGE (WAUK 90343-A) 345/230/13.2KV TRANSFORMER CKT 1	560	560	0.20025	126.1075	GEN527902 1-HOBBS PLANT #2 (CT)
FDNS	02ALL	0	25SP	G14_038	FROM->TO	POTTER COUNTY INTERCHANGE (WAUK 90343-A) 345/230/13.2KV TRANSFORMER CKT 1	560	560	0.20315	125.8002	HITCHLAND INTERCHANGE - Hansford County Switch Station 115KV CKT 1
FDNS	02ALL	0	25SP	G14_038	FROM->TO	POTTER COUNTY INTERCHANGE (WAUK 90343-A) 345/230/13.2KV TRANSFORMER CKT 1	560	560	0.20315	125.8002	HITCHLAND INTERCHANGE - Hansford County Switch Station 115KV CKT 1
FDNS	02ALL	0	25SP	G14_038	FROM->TO	POTTER COUNTY INTERCHANGE (WAUK 90343-A) 345/230/13.2KV TRANSFORMER CKT 1	560	560	0.23155	125.7167	P12:345:SPS:J07.1.FINN.HITCH
FDNS	02ALL	0	25SP	G14_038	FROM->TO	POTTER COUNTY INTERCHANGE (WAUK 90343-A) 345/230/13.2KV TRANSFORMER CKT 1	560	560	0.23155	125.6761	Hitchland Interchange - WALKTAP7 345.00 345KV CKT 1
FDNS	02ALL	0	25SP	G14_038	FROM->TO	POTTER COUNTY INTERCHANGE (WAUK 90343-A) 345/230/13.2KV TRANSFORMER CKT 1	560	560	0.23155	125.6761	Hitchland Interchange - WALKTAP7 345.00 345KV CKT 1
FDNS	02ALL	0	25SP	G14_038	FROM->TO	POTTER COUNTY INTERCHANGE (WAUK 90343-A) 345/230/13.2KV TRANSFORMER CKT 1	560	560	0.20225	125.6699	Hitchland Interchange (H TB80155502) 345/230/13.2KV TRANSFORMER CKT 1
FDNS	02ALL	0	25SP	G14_038	FROM->TO	POTTER COUNTY INTERCHANGE (WAUK 90343-A) 345/230/13.2KV TRANSFORMER CKT 1	560	560	0.20225	125.6699	Hitchland Interchange (H TB80155502) 345/230/13.2KV TRANSFORMER CKT 1
FDNS	02ALL	0	25SP	G14_038	FROM->TO	POTTER COUNTY INTERCHANGE (WAUK 90343-A) 345/230/13.2KV TRANSFORMER CKT 1	560	560	0.20025	125.5858	GEN525494 1-PLANT X GEN #4 20 KV
FDNS	02ALL	0	25SP	G14_038	FROM->TO	POTTER COUNTY INTERCHANGE (WAUK 90343-A) 345/230/13.2KV TRANSFORMER CKT 1	560	560	0.20688	125.5481	BUCKNER7 345.00 - SPEARVILLE 345KV CKT 1
FDNS	02ALL	0	25SP	G14_038	FROM->TO	POTTER COUNTY INTERCHANGE (WAUK 90343-A) 345/230/13.2KV TRANSFORMER CKT 1	560	560	0.20688	125.5481	BUCKNER7 345.00 - SPEARVILLE 345KV CKT 1
FDNS	02ALL	0	25SP	G14_038	FROM->TO	POTTER COUNTY INTERCHANGE (WAUK 90343-A) 345/230/13.2KV TRANSFORMER CKT 1	560	560	0.20025	125.2529	GEN527163 1-MUSTANG GEN #3 22 KV
FDNS	02ALL	0	25SP	G14_038	FROM->TO	POTTER COUNTY INTERCHANGE (WAUK 90343-A) 345/230/13.2KV TRANSFORMER CKT 1	560	560	0.20528	125.225	MOORE COUNTY INTERCHANGE - POTTER COUNTY INTERCHANGE 230KV CKT 1
FDNS	02ALL	0	25SP	G14_038	FROM->TO	POTTER COUNTY INTERCHANGE (WAUK 90343-A) 345/230/13.2KV TRANSFORMER CKT 1	560	560	0.20528	125.225	MOORE COUNTY INTERCHANGE - POTTER COUNTY INTERCHANGE 230KV CKT 1
FDNS	02ALL	0	25SP	G14_038	FROM->TO	POTTER COUNTY INTERCHANGE (WAUK 90343-A) 345/230/13.2KV TRANSFORMER CKT 1	560	560	0.2189	125.1264	FINNEY SWITCHING STATION - WALKTAP7 345.00 345KV CKT 1
FDNS	02ALL	0	25SP	G14_038	FROM->TO	POTTER COUNTY INTERCHANGE (WAUK 90343-A) 345/230/13.2KV TRANSFORMER CKT 1	560	560	0.2189	125.1264	FINNEY SWITCHING STATION - WALKTAP7 345.00 345KV CKT 1
FDNS	02ALL	0	25SP	G14_038	FROM->TO	POTTER COUNTY INTERCHANGE (WAUK 90343-A) 345/230/13.2KV TRANSFORMER CKT 1	560	560	0.20025	125.0156	GEN527161 1-MUSTANG GEN #1
FDNS	02ALL	0	25SP	G14_038	FROM->TO	POTTER COUNTY INTERCHANGE (WAUK 90343-A) 345/230/13.2KV TRANSFORMER CKT 1	560	560	0.20025	125.0156	GEN527162 1-MUSTANG GEN #2
FDNS	02ALL	0	25SP	G14_038	FROM->TO	POTTER COUNTY INTERCHANGE (WAUK 90343-A) 345/230/13.2KV TRANSFORMER CKT 1	560	560	0.20315	124.926	Hansford County Switch Station - SPEARMAN INTERCHANGE 115KV CKT 1
FDNS	02ALL	0	25SP	G14_038	FROM->TO	POTTER COUNTY INTERCHANGE (WAUK 90343-A) 345/230/13.2KV TRANSFORMER CKT 1	560	560	0.20025	124.7669	GEN527164 1-MUSTANG GEN #4 22 KV
FDNS	02ALL	0	25SP	G14_038	FROM->TO	POTTER COUNTY INTERCHANGE (WAUK 90343-A) 345/230/13.2KV TRANSFORMER CKT 1	560	560	0.20025	124.7599	GEN527165 1-Mustang Gen #5
FDNS	02ALL	0	25SP	G14_038	FROM->TO	POTTER COUNTY INTERCHANGE (WAUK 90343-A) 345/230/13.2KV TRANSFORMER CKT 1	560	560	0.20025	124.6367	GEN524023 1-NICHOLS GEN #3 22 KV
FDNS	02ALL	0	25SP	G14_038	FROM->TO	POTTER COUNTY INTERCHANGE (WAUK 90343-A) 345/230/13.2KV TRANSFORMER CKT 1	560	560	0.19988	124.536	TUCO INTERCHANGE - YOAKUM_345 345.00 345KV CKT 1
FDNS	02ALL	0	25SP	G14_038	FROM->TO	POTTER COUNTY INTERCHANGE (WAUK 90343-A) 345/230/13.2KV TRANSFORMER CKT 1	560	560	0.20025	124.445	GEN527903 1-HOBBS PLANT #3 (ST)
FDNS	02ALL	0	25SP	G14_038	FROM->TO	POTTER COUNTY INTERCHANGE (WAUK 90343-A) 345/230/13.2KV TRANSFORMER CKT 1	560	560	0.20025	124.4242	GEN523942 1-MAJSTC-WTG210.6900
FDNS	02ALL	0	25SP	G14_038	FROM->TO	POTTER COUNTY INTERCHANGE (WAUK 90343-A) 345/230/13.2KV TRANSFORMER CKT 1	560	560	0.20025	124.4172	GEN523941 1-MAJSTC-WTG110.6900
FDNS	02ALL	0	25SP	G14_038	FROM->TO	POTTER COUNTY INTERCHANGE (WAUK 90343-A) 345/230/13.2KV TRANSFORMER CKT 1	560	560	0.20688	124.399	BUCKNER7 345.00 - HOLCOMB 345KV CKT 1
FDNS	02ALL	0	25SP	G14_038	FROM->TO	POTTER COUNTY INTERCHANGE (WAUK 90343-A) 345/230/13.2KV TRANSFORMER CKT 1	560	560	0.20688	124.399	BUCKNER7 345.00 - HOLCOMB 345KV CKT 1
FDNS	02ALL	0	25SP	G14_038	FROM->TO	POTTER COUNTY INTERCHANGE (WAUK 90343-A) 345/230/13.2KV TRANSFORMER CKT 1	560	560	0.20025	124.3565	GEN527884 1-CUNNINGHAM GEN #4 22 KV
FDNS	02ALL	0	25SP	G14_038	FROM->TO	POTTER COUNTY INTERCHANGE (WAUK 90343-A) 345/230/13.2KV TRANSFORMER CKT 1	560	560	0.20025	124.3463	GEN527883 1-CUNNINGHAM GEN #3 22 KV
FDNS	02ALL	0	25SP	G14_038	FROM->TO	POTTER COUNTY INTERCHANGE (WAUK 90343-A) 345/230/13.2KV TRANSFORMER CKT 1	560	560	0.20106	124.3379	HITCHLAND INTERCHANGE - OCHILTREE 230KV CKT 1
FDNS	02ALL	0	25SP	G14_038	FROM->TO	POTTER COUNTY INTERCHANGE (WAUK 90343-A) 345/230/13.2KV TRANSFORMER CKT 1	560	560	0.20106	124.3379	HITCHLAND INTERCHANGE - OCHILTREE 230KV CKT 1
FDNS	02ALL	0	25SP	G14_038	FROM->TO	POTTER COUNTY INTERCHANGE (WAUK 90343-A) 345/230/13.2KV TRANSFORMER CKT 1	560	560	0.20106	124.2454	OCHILTREE (H TP80219401) 230/115/13.2KV TRANSFORMER CKT 1
FDNS	02ALL	0	25SP	G14_038	FROM->TO	POTTER COUNTY INTERCHANGE (WAUK 90343-A) 345/230/13.2KV TRANSFORMER CKT 1	560	560	0.20106	124.2454	OCHILTREE (H TP80219401) 230/115/13.2KV TRANSFORMER CKT 1
FDNS	02ALL	0	25SP	G14_038	FROM->TO	POTTER COUNTY INTERCHANGE (WAUK 90343-A) 345/230/13.2KV TRANSFORMER CKT 1	560	560	0.20025	124.1048	GEN523462 1-BLACKHAWK GEN #2
FDNS	02ALL	0	25SP	G14_038	FROM->TO	POTTER COUNTY INTERCHANGE (WAUK 90343-A) 345/230/13.2KV TRANSFORMER CKT 1	560	560	0.20025	124.1043	GEN523461 1-BLACKHAWK GEN #1
FDNS	02ALL	0	25SP	G14_038	FROM->TO	POTTER COUNTY INTERCHANGE (WAUK 90343-A) 345/230/13.2KV TRANSFORMER CKT 1	560	560	0.20025	124.0253	GEN528361 1-MADDOX GEN #1
FDNS	02ALL	0	25SP	G14_038	FROM->TO	POTTER COUNTY INTERCHANGE (WAUK 90343-A) 345/230/13.2KV TRANSFORMER CKT 1	560	560	0.20235	123.996	DWS FRISCO - SHERMAN COUNTY TAP 115KV CKT 1
FDNS	02ALL	0	25SP	G14_038	FROM->TO	POTTER COUNTY INTERCHANGE (WAUK 90343-A) 345/230/13.2KV TRANSFORMER CKT 1	560	560	0.20025	123.8858	GEN528501 1-G14_012 24.000
FDNS	02ALL	0	25SP	G14_038	FROM->TO	POTTER COUNTY INTERCHANGE (WAUK 90343-A) 345/230/13.2KV TRANSFORMER CKT 1	560	560	0.20025	123.5644	GEN562550 1-G14_040_3 0.6900
FDNS	02ALL	0	25SP	G14_038	FROM->TO	POTTER COUNTY INTERCHANGE (WAUK 90343-A) 345/230/13.2KV TRANSFORMER CKT 1	560	560	0.2189	123.4501	FINNEY SWITCHING STATION - HOLCOMB 345KV CKT 1

SOLUTION	GROUP	SCENARIO	SEASON	SOURCE	DIRECTION	MONITORED ELEMENT	RATEA (MVA)	RATEB(MVA)	TDF	TC%LOADING (% MVA)	CONTINGENCY
FDNS	02ALL	0	25SP	G14_038	FROM->TO	POTTER COUNTY INTERCHANGE (WAUK 90343-A) 345/230/13.2KV TRANSFORMER CKT 1	560	560	0.2189	123.4501	FINNEY SWITCHING STATION - HOLCOMB 345KV CKT 1
FDNS	02ALL	0	25SP	G14_038	FROM->TO	POTTER COUNTY INTERCHANGE (WAUK 90343-A) 345/230/13.2KV TRANSFORMER CKT 1	560	560	0.20025	123.3997	GEN560105 1-G08-22 0.6900
FDNS	02ALL	0	25SP	G14_038	FROM->TO	POTTER COUNTY INTERCHANGE (WAUK 90343-A) 345/230/13.2KV TRANSFORMER CKT 1	560	560	0.20089	123.3839	RB-ELKS 3115.00 - SHERMAN COUNTY TAP 115KV CKT 1
FDNS	02ALL	0	25SP	G14_038	FROM->TO	POTTER COUNTY INTERCHANGE (WAUK 90343-A) 345/230/13.2KV TRANSFORMER CKT 1	560	560	0.20235	123.3233	P12:115:SPS:W08.1.HITCH.LASLEY
FDNS	02ALL	0	25SP	G14_038	FROM->TO	POTTER COUNTY INTERCHANGE (WAUK 90343-A) 345/230/13.2KV TRANSFORMER CKT 1	560	560	0.20089	123.3195	P12:115:SPS:W24.1.MOOREE.LASLEY
FDNS	02ALL	0	25SP	G14_038	FROM->TO	POTTER COUNTY INTERCHANGE (WAUK 90343-A) 345/230/13.2KV TRANSFORMER CKT 1	560	560	0.20618	123.2308	BVRCNTY7 345.00 - G11-14T 345.00 345KV CKT 2
FDNS	02ALL	0	25SP	G14_038	FROM->TO	POTTER COUNTY INTERCHANGE (WAUK 90343-A) 345/230/13.2KV TRANSFORMER CKT 1	560	560	0.20284	123.2182	Hitchland Interchange (SIEM 8743067) 345/230/13.2KV TRANSFORMER CKT 2
FDNS	02ALL	0	25SP	G14_038	FROM->TO	POTTER COUNTY INTERCHANGE (WAUK 90343-A) 345/230/13.2KV TRANSFORMER CKT 1	560	560	0.20284	123.2182	Hitchland Interchange (SIEM 8743067) 345/230/13.2KV TRANSFORMER CKT 2
FDNS	02ALL	0	25SP	G14_038	FROM->TO	POTTER COUNTY INTERCHANGE (WAUK 90343-A) 345/230/13.2KV TRANSFORMER CKT 1	560	560	0.2015	123.206	P12:115:SPS:W29.1.OCLTRE.SPRMN
FDNS	02ALL	0	25SP	G14_038	FROM->TO	POTTER COUNTY INTERCHANGE (WAUK 90343-A) 345/230/13.2KV TRANSFORMER CKT 1	560	560	0.20235	123.2017	DWS FRISCO - HITCHLAND INTERCHANGE 115KV CKT 1
FDNS	02ALL	0	25SP	G14_038	FROM->TO	POTTER COUNTY INTERCHANGE (WAUK 90343-A) 345/230/13.2KV TRANSFORMER CKT 1	560	560	0.20175	123.1858	PRINGLE INTERCHANGE - SPEARMAN INTERCHANGE 115KV CKT 1
FDNS	02ALL	0	25SP	G14_038	FROM->TO	POTTER COUNTY INTERCHANGE (WAUK 90343-A) 345/230/13.2KV TRANSFORMER CKT 1	560	560	0.20089	123.1836	RB-ELKS 3115.00 - RB-SPURLOCK3115.00 115KV CKT 1
FDNS	02ALL	0	25SP	G14_038	FROM->TO	POTTER COUNTY INTERCHANGE (WAUK 90343-A) 345/230/13.2KV TRANSFORMER CKT 1	560	560	0.20025	123.1334	GEN527166 1-MUSTANG_6 118.000
FDNS	02ALL	0	25SP	G14_038	FROM->TO	POTTER COUNTY INTERCHANGE (WAUK 90343-A) 345/230/13.2KV TRANSFORMER CKT 1	560	560	0.2015	123.1073	OCHILTREE - TEXAS FARMS SUB 115KV CKT 1
FDNS	02ALL	0	25SP	G14_038	FROM->TO	POTTER COUNTY INTERCHANGE (WAUK 90343-A) 345/230/13.2KV TRANSFORMER CKT 1	560	560	0.20383	123.024	G15061_T 345.00 - MINGO 345KV CKT 1
FDNS	02ALL	0	25SP	G14_038	FROM->TO	POTTER COUNTY INTERCHANGE (WAUK 90343-A) 345/230/13.2KV TRANSFORMER CKT 1	560	560	0.2015	122.9332	SPEARMAN SUB - TEXAS FARMS SUB 115KV CKT 1
FDNS	02ALL	0	25SP	G14_038	FROM->TO	POTTER COUNTY INTERCHANGE (WAUK 90343-A) 345/230/13.2KV TRANSFORMER CKT 1	560	560	0.20025	122.9213	GEN526333 1-JONES GEN #3 21 KV
FDNS	02ALL	0	25SP	G14_038	FROM->TO	POTTER COUNTY INTERCHANGE (WAUK 90343-A) 345/230/13.2KV TRANSFORMER CKT 1	560	560	0.20089	122.9048	MOORE COUNTY INTERCHANGE EAST BUS - RB-SPURLOCK3115.00 115KV CKT 1
FDNS	02ALL	0	25SP	G14_038	FROM->TO	POTTER COUNTY INTERCHANGE (WAUK 90343-A) 345/230/13.2KV TRANSFORMER CKT 1	560	560	0.20075	122.873	DALLAM COUNTY INTERCHANGE - SHERMAN COUNTY SUB 115KV CKT 1
FDNS	02ALL	0	25SP	G14_038	FROM->TO	POTTER COUNTY INTERCHANGE (WAUK 90343-A) 345/230/13.2KV TRANSFORMER CKT 1	560	560	0.20025	122.8353	GEN526334 1-JONES_4 116.500
FDNS	02ALL	0	25SP	G14_038	FROM->TO	POTTER COUNTY INTERCHANGE (WAUK 90343-A) 345/230/13.2KV TRANSFORMER CKT 1	560	560	0.20383	122.7968	G15061_T 345.00 - SETAB 345KV CKT 1
FDNS	02ALL	0	25SP	G14_038	FROM->TO	POTTER COUNTY INTERCHANGE (WAUK 90343-A) 345/230/13.2KV TRANSFORMER CKT 1	560	560	0.20075	122.7938	P12:115:SPS:W05.1.DALLAM.LASLEY
FDNS	02ALL	0	25SP	G14_038	FROM->TO	POTTER COUNTY INTERCHANGE (WAUK 90343-A) 345/230/13.2KV TRANSFORMER CKT 1	560	560	0.20025	122.7795	GEN525844 1-ELK_1 118.000
FDNS	02ALL	0	25SP	G14_038	FROM->TO	POTTER COUNTY INTERCHANGE (WAUK 90343-A) 345/230/13.2KV TRANSFORMER CKT 1	560	560	0.20025	122.7788	GEN525845 1-ELK_2 1 18.000
FDNS	02ALL	0	25SP	G14_038	FROM->TO	POTTER COUNTY INTERCHANGE (WAUK 90343-A) 345/230/13.2KV TRANSFORMER CKT 1	560	560	0.20075	122.7739	SHERMAN COUNTY SUB - SHERMAN COUNTY TAP 115KV CKT 1
FDNS	02ALL	0	25SP	G14_038	FROM->TO	POTTER COUNTY INTERCHANGE (WAUK 90343-A) 345/230/13.2KV TRANSFORMER CKT 1	560	560	0.20025	122.7558	GEN336821 1-GRAND GULF UNIT
FDNS	02ALL	0	25SP	G14_038	FROM->TO	POTTER COUNTY INTERCHANGE (WAUK 90343-A) 345/230/13.2KV TRANSFORMER CKT 1	560	560	0.20102	122.7542	HITCHLAND INTERCHANGE (H TP80148301) 230/115/13.2KV TRANSFORMER CKT 1
FDNS	02ALL	0	25SP	G14_038	FROM->TO	POTTER COUNTY INTERCHANGE (WAUK 90343-A) 345/230/13.2KV TRANSFORMER CKT 1	560	560	0.20102	122.7542	HITCHLAND INTERCHANGE (H TP80148301) 230/115/13.2KV TRANSFORMER CKT 1
FDNS	02ALL	0	25SP	G14_038	FROM->TO	POTTER COUNTY INTERCHANGE (WAUK 90343-A) 345/230/13.2KV TRANSFORMER CKT 1	560	560	0.20102	122.7542	HITCHLAND INTERCHANGE (UPDATE LATER) 230/115/13.2KV TRANSFORMER CKT 2
FDNS	02ALL	0	25SP	G14_038	FROM->TO	POTTER COUNTY INTERCHANGE (WAUK 90343-A) 345/230/13.2KV TRANSFORMER CKT 1	560	560	0.20102	122.7542	HITCHLAND INTERCHANGE (UPDATE LATER) 230/115/13.2KV TRANSFORMER CKT 2
FDNS	02ALL	0	25SP	G14_038	FROM->TO	POTTER COUNTY INTERCHANGE (WAUK 90343-A) 345/230/13.2KV TRANSFORMER CKT 1	560	560	0.20025	122.7485	GEN524285 1-WILDORADO WIND GEN
FDNS	02ALL	0	25SP	G14_038	FROM->TO	POTTER COUNTY INTERCHANGE (WAUK 90343-A) 345/230/13.2KV TRANSFORMER CKT 1	560	560	0.20025	122.7398	GEN562270 1-G12-020-2 0.6900
FDNS	02ALL	0	25SP	G14_038	FROM->TO	POTTER COUNTY INTERCHANGE (WAUK 90343-A) 345/230/13.2KV TRANSFORMER CKT 1	560	560	0.20025	122.7086	GEN526331 1-JONES GEN #1 22 KV
FDNS	02ALL	0	25SP	G14_038	FROM->TO	POTTER COUNTY INTERCHANGE (WAUK 90343-A) 345/230/13.2KV TRANSFORMER CKT 1	560	560	0.20025	122.7066	GEN526332 1-JONES GEN #2 21 KV
FDNS	02ALL	0	25SP	G14_038	FROM->TO	POTTER COUNTY INTERCHANGE (WAUK 90343-A) 345/230/13.2KV TRANSFORMER CKT 1	560	560	0.20299	122.6939	HOLCOMB - SETAB 345KV CKT 1
FDNS	02ALL	0	25SP	G14_038	FROM->TO	POTTER COUNTY INTERCHANGE (WAUK 90343-A) 345/230/13.2KV TRANSFORMER CKT 1	560	560	0.20299	122.6939	HOLCOMB - SETAB 345KV CKT 1
FDNS	02ALL	0	25SP	G14_038	FROM->TO	POTTER COUNTY INTERCHANGE (WAUK 90343-A) 345/230/13.2KV TRANSFORMER CKT 1	560	560	0.2015	122.6646	SPEARMAN INTERCHANGE - SPEARMAN SUB 115KV CKT 1
FDNS	02ALL	0	25SP	G14_038	FROM->TO	POTTER COUNTY INTERCHANGE (WAUK 90343-A) 345/230/13.2KV TRANSFORMER CKT 1	560	560	0.20025	122.6646	GEN562269 1-G12-020-1 0.6900
FDNS	02ALL	0	25SP	G14_038	FROM->TO	POTTER COUNTY INTERCHANGE (WAUK 90343-A) 345/230/13.2KV TRANSFORMER CKT 1	560	560	0.20155	122.6038	PRINGLE INTERCHANGE (ENRCO13617-1) 230/115/13.2KV TRANSFORMER CKT 1
FDNS	02ALL	0	25SP	G14_038	FROM->TO	POTTER COUNTY INTERCHANGE (WAUK 90343-A) 345/230/13.2KV TRANSFORMER CKT 1	560	560	0.20155	122.6038	PRINGLE INTERCHANGE (ENRCO13617-1) 230/115/13.2KV TRANSFORMER CKT 1
FDNS	02ALL	0	25SP	G14_038	FROM->TO	POTTER COUNTY INTERCHANGE (WAUK 90343-A) 345/230/13.2KV TRANSFORMER CKT 1	560	560	0.20025	122.5838	GEN527901 1-HOBBS PLANT #1 (CT)
FDNS	02ALL	0	25SP	G14_038	FROM->TO	POTTER COUNTY INTERCHANGE (WAUK 90343-A) 345/230/13.2KV TRANSFORMER CKT 1	560	560	0.20025	122.5838	GEN527902 1-HOBBS PLANT #2 (CT)
FDNS	02ALL	0	25SP	G14_038	FROM->TO	POTTER COUNTY INTERCHANGE (WAUK 90343-A) 345/230/13.2KV TRANSFORMER CKT 1	560	560	0.20025	122.5655	GEN336153 1-WATERFORD UNIT#3
FDNS	02ALL	0	25SP	G14_038	FROM->TO	POTTER COUNTY INTERCHANGE (WAUK 90343-A) 345/230/13.2KV TRANSFORMER CKT 1	560	560	0.20155	122.5342	Harrington Station East Bus - PRINGLE INTERCHANGE 230KV CKT 1
FDNS	02ALL	0	25SP	G14_038	FROM->TO	POTTER COUNTY INTERCHANGE (WAUK 90343-A) 345/230/13.2KV TRANSFORMER CKT 1	560	560	0.20155	122.533	P12:230:SPS:K43.1.PRNGLE.HARR_E
FDNS	02ALL	0	25SP	G14_038	FROM->TO	POTTER COUNTY INTERCHANGE (WAUK 90343-A) 345/230/13.2KV TRANSFORMER CKT 1	560	560	0.20114	122.5305	PRINGLE INTERCHANGE - SPEARMAN INTERCHANGE 115KV CKT 2
FDNS	02ALL	0	25SP	G14_038	FROM->TO	POTTER COUNTY INTERCHANGE (WAUK 90343-A) 345/230/13.2KV TRANSFORMER CKT 1	560	560	0.20025	122.505	GEN337911 1-ARKANSAS NUCLEAR ONE UNIT #2
FDNS	02ALL	0	25SP	G14_038	FROM->TO	POTTER COUNTY INTERCHANGE (WAUK 90343-A) 345/230/13.2KV TRANSFORMER CKT 1	560	560	0.20025	122.5	GEN501801 1-DOLET HILLS UNIT1
FDNS	02ALL	0	25SP	G14_038	FROM->TO	POTTER COUNTY INTERCHANGE (WAUK 90343-A) 345/230/13.2KV TRANSFORMER CKT 1	560	560	0.20413	122.451	MINGO - RED WILLOW 345KV CKT 1
FDNS	02ALL	0	25SP	G14_038	FROM->TO	POTTER COUNTY INTERCHANGE (WAUK 90343-A) 345/230/13.2KV TRANSFORMER CKT 1	560	560	0.20413	122.451	MINGO - RED WILLOW 345KV CKT 1
FDNS	02ALL	0	25SP	G14_038	FROM->TO	POTTER COUNTY INTERCHANGE (WAUK 90343-A) 345/230/13.2KV TRANSFORMER CKT 1	560	560	0.20025	122.4353	GEN335831 1-RIVERBEND UNIT#1
FDNS	02ALL	0	25SP	G14_038	FROM->TO	POTTER COUNTY INTERCHANGE (WAUK 90343-A) 345/230/13.2KV TRANSFORMER CKT 1	560	560	0.20025	122.4214	GEN527881 1-CUNNINGHAM GEN #1
FDNS	02ALL	0	25SP	G14_038	FROM->TO	POTTER COUNTY INTERCHANGE (WAUK 90343-A) 345/230/13.2KV TRANSFORMER CKT 1	560	560	0.20025	122.4074	GEN562688 1-G15_014_3 0.6900
FDNS	02ALL	0	25SP	G14_038	FROM->TO	POTTER COUNTY INTERCHANGE (WAUK 90343-A) 345/230/13.2KV TRANSFORMER CKT 1	560	560	0.20089	122.383	PRINGLE INTERCHANGE - RIVERVIEW INTERCHANGE 115KV CKT 1
FDNS	02ALL	0	25SP	G14_038	FROM->TO	POTTER COUNTY INTERCHANGE (WAUK 90343-A) 345/230/13.2KV TRANSFORMER CKT 1	560	560	0.20025	122.3806	GEN562483 1-G13_027_3 0.6900
FDNS	02ALL	0	25SP	G14_038	FROM->TO	POTTER COUNTY INTERCHANGE (WAUK 90343-A) 345/230/13.2KV TRANSFORMER CKT 1	560	560	0.20061	122.3603	MOORE COUNTY INTERCHANGE (ENRCO 136402) 230/115/13.2KV TRANSFORMER CKT 1
FDNS	02ALL	0	25SP	G14_038	FROM->TO	POTTER COUNTY INTERCHANGE (WAUK 90343-A) 345/230/13.2KV TRANSFORMER CKT 1	560	560	0.20061	122.3603	MOORE COUNTY INTERCHANGE (ENRCO 136402) 230/115/13.2KV TRANSFORMER CKT 1
FDNS	02ALL	0	25SP	G14_038	FROM->TO	POTTER COUNTY INTERCHANGE (WAUK 90343-A) 345/230/13.2KV TRANSFORMER CKT 1	560	560	0.20025	122.3304	GEN337910 1-ARKANSAS NUCLEAR ONE UNIT #1
FDNS	02ALL	0	25SP	G14_038	FROM->TO	POTTER COUNTY INTERCHANGE (WAUK 90343-A) 345/230/13.2KV TRANSFORMER CKT 1	560	560	0.20025	122.3218	GEN562756 1-G15031_7 0.6900
FDNS	02ALL	0	25SP	G14_038	FROM->TO	POTTER COUNTY INTERCHANGE (WAUK 90343-A) 345/230/13.2KV TRANSFORMER CKT 1	560	560	0.20025	122.2903	GEN562754 1-G15031_5 0.6900
FDNS	02ALL	0	25SP	G14_038	FROM->TO	POTTER COUNTY INTERCHANGE (WAUK 90343-A) 345/230/13.2KV TRANSFORMER CKT 1	560	560	0.20022	122.2776	BEARCAT 138.00 - MOORELAND 138KV CKT 1
FDNS	02ALL	0	25SP	G14_038	FROM->TO	POTTER COUNTY INTERCHANGE (WAUK 90343-A) 345/230/13.2KV TRANSFORMER CKT 1	560	560	0.20025	122.2565	GEN562556 1-G14_046_3 0.3420
FDNS	02ALL	0	25SP	G14_038	FROM->TO	POTTER COUNTY INTERCHANGE (WAUK 90343-A) 345/230/13.2KV TRANSFORMER CKT 1	560	560	0.20138	122.2466	G13-010T 345.00 - POST ROCK 345KV CKT 1
FDNS	02ALL	0	25SP	G14_038	FROM->TO	POTTER COUNTY INTERCHANGE (WAUK 90343-A) 345/230/13.2KV TRANSFORMER CKT 1	560	560	0.20315	122.2429	HITCHLAND INTERCHANGE - Hansford County Switch Station 115KV CKT 1
FDNS	02ALL	0	25SP	G14_038	FROM->TO	POTTER COUNTY INTERCHANGE (WAUK 90343-A) 345/230/13.2KV TRANSFORMER CKT 1	560	560	0.20315	122.2429	HITCHLAND INTERCHANGE - Hansford County Switch Station 115KV CKT 1
FDNS	02ALL	0	25SP	G14_038	FROM->TO	POTTER COUNTY INTERCHANGE (WAUK 90343-A) 345/230/13.2KV TRANSFORMER CKT 1	560	560	0.20025	122.2347	GEN563142 1-G15079_3 0.5500
FDNS	02ALL	0	25SP	G14_038	FROM->TO	POTTER COUNTY INTERCHANGE (WAUK 90343-A) 345/230/13.2KV TRANSFORMER CKT 1	560	560	0.20025	122.2347	GEN563151 1-G15080_2 0.5500
FDNS	02ALL	0	25SP	G14_038	FROM->TO	POTTER COUNTY INTERCHANGE (WAUK 90343-A) 345/230/13.2KV TRANSFORMER CKT 1	560	560	0.20088	122.2295	MOORE COUNTY INTERCHANGE W. - RB-S&S 3115.00 115KV CKT 1
FDNS	02ALL	0	25SP	G14_038	FROM->TO	POTTER COUNTY INTERCHANGE (WAUK 90343-A) 345/230/13.2KV TRANSFORMER CKT 1	560	560	0.20025	122.2168	GEN524890 1-SNJN-WTGA1 10.6000
FDNS	02ALL	0	25SP	G14_038	FROM->TO	POTTER COUNTY INTERCHANGE (WAUK 90343-A) 345/230/13.2KV TRANSFORMER CKT 1	560	560	0.20025	122.208	GEN522866 1-LUBBOCK POWER & LIGHT-HOLLY GEN
FDNS	02ALL	0	25SP	G14_038	FROM->TO	POTTER COUNTY INTERCHANGE (WAUK 90343-A) 345/230/13.2KV TRANSFORMER CKT 1	560	560	0.20138	122.2047	G13-010T 345.00 - SPEARVILLE 345KV CKT 1
FDNS	02ALL	0	25SP	G14_038	FROM->TO	POTTER COUNTY INTERCHANGE (WAUK 90343-A) 345/230/13.2KV TRANSFORMER CKT 1	560	560	0.20025	122.2033	GEN563043 1-G15068_4 0.6900
FDNS	02ALL	0	25SP	G14_038	FROM->TO	POTTER COUNTY INTERCHANGE (WAUK 90343-A) 345/230/13.2KV TRANSFORMER CKT 1	560	560	0.20021	122.1772	HOBBS - YOAKUM_345 345.00 345KV CKT 1
FDNS	02ALL	0	25SP	G14_038	FROM->TO	POTTER COUNTY INTERCHANGE (WAUK 90343-A) 345/230/13.2KV TRANSFORMER CKT 1	560	560	0.20025	122.1575	GEN337652 1-WHITE BLUFF UNIT #1
FDNS	02ALL	0	25SP	G14_038	FROM->TO	POTTER COUNTY INTERCHANGE (WAUK 90343-A) 345/230/13.2KV TRANSFORMER CKT 1	560	560	0.20022	122.1573	BEARCAT 138.00 - NINE MILE 138KV CKT 1
FDNS	02ALL	0	25SP	G14_038	FROM->TO	POTTER COUNTY INTERCHANGE (WAUK 90343-A) 345/230/13.2KV TRANSFORMER CKT 1	560	560	0.20022	122.1444	P12:138:WFEC:MSL14
FDNSLock	02ALL	0	25SP	G14_038	FROM->TO	POTTER COUNTY INTERCHANGE (WAUK 90343-A) 345/230/13.2KV TRANSFORMER CKT 1	560	560	0.19935	122.1397	STATELINE INTERCHANGE (H TP80154301) 230/115/13.2KV TRANSFORMER CKT 1
FDNS	02ALL	0	25SP	G14_038	FROM->TO	POTTER COUNTY INTERCHANGE (WAUK 90343-A) 345/230/13.2KV TRANSFORMER CKT 1	560	560	0.20025	122.1383	GEN525494 1-PLANT X GEN #4 20 KV
FDNS	02ALL	0	25SP	G14_038	FROM->TO	POTTER COUNTY INTERCHANGE (WAUK 90343-A) 345/230/13.2KV TRANSFORMER CKT 1	560	560	0.20025	122.1302	GEN562710 1-G15_022_3 0.5500

SOLUTION	GROUP	SCENARIO	SEASON	SOURCE	DIRECTION	MONITORED ELEMENT	RATEA (MVA)	RATEB(MVA)	TDF	TC%LOADING (% MVA)	CONTINGENCY
FDNS	02ALL	0	25SP	G14_038	FROM->TO	POTTER COUNTY INTERCHANGE (WAUK 90343-A) 345/230/13.2KV TRANSFORMER CKT 1	560	560	0.20025	122.1274	GEN337653 1-WHITE BLUFF UNIT #2
FDNS	02ALL	0	25SP	G14_038	FROM->TO	POTTER COUNTY INTERCHANGE (WAUK 90343-A) 345/230/13.2KV TRANSFORMER CKT 1	560	560	0.20025	122.1185	GEN501813 1-RODEMACHER UNIT 3
FDNS	02ALL	0	25SP	G14_038	FROM->TO	POTTER COUNTY INTERCHANGE (WAUK 90343-A) 345/230/13.2KV TRANSFORMER CKT 1	560	560	0.20025	122.1021	GEN336252 1-NINEMILE POINT UNIT#5
FDNS	02ALL	0	25SP	G14_038	FROM->TO	POTTER COUNTY INTERCHANGE (WAUK 90343-A) 345/230/13.2KV TRANSFORMER CKT 1	560	560	0.20025	122.0995	GEN563042 1-G15068_3 0.6900
FDNS	02ALL	0	25SP	G14_038	FROM->TO	POTTER COUNTY INTERCHANGE (WAUK 90343-A) 345/230/13.2KV TRANSFORMER CKT 1	560	560	0.20025	122.0958	GEN562704 1-G15_020_3 0.3550
FDNS	02ALL	0	25SP	G14_038	FROM->TO	POTTER COUNTY INTERCHANGE (WAUK 90343-A) 345/230/13.2KV TRANSFORMER CKT 1	560	560	0.20225	122.0884	Hitchland Interchange (H TB80155502) 345/230/13.2KV TRANSFORMER CKT 1
FDNS	02ALL	0	25SP	G14_038	FROM->TO	POTTER COUNTY INTERCHANGE (WAUK 90343-A) 345/230/13.2KV TRANSFORMER CKT 1	560	560	0.20225	122.0884	Hitchland Interchange (H TB80155502) 345/230/13.2KV TRANSFORMER CKT 1
FDNS	02ALL	0	25SP	G14_038	FROM->TO	POTTER COUNTY INTERCHANGE (WAUK 90343-A) 345/230/13.2KV TRANSFORMER CKT 1	560	560	0.20027	122.0879	G15093_T 345.00 - GRACEMONT 345KV CKT 1
FDNS	02ALL	0	25SP	G14_038	FROM->TO	POTTER COUNTY INTERCHANGE (WAUK 90343-A) 345/230/13.2KV TRANSFORMER CKT 1	560	560	0.19935	122.0705	Graves Sub - STATELINE INTERCHANGE 115KV CKT 1
FDNS	02ALL	0	25SP	G14_038	FROM->TO	POTTER COUNTY INTERCHANGE (WAUK 90343-A) 345/230/13.2KV TRANSFORMER CKT 1	560	560	0.19935	122.0705	Graves Sub - STATELINE INTERCHANGE 115KV CKT 1
FDNS	02ALL	0	25SP	G14_038	FROM->TO	POTTER COUNTY INTERCHANGE (WAUK 90343-A) 345/230/13.2KV TRANSFORMER CKT 1	560	560	0.20025	122.0704	GEN336251 1-NINEMILE POINT UNIT#4
FDNS	02ALL	0	25SP	G14_038	FROM->TO	POTTER COUNTY INTERCHANGE (WAUK 90343-A) 345/230/13.2KV TRANSFORMER CKT 1	560	560	0.20025	122.058	GEN562942 1-G15056_3 0.6900
FDNS	02ALL	0	25SP	G14_038	FROM->TO	POTTER COUNTY INTERCHANGE (WAUK 90343-A) 345/230/13.2KV TRANSFORMER CKT 1	560	560	0.19976	122.0543	TUCO INTERCHANGE (GE M1022338) 345/230/13.2KV TRANSFORMER CKT 1
FDNS	02ALL	0	25SP	G14_038	FROM->TO	POTTER COUNTY INTERCHANGE (WAUK 90343-A) 345/230/13.2KV TRANSFORMER CKT 1	560	560	0.19976	122.0543	TUCO INTERCHANGE (GE M1022338) 345/230/13.2KV TRANSFORMER CKT 1
FDNS	02ALL	0	25SP	G14_038	FROM->TO	POTTER COUNTY INTERCHANGE (WAUK 90343-A) 345/230/13.2KV TRANSFORMER CKT 1	560	560	0.20025	122.0497	GEN334440 1-SABINE UNIT 4
FDNS	02ALL	0	25SP	G14_038	FROM->TO	POTTER COUNTY INTERCHANGE (WAUK 90343-A) 345/230/13.2KV TRANSFORMER CKT 1	560	560	0.20025	122.0409	GEN335206 1-NELSON UNIT 6
FDNS	02ALL	0	25SP	G14_038	FROM->TO	POTTER COUNTY INTERCHANGE (WAUK 90343-A) 345/230/13.2KV TRANSFORMER CKT 1	560	560	0.20025	122.0409	GEN524287 1-GS-PHWD_GEN10.6900
FDNS	02ALL	0	25SP	G14_038	FROM->TO	POTTER COUNTY INTERCHANGE (WAUK 90343-A) 345/230/13.2KV TRANSFORMER CKT 1	560	560	0.20115	122.0353	WALKEMEYER - WALKTAP3 115.00 115KV CKT 1
FDNS	02ALL	0	25SP	G14_038	FROM->TO	POTTER COUNTY INTERCHANGE (WAUK 90343-A) 345/230/13.2KV TRANSFORMER CKT 1	560	560	0.20115	122.0353	WALKEMEYER - WALKTAP3 115.00 115KV CKT 1
FDNS	02ALL	0	25SP	G14_038	FROM->TO	POTTER COUNTY INTERCHANGE (WAUK 90343-A) 345/230/13.2KV TRANSFORMER CKT 1	560	560	0.20115	122.0352	WALKTAP7 345.00 (WALKE345) 345/115/13.8KV TRANSFORMER CKT 1
FDNS	02ALL	0	25SP	G14_038	FROM->TO	POTTER COUNTY INTERCHANGE (WAUK 90343-A) 345/230/13.2KV TRANSFORMER CKT 1	560	560	0.20115	122.0352	WALKTAP7 345.00 (WALKE345) 345/115/13.8KV TRANSFORMER CKT 1
FDNS	02ALL	0	25SP	G14_038	FROM->TO	POTTER COUNTY INTERCHANGE (WAUK 90343-A) 345/230/13.2KV TRANSFORMER CKT 1	560	560	0.20036	122.0314	MARTIN SUB - PANTEX NORTH SUB 115KV CKT 1
FDNS	02ALL	0	25SP	G14_038	FROM->TO	POTTER COUNTY INTERCHANGE (WAUK 90343-A) 345/230/13.2KV TRANSFORMER CKT 1	560	560	0.20036	122.0314	MARTIN SUB - PANTEX NORTH SUB 115KV CKT 1
FDNS	02ALL	0	25SP	G14_038	FROM->TO	POTTER COUNTY INTERCHANGE (WAUK 90343-A) 345/230/13.2KV TRANSFORMER CKT 1	560	560	0.20025	122.0295	GEN336831 1-BAXTER WILSON SES
FDNS	02ALL	0	25SP	G14_038	FROM->TO	POTTER COUNTY INTERCHANGE (WAUK 90343-A) 345/230/13.2KV TRANSFORMER CKT 1	560	560	0.20025	122.0283	GEN562655 1-G14_074_3 0.6900
FDNS	02ALL	0	25SP	G14_038	FROM->TO	POTTER COUNTY INTERCHANGE (WAUK 90343-A) 345/230/13.2KV TRANSFORMER CKT 1	560	560	0.20025	122.0279	GEN562762 1-G15033_3 0.6900
FDNS	02ALL	0	25SP	G14_038	FROM->TO	POTTER COUNTY INTERCHANGE (WAUK 90343-A) 345/230/13.2KV TRANSFORMER CKT 1	560	560	0.19956	122.0279	TUCO_2 345.00 (TUCO_2 XFMR) 345/230/13.2KV TRANSFORMER CKT 1
FDNS	02ALL	0	25SP	G14_038	FROM->TO	POTTER COUNTY INTERCHANGE (WAUK 90343-A) 345/230/13.2KV TRANSFORMER CKT 1	560	560	0.20036	122.0261	PANTEX NORTH SUB - PANTEX SOUTH SUB 115KV CKT 1
FDNS	02ALL	0	25SP	G14_038	FROM->TO	POTTER COUNTY INTERCHANGE (WAUK 90343-A) 345/230/13.2KV TRANSFORMER CKT 1	560	560	0.20036	122.0261	PANTEX NORTH SUB - PANTEX SOUTH SUB 115KV CKT 1
FDNS	02ALL	0	25SP	G14_038	FROM->TO	POTTER COUNTY INTERCHANGE (WAUK 90343-A) 345/230/13.2KV TRANSFORMER CKT 1	560	560	0.20036	122.0199	HIGHLAND PARK TAP - PANTEX SOUTH SUB 115KV CKT 1
FDNS	02ALL	0	25SP	G14_038	FROM->TO	POTTER COUNTY INTERCHANGE (WAUK 90343-A) 345/230/13.2KV TRANSFORMER CKT 1	560	560	0.20025	122.0161	GEN524485 1-CAPROCK WIND GEN
FDNS	02ALL	0	25SP	G14_038	FROM->TO	POTTER COUNTY INTERCHANGE (WAUK 90343-A) 345/230/13.2KV TRANSFORMER CKT 1	560	560	0.20025	122.015	GEN523815 1-LLANO ESTACADO WIND GEN
FDNS	02ALL	0	25SP	G14_038	FROM->TO	POTTER COUNTY INTERCHANGE (WAUK 90343-A) 345/230/13.2KV TRANSFORMER CKT 1	560	560	0.20022	122.0068	MOREWOOD SW - NINE MILE 138KV CKT 1
FDNS	02ALL	0	25SP	G14_038	FROM->TO	POTTER COUNTY INTERCHANGE (WAUK 90343-A) 345/230/13.2KV TRANSFORMER CKT 1	560	560	0.20025	121.993	GEN338146 1-INDEPENDENCE UNIT #2
FDNS	02ALL	0	25SP	G14_038	FROM->TO	POTTER COUNTY INTERCHANGE (WAUK 90343-A) 345/230/13.2KV TRANSFORMER CKT 1	560	560	0.20131	121.9829	G1524G1525 345.00 - THISTLE7 345.00 345KV CKT 1
FDNS	02ALL	0	25SP	G14_038	FROM->TO	POTTER COUNTY INTERCHANGE (WAUK 90343-A) 345/230/13.2KV TRANSFORMER CKT 1	560	560	0.20131	121.9829	G1524G1525 345.00 - THISTLE7 345.00 345KV CKT 2
FDNS	02ALL	0	25SP	G14_038	FROM->TO	POTTER COUNTY INTERCHANGE (WAUK 90343-A) 345/230/13.2KV TRANSFORMER CKT 1	560	560	0.20025	121.98	GEN501812 1-RODEMACHER UNIT 2
FDNS	02ALL	0	25SP	G14_038	FROM->TO	POTTER COUNTY INTERCHANGE (WAUK 90343-A) 345/230/13.2KV TRANSFORMER CKT 1	560	560	0.20088	121.9796	DUMAS SUB - RB-S&S 3115.00 115KV CKT 1
FDNS	02ALL	0	25SP	G14_038	FROM->TO	POTTER COUNTY INTERCHANGE (WAUK 90343-A) 345/230/13.2KV TRANSFORMER CKT 1	560	560	0.20688	121.9754	BUCKNER7 345.00 - SPEARVILLE 345KV CKT 1
FDNS	02ALL	0	25SP	G14_038	FROM->TO	POTTER COUNTY INTERCHANGE (WAUK 90343-A) 345/230/13.2KV TRANSFORMER CKT 1	560	560	0.20688	121.9754	BUCKNER7 345.00 - SPEARVILLE 345KV CKT 1
FDNS	02ALL	0	25SP	G14_038	FROM->TO	POTTER COUNTY INTERCHANGE (WAUK 90343-A) 345/230/13.2KV TRANSFORMER CKT 1	560	560	0.2005	121.9659	TUCO INTERCHANGE - TUCO_2 345.00 345KV CKT 1
FDNS	02ALL	0	25SP	G14_038	FROM->TO	POTTER COUNTY INTERCHANGE (WAUK 90343-A) 345/230/13.2KV TRANSFORMER CKT 1	560	560	0.20025	121.9657	GRAND GULF 500/22.0KV TRANSFORMER CKT 1
FDNS	02ALL	0	25SP	G14_038	FROM->TO	POTTER COUNTY INTERCHANGE (WAUK 90343-A) 345/230/13.2KV TRANSFORMER CKT 1	560	560	0.20025	121.9632	GEN337041 1-GERALD ANDRUS
FDNS	02ALL	0	25SP	G14_038	FROM->TO	POTTER COUNTY INTERCHANGE (WAUK 90343-A) 345/230/13.2KV TRANSFORMER CKT 1	560	560	0.20021	121.9585	P12:138:WFEC:MSL15
FDNS	02ALL	0	25SP	G14_038	FROM->TO	POTTER COUNTY INTERCHANGE (WAUK 90343-A) 345/230/13.2KV TRANSFORMER CKT 1	560	560	0.20025	121.9578	GEN338143 1-INDEPENDENCE UNIT #1
FDNS	02ALL	0	25SP	G14_038	FROM->TO	POTTER COUNTY INTERCHANGE (WAUK 90343-A) 345/230/13.2KV TRANSFORMER CKT 1	560	560	0.19999	121.9546	SUNDOWN INTERCHANGE - WOLFFORTH INTERCHANGE 230KV CKT 1
FDNS	02ALL	0	25SP	G14_038	FROM->TO	POTTER COUNTY INTERCHANGE (WAUK 90343-A) 345/230/13.2KV TRANSFORMER CKT 1	560	560	0.19999	121.9546	SUNDOWN INTERCHANGE - WOLFFORTH INTERCHANGE 230KV CKT 1
FDNS	02ALL	0	25SP	G14_038	FROM->TO	POTTER COUNTY INTERCHANGE (WAUK 90343-A) 345/230/13.2KV TRANSFORMER CKT 1	560	560	0.20025	121.952	GEN562699 1-G15_018_3 0.6900
FDNS	02ALL	0	25SP	G14_038	FROM->TO	POTTER COUNTY INTERCHANGE (WAUK 90343-A) 345/230/13.2KV TRANSFORMER CKT 1	560	560	0.20025	121.944	GEN334441 1-SABINE UNIT 5
FDNS	02ALL	0	25SP	G14_038	FROM->TO	POTTER COUNTY INTERCHANGE (WAUK 90343-A) 345/230/13.2KV TRANSFORMER CKT 1	560	560	0.2002	121.9378	CARLISLE INTERCHANGE - TUCO INTERCHANGE 230KV CKT 1
FDNS	02ALL	0	25SP	G14_038	FROM->TO	POTTER COUNTY INTERCHANGE (WAUK 90343-A) 345/230/13.2KV TRANSFORMER CKT 1	560	560	0.2002	121.9378	CARLISLE INTERCHANGE - TUCO INTERCHANGE 230KV CKT 1
FDNS	02ALL	0	25SP	G14_038	FROM->TO	POTTER COUNTY INTERCHANGE (WAUK 90343-A) 345/230/13.2KV TRANSFORMER CKT 1	560	560	0.19985	121.9303	TUCO INTERCHANGE (SIEM 8743066) 345/230/13.2KV TRANSFORMER CKT 2
FDNS	02ALL	0	25SP	G14_038	FROM->TO	POTTER COUNTY INTERCHANGE (WAUK 90343-A) 345/230/13.2KV TRANSFORMER CKT 1	560	560	0.19985	121.9303	TUCO INTERCHANGE (SIEM 8743066) 345/230/13.2KV TRANSFORMER CKT 2
FDNS	02ALL	0	25SP	G14_038	FROM->TO	POTTER COUNTY INTERCHANGE (WAUK 90343-A) 345/230/13.2KV TRANSFORMER CKT 1	560	560	0.20036	121.9299	ASARCO_TP 3115.00 - NICHOLS STATION 115KV CKT 1
FDNS	02ALL	0	25SP	G14_038	FROM->TO	POTTER COUNTY INTERCHANGE (WAUK 90343-A) 345/230/13.2KV TRANSFORMER CKT 1	560	560	0.20036	121.9298	ASARCO_TP 3115.00 - HIGHLAND PARK TAP 115KV CKT 1
FDNS	02ALL	0	25SP	G14_038	FROM->TO	POTTER COUNTY INTERCHANGE (WAUK 90343-A) 345/230/13.2KV TRANSFORMER CKT 1	560	560	0.20025	121.9217	GEN335204 1-NELSON UNIT 4
FDNS	02ALL	0	25SP	G14_038	FROM->TO	POTTER COUNTY INTERCHANGE (WAUK 90343-A) 345/230/13.2KV TRANSFORMER CKT 1	560	560	0.20025	121.9197	P12:230:SPS:CL.1.BSHLND.WLDRDO
FDNS	02ALL	0	25SP	G14_038	FROM->TO	POTTER COUNTY INTERCHANGE (WAUK 90343-A) 345/230/13.2KV TRANSFORMER CKT 1	560	560	0.20025	121.9188	GEN563122 1-G15077_3 0.3850
FDNS	02ALL	0	25SP	G14_038	FROM->TO	POTTER COUNTY INTERCHANGE (WAUK 90343-A) 345/230/13.2KV TRANSFORMER CKT 1	560	560	0.20025	121.8025	GEN527163 1-MUSTANG GEN #3 22 KV
FDNS	02ALL	0	25SP	G14_038	FROM->TO	POTTER COUNTY INTERCHANGE (WAUK 90343-A) 345/230/13.2KV TRANSFORMER CKT 1	560	560	0.20025	121.5866	GEN527161 1-MUSTANG GEN #1
FDNS	02ALL	0	25SP	G14_038	FROM->TO	POTTER COUNTY INTERCHANGE (WAUK 90343-A) 345/230/13.2KV TRANSFORMER CKT 1	560	560	0.20025	121.5865	GEN527162 1-MUSTANG GEN #2
FDNS	02ALL	0	25SP	G14_038	FROM->TO	POTTER COUNTY INTERCHANGE (WAUK 90343-A) 345/230/13.2KV TRANSFORMER CKT 1	560	560	0.2189	121.4655	FINNEY SWITCHING STATION - WALKTAP7 345.00 345KV CKT 1
FDNS	02ALL	0	25SP	G14_038	FROM->TO	POTTER COUNTY INTERCHANGE (WAUK 90343-A) 345/230/13.2KV TRANSFORMER CKT 1	560	560	0.2189	121.4655	FINNEY SWITCHING STATION - WALKTAP7 345.00 345KV CKT 1
FDNS	02ALL	0	25SP	G14_038	FROM->TO	POTTER COUNTY INTERCHANGE (WAUK 90343-A) 345/230/13.2KV TRANSFORMER CKT 1	560	560	0.20025	121.3761	2109-BUSHLAND INTERCHANGE
FDNS	02ALL	0	25SP	G14_038	FROM->TO	POTTER COUNTY INTERCHANGE (WAUK 90343-A) 345/230/13.2KV TRANSFORMER CKT 1	560	560	0.20025	121.3761	BASE CASE
FDNS	02ALL	0	25SP	G14_038	FROM->TO	POTTER COUNTY INTERCHANGE (WAUK 90343-A) 345/230/13.2KV TRANSFORMER CKT 1	560	560	0.20025	121.3587	GEN527164 1-MUSTANG GEN #4 22 KV
FDNS	02ALL	0	25SP	G14_038	FROM->TO	POTTER COUNTY INTERCHANGE (WAUK 90343-A) 345/230/13.2KV TRANSFORMER CKT 1	560	560	0.20025	121.3527	GEN527165 1-Mustang Gen #5
FDNS	02ALL	0	25SP	G14_038	FROM->TO	POTTER COUNTY INTERCHANGE (WAUK 90343-A) 345/230/13.2KV TRANSFORMER CKT 1	560	560	0.19988	121.1834	TUCO INTERCHANGE - YOAKUM_345 345.00 345KV CKT 1
FDNS	02ALL	0	25SP	G14_038	FROM->TO	POTTER COUNTY INTERCHANGE (WAUK 90343-A) 345/230/13.2KV TRANSFORMER CKT 1	560	560	0.20025	120.9967	GEN523942 1-MAJSTC-WTG210.6900
FDNS	02ALL	0	25SP	G14_038	FROM->TO	POTTER COUNTY INTERCHANGE (WAUK 90343-A) 345/230/13.2KV TRANSFORMER CKT 1	560	560	0.20025	120.9921	GEN527884 1-CUNNINGHAM GEN #4 22 KV
FDNS	02ALL	0	25SP	G14_038	FROM->TO	POTTER COUNTY INTERCHANGE (WAUK 90343-A) 345/230/13.2KV TRANSFORMER CKT 1	560	560	0.20025	120.9894	GEN523941 1-MAJSTC-WTG110.6900
FDNS	02ALL	0	25SP	G14_038	FROM->TO	POTTER COUNTY INTERCHANGE (WAUK 90343-A) 345/230/13.2KV TRANSFORMER CKT 1	560	560	0.20025	120.983	GEN527883 1-CUNNINGHAM GEN #3 22 KV
FDNS	02ALL	0	25SP	G14_038	FROM->TO	POTTER COUNTY INTERCHANGE (WAUK 90343-A) 345/230/13.2KV TRANSFORMER CKT 1	560	560	0.20688	120.953	BUCKNER7 345.00 - HOLCOMB 345KV CKT 1
FDNS	02ALL	0	25SP	G14_038	FROM->TO	POTTER COUNTY INTERCHANGE (WAUK 90343-A) 345/230/13.2KV TRANSFORMER CKT 1	560	560	0.20688	120.953	BUCKNER7 345.00 - HOLCOMB 345KV CKT 1
FDNS	02ALL	0	25SP	G14_038	FROM->TO	POTTER COUNTY INTERCHANGE (WAUK 90343-A) 345/230/13.2KV TRANSFORMER CKT 1	560	560	0.20106	120.8609	HITCHLAND INTERCHANGE - OCHILTREE 230KV CKT 1
FDNS	02ALL	0	25SP	G14_038	FROM->TO	POTTER COUNTY INTERCHANGE (WAUK 90343-A) 345/230/13.2KV TRANSFORMER CKT 1	560	560	0.20106	120.8609	HITCHLAND INTERCHANGE - OCHILTREE 230KV CKT 1
FDNS	02ALL	0	25SP	G14_038	FROM->TO	POTTER COUNTY INTERCHANGE (WAUK 90343-A) 345/230/13.2KV TRANSFORMER CKT 1	560	560	0.20025	120.8394	GEN531461 4-S4 GENERATOR
FDNS	02ALL	0	25SP	G14_038	FROM->TO	POTTER COUNTY INTERCHANGE (WAUK 90343-A) 345/230/13.2KV TRANSFORMER CKT 1	560	560	0.20025	120.8363	GEN515266 1-AES 1G
FDNS	02ALL	0	25SP	G14_038	FROM->TO	POTTER COUNTY INTERCHANGE (WAUK 90343-A) 345/230/13.2KV TRANSFORMER CKT 1	560	560	0.20025	120.8363	GEN515267 1-AES 2G

SOLUTION	GROUP	SCENARIO	SEASON	SOURCE	DIRECTION	MONITORED ELEMENT	RATEA (MVA)	RATEB(MVA)	TDF	TC%LOADING (% MVA)	CONTINGENCY
FDNS	02ALL	0	25SP	G14_038	FROM->TO	POTTER COUNTY INTERCHANGE (WAUK 90343-A) 345/230/13.2KV TRANSFORMER CKT 1	560	560	0.20025	120.8356	GEN640020 2-SHELDON STATION UNIT 2
FDNS	02ALL	0	25SP	G14_038	FROM->TO	POTTER COUNTY INTERCHANGE (WAUK 90343-A) 345/230/13.2KV TRANSFORMER CKT 1	560	560	0.20025	120.8346	GEN532662 1-LAWRENCE ENERGY CENTER UNIT 4
FDNS	02ALL	0	25SP	G14_038	FROM->TO	POTTER COUNTY INTERCHANGE (WAUK 90343-A) 345/230/13.2KV TRANSFORMER CKT 1	560	560	0.20025	120.8338	GEN542961 6-HAWTHORN COMBUSTION TURBINE #6
FDNS	02ALL	0	25SP	G14_038	FROM->TO	POTTER COUNTY INTERCHANGE (WAUK 90343-A) 345/230/13.2KV TRANSFORMER CKT 1	560	560	0.20025	120.8283	GEN511939 1-OEC GAS # 1-1
FDNS	02ALL	0	25SP	G14_038	FROM->TO	POTTER COUNTY INTERCHANGE (WAUK 90343-A) 345/230/13.2KV TRANSFORMER CKT 1	560	560	0.20025	120.8283	GEN511940 1-OEC GAS # 1-2
FDNS	02ALL	0	25SP	G14_038	FROM->TO	POTTER COUNTY INTERCHANGE (WAUK 90343-A) 345/230/13.2KV TRANSFORMER CKT 1	560	560	0.20025	120.827	GEN640019 1-SHELDON STATION UNIT 1
FDNS	02ALL	0	25SP	G14_038	FROM->TO	POTTER COUNTY INTERCHANGE (WAUK 90343-A) 345/230/13.2KV TRANSFORMER CKT 1	560	560	0.20025	120.8268	GEN645033 3-SARPY COUNTY 3
FDNS	02ALL	0	25SP	G14_038	FROM->TO	POTTER COUNTY INTERCHANGE (WAUK 90343-A) 345/230/13.2KV TRANSFORMER CKT 1	560	560	0.20025	120.8251	GEN509408 1-WILKES #2
FDNS	02ALL	0	25SP	G14_038	FROM->TO	POTTER COUNTY INTERCHANGE (WAUK 90343-A) 345/230/13.2KV TRANSFORMER CKT 1	560	560	0.20025	120.8203	GEN531462 5-S5 GENERATOR
FDNS	02ALL	0	25SP	G14_038	FROM->TO	POTTER COUNTY INTERCHANGE (WAUK 90343-A) 345/230/13.2KV TRANSFORMER CKT 1	560	560	0.20025	120.8181	GEN657748 1-YOUNG 2 GENERATOR
FDNS	02ALL	0	25SP	G14_038	FROM->TO	POTTER COUNTY INTERCHANGE (WAUK 90343-A) 345/230/13.2KV TRANSFORMER CKT 1	560	560	0.20025	120.8133	GEN600006 1-AS KING
FDNS	02ALL	0	25SP	G14_038	FROM->TO	POTTER COUNTY INTERCHANGE (WAUK 90343-A) 345/230/13.2KV TRANSFORMER CKT 1	560	560	0.20025	120.8127	GEN547642 1-RIVERTON GEN #12
FDNS	02ALL	0	25SP	G14_038	FROM->TO	POTTER COUNTY INTERCHANGE (WAUK 90343-A) 345/230/13.2KV TRANSFORMER CKT 1	560	560	0.19865	120.8086	CONWAY SUB - KIRBY SWITCHING STATION 115KV CKT 1
FDNS	02ALL	0	25SP	G14_038	FROM->TO	POTTER COUNTY INTERCHANGE (WAUK 90343-A) 345/230/13.2KV TRANSFORMER CKT 1	560	560	0.20106	120.8077	OCHILTREE (H TP80219401) 230/115/13.2KV TRANSFORMER CKT 1
FDNS	02ALL	0	25SP	G14_038	FROM->TO	POTTER COUNTY INTERCHANGE (WAUK 90343-A) 345/230/13.2KV TRANSFORMER CKT 1	560	560	0.20106	120.8077	OCHILTREE (H TP80219401) 230/115/13.2KV TRANSFORMER CKT 1
FDNS	02ALL	0	25SP	G14_038	FROM->TO	POTTER COUNTY INTERCHANGE (WAUK 90343-A) 345/230/13.2KV TRANSFORMER CKT 1	560	560	0.19992	120.8061	KINGSMILL INTERCHANGE - LLANO ESTACADO WIND GEN 115KV CKT 1
FDNS	02ALL	0	25SP	G14_038	FROM->TO	POTTER COUNTY INTERCHANGE (WAUK 90343-A) 345/230/13.2KV TRANSFORMER CKT 1	560	560	0.19994	120.8047	CARGILL SUB - FRIONA SUB 115KV CKT 1
FDNS	02ALL	0	25SP	G14_038	FROM->TO	POTTER COUNTY INTERCHANGE (WAUK 90343-A) 345/230/13.2KV TRANSFORMER CKT 1	560	560	0.20025	120.7888	GEN511953 G-COGENTRIX GAS # 1
FDNS	02ALL	0	25SP	G14_038	FROM->TO	POTTER COUNTY INTERCHANGE (WAUK 90343-A) 345/230/13.2KV TRANSFORMER CKT 1	560	560	0.20025	120.7885	GEN546698 1-QN GEN2
FDNS	02ALL	0	25SP	G14_038	FROM->TO	POTTER COUNTY INTERCHANGE (WAUK 90343-A) 345/230/13.2KV TRANSFORMER CKT 1	560	560	0.20025	120.7825	GEN547657 1-STATE LINE UNIT #3
FDNS	02ALL	0	25SP	G14_038	FROM->TO	POTTER COUNTY INTERCHANGE (WAUK 90343-A) 345/230/13.2KV TRANSFORMER CKT 1	560	560	0.20025	120.7824	GEN547656 1-STATE LINE UNIT #2
FDNS	02ALL	0	25SP	G14_038	FROM->TO	POTTER COUNTY INTERCHANGE (WAUK 90343-A) 345/230/13.2KV TRANSFORMER CKT 1	560	560	0.19906	120.7823	KIRBY SWITCHING STATION - MCCLELLAN SUB 115KV CKT 1
FDNS	02ALL	0	25SP	G14_038	FROM->TO	POTTER COUNTY INTERCHANGE (WAUK 90343-A) 345/230/13.2KV TRANSFORMER CKT 1	560	560	0.19906	120.7783	MCCLELLAN SUB - MCLEAN RURAL SUB 115KV CKT 1
FDNS	02ALL	0	25SP	G14_038	FROM->TO	POTTER COUNTY INTERCHANGE (WAUK 90343-A) 345/230/13.2KV TRANSFORMER CKT 1	560	560	0.20025	120.7713	GEN542967 9-HAWTHORN UNIT #9
FDNS	02ALL	0	25SP	G14_038	FROM->TO	POTTER COUNTY INTERCHANGE (WAUK 90343-A) 345/230/13.2KV TRANSFORMER CKT 1	560	560	0.20025	120.7664	GEN659018 1-G14_003IS_3 0.6900
FDNS	02ALL	0	25SP	G14_038	FROM->TO	POTTER COUNTY INTERCHANGE (WAUK 90343-A) 345/230/13.2KV TRANSFORMER CKT 1	560	560	0.20019	120.7616	EAST PLANT INTERCHANGE (WH ALM21481) 230/115/13.2KV TRANSFORMER CKT 1
FDNS	02ALL	0	25SP	G14_038	FROM->TO	POTTER COUNTY INTERCHANGE (WAUK 90343-A) 345/230/13.2KV TRANSFORMER CKT 1	560	560	0.20019	120.7616	EAST PLANT INTERCHANGE (WH ALM21481) 230/115/13.2KV TRANSFORMER CKT 1
FDNS	02ALL	0	25SP	G14_038	FROM->TO	POTTER COUNTY INTERCHANGE (WAUK 90343-A) 345/230/13.2KV TRANSFORMER CKT 1	560	560	0.20019	120.7615	EAST PLANT INTERCHANGE - HARRINGTON STATION 230KV CKT 1
FDNS	02ALL	0	25SP	G14_038	FROM->TO	POTTER COUNTY INTERCHANGE (WAUK 90343-A) 345/230/13.2KV TRANSFORMER CKT 1	560	560	0.20019	120.7615	EAST PLANT INTERCHANGE - HARRINGTON STATION 230KV CKT 1
FDNS	02ALL	0	25SP	G14_038	FROM->TO	POTTER COUNTY INTERCHANGE (WAUK 90343-A) 345/230/13.2KV TRANSFORMER CKT 1	560	560	0.20011	120.7581	CROSSROADS 7345.00 - TOLK STATION 345KV CKT 1
FDNS	02ALL	0	25SP	G14_038	FROM->TO	POTTER COUNTY INTERCHANGE (WAUK 90343-A) 345/230/13.2KV TRANSFORMER CKT 1	560	560	0.20011	120.7508	TOLK STATION (ABBXNL844501) 345/230/13.2KV TRANSFORMER CKT 1
FDNS	02ALL	0	25SP	G14_038	FROM->TO	POTTER COUNTY INTERCHANGE (WAUK 90343-A) 345/230/13.2KV TRANSFORMER CKT 1	560	560	0.20011	120.7508	TOLK STATION (ABBXNL844501) 345/230/13.2KV TRANSFORMER CKT 1
FDNS	02ALL	0	25SP	G14_038	FROM->TO	POTTER COUNTY INTERCHANGE (WAUK 90343-A) 345/230/13.2KV TRANSFORMER CKT 1	560	560	0.20025	120.7462	GEN635213 3-NEAL UNIT 3
FDNS	02ALL	0	25SP	G14_038	FROM->TO	POTTER COUNTY INTERCHANGE (WAUK 90343-A) 345/230/13.2KV TRANSFORMER CKT 1	560	560	0.19994	120.7437	DEAF SMITH REC-#6 - FRIONA SUB 115KV CKT 1
FDNS	02ALL	0	25SP	G14_038	FROM->TO	POTTER COUNTY INTERCHANGE (WAUK 90343-A) 345/230/13.2KV TRANSFORMER CKT 1	560	560	0.20025	120.7391	GEN300020 1-1CHOTCT4 16.000
FDNS	02ALL	0	25SP	G14_038	FROM->TO	POTTER COUNTY INTERCHANGE (WAUK 90343-A) 345/230/13.2KV TRANSFORMER CKT 1	560	560	0.20025	120.7391	GEN300021 1-1CHOTCT5 16.000
FDNS	02ALL	0	25SP	G14_038	FROM->TO	POTTER COUNTY INTERCHANGE (WAUK 90343-A) 345/230/13.2KV TRANSFORMER CKT 1	560	560	0.20025	120.739	GEN300032 1-CHOUTEAU CTG 2
FDNS	02ALL	0	25SP	G14_038	FROM->TO	POTTER COUNTY INTERCHANGE (WAUK 90343-A) 345/230/13.2KV TRANSFORMER CKT 1	560	560	0.20025	120.739	GEN300033 1-CHOUTEAU STG 3
FDNS	02ALL	0	25SP	G14_038	FROM->TO	POTTER COUNTY INTERCHANGE (WAUK 90343-A) 345/230/13.2KV TRANSFORMER CKT 1	560	560	0.20025	120.7357	GEN539677 3-A. M. MULLERGREN GENERATOR
FDNS	02ALL	0	25SP	G14_038	FROM->TO	POTTER COUNTY INTERCHANGE (WAUK 90343-A) 345/230/13.2KV TRANSFORMER CKT 1	560	560	0.20025	120.7333	GEN652559 1-OAHE
FDNS	02ALL	0	25SP	G14_038	FROM->TO	POTTER COUNTY INTERCHANGE (WAUK 90343-A) 345/230/13.2KV TRANSFORMER CKT 1	560	560	0.20025	120.724	GEN659289 1-DAYCNTYWND W0.6900
FDNS	02ALL	0	25SP	G14_038	FROM->TO	POTTER COUNTY INTERCHANGE (WAUK 90343-A) 345/230/13.2KV TRANSFORMER CKT 1	560	560	0.20025	120.7231	GEN520947 1-HUGO1
FDNS	02ALL	0	25SP	G14_038	FROM->TO	POTTER COUNTY INTERCHANGE (WAUK 90343-A) 345/230/13.2KV TRANSFORMER CKT 1	560	560	0.20025	120.7151	GEN300024 1-1CHOTST6 16.000
FDNS	02ALL	0	25SP	G14_038	FROM->TO	POTTER COUNTY INTERCHANGE (WAUK 90343-A) 345/230/13.2KV TRANSFORMER CKT 1	560	560	0.20025	120.715	GEN300031 1-CHOUTEAU CTG 1
FDNS	02ALL	0	25SP	G14_038	FROM->TO	POTTER COUNTY INTERCHANGE (WAUK 90343-A) 345/230/13.2KV TRANSFORMER CKT 1	560	560	0.20025	120.715	GEN532672 1-TECUMSEH ENERGY CENTER UNIT 8
FDNS	02ALL	0	25SP	G14_038	FROM->TO	POTTER COUNTY INTERCHANGE (WAUK 90343-A) 345/230/13.2KV TRANSFORMER CKT 1	560	560	0.20025	120.7125	GEN539653 1-CIMARRON RIVER PLANT GENERATOR
FDNS	02ALL	0	25SP	G14_038	FROM->TO	POTTER COUNTY INTERCHANGE (WAUK 90343-A) 345/230/13.2KV TRANSFORMER CKT 1	560	560	0.20025	120.708	GEN652556 2-OAHE
FDNS	02ALL	0	25SP	G14_038	FROM->TO	POTTER COUNTY INTERCHANGE (WAUK 90343-A) 345/230/13.2KV TRANSFORMER CKT 1	560	560	0.20025	120.708	GEN652557 4-OAHE
FDNS	02ALL	0	25SP	G14_038	FROM->TO	POTTER COUNTY INTERCHANGE (WAUK 90343-A) 345/230/13.2KV TRANSFORMER CKT 1	560	560	0.20025	120.708	GEN652558 6-OAHE
FDNS	02ALL	0	25SP	G14_038	FROM->TO	POTTER COUNTY INTERCHANGE (WAUK 90343-A) 345/230/13.2KV TRANSFORMER CKT 1	560	560	0.20025	120.7075	GEN652460 4-GARRISON
FDNS	02ALL	0	25SP	G14_038	FROM->TO	POTTER COUNTY INTERCHANGE (WAUK 90343-A) 345/230/13.2KV TRANSFORMER CKT 1	560	560	0.20025	120.7074	GEN652461 5-GARRISON
FDNS	02ALL	0	25SP	G14_038	FROM->TO	POTTER COUNTY INTERCHANGE (WAUK 90343-A) 345/230/13.2KV TRANSFORMER CKT 1	560	560	0.20025	120.7052	GEN652457 1-GARRISON
FDNS	02ALL	0	25SP	G14_038	FROM->TO	POTTER COUNTY INTERCHANGE (WAUK 90343-A) 345/230/13.2KV TRANSFORMER CKT 1	560	560	0.20025	120.7052	GEN652458 2-GARRISON
FDNS	02ALL	0	25SP	G14_038	FROM->TO	POTTER COUNTY INTERCHANGE (WAUK 90343-A) 345/230/13.2KV TRANSFORMER CKT 1	560	560	0.20025	120.7052	GEN652459 3-GARRISON
FDNS	02ALL	0	25SP	G14_038	FROM->TO	POTTER COUNTY INTERCHANGE (WAUK 90343-A) 345/230/13.2KV TRANSFORMER CKT 1	560	560	0.19994	120.7026	DEAF SMITH REC-#6 - HEREFORD INTERCHANGE 115KV CKT 1
FDNS	02ALL	0	25SP	G14_038	FROM->TO	POTTER COUNTY INTERCHANGE (WAUK 90343-A) 345/230/13.2KV TRANSFORMER CKT 1	560	560	0.20025	120.7018	GEN523462 1-BLACKHAWK GEN #2
FDNS	02ALL	0	25SP	G14_038	FROM->TO	POTTER COUNTY INTERCHANGE (WAUK 90343-A) 345/230/13.2KV TRANSFORMER CKT 1	560	560	0.20025	120.7014	GEN645024 4-NORTH OMAHA 4
FDNS	02ALL	0	25SP	G14_038	FROM->TO	POTTER COUNTY INTERCHANGE (WAUK 90343-A) 345/230/13.2KV TRANSFORMER CKT 1	560	560	0.20025	120.7013	GEN523461 1-BLACKHAWK GEN #1
FDNS	02ALL	0	25SP	G14_038	FROM->TO	POTTER COUNTY INTERCHANGE (WAUK 90343-A) 345/230/13.2KV TRANSFORMER CKT 1	560	560	0.20025	120.7002	BIG STONE 230/24.0KV TRANSFORMER CKT 1
FDNS	02ALL	0	25SP	G14_038	FROM->TO	POTTER COUNTY INTERCHANGE (WAUK 90343-A) 345/230/13.2KV TRANSFORMER CKT 1	560	560	0.20025	120.6895	GEN528361 1-MADDOX GEN #1
FDNS	02ALL	0	25SP	G14_038	FROM->TO	POTTER COUNTY INTERCHANGE (WAUK 90343-A) 345/230/13.2KV TRANSFORMER CKT 1	560	560	0.19999	120.6895	G13_027T 230.00 - YOAKUM COUNTY INTERCHANGE 230KV CKT 1
FDNS	02ALL	0	25SP	G14_038	FROM->TO	POTTER COUNTY INTERCHANGE (WAUK 90343-A) 345/230/13.2KV TRANSFORMER CKT 1	560	560	0.20025	120.6888	GEN600001 2-SHERBURNE CNTY G2
FDNS	02ALL	0	25SP	G14_038	FROM->TO	POTTER COUNTY INTERCHANGE (WAUK 90343-A) 345/230/13.2KV TRANSFORMER CKT 1	560	560	0.20025	120.6887	GEN600005 1-MONTICELLO
FDNS	02ALL	0	25SP	G14_038	FROM->TO	POTTER COUNTY INTERCHANGE (WAUK 90343-A) 345/230/13.2KV TRANSFORMER CKT 1	560	560	0.20025	120.6843	GEN532742 5-EMPORIA ENERGY CENTER UNIT 5
FDNS	02ALL	0	25SP	G14_038	FROM->TO	POTTER COUNTY INTERCHANGE (WAUK 90343-A) 345/230/13.2KV TRANSFORMER CKT 1	560	560	0.20025	120.6501	GEN640005 1-CANADAY
FDNS	02ALL	0	25SP	G14_038	FROM->TO	POTTER COUNTY INTERCHANGE (WAUK 90343-A) 345/230/13.2KV TRANSFORMER CKT 1	560	560	0.20025	120.6415	GEN600000 1-SHERBURNECNTY G1
FDNS	02ALL	0	25SP	G14_038	FROM->TO	POTTER COUNTY INTERCHANGE (WAUK 90343-A) 345/230/13.2KV TRANSFORMER CKT 1	560	560	0.20025	120.6341	GEN615001 1-COAL CREEK
FDNS	02ALL	0	25SP	G14_038	FROM->TO	POTTER COUNTY INTERCHANGE (WAUK 90343-A) 345/230/13.2KV TRANSFORMER CKT 1	560	560	0.20006	120.6328	CANYON E_TP3115.00 - CANYON WEST SUB 115KV CKT 1
FDNS	02ALL	0	25SP	G14_038	FROM->TO	POTTER COUNTY INTERCHANGE (WAUK 90343-A) 345/230/13.2KV TRANSFORMER CKT 1	560	560	0.20001	120.6283	AMARILLO SOUTH INTERCHANGE - NICHOLS STATION 230KV CKT 1
FDNS	02ALL	0	25SP	G14_038	FROM->TO	POTTER COUNTY INTERCHANGE (WAUK 90343-A) 345/230/13.2KV TRANSFORMER CKT 1	560	560	0.20001	120.6283	AMARILLO SOUTH INTERCHANGE - NICHOLS STATION 230KV CKT 1
FDNS	02ALL	0	25SP	G14_038	FROM->TO	POTTER COUNTY INTERCHANGE (WAUK 90343-A) 345/230/13.2KV TRANSFORMER CKT 1	560	560	0.20025	120.6248	GEN615002 2-COAL CREEK
FDNS	02ALL	0	25SP	G14_038	FROM->TO	POTTER COUNTY INTERCHANGE (WAUK 90343-A) 345/230/13.2KV TRANSFORMER CKT 1	560	560	0.19961	120.6211	KRESS INTERCHANGE - TULIA TAP 115KV CKT 1
FDNS	02ALL	0	25SP	G14_038	FROM->TO	POTTER COUNTY INTERCHANGE (WAUK 90343-A) 345/230/13.2KV TRANSFORMER CKT 1	560	560	0.20025	120.6166	GEN549890 1-SOUTHWEST 1
FDNS	02ALL	0	25SP	G14_038	FROM->TO	POTTER COUNTY INTERCHANGE (WAUK 90343-A) 345/230/13.2KV TRANSFORMER CKT 1	560	560	0.19865	120.6152	CONWAY SUB - NICHOLS STATION 115KV CKT 1
FDNS	02ALL	0	25SP	G14_038	FROM->TO	POTTER COUNTY INTERCHANGE (WAUK 90343-A) 345/230/13.2KV TRANSFORMER CKT 1	560	560	0.20025	120.6134	GEN300017 1-1G2GPDEL 18.000
FDNS	02ALL	0	25SP	G14_038	FROM->TO	POTTER COUNTY INTERCHANGE (WAUK 90343-A) 345/230/13.2KV TRANSFORMER CKT 1	560	560	0.20025	120.6118	GEN547649 1-ASBURY UNIT #1
FDNS	02ALL	0	25SP	G14_038	FROM->TO	POTTER COUNTY INTERCHANGE (WAUK 90343-A) 345/230/13.2KV TRANSFORMER CKT 1	560	560	0.20025	120.5985	GEN511941 1-OEC STEAM # 2
FDNS	02ALL	0	25SP	G14_038	FROM->TO	POTTER COUNTY INTERCHANGE (WAUK 90343-A) 345/230/13.2KV TRANSFORMER CKT 1	560	560	0.20025	120.5973	GEN532725 1-EVANS ENERGY CENTER GAS TURBINE 3
FDNS	02ALL	0	25SP	G14_038	FROM->TO	POTTER COUNTY INTERCHANGE (WAUK 90343-A) 345/230/13.2KV TRANSFORMER CKT 1	560	560	0.20025	120.5914	GEN547658 1-STATE LINE COMBINED CYCLE

SOLUTION	GROUP	SCENARIO	SEASON	SOURCE	DIRECTION	MONITORED ELEMENT	RATEA (MVA)	RATEB(MVA)	TDF	TC%LOADING (% MVA)	CONTINGENCY
FDNS	02ALL	0	25SP	G14_038	FROM->TO	POTTER COUNTY INTERCHANGE (WAUK 90343-A) 345/230/13.2KV TRANSFORMER CKT 1	560	560	0.20025	120.5896	GEN514939 1-HORSESHOE LAKE 8G
FDNS	02ALL	0	25SP	G14_038	FROM->TO	POTTER COUNTY INTERCHANGE (WAUK 90343-A) 345/230/13.2KV TRANSFORMER CKT 1	560	560	0.20025	120.5878	GEN511938 1-OEC STEAM # 1
FDNS	02ALL	0	25SP	G14_038	FROM->TO	POTTER COUNTY INTERCHANGE (WAUK 90343-A) 345/230/13.2KV TRANSFORMER CKT 1	560	560	0.20025	120.5793	GEN300016 1-1G1GPDEL 18.000
FDNS	02ALL	0	25SP	G14_038	FROM->TO	POTTER COUNTY INTERCHANGE (WAUK 90343-A) 345/230/13.2KV TRANSFORMER CKT 1	560	560	0.20025	120.5767	GEN532721 1-EVANS ENERGY CENTER UNIT 1
FDNS	02ALL	0	25SP	G14_038	FROM->TO	POTTER COUNTY INTERCHANGE (WAUK 90343-A) 345/230/13.2KV TRANSFORMER CKT 1	560	560	0.20025	120.5674	GEN532743 6-EMPORIA ENERGY CENTER UNIT 6
FDNS	02ALL	0	25SP	G14_038	FROM->TO	POTTER COUNTY INTERCHANGE (WAUK 90343-A) 345/230/13.2KV TRANSFORMER CKT 1	560	560	0.20025	120.5674	GEN532744 7-EMPORIA ENERGY CENTER UNIT 7
FDNS	02ALL	0	25SP	G14_038	FROM->TO	POTTER COUNTY INTERCHANGE (WAUK 90343-A) 345/230/13.2KV TRANSFORMER CKT 1	560	560	0.19961	120.5634	HAPPY INTERCHANGE - TULIA TAP 115KV CKT 1
FDNS	02ALL	0	25SP	G14_038	FROM->TO	POTTER COUNTY INTERCHANGE (WAUK 90343-A) 345/230/13.2KV TRANSFORMER CKT 1	560	560	0.20025	120.5626	GEN659354 1-DEERCREK STG18.000
FDNS	02ALL	0	25SP	G14_038	FROM->TO	POTTER COUNTY INTERCHANGE (WAUK 90343-A) 345/230/13.2KV TRANSFORMER CKT 1	560	560	0.20025	120.5623	GEN659353 1-DEERCREK CTG18.000
FDNS	02ALL	0	25SP	G14_038	FROM->TO	POTTER COUNTY INTERCHANGE (WAUK 90343-A) 345/230/13.2KV TRANSFORMER CKT 1	560	560	0.20025	120.5548	GEN513602 1-GRECSTG_1 17.500
FDNS	02ALL	0	25SP	G14_038	FROM->TO	POTTER COUNTY INTERCHANGE (WAUK 90343-A) 345/230/13.2KV TRANSFORMER CKT 1	560	560	0.2001	120.5455	P12:345:SPS:J02.1.TOLK.EDDY
FDNS	02ALL	0	25SP	G14_038	FROM->TO	POTTER COUNTY INTERCHANGE (WAUK 90343-A) 345/230/13.2KV TRANSFORMER CKT 1	560	560	0.20025	120.5343	GEN645041 1-CASS COUNTY 1
FDNS	02ALL	0	25SP	G14_038	FROM->TO	POTTER COUNTY INTERCHANGE (WAUK 90343-A) 345/230/13.2KV TRANSFORMER CKT 1	560	560	0.20025	120.5312	GEN645042 2-CASS COUNTY 2
FDNS	02ALL	0	25SP	G14_038	FROM->TO	POTTER COUNTY INTERCHANGE (WAUK 90343-A) 345/230/13.2KV TRANSFORMER CKT 1	560	560	0.20025	120.505	GEN635214 4-NEAL UNIT 4
FDNS	02ALL	0	25SP	G14_038	FROM->TO	POTTER COUNTY INTERCHANGE (WAUK 90343-A) 345/230/13.2KV TRANSFORMER CKT 1	560	560	0.20025	120.5046	FINNEY SWITCHING STATION - PSCO LAMAR DC TIE 345KV CKT 1
FDNS	02ALL	0	25SP	G14_038	FROM->TO	POTTER COUNTY INTERCHANGE (WAUK 90343-A) 345/230/13.2KV TRANSFORMER CKT 1	560	560	0.20025	120.5046	FINNEY SWITCHING STATION - PSCO LAMAR DC TIE 345KV CKT 1
FDNS	02ALL	0	25SP	G14_038	FROM->TO	POTTER COUNTY INTERCHANGE (WAUK 90343-A) 345/230/13.2KV TRANSFORMER CKT 1	560	560	0.20025	120.4931	SHERBURNE CO 345/24.0KV TRANSFORMER CKT 1
FDNS	02ALL	0	25SP	G14_038	FROM->TO	POTTER COUNTY INTERCHANGE (WAUK 90343-A) 345/230/13.2KV TRANSFORMER CKT 1	560	560	0.20025	120.4852	GEN541163 1-ARIES COMBUSTION TURBINE #1
FDNS	02ALL	0	25SP	G14_038	FROM->TO	POTTER COUNTY INTERCHANGE (WAUK 90343-A) 345/230/13.2KV TRANSFORMER CKT 1	560	560	0.20025	120.4623	GEN509398 1-KNOXLEE #5
FDNS	02ALL	0	25SP	G14_038	FROM->TO	POTTER COUNTY INTERCHANGE (WAUK 90343-A) 345/230/13.2KV TRANSFORMER CKT 1	560	560	0.20025	120.4612	GEN509409 1-WILKES #3
FDNS	02ALL	0	25SP	G14_038	FROM->TO	POTTER COUNTY INTERCHANGE (WAUK 90343-A) 345/230/13.2KV TRANSFORMER CKT 1	560	560	0.20025	120.4575	GEN300001 1-THOMAS HILL UNIT 1
FDNS	02ALL	0	25SP	G14_038	FROM->TO	POTTER COUNTY INTERCHANGE (WAUK 90343-A) 345/230/13.2KV TRANSFORMER CKT 1	560	560	0.20025	120.4567	GEN600002 3-SHERBURNE CNTY G3
FDNS	02ALL	0	25SP	G14_038	FROM->TO	POTTER COUNTY INTERCHANGE (WAUK 90343-A) 345/230/13.2KV TRANSFORMER CKT 1	560	560	0.20011	120.4489	EDDY COUNTY INTERCHANGE (ABB AEM30711) 345/230/13.2KV TRANSFORMER CKT 1
FDNS	02ALL	0	25SP	G14_038	FROM->TO	POTTER COUNTY INTERCHANGE (WAUK 90343-A) 345/230/13.2KV TRANSFORMER CKT 1	560	560	0.20011	120.4489	EDDY COUNTY INTERCHANGE (ABB AEM30711) 345/230/13.2KV TRANSFORMER CKT 1
FDNS	02ALL	0	25SP	G14_038	FROM->TO	POTTER COUNTY INTERCHANGE (WAUK 90343-A) 345/230/13.2KV TRANSFORMER CKT 1	560	560	0.20011	120.4488	P12:345:SPS:J14.1.EDDY.XRD$
FDNS	02ALL	0	25SP	G14_038	FROM->TO	POTTER COUNTY INTERCHANGE (WAUK 90343-A) 345/230/13.2KV TRANSFORMER CKT 1	560	560	0.20011	120.4487	CROSSROADS 7345.00 - EDDY COUNTY INTERCHANGE 345KV CKT 1
FDNS	02ALL	0	25SP	G14_038	FROM->TO	POTTER COUNTY INTERCHANGE (WAUK 90343-A) 345/230/13.2KV TRANSFORMER CKT 1	560	560	0.20025	120.4431	GEN515040 1-SEMINOLE 1G
FDNS	02ALL	0	25SP	G14_038	FROM->TO	POTTER COUNTY INTERCHANGE (WAUK 90343-A) 345/230/13.2KV TRANSFORMER CKT 1	560	560	0.20025	120.4395	GEN541162 1-ARIES STEAM TURBINE
FDNS	02ALL	0	25SP	G14_038	FROM->TO	POTTER COUNTY INTERCHANGE (WAUK 90343-A) 345/230/13.2KV TRANSFORMER CKT 1	560	560	0.20025	120.4166	GEN635023 3-WALTER SCOTT UNIT 3
FDNS	02ALL	0	25SP	G14_038	FROM->TO	POTTER COUNTY INTERCHANGE (WAUK 90343-A) 345/230/13.2KV TRANSFORMER CKT 1	560	560	0.20025	120.3638	GEN531459 2-S2 GENERATOR
FDNS	02ALL	0	25SP	G14_038	FROM->TO	POTTER COUNTY INTERCHANGE (WAUK 90343-A) 345/230/13.2KV TRANSFORMER CKT 1	560	560	0.20025	120.3606	GEN515592 1-PALDRW21 0.6900
FDNS	02ALL	0	25SP	G14_038	FROM->TO	POTTER COUNTY INTERCHANGE (WAUK 90343-A) 345/230/13.2KV TRANSFORMER CKT 1	560	560	0.20025	120.3186	GEN523170 1-GOODWELL_1 10.6900
FDNS	02ALL	0	25SP	G14_038	FROM->TO	POTTER COUNTY INTERCHANGE (WAUK 90343-A) 345/230/13.2KV TRANSFORMER CKT 1	560	560	0.20025	120.3159	GEN515041 1-SEMINOLE 2G
FDNS	02ALL	0	25SP	G14_038	FROM->TO	POTTER COUNTY INTERCHANGE (WAUK 90343-A) 345/230/13.2KV TRANSFORMER CKT 1	560	560	0.20092	120.3001	CHAN/TASCOS6230.00 - POTTER COUNTY INTERCHANGE 230KV CKT 1
FDNS	02ALL	0	25SP	G14_038	FROM->TO	POTTER COUNTY INTERCHANGE (WAUK 90343-A) 345/230/13.2KV TRANSFORMER CKT 1	560	560	0.20025	120.2998	GEN562550 1-G14_040_3 0.6900
FDNS	02ALL	0	25SP	G14_038	FROM->TO	POTTER COUNTY INTERCHANGE (WAUK 90343-A) 345/230/13.2KV TRANSFORMER CKT 1	560	560	0.20025	120.2832	GEN645025 5-NORTH OMAHA 5
FDNS	02ALL	0	25SP	G14_038	FROM->TO	POTTER COUNTY INTERCHANGE (WAUK 90343-A) 345/230/13.2KV TRANSFORMER CKT 1	560	560	0.20025	120.2779	GEN515042 1-SEMINOLE 3G
FDNS	02ALL	0	25SP	G14_038	FROM->TO	POTTER COUNTY INTERCHANGE (WAUK 90343-A) 345/230/13.2KV TRANSFORMER CKT 1	560	560	0.20025	120.2775	GEN300010 1-ST FRANCIS UNIT 1
FDNS	02ALL	0	25SP	G14_038	FROM->TO	POTTER COUNTY INTERCHANGE (WAUK 90343-A) 345/230/13.2KV TRANSFORMER CKT 1	560	560	0.20025	120.2761	GEN523171 1-GOODWELL_2 10.6900
FDNS	02ALL	0	25SP	G14_038	FROM->TO	POTTER COUNTY INTERCHANGE (WAUK 90343-A) 345/230/13.2KV TRANSFORMER CKT 1	560	560	0.20025	120.2725	GEN635024 4-WALTER SCOTT UNIT 4
FDNS	02ALL	0	25SP	G14_038	FROM->TO	POTTER COUNTY INTERCHANGE (WAUK 90343-A) 345/230/13.2KV TRANSFORMER CKT 1	560	560	0.20025	120.2719	GEN549893 2-SOUTHWEST 2
FDNS	02ALL	0	25SP	G14_038	FROM->TO	POTTER COUNTY INTERCHANGE (WAUK 90343-A) 345/230/13.2KV TRANSFORMER CKT 1	560	560	0.20025	120.2637	GEN300015 1-1SGPDEL 18.000
FDNS	02ALL	0	25SP	G14_038	FROM->TO	POTTER COUNTY INTERCHANGE (WAUK 90343-A) 345/230/13.2KV TRANSFORMER CKT 1	560	560	0.20006	120.2443	CANYON E_TP3115.00 - RANDALL COUNTY INTERCHANGE 115KV CKT 1
FDNS	02ALL	0	25SP	G14_038	FROM->TO	POTTER COUNTY INTERCHANGE (WAUK 90343-A) 345/230/13.2KV TRANSFORMER CKT 1	560	560	0.20025	120.2294	GEN505432 1-SIKESTON
FDNS	02ALL	0	25SP	G14_038	FROM->TO	POTTER COUNTY INTERCHANGE (WAUK 90343-A) 345/230/13.2KV TRANSFORMER CKT 1	560	560	0.20025	120.2278	GEN300011 1-ST FRANCIS UNIT 2
FDNS	02ALL	0	25SP	G14_038	FROM->TO	POTTER COUNTY INTERCHANGE (WAUK 90343-A) 345/230/13.2KV TRANSFORMER CKT 1	560	560	0.20025	120.2001	GEN659110 1-LELAND OLDS UNIT1
FDNS	02ALL	0	25SP	G14_038	FROM->TO	POTTER COUNTY INTERCHANGE (WAUK 90343-A) 345/230/13.2KV TRANSFORMER CKT 1	560	560	0.20025	120.1704	GEN546702 1-NM GEN N1
FDNS	02ALL	0	25SP	G14_038	FROM->TO	POTTER COUNTY INTERCHANGE (WAUK 90343-A) 345/230/13.2KV TRANSFORMER CKT 1	560	560	0.1996	120.1283	PLANT X STATION - SUNDOWN INTERCHANGE 230KV CKT 1
FDNS	02ALL	0	25SP	G14_038	FROM->TO	POTTER COUNTY INTERCHANGE (WAUK 90343-A) 345/230/13.2KV TRANSFORMER CKT 1	560	560	0.1996	120.1283	PLANT X STATION - SUNDOWN INTERCHANGE 230KV CKT 1
FDNS	02ALL	0	25SP	G14_038	FROM->TO	POTTER COUNTY INTERCHANGE (WAUK 90343-A) 345/230/13.2KV TRANSFORMER CKT 1	560	560	0.19988	120.1239	Harrington Station Mid Bus - RANDALL COUNTY INTERCHANGE 230KV CKT 1
FDNS	02ALL	0	25SP	G14_038	FROM->TO	POTTER COUNTY INTERCHANGE (WAUK 90343-A) 345/230/13.2KV TRANSFORMER CKT 1	560	560	0.19988	120.1239	Harrington Station Mid Bus - RANDALL COUNTY INTERCHANGE 230KV CKT 1
FDNS	02ALL	0	25SP	G14_038	FROM->TO	POTTER COUNTY INTERCHANGE (WAUK 90343-A) 345/230/13.2KV TRANSFORMER CKT 1	560	560	0.20025	120.1169	GEN560105 1-G08-22 0.6900
FDNS	02ALL	0	25SP	G14_038	FROM->TO	POTTER COUNTY INTERCHANGE (WAUK 90343-A) 345/230/13.2KV TRANSFORMER CKT 1	560	560	0.19961	120.0963	HAPPY INTERCHANGE - PALO DURO SUB 115KV CKT 1
FDNS	02ALL	0	25SP	G14_038	FROM->TO	POTTER COUNTY INTERCHANGE (WAUK 90343-A) 345/230/13.2KV TRANSFORMER CKT 1	560	560	0.20025	120.0927	GEN513601 1-GRECCTG_1 20.000
FDNS	02ALL	0	25SP	G14_038	FROM->TO	POTTER COUNTY INTERCHANGE (WAUK 90343-A) 345/230/13.2KV TRANSFORMER CKT 1	560	560	0.20025	120.0756	GEN641089 2-ENERGY CENTER 2
FDNS	02ALL	0	25SP	G14_038	FROM->TO	POTTER COUNTY INTERCHANGE (WAUK 90343-A) 345/230/13.2KV TRANSFORMER CKT 1	560	560	0.20025	120.0747	GEN509406 1-WELSH #3
FDNS	02ALL	0	25SP	G14_038	FROM->TO	POTTER COUNTY INTERCHANGE (WAUK 90343-A) 345/230/13.2KV TRANSFORMER CKT 1	560	560	0.20025	120.0745	GEN509404 1-WELSH #1
FDNS	02ALL	0	25SP	G14_038	FROM->TO	POTTER COUNTY INTERCHANGE (WAUK 90343-A) 345/230/13.2KV TRANSFORMER CKT 1	560	560	0.20025	120.0717	GEN539670 4-JUDSON LARGE GENERATOR
FDNS	02ALL	0	25SP	G14_038	FROM->TO	POTTER COUNTY INTERCHANGE (WAUK 90343-A) 345/230/13.2KV TRANSFORMER CKT 1	560	560	0.20089	120.04	RB-ELKS 3115.00 - SHERMAN COUNTY TAP 115KV CKT 1
FDNS	02ALL	0	25SP	G14_038	FROM->TO	POTTER COUNTY INTERCHANGE (WAUK 90343-A) 345/230/13.2KV TRANSFORMER CKT 1	560	560	0.19961	120.0116	PALO DURO SUB - RANDALL COUNTY INTERCHANGE 115KV CKT 1
FDNS	02ALL	0	25SP	G14_038	FROM->TO	POTTER COUNTY INTERCHANGE (WAUK 90343-A) 345/230/13.2KV TRANSFORMER CKT 1	560	560	0.20089	120.0047	P12:115:SPS:W24.1.MOOREE.LASLEY
FDNS	02ALL	0	25SP	G14_038	FROM->TO	POTTER COUNTY INTERCHANGE (WAUK 90343-A) 345/230/13.2KV TRANSFORMER CKT 1	560	560	0.20025	119.9992	GEN300002 1-THOMAS HILL UNIT 2
FDNS	02ALL	0	25SP	G14_038	FROM->TO	POTTER COUNTY INTERCHANGE (WAUK 90343-A) 345/230/13.2KV TRANSFORMER CKT 1	560	560	0.2015	119.9522	P12:115:SPS:W29.1.OCLTRE.SPRMN
FDNS	02ALL	0	25SP	G14_038	FROM->TO	POTTER COUNTY INTERCHANGE (WAUK 90343-A) 345/230/13.2KV TRANSFORMER CKT 1	560	560	0.20025	119.951	GEN511842 1-RIVERSIDE STATION #1
FDNS	02ALL	0	25SP	G14_038	FROM->TO	POTTER COUNTY INTERCHANGE (WAUK 90343-A) 345/230/13.2KV TRANSFORMER CKT 1	560	560	0.20025	119.9449	GEN511843 1-RIVERSIDE STATION #2
FDNS	02ALL	0	25SP	G14_038	FROM->TO	POTTER COUNTY INTERCHANGE (WAUK 90343-A) 345/230/13.2KV TRANSFORMER CKT 1	560	560	0.20025	119.899	GEN509416 1-TURK GENERATION
FDNS	02ALL	0	25SP	G14_038	FROM->TO	POTTER COUNTY INTERCHANGE (WAUK 90343-A) 345/230/13.2KV TRANSFORMER CKT 1	560	560	0.20025	119.8881	GEN511839 1-NORTHEASTERN STATION #2
FDNS	02ALL	0	25SP	G14_038	FROM->TO	POTTER COUNTY INTERCHANGE (WAUK 90343-A) 345/230/13.2KV TRANSFORMER CKT 1	560	560	0.20175	119.8773	PRINGLE INTERCHANGE - SPEARMAN INTERCHANGE 115KV CKT 1
FDNS	02ALL	0	25SP	G14_038	FROM->TO	POTTER COUNTY INTERCHANGE (WAUK 90343-A) 345/230/13.2KV TRANSFORMER CKT 1	560	560	0.20025	119.8652	GEN515223 1-MUSKOGEE 4G
FDNS	02ALL	0	25SP	G14_038	FROM->TO	POTTER COUNTY INTERCHANGE (WAUK 90343-A) 345/230/13.2KV TRANSFORMER CKT 1	560	560	0.19836	119.857	ELK CITY 230KV (ELKCTY-6) 230/138/13.8KV TRANSFORMER CKT 1
FDNS	02ALL	0	25SP	G14_038	FROM->TO	POTTER COUNTY INTERCHANGE (WAUK 90343-A) 345/230/13.2KV TRANSFORMER CKT 1	560	560	0.20089	119.8562	RB-ELKS 3115.00 - RB-SPURLOCK3115.00 115KV CKT 1
FDNS	02ALL	0	25SP	G14_038	FROM->TO	POTTER COUNTY INTERCHANGE (WAUK 90343-A) 345/230/13.2KV TRANSFORMER CKT 1	560	560	0.19791	119.854	CHERRY1 - HARRINGTON STATION 230KV CKT 1
FDNS	02ALL	0	25SP	G14_038	FROM->TO	POTTER COUNTY INTERCHANGE (WAUK 90343-A) 345/230/13.2KV TRANSFORMER CKT 1	560	560	0.19791	119.854	CHERRY1 - HARRINGTON STATION 230KV CKT 1
FDNS	02ALL	0	25SP	G14_038	FROM->TO	POTTER COUNTY INTERCHANGE (WAUK 90343-A) 345/230/13.2KV TRANSFORMER CKT 1	560	560	0.20025	119.8514	GEN515226 1-MUSKOGEE 6G
FDNS	02ALL	0	25SP	G14_038	FROM->TO	POTTER COUNTY INTERCHANGE (WAUK 90343-A) 345/230/13.2KV TRANSFORMER CKT 1	560	560	0.2015	119.851	OCHILTREE - TEXAS FARMS SUB 115KV CKT 1
FDNS	02ALL	0	25SP	G14_038	FROM->TO	POTTER COUNTY INTERCHANGE (WAUK 90343-A) 345/230/13.2KV TRANSFORMER CKT 1	560	560	0.20025	119.8325	GEN515225 1-MUSKOGEE 5G
FDNS	02ALL	0	25SP	G14_038	FROM->TO	POTTER COUNTY INTERCHANGE (WAUK 90343-A) 345/230/13.2KV TRANSFORMER CKT 1	560	560	0.20618	119.8284	BVRCNTY7 345.00 - G11-14T 345.00 345KV CKT 1
FDNS	02ALL	0	25SP	G14_038	FROM->TO	POTTER COUNTY INTERCHANGE (WAUK 90343-A) 345/230/13.2KV TRANSFORMER CKT 1	560	560	0.20618	119.8284	BVRCNTY7 345.00 - G11-14T 345.00 345KV CKT 2
FDNS	02ALL	0	25SP	G14_038	FROM->TO	POTTER COUNTY INTERCHANGE (WAUK 90343-A) 345/230/13.2KV TRANSFORMER CKT 1	560	560	0.20025	119.7744	GEN511840 1-NORTHEASTERN STATION #3

SOLUTION	GROUP	SCENARIO	SEASON	SOURCE	DIRECTION	MONITORED ELEMENT	RATEA (MVA)	RATEB(MVA)	TDF	TC%LOADING (% MVA)	CONTINGENCY
FDNS	02ALL	0	25SP	G14_038	FROM->TO	POTTER COUNTY INTERCHANGE (WAUK 90343-A) 345/230/13.2KV TRANSFORMER CKT 1	560	560	0.20383	119.7362	G15061_T 345.00 - MINGO 345KV CKT 1
FDNS	02ALL	0	25SP	G14_038	FROM->TO	POTTER COUNTY INTERCHANGE (WAUK 90343-A) 345/230/13.2KV TRANSFORMER CKT 1	560	560	0.19933	119.7103	NEWHART 230 - PLANT X STATION 230KV CKT 1
FDNS	02ALL	0	25SP	G14_038	FROM->TO	POTTER COUNTY INTERCHANGE (WAUK 90343-A) 345/230/13.2KV TRANSFORMER CKT 1	560	560	0.20025	119.6974	GEN512688 2-GRDA1 GSU2 22
FDNS	02ALL	0	25SP	G14_038	FROM->TO	POTTER COUNTY INTERCHANGE (WAUK 90343-A) 345/230/13.2KV TRANSFORMER CKT 1	560	560	0.2015	119.689	SPEARMAN SUB - TEXAS FARMS SUB 115KV CKT 1
FDNS	02ALL	0	25SP	G14_038	FROM->TO	POTTER COUNTY INTERCHANGE (WAUK 90343-A) 345/230/13.2KV TRANSFORMER CKT 1	560	560	0.19683	119.6546	Harrington Station East Bus - POTTER COUNTY INTERCHANGE 230KV CKT 1
FDNS	02ALL	0	25SP	G14_038	FROM->TO	POTTER COUNTY INTERCHANGE (WAUK 90343-A) 345/230/13.2KV TRANSFORMER CKT 1	560	560	0.19683	119.6546	Harrington Station East Bus - POTTER COUNTY INTERCHANGE 230KV CKT 1
FDNS	02ALL	0	25SP	G14_038	FROM->TO	POTTER COUNTY INTERCHANGE (WAUK 90343-A) 345/230/13.2KV TRANSFORMER CKT 1	560	560	0.19654	119.6433	CHERRY1 - POTTER COUNTY INTERCHANGE 230KV CKT 1
FDNS	02ALL	0	25SP	G14_038	FROM->TO	POTTER COUNTY INTERCHANGE (WAUK 90343-A) 345/230/13.2KV TRANSFORMER CKT 1	560	560	0.19654	119.6433	CHERRY1 - POTTER COUNTY INTERCHANGE 230KV CKT 1
FDNS	02ALL	0	25SP	G14_038	FROM->TO	POTTER COUNTY INTERCHANGE (WAUK 90343-A) 345/230/13.2KV TRANSFORMER CKT 1	560	560	0.20075	119.627	DALLAM COUNTY INTERCHANGE - SHERMAN COUNTY SUB 115KV CKT 1
FDNS	02ALL	0	25SP	G14_038	FROM->TO	POTTER COUNTY INTERCHANGE (WAUK 90343-A) 345/230/13.2KV TRANSFORMER CKT 1	560	560	0.20025	119.6131	GEN509403 1-PIRKEY GENERATION
FDNS	02ALL	0	25SP	G14_038	FROM->TO	POTTER COUNTY INTERCHANGE (WAUK 90343-A) 345/230/13.2KV TRANSFORMER CKT 1	560	560	0.20089	119.6004	MOORE COUNTY INTERCHANGE EAST BUS - RB-SPURLOCK3115.00 115KV CKT 1
FDNS	02ALL	0	25SP	G14_038	FROM->TO	POTTER COUNTY INTERCHANGE (WAUK 90343-A) 345/230/13.2KV TRANSFORMER CKT 1	560	560	0.20025	119.5736	GEN541151 3-SIBLEY GENERATING UNIT #3
FDNS	02ALL	0	25SP	G14_038	FROM->TO	POTTER COUNTY INTERCHANGE (WAUK 90343-A) 345/230/13.2KV TRANSFORMER CKT 1	560	560	0.20025	119.5628	GEN532663 1-LAWRENCE ENERGY CENTER UNIT 5
FDNS	02ALL	0	25SP	G14_038	FROM->TO	POTTER COUNTY INTERCHANGE (WAUK 90343-A) 345/230/13.2KV TRANSFORMER CKT 1	560	560	0.20075	119.5622	P12:115:SPS:W05.1.DALLAM.LASLEY
FDNS	02ALL	0	25SP	G14_038	FROM->TO	POTTER COUNTY INTERCHANGE (WAUK 90343-A) 345/230/13.2KV TRANSFORMER CKT 1	560	560	0.20075	119.5469	SHERMAN COUNTY SUB - SHERMAN COUNTY TAP 115KV CKT 1
FDNS	02ALL	0	25SP	G14_038	FROM->TO	POTTER COUNTY INTERCHANGE (WAUK 90343-A) 345/230/13.2KV TRANSFORMER CKT 1	560	560	0.20025	119.5171	GEN524285 1-WILDORADO WIND GEN
FDNS	02ALL	0	25SP	G14_038	FROM->TO	POTTER COUNTY INTERCHANGE (WAUK 90343-A) 345/230/13.2KV TRANSFORMER CKT 1	560	560	0.20025	119.5139	GEN336821 1-GRAND GULF UNIT
FDNS	02ALL	0	25SP	G14_038	FROM->TO	POTTER COUNTY INTERCHANGE (WAUK 90343-A) 345/230/13.2KV TRANSFORMER CKT 1	560	560	0.20025	119.5111	GEN523122 1-NBLWND-WTG210.6900
FDNS	02ALL	0	25SP	G14_038	FROM->TO	POTTER COUNTY INTERCHANGE (WAUK 90343-A) 345/230/13.2KV TRANSFORMER CKT 1	560	560	0.20025	119.5102	GEN562270 1-G12-020-2 0.6900
FDNS	02ALL	0	25SP	G14_038	FROM->TO	POTTER COUNTY INTERCHANGE (WAUK 90343-A) 345/230/13.2KV TRANSFORMER CKT 1	560	560	0.20383	119.5095	G15061_T 345.00 - SETAB 345KV CKT 1
FDNS	02ALL	0	25SP	G14_038	FROM->TO	POTTER COUNTY INTERCHANGE (WAUK 90343-A) 345/230/13.2KV TRANSFORMER CKT 1	560	560	0.20025	119.5086	GEN514805 1-SOONER UNIT 1
FDNS	02ALL	0	25SP	G14_038	FROM->TO	POTTER COUNTY INTERCHANGE (WAUK 90343-A) 345/230/13.2KV TRANSFORMER CKT 1	560	560	0.20102	119.494	HITCHLAND INTERCHANGE (H TP80148301) 230/115/13.2KV TRANSFORMER CKT 1
FDNS	02ALL	0	25SP	G14_038	FROM->TO	POTTER COUNTY INTERCHANGE (WAUK 90343-A) 345/230/13.2KV TRANSFORMER CKT 1	560	560	0.20102	119.494	HITCHLAND INTERCHANGE (H TP80148301) 230/115/13.2KV TRANSFORMER CKT 1
FDNS	02ALL	0	25SP	G14_038	FROM->TO	POTTER COUNTY INTERCHANGE (WAUK 90343-A) 345/230/13.2KV TRANSFORMER CKT 1	560	560	0.20102	119.494	HITCHLAND INTERCHANGE (UPDATE LATER) 230/115/13.2KV TRANSFORMER CKT 2
FDNS	02ALL	0	25SP	G14_038	FROM->TO	POTTER COUNTY INTERCHANGE (WAUK 90343-A) 345/230/13.2KV TRANSFORMER CKT 1	560	560	0.20102	119.494	HITCHLAND INTERCHANGE (UPDATE LATER) 230/115/13.2KV TRANSFORMER CKT 2
FDNS	02ALL	0	25SP	G14_038	FROM->TO	POTTER COUNTY INTERCHANGE (WAUK 90343-A) 345/230/13.2KV TRANSFORMER CKT 1	560	560	0.20025	119.4914	GEN509394 1-FLINT CREEK
FDNS	02ALL	0	25SP	G14_038	FROM->TO	POTTER COUNTY INTERCHANGE (WAUK 90343-A) 345/230/13.2KV TRANSFORMER CKT 1	560	560	0.20025	119.4913	GEN523121 1-NBLWND-WTG110.6900
FDNS	02ALL	0	25SP	G14_038	FROM->TO	POTTER COUNTY INTERCHANGE (WAUK 90343-A) 345/230/13.2KV TRANSFORMER CKT 1	560	560	0.20025	119.4874	GEN514806 1-SOONER UNIT 2
FDNS	02ALL	0	25SP	G14_038	FROM->TO	POTTER COUNTY INTERCHANGE (WAUK 90343-A) 345/230/13.2KV TRANSFORMER CKT 1	560	560	0.20025	119.4605	GEN560584 1-G06-44-2 4.1600
FDNS	02ALL	0	25SP	G14_038	FROM->TO	POTTER COUNTY INTERCHANGE (WAUK 90343-A) 345/230/13.2KV TRANSFORMER CKT 1	560	560	0.20025	119.4516	GEN523107 1-NOVUS_WND 14.1600
FDNS	02ALL	0	25SP	G14_038	FROM->TO	POTTER COUNTY INTERCHANGE (WAUK 90343-A) 345/230/13.2KV TRANSFORMER CKT 1	560	560	0.2015	119.4442	SPEARMAN INTERCHANGE - SPEARMAN SUB 115KV CKT 1
FDNS	02ALL	0	25SP	G14_038	FROM->TO	POTTER COUNTY INTERCHANGE (WAUK 90343-A) 345/230/13.2KV TRANSFORMER CKT 1	560	560	0.20025	119.4409	GEN562269 1-G12-020-1 0.6900
FDNS	02ALL	0	25SP	G14_038	FROM->TO	POTTER COUNTY INTERCHANGE (WAUK 90343-A) 345/230/13.2KV TRANSFORMER CKT 1	560	560	0.20025	119.4327	GEN532722 1-EVANS ENERGY CENTER UNIT 2
FDNS	02ALL	0	25SP	G14_038	FROM->TO	POTTER COUNTY INTERCHANGE (WAUK 90343-A) 345/230/13.2KV TRANSFORMER CKT 1	560	560	0.19802	119.4188	Harrington Station East Bus - Harrington Station Mid Bus 230KV CKT @1
FDNS	02ALL	0	25SP	G14_038	FROM->TO	POTTER COUNTY INTERCHANGE (WAUK 90343-A) 345/230/13.2KV TRANSFORMER CKT 1	560	560	0.20299	119.4082	HOLCOMB - SETAB 345KV CKT 1
FDNS	02ALL	0	25SP	G14_038	FROM->TO	POTTER COUNTY INTERCHANGE (WAUK 90343-A) 345/230/13.2KV TRANSFORMER CKT 1	560	560	0.20299	119.4082	HOLCOMB - SETAB 345KV CKT 1
FDNS	02ALL	0	25SP	G14_038	FROM->TO	POTTER COUNTY INTERCHANGE (WAUK 90343-A) 345/230/13.2KV TRANSFORMER CKT 1	560	560	0.20025	119.399	GEN523123 1-NBLWND-WTG310.6900
FDNS	02ALL	0	25SP	G14_038	FROM->TO	POTTER COUNTY INTERCHANGE (WAUK 90343-A) 345/230/13.2KV TRANSFORMER CKT 1	560	560	0.20155	119.3733	PRINGLE INTERCHANGE (ENRCO13617-1) 230/115/13.2KV TRANSFORMER CKT 1
FDNS	02ALL	0	25SP	G14_038	FROM->TO	POTTER COUNTY INTERCHANGE (WAUK 90343-A) 345/230/13.2KV TRANSFORMER CKT 1	560	560	0.20155	119.3733	PRINGLE INTERCHANGE (ENRCO13617-1) 230/115/13.2KV TRANSFORMER CKT 1
FDNS	02ALL	0	25SP	G14_038	FROM->TO	POTTER COUNTY INTERCHANGE (WAUK 90343-A) 345/230/13.2KV TRANSFORMER CKT 1	560	560	0.20025	119.3405	GEN336153 1-WATERFORD UNIT#3
FDNS	02ALL	0	25SP	G14_038	FROM->TO	POTTER COUNTY INTERCHANGE (WAUK 90343-A) 345/230/13.2KV TRANSFORMER CKT 1	560	560	0.20155	119.3182	Harrington Station East Bus - PRINGLE INTERCHANGE 230KV CKT 1
FDNS	02ALL	0	25SP	G14_038	FROM->TO	POTTER COUNTY INTERCHANGE (WAUK 90343-A) 345/230/13.2KV TRANSFORMER CKT 1	560	560	0.20155	119.3171	P12:230:SPS:K43.1.PRNGLE.HARR_E
FDNS	02ALL	0	25SP	G14_038	FROM->TO	POTTER COUNTY INTERCHANGE (WAUK 90343-A) 345/230/13.2KV TRANSFORMER CKT 1	560	560	0.20114	119.2951	PRINGLE INTERCHANGE - SPEARMAN INTERCHANGE 115KV CKT 2
FDNS	02ALL	0	25SP	G14_038	FROM->TO	POTTER COUNTY INTERCHANGE (WAUK 90343-A) 345/230/13.2KV TRANSFORMER CKT 1	560	560	0.20025	119.2851	GEN337911 1-ARKANSAS NUCLEAR ONE UNIT #2
FDNS	02ALL	0	25SP	G14_038	FROM->TO	POTTER COUNTY INTERCHANGE (WAUK 90343-A) 345/230/13.2KV TRANSFORMER CKT 1	560	560	0.20025	119.2809	GEN501801 1-DOLET HILLS UNIT1
FDNS	02ALL	0	25SP	G14_038	FROM->TO	POTTER COUNTY INTERCHANGE (WAUK 90343-A) 345/230/13.2KV TRANSFORMER CKT 1	560	560	0.20413	119.2232	MINGO - RED WILLOW 345KV CKT 1
FDNS	02ALL	0	25SP	G14_038	FROM->TO	POTTER COUNTY INTERCHANGE (WAUK 90343-A) 345/230/13.2KV TRANSFORMER CKT 1	560	560	0.20413	119.2232	MINGO - RED WILLOW 345KV CKT 1
FDNS	02ALL	0	25SP	G14_038	FROM->TO	POTTER COUNTY INTERCHANGE (WAUK 90343-A) 345/230/13.2KV TRANSFORMER CKT 1	560	560	0.20025	119.2218	GEN335831 1-RIVERBEND UNIT#1
FDNS	02ALL	0	25SP	G14_038	FROM->TO	POTTER COUNTY INTERCHANGE (WAUK 90343-A) 345/230/13.2KV TRANSFORMER CKT 1	560	560	0.20025	119.2169	GEN527881 1-CUNNINGHAM GEN #1
FDNS	02ALL	0	25SP	G14_038	FROM->TO	POTTER COUNTY INTERCHANGE (WAUK 90343-A) 345/230/13.2KV TRANSFORMER CKT 1	560	560	0.20025	119.2049	GEN562688 1-G15_014_3 0.6900
FDNS	02ALL	0	25SP	G14_038	FROM->TO	POTTER COUNTY INTERCHANGE (WAUK 90343-A) 345/230/13.2KV TRANSFORMER CKT 1	560	560	0.20025	119.1794	GEN562483 1-G13_027_3 0.6900
FDNS	02ALL	0	25SP	G14_038	FROM->TO	POTTER COUNTY INTERCHANGE (WAUK 90343-A) 345/230/13.2KV TRANSFORMER CKT 1	560	560	0.20061	119.1682	MOORE COUNTY INTERCHANGE (ENRCO 136402) 230/115/13.2KV TRANSFORMER CKT 1
FDNS	02ALL	0	25SP	G14_038	FROM->TO	POTTER COUNTY INTERCHANGE (WAUK 90343-A) 345/230/13.2KV TRANSFORMER CKT 1	560	560	0.20061	119.1682	MOORE COUNTY INTERCHANGE (ENRCO 136402) 230/115/13.2KV TRANSFORMER CKT 1
FDNS	02ALL	0	25SP	G14_038	FROM->TO	POTTER COUNTY INTERCHANGE (WAUK 90343-A) 345/230/13.2KV TRANSFORMER CKT 1	560	560	0.20089	119.155	PRINGLE INTERCHANGE - RIVERVIEW INTERCHANGE 115KV CKT 1
FDNS	02ALL	0	25SP	G14_038	FROM->TO	POTTER COUNTY INTERCHANGE (WAUK 90343-A) 345/230/13.2KV TRANSFORMER CKT 1	560	560	0.20025	119.1266	GEN562756 1-G15031_7 0.6900
FDNS	02ALL	0	25SP	G14_038	FROM->TO	POTTER COUNTY INTERCHANGE (WAUK 90343-A) 345/230/13.2KV TRANSFORMER CKT 1	560	560	0.20025	119.1259	GEN337910 1-ARKANSAS NUCLEAR ONE UNIT #1
FDNS	02ALL	0	25SP	G14_038	FROM->TO	POTTER COUNTY INTERCHANGE (WAUK 90343-A) 345/230/13.2KV TRANSFORMER CKT 1	560	560	0.20025	119.0975	GEN562754 1-G15031_5 0.6900
FDNS	02ALL	0	25SP	G14_038	FROM->TO	POTTER COUNTY INTERCHANGE (WAUK 90343-A) 345/230/13.2KV TRANSFORMER CKT 1	560	560	0.20022	119.0685	BEARCAT 138.00 - MOORELAND 138KV CKT 1
FDNS	02ALL	0	25SP	G14_038	FROM->TO	POTTER COUNTY INTERCHANGE (WAUK 90343-A) 345/230/13.2KV TRANSFORMER CKT 1	560	560	0.20025	119.0654	GEN562556 1-G14_046_3 0.3420
FDNS	02ALL	0	25SP	G14_038	FROM->TO	POTTER COUNTY INTERCHANGE (WAUK 90343-A) 345/230/13.2KV TRANSFORMER CKT 1	560	560	0.20088	119.0491	MOORE COUNTY INTERCHANGE W. - RB-S&S 3115.00 115KV CKT 1
FDNS	02ALL	0	25SP	G14_038	FROM->TO	POTTER COUNTY INTERCHANGE (WAUK 90343-A) 345/230/13.2KV TRANSFORMER CKT 1	560	560	0.20025	119.0452	GEN563142 1-G15079_3 0.5500
FDNS	02ALL	0	25SP	G14_038	FROM->TO	POTTER COUNTY INTERCHANGE (WAUK 90343-A) 345/230/13.2KV TRANSFORMER CKT 1	560	560	0.20025	119.0452	GEN563151 1-G15080_2 0.5500
FDNS	02ALL	0	25SP	G14_038	FROM->TO	POTTER COUNTY INTERCHANGE (WAUK 90343-A) 345/230/13.2KV TRANSFORMER CKT 1	560	560	0.20138	119.0445	G13-010T 345.00 - POST ROCK 345KV CKT 1
FDNS	02ALL	0	25SP	G14_038	FROM->TO	POTTER COUNTY INTERCHANGE (WAUK 90343-A) 345/230/13.2KV TRANSFORMER CKT 1	560	560	0.20025	119.0285	GEN524890 1-SNJN-WTGA1 10.6000
FDNS	02ALL	0	25SP	G14_038	FROM->TO	POTTER COUNTY INTERCHANGE (WAUK 90343-A) 345/230/13.2KV TRANSFORMER CKT 1	560	560	0.20025	119.0211	GEN522866 1-LUBBOCK POWER & LIGHT-HOLLY GEN
FDNS	02ALL	0	25SP	G14_038	FROM->TO	POTTER COUNTY INTERCHANGE (WAUK 90343-A) 345/230/13.2KV TRANSFORMER CKT 1	560	560	0.20025	119.0151	GEN563043 1-G15068_4 0.6900
FDNS	02ALL	0	25SP	G14_038	FROM->TO	POTTER COUNTY INTERCHANGE (WAUK 90343-A) 345/230/13.2KV TRANSFORMER CKT 1	560	560	0.20025	119.0095	GEN659111 2-LELAND OLDS UNIT2
FDNS	02ALL	0	25SP	G14_038	FROM->TO	POTTER COUNTY INTERCHANGE (WAUK 90343-A) 345/230/13.2KV TRANSFORMER CKT 1	560	560	0.20138	119.0044	G13-010T 345.00 - SPEARVILLE 345KV CKT 1
FDNS	02ALL	0	25SP	G14_038	FROM->TO	POTTER COUNTY INTERCHANGE (WAUK 90343-A) 345/230/13.2KV TRANSFORMER CKT 1	560	560	0.20021	119.0006	HOBBS - YOAKUM_345 345.00 345KV CKT 1
FDNS	02ALL	0	25SP	G14_038	FROM->TO	POTTER COUNTY INTERCHANGE (WAUK 90343-A) 345/230/13.2KV TRANSFORMER CKT 1	560	560	0.19517	118.9952	SWISHER COUNTY INTERCHANGE - TUCO_2 230.00 230KV CKT 1
FDNS	02ALL	0	25SP	G14_038	FROM->TO	POTTER COUNTY INTERCHANGE (WAUK 90343-A) 345/230/13.2KV TRANSFORMER CKT 1	560	560	0.20025	118.9737	GEN560586 1-G06-44-4 4.1600
FDNS	02ALL	0	25SP	G14_038	FROM->TO	POTTER COUNTY INTERCHANGE (WAUK 90343-A) 345/230/13.2KV TRANSFORMER CKT 1	560	560	0.20025	118.9682	GEN337652 1-WHITE BLUFF UNIT #1
FDNS	02ALL	0	25SP	G14_038	FROM->TO	POTTER COUNTY INTERCHANGE (WAUK 90343-A) 345/230/13.2KV TRANSFORMER CKT 1	560	560	0.20022	118.9628	BEARCAT 138.00 - NINE MILE 138KV CKT 1
FDNSLock	02ALL	0	25SP	G14_038	FROM->TO	POTTER COUNTY INTERCHANGE (WAUK 90343-A) 345/230/13.2KV TRANSFORMER CKT 1	560	560	0.19935	118.9537	STATELINE INTERCHANGE (H TP80154301) 230/115/13.2KV TRANSFORMER CKT 1
FDNS	02ALL	0	25SP	G14_038	FROM->TO	POTTER COUNTY INTERCHANGE (WAUK 90343-A) 345/230/13.2KV TRANSFORMER CKT 1	560	560	0.20025	118.9506	GEN562710 1-G15_022_3 0.5500
FDNS	02ALL	0	25SP	G14_038	FROM->TO	POTTER COUNTY INTERCHANGE (WAUK 90343-A) 345/230/13.2KV TRANSFORMER CKT 1	560	560	0.20022	118.9506	P12:138:WFEC:MSL14
FDNS	02ALL	0	25SP	G14_038	FROM->TO	POTTER COUNTY INTERCHANGE (WAUK 90343-A) 345/230/13.2KV TRANSFORMER CKT 1	560	560	0.20025	118.9408	GEN337653 1-WHITE BLUFF UNIT #2
FDNS	02ALL	0	25SP	G14_038	FROM->TO	POTTER COUNTY INTERCHANGE (WAUK 90343-A) 345/230/13.2KV TRANSFORMER CKT 1	560	560	0.20025	118.9328	GEN501813 1-RODEMACHER UNIT 3
FDNS	02ALL	0	25SP	G14_038	FROM->TO	POTTER COUNTY INTERCHANGE (WAUK 90343-A) 345/230/13.2KV TRANSFORMER CKT 1	560	560	0.20025	118.9197	GEN563042 1-G15068_3 0.6900

SOLUTION	GROUP	SCENARIO	SEASON	SOURCE	DIRECTION	MONITORED ELEMENT	RATEA (MVA)	RATEB(MVA)	TDF	TC%LOADING (% MVA)	CONTINGENCY
FDNS	02ALL	0	25SP	G14_038	FROM->TO	POTTER COUNTY INTERCHANGE (WAUK 90343-A) 345/230/13.2KV TRANSFORMER CKT 1	560	560	0.20025	118.9178	GEN336252 1-NINEMILE POINT UNIT#5
FDNS	02ALL	0	25SP	G14_038	FROM->TO	POTTER COUNTY INTERCHANGE (WAUK 90343-A) 345/230/13.2KV TRANSFORMER CKT 1	560	560	0.20025	118.9169	GEN562704 1-G15_020_3 0.3550
FDNS	02ALL	0	25SP	G14_038	FROM->TO	POTTER COUNTY INTERCHANGE (WAUK 90343-A) 345/230/13.2KV TRANSFORMER CKT 1	560	560	0.20027	118.9136	G15093_T 345.00 - GRACEMONT 345KV CKT 1
FDNS	02ALL	0	25SP	G14_038	FROM->TO	POTTER COUNTY INTERCHANGE (WAUK 90343-A) 345/230/13.2KV TRANSFORMER CKT 1	560	560	0.20025	118.8888	GEN336251 1-NINEMILE POINT UNIT#4
FDNS	02ALL	0	25SP	G14_038	FROM->TO	POTTER COUNTY INTERCHANGE (WAUK 90343-A) 345/230/13.2KV TRANSFORMER CKT 1	560	560	0.20025	118.8816	GEN562942 1-G15056_3 0.6900
FDNS	02ALL	0	25SP	G14_038	FROM->TO	POTTER COUNTY INTERCHANGE (WAUK 90343-A) 345/230/13.2KV TRANSFORMER CKT 1	560	560	0.19935	118.8816	Graves Sub - STATELINE INTERCHANGE 115KV CKT 1
FDNS	02ALL	0	25SP	G14_038	FROM->TO	POTTER COUNTY INTERCHANGE (WAUK 90343-A) 345/230/13.2KV TRANSFORMER CKT 1	560	560	0.19935	118.8816	Graves Sub - STATELINE INTERCHANGE 115KV CKT 1
FDNS	02ALL	0	25SP	G14_038	FROM->TO	POTTER COUNTY INTERCHANGE (WAUK 90343-A) 345/230/13.2KV TRANSFORMER CKT 1	560	560	0.19976	118.8789	TUCO INTERCHANGE (GE M1022338) 345/230/13.2KV TRANSFORMER CKT 1
FDNS	02ALL	0	25SP	G14_038	FROM->TO	POTTER COUNTY INTERCHANGE (WAUK 90343-A) 345/230/13.2KV TRANSFORMER CKT 1	560	560	0.19976	118.8789	TUCO INTERCHANGE (GE M1022338) 345/230/13.2KV TRANSFORMER CKT 1
FDNS	02ALL	0	25SP	G14_038	FROM->TO	POTTER COUNTY INTERCHANGE (WAUK 90343-A) 345/230/13.2KV TRANSFORMER CKT 1	560	560	0.20025	118.8699	GEN334440 1-SABINE UNIT 4
FDNS	02ALL	0	25SP	G14_038	FROM->TO	POTTER COUNTY INTERCHANGE (WAUK 90343-A) 345/230/13.2KV TRANSFORMER CKT 1	560	560	0.20025	118.8664	GEN524287 1-GS-PHWD_GEN10.6900
FDNS	02ALL	0	25SP	G14_038	FROM->TO	POTTER COUNTY INTERCHANGE (WAUK 90343-A) 345/230/13.2KV TRANSFORMER CKT 1	560	560	0.20036	118.8637	MARTIN SUB - PANTEX NORTH SUB 115KV CKT 1
FDNS	02ALL	0	25SP	G14_038	FROM->TO	POTTER COUNTY INTERCHANGE (WAUK 90343-A) 345/230/13.2KV TRANSFORMER CKT 1	560	560	0.20036	118.8637	MARTIN SUB - PANTEX NORTH SUB 115KV CKT 1
FDNS	02ALL	0	25SP	G14_038	FROM->TO	POTTER COUNTY INTERCHANGE (WAUK 90343-A) 345/230/13.2KV TRANSFORMER CKT 1	560	560	0.20025	118.8619	GEN335206 1-NELSON UNIT 6
FDNS	02ALL	0	25SP	G14_038	FROM->TO	POTTER COUNTY INTERCHANGE (WAUK 90343-A) 345/230/13.2KV TRANSFORMER CKT 1	560	560	0.20036	118.8585	PANTEX NORTH SUB - PANTEX SOUTH SUB 115KV CKT 1
FDNS	02ALL	0	25SP	G14_038	FROM->TO	POTTER COUNTY INTERCHANGE (WAUK 90343-A) 345/230/13.2KV TRANSFORMER CKT 1	560	560	0.20036	118.8585	PANTEX NORTH SUB - PANTEX SOUTH SUB 115KV CKT 1
FDNS	02ALL	0	25SP	G14_038	FROM->TO	POTTER COUNTY INTERCHANGE (WAUK 90343-A) 345/230/13.2KV TRANSFORMER CKT 1	560	560	0.20025	118.8541	GEN562655 1-G14_074_3 0.6900
FDNS	02ALL	0	25SP	G14_038	FROM->TO	POTTER COUNTY INTERCHANGE (WAUK 90343-A) 345/230/13.2KV TRANSFORMER CKT 1	560	560	0.20025	118.8537	GEN562762 1-G15033_3 0.6900
FDNS	02ALL	0	25SP	G14_038	FROM->TO	POTTER COUNTY INTERCHANGE (WAUK 90343-A) 345/230/13.2KV TRANSFORMER CKT 1	560	560	0.20036	118.8536	HIGHLAND PARK TAP - PANTEX SOUTH SUB 115KV CKT 1
FDNS	02ALL	0	25SP	G14_038	FROM->TO	POTTER COUNTY INTERCHANGE (WAUK 90343-A) 345/230/13.2KV TRANSFORMER CKT 1	560	560	0.20025	118.8536	GEN590010 1-ERCOT EQUIVALENCE
FDNS	02ALL	0	25SP	G14_038	FROM->TO	POTTER COUNTY INTERCHANGE (WAUK 90343-A) 345/230/13.2KV TRANSFORMER CKT 1	560	560	0.19956	118.8534	TUCO_2 345.00 (TUCO_2 XFMR) 345/230/13.2KV TRANSFORMER CKT 1
FDNS	02ALL	0	25SP	G14_038	FROM->TO	POTTER COUNTY INTERCHANGE (WAUK 90343-A) 345/230/13.2KV TRANSFORMER CKT 1	560	560	0.20025	118.8514	GEN336831 1-BAXTER WILSON SES
FDNS	02ALL	0	25SP	G14_038	FROM->TO	POTTER COUNTY INTERCHANGE (WAUK 90343-A) 345/230/13.2KV TRANSFORMER CKT 1	560	560	0.20025	118.8432	GEN524485 1-CAPROCK WIND GEN
FDNS	02ALL	0	25SP	G14_038	FROM->TO	POTTER COUNTY INTERCHANGE (WAUK 90343-A) 345/230/13.2KV TRANSFORMER CKT 1	560	560	0.20025	118.8312	GEN523815 1-LLANO ESTACADO WIND GEN
FDNS	02ALL	0	25SP	G14_038	FROM->TO	POTTER COUNTY INTERCHANGE (WAUK 90343-A) 345/230/13.2KV TRANSFORMER CKT 1	560	560	0.20022	118.8262	MOREWOOD SW - NINE MILE 138KV CKT 1
FDNS	02ALL	0	25SP	G14_038	FROM->TO	POTTER COUNTY INTERCHANGE (WAUK 90343-A) 345/230/13.2KV TRANSFORMER CKT 1	560	560	0.20115	118.8234	WALKEMEYER - WALKTAP3 115.00 115KV CKT 1
FDNS	02ALL	0	25SP	G14_038	FROM->TO	POTTER COUNTY INTERCHANGE (WAUK 90343-A) 345/230/13.2KV TRANSFORMER CKT 1	560	560	0.20115	118.8234	WALKEMEYER - WALKTAP3 115.00 115KV CKT 1
FDNS	02ALL	0	25SP	G14_038	FROM->TO	POTTER COUNTY INTERCHANGE (WAUK 90343-A) 345/230/13.2KV TRANSFORMER CKT 1	560	560	0.20115	118.8233	WALKTAP7 345.00 (WALKE345) 345/115/13.8KV TRANSFORMER CKT 1
FDNS	02ALL	0	25SP	G14_038	FROM->TO	POTTER COUNTY INTERCHANGE (WAUK 90343-A) 345/230/13.2KV TRANSFORMER CKT 1	560	560	0.20115	118.8233	WALKTAP7 345.00 (WALKE345) 345/115/13.8KV TRANSFORMER CKT 1
FDNS	02ALL	0	25SP	G14_038	FROM->TO	POTTER COUNTY INTERCHANGE (WAUK 90343-A) 345/230/13.2KV TRANSFORMER CKT 1	560	560	0.20025	118.818	GEN338146 1-INDEPENDENCE UNIT #2
FDNS	02ALL	0	25SP	G14_038	FROM->TO	POTTER COUNTY INTERCHANGE (WAUK 90343-A) 345/230/13.2KV TRANSFORMER CKT 1	560	560	0.20088	118.8143	DUMAS SUB - RB-S&S 3115.00 115KV CKT 1
FDNS	02ALL	0	25SP	G14_038	FROM->TO	POTTER COUNTY INTERCHANGE (WAUK 90343-A) 345/230/13.2KV TRANSFORMER CKT 1	560	560	0.20025	118.8063	GEN501812 1-RODEMACHER UNIT 2
FDNS	02ALL	0	25SP	G14_038	FROM->TO	POTTER COUNTY INTERCHANGE (WAUK 90343-A) 345/230/13.2KV TRANSFORMER CKT 1	560	560	0.20131	118.8025	G1524G1525 345.00 - THISTLE7 345.00 345KV CKT 1
FDNS	02ALL	0	25SP	G14_038	FROM->TO	POTTER COUNTY INTERCHANGE (WAUK 90343-A) 345/230/13.2KV TRANSFORMER CKT 1	560	560	0.20131	118.8025	G1524G1525 345.00 - THISTLE7 345.00 345KV CKT 2
FDNS	02ALL	0	25SP	G14_038	FROM->TO	POTTER COUNTY INTERCHANGE (WAUK 90343-A) 345/230/13.2KV TRANSFORMER CKT 1	560	560	0.20025	118.8022	GEN659103 1-ANTELOPE VALLEY UNIT1
FDNS	02ALL	0	25SP	G14_038	FROM->TO	POTTER COUNTY INTERCHANGE (WAUK 90343-A) 345/230/13.2KV TRANSFORMER CKT 1	560	560	0.20025	118.8022	GEN659107 2-ANTELOPE VALLEY UNIT2
FDNS	02ALL	0	25SP	G14_038	FROM->TO	POTTER COUNTY INTERCHANGE (WAUK 90343-A) 345/230/13.2KV TRANSFORMER CKT 1	560	560	0.2005	118.7993	TUCO INTERCHANGE - TUCO_2 345.00 345KV CKT 1
FDNS	02ALL	0	25SP	G14_038	FROM->TO	POTTER COUNTY INTERCHANGE (WAUK 90343-A) 345/230/13.2KV TRANSFORMER CKT 1	560	560	0.19999	118.7974	SUNDOWN INTERCHANGE - WOLFFORTH INTERCHANGE 230KV CKT 1
FDNS	02ALL	0	25SP	G14_038	FROM->TO	POTTER COUNTY INTERCHANGE (WAUK 90343-A) 345/230/13.2KV TRANSFORMER CKT 1	560	560	0.19999	118.7974	SUNDOWN INTERCHANGE - WOLFFORTH INTERCHANGE 230KV CKT 1
FDNS	02ALL	0	25SP	G14_038	FROM->TO	POTTER COUNTY INTERCHANGE (WAUK 90343-A) 345/230/13.2KV TRANSFORMER CKT 1	560	560	0.20025	118.793	GRAND GULF 500/22.0KV TRANSFORMER CKT 1
FDNS	02ALL	0	25SP	G14_038	FROM->TO	POTTER COUNTY INTERCHANGE (WAUK 90343-A) 345/230/13.2KV TRANSFORMER CKT 1	560	560	0.20025	118.7908	GEN337041 1-GERALD ANDRUS
FDNS	02ALL	0	25SP	G14_038	FROM->TO	POTTER COUNTY INTERCHANGE (WAUK 90343-A) 345/230/13.2KV TRANSFORMER CKT 1	560	560	0.20025	118.7859	GEN338143 1-INDEPENDENCE UNIT #1
FDNS	02ALL	0	25SP	G14_038	FROM->TO	POTTER COUNTY INTERCHANGE (WAUK 90343-A) 345/230/13.2KV TRANSFORMER CKT 1	560	560	0.20025	118.7791	GEN590011 2-ERCOT EQUIVALENCE
FDNS	02ALL	0	25SP	G14_038	FROM->TO	POTTER COUNTY INTERCHANGE (WAUK 90343-A) 345/230/13.2KV TRANSFORMER CKT 1	560	560	0.20025	118.7356	GEN560585 1-G06-44-3 4.1600
FDNS	02ALL	0	25SP	G14_038	FROM->TO	POTTER COUNTY INTERCHANGE (WAUK 90343-A) 345/230/13.2KV TRANSFORMER CKT 1	560	560	0.20025	118.6804	GEN300006 1-NEW MADRID UNIT 1
FDNS	02ALL	0	25SP	G14_038	FROM->TO	POTTER COUNTY INTERCHANGE (WAUK 90343-A) 345/230/13.2KV TRANSFORMER CKT 1	560	560	0.20025	118.6774	GEN300007 1-NEW MADRID UNIT 2
FDNS	02ALL	0	25SP	G14_038	FROM->TO	POTTER COUNTY INTERCHANGE (WAUK 90343-A) 345/230/13.2KV TRANSFORMER CKT 1	560	560	0.20025	118.4631	GEN542951 5-HAWTHORN UNIT #5
FDNS	02ALL	0	25SP	G14_038	FROM->TO	POTTER COUNTY INTERCHANGE (WAUK 90343-A) 345/230/13.2KV TRANSFORMER CKT 1	560	560	0.19724	118.4121	DEAF SMITH COUNTY INTERCHANGE - G15039_T 230.00 230KV CKT 1
FDNS	02ALL	0	25SP	G14_038	FROM->TO	POTTER COUNTY INTERCHANGE (WAUK 90343-A) 345/230/13.2KV TRANSFORMER CKT 1	560	560	0.19724	118.3407	G15039_T 230.00 - PLANT X STATION 230KV CKT 1
FDNS	02ALL	0	25SP	G14_038	FROM->TO	POTTER COUNTY INTERCHANGE (WAUK 90343-A) 345/230/13.2KV TRANSFORMER CKT 1	560	560	0.20025	118.254	2109-BUSHLAND INTERCHANGE
FDNS	02ALL	0	25SP	G14_038	FROM->TO	POTTER COUNTY INTERCHANGE (WAUK 90343-A) 345/230/13.2KV TRANSFORMER CKT 1	560	560	0.20025	118.254	BASE CASE
FDNS	02ALL	0	25SP	G14_038	FROM->TO	POTTER COUNTY INTERCHANGE (WAUK 90343-A) 345/230/13.2KV TRANSFORMER CKT 1	560	560	0.20025	118.2299	GEN560286 1-G10-01-1WTG 0.6900
FDNS	02ALL	0	25SP	G14_038	FROM->TO	POTTER COUNTY INTERCHANGE (WAUK 90343-A) 345/230/13.2KV TRANSFORMER CKT 1	560	560	0.20025	118.2299	GEN560287 1-G10-01-2WTG 0.6900
FDNS	02ALL	0	25SP	G14_038	FROM->TO	POTTER COUNTY INTERCHANGE (WAUK 90343-A) 345/230/13.2KV TRANSFORMER CKT 1	560	560	0.20025	118.2231	GEN542956 2-LACYGNE UNIT #2
FDNS	02ALL	0	25SP	G14_038	FROM->TO	POTTER COUNTY INTERCHANGE (WAUK 90343-A) 345/230/13.2KV TRANSFORMER CKT 1	560	560	0.20025	117.9375	GEN645011 1-NEBRASKA CITY 1
FDNS	02ALL	0	25SP	G14_038	FROM->TO	POTTER COUNTY INTERCHANGE (WAUK 90343-A) 345/230/13.2KV TRANSFORMER CKT 1	560	560	0.20025	117.7761	GEN542955 1-LACYGNE UNIT #1
FDNS	02ALL	0	25SP	G14_038	FROM->TO	POTTER COUNTY INTERCHANGE (WAUK 90343-A) 345/230/13.2KV TRANSFORMER CKT 1	560	560	0.20025	117.7323	GEN645012 2-NEBRASKA CITY 2
FDNS	02ALL	0	25SP	G14_038	FROM->TO	POTTER COUNTY INTERCHANGE (WAUK 90343-A) 345/230/13.2KV TRANSFORMER CKT 1	560	560	0.20025	117.732	GEN563173 1-G15082_3 0.6900
FDNS	02ALL	0	25SP	G14_038	FROM->TO	POTTER COUNTY INTERCHANGE (WAUK 90343-A) 345/230/13.2KV TRANSFORMER CKT 1	560	560	0.19906	117.718	KIRBY SWITCHING STATION - MCCLELLAN SUB 115KV CKT 1
FDNS	02ALL	0	25SP	G14_038	FROM->TO	POTTER COUNTY INTERCHANGE (WAUK 90343-A) 345/230/13.2KV TRANSFORMER CKT 1	560	560	0.20025	117.7163	GEN546698 1-QN GEN2
FDNS	02ALL	0	25SP	G14_038	FROM->TO	POTTER COUNTY INTERCHANGE (WAUK 90343-A) 345/230/13.2KV TRANSFORMER CKT 1	560	560	0.20025	117.7161	GEN511953 G-COGENTRIX GAS # 1
FDNS	02ALL	0	25SP	G14_038	FROM->TO	POTTER COUNTY INTERCHANGE (WAUK 90343-A) 345/230/13.2KV TRANSFORMER CKT 1	560	560	0.19906	117.7143	MCCLELLAN SUB - MCLEAN RURAL SUB 115KV CKT 1
FDNS	02ALL	0	25SP	G14_038	FROM->TO	POTTER COUNTY INTERCHANGE (WAUK 90343-A) 345/230/13.2KV TRANSFORMER CKT 1	560	560	0.20025	117.7118	GEN645001 1-FORT CALHOUN 1
FDNS	02ALL	0	25SP	G14_038	FROM->TO	POTTER COUNTY INTERCHANGE (WAUK 90343-A) 345/230/13.2KV TRANSFORMER CKT 1	560	560	0.20025	117.7114	GEN562042 1-G11_014_3 0.6900
FDNS	02ALL	0	25SP	G14_038	FROM->TO	POTTER COUNTY INTERCHANGE (WAUK 90343-A) 345/230/13.2KV TRANSFORMER CKT 1	560	560	0.20025	117.7104	GEN547656 1-STATE LINE UNIT #2
FDNS	02ALL	0	25SP	G14_038	FROM->TO	POTTER COUNTY INTERCHANGE (WAUK 90343-A) 345/230/13.2KV TRANSFORMER CKT 1	560	560	0.20025	117.7104	GEN547657 1-STATE LINE UNIT #3
FDNS	02ALL	0	25SP	G14_038	FROM->TO	POTTER COUNTY INTERCHANGE (WAUK 90343-A) 345/230/13.2KV TRANSFORMER CKT 1	560	560	0.20025	117.7006	GEN542967 9-HAWTHORN UNIT #9
FDNS	02ALL	0	25SP	G14_038	FROM->TO	POTTER COUNTY INTERCHANGE (WAUK 90343-A) 345/230/13.2KV TRANSFORMER CKT 1	560	560	0.20025	117.6957	GEN659018 1-G14_003IS_3 0.6900
FDNS	02ALL	0	25SP	G14_038	FROM->TO	POTTER COUNTY INTERCHANGE (WAUK 90343-A) 345/230/13.2KV TRANSFORMER CKT 1	560	560	0.20025	117.6861	GEN542957 1-IATAN UNIT #1
FDNS	02ALL	0	25SP	G14_038	FROM->TO	POTTER COUNTY INTERCHANGE (WAUK 90343-A) 345/230/13.2KV TRANSFORMER CKT 1	560	560	0.19994	117.6856	DEAF SMITH REC-#6 - FRIONA SUB 115KV CKT 1
FDNS	02ALL	0	25SP	G14_038	FROM->TO	POTTER COUNTY INTERCHANGE (WAUK 90343-A) 345/230/13.2KV TRANSFORMER CKT 1	560	560	0.20011	117.6838	CROSSROADS 7345.00 - TOLK STATION 345KV CKT 1
FDNS	02ALL	0	25SP	G14_038	FROM->TO	POTTER COUNTY INTERCHANGE (WAUK 90343-A) 345/230/13.2KV TRANSFORMER CKT 1	560	560	0.20011	117.6812	TOLK STATION (ABBXNL844501) 345/230/13.2KV TRANSFORMER CKT 1
FDNS	02ALL	0	25SP	G14_038	FROM->TO	POTTER COUNTY INTERCHANGE (WAUK 90343-A) 345/230/13.2KV TRANSFORMER CKT 1	560	560	0.20011	117.6812	TOLK STATION (ABBXNL844501) 345/230/13.2KV TRANSFORMER CKT 1
FDNS	02ALL	0	25SP	G14_038	FROM->TO	POTTER COUNTY INTERCHANGE (WAUK 90343-A) 345/230/13.2KV TRANSFORMER CKT 1	560	560	0.20025	117.6768	GEN635213 3-NEAL UNIT 3
FDNS	02ALL	0	25SP	G14_038	FROM->TO	POTTER COUNTY INTERCHANGE (WAUK 90343-A) 345/230/13.2KV TRANSFORMER CKT 1	560	560	0.20025	117.6706	GEN300020 1-1CHOTCT4 16.000
FDNS	02ALL	0	25SP	G14_038	FROM->TO	POTTER COUNTY INTERCHANGE (WAUK 90343-A) 345/230/13.2KV TRANSFORMER CKT 1	560	560	0.20025	117.6706	GEN300021 1-1CHOTCT5 16.000
FDNS	02ALL	0	25SP	G14_038	FROM->TO	POTTER COUNTY INTERCHANGE (WAUK 90343-A) 345/230/13.2KV TRANSFORMER CKT 1	560	560	0.20025	117.6705	GEN300032 1-CHOUTEAU CTG 2
FDNS	02ALL	0	25SP	G14_038	FROM->TO	POTTER COUNTY INTERCHANGE (WAUK 90343-A) 345/230/13.2KV TRANSFORMER CKT 1	560	560	0.20025	117.6705	GEN300033 1-CHOUTEAU STG 3
FDNS	02ALL	0	25SP	G14_038	FROM->TO	POTTER COUNTY INTERCHANGE (WAUK 90343-A) 345/230/13.2KV TRANSFORMER CKT 1	560	560	0.20025	117.6683	GEN539677 3-A. M. MULLERGREN GENERATOR

SOLUTION	GROUP	SCENARIO	SEASON	SOURCE	DIRECTION	MONITORED ELEMENT	RATEA (MVA)	RATEB(MVA)	TDF	TC%LOADING (% MVA)	CONTINGENCY
FDNS	02ALL	0	25SP	G14_038	FROM->TO	POTTER COUNTY INTERCHANGE (WAUK 90343-A) 345/230/13.2KV TRANSFORMER CKT 1	560	560	0.20025	117.6653	GEN652559 1-OAHE
FDNS	02ALL	0	25SP	G14_038	FROM->TO	POTTER COUNTY INTERCHANGE (WAUK 90343-A) 345/230/13.2KV TRANSFORMER CKT 1	560	560	0.20025	117.6567	GEN659289 1-DAYCNTYWND W0.6900
FDNS	02ALL	0	25SP	G14_038	FROM->TO	POTTER COUNTY INTERCHANGE (WAUK 90343-A) 345/230/13.2KV TRANSFORMER CKT 1	560	560	0.20025	117.6558	GEN520947 1-HUGO1
FDNS	02ALL	0	25SP	G14_038	FROM->TO	POTTER COUNTY INTERCHANGE (WAUK 90343-A) 345/230/13.2KV TRANSFORMER CKT 1	560	560	0.20025	117.649	GEN532672 1-TECUMSEH ENERGY CENTER UNIT 8
FDNS	02ALL	0	25SP	G14_038	FROM->TO	POTTER COUNTY INTERCHANGE (WAUK 90343-A) 345/230/13.2KV TRANSFORMER CKT 1	560	560	0.20025	117.6486	GEN300024 1-1CHOTST6 16.000
FDNS	02ALL	0	25SP	G14_038	FROM->TO	POTTER COUNTY INTERCHANGE (WAUK 90343-A) 345/230/13.2KV TRANSFORMER CKT 1	560	560	0.20025	117.6486	GEN300031 1-CHOUTEAU CTG 1
FDNS	02ALL	0	25SP	G14_038	FROM->TO	POTTER COUNTY INTERCHANGE (WAUK 90343-A) 345/230/13.2KV TRANSFORMER CKT 1	560	560	0.20025	117.6466	GEN539653 1-CIMARRON RIVER PLANT GENERATOR
FDNS	02ALL	0	25SP	G14_038	FROM->TO	POTTER COUNTY INTERCHANGE (WAUK 90343-A) 345/230/13.2KV TRANSFORMER CKT 1	560	560	0.19994	117.6423	DEAF SMITH REC-#6 - HEREFORD INTERCHANGE 115KV CKT 1
FDNS	02ALL	0	25SP	G14_038	FROM->TO	POTTER COUNTY INTERCHANGE (WAUK 90343-A) 345/230/13.2KV TRANSFORMER CKT 1	560	560	0.20025	117.6421	GEN652556 2-OAHE
FDNS	02ALL	0	25SP	G14_038	FROM->TO	POTTER COUNTY INTERCHANGE (WAUK 90343-A) 345/230/13.2KV TRANSFORMER CKT 1	560	560	0.20025	117.6421	GEN652557 4-OAHE
FDNS	02ALL	0	25SP	G14_038	FROM->TO	POTTER COUNTY INTERCHANGE (WAUK 90343-A) 345/230/13.2KV TRANSFORMER CKT 1	560	560	0.20025	117.6421	GEN652558 6-OAHE
FDNS	02ALL	0	25SP	G14_038	FROM->TO	POTTER COUNTY INTERCHANGE (WAUK 90343-A) 345/230/13.2KV TRANSFORMER CKT 1	560	560	0.20025	117.6416	GEN652460 4-GARRISON
FDNS	02ALL	0	25SP	G14_038	FROM->TO	POTTER COUNTY INTERCHANGE (WAUK 90343-A) 345/230/13.2KV TRANSFORMER CKT 1	560	560	0.20025	117.6416	GEN652461 5-GARRISON
FDNS	02ALL	0	25SP	G14_038	FROM->TO	POTTER COUNTY INTERCHANGE (WAUK 90343-A) 345/230/13.2KV TRANSFORMER CKT 1	560	560	0.20025	117.6396	GEN652458 2-GARRISON
FDNS	02ALL	0	25SP	G14_038	FROM->TO	POTTER COUNTY INTERCHANGE (WAUK 90343-A) 345/230/13.2KV TRANSFORMER CKT 1	560	560	0.20025	117.6395	GEN652457 1-GARRISON
FDNS	02ALL	0	25SP	G14_038	FROM->TO	POTTER COUNTY INTERCHANGE (WAUK 90343-A) 345/230/13.2KV TRANSFORMER CKT 1	560	560	0.20025	117.6395	GEN652459 3-GARRISON
FDNS	02ALL	0	25SP	G14_038	FROM->TO	POTTER COUNTY INTERCHANGE (WAUK 90343-A) 345/230/13.2KV TRANSFORMER CKT 1	560	560	0.20025	117.6362	GEN645024 4-NORTH OMAHA 4
FDNS	02ALL	0	25SP	G14_038	FROM->TO	POTTER COUNTY INTERCHANGE (WAUK 90343-A) 345/230/13.2KV TRANSFORMER CKT 1	560	560	0.20025	117.6348	BIG STONE 230/24.0KV TRANSFORMER CKT 1
FDNS	02ALL	0	25SP	G14_038	FROM->TO	POTTER COUNTY INTERCHANGE (WAUK 90343-A) 345/230/13.2KV TRANSFORMER CKT 1	560	560	0.19999	117.6247	G13_027T 230.00 - YOAKUM COUNTY INTERCHANGE 230KV CKT 1
FDNS	02ALL	0	25SP	G14_038	FROM->TO	POTTER COUNTY INTERCHANGE (WAUK 90343-A) 345/230/13.2KV TRANSFORMER CKT 1	560	560	0.20025	117.6242	GEN600001 2-SHERBURNE CNTY G2
FDNS	02ALL	0	25SP	G14_038	FROM->TO	POTTER COUNTY INTERCHANGE (WAUK 90343-A) 345/230/13.2KV TRANSFORMER CKT 1	560	560	0.20025	117.6241	GEN600005 1-MONTICELLO
FDNS	02ALL	0	25SP	G14_038	FROM->TO	POTTER COUNTY INTERCHANGE (WAUK 90343-A) 345/230/13.2KV TRANSFORMER CKT 1	560	560	0.20025	117.6209	GEN532742 5-EMPORIA ENERGY CENTER UNIT 5
FDNS	02ALL	0	25SP	G14_038	FROM->TO	POTTER COUNTY INTERCHANGE (WAUK 90343-A) 345/230/13.2KV TRANSFORMER CKT 1	560	560	0.20006	117.6175	CANYON E_TP3115.00 - CANYON WEST SUB 115KV CKT 1
FDNS	02ALL	0	25SP	G14_038	FROM->TO	POTTER COUNTY INTERCHANGE (WAUK 90343-A) 345/230/13.2KV TRANSFORMER CKT 1	560	560	0.20001	117.6112	AMARILLO SOUTH INTERCHANGE - NICHOLS STATION 230KV CKT 1
FDNS	02ALL	0	25SP	G14_038	FROM->TO	POTTER COUNTY INTERCHANGE (WAUK 90343-A) 345/230/13.2KV TRANSFORMER CKT 1	560	560	0.20001	117.6112	AMARILLO SOUTH INTERCHANGE - NICHOLS STATION 230KV CKT 1
FDNS	02ALL	0	25SP	G14_038	FROM->TO	POTTER COUNTY INTERCHANGE (WAUK 90343-A) 345/230/13.2KV TRANSFORMER CKT 1	560	560	0.20025	117.589	GEN640005 1-CANADAY
FDNS	02ALL	0	25SP	G14_038	FROM->TO	POTTER COUNTY INTERCHANGE (WAUK 90343-A) 345/230/13.2KV TRANSFORMER CKT 1	560	560	0.19961	117.5867	KRESS INTERCHANGE - TULIA TAP 115KV CKT 1
FDNS	02ALL	0	25SP	G14_038	FROM->TO	POTTER COUNTY INTERCHANGE (WAUK 90343-A) 345/230/13.2KV TRANSFORMER CKT 1	560	560	0.20025	117.5808	GEN600000 1-SHERBURNECNTY G1
FDNS	02ALL	0	25SP	G14_038	FROM->TO	POTTER COUNTY INTERCHANGE (WAUK 90343-A) 345/230/13.2KV TRANSFORMER CKT 1	560	560	0.20025	117.5741	GEN615001 1-COAL CREEK
FDNS	02ALL	0	25SP	G14_038	FROM->TO	POTTER COUNTY INTERCHANGE (WAUK 90343-A) 345/230/13.2KV TRANSFORMER CKT 1	560	560	0.19865	117.5721	CONWAY SUB - NICHOLS STATION 115KV CKT 1
FDNS	02ALL	0	25SP	G14_038	FROM->TO	POTTER COUNTY INTERCHANGE (WAUK 90343-A) 345/230/13.2KV TRANSFORMER CKT 1	560	560	0.20025	117.5655	GEN615002 2-COAL CREEK
FDNS	02ALL	0	25SP	G14_038	FROM->TO	POTTER COUNTY INTERCHANGE (WAUK 90343-A) 345/230/13.2KV TRANSFORMER CKT 1	560	560	0.20025	117.5583	GEN549890 1-SOUTHWEST 1
FDNS	02ALL	0	25SP	G14_038	FROM->TO	POTTER COUNTY INTERCHANGE (WAUK 90343-A) 345/230/13.2KV TRANSFORMER CKT 1	560	560	0.20025	117.5554	GEN300017 1-1G2GPDEL 18.000
FDNS	02ALL	0	25SP	G14_038	FROM->TO	POTTER COUNTY INTERCHANGE (WAUK 90343-A) 345/230/13.2KV TRANSFORMER CKT 1	560	560	0.20025	117.5539	GEN547649 1-ASBURY UNIT #1
FDNS	02ALL	0	25SP	G14_038	FROM->TO	POTTER COUNTY INTERCHANGE (WAUK 90343-A) 345/230/13.2KV TRANSFORMER CKT 1	560	560	0.20025	117.5417	GEN511941 1-OEC STEAM # 2
FDNS	02ALL	0	25SP	G14_038	FROM->TO	POTTER COUNTY INTERCHANGE (WAUK 90343-A) 345/230/13.2KV TRANSFORMER CKT 1	560	560	0.20025	117.5406	GEN532725 1-EVANS ENERGY CENTER GAS TURBINE 3
FDNS	02ALL	0	25SP	G14_038	FROM->TO	POTTER COUNTY INTERCHANGE (WAUK 90343-A) 345/230/13.2KV TRANSFORMER CKT 1	560	560	0.20025	117.5352	GEN547658 1-STATE LINE COMBINED CYCLE
FDNS	02ALL	0	25SP	G14_038	FROM->TO	POTTER COUNTY INTERCHANGE (WAUK 90343-A) 345/230/13.2KV TRANSFORMER CKT 1	560	560	0.19961	117.5333	HAPPY INTERCHANGE - TULIA TAP 115KV CKT 1
FDNS	02ALL	0	25SP	G14_038	FROM->TO	POTTER COUNTY INTERCHANGE (WAUK 90343-A) 345/230/13.2KV TRANSFORMER CKT 1	560	560	0.20025	117.532	GEN514939 1-HORSESHOE LAKE 8G
FDNS	02ALL	0	25SP	G14_038	FROM->TO	POTTER COUNTY INTERCHANGE (WAUK 90343-A) 345/230/13.2KV TRANSFORMER CKT 1	560	560	0.20025	117.5319	GEN511938 1-OEC STEAM # 1
FDNS	02ALL	0	25SP	G14_038	FROM->TO	POTTER COUNTY INTERCHANGE (WAUK 90343-A) 345/230/13.2KV TRANSFORMER CKT 1	560	560	0.20025	117.5287	GEN531447 1-HOLCOMB GENERATOR
FDNS	02ALL	0	25SP	G14_038	FROM->TO	POTTER COUNTY INTERCHANGE (WAUK 90343-A) 345/230/13.2KV TRANSFORMER CKT 1	560	560	0.20025	117.5241	GEN300016 1-1G1GPDEL 18.000
FDNS	02ALL	0	25SP	G14_038	FROM->TO	POTTER COUNTY INTERCHANGE (WAUK 90343-A) 345/230/13.2KV TRANSFORMER CKT 1	560	560	0.20025	117.5218	GEN532721 1-EVANS ENERGY CENTER UNIT 1
FDNS	02ALL	0	25SP	G14_038	FROM->TO	POTTER COUNTY INTERCHANGE (WAUK 90343-A) 345/230/13.2KV TRANSFORMER CKT 1	560	560	0.20025	117.5133	GEN532743 6-EMPORIA ENERGY CENTER UNIT 6
FDNS	02ALL	0	25SP	G14_038	FROM->TO	POTTER COUNTY INTERCHANGE (WAUK 90343-A) 345/230/13.2KV TRANSFORMER CKT 1	560	560	0.20025	117.5133	GEN532744 7-EMPORIA ENERGY CENTER UNIT 7
FDNS	02ALL	0	25SP	G14_038	FROM->TO	POTTER COUNTY INTERCHANGE (WAUK 90343-A) 345/230/13.2KV TRANSFORMER CKT 1	560	560	0.20025	117.5088	GEN659354 1-DEERCREK STG18.000
FDNS	02ALL	0	25SP	G14_038	FROM->TO	POTTER COUNTY INTERCHANGE (WAUK 90343-A) 345/230/13.2KV TRANSFORMER CKT 1	560	560	0.20025	117.5085	GEN659353 1-DEERCREK CTG18.000
FDNS	02ALL	0	25SP	G14_038	FROM->TO	POTTER COUNTY INTERCHANGE (WAUK 90343-A) 345/230/13.2KV TRANSFORMER CKT 1	560	560	0.20025	117.5017	GEN513602 1-GRECSTG_1 17.500
FDNS	02ALL	0	25SP	G14_038	FROM->TO	POTTER COUNTY INTERCHANGE (WAUK 90343-A) 345/230/13.2KV TRANSFORMER CKT 1	560	560	0.2001	117.499	P12:345:SPS:J02.1.TOLK.EDDY
FDNS	02ALL	0	25SP	G14_038	FROM->TO	POTTER COUNTY INTERCHANGE (WAUK 90343-A) 345/230/13.2KV TRANSFORMER CKT 1	560	560	0.20025	117.4834	GEN645041 1-CASS COUNTY 1
FDNS	02ALL	0	25SP	G14_038	FROM->TO	POTTER COUNTY INTERCHANGE (WAUK 90343-A) 345/230/13.2KV TRANSFORMER CKT 1	560	560	0.20025	117.4805	GEN645042 2-CASS COUNTY 2
FDNS	02ALL	0	25SP	G14_038	FROM->TO	POTTER COUNTY INTERCHANGE (WAUK 90343-A) 345/230/13.2KV TRANSFORMER CKT 1	560	560	0.20025	117.4773	GEN532653 1-JEFFREY ENERGY CENTER UNIT 3
FDNS	02ALL	0	25SP	G14_038	FROM->TO	POTTER COUNTY INTERCHANGE (WAUK 90343-A) 345/230/13.2KV TRANSFORMER CKT 1	560	560	0.20025	117.4771	GEN532652 1-JEFFREY ENERGY CENTER UNIT 2
FDNS	02ALL	0	25SP	G14_038	FROM->TO	POTTER COUNTY INTERCHANGE (WAUK 90343-A) 345/230/13.2KV TRANSFORMER CKT 1	560	560	0.20025	117.4712	GEN532651 1-JEFFREY ENERGY CENTER UNIT 1
FDNS	02ALL	0	25SP	G14_038	FROM->TO	POTTER COUNTY INTERCHANGE (WAUK 90343-A) 345/230/13.2KV TRANSFORMER CKT 1	560	560	0.20025	117.4607	FINNEY SWITCHING STATION - PSCO LAMAR DC TIE 345KV CKT 1
FDNS	02ALL	0	25SP	G14_038	FROM->TO	POTTER COUNTY INTERCHANGE (WAUK 90343-A) 345/230/13.2KV TRANSFORMER CKT 1	560	560	0.20025	117.4607	FINNEY SWITCHING STATION - PSCO LAMAR DC TIE 345KV CKT 1
FDNS	02ALL	0	25SP	G14_038	FROM->TO	POTTER COUNTY INTERCHANGE (WAUK 90343-A) 345/230/13.2KV TRANSFORMER CKT 1	560	560	0.20025	117.4598	GEN300003 1-THOMAS HILL UNIT 3
FDNS	02ALL	0	25SP	G14_038	FROM->TO	POTTER COUNTY INTERCHANGE (WAUK 90343-A) 345/230/13.2KV TRANSFORMER CKT 1	560	560	0.20025	117.4553	GEN635214 4-NEAL UNIT 4
FDNS	02ALL	0	25SP	G14_038	FROM->TO	POTTER COUNTY INTERCHANGE (WAUK 90343-A) 345/230/13.2KV TRANSFORMER CKT 1	560	560	0.20025	117.4448	SHERBURNE CO 345/24.0KV TRANSFORMER CKT 1
FDNS	02ALL	0	25SP	G14_038	FROM->TO	POTTER COUNTY INTERCHANGE (WAUK 90343-A) 345/230/13.2KV TRANSFORMER CKT 1	560	560	0.20025	117.4379	GEN541163 1-ARIES COMBUSTION TURBINE #1
FDNS	02ALL	0	25SP	G14_038	FROM->TO	POTTER COUNTY INTERCHANGE (WAUK 90343-A) 345/230/13.2KV TRANSFORMER CKT 1	560	560	0.20025	117.4168	GEN509398 1-KNOXLEE #5
FDNS	02ALL	0	25SP	G14_038	FROM->TO	POTTER COUNTY INTERCHANGE (WAUK 90343-A) 345/230/13.2KV TRANSFORMER CKT 1	560	560	0.20025	117.4157	GEN509409 1-WILKES #3
FDNS	02ALL	0	25SP	G14_038	FROM->TO	POTTER COUNTY INTERCHANGE (WAUK 90343-A) 345/230/13.2KV TRANSFORMER CKT 1	560	560	0.20025	117.4125	GEN300001 1-THOMAS HILL UNIT 1
FDNS	02ALL	0	25SP	G14_038	FROM->TO	POTTER COUNTY INTERCHANGE (WAUK 90343-A) 345/230/13.2KV TRANSFORMER CKT 1	560	560	0.20025	117.4123	GEN640009 1-COOPER NUCLEAR STATION
FDNS	02ALL	0	25SP	G14_038	FROM->TO	POTTER COUNTY INTERCHANGE (WAUK 90343-A) 345/230/13.2KV TRANSFORMER CKT 1	560	560	0.20025	117.4112	GEN600002 3-SHERBURNE CNTY G3
FDNS	02ALL	0	25SP	G14_038	FROM->TO	POTTER COUNTY INTERCHANGE (WAUK 90343-A) 345/230/13.2KV TRANSFORMER CKT 1	560	560	0.20011	117.4051	EDDY COUNTY INTERCHANGE (ABB AEM30711) 345/230/13.2KV TRANSFORMER CKT 1
FDNS	02ALL	0	25SP	G14_038	FROM->TO	POTTER COUNTY INTERCHANGE (WAUK 90343-A) 345/230/13.2KV TRANSFORMER CKT 1	560	560	0.20011	117.4051	EDDY COUNTY INTERCHANGE (ABB AEM30711) 345/230/13.2KV TRANSFORMER CKT 1
FDNS	02ALL	0	25SP	G14_038	FROM->TO	POTTER COUNTY INTERCHANGE (WAUK 90343-A) 345/230/13.2KV TRANSFORMER CKT 1	560	560	0.20011	117.405	CROSSROADS 7345.00 - EDDY COUNTY INTERCHANGE 345KV CKT 1
FDNS	02ALL	0	25SP	G14_038	FROM->TO	POTTER COUNTY INTERCHANGE (WAUK 90343-A) 345/230/13.2KV TRANSFORMER CKT 1	560	560	0.20011	117.405	P12:345:SPS:J14.1.EDDY.XRDS
FDNS	02ALL	0	25SP	G14_038	FROM->TO	POTTER COUNTY INTERCHANGE (WAUK 90343-A) 345/230/13.2KV TRANSFORMER CKT 1	560	560	0.20025	117.3983	GEN515040 1-SEMINOLE 1G
FDNS	02ALL	0	25SP	G14_038	FROM->TO	POTTER COUNTY INTERCHANGE (WAUK 90343-A) 345/230/13.2KV TRANSFORMER CKT 1	560	560	0.20025	117.396	GEN541162 1-ARIES STEAM TURBINE
FDNS	02ALL	0	25SP	G14_038	FROM->TO	POTTER COUNTY INTERCHANGE (WAUK 90343-A) 345/230/13.2KV TRANSFORMER CKT 1	560	560	0.20025	117.3743	GEN635023 3-WALTER SCOTT UNIT 3
FDNS	02ALL	0	25SP	G14_038	FROM->TO	POTTER COUNTY INTERCHANGE (WAUK 90343-A) 345/230/13.2KV TRANSFORMER CKT 1	560	560	0.20025	117.3347	GEN515592 1-PALDRW21 0.6900
FDNS	02ALL	0	25SP	G14_038	FROM->TO	POTTER COUNTY INTERCHANGE (WAUK 90343-A) 345/230/13.2KV TRANSFORMER CKT 1	560	560	0.20025	117.3271	GEN531459 2-S2 GENERATOR
FDNS	02ALL	0	25SP	G14_038	FROM->TO	POTTER COUNTY INTERCHANGE (WAUK 90343-A) 345/230/13.2KV TRANSFORMER CKT 1	560	560	0.20025	117.3017	GEN523170 1-GOODWELL_1 10.6900
FDNS	02ALL	0	25SP	G14_038	FROM->TO	POTTER COUNTY INTERCHANGE (WAUK 90343-A) 345/230/13.2KV TRANSFORMER CKT 1	560	560	0.20006	117.2935	CANYON E_TP3115.00 - RANDALL COUNTY INTERCHANGE 115KV CKT 1
FDNS	02ALL	0	25SP	G14_038	FROM->TO	POTTER COUNTY INTERCHANGE (WAUK 90343-A) 345/230/13.2KV TRANSFORMER CKT 1	560	560	0.20025	117.2816	GEN515041 1-SEMINOLE 2G
FDNS	02ALL	0	25SP	G14_038	FROM->TO	POTTER COUNTY INTERCHANGE (WAUK 90343-A) 345/230/13.2KV TRANSFORMER CKT 1	560	560	0.20025	117.2633	GEN523171 1-GOODWELL_2 10.6900
FDNS	02ALL	0	25SP	G14_038	FROM->TO	POTTER COUNTY INTERCHANGE (WAUK 90343-A) 345/230/13.2KV TRANSFORMER CKT 1	560	560	0.20025	117.2528	GEN645025 5-NORTH OMAHA 5

SOLUTION	GROUP	SCENARIO	SEASON	SOURCE	DIRECTION	MONITORED ELEMENT	RATEA (MVA)	RATEB(MVA)	TDF	TC%LOADING (% MVA)	CONTINGENCY
FDNS	02ALL	0	25SP	G14_038	FROM->TO	POTTER COUNTY INTERCHANGE (WAUK 90343-A) 345/230/13.2KV TRANSFORMER CKT 1	560	560	0.20025	117.2474	GEN300010 1-ST FRANCIS UNIT 1
FDNS	02ALL	0	25SP	G14_038	FROM->TO	POTTER COUNTY INTERCHANGE (WAUK 90343-A) 345/230/13.2KV TRANSFORMER CKT 1	560	560	0.20025	117.2467	GEN515042 1-SEMINOLE 3G
FDNS	02ALL	0	25SP	G14_038	FROM->TO	POTTER COUNTY INTERCHANGE (WAUK 90343-A) 345/230/13.2KV TRANSFORMER CKT 1	560	560	0.20025	117.2431	GEN659118 1-LARAMIE RIVER UNIT1
FDNS	02ALL	0	25SP	G14_038	FROM->TO	POTTER COUNTY INTERCHANGE (WAUK 90343-A) 345/230/13.2KV TRANSFORMER CKT 1	560	560	0.20025	117.2422	GEN549893 2-SOUTHWEST 2
FDNS	02ALL	0	25SP	G14_038	FROM->TO	POTTER COUNTY INTERCHANGE (WAUK 90343-A) 345/230/13.2KV TRANSFORMER CKT 1	560	560	0.20025	117.2419	GEN635024 4-WALTER SCOTT UNIT 4
FDNS	02ALL	0	25SP	G14_038	FROM->TO	POTTER COUNTY INTERCHANGE (WAUK 90343-A) 345/230/13.2KV TRANSFORMER CKT 1	560	560	0.20092	117.2362	CHAN/TASCOS6230.00 - POTTER COUNTY INTERCHANGE 230KV CKT 1
FDNS	02ALL	0	25SP	G14_038	FROM->TO	POTTER COUNTY INTERCHANGE (WAUK 90343-A) 345/230/13.2KV TRANSFORMER CKT 1	560	560	0.20025	117.2347	GEN300015 1-1SGPDEL 18.000
FDNS	02ALL	0	25SP	G14_038	FROM->TO	POTTER COUNTY INTERCHANGE (WAUK 90343-A) 345/230/13.2KV TRANSFORMER CKT 1	560	560	0.20025	117.2032	GEN505432 1-SIKESTON
FDNS	02ALL	0	25SP	G14_038	FROM->TO	POTTER COUNTY INTERCHANGE (WAUK 90343-A) 345/230/13.2KV TRANSFORMER CKT 1	560	560	0.20025	117.2017	GEN300011 1-ST FRANCIS UNIT 2
FDNS	02ALL	0	25SP	G14_038	FROM->TO	POTTER COUNTY INTERCHANGE (WAUK 90343-A) 345/230/13.2KV TRANSFORMER CKT 1	560	560	0.20025	117.1762	GEN659110 1-LELAND OLDS UNIT1
FDNS	02ALL	0	25SP	G14_038	FROM->TO	POTTER COUNTY INTERCHANGE (WAUK 90343-A) 345/230/13.2KV TRANSFORMER CKT 1	560	560	0.19988	117.1743	Harrington Station Mid Bus - RANDALL COUNTY INTERCHANGE 230KV CKT 1
FDNS	02ALL	0	25SP	G14_038	FROM->TO	POTTER COUNTY INTERCHANGE (WAUK 90343-A) 345/230/13.2KV TRANSFORMER CKT 1	560	560	0.19988	117.1743	Harrington Station Mid Bus - RANDALL COUNTY INTERCHANGE 230KV CKT 1
FDNS	02ALL	0	25SP	G14_038	FROM->TO	POTTER COUNTY INTERCHANGE (WAUK 90343-A) 345/230/13.2KV TRANSFORMER CKT 1	560	560	0.20025	117.1491	GEN546702 1-NM GEN N1
FDNS	02ALL	0	25SP	G14_038	FROM->TO	POTTER COUNTY INTERCHANGE (WAUK 90343-A) 345/230/13.2KV TRANSFORMER CKT 1	560	560	0.20025	117.1365	GEN560256 1-G10-14-1 0.6900
FDNS	02ALL	0	25SP	G14_038	FROM->TO	POTTER COUNTY INTERCHANGE (WAUK 90343-A) 345/230/13.2KV TRANSFORMER CKT 1	560	560	0.19717	117.1331	AMARILLO SOUTH INTERCHANGE - G15031_T 230.00 230KV CKT 1
FDNS	02ALL	0	25SP	G14_038	FROM->TO	POTTER COUNTY INTERCHANGE (WAUK 90343-A) 345/230/13.2KV TRANSFORMER CKT 1	560	560	0.19791	117.1303	CHERRY1 - HARRINGTON STATION 230KV CKT 1
FDNS	02ALL	0	25SP	G14_038	FROM->TO	POTTER COUNTY INTERCHANGE (WAUK 90343-A) 345/230/13.2KV TRANSFORMER CKT 1	560	560	0.19791	117.1303	CHERRY1 - HARRINGTON STATION 230KV CKT 1
FDNS	02ALL	0	25SP	G14_038	FROM->TO	POTTER COUNTY INTERCHANGE (WAUK 90343-A) 345/230/13.2KV TRANSFORMER CKT 1	560	560	0.19961	117.1179	HAPPY INTERCHANGE - PALO DURO SUB 115KV CKT 1
FDNS	02ALL	0	25SP	G14_038	FROM->TO	POTTER COUNTY INTERCHANGE (WAUK 90343-A) 345/230/13.2KV TRANSFORMER CKT 1	560	560	0.1996	117.0893	PLANT X STATION - SUNDOWN INTERCHANGE 230KV CKT 1
FDNS	02ALL	0	25SP	G14_038	FROM->TO	POTTER COUNTY INTERCHANGE (WAUK 90343-A) 345/230/13.2KV TRANSFORMER CKT 1	560	560	0.1996	117.0893	PLANT X STATION - SUNDOWN INTERCHANGE 230KV CKT 1
FDNS	02ALL	0	25SP	G14_038	FROM->TO	POTTER COUNTY INTERCHANGE (WAUK 90343-A) 345/230/13.2KV TRANSFORMER CKT 1	560	560	0.20025	117.0777	GEN513601 1-GRECCTG_1 20.000
FDNS	02ALL	0	25SP	G14_038	FROM->TO	POTTER COUNTY INTERCHANGE (WAUK 90343-A) 345/230/13.2KV TRANSFORMER CKT 1	560	560	0.20025	117.0615	GEN641089 2-ENERGY CENTER 2
FDNS	02ALL	0	25SP	G14_038	FROM->TO	POTTER COUNTY INTERCHANGE (WAUK 90343-A) 345/230/13.2KV TRANSFORMER CKT 1	560	560	0.20025	117.0611	GEN509406 1-WELSH #3
FDNS	02ALL	0	25SP	G14_038	FROM->TO	POTTER COUNTY INTERCHANGE (WAUK 90343-A) 345/230/13.2KV TRANSFORMER CKT 1	560	560	0.20025	117.061	GEN509404 1-WELSH #1
FDNS	02ALL	0	25SP	G14_038	FROM->TO	POTTER COUNTY INTERCHANGE (WAUK 90343-A) 345/230/13.2KV TRANSFORMER CKT 1	560	560	0.20025	117.0596	GEN539670 4-JUDSON LARGE GENERATOR
FDNS	02ALL	0	25SP	G14_038	FROM->TO	POTTER COUNTY INTERCHANGE (WAUK 90343-A) 345/230/13.2KV TRANSFORMER CKT 1	560	560	0.19961	117.0422	PALO DURO SUB - RANDALL COUNTY INTERCHANGE 115KV CKT 1
FDNS	02ALL	0	25SP	G14_038	FROM->TO	POTTER COUNTY INTERCHANGE (WAUK 90343-A) 345/230/13.2KV TRANSFORMER CKT 1	560	560	0.20025	117.0268	GEN560257 1-G10-14-2 0.6900
FDNS	02ALL	0	25SP	G14_038	FROM->TO	POTTER COUNTY INTERCHANGE (WAUK 90343-A) 345/230/13.2KV TRANSFORMER CKT 1	560	560	0.20025	116.992	GEN300002 1-THOMAS HILL UNIT 2
FDNS	02ALL	0	25SP	G14_038	FROM->TO	POTTER COUNTY INTERCHANGE (WAUK 90343-A) 345/230/13.2KV TRANSFORMER CKT 1	560	560	0.20025	116.957	GEN542962 2-IATAN UNIT #2
FDNS	02ALL	0	25SP	G14_038	FROM->TO	POTTER COUNTY INTERCHANGE (WAUK 90343-A) 345/230/13.2KV TRANSFORMER CKT 1	560	560	0.20025	116.9475	GEN511842 1-RIVERSIDE STATION #1
FDNS	02ALL	0	25SP	G14_038	FROM->TO	POTTER COUNTY INTERCHANGE (WAUK 90343-A) 345/230/13.2KV TRANSFORMER CKT 1	560	560	0.20025	116.9444	GEN640010 1-GERALD GENTLEMAN STATION UNIT 1
FDNS	02ALL	0	25SP	G14_038	FROM->TO	POTTER COUNTY INTERCHANGE (WAUK 90343-A) 345/230/13.2KV TRANSFORMER CKT 1	560	560	0.20025	116.9419	GEN511843 1-RIVERSIDE STATION #2
FDNS	02ALL	0	25SP	G14_038	FROM->TO	POTTER COUNTY INTERCHANGE (WAUK 90343-A) 345/230/13.2KV TRANSFORMER CKT 1	560	560	0.19683	116.9173	Harrington Station East Bus - POTTER COUNTY INTERCHANGE 230KV CKT 1
FDNS	02ALL	0	25SP	G14_038	FROM->TO	POTTER COUNTY INTERCHANGE (WAUK 90343-A) 345/230/13.2KV TRANSFORMER CKT 1	560	560	0.19683	116.9173	Harrington Station East Bus - POTTER COUNTY INTERCHANGE 230KV CKT 1
FDNS	02ALL	0	25SP	G14_038	FROM->TO	POTTER COUNTY INTERCHANGE (WAUK 90343-A) 345/230/13.2KV TRANSFORMER CKT 1	560	560	0.20025	116.8998	GEN509416 1-TURK GENERATION
FDNS	02ALL	0	25SP	G14_038	FROM->TO	POTTER COUNTY INTERCHANGE (WAUK 90343-A) 345/230/13.2KV TRANSFORMER CKT 1	560	560	0.20025	116.8899	GEN511839 1-NORTHEASTERN STATION #2
FDNS	02ALL	0	25SP	G14_038	FROM->TO	POTTER COUNTY INTERCHANGE (WAUK 90343-A) 345/230/13.2KV TRANSFORMER CKT 1	560	560	0.20025	116.8686	GEN515223 1-MUSKOGEE 4G
FDNS	02ALL	0	25SP	G14_038	FROM->TO	POTTER COUNTY INTERCHANGE (WAUK 90343-A) 345/230/13.2KV TRANSFORMER CKT 1	560	560	0.19836	116.8684	ELK CITY 230KV (ELKCTY-6) 230/138/13.8KV TRANSFORMER CKT 1
FDNS	02ALL	0	25SP	G14_038	FROM->TO	POTTER COUNTY INTERCHANGE (WAUK 90343-A) 345/230/13.2KV TRANSFORMER CKT 1	560	560	0.20025	116.856	GEN515226 1-MUSKOGEE 6G
FDNS	02ALL	0	25SP	G14_038	FROM->TO	POTTER COUNTY INTERCHANGE (WAUK 90343-A) 345/230/13.2KV TRANSFORMER CKT 1	560	560	0.19654	116.8423	CHERRY1 - POTTER COUNTY INTERCHANGE 230KV CKT 1
FDNS	02ALL	0	25SP	G14_038	FROM->TO	POTTER COUNTY INTERCHANGE (WAUK 90343-A) 345/230/13.2KV TRANSFORMER CKT 1	560	560	0.19654	116.8423	CHERRY1 - POTTER COUNTY INTERCHANGE 230KV CKT 1
FDNS	02ALL	0	25SP	G14_038	FROM->TO	POTTER COUNTY INTERCHANGE (WAUK 90343-A) 345/230/13.2KV TRANSFORMER CKT 1	560	560	0.20025	116.8386	GEN515225 1-MUSKOGEE 5G
FDNS	02ALL	0	25SP	G14_038	FROM->TO	POTTER COUNTY INTERCHANGE (WAUK 90343-A) 345/230/13.2KV TRANSFORMER CKT 1	560	560	0.19933	116.8239	NEWHART 230 - PLANT X STATION 230KV CKT 1
FDNS	02ALL	0	25SP	G14_038	FROM->TO	POTTER COUNTY INTERCHANGE (WAUK 90343-A) 345/230/13.2KV TRANSFORMER CKT 1	560	560	0.20025	116.7856	GEN511840 1-NORTHEASTERN STATION #3
FDNS	02ALL	0	25SP	G14_038	FROM->TO	POTTER COUNTY INTERCHANGE (WAUK 90343-A) 345/230/13.2KV TRANSFORMER CKT 1	560	560	0.20025	116.7569	GEN562648 1-G14_037_3 0.6900
FDNS	02ALL	0	25SP	G14_038	FROM->TO	POTTER COUNTY INTERCHANGE (WAUK 90343-A) 345/230/13.2KV TRANSFORMER CKT 1	560	560	0.20025	116.7149	GEN512688 2-GRDA1 GSU2 22
FDNS	02ALL	0	25SP	G14_038	FROM->TO	POTTER COUNTY INTERCHANGE (WAUK 90343-A) 345/230/13.2KV TRANSFORMER CKT 1	560	560	0.20025	116.6856	GEN640011 2-GERALD GENTLEMAN STATION UNIT 2
FDNS	02ALL	0	25SP	G14_038	FROM->TO	POTTER COUNTY INTERCHANGE (WAUK 90343-A) 345/230/13.2KV TRANSFORMER CKT 1	560	560	0.20025	116.6373	GEN509403 1-PIRKEY GENERATION
FDNS	02ALL	0	25SP	G14_038	FROM->TO	POTTER COUNTY INTERCHANGE (WAUK 90343-A) 345/230/13.2KV TRANSFORMER CKT 1	560	560	0.20025	116.6065	GEN523122 1-NBLWND-WTG210.6900
FDNS	02ALL	0	25SP	G14_038	FROM->TO	POTTER COUNTY INTERCHANGE (WAUK 90343-A) 345/230/13.2KV TRANSFORMER CKT 1	560	560	0.20025	116.6013	GEN541151 3-SIBLEY GENERATING UNIT #3
FDNS	02ALL	0	25SP	G14_038	FROM->TO	POTTER COUNTY INTERCHANGE (WAUK 90343-A) 345/230/13.2KV TRANSFORMER CKT 1	560	560	0.20025	116.5913	GEN532663 1-LAWRENCE ENERGY CENTER UNIT 5
FDNS	02ALL	0	25SP	G14_038	FROM->TO	POTTER COUNTY INTERCHANGE (WAUK 90343-A) 345/230/13.2KV TRANSFORMER CKT 1	560	560	0.20025	116.5829	GEN523121 1-NBLWND-WTG110.6900
FDNS	02ALL	0	25SP	G14_038	FROM->TO	POTTER COUNTY INTERCHANGE (WAUK 90343-A) 345/230/13.2KV TRANSFORMER CKT 1	560	560	0.20025	116.546	GEN560584 1-G06-44-2 4.1600
FDNS	02ALL	0	25SP	G14_038	FROM->TO	POTTER COUNTY INTERCHANGE (WAUK 90343-A) 345/230/13.2KV TRANSFORMER CKT 1	560	560	0.20025	116.5443	GEN523107 1-NOVUS_WND 14.1600
FDNS	02ALL	0	25SP	G14_038	FROM->TO	POTTER COUNTY INTERCHANGE (WAUK 90343-A) 345/230/13.2KV TRANSFORMER CKT 1	560	560	0.20025	116.5414	GEN514805 1-SOONER UNIT 1
FDNS	02ALL	0	25SP	G14_038	FROM->TO	POTTER COUNTY INTERCHANGE (WAUK 90343-A) 345/230/13.2KV TRANSFORMER CKT 1	560	560	0.20025	116.5256	GEN509394 1-FLINT CREEK
FDNS	02ALL	0	25SP	G14_038	FROM->TO	POTTER COUNTY INTERCHANGE (WAUK 90343-A) 345/230/13.2KV TRANSFORMER CKT 1	560	560	0.20025	116.5224	GEN514806 1-SOONER UNIT 2
FDNS	02ALL	0	25SP	G14_038	FROM->TO	POTTER COUNTY INTERCHANGE (WAUK 90343-A) 345/230/13.2KV TRANSFORMER CKT 1	560	560	0.20025	116.5073	GEN523123 1-NBLWND-WTG310.6900
FDNS	02ALL	0	25SP	G14_038	FROM->TO	POTTER COUNTY INTERCHANGE (WAUK 90343-A) 345/230/13.2KV TRANSFORMER CKT 1	560	560	0.19802	116.5003	Harrington Station East Bus - Harrington Station Mid Bus 230KV CKT @1
FDNS	02ALL	0	25SP	G14_038	FROM->TO	POTTER COUNTY INTERCHANGE (WAUK 90343-A) 345/230/13.2KV TRANSFORMER CKT 1	560	560	0.20025	116.4715	GEN532722 1-EVANS ENERGY CENTER UNIT 2
FDNS	02ALL	0	25SP	G14_038	FROM->TO	POTTER COUNTY INTERCHANGE (WAUK 90343-A) 345/230/13.2KV TRANSFORMER CKT 1	560	560	0.20025	116.2266	GEN515591 1-PALDRW11 0.6900
FDNS	02ALL	0	25SP	G14_038	FROM->TO	POTTER COUNTY INTERCHANGE (WAUK 90343-A) 345/230/13.2KV TRANSFORMER CKT 1	560	560	0.19517	116.1456	SWISHER COUNTY INTERCHANGE - TUCO_2 230.00 230KV CKT 1
FDNS	02ALL	0	25SP	G14_038	FROM->TO	POTTER COUNTY INTERCHANGE (WAUK 90343-A) 345/230/13.2KV TRANSFORMER CKT 1	560	560	0.20025	116.1202	GEN560586 1-G06-44-4 4.1600
FDNS	02ALL	0	25SP	G14_038	FROM->TO	POTTER COUNTY INTERCHANGE (WAUK 90343-A) 345/230/13.2KV TRANSFORMER CKT 1	560	560	0.20025	116.0823	GEN659111 2-LELAND OLDS UNIT2
FDNS	02ALL	0	25SP	G14_038	FROM->TO	POTTER COUNTY INTERCHANGE (WAUK 90343-A) 345/230/13.2KV TRANSFORMER CKT 1	560	560	0.19717	116.0359	G15031_T 230.00 - SWISHER COUNTY INTERCHANGE 230KV CKT 1
FDNS	02ALL	0	25SP	G14_038	FROM->TO	POTTER COUNTY INTERCHANGE (WAUK 90343-A) 345/230/13.2KV TRANSFORMER CKT 1	560	560	0.20025	115.9393	GEN590010 1-ERCOT EQUIVALENCE
FDNS	02ALL	0	25SP	G14_038	FROM->TO	POTTER COUNTY INTERCHANGE (WAUK 90343-A) 345/230/13.2KV TRANSFORMER CKT 1	560	560	0.20025	115.9069	GEN560585 1-G06-44-3 4.1600
FDNS	02ALL	0	25SP	G14_038	FROM->TO	POTTER COUNTY INTERCHANGE (WAUK 90343-A) 345/230/13.2KV TRANSFORMER CKT 1	560	560	0.20025	115.8915	GEN659103 1-ANTELOPE VALLEY UNIT1
FDNS	02ALL	0	25SP	G14_038	FROM->TO	POTTER COUNTY INTERCHANGE (WAUK 90343-A) 345/230/13.2KV TRANSFORMER CKT 1	560	560	0.20025	115.8915	GEN659107 2-ANTELOPE VALLEY UNIT2
FDNS	02ALL	0	25SP	G14_038	FROM->TO	POTTER COUNTY INTERCHANGE (WAUK 90343-A) 345/230/13.2KV TRANSFORMER CKT 1	560	560	0.20025	115.8708	GEN590011 2-ERCOT EQUIVALENCE
FDNS	02ALL	0	25SP	G14_038	FROM->TO	POTTER COUNTY INTERCHANGE (WAUK 90343-A) 345/230/13.2KV TRANSFORMER CKT 1	560	560	0.20025	115.7799	GEN300006 1-NEW MADRID UNIT 1
FDNS	02ALL	0	25SP	G14_038	FROM->TO	POTTER COUNTY INTERCHANGE (WAUK 90343-A) 345/230/13.2KV TRANSFORMER CKT 1	560	560	0.20025	115.7772	GEN300007 1-NEW MADRID UNIT 2
FDNS	02ALL	0	25SP	G14_038	FROM->TO	POTTER COUNTY INTERCHANGE (WAUK 90343-A) 345/230/13.2KV TRANSFORMER CKT 1	560	560	0.19724	115.6846	DEAF SMITH COUNTY INTERCHANGE - G15039_T 230.00 230KV CKT 1
FDNS	02ALL	0	25SP	G14_038	FROM->TO	POTTER COUNTY INTERCHANGE (WAUK 90343-A) 345/230/13.2KV TRANSFORMER CKT 1	560	560	0.20025	115.6264	GEN532751 1-WOLF CREEK GENERATING STATION UNIT 1
FDNS	02ALL	0	25SP	G14_038	FROM->TO	POTTER COUNTY INTERCHANGE (WAUK 90343-A) 345/230/13.2KV TRANSFORMER CKT 1	560	560	0.19724	115.6095	G15039_T 230.00 - PLANT X STATION 230KV CKT 1
FDNS	02ALL	0	25SP	G14_038	FROM->TO	POTTER COUNTY INTERCHANGE (WAUK 90343-A) 345/230/13.2KV TRANSFORMER CKT 1	560	560	0.20025	115.5799	GEN542951 5-HAWTHORN UNIT #5
FDNS	02ALL	0	25SP	G14_038	FROM->TO	POTTER COUNTY INTERCHANGE (WAUK 90343-A) 345/230/13.2KV TRANSFORMER CKT 1	560	560	0.20025	115.4468	GEN560286 1-G10-01-1WTG 0.6900
FDNS	02ALL	0	25SP	G14_038	FROM->TO	POTTER COUNTY INTERCHANGE (WAUK 90343-A) 345/230/13.2KV TRANSFORMER CKT 1	560	560	0.20025	115.4468	GEN560287 1-G10-01-2WTG 0.6900
FDNS	02ALL	0	25SP	G14_038	FROM->TO	POTTER COUNTY INTERCHANGE (WAUK 90343-A) 345/230/13.2KV TRANSFORMER CKT 1	560	560	0.20025	115.3593	GEN542956 2-LACYGNE UNIT #2

SOLUTION	GROUP	SCENARIO	SEASON	SOURCE	DIRECTION	MONITORED ELEMENT	RATEA (MVA)	RATEB(MVA)	TDF	TC%LOADING (% MVA)	CONTINGENCY
FDNS	02ALL	0	25SP	G14_038	FROM->TO	POTTER COUNTY INTERCHANGE (WAUK 90343-A) 345/230/13.2KV TRANSFORMER CKT 1	560	560	0.20025	115.3404	GEN524295 1-SPNSPUR_WND10.6900
FDNS	02ALL	0	25SP	G14_038	FROM->TO	POTTER COUNTY INTERCHANGE (WAUK 90343-A) 345/230/13.2KV TRANSFORMER CKT 1	560	560	0.19629	115.2492	BUSHLAND INTERCHANGE - POTTER COUNTY INTERCHANGE 230KV CKT 1
FDNS	02ALL	0	25SP	G14_038	FROM->TO	POTTER COUNTY INTERCHANGE (WAUK 90343-A) 345/230/13.2KV TRANSFORMER CKT 1	560	560	0.19629	115.2492	BUSHLAND INTERCHANGE - POTTER COUNTY INTERCHANGE 230KV CKT 1
FDNS	02ALL	0	25SP	G14_038	FROM->TO	POTTER COUNTY INTERCHANGE (WAUK 90343-A) 345/230/13.2KV TRANSFORMER CKT 1	560	560	0.20025	115.2408	GEN562432 1-G13-030 0.6900
FDNS	02ALL	0	25SP	G14_038	FROM->TO	POTTER COUNTY INTERCHANGE (WAUK 90343-A) 345/230/13.2KV TRANSFORMER CKT 1	560	560	0.20025	115.095	GEN645011 1-NEBRASKA CITY 1
FDNS	02ALL	0	25SP	G14_038	FROM->TO	POTTER COUNTY INTERCHANGE (WAUK 90343-A) 345/230/13.2KV TRANSFORMER CKT 1	560	560	0.20025	114.9711	GEN563173 1-G15082_3 0.6900
FDNS	02ALL	0	25SP	G14_038	FROM->TO	POTTER COUNTY INTERCHANGE (WAUK 90343-A) 345/230/13.2KV TRANSFORMER CKT 1	560	560	0.20025	114.9532	GEN562042 1-G11_014_3 0.6900
FDNS	02ALL	0	25SP	G14_038	FROM->TO	POTTER COUNTY INTERCHANGE (WAUK 90343-A) 345/230/13.2KV TRANSFORMER CKT 1	560	560	0.20025	114.9473	GEN542955 1-LACYGNE UNIT #1
FDNS	02ALL	0	25SP	G14_038	FROM->TO	POTTER COUNTY INTERCHANGE (WAUK 90343-A) 345/230/13.2KV TRANSFORMER CKT 1	560	560	0.20025	114.9057	GEN645012 2-NEBRASKA CITY 2
FDNS	02ALL	0	25SP	G14_038	FROM->TO	POTTER COUNTY INTERCHANGE (WAUK 90343-A) 345/230/13.2KV TRANSFORMER CKT 1	560	560	0.20025	114.8867	GEN645001 1-FORT CALHOUN 1
FDNS	02ALL	0	25SP	G14_038	FROM->TO	POTTER COUNTY INTERCHANGE (WAUK 90343-A) 345/230/13.2KV TRANSFORMER CKT 1	560	560	0.20025	114.864	GEN542957 1-IATAN UNIT #1
FDNS	02ALL	0	25SP	G14_038	FROM->TO	POTTER COUNTY INTERCHANGE (WAUK 90343-A) 345/230/13.2KV TRANSFORMER CKT 1	560	560	0.20025	114.7271	GEN531447 1-HOLCOMB GENERATOR
FDNS	02ALL	0	25SP	G14_038	FROM->TO	POTTER COUNTY INTERCHANGE (WAUK 90343-A) 345/230/13.2KV TRANSFORMER CKT 1	560	560	0.20025	114.6715	GEN532653 1-JEFFREY ENERGY CENTER UNIT 3
FDNS	02ALL	0	25SP	G14_038	FROM->TO	POTTER COUNTY INTERCHANGE (WAUK 90343-A) 345/230/13.2KV TRANSFORMER CKT 1	560	560	0.20025	114.6714	GEN532652 1-JEFFREY ENERGY CENTER UNIT 2
FDNS	02ALL	0	25SP	G14_038	FROM->TO	POTTER COUNTY INTERCHANGE (WAUK 90343-A) 345/230/13.2KV TRANSFORMER CKT 1	560	560	0.20025	114.6659	GEN532651 1-JEFFREY ENERGY CENTER UNIT 1
FDNS	02ALL	0	25SP	G14_038	FROM->TO	POTTER COUNTY INTERCHANGE (WAUK 90343-A) 345/230/13.2KV TRANSFORMER CKT 1	560	560	0.20025	114.6553	GEN300003 1-THOMAS HILL UNIT 3
FDNS	02ALL	0	25SP	G14_038	FROM->TO	POTTER COUNTY INTERCHANGE (WAUK 90343-A) 345/230/13.2KV TRANSFORMER CKT 1	560	560	0.20025	114.6106	GEN640009 1-COOPER NUCLEAR STATION
FDNS	02ALL	0	25SP	G14_038	FROM->TO	POTTER COUNTY INTERCHANGE (WAUK 90343-A) 345/230/13.2KV TRANSFORMER CKT 1	560	560	0.19717	114.4961	AMARILLO SOUTH INTERCHANGE - G15031_T 230.00 230KV CKT 1
FDNS	02ALL	0	25SP	G14_038	FROM->TO	POTTER COUNTY INTERCHANGE (WAUK 90343-A) 345/230/13.2KV TRANSFORMER CKT 1	560	560	0.20025	114.4719	GEN560256 1-G10-14-1 0.6900
FDNS	02ALL	0	25SP	G14_038	FROM->TO	POTTER COUNTY INTERCHANGE (WAUK 90343-A) 345/230/13.2KV TRANSFORMER CKT 1	560	560	0.20025	114.4526	GEN659118 1-LARAMIE RIVER UNIT1
FDNS	02ALL	0	25SP	G14_038	FROM->TO	POTTER COUNTY INTERCHANGE (WAUK 90343-A) 345/230/13.2KV TRANSFORMER CKT 1	560	560	0.20025	114.3745	GEN560257 1-G10-14-2 0.6900
FDNS	02ALL	0	25SP	G14_038	FROM->TO	POTTER COUNTY INTERCHANGE (WAUK 90343-A) 345/230/13.2KV TRANSFORMER CKT 1	560	560	0.20025	114.3409	GEN562017 1-G11_022_3 0.6900
FDNS	02ALL	0	25SP	G14_038	FROM->TO	POTTER COUNTY INTERCHANGE (WAUK 90343-A) 345/230/13.2KV TRANSFORMER CKT 1	560	560	0.20025	114.1912	GEN542962 2-IATAN UNIT #2
FDNS	02ALL	0	25SP	G14_038	FROM->TO	POTTER COUNTY INTERCHANGE (WAUK 90343-A) 345/230/13.2KV TRANSFORMER CKT 1	560	560	0.20025	114.1749	GEN640010 1-GERALD GENTLEMAN STATION UNIT 1
FDNS	02ALL	0	25SP	G14_038	FROM->TO	POTTER COUNTY INTERCHANGE (WAUK 90343-A) 345/230/13.2KV TRANSFORMER CKT 1	560	560	0.20025	114.0683	GEN562648 1-G14_037_3 0.6900
FDNS	02ALL	0	25SP	G14_038	FROM->TO	POTTER COUNTY INTERCHANGE (WAUK 90343-A) 345/230/13.2KV TRANSFORMER CKT 1	560	560	0.19548	113.9942	BUSHLAND INTERCHANGE - DEAF SMITH COUNTY INTERCHANGE 230KV CKT 1
FDNS	02ALL	0	25SP	G14_038	FROM->TO	POTTER COUNTY INTERCHANGE (WAUK 90343-A) 345/230/13.2KV TRANSFORMER CKT 1	560	560	0.19548	113.9942	BUSHLAND INTERCHANGE - DEAF SMITH COUNTY INTERCHANGE 230KV CKT 1
FDNS	02ALL	0	25SP	G14_038	FROM->TO	POTTER COUNTY INTERCHANGE (WAUK 90343-A) 345/230/13.2KV TRANSFORMER CKT 1	560	560	0.20025	113.9354	GEN640011 2-GERALD GENTLEMAN STATION UNIT 2
FDNS	02ALL	0	25SP	G14_038	FROM->TO	POTTER COUNTY INTERCHANGE (WAUK 90343-A) 345/230/13.2KV TRANSFORMER CKT 1	560	560	0.20025	113.6811	GEN562544 1-G14_038_3 0.6900
FDNS	02ALL	0	25SP	G14_038	FROM->TO	POTTER COUNTY INTERCHANGE (WAUK 90343-A) 345/230/13.2KV TRANSFORMER CKT 1	560	560	0.20025	113.6295	GEN515591 1-PALDRW11 0.6900
FDNS	02ALL	0	25SP	G14_038	FROM->TO	POTTER COUNTY INTERCHANGE (WAUK 90343-A) 345/230/13.2KV TRANSFORMER CKT 1	560	560	0.19717	113.5218	G15031_T 230.00 - SWISHER COUNTY INTERCHANGE 230KV CKT 1
FDNS	02ALL	0	25SP	G14_038	FROM->TO	POTTER COUNTY INTERCHANGE (WAUK 90343-A) 345/230/13.2KV TRANSFORMER CKT 1	560	560	0.20025	112.9626	GEN532751 1-WOLF CREEK GENERATING STATION UNIT 1
FDNS	02ALL	0	25SP	G14_038	FROM->TO	POTTER COUNTY INTERCHANGE (WAUK 90343-A) 345/230/13.2KV TRANSFORMER CKT 1	560	560	0.19629	112.7898	BUSHLAND INTERCHANGE - POTTER COUNTY INTERCHANGE 230KV CKT 1
FDNS	02ALL	0	25SP	G14_038	FROM->TO	POTTER COUNTY INTERCHANGE (WAUK 90343-A) 345/230/13.2KV TRANSFORMER CKT 1	560	560	0.19629	112.7898	BUSHLAND INTERCHANGE - POTTER COUNTY INTERCHANGE 230KV CKT 1
FDNS	02ALL	0	25SP	G14_038	FROM->TO	POTTER COUNTY INTERCHANGE (WAUK 90343-A) 345/230/13.2KV TRANSFORMER CKT 1	560	560	0.20025	112.7298	GEN562432 1-G13-030 0.6900
FDNS	02ALL	0	25SP	G14_038	FROM->TO	POTTER COUNTY INTERCHANGE (WAUK 90343-A) 345/230/13.2KV TRANSFORMER CKT 1	560	560	0.20025	111.8932	GEN524295 1-SPNSPUR_WND10.6900
FDNS	02ALL	0	25SP	G14_038	FROM->TO	POTTER COUNTY INTERCHANGE (WAUK 90343-A) 345/230/13.2KV TRANSFORMER CKT 1	560	560	0.20025	111.8426	GEN562017 1-G11_022_3 0.6900
FDNS	02ALL	0	25SP	G14_038	FROM->TO	POTTER COUNTY INTERCHANGE (WAUK 90343-A) 345/230/13.2KV TRANSFORMER CKT 1	560	560	0.19548	111.5053	BUSHLAND INTERCHANGE - DEAF SMITH COUNTY INTERCHANGE 230KV CKT 1
FDNS	02ALL	0	25SP	G14_038	FROM->TO	POTTER COUNTY INTERCHANGE (WAUK 90343-A) 345/230/13.2KV TRANSFORMER CKT 1	560	560	0.19548	111.5053	BUSHLAND INTERCHANGE - DEAF SMITH COUNTY INTERCHANGE 230KV CKT 1
FDNS	02ALL	0	25SP	G14_038	FROM->TO	POTTER COUNTY INTERCHANGE (WAUK 90343-A) 345/230/13.2KV TRANSFORMER CKT 1	560	560	0.20025	111.0146	GEN562544 1-G14_038_3 0.6900
FDNS	02ALL	2	25SP	G14_038	TO->FROM	BUSHLAND INTERCHANGE - POTTER COUNTY INTERCHANGE 230KV CKT 1	318.7	350.57	0.04567	115.1531	BASE CASE
FDNS	02ALL	2	20L	G14_038	FROM->TO	Hitchland Interchange - WALKTAP7 345.00 345KV CKT 1	956.09	1051.7	0.27848	99.5	G11-14T 345.00 - WOODWARD DISTRICT EHV 345KV CKT 1
FDNS	02ALL	2	20L	G14_038	FROM->TO	Hitchland Interchange - WALKTAP7 345.00 345KV CKT 1	956.09	1051.7	0.27848	99.5	G11-14T 345.00 - WOODWARD DISTRICT EHV 345KV CKT 2
FDNS	02ALL	2	25SP	G14_038	FROM->TO	POTTER COUNTY INTERCHANGE (WAUK 90343-A) 345/230/13.2KV TRANSFORMER CKT 1	560	560	0.21016	142.0015	HITCHLAND INTERCHANGE - MOORE COUNTY INTERCHANGE 230KV CKT 1
FDNS	02ALL	2	25SP	G14_038	FROM->TO	POTTER COUNTY INTERCHANGE (WAUK 90343-A) 345/230/13.2KV TRANSFORMER CKT 1	560	560	0.21016	142.0015	HITCHLAND INTERCHANGE - MOORE COUNTY INTERCHANGE 230KV CKT 1
FDNS	02ALL	2	25SP	G14_038	FROM->TO	POTTER COUNTY INTERCHANGE (WAUK 90343-A) 345/230/13.2KV TRANSFORMER CKT 1	560	560	0.21016	136.5068	HITCHLAND INTERCHANGE - MOORE COUNTY INTERCHANGE 230KV CKT 1
FDNS	02ALL	2	25SP	G14_038	FROM->TO	POTTER COUNTY INTERCHANGE (WAUK 90343-A) 345/230/13.2KV TRANSFORMER CKT 1	560	560	0.21016	136.5068	HITCHLAND INTERCHANGE - MOORE COUNTY INTERCHANGE 230KV CKT 1
FDNS	02ALL	2	25SP	G14_038	FROM->TO	POTTER COUNTY INTERCHANGE (WAUK 90343-A) 345/230/13.2KV TRANSFORMER CKT 1	560	560	0.20029	134.0673	GEN525561 1-TOLK GEN #1 24 KV
FDNS	02ALL	2	25SP	G14_038	FROM->TO	POTTER COUNTY INTERCHANGE (WAUK 90343-A) 345/230/13.2KV TRANSFORMER CKT 1	560	560	0.20029	133.3575	GEN525562 1-TOLK GEN #2 24 KV
FDNS	02ALL	2	25SP	G14_038	FROM->TO	POTTER COUNTY INTERCHANGE (WAUK 90343-A) 345/230/13.2KV TRANSFORMER CKT 1	560	560	0.20029	131.2624	GEN523971 1-HARRINGTON GEN #1 24 KV
FDNS	02ALL	2	25SP	G14_038	FROM->TO	POTTER COUNTY INTERCHANGE (WAUK 90343-A) 345/230/13.2KV TRANSFORMER CKT 1	560	560	0.20029	131.2607	GEN523973 1-HARRINGTON GEN #3 24 KV
FDNS	02ALL	2	25SP	G14_038	FROM->TO	POTTER COUNTY INTERCHANGE (WAUK 90343-A) 345/230/13.2KV TRANSFORMER CKT 1	560	560	0.20029	131.2005	GEN523972 1-HARRINGTON GEN #2 24 KV
FDNS	02ALL	2	25SP	G14_038	FROM->TO	POTTER COUNTY INTERCHANGE (WAUK 90343-A) 345/230/13.2KV TRANSFORMER CKT 1	560	560	0.23161	130.4085	P12:345:SPS:J07.1.FINN.HITCH
FDNS	02ALL	2	25SP	G14_038	FROM->TO	POTTER COUNTY INTERCHANGE (WAUK 90343-A) 345/230/13.2KV TRANSFORMER CKT 1	560	560	0.23161	130.3161	Hitchland Interchange - WALKTAP7 345.00 345KV CKT 1
FDNS	02ALL	2	25SP	G14_038	FROM->TO	POTTER COUNTY INTERCHANGE (WAUK 90343-A) 345/230/13.2KV TRANSFORMER CKT 1	560	560	0.23161	130.3161	Hitchland Interchange - WALKTAP7 345.00 345KV CKT 1
FDNS	02ALL	2	25SP	G14_038	FROM->TO	POTTER COUNTY INTERCHANGE (WAUK 90343-A) 345/230/13.2KV TRANSFORMER CKT 1	560	560	0.20029	130.0308	GEN525561 1-TOLK GEN #1 24 KV
FDNS	02ALL	2	25SP	G14_038	FROM->TO	POTTER COUNTY INTERCHANGE (WAUK 90343-A) 345/230/13.2KV TRANSFORMER CKT 1	560	560	0.20532	129.4064	MOORE COUNTY INTERCHANGE - POTTER COUNTY INTERCHANGE 230KV CKT 1
FDNS	02ALL	2	25SP	G14_038	FROM->TO	POTTER COUNTY INTERCHANGE (WAUK 90343-A) 345/230/13.2KV TRANSFORMER CKT 1	560	560	0.20532	129.4064	MOORE COUNTY INTERCHANGE - POTTER COUNTY INTERCHANGE 230KV CKT 1
FDNS	02ALL	2	25SP	G14_038	FROM->TO	POTTER COUNTY INTERCHANGE (WAUK 90343-A) 345/230/13.2KV TRANSFORMER CKT 1	560	560	0.20029	129.2923	GEN525562 1-TOLK GEN #2 24 KV
FDNS	02ALL	2	25SP	G14_038	FROM->TO	POTTER COUNTY INTERCHANGE (WAUK 90343-A) 345/230/13.2KV TRANSFORMER CKT 1	560	560	0.20319	128.9671	Hansford County Switch Station - SPEARMAN INTERCHANGE 115KV CKT 1
FDNS	02ALL	2	25SP	G14_038	FROM->TO	POTTER COUNTY INTERCHANGE (WAUK 90343-A) 345/230/13.2KV TRANSFORMER CKT 1	560	560	0.20029	128.5335	GEN524023 1-NICHOLS GEN #3 22 KV
FDNS	02ALL	2	25SP	G14_038	FROM->TO	POTTER COUNTY INTERCHANGE (WAUK 90343-A) 345/230/13.2KV TRANSFORMER CKT 1	560	560	0.20029	128.2954	GEN527903 1-HOBBS PLANT #3 (ST)
FDNS	02ALL	2	25SP	G14_038	FROM->TO	POTTER COUNTY INTERCHANGE (WAUK 90343-A) 345/230/13.2KV TRANSFORMER CKT 1	560	560	0.2024	127.9132	DWS FRISCO - SHERMAN COUNTY TAP 115KV CKT 1
FDNS	02ALL	2	25SP	G14_038	FROM->TO	POTTER COUNTY INTERCHANGE (WAUK 90343-A) 345/230/13.2KV TRANSFORMER CKT 1	560	560	0.20029	127.6228	GEN528501 1-G14_012 24.000
FDNS	02ALL	2	25SP	G14_038	FROM->TO	POTTER COUNTY INTERCHANGE (WAUK 90343-A) 345/230/13.2KV TRANSFORMER CKT 1	560	560	0.21895	127.5185	FINNEY SWITCHING STATION - HOLCOMB 345KV CKT 1
FDNS	02ALL	2	25SP	G14_038	FROM->TO	POTTER COUNTY INTERCHANGE (WAUK 90343-A) 345/230/13.2KV TRANSFORMER CKT 1	560	560	0.21895	127.5185	FINNEY SWITCHING STATION - HOLCOMB 345KV CKT 1
FDNS	02ALL	2	25SP	G14_038	FROM->TO	POTTER COUNTY INTERCHANGE (WAUK 90343-A) 345/230/13.2KV TRANSFORMER CKT 1	560	560	0.20029	127.2217	GEN523971 1-HARRINGTON GEN #1 24 KV
FDNS	02ALL	2	25SP	G14_038	FROM->TO	POTTER COUNTY INTERCHANGE (WAUK 90343-A) 345/230/13.2KV TRANSFORMER CKT 1	560	560	0.20029	127.2204	GEN523973 1-HARRINGTON GEN #3 24 KV
FDNS	02ALL	2	25SP	G14_038	FROM->TO	POTTER COUNTY INTERCHANGE (WAUK 90343-A) 345/230/13.2KV TRANSFORMER CKT 1	560	560	0.20029	127.1748	GEN523972 1-HARRINGTON GEN #2 24 KV
FDNS	02ALL	2	25SP	G14_038	FROM->TO	POTTER COUNTY INTERCHANGE (WAUK 90343-A) 345/230/13.2KV TRANSFORMER CKT 1	560	560	0.2024	127.1314	P12:115:SPS:W08.1.HITCH.LASLEY
FDNS	02ALL	2	25SP	G14_038	FROM->TO	POTTER COUNTY INTERCHANGE (WAUK 90343-A) 345/230/13.2KV TRANSFORMER CKT 1	560	560	0.2024	127.0287	DWS FRISCO - HITCHLAND INTERCHANGE 115KV CKT 1
FDNS	02ALL	2	25SP	G14_038	FROM->TO	POTTER COUNTY INTERCHANGE (WAUK 90343-A) 345/230/13.2KV TRANSFORMER CKT 1	560	560	0.20288	127.0191	Hitchland Interchange (SIEM 8743067) 345/230/13.2KV TRANSFORMER CKT 2
FDNS	02ALL	2	25SP	G14_038	FROM->TO	POTTER COUNTY INTERCHANGE (WAUK 90343-A) 345/230/13.2KV TRANSFORMER CKT 1	560	560	0.20288	127.0191	Hitchland Interchange (SIEM 8743067) 345/230/13.2KV TRANSFORMER CKT 2
FDNS	02ALL	2	25SP	G14_038	FROM->TO	POTTER COUNTY INTERCHANGE (WAUK 90343-A) 345/230/13.2KV TRANSFORMER CKT 1	560	560	0.20029	126.8118	GEN527166 1-MUSTANG_6 118.000
FDNS	02ALL	2	25SP	G14_038	FROM->TO	POTTER COUNTY INTERCHANGE (WAUK 90343-A) 345/230/13.2KV TRANSFORMER CKT 1	560	560	0.20029	126.5783	GEN526333 1-JONES GEN #3 21 KV
FDNS	02ALL	2	25SP	G14_038	FROM->TO	POTTER COUNTY INTERCHANGE (WAUK 90343-A) 345/230/13.2KV TRANSFORMER CKT 1	560	560	0.20029	126.4834	GEN526334 1-JONES_4 116.500
FDNS	02ALL	2	25SP	G14_038	FROM->TO	POTTER COUNTY INTERCHANGE (WAUK 90343-A) 345/230/13.2KV TRANSFORMER CKT 1	560	560	0.20029	126.4217	GEN525844 1-ELK_1 118.000
FDNS	02ALL	2	25SP	G14_038	FROM->TO	POTTER COUNTY INTERCHANGE (WAUK 90343-A) 345/230/13.2KV TRANSFORMER CKT 1	560	560	0.20029	126.4209	GEN525845 1-ELK_2 1 18.000
FDNS	02ALL	2	25SP	G14_038	FROM->TO	POTTER COUNTY INTERCHANGE (WAUK 90343-A) 345/230/13.2KV TRANSFORMER CKT 1	560	560	0.20029	126.3316	GEN526331 1-JONES GEN #1 22 KV

SOLUTION	GROUP	SCENARIO	SEASON	SOURCE	DIRECTION	MONITORED ELEMENT	RATEA (MVA)	RATEB(MVA)	TDF	TC%LOADING (% MVA)	CONTINGENCY
FDNS	02ALL	2	25SP	G14_038	FROM->TO	POTTER COUNTY INTERCHANGE (WAUK 90343-A) 345/230/13.2KV TRANSFORMER CKT 1	560	560	0.20029	126.3297	GEN526332 1-JONES GEN #2 21 KV
FDNS	02ALL	2	25SP	G14_038	FROM->TO	POTTER COUNTY INTERCHANGE (WAUK 90343-A) 345/230/13.2KV TRANSFORMER CKT 1	560	560	0.20029	126.1973	GEN527901 1-HOBBS PLANT #1 (CT)
FDNS	02ALL	2	25SP	G14_038	FROM->TO	POTTER COUNTY INTERCHANGE (WAUK 90343-A) 345/230/13.2KV TRANSFORMER CKT 1	560	560	0.20029	126.1973	GEN527902 1-HOBBS PLANT #2 (CT)
FDNS	02ALL	2	25SP	G14_038	FROM->TO	POTTER COUNTY INTERCHANGE (WAUK 90343-A) 345/230/13.2KV TRANSFORMER CKT 1	560	560	0.20319	125.8829	HITCHLAND INTERCHANGE - Hansford County Switch Station 115KV CKT 1
FDNS	02ALL	2	25SP	G14_038	FROM->TO	POTTER COUNTY INTERCHANGE (WAUK 90343-A) 345/230/13.2KV TRANSFORMER CKT 1	560	560	0.20319	125.8829	HITCHLAND INTERCHANGE - Hansford County Switch Station 115KV CKT 1
FDNS	02ALL	2	25SP	G14_038	FROM->TO	POTTER COUNTY INTERCHANGE (WAUK 90343-A) 345/230/13.2KV TRANSFORMER CKT 1	560	560	0.23161	125.8241	P12:345:SPS:J07.1.FINN.HITCH
FDNS	02ALL	2	25SP	G14_038	FROM->TO	POTTER COUNTY INTERCHANGE (WAUK 90343-A) 345/230/13.2KV TRANSFORMER CKT 1	560	560	0.23161	125.7667	Hitchland Interchange - WALKTAP7 345.00 345KV CKT 1
FDNS	02ALL	2	25SP	G14_038	FROM->TO	POTTER COUNTY INTERCHANGE (WAUK 90343-A) 345/230/13.2KV TRANSFORMER CKT 1	560	560	0.23161	125.7667	Hitchland Interchange - WALKTAP7 345.00 345KV CKT 1
FDNS	02ALL	2	25SP	G14_038	FROM->TO	POTTER COUNTY INTERCHANGE (WAUK 90343-A) 345/230/13.2KV TRANSFORMER CKT 1	560	560	0.20229	125.7526	Hitchland Interchange (H TB80155502) 345/230/13.2KV TRANSFORMER CKT 1
FDNS	02ALL	2	25SP	G14_038	FROM->TO	POTTER COUNTY INTERCHANGE (WAUK 90343-A) 345/230/13.2KV TRANSFORMER CKT 1	560	560	0.20229	125.7526	Hitchland Interchange (H TB80155502) 345/230/13.2KV TRANSFORMER CKT 1
FDNS	02ALL	2	25SP	G14_038	FROM->TO	POTTER COUNTY INTERCHANGE (WAUK 90343-A) 345/230/13.2KV TRANSFORMER CKT 1	560	560	0.20693	125.6785	BUCKNER7 345.00 - SPEARVILLE 345KV CKT 1
FDNS	02ALL	2	25SP	G14_038	FROM->TO	POTTER COUNTY INTERCHANGE (WAUK 90343-A) 345/230/13.2KV TRANSFORMER CKT 1	560	560	0.20693	125.6785	BUCKNER7 345.00 - SPEARVILLE 345KV CKT 1
FDNS	02ALL	2	25SP	G14_038	FROM->TO	POTTER COUNTY INTERCHANGE (WAUK 90343-A) 345/230/13.2KV TRANSFORMER CKT 1	560	560	0.20029	125.6757	GEN525494 1-PLANT X GEN #4 20 KV
FDNS	02ALL	2	25SP	G14_038	FROM->TO	POTTER COUNTY INTERCHANGE (WAUK 90343-A) 345/230/13.2KV TRANSFORMER CKT 1	560	560	0.20029	125.3801	GEN527163 1-MUSTANG GEN #3 22 KV
FDNS	02ALL	2	25SP	G14_038	FROM->TO	POTTER COUNTY INTERCHANGE (WAUK 90343-A) 345/230/13.2KV TRANSFORMER CKT 1	560	560	0.20532	125.3489	MOORE COUNTY INTERCHANGE - POTTER COUNTY INTERCHANGE 230KV CKT 1
FDNS	02ALL	2	25SP	G14_038	FROM->TO	POTTER COUNTY INTERCHANGE (WAUK 90343-A) 345/230/13.2KV TRANSFORMER CKT 1	560	560	0.20532	125.3489	MOORE COUNTY INTERCHANGE - POTTER COUNTY INTERCHANGE 230KV CKT 1
FDNS	02ALL	2	25SP	G14_038	FROM->TO	POTTER COUNTY INTERCHANGE (WAUK 90343-A) 345/230/13.2KV TRANSFORMER CKT 1	560	560	0.21895	125.2586	FINNEY SWITCHING STATION - WALKTAP7 345.00 345KV CKT 1
FDNS	02ALL	2	25SP	G14_038	FROM->TO	POTTER COUNTY INTERCHANGE (WAUK 90343-A) 345/230/13.2KV TRANSFORMER CKT 1	560	560	0.21895	125.2586	FINNEY SWITCHING STATION - WALKTAP7 345.00 345KV CKT 1
FDNS	02ALL	2	25SP	G14_038	FROM->TO	POTTER COUNTY INTERCHANGE (WAUK 90343-A) 345/230/13.2KV TRANSFORMER CKT 1	560	560	0.20029	125.1417	GEN527161 1-MUSTANG GEN #1
FDNS	02ALL	2	25SP	G14_038	FROM->TO	POTTER COUNTY INTERCHANGE (WAUK 90343-A) 345/230/13.2KV TRANSFORMER CKT 1	560	560	0.20029	125.1417	GEN527162 1-MUSTANG GEN #2
FDNS	02ALL	2	25SP	G14_038	FROM->TO	POTTER COUNTY INTERCHANGE (WAUK 90343-A) 345/230/13.2KV TRANSFORMER CKT 1	560	560	0.20319	125.0377	Hansford County Switch Station - SPEARMAN INTERCHANGE 115KV CKT 1
FDNS	02ALL	2	25SP	G14_038	FROM->TO	POTTER COUNTY INTERCHANGE (WAUK 90343-A) 345/230/13.2KV TRANSFORMER CKT 1	560	560	0.20029	124.8848	GEN527164 1-MUSTANG GEN #4 22 KV
FDNS	02ALL	2	25SP	G14_038	FROM->TO	POTTER COUNTY INTERCHANGE (WAUK 90343-A) 345/230/13.2KV TRANSFORMER CKT 1	560	560	0.20029	124.8778	GEN527165 1-Mustang Gen #5
FDNS	02ALL	2	25SP	G14_038	FROM->TO	POTTER COUNTY INTERCHANGE (WAUK 90343-A) 345/230/13.2KV TRANSFORMER CKT 1	560	560	0.20029	124.7595	GEN524023 1-NICHOLS GEN #3 22 KV
FDNS	02ALL	2	25SP	G14_038	FROM->TO	POTTER COUNTY INTERCHANGE (WAUK 90343-A) 345/230/13.2KV TRANSFORMER CKT 1	560	560	0.19992	124.6621	TUCO INTERCHANGE - YOAKUM_345 345.00 345KV CKT 1
FDNS	02ALL	2	25SP	G14_038	FROM->TO	POTTER COUNTY INTERCHANGE (WAUK 90343-A) 345/230/13.2KV TRANSFORMER CKT 1	560	560	0.20029	124.6115	GEN527903 1-HOBBS PLANT #3 (ST)
FDNS	02ALL	2	25SP	G14_038	FROM->TO	POTTER COUNTY INTERCHANGE (WAUK 90343-A) 345/230/13.2KV TRANSFORMER CKT 1	560	560	0.20693	124.6076	BUCKNER7 345.00 - HOLCOMB 345KV CKT 1
FDNS	02ALL	2	25SP	G14_038	FROM->TO	POTTER COUNTY INTERCHANGE (WAUK 90343-A) 345/230/13.2KV TRANSFORMER CKT 1	560	560	0.20693	124.6076	BUCKNER7 345.00 - HOLCOMB 345KV CKT 1
FDNS	02ALL	2	25SP	G14_038	FROM->TO	POTTER COUNTY INTERCHANGE (WAUK 90343-A) 345/230/13.2KV TRANSFORMER CKT 1	560	560	0.20029	124.5143	GEN523942 1-MAJSTC-WTG210.6900
FDNS	02ALL	2	25SP	G14_038	FROM->TO	POTTER COUNTY INTERCHANGE (WAUK 90343-A) 345/230/13.2KV TRANSFORMER CKT 1	560	560	0.20029	124.5076	GEN523941 1-MAJSTC-WTG110.6900
FDNS	02ALL	2	25SP	G14_038	FROM->TO	POTTER COUNTY INTERCHANGE (WAUK 90343-A) 345/230/13.2KV TRANSFORMER CKT 1	560	560	0.20029	124.4467	GEN527884 1-CUNNINGHAM GEN #4 22 KV
FDNS	02ALL	2	25SP	G14_038	FROM->TO	POTTER COUNTY INTERCHANGE (WAUK 90343-A) 345/230/13.2KV TRANSFORMER CKT 1	560	560	0.20029	124.4365	GEN527883 1-CUNNINGHAM GEN #3 22 KV
FDNS	02ALL	2	25SP	G14_038	FROM->TO	POTTER COUNTY INTERCHANGE (WAUK 90343-A) 345/230/13.2KV TRANSFORMER CKT 1	560	560	0.2011	124.38	HITCHLAND INTERCHANGE - OCHILTREE 230KV CKT 1
FDNS	02ALL	2	25SP	G14_038	FROM->TO	POTTER COUNTY INTERCHANGE (WAUK 90343-A) 345/230/13.2KV TRANSFORMER CKT 1	560	560	0.2011	124.38	HITCHLAND INTERCHANGE - OCHILTREE 230KV CKT 1
FDNS	02ALL	2	25SP	G14_038	FROM->TO	POTTER COUNTY INTERCHANGE (WAUK 90343-A) 345/230/13.2KV TRANSFORMER CKT 1	560	560	0.2011	124.3313	OCHILTREE (H TP80219401) 230/115/13.2KV TRANSFORMER CKT 1
FDNS	02ALL	2	25SP	G14_038	FROM->TO	POTTER COUNTY INTERCHANGE (WAUK 90343-A) 345/230/13.2KV TRANSFORMER CKT 1	560	560	0.2011	124.3313	OCHILTREE (H TP80219401) 230/115/13.2KV TRANSFORMER CKT 1
FDNS	02ALL	2	25SP	G14_038	FROM->TO	POTTER COUNTY INTERCHANGE (WAUK 90343-A) 345/230/13.2KV TRANSFORMER CKT 1	560	560	0.20029	124.2026	GEN523462 1-BLACKHAWK GEN #2
FDNS	02ALL	2	25SP	G14_038	FROM->TO	POTTER COUNTY INTERCHANGE (WAUK 90343-A) 345/230/13.2KV TRANSFORMER CKT 1	560	560	0.20029	124.2021	GEN523461 1-BLACKHAWK GEN #1
FDNS	02ALL	2	25SP	G14_038	FROM->TO	POTTER COUNTY INTERCHANGE (WAUK 90343-A) 345/230/13.2KV TRANSFORMER CKT 1	560	560	0.2024	124.1535	DWS FRISCO - SHERMAN COUNTY TAP 115KV CKT 1
FDNS	02ALL	2	25SP	G14_038	FROM->TO	POTTER COUNTY INTERCHANGE (WAUK 90343-A) 345/230/13.2KV TRANSFORMER CKT 1	560	560	0.20029	124.1108	GEN528361 1-MADDOX GEN #1
FDNS	02ALL	2	25SP	G14_038	FROM->TO	POTTER COUNTY INTERCHANGE (WAUK 90343-A) 345/230/13.2KV TRANSFORMER CKT 1	560	560	0.20029	123.9976	GEN528501 1-G14_012 24.000
FDNS	02ALL	2	25SP	G14_038	FROM->TO	POTTER COUNTY INTERCHANGE (WAUK 90343-A) 345/230/13.2KV TRANSFORMER CKT 1	560	560	0.20029	123.6551	GEN562550 1-G14_040_3 0.6900
FDNS	02ALL	2	25SP	G14_038	FROM->TO	POTTER COUNTY INTERCHANGE (WAUK 90343-A) 345/230/13.2KV TRANSFORMER CKT 1	560	560	0.21895	123.5961	FINNEY SWITCHING STATION - HOLCOMB 345KV CKT 1
FDNS	02ALL	2	25SP	G14_038	FROM->TO	POTTER COUNTY INTERCHANGE (WAUK 90343-A) 345/230/13.2KV TRANSFORMER CKT 1	560	560	0.21895	123.5961	FINNEY SWITCHING STATION - HOLCOMB 345KV CKT 1
FDNS	02ALL	2	25SP	G14_038	FROM->TO	POTTER COUNTY INTERCHANGE (WAUK 90343-A) 345/230/13.2KV TRANSFORMER CKT 1	560	560	0.20029	123.4898	GEN560105 1-G08-22 0.6900
FDNS	02ALL	2	25SP	G14_038	FROM->TO	POTTER COUNTY INTERCHANGE (WAUK 90343-A) 345/230/13.2KV TRANSFORMER CKT 1	560	560	0.20093	123.455	RB-ELKS 3115.00 - SHERMAN COUNTY TAP 115KV CKT 1
FDNS	02ALL	2	25SP	G14_038	FROM->TO	POTTER COUNTY INTERCHANGE (WAUK 90343-A) 345/230/13.2KV TRANSFORMER CKT 1	560	560	0.2024	123.4479	P12:115:SPS:W08.1.HITCH.LASLEY
FDNS	02ALL	2	25SP	G14_038	FROM->TO	POTTER COUNTY INTERCHANGE (WAUK 90343-A) 345/230/13.2KV TRANSFORMER CKT 1	560	560	0.20093	123.4017	P12:115:SPS:W24.1.MOOREE.LASLEY
FDNS	02ALL	2	25SP	G14_038	FROM->TO	POTTER COUNTY INTERCHANGE (WAUK 90343-A) 345/230/13.2KV TRANSFORMER CKT 1	560	560	0.2024	123.3614	DWS FRISCO - HITCHLAND INTERCHANGE 115KV CKT 1
FDNS	02ALL	2	25SP	G14_038	FROM->TO	POTTER COUNTY INTERCHANGE (WAUK 90343-A) 345/230/13.2KV TRANSFORMER CKT 1	560	560	0.20288	123.3314	Hitchland Interchange (SIEM 8743067) 345/230/13.2KV TRANSFORMER CKT 2
FDNS	02ALL	2	25SP	G14_038	FROM->TO	POTTER COUNTY INTERCHANGE (WAUK 90343-A) 345/230/13.2KV TRANSFORMER CKT 1	560	560	0.20288	123.3314	Hitchland Interchange (SIEM 8743067) 345/230/13.2KV TRANSFORMER CKT 2
FDNS	02ALL	2	25SP	G14_038	FROM->TO	POTTER COUNTY INTERCHANGE (WAUK 90343-A) 345/230/13.2KV TRANSFORMER CKT 1	560	560	0.20179	123.3196	PRINGLE INTERCHANGE - SPEARMAN INTERCHANGE 115KV CKT 1
FDNS	02ALL	2	25SP	G14_038	FROM->TO	POTTER COUNTY INTERCHANGE (WAUK 90343-A) 345/230/13.2KV TRANSFORMER CKT 1	560	560	0.20093	123.2958	RB-ELKS 3115.00 - RB-SPURLOCK3115.00 115KV CKT 1
FDNS	02ALL	2	25SP	G14_038	FROM->TO	POTTER COUNTY INTERCHANGE (WAUK 90343-A) 345/230/13.2KV TRANSFORMER CKT 1	560	560	0.20154	123.2903	P12:115:SPS:W29.1.OCLTRE.SPRMN
FDNS	02ALL	2	25SP	G14_038	FROM->TO	POTTER COUNTY INTERCHANGE (WAUK 90343-A) 345/230/13.2KV TRANSFORMER CKT 1	560	560	0.20622	123.2818	BVRCNTY7 345.00 - G11-14T 345.00 345KV CKT 2
FDNS	02ALL	2	25SP	G14_038	FROM->TO	POTTER COUNTY INTERCHANGE (WAUK 90343-A) 345/230/13.2KV TRANSFORMER CKT 1	560	560	0.20029	123.2615	GEN527166 1-MUSTANG_6 118.000
FDNS	02ALL	2	25SP	G14_038	FROM->TO	POTTER COUNTY INTERCHANGE (WAUK 90343-A) 345/230/13.2KV TRANSFORMER CKT 1	560	560	0.20154	123.2037	OCHILTREE - TEXAS FARMS SUB 115KV CKT 1
FDNS	02ALL	2	25SP	G14_038	FROM->TO	POTTER COUNTY INTERCHANGE (WAUK 90343-A) 345/230/13.2KV TRANSFORMER CKT 1	560	560	0.20388	123.0718	G15061_T 345.00 - MINGO 345KV CKT 1
FDNS	02ALL	2	25SP	G14_038	FROM->TO	POTTER COUNTY INTERCHANGE (WAUK 90343-A) 345/230/13.2KV TRANSFORMER CKT 1	560	560	0.20029	123.0453	GEN526333 1-JONES GEN #3 21 KV
FDNS	02ALL	2	25SP	G14_038	FROM->TO	POTTER COUNTY INTERCHANGE (WAUK 90343-A) 345/230/13.2KV TRANSFORMER CKT 1	560	560	0.20154	123.0258	SPEARMAN SUB - TEXAS FARMS SUB 115KV CKT 1
FDNS	02ALL	2	25SP	G14_038	FROM->TO	POTTER COUNTY INTERCHANGE (WAUK 90343-A) 345/230/13.2KV TRANSFORMER CKT 1	560	560	0.20093	122.9656	MOORE COUNTY INTERCHANGE EAST BUS - RB-SPURLOCK3115.00 115KV CKT 1
FDNS	02ALL	2	25SP	G14_038	FROM->TO	POTTER COUNTY INTERCHANGE (WAUK 90343-A) 345/230/13.2KV TRANSFORMER CKT 1	560	560	0.20029	122.9592	GEN526334 1-JONES_4 116.500
FDNS	02ALL	2	25SP	G14_038	FROM->TO	POTTER COUNTY INTERCHANGE (WAUK 90343-A) 345/230/13.2KV TRANSFORMER CKT 1	560	560	0.20079	122.9542	DALLAM COUNTY INTERCHANGE - SHERMAN COUNTY SUB 115KV CKT 1
FDNS	02ALL	2	25SP	G14_038	FROM->TO	POTTER COUNTY INTERCHANGE (WAUK 90343-A) 345/230/13.2KV TRANSFORMER CKT 1	560	560	0.20079	122.9044	P12:115:SPS:W05.1.DALLAM.LASLEY
FDNS	02ALL	2	25SP	G14_038	FROM->TO	POTTER COUNTY INTERCHANGE (WAUK 90343-A) 345/230/13.2KV TRANSFORMER CKT 1	560	560	0.20029	122.9025	GEN525844 1-ELK_1 118.000
FDNS	02ALL	2	25SP	G14_038	FROM->TO	POTTER COUNTY INTERCHANGE (WAUK 90343-A) 345/230/13.2KV TRANSFORMER CKT 1	560	560	0.20029	122.9018	GEN525845 1-ELK_2 1 118.000
FDNS	02ALL	2	25SP	G14_038	FROM->TO	POTTER COUNTY INTERCHANGE (WAUK 90343-A) 345/230/13.2KV TRANSFORMER CKT 1	560	560	0.20079	122.8611	SHERMAN COUNTY SUB - SHERMAN COUNTY TAP 115KV CKT 1
FDNS	02ALL	2	25SP	G14_038	FROM->TO	POTTER COUNTY INTERCHANGE (WAUK 90343-A) 345/230/13.2KV TRANSFORMER CKT 1	560	560	0.20388	122.8486	G15061_T 345.00 - SETAB 345KV CKT 1
FDNS	02ALL	2	25SP	G14_038	FROM->TO	POTTER COUNTY INTERCHANGE (WAUK 90343-A) 345/230/13.2KV TRANSFORMER CKT 1	560	560	0.20029	122.8446	GEN336821 1-GRAND GULF UNIT
FDNS	02ALL	2	25SP	G14_038	FROM->TO	POTTER COUNTY INTERCHANGE (WAUK 90343-A) 345/230/13.2KV TRANSFORMER CKT 1	560	560	0.20029	122.8387	GEN524285 1-WILDORADO WIND GEN
FDNS	02ALL	2	25SP	G14_038	FROM->TO	POTTER COUNTY INTERCHANGE (WAUK 90343-A) 345/230/13.2KV TRANSFORMER CKT 1	560	560	0.20106	122.8365	HITCHLAND INTERCHANGE (H TP80148301) 230/115/13.2KV TRANSFORMER CKT 1
FDNS	02ALL	2	25SP	G14_038	FROM->TO	POTTER COUNTY INTERCHANGE (WAUK 90343-A) 345/230/13.2KV TRANSFORMER CKT 1	560	560	0.20106	122.8365	HITCHLAND INTERCHANGE (H TP80148301) 230/115/13.2KV TRANSFORMER CKT 1
FDNS	02ALL	2	25SP	G14_038	FROM->TO	POTTER COUNTY INTERCHANGE (WAUK 90343-A) 345/230/13.2KV TRANSFORMER CKT 1	560	560	0.20106	122.8365	HITCHLAND INTERCHANGE (UPDATE LATER) 230/115/13.2KV TRANSFORMER CKT 2
FDNS	02ALL	2	25SP	G14_038	FROM->TO	POTTER COUNTY INTERCHANGE (WAUK 90343-A) 345/230/13.2KV TRANSFORMER CKT 1	560	560	0.20106	122.8365	HITCHLAND INTERCHANGE (UPDATE LATER) 230/115/13.2KV TRANSFORMER CKT 2
FDNS	02ALL	2	25SP	G14_038	FROM->TO	POTTER COUNTY INTERCHANGE (WAUK 90343-A) 345/230/13.2KV TRANSFORMER CKT 1	560	560	0.20029	122.8298	GEN562270 1-G12-020-2 0.6900
FDNS	02ALL	2	25SP	G14_038	FROM->TO	POTTER COUNTY INTERCHANGE (WAUK 90343-A) 345/230/13.2KV TRANSFORMER CKT 1	560	560	0.20029	122.8215	GEN526331 1-JONES GEN #1 22 KV
FDNS	02ALL	2	25SP	G14_038	FROM->TO	POTTER COUNTY INTERCHANGE (WAUK 90343-A) 345/230/13.2KV TRANSFORMER CKT 1	560	560	0.20029	122.8196	GEN526332 1-JONES GEN #2 21 KV
FDNS	02ALL	2	25SP	G14_038	FROM->TO	POTTER COUNTY INTERCHANGE (WAUK 90343-A) 345/230/13.2KV TRANSFORMER CKT 1	560	560	0.20029	122.7545	GEN562269 1-G12-020-1 0.6900
FDNS	02ALL	2	25SP	G14_038	FROM->TO	POTTER COUNTY INTERCHANGE (WAUK 90343-A) 345/230/13.2KV TRANSFORMER CKT 1	560	560	0.20304	122.7473	HOLCOMB - SETAB 345KV CKT 1

SOLUTION	GROUP	SCENARIO	SEASON	SOURCE	DIRECTION	MONITORED ELEMENT	RATEA (MVA)	RATEB(MVA)	TDF	TC%LOADING (% MVA)	CONTINGENCY
FDNS	02ALL	2	25SP	G14_038	FROM->TO	POTTER COUNTY INTERCHANGE (WAUK 90343-A) 345/230/13.2KV TRANSFORMER CKT 1	560	560	0.20304	122.7473	HOLCOMB - SETAB 345KV CKT 1
FDNS	02ALL	2	25SP	G14_038	FROM->TO	POTTER COUNTY INTERCHANGE (WAUK 90343-A) 345/230/13.2KV TRANSFORMER CKT 1	560	560	0.20154	122.713	SPEARMAN INTERCHANGE - SPEARMAN SUB 115KV CKT 1
FDNS	02ALL	2	25SP	G14_038	FROM->TO	POTTER COUNTY INTERCHANGE (WAUK 90343-A) 345/230/13.2KV TRANSFORMER CKT 1	560	560	0.20029	122.7001	GEN527901 1-HOBBS PLANT #1 (CT)
FDNS	02ALL	2	25SP	G14_038	FROM->TO	POTTER COUNTY INTERCHANGE (WAUK 90343-A) 345/230/13.2KV TRANSFORMER CKT 1	560	560	0.20029	122.7001	GEN527902 1-HOBBS PLANT #2 (CT)
FDNS	02ALL	2	25SP	G14_038	FROM->TO	POTTER COUNTY INTERCHANGE (WAUK 90343-A) 345/230/13.2KV TRANSFORMER CKT 1	560	560	0.20159	122.6951	PRINGLE INTERCHANGE (ENRCO13617-1) 230/115/13.2KV TRANSFORMER CKT 1
FDNS	02ALL	2	25SP	G14_038	FROM->TO	POTTER COUNTY INTERCHANGE (WAUK 90343-A) 345/230/13.2KV TRANSFORMER CKT 1	560	560	0.20159	122.6951	PRINGLE INTERCHANGE (ENRCO13617-1) 230/115/13.2KV TRANSFORMER CKT 1
FDNS	02ALL	2	25SP	G14_038	FROM->TO	POTTER COUNTY INTERCHANGE (WAUK 90343-A) 345/230/13.2KV TRANSFORMER CKT 1	560	560	0.20029	122.6544	GEN336153 1-WATERFORD UNIT#3
FDNS	02ALL	2	25SP	G14_038	FROM->TO	POTTER COUNTY INTERCHANGE (WAUK 90343-A) 345/230/13.2KV TRANSFORMER CKT 1	560	560	0.20159	122.6255	Harrington Station East Bus - PRINGLE INTERCHANGE 230KV CKT 1
FDNS	02ALL	2	25SP	G14_038	FROM->TO	POTTER COUNTY INTERCHANGE (WAUK 90343-A) 345/230/13.2KV TRANSFORMER CKT 1	560	560	0.20159	122.6244	P12:230:SPS:K43.1.PRNGLE.HARR_E
FDNS	02ALL	2	25SP	G14_038	FROM->TO	POTTER COUNTY INTERCHANGE (WAUK 90343-A) 345/230/13.2KV TRANSFORMER CKT 1	560	560	0.20119	122.6119	PRINGLE INTERCHANGE - SPEARMAN INTERCHANGE 115KV CKT 2
FDNS	02ALL	2	25SP	G14_038	FROM->TO	POTTER COUNTY INTERCHANGE (WAUK 90343-A) 345/230/13.2KV TRANSFORMER CKT 1	560	560	0.20029	122.5937	GEN337911 1-ARKANSAS NUCLEAR ONE UNIT #2
FDNS	02ALL	2	25SP	G14_038	FROM->TO	POTTER COUNTY INTERCHANGE (WAUK 90343-A) 345/230/13.2KV TRANSFORMER CKT 1	560	560	0.20029	122.5895	GEN501801 1-DOLET HILLS UNIT1
FDNS	02ALL	2	25SP	G14_038	FROM->TO	POTTER COUNTY INTERCHANGE (WAUK 90343-A) 345/230/13.2KV TRANSFORMER CKT 1	560	560	0.20029	122.5242	GEN335831 1-RIVERBEND UNIT#1
FDNS	02ALL	2	25SP	G14_038	FROM->TO	POTTER COUNTY INTERCHANGE (WAUK 90343-A) 345/230/13.2KV TRANSFORMER CKT 1	560	560	0.20417	122.5131	MINGO - RED WILLOW 345KV CKT 1
FDNS	02ALL	2	25SP	G14_038	FROM->TO	POTTER COUNTY INTERCHANGE (WAUK 90343-A) 345/230/13.2KV TRANSFORMER CKT 1	560	560	0.20417	122.5131	MINGO - RED WILLOW 345KV CKT 1
FDNS	02ALL	2	25SP	G14_038	FROM->TO	POTTER COUNTY INTERCHANGE (WAUK 90343-A) 345/230/13.2KV TRANSFORMER CKT 1	560	560	0.20029	122.5113	GEN527881 1-CUNNINGHAM GEN #1
FDNS	02ALL	2	25SP	G14_038	FROM->TO	POTTER COUNTY INTERCHANGE (WAUK 90343-A) 345/230/13.2KV TRANSFORMER CKT 1	560	560	0.20029	122.4973	GEN562688 1-G15_014_3 0.6900
FDNS	02ALL	2	25SP	G14_038	FROM->TO	POTTER COUNTY INTERCHANGE (WAUK 90343-A) 345/230/13.2KV TRANSFORMER CKT 1	560	560	0.20066	122.4876	MOORE COUNTY INTERCHANGE (ENRCO 136402) 230/115/13.2KV TRANSFORMER CKT 1
FDNS	02ALL	2	25SP	G14_038	FROM->TO	POTTER COUNTY INTERCHANGE (WAUK 90343-A) 345/230/13.2KV TRANSFORMER CKT 1	560	560	0.20066	122.4876	MOORE COUNTY INTERCHANGE (ENRCO 136402) 230/115/13.2KV TRANSFORMER CKT 1
FDNS	02ALL	2	25SP	G14_038	FROM->TO	POTTER COUNTY INTERCHANGE (WAUK 90343-A) 345/230/13.2KV TRANSFORMER CKT 1	560	560	0.20029	122.4706	GEN562483 1-G13_027_3 0.6900
FDNS	02ALL	2	25SP	G14_038	FROM->TO	POTTER COUNTY INTERCHANGE (WAUK 90343-A) 345/230/13.2KV TRANSFORMER CKT 1	560	560	0.20094	122.4647	PRINGLE INTERCHANGE - RIVERVIEW INTERCHANGE 115KV CKT 1
FDNS	02ALL	2	25SP	G14_038	FROM->TO	POTTER COUNTY INTERCHANGE (WAUK 90343-A) 345/230/13.2KV TRANSFORMER CKT 1	560	560	0.20029	122.4193	GEN337910 1-ARKANSAS NUCLEAR ONE UNIT #1
FDNS	02ALL	2	25SP	G14_038	FROM->TO	POTTER COUNTY INTERCHANGE (WAUK 90343-A) 345/230/13.2KV TRANSFORMER CKT 1	560	560	0.20029	122.4118	GEN562756 1-G15031_7 0.6900
FDNS	02ALL	2	25SP	G14_038	FROM->TO	POTTER COUNTY INTERCHANGE (WAUK 90343-A) 345/230/13.2KV TRANSFORMER CKT 1	560	560	0.20029	122.3802	GEN562754 1-G15031_5 0.6900
FDNS	02ALL	2	25SP	G14_038	FROM->TO	POTTER COUNTY INTERCHANGE (WAUK 90343-A) 345/230/13.2KV TRANSFORMER CKT 1	560	560	0.20319	122.3554	HITCHLAND INTERCHANGE - Hansford County Switch Station 115KV CKT 1
FDNS	02ALL	2	25SP	G14_038	FROM->TO	POTTER COUNTY INTERCHANGE (WAUK 90343-A) 345/230/13.2KV TRANSFORMER CKT 1	560	560	0.20319	122.3554	HITCHLAND INTERCHANGE - Hansford County Switch Station 115KV CKT 1
FDNS	02ALL	2	25SP	G14_038	FROM->TO	POTTER COUNTY INTERCHANGE (WAUK 90343-A) 345/230/13.2KV TRANSFORMER CKT 1	560	560	0.20029	122.3463	GEN562556 1-G14_046_3 0.3420
FDNS	02ALL	2	25SP	G14_038	FROM->TO	POTTER COUNTY INTERCHANGE (WAUK 90343-A) 345/230/13.2KV TRANSFORMER CKT 1	560	560	0.20142	122.3294	G13-010T 345.00 - POST ROCK 345KV CKT 1
FDNS	02ALL	2	25SP	G14_038	FROM->TO	POTTER COUNTY INTERCHANGE (WAUK 90343-A) 345/230/13.2KV TRANSFORMER CKT 1	560	560	0.20029	122.3245	GEN563142 1-G15079_3 0.5500
FDNS	02ALL	2	25SP	G14_038	FROM->TO	POTTER COUNTY INTERCHANGE (WAUK 90343-A) 345/230/13.2KV TRANSFORMER CKT 1	560	560	0.20029	122.3245	GEN563151 1-G15080_2 0.5500
FDNS	02ALL	2	25SP	G14_038	FROM->TO	POTTER COUNTY INTERCHANGE (WAUK 90343-A) 345/230/13.2KV TRANSFORMER CKT 1	560	560	0.20142	122.3123	G13-010T 345.00 - SPEARVILLE 345KV CKT 1
FDNS	02ALL	2	25SP	G14_038	FROM->TO	POTTER COUNTY INTERCHANGE (WAUK 90343-A) 345/230/13.2KV TRANSFORMER CKT 1	560	560	0.20029	122.3066	GEN524890 1-SNJN-WTGA1 10.6000
FDNS	02ALL	2	25SP	G14_038	FROM->TO	POTTER COUNTY INTERCHANGE (WAUK 90343-A) 345/230/13.2KV TRANSFORMER CKT 1	560	560	0.20029	122.2977	GEN522866 1-LUBBOCK POWER & LIGHT-HOLLY GEN
FDNS	02ALL	2	25SP	G14_038	FROM->TO	POTTER COUNTY INTERCHANGE (WAUK 90343-A) 345/230/13.2KV TRANSFORMER CKT 1	560	560	0.20029	122.293	GEN563043 1-G15068_4 0.6900
FDNS	02ALL	2	25SP	G14_038	FROM->TO	POTTER COUNTY INTERCHANGE (WAUK 90343-A) 345/230/13.2KV TRANSFORMER CKT 1	560	560	0.20093	122.2724	MOORE COUNTY INTERCHANGE W. - RB-S&S 3115.00 115KV CKT 1
FDNS	02ALL	2	25SP	G14_038	FROM->TO	POTTER COUNTY INTERCHANGE (WAUK 90343-A) 345/230/13.2KV TRANSFORMER CKT 1	560	560	0.20025	122.2598	HOBBS - YOAKUM_345 345.00 345KV CKT 1
FDNS	02ALL	2	25SP	G14_038	FROM->TO	POTTER COUNTY INTERCHANGE (WAUK 90343-A) 345/230/13.2KV TRANSFORMER CKT 1	560	560	0.20029	122.2562	GEN525494 1-PLANT X GEN #4 20 KV
FDNS	02ALL	2	25SP	G14_038	FROM->TO	POTTER COUNTY INTERCHANGE (WAUK 90343-A) 345/230/13.2KV TRANSFORMER CKT 1	560	560	0.20029	122.2465	GEN337652 1-WHITE BLUFF UNIT #1
FDNS	02ALL	2	25SP	G14_038	FROM->TO	POTTER COUNTY INTERCHANGE (WAUK 90343-A) 345/230/13.2KV TRANSFORMER CKT 1	560	560	0.20024	122.2407	BEARCAT 138.00 - MOORELAND 138KV CKT 1
FDNS	02ALL	2	25SP	G14_038	FROM->TO	POTTER COUNTY INTERCHANGE (WAUK 90343-A) 345/230/13.2KV TRANSFORMER CKT 1	560	560	0.20029	122.2204	GEN562710 1-G15_022_3 0.5500
FDNS	02ALL	2	25SP	G14_038	FROM->TO	POTTER COUNTY INTERCHANGE (WAUK 90343-A) 345/230/13.2KV TRANSFORMER CKT 1	560	560	0.20029	122.2165	GEN337653 1-WHITE BLUFF UNIT #2
FDNSLock	02ALL	2	25SP	G14_038	FROM->TO	POTTER COUNTY INTERCHANGE (WAUK 90343-A) 345/230/13.2KV TRANSFORMER CKT 1	560	560	0.1994	122.216	STATELINE INTERCHANGE (H TP80154301) 230/115/13.2KV TRANSFORMER CKT 1
FDNS	02ALL	2	25SP	G14_038	FROM->TO	POTTER COUNTY INTERCHANGE (WAUK 90343-A) 345/230/13.2KV TRANSFORMER CKT 1	560	560	0.20029	122.2078	GEN501813 1-RODEMACHER UNIT 3
FDNS	02ALL	2	25SP	G14_038	FROM->TO	POTTER COUNTY INTERCHANGE (WAUK 90343-A) 345/230/13.2KV TRANSFORMER CKT 1	560	560	0.20229	122.2008	Hitchland Interchange (H TB80155502) 345/230/13.2KV TRANSFORMER CKT 1
FDNS	02ALL	2	25SP	G14_038	FROM->TO	POTTER COUNTY INTERCHANGE (WAUK 90343-A) 345/230/13.2KV TRANSFORMER CKT 1	560	560	0.20229	122.2008	Hitchland Interchange (H TB80155502) 345/230/13.2KV TRANSFORMER CKT 1
FDNS	02ALL	2	25SP	G14_038	FROM->TO	POTTER COUNTY INTERCHANGE (WAUK 90343-A) 345/230/13.2KV TRANSFORMER CKT 1	560	560	0.20029	122.1913	GEN336252 1-NINEMILE POINT UNIT#5
FDNS	02ALL	2	25SP	G14_038	FROM->TO	POTTER COUNTY INTERCHANGE (WAUK 90343-A) 345/230/13.2KV TRANSFORMER CKT 1	560	560	0.20029	122.1891	GEN563042 1-G15068_3 0.6900
FDNS	02ALL	2	25SP	G14_038	FROM->TO	POTTER COUNTY INTERCHANGE (WAUK 90343-A) 345/230/13.2KV TRANSFORMER CKT 1	560	560	0.20029	122.1855	GEN562704 1-G15_020_3 0.3550
FDNS	02ALL	2	25SP	G14_038	FROM->TO	POTTER COUNTY INTERCHANGE (WAUK 90343-A) 345/230/13.2KV TRANSFORMER CKT 1	560	560	0.20031	122.1652	G15093_T 345.00 - GRACEMONT 345KV CKT 1
FDNS	02ALL	2	25SP	G14_038	FROM->TO	POTTER COUNTY INTERCHANGE (WAUK 90343-A) 345/230/13.2KV TRANSFORMER CKT 1	560	560	0.2012	122.1628	WALKEMEYER - WALKTAP3 115.00 115KV CKT 1
FDNS	02ALL	2	25SP	G14_038	FROM->TO	POTTER COUNTY INTERCHANGE (WAUK 90343-A) 345/230/13.2KV TRANSFORMER CKT 1	560	560	0.2012	122.1628	WALKEMEYER - WALKTAP3 115.00 115KV CKT 1
FDNS	02ALL	2	25SP	G14_038	FROM->TO	POTTER COUNTY INTERCHANGE (WAUK 90343-A) 345/230/13.2KV TRANSFORMER CKT 1	560	560	0.2012	122.1627	WALKTAP7 345.00 (WALKE345) 345/115/13.8KV TRANSFORMER CKT 1
FDNS	02ALL	2	25SP	G14_038	FROM->TO	POTTER COUNTY INTERCHANGE (WAUK 90343-A) 345/230/13.2KV TRANSFORMER CKT 1	560	560	0.2012	122.1627	WALKTAP7 345.00 (WALKE345) 345/115/13.8KV TRANSFORMER CKT 1
FDNS	02ALL	2	25SP	G14_038	FROM->TO	POTTER COUNTY INTERCHANGE (WAUK 90343-A) 345/230/13.2KV TRANSFORMER CKT 1	560	560	0.20029	122.1596	GEN336251 1-NINEMILE POINT UNIT#4
FDNS	02ALL	2	25SP	G14_038	FROM->TO	POTTER COUNTY INTERCHANGE (WAUK 90343-A) 345/230/13.2KV TRANSFORMER CKT 1	560	560	0.20029	122.1478	GEN562942 1-G15056_3 0.6900
FDNS	02ALL	2	25SP	G14_038	FROM->TO	POTTER COUNTY INTERCHANGE (WAUK 90343-A) 345/230/13.2KV TRANSFORMER CKT 1	560	560	0.1994	122.1473	Graves Sub - STATELINE INTERCHANGE 115KV CKT 1
FDNS	02ALL	2	25SP	G14_038	FROM->TO	POTTER COUNTY INTERCHANGE (WAUK 90343-A) 345/230/13.2KV TRANSFORMER CKT 1	560	560	0.1994	122.1473	Graves Sub - STATELINE INTERCHANGE 115KV CKT 1
FDNS	02ALL	2	25SP	G14_038	FROM->TO	POTTER COUNTY INTERCHANGE (WAUK 90343-A) 345/230/13.2KV TRANSFORMER CKT 1	560	560	0.20029	122.1391	GEN334440 1-SABINE UNIT 4
FDNS	02ALL	2	25SP	G14_038	FROM->TO	POTTER COUNTY INTERCHANGE (WAUK 90343-A) 345/230/13.2KV TRANSFORMER CKT 1	560	560	0.19981	122.1366	TUCO INTERCHANGE (GE M1022338) 345/230/13.2KV TRANSFORMER CKT 1
FDNS	02ALL	2	25SP	G14_038	FROM->TO	POTTER COUNTY INTERCHANGE (WAUK 90343-A) 345/230/13.2KV TRANSFORMER CKT 1	560	560	0.19981	122.1366	TUCO INTERCHANGE (GE M1022338) 345/230/13.2KV TRANSFORMER CKT 1
FDNS	02ALL	2	25SP	G14_038	FROM->TO	POTTER COUNTY INTERCHANGE (WAUK 90343-A) 345/230/13.2KV TRANSFORMER CKT 1	560	560	0.20029	122.1307	GEN524287 1-GS-PHWD_GEN10.6900
FDNS	02ALL	2	25SP	G14_038	FROM->TO	POTTER COUNTY INTERCHANGE (WAUK 90343-A) 345/230/13.2KV TRANSFORMER CKT 1	560	560	0.20029	122.1303	GEN335206 1-NELSON UNIT 6
FDNS	02ALL	2	25SP	G14_038	FROM->TO	POTTER COUNTY INTERCHANGE (WAUK 90343-A) 345/230/13.2KV TRANSFORMER CKT 1	560	560	0.19961	122.1246	TUCO_2 345.00 (TUCO_2 XFMR) 345/230/13.2KV TRANSFORMER CKT 1
FDNS	02ALL	2	25SP	G14_038	FROM->TO	POTTER COUNTY INTERCHANGE (WAUK 90343-A) 345/230/13.2KV TRANSFORMER CKT 1	560	560	0.2004	122.1213	MARTIN SUB - PANTEX NORTH SUB 115KV CKT 1
FDNS	02ALL	2	25SP	G14_038	FROM->TO	POTTER COUNTY INTERCHANGE (WAUK 90343-A) 345/230/13.2KV TRANSFORMER CKT 1	560	560	0.2004	122.1213	MARTIN SUB - PANTEX NORTH SUB 115KV CKT 1
FDNS	02ALL	2	25SP	G14_038	FROM->TO	POTTER COUNTY INTERCHANGE (WAUK 90343-A) 345/230/13.2KV TRANSFORMER CKT 1	560	560	0.20693	122.1201	BUCKNER7 345.00 - SPEARVILLE 345KV CKT 1
FDNS	02ALL	2	25SP	G14_038	FROM->TO	POTTER COUNTY INTERCHANGE (WAUK 90343-A) 345/230/13.2KV TRANSFORMER CKT 1	560	560	0.20693	122.1201	BUCKNER7 345.00 - SPEARVILLE 345KV CKT 1
FDNS	02ALL	2	25SP	G14_038	FROM->TO	POTTER COUNTY INTERCHANGE (WAUK 90343-A) 345/230/13.2KV TRANSFORMER CKT 1	560	560	0.20029	122.1187	GEN336831 1-BAXTER WILSON SES
FDNS	02ALL	2	25SP	G14_038	FROM->TO	POTTER COUNTY INTERCHANGE (WAUK 90343-A) 345/230/13.2KV TRANSFORMER CKT 1	560	560	0.20029	122.1179	GEN562655 1-G14_074_3 0.6900
FDNS	02ALL	2	25SP	G14_038	FROM->TO	POTTER COUNTY INTERCHANGE (WAUK 90343-A) 345/230/13.2KV TRANSFORMER CKT 1	560	560	0.20024	122.1177	BEARCAT 138.00 - NINE MILE 138KV CKT 1
FDNS	02ALL	2	25SP	G14_038	FROM->TO	POTTER COUNTY INTERCHANGE (WAUK 90343-A) 345/230/13.2KV TRANSFORMER CKT 1	560	560	0.20029	122.1175	GEN562762 1-G15033_3 0.6900
FDNS	02ALL	2	25SP	G14_038	FROM->TO	POTTER COUNTY INTERCHANGE (WAUK 90343-A) 345/230/13.2KV TRANSFORMER CKT 1	560	560	0.2004	122.116	PANTEX NORTH SUB - PANTEX SOUTH SUB 115KV CKT 1
FDNS	02ALL	2	25SP	G14_038	FROM->TO	POTTER COUNTY INTERCHANGE (WAUK 90343-A) 345/230/13.2KV TRANSFORMER CKT 1	560	560	0.2004	122.116	PANTEX NORTH SUB - PANTEX SOUTH SUB 115KV CKT 1
FDNS	02ALL	2	25SP	G14_038	FROM->TO	POTTER COUNTY INTERCHANGE (WAUK 90343-A) 345/230/13.2KV TRANSFORMER CKT 1	560	560	0.2004	122.1097	HIGHLAND PARK TAP - PANTEX SOUTH SUB 115KV CKT 1
FDNS	02ALL	2	25SP	G14_038	FROM->TO	POTTER COUNTY INTERCHANGE (WAUK 90343-A) 345/230/13.2KV TRANSFORMER CKT 1	560	560	0.20029	122.1058	GEN524485 1-CAPROCK WIND GEN
FDNS	02ALL	2	25SP	G14_038	FROM->TO	POTTER COUNTY INTERCHANGE (WAUK 90343-A) 345/230/13.2KV TRANSFORMER CKT 1	560	560	0.20029	122.1046	GEN523815 1-LLANO ESTACADO WIND GEN
FDNS	02ALL	2	25SP	G14_038	FROM->TO	POTTER COUNTY INTERCHANGE (WAUK 90343-A) 345/230/13.2KV TRANSFORMER CKT 1	560	560	0.20024	122.1041	P12:138:WFEC:MSL14
FDNS	02ALL	2	25SP	G14_038	FROM->TO	POTTER COUNTY INTERCHANGE (WAUK 90343-A) 345/230/13.2KV TRANSFORMER CKT 1	560	560	0.20029	122.0818	GEN338146 1-INDEPENDENCE UNIT #2
FDNS	02ALL	2	25SP	G14_038	FROM->TO	POTTER COUNTY INTERCHANGE (WAUK 90343-A) 345/230/13.2KV TRANSFORMER CKT 1	560	560	0.20093	122.0699	DUMAS SUB - RB-S&S 3115.00 115KV CKT 1

SOLUTION	GROUP	SCENARIO	SEASON	SOURCE	DIRECTION	MONITORED ELEMENT	RATEA (MVA)	RATEB(MVA)	TDF	TC%LOADING (% MVA)	CONTINGENCY
FDNS	02ALL	2	25SP	G14_038	FROM->TO	POTTER COUNTY INTERCHANGE (WAUK 90343-A) 345/230/13.2KV TRANSFORMER CKT 1	560	560	0.20029	122.0693	GEN501812 1-RODEMACHER UNIT 2
FDNS	02ALL	2	25SP	G14_038	FROM->TO	POTTER COUNTY INTERCHANGE (WAUK 90343-A) 345/230/13.2KV TRANSFORMER CKT 1	560	560	0.20136	122.0599	G1524G1525 345.00 - THISTLE7 345.00 345KV CKT 1
FDNS	02ALL	2	25SP	G14_038	FROM->TO	POTTER COUNTY INTERCHANGE (WAUK 90343-A) 345/230/13.2KV TRANSFORMER CKT 1	560	560	0.20136	122.0599	G1524G1525 345.00 - THISTLE7 345.00 345KV CKT 2
FDNS	02ALL	2	25SP	G14_038	FROM->TO	POTTER COUNTY INTERCHANGE (WAUK 90343-A) 345/230/13.2KV TRANSFORMER CKT 1	560	560	0.20054	122.0527	TUCO INTERCHANGE - TUCO_2 345.00 345KV CKT 1
FDNS	02ALL	2	25SP	G14_038	FROM->TO	POTTER COUNTY INTERCHANGE (WAUK 90343-A) 345/230/13.2KV TRANSFORMER CKT 1	560	560	0.20029	122.0523	GEN337041 1-GERALD ANDRUS
FDNS	02ALL	2	25SP	G14_038	FROM->TO	POTTER COUNTY INTERCHANGE (WAUK 90343-A) 345/230/13.2KV TRANSFORMER CKT 1	560	560	0.20029	122.0479	GRAND GULF 500/22.0KV TRANSFORMER CKT 1
FDNS	02ALL	2	25SP	G14_038	FROM->TO	POTTER COUNTY INTERCHANGE (WAUK 90343-A) 345/230/13.2KV TRANSFORMER CKT 1	560	560	0.20029	122.0466	GEN338143 1-INDEPENDENCE UNIT #1
FDNS	02ALL	2	25SP	G14_038	FROM->TO	POTTER COUNTY INTERCHANGE (WAUK 90343-A) 345/230/13.2KV TRANSFORMER CKT 1	560	560	0.20029	122.0417	GEN562699 1-G15_018_3 0.6900
FDNS	02ALL	2	25SP	G14_038	FROM->TO	POTTER COUNTY INTERCHANGE (WAUK 90343-A) 345/230/13.2KV TRANSFORMER CKT 1	560	560	0.20025	122.0398	P12:138:WFEC:MSL15
FDNS	02ALL	2	25SP	G14_038	FROM->TO	POTTER COUNTY INTERCHANGE (WAUK 90343-A) 345/230/13.2KV TRANSFORMER CKT 1	560	560	0.20004	122.0373	SUNDOWN INTERCHANGE - WOLFFORTH INTERCHANGE 230KV CKT 1
FDNS	02ALL	2	25SP	G14_038	FROM->TO	POTTER COUNTY INTERCHANGE (WAUK 90343-A) 345/230/13.2KV TRANSFORMER CKT 1	560	560	0.20004	122.0373	SUNDOWN INTERCHANGE - WOLFFORTH INTERCHANGE 230KV CKT 1
FDNS	02ALL	2	25SP	G14_038	FROM->TO	POTTER COUNTY INTERCHANGE (WAUK 90343-A) 345/230/13.2KV TRANSFORMER CKT 1	560	560	0.20029	122.0334	GEN334441 1-SABINE UNIT 5
FDNS	02ALL	2	25SP	G14_038	FROM->TO	POTTER COUNTY INTERCHANGE (WAUK 90343-A) 345/230/13.2KV TRANSFORMER CKT 1	560	560	0.20024	122.0198	CARLISLE INTERCHANGE - TUCO INTERCHANGE 230KV CKT 1
FDNS	02ALL	2	25SP	G14_038	FROM->TO	POTTER COUNTY INTERCHANGE (WAUK 90343-A) 345/230/13.2KV TRANSFORMER CKT 1	560	560	0.20024	122.0198	CARLISLE INTERCHANGE - TUCO INTERCHANGE 230KV CKT 1
FDNS	02ALL	2	25SP	G14_038	FROM->TO	POTTER COUNTY INTERCHANGE (WAUK 90343-A) 345/230/13.2KV TRANSFORMER CKT 1	560	560	0.1999	122.0123	TUCO INTERCHANGE (SIEM 8743066) 345/230/13.2KV TRANSFORMER CKT 2
FDNS	02ALL	2	25SP	G14_038	FROM->TO	POTTER COUNTY INTERCHANGE (WAUK 90343-A) 345/230/13.2KV TRANSFORMER CKT 1	560	560	0.1999	122.0123	TUCO INTERCHANGE (SIEM 8743066) 345/230/13.2KV TRANSFORMER CKT 2
FDNS	02ALL	2	25SP	G14_038	FROM->TO	POTTER COUNTY INTERCHANGE (WAUK 90343-A) 345/230/13.2KV TRANSFORMER CKT 1	560	560	0.20029	122.011	GEN335204 1-NELSON UNIT 4
FDNS	02ALL	2	25SP	G14_038	FROM->TO	POTTER COUNTY INTERCHANGE (WAUK 90343-A) 345/230/13.2KV TRANSFORMER CKT 1	560	560	0.20029	122.0084	GEN563122 1-G15077_3 0.3850
FDNS	02ALL	2	25SP	G14_038	FROM->TO	POTTER COUNTY INTERCHANGE (WAUK 90343-A) 345/230/13.2KV TRANSFORMER CKT 1	560	560	0.20029	121.967	GEN527163 1-MUSTANG GEN #3 22 KV
FDNS	02ALL	2	25SP	G14_038	FROM->TO	POTTER COUNTY INTERCHANGE (WAUK 90343-A) 345/230/13.2KV TRANSFORMER CKT 1	560	560	0.20029	121.7505	GEN527161 1-MUSTANG GEN #1
FDNS	02ALL	2	25SP	G14_038	FROM->TO	POTTER COUNTY INTERCHANGE (WAUK 90343-A) 345/230/13.2KV TRANSFORMER CKT 1	560	560	0.20029	121.7505	GEN527162 1-MUSTANG GEN #2
FDNS	02ALL	2	25SP	G14_038	FROM->TO	POTTER COUNTY INTERCHANGE (WAUK 90343-A) 345/230/13.2KV TRANSFORMER CKT 1	560	560	0.21895	121.6053	FINNEY SWITCHING STATION - WALKTAP7 345.00 345KV CKT 1
FDNS	02ALL	2	25SP	G14_038	FROM->TO	POTTER COUNTY INTERCHANGE (WAUK 90343-A) 345/230/13.2KV TRANSFORMER CKT 1	560	560	0.21895	121.6053	FINNEY SWITCHING STATION - WALKTAP7 345.00 345KV CKT 1
FDNS	02ALL	2	25SP	G14_038	FROM->TO	POTTER COUNTY INTERCHANGE (WAUK 90343-A) 345/230/13.2KV TRANSFORMER CKT 1	560	560	0.20029	121.5149	GEN527164 1-MUSTANG GEN #4 22 KV
FDNS	02ALL	2	25SP	G14_038	FROM->TO	POTTER COUNTY INTERCHANGE (WAUK 90343-A) 345/230/13.2KV TRANSFORMER CKT 1	560	560	0.20029	121.5089	GEN527165 1-Mustang Gen #5
FDNS	02ALL	2	25SP	G14_038	FROM->TO	POTTER COUNTY INTERCHANGE (WAUK 90343-A) 345/230/13.2KV TRANSFORMER CKT 1	560	560	0.20029	121.4654	2109-BUSHLAND INTERCHANGE
FDNS	02ALL	2	25SP	G14_038	FROM->TO	POTTER COUNTY INTERCHANGE (WAUK 90343-A) 345/230/13.2KV TRANSFORMER CKT 1	560	560	0.20029	121.4654	BASE CASE
FDNS	02ALL	2	25SP	G14_038	FROM->TO	POTTER COUNTY INTERCHANGE (WAUK 90343-A) 345/230/13.2KV TRANSFORMER CKT 1	560	560	0.19992	121.3464	TUCO INTERCHANGE - YOAKUM_345 345.00 345KV CKT 1
FDNS	02ALL	2	25SP	G14_038	FROM->TO	POTTER COUNTY INTERCHANGE (WAUK 90343-A) 345/230/13.2KV TRANSFORMER CKT 1	560	560	0.20693	121.1696	BUCKNER7 345.00 - HOLCOMB 345KV CKT 1
FDNS	02ALL	2	25SP	G14_038	FROM->TO	POTTER COUNTY INTERCHANGE (WAUK 90343-A) 345/230/13.2KV TRANSFORMER CKT 1	560	560	0.20693	121.1696	BUCKNER7 345.00 - HOLCOMB 345KV CKT 1
FDNS	02ALL	2	25SP	G14_038	FROM->TO	POTTER COUNTY INTERCHANGE (WAUK 90343-A) 345/230/13.2KV TRANSFORMER CKT 1	560	560	0.20029	121.1108	GEN523942 1-MAJSTC-WTG210.6900
FDNS	02ALL	2	25SP	G14_038	FROM->TO	POTTER COUNTY INTERCHANGE (WAUK 90343-A) 345/230/13.2KV TRANSFORMER CKT 1	560	560	0.20029	121.1099	GEN527884 1-CUNNINGHAM GEN #4 22 KV
FDNS	02ALL	2	25SP	G14_038	FROM->TO	POTTER COUNTY INTERCHANGE (WAUK 90343-A) 345/230/13.2KV TRANSFORMER CKT 1	560	560	0.20029	121.1037	GEN523941 1-MAJSTC-WTG110.6900
FDNS	02ALL	2	25SP	G14_038	FROM->TO	POTTER COUNTY INTERCHANGE (WAUK 90343-A) 345/230/13.2KV TRANSFORMER CKT 1	560	560	0.20029	121.1008	GEN527883 1-CUNNINGHAM GEN #3 22 KV
FDNS	02ALL	2	25SP	G14_038	FROM->TO	POTTER COUNTY INTERCHANGE (WAUK 90343-A) 345/230/13.2KV TRANSFORMER CKT 1	560	560	0.2011	120.9435	HITCHLAND INTERCHANGE - OCHILTREE 230KV CKT 1
FDNS	02ALL	2	25SP	G14_038	FROM->TO	POTTER COUNTY INTERCHANGE (WAUK 90343-A) 345/230/13.2KV TRANSFORMER CKT 1	560	560	0.2011	120.9435	HITCHLAND INTERCHANGE - OCHILTREE 230KV CKT 1
FDNS	02ALL	2	25SP	G14_038	FROM->TO	POTTER COUNTY INTERCHANGE (WAUK 90343-A) 345/230/13.2KV TRANSFORMER CKT 1	560	560	0.20029	120.9251	GEN515266 1-AES 1G
FDNS	02ALL	2	25SP	G14_038	FROM->TO	POTTER COUNTY INTERCHANGE (WAUK 90343-A) 345/230/13.2KV TRANSFORMER CKT 1	560	560	0.20029	120.9251	GEN515267 1-AES 2G
FDNS	02ALL	2	25SP	G14_038	FROM->TO	POTTER COUNTY INTERCHANGE (WAUK 90343-A) 345/230/13.2KV TRANSFORMER CKT 1	560	560	0.20029	120.9242	GEN640020 2-SHELDON STATION UNIT 2
FDNS	02ALL	2	25SP	G14_038	FROM->TO	POTTER COUNTY INTERCHANGE (WAUK 90343-A) 345/230/13.2KV TRANSFORMER CKT 1	560	560	0.20029	120.923	GEN532662 1-LAWRENCE ENERGY CENTER UNIT 4
FDNS	02ALL	2	25SP	G14_038	FROM->TO	POTTER COUNTY INTERCHANGE (WAUK 90343-A) 345/230/13.2KV TRANSFORMER CKT 1	560	560	0.20029	120.9224	GEN542961 6-HAWTHORN COMBUSTION TURBINE #6
FDNS	02ALL	2	25SP	G14_038	FROM->TO	POTTER COUNTY INTERCHANGE (WAUK 90343-A) 345/230/13.2KV TRANSFORMER CKT 1	560	560	0.2011	120.9216	OCHILTREE (H TP80219401) 230/115/13.2KV TRANSFORMER CKT 1
FDNS	02ALL	2	25SP	G14_038	FROM->TO	POTTER COUNTY INTERCHANGE (WAUK 90343-A) 345/230/13.2KV TRANSFORMER CKT 1	560	560	0.2011	120.9216	OCHILTREE (H TP80219401) 230/115/13.2KV TRANSFORMER CKT 1
FDNS	02ALL	2	25SP	G14_038	FROM->TO	POTTER COUNTY INTERCHANGE (WAUK 90343-A) 345/230/13.2KV TRANSFORMER CKT 1	560	560	0.20003	120.9212	G13_027T 230.00 - TOLK STATION WEST 230KV CKT 1
FDNS	02ALL	2	25SP	G14_038	FROM->TO	POTTER COUNTY INTERCHANGE (WAUK 90343-A) 345/230/13.2KV TRANSFORMER CKT 1	560	560	0.20029	120.917	GEN511939 1-OEC GAS # 1-1
FDNS	02ALL	2	25SP	G14_038	FROM->TO	POTTER COUNTY INTERCHANGE (WAUK 90343-A) 345/230/13.2KV TRANSFORMER CKT 1	560	560	0.20029	120.917	GEN511940 1-OEC GAS # 1-2
FDNS	02ALL	2	25SP	G14_038	FROM->TO	POTTER COUNTY INTERCHANGE (WAUK 90343-A) 345/230/13.2KV TRANSFORMER CKT 1	560	560	0.20029	120.9159	GEN640019 1-SHELDON STATION UNIT 1
FDNS	02ALL	2	25SP	G14_038	FROM->TO	POTTER COUNTY INTERCHANGE (WAUK 90343-A) 345/230/13.2KV TRANSFORMER CKT 1	560	560	0.20029	120.9156	GEN645033 3-SARPY COUNTY 3
FDNS	02ALL	2	25SP	G14_038	FROM->TO	POTTER COUNTY INTERCHANGE (WAUK 90343-A) 345/230/13.2KV TRANSFORMER CKT 1	560	560	0.20029	120.9137	GEN509408 1-WILKES #2
FDNS	02ALL	2	25SP	G14_038	FROM->TO	POTTER COUNTY INTERCHANGE (WAUK 90343-A) 345/230/13.2KV TRANSFORMER CKT 1	560	560	0.20029	120.911	GEN531462 5-S5 GENERATOR
FDNS	02ALL	2	25SP	G14_038	FROM->TO	POTTER COUNTY INTERCHANGE (WAUK 90343-A) 345/230/13.2KV TRANSFORMER CKT 1	560	560	0.20029	120.9081	GEN657748 1-YOUNG 2 GENERATOR
FDNS	02ALL	2	25SP	G14_038	FROM->TO	POTTER COUNTY INTERCHANGE (WAUK 90343-A) 345/230/13.2KV TRANSFORMER CKT 1	560	560	0.20029	120.9031	GEN600006 1-AS KING
FDNS	02ALL	2	25SP	G14_038	FROM->TO	POTTER COUNTY INTERCHANGE (WAUK 90343-A) 345/230/13.2KV TRANSFORMER CKT 1	560	560	0.20029	120.9013	GEN547642 1-RIVERTON GEN #12
FDNS	02ALL	2	25SP	G14_038	FROM->TO	POTTER COUNTY INTERCHANGE (WAUK 90343-A) 345/230/13.2KV TRANSFORMER CKT 1	560	560	0.19869	120.8907	CONWAY SUB - KIRBY SWITCHING STATION 115KV CKT 1
FDNS	02ALL	2	25SP	G14_038	FROM->TO	POTTER COUNTY INTERCHANGE (WAUK 90343-A) 345/230/13.2KV TRANSFORMER CKT 1	560	560	0.19998	120.8854	CARGILL SUB - FRIONA SUB 115KV CKT 1
FDNS	02ALL	2	25SP	G14_038	FROM->TO	POTTER COUNTY INTERCHANGE (WAUK 90343-A) 345/230/13.2KV TRANSFORMER CKT 1	560	560	0.19997	120.8838	KINGSMILL INTERCHANGE - LLANO ESTACADO WIND GEN 115KV CKT 1
FDNS	02ALL	2	25SP	G14_038	FROM->TO	POTTER COUNTY INTERCHANGE (WAUK 90343-A) 345/230/13.2KV TRANSFORMER CKT 1	560	560	0.20029	120.8773	GEN511953 G-COGENTRIX GAS # 1
FDNS	02ALL	2	25SP	G14_038	FROM->TO	POTTER COUNTY INTERCHANGE (WAUK 90343-A) 345/230/13.2KV TRANSFORMER CKT 1	560	560	0.20029	120.8769	GEN546698 1-QN GEN2
FDNS	02ALL	2	25SP	G14_038	FROM->TO	POTTER COUNTY INTERCHANGE (WAUK 90343-A) 345/230/13.2KV TRANSFORMER CKT 1	560	560	0.20029	120.871	GEN547656 1-STATE LINE UNIT #2
FDNS	02ALL	2	25SP	G14_038	FROM->TO	POTTER COUNTY INTERCHANGE (WAUK 90343-A) 345/230/13.2KV TRANSFORMER CKT 1	560	560	0.20029	120.871	GEN547657 1-STATE LINE UNIT #3
FDNS	02ALL	2	25SP	G14_038	FROM->TO	POTTER COUNTY INTERCHANGE (WAUK 90343-A) 345/230/13.2KV TRANSFORMER CKT 1	560	560	0.20029	120.8597	GEN542967 9-HAWTHORN UNIT #9
FDNS	02ALL	2	25SP	G14_038	FROM->TO	POTTER COUNTY INTERCHANGE (WAUK 90343-A) 345/230/13.2KV TRANSFORMER CKT 1	560	560	0.1991	120.8597	KIRBY SWITCHING STATION - MCCLELLAN SUB 115KV CKT 1
FDNS	02ALL	2	25SP	G14_038	FROM->TO	POTTER COUNTY INTERCHANGE (WAUK 90343-A) 345/230/13.2KV TRANSFORMER CKT 1	560	560	0.1991	120.8557	MCCLELLAN SUB - MCLEAN RURAL SUB 115KV CKT 1
FDNS	02ALL	2	25SP	G14_038	FROM->TO	POTTER COUNTY INTERCHANGE (WAUK 90343-A) 345/230/13.2KV TRANSFORMER CKT 1	560	560	0.20029	120.8556	GEN659018 1-G14_003IS_3 0.6900
FDNS	02ALL	2	25SP	G14_038	FROM->TO	POTTER COUNTY INTERCHANGE (WAUK 90343-A) 345/230/13.2KV TRANSFORMER CKT 1	560	560	0.20024	120.8436	EAST PLANT INTERCHANGE (WH ALM21481) 230/115/13.2KV TRANSFORMER CKT 1
FDNS	02ALL	2	25SP	G14_038	FROM->TO	POTTER COUNTY INTERCHANGE (WAUK 90343-A) 345/230/13.2KV TRANSFORMER CKT 1	560	560	0.20024	120.8436	EAST PLANT INTERCHANGE (WH ALM21481) 230/115/13.2KV TRANSFORMER CKT 1
FDNS	02ALL	2	25SP	G14_038	FROM->TO	POTTER COUNTY INTERCHANGE (WAUK 90343-A) 345/230/13.2KV TRANSFORMER CKT 1	560	560	0.20024	120.8432	EAST PLANT INTERCHANGE - HARRINGTON STATION 230KV CKT 1
FDNS	02ALL	2	25SP	G14_038	FROM->TO	POTTER COUNTY INTERCHANGE (WAUK 90343-A) 345/230/13.2KV TRANSFORMER CKT 1	560	560	0.20024	120.8432	EAST PLANT INTERCHANGE - HARRINGTON STATION 230KV CKT 1
FDNS	02ALL	2	25SP	G14_038	FROM->TO	POTTER COUNTY INTERCHANGE (WAUK 90343-A) 345/230/13.2KV TRANSFORMER CKT 1	560	560	0.20016	120.8384	CROSSROADS 7345.00 - TOLK STATION 345KV CKT 1
FDNS	02ALL	2	25SP	G14_038	FROM->TO	POTTER COUNTY INTERCHANGE (WAUK 90343-A) 345/230/13.2KV TRANSFORMER CKT 1	560	560	0.20029	120.8359	GEN635213 3-NEAL UNIT 3
FDNS	02ALL	2	25SP	G14_038	FROM->TO	POTTER COUNTY INTERCHANGE (WAUK 90343-A) 345/230/13.2KV TRANSFORMER CKT 1	560	560	0.20016	120.8312	TOLK STATION (ABBXNL844501) 345/230/13.2KV TRANSFORMER CKT 1
FDNS	02ALL	2	25SP	G14_038	FROM->TO	POTTER COUNTY INTERCHANGE (WAUK 90343-A) 345/230/13.2KV TRANSFORMER CKT 1	560	560	0.20016	120.8312	TOLK STATION (ABBXNL844501) 345/230/13.2KV TRANSFORMER CKT 1
FDNS	02ALL	2	25SP	G14_038	FROM->TO	POTTER COUNTY INTERCHANGE (WAUK 90343-A) 345/230/13.2KV TRANSFORMER CKT 1	560	560	0.20029	120.8276	GEN300020 1-1CHOTCT4 16.000
FDNS	02ALL	2	25SP	G14_038	FROM->TO	POTTER COUNTY INTERCHANGE (WAUK 90343-A) 345/230/13.2KV TRANSFORMER CKT 1	560	560	0.20029	120.8276	GEN300021 1-1CHOTCT5 16.000
FDNS	02ALL	2	25SP	G14_038	FROM->TO	POTTER COUNTY INTERCHANGE (WAUK 90343-A) 345/230/13.2KV TRANSFORMER CKT 1	560	560	0.20029	120.8275	GEN300032 1-CHOUTEAU CTG 2
FDNS	02ALL	2	25SP	G14_038	FROM->TO	POTTER COUNTY INTERCHANGE (WAUK 90343-A) 345/230/13.2KV TRANSFORMER CKT 1	560	560	0.20029	120.8275	GEN300033 1-CHOUTEAU STG 3
FDNS	02ALL	2	25SP	G14_038	FROM->TO	POTTER COUNTY INTERCHANGE (WAUK 90343-A) 345/230/13.2KV TRANSFORMER CKT 1	560	560	0.20029	120.8272	GEN523462 1-BLACKHAWK GEN #2
FDNS	02ALL	2	25SP	G14_038	FROM->TO	POTTER COUNTY INTERCHANGE (WAUK 90343-A) 345/230/13.2KV TRANSFORMER CKT 1	560	560	0.20029	120.8268	GEN523461 1-BLACKHAWK GEN #1
FDNS	02ALL	2	25SP	G14_038	FROM->TO	POTTER COUNTY INTERCHANGE (WAUK 90343-A) 345/230/13.2KV TRANSFORMER CKT 1	560	560	0.20029	120.8256	GEN539677 3-A. M. MULLERGREN GENERATOR

SOLUTION	GROUP	SCENARIO	SEASON	SOURCE	DIRECTION	MONITORED ELEMENT	RATEA (MVA)	RATEB(MVA)	TDF	TC%LOADING (% MVA)	CONTINGENCY
FDNS	02ALL	2	25SP	G14_038	FROM->TO	POTTER COUNTY INTERCHANGE (WAUK 90343-A) 345/230/13.2KV TRANSFORMER CKT 1	560	560	0.20029	120.8223	GEN652559 1-OAHE
FDNS	02ALL	2	25SP	G14_038	FROM->TO	POTTER COUNTY INTERCHANGE (WAUK 90343-A) 345/230/13.2KV TRANSFORMER CKT 1	560	560	0.20029	120.8131	GEN659289 1-DAYCNTYWND W0.6900
FDNS	02ALL	2	25SP	G14_038	FROM->TO	POTTER COUNTY INTERCHANGE (WAUK 90343-A) 345/230/13.2KV TRANSFORMER CKT 1	560	560	0.20029	120.8115	GEN520947 1-HUGO1
FDNS	02ALL	2	25SP	G14_038	FROM->TO	POTTER COUNTY INTERCHANGE (WAUK 90343-A) 345/230/13.2KV TRANSFORMER CKT 1	560	560	0.20029	120.805	GEN539653 1-CIMARRON RIVER PLANT GENERATOR
FDNS	02ALL	2	25SP	G14_038	FROM->TO	POTTER COUNTY INTERCHANGE (WAUK 90343-A) 345/230/13.2KV TRANSFORMER CKT 1	560	560	0.20029	120.8039	GEN528361 1-MADDOX GEN #1
FDNS	02ALL	2	25SP	G14_038	FROM->TO	POTTER COUNTY INTERCHANGE (WAUK 90343-A) 345/230/13.2KV TRANSFORMER CKT 1	560	560	0.20029	120.8035	GEN300024 1-1CHOTST6 16.000
FDNS	02ALL	2	25SP	G14_038	FROM->TO	POTTER COUNTY INTERCHANGE (WAUK 90343-A) 345/230/13.2KV TRANSFORMER CKT 1	560	560	0.20029	120.8035	GEN300031 1-CHOUTEAU CTG 1
FDNS	02ALL	2	25SP	G14_038	FROM->TO	POTTER COUNTY INTERCHANGE (WAUK 90343-A) 345/230/13.2KV TRANSFORMER CKT 1	560	560	0.20029	120.8032	GEN532672 1-TECUMSEH ENERGY CENTER UNIT 8
FDNS	02ALL	2	25SP	G14_038	FROM->TO	POTTER COUNTY INTERCHANGE (WAUK 90343-A) 345/230/13.2KV TRANSFORMER CKT 1	560	560	0.20029	120.7972	GEN652556 2-OAHE
FDNS	02ALL	2	25SP	G14_038	FROM->TO	POTTER COUNTY INTERCHANGE (WAUK 90343-A) 345/230/13.2KV TRANSFORMER CKT 1	560	560	0.20029	120.7972	GEN652557 4-OAHE
FDNS	02ALL	2	25SP	G14_038	FROM->TO	POTTER COUNTY INTERCHANGE (WAUK 90343-A) 345/230/13.2KV TRANSFORMER CKT 1	560	560	0.20029	120.7972	GEN652558 6-OAHE
FDNS	02ALL	2	25SP	G14_038	FROM->TO	POTTER COUNTY INTERCHANGE (WAUK 90343-A) 345/230/13.2KV TRANSFORMER CKT 1	560	560	0.20029	120.7965	GEN652460 4-GARRISON
FDNS	02ALL	2	25SP	G14_038	FROM->TO	POTTER COUNTY INTERCHANGE (WAUK 90343-A) 345/230/13.2KV TRANSFORMER CKT 1	560	560	0.20029	120.7965	GEN652461 5-GARRISON
FDNS	02ALL	2	25SP	G14_038	FROM->TO	POTTER COUNTY INTERCHANGE (WAUK 90343-A) 345/230/13.2KV TRANSFORMER CKT 1	560	560	0.20029	120.7943	GEN652457 1-GARRISON
FDNS	02ALL	2	25SP	G14_038	FROM->TO	POTTER COUNTY INTERCHANGE (WAUK 90343-A) 345/230/13.2KV TRANSFORMER CKT 1	560	560	0.20029	120.7943	GEN652458 2-GARRISON
FDNS	02ALL	2	25SP	G14_038	FROM->TO	POTTER COUNTY INTERCHANGE (WAUK 90343-A) 345/230/13.2KV TRANSFORMER CKT 1	560	560	0.20029	120.7943	GEN652459 3-GARRISON
FDNS	02ALL	2	25SP	G14_038	FROM->TO	POTTER COUNTY INTERCHANGE (WAUK 90343-A) 345/230/13.2KV TRANSFORMER CKT 1	560	560	0.19998	120.7909	DEAF SMITH REC-#6 - FRIONA SUB 115KV CKT 1
FDNS	02ALL	2	25SP	G14_038	FROM->TO	POTTER COUNTY INTERCHANGE (WAUK 90343-A) 345/230/13.2KV TRANSFORMER CKT 1	560	560	0.20029	120.7902	GEN645024 4-NORTH OMAHA 4
FDNS	02ALL	2	25SP	G14_038	FROM->TO	POTTER COUNTY INTERCHANGE (WAUK 90343-A) 345/230/13.2KV TRANSFORMER CKT 1	560	560	0.19998	120.783	DEAF SMITH REC-#6 - HEREFORD INTERCHANGE 115KV CKT 1
FDNS	02ALL	2	25SP	G14_038	FROM->TO	POTTER COUNTY INTERCHANGE (WAUK 90343-A) 345/230/13.2KV TRANSFORMER CKT 1	560	560	0.20029	120.7821	BIG STONE 230/24.0KV TRANSFORMER CKT 1
FDNS	02ALL	2	25SP	G14_038	FROM->TO	POTTER COUNTY INTERCHANGE (WAUK 90343-A) 345/230/13.2KV TRANSFORMER CKT 1	560	560	0.20029	120.7787	GEN600001 2-SHERBURNE CNTY G2
FDNS	02ALL	2	25SP	G14_038	FROM->TO	POTTER COUNTY INTERCHANGE (WAUK 90343-A) 345/230/13.2KV TRANSFORMER CKT 1	560	560	0.20029	120.7786	GEN600005 1-MONTICELLO
FDNS	02ALL	2	25SP	G14_038	FROM->TO	POTTER COUNTY INTERCHANGE (WAUK 90343-A) 345/230/13.2KV TRANSFORMER CKT 1	560	560	0.20029	120.7723	GEN532742 5-EMPORIA ENERGY CENTER UNIT 5
FDNS	02ALL	2	25SP	G14_038	FROM->TO	POTTER COUNTY INTERCHANGE (WAUK 90343-A) 345/230/13.2KV TRANSFORMER CKT 1	560	560	0.20003	120.7688	G13_027T 230.00 - YOAKUM COUNTY INTERCHANGE 230KV CKT 1
FDNS	02ALL	2	25SP	G14_038	FROM->TO	POTTER COUNTY INTERCHANGE (WAUK 90343-A) 345/230/13.2KV TRANSFORMER CKT 1	560	560	0.2001	120.7397	CANYON E_TP3115.00 - CANYON WEST SUB 115KV CKT 1
FDNS	02ALL	2	25SP	G14_038	FROM->TO	POTTER COUNTY INTERCHANGE (WAUK 90343-A) 345/230/13.2KV TRANSFORMER CKT 1	560	560	0.20029	120.7396	GEN640005 1-CANADAY
FDNS	02ALL	2	25SP	G14_038	FROM->TO	POTTER COUNTY INTERCHANGE (WAUK 90343-A) 345/230/13.2KV TRANSFORMER CKT 1	560	560	0.20029	120.7314	GEN600000 1-SHERBURNECNTY G1
FDNS	02ALL	2	25SP	G14_038	FROM->TO	POTTER COUNTY INTERCHANGE (WAUK 90343-A) 345/230/13.2KV TRANSFORMER CKT 1	560	560	0.20029	120.7244	GEN615001 1-COAL CREEK
FDNS	02ALL	2	25SP	G14_038	FROM->TO	POTTER COUNTY INTERCHANGE (WAUK 90343-A) 345/230/13.2KV TRANSFORMER CKT 1	560	560	0.20029	120.7151	GEN615002 2-COAL CREEK
FDNS	02ALL	2	25SP	G14_038	FROM->TO	POTTER COUNTY INTERCHANGE (WAUK 90343-A) 345/230/13.2KV TRANSFORMER CKT 1	560	560	0.19966	120.711	KRESS INTERCHANGE - TULIA TAP 115KV CKT 1
FDNS	02ALL	2	25SP	G14_038	FROM->TO	POTTER COUNTY INTERCHANGE (WAUK 90343-A) 345/230/13.2KV TRANSFORMER CKT 1	560	560	0.20005	120.7088	AMARILLO SOUTH INTERCHANGE - NICHOLS STATION 230KV CKT 1
FDNS	02ALL	2	25SP	G14_038	FROM->TO	POTTER COUNTY INTERCHANGE (WAUK 90343-A) 345/230/13.2KV TRANSFORMER CKT 1	560	560	0.20005	120.7088	AMARILLO SOUTH INTERCHANGE - NICHOLS STATION 230KV CKT 1
FDNS	02ALL	2	25SP	G14_038	FROM->TO	POTTER COUNTY INTERCHANGE (WAUK 90343-A) 345/230/13.2KV TRANSFORMER CKT 1	560	560	0.20029	120.705	GEN549890 1-SOUTHWEST 1
FDNS	02ALL	2	25SP	G14_038	FROM->TO	POTTER COUNTY INTERCHANGE (WAUK 90343-A) 345/230/13.2KV TRANSFORMER CKT 1	560	560	0.20029	120.7019	GEN300017 1-1G2GPDEL 18.000
FDNS	02ALL	2	25SP	G14_038	FROM->TO	POTTER COUNTY INTERCHANGE (WAUK 90343-A) 345/230/13.2KV TRANSFORMER CKT 1	560	560	0.20029	120.7	GEN547649 1-ASBURY UNIT #1
FDNS	02ALL	2	25SP	G14_038	FROM->TO	POTTER COUNTY INTERCHANGE (WAUK 90343-A) 345/230/13.2KV TRANSFORMER CKT 1	560	560	0.19869	120.697	CONWAY SUB - NICHOLS STATION 115KV CKT 1
FDNS	02ALL	2	25SP	G14_038	FROM->TO	POTTER COUNTY INTERCHANGE (WAUK 90343-A) 345/230/13.2KV TRANSFORMER CKT 1	560	560	0.20029	120.6868	GEN511941 1-OEC STEAM # 2
FDNS	02ALL	2	25SP	G14_038	FROM->TO	POTTER COUNTY INTERCHANGE (WAUK 90343-A) 345/230/13.2KV TRANSFORMER CKT 1	560	560	0.20029	120.6849	GEN532725 1-EVANS ENERGY CENTER GAS TURBINE 3
FDNS	02ALL	2	25SP	G14_038	FROM->TO	POTTER COUNTY INTERCHANGE (WAUK 90343-A) 345/230/13.2KV TRANSFORMER CKT 1	560	560	0.20029	120.6796	GEN547658 1-STATE LINE COMBINED CYCLE
FDNS	02ALL	2	25SP	G14_038	FROM->TO	POTTER COUNTY INTERCHANGE (WAUK 90343-A) 345/230/13.2KV TRANSFORMER CKT 1	560	560	0.20029	120.678	GEN514939 1-HORSESHOE LAKE 8G
FDNS	02ALL	2	25SP	G14_038	FROM->TO	POTTER COUNTY INTERCHANGE (WAUK 90343-A) 345/230/13.2KV TRANSFORMER CKT 1	560	560	0.20029	120.6761	GEN511938 1-OEC STEAM # 1
FDNS	02ALL	2	25SP	G14_038	FROM->TO	POTTER COUNTY INTERCHANGE (WAUK 90343-A) 345/230/13.2KV TRANSFORMER CKT 1	560	560	0.20029	120.6678	GEN300016 1-1G1GPDEL 18.000
FDNS	02ALL	2	25SP	G14_038	FROM->TO	POTTER COUNTY INTERCHANGE (WAUK 90343-A) 345/230/13.2KV TRANSFORMER CKT 1	560	560	0.20029	120.6644	GEN532721 1-EVANS ENERGY CENTER UNIT 1
FDNS	02ALL	2	25SP	G14_038	FROM->TO	POTTER COUNTY INTERCHANGE (WAUK 90343-A) 345/230/13.2KV TRANSFORMER CKT 1	560	560	0.20029	120.6554	GEN532743 6-EMPORIA ENERGY CENTER UNIT 6
FDNS	02ALL	2	25SP	G14_038	FROM->TO	POTTER COUNTY INTERCHANGE (WAUK 90343-A) 345/230/13.2KV TRANSFORMER CKT 1	560	560	0.20029	120.6554	GEN532744 7-EMPORIA ENERGY CENTER UNIT 7
FDNS	02ALL	2	25SP	G14_038	FROM->TO	POTTER COUNTY INTERCHANGE (WAUK 90343-A) 345/230/13.2KV TRANSFORMER CKT 1	560	560	0.19966	120.6533	HAPPY INTERCHANGE - TULIA TAP 115KV CKT 1
FDNS	02ALL	2	25SP	G14_038	FROM->TO	POTTER COUNTY INTERCHANGE (WAUK 90343-A) 345/230/13.2KV TRANSFORMER CKT 1	560	560	0.20029	120.6516	GEN659354 1-DEERCREK STG18.000
FDNS	02ALL	2	25SP	G14_038	FROM->TO	POTTER COUNTY INTERCHANGE (WAUK 90343-A) 345/230/13.2KV TRANSFORMER CKT 1	560	560	0.20029	120.6513	GEN659353 1-DEERCREK CTG18.000
FDNS	02ALL	2	25SP	G14_038	FROM->TO	POTTER COUNTY INTERCHANGE (WAUK 90343-A) 345/230/13.2KV TRANSFORMER CKT 1	560	560	0.20029	120.643	GEN513602 1-GRECSTG_1 17.500
FDNS	02ALL	2	25SP	G14_038	FROM->TO	POTTER COUNTY INTERCHANGE (WAUK 90343-A) 345/230/13.2KV TRANSFORMER CKT 1	560	560	0.20014	120.6259	P12:345:SPS:J02.1.TOLK.EDDY
FDNS	02ALL	2	25SP	G14_038	FROM->TO	POTTER COUNTY INTERCHANGE (WAUK 90343-A) 345/230/13.2KV TRANSFORMER CKT 1	560	560	0.20029	120.6228	GEN645041 1-CASS COUNTY 1
FDNS	02ALL	2	25SP	G14_038	FROM->TO	POTTER COUNTY INTERCHANGE (WAUK 90343-A) 345/230/13.2KV TRANSFORMER CKT 1	560	560	0.20029	120.6197	GEN645042 2-CASS COUNTY 2
FDNS	02ALL	2	25SP	G14_038	FROM->TO	POTTER COUNTY INTERCHANGE (WAUK 90343-A) 345/230/13.2KV TRANSFORMER CKT 1	560	560	0.20029	120.5944	GEN635214 4-NEAL UNIT 4
FDNS	02ALL	2	25SP	G14_038	FROM->TO	POTTER COUNTY INTERCHANGE (WAUK 90343-A) 345/230/13.2KV TRANSFORMER CKT 1	560	560	0.20029	120.5891	FINNEY SWITCHING STATION - PSCO LAMAR DC TIE 345KV CKT 1
FDNS	02ALL	2	25SP	G14_038	FROM->TO	POTTER COUNTY INTERCHANGE (WAUK 90343-A) 345/230/13.2KV TRANSFORMER CKT 1	560	560	0.20029	120.5891	FINNEY SWITCHING STATION - PSCO LAMAR DC TIE 345KV CKT 1
FDNS	02ALL	2	25SP	G14_038	FROM->TO	POTTER COUNTY INTERCHANGE (WAUK 90343-A) 345/230/13.2KV TRANSFORMER CKT 1	560	560	0.20029	120.5749	SHERBURNE CO 345/24.0KV TRANSFORMER CKT 1
FDNS	02ALL	2	25SP	G14_038	FROM->TO	POTTER COUNTY INTERCHANGE (WAUK 90343-A) 345/230/13.2KV TRANSFORMER CKT 1	560	560	0.20029	120.5734	GEN541163 1-ARIES COMBUSTION TURBINE #1
FDNS	02ALL	2	25SP	G14_038	FROM->TO	POTTER COUNTY INTERCHANGE (WAUK 90343-A) 345/230/13.2KV TRANSFORMER CKT 1	560	560	0.20029	120.5505	GEN509398 1-KNOXLEE #5
FDNS	02ALL	2	25SP	G14_038	FROM->TO	POTTER COUNTY INTERCHANGE (WAUK 90343-A) 345/230/13.2KV TRANSFORMER CKT 1	560	560	0.20029	120.5494	GEN509409 1-WILKES #3
FDNS	02ALL	2	25SP	G14_038	FROM->TO	POTTER COUNTY INTERCHANGE (WAUK 90343-A) 345/230/13.2KV TRANSFORMER CKT 1	560	560	0.20029	120.5467	GEN600002 3-SHERBURNE CNTY G3
FDNS	02ALL	2	25SP	G14_038	FROM->TO	POTTER COUNTY INTERCHANGE (WAUK 90343-A) 345/230/13.2KV TRANSFORMER CKT 1	560	560	0.20029	120.5459	GEN300001 1-THOMAS HILL UNIT 1
FDNS	02ALL	2	25SP	G14_038	FROM->TO	POTTER COUNTY INTERCHANGE (WAUK 90343-A) 345/230/13.2KV TRANSFORMER CKT 1	560	560	0.20029	120.5277	GEN541162 1-ARIES STEAM TURBINE
FDNS	02ALL	2	25SP	G14_038	FROM->TO	POTTER COUNTY INTERCHANGE (WAUK 90343-A) 345/230/13.2KV TRANSFORMER CKT 1	560	560	0.20016	120.5274	EDDY COUNTY INTERCHANGE (ABB AEM30711) 345/230/13.2KV TRANSFORMER CKT 1
FDNS	02ALL	2	25SP	G14_038	FROM->TO	POTTER COUNTY INTERCHANGE (WAUK 90343-A) 345/230/13.2KV TRANSFORMER CKT 1	560	560	0.20016	120.5274	EDDY COUNTY INTERCHANGE (ABB AEM30711) 345/230/13.2KV TRANSFORMER CKT 1
FDNS	02ALL	2	25SP	G14_038	FROM->TO	POTTER COUNTY INTERCHANGE (WAUK 90343-A) 345/230/13.2KV TRANSFORMER CKT 1	560	560	0.20016	120.5273	P12:345:SPS:J14.1.EDDY.XRDS
FDNS	02ALL	2	25SP	G14_038	FROM->TO	POTTER COUNTY INTERCHANGE (WAUK 90343-A) 345/230/13.2KV TRANSFORMER CKT 1	560	560	0.20029	120.5272	GEN515040 1-SEMINOLE 1G
FDNS	02ALL	2	25SP	G14_038	FROM->TO	POTTER COUNTY INTERCHANGE (WAUK 90343-A) 345/230/13.2KV TRANSFORMER CKT 1	560	560	0.20016	120.5272	CROSSROADS 7345.00 - EDDY COUNTY INTERCHANGE 345KV CKT 1
FDNS	02ALL	2	25SP	G14_038	FROM->TO	POTTER COUNTY INTERCHANGE (WAUK 90343-A) 345/230/13.2KV TRANSFORMER CKT 1	560	560	0.20029	120.5057	GEN635023 3-WALTER SCOTT UNIT 3
FDNS	02ALL	2	25SP	G14_038	FROM->TO	POTTER COUNTY INTERCHANGE (WAUK 90343-A) 345/230/13.2KV TRANSFORMER CKT 1	560	560	0.20029	120.4578	GEN531459 2-S2 GENERATOR
FDNS	02ALL	2	25SP	G14_038	FROM->TO	POTTER COUNTY INTERCHANGE (WAUK 90343-A) 345/230/13.2KV TRANSFORMER CKT 1	560	560	0.20029	120.4532	GEN515592 1-PALDRW21 0.6900
FDNS	02ALL	2	25SP	G14_038	FROM->TO	POTTER COUNTY INTERCHANGE (WAUK 90343-A) 345/230/13.2KV TRANSFORMER CKT 1	560	560	0.20097	120.4221	CHAN/TASCOS6230.00 - POTTER COUNTY INTERCHANGE 230KV CKT 1
FDNS	02ALL	2	25SP	G14_038	FROM->TO	POTTER COUNTY INTERCHANGE (WAUK 90343-A) 345/230/13.2KV TRANSFORMER CKT 1	560	560	0.20029	120.4189	GEN562550 1-G14_040_3 0.6900
FDNS	02ALL	2	25SP	G14_038	FROM->TO	POTTER COUNTY INTERCHANGE (WAUK 90343-A) 345/230/13.2KV TRANSFORMER CKT 1	560	560	0.20029	120.4103	GEN523170 1-GOODWELL_1 10.6900
FDNS	02ALL	2	25SP	G14_038	FROM->TO	POTTER COUNTY INTERCHANGE (WAUK 90343-A) 345/230/13.2KV TRANSFORMER CKT 1	560	560	0.20029	120.404	GEN515041 1-SEMINOLE 2G
FDNS	02ALL	2	25SP	G14_038	FROM->TO	POTTER COUNTY INTERCHANGE (WAUK 90343-A) 345/230/13.2KV TRANSFORMER CKT 1	560	560	0.20029	120.3714	GEN645025 5-NORTH OMAHA 5
FDNS	02ALL	2	25SP	G14_038	FROM->TO	POTTER COUNTY INTERCHANGE (WAUK 90343-A) 345/230/13.2KV TRANSFORMER CKT 1	560	560	0.20029	120.3678	GEN523171 1-GOODWELL_2 10.6900
FDNS	02ALL	2	25SP	G14_038	FROM->TO	POTTER COUNTY INTERCHANGE (WAUK 90343-A) 345/230/13.2KV TRANSFORMER CKT 1	560	560	0.20029	120.3659	GEN515042 1-SEMINOLE 3G
FDNS	02ALL	2	25SP	G14_038	FROM->TO	POTTER COUNTY INTERCHANGE (WAUK 90343-A) 345/230/13.2KV TRANSFORMER CKT 1	560	560	0.20029	120.3656	GEN300010 1-ST FRANCIS UNIT 1
FDNS	02ALL	2	25SP	G14_038	FROM->TO	POTTER COUNTY INTERCHANGE (WAUK 90343-A) 345/230/13.2KV TRANSFORMER CKT 1	560	560	0.20029	120.3619	GEN635024 4-WALTER SCOTT UNIT 4

SOLUTION	GROUP	SCENARIO	SEASON	SOURCE	DIRECTION	MONITORED ELEMENT	RATEA (MVA)	RATEB(MVA)	TDF	TC%LOADING (% MVA)	CONTINGENCY
FDNS	02ALL	2	25SP	G14_038	FROM->TO	POTTER COUNTY INTERCHANGE (WAUK 90343-A) 345/230/13.2KV TRANSFORMER CKT 1	560	560	0.20029	120.3598	GEN549893 2-SOUTHWEST 2
FDNS	02ALL	2	25SP	G14_038	FROM->TO	POTTER COUNTY INTERCHANGE (WAUK 90343-A) 345/230/13.2KV TRANSFORMER CKT 1	560	560	0.20029	120.3518	GEN300015 1-1SGPDEL 18.000
FDNS	02ALL	2	25SP	G14_038	FROM->TO	POTTER COUNTY INTERCHANGE (WAUK 90343-A) 345/230/13.2KV TRANSFORMER CKT 1	560	560	0.2001	120.3252	CANYON E_TP3115.00 - RANDALL COUNTY INTERCHANGE 115KV CKT 1
FDNS	02ALL	2	25SP	G14_038	FROM->TO	POTTER COUNTY INTERCHANGE (WAUK 90343-A) 345/230/13.2KV TRANSFORMER CKT 1	560	560	0.20029	120.3174	GEN505432 1-SIKESTON
FDNS	02ALL	2	25SP	G14_038	FROM->TO	POTTER COUNTY INTERCHANGE (WAUK 90343-A) 345/230/13.2KV TRANSFORMER CKT 1	560	560	0.20029	120.3158	GEN300011 1-ST FRANCIS UNIT 2
FDNS	02ALL	2	25SP	G14_038	FROM->TO	POTTER COUNTY INTERCHANGE (WAUK 90343-A) 345/230/13.2KV TRANSFORMER CKT 1	560	560	0.20029	120.2888	GEN659110 1-LELAND OLDS UNIT1
FDNS	02ALL	2	25SP	G14_038	FROM->TO	POTTER COUNTY INTERCHANGE (WAUK 90343-A) 345/230/13.2KV TRANSFORMER CKT 1	560	560	0.20029	120.2581	GEN546702 1-NM GEN N1
FDNS	02ALL	2	25SP	G14_038	FROM->TO	POTTER COUNTY INTERCHANGE (WAUK 90343-A) 345/230/13.2KV TRANSFORMER CKT 1	560	560	0.20029	120.2322	GEN560105 1-G08-22 0.6900
FDNS	02ALL	2	25SP	G14_038	FROM->TO	POTTER COUNTY INTERCHANGE (WAUK 90343-A) 345/230/13.2KV TRANSFORMER CKT 1	560	560	0.19964	120.2064	PLANT X STATION - SUNDOWN INTERCHANGE 230KV CKT 1
FDNS	02ALL	2	25SP	G14_038	FROM->TO	POTTER COUNTY INTERCHANGE (WAUK 90343-A) 345/230/13.2KV TRANSFORMER CKT 1	560	560	0.19964	120.2064	PLANT X STATION - SUNDOWN INTERCHANGE 230KV CKT 1
FDNS	02ALL	2	25SP	G14_038	FROM->TO	POTTER COUNTY INTERCHANGE (WAUK 90343-A) 345/230/13.2KV TRANSFORMER CKT 1	560	560	0.19993	120.2056	Harrington Station Mid Bus - RANDALL COUNTY INTERCHANGE 230KV CKT 1
FDNS	02ALL	2	25SP	G14_038	FROM->TO	POTTER COUNTY INTERCHANGE (WAUK 90343-A) 345/230/13.2KV TRANSFORMER CKT 1	560	560	0.19993	120.2056	Harrington Station Mid Bus - RANDALL COUNTY INTERCHANGE 230KV CKT 1
FDNS	02ALL	2	25SP	G14_038	FROM->TO	POTTER COUNTY INTERCHANGE (WAUK 90343-A) 345/230/13.2KV TRANSFORMER CKT 1	560	560	0.20029	120.18	GEN513601 1-GRECCTG_1 20.000
FDNS	02ALL	2	25SP	G14_038	FROM->TO	POTTER COUNTY INTERCHANGE (WAUK 90343-A) 345/230/13.2KV TRANSFORMER CKT 1	560	560	0.19966	120.177	HAPPY INTERCHANGE - PALO DURO SUB 115KV CKT 1
FDNS	02ALL	2	25SP	G14_038	FROM->TO	POTTER COUNTY INTERCHANGE (WAUK 90343-A) 345/230/13.2KV TRANSFORMER CKT 1	560	560	0.20029	120.1642	GEN641089 2-ENERGY CENTER 2
FDNS	02ALL	2	25SP	G14_038	FROM->TO	POTTER COUNTY INTERCHANGE (WAUK 90343-A) 345/230/13.2KV TRANSFORMER CKT 1	560	560	0.20029	120.1623	GEN509406 1-WELSH #3
FDNS	02ALL	2	25SP	G14_038	FROM->TO	POTTER COUNTY INTERCHANGE (WAUK 90343-A) 345/230/13.2KV TRANSFORMER CKT 1	560	560	0.20029	120.1622	GEN509404 1-WELSH #1
FDNS	02ALL	2	25SP	G14_038	FROM->TO	POTTER COUNTY INTERCHANGE (WAUK 90343-A) 345/230/13.2KV TRANSFORMER CKT 1	560	560	0.20029	120.1588	GEN539670 4-JUDSON LARGE GENERATOR
FDNS	02ALL	2	25SP	G14_038	FROM->TO	POTTER COUNTY INTERCHANGE (WAUK 90343-A) 345/230/13.2KV TRANSFORMER CKT 1	560	560	0.20093	120.1481	RB-ELKS 3115.00 - SHERMAN COUNTY TAP 115KV CKT 1
FDNS	02ALL	2	25SP	G14_038	FROM->TO	POTTER COUNTY INTERCHANGE (WAUK 90343-A) 345/230/13.2KV TRANSFORMER CKT 1	560	560	0.20093	120.1111	P12:115:SPS:W24.1.MOOREE.LASLEY
FDNS	02ALL	2	25SP	G14_038	FROM->TO	POTTER COUNTY INTERCHANGE (WAUK 90343-A) 345/230/13.2KV TRANSFORMER CKT 1	560	560	0.19966	120.0921	PALO DURO SUB - RANDALL COUNTY INTERCHANGE 115KV CKT 1
FDNS	02ALL	2	25SP	G14_038	FROM->TO	POTTER COUNTY INTERCHANGE (WAUK 90343-A) 345/230/13.2KV TRANSFORMER CKT 1	560	560	0.20029	120.0868	GEN300002 1-THOMAS HILL UNIT 2
FDNS	02ALL	2	25SP	G14_038	FROM->TO	POTTER COUNTY INTERCHANGE (WAUK 90343-A) 345/230/13.2KV TRANSFORMER CKT 1	560	560	0.20154	120.0607	P12:115:SPS:W29.1.OCLTRE.SPRMN
FDNS	02ALL	2	25SP	G14_038	FROM->TO	POTTER COUNTY INTERCHANGE (WAUK 90343-A) 345/230/13.2KV TRANSFORMER CKT 1	560	560	0.20029	120.0382	GEN511842 1-RIVERSIDE STATION #1
FDNS	02ALL	2	25SP	G14_038	FROM->TO	POTTER COUNTY INTERCHANGE (WAUK 90343-A) 345/230/13.2KV TRANSFORMER CKT 1	560	560	0.20179	120.0366	PRINGLE INTERCHANGE - SPEARMAN INTERCHANGE 115KV CKT 1
FDNS	02ALL	2	25SP	G14_038	FROM->TO	POTTER COUNTY INTERCHANGE (WAUK 90343-A) 345/230/13.2KV TRANSFORMER CKT 1	560	560	0.20029	120.032	GEN511843 1-RIVERSIDE STATION #2
FDNS	02ALL	2	25SP	G14_038	FROM->TO	POTTER COUNTY INTERCHANGE (WAUK 90343-A) 345/230/13.2KV TRANSFORMER CKT 1	560	560	0.20093	120.0008	RB-ELKS 3115.00 - RB-SPURLOCK3115.00 115KV CKT 1
FDNS	02ALL	2	25SP	G14_038	FROM->TO	POTTER COUNTY INTERCHANGE (WAUK 90343-A) 345/230/13.2KV TRANSFORMER CKT 1	560	560	0.20029	119.9863	GEN509416 1-TURK GENERATION
FDNS	02ALL	2	25SP	G14_038	FROM->TO	POTTER COUNTY INTERCHANGE (WAUK 90343-A) 345/230/13.2KV TRANSFORMER CKT 1	560	560	0.19795	119.9847	CHERRY1 - HARRINGTON STATION 230KV CKT 1
FDNS	02ALL	2	25SP	G14_038	FROM->TO	POTTER COUNTY INTERCHANGE (WAUK 90343-A) 345/230/13.2KV TRANSFORMER CKT 1	560	560	0.19795	119.9847	CHERRY1 - HARRINGTON STATION 230KV CKT 1
FDNS	02ALL	2	25SP	G14_038	FROM->TO	POTTER COUNTY INTERCHANGE (WAUK 90343-A) 345/230/13.2KV TRANSFORMER CKT 1	560	560	0.20029	119.9751	GEN511839 1-NORTHEASTERN STATION #2
FDNS	02ALL	2	25SP	G14_038	FROM->TO	POTTER COUNTY INTERCHANGE (WAUK 90343-A) 345/230/13.2KV TRANSFORMER CKT 1	560	560	0.20154	119.969	OCHILTREE - TEXAS FARMS SUB 115KV CKT 1
FDNS	02ALL	2	25SP	G14_038	FROM->TO	POTTER COUNTY INTERCHANGE (WAUK 90343-A) 345/230/13.2KV TRANSFORMER CKT 1	560	560	0.20029	119.9524	GEN515223 1-MUSKOGEE 4G
FDNS	02ALL	2	25SP	G14_038	FROM->TO	POTTER COUNTY INTERCHANGE (WAUK 90343-A) 345/230/13.2KV TRANSFORMER CKT 1	560	560	0.20029	119.9386	GEN515226 1-MUSKOGEE 6G
FDNS	02ALL	2	25SP	G14_038	FROM->TO	POTTER COUNTY INTERCHANGE (WAUK 90343-A) 345/230/13.2KV TRANSFORMER CKT 1	560	560	0.20029	119.9197	GEN515225 1-MUSKOGEE 5G
FDNS	02ALL	2	25SP	G14_038	FROM->TO	POTTER COUNTY INTERCHANGE (WAUK 90343-A) 345/230/13.2KV TRANSFORMER CKT 1	560	560	0.20622	119.9102	BVRCNTY7 345.00 - G11-14T 345.00 345KV CKT 2
FDNS	02ALL	2	25SP	G14_038	FROM->TO	POTTER COUNTY INTERCHANGE (WAUK 90343-A) 345/230/13.2KV TRANSFORMER CKT 1	560	560	0.19839	119.868	ELK CITY 230KV (ELKCTY-6) 230/138/13.8KV TRANSFORMER CKT 1
FDNS	02ALL	2	25SP	G14_038	FROM->TO	POTTER COUNTY INTERCHANGE (WAUK 90343-A) 345/230/13.2KV TRANSFORMER CKT 1	560	560	0.20029	119.8612	GEN511840 1-NORTHEASTERN STATION #3
FDNS	02ALL	2	25SP	G14_038	FROM->TO	POTTER COUNTY INTERCHANGE (WAUK 90343-A) 345/230/13.2KV TRANSFORMER CKT 1	560	560	0.20388	119.815	G15061_T 345.00 - MINGO 345KV CKT 1
FDNS	02ALL	2	25SP	G14_038	FROM->TO	POTTER COUNTY INTERCHANGE (WAUK 90343-A) 345/230/13.2KV TRANSFORMER CKT 1	560	560	0.20154	119.805	SPEARMAN SUB - TEXAS FARMS SUB 115KV CKT 1
FDNS	02ALL	2	25SP	G14_038	FROM->TO	POTTER COUNTY INTERCHANGE (WAUK 90343-A) 345/230/13.2KV TRANSFORMER CKT 1	560	560	0.20029	119.7842	GEN512688 2-GRDA1 GSU2 22
FDNS	02ALL	2	25SP	G14_038	FROM->TO	POTTER COUNTY INTERCHANGE (WAUK 90343-A) 345/230/13.2KV TRANSFORMER CKT 1	560	560	0.19937	119.7823	NEWHART 230 - PLANT X STATION 230KV CKT 1
FDNS	02ALL	2	25SP	G14_038	FROM->TO	POTTER COUNTY INTERCHANGE (WAUK 90343-A) 345/230/13.2KV TRANSFORMER CKT 1	560	560	0.19687	119.7406	Harrington Station East Bus - POTTER COUNTY INTERCHANGE 230KV CKT 1
FDNS	02ALL	2	25SP	G14_038	FROM->TO	POTTER COUNTY INTERCHANGE (WAUK 90343-A) 345/230/13.2KV TRANSFORMER CKT 1	560	560	0.19687	119.7406	Harrington Station East Bus - POTTER COUNTY INTERCHANGE 230KV CKT 1
FDNS	02ALL	2	25SP	G14_038	FROM->TO	POTTER COUNTY INTERCHANGE (WAUK 90343-A) 345/230/13.2KV TRANSFORMER CKT 1	560	560	0.19658	119.7375	CHERRY1 - POTTER COUNTY INTERCHANGE 230KV CKT 1
FDNS	02ALL	2	25SP	G14_038	FROM->TO	POTTER COUNTY INTERCHANGE (WAUK 90343-A) 345/230/13.2KV TRANSFORMER CKT 1	560	560	0.19658	119.7375	CHERRY1 - POTTER COUNTY INTERCHANGE 230KV CKT 1
FDNS	02ALL	2	25SP	G14_038	FROM->TO	POTTER COUNTY INTERCHANGE (WAUK 90343-A) 345/230/13.2KV TRANSFORMER CKT 1	560	560	0.20079	119.7325	DALLAM COUNTY INTERCHANGE - SHERMAN COUNTY SUB 115KV CKT 1
FDNS	02ALL	2	25SP	G14_038	FROM->TO	POTTER COUNTY INTERCHANGE (WAUK 90343-A) 345/230/13.2KV TRANSFORMER CKT 1	560	560	0.20029	119.7001	GEN509403 1-PIRKEY GENERATION
FDNS	02ALL	2	25SP	G14_038	FROM->TO	POTTER COUNTY INTERCHANGE (WAUK 90343-A) 345/230/13.2KV TRANSFORMER CKT 1	560	560	0.20093	119.6934	MOORE COUNTY INTERCHANGE EAST BUS - RB-SPURLOCK3115.00 115KV CKT 1
FDNS	02ALL	2	25SP	G14_038	FROM->TO	POTTER COUNTY INTERCHANGE (WAUK 90343-A) 345/230/13.2KV TRANSFORMER CKT 1	560	560	0.20079	119.69	P12:115:SPS:W05.1.DALLAM.LASLEY
FDNS	02ALL	2	25SP	G14_038	FROM->TO	POTTER COUNTY INTERCHANGE (WAUK 90343-A) 345/230/13.2KV TRANSFORMER CKT 1	560	560	0.20029	119.6606	GEN541151 3-SIBLEY GENERATING UNIT #3
FDNS	02ALL	2	25SP	G14_038	FROM->TO	POTTER COUNTY INTERCHANGE (WAUK 90343-A) 345/230/13.2KV TRANSFORMER CKT 1	560	560	0.20079	119.6564	SHERMAN COUNTY SUB - SHERMAN COUNTY TAP 115KV CKT 1
FDNS	02ALL	2	25SP	G14_038	FROM->TO	POTTER COUNTY INTERCHANGE (WAUK 90343-A) 345/230/13.2KV TRANSFORMER CKT 1	560	560	0.20029	119.6478	GEN532663 1-LAWRENCE ENERGY CENTER UNIT 5
FDNS	02ALL	2	25SP	G14_038	FROM->TO	POTTER COUNTY INTERCHANGE (WAUK 90343-A) 345/230/13.2KV TRANSFORMER CKT 1	560	560	0.20029	119.6307	GEN524285 1-WILDORADO WIND GEN
FDNS	02ALL	2	25SP	G14_038	FROM->TO	POTTER COUNTY INTERCHANGE (WAUK 90343-A) 345/230/13.2KV TRANSFORMER CKT 1	560	560	0.20029	119.6264	GEN336821 1-GRAND GULF UNIT
FDNS	02ALL	2	25SP	G14_038	FROM->TO	POTTER COUNTY INTERCHANGE (WAUK 90343-A) 345/230/13.2KV TRANSFORMER CKT 1	560	560	0.20029	119.6235	GEN562270 1-G12-020-2 0.6900
FDNS	02ALL	2	25SP	G14_038	FROM->TO	POTTER COUNTY INTERCHANGE (WAUK 90343-A) 345/230/13.2KV TRANSFORMER CKT 1	560	560	0.20029	119.6053	GEN523122 1-NBLWND-WTG210.6900
FDNS	02ALL	2	25SP	G14_038	FROM->TO	POTTER COUNTY INTERCHANGE (WAUK 90343-A) 345/230/13.2KV TRANSFORMER CKT 1	560	560	0.20106	119.6004	HITCHLAND INTERCHANGE (H TP80148301) 230/115/13.2KV TRANSFORMER CKT 1
FDNS	02ALL	2	25SP	G14_038	FROM->TO	POTTER COUNTY INTERCHANGE (WAUK 90343-A) 345/230/13.2KV TRANSFORMER CKT 1	560	560	0.20106	119.6004	HITCHLAND INTERCHANGE (H TP80148301) 230/115/13.2KV TRANSFORMER CKT 1
FDNS	02ALL	2	25SP	G14_038	FROM->TO	POTTER COUNTY INTERCHANGE (WAUK 90343-A) 345/230/13.2KV TRANSFORMER CKT 1	560	560	0.20106	119.6004	HITCHLAND INTERCHANGE (UPDATE LATER) 230/115/13.2KV TRANSFORMER CKT 2
FDNS	02ALL	2	25SP	G14_038	FROM->TO	POTTER COUNTY INTERCHANGE (WAUK 90343-A) 345/230/13.2KV TRANSFORMER CKT 1	560	560	0.20106	119.6004	HITCHLAND INTERCHANGE (UPDATE LATER) 230/115/13.2KV TRANSFORMER CKT 2
FDNS	02ALL	2	25SP	G14_038	FROM->TO	POTTER COUNTY INTERCHANGE (WAUK 90343-A) 345/230/13.2KV TRANSFORMER CKT 1	560	560	0.20029	119.5957	GEN514805 1-SOONER UNIT 1
FDNS	02ALL	2	25SP	G14_038	FROM->TO	POTTER COUNTY INTERCHANGE (WAUK 90343-A) 345/230/13.2KV TRANSFORMER CKT 1	560	560	0.20388	119.5936	G15061_T 345.00 - SETAB 345KV CKT 1
FDNS	02ALL	2	25SP	G14_038	FROM->TO	POTTER COUNTY INTERCHANGE (WAUK 90343-A) 345/230/13.2KV TRANSFORMER CKT 1	560	560	0.20029	119.5856	GEN523121 1-NBLWND-WTG110.6900
FDNS	02ALL	2	25SP	G14_038	FROM->TO	POTTER COUNTY INTERCHANGE (WAUK 90343-A) 345/230/13.2KV TRANSFORMER CKT 1	560	560	0.20029	119.578	GEN509394 1-FLINT CREEK
FDNS	02ALL	2	25SP	G14_038	FROM->TO	POTTER COUNTY INTERCHANGE (WAUK 90343-A) 345/230/13.2KV TRANSFORMER CKT 1	560	560	0.20029	119.5732	GEN514806 1-SOONER UNIT 2
FDNS	02ALL	2	25SP	G14_038	FROM->TO	POTTER COUNTY INTERCHANGE (WAUK 90343-A) 345/230/13.2KV TRANSFORMER CKT 1	560	560	0.20029	119.5546	GEN560584 1-G06-44-2 4.1600
FDNS	02ALL	2	25SP	G14_038	FROM->TO	POTTER COUNTY INTERCHANGE (WAUK 90343-A) 345/230/13.2KV TRANSFORMER CKT 1	560	560	0.20029	119.5542	GEN562269 1-G12-020-1 0.6900
FDNS	02ALL	2	25SP	G14_038	FROM->TO	POTTER COUNTY INTERCHANGE (WAUK 90343-A) 345/230/13.2KV TRANSFORMER CKT 1	560	560	0.20029	119.546	GEN523107 1-NOVUS_WND 14.1600
FDNS	02ALL	2	25SP	G14_038	FROM->TO	POTTER COUNTY INTERCHANGE (WAUK 90343-A) 345/230/13.2KV TRANSFORMER CKT 1	560	560	0.20154	119.5198	SPEARMAN INTERCHANGE - SPEARMAN SUB 115KV CKT 1
FDNS	02ALL	2	25SP	G14_038	FROM->TO	POTTER COUNTY INTERCHANGE (WAUK 90343-A) 345/230/13.2KV TRANSFORMER CKT 1	560	560	0.20029	119.5175	GEN532722 1-EVANS ENERGY CENTER UNIT 2
FDNS	02ALL	2	25SP	G14_038	FROM->TO	POTTER COUNTY INTERCHANGE (WAUK 90343-A) 345/230/13.2KV TRANSFORMER CKT 1	560	560	0.20304	119.4958	HOLCOMB - SETAB 345KV CKT 1
FDNS	02ALL	2	25SP	G14_038	FROM->TO	POTTER COUNTY INTERCHANGE (WAUK 90343-A) 345/230/13.2KV TRANSFORMER CKT 1	560	560	0.20304	119.4958	HOLCOMB - SETAB 345KV CKT 1
FDNS	02ALL	2	25SP	G14_038	FROM->TO	POTTER COUNTY INTERCHANGE (WAUK 90343-A) 345/230/13.2KV TRANSFORMER CKT 1	560	560	0.19806	119.4945	Harrington Station East Bus - Harrington Station Mid Bus 230KV CKT @1
FDNS	02ALL	2	25SP	G14_038	FROM->TO	POTTER COUNTY INTERCHANGE (WAUK 90343-A) 345/230/13.2KV TRANSFORMER CKT 1	560	560	0.20029	119.4934	GEN523123 1-NBLWND-WTG310.6900
FDNS	02ALL	2	25SP	G14_038	FROM->TO	POTTER COUNTY INTERCHANGE (WAUK 90343-A) 345/230/13.2KV TRANSFORMER CKT 1	560	560	0.20159	119.488	PRINGLE INTERCHANGE (ENRCO13617-1) 230/115/13.2KV TRANSFORMER CKT 1
FDNS	02ALL	2	25SP	G14_038	FROM->TO	POTTER COUNTY INTERCHANGE (WAUK 90343-A) 345/230/13.2KV TRANSFORMER CKT 1	560	560	0.20159	119.488	PRINGLE INTERCHANGE (ENRCO13617-1) 230/115/13.2KV TRANSFORMER CKT 1
FDNS	02ALL	2	25SP	G14_038	FROM->TO	POTTER COUNTY INTERCHANGE (WAUK 90343-A) 345/230/13.2KV TRANSFORMER CKT 1	560	560	0.20029	119.453	GEN336153 1-WATERFORD UNIT#3
FDNS	02ALL	2	25SP	G14_038	FROM->TO	POTTER COUNTY INTERCHANGE (WAUK 90343-A) 345/230/13.2KV TRANSFORMER CKT 1	560	560	0.20159	119.4329	Harrington Station East Bus - PRINGLE INTERCHANGE 230KV CKT 1

SOLUTION	GROUP	SCENARIO	SEASON	SOURCE	DIRECTION	MONITORED ELEMENT	RATEA (MVA)	RATEB(MVA)	TDF	TC%LOADING (% MVA)	CONTINGENCY
FDNS	02ALL	2	25SP	G14_038	FROM->TO	POTTER COUNTY INTERCHANGE (WAUK 90343-A) 345/230/13.2KV TRANSFORMER CKT 1	560	560	0.20159	119.4319	P12:230:SPS:K43.1.PRNGLE.HARR_E
FDNS	02ALL	2	25SP	G14_038	FROM->TO	POTTER COUNTY INTERCHANGE (WAUK 90343-A) 345/230/13.2KV TRANSFORMER CKT 1	560	560	0.20119	119.4007	PRINGLE INTERCHANGE - SPEARMAN INTERCHANGE 115KV CKT 2
FDNS	02ALL	2	25SP	G14_038	FROM->TO	POTTER COUNTY INTERCHANGE (WAUK 90343-A) 345/230/13.2KV TRANSFORMER CKT 1	560	560	0.20029	119.3975	GEN337911 1-ARKANSAS NUCLEAR ONE UNIT #2
FDNS	02ALL	2	25SP	G14_038	FROM->TO	POTTER COUNTY INTERCHANGE (WAUK 90343-A) 345/230/13.2KV TRANSFORMER CKT 1	560	560	0.20029	119.394	GEN501801 1-DOLET HILLS UNIT1
FDNS	02ALL	2	25SP	G14_038	FROM->TO	POTTER COUNTY INTERCHANGE (WAUK 90343-A) 345/230/13.2KV TRANSFORMER CKT 1	560	560	0.20029	119.3343	GEN335831 1-RIVERBEND UNIT#1
FDNS	02ALL	2	25SP	G14_038	FROM->TO	POTTER COUNTY INTERCHANGE (WAUK 90343-A) 345/230/13.2KV TRANSFORMER CKT 1	560	560	0.20029	119.3301	GEN527881 1-CUNNINGHAM GEN #1
FDNS	02ALL	2	25SP	G14_038	FROM->TO	POTTER COUNTY INTERCHANGE (WAUK 90343-A) 345/230/13.2KV TRANSFORMER CKT 1	560	560	0.20066	119.3265	MOORE COUNTY INTERCHANGE (ENRCO 136402) 230/115/13.2KV TRANSFORMER CKT 1
FDNS	02ALL	2	25SP	G14_038	FROM->TO	POTTER COUNTY INTERCHANGE (WAUK 90343-A) 345/230/13.2KV TRANSFORMER CKT 1	560	560	0.20066	119.3265	MOORE COUNTY INTERCHANGE (ENRCO 136402) 230/115/13.2KV TRANSFORMER CKT 1
FDNS	02ALL	2	25SP	G14_038	FROM->TO	POTTER COUNTY INTERCHANGE (WAUK 90343-A) 345/230/13.2KV TRANSFORMER CKT 1	560	560	0.20029	119.3181	GEN562688 1-G15_014_3 0.6900
FDNS	02ALL	2	25SP	G14_038	FROM->TO	POTTER COUNTY INTERCHANGE (WAUK 90343-A) 345/230/13.2KV TRANSFORMER CKT 1	560	560	0.20417	119.3114	MINGO - RED WILLOW 345KV CKT 1
FDNS	02ALL	2	25SP	G14_038	FROM->TO	POTTER COUNTY INTERCHANGE (WAUK 90343-A) 345/230/13.2KV TRANSFORMER CKT 1	560	560	0.20417	119.3114	MINGO - RED WILLOW 345KV CKT 1
FDNS	02ALL	2	25SP	G14_038	FROM->TO	POTTER COUNTY INTERCHANGE (WAUK 90343-A) 345/230/13.2KV TRANSFORMER CKT 1	560	560	0.20029	119.2926	GEN562483 1-G13_027_3 0.6900
FDNS	02ALL	2	25SP	G14_038	FROM->TO	POTTER COUNTY INTERCHANGE (WAUK 90343-A) 345/230/13.2KV TRANSFORMER CKT 1	560	560	0.20094	119.2608	PRINGLE INTERCHANGE - RIVERVIEW INTERCHANGE 115KV CKT 1
FDNS	02ALL	2	25SP	G14_038	FROM->TO	POTTER COUNTY INTERCHANGE (WAUK 90343-A) 345/230/13.2KV TRANSFORMER CKT 1	560	560	0.20029	119.2398	GEN562756 1-G15031_7 0.6900
FDNS	02ALL	2	25SP	G14_038	FROM->TO	POTTER COUNTY INTERCHANGE (WAUK 90343-A) 345/230/13.2KV TRANSFORMER CKT 1	560	560	0.20029	119.2384	GEN337910 1-ARKANSAS NUCLEAR ONE UNIT #1
FDNS	02ALL	2	25SP	G14_038	FROM->TO	POTTER COUNTY INTERCHANGE (WAUK 90343-A) 345/230/13.2KV TRANSFORMER CKT 1	560	560	0.20029	119.2108	GEN562754 1-G15031_5 0.6900
FDNS	02ALL	2	25SP	G14_038	FROM->TO	POTTER COUNTY INTERCHANGE (WAUK 90343-A) 345/230/13.2KV TRANSFORMER CKT 1	560	560	0.20029	119.1785	GEN562556 1-G14_046_3 0.3420
FDNS	02ALL	2	25SP	G14_038	FROM->TO	POTTER COUNTY INTERCHANGE (WAUK 90343-A) 345/230/13.2KV TRANSFORMER CKT 1	560	560	0.20029	119.1582	GEN563142 1-G15079_3 0.5500
FDNS	02ALL	2	25SP	G14_038	FROM->TO	POTTER COUNTY INTERCHANGE (WAUK 90343-A) 345/230/13.2KV TRANSFORMER CKT 1	560	560	0.20029	119.1582	GEN563151 1-G15080_2 0.5500
FDNS	02ALL	2	25SP	G14_038	FROM->TO	POTTER COUNTY INTERCHANGE (WAUK 90343-A) 345/230/13.2KV TRANSFORMER CKT 1	560	560	0.20142	119.1519	G13-010T 345.00 - POST ROCK 345KV CKT 1
FDNS	02ALL	2	25SP	G14_038	FROM->TO	POTTER COUNTY INTERCHANGE (WAUK 90343-A) 345/230/13.2KV TRANSFORMER CKT 1	560	560	0.20029	119.1415	GEN524890 1-SNJN-WTGA1 10.6000
FDNS	02ALL	2	25SP	G14_038	FROM->TO	POTTER COUNTY INTERCHANGE (WAUK 90343-A) 345/230/13.2KV TRANSFORMER CKT 1	560	560	0.20029	119.1341	GEN522866 1-LUBBOCK POWER & LIGHT-HOLLY GEN
FDNS	02ALL	2	25SP	G14_038	FROM->TO	POTTER COUNTY INTERCHANGE (WAUK 90343-A) 345/230/13.2KV TRANSFORMER CKT 1	560	560	0.20142	119.1297	G13-010T 345.00 - SPEARVILLE 345KV CKT 1
FDNS	02ALL	2	25SP	G14_038	FROM->TO	POTTER COUNTY INTERCHANGE (WAUK 90343-A) 345/230/13.2KV TRANSFORMER CKT 1	560	560	0.20029	119.1281	GEN563043 1-G15068_4 0.6900
FDNS	02ALL	2	25SP	G14_038	FROM->TO	POTTER COUNTY INTERCHANGE (WAUK 90343-A) 345/230/13.2KV TRANSFORMER CKT 1	560	560	0.20093	119.1218	MOORE COUNTY INTERCHANGE W. - RB-S&S 3115.00 115KV CKT 1
FDNS	02ALL	2	25SP	G14_038	FROM->TO	POTTER COUNTY INTERCHANGE (WAUK 90343-A) 345/230/13.2KV TRANSFORMER CKT 1	560	560	0.20025	119.1071	HOBBS - YOAKUM_345 345.00 345KV CKT 1
FDNS	02ALL	2	25SP	G14_038	FROM->TO	POTTER COUNTY INTERCHANGE (WAUK 90343-A) 345/230/13.2KV TRANSFORMER CKT 1	560	560	0.20029	119.0975	GEN659111 2-LELAND OLDS UNIT2
FDNS	02ALL	2	25SP	G14_038	FROM->TO	POTTER COUNTY INTERCHANGE (WAUK 90343-A) 345/230/13.2KV TRANSFORMER CKT 1	560	560	0.19521	119.0818	SWISHER COUNTY INTERCHANGE - TUCO_2 230.00 230KV CKT 1
FDNS	02ALL	2	25SP	G14_038	FROM->TO	POTTER COUNTY INTERCHANGE (WAUK 90343-A) 345/230/13.2KV TRANSFORMER CKT 1	560	560	0.20029	119.0808	GEN337652 1-WHITE BLUFF UNIT #1
FDNS	02ALL	2	25SP	G14_038	FROM->TO	POTTER COUNTY INTERCHANGE (WAUK 90343-A) 345/230/13.2KV TRANSFORMER CKT 1	560	560	0.20029	119.069	GEN560586 1-G06-44-4 4.1600
FDNS	02ALL	2	25SP	G14_038	FROM->TO	POTTER COUNTY INTERCHANGE (WAUK 90343-A) 345/230/13.2KV TRANSFORMER CKT 1	560	560	0.20024	119.0671	BEARCAT 138.00 - MOORELAND 138KV CKT 1
FDNS	02ALL	2	25SP	G14_038	FROM->TO	POTTER COUNTY INTERCHANGE (WAUK 90343-A) 345/230/13.2KV TRANSFORMER CKT 1	560	560	0.20029	119.0639	GEN562710 1-G15_022_3 0.5500
FDNSLock	02ALL	2	25SP	G14_038	FROM->TO	POTTER COUNTY INTERCHANGE (WAUK 90343-A) 345/230/13.2KV TRANSFORMER CKT 1	560	560	0.1994	119.0544	STATELINE INTERCHANGE (H TP80154301) 230/115/13.2KV TRANSFORMER CKT 1
FDNS	02ALL	2	25SP	G14_038	FROM->TO	POTTER COUNTY INTERCHANGE (WAUK 90343-A) 345/230/13.2KV TRANSFORMER CKT 1	560	560	0.20029	119.0533	GEN337653 1-WHITE BLUFF UNIT #2
FDNS	02ALL	2	25SP	G14_038	FROM->TO	POTTER COUNTY INTERCHANGE (WAUK 90343-A) 345/230/13.2KV TRANSFORMER CKT 1	560	560	0.20029	119.0455	GEN501813 1-RODEMACHER UNIT 3
FDNS	02ALL	2	25SP	G14_038	FROM->TO	POTTER COUNTY INTERCHANGE (WAUK 90343-A) 345/230/13.2KV TRANSFORMER CKT 1	560	560	0.20029	119.0326	GEN563042 1-G15068_3 0.6900
FDNS	02ALL	2	25SP	G14_038	FROM->TO	POTTER COUNTY INTERCHANGE (WAUK 90343-A) 345/230/13.2KV TRANSFORMER CKT 1	560	560	0.20029	119.0304	GEN336252 1-NINEMILE POINT UNIT#5
FDNS	02ALL	2	25SP	G14_038	FROM->TO	POTTER COUNTY INTERCHANGE (WAUK 90343-A) 345/230/13.2KV TRANSFORMER CKT 1	560	560	0.20029	119.0299	GEN562704 1-G15_020_3 0.3550
FDNS	02ALL	2	25SP	G14_038	FROM->TO	POTTER COUNTY INTERCHANGE (WAUK 90343-A) 345/230/13.2KV TRANSFORMER CKT 1	560	560	0.20031	119.0151	G15093_T 345.00 - GRACEMONT 345KV CKT 1
FDNS	02ALL	2	25SP	G14_038	FROM->TO	POTTER COUNTY INTERCHANGE (WAUK 90343-A) 345/230/13.2KV TRANSFORMER CKT 1	560	560	0.20029	119.0014	GEN336251 1-NINEMILE POINT UNIT#4
FDNS	02ALL	2	25SP	G14_038	FROM->TO	POTTER COUNTY INTERCHANGE (WAUK 90343-A) 345/230/13.2KV TRANSFORMER CKT 1	560	560	0.20029	118.9946	GEN562942 1-G15056_3 0.6900
FDNS	02ALL	2	25SP	G14_038	FROM->TO	POTTER COUNTY INTERCHANGE (WAUK 90343-A) 345/230/13.2KV TRANSFORMER CKT 1	560	560	0.19981	118.985	TUCO INTERCHANGE (GE M1022338) 345/230/13.2KV TRANSFORMER CKT 1
FDNS	02ALL	2	25SP	G14_038	FROM->TO	POTTER COUNTY INTERCHANGE (WAUK 90343-A) 345/230/13.2KV TRANSFORMER CKT 1	560	560	0.19981	118.985	TUCO INTERCHANGE (GE M1022338) 345/230/13.2KV TRANSFORMER CKT 1
FDNS	02ALL	2	25SP	G14_038	FROM->TO	POTTER COUNTY INTERCHANGE (WAUK 90343-A) 345/230/13.2KV TRANSFORMER CKT 1	560	560	0.20029	118.9827	GEN334440 1-SABINE UNIT 4
FDNS	02ALL	2	25SP	G14_038	FROM->TO	POTTER COUNTY INTERCHANGE (WAUK 90343-A) 345/230/13.2KV TRANSFORMER CKT 1	560	560	0.1994	118.9827	Graves Sub - STATELINE INTERCHANGE 115KV CKT 1
FDNS	02ALL	2	25SP	G14_038	FROM->TO	POTTER COUNTY INTERCHANGE (WAUK 90343-A) 345/230/13.2KV TRANSFORMER CKT 1	560	560	0.1994	118.9827	Graves Sub - STATELINE INTERCHANGE 115KV CKT 1
FDNS	02ALL	2	25SP	G14_038	FROM->TO	POTTER COUNTY INTERCHANGE (WAUK 90343-A) 345/230/13.2KV TRANSFORMER CKT 1	560	560	0.2012	118.9823	WALKEMEYER - WALKTAP3 115.00 115KV CKT 1
FDNS	02ALL	2	25SP	G14_038	FROM->TO	POTTER COUNTY INTERCHANGE (WAUK 90343-A) 345/230/13.2KV TRANSFORMER CKT 1	560	560	0.2012	118.9823	WALKEMEYER - WALKTAP3 115.00 115KV CKT 1
FDNS	02ALL	2	25SP	G14_038	FROM->TO	POTTER COUNTY INTERCHANGE (WAUK 90343-A) 345/230/13.2KV TRANSFORMER CKT 1	560	560	0.2012	118.9822	WALKTAP7 345.00 (WALKE345) 345/115/13.8KV TRANSFORMER CKT 1
FDNS	02ALL	2	25SP	G14_038	FROM->TO	POTTER COUNTY INTERCHANGE (WAUK 90343-A) 345/230/13.2KV TRANSFORMER CKT 1	560	560	0.2012	118.9822	WALKTAP7 345.00 (WALKE345) 345/115/13.8KV TRANSFORMER CKT 1
FDNS	02ALL	2	25SP	G14_038	FROM->TO	POTTER COUNTY INTERCHANGE (WAUK 90343-A) 345/230/13.2KV TRANSFORMER CKT 1	560	560	0.20029	118.9794	GEN524287 1-GS-PHWD_GEN10.6900
FDNS	02ALL	2	25SP	G14_038	FROM->TO	POTTER COUNTY INTERCHANGE (WAUK 90343-A) 345/230/13.2KV TRANSFORMER CKT 1	560	560	0.2004	118.9768	MARTIN SUB - PANTEX NORTH SUB 115KV CKT 1
FDNS	02ALL	2	25SP	G14_038	FROM->TO	POTTER COUNTY INTERCHANGE (WAUK 90343-A) 345/230/13.2KV TRANSFORMER CKT 1	560	560	0.2004	118.9768	MARTIN SUB - PANTEX NORTH SUB 115KV CKT 1
FDNS	02ALL	2	25SP	G14_038	FROM->TO	POTTER COUNTY INTERCHANGE (WAUK 90343-A) 345/230/13.2KV TRANSFORMER CKT 1	560	560	0.20029	118.9746	GEN335206 1-NELSON UNIT 6
FDNS	02ALL	2	25SP	G14_038	FROM->TO	POTTER COUNTY INTERCHANGE (WAUK 90343-A) 345/230/13.2KV TRANSFORMER CKT 1	560	560	0.19961	118.9723	TUCO_2 345.00 (TUCO_2 XFMR) 345/230/13.2KV TRANSFORMER CKT 1
FDNS	02ALL	2	25SP	G14_038	FROM->TO	POTTER COUNTY INTERCHANGE (WAUK 90343-A) 345/230/13.2KV TRANSFORMER CKT 1	560	560	0.2004	118.9716	PANTEX NORTH SUB - PANTEX SOUTH SUB 115KV CKT 1
FDNS	02ALL	2	25SP	G14_038	FROM->TO	POTTER COUNTY INTERCHANGE (WAUK 90343-A) 345/230/13.2KV TRANSFORMER CKT 1	560	560	0.2004	118.9716	PANTEX NORTH SUB - PANTEX SOUTH SUB 115KV CKT 1
FDNS	02ALL	2	25SP	G14_038	FROM->TO	POTTER COUNTY INTERCHANGE (WAUK 90343-A) 345/230/13.2KV TRANSFORMER CKT 1	560	560	0.20029	118.9668	GEN562655 1-G14_074_3 0.6900
FDNS	02ALL	2	25SP	G14_038	FROM->TO	POTTER COUNTY INTERCHANGE (WAUK 90343-A) 345/230/13.2KV TRANSFORMER CKT 1	560	560	0.2004	118.9667	HIGHLAND PARK TAP - PANTEX SOUTH SUB 115KV CKT 1
FDNS	02ALL	2	25SP	G14_038	FROM->TO	POTTER COUNTY INTERCHANGE (WAUK 90343-A) 345/230/13.2KV TRANSFORMER CKT 1	560	560	0.20029	118.9664	GEN562762 1-G15033_3 0.6900
FDNS	02ALL	2	25SP	G14_038	FROM->TO	POTTER COUNTY INTERCHANGE (WAUK 90343-A) 345/230/13.2KV TRANSFORMER CKT 1	560	560	0.20029	118.964	GEN336831 1-BAXTER WILSON SES
FDNS	02ALL	2	25SP	G14_038	FROM->TO	POTTER COUNTY INTERCHANGE (WAUK 90343-A) 345/230/13.2KV TRANSFORMER CKT 1	560	560	0.20024	118.9583	BEARCAT 138.00 - NINE MILE 138KV CKT 1
FDNS	02ALL	2	25SP	G14_038	FROM->TO	POTTER COUNTY INTERCHANGE (WAUK 90343-A) 345/230/13.2KV TRANSFORMER CKT 1	560	560	0.20029	118.9561	GEN524485 1-CAPROCK WIND GEN
FDNS	02ALL	2	25SP	G14_038	FROM->TO	POTTER COUNTY INTERCHANGE (WAUK 90343-A) 345/230/13.2KV TRANSFORMER CKT 1	560	560	0.20024	118.9456	P12:138:WFEC:MSL14
FDNS	02ALL	2	25SP	G14_038	FROM->TO	POTTER COUNTY INTERCHANGE (WAUK 90343-A) 345/230/13.2KV TRANSFORMER CKT 1	560	560	0.20029	118.944	GEN523815 1-LLANO ESTACADO WIND GEN
FDNS	02ALL	2	25SP	G14_038	FROM->TO	POTTER COUNTY INTERCHANGE (WAUK 90343-A) 345/230/13.2KV TRANSFORMER CKT 1	560	560	0.20029	118.9401	GEN590010 1-ERCOT EQUIVALENCE
FDNS	02ALL	2	25SP	G14_038	FROM->TO	POTTER COUNTY INTERCHANGE (WAUK 90343-A) 345/230/13.2KV TRANSFORMER CKT 1	560	560	0.20029	118.9303	GEN338146 1-INDEPENDENCE UNIT #2
FDNS	02ALL	2	25SP	G14_038	FROM->TO	POTTER COUNTY INTERCHANGE (WAUK 90343-A) 345/230/13.2KV TRANSFORMER CKT 1	560	560	0.20093	118.9278	DUMAS SUB - RB-S&S 3115.00 115KV CKT 1
FDNS	02ALL	2	25SP	G14_038	FROM->TO	POTTER COUNTY INTERCHANGE (WAUK 90343-A) 345/230/13.2KV TRANSFORMER CKT 1	560	560	0.20029	118.919	GEN501812 1-RODEMACHER UNIT 2
FDNS	02ALL	2	25SP	G14_038	FROM->TO	POTTER COUNTY INTERCHANGE (WAUK 90343-A) 345/230/13.2KV TRANSFORMER CKT 1	560	560	0.20054	118.9096	TUCO INTERCHANGE - TUCO_2 345.00 345KV CKT 1
FDNS	02ALL	2	25SP	G14_038	FROM->TO	POTTER COUNTY INTERCHANGE (WAUK 90343-A) 345/230/13.2KV TRANSFORMER CKT 1	560	560	0.20136	118.9055	G1524G1525 345.00 - THISTLE7 345.00 345KV CKT 1
FDNS	02ALL	2	25SP	G14_038	FROM->TO	POTTER COUNTY INTERCHANGE (WAUK 90343-A) 345/230/13.2KV TRANSFORMER CKT 1	560	560	0.20136	118.9055	G1524G1525 345.00 - THISTLE7 345.00 345KV CKT 2
FDNS	02ALL	2	25SP	G14_038	FROM->TO	POTTER COUNTY INTERCHANGE (WAUK 90343-A) 345/230/13.2KV TRANSFORMER CKT 1	560	560	0.20004	118.9039	SUNDOWN INTERCHANGE - WOLFFORTH INTERCHANGE 230KV CKT 1
FDNS	02ALL	2	25SP	G14_038	FROM->TO	POTTER COUNTY INTERCHANGE (WAUK 90343-A) 345/230/13.2KV TRANSFORMER CKT 1	560	560	0.20004	118.9039	SUNDOWN INTERCHANGE - WOLFFORTH INTERCHANGE 230KV CKT 1
FDNS	02ALL	2	25SP	G14_038	FROM->TO	POTTER COUNTY INTERCHANGE (WAUK 90343-A) 345/230/13.2KV TRANSFORMER CKT 1	560	560	0.20029	118.9034	GEN337041 1-GERALD ANDRUS
FDNS	02ALL	2	25SP	G14_038	FROM->TO	POTTER COUNTY INTERCHANGE (WAUK 90343-A) 345/230/13.2KV TRANSFORMER CKT 1	560	560	0.20029	118.8981	GEN338143 1-INDEPENDENCE UNIT #1
FDNS	02ALL	2	25SP	G14_038	FROM->TO	POTTER COUNTY INTERCHANGE (WAUK 90343-A) 345/230/13.2KV TRANSFORMER CKT 1	560	560	0.20029	118.89	GEN659103 1-ANTELOPE VALLEY UNIT1
FDNS	02ALL	2	25SP	G14_038	FROM->TO	POTTER COUNTY INTERCHANGE (WAUK 90343-A) 345/230/13.2KV TRANSFORMER CKT 1	560	560	0.20029	118.89	GEN659107 2-ANTELOPE VALLEY UNIT2
FDNS	02ALL	2	25SP	G14_038	FROM->TO	POTTER COUNTY INTERCHANGE (WAUK 90343-A) 345/230/13.2KV TRANSFORMER CKT 1	560	560	0.20029	118.8655	GEN590011 2-ERCOT EQUIVALENCE

SOLUTION	GROUP	SCENARIO	SEASON	SOURCE	DIRECTION	MONITORED ELEMENT	RATEA (MVA)	RATEB(MVA)	TDF	TC%LOADING (% MVA)	CONTINGENCY
FDNS	02ALL	2	25SP	G14_038	FROM->TO	POTTER COUNTY INTERCHANGE (WAUK 90343-A) 345/230/13.2KV TRANSFORMER CKT 1	560	560	0.20029	118.831	GEN560585 1-G06-44-3 4.1600
FDNS	02ALL	2	25SP	G14_038	FROM->TO	POTTER COUNTY INTERCHANGE (WAUK 90343-A) 345/230/13.2KV TRANSFORMER CKT 1	560	560	0.20029	118.7665	GEN300006 1-NEW MADRID UNIT 1
FDNS	02ALL	2	25SP	G14_038	FROM->TO	POTTER COUNTY INTERCHANGE (WAUK 90343-A) 345/230/13.2KV TRANSFORMER CKT 1	560	560	0.20029	118.7635	GEN300007 1-NEW MADRID UNIT 2
FDNS	02ALL	2	25SP	G14_038	FROM->TO	POTTER COUNTY INTERCHANGE (WAUK 90343-A) 345/230/13.2KV TRANSFORMER CKT 1	560	560	0.20029	118.5482	GEN542951 5-HAWTHORN UNIT #5
FDNS	02ALL	2	25SP	G14_038	FROM->TO	POTTER COUNTY INTERCHANGE (WAUK 90343-A) 345/230/13.2KV TRANSFORMER CKT 1	560	560	0.19729	118.4943	DEAF SMITH COUNTY INTERCHANGE - G15039_T 230.00 230KV CKT 1
FDNS	02ALL	2	25SP	G14_038	FROM->TO	POTTER COUNTY INTERCHANGE (WAUK 90343-A) 345/230/13.2KV TRANSFORMER CKT 1	560	560	0.19729	118.4211	G15039_T 230.00 - PLANT X STATION 230KV CKT 1
FDNS	02ALL	2	25SP	G14_038	FROM->TO	POTTER COUNTY INTERCHANGE (WAUK 90343-A) 345/230/13.2KV TRANSFORMER CKT 1	560	560	0.20029	118.3664	2109-BUSHLAND INTERCHANGE
FDNS	02ALL	2	25SP	G14_038	FROM->TO	POTTER COUNTY INTERCHANGE (WAUK 90343-A) 345/230/13.2KV TRANSFORMER CKT 1	560	560	0.20029	118.3664	BASE CASE
FDNS	02ALL	2	25SP	G14_038	FROM->TO	POTTER COUNTY INTERCHANGE (WAUK 90343-A) 345/230/13.2KV TRANSFORMER CKT 1	560	560	0.20029	118.3314	GEN560286 1-G10-01-1WTG 0.6900
FDNS	02ALL	2	25SP	G14_038	FROM->TO	POTTER COUNTY INTERCHANGE (WAUK 90343-A) 345/230/13.2KV TRANSFORMER CKT 1	560	560	0.20029	118.3314	GEN560287 1-G10-01-2WTG 0.6900
FDNS	02ALL	2	25SP	G14_038	FROM->TO	POTTER COUNTY INTERCHANGE (WAUK 90343-A) 345/230/13.2KV TRANSFORMER CKT 1	560	560	0.20029	118.3074	GEN542956 2-LACYGNE UNIT #2
FDNS	02ALL	2	25SP	G14_038	FROM->TO	POTTER COUNTY INTERCHANGE (WAUK 90343-A) 345/230/13.2KV TRANSFORMER CKT 1	560	560	0.20029	118.0241	GEN645011 1-NEBRASKA CITY 1
FDNS	02ALL	2	25SP	G14_038	FROM->TO	POTTER COUNTY INTERCHANGE (WAUK 90343-A) 345/230/13.2KV TRANSFORMER CKT 1	560	560	0.20029	117.8595	GEN542955 1-LACYGNE UNIT #1
FDNS	02ALL	2	25SP	G14_038	FROM->TO	POTTER COUNTY INTERCHANGE (WAUK 90343-A) 345/230/13.2KV TRANSFORMER CKT 1	560	560	0.20029	117.8314	GEN563173 1-G15082_3 0.6900
FDNS	02ALL	2	25SP	G14_038	FROM->TO	POTTER COUNTY INTERCHANGE (WAUK 90343-A) 345/230/13.2KV TRANSFORMER CKT 1	560	560	0.20029	117.8278	GEN511953 G-COGENTRIX GAS # 1
FDNS	02ALL	2	25SP	G14_038	FROM->TO	POTTER COUNTY INTERCHANGE (WAUK 90343-A) 345/230/13.2KV TRANSFORMER CKT 1	560	560	0.20029	117.8278	GEN546698 1-QN GEN2
FDNS	02ALL	2	25SP	G14_038	FROM->TO	POTTER COUNTY INTERCHANGE (WAUK 90343-A) 345/230/13.2KV TRANSFORMER CKT 1	560	560	0.20029	117.822	GEN547656 1-STATE LINE UNIT #2
FDNS	02ALL	2	25SP	G14_038	FROM->TO	POTTER COUNTY INTERCHANGE (WAUK 90343-A) 345/230/13.2KV TRANSFORMER CKT 1	560	560	0.20029	117.822	GEN547657 1-STATE LINE UNIT #3
FDNS	02ALL	2	25SP	G14_038	FROM->TO	POTTER COUNTY INTERCHANGE (WAUK 90343-A) 345/230/13.2KV TRANSFORMER CKT 1	560	560	0.1991	117.8196	KIRBY SWITCHING STATION - MCCLELLAN SUB 115KV CKT 1
FDNS	02ALL	2	25SP	G14_038	FROM->TO	POTTER COUNTY INTERCHANGE (WAUK 90343-A) 345/230/13.2KV TRANSFORMER CKT 1	560	560	0.20029	117.8184	GEN645012 2-NEBRASKA CITY 2
FDNS	02ALL	2	25SP	G14_038	FROM->TO	POTTER COUNTY INTERCHANGE (WAUK 90343-A) 345/230/13.2KV TRANSFORMER CKT 1	560	560	0.1991	117.8158	MCCLELLAN SUB - MCLEAN RURAL SUB 115KV CKT 1
FDNS	02ALL	2	25SP	G14_038	FROM->TO	POTTER COUNTY INTERCHANGE (WAUK 90343-A) 345/230/13.2KV TRANSFORMER CKT 1	560	560	0.20029	117.8121	GEN542967 9-HAWTHORN UNIT #9
FDNS	02ALL	2	25SP	G14_038	FROM->TO	POTTER COUNTY INTERCHANGE (WAUK 90343-A) 345/230/13.2KV TRANSFORMER CKT 1	560	560	0.20029	117.8111	GEN562042 1-G11_014_3 0.6900
FDNS	02ALL	2	25SP	G14_038	FROM->TO	POTTER COUNTY INTERCHANGE (WAUK 90343-A) 345/230/13.2KV TRANSFORMER CKT 1	560	560	0.20029	117.8078	GEN659018 1-G14_003IS_3 0.6900
FDNS	02ALL	2	25SP	G14_038	FROM->TO	POTTER COUNTY INTERCHANGE (WAUK 90343-A) 345/230/13.2KV TRANSFORMER CKT 1	560	560	0.20029	117.7982	GEN645001 1-FORT CALHOUN 1
FDNS	02ALL	2	25SP	G14_038	FROM->TO	POTTER COUNTY INTERCHANGE (WAUK 90343-A) 345/230/13.2KV TRANSFORMER CKT 1	560	560	0.20029	117.7893	GEN635213 3-NEAL UNIT 3
FDNS	02ALL	2	25SP	G14_038	FROM->TO	POTTER COUNTY INTERCHANGE (WAUK 90343-A) 345/230/13.2KV TRANSFORMER CKT 1	560	560	0.20016	117.7878	CROSSROADS 7345.00 - TOLK STATION 345KV CKT 1
FDNS	02ALL	2	25SP	G14_038	FROM->TO	POTTER COUNTY INTERCHANGE (WAUK 90343-A) 345/230/13.2KV TRANSFORMER CKT 1	560	560	0.20016	117.7853	TOLK STATION (ABBXNL844501) 345/230/13.2KV TRANSFORMER CKT 1
FDNS	02ALL	2	25SP	G14_038	FROM->TO	POTTER COUNTY INTERCHANGE (WAUK 90343-A) 345/230/13.2KV TRANSFORMER CKT 1	560	560	0.20016	117.7853	TOLK STATION (ABBXNL844501) 345/230/13.2KV TRANSFORMER CKT 1
FDNS	02ALL	2	25SP	G14_038	FROM->TO	POTTER COUNTY INTERCHANGE (WAUK 90343-A) 345/230/13.2KV TRANSFORMER CKT 1	560	560	0.20029	117.7822	GEN300020 1-1CHOTCT4 16.000
FDNS	02ALL	2	25SP	G14_038	FROM->TO	POTTER COUNTY INTERCHANGE (WAUK 90343-A) 345/230/13.2KV TRANSFORMER CKT 1	560	560	0.20029	117.7822	GEN300021 1-1CHOTCT5 16.000
FDNS	02ALL	2	25SP	G14_038	FROM->TO	POTTER COUNTY INTERCHANGE (WAUK 90343-A) 345/230/13.2KV TRANSFORMER CKT 1	560	560	0.20029	117.7821	GEN300032 1-CHOUTEAU CTG 2
FDNS	02ALL	2	25SP	G14_038	FROM->TO	POTTER COUNTY INTERCHANGE (WAUK 90343-A) 345/230/13.2KV TRANSFORMER CKT 1	560	560	0.20029	117.7821	GEN300033 1-CHOUTEAU STG 3
FDNS	02ALL	2	25SP	G14_038	FROM->TO	POTTER COUNTY INTERCHANGE (WAUK 90343-A) 345/230/13.2KV TRANSFORMER CKT 1	560	560	0.20029	117.7811	GEN539677 3-A. M. MULLERGREN GENERATOR
FDNS	02ALL	2	25SP	G14_038	FROM->TO	POTTER COUNTY INTERCHANGE (WAUK 90343-A) 345/230/13.2KV TRANSFORMER CKT 1	560	560	0.20029	117.7773	GEN652559 1-OAHE
FDNS	02ALL	2	25SP	G14_038	FROM->TO	POTTER COUNTY INTERCHANGE (WAUK 90343-A) 345/230/13.2KV TRANSFORMER CKT 1	560	560	0.20029	117.7701	GEN542957 1-IATAN UNIT #1
FDNS	02ALL	2	25SP	G14_038	FROM->TO	POTTER COUNTY INTERCHANGE (WAUK 90343-A) 345/230/13.2KV TRANSFORMER CKT 1	560	560	0.20029	117.7688	GEN659289 1-DAYCNTYWND W0.6900
FDNS	02ALL	2	25SP	G14_038	FROM->TO	POTTER COUNTY INTERCHANGE (WAUK 90343-A) 345/230/13.2KV TRANSFORMER CKT 1	560	560	0.20029	117.7674	GEN520947 1-HUGO1
FDNS	02ALL	2	25SP	G14_038	FROM->TO	POTTER COUNTY INTERCHANGE (WAUK 90343-A) 345/230/13.2KV TRANSFORMER CKT 1	560	560	0.19998	117.7631	DEAF SMITH REC-#6 - FRIONA SUB 115KV CKT 1
FDNS	02ALL	2	25SP	G14_038	FROM->TO	POTTER COUNTY INTERCHANGE (WAUK 90343-A) 345/230/13.2KV TRANSFORMER CKT 1	560	560	0.20029	117.7616	GEN539653 1-CIMARRON RIVER PLANT GENERATOR
FDNS	02ALL	2	25SP	G14_038	FROM->TO	POTTER COUNTY INTERCHANGE (WAUK 90343-A) 345/230/13.2KV TRANSFORMER CKT 1	560	560	0.20029	117.7603	GEN532672 1-TECUMSEH ENERGY CENTER UNIT 8
FDNS	02ALL	2	25SP	G14_038	FROM->TO	POTTER COUNTY INTERCHANGE (WAUK 90343-A) 345/230/13.2KV TRANSFORMER CKT 1	560	560	0.20029	117.7602	GEN300024 1-1CHOTST6 16.000
FDNS	02ALL	2	25SP	G14_038	FROM->TO	POTTER COUNTY INTERCHANGE (WAUK 90343-A) 345/230/13.2KV TRANSFORMER CKT 1	560	560	0.20029	117.7601	GEN300031 1-CHOUTEAU CTG 1
FDNS	02ALL	2	25SP	G14_038	FROM->TO	POTTER COUNTY INTERCHANGE (WAUK 90343-A) 345/230/13.2KV TRANSFORMER CKT 1	560	560	0.20029	117.7543	GEN652556 2-OAHE
FDNS	02ALL	2	25SP	G14_038	FROM->TO	POTTER COUNTY INTERCHANGE (WAUK 90343-A) 345/230/13.2KV TRANSFORMER CKT 1	560	560	0.20029	117.7543	GEN652557 4-OAHE
FDNS	02ALL	2	25SP	G14_038	FROM->TO	POTTER COUNTY INTERCHANGE (WAUK 90343-A) 345/230/13.2KV TRANSFORMER CKT 1	560	560	0.20029	117.7543	GEN652558 6-OAHE
FDNS	02ALL	2	25SP	G14_038	FROM->TO	POTTER COUNTY INTERCHANGE (WAUK 90343-A) 345/230/13.2KV TRANSFORMER CKT 1	560	560	0.20029	117.7537	GEN652460 4-GARRISON
FDNS	02ALL	2	25SP	G14_038	FROM->TO	POTTER COUNTY INTERCHANGE (WAUK 90343-A) 345/230/13.2KV TRANSFORMER CKT 1	560	560	0.20029	117.7536	GEN652461 5-GARRISON
FDNS	02ALL	2	25SP	G14_038	FROM->TO	POTTER COUNTY INTERCHANGE (WAUK 90343-A) 345/230/13.2KV TRANSFORMER CKT 1	560	560	0.20029	117.7516	GEN652457 1-GARRISON
FDNS	02ALL	2	25SP	G14_038	FROM->TO	POTTER COUNTY INTERCHANGE (WAUK 90343-A) 345/230/13.2KV TRANSFORMER CKT 1	560	560	0.20029	117.7516	GEN652458 2-GARRISON
FDNS	02ALL	2	25SP	G14_038	FROM->TO	POTTER COUNTY INTERCHANGE (WAUK 90343-A) 345/230/13.2KV TRANSFORMER CKT 1	560	560	0.20029	117.7516	GEN652459 3-GARRISON
FDNS	02ALL	2	25SP	G14_038	FROM->TO	POTTER COUNTY INTERCHANGE (WAUK 90343-A) 345/230/13.2KV TRANSFORMER CKT 1	560	560	0.20029	117.7479	GEN645024 4-NORTH OMAHA 4
FDNS	02ALL	2	25SP	G14_038	FROM->TO	POTTER COUNTY INTERCHANGE (WAUK 90343-A) 345/230/13.2KV TRANSFORMER CKT 1	560	560	0.19998	117.7464	DEAF SMITH REC-#6 - HEREFORD INTERCHANGE 115KV CKT 1
FDNS	02ALL	2	25SP	G14_038	FROM->TO	POTTER COUNTY INTERCHANGE (WAUK 90343-A) 345/230/13.2KV TRANSFORMER CKT 1	560	560	0.2001	117.7456	CANYON E_TP3115.00 - CANYON WEST SUB 115KV CKT 1
FDNS	02ALL	2	25SP	G14_038	FROM->TO	POTTER COUNTY INTERCHANGE (WAUK 90343-A) 345/230/13.2KV TRANSFORMER CKT 1	560	560	0.20029	117.7402	BIG STONE 230/24.0KV TRANSFORMER CKT 1
FDNS	02ALL	2	25SP	G14_038	FROM->TO	POTTER COUNTY INTERCHANGE (WAUK 90343-A) 345/230/13.2KV TRANSFORMER CKT 1	560	560	0.20029	117.7369	GEN600001 2-SHERBURNE CNTY G2
FDNS	02ALL	2	25SP	G14_038	FROM->TO	POTTER COUNTY INTERCHANGE (WAUK 90343-A) 345/230/13.2KV TRANSFORMER CKT 1	560	560	0.20029	117.7368	GEN600005 1-MONTICELLO
FDNS	02ALL	2	25SP	G14_038	FROM->TO	POTTER COUNTY INTERCHANGE (WAUK 90343-A) 345/230/13.2KV TRANSFORMER CKT 1	560	560	0.20029	117.732	GEN532742 5-EMPORIA ENERGY CENTER UNIT 5
FDNS	02ALL	2	25SP	G14_038	FROM->TO	POTTER COUNTY INTERCHANGE (WAUK 90343-A) 345/230/13.2KV TRANSFORMER CKT 1	560	560	0.20003	117.7279	G13_027T 230.00 - YOAKUM COUNTY INTERCHANGE 230KV CKT 1
FDNS	02ALL	2	25SP	G14_038	FROM->TO	POTTER COUNTY INTERCHANGE (WAUK 90343-A) 345/230/13.2KV TRANSFORMER CKT 1	560	560	0.20005	117.7154	AMARILLO SOUTH INTERCHANGE - NICHOLS STATION 230KV CKT 1
FDNS	02ALL	2	25SP	G14_038	FROM->TO	POTTER COUNTY INTERCHANGE (WAUK 90343-A) 345/230/13.2KV TRANSFORMER CKT 1	560	560	0.20005	117.7154	AMARILLO SOUTH INTERCHANGE - NICHOLS STATION 230KV CKT 1
FDNS	02ALL	2	25SP	G14_038	FROM->TO	POTTER COUNTY INTERCHANGE (WAUK 90343-A) 345/230/13.2KV TRANSFORMER CKT 1	560	560	0.20029	117.7014	GEN640005 1-CANADAY
FDNS	02ALL	2	25SP	G14_038	FROM->TO	POTTER COUNTY INTERCHANGE (WAUK 90343-A) 345/230/13.2KV TRANSFORMER CKT 1	560	560	0.19966	117.6996	KRESS INTERCHANGE - TULIA TAP 115KV CKT 1
FDNS	02ALL	2	25SP	G14_038	FROM->TO	POTTER COUNTY INTERCHANGE (WAUK 90343-A) 345/230/13.2KV TRANSFORMER CKT 1	560	560	0.20029	117.6935	GEN600000 1-SHERBURNECNTY G1
FDNS	02ALL	2	25SP	G14_038	FROM->TO	POTTER COUNTY INTERCHANGE (WAUK 90343-A) 345/230/13.2KV TRANSFORMER CKT 1	560	560	0.20029	117.6871	GEN615001 1-COAL CREEK
FDNS	02ALL	2	25SP	G14_038	FROM->TO	POTTER COUNTY INTERCHANGE (WAUK 90343-A) 345/230/13.2KV TRANSFORMER CKT 1	560	560	0.20029	117.6786	GEN615002 2-COAL CREEK
FDNS	02ALL	2	25SP	G14_038	FROM->TO	POTTER COUNTY INTERCHANGE (WAUK 90343-A) 345/230/13.2KV TRANSFORMER CKT 1	560	560	0.19869	117.6776	CONWAY SUB - NICHOLS STATION 115KV CKT 1
FDNS	02ALL	2	25SP	G14_038	FROM->TO	POTTER COUNTY INTERCHANGE (WAUK 90343-A) 345/230/13.2KV TRANSFORMER CKT 1	560	560	0.20029	117.6698	GEN549890 1-SOUTHWEST 1
FDNS	02ALL	2	25SP	G14_038	FROM->TO	POTTER COUNTY INTERCHANGE (WAUK 90343-A) 345/230/13.2KV TRANSFORMER CKT 1	560	560	0.20029	117.6669	GEN300017 1-1G2GPDEL 18.000
FDNS	02ALL	2	25SP	G14_038	FROM->TO	POTTER COUNTY INTERCHANGE (WAUK 90343-A) 345/230/13.2KV TRANSFORMER CKT 1	560	560	0.20029	117.6652	GEN547649 1-ASBURY UNIT #1
FDNS	02ALL	2	25SP	G14_038	FROM->TO	POTTER COUNTY INTERCHANGE (WAUK 90343-A) 345/230/13.2KV TRANSFORMER CKT 1	560	560	0.20029	117.6531	GEN511941 1-OEC STEAM # 2
FDNS	02ALL	2	25SP	G14_038	FROM->TO	POTTER COUNTY INTERCHANGE (WAUK 90343-A) 345/230/13.2KV TRANSFORMER CKT 1	560	560	0.20029	117.6514	GEN532725 1-EVANS ENERGY CENTER GAS TURBINE 3
FDNS	02ALL	2	25SP	G14_038	FROM->TO	POTTER COUNTY INTERCHANGE (WAUK 90343-A) 345/230/13.2KV TRANSFORMER CKT 1	560	560	0.20029	117.6466	GEN547658 1-STATE LINE COMBINED CYCLE
FDNS	02ALL	2	25SP	G14_038	FROM->TO	POTTER COUNTY INTERCHANGE (WAUK 90343-A) 345/230/13.2KV TRANSFORMER CKT 1	560	560	0.19966	117.6461	HAPPY INTERCHANGE - TULIA TAP 115KV CKT 1
FDNS	02ALL	2	25SP	G14_038	FROM->TO	POTTER COUNTY INTERCHANGE (WAUK 90343-A) 345/230/13.2KV TRANSFORMER CKT 1	560	560	0.20029	117.6436	GEN514939 1-HORSESHOE LAKE 8G
FDNS	02ALL	2	25SP	G14_038	FROM->TO	POTTER COUNTY INTERCHANGE (WAUK 90343-A) 345/230/13.2KV TRANSFORMER CKT 1	560	560	0.20029	117.6432	GEN511938 1-OEC STEAM # 1
FDNS	02ALL	2	25SP	G14_038	FROM->TO	POTTER COUNTY INTERCHANGE (WAUK 90343-A) 345/230/13.2KV TRANSFORMER CKT 1	560	560	0.20029	117.6356	GEN300016 1-1G1GPDEL 18.000
FDNS	02ALL	2	25SP	G14_038	FROM->TO	POTTER COUNTY INTERCHANGE (WAUK 90343-A) 345/230/13.2KV TRANSFORMER CKT 1	560	560	0.20029	117.6325	GEN532721 1-EVANS ENERGY CENTER UNIT 1
FDNS	02ALL	2	25SP	G14_038	FROM->TO	POTTER COUNTY INTERCHANGE (WAUK 90343-A) 345/230/13.2KV TRANSFORMER CKT 1	560	560	0.20029	117.6295	GEN531447 1-HOLCOMB GENERATOR

SOLUTION	GROUP	SCENARIO	SEASON	SOURCE	DIRECTION	MONITORED ELEMENT	RATEA (MVA)	RATEB(MVA)	TDF	TC%LOADING (% MVA)	CONTINGENCY
FDNS	02ALL	2	25SP	G14_038	FROM->TO	POTTER COUNTY INTERCHANGE (WAUK 90343-A) 345/230/13.2KV TRANSFORMER CKT 1	560	560	0.20029	117.6244	GEN532743 6-EMPORIA ENERGY CENTER UNIT 6
FDNS	02ALL	2	25SP	G14_038	FROM->TO	POTTER COUNTY INTERCHANGE (WAUK 90343-A) 345/230/13.2KV TRANSFORMER CKT 1	560	560	0.20029	117.6244	GEN532744 7-EMPORIA ENERGY CENTER UNIT 7
FDNS	02ALL	2	25SP	G14_038	FROM->TO	POTTER COUNTY INTERCHANGE (WAUK 90343-A) 345/230/13.2KV TRANSFORMER CKT 1	560	560	0.20029	117.6207	GEN659354 1-DEERCREK STG18.000
FDNS	02ALL	2	25SP	G14_038	FROM->TO	POTTER COUNTY INTERCHANGE (WAUK 90343-A) 345/230/13.2KV TRANSFORMER CKT 1	560	560	0.20029	117.6205	GEN659353 1-DEERCREK CTG18.000
FDNS	02ALL	2	25SP	G14_038	FROM->TO	POTTER COUNTY INTERCHANGE (WAUK 90343-A) 345/230/13.2KV TRANSFORMER CKT 1	560	560	0.20029	117.6129	GEN513602 1-GRECSTG_1 17.500
FDNS	02ALL	2	25SP	G14_038	FROM->TO	POTTER COUNTY INTERCHANGE (WAUK 90343-A) 345/230/13.2KV TRANSFORMER CKT 1	560	560	0.20014	117.6031	P12:345:SPS:J02.1.TOLK.EDDY
FDNS	02ALL	2	25SP	G14_038	FROM->TO	POTTER COUNTY INTERCHANGE (WAUK 90343-A) 345/230/13.2KV TRANSFORMER CKT 1	560	560	0.20029	117.5949	GEN645041 1-CASS COUNTY 1
FDNS	02ALL	2	25SP	G14_038	FROM->TO	POTTER COUNTY INTERCHANGE (WAUK 90343-A) 345/230/13.2KV TRANSFORMER CKT 1	560	560	0.20029	117.5921	GEN645042 2-CASS COUNTY 2
FDNS	02ALL	2	25SP	G14_038	FROM->TO	POTTER COUNTY INTERCHANGE (WAUK 90343-A) 345/230/13.2KV TRANSFORMER CKT 1	560	560	0.20029	117.5691	FINNEY SWITCHING STATION - PSCO LAMAR DC TIE 345KV CKT 1
FDNS	02ALL	2	25SP	G14_038	FROM->TO	POTTER COUNTY INTERCHANGE (WAUK 90343-A) 345/230/13.2KV TRANSFORMER CKT 1	560	560	0.20029	117.5691	FINNEY SWITCHING STATION - PSCO LAMAR DC TIE 345KV CKT 1
FDNS	02ALL	2	25SP	G14_038	FROM->TO	POTTER COUNTY INTERCHANGE (WAUK 90343-A) 345/230/13.2KV TRANSFORMER CKT 1	560	560	0.20029	117.5676	GEN635214 4-NEAL UNIT 4
FDNS	02ALL	2	25SP	G14_038	FROM->TO	POTTER COUNTY INTERCHANGE (WAUK 90343-A) 345/230/13.2KV TRANSFORMER CKT 1	560	560	0.20029	117.5604	GEN532653 1-JEFFREY ENERGY CENTER UNIT 3
FDNS	02ALL	2	25SP	G14_038	FROM->TO	POTTER COUNTY INTERCHANGE (WAUK 90343-A) 345/230/13.2KV TRANSFORMER CKT 1	560	560	0.20029	117.5603	GEN532652 1-JEFFREY ENERGY CENTER UNIT 2
FDNS	02ALL	2	25SP	G14_038	FROM->TO	POTTER COUNTY INTERCHANGE (WAUK 90343-A) 345/230/13.2KV TRANSFORMER CKT 1	560	560	0.20029	117.5543	GEN532651 1-JEFFREY ENERGY CENTER UNIT 1
FDNS	02ALL	2	25SP	G14_038	FROM->TO	POTTER COUNTY INTERCHANGE (WAUK 90343-A) 345/230/13.2KV TRANSFORMER CKT 1	560	560	0.20029	117.5499	SHERBURNE CO 345/24.0KV TRANSFORMER CKT 1
FDNS	02ALL	2	25SP	G14_038	FROM->TO	POTTER COUNTY INTERCHANGE (WAUK 90343-A) 345/230/13.2KV TRANSFORMER CKT 1	560	560	0.20029	117.5492	GEN541163 1-ARIES COMBUSTION TURBINE #1
FDNS	02ALL	2	25SP	G14_038	FROM->TO	POTTER COUNTY INTERCHANGE (WAUK 90343-A) 345/230/13.2KV TRANSFORMER CKT 1	560	560	0.20029	117.5442	GEN300003 1-THOMAS HILL UNIT 3
FDNS	02ALL	2	25SP	G14_038	FROM->TO	POTTER COUNTY INTERCHANGE (WAUK 90343-A) 345/230/13.2KV TRANSFORMER CKT 1	560	560	0.20029	117.5281	GEN509398 1-KNOXLEE #5
FDNS	02ALL	2	25SP	G14_038	FROM->TO	POTTER COUNTY INTERCHANGE (WAUK 90343-A) 345/230/13.2KV TRANSFORMER CKT 1	560	560	0.20029	117.5271	GEN509409 1-WILKES #3
FDNS	02ALL	2	25SP	G14_038	FROM->TO	POTTER COUNTY INTERCHANGE (WAUK 90343-A) 345/230/13.2KV TRANSFORMER CKT 1	560	560	0.20029	117.5239	GEN600002 3-SHERBURNE CNTY G3
FDNS	02ALL	2	25SP	G14_038	FROM->TO	POTTER COUNTY INTERCHANGE (WAUK 90343-A) 345/230/13.2KV TRANSFORMER CKT 1	560	560	0.20029	117.5238	GEN300001 1-THOMAS HILL UNIT 1
FDNS	02ALL	2	25SP	G14_038	FROM->TO	POTTER COUNTY INTERCHANGE (WAUK 90343-A) 345/230/13.2KV TRANSFORMER CKT 1	560	560	0.20016	117.5075	EDDY COUNTY INTERCHANGE (ABB AEM30711) 345/230/13.2KV TRANSFORMER CKT 1
FDNS	02ALL	2	25SP	G14_038	FROM->TO	POTTER COUNTY INTERCHANGE (WAUK 90343-A) 345/230/13.2KV TRANSFORMER CKT 1	560	560	0.20016	117.5075	EDDY COUNTY INTERCHANGE (ABB AEM30711) 345/230/13.2KV TRANSFORMER CKT 1
FDNS	02ALL	2	25SP	G14_038	FROM->TO	POTTER COUNTY INTERCHANGE (WAUK 90343-A) 345/230/13.2KV TRANSFORMER CKT 1	560	560	0.20016	117.5074	CROSSROADS 7345.00 - EDDY COUNTY INTERCHANGE 345KV CKT 1
FDNS	02ALL	2	25SP	G14_038	FROM->TO	POTTER COUNTY INTERCHANGE (WAUK 90343-A) 345/230/13.2KV TRANSFORMER CKT 1	560	560	0.20016	117.5074	P12:345:SPS:J14.1.EDDY.XRD$
FDNS	02ALL	2	25SP	G14_038	FROM->TO	POTTER COUNTY INTERCHANGE (WAUK 90343-A) 345/230/13.2KV TRANSFORMER CKT 1	560	560	0.20029	117.5072	GEN541162 1-ARIES STEAM TURBINE
FDNS	02ALL	2	25SP	G14_038	FROM->TO	POTTER COUNTY INTERCHANGE (WAUK 90343-A) 345/230/13.2KV TRANSFORMER CKT 1	560	560	0.20029	117.506	GEN515040 1-SEMINOLE 1G
FDNS	02ALL	2	25SP	G14_038	FROM->TO	POTTER COUNTY INTERCHANGE (WAUK 90343-A) 345/230/13.2KV TRANSFORMER CKT 1	560	560	0.20029	117.4978	GEN640009 1-COOPER NUCLEAR STATION
FDNS	02ALL	2	25SP	G14_038	FROM->TO	POTTER COUNTY INTERCHANGE (WAUK 90343-A) 345/230/13.2KV TRANSFORMER CKT 1	560	560	0.20029	117.4862	GEN635023 3-WALTER SCOTT UNIT 3
FDNS	02ALL	2	25SP	G14_038	FROM->TO	POTTER COUNTY INTERCHANGE (WAUK 90343-A) 345/230/13.2KV TRANSFORMER CKT 1	560	560	0.20029	117.4513	GEN515592 1-PALDRW21 0.6900
FDNS	02ALL	2	25SP	G14_038	FROM->TO	POTTER COUNTY INTERCHANGE (WAUK 90343-A) 345/230/13.2KV TRANSFORMER CKT 1	560	560	0.20029	117.4443	GEN531459 2-S2 GENERATOR
FDNS	02ALL	2	25SP	G14_038	FROM->TO	POTTER COUNTY INTERCHANGE (WAUK 90343-A) 345/230/13.2KV TRANSFORMER CKT 1	560	560	0.20029	117.4163	GEN523170 1-GOODWELL_1 10.6900
FDNS	02ALL	2	25SP	G14_038	FROM->TO	POTTER COUNTY INTERCHANGE (WAUK 90343-A) 345/230/13.2KV TRANSFORMER CKT 1	560	560	0.2001	117.3981	CANYON E_TP3115.00 - RANDALL COUNTY INTERCHANGE 115KV CKT 1
FDNS	02ALL	2	25SP	G14_038	FROM->TO	POTTER COUNTY INTERCHANGE (WAUK 90343-A) 345/230/13.2KV TRANSFORMER CKT 1	560	560	0.20029	117.3929	GEN515041 1-SEMINOLE 2G
FDNS	02ALL	2	25SP	G14_038	FROM->TO	POTTER COUNTY INTERCHANGE (WAUK 90343-A) 345/230/13.2KV TRANSFORMER CKT 1	560	560	0.20097	117.39	CHAN/TASCOS6230.00 - POTTER COUNTY INTERCHANGE 230KV CKT 1
FDNS	02ALL	2	25SP	G14_038	FROM->TO	POTTER COUNTY INTERCHANGE (WAUK 90343-A) 345/230/13.2KV TRANSFORMER CKT 1	560	560	0.20029	117.378	GEN523171 1-GOODWELL_2 10.6900
FDNS	02ALL	2	25SP	G14_038	FROM->TO	POTTER COUNTY INTERCHANGE (WAUK 90343-A) 345/230/13.2KV TRANSFORMER CKT 1	560	560	0.20029	117.3639	GEN645025 5-NORTH OMAHA 5
FDNS	02ALL	2	25SP	G14_038	FROM->TO	POTTER COUNTY INTERCHANGE (WAUK 90343-A) 345/230/13.2KV TRANSFORMER CKT 1	560	560	0.20029	117.3585	GEN300010 1-ST FRANCIS UNIT 1
FDNS	02ALL	2	25SP	G14_038	FROM->TO	POTTER COUNTY INTERCHANGE (WAUK 90343-A) 345/230/13.2KV TRANSFORMER CKT 1	560	560	0.20029	117.3579	GEN515042 1-SEMINOLE 3G
FDNS	02ALL	2	25SP	G14_038	FROM->TO	POTTER COUNTY INTERCHANGE (WAUK 90343-A) 345/230/13.2KV TRANSFORMER CKT 1	560	560	0.20029	117.3541	GEN635024 4-WALTER SCOTT UNIT 4
FDNS	02ALL	2	25SP	G14_038	FROM->TO	POTTER COUNTY INTERCHANGE (WAUK 90343-A) 345/230/13.2KV TRANSFORMER CKT 1	560	560	0.20029	117.3531	GEN549893 2-SOUTHWEST 2
FDNS	02ALL	2	25SP	G14_038	FROM->TO	POTTER COUNTY INTERCHANGE (WAUK 90343-A) 345/230/13.2KV TRANSFORMER CKT 1	560	560	0.20029	117.3458	GEN300015 1-1SGPDEL 18.000
FDNS	02ALL	2	25SP	G14_038	FROM->TO	POTTER COUNTY INTERCHANGE (WAUK 90343-A) 345/230/13.2KV TRANSFORMER CKT 1	560	560	0.20029	117.3319	GEN659118 1-LARAMIE RIVER UNIT1
FDNS	02ALL	2	25SP	G14_038	FROM->TO	POTTER COUNTY INTERCHANGE (WAUK 90343-A) 345/230/13.2KV TRANSFORMER CKT 1	560	560	0.20029	117.3142	GEN505432 1-SIKESTON
FDNS	02ALL	2	25SP	G14_038	FROM->TO	POTTER COUNTY INTERCHANGE (WAUK 90343-A) 345/230/13.2KV TRANSFORMER CKT 1	560	560	0.20029	117.3128	GEN300011 1-ST FRANCIS UNIT 2
FDNS	02ALL	2	25SP	G14_038	FROM->TO	POTTER COUNTY INTERCHANGE (WAUK 90343-A) 345/230/13.2KV TRANSFORMER CKT 1	560	560	0.19795	117.2966	CHERRY1 - HARRINGTON STATION 230KV CKT 1
FDNS	02ALL	2	25SP	G14_038	FROM->TO	POTTER COUNTY INTERCHANGE (WAUK 90343-A) 345/230/13.2KV TRANSFORMER CKT 1	560	560	0.19795	117.2966	CHERRY1 - HARRINGTON STATION 230KV CKT 1
FDNS	02ALL	2	25SP	G14_038	FROM->TO	POTTER COUNTY INTERCHANGE (WAUK 90343-A) 345/230/13.2KV TRANSFORMER CKT 1	560	560	0.20029	117.2878	GEN659110 1-LELAND OLDS UNIT1
FDNS	02ALL	2	25SP	G14_038	FROM->TO	POTTER COUNTY INTERCHANGE (WAUK 90343-A) 345/230/13.2KV TRANSFORMER CKT 1	560	560	0.19993	117.2796	Harrington Station Mid Bus - RANDALL COUNTY INTERCHANGE 230KV CKT 1
FDNS	02ALL	2	25SP	G14_038	FROM->TO	POTTER COUNTY INTERCHANGE (WAUK 90343-A) 345/230/13.2KV TRANSFORMER CKT 1	560	560	0.19993	117.2796	Harrington Station Mid Bus - RANDALL COUNTY INTERCHANGE 230KV CKT 1
FDNS	02ALL	2	25SP	G14_038	FROM->TO	POTTER COUNTY INTERCHANGE (WAUK 90343-A) 345/230/13.2KV TRANSFORMER CKT 1	560	560	0.20029	117.2599	GEN546702 1-NM GEN N1
FDNS	02ALL	2	25SP	G14_038	FROM->TO	POTTER COUNTY INTERCHANGE (WAUK 90343-A) 345/230/13.2KV TRANSFORMER CKT 1	560	560	0.20029	117.2356	GEN560256 1-G10-14-1 0.6900
FDNS	02ALL	2	25SP	G14_038	FROM->TO	POTTER COUNTY INTERCHANGE (WAUK 90343-A) 345/230/13.2KV TRANSFORMER CKT 1	560	560	0.19966	117.2222	HAPPY INTERCHANGE - PALO DURO SUB 115KV CKT 1
FDNS	02ALL	2	25SP	G14_038	FROM->TO	POTTER COUNTY INTERCHANGE (WAUK 90343-A) 345/230/13.2KV TRANSFORMER CKT 1	560	560	0.19722	117.2169	AMARILLO SOUTH INTERCHANGE - G15031_T 230.00 230KV CKT 1
FDNS	02ALL	2	25SP	G14_038	FROM->TO	POTTER COUNTY INTERCHANGE (WAUK 90343-A) 345/230/13.2KV TRANSFORMER CKT 1	560	560	0.19964	117.1912	PLANT X STATION - SUNDOWN INTERCHANGE 230KV CKT 1
FDNS	02ALL	2	25SP	G14_038	FROM->TO	POTTER COUNTY INTERCHANGE (WAUK 90343-A) 345/230/13.2KV TRANSFORMER CKT 1	560	560	0.19964	117.1912	PLANT X STATION - SUNDOWN INTERCHANGE 230KV CKT 1
FDNS	02ALL	2	25SP	G14_038	FROM->TO	POTTER COUNTY INTERCHANGE (WAUK 90343-A) 345/230/13.2KV TRANSFORMER CKT 1	560	560	0.20029	117.1882	GEN513601 1-GRECCTG_1 20.000
FDNS	02ALL	2	25SP	G14_038	FROM->TO	POTTER COUNTY INTERCHANGE (WAUK 90343-A) 345/230/13.2KV TRANSFORMER CKT 1	560	560	0.20029	117.1729	GEN641089 2-ENERGY CENTER 2
FDNS	02ALL	2	25SP	G14_038	FROM->TO	POTTER COUNTY INTERCHANGE (WAUK 90343-A) 345/230/13.2KV TRANSFORMER CKT 1	560	560	0.20029	117.1719	GEN509406 1-WELSH #3
FDNS	02ALL	2	25SP	G14_038	FROM->TO	POTTER COUNTY INTERCHANGE (WAUK 90343-A) 345/230/13.2KV TRANSFORMER CKT 1	560	560	0.20029	117.1718	GEN509404 1-WELSH #1
FDNS	02ALL	2	25SP	G14_038	FROM->TO	POTTER COUNTY INTERCHANGE (WAUK 90343-A) 345/230/13.2KV TRANSFORMER CKT 1	560	560	0.20029	117.1711	GEN539670 4-JUDSON LARGE GENERATOR
FDNS	02ALL	2	25SP	G14_038	FROM->TO	POTTER COUNTY INTERCHANGE (WAUK 90343-A) 345/230/13.2KV TRANSFORMER CKT 1	560	560	0.19966	117.1465	PALO DURO SUB - RANDALL COUNTY INTERCHANGE 115KV CKT 1
FDNS	02ALL	2	25SP	G14_038	FROM->TO	POTTER COUNTY INTERCHANGE (WAUK 90343-A) 345/230/13.2KV TRANSFORMER CKT 1	560	560	0.20029	117.1261	GEN560257 1-G10-14-2 0.6900
FDNS	02ALL	2	25SP	G14_038	FROM->TO	POTTER COUNTY INTERCHANGE (WAUK 90343-A) 345/230/13.2KV TRANSFORMER CKT 1	560	560	0.20029	117.1026	GEN300002 1-THOMAS HILL UNIT 2
FDNS	02ALL	2	25SP	G14_038	FROM->TO	POTTER COUNTY INTERCHANGE (WAUK 90343-A) 345/230/13.2KV TRANSFORMER CKT 1	560	560	0.20029	117.0578	GEN511842 1-RIVERSIDE STATION #1
FDNS	02ALL	2	25SP	G14_038	FROM->TO	POTTER COUNTY INTERCHANGE (WAUK 90343-A) 345/230/13.2KV TRANSFORMER CKT 1	560	560	0.20029	117.0522	GEN511843 1-RIVERSIDE STATION #2
FDNS	02ALL	2	25SP	G14_038	FROM->TO	POTTER COUNTY INTERCHANGE (WAUK 90343-A) 345/230/13.2KV TRANSFORMER CKT 1	560	560	0.20029	117.04	GEN542962 2-IATAN UNIT #2
FDNS	02ALL	2	25SP	G14_038	FROM->TO	POTTER COUNTY INTERCHANGE (WAUK 90343-A) 345/230/13.2KV TRANSFORMER CKT 1	560	560	0.20029	117.0359	GEN640010 1-GERALD GENTLEMAN STATION UNIT 1
FDNS	02ALL	2	25SP	G14_038	FROM->TO	POTTER COUNTY INTERCHANGE (WAUK 90343-A) 345/230/13.2KV TRANSFORMER CKT 1	560	560	0.19687	117.0302	Harrington Station East Bus - POTTER COUNTY INTERCHANGE 230KV CKT 1
FDNS	02ALL	2	25SP	G14_038	FROM->TO	POTTER COUNTY INTERCHANGE (WAUK 90343-A) 345/230/13.2KV TRANSFORMER CKT 1	560	560	0.19687	117.0302	Harrington Station East Bus - POTTER COUNTY INTERCHANGE 230KV CKT 1
FDNS	02ALL	2	25SP	G14_038	FROM->TO	POTTER COUNTY INTERCHANGE (WAUK 90343-A) 345/230/13.2KV TRANSFORMER CKT 1	560	560	0.20029	117.0103	GEN509416 1-TURK GENERATION
FDNS	02ALL	2	25SP	G14_038	FROM->TO	POTTER COUNTY INTERCHANGE (WAUK 90343-A) 345/230/13.2KV TRANSFORMER CKT 1	560	560	0.20029	117.0001	GEN511839 1-NORTHEASTERN STATION #2
FDNS	02ALL	2	25SP	G14_038	FROM->TO	POTTER COUNTY INTERCHANGE (WAUK 90343-A) 345/230/13.2KV TRANSFORMER CKT 1	560	560	0.20029	116.979	GEN515223 1-MUSKOGEE 4G
FDNS	02ALL	2	25SP	G14_038	FROM->TO	POTTER COUNTY INTERCHANGE (WAUK 90343-A) 345/230/13.2KV TRANSFORMER CKT 1	560	560	0.20029	116.9664	GEN515226 1-MUSKOGEE 6G
FDNS	02ALL	2	25SP	G14_038	FROM->TO	POTTER COUNTY INTERCHANGE (WAUK 90343-A) 345/230/13.2KV TRANSFORMER CKT 1	560	560	0.19658	116.9587	CHERRY1 - POTTER COUNTY INTERCHANGE 230KV CKT 1
FDNS	02ALL	2	25SP	G14_038	FROM->TO	POTTER COUNTY INTERCHANGE (WAUK 90343-A) 345/230/13.2KV TRANSFORMER CKT 1	560	560	0.19658	116.9587	CHERRY1 - POTTER COUNTY INTERCHANGE 230KV CKT 1
FDNS	02ALL	2	25SP	G14_038	FROM->TO	POTTER COUNTY INTERCHANGE (WAUK 90343-A) 345/230/13.2KV TRANSFORMER CKT 1	560	560	0.20029	116.949	GEN515225 1-MUSKOGEE 5G
FDNS	02ALL	2	25SP	G14_038	FROM->TO	POTTER COUNTY INTERCHANGE (WAUK 90343-A) 345/230/13.2KV TRANSFORMER CKT 1	560	560	0.19937	116.9213	NEWHART 230 - PLANT X STATION 230KV CKT 1
FDNS	02ALL	2	25SP	G14_038	FROM->TO	POTTER COUNTY INTERCHANGE (WAUK 90343-A) 345/230/13.2KV TRANSFORMER CKT 1	560	560	0.19839	116.9092	ELK CITY 230KV (ELKCTY-6) 230/138/13.8KV TRANSFORMER CKT 1

SOLUTION	GROUP	SCENARIO	SEASON	SOURCE	DIRECTION	MONITORED ELEMENT	RATEA (MVA)	RATEB(MVA)	TDF	TC%LOADING (% MVA)	CONTINGENCY
FDNS	02ALL	2	25SP	G14_038	FROM->TO	POTTER COUNTY INTERCHANGE (WAUK 90343-A) 345/230/13.2KV TRANSFORMER CKT 1	560	560	0.20029	116.8955	GEN511840 1-NORTHEASTERN STATION #3
FDNS	02ALL	2	25SP	G14_038	FROM->TO	POTTER COUNTY INTERCHANGE (WAUK 90343-A) 345/230/13.2KV TRANSFORMER CKT 1	560	560	0.20029	116.8602	GEN562648 1-G14_037_3 0.6900
FDNS	02ALL	2	25SP	G14_038	FROM->TO	POTTER COUNTY INTERCHANGE (WAUK 90343-A) 345/230/13.2KV TRANSFORMER CKT 1	560	560	0.20029	116.8247	GEN512688 2-GRDA1 GSU2 22
FDNS	02ALL	2	25SP	G14_038	FROM->TO	POTTER COUNTY INTERCHANGE (WAUK 90343-A) 345/230/13.2KV TRANSFORMER CKT 1	560	560	0.20029	116.7769	GEN640011 2-GERALD GENTLEMAN STATION UNIT 2
FDNS	02ALL	2	25SP	G14_038	FROM->TO	POTTER COUNTY INTERCHANGE (WAUK 90343-A) 345/230/13.2KV TRANSFORMER CKT 1	560	560	0.20029	116.7475	GEN509403 1-PIRKEY GENERATION
FDNS	02ALL	2	25SP	G14_038	FROM->TO	POTTER COUNTY INTERCHANGE (WAUK 90343-A) 345/230/13.2KV TRANSFORMER CKT 1	560	560	0.20029	116.7234	GEN523122 1-NBLWND-WTG210.6900
FDNS	02ALL	2	25SP	G14_038	FROM->TO	POTTER COUNTY INTERCHANGE (WAUK 90343-A) 345/230/13.2KV TRANSFORMER CKT 1	560	560	0.20029	116.7112	GEN541151 3-SIBLEY GENERATING UNIT #3
FDNS	02ALL	2	25SP	G14_038	FROM->TO	POTTER COUNTY INTERCHANGE (WAUK 90343-A) 345/230/13.2KV TRANSFORMER CKT 1	560	560	0.20029	116.6999	GEN523121 1-NBLWND-WTG110.6900
FDNS	02ALL	2	25SP	G14_038	FROM->TO	POTTER COUNTY INTERCHANGE (WAUK 90343-A) 345/230/13.2KV TRANSFORMER CKT 1	560	560	0.20029	116.6994	GEN532663 1-LAWRENCE ENERGY CENTER UNIT 5
FDNS	02ALL	2	25SP	G14_038	FROM->TO	POTTER COUNTY INTERCHANGE (WAUK 90343-A) 345/230/13.2KV TRANSFORMER CKT 1	560	560	0.20029	116.663	GEN560584 1-G06-44-2 4.1600
FDNS	02ALL	2	25SP	G14_038	FROM->TO	POTTER COUNTY INTERCHANGE (WAUK 90343-A) 345/230/13.2KV TRANSFORMER CKT 1	560	560	0.20029	116.6614	GEN523107 1-NOVUS_WND 14.1600
FDNS	02ALL	2	25SP	G14_038	FROM->TO	POTTER COUNTY INTERCHANGE (WAUK 90343-A) 345/230/13.2KV TRANSFORMER CKT 1	560	560	0.20029	116.6516	GEN514805 1-SOONER UNIT 1
FDNS	02ALL	2	25SP	G14_038	FROM->TO	POTTER COUNTY INTERCHANGE (WAUK 90343-A) 345/230/13.2KV TRANSFORMER CKT 1	560	560	0.20029	116.6352	GEN509394 1-FLINT CREEK
FDNS	02ALL	2	25SP	G14_038	FROM->TO	POTTER COUNTY INTERCHANGE (WAUK 90343-A) 345/230/13.2KV TRANSFORMER CKT 1	560	560	0.20029	116.6315	GEN514806 1-SOONER UNIT 2
FDNS	02ALL	2	25SP	G14_038	FROM->TO	POTTER COUNTY INTERCHANGE (WAUK 90343-A) 345/230/13.2KV TRANSFORMER CKT 1	560	560	0.20029	116.6244	GEN523123 1-NBLWND-WTG310.6900
FDNS	02ALL	2	25SP	G14_038	FROM->TO	POTTER COUNTY INTERCHANGE (WAUK 90343-A) 345/230/13.2KV TRANSFORMER CKT 1	560	560	0.19806	116.5999	Harrington Station East Bus - Harrington Station Mid Bus 230KV CKT @1
FDNS	02ALL	2	25SP	G14_038	FROM->TO	POTTER COUNTY INTERCHANGE (WAUK 90343-A) 345/230/13.2KV TRANSFORMER CKT 1	560	560	0.20029	116.5795	GEN532722 1-EVANS ENERGY CENTER UNIT 2
FDNS	02ALL	2	25SP	G14_038	FROM->TO	POTTER COUNTY INTERCHANGE (WAUK 90343-A) 345/230/13.2KV TRANSFORMER CKT 1	560	560	0.20029	116.3253	GEN515591 1-PALDRW11 0.6900
FDNS	02ALL	2	25SP	G14_038	FROM->TO	POTTER COUNTY INTERCHANGE (WAUK 90343-A) 345/230/13.2KV TRANSFORMER CKT 1	560	560	0.19521	116.2552	SWISHER COUNTY INTERCHANGE - TUCO_2 230.00 230KV CKT 1
FDNS	02ALL	2	25SP	G14_038	FROM->TO	POTTER COUNTY INTERCHANGE (WAUK 90343-A) 345/230/13.2KV TRANSFORMER CKT 1	560	560	0.20029	116.2383	GEN560586 1-G06-44-4 4.1600
FDNS	02ALL	2	25SP	G14_038	FROM->TO	POTTER COUNTY INTERCHANGE (WAUK 90343-A) 345/230/13.2KV TRANSFORMER CKT 1	560	560	0.20029	116.193	GEN659111 2-LELAND OLDS UNIT2
FDNS	02ALL	2	25SP	G14_038	FROM->TO	POTTER COUNTY INTERCHANGE (WAUK 90343-A) 345/230/13.2KV TRANSFORMER CKT 1	560	560	0.19722	116.1349	G15031_T 230.00 - SWISHER COUNTY INTERCHANGE 230KV CKT 1
FDNS	02ALL	2	25SP	G14_038	FROM->TO	POTTER COUNTY INTERCHANGE (WAUK 90343-A) 345/230/13.2KV TRANSFORMER CKT 1	560	560	0.20029	116.0487	GEN590010 1-ERCOT EQUIVALENCE
FDNS	02ALL	2	25SP	G14_038	FROM->TO	POTTER COUNTY INTERCHANGE (WAUK 90343-A) 345/230/13.2KV TRANSFORMER CKT 1	560	560	0.20029	116.0251	GEN560585 1-G06-44-3 4.1600
FDNS	02ALL	2	25SP	G14_038	FROM->TO	POTTER COUNTY INTERCHANGE (WAUK 90343-A) 345/230/13.2KV TRANSFORMER CKT 1	560	560	0.20029	116.002	GEN659103 1-ANTELOPE VALLEY UNIT1
FDNS	02ALL	2	25SP	G14_038	FROM->TO	POTTER COUNTY INTERCHANGE (WAUK 90343-A) 345/230/13.2KV TRANSFORMER CKT 1	560	560	0.20029	116.002	GEN659107 2-ANTELOPE VALLEY UNIT2
FDNS	02ALL	2	25SP	G14_038	FROM->TO	POTTER COUNTY INTERCHANGE (WAUK 90343-A) 345/230/13.2KV TRANSFORMER CKT 1	560	560	0.20029	115.98	GEN590011 2-ERCOT EQUIVALENCE
FDNS	02ALL	2	25SP	G14_038	FROM->TO	POTTER COUNTY INTERCHANGE (WAUK 90343-A) 345/230/13.2KV TRANSFORMER CKT 1	560	560	0.20029	115.889	GEN300006 1-NEW MADRID UNIT 1
FDNS	02ALL	2	25SP	G14_038	FROM->TO	POTTER COUNTY INTERCHANGE (WAUK 90343-A) 345/230/13.2KV TRANSFORMER CKT 1	560	560	0.20029	115.8862	GEN300007 1-NEW MADRID UNIT 2
FDNS	02ALL	2	25SP	G14_038	FROM->TO	POTTER COUNTY INTERCHANGE (WAUK 90343-A) 345/230/13.2KV TRANSFORMER CKT 1	560	560	0.19729	115.7903	DEAF SMITH COUNTY INTERCHANGE - G15039_T 230.00 230KV CKT 1
FDNS	02ALL	2	25SP	G14_038	FROM->TO	POTTER COUNTY INTERCHANGE (WAUK 90343-A) 345/230/13.2KV TRANSFORMER CKT 1	560	560	0.19729	115.7135	G15039_T 230.00 - PLANT X STATION 230KV CKT 1
FDNS	02ALL	2	25SP	G14_038	FROM->TO	POTTER COUNTY INTERCHANGE (WAUK 90343-A) 345/230/13.2KV TRANSFORMER CKT 1	560	560	0.20029	115.7012	GEN532751 1-WOLF CREEK GENERATING STATION UNIT 1
FDNS	02ALL	2	25SP	G14_038	FROM->TO	POTTER COUNTY INTERCHANGE (WAUK 90343-A) 345/230/13.2KV TRANSFORMER CKT 1	560	560	0.20029	115.688	GEN542951 5-HAWTHORN UNIT #5
FDNS	02ALL	2	25SP	G14_038	FROM->TO	POTTER COUNTY INTERCHANGE (WAUK 90343-A) 345/230/13.2KV TRANSFORMER CKT 1	560	560	0.20029	115.5698	GEN560286 1-G10-01-1WTG 0.6900
FDNS	02ALL	2	25SP	G14_038	FROM->TO	POTTER COUNTY INTERCHANGE (WAUK 90343-A) 345/230/13.2KV TRANSFORMER CKT 1	560	560	0.20029	115.5698	GEN560287 1-G10-01-2WTG 0.6900
FDNS	02ALL	2	25SP	G14_038	FROM->TO	POTTER COUNTY INTERCHANGE (WAUK 90343-A) 345/230/13.2KV TRANSFORMER CKT 1	560	560	0.20029	115.4664	GEN542956 2-LACYGNE UNIT #2
FDNS	02ALL	2	25SP	G14_038	FROM->TO	POTTER COUNTY INTERCHANGE (WAUK 90343-A) 345/230/13.2KV TRANSFORMER CKT 1	560	560	0.20029	115.4257	GEN524295 1-SPNSPUR_WND10.6900
FDNS	02ALL	2	25SP	G14_038	FROM->TO	POTTER COUNTY INTERCHANGE (WAUK 90343-A) 345/230/13.2KV TRANSFORMER CKT 1	560	560	0.20029	115.3409	GEN562432 1-G13-030 0.6900
FDNS	02ALL	2	25SP	G14_038	FROM->TO	POTTER COUNTY INTERCHANGE (WAUK 90343-A) 345/230/13.2KV TRANSFORMER CKT 1	560	560	0.19633	115.3194	BUSHLAND INTERCHANGE - POTTER COUNTY INTERCHANGE 230KV CKT 1
FDNS	02ALL	2	25SP	G14_038	FROM->TO	POTTER COUNTY INTERCHANGE (WAUK 90343-A) 345/230/13.2KV TRANSFORMER CKT 1	560	560	0.19633	115.3194	BUSHLAND INTERCHANGE - POTTER COUNTY INTERCHANGE 230KV CKT 1
FDNS	02ALL	2	25SP	G14_038	FROM->TO	POTTER COUNTY INTERCHANGE (WAUK 90343-A) 345/230/13.2KV TRANSFORMER CKT 1	560	560	0.20029	115.2042	GEN645011 1-NEBRASKA CITY 1
FDNS	02ALL	2	25SP	G14_038	FROM->TO	POTTER COUNTY INTERCHANGE (WAUK 90343-A) 345/230/13.2KV TRANSFORMER CKT 1	560	560	0.20029	115.0933	GEN563173 1-G15082_3 0.6900
FDNS	02ALL	2	25SP	G14_038	FROM->TO	POTTER COUNTY INTERCHANGE (WAUK 90343-A) 345/230/13.2KV TRANSFORMER CKT 1	560	560	0.20029	115.0756	GEN562042 1-G11_014_3 0.6900
FDNS	02ALL	2	25SP	G14_038	FROM->TO	POTTER COUNTY INTERCHANGE (WAUK 90343-A) 345/230/13.2KV TRANSFORMER CKT 1	560	560	0.20029	115.0537	GEN542955 1-LACYGNE UNIT #1
FDNS	02ALL	2	25SP	G14_038	FROM->TO	POTTER COUNTY INTERCHANGE (WAUK 90343-A) 345/230/13.2KV TRANSFORMER CKT 1	560	560	0.20029	115.0144	GEN645012 2-NEBRASKA CITY 2
FDNS	02ALL	2	25SP	G14_038	FROM->TO	POTTER COUNTY INTERCHANGE (WAUK 90343-A) 345/230/13.2KV TRANSFORMER CKT 1	560	560	0.20029	114.9957	GEN645001 1-FORT CALHOUN 1
FDNS	02ALL	2	25SP	G14_038	FROM->TO	POTTER COUNTY INTERCHANGE (WAUK 90343-A) 345/230/13.2KV TRANSFORMER CKT 1	560	560	0.20029	114.9708	GEN542957 1-IATAN UNIT #1
FDNS	02ALL	2	25SP	G14_038	FROM->TO	POTTER COUNTY INTERCHANGE (WAUK 90343-A) 345/230/13.2KV TRANSFORMER CKT 1	560	560	0.20029	114.8495	GEN531447 1-HOLCOMB GENERATOR
FDNS	02ALL	2	25SP	G14_038	FROM->TO	POTTER COUNTY INTERCHANGE (WAUK 90343-A) 345/230/13.2KV TRANSFORMER CKT 1	560	560	0.20029	114.7775	GEN532653 1-JEFFREY ENERGY CENTER UNIT 3
FDNS	02ALL	2	25SP	G14_038	FROM->TO	POTTER COUNTY INTERCHANGE (WAUK 90343-A) 345/230/13.2KV TRANSFORMER CKT 1	560	560	0.20029	114.7774	GEN532652 1-JEFFREY ENERGY CENTER UNIT 2
FDNS	02ALL	2	25SP	G14_038	FROM->TO	POTTER COUNTY INTERCHANGE (WAUK 90343-A) 345/230/13.2KV TRANSFORMER CKT 1	560	560	0.20029	114.7719	GEN532651 1-JEFFREY ENERGY CENTER UNIT 1
FDNS	02ALL	2	25SP	G14_038	FROM->TO	POTTER COUNTY INTERCHANGE (WAUK 90343-A) 345/230/13.2KV TRANSFORMER CKT 1	560	560	0.20029	114.7625	GEN300003 1-THOMAS HILL UNIT 3
FDNS	02ALL	2	25SP	G14_038	FROM->TO	POTTER COUNTY INTERCHANGE (WAUK 90343-A) 345/230/13.2KV TRANSFORMER CKT 1	560	560	0.20029	114.7188	GEN640009 1-COOPER NUCLEAR STATION
FDNS	02ALL	2	25SP	G14_038	FROM->TO	POTTER COUNTY INTERCHANGE (WAUK 90343-A) 345/230/13.2KV TRANSFORMER CKT 1	560	560	0.19722	114.6016	AMARILLO SOUTH INTERCHANGE - G15031_T 230.00 230KV CKT 1
FDNS	02ALL	2	25SP	G14_038	FROM->TO	POTTER COUNTY INTERCHANGE (WAUK 90343-A) 345/230/13.2KV TRANSFORMER CKT 1	560	560	0.20029	114.5939	GEN560256 1-G10-14-1 0.6900
FDNS	02ALL	2	25SP	G14_038	FROM->TO	POTTER COUNTY INTERCHANGE (WAUK 90343-A) 345/230/13.2KV TRANSFORMER CKT 1	560	560	0.20029	114.5634	GEN659118 1-LARAMIE RIVER UNIT1
FDNS	02ALL	2	25SP	G14_038	FROM->TO	POTTER COUNTY INTERCHANGE (WAUK 90343-A) 345/230/13.2KV TRANSFORMER CKT 1	560	560	0.20029	114.4967	GEN560257 1-G10-14-2 0.6900
FDNS	02ALL	2	25SP	G14_038	FROM->TO	POTTER COUNTY INTERCHANGE (WAUK 90343-A) 345/230/13.2KV TRANSFORMER CKT 1	560	560	0.20029	114.4433	GEN562017 1-G11_022_3 0.6900
FDNS	02ALL	2	25SP	G14_038	FROM->TO	POTTER COUNTY INTERCHANGE (WAUK 90343-A) 345/230/13.2KV TRANSFORMER CKT 1	560	560	0.20029	114.297	GEN542962 2-IATAN UNIT #2
FDNS	02ALL	2	25SP	G14_038	FROM->TO	POTTER COUNTY INTERCHANGE (WAUK 90343-A) 345/230/13.2KV TRANSFORMER CKT 1	560	560	0.20029	114.2883	GEN640010 1-GERALD GENTLEMAN STATION UNIT 1
FDNS	02ALL	2	25SP	G14_038	FROM->TO	POTTER COUNTY INTERCHANGE (WAUK 90343-A) 345/230/13.2KV TRANSFORMER CKT 1	560	560	0.20029	114.194	GEN562648 1-G14_037_3 0.6900
FDNS	02ALL	2	25SP	G14_038	FROM->TO	POTTER COUNTY INTERCHANGE (WAUK 90343-A) 345/230/13.2KV TRANSFORMER CKT 1	560	560	0.19552	114.0682	BUSHLAND INTERCHANGE - DEAF SMITH COUNTY INTERCHANGE 230KV CKT 1
FDNS	02ALL	2	25SP	G14_038	FROM->TO	POTTER COUNTY INTERCHANGE (WAUK 90343-A) 345/230/13.2KV TRANSFORMER CKT 1	560	560	0.19552	114.0682	BUSHLAND INTERCHANGE - DEAF SMITH COUNTY INTERCHANGE 230KV CKT 1
FDNS	02ALL	2	25SP	G14_038	FROM->TO	POTTER COUNTY INTERCHANGE (WAUK 90343-A) 345/230/13.2KV TRANSFORMER CKT 1	560	560	0.20029	114.0485	GEN640011 2-GERALD GENTLEMAN STATION UNIT 2
FDNS	02ALL	2	25SP	G14_038	FROM->TO	POTTER COUNTY INTERCHANGE (WAUK 90343-A) 345/230/13.2KV TRANSFORMER CKT 1	560	560	0.20029	113.783	GEN562544 1-G14_038_3 0.6900
FDNS	02ALL	2	25SP	G14_038	FROM->TO	POTTER COUNTY INTERCHANGE (WAUK 90343-A) 345/230/13.2KV TRANSFORMER CKT 1	560	560	0.20029	113.7516	GEN515591 1-PALDRW11 0.6900
FDNS	02ALL	2	25SP	G14_038	FROM->TO	POTTER COUNTY INTERCHANGE (WAUK 90343-A) 345/230/13.2KV TRANSFORMER CKT 1	560	560	0.19722	113.6393	G15031_T 230.00 - SWISHER COUNTY INTERCHANGE 230KV CKT 1
FDNS	02ALL	2	25SP	G14_038	FROM->TO	POTTER COUNTY INTERCHANGE (WAUK 90343-A) 345/230/13.2KV TRANSFORMER CKT 1	560	560	0.20029	113.0608	GEN532751 1-WOLF CREEK GENERATING STATION UNIT 1
FDNS	02ALL	2	25SP	G14_038	FROM->TO	POTTER COUNTY INTERCHANGE (WAUK 90343-A) 345/230/13.2KV TRANSFORMER CKT 1	560	560	0.19633	112.8842	BUSHLAND INTERCHANGE - POTTER COUNTY INTERCHANGE 230KV CKT 1
FDNS	02ALL	2	25SP	G14_038	FROM->TO	POTTER COUNTY INTERCHANGE (WAUK 90343-A) 345/230/13.2KV TRANSFORMER CKT 1	560	560	0.19633	112.8842	BUSHLAND INTERCHANGE - POTTER COUNTY INTERCHANGE 230KV CKT 1
FDNS	02ALL	2	25SP	G14_038	FROM->TO	POTTER COUNTY INTERCHANGE (WAUK 90343-A) 345/230/13.2KV TRANSFORMER CKT 1	560	560	0.20029	112.8534	GEN562432 1-G13-030 0.6900
FDNS	02ALL	2	25SP	G14_038	FROM->TO	POTTER COUNTY INTERCHANGE (WAUK 90343-A) 345/230/13.2KV TRANSFORMER CKT 1	560	560	0.20029	112.0052	GEN524295 1-SPNSPUR_WND10.6900
FDNS	02ALL	2	25SP	G14_038	FROM->TO	POTTER COUNTY INTERCHANGE (WAUK 90343-A) 345/230/13.2KV TRANSFORMER CKT 1	560	560	0.20029	111.9687	GEN562017 1-G11_022_3 0.6900
FDNS	02ALL	2	25SP	G14_038	FROM->TO	POTTER COUNTY INTERCHANGE (WAUK 90343-A) 345/230/13.2KV TRANSFORMER CKT 1	560	560	0.19552	111.6021	BUSHLAND INTERCHANGE - DEAF SMITH COUNTY INTERCHANGE 230KV CKT 1
FDNS	02ALL	2	25SP	G14_038	FROM->TO	POTTER COUNTY INTERCHANGE (WAUK 90343-A) 345/230/13.2KV TRANSFORMER CKT 1	560	560	0.19552	111.6021	BUSHLAND INTERCHANGE - DEAF SMITH COUNTY INTERCHANGE 230KV CKT 1
FDNS	02ALL	2	25SP	G14_038	FROM->TO	POTTER COUNTY INTERCHANGE (WAUK 90343-A) 345/230/13.2KV TRANSFORMER CKT 1	560	560	0.20029	111.1412	GEN562544 1-G14_038_3 0.6900
FDNS	02ALL	3	25SP	G14_038	TO->FROM	BUSHLAND INTERCHANGE - POTTER COUNTY INTERCHANGE 230KV CKT 1	318.7	350.57	0.04251	112.4955	BASE CASE
FDNS	02ALL	3	25SP	G14_038	FROM->TO	POTTER COUNTY INTERCHANGE (WAUK 90343-A) 345/230/13.2KV TRANSFORMER CKT 1	560	560	0.19709	116.4051	BVRCNTY7 345.00 - GRAPEVINE 345.00 345KV CKT 1
FDNS	02ALL	3	25SP	G14_038	FROM->TO	POTTER COUNTY INTERCHANGE (WAUK 90343-A) 345/230/13.2KV TRANSFORMER CKT 1	560	560	0.20512	115.8946	P12:345:SPS:J07.1.FINN.HITCH

SOLUTION	GROUP	SCENARIO	SEASON	SOURCE	DIRECTION	MONITORED ELEMENT	RATEA (MVA)	RATEB(MVA)	TDF	TC%LOADING (% MVA)	CONTINGENCY
FDNS	02ALL	3	25SP	G14_038	FROM->TO	POTTER COUNTY INTERCHANGE (WAUK 90343-A) 345/230/13.2KV TRANSFORMER CKT 1	560	560	0.20512	115.8517	Hitchland Interchange - WALKTAP7 345.00 345KV CKT 1
FDNS	02ALL	3	25SP	G14_038	FROM->TO	POTTER COUNTY INTERCHANGE (WAUK 90343-A) 345/230/13.2KV TRANSFORMER CKT 1	560	560	0.20512	115.8517	Hitchland Interchange - WALKTAP7 345.00 345KV CKT 1
FDNS	02ALL	3	25SP	G14_038	FROM->TO	POTTER COUNTY INTERCHANGE (WAUK 90343-A) 345/230/13.2KV TRANSFORMER CKT 1	560	560	0.19589	114.1651	FINNEY SWITCHING STATION - HOLCOMB 345KV CKT 1
FDNS	02ALL	3	25SP	G14_038	FROM->TO	POTTER COUNTY INTERCHANGE (WAUK 90343-A) 345/230/13.2KV TRANSFORMER CKT 1	560	560	0.19589	114.1651	FINNEY SWITCHING STATION - HOLCOMB 345KV CKT 1
FDNS	02ALL	3	25SP	G14_038	FROM->TO	POTTER COUNTY INTERCHANGE (WAUK 90343-A) 345/230/13.2KV TRANSFORMER CKT 1	560	560	0.20512	113.1198	P12:345:SPS:J07.1.FINN.HITCH
FDNS	02ALL	3	25SP	G14_038	FROM->TO	POTTER COUNTY INTERCHANGE (WAUK 90343-A) 345/230/13.2KV TRANSFORMER CKT 1	560	560	0.20512	113.1034	Hitchland Interchange - WALKTAP7 345.00 345KV CKT 1
FDNS	02ALL	3	25SP	G14_038	FROM->TO	POTTER COUNTY INTERCHANGE (WAUK 90343-A) 345/230/13.2KV TRANSFORMER CKT 1	560	560	0.20512	113.1034	Hitchland Interchange - WALKTAP7 345.00 345KV CKT 1
FDNS	02ALL	3	25SP	G14_038	FROM->TO	POTTER COUNTY INTERCHANGE (WAUK 90343-A) 345/230/13.2KV TRANSFORMER CKT 1	560	560	0.19589	112.3881	FINNEY SWITCHING STATION - WALKTAP7 345.00 345KV CKT 1
FDNS	02ALL	3	25SP	G14_038	FROM->TO	POTTER COUNTY INTERCHANGE (WAUK 90343-A) 345/230/13.2KV TRANSFORMER CKT 1	560	560	0.19589	112.3881	FINNEY SWITCHING STATION - WALKTAP7 345.00 345KV CKT 1
FDNS	02ALL	3	25SP	G14_038	FROM->TO	POTTER COUNTY INTERCHANGE (WAUK 90343-A) 345/230/13.2KV TRANSFORMER CKT 1	560	560	0.19589	111.7102	FINNEY SWITCHING STATION - HOLCOMB 345KV CKT 1
FDNS	02ALL	3	25SP	G14_038	FROM->TO	POTTER COUNTY INTERCHANGE (WAUK 90343-A) 345/230/13.2KV TRANSFORMER CKT 1	560	560	0.19589	111.7102	FINNEY SWITCHING STATION - HOLCOMB 345KV CKT 1
FDNS	02ALL	3	25SP	G14_038	FROM->TO	POTTER COUNTY INTERCHANGE (WAUK 90343-A) 345/230/13.2KV TRANSFORMER CKT 1	560	560	0.19589	110.0795	FINNEY SWITCHING STATION - WALKTAP7 345.00 345KV CKT 1
FDNS	02ALL	3	25SP	G14_038	FROM->TO	POTTER COUNTY INTERCHANGE (WAUK 90343-A) 345/230/13.2KV TRANSFORMER CKT 1	560	560	0.19589	110.0795	FINNEY SWITCHING STATION - WALKTAP7 345.00 345KV CKT 1
FDNS	02ALL	3	25SP	G14_038	FROM->TO	POTTER COUNTY INTERCHANGE (WAUK 90343-A) 345/230/13.2KV TRANSFORMER CKT 1	560	560	0.18199	110.0696	BASE CASE
FDNS	02ALL	3	25SP	G14_038	FROM->TO	POTTER COUNTY INTERCHANGE (WAUK 90343-A) 345/230/13.2KV TRANSFORMER CKT 1	560	560	0.18199	108.0209	BASE CASE
FDNSLock-Blown up	06ALL	0	16WP	G14_046		Non-Converged Contingency	552.14	607.52	0.22189	-	TOLK STATION EAST - TUCO INTERCHANGE 230KV CKT 1
FDNSLock-Blown up	06ALL	0	16WP	G14_046		Non-Converged Contingency	1022	1124	0.19735	-	G14-074T 345.00 - OKLAUNION 345KV CKT 1
FDNSLock-Blown up	06ALL	0	16WP	G14_046		Non-Converged Contingency	1022	1124	0.19735	-	G14-074T 345.00 - TUCO INTERCHANGE 345KV CKT 1
FDNSLock-Blown up	06ALL	0	16WP	G14_046		Non-Converged Contingency	1022	1124	0.19735	-	GEN509403 1-PIRKEY GENERATION
FDNSLock-Blown up	06ALL	0	16WP	G14_046		Non-Converged Contingency	1022	1124	0.19735	-	GEN509404 1-WELSH #1
FDNSLock-Blown up	06ALL	0	16WP	G14_046		Non-Converged Contingency	1022	1124	0.19735	-	GEN509406 1-WELSH #3
FDNSLock-Blown up	06ALL	0	16WP	G14_046		Non-Converged Contingency	1022	1124	0.19735	-	GEN509416 1-TURK GENERATION
FDNSLock-Blown up	06ALL	0	16WP	G14_046		Non-Converged Contingency	1022	1124	0.19735	-	GEN511848 1-SOUTHWESTERN STATION #3
FDNSLock-Blown up	06ALL	0	16WP	G14_046		Non-Converged Contingency	556.53	611.5	0.18709	-	NEWHART 230 - PLANT X STATION 230KV CKT 1
FDNSLock-Blown up	06ALL	0	16WP	G14_046		Non-Converged Contingency	560	560	0.18363	-	TUCO INTERCHANGE (GE M1022338) 345/230/13.2KV TRANSFORMER CKT 1
FDNSLock-Blown up	06ALL	0	16WP	G14_046		Non-Converged Contingency	442	752	0.17968	-	PLANT X STATION - TOLK STATION WEST 230KV CKT 1
FDNSLock-Blown up	06ALL	0	16WP	G14_046		Non-Converged Contingency	442	752	0.17839	-	PLANT X STATION - TOLK STATION EAST 230KV CKT 2
FDNSLock-Blown up	06ALL	0	16WP	G14_046		Non-Converged Contingency	956	956	0.17563	-	CIMARRON - MINCO 345KV CKT 1
FDNSLock-Blown up	06ALL	0	16WP	G14_046		Non-Converged Contingency	1195	1195	0.17563	-	GRACEMONT - MINCO 345KV CKT 1
FDNSLock-Blown up	06ALL	0	16WP	G14_046		Non-Converged Contingency	987.16	1082.8	0.17177	-	G14_038T 345.00 - Hitchland Interchange 345KV CKT 1
FDNSLock-Blown up	06ALL	0	16WP	G14_046		Non-Converged Contingency	987.16	1082.8	0.17177	-	G14_038T 345.00 - POTTER COUNTY INTERCHANGE 345KV CKT 1
FDNSLock-Blown up	06ALL	0	16WP	G14_046		Non-Converged Contingency	560	560	0.17177	-	POTTER COUNTY INTERCHANGE (WAUK 90343-A) 345/230/13.2KV TRANSFORMER CKT 1
FDNSLock-Blown up	06ALL	0	16WP	G14_046		Non-Converged Contingency	557	557	0.16937	-	BUSHLAND INTERCHANGE - DEAF SMITH COUNTY INTERCHANGE 230KV CKT 1
FDNSLock-Blown up	06ALL	0	16WP	G14_046		Non-Converged Contingency	560	560	0.1603	-	TUCO_2 345.00 (TUCO_2 XFMR) 345/230/13.2KV TRANSFORMER CKT 1
FDNSLock-Blown up	06ALL	0	16WP	G14_046		Non-Converged Contingency	1330	1940	0.16013	-	CHISHOLM7 345.00 - GRACEMONT 345KV CKT 1
FDNSLock-Blown up	06ALL	0	16WP	G14_046		Non-Converged Contingency	616	700	0.16002	-	TUCO INTERCHANGE (SIEM 8743066) 345/230/13.2KV TRANSFORMER CKT 2
FDNSLock-Blown up	06ALL	0	16WP	G14_046		Non-Converged Contingency	1792	1792	0.15631	-	CHISHOLM7 345.00 - WOODWARD DISTRICT EHV 345KV CKT 1
FDNSLock-Blown up	06ALL	0	16WP	G14_046		Non-Converged Contingency	1792	1792	0.1533	-	BORDER 7345.00 - CHISHOLM7 345.00 345KV CKT 1
FDNSLock-Blown up	06ALL	0	16WP	G14_046		Non-Converged Contingency	1792	1792	0.1533	-	BORDER 7345.00 - CHISHOLM7 345.00 345KV CKT 2
FDNSLock-Blown up	06ALL	0	16WP	G14_046		Non-Converged Contingency	1792	1972	0.1533	-	BORDER 7345.00 - TUCO_2 345.00 345KV CKT 1
FDNSLock-Blown up	06ALL	0	16WP	G14_046		Non-Converged Contingency	1420	1775	0.1533	-	BORDER 7345.00 - TUCO_2 345.00 345KV CKT 2
FDNSLock-Blown up	06ALL	0	16WP	G14_046		Non-Converged Contingency	329.05	360.92	0.14912	-	BUSHLAND INTERCHANGE - POTTER COUNTY INTERCHANGE 230KV CKT 1
FDNSLock-Blown up	06ALL	0	16WP	G14_046		Non-Converged Contingency	1792	1972	0.1463	-	TUCO INTERCHANGE - TUCO_2 345.00 345KV CKT 1
FDNSLock-Blown up	06ALL	0	16WP	G14_046		Non-Converged Contingency	483	483	0.14477	-	AMOCO SWITCHING STATION - YOAKUM COUNTY INTERCHANGE 230KV CKT 1
FDNSLock-Blown up	06ALL	0	16WP	G14_046		Non-Converged Contingency	329.05	360.92	0.14127	-	DEAF SMITH COUNTY INTERCHANGE - G15039_T 230.00 230KV CKT 1
FDNSLock-Blown up	06ALL	0	16WP	G14_046		Non-Converged Contingency	329.05	360.92	0.14127	-	G15039_T 230.00 - PLANT X STATION 230KV CKT 1
FDNSLock-Blown up	06ALL	0	16WP	G14_046		Non-Converged Contingency	987.16	1082.8	0.14011	-	FINNEY SWITCHING STATION - Hitchland Interchange 345KV CKT 1
FDNSLock-Blown up	06ALL	0	16WP	G14_046		Non-Converged Contingency	956.09	1051.7	0.14011	-	FINNEY SWITCHING STATION - HOLCOMB 345KV CKT 1
FDNSLock-Blown up	06ALL	0	16WP	G14_046		Non-Converged Contingency	552	608	0.13074	-	TUCO INTERCHANGE - TUCO_2 230.00 230KV CKT 1
FDNSLock-Blown up	06ALL	0	16WP	G14_046		Non-Converged Contingency	717	789	0.12678	-	G14-057T 345.00 - LAWTON EASTSIDE 345KV CKT 1
FDNSLock-Blown up	06ALL	0	16WP	G14_046		Non-Converged Contingency	717	789	0.12678	-	G14-057T 345.00 - SUNNYSIDE 345KV CKT 1
FDNSLock-Blown up	06ALL	0	16WP	G14_046		Non-Converged Contingency	427.05	427.05	0.12083	-	JONES STATION - TUCO INTERCHANGE 230KV CKT 1
FDNSLock-Blown up	06ALL	0	16WP	G14_046		Non-Converged Contingency	557	557	0.11735	-	NEWHART 230 - POTTER COUNTY INTERCHANGE 230KV CKT 1
FDNSLock-Blown up	06ALL	0	16WP	G14_046		Non-Converged Contingency	1420	1775	0.10134	-	G11_051T 345.00 - TATONGA7 345.00 345KV CKT 1
FDNSLock-Blown up	06ALL	0	16WP	G14_046		Non-Converged Contingency	1420	1775	0.10134	-	G11_051T 345.00 - WOODWARD DISTRICT EHV 345KV CKT 1
FDNSLock-Blown up	06ALL	0	16WP	G14_046		Non-Converged Contingency	1195	1195	0.10134	-	MATHWSN7 345.00 - TATONGA7 345.00 345KV CKT 1
FDNSLock-Blown up	06ALL	0	16WP	G14_046		Non-Converged Contingency	1561	1793	0.09431	-	THISTLE7 345.00 - WOODWARD DISTRICT EHV 345KV CKT 1
FDNSLock-Blown up	06ALL	0	16WP	G14_046		Non-Converged Contingency	1561	1793	0.09431	-	THISTLE7 345.00 - WOODWARD DISTRICT EHV 345KV CKT 2
FDNSLock-Blown up	06ALL	0	16WP	G14_046		Non-Converged Contingency	329.05	360.92	0.08368	-	AMARILLO SOUTH INTERCHANGE - G15031_T 230.00 230KV CKT 1
FDNSLock-Blown up	06ALL	0	16WP	G14_046		Non-Converged Contingency	1793	1793	0.08271	-	BVRCNTY7 345.00 - G11-14T 345.00 345KV CKT 1
FDNSLock-Blown up	06ALL	0	16WP	G14_046		Non-Converged Contingency	1716	1793	0.08271	-	BVRCNTY7 345.00 - G11-14T 345.00 345KV CKT 2
FDNSLock-Blown up	06ALL	0	16WP	G14_046		Non-Converged Contingency	1792	1792	0.08271	-	BVRCNTY7 345.00 - OPTIMA 345.00 345KV CKT 1
FDNSLock-Blown up	06ALL	0	16WP	G14_046		Non-Converged Contingency	1792	1792	0.08271	-	BVRCNTY7 345.00 - OPTIMA 345.00 345KV CKT 2
FDNSLock-Blown up	06ALL	0	16WP	G14_046		Non-Converged Contingency	1793	1793	0.08271	-	G11-14T 345.00 - WOODWARD DISTRICT EHV 345KV CKT 1
FDNSLock-Blown up	06ALL	0	16WP	G14_046		Non-Converged Contingency	1716	1793	0.08271	-	G11-14T 345.00 - WOODWARD DISTRICT EHV 345KV CKT 2
FDNSLock-Blown up	06ALL	0	16WP	G14_046		Non-Converged Contingency	1532	1793	0.07613	-	G1524G1525 345.00 - THISTLE7 345.00 345KV CKT 1
FDNSLock-Blown up	06ALL	0	16WP	G14_046		Non-Converged Contingency	1532	1793	0.07613	-	G1524G1525 345.00 - THISTLE7 345.00 345KV CKT 2
FDNSLock-Blown up	06ALL	0	16WP	G14_046		Non-Converged Contingency	1532	1793	0.07613	-	GEN532751 1-WOLF CREEK GENERATING STATION UNIT 1
FDNSLock-Blown up	06ALL	0	16WP	G14_046		Non-Converged Contingency	143.02	173.09	0.07402	-	WOLFFORTH INTERCHANGE - YUMA INTERCHANGE 115KV CKT 1
FDNSLock-Blown up	06ALL	0	16WP	G14_046		Non-Converged Contingency	439	439	0.07358	-	CHISHOLM6 230.00 - SWEETWATER 230KV CKT 1
FDNSLock-Blown up	06ALL	0	16WP	G14_046		Non-Converged Contingency	435.02	457.73	0.07358	-	STATELINE INTERCHANGE - STLN-DEMARC6 230KV CKT 1
FDNSLock-Blown up	06ALL	0	16WP	G14_046		Non-Converged Contingency	439	439	0.07358	-	STLN-DEMARC6 - SWEETWATER 230KV CKT 1
FDNSLock-Blown up	06ALL	0	16WP	G14_046		Non-Converged Contingency	556.92	556.92	0.07289	-	HITCHLAND INTERCHANGE - MOORE COUNTY INTERCHANGE 230KV CKT 1
FDNSLock-Blown up	06ALL	0	16WP	G14_046		Non-Converged Contingency	717.1	717.1	0.06713	-	HOLCOMB - SETAB 345KV CKT 1
FDNSLock-Blown up	06ALL	0	16WP	G14_046		Non-Converged Contingency	785	785	0.06602	-	MINGO - RED WILLOW 345KV CKT 1
FDNSLock-Blown up	06ALL	0	16WP	G14_046		Non-Converged Contingency	762.5	762.5	0.06599	-	MINGO - SETAB 345KV CKT 1
FDNSLock-Blown up	06ALL	0	16WP	G14_046		Non-Converged Contingency	439	439	0.06374	-	CHISHOLM6 230.00 - ELK CITY 230KV 230KV CKT 1
FDNSLock-Blown up	06ALL	0	16WP	G14_046		Non-Converged Contingency	450	450	0.06374	-	ELK CITY 230KV (ELKCTY-6) 230/138/13.8KV TRANSFORMER CKT 1
FDNSLock-Blown up	06ALL	0	16WP	G14_046		Non-Converged Contingency	717	717	0.06357	-	CIMARRON - DRAPER LAKE 345KV CKT 1

SOLUTION	GROUP	SCENARIO	SEASON	SOURCE	DIRECTION	MONITORED ELEMENT	RATEA (MVA)	RATEB(MVA)	TDF	TC%LOADING (% MVA)	CONTINGENCY
FDNSLock-Blown up	06ALL	0	16WP	G14_046		Non-Converged Contingency	557	557	0.06252	-	GRAPEVINE INTERCHANGE - STATELINE INTERCHANGE 230KV CKT 1
FDNSLock-Blown up	06ALL	0	16WP	G14_046		Non-Converged Contingency	557	557	0.06227	-	GRAPEVINE INTERCHANGE - NICHOLS STATION 230KV CKT 1
FDNSLock-Blown up	06ALL	0	16WP	G14_046		Non-Converged Contingency	329.05	360.92	0.06225	-	MOORE COUNTY INTERCHANGE - POTTER COUNTY INTERCHANGE 230KV CKT 1
FDNSLock-Blown up	06ALL	0	16WP	G14_046		Non-Converged Contingency	726.6	726.6	0.05723	-	BUCKNER7 345.00 - HOLCOMB 345KV CKT 1
FDNSLock-Blown up	06ALL	0	16WP	G14_046		Non-Converged Contingency	1413	1517	0.05723	-	BUCKNER7 345.00 - SPEARVILLE 345KV CKT 1
FDNSLock-Blown up	06ALL	0	16WP	G14_046		Non-Converged Contingency	1793	1793	0.057	-	G13-010T 345.00 - POST ROCK 345KV CKT 1
FDNSLock-Blown up	06ALL	0	16WP	G14_046		Non-Converged Contingency	1793	1793	0.057	-	G13-010T 345.00 - SPEARVILLE 345KV CKT 1
FDNSLock-Blown up	06ALL	0	16WP	G14_046		Non-Converged Contingency	1195	1195	0.05698	-	GEN520947 1-HUGO1
FDNSLock-Blown up	06ALL	0	16WP	G14_046		Non-Converged Contingency	717	789	0.04071	-	GRACEMONT - LAWTON EASTSIDE 345KV CKT 1
FDNSLock-Blown up	06ALL	0	16WP	G14_046		Non-Converged Contingency	286	315	0.03661	-	CANYON E_TP3115.00 - CANYON WEST SUB 115KV CKT 1
FDNSLock-Blown up	06ALL	0	16WP	G14_046		Non-Converged Contingency	106	106	0.03661	-	CANYON WEST SUB - DAWN SUB 115KV CKT 1
FDNSLock-Blown up	06ALL	0	16WP	G14_046		Non-Converged Contingency	106	106	0.03661	-	DAWN SUB - Panda Energy Substation Hereford 115KV CKT 1
FDNSLock-Blown up	06ALL	0	16WP	G14_046		Non-Converged Contingency	106	106	0.03661	-	DEAF SMITH COUNTY INTERCHANGE - Panda Energy Substation Hereford 115KV CKT 1
FDNSLock-Blown up	06ALL	0	16WP	G14_046		Non-Converged Contingency	164.53	177.08	0.0309	-	Hansford County Switch Station - SPEARMAN INTERCHANGE 115KV CKT 1
FDNSLock-Blown up	06ALL	0	16WP	G14_046		Non-Converged Contingency	177.08	177.08	0.0309	-	HITCHLAND INTERCHANGE - Hansford County Switch Station 115KV CKT 1
FDNSLock-Blown up	06NR	0	17G	G14_046		Non-Converged Contingency	478	502	0.10536	-	BUSHLAND INTERCHANGE - DEAF SMITH COUNTY INTERCHANGE 230KV CKT 1
FDNSLock-Blown up	06NR	0	17G	G14_046		Non-Converged Contingency	318.7	350.57	0.0874	-	BUSHLAND INTERCHANGE - POTTER COUNTY INTERCHANGE 230KV CKT 1
FDNSLock-Blown up	06NR	0	17G	G14_046		Non-Converged Contingency	318.7	350.57	0.08346	-	DEAF SMITH COUNTY INTERCHANGE - G15039_T 230.00 230KV CKT 1
FDNSLock-Blown up	06NR	0	17G	G14_046		Non-Converged Contingency	318.7	350.57	0.08346	-	G15039_T 230.00 - PLANT X STATION 230KV CKT 1
FDNSLock-Blown up	06NR	0	17G	G14_046		Non-Converged Contingency	478	502	0.07427	-	NEWHART 230 - POTTER COUNTY INTERCHANGE 230KV CKT 1
FDNSLock-Blown up	06NR	0	17G	G14_046		Non-Converged Contingency	318.7	350.57	0.06937	-	AMARILLO SOUTH INTERCHANGE - G15031_T 230.00 230KV CKT 1
FDNSLock-Blown up	06NR	0	17G	G14_046		Non-Converged Contingency	1022	1124	0.03257	-	G14-074T 345.00 - OKLAUNION 345KV CKT 1
FDNSLock-Blown up	06NR	0	17G	G14_046		Non-Converged Contingency	1022	1124	0.03257	-	G14-074T 345.00 - TUCO INTERCHANGE 345KV CKT 1
FDNSLock-Blown up	06NR	0	17G	G14_046		Non-Converged Contingency	1792	1972	0.0309	-	BORDER 7345.00 - TUCO_2 345.00 345KV CKT 1
FDNSLock-Blown up	06NR	0	17G	G14_046		Non-Converged Contingency	1792	1792	0.0309	-	BORDER 7345.00 - WOODWARD DISTRICT EHV 345KV CKT 1
FDNSLock-Blown up	06ALL	0	17SP	G14_046		Non-Converged Contingency	956	1042	0.19647	-	G14-074T 345.00 - OKLAUNION 345KV CKT 1
FDNSLock-Blown up	06ALL	0	17SP	G14_046		Non-Converged Contingency	956	1042	0.19647	-	G14-074T 345.00 - TUCO INTERCHANGE 345KV CKT 1
FDNSLock-Blown up	06ALL	0	17SP	G14_046		Non-Converged Contingency	956.09	1051.7	0.17024	-	G14_038T 345.00 - Hitchland Interchange 345KV CKT 1
FDNSLock-Blown up	06ALL	0	17SP	G14_046		Non-Converged Contingency	956.09	1051.7	0.17024	-	G14_038T 345.00 - POTTER COUNTY INTERCHANGE 345KV CKT 1
FDNSLock-Blown up	06ALL	0	17SP	G14_046		Non-Converged Contingency	560	560	0.17024	-	POTTER COUNTY INTERCHANGE (WAUK 90343-A) 345/230/13.2KV TRANSFORMER CKT 1
FDNSLock-Blown up	06ALL	0	17SP	G14_046		Non-Converged Contingency	1792	1972	0.15362	-	BORDER 7345.00 - TUCO_2 345.00 345KV CKT 1
FDNSLock-Blown up	06ALL	0	17SP	G14_046		Non-Converged Contingency	1420	1775	0.15362	-	BORDER 7345.00 - TUCO_2 345.00 345KV CKT 2
FDNSLock-Blown up	06ALL	0	20L	G14_046		Non-Converged Contingency	0	0	0.56145	-	P12:115:SPS:V26.1.RSWLL.EDDY_N
FDNSLock-Blown up	06ALL	0	20L	G14_046		Non-Converged Contingency	0	0	0.47945	-	P12:230:SPS:K51.1.OASIS.RSVLT
FDNSLock-Blown up	06ALL	0	20L	G14_046		Non-Converged Contingency	319	351	0.46565	-	CHAVES COUNTY INTERCHANGE - EDDY_NORTH 6230.00 230KV CKT 1
FDNSLock-Blown up	06ALL	0	20L	G14_046		Non-Converged Contingency	319	351	0.46565	-	CHAVES COUNTY INTERCHANGE - EDDY_NORTH 6230.00 230KV CKT 1
FDNSLock-Blown up	06ALL	0	20L	G14_046		Non-Converged Contingency	478	478	0.28195	-	EDDY COUNTY INTERCHANGE - EDDY_NORTH 6230.00 230KV CKT @1
FDNSLock-Blown up	06ALL	0	20L	G14_046		Non-Converged Contingency	0	0	0.24472	-	P12:345:SPS:J15.1.XRDS.TOLK
FDNSLock-Blown up	06ALL	0	20L	G14_046		Non-Converged Contingency	1792	1792	0.21801	-	TUCO INTERCHANGE - YOAKUM_345 345.00 345KV CKT 1
FDNSLock-Blown up	06ALL	0	20L	G14_046		Non-Converged Contingency	1792	1792	0.21316	-	HOBBS - YOAKUM_345 345.00 345KV CKT 1
FDNSLock-Blown up	06ALL	0	20L	G14_046		Non-Converged Contingency	0	0	0.2091	-	P12:345:SPS:J07.1.FINN.HITCH
FDNSLock-Blown up	06ALL	0	20L	G14_046		Non-Converged Contingency	717	926	0.20856	-	CROSSROADS 7345.00 - TOLK STATION 345KV CKT 1
FDNSLock-Blown up	06ALL	0	20L	G14_046		Non-Converged Contingency	560	560	0.20856	-	TOLK STATION (ABBXNL844501) 345/230/13.2KV TRANSFORMER CKT 1
FDNSLock-Blown up	06ALL	0	20L	G14_046		Non-Converged Contingency	560	560	0.20856	-	TOLK STATION (ABBXNL844501) 345/230/13.2KV TRANSFORMER CKT 1
FDNSLock-Blown up	06ALL	0	20L	G14_046		Non-Converged Contingency	1792	1972	0.20501	-	TUCO INTERCHANGE - TUCO_2 345.00 345KV CKT 1
FDNSLock-Blown up	06ALL	0	20L	G14_046		Non-Converged Contingency	318.7	350.57	0.18723	-	CUNNINGHAM STATION - EDDY COUNTY INTERCHANGE 230KV CKT 1
FDNSLock-Blown up	06ALL	0	20L	G14_046		Non-Converged Contingency	318.7	350.57	0.18723	-	CUNNINGHAM STATION - EDDY COUNTY INTERCHANGE 230KV CKT 1
FDNSLock-Blown up	06ALL	0	20L	G14_046		Non-Converged Contingency	0	0	0.17887	-	P12:115:SPS:T59.1.CARGIL.CURRY
FDNSLock-Blown up	06ALL	0	20L	G14_046		Non-Converged Contingency	1022	1124	0.17204	-	G14-074T 345.00 - OKLAUNION 345KV CKT 1
FDNSLock-Blown up	06ALL	0	20L	G14_046		Non-Converged Contingency	1022	1124	0.17204	-	G14-074T 345.00 - TUCO INTERCHANGE 345KV CKT 1
FDNSLock-Blown up	06ALL	0	20L	G14_046		Non-Converged Contingency	1022	1124	0.17204	-	GEN506754 1-LEBROCK STEAM 1
FDNSLock-Blown up	06ALL	0	20L	G14_046		Non-Converged Contingency	1022	1124	0.17204	-	GEN509394 1-FLINT CREEK
FDNSLock-Blown up	06ALL	0	20L	G14_046		Non-Converged Contingency	1022	1124	0.17204	-	GEN509403 1-PIRKEY GENERATION
FDNSLock-Blown up	06ALL	0	20L	G14_046		Non-Converged Contingency	1022	1124	0.17204	-	GEN509404 1-WELSH #1
FDNSLock-Blown up	06ALL	0	20L	G14_046		Non-Converged Contingency	1022	1124	0.17204	-	GEN509406 1-WELSH #3
FDNSLock-Blown up	06ALL	0	20L	G14_046		Non-Converged Contingency	1022	1124	0.17204	-	GEN509408 1-WILKES #2
FDNSLock-Blown up	06ALL	0	20L	G14_046		Non-Converged Contingency	1022	1124	0.17204	-	GEN509416 1-TURK GENERATION
FDNSLock-Blown up	06ALL	0	20L	G14_046		Non-Converged Contingency	1022	1124	0.17204	-	GEN511840 1-NORTHEASTERN STATION #3
FDNSLock-Blown up	06ALL	0	20L	G14_046		Non-Converged Contingency	1022	1124	0.17204	-	GEN511960 1-ROARK1 0.7000
FDNSLock-Blown up	06ALL	0	20L	G14_046		Non-Converged Contingency	1022	1124	0.17204	-	GEN562590 1-G14_057_3 0.6900
FDNSLock-Blown up	06ALL	0	20L	G14_046		Non-Converged Contingency	1022	1124	0.17204	-	OKLAUNION 345KV SWITCHED SHUNT
FDNSLock-Blown up	06ALL	0	20L	G14_046		Non-Converged Contingency	956	956	0.15802	-	CIMARRON - MINCO 345KV CKT 1
FDNSLock-Blown up	06ALL	0	20L	G14_046		Non-Converged Contingency	1195	1195	0.15802	-	GRACEMONT - MINCO 345KV CKT 1
FDNSLock-Blown up	06ALL	0	20L	G14_046		Non-Converged Contingency	0	0	0.15407	-	P12:115:SPS:T43.1.SEVEN.EDDY_S
FDNSLock-Blown up	06ALL	0	20L	G14_046		Non-Converged Contingency	1792	1792	0.14406	-	CHISHOLM7 345.00 - WOODWARD DISTRICT EHV 345KV CKT 1
FDNSLock-Blown up	06ALL	0	20L	G14_046		Non-Converged Contingency	442	752	0.14053	-	PLANT X STATION - TOLK STATION WEST 230KV CKT 1
FDNSLock-Blown up	06ALL	0	20L	G14_046		Non-Converged Contingency	442	752	0.14053	-	PLANT X STATION - TOLK STATION WEST 230KV CKT 1
FDNSLock-Blown up	06ALL	0	20L	G14_046		Non-Converged Contingency	442	752	0.13962	-	PLANT X STATION - TOLK STATION EAST 230KV CKT 2
FDNSLock-Blown up	06ALL	0	20L	G14_046		Non-Converged Contingency	442	752	0.13962	-	PLANT X STATION - TOLK STATION EAST 230KV CKT 2
FDNSLock-Blown up	06ALL	0	20L	G14_046		Non-Converged Contingency	1792	1792	0.13957	-	BORDER 7345.00 - CHISHOLM7 345.00 345KV CKT 1
FDNSLock-Blown up	06ALL	0	20L	G14_046		Non-Converged Contingency	1792	1792	0.13957	-	BORDER 7345.00 - CHISHOLM7 345.00 345KV CKT 2
FDNSLock-Blown up	06ALL	0	20L	G14_046		Non-Converged Contingency	1792	1972	0.13957	-	BORDER 7345.00 - TUCO_2 345.00 345KV CKT 1
FDNSLock-Blown up	06ALL	0	20L	G14_046		Non-Converged Contingency	1420	1775	0.13957	-	BORDER 7345.00 - TUCO_2 345.00 345KV CKT 2
FDNSLock-Blown up	06ALL	0	20L	G14_046		Non-Converged Contingency	1792	1972	0.13957	-	BORDER 7345.00 345KV SWITCHED SHUNT
FDNSLock-Blown up	06ALL	0	20L	G14_046		Non-Converged Contingency	478.05	478.05	0.13539	-	Roosevelt County Interchange SOUTH - TOLK STATION EAST 230KV CKT 1
FDNSLock-Blown up	06ALL	0	20L	G14_046		Non-Converged Contingency	478.05	478.05	0.13539	-	Roosevelt County Interchange SOUTH - TOLK STATION EAST 230KV CKT 1
FDNSLock-Blown up	06ALL	0	20L	G14_046		Non-Converged Contingency	0	0	0.13415	-	P12:115:SPS:T58.1.HERFRD.CARGIL
FDNSLock-Blown up	06ALL	0	20L	G14_046		Non-Converged Contingency	478.05	478.05	0.13363	-	ROOSEVELT COUNTY INTERCHANGE - TOLK STATION WEST 230KV CKT 2
FDNSLock-Blown up	06ALL	0	20L	G14_046		Non-Converged Contingency	478.05	478.05	0.13363	-	ROOSEVELT COUNTY INTERCHANGE - TOLK STATION WEST 230KV CKT 2

SOLUTION	GROUP	SCENARIO	SEASON	SOURCE	DIRECTION	MONITORED ELEMENT	RATEA (MVA)	RATEB(MVA)	TDF	TC%LOADING (% MVA)	CONTINGENCY
FDNSLock-Blown up	06ALL	0	20L	G14_046		Non-Converged Contingency	478	502	0.13233	-	BUSHLAND INTERCHANGE - DEAF SMITH COUNTY INTERCHANGE 230KV CKT 1
FDNSLock-Blown up	06ALL	0	20L	G14_046		Non-Converged Contingency	478	502	0.13233	-	BUSHLAND INTERCHANGE - DEAF SMITH COUNTY INTERCHANGE 230KV CKT 1
FDNSLock-Blown up	06ALL	0	20L	G14_046		Non-Converged Contingency	478	502	0.13233	-	BUSHLAND INTERCHANGE 230KV SWITCHED SHUNT
FDNSLock-Blown up	06ALL	0	20L	G14_046		Non-Converged Contingency	478.05	547.36	0.13174	-	NEWHART 230 - PLANT X STATION 230KV CKT 1
FDNSLock-Blown up	06ALL	0	20L	G14_046		Non-Converged Contingency	478.05	501.55	0.13069	-	PECOS INTERCHANGE - SEVEN RIVERS INTERCHANGE 230KV CKT 1
FDNSLock-Blown up	06ALL	0	20L	G14_046		Non-Converged Contingency	478.05	501.55	0.13069	-	PECOS INTERCHANGE - SEVEN RIVERS INTERCHANGE 230KV CKT 1
FDNSLock-Blown up	06ALL	0	20L	G14_046		Non-Converged Contingency	478.05	546.96	0.12811	-	TOLK STATION EAST - TUCO INTERCHANGE 230KV CKT 1
FDNSLock-Blown up	06ALL	0	20L	G14_046		Non-Converged Contingency	478.05	546.96	0.12811	-	TOLK STATION EAST - TUCO INTERCHANGE 230KV CKT 1
FDNSLock-Blown up	06ALL	0	20L	G14_046		Non-Converged Contingency	1584	2098	0.12804	-	CHISHOLM7 345.00 - GRACEMONT 345KV CKT 1
FDNSLock-Blown up	06ALL	0	20L	G14_046		Non-Converged Contingency	1584	2098	0.12804	-	GEN514805 1-SOONER UNIT 1
FDNSLock-Blown up	06ALL	0	20L	G14_046		Non-Converged Contingency	1584	2098	0.12804	-	GEN514806 1-SOONER UNIT 2
FDNSLock-Blown up	06ALL	0	20L	G14_046		Non-Converged Contingency	1584	2098	0.12804	-	GEN515040 1-SEMINOLE 1G
FDNSLock-Blown up	06ALL	0	20L	G14_046		Non-Converged Contingency	1584	2098	0.12804	-	GEN515223 1-MUSKOGEE 4G
FDNSLock-Blown up	06ALL	0	20L	G14_046		Non-Converged Contingency	478.05	501.55	0.1221	-	EDDY COUNTY INTERCHANGE - SEVEN RIVERS INTERCHANGE 230KV CKT 1
FDNSLock-Blown up	06ALL	0	20L	G14_046		Non-Converged Contingency	478.05	501.55	0.1221	-	EDDY COUNTY INTERCHANGE - SEVEN RIVERS INTERCHANGE 230KV CKT 1
FDNSLock-Blown up	06ALL	0	20L	G14_046		Non-Converged Contingency	956.09	1051.7	0.12191	-	G14_038T 345.00 - Hitchland Interchange 345KV CKT 1
FDNSLock-Blown up	06ALL	0	20L	G14_046		Non-Converged Contingency	956.09	1051.7	0.12191	-	G14_038T 345.00 - POTTER COUNTY INTERCHANGE 345KV CKT 1
FDNSLock-Blown up	06ALL	0	20L	G14_046		Non-Converged Contingency	560	560	0.12191	-	POTTER COUNTY INTERCHANGE (WAUK 90343-A) 345/230/13.2KV TRANSFORMER CKT 1
FDNSLock-Blown up	06ALL	0	20L	G14_046		Non-Converged Contingency	560	560	0.12191	-	POTTER COUNTY INTERCHANGE (WAUK 90343-A) 345/230/13.2KV TRANSFORMER CKT 1
FDNSLock-Blown up	06ALL	0	20L	G14_046		Non-Converged Contingency	318.7	350.57	0.11662	-	BUSHLAND INTERCHANGE - POTTER COUNTY INTERCHANGE 230KV CKT 1
FDNSLock-Blown up	06ALL	0	20L	G14_046		Non-Converged Contingency	318.7	350.57	0.11662	-	BUSHLAND INTERCHANGE - POTTER COUNTY INTERCHANGE 230KV CKT 1
FDNSLock-Blown up	06ALL	0	20L	G14_046		Non-Converged Contingency	956.09	1051.7	0.11165	-	Hitchland Interchange - WALKTAP7 345.00 345KV CKT 1
FDNSLock-Blown up	06ALL	0	20L	G14_046		Non-Converged Contingency	956.09	1051.7	0.11165	-	Hitchland Interchange - WALKTAP7 345.00 345KV CKT 1
FDNSLock-Blown up	06ALL	0	20L	G14_046		Non-Converged Contingency	318.7	350.57	0.10917	-	DEAF SMITH COUNTY INTERCHANGE - G15039_T 230.00 230KV CKT 1
FDNSLock-Blown up	06ALL	0	20L	G14_046		Non-Converged Contingency	318.7	350.57	0.10917	-	G15039_T 230.00 - PLANT X STATION 230KV CKT 1
FDNSLock-Blown up	06ALL	0	20L	G14_046		Non-Converged Contingency	717	789	0.10145	-	G14-057T 345.00 - LAWTON EASTSIDE 345KV CKT 1
FDNSLock-Blown up	06ALL	0	20L	G14_046		Non-Converged Contingency	717	789	0.10145	-	G14-057T 345.00 - SUNNYSIDE 345KV CKT 1
FDNSLock-Blown up	06ALL	0	20L	G14_046		Non-Converged Contingency	478	502	0.09938	-	NEWHART 230 - POTTER COUNTY INTERCHANGE 230KV CKT 1
FDNSLock-Blown up	06ALL	0	20L	G14_046		Non-Converged Contingency	318.7	350.57	0.09881	-	G15079_T 230.00 - YOAKUM COUNTY INTERCHANGE 230KV CKT 1
FDNSLock-Blown up	06ALL	0	20L	G14_046		Non-Converged Contingency	0	0	0.09845	-	P12:115:SPS:W40.1.WCANYON.DFSMTH
FDNSLock-Blown up	06ALL	0	20L	G14_046		Non-Converged Contingency	956.09	1051.7	0.09745	-	FINNEY SWITCHING STATION - HOLCOMB 345KV CKT 1
FDNSLock-Blown up	06ALL	0	20L	G14_046		Non-Converged Contingency	956.09	1051.7	0.09745	-	FINNEY SWITCHING STATION - HOLCOMB 345KV CKT 1
FDNSLock-Blown up	06ALL	0	20L	G14_046		Non-Converged Contingency	956.09	1051.7	0.09745	-	FINNEY SWITCHING STATION - WALKTAP7 345.00 345KV CKT 1
FDNSLock-Blown up	06ALL	0	20L	G14_046		Non-Converged Contingency	956.09	1051.7	0.09745	-	FINNEY SWITCHING STATION - WALKTAP7 345.00 345KV CKT 1
FDNSLock-Blown up	06ALL	0	20L	G14_046		Non-Converged Contingency	0	0	0.09383	-	P12:115:SPS:T62.1.SEVEN.PECOS
FDNSLock-Blown up	06ALL	0	20L	G14_046		Non-Converged Contingency	560	644	0.0934	-	HOBBS (UPDATE DATA) 345/230/13.2KV TRANSFORMER CKT 1
FDNSLock-Blown up	06ALL	0	20L	G14_046		Non-Converged Contingency	0	0	0.09279	-	P12:230:AEPW:ELKCITY6:SWEETWT6
FDNSLock-Blown up	06ALL	0	20L	G14_046		Non-Converged Contingency	497	547	0.09158	-	TUCO INTERCHANGE - TUCO_2 230.00 230KV CKT 1
FDNSLock-Blown up	06ALL	0	20L	G14_046		Non-Converged Contingency	0	0	0.08575	-	P12:230:AEPW-SPS:SWEETWT6:WHEELER 6
FDNSLock-Blown up	06ALL	0	20L	G14_046		Non-Converged Contingency	560	560	0.08498	-	TUCO INTERCHANGE (GE M1022338) 345/230/13.2KV TRANSFORMER CKT 1
FDNSLock-Blown up	06ALL	0	20L	G14_046		Non-Converged Contingency	560	560	0.08498	-	TUCO INTERCHANGE (GE M1022338) 345/230/13.2KV TRANSFORMER CKT 1
FDNSLock-Blown up	06ALL	0	20L	G14_046		Non-Converged Contingency	478	502	0.08099	-	AMARILLO SOUTH INTERCHANGE - G15031_T 230.00 230KV CKT 1
FDNSLock-Blown up	06NR	0	20L	G14_046		Non-Converged Contingency	318.7	350.57	0.08098	-	BUSHLAND INTERCHANGE - POTTER COUNTY INTERCHANGE 230KV CKT 1
FDNSLock-Blown up	06NR	0	20L	G14_046		Non-Converged Contingency	318.7	350.57	0.08098	-	BUSHLAND INTERCHANGE - POTTER COUNTY INTERCHANGE 230KV CKT 1
FDNSLock-Blown up	06ALL	0	20L	G14_046		Non-Converged Contingency	0	0	0.07752	-	P12:115:SPS:T28.1.LAMTON.PLANTX
FDNSLock-Blown up	06NR	0	20L	G14_046		Non-Converged Contingency	318.7	350.57	0.07732	-	DEAF SMITH COUNTY INTERCHANGE - G15039_T 230.00 230KV CKT 1
FDNSLock-Blown up	06ALL	0	20L	G14_046		Non-Converged Contingency	1420	1775	0.0772	-	G11_051T 345.00 - TATONGA7 345.00 345KV CKT 1
FDNSLock-Blown up	06ALL	0	20L	G14_046		Non-Converged Contingency	1420	1775	0.0772	-	G11_051T 345.00 - WOODWARD DISTRICT EHV 345KV CKT 1
FDNSLock-Blown up	06ALL	0	20L	G14_046		Non-Converged Contingency	1195	1195	0.0772	-	MATHWSN7 345.00 - TATONGA7 345.00 345KV CKT 1
FDNSLock-Blown up	06ALL	0	20L	G14_046		Non-Converged Contingency	0	0	0.07611	-	P12:115:SPS:T71.1.CRLSLE.YUMA
FDNSLock-Blown up	06ALL	0	20L	G14_046		Non-Converged Contingency	0	0	0.07597	-	P12:115:SPS:T45.1.NORRIS.OASIS
FDNSLock-Blown up	06ALL	0	20L	G14_046		Non-Converged Contingency	1561	1793	0.07568	-	THISTLE7 345.00 - WOODWARD DISTRICT EHV 345KV CKT 1
FDNSLock-Blown up	06ALL	0	20L	G14_046		Non-Converged Contingency	1561	1793	0.07568	-	THISTLE7 345.00 - WOODWARD DISTRICT EHV 345KV CKT 1
FDNSLock-Blown up	06ALL	0	20L	G14_046		Non-Converged Contingency	1561	1793	0.07568	-	THISTLE7 345.00 - WOODWARD DISTRICT EHV 345KV CKT 2
FDNSLock-Blown up	06ALL	0	20L	G14_046		Non-Converged Contingency	1561	1793	0.07568	-	THISTLE7 345.00 - WOODWARD DISTRICT EHV 345KV CKT 2
FDNSLock-Blown up	06NR	0	20L	G14_046		Non-Converged Contingency	478	502	0.07515	-	AMARILLO SOUTH INTERCHANGE - G15031_T 230.00 230KV CKT 1
FDNSLock-Blown up	06NR	0	20L	G14_046		Non-Converged Contingency	478	502	0.07457	-	NEWHART 230 - POTTER COUNTY INTERCHANGE 230KV CKT 1
FDNSLock-Blown up	06ALL	0	20L	G14_046		Non-Converged Contingency	560	560	0.07414	-	TUCO_2 345.00 (TUCO_2 XFMR) 345/230/13.2KV TRANSFORMER CKT 1
FDNSLock-Blown up	06ALL	0	20L	G14_046		Non-Converged Contingency	560	644	0.07406	-	TUCO INTERCHANGE (SIEM 8743066) 345/230/13.2KV TRANSFORMER CKT 2
FDNSLock-Blown up	06ALL	0	20L	G14_046		Non-Converged Contingency	560	644	0.07406	-	TUCO INTERCHANGE (SIEM 8743066) 345/230/13.2KV TRANSFORMER CKT 2
FDNSLock-Blown up	06ALL	0	20L	G14_046		Non-Converged Contingency	1195	1195	0.07186	-	ARCADIA - NORTHWEST 345KV CKT 1
FDNSLock-Blown up	06ALL	0	20L	G14_046		Non-Converged Contingency	956	956	0.06851	-	CIMARRON - NORTHWEST 345KV CKT 1
FDNSLock-Blown up	06ALL	0	20L	G14_046		Non-Converged Contingency	414	414	0.0678	-	AMOCO SWITCHING STATION - YOAKUM COUNTY INTERCHANGE 230KV CKT 1
FDNSLock-Blown up	06ALL	0	20L	G14_046		Non-Converged Contingency	414	414	0.0678	-	AMOCO SWITCHING STATION - YOAKUM COUNTY INTERCHANGE 230KV CKT 1
FDNSLock-Blown up	06ALL	0	20L	G14_046		Non-Converged Contingency	0	0	0.06649	-	P12:115:SPS:T38.1.POTJCT.WIPP
FDNSLock-Blown up	06ALL	0	20L	G14_046		Non-Converged Contingency	0	0	0.06564	-	P12:115:SPS:V05.1.OSAGE.WCANYON
FDNSLock-Blown up	06ALL	0	20L	G14_046		Non-Converged Contingency	1195	1195	0.06442	-	MATHWSN7 345.00 - NORTHWEST 345KV CKT 1
FDNSLock-Blown up	06ALL	0	20L	G14_046		Non-Converged Contingency	0	0	0.05991	-	P12:138:AEPW-OGE:WTH_JCT4:JENSEN4
FDNSLock-Blown up	06ALL	0	20L	G14_046		Non-Converged Contingency	318.7	350.57	0.0582	-	LUBBOCK SOUTH INTERCHANGE - WOLFFORTH INTERCHANGE 230KV CKT 1
FDNSLock-Blown up	06ALL	0	20L	G14_046		Non-Converged Contingency	318.7	350.57	0.0582	-	LUBBOCK SOUTH INTERCHANGE - WOLFFORTH INTERCHANGE 230KV CKT 1
FDNSLock-Blown up	06ALL	0	20L	G14_046		Non-Converged Contingency	318.7	350.57	0.0582	-	LUBBOCK SOUTH INTERCHANGE 230KV SWITCHED SHUNT
FDNSLock-Blown up	06ALL	0	20L	G14_046		Non-Converged Contingency	435.82	501.55	0.05792	-	Harrington Station Mid Bus - RANDALL COUNTY INTERCHANGE 230KV CKT 1
FDNSLock-Blown up	06ALL	0	20L	G14_046		Non-Converged Contingency	435.82	501.55	0.05792	-	Harrington Station Mid Bus - RANDALL COUNTY INTERCHANGE 230KV CKT 1
FDNSLock-Blown up	06ALL	0	20L	G14_046		Non-Converged Contingency	1532	1793	0.05781	-	G1524G1525 345.00 - THISTLE7 345.00 345KV CKT 1
FDNSLock-Blown up	06ALL	0	20L	G14_046		Non-Converged Contingency	1532	1793	0.05781	-	G1524G1525 345.00 - THISTLE7 345.00 345KV CKT 2
FDNSLock-Blown up	06ALL	0	20L	G14_046		Non-Converged Contingency	1532	1793	0.05781	-	G1524G1525 345.00 - WICHITA 345KV CKT 1
FDNSLock-Blown up	06ALL	0	20L	G14_046		Non-Converged Contingency	1532	1793	0.05781	-	G1524G1525 345.00 - WICHITA 345KV CKT 2
FDNSLock-Blown up	06ALL	0	20L	G14_046		Non-Converged Contingency	1532	1793	0.05781	-	GEN532653 1-JEFFREY ENERGY CENTER UNIT 3
FDNSLock-Blown up	06ALL	0	20L	G14_046		Non-Converged Contingency	1532	1793	0.05781	-	GEN532663 1-LAWRENCE ENERGY CENTER UNIT 5

SOLUTION	GROUP	SCENARIO	SEASON	SOURCE	DIRECTION	MONITORED ELEMENT	RATEA (MVA)	RATEB(MVA)	TDF	TC%LOADING (% MVA)	CONTINGENCY
FDNSLock-Blown up	06ALL	0	20L	G14_046		Non-Converged Contingency	1532	1793	0.05781	-	GEN532751 1-WOLF CREEK GENERATING STATION UNIT 1
FDNSLock-Blown up	06ALL	0	20L	G14_046		Non-Converged Contingency	956	956	0.05747	-	G15063_T 345.00 - MATHWSN7 345.00 345KV CKT 1
FDNSLock-Blown up	06ALL	0	20L	G14_046		Non-Converged Contingency	956	956	0.05747	-	G15063_T 345.00 - WOODRING 345KV CKT 1
FDNSLock-Blown up	06ALL	0	20L	G14_046		Non-Converged Contingency	0	0	0.05687	-	P12:115:SPS:T14.1.MADDOX.WBENDR
FDNSLock-Blown up	06ALL	0	20L	G14_046		Non-Converged Contingency	1039	1195	0.05577	-	NORTHWEST - SPRING CREEK 345KV CKT 1
FDNSLock-Blown up	06ALL	0	20L	G14_046		Non-Converged Contingency	1039	1195	0.05577	-	SOONER - SPRING CREEK 345KV CKT 1
FDNSLock-Blown up	06ALL	0	20L	G14_046		Non-Converged Contingency	478	502	0.05372	-	CARLISLE INTERCHANGE - TUCO INTERCHANGE 230KV CKT 1
FDNSLock-Blown up	06ALL	0	20L	G14_046		Non-Converged Contingency	478	502	0.05372	-	CARLISLE INTERCHANGE - TUCO INTERCHANGE 230KV CKT 1
FDNSLock-Blown up	06ALL	0	20L	G14_046		Non-Converged Contingency	785	785	0.05369	-	GEN640009 1-COOPER NUCLEAR STATION
FDNSLock-Blown up	06ALL	0	20L	G14_046		Non-Converged Contingency	785	785	0.05369	-	MINGO - RED WILLOW 345KV CKT 1
FDNSLock-Blown up	06ALL	0	20L	G14_046		Non-Converged Contingency	785	785	0.05369	-	MINGO - RED WILLOW 345KV CKT 1
FDNSLock-Blown up	06ALL	0	20L	G14_046		Non-Converged Contingency	762.5	762.5	0.0524	-	MINGO - SETAB 345KV CKT 1
FDNSLock-Blown up	06ALL	0	20L	G14_046		Non-Converged Contingency	762.5	762.5	0.0524	-	MINGO - SETAB 345KV CKT 1
FDNSLock-Blown up	06ALL	0	20L	G14_046		Non-Converged Contingency	1793	1793	0.05215	-	BVRCNTY7 345.00 - G11-14T 345.00 345KV CKT 1
FDNSLock-Blown up	06ALL	0	20L	G14_046		Non-Converged Contingency	1716	1793	0.05215	-	BVRCNTY7 345.00 - G11-14T 345.00 345KV CKT 2
FDNSLock-Blown up	06ALL	0	20L	G14_046		Non-Converged Contingency	1792	1792	0.05215	-	BVRCNTY7 345.00 - OPTIMA 345.00 345KV CKT 1
FDNSLock-Blown up	06ALL	0	20L	G14_046		Non-Converged Contingency	1792	1792	0.05215	-	BVRCNTY7 345.00 - OPTIMA 345.00 345KV CKT 2
FDNSLock-Blown up	06ALL	0	20L	G14_046		Non-Converged Contingency	1793	1793	0.05215	-	G11-14T 345.00 - WOODWARD DISTRICT EHV 345KV CKT 1
FDNSLock-Blown up	06ALL	0	20L	G14_046		Non-Converged Contingency	1716	1793	0.05215	-	G11-14T 345.00 - WOODWARD DISTRICT EHV 345KV CKT 2
FDNSLock-Blown up	06ALL	0	20L	G14_046		Non-Converged Contingency	1792	1792	0.05215	-	Hitchland Interchange - OPTIMA 345.00 345KV CKT 1
FDNSLock-Blown up	06ALL	0	20L	G14_046		Non-Converged Contingency	1792	1792	0.05215	-	Hitchland Interchange - OPTIMA 345.00 345KV CKT 2
FDNSLock-Blown up	06ALL	0	20L	G14_046		Non-Converged Contingency	717.1	717.1	0.05193	-	HOLCOMB - SETAB 345KV CKT 1
FDNSLock-Blown up	06ALL	0	20L	G14_046		Non-Converged Contingency	717.1	717.1	0.05193	-	HOLCOMB - SETAB 345KV CKT 1
FDNSLock-Blown up	06ALL	0	20L	G14_046		Non-Converged Contingency	501.95	501.95	0.05157	-	HITCHLAND INTERCHANGE - MOORE COUNTY INTERCHANGE 230KV CKT 1
FDNSLock-Blown up	06ALL	0	20L	G14_046		Non-Converged Contingency	501.95	501.95	0.05157	-	HITCHLAND INTERCHANGE - MOORE COUNTY INTERCHANGE 230KV CKT 1
FDNSLock-Blown up	06ALL	0	20L	G14_046		Non-Converged Contingency	0	0	0.05127	-	P12:138:AEPW:S.W.S.-4:L.E.S.-4
FDNSLock-Blown up	06ALL	0	20L	G14_046		Non-Converged Contingency	1195	1195	0.05054	-	SOONER - WOODRING 345KV CKT 1
FDNSLock-Blown up	06ALL	0	20L	G14_046		Non-Converged Contingency	560	644	0.05029	-	Hitchland Interchange (SIEM 8743067) 345/230/13.2KV TRANSFORMER CKT 2
FDNSLock-Blown up	06ALL	0	20L	G14_046		Non-Converged Contingency	560	644	0.05029	-	Hitchland Interchange (SIEM 8743067) 345/230/13.2KV TRANSFORMER CKT 2
FDNSLock-Blown up	06ALL	0	20L	G14_046		Non-Converged Contingency	439	439	0.04992	-	CHISHOLM6 230.00 - ELK CITY 230KV 230KV CKT 1
FDNSLock-Blown up	06ALL	0	20L	G14_046		Non-Converged Contingency	450	450	0.04992	-	ELK CITY 230KV (ELKCTY-6) 230/138/13.8KV TRANSFORMER CKT 1
FDNSLock-Blown up	06ALL	0	20L	G14_046		Non-Converged Contingency	450	450	0.04992	-	ELK CITY 230KV (ELKCTY-6) 230/138/13.8KV TRANSFORMER CKT 1
FDNSLock-Blown up	06ALL	0	20L	G14_046		Non-Converged Contingency	0	0	0.0493	-	P12:115:SPS:T66.1.RNDALL.HAPPY
FDNSLock-Blown up	06ALL	0	20L	G14_046		Non-Converged Contingency	0	0	0.0493	-	P12:115:SPS:T67.1.HAPPY.KRESS
FDNSLock-Blown up	06ALL	0	20L	G14_046		Non-Converged Contingency	478	478	0.04872	-	CARLISLE INTERCHANGE - WOLFFORTH INTERCHANGE 230KV CKT 1
FDNSLock-Blown up	06ALL	0	20L	G14_046		Non-Converged Contingency	478.05	501.55	0.04789	-	AMARILLO SOUTH INTERCHANGE - NICHOLS STATION 230KV CKT 1
FDNSLock-Blown up	06ALL	0	20L	G14_046		Non-Converged Contingency	478.05	501.55	0.04789	-	AMARILLO SOUTH INTERCHANGE - NICHOLS STATION 230KV CKT 1
FDNSLock-Blown up	06ALL	0	20L	G14_046		Non-Converged Contingency	0	0	0.04667	-	P12:138:WFEC-AEPW:WASHITA4:CLINTJC4
FDNSLock-Blown up	06ALL	0	20L	G14_046		Non-Converged Contingency	1195	1195	0.0465	-	JOHNSON COUNTY - SUNNYSIDE 345KV CKT 1
FDNSLock-Blown up	06ALL	0	20L	G14_046		Non-Converged Contingency	717	789	0.04645	-	GRACEMONT - LAWTON EASTSIDE 345KV CKT 1
FDNSLock-Blown up	06ALL	0	20L	G14_046		Non-Converged Contingency	717	789	0.04645	-	GRACEMONT - LAWTON EASTSIDE 345KV CKT 1
FDNSLock-Blown up	06ALL	0	20L	G14_046		Non-Converged Contingency	878	956	0.04578	-	BENTON - WICHITA 345KV CKT 1
FDNSLock-Blown up	06ALL	0	20L	G14_046		Non-Converged Contingency	1504	1792	0.04558	-	AXTELL - POST ROCK 345KV CKT 1
FDNSLock-Blown up	06ALL	0	20L	G14_046		Non-Converged Contingency	1505	1793	0.04494	-	G13-010T 345.00 - POST ROCK 345KV CKT 1
FDNSLock-Blown up	06ALL	0	20L	G14_046		Non-Converged Contingency	1505	1793	0.04494	-	G13-010T 345.00 - SPEARVILLE 345KV CKT 1
FDNSLock-Blown up	06ALL	0	20L	G14_046		Non-Converged Contingency	96	96	0.04472	-	CARGILL SUB - DEAF SMITH REC-#24 115KV CKT 1
FDNSLock-Blown up	06ALL	0	20L	G14_046		Non-Converged Contingency	96	96	0.04472	-	CARGILL SUB - FRIONA SUB 115KV CKT 1
FDNSLock-Blown up	06ALL	0	20L	G14_046		Non-Converged Contingency	96	96	0.04472	-	CURRY COUNTY INTERCHANGE - DEAF SMITH REC-#20 115KV CKT 1
FDNSLock-Blown up	06ALL	0	20L	G14_046		Non-Converged Contingency	96	96	0.04472	-	DEAF SMITH REC-#20 - PARMER COUNTY SUB 115KV CKT 1
FDNSLock-Blown up	06ALL	0	20L	G14_046		Non-Converged Contingency	96	96	0.04472	-	DEAF SMITH REC-#24 - PARMER COUNTY SUB 115KV CKT 1
FDNSLock-Blown up	06ALL	0	20L	G14_046		Non-Converged Contingency	96	96	0.04472	-	DEAF SMITH REC-#6 - FRIONA SUB 115KV CKT 1
FDNSLock-Blown up	06ALL	0	20L	G14_046		Non-Converged Contingency	96	96	0.04472	-	DEAF SMITH REC-#6 - HEREFORD INTERCHANGE 115KV CKT 1
FDNSLock-Blown up	06ALL	0	20L	G14_046		Non-Converged Contingency	96	96	0.04472	-	PARMER COUNTY SUB 115KV SWITCHED SHUNT
FDNSLock-Blown up	06ALL	0	20L	G14_046		Non-Converged Contingency	318.7	350.57	0.04453	-	MOORE COUNTY INTERCHANGE - POTTER COUNTY INTERCHANGE 230KV CKT 1
FDNSLock-Blown up	06ALL	0	20L	G14_046		Non-Converged Contingency	318.7	350.57	0.04453	-	MOORE COUNTY INTERCHANGE - POTTER COUNTY INTERCHANGE 230KV CKT 1
FDNSLock-Blown up	06ALL	0	20L	G14_046		Non-Converged Contingency	0	0	0.04445	-	P12:115:SPS:V03.1.NICHLS.EPLANT
FDNSLock-Blown up	06ALL	0	20L	G14_046		Non-Converged Contingency	0	0	0.04426	-	P12:115:SPS:W35.1.GAINES.JNSDRW
FDNSLock-Blown up	06ALL	0	20L	G14_046		Non-Converged Contingency	1195	1195	0.04414	-	CIMARRON - DRAPER LAKE 345KV CKT 1
FDNSLock-Blown up	06ALL	0	20L	G14_046		Non-Converged Contingency	560	644	0.04374	-	Hitchland Interchange (H TB80155502) 345/230/13.2KV TRANSFORMER CKT 1
FDNSLock-Blown up	06ALL	0	20L	G14_046		Non-Converged Contingency	560	644	0.04374	-	Hitchland Interchange (H TB80155502) 345/230/13.2KV TRANSFORMER CKT 1
FDNSLock-Blown up	06NR	0	20L	G14_046		Non-Converged Contingency	1022	1124	0.04356	-	G14-074T 345.00 - OKLAUNION 345KV CKT 1
FDNSLock-Blown up	06NR	0	20L	G14_046		Non-Converged Contingency	1022	1124	0.04356	-	G14-074T 345.00 - TUCO INTERCHANGE 345KV CKT 1
FDNSLock-Blown up	06NR	0	20L	G14_046		Non-Converged Contingency	1022	1124	0.04356	-	OKLAUNION 345KV SWITCHED SHUNT
FDNSLock-Blown up	06ALL	0	20L	G14_046		Non-Converged Contingency	1151	1195	0.04288	-	JOHNSON COUNTY - PITTSBURG 345KV CKT 1
FDNSLock-Blown up	06ALL	0	20L	G14_046		Non-Converged Contingency	1151	1195	0.04288	-	JOHNSON COUNTY - PITTSBURG 345KV CKT 1
FDNSLock-Blown up	06ALL	0	20L	G14_046		Non-Converged Contingency	421	439	0.04287	-	CHISHOLM6 230.00 - SWEETWATER 230KV CKT 1
FDNSLock-Blown up	06ALL	0	20L	G14_046		Non-Converged Contingency	348.58	381.24	0.04287	-	STATELINE INTERCHANGE - STLN-DEMARC6 230KV CKT 1
FDNSLock-Blown up	06ALL	0	20L	G14_046		Non-Converged Contingency	353	353	0.04287	-	STLN-DEMARC6 - SWEETWATER 230KV CKT 1
FDNSLock-Blown up	06ALL	0	20L	G14_046		Non-Converged Contingency	956	956	0.0421	-	GERALD GENTLEMAN STATION - RED WILLOW 345KV CKT 1
FDNSLock-Blown up	06NR	0	20L	G14_046		Non-Converged Contingency	1792	1972	0.04143	-	BORDER 7345.00 - TUCO_2 345.00 345KV CKT 1
FDNSLock-Blown up	06NR	0	20L	G14_046		Non-Converged Contingency	1792	1792	0.04143	-	BORDER 7345.00 - WOODWARD DISTRICT EHV 345KV CKT 1
FDNSLock-Blown up	06NR	0	20L	G14_046		Non-Converged Contingency	1792	1972	0.04143	-	BORDER 7345.00 345KV SWITCHED SHUNT
FDNSLock-Blown up	06ALL	0	20L	G14_046		Non-Converged Contingency	0	0	0.04136	-	P12:115:SPS:T98.1.HIGG.HOBBG
FDNSLock-Blown up	06ALL	0	20L	G14_046		Non-Converged Contingency	0	0	0.04102	-	P12:115:LCEC:W56.1.HOBBG.LE-LVN
FDNSLock-Blown up	06ALL	0	20L	G14_046		Non-Converged Contingency	1035	1035	0.0406	-	EMPORIA ENERGY CENTER - G14_001T 345.00 345KV CKT 1
FDNSLock-Blown up	06ALL	0	20L	G14_046		Non-Converged Contingency	1035	1035	0.0406	-	G14_001T 345.00 - WICHITA 345KV CKT 1
FDNSLock-Blown up	06ALL	0	20L	G14_046		Non-Converged Contingency	343.79	343.79	0.03963	-	JONES STATION - TUCO INTERCHANGE 230KV CKT 1
FDNSLock-Blown up	06ALL	0	20L	G14_046		Non-Converged Contingency	343.79	343.79	0.03963	-	JONES STATION - TUCO INTERCHANGE 230KV CKT 1
FDNSLock-Blown up	06ALL	0	20L	G14_046		Non-Converged Contingency	0	0	0.03924	-	P12:138:AEPW-OGE:CORNVIL4:CIMARON4

SOLUTION	GROUP	SCENARIO	SEASON	SOURCE	DIRECTION	MONITORED ELEMENT	RATEA (MVA)	RATEB(MVA)	TDF	TC%LOADING (% MVA)	CONTINGENCY
FDNSLock-Blown up	06ALL	0	20L	G14_046		Non-Converged Contingency	1195	1195	0.03883	-	GEN520811 1-ANADRK4
FDNSLock-Blown up	06ALL	0	20L	G14_046		Non-Converged Contingency	1195	1195	0.03883	-	HUGO - SUNNYSIDE 345KV CKT 1
FDNSLock-Blown up	06ALL	0	20L	G14_046		Non-Converged Contingency	1141	1195	0.03789	-	GEN542951 5-HAWTHORN UNIT #5
FDNSLock-Blown up	06ALL	0	20L	G14_046		Non-Converged Contingency	1141	1195	0.03789	-	LACYGNE - WAVERLY7 345.00 345KV CKT 1
FDNSLock-Blown up	06ALL	0	20L	G14_046		Non-Converged Contingency	1141	1195	0.03789	-	WAVERLY7 345.00 - WOLF CREEK 345KV CKT 1
FDNSLock-Blown up	06ALL	0	20L	G14_046		Non-Converged Contingency	726.6	726.6	0.03744	-	BUCKNER7 345.00 - HOLCOMB 345KV CKT 1
FDNSLock-Blown up	06ALL	0	20L	G14_046		Non-Converged Contingency	726.6	726.6	0.03744	-	BUCKNER7 345.00 - HOLCOMB 345KV CKT 1
FDNSLock-Blown up	06ALL	0	20L	G14_046		Non-Converged Contingency	1413	1517	0.03744	-	BUCKNER7 345.00 - SPEARVILLE 345KV CKT 1
FDNSLock-Blown up	06ALL	0	20L	G14_046		Non-Converged Contingency	1413	1517	0.03744	-	BUCKNER7 345.00 - SPEARVILLE 345KV CKT 1
FDNSLock-Blown up	06ALL	0	20L	G14_046		Non-Converged Contingency	502	502	0.03671	-	GRAPEVINE INTERCHANGE - NICHOLS STATION 230KV CKT 1
FDNSLock-Blown up	06ALL	0	20L	G14_046		Non-Converged Contingency	502	502	0.03671	-	GRAPEVINE INTERCHANGE - NICHOLS STATION 230KV CKT 1
FDNSLock-Blown up	06ALL	0	20L	G14_046		Non-Converged Contingency	502	502	0.03649	-	GRAPEVINE INTERCHANGE - STATELINE INTERCHANGE 230KV CKT 1
FDNSLock-Blown up	06ALL	0	20L	G14_046		Non-Converged Contingency	502	502	0.03649	-	GRAPEVINE INTERCHANGE - STATELINE INTERCHANGE 230KV CKT 1
FDNSLock-Blown up	06ALL	0	20L	G14_046		Non-Converged Contingency	1076	1076	0.03561	-	G15074_T 345.00 - HOYT 345KV CKT 1
FDNSLock-Blown up	06ALL	0	20L	G14_046		Non-Converged Contingency	1076	1076	0.03561	-	G15074_T 345.00 - JEFFREY ENERGY CENTER 345KV CKT 1
FDNSLock-Blown up	06ALL	0	20L	G14_046		Non-Converged Contingency	1195	1195	0.03554	-	MUSKOGEE - SEMINOLE 345KV CKT 1
FDNSLock-Blown up	06ALL	0	20L	G14_046		Non-Converged Contingency	1036	1195	0.03544	-	HOYT - STRANGER CREEK 345KV CKT 1
FDNSLock-Blown up	06ALL	0	20L	G14_046		Non-Converged Contingency	0	0	0.03392	-	P12:115:SPS:W29.1.OCLTRE.SPRMN
FDNSLock-Blown up	06ALL	0	20L	G14_046		Non-Converged Contingency	0	0	0.03351	-	P12:115:SPS:W08.1.HITCH.LASLEY
FDNSLock-Blown up	06ALL	0	20L	G14_046		Non-Converged Contingency	276	304	0.03347	-	BAILEY COUNTY INTERCHANGE - G15-018T 115.00 115KV CKT 1
FDNSLock-Blown up	06ALL	0	20L	G14_046		Non-Converged Contingency	159	160	0.03314	-	JOHNSON DRAW - TAYLOR SWITCHING STATION 115KV CKT 1
FDNSLock-Blown up	06ALL	0	20L	G14_046		Non-Converged Contingency	159	160	0.03314	-	JOHNSON DRAW - TAYLOR SWITCHING STATION 115KV CKT 1
FDNSLock-Blown up	06ALL	0	20L	G14_046		Non-Converged Contingency	276	304	0.03282	-	CANYON E_TP3115.00 - CANYON WEST SUB 115KV CKT 1
FDNSLock-Blown up	06ALL	0	20L	G14_046		Non-Converged Contingency	160	160	0.03282	-	CANYON E_TP3115.00 - RANDALL COUNTY INTERCHANGE 115KV CKT 1
FDNSLock-Blown up	06ALL	0	20L	G14_046		Non-Converged Contingency	276	304	0.03282	-	CANYON WEST SUB - DAWN SUB 115KV CKT 1
FDNSLock-Blown up	06ALL	0	20L	G14_046		Non-Converged Contingency	276	304	0.03282	-	DAWN SUB - Panda Energy Substation Hereford 115KV CKT 1
FDNSLock-Blown up	06ALL	0	20L	G14_046		Non-Converged Contingency	276	304	0.03282	-	DEAF SMITH COUNTY INTERCHANGE - Panda Energy Substation Hereford 115KV CKT 1
FDNSLock-Blown up	06ALL	0	20L	G14_046		Non-Converged Contingency	0	0	0.03274	-	P12:230:SPS:K37.1.TOLK.LAMB
FDNSLock-Blown up	06ALL	0	20L	G14_046		Non-Converged Contingency	0	0	0.03252	-	P12:138:OKGE:3TERM10
FDNSLock-Blown up	06ALL	0	20L	G14_046		Non-Converged Contingency	0	0	0.03216	-	P12:230:SPS:K43.1.PRNGLE.HARR_E
FDNSLock-Blown up	06ALL	0	20L	G14_046		Non-Converged Contingency	497.17	546.96	0.03206	-	AMARILLO SOUTH INTERCHANGE - RANDALL COUNTY INTERCHANGE 230KV CKT 1
FDNSLock-Blown up	06ALL	0	20L	G14_046		Non-Converged Contingency	497.17	546.96	0.03206	-	AMARILLO SOUTH INTERCHANGE - RANDALL COUNTY INTERCHANGE 230KV CKT 1
FDNSLock-Blown up	06ALL	0	20L	G14_046		Non-Converged Contingency	717	717	0.03192	-	EMPORIA ENERGY CENTER - SWISSVALE 345KV CKT 1
FDNSLock-Blown up	06ALL	0	20L	G14_046		Non-Converged Contingency	0	0	0.03166	-	P12:115:SPS:T13.1.TAYLOR.WHOBBS
FDNSLock-Blown up	06ALL	0	20L	G14_046		Non-Converged Contingency	0	0	0.03026	-	P12:138:AEPW:REDROCKRD4:WTH_JCT4
FDNSLock-Blown up	06ALL	0	20L	G14_046		Non-Converged Contingency	717	717	0.03007	-	SWISSVALE - WEST GARDNER 345KV CKT 1
FDNSLock-Blown up	06ALL	0	20L	G14_046		Non-Converged Contingency	0	0	0.02964	-	P12:138:OKGE-AEPW:JENSEN4:REDROCKRD4
FDNSLock-Blown up	06ALL	0	20SP	G14_046		Non-Converged Contingency	956	1042	0.20684	-	G14-074T 345.00 - OKLAUNION 345KV CKT 1
FDNSLock-Blown up	06ALL	0	20SP	G14_046		Non-Converged Contingency	1792	1972	0.16443	-	BORDER 7345.00 - TUCO_2 345.00 345KV CKT 1
FDNSLock-Blown up	06ALL	0	20SP	G14_046		Non-Converged Contingency	1420	1775	0.16443	-	BORDER 7345.00 - TUCO_2 345.00 345KV CKT 2
FDNSLock-Blown up	06ALL	0	20SP	G14_046		Non-Converged Contingency	956.09	1051.7	0.15618	-	G14_038T 345.00 - Hitchland Interchange 345KV CKT 1
FDNSLock-Blown up	06ALL	0	20SP	G14_046		Non-Converged Contingency	956.09	1051.7	0.15618	-	G14_038T 345.00 - POTTER COUNTY INTERCHANGE 345KV CKT 1
FDNSLock-Blown up	06ALL	0	20WP	G14_046		Non-Converged Contingency	0	0	0.25099	-	P12:345:SPS:J07.1.FINN.HITCH
FDNSLock-Blown up	06ALL	0	20WP	G14_046		Non-Converged Contingency	1792	1792	0.24836	-	TUCO INTERCHANGE - YOAKUM_345 345.00 345KV CKT 1
FDNSLock-Blown up	06ALL	0	20WP	G14_046		Non-Converged Contingency	1792	1972	0.23324	-	TUCO INTERCHANGE - TUCO_2 345.00 345KV CKT 1
FDNSLock-Blown up	06ALL	0	20WP	G14_046		Non-Converged Contingency	1022	1124	0.20198	-	G14-074T 345.00 - OKLAUNION 345KV CKT 1
FDNSLock-Blown up	06ALL	0	20WP	G14_046		Non-Converged Contingency	1022	1124	0.20198	-	G14-074T 345.00 - TUCO INTERCHANGE 345KV CKT 1
FDNSLock-Blown up	06ALL	0	20WP	G14_046		Non-Converged Contingency	1022	1124	0.20198	-	OKLAUNION 345KV SWITCHED SHUNT
FDNSLock-Blown up	06ALL	0	20WP	G14_046		Non-Converged Contingency	956	956	0.17475	-	CIMARRON - MINCO 345KV CKT 1
FDNSLock-Blown up	06ALL	0	20WP	G14_046		Non-Converged Contingency	1195	1195	0.17475	-	GRACEMONT - MINCO 345KV CKT 1
FDNSLock-Blown up	06ALL	0	20WP	G14_046		Non-Converged Contingency	1792	1792	0.16419	-	CHISHOLM7 345.00 - WOODWARD DISTRICT EHV 345KV CKT 1
FDNSLock-Blown up	06ALL	0	20WP	G14_046		Non-Converged Contingency	1792	1972	0.16076	-	BORDER 7345.00 - TUCO_2 345.00 345KV CKT 1
FDNSLock-Blown up	06ALL	0	20WP	G14_046		Non-Converged Contingency	1420	1775	0.16076	-	BORDER 7345.00 - TUCO_2 345.00 345KV CKT 2
FDNSLock-Blown up	06ALL	0	20WP	G14_046		Non-Converged Contingency	1792	1972	0.16076	-	BORDER 7345.00 345KV SWITCHED SHUNT
FDNSLock-Blown up	06ALL	0	20WP	G14_046		Non-Converged Contingency	1584	2098	0.15416	-	CHISHOLM7 345.00 - GRACEMONT 345KV CKT 1
FDNSLock-Blown up	06ALL	0	20WP	G14_046		Non-Converged Contingency	987.16	1082.8	0.15111	-	G14_038T 345.00 - Hitchland Interchange 345KV CKT 1
FDNSLock-Blown up	06ALL	0	20WP	G14_046		Non-Converged Contingency	987.16	1082.8	0.15111	-	G14_038T 345.00 - POTTER COUNTY INTERCHANGE 345KV CKT 1
FDNSLock-Blown up	06ALL	0	20WP	G14_046		Non-Converged Contingency	560	560	0.15111	-	POTTER COUNTY INTERCHANGE (WAUK 90343-A) 345/230/13.2KV TRANSFORMER CKT 1
FDNSLock-Blown up	06ALL	0	20WP	G14_046		Non-Converged Contingency	560	560	0.15111	-	POTTER COUNTY INTERCHANGE (WAUK 90343-A) 345/230/13.2KV TRANSFORMER CKT 1
FDNSLock-Blown up	06ALL	0	20WP	G14_046		Non-Converged Contingency	557	557	0.14076	-	BUSHLAND INTERCHANGE - DEAF SMITH COUNTY INTERCHANGE 230KV CKT 1
FDNSLock-Blown up	06ALL	0	20WP	G14_046		Non-Converged Contingency	557	557	0.14076	-	BUSHLAND INTERCHANGE - DEAF SMITH COUNTY INTERCHANGE 230KV CKT 1
FDNSLock-Blown up	06ALL	0	20WP	G14_046		Non-Converged Contingency	987.16	1082.8	0.13378	-	Hitchland Interchange - WALKTAP7 345.00 345KV CKT 1
FDNSLock-Blown up	06ALL	0	20WP	G14_046		Non-Converged Contingency	987.16	1082.8	0.13378	-	Hitchland Interchange - WALKTAP7 345.00 345KV CKT 1
FDNSLock-Blown up	06ALL	0	20WP	G14_046		Non-Converged Contingency	717	789	0.1252	-	G14-057T 345.00 - LAWTON EASTSIDE 345KV CKT 1
FDNSLock-Blown up	06ALL	0	20WP	G14_046		Non-Converged Contingency	717	789	0.1252	-	G14-057T 345.00 - SUNNYSIDE 345KV CKT 1
FDNSLock-Blown up	06ALL	0	20WP	G14_046		Non-Converged Contingency	329.05	360.92	0.12477	-	BUSHLAND INTERCHANGE - POTTER COUNTY INTERCHANGE 230KV CKT 1
FDNSLock-Blown up	06ALL	0	20WP	G14_046		Non-Converged Contingency	329.05	360.92	0.12477	-	BUSHLAND INTERCHANGE - POTTER COUNTY INTERCHANGE 230KV CKT 1
FDNSLock-Blown up	06ALL	0	20WP	G14_046		Non-Converged Contingency	0	0	0.11991	-	P12:230:AEPW:ELKCITY6:SWEETWT6
FDNSLock-Blown up	06ALL	0	20WP	G14_046		Non-Converged Contingency	956.09	1051.7	0.11722	-	FINNEY SWITCHING STATION - HOLCOMB 345KV CKT 1
FDNSLock-Blown up	06ALL	0	20WP	G14_046		Non-Converged Contingency	956.09	1051.7	0.11722	-	FINNEY SWITCHING STATION - HOLCOMB 345KV CKT 1
FDNSLock-Blown up	06ALL	0	20WP	G14_046		Non-Converged Contingency	987.16	1082.8	0.11722	-	FINNEY SWITCHING STATION - WALKTAP7 345.00 345KV CKT 1
FDNSLock-Blown up	06ALL	0	20WP	G14_046		Non-Converged Contingency	987.16	1082.8	0.11722	-	FINNEY SWITCHING STATION - WALKTAP7 345.00 345KV CKT 1
FDNSLock-Blown up	06ALL	0	20WP	G14_046		Non-Converged Contingency	329.05	360.92	0.11692	-	DEAF SMITH COUNTY INTERCHANGE - G15039_T 230.00 230KV CKT 1
FDNSLock-Blown up	06ALL	0	20WP	G14_046		Non-Converged Contingency	329.05	360.92	0.11692	-	G15039_T 230.00 - PLANT X STATION 230KV CKT 1
FDNSLock-Blown up	06ALL	0	20WP	G14_046		Non-Converged Contingency	0	0	0.11672	-	P12:230:AEPW-SPS:SWEETWT6:WHEELER 6
FDNSLock-Blown up	06ALL	0	20WP	G14_046		Non-Converged Contingency	557	557	0.10519	-	NEWHART 230 - POTTER COUNTY INTERCHANGE 230KV CKT 1
FDNSLock-Blown up	06ALL	0	20WP	G14_046		Non-Converged Contingency	1420	1775	0.09164	-	G11_051T 345.00 - TATONGA7 345.00 345KV CKT 1
FDNSLock-Blown up	06ALL	0	20WP	G14_046		Non-Converged Contingency	1420	1775	0.09164	-	G11_051T 345.00 - WOODWARD DISTRICT EHV 345KV CKT 1
FDNSLock-Blown up	06ALL	0	20WP	G14_046		Non-Converged Contingency	1195	1195	0.09164	-	MATHWSN7 345.00 - TATONGA7 345.00 345KV CKT 1

SOLUTION	GROUP	SCENARIO	SEASON	SOURCE	DIRECTION	MONITORED ELEMENT	RATEA (MVA)	RATEB(MVA)	TDF	TC%LOADING (% MVA)	CONTINGENCY
FDNSLock-Blown up	06ALL	0	20WP	G14_046		Non-Converged Contingency	1561	1793	0.08953	-	THISTLE7 345.00 - WOODWARD DISTRICT EHV 345KV CKT 1
FDNSLock-Blown up	06ALL	0	20WP	G14_046		Non-Converged Contingency	1561	1793	0.08953	-	THISTLE7 345.00 - WOODWARD DISTRICT EHV 345KV CKT 1
FDNSLock-Blown up	06ALL	0	20WP	G14_046		Non-Converged Contingency	1561	1793	0.08953	-	THISTLE7 345.00 - WOODWARD DISTRICT EHV 345KV CKT 2
FDNSLock-Blown up	06ALL	0	20WP	G14_046		Non-Converged Contingency	1561	1793	0.08953	-	THISTLE7 345.00 - WOODWARD DISTRICT EHV 345KV CKT 2
FDNSLock-Blown up	06ALL	0	20WP	G14_046		Non-Converged Contingency	478	502	0.08283	-	AMARILLO SOUTH INTERCHANGE - G15031_T 230.00 230KV CKT 1
FDNSLock-Blown up	06ALL	0	20WP	G14_046		Non-Converged Contingency	1793	1793	0.06758	-	G11-14T 345.00 - WOODWARD DISTRICT EHV 345KV CKT 1
FDNSLock-Blown up	06ALL	0	20WP	G14_046		Non-Converged Contingency	1716	1793	0.06758	-	G11-14T 345.00 - WOODWARD DISTRICT EHV 345KV CKT 2
FDNSLock-Blown up	06ALL	0	20WP	G14_046		Non-Converged Contingency	556.92	556.92	0.06412	-	HITCHLAND INTERCHANGE - MOORE COUNTY INTERCHANGE 230KV CKT 1
FDNSLock-Blown up	06ALL	0	20WP	G14_046		Non-Converged Contingency	556.92	556.92	0.06412	-	HITCHLAND INTERCHANGE - MOORE COUNTY INTERCHANGE 230KV CKT 1
FDNSLock-Blown up	06ALL	0	20WP	G14_046		Non-Converged Contingency	421	439	0.05836	-	CHISHOLM6 230.00 - SWEETWATER 230KV CKT 1
FDNSLock-Blown up	06ALL	0	20WP	G14_046		Non-Converged Contingency	435.02	457.73	0.05836	-	STATELINE INTERCHANGE - STLN-DEMARC6 230KV CKT 1
FDNSLock-Blown up	06ALL	0	20WP	G14_046		Non-Converged Contingency	439	439	0.05836	-	STLN-DEMARC6 - SWEETWATER 230KV CKT 1
FDNSLock-Blown up	06ALL	0	20WP	G14_046		Non-Converged Contingency	329.05	360.92	0.05475	-	MOORE COUNTY INTERCHANGE - POTTER COUNTY INTERCHANGE 230KV CKT 1
FDNSLock-Blown up	06ALL	0	20WP	G14_046		Non-Converged Contingency	329.05	360.92	0.05475	-	MOORE COUNTY INTERCHANGE - POTTER COUNTY INTERCHANGE 230KV CKT 1
FDNSLock-Blown up	06ALL	0	20WP	G14_046		Non-Converged Contingency	557	557	0.05007	-	GRAPEVINE INTERCHANGE - NICHOLS STATION 230KV CKT 1
FDNSLock-Blown up	06ALL	0	20WP	G14_046		Non-Converged Contingency	557	557	0.05007	-	GRAPEVINE INTERCHANGE - NICHOLS STATION 230KV CKT 1
FDNSLock-Blown up	06ALL	0	20WP	G14_046		Non-Converged Contingency	557	557	0.04968	-	GRAPEVINE INTERCHANGE - STATELINE INTERCHANGE 230KV CKT 1
FDNSLock-Blown up	06ALL	0	20WP	G14_046		Non-Converged Contingency	557	557	0.04968	-	GRAPEVINE INTERCHANGE - STATELINE INTERCHANGE 230KV CKT 1
FDNSLock-Blown up	06ALL	2	16WP	G14_046		Non-Converged Contingency	1022	1124	0.19769	-	G14-074T 345.00 - OKLAUNION 345KV CKT 1
FDNSLock-Blown up	06ALL	2	16WP	G14_046		Non-Converged Contingency	1022	1124	0.19769	-	G14-074T 345.00 - TUCO INTERCHANGE 345KV CKT 1
FDNSLock-Blown up	06ALL	2	16WP	G14_046		Non-Converged Contingency	987.16	1082.8	0.1721	-	G14_038T 345.00 - Hitchland Interchange 345KV CKT 1
FDNSLock-Blown up	06ALL	2	16WP	G14_046		Non-Converged Contingency	987.16	1082.8	0.1721	-	G14_038T 345.00 - POTTER COUNTY INTERCHANGE 345KV CKT 1
FDNSLock-Blown up	06ALL	2	16WP	G14_046		Non-Converged Contingency	560	560	0.1721	-	POTTER COUNTY INTERCHANGE (WAUK 90343-A) 345/230/13.2KV TRANSFORMER CKT 1
FDNSLock-Blown up	06ALL	2	16WP	G14_046		Non-Converged Contingency	1792	1972	0.15358	-	BORDER 7345.00 - TUCO_2 345.00 345KV CKT 1
FDNSLock-Blown up	06ALL	2	16WP	G14_046		Non-Converged Contingency	1420	1775	0.15358	-	BORDER 7345.00 - TUCO_2 345.00 345KV CKT 2
FDNSLock-Blown up	06ALL	2	17G	G14_046		Non-Converged Contingency	1022	1124	0.19115	-	G14-074T 345.00 - OKLAUNION 345KV CKT 1
FDNSLock-Blown up	06ALL	2	17G	G14_046		Non-Converged Contingency	1022	1124	0.19115	-	G14-074T 345.00 - TUCO INTERCHANGE 345KV CKT 1
FDNSLock-Blown up	06ALL	2	17G	G14_046		Non-Converged Contingency	956.09	1051.7	0.16287	-	G14_038T 345.00 - Hitchland Interchange 345KV CKT 1
FDNSLock-Blown up	06ALL	2	17G	G14_046		Non-Converged Contingency	956.09	1051.7	0.16287	-	G14_038T 345.00 - POTTER COUNTY INTERCHANGE 345KV CKT 1
FDNSLock-Blown up	06ALL	2	17G	G14_046		Non-Converged Contingency	560	560	0.16287	-	POTTER COUNTY INTERCHANGE (WAUK 90343-A) 345/230/13.2KV TRANSFORMER CKT 1
FDNSLock-Blown up	06ALL	2	17G	G14_046		Non-Converged Contingency	1792	1972	0.14785	-	BORDER 7345.00 - TUCO_2 345.00 345KV CKT 1
FDNSLock-Blown up	06ALL	2	17G	G14_046		Non-Converged Contingency	1420	1775	0.14785	-	BORDER 7345.00 - TUCO_2 345.00 345KV CKT 2
FDNSLock-Blown up	06NR	2	17G	G14_046		Non-Converged Contingency	1022	1124	0.03257	-	G14-074T 345.00 - OKLAUNION 345KV CKT 1
FDNSLock-Blown up	06NR	2	17G	G14_046		Non-Converged Contingency	1022	1124	0.03257	-	G14-074T 345.00 - TUCO INTERCHANGE 345KV CKT 1
FDNSLock-Blown up	06NR	2	17G	G14_046		Non-Converged Contingency	1792	1972	0.0309	-	BORDER 7345.00 - TUCO_2 345.00 345KV CKT 1
FDNSLock-Blown up	06NR	2	17G	G14_046		Non-Converged Contingency	1792	1792	0.0309	-	BORDER 7345.00 - WOODWARD DISTRICT EHV 345KV CKT 1
FDNSLock-Blown up	06ALL	2	17SP	G14_046		Non-Converged Contingency	956	1042	0.19656	-	G14-074T 345.00 - OKLAUNION 345KV CKT 1
FDNSLock-Blown up	06ALL	2	20L	G14_046		Non-Converged Contingency	0	0	0.21041	-	P12:345:SPS:J07.1.FINN.HITCH
FDNSLock-Blown up	06ALL	2	20L	G14_046		Non-Converged Contingency	1022	1124	0.17278	-	G14-074T 345.00 - OKLAUNION 345KV CKT 1
FDNSLock-Blown up	06ALL	2	20L	G14_046		Non-Converged Contingency	1022	1124	0.17278	-	G14-074T 345.00 - TUCO INTERCHANGE 345KV CKT 1
FDNSLock-Blown up	06ALL	2	20L	G14_046		Non-Converged Contingency	1022	1124	0.17278	-	OKLAUNION 345KV SWITCHED SHUNT
FDNSLock-Blown up	06ALL	2	20L	G14_046		Non-Converged Contingency	1792	1972	0.14024	-	BORDER 7345.00 - TUCO_2 345.00 345KV CKT 1
FDNSLock-Blown up	06ALL	2	20L	G14_046		Non-Converged Contingency	1420	1775	0.14024	-	BORDER 7345.00 - TUCO_2 345.00 345KV CKT 2
FDNSLock-Blown up	06ALL	2	20L	G14_046		Non-Converged Contingency	1584	2098	0.12849	-	CHISHOLM7 345.00 - GRACEMONT 345KV CKT 1
FDNSLock-Blown up	06ALL	2	20L	G14_046		Non-Converged Contingency	956.09	1051.7	0.12256	-	G14_038T 345.00 - Hitchland Interchange 345KV CKT 1
FDNSLock-Blown up	06ALL	2	20L	G14_046		Non-Converged Contingency	956.09	1051.7	0.12256	-	G14_038T 345.00 - POTTER COUNTY INTERCHANGE 345KV CKT 1
FDNSLock-Blown up	06ALL	2	20L	G14_046		Non-Converged Contingency	560	560	0.12256	-	POTTER COUNTY INTERCHANGE (WAUK 90343-A) 345/230/13.2KV TRANSFORMER CKT 1
FDNSLock-Blown up	06ALL	2	20L	G14_046		Non-Converged Contingency	560	560	0.12256	-	POTTER COUNTY INTERCHANGE (WAUK 90343-A) 345/230/13.2KV TRANSFORMER CKT 1
FDNSLock-Blown up	06ALL	2	20L	G14_046		Non-Converged Contingency	956.09	1051.7	0.11234	-	Hitchland Interchange - WALKTAP7 345.00 345KV CKT 1
FDNSLock-Blown up	06ALL	2	20L	G14_046		Non-Converged Contingency	956.09	1051.7	0.11234	-	Hitchland Interchange - WALKTAP7 345.00 345KV CKT 1
FDNSLock-Blown up	06ALL	2	20L	G14_046		Non-Converged Contingency	0	0	0.09315	-	P12:230:AEPW:ELKCITY6:SWEETWT6
FDNSLock-Blown up	06NR	2	20L	G14_046		Non-Converged Contingency	318.7	350.57	0.08098	-	BUSHLAND INTERCHANGE - POTTER COUNTY INTERCHANGE 230KV CKT 1
FDNSLock-Blown up	06NR	2	20L	G14_046		Non-Converged Contingency	318.7	350.57	0.08098	-	BUSHLAND INTERCHANGE - POTTER COUNTY INTERCHANGE 230KV CKT 1
FDNSLock-Blown up	06ALL	2	20L	G14_046		Non-Converged Contingency	1195	1195	0.07747	-	MATHWSN7 345.00 - TATONGA7 345.00 345KV CKT 1
FDNSLock-Blown up	06NR	2	20L	G14_046		Non-Converged Contingency	318.7	350.57	0.07732	-	DEAF SMITH COUNTY INTERCHANGE - G15039_T 230.00 230KV CKT 1
FDNSLock-Blown up	06NR	2	20L	G14_046		Non-Converged Contingency	478	502	0.07515	-	AMARILLO SOUTH INTERCHANGE - G15031_T 230.00 230KV CKT 1
FDNSLock-Blown up	06NR	2	20L	G14_046		Non-Converged Contingency	478	502	0.07457	-	NEWHART 230 - POTTER COUNTY INTERCHANGE 230KV CKT 1
FDNSLock-Blown up	06NR	2	20L	G14_046		Non-Converged Contingency	1022	1124	0.04356	-	G14-074T 345.00 - OKLAUNION 345KV CKT 1
FDNSLock-Blown up	06NR	2	20L	G14_046		Non-Converged Contingency	1022	1124	0.04356	-	G14-074T 345.00 - TUCO INTERCHANGE 345KV CKT 1
FDNSLock-Blown up	06NR	2	20L	G14_046		Non-Converged Contingency	1022	1124	0.04356	-	OKLAUNION 345KV SWITCHED SHUNT
FDNSLock-Blown up	06ALL	2	20L	G14_046		Non-Converged Contingency	421	439	0.04304	-	CHISHOLM6 230.00 - SWEETWATER 230KV CKT 1
FDNSLock-Blown up	06NR	2	20L	G14_046		Non-Converged Contingency	1792	1972	0.04143	-	BORDER 7345.00 - TUCO_2 345.00 345KV CKT 1
FDNSLock-Blown up	06NR	2	20L	G14_046		Non-Converged Contingency	1792	1792	0.04143	-	BORDER 7345.00 - WOODWARD DISTRICT EHV 345KV CKT 1
FDNSLock-Blown up	06NR	2	20L	G14_046		Non-Converged Contingency	1792	1972	0.04143	-	BORDER 7345.00 345KV SWITCHED SHUNT
FDNSLock-Blown up	06ALL	2	20SP	G14_046		Non-Converged Contingency	956	1042	0.20693	-	G14-074T 345.00 - OKLAUNION 345KV CKT 1
FDNSLock-Blown up	06ALL	2	20WP	G14_046		Non-Converged Contingency	1022	1124	0.20222	-	G14-074T 345.00 - OKLAUNION 345KV CKT 1
FDNSLock-Blown up	06ALL	2	20WP	G14_046		Non-Converged Contingency	1022	1124	0.20222	-	G14-074T 345.00 - TUCO INTERCHANGE 345KV CKT 1
FDNSLock-Blown up	06ALL	2	20WP	G14_046		Non-Converged Contingency	1792	1972	0.16097	-	BORDER 7345.00 - TUCO_2 345.00 345KV CKT 1
FDNSLock-Blown up	06ALL	2	20WP	G14_046		Non-Converged Contingency	1420	1775	0.16097	-	BORDER 7345.00 - TUCO_2 345.00 345KV CKT 2
FDNSLock-Blown up	06ALL	2	20WP	G14_046		Non-Converged Contingency	987.16	1082.8	0.15133	-	G14_038T 345.00 - Hitchland Interchange 345KV CKT 1
FDNSLock-Blown up	06ALL	2	20WP	G14_046		Non-Converged Contingency	987.16	1082.8	0.15133	-	G14_038T 345.00 - POTTER COUNTY INTERCHANGE 345KV CKT 1
FDNSLock-Blown up	06ALL	2	20WP	G14_046		Non-Converged Contingency	560	560	0.15133	-	POTTER COUNTY INTERCHANGE (WAUK 90343-A) 345/230/13.2KV TRANSFORMER CKT 1
FDNSLock-Blown up	06ALL	2	20WP	G14_046		Non-Converged Contingency	560	560	0.15133	-	POTTER COUNTY INTERCHANGE (WAUK 90343-A) 345/230/13.2KV TRANSFORMER CKT 1
FDNSLock-Blown up	06ALL	3	16WP	G14_046		Non-Converged Contingency	1022	1124	0.21437	-	G14-074T 345.00 - OKLAUNION 345KV CKT 1
FDNSLock-Blown up	06ALL	3	16WP	G14_046		Non-Converged Contingency	1022	1124	0.21437	-	G14-074T 345.00 - TUCO INTERCHANGE 345KV CKT 1
FDNSLock-Blown up	06NR	3	17G	G14_046		Non-Converged Contingency	1022	1124	0.04398	-	G14-074T 345.00 - OKLAUNION 345KV CKT 1
FDNSLock-Blown up	06NR	3	17G	G14_046		Non-Converged Contingency	1022	1124	0.04398	-	G14-074T 345.00 - TUCO INTERCHANGE 345KV CKT 1
FDNSLock-Blown up	06NR	3	17G	G14_046		Non-Converged Contingency	1792	1972	0.04262	-	BORDER 7345.00 - TUCO_2 345.00 345KV CKT 1
FDNSLock-Blown up	06NR	3	17G	G14_046		Non-Converged Contingency	1792	1792	0.04262	-	BORDER 7345.00 - WOODWARD DISTRICT EHV 345KV CKT 1

SOLUTION	GROUP	SCENARIO	SEASON	SOURCE	DIRECTION	MONITORED ELEMENT	RATEA (MVA)	RATEB(MVA)	TDF	TC%LOADING (% MVA)	CONTINGENCY
FDNSLock-Blown up	06ALL	3	17SP	G14_046		Non-Converged Contingency	956	1042	0.212	-	G14-074T 345.00 - OKLAUNION 345KV CKT 1
FDNSLock-Blown up	06ALL	3	20L	G14_046		Non-Converged Contingency	1022	1124	0.18195	-	G14-074T 345.00 - OKLAUNION 345KV CKT 1
FDNSLock-Blown up	06ALL	3	20L	G14_046		Non-Converged Contingency	1022	1124	0.18195	-	G14-074T 345.00 - TUCO INTERCHANGE 345KV CKT 1
FDNSLock-Blown up	06ALL	3	20L	G14_046		Non-Converged Contingency	1792	1972	0.15104	-	BORDER 7345.00 - TUCO_2 345.00 345KV CKT 1
FDNSLock-Blown up	06ALL	3	20L	G14_046		Non-Converged Contingency	1420	1775	0.15104	-	BORDER 7345.00 - TUCO_2 345.00 345KV CKT 2
FDNSLock-Blown up	06ALL	3	20L	G14_046		Non-Converged Contingency	1584	2098	0.13097	-	CHISHOLM7 345.00 - GRACEMONT 345KV CKT 1
FDNSLock-Blown up	06ALL	3	20L	G14_046		Non-Converged Contingency	956.09	1051.7	0.11282	-	G14_038T 345.00 - Hitchland Interchange 345KV CKT 1
FDNSLock-Blown up	06ALL	3	20L	G14_046		Non-Converged Contingency	956.09	1051.7	0.11282	-	G14_038T 345.00 - POTTER COUNTY INTERCHANGE 345KV CKT 1
FDNSLock-Blown up	06ALL	3	20L	G14_046		Non-Converged Contingency	560	560	0.11282	-	POTTER COUNTY INTERCHANGE (WAUK 90343-A) 345/230/13.2KV TRANSFORMER CKT 1
FDNSLock-Blown up	06ALL	3	20L	G14_046		Non-Converged Contingency	956.09	1051.7	0.10829	-	Hitchland Interchange - WALKTAP7 345.00 345KV CKT 1
FDNSLock-Blown up	06ALL	3	20L	G14_046		Non-Converged Contingency	1195	1195	0.07528	-	MATHWSN7 345.00 - TATONGA7 345.00 345KV CKT 1
FDNSLock-Blown up	06NR	3	20L	G14_046		Non-Converged Contingency	1022	1124	0.05013	-	G14-074T 345.00 - OKLAUNION 345KV CKT 1
FDNSLock-Blown up	06NR	3	20L	G14_046		Non-Converged Contingency	1022	1124	0.05013	-	G14-074T 345.00 - TUCO INTERCHANGE 345KV CKT 1
FDNSLock-Blown up	06NR	3	20L	G14_046		Non-Converged Contingency	1022	1124	0.05013	-	OKLAUNION 345KV SWITCHED SHUNT
FDNSLock-Blown up	06NR	3	20L	G14_046		Non-Converged Contingency	1792	1972	0.04834	-	BORDER 7345.00 - TUCO_2 345.00 345KV CKT 1
FDNSLock-Blown up	06NR	3	20L	G14_046		Non-Converged Contingency	1792	1792	0.04834	-	BORDER 7345.00 - WOODWARD DISTRICT EHV 345KV CKT 1
FDNSLock-Blown up	06NR	3	20L	G14_046		Non-Converged Contingency	1792	1972	0.04834	-	BORDER 7345.00 345KV SWITCHED SHUNT
FDNSLock-Blown up	06ALL	3	20L	G14_046		Non-Converged Contingency	421	439	0.03505	-	CHISHOLM6 230.00 - SWEETWATER 230KV CKT 1
FDNSLock-Blown up	06ALL	3	20SP	G14_046		Non-Converged Contingency	956	1042	0.21622	-	G14-074T 345.00 - OKLAUNION 345KV CKT 1
FDNSLock-Blown up	06ALL	3	20WP	G14_046		Non-Converged Contingency	1022	1124	0.21162	-	G14-074T 345.00 - OKLAUNION 345KV CKT 1
FDNSLock-Blown up	06ALL	3	20WP	G14_046		Non-Converged Contingency	1022	1124	0.21162	-	G14-074T 345.00 - TUCO INTERCHANGE 345KV CKT 1
FDNSLock-Blown up	06ALL	3	20WP	G14_046		Non-Converged Contingency	1792	1972	0.17225	-	BORDER 7345.00 - TUCO_2 345.00 345KV CKT 1
FDNSLock-Blown up	06ALL	3	20WP	G14_046		Non-Converged Contingency	1420	1775	0.17225	-	BORDER 7345.00 - TUCO_2 345.00 345KV CKT 2
FDNSLock-Blown up	06ALL	3	20WP	G14_046		Non-Converged Contingency	987.16	1082.8	0.14025	-	G14_038T 345.00 - Hitchland Interchange 345KV CKT 1
FDNSLock-Blown up	06ALL	3	20WP	G14_046		Non-Converged Contingency	987.16	1082.8	0.14025	-	G14_038T 345.00 - POTTER COUNTY INTERCHANGE 345KV CKT 1
FDNSLock-Blown up	06ALL	4	16WP	G14_046		Non-Converged Contingency	1022	1124	0.19063	-	G14-074T 345.00 - OKLAUNION 345KV CKT 1
FDNSLock-Blown up	06ALL	4	17G	G14_046		Non-Converged Contingency	956.09	1051.7	0.20498	-	G14_038T 345.00 - Hitchland Interchange 345KV CKT 1
FDNSLock-Blown up	06ALL	4	17G	G14_046		Non-Converged Contingency	956.09	1051.7	0.20498	-	G14_038T 345.00 - POTTER COUNTY INTERCHANGE 345KV CKT 1
FDNSLock-Blown up	06ALL	4	17G	G14_046		Non-Converged Contingency	1022	1124	0.18412	-	G14-074T 345.00 - OKLAUNION 345KV CKT 1
FDNSLock-Blown up	06ALL	4	17G	G14_046		Non-Converged Contingency	1022	1124	0.18412	-	G14-074T 345.00 - TUCO INTERCHANGE 345KV CKT 1
FDNSLock-Blown up	06ALL	4	20L	G14_046		Non-Converged Contingency	0	0	0.22942	-	P12:345:SPS:J07.1.FINN.HITCH
FDNSLock-Blown up	06ALL	4	20L	G14_046		Non-Converged Contingency	956.09	1051.7	0.16812	-	G14_038T 345.00 - Hitchland Interchange 345KV CKT 1
FDNSLock-Blown up	06ALL	4	20L	G14_046		Non-Converged Contingency	956.09	1051.7	0.16812	-	G14_038T 345.00 - POTTER COUNTY INTERCHANGE 345KV CKT 1
FDNSLock-Blown up	06ALL	4	20L	G14_046		Non-Converged Contingency	1022	1124	0.16139	-	G14-074T 345.00 - OKLAUNION 345KV CKT 1
FDNSLock-Blown up	06ALL	4	20L	G14_046		Non-Converged Contingency	1022	1124	0.16139	-	G14-074T 345.00 - TUCO INTERCHANGE 345KV CKT 1
FDNSLock-Blown up	06ALL	4	20L	G14_046		Non-Converged Contingency	1792	1972	0.12889	-	BORDER 7345.00 - TUCO_2 345.00 345KV CKT 1
FDNSLock-Blown up	06ALL	4	20L	G14_046		Non-Converged Contingency	1420	1775	0.12889	-	BORDER 7345.00 - TUCO_2 345.00 345KV CKT 2
FDNSLock-Blown up	06ALL	4	20L	G14_046		Non-Converged Contingency	1584	2098	0.12657	-	CHISHOLM7 345.00 - GRACEMONT 345KV CKT 1
FDNSLock-Blown up	06ALL	4	20L	G14_046		Non-Converged Contingency	956.09	1051.7	0.12248	-	Hitchland Interchange - WALKTAP7 345.00 345KV CKT 1
FDNSLock-Blown up	06ALL	4	20L	G14_046		Non-Converged Contingency	956.09	1051.7	0.12248	-	Hitchland Interchange - WALKTAP7 345.00 345KV CKT 1
FDNSLock-Blown up	06ALL	4	20L	G14_046		Non-Converged Contingency	0	0	0.09487	-	P12:230:AEPW:ELKCITY6:SWEETWT6
FDNSLock-Blown up	06NR	4	20L	G14_046		Non-Converged Contingency	1022	1124	0.03127	-	G14-074T 345.00 - OKLAUNION 345KV CKT 1
FDNSLock-Blown up	06NR	4	20L	G14_046		Non-Converged Contingency	1022	1124	0.03127	-	G14-074T 345.00 - TUCO INTERCHANGE 345KV CKT 1
FDNSLock-Blown up	06NR	4	20L	G14_046		Non-Converged Contingency	1022	1124	0.03127	-	OKLAUNION 345KV SWITCHED SHUNT
FDNSLock-Blown up	06ALL	4	20WP	G14_046		Non-Converged Contingency	987.16	1082.8	0.19864	-	G14_038T 345.00 - Hitchland Interchange 345KV CKT 1
FDNSLock-Blown up	06ALL	4	20WP	G14_046		Non-Converged Contingency	1022	1124	0.18932	-	G14-074T 345.00 - OKLAUNION 345KV CKT 1
FDNSLock-Blown up	06ALL	4	20WP	G14_046		Non-Converged Contingency	1022	1124	0.18932	-	G14-074T 345.00 - TUCO INTERCHANGE 345KV CKT 1
FDNSLock-Blown up	06ALL	5	16WP	G14_046		Non-Converged Contingency	1022	1124	0.18258	-	G14-074T 345.00 - OKLAUNION 345KV CKT 1
FDNSLock-Blown up	06ALL	5	17G	G14_046		Non-Converged Contingency	1022	1124	0.17655	-	G14-074T 345.00 - OKLAUNION 345KV CKT 1
FDNSLock-Blown up	06ALL	5	20L	G14_046		Non-Converged Contingency	1022	1124	0.15674	-	G14-074T 345.00 - OKLAUNION 345KV CKT 1
FDNSLock-Blown up	06NR	5	20L	G14_046		Non-Converged Contingency	1022	1124	0.03089	-	G14-074T 345.00 - OKLAUNION 345KV CKT 1
FDNSLock-Blown up	06NR	5	20L	G14_046		Non-Converged Contingency	1022	1124	0.03089	-	G14-074T 345.00 - TUCO INTERCHANGE 345KV CKT 1
FDNSLock-Blown up	06ALL	5	20WP	G14_046		Non-Converged Contingency	1022	1124	0.18186	-	G14-074T 345.00 - OKLAUNION 345KV CKT 1
FDNSLock-Blown up	06ALL	6	17G	G14_046		Non-Converged Contingency	1022	1124	0.16941	-	G14-074T 345.00 - OKLAUNION 345KV CKT 1
FDNSLock-Blown up	06ALL	6	20L	G14_046		Non-Converged Contingency	1022	1124	0.15062	-	G14-074T 345.00 - OKLAUNION 345KV CKT 1
FDNSLock-Blown up	06NR	6	20L	G14_046		Non-Converged Contingency	1022	1124	0.03092	-	G14-074T 345.00 - OKLAUNION 345KV CKT 1
FDNSLock-Blown up	06ALL	6	20WP	G14_046		Non-Converged Contingency	1022	1124	0.17491	-	G14-074T 345.00 - OKLAUNION 345KV CKT 1
FDNSLock-Blown up	06NR	7	20L	G14_046		Non-Converged Contingency	1022	1124	0.03092	-	G14-074T 345.00 - OKLAUNION 345KV CKT 1
FDNS	06ALL	0	16WP	G14_046	FROM->TO	BUSHLAND INTERCHANGE - POTTER COUNTY INTERCHANGE 230KV CKT 1	329.05	360.92	0.14912	103.4995	BASE CASE
FDNS	06NR	0	17G	G14_046	FROM->TO	BUSHLAND INTERCHANGE - POTTER COUNTY INTERCHANGE 230KV CKT 1	318.7	350.57	0.10126	101.2444	BUSHLAND INTERCHANGE - HILLSIDE 115KV CKT 1
FDNS	06NR	0	17G	G14_046	FROM->TO	BUSHLAND INTERCHANGE - POTTER COUNTY INTERCHANGE 230KV CKT 1	318.7	350.57	0.10126	101.1735	BUSHLAND INTERCHANGE (WH 7001795) 230/115/13.2KV TRANSFORMER CKT 1
FDNS	06NR	0	17G	G14_046	FROM->TO	BUSHLAND INTERCHANGE - POTTER COUNTY INTERCHANGE 230KV CKT 1	318.7	350.57	0.10126	101.1735	BUSHLAND INTERCHANGE (WH 7001795) 230/115/13.2KV TRANSFORMER CKT 1
FDNS	06NR	0	17G	G14_046	FROM->TO	BUSHLAND INTERCHANGE - POTTER COUNTY INTERCHANGE 230KV CKT 1	318.7	350.57	0.10126	100.4335	P12:115:SPS:V52.1.COLTR.BSHLND
FDNS	06NR	0	20L	G14_046	TO->FROM	CARGILL SUB - DEAF SMITH REC-#24 115KV CKT 1	96	96	0.04831	102.4809	G15039_T 230.00 - PLANT X STATION 230KV CKT 1
FDNS	06ALL	0	20SP	G14_046	FROM->TO	CHISHOLM6 230.00 - ELK CITY 230KV 230KV CKT 1	353	353	0.06324	106.4803	BASE CASE
FDNS	06ALL	0	17SP	G14_046	FROM->TO	CHISHOLM6 230.00 - ELK CITY 230KV 230KV CKT 1	353	353	0.0633	104.7427	BASE CASE
FDNS	06ALL	0	17SP	G14_046	TO->FROM	CIMARRON - MINCO 345KV CKT 1	956	956	0.23585	123.2446	G14-057T 345.00 - SUNNYSIDE 345KV CKT 1
FDNS	06ALL	0	20SP	G14_046	TO->FROM	CIMARRON - MINCO 345KV CKT 1	956	956	0.24207	120.5642	G14-057T 345.00 - SUNNYSIDE 345KV CKT 1
FDNS	06ALL	0	17SP	G14_046	TO->FROM	CIMARRON - MINCO 345KV CKT 1	956	956	0.23585	117.8925	G14-057T 345.00 - LAWTON EASTSIDE 345KV CKT 1
FDNS	06ALL	0	20SP	G14_046	TO->FROM	CIMARRON - MINCO 345KV CKT 1	956	956	0.24207	115.1699	G14-057T 345.00 - LAWTON EASTSIDE 345KV CKT 1
FDNS	06ALL	0	17SP	G14_046	TO->FROM	CIMARRON - MINCO 345KV CKT 1	956	956	0.2024	105.5731	MATHWSN7 345.00 - TATONGA7 345.00 345KV CKT 1
FDNS	06ALL	0	20SP	G14_046	TO->FROM	CIMARRON - MINCO 345KV CKT 1	956	956	0.20633	104.5241	MATHWSN7 345.00 - TATONGA7 345.00 345KV CKT 1
FDNS	06ALL	0	20SP	G14_046	TO->FROM	CIMARRON - MINCO 345KV CKT 1	956	956	0.24164	102.9387	CHISHOLM7 345.00 - WOODWARD DISTRICT EHV 345KV CKT 1
FDNS	06ALL	0	17SP	G14_046	TO->FROM	CIMARRON - MINCO 345KV CKT 1	956	956	0.23308	102.0892	CHISHOLM7 345.00 - WOODWARD DISTRICT EHV 345KV CKT 1
FDNS	06ALL	0	17SP	G14_046	TO->FROM	CIMARRON - MINCO 345KV CKT 1	956	956	0.2024	100.3376	G11_051T 345.00 - TATONGA7 345.00 345KV CKT 1
FDNS	06NR	0	20L	G14_046	FROM->TO	CURRY COUNTY INTERCHANGE - DEAF SMITH REC-#20 115KV CKT 1	96	96	0.04831	120.2948	G15039_T 230.00 - PLANT X STATION 230KV CKT 1
FDNS	06ALL	0	20SP	G14_046	TO->FROM	DEAF SMITH COUNTY INTERCHANGE - G15039_T 230.00 230KV CKT 1	318.7	350.57	0.11822	110.3343	BASE CASE
FDNS	06NR	0	17G	G14_046	TO->FROM	DEAF SMITH COUNTY INTERCHANGE - G15039_T 230.00 230KV CKT 1	318.7	350.57	0.11132	110.3216	NEWHART 230 - PLANT X STATION 230KV CKT 1
FDNS	06ALL	0	17SP	G14_046	TO->FROM	DEAF SMITH COUNTY INTERCHANGE - G15039_T 230.00 230KV CKT 1	318.7	350.57	0.13805	108.4885	BASE CASE

SOLUTION	GROUP	SCENARIO	SEASON	SOURCE	DIRECTION	MONITORED ELEMENT	RATEA (MVA)	RATEB(MVA)	TDF	TC%LOADING (% MVA)	CONTINGENCY
FDNS	06NR	0	17G	G14_046	TO->FROM	DEAF SMITH COUNTY INTERCHANGE - G15039_T 230.00 230KV CKT 1	318.7	350.57	0.08661	103.1436	P12:115:SPS:T04.1.DFSMTH.CASTRO
FDNS	06NR	0	17G	G14_046	TO->FROM	DEAF SMITH COUNTY INTERCHANGE - G15039_T 230.00 230KV CKT 1	318.7	350.57	0.1024	101.0528	CURRY COUNTY INTERCHANGE - DEAF SMITH REC-#20 115KV CKT 1
FDNS	06NR	0	17G	G14_046	TO->FROM	DEAF SMITH COUNTY INTERCHANGE - G15039_T 230.00 230KV CKT 1	318.7	350.57	0.09885	100.4761	TOLK STATION EAST - TUCO INTERCHANGE 230KV CKT 1
FDNS	06NR	0	17G	G14_046	TO->FROM	DEAF SMITH COUNTY INTERCHANGE - G15039_T 230.00 230KV CKT 1	318.7	350.57	0.09885	100.4761	TOLK STATION EAST - TUCO INTERCHANGE 230KV CKT 1
FDNS	06NR	0	17G	G14_046	TO->FROM	DEAF SMITH COUNTY INTERCHANGE - G15039_T 230.00 230KV CKT 1	318.7	350.57	0.08346	99.9	P12:230:SPS:CL.1.BSHLND.WLDRDO
FDNS	06NR	0	17G	G14_046	TO->FROM	DEAF SMITH COUNTY INTERCHANGE - G15039_T 230.00 230KV CKT 1	318.7	350.57	0.1024	99.6	DEAF SMITH REC-#20 - PARMER COUNTY SUB 115KV CKT 1
FDNS	06NR	0	20L	G14_046	FROM->TO	DEAF SMITH REC-#20 - PARMER COUNTY SUB 115KV CKT 1	96	96	0.04831	112.8529	G15039_T 230.00 - PLANT X STATION 230KV CKT 1
FDNS	06NR	0	20L	G14_046	TO->FROM	DEAF SMITH REC-#24 - PARMER COUNTY SUB 115KV CKT 1	96	96	0.04831	107.7543	G15039_T 230.00 - PLANT X STATION 230KV CKT 1
FDNSLock	06ALL	0	20WP	G14_046		ELK CITY 230KV (ELKCTY-6) 230/138/13.8KV TRANSFORMER CKT 1	450	450	0.06154	87.66341	BASE CASE
FDNSLock	06ALL	0	20WP	G14_046		ELK CITY 230KV (ELKCTY-6) 230/138/13.8KV TRANSFORMER CKT 1	450	450	0.06154	87.66341	BASE CASE
FDNS	06ALL	0	20L	G14_046	TO->FROM	G14-057T 345.00 - LAWTON EASTSIDE 345KV CKT 1	717	789	0.10145	108.0268	BASE CASE
FDNS	06ALL	0	20L	G14_046	FROM->TO	G14-057T 345.00 - SUNNYSIDE 345KV CKT 1	717	789	0.10145	120.8788	BASE CASE
FDNS	06ALL	0	20WP	G14_046	FROM->TO	G14-057T 345.00 - SUNNYSIDE 345KV CKT 1	717	789	0.1252	107.5634	BASE CASE
FDNS	06ALL	0	17G	G14_046	FROM->TO	G14-057T 345.00 - SUNNYSIDE 345KV CKT 1	717	789	0.1235	106.9763	BASE CASE
FDNS	06ALL	0	16WP	G14_046	FROM->TO	G14-057T 345.00 - SUNNYSIDE 345KV CKT 1	717	789	0.12678	105.0999	BASE CASE
FDNS	06NR	0	20L	G14_046	FROM->TO	G14-074T 345.00 - OKLAUNION 345KV CKT 1	1022	1124	0.04356	106.9322	BASE CASE
FDNS	06NR	0	17G	G14_046	FROM->TO	G14-074T 345.00 - OKLAUNION 345KV CKT 1	1022	1124	0.03257	102.2735	BASE CASE
FDNS	06NR	0	20L	G14_046	FROM->TO	G14-074T 345.00 - OKLAUNION 345KV CKT 1	1022	1124	0.04145	102.2532	CHISHOLM7 345.00 - GRACEMONT 345KV CKT 1
FDNS	06NR	0	20L	G14_046	FROM->TO	G14-074T 345.00 - OKLAUNION 345KV CKT 1	1022	1124	0.04145	101.8896	CHISHOLM7 345.00 () 345/230/13.2KV TRANSFORMER CKT 1
FDNS	06NR	0	20L	G14_046	FROM->TO	G14-074T 345.00 - OKLAUNION 345KV CKT 1	1022	1124	0.04683	101.4902	TUCO INTERCHANGE - TUCO_2 345.00 345KV CKT 1
FDNS	06NR	0	20L	G14_046	FROM->TO	G14-074T 345.00 - OKLAUNION 345KV CKT 1	1022	1124	0.05507	101.2851	BUSHLAND INTERCHANGE - DEAF SMITH COUNTY INTERCHANGE 230KV CKT 1
FDNS	06NR	0	20L	G14_046	FROM->TO	G14-074T 345.00 - OKLAUNION 345KV CKT 1	1022	1124	0.05507	101.2851	BUSHLAND INTERCHANGE - DEAF SMITH COUNTY INTERCHANGE 230KV CKT 1
FDNS	06NR	0	20L	G14_046	FROM->TO	G14-074T 345.00 - OKLAUNION 345KV CKT 1	1022	1124	0.04348	101.2671	MOORE COUNTY INTERCHANGE - POTTER COUNTY INTERCHANGE 230KV CKT 1
FDNS	06NR	0	20L	G14_046	FROM->TO	G14-074T 345.00 - OKLAUNION 345KV CKT 1	1022	1124	0.04348	101.2671	MOORE COUNTY INTERCHANGE - POTTER COUNTY INTERCHANGE 230KV CKT 1
FDNS	06NR	0	20L	G14_046	FROM->TO	G14-074T 345.00 - OKLAUNION 345KV CKT 1	1022	1124	0.04285	101.2654	G11-14T 345.00 - WOODWARD DISTRICT EHV 345KV CKT 1
FDNS	06NR	0	20L	G14_046	FROM->TO	G14-074T 345.00 - OKLAUNION 345KV CKT 1	1022	1124	0.04285	101.2654	G11-14T 345.00 - WOODWARD DISTRICT EHV 345KV CKT 2
FDNS	00NR	0	25SP	G14_046	TO->FROM	JONES STATION - TUCO INTERCHANGE 230KV CKT 1	343.79	343.79	0.05534	139.3518	CARLISLE INTERCHANGE - TUCO INTERCHANGE 230KV CKT 1
FDNS	00NR	0	25SP	G14_046	TO->FROM	JONES STATION - TUCO INTERCHANGE 230KV CKT 1	343.79	343.79	0.05534	139.3518	CARLISLE INTERCHANGE - TUCO INTERCHANGE 230KV CKT 1
FDNS	00NR	0	25SP	G14_046	TO->FROM	JONES STATION - TUCO INTERCHANGE 230KV CKT 1	343.79	343.79	0.03647	123.0773	TUCO INTERCHANGE - YOAKUM_345 345.00 345KV CKT 1
FDNS	00NR	0	25SP	G14_046	TO->FROM	JONES STATION - TUCO INTERCHANGE 230KV CKT 1	343.79	343.79	0.05112	119.4572	GEN526333 1-JONES GEN #3 21 KV
FDNS	00NR	0	25SP	G14_046	TO->FROM	JONES STATION - TUCO INTERCHANGE 230KV CKT 1	343.79	343.79	0.05112	119.0504	GEN526334 1-JONES_4 116.500
FDNS	00NR	0	25SP	G14_046	TO->FROM	JONES STATION - TUCO INTERCHANGE 230KV CKT 1	343.79	343.79	0.05164	111.1942	CARLISLE INTERCHANGE - WOLFFORTH INTERCHANGE 230KV CKT 1
FDNS	00NR	0	25SP	G14_046	TO->FROM	JONES STATION - TUCO INTERCHANGE 230KV CKT 1	343.79	343.79	0.05194	107.2791	TUCO INTERCHANGE (ENRCO 136401) 230/115/13.2KV TRANSFORMER CKT 1
FDNS	00NR	0	25SP	G14_046	TO->FROM	JONES STATION - TUCO INTERCHANGE 230KV CKT 1	343.79	343.79	0.05194	107.2791	TUCO INTERCHANGE (ENRCO 136401) 230/115/13.2KV TRANSFORMER CKT 1
FDNS	00NR	0	25SP	G14_046	TO->FROM	JONES STATION - TUCO INTERCHANGE 230KV CKT 1	343.79	343.79	0.05194	107.2791	TUCO INTERCHANGE (ENRCO 136401) 230/115/13.2KV TRANSFORMER CKT 2
FDNS	00NR	0	25SP	G14_046	TO->FROM	JONES STATION - TUCO INTERCHANGE 230KV CKT 1	343.79	343.79	0.05194	107.2791	TUCO INTERCHANGE (ENRCO 136401) 230/115/13.2KV TRANSFORMER CKT 2
FDNS	00NR	0	25SP	G14_046	TO->FROM	JONES STATION - TUCO INTERCHANGE 230KV CKT 1	343.79	343.79	0.05112	106.7618	GEN526332 1-JONES GEN #2 21 KV
FDNS	00NR	0	25SP	G14_046	TO->FROM	JONES STATION - TUCO INTERCHANGE 230KV CKT 1	343.79	343.79	0.05112	106.7593	GEN526331 1-JONES GEN #1 22 KV
FDNS	00NR	0	25SP	G14_046	TO->FROM	JONES STATION - TUCO INTERCHANGE 230KV CKT 1	343.79	343.79	0.05462	105.7876	PLANT X STATION - SUNDOWN INTERCHANGE 230KV CKT 1
FDNS	00NR	0	25SP	G14_046	TO->FROM	JONES STATION - TUCO INTERCHANGE 230KV CKT 1	343.79	343.79	0.05462	105.7876	PLANT X STATION - SUNDOWN INTERCHANGE 230KV CKT 1
FDNS	00NR	0	25SP	G14_046	TO->FROM	JONES STATION - TUCO INTERCHANGE 230KV CKT 1	343.79	343.79	0.05556	105.7418	LUBBOCK EAST INTERCHANGE - TUCO INTERCHANGE 115KV CKT 1
FDNS	00NR	0	25SP	G14_046	TO->FROM	JONES STATION - TUCO INTERCHANGE 230KV CKT 1	343.79	343.79	0.05556	105.7418	LUBBOCK EAST INTERCHANGE - TUCO INTERCHANGE 115KV CKT 1
FDNS	00NR	0	25SP	G14_046	TO->FROM	JONES STATION - TUCO INTERCHANGE 230KV CKT 1	343.79	343.79	0.05138	102.5912	STANTON SUB - TUCO INTERCHANGE 115KV CKT 1
FDNS	00NR	0	25SP	G14_046	TO->FROM	JONES STATION - TUCO INTERCHANGE 230KV CKT 1	343.79	343.79	0.05327	102.3658	P12:230:LPL:K39.1.CRLSLE.LP-MLWK
FDNS	00NR	0	25SP	G14_046	TO->FROM	JONES STATION - TUCO INTERCHANGE 230KV CKT 1	343.79	343.79	0.05327	102.3646	CARLISLE INTERCHANGE - LUBBOCK POWER & LIGHT-MILWAUKEE 230KV CKT 1
FDNS	00NR	0	25SP	G14_046	TO->FROM	JONES STATION - TUCO INTERCHANGE 230KV CKT 1	343.79	343.79	0.05327	102.363	LUBBOCK POWER & LIGHT-MILWAUKEE (M-E C0681251) 230/69/13.5KV TRANSFORMER CKT 1
FDNS	00NR	0	25SP	G14_046	TO->FROM	JONES STATION - TUCO INTERCHANGE 230KV CKT 1	343.79	343.79	0.05327	102.363	LUBBOCK POWER & LIGHT-MILWAUKEE (M-E C0681251) 230/69/13.5KV TRANSFORMER CKT 1
FDNS	00NR	0	25SP	G14_046	TO->FROM	JONES STATION - TUCO INTERCHANGE 230KV CKT 1	343.79	343.79	0.04317	102.0923	TOLK STATION EAST - TUCO INTERCHANGE 230KV CKT 1
FDNS	00NR	0	25SP	G14_046	TO->FROM	JONES STATION - TUCO INTERCHANGE 230KV CKT 1	343.79	343.79	0.04317	102.0923	TOLK STATION EAST - TUCO INTERCHANGE 230KV CKT 1
FDNS	00NR	0	25SP	G14_046	TO->FROM	JONES STATION - TUCO INTERCHANGE 230KV CKT 1	343.79	343.79	0.05138	101.6363	P12:115:SPS:V15.1.TUCO.INDANA
FDNS	00NR	0	25SP	G14_046	TO->FROM	JONES STATION - TUCO INTERCHANGE 230KV CKT 1	343.79	343.79	0.05138	101.6061	INDIANA SUB - STANTON SUB 115KV CKT 1
FDNS	00NR	0	25SP	G14_046	TO->FROM	JONES STATION - TUCO INTERCHANGE 230KV CKT 1	343.79	343.79	0.05112	101.0841	GEN527903 1-HOBBS PLANT #3 (ST)
FDNS	00NR	0	25SP	G14_046	TO->FROM	JONES STATION - TUCO INTERCHANGE 230KV CKT 1	343.79	343.79	0.05112	101.0701	GEN527166 1-MUSTANG_6 118.000
FDNS	00NR	0	25SP	G14_046	TO->FROM	JONES STATION - TUCO INTERCHANGE 230KV CKT 1	343.79	343.79	0.05112	100.6214	GEN528501 1-G14_012 24.000
FDNS	00NR	0	25SP	G14_046	TO->FROM	JONES STATION - TUCO INTERCHANGE 230KV CKT 1	343.79	343.79	0.05093	100.6076	KRESS INTERCHANGE - SWISHER COUNTY INTERCHANGE 115KV CKT 1
FDNS	00NR	0	25SP	G14_046	TO->FROM	JONES STATION - TUCO INTERCHANGE 230KV CKT 1	343.79	343.79	0.05093	100.6076	KRESS INTERCHANGE - SWISHER COUNTY INTERCHANGE 115KV CKT 1
FDNS	00NR	0	25SP	G14_046	TO->FROM	JONES STATION - TUCO INTERCHANGE 230KV CKT 1	343.79	343.79	0.05391	100.4516	CARLISLE INTERCHANGE - MURPHY SUB 115KV CKT 1
FDNS	00NR	0	25SP	G14_046	TO->FROM	JONES STATION - TUCO INTERCHANGE 230KV CKT 1	343.79	343.79	0.05391	100.4516	CARLISLE INTERCHANGE - MURPHY SUB 115KV CKT 1
FDNS	00NR	0	25SP	G14_046	TO->FROM	JONES STATION - TUCO INTERCHANGE 230KV CKT 1	343.79	343.79	0.05571	100.2532	YOAKUM_345 345.00 (UPDATE DATA) 345/230/13.2KV TRANSFORMER CKT 1
FDNS	00NR	0	25SP	G14_046	TO->FROM	JONES STATION - TUCO INTERCHANGE 230KV CKT 1	343.79	343.79	0.05138	100	POTTER COUNTY INTERCHANGE (WAUK 90343-A) 345/230/13.2KV TRANSFORMER CKT 1
FDNS	00NR	0	25SP	G14_046	TO->FROM	JONES STATION - TUCO INTERCHANGE 230KV CKT 1	343.79	343.79	0.05138	100	POTTER COUNTY INTERCHANGE (WAUK 90343-A) 345/230/13.2KV TRANSFORMER CKT 1
FDNS	00NR	0	25SP	G14_046	TO->FROM	JONES STATION - TUCO INTERCHANGE 230KV CKT 1	343.79	343.79	0.05112	100	GEN563122 1-G15077_3 0.3850
FDNS	00NR	0	25SP	G14_046	TO->FROM	JONES STATION - TUCO INTERCHANGE 230KV CKT 1	343.79	343.79	0.05138	99.9	INDIANA SUB - SOUTH PLAINS REC-ERSKINE 115KV CKT 1
FDNS	00NR	0	25SP	G14_046	TO->FROM	JONES STATION - TUCO INTERCHANGE 230KV CKT 1	343.79	343.79	0.05112	99.9	GEN527901 1-HOBBS PLANT #1 (CT)
FDNS	00NR	0	25SP	G14_046	TO->FROM	JONES STATION - TUCO INTERCHANGE 230KV CKT 1	343.79	343.79	0.05112	99.9	GEN527902 1-HOBBS PLANT #2 (CT)
FDNS	00NR	0	25SP	G14_046	TO->FROM	JONES STATION - TUCO INTERCHANGE 230KV CKT 1	343.79	343.79	0.05112	99.9	GEN563102 1-G15075_3 0.5500
FDNS	00NR	0	25SP	G14_046	TO->FROM	JONES STATION - TUCO INTERCHANGE 230KV CKT 1	343.79	343.79	0.05134	99.7	FLOYD COUNTY INTERCHANGE - TUCO INTERCHANGE 115KV CKT 1
FDNS	00NR	0	25SP	G14_046	TO->FROM	JONES STATION - TUCO INTERCHANGE 230KV CKT 1	343.79	343.79	0.05134	99.7	FLOYD COUNTY INTERCHANGE - TUCO INTERCHANGE 115KV CKT 1
FDNS	00NR	0	25SP	G14_046	TO->FROM	JONES STATION - TUCO INTERCHANGE 230KV CKT 1	343.79	343.79	0.04764	99.7	HOBBS - YOAKUM_345 345.00 345KV CKT 1
FDNS	00NR	0	25SP	G14_046	TO->FROM	JONES STATION - TUCO INTERCHANGE 230KV CKT 1	343.79	343.79	0.05138	99.6	G14_038T 345.00 - POTTER COUNTY INTERCHANGE 345KV CKT 1
FDNS	00NR	0	25SP	G14_046	TO->FROM	JONES STATION - TUCO INTERCHANGE 230KV CKT 1	343.79	343.79	0.05112	99.6	GEN563142 1-G15079_3 0.5500
FDNS	00NR	0	25SP	G14_046	TO->FROM	JONES STATION - TUCO INTERCHANGE 230KV CKT 1	343.79	343.79	0.05112	99.6	GEN563151 1-G15080_2 0.5500
FDNS	00NR	0	25SP	G14_046	TO->FROM	JONES STATION - TUCO INTERCHANGE 230KV CKT 1	343.79	343.79	0.04849	99.6	BUSHLAND INTERCHANGE - DEAF SMITH COUNTY INTERCHANGE 230KV CKT 1
FDNS	00NR	0	25SP	G14_046	TO->FROM	JONES STATION - TUCO INTERCHANGE 230KV CKT 1	343.79	343.79	0.04849	99.6	BUSHLAND INTERCHANGE - DEAF SMITH COUNTY INTERCHANGE 230KV CKT 1
FDNS	00NR	0	25SP	G14_046	TO->FROM	JONES STATION - TUCO INTERCHANGE 230KV CKT 1	343.79	343.79	0.04744	99.6	P12:345:SPS:J02.1.TOLK.EDDY
FDNS	00NR	0	25SP	G14_046	FROM->TO	LUBBOCK POWER & LIGHT-HOLLY PLANT (SHIH T101039) 230/69/13.5KV TRANSFORMER CKT 1	224	224	0.03579	104.8294	LUBBOCK POWER & LIGHT-SOUTHEAST - LUBBOCK SOUTH INTERCHANGE 230KV CKT 1
FDNS	00NR	0	25SP	G14_046	FROM->TO	LUBBOCK POWER & LIGHT-HOLLY PLANT (SHIH T101039) 230/69/13.5KV TRANSFORMER CKT 1	224	224	0.03579	104.8165	P12:LPL:SPS:K64.1.LP-SE.LUBBS
FDNS	00NR	0	25SP	G14_046	FROM->TO	LUBBOCK POWER & LIGHT-HOLLY PLANT (SHIH T101039) 230/69/13.5KV TRANSFORMER CKT 1	224	224	0.03409	101.9053	LUBBOCK EAST INTERCHANGE - LUBBOCK POWER & LIGHT-WADSWORTH 230KV CKT 1
FDNS	00NR	0	25SP	G14_046	FROM->TO	LUBBOCK POWER & LIGHT-HOLLY PLANT (SHIH T101039) 230/69/13.5KV TRANSFORMER CKT 1	224	224	0.03409	101.8957	P12:230:LPL:K57.1.LP-WADS.LUBBE

SOLUTION	GROUP	SCENARIO	SEASON	SOURCE	DIRECTION	MONITORED ELEMENT	RATEA (MVA)	RATEB(MVA)	TDF	TC%LOADING (% MVA)	CONTINGENCY
FDNS	00NR	0	25SP	G14_046	FROM->TO	LUBBOCK POWER & LIGHT-HOLLY PLANT (SHIH T101039) 230/69/13.5KV TRANSFORMER CKT 1	224	224	0.03409	101.8956	LUBBOCK POWER & LIGHT-WADSWORTH (SHIH T101038) 230/69/13.5KV TRANSFORMER CKT 1
FDNS	00NR	0	25SP	G14_046	FROM->TO	LUBBOCK POWER & LIGHT-HOLLY PLANT (SHIH T101039) 230/69/13.5KV TRANSFORMER CKT 1	224	224	0.03409	101.8956	LUBBOCK POWER & LIGHT-WADSWORTH (SHIH T101038) 230/69/13.5KV TRANSFORMER CKT 1
FDNSLock	06ALL	0	20WP	G14_046		Non-Converged Contingency	1792	1792	0.16076	-	BORDER 7345.00 - CHISHOLM7 345.00 345KV CKT 1
FDNSLock	06ALL	0	20WP	G14_046		Non-Converged Contingency	1792	1792	0.16076	-	BORDER 7345.00 - CHISHOLM7 345.00 345KV CKT 2
FDNSLock	06ALL	0	20WP	G14_046		Non-Converged Contingency	439	439	0.06154	-	CHISHOLM6 230.00 - ELK CITY 230KV 230KV CKT 1
FDNS	06ALL	0	20WP	G14_046	FROM->TO	POTTER COUNTY INTERCHANGE (WAUK 90343-A) 345/230/13.2KV TRANSFORMER CKT 1	560	560	0.15111	101.9937	BASE CASE
FDNS	06ALL	0	20WP	G14_046	FROM->TO	POTTER COUNTY INTERCHANGE (WAUK 90343-A) 345/230/13.2KV TRANSFORMER CKT 1	560	560	0.15111	100.9471	BASE CASE
FDNS	06ALL	0	17SP	G14_046	FROM->TO	SUNDOWN INTERCHANGE - WOLFFORTH INTERCHANGE 230KV CKT 1	318.7	350.57	0.25377	100	TOLK STATION EAST - TUCO INTERCHANGE 230KV CKT 1
FDNS	06ALL	0	17SP	G14_046	FROM->TO	SUNDOWN INTERCHANGE - WOLFFORTH INTERCHANGE 230KV CKT 1	318.7	350.57	0.25377	100	TOLK STATION EAST - TUCO INTERCHANGE 230KV CKT 1
FDNS	06ALL	0	20SP	G14_046	FROM->TO	TUCO INTERCHANGE - TUCO_2 230.00 230KV CKT 1	497	547	0.29793	176.1131	TUCO INTERCHANGE - TUCO_2 345.00 345KV CKT 1
FDNS	06ALL	0	17SP	G14_046	FROM->TO	TUCO INTERCHANGE - TUCO_2 230.00 230KV CKT 1	497	547	0.25996	172.1789	TUCO INTERCHANGE - TUCO_2 345.00 345KV CKT 1
FDNS	06NR	0	17G	G14_046	FROM->TO	TUCO INTERCHANGE - TUCO_2 230.00 230KV CKT 1	497	547	0.04409	120.0923	TUCO INTERCHANGE - TUCO_2 345.00 345KV CKT 1
FDNS	06NR	0	20L	G14_046	FROM->TO	TUCO INTERCHANGE - TUCO_2 230.00 230KV CKT 1	497	547	0.07643	110.6573	TUCO INTERCHANGE - TUCO_2 345.00 345KV CKT 1
FDNS	06ALL	0	25SP	G14_046	FROM->TO	TUCO INTERCHANGE - TUCO_2 230.00 230KV CKT 1	497	547	0.30856	101.2227615	TUCO INTERCHANGE - TUCO_2 345.00 345KV CKT 1
FDNS	06ALL	0	20SP	G14_046	FROM->TO	TUCO_2 345.00 (TUCO_2 XFMR) 345/230/13.2KV TRANSFORMER CKT 1	560	560	0.28894	168.9327	TUCO INTERCHANGE - TUCO_2 345.00 345KV CKT 1
FDNS	06ALL	0	17SP	G14_046	FROM->TO	TUCO_2 345.00 (TUCO_2 XFMR) 345/230/13.2KV TRANSFORMER CKT 1	560	560	0.28278	168.0719	TUCO INTERCHANGE - TUCO_2 345.00 345KV CKT 1
FDNS	06ALL	0	20SP	G14_046	FROM->TO	TUCO_2 345.00 (TUCO_2 XFMR) 345/230/13.2KV TRANSFORMER CKT 1	560	560	0.28894	162.4281	TUCO INTERCHANGE - TUCO_2 345.00 345KV CKT 1
FDNS	06ALL	0	17SP	G14_046	FROM->TO	TUCO_2 345.00 (TUCO_2 XFMR) 345/230/13.2KV TRANSFORMER CKT 1	560	560	0.28278	161.5424	TUCO INTERCHANGE - TUCO_2 345.00 345KV CKT 1
FDNS	06NR	0	17G	G14_046	FROM->TO	TUCO_2 345.00 (TUCO_2 XFMR) 345/230/13.2KV TRANSFORMER CKT 1	560	560	0.02954	114.7643	TUCO INTERCHANGE - TUCO_2 345.00 345KV CKT 1
FDNS	06NR	0	17G	G14_046	FROM->TO	TUCO_2 345.00 (TUCO_2 XFMR) 345/230/13.2KV TRANSFORMER CKT 1	560	560	0.02954	111.8684	TUCO INTERCHANGE - TUCO_2 345.00 345KV CKT 1
FDNS	06NR	0	20L	G14_046	FROM->TO	TUCO_2 345.00 (TUCO_2 XFMR) 345/230/13.2KV TRANSFORMER CKT 1	560	560	0.03691	110.8936	TUCO INTERCHANGE - TUCO_2 345.00 345KV CKT 1
FDNS	06NR	0	20L	G14_046	FROM->TO	TUCO_2 345.00 (TUCO_2 XFMR) 345/230/13.2KV TRANSFORMER CKT 1	560	560	0.03691	108.3383	TUCO INTERCHANGE - TUCO_2 345.00 345KV CKT 1
FDNS	06NR	2	17G	G14_046	TO->FROM	AMARILLO SOUTH INTERCHANGE - G15031_T 230.00 230KV CKT 1	318.7	350.57	0.09415	103.4449	NEWHART 230 - POTTER COUNTY INTERCHANGE 230KV CKT 1
FDNS	06NR	2	17G	G14_046	FROM->TO	BUSHLAND INTERCHANGE - HILLSIDE 115KV CKT 1	159	160	0.05552	118.1849	BUSHLAND INTERCHANGE - POTTER COUNTY INTERCHANGE 230KV CKT 1
FDNS	06NR	2	17G	G14_046	FROM->TO	BUSHLAND INTERCHANGE - HILLSIDE 115KV CKT 1	159	160	0.05552	118.1849	BUSHLAND INTERCHANGE - POTTER COUNTY INTERCHANGE 230KV CKT 1
FDNS	06NR	2	17G	G14_046	FROM->TO	BUSHLAND INTERCHANGE - POTTER COUNTY INTERCHANGE 230KV CKT 1	318.7	350.57	0.10836	103.6906	NEWHART 230 - POTTER COUNTY INTERCHANGE 230KV CKT 1
FDNS	06NR	2	17G	G14_046	FROM->TO	BUSHLAND INTERCHANGE (WH 7001795) 230/115/13.2KV TRANSFORMER CKT 1	168	168	0.05552	116.5462	BUSHLAND INTERCHANGE - POTTER COUNTY INTERCHANGE 230KV CKT 1
FDNS	06NR	2	17G	G14_046	FROM->TO	BUSHLAND INTERCHANGE (WH 7001795) 230/115/13.2KV TRANSFORMER CKT 1	168	168	0.05552	116.5462	BUSHLAND INTERCHANGE - POTTER COUNTY INTERCHANGE 230KV CKT 1
FDNS	06NR	2	17G	G14_046	FROM->TO	BUSHLAND INTERCHANGE (WH 7001795) 230/115/13.2KV TRANSFORMER CKT 1	168	168	0.05552	114.0422	BUSHLAND INTERCHANGE - POTTER COUNTY INTERCHANGE 230KV CKT 1
FDNS	06NR	2	17G	G14_046	FROM->TO	BUSHLAND INTERCHANGE (WH 7001795) 230/115/13.2KV TRANSFORMER CKT 1	168	168	0.05552	114.0422	BUSHLAND INTERCHANGE - POTTER COUNTY INTERCHANGE 230KV CKT 1
FDNS	06NR	2	17G	G14_046	FROM->TO	CANYON E_TP3115.00 - RANDALL COUNTY INTERCHANGE 115KV CKT 1	96	96	0.04694	100.8119	BUSHLAND INTERCHANGE - DEAF SMITH COUNTY INTERCHANGE 230KV CKT 1
FDNS	06NR	2	17G	G14_046	FROM->TO	CANYON E_TP3115.00 - RANDALL COUNTY INTERCHANGE 115KV CKT 1	96	96	0.04694	100.8119	BUSHLAND INTERCHANGE - DEAF SMITH COUNTY INTERCHANGE 230KV CKT 1
FDNS	06NR	2	17G	G14_046	TO->FROM	CANYON WEST SUB - DAWN SUB 115KV CKT 1	96	96	0.04694	127.5172	BUSHLAND INTERCHANGE - DEAF SMITH COUNTY INTERCHANGE 230KV CKT 1
FDNS	06NR	2	17G	G14_046	TO->FROM	CANYON WEST SUB - DAWN SUB 115KV CKT 1	96	96	0.04694	127.5172	BUSHLAND INTERCHANGE - DEAF SMITH COUNTY INTERCHANGE 230KV CKT 1
FDNS	06NR	2	17G	G14_046	TO->FROM	CARGILL SUB - DEAF SMITH REC-#24 115KV CKT 1	96	96	0.05254	107.5549	DEAF SMITH COUNTY INTERCHANGE - G15039_T 230.00 230KV CKT 1
FDNS	06NR	2	20L	G14_046	TO->FROM	CARGILL SUB - DEAF SMITH REC-#24 115KV CKT 1	96	96	0.04831	102.4808	G15039_T 230.00 - PLANT X STATION 230KV CKT 1
FDNS	06NR	2	17G	G14_046	TO->FROM	CARGILL SUB - DEAF SMITH REC-#24 115KV CKT 1	96	96	0.05254	99.6	G15039_T 230.00 - PLANT X STATION 230KV CKT 1
FDNS	06NR	2	17G	G14_046	FROM->TO	CARGILL SUB - FRIONA SUB 115KV CKT 1	96	96	0.05254	100.202	DEAF SMITH COUNTY INTERCHANGE - G15039_T 230.00 230KV CKT 1
FDNS	06ALL	2	20SP	G14_046	FROM->TO	CHISHOLM6 230.00 - ELK CITY 230KV 230KV CKT 1	353	353	0.06327	103.9805	BASE CASE
FDNS	06ALL	2	17SP	G14_046	FROM->TO	CHISHOLM6 230.00 - ELK CITY 230KV 230KV CKT 1	353	353	0.06333	101.7938	BASE CASE
FDNS	06ALL	2	20L	G14_046	TO->FROM	CIMARRON - MINCO 345KV CKT 1	956	956	0.20853	140.1322	G14-057T 345.00 - SUNNYSIDE 345KV CKT 1
FDNS	06ALL	2	20L	G14_046	TO->FROM	CIMARRON - MINCO 345KV CKT 1	956	956	0.20853	133.5433	G14-057T 345.00 - LAWTON EASTSIDE 345KV CKT 1
FDNS	06ALL	2	17G	G14_046	TO->FROM	CIMARRON - MINCO 345KV CKT 1	956	956	0.23133	131.7687	G14-057T 345.00 - SUNNYSIDE 345KV CKT 1
FDNS	06ALL	2	20WP	G14_046	TO->FROM	CIMARRON - MINCO 345KV CKT 1	956	956	0.23599	130.9595	G14-057T 345.00 - SUNNYSIDE 345KV CKT 1
FDNS	06ALL	2	17G	G14_046	TO->FROM	CIMARRON - MINCO 345KV CKT 1	956	956	0.23133	126.2954	G14-057T 345.00 - LAWTON EASTSIDE 345KV CKT 1
FDNS	06ALL	2	20WP	G14_046	TO->FROM	CIMARRON - MINCO 345KV CKT 1	956	956	0.23599	125.3296	G14-057T 345.00 - LAWTON EASTSIDE 345KV CKT 1
FDNS	06ALL	2	16WP	G14_046	TO->FROM	CIMARRON - MINCO 345KV CKT 1	956	956	0.23788	123.9324	G14-057T 345.00 - SUNNYSIDE 345KV CKT 1
FDNS	06ALL	2	17SP	G14_046	TO->FROM	CIMARRON - MINCO 345KV CKT 1	956	956	0.23598	123.0412	G14-057T 345.00 - SUNNYSIDE 345KV CKT 1
FDNS	06ALL	2	20SP	G14_046	TO->FROM	CIMARRON - MINCO 345KV CKT 1	956	956	0.24219	120.4683	G14-057T 345.00 - SUNNYSIDE 345KV CKT 1
FDNS	06ALL	2	16WP	G14_046	TO->FROM	CIMARRON - MINCO 345KV CKT 1	956	956	0.23788	118.3934	G14-057T 345.00 - LAWTON EASTSIDE 345KV CKT 1
FDNS	06ALL	2	17SP	G14_046	TO->FROM	CIMARRON - MINCO 345KV CKT 1	956	956	0.23598	117.7499	G14-057T 345.00 - LAWTON EASTSIDE 345KV CKT 1
FDNS	06ALL	2	20SP	G14_046	TO->FROM	CIMARRON - MINCO 345KV CKT 1	956	956	0.24219	115.0256	G14-057T 345.00 - LAWTON EASTSIDE 345KV CKT 1
FDNS	06ALL	2	17G	G14_046	TO->FROM	CIMARRON - MINCO 345KV CKT 1	956	956	0.19845	111.0722	MATHWSN7 345.00 - TATONGA7 345.00 345KV CKT 1
FDNS	06ALL	2	20WP	G14_046	TO->FROM	CIMARRON - MINCO 345KV CKT 1	956	956	0.19972	110.8109	MATHWSN7 345.00 - TATONGA7 345.00 345KV CKT 1
FDNS	06ALL	2	20L	G14_046	TO->FROM	CIMARRON - MINCO 345KV CKT 1	956	956	0.21175	107.6011	CHISHOLM7 345.00 - WOODWARD DISTRICT EHV 345KV CKT 1
FDNS	06ALL	2	17G	G14_046	TO->FROM	CIMARRON - MINCO 345KV CKT 1	956	956	0.22514	107.4004	CHISHOLM7 345.00 - WOODWARD DISTRICT EHV 345KV CKT 1
FDNS	06ALL	2	20WP	G14_046	TO->FROM	CIMARRON - MINCO 345KV CKT 1	956	956	0.19972	105.5266	G11_051T 345.00 - TATONGA7 345.00 345KV CKT 1
FDNSLock	06ALL	2	17G	G14_046	TO->FROM	CIMARRON - MINCO 345KV CKT 1	956	956	0.19845	105.1772	G11_051T 345.00 - TATONGA7 345.00 345KV CKT 1
FDNS	06ALL	2	17SP	G14_046	TO->FROM	CIMARRON - MINCO 345KV CKT 1	956	956	0.20252	104.7953	MATHWSN7 345.00 - TATONGA7 345.00 345KV CKT 1
FDNS	06ALL	2	20SP	G14_046	TO->FROM	CIMARRON - MINCO 345KV CKT 1	956	956	0.20644	104.2231	MATHWSN7 345.00 - TATONGA7 345.00 345KV CKT 1
FDNS	06ALL	2	16WP	G14_046	TO->FROM	CIMARRON - MINCO 345KV CKT 1	956	956	0.20345	104.0692	MATHWSN7 345.00 - TATONGA7 345.00 345KV CKT 1
FDNS	06ALL	2	20WP	G14_046	TO->FROM	CIMARRON - MINCO 345KV CKT 1	956	956	0.19972	103.9402	G11_051T 345.00 - WOODWARD DISTRICT EHV 345KV CKT 1
FDNS	06ALL	2	20WP	G14_046	TO->FROM	CIMARRON - MINCO 345KV CKT 1	956	956	0.23483	103.712	CHISHOLM7 345.00 - WOODWARD DISTRICT EHV 345KV CKT 1
FDNSLock	06ALL	2	17G	G14_046	TO->FROM	CIMARRON - MINCO 345KV CKT 1	956	956	0.19845	103.655	G11_051T 345.00 - WOODWARD DISTRICT EHV 345KV CKT 1
FDNS	06ALL	2	20SP	G14_046	TO->FROM	CIMARRON - MINCO 345KV CKT 1	956	956	0.24178	102.1101	CHISHOLM7 345.00 - WOODWARD DISTRICT EHV 345KV CKT 1
FDNS	06ALL	2	17SP	G14_046	TO->FROM	CIMARRON - MINCO 345KV CKT 1	956	956	0.23323	100.969	CHISHOLM7 345.00 - WOODWARD DISTRICT EHV 345KV CKT 1
FDNS	06ALL	2	17SP	G14_046	TO->FROM	CIMARRON - MINCO 345KV CKT 1	956	956	0.20252	99.6	G11_051T 345.00 - TATONGA7 345.00 345KV CKT 1
FDNS	06NR	2	17G	G14_046	TO->FROM	COULTER INTERCHANGE - HILLSIDE 115KV CKT 1	159	159	0.05552	113.2181	BUSHLAND INTERCHANGE - POTTER COUNTY INTERCHANGE 230KV CKT 1
FDNS	06NR	2	17G	G14_046	TO->FROM	COULTER INTERCHANGE - HILLSIDE 115KV CKT 1	159	159	0.05552	113.2181	BUSHLAND INTERCHANGE - POTTER COUNTY INTERCHANGE 230KV CKT 1
FDNS	06NR	2	17G	G14_046	FROM->TO	CURRY COUNTY INTERCHANGE - DEAF SMITH REC-#20 115KV CKT 1	96	96	0.05254	129.1509	DEAF SMITH COUNTY INTERCHANGE - G15039_T 230.00 230KV CKT 1
FDNS	06NR	2	17G	G14_046	FROM->TO	CURRY COUNTY INTERCHANGE - DEAF SMITH REC-#20 115KV CKT 1	96	96	0.05254	121.3057	G15039_T 230.00 - PLANT X STATION 230KV CKT 1
FDNS	06NR	2	20L	G14_046	FROM->TO	CURRY COUNTY INTERCHANGE - DEAF SMITH REC-#20 115KV CKT 1	96	96	0.04831	120.2947	G15039_T 230.00 - PLANT X STATION 230KV CKT 1
FDNS	06NR	2	17G	G14_046	TO->FROM	DAWN SUB - Panda Energy Substation Hereford 115KV CKT 1	96	96	0.04694	130.9313	BUSHLAND INTERCHANGE - DEAF SMITH COUNTY INTERCHANGE 230KV CKT 1
FDNS	06NR	2	17G	G14_046	TO->FROM	DAWN SUB - Panda Energy Substation Hereford 115KV CKT 1	96	96	0.04694	130.9313	BUSHLAND INTERCHANGE - DEAF SMITH COUNTY INTERCHANGE 230KV CKT 1
FDNS	06NR	2	17G	G14_046	TO->FROM	DAWN SUB - Panda Energy Substation Hereford 115KV CKT 1	96	96	0.03459	102.1469	BUSHLAND INTERCHANGE - POTTER COUNTY INTERCHANGE 230KV CKT 1
FDNS	06NR	2	17G	G14_046	TO->FROM	DAWN SUB - Panda Energy Substation Hereford 115KV CKT 1	96	96	0.03459	102.1469	BUSHLAND INTERCHANGE - POTTER COUNTY INTERCHANGE 230KV CKT 1
FDNS	06ALL	2	20SP	G14_046	TO->FROM	DEAF SMITH COUNTY INTERCHANGE - G15039_T 230.00 230KV CKT 1	318.7	350.57	0.1183	106.1518	BASE CASE
FDNS	06NR	2	17G	G14_046	TO->FROM	DEAF SMITH COUNTY INTERCHANGE - G15039_T 230.00 230KV CKT 1	318.7	350.57	0.11132	104.2484	NEWHART 230 - PLANT X STATION 230KV CKT 1
FDNS	06ALL	2	17SP	G14_046	TO->FROM	DEAF SMITH COUNTY INTERCHANGE - G15039_T 230.00 230KV CKT 1	318.7	350.57	0.13813	104.2255	BASE CASE

SOLUTION	GROUP	SCENARIO	SEASON	SOURCE	DIRECTION	MONITORED ELEMENT	RATEA (MVA)	RATEB(MVA)	TDF	TC%LOADING (% MVA)	CONTINGENCY
FDNS	06NR	2	17G	G14_046	TO->FROM	DEAF SMITH COUNTY INTERCHANGE - G15039_T 230.00 230KV CKT 1	318.7	350.57	0.09879	103.9799	NEWHART 230 - POTTER COUNTY INTERCHANGE 230KV CKT 1
FDNS	06NR	2	17G	G14_046	TO->FROM	DEAF SMITH COUNTY INTERCHANGE - G15039_T 230.00 230KV CKT 1	318.7	350.57	0.0955	102.5424	AMARILLO SOUTH INTERCHANGE - G15031_T 230.00 230KV CKT 1
FDNS	06NR	2	17G	G14_046	FROM->TO	DEAF SMITH COUNTY INTERCHANGE - Panda Energy Substation Hereford 115KV CKT 1	96	96	0.04694	136.0663	BUSHLAND INTERCHANGE - DEAF SMITH COUNTY INTERCHANGE 230KV CKT 1
FDNS	06NR	2	17G	G14_046	FROM->TO	DEAF SMITH COUNTY INTERCHANGE - Panda Energy Substation Hereford 115KV CKT 1	96	96	0.04694	136.0663	BUSHLAND INTERCHANGE - DEAF SMITH COUNTY INTERCHANGE 230KV CKT 1
FDNS	06NR	2	17G	G14_046	FROM->TO	DEAF SMITH COUNTY INTERCHANGE - Panda Energy Substation Hereford 115KV CKT 1	96	96	0.03459	107.2414	BUSHLAND INTERCHANGE - POTTER COUNTY INTERCHANGE 230KV CKT 1
FDNS	06NR	2	17G	G14_046	FROM->TO	DEAF SMITH COUNTY INTERCHANGE - Panda Energy Substation Hereford 115KV CKT 1	96	96	0.03459	107.2414	BUSHLAND INTERCHANGE - POTTER COUNTY INTERCHANGE 230KV CKT 1
FDNS	06NR	2	17G	G14_046	FROM->TO	DEAF SMITH REC-#20 - PARMER COUNTY SUB 115KV CKT 1	96	96	0.05254	121.0569	DEAF SMITH COUNTY INTERCHANGE - G15039_T 230.00 230KV CKT 1
FDNS	06NR	2	17G	G14_046	FROM->TO	DEAF SMITH REC-#20 - PARMER COUNTY SUB 115KV CKT 1	96	96	0.05254	113.3561	G15039_T 230.00 - PLANT X STATION 230KV CKT 1
FDNS	06NR	2	20L	G14_046	FROM->TO	DEAF SMITH REC-#20 - PARMER COUNTY SUB 115KV CKT 1	96	96	0.04831	112.8528	G15039_T 230.00 - PLANT X STATION 230KV CKT 1
FDNS	06NR	2	17G	G14_046	TO->FROM	DEAF SMITH REC-#24 - PARMER COUNTY SUB 115KV CKT 1	96	96	0.05254	114.1557	DEAF SMITH COUNTY INTERCHANGE - G15039_T 230.00 230KV CKT 1
FDNS	06NR	2	20L	G14_046	TO->FROM	DEAF SMITH REC-#24 - PARMER COUNTY SUB 115KV CKT 1	96	96	0.04831	107.7543	G15039_T 230.00 - PLANT X STATION 230KV CKT 1
FDNS	06NR	2	17G	G14_046	TO->FROM	DEAF SMITH REC-#24 - PARMER COUNTY SUB 115KV CKT 1	96	96	0.05254	106.1261	G15039_T 230.00 - PLANT X STATION 230KV CKT 1
FDNS	06ALL	2	20L	G14_046	TO->FROM	EDDY COUNTY INTERCHANGE - EDDY_NORTH 6230.00 230KV CKT @1	478	478	0.42102	103.965	P12:345:SPS:J15.1.XRDS.TOLK
FDNS	06ALL	2	20L	G14_046	TO->FROM	EDDY COUNTY INTERCHANGE - EDDY_NORTH 6230.00 230KV CKT @1	478	478	0.4213	103.6323	CROSSROADS 7345.00 - TOLK STATION 345KV CKT 1
FDNS	06ALL	2	20L	G14_046	TO->FROM	EDDY COUNTY INTERCHANGE - EDDY_NORTH 6230.00 230KV CKT @1	478	478	0.4213	103.5624	TOLK STATION (ABBXNL844501) 345/230/13.2KV TRANSFORMER CKT 1
FDNS	06ALL	2	20L	G14_046	TO->FROM	EDDY COUNTY INTERCHANGE - EDDY_NORTH 6230.00 230KV CKT @1	478	478	0.4213	103.5624	TOLK STATION (ABBXNL844501) 345/230/13.2KV TRANSFORMER CKT 1
FDNS	06ALL	2	20L	G14_046	TO->FROM	G14-057T 345.00 - LAWTON EASTSIDE 345KV CKT 1	717	789	0.10173	105.4406	BASE CASE
FDNS	06ALL	2	20L	G14_046	FROM->TO	G14-057T 345.00 - SUNNYSIDE 345KV CKT 1	717	789	0.10173	118.6576	BASE CASE
FDNS	06ALL	2	20WP	G14_046	FROM->TO	G14-057T 345.00 - SUNNYSIDE 345KV CKT 1	717	789	0.12533	106.4822	BASE CASE
FDNS	06ALL	2	17G	G14_046	FROM->TO	G14-057T 345.00 - SUNNYSIDE 345KV CKT 1	717	789	0.12368	105.8626	BASE CASE
FDNS	06ALL	2	16WP	G14_046	FROM->TO	G14-057T 345.00 - SUNNYSIDE 345KV CKT 1	717	789	0.12697	104.4384	BASE CASE
FDNS	06NR	2	20L	G14_046	FROM->TO	G14-074T 345.00 - OKLAUNION 345KV CKT 1	1022	1124	0.04356	106.9322	BASE CASE
FDNS	06NR	2	17G	G14_046	FROM->TO	G14-074T 345.00 - OKLAUNION 345KV CKT 1	1022	1124	0.03257	102.9455	BASE CASE
FDNS	06NR	2	20L	G14_046	FROM->TO	G14-074T 345.00 - OKLAUNION 345KV CKT 1	1022	1124	0.04145	102.2532	CHISHOLM7 345.00 - GRACEMONT 345KV CKT 1
FDNS	06NR	2	20L	G14_046	FROM->TO	G14-074T 345.00 - OKLAUNION 345KV CKT 1	1022	1124	0.04145	101.8896	CHISHOLM7 345.00 () 345/230/13.2KV TRANSFORMER CKT 1
FDNS	06NR	2	20L	G14_046	FROM->TO	G14-074T 345.00 - OKLAUNION 345KV CKT 1	1022	1124	0.04683	101.4902	TUCO INTERCHANGE - TUCO_2 345.00 345KV CKT 1
FDNS	06NR	2	20L	G14_046	FROM->TO	G14-074T 345.00 - OKLAUNION 345KV CKT 1	1022	1124	0.05507	101.2851	BUSHLAND INTERCHANGE - DEAF SMITH COUNTY INTERCHANGE 230KV CKT 1
FDNS	06NR	2	20L	G14_046	FROM->TO	G14-074T 345.00 - OKLAUNION 345KV CKT 1	1022	1124	0.05507	101.2851	BUSHLAND INTERCHANGE - DEAF SMITH COUNTY INTERCHANGE 230KV CKT 1
FDNS	06NR	2	20L	G14_046	FROM->TO	G14-074T 345.00 - OKLAUNION 345KV CKT 1	1022	1124	0.04348	101.2671	MOORE COUNTY INTERCHANGE - POTTER COUNTY INTERCHANGE 230KV CKT 1
FDNS	06NR	2	20L	G14_046	FROM->TO	G14-074T 345.00 - OKLAUNION 345KV CKT 1	1022	1124	0.04348	101.2671	MOORE COUNTY INTERCHANGE - POTTER COUNTY INTERCHANGE 230KV CKT 1
FDNS	06NR	2	20L	G14_046	FROM->TO	G14-074T 345.00 - OKLAUNION 345KV CKT 1	1022	1124	0.04285	101.2654	G11-14T 345.00 - WOODWARD DISTRICT EHV 345KV CKT 1
FDNS	06NR	2	20L	G14_046	FROM->TO	G14-074T 345.00 - OKLAUNION 345KV CKT 1	1022	1124	0.04285	101.2654	G11-14T 345.00 - WOODWARD DISTRICT EHV 345KV CKT 2
FDNS	06ALL	2	20L	G14_046	FROM->TO	GRACEMONT - MINCO 345KV CKT 1	1195	1195	0.20853	101.0673	G14-057T 345.00 - SUNNYSIDE 345KV CKT 1
FDNS	00NR	2	25SP	G14_046	TO->FROM	JONES STATION - TUCO INTERCHANGE 230KV CKT 1	343.79	343.79	0.05534	139.1643	CARLISLE INTERCHANGE - TUCO INTERCHANGE 230KV CKT 1
FDNS	00NR	2	25SP	G14_046	TO->FROM	JONES STATION - TUCO INTERCHANGE 230KV CKT 1	343.79	343.79	0.05534	139.1643	CARLISLE INTERCHANGE - TUCO INTERCHANGE 230KV CKT 1
FDNS	00NR	2	25SP	G14_046	TO->FROM	JONES STATION - TUCO INTERCHANGE 230KV CKT 1	343.79	343.79	0.03647	122.6847	TUCO INTERCHANGE - YOAKUM_345 345.00 345KV CKT 1
FDNS	00NR	2	25SP	G14_046	TO->FROM	JONES STATION - TUCO INTERCHANGE 230KV CKT 1	343.79	343.79	0.05112	119.1138	GEN526333 1-JONES GEN #3 21 KV
FDNS	00NR	2	25SP	G14_046	TO->FROM	JONES STATION - TUCO INTERCHANGE 230KV CKT 1	343.79	343.79	0.05112	118.7159	GEN526334 1-JONES_4 116.500
FDNS	00NR	2	25SP	G14_046	TO->FROM	JONES STATION - TUCO INTERCHANGE 230KV CKT 1	343.79	343.79	0.05164	111.2162	CARLISLE INTERCHANGE - WOLFFORTH INTERCHANGE 230KV CKT 1
FDNS	00NR	2	25SP	G14_046	TO->FROM	JONES STATION - TUCO INTERCHANGE 230KV CKT 1	343.79	343.79	0.05194	106.9963	TUCO INTERCHANGE (ENRCO 136401) 230/115/13.2KV TRANSFORMER CKT 1
FDNS	00NR	2	25SP	G14_046	TO->FROM	JONES STATION - TUCO INTERCHANGE 230KV CKT 1	343.79	343.79	0.05194	106.9963	TUCO INTERCHANGE (ENRCO 136401) 230/115/13.2KV TRANSFORMER CKT 1
FDNS	00NR	2	25SP	G14_046	TO->FROM	JONES STATION - TUCO INTERCHANGE 230KV CKT 1	343.79	343.79	0.05194	106.9963	TUCO INTERCHANGE (ENRCO 136401) 230/115/13.2KV TRANSFORMER CKT 2
FDNS	00NR	2	25SP	G14_046	TO->FROM	JONES STATION - TUCO INTERCHANGE 230KV CKT 1	343.79	343.79	0.05194	106.9963	TUCO INTERCHANGE (ENRCO 136401) 230/115/13.2KV TRANSFORMER CKT 2
FDNS	00NR	2	25SP	G14_046	TO->FROM	JONES STATION - TUCO INTERCHANGE 230KV CKT 1	343.79	343.79	0.05112	106.4847	GEN526332 1-JONES GEN #2 21 KV
FDNS	00NR	2	25SP	G14_046	TO->FROM	JONES STATION - TUCO INTERCHANGE 230KV CKT 1	343.79	343.79	0.05112	106.4826	GEN526331 1-JONES GEN #1 22 KV
FDNS	00NR	2	25SP	G14_046	TO->FROM	JONES STATION - TUCO INTERCHANGE 230KV CKT 1	343.79	343.79	0.05556	105.6092	LUBBOCK EAST INTERCHANGE - TUCO INTERCHANGE 115KV CKT 1
FDNS	00NR	2	25SP	G14_046	TO->FROM	JONES STATION - TUCO INTERCHANGE 230KV CKT 1	343.79	343.79	0.05556	105.6092	LUBBOCK EAST INTERCHANGE - TUCO INTERCHANGE 115KV CKT 1
FDNS	00NR	2	25SP	G14_046	TO->FROM	JONES STATION - TUCO INTERCHANGE 230KV CKT 1	343.79	343.79	0.05462	105.4194	PLANT X STATION - SUNDOWN INTERCHANGE 230KV CKT 1
FDNS	00NR	2	25SP	G14_046	TO->FROM	JONES STATION - TUCO INTERCHANGE 230KV CKT 1	343.79	343.79	0.05462	105.4194	PLANT X STATION - SUNDOWN INTERCHANGE 230KV CKT 1
FDNS	00NR	2	25SP	G14_046	TO->FROM	JONES STATION - TUCO INTERCHANGE 230KV CKT 1	343.79	343.79	0.05138	102.5525	STANTON SUB - TUCO INTERCHANGE 115KV CKT 1
FDNS	00NR	2	25SP	G14_046	TO->FROM	JONES STATION - TUCO INTERCHANGE 230KV CKT 1	343.79	343.79	0.05327	102.3349	P12:230:LPL:K39.1.CRLSLE.LP-MLWK
FDNS	00NR	2	25SP	G14_046	TO->FROM	JONES STATION - TUCO INTERCHANGE 230KV CKT 1	343.79	343.79	0.05327	102.3335	LUBBOCK POWER & LIGHT-MILWAUKEE (M-E C0681251) 230/69/13.5KV TRANSFORMER CKT 1
FDNS	00NR	2	25SP	G14_046	TO->FROM	JONES STATION - TUCO INTERCHANGE 230KV CKT 1	343.79	343.79	0.05327	102.3335	LUBBOCK POWER & LIGHT-MILWAUKEE (M-E C0681251) 230/69/13.5KV TRANSFORMER CKT 1
FDNS	00NR	2	25SP	G14_046	TO->FROM	JONES STATION - TUCO INTERCHANGE 230KV CKT 1	343.79	343.79	0.05327	102.3328	CARLISLE INTERCHANGE - LUBBOCK POWER & LIGHT-MILWAUKEE 230KV CKT 1
FDNS	00NR	2	25SP	G14_046	TO->FROM	JONES STATION - TUCO INTERCHANGE 230KV CKT 1	343.79	343.79	0.04317	101.8206	TOLK STATION EAST - TUCO INTERCHANGE 230KV CKT 1
FDNS	00NR	2	25SP	G14_046	TO->FROM	JONES STATION - TUCO INTERCHANGE 230KV CKT 1	343.79	343.79	0.04317	101.8206	TOLK STATION EAST - TUCO INTERCHANGE 230KV CKT 1
FDNS	00NR	2	25SP	G14_046	TO->FROM	JONES STATION - TUCO INTERCHANGE 230KV CKT 1	343.79	343.79	0.05138	101.6251	P12:115:SPS:V15.1.TUCO.INDANA
FDNS	00NR	2	25SP	G14_046	TO->FROM	JONES STATION - TUCO INTERCHANGE 230KV CKT 1	343.79	343.79	0.05138	101.5793	INDIANA SUB - STANTON SUB 115KV CKT 1
FDNS	00NR	2	25SP	G14_046	TO->FROM	JONES STATION - TUCO INTERCHANGE 230KV CKT 1	343.79	343.79	0.05112	100.7469	GEN527166 1-MUSTANG_6 118.000
FDNS	00NR	2	25SP	G14_046	TO->FROM	JONES STATION - TUCO INTERCHANGE 230KV CKT 1	343.79	343.79	0.05112	100.7466	GEN527903 1-HOBBS PLANT #3 (ST)
FDNS	00NR	2	25SP	G14_046	TO->FROM	JONES STATION - TUCO INTERCHANGE 230KV CKT 1	343.79	343.79	0.05391	100.3452	CARLISLE INTERCHANGE - MURPHY SUB 115KV CKT 1
FDNS	00NR	2	25SP	G14_046	TO->FROM	JONES STATION - TUCO INTERCHANGE 230KV CKT 1	343.79	343.79	0.05391	100.3452	CARLISLE INTERCHANGE - MURPHY SUB 115KV CKT 1
FDNS	00NR	2	25SP	G14_046	TO->FROM	JONES STATION - TUCO INTERCHANGE 230KV CKT 1	343.79	343.79	0.05093	100.3228	KRESS INTERCHANGE - SWISHER COUNTY INTERCHANGE 115KV CKT 1
FDNS	00NR	2	25SP	G14_046	TO->FROM	JONES STATION - TUCO INTERCHANGE 230KV CKT 1	343.79	343.79	0.05093	100.3228	KRESS INTERCHANGE - SWISHER COUNTY INTERCHANGE 115KV CKT 1
FDNS	00NR	2	25SP	G14_046	TO->FROM	JONES STATION - TUCO INTERCHANGE 230KV CKT 1	343.79	343.79	0.05112	100.2967	GEN528501 1-G14_012 24.000
FDNS	00NR	2	25SP	G14_046	TO->FROM	JONES STATION - TUCO INTERCHANGE 230KV CKT 1	343.79	343.79	0.05571	100.1964	YOAKUM_345 345.00 (UPDATE DATA) 345/230/13.2KV TRANSFORMER CKT 1
FDNS	00NR	2	25SP	G14_046	TO->FROM	JONES STATION - TUCO INTERCHANGE 230KV CKT 1	343.79	343.79	0.05138	99.9	INDIANA SUB - SOUTH PLAINS REC-ERSKINE 115KV CKT 1
FDNS	00NR	2	25SP	G14_046	TO->FROM	JONES STATION - TUCO INTERCHANGE 230KV CKT 1	343.79	343.79	0.05134	99.8	FLOYD COUNTY INTERCHANGE - TUCO INTERCHANGE 115KV CKT 1
FDNS	00NR	2	25SP	G14_046	TO->FROM	JONES STATION - TUCO INTERCHANGE 230KV CKT 1	343.79	343.79	0.05134	99.8	FLOYD COUNTY INTERCHANGE - TUCO INTERCHANGE 115KV CKT 1
FDNS	00NR	2	25SP	G14_046	TO->FROM	JONES STATION - TUCO INTERCHANGE 230KV CKT 1	343.79	343.79	0.05138	99.7	POTTER COUNTY INTERCHANGE (WAUK 90343-A) 345/230/13.2KV TRANSFORMER CKT 1
FDNS	00NR	2	25SP	G14_046	TO->FROM	JONES STATION - TUCO INTERCHANGE 230KV CKT 1	343.79	343.79	0.05138	99.7	POTTER COUNTY INTERCHANGE (WAUK 90343-A) 345/230/13.2KV TRANSFORMER CKT 1
FDNS	00NR	2	25SP	G14_046	TO->FROM	JONES STATION - TUCO INTERCHANGE 230KV CKT 1	343.79	343.79	0.05112	99.7	GEN563122 1-G15077_3 0.3850
FDNS	00NR	2	25SP	G14_046	TO->FROM	JONES STATION - TUCO INTERCHANGE 230KV CKT 1	343.79	343.79	0.05112	99.6	GEN527901 1-HOBBS PLANT #1 (CT)
FDNS	00NR	2	25SP	G14_046	TO->FROM	JONES STATION - TUCO INTERCHANGE 230KV CKT 1	343.79	343.79	0.05112	99.6	GEN527902 1-HOBBS PLANT #2 (CT)
FDNS	00NR	2	25SP	G14_046	TO->FROM	JONES STATION - TUCO INTERCHANGE 230KV CKT 1	343.79	343.79	0.05112	99.6	GEN563102 1-G15075_3 0.5500
FDNS	00NR	2	25SP	G14_046	FROM->TO	LUBBOCK POWER & LIGHT-HOLLY PLANT (SHIH T101039) 230/69/13.5KV TRANSFORMER CKT 1	224	224	0.03579	104.7613	LUBBOCK POWER & LIGHT-SOUTHEAST - LUBBOCK SOUTH INTERCHANGE 230KV CKT 1
FDNS	00NR	2	25SP	G14_046	FROM->TO	LUBBOCK POWER & LIGHT-HOLLY PLANT (SHIH T101039) 230/69/13.5KV TRANSFORMER CKT 1	224	224	0.03579	104.7484	P12:LPL:SPS:K64.1.LP-SE.LUBBS
FDNS	00NR	2	25SP	G14_046	FROM->TO	LUBBOCK POWER & LIGHT-HOLLY PLANT (SHIH T101039) 230/69/13.5KV TRANSFORMER CKT 1	224	224	0.03409	102.133	P12:230:LPL:K57.1.LP-WADS.LUBBE
FDNS	00NR	2	25SP	G14_046	FROM->TO	LUBBOCK POWER & LIGHT-HOLLY PLANT (SHIH T101039) 230/69/13.5KV TRANSFORMER CKT 1	224	224	0.03409	102.1329	LUBBOCK POWER & LIGHT-WADSWORTH (SHIH T101038) 230/69/13.5KV TRANSFORMER CKT 1

SOLUTION	GROUP	SCENARIO	SEASON	SOURCE	DIRECTION	MONITORED ELEMENT	RATEA (MVA)	RATEB(MVA)	TDF	TC%LOADING (% MVA)	CONTINGENCY
FDNS	00NR	2	25SP	G14_046	FROM->TO	LUBBOCK POWER & LIGHT-HOLLY PLANT (SHIH T101039) 230/69/13.5KV TRANSFORMER CKT 1	224	224	0.03409	102.1329	LUBBOCK POWER & LIGHT-WADSWORTH (SHIH T101038) 230/69/13.5KV TRANSFORMER CKT 1
FDNS	00NR	2	25SP	G14_046	FROM->TO	LUBBOCK POWER & LIGHT-HOLLY PLANT (SHIH T101039) 230/69/13.5KV TRANSFORMER CKT 1	224	224	0.03409	101.829	LUBBOCK EAST INTERCHANGE - LUBBOCK POWER & LIGHT-WADSWORTH 230KV CKT 1
FDNSLock	06ALL	2	20WP	G14_046		P12:230:AEPW:ELKCITY6:SWEETWT6	0	0	0.12005	9999	BASE CASE
FDNS	06ALL	2	16WP	G14_046	FROM->TO	POTTER COUNTY INTERCHANGE (WAUK 90343-A) 345/230/13.2KV TRANSFORMER CKT 1	560	560	0.20064	102.0618	HITCHLAND INTERCHANGE - MOORE COUNTY INTERCHANGE 230KV CKT 1
FDNS	06ALL	2	16WP	G14_046	FROM->TO	POTTER COUNTY INTERCHANGE (WAUK 90343-A) 345/230/13.2KV TRANSFORMER CKT 1	560	560	0.20064	102.0618	HITCHLAND INTERCHANGE - MOORE COUNTY INTERCHANGE 230KV CKT 1
FDNS	06ALL	2	16WP	G14_046	FROM->TO	POTTER COUNTY INTERCHANGE (WAUK 90343-A) 345/230/13.2KV TRANSFORMER CKT 1	560	560	0.20064	101.6956	HITCHLAND INTERCHANGE - MOORE COUNTY INTERCHANGE 230KV CKT 1
FDNS	06ALL	2	16WP	G14_046	FROM->TO	POTTER COUNTY INTERCHANGE (WAUK 90343-A) 345/230/13.2KV TRANSFORMER CKT 1	560	560	0.20064	101.6956	HITCHLAND INTERCHANGE - MOORE COUNTY INTERCHANGE 230KV CKT 1
FDNS	06ALL	2	17SP	G14_046	FROM->TO	SUNDOWN INTERCHANGE - WOLFFORTH INTERCHANGE 230KV CKT 1	318.7	350.57	0.25389	101.6908	TOLK STATION EAST - TUCO INTERCHANGE 230KV CKT 1
FDNS	06ALL	2	17SP	G14_046	FROM->TO	SUNDOWN INTERCHANGE - WOLFFORTH INTERCHANGE 230KV CKT 1	318.7	350.57	0.25389	101.6908	TOLK STATION EAST - TUCO INTERCHANGE 230KV CKT 1
FDNS	06ALL	2	20L	G14_046	FROM->TO	TUCO INTERCHANGE - TUCO_2 230.00 230KV CKT 1	497	547	0.26088	181.2199	TUCO INTERCHANGE - TUCO_2 345.00 345KV CKT 1
FDNS	06ALL	2	17G	G14_046	FROM->TO	TUCO INTERCHANGE - TUCO_2 230.00 230KV CKT 1	497	547	0.24346	176.0864	TUCO INTERCHANGE - TUCO_2 345.00 345KV CKT 1
FDNS	06ALL	2	20SP	G14_046	FROM->TO	TUCO INTERCHANGE - TUCO_2 230.00 230KV CKT 1	497	547	0.29806	166.2483	TUCO INTERCHANGE - TUCO_2 345.00 345KV CKT 1
FDNS	06ALL	2	17SP	G14_046	FROM->TO	TUCO INTERCHANGE - TUCO_2 230.00 230KV CKT 1	497	547	0.26009	159.9768	TUCO INTERCHANGE - TUCO_2 345.00 345KV CKT 1
FDNS	06ALL	2	20WP	G14_046	FROM->TO	TUCO INTERCHANGE - TUCO_2 230.00 230KV CKT 1	552	608	0.29257	155.2742	TUCO INTERCHANGE - TUCO_2 345.00 345KV CKT 1
FDNS	06ALL	2	16WP	G14_046	FROM->TO	TUCO INTERCHANGE - TUCO_2 230.00 230KV CKT 1	552	608	0.25307	142.7524	TUCO INTERCHANGE - TUCO_2 345.00 345KV CKT 1
FDNS	06NR	2	20L	G14_046	FROM->TO	TUCO INTERCHANGE - TUCO_2 230.00 230KV CKT 1	497	547	0.07643	110.6574	TUCO INTERCHANGE - TUCO_2 345.00 345KV CKT 1
FDNS	06NR	2	17G	G14_046	FROM->TO	TUCO INTERCHANGE - TUCO_2 230.00 230KV CKT 1	497	547	0.04409	106.5066	TUCO INTERCHANGE - TUCO_2 345.00 345KV CKT 1
FDNS	06ALL	2	25SP	G14_046	FROM->TO	TUCO INTERCHANGE - TUCO_2 230.00 230KV CKT 1	497	547	0.30857	102.0482993	TUCO INTERCHANGE - TUCO_2 345.00 345KV CKT 1
FDNS	06ALL	2	16WP	G14_046	FROM->TO	TUCO INTERCHANGE (GE M1022338) 345/230/13.2KV TRANSFORMER CKT 1	560	560	0.26962	120.5418	TUCO INTERCHANGE (SIEM 8743066) 345/230/13.2KV TRANSFORMER CKT 2
FDNS	06ALL	2	16WP	G14_046	FROM->TO	TUCO INTERCHANGE (GE M1022338) 345/230/13.2KV TRANSFORMER CKT 1	560	560	0.26962	120.5418	TUCO INTERCHANGE (SIEM 8743066) 345/230/13.2KV TRANSFORMER CKT 2
FDNS	06ALL	2	16WP	G14_046	FROM->TO	TUCO INTERCHANGE (GE M1022338) 345/230/13.2KV TRANSFORMER CKT 1	560	560	0.26344	120.3223	TUCO_2 345.00 (TUCO_2 XFMR) 345/230/13.2KV TRANSFORMER CKT 1
FDNS	06ALL	2	16WP	G14_046	FROM->TO	TUCO INTERCHANGE (GE M1022338) 345/230/13.2KV TRANSFORMER CKT 1	560	560	0.26962	118.6764	TUCO INTERCHANGE (SIEM 8743066) 345/230/13.2KV TRANSFORMER CKT 2
FDNS	06ALL	2	16WP	G14_046	FROM->TO	TUCO INTERCHANGE (GE M1022338) 345/230/13.2KV TRANSFORMER CKT 1	560	560	0.26962	118.6764	TUCO INTERCHANGE (SIEM 8743066) 345/230/13.2KV TRANSFORMER CKT 2
FDNS	06ALL	2	16WP	G14_046	FROM->TO	TUCO INTERCHANGE (GE M1022338) 345/230/13.2KV TRANSFORMER CKT 1	560	560	0.26344	118.6764	TUCO_2 345.00 (TUCO_2 XFMR) 345/230/13.2KV TRANSFORMER CKT 1
FDNS	06ALL	2	17G	G14_046	FROM->TO	TUCO INTERCHANGE (GE M1022338) 345/230/13.2KV TRANSFORMER CKT 1	560	560	0.25999	114.4569	TUCO INTERCHANGE (SIEM 8743066) 345/230/13.2KV TRANSFORMER CKT 2
FDNS	06ALL	2	17G	G14_046	FROM->TO	TUCO INTERCHANGE (GE M1022338) 345/230/13.2KV TRANSFORMER CKT 1	560	560	0.25404	114.4414	TUCO_2 345.00 (TUCO_2 XFMR) 345/230/13.2KV TRANSFORMER CKT 1
FDNS	06ALL	2	17G	G14_046	FROM->TO	TUCO INTERCHANGE (GE M1022338) 345/230/13.2KV TRANSFORMER CKT 1	560	560	0.25404	112.333	TUCO_2 345.00 (TUCO_2 XFMR) 345/230/13.2KV TRANSFORMER CKT 1
FDNS	06ALL	2	17G	G14_046	FROM->TO	TUCO INTERCHANGE (GE M1022338) 345/230/13.2KV TRANSFORMER CKT 1	560	560	0.25999	112.1874	TUCO INTERCHANGE (SIEM 8743066) 345/230/13.2KV TRANSFORMER CKT 2
FDNS	06ALL	2	16WP	G14_046	FROM->TO	TUCO INTERCHANGE (GE M1022338) 345/230/13.2KV TRANSFORMER CKT 1	560	560	0.24231	103.9349	TUCO INTERCHANGE - TUCO_2 230.00 230KV CKT 1
FDNS	06ALL	2	16WP	G14_046	FROM->TO	TUCO INTERCHANGE (GE M1022338) 345/230/13.2KV TRANSFORMER CKT 1	560	560	0.24231	102.2603	TUCO INTERCHANGE - TUCO_2 230.00 230KV CKT 1
FDNS	06ALL	2	17G	G14_046	FROM->TO	TUCO INTERCHANGE (GE M1022338) 345/230/13.2KV TRANSFORMER CKT 1	560	560	0.23359	100.6861	TUCO INTERCHANGE - TUCO_2 230.00 230KV CKT 1
FDNS	06ALL	2	20L	G14_046	FROM->TO	TUCO_2 345.00 (TUCO_2 XFMR) 345/230/13.2KV TRANSFORMER CKT 1	560	560	0.24596	190.1451	TUCO INTERCHANGE - TUCO_2 345.00 345KV CKT 1
FDNS	06ALL	2	20WP	G14_046	FROM->TO	TUCO_2 345.00 (TUCO_2 XFMR) 345/230/13.2KV TRANSFORMER CKT 1	560	560	0.28276	189.4604	TUCO INTERCHANGE - TUCO_2 345.00 345KV CKT 1
FDNS	06ALL	2	17G	G14_046	FROM->TO	TUCO_2 345.00 (TUCO_2 XFMR) 345/230/13.2KV TRANSFORMER CKT 1	560	560	0.27244	187.4581	TUCO INTERCHANGE - TUCO_2 345.00 345KV CKT 1
FDNS	06ALL	2	20WP	G14_046	FROM->TO	TUCO_2 345.00 (TUCO_2 XFMR) 345/230/13.2KV TRANSFORMER CKT 1	560	560	0.28276	184.0471	TUCO INTERCHANGE - TUCO_2 345.00 345KV CKT 1
FDNS	06ALL	2	20L	G14_046	FROM->TO	TUCO_2 345.00 (TUCO_2 XFMR) 345/230/13.2KV TRANSFORMER CKT 1	560	560	0.24596	184.0031	TUCO INTERCHANGE - TUCO_2 345.00 345KV CKT 1
FDNS	06ALL	2	17G	G14_046	FROM->TO	TUCO_2 345.00 (TUCO_2 XFMR) 345/230/13.2KV TRANSFORMER CKT 1	560	560	0.27244	182.4703	TUCO INTERCHANGE - TUCO_2 345.00 345KV CKT 1
FDNS	06ALL	2	16WP	G14_046	FROM->TO	TUCO_2 345.00 (TUCO_2 XFMR) 345/230/13.2KV TRANSFORMER CKT 1	560	560	0.28296	175.5009	TUCO INTERCHANGE - TUCO_2 345.00 345KV CKT 1
FDNS	06ALL	2	16WP	G14_046	FROM->TO	TUCO_2 345.00 (TUCO_2 XFMR) 345/230/13.2KV TRANSFORMER CKT 1	560	560	0.28296	172.6087	TUCO INTERCHANGE - TUCO_2 345.00 345KV CKT 1
FDNS	06ALL	2	20SP	G14_046	FROM->TO	TUCO_2 345.00 (TUCO_2 XFMR) 345/230/13.2KV TRANSFORMER CKT 1	560	560	0.28908	166.4217	TUCO INTERCHANGE - TUCO_2 345.00 345KV CKT 1
FDNS	06ALL	2	17SP	G14_046	FROM->TO	TUCO_2 345.00 (TUCO_2 XFMR) 345/230/13.2KV TRANSFORMER CKT 1	560	560	0.28292	164.6979	TUCO INTERCHANGE - TUCO_2 345.00 345KV CKT 1
FDNS	06ALL	2	20SP	G14_046	FROM->TO	TUCO_2 345.00 (TUCO_2 XFMR) 345/230/13.2KV TRANSFORMER CKT 1	560	560	0.28908	163.5805	TUCO INTERCHANGE - TUCO_2 345.00 345KV CKT 1
FDNS	06ALL	2	17SP	G14_046	FROM->TO	TUCO_2 345.00 (TUCO_2 XFMR) 345/230/13.2KV TRANSFORMER CKT 1	560	560	0.28292	162.1713	TUCO INTERCHANGE - TUCO_2 345.00 345KV CKT 1
FDNS	06ALL	2	16WP	G14_046	FROM->TO	TUCO_2 345.00 (TUCO_2 XFMR) 345/230/13.2KV TRANSFORMER CKT 1	560	560	0.24157	112.6263	TUCO INTERCHANGE (GE M1022338) 345/230/13.2KV TRANSFORMER CKT 1
FDNS	06ALL	2	16WP	G14_046	FROM->TO	TUCO_2 345.00 (TUCO_2 XFMR) 345/230/13.2KV TRANSFORMER CKT 1	560	560	0.24157	112.6263	TUCO INTERCHANGE (GE M1022338) 345/230/13.2KV TRANSFORMER CKT 1
FDNS	06ALL	2	16WP	G14_046	FROM->TO	TUCO_2 345.00 (TUCO_2 XFMR) 345/230/13.2KV TRANSFORMER CKT 1	560	560	0.24157	111.4972	TUCO INTERCHANGE (GE M1022338) 345/230/13.2KV TRANSFORMER CKT 1
FDNS	06ALL	2	16WP	G14_046	FROM->TO	TUCO_2 345.00 (TUCO_2 XFMR) 345/230/13.2KV TRANSFORMER CKT 1	560	560	0.24157	111.4972	TUCO INTERCHANGE (GE M1022338) 345/230/13.2KV TRANSFORMER CKT 1
FDNS	06NR	2	20L	G14_046	FROM->TO	TUCO_2 345.00 (TUCO_2 XFMR) 345/230/13.2KV TRANSFORMER CKT 1	560	560	0.03691	110.8937	TUCO INTERCHANGE - TUCO_2 345.00 345KV CKT 1
FDNS	06NR	2	20L	G14_046	FROM->TO	TUCO_2 345.00 (TUCO_2 XFMR) 345/230/13.2KV TRANSFORMER CKT 1	560	560	0.03691	108.3383	TUCO INTERCHANGE - TUCO_2 345.00 345KV CKT 1
FDNS	06ALL	2	17G	G14_046	FROM->TO	TUCO_2 345.00 (TUCO_2 XFMR) 345/230/13.2KV TRANSFORMER CKT 1	560	560	0.23296	107.1719	TUCO INTERCHANGE (GE M1022338) 345/230/13.2KV TRANSFORMER CKT 1
FDNS	06NR	2	17G	G14_046	FROM->TO	TUCO_2 345.00 (TUCO_2 XFMR) 345/230/13.2KV TRANSFORMER CKT 1	560	560	0.02954	107.0023	TUCO INTERCHANGE - TUCO_2 345.00 345KV CKT 1
FDNS	06ALL	2	16WP	G14_046	FROM->TO	TUCO_2 345.00 (TUCO_2 XFMR) 345/230/13.2KV TRANSFORMER CKT 1	560	560	0.22632	105.8242	TUCO INTERCHANGE (SIEM 8743066) 345/230/13.2KV TRANSFORMER CKT 2
FDNS	06ALL	2	16WP	G14_046	FROM->TO	TUCO_2 345.00 (TUCO_2 XFMR) 345/230/13.2KV TRANSFORMER CKT 1	560	560	0.22632	105.8242	TUCO INTERCHANGE (SIEM 8743066) 345/230/13.2KV TRANSFORMER CKT 2
FDNS	06ALL	2	17G	G14_046	FROM->TO	TUCO_2 345.00 (TUCO_2 XFMR) 345/230/13.2KV TRANSFORMER CKT 1	560	560	0.23296	105.6097	TUCO INTERCHANGE (GE M1022338) 345/230/13.2KV TRANSFORMER CKT 1
FDNS	06ALL	2	16WP	G14_046	FROM->TO	TUCO_2 345.00 (TUCO_2 XFMR) 345/230/13.2KV TRANSFORMER CKT 1	560	560	0.22632	104.8168	TUCO INTERCHANGE (SIEM 8743066) 345/230/13.2KV TRANSFORMER CKT 2
FDNS	06ALL	2	16WP	G14_046	FROM->TO	TUCO_2 345.00 (TUCO_2 XFMR) 345/230/13.2KV TRANSFORMER CKT 1	560	560	0.22632	104.8168	TUCO INTERCHANGE (SIEM 8743066) 345/230/13.2KV TRANSFORMER CKT 2
FDNS	06NR	2	17G	G14_046	FROM->TO	TUCO_2 345.00 (TUCO_2 XFMR) 345/230/13.2KV TRANSFORMER CKT 1	560	560	0.02954	104.728	TUCO INTERCHANGE - TUCO_2 345.00 345KV CKT 1
FDNS	06ALL	2	17G	G14_046	FROM->TO	TUCO_2 345.00 (TUCO_2 XFMR) 345/230/13.2KV TRANSFORMER CKT 1	560	560	0.21825	100.7205	TUCO INTERCHANGE (SIEM 8743066) 345/230/13.2KV TRANSFORMER CKT 2
FDNS	06NR	3	17G	G14_046	TO->FROM	AMARILLO SOUTH INTERCHANGE - G15031_T 230.00 230KV CKT 1	318.7	350.57	0.09409	103.2239	NEWHART 230 - POTTER COUNTY INTERCHANGE 230KV CKT 1
FDNS	06NR	3	20L	G14_046	FROM->TO	BUSHLAND INTERCHANGE - HILLSIDE 115KV CKT 1	159	160	0.04542	108.1399	BUSHLAND INTERCHANGE - POTTER COUNTY INTERCHANGE 230KV CKT 1
FDNS	06NR	3	20L	G14_046	FROM->TO	BUSHLAND INTERCHANGE - HILLSIDE 115KV CKT 1	159	160	0.04542	108.1399	BUSHLAND INTERCHANGE - POTTER COUNTY INTERCHANGE 230KV CKT 1
FDNS	06NR	3	17G	G14_046	FROM->TO	BUSHLAND INTERCHANGE - HILLSIDE 115KV CKT 1	159	160	0.04699	105.508	BUSHLAND INTERCHANGE - POTTER COUNTY INTERCHANGE 230KV CKT 1
FDNS	06NR	3	17G	G14_046	FROM->TO	BUSHLAND INTERCHANGE - HILLSIDE 115KV CKT 1	159	160	0.04699	105.508	BUSHLAND INTERCHANGE - POTTER COUNTY INTERCHANGE 230KV CKT 1
FDNS	06NR	3	20L	G14_046	FROM->TO	BUSHLAND INTERCHANGE - POTTER COUNTY INTERCHANGE 230KV CKT 1	318.7	350.57	0.09276	102.6252	NEWHART 230 - POTTER COUNTY INTERCHANGE 230KV CKT 1
FDNS	06NR	3	20L	G14_046	FROM->TO	BUSHLAND INTERCHANGE (WH 7001795) 230/115/13.2KV TRANSFORMER CKT 1	168	168	0.04542	106.6189	BUSHLAND INTERCHANGE - POTTER COUNTY INTERCHANGE 230KV CKT 1
FDNS	06NR	3	20L	G14_046	FROM->TO	BUSHLAND INTERCHANGE (WH 7001795) 230/115/13.2KV TRANSFORMER CKT 1	168	168	0.04542	106.6189	BUSHLAND INTERCHANGE - POTTER COUNTY INTERCHANGE 230KV CKT 1
FDNS	06NR	3	17G	G14_046	FROM->TO	BUSHLAND INTERCHANGE (WH 7001795) 230/115/13.2KV TRANSFORMER CKT 1	168	168	0.04699	104.9286	BUSHLAND INTERCHANGE - POTTER COUNTY INTERCHANGE 230KV CKT 1
FDNS	06NR	3	17G	G14_046	FROM->TO	BUSHLAND INTERCHANGE (WH 7001795) 230/115/13.2KV TRANSFORMER CKT 1	168	168	0.04699	104.9286	BUSHLAND INTERCHANGE - POTTER COUNTY INTERCHANGE 230KV CKT 1
FDNS	06NR	3	20L	G14_046	FROM->TO	BUSHLAND INTERCHANGE (WH 7001795) 230/115/13.2KV TRANSFORMER CKT 1	168	168	0.04542	104.4653	BUSHLAND INTERCHANGE - POTTER COUNTY INTERCHANGE 230KV CKT 1
FDNS	06NR	3	20L	G14_046	FROM->TO	BUSHLAND INTERCHANGE (WH 7001795) 230/115/13.2KV TRANSFORMER CKT 1	168	168	0.04542	104.4653	BUSHLAND INTERCHANGE - POTTER COUNTY INTERCHANGE 230KV CKT 1
FDNS	06NR	3	17G	G14_046	FROM->TO	BUSHLAND INTERCHANGE (WH 7001795) 230/115/13.2KV TRANSFORMER CKT 1	168	168	0.04699	102.648	BUSHLAND INTERCHANGE - POTTER COUNTY INTERCHANGE 230KV CKT 1
FDNS	06NR	3	17G	G14_046	FROM->TO	BUSHLAND INTERCHANGE (WH 7001795) 230/115/13.2KV TRANSFORMER CKT 1	168	168	0.04699	102.648	BUSHLAND INTERCHANGE - POTTER COUNTY INTERCHANGE 230KV CKT 1
FDNS	06NR	3	17G	G14_046	TO->FROM	CANYON WEST SUB - DAWN SUB 115KV CKT 1	96	96	0.03964	109.382	BUSHLAND INTERCHANGE - DEAF SMITH COUNTY INTERCHANGE 230KV CKT 1
FDNS	06NR	3	17G	G14_046	TO->FROM	CANYON WEST SUB - DAWN SUB 115KV CKT 1	96	96	0.03964	109.382	BUSHLAND INTERCHANGE - DEAF SMITH COUNTY INTERCHANGE 230KV CKT 1
FDNS	06ALL	3	20SP	G14_046	FROM->TO	CHISHOLM6 230.00 - ELK CITY 230KV 230KV CKT 1	353	353	0.06362	104.1963	BASE CASE
FDNS	06ALL	3	17SP	G14_046	FROM->TO	CHISHOLM6 230.00 - ELK CITY 230KV 230KV CKT 1	353	353	0.06385	101.9728	BASE CASE
FDNS	06ALL	3	20L	G14_046	TO->FROM	CIMARRON - MINCO 345KV CKT 1	956	956	0.21556	140.6921	G14-057T 345.00 - SUNNYSIDE 345KV CKT 1
FDNS	06ALL	3	20L	G14_046	TO->FROM	CIMARRON - MINCO 345KV CKT 1	956	956	0.21556	134.2883	G14-057T 345.00 - LAWTON EASTSIDE 345KV CKT 1
FDNS	06ALL	3	17G	G14_046	TO->FROM	CIMARRON - MINCO 345KV CKT 1	956	956	0.24292	132.797	G14-057T 345.00 - SUNNYSIDE 345KV CKT 1

SOLUTION	GROUP	SCENARIO	SEASON	SOURCE	DIRECTION	MONITORED ELEMENT	RATEA (MVA)	RATEB(MVA)	TDF	TC%LOADING (% MVA)	CONTINGENCY
FDNS	06ALL	3	20WP	G14_046	TO->FROM	CIMARRON - MINCO 345KV CKT 1	956	956	0.24287	131.9094	G14-057T 345.00 - SUNNYSIDE 345KV CKT 1
FDNS	06ALL	3	17G	G14_046	TO->FROM	CIMARRON - MINCO 345KV CKT 1	956	956	0.24292	127.3481	G14-057T 345.00 - LAWTON EASTSIDE 345KV CKT 1
FDNS	06ALL	3	20WP	G14_046	TO->FROM	CIMARRON - MINCO 345KV CKT 1	956	956	0.24287	126.3057	G14-057T 345.00 - LAWTON EASTSIDE 345KV CKT 1
FDNS	06ALL	3	16WP	G14_046	TO->FROM	CIMARRON - MINCO 345KV CKT 1	956	956	0.24983	125.3645	G14-057T 345.00 - SUNNYSIDE 345KV CKT 1
FDNS	06ALL	3	17SP	G14_046	TO->FROM	CIMARRON - MINCO 345KV CKT 1	956	956	0.24692	124.3731	G14-057T 345.00 - SUNNYSIDE 345KV CKT 1
FDNS	06ALL	3	20SP	G14_046	TO->FROM	CIMARRON - MINCO 345KV CKT 1	956	956	0.24888	121.3286	G14-057T 345.00 - SUNNYSIDE 345KV CKT 1
FDNS	06ALL	3	16WP	G14_046	TO->FROM	CIMARRON - MINCO 345KV CKT 1	956	956	0.24983	119.9255	G14-057T 345.00 - LAWTON EASTSIDE 345KV CKT 1
FDNS	06ALL	3	17SP	G14_046	TO->FROM	CIMARRON - MINCO 345KV CKT 1	956	956	0.24692	118.8978	G14-057T 345.00 - LAWTON EASTSIDE 345KV CKT 1
FDNS	06ALL	3	20SP	G14_046	TO->FROM	CIMARRON - MINCO 345KV CKT 1	956	956	0.24888	116.0894	G14-057T 345.00 - LAWTON EASTSIDE 345KV CKT 1
FDNS	06ALL	3	20WP	G14_046	TO->FROM	CIMARRON - MINCO 345KV CKT 1	956	956	0.2044	111.5734	MATHWSN7 345.00 - TATONGA7 345.00 345KV CKT 1
FDNS	06ALL	3	20L	G14_046	TO->FROM	CIMARRON - MINCO 345KV CKT 1	956	956	0.22083	109.488	CHISHOLM7 345.00 - WOODWARD DISTRICT EHV 345KV CKT 1
FDNS	06ALL	3	17G	G14_046	TO->FROM	CIMARRON - MINCO 345KV CKT 1	956	956	0.24058	109.1031	CHISHOLM7 345.00 - WOODWARD DISTRICT EHV 345KV CKT 1
FDNS	06ALL	3	20WP	G14_046	TO->FROM	CIMARRON - MINCO 345KV CKT 1	956	956	0.2044	106.2571	G11_051T 345.00 - TATONGA7 345.00 345KV CKT 1
FDNS	06ALL	3	17G	G14_046	TO->FROM	CIMARRON - MINCO 345KV CKT 1	956	956	0.20623	106.016	G11_051T 345.00 - TATONGA7 345.00 345KV CKT 1
FDNS	06ALL	3	17SP	G14_046	TO->FROM	CIMARRON - MINCO 345KV CKT 1	956	956	0.20984	105.6361	MATHWSN7 345.00 - TATONGA7 345.00 345KV CKT 1
FDNS	06ALL	3	20WP	G14_046	TO->FROM	CIMARRON - MINCO 345KV CKT 1	956	956	0.24393	105.2058	CHISHOLM7 345.00 - WOODWARD DISTRICT EHV 345KV CKT 1
FDNS	06ALL	3	16WP	G14_046	TO->FROM	CIMARRON - MINCO 345KV CKT 1	956	956	0.21149	105.1594	MATHWSN7 345.00 - TATONGA7 345.00 345KV CKT 1
FDNS	06ALL	3	20SP	G14_046	TO->FROM	CIMARRON - MINCO 345KV CKT 1	956	956	0.21095	104.8651	MATHWSN7 345.00 - TATONGA7 345.00 345KV CKT 1
FDNS	06ALL	3	20WP	G14_046	TO->FROM	CIMARRON - MINCO 345KV CKT 1	956	956	0.2044	104.6601	G11_051T 345.00 - WOODWARD DISTRICT EHV 345KV CKT 1
FDNS	06ALL	3	17G	G14_046	TO->FROM	CIMARRON - MINCO 345KV CKT 1	956	956	0.20623	104.4511	G11_051T 345.00 - WOODWARD DISTRICT EHV 345KV CKT 1
FDNS	06ALL	3	20SP	G14_046	TO->FROM	CIMARRON - MINCO 345KV CKT 1	956	956	0.25071	103.3967	CHISHOLM7 345.00 - WOODWARD DISTRICT EHV 345KV CKT 1
FDNS	06ALL	3	17SP	G14_046	TO->FROM	CIMARRON - MINCO 345KV CKT 1	956	956	0.24786	102.6701	CHISHOLM7 345.00 - WOODWARD DISTRICT EHV 345KV CKT 1
FDNS	06ALL	3	17SP	G14_046	TO->FROM	CIMARRON - MINCO 345KV CKT 1	956	956	0.20984	100.4546	G11_051T 345.00 - TATONGA7 345.00 345KV CKT 1
FDNS	06ALL	3	20WP	G14_046	TO->FROM	CIMARRON - MINCO 345KV CKT 1	956	956	0.19541	100.2954	P12:138:WFEC:MSL03
FDNS	06ALL	3	16WP	G14_046	TO->FROM	CIMARRON - MINCO 345KV CKT 1	956	956	0.21149	99.8	G11_051T 345.00 - TATONGA7 345.00 345KV CKT 1
FDNS	06ALL	3	20SP	G14_046	TO->FROM	CIMARRON - MINCO 345KV CKT 1	956	956	0.21095	99.7	G11_051T 345.00 - TATONGA7 345.00 345KV CKT 1
FDNS	06ALL	3	17SP	G14_046	TO->FROM	CIMARRON - MINCO 345KV CKT 1	956	956	0.19986	99.6	P12:138:WFEC:MSL03
FDNS	06ALL	3	20SP	G14_046	TO->FROM	CIMARRON - MINCO 345KV CKT 1	956	956	0.20162	99.6	P12:138:WFEC:MSL03
FDNS	06NR	3	20L	G14_046	TO->FROM	COULTER INTERCHANGE - HILLSIDE 115KV CKT 1	159	159	0.04542	105.531	BUSHLAND INTERCHANGE - POTTER COUNTY INTERCHANGE 230KV CKT 1
FDNS	06NR	3	20L	G14_046	TO->FROM	COULTER INTERCHANGE - HILLSIDE 115KV CKT 1	159	159	0.04542	105.531	BUSHLAND INTERCHANGE - POTTER COUNTY INTERCHANGE 230KV CKT 1
FDNS	06NR	3	17G	G14_046	TO->FROM	COULTER INTERCHANGE - HILLSIDE 115KV CKT 1	159	159	0.04699	100.454	BUSHLAND INTERCHANGE - POTTER COUNTY INTERCHANGE 230KV CKT 1
FDNS	06NR	3	17G	G14_046	TO->FROM	COULTER INTERCHANGE - HILLSIDE 115KV CKT 1	159	159	0.04699	100.454	BUSHLAND INTERCHANGE - POTTER COUNTY INTERCHANGE 230KV CKT 1
FDNS	06NR	3	20L	G14_046	FROM->TO	CURRY COUNTY INTERCHANGE - DEAF SMITH REC-#20 115KV CKT 1	96	96	0.04439	115.2042	DEAF SMITH COUNTY INTERCHANGE - G15039_T 230.00 230KV CKT 1
FDNS	06NR	3	17G	G14_046	FROM->TO	CURRY COUNTY INTERCHANGE - DEAF SMITH REC-#20 115KV CKT 1	96	96	0.04586	112.5719	DEAF SMITH COUNTY INTERCHANGE - G15039_T 230.00 230KV CKT 1
FDNS	06NR	3	20L	G14_046	FROM->TO	CURRY COUNTY INTERCHANGE - DEAF SMITH REC-#20 115KV CKT 1	96	96	0.04439	107.0377	G15039_T 230.00 - PLANT X STATION 230KV CKT 1
FDNS	06NR	3	17G	G14_046	FROM->TO	CURRY COUNTY INTERCHANGE - DEAF SMITH REC-#20 115KV CKT 1	96	96	0.04586	104.7125	G15039_T 230.00 - PLANT X STATION 230KV CKT 1
FDNS	06NR	3	17G	G14_046	TO->FROM	DAWN SUB - Panda Energy Substation Hereford 115KV CKT 1	96	96	0.03964	112.7612	BUSHLAND INTERCHANGE - DEAF SMITH COUNTY INTERCHANGE 230KV CKT 1
FDNS	06NR	3	17G	G14_046	TO->FROM	DAWN SUB - Panda Energy Substation Hereford 115KV CKT 1	96	96	0.03964	112.7612	BUSHLAND INTERCHANGE - DEAF SMITH COUNTY INTERCHANGE 230KV CKT 1
FDNS	06NR	3	17G	G14_046	FROM->TO	DEAF SMITH COUNTY INTERCHANGE - Panda Energy Substation Hereford 115KV CKT 1	96	96	0.03964	117.8354	BUSHLAND INTERCHANGE - DEAF SMITH COUNTY INTERCHANGE 230KV CKT 1
FDNS	06NR	3	17G	G14_046	FROM->TO	DEAF SMITH COUNTY INTERCHANGE - Panda Energy Substation Hereford 115KV CKT 1	96	96	0.03964	117.8354	BUSHLAND INTERCHANGE - DEAF SMITH COUNTY INTERCHANGE 230KV CKT 1
FDNS	06NR	3	20L	G14_046	FROM->TO	DEAF SMITH REC-#20 - PARMER COUNTY SUB 115KV CKT 1	96	96	0.04439	107.8332	DEAF SMITH COUNTY INTERCHANGE - G15039_T 230.00 230KV CKT 1
FDNS	06NR	3	17G	G14_046	FROM->TO	DEAF SMITH REC-#20 - PARMER COUNTY SUB 115KV CKT 1	96	96	0.04586	104.6652	DEAF SMITH COUNTY INTERCHANGE - G15039_T 230.00 230KV CKT 1
FDNS	06NR	3	20L	G14_046	FROM->TO	DEAF SMITH REC-#20 - PARMER COUNTY SUB 115KV CKT 1	96	96	0.04439	99.8	G15039_T 230.00 - PLANT X STATION 230KV CKT 1
FDNS	06NR	3	20L	G14_046	TO->FROM	DEAF SMITH REC-#24 - PARMER COUNTY SUB 115KV CKT 1	96	96	0.04439	102.5777	DEAF SMITH COUNTY INTERCHANGE - G15039_T 230.00 230KV CKT 1
FDNS	06ALL	3	20L	G14_046	TO->FROM	EDDY COUNTY INTERCHANGE - EDDY_NORTH 6230.00 230KV CKT @1	478	478	0.42124	103.9635	P12:345:SPS:J15.1.XRDS.TOLK
FDNS	06ALL	3	20L	G14_046	TO->FROM	EDDY COUNTY INTERCHANGE - EDDY_NORTH 6230.00 230KV CKT @1	478	478	0.41702	101.1384	CROSSROADS 7345.00 - TOLK STATION 345KV CKT 1
FDNS	06ALL	3	20L	G14_046	TO->FROM	G14-057T 345.00 - LAWTON EASTSIDE 345KV CKT 1	717	789	0.10498	106.0801	BASE CASE
FDNS	06ALL	3	20L	G14_046	FROM->TO	G14-057T 345.00 - SUNNYSIDE 345KV CKT 1	717	789	0.10498	119.3111	BASE CASE
FDNS	06ALL	3	20WP	G14_046	FROM->TO	G14-057T 345.00 - SUNNYSIDE 345KV CKT 1	717	789	0.12851	107.198	BASE CASE
FDNS	06ALL	3	17G	G14_046	FROM->TO	G14-057T 345.00 - SUNNYSIDE 345KV CKT 1	717	789	0.12904	106.7167	BASE CASE
FDNS	06ALL	3	16WP	G14_046	FROM->TO	G14-057T 345.00 - SUNNYSIDE 345KV CKT 1	717	789	0.13251	105.3992	BASE CASE
FDNS	06NR	3	20L	G14_046	FROM->TO	G14-074T 345.00 - OKLAUNION 345KV CKT 1	1022	1124	0.05013	108.2612	BASE CASE
FDNS	06NR	3	17G	G14_046	FROM->TO	G14-074T 345.00 - OKLAUNION 345KV CKT 1	1022	1124	0.04347	106.9843	G11_051T 345.00 - WOODWARD DISTRICT EHV 345KV CKT 1
FDNS	06NR	3	17G	G14_046	FROM->TO	G14-074T 345.00 - OKLAUNION 345KV CKT 1	1022	1124	0.04398	105.0698	BASE CASE
FDNS	06NR	3	20L	G14_046	FROM->TO	G14-074T 345.00 - OKLAUNION 345KV CKT 1	1022	1124	0.0477	103.3966	CHISHOLM7 345.00 - GRACEMONT 345KV CKT 1
FDNS	06NR	3	20L	G14_046	FROM->TO	G14-074T 345.00 - OKLAUNION 345KV CKT 1	1022	1124	0.0477	102.9036	CHISHOLM7 345.00 () 345/230/13.2KV TRANSFORMER CKT 1
FDNS	06NR	3	20L	G14_046	FROM->TO	G14-074T 345.00 - OKLAUNION 345KV CKT 1	1022	1124	0.06026	102.6829	AMARILLO SOUTH INTERCHANGE - G15031_T 230.00 230KV CKT 1
FDNS	06NR	3	20L	G14_046	FROM->TO	G14-074T 345.00 - OKLAUNION 345KV CKT 1	1022	1124	0.05922	102.2907	NEWHART 230 - POTTER COUNTY INTERCHANGE 230KV CKT 1
FDNS	06NR	3	20L	G14_046	FROM->TO	G14-074T 345.00 - OKLAUNION 345KV CKT 1	1022	1124	0.05728	101.9316	DEAF SMITH COUNTY INTERCHANGE - G15039_T 230.00 230KV CKT 1
FDNS	06NR	3	20L	G14_046	FROM->TO	G14-074T 345.00 - OKLAUNION 345KV CKT 1	1022	1124	0.05728	100.8261	G15039_T 230.00 - PLANT X STATION 230KV CKT 1
FDNS	06NR	3	20L	G14_046	FROM->TO	G14-074T 345.00 - OKLAUNION 345KV CKT 1	1022	1124	0.04996	100.637	MINGO - RED WILLOW 345KV CKT 1
FDNS	06NR	3	20L	G14_046	FROM->TO	G14-074T 345.00 - OKLAUNION 345KV CKT 1	1022	1124	0.04996	100.637	MINGO - RED WILLOW 345KV CKT 1
FDNS	06NR	3	20L	G14_046	FROM->TO	G14-074T 345.00 - OKLAUNION 345KV CKT 1	1022	1124	0.04943	100.065	CHILDRESS - LAKE PAULINE 138KV CKT 1
FDNS	06NR	3	20L	G14_046	FROM->TO	G14-074T 345.00 - OKLAUNION 345KV CKT 1	1022	1124	0.04943	100.065	CHILDRESS - LAKE PAULINE 138KV CKT 1
FDNS	06NR	3	20L	G14_046	FROM->TO	G14-074T 345.00 - OKLAUNION 345KV CKT 1	1022	1124	0.04972	100	CONWAY SUB - NICHOLS STATION 115KV CKT 1
FDNS	06NR	3	20L	G14_046	FROM->TO	G14-074T 345.00 - OKLAUNION 345KV CKT 1	1022	1124	0.04972	99.9	CONWAY SUB - KIRBY SWITCHING STATION 115KV CKT 1
FDNS	06NR	3	17G	G14_046	FROM->TO	G14-074T 345.00 - OKLAUNION 345KV CKT 1	1022	1124	0.05349	99.8	AMARILLO SOUTH INTERCHANGE - G15031_T 230.00 230KV CKT 1
FDNS	06NR	3	20L	G14_046	FROM->TO	G14-074T 345.00 - OKLAUNION 345KV CKT 1	1022	1124	0.04972	99.8	P12:115:SPS:T53.1.NICHLS.KIRBY
FDNS	06NR	3	20L	G14_046	FROM->TO	G14-074T 345.00 - OKLAUNION 345KV CKT 1	1022	1124	0.05011	99.7	IODINE - WOODWARD EHV 138KV CKT 1
FDNS	06NR	3	20L	G14_046	FROM->TO	G14-074T 345.00 - OKLAUNION 345KV CKT 1	1022	1124	0.05011	99.6	DEWEY - IODINE 138KV CKT 1
FDNS	06NR	3	20L	G14_046	FROM->TO	G14-074T 345.00 - OKLAUNION 345KV CKT 1	1022	1124	0.05011	99.6	WOODWARD - WWPAR4 138.00 138KV CKT 1
FDNS	06NR	3	20L	G14_046	FROM->TO	G14-074T 345.00 - OKLAUNION 345KV CKT 1	1022	1124	0.05011	99.6	WOODWARD EHV - WWPAR4 138.00 138KV CKT 1
FDNS	06NR	3	17G	G14_046	FROM->TO	G14-074T 345.00 - OKLAUNION 345KV CKT 1	1022	1124	0.04175	99.5	CHISHOLM7 345.00 - GRACEMONT 345KV CKT 1
FDNS	06NR	3	20L	G14_046	FROM->TO	G14-074T 345.00 - OKLAUNION 345KV CKT 1	1022	1124	0.04975	99.5	KIRBY SWITCHING STATION - MCCLELLAN SUB 115KV CKT 1
FDNS	06NR	3	20L	G14_046	FROM->TO	G14-074T 345.00 - OKLAUNION 345KV CKT 1	1022	1124	0.04975	99.5	MCCLELLAN SUB - MCLEAN RURAL SUB 115KV CKT 1
FDNS	06ALL	3	20L	G14_046	FROM->TO	GRACEMONT - MINCO 345KV CKT 1	1195	1195	0.21556	101.53	G14-057T 345.00 - SUNNYSIDE 345KV CKT 1
FDNS	00NR	3	25SP	G14_046	TO->FROM	JONES STATION - TUCO INTERCHANGE 230KV CKT 1	343.79	343.79	0.06835	130.1614	CARLISLE INTERCHANGE - TUCO INTERCHANGE 230KV CKT 1
FDNS	00NR	3	25SP	G14_046	TO->FROM	JONES STATION - TUCO INTERCHANGE 230KV CKT 1	343.79	343.79	0.06835	130.1614	CARLISLE INTERCHANGE - TUCO INTERCHANGE 230KV CKT 1
FDNS	00NR	3	25SP	G14_046	TO->FROM	JONES STATION - TUCO INTERCHANGE 230KV CKT 1	343.79	343.79	0.06013	113.3309	GEN526333 1-JONES GEN #3 21 KV

SOLUTION	GROUP	SCENARIO	SEASON	SOURCE	DIRECTION	MONITORED ELEMENT	RATEA (MVA)	RATEB(MVA)	TDF	TC%LOADING (% MVA)	CONTINGENCY
FDNS	00NR	3	25SP	G14_046	TO->FROM	JONES STATION - TUCO INTERCHANGE 230KV CKT 1	343.79	343.79	0.06013	112.9359	GEN526334 1-JONES_4 116.500
FDNS	00NR	3	25SP	G14_046	TO->FROM	JONES STATION - TUCO INTERCHANGE 230KV CKT 1	343.79	343.79	0.05245	108.5941	TUCO INTERCHANGE - YOAKUM_345 345.00 345KV CKT 1
FDNS	00NR	3	25SP	G14_046	TO->FROM	JONES STATION - TUCO INTERCHANGE 230KV CKT 1	343.79	343.79	0.06319	103.864	CARLISLE INTERCHANGE - WOLFFORTH INTERCHANGE 230KV CKT 1
FDNS	00NR	3	25SP	G14_046	TO->FROM	JONES STATION - TUCO INTERCHANGE 230KV CKT 1	343.79	343.79	0.06155	101.6819	PLANT X STATION - SUNDOWN INTERCHANGE 230KV CKT 1
FDNS	00NR	3	25SP	G14_046	TO->FROM	JONES STATION - TUCO INTERCHANGE 230KV CKT 1	343.79	343.79	0.06155	101.6819	PLANT X STATION - SUNDOWN INTERCHANGE 230KV CKT 1
FDNS	00NR	3	25SP	G14_046	TO->FROM	JONES STATION - TUCO INTERCHANGE 230KV CKT 1	343.79	343.79	0.06013	100.8779	GEN526332 1-JONES GEN #2 21 KV
FDNS	00NR	3	25SP	G14_046	TO->FROM	JONES STATION - TUCO INTERCHANGE 230KV CKT 1	343.79	343.79	0.06013	100.876	GEN526331 1-JONES GEN #1 22 KV
FDNS	00NR	3	25SP	G14_046	TO->FROM	JONES STATION - TUCO INTERCHANGE 230KV CKT 1	343.79	343.79	0.06166	100.7208	TUCO INTERCHANGE (ENRCO 136401) 230/115/13.2KV TRANSFORMER CKT 1
FDNS	00NR	3	25SP	G14_046	TO->FROM	JONES STATION - TUCO INTERCHANGE 230KV CKT 1	343.79	343.79	0.06166	100.7208	TUCO INTERCHANGE (ENRCO 136401) 230/115/13.2KV TRANSFORMER CKT 1
FDNS	00NR	3	25SP	G14_046	TO->FROM	JONES STATION - TUCO INTERCHANGE 230KV CKT 1	343.79	343.79	0.06166	100.7208	TUCO INTERCHANGE (ENRCO 136401) 230/115/13.2KV TRANSFORMER CKT 2
FDNS	00NR	3	25SP	G14_046	TO->FROM	JONES STATION - TUCO INTERCHANGE 230KV CKT 1	343.79	343.79	0.06166	100.7208	TUCO INTERCHANGE (ENRCO 136401) 230/115/13.2KV TRANSFORMER CKT 2
FDNS	00NR	3	25SP	G14_046	TO->FROM	JONES STATION - TUCO INTERCHANGE 230KV CKT 1	343.79	343.79	0.06498	99.8	LUBBOCK EAST INTERCHANGE - TUCO INTERCHANGE 115KV CKT 1
FDNS	00NR	3	25SP	G14_046	TO->FROM	JONES STATION - TUCO INTERCHANGE 230KV CKT 1	343.79	343.79	0.06498	99.8	LUBBOCK EAST INTERCHANGE - TUCO INTERCHANGE 115KV CKT 1
FDNS	00NR	3	25SP	G14_046	FROM->TO	LUBBOCK POWER & LIGHT-HOLLY PLANT (SHIH T101039) 230/69/13.5KV TRANSFORMER CKT 1	224	224	0.03581	104.7002	LUBBOCK POWER & LIGHT-SOUTHEAST - LUBBOCK SOUTH INTERCHANGE 230KV CKT 1
FDNS	00NR	3	25SP	G14_046	FROM->TO	LUBBOCK POWER & LIGHT-HOLLY PLANT (SHIH T101039) 230/69/13.5KV TRANSFORMER CKT 1	224	224	0.03581	104.6872	P12:LPL:SPS:K64.1.LP-SE.LUBBS
FDNS	00NR	3	25SP	G14_046	FROM->TO	LUBBOCK POWER & LIGHT-HOLLY PLANT (SHIH T101039) 230/69/13.5KV TRANSFORMER CKT 1	224	224	0.03423	101.9683	LUBBOCK EAST INTERCHANGE - LUBBOCK POWER & LIGHT-WADSWORTH 230KV CKT 1
FDNS	00NR	3	25SP	G14_046	FROM->TO	LUBBOCK POWER & LIGHT-HOLLY PLANT (SHIH T101039) 230/69/13.5KV TRANSFORMER CKT 1	224	224	0.03423	101.9535	P12:230:LPL:K57.1.LP-WADS.LUBBE
FDNS	00NR	3	25SP	G14_046	FROM->TO	LUBBOCK POWER & LIGHT-HOLLY PLANT (SHIH T101039) 230/69/13.5KV TRANSFORMER CKT 1	224	224	0.03423	101.9534	LUBBOCK POWER & LIGHT-WADSWORTH (SHIH T101038) 230/69/13.5KV TRANSFORMER CKT 1
FDNS	00NR	3	25SP	G14_046	FROM->TO	LUBBOCK POWER & LIGHT-HOLLY PLANT (SHIH T101039) 230/69/13.5KV TRANSFORMER CKT 1	224	224	0.03423	101.9534	LUBBOCK POWER & LIGHT-WADSWORTH (SHIH T101038) 230/69/13.5KV TRANSFORMER CKT 1
FDNS	06ALL	4	20SP	G14_046	FROM->TO	CHISHOLM6 230.00 - ELK CITY 230KV 230KV CKT 1	353	353	0.06166	103.152	BASE CASE
FDNS	06ALL	4	17SP	G14_046	FROM->TO	CHISHOLM6 230.00 - ELK CITY 230KV 230KV CKT 1	353	353	0.06176	100.7007	BASE CASE
FDNS	06ALL	4	20L	G14_046	TO->FROM	CIMARRON - MINCO 345KV CKT 1	956	956	0.19966	136.9659	G14-057T 345.00 - SUNNYSIDE 345KV CKT 1
FDNS	06ALL	4	20L	G14_046	TO->FROM	CIMARRON - MINCO 345KV CKT 1	956	956	0.19966	130.9905	G14-057T 345.00 - LAWTON EASTSIDE 345KV CKT 1
FDNS	06ALL	4	17G	G14_046	TO->FROM	CIMARRON - MINCO 345KV CKT 1	956	956	0.2247	129.7974	G14-057T 345.00 - SUNNYSIDE 345KV CKT 1
FDNS	06ALL	4	20WP	G14_046	TO->FROM	CIMARRON - MINCO 345KV CKT 1	956	956	0.22536	128.511	G14-057T 345.00 - SUNNYSIDE 345KV CKT 1
FDNS	06ALL	4	17G	G14_046	TO->FROM	CIMARRON - MINCO 345KV CKT 1	956	956	0.2247	124.286	G14-057T 345.00 - LAWTON EASTSIDE 345KV CKT 1
FDNS	06ALL	4	20WP	G14_046	TO->FROM	CIMARRON - MINCO 345KV CKT 1	956	956	0.22536	123.0537	G14-057T 345.00 - LAWTON EASTSIDE 345KV CKT 1
FDNS	06ALL	4	16WP	G14_046	TO->FROM	CIMARRON - MINCO 345KV CKT 1	956	956	0.23126	122.1275	G14-057T 345.00 - SUNNYSIDE 345KV CKT 1
FDNS	06ALL	4	17SP	G14_046	TO->FROM	CIMARRON - MINCO 345KV CKT 1	956	956	0.22817	121.005	G14-057T 345.00 - SUNNYSIDE 345KV CKT 1
FDNS	06ALL	4	20SP	G14_046	TO->FROM	CIMARRON - MINCO 345KV CKT 1	956	956	0.23111	117.7968	G14-057T 345.00 - SUNNYSIDE 345KV CKT 1
FDNS	06ALL	4	16WP	G14_046	TO->FROM	CIMARRON - MINCO 345KV CKT 1	956	956	0.23126	116.5578	G14-057T 345.00 - LAWTON EASTSIDE 345KV CKT 1
FDNS	06ALL	4	17SP	G14_046	TO->FROM	CIMARRON - MINCO 345KV CKT 1	956	956	0.22817	115.6625	G14-057T 345.00 - LAWTON EASTSIDE 345KV CKT 1
FDNS	06ALL	4	20SP	G14_046	TO->FROM	CIMARRON - MINCO 345KV CKT 1	956	956	0.23111	112.5931	G14-057T 345.00 - LAWTON EASTSIDE 345KV CKT 1
FDNS	06ALL	4	17G	G14_046	TO->FROM	CIMARRON - MINCO 345KV CKT 1	956	956	0.21346	104.4362	CHISHOLM7 345.00 - WOODWARD DISTRICT EHV 345KV CKT 1
FDNS	06ALL	4	20L	G14_046	TO->FROM	CIMARRON - MINCO 345KV CKT 1	956	956	0.19691	103.7687	CHISHOLM7 345.00 - WOODWARD DISTRICT EHV 345KV CKT 1
FDNS	06ALL	4	17SP	G14_046	TO->FROM	CIMARRON - MINCO 345KV CKT 1	956	956	0.19802	103.6969	MATHWSN7 345.00 - TATONGA7 345.00 345KV CKT 1
FDNS	06ALL	4	16WP	G14_046	TO->FROM	CIMARRON - MINCO 345KV CKT 1	956	956	0.19988	103.3746	MATHWSN7 345.00 - TATONGA7 345.00 345KV CKT 1
FDNS	06ALL	4	20SP	G14_046	TO->FROM	CIMARRON - MINCO 345KV CKT 1	956	956	0.19976	102.8303	MATHWSN7 345.00 - TATONGA7 345.00 345KV CKT 1
FDNS	06ALL	4	20WP	G14_046	TO->FROM	CIMARRON - MINCO 345KV CKT 1	956	956	0.21777	100.3052	CHISHOLM7 345.00 - WOODWARD DISTRICT EHV 345KV CKT 1
FDNS	06ALL	4	20L	G14_046	TO->FROM	EDDY COUNTY INTERCHANGE - EDDY_NORTH 6230.00 230KV CKT @1	478	478	0.4214	103.9614	P12:345:SPS:J15.1.XRDS.TOLK
FDNS	06ALL	4	20L	G14_046	TO->FROM	EDDY COUNTY INTERCHANGE - EDDY_NORTH 6230.00 230KV CKT @1	478	478	0.41651	101.0312	CROSSROADS 7345.00 - TOLK STATION 345KV CKT 1
FDNSLock	06ALL	4	16WP	G14_046		G14_001T 345.00 - WICHITA 345KV CKT 1	1035	1035	0.05402	25.24282	BASE CASE
FDNS	06ALL	4	20L	G14_046	TO->FROM	G14-057T 345.00 - LAWTON EASTSIDE 345KV CKT 1	717	789	0.098	104.3251	BASE CASE
FDNS	06ALL	4	20L	G14_046	FROM->TO	G14-057T 345.00 - SUNNYSIDE 345KV CKT 1	717	789	0.098	117.5276	BASE CASE
FDNS	06ALL	4	20WP	G14_046	FROM->TO	G14-057T 345.00 - SUNNYSIDE 345KV CKT 1	717	789	0.12089	105.3579	BASE CASE
FDNS	06ALL	4	17G	G14_046	FROM->TO	G14-057T 345.00 - SUNNYSIDE 345KV CKT 1	717	789	0.12112	105.0325	BASE CASE
FDNS	06ALL	4	16WP	G14_046	FROM->TO	G14-057T 345.00 - SUNNYSIDE 345KV CKT 1	717	789	0.12445	103.6585	BASE CASE
FDNS	06NR	4	20L	G14_046	FROM->TO	G14-074T 345.00 - OKLAUNION 345KV CKT 1	1022	1124	0.03127	101.1904	BASE CASE
FDNS	00NR	4	25SP	G14_046	TO->FROM	JONES STATION - TUCO INTERCHANGE 230KV CKT 1	343.79	343.79	0.0687	129.809	CARLISLE INTERCHANGE - TUCO INTERCHANGE 230KV CKT 1
FDNS	00NR	4	25SP	G14_046	TO->FROM	JONES STATION - TUCO INTERCHANGE 230KV CKT 1	343.79	343.79	0.0687	129.809	CARLISLE INTERCHANGE - TUCO INTERCHANGE 230KV CKT 1
FDNS	00NR	4	25SP	G14_046	TO->FROM	JONES STATION - TUCO INTERCHANGE 230KV CKT 1	343.79	343.79	0.06029	113.028	GEN526333 1-JONES GEN #3 21 KV
FDNS	00NR	4	25SP	G14_046	TO->FROM	JONES STATION - TUCO INTERCHANGE 230KV CKT 1	343.79	343.79	0.06029	112.6359	GEN526334 1-JONES_4 116.500
FDNS	00NR	4	25SP	G14_046	TO->FROM	JONES STATION - TUCO INTERCHANGE 230KV CKT 1	343.79	343.79	0.05301	108.0461	TUCO INTERCHANGE - YOAKUM_345 345.00 345KV CKT 1
FDNS	00NR	4	25SP	G14_046	TO->FROM	JONES STATION - TUCO INTERCHANGE 230KV CKT 1	343.79	343.79	0.06351	103.563	CARLISLE INTERCHANGE - WOLFFORTH INTERCHANGE 230KV CKT 1
FDNS	00NR	4	25SP	G14_046	TO->FROM	JONES STATION - TUCO INTERCHANGE 230KV CKT 1	343.79	343.79	0.06188	101.3715	PLANT X STATION - SUNDOWN INTERCHANGE 230KV CKT 1
FDNS	00NR	4	25SP	G14_046	TO->FROM	JONES STATION - TUCO INTERCHANGE 230KV CKT 1	343.79	343.79	0.06188	101.3715	PLANT X STATION - SUNDOWN INTERCHANGE 230KV CKT 1
FDNS	00NR	4	25SP	G14_046	TO->FROM	JONES STATION - TUCO INTERCHANGE 230KV CKT 1	343.79	343.79	0.04556	100.6898	P12:345:SPS:J02.1.TOLK.EDDY
FDNS	00NR	4	25SP	G14_046	TO->FROM	JONES STATION - TUCO INTERCHANGE 230KV CKT 1	343.79	343.79	0.06029	100.6764	GEN526332 1-JONES GEN #2 21 KV
FDNS	00NR	4	25SP	G14_046	TO->FROM	JONES STATION - TUCO INTERCHANGE 230KV CKT 1	343.79	343.79	0.06029	100.6745	GEN526331 1-JONES GEN #1 22 KV
FDNS	00NR	4	25SP	G14_046	TO->FROM	JONES STATION - TUCO INTERCHANGE 230KV CKT 1	343.79	343.79	0.06162	100.6429	TUCO INTERCHANGE (ENRCO 136401) 230/115/13.2KV TRANSFORMER CKT 1
FDNS	00NR	4	25SP	G14_046	TO->FROM	JONES STATION - TUCO INTERCHANGE 230KV CKT 1	343.79	343.79	0.06162	100.6429	TUCO INTERCHANGE (ENRCO 136401) 230/115/13.2KV TRANSFORMER CKT 1
FDNS	00NR	4	25SP	G14_046	TO->FROM	JONES STATION - TUCO INTERCHANGE 230KV CKT 1	343.79	343.79	0.06162	100.6429	TUCO INTERCHANGE (ENRCO 136401) 230/115/13.2KV TRANSFORMER CKT 2
FDNS	00NR	4	25SP	G14_046	TO->FROM	JONES STATION - TUCO INTERCHANGE 230KV CKT 1	343.79	343.79	0.06162	100.6429	TUCO INTERCHANGE (ENRCO 136401) 230/115/13.2KV TRANSFORMER CKT 2
FDNS	00NR	4	25SP	G14_046	TO->FROM	JONES STATION - TUCO INTERCHANGE 230KV CKT 1	343.79	343.79	0.06528	99.8	LUBBOCK EAST INTERCHANGE - TUCO INTERCHANGE 115KV CKT 1
FDNS	00NR	4	25SP	G14_046	TO->FROM	JONES STATION - TUCO INTERCHANGE 230KV CKT 1	343.79	343.79	0.06528	99.8	LUBBOCK EAST INTERCHANGE - TUCO INTERCHANGE 115KV CKT 1
FDNS	00NR	4	25SP	G14_046	FROM->TO	LUBBOCK POWER & LIGHT-HOLLY PLANT (SHIH T101039) 230/69/13.5KV TRANSFORMER CKT 1	224	224	0.0358	104.6928	LUBBOCK POWER & LIGHT-SOUTHEAST - LUBBOCK SOUTH INTERCHANGE 230KV CKT 1
FDNS	00NR	4	25SP	G14_046	FROM->TO	LUBBOCK POWER & LIGHT-HOLLY PLANT (SHIH T101039) 230/69/13.5KV TRANSFORMER CKT 1	224	224	0.0358	104.6926	P12:LPL:SPS:K64.1.LP-SE.LUBBS
FDNS	00NR	4	25SP	G14_046	FROM->TO	LUBBOCK POWER & LIGHT-HOLLY PLANT (SHIH T101039) 230/69/13.5KV TRANSFORMER CKT 1	224	224	0.03425	101.9377	LUBBOCK EAST INTERCHANGE - LUBBOCK POWER & LIGHT-WADSWORTH 230KV CKT 1
FDNS	00NR	4	25SP	G14_046	FROM->TO	LUBBOCK POWER & LIGHT-HOLLY PLANT (SHIH T101039) 230/69/13.5KV TRANSFORMER CKT 1	224	224	0.03425	101.923	P12:230:LPL:K57.1.LP-WADS.LUBBE
FDNS	00NR	4	25SP	G14_046	FROM->TO	LUBBOCK POWER & LIGHT-HOLLY PLANT (SHIH T101039) 230/69/13.5KV TRANSFORMER CKT 1	224	224	0.03425	101.9229	LUBBOCK POWER & LIGHT-WADSWORTH (SHIH T101038) 230/69/13.5KV TRANSFORMER CKT 1
FDNS	00NR	4	25SP	G14_046	FROM->TO	LUBBOCK POWER & LIGHT-HOLLY PLANT (SHIH T101039) 230/69/13.5KV TRANSFORMER CKT 1	224	224	0.03425	101.9229	LUBBOCK POWER & LIGHT-WADSWORTH (SHIH T101038) 230/69/13.5KV TRANSFORMER CKT 1
FDNSLock	06ALL	4	20L	G14_046		OKLAUNION 345KV SWITCHED SHUNT	1022	1124	0.16139	86.37846	BASE CASE
FDNS	06ALL	4	16WP	G14_046	FROM->TO	TOLK STATION (ABBXNL844501) 345/230/13.2KV TRANSFORMER CKT 1	560	560	0.30688	113.0515	CROSSROADS 7345.00 - TOLK STATION 345KV CKT 1
FDNS	06ALL	4	16WP	G14_046	FROM->TO	TOLK STATION (ABBXNL844501) 345/230/13.2KV TRANSFORMER CKT 1	560	560	0.30688	110.3257	CROSSROADS 7345.00 - TOLK STATION 345KV CKT 1
FDNS	06ALL	4	20WP	G14_046	FROM->TO	TOLK STATION (ABBXNL844501) 345/230/13.2KV TRANSFORMER CKT 1	560	560	0.21195	105.1552	CROSSROADS 7345.00 - TOLK STATION 345KV CKT 1
FDNS	06ALL	4	20WP	G14_046	FROM->TO	TOLK STATION (ABBXNL844501) 345/230/13.2KV TRANSFORMER CKT 1	560	560	0.21195	102.8567	CROSSROADS 7345.00 - TOLK STATION 345KV CKT 1
FDNS	06ALL	5	20SP	G14_046	FROM->TO	CHISHOLM6 230.00 - ELK CITY 230KV 230KV CKT 1	353	353	0.06623	107.7212	BASE CASE
FDNS	06ALL	5	17SP	G14_046	FROM->TO	CHISHOLM6 230.00 - ELK CITY 230KV 230KV CKT 1	353	353	0.06675	105.7594	BASE CASE
FDNS	06ALL	5	20L	G14_046	TO->FROM	CIMARRON - MINCO 345KV CKT 1	956	956	0.20763	139.1694	G14-057T 345.00 - SUNNYSIDE 345KV CKT 1

SOLUTION	GROUP	SCENARIO	SEASON	SOURCE	DIRECTION	MONITORED ELEMENT	RATEA (MVA)	RATEB(MVA)	TDF	TC%LOADING (% MVA)	CONTINGENCY
FDNS	06ALL	5	20L	G14_046	TO->FROM	CIMARRON - MINCO 345KV CKT 1	956	956	0.20763	133.4583	G14-057T 345.00 - LAWTON EASTSIDE 345KV CKT 1
FDNS	06ALL	5	17G	G14_046	TO->FROM	CIMARRON - MINCO 345KV CKT 1	956	956	0.23366	132.5137	G14-057T 345.00 - SUNNYSIDE 345KV CKT 1
FDNS	06ALL	5	20WP	G14_046	TO->FROM	CIMARRON - MINCO 345KV CKT 1	956	956	0.23279	131.4126	G14-057T 345.00 - SUNNYSIDE 345KV CKT 1
FDNS	06ALL	5	17G	G14_046	TO->FROM	CIMARRON - MINCO 345KV CKT 1	956	956	0.23366	127.0859	G14-057T 345.00 - LAWTON EASTSIDE 345KV CKT 1
FDNS	06ALL	5	20WP	G14_046	TO->FROM	CIMARRON - MINCO 345KV CKT 1	956	956	0.23279	126.0182	G14-057T 345.00 - LAWTON EASTSIDE 345KV CKT 1
FDNS	06ALL	5	16WP	G14_046	TO->FROM	CIMARRON - MINCO 345KV CKT 1	956	956	0.24042	125.0103	G14-057T 345.00 - SUNNYSIDE 345KV CKT 1
FDNS	06ALL	5	17SP	G14_046	TO->FROM	CIMARRON - MINCO 345KV CKT 1	956	956	0.23688	123.5221	G14-057T 345.00 - SUNNYSIDE 345KV CKT 1
FDNS	06ALL	5	20SP	G14_046	TO->FROM	CIMARRON - MINCO 345KV CKT 1	956	956	0.23899	120.476	G14-057T 345.00 - SUNNYSIDE 345KV CKT 1
FDNS	06ALL	5	16WP	G14_046	TO->FROM	CIMARRON - MINCO 345KV CKT 1	956	956	0.24042	119.6144	G14-057T 345.00 - LAWTON EASTSIDE 345KV CKT 1
FDNS	06ALL	5	17SP	G14_046	TO->FROM	CIMARRON - MINCO 345KV CKT 1	956	956	0.23688	118.2604	G14-057T 345.00 - LAWTON EASTSIDE 345KV CKT 1
FDNS	06ALL	5	20SP	G14_046	TO->FROM	CIMARRON - MINCO 345KV CKT 1	956	956	0.23899	115.0864	G14-057T 345.00 - LAWTON EASTSIDE 345KV CKT 1
FDNS	06ALL	5	17G	G14_046	TO->FROM	CIMARRON - MINCO 345KV CKT 1	956	956	0.20269	113.1247	MATHWSN7 345.00 - TATONGA7 345.00 345KV CKT 1
FDNS	06ALL	5	20WP	G14_046	TO->FROM	CIMARRON - MINCO 345KV CKT 1	956	956	0.19995	112.7231	MATHWSN7 345.00 - TATONGA7 345.00 345KV CKT 1
FDNS	06ALL	5	20L	G14_046	TO->FROM	CIMARRON - MINCO 345KV CKT 1	956	956	0.20717	110.4804	CHISHOLM7 345.00 - WOODWARD DISTRICT EHV 345KV CKT 1
FDNS	06ALL	5	17G	G14_046	TO->FROM	CIMARRON - MINCO 345KV CKT 1	956	956	0.22708	110.4087	CHISHOLM7 345.00 - WOODWARD DISTRICT EHV 345KV CKT 1
FDNS	06ALL	5	20WP	G14_046	TO->FROM	CIMARRON - MINCO 345KV CKT 1	956	956	0.19995	107.3503	G11_051T 345.00 - TATONGA7 345.00 345KV CKT 1
FDNS	06ALL	5	17G	G14_046	TO->FROM	CIMARRON - MINCO 345KV CKT 1	956	956	0.20269	107.1655	G11_051T 345.00 - TATONGA7 345.00 345KV CKT 1
FDNS	06ALL	5	20WP	G14_046	TO->FROM	CIMARRON - MINCO 345KV CKT 1	956	956	0.22855	106.6912	CHISHOLM7 345.00 - WOODWARD DISTRICT EHV 345KV CKT 1
FDNS	06ALL	5	16WP	G14_046	TO->FROM	CIMARRON - MINCO 345KV CKT 1	956	956	0.2079	106.1194	MATHWSN7 345.00 - TATONGA7 345.00 345KV CKT 1
FDNS	06ALL	5	17SP	G14_046	TO->FROM	CIMARRON - MINCO 345KV CKT 1	956	956	0.20568	106.0588	MATHWSN7 345.00 - TATONGA7 345.00 345KV CKT 1
FDNS	06ALL	5	20WP	G14_046	TO->FROM	CIMARRON - MINCO 345KV CKT 1	956	956	0.19995	105.6974	G11_051T 345.00 - WOODWARD DISTRICT EHV 345KV CKT 1
FDNS	06ALL	5	17G	G14_046	TO->FROM	CIMARRON - MINCO 345KV CKT 1	956	956	0.20269	105.5499	G11_051T 345.00 - WOODWARD DISTRICT EHV 345KV CKT 1
FDNS	06ALL	5	20SP	G14_046	TO->FROM	CIMARRON - MINCO 345KV CKT 1	956	956	0.20672	105.1459	MATHWSN7 345.00 - TATONGA7 345.00 345KV CKT 1
FDNS	06ALL	5	20SP	G14_046	TO->FROM	CIMARRON - MINCO 345KV CKT 1	956	956	0.2356	102.6282	CHISHOLM7 345.00 - WOODWARD DISTRICT EHV 345KV CKT 1
FDNS	06ALL	5	17SP	G14_046	TO->FROM	CIMARRON - MINCO 345KV CKT 1	956	956	0.23324	102.3712	CHISHOLM7 345.00 - WOODWARD DISTRICT EHV 345KV CKT 1
FDNS	06ALL	5	17SP	G14_046	TO->FROM	CIMARRON - MINCO 345KV CKT 1	956	956	0.20568	100.8538	G11_051T 345.00 - TATONGA7 345.00 345KV CKT 1
FDNS	06ALL	5	16WP	G14_046	TO->FROM	CIMARRON - MINCO 345KV CKT 1	956	956	0.2079	100.7286	G11_051T 345.00 - TATONGA7 345.00 345KV CKT 1
FDNS	06ALL	5	20SP	G14_046	TO->FROM	CIMARRON - MINCO 345KV CKT 1	956	956	0.20672	100	G11_051T 345.00 - TATONGA7 345.00 345KV CKT 1
FDNS	06ALL	5	16WP	G14_046	TO->FROM	CIMARRON - MINCO 345KV CKT 1	956	956	0.23523	99.9	CHISHOLM7 345.00 - WOODWARD DISTRICT EHV 345KV CKT 1
FDNS	06ALL	5	20L	G14_046	TO->FROM	EDDY COUNTY INTERCHANGE - EDDY_NORTH 6230.00 230KV CKT @1	478	478	0.4214	103.026	P12:345:SPS:J15.1.XRDS.TOLK
FDNS	06ALL	5	20L	G14_046	TO->FROM	EDDY COUNTY INTERCHANGE - EDDY_NORTH 6230.00 230KV CKT @1	478	478	0.41624	100.0838	CROSSROADS 7345.00 - TOLK STATION 345KV CKT 1
FDNS	06ALL	5	20L	G14_046	TO->FROM	G14-057T 345.00 - LAWTON EASTSIDE 345KV CKT 1	717	789	0.09978	104.5834	BASE CASE
FDNS	06ALL	5	20L	G14_046	FROM->TO	G14-057T 345.00 - SUNNYSIDE 345KV CKT 1	717	789	0.09978	117.7866	BASE CASE
FDNS	06ALL	5	20WP	G14_046	FROM->TO	G14-057T 345.00 - SUNNYSIDE 345KV CKT 1	717	789	0.12175	105.6059	BASE CASE
FDNS	06ALL	5	17G	G14_046	FROM->TO	G14-057T 345.00 - SUNNYSIDE 345KV CKT 1	717	789	0.12246	105.2883	BASE CASE
FDNS	06ALL	5	16WP	G14_046	FROM->TO	G14-057T 345.00 - SUNNYSIDE 345KV CKT 1	717	789	0.12572	103.9305	BASE CASE
FDNS	06ALL	5	20L	G14_046	FROM->TO	GRACEMONT - MINCO 345KV CKT 1	1195	1195	0.20763	100.3039	G14-057T 345.00 - SUNNYSIDE 345KV CKT 1
FDNS	00NR	5	25SP	G14_046	TO->FROM	JONES STATION - TUCO INTERCHANGE 230KV CKT 1	343.79	343.79	0.06874	129.641	CARLISLE INTERCHANGE - TUCO INTERCHANGE 230KV CKT 1
FDNS	00NR	5	25SP	G14_046	TO->FROM	JONES STATION - TUCO INTERCHANGE 230KV CKT 1	343.79	343.79	0.06874	129.641	CARLISLE INTERCHANGE - TUCO INTERCHANGE 230KV CKT 1
FDNS	00NR	5	25SP	G14_046	TO->FROM	JONES STATION - TUCO INTERCHANGE 230KV CKT 1	343.79	343.79	0.06031	112.7964	GEN526333 1-JONES GEN #3 21 KV
FDNS	00NR	5	25SP	G14_046	TO->FROM	JONES STATION - TUCO INTERCHANGE 230KV CKT 1	343.79	343.79	0.06031	112.4061	GEN526334 1-JONES_4 116.500
FDNS	00NR	5	25SP	G14_046	TO->FROM	JONES STATION - TUCO INTERCHANGE 230KV CKT 1	343.79	343.79	0.05306	107.7831	TUCO INTERCHANGE - YOAKUM_345 345.00 345KV CKT 1
FDNS	00NR	5	25SP	G14_046	TO->FROM	JONES STATION - TUCO INTERCHANGE 230KV CKT 1	343.79	343.79	0.06355	103.4197	CARLISLE INTERCHANGE - WOLFFORTH INTERCHANGE 230KV CKT 1
FDNS	00NR	5	25SP	G14_046	TO->FROM	JONES STATION - TUCO INTERCHANGE 230KV CKT 1	343.79	343.79	0.0619	101.2834	PLANT X STATION - SUNDOWN INTERCHANGE 230KV CKT 1
FDNS	00NR	5	25SP	G14_046	TO->FROM	JONES STATION - TUCO INTERCHANGE 230KV CKT 1	343.79	343.79	0.0619	101.2834	PLANT X STATION - SUNDOWN INTERCHANGE 230KV CKT 1
FDNS	00NR	5	25SP	G14_046	TO->FROM	JONES STATION - TUCO INTERCHANGE 230KV CKT 1	343.79	343.79	0.04554	100.5886	P12:345:SPS:J02.1.TOLK.EDDY
FDNS	00NR	5	25SP	G14_046	TO->FROM	JONES STATION - TUCO INTERCHANGE 230KV CKT 1	343.79	343.79	0.06031	100.5344	GEN526332 1-JONES GEN #2 21 KV
FDNS	00NR	5	25SP	G14_046	TO->FROM	JONES STATION - TUCO INTERCHANGE 230KV CKT 1	343.79	343.79	0.06031	100.5324	GEN526331 1-JONES GEN #1 22 KV
FDNS	00NR	5	25SP	G14_046	TO->FROM	JONES STATION - TUCO INTERCHANGE 230KV CKT 1	343.79	343.79	0.06165	100.5232	TUCO INTERCHANGE (ENRCO 136401) 230/115/13.2KV TRANSFORMER CKT 1
FDNS	00NR	5	25SP	G14_046	TO->FROM	JONES STATION - TUCO INTERCHANGE 230KV CKT 1	343.79	343.79	0.06165	100.5232	TUCO INTERCHANGE (ENRCO 136401) 230/115/13.2KV TRANSFORMER CKT 1
FDNS	00NR	5	25SP	G14_046	TO->FROM	JONES STATION - TUCO INTERCHANGE 230KV CKT 1	343.79	343.79	0.06165	100.5232	TUCO INTERCHANGE (ENRCO 136401) 230/115/13.2KV TRANSFORMER CKT 2
FDNS	00NR	5	25SP	G14_046	TO->FROM	JONES STATION - TUCO INTERCHANGE 230KV CKT 1	343.79	343.79	0.06165	100.5232	TUCO INTERCHANGE (ENRCO 136401) 230/115/13.2KV TRANSFORMER CKT 2
FDNS	00NR	5	25SP	G14_046	TO->FROM	JONES STATION - TUCO INTERCHANGE 230KV CKT 1	343.79	343.79	0.06531	99.6	LUBBOCK EAST INTERCHANGE - TUCO INTERCHANGE 115KV CKT 1
FDNS	00NR	5	25SP	G14_046	TO->FROM	JONES STATION - TUCO INTERCHANGE 230KV CKT 1	343.79	343.79	0.06531	99.6	LUBBOCK EAST INTERCHANGE - TUCO INTERCHANGE 115KV CKT 1
FDNS	00NR	5	25SP	G14_046	FROM->TO	LUBBOCK POWER & LIGHT-HOLLY PLANT (SHIH T101039) 230/69/13.5KV TRANSFORMER CKT 1	224	224	0.0358	104.6927	LUBBOCK POWER & LIGHT-SOUTHEAST - LUBBOCK SOUTH INTERCHANGE 230KV CKT 1
FDNS	00NR	5	25SP	G14_046	FROM->TO	LUBBOCK POWER & LIGHT-HOLLY PLANT (SHIH T101039) 230/69/13.5KV TRANSFORMER CKT 1	224	224	0.0358	104.6925	P12:LPL:SPS:K64.1.LP-SE.LUBBS
FDNS	00NR	5	25SP	G14_046	FROM->TO	LUBBOCK POWER & LIGHT-HOLLY PLANT (SHIH T101039) 230/69/13.5KV TRANSFORMER CKT 1	224	224	0.03425	101.9351	LUBBOCK EAST INTERCHANGE - LUBBOCK POWER & LIGHT-WADSWORTH 230KV CKT 1
FDNS	00NR	5	25SP	G14_046	FROM->TO	LUBBOCK POWER & LIGHT-HOLLY PLANT (SHIH T101039) 230/69/13.5KV TRANSFORMER CKT 1	224	224	0.03425	101.9204	P12:230:LPL:K57.1.LP-WADS.LUBBE
FDNS	00NR	5	25SP	G14_046	FROM->TO	LUBBOCK POWER & LIGHT-HOLLY PLANT (SHIH T101039) 230/69/13.5KV TRANSFORMER CKT 1	224	224	0.03425	101.9203	LUBBOCK POWER & LIGHT-WADSWORTH (SHIH T101038) 230/69/13.5KV TRANSFORMER CKT 1
FDNS	00NR	5	25SP	G14_046	FROM->TO	LUBBOCK POWER & LIGHT-HOLLY PLANT (SHIH T101039) 230/69/13.5KV TRANSFORMER CKT 1	224	224	0.03425	101.9203	LUBBOCK POWER & LIGHT-WADSWORTH (SHIH T101038) 230/69/13.5KV TRANSFORMER CKT 1
FDNS	06ALL	5	17G	G14_046	FROM->TO	POTTER COUNTY INTERCHANGE (WAUK 90343-A) 345/230/13.2KV TRANSFORMER CKT 1	560	560	0.20397	131.4477	P12:345:SPS:J15.1.XRDS.TOLK
FDNS	06ALL	5	17G	G14_046	FROM->TO	POTTER COUNTY INTERCHANGE (WAUK 90343-A) 345/230/13.2KV TRANSFORMER CKT 1	560	560	0.20397	130.9697	P12:345:SPS:J15.1.XRDS.TOLK
FDNS	06ALL	5	16WP	G14_046	FROM->TO	POTTER COUNTY INTERCHANGE (WAUK 90343-A) 345/230/13.2KV TRANSFORMER CKT 1	560	560	0.21523	123.3278	P12:345:SPS:J15.1.XRDS.TOLK
FDNS	06ALL	5	16WP	G14_046	FROM->TO	POTTER COUNTY INTERCHANGE (WAUK 90343-A) 345/230/13.2KV TRANSFORMER CKT 1	560	560	0.21523	122.0001	P12:345:SPS:J15.1.XRDS.TOLK
FDNS	06ALL	5	17SP	G14_046	FROM->TO	POTTER COUNTY INTERCHANGE (WAUK 90343-A) 345/230/13.2KV TRANSFORMER CKT 1	560	560	0.21009	108.8592	P12:345:SPS:J15.1.XRDS.TOLK
FDNS	06ALL	5	17SP	G14_046	FROM->TO	POTTER COUNTY INTERCHANGE (WAUK 90343-A) 345/230/13.2KV TRANSFORMER CKT 1	560	560	0.21009	107.3735	P12:345:SPS:J15.1.XRDS.TOLK
FDNS	06ALL	5	16WP	G14_046	FROM->TO	TOLK STATION (ABBXNL844501) 345/230/13.2KV TRANSFORMER CKT 1	560	560	0.31224	113.0248	CROSSROADS 7345.00 - TOLK STATION 345KV CKT 1
FDNS	06ALL	5	16WP	G14_046	FROM->TO	TOLK STATION (ABBXNL844501) 345/230/13.2KV TRANSFORMER CKT 1	560	560	0.31224	110.571	CROSSROADS 7345.00 - TOLK STATION 345KV CKT 1
FDNS	06ALL	5	20WP	G14_046	FROM->TO	TOLK STATION (ABBXNL844501) 345/230/13.2KV TRANSFORMER CKT 1	560	560	0.21665	106.1712	CROSSROADS 7345.00 - TOLK STATION 345KV CKT 1
FDNS	06ALL	5	20WP	G14_046	FROM->TO	TOLK STATION (ABBXNL844501) 345/230/13.2KV TRANSFORMER CKT 1	560	560	0.21665	104.0137	CROSSROADS 7345.00 - TOLK STATION 345KV CKT 1
FDNS	06ALL	6	20SP	G14_046	FROM->TO	CHISHOLM6 230.00 - ELK CITY 230KV 230KV CKT 1	353	353	0.05927	102.8848	BASE CASE
FDNS	06ALL	6	17SP	G14_046	FROM->TO	CHISHOLM6 230.00 - ELK CITY 230KV 230KV CKT 1	353	353	0.05966	100.6562	BASE CASE
FDNS	06ALL	6	17G	G14_046	TO->FROM	CIMARRON - MINCO 345KV CKT 1	956	956	0.20684	121.6178	G14-057T 345.00 - SUNNYSIDE 345KV CKT 1
FDNS	06ALL	6	20WP	G14_046	TO->FROM	CIMARRON - MINCO 345KV CKT 1	956	956	0.20693	119.7395	G14-057T 345.00 - SUNNYSIDE 345KV CKT 1
FDNS	06ALL	6	17G	G14_046	TO->FROM	CIMARRON - MINCO 345KV CKT 1	956	956	0.20684	116.437	G14-057T 345.00 - LAWTON EASTSIDE 345KV CKT 1
FDNS	06ALL	6	20WP	G14_046	TO->FROM	CIMARRON - MINCO 345KV CKT 1	956	956	0.20693	114.5016	G14-057T 345.00 - LAWTON EASTSIDE 345KV CKT 1
FDNS	06ALL	6	17SP	G14_046	TO->FROM	CIMARRON - MINCO 345KV CKT 1	956	956	0.20977	114.4047	G14-057T 345.00 - SUNNYSIDE 345KV CKT 1
FDNS	06ALL	6	16WP	G14_046	TO->FROM	CIMARRON - MINCO 345KV CKT 1	956	956	0.21298	114.352	G14-057T 345.00 - SUNNYSIDE 345KV CKT 1
FDNS	06ALL	6	20SP	G14_046	TO->FROM	CIMARRON - MINCO 345KV CKT 1	956	956	0.21235	111.5632	G14-057T 345.00 - SUNNYSIDE 345KV CKT 1

SOLUTION	GROUP	SCENARIO	SEASON	SOURCE	DIRECTION	MONITORED ELEMENT	RATEA (MVA)	RATEB(MVA)	TDF	TC%LOADING (% MVA)	CONTINGENCY
FDNS	06ALL	6	17SP	G14_046	TO->FROM	CIMARRON - MINCO 345KV CKT 1	956	956	0.20977	109.1774	G14-057T 345.00 - LAWTON EASTSIDE 345KV CKT 1
FDNS	06ALL	6	16WP	G14_046	TO->FROM	CIMARRON - MINCO 345KV CKT 1	956	956	0.21298	108.975	G14-057T 345.00 - LAWTON EASTSIDE 345KV CKT 1
FDNS	06ALL	6	20SP	G14_046	TO->FROM	CIMARRON - MINCO 345KV CKT 1	956	956	0.21235	106.5254	G14-057T 345.00 - LAWTON EASTSIDE 345KV CKT 1
FDNS	06ALL	6	17G	G14_046	TO->FROM	CIMARRON - MINCO 345KV CKT 1	956	956	0.19605	105.9404	CHISHOLM7 345.00 - WOODWARD DISTRICT EHV 345KV CKT 1
FDNS	06ALL	6	20WP	G14_046	TO->FROM	CIMARRON - MINCO 345KV CKT 1	956	956	0.1978	101.5954	CHISHOLM7 345.00 - WOODWARD DISTRICT EHV 345KV CKT 1
FDNS	06ALL	6	20L	G14_046	TO->FROM	EDDY COUNTY INTERCHANGE - EDDY_NORTH 6230.00 230KV CKT @1	478	478	0.42144	102.9135	P12:345:SPS:J15.1.XRDS.TOLK
FDNS	06ALL	6	20L	G14_046	TO->FROM	EDDY COUNTY INTERCHANGE - EDDY_NORTH 6230.00 230KV CKT @1	478	478	0.41626	100	CROSSROADS 7345.00 - TOLK STATION 345KV CKT 1
FDNS	06ALL	6	20L	G14_046	TO->FROM	G14-057T 345.00 - LAWTON EASTSIDE 345KV CKT 1	717	789	0.09506	102.0743	BASE CASE
FDNS	06ALL	6	20L	G14_046	FROM->TO	G14-057T 345.00 - SUNNYSIDE 345KV CKT 1	717	789	0.09506	115.279	BASE CASE
FDNS	06ALL	6	20WP	G14_046	FROM->TO	G14-057T 345.00 - SUNNYSIDE 345KV CKT 1	717	789	0.11656	103.5944	BASE CASE
FDNS	06ALL	6	17G	G14_046	FROM->TO	G14-057T 345.00 - SUNNYSIDE 345KV CKT 1	717	789	0.11718	103.4014	BASE CASE
FDNS	06ALL	6	16WP	G14_046	FROM->TO	G14-057T 345.00 - SUNNYSIDE 345KV CKT 1	717	789	0.12029	102.0868	BASE CASE
FDNS	00NR	6	25SP	G14_046	TO->FROM	JONES STATION - TUCO INTERCHANGE 230KV CKT 1	343.79	343.79	0.06875	129.6325	CARLISLE INTERCHANGE - TUCO INTERCHANGE 230KV CKT 1
FDNS	00NR	6	25SP	G14_046	TO->FROM	JONES STATION - TUCO INTERCHANGE 230KV CKT 1	343.79	343.79	0.06875	129.6325	CARLISLE INTERCHANGE - TUCO INTERCHANGE 230KV CKT 1
FDNS	00NR	6	25SP	G14_046	TO->FROM	JONES STATION - TUCO INTERCHANGE 230KV CKT 1	343.79	343.79	0.06032	112.7855	GEN526333 1-JONES GEN #3 21 KV
FDNS	00NR	6	25SP	G14_046	TO->FROM	JONES STATION - TUCO INTERCHANGE 230KV CKT 1	343.79	343.79	0.06032	112.3951	GEN526334 1-JONES_4 116.500
FDNS	00NR	6	25SP	G14_046	TO->FROM	JONES STATION - TUCO INTERCHANGE 230KV CKT 1	343.79	343.79	0.05308	107.7709	TUCO INTERCHANGE - YOAKUM_345 345.00 345KV CKT 1
FDNS	00NR	6	25SP	G14_046	TO->FROM	JONES STATION - TUCO INTERCHANGE 230KV CKT 1	343.79	343.79	0.06356	103.4125	CARLISLE INTERCHANGE - WOLFFORTH INTERCHANGE 230KV CKT 1
FDNS	00NR	6	25SP	G14_046	TO->FROM	JONES STATION - TUCO INTERCHANGE 230KV CKT 1	343.79	343.79	0.06191	101.2811	PLANT X STATION - SUNDOWN INTERCHANGE 230KV CKT 1
FDNS	00NR	6	25SP	G14_046	TO->FROM	JONES STATION - TUCO INTERCHANGE 230KV CKT 1	343.79	343.79	0.06191	101.2811	PLANT X STATION - SUNDOWN INTERCHANGE 230KV CKT 1
FDNS	00NR	6	25SP	G14_046	TO->FROM	JONES STATION - TUCO INTERCHANGE 230KV CKT 1	343.79	343.79	0.04554	100.5783	P12:345:SPS:J02.1.TOLK.EDDY
FDNS	00NR	6	25SP	G14_046	TO->FROM	JONES STATION - TUCO INTERCHANGE 230KV CKT 1	343.79	343.79	0.06032	100.5273	GEN526332 1-JONES GEN #2 21 KV
FDNS	00NR	6	25SP	G14_046	TO->FROM	JONES STATION - TUCO INTERCHANGE 230KV CKT 1	343.79	343.79	0.06032	100.5254	GEN526331 1-JONES GEN #1 22 KV
FDNS	00NR	6	25SP	G14_046	TO->FROM	JONES STATION - TUCO INTERCHANGE 230KV CKT 1	343.79	343.79	0.06166	100.5163	TUCO INTERCHANGE (ENRCO 136401) 230/115/13.2KV TRANSFORMER CKT 1
FDNS	00NR	6	25SP	G14_046	TO->FROM	JONES STATION - TUCO INTERCHANGE 230KV CKT 1	343.79	343.79	0.06166	100.5163	TUCO INTERCHANGE (ENRCO 136401) 230/115/13.2KV TRANSFORMER CKT 1
FDNS	00NR	6	25SP	G14_046	TO->FROM	JONES STATION - TUCO INTERCHANGE 230KV CKT 1	343.79	343.79	0.06166	100.5163	TUCO INTERCHANGE (ENRCO 136401) 230/115/13.2KV TRANSFORMER CKT 2
FDNS	00NR	6	25SP	G14_046	TO->FROM	JONES STATION - TUCO INTERCHANGE 230KV CKT 1	343.79	343.79	0.06166	100.5163	TUCO INTERCHANGE (ENRCO 136401) 230/115/13.2KV TRANSFORMER CKT 2
FDNS	00NR	6	25SP	G14_046	TO->FROM	JONES STATION - TUCO INTERCHANGE 230KV CKT 1	343.79	343.79	0.06532	99.6	LUBBOCK EAST INTERCHANGE - TUCO INTERCHANGE 115KV CKT 1
FDNS	00NR	6	25SP	G14_046	TO->FROM	JONES STATION - TUCO INTERCHANGE 230KV CKT 1	343.79	343.79	0.06532	99.6	LUBBOCK EAST INTERCHANGE - TUCO INTERCHANGE 115KV CKT 1
FDNS	00NR	6	25SP	G14_046	FROM->TO	LUBBOCK POWER & LIGHT-HOLLY PLANT (SHIH T101039) 230/69/13.5KV TRANSFORMER CKT 1	224	224	0.0358	104.6926	LUBBOCK POWER & LIGHT-SOUTHEAST - LUBBOCK SOUTH INTERCHANGE 230KV CKT 1
FDNS	00NR	6	25SP	G14_046	FROM->TO	LUBBOCK POWER & LIGHT-HOLLY PLANT (SHIH T101039) 230/69/13.5KV TRANSFORMER CKT 1	224	224	0.0358	104.6924	P12:LPL:SPS:K64.1.LP-SE.LUBBS
FDNS	00NR	6	25SP	G14_046	FROM->TO	LUBBOCK POWER & LIGHT-HOLLY PLANT (SHIH T101039) 230/69/13.5KV TRANSFORMER CKT 1	224	224	0.03425	101.9349	LUBBOCK EAST INTERCHANGE - LUBBOCK POWER & LIGHT-WADSWORTH 230KV CKT 1
FDNS	00NR	6	25SP	G14_046	FROM->TO	LUBBOCK POWER & LIGHT-HOLLY PLANT (SHIH T101039) 230/69/13.5KV TRANSFORMER CKT 1	224	224	0.03425	101.9202	LUBBOCK POWER & LIGHT-WADSWORTH (SHIH T101038) 230/69/13.5KV TRANSFORMER CKT 1
FDNS	00NR	6	25SP	G14_046	FROM->TO	LUBBOCK POWER & LIGHT-HOLLY PLANT (SHIH T101039) 230/69/13.5KV TRANSFORMER CKT 1	224	224	0.03425	101.9202	LUBBOCK POWER & LIGHT-WADSWORTH (SHIH T101038) 230/69/13.5KV TRANSFORMER CKT 1
FDNS	00NR	6	25SP	G14_046	FROM->TO	LUBBOCK POWER & LIGHT-HOLLY PLANT (SHIH T101039) 230/69/13.5KV TRANSFORMER CKT 1	224	224	0.03425	101.9202	P12:230:LPL:K57.1.LP-WADS.LUBBE
FDNS	06ALL	6	16WP	G14_046	FROM->TO	POTTER COUNTY INTERCHANGE (WAUK 90343-A) 345/230/13.2KV TRANSFORMER CKT 1	560	560	0.22941	124.5835	P12:345:SPS:J15.1.XRDS.TOLK
FDNS	06ALL	6	16WP	G14_046	FROM->TO	POTTER COUNTY INTERCHANGE (WAUK 90343-A) 345/230/13.2KV TRANSFORMER CKT 1	560	560	0.22941	123.2053	P12:345:SPS:J15.1.XRDS.TOLK
FDNS	06ALL	6	16WP	G14_046	FROM->TO	POTTER COUNTY INTERCHANGE (WAUK 90343-A) 345/230/13.2KV TRANSFORMER CKT 1	560	560	0.19919	116.5159	POTTER COUNTY INTERCHANGE - TOLK STATION 345KV CKT 1
FDNS	06ALL	6	16WP	G14_046	FROM->TO	POTTER COUNTY INTERCHANGE (WAUK 90343-A) 345/230/13.2KV TRANSFORMER CKT 1	560	560	0.19919	115.3558	POTTER COUNTY INTERCHANGE - TOLK STATION 345KV CKT 1
FDNS	06ALL	6	17SP	G14_046	FROM->TO	POTTER COUNTY INTERCHANGE (WAUK 90343-A) 345/230/13.2KV TRANSFORMER CKT 1	560	560	0.22424	109.9868	P12:345:SPS:J15.1.XRDS.TOLK
FDNS	06ALL	6	17SP	G14_046	FROM->TO	POTTER COUNTY INTERCHANGE (WAUK 90343-A) 345/230/13.2KV TRANSFORMER CKT 1	560	560	0.22424	108.4833	P12:345:SPS:J15.1.XRDS.TOLK
FDNS	06ALL	6	20SP	G14_046	FROM->TO	POTTER COUNTY INTERCHANGE (WAUK 90343-A) 345/230/13.2KV TRANSFORMER CKT 1	560	560	0.19791	103.5013	P12:345:SPS:J15.1.XRDS.TOLK
FDNS	06ALL	6	17SP	G14_046	FROM->TO	POTTER COUNTY INTERCHANGE (WAUK 90343-A) 345/230/13.2KV TRANSFORMER CKT 1	560	560	0.19638	103.4959	POTTER COUNTY INTERCHANGE - TOLK STATION 345KV CKT 1
FDNS	06ALL	6	20SP	G14_046	FROM->TO	POTTER COUNTY INTERCHANGE (WAUK 90343-A) 345/230/13.2KV TRANSFORMER CKT 1	560	560	0.19791	102.1921	P12:345:SPS:J15.1.XRDS.TOLK
FDNS	06ALL	6	17SP	G14_046	FROM->TO	POTTER COUNTY INTERCHANGE (WAUK 90343-A) 345/230/13.2KV TRANSFORMER CKT 1	560	560	0.19638	102.1846	POTTER COUNTY INTERCHANGE - TOLK STATION 345KV CKT 1
FDNS	06ALL	6	16WP	G14_046	FROM->TO	TOLK STATION (ABBXNL844501) 345/230/13.2KV TRANSFORMER CKT 1	560	560	0.31389	112.8509	CROSSROADS 7345.00 - TOLK STATION 345KV CKT 1
FDNS	06ALL	6	16WP	G14_046	FROM->TO	TOLK STATION (ABBXNL844501) 345/230/13.2KV TRANSFORMER CKT 1	560	560	0.31389	110.425	CROSSROADS 7345.00 - TOLK STATION 345KV CKT 1
FDNS	06ALL	6	20WP	G14_046	FROM->TO	TOLK STATION (ABBXNL844501) 345/230/13.2KV TRANSFORMER CKT 1	560	560	0.21824	106.0959	CROSSROADS 7345.00 - TOLK STATION 345KV CKT 1
FDNS	06ALL	6	20WP	G14_046	FROM->TO	TOLK STATION (ABBXNL844501) 345/230/13.2KV TRANSFORMER CKT 1	560	560	0.21824	103.968	CROSSROADS 7345.00 - TOLK STATION 345KV CKT 1
FDNS	06ALL	7	20SP	G14_046	FROM->TO	CHISHOLM6 230.00 - ELK CITY 230KV 230KV CKT 1	353	353	0.05928	100.158	BASE CASE
FDNS	06ALL	7	17G	G14_046	TO->FROM	CIMARRON - MINCO 345KV CKT 1	956	956	0.20687	117.9395	G14-057T 345.00 - SUNNYSIDE 345KV CKT 1
FDNS	06ALL	7	20WP	G14_046	TO->FROM	CIMARRON - MINCO 345KV CKT 1	956	956	0.20692	116.4002	G14-057T 345.00 - SUNNYSIDE 345KV CKT 1
FDNS	06ALL	7	17G	G14_046	TO->FROM	CIMARRON - MINCO 345KV CKT 1	956	956	0.20687	112.8925	G14-057T 345.00 - LAWTON EASTSIDE 345KV CKT 1
FDNS	06ALL	7	16WP	G14_046	TO->FROM	CIMARRON - MINCO 345KV CKT 1	956	956	0.213	111.0593	G14-057T 345.00 - SUNNYSIDE 345KV CKT 1
FDNS	06ALL	7	20WP	G14_046	TO->FROM	CIMARRON - MINCO 345KV CKT 1	956	956	0.20692	111.0342	G14-057T 345.00 - LAWTON EASTSIDE 345KV CKT 1
FDNS	06ALL	7	17SP	G14_046	TO->FROM	CIMARRON - MINCO 345KV CKT 1	956	956	0.20978	111.0288	G14-057T 345.00 - SUNNYSIDE 345KV CKT 1
FDNS	06ALL	7	20SP	G14_046	TO->FROM	CIMARRON - MINCO 345KV CKT 1	956	956	0.21236	108.4281	G14-057T 345.00 - SUNNYSIDE 345KV CKT 1
FDNS	06ALL	7	17SP	G14_046	TO->FROM	CIMARRON - MINCO 345KV CKT 1	956	956	0.20978	106.172	G14-057T 345.00 - LAWTON EASTSIDE 345KV CKT 1
FDNS	06ALL	7	16WP	G14_046	TO->FROM	CIMARRON - MINCO 345KV CKT 1	956	956	0.213	105.9627	G14-057T 345.00 - LAWTON EASTSIDE 345KV CKT 1
FDNS	06ALL	7	20SP	G14_046	TO->FROM	CIMARRON - MINCO 345KV CKT 1	956	956	0.21236	103.5061	G14-057T 345.00 - LAWTON EASTSIDE 345KV CKT 1
FDNS	06ALL	7	20L	G14_046	TO->FROM	EDDY COUNTY INTERCHANGE - EDDY_NORTH 6230.00 230KV CKT @1	478	478	0.42146	102.8092	P12:345:SPS:J15.1.XRDS.TOLK
FDNS	06ALL	7	20L	G14_046	TO->FROM	EDDY COUNTY INTERCHANGE - EDDY_NORTH 6230.00 230KV CKT @1	478	478	0.41627	99.7	CROSSROADS 7345.00 - TOLK STATION 345KV CKT 1
FDNS	06ALL	7	20L	G14_046	TO->FROM	G14-057T 345.00 - LAWTON EASTSIDE 345KV CKT 1	717	789	0.09508	100.7791	BASE CASE
FDNS	06ALL	7	20L	G14_046	FROM->TO	G14-057T 345.00 - SUNNYSIDE 345KV CKT 1	717	789	0.09508	114.0012	BASE CASE
FDNS	06ALL	7	20WP	G14_046	FROM->TO	G14-057T 345.00 - SUNNYSIDE 345KV CKT 1	717	789	0.11655	102.5888	BASE CASE
FDNS	06ALL	7	17G	G14_046	FROM->TO	G14-057T 345.00 - SUNNYSIDE 345KV CKT 1	717	789	0.11719	102.2119	BASE CASE
FDNS	06ALL	7	16WP	G14_046	FROM->TO	G14-057T 345.00 - SUNNYSIDE 345KV CKT 1	717	789	0.1203	101.1576	BASE CASE
FDNS	00NR	7	25SP	G14_046	TO->FROM	JONES STATION - TUCO INTERCHANGE 230KV CKT 1	343.79	343.79	0.06875	129.1537	CARLISLE INTERCHANGE - TUCO INTERCHANGE 230KV CKT 1
FDNS	00NR	7	25SP	G14_046	TO->FROM	JONES STATION - TUCO INTERCHANGE 230KV CKT 1	343.79	343.79	0.06875	129.1537	CARLISLE INTERCHANGE - TUCO INTERCHANGE 230KV CKT 1
FDNS	00NR	7	25SP	G14_046	TO->FROM	JONES STATION - TUCO INTERCHANGE 230KV CKT 1	343.79	343.79	0.06032	112.419	GEN526333 1-JONES GEN #3 21 KV
FDNS	00NR	7	25SP	G14_046	TO->FROM	JONES STATION - TUCO INTERCHANGE 230KV CKT 1	343.79	343.79	0.06032	112.036	GEN526334 1-JONES_4 116.500
FDNS	00NR	7	25SP	G14_046	TO->FROM	JONES STATION - TUCO INTERCHANGE 230KV CKT 1	343.79	343.79	0.05308	107.2187	TUCO INTERCHANGE - YOAKUM_345 345.00 345KV CKT 1
FDNS	00NR	7	25SP	G14_046	TO->FROM	JONES STATION - TUCO INTERCHANGE 230KV CKT 1	343.79	343.79	0.06356	103.0013	CARLISLE INTERCHANGE - WOLFFORTH INTERCHANGE 230KV CKT 1
FDNS	00NR	7	25SP	G14_046	TO->FROM	JONES STATION - TUCO INTERCHANGE 230KV CKT 1	343.79	343.79	0.06191	101.0414	PLANT X STATION - SUNDOWN INTERCHANGE 230KV CKT 1
FDNS	00NR	7	25SP	G14_046	TO->FROM	JONES STATION - TUCO INTERCHANGE 230KV CKT 1	343.79	343.79	0.06191	101.0414	PLANT X STATION - SUNDOWN INTERCHANGE 230KV CKT 1
FDNS	00NR	7	25SP	G14_046	TO->FROM	JONES STATION - TUCO INTERCHANGE 230KV CKT 1	343.79	343.79	0.04554	100.2536	P12:345:SPS:J02.1.TOLK.EDDY
FDNS	00NR	7	25SP	G14_046	TO->FROM	JONES STATION - TUCO INTERCHANGE 230KV CKT 1	343.79	343.79	0.06032	100.1954	GEN526332 1-JONES GEN #2 21 KV
FDNS	00NR	7	25SP	G14_046	TO->FROM	JONES STATION - TUCO INTERCHANGE 230KV CKT 1	343.79	343.79	0.06032	100.1934	GEN526331 1-JONES GEN #1 22 KV
FDNS	00NR	7	25SP	G14_046	TO->FROM	JONES STATION - TUCO INTERCHANGE 230KV CKT 1	343.79	343.79	0.06166	100.1486	TUCO INTERCHANGE (ENRCO 136401) 230/115/13.2KV TRANSFORMER CKT 1

SOLUTION	GROUP	SCENARIO	SEASON	SOURCE	DIRECTION	MONITORED ELEMENT	RATEA (MVA)	RATEB(MVA)	TDF	TC%LOADING (% MVA)	CONTINGENCY
FDNS	00NR	7	25SP	G14_046	TO->FROM	JONES STATION - TUCO INTERCHANGE 230KV CKT 1	343.79	343.79	0.06166	100.1486	TUCO INTERCHANGE (ENRCO 136401) 230/115/13.2KV TRANSFORMER CKT 1
FDNS	00NR	7	25SP	G14_046	TO->FROM	JONES STATION - TUCO INTERCHANGE 230KV CKT 1	343.79	343.79	0.06166	100.1486	TUCO INTERCHANGE (ENRCO 136401) 230/115/13.2KV TRANSFORMER CKT 2
FDNS	00NR	7	25SP	G14_046	TO->FROM	JONES STATION - TUCO INTERCHANGE 230KV CKT 1	343.79	343.79	0.06166	100.1486	TUCO INTERCHANGE (ENRCO 136401) 230/115/13.2KV TRANSFORMER CKT 2
FDNS	00NR	7	25SP	G14_046	FROM->TO	LUBBOCK POWER & LIGHT-HOLLY PLANT (SHIH T101039) 230/69/13.5KV TRANSFORMER CKT 1	224	224	0.0358	104.7009	LUBBOCK POWER & LIGHT-SOUTHEAST - LUBBOCK SOUTH INTERCHANGE 230KV CKT 1
FDNS	00NR	7	25SP	G14_046	FROM->TO	LUBBOCK POWER & LIGHT-HOLLY PLANT (SHIH T101039) 230/69/13.5KV TRANSFORMER CKT 1	224	224	0.0358	104.6879	P12:LPL:SPS:K64.1.LP-SE.LUBBS
FDNS	00NR	7	25SP	G14_046	FROM->TO	LUBBOCK POWER & LIGHT-HOLLY PLANT (SHIH T101039) 230/69/13.5KV TRANSFORMER CKT 1	224	224	0.03425	101.9255	LUBBOCK EAST INTERCHANGE - LUBBOCK POWER & LIGHT-WADSWORTH 230KV CKT 1
FDNS	00NR	7	25SP	G14_046	FROM->TO	LUBBOCK POWER & LIGHT-HOLLY PLANT (SHIH T101039) 230/69/13.5KV TRANSFORMER CKT 1	224	224	0.03425	101.9108	P12:230:LPL:K57.1.LP-WADS.LUBBE
FDNS	00NR	7	25SP	G14_046	FROM->TO	LUBBOCK POWER & LIGHT-HOLLY PLANT (SHIH T101039) 230/69/13.5KV TRANSFORMER CKT 1	224	224	0.03425	101.9107	LUBBOCK POWER & LIGHT-WADSWORTH (SHIH T101038) 230/69/13.5KV TRANSFORMER CKT 1
FDNS	00NR	7	25SP	G14_046	FROM->TO	LUBBOCK POWER & LIGHT-HOLLY PLANT (SHIH T101039) 230/69/13.5KV TRANSFORMER CKT 1	224	224	0.03425	101.9107	LUBBOCK POWER & LIGHT-WADSWORTH (SHIH T101038) 230/69/13.5KV TRANSFORMER CKT 1
FDNS	06ALL	7	16WP	G14_046	FROM->TO	POTTER COUNTY INTERCHANGE (WAUK 90343-A) 345/230/13.2KV TRANSFORMER CKT 1	560	560	0.22943	133.795	P12:345:SPS:J15.1.XRDS.TOLK
FDNS	06ALL	7	16WP	G14_046	FROM->TO	POTTER COUNTY INTERCHANGE (WAUK 90343-A) 345/230/13.2KV TRANSFORMER CKT 1	560	560	0.22943	130.8152	P12:345:SPS:J15.1.XRDS.TOLK
FDNS	06ALL	7	16WP	G14_046	FROM->TO	POTTER COUNTY INTERCHANGE (WAUK 90343-A) 345/230/13.2KV TRANSFORMER CKT 1	560	560	0.19921	125.2874	POTTER COUNTY INTERCHANGE - TOLK STATION 345KV CKT 1
FDNS	06ALL	7	16WP	G14_046	FROM->TO	POTTER COUNTY INTERCHANGE (WAUK 90343-A) 345/230/13.2KV TRANSFORMER CKT 1	560	560	0.19921	122.7478	POTTER COUNTY INTERCHANGE - TOLK STATION 345KV CKT 1
FDNS	06ALL	7	17SP	G14_046	FROM->TO	POTTER COUNTY INTERCHANGE (WAUK 90343-A) 345/230/13.2KV TRANSFORMER CKT 1	560	560	0.22426	118.7065	P12:345:SPS:J15.1.XRDS.TOLK
FDNS	06ALL	7	17SP	G14_046	FROM->TO	POTTER COUNTY INTERCHANGE (WAUK 90343-A) 345/230/13.2KV TRANSFORMER CKT 1	560	560	0.22426	115.9022	P12:345:SPS:J15.1.XRDS.TOLK
FDNS	06ALL	7	17SP	G14_046	FROM->TO	POTTER COUNTY INTERCHANGE (WAUK 90343-A) 345/230/13.2KV TRANSFORMER CKT 1	560	560	0.1964	112.021	POTTER COUNTY INTERCHANGE - TOLK STATION 345KV CKT 1
FDNS	06ALL	7	20SP	G14_046	FROM->TO	POTTER COUNTY INTERCHANGE (WAUK 90343-A) 345/230/13.2KV TRANSFORMER CKT 1	560	560	0.19791	111.9416	P12:345:SPS:J15.1.XRDS.TOLK
FDNS	06ALL	7	17SP	G14_046	FROM->TO	POTTER COUNTY INTERCHANGE (WAUK 90343-A) 345/230/13.2KV TRANSFORMER CKT 1	560	560	0.1964	109.5353	POTTER COUNTY INTERCHANGE - TOLK STATION 345KV CKT 1
FDNS	06ALL	7	20SP	G14_046	FROM->TO	POTTER COUNTY INTERCHANGE (WAUK 90343-A) 345/230/13.2KV TRANSFORMER CKT 1	560	560	0.19791	109.4721	P12:345:SPS:J15.1.XRDS.TOLK
FDNS	06ALL	7	16WP	G14_046	FROM->TO	TOLK STATION (ABBXNL844501) 345/230/13.2KV TRANSFORMER CKT 1	560	560	0.31393	112.9883	CROSSROADS 7345.00 - TOLK STATION 345KV CKT 1
FDNS	06ALL	7	16WP	G14_046	FROM->TO	TOLK STATION (ABBXNL844501) 345/230/13.2KV TRANSFORMER CKT 1	560	560	0.31393	110.8952	CROSSROADS 7345.00 - TOLK STATION 345KV CKT 1
FDNS	06ALL	7	20WP	G14_046	FROM->TO	TOLK STATION (ABBXNL844501) 345/230/13.2KV TRANSFORMER CKT 1	560	560	0.21823	106.354	CROSSROADS 7345.00 - TOLK STATION 345KV CKT 1
FDNS	06ALL	7	20WP	G14_046	FROM->TO	TOLK STATION (ABBXNL844501) 345/230/13.2KV TRANSFORMER CKT 1	560	560	0.21823	104.5262	CROSSROADS 7345.00 - TOLK STATION 345KV CKT 1
FDNS	06ALL	8	20L	G14_046	TO->FROM	EDDY COUNTY INTERCHANGE - EDDY_NORTH 6230.00 230KV CKT @1	478	478	0.41944	101.5505	P12:345:SPS:J15.1.XRDS.TOLK
FDNS	00NR	8	25SP	G14_046	TO->FROM	JONES STATION - TUCO INTERCHANGE 230KV CKT 1	343.79	343.79	0.06812	128.3131	CARLISLE INTERCHANGE - TUCO INTERCHANGE 230KV CKT 1
FDNS	00NR	8	25SP	G14_046	TO->FROM	JONES STATION - TUCO INTERCHANGE 230KV CKT 1	343.79	343.79	0.06812	128.3131	CARLISLE INTERCHANGE - TUCO INTERCHANGE 230KV CKT 1
FDNS	00NR	8	25SP	G14_046	TO->FROM	JONES STATION - TUCO INTERCHANGE 230KV CKT 1	343.79	343.79	0.05987	111.8492	GEN526333 1-JONES GEN #3 21 KV
FDNS	00NR	8	25SP	G14_046	TO->FROM	JONES STATION - TUCO INTERCHANGE 230KV CKT 1	343.79	343.79	0.05987	111.4668	GEN526334 1-JONES_4 116.500
FDNS	00NR	8	25SP	G14_046	TO->FROM	JONES STATION - TUCO INTERCHANGE 230KV CKT 1	343.79	343.79	0.05285	106.1183	TUCO_2 345.00 - YOAKUM_345 345.00 345KV CKT 1
FDNS	00NR	8	25SP	G14_046	TO->FROM	JONES STATION - TUCO INTERCHANGE 230KV CKT 1	343.79	343.79	0.06301	102.3279	CARLISLE INTERCHANGE - WOLFFORTH INTERCHANGE 230KV CKT 1
FDNS	00NR	8	25SP	G14_046	TO->FROM	JONES STATION - TUCO INTERCHANGE 230KV CKT 1	343.79	343.79	0.06172	100.9491	PLANT X STATION - SUNDOWN INTERCHANGE 230KV CKT 1
FDNS	00NR	8	25SP	G14_046	TO->FROM	JONES STATION - TUCO INTERCHANGE 230KV CKT 1	343.79	343.79	0.06172	100.9491	PLANT X STATION - SUNDOWN INTERCHANGE 230KV CKT 1
FDNS	00NR	8	25SP	G14_046	TO->FROM	JONES STATION - TUCO INTERCHANGE 230KV CKT 1	343.79	343.79	0.04576	99.7	P12:345:SPS:J02.1.TOLK.EDDY
FDNS	00NR	8	25SP	G14_046	TO->FROM	JONES STATION - TUCO INTERCHANGE 230KV CKT 1	343.79	343.79	0.06111	99.5	TUCO INTERCHANGE (ENRCO 136401) 230/115/13.2KV TRANSFORMER CKT 1
FDNS	00NR	8	25SP	G14_046	TO->FROM	JONES STATION - TUCO INTERCHANGE 230KV CKT 1	343.79	343.79	0.06111	99.5	TUCO INTERCHANGE (ENRCO 136401) 230/115/13.2KV TRANSFORMER CKT 1
FDNS	00NR	8	25SP	G14_046	TO->FROM	JONES STATION - TUCO INTERCHANGE 230KV CKT 1	343.79	343.79	0.06111	99.5	TUCO INTERCHANGE (ENRCO 136401) 230/115/13.2KV TRANSFORMER CKT 2
FDNS	00NR	8	25SP	G14_046	TO->FROM	JONES STATION - TUCO INTERCHANGE 230KV CKT 1	343.79	343.79	0.06111	99.5	TUCO INTERCHANGE (ENRCO 136401) 230/115/13.2KV TRANSFORMER CKT 2
FDNS	00NR	8	25SP	G14_046	TO->FROM	JONES STATION - TUCO INTERCHANGE 230KV CKT 1	343.79	343.79	0.05987	99.5	GEN526331 1-JONES GEN #1 22 KV
FDNS	00NR	8	25SP	G14_046	TO->FROM	JONES STATION - TUCO INTERCHANGE 230KV CKT 1	343.79	343.79	0.05987	99.5	GEN526332 1-JONES GEN #2 21 KV
FDNS	00NR	8	25SP	G14_046	FROM->TO	LUBBOCK POWER & LIGHT-HOLLY PLANT (SHIH T101039) 230/69/13.5KV TRANSFORMER CKT 1	224	224	0.0358	104.7109	LUBBOCK POWER & LIGHT-SOUTHEAST - LUBBOCK SOUTH INTERCHANGE 230KV CKT 1
FDNS	00NR	8	25SP	G14_046	FROM->TO	LUBBOCK POWER & LIGHT-HOLLY PLANT (SHIH T101039) 230/69/13.5KV TRANSFORMER CKT 1	224	224	0.0358	104.6979	P12:LPL:SPS:K64.1.LP-SE.LUBBS
FDNS	00NR	8	25SP	G14_046	FROM->TO	LUBBOCK POWER & LIGHT-HOLLY PLANT (SHIH T101039) 230/69/13.5KV TRANSFORMER CKT 1	224	224	0.03425	101.953	LUBBOCK EAST INTERCHANGE - LUBBOCK POWER & LIGHT-WADSWORTH 230KV CKT 1
FDNS	00NR	8	25SP	G14_046	FROM->TO	LUBBOCK POWER & LIGHT-HOLLY PLANT (SHIH T101039) 230/69/13.5KV TRANSFORMER CKT 1	224	224	0.03425	101.9381	P12:230:LPL:K57.1.LP-WADS.LUBBE
FDNS	00NR	8	25SP	G14_046	FROM->TO	LUBBOCK POWER & LIGHT-HOLLY PLANT (SHIH T101039) 230/69/13.5KV TRANSFORMER CKT 1	224	224	0.03425	101.938	LUBBOCK POWER & LIGHT-WADSWORTH (SHIH T101038) 230/69/13.5KV TRANSFORMER CKT 1
FDNS	00NR	8	25SP	G14_046	FROM->TO	LUBBOCK POWER & LIGHT-HOLLY PLANT (SHIH T101039) 230/69/13.5KV TRANSFORMER CKT 1	224	224	0.03425	101.938	LUBBOCK POWER & LIGHT-WADSWORTH (SHIH T101038) 230/69/13.5KV TRANSFORMER CKT 1
FDNS	00NR	9	25SP	G14_046	FROM->TO	LUBBOCK POWER & LIGHT-HOLLY PLANT (SHIH T101039) 230/69/13.5KV TRANSFORMER CKT 1	224	224	0.0358	104.6637	LUBBOCK POWER & LIGHT-SOUTHEAST - LUBBOCK SOUTH INTERCHANGE 230KV CKT 1
FDNS	00NR	9	25SP	G14_046	FROM->TO	LUBBOCK POWER & LIGHT-HOLLY PLANT (SHIH T101039) 230/69/13.5KV TRANSFORMER CKT 1	224	224	0.0358	104.6507	P12:LPL:SPS:K64.1.LP-SE.LUBBS
FDNS	00NR	9	25SP	G14_046	FROM->TO	LUBBOCK POWER & LIGHT-HOLLY PLANT (SHIH T101039) 230/69/13.5KV TRANSFORMER CKT 1	224	224	0.03425	101.7729	LUBBOCK EAST INTERCHANGE - LUBBOCK POWER & LIGHT-WADSWORTH 230KV CKT 1
FDNS	00NR	9	25SP	G14_046	FROM->TO	LUBBOCK POWER & LIGHT-HOLLY PLANT (SHIH T101039) 230/69/13.5KV TRANSFORMER CKT 1	224	224	0.03425	101.758	P12:230:LPL:K57.1.LP-WADS.LUBBE
FDNS	00NR	9	25SP	G14_046	FROM->TO	LUBBOCK POWER & LIGHT-HOLLY PLANT (SHIH T101039) 230/69/13.5KV TRANSFORMER CKT 1	224	224	0.03425	101.7579	LUBBOCK POWER & LIGHT-WADSWORTH (SHIH T101038) 230/69/13.5KV TRANSFORMER CKT 1
FDNS	00NR	9	25SP	G14_046	FROM->TO	LUBBOCK POWER & LIGHT-HOLLY PLANT (SHIH T101039) 230/69/13.5KV TRANSFORMER CKT 1	224	224	0.03425	101.7579	LUBBOCK POWER & LIGHT-WADSWORTH (SHIH T101038) 230/69/13.5KV TRANSFORMER CKT 1
FDNS	00NR	0	25SP	G14_059	TO->FROM	CHAPPEL - COLTON 7 115.00 115KV CKT 1	109	109	0.03034	105.1836	P12:115:TSGT:GRANTNB7-OGALALA7_2
FDNS	00NR	0	17SP	G14_059	TO->FROM	CHAPPEL - COLTON 7 115.00 115KV CKT 1	109	109	0.03741	103.1798	SIDNEY - SIDNEY1-LNX3345.00 345KV CKT Z
FDNS	00NR	0	17SP	G14_059	TO->FROM	CHAPPEL - COLTON 7 115.00 115KV CKT 1	109	109	0.03741	103.1009	KEYSTONE - SIDNEY1-LNX3345.00 345KV CKT 1
FDNS	00NR	0	17SP	G14_059	TO->FROM	CHAPPEL - COLTON 7 115.00 115KV CKT 1	109	109	0.03073	101.5047	P12:115:TSGT:GRANTNB7-OGALALA7_2
FDNS	00NR	0	20SP	G14_059	TO->FROM	CHAPPEL - COLTON 7 115.00 115KV CKT 1	109	109	0.0303	101.0434	P12:115:TSGT:GRANTNB7-OGALALA7_2
FDNS	00NR	0	25SP	G14_059	TO->FROM	COLTON 7 115.00 - SIDNEY 115KV CKT 1	109	109	0.03034	108.3279	P12:115:TSGT:GRANTNB7-OGALALA7_2
FDNS	00NR	0	17SP	G14_059	TO->FROM	COLTON 7 115.00 - SIDNEY 115KV CKT 1	109	109	0.03741	106.2157	SIDNEY - SIDNEY1-LNX3345.00 345KV CKT Z
FDNS	00NR	0	17SP	G14_059	TO->FROM	COLTON 7 115.00 - SIDNEY 115KV CKT 1	109	109	0.03741	106.1369	KEYSTONE - SIDNEY1-LNX3345.00 345KV CKT 1
FDNS	00NR	0	17SP	G14_059	TO->FROM	COLTON 7 115.00 - SIDNEY 115KV CKT 1	109	109	0.03073	104.7239	P12:115:TSGT:GRANTNB7-OGALALA7_2
FDNS	00NR	0	20SP	G14_059	TO->FROM	COLTON 7 115.00 - SIDNEY 115KV CKT 1	109	109	0.0303	104.2051	P12:115:TSGT:GRANTNB7-OGALALA7_2
FDNS	00NR	0	25SP	G14_059	TO->FROM	COLTON 7 115.00 - SIDNEY 115KV CKT 1	109	109	0.03776	101.9868	SIDNEY - SIDNEY1-LNX3345.00 345KV CKT Z
FDNS	00NR	0	25SP	G14_059	TO->FROM	COLTON 7 115.00 - SIDNEY 115KV CKT 1	109	109	0.03776	101.8225	KEYSTONE - SIDNEY1-LNX3345.00 345KV CKT 1
FDNS	00NR	0	20SP	G14_059	TO->FROM	COLTON 7 115.00 - SIDNEY 115KV CKT 1	109	109	0.0378	100.8041	SIDNEY - SIDNEY1-LNX3345.00 345KV CKT Z
FDNSLock	00NR	0	20SP	G14_059	TO->FROM	COLTON 7 115.00 - SIDNEY 115KV CKT 1	109	109	0.0378	100.3427	KEYSTONE - SIDNEY1-LNX3345.00 345KV CKT 1
FDNS	00NR	0	17SP	G14_059	FROM->TO	G14-059T 230.00 - OGALLALA 230KV CKT 1	320	320	0.83795	169.5112	SIDNEY - SIDNEY1-LNX3345.00 345KV CKT Z
FDNS	00NR	0	17SP	G14_059	FROM->TO	G14-059T 230.00 - OGALLALA 230KV CKT 1	320	320	0.83795	169.4494	KEYSTONE - SIDNEY1-LNX3345.00 345KV CKT 1
FDNSLock	00NR	0	20SP	G14_059	FROM->TO	G14-059T 230.00 - OGALLALA 230KV CKT 1	320	320	0.8405	158.627	KEYSTONE - SIDNEY1-LNX3345.00 345KV CKT 1
FDNS	00NR	0	20SP	G14_059	FROM->TO	G14-059T 230.00 - OGALLALA 230KV CKT 1	320	320	0.8405	158.2466	SIDNEY - SIDNEY1-LNX3345.00 345KV CKT Z
FDNS	00NR	0	25SP	G14_059	FROM->TO	G14-059T 230.00 - OGALLALA 230KV CKT 1	320	320	0.84015	157.6276	SIDNEY - SIDNEY1-LNX3345.00 345KV CKT Z
FDNS	00NR	0	25SP	G14_059	FROM->TO	G14-059T 230.00 - OGALLALA 230KV CKT 1	320	320	0.84015	157.369	KEYSTONE - SIDNEY1-LNX3345.00 345KV CKT 1
FDNS	09ALL	0	17G	G14_059	FROM->TO	G14-059T 230.00 - OGALLALA 230KV CKT 1	320	320	0.80763	149.5595	KEYSTONE - SIDNEY1-LNX3345.00 345KV CKT 1
FDNS	09ALL	0	17G	G14_059	FROM->TO	G14-059T 230.00 - OGALLALA 230KV CKT 1	320	320	0.80763	149.4129	SIDNEY - SIDNEY1-LNX3345.00 345KV CKT Z
FDNS	09ALL	0	17SP	G14_059	FROM->TO	G14-059T 230.00 - OGALLALA 230KV CKT 1	320	320	0.80783	148.8943	KEYSTONE - SIDNEY1-LNX3345.00 345KV CKT 1
FDNS	09ALL	0	17SP	G14_059	FROM->TO	G14-059T 230.00 - OGALLALA 230KV CKT 1	320	320	0.80783	148.7484	SIDNEY - SIDNEY1-LNX3345.00 345KV CKT Z
FDNS	09NR	0	17G	G14_059	FROM->TO	G14-059T 230.00 - OGALLALA 230KV CKT 1	320	320	0.8405	148.0014	KEYSTONE - SIDNEY1-LNX3345.00 345KV CKT 1
FDNS	09NR	0	17G	G14_059	FROM->TO	G14-059T 230.00 - OGALLALA 230KV CKT 1	320	320	0.8405	147.9713	SIDNEY - SIDNEY1-LNX3345.00 345KV CKT Z
FDNS	09ALL	0	16WP	G14_059	FROM->TO	G14-059T 230.00 - OGALLALA 230KV CKT 1	320	320	0.80688	144.4749	SIDNEY - SIDNEY1-LNX3345.00 345KV CKT Z
FDNS	09ALL	0	16WP	G14_059	FROM->TO	G14-059T 230.00 - OGALLALA 230KV CKT 1	320	320	0.80688	144.3246	KEYSTONE - SIDNEY1-LNX3345.00 345KV CKT 1

SOLUTION	GROUP	SCENARIO	SEASON	SOURCE	DIRECTION	MONITORED ELEMENT	RATEA (MVA)	RATEB(MVA)	TDF	TC%LOADING (% MVA)	CONTINGENCY
FDNS	09ALL	0	20SP	G14_059	FROM->TO	G14-059T 230.00 - OGALLALA 230KV CKT 1	320	320	0.8127	143.748	KEYSTONE - SIDNEY1-LNX3345.00 345KV CKT 1
FDNS	09ALL	0	20SP	G14_059	FROM->TO	G14-059T 230.00 - OGALLALA 230KV CKT 1	320	320	0.8127	143.6257	SIDNEY - SIDNEY1-LNX3345.00 345KV CKT Z
FDNS	09ALL	0	25SP	G14_059	FROM->TO	G14-059T 230.00 - OGALLALA 230KV CKT 1	320	320	0.81345	143.1778	SIDNEY - SIDNEY1-LNX3345.00 345KV CKT Z
FDNS	09ALL	0	25SP	G14_059	FROM->TO	G14-059T 230.00 - OGALLALA 230KV CKT 1	320	320	0.81345	143.1011	KEYSTONE - SIDNEY1-LNX3345.00 345KV CKT 1
FDNSLock	00NR	0	16WP	G14_059	FROM->TO	G14-059T 230.00 - OGALLALA 230KV CKT 1	320	320	0.84014	141.3538	KEYSTONE - SIDNEY1-LNX3345.00 345KV CKT 1
FDNSLock	00NR	0	16WP	G14_059	FROM->TO	G14-059T 230.00 - OGALLALA 230KV CKT 1	320	320	0.84014	141.3219	SIDNEY - SIDNEY1-LNX3345.00 345KV CKT Z
FDNS	09ALL	0	20WP	G14_059	FROM->TO	G14-059T 230.00 - OGALLALA 230KV CKT 1	320	320	0.80949	135.843	SIDNEY - SIDNEY1-LNX3345.00 345KV CKT Z
FDNS	09ALL	0	20WP	G14_059	FROM->TO	G14-059T 230.00 - OGALLALA 230KV CKT 1	320	320	0.80949	135.4242	KEYSTONE - SIDNEY1-LNX3345.00 345KV CKT 1
FDNS	00NR	0	20WP	G14_059	FROM->TO	G14-059T 230.00 - OGALLALA 230KV CKT 1	320	320	0.84021	134.2017	KEYSTONE - SIDNEY1-LNX3345.00 345KV CKT 1
FDNS	00NR	0	20WP	G14_059	FROM->TO	G14-059T 230.00 - OGALLALA 230KV CKT 1	320	320	0.84021	134.1981	SIDNEY - SIDNEY1-LNX3345.00 345KV CKT Z
FDNS	00NR	0	17SP	G14_059	FROM->TO	G14-059T 230.00 - OGALLALA 230KV CKT 1	320	320	0.79871	110.7678	GERALD GENTLEMAN STATION - KEYSTONE 345KV CKT 1
FDNS	00NR	0	20SP	G14_059	FROM->TO	G14-059T 230.00 - OGALLALA 230KV CKT 1	320	320	0.79994	104.3758	GERALD GENTLEMAN STATION - KEYSTONE 345KV CKT 1
FDNS	00NR	0	25SP	G14_059	FROM->TO	G14-059T 230.00 - OGALLALA 230KV CKT 1	320	320	0.79975	103.7458	GERALD GENTLEMAN STATION - KEYSTONE 345KV CKT 1
FDNS	09ALL	0	17G	G14_059	FROM->TO	G14-059T 230.00 - OGALLALA 230KV CKT 1	320	320	0.78066	101.2543	GERALD GENTLEMAN STATION - KEYSTONE 345KV CKT 1
FDNS	09NR	0	17G	G14_059	FROM->TO	G14-059T 230.00 - OGALLALA 230KV CKT 1	320	320	0.80192	100.413	GERALD GENTLEMAN STATION - KEYSTONE 345KV CKT 1
FDNS	09ALL	0	17G	G14_059	TO->FROM	GERALD GENTLEMAN STATION - OGALLALA 230KV CKT 1	320	320	0.65239	120.3434	GERALD GENTLEMAN STATION - KEYSTONE 345KV CKT 1
FDNS	09NR	0	17G	G14_059	TO->FROM	GERALD GENTLEMAN STATION - OGALLALA 230KV CKT 1	320	320	0.69994	119.5022	GERALD GENTLEMAN STATION - KEYSTONE 345KV CKT 1
FDNSLock	00NR	0	16WP	G14_059	TO->FROM	GERALD GENTLEMAN STATION - OGALLALA 230KV CKT 1	320	320	0.69913	113.6765	GERALD GENTLEMAN STATION - KEYSTONE 345KV CKT 1
FDNS	00NR	0	17SP	G14_059	TO->FROM	GERALD GENTLEMAN STATION - OGALLALA 230KV CKT 1	320	320	0.68807	112.452	GERALD GENTLEMAN STATION - KEYSTONE 345KV CKT 1
FDNS	09ALL	0	16WP	G14_059	TO->FROM	GERALD GENTLEMAN STATION - OGALLALA 230KV CKT 1	320	320	0.65177	111.5122	GERALD GENTLEMAN STATION - KEYSTONE 345KV CKT 1
FDNS	00NR	0	20WP	G14_059	TO->FROM	GERALD GENTLEMAN STATION - OGALLALA 230KV CKT 1	320	320	0.70066	107.125	GERALD GENTLEMAN STATION - KEYSTONE 345KV CKT 1
FDNS	09ALL	0	20WP	G14_059	TO->FROM	GERALD GENTLEMAN STATION - OGALLALA 230KV CKT 1	320	320	0.65683	104.7603	GERALD GENTLEMAN STATION - KEYSTONE 345KV CKT 1
FDNS	00NR	0	20SP	G14_059	TO->FROM	GERALD GENTLEMAN STATION - OGALLALA 230KV CKT 1	320	320	0.69056	101.6888	GERALD GENTLEMAN STATION - KEYSTONE 345KV CKT 1
FDNS	09ALL	0	25SP	G14_059	FROM->TO	GGS	1635	1635	0.64291	100.4759	BASE CASE
FDNS	00NR	0	20SP	G14_059	FROM->TO	GR ISLD-LNX3345.00 - GRAND ISLAND 345KV CKT Z	720	720	0.05449	115.7631	GERALD GENTLEMAN STATION - SWEETWATER 345KV CKT 1
FDNS	00NR	0	20SP	G14_059	FROM->TO	GR ISLD-LNX3345.00 - GRAND ISLAND 345KV CKT Z	720	720	0.06285	115.3788	GRAND ISLAND - SWEETWATER 345KV CKT 1
FDNS	00NR	0	20SP	G14_059	FROM->TO	GR ISLD-LNX3345.00 - GRAND ISLAND 345KV CKT Z	720	720	0.04157	115.2739	KELLY - MEADOWGROVE4230.00 230KV CKT 1
FDNS	00NR	0	25SP	G14_059	FROM->TO	GR ISLD-LNX3345.00 - GRAND ISLAND 345KV CKT Z	720	720	0.05696	114.8159	GERALD GENTLEMAN STATION - SWEETWATER 345KV CKT 1
FDNS	00NR	0	25SP	G14_059	FROM->TO	GR ISLD-LNX3345.00 - GRAND ISLAND 345KV CKT Z	720	720	0.04373	114.5039	KELLY - MEADOWGROVE4230.00 230KV CKT 1
FDNS	00NR	0	20SP	G14_059	FROM->TO	GR ISLD-LNX3345.00 - GRAND ISLAND 345KV CKT Z	720	720	0.05103	114.0693	GERALD GENTLEMAN STATION - SWEETWATER 345KV CKT 2
FDNS	00NR	0	25SP	G14_059	FROM->TO	GR ISLD-LNX3345.00 - GRAND ISLAND 345KV CKT Z	720	720	0.06576	113.8505	GRAND ISLAND - SWEETWATER 345KV CKT 1
FDNS	00NR	0	20SP	G14_059	FROM->TO	GR ISLD-LNX3345.00 - GRAND ISLAND 345KV CKT Z	720	720	0.04154	113.8285	P12:230:UMZB:# 116 #: ST IN SD. WSG-ST-VH
FDNS	00NR	0	25SP	G14_059	FROM->TO	GR ISLD-LNX3345.00 - GRAND ISLAND 345KV CKT Z	720	720	0.05341	113.4603	GERALD GENTLEMAN STATION - SWEETWATER 345KV CKT 2
FDNS	00NR	0	20SP	G14_059	FROM->TO	GR ISLD-LNX3345.00 - GRAND ISLAND 345KV CKT Z	720	720	0.04139	113.2349	STORLA - WESSINGTON 230KV CKT 1
FDNS	00NR	0	25SP	G14_059	FROM->TO	GR ISLD-LNX3345.00 - GRAND ISLAND 345KV CKT Z	720	720	0.04366	113.1481	P12:230:UMZB:# 116 #: ST IN SD. WSG-ST-VH
FDNS	00NR	0	20SP	G14_059	FROM->TO	GR ISLD-LNX3345.00 - GRAND ISLAND 345KV CKT Z	720	720	0.04134	112.5899	HANLON - STORLA 230KV CKT 1
FDNS	00NR	0	20SP	G14_059	FROM->TO	GR ISLD-LNX3345.00 - GRAND ISLAND 345KV CKT Z	720	720	0.04155	112.5755	FT THOMPSON - LETCHER 230KV CKT 1
FDNS	00NR	0	20SP	G14_059	FROM->TO	GR ISLD-LNX3345.00 - GRAND ISLAND 345KV CKT Z	720	720	0.04155	112.5755	FT THOMPSON - LETCHER 230KV CKT 1
FDNS	00NR	0	25SP	G14_059	FROM->TO	GR ISLD-LNX3345.00 - GRAND ISLAND 345KV CKT Z	720	720	0.04352	112.5744	STORLA - WESSINGTON 230KV CKT 1
FDNS	00NR	0	20SP	G14_059	FROM->TO	GR ISLD-LNX3345.00 - GRAND ISLAND 345KV CKT Z	720	720	0.04723	112.3766	CROOKED CREEK - NORTH PLATTE 230KV CKT 1
FDNS	00NR	0	20SP	G14_059	FROM->TO	GR ISLD-LNX3345.00 - GRAND ISLAND 345KV CKT Z	720	720	0.0407	112.2773	BUFFALO - JAMESTOWN 345KV CKT 1
FDNS	00NR	0	20SP	G14_059	FROM->TO	GR ISLD-LNX3345.00 - GRAND ISLAND 345KV CKT Z	720	720	0.04054	112.201	GEN635024 4-WALTER SCOTT UNIT 4
FDNS	00NR	0	20SP	G14_059	FROM->TO	GR ISLD-LNX3345.00 - GRAND ISLAND 345KV CKT Z	720	720	0.04073	112.1371	G09_001IST 345.00 - WATERTOWN 345KV CKT 1
FDNS	00NR	0	20SP	G14_059	FROM->TO	GR ISLD-LNX3345.00 - GRAND ISLAND 345KV CKT Z	720	720	0.04157	112.1156	FT RANDAL - MEADOWGROVE4230.00 230KV CKT 1
FDNS	00NR	0	20SP	G14_059	FROM->TO	GR ISLD-LNX3345.00 - GRAND ISLAND 345KV CKT Z	720	720	0.04054	112.0277	GEN635023 3-WALTER SCOTT UNIT 3
FDNS	00NR	0	25SP	G14_059	FROM->TO	GR ISLD-LNX3345.00 - GRAND ISLAND 345KV CKT Z	720	720	0.04347	111.9247	HANLON - STORLA 230KV CKT 1
FDNS	00NR	0	25SP	G14_059	FROM->TO	GR ISLD-LNX3345.00 - GRAND ISLAND 345KV CKT Z	720	720	0.04282	111.7906	BUFFALO - JAMESTOWN 345KV CKT 1
FDNS	00NR	0	20SP	G14_059	FROM->TO	GR ISLD-LNX3345.00 - GRAND ISLAND 345KV CKT Z	720	720	0.04177	111.7834	RAUN - SUB 3451 FT CAL 345KV CKT 1
FDNS	00NR	0	20SP	G14_059	FROM->TO	GR ISLD-LNX3345.00 - GRAND ISLAND 345KV CKT Z	720	720	0.04177	111.7834	RAUN - SUB 3451 FT CAL 345KV CKT 1
FDNS	00NR	0	20SP	G14_059	FROM->TO	GR ISLD-LNX3345.00 - GRAND ISLAND 345KV CKT Z	720	720	0.04145	111.71	FT RANDAL - G12_009IST 230.00 230KV CKT 1
FDNS	00NR	0	20SP	G14_059	FROM->TO	GR ISLD-LNX3345.00 - GRAND ISLAND 345KV CKT Z	720	720	0.04148	111.7003	FT RANDAL - FT THOMPSON 230KV CKT 1
FDNS	00NR	0	20SP	G14_059	FROM->TO	GR ISLD-LNX3345.00 - GRAND ISLAND 345KV CKT Z	720	720	0.04148	111.7003	FT RANDAL - FT THOMPSON 230KV CKT 1
FDNS	00NR	0	20SP	G14_059	FROM->TO	GR ISLD-LNX3345.00 - GRAND ISLAND 345KV CKT Z	720	720	0.04098	111.6919	WATERTN-LNX3345.00 - WHITE 345KV CKT 1
FDNS	00NR	0	20SP	G14_059	FROM->TO	GR ISLD-LNX3345.00 - GRAND ISLAND 345KV CKT Z	720	720	0.04098	111.685	P12:345:UMZW:# 1747 #: WT2 IN SD. WT2-WHT LINE FAULT
FDNS	00NR	0	20SP	G14_059	FROM->TO	GR ISLD-LNX3345.00 - GRAND ISLAND 345KV CKT Z	720	720	0.04098	111.6799	WATERTN-LNX3345.00 - WATERTOWN 345KV CKT Z
FDNS	00NR	0	20SP	G14_059	FROM->TO	GR ISLD-LNX3345.00 - GRAND ISLAND 345KV CKT Z	720	720	0.04145	111.6576	FT THOMPSON - LAKE PLATT 230KV CKT 1
FDNS	00NR	0	20SP	G14_059	FROM->TO	GR ISLD-LNX3345.00 - GRAND ISLAND 345KV CKT Z	720	720	0.04145	111.6576	FT THOMPSON - LAKE PLATT 230KV CKT 1
FDNS	00NR	0	20SP	G14_059	FROM->TO	GR ISLD-LNX3345.00 - GRAND ISLAND 345KV CKT Z	720	720	0.04054	111.5326	GEN336821 1-GRAND GULF UNIT
FDNS	00NR	0	25SP	G14_059	FROM->TO	GR ISLD-LNX3345.00 - GRAND ISLAND 345KV CKT Z	720	720	0.04367	111.5101	FT THOMPSON - LETCHER 230KV CKT 1
FDNS	00NR	0	25SP	G14_059	FROM->TO	GR ISLD-LNX3345.00 - GRAND ISLAND 345KV CKT Z	720	720	0.04367	111.5101	FT THOMPSON - LETCHER 230KV CKT 1
FDNS	00NR	0	25SP	G14_059	FROM->TO	GR ISLD-LNX3345.00 - GRAND ISLAND 345KV CKT Z	720	720	0.04953	111.497	CROOKED CREEK - NORTH PLATTE 230KV CKT 1
FDNS	00NR	0	20SP	G14_059	FROM->TO	GR ISLD-LNX3345.00 - GRAND ISLAND 345KV CKT Z	720	720	0.04145	111.4321	G12_009IST 230.00 - LAKE PLATT 230KV CKT 1
FDNS	00NR	0	25SP	G14_059	FROM->TO	GR ISLD-LNX3345.00 - GRAND ISLAND 345KV CKT Z	720	720	0.04285	111.4024	G09_001IST 345.00 - WATERTOWN 345KV CKT 1
FDNS	00NR	0	20SP	G14_059	FROM->TO	GR ISLD-LNX3345.00 - GRAND ISLAND 345KV CKT Z	720	720	0.04054	111.3927	GEN344225 1-1CAL G1 25.000
FDNS	00NR	0	20SP	G14_059	FROM->TO	GR ISLD-LNX3345.00 - GRAND ISLAND 345KV CKT Z	720	720	0.04085	111.3903	SPLIT ROCK - WHITE 345KV CKT 1
FDNS	00NR	0	20SP	G14_059	FROM->TO	GR ISLD-LNX3345.00 - GRAND ISLAND 345KV CKT Z	720	720	0.04085	111.3903	SPLIT ROCK - WHITE 345KV CKT 1
FDNS	00NR	0	20SP	G14_059	FROM->TO	GR ISLD-LNX3345.00 - GRAND ISLAND 345KV CKT Z	720	720	0.04065	111.3774	CHISAGO COUNTY - FORBES 500KV CKT 1
FDNS	00NR	0	25SP	G14_059	FROM->TO	GR ISLD-LNX3345.00 - GRAND ISLAND 345KV CKT Z	720	720	0.04266	111.3399	GEN635024 4-WALTER SCOTT UNIT 4
FDNS	00NR	0	25SP	G14_059	FROM->TO	GR ISLD-LNX3345.00 - GRAND ISLAND 345KV CKT Z	720	720	0.04373	111.3387	FT RANDAL - MEADOWGROVE4230.00 230KV CKT 1
FDNS	00NR	0	20SP	G14_059	FROM->TO	GR ISLD-LNX3345.00 - GRAND ISLAND 345KV CKT Z	720	720	0.04065	111.3331	CHISAGO COUNTY - CHISAGO COUNTY 500KV CKT 1
FDNS	00NR	0	20SP	G14_059	FROM->TO	GR ISLD-LNX3345.00 - GRAND ISLAND 345KV CKT Z	720	720	0.04065	111.2963	BISON 3 345.00 - BUFFALO 345KV CKT 1
FDNS	00NR	0	20SP	G14_059	FROM->TO	GR ISLD-LNX3345.00 - GRAND ISLAND 345KV CKT Z	720	720	0.0412	111.2617	LETCHER - SIOUX FALLS 230KV CKT 1
FDNS	00NR	0	20SP	G14_059	FROM->TO	GR ISLD-LNX3345.00 - GRAND ISLAND 345KV CKT Z	720	720	0.04054	111.2512	GEN640009 1-COOPER NUCLEAR STATION
FDNS	00NR	0	25SP	G14_059	FROM->TO	GR ISLD-LNX3345.00 - GRAND ISLAND 345KV CKT Z	720	720	0.04552	111.1527	GERALD GENTLEMAN STATION - RED WILLOW 345KV CKT 1
FDNS	00NR	0	20SP	G14_059	FROM->TO	GR ISLD-LNX3345.00 - GRAND ISLAND 345KV CKT Z	720	720	0.0407	111.1492	CENTER - JAMESTOWN 345KV CKT 1
FDNS	00NR	0	20SP	G14_059	FROM->TO	GR ISLD-LNX3345.00 - GRAND ISLAND 345KV CKT Z	720	720	0.04054	111.0569	GEN336153 1-WATERFORD UNIT#3
FDNS	00NR	0	25SP	G14_059	FROM->TO	GR ISLD-LNX3345.00 - GRAND ISLAND 345KV CKT Z	720	720	0.04388	111.0438	RAUN - SUB 3451 FT CAL 345KV CKT 1
FDNS	00NR	0	25SP	G14_059	FROM->TO	GR ISLD-LNX3345.00 - GRAND ISLAND 345KV CKT Z	720	720	0.04388	111.0438	RAUN - SUB 3451 FT CAL 345KV CKT 1
FDNS	00NR	0	20SP	G14_059	FROM->TO	GR ISLD-LNX3345.00 - GRAND ISLAND 345KV CKT Z	720	720	0.04054	111.0397	GEN337911 1-ARKANSAS NUCLEAR ONE UNIT #2

SOLUTION	GROUP	SCENARIO	SEASON	SOURCE	DIRECTION	MONITORED ELEMENT	RATEA (MVA)	RATEB(MVA)	TDF	TC%LOADING (% MVA)	CONTINGENCY
FDNS	00NR	0	20SP	G14_059	FROM->TO	GR ISLD-LNX3345.00 - GRAND ISLAND 345KV CKT Z	720	720	0.04073	111.0059	G09_001IST 345.00 - GROTON 345KV CKT 1
FDNS	00NR	0	25SP	G14_059	FROM->TO	GR ISLD-LNX3345.00 - GRAND ISLAND 345KV CKT Z	720	720	0.04358	110.9899	FT RANDAL - G12_009IST 230.00 230KV CKT 1
FDNS	00NR	0	20SP	G14_059	FROM->TO	GR ISLD-LNX3345.00 - GRAND ISLAND 345KV CKT Z	720	720	0.04107	110.9246	FT RANDAL - SIOUX CITY 230KV CKT 1
FDNS	00NR	0	25SP	G14_059	FROM->TO	GR ISLD-LNX3345.00 - GRAND ISLAND 345KV CKT Z	720	720	0.04266	110.9013	GEN635023 3-WALTER SCOTT UNIT 3
FDNS	00NR	0	20SP	G14_059	FROM->TO	GR ISLD-LNX3345.00 - GRAND ISLAND 345KV CKT Z	720	720	0.04335	110.853	GERALD GENTLEMAN STATION - RED WILLOW 345KV CKT 1
FDNS	00NR	0	25SP	G14_059	FROM->TO	GR ISLD-LNX3345.00 - GRAND ISLAND 345KV CKT Z	720	720	0.04808	110.819	MINGO - RED WILLOW 345KV CKT 1
FDNS	00NR	0	25SP	G14_059	FROM->TO	GR ISLD-LNX3345.00 - GRAND ISLAND 345KV CKT Z	720	720	0.04808	110.819	MINGO - RED WILLOW 345KV CKT 1
FDNS	00NR	0	20SP	G14_059	FROM->TO	GR ISLD-LNX3345.00 - GRAND ISLAND 345KV CKT Z	720	720	0.04054	110.801	GEN335831 1-RIVERBEND UNIT#1
FDNS	00NR	0	20SP	G14_059	FROM->TO	GR ISLD-LNX3345.00 - GRAND ISLAND 345KV CKT Z	720	720	0.04054	110.799	GEN563222 1-G15088_3 0.6900
FDNS	00NR	0	20SP	G14_059	FROM->TO	GR ISLD-LNX3345.00 - GRAND ISLAND 345KV CKT Z	720	720	0.04054	110.7178	GEN337910 1-ARKANSAS NUCLEAR ONE UNIT #1
FDNS	00NR	0	20SP	G14_059	FROM->TO	GR ISLD-LNX3345.00 - GRAND ISLAND 345KV CKT Z	720	720	0.04118	110.7087	THEDFRD3 345.00 (THEDFORDT2) 345/115/13.8KV TRANSFORMER CKT 1
FDNS	00NR	0	25SP	G14_059	FROM->TO	GR ISLD-LNX3345.00 - GRAND ISLAND 345KV CKT Z	720	720	0.04358	110.7032	G12_009IST 230.00 - LAKE PLATT 230KV CKT 1
FDNS	00NR	0	20SP	G14_059	FROM->TO	GR ISLD-LNX3345.00 - GRAND ISLAND 345KV CKT Z	720	720	0.04111	110.6869	SIOUXCY-LNX3345.00 - SPLIT ROCK 345KV CKT 1
FDNS	00NR	0	20SP	G14_059	FROM->TO	GR ISLD-LNX3345.00 - GRAND ISLAND 345KV CKT Z	720	720	0.04111	110.6869	SIOUXCY-LNX3345.00 - SPLIT ROCK 345KV CKT 1
FDNS	00NR	0	25SP	G14_059	FROM->TO	GR ISLD-LNX3345.00 - GRAND ISLAND 345KV CKT Z	720	720	0.04266	110.6729	GEN640009 1-COOPER NUCLEAR STATION
FDNS	00NR	0	20SP	G14_059	FROM->TO	GR ISLD-LNX3345.00 - GRAND ISLAND 345KV CKT Z	720	720	0.04111	110.6517	P12:345:UMZW:# 907 #: SC2-SR IN IA. SC2-SR 345 KV LINE
FDNS	00NR	0	20SP	G14_059	FROM->TO	GR ISLD-LNX3345.00 - GRAND ISLAND 345KV CKT Z	720	720	0.04111	110.6262	SIOUX CITY - SIOUXCY-LNX3345.00 345KV CKT Z
FDNS	00NR	0	25SP	G14_059	FROM->TO	GR ISLD-LNX3345.00 - GRAND ISLAND 345KV CKT Z	720	720	0.0431	110.6136	WATERTN-LNX3345.00 - WHITE 345KV CKT 1
FDNS	00NR	0	25SP	G14_059	FROM->TO	GR ISLD-LNX3345.00 - GRAND ISLAND 345KV CKT Z	720	720	0.04282	110.5988	CENTER - JAMESTOWN 345KV CKT 1
FDNS	00NR	0	25SP	G14_059	FROM->TO	GR ISLD-LNX3345.00 - GRAND ISLAND 345KV CKT Z	720	720	0.04361	110.5937	FT RANDAL - FT THOMPSON 230KV CKT 1
FDNS	00NR	0	25SP	G14_059	FROM->TO	GR ISLD-LNX3345.00 - GRAND ISLAND 345KV CKT Z	720	720	0.04361	110.5937	FT RANDAL - FT THOMPSON 230KV CKT 1
FDNS	00NR	0	25SP	G14_059	FROM->TO	GR ISLD-LNX3345.00 - GRAND ISLAND 345KV CKT Z	720	720	0.04358	110.5685	FT THOMPSON - LAKE PLATT 230KV CKT 1
FDNS	00NR	0	25SP	G14_059	FROM->TO	GR ISLD-LNX3345.00 - GRAND ISLAND 345KV CKT Z	720	720	0.04358	110.5685	FT THOMPSON - LAKE PLATT 230KV CKT 1
FDNS	00NR	0	20SP	G14_059	FROM->TO	GR ISLD-LNX3345.00 - GRAND ISLAND 345KV CKT Z	720	720	0.04072	110.5591	GROTON-LNX3 345.00 - LELAND1-LNX3345.00 345KV CKT 1
FDNS	00NR	0	25SP	G14_059	FROM->TO	GR ISLD-LNX3345.00 - GRAND ISLAND 345KV CKT Z	720	720	0.04332	110.554	LETCHER - SIOUX FALLS 230KV CKT 1
FDNS	00NR	0	20SP	G14_059	FROM->TO	GR ISLD-LNX3345.00 - GRAND ISLAND 345KV CKT Z	720	720	0.04078	110.5427	LAKEFIELD 3 - NOBLES 345KV CKT 1
FDNS	00NR	0	20SP	G14_059	FROM->TO	GR ISLD-LNX3345.00 - GRAND ISLAND 345KV CKT Z	720	720	0.04099	110.5423	HANLON - SIOUX FALLS 230KV CKT 1
FDNS	00NR	0	25SP	G14_059	FROM->TO	GR ISLD-LNX3345.00 - GRAND ISLAND 345KV CKT Z	720	720	0.04266	110.5352	GEN344225 1-1CAL G1 25.000
FDNS	00NR	0	25SP	G14_059	FROM->TO	GR ISLD-LNX3345.00 - GRAND ISLAND 345KV CKT Z	720	720	0.0431	110.5315	WATERTN-LNX3345.00 - WATERTOWN 345KV CKT Z
FDNS	00NR	0	25SP	G14_059	FROM->TO	GR ISLD-LNX3345.00 - GRAND ISLAND 345KV CKT Z	720	720	0.0431	110.5229	P12:345:UMZW:# 1747 #: WT2 IN SD. WT2-WHT LINE FAULT
FDNS	00NR	0	20SP	G14_059	FROM->TO	GR ISLD-LNX3345.00 - GRAND ISLAND 345KV CKT Z	720	720	0.04072	110.504	P12:345:UMZB:# 109 #: LOS GRT IN ND. LOS GRT
FDNS	00NR	0	20SP	G14_059	FROM->TO	GR ISLD-LNX3345.00 - GRAND ISLAND 345KV CKT Z	720	720	0.04072	110.5036	GROTON - GROTON-LNX3 345.00 345KV CKT Z
FDNS	00NR	0	20SP	G14_059	FROM->TO	GR ISLD-LNX3345.00 - GRAND ISLAND 345KV CKT Z	720	720	0.04072	110.4965	LELAND OLDS - LELAND1-LNX3345.00 345KV CKT Z
FDNS	00NR	0	20SP	G14_059	FROM->TO	GR ISLD-LNX3345.00 - GRAND ISLAND 345KV CKT Z	720	720	0.0409	110.4514	FT RANDAL - UTICA JCT 230KV CKT 1
FDNS	00NR	0	20SP	G14_059	FROM->TO	GR ISLD-LNX3345.00 - GRAND ISLAND 345KV CKT Z	720	720	0.04226	110.4354	CALLAWAY - MAXWELL 115KV CKT 1
FDNS	00NR	0	20SP	G14_059	FROM->TO	GR ISLD-LNX3345.00 - GRAND ISLAND 345KV CKT Z	720	720	0.04061	110.4058	ARROWHEAD - ARROWHEAD 230 230KV CKT 1
FDNS	00NR	0	20SP	G14_059	FROM->TO	GR ISLD-LNX3345.00 - GRAND ISLAND 345KV CKT Z	720	720	0.04054	110.3976	GEN337653 1-WHITE BLUFF UNIT #2
FDNS	00NR	0	20SP	G14_059	FROM->TO	GR ISLD-LNX3345.00 - GRAND ISLAND 345KV CKT Z	720	720	0.04159	110.3951	P12:115:NPPD:1167A:AINSWRT7:ONEILL 7:BTB
FDNS	00NR	0	20SP	G14_059	FROM->TO	GR ISLD-LNX3345.00 - GRAND ISLAND 345KV CKT Z	720	720	0.04092	110.3843	HOSKINS - SHELL CREEK 345KV CKT 1
FDNS	00NR	0	20SP	G14_059	FROM->TO	GR ISLD-LNX3345.00 - GRAND ISLAND 345KV CKT Z	720	720	0.04054	110.3785	GEN641089 2-ENERGY CENTER 2
FDNS	00NR	0	20SP	G14_059	FROM->TO	GR ISLD-LNX3345.00 - GRAND ISLAND 345KV CKT Z	720	720	0.04054	110.3617	GEN337652 1-WHITE BLUFF UNIT #1
FDNS	00NR	0	20SP	G14_059	FROM->TO	GR ISLD-LNX3345.00 - GRAND ISLAND 345KV CKT Z	720	720	0.04054	110.3502	GEN338143 1-INDEPENDENCE UNIT #1
FDNS	00NR	0	20SP	G14_059	FROM->TO	GR ISLD-LNX3345.00 - GRAND ISLAND 345KV CKT Z	720	720	0.04054	110.3487	GEN338146 1-INDEPENDENCE UNIT #2
FDNS	00NR	0	20SP	G14_059	FROM->TO	GR ISLD-LNX3345.00 - GRAND ISLAND 345KV CKT Z	720	720	0.04087	110.3436	PAHOJA - SIOUX FALLS 230KV CKT 1
FDNS	00NR	0	25SP	G14_059	FROM->TO	GR ISLD-LNX3345.00 - GRAND ISLAND 345KV CKT Z	720	720	0.04277	110.3378	CHISAGO COUNTY - FORBES 500KV CKT 1
FDNS	00NR	0	25SP	G14_059	FROM->TO	GR ISLD-LNX3345.00 - GRAND ISLAND 345KV CKT Z	720	720	0.04266	110.3256	GEN336821 1-GRAND GULF UNIT
FDNS	00NR	0	20SP	G14_059	FROM->TO	GR ISLD-LNX3345.00 - GRAND ISLAND 345KV CKT Z	720	720	0.04062	110.3161	BROOKING COUNTY - LYON COUNTY 345KV CKT 1
FDNS	00NR	0	20SP	G14_059	FROM->TO	GR ISLD-LNX3345.00 - GRAND ISLAND 345KV CKT Z	720	720	0.04069	110.3149	ALEXMRES3 345.00 - BISON 3 345.00 345KV CKT 1
FDNS	00NR	0	25SP	G14_059	FROM->TO	GR ISLD-LNX3345.00 - GRAND ISLAND 345KV CKT Z	720	720	0.04542	110.312	MINGO - SETAB 345KV CKT 1
FDNS	00NR	0	25SP	G14_059	FROM->TO	GR ISLD-LNX3345.00 - GRAND ISLAND 345KV CKT Z	720	720	0.04542	110.312	MINGO - SETAB 345KV CKT 1
FDNS	00NR	0	20SP	G14_059	FROM->TO	GR ISLD-LNX3345.00 - GRAND ISLAND 345KV CKT Z	720	720	0.0406	110.307	AS KING - EAU CLAIRE 345KV CKT 1
FDNS	00NR	0	25SP	G14_059	FROM->TO	GR ISLD-LNX3345.00 - GRAND ISLAND 345KV CKT Z	720	720	0.04277	110.3002	CHISAGO COUNTY - CHISAGO COUNTY 500KV CKT 1
FDNS	00NR	0	25SP	G14_059	FROM->TO	GR ISLD-LNX3345.00 - GRAND ISLAND 345KV CKT Z	720	720	0.04277	110.2753	BISON 3 345.00 - BUFFALO 345KV CKT 1
FDNS	00NR	0	20SP	G14_059	FROM->TO	GR ISLD-LNX3345.00 - GRAND ISLAND 345KV CKT Z	720	720	0.0409	110.2679	CARPENTER - HURON 230KV CKT 1
FDNS	00NR	0	20SP	G14_059	FROM->TO	GR ISLD-LNX3345.00 - GRAND ISLAND 345KV CKT Z	720	720	0.04127	110.2633	BUCKNER7 345.00 - SPEARVILLE 345KV CKT 1
FDNS	00NR	0	20SP	G14_059	FROM->TO	GR ISLD-LNX3345.00 - GRAND ISLAND 345KV CKT Z	720	720	0.04127	110.2633	BUCKNER7 345.00 - SPEARVILLE 345KV CKT 1
FDNS	00NR	0	20SP	G14_059	FROM->TO	GR ISLD-LNX3345.00 - GRAND ISLAND 345KV CKT Z	720	720	0.04054	110.2559	GEN501801 1-DOLET HILLS UNIT1
FDNS	00NR	0	25SP	G14_059	FROM->TO	GR ISLD-LNX3345.00 - GRAND ISLAND 345KV CKT Z	720	720	0.04266	110.2328	GEN337911 1-ARKANSAS NUCLEAR ONE UNIT #2
FDNS	00NR	0	20SP	G14_059	FROM->TO	GR ISLD-LNX3345.00 - GRAND ISLAND 345KV CKT Z	720	720	0.04054	110.2241	GEN645012 2-NEBRASKA CITY 2
FDNS	00NR	0	25SP	G14_059	FROM->TO	GR ISLD-LNX3345.00 - GRAND ISLAND 345KV CKT Z	720	720	0.04266	110.2161	GEN336153 1-WATERFORD UNIT#3
FDNS	00NR	0	20SP	G14_059	FROM->TO	GR ISLD-LNX3345.00 - GRAND ISLAND 345KV CKT Z	720	720	0.04054	110.2157	GEN336252 1-NINEMILE POINT UNIT#5
FDNS	00NR	0	20SP	G14_059	FROM->TO	GR ISLD-LNX3345.00 - GRAND ISLAND 345KV CKT Z	720	720	0.04071	110.203	HAZLETON - MITCHLCO3 345.00 345KV CKT 1
FDNS	00NR	0	20SP	G14_059	FROM->TO	GR ISLD-LNX3345.00 - GRAND ISLAND 345KV CKT Z	720	720	0.0409	110.1963	HURON - WATERTOWN 230KV CKT 2
FDNS	00NR	0	20SP	G14_059	FROM->TO	GR ISLD-LNX3345.00 - GRAND ISLAND 345KV CKT Z	720	720	0.0409	110.1963	HURON - WATERTOWN 230KV CKT 2
FDNS	00NR	0	20SP	G14_059	FROM->TO	GR ISLD-LNX3345.00 - GRAND ISLAND 345KV CKT Z	720	720	0.04099	110.1885	GRIMES - LEHIGH 345KV CKT 1
FDNS	00NR	0	20SP	G14_059	FROM->TO	GR ISLD-LNX3345.00 - GRAND ISLAND 345KV CKT Z	720	720	0.0409	110.1689	CARPENTER - WATERTOWN 230KV CKT 1
FDNS	00NR	0	20SP	G14_059	FROM->TO	GR ISLD-LNX3345.00 - GRAND ISLAND 345KV CKT Z	720	720	0.0409	110.1689	CARPENTER - WATERTOWN 230KV CKT 1
FDNS	00NR	0	25SP	G14_059	FROM->TO	GR ISLD-LNX3345.00 - GRAND ISLAND 345KV CKT Z	720	720	0.04319	110.1689	FT RANDAL - SIOUX CITY 230KV CKT 1
FDNS	00NR	0	20SP	G14_059	FROM->TO	GR ISLD-LNX3345.00 - GRAND ISLAND 345KV CKT Z	720	720	0.04054	110.1599	GEN336251 1-NINEMILE POINT UNIT#4
FDNS	00NR	0	20SP	G14_059	FROM->TO	GR ISLD-LNX3345.00 - GRAND ISLAND 345KV CKT Z	720	720	0.03957	110.1507	STAPLETON - THEDFORD 115KV CKT 1
FDNS	00NR	0	20SP	G14_059	FROM->TO	GR ISLD-LNX3345.00 - GRAND ISLAND 345KV CKT Z	720	720	0.04054	110.1499	GEN336831 1-BAXTER WILSON SES
FDNS	00NR	0	20SP	G14_059	FROM->TO	GR ISLD-LNX3345.00 - GRAND ISLAND 345KV CKT Z	720	720	0.04054	110.1469	GEN645011 1-NEBRASKA CITY 1
FDNS	00NR	0	20SP	G14_059	FROM->TO	GR ISLD-LNX3345.00 - GRAND ISLAND 345KV CKT Z	720	720	0.0409	110.1441	RASMUSN - UTICA JCT 230KV CKT 1
FDNS	00NR	0	25SP	G14_059	FROM->TO	GR ISLD-LNX3345.00 - GRAND ISLAND 345KV CKT Z	720	720	0.04297	110.1435	SPLIT ROCK - WHITE 345KV CKT 1
FDNS	00NR	0	25SP	G14_059	FROM->TO	GR ISLD-LNX3345.00 - GRAND ISLAND 345KV CKT Z	720	720	0.04297	110.1435	SPLIT ROCK - WHITE 345KV CKT 1
FDNS	00NR	0	20SP	G14_059	FROM->TO	GR ISLD-LNX3345.00 - GRAND ISLAND 345KV CKT Z	720	720	0.04054	110.1191	GEN337041 1-GERALD ANDRUS
FDNS	00NR	0	25SP	G14_059	FROM->TO	GR ISLD-LNX3345.00 - GRAND ISLAND 345KV CKT Z	720	720	0.04266	110.1059	GEN563222 1-G15088_3 0.6900
FDNS	00NR	0	25SP	G14_059	FROM->TO	GR ISLD-LNX3345.00 - GRAND ISLAND 345KV CKT Z	720	720	0.04331	110.1008	THEDFRD3 345.00 (THEDFORDT2) 345/115/13.8KV TRANSFORMER CKT 1
FDNS	00NR	0	25SP	G14_059	FROM->TO	GR ISLD-LNX3345.00 - GRAND ISLAND 345KV CKT Z	720	720	0.04266	110.1	GEN335831 1-RIVERBEND UNIT#1

SOLUTION	GROUP	SCENARIO	SEASON	SOURCE	DIRECTION	MONITORED ELEMENT	RATEA (MVA)	RATEB(MVA)	TDF	TC%LOADING (% MVA)	CONTINGENCY
FDNS	00NR	0	20SP	G14_059	FROM->TO	GR ISLD-LNX3345.00 - GRAND ISLAND 345KV CKT Z	720	720	0.04054	110.0696	GEN501813 1-RODEMACHER UNIT 3
FDNSLock	00NR	0	20SP	G14_059	FROM->TO	GR ISLD-LNX3345.00 - GRAND ISLAND 345KV CKT Z	720	720	0.04441	110.0674	KEYSTONE - SIDNEY1-LNX3345.00 345KV CKT 1
FDNS	00NR	0	20SP	G14_059	FROM->TO	GR ISLD-LNX3345.00 - GRAND ISLAND 345KV CKT Z	720	720	0.04087	110.0671	EAGLE 4 230.00 - PAHOJA 230KV CKT 1
FDNS	00NR	0	20SP	G14_059	FROM->TO	GR ISLD-LNX3345.00 - GRAND ISLAND 345KV CKT Z	720	720	0.04054	110.0558	GEN344897 4-1LAB G4 20.000
FDNS	00NR	0	20SP	G14_059	FROM->TO	GR ISLD-LNX3345.00 - GRAND ISLAND 345KV CKT Z	720	720	0.04054	110.0546	GEN344894 1-1LAB G1 20.000
FDNS	00NR	0	20SP	G14_059	FROM->TO	GR ISLD-LNX3345.00 - GRAND ISLAND 345KV CKT Z	720	720	0.04054	110.0545	GEN344895 2-1LAB G2 20.000
FDNS	00NR	0	20SP	G14_059	FROM->TO	GR ISLD-LNX3345.00 - GRAND ISLAND 345KV CKT Z	720	720	0.04054	110.0544	GEN344896 3-1LAB G3 20.000
FDNS	00NR	0	20SP	G14_059	FROM->TO	GR ISLD-LNX3345.00 - GRAND ISLAND 345KV CKT Z	720	720	0.04054	110.0525	GEN629075 1-OTTUMWA GENERATOR FOR OTTUMWA UNIT NO 1
FDNS	00NR	0	20SP	G14_059	FROM->TO	GR ISLD-LNX3345.00 - GRAND ISLAND 345KV CKT Z	720	720	0.04139	110.0492	FT THOMPSON - WESSINGTON 230KV CKT 1
FDNS	00NR	0	20SP	G14_059	FROM->TO	GR ISLD-LNX3345.00 - GRAND ISLAND 345KV CKT Z	720	720	0.04139	110.0492	FT THOMPSON - WESSINGTON 230KV CKT 1
FDNS	00NR	0	20SP	G14_059	FROM->TO	GR ISLD-LNX3345.00 - GRAND ISLAND 345KV CKT Z	720	720	0.04059	110.0296	CNTSHNT3 345.00 - PRAIRIE3 345.00 345KV CKT 1
FDNS	00NR	0	20SP	G14_059	FROM->TO	GR ISLD-LNX3345.00 - GRAND ISLAND 345KV CKT Z	720	720	0.04591	110.0126	MINGO - RED WILLOW 345KV CKT 1
FDNS	00NR	0	20SP	G14_059	FROM->TO	GR ISLD-LNX3345.00 - GRAND ISLAND 345KV CKT Z	720	720	0.04591	110.0126	MINGO - RED WILLOW 345KV CKT 1
FDNS	00NR	0	20SP	G14_059	FROM->TO	GR ISLD-LNX3345.00 - GRAND ISLAND 345KV CKT Z	720	720	0.04327	110.0096	MINGO - SETAB 345KV CKT 1
FDNS	00NR	0	20SP	G14_059	FROM->TO	GR ISLD-LNX3345.00 - GRAND ISLAND 345KV CKT Z	720	720	0.04327	110.0096	MINGO - SETAB 345KV CKT 1
FDNS	00NR	0	20SP	G14_059	FROM->TO	GR ISLD-LNX3345.00 - GRAND ISLAND 345KV CKT Z	720	720	0.04054	110.0026	GEN345671 2-1RUSH G2 18.000
FDNS	00NR	0	20SP	G14_059	FROM->TO	GR ISLD-LNX3345.00 - GRAND ISLAND 345KV CKT Z	720	720	0.04054	109.9992	GEN345670 1-1RUSH G1 18.000
FDNS	00NR	0	20SP	G14_059	FROM->TO	GR ISLD-LNX3345.00 - GRAND ISLAND 345KV CKT Z	720	720	0.04057	109.999	DIXONCO 230.00 - HOSKINS 230KV CKT 1
FDNS	00NR	0	20SP	G14_059	FROM->TO	GR ISLD-LNX3345.00 - GRAND ISLAND 345KV CKT Z	720	720	0.04054	109.9961	GEN645001 1-FORT CALHOUN 1
FDNS	00NR	0	20SP	G14_059	FROM->TO	GR ISLD-LNX3345.00 - GRAND ISLAND 345KV CKT Z	720	720	0.04059	109.9925	ARPIN B4 345.00 - EAU CLAIRE 345KV CKT 1
FDNS	00NR	0	20SP	G14_059	FROM->TO	GR ISLD-LNX3345.00 - GRAND ISLAND 345KV CKT Z	720	720	0.04054	109.9916	GEN532751 1-WOLF CREEK GENERATING STATION UNIT 1
FDNS	00NR	0	20SP	G14_059	FROM->TO	GR ISLD-LNX3345.00 - GRAND ISLAND 345KV CKT Z	720	720	0.0409	109.9871	RASMUSN - SIOUX CITY 230KV CKT 1
FDNS	00NR	0	20SP	G14_059	FROM->TO	GR ISLD-LNX3345.00 - GRAND ISLAND 345KV CKT Z	720	720	0.04054	109.9541	GEN335206 1-NELSON UNIT 6
FDNS	00NR	0	20SP	G14_059	FROM->TO	GR ISLD-LNX3345.00 - GRAND ISLAND 345KV CKT Z	720	720	0.04054	109.9473	GEN542962 2-IATAN UNIT #2
FDNS	00NR	0	20SP	G14_059	FROM->TO	GR ISLD-LNX3345.00 - GRAND ISLAND 345KV CKT Z	720	720	0.04441	109.9444	SIDNEY - SIDNEY1-LNX3345.00 345KV CKT Z
FDNS	00NR	0	25SP	G14_059	FROM->TO	GR ISLD-LNX3345.00 - GRAND ISLAND 345KV CKT Z	720	720	0.04285	109.933	G09_001IST 345.00 - GROTON 345KV CKT 1
FDNS	00NR	0	25SP	G14_059	FROM->TO	GR ISLD-LNX3345.00 - GRAND ISLAND 345KV CKT Z	720	720	0.04266	109.9272	GEN337910 1-ARKANSAS NUCLEAR ONE UNIT #1
FDNS	00NR	0	20SP	G14_059	FROM->TO	GR ISLD-LNX3345.00 - GRAND ISLAND 345KV CKT Z	720	720	0.04108	109.927	COLUMEAST - SHELL CREEK 345KV CKT 1
FDNS	00NR	0	20SP	G14_059	FROM->TO	GR ISLD-LNX3345.00 - GRAND ISLAND 345KV CKT Z	720	720	0.04054	109.9222	GEN334440 1-SABINE UNIT 4
FDNS	00NR	0	25SP	G14_059	FROM->TO	GR ISLD-LNX3345.00 - GRAND ISLAND 345KV CKT Z	720	720	0.04323	109.9172	SIOUXCY-LNX3345.00 - SPLIT ROCK 345KV CKT 1
FDNS	00NR	0	25SP	G14_059	FROM->TO	GR ISLD-LNX3345.00 - GRAND ISLAND 345KV CKT Z	720	720	0.04323	109.9172	SIOUXCY-LNX3345.00 - SPLIT ROCK 345KV CKT 1
FDNS	00NR	0	20SP	G14_059	FROM->TO	GR ISLD-LNX3345.00 - GRAND ISLAND 345KV CKT Z	720	720	0.04058	109.906	P12:115:NPPD:WAPA4:SIDNEY 7:B.SPRGS7:BTB
FDNS	00NR	0	20SP	G14_059	FROM->TO	GR ISLD-LNX3345.00 - GRAND ISLAND 345KV CKT Z	720	720	0.04058	109.906	P12:115:UMZB:# 119 #: IN NE.
FDNS	00NR	0	25SP	G14_059	FROM->TO	GR ISLD-LNX3345.00 - GRAND ISLAND 345KV CKT Z	720	720	0.04323	109.8896	P12:345:UMZW:# 907 #: SC2-SR IN IA. SC2-SR 345 KV LINE
FDNS	00NR	0	20SP	G14_059	FROM->TO	GR ISLD-LNX3345.00 - GRAND ISLAND 345KV CKT Z	720	720	0.03628	109.8737	NUNDRWD - WAYSIDE 230KV CKT 1
FDNS	00NR	0	25SP	G14_059	FROM->TO	GR ISLD-LNX3345.00 - GRAND ISLAND 345KV CKT Z	720	720	0.04323	109.8656	SIOUX CITY - SIOUXCY-LNX3345.00 345KV CKT Z
FDNS	00NR	0	20SP	G14_059	FROM->TO	GR ISLD-LNX3345.00 - GRAND ISLAND 345KV CKT Z	720	720	0.04054	109.8639	GEN338388 1-1PLUM PT U1 23.000
FDNS	00NR	0	20SP	G14_059	FROM->TO	GR ISLD-LNX3345.00 - GRAND ISLAND 345KV CKT Z	720	720	0.04054	109.8632	GEN501812 1-RODEMACHER UNIT 2
FDNS	00NR	0	25SP	G14_059	FROM->TO	GR ISLD-LNX3345.00 - GRAND ISLAND 345KV CKT Z	720	720	0.0429	109.863	LAKEFIELD 3 - NOBLES 345KV CKT 1
FDNS	00NR	0	20SP	G14_059	FROM->TO	GR ISLD-LNX3345.00 - GRAND ISLAND 345KV CKT Z	720	720	0.04054	109.8532	GEN336191 1-LITTLE GYPSY UNIT#3
FDNS	00NR	0	20SP	G14_059	FROM->TO	GR ISLD-LNX3345.00 - GRAND ISLAND 345KV CKT Z	720	720	0.04077	109.8482	KOSSUTH 3 345.00 - WEBSTER 345KV CKT 1
FDNS	00NR	0	20SP	G14_059	FROM->TO	GR ISLD-LNX3345.00 - GRAND ISLAND 345KV CKT Z	720	720	0.04119	109.8357	RAUN - SIOUX CITY 345KV CKT 1
FDNS	00NR	0	20SP	G14_059	FROM->TO	GR ISLD-LNX3345.00 - GRAND ISLAND 345KV CKT Z	720	720	0.04119	109.8357	RAUN - SIOUX CITY 345KV CKT 1
FDNS	00NR	0	20SP	G14_059	FROM->TO	GR ISLD-LNX3345.00 - GRAND ISLAND 345KV CKT Z	720	720	0.04057	109.8313	NORTH LA CROSSE - NORTH ROCHESTER 345KV CKT 1
FDNS	00NR	0	20SP	G14_059	FROM->TO	GR ISLD-LNX3345.00 - GRAND ISLAND 345KV CKT Z	720	720	0.04054	109.8269	P13:230-345:NPPD:NUCOR-1
FDNS	00NR	0	20SP	G14_059	FROM->TO	GR ISLD-LNX3345.00 - GRAND ISLAND 345KV CKT Z	720	720	0.04127	109.8257	BUCKNER7 345.00 - HOLCOMB 345KV CKT 1
FDNS	00NR	0	20SP	G14_059	FROM->TO	GR ISLD-LNX3345.00 - GRAND ISLAND 345KV CKT Z	720	720	0.04127	109.8257	BUCKNER7 345.00 - HOLCOMB 345KV CKT 1
FDNS	00NR	0	25SP	G14_059	FROM->TO	GR ISLD-LNX3345.00 - GRAND ISLAND 345KV CKT Z	720	720	0.04311	109.8199	HANLON - SIOUX FALLS 230KV CKT 1
FDNS	00NR	0	20SP	G14_059	FROM->TO	GR ISLD-LNX3345.00 - GRAND ISLAND 345KV CKT Z	720	720	0.04159	109.8197	BASSETT 7115.00 - STUART 115KV CKT 1
FDNS	00NR	0	20SP	G14_059	FROM->TO	GR ISLD-LNX3345.00 - GRAND ISLAND 345KV CKT Z	720	720	0.04246	109.8158	JEFFREY - NORTH PLATTE 115KV CKT 1
FDNS	00NR	0	20SP	G14_059	FROM->TO	GR ISLD-LNX3345.00 - GRAND ISLAND 345KV CKT Z	720	720	0.04054	109.8061	GEN335614 1-WILLOW GLENN UNIT#4
FDNS	00NR	0	20SP	G14_059	FROM->TO	GR ISLD-LNX3345.00 - GRAND ISLAND 345KV CKT Z	720	720	0.04054	109.8007	GEN542957 1-IATAN UNIT #1
FDNS	00NR	0	20SP	G14_059	FROM->TO	GR ISLD-LNX3345.00 - GRAND ISLAND 345KV CKT Z	720	720	0.0402	109.8004	P12:115:NPPD:WAPA2:HEMINGF7:SNAKECK7:BTB
FDNS	00NR	0	25SP	G14_059	FROM->TO	GR ISLD-LNX3345.00 - GRAND ISLAND 345KV CKT Z	720	720	0.04443	109.8003	CALLAWAY - MAXWELL 115KV CKT 1
FDNS	00NR	0	20SP	G14_059	FROM->TO	GR ISLD-LNX3345.00 - GRAND ISLAND 345KV CKT Z	720	720	0.04054	109.8002	GEN336801 1-BAXTER WILSON UNIT #1
FDNS	00NR	0	20SP	G14_059	FROM->TO	GR ISLD-LNX3345.00 - GRAND ISLAND 345KV CKT Z	720	720	0.04054	109.7973	GEN336464 1-MICHOUD UNIT #3
FDNS	00NR	0	20SP	G14_059	FROM->TO	GR ISLD-LNX3345.00 - GRAND ISLAND 345KV CKT Z	720	720	0.04159	109.7965	AINSWORTH - BASSETT 7115.00 115KV CKT 1
FDNS	00NR	0	20SP	G14_059	FROM->TO	GR ISLD-LNX3345.00 - GRAND ISLAND 345KV CKT Z	720	720	0.04054	109.7773	GEN335204 1-NELSON UNIT 4
FDNS	00NR	0	20SP	G14_059	FROM->TO	GR ISLD-LNX3345.00 - GRAND ISLAND 345KV CKT Z	720	720	0.04054	109.7685	GEN334441 1-SABINE UNIT 5
FDNS	00NR	0	25SP	G14_059	FROM->TO	GR ISLD-LNX3345.00 - GRAND ISLAND 345KV CKT Z	720	720	0.04302	109.7526	FT RANDAL - UTICA JCT 230KV CKT 1
FDNS	00NR	0	20SP	G14_059	FROM->TO	GR ISLD-LNX3345.00 - GRAND ISLAND 345KV CKT Z	720	720	0.04054	109.7439	P12:115:UMZW:# 162 #: NEL IN ND. FAULT ON ML-NEL-MX-GA 115 KV
FDNS	00NR	0	25SP	G14_059	FROM->TO	GR ISLD-LNX3345.00 - GRAND ISLAND 345KV CKT Z	720	720	0.04266	109.7221	GEN641089 2-ENERGY CENTER 2
FDNS	00NR	0	20SP	G14_059	FROM->TO	GR ISLD-LNX3345.00 - GRAND ISLAND 345KV CKT Z	720	720	0.04071	109.714	ADAMS - MITCHLCO3 345.00 345KV CKT 1
FDNS	00NR	0	25SP	G14_059	FROM->TO	GR ISLD-LNX3345.00 - GRAND ISLAND 345KV CKT Z	720	720	0.04275	109.7128	BROOKING COUNTY - LYON COUNTY 345KV CKT 1
FDNS	00NR	0	20SP	G14_059	FROM->TO	GR ISLD-LNX3345.00 - GRAND ISLAND 345KV CKT Z	720	720	0.04058	109.7098	NMA B3 345 345.00 - NORTH LA CROSSE 345KV CKT 1
FDNS	00NR	0	20SP	G14_059	FROM->TO	GR ISLD-LNX3345.00 - GRAND ISLAND 345KV CKT Z	720	720	0.04159	109.7069	ATKINSON - STUART 115KV CKT 1
FDNS	00NR	0	20SP	G14_059	FROM->TO	GR ISLD-LNX3345.00 - GRAND ISLAND 345KV CKT Z	720	720	0.04128	109.7051	P12:115:NPPD:1164:ONEILL 7:JEFFREY9:BTB
FDNS	00NR	0	25SP	G14_059	FROM->TO	GR ISLD-LNX3345.00 - GRAND ISLAND 345KV CKT Z	720	720	0.04309	109.7031	HOSKINS - SHELL CREEK 345KV CKT 1
FDNS	00NR	0	25SP	G14_059	FROM->TO	GR ISLD-LNX3345.00 - GRAND ISLAND 345KV CKT Z	720	720	0.04372	109.6955	P12:115:NPPD:1167A:AINSWRT7:ONEILL 7:BTB
FDNS	00NR	0	20SP	G14_059	FROM->TO	GR ISLD-LNX3345.00 - GRAND ISLAND 345KV CKT Z	720	720	0.04226	109.682	BROKEN BOW - CALLAWAY 115KV CKT 1
FDNS	00NR	0	20SP	G14_059	FROM->TO	GR ISLD-LNX3345.00 - GRAND ISLAND 345KV CKT Z	720	720	0.04059	109.6805	BROOKING COUNTY - BSSOUTH3 345.00 345KV CKT 1
FDNS	00NR	0	20SP	G14_059	FROM->TO	GR ISLD-LNX3345.00 - GRAND ISLAND 345KV CKT Z	720	720	0.04054	109.6774	GEN334433 1-SABINE UNIT 3
FDNS	00NR	0	20SP	G14_059	FROM->TO	GR ISLD-LNX3345.00 - GRAND ISLAND 345KV CKT Z	720	720	0.04057	109.6739	CENTER - COYOTE 345KV CKT 1
FDNS	00NR	0	25SP	G14_059	FROM->TO	GR ISLD-LNX3345.00 - GRAND ISLAND 345KV CKT Z	720	720	0.04266	109.6705	GEN337652 1-WHITE BLUFF UNIT #1
FDNS	00NR	0	20SP	G14_059	FROM->TO	GR ISLD-LNX3345.00 - GRAND ISLAND 345KV CKT Z	720	720	0.04064	109.6604	GLENBORO SOUTH - RUGBY 230KV CKT 1
FDNS	00NR	0	25SP	G14_059	FROM->TO	GR ISLD-LNX3345.00 - GRAND ISLAND 345KV CKT Z	720	720	0.04266	109.6578	GEN338143 1-INDEPENDENCE UNIT #1
FDNS	00NR	0	25SP	G14_059	FROM->TO	GR ISLD-LNX3345.00 - GRAND ISLAND 345KV CKT Z	720	720	0.04281	109.6572	ALEXMRES3 345.00 - BISON 3 345.00 345KV CKT 1
FDNS	00NR	0	25SP	G14_059	FROM->TO	GR ISLD-LNX3345.00 - GRAND ISLAND 345KV CKT Z	720	720	0.04266	109.6552	GEN338146 1-INDEPENDENCE UNIT #2
FDNS	00NR	0	20SP	G14_059	FROM->TO	GR ISLD-LNX3345.00 - GRAND ISLAND 345KV CKT Z	720	720	0.03974	109.6521	SIDNEY - STEGALL 345KV CKT 1

SOLUTION	GROUP	SCENARIO	SEASON	SOURCE	DIRECTION	MONITORED ELEMENT	RATEA (MVA)	RATEB(MVA)	TDF	TC%LOADING (% MVA)	CONTINGENCY
FDNS	00NR	0	25SP	G14_059	FROM->TO	GR ISLD-LNX3345.00 - GRAND ISLAND 345KV CKT Z	720	720	0.04273	109.6521	ARROWHEAD - ARROWHEAD 230 230KV CKT 1
FDNS	00NR	0	20SP	G14_059	FROM->TO	GR ISLD-LNX3345.00 - GRAND ISLAND 345KV CKT Z	720	720	0.04062	109.6502	HESKETT - WISHEK 230KV CKT 1
FDNS	00NR	0	20SP	G14_059	FROM->TO	GR ISLD-LNX3345.00 - GRAND ISLAND 345KV CKT Z	720	720	0.04054	109.6458	GEN532652 1-JEFFREY ENERGY CENTER UNIT 2
FDNS	00NR	0	20SP	G14_059	FROM->TO	GR ISLD-LNX3345.00 - GRAND ISLAND 345KV CKT Z	720	720	0.04054	109.6456	GEN532653 1-JEFFREY ENERGY CENTER UNIT 3
FDNS	00NR	0	20SP	G14_059	FROM->TO	GR ISLD-LNX3345.00 - GRAND ISLAND 345KV CKT Z	720	720	0.04054	109.6455	GEN532651 1-JEFFREY ENERGY CENTER UNIT 1
FDNS	00NR	0	20SP	G14_059	FROM->TO	GR ISLD-LNX3345.00 - GRAND ISLAND 345KV CKT Z	720	720	0.04128	109.6416	CLEARWATER - ONEILL 115KV CKT 1
FDNS	00NR	0	20SP	G14_059	FROM->TO	GR ISLD-LNX3345.00 - GRAND ISLAND 345KV CKT Z	720	720	0.04054	109.6401	GEN336222 1-LITTLE GYPSY UNIT#2
FDNS	00NR	0	25SP	G14_059	FROM->TO	GR ISLD-LNX3345.00 - GRAND ISLAND 345KV CKT Z	720	720	0.04299	109.6354	PAHOJA - SIOUX FALLS 230KV CKT 1
FDNS	00NR	0	20SP	G14_059	FROM->TO	GR ISLD-LNX3345.00 - GRAND ISLAND 345KV CKT Z	720	720	0.04062	109.6267	MERRCRT4 230.00 - WISHEK 230KV CKT 1
FDNS	00NR	0	20SP	G14_059	FROM->TO	GR ISLD-LNX3345.00 - GRAND ISLAND 345KV CKT Z	720	720	0.04058	109.6198	GARRISON - JAMES TOWN 230KV CKT 1
FDNS	00NR	0	20SP	G14_059	FROM->TO	GR ISLD-LNX3345.00 - GRAND ISLAND 345KV CKT Z	720	720	0.04067	109.6196	ADAMS - PLEASANT VALLEY 345KV CKT 1
FDNS	00NR	0	25SP	G14_059	FROM->TO	GR ISLD-LNX3345.00 - GRAND ISLAND 345KV CKT Z	720	720	0.04266	109.6132	GEN337653 1-WHITE BLUFF UNIT #2
FDNS	00NR	0	20SP	G14_059	FROM->TO	GR ISLD-LNX3345.00 - GRAND ISLAND 345KV CKT Z	720	720	0.04054	109.6101	P13:115-230:NPPD:NUCOR-3
FDNS	00NR	0	25SP	G14_059	FROM->TO	GR ISLD-LNX3345.00 - GRAND ISLAND 345KV CKT Z	720	720	0.04302	109.6065	CARPENTER - HURON 230KV CKT 1
FDNS	00NR	0	20SP	G14_059	FROM->TO	GR ISLD-LNX3345.00 - GRAND ISLAND 345KV CKT Z	720	720	0.04054	109.6057	GEN336151 1-WATERFORD UNIT#1
FDNS	00NR	0	20SP	G14_059	FROM->TO	GR ISLD-LNX3345.00 - GRAND ISLAND 345KV CKT Z	720	720	0.04054	109.6057	GEN336152 1-WATERFORD UNIT#2
FDNS	00NR	0	20SP	G14_059	FROM->TO	GR ISLD-LNX3345.00 - GRAND ISLAND 345KV CKT Z	720	720	0.04082	109.6039	WINNER - WITTEN 115KV CKT 1
FDNS	00NR	0	25SP	G14_059	FROM->TO	GR ISLD-LNX3345.00 - GRAND ISLAND 345KV CKT Z	720	720	0.04266	109.5976	GEN645012 2-NEBRASKA CITY 2
FDNS	00NR	0	20SP	G14_059	FROM->TO	GR ISLD-LNX3345.00 - GRAND ISLAND 345KV CKT Z	720	720	0.04069	109.5896	ALEXMRES3 345.00 - WAITE PARK 345KV CKT 1
FDNS	00NR	0	25SP	G14_059	FROM->TO	GR ISLD-LNX3345.00 - GRAND ISLAND 345KV CKT Z	720	720	0.04272	109.5792	AS KING - EAU CLAIRE 345KV CKT 1
FDNS	00NR	0	20SP	G14_059	FROM->TO	GR ISLD-LNX3345.00 - GRAND ISLAND 345KV CKT Z	720	720	0.04047	109.5762	P12:115:NPPD:WAPA6:FTRANDL7:ONEILL 7:BTB
FDNS	00NR	0	20SP	G14_059	FROM->TO	GR ISLD-LNX3345.00 - GRAND ISLAND 345KV CKT Z	720	720	0.04047	109.5762	P12:115:UMZB:# 115 #: SE IN NE. FR-SE-ON
FDNS	00NR	0	25SP	G14_059	FROM->TO	GR ISLD-LNX3345.00 - GRAND ISLAND 345KV CKT Z	720	720	0.04282	109.5727	HAZLETON - MITCHLCO3 345.00 345KV CKT 1
FDNS	00NR	0	20SP	G14_059	FROM->TO	GR ISLD-LNX3345.00 - GRAND ISLAND 345KV CKT Z	720	720	0.04104	109.5723	FT THOMPSON - HURON 230KV CKT 1
FDNS	00NR	0	20SP	G14_059	FROM->TO	GR ISLD-LNX3345.00 - GRAND ISLAND 345KV CKT Z	720	720	0.04104	109.5723	FT THOMPSON - HURON 230KV CKT 1
FDNS	00NR	0	20SP	G14_059	FROM->TO	GR ISLD-LNX3345.00 - GRAND ISLAND 345KV CKT Z	720	720	0.04104	109.5723	FT THOMPSON - HURON 230KV CKT 2
FDNS	00NR	0	20SP	G14_059	FROM->TO	GR ISLD-LNX3345.00 - GRAND ISLAND 345KV CKT Z	720	720	0.04104	109.5723	FT THOMPSON - HURON 230KV CKT 2
FDNS	00NR	0	20SP	G14_059	FROM->TO	GR ISLD-LNX3345.00 - GRAND ISLAND 345KV CKT Z	720	720	0.04061	109.5688	APPLEDORN 4 230.00 - WATERTOWN 230KV CKT 1
FDNS	00NR	0	20SP	G14_059	FROM->TO	GR ISLD-LNX3345.00 - GRAND ISLAND 345KV CKT Z	720	720	0.04061	109.5688	APPLEDORN 4 230.00 - WATERTOWN 230KV CKT 1
FDNS	00NR	0	20SP	G14_059	FROM->TO	GR ISLD-LNX3345.00 - GRAND ISLAND 345KV CKT Z	720	720	0.04059	109.562	BSSOUTH3 345.00 - ELLENDLMVP3 345.00 345KV CKT 1
FDNS	00NR	0	20SP	G14_059	FROM->TO	GR ISLD-LNX3345.00 - GRAND ISLAND 345KV CKT Z	720	720	0.04059	109.562	BSSOUTH3 345.00 - ELLENDLMVP3 345.00 345KV CKT 1
FDNS	00NR	0	20SP	G14_059	FROM->TO	GR ISLD-LNX3345.00 - GRAND ISLAND 345KV CKT Z	720	720	0.04054	109.5586	GEN303007 1-1BC2 U2
FDNS	00NR	0	20SP	G14_059	FROM->TO	GR ISLD-LNX3345.00 - GRAND ISLAND 345KV CKT Z	720	720	0.04054	109.5545	GEN303006 1-1BC2 U1
FDNS	00NR	0	20SP	G14_059	FROM->TO	GR ISLD-LNX3345.00 - GRAND ISLAND 345KV CKT Z	720	720	0.04159	109.5539	ATKINSON - EMMET 115KV CKT 1
FDNS	00NR	0	20SP	G14_059	FROM->TO	GR ISLD-LNX3345.00 - GRAND ISLAND 345KV CKT Z	720	720	0.04059	109.5529	MENNO JCT - TRIPP JCT 115KV CKT 1
FDNS	00NR	0	25SP	G14_059	FROM->TO	GR ISLD-LNX3345.00 - GRAND ISLAND 345KV CKT Z	720	720	0.0431	109.5515	GRIMES - LEHIGH 345KV CKT 1
FDNS	00NR	0	20SP	G14_059	FROM->TO	GR ISLD-LNX3345.00 - GRAND ISLAND 345KV CKT Z	720	720	0.04054	109.5501	GEN562547 1-G14_039_3 0.6900
FDNS	00NR	0	20SP	G14_059	FROM->TO	GR ISLD-LNX3345.00 - GRAND ISLAND 345KV CKT Z	720	720	0.04059	109.5465	NORTH ROCHESTER - PRAIRIE ISLAND 345KV CKT 1
FDNS	00NR	0	20SP	G14_059	FROM->TO	GR ISLD-LNX3345.00 - GRAND ISLAND 345KV CKT Z	720	720	0.04054	109.5464	GEN563212 1-G15087_3 0.6900
FDNS	00NR	0	20SP	G14_059	FROM->TO	GR ISLD-LNX3345.00 - GRAND ISLAND 345KV CKT Z	720	720	0.04059	109.5449	ELLENDLMVP3 345.00 (1) 345/230/34.5KV TRANSFORMER CKT 1
FDNS	00NR	0	20SP	G14_059	FROM->TO	GR ISLD-LNX3345.00 - GRAND ISLAND 345KV CKT Z	720	720	0.04153	109.5404	AINSWORTH - AINSWORTH 115KV CKT 1
FDNS	00NR	0	25SP	G14_059	FROM->TO	GR ISLD-LNX3345.00 - GRAND ISLAND 345KV CKT Z	720	720	0.04302	109.5339	HURON - WATERTOWN 230KV CKT 2
FDNS	00NR	0	25SP	G14_059	FROM->TO	GR ISLD-LNX3345.00 - GRAND ISLAND 345KV CKT Z	720	720	0.04302	109.5339	HURON - WATERTOWN 230KV CKT 2
FDNS	00NR	0	20SP	G14_059	FROM->TO	GR ISLD-LNX3345.00 - GRAND ISLAND 345KV CKT Z	720	720	0.04054	109.5326	P13:115-345:NPPD:NUCOR-2
FDNS	00NR	0	20SP	G14_059	FROM->TO	GR ISLD-LNX3345.00 - GRAND ISLAND 345KV CKT Z	720	720	0.04058	109.5316	BLAIR - GRANITE FALLS 230KV CKT 1
FDNS	00NR	0	20SP	G14_059	FROM->TO	GR ISLD-LNX3345.00 - GRAND ISLAND 345KV CKT Z	720	720	0.04058	109.5316	BLAIR - GRANITE FALLS 230KV CKT 1
FDNS	00NR	0	20SP	G14_059	FROM->TO	GR ISLD-LNX3345.00 - GRAND ISLAND 345KV CKT Z	720	720	0.04054	109.5309	P12:115:NPPD:1091:VALENTN7:MISSION7:BTB
FDNS	00NR	0	25SP	G14_059	FROM->TO	GR ISLD-LNX3345.00 - GRAND ISLAND 345KV CKT Z	720	720	0.04271	109.5282	CNTSHNT3 345.00 - PRAIRIE3 345.00 345KV CKT 1
FDNS	00NR	0	20SP	G14_059	FROM->TO	GR ISLD-LNX3345.00 - GRAND ISLAND 345KV CKT Z	720	720	0.04061	109.5271	APPLEDORN 4 230.00 - GRANITE FALLS 230KV CKT 1
FDNS	00NR	0	20SP	G14_059	FROM->TO	GR ISLD-LNX3345.00 - GRAND ISLAND 345KV CKT Z	720	720	0.04061	109.5271	APPLEDORN 4 230.00 - GRANITE FALLS 230KV CKT 1
FDNS	00NR	0	20SP	G14_059	FROM->TO	GR ISLD-LNX3345.00 - GRAND ISLAND 345KV CKT Z	720	720	0.04038	109.5248	G15094_T 345.00 - SIDNEY2-LNX3345.00 345KV CKT 1
FDNS	00NR	0	20SP	G14_059	FROM->TO	GR ISLD-LNX3345.00 - GRAND ISLAND 345KV CKT Z	720	720	0.04069	109.5247	HUNTLEY3 345.00 - LEDYARD3 345.00 345KV CKT 1
FDNS	00NR	0	20SP	G14_059	FROM->TO	GR ISLD-LNX3345.00 - GRAND ISLAND 345KV CKT Z	720	720	0.04065	109.5213	DENISON - SIOUX CITY 230KV CKT 1
FDNS	00NR	0	25SP	G14_059	FROM->TO	GR ISLD-LNX3345.00 - GRAND ISLAND 345KV CKT Z	720	720	0.04266	109.518	GEN645011 1-NEBRASKA CITY 1
FDNS	00NR	0	20SP	G14_059	FROM->TO	GR ISLD-LNX3345.00 - GRAND ISLAND 345KV CKT Z	720	720	0.04038	109.5102	SIDNEY - SIDNEY2-LNX3345.00 345KV CKT Z
FDNS	00NR	0	20SP	G14_059	FROM->TO	GR ISLD-LNX3345.00 - GRAND ISLAND 345KV CKT Z	720	720	0.04054	109.5088	GEN303008 1-1BC2 U3
FDNS	00NR	0	20SP	G14_059	FROM->TO	GR ISLD-LNX3345.00 - GRAND ISLAND 345KV CKT Z	720	720	0.03957	109.5087	MAXWELL - STAPLETON 115KV CKT 1
FDNS	00NR	0	20SP	G14_059	FROM->TO	GR ISLD-LNX3345.00 - GRAND ISLAND 345KV CKT Z	720	720	0.04054	109.5073	GEN636641 1-LOUISA UNIT 1
FDNS	00NR	0	20SP	G14_059	FROM->TO	GR ISLD-LNX3345.00 - GRAND ISLAND 345KV CKT Z	720	720	0.04054	109.5062	GEN336170 1-GULF OXY U4
FDNS	00NR	0	20SP	G14_059	FROM->TO	GR ISLD-LNX3345.00 - GRAND ISLAND 345KV CKT Z	720	720	0.04047	109.5002	FT RANDAL - SPENCER 115KV CKT 1
FDNS	00NR	0	25SP	G14_059	FROM->TO	GR ISLD-LNX3345.00 - GRAND ISLAND 345KV CKT Z	720	720	0.04302	109.4979	CARPENTER - WATERTOWN 230KV CKT 1
FDNS	00NR	0	25SP	G14_059	FROM->TO	GR ISLD-LNX3345.00 - GRAND ISLAND 345KV CKT Z	720	720	0.04302	109.4979	CARPENTER - WATERTOWN 230KV CKT 1
FDNS	00NR	0	25SP	G14_059	FROM->TO	GR ISLD-LNX3345.00 - GRAND ISLAND 345KV CKT Z	720	720	0.04266	109.4933	GEN501801 1-DOLET HILLS UNIT1
FDNS	00NR	0	20SP	G14_059	FROM->TO	GR ISLD-LNX3345.00 - GRAND ISLAND 345KV CKT Z	720	720	0.04069	109.4827	NOBLES - SPLIT ROCK 345KV CKT 1
FDNS	00NR	0	20SP	G14_059	FROM->TO	GR ISLD-LNX3345.00 - GRAND ISLAND 345KV CKT Z	720	720	0.04063	109.4798	HUNTLEY3 345.00 - LAKEFIELD 3 345KV CKT 1
FDNS	00NR	0	20SP	G14_059	FROM->TO	GR ISLD-LNX3345.00 - GRAND ISLAND 345KV CKT Z	720	720	0.04082	109.478	GREGORY - WINNER 115KV CKT 1
FDNS	00NR	0	20SP	G14_059	FROM->TO	GR ISLD-LNX3345.00 - GRAND ISLAND 345KV CKT Z	720	720	0.04059	109.4754	MENNO JCT - UTICA 115KV CKT 1
FDNS	00NR	0	20SP	G14_059	FROM->TO	GR ISLD-LNX3345.00 - GRAND ISLAND 345KV CKT Z	720	720	0.04082	109.4752	P12:115:UMZW:# 172 #: WI IN SD.
FDNS	00NR	0	20SP	G14_059	FROM->TO	GR ISLD-LNX3345.00 - GRAND ISLAND 345KV CKT Z	720	720	0.04047	109.4738	ONEILL - SPENCER 115KV CKT 1
FDNS	00NR	0	20SP	G14_059	FROM->TO	GR ISLD-LNX3345.00 - GRAND ISLAND 345KV CKT Z	720	720	0.04058	109.4736	FARGO - JAMES TOWN 230KV CKT 1
FDNS	00NR	0	25SP	G14_059	FROM->TO	GR ISLD-LNX3345.00 - GRAND ISLAND 345KV CKT Z	720	720	0.04169	109.4595	STAPLETON - THEDFORD 115KV CKT 1
FDNS	00NR	0	20SP	G14_059	FROM->TO	GR ISLD-LNX3345.00 - GRAND ISLAND 345KV CKT Z	720	720	0.04057	109.4588	FARGO - JAMES TOWN 230KV CKT 2
FDNS	00NR	0	25SP	G14_059	FROM->TO	GR ISLD-LNX3345.00 - GRAND ISLAND 345KV CKT Z	720	720	0.04285	109.4561	GROTON-LNX3 345.00 - LELAND1-LNX3345.00 345KV CKT 1
FDNS	00NR	0	20SP	G14_059	FROM->TO	GR ISLD-LNX3345.00 - GRAND ISLAND 345KV CKT Z	720	720	0.04054	109.45	P13:230:UMZW:# 2218 #: FP IN MT. LOSS OF TRANSFORMER (AT2).
FDNS	00NR	0	25SP	G14_059	FROM->TO	GR ISLD-LNX3345.00 - GRAND ISLAND 345KV CKT Z	720	720	0.04266	109.449	GEN336252 1-NINEMILE POINT UNIT#5
FDNS	00NR	0	20SP	G14_059	FROM->TO	GR ISLD-LNX3345.00 - GRAND ISLAND 345KV CKT Z	720	720	0.04054	109.444	GEN501811 1-RODEMACHER UNIT 1
FDNS	00NR	0	20SP	G14_059	FROM->TO	GR ISLD-LNX3345.00 - GRAND ISLAND 345KV CKT Z	720	720	0.04059	109.441	P12:115:UMZZ:# 237 #: MEN IN SD. MENNO JUNCTION IS A TAP (UJ-MEN-TP).
FDNS	00NR	0	20SP	G14_059	FROM->TO	GR ISLD-LNX3345.00 - GRAND ISLAND 345KV CKT Z	720	720	0.04058	109.4402	BISMARK - JAMES TOWN 230KV CKT 1
FDNS	00NR	0	25SP	G14_059	FROM->TO	GR ISLD-LNX3345.00 - GRAND ISLAND 345KV CKT Z	720	720	0.04285	109.4165	GROTON - GROTON-LNX3 345.00 345KV CKT Z

SOLUTION	GROUP	SCENARIO	SEASON	SOURCE	DIRECTION	MONITORED ELEMENT	RATEA (MVA)	RATEB(MVA)	TDF	TC%LOADING (% MVA)	CONTINGENCY
FDNS	00NR	0	25SP	G14_059	FROM->TO	GR ISLD-LNX3345.00 - GRAND ISLAND 345KV CKT Z	720	720	0.04285	109.4147	P12:345:UMZB:# 109 #: LOS GRT IN ND. LOS GRT
FDNS	00NR	0	20SP	G14_059	FROM->TO	GR ISLD-LNX3345.00 - GRAND ISLAND 345KV CKT Z	720	720	0.04052	109.4129	ARKANSAS NUCLEAR ONE - FT SMITH 500KV CKT 1
FDNS	00NR	0	20SP	G14_059	FROM->TO	GR ISLD-LNX3345.00 - GRAND ISLAND 345KV CKT Z	720	720	0.04052	109.4129	ARKANSAS NUCLEAR ONE - FT SMITH 500KV CKT 1
FDNS	00NR	0	25SP	G14_059	FROM->TO	GR ISLD-LNX3345.00 - GRAND ISLAND 345KV CKT Z	720	720	0.04285	109.4106	LELAND OLDS - LELAND1-LNX3345.00 345KV CKT Z
FDNS	00NR	0	20SP	G14_059	FROM->TO	GR ISLD-LNX3345.00 - GRAND ISLAND 345KV CKT Z	720	720	0.04054	109.4013	GEN334071 1-LEWIS CREEK 2
FDNS	00NR	0	20SP	G14_059	FROM->TO	GR ISLD-LNX3345.00 - GRAND ISLAND 345KV CKT Z	720	720	0.04054	109.399	GEN334070 1-LEWIS CREEK 1
FDNS	00NR	0	25SP	G14_059	FROM->TO	GR ISLD-LNX3345.00 - GRAND ISLAND 345KV CKT Z	720	720	0.04266	109.3973	GEN336251 1-NINEMILE POINT UNIT#4
FDNS	00NR	0	25SP	G14_059	FROM->TO	GR ISLD-LNX3345.00 - GRAND ISLAND 345KV CKT Z	720	720	0.04266	109.3752	GEN336831 1-BAXTER WILSON SES
FDNS	00NR	0	25SP	G14_059	FROM->TO	GR ISLD-LNX3345.00 - GRAND ISLAND 345KV CKT Z	720	720	0.04302	109.369	RASMUSN - UTICA JCT 230KV CKT 1
FDNS	00NR	0	25SP	G14_059	FROM->TO	GR ISLD-LNX3345.00 - GRAND ISLAND 345KV CKT Z	720	720	0.04266	109.3511	GEN542962 2-IATAN UNIT #2
FDNS	00NR	0	25SP	G14_059	FROM->TO	GR ISLD-LNX3345.00 - GRAND ISLAND 345KV CKT Z	720	720	0.04352	109.3467	FT THOMPSON - WESSINGTON 230KV CKT 1
FDNS	00NR	0	25SP	G14_059	FROM->TO	GR ISLD-LNX3345.00 - GRAND ISLAND 345KV CKT Z	720	720	0.04352	109.3467	FT THOMPSON - WESSINGTON 230KV CKT 1
FDNS	00NR	0	25SP	G14_059	FROM->TO	GR ISLD-LNX3345.00 - GRAND ISLAND 345KV CKT Z	720	720	0.04266	109.3442	GEN532751 1-WOLF CREEK GENERATING STATION UNIT 1
FDNS	00NR	0	25SP	G14_059	FROM->TO	GR ISLD-LNX3345.00 - GRAND ISLAND 345KV CKT Z	720	720	0.04266	109.3405	GEN337041 1-GERALD ANDRUS
FDNS	00NR	0	25SP	G14_059	FROM->TO	GR ISLD-LNX3345.00 - GRAND ISLAND 345KV CKT Z	720	720	0.04299	109.3297	EAGLE 4 230.00 - PAHOJA 230KV CKT 1
FDNS	00NR	0	25SP	G14_059	FROM->TO	GR ISLD-LNX3345.00 - GRAND ISLAND 345KV CKT Z	720	720	0.04266	109.307	GEN645001 1-FORT CALHOUN 1
FDNS	00NR	0	25SP	G14_059	FROM->TO	GR ISLD-LNX3345.00 - GRAND ISLAND 345KV CKT Z	720	720	0.0427	109.3039	DIXONCO 230.00 - HOSKINS 230KV CKT 1
FDNS	00NR	0	25SP	G14_059	FROM->TO	GR ISLD-LNX3345.00 - GRAND ISLAND 345KV CKT Z	720	720	0.04266	109.3038	GEN501813 1-RODEMACHER UNIT 3
FDNS	00NR	0	20SP	G14_059	FROM->TO	GR ISLD-LNX3345.00 - GRAND ISLAND 345KV CKT Z	720	720	0.04062	109.2851	AXTELL - SWEETWATER 345KV CKT 1
FDNS	00NR	0	25SP	G14_059	FROM->TO	GR ISLD-LNX3345.00 - GRAND ISLAND 345KV CKT Z	720	720	0.04654	109.28	SIDNEY - SIDNEY1-LNX3345.00 345KV CKT Z
FDNS	00NR	0	25SP	G14_059	FROM->TO	GR ISLD-LNX3345.00 - GRAND ISLAND 345KV CKT Z	720	720	0.04266	109.2747	GEN344897 4-1LAB G4 20.000
FDNS	00NR	0	25SP	G14_059	FROM->TO	GR ISLD-LNX3345.00 - GRAND ISLAND 345KV CKT Z	720	720	0.04266	109.2738	GEN344894 1-1LAB G1 20.000
FDNS	00NR	0	25SP	G14_059	FROM->TO	GR ISLD-LNX3345.00 - GRAND ISLAND 345KV CKT Z	720	720	0.04266	109.2738	GEN344895 2-1LAB G2 20.000
FDNS	00NR	0	25SP	G14_059	FROM->TO	GR ISLD-LNX3345.00 - GRAND ISLAND 345KV CKT Z	720	720	0.04266	109.2736	GEN344896 3-1LAB G3 20.000
FDNS	00NR	0	25SP	G14_059	FROM->TO	GR ISLD-LNX3345.00 - GRAND ISLAND 345KV CKT Z	720	720	0.04272	109.2699	ARPIN B4 345.00 - EAU CLAIRE 345KV CKT 1
FDNS	00NR	0	25SP	G14_059	FROM->TO	GR ISLD-LNX3345.00 - GRAND ISLAND 345KV CKT Z	720	720	0.04266	109.2393	GEN629075 1-OTTUMWA GENERATOR FOR OTTUMWA UNIT NO 1
FDNS	00NR	0	25SP	G14_059	FROM->TO	GR ISLD-LNX3345.00 - GRAND ISLAND 345KV CKT Z	720	720	0.04302	109.229	RASMUSN - SIOUX CITY 230KV CKT 1
FDNS	00NR	0	25SP	G14_059	FROM->TO	GR ISLD-LNX3345.00 - GRAND ISLAND 345KV CKT Z	720	720	0.0427	109.2246	P12:115:NPPD:WAPA4:SIDNEY 7:B.SPRGS7:BTB
FDNS	00NR	0	25SP	G14_059	FROM->TO	GR ISLD-LNX3345.00 - GRAND ISLAND 345KV CKT Z	720	720	0.0427	109.2246	P12:115:UMZB:# 119 #: IN NE.
FDNS	00NR	0	25SP	G14_059	FROM->TO	GR ISLD-LNX3345.00 - GRAND ISLAND 345KV CKT Z	720	720	0.04266	109.2241	GEN345671 2-1RUSH G2 18.000
FDNS	00NR	0	25SP	G14_059	FROM->TO	GR ISLD-LNX3345.00 - GRAND ISLAND 345KV CKT Z	720	720	0.04266	109.2212	GEN345670 1-1RUSH G1 18.000
FDNS	00NR	0	25SP	G14_059	FROM->TO	GR ISLD-LNX3345.00 - GRAND ISLAND 345KV CKT Z	720	720	0.0429	109.2188	KOSSUTH 3 345.00 - WEBSTER 345KV CKT 1
FDNS	00NR	0	25SP	G14_059	FROM->TO	GR ISLD-LNX3345.00 - GRAND ISLAND 345KV CKT Z	720	720	0.0444	109.2127	HOLCOMB - SETAB 345KV CKT 1
FDNS	00NR	0	25SP	G14_059	FROM->TO	GR ISLD-LNX3345.00 - GRAND ISLAND 345KV CKT Z	720	720	0.0444	109.2127	HOLCOMB - SETAB 345KV CKT 1
FDNS	00NR	0	25SP	G14_059	FROM->TO	GR ISLD-LNX3345.00 - GRAND ISLAND 345KV CKT Z	720	720	0.0432	109.2005	COLUMEAST - SHELL CREEK 345KV CKT 1
FDNS	00NR	0	25SP	G14_059	FROM->TO	GR ISLD-LNX3345.00 - GRAND ISLAND 345KV CKT Z	720	720	0.04266	109.1936	GEN335206 1-NELSON UNIT 6
FDNS	00NR	0	25SP	G14_059	FROM->TO	GR ISLD-LNX3345.00 - GRAND ISLAND 345KV CKT Z	720	720	0.04461	109.1905	JEFFREY - NORTH PLATTE 115KV CKT 1
FDNS	00NR	0	25SP	G14_059	FROM->TO	GR ISLD-LNX3345.00 - GRAND ISLAND 345KV CKT Z	720	720	0.04266	109.179	GEN542957 1-IATAN UNIT #1
FDNS	00NR	0	25SP	G14_059	FROM->TO	GR ISLD-LNX3345.00 - GRAND ISLAND 345KV CKT Z	720	720	0.04266	109.1749	GEN334440 1-SABINE UNIT 4
FDNS	00NR	0	25SP	G14_059	FROM->TO	GR ISLD-LNX3345.00 - GRAND ISLAND 345KV CKT Z	720	720	0.04266	109.1637	GEN338388 1-1PLUM PT U1 23.000
FDNS	00NR	0	25SP	G14_059	FROM->TO	GR ISLD-LNX3345.00 - GRAND ISLAND 345KV CKT Z	720	720	0.03837	109.1481	NUNDRWD - WAYSIDE 230KV CKT 1
FDNS	00NR	0	25SP	G14_059	FROM->TO	GR ISLD-LNX3345.00 - GRAND ISLAND 345KV CKT Z	720	720	0.04232	109.1329	P12:115:NPPD:WAPA2:HEMINGF7:SNAKECK7:BTB
FDNS	00NR	0	25SP	G14_059	FROM->TO	GR ISLD-LNX3345.00 - GRAND ISLAND 345KV CKT Z	720	720	0.04266	109.1304	P13:230-345:NPPD:NUCOR-1
FDNS	00NR	0	25SP	G14_059	FROM->TO	GR ISLD-LNX3345.00 - GRAND ISLAND 345KV CKT Z	720	720	0.04277	109.1187	GLENBORO SOUTH - RUGBY 230KV CKT 1
FDNS	00NR	0	25SP	G14_059	FROM->TO	GR ISLD-LNX3345.00 - GRAND ISLAND 345KV CKT Z	720	720	0.04372	109.1142	BASSETT 7115.00 - STUART 115KV CKT 1
FDNS	00NR	0	25SP	G14_059	FROM->TO	GR ISLD-LNX3345.00 - GRAND ISLAND 345KV CKT Z	720	720	0.04266	109.1092	GEN501812 1-RODEMACHER UNIT 2
FDNS	00NR	0	25SP	G14_059	FROM->TO	GR ISLD-LNX3345.00 - GRAND ISLAND 345KV CKT Z	720	720	0.04266	109.1084	P12:115:UMZW:# 162 #: NEL IN ND. FAULT ON ML-NEL-MX-GA 115 KV
FDNS	00NR	0	25SP	G14_059	FROM->TO	GR ISLD-LNX3345.00 - GRAND ISLAND 345KV CKT Z	720	720	0.04266	109.1032	GEN336191 1-LITTLE GYPSY UNIT#3
FDNS	00NR	0	25SP	G14_059	FROM->TO	GR ISLD-LNX3345.00 - GRAND ISLAND 345KV CKT Z	720	720	0.04372	109.0933	AINSWORTH - BASSETT 7115.00 115KV CKT 1
FDNS	00NR	0	25SP	G14_059	FROM->TO	GR ISLD-LNX3345.00 - GRAND ISLAND 345KV CKT Z	720	720	0.0427	109.0899	NORTH LA CROSSE - NORTH ROCHESTER 345KV CKT 1
FDNS	00NR	0	25SP	G14_059	FROM->TO	GR ISLD-LNX3345.00 - GRAND ISLAND 345KV CKT Z	720	720	0.04282	109.0858	ADAMS - MITCHLCO3 345.00 345KV CKT 1
FDNS	00NR	0	25SP	G14_059	FROM->TO	GR ISLD-LNX3345.00 - GRAND ISLAND 345KV CKT Z	720	720	0.04266	109.0518	GEN335614 1-WILLOW GLENN UNIT#4
FDNS	00NR	0	25SP	G14_059	FROM->TO	GR ISLD-LNX3345.00 - GRAND ISLAND 345KV CKT Z	720	720	0.04266	109.051	GEN336801 1-BAXTER WILSON UNIT #1
FDNS	00NR	0	25SP	G14_059	FROM->TO	GR ISLD-LNX3345.00 - GRAND ISLAND 345KV CKT Z	720	720	0.04266	109.0433	GEN532652 1-JEFFREY ENERGY CENTER UNIT 2
FDNS	00NR	0	25SP	G14_059	FROM->TO	GR ISLD-LNX3345.00 - GRAND ISLAND 345KV CKT Z	720	720	0.04266	109.0432	GEN532653 1-JEFFREY ENERGY CENTER UNIT 3
FDNS	00NR	0	25SP	G14_059	FROM->TO	GR ISLD-LNX3345.00 - GRAND ISLAND 345KV CKT Z	720	720	0.04266	109.0423	GEN532651 1-JEFFREY ENERGY CENTER UNIT 1
FDNS	00NR	0	25SP	G14_059	FROM->TO	GR ISLD-LNX3345.00 - GRAND ISLAND 345KV CKT Z	720	720	0.04266	109.0421	GEN336464 1-MICHOUD UNIT #3
FDNS	00NR	0	25SP	G14_059	FROM->TO	GR ISLD-LNX3345.00 - GRAND ISLAND 345KV CKT Z	720	720	0.04266	109.0323	GEN334441 1-SABINE UNIT 5
FDNS	00NR	0	25SP	G14_059	FROM->TO	GR ISLD-LNX3345.00 - GRAND ISLAND 345KV CKT Z	720	720	0.04266	109.0241	GEN335204 1-NELSON UNIT 4
FDNS	00NR	0	25SP	G14_059	FROM->TO	GR ISLD-LNX3345.00 - GRAND ISLAND 345KV CKT Z	720	720	0.04331	109.0204	RAUN - SIOUX CITY 345KV CKT 1
FDNS	00NR	0	25SP	G14_059	FROM->TO	GR ISLD-LNX3345.00 - GRAND ISLAND 345KV CKT Z	720	720	0.04331	109.0204	RAUN - SIOUX CITY 345KV CKT 1
FDNS	00NR	0	25SP	G14_059	FROM->TO	GR ISLD-LNX3345.00 - GRAND ISLAND 345KV CKT Z	720	720	0.04274	109.0149	HESKETT - WISHEK 230KV CKT 1
FDNS	00NR	0	25SP	G14_059	FROM->TO	GR ISLD-LNX3345.00 - GRAND ISLAND 345KV CKT Z	720	720	0.0427	109.0092	CENTER - COYOTE 345KV CKT 1
FDNS	00NR	0	25SP	G14_059	FROM->TO	GR ISLD-LNX3345.00 - GRAND ISLAND 345KV CKT Z	720	720	0.04372	108.99	ATKINSON - STUART 115KV CKT 1
FDNS	00NR	0	20SP	G14_059	FROM->TO	GR ISLD-LNX3345.00 - GRAND ISLAND 345KV CKT Z	720	720	0.03949	108.9892	103RD & ROKEBY - SUB 3458 NEB CTY 345KV CKT 1
FDNS	00NR	0	20SP	G14_059	FROM->TO	GR ISLD-LNX3345.00 - GRAND ISLAND 345KV CKT Z	720	720	0.03949	108.9892	103RD & ROKEBY - SUB 3458 NEB CTY 345KV CKT 1
FDNS	00NR	0	25SP	G14_059	FROM->TO	GR ISLD-LNX3345.00 - GRAND ISLAND 345KV CKT Z	720	720	0.04274	108.959	MERRCRT4 230.00 - WISHEK 230KV CKT 1
FDNS	00NR	0	25SP	G14_059	FROM->TO	GR ISLD-LNX3345.00 - GRAND ISLAND 345KV CKT Z	720	720	0.04654	108.9571	KEYSTONE - SIDNEY1-LNX3345.00 345KV CKT 1
FDNS	00NR	0	25SP	G14_059	FROM->TO	GR ISLD-LNX3345.00 - GRAND ISLAND 345KV CKT Z	720	720	0.0427	108.9545	GARRISON - JAMES TOWN 230KV CKT 1
FDNS	00NR	0	25SP	G14_059	FROM->TO	GR ISLD-LNX3345.00 - GRAND ISLAND 345KV CKT Z	720	720	0.04186	108.9474	SIDNEY - STEGALL 345KV CKT 1
FDNS	00NR	0	25SP	G14_059	FROM->TO	GR ISLD-LNX3345.00 - GRAND ISLAND 345KV CKT Z	720	720	0.04272	108.9426	BROOKING COUNTY - BSSOUTH3 345.00 345KV CKT 1
FDNS	00NR	0	25SP	G14_059	FROM->TO	GR ISLD-LNX3345.00 - GRAND ISLAND 345KV CKT Z	720	720	0.04266	108.9401	GEN334433 1-SABINE UNIT 3
FDNS	00NR	0	25SP	G14_059	FROM->TO	GR ISLD-LNX3345.00 - GRAND ISLAND 345KV CKT Z	720	720	0.04279	108.9366	ADAMS - PLEASANT VALLEY 345KV CKT 1
FDNS	00NR	0	20SP	G14_059	FROM->TO	GR ISLD-LNX3345.00 - GRAND ISLAND 345KV CKT Z	720	720	0.04054	108.9202	BASE CASE
FDNS	00NR	0	25SP	G14_059	FROM->TO	GR ISLD-LNX3345.00 - GRAND ISLAND 345KV CKT Z	720	720	0.04443	108.9088	BROKEN BOW - CALLAWAY 115KV CKT 1
FDNS	00NR	0	25SP	G14_059	FROM->TO	GR ISLD-LNX3345.00 - GRAND ISLAND 345KV CKT Z	720	720	0.04266	108.905	GEN336222 1-LITTLE GYPSY UNIT#2
FDNS	00NR	0	25SP	G14_059	FROM->TO	GR ISLD-LNX3345.00 - GRAND ISLAND 345KV CKT Z	720	720	0.04341	108.9048	P12:115:NPPD:1164:ONEILL 7:JEFFREY9:BTB
FDNS	00NR	0	25SP	G14_059	FROM->TO	GR ISLD-LNX3345.00 - GRAND ISLAND 345KV CKT Z	720	720	0.04273	108.8974	APPLEDORN 4 230.00 - WATERTOWN 230KV CKT 1
FDNS	00NR	0	25SP	G14_059	FROM->TO	GR ISLD-LNX3345.00 - GRAND ISLAND 345KV CKT Z	720	720	0.04273	108.8974	APPLEDORN 4 230.00 - WATERTOWN 230KV CKT 1

SOLUTION	GROUP	SCENARIO	SEASON	SOURCE	DIRECTION	MONITORED ELEMENT	RATEA (MVA)	RATEB(MVA)	TDF	TC%LOADING (% MVA)	CONTINGENCY
FDNS	00NR	0	25SP	G14_059	FROM->TO	GR ISLD-LNX3345.00 - GRAND ISLAND 345KV CKT Z	720	720	0.04294	108.8918	WINNER - WITTEN 115KV CKT 1
FDNS	00NR	0	20SP	G14_059	FROM->TO	GR ISLD-LNX3345.00 - GRAND ISLAND 345KV CKT Z	720	720	0.03687	108.8809	COLUMWEST - KELLY 230KV CKT 1
FDNS	00NR	0	25SP	G14_059	FROM->TO	GR ISLD-LNX3345.00 - GRAND ISLAND 345KV CKT Z	720	720	0.04266	108.8683	GEN336151 1-WATERFORD UNIT#1
FDNS	00NR	0	25SP	G14_059	FROM->TO	GR ISLD-LNX3345.00 - GRAND ISLAND 345KV CKT Z	720	720	0.04266	108.8683	GEN336152 1-WATERFORD UNIT#2
FDNS	00NR	0	25SP	G14_059	FROM->TO	GR ISLD-LNX3345.00 - GRAND ISLAND 345KV CKT Z	720	720	0.04316	108.8661	FT THOMPSON - HURON 230KV CKT 1
FDNS	00NR	0	25SP	G14_059	FROM->TO	GR ISLD-LNX3345.00 - GRAND ISLAND 345KV CKT Z	720	720	0.04316	108.8661	FT THOMPSON - HURON 230KV CKT 1
FDNS	00NR	0	25SP	G14_059	FROM->TO	GR ISLD-LNX3345.00 - GRAND ISLAND 345KV CKT Z	720	720	0.04316	108.8661	FT THOMPSON - HURON 230KV CKT 2
FDNS	00NR	0	25SP	G14_059	FROM->TO	GR ISLD-LNX3345.00 - GRAND ISLAND 345KV CKT Z	720	720	0.04316	108.8661	FT THOMPSON - HURON 230KV CKT 2
FDNS	00NR	0	20SP	G14_059	FROM->TO	GR ISLD-LNX3345.00 - GRAND ISLAND 345KV CKT Z	720	720	0.04457	108.8608	GRAND ISLAND - RIVERDALE 230KV CKT 1
FDNS	00NR	0	25SP	G14_059	FROM->TO	GR ISLD-LNX3345.00 - GRAND ISLAND 345KV CKT Z	720	720	0.04341	108.8453	CLEARWATER - ONEILL 115KV CKT 1
FDNS	00NR	0	25SP	G14_059	FROM->TO	GR ISLD-LNX3345.00 - GRAND ISLAND 345KV CKT Z	720	720	0.04273	108.8363	APPLEDORN 4 230.00 - GRANITE FALLS 230KV CKT 1
FDNS	00NR	0	25SP	G14_059	FROM->TO	GR ISLD-LNX3345.00 - GRAND ISLAND 345KV CKT Z	720	720	0.04273	108.8363	APPLEDORN 4 230.00 - GRANITE FALLS 230KV CKT 1
FDNS	00NR	0	25SP	G14_059	FROM->TO	GR ISLD-LNX3345.00 - GRAND ISLAND 345KV CKT Z	720	720	0.04251	108.8322	G15094_T 345.00 - SIDNEY2-LNX3345.00 345KV CKT 1
FDNS	00NR	0	25SP	G14_059	FROM->TO	GR ISLD-LNX3345.00 - GRAND ISLAND 345KV CKT Z	720	720	0.04271	108.8279	BLAIR - GRANITE FALLS 230KV CKT 1
FDNS	00NR	0	25SP	G14_059	FROM->TO	GR ISLD-LNX3345.00 - GRAND ISLAND 345KV CKT Z	720	720	0.04271	108.8279	BLAIR - GRANITE FALLS 230KV CKT 1
FDNS	00NR	0	25SP	G14_059	FROM->TO	GR ISLD-LNX3345.00 - GRAND ISLAND 345KV CKT Z	720	720	0.04272	108.8264	MENNO JCT - TRIPP JCT 115KV CKT 1
FDNS	00NR	0	25SP	G14_059	FROM->TO	GR ISLD-LNX3345.00 - GRAND ISLAND 345KV CKT Z	720	720	0.04251	108.8223	SIDNEY - SIDNEY2-LNX3345.00 345KV CKT Z
FDNS	00NR	0	25SP	G14_059	FROM->TO	GR ISLD-LNX3345.00 - GRAND ISLAND 345KV CKT Z	720	720	0.04266	108.8166	GEN563212 1-G15087_3 0.6900
FDNS	00NR	0	25SP	G14_059	FROM->TO	GR ISLD-LNX3345.00 - GRAND ISLAND 345KV CKT Z	720	720	0.04281	108.7987	HUNTLEY3 345.00 - LEDYARD3 345.00 345KV CKT 1
FDNS	00NR	0	25SP	G14_059	FROM->TO	GR ISLD-LNX3345.00 - GRAND ISLAND 345KV CKT Z	720	720	0.0427	108.7885	FARGO - JAMES TOWN 230KV CKT 1
FDNS	00NR	0	25SP	G14_059	FROM->TO	GR ISLD-LNX3345.00 - GRAND ISLAND 345KV CKT Z	720	720	0.04372	108.7867	ATKINSON - EMMET 115KV CKT 1
FDNS	00NR	0	25SP	G14_059	FROM->TO	GR ISLD-LNX3345.00 - GRAND ISLAND 345KV CKT Z	720	720	0.04266	108.7781	P13:230:UMZW:# 2218 #: FP IN MT. LOSS OF TRANSFORMER (AT2).
FDNS	00NR	0	20SP	G14_059	FROM->TO	GR ISLD-LNX3345.00 - GRAND ISLAND 345KV CKT Z	720	720	0.03969	108.7747	G15088_T 345.00 - PAULINE 345KV CKT 1
FDNS	00NR	0	25SP	G14_059	FROM->TO	GR ISLD-LNX3345.00 - GRAND ISLAND 345KV CKT Z	720	720	0.0427	108.7732	FARGO - JAMES TOWN 230KV CKT 2
FDNS	00NR	0	25SP	G14_059	FROM->TO	GR ISLD-LNX3345.00 - GRAND ISLAND 345KV CKT Z	720	720	0.04169	108.773	MAXWELL - STAPLETON 115KV CKT 1
FDNS	00NR	0	20SP	G14_059	FROM->TO	GR ISLD-LNX3345.00 - GRAND ISLAND 345KV CKT Z	720	720	0.04023	108.7708	KELLY - SHELL CREEK 230KV CKT 1
FDNS	00NR	0	25SP	G14_059	FROM->TO	GR ISLD-LNX3345.00 - GRAND ISLAND 345KV CKT Z	720	720	0.04271	108.7655	BISMARK - JAMES TOWN 230KV CKT 1
FDNS	00NR	0	20SP	G14_059	FROM->TO	GR ISLD-LNX3345.00 - GRAND ISLAND 345KV CKT Z	720	720	0.04023	108.7628	SHELL CREEK (SHELLCREEKT1) 345/230/13.8KV TRANSFORMER CKT 1
FDNS	00NR	0	20SP	G14_059	FROM->TO	GR ISLD-LNX3345.00 - GRAND ISLAND 345KV CKT Z	720	720	0.04023	108.7628	SHELL CREEK (SHELLCREEKT1) 345/230/13.8KV TRANSFORMER CKT 1
FDNS	00NR	0	25SP	G14_059	FROM->TO	GR ISLD-LNX3345.00 - GRAND ISLAND 345KV CKT Z	720	720	0.04266	108.7589	GEN303008 1-1BC2 U3
FDNS	00NR	0	25SP	G14_059	FROM->TO	GR ISLD-LNX3345.00 - GRAND ISLAND 345KV CKT Z	720	720	0.04272	108.7578	MENNO JCT - UTICA 115KV CKT 1
FDNS	00NR	0	25SP	G14_059	FROM->TO	GR ISLD-LNX3345.00 - GRAND ISLAND 345KV CKT Z	720	720	0.04294	108.7561	GREGORY - WINNER 115KV CKT 1
FDNS	00NR	0	25SP	G14_059	FROM->TO	GR ISLD-LNX3345.00 - GRAND ISLAND 345KV CKT Z	720	720	0.04266	108.756	GEN336170 1-GULF OXY U4
FDNS	00NR	0	25SP	G14_059	FROM->TO	GR ISLD-LNX3345.00 - GRAND ISLAND 345KV CKT Z	720	720	0.04294	108.7516	P12:115:UMZW:# 172 #: WI IN SD.
FDNS	00NR	0	25SP	G14_059	FROM->TO	GR ISLD-LNX3345.00 - GRAND ISLAND 345KV CKT Z	720	720	0.04271	108.7462	JAMES TOWN - WEBER 230KV CKT 1
FDNS	00NR	0	25SP	G14_059	FROM->TO	GR ISLD-LNX3345.00 - GRAND ISLAND 345KV CKT Z	720	720	0.04267	108.74	BALTA - RAMSEY 230KV CKT 1
FDNS	00NR	0	25SP	G14_059	FROM->TO	GR ISLD-LNX3345.00 - GRAND ISLAND 345KV CKT Z	720	720	0.04264	108.7344	ARKANSAS NUCLEAR ONE - FT SMITH 500KV CKT 1
FDNS	00NR	0	25SP	G14_059	FROM->TO	GR ISLD-LNX3345.00 - GRAND ISLAND 345KV CKT Z	720	720	0.04264	108.7344	ARKANSAS NUCLEAR ONE - FT SMITH 500KV CKT 1
FDNS	00NR	0	25SP	G14_059	FROM->TO	GR ISLD-LNX3345.00 - GRAND ISLAND 345KV CKT Z	720	720	0.04272	108.7066	P12:115:UMZZ:# 237 #: MEN IN SD. MENNO JUNCTION IS A TAP (UJ-MEN-TP).
FDNS	00NR	0	25SP	G14_059	FROM->TO	GR ISLD-LNX3345.00 - GRAND ISLAND 345KV CKT Z	720	720	0.04268	108.7023	FORMAN - HANKINSON 230KV CKT 1
FDNS	00NR	0	25SP	G14_059	FROM->TO	GR ISLD-LNX3345.00 - GRAND ISLAND 345KV CKT Z	720	720	0.04266	108.7011	GEN501811 1-RODEMACHER UNIT 1
FDNS	00NR	0	25SP	G14_059	FROM->TO	GR ISLD-LNX3345.00 - GRAND ISLAND 345KV CKT Z	720	720	0.04274	108.6738	AXTELL - SWEETWATER 345KV CKT 1
FDNS	00NR	0	20SP	G14_059	FROM->TO	GR ISLD-LNX3345.00 - GRAND ISLAND 345KV CKT Z	720	720	0.04128	108.6218	LOUP CITY - ST LIBORY 115KV CKT 1
FDNS	00NR	0	20SP	G14_059	FROM->TO	GR ISLD-LNX3345.00 - GRAND ISLAND 345KV CKT Z	720	720	0.04032	108.5336	AURORA - GRAND ISLAND 115KV CKT 1
FDNS	00NR	0	20SP	G14_059	FROM->TO	GR ISLD-LNX3345.00 - GRAND ISLAND 345KV CKT Z	720	720	0.04039	108.5167	MOORE - NW68TH & HOLDREGE 345KV CKT 1
FDNS	00NR	0	20SP	G14_059	FROM->TO	GR ISLD-LNX3345.00 - GRAND ISLAND 345KV CKT Z	720	720	0.04039	108.5167	MOORE - NW68TH & HOLDREGE 345KV CKT 1
FDNS	00NR	0	25SP	G14_059	FROM->TO	GR ISLD-LNX3345.00 - GRAND ISLAND 345KV CKT Z	720	720	0.03922	108.4487	COLUMWEST - KELLY 230KV CKT 1
FDNS	00NR	0	25SP	G14_059	FROM->TO	GR ISLD-LNX3345.00 - GRAND ISLAND 345KV CKT Z	720	720	0.04166	108.4269	103RD & ROKEBY - SUB 3458 NEB CTY 345KV CKT 1
FDNS	00NR	0	25SP	G14_059	FROM->TO	GR ISLD-LNX3345.00 - GRAND ISLAND 345KV CKT Z	720	720	0.04166	108.4269	103RD & ROKEBY - SUB 3458 NEB CTY 345KV CKT 1
FDNS	00NR	0	20SP	G14_059	FROM->TO	GR ISLD-LNX3345.00 - GRAND ISLAND 345KV CKT Z	720	720	0.04006	108.4164	SUB 3454 - WAGENER 345KV CKT 1
FDNS	00NR	0	20SP	G14_059	FROM->TO	GR ISLD-LNX3345.00 - GRAND ISLAND 345KV CKT Z	720	720	0.04006	108.4164	SUB 3454 - WAGENER 345KV CKT 1
FDNS	00NR	0	20SP	G14_059	FROM->TO	GR ISLD-LNX3345.00 - GRAND ISLAND 345KV CKT Z	720	720	0.03932	108.4006	MAXWELL - NORTH PLATTE 115KV CKT 1
FDNS	00NR	0	20SP	G14_059	FROM->TO	GR ISLD-LNX3345.00 - GRAND ISLAND 345KV CKT Z	720	720	0.04061	108.3972	FALLOW 3 345.00 - GRIMES 345KV CKT 1
FDNS	00NR	0	20SP	G14_059	FROM->TO	GR ISLD-LNX3345.00 - GRAND ISLAND 345KV CKT Z	720	720	0.04054	108.3961	GEN600047 1-MECCT1
FDNS	00NR	0	20SP	G14_059	FROM->TO	GR ISLD-LNX3345.00 - GRAND ISLAND 345KV CKT Z	720	720	0.04156	108.3957	ATCHSNT3 345.00 - BOONEVILLE 345KV CKT 1
FDNS	00NR	0	20SP	G14_059	FROM->TO	GR ISLD-LNX3345.00 - GRAND ISLAND 345KV CKT Z	720	720	0.04054	108.392	GEN 11104 1-J262_GEN 0.6000
FDNS	00NR	0	20SP	G14_059	FROM->TO	GR ISLD-LNX3345.00 - GRAND ISLAND 345KV CKT Z	720	720	0.04054	108.392	GEN 11108 1-J263_GEN 0.6000
FDNS	00NR	0	20SP	G14_059	FROM->TO	GR ISLD-LNX3345.00 - GRAND ISLAND 345KV CKT Z	720	720	0.04054	108.386	GEN600063 1-COLVILLE GEN 1
FDNS	00NR	0	20SP	G14_059	FROM->TO	GR ISLD-LNX3345.00 - GRAND ISLAND 345KV CKT Z	720	720	0.04054	108.386	GEN600064 2-COLVILLE GEN 2
FDNS	00NR	0	20SP	G14_059	FROM->TO	GR ISLD-LNX3345.00 - GRAND ISLAND 345KV CKT Z	720	720	0.04052	108.3848	BRDLAND-LNX3345.00 - HURON 345KV CKT Z
FDNS	00NR	0	20SP	G14_059	FROM->TO	GR ISLD-LNX3345.00 - GRAND ISLAND 345KV CKT Z	720	720	0.04052	108.3844	BROADLAND - HURON 230KV CKT 1
FDNS	00NR	0	20SP	G14_059	FROM->TO	GR ISLD-LNX3345.00 - GRAND ISLAND 345KV CKT Z	720	720	0.04052	108.3843	HURON (BD KU2A) 345/230/13.8KV TRANSFORMER CKT 1
FDNS	00NR	0	20SP	G14_059	FROM->TO	GR ISLD-LNX3345.00 - GRAND ISLAND 345KV CKT Z	720	720	0.04052	108.3843	HURON (BD KU2A) 345/230/13.8KV TRANSFORMER CKT 1
FDNS	00NR	0	20SP	G14_059	FROM->TO	GR ISLD-LNX3345.00 - GRAND ISLAND 345KV CKT Z	720	720	0.04052	108.3833	P12:345:UMZB:# 102 #: AVS BD IN ND. AVS BRD LR
FDNS	00NR	0	20SP	G14_059	FROM->TO	GR ISLD-LNX3345.00 - GRAND ISLAND 345KV CKT Z	720	720	0.04052	108.3827	P12:345:UMZB:# 103 #: BD IN SD. LOSS OF LINE
FDNS	00NR	0	20SP	G14_059	FROM->TO	GR ISLD-LNX3345.00 - GRAND ISLAND 345KV CKT Z	720	720	0.04054	108.3824	GEN681522 3-GENOA 3
FDNS	00NR	0	20SP	G14_059	FROM->TO	GR ISLD-LNX3345.00 - GRAND ISLAND 345KV CKT Z	720	720	0.04054	108.3795	G830_SUB 115.00 - GRE-MCHENRY7115.00 115KV CKT 1
FDNS	00NR	0	20SP	G14_059	FROM->TO	GR ISLD-LNX3345.00 - GRAND ISLAND 345KV CKT Z	720	720	0.04054	108.3766	G830_SUB 115.00 115/34.5KV TRANSFORMER CKT 1
FDNS	00NR	0	20SP	G14_059	FROM->TO	GR ISLD-LNX3345.00 - GRAND ISLAND 345KV CKT Z	720	720	0.04054	108.3685	GEN600043 7-BLUE LAKE5
FDNS	00NR	0	20SP	G14_059	FROM->TO	GR ISLD-LNX3345.00 - GRAND ISLAND 345KV CKT Z	720	720	0.04054	108.3685	GEN600044 8-BLUE LAKE6
FDNS	00NR	0	20SP	G14_059	FROM->TO	GR ISLD-LNX3345.00 - GRAND ISLAND 345KV CKT Z	720	720	0.04092	108.3679	OAHE - SULLEY BUTTE 230KV CKT 1
FDNS	00NR	0	20SP	G14_059	FROM->TO	GR ISLD-LNX3345.00 - GRAND ISLAND 345KV CKT Z	720	720	0.04054	108.3501	GEN600014 4-BLACK DOG GEN 4
FDNS	00NR	0	20SP	G14_059	FROM->TO	GR ISLD-LNX3345.00 - GRAND ISLAND 345KV CKT Z	720	720	0.04054	108.3496	GEN600065 7-HIGH BRIDGE
FDNS	00NR	0	20SP	G14_059	FROM->TO	GR ISLD-LNX3345.00 - GRAND ISLAND 345KV CKT Z	720	720	0.04054	108.3496	GEN600066 8-HIGH BRIDGE
FDNS	00NR	0	20SP	G14_059	FROM->TO	GR ISLD-LNX3345.00 - GRAND ISLAND 345KV CKT Z	720	720	0.04054	108.3452	GEN600011 5-BLACK DOG GEN 1
FDNS	00NR	0	20SP	G14_059	FROM->TO	GR ISLD-LNX3345.00 - GRAND ISLAND 345KV CKT Z	720	720	0.04054	108.3406	GEN600071 10-RIVER SIDE
FDNS	00NR	0	20SP	G14_059	FROM->TO	GR ISLD-LNX3345.00 - GRAND ISLAND 345KV CKT Z	720	720	0.04054	108.3404	GEN600070 9-RIVER SIDE
FDNS	00NR	0	20SP	G14_059	FROM->TO	GR ISLD-LNX3345.00 - GRAND ISLAND 345KV CKT Z	720	720	0.04054	108.3338	GEN659273 2-GROTON SYNC COND
FDNS	00NR	0	20SP	G14_059	FROM->TO	GR ISLD-LNX3345.00 - GRAND ISLAND 345KV CKT Z	720	720	0.04054	108.3338	GEN659294 1-WILTONCOL9

SOLUTION	GROUP	SCENARIO	SEASON	SOURCE	DIRECTION	MONITORED ELEMENT	RATEA (MVA)	RATEB(MVA)	TDF	TC%LOADING (% MVA)	CONTINGENCY
FDNS	00NR	0	20SP	G14_059	FROM->TO	GR ISLD-LNX3345.00 - GRAND ISLAND 345KV CKT Z	720	720	0.04054	108.3322	GEN600007 7-RIVERSIDE GEN 7
FDNS	00NR	0	20SP	G14_059	FROM->TO	GR ISLD-LNX3345.00 - GRAND ISLAND 345KV CKT Z	720	720	0.04054	108.3196	GEN600017 C-LS POWER CT
FDNS	00NR	0	20SP	G14_059	FROM->TO	GR ISLD-LNX3345.00 - GRAND ISLAND 345KV CKT Z	720	720	0.03969	108.3186	G15088_T 345.00 - MOORE 345KV CKT 1
FDNS	00NR	0	20SP	G14_059	FROM->TO	GR ISLD-LNX3345.00 - GRAND ISLAND 345KV CKT Z	720	720	0.04005	108.3099	GRAND ISLAND (GRAND.ISD T5) 230/115/13.8KV TRANSFORMER CKT 2
FDNS	00NR	0	20SP	G14_059	FROM->TO	GR ISLD-LNX3345.00 - GRAND ISLAND 345KV CKT Z	720	720	0.04005	108.3099	GRAND ISLAND (GRAND.ISD T5) 230/115/13.8KV TRANSFORMER CKT 2
FDNS	00NR	0	20SP	G14_059	FROM->TO	GR ISLD-LNX3345.00 - GRAND ISLAND 345KV CKT Z	720	720	0.04054	108.3078	LANSING WEST 161/22.0KV TRANSFORMER CKT 1
FDNS	00NR	0	20SP	G14_059	FROM->TO	GR ISLD-LNX3345.00 - GRAND ISLAND 345KV CKT Z	720	720	0.04004	108.3064	GRAND ISLAND (GRAND.ISD T2) 230/115/13.8KV TRANSFORMER CKT 1
FDNS	00NR	0	20SP	G14_059	FROM->TO	GR ISLD-LNX3345.00 - GRAND ISLAND 345KV CKT Z	720	720	0.04004	108.3064	GRAND ISLAND (GRAND.ISD T2) 230/115/13.8KV TRANSFORMER CKT 1
FDNS	00NR	0	20SP	G14_059	FROM->TO	GR ISLD-LNX3345.00 - GRAND ISLAND 345KV CKT Z	720	720	0.04054	108.2913	GEN659031 1-G12_014IS_4 0.6900
FDNS	00NR	0	20SP	G14_059	FROM->TO	GR ISLD-LNX3345.00 - GRAND ISLAND 345KV CKT Z	720	720	0.04052	108.2876	ANTELOP-LNX3345.00 - ANTELOPE VALLEY 345KV CKT Z
FDNS	00NR	0	20SP	G14_059	FROM->TO	GR ISLD-LNX3345.00 - GRAND ISLAND 345KV CKT Z	720	720	0.04054	108.2871	GEN659192 6-LYNN
FDNS	00NR	0	20SP	G14_059	FROM->TO	GR ISLD-LNX3345.00 - GRAND ISLAND 345KV CKT Z	720	720	0.04054	108.2863	GEN659162 4-RED WLCK
FDNS	00NR	0	20SP	G14_059	FROM->TO	GR ISLD-LNX3345.00 - GRAND ISLAND 345KV CKT Z	720	720	0.04054	108.2863	GEN659163 5-BLACK WDCK
FDNS	00NR	0	20SP	G14_059	FROM->TO	GR ISLD-LNX3345.00 - GRAND ISLAND 345KV CKT Z	720	720	0.04054	108.2743	GEN615052 1-CAMBRIDGE GENERATING STATION
FDNS	00NR	0	20SP	G14_059	FROM->TO	GR ISLD-LNX3345.00 - GRAND ISLAND 345KV CKT Z	720	720	0.04092	108.2666	COOPER - FAIRPORT 345KV CKT 1
FDNS	00NR	0	20SP	G14_059	FROM->TO	GR ISLD-LNX3345.00 - GRAND ISLAND 345KV CKT Z	720	720	0.04092	108.2666	COOPER - FAIRPORT 345KV CKT 1
FDNS	00NR	0	20SP	G14_059	FROM->TO	GR ISLD-LNX3345.00 - GRAND ISLAND 345KV CKT Z	720	720	0.04054	108.2665	GEN600045 4-ANSON
FDNS	00NR	0	20SP	G14_059	FROM->TO	GR ISLD-LNX3345.00 - GRAND ISLAND 345KV CKT Z	720	720	0.04029	108.2649	POST ROCK (POSTROCK T1) 345/230/13.8KV TRANSFORMER CKT 1
FDNS	00NR	0	20SP	G14_059	FROM->TO	GR ISLD-LNX3345.00 - GRAND ISLAND 345KV CKT Z	720	720	0.04054	108.2637	GEN615021 1-GRE-ER 14G 16.000
FDNS	00NR	0	20SP	G14_059	FROM->TO	GR ISLD-LNX3345.00 - GRAND ISLAND 345KV CKT Z	720	720	0.04054	108.2588	GEN 10648 1-G830_GEN 0.6900
FDNS	00NR	0	20SP	G14_059	FROM->TO	GR ISLD-LNX3345.00 - GRAND ISLAND 345KV CKT Z	720	720	0.04092	108.256	SULLYBT-LNX3230.00 - WHITLOK 230KV CKT 1
FDNS	00NR	0	20SP	G14_059	FROM->TO	GR ISLD-LNX3345.00 - GRAND ISLAND 345KV CKT Z	720	720	0.04092	108.253	SULLEY BUTTE - SULLYBT-LNX3230.00 230KV CKT Z
FDNSLock	00NR	0	20SP	G14_059	FROM->TO	GR ISLD-LNX3345.00 - GRAND ISLAND 345KV CKT Z	720	720	0.0403	108.2306	MCCOOL (MCCOOL T2) 345/115/13.8KV TRANSFORMER CKT 1
FDNS	00NR	0	20SP	G14_059	FROM->TO	GR ISLD-LNX3345.00 - GRAND ISLAND 345KV CKT Z	720	720	0.04054	108.2259	GEN615015 1-GRE-SPRITWDG13.200
FDNS	00NR	0	20SP	G14_059	FROM->TO	GR ISLD-LNX3345.00 - GRAND ISLAND 345KV CKT Z	720	720	0.04012	108.22	GRAND ISLAND (GI KU1B) 345/230/13.8KV TRANSFORMER CKT 2
FDNS	00NR	0	20SP	G14_059	FROM->TO	GR ISLD-LNX3345.00 - GRAND ISLAND 345KV CKT Z	720	720	0.04012	108.22	GRAND ISLAND (GI KU1B) 345/230/13.8KV TRANSFORMER CKT 2
FDNS	00NR	0	20SP	G14_059	FROM->TO	GR ISLD-LNX3345.00 - GRAND ISLAND 345KV CKT Z	720	720	0.04012	108.2186	GRAND ISLAND (GI KU1A) 345/230/13.8KV TRANSFORMER CKT 1
FDNS	00NR	0	20SP	G14_059	FROM->TO	GR ISLD-LNX3345.00 - GRAND ISLAND 345KV CKT Z	720	720	0.04012	108.2186	GRAND ISLAND (GI KU1A) 345/230/13.8KV TRANSFORMER CKT 1
FDNS	00NR	0	20SP	G14_059	FROM->TO	GR ISLD-LNX3345.00 - GRAND ISLAND 345KV CKT Z	720	720	0.04092	108.2141	P12:230:UMZB:# 114 #: SB IN SD. SB-WK-GH
FDNS	00NR	0	20SP	G14_059	FROM->TO	GR ISLD-LNX3345.00 - GRAND ISLAND 345KV CKT Z	720	720	0.04092	108.2141	P12:230:UMZB:# 117 #: WK IN SD. SB-WK-GH
FDNS	00NR	0	20SP	G14_059	FROM->TO	GR ISLD-LNX3345.00 - GRAND ISLAND 345KV CKT Z	720	720	0.04057	108.2111	DIXONCO 230.00 - TWIN CHURCH 230KV CKT 1
FDNS	00NR	0	25SP	G14_059	FROM->TO	GR ISLD-LNX3345.00 - GRAND ISLAND 345KV CKT Z	720	720	0.04266	108.1925	BASE CASE
FDNS	00NR	0	20SP	G14_059	FROM->TO	GR ISLD-LNX3345.00 - GRAND ISLAND 345KV CKT Z	720	720	0.04054	108.1842	GEN660016 1-B_H WIND 0.7000
FDNS	00NR	0	20SP	G14_059	FROM->TO	GR ISLD-LNX3345.00 - GRAND ISLAND 345KV CKT Z	720	720	0.04092	108.1821	GLENHAM - WHITLOK 230KV CKT 1
FDNS	00NR	0	20SP	G14_059	FROM->TO	GR ISLD-LNX3345.00 - GRAND ISLAND 345KV CKT Z	720	720	0.04054	108.1627	BISONMP4 230.00 - SQUARE BUTTE 230KV CKT 1
FDNS	00NR	0	20SP	G14_059	FROM->TO	GR ISLD-LNX3345.00 - GRAND ISLAND 345KV CKT Z	720	720	0.04054	108.1478	GEN659353 1-DEERCREK CTG18.000
FDNS	00NR	0	20SP	G14_059	FROM->TO	GR ISLD-LNX3345.00 - GRAND ISLAND 345KV CKT Z	720	720	0.04054	108.1468	GEN659354 1-DEERCREK STG18.000
FDNS	00NR	0	20SP	G14_059	FROM->TO	GR ISLD-LNX3345.00 - GRAND ISLAND 345KV CKT Z	720	720	0.04096	108.1326	COPSTJCPFRSJ
FDNS	00NR	0	20SP	G14_059	FROM->TO	GR ISLD-LNX3345.00 - GRAND ISLAND 345KV CKT Z	720	720	0.04096	108.1326	P12:345:NPPD:3517:COOPER 3:ST JOE 3:BTB
FDNS	00NR	0	20SP	G14_059	FROM->TO	GR ISLD-LNX3345.00 - GRAND ISLAND 345KV CKT Z	720	720	0.04096	108.1326	STMDSJFAFACO
FDNS	00NR	0	20SP	G14_059	FROM->TO	GR ISLD-LNX3345.00 - GRAND ISLAND 345KV CKT Z	720	720	0.04054	108.1196	GEN672303 3-BOUNDARY DAM GENERATOR 3
FDNS	00NR	0	20SP	G14_059	FROM->TO	GR ISLD-LNX3345.00 - GRAND ISLAND 345KV CKT Z	720	720	0.04054	108.1196	GEN672304 4-BOUNDARY DAM GENERATOR 4
FDNS	00NR	0	20SP	G14_059	FROM->TO	GR ISLD-LNX3345.00 - GRAND ISLAND 345KV CKT Z	720	720	0.04054	108.1196	GEN672305 5-BOUNDARY DAM GENERATOR 5
FDNS	00NR	0	20SP	G14_059	FROM->TO	GR ISLD-LNX3345.00 - GRAND ISLAND 345KV CKT Z	720	720	0.04054	108.1162	GEN600067 9-HIGH BRIDGE
FDNS	00NR	0	25SP	G14_059	FROM->TO	GR ISLD-LNX3345.00 - GRAND ISLAND 345KV CKT Z	720	720	0.04238	108.0965	KELLY - SHELL CREEK 230KV CKT 1
FDNS	00NR	0	25SP	G14_059	FROM->TO	GR ISLD-LNX3345.00 - GRAND ISLAND 345KV CKT Z	720	720	0.04238	108.0903	SHELL CREEK (SHELLCREEKT1) 345/230/13.8KV TRANSFORMER CKT 1
FDNS	00NR	0	25SP	G14_059	FROM->TO	GR ISLD-LNX3345.00 - GRAND ISLAND 345KV CKT Z	720	720	0.04238	108.0903	SHELL CREEK (SHELLCREEKT1) 345/230/13.8KV TRANSFORMER CKT 1
FDNS	00NR	0	20SP	G14_059	FROM->TO	GR ISLD-LNX3345.00 - GRAND ISLAND 345KV CKT Z	720	720	0.04054	108.0827	GEN672392 1-NBECGT1G 18.000
FDNS	00NR	0	20SP	G14_059	FROM->TO	GR ISLD-LNX3345.00 - GRAND ISLAND 345KV CKT Z	720	720	0.03925	108.0568	AXTELL - POST ROCK 345KV CKT 1
FDNS	00NR	0	20SP	G14_059	FROM->TO	GR ISLD-LNX3345.00 - GRAND ISLAND 345KV CKT Z	720	720	0.04054	108.0514	GEN662101 1-WESSINGTON190.5750
FDNS	00NR	0	20SP	G14_059	FROM->TO	GR ISLD-LNX3345.00 - GRAND ISLAND 345KV CKT Z	720	720	0.0375	108.0313	COOPER - MOORE 345KV CKT 1
FDNSLock	00NR	0	20SP	G14_059	FROM->TO	GR ISLD-LNX3345.00 - GRAND ISLAND 345KV CKT Z	720	720	0.03998	108.025	CENTRAL CITY - GRAND ISLAND 115KV CKT 1
FDNS	00NR	0	20SP	G14_059	FROM->TO	GR ISLD-LNX3345.00 - GRAND ISLAND 345KV CKT Z	720	720	0.04054	108.0121	CENTER 230/22.0KV TRANSFORMER CKT 1
FDNS	00NR	0	20SP	G14_059	FROM->TO	GR ISLD-LNX3345.00 - GRAND ISLAND 345KV CKT Z	720	720	0.04054	108.0098	GEN910006 1-G12_012IS_3 0.6900
FDNS	00NR	0	20SP	G14_059	FROM->TO	GR ISLD-LNX3345.00 - GRAND ISLAND 345KV CKT Z	720	720	0.03953	108.008	103RD & ROKEBY - MOORE 345KV CKT 1
FDNS	00NR	0	20SP	G14_059	FROM->TO	GR ISLD-LNX3345.00 - GRAND ISLAND 345KV CKT Z	720	720	0.03953	108.008	103RD & ROKEBY - MOORE 345KV CKT 1
FDNS	00NR	0	20SP	G14_059	FROM->TO	GR ISLD-LNX3345.00 - GRAND ISLAND 345KV CKT Z	720	720	0.04054	107.9829	GEN681542 6-JP MADGETT
FDNS	00NR	0	25SP	G14_059	FROM->TO	GR ISLD-LNX3345.00 - GRAND ISLAND 345KV CKT Z	720	720	0.04684	107.9691	GRAND ISLAND - RIVERDALE 230KV CKT 1
FDNS	00NR	0	20SP	G14_059	FROM->TO	GR ISLD-LNX3345.00 - GRAND ISLAND 345KV CKT Z	720	720	0.04114	107.9544	COOPER - ST JOE 345KV CKT 1
FDNS	00NR	0	20SP	G14_059	FROM->TO	GR ISLD-LNX3345.00 - GRAND ISLAND 345KV CKT Z	720	720	0.04072	107.9405	G14-021T 345.00 - MULLNCR7 345.00 345KV CKT 1
FDNS	00NR	0	20SP	G14_059	FROM->TO	GR ISLD-LNX3345.00 - GRAND ISLAND 345KV CKT Z	720	720	0.03687	107.9365	COLUMWEST - GRAND ISLAND 230KV CKT 1
FDNS	00NR	0	20SP	G14_059	FROM->TO	GR ISLD-LNX3345.00 - GRAND ISLAND 345KV CKT Z	720	720	0.04072	107.9354	G15-005T 345.00 - MULLNCR7 345.00 345KV CKT 1
FDNS	00NR	0	20SP	G14_059	FROM->TO	GR ISLD-LNX3345.00 - GRAND ISLAND 345KV CKT Z	720	720	0.04054	107.8849	GEN659289 1-DAYCNTYWND W0.6900
FDNS	00NR	0	20SP	G14_059	FROM->TO	GR ISLD-LNX3345.00 - GRAND ISLAND 345KV CKT Z	720	720	0.03992	107.8846	GRAND ISLAND (GI KU3A) 345/230/13.8KV TRANSFORMER CKT 3
FDNS	00NR	0	20SP	G14_059	FROM->TO	GR ISLD-LNX3345.00 - GRAND ISLAND 345KV CKT Z	720	720	0.03992	107.8846	GRAND ISLAND (GI KU3A) 345/230/13.8KV TRANSFORMER CKT 3
FDNS	00NR	0	20SP	G14_059	FROM->TO	GR ISLD-LNX3345.00 - GRAND ISLAND 345KV CKT Z	720	720	0.04054	107.881	CLAY BOSWELL 230/20.9KV TRANSFORMER CKT 1
FDNS	00NR	0	25SP	G14_059	FROM->TO	GR ISLD-LNX3345.00 - GRAND ISLAND 345KV CKT Z	720	720	0.0435	107.8609	LOUP CITY - ST LIBORY 115KV CKT 1
FDNS	00NR	0	20SP	G14_059	FROM->TO	GR ISLD-LNX3345.00 - GRAND ISLAND 345KV CKT Z	720	720	0.04054	107.8595	GEN563312 1-G15097_3 0.6900
FDNS	00NR	0	20SP	G14_059	FROM->TO	GR ISLD-LNX3345.00 - GRAND ISLAND 345KV CKT Z	720	720	0.04072	107.852	G15-005T 345.00 - SIBLEY 345KV CKT 1
FDNS	00NR	0	25SP	G14_059	FROM->TO	GR ISLD-LNX3345.00 - GRAND ISLAND 345KV CKT Z	720	720	0.04248	107.8399	AURORA - GRAND ISLAND 115KV CKT 1
FDNS	00NR	0	20SP	G14_059	FROM->TO	GR ISLD-LNX3345.00 - GRAND ISLAND 345KV CKT Z	720	720	0.04054	107.8252	GEN659018 1-G14_003IS_3 0.6900
FDNS	00NR	0	20SP	G14_059	FROM->TO	GR ISLD-LNX3345.00 - GRAND ISLAND 345KV CKT Z	720	720	0.04054	107.8151	GEN652543 3-BIG BEND
FDNS	00NR	0	25SP	G14_059	FROM->TO	GR ISLD-LNX3345.00 - GRAND ISLAND 345KV CKT Z	720	720	0.04222	107.785	SUB 3454 - WAGENER 345KV CKT 1
FDNS	00NR	0	25SP	G14_059	FROM->TO	GR ISLD-LNX3345.00 - GRAND ISLAND 345KV CKT Z	720	720	0.04222	107.785	SUB 3454 - WAGENER 345KV CKT 1
FDNS	00NR	0	20SP	G14_059	FROM->TO	GR ISLD-LNX3345.00 - GRAND ISLAND 345KV CKT Z	720	720	0.04054	107.7741	GEN562596 1-G14_059_3 0.6900
FDNS	00NR	0	20SP	G14_059	FROM->TO	GR ISLD-LNX3345.00 - GRAND ISLAND 345KV CKT Z	720	720	0.04092	107.7544	GLENHAM - L3 HAWDON 230KV CKT 1
FDNS	00NR	0	20SP	G14_059	FROM->TO	GR ISLD-LNX3345.00 - GRAND ISLAND 345KV CKT Z	720	720	0.04054	107.7509	GEN659194 1-NDPRAIRWND1W0.6900
FDNS	00NR	0	20SP	G14_059	FROM->TO	GR ISLD-LNX3345.00 - GRAND ISLAND 345KV CKT Z	720	720	0.04054	107.7481	GEN659010 4-G07_027IS_2 0.6900
FDNS	00NR	0	20SP	G14_059	FROM->TO	GR ISLD-LNX3345.00 - GRAND ISLAND 345KV CKT Z	720	720	0.04054	107.7405	GEN652460 4-GARRISON

SOLUTION	GROUP	SCENARIO	SEASON	SOURCE	DIRECTION	MONITORED ELEMENT	RATEA (MVA)	RATEB(MVA)	TDF	TC%LOADING (% MVA)	CONTINGENCY
FDNS	00NR	0	20SP	G14_059	FROM->TO	GR ISLD-LNX3345.00 - GRAND ISLAND 345KV CKT Z	720	720	0.04054	107.7405	GEN652461 5-GARRISON
FDNS	00NR	0	25SP	G14_059	FROM->TO	GR ISLD-LNX3345.00 - GRAND ISLAND 345KV CKT Z	720	720	0.04265	107.7285	BRDLAND-LNX3345.00 - HURON 345KV CKT Z
FDNS	00NR	0	25SP	G14_059	FROM->TO	GR ISLD-LNX3345.00 - GRAND ISLAND 345KV CKT Z	720	720	0.04265	107.7279	BROADLAND - HURON 230KV CKT 1
FDNS	00NR	0	25SP	G14_059	FROM->TO	GR ISLD-LNX3345.00 - GRAND ISLAND 345KV CKT Z	720	720	0.04265	107.7279	HURON (BD KU2A) 345/230/13.8KV TRANSFORMER CKT 1
FDNS	00NR	0	25SP	G14_059	FROM->TO	GR ISLD-LNX3345.00 - GRAND ISLAND 345KV CKT Z	720	720	0.04265	107.7279	HURON (BD KU2A) 345/230/13.8KV TRANSFORMER CKT 1
FDNS	00NR	0	25SP	G14_059	FROM->TO	GR ISLD-LNX3345.00 - GRAND ISLAND 345KV CKT Z	720	720	0.04265	107.7277	P12:345:UMZB:# 102 #: AVS BD IN ND. AVS BRD LR
FDNS	00NR	0	25SP	G14_059	FROM->TO	GR ISLD-LNX3345.00 - GRAND ISLAND 345KV CKT Z	720	720	0.04265	107.727	P12:345:UMZB:# 103 #: BD IN SD. LOSS OF LINE
FDNS	00NR	0	20SP	G14_059	FROM->TO	GR ISLD-LNX3345.00 - GRAND ISLAND 345KV CKT Z	720	720	0.04054	107.7114	COYOTE 345/24.0KV TRANSFORMER CKT 1
FDNS	00NR	0	20SP	G14_059	FROM->TO	GR ISLD-LNX3345.00 - GRAND ISLAND 345KV CKT Z	720	720	0.04054	107.7027	GEN652457 1-GARRISON
FDNS	00NR	0	20SP	G14_059	FROM->TO	GR ISLD-LNX3345.00 - GRAND ISLAND 345KV CKT Z	720	720	0.04054	107.7026	GEN652458 2-GARRISON
FDNS	00NR	0	20SP	G14_059	FROM->TO	GR ISLD-LNX3345.00 - GRAND ISLAND 345KV CKT Z	720	720	0.04054	107.7026	GEN652459 3-GARRISON
FDNS	00NR	0	25SP	G14_059	FROM->TO	GR ISLD-LNX3345.00 - GRAND ISLAND 345KV CKT Z	720	720	0.04184	107.7006	G15088_T 345.00 - MOORE 345KV CKT 1
FDNS	00NR	0	25SP	G14_059	FROM->TO	GR ISLD-LNX3345.00 - GRAND ISLAND 345KV CKT Z	720	720	0.04304	107.6864	OAHE - SULLEY BUTTE 230KV CKT 1
FDNS	00NR	0	25SP	G14_059	FROM->TO	GR ISLD-LNX3345.00 - GRAND ISLAND 345KV CKT Z	720	720	0.04141	107.6753	MAXWELL - NORTH PLATTE 115KV CKT 1
FDNS	00NR	0	20SP	G14_059	FROM->TO	GR ISLD-LNX3345.00 - GRAND ISLAND 345KV CKT Z	720	720	0.04054	107.6687	GEN652542 1-BIG BEND
FDNS	00NR	0	25SP	G14_059	FROM->TO	GR ISLD-LNX3345.00 - GRAND ISLAND 345KV CKT Z	720	720	0.04266	107.6671	GEN 11104 1-J262_GEN 0.6000
FDNS	00NR	0	25SP	G14_059	FROM->TO	GR ISLD-LNX3345.00 - GRAND ISLAND 345KV CKT Z	720	720	0.04266	107.6671	GEN 11108 1-J263_GEN 0.6000
FDNS	00NR	0	25SP	G14_059	FROM->TO	GR ISLD-LNX3345.00 - GRAND ISLAND 345KV CKT Z	720	720	0.04266	107.6649	GEN600046 1-MECST
FDNS	00NR	0	25SP	G14_059	FROM->TO	GR ISLD-LNX3345.00 - GRAND ISLAND 345KV CKT Z	720	720	0.04266	107.6614	G830_SUB 115.00 - GRE-MCHENRY7115.00 115KV CKT 1
FDNS	00NR	0	25SP	G14_059	FROM->TO	GR ISLD-LNX3345.00 - GRAND ISLAND 345KV CKT Z	720	720	0.04266	107.6607	G830_SUB 115.00 115/34.5KV TRANSFORMER CKT 1
FDNS	00NR	0	25SP	G14_059	FROM->TO	GR ISLD-LNX3345.00 - GRAND ISLAND 345KV CKT Z	720	720	0.04274	107.6563	FALLOW 3 345.00 - GRIMES 345KV CKT 1
FDNS	00NR	0	25SP	G14_059	FROM->TO	GR ISLD-LNX3345.00 - GRAND ISLAND 345KV CKT Z	720	720	0.04266	107.6527	GEN600047 1-MECCT1
FDNS	00NR	0	20SP	G14_059	FROM->TO	GR ISLD-LNX3345.00 - GRAND ISLAND 345KV CKT Z	720	720	0.04054	107.6516	GEN563342 1-G15098_3 0.6900
FDNS	00NR	0	20SP	G14_059	FROM->TO	GR ISLD-LNX3345.00 - GRAND ISLAND 345KV CKT Z	720	720	0.04054	107.6505	GEN563282 1-G15094_3 0.6900
FDNS	00NR	0	20SP	G14_059	FROM->TO	GR ISLD-LNX3345.00 - GRAND ISLAND 345KV CKT Z	720	720	0.04054	107.6484	GEN659403 1-NDSUNFLWR W0.6900
FDNS	00NR	0	25SP	G14_059	FROM->TO	GR ISLD-LNX3345.00 - GRAND ISLAND 345KV CKT Z	720	720	0.04266	107.6453	GEN600063 1-COLVILLE GEN 1
FDNS	00NR	0	25SP	G14_059	FROM->TO	GR ISLD-LNX3345.00 - GRAND ISLAND 345KV CKT Z	720	720	0.04266	107.6453	GEN600064 2-COLVILLE GEN 2
FDNS	00NR	0	25SP	G14_059	FROM->TO	GR ISLD-LNX3345.00 - GRAND ISLAND 345KV CKT Z	720	720	0.04266	107.6316	GEN600043 7-BLUE LAKE5
FDNS	00NR	0	25SP	G14_059	FROM->TO	GR ISLD-LNX3345.00 - GRAND ISLAND 345KV CKT Z	720	720	0.04266	107.6316	GEN600044 8-BLUE LAKE6
FDNS	00NR	0	25SP	G14_059	FROM->TO	GR ISLD-LNX3345.00 - GRAND ISLAND 345KV CKT Z	720	720	0.04265	107.6292	ANTELOP-LNX3345.00 - ANTELOPE VALLEY 345KV CKT Z
FDNS	00NR	0	25SP	G14_059	FROM->TO	GR ISLD-LNX3345.00 - GRAND ISLAND 345KV CKT Z	720	720	0.04266	107.6192	GEN681522 3-GENOA 3
FDNS	00NR	0	25SP	G14_059	FROM->TO	GR ISLD-LNX3345.00 - GRAND ISLAND 345KV CKT Z	720	720	0.04266	107.6184	GEN659273 2-GROTON SYNC COND
FDNS	00NR	0	25SP	G14_059	FROM->TO	GR ISLD-LNX3345.00 - GRAND ISLAND 345KV CKT Z	720	720	0.04266	107.6184	GEN659294 1-WILTONCOL9
FDNS	00NR	0	25SP	G14_059	FROM->TO	GR ISLD-LNX3345.00 - GRAND ISLAND 345KV CKT Z	720	720	0.04266	107.6108	GEN600065 7-HIGH BRIDGE
FDNS	00NR	0	25SP	G14_059	FROM->TO	GR ISLD-LNX3345.00 - GRAND ISLAND 345KV CKT Z	720	720	0.04266	107.6108	GEN600066 8-HIGH BRIDGE
FDNS	00NR	0	25SP	G14_059	FROM->TO	GR ISLD-LNX3345.00 - GRAND ISLAND 345KV CKT Z	720	720	0.04304	107.6101	COOPER - FAIRPORT 345KV CKT 1
FDNS	00NR	0	25SP	G14_059	FROM->TO	GR ISLD-LNX3345.00 - GRAND ISLAND 345KV CKT Z	720	720	0.04266	107.6101	GEN600014 4-BLACK DOG GEN 4
FDNS	00NR	0	25SP	G14_059	FROM->TO	GR ISLD-LNX3345.00 - GRAND ISLAND 345KV CKT Z	720	720	0.04266	107.6063	GEN600011 5-BLACK DOG GEN 1
FDNS	00NR	0	25SP	G14_059	FROM->TO	GR ISLD-LNX3345.00 - GRAND ISLAND 345KV CKT Z	720	720	0.04266	107.6018	GEN600071 10-RIVER SIDE
FDNS	00NR	0	25SP	G14_059	FROM->TO	GR ISLD-LNX3345.00 - GRAND ISLAND 345KV CKT Z	720	720	0.04266	107.6017	GEN600070 9-RIVER SIDE
FDNS	00NR	0	25SP	G14_059	FROM->TO	GR ISLD-LNX3345.00 - GRAND ISLAND 345KV CKT Z	720	720	0.04266	107.5932	GEN600007 7-RIVERSIDE GEN 7
FDNS	00NR	0	25SP	G14_059	FROM->TO	GR ISLD-LNX3345.00 - GRAND ISLAND 345KV CKT Z	720	720	0.04266	107.5932	LANSING WEST 161/22.0KV TRANSFORMER CKT 1
FDNS	00NR	0	25SP	G14_059	FROM->TO	GR ISLD-LNX3345.00 - GRAND ISLAND 345KV CKT Z	720	720	0.04205	107.5838	GRAND ISLAND (GRAND.ISD T5) 230/115/13.8KV TRANSFORMER CKT 2
FDNS	00NR	0	25SP	G14_059	FROM->TO	GR ISLD-LNX3345.00 - GRAND ISLAND 345KV CKT Z	720	720	0.04205	107.5838	GRAND ISLAND (GRAND.ISD T5) 230/115/13.8KV TRANSFORMER CKT 2
FDNS	00NR	0	25SP	G14_059	FROM->TO	GR ISLD-LNX3345.00 - GRAND ISLAND 345KV CKT Z	720	720	0.04367	107.5832	ATCHSNT3 345.00 - BOONEVILLE 345KV CKT 1
FDNS	00NR	0	25SP	G14_059	FROM->TO	GR ISLD-LNX3345.00 - GRAND ISLAND 345KV CKT Z	720	720	0.04205	107.5786	GRAND ISLAND (GRAND.ISD T2) 230/115/13.8KV TRANSFORMER CKT 1
FDNS	00NR	0	25SP	G14_059	FROM->TO	GR ISLD-LNX3345.00 - GRAND ISLAND 345KV CKT Z	720	720	0.04205	107.5786	GRAND ISLAND (GRAND.ISD T2) 230/115/13.8KV TRANSFORMER CKT 1
FDNS	00NR	0	25SP	G14_059	FROM->TO	GR ISLD-LNX3345.00 - GRAND ISLAND 345KV CKT Z	720	720	0.04266	107.5784	GEN600017 C-LS POWER CT
FDNS	00NR	0	25SP	G14_059	FROM->TO	GR ISLD-LNX3345.00 - GRAND ISLAND 345KV CKT Z	720	720	0.04266	107.5776	GEN659031 1-G12_014IS_4 0.6900
FDNS	00NR	0	25SP	G14_059	FROM->TO	GR ISLD-LNX3345.00 - GRAND ISLAND 345KV CKT Z	720	720	0.04304	107.5701	SULLEY BUTTE - SULLYBT-LNX3230.00 230KV CKT Z
FDNS	00NR	0	25SP	G14_059	FROM->TO	GR ISLD-LNX3345.00 - GRAND ISLAND 345KV CKT Z	720	720	0.04304	107.5694	SULLYBT-LNX3230.00 - WHITLOK 230KV CKT 1
FDNS	00NR	0	25SP	G14_059	FROM->TO	GR ISLD-LNX3345.00 - GRAND ISLAND 345KV CKT Z	720	720	0.03972	107.5609	COOPER - MOORE 345KV CKT 1
FDNS	00NR	0	25SP	G14_059	FROM->TO	GR ISLD-LNX3345.00 - GRAND ISLAND 345KV CKT Z	720	720	0.04266	107.5584	GEN659192 6-LYNN
FDNS	00NR	0	25SP	G14_059	FROM->TO	GR ISLD-LNX3345.00 - GRAND ISLAND 345KV CKT Z	720	720	0.04266	107.5573	GEN659162 4-RED WLCK
FDNS	00NR	0	25SP	G14_059	FROM->TO	GR ISLD-LNX3345.00 - GRAND ISLAND 345KV CKT Z	720	720	0.04266	107.5573	GEN659163 5-BLACK WDCK
FDNS	00NR	0	25SP	G14_059	FROM->TO	GR ISLD-LNX3345.00 - GRAND ISLAND 345KV CKT Z	720	720	0.04266	107.5433	GEN600045 4-ANSON
FDNS	00NR	0	25SP	G14_059	FROM->TO	GR ISLD-LNX3345.00 - GRAND ISLAND 345KV CKT Z	720	720	0.04266	107.5354	GEN 10648 1-G830_GEN 0.6900
FDNS	00NR	0	25SP	G14_059	FROM->TO	GR ISLD-LNX3345.00 - GRAND ISLAND 345KV CKT Z	720	720	0.04266	107.5318	GEN615052 1-CAMBRIDGE GENERATING STATION
FDNS	00NR	0	25SP	G14_059	FROM->TO	GR ISLD-LNX3345.00 - GRAND ISLAND 345KV CKT Z	720	720	0.04304	107.5295	P12:230:UMZB:# 114 #: SB IN SD. SB-WK-GH
FDNS	00NR	0	25SP	G14_059	FROM->TO	GR ISLD-LNX3345.00 - GRAND ISLAND 345KV CKT Z	720	720	0.04304	107.5295	P12:230:UMZB:# 117 #: WK IN SD. SB-WK-GH
FDNS	00NR	0	20SP	G14_059	FROM->TO	GR ISLD-LNX3345.00 - GRAND ISLAND 345KV CKT Z	720	720	0.04054	107.5097	SQUARE BUTTE - YNG2 4 230.00 230KV CKT 1
FDNS	00NR	0	20SP	G14_059	FROM->TO	GR ISLD-LNX3345.00 - GRAND ISLAND 345KV CKT Z	720	720	0.04054	107.5095	YNG2 4 230.00 230/20.0KV TRANSFORMER CKT 1
FDNS	00NR	0	20SP	G14_059	FROM->TO	GR ISLD-LNX3345.00 - GRAND ISLAND 345KV CKT Z	720	720	0.04054	107.5034	ALMA 161 161/24.0KV TRANSFORMER CKT 1
FDNS	00NR	0	25SP	G14_059	FROM->TO	GR ISLD-LNX3345.00 - GRAND ISLAND 345KV CKT Z	720	720	0.0427	107.5032	DIXONCO 230.00 - TWIN CHURCH 230KV CKT 1
FDNS	00NR	0	25SP	G14_059	FROM->TO	GR ISLD-LNX3345.00 - GRAND ISLAND 345KV CKT Z	720	720	0.04217	107.5022	GRAND ISLAND (GI KU1B) 345/230/13.8KV TRANSFORMER CKT 2
FDNS	00NR	0	25SP	G14_059	FROM->TO	GR ISLD-LNX3345.00 - GRAND ISLAND 345KV CKT Z	720	720	0.04217	107.5022	GRAND ISLAND (GI KU1B) 345/230/13.8KV TRANSFORMER CKT 2
FDNS	00NR	0	25SP	G14_059	FROM->TO	GR ISLD-LNX3345.00 - GRAND ISLAND 345KV CKT Z	720	720	0.0424	107.5019	MCCOOL (MCCOOL T2) 345/115/13.8KV TRANSFORMER CKT 1
FDNS	00NR	0	25SP	G14_059	FROM->TO	GR ISLD-LNX3345.00 - GRAND ISLAND 345KV CKT Z	720	720	0.0424	107.5019	MCCOOL (MCCOOL T2) 345/115/13.8KV TRANSFORMER CKT 1
FDNS	00NR	0	25SP	G14_059	FROM->TO	GR ISLD-LNX3345.00 - GRAND ISLAND 345KV CKT Z	720	720	0.04216	107.5007	GRAND ISLAND (GI KU1A) 345/230/13.8KV TRANSFORMER CKT 1
FDNS	00NR	0	25SP	G14_059	FROM->TO	GR ISLD-LNX3345.00 - GRAND ISLAND 345KV CKT Z	720	720	0.04216	107.5007	GRAND ISLAND (GI KU1A) 345/230/13.8KV TRANSFORMER CKT 1
FDNS	00NR	0	25SP	G14_059	FROM->TO	GR ISLD-LNX3345.00 - GRAND ISLAND 345KV CKT Z	720	720	0.04304	107.4947	GLENHAM - WHITLOK 230KV CKT 1
FDNS	00NR	0	25SP	G14_059	FROM->TO	GR ISLD-LNX3345.00 - GRAND ISLAND 345KV CKT Z	720	720	0.04266	107.483	GEN615021 1-GRE-ER 14G 16.000
FDNS	00NR	0	25SP	G14_059	FROM->TO	GR ISLD-LNX3345.00 - GRAND ISLAND 345KV CKT Z	720	720	0.04266	107.4823	GEN615015 1-GRE-SPRITWDG13.200
FDNS	00NR	0	25SP	G14_059	FROM->TO	GR ISLD-LNX3345.00 - GRAND ISLAND 345KV CKT Z	720	720	0.04266	107.4731	GEN660016 1-B_H WIND 0.7000
FDNS	00NR	0	25SP	G14_059	FROM->TO	GR ISLD-LNX3345.00 - GRAND ISLAND 345KV CKT Z	720	720	0.04308	107.4652	COPSTJCPFRSJ
FDNS	00NR	0	25SP	G14_059	FROM->TO	GR ISLD-LNX3345.00 - GRAND ISLAND 345KV CKT Z	720	720	0.04308	107.4652	P12:345:NPPD:3517:COOPER 3:ST JOE 3:BTB
FDNS	00NR	0	25SP	G14_059	FROM->TO	GR ISLD-LNX3345.00 - GRAND ISLAND 345KV CKT Z	720	720	0.04308	107.4652	STMDSJFAFACO
FDNS	00NR	0	25SP	G14_059	FROM->TO	GR ISLD-LNX3345.00 - GRAND ISLAND 345KV CKT Z	720	720	0.04266	107.4599	GEN657705 X-DRAYTON
FDNS	00NR	0	25SP	G14_059	FROM->TO	GR ISLD-LNX3345.00 - GRAND ISLAND 345KV CKT Z	720	720	0.0417	107.4531	103RD & ROKEBY - MOORE 345KV CKT 1

SOLUTION	GROUP	SCENARIO	SEASON	SOURCE	DIRECTION	MONITORED ELEMENT	RATEA (MVA)	RATEB(MVA)	TDF	TC%LOADING (% MVA)	CONTINGENCY
FDNS	00NR	0	25SP	G14_059	FROM->TO	GR ISLD-LNX3345.00 - GRAND ISLAND 345KV CKT Z	720	720	0.0417	107.4531	103RD & ROKEBY - MOORE 345KV CKT 1
FDNS	00NR	0	25SP	G14_059	FROM->TO	GR ISLD-LNX3345.00 - GRAND ISLAND 345KV CKT Z	720	720	0.04266	107.4394	BISONMP4 230.00 - SQUARE BUTTE 230KV CKT 1
FDNS	00NR	0	25SP	G14_059	FROM->TO	GR ISLD-LNX3345.00 - GRAND ISLAND 345KV CKT Z	720	720	0.04266	107.4312	GEN659353 1-DEERCREK CTG18.000
FDNS	00NR	0	25SP	G14_059	FROM->TO	GR ISLD-LNX3345.00 - GRAND ISLAND 345KV CKT Z	720	720	0.04266	107.4301	GEN659354 1-DEERCREK STG18.000
FDNS	00NR	0	25SP	G14_059	FROM->TO	GR ISLD-LNX3345.00 - GRAND ISLAND 345KV CKT Z	720	720	0.03922	107.4279	COLUMWEST - GRAND ISLAND 230KV CKT 1
FDNS	00NR	0	20SP	G14_059	FROM->TO	GR ISLD-LNX3345.00 - GRAND ISLAND 345KV CKT Z	720	720	0.04054	107.4254	GEN652906 1-G09_006IS_3 0.6900
FDNS	00NR	0	20SP	G14_059	FROM->TO	GR ISLD-LNX3345.00 - GRAND ISLAND 345KV CKT Z	720	720	0.04054	107.398	GEN659411 1-CAMPBLCNTY W0.6900
FDNS	00NR	0	25SP	G14_059	FROM->TO	GR ISLD-LNX3345.00 - GRAND ISLAND 345KV CKT Z	720	720	0.04266	107.3768	GEN672303 3-BOUNDARY DAM GENERATOR 3
FDNS	00NR	0	25SP	G14_059	FROM->TO	GR ISLD-LNX3345.00 - GRAND ISLAND 345KV CKT Z	720	720	0.04266	107.3768	GEN672304 4-BOUNDARY DAM GENERATOR 4
FDNS	00NR	0	25SP	G14_059	FROM->TO	GR ISLD-LNX3345.00 - GRAND ISLAND 345KV CKT Z	720	720	0.04266	107.3768	GEN672305 5-BOUNDARY DAM GENERATOR 5
FDNS	00NR	0	25SP	G14_059	FROM->TO	GR ISLD-LNX3345.00 - GRAND ISLAND 345KV CKT Z	720	720	0.04266	107.3662	GEN600067 9-HIGH BRIDGE
FDNS	00NR	0	25SP	G14_059	FROM->TO	GR ISLD-LNX3345.00 - GRAND ISLAND 345KV CKT Z	720	720	0.04266	107.3554	GEN672356 1-FUT-WL1X 18.000
FDNS	00NR	0	25SP	G14_059	FROM->TO	GR ISLD-LNX3345.00 - GRAND ISLAND 345KV CKT Z	720	720	0.04326	107.3469	COOPER - ST JOE 345KV CKT 1
FDNS	00NR	0	25SP	G14_059	FROM->TO	GR ISLD-LNX3345.00 - GRAND ISLAND 345KV CKT Z	720	720	0.04266	107.3371	GEN662101 1-WESSINGTON190.5750
FDNS	00NR	0	25SP	G14_059	FROM->TO	GR ISLD-LNX3345.00 - GRAND ISLAND 345KV CKT Z	720	720	0.04266	107.3337	GEN672389 1-FUT-SW1X 18.000
FDNS	00NR	0	25SP	G14_059	FROM->TO	GR ISLD-LNX3345.00 - GRAND ISLAND 345KV CKT Z	720	720	0.04266	107.3273	GEN672392 1-NBECGT1G 18.000
FDNS	00NR	0	25SP	G14_059	FROM->TO	GR ISLD-LNX3345.00 - GRAND ISLAND 345KV CKT Z	720	720	0.04285	107.3036	G14-021T 345.00 - MULLNCR7 345.00 345KV CKT 1
FDNS	00NR	0	25SP	G14_059	FROM->TO	GR ISLD-LNX3345.00 - GRAND ISLAND 345KV CKT Z	720	720	0.04285	107.3008	G15-005T 345.00 - MULLNCR7 345.00 345KV CKT 1
FDNS	00NR	0	25SP	G14_059	FROM->TO	GR ISLD-LNX3345.00 - GRAND ISLAND 345KV CKT Z	720	720	0.04281	107.3005	HIGHLND 3 345.00 - OBRIEN 3 345.00 345KV CKT 1
FDNS	00NR	0	25SP	G14_059	FROM->TO	GR ISLD-LNX3345.00 - GRAND ISLAND 345KV CKT Z	720	720	0.04266	107.285	GEN910006 1-G12_012IS_3 0.6900
FDNS	00NR	0	20SP	G14_059	FROM->TO	GR ISLD-LNX3345.00 - GRAND ISLAND 345KV CKT Z	720	720	0.04054	107.2596	GEN659296 2-SDPRAIRWND1W0.6900
FDNS	00NR	0	20SP	G14_059	FROM->TO	GR ISLD-LNX3345.00 - GRAND ISLAND 345KV CKT Z	720	720	0.04054	107.2538	GEN652907 1-G09_007IS_3 0.6900
FDNS	00NR	0	25SP	G14_059	FROM->TO	GR ISLD-LNX3345.00 - GRAND ISLAND 345KV CKT Z	720	720	0.04266	107.2498	CENTER 230/22.0KV TRANSFORMER CKT 1
FDNS	00NR	0	25SP	G14_059	FROM->TO	GR ISLD-LNX3345.00 - GRAND ISLAND 345KV CKT Z	720	720	0.04266	107.2278	GEN681542 6-JP MADGETT
FDNS	00NR	0	20SP	G14_059	FROM->TO	GR ISLD-LNX3345.00 - GRAND ISLAND 345KV CKT Z	720	720	0.04054	107.2204	GEN652559 1-OAHE
FDNS	00NR	0	25SP	G14_059	FROM->TO	GR ISLD-LNX3345.00 - GRAND ISLAND 345KV CKT Z	720	720	0.04285	107.2163	G15-005T 345.00 - SIBLEY 345KV CKT 1
FDNS	00NR	0	20SP	G14_059	FROM->TO	GR ISLD-LNX3345.00 - GRAND ISLAND 345KV CKT Z	720	720	0.04054	107.2035	GEN672321 1-SHAND GENERATOR 1
FDNS	00NR	0	20SP	G14_059	FROM->TO	GR ISLD-LNX3345.00 - GRAND ISLAND 345KV CKT Z	720	720	0.04054	107.1915	GEN600004 2-PRAIRIE ISLAND G2
FDNS	00NR	0	20SP	G14_059	FROM->TO	GR ISLD-LNX3345.00 - GRAND ISLAND 345KV CKT Z	720	720	0.04054	107.1888	GEN600003 1-PRAIRIE ISLAND G1
FDNS	00NR	0	25SP	G14_059	FROM->TO	GR ISLD-LNX3345.00 - GRAND ISLAND 345KV CKT Z	720	720	0.04266	107.1706	GEN659289 1-DAYCNTYWND W0.6900
FDNS	00NR	0	20SP	G14_059	FROM->TO	GR ISLD-LNX3345.00 - GRAND ISLAND 345KV CKT Z	720	720	0.04054	107.1614	GEN672310 1-POPLAR RIVER GENERATOR 1
FDNS	00NR	0	20SP	G14_059	FROM->TO	GR ISLD-LNX3345.00 - GRAND ISLAND 345KV CKT Z	720	720	0.04054	107.1614	GEN672311 2-POPLAR RIVER GENERATOR 2
FDNS	00NR	0	25SP	G14_059	FROM->TO	GR ISLD-LNX3345.00 - GRAND ISLAND 345KV CKT Z	720	720	0.04193	107.1585	GRAND ISLAND (GI KU3A) 345/230/13.8KV TRANSFORMER CKT 3
FDNS	00NR	0	25SP	G14_059	FROM->TO	GR ISLD-LNX3345.00 - GRAND ISLAND 345KV CKT Z	720	720	0.04193	107.1585	GRAND ISLAND (GI KU3A) 345/230/13.8KV TRANSFORMER CKT 3
FDNS	00NR	0	20SP	G14_059	FROM->TO	GR ISLD-LNX3345.00 - GRAND ISLAND 345KV CKT Z	720	720	0.04054	107.1483	GEN672306 6-BOUNDARY DAM GENERATOR 6
FDNS	00NR	0	25SP	G14_059	FROM->TO	GR ISLD-LNX3345.00 - GRAND ISLAND 345KV CKT Z	720	720	0.04266	107.1449	GEN563312 1-G15097_3 0.6900
FDNS	00NR	0	25SP	G14_059	FROM->TO	GR ISLD-LNX3345.00 - GRAND ISLAND 345KV CKT Z	720	720	0.04266	107.1018	GEN659018 1-G14_003IS_3 0.6900
FDNSLock	00NR	0	20SP	G14_059	FROM->TO	GR ISLD-LNX3345.00 - GRAND ISLAND 345KV CKT Z	720	720	0.04054	107.0875	GEN659453 1-GI1414GEN W0.6900
FDNS	00NR	0	20SP	G14_059	FROM->TO	GR ISLD-LNX3345.00 - GRAND ISLAND 345KV CKT Z	720	720	0.04054	107.0853	GEN563302 1-G15096_3 0.6900
FDNS	00NR	0	20SP	G14_059	FROM->TO	GR ISLD-LNX3345.00 - GRAND ISLAND 345KV CKT Z	720	720	0.04054	107.083	GEN615010 1-STANTON4
FDNS	00NR	0	25SP	G14_059	FROM->TO	GR ISLD-LNX3345.00 - GRAND ISLAND 345KV CKT Z	720	720	0.04266	107.0514	GEN562596 1-G14_059_3 0.6900
FDNS	00NR	0	25SP	G14_059	FROM->TO	GR ISLD-LNX3345.00 - GRAND ISLAND 345KV CKT Z	720	720	0.04304	107.044	GLENHAM - L3 HAWDON 230KV CKT 1
FDNS	00NR	0	20SP	G14_059	FROM->TO	GR ISLD-LNX3345.00 - GRAND ISLAND 345KV CKT Z	720	720	0.04054	107.0354	GEN659141 1-K10215A
FDNS	00NR	0	20SP	G14_059	FROM->TO	GR ISLD-LNX3345.00 - GRAND ISLAND 345KV CKT Z	720	720	0.04054	107.0309	GEN659110 1-LELAND OLDS UNIT1
FDNS	00NR	0	25SP	G14_059	FROM->TO	GR ISLD-LNX3345.00 - GRAND ISLAND 345KV CKT Z	720	720	0.04266	107.0298	GEN659010 4-G07_027IS_2 0.6900
FDNS	00NR	0	25SP	G14_059	FROM->TO	GR ISLD-LNX3345.00 - GRAND ISLAND 345KV CKT Z	720	720	0.04266	107.0272	GEN659194 1-NDPRAIRWND1W0.6900
FDNS	00NR	0	20SP	G14_059	FROM->TO	GR ISLD-LNX3345.00 - GRAND ISLAND 345KV CKT Z	720	720	0.04054	107.0247	GEN652556 2-OAHE
FDNS	00NR	0	20SP	G14_059	FROM->TO	GR ISLD-LNX3345.00 - GRAND ISLAND 345KV CKT Z	720	720	0.04054	107.0247	GEN652557 4-OAHE
FDNS	00NR	0	20SP	G14_059	FROM->TO	GR ISLD-LNX3345.00 - GRAND ISLAND 345KV CKT Z	720	720	0.04054	107.0247	GEN652558 6-OAHE
FDNS	00NR	0	25SP	G14_059	FROM->TO	GR ISLD-LNX3345.00 - GRAND ISLAND 345KV CKT Z	720	720	0.04266	107.0196	GEN652460 4-GARRISON
FDNS	00NR	0	25SP	G14_059	FROM->TO	GR ISLD-LNX3345.00 - GRAND ISLAND 345KV CKT Z	720	720	0.04266	107.0196	GEN652461 5-GARRISON
FDNS	00NR	0	25SP	G14_059	FROM->TO	GR ISLD-LNX3345.00 - GRAND ISLAND 345KV CKT Z	720	720	0.04266	106.9825	GEN652457 1-GARRISON
FDNS	00NR	0	25SP	G14_059	FROM->TO	GR ISLD-LNX3345.00 - GRAND ISLAND 345KV CKT Z	720	720	0.04266	106.9825	GEN652458 2-GARRISON
FDNS	00NR	0	25SP	G14_059	FROM->TO	GR ISLD-LNX3345.00 - GRAND ISLAND 345KV CKT Z	720	720	0.04266	106.9825	GEN652459 3-GARRISON
FDNS	00NR	0	25SP	G14_059	FROM->TO	GR ISLD-LNX3345.00 - GRAND ISLAND 345KV CKT Z	720	720	0.04266	106.9589	GEN652543 3-BIG BEND
FDNS	00NR	0	25SP	G14_059	FROM->TO	GR ISLD-LNX3345.00 - GRAND ISLAND 345KV CKT Z	720	720	0.04266	106.9544	GEN652542 1-BIG BEND
FDNS	00NR	0	20SP	G14_059	FROM->TO	GR ISLD-LNX3345.00 - GRAND ISLAND 345KV CKT Z	720	720	0.04054	106.9503	GEN600006 1-AS KING
FDNS	00NR	0	20SP	G14_059	FROM->TO	GR ISLD-LNX3345.00 - GRAND ISLAND 345KV CKT Z	720	720	0.04054	106.928	GEN652173 1-G09_001IS_2 0.6900
FDNS	00NR	0	25SP	G14_059	FROM->TO	GR ISLD-LNX3345.00 - GRAND ISLAND 345KV CKT Z	720	720	0.04266	106.9273	GEN659403 1-NDSUNFLWR W0.6900
FDNS	00NR	0	25SP	G14_059	FROM->TO	GR ISLD-LNX3345.00 - GRAND ISLAND 345KV CKT Z	720	720	0.04266	106.9251	GEN563282 1-G15094_3 0.6900
FDNS	00NR	0	25SP	G14_059	FROM->TO	GR ISLD-LNX3345.00 - GRAND ISLAND 345KV CKT Z	720	720	0.04266	106.9223	GEN563342 1-G15098_3 0.6900
FDNS	00NR	0	25SP	G14_059	FROM->TO	GR ISLD-LNX3345.00 - GRAND ISLAND 345KV CKT Z	720	720	0.04266	106.8931	COYOTE 345/24.0KV TRANSFORMER CKT 1
FDNS	00NR	0	25SP	G14_059	FROM->TO	GR ISLD-LNX3345.00 - GRAND ISLAND 345KV CKT Z	720	720	0.04141	106.8045	AXTELL - POST ROCK 345KV CKT 1
FDNS	00NR	0	25SP	G14_059	FROM->TO	GR ISLD-LNX3345.00 - GRAND ISLAND 345KV CKT Z	720	720	0.04266	106.7752	STANTON 230/18.0KV TRANSFORMER CKT 1
FDNS	00NR	0	20SP	G14_059	FROM->TO	GR ISLD-LNX3345.00 - GRAND ISLAND 345KV CKT Z	720	720	0.04054	106.7379	RCDC EAST 4230.00 - RED CEDAR DC 230KV CKT 1
FDNS	00NR	0	20SP	G14_059	FROM->TO	GR ISLD-LNX3345.00 - GRAND ISLAND 345KV CKT Z	720	720	0.04053	106.7289	P12:230:UMZB:# 112 #: NU IN SD. NU-RCDC & DRY CREEK XFMR
FDNS	00NR	0	20SP	G14_059	FROM->TO	GR ISLD-LNX3345.00 - GRAND ISLAND 345KV CKT Z	720	720	0.04054	106.7137	GEN659407 1-ANTELPHILLSW0.6900
FDNS	00NR	0	25SP	G14_059	FROM->TO	GR ISLD-LNX3345.00 - GRAND ISLAND 345KV CKT Z	720	720	0.04266	106.7071	GEN652906 1-G09_006IS_3 0.6900
FDNS	00NR	0	25SP	G14_059	FROM->TO	GR ISLD-LNX3345.00 - GRAND ISLAND 345KV CKT Z	720	720	0.04266	106.6797	GEN659411 1-CAMPBLCNTY W0.6900
FDNS	00NR	0	20SP	G14_059	FROM->TO	GR ISLD-LNX3345.00 - GRAND ISLAND 345KV CKT Z	720	720	0.04054	106.6525	GEN657749 1-YOUNG 1 GENERATOR
FDNS	00NR	0	20SP	G14_059	FROM->TO	GR ISLD-LNX3345.00 - GRAND ISLAND 345KV CKT Z	720	720	0.04054	106.5568	GEN640010 1-GERALD GENTLEMAN STATION UNIT 1
FDNS	00NR	0	25SP	G14_059	FROM->TO	GR ISLD-LNX3345.00 - GRAND ISLAND 345KV CKT Z	720	720	0.04266	106.5501	GEN659296 2-SDPRAIRWND1W0.6900
FDNS	00NR	0	25SP	G14_059	FROM->TO	GR ISLD-LNX3345.00 - GRAND ISLAND 345KV CKT Z	720	720	0.04266	106.5456	SQUARE BUTTE - YNG2 4 230.00 230KV CKT 1
FDNS	00NR	0	25SP	G14_059	FROM->TO	GR ISLD-LNX3345.00 - GRAND ISLAND 345KV CKT Z	720	720	0.04266	106.5453	YNG2 4 230.00 230/20.0KV TRANSFORMER CKT 1
FDNS	00NR	0	25SP	G14_059	FROM->TO	GR ISLD-LNX3345.00 - GRAND ISLAND 345KV CKT Z	720	720	0.04266	106.535	GEN652907 1-G09_007IS_3 0.6900
FDNS	00NR	0	20SP	G14_059	FROM->TO	GR ISLD-LNX3345.00 - GRAND ISLAND 345KV CKT Z	720	720	0.04054	106.4917	GEN640011 2-GERALD GENTLEMAN STATION UNIT 2
FDNS	00NR	0	25SP	G14_059	FROM->TO	GR ISLD-LNX3345.00 - GRAND ISLAND 345KV CKT Z	720	720	0.04266	106.4294	GEN672310 1-POPLAR RIVER GENERATOR 1
FDNS	00NR	0	25SP	G14_059	FROM->TO	GR ISLD-LNX3345.00 - GRAND ISLAND 345KV CKT Z	720	720	0.04266	106.4294	GEN672311 2-POPLAR RIVER GENERATOR 2
FDNS	00NR	0	25SP	G14_059	FROM->TO	GR ISLD-LNX3345.00 - GRAND ISLAND 345KV CKT Z	720	720	0.04266	106.4203	GEN672321 1-SHAND GENERATOR 1

SOLUTION	GROUP	SCENARIO	SEASON	SOURCE	DIRECTION	MONITORED ELEMENT	RATEA (MVA)	RATEB(MVA)	TDF	TC%LOADING (% MVA)	CONTINGENCY
FDNS	00NR	0	25SP	G14_059	FROM->TO	GR ISLD-LNX3345.00 - GRAND ISLAND 345KV CKT Z	720	720	0.04266	106.3738	GEN600004 2-PRAIRIE ISLAND G2
FDNS	00NR	0	25SP	G14_059	FROM->TO	GR ISLD-LNX3345.00 - GRAND ISLAND 345KV CKT Z	720	720	0.04266	106.3704	GEN600003 1-PRAIRIE ISLAND G1
FDNS	00NR	0	25SP	G14_059	FROM->TO	GR ISLD-LNX3345.00 - GRAND ISLAND 345KV CKT Z	720	720	0.04266	106.36	GEN672306 6-BOUNDARY DAM GENERATOR 6
FDNS	00NR	0	25SP	G14_059	FROM->TO	GR ISLD-LNX3345.00 - GRAND ISLAND 345KV CKT Z	720	720	0.04266	106.3583	GEN659453 1-GI1414GEN W0.6900
FDNS	00NR	0	25SP	G14_059	FROM->TO	GR ISLD-LNX3345.00 - GRAND ISLAND 345KV CKT Z	720	720	0.04266	106.3557	GEN563302 1-G15096_3 0.6900
FDNS	00NR	0	25SP	G14_059	FROM->TO	GR ISLD-LNX3345.00 - GRAND ISLAND 345KV CKT Z	720	720	0.04266	106.3119	GEN615010 1-STANTON4
FDNS	00NR	0	25SP	G14_059	FROM->TO	GR ISLD-LNX3345.00 - GRAND ISLAND 345KV CKT Z	720	720	0.04266	106.3099	GEN652556 2-OAHE
FDNS	00NR	0	25SP	G14_059	FROM->TO	GR ISLD-LNX3345.00 - GRAND ISLAND 345KV CKT Z	720	720	0.04266	106.3098	GEN652557 4-OAHE
FDNS	00NR	0	25SP	G14_059	FROM->TO	GR ISLD-LNX3345.00 - GRAND ISLAND 345KV CKT Z	720	720	0.04266	106.3098	GEN652558 6-OAHE
FDNS	00NR	0	25SP	G14_059	FROM->TO	GR ISLD-LNX3345.00 - GRAND ISLAND 345KV CKT Z	720	720	0.04266	106.2994	GEN659141 1-K10215A
FDNS	00NR	0	25SP	G14_059	FROM->TO	GR ISLD-LNX3345.00 - GRAND ISLAND 345KV CKT Z	720	720	0.04266	106.2837	GEN659110 1-LELAND OLDS UNIT1
FDNS	00NR	0	20SP	G14_059	FROM->TO	GR ISLD-LNX3345.00 - GRAND ISLAND 345KV CKT Z	720	720	0.04054	106.2797	GEN600005 1-MONTICELLO
FDNS	00NR	0	25SP	G14_059	FROM->TO	GR ISLD-LNX3345.00 - GRAND ISLAND 345KV CKT Z	720	720	0.04266	106.2537	GEN652559 1-OAHE
FDNS	00NR	0	25SP	G14_059	FROM->TO	GR ISLD-LNX3345.00 - GRAND ISLAND 345KV CKT Z	720	720	0.04266	106.2111	GEN652173 1-G09_001IS_2 0.6900
FDNS	00NR	0	25SP	G14_059	FROM->TO	GR ISLD-LNX3345.00 - GRAND ISLAND 345KV CKT Z	720	720	0.04266	106.1299	GEN600006 1-AS KING
FDNS	00NR	0	20SP	G14_059	FROM->TO	GR ISLD-LNX3345.00 - GRAND ISLAND 345KV CKT Z	720	720	0.04054	106.1084	GEN600000 1-SHERBURNECNTY G1
FDNS	00NR	0	25SP	G14_059	FROM->TO	GR ISLD-LNX3345.00 - GRAND ISLAND 345KV CKT Z	720	720	0.04266	106.0042	P12:230:UMZB:# 112 #: NU IN SD. NU-RCDC & DRY CREEK XFMR
FDNS	00NR	0	25SP	G14_059	FROM->TO	GR ISLD-LNX3345.00 - GRAND ISLAND 345KV CKT Z	720	720	0.04266	106.0008	RCDC EAST 4230.00 - RED CEDAR DC 230KV CKT 1
FDNS	00NR	0	25SP	G14_059	FROM->TO	GR ISLD-LNX3345.00 - GRAND ISLAND 345KV CKT Z	720	720	0.04266	105.9878	GEN659407 1-ANTELPHILLSW0.6900
FDNS	00NR	0	20SP	G14_059	FROM->TO	GR ISLD-LNX3345.00 - GRAND ISLAND 345KV CKT Z	720	720	0.04054	105.9119	GEN600001 2-SHERBURNE CNTY G2
FDNS	00NR	0	20SP	G14_059	FROM->TO	GR ISLD-LNX3345.00 - GRAND ISLAND 345KV CKT Z	720	720	0.04054	105.8963	GEN661015 1-COYOTE
FDNS	00NR	0	25SP	G14_059	FROM->TO	GR ISLD-LNX3345.00 - GRAND ISLAND 345KV CKT Z	720	720	0.04266	105.8443	GEN657749 1-YOUNG 1 GENERATOR
FDNS	00NR	0	25SP	G14_059	FROM->TO	GR ISLD-LNX3345.00 - GRAND ISLAND 345KV CKT Z	720	720	0.04266	105.8274	CLAY BOSWELL 230/20.9KV TRANSFORMER CKT 1
FDNS	00NR	0	20SP	G14_059	FROM->TO	GR ISLD-LNX3345.00 - GRAND ISLAND 345KV CKT Z	720	720	0.04054	105.8	GEN620315 1-BIG STONE GEN
FDNS	00NR	0	25SP	G14_059	FROM->TO	GR ISLD-LNX3345.00 - GRAND ISLAND 345KV CKT Z	720	720	0.04266	105.4516	GEN600005 1-MONTICELLO
FDNS	00NR	0	20SP	G14_059	FROM->TO	GR ISLD-LNX3345.00 - GRAND ISLAND 345KV CKT Z	720	720	0.04054	105.4113	GEN600002 3-SHERBURNE CNTY G3
FDNS	00NR	0	25SP	G14_059	FROM->TO	GR ISLD-LNX3345.00 - GRAND ISLAND 345KV CKT Z	720	720	0.04266	105.3933	GEN640011 2-GERALD GENTLEMAN STATION UNIT 2
FDNS	00NR	0	20SP	G14_059	FROM->TO	GR ISLD-LNX3345.00 - GRAND ISLAND 345KV CKT Z	720	720	0.04054	105.3045	GEN659118 1-LARAMIE RIVER UNIT1
FDNS	00NR	0	25SP	G14_059	FROM->TO	GR ISLD-LNX3345.00 - GRAND ISLAND 345KV CKT Z	720	720	0.04266	105.3012	GEN640010 1-GERALD GENTLEMAN STATION UNIT 1
FDNS	00NR	0	25SP	G14_059	FROM->TO	GR ISLD-LNX3345.00 - GRAND ISLAND 345KV CKT Z	720	720	0.04266	105.2728	GEN600000 1-SHERBURNECNTY G1
FDNS	00NR	0	20SP	G14_059	FROM->TO	GR ISLD-LNX3345.00 - GRAND ISLAND 345KV CKT Z	720	720	0.04054	105.2709	GEN657748 1-YOUNG 2 GENERATOR
FDNS	00NR	0	25SP	G14_059	FROM->TO	GR ISLD-LNX3345.00 - GRAND ISLAND 345KV CKT Z	720	720	0.04266	105.103	GEN600001 2-SHERBURNE CNTY G2
FDNS	00NR	0	20SP	G14_059	FROM->TO	GR ISLD-LNX3345.00 - GRAND ISLAND 345KV CKT Z	720	720	0.04054	105.1	GEN562872 1-G15046_3 0.6900
FDNS	00NR	0	20SP	G14_059	FROM->TO	GR ISLD-LNX3345.00 - GRAND ISLAND 345KV CKT Z	720	720	0.04054	104.9804	GEN659111 2-LELAND OLDS UNIT2
FDNS	00NR	0	25SP	G14_059	FROM->TO	GR ISLD-LNX3345.00 - GRAND ISLAND 345KV CKT Z	720	720	0.04266	104.9414	GEN620315 1-BIG STONE GEN
FDNS	00NR	0	25SP	G14_059	FROM->TO	GR ISLD-LNX3345.00 - GRAND ISLAND 345KV CKT Z	720	720	0.04266	104.9146	GEN661015 1-COYOTE
FDNS	00NR	0	20SP	G14_059	FROM->TO	GR ISLD-LNX3345.00 - GRAND ISLAND 345KV CKT Z	720	720	0.04054	104.7787	BIG STONE 230/24.0KV TRANSFORMER CKT 1
FDNS	00NR	0	20SP	G14_059	FROM->TO	GR ISLD-LNX3345.00 - GRAND ISLAND 345KV CKT Z	720	720	0.04054	104.6757	GEN659103 1-ANTELOPE VALLEY UNIT1
FDNS	00NR	0	20SP	G14_059	FROM->TO	GR ISLD-LNX3345.00 - GRAND ISLAND 345KV CKT Z	720	720	0.04054	104.6757	GEN659107 2-ANTELOPE VALLEY UNIT2
FDNS	00NR	0	25SP	G14_059	FROM->TO	GR ISLD-LNX3345.00 - GRAND ISLAND 345KV CKT Z	720	720	0.04266	104.5489	GEN659118 1-LARAMIE RIVER UNIT1
FDNS	00NR	0	25SP	G14_059	FROM->TO	GR ISLD-LNX3345.00 - GRAND ISLAND 345KV CKT Z	720	720	0.04266	104.5092	GEN600002 3-SHERBURNE CNTY G3
FDNS	00NR	0	25SP	G14_059	FROM->TO	GR ISLD-LNX3345.00 - GRAND ISLAND 345KV CKT Z	720	720	0.04266	104.3824	GEN562872 1-G15046_3 0.6900
FDNS	00NR	0	25SP	G14_059	FROM->TO	GR ISLD-LNX3345.00 - GRAND ISLAND 345KV CKT Z	720	720	0.04266	104.195	SHERBURNE CO 345/24.0KV TRANSFORMER CKT 1
FDNS	00NR	0	25SP	G14_059	FROM->TO	GR ISLD-LNX3345.00 - GRAND ISLAND 345KV CKT Z	720	720	0.04266	104.1928	GEN659111 2-LELAND OLDS UNIT2
FDNS	00NR	0	20SP	G14_059	FROM->TO	GR ISLD-LNX3345.00 - GRAND ISLAND 345KV CKT Z	720	720	0.04132	104.1074	FTTHOM1-LNX3345.00 - LELAND2-LNX3345.00 345KV CKT 1
FDNS	00NR	0	25SP	G14_059	FROM->TO	GR ISLD-LNX3345.00 - GRAND ISLAND 345KV CKT Z	720	720	0.04266	104.059	BIG STONE 230/24.0KV TRANSFORMER CKT 1
FDNSLock	00NR	0	20SP	G14_059	FROM->TO	GR ISLD-LNX3345.00 - GRAND ISLAND 345KV CKT Z	720	720	0.04054	104.0338	GEN659125 1-COVEY
FDNS	00NR	0	20SP	G14_059	FROM->TO	GR ISLD-LNX3345.00 - GRAND ISLAND 345KV CKT Z	720	720	0.04132	104.0082	P12:345:UMZB:# 108 #: LOS FT IN ND. LOS FT
FDNS	00NR	0	20SP	G14_059	FROM->TO	GR ISLD-LNX3345.00 - GRAND ISLAND 345KV CKT Z	720	720	0.04132	104.0039	FT THOMPSON - FTTHOM1-LNX3345.00 345KV CKT Z
FDNS	00NR	0	20SP	G14_059	FROM->TO	GR ISLD-LNX3345.00 - GRAND ISLAND 345KV CKT Z	720	720	0.04132	103.9592	LELAND OLDS - LELAND2-LNX3345.00 345KV CKT Z
FDNS	00NR	0	25SP	G14_059	FROM->TO	GR ISLD-LNX3345.00 - GRAND ISLAND 345KV CKT Z	720	720	0.04266	103.9075	GEN657748 1-YOUNG 2 GENERATOR
FDNS	00NR	0	25SP	G14_059	FROM->TO	GR ISLD-LNX3345.00 - GRAND ISLAND 345KV CKT Z	720	720	0.04266	103.8783	GEN659103 1-ANTELOPE VALLEY UNIT1
FDNS	00NR	0	25SP	G14_059	FROM->TO	GR ISLD-LNX3345.00 - GRAND ISLAND 345KV CKT Z	720	720	0.04266	103.8783	GEN659107 2-ANTELOPE VALLEY UNIT2
FDNS	00NR	0	25SP	G14_059	FROM->TO	GR ISLD-LNX3345.00 - GRAND ISLAND 345KV CKT Z	720	720	0.04344	103.5081	FTTHOM1-LNX3345.00 - LELAND2-LNX3345.00 345KV CKT 1
FDNS	00NR	0	25SP	G14_059	FROM->TO	GR ISLD-LNX3345.00 - GRAND ISLAND 345KV CKT Z	720	720	0.04344	103.4031	P12:345:UMZB:# 108 #: LOS FT IN ND. LOS FT
FDNS	00NR	0	25SP	G14_059	FROM->TO	GR ISLD-LNX3345.00 - GRAND ISLAND 345KV CKT Z	720	720	0.04344	103.3985	FT THOMPSON - FTTHOM1-LNX3345.00 345KV CKT Z
FDNSLock	00NR	0	20SP	G14_059	FROM->TO	GR ISLD-LNX3345.00 - GRAND ISLAND 345KV CKT Z	720	720	0.04054	103.3687	GEN615001 1-COAL CREEK
FDNS	00NR	0	25SP	G14_059	FROM->TO	GR ISLD-LNX3345.00 - GRAND ISLAND 345KV CKT Z	720	720	0.04344	103.3523	LELAND OLDS - LELAND2-LNX3345.00 345KV CKT Z
FDNSLock	00NR	0	20SP	G14_059	FROM->TO	GR ISLD-LNX3345.00 - GRAND ISLAND 345KV CKT Z	720	720	0.04054	103.2866	GEN615002 2-COAL CREEK
FDNS	00NR	0	25SP	G14_059	FROM->TO	GR ISLD-LNX3345.00 - GRAND ISLAND 345KV CKT Z	720	720	0.04266	103.2714	GEN659125 1-COVEY
FDNS	00NR	0	25SP	G14_059	FROM->TO	GR ISLD-LNX3345.00 - GRAND ISLAND 345KV CKT Z	720	720	0.04266	102.4772	GEN615001 1-COAL CREEK
FDNS	00NR	0	25SP	G14_059	FROM->TO	GR ISLD-LNX3345.00 - GRAND ISLAND 345KV CKT Z	720	720	0.04266	102.3977	GEN615002 2-COAL CREEK
FDNS	00NR	0	25SP	G14_059	FROM->TO	GR ISLD-LNX3345.00 - GRAND ISLAND 345KV CKT Z	720	720	0.02969	102.0118	MCCOOL - MOORE 345KV CKT 1
FDNS	00NR	0	20SP	G14_059	TO->FROM	GR ISLD-LNX3345.00 - HOLT.CO3 345.00 345KV CKT 1	720	720	0.05449	114.8445	GERALD GENTLEMAN STATION - SWEETWATER 345KV CKT 1
FDNS	00NR	0	20SP	G14_059	TO->FROM	GR ISLD-LNX3345.00 - HOLT.CO3 345.00 345KV CKT 1	720	720	0.04157	114.3346	KELLY - MEADOWGROVE4230.00 230KV CKT 1
FDNS	00NR	0	20SP	G14_059	TO->FROM	GR ISLD-LNX3345.00 - HOLT.CO3 345.00 345KV CKT 1	720	720	0.06285	114.3327	GRAND ISLAND - SWEETWATER 345KV CKT 1
FDNS	00NR	0	25SP	G14_059	TO->FROM	GR ISLD-LNX3345.00 - HOLT.CO3 345.00 345KV CKT 1	720	720	0.05696	113.8268	GERALD GENTLEMAN STATION - SWEETWATER 345KV CKT 1
FDNS	00NR	0	25SP	G14_059	TO->FROM	GR ISLD-LNX3345.00 - HOLT.CO3 345.00 345KV CKT 1	720	720	0.04373	113.5713	KELLY - MEADOWGROVE4230.00 230KV CKT 1
FDNS	00NR	0	20SP	G14_059	TO->FROM	GR ISLD-LNX3345.00 - HOLT.CO3 345.00 345KV CKT 1	720	720	0.05103	113.188	GERALD GENTLEMAN STATION - SWEETWATER 345KV CKT 2
FDNS	00NR	0	20SP	G14_059	TO->FROM	GR ISLD-LNX3345.00 - HOLT.CO3 345.00 345KV CKT 1	720	720	0.04154	112.9023	P12:230:UMZB:# 116 #: ST IN SD. WSG-ST-VH
FDNS	00NR	0	25SP	G14_059	TO->FROM	GR ISLD-LNX3345.00 - HOLT.CO3 345.00 345KV CKT 1	720	720	0.06576	112.8182	GRAND ISLAND - SWEETWATER 345KV CKT 1
FDNS	00NR	0	25SP	G14_059	TO->FROM	GR ISLD-LNX3345.00 - HOLT.CO3 345.00 345KV CKT 1	720	720	0.05341	112.5807	GERALD GENTLEMAN STATION - SWEETWATER 345KV CKT 2
FDNS	00NR	0	20SP	G14_059	TO->FROM	GR ISLD-LNX3345.00 - HOLT.CO3 345.00 345KV CKT 1	720	720	0.04139	112.312	STORLA - WESSINGTON 230KV CKT 1
FDNS	00NR	0	25SP	G14_059	TO->FROM	GR ISLD-LNX3345.00 - HOLT.CO3 345.00 345KV CKT 1	720	720	0.04366	112.2292	P12:230:UMZB:# 116 #: ST IN SD. WSG-ST-VH
FDNS	00NR	0	20SP	G14_059	TO->FROM	GR ISLD-LNX3345.00 - HOLT.CO3 345.00 345KV CKT 1	720	720	0.04155	111.7315	FT THOMPSON - LETCHER 230KV CKT 1
FDNS	00NR	0	20SP	G14_059	TO->FROM	GR ISLD-LNX3345.00 - HOLT.CO3 345.00 345KV CKT 1	720	720	0.04155	111.7315	FT THOMPSON - LETCHER 230KV CKT 1
FDNS	00NR	0	20SP	G14_059	TO->FROM	GR ISLD-LNX3345.00 - HOLT.CO3 345.00 345KV CKT 1	720	720	0.04134	111.6658	HANLON - STORLA 230KV CKT 1
FDNS	00NR	0	25SP	G14_059	TO->FROM	GR ISLD-LNX3345.00 - HOLT.CO3 345.00 345KV CKT 1	720	720	0.04352	111.6573	STORLA - WESSINGTON 230KV CKT 1
FDNS	00NR	0	20SP	G14_059	TO->FROM	GR ISLD-LNX3345.00 - HOLT.CO3 345.00 345KV CKT 1	720	720	0.04723	111.4887	CROOKED CREEK - NORTH PLATTE 230KV CKT 1

SOLUTION	GROUP	SCENARIO	SEASON	SOURCE	DIRECTION	MONITORED ELEMENT	RATEA (MVA)	RATEB(MVA)	TDF	TC%LOADING (% MVA)	CONTINGENCY
FDNS	00NR	0	20SP	G14_059	TO->FROM	GR ISLD-LNX3345.00 - HOLT.CO3 345.00 345KV CKT 1	720	720	0.0407	111.3665	BUFFALO - JAMESTOWN 345KV CKT 1
FDNS	00NR	0	20SP	G14_059	TO->FROM	GR ISLD-LNX3345.00 - HOLT.CO3 345.00 345KV CKT 1	720	720	0.04157	111.282	FT RANDAL - MEADOWGROVE4230.00 230KV CKT 1
FDNS	00NR	0	20SP	G14_059	TO->FROM	GR ISLD-LNX3345.00 - HOLT.CO3 345.00 345KV CKT 1	720	720	0.04054	111.2586	GEN635024 4-WALTER SCOTT UNIT 4
FDNS	00NR	0	20SP	G14_059	TO->FROM	GR ISLD-LNX3345.00 - HOLT.CO3 345.00 345KV CKT 1	720	720	0.04073	111.2344	G09_001IST 345.00 - WATERTOWN 345KV CKT 1
FDNS	00NR	0	20SP	G14_059	TO->FROM	GR ISLD-LNX3345.00 - HOLT.CO3 345.00 345KV CKT 1	720	720	0.04054	111.1762	GEN635023 3-WALTER SCOTT UNIT 3
FDNS	00NR	0	25SP	G14_059	TO->FROM	GR ISLD-LNX3345.00 - HOLT.CO3 345.00 345KV CKT 1	720	720	0.04347	111.0058	HANLON - STORLA 230KV CKT 1
FDNS	00NR	0	20SP	G14_059	TO->FROM	GR ISLD-LNX3345.00 - HOLT.CO3 345.00 345KV CKT 1	720	720	0.04177	110.9359	RAUN - SUB 3451 FT CAL 345KV CKT 1
FDNS	00NR	0	20SP	G14_059	TO->FROM	GR ISLD-LNX3345.00 - HOLT.CO3 345.00 345KV CKT 1	720	720	0.04177	110.9359	RAUN - SUB 3451 FT CAL 345KV CKT 1
FDNS	00NR	0	25SP	G14_059	TO->FROM	GR ISLD-LNX3345.00 - HOLT.CO3 345.00 345KV CKT 1	720	720	0.04282	110.8871	BUFFALO - JAMESTOWN 345KV CKT 1
FDNS	00NR	0	20SP	G14_059	TO->FROM	GR ISLD-LNX3345.00 - HOLT.CO3 345.00 345KV CKT 1	720	720	0.04145	110.881	FT RANDAL - G12_009IST 230.00 230KV CKT 1
FDNS	00NR	0	20SP	G14_059	TO->FROM	GR ISLD-LNX3345.00 - HOLT.CO3 345.00 345KV CKT 1	720	720	0.04148	110.873	FT RANDAL - FT THOMPSON 230KV CKT 1
FDNS	00NR	0	20SP	G14_059	TO->FROM	GR ISLD-LNX3345.00 - HOLT.CO3 345.00 345KV CKT 1	720	720	0.04148	110.873	FT RANDAL - FT THOMPSON 230KV CKT 1
FDNS	00NR	0	20SP	G14_059	TO->FROM	GR ISLD-LNX3345.00 - HOLT.CO3 345.00 345KV CKT 1	720	720	0.04098	110.8598	WATERTN-LNX3345.00 - WHITE 345KV CKT 1
FDNS	00NR	0	20SP	G14_059	TO->FROM	GR ISLD-LNX3345.00 - HOLT.CO3 345.00 345KV CKT 1	720	720	0.04098	110.8525	P12:345:UMZW:# 1747 #: WT2 IN SD. WT2-WHT LINE FAULT
FDNS	00NR	0	20SP	G14_059	TO->FROM	GR ISLD-LNX3345.00 - HOLT.CO3 345.00 345KV CKT 1	720	720	0.04098	110.8465	WATERTN-LNX3345.00 - WATERTOWN 345KV CKT Z
FDNS	00NR	0	20SP	G14_059	TO->FROM	GR ISLD-LNX3345.00 - HOLT.CO3 345.00 345KV CKT 1	720	720	0.04145	110.8313	FT THOMPSON - LAKE PLATT 230KV CKT 1
FDNS	00NR	0	20SP	G14_059	TO->FROM	GR ISLD-LNX3345.00 - HOLT.CO3 345.00 345KV CKT 1	720	720	0.04145	110.8313	FT THOMPSON - LAKE PLATT 230KV CKT 1
FDNS	00NR	0	20SP	G14_059	TO->FROM	GR ISLD-LNX3345.00 - HOLT.CO3 345.00 345KV CKT 1	720	720	0.04054	110.7054	GEN336821 1-GRAND GULF UNIT
FDNS	00NR	0	20SP	G14_059	TO->FROM	GR ISLD-LNX3345.00 - HOLT.CO3 345.00 345KV CKT 1	720	720	0.04145	110.6054	G12_009IST 230.00 - LAKE PLATT 230KV CKT 1
FDNS	00NR	0	25SP	G14_059	TO->FROM	GR ISLD-LNX3345.00 - HOLT.CO3 345.00 345KV CKT 1	720	720	0.04367	110.589	FT THOMPSON - LETCHER 230KV CKT 1
FDNS	00NR	0	25SP	G14_059	TO->FROM	GR ISLD-LNX3345.00 - HOLT.CO3 345.00 345KV CKT 1	720	720	0.04367	110.589	FT THOMPSON - LETCHER 230KV CKT 1
FDNS	00NR	0	20SP	G14_059	TO->FROM	GR ISLD-LNX3345.00 - HOLT.CO3 345.00 345KV CKT 1	720	720	0.04085	110.5617	SPLIT ROCK - WHITE 345KV CKT 1
FDNS	00NR	0	20SP	G14_059	TO->FROM	GR ISLD-LNX3345.00 - HOLT.CO3 345.00 345KV CKT 1	720	720	0.04085	110.5617	SPLIT ROCK - WHITE 345KV CKT 1
FDNS	00NR	0	20SP	G14_059	TO->FROM	GR ISLD-LNX3345.00 - HOLT.CO3 345.00 345KV CKT 1	720	720	0.04054	110.5591	GEN344225 1-1CAL G1 25.000
FDNS	00NR	0	20SP	G14_059	TO->FROM	GR ISLD-LNX3345.00 - HOLT.CO3 345.00 345KV CKT 1	720	720	0.04065	110.5507	CHISAGO COUNTY - FORBES 500KV CKT 1
FDNS	00NR	0	25SP	G14_059	TO->FROM	GR ISLD-LNX3345.00 - HOLT.CO3 345.00 345KV CKT 1	720	720	0.04953	110.5235	CROOKED CREEK - NORTH PLATTE 230KV CKT 1
FDNS	00NR	0	25SP	G14_059	TO->FROM	GR ISLD-LNX3345.00 - HOLT.CO3 345.00 345KV CKT 1	720	720	0.04373	110.5094	FT RANDAL - MEADOWGROVE4230.00 230KV CKT 1
FDNS	00NR	0	20SP	G14_059	TO->FROM	GR ISLD-LNX3345.00 - HOLT.CO3 345.00 345KV CKT 1	720	720	0.04065	110.5066	CHISAGO COUNTY - CHISAGO COUNTY 500KV CKT 1
FDNS	00NR	0	25SP	G14_059	TO->FROM	GR ISLD-LNX3345.00 - HOLT.CO3 345.00 345KV CKT 1	720	720	0.04285	110.5051	G09_001IST 345.00 - WATERTOWN 345KV CKT 1
FDNS	00NR	0	20SP	G14_059	TO->FROM	GR ISLD-LNX3345.00 - HOLT.CO3 345.00 345KV CKT 1	720	720	0.04065	110.4696	BISON 3 345.00 - BUFFALO 345KV CKT 1
FDNS	00NR	0	20SP	G14_059	TO->FROM	GR ISLD-LNX3345.00 - HOLT.CO3 345.00 345KV CKT 1	720	720	0.0412	110.4238	LETCHER - SIOUX FALLS 230KV CKT 1
FDNS	00NR	0	25SP	G14_059	TO->FROM	GR ISLD-LNX3345.00 - HOLT.CO3 345.00 345KV CKT 1	720	720	0.04266	110.4116	GEN635024 4-WALTER SCOTT UNIT 4
FDNS	00NR	0	20SP	G14_059	TO->FROM	GR ISLD-LNX3345.00 - HOLT.CO3 345.00 345KV CKT 1	720	720	0.04054	110.3795	GEN640009 1-COOPER NUCLEAR STATION
FDNS	00NR	0	25SP	G14_059	TO->FROM	GR ISLD-LNX3345.00 - HOLT.CO3 345.00 345KV CKT 1	720	720	0.04552	110.2704	GERALD GENTLEMAN STATION - RED WILLOW 345KV CKT 1
FDNS	00NR	0	20SP	G14_059	TO->FROM	GR ISLD-LNX3345.00 - HOLT.CO3 345.00 345KV CKT 1	720	720	0.0407	110.2408	CENTER - JAMESTOWN 345KV CKT 1
FDNS	00NR	0	20SP	G14_059	TO->FROM	GR ISLD-LNX3345.00 - HOLT.CO3 345.00 345KV CKT 1	720	720	0.04054	110.2305	GEN336153 1-WATERFORD UNIT#3
FDNS	00NR	0	20SP	G14_059	TO->FROM	GR ISLD-LNX3345.00 - HOLT.CO3 345.00 345KV CKT 1	720	720	0.04054	110.2177	GEN337911 1-ARKANSAS NUCLEAR ONE UNIT #2
FDNS	00NR	0	25SP	G14_059	TO->FROM	GR ISLD-LNX3345.00 - HOLT.CO3 345.00 345KV CKT 1	720	720	0.04388	110.2044	RAUN - SUB 3451 FT CAL 345KV CKT 1
FDNS	00NR	0	25SP	G14_059	TO->FROM	GR ISLD-LNX3345.00 - HOLT.CO3 345.00 345KV CKT 1	720	720	0.04388	110.2044	RAUN - SUB 3451 FT CAL 345KV CKT 1
FDNS	00NR	0	20SP	G14_059	TO->FROM	GR ISLD-LNX3345.00 - HOLT.CO3 345.00 345KV CKT 1	720	720	0.04073	110.1809	G09_001IST 345.00 - GROTON 345KV CKT 1
FDNS	00NR	0	25SP	G14_059	TO->FROM	GR ISLD-LNX3345.00 - HOLT.CO3 345.00 345KV CKT 1	720	720	0.04358	110.1644	FT RANDAL - G12_009IST 230.00 230KV CKT 1
FDNS	00NR	0	20SP	G14_059	TO->FROM	GR ISLD-LNX3345.00 - HOLT.CO3 345.00 345KV CKT 1	720	720	0.04107	110.0864	FT RANDAL - SIOUX CITY 230KV CKT 1
FDNS	00NR	0	20SP	G14_059	TO->FROM	GR ISLD-LNX3345.00 - HOLT.CO3 345.00 345KV CKT 1	720	720	0.04335	109.9907	GERALD GENTLEMAN STATION - RED WILLOW 345KV CKT 1
FDNS	00NR	0	20SP	G14_059	TO->FROM	GR ISLD-LNX3345.00 - HOLT.CO3 345.00 345KV CKT 1	720	720	0.04054	109.9793	GEN335831 1-RIVERBEND UNIT#1
FDNS	00NR	0	25SP	G14_059	TO->FROM	GR ISLD-LNX3345.00 - HOLT.CO3 345.00 345KV CKT 1	720	720	0.04266	109.9704	GEN635023 3-WALTER SCOTT UNIT 3
FDNS	00NR	0	20SP	G14_059	TO->FROM	GR ISLD-LNX3345.00 - HOLT.CO3 345.00 345KV CKT 1	720	720	0.04054	109.9648	GEN563222 1-G15088_3 0.6900
FDNS	00NR	0	25SP	G14_059	TO->FROM	GR ISLD-LNX3345.00 - HOLT.CO3 345.00 345KV CKT 1	720	720	0.04808	109.9344	MINGO - RED WILLOW 345KV CKT 1
FDNS	00NR	0	25SP	G14_059	TO->FROM	GR ISLD-LNX3345.00 - HOLT.CO3 345.00 345KV CKT 1	720	720	0.04808	109.9344	MINGO - RED WILLOW 345KV CKT 1
FDNS	00NR	0	20SP	G14_059	TO->FROM	GR ISLD-LNX3345.00 - HOLT.CO3 345.00 345KV CKT 1	720	720	0.04054	109.8966	GEN337910 1-ARKANSAS NUCLEAR ONE UNIT #1
FDNS	00NR	0	25SP	G14_059	TO->FROM	GR ISLD-LNX3345.00 - HOLT.CO3 345.00 345KV CKT 1	720	720	0.04358	109.8814	G12_009IST 230.00 - LAKE PLATT 230KV CKT 1
FDNS	00NR	0	20SP	G14_059	TO->FROM	GR ISLD-LNX3345.00 - HOLT.CO3 345.00 345KV CKT 1	720	720	0.04118	109.8672	THEDFRD3 345.00 (THEDFORDT2) 345/115/13.8KV TRANSFORMER CKT 1
FDNS	00NR	0	20SP	G14_059	TO->FROM	GR ISLD-LNX3345.00 - HOLT.CO3 345.00 345KV CKT 1	720	720	0.04111	109.8547	SIOUXCY-LNX3345.00 - SPLIT ROCK 345KV CKT 1
FDNS	00NR	0	20SP	G14_059	TO->FROM	GR ISLD-LNX3345.00 - HOLT.CO3 345.00 345KV CKT 1	720	720	0.04111	109.8547	SIOUXCY-LNX3345.00 - SPLIT ROCK 345KV CKT 1
FDNS	00NR	0	20SP	G14_059	TO->FROM	GR ISLD-LNX3345.00 - HOLT.CO3 345.00 345KV CKT 1	720	720	0.04111	109.8235	P12:345:UMZW:# 907 #: SC2-SR IN IA. SC2-SR 345 KV LINE
FDNS	00NR	0	25SP	G14_059	TO->FROM	GR ISLD-LNX3345.00 - HOLT.CO3 345.00 345KV CKT 1	720	720	0.04266	109.8109	GEN640009 1-COOPER NUCLEAR STATION
FDNS	00NR	0	20SP	G14_059	TO->FROM	GR ISLD-LNX3345.00 - HOLT.CO3 345.00 345KV CKT 1	720	720	0.04111	109.7982	SIOUX CITY - SIOUXCY-LNX3345.00 345KV CKT Z
FDNS	00NR	0	20SP	G14_059	TO->FROM	GR ISLD-LNX3345.00 - HOLT.CO3 345.00 345KV CKT 1	720	720	0.04072	109.7399	GROTON-LNX3 345.00 - LELAND1-LNX3345.00 345KV CKT 1
FDNS	00NR	0	25SP	G14_059	TO->FROM	GR ISLD-LNX3345.00 - HOLT.CO3 345.00 345KV CKT 1	720	720	0.04332	109.7233	LETCHER - SIOUX FALLS 230KV CKT 1
FDNS	00NR	0	20SP	G14_059	TO->FROM	GR ISLD-LNX3345.00 - HOLT.CO3 345.00 345KV CKT 1	720	720	0.04099	109.715	HANLON - SIOUX FALLS 230KV CKT 1
FDNS	00NR	0	20SP	G14_059	TO->FROM	GR ISLD-LNX3345.00 - HOLT.CO3 345.00 345KV CKT 1	720	720	0.04078	109.7135	LAKEFIELD 3 - NOBLES 345KV CKT 1
FDNS	00NR	0	25SP	G14_059	TO->FROM	GR ISLD-LNX3345.00 - HOLT.CO3 345.00 345KV CKT 1	720	720	0.04266	109.7088	GEN344225 1-1CAL G1 25.000
FDNS	00NR	0	25SP	G14_059	TO->FROM	GR ISLD-LNX3345.00 - HOLT.CO3 345.00 345KV CKT 1	720	720	0.0431	109.7047	WATERTN-LNX3345.00 - WHITE 345KV CKT 1
FDNS	00NR	0	25SP	G14_059	TO->FROM	GR ISLD-LNX3345.00 - HOLT.CO3 345.00 345KV CKT 1	720	720	0.04282	109.6956	CENTER - JAMESTOWN 345KV CKT 1
FDNS	00NR	0	25SP	G14_059	TO->FROM	GR ISLD-LNX3345.00 - HOLT.CO3 345.00 345KV CKT 1	720	720	0.04361	109.6875	FT RANDAL - FT THOMPSON 230KV CKT 1
FDNS	00NR	0	25SP	G14_059	TO->FROM	GR ISLD-LNX3345.00 - HOLT.CO3 345.00 345KV CKT 1	720	720	0.04361	109.6875	FT RANDAL - FT THOMPSON 230KV CKT 1
FDNS	00NR	0	20SP	G14_059	TO->FROM	GR ISLD-LNX3345.00 - HOLT.CO3 345.00 345KV CKT 1	720	720	0.04072	109.6842	P12:345:UMZB:# 109 #: LOS GRT IN ND. LOS GRT
FDNS	00NR	0	20SP	G14_059	TO->FROM	GR ISLD-LNX3345.00 - HOLT.CO3 345.00 345KV CKT 1	720	720	0.04072	109.6834	GROTON - GROTON-LNX3 345.00 345KV CKT Z
FDNS	00NR	0	20SP	G14_059	TO->FROM	GR ISLD-LNX3345.00 - HOLT.CO3 345.00 345KV CKT 1	720	720	0.04072	109.6753	LELAND OLDS - LELAND1-LNX3345.00 345KV CKT Z
FDNS	00NR	0	25SP	G14_059	TO->FROM	GR ISLD-LNX3345.00 - HOLT.CO3 345.00 345KV CKT 1	720	720	0.04358	109.6613	FT THOMPSON - LAKE PLATT 230KV CKT 1
FDNS	00NR	0	25SP	G14_059	TO->FROM	GR ISLD-LNX3345.00 - HOLT.CO3 345.00 345KV CKT 1	720	720	0.04358	109.6613	FT THOMPSON - LAKE PLATT 230KV CKT 1
FDNS	00NR	0	25SP	G14_059	TO->FROM	GR ISLD-LNX3345.00 - HOLT.CO3 345.00 345KV CKT 1	720	720	0.0431	109.622	WATERTN-LNX3345.00 - WATERTOWN 345KV CKT Z
FDNS	00NR	0	20SP	G14_059	TO->FROM	GR ISLD-LNX3345.00 - HOLT.CO3 345.00 345KV CKT 1	720	720	0.0409	109.6171	FT RANDAL - UTICA JCT 230KV CKT 1
FDNS	00NR	0	25SP	G14_059	TO->FROM	GR ISLD-LNX3345.00 - HOLT.CO3 345.00 345KV CKT 1	720	720	0.0431	109.6134	P12:345:UMZW:# 1747 #: WT2 IN SD. WT2-WHT LINE FAULT
FDNS	00NR	0	20SP	G14_059	TO->FROM	GR ISLD-LNX3345.00 - HOLT.CO3 345.00 345KV CKT 1	720	720	0.04226	109.5884	CALLAWAY - MAXWELL 115KV CKT 1
FDNS	00NR	0	20SP	G14_059	TO->FROM	GR ISLD-LNX3345.00 - HOLT.CO3 345.00 345KV CKT 1	720	720	0.04061	109.5819	ARROWHEAD - ARROWHEAD 230 230KV CKT 1
FDNS	00NR	0	20SP	G14_059	TO->FROM	GR ISLD-LNX3345.00 - HOLT.CO3 345.00 345KV CKT 1	720	720	0.04054	109.5763	GEN337653 1-WHITE BLUFF UNIT #2
FDNS	00NR	0	20SP	G14_059	TO->FROM	GR ISLD-LNX3345.00 - HOLT.CO3 345.00 345KV CKT 1	720	720	0.04159	109.5589	P12:115:NPPD:1167A:AINSWRT7:ONEILL 7:BTB
FDNS	00NR	0	20SP	G14_059	TO->FROM	GR ISLD-LNX3345.00 - HOLT.CO3 345.00 345KV CKT 1	720	720	0.04054	109.5474	GEN641089 2-ENERGY CENTER 2
FDNS	00NR	0	20SP	G14_059	TO->FROM	GR ISLD-LNX3345.00 - HOLT.CO3 345.00 345KV CKT 1	720	720	0.04092	109.541	HOSKINS - SHELL CREEK 345KV CKT 1

SOLUTION	GROUP	SCENARIO	SEASON	SOURCE	DIRECTION	MONITORED ELEMENT	RATEA (MVA)	RATEB(MVA)	TDF	TC%LOADING (% MVA)	CONTINGENCY
FDNS	00NR	0	20SP	G14_059	TO->FROM	GR ISLD-LNX3345.00 - HOLT.CO3 345.00 345KV CKT 1	720	720	0.04054	109.5405	GEN337652 1-WHITE BLUFF UNIT #1
FDNS	00NR	0	20SP	G14_059	TO->FROM	GR ISLD-LNX3345.00 - HOLT.CO3 345.00 345KV CKT 1	720	720	0.04054	109.5283	GEN338143 1-INDEPENDENCE UNIT #1
FDNS	00NR	0	20SP	G14_059	TO->FROM	GR ISLD-LNX3345.00 - HOLT.CO3 345.00 345KV CKT 1	720	720	0.04054	109.5271	GEN338146 1-INDEPENDENCE UNIT #2
FDNS	00NR	0	20SP	G14_059	TO->FROM	GR ISLD-LNX3345.00 - HOLT.CO3 345.00 345KV CKT 1	720	720	0.04087	109.5156	PAHOJA - SIOUX FALLS 230KV CKT 1
FDNS	00NR	0	20SP	G14_059	TO->FROM	GR ISLD-LNX3345.00 - HOLT.CO3 345.00 345KV CKT 1	720	720	0.04069	109.4932	ALEXMRES3 345.00 - BISON 3 345.00 345KV CKT 1
FDNS	00NR	0	20SP	G14_059	TO->FROM	GR ISLD-LNX3345.00 - HOLT.CO3 345.00 345KV CKT 1	720	720	0.04062	109.4902	BROOKING COUNTY - LYON COUNTY 345KV CKT 1
FDNS	00NR	0	20SP	G14_059	TO->FROM	GR ISLD-LNX3345.00 - HOLT.CO3 345.00 345KV CKT 1	720	720	0.0406	109.4827	AS KING - EAU CLAIRE 345KV CKT 1
FDNS	00NR	0	20SP	G14_059	TO->FROM	GR ISLD-LNX3345.00 - HOLT.CO3 345.00 345KV CKT 1	720	720	0.0409	109.4432	CARPENTER - HURON 230KV CKT 1
FDNS	00NR	0	25SP	G14_059	TO->FROM	GR ISLD-LNX3345.00 - HOLT.CO3 345.00 345KV CKT 1	720	720	0.04542	109.4375	MINGO - SETAB 345KV CKT 1
FDNS	00NR	0	25SP	G14_059	TO->FROM	GR ISLD-LNX3345.00 - HOLT.CO3 345.00 345KV CKT 1	720	720	0.04542	109.4375	MINGO - SETAB 345KV CKT 1
FDNS	00NR	0	20SP	G14_059	TO->FROM	GR ISLD-LNX3345.00 - HOLT.CO3 345.00 345KV CKT 1	720	720	0.04054	109.4361	GEN501801 1-DOLET HILLS UNIT1
FDNS	00NR	0	25SP	G14_059	TO->FROM	GR ISLD-LNX3345.00 - HOLT.CO3 345.00 345KV CKT 1	720	720	0.04277	109.4333	CHISAGO COUNTY - FORBES 500KV CKT 1
FDNS	00NR	0	25SP	G14_059	TO->FROM	GR ISLD-LNX3345.00 - HOLT.CO3 345.00 345KV CKT 1	720	720	0.04266	109.4206	GEN336821 1-GRAND GULF UNIT
FDNS	00NR	0	20SP	G14_059	TO->FROM	GR ISLD-LNX3345.00 - HOLT.CO3 345.00 345KV CKT 1	720	720	0.04127	109.4134	BUCKNER7 345.00 - SPEARVILLE 345KV CKT 1
FDNS	00NR	0	20SP	G14_059	TO->FROM	GR ISLD-LNX3345.00 - HOLT.CO3 345.00 345KV CKT 1	720	720	0.04127	109.4134	BUCKNER7 345.00 - SPEARVILLE 345KV CKT 1
FDNS	00NR	0	25SP	G14_059	TO->FROM	GR ISLD-LNX3345.00 - HOLT.CO3 345.00 345KV CKT 1	720	720	0.04266	109.4126	GEN337911 1-ARKANSAS NUCLEAR ONE UNIT #2
FDNS	00NR	0	25SP	G14_059	TO->FROM	GR ISLD-LNX3345.00 - HOLT.CO3 345.00 345KV CKT 1	720	720	0.04277	109.396	CHISAGO COUNTY - CHISAGO COUNTY 500KV CKT 1
FDNS	00NR	0	25SP	G14_059	TO->FROM	GR ISLD-LNX3345.00 - HOLT.CO3 345.00 345KV CKT 1	720	720	0.04266	109.3955	GEN336153 1-WATERFORD UNIT#3
FDNS	00NR	0	20SP	G14_059	TO->FROM	GR ISLD-LNX3345.00 - HOLT.CO3 345.00 345KV CKT 1	720	720	0.04054	109.3948	GEN336252 1-NINEMILE POINT UNIT#5
FDNS	00NR	0	20SP	G14_059	TO->FROM	GR ISLD-LNX3345.00 - HOLT.CO3 345.00 345KV CKT 1	720	720	0.04493	109.3904	CROOKED CREEK - RIVERDALE 230KV CKT 1
FDNS	00NR	0	20SP	G14_059	TO->FROM	GR ISLD-LNX3345.00 - HOLT.CO3 345.00 345KV CKT 1	720	720	0.04054	109.3772	GEN645012 2-NEBRASKA CITY 2
FDNS	00NR	0	20SP	G14_059	TO->FROM	GR ISLD-LNX3345.00 - HOLT.CO3 345.00 345KV CKT 1	720	720	0.04071	109.3746	HAZLETON - MITCHLCO3 345.00 345KV CKT 1
FDNS	00NR	0	20SP	G14_059	TO->FROM	GR ISLD-LNX3345.00 - HOLT.CO3 345.00 345KV CKT 1	720	720	0.0409	109.3726	HURON - WATERTOWN 230KV CKT 2
FDNS	00NR	0	20SP	G14_059	TO->FROM	GR ISLD-LNX3345.00 - HOLT.CO3 345.00 345KV CKT 1	720	720	0.0409	109.3726	HURON - WATERTOWN 230KV CKT 2
FDNS	00NR	0	25SP	G14_059	TO->FROM	GR ISLD-LNX3345.00 - HOLT.CO3 345.00 345KV CKT 1	720	720	0.04277	109.3721	BISON 3 345.00 - BUFFALO 345KV CKT 1
FDNS	00NR	0	20SP	G14_059	TO->FROM	GR ISLD-LNX3345.00 - HOLT.CO3 345.00 345KV CKT 1	720	720	0.04099	109.3608	GRIMES - LEHIGH 345KV CKT 1
FDNS	00NR	0	20SP	G14_059	TO->FROM	GR ISLD-LNX3345.00 - HOLT.CO3 345.00 345KV CKT 1	720	720	0.0409	109.3449	CARPENTER - WATERTOWN 230KV CKT 1
FDNS	00NR	0	20SP	G14_059	TO->FROM	GR ISLD-LNX3345.00 - HOLT.CO3 345.00 345KV CKT 1	720	720	0.0409	109.3449	CARPENTER - WATERTOWN 230KV CKT 1
FDNS	00NR	0	20SP	G14_059	TO->FROM	GR ISLD-LNX3345.00 - HOLT.CO3 345.00 345KV CKT 1	720	720	0.04054	109.3392	GEN336251 1-NINEMILE POINT UNIT#4
FDNS	00NR	0	25SP	G14_059	TO->FROM	GR ISLD-LNX3345.00 - HOLT.CO3 345.00 345KV CKT 1	720	720	0.04319	109.3382	FT RANDAL - SIOUX CITY 230KV CKT 1
FDNS	00NR	0	20SP	G14_059	TO->FROM	GR ISLD-LNX3345.00 - HOLT.CO3 345.00 345KV CKT 1	720	720	0.04054	109.3291	GEN336831 1-BAXTER WILSON SES
FDNS	00NR	0	20SP	G14_059	TO->FROM	GR ISLD-LNX3345.00 - HOLT.CO3 345.00 345KV CKT 1	720	720	0.03957	109.3205	STAPLETON - THEDFORD 115KV CKT 1
FDNS	00NR	0	20SP	G14_059	TO->FROM	GR ISLD-LNX3345.00 - HOLT.CO3 345.00 345KV CKT 1	720	720	0.0409	109.3165	RASMUSN - UTICA JCT 230KV CKT 1
FDNS	00NR	0	20SP	G14_059	TO->FROM	GR ISLD-LNX3345.00 - HOLT.CO3 345.00 345KV CKT 1	720	720	0.04054	109.3037	GEN645011 1-NEBRASKA CITY 1
FDNS	00NR	0	25SP	G14_059	TO->FROM	GR ISLD-LNX3345.00 - HOLT.CO3 345.00 345KV CKT 1	720	720	0.04266	109.3	GEN335831 1-RIVERBEND UNIT#1
FDNS	00NR	0	20SP	G14_059	TO->FROM	GR ISLD-LNX3345.00 - HOLT.CO3 345.00 345KV CKT 1	720	720	0.04054	109.2983	GEN337041 1-GERALD ANDRUS
FDNSLock	00NR	0	20SP	G14_059	TO->FROM	GR ISLD-LNX3345.00 - HOLT.CO3 345.00 345KV CKT 1	720	720	0.04441	109.2765	KEYSTONE - SIDNEY1-LNX3345.00 345KV CKT 1
FDNS	00NR	0	25SP	G14_059	TO->FROM	GR ISLD-LNX3345.00 - HOLT.CO3 345.00 345KV CKT 1	720	720	0.04266	109.2762	GEN563222 1-G15088_3 0.6900
FDNS	00NR	0	25SP	G14_059	TO->FROM	GR ISLD-LNX3345.00 - HOLT.CO3 345.00 345KV CKT 1	720	720	0.04331	109.2576	THEDFRD3 345.00 (THEDFORDT2) 345/115/13.8KV TRANSFORMER CKT 1
FDNS	00NR	0	20SP	G14_059	TO->FROM	GR ISLD-LNX3345.00 - HOLT.CO3 345.00 345KV CKT 1	720	720	0.04054	109.2498	GEN501813 1-RODEMACHER UNIT 3
FDNS	00NR	0	20SP	G14_059	TO->FROM	GR ISLD-LNX3345.00 - HOLT.CO3 345.00 345KV CKT 1	720	720	0.04087	109.2413	EAGLE 4 230.00 - PAHOJA 230KV CKT 1
FDNS	00NR	0	25SP	G14_059	TO->FROM	GR ISLD-LNX3345.00 - HOLT.CO3 345.00 345KV CKT 1	720	720	0.04297	109.2391	SPLIT ROCK - WHITE 345KV CKT 1
FDNS	00NR	0	25SP	G14_059	TO->FROM	GR ISLD-LNX3345.00 - HOLT.CO3 345.00 345KV CKT 1	720	720	0.04297	109.2391	SPLIT ROCK - WHITE 345KV CKT 1
FDNS	00NR	0	20SP	G14_059	TO->FROM	GR ISLD-LNX3345.00 - HOLT.CO3 345.00 345KV CKT 1	720	720	0.04054	109.233	GEN344897 4-1LAB G4 20.000
FDNS	00NR	0	20SP	G14_059	TO->FROM	GR ISLD-LNX3345.00 - HOLT.CO3 345.00 345KV CKT 1	720	720	0.04054	109.2318	GEN344894 1-1LAB G1 20.000
FDNS	00NR	0	20SP	G14_059	TO->FROM	GR ISLD-LNX3345.00 - HOLT.CO3 345.00 345KV CKT 1	720	720	0.04054	109.2317	GEN344895 2-1LAB G2 20.000
FDNS	00NR	0	20SP	G14_059	TO->FROM	GR ISLD-LNX3345.00 - HOLT.CO3 345.00 345KV CKT 1	720	720	0.04054	109.2316	GEN344896 3-1LAB G3 20.000
FDNS	00NR	0	20SP	G14_059	TO->FROM	GR ISLD-LNX3345.00 - HOLT.CO3 345.00 345KV CKT 1	720	720	0.04054	109.2263	GEN629075 1-OTTUMWA GENERATOR FOR OTTUMWA UNIT NO 1
FDNS	00NR	0	20SP	G14_059	TO->FROM	GR ISLD-LNX3345.00 - HOLT.CO3 345.00 345KV CKT 1	720	720	0.04139	109.2249	FT THOMPSON - WESSINGTON 230KV CKT 1
FDNS	00NR	0	20SP	G14_059	TO->FROM	GR ISLD-LNX3345.00 - HOLT.CO3 345.00 345KV CKT 1	720	720	0.04139	109.2249	FT THOMPSON - WESSINGTON 230KV CKT 1
FDNS	00NR	0	20SP	G14_059	TO->FROM	GR ISLD-LNX3345.00 - HOLT.CO3 345.00 345KV CKT 1	720	720	0.04059	109.209	CNTSHNT3 345.00 - PRAIRIE3 345.00 345KV CKT 1
FDNS	00NR	0	20SP	G14_059	TO->FROM	GR ISLD-LNX3345.00 - HOLT.CO3 345.00 345KV CKT 1	720	720	0.04054	109.1802	GEN345671 2-1RUSH G2 18.000
FDNS	00NR	0	20SP	G14_059	TO->FROM	GR ISLD-LNX3345.00 - HOLT.CO3 345.00 345KV CKT 1	720	720	0.04054	109.1769	GEN345670 1-1RUSH G1 18.000
FDNS	00NR	0	20SP	G14_059	TO->FROM	GR ISLD-LNX3345.00 - HOLT.CO3 345.00 345KV CKT 1	720	720	0.04057	109.1732	DIXONCO 230.00 - HOSKINS 230KV CKT 1
FDNS	00NR	0	20SP	G14_059	TO->FROM	GR ISLD-LNX3345.00 - HOLT.CO3 345.00 345KV CKT 1	720	720	0.04059	109.1698	ARPIN B4 345.00 - EAU CLAIRE 345KV CKT 1
FDNS	00NR	0	20SP	G14_059	TO->FROM	GR ISLD-LNX3345.00 - HOLT.CO3 345.00 345KV CKT 1	720	720	0.04591	109.1647	MINGO - RED WILLOW 345KV CKT 1
FDNS	00NR	0	20SP	G14_059	TO->FROM	GR ISLD-LNX3345.00 - HOLT.CO3 345.00 345KV CKT 1	720	720	0.04591	109.1647	MINGO - RED WILLOW 345KV CKT 1
FDNS	00NR	0	20SP	G14_059	TO->FROM	GR ISLD-LNX3345.00 - HOLT.CO3 345.00 345KV CKT 1	720	720	0.04327	109.1605	MINGO - SETAB 345KV CKT 1
FDNS	00NR	0	20SP	G14_059	TO->FROM	GR ISLD-LNX3345.00 - HOLT.CO3 345.00 345KV CKT 1	720	720	0.04327	109.1605	MINGO - SETAB 345KV CKT 1
FDNS	00NR	0	20SP	G14_059	TO->FROM	GR ISLD-LNX3345.00 - HOLT.CO3 345.00 345KV CKT 1	720	720	0.0409	109.1605	RASMUSN - SIOUX CITY 230KV CKT 1
FDNS	00NR	0	20SP	G14_059	TO->FROM	GR ISLD-LNX3345.00 - HOLT.CO3 345.00 345KV CKT 1	720	720	0.04054	109.1568	GEN532751 1-WOLF CREEK GENERATING STATION UNIT 1
FDNS	00NR	0	20SP	G14_059	TO->FROM	GR ISLD-LNX3345.00 - HOLT.CO3 345.00 345KV CKT 1	720	720	0.04441	109.1558	SIDNEY - SIDNEY1-LNX3345.00 345KV CKT Z
FDNS	00NR	0	20SP	G14_059	TO->FROM	GR ISLD-LNX3345.00 - HOLT.CO3 345.00 345KV CKT 1	720	720	0.04054	109.147	GEN645001 1-FORT CALHOUN 1
FDNS	00NR	0	20SP	G14_059	TO->FROM	GR ISLD-LNX3345.00 - HOLT.CO3 345.00 345KV CKT 1	720	720	0.04054	109.1345	GEN335206 1-NELSON UNIT 6
FDNS	00NR	0	20SP	G14_059	TO->FROM	GR ISLD-LNX3345.00 - HOLT.CO3 345.00 345KV CKT 1	720	720	0.04054	109.1082	GEN542962 2-IATAN UNIT #2
FDNS	00NR	0	25SP	G14_059	TO->FROM	GR ISLD-LNX3345.00 - HOLT.CO3 345.00 345KV CKT 1	720	720	0.04266	109.1077	GEN337910 1-ARKANSAS NUCLEAR ONE UNIT #1
FDNS	00NR	0	20SP	G14_059	TO->FROM	GR ISLD-LNX3345.00 - HOLT.CO3 345.00 345KV CKT 1	720	720	0.04054	109.1047	GEN334440 1-SABINE UNIT 4
FDNS	00NR	0	20SP	G14_059	TO->FROM	GR ISLD-LNX3345.00 - HOLT.CO3 345.00 345KV CKT 1	720	720	0.04108	109.1007	COLUMEAST - SHELL CREEK 345KV CKT 1
FDNS	00NR	0	25SP	G14_059	TO->FROM	GR ISLD-LNX3345.00 - HOLT.CO3 345.00 345KV CKT 1	720	720	0.04323	109.0924	SIOUXCY-LNX3345.00 - SPLIT ROCK 345KV CKT 1
FDNS	00NR	0	25SP	G14_059	TO->FROM	GR ISLD-LNX3345.00 - HOLT.CO3 345.00 345KV CKT 1	720	720	0.04323	109.0924	SIOUXCY-LNX3345.00 - SPLIT ROCK 345KV CKT 1
FDNS	00NR	0	20SP	G14_059	TO->FROM	GR ISLD-LNX3345.00 - HOLT.CO3 345.00 345KV CKT 1	720	720	0.03628	109.0674	NUNDRWD - WAYSIDE 230KV CKT 1
FDNS	00NR	0	20SP	G14_059	TO->FROM	GR ISLD-LNX3345.00 - HOLT.CO3 345.00 345KV CKT 1	720	720	0.04058	109.0657	P12:115:NPPD:WAPA4:SIDNEY 7:B.SPRGS7:BTB
FDNS	00NR	0	20SP	G14_059	TO->FROM	GR ISLD-LNX3345.00 - HOLT.CO3 345.00 345KV CKT 1	720	720	0.04058	109.0657	P12:115:UMZB:# 119 #: IN NE.
FDNS	00NR	0	25SP	G14_059	TO->FROM	GR ISLD-LNX3345.00 - HOLT.CO3 345.00 345KV CKT 1	720	720	0.04323	109.0648	P12:345:UMZW:# 907 #: SC2-SR IN IA. SC2-SR 345 KV LINE
FDNS	00NR	0	20SP	G14_059	TO->FROM	GR ISLD-LNX3345.00 - HOLT.CO3 345.00 345KV CKT 1	720	720	0.04054	109.0458	GEN501812 1-RODEMACHER UNIT 2
FDNS	00NR	0	20SP	G14_059	TO->FROM	GR ISLD-LNX3345.00 - HOLT.CO3 345.00 345KV CKT 1	720	720	0.04054	109.0436	GEN338388 1-1PLUM PT U1 23.000
FDNS	00NR	0	25SP	G14_059	TO->FROM	GR ISLD-LNX3345.00 - HOLT.CO3 345.00 345KV CKT 1	720	720	0.04323	109.0408	SIOUX CITY - SIOUXCY-LNX3345.00 345KV CKT Z
FDNS	00NR	0	25SP	G14_059	TO->FROM	GR ISLD-LNX3345.00 - HOLT.CO3 345.00 345KV CKT 1	720	720	0.0429	109.0362	LAKEFIELD 3 - NOBLES 345KV CKT 1
FDNS	00NR	0	20SP	G14_059	TO->FROM	GR ISLD-LNX3345.00 - HOLT.CO3 345.00 345KV CKT 1	720	720	0.04054	109.0355	GEN336191 1-LITTLE GYPSY UNIT#3

SOLUTION	GROUP	SCENARIO	SEASON	SOURCE	DIRECTION	MONITORED ELEMENT	RATEA (MVA)	RATEB(MVA)	TDF	TC%LOADING (% MVA)	CONTINGENCY
FDNS	00NR	0	25SP	G14_059	TO->FROM	GR ISLD-LNX3345.00 - HOLT.CO3 345.00 345KV CKT 1	720	720	0.04285	109.0276	G09_001IST 345.00 - GROTON 345KV CKT 1
FDNS	00NR	0	20SP	G14_059	TO->FROM	GR ISLD-LNX3345.00 - HOLT.CO3 345.00 345KV CKT 1	720	720	0.04077	109.0246	KOSSUTH 3 345.00 - WEBSTER 345KV CKT 1
FDNS	00NR	0	20SP	G14_059	TO->FROM	GR ISLD-LNX3345.00 - HOLT.CO3 345.00 345KV CKT 1	720	720	0.04119	109.0117	RAUN - SIOUX CITY 345KV CKT 1
FDNS	00NR	0	20SP	G14_059	TO->FROM	GR ISLD-LNX3345.00 - HOLT.CO3 345.00 345KV CKT 1	720	720	0.04119	109.0117	RAUN - SIOUX CITY 345KV CKT 1
FDNS	00NR	0	20SP	G14_059	TO->FROM	GR ISLD-LNX3345.00 - HOLT.CO3 345.00 345KV CKT 1	720	720	0.04057	109.0092	NORTH LA CROSSE - NORTH ROCHESTER 345KV CKT 1
FDNS	00NR	0	20SP	G14_059	TO->FROM	GR ISLD-LNX3345.00 - HOLT.CO3 345.00 345KV CKT 1	720	720	0.04054	109.003	P13:230-345:NPPD:NUCOR-1
FDNS	00NR	0	25SP	G14_059	TO->FROM	GR ISLD-LNX3345.00 - HOLT.CO3 345.00 345KV CKT 1	720	720	0.04311	108.9956	HANLON - SIOUX FALLS 230KV CKT 1
FDNS	00NR	0	20SP	G14_059	TO->FROM	GR ISLD-LNX3345.00 - HOLT.CO3 345.00 345KV CKT 1	720	720	0.04246	108.9891	JEFFREY - NORTH PLATTE 115KV CKT 1
FDNS	00NR	0	20SP	G14_059	TO->FROM	GR ISLD-LNX3345.00 - HOLT.CO3 345.00 345KV CKT 1	720	720	0.04054	108.9886	GEN335614 1-WILLOW GLENN UNIT#4
FDNS	00NR	0	20SP	G14_059	TO->FROM	GR ISLD-LNX3345.00 - HOLT.CO3 345.00 345KV CKT 1	720	720	0.04159	108.9884	BASSETT 7115.00 - STUART 115KV CKT 1
FDNS	00NR	0	20SP	G14_059	TO->FROM	GR ISLD-LNX3345.00 - HOLT.CO3 345.00 345KV CKT 1	720	720	0.04127	108.9854	BUCKNER7 345.00 - HOLCOMB 345KV CKT 1
FDNS	00NR	0	20SP	G14_059	TO->FROM	GR ISLD-LNX3345.00 - HOLT.CO3 345.00 345KV CKT 1	720	720	0.04127	108.9854	BUCKNER7 345.00 - HOLCOMB 345KV CKT 1
FDNS	00NR	0	20SP	G14_059	TO->FROM	GR ISLD-LNX3345.00 - HOLT.CO3 345.00 345KV CKT 1	720	720	0.04054	108.9827	GEN336801 1-BAXTER WILSON UNIT #1
FDNS	00NR	0	20SP	G14_059	TO->FROM	GR ISLD-LNX3345.00 - HOLT.CO3 345.00 345KV CKT 1	720	720	0.04054	108.9797	GEN336464 1-MICHOUD UNIT #3
FDNS	00NR	0	20SP	G14_059	TO->FROM	GR ISLD-LNX3345.00 - HOLT.CO3 345.00 345KV CKT 1	720	720	0.0402	108.9721	P12:115:NPPD:WAPA2:HEMINGF7:SNAKECK7:BTB
FDNS	00NR	0	20SP	G14_059	TO->FROM	GR ISLD-LNX3345.00 - HOLT.CO3 345.00 345KV CKT 1	720	720	0.04054	108.9651	GEN542957 1-IATAN UNIT #1
FDNS	00NR	0	20SP	G14_059	TO->FROM	GR ISLD-LNX3345.00 - HOLT.CO3 345.00 345KV CKT 1	720	720	0.04159	108.9641	AINSWORTH - BASSETT 7115.00 115KV CKT 1
FDNS	00NR	0	20SP	G14_059	TO->FROM	GR ISLD-LNX3345.00 - HOLT.CO3 345.00 345KV CKT 1	720	720	0.04054	108.9601	GEN335204 1-NELSON UNIT 4
FDNS	00NR	0	25SP	G14_059	TO->FROM	GR ISLD-LNX3345.00 - HOLT.CO3 345.00 345KV CKT 1	720	720	0.04443	108.9581	CALLAWAY - MAXWELL 115KV CKT 1
FDNS	00NR	0	20SP	G14_059	TO->FROM	GR ISLD-LNX3345.00 - HOLT.CO3 345.00 345KV CKT 1	720	720	0.04054	108.9513	GEN334441 1-SABINE UNIT 5
FDNS	00NR	0	25SP	G14_059	TO->FROM	GR ISLD-LNX3345.00 - HOLT.CO3 345.00 345KV CKT 1	720	720	0.04302	108.9247	FT RANDAL - UTICA JCT 230KV CKT 1
FDNS	00NR	0	20SP	G14_059	TO->FROM	GR ISLD-LNX3345.00 - HOLT.CO3 345.00 345KV CKT 1	720	720	0.04054	108.9208	P12:115:UMZW:# 162 #: NEL IN ND. FAULT ON ML-NEL-MX-GA 115 KV
FDNS	00NR	0	20SP	G14_059	TO->FROM	GR ISLD-LNX3345.00 - HOLT.CO3 345.00 345KV CKT 1	720	720	0.04071	108.8948	ADAMS - MITCHLCO3 345.00 345KV CKT 1
FDNS	00NR	0	25SP	G14_059	TO->FROM	GR ISLD-LNX3345.00 - HOLT.CO3 345.00 345KV CKT 1	720	720	0.04266	108.8939	GEN641089 2-ENERGY CENTER 2
FDNS	00NR	0	20SP	G14_059	TO->FROM	GR ISLD-LNX3345.00 - HOLT.CO3 345.00 345KV CKT 1	720	720	0.04058	108.8907	NMA B3 345 345.00 - NORTH LA CROSSE 345KV CKT 1
FDNS	00NR	0	25SP	G14_059	TO->FROM	GR ISLD-LNX3345.00 - HOLT.CO3 345.00 345KV CKT 1	720	720	0.04275	108.8893	BROOKING COUNTY - LYON COUNTY 345KV CKT 1
FDNS	00NR	0	20SP	G14_059	TO->FROM	GR ISLD-LNX3345.00 - HOLT.CO3 345.00 345KV CKT 1	720	720	0.04095	108.8831	COLUMEAST - NW68TH & HOLDREGE 345KV CKT 1
FDNS	00NR	0	20SP	G14_059	TO->FROM	GR ISLD-LNX3345.00 - HOLT.CO3 345.00 345KV CKT 1	720	720	0.04095	108.8831	COLUMEAST - NW68TH & HOLDREGE 345KV CKT 1
FDNS	00NR	0	20SP	G14_059	TO->FROM	GR ISLD-LNX3345.00 - HOLT.CO3 345.00 345KV CKT 1	720	720	0.04128	108.8825	P12:115:NPPD:1164:ONEILL 7:JEFFREY9:BTB
FDNS	00NR	0	20SP	G14_059	TO->FROM	GR ISLD-LNX3345.00 - HOLT.CO3 345.00 345KV CKT 1	720	720	0.04159	108.8772	ATKINSON - STUART 115KV CKT 1
FDNS	00NR	0	25SP	G14_059	TO->FROM	GR ISLD-LNX3345.00 - HOLT.CO3 345.00 345KV CKT 1	720	720	0.04372	108.8652	P12:115:NPPD:1167A:AINSWRT7:ONEILL 7:BTB
FDNS	00NR	0	20SP	G14_059	TO->FROM	GR ISLD-LNX3345.00 - HOLT.CO3 345.00 345KV CKT 1	720	720	0.04059	108.8635	BROOKING COUNTY - BSSOUTH3 345.00 345KV CKT 1
FDNS	00NR	0	20SP	G14_059	TO->FROM	GR ISLD-LNX3345.00 - HOLT.CO3 345.00 345KV CKT 1	720	720	0.04054	108.8605	GEN334433 1-SABINE UNIT 3
FDNS	00NR	0	25SP	G14_059	TO->FROM	GR ISLD-LNX3345.00 - HOLT.CO3 345.00 345KV CKT 1	720	720	0.04309	108.8605	HOSKINS - SHELL CREEK 345KV CKT 1
FDNS	00NR	0	20SP	G14_059	TO->FROM	GR ISLD-LNX3345.00 - HOLT.CO3 345.00 345KV CKT 1	720	720	0.04226	108.8566	BROKEN BOW - CALLAWAY 115KV CKT 1
FDNS	00NR	0	20SP	G14_059	TO->FROM	GR ISLD-LNX3345.00 - HOLT.CO3 345.00 345KV CKT 1	720	720	0.04057	108.8561	CENTER - COYOTE 345KV CKT 1
FDNS	00NR	0	25SP	G14_059	TO->FROM	GR ISLD-LNX3345.00 - HOLT.CO3 345.00 345KV CKT 1	720	720	0.04266	108.8526	GEN337652 1-WHITE BLUFF UNIT #1
FDNS	00NR	0	20SP	G14_059	TO->FROM	GR ISLD-LNX3345.00 - HOLT.CO3 345.00 345KV CKT 1	720	720	0.03974	108.8445	SIDNEY - STEGALL 345KV CKT 1
FDNS	00NR	0	20SP	G14_059	TO->FROM	GR ISLD-LNX3345.00 - HOLT.CO3 345.00 345KV CKT 1	720	720	0.04064	108.843	GLENBORO SOUTH - RUGBY 230KV CKT 1
FDNS	00NR	0	25SP	G14_059	TO->FROM	GR ISLD-LNX3345.00 - HOLT.CO3 345.00 345KV CKT 1	720	720	0.04281	108.8384	ALEXMRES3 345.00 - BISON 3 345.00 345KV CKT 1
FDNS	00NR	0	25SP	G14_059	TO->FROM	GR ISLD-LNX3345.00 - HOLT.CO3 345.00 345KV CKT 1	720	720	0.04266	108.8382	GEN338143 1-INDEPENDENCE UNIT #1
FDNS	00NR	0	25SP	G14_059	TO->FROM	GR ISLD-LNX3345.00 - HOLT.CO3 345.00 345KV CKT 1	720	720	0.04266	108.8357	GEN338146 1-INDEPENDENCE UNIT #2
FDNS	00NR	0	20SP	G14_059	TO->FROM	GR ISLD-LNX3345.00 - HOLT.CO3 345.00 345KV CKT 1	720	720	0.04054	108.8324	GEN642067 1-PLATTE
FDNS	00NR	0	20SP	G14_059	TO->FROM	GR ISLD-LNX3345.00 - HOLT.CO3 345.00 345KV CKT 1	720	720	0.04062	108.8317	HESKETT - WISHEK 230KV CKT 1
FDNS	00NR	0	25SP	G14_059	TO->FROM	GR ISLD-LNX3345.00 - HOLT.CO3 345.00 345KV CKT 1	720	720	0.04273	108.8311	ARROWHEAD - ARROWHEAD 230 230KV CKT 1
FDNS	00NR	0	20SP	G14_059	TO->FROM	GR ISLD-LNX3345.00 - HOLT.CO3 345.00 345KV CKT 1	720	720	0.04054	108.8231	GEN336222 1-LITTLE GYPSY UNIT#2
FDNS	00NR	0	20SP	G14_059	TO->FROM	GR ISLD-LNX3345.00 - HOLT.CO3 345.00 345KV CKT 1	720	720	0.04054	108.8189	GEN532651 1-JEFFREY ENERGY CENTER UNIT 1
FDNS	00NR	0	20SP	G14_059	TO->FROM	GR ISLD-LNX3345.00 - HOLT.CO3 345.00 345KV CKT 1	720	720	0.04054	108.8189	GEN532652 1-JEFFREY ENERGY CENTER UNIT 2
FDNS	00NR	0	20SP	G14_059	TO->FROM	GR ISLD-LNX3345.00 - HOLT.CO3 345.00 345KV CKT 1	720	720	0.04054	108.8187	GEN532653 1-JEFFREY ENERGY CENTER UNIT 3
FDNS	00NR	0	20SP	G14_059	TO->FROM	GR ISLD-LNX3345.00 - HOLT.CO3 345.00 345KV CKT 1	720	720	0.04128	108.8185	CLEARWATER - ONEILL 115KV CKT 1
FDNS	00NR	0	25SP	G14_059	TO->FROM	GR ISLD-LNX3345.00 - HOLT.CO3 345.00 345KV CKT 1	720	720	0.04299	108.8112	PAHOJA - SIOUX FALLS 230KV CKT 1
FDNS	00NR	0	20SP	G14_059	TO->FROM	GR ISLD-LNX3345.00 - HOLT.CO3 345.00 345KV CKT 1	720	720	0.04062	108.8109	MERRCRT4 230.00 - WISHEK 230KV CKT 1
FDNS	00NR	0	20SP	G14_059	TO->FROM	GR ISLD-LNX3345.00 - HOLT.CO3 345.00 345KV CKT 1	720	720	0.04054	108.8041	GEN542951 5-HAWTHORN UNIT #5
FDNS	00NR	0	20SP	G14_059	TO->FROM	GR ISLD-LNX3345.00 - HOLT.CO3 345.00 345KV CKT 1	720	720	0.04058	108.8037	GARRISON - JAMES TOWN 230KV CKT 1
FDNS	00NR	0	20SP	G14_059	TO->FROM	GR ISLD-LNX3345.00 - HOLT.CO3 345.00 345KV CKT 1	720	720	0.04067	108.8008	ADAMS - PLEASANT VALLEY 345KV CKT 1
FDNS	00NR	0	25SP	G14_059	TO->FROM	GR ISLD-LNX3345.00 - HOLT.CO3 345.00 345KV CKT 1	720	720	0.04266	108.7955	GEN337653 1-WHITE BLUFF UNIT #2
FDNS	00NR	0	20SP	G14_059	TO->FROM	GR ISLD-LNX3345.00 - HOLT.CO3 345.00 345KV CKT 1	720	720	0.04054	108.7888	GEN336152 1-WATERFORD UNIT#2
FDNS	00NR	0	20SP	G14_059	TO->FROM	GR ISLD-LNX3345.00 - HOLT.CO3 345.00 345KV CKT 1	720	720	0.04054	108.7887	GEN336151 1-WATERFORD UNIT#1
FDNS	00NR	0	20SP	G14_059	TO->FROM	GR ISLD-LNX3345.00 - HOLT.CO3 345.00 345KV CKT 1	720	720	0.04082	108.7867	WINNER - WITTEN 115KV CKT 1
FDNS	00NR	0	20SP	G14_059	TO->FROM	GR ISLD-LNX3345.00 - HOLT.CO3 345.00 345KV CKT 1	720	720	0.04054	108.7862	P13:115-230:NPPD:NUCOR-3
FDNS	00NR	0	25SP	G14_059	TO->FROM	GR ISLD-LNX3345.00 - HOLT.CO3 345.00 345KV CKT 1	720	720	0.04302	108.7858	CARPENTER - HURON 230KV CKT 1
FDNS	00NR	0	20SP	G14_059	TO->FROM	GR ISLD-LNX3345.00 - HOLT.CO3 345.00 345KV CKT 1	720	720	0.04054	108.7851	P12:115:TSGT:BLKWDCK7-ELSIETP7
FDNS	00NR	0	20SP	G14_059	TO->FROM	GR ISLD-LNX3345.00 - HOLT.CO3 345.00 345KV CKT 1	720	720	0.04069	108.772	ALEXMRES3 345.00 - WAITE PARK 345KV CKT 1
FDNS	00NR	0	25SP	G14_059	TO->FROM	GR ISLD-LNX3345.00 - HOLT.CO3 345.00 345KV CKT 1	720	720	0.04266	108.7589	GEN645012 2-NEBRASKA CITY 2
FDNS	00NR	0	25SP	G14_059	TO->FROM	GR ISLD-LNX3345.00 - HOLT.CO3 345.00 345KV CKT 1	720	720	0.04272	108.7573	AS KING - EAU CLAIRE 345KV CKT 1
FDNS	00NR	0	20SP	G14_059	TO->FROM	GR ISLD-LNX3345.00 - HOLT.CO3 345.00 345KV CKT 1	720	720	0.04054	108.757	GEN542955 1-LACYGNE UNIT #1
FDNS	00NR	0	20SP	G14_059	TO->FROM	GR ISLD-LNX3345.00 - HOLT.CO3 345.00 345KV CKT 1	720	720	0.04104	108.754	FT THOMPSON - HURON 230KV CKT 1
FDNS	00NR	0	20SP	G14_059	TO->FROM	GR ISLD-LNX3345.00 - HOLT.CO3 345.00 345KV CKT 1	720	720	0.04104	108.754	FT THOMPSON - HURON 230KV CKT 1
FDNS	00NR	0	20SP	G14_059	TO->FROM	GR ISLD-LNX3345.00 - HOLT.CO3 345.00 345KV CKT 1	720	720	0.04104	108.754	FT THOMPSON - HURON 230KV CKT 2
FDNS	00NR	0	20SP	G14_059	TO->FROM	GR ISLD-LNX3345.00 - HOLT.CO3 345.00 345KV CKT 1	720	720	0.04104	108.754	FT THOMPSON - HURON 230KV CKT 2
FDNS	00NR	0	25SP	G14_059	TO->FROM	GR ISLD-LNX3345.00 - HOLT.CO3 345.00 345KV CKT 1	720	720	0.04282	108.7506	HAZLETON - MITCHLCO3 345.00 345KV CKT 1
FDNS	00NR	0	20SP	G14_059	TO->FROM	GR ISLD-LNX3345.00 - HOLT.CO3 345.00 345KV CKT 1	720	720	0.04061	108.7499	APPLEDORN 4 230.00 - WATERTOWN 230KV CKT 1
FDNS	00NR	0	20SP	G14_059	TO->FROM	GR ISLD-LNX3345.00 - HOLT.CO3 345.00 345KV CKT 1	720	720	0.04061	108.7499	APPLEDORN 4 230.00 - WATERTOWN 230KV CKT 1
FDNS	00NR	0	20SP	G14_059	TO->FROM	GR ISLD-LNX3345.00 - HOLT.CO3 345.00 345KV CKT 1	720	720	0.04059	108.7456	BSSOUTH3 345.00 - ELLENDLMVP3 345.00 345KV CKT 1
FDNS	00NR	0	20SP	G14_059	TO->FROM	GR ISLD-LNX3345.00 - HOLT.CO3 345.00 345KV CKT 1	720	720	0.04059	108.7456	BSSOUTH3 345.00 - ELLENDLMVP3 345.00 345KV CKT 1
FDNS	00NR	0	20SP	G14_059	TO->FROM	GR ISLD-LNX3345.00 - HOLT.CO3 345.00 345KV CKT 1	720	720	0.04054	108.7418	GEN303007 1-1BC2 U2
FDNS	00NR	0	20SP	G14_059	TO->FROM	GR ISLD-LNX3345.00 - HOLT.CO3 345.00 345KV CKT 1	720	720	0.04054	108.7376	GEN303006 1-1BC2 U1
FDNS	00NR	0	20SP	G14_059	TO->FROM	GR ISLD-LNX3345.00 - HOLT.CO3 345.00 345KV CKT 1	720	720	0.04059	108.7353	MENNO JCT - TRIPP JCT 115KV CKT 1
FDNS	00NR	0	20SP	G14_059	TO->FROM	GR ISLD-LNX3345.00 - HOLT.CO3 345.00 345KV CKT 1	720	720	0.04159	108.7293	ATKINSON - EMMET 115KV CKT 1

SOLUTION	GROUP	SCENARIO	SEASON	SOURCE	DIRECTION	MONITORED ELEMENT	RATEA (MVA)	RATEB(MVA)	TDF	TC%LOADING (% MVA)	CONTINGENCY
FDNS	00NR	0	20SP	G14_059	TO->FROM	GR ISLD-LNX3345.00 - HOLT.CO3 345.00 345KV CKT 1	720	720	0.04059	108.7288	ELLENDLMVP3 345.00 (1) 345/230/34.5KV TRANSFORMER CKT 1
FDNS	00NR	0	20SP	G14_059	TO->FROM	GR ISLD-LNX3345.00 - HOLT.CO3 345.00 345KV CKT 1	720	720	0.04059	108.7282	NORTH ROCHESTER - PRAIRIE ISLAND 345KV CKT 1
FDNS	00NR	0	25SP	G14_059	TO->FROM	GR ISLD-LNX3345.00 - HOLT.CO3 345.00 345KV CKT 1	720	720	0.0431	108.7265	GRIMES - LEHIGH 345KV CKT 1
FDNS	00NR	0	20SP	G14_059	TO->FROM	GR ISLD-LNX3345.00 - HOLT.CO3 345.00 345KV CKT 1	720	720	0.04054	108.7259	GEN562547 1-G14_039_3 0.6900
FDNS	00NR	0	20SP	G14_059	TO->FROM	GR ISLD-LNX3345.00 - HOLT.CO3 345.00 345KV CKT 1	720	720	0.04054	108.7245	GEN563212 1-G15087_3 0.6900
FDNS	00NR	0	25SP	G14_059	TO->FROM	GR ISLD-LNX3345.00 - HOLT.CO3 345.00 345KV CKT 1	720	720	0.04302	108.7139	HURON - WATERTOWN 230KV CKT 2
FDNS	00NR	0	25SP	G14_059	TO->FROM	GR ISLD-LNX3345.00 - HOLT.CO3 345.00 345KV CKT 1	720	720	0.04302	108.7139	HURON - WATERTOWN 230KV CKT 2
FDNS	00NR	0	20SP	G14_059	TO->FROM	GR ISLD-LNX3345.00 - HOLT.CO3 345.00 345KV CKT 1	720	720	0.04058	108.7128	BLAIR - GRANITE FALLS 230KV CKT 1
FDNS	00NR	0	20SP	G14_059	TO->FROM	GR ISLD-LNX3345.00 - HOLT.CO3 345.00 345KV CKT 1	720	720	0.04058	108.7128	BLAIR - GRANITE FALLS 230KV CKT 1
FDNS	00NR	0	20SP	G14_059	TO->FROM	GR ISLD-LNX3345.00 - HOLT.CO3 345.00 345KV CKT 1	720	720	0.04054	108.7101	P13:115-345:NPPD:NUCOR-2
FDNS	00NR	0	25SP	G14_059	TO->FROM	GR ISLD-LNX3345.00 - HOLT.CO3 345.00 345KV CKT 1	720	720	0.04271	108.7099	CNTSHNT3 345.00 - PRAIRIE3 345.00 345KV CKT 1
FDNS	00NR	0	20SP	G14_059	TO->FROM	GR ISLD-LNX3345.00 - HOLT.CO3 345.00 345KV CKT 1	720	720	0.04153	108.7091	AINSWORTH - AINSWORTH 115KV CKT 1
FDNS	00NR	0	20SP	G14_059	TO->FROM	GR ISLD-LNX3345.00 - HOLT.CO3 345.00 345KV CKT 1	720	720	0.04061	108.7077	APPLEDORN 4 230.00 - GRANITE FALLS 230KV CKT 1
FDNS	00NR	0	20SP	G14_059	TO->FROM	GR ISLD-LNX3345.00 - HOLT.CO3 345.00 345KV CKT 1	720	720	0.04061	108.7077	APPLEDORN 4 230.00 - GRANITE FALLS 230KV CKT 1
FDNS	00NR	0	20SP	G14_059	TO->FROM	GR ISLD-LNX3345.00 - HOLT.CO3 345.00 345KV CKT 1	720	720	0.04069	108.7058	HUNTLEY3 345.00 - LEDYARD3 345.00 345KV CKT 1
FDNS	00NR	0	20SP	G14_059	TO->FROM	GR ISLD-LNX3345.00 - HOLT.CO3 345.00 345KV CKT 1	720	720	0.04065	108.6987	DENISON - SIOUX CITY 230KV CKT 1
FDNS	00NR	0	20SP	G14_059	TO->FROM	GR ISLD-LNX3345.00 - HOLT.CO3 345.00 345KV CKT 1	720	720	0.04054	108.6921	GEN303008 1-1BC2 U3
FDNS	00NR	0	20SP	G14_059	TO->FROM	GR ISLD-LNX3345.00 - HOLT.CO3 345.00 345KV CKT 1	720	720	0.04054	108.6895	GEN336170 1-GULF OXY U4
FDNS	00NR	0	20SP	G14_059	TO->FROM	GR ISLD-LNX3345.00 - HOLT.CO3 345.00 345KV CKT 1	720	720	0.03957	108.6872	MAXWELL - STAPLETON 115KV CKT 1
FDNS	00NR	0	20SP	G14_059	TO->FROM	GR ISLD-LNX3345.00 - HOLT.CO3 345.00 345KV CKT 1	720	720	0.04054	108.6853	GEN636641 1-LOUISA UNIT 1
FDNS	00NR	0	25SP	G14_059	TO->FROM	GR ISLD-LNX3345.00 - HOLT.CO3 345.00 345KV CKT 1	720	720	0.04266	108.6812	GEN645011 1-NEBRASKA CITY 1
FDNS	00NR	0	25SP	G14_059	TO->FROM	GR ISLD-LNX3345.00 - HOLT.CO3 345.00 345KV CKT 1	720	720	0.04302	108.6779	CARPENTER - WATERTOWN 230KV CKT 1
FDNS	00NR	0	25SP	G14_059	TO->FROM	GR ISLD-LNX3345.00 - HOLT.CO3 345.00 345KV CKT 1	720	720	0.04302	108.6779	CARPENTER - WATERTOWN 230KV CKT 1
FDNS	00NR	0	25SP	G14_059	TO->FROM	GR ISLD-LNX3345.00 - HOLT.CO3 345.00 345KV CKT 1	720	720	0.04266	108.6768	GEN501801 1-DOLET HILLS UNIT1
FDNS	00NR	0	20SP	G14_059	TO->FROM	GR ISLD-LNX3345.00 - HOLT.CO3 345.00 345KV CKT 1	720	720	0.04069	108.6635	NOBLES - SPLIT ROCK 345KV CKT 1
FDNS	00NR	0	20SP	G14_059	TO->FROM	GR ISLD-LNX3345.00 - HOLT.CO3 345.00 345KV CKT 1	720	720	0.04063	108.6609	HUNTLEY3 345.00 - LAKEFIELD 3 345KV CKT 1
FDNS	00NR	0	25SP	G14_059	TO->FROM	GR ISLD-LNX3345.00 - HOLT.CO3 345.00 345KV CKT 1	720	720	0.04169	108.6371	STAPLETON - THEDFORD 115KV CKT 1
FDNS	00NR	0	25SP	G14_059	TO->FROM	GR ISLD-LNX3345.00 - HOLT.CO3 345.00 345KV CKT 1	720	720	0.04722	108.6325	CROOKED CREEK - RIVERDALE 230KV CKT 1
FDNS	00NR	0	25SP	G14_059	TO->FROM	GR ISLD-LNX3345.00 - HOLT.CO3 345.00 345KV CKT 1	720	720	0.04266	108.6317	GEN336252 1-NINEMILE POINT UNIT#5
FDNS	00NR	0	25SP	G14_059	TO->FROM	GR ISLD-LNX3345.00 - HOLT.CO3 345.00 345KV CKT 1	720	720	0.04266	108.5802	GEN336251 1-NINEMILE POINT UNIT#4
FDNS	00NR	0	25SP	G14_059	TO->FROM	GR ISLD-LNX3345.00 - HOLT.CO3 345.00 345KV CKT 1	720	720	0.04285	108.5605	GROTON-LNX3 345.00 - LELAND1-LNX3345.00 345KV CKT 1
FDNS	00NR	0	25SP	G14_059	TO->FROM	GR ISLD-LNX3345.00 - HOLT.CO3 345.00 345KV CKT 1	720	720	0.04266	108.5581	GEN336831 1-BAXTER WILSON SES
FDNS	00NR	0	25SP	G14_059	TO->FROM	GR ISLD-LNX3345.00 - HOLT.CO3 345.00 345KV CKT 1	720	720	0.04302	108.5459	RASMUSN - UTICA JCT 230KV CKT 1
FDNS	00NR	0	25SP	G14_059	TO->FROM	GR ISLD-LNX3345.00 - HOLT.CO3 345.00 345KV CKT 1	720	720	0.04352	108.5262	FT THOMPSON - WESSINGTON 230KV CKT 1
FDNS	00NR	0	25SP	G14_059	TO->FROM	GR ISLD-LNX3345.00 - HOLT.CO3 345.00 345KV CKT 1	720	720	0.04352	108.5262	FT THOMPSON - WESSINGTON 230KV CKT 1
FDNS	00NR	0	25SP	G14_059	TO->FROM	GR ISLD-LNX3345.00 - HOLT.CO3 345.00 345KV CKT 1	720	720	0.04266	108.5234	GEN337041 1-GERALD ANDRUS
FDNS	00NR	0	25SP	G14_059	TO->FROM	GR ISLD-LNX3345.00 - HOLT.CO3 345.00 345KV CKT 1	720	720	0.04285	108.5193	GROTON - GROTON-LNX3 345.00 345KV CKT Z
FDNS	00NR	0	25SP	G14_059	TO->FROM	GR ISLD-LNX3345.00 - HOLT.CO3 345.00 345KV CKT 1	720	720	0.04266	108.5184	GEN542962 2-IATAN UNIT #2
FDNS	00NR	0	25SP	G14_059	TO->FROM	GR ISLD-LNX3345.00 - HOLT.CO3 345.00 345KV CKT 1	720	720	0.04285	108.5179	P12:345:UMZB:# 109 #: LOS GRT IN ND. LOS GRT
FDNS	00NR	0	25SP	G14_059	TO->FROM	GR ISLD-LNX3345.00 - HOLT.CO3 345.00 345KV CKT 1	720	720	0.04266	108.517	GEN532751 1-WOLF CREEK GENERATING STATION UNIT 1
FDNS	00NR	0	25SP	G14_059	TO->FROM	GR ISLD-LNX3345.00 - HOLT.CO3 345.00 345KV CKT 1	720	720	0.04285	108.5136	LELAND OLDS - LELAND1-LNX3345.00 345KV CKT Z
FDNS	00NR	0	25SP	G14_059	TO->FROM	GR ISLD-LNX3345.00 - HOLT.CO3 345.00 345KV CKT 1	720	720	0.04299	108.5077	EAGLE 4 230.00 - PAHOJA 230KV CKT 1
FDNS	00NR	0	25SP	G14_059	TO->FROM	GR ISLD-LNX3345.00 - HOLT.CO3 345.00 345KV CKT 1	720	720	0.04654	108.4975	SIDNEY - SIDNEY1-LNX3345.00 345KV CKT Z
FDNS	00NR	0	25SP	G14_059	TO->FROM	GR ISLD-LNX3345.00 - HOLT.CO3 345.00 345KV CKT 1	720	720	0.04266	108.4872	GEN501813 1-RODEMACHER UNIT 3
FDNS	00NR	0	25SP	G14_059	TO->FROM	GR ISLD-LNX3345.00 - HOLT.CO3 345.00 345KV CKT 1	720	720	0.0427	108.482	DIXONCO 230.00 - HOSKINS 230KV CKT 1
FDNS	00NR	0	25SP	G14_059	TO->FROM	GR ISLD-LNX3345.00 - HOLT.CO3 345.00 345KV CKT 1	720	720	0.04266	108.4675	GEN645001 1-FORT CALHOUN 1
FDNS	00NR	0	25SP	G14_059	TO->FROM	GR ISLD-LNX3345.00 - HOLT.CO3 345.00 345KV CKT 1	720	720	0.04266	108.456	GEN344897 4-1LAB G4 20.000
FDNS	00NR	0	25SP	G14_059	TO->FROM	GR ISLD-LNX3345.00 - HOLT.CO3 345.00 345KV CKT 1	720	720	0.04266	108.4552	GEN344894 1-1LAB G1 20.000
FDNS	00NR	0	25SP	G14_059	TO->FROM	GR ISLD-LNX3345.00 - HOLT.CO3 345.00 345KV CKT 1	720	720	0.04266	108.4551	GEN344895 2-1LAB G2 20.000
FDNS	00NR	0	25SP	G14_059	TO->FROM	GR ISLD-LNX3345.00 - HOLT.CO3 345.00 345KV CKT 1	720	720	0.04266	108.455	GEN344896 3-1LAB G3 20.000
FDNS	00NR	0	25SP	G14_059	TO->FROM	GR ISLD-LNX3345.00 - HOLT.CO3 345.00 345KV CKT 1	720	720	0.04272	108.4509	ARPIN B4 345.00 - EAU CLAIRE 345KV CKT 1
FDNS	00NR	0	25SP	G14_059	TO->FROM	GR ISLD-LNX3345.00 - HOLT.CO3 345.00 345KV CKT 1	720	720	0.04266	108.4178	GEN629075 1-OTTUMWA GENERATOR FOR OTTUMWA UNIT NO 1
FDNS	00NR	0	25SP	G14_059	TO->FROM	GR ISLD-LNX3345.00 - HOLT.CO3 345.00 345KV CKT 1	720	720	0.04302	108.4069	RASMUSN - SIOUX CITY 230KV CKT 1
FDNS	00NR	0	25SP	G14_059	TO->FROM	GR ISLD-LNX3345.00 - HOLT.CO3 345.00 345KV CKT 1	720	720	0.04266	108.4058	GEN345671 2-1RUSH G2 18.000
FDNS	00NR	0	25SP	G14_059	TO->FROM	GR ISLD-LNX3345.00 - HOLT.CO3 345.00 345KV CKT 1	720	720	0.04266	108.4028	GEN345670 1-1RUSH G1 18.000
FDNS	00NR	0	25SP	G14_059	TO->FROM	GR ISLD-LNX3345.00 - HOLT.CO3 345.00 345KV CKT 1	720	720	0.0429	108.3983	KOSSUTH 3 345.00 - WEBSTER 345KV CKT 1
FDNS	00NR	0	25SP	G14_059	TO->FROM	GR ISLD-LNX3345.00 - HOLT.CO3 345.00 345KV CKT 1	720	720	0.0427	108.3909	P12:115:NPPD:WAPA4:SIDNEY 7:B.SPRGS7:BTB
FDNS	00NR	0	25SP	G14_059	TO->FROM	GR ISLD-LNX3345.00 - HOLT.CO3 345.00 345KV CKT 1	720	720	0.0427	108.3909	P12:115:UMZB:# 119 #: IN NE.
FDNS	00NR	0	25SP	G14_059	TO->FROM	GR ISLD-LNX3345.00 - HOLT.CO3 345.00 345KV CKT 1	720	720	0.0432	108.3782	COLUMEAST - SHELL CREEK 345KV CKT 1
FDNS	00NR	0	25SP	G14_059	TO->FROM	GR ISLD-LNX3345.00 - HOLT.CO3 345.00 345KV CKT 1	720	720	0.04266	108.3774	GEN335206 1-NELSON UNIT 6
FDNS	00NR	0	25SP	G14_059	TO->FROM	GR ISLD-LNX3345.00 - HOLT.CO3 345.00 345KV CKT 1	720	720	0.0444	108.3719	HOLCOMB - SETAB 345KV CKT 1
FDNS	00NR	0	25SP	G14_059	TO->FROM	GR ISLD-LNX3345.00 - HOLT.CO3 345.00 345KV CKT 1	720	720	0.0444	108.3719	HOLCOMB - SETAB 345KV CKT 1
FDNS	00NR	0	25SP	G14_059	TO->FROM	GR ISLD-LNX3345.00 - HOLT.CO3 345.00 345KV CKT 1	720	720	0.04461	108.3647	JEFFREY - NORTH PLATTE 115KV CKT 1
FDNS	00NR	0	25SP	G14_059	TO->FROM	GR ISLD-LNX3345.00 - HOLT.CO3 345.00 345KV CKT 1	720	720	0.04266	108.3589	GEN334440 1-SABINE UNIT 4
FDNS	00NR	0	25SP	G14_059	TO->FROM	GR ISLD-LNX3345.00 - HOLT.CO3 345.00 345KV CKT 1	720	720	0.04266	108.3499	GEN542957 1-IATAN UNIT #1
FDNS	00NR	0	25SP	G14_059	TO->FROM	GR ISLD-LNX3345.00 - HOLT.CO3 345.00 345KV CKT 1	720	720	0.03837	108.3498	NUNDRWD - WAYSIDE 230KV CKT 1
FDNS	00NR	0	25SP	G14_059	TO->FROM	GR ISLD-LNX3345.00 - HOLT.CO3 345.00 345KV CKT 1	720	720	0.04266	108.3469	GEN338388 1-1PLUM PT U1 23.000
FDNS	00NR	0	25SP	G14_059	TO->FROM	GR ISLD-LNX3345.00 - HOLT.CO3 345.00 345KV CKT 1	720	720	0.04266	108.3102	P13:230-345:NPPD:NUCOR-1
FDNS	00NR	0	25SP	G14_059	TO->FROM	GR ISLD-LNX3345.00 - HOLT.CO3 345.00 345KV CKT 1	720	720	0.04232	108.3068	P12:115:NPPD:WAPA2:HEMINGF7:SNAKECK7:BTB
FDNS	00NR	0	25SP	G14_059	TO->FROM	GR ISLD-LNX3345.00 - HOLT.CO3 345.00 345KV CKT 1	720	720	0.04277	108.3026	GLENBORO SOUTH - RUGBY 230KV CKT 1
FDNS	00NR	0	25SP	G14_059	TO->FROM	GR ISLD-LNX3345.00 - HOLT.CO3 345.00 345KV CKT 1	720	720	0.04266	108.2931	GEN501812 1-RODEMACHER UNIT 2
FDNS	00NR	0	25SP	G14_059	TO->FROM	GR ISLD-LNX3345.00 - HOLT.CO3 345.00 345KV CKT 1	720	720	0.04266	108.2898	P12:115:UMZW:# 162 #: NEL IN ND. FAULT ON ML-NEL-MX-GA 115 KV
FDNS	00NR	0	25SP	G14_059	TO->FROM	GR ISLD-LNX3345.00 - HOLT.CO3 345.00 345KV CKT 1	720	720	0.04372	108.2883	BASSETT 7115.00 - STUART 115KV CKT 1
FDNS	00NR	0	25SP	G14_059	TO->FROM	GR ISLD-LNX3345.00 - HOLT.CO3 345.00 345KV CKT 1	720	720	0.04266	108.2871	GEN336191 1-LITTLE GYPSY UNIT#3
FDNS	00NR	0	25SP	G14_059	TO->FROM	GR ISLD-LNX3345.00 - HOLT.CO3 345.00 345KV CKT 1	720	720	0.0427	108.2718	NORTH LA CROSSE - NORTH ROCHESTER 345KV CKT 1
FDNS	00NR	0	25SP	G14_059	TO->FROM	GR ISLD-LNX3345.00 - HOLT.CO3 345.00 345KV CKT 1	720	720	0.04372	108.2691	AINSWORTH - BASSETT 7115.00 115KV CKT 1
FDNS	00NR	0	25SP	G14_059	TO->FROM	GR ISLD-LNX3345.00 - HOLT.CO3 345.00 345KV CKT 1	720	720	0.04282	108.2677	ADAMS - MITCHLCO3 345.00 345KV CKT 1
FDNS	00NR	0	25SP	G14_059	TO->FROM	GR ISLD-LNX3345.00 - HOLT.CO3 345.00 345KV CKT 1	720	720	0.04266	108.2359	GEN335614 1-WILLOW GLENN UNIT#4
FDNS	00NR	0	25SP	G14_059	TO->FROM	GR ISLD-LNX3345.00 - HOLT.CO3 345.00 345KV CKT 1	720	720	0.04266	108.235	GEN336801 1-BAXTER WILSON UNIT #1

SOLUTION	GROUP	SCENARIO	SEASON	SOURCE	DIRECTION	MONITORED ELEMENT	RATEA (MVA)	RATEB(MVA)	TDF	TC%LOADING (% MVA)	CONTINGENCY
FDNS	00NR	0	25SP	G14_059	TO->FROM	GR ISLD-LNX3345.00 - HOLT.CO3 345.00 345KV CKT 1	720	720	0.04266	108.2262	GEN336464 1-MICHOUD UNIT #3
FDNS	00NR	0	25SP	G14_059	TO->FROM	GR ISLD-LNX3345.00 - HOLT.CO3 345.00 345KV CKT 1	720	720	0.04266	108.2186	GEN532652 1-JEFFREY ENERGY CENTER UNIT 2
FDNS	00NR	0	25SP	G14_059	TO->FROM	GR ISLD-LNX3345.00 - HOLT.CO3 345.00 345KV CKT 1	720	720	0.04266	108.2186	GEN532653 1-JEFFREY ENERGY CENTER UNIT 3
FDNS	00NR	0	25SP	G14_059	TO->FROM	GR ISLD-LNX3345.00 - HOLT.CO3 345.00 345KV CKT 1	720	720	0.04266	108.2178	GEN532651 1-JEFFREY ENERGY CENTER UNIT 1
FDNS	00NR	0	25SP	G14_059	TO->FROM	GR ISLD-LNX3345.00 - HOLT.CO3 345.00 345KV CKT 1	720	720	0.04266	108.2166	GEN334441 1-SABINE UNIT 5
FDNS	00NR	0	25SP	G14_059	TO->FROM	GR ISLD-LNX3345.00 - HOLT.CO3 345.00 345KV CKT 1	720	720	0.04266	108.2083	GEN335204 1-NELSON UNIT 4
FDNS	00NR	0	25SP	G14_059	TO->FROM	GR ISLD-LNX3345.00 - HOLT.CO3 345.00 345KV CKT 1	720	720	0.04331	108.2016	RAUN - SIOUX CITY 345KV CKT 1
FDNS	00NR	0	25SP	G14_059	TO->FROM	GR ISLD-LNX3345.00 - HOLT.CO3 345.00 345KV CKT 1	720	720	0.04331	108.2016	RAUN - SIOUX CITY 345KV CKT 1
FDNS	00NR	0	25SP	G14_059	TO->FROM	GR ISLD-LNX3345.00 - HOLT.CO3 345.00 345KV CKT 1	720	720	0.04274	108.2009	HESKETT - WISHEK 230KV CKT 1
FDNS	00NR	0	25SP	G14_059	TO->FROM	GR ISLD-LNX3345.00 - HOLT.CO3 345.00 345KV CKT 1	720	720	0.0427	108.1938	CENTER - COYOTE 345KV CKT 1
FDNS	00NR	0	25SP	G14_059	TO->FROM	GR ISLD-LNX3345.00 - HOLT.CO3 345.00 345KV CKT 1	720	720	0.0434	108.1812	BUCKNER7 345.00 - SPEARVILLE 345KV CKT 1
FDNS	00NR	0	25SP	G14_059	TO->FROM	GR ISLD-LNX3345.00 - HOLT.CO3 345.00 345KV CKT 1	720	720	0.0434	108.1812	BUCKNER7 345.00 - SPEARVILLE 345KV CKT 1
FDNS	00NR	0	25SP	G14_059	TO->FROM	GR ISLD-LNX3345.00 - HOLT.CO3 345.00 345KV CKT 1	720	720	0.04266	108.174	GEN542951 5-HAWTHORN UNIT #5
FDNS	00NR	0	25SP	G14_059	TO->FROM	GR ISLD-LNX3345.00 - HOLT.CO3 345.00 345KV CKT 1	720	720	0.04372	108.1658	ATKINSON - STUART 115KV CKT 1
FDNS	00NR	0	25SP	G14_059	TO->FROM	GR ISLD-LNX3345.00 - HOLT.CO3 345.00 345KV CKT 1	720	720	0.04186	108.1479	SIDNEY - STEGALL 345KV CKT 1
FDNS	00NR	0	25SP	G14_059	TO->FROM	GR ISLD-LNX3345.00 - HOLT.CO3 345.00 345KV CKT 1	720	720	0.04274	108.1451	MERRCRT4 230.00 - WISHEK 230KV CKT 1
FDNS	00NR	0	25SP	G14_059	TO->FROM	GR ISLD-LNX3345.00 - HOLT.CO3 345.00 345KV CKT 1	720	720	0.04266	108.1451	GEN542955 1-LACYGNE UNIT #1
FDNS	00NR	0	25SP	G14_059	TO->FROM	GR ISLD-LNX3345.00 - HOLT.CO3 345.00 345KV CKT 1	720	720	0.0427	108.1397	GARRISON - JAMES TOWN 230KV CKT 1
FDNS	00NR	0	25SP	G14_059	TO->FROM	GR ISLD-LNX3345.00 - HOLT.CO3 345.00 345KV CKT 1	720	720	0.04266	108.1359	GEN642067 1-PLATTE
FDNS	00NR	0	25SP	G14_059	TO->FROM	GR ISLD-LNX3345.00 - HOLT.CO3 345.00 345KV CKT 1	720	720	0.04272	108.1275	BROOKING COUNTY - BSSOUTH3 345.00 345KV CKT 1
FDNS	00NR	0	25SP	G14_059	TO->FROM	GR ISLD-LNX3345.00 - HOLT.CO3 345.00 345KV CKT 1	720	720	0.04266	108.1246	GEN334433 1-SABINE UNIT 3
FDNS	00NR	0	25SP	G14_059	TO->FROM	GR ISLD-LNX3345.00 - HOLT.CO3 345.00 345KV CKT 1	720	720	0.04279	108.1191	ADAMS - PLEASANT VALLEY 345KV CKT 1
FDNS	00NR	0	25SP	G14_059	TO->FROM	GR ISLD-LNX3345.00 - HOLT.CO3 345.00 345KV CKT 1	720	720	0.04266	108.1095	P12:115:TSGT:BLKWDCK7-ELSIETP7
FDNS	00NR	0	20SP	G14_059	TO->FROM	GR ISLD-LNX3345.00 - HOLT.CO3 345.00 345KV CKT 1	720	720	0.04054	108.1052	BASE CASE
FDNS	00NR	0	25SP	G14_059	TO->FROM	GR ISLD-LNX3345.00 - HOLT.CO3 345.00 345KV CKT 1	720	720	0.04266	108.1014	P13:115-230:NPPD:NUCOR-3
FDNS	00NR	0	25SP	G14_059	TO->FROM	GR ISLD-LNX3345.00 - HOLT.CO3 345.00 345KV CKT 1	720	720	0.04443	108.094	BROKEN BOW - CALLAWAY 115KV CKT 1
FDNS	00NR	0	25SP	G14_059	TO->FROM	GR ISLD-LNX3345.00 - HOLT.CO3 345.00 345KV CKT 1	720	720	0.04341	108.0923	P12:115:NPPD:1164:ONEILL 7:JEFFREY9:BTB
FDNS	00NR	0	25SP	G14_059	TO->FROM	GR ISLD-LNX3345.00 - HOLT.CO3 345.00 345KV CKT 1	720	720	0.04266	108.0901	GEN336222 1-LITTLE GYPSY UNIT#2
FDNS	00NR	0	25SP	G14_059	TO->FROM	GR ISLD-LNX3345.00 - HOLT.CO3 345.00 345KV CKT 1	720	720	0.04654	108.0845	KEYSTONE - SIDNEY1-LNX3345.00 345KV CKT 1
FDNS	00NR	0	25SP	G14_059	TO->FROM	GR ISLD-LNX3345.00 - HOLT.CO3 345.00 345KV CKT 1	720	720	0.04294	108.0831	WINNER - WITTEN 115KV CKT 1
FDNS	00NR	0	25SP	G14_059	TO->FROM	GR ISLD-LNX3345.00 - HOLT.CO3 345.00 345KV CKT 1	720	720	0.04273	108.0804	APPLEDORN 4 230.00 - WATERTOWN 230KV CKT 1
FDNS	00NR	0	25SP	G14_059	TO->FROM	GR ISLD-LNX3345.00 - HOLT.CO3 345.00 345KV CKT 1	720	720	0.04273	108.0804	APPLEDORN 4 230.00 - WATERTOWN 230KV CKT 1
FDNS	00NR	0	25SP	G14_059	TO->FROM	GR ISLD-LNX3345.00 - HOLT.CO3 345.00 345KV CKT 1	720	720	0.04367	108.0708	AINSWORTH - AINSWORTH 115KV CKT 1
FDNS	00NR	0	25SP	G14_059	TO->FROM	GR ISLD-LNX3345.00 - HOLT.CO3 345.00 345KV CKT 1	720	720	0.04271	108.0669	NMA B3 345 345.00 - NORTH LA CROSSE 345KV CKT 1
FDNS	00NR	0	25SP	G14_059	TO->FROM	GR ISLD-LNX3345.00 - HOLT.CO3 345.00 345KV CKT 1	720	720	0.04316	108.0564	FT THOMPSON - HURON 230KV CKT 1
FDNS	00NR	0	25SP	G14_059	TO->FROM	GR ISLD-LNX3345.00 - HOLT.CO3 345.00 345KV CKT 1	720	720	0.04316	108.0564	FT THOMPSON - HURON 230KV CKT 1
FDNS	00NR	0	25SP	G14_059	TO->FROM	GR ISLD-LNX3345.00 - HOLT.CO3 345.00 345KV CKT 1	720	720	0.04316	108.0564	FT THOMPSON - HURON 230KV CKT 2
FDNS	00NR	0	25SP	G14_059	TO->FROM	GR ISLD-LNX3345.00 - HOLT.CO3 345.00 345KV CKT 1	720	720	0.04316	108.0564	FT THOMPSON - HURON 230KV CKT 2
FDNS	00NR	0	25SP	G14_059	TO->FROM	GR ISLD-LNX3345.00 - HOLT.CO3 345.00 345KV CKT 1	720	720	0.04266	108.053	GEN336151 1-WATERFORD UNIT#1
FDNS	00NR	0	25SP	G14_059	TO->FROM	GR ISLD-LNX3345.00 - HOLT.CO3 345.00 345KV CKT 1	720	720	0.04266	108.053	GEN336152 1-WATERFORD UNIT#2
FDNS	00NR	0	25SP	G14_059	TO->FROM	GR ISLD-LNX3345.00 - HOLT.CO3 345.00 345KV CKT 1	720	720	0.04341	108.0334	CLEARWATER - ONEILL 115KV CKT 1
FDNS	00NR	0	20SP	G14_059	TO->FROM	GR ISLD-LNX3345.00 - HOLT.CO3 345.00 345KV CKT 1	720	720	0.03687	108.0333	COLUMWEST - KELLY 230KV CKT 1
FDNS	00NR	0	25SP	G14_059	TO->FROM	GR ISLD-LNX3345.00 - HOLT.CO3 345.00 345KV CKT 1	720	720	0.04251	108.0312	G15094_T 345.00 - SIDNEY2-LNX3345.00 345KV CKT 1
FDNS	00NR	0	25SP	G14_059	TO->FROM	GR ISLD-LNX3345.00 - HOLT.CO3 345.00 345KV CKT 1	720	720	0.04273	108.0257	APPLEDORN 4 230.00 - GRANITE FALLS 230KV CKT 1
FDNS	00NR	0	25SP	G14_059	TO->FROM	GR ISLD-LNX3345.00 - HOLT.CO3 345.00 345KV CKT 1	720	720	0.04273	108.0257	APPLEDORN 4 230.00 - GRANITE FALLS 230KV CKT 1
FDNS	00NR	0	25SP	G14_059	TO->FROM	GR ISLD-LNX3345.00 - HOLT.CO3 345.00 345KV CKT 1	720	720	0.04251	108.0211	SIDNEY - SIDNEY2-LNX3345.00 345KV CKT Z
FDNS	00NR	0	25SP	G14_059	TO->FROM	GR ISLD-LNX3345.00 - HOLT.CO3 345.00 345KV CKT 1	720	720	0.04266	108.0201	GEN562547 1-G14_039_3 0.6900
FDNS	00NR	0	25SP	G14_059	TO->FROM	GR ISLD-LNX3345.00 - HOLT.CO3 345.00 345KV CKT 1	720	720	0.04271	108.0178	BLAIR - GRANITE FALLS 230KV CKT 1
FDNS	00NR	0	25SP	G14_059	TO->FROM	GR ISLD-LNX3345.00 - HOLT.CO3 345.00 345KV CKT 1	720	720	0.04271	108.0178	BLAIR - GRANITE FALLS 230KV CKT 1
FDNS	00NR	0	25SP	G14_059	TO->FROM	GR ISLD-LNX3345.00 - HOLT.CO3 345.00 345KV CKT 1	720	720	0.04272	108.0173	MENNO JCT - TRIPP JCT 115KV CKT 1
FDNS	00NR	0	25SP	G14_059	TO->FROM	GR ISLD-LNX3345.00 - HOLT.CO3 345.00 345KV CKT 1	720	720	0.04266	108.002	GEN563212 1-G15087_3 0.6900
FDNS	00NR	0	25SP	G14_059	TO->FROM	GR ISLD-LNX3345.00 - HOLT.CO3 345.00 345KV CKT 1	720	720	0.04281	107.9885	HUNTLEY3 345.00 - LEDYARD3 345.00 345KV CKT 1
FDNS	00NR	0	25SP	G14_059	TO->FROM	GR ISLD-LNX3345.00 - HOLT.CO3 345.00 345KV CKT 1	720	720	0.04372	107.9726	ATKINSON - EMMET 115KV CKT 1
FDNS	00NR	0	25SP	G14_059	TO->FROM	GR ISLD-LNX3345.00 - HOLT.CO3 345.00 345KV CKT 1	720	720	0.04266	107.9679	P13:230:UMZW:# 2218 #: FP IN MT. LOSS OF TRANSFORMER (AT2).
FDNS	00NR	0	25SP	G14_059	TO->FROM	GR ISLD-LNX3345.00 - HOLT.CO3 345.00 345KV CKT 1	720	720	0.04169	107.9597	MAXWELL - STAPLETON 115KV CKT 1
FDNS	00NR	0	25SP	G14_059	TO->FROM	GR ISLD-LNX3345.00 - HOLT.CO3 345.00 345KV CKT 1	720	720	0.04266	107.9507	GEN303008 1-1BC2 U3
FDNS	00NR	0	25SP	G14_059	TO->FROM	GR ISLD-LNX3345.00 - HOLT.CO3 345.00 345KV CKT 1	720	720	0.04272	107.9491	MENNO JCT - UTICA 115KV CKT 1
FDNS	00NR	0	25SP	G14_059	TO->FROM	GR ISLD-LNX3345.00 - HOLT.CO3 345.00 345KV CKT 1	720	720	0.04266	107.9478	GEN336170 1-GULF OXY U4
FDNS	00NR	0	20SP	G14_059	TO->FROM	GR ISLD-LNX3345.00 - HOLT.CO3 345.00 345KV CKT 1	720	720	0.04052	107.7748	ANTELOP-LNX3345.00 - BRDLAND-LNX3345.00 345KV CKT 1
FDNS	00NR	0	20SP	G14_059	TO->FROM	GR ISLD-LNX3345.00 - HOLT.CO3 345.00 345KV CKT 1	720	720	0.04006	107.5972	SUB 3454 - WAGENER 345KV CKT 1
FDNS	00NR	0	20SP	G14_059	TO->FROM	GR ISLD-LNX3345.00 - HOLT.CO3 345.00 345KV CKT 1	720	720	0.04006	107.5972	SUB 3454 - WAGENER 345KV CKT 1
FDNS	00NR	0	20SP	G14_059	TO->FROM	GR ISLD-LNX3345.00 - HOLT.CO3 345.00 345KV CKT 1	720	720	0.03932	107.592	MAXWELL - NORTH PLATTE 115KV CKT 1
FDNS	00NR	0	20SP	G14_059	TO->FROM	GR ISLD-LNX3345.00 - HOLT.CO3 345.00 345KV CKT 1	720	720	0.04052	107.5829	BRDLAND-LNX3345.00 - HURON 345KV CKT Z
FDNS	00NR	0	20SP	G14_059	TO->FROM	GR ISLD-LNX3345.00 - HOLT.CO3 345.00 345KV CKT 1	720	720	0.04052	107.5824	BROADLAND - HURON 230KV CKT 1
FDNS	00NR	0	20SP	G14_059	TO->FROM	GR ISLD-LNX3345.00 - HOLT.CO3 345.00 345KV CKT 1	720	720	0.04052	107.5824	HURON (BD KU2A) 345/230/13.8KV TRANSFORMER CKT 1
FDNS	00NR	0	20SP	G14_059	TO->FROM	GR ISLD-LNX3345.00 - HOLT.CO3 345.00 345KV CKT 1	720	720	0.04052	107.5824	HURON (BD KU2A) 345/230/13.8KV TRANSFORMER CKT 1
FDNS	00NR	0	20SP	G14_059	TO->FROM	GR ISLD-LNX3345.00 - HOLT.CO3 345.00 345KV CKT 1	720	720	0.04052	107.5816	P12:345:UMZB:# 102 #: AVS BD IN ND. AVS BRD LR
FDNS	00NR	0	20SP	G14_059	TO->FROM	GR ISLD-LNX3345.00 - HOLT.CO3 345.00 345KV CKT 1	720	720	0.04052	107.581	P12:345:UMZB:# 103 #: BD IN SD. LOSS OF LINE
FDNS	00NR	0	20SP	G14_059	TO->FROM	GR ISLD-LNX3345.00 - HOLT.CO3 345.00 345KV CKT 1	720	720	0.04092	107.5566	OAHE - SULLEY BUTTE 230KV CKT 1
FDNS	00NR	0	20SP	G14_059	TO->FROM	GR ISLD-LNX3345.00 - HOLT.CO3 345.00 345KV CKT 1	720	720	0.04054	107.5332	GEN600011 5-BLACK DOG GEN 1
FDNS	00NR	0	20SP	G14_059	TO->FROM	GR ISLD-LNX3345.00 - HOLT.CO3 345.00 345KV CKT 1	720	720	0.04054	107.5286	GEN600071 10-RIVER SIDE
FDNS	00NR	0	20SP	G14_059	TO->FROM	GR ISLD-LNX3345.00 - HOLT.CO3 345.00 345KV CKT 1	720	720	0.04054	107.5284	GEN600070 9-RIVER SIDE
FDNS	00NR	0	20SP	G14_059	TO->FROM	GR ISLD-LNX3345.00 - HOLT.CO3 345.00 345KV CKT 1	720	720	0.04054	107.5203	GEN659273 2-GROTON SYNC COND
FDNS	00NR	0	20SP	G14_059	TO->FROM	GR ISLD-LNX3345.00 - HOLT.CO3 345.00 345KV CKT 1	720	720	0.04054	107.5203	GEN659294 1-WILTONCOL9
FDNS	00NR	0	20SP	G14_059	TO->FROM	GR ISLD-LNX3345.00 - HOLT.CO3 345.00 345KV CKT 1	720	720	0.04054	107.5202	GEN600007 7-RIVERSIDE GEN 7
FDNS	00NR	0	20SP	G14_059	TO->FROM	GR ISLD-LNX3345.00 - HOLT.CO3 345.00 345KV CKT 1	720	720	0.04054	107.5077	GEN600017 C-LS POWER CT
FDNS	00NR	0	20SP	G14_059	TO->FROM	GR ISLD-LNX3345.00 - HOLT.CO3 345.00 345KV CKT 1	720	720	0.04054	107.4962	LANSING WEST 161/22.0KV TRANSFORMER CKT 1
FDNS	00NR	0	20SP	G14_059	TO->FROM	GR ISLD-LNX3345.00 - HOLT.CO3 345.00 345KV CKT 1	720	720	0.04005	107.4859	GRAND ISLAND (GRAND.ISD T5) 230/115/13.8KV TRANSFORMER CKT 2
FDNS	00NR	0	20SP	G14_059	TO->FROM	GR ISLD-LNX3345.00 - HOLT.CO3 345.00 345KV CKT 1	720	720	0.04005	107.4859	GRAND ISLAND (GRAND.ISD T5) 230/115/13.8KV TRANSFORMER CKT 2

SOLUTION	GROUP	SCENARIO	SEASON	SOURCE	DIRECTION	MONITORED ELEMENT	RATEA (MVA)	RATEB(MVA)	TDF	TC%LOADING (% MVA)	CONTINGENCY
FDNS	00NR	0	20SP	G14_059	TO->FROM	GR ISLD-LNX3345.00 - HOLT.CO3 345.00 345KV CKT 1	720	720	0.04052	107.483	ANTELOP-LNX3345.00 - ANTELOPE VALLEY 345KV CKT Z
FDNS	00NR	0	20SP	G14_059	TO->FROM	GR ISLD-LNX3345.00 - HOLT.CO3 345.00 345KV CKT 1	720	720	0.04004	107.4823	GRAND ISLAND (GRAND.ISD T2) 230/115/13.8KV TRANSFORMER CKT 1
FDNS	00NR	0	20SP	G14_059	TO->FROM	GR ISLD-LNX3345.00 - HOLT.CO3 345.00 345KV CKT 1	720	720	0.04004	107.4823	GRAND ISLAND (GRAND.ISD T2) 230/115/13.8KV TRANSFORMER CKT 1
FDNS	00NR	0	20SP	G14_059	TO->FROM	GR ISLD-LNX3345.00 - HOLT.CO3 345.00 345KV CKT 1	720	720	0.04054	107.4785	GEN659031 1-G12_014IS_4 0.6900
FDNS	00NR	0	20SP	G14_059	TO->FROM	GR ISLD-LNX3345.00 - HOLT.CO3 345.00 345KV CKT 1	720	720	0.04054	107.4738	GEN659192 6-LYNN
FDNS	00NR	0	20SP	G14_059	TO->FROM	GR ISLD-LNX3345.00 - HOLT.CO3 345.00 345KV CKT 1	720	720	0.04054	107.473	GEN659162 4-RED WLCK
FDNS	00NR	0	20SP	G14_059	TO->FROM	GR ISLD-LNX3345.00 - HOLT.CO3 345.00 345KV CKT 1	720	720	0.04054	107.473	GEN659163 5-BLACK WDCK
FDNS	00NR	0	20SP	G14_059	TO->FROM	GR ISLD-LNX3345.00 - HOLT.CO3 345.00 345KV CKT 1	720	720	0.04054	107.4625	GEN615052 1-CAMBRIDGE GENERATING STATION
FDNS	00NR	0	20SP	G14_059	TO->FROM	GR ISLD-LNX3345.00 - HOLT.CO3 345.00 345KV CKT 1	720	720	0.04092	107.4599	COOPER - FAIRPORT 345KV CKT 1
FDNS	00NR	0	20SP	G14_059	TO->FROM	GR ISLD-LNX3345.00 - HOLT.CO3 345.00 345KV CKT 1	720	720	0.04092	107.4599	COOPER - FAIRPORT 345KV CKT 1
FDNS	00NR	0	20SP	G14_059	TO->FROM	GR ISLD-LNX3345.00 - HOLT.CO3 345.00 345KV CKT 1	720	720	0.04054	107.457	GEN600045 4-ANSON
FDNS	00NR	0	20SP	G14_059	TO->FROM	GR ISLD-LNX3345.00 - HOLT.CO3 345.00 345KV CKT 1	720	720	0.04029	107.454	POST ROCK (POSTROCK T1) 345/230/13.8KV TRANSFORMER CKT 1
FDNS	00NR	0	20SP	G14_059	TO->FROM	GR ISLD-LNX3345.00 - HOLT.CO3 345.00 345KV CKT 1	720	720	0.04054	107.452	GEN615021 1-GRE-ER 14G 16.000
FDNS	00NR	0	20SP	G14_059	TO->FROM	GR ISLD-LNX3345.00 - HOLT.CO3 345.00 345KV CKT 1	720	720	0.03969	107.4485	G15088_T 345.00 - MOORE 345KV CKT 1
FDNS	00NR	0	20SP	G14_059	TO->FROM	GR ISLD-LNX3345.00 - HOLT.CO3 345.00 345KV CKT 1	720	720	0.04054	107.4462	GEN 10648 1-G830_GEN 0.6900
FDNS	00NR	0	20SP	G14_059	TO->FROM	GR ISLD-LNX3345.00 - HOLT.CO3 345.00 345KV CKT 1	720	720	0.04092	107.4456	SULLYBT-LNX3230.00 - WHITLOK 230KV CKT 1
FDNS	00NR	0	20SP	G14_059	TO->FROM	GR ISLD-LNX3345.00 - HOLT.CO3 345.00 345KV CKT 1	720	720	0.04092	107.4426	SULLEY BUTTE - SULLYBT-LNX3230.00 230KV CKT Z
FDNSLock	00NR	0	20SP	G14_059	TO->FROM	GR ISLD-LNX3345.00 - HOLT.CO3 345.00 345KV CKT 1	720	720	0.0403	107.4258	MCCOOL (MCCOOL T2) 345/115/13.8KV TRANSFORMER CKT 1
FDNS	00NR	0	20SP	G14_059	TO->FROM	GR ISLD-LNX3345.00 - HOLT.CO3 345.00 345KV CKT 1	720	720	0.04054	107.4137	GEN615015 1-GRE-SPRITWDG13.200
FDNS	00NR	0	20SP	G14_059	TO->FROM	GR ISLD-LNX3345.00 - HOLT.CO3 345.00 345KV CKT 1	720	720	0.04012	107.408	GRAND ISLAND (GI KU1B) 345/230/13.8KV TRANSFORMER CKT 2
FDNS	00NR	0	20SP	G14_059	TO->FROM	GR ISLD-LNX3345.00 - HOLT.CO3 345.00 345KV CKT 1	720	720	0.04012	107.408	GRAND ISLAND (GI KU1B) 345/230/13.8KV TRANSFORMER CKT 2
FDNS	00NR	0	20SP	G14_059	TO->FROM	GR ISLD-LNX3345.00 - HOLT.CO3 345.00 345KV CKT 1	720	720	0.04012	107.4066	GRAND ISLAND (GI KU1A) 345/230/13.8KV TRANSFORMER CKT 1
FDNS	00NR	0	20SP	G14_059	TO->FROM	GR ISLD-LNX3345.00 - HOLT.CO3 345.00 345KV CKT 1	720	720	0.04012	107.4066	GRAND ISLAND (GI KU1A) 345/230/13.8KV TRANSFORMER CKT 1
FDNS	00NR	0	20SP	G14_059	TO->FROM	GR ISLD-LNX3345.00 - HOLT.CO3 345.00 345KV CKT 1	720	720	0.04092	107.4045	P12:230:UMZB:# 114 #: SB IN SD. SB-WK-GH
FDNS	00NR	0	20SP	G14_059	TO->FROM	GR ISLD-LNX3345.00 - HOLT.CO3 345.00 345KV CKT 1	720	720	0.04092	107.4045	P12:230:UMZB:# 117 #: WK IN SD. SB-WK-GH
FDNS	00NR	0	20SP	G14_059	TO->FROM	GR ISLD-LNX3345.00 - HOLT.CO3 345.00 345KV CKT 1	720	720	0.04057	107.3986	DIXONCO 230.00 - TWIN CHURCH 230KV CKT 1
FDNS	00NR	0	25SP	G14_059	TO->FROM	GR ISLD-LNX3345.00 - HOLT.CO3 345.00 345KV CKT 1	720	720	0.04266	107.386	BASE CASE
FDNS	00NR	0	20SP	G14_059	TO->FROM	GR ISLD-LNX3345.00 - HOLT.CO3 345.00 345KV CKT 1	720	720	0.04054	107.3732	GEN660016 1-B_H WIND 0.7000
FDNS	00NR	0	20SP	G14_059	TO->FROM	GR ISLD-LNX3345.00 - HOLT.CO3 345.00 345KV CKT 1	720	720	0.04092	107.3721	GLENHAM - WHITLOK 230KV CKT 1
FDNS	00NR	0	20SP	G14_059	TO->FROM	GR ISLD-LNX3345.00 - HOLT.CO3 345.00 345KV CKT 1	720	720	0.04054	107.3503	BISONMP4 230.00 - SQUARE BUTTE 230KV CKT 1
FDNS	00NR	0	20SP	G14_059	TO->FROM	GR ISLD-LNX3345.00 - HOLT.CO3 345.00 345KV CKT 1	720	720	0.04054	107.3358	GEN659353 1-DEERCREK CTG18.000
FDNS	00NR	0	20SP	G14_059	TO->FROM	GR ISLD-LNX3345.00 - HOLT.CO3 345.00 345KV CKT 1	720	720	0.04054	107.3348	GEN659354 1-DEERCREK STG18.000
FDNS	00NR	0	20SP	G14_059	TO->FROM	GR ISLD-LNX3345.00 - HOLT.CO3 345.00 345KV CKT 1	720	720	0.04096	107.3271	COPSTJCPFRSJ
FDNS	00NR	0	20SP	G14_059	TO->FROM	GR ISLD-LNX3345.00 - HOLT.CO3 345.00 345KV CKT 1	720	720	0.04096	107.3271	P12:345:NPPD:3517:COOPER 3:ST JOE 3:BTB
FDNS	00NR	0	20SP	G14_059	TO->FROM	GR ISLD-LNX3345.00 - HOLT.CO3 345.00 345KV CKT 1	720	720	0.04096	107.3271	STMDSJFAFACO
FDNS	00NR	0	20SP	G14_059	TO->FROM	GR ISLD-LNX3345.00 - HOLT.CO3 345.00 345KV CKT 1	720	720	0.04054	107.3081	GEN672303 3-BOUNDARY DAM GENERATOR 3
FDNS	00NR	0	20SP	G14_059	TO->FROM	GR ISLD-LNX3345.00 - HOLT.CO3 345.00 345KV CKT 1	720	720	0.04054	107.3081	GEN672304 4-BOUNDARY DAM GENERATOR 4
FDNS	00NR	0	20SP	G14_059	TO->FROM	GR ISLD-LNX3345.00 - HOLT.CO3 345.00 345KV CKT 1	720	720	0.04054	107.3081	GEN672305 5-BOUNDARY DAM GENERATOR 5
FDNS	00NR	0	20SP	G14_059	TO->FROM	GR ISLD-LNX3345.00 - HOLT.CO3 345.00 345KV CKT 1	720	720	0.04054	107.3053	GEN600067 9-HIGH BRIDGE
FDNS	00NR	0	20SP	G14_059	TO->FROM	GR ISLD-LNX3345.00 - HOLT.CO3 345.00 345KV CKT 1	720	720	0.04054	107.2713	GEN672392 1-NBECGT1G 18.000
FDNS	00NR	0	20SP	G14_059	TO->FROM	GR ISLD-LNX3345.00 - HOLT.CO3 345.00 345KV CKT 1	720	720	0.03925	107.2418	AXTELL - POST ROCK 345KV CKT 1
FDNS	00NR	0	20SP	G14_059	TO->FROM	GR ISLD-LNX3345.00 - HOLT.CO3 345.00 345KV CKT 1	720	720	0.04054	107.2409	GEN662101 1-WESSINGTON190.5750
FDNSLock	00NR	0	20SP	G14_059	TO->FROM	GR ISLD-LNX3345.00 - HOLT.CO3 345.00 345KV CKT 1	720	720	0.03998	107.2142	CENTRAL CITY - GRAND ISLAND 115KV CKT 1
FDNS	00NR	0	20SP	G14_059	TO->FROM	GR ISLD-LNX3345.00 - HOLT.CO3 345.00 345KV CKT 1	720	720	0.0375	107.2028	COOPER - MOORE 345KV CKT 1
FDNS	00NR	0	20SP	G14_059	TO->FROM	GR ISLD-LNX3345.00 - HOLT.CO3 345.00 345KV CKT 1	720	720	0.04054	107.1982	CENTER 230/22.0KV TRANSFORMER CKT 1
FDNS	00NR	0	20SP	G14_059	TO->FROM	GR ISLD-LNX3345.00 - HOLT.CO3 345.00 345KV CKT 1	720	720	0.04054	107.1973	GEN910006 1-G12_012IS_3 0.6900
FDNS	00NR	0	20SP	G14_059	TO->FROM	GR ISLD-LNX3345.00 - HOLT.CO3 345.00 345KV CKT 1	720	720	0.03953	107.1869	103RD & ROKEBY - MOORE 345KV CKT 1
FDNS	00NR	0	20SP	G14_059	TO->FROM	GR ISLD-LNX3345.00 - HOLT.CO3 345.00 345KV CKT 1	720	720	0.03953	107.1869	103RD & ROKEBY - MOORE 345KV CKT 1
FDNS	00NR	0	20SP	G14_059	TO->FROM	GR ISLD-LNX3345.00 - HOLT.CO3 345.00 345KV CKT 1	720	720	0.04054	107.1725	GEN681542 6-JP MADGETT
FDNS	00NR	0	20SP	G14_059	TO->FROM	GR ISLD-LNX3345.00 - HOLT.CO3 345.00 345KV CKT 1	720	720	0.04114	107.1529	COOPER - ST JOE 345KV CKT 1
FDNS	00NR	0	20SP	G14_059	TO->FROM	GR ISLD-LNX3345.00 - HOLT.CO3 345.00 345KV CKT 1	720	720	0.04072	107.1384	G14-021T 345.00 - MULLNCR7 345.00 345KV CKT 1
FDNS	00NR	0	20SP	G14_059	TO->FROM	GR ISLD-LNX3345.00 - HOLT.CO3 345.00 345KV CKT 1	720	720	0.04072	107.1328	G15-005T 345.00 - MULLNCR7 345.00 345KV CKT 1
FDNS	00NR	0	20SP	G14_059	TO->FROM	GR ISLD-LNX3345.00 - HOLT.CO3 345.00 345KV CKT 1	720	720	0.03687	107.1039	COLUMWEST - GRAND ISLAND 230KV CKT 1
FDNS	00NR	0	25SP	G14_059	TO->FROM	GR ISLD-LNX3345.00 - HOLT.CO3 345.00 345KV CKT 1	720	720	0.04265	107.0834	ANTELOP-LNX3345.00 - BRDLAND-LNX3345.00 345KV CKT 1
FDNS	00NR	0	20SP	G14_059	TO->FROM	GR ISLD-LNX3345.00 - HOLT.CO3 345.00 345KV CKT 1	720	720	0.04054	107.0735	GEN659289 1-DAYCNTYWND W0.6900
FDNS	00NR	0	20SP	G14_059	TO->FROM	GR ISLD-LNX3345.00 - HOLT.CO3 345.00 345KV CKT 1	720	720	0.03992	107.072	GRAND ISLAND (GI KU3A) 345/230/13.8KV TRANSFORMER CKT 3
FDNS	00NR	0	20SP	G14_059	TO->FROM	GR ISLD-LNX3345.00 - HOLT.CO3 345.00 345KV CKT 1	720	720	0.03992	107.072	GRAND ISLAND (GI KU3A) 345/230/13.8KV TRANSFORMER CKT 3
FDNS	00NR	0	20SP	G14_059	TO->FROM	GR ISLD-LNX3345.00 - HOLT.CO3 345.00 345KV CKT 1	720	720	0.04054	107.0705	CLAY BOSWELL 230/20.9KV TRANSFORMER CKT 1
FDNS	00NR	0	20SP	G14_059	TO->FROM	GR ISLD-LNX3345.00 - HOLT.CO3 345.00 345KV CKT 1	720	720	0.04072	107.0506	G15-005T 345.00 - SIBLEY 345KV CKT 1
FDNS	00NR	0	20SP	G14_059	TO->FROM	GR ISLD-LNX3345.00 - HOLT.CO3 345.00 345KV CKT 1	720	720	0.04054	107.0483	GEN563312 1-G15097_3 0.6900
FDNS	00NR	0	25SP	G14_059	TO->FROM	GR ISLD-LNX3345.00 - HOLT.CO3 345.00 345KV CKT 1	720	720	0.0435	107.0477	LOUP CITY - ST LIBORY 115KV CKT 1
FDNS	00NR	0	20SP	G14_059	TO->FROM	GR ISLD-LNX3345.00 - HOLT.CO3 345.00 345KV CKT 1	720	720	0.04054	107.0129	GEN659018 1-G14_003IS_3 0.6900
FDNS	00NR	0	20SP	G14_059	TO->FROM	GR ISLD-LNX3345.00 - HOLT.CO3 345.00 345KV CKT 1	720	720	0.04054	107.0085	GEN652543 3-BIG BEND
FDNS	00NR	0	20SP	G14_059	TO->FROM	GR ISLD-LNX3345.00 - HOLT.CO3 345.00 345KV CKT 1	720	720	0.04054	106.9888	GEN562596 1-G14_059_3 0.6900
FDNS	00NR	0	25SP	G14_059	TO->FROM	GR ISLD-LNX3345.00 - HOLT.CO3 345.00 345KV CKT 1	720	720	0.04222	106.966	SUB 3454 - WAGENER 345KV CKT 1
FDNS	00NR	0	25SP	G14_059	TO->FROM	GR ISLD-LNX3345.00 - HOLT.CO3 345.00 345KV CKT 1	720	720	0.04222	106.966	SUB 3454 - WAGENER 345KV CKT 1
FDNS	00NR	0	20SP	G14_059	TO->FROM	GR ISLD-LNX3345.00 - HOLT.CO3 345.00 345KV CKT 1	720	720	0.04092	106.9474	GLENHAM - L3 HAWDON 230KV CKT 1
FDNS	00NR	0	20SP	G14_059	TO->FROM	GR ISLD-LNX3345.00 - HOLT.CO3 345.00 345KV CKT 1	720	720	0.04054	106.9387	GEN659194 1-NDPRAIRWND1W0.6900
FDNS	00NR	0	20SP	G14_059	TO->FROM	GR ISLD-LNX3345.00 - HOLT.CO3 345.00 345KV CKT 1	720	720	0.04054	106.936	GEN659010 4-G07_027IS_2 0.6900
FDNS	00NR	0	25SP	G14_059	TO->FROM	GR ISLD-LNX3345.00 - HOLT.CO3 345.00 345KV CKT 1	720	720	0.04265	106.9345	BRDLAND-LNX3345.00 - HURON 345KV CKT Z
FDNS	00NR	0	25SP	G14_059	TO->FROM	GR ISLD-LNX3345.00 - HOLT.CO3 345.00 345KV CKT 1	720	720	0.04265	106.9341	P12:345:UMZB:# 102 #: AVS BD IN ND. AVS BRD LR
FDNS	00NR	0	25SP	G14_059	TO->FROM	GR ISLD-LNX3345.00 - HOLT.CO3 345.00 345KV CKT 1	720	720	0.04265	106.9339	BROADLAND - HURON 230KV CKT 1
FDNS	00NR	0	25SP	G14_059	TO->FROM	GR ISLD-LNX3345.00 - HOLT.CO3 345.00 345KV CKT 1	720	720	0.04265	106.9339	HURON (BD KU2A) 345/230/13.8KV TRANSFORMER CKT 1
FDNS	00NR	0	25SP	G14_059	TO->FROM	GR ISLD-LNX3345.00 - HOLT.CO3 345.00 345KV CKT 1	720	720	0.04265	106.9339	HURON (BD KU2A) 345/230/13.8KV TRANSFORMER CKT 1
FDNS	00NR	0	25SP	G14_059	TO->FROM	GR ISLD-LNX3345.00 - HOLT.CO3 345.00 345KV CKT 1	720	720	0.04265	106.9333	P12:345:UMZB:# 103 #: BD IN SD. LOSS OF LINE
FDNS	00NR	0	20SP	G14_059	TO->FROM	GR ISLD-LNX3345.00 - HOLT.CO3 345.00 345KV CKT 1	720	720	0.04054	106.9283	GEN652460 4-GARRISON
FDNS	00NR	0	20SP	G14_059	TO->FROM	GR ISLD-LNX3345.00 - HOLT.CO3 345.00 345KV CKT 1	720	720	0.04054	106.9282	GEN652461 5-GARRISON
FDNS	00NR	0	20SP	G14_059	TO->FROM	GR ISLD-LNX3345.00 - HOLT.CO3 345.00 345KV CKT 1	720	720	0.04054	106.8982	COYOTE 345/24.0KV TRANSFORMER CKT 1
FDNS	00NR	0	20SP	G14_059	TO->FROM	GR ISLD-LNX3345.00 - HOLT.CO3 345.00 345KV CKT 1	720	720	0.04054	106.8904	GEN652457 1-GARRISON

SOLUTION	GROUP	SCENARIO	SEASON	SOURCE	DIRECTION	MONITORED ELEMENT	RATEA (MVA)	RATEB(MVA)	TDF	TC%LOADING (% MVA)	CONTINGENCY
FDNS	00NR	0	20SP	G14_059	TO->FROM	GR ISLD-LNX3345.00 - HOLT.CO3 345.00 345KV CKT 1	720	720	0.04054	106.8904	GEN652458 2-GARRISON
FDNS	00NR	0	20SP	G14_059	TO->FROM	GR ISLD-LNX3345.00 - HOLT.CO3 345.00 345KV CKT 1	720	720	0.04054	106.8904	GEN652459 3-GARRISON
FDNS	00NR	0	25SP	G14_059	TO->FROM	GR ISLD-LNX3345.00 - HOLT.CO3 345.00 345KV CKT 1	720	720	0.04141	106.8718	MAXWELL - NORTH PLATTE 115KV CKT 1
FDNS	00NR	0	20SP	G14_059	TO->FROM	GR ISLD-LNX3345.00 - HOLT.CO3 345.00 345KV CKT 1	720	720	0.04054	106.8619	GEN652542 1-BIG BEND
FDNS	00NR	0	20SP	G14_059	TO->FROM	GR ISLD-LNX3345.00 - HOLT.CO3 345.00 345KV CKT 1	720	720	0.04054	106.8618	GEN563282 1-G15094_3 0.6900
FDNS	00NR	0	25SP	G14_059	TO->FROM	GR ISLD-LNX3345.00 - HOLT.CO3 345.00 345KV CKT 1	720	720	0.04184	106.8465	G15088_T 345.00 - MOORE 345KV CKT 1
FDNS	00NR	0	20SP	G14_059	TO->FROM	GR ISLD-LNX3345.00 - HOLT.CO3 345.00 345KV CKT 1	720	720	0.04054	106.8401	GEN563342 1-G15098_3 0.6900
FDNS	00NR	0	20SP	G14_059	TO->FROM	GR ISLD-LNX3345.00 - HOLT.CO3 345.00 345KV CKT 1	720	720	0.04054	106.8368	GEN659403 1-NDSUNFLWR W0.6900
FDNS	00NR	0	25SP	G14_059	TO->FROM	GR ISLD-LNX3345.00 - HOLT.CO3 345.00 345KV CKT 1	720	720	0.04265	106.8327	ANTELOP-LNX3345.00 - ANTELOPE VALLEY 345KV CKT Z
FDNS	00NR	0	25SP	G14_059	TO->FROM	GR ISLD-LNX3345.00 - HOLT.CO3 345.00 345KV CKT 1	720	720	0.04304	106.8105	COOPER - FAIRPORT 345KV CKT 1
FDNS	00NR	0	25SP	G14_059	TO->FROM	GR ISLD-LNX3345.00 - HOLT.CO3 345.00 345KV CKT 1	720	720	0.04266	106.8071	GEN600065 7-HIGH BRIDGE
FDNS	00NR	0	25SP	G14_059	TO->FROM	GR ISLD-LNX3345.00 - HOLT.CO3 345.00 345KV CKT 1	720	720	0.04266	106.8071	GEN600066 8-HIGH BRIDGE
FDNS	00NR	0	25SP	G14_059	TO->FROM	GR ISLD-LNX3345.00 - HOLT.CO3 345.00 345KV CKT 1	720	720	0.04266	106.8065	GEN600014 4-BLACK DOG GEN 4
FDNS	00NR	0	25SP	G14_059	TO->FROM	GR ISLD-LNX3345.00 - HOLT.CO3 345.00 345KV CKT 1	720	720	0.04266	106.8027	GEN600011 5-BLACK DOG GEN 1
FDNS	00NR	0	25SP	G14_059	TO->FROM	GR ISLD-LNX3345.00 - HOLT.CO3 345.00 345KV CKT 1	720	720	0.04266	106.7982	GEN600071 10-RIVER SIDE
FDNS	00NR	0	25SP	G14_059	TO->FROM	GR ISLD-LNX3345.00 - HOLT.CO3 345.00 345KV CKT 1	720	720	0.04266	106.7981	GEN600070 9-RIVER SIDE
FDNS	00NR	0	25SP	G14_059	TO->FROM	GR ISLD-LNX3345.00 - HOLT.CO3 345.00 345KV CKT 1	720	720	0.04266	106.7899	LANSING WEST 161/22.0KV TRANSFORMER CKT 1
FDNS	00NR	0	25SP	G14_059	TO->FROM	GR ISLD-LNX3345.00 - HOLT.CO3 345.00 345KV CKT 1	720	720	0.04266	106.7896	GEN600007 7-RIVERSIDE GEN 7
FDNS	00NR	0	25SP	G14_059	TO->FROM	GR ISLD-LNX3345.00 - HOLT.CO3 345.00 345KV CKT 1	720	720	0.04367	106.7807	ATCHSNT3 345.00 - BOONEVILLE 345KV CKT 1
FDNS	00NR	0	25SP	G14_059	TO->FROM	GR ISLD-LNX3345.00 - HOLT.CO3 345.00 345KV CKT 1	720	720	0.04266	106.775	GEN600017 C-LS POWER CT
FDNS	00NR	0	25SP	G14_059	TO->FROM	GR ISLD-LNX3345.00 - HOLT.CO3 345.00 345KV CKT 1	720	720	0.04266	106.7731	GEN659031 1-G12_014IS_4 0.6900
FDNS	00NR	0	25SP	G14_059	TO->FROM	GR ISLD-LNX3345.00 - HOLT.CO3 345.00 345KV CKT 1	720	720	0.04205	106.7678	GRAND ISLAND (GRAND.ISD T5) 230/115/13.8KV TRANSFORMER CKT 2
FDNS	00NR	0	25SP	G14_059	TO->FROM	GR ISLD-LNX3345.00 - HOLT.CO3 345.00 345KV CKT 1	720	720	0.04205	106.7678	GRAND ISLAND (GRAND.ISD T5) 230/115/13.8KV TRANSFORMER CKT 2
FDNS	00NR	0	25SP	G14_059	TO->FROM	GR ISLD-LNX3345.00 - HOLT.CO3 345.00 345KV CKT 1	720	720	0.04304	106.7676	SULLEY BUTTE - SULLYBT-LNX3230.00 230KV CKT Z
FDNS	00NR	0	25SP	G14_059	TO->FROM	GR ISLD-LNX3345.00 - HOLT.CO3 345.00 345KV CKT 1	720	720	0.04304	106.7668	SULLYBT-LNX3230.00 - WHITLOK 230KV CKT 1
FDNS	00NR	0	25SP	G14_059	TO->FROM	GR ISLD-LNX3345.00 - HOLT.CO3 345.00 345KV CKT 1	720	720	0.04205	106.7627	GRAND ISLAND (GRAND.ISD T2) 230/115/13.8KV TRANSFORMER CKT 1
FDNS	00NR	0	25SP	G14_059	TO->FROM	GR ISLD-LNX3345.00 - HOLT.CO3 345.00 345KV CKT 1	720	720	0.04205	106.7627	GRAND ISLAND (GRAND.ISD T2) 230/115/13.8KV TRANSFORMER CKT 1
FDNS	00NR	0	25SP	G14_059	TO->FROM	GR ISLD-LNX3345.00 - HOLT.CO3 345.00 345KV CKT 1	720	720	0.04266	106.7534	GEN659192 6-LYNN
FDNS	00NR	0	25SP	G14_059	TO->FROM	GR ISLD-LNX3345.00 - HOLT.CO3 345.00 345KV CKT 1	720	720	0.04266	106.7523	GEN659162 4-RED WLCK
FDNS	00NR	0	25SP	G14_059	TO->FROM	GR ISLD-LNX3345.00 - HOLT.CO3 345.00 345KV CKT 1	720	720	0.04266	106.7523	GEN659163 5-BLACK WDCK
FDNS	00NR	0	25SP	G14_059	TO->FROM	GR ISLD-LNX3345.00 - HOLT.CO3 345.00 345KV CKT 1	720	720	0.04266	106.7423	GEN600045 4-ANSON
FDNS	00NR	0	25SP	G14_059	TO->FROM	GR ISLD-LNX3345.00 - HOLT.CO3 345.00 345KV CKT 1	720	720	0.03972	106.7358	COOPER - MOORE 345KV CKT 1
FDNS	00NR	0	25SP	G14_059	TO->FROM	GR ISLD-LNX3345.00 - HOLT.CO3 345.00 345KV CKT 1	720	720	0.04266	106.731	GEN 10648 1-G830_GEN 0.6900
FDNS	00NR	0	25SP	G14_059	TO->FROM	GR ISLD-LNX3345.00 - HOLT.CO3 345.00 345KV CKT 1	720	720	0.04266	106.7283	GEN615052 1-CAMBRIDGE GENERATING STATION
FDNS	00NR	0	25SP	G14_059	TO->FROM	GR ISLD-LNX3345.00 - HOLT.CO3 345.00 345KV CKT 1	720	720	0.04304	106.7271	P12:230:UMZB:# 114 #: SB IN SD. SB-WK-GH
FDNS	00NR	0	25SP	G14_059	TO->FROM	GR ISLD-LNX3345.00 - HOLT.CO3 345.00 345KV CKT 1	720	720	0.04304	106.7271	P12:230:UMZB:# 117 #: WK IN SD. SB-WK-GH
FDNS	00NR	0	25SP	G14_059	TO->FROM	GR ISLD-LNX3345.00 - HOLT.CO3 345.00 345KV CKT 1	720	720	0.0424	106.6992	MCCOOL (MCCOOL T2) 345/115/13.8KV TRANSFORMER CKT 1
FDNS	00NR	0	25SP	G14_059	TO->FROM	GR ISLD-LNX3345.00 - HOLT.CO3 345.00 345KV CKT 1	720	720	0.0424	106.6992	MCCOOL (MCCOOL T2) 345/115/13.8KV TRANSFORMER CKT 1
FDNS	00NR	0	25SP	G14_059	TO->FROM	GR ISLD-LNX3345.00 - HOLT.CO3 345.00 345KV CKT 1	720	720	0.0427	106.6987	DIXONCO 230.00 - TWIN CHURCH 230KV CKT 1
FDNS	00NR	0	20SP	G14_059	TO->FROM	GR ISLD-LNX3345.00 - HOLT.CO3 345.00 345KV CKT 1	720	720	0.04054	106.6968	SQUARE BUTTE - YNG2 4 230.00 230KV CKT 1
FDNS	00NR	0	20SP	G14_059	TO->FROM	GR ISLD-LNX3345.00 - HOLT.CO3 345.00 345KV CKT 1	720	720	0.04054	106.6966	YNG2 4 230.00 230/20.0KV TRANSFORMER CKT 1
FDNS	00NR	0	20SP	G14_059	TO->FROM	GR ISLD-LNX3345.00 - HOLT.CO3 345.00 345KV CKT 1	720	720	0.04054	106.6946	ALMA 161 161/24.0KV TRANSFORMER CKT 1
FDNS	00NR	0	25SP	G14_059	TO->FROM	GR ISLD-LNX3345.00 - HOLT.CO3 345.00 345KV CKT 1	720	720	0.04217	106.6926	GRAND ISLAND (GI KU1B) 345/230/13.8KV TRANSFORMER CKT 2
FDNS	00NR	0	25SP	G14_059	TO->FROM	GR ISLD-LNX3345.00 - HOLT.CO3 345.00 345KV CKT 1	720	720	0.04217	106.6926	GRAND ISLAND (GI KU1B) 345/230/13.8KV TRANSFORMER CKT 2
FDNS	00NR	0	25SP	G14_059	TO->FROM	GR ISLD-LNX3345.00 - HOLT.CO3 345.00 345KV CKT 1	720	720	0.04304	106.6924	GLENHAM - WHITLOK 230KV CKT 1
FDNS	00NR	0	25SP	G14_059	TO->FROM	GR ISLD-LNX3345.00 - HOLT.CO3 345.00 345KV CKT 1	720	720	0.04216	106.6911	GRAND ISLAND (GI KU1A) 345/230/13.8KV TRANSFORMER CKT 1
FDNS	00NR	0	25SP	G14_059	TO->FROM	GR ISLD-LNX3345.00 - HOLT.CO3 345.00 345KV CKT 1	720	720	0.04216	106.6911	GRAND ISLAND (GI KU1A) 345/230/13.8KV TRANSFORMER CKT 1
FDNS	00NR	0	25SP	G14_059	TO->FROM	GR ISLD-LNX3345.00 - HOLT.CO3 345.00 345KV CKT 1	720	720	0.04266	106.6799	GEN615021 1-GRE-ER 14G 16.000
FDNS	00NR	0	25SP	G14_059	TO->FROM	GR ISLD-LNX3345.00 - HOLT.CO3 345.00 345KV CKT 1	720	720	0.04266	106.6785	GEN615015 1-GRE-SPRITWDG13.200
FDNS	00NR	0	25SP	G14_059	TO->FROM	GR ISLD-LNX3345.00 - HOLT.CO3 345.00 345KV CKT 1	720	720	0.04266	106.6705	GEN660016 1-B_H WIND 0.7000
FDNS	00NR	0	25SP	G14_059	TO->FROM	GR ISLD-LNX3345.00 - HOLT.CO3 345.00 345KV CKT 1	720	720	0.04308	106.6668	COPSTJCPFRSJ
FDNS	00NR	0	25SP	G14_059	TO->FROM	GR ISLD-LNX3345.00 - HOLT.CO3 345.00 345KV CKT 1	720	720	0.04308	106.6668	P12:345:NPPD:3517:COOPER 3:ST JOE 3:BTB
FDNS	00NR	0	25SP	G14_059	TO->FROM	GR ISLD-LNX3345.00 - HOLT.CO3 345.00 345KV CKT 1	720	720	0.04308	106.6668	STMDSJFAFACO
FDNS	00NR	0	25SP	G14_059	TO->FROM	GR ISLD-LNX3345.00 - HOLT.CO3 345.00 345KV CKT 1	720	720	0.04266	106.6562	GEN657705 X-DRAYTON
FDNS	00NR	0	25SP	G14_059	TO->FROM	GR ISLD-LNX3345.00 - HOLT.CO3 345.00 345KV CKT 1	720	720	0.04266	106.6353	BISONMP4 230.00 - SQUARE BUTTE 230KV CKT 1
FDNS	00NR	0	25SP	G14_059	TO->FROM	GR ISLD-LNX3345.00 - HOLT.CO3 345.00 345KV CKT 1	720	720	0.0417	106.6337	103RD & ROKEBY - MOORE 345KV CKT 1
FDNS	00NR	0	25SP	G14_059	TO->FROM	GR ISLD-LNX3345.00 - HOLT.CO3 345.00 345KV CKT 1	720	720	0.0417	106.6337	103RD & ROKEBY - MOORE 345KV CKT 1
FDNS	00NR	0	25SP	G14_059	TO->FROM	GR ISLD-LNX3345.00 - HOLT.CO3 345.00 345KV CKT 1	720	720	0.04266	106.6281	GEN659353 1-DEERCREK CTG18.000
FDNS	00NR	0	25SP	G14_059	TO->FROM	GR ISLD-LNX3345.00 - HOLT.CO3 345.00 345KV CKT 1	720	720	0.04266	106.627	GEN659354 1-DEERCREK STG18.000
FDNS	00NR	0	20SP	G14_059	TO->FROM	GR ISLD-LNX3345.00 - HOLT.CO3 345.00 345KV CKT 1	720	720	0.04054	106.62	GEN652906 1-G09_006IS_3 0.6900
FDNS	00NR	0	25SP	G14_059	TO->FROM	GR ISLD-LNX3345.00 - HOLT.CO3 345.00 345KV CKT 1	720	720	0.03922	106.5961	COLUMWEST - GRAND ISLAND 230KV CKT 1
FDNS	00NR	0	20SP	G14_059	TO->FROM	GR ISLD-LNX3345.00 - HOLT.CO3 345.00 345KV CKT 1	720	720	0.04054	106.5883	GEN659411 1-CAMPBLCNTY W0.6900
FDNS	00NR	0	25SP	G14_059	TO->FROM	GR ISLD-LNX3345.00 - HOLT.CO3 345.00 345KV CKT 1	720	720	0.04266	106.5737	GEN672303 3-BOUNDARY DAM GENERATOR 3
FDNS	00NR	0	25SP	G14_059	TO->FROM	GR ISLD-LNX3345.00 - HOLT.CO3 345.00 345KV CKT 1	720	720	0.04266	106.5737	GEN672304 4-BOUNDARY DAM GENERATOR 4
FDNS	00NR	0	25SP	G14_059	TO->FROM	GR ISLD-LNX3345.00 - HOLT.CO3 345.00 345KV CKT 1	720	720	0.04266	106.5737	GEN672305 5-BOUNDARY DAM GENERATOR 5
FDNS	00NR	0	25SP	G14_059	TO->FROM	GR ISLD-LNX3345.00 - HOLT.CO3 345.00 345KV CKT 1	720	720	0.04266	106.5637	GEN600067 9-HIGH BRIDGE
FDNS	00NR	0	25SP	G14_059	TO->FROM	GR ISLD-LNX3345.00 - HOLT.CO3 345.00 345KV CKT 1	720	720	0.04266	106.5522	GEN672356 1-FUT-WL1X 18.000
FDNS	00NR	0	25SP	G14_059	TO->FROM	GR ISLD-LNX3345.00 - HOLT.CO3 345.00 345KV CKT 1	720	720	0.04326	106.5513	COOPER - ST JOE 345KV CKT 1
FDNS	00NR	0	25SP	G14_059	TO->FROM	GR ISLD-LNX3345.00 - HOLT.CO3 345.00 345KV CKT 1	720	720	0.04266	106.5354	GEN662101 1-WESSINGTON190.5750
FDNS	00NR	0	25SP	G14_059	TO->FROM	GR ISLD-LNX3345.00 - HOLT.CO3 345.00 345KV CKT 1	720	720	0.04266	106.5305	GEN672389 1-FUT-SW1X 18.000
FDNS	00NR	0	25SP	G14_059	TO->FROM	GR ISLD-LNX3345.00 - HOLT.CO3 345.00 345KV CKT 1	720	720	0.04266	106.5242	GEN672392 1-NBECGT1G 18.000
FDNS	00NR	0	25SP	G14_059	TO->FROM	GR ISLD-LNX3345.00 - HOLT.CO3 345.00 345KV CKT 1	720	720	0.04285	106.5076	G14-021T 345.00 - MULLNCR7 345.00 345KV CKT 1
FDNS	00NR	0	25SP	G14_059	TO->FROM	GR ISLD-LNX3345.00 - HOLT.CO3 345.00 345KV CKT 1	720	720	0.04285	106.5043	G15-005T 345.00 - MULLNCR7 345.00 345KV CKT 1
FDNS	00NR	0	25SP	G14_059	TO->FROM	GR ISLD-LNX3345.00 - HOLT.CO3 345.00 345KV CKT 1	720	720	0.04281	106.4989	HIGHLND 3 345.00 - OBRIEN 3 345.00 345KV CKT 1
FDNS	00NR	0	25SP	G14_059	TO->FROM	GR ISLD-LNX3345.00 - HOLT.CO3 345.00 345KV CKT 1	720	720	0.04266	106.4808	GEN910006 1-G12_012IS_3 0.6900
FDNS	00NR	0	20SP	G14_059	TO->FROM	GR ISLD-LNX3345.00 - HOLT.CO3 345.00 345KV CKT 1	720	720	0.04054	106.4539	GEN659296 2-SDPRAIRWND1W0.6900
FDNS	00NR	0	20SP	G14_059	TO->FROM	GR ISLD-LNX3345.00 - HOLT.CO3 345.00 345KV CKT 1	720	720	0.04054	106.4495	GEN652907 1-G09_007IS_3 0.6900
FDNS	00NR	0	25SP	G14_059	TO->FROM	GR ISLD-LNX3345.00 - HOLT.CO3 345.00 345KV CKT 1	720	720	0.04266	106.4442	CENTER 230/22.0KV TRANSFORMER CKT 1
FDNS	00NR	0	25SP	G14_059	TO->FROM	GR ISLD-LNX3345.00 - HOLT.CO3 345.00 345KV CKT 1	720	720	0.04266	106.4258	GEN681542 6-JP MADGETT

SOLUTION	GROUP	SCENARIO	SEASON	SOURCE	DIRECTION	MONITORED ELEMENT	RATEA (MVA)	RATEB(MVA)	TDF	TC%LOADING (% MVA)	CONTINGENCY
FDNS	00NR	0	25SP	G14_059	TO->FROM	GR ISLD-LNX3345.00 - HOLT.CO3 345.00 345KV CKT 1	720	720	0.04285	106.4211	G15-005T 345.00 - SIBLEY 345KV CKT 1
FDNS	00NR	0	20SP	G14_059	TO->FROM	GR ISLD-LNX3345.00 - HOLT.CO3 345.00 345KV CKT 1	720	720	0.04054	106.4129	GEN652559 1-OAHE
FDNS	00NR	0	20SP	G14_059	TO->FROM	GR ISLD-LNX3345.00 - HOLT.CO3 345.00 345KV CKT 1	720	720	0.04054	106.3959	GEN672321 1-SHAND GENERATOR 1
FDNS	00NR	0	20SP	G14_059	TO->FROM	GR ISLD-LNX3345.00 - HOLT.CO3 345.00 345KV CKT 1	720	720	0.04054	106.3855	GEN600004 2-PRAIRIE ISLAND G2
FDNS	00NR	0	20SP	G14_059	TO->FROM	GR ISLD-LNX3345.00 - HOLT.CO3 345.00 345KV CKT 1	720	720	0.04054	106.3827	GEN600003 1-PRAIRIE ISLAND G1
FDNS	00NR	0	25SP	G14_059	TO->FROM	GR ISLD-LNX3345.00 - HOLT.CO3 345.00 345KV CKT 1	720	720	0.04266	106.3676	GEN659289 1-DAYCNTYWND W0.6900
FDNS	00NR	0	20SP	G14_059	TO->FROM	GR ISLD-LNX3345.00 - HOLT.CO3 345.00 345KV CKT 1	720	720	0.04054	106.354	GEN672310 1-POPLAR RIVER GENERATOR 1
FDNS	00NR	0	20SP	G14_059	TO->FROM	GR ISLD-LNX3345.00 - HOLT.CO3 345.00 345KV CKT 1	720	720	0.04054	106.354	GEN672311 2-POPLAR RIVER GENERATOR 2
FDNS	00NR	0	25SP	G14_059	TO->FROM	GR ISLD-LNX3345.00 - HOLT.CO3 345.00 345KV CKT 1	720	720	0.04193	106.3511	GRAND ISLAND (GI KU3A) 345/230/13.8KV TRANSFORMER CKT 3
FDNS	00NR	0	25SP	G14_059	TO->FROM	GR ISLD-LNX3345.00 - HOLT.CO3 345.00 345KV CKT 1	720	720	0.04193	106.3511	GRAND ISLAND (GI KU3A) 345/230/13.8KV TRANSFORMER CKT 3
FDNS	00NR	0	25SP	G14_059	TO->FROM	GR ISLD-LNX3345.00 - HOLT.CO3 345.00 345KV CKT 1	720	720	0.04266	106.342	GEN563312 1-G15097_3 0.6900
FDNS	00NR	0	20SP	G14_059	TO->FROM	GR ISLD-LNX3345.00 - HOLT.CO3 345.00 345KV CKT 1	720	720	0.04054	106.3409	GEN672306 6-BOUNDARY DAM GENERATOR 6
FDNS	00NR	0	25SP	G14_059	TO->FROM	GR ISLD-LNX3345.00 - HOLT.CO3 345.00 345KV CKT 1	720	720	0.04266	106.2979	GEN659018 1-G14_003IS_3 0.6900
FDNSLock	00NR	0	20SP	G14_059	TO->FROM	GR ISLD-LNX3345.00 - HOLT.CO3 345.00 345KV CKT 1	720	720	0.04054	106.2775	GEN659453 1-GI1414GEN W0.6900
FDNS	00NR	0	20SP	G14_059	TO->FROM	GR ISLD-LNX3345.00 - HOLT.CO3 345.00 345KV CKT 1	720	720	0.04054	106.2751	GEN563302 1-G15096_3 0.6900
FDNS	00NR	0	20SP	G14_059	TO->FROM	GR ISLD-LNX3345.00 - HOLT.CO3 345.00 345KV CKT 1	720	720	0.04054	106.2747	GEN615010 1-STANTON4
FDNS	00NR	0	25SP	G14_059	TO->FROM	GR ISLD-LNX3345.00 - HOLT.CO3 345.00 345KV CKT 1	720	720	0.04266	106.274	GEN562596 1-G14_059_3 0.6900
FDNS	00NR	0	25SP	G14_059	TO->FROM	GR ISLD-LNX3345.00 - HOLT.CO3 345.00 345KV CKT 1	720	720	0.04304	106.2449	GLENHAM - L3 HAWDON 230KV CKT 1
FDNS	00NR	0	25SP	G14_059	TO->FROM	GR ISLD-LNX3345.00 - HOLT.CO3 345.00 345KV CKT 1	720	720	0.04266	106.2261	GEN659010 4-G07_027IS_2 0.6900
FDNS	00NR	0	20SP	G14_059	TO->FROM	GR ISLD-LNX3345.00 - HOLT.CO3 345.00 345KV CKT 1	720	720	0.04054	106.225	GEN659141 1-K10215A
FDNS	00NR	0	25SP	G14_059	TO->FROM	GR ISLD-LNX3345.00 - HOLT.CO3 345.00 345KV CKT 1	720	720	0.04266	106.2235	GEN659194 1-NDPRAIRWND1W0.6900
FDNS	00NR	0	20SP	G14_059	TO->FROM	GR ISLD-LNX3345.00 - HOLT.CO3 345.00 345KV CKT 1	720	720	0.04054	106.2204	GEN659110 1-LELAND OLDS UNIT1
FDNS	00NR	0	20SP	G14_059	TO->FROM	GR ISLD-LNX3345.00 - HOLT.CO3 345.00 345KV CKT 1	720	720	0.04054	106.2176	GEN652557 4-OAHE
FDNS	00NR	0	20SP	G14_059	TO->FROM	GR ISLD-LNX3345.00 - HOLT.CO3 345.00 345KV CKT 1	720	720	0.04054	106.2176	GEN652558 6-OAHE
FDNS	00NR	0	20SP	G14_059	TO->FROM	GR ISLD-LNX3345.00 - HOLT.CO3 345.00 345KV CKT 1	720	720	0.04054	106.2175	GEN652556 2-OAHE
FDNS	00NR	0	25SP	G14_059	TO->FROM	GR ISLD-LNX3345.00 - HOLT.CO3 345.00 345KV CKT 1	720	720	0.04266	106.2158	GEN652460 4-GARRISON
FDNS	00NR	0	25SP	G14_059	TO->FROM	GR ISLD-LNX3345.00 - HOLT.CO3 345.00 345KV CKT 1	720	720	0.04266	106.2158	GEN652461 5-GARRISON
FDNS	00NR	0	25SP	G14_059	TO->FROM	GR ISLD-LNX3345.00 - HOLT.CO3 345.00 345KV CKT 1	720	720	0.04266	106.1787	GEN652457 1-GARRISON
FDNS	00NR	0	25SP	G14_059	TO->FROM	GR ISLD-LNX3345.00 - HOLT.CO3 345.00 345KV CKT 1	720	720	0.04266	106.1787	GEN652458 2-GARRISON
FDNS	00NR	0	25SP	G14_059	TO->FROM	GR ISLD-LNX3345.00 - HOLT.CO3 345.00 345KV CKT 1	720	720	0.04266	106.1787	GEN652459 3-GARRISON
FDNS	00NR	0	25SP	G14_059	TO->FROM	GR ISLD-LNX3345.00 - HOLT.CO3 345.00 345KV CKT 1	720	720	0.04266	106.161	GEN652543 3-BIG BEND
FDNS	00NR	0	25SP	G14_059	TO->FROM	GR ISLD-LNX3345.00 - HOLT.CO3 345.00 345KV CKT 1	720	720	0.04266	106.1559	GEN652542 1-BIG BEND
FDNS	00NR	0	20SP	G14_059	TO->FROM	GR ISLD-LNX3345.00 - HOLT.CO3 345.00 345KV CKT 1	720	720	0.04054	106.1452	GEN600006 1-AS KING
FDNS	00NR	0	25SP	G14_059	TO->FROM	GR ISLD-LNX3345.00 - HOLT.CO3 345.00 345KV CKT 1	720	720	0.04266	106.1444	GEN563282 1-G15094_3 0.6900
FDNS	00NR	0	25SP	G14_059	TO->FROM	GR ISLD-LNX3345.00 - HOLT.CO3 345.00 345KV CKT 1	720	720	0.04266	106.1241	GEN659403 1-NDSUNFLWR W0.6900
FDNS	00NR	0	20SP	G14_059	TO->FROM	GR ISLD-LNX3345.00 - HOLT.CO3 345.00 345KV CKT 1	720	720	0.04054	106.1203	GEN652173 1-G09_001IS_2 0.6900
FDNS	00NR	0	25SP	G14_059	TO->FROM	GR ISLD-LNX3345.00 - HOLT.CO3 345.00 345KV CKT 1	720	720	0.04266	106.1193	GEN563342 1-G15098_3 0.6900
FDNS	00NR	0	25SP	G14_059	TO->FROM	GR ISLD-LNX3345.00 - HOLT.CO3 345.00 345KV CKT 1	720	720	0.04266	106.0879	COYOTE 345/24.0KV TRANSFORMER CKT 1
FDNS	00NR	0	25SP	G14_059	TO->FROM	GR ISLD-LNX3345.00 - HOLT.CO3 345.00 345KV CKT 1	720	720	0.04141	105.9923	AXTELL - POST ROCK 345KV CKT 1
FDNS	00NR	0	25SP	G14_059	TO->FROM	GR ISLD-LNX3345.00 - HOLT.CO3 345.00 345KV CKT 1	720	720	0.04266	105.9729	STANTON 230/18.0KV TRANSFORMER CKT 1
FDNS	00NR	0	20SP	G14_059	TO->FROM	GR ISLD-LNX3345.00 - HOLT.CO3 345.00 345KV CKT 1	720	720	0.04054	105.9384	RCDC EAST 4230.00 - RED CEDAR DC 230KV CKT 1
FDNS	00NR	0	20SP	G14_059	TO->FROM	GR ISLD-LNX3345.00 - HOLT.CO3 345.00 345KV CKT 1	720	720	0.04053	105.9283	P12:230:UMZB:# 112 #: NU IN SD. NU-RCDC & DRY CREEK XFMR
FDNS	00NR	0	25SP	G14_059	TO->FROM	GR ISLD-LNX3345.00 - HOLT.CO3 345.00 345KV CKT 1	720	720	0.04266	105.91	GEN652906 1-G09_006IS_3 0.6900
FDNS	00NR	0	20SP	G14_059	TO->FROM	GR ISLD-LNX3345.00 - HOLT.CO3 345.00 345KV CKT 1	720	720	0.04054	105.9035	GEN659407 1-ANTELPHILLSW0.6900
FDNS	00NR	0	25SP	G14_059	TO->FROM	GR ISLD-LNX3345.00 - HOLT.CO3 345.00 345KV CKT 1	720	720	0.04266	105.8783	GEN659411 1-CAMPBLCNTY W0.6900
FDNS	00NR	0	20SP	G14_059	TO->FROM	GR ISLD-LNX3345.00 - HOLT.CO3 345.00 345KV CKT 1	720	720	0.04054	105.8461	GEN657749 1-YOUNG 1 GENERATOR
FDNS	00NR	0	20SP	G14_059	TO->FROM	GR ISLD-LNX3345.00 - HOLT.CO3 345.00 345KV CKT 1	720	720	0.04054	105.8203	GEN640010 1-GERALD GENTLEMAN STATION UNIT 1
FDNS	00NR	0	20SP	G14_059	TO->FROM	GR ISLD-LNX3345.00 - HOLT.CO3 345.00 345KV CKT 1	720	720	0.04054	105.758	GEN640011 2-GERALD GENTLEMAN STATION UNIT 2
FDNS	00NR	0	25SP	G14_059	TO->FROM	GR ISLD-LNX3345.00 - HOLT.CO3 345.00 345KV CKT 1	720	720	0.04266	105.7528	GEN659296 2-SDPRAIRWND1W0.6900
FDNS	00NR	0	25SP	G14_059	TO->FROM	GR ISLD-LNX3345.00 - HOLT.CO3 345.00 345KV CKT 1	720	720	0.04266	105.741	SQUARE BUTTE - YNG2 4 230.00 230KV CKT 1
FDNS	00NR	0	25SP	G14_059	TO->FROM	GR ISLD-LNX3345.00 - HOLT.CO3 345.00 345KV CKT 1	720	720	0.04266	105.7407	YNG2 4 230.00 230/20.0KV TRANSFORMER CKT 1
FDNS	00NR	0	25SP	G14_059	TO->FROM	GR ISLD-LNX3345.00 - HOLT.CO3 345.00 345KV CKT 1	720	720	0.04266	105.739	GEN652907 1-G09_007IS_3 0.6900
FDNS	00NR	0	25SP	G14_059	TO->FROM	GR ISLD-LNX3345.00 - HOLT.CO3 345.00 345KV CKT 1	720	720	0.04266	105.6301	GEN672310 1-POPLAR RIVER GENERATOR 1
FDNS	00NR	0	25SP	G14_059	TO->FROM	GR ISLD-LNX3345.00 - HOLT.CO3 345.00 345KV CKT 1	720	720	0.04266	105.6301	GEN672311 2-POPLAR RIVER GENERATOR 2
FDNS	00NR	0	25SP	G14_059	TO->FROM	GR ISLD-LNX3345.00 - HOLT.CO3 345.00 345KV CKT 1	720	720	0.04266	105.6211	GEN672321 1-SHAND GENERATOR 1
FDNS	00NR	0	25SP	G14_059	TO->FROM	GR ISLD-LNX3345.00 - HOLT.CO3 345.00 345KV CKT 1	720	720	0.04266	105.5763	GEN600004 2-PRAIRIE ISLAND G2
FDNS	00NR	0	25SP	G14_059	TO->FROM	GR ISLD-LNX3345.00 - HOLT.CO3 345.00 345KV CKT 1	720	720	0.04266	105.573	GEN600003 1-PRAIRIE ISLAND G1
FDNS	00NR	0	25SP	G14_059	TO->FROM	GR ISLD-LNX3345.00 - HOLT.CO3 345.00 345KV CKT 1	720	720	0.04266	105.5611	GEN672306 6-BOUNDARY DAM GENERATOR 6
FDNS	00NR	0	25SP	G14_059	TO->FROM	GR ISLD-LNX3345.00 - HOLT.CO3 345.00 345KV CKT 1	720	720	0.04266	105.5565	GEN659453 1-GI1414GEN W0.6900
FDNS	00NR	0	25SP	G14_059	TO->FROM	GR ISLD-LNX3345.00 - HOLT.CO3 345.00 345KV CKT 1	720	720	0.04266	105.5539	GEN563302 1-G15096_3 0.6900
FDNS	00NR	0	25SP	G14_059	TO->FROM	GR ISLD-LNX3345.00 - HOLT.CO3 345.00 345KV CKT 1	720	720	0.04266	105.5119	GEN615010 1-STANTON4
FDNS	00NR	0	25SP	G14_059	TO->FROM	GR ISLD-LNX3345.00 - HOLT.CO3 345.00 345KV CKT 1	720	720	0.04266	105.5109	GEN652556 2-OAHE
FDNS	00NR	0	25SP	G14_059	TO->FROM	GR ISLD-LNX3345.00 - HOLT.CO3 345.00 345KV CKT 1	720	720	0.04266	105.5108	GEN652557 4-OAHE
FDNS	00NR	0	25SP	G14_059	TO->FROM	GR ISLD-LNX3345.00 - HOLT.CO3 345.00 345KV CKT 1	720	720	0.04266	105.5108	GEN652558 6-OAHE
FDNS	00NR	0	25SP	G14_059	TO->FROM	GR ISLD-LNX3345.00 - HOLT.CO3 345.00 345KV CKT 1	720	720	0.04266	105.4975	GEN659141 1-K10215A
FDNS	00NR	0	25SP	G14_059	TO->FROM	GR ISLD-LNX3345.00 - HOLT.CO3 345.00 345KV CKT 1	720	720	0.04266	105.4817	GEN659110 1-LELAND OLDS UNIT1
FDNS	00NR	0	20SP	G14_059	TO->FROM	GR ISLD-LNX3345.00 - HOLT.CO3 345.00 345KV CKT 1	720	720	0.04054	105.478	GEN600005 1-MONTICELLO
FDNS	00NR	0	25SP	G14_059	TO->FROM	GR ISLD-LNX3345.00 - HOLT.CO3 345.00 345KV CKT 1	720	720	0.04266	105.4552	GEN652559 1-OAHE
FDNS	00NR	0	25SP	G14_059	TO->FROM	GR ISLD-LNX3345.00 - HOLT.CO3 345.00 345KV CKT 1	720	720	0.04266	105.412	GEN652173 1-G09_001IS_2 0.6900
FDNS	00NR	0	25SP	G14_059	TO->FROM	GR ISLD-LNX3345.00 - HOLT.CO3 345.00 345KV CKT 1	720	720	0.04266	105.3334	GEN600006 1-AS KING
FDNS	00NR	0	20SP	G14_059	TO->FROM	GR ISLD-LNX3345.00 - HOLT.CO3 345.00 345KV CKT 1	720	720	0.04054	105.3075	GEN600000 1-SHERBURNECNTY G1
FDNS	00NR	0	25SP	G14_059	TO->FROM	GR ISLD-LNX3345.00 - HOLT.CO3 345.00 345KV CKT 1	720	720	0.04266	105.2125	P12:230:UMZB:# 112 #: NU IN SD. NU-RCDC & DRY CREEK XFMR
FDNS	00NR	0	25SP	G14_059	TO->FROM	GR ISLD-LNX3345.00 - HOLT.CO3 345.00 345KV CKT 1	720	720	0.04266	105.209	RCDC EAST 4230.00 - RED CEDAR DC 230KV CKT 1
FDNS	00NR	0	25SP	G14_059	TO->FROM	GR ISLD-LNX3345.00 - HOLT.CO3 345.00 345KV CKT 1	720	720	0.04266	105.186	GEN659407 1-ANTELPHILLSW0.6900
FDNS	00NR	0	20SP	G14_059	TO->FROM	GR ISLD-LNX3345.00 - HOLT.CO3 345.00 345KV CKT 1	720	720	0.04054	105.1119	GEN600001 2-SHERBURNE CNTY G2
FDNS	00NR	0	20SP	G14_059	TO->FROM	GR ISLD-LNX3345.00 - HOLT.CO3 345.00 345KV CKT 1	720	720	0.04054	105.0923	GEN661015 1-COYOTE
FDNS	00NR	0	25SP	G14_059	TO->FROM	GR ISLD-LNX3345.00 - HOLT.CO3 345.00 345KV CKT 1	720	720	0.04266	105.0462	GEN657749 1-YOUNG 1 GENERATOR
FDNS	00NR	0	25SP	G14_059	TO->FROM	GR ISLD-LNX3345.00 - HOLT.CO3 345.00 345KV CKT 1	720	720	0.04266	105.0306	CLAY BOSWELL 230/20.9KV TRANSFORMER CKT 1
FDNS	00NR	0	20SP	G14_059	TO->FROM	GR ISLD-LNX3345.00 - HOLT.CO3 345.00 345KV CKT 1	720	720	0.04054	105	GEN620315 1-BIG STONE GEN

SOLUTION	GROUP	SCENARIO	SEASON	SOURCE	DIRECTION	MONITORED ELEMENT	RATEA (MVA)	RATEB(MVA)	TDF	TC%LOADING (% MVA)	CONTINGENCY
FDNS	00NR	0	25SP	G14_059	TO->FROM	GR ISLD-LNX3345.00 - HOLT.CO3 345.00 345KV CKT 1	720	720	0.04266	104.6795	GEN640011 2-GERALD GENTLEMAN STATION UNIT 2
FDNS	00NR	0	25SP	G14_059	TO->FROM	GR ISLD-LNX3345.00 - HOLT.CO3 345.00 345KV CKT 1	720	720	0.04266	104.6585	GEN600005 1-MONTICELLO
FDNS	00NR	0	20SP	G14_059	TO->FROM	GR ISLD-LNX3345.00 - HOLT.CO3 345.00 345KV CKT 1	720	720	0.04054	104.6134	GEN600002 3-SHERBURNE CNTY G3
FDNS	00NR	0	25SP	G14_059	TO->FROM	GR ISLD-LNX3345.00 - HOLT.CO3 345.00 345KV CKT 1	720	720	0.04266	104.5891	GEN640010 1-GERALD GENTLEMAN STATION UNIT 1
FDNS	00NR	0	20SP	G14_059	TO->FROM	GR ISLD-LNX3345.00 - HOLT.CO3 345.00 345KV CKT 1	720	720	0.04054	104.5605	GEN659118 1-LARAMIE RIVER UNIT1
FDNS	00NR	0	25SP	G14_059	TO->FROM	GR ISLD-LNX3345.00 - HOLT.CO3 345.00 345KV CKT 1	720	720	0.04266	104.4806	GEN600000 1-SHERBURNECNTY G1
FDNS	00NR	0	20SP	G14_059	TO->FROM	GR ISLD-LNX3345.00 - HOLT.CO3 345.00 345KV CKT 1	720	720	0.04054	104.4689	GEN657748 1-YOUNG 2 GENERATOR
FDNS	00NR	0	25SP	G14_059	TO->FROM	GR ISLD-LNX3345.00 - HOLT.CO3 345.00 345KV CKT 1	720	720	0.04266	104.3116	GEN600001 2-SHERBURNE CNTY G2
FDNS	00NR	0	20SP	G14_059	TO->FROM	GR ISLD-LNX3345.00 - HOLT.CO3 345.00 345KV CKT 1	720	720	0.04054	104.3	GEN562872 1-G15046_3 0.6900
FDNS	00NR	0	20SP	G14_059	TO->FROM	GR ISLD-LNX3345.00 - HOLT.CO3 345.00 345KV CKT 1	720	720	0.04054	104.1744	GEN659111 2-LELAND OLDS UNIT2
FDNS	00NR	0	25SP	G14_059	TO->FROM	GR ISLD-LNX3345.00 - HOLT.CO3 345.00 345KV CKT 1	720	720	0.04266	104.1524	GEN620315 1-BIG STONE GEN
FDNS	00NR	0	25SP	G14_059	TO->FROM	GR ISLD-LNX3345.00 - HOLT.CO3 345.00 345KV CKT 1	720	720	0.04266	104.1195	GEN661015 1-COYOTE
FDNS	00NR	0	20SP	G14_059	TO->FROM	GR ISLD-LNX3345.00 - HOLT.CO3 345.00 345KV CKT 1	720	720	0.04054	103.9837	BIG STONE 230/24.0KV TRANSFORMER CKT 1
FDNS	00NR	0	20SP	G14_059	TO->FROM	GR ISLD-LNX3345.00 - HOLT.CO3 345.00 345KV CKT 1	720	720	0.04054	103.8712	GEN659103 1-ANTELOPE VALLEY UNIT1
FDNS	00NR	0	20SP	G14_059	TO->FROM	GR ISLD-LNX3345.00 - HOLT.CO3 345.00 345KV CKT 1	720	720	0.04054	103.8712	GEN659107 2-ANTELOPE VALLEY UNIT2
FDNS	00NR	0	25SP	G14_059	TO->FROM	GR ISLD-LNX3345.00 - HOLT.CO3 345.00 345KV CKT 1	720	720	0.04266	103.8121	GEN659118 1-LARAMIE RIVER UNIT1
FDNS	00NR	0	25SP	G14_059	TO->FROM	GR ISLD-LNX3345.00 - HOLT.CO3 345.00 345KV CKT 1	720	720	0.04266	103.7202	GEN600002 3-SHERBURNE CNTY G3
FDNS	00NR	0	25SP	G14_059	TO->FROM	GR ISLD-LNX3345.00 - HOLT.CO3 345.00 345KV CKT 1	720	720	0.04266	103.585	GEN562872 1-G15046_3 0.6900
FDNS	00NR	0	25SP	G14_059	TO->FROM	GR ISLD-LNX3345.00 - HOLT.CO3 345.00 345KV CKT 1	720	720	0.04266	103.4058	SHERBURNE CO 345/24.0KV TRANSFORMER CKT 1
FDNS	00NR	0	25SP	G14_059	TO->FROM	GR ISLD-LNX3345.00 - HOLT.CO3 345.00 345KV CKT 1	720	720	0.04266	103.3956	GEN659111 2-LELAND OLDS UNIT2
FDNS	00NR	0	20SP	G14_059	TO->FROM	GR ISLD-LNX3345.00 - HOLT.CO3 345.00 345KV CKT 1	720	720	0.04132	103.3305	FTTHOM1-LNX3345.00 - LELAND2-LNX3345.00 345KV CKT 1
FDNS	00NR	0	25SP	G14_059	TO->FROM	GR ISLD-LNX3345.00 - HOLT.CO3 345.00 345KV CKT 1	720	720	0.04266	103.2723	BIG STONE 230/24.0KV TRANSFORMER CKT 1
FDNSLock	00NR	0	20SP	G14_059	TO->FROM	GR ISLD-LNX3345.00 - HOLT.CO3 345.00 345KV CKT 1	720	720	0.04054	103.2333	GEN659125 1-COVEY
FDNS	00NR	0	20SP	G14_059	TO->FROM	GR ISLD-LNX3345.00 - HOLT.CO3 345.00 345KV CKT 1	720	720	0.04132	103.2111	P12:345:UMZB:# 108 #: LOS FT IN ND. LOS FT
FDNS	00NR	0	20SP	G14_059	TO->FROM	GR ISLD-LNX3345.00 - HOLT.CO3 345.00 345KV CKT 1	720	720	0.04132	103.2067	FT THOMPSON - FTTHOM1-LNX3345.00 345KV CKT Z
FDNS	00NR	0	20SP	G14_059	TO->FROM	GR ISLD-LNX3345.00 - HOLT.CO3 345.00 345KV CKT 1	720	720	0.04132	103.15	LELAND OLDS - LELAND2-LNX3345.00 345KV CKT Z
FDNS	00NR	0	25SP	G14_059	TO->FROM	GR ISLD-LNX3345.00 - HOLT.CO3 345.00 345KV CKT 1	720	720	0.04266	103.1155	GEN657748 1-YOUNG 2 GENERATOR
FDNS	00NR	0	25SP	G14_059	TO->FROM	GR ISLD-LNX3345.00 - HOLT.CO3 345.00 345KV CKT 1	720	720	0.04266	103.0814	GEN659103 1-ANTELOPE VALLEY UNIT1
FDNS	00NR	0	25SP	G14_059	TO->FROM	GR ISLD-LNX3345.00 - HOLT.CO3 345.00 345KV CKT 1	720	720	0.04266	103.0814	GEN659107 2-ANTELOPE VALLEY UNIT2
FDNS	00NR	0	25SP	G14_059	TO->FROM	GR ISLD-LNX3345.00 - HOLT.CO3 345.00 345KV CKT 1	720	720	0.04344	102.7398	FTTHOM1-LNX3345.00 - LELAND2-LNX3345.00 345KV CKT 1
FDNS	00NR	0	25SP	G14_059	TO->FROM	GR ISLD-LNX3345.00 - HOLT.CO3 345.00 345KV CKT 1	720	720	0.04344	102.6121	P12:345:UMZB:# 108 #: LOS FT IN ND. LOS FT
FDNS	00NR	0	25SP	G14_059	TO->FROM	GR ISLD-LNX3345.00 - HOLT.CO3 345.00 345KV CKT 1	720	720	0.04344	102.6075	FT THOMPSON - FTTHOM1-LNX3345.00 345KV CKT Z
FDNSLock	00NR	0	20SP	G14_059	TO->FROM	GR ISLD-LNX3345.00 - HOLT.CO3 345.00 345KV CKT 1	720	720	0.04054	102.5786	GEN615001 1-COAL CREEK
FDNS	00NR	0	25SP	G14_059	TO->FROM	GR ISLD-LNX3345.00 - HOLT.CO3 345.00 345KV CKT 1	720	720	0.04344	102.5475	LELAND OLDS - LELAND2-LNX3345.00 345KV CKT Z
FDNSLock	00NR	0	20SP	G14_059	TO->FROM	GR ISLD-LNX3345.00 - HOLT.CO3 345.00 345KV CKT 1	720	720	0.04054	102.4971	GEN615002 2-COAL CREEK
FDNS	00NR	0	25SP	G14_059	TO->FROM	GR ISLD-LNX3345.00 - HOLT.CO3 345.00 345KV CKT 1	720	720	0.04266	102.4767	GEN659125 1-COVEY
FDNS	00NR	0	25SP	G14_059	TO->FROM	GR ISLD-LNX3345.00 - HOLT.CO3 345.00 345KV CKT 1	720	720	0.04266	101.6925	GEN615001 1-COAL CREEK
FDNS	00NR	0	25SP	G14_059	TO->FROM	GR ISLD-LNX3345.00 - HOLT.CO3 345.00 345KV CKT 1	720	720	0.04266	101.6136	GEN615002 2-COAL CREEK
FDNS	00NR	0	25SP	G14_059	TO->FROM	GR ISLD-LNX3345.00 - HOLT.CO3 345.00 345KV CKT 1	720	720	0.02969	101.104	MCCOOL - MOORE 345KV CKT 1
FDNS	00NR	0	25SP	G14_059	FROM->TO	SIDNEY (SD KV1A) 230/115/13.8KV TRANSFORMER CKT 1	112	112	0.03034	107.5865	P12:115:TSGT:GRANTNB7-OGALALA7_2
FDNS	00NR	0	17SP	G14_059	FROM->TO	SIDNEY (SD KV1A) 230/115/13.8KV TRANSFORMER CKT 1	112	112	0.03741	105.4874	SIDNEY - SIDNEY1-LNX3345.00 345KV CKT Z
FDNS	00NR	0	25SP	G14_059	FROM->TO	SIDNEY (SD KV1A) 230/115/13.8KV TRANSFORMER CKT 1	112	112	0.03034	105.4607	P12:115:TSGT:GRANTNB7-OGALALA7_2
FDNS	00NR	0	17SP	G14_059	FROM->TO	SIDNEY (SD KV1A) 230/115/13.8KV TRANSFORMER CKT 1	112	112	0.03741	105.4092	KEYSTONE - SIDNEY1-LNX3345.00 345KV CKT 1
FDNS	00NR	0	17SP	G14_059	FROM->TO	SIDNEY (SD KV1A) 230/115/13.8KV TRANSFORMER CKT 1	112	112	0.03741	105.1384	SIDNEY - SIDNEY1-LNX3345.00 345KV CKT Z
FDNS	00NR	0	17SP	G14_059	FROM->TO	SIDNEY (SD KV1A) 230/115/13.8KV TRANSFORMER CKT 1	112	112	0.03741	105.0588	KEYSTONE - SIDNEY1-LNX3345.00 345KV CKT 1
FDNS	00NR	0	17SP	G14_059	FROM->TO	SIDNEY (SD KV1A) 230/115/13.8KV TRANSFORMER CKT 1	112	112	0.03073	104.0052	P12:115:TSGT:GRANTNB7-OGALALA7_2
FDNS	00NR	0	20SP	G14_059	FROM->TO	SIDNEY (SD KV1A) 230/115/13.8KV TRANSFORMER CKT 1	112	112	0.0303	103.4958	P12:115:TSGT:GRANTNB7-OGALALA7_2
FDNS	00NR	0	17SP	G14_059	FROM->TO	SIDNEY (SD KV1A) 230/115/13.8KV TRANSFORMER CKT 1	112	112	0.03073	101.8814	P12:115:TSGT:GRANTNB7-OGALALA7_2
FDNS	00NR	0	20SP	G14_059	FROM->TO	SIDNEY (SD KV1A) 230/115/13.8KV TRANSFORMER CKT 1	112	112	0.0303	101.7226	P12:115:TSGT:GRANTNB7-OGALALA7_2
FDNS	00NR	0	25SP	G14_059	FROM->TO	SIDNEY (SD KV1A) 230/115/13.8KV TRANSFORMER CKT 1	112	112	0.03776	101.2874	SIDNEY - SIDNEY1-LNX3345.00 345KV CKT Z
FDNS	00NR	0	25SP	G14_059	FROM->TO	SIDNEY (SD KV1A) 230/115/13.8KV TRANSFORMER CKT 1	112	112	0.03776	101.1683	SIDNEY - SIDNEY1-LNX3345.00 345KV CKT Z
FDNS	00NR	0	25SP	G14_059	FROM->TO	SIDNEY (SD KV1A) 230/115/13.8KV TRANSFORMER CKT 1	112	112	0.03776	101.1241	KEYSTONE - SIDNEY1-LNX3345.00 345KV CKT 1
FDNS	00NR	0	25SP	G14_059	FROM->TO	SIDNEY (SD KV1A) 230/115/13.8KV TRANSFORMER CKT 1	112	112	0.03776	101.0167	KEYSTONE - SIDNEY1-LNX3345.00 345KV CKT 1
FDNS	00NR	0	20SP	G14_059	FROM->TO	SIDNEY (SD KV1A) 230/115/13.8KV TRANSFORMER CKT 1	112	112	0.0378	100.1137	SIDNEY - SIDNEY1-LNX3345.00 345KV CKT Z
FDNS	00NR	0	20SP	G14_059	FROM->TO	SIDNEY (SD KV1A) 230/115/13.8KV TRANSFORMER CKT 1	112	112	0.0378	99.9	SIDNEY - SIDNEY1-LNX3345.00 345KV CKT Z
FDNSLock	00NR	0	20SP	G14_059	FROM->TO	SIDNEY (SD KV1A) 230/115/13.8KV TRANSFORMER CKT 1	112	112	0.0378	99.7	KEYSTONE - SIDNEY1-LNX3345.00 345KV CKT 1
FDNS	00NR	2	17SP	G14_059	TO->FROM	CHAPPEL - COLTON 7 115.00 115KV CKT 1	109	109	0.03781	102.1895	SIDNEY - SIDNEY1-LNX3345.00 345KV CKT Z
FDNS	00NR	2	17SP	G14_059	TO->FROM	CHAPPEL - COLTON 7 115.00 115KV CKT 1	109	109	0.03781	102.0173	KEYSTONE - SIDNEY1-LNX3345.00 345KV CKT 1
FDNS	00NR	2	17SP	G14_059	TO->FROM	CHAPPEL - COLTON 7 115.00 115KV CKT 1	109	109	0.0303	101.4983	P12:115:TSGT:GRANTNB7-OGALALA7_2
FDNS	00NR	2	17SP	G14_059	TO->FROM	COLTON 7 115.00 - SIDNEY 115KV CKT 1	109	109	0.03781	105.2249	SIDNEY - SIDNEY1-LNX3345.00 345KV CKT Z
FDNS	00NR	2	17SP	G14_059	TO->FROM	COLTON 7 115.00 - SIDNEY 115KV CKT 1	109	109	0.03781	105.0464	KEYSTONE - SIDNEY1-LNX3345.00 345KV CKT 1
FDNS	00NR	2	17SP	G14_059	TO->FROM	COLTON 7 115.00 - SIDNEY 115KV CKT 1	109	109	0.0303	104.7327	P12:115:TSGT:GRANTNB7-OGALALA7_2
FDNS	00NR	2	17SP	G14_059	FROM->TO	G14-059T 230.00 - OGALLALA 230KV CKT 1	320	320	0.84051	167.2434	SIDNEY - SIDNEY1-LNX3345.00 345KV CKT Z
FDNS	00NR	2	17SP	G14_059	FROM->TO	G14-059T 230.00 - OGALLALA 230KV CKT 1	320	320	0.84051	167.0441	KEYSTONE - SIDNEY1-LNX3345.00 345KV CKT 1
FDNS	09ALL	2	17G	G14_059	FROM->TO	G14-059T 230.00 - OGALLALA 230KV CKT 1	320	320	0.81321	148.8893	SIDNEY - SIDNEY1-LNX3345.00 345KV CKT Z
FDNS	09ALL	2	17G	G14_059	FROM->TO	G14-059T 230.00 - OGALLALA 230KV CKT 1	320	320	0.81321	148.6202	KEYSTONE - SIDNEY1-LNX3345.00 345KV CKT 1
FDNS	09ALL	2	17SP	G14_059	FROM->TO	G14-059T 230.00 - OGALLALA 230KV CKT 1	320	320	0.81336	148.4304	KEYSTONE - SIDNEY1-LNX3345.00 345KV CKT 1
FDNS	09ALL	2	17SP	G14_059	FROM->TO	G14-059T 230.00 - OGALLALA 230KV CKT 1	320	320	0.81336	148.3915	SIDNEY - SIDNEY1-LNX3345.00 345KV CKT Z
FDNS	09ALL	2	16WP	G14_059	FROM->TO	G14-059T 230.00 - OGALLALA 230KV CKT 1	320	320	0.81256	144.3535	SIDNEY - SIDNEY1-LNX3345.00 345KV CKT Z
FDNS	09ALL	2	16WP	G14_059	FROM->TO	G14-059T 230.00 - OGALLALA 230KV CKT 1	320	320	0.81256	144.2007	KEYSTONE - SIDNEY1-LNX3345.00 345KV CKT 1
FDNS	09ALL	2	20SP	G14_059	FROM->TO	G14-059T 230.00 - OGALLALA 230KV CKT 1	320	320	0.8127	144.139	SIDNEY - SIDNEY1-LNX3345.00 345KV CKT Z
FDNS	09ALL	2	20SP	G14_059	FROM->TO	G14-059T 230.00 - OGALLALA 230KV CKT 1	320	320	0.8127	143.9527	KEYSTONE - SIDNEY1-LNX3345.00 345KV CKT 1
FDNS	09ALL	2	25SP	G14_059	FROM->TO	G14-059T 230.00 - OGALLALA 230KV CKT 1	320	320	0.81346	143.3797	SIDNEY - SIDNEY1-LNX3345.00 345KV CKT Z
FDNS	09ALL	2	25SP	G14_059	FROM->TO	G14-059T 230.00 - OGALLALA 230KV CKT 1	320	320	0.81346	143.3759	KEYSTONE - SIDNEY1-LNX3345.00 345KV CKT 1
FDNS	09ALL	2	20WP	G14_059	FROM->TO	G14-059T 230.00 - OGALLALA 230KV CKT 1	320	320	0.80951	136.0766	SIDNEY - SIDNEY1-LNX3345.00 345KV CKT Z
FDNS	09ALL	2	20WP	G14_059	FROM->TO	G14-059T 230.00 - OGALLALA 230KV CKT 1	320	320	0.80951	135.7348	KEYSTONE - SIDNEY1-LNX3345.00 345KV CKT 1
FDNS	00NR	2	17SP	G14_059	FROM->TO	G14-059T 230.00 - OGALLALA 230KV CKT 1	320	320	0.79999	109.435	GERALD GENTLEMAN STATION - KEYSTONE 345KV CKT 1
FDNS	09ALL	2	17G	G14_059	FROM->TO	G14-059T 230.00 - OGALLALA 230KV CKT 1	320	320	0.78383	100.9239	GERALD GENTLEMAN STATION - KEYSTONE 345KV CKT 1
FDNS	09ALL	2	17G	G14_059	TO->FROM	GERALD GENTLEMAN STATION - OGALLALA 230KV CKT 1	320	320	0.65916	119.4651	GERALD GENTLEMAN STATION - KEYSTONE 345KV CKT 1

SOLUTION	GROUP	SCENARIO	SEASON	SOURCE	DIRECTION	MONITORED ELEMENT	RATEA (MVA)	RATEB(MVA)	TDF	TC%LOADING (% MVA)	CONTINGENCY
FDNS	09ALL	2	16WP	G14_059	TO->FROM	GERALD GENTLEMAN STATION - OGALLALA 230KV CKT 1	320	320	0.65866	111.354	GERALD GENTLEMAN STATION - KEYSTONE 345KV CKT 1
FDNS	00NR	2	17SP	G14_059	TO->FROM	GERALD GENTLEMAN STATION - OGALLALA 230KV CKT 1	320	320	0.69069	109.9012	GERALD GENTLEMAN STATION - KEYSTONE 345KV CKT 1
FDNS	09ALL	2	20WP	G14_059	TO->FROM	GERALD GENTLEMAN STATION - OGALLALA 230KV CKT 1	320	320	0.65684	105.0389	GERALD GENTLEMAN STATION - KEYSTONE 345KV CKT 1
FDNS	09ALL	2	25SP	G14_059	FROM->TO	GGS	1635	1635	0.64294	100.5842	BASE CASE
FDNS	00NR	2	17SP	G14_059	FROM->TO	GR ISLD-LNX3345.00 - GRAND ISLAND 345KV CKT Z	720	720	0.04344	121.3644	KELLY - MEADOWGROVE4230.00 230KV CKT 1
FDNS	00NR	2	17SP	G14_059	FROM->TO	GR ISLD-LNX3345.00 - GRAND ISLAND 345KV CKT Z	720	720	0.05686	121.2201	GERALD GENTLEMAN STATION - SWEETWATER 345KV CKT 1
FDNS	00NR	2	17SP	G14_059	FROM->TO	GR ISLD-LNX3345.00 - GRAND ISLAND 345KV CKT Z	720	720	0.06547	120.5548	GRAND ISLAND - SWEETWATER 345KV CKT 1
FDNS	00NR	2	17SP	G14_059	FROM->TO	GR ISLD-LNX3345.00 - GRAND ISLAND 345KV CKT Z	720	720	0.04339	120.3664	P12:230:UMZB:# 116 #: ST IN SD. WSG-ST-VH
FDNS	00NR	2	17SP	G14_059	FROM->TO	GR ISLD-LNX3345.00 - GRAND ISLAND 345KV CKT Z	720	720	0.04323	119.6893	STORLA - WESSINGTON 230KV CKT 1
FDNS	00NR	2	17SP	G14_059	FROM->TO	GR ISLD-LNX3345.00 - GRAND ISLAND 345KV CKT Z	720	720	0.043	119.6626	WATERTN-LNX3345.00 - WATERTOWN 345KV CKT Z
FDNS	00NR	2	17SP	G14_059	FROM->TO	GR ISLD-LNX3345.00 - GRAND ISLAND 345KV CKT Z	720	720	0.043	119.6304	P12:345:UMZW:# 1747 #: WT2 IN SD. WT2-WHT LINE FAULT
FDNS	00NR	2	17SP	G14_059	FROM->TO	GR ISLD-LNX3345.00 - GRAND ISLAND 345KV CKT Z	720	720	0.04262	119.61	G09_001IST 345.00 - WATERTOWN 345KV CKT 1
FDNS	00NR	2	17SP	G14_059	FROM->TO	GR ISLD-LNX3345.00 - GRAND ISLAND 345KV CKT Z	720	720	0.043	119.5368	WATERTN-LNX3345.00 - WHITE 345KV CKT 1
FDNS	00NR	2	17SP	G14_059	FROM->TO	GR ISLD-LNX3345.00 - GRAND ISLAND 345KV CKT Z	720	720	0.05326	119.5275	GERALD GENTLEMAN STATION - SWEETWATER 345KV CKT 2
FDNS	00NR	2	17SP	G14_059	FROM->TO	GR ISLD-LNX3345.00 - GRAND ISLAND 345KV CKT Z	720	720	0.0432	118.9809	HANLON - STORLA 230KV CKT 1
FDNS	00NR	2	17SP	G14_059	FROM->TO	GR ISLD-LNX3345.00 - GRAND ISLAND 345KV CKT Z	720	720	0.0434	118.753	FT THOMPSON - LETCHER 230KV CKT 1
FDNS	00NR	2	17SP	G14_059	FROM->TO	GR ISLD-LNX3345.00 - GRAND ISLAND 345KV CKT Z	720	720	0.0434	118.753	FT THOMPSON - LETCHER 230KV CKT 1
FDNS	00NR	2	17SP	G14_059	FROM->TO	GR ISLD-LNX3345.00 - GRAND ISLAND 345KV CKT Z	720	720	0.04254	118.3812	BUFFALO - JAMESTOWN 345KV CKT 1
FDNS	00NR	2	17SP	G14_059	FROM->TO	GR ISLD-LNX3345.00 - GRAND ISLAND 345KV CKT Z	720	720	0.04238	117.8377	GEN635024 4-WALTER SCOTT UNIT 4
FDNS	00NR	2	17SP	G14_059	FROM->TO	GR ISLD-LNX3345.00 - GRAND ISLAND 345KV CKT Z	720	720	0.04344	117.7989	FT RANDAL - MEADOWGROVE4230.00 230KV CKT 1
FDNS	00NR	2	17SP	G14_059	FROM->TO	GR ISLD-LNX3345.00 - GRAND ISLAND 345KV CKT Z	720	720	0.04919	117.7411	CROOKED CREEK - NORTH PLATTE 230KV CKT 1
FDNS	00NR	2	17SP	G14_059	FROM->TO	GR ISLD-LNX3345.00 - GRAND ISLAND 345KV CKT Z	720	720	0.04329	117.7124	FT RANDAL - G12_009IST 230.00 230KV CKT 1
FDNS	00NR	2	17SP	G14_059	FROM->TO	GR ISLD-LNX3345.00 - GRAND ISLAND 345KV CKT Z	720	720	0.04331	117.7074	FT RANDAL - FT THOMPSON 230KV CKT 1
FDNS	00NR	2	17SP	G14_059	FROM->TO	GR ISLD-LNX3345.00 - GRAND ISLAND 345KV CKT Z	720	720	0.04331	117.7074	FT RANDAL - FT THOMPSON 230KV CKT 1
FDNS	00NR	2	17SP	G14_059	FROM->TO	GR ISLD-LNX3345.00 - GRAND ISLAND 345KV CKT Z	720	720	0.04329	117.5947	FT THOMPSON - LAKE PLATT 230KV CKT 1
FDNS	00NR	2	17SP	G14_059	FROM->TO	GR ISLD-LNX3345.00 - GRAND ISLAND 345KV CKT Z	720	720	0.04329	117.5947	FT THOMPSON - LAKE PLATT 230KV CKT 1
FDNS	00NR	2	17SP	G14_059	FROM->TO	GR ISLD-LNX3345.00 - GRAND ISLAND 345KV CKT Z	720	720	0.04366	117.4646	RAUN - SUB 3451 FT CAL 345KV CKT 1
FDNS	00NR	2	17SP	G14_059	FROM->TO	GR ISLD-LNX3345.00 - GRAND ISLAND 345KV CKT Z	720	720	0.04366	117.4646	RAUN - SUB 3451 FT CAL 345KV CKT 1
FDNS	00NR	2	17SP	G14_059	FROM->TO	GR ISLD-LNX3345.00 - GRAND ISLAND 345KV CKT Z	720	720	0.0425	117.3906	CHISAGO COUNTY - FORBES 500KV CKT 1
FDNS	00NR	2	17SP	G14_059	FROM->TO	GR ISLD-LNX3345.00 - GRAND ISLAND 345KV CKT Z	720	720	0.04329	117.3852	G12_009IST 230.00 - LAKE PLATT 230KV CKT 1
FDNS	00NR	2	17SP	G14_059	FROM->TO	GR ISLD-LNX3345.00 - GRAND ISLAND 345KV CKT Z	720	720	0.04238	117.3777	GEN635023 3-WALTER SCOTT UNIT 3
FDNS	00NR	2	17SP	G14_059	FROM->TO	GR ISLD-LNX3345.00 - GRAND ISLAND 345KV CKT Z	720	720	0.04262	117.2441	G09_001IST 345.00 - GROTON 345KV CKT 1
FDNS	00NR	2	17SP	G14_059	FROM->TO	GR ISLD-LNX3345.00 - GRAND ISLAND 345KV CKT Z	720	720	0.04254	117.1749	CENTER - JAMESTOWN 345KV CKT 1
FDNS	00NR	2	17SP	G14_059	FROM->TO	GR ISLD-LNX3345.00 - GRAND ISLAND 345KV CKT Z	720	720	0.04305	117.1635	LETCHER - SIOUX FALLS 230KV CKT 1
FDNS	00NR	2	17SP	G14_059	FROM->TO	GR ISLD-LNX3345.00 - GRAND ISLAND 345KV CKT Z	720	720	0.04238	116.9186	GEN344225 1-1CAL G1 25.000
FDNS	00NR	2	17SP	G14_059	FROM->TO	GR ISLD-LNX3345.00 - GRAND ISLAND 345KV CKT Z	720	720	0.04238	116.9137	GEN336821 1-GRAND GULF UNIT
FDNS	00NR	2	17SP	G14_059	FROM->TO	GR ISLD-LNX3345.00 - GRAND ISLAND 345KV CKT Z	720	720	0.0425	116.7808	BISON 3 345.00 - BUFFALO 345KV CKT 1
FDNS	00NR	2	17SP	G14_059	FROM->TO	GR ISLD-LNX3345.00 - GRAND ISLAND 345KV CKT Z	720	720	0.04525	116.6801	GERALD GENTLEMAN STATION - RED WILLOW 345KV CKT 1
FDNS	00NR	2	17SP	G14_059	FROM->TO	GR ISLD-LNX3345.00 - GRAND ISLAND 345KV CKT Z	720	720	0.04238	116.6727	GEN640009 1-COOPER NUCLEAR STATION
FDNS	00NR	2	17SP	G14_059	FROM->TO	GR ISLD-LNX3345.00 - GRAND ISLAND 345KV CKT Z	720	720	0.04266	116.6627	SPLIT ROCK - WHITE 345KV CKT 1
FDNS	00NR	2	17SP	G14_059	FROM->TO	GR ISLD-LNX3345.00 - GRAND ISLAND 345KV CKT Z	720	720	0.04266	116.6627	SPLIT ROCK - WHITE 345KV CKT 1
FDNS	00NR	2	17SP	G14_059	FROM->TO	GR ISLD-LNX3345.00 - GRAND ISLAND 345KV CKT Z	720	720	0.04292	116.5171	FT RANDAL - SIOUX CITY 230KV CKT 1
FDNS	00NR	2	17SP	G14_059	FROM->TO	GR ISLD-LNX3345.00 - GRAND ISLAND 345KV CKT Z	720	720	0.04238	116.4493	GEN336153 1-WATERFORD UNIT#3
FDNS	00NR	2	17SP	G14_059	FROM->TO	GR ISLD-LNX3345.00 - GRAND ISLAND 345KV CKT Z	720	720	0.04238	116.4404	GEN337911 1-ARKANSAS NUCLEAR ONE UNIT #2
FDNS	00NR	2	17SP	G14_059	FROM->TO	GR ISLD-LNX3345.00 - GRAND ISLAND 345KV CKT Z	720	720	0.04246	116.3635	ARROWHEAD - ARROWHEAD 230 230KV CKT 1
FDNS	00NR	2	17SP	G14_059	FROM->TO	GR ISLD-LNX3345.00 - GRAND ISLAND 345KV CKT Z	720	720	0.04284	116.3339	HANLON - SIOUX FALLS 230KV CKT 1
FDNS	00NR	2	17SP	G14_059	FROM->TO	GR ISLD-LNX3345.00 - GRAND ISLAND 345KV CKT Z	720	720	0.04258	116.2942	GROTON-LNX3 345.00 - LELAND1-LNX3345.00 345KV CKT 1
FDNS	00NR	2	17SP	G14_059	FROM->TO	GR ISLD-LNX3345.00 - GRAND ISLAND 345KV CKT Z	720	720	0.0426	116.2375	HAZLETON - MITCHLCO3 345.00 345KV CKT 1
FDNS	00NR	2	17SP	G14_059	FROM->TO	GR ISLD-LNX3345.00 - GRAND ISLAND 345KV CKT Z	720	720	0.04238	116.2368	GEN563222 1-G15088_3 0.6900
FDNS	00NR	2	17SP	G14_059	FROM->TO	GR ISLD-LNX3345.00 - GRAND ISLAND 345KV CKT Z	720	720	0.04258	116.2273	P12:345:UMZB:# 109 #: LOS GRT IN ND. LOS GRT
FDNS	00NR	2	17SP	G14_059	FROM->TO	GR ISLD-LNX3345.00 - GRAND ISLAND 345KV CKT Z	720	720	0.04238	116.2097	GEN335831 1-RIVERBEND UNIT#1
FDNS	00NR	2	17SP	G14_059	FROM->TO	GR ISLD-LNX3345.00 - GRAND ISLAND 345KV CKT Z	720	720	0.04258	116.2078	GROTON - GROTON-LNX3 345.00 345KV CKT Z
FDNS	00NR	2	17SP	G14_059	FROM->TO	GR ISLD-LNX3345.00 - GRAND ISLAND 345KV CKT Z	720	720	0.04258	116.1982	LELAND OLDS - LELAND1-LNX3345.00 345KV CKT Z
FDNS	00NR	2	17SP	G14_059	FROM->TO	GR ISLD-LNX3345.00 - GRAND ISLAND 345KV CKT Z	720	720	0.04278	116.1433	FT RANDAL - UTICA JCT 230KV CKT 1
FDNS	00NR	2	17SP	G14_059	FROM->TO	GR ISLD-LNX3345.00 - GRAND ISLAND 345KV CKT Z	720	720	0.04238	116.1237	GEN337910 1-ARKANSAS NUCLEAR ONE UNIT #1
FDNS	00NR	2	17SP	G14_059	FROM->TO	GR ISLD-LNX3345.00 - GRAND ISLAND 345KV CKT Z	720	720	0.04295	116.1206	SIOUXCY-LNX3345.00 - SPLIT ROCK 345KV CKT 1
FDNS	00NR	2	17SP	G14_059	FROM->TO	GR ISLD-LNX3345.00 - GRAND ISLAND 345KV CKT Z	720	720	0.04295	116.1206	SIOUXCY-LNX3345.00 - SPLIT ROCK 345KV CKT 1
FDNS	00NR	2	17SP	G14_059	FROM->TO	GR ISLD-LNX3345.00 - GRAND ISLAND 345KV CKT Z	720	720	0.04254	116.1195	ALEXMRES3 345.00 - BISON 3 345.00 345KV CKT 1
FDNS	00NR	2	17SP	G14_059	FROM->TO	GR ISLD-LNX3345.00 - GRAND ISLAND 345KV CKT Z	720	720	0.04295	116.0889	P12:345:UMZW:# 907 #: SC2-SR IN IA. SC2-SR 345 KV LINE
FDNS	00NR	2	17SP	G14_059	FROM->TO	GR ISLD-LNX3345.00 - GRAND ISLAND 345KV CKT Z	720	720	0.04789	116.043	MINGO - RED WILLOW 345KV CKT 1
FDNS	00NR	2	17SP	G14_059	FROM->TO	GR ISLD-LNX3345.00 - GRAND ISLAND 345KV CKT Z	720	720	0.04789	116.043	MINGO - RED WILLOW 345KV CKT 1
FDNS	00NR	2	17SP	G14_059	FROM->TO	GR ISLD-LNX3345.00 - GRAND ISLAND 345KV CKT Z	720	720	0.04295	116.0353	SIOUX CITY - SIOUXCY-LNX3345.00 345KV CKT Z
FDNS	00NR	2	17SP	G14_059	FROM->TO	GR ISLD-LNX3345.00 - GRAND ISLAND 345KV CKT Z	720	720	0.04288	116.0157	CHERRYC3 345.00 (THEDFORDT2) 345/115/13.8KV TRANSFORMER CKT 1
FDNS	00NR	2	17SP	G14_059	FROM->TO	GR ISLD-LNX3345.00 - GRAND ISLAND 345KV CKT Z	720	720	0.04533	116.0016	G15061_T 345.00 - SETAB 345KV CKT 1
FDNS	00NR	2	17SP	G14_059	FROM->TO	GR ISLD-LNX3345.00 - GRAND ISLAND 345KV CKT Z	720	720	0.03791	115.9824	NUNDRWD - WAYSIDE 230KV CKT 1
FDNS	00NR	2	17SP	G14_059	FROM->TO	GR ISLD-LNX3345.00 - GRAND ISLAND 345KV CKT Z	720	720	0.04244	115.9684	AS KING - EAU CLAIRE 345KV CKT 1
FDNS	00NR	2	17SP	G14_059	FROM->TO	GR ISLD-LNX3345.00 - GRAND ISLAND 345KV CKT Z	720	720	0.04274	115.9426	CARPENTER - HURON 230KV CKT 1
FDNS	00NR	2	17SP	G14_059	FROM->TO	GR ISLD-LNX3345.00 - GRAND ISLAND 345KV CKT Z	720	720	0.04244	115.9204	ELLENDALE - OAKES 230KV CKT 1
FDNS	00NR	2	17SP	G14_059	FROM->TO	GR ISLD-LNX3345.00 - GRAND ISLAND 345KV CKT Z	720	720	0.04244	115.9204	ELLENDALE - OAKES 230KV CKT 1
FDNS	00NR	2	17SP	G14_059	FROM->TO	GR ISLD-LNX3345.00 - GRAND ISLAND 345KV CKT Z	720	720	0.04274	115.8659	HURON - WATERTOWN 230KV CKT 2
FDNS	00NR	2	17SP	G14_059	FROM->TO	GR ISLD-LNX3345.00 - GRAND ISLAND 345KV CKT Z	720	720	0.04274	115.8659	HURON - WATERTOWN 230KV CKT 2
FDNS	00NR	2	17SP	G14_059	FROM->TO	GR ISLD-LNX3345.00 - GRAND ISLAND 345KV CKT Z	720	720	0.04243	115.8551	FORMAN - OAKES 230KV CKT 1
FDNS	00NR	2	17SP	G14_059	FROM->TO	GR ISLD-LNX3345.00 - GRAND ISLAND 345KV CKT Z	720	720	0.04274	115.8442	CARPENTER - WATERTOWN 230KV CKT 1
FDNS	00NR	2	17SP	G14_059	FROM->TO	GR ISLD-LNX3345.00 - GRAND ISLAND 345KV CKT Z	720	720	0.04274	115.8442	CARPENTER - WATERTOWN 230KV CKT 1
FDNS	00NR	2	17SP	G14_059	FROM->TO	GR ISLD-LNX3345.00 - GRAND ISLAND 345KV CKT Z	720	720	0.04282	115.8314	HOSKINS - SHELL CREEK 345KV CKT 1
FDNS	00NR	2	17SP	G14_059	FROM->TO	GR ISLD-LNX3345.00 - GRAND ISLAND 345KV CKT Z	720	720	0.04245	115.8157	ARPIN B4 345.00 - EAU CLAIRE 345KV CKT 1
FDNS	00NR	2	17SP	G14_059	FROM->TO	GR ISLD-LNX3345.00 - GRAND ISLAND 345KV CKT Z	720	720	0.04238	115.8151	GEN337653 1-WHITE BLUFF UNIT #2
FDNS	00NR	2	17SP	G14_059	FROM->TO	GR ISLD-LNX3345.00 - GRAND ISLAND 345KV CKT Z	720	720	0.04271	115.8097	PAHOJA - SIOUX FALLS 230KV CKT 1
FDNS	00NR	2	17SP	G14_059	FROM->TO	GR ISLD-LNX3345.00 - GRAND ISLAND 345KV CKT Z	720	720	0.04238	115.8057	GEN337652 1-WHITE BLUFF UNIT #1

SOLUTION	GROUP	SCENARIO	SEASON	SOURCE	DIRECTION	MONITORED ELEMENT	RATEA (MVA)	RATEB(MVA)	TDF	TC%LOADING (% MVA)	CONTINGENCY
FDNS	00NR	2	17SP	G14_059	FROM->TO	GR ISLD-LNX3345.00 - GRAND ISLAND 345KV CKT Z	720	720	0.04238	115.7981	GEN338146 1-INDEPENDENCE UNIT #2
FDNS	00NR	2	17SP	G14_059	FROM->TO	GR ISLD-LNX3345.00 - GRAND ISLAND 345KV CKT Z	720	720	0.04238	115.7977	GEN641089 2-ENERGY CENTER 2
FDNS	00NR	2	17SP	G14_059	FROM->TO	GR ISLD-LNX3345.00 - GRAND ISLAND 345KV CKT Z	720	720	0.04238	115.7975	GEN338143 1-INDEPENDENCE UNIT #1
FDNS	00NR	2	17SP	G14_059	FROM->TO	GR ISLD-LNX3345.00 - GRAND ISLAND 345KV CKT Z	720	720	0.04323	115.7791	FT THOMPSON - WESSINGTON 230KV CKT 1
FDNS	00NR	2	17SP	G14_059	FROM->TO	GR ISLD-LNX3345.00 - GRAND ISLAND 345KV CKT Z	720	720	0.04323	115.7791	FT THOMPSON - WESSINGTON 230KV CKT 1
FDNS	00NR	2	17SP	G14_059	FROM->TO	GR ISLD-LNX3345.00 - GRAND ISLAND 345KV CKT Z	720	720	0.04396	115.7281	CALLAWAY - MAXWELL 115KV CKT 1
FDNS	00NR	2	17SP	G14_059	FROM->TO	GR ISLD-LNX3345.00 - GRAND ISLAND 345KV CKT Z	720	720	0.04709	115.7274	CROOKED CREEK - RIVERDALE 230KV CKT 1
FDNS	00NR	2	17SP	G14_059	FROM->TO	GR ISLD-LNX3345.00 - GRAND ISLAND 345KV CKT Z	720	720	0.0428	115.6826	RASMUSN - UTICA JCT 230KV CKT 1
FDNS	00NR	2	17SP	G14_059	FROM->TO	GR ISLD-LNX3345.00 - GRAND ISLAND 345KV CKT Z	720	720	0.04238	115.6741	GEN645012 2-NEBRASKA CITY 2
FDNS	00NR	2	17SP	G14_059	FROM->TO	GR ISLD-LNX3345.00 - GRAND ISLAND 345KV CKT Z	720	720	0.0426	115.6704	ADAMS - MITCHLCO3 345.00 345KV CKT 1
FDNS	00NR	2	17SP	G14_059	FROM->TO	GR ISLD-LNX3345.00 - GRAND ISLAND 345KV CKT Z	720	720	0.04238	115.6687	GEN501801 1-DOLET HILLS UNIT1
FDNS	00NR	2	17SP	G14_059	FROM->TO	GR ISLD-LNX3345.00 - GRAND ISLAND 345KV CKT Z	720	720	0.04244	115.6654	FORMAN - HANKINSON 230KV CKT 1
FDNS	00NR	2	17SP	G14_059	FROM->TO	GR ISLD-LNX3345.00 - GRAND ISLAND 345KV CKT Z	720	720	0.04243	115.6211	CNTSHNT3 345.00 - PRAIRIE3 345.00 345KV CKT 1
FDNS	00NR	2	17SP	G14_059	FROM->TO	GR ISLD-LNX3345.00 - GRAND ISLAND 345KV CKT Z	720	720	0.04135	115.5993	STAPLETON - THEDFORD 115KV CKT 1
FDNS	00NR	2	17SP	G14_059	FROM->TO	GR ISLD-LNX3345.00 - GRAND ISLAND 345KV CKT Z	720	720	0.04238	115.5981	GEN645011 1-NEBRASKA CITY 1
FDNS	00NR	2	17SP	G14_059	FROM->TO	GR ISLD-LNX3345.00 - GRAND ISLAND 345KV CKT Z	720	720	0.04314	115.5648	BUCKNER7 345.00 - SPEARVILLE 345KV CKT 1
FDNS	00NR	2	17SP	G14_059	FROM->TO	GR ISLD-LNX3345.00 - GRAND ISLAND 345KV CKT Z	720	720	0.04314	115.5648	BUCKNER7 345.00 - SPEARVILLE 345KV CKT 1
FDNS	00NR	2	17SP	G14_059	FROM->TO	GR ISLD-LNX3345.00 - GRAND ISLAND 345KV CKT Z	720	720	0.04271	115.5407	EAGLE 4 230.00 - PAHOJA 230KV CKT 1
FDNS	00NR	2	17SP	G14_059	FROM->TO	GR ISLD-LNX3345.00 - GRAND ISLAND 345KV CKT Z	720	720	0.04255	115.5317	ADAMS - PLEASANT VALLEY 345KV CKT 1
FDNS	00NR	2	17SP	G14_059	FROM->TO	GR ISLD-LNX3345.00 - GRAND ISLAND 345KV CKT Z	720	720	0.04238	115.5306	GEN336252 1-NINEMILE POINT UNIT#5
FDNS	00NR	2	17SP	G14_059	FROM->TO	GR ISLD-LNX3345.00 - GRAND ISLAND 345KV CKT Z	720	720	0.04614	115.5297	KEYSTONE - SIDNEY1-LNX3345.00 345KV CKT 1
FDNS	00NR	2	17SP	G14_059	FROM->TO	GR ISLD-LNX3345.00 - GRAND ISLAND 345KV CKT Z	720	720	0.04279	115.5259	GRIMES - LEHIGH 345KV CKT 1
FDNS	00NR	2	17SP	G14_059	FROM->TO	GR ISLD-LNX3345.00 - GRAND ISLAND 345KV CKT Z	720	720	0.04238	115.5107	GEN344897 4-1LAB G4 20.000
FDNS	00NR	2	17SP	G14_059	FROM->TO	GR ISLD-LNX3345.00 - GRAND ISLAND 345KV CKT Z	720	720	0.04238	115.5086	GEN344894 1-1LAB G1 20.000
FDNS	00NR	2	17SP	G14_059	FROM->TO	GR ISLD-LNX3345.00 - GRAND ISLAND 345KV CKT Z	720	720	0.04238	115.5083	GEN344896 3-1LAB G3 20.000
FDNS	00NR	2	17SP	G14_059	FROM->TO	GR ISLD-LNX3345.00 - GRAND ISLAND 345KV CKT Z	720	720	0.04238	115.4857	GEN501813 1-RODEMACHER UNIT 3
FDNS	00NR	2	17SP	G14_059	FROM->TO	GR ISLD-LNX3345.00 - GRAND ISLAND 345KV CKT Z	720	720	0.04238	115.476	GEN629075 1-OTTUMWA GENERATOR FOR OTTUMWA UNIT NO 1
FDNS	00NR	2	17SP	G14_059	FROM->TO	GR ISLD-LNX3345.00 - GRAND ISLAND 345KV CKT Z	720	720	0.04238	115.4717	GEN344895 2-1LAB G2 20.000
FDNS	00NR	2	17SP	G14_059	FROM->TO	GR ISLD-LNX3345.00 - GRAND ISLAND 345KV CKT Z	720	720	0.04614	115.4643	SIDNEY - SIDNEY1-LNX3345.00 345KV CKT Z
FDNS	00NR	2	17SP	G14_059	FROM->TO	GR ISLD-LNX3345.00 - GRAND ISLAND 345KV CKT Z	720	720	0.04238	115.4517	GEN336831 1-BAXTER WILSON SES
FDNS	00NR	2	17SP	G14_059	FROM->TO	GR ISLD-LNX3345.00 - GRAND ISLAND 345KV CKT Z	720	720	0.04238	115.4499	GEN345670 1-1RUSH G1 18.000
FDNS	00NR	2	17SP	G14_059	FROM->TO	GR ISLD-LNX3345.00 - GRAND ISLAND 345KV CKT Z	720	720	0.04238	115.4497	GEN345671 2-1RUSH G2 18.000
FDNS	00NR	2	17SP	G14_059	FROM->TO	GR ISLD-LNX3345.00 - GRAND ISLAND 345KV CKT Z	720	720	0.04246	115.4496	DIXONCO 230.00 - HOSKINS 230KV CKT 1
FDNS	00NR	2	17SP	G14_059	FROM->TO	GR ISLD-LNX3345.00 - GRAND ISLAND 345KV CKT Z	720	720	0.04238	115.4416	GEN336251 1-NINEMILE POINT UNIT#4
FDNS	00NR	2	17SP	G14_059	FROM->TO	GR ISLD-LNX3345.00 - GRAND ISLAND 345KV CKT Z	720	720	0.04238	115.4282	GEN532751 1-WOLF CREEK GENERATING STATION UNIT 1
FDNS	00NR	2	17SP	G14_059	FROM->TO	GR ISLD-LNX3345.00 - GRAND ISLAND 345KV CKT Z	720	720	0.04238	115.407	GEN337041 1-GERALD ANDRUS
FDNS	00NR	2	17SP	G14_059	FROM->TO	GR ISLD-LNX3345.00 - GRAND ISLAND 345KV CKT Z	720	720	0.04295	115.401	COLUMEAST - SHELL CREEK 345KV CKT 1
FDNS	00NR	2	17SP	G14_059	FROM->TO	GR ISLD-LNX3345.00 - GRAND ISLAND 345KV CKT Z	720	720	0.04238	115.3912	GEN542962 2-IATAN UNIT #2
FDNS	00NR	2	17SP	G14_059	FROM->TO	GR ISLD-LNX3345.00 - GRAND ISLAND 345KV CKT Z	720	720	0.04316	115.3709	P12:115:NPPD:1164:ONEILL 7:JEFFREY9:BTB
FDNS	00NR	2	17SP	G14_059	FROM->TO	GR ISLD-LNX3345.00 - GRAND ISLAND 345KV CKT Z	720	720	0.04238	115.3693	GEN335206 1-NELSON UNIT 6
FDNS	00NR	2	17SP	G14_059	FROM->TO	GR ISLD-LNX3345.00 - GRAND ISLAND 345KV CKT Z	720	720	0.04255	115.3614	ALEXMRES3 345.00 - WAITE PARK 345KV CKT 1
FDNS	00NR	2	17SP	G14_059	FROM->TO	GR ISLD-LNX3345.00 - GRAND ISLAND 345KV CKT Z	720	720	0.04259	115.3579	LAKEFIELD 3 - NOBLES 345KV CKT 1
FDNS	00NR	2	17SP	G14_059	FROM->TO	GR ISLD-LNX3345.00 - GRAND ISLAND 345KV CKT Z	720	720	0.04242	115.3361	P12:115:NPPD:WAPA4:SIDNEY 7:B.SPRGS7:BTB
FDNS	00NR	2	17SP	G14_059	FROM->TO	GR ISLD-LNX3345.00 - GRAND ISLAND 345KV CKT Z	720	720	0.04242	115.3361	P12:115:UMZB:# 119 #: IN NE.
FDNS	00NR	2	17SP	G14_059	FROM->TO	GR ISLD-LNX3345.00 - GRAND ISLAND 345KV CKT Z	720	720	0.04238	115.3187	P13:230-345:NPPD:NUCOR-1
FDNS	00NR	2	17SP	G14_059	FROM->TO	GR ISLD-LNX3345.00 - GRAND ISLAND 345KV CKT Z	720	720	0.04316	115.3135	CLEARWATER - ONEILL 115KV CKT 1
FDNS	00NR	2	17SP	G14_059	FROM->TO	GR ISLD-LNX3345.00 - GRAND ISLAND 345KV CKT Z	720	720	0.04299	115.312	RAUN - SIOUX CITY 345KV CKT 1
FDNS	00NR	2	17SP	G14_059	FROM->TO	GR ISLD-LNX3345.00 - GRAND ISLAND 345KV CKT Z	720	720	0.04238	115.3093	GEN645001 1-FORT CALHOUN 1
FDNS	00NR	2	17SP	G14_059	FROM->TO	GR ISLD-LNX3345.00 - GRAND ISLAND 345KV CKT Z	720	720	0.04206	115.3017	P12:115:NPPD:WAPA2:HEMINGF7:SNAKECK7:BTB
FDNS	00NR	2	17SP	G14_059	FROM->TO	GR ISLD-LNX3345.00 - GRAND ISLAND 345KV CKT Z	720	720	0.04242	115.3001	CENTER - COYOTE 345KV CKT 1
FDNS	00NR	2	17SP	G14_059	FROM->TO	GR ISLD-LNX3345.00 - GRAND ISLAND 345KV CKT Z	720	720	0.04256	115.2955	KOSSUTH 3 345.00 - OBRIEN 3 345.00 345KV CKT 1
FDNS	00NR	2	17SP	G14_059	FROM->TO	GR ISLD-LNX3345.00 - GRAND ISLAND 345KV CKT Z	720	720	0.04238	115.2811	GEN501812 1-RODEMACHER UNIT 2
FDNS	00NR	2	17SP	G14_059	FROM->TO	GR ISLD-LNX3345.00 - GRAND ISLAND 345KV CKT Z	720	720	0.04256	115.2806	KOSSUTH 3 345.00 - WEBSTER 345KV CKT 1
FDNS	00NR	2	17SP	G14_059	FROM->TO	GR ISLD-LNX3345.00 - GRAND ISLAND 345KV CKT Z	720	720	0.04244	115.269	BLAIR - GRANITE FALLS 230KV CKT 1
FDNS	00NR	2	17SP	G14_059	FROM->TO	GR ISLD-LNX3345.00 - GRAND ISLAND 345KV CKT Z	720	720	0.04244	115.269	BLAIR - GRANITE FALLS 230KV CKT 1
FDNS	00NR	2	17SP	G14_059	FROM->TO	GR ISLD-LNX3345.00 - GRAND ISLAND 345KV CKT Z	720	720	0.04238	115.2644	GEN334440 1-SABINE UNIT 4
FDNS	00NR	2	17SP	G14_059	FROM->TO	GR ISLD-LNX3345.00 - GRAND ISLAND 345KV CKT Z	720	720	0.04249	115.2625	GLENBORO SOUTH - RUGBY 230KV CKT 1
FDNS	00NR	2	17SP	G14_059	FROM->TO	GR ISLD-LNX3345.00 - GRAND ISLAND 345KV CKT Z	720	720	0.04281	115.2423	COLUMEAST - NW68TH & HOLDREGE 345KV CKT 1
FDNS	00NR	2	17SP	G14_059	FROM->TO	GR ISLD-LNX3345.00 - GRAND ISLAND 345KV CKT Z	720	720	0.04281	115.2423	COLUMEAST - NW68TH & HOLDREGE 345KV CKT 1
FDNS	00NR	2	17SP	G14_059	FROM->TO	GR ISLD-LNX3345.00 - GRAND ISLAND 345KV CKT Z	720	720	0.04433	115.2412	JEFFREY - NORTH PLATTE 115KV CKT 1
FDNS	00NR	2	17SP	G14_059	FROM->TO	GR ISLD-LNX3345.00 - GRAND ISLAND 345KV CKT Z	720	720	0.04243	115.2401	BROOKING COUNTY - LYON COUNTY 345KV CKT 1
FDNS	00NR	2	17SP	G14_059	FROM->TO	GR ISLD-LNX3345.00 - GRAND ISLAND 345KV CKT Z	720	720	0.04238	115.2201	GEN542957 1-IATAN UNIT #1
FDNS	00NR	2	17SP	G14_059	FROM->TO	GR ISLD-LNX3345.00 - GRAND ISLAND 345KV CKT Z	720	720	0.0416	115.2015	SIDNEY - STEGALL 345KV CKT 1
FDNS	00NR	2	17SP	G14_059	FROM->TO	GR ISLD-LNX3345.00 - GRAND ISLAND 345KV CKT Z	720	720	0.04238	115.1954	P12:115:UMZW:# 162 #: NEL IN ND. FAULT ON ML-NEL-MX-GA 115 KV
FDNS	00NR	2	17SP	G14_059	FROM->TO	GR ISLD-LNX3345.00 - GRAND ISLAND 345KV CKT Z	720	720	0.04238	115.1937	GEN336191 1-LITTLE GYPSY UNIT#3
FDNS	00NR	2	17SP	G14_059	FROM->TO	GR ISLD-LNX3345.00 - GRAND ISLAND 345KV CKT Z	720	720	0.04238	115.1858	GEN338388 1-1PLUM PT U1 23.000
FDNS	00NR	2	17SP	G14_059	FROM->TO	GR ISLD-LNX3345.00 - GRAND ISLAND 345KV CKT Z	720	720	0.04346	115.1743	AINSWORTH - STUART 115KV CKT 1
FDNS	00NR	2	17SP	G14_059	FROM->TO	GR ISLD-LNX3345.00 - GRAND ISLAND 345KV CKT Z	720	720	0.04238	115.1435	GEN336801 1-BAXTER WILSON UNIT #1
FDNS	00NR	2	17SP	G14_059	FROM->TO	GR ISLD-LNX3345.00 - GRAND ISLAND 345KV CKT Z	720	720	0.0424	115.142	HANKINSON - WAHPETON 230KV CKT 1
FDNS	00NR	2	17SP	G14_059	FROM->TO	GR ISLD-LNX3345.00 - GRAND ISLAND 345KV CKT Z	720	720	0.04252	115.1411	BYRON - NORTH ROCHESTER 345KV CKT 1
FDNS	00NR	2	17SP	G14_059	FROM->TO	GR ISLD-LNX3345.00 - GRAND ISLAND 345KV CKT Z	720	720	0.04238	115.1303	GEN335614 1-WILLOW GLENN UNIT#4
FDNS	00NR	2	17SP	G14_059	FROM->TO	GR ISLD-LNX3345.00 - GRAND ISLAND 345KV CKT Z	720	720	0.04244	115.13	MENNO JCT - TRIPP JCT 115KV CKT 1
FDNS	00NR	2	17SP	G14_059	FROM->TO	GR ISLD-LNX3345.00 - GRAND ISLAND 345KV CKT Z	720	720	0.04314	115.1292	BUCKNER7 345.00 - HOLCOMB 345KV CKT 1
FDNS	00NR	2	17SP	G14_059	FROM->TO	GR ISLD-LNX3345.00 - GRAND ISLAND 345KV CKT Z	720	720	0.04314	115.1292	BUCKNER7 345.00 - HOLCOMB 345KV CKT 1
FDNS	00NR	2	17SP	G14_059	FROM->TO	GR ISLD-LNX3345.00 - GRAND ISLAND 345KV CKT Z	720	720	0.04238	115.1233	GEN336464 1-MICHOUD UNIT #3
FDNS	00NR	2	17SP	G14_059	FROM->TO	GR ISLD-LNX3345.00 - GRAND ISLAND 345KV CKT Z	720	720	0.04238	115.1106	GEN334441 1-SABINE UNIT 5
FDNS	00NR	2	17SP	G14_059	FROM->TO	GR ISLD-LNX3345.00 - GRAND ISLAND 345KV CKT Z	720	720	0.04238	115.1019	GEN335204 1-NELSON UNIT 4
FDNS	00NR	2	17SP	G14_059	FROM->TO	GR ISLD-LNX3345.00 - GRAND ISLAND 345KV CKT Z	720	720	0.04238	115.0936	GEN532652 1-JEFFREY ENERGY CENTER UNIT 2
FDNS	00NR	2	17SP	G14_059	FROM->TO	GR ISLD-LNX3345.00 - GRAND ISLAND 345KV CKT Z	720	720	0.04238	115.0935	GEN532653 1-JEFFREY ENERGY CENTER UNIT 3

SOLUTION	GROUP	SCENARIO	SEASON	SOURCE	DIRECTION	MONITORED ELEMENT	RATEA (MVA)	RATEB(MVA)	TDF	TC%LOADING (% MVA)	CONTINGENCY
FDNS	00NR	2	17SP	G14_059	FROM->TO	GR ISLD-LNX3345.00 - GRAND ISLAND 345KV CKT Z	720	720	0.04238	115.0925	GEN532651 1-JEFFREY ENERGY CENTER UNIT 1
FDNS	00NR	2	17SP	G14_059	FROM->TO	GR ISLD-LNX3345.00 - GRAND ISLAND 345KV CKT Z	720	720	0.04238	115.0839	P13:115-230:NPPD:NUCOR-3
FDNS	00NR	2	17SP	G14_059	FROM->TO	GR ISLD-LNX3345.00 - GRAND ISLAND 345KV CKT Z	720	720	0.04238	115.0771	GEN542951 5-HAWTHORN UNIT #5
FDNS	00NR	2	17SP	G14_059	FROM->TO	GR ISLD-LNX3345.00 - GRAND ISLAND 345KV CKT Z	720	720	0.04316	115.058	CLEARWATER - NELIGH 115KV CKT 1
FDNS	00NR	2	17SP	G14_059	FROM->TO	GR ISLD-LNX3345.00 - GRAND ISLAND 345KV CKT Z	720	720	0.0423	115.0572	PETERSBRG.N7115.00 - PETERSBURG 115KV CKT Z1
FDNS	00NR	2	17SP	G14_059	FROM->TO	GR ISLD-LNX3345.00 - GRAND ISLAND 345KV CKT Z	720	720	0.04346	115.055	ATKINSON - STUART 115KV CKT 1
FDNS	00NR	2	17SP	G14_059	FROM->TO	GR ISLD-LNX3345.00 - GRAND ISLAND 345KV CKT Z	720	720	0.04238	115.055	P12:115:TSGT:BLKWDCK7-ELSIETP7
FDNS	00NR	2	17SP	G14_059	FROM->TO	GR ISLD-LNX3345.00 - GRAND ISLAND 345KV CKT Z	720	720	0.04242	115.0504	GARRISON - JAMES TOWN 230KV CKT 1
FDNS	00NR	2	17SP	G14_059	FROM->TO	GR ISLD-LNX3345.00 - GRAND ISLAND 345KV CKT Z	720	720	0.0423	115.0465	P12:115:NPPD:1168B:ALBION 7:PETERSBRG.N7:BTB
FDNS	00NR	2	17SP	G14_059	FROM->TO	GR ISLD-LNX3345.00 - GRAND ISLAND 345KV CKT Z	720	720	0.04238	115.0438	GEN642067 1-PLATTE
FDNS	00NR	2	17SP	G14_059	FROM->TO	GR ISLD-LNX3345.00 - GRAND ISLAND 345KV CKT Z	720	720	0.04244	115.0354	MENNO JCT - UTICA 115KV CKT 1
FDNS	00NR	2	17SP	G14_059	FROM->TO	GR ISLD-LNX3345.00 - GRAND ISLAND 345KV CKT Z	720	720	0.04245	115.0336	APPLEDORN 4 230.00 - WATERTOWN 230KV CKT 1
FDNS	00NR	2	17SP	G14_059	FROM->TO	GR ISLD-LNX3345.00 - GRAND ISLAND 345KV CKT Z	720	720	0.04245	115.0336	APPLEDORN 4 230.00 - WATERTOWN 230KV CKT 1
FDNS	00NR	2	17SP	G14_059	FROM->TO	GR ISLD-LNX3345.00 - GRAND ISLAND 345KV CKT Z	720	720	0.04223	115.03	G15094_T 345.00 - SIDNEY2-LNX3345.00 345KV CKT 1
FDNS	00NR	2	17SP	G14_059	FROM->TO	GR ISLD-LNX3345.00 - GRAND ISLAND 345KV CKT Z	720	720	0.04223	115.0203	SIDNEY - SIDNEY2-LNX3345.00 345KV CKT Z
FDNS	00NR	2	17SP	G14_059	FROM->TO	GR ISLD-LNX3345.00 - GRAND ISLAND 345KV CKT Z	720	720	0.04241	115.0179	FERGSFL4 230.00 - WAHPETON 230KV CKT 1
FDNS	00NR	2	17SP	G14_059	FROM->TO	GR ISLD-LNX3345.00 - GRAND ISLAND 345KV CKT Z	720	720	0.04286	115.0104	FT THOMPSON - HURON 230KV CKT 1
FDNS	00NR	2	17SP	G14_059	FROM->TO	GR ISLD-LNX3345.00 - GRAND ISLAND 345KV CKT Z	720	720	0.04286	115.0104	FT THOMPSON - HURON 230KV CKT 1
FDNS	00NR	2	17SP	G14_059	FROM->TO	GR ISLD-LNX3345.00 - GRAND ISLAND 345KV CKT Z	720	720	0.04286	115.0104	FT THOMPSON - HURON 230KV CKT 2
FDNS	00NR	2	17SP	G14_059	FROM->TO	GR ISLD-LNX3345.00 - GRAND ISLAND 345KV CKT Z	720	720	0.04286	115.0104	FT THOMPSON - HURON 230KV CKT 2
FDNS	00NR	2	17SP	G14_059	FROM->TO	GR ISLD-LNX3345.00 - GRAND ISLAND 345KV CKT Z	720	720	0.04231	115.0095	P12:115:NPPD:WAPA6:FTRANDL7:ONEILL 7:BTB
FDNS	00NR	2	17SP	G14_059	FROM->TO	GR ISLD-LNX3345.00 - GRAND ISLAND 345KV CKT Z	720	720	0.04231	115.0095	P12:115:UMZB:# 115 #: SE IN NE. FR-SE-ON
FDNS	00NR	2	17SP	G14_059	FROM->TO	GR ISLD-LNX3345.00 - GRAND ISLAND 345KV CKT Z	720	720	0.04238	115.0086	GEN542955 1-LACYGNE UNIT #1
FDNS	00NR	2	17SP	G14_059	FROM->TO	GR ISLD-LNX3345.00 - GRAND ISLAND 345KV CKT Z	720	720	0.04396	115.0081	BROKEN BOW - CALLAWAY 115KV CKT 1
FDNS	00NR	2	17SP	G14_059	FROM->TO	GR ISLD-LNX3345.00 - GRAND ISLAND 345KV CKT Z	720	720	0.04272	115.0052	MINGO (MINGO) 345/115/13.8KV TRANSFORMER CKT 1
FDNS	00NR	2	17SP	G14_059	FROM->TO	GR ISLD-LNX3345.00 - GRAND ISLAND 345KV CKT Z	720	720	0.04272	115.0052	MINGO (MINGO) 345/115/13.8KV TRANSFORMER CKT 1
FDNS	00NR	2	17SP	G14_059	FROM->TO	GR ISLD-LNX3345.00 - GRAND ISLAND 345KV CKT Z	720	720	0.0423	115.0037	ALBION - PETERSBURG 115KV CKT 1
FDNS	00NR	2	17SP	G14_059	FROM->TO	GR ISLD-LNX3345.00 - GRAND ISLAND 345KV CKT Z	720	720	0.04243	115.0003	NORTH ROCHESTER - PRAIRIE ISLAND 345KV CKT 1
FDNS	00NR	2	17SP	G14_059	FROM->TO	GR ISLD-LNX3345.00 - GRAND ISLAND 345KV CKT Z	720	720	0.04244	115.0001	P12:115:UMZZ:# 237 #: MEN IN SD. MENNO JUNCTION IS A TAP (UJ-MEN-TP).
FDNS	00NR	2	17SP	G14_059	FROM->TO	GR ISLD-LNX3345.00 - GRAND ISLAND 345KV CKT Z	720	720	0.04242	114.9906	FARGO - JAMES TOWN 230KV CKT 1
FDNS	00NR	2	17SP	G14_059	FROM->TO	GR ISLD-LNX3345.00 - GRAND ISLAND 345KV CKT Z	720	720	0.04238	114.9899	GEN336222 1-LITTLE GYPSY UNIT#2
FDNS	00NR	2	17SP	G14_059	FROM->TO	GR ISLD-LNX3345.00 - GRAND ISLAND 345KV CKT Z	720	720	0.04238	114.9878	GEN334433 1-SABINE UNIT 3
FDNS	00NR	2	17SP	G14_059	FROM->TO	GR ISLD-LNX3345.00 - GRAND ISLAND 345KV CKT Z	720	720	0.04238	114.9817	GEN303007 1-1BC2 U2
FDNS	00NR	2	17SP	G14_059	FROM->TO	GR ISLD-LNX3345.00 - GRAND ISLAND 345KV CKT Z	720	720	0.04419	114.9803	HOLCOMB - SETAB 345KV CKT 1
FDNS	00NR	2	17SP	G14_059	FROM->TO	GR ISLD-LNX3345.00 - GRAND ISLAND 345KV CKT Z	720	720	0.04419	114.9803	HOLCOMB - SETAB 345KV CKT 1
FDNS	00NR	2	17SP	G14_059	FROM->TO	GR ISLD-LNX3345.00 - GRAND ISLAND 345KV CKT Z	720	720	0.04238	114.9803	GEN562547 1-G14_039_3 0.6900
FDNS	00NR	2	17SP	G14_059	FROM->TO	GR ISLD-LNX3345.00 - GRAND ISLAND 345KV CKT Z	720	720	0.04238	114.9782	P13:115-345:NPPD:NUCOR-2
FDNS	00NR	2	17SP	G14_059	FROM->TO	GR ISLD-LNX3345.00 - GRAND ISLAND 345KV CKT Z	720	720	0.04238	114.9778	GEN303006 1-1BC2 U1
FDNS	00NR	2	17SP	G14_059	FROM->TO	GR ISLD-LNX3345.00 - GRAND ISLAND 345KV CKT Z	720	720	0.04242	114.9731	FARGO - JAMES TOWN 230KV CKT 2
FDNS	00NR	2	17SP	G14_059	FROM->TO	GR ISLD-LNX3345.00 - GRAND ISLAND 345KV CKT Z	720	720	0.04245	114.9726	APPLEDORN 4 230.00 - GRANITE FALLS 230KV CKT 1
FDNS	00NR	2	17SP	G14_059	FROM->TO	GR ISLD-LNX3345.00 - GRAND ISLAND 345KV CKT Z	720	720	0.04245	114.9726	APPLEDORN 4 230.00 - GRANITE FALLS 230KV CKT 1
FDNS	00NR	2	17SP	G14_059	FROM->TO	GR ISLD-LNX3345.00 - GRAND ISLAND 345KV CKT Z	720	720	0.04238	114.9687	P13:230:UMZW:# 2218 #: FP IN MT. LOSS OF TRANSFORMER (AT2).
FDNS	00NR	2	17SP	G14_059	FROM->TO	GR ISLD-LNX3345.00 - GRAND ISLAND 345KV CKT Z	720	720	0.04238	114.9682	GEN563212 1-G15087_3 0.6900
FDNS	00NR	2	17SP	G14_059	FROM->TO	GR ISLD-LNX3345.00 - GRAND ISLAND 345KV CKT Z	720	720	0.04252	114.9657	BYRON - PLEASANT VALLEY 345KV CKT 1
FDNS	00NR	2	17SP	G14_059	FROM->TO	GR ISLD-LNX3345.00 - GRAND ISLAND 345KV CKT Z	720	720	0.04135	114.9542	MAXWELL - STAPLETON 115KV CKT 1
FDNS	00NR	2	17SP	G14_059	FROM->TO	GR ISLD-LNX3345.00 - GRAND ISLAND 345KV CKT Z	720	720	0.04238	114.9475	GEN336152 1-WATERFORD UNIT#2
FDNS	00NR	2	17SP	G14_059	FROM->TO	GR ISLD-LNX3345.00 - GRAND ISLAND 345KV CKT Z	720	720	0.04238	114.9472	GEN336151 1-WATERFORD UNIT#1
FDNS	00NR	2	17SP	G14_059	FROM->TO	GR ISLD-LNX3345.00 - GRAND ISLAND 345KV CKT Z	720	720	0.0425	114.9465	DENISON - SIOUX CITY 230KV CKT 1
FDNS	00NR	2	17SP	G14_059	FROM->TO	GR ISLD-LNX3345.00 - GRAND ISLAND 345KV CKT Z	720	720	0.04252	114.9378	LAKEFIELD 3 - LKFLDXL3 345KV CKT 1
FDNS	00NR	2	17SP	G14_059	FROM->TO	GR ISLD-LNX3345.00 - GRAND ISLAND 345KV CKT Z	720	720	0.04238	114.9328	GEN303008 1-1BC2 U3
FDNS	00NR	2	17SP	G14_059	FROM->TO	GR ISLD-LNX3345.00 - GRAND ISLAND 345KV CKT Z	720	720	0.04242	114.9321	BISMARK - WEBER 230KV CKT 1
FDNS	00NR	2	17SP	G14_059	FROM->TO	GR ISLD-LNX3345.00 - GRAND ISLAND 345KV CKT Z	720	720	0.04238	114.9305	GEN336170 1-GULF OXY U4
FDNS	00NR	2	17SP	G14_059	FROM->TO	GR ISLD-LNX3345.00 - GRAND ISLAND 345KV CKT Z	720	720	0.04231	114.9295	FT RANDAL - SPENCER 115KV CKT 1
FDNS	00NR	2	17SP	G14_059	FROM->TO	GR ISLD-LNX3345.00 - GRAND ISLAND 345KV CKT Z	720	720	0.04242	114.9266	JAMES TOWN - WEBER 230KV CKT 1
FDNS	00NR	2	17SP	G14_059	FROM->TO	GR ISLD-LNX3345.00 - GRAND ISLAND 345KV CKT Z	720	720	0.04349	114.9201	BROKEN BOW - LOUP CITY 115KV CKT 1
FDNS	00NR	2	17SP	G14_059	FROM->TO	GR ISLD-LNX3345.00 - GRAND ISLAND 345KV CKT Z	720	720	0.04242	114.9192	BISMARK - JAMES TOWN 230KV CKT 1
FDNS	00NR	2	17SP	G14_059	FROM->TO	GR ISLD-LNX3345.00 - GRAND ISLAND 345KV CKT Z	720	720	0.04231	114.9058	ONEILL - SPENCER 115KV CKT 1
FDNS	00NR	2	17SP	G14_059	FROM->TO	GR ISLD-LNX3345.00 - GRAND ISLAND 345KV CKT Z	720	720	0.04346	114.8925	AINSWORTH - AINSWORTH 115KV CKT 1
FDNS	00NR	2	17SP	G14_059	FROM->TO	GR ISLD-LNX3345.00 - GRAND ISLAND 345KV CKT Z	720	720	0.04346	114.8845	ATKINSON - EMMET 115KV CKT 1
FDNS	00NR	2	17SP	G14_059	FROM->TO	GR ISLD-LNX3345.00 - GRAND ISLAND 345KV CKT Z	720	720	0.04249	114.8844	AXTELL - SWEETWATER 345KV CKT 1
FDNS	00NR	2	17SP	G14_059	FROM->TO	GR ISLD-LNX3345.00 - GRAND ISLAND 345KV CKT Z	720	720	0.04239	114.8791	ELM CREEK - MONTICELLO 345KV CKT 1
FDNS	00NR	2	17SP	G14_059	FROM->TO	GR ISLD-LNX3345.00 - GRAND ISLAND 345KV CKT Z	720	720	0.0424	114.867	FERGSFL4 230.00 - GRE-SILVRLK4230.00 230KV CKT 1
FDNS	00NR	2	17SP	G14_059	FROM->TO	GR ISLD-LNX3345.00 - GRAND ISLAND 345KV CKT Z	720	720	0.04238	114.8639	GEN636641 1-LOUISA UNIT 1
FDNS	00NR	2	17SP	G14_059	FROM->TO	GR ISLD-LNX3345.00 - GRAND ISLAND 345KV CKT Z	720	720	0.04238	114.8473	GEN501811 1-RODEMACHER UNIT 1
FDNS	00NR	2	17SP	G14_059	FROM->TO	GR ISLD-LNX3345.00 - GRAND ISLAND 345KV CKT Z	720	720	0.04238	114.3453	BASE CASE
FDNS	00NR	2	17SP	G14_059	FROM->TO	GR ISLD-LNX3345.00 - GRAND ISLAND 345KV CKT Z	720	720	0.04138	114.2975	103RD & ROKEBY - SUB 3458 NEB CTY 345KV CKT 1
FDNS	00NR	2	17SP	G14_059	FROM->TO	GR ISLD-LNX3345.00 - GRAND ISLAND 345KV CKT Z	720	720	0.04138	114.2975	103RD & ROKEBY - SUB 3458 NEB CTY 345KV CKT 1
FDNS	00NR	2	17SP	G14_059	FROM->TO	GR ISLD-LNX3345.00 - GRAND ISLAND 345KV CKT Z	720	720	0.03881	114.2396	COLUMWEST - KELLY 230KV CKT 1
FDNS	00NR	2	17SP	G14_059	FROM->TO	GR ISLD-LNX3345.00 - GRAND ISLAND 345KV CKT Z	720	720	0.04207	114.1927	KELLY - SHELL CREEK 230KV CKT 1
FDNS	00NR	2	17SP	G14_059	FROM->TO	GR ISLD-LNX3345.00 - GRAND ISLAND 345KV CKT Z	720	720	0.04217	113.9488	AURORA - GRAND ISLAND 115KV CKT 1
FDNS	00NR	2	17SP	G14_059	FROM->TO	GR ISLD-LNX3345.00 - GRAND ISLAND 345KV CKT Z	720	720	0.04236	113.9476	ANTELOP-LNX3345.00 - BRDLAND-LNX3345.00 345KV CKT 1
FDNS	00NR	2	17SP	G14_059	FROM->TO	GR ISLD-LNX3345.00 - GRAND ISLAND 345KV CKT Z	720	720	0.04116	113.8599	MAXWELL - NORTH PLATTE 115KV CKT 1
FDNS	00NR	2	17SP	G14_059	FROM->TO	GR ISLD-LNX3345.00 - GRAND ISLAND 345KV CKT Z	720	720	0.04238	113.8332	GEN652345 W-G07_023IS_2 0.6900
FDNS	00NR	2	17SP	G14_059	FROM->TO	GR ISLD-LNX3345.00 - GRAND ISLAND 345KV CKT Z	720	720	0.04156	113.8331	G15088_T 345.00 - MOORE 345KV CKT 1
FDNS	00NR	2	17SP	G14_059	FROM->TO	GR ISLD-LNX3345.00 - GRAND ISLAND 345KV CKT Z	720	720	0.04238	113.8244	GEN562832 1-G15042_3 0.6900
FDNS	00NR	2	17SP	G14_059	FROM->TO	GR ISLD-LNX3345.00 - GRAND ISLAND 345KV CKT Z	720	720	0.04238	113.8221	EMERY 161/18.0KV TRANSFORMER CKT 1
FDNS	00NR	2	17SP	G14_059	FROM->TO	GR ISLD-LNX3345.00 - GRAND ISLAND 345KV CKT Z	720	720	0.04238	113.817	GEN600046 1-MECST
FDNS	00NR	2	17SP	G14_059	FROM->TO	GR ISLD-LNX3345.00 - GRAND ISLAND 345KV CKT Z	720	720	0.04192	113.8146	SUB 3454 - WAGENER 345KV CKT 1
FDNS	00NR	2	17SP	G14_059	FROM->TO	GR ISLD-LNX3345.00 - GRAND ISLAND 345KV CKT Z	720	720	0.04192	113.8146	SUB 3454 - WAGENER 345KV CKT 1

SOLUTION	GROUP	SCENARIO	SEASON	SOURCE	DIRECTION	MONITORED ELEMENT	RATEA (MVA)	RATEB(MVA)	TDF	TC%LOADING (% MVA)	CONTINGENCY
FDNS	00NR	2	17SP	G14_059	FROM->TO	GR ISLD-LNX3345.00 - GRAND ISLAND 345KV CKT Z	720	720	0.04238	113.8082	GEN600050 1-FEP
FDNS	00NR	2	17SP	G14_059	FROM->TO	GR ISLD-LNX3345.00 - GRAND ISLAND 345KV CKT Z	720	720	0.04238	113.7999	LADISH 115/13.2KV TRANSFORMER CKT 1
FDNS	00NR	2	17SP	G14_059	FROM->TO	GR ISLD-LNX3345.00 - GRAND ISLAND 345KV CKT Z	720	720	0.04238	113.7731	GEN600047 1-MECCT1
FDNS	00NR	2	17SP	G14_059	FROM->TO	GR ISLD-LNX3345.00 - GRAND ISLAND 345KV CKT Z	720	720	0.04238	113.7603	GEN 11104 1-J262_GEN 0.6000
FDNS	00NR	2	17SP	G14_059	FROM->TO	GR ISLD-LNX3345.00 - GRAND ISLAND 345KV CKT Z	720	720	0.04238	113.7603	GEN 11108 1-J263_GEN 0.6000
FDNS	00NR	2	17SP	G14_059	FROM->TO	GR ISLD-LNX3345.00 - GRAND ISLAND 345KV CKT Z	720	720	0.04238	113.7464	GEN600063 1-COLVILLE GEN 1
FDNS	00NR	2	17SP	G14_059	FROM->TO	GR ISLD-LNX3345.00 - GRAND ISLAND 345KV CKT Z	720	720	0.04238	113.7463	GEN600064 2-COLVILLE GEN 2
FDNS	00NR	2	17SP	G14_059	FROM->TO	GR ISLD-LNX3345.00 - GRAND ISLAND 345KV CKT Z	720	720	0.04214	113.7393	POST ROCK (POSTROCK T1) 345/230/13.8KV TRANSFORMER CKT 1
FDNS	00NR	2	17SP	G14_059	FROM->TO	GR ISLD-LNX3345.00 - GRAND ISLAND 345KV CKT Z	720	720	0.04238	113.7389	GEN600043 7-BLUE LAKE5
FDNS	00NR	2	17SP	G14_059	FROM->TO	GR ISLD-LNX3345.00 - GRAND ISLAND 345KV CKT Z	720	720	0.04238	113.7389	GEN600044 8-BLUE LAKE6
FDNS	00NR	2	17SP	G14_059	FROM->TO	GR ISLD-LNX3345.00 - GRAND ISLAND 345KV CKT Z	720	720	0.04236	113.7316	BRDLAND-LNX3345.00 - HURON 345KV CKT Z
FDNS	00NR	2	17SP	G14_059	FROM->TO	GR ISLD-LNX3345.00 - GRAND ISLAND 345KV CKT Z	720	720	0.04236	113.7313	P12:345:UMZB:# 102 #: AVS BD IN ND. AVS BRD LR
FDNS	00NR	2	17SP	G14_059	FROM->TO	GR ISLD-LNX3345.00 - GRAND ISLAND 345KV CKT Z	720	720	0.04236	113.7307	HURON (BD KU2A) 345/230/13.8KV TRANSFORMER CKT 1
FDNS	00NR	2	17SP	G14_059	FROM->TO	GR ISLD-LNX3345.00 - GRAND ISLAND 345KV CKT Z	720	720	0.04236	113.7307	HURON (BD KU2A) 345/230/13.8KV TRANSFORMER CKT 1
FDNS	00NR	2	17SP	G14_059	FROM->TO	GR ISLD-LNX3345.00 - GRAND ISLAND 345KV CKT Z	720	720	0.04236	113.7306	BROADLAND - HURON 230KV CKT 1
FDNS	00NR	2	17SP	G14_059	FROM->TO	GR ISLD-LNX3345.00 - GRAND ISLAND 345KV CKT Z	720	720	0.04238	113.7305	G830_SUB 115.00 - GRE-MCHENRY7115.00 115KV CKT 1
FDNS	00NR	2	17SP	G14_059	FROM->TO	GR ISLD-LNX3345.00 - GRAND ISLAND 345KV CKT Z	720	720	0.04236	113.7304	P12:345:UMZB:# 103 #: BD IN SD. LOSS OF LINE
FDNS	00NR	2	17SP	G14_059	FROM->TO	GR ISLD-LNX3345.00 - GRAND ISLAND 345KV CKT Z	720	720	0.04238	113.7255	G830_SUB 115.00 115/34.5KV TRANSFORMER CKT 1
FDNS	00NR	2	17SP	G14_059	FROM->TO	GR ISLD-LNX3345.00 - GRAND ISLAND 345KV CKT Z	720	720	0.04238	113.724	GEN659273 2-GROTON SYNC COND
FDNS	00NR	2	17SP	G14_059	FROM->TO	GR ISLD-LNX3345.00 - GRAND ISLAND 345KV CKT Z	720	720	0.04238	113.724	GEN659294 1-WILTONCOL9
FDNS	00NR	2	17SP	G14_059	FROM->TO	GR ISLD-LNX3345.00 - GRAND ISLAND 345KV CKT Z	720	720	0.04187	113.717	GRAND ISLAND (GRAND.ISD T5) 230/115/13.8KV TRANSFORMER CKT 2
FDNS	00NR	2	17SP	G14_059	FROM->TO	GR ISLD-LNX3345.00 - GRAND ISLAND 345KV CKT Z	720	720	0.04187	113.717	GRAND ISLAND (GRAND.ISD T5) 230/115/13.8KV TRANSFORMER CKT 2
FDNS	00NR	2	17SP	G14_059	FROM->TO	GR ISLD-LNX3345.00 - GRAND ISLAND 345KV CKT Z	720	720	0.04238	113.7145	GEN600014 4-BLACK DOG GEN 4
FDNS	00NR	2	17SP	G14_059	FROM->TO	GR ISLD-LNX3345.00 - GRAND ISLAND 345KV CKT Z	720	720	0.04238	113.7139	GEN600065 7-HIGH BRIDGE
FDNS	00NR	2	17SP	G14_059	FROM->TO	GR ISLD-LNX3345.00 - GRAND ISLAND 345KV CKT Z	720	720	0.04238	113.7139	GEN600066 8-HIGH BRIDGE
FDNS	00NR	2	17SP	G14_059	FROM->TO	GR ISLD-LNX3345.00 - GRAND ISLAND 345KV CKT Z	720	720	0.04187	113.7135	GRAND ISLAND (GRAND.ISD T2) 230/115/13.8KV TRANSFORMER CKT 1
FDNS	00NR	2	17SP	G14_059	FROM->TO	GR ISLD-LNX3345.00 - GRAND ISLAND 345KV CKT Z	720	720	0.04187	113.7135	GRAND ISLAND (GRAND.ISD T2) 230/115/13.8KV TRANSFORMER CKT 1
FDNS	00NR	2	17SP	G14_059	FROM->TO	GR ISLD-LNX3345.00 - GRAND ISLAND 345KV CKT Z	720	720	0.04238	113.7102	GEN600011 5-BLACK DOG GEN 1
FDNS	00NR	2	17SP	G14_059	FROM->TO	GR ISLD-LNX3345.00 - GRAND ISLAND 345KV CKT Z	720	720	0.04238	113.7079	GEN600045 4-ANSON
FDNS	00NR	2	17SP	G14_059	FROM->TO	GR ISLD-LNX3345.00 - GRAND ISLAND 345KV CKT Z	720	720	0.04238	113.7031	GEN600070 9-RIVER SIDE
FDNS	00NR	2	17SP	G14_059	FROM->TO	GR ISLD-LNX3345.00 - GRAND ISLAND 345KV CKT Z	720	720	0.04238	113.7031	GEN600071 10-RIVER SIDE
FDNS	00NR	2	17SP	G14_059	FROM->TO	GR ISLD-LNX3345.00 - GRAND ISLAND 345KV CKT Z	720	720	0.04238	113.6937	GEN600007 7-RIVERSIDE GEN 7
FDNS	00NR	2	17SP	G14_059	FROM->TO	GR ISLD-LNX3345.00 - GRAND ISLAND 345KV CKT Z	720	720	0.04238	113.6924	GEN659192 6-LYNN
FDNS	00NR	2	17SP	G14_059	FROM->TO	GR ISLD-LNX3345.00 - GRAND ISLAND 345KV CKT Z	720	720	0.04238	113.6917	GEN659162 4-RED WLCK
FDNS	00NR	2	17SP	G14_059	FROM->TO	GR ISLD-LNX3345.00 - GRAND ISLAND 345KV CKT Z	720	720	0.04238	113.6917	GEN659163 5-BLACK WDCK
FDNS	00NR	2	17SP	G14_059	FROM->TO	GR ISLD-LNX3345.00 - GRAND ISLAND 345KV CKT Z	720	720	0.04238	113.6782	GEN659031 1-G12_014IS_4 0.6900
FDNS	00NR	2	17SP	G14_059	FROM->TO	GR ISLD-LNX3345.00 - GRAND ISLAND 345KV CKT Z	720	720	0.04238	113.6779	GEN600017 C-LS POWER CT
FDNS	00NR	2	17SP	G14_059	FROM->TO	GR ISLD-LNX3345.00 - GRAND ISLAND 345KV CKT Z	720	720	0.04274	113.6578	COOPER - FAIRPORT 345KV CKT 1
FDNS	00NR	2	17SP	G14_059	FROM->TO	GR ISLD-LNX3345.00 - GRAND ISLAND 345KV CKT Z	720	720	0.04238	113.6563	GEN681522 3-GENOA 3
FDNS	00NR	2	17SP	G14_059	FROM->TO	GR ISLD-LNX3345.00 - GRAND ISLAND 345KV CKT Z	720	720	0.04238	113.6549	LANSING WEST 161/22.0KV TRANSFORMER CKT 1
FDNS	00NR	2	17SP	G14_059	FROM->TO	GR ISLD-LNX3345.00 - GRAND ISLAND 345KV CKT Z	720	720	0.04192	113.6472	GRAND ISLAND (GI KU1B) 345/230/13.8KV TRANSFORMER CKT 2
FDNS	00NR	2	17SP	G14_059	FROM->TO	GR ISLD-LNX3345.00 - GRAND ISLAND 345KV CKT Z	720	720	0.04192	113.6472	GRAND ISLAND (GI KU1B) 345/230/13.8KV TRANSFORMER CKT 2
FDNS	00NR	2	17SP	G14_059	FROM->TO	GR ISLD-LNX3345.00 - GRAND ISLAND 345KV CKT Z	720	720	0.04191	113.6458	GRAND ISLAND (GI KU1A) 345/230/13.8KV TRANSFORMER CKT 1
FDNS	00NR	2	17SP	G14_059	FROM->TO	GR ISLD-LNX3345.00 - GRAND ISLAND 345KV CKT Z	720	720	0.04191	113.6458	GRAND ISLAND (GI KU1A) 345/230/13.8KV TRANSFORMER CKT 1
FDNS	00NR	2	17SP	G14_059	FROM->TO	GR ISLD-LNX3345.00 - GRAND ISLAND 345KV CKT Z	720	720	0.04238	113.6345	GEN615021 1-GRE-ER 14G 16.000
FDNS	00NR	2	17SP	G14_059	FROM->TO	GR ISLD-LNX3345.00 - GRAND ISLAND 345KV CKT Z	720	720	0.04238	113.6259	GEN 10648 1-G830_GEN 0.6900
FDNS	00NR	2	17SP	G14_059	FROM->TO	GR ISLD-LNX3345.00 - GRAND ISLAND 345KV CKT Z	720	720	0.04238	113.6241	GEN615052 1-CAMBRIDGE GENERATING STATION
FDNS	00NR	2	17SP	G14_059	FROM->TO	GR ISLD-LNX3345.00 - GRAND ISLAND 345KV CKT Z	720	720	0.04238	113.6136	GEN659353 1-DEERCREK CTG18.000
FDNS	00NR	2	17SP	G14_059	FROM->TO	GR ISLD-LNX3345.00 - GRAND ISLAND 345KV CKT Z	720	720	0.04238	113.611	GEN659354 1-DEERCREK STG18.000
FDNS	00NR	2	17SP	G14_059	FROM->TO	GR ISLD-LNX3345.00 - GRAND ISLAND 345KV CKT Z	720	720	0.04238	113.5956	GEN660016 1-B_H WIND 0.7000
FDNS	00NR	2	17SP	G14_059	FROM->TO	GR ISLD-LNX3345.00 - GRAND ISLAND 345KV CKT Z	720	720	0.04238	113.5737	GEN615015 1-GRE-SPRITWDG13.200
FDNSLock	00NR	2	17SP	G14_059	FROM->TO	GR ISLD-LNX3345.00 - GRAND ISLAND 345KV CKT Z	720	720	0.04184	113.5722	CENTRAL CITY - GRAND ISLAND 115KV CKT 1
FDNS	00NR	2	17SP	G14_059	FROM->TO	GR ISLD-LNX3345.00 - GRAND ISLAND 345KV CKT Z	720	720	0.04236	113.5634	ANTELOP-LNX3345.00 - ANTELOPE VALLEY 345KV CKT Z
FDNS	00NR	2	17SP	G14_059	FROM->TO	GR ISLD-LNX3345.00 - GRAND ISLAND 345KV CKT Z	720	720	0.04273	113.5417	OAHE - SULLEY BUTTE 230KV CKT 1
FDNSLock	00NR	2	17SP	G14_059	FROM->TO	GR ISLD-LNX3345.00 - GRAND ISLAND 345KV CKT Z	720	720	0.04278	113.5278	COPSTJCPFRSJ
FDNSLock	00NR	2	17SP	G14_059	FROM->TO	GR ISLD-LNX3345.00 - GRAND ISLAND 345KV CKT Z	720	720	0.04278	113.5278	STMDSJFAFACO
FDNS	00NR	2	17SP	G14_059	FROM->TO	GR ISLD-LNX3345.00 - GRAND ISLAND 345KV CKT Z	720	720	0.04238	113.4584	GEN672303 3-BOUNDARY DAM GENERATOR 3
FDNS	00NR	2	17SP	G14_059	FROM->TO	GR ISLD-LNX3345.00 - GRAND ISLAND 345KV CKT Z	720	720	0.04238	113.4584	GEN672305 5-BOUNDARY DAM GENERATOR 5
FDNS	00NR	2	17SP	G14_059	FROM->TO	GR ISLD-LNX3345.00 - GRAND ISLAND 345KV CKT Z	720	720	0.04238	113.4529	GEN600067 9-HIGH BRIDGE
FDNS	00NR	2	17SP	G14_059	FROM->TO	GR ISLD-LNX3345.00 - GRAND ISLAND 345KV CKT Z	720	720	0.04238	113.4411	GEN672392 1-NBECGT1G 18.000
FDNS	00NR	2	17SP	G14_059	FROM->TO	GR ISLD-LNX3345.00 - GRAND ISLAND 345KV CKT Z	720	720	0.04238	113.4404	GEN910006 1-G12_012IS_3 0.6900
FDNS	00NR	2	17SP	G14_059	FROM->TO	GR ISLD-LNX3345.00 - GRAND ISLAND 345KV CKT Z	720	720	0.04273	113.4401	SULLEY BUTTE - SULLYBT-LNX3230.00 230KV CKT Z
FDNS	00NR	2	17SP	G14_059	FROM->TO	GR ISLD-LNX3345.00 - GRAND ISLAND 345KV CKT Z	720	720	0.04273	113.4396	SULLYBT-LNX3230.00 - WHITLOK 230KV CKT 1
FDNS	00NR	2	17SP	G14_059	FROM->TO	GR ISLD-LNX3345.00 - GRAND ISLAND 345KV CKT Z	720	720	0.04238	113.4202	GEN662101 1-WESSINGTON190.5750
FDNS	00NR	2	17SP	G14_059	FROM->TO	GR ISLD-LNX3345.00 - GRAND ISLAND 345KV CKT Z	720	720	0.04273	113.4045	P12:230:UMZB:# 114 #: SB IN SD. SB-WK-GH
FDNS	00NR	2	17SP	G14_059	FROM->TO	GR ISLD-LNX3345.00 - GRAND ISLAND 345KV CKT Z	720	720	0.04273	113.4045	P12:230:UMZB:# 117 #: WK IN SD. SB-WK-GH
FDNS	00NR	2	17SP	G14_059	FROM->TO	GR ISLD-LNX3345.00 - GRAND ISLAND 345KV CKT Z	720	720	0.04141	113.3913	103RD & ROKEBY - MOORE 345KV CKT 1
FDNS	00NR	2	17SP	G14_059	FROM->TO	GR ISLD-LNX3345.00 - GRAND ISLAND 345KV CKT Z	720	720	0.04141	113.3913	103RD & ROKEBY - MOORE 345KV CKT 1
FDNS	00NR	2	17SP	G14_059	FROM->TO	GR ISLD-LNX3345.00 - GRAND ISLAND 345KV CKT Z	720	720	0.04238	113.3769	BISONMP4 230.00 - SQUARE BUTTE 230KV CKT 1
FDNS	00NR	2	17SP	G14_059	FROM->TO	GR ISLD-LNX3345.00 - GRAND ISLAND 345KV CKT Z	720	720	0.04273	113.3693	GLENHAM - WHITLOK 230KV CKT 1
FDNS	00NR	2	17SP	G14_059	FROM->TO	GR ISLD-LNX3345.00 - GRAND ISLAND 345KV CKT Z	720	720	0.04117	113.3277	AXTELL - POST ROCK 345KV CKT 1
FDNS	00NR	2	17SP	G14_059	FROM->TO	GR ISLD-LNX3345.00 - GRAND ISLAND 345KV CKT Z	720	720	0.04295	113.3244	COOPER - ST JOE 345KV CKT 1
FDNS	00NR	2	17SP	G14_059	FROM->TO	GR ISLD-LNX3345.00 - GRAND ISLAND 345KV CKT Z	720	720	0.03881	113.3233	COLUMWEST - GRAND ISLAND 230KV CKT 1
FDNS	00NR	2	17SP	G14_059	FROM->TO	GR ISLD-LNX3345.00 - GRAND ISLAND 345KV CKT Z	720	720	0.04169	113.3108	GRAND ISLAND (GI KU3A) 345/230/13.8KV TRANSFORMER CKT 3
FDNS	00NR	2	17SP	G14_059	FROM->TO	GR ISLD-LNX3345.00 - GRAND ISLAND 345KV CKT Z	720	720	0.04169	113.3108	GRAND ISLAND (GI KU3A) 345/230/13.8KV TRANSFORMER CKT 3
FDNS	00NR	2	17SP	G14_059	FROM->TO	GR ISLD-LNX3345.00 - GRAND ISLAND 345KV CKT Z	720	720	0.03947	113.3033	COOPER - MOORE 345KV CKT 1
FDNS	00NR	2	17SP	G14_059	FROM->TO	GR ISLD-LNX3345.00 - GRAND ISLAND 345KV CKT Z	720	720	0.04256	113.2727	G14-021T 345.00 - MULLNCR7 345.00 345KV CKT 1
FDNS	00NR	2	17SP	G14_059	FROM->TO	GR ISLD-LNX3345.00 - GRAND ISLAND 345KV CKT Z	720	720	0.04256	113.2717	G15-005T 345.00 - MULLNCR7 345.00 345KV CKT 1
FDNS	00NR	2	17SP	G14_059	FROM->TO	GR ISLD-LNX3345.00 - GRAND ISLAND 345KV CKT Z	720	720	0.04238	113.2431	GEN659289 1-DAYCNTYWND W0.6900

SOLUTION	GROUP	SCENARIO	SEASON	SOURCE	DIRECTION	MONITORED ELEMENT	RATEA (MVA)	RATEB(MVA)	TDF	TC%LOADING (% MVA)	CONTINGENCY
FDNS	00NR	2	17SP	G14_059	FROM->TO	GR ISLD-LNX3345.00 - GRAND ISLAND 345KV CKT Z	720	720	0.04238	113.2402	GEN652543 3-BIG BEND
FDNS	00NR	2	17SP	G14_059	FROM->TO	GR ISLD-LNX3345.00 - GRAND ISLAND 345KV CKT Z	720	720	0.04238	113.2187	GEN563312 1-G15097_3 0.6900
FDNS	00NR	2	17SP	G14_059	FROM->TO	GR ISLD-LNX3345.00 - GRAND ISLAND 345KV CKT Z	720	720	0.04238	113.2106	GEN659018 1-G14_003IS_3 0.6900
FDNS	00NR	2	17SP	G14_059	FROM->TO	GR ISLD-LNX3345.00 - GRAND ISLAND 345KV CKT Z	720	720	0.04238	113.1963	GEN681542 6-JP MADGETT
FDNS	00NR	2	17SP	G14_059	FROM->TO	GR ISLD-LNX3345.00 - GRAND ISLAND 345KV CKT Z	720	720	0.04256	113.1836	G15-005T 345.00 - SIBLEY 345KV CKT 1
FDNS	00NR	2	17SP	G14_059	FROM->TO	GR ISLD-LNX3345.00 - GRAND ISLAND 345KV CKT Z	720	720	0.04238	113.1528	SQUARE BUTTE - YNG2 4 230.00 230KV CKT 1
FDNS	00NR	2	17SP	G14_059	FROM->TO	GR ISLD-LNX3345.00 - GRAND ISLAND 345KV CKT Z	720	720	0.04238	113.1289	GEN562596 1-G14_059_3 0.6900
FDNS	00NR	2	17SP	G14_059	FROM->TO	GR ISLD-LNX3345.00 - GRAND ISLAND 345KV CKT Z	720	720	0.04238	113.1099	GEN659194 1-NDPRAIRWND1W0.6900
FDNS	00NR	2	17SP	G14_059	FROM->TO	GR ISLD-LNX3345.00 - GRAND ISLAND 345KV CKT Z	720	720	0.04238	113.0978	GEN659010 4-G07_027IS_2 0.6900
FDNS	00NR	2	17SP	G14_059	FROM->TO	GR ISLD-LNX3345.00 - GRAND ISLAND 345KV CKT Z	720	720	0.04238	113.0939	GEN652460 4-GARRISON
FDNS	00NR	2	17SP	G14_059	FROM->TO	GR ISLD-LNX3345.00 - GRAND ISLAND 345KV CKT Z	720	720	0.04238	113.0938	GEN652461 5-GARRISON
FDNS	00NR	2	17SP	G14_059	FROM->TO	GR ISLD-LNX3345.00 - GRAND ISLAND 345KV CKT Z	720	720	0.04238	113.0538	GEN652457 1-GARRISON
FDNS	00NR	2	17SP	G14_059	FROM->TO	GR ISLD-LNX3345.00 - GRAND ISLAND 345KV CKT Z	720	720	0.04238	113.0538	GEN652458 2-GARRISON
FDNS	00NR	2	17SP	G14_059	FROM->TO	GR ISLD-LNX3345.00 - GRAND ISLAND 345KV CKT Z	720	720	0.04238	113.0538	GEN652459 3-GARRISON
FDNS	00NR	2	17SP	G14_059	FROM->TO	GR ISLD-LNX3345.00 - GRAND ISLAND 345KV CKT Z	720	720	0.04238	113.0522	GEN652906 1-G09_006IS_3 0.6900
FDNS	00NR	2	17SP	G14_059	FROM->TO	GR ISLD-LNX3345.00 - GRAND ISLAND 345KV CKT Z	720	720	0.04238	113.0441	GEN563342 1-G15098_3 0.6900
FDNS	00NR	2	17SP	G14_059	FROM->TO	GR ISLD-LNX3345.00 - GRAND ISLAND 345KV CKT Z	720	720	0.04238	113.019	GEN652542 1-BIG BEND
FDNS	00NR	2	17SP	G14_059	FROM->TO	GR ISLD-LNX3345.00 - GRAND ISLAND 345KV CKT Z	720	720	0.04238	113.012	GEN659403 1-NDSUNFLWR W0.6900
FDNS	00NR	2	17SP	G14_059	FROM->TO	GR ISLD-LNX3345.00 - GRAND ISLAND 345KV CKT Z	720	720	0.04238	113.0083	GEN563282 1-G15094_3 0.6900
FDNS	00NR	2	17SP	G14_059	FROM->TO	GR ISLD-LNX3345.00 - GRAND ISLAND 345KV CKT Z	720	720	0.04273	112.9366	GLENHAM - L3 HAWDON 230KV CKT 1
FDNS	00NR	2	17SP	G14_059	FROM->TO	GR ISLD-LNX3345.00 - GRAND ISLAND 345KV CKT Z	720	720	0.04238	112.8985	GEN652907 1-G09_007IS_3 0.6900
FDNS	00NR	2	17SP	G14_059	FROM->TO	GR ISLD-LNX3345.00 - GRAND ISLAND 345KV CKT Z	720	720	0.04238	112.8117	CLAY BOSWELL 230/20.9KV TRANSFORMER CKT 1
FDNS	00NR	2	17SP	G14_059	FROM->TO	GR ISLD-LNX3345.00 - GRAND ISLAND 345KV CKT Z	720	720	0.04238	112.8006	STANTON 230/18.0KV TRANSFORMER CKT 1
FDNS	00NR	2	17SP	G14_059	FROM->TO	GR ISLD-LNX3345.00 - GRAND ISLAND 345KV CKT Z	720	720	0.04238	112.7235	GEN659411 1-CAMPBLCNTY W0.6900
FDNS	00NR	2	17SP	G14_059	FROM->TO	GR ISLD-LNX3345.00 - GRAND ISLAND 345KV CKT Z	720	720	0.04238	112.6083	GEN652559 1-OAHE
FDNS	00NR	2	17SP	G14_059	FROM->TO	GR ISLD-LNX3345.00 - GRAND ISLAND 345KV CKT Z	720	720	0.04238	112.5909	GEN659296 2-SDPRAIRWND1W0.6900
FDNS	00NR	2	17SP	G14_059	FROM->TO	GR ISLD-LNX3345.00 - GRAND ISLAND 345KV CKT Z	720	720	0.04238	112.432	GEN659453 1-GI1414GEN W0.6900
FDNS	00NR	2	17SP	G14_059	FROM->TO	GR ISLD-LNX3345.00 - GRAND ISLAND 345KV CKT Z	720	720	0.04238	112.4294	GEN563302 1-G15096_3 0.6900
FDNS	00NR	2	17SP	G14_059	FROM->TO	GR ISLD-LNX3345.00 - GRAND ISLAND 345KV CKT Z	720	720	0.04238	112.4254	GEN672321 1-SHAND GENERATOR 1
FDNS	00NR	2	17SP	G14_059	FROM->TO	GR ISLD-LNX3345.00 - GRAND ISLAND 345KV CKT Z	720	720	0.04238	112.4076	GEN672310 1-POPLAR RIVER GENERATOR 1
FDNS	00NR	2	17SP	G14_059	FROM->TO	GR ISLD-LNX3345.00 - GRAND ISLAND 345KV CKT Z	720	720	0.04238	112.4076	GEN672311 2-POPLAR RIVER GENERATOR 2
FDNS	00NR	2	17SP	G14_059	FROM->TO	GR ISLD-LNX3345.00 - GRAND ISLAND 345KV CKT Z	720	720	0.04238	112.3821	GEN600004 2-PRAIRIE ISLAND G2
FDNS	00NR	2	17SP	G14_059	FROM->TO	GR ISLD-LNX3345.00 - GRAND ISLAND 345KV CKT Z	720	720	0.04238	112.3791	GEN600003 1-PRAIRIE ISLAND G1
FDNS	00NR	2	17SP	G14_059	FROM->TO	GR ISLD-LNX3345.00 - GRAND ISLAND 345KV CKT Z	720	720	0.04238	112.3779	GEN659141 1-K10215A
FDNS	00NR	2	17SP	G14_059	FROM->TO	GR ISLD-LNX3345.00 - GRAND ISLAND 345KV CKT Z	720	720	0.04238	112.366	GEN615010 1-STANTON4
FDNS	00NR	2	17SP	G14_059	FROM->TO	GR ISLD-LNX3345.00 - GRAND ISLAND 345KV CKT Z	720	720	0.04238	112.3567	GEN672306 6-BOUNDARY DAM GENERATOR 6
FDNS	00NR	2	17SP	G14_059	FROM->TO	GR ISLD-LNX3345.00 - GRAND ISLAND 345KV CKT Z	720	720	0.04238	112.3493	GEN659110 1-LELAND OLDS UNIT1
FDNS	00NR	2	17SP	G14_059	FROM->TO	GR ISLD-LNX3345.00 - GRAND ISLAND 345KV CKT Z	720	720	0.04238	112.3221	GEN652556 2-OAHE
FDNS	00NR	2	17SP	G14_059	FROM->TO	GR ISLD-LNX3345.00 - GRAND ISLAND 345KV CKT Z	720	720	0.04238	112.3221	GEN652557 4-OAHE
FDNS	00NR	2	17SP	G14_059	FROM->TO	GR ISLD-LNX3345.00 - GRAND ISLAND 345KV CKT Z	720	720	0.04238	112.3221	GEN652558 6-OAHE
FDNS	00NR	2	17SP	G14_059	FROM->TO	GR ISLD-LNX3345.00 - GRAND ISLAND 345KV CKT Z	720	720	0.04238	112.2758	GEN652173 1-G09_001IS_2 0.6900
FDNS	00NR	2	17SP	G14_059	FROM->TO	GR ISLD-LNX3345.00 - GRAND ISLAND 345KV CKT Z	720	720	0.04238	112.1618	GEN657749 1-YOUNG 1 GENERATOR
FDNS	00NR	2	17SP	G14_059	FROM->TO	GR ISLD-LNX3345.00 - GRAND ISLAND 345KV CKT Z	720	720	0.04238	112.1407	GEN600006 1-AS KING
FDNS	00NR	2	17SP	G14_059	FROM->TO	GR ISLD-LNX3345.00 - GRAND ISLAND 345KV CKT Z	720	720	0.04238	112.0615	GEN640011 2-GERALD GENTLEMAN STATION UNIT 2
FDNS	00NR	2	17SP	G14_059	FROM->TO	GR ISLD-LNX3345.00 - GRAND ISLAND 345KV CKT Z	720	720	0.04238	112.016	GEN659407 1-ANTELPHILLSW0.6900
FDNS	00NR	2	17SP	G14_059	FROM->TO	GR ISLD-LNX3345.00 - GRAND ISLAND 345KV CKT Z	720	720	0.04238	111.9923	RCDC EAST 4230.00 - RED CEDAR DC 230KV CKT 1
FDNS	00NR	2	17SP	G14_059	FROM->TO	GR ISLD-LNX3345.00 - GRAND ISLAND 345KV CKT Z	720	720	0.04238	111.9893	P12:230:UMZB:# 112 #: NU IN SD. NU-RCDC & DRY CREEK XFMR
FDNS	00NR	2	17SP	G14_059	FROM->TO	GR ISLD-LNX3345.00 - GRAND ISLAND 345KV CKT Z	720	720	0.04238	111.8446	GEN640010 1-GERALD GENTLEMAN STATION UNIT 1
FDNS	00NR	2	17SP	G14_059	FROM->TO	GR ISLD-LNX3345.00 - GRAND ISLAND 345KV CKT Z	720	720	0.04238	111.7545	GEN600005 1-MONTICELLO
FDNS	00NR	2	17SP	G14_059	FROM->TO	GR ISLD-LNX3345.00 - GRAND ISLAND 345KV CKT Z	720	720	0.04238	111.2576	GEN600000 1-SHERBURNECNTY G1
FDNS	00NR	2	17SP	G14_059	FROM->TO	GR ISLD-LNX3345.00 - GRAND ISLAND 345KV CKT Z	720	720	0.04238	110.9892	GEN600001 2-SHERBURNE CNTY G2
FDNS	00NR	2	17SP	G14_059	FROM->TO	GR ISLD-LNX3345.00 - GRAND ISLAND 345KV CKT Z	720	720	0.04238	110.7182	GEN620315 1-BIG STONE GEN
FDNS	00NR	2	17SP	G14_059	FROM->TO	GR ISLD-LNX3345.00 - GRAND ISLAND 345KV CKT Z	720	720	0.04238	110.6292	GEN661015 1-COYOTE
FDNS	00NR	2	17SP	G14_059	FROM->TO	GR ISLD-LNX3345.00 - GRAND ISLAND 345KV CKT Z	720	720	0.04238	110.5758	GEN659118 1-LARAMIE RIVER UNIT1
FDNS	00NR	2	17SP	G14_059	FROM->TO	GR ISLD-LNX3345.00 - GRAND ISLAND 345KV CKT Z	720	720	0.04238	110.4843	GEN600002 3-SHERBURNE CNTY G3
FDNS	00NR	2	17SP	G14_059	FROM->TO	GR ISLD-LNX3345.00 - GRAND ISLAND 345KV CKT Z	720	720	0.04238	110.4	GEN657748 1-YOUNG 2 GENERATOR
FDNS	00NR	2	17SP	G14_059	FROM->TO	GR ISLD-LNX3345.00 - GRAND ISLAND 345KV CKT Z	720	720	0.04238	110.378	GEN562872 1-G15046_3 0.6900
FDNS	00NR	2	17SP	G14_059	FROM->TO	GR ISLD-LNX3345.00 - GRAND ISLAND 345KV CKT Z	720	720	0.04238	110.1891	GEN659111 2-LELAND OLDS UNIT2
FDNS	00NR	2	17SP	G14_059	FROM->TO	GR ISLD-LNX3345.00 - GRAND ISLAND 345KV CKT Z	720	720	0.04238	109.9345	SHERBURNE CO 345/24.0KV TRANSFORMER CKT 1
FDNS	00NR	2	17SP	G14_059	FROM->TO	GR ISLD-LNX3345.00 - GRAND ISLAND 345KV CKT Z	720	720	0.04238	109.868	GEN659103 1-ANTELOPE VALLEY UNIT1
FDNS	00NR	2	17SP	G14_059	FROM->TO	GR ISLD-LNX3345.00 - GRAND ISLAND 345KV CKT Z	720	720	0.04238	109.868	GEN659107 2-ANTELOPE VALLEY UNIT2
FDNS	00NR	2	17SP	G14_059	FROM->TO	GR ISLD-LNX3345.00 - GRAND ISLAND 345KV CKT Z	720	720	0.04238	109.6243	BIG STONE 230/24.0KV TRANSFORMER CKT 1
FDNS	00NR	2	17SP	G14_059	FROM->TO	GR ISLD-LNX3345.00 - GRAND ISLAND 345KV CKT Z	720	720	0.04238	109.2203	GEN659125 1-COVEY
FDNS	00NR	2	17SP	G14_059	FROM->TO	GR ISLD-LNX3345.00 - GRAND ISLAND 345KV CKT Z	720	720	0.04309	108.7431	FTTHOM1-LNX3345.00 - LELAND2-LNX3345.00 345KV CKT 1
FDNS	00NR	2	17SP	G14_059	FROM->TO	GR ISLD-LNX3345.00 - GRAND ISLAND 345KV CKT Z	720	720	0.04309	108.6067	P12:345:UMZB:# 108 #: LOS FT IN ND. LOS FT
FDNS	00NR	2	17SP	G14_059	FROM->TO	GR ISLD-LNX3345.00 - GRAND ISLAND 345KV CKT Z	720	720	0.04309	108.5986	FT THOMPSON - FTTHOM1-LNX3345.00 345KV CKT Z
FDNS	00NR	2	17SP	G14_059	FROM->TO	GR ISLD-LNX3345.00 - GRAND ISLAND 345KV CKT Z	720	720	0.04309	108.5398	LELAND OLDS - LELAND2-LNX3345.00 345KV CKT Z
FDNS	00NR	2	17SP	G14_059	FROM->TO	GR ISLD-LNX3345.00 - GRAND ISLAND 345KV CKT Z	720	720	0.04238	108.2836	GEN615001 1-COAL CREEK
FDNS	00NR	2	17SP	G14_059	FROM->TO	GR ISLD-LNX3345.00 - GRAND ISLAND 345KV CKT Z	720	720	0.04238	108.1953	GEN615002 2-COAL CREEK
FDNS	00NR	2	17SP	G14_059	FROM->TO	GR ISLD-LNX3345.00 - GRAND ISLAND 345KV CKT Z	720	720	0.04238	103.2695	GEN562714 1-G15_023_4 0.6900
FDNS	00NR	2	17SP	G14_059	FROM->TO	GR ISLD-LNX3345.00 - GRAND ISLAND 345KV CKT Z	720	720	0.04238	103.2695	GEN562715 1-G15_023_5 0.6900
FDNS	00NR	2	17SP	G14_059	TO->FROM	GR ISLD-LNX3345.00 - HOLT.CO3 345.00 345KV CKT 1	720	720	0.04344	120.4142	KELLY - MEADOWGROVE4230.00 230KV CKT 1
FDNS	00NR	2	17SP	G14_059	TO->FROM	GR ISLD-LNX3345.00 - HOLT.CO3 345.00 345KV CKT 1	720	720	0.05686	120.2137	GERALD GENTLEMAN STATION - SWEETWATER 345KV CKT 1
FDNS	00NR	2	17SP	G14_059	TO->FROM	GR ISLD-LNX3345.00 - HOLT.CO3 345.00 345KV CKT 1	720	720	0.06547	119.5004	GRAND ISLAND - SWEETWATER 345KV CKT 1
FDNS	00NR	2	17SP	G14_059	TO->FROM	GR ISLD-LNX3345.00 - HOLT.CO3 345.00 345KV CKT 1	720	720	0.04339	119.4263	P12:230:UMZB:# 116 #: ST IN SD. WSG-ST-VH
FDNS	00NR	2	17SP	G14_059	TO->FROM	GR ISLD-LNX3345.00 - HOLT.CO3 345.00 345KV CKT 1	720	720	0.04323	118.7557	STORLA - WESSINGTON 230KV CKT 1
FDNS	00NR	2	17SP	G14_059	TO->FROM	GR ISLD-LNX3345.00 - HOLT.CO3 345.00 345KV CKT 1	720	720	0.043	118.7315	WATERTN-LNX3345.00 - WATERTOWN 345KV CKT Z
FDNS	00NR	2	17SP	G14_059	TO->FROM	GR ISLD-LNX3345.00 - HOLT.CO3 345.00 345KV CKT 1	720	720	0.04262	118.7056	G09_001IST 345.00 - WATERTOWN 345KV CKT 1
FDNS	00NR	2	17SP	G14_059	TO->FROM	GR ISLD-LNX3345.00 - HOLT.CO3 345.00 345KV CKT 1	720	720	0.043	118.696	P12:345:UMZW:# 1747 #: WT2 IN SD. WT2-WHT LINE FAULT

SOLUTION	GROUP	SCENARIO	SEASON	SOURCE	DIRECTION	MONITORED ELEMENT	RATEA (MVA)	RATEB(MVA)	TDF	TC%LOADING (% MVA)	CONTINGENCY
FDNS	00NR	2	17SP	G14_059	TO->FROM	GR ISLD-LNX3345.00 - HOLT.CO3 345.00 345KV CKT 1	720	720	0.043	118.6083	WATERTN-LNX3345.00 - WHITE 345KV CKT 1
FDNS	00NR	2	17SP	G14_059	TO->FROM	GR ISLD-LNX3345.00 - HOLT.CO3 345.00 345KV CKT 1	720	720	0.05326	118.5519	GERALD GENTLEMAN STATION - SWEETWATER 345KV CKT 2
FDNS	00NR	2	17SP	G14_059	TO->FROM	GR ISLD-LNX3345.00 - HOLT.CO3 345.00 345KV CKT 1	720	720	0.0432	118.044	HANLON - STORLA 230KV CKT 1
FDNS	00NR	2	17SP	G14_059	TO->FROM	GR ISLD-LNX3345.00 - HOLT.CO3 345.00 345KV CKT 1	720	720	0.0434	117.8162	FT THOMPSON - LETCHER 230KV CKT 1
FDNS	00NR	2	17SP	G14_059	TO->FROM	GR ISLD-LNX3345.00 - HOLT.CO3 345.00 345KV CKT 1	720	720	0.0434	117.8162	FT THOMPSON - LETCHER 230KV CKT 1
FDNS	00NR	2	17SP	G14_059	TO->FROM	GR ISLD-LNX3345.00 - HOLT.CO3 345.00 345KV CKT 1	720	720	0.04254	117.4634	BUFFALO - JAMESTOWN 345KV CKT 1
FDNS	00NR	2	17SP	G14_059	TO->FROM	GR ISLD-LNX3345.00 - HOLT.CO3 345.00 345KV CKT 1	720	720	0.04238	116.8936	GEN635024 4-WALTER SCOTT UNIT 4
FDNS	00NR	2	17SP	G14_059	TO->FROM	GR ISLD-LNX3345.00 - HOLT.CO3 345.00 345KV CKT 1	720	720	0.04344	116.8701	FT RANDAL - MEADOWGROVE4230.00 230KV CKT 1
FDNS	00NR	2	17SP	G14_059	TO->FROM	GR ISLD-LNX3345.00 - HOLT.CO3 345.00 345KV CKT 1	720	720	0.04329	116.7866	FT RANDAL - G12_009IST 230.00 230KV CKT 1
FDNS	00NR	2	17SP	G14_059	TO->FROM	GR ISLD-LNX3345.00 - HOLT.CO3 345.00 345KV CKT 1	720	720	0.04331	116.7829	FT RANDAL - FT THOMPSON 230KV CKT 1
FDNS	00NR	2	17SP	G14_059	TO->FROM	GR ISLD-LNX3345.00 - HOLT.CO3 345.00 345KV CKT 1	720	720	0.04331	116.7829	FT RANDAL - FT THOMPSON 230KV CKT 1
FDNS	00NR	2	17SP	G14_059	TO->FROM	GR ISLD-LNX3345.00 - HOLT.CO3 345.00 345KV CKT 1	720	720	0.04919	116.7653	CROOKED CREEK - NORTH PLATTE 230KV CKT 1
FDNS	00NR	2	17SP	G14_059	TO->FROM	GR ISLD-LNX3345.00 - HOLT.CO3 345.00 345KV CKT 1	720	720	0.04329	116.672	FT THOMPSON - LAKE PLATT 230KV CKT 1
FDNS	00NR	2	17SP	G14_059	TO->FROM	GR ISLD-LNX3345.00 - HOLT.CO3 345.00 345KV CKT 1	720	720	0.04329	116.672	FT THOMPSON - LAKE PLATT 230KV CKT 1
FDNS	00NR	2	17SP	G14_059	TO->FROM	GR ISLD-LNX3345.00 - HOLT.CO3 345.00 345KV CKT 1	720	720	0.04366	116.5231	RAUN - SUB 3451 FT CAL 345KV CKT 1
FDNS	00NR	2	17SP	G14_059	TO->FROM	GR ISLD-LNX3345.00 - HOLT.CO3 345.00 345KV CKT 1	720	720	0.04366	116.5231	RAUN - SUB 3451 FT CAL 345KV CKT 1
FDNS	00NR	2	17SP	G14_059	TO->FROM	GR ISLD-LNX3345.00 - HOLT.CO3 345.00 345KV CKT 1	720	720	0.0425	116.4739	CHISAGO COUNTY - FORBES 500KV CKT 1
FDNS	00NR	2	17SP	G14_059	TO->FROM	GR ISLD-LNX3345.00 - HOLT.CO3 345.00 345KV CKT 1	720	720	0.04329	116.4622	G12_009IST 230.00 - LAKE PLATT 230KV CKT 1
FDNS	00NR	2	17SP	G14_059	TO->FROM	GR ISLD-LNX3345.00 - HOLT.CO3 345.00 345KV CKT 1	720	720	0.04238	116.4377	GEN635023 3-WALTER SCOTT UNIT 3
FDNS	00NR	2	17SP	G14_059	TO->FROM	GR ISLD-LNX3345.00 - HOLT.CO3 345.00 345KV CKT 1	720	720	0.04262	116.3325	G09_001IST 345.00 - GROTON 345KV CKT 1
FDNS	00NR	2	17SP	G14_059	TO->FROM	GR ISLD-LNX3345.00 - HOLT.CO3 345.00 345KV CKT 1	720	720	0.04254	116.2588	CENTER - JAMESTOWN 345KV CKT 1
FDNS	00NR	2	17SP	G14_059	TO->FROM	GR ISLD-LNX3345.00 - HOLT.CO3 345.00 345KV CKT 1	720	720	0.04305	116.2312	LETCHER - SIOUX FALLS 230KV CKT 1
FDNS	00NR	2	17SP	G14_059	TO->FROM	GR ISLD-LNX3345.00 - HOLT.CO3 345.00 345KV CKT 1	720	720	0.04238	115.9963	GEN336821 1-GRAND GULF UNIT
FDNS	00NR	2	17SP	G14_059	TO->FROM	GR ISLD-LNX3345.00 - HOLT.CO3 345.00 345KV CKT 1	720	720	0.04238	115.9946	GEN344225 1-1CAL G1 25.000
FDNS	00NR	2	17SP	G14_059	TO->FROM	GR ISLD-LNX3345.00 - HOLT.CO3 345.00 345KV CKT 1	720	720	0.0425	115.8647	BISON 3 345.00 - BUFFALO 345KV CKT 1
FDNS	00NR	2	17SP	G14_059	TO->FROM	GR ISLD-LNX3345.00 - HOLT.CO3 345.00 345KV CKT 1	720	720	0.04266	115.7427	SPLIT ROCK - WHITE 345KV CKT 1
FDNS	00NR	2	17SP	G14_059	TO->FROM	GR ISLD-LNX3345.00 - HOLT.CO3 345.00 345KV CKT 1	720	720	0.04266	115.7427	SPLIT ROCK - WHITE 345KV CKT 1
FDNS	00NR	2	17SP	G14_059	TO->FROM	GR ISLD-LNX3345.00 - HOLT.CO3 345.00 345KV CKT 1	720	720	0.04525	115.7169	GERALD GENTLEMAN STATION - RED WILLOW 345KV CKT 1
FDNS	00NR	2	17SP	G14_059	TO->FROM	GR ISLD-LNX3345.00 - HOLT.CO3 345.00 345KV CKT 1	720	720	0.04238	115.7118	GEN640009 1-COOPER NUCLEAR STATION
FDNS	00NR	2	17SP	G14_059	TO->FROM	GR ISLD-LNX3345.00 - HOLT.CO3 345.00 345KV CKT 1	720	720	0.04292	115.5851	FT RANDAL - SIOUX CITY 230KV CKT 1
FDNS	00NR	2	17SP	G14_059	TO->FROM	GR ISLD-LNX3345.00 - HOLT.CO3 345.00 345KV CKT 1	720	720	0.04238	115.5321	GEN336153 1-WATERFORD UNIT#3
FDNS	00NR	2	17SP	G14_059	TO->FROM	GR ISLD-LNX3345.00 - HOLT.CO3 345.00 345KV CKT 1	720	720	0.04238	115.524	GEN337911 1-ARKANSAS NUCLEAR ONE UNIT #2
FDNS	00NR	2	17SP	G14_059	TO->FROM	GR ISLD-LNX3345.00 - HOLT.CO3 345.00 345KV CKT 1	720	720	0.04246	115.4423	ARROWHEAD - ARROWHEAD 230 230KV CKT 1
FDNS	00NR	2	17SP	G14_059	TO->FROM	GR ISLD-LNX3345.00 - HOLT.CO3 345.00 345KV CKT 1	720	720	0.04284	115.4083	HANLON - SIOUX FALLS 230KV CKT 1
FDNS	00NR	2	17SP	G14_059	TO->FROM	GR ISLD-LNX3345.00 - HOLT.CO3 345.00 345KV CKT 1	720	720	0.04258	115.388	GROTON-LNX3 345.00 - LELAND1-LNX3345.00 345KV CKT 1
FDNS	00NR	2	17SP	G14_059	TO->FROM	GR ISLD-LNX3345.00 - HOLT.CO3 345.00 345KV CKT 1	720	720	0.04258	115.3196	P12:345:UMZB:# 109 #: LOS GRT IN ND. LOS GRT
FDNS	00NR	2	17SP	G14_059	TO->FROM	GR ISLD-LNX3345.00 - HOLT.CO3 345.00 345KV CKT 1	720	720	0.0426	115.3137	HAZLETON - MITCHLCO3 345.00 345KV CKT 1
FDNS	00NR	2	17SP	G14_059	TO->FROM	GR ISLD-LNX3345.00 - HOLT.CO3 345.00 345KV CKT 1	720	720	0.04238	115.3051	GEN563222 1-G15088_3 0.6900
FDNS	00NR	2	17SP	G14_059	TO->FROM	GR ISLD-LNX3345.00 - HOLT.CO3 345.00 345KV CKT 1	720	720	0.04258	115.3002	GROTON - GROTON-LNX3 345.00 345KV CKT Z
FDNS	00NR	2	17SP	G14_059	TO->FROM	GR ISLD-LNX3345.00 - HOLT.CO3 345.00 345KV CKT 1	720	720	0.04238	115.2919	GEN335831 1-RIVERBEND UNIT#1
FDNS	00NR	2	17SP	G14_059	TO->FROM	GR ISLD-LNX3345.00 - HOLT.CO3 345.00 345KV CKT 1	720	720	0.04258	115.2907	LELAND OLDS - LELAND1-LNX3345.00 345KV CKT Z
FDNS	00NR	2	17SP	G14_059	TO->FROM	GR ISLD-LNX3345.00 - HOLT.CO3 345.00 345KV CKT 1	720	720	0.04278	115.2135	FT RANDAL - UTICA JCT 230KV CKT 1
FDNS	00NR	2	17SP	G14_059	TO->FROM	GR ISLD-LNX3345.00 - HOLT.CO3 345.00 345KV CKT 1	720	720	0.04238	115.2063	GEN337910 1-ARKANSAS NUCLEAR ONE UNIT #1
FDNS	00NR	2	17SP	G14_059	TO->FROM	GR ISLD-LNX3345.00 - HOLT.CO3 345.00 345KV CKT 1	720	720	0.04254	115.2021	ALEXMRES3 345.00 - BISON 3 345.00 345KV CKT 1
FDNS	00NR	2	17SP	G14_059	TO->FROM	GR ISLD-LNX3345.00 - HOLT.CO3 345.00 345KV CKT 1	720	720	0.04295	115.1949	SIOUXCY-LNX3345.00 - SPLIT ROCK 345KV CKT 1
FDNS	00NR	2	17SP	G14_059	TO->FROM	GR ISLD-LNX3345.00 - HOLT.CO3 345.00 345KV CKT 1	720	720	0.04295	115.1949	SIOUXCY-LNX3345.00 - SPLIT ROCK 345KV CKT 1
FDNS	00NR	2	17SP	G14_059	TO->FROM	GR ISLD-LNX3345.00 - HOLT.CO3 345.00 345KV CKT 1	720	720	0.04295	115.1636	P12:345:UMZW:# 907 #: SC2-SR IN IA. SC2-SR 345 KV LINE
FDNS	00NR	2	17SP	G14_059	TO->FROM	GR ISLD-LNX3345.00 - HOLT.CO3 345.00 345KV CKT 1	720	720	0.04295	115.1105	SIOUX CITY - SIOUXCY-LNX3345.00 345KV CKT Z
FDNS	00NR	2	17SP	G14_059	TO->FROM	GR ISLD-LNX3345.00 - HOLT.CO3 345.00 345KV CKT 1	720	720	0.04789	115.0856	MINGO - RED WILLOW 345KV CKT 1
FDNS	00NR	2	17SP	G14_059	TO->FROM	GR ISLD-LNX3345.00 - HOLT.CO3 345.00 345KV CKT 1	720	720	0.04789	115.0856	MINGO - RED WILLOW 345KV CKT 1
FDNS	00NR	2	17SP	G14_059	TO->FROM	GR ISLD-LNX3345.00 - HOLT.CO3 345.00 345KV CKT 1	720	720	0.03791	115.0815	NUNDRWD - WAYSIDE 230KV CKT 1
FDNS	00NR	2	17SP	G14_059	TO->FROM	GR ISLD-LNX3345.00 - HOLT.CO3 345.00 345KV CKT 1	720	720	0.04288	115.0722	CHERRYC3 345.00 (THEDFORDT2) 345/115/13.8KV TRANSFORMER CKT 1
FDNS	00NR	2	17SP	G14_059	TO->FROM	GR ISLD-LNX3345.00 - HOLT.CO3 345.00 345KV CKT 1	720	720	0.04244	115.0469	AS KING - EAU CLAIRE 345KV CKT 1
FDNS	00NR	2	17SP	G14_059	TO->FROM	GR ISLD-LNX3345.00 - HOLT.CO3 345.00 345KV CKT 1	720	720	0.04533	115.0437	G15061_T 345.00 - SETAB 345KV CKT 1
FDNS	00NR	2	17SP	G14_059	TO->FROM	GR ISLD-LNX3345.00 - HOLT.CO3 345.00 345KV CKT 1	720	720	0.04274	115.0205	CARPENTER - HURON 230KV CKT 1
FDNS	00NR	2	17SP	G14_059	TO->FROM	GR ISLD-LNX3345.00 - HOLT.CO3 345.00 345KV CKT 1	720	720	0.04244	115.0036	ELLENDALE - OAKES 230KV CKT 1
FDNS	00NR	2	17SP	G14_059	TO->FROM	GR ISLD-LNX3345.00 - HOLT.CO3 345.00 345KV CKT 1	720	720	0.04244	115.0036	ELLENDALE - OAKES 230KV CKT 1
FDNS	00NR	2	17SP	G14_059	TO->FROM	GR ISLD-LNX3345.00 - HOLT.CO3 345.00 345KV CKT 1	720	720	0.04274	114.9445	HURON - WATERTOWN 230KV CKT 2
FDNS	00NR	2	17SP	G14_059	TO->FROM	GR ISLD-LNX3345.00 - HOLT.CO3 345.00 345KV CKT 1	720	720	0.04274	114.9445	HURON - WATERTOWN 230KV CKT 2
FDNS	00NR	2	17SP	G14_059	TO->FROM	GR ISLD-LNX3345.00 - HOLT.CO3 345.00 345KV CKT 1	720	720	0.04243	114.9383	FORMAN - OAKES 230KV CKT 1
FDNS	00NR	2	17SP	G14_059	TO->FROM	GR ISLD-LNX3345.00 - HOLT.CO3 345.00 345KV CKT 1	720	720	0.04274	114.9228	CARPENTER - WATERTOWN 230KV CKT 1
FDNS	00NR	2	17SP	G14_059	TO->FROM	GR ISLD-LNX3345.00 - HOLT.CO3 345.00 345KV CKT 1	720	720	0.04274	114.9228	CARPENTER - WATERTOWN 230KV CKT 1
FDNS	00NR	2	17SP	G14_059	TO->FROM	GR ISLD-LNX3345.00 - HOLT.CO3 345.00 345KV CKT 1	720	720	0.04238	114.8973	GEN337653 1-WHITE BLUFF UNIT #2
FDNS	00NR	2	17SP	G14_059	TO->FROM	GR ISLD-LNX3345.00 - HOLT.CO3 345.00 345KV CKT 1	720	720	0.04245	114.8947	ARPIN B4 345.00 - EAU CLAIRE 345KV CKT 1
FDNS	00NR	2	17SP	G14_059	TO->FROM	GR ISLD-LNX3345.00 - HOLT.CO3 345.00 345KV CKT 1	720	720	0.04282	114.8933	HOSKINS - SHELL CREEK 345KV CKT 1
FDNS	00NR	2	17SP	G14_059	TO->FROM	GR ISLD-LNX3345.00 - HOLT.CO3 345.00 345KV CKT 1	720	720	0.04238	114.888	GEN337652 1-WHITE BLUFF UNIT #1
FDNS	00NR	2	17SP	G14_059	TO->FROM	GR ISLD-LNX3345.00 - HOLT.CO3 345.00 345KV CKT 1	720	720	0.04271	114.8838	PAHOJA - SIOUX FALLS 230KV CKT 1
FDNS	00NR	2	17SP	G14_059	TO->FROM	GR ISLD-LNX3345.00 - HOLT.CO3 345.00 345KV CKT 1	720	720	0.04238	114.8798	GEN338146 1-INDEPENDENCE UNIT #2
FDNS	00NR	2	17SP	G14_059	TO->FROM	GR ISLD-LNX3345.00 - HOLT.CO3 345.00 345KV CKT 1	720	720	0.04238	114.8792	GEN338143 1-INDEPENDENCE UNIT #1
FDNS	00NR	2	17SP	G14_059	TO->FROM	GR ISLD-LNX3345.00 - HOLT.CO3 345.00 345KV CKT 1	720	720	0.04238	114.8709	GEN641089 2-ENERGY CENTER 2
FDNS	00NR	2	17SP	G14_059	TO->FROM	GR ISLD-LNX3345.00 - HOLT.CO3 345.00 345KV CKT 1	720	720	0.04323	114.8553	FT THOMPSON - WESSINGTON 230KV CKT 1
FDNS	00NR	2	17SP	G14_059	TO->FROM	GR ISLD-LNX3345.00 - HOLT.CO3 345.00 345KV CKT 1	720	720	0.04323	114.8553	FT THOMPSON - WESSINGTON 230KV CKT 1
FDNS	00NR	2	17SP	G14_059	TO->FROM	GR ISLD-LNX3345.00 - HOLT.CO3 345.00 345KV CKT 1	720	720	0.04396	114.791	CALLAWAY - MAXWELL 115KV CKT 1
FDNS	00NR	2	17SP	G14_059	TO->FROM	GR ISLD-LNX3345.00 - HOLT.CO3 345.00 345KV CKT 1	720	720	0.04709	114.7734	CROOKED CREEK - RIVERDALE 230KV CKT 1
FDNS	00NR	2	17SP	G14_059	TO->FROM	GR ISLD-LNX3345.00 - HOLT.CO3 345.00 345KV CKT 1	720	720	0.0428	114.7572	RASMUSN - UTICA JCT 230KV CKT 1
FDNS	00NR	2	17SP	G14_059	TO->FROM	GR ISLD-LNX3345.00 - HOLT.CO3 345.00 345KV CKT 1	720	720	0.04238	114.752	GEN501801 1-DOLET HILLS UNIT1
FDNS	00NR	2	17SP	G14_059	TO->FROM	GR ISLD-LNX3345.00 - HOLT.CO3 345.00 345KV CKT 1	720	720	0.0426	114.7487	ADAMS - MITCHLCO3 345.00 345KV CKT 1
FDNS	00NR	2	17SP	G14_059	TO->FROM	GR ISLD-LNX3345.00 - HOLT.CO3 345.00 345KV CKT 1	720	720	0.04244	114.7473	FORMAN - HANKINSON 230KV CKT 1
FDNS	00NR	2	17SP	G14_059	TO->FROM	GR ISLD-LNX3345.00 - HOLT.CO3 345.00 345KV CKT 1	720	720	0.04238	114.7346	GEN645012 2-NEBRASKA CITY 2

SOLUTION	GROUP	SCENARIO	SEASON	SOURCE	DIRECTION	MONITORED ELEMENT	RATEA (MVA)	RATEB(MVA)	TDF	TC%LOADING (% MVA)	CONTINGENCY
FDNS	00NR	2	17SP	G14_059	TO->FROM	GR ISLD-LNX3345.00 - HOLT.CO3 345.00 345KV CKT 1	720	720	0.04243	114.7042	CNTSHNT3 345.00 - PRAIRIE3 345.00 345KV CKT 1
FDNS	00NR	2	17SP	G14_059	TO->FROM	GR ISLD-LNX3345.00 - HOLT.CO3 345.00 345KV CKT 1	720	720	0.04135	114.6665	STAPLETON - THEDFORD 115KV CKT 1
FDNS	00NR	2	17SP	G14_059	TO->FROM	GR ISLD-LNX3345.00 - HOLT.CO3 345.00 345KV CKT 1	720	720	0.04238	114.6602	GEN645011 1-NEBRASKA CITY 1
FDNS	00NR	2	17SP	G14_059	TO->FROM	GR ISLD-LNX3345.00 - HOLT.CO3 345.00 345KV CKT 1	720	720	0.04314	114.6236	BUCKNER7 345.00 - SPEARVILLE 345KV CKT 1
FDNS	00NR	2	17SP	G14_059	TO->FROM	GR ISLD-LNX3345.00 - HOLT.CO3 345.00 345KV CKT 1	720	720	0.04314	114.6236	BUCKNER7 345.00 - SPEARVILLE 345KV CKT 1
FDNS	00NR	2	17SP	G14_059	TO->FROM	GR ISLD-LNX3345.00 - HOLT.CO3 345.00 345KV CKT 1	720	720	0.04271	114.6161	EAGLE 4 230.00 - PAHOJA 230KV CKT 1
FDNS	00NR	2	17SP	G14_059	TO->FROM	GR ISLD-LNX3345.00 - HOLT.CO3 345.00 345KV CKT 1	720	720	0.04238	114.6128	GEN336252 1-NINEMILE POINT UNIT#5
FDNS	00NR	2	17SP	G14_059	TO->FROM	GR ISLD-LNX3345.00 - HOLT.CO3 345.00 345KV CKT 1	720	720	0.04255	114.6107	ADAMS - PLEASANT VALLEY 345KV CKT 1
FDNS	00NR	2	17SP	G14_059	TO->FROM	GR ISLD-LNX3345.00 - HOLT.CO3 345.00 345KV CKT 1	720	720	0.04279	114.6009	GRIMES - LEHIGH 345KV CKT 1
FDNS	00NR	2	17SP	G14_059	TO->FROM	GR ISLD-LNX3345.00 - HOLT.CO3 345.00 345KV CKT 1	720	720	0.04238	114.5905	GEN344897 4-1LAB G4 20.000
FDNS	00NR	2	17SP	G14_059	TO->FROM	GR ISLD-LNX3345.00 - HOLT.CO3 345.00 345KV CKT 1	720	720	0.04238	114.5884	GEN344894 1-1LAB G1 20.000
FDNS	00NR	2	17SP	G14_059	TO->FROM	GR ISLD-LNX3345.00 - HOLT.CO3 345.00 345KV CKT 1	720	720	0.04238	114.5881	GEN344896 3-1LAB G3 20.000
FDNS	00NR	2	17SP	G14_059	TO->FROM	GR ISLD-LNX3345.00 - HOLT.CO3 345.00 345KV CKT 1	720	720	0.04238	114.5683	GEN501813 1-RODEMACHER UNIT 3
FDNS	00NR	2	17SP	G14_059	TO->FROM	GR ISLD-LNX3345.00 - HOLT.CO3 345.00 345KV CKT 1	720	720	0.04238	114.5516	GEN629075 1-OTTUMWA GENERATOR FOR OTTUMWA UNIT NO 1
FDNS	00NR	2	17SP	G14_059	TO->FROM	GR ISLD-LNX3345.00 - HOLT.CO3 345.00 345KV CKT 1	720	720	0.04238	114.5515	GEN344895 2-1LAB G2 20.000
FDNS	00NR	2	17SP	G14_059	TO->FROM	GR ISLD-LNX3345.00 - HOLT.CO3 345.00 345KV CKT 1	720	720	0.04238	114.534	GEN336831 1-BAXTER WILSON SES
FDNS	00NR	2	17SP	G14_059	TO->FROM	GR ISLD-LNX3345.00 - HOLT.CO3 345.00 345KV CKT 1	720	720	0.04238	114.5301	GEN345670 1-1RUSH G1 18.000
FDNS	00NR	2	17SP	G14_059	TO->FROM	GR ISLD-LNX3345.00 - HOLT.CO3 345.00 345KV CKT 1	720	720	0.04238	114.5299	GEN345671 2-1RUSH G2 18.000
FDNS	00NR	2	17SP	G14_059	TO->FROM	GR ISLD-LNX3345.00 - HOLT.CO3 345.00 345KV CKT 1	720	720	0.04238	114.5239	GEN336251 1-NINEMILE POINT UNIT#4
FDNS	00NR	2	17SP	G14_059	TO->FROM	GR ISLD-LNX3345.00 - HOLT.CO3 345.00 345KV CKT 1	720	720	0.04246	114.5232	DIXONCO 230.00 - HOSKINS 230KV CKT 1
FDNS	00NR	2	17SP	G14_059	TO->FROM	GR ISLD-LNX3345.00 - HOLT.CO3 345.00 345KV CKT 1	720	720	0.04238	114.4995	GEN532751 1-WOLF CREEK GENERATING STATION UNIT 1
FDNS	00NR	2	17SP	G14_059	TO->FROM	GR ISLD-LNX3345.00 - HOLT.CO3 345.00 345KV CKT 1	720	720	0.04238	114.4891	GEN337041 1-GERALD ANDRUS
FDNS	00NR	2	17SP	G14_059	TO->FROM	GR ISLD-LNX3345.00 - HOLT.CO3 345.00 345KV CKT 1	720	720	0.04295	114.476	COLUMEAST - SHELL CREEK 345KV CKT 1
FDNS	00NR	2	17SP	G14_059	TO->FROM	GR ISLD-LNX3345.00 - HOLT.CO3 345.00 345KV CKT 1	720	720	0.04238	114.458	GEN542962 2-IATAN UNIT #2
FDNS	00NR	2	17SP	G14_059	TO->FROM	GR ISLD-LNX3345.00 - HOLT.CO3 345.00 345KV CKT 1	720	720	0.04238	114.4519	GEN335206 1-NELSON UNIT 6
FDNS	00NR	2	17SP	G14_059	TO->FROM	GR ISLD-LNX3345.00 - HOLT.CO3 345.00 345KV CKT 1	720	720	0.04316	114.4474	P12:115:NPPD:1164:ONEILL 7:JEFFREY9:BTB
FDNS	00NR	2	17SP	G14_059	TO->FROM	GR ISLD-LNX3345.00 - HOLT.CO3 345.00 345KV CKT 1	720	720	0.04255	114.4429	ALEXMRES3 345.00 - WAITE PARK 345KV CKT 1
FDNS	00NR	2	17SP	G14_059	TO->FROM	GR ISLD-LNX3345.00 - HOLT.CO3 345.00 345KV CKT 1	720	720	0.04259	114.4341	LAKEFIELD 3 - NOBLES 345KV CKT 1
FDNS	00NR	2	17SP	G14_059	TO->FROM	GR ISLD-LNX3345.00 - HOLT.CO3 345.00 345KV CKT 1	720	720	0.04242	114.4011	P12:115:NPPD:WAPA4:SIDNEY 7:B.SPRGS7:BTB
FDNS	00NR	2	17SP	G14_059	TO->FROM	GR ISLD-LNX3345.00 - HOLT.CO3 345.00 345KV CKT 1	720	720	0.04242	114.4011	P12:115:UMZB:# 119 #: IN NE.
FDNS	00NR	2	17SP	G14_059	TO->FROM	GR ISLD-LNX3345.00 - HOLT.CO3 345.00 345KV CKT 1	720	720	0.04238	114.3946	P13:230-345:NPPD:NUCOR-1
FDNS	00NR	2	17SP	G14_059	TO->FROM	GR ISLD-LNX3345.00 - HOLT.CO3 345.00 345KV CKT 1	720	720	0.04316	114.3901	CLEARWATER - ONEILL 115KV CKT 1
FDNS	00NR	2	17SP	G14_059	TO->FROM	GR ISLD-LNX3345.00 - HOLT.CO3 345.00 345KV CKT 1	720	720	0.04299	114.3896	RAUN - SIOUX CITY 345KV CKT 1
FDNS	00NR	2	17SP	G14_059	TO->FROM	GR ISLD-LNX3345.00 - HOLT.CO3 345.00 345KV CKT 1	720	720	0.04242	114.383	CENTER - COYOTE 345KV CKT 1
FDNS	00NR	2	17SP	G14_059	TO->FROM	GR ISLD-LNX3345.00 - HOLT.CO3 345.00 345KV CKT 1	720	720	0.04206	114.3752	P12:115:NPPD:WAPA2:HEMINGF7:SNAKECK7:BTB
FDNS	00NR	2	17SP	G14_059	TO->FROM	GR ISLD-LNX3345.00 - HOLT.CO3 345.00 345KV CKT 1	720	720	0.04256	114.3736	KOSSUTH 3 345.00 - OBRIEN 3 345.00 345KV CKT 1
FDNS	00NR	2	17SP	G14_059	TO->FROM	GR ISLD-LNX3345.00 - HOLT.CO3 345.00 345KV CKT 1	720	720	0.04238	114.3698	GEN645001 1-FORT CALHOUN 1
FDNS	00NR	2	17SP	G14_059	TO->FROM	GR ISLD-LNX3345.00 - HOLT.CO3 345.00 345KV CKT 1	720	720	0.04238	114.3636	GEN501812 1-RODEMACHER UNIT 2
FDNS	00NR	2	17SP	G14_059	TO->FROM	GR ISLD-LNX3345.00 - HOLT.CO3 345.00 345KV CKT 1	720	720	0.04256	114.3578	KOSSUTH 3 345.00 - WEBSTER 345KV CKT 1
FDNS	00NR	2	17SP	G14_059	TO->FROM	GR ISLD-LNX3345.00 - HOLT.CO3 345.00 345KV CKT 1	720	720	0.04244	114.3483	BLAIR - GRANITE FALLS 230KV CKT 1
FDNS	00NR	2	17SP	G14_059	TO->FROM	GR ISLD-LNX3345.00 - HOLT.CO3 345.00 345KV CKT 1	720	720	0.04244	114.3483	BLAIR - GRANITE FALLS 230KV CKT 1
FDNS	00NR	2	17SP	G14_059	TO->FROM	GR ISLD-LNX3345.00 - HOLT.CO3 345.00 345KV CKT 1	720	720	0.04238	114.347	GEN334440 1-SABINE UNIT 4
FDNS	00NR	2	17SP	G14_059	TO->FROM	GR ISLD-LNX3345.00 - HOLT.CO3 345.00 345KV CKT 1	720	720	0.04249	114.3456	GLENBORO SOUTH - RUGBY 230KV CKT 1
FDNS	00NR	2	17SP	G14_059	TO->FROM	GR ISLD-LNX3345.00 - HOLT.CO3 345.00 345KV CKT 1	720	720	0.04243	114.3179	BROOKING COUNTY - LYON COUNTY 345KV CKT 1
FDNS	00NR	2	17SP	G14_059	TO->FROM	GR ISLD-LNX3345.00 - HOLT.CO3 345.00 345KV CKT 1	720	720	0.04281	114.3144	COLUMEAST - NW68TH & HOLDREGE 345KV CKT 1
FDNS	00NR	2	17SP	G14_059	TO->FROM	GR ISLD-LNX3345.00 - HOLT.CO3 345.00 345KV CKT 1	720	720	0.04281	114.3144	COLUMEAST - NW68TH & HOLDREGE 345KV CKT 1
FDNS	00NR	2	17SP	G14_059	TO->FROM	GR ISLD-LNX3345.00 - HOLT.CO3 345.00 345KV CKT 1	720	720	0.04433	114.3132	JEFFREY - NORTH PLATTE 115KV CKT 1
FDNS	00NR	2	17SP	G14_059	TO->FROM	GR ISLD-LNX3345.00 - HOLT.CO3 345.00 345KV CKT 1	720	720	0.0416	114.2943	SIDNEY - STEGALL 345KV CKT 1
FDNS	00NR	2	17SP	G14_059	TO->FROM	GR ISLD-LNX3345.00 - HOLT.CO3 345.00 345KV CKT 1	720	720	0.04238	114.2903	GEN542957 1-IATAN UNIT #1
FDNS	00NR	2	17SP	G14_059	TO->FROM	GR ISLD-LNX3345.00 - HOLT.CO3 345.00 345KV CKT 1	720	720	0.04238	114.2759	GEN336191 1-LITTLE GYPSY UNIT#3
FDNS	00NR	2	17SP	G14_059	TO->FROM	GR ISLD-LNX3345.00 - HOLT.CO3 345.00 345KV CKT 1	720	720	0.04238	114.2736	P12:115:UMZW:# 162 #: NEL IN ND. FAULT ON ML-NEL-MX-GA 115 KV
FDNS	00NR	2	17SP	G14_059	TO->FROM	GR ISLD-LNX3345.00 - HOLT.CO3 345.00 345KV CKT 1	720	720	0.04238	114.2676	GEN338388 1-1PLUM PT U1 23.000
FDNS	00NR	2	17SP	G14_059	TO->FROM	GR ISLD-LNX3345.00 - HOLT.CO3 345.00 345KV CKT 1	720	720	0.04346	114.2445	AINSWORTH - STUART 115KV CKT 1
FDNS	00NR	2	17SP	G14_059	TO->FROM	GR ISLD-LNX3345.00 - HOLT.CO3 345.00 345KV CKT 1	720	720	0.04238	114.2257	GEN336801 1-BAXTER WILSON UNIT #1
FDNS	00NR	2	17SP	G14_059	TO->FROM	GR ISLD-LNX3345.00 - HOLT.CO3 345.00 345KV CKT 1	720	720	0.0424	114.2223	HANKINSON - WAHPETON 230KV CKT 1
FDNS	00NR	2	17SP	G14_059	TO->FROM	GR ISLD-LNX3345.00 - HOLT.CO3 345.00 345KV CKT 1	720	720	0.04252	114.2214	BYRON - NORTH ROCHESTER 345KV CKT 1
FDNS	00NR	2	17SP	G14_059	TO->FROM	GR ISLD-LNX3345.00 - HOLT.CO3 345.00 345KV CKT 1	720	720	0.04238	114.2126	GEN335614 1-WILLOW GLENN UNIT#4
FDNS	00NR	2	17SP	G14_059	TO->FROM	GR ISLD-LNX3345.00 - HOLT.CO3 345.00 345KV CKT 1	720	720	0.04244	114.2112	MENNO JCT - TRIPP JCT 115KV CKT 1
FDNS	00NR	2	17SP	G14_059	TO->FROM	GR ISLD-LNX3345.00 - HOLT.CO3 345.00 345KV CKT 1	720	720	0.04238	114.2055	GEN336464 1-MICHOUD UNIT #3
FDNS	00NR	2	17SP	G14_059	TO->FROM	GR ISLD-LNX3345.00 - HOLT.CO3 345.00 345KV CKT 1	720	720	0.04314	114.1968	BUCKNER7 345.00 - HOLCOMB 345KV CKT 1
FDNS	00NR	2	17SP	G14_059	TO->FROM	GR ISLD-LNX3345.00 - HOLT.CO3 345.00 345KV CKT 1	720	720	0.04314	114.1968	BUCKNER7 345.00 - HOLCOMB 345KV CKT 1
FDNS	00NR	2	17SP	G14_059	TO->FROM	GR ISLD-LNX3345.00 - HOLT.CO3 345.00 345KV CKT 1	720	720	0.04238	114.1931	GEN334441 1-SABINE UNIT 5
FDNS	00NR	2	17SP	G14_059	TO->FROM	GR ISLD-LNX3345.00 - HOLT.CO3 345.00 345KV CKT 1	720	720	0.04238	114.1844	GEN335204 1-NELSON UNIT 4
FDNS	00NR	2	17SP	G14_059	TO->FROM	GR ISLD-LNX3345.00 - HOLT.CO3 345.00 345KV CKT 1	720	720	0.04238	114.1684	GEN532652 1-JEFFREY ENERGY CENTER UNIT 2
FDNS	00NR	2	17SP	G14_059	TO->FROM	GR ISLD-LNX3345.00 - HOLT.CO3 345.00 345KV CKT 1	720	720	0.04238	114.1683	GEN532653 1-JEFFREY ENERGY CENTER UNIT 3
FDNS	00NR	2	17SP	G14_059	TO->FROM	GR ISLD-LNX3345.00 - HOLT.CO3 345.00 345KV CKT 1	720	720	0.04238	114.1675	GEN532651 1-JEFFREY ENERGY CENTER UNIT 1
FDNS	00NR	2	17SP	G14_059	TO->FROM	GR ISLD-LNX3345.00 - HOLT.CO3 345.00 345KV CKT 1	720	720	0.04238	114.1602	P13:115-230:NPPD:NUCOR-3
FDNS	00NR	2	17SP	G14_059	TO->FROM	GR ISLD-LNX3345.00 - HOLT.CO3 345.00 345KV CKT 1	720	720	0.04238	114.1491	GEN542951 5-HAWTHORN UNIT #5
FDNS	00NR	2	17SP	G14_059	TO->FROM	GR ISLD-LNX3345.00 - HOLT.CO3 345.00 345KV CKT 1	720	720	0.04316	114.1374	CLEARWATER - NELIGH 115KV CKT 1
FDNS	00NR	2	17SP	G14_059	TO->FROM	GR ISLD-LNX3345.00 - HOLT.CO3 345.00 345KV CKT 1	720	720	0.0423	114.1334	PETERSBRG.N7115.00 - PETERSBURG 115KV CKT Z1
FDNS	00NR	2	17SP	G14_059	TO->FROM	GR ISLD-LNX3345.00 - HOLT.CO3 345.00 345KV CKT 1	720	720	0.04346	114.1266	ATKINSON - STUART 115KV CKT 1
FDNS	00NR	2	17SP	G14_059	TO->FROM	GR ISLD-LNX3345.00 - HOLT.CO3 345.00 345KV CKT 1	720	720	0.04238	114.1235	P12:115:TSGT:BLKWDCK7-ELSIETP7
FDNS	00NR	2	17SP	G14_059	TO->FROM	GR ISLD-LNX3345.00 - HOLT.CO3 345.00 345KV CKT 1	720	720	0.0423	114.1232	P12:115:NPPD:1168B:ALBION 7:PETERSBRG.N7:BTB
FDNS	00NR	2	17SP	G14_059	TO->FROM	GR ISLD-LNX3345.00 - HOLT.CO3 345.00 345KV CKT 1	720	720	0.04238	114.1184	GEN642067 1-PLATTE
FDNS	00NR	2	17SP	G14_059	TO->FROM	GR ISLD-LNX3345.00 - HOLT.CO3 345.00 345KV CKT 1	720	720	0.04244	114.1159	MENNO JCT - UTICA 115KV CKT 1
FDNS	00NR	2	17SP	G14_059	TO->FROM	GR ISLD-LNX3345.00 - HOLT.CO3 345.00 345KV CKT 1	720	720	0.04245	114.1131	APPLEDORN 4 230.00 - WATERTOWN 230KV CKT 1
FDNS	00NR	2	17SP	G14_059	TO->FROM	GR ISLD-LNX3345.00 - HOLT.CO3 345.00 345KV CKT 1	720	720	0.04245	114.1131	APPLEDORN 4 230.00 - WATERTOWN 230KV CKT 1
FDNS	00NR	2	17SP	G14_059	TO->FROM	GR ISLD-LNX3345.00 - HOLT.CO3 345.00 345KV CKT 1	720	720	0.04241	114.0996	FERGSFL4 230.00 - WAHPETON 230KV CKT 1
FDNS	00NR	2	17SP	G14_059	TO->FROM	GR ISLD-LNX3345.00 - HOLT.CO3 345.00 345KV CKT 1	720	720	0.04286	114.0916	FT THOMPSON - HURON 230KV CKT 1

SOLUTION	GROUP	SCENARIO	SEASON	SOURCE	DIRECTION	MONITORED ELEMENT	RATEA (MVA)	RATEB(MVA)	TDF	TC%LOADING (% MVA)	CONTINGENCY
FDNS	00NR	2	17SP	G14_059	TO->FROM	GR ISLD-LNX3345.00 - HOLT.CO3 345.00 345KV CKT 1	720	720	0.04286	114.0916	FT THOMPSON - HURON 230KV CKT 1
FDNS	00NR	2	17SP	G14_059	TO->FROM	GR ISLD-LNX3345.00 - HOLT.CO3 345.00 345KV CKT 1	720	720	0.04286	114.0916	FT THOMPSON - HURON 230KV CKT 2
FDNS	00NR	2	17SP	G14_059	TO->FROM	GR ISLD-LNX3345.00 - HOLT.CO3 345.00 345KV CKT 1	720	720	0.04286	114.0916	FT THOMPSON - HURON 230KV CKT 2
FDNS	00NR	2	17SP	G14_059	TO->FROM	GR ISLD-LNX3345.00 - HOLT.CO3 345.00 345KV CKT 1	720	720	0.0423	114.0834	ALBION - PETERSBURG 115KV CKT 1
FDNS	00NR	2	17SP	G14_059	TO->FROM	GR ISLD-LNX3345.00 - HOLT.CO3 345.00 345KV CKT 1	720	720	0.04238	114.0828	GEN542955 1-LACYGNE UNIT #1
FDNS	00NR	2	17SP	G14_059	TO->FROM	GR ISLD-LNX3345.00 - HOLT.CO3 345.00 345KV CKT 1	720	720	0.04396	114.0822	BROKEN BOW - CALLAWAY 115KV CKT 1
FDNS	00NR	2	17SP	G14_059	TO->FROM	GR ISLD-LNX3345.00 - HOLT.CO3 345.00 345KV CKT 1	720	720	0.04244	114.0813	P12:115:UMZZ:# 237 #: MEN IN SD. MENNO JUNCTION IS A TAP (UJ-MEN-TP).
FDNS	00NR	2	17SP	G14_059	TO->FROM	GR ISLD-LNX3345.00 - HOLT.CO3 345.00 345KV CKT 1	720	720	0.04243	114.081	NORTH ROCHESTER - PRAIRIE ISLAND 345KV CKT 1
FDNS	00NR	2	17SP	G14_059	TO->FROM	GR ISLD-LNX3345.00 - HOLT.CO3 345.00 345KV CKT 1	720	720	0.04272	114.0726	MINGO (MINGO) 345/115/13.8KV TRANSFORMER CKT 1
FDNS	00NR	2	17SP	G14_059	TO->FROM	GR ISLD-LNX3345.00 - HOLT.CO3 345.00 345KV CKT 1	720	720	0.04272	114.0726	MINGO (MINGO) 345/115/13.8KV TRANSFORMER CKT 1
FDNS	00NR	2	17SP	G14_059	TO->FROM	GR ISLD-LNX3345.00 - HOLT.CO3 345.00 345KV CKT 1	720	720	0.04238	114.0722	GEN336222 1-LITTLE GYPSY UNIT#2
FDNS	00NR	2	17SP	G14_059	TO->FROM	GR ISLD-LNX3345.00 - HOLT.CO3 345.00 345KV CKT 1	720	720	0.04238	114.0703	GEN334433 1-SABINE UNIT 3
FDNS	00NR	2	17SP	G14_059	TO->FROM	GR ISLD-LNX3345.00 - HOLT.CO3 345.00 345KV CKT 1	720	720	0.04402	114.0655	AXTELL - PAULINE 345KV CKT 1
FDNS	00NR	2	17SP	G14_059	TO->FROM	GR ISLD-LNX3345.00 - HOLT.CO3 345.00 345KV CKT 1	720	720	0.04238	114.064	GEN303007 1-1BC2 U2
FDNS	00NR	2	17SP	G14_059	TO->FROM	GR ISLD-LNX3345.00 - HOLT.CO3 345.00 345KV CKT 1	720	720	0.04238	114.0601	GEN303006 1-1BC2 U1
FDNS	00NR	2	17SP	G14_059	TO->FROM	GR ISLD-LNX3345.00 - HOLT.CO3 345.00 345KV CKT 1	720	720	0.04238	114.0565	GEN562547 1-G14_039_3 0.6900
FDNS	00NR	2	17SP	G14_059	TO->FROM	GR ISLD-LNX3345.00 - HOLT.CO3 345.00 345KV CKT 1	720	720	0.04238	114.0556	P13:115-345:NPPD:NUCOR-2
FDNS	00NR	2	17SP	G14_059	TO->FROM	GR ISLD-LNX3345.00 - HOLT.CO3 345.00 345KV CKT 1	720	720	0.04245	114.0524	APPLEDORN 4 230.00 - GRANITE FALLS 230KV CKT 1
FDNS	00NR	2	17SP	G14_059	TO->FROM	GR ISLD-LNX3345.00 - HOLT.CO3 345.00 345KV CKT 1	720	720	0.04245	114.0524	APPLEDORN 4 230.00 - GRANITE FALLS 230KV CKT 1
FDNS	00NR	2	17SP	G14_059	TO->FROM	GR ISLD-LNX3345.00 - HOLT.CO3 345.00 345KV CKT 1	720	720	0.04419	114.0478	HOLCOMB - SETAB 345KV CKT 1
FDNS	00NR	2	17SP	G14_059	TO->FROM	GR ISLD-LNX3345.00 - HOLT.CO3 345.00 345KV CKT 1	720	720	0.04419	114.0478	HOLCOMB - SETAB 345KV CKT 1
FDNS	00NR	2	17SP	G14_059	TO->FROM	GR ISLD-LNX3345.00 - HOLT.CO3 345.00 345KV CKT 1	720	720	0.04238	114.0477	P13:230:UMZW:# 2218 #: FP IN MT. LOSS OF TRANSFORMER (AT2).
FDNS	00NR	2	17SP	G14_059	TO->FROM	GR ISLD-LNX3345.00 - HOLT.CO3 345.00 345KV CKT 1	720	720	0.04252	114.0462	BYRON - PLEASANT VALLEY 345KV CKT 1
FDNS	00NR	2	17SP	G14_059	TO->FROM	GR ISLD-LNX3345.00 - HOLT.CO3 345.00 345KV CKT 1	720	720	0.04238	114.0447	GEN563212 1-G15087_3 0.6900
FDNS	00NR	2	17SP	G14_059	TO->FROM	GR ISLD-LNX3345.00 - HOLT.CO3 345.00 345KV CKT 1	720	720	0.04135	114.0289	MAXWELL - STAPLETON 115KV CKT 1
FDNS	00NR	2	17SP	G14_059	TO->FROM	GR ISLD-LNX3345.00 - HOLT.CO3 345.00 345KV CKT 1	720	720	0.0425	114.0241	DENISON - SIOUX CITY 230KV CKT 1
FDNS	00NR	2	17SP	G14_059	TO->FROM	GR ISLD-LNX3345.00 - HOLT.CO3 345.00 345KV CKT 1	720	720	0.04349	113.9916	BROKEN BOW - LOUP CITY 115KV CKT 1
FDNS	00NR	2	17SP	G14_059	TO->FROM	GR ISLD-LNX3345.00 - HOLT.CO3 345.00 345KV CKT 1	720	720	0.04346	113.9599	AINSWORTH - AINSWORTH 115KV CKT 1
FDNS	00NR	2	17SP	G14_059	TO->FROM	GR ISLD-LNX3345.00 - HOLT.CO3 345.00 345KV CKT 1	720	720	0.04346	113.9578	ATKINSON - EMMET 115KV CKT 1
FDNS	00NR	2	17SP	G14_059	TO->FROM	GR ISLD-LNX3345.00 - HOLT.CO3 345.00 345KV CKT 1	720	720	0.04238	113.4275	BASE CASE
FDNS	00NR	2	17SP	G14_059	TO->FROM	GR ISLD-LNX3345.00 - HOLT.CO3 345.00 345KV CKT 1	720	720	0.04236	113.0541	ANTELOP-LNX3345.00 - BRDLAND-LNX3345.00 345KV CKT 1
FDNS	00NR	2	17SP	G14_059	TO->FROM	GR ISLD-LNX3345.00 - HOLT.CO3 345.00 345KV CKT 1	720	720	0.04116	112.9493	MAXWELL - NORTH PLATTE 115KV CKT 1
FDNS	00NR	2	17SP	G14_059	TO->FROM	GR ISLD-LNX3345.00 - HOLT.CO3 345.00 345KV CKT 1	720	720	0.04192	112.894	SUB 3454 - WAGENER 345KV CKT 1
FDNS	00NR	2	17SP	G14_059	TO->FROM	GR ISLD-LNX3345.00 - HOLT.CO3 345.00 345KV CKT 1	720	720	0.04192	112.894	SUB 3454 - WAGENER 345KV CKT 1
FDNS	00NR	2	17SP	G14_059	TO->FROM	GR ISLD-LNX3345.00 - HOLT.CO3 345.00 345KV CKT 1	720	720	0.04156	112.8693	G15088_T 345.00 - MOORE 345KV CKT 1
FDNS	00NR	2	17SP	G14_059	TO->FROM	GR ISLD-LNX3345.00 - HOLT.CO3 345.00 345KV CKT 1	720	720	0.04236	112.8291	P12:345:UMZB:# 102 #: AVS BD IN ND. AVS BRD LR
FDNS	00NR	2	17SP	G14_059	TO->FROM	GR ISLD-LNX3345.00 - HOLT.CO3 345.00 345KV CKT 1	720	720	0.04236	112.829	BRDLAND-LNX3345.00 - HURON 345KV CKT Z
FDNS	00NR	2	17SP	G14_059	TO->FROM	GR ISLD-LNX3345.00 - HOLT.CO3 345.00 345KV CKT 1	720	720	0.04236	112.8282	P12:345:UMZB:# 103 #: BD IN SD. LOSS OF LINE
FDNS	00NR	2	17SP	G14_059	TO->FROM	GR ISLD-LNX3345.00 - HOLT.CO3 345.00 345KV CKT 1	720	720	0.04236	112.828	HURON (BD KU2A) 345/230/13.8KV TRANSFORMER CKT 1
FDNS	00NR	2	17SP	G14_059	TO->FROM	GR ISLD-LNX3345.00 - HOLT.CO3 345.00 345KV CKT 1	720	720	0.04236	112.828	HURON (BD KU2A) 345/230/13.8KV TRANSFORMER CKT 1
FDNS	00NR	2	17SP	G14_059	TO->FROM	GR ISLD-LNX3345.00 - HOLT.CO3 345.00 345KV CKT 1	720	720	0.04236	112.8279	BROADLAND - HURON 230KV CKT 1
FDNS	00NR	2	17SP	G14_059	TO->FROM	GR ISLD-LNX3345.00 - HOLT.CO3 345.00 345KV CKT 1	720	720	0.04238	112.8228	GEN600043 7-BLUE LAKE5
FDNS	00NR	2	17SP	G14_059	TO->FROM	GR ISLD-LNX3345.00 - HOLT.CO3 345.00 345KV CKT 1	720	720	0.04238	112.8228	GEN600044 8-BLUE LAKE6
FDNS	00NR	2	17SP	G14_059	TO->FROM	GR ISLD-LNX3345.00 - HOLT.CO3 345.00 345KV CKT 1	720	720	0.04214	112.8225	POST ROCK (POSTROCK T1) 345/230/13.8KV TRANSFORMER CKT 1
FDNS	00NR	2	17SP	G14_059	TO->FROM	GR ISLD-LNX3345.00 - HOLT.CO3 345.00 345KV CKT 1	720	720	0.04187	112.8025	GRAND ISLAND (GRAND.ISD T5) 230/115/13.8KV TRANSFORMER CKT 2
FDNS	00NR	2	17SP	G14_059	TO->FROM	GR ISLD-LNX3345.00 - HOLT.CO3 345.00 345KV CKT 1	720	720	0.04187	112.8025	GRAND ISLAND (GRAND.ISD T5) 230/115/13.8KV TRANSFORMER CKT 2
FDNS	00NR	2	17SP	G14_059	TO->FROM	GR ISLD-LNX3345.00 - HOLT.CO3 345.00 345KV CKT 1	720	720	0.04187	112.799	GRAND ISLAND (GRAND.ISD T2) 230/115/13.8KV TRANSFORMER CKT 1
FDNS	00NR	2	17SP	G14_059	TO->FROM	GR ISLD-LNX3345.00 - HOLT.CO3 345.00 345KV CKT 1	720	720	0.04187	112.799	GRAND ISLAND (GRAND.ISD T2) 230/115/13.8KV TRANSFORMER CKT 1
FDNS	00NR	2	17SP	G14_059	TO->FROM	GR ISLD-LNX3345.00 - HOLT.CO3 345.00 345KV CKT 1	720	720	0.04238	112.7984	GEN600014 4-BLACK DOG GEN 4
FDNS	00NR	2	17SP	G14_059	TO->FROM	GR ISLD-LNX3345.00 - HOLT.CO3 345.00 345KV CKT 1	720	720	0.04238	112.7977	GEN600065 7-HIGH BRIDGE
FDNS	00NR	2	17SP	G14_059	TO->FROM	GR ISLD-LNX3345.00 - HOLT.CO3 345.00 345KV CKT 1	720	720	0.04238	112.7977	GEN600066 8-HIGH BRIDGE
FDNS	00NR	2	17SP	G14_059	TO->FROM	GR ISLD-LNX3345.00 - HOLT.CO3 345.00 345KV CKT 1	720	720	0.04238	112.7948	GEN600045 4-ANSON
FDNS	00NR	2	17SP	G14_059	TO->FROM	GR ISLD-LNX3345.00 - HOLT.CO3 345.00 345KV CKT 1	720	720	0.04238	112.794	GEN600011 5-BLACK DOG GEN 1
FDNS	00NR	2	17SP	G14_059	TO->FROM	GR ISLD-LNX3345.00 - HOLT.CO3 345.00 345KV CKT 1	720	720	0.04238	112.7869	GEN600070 9-RIVER SIDE
FDNS	00NR	2	17SP	G14_059	TO->FROM	GR ISLD-LNX3345.00 - HOLT.CO3 345.00 345KV CKT 1	720	720	0.04238	112.7869	GEN600071 10-RIVER SIDE
FDNS	00NR	2	17SP	G14_059	TO->FROM	GR ISLD-LNX3345.00 - HOLT.CO3 345.00 345KV CKT 1	720	720	0.04238	112.7774	GEN600007 7-RIVERSIDE GEN 7
FDNS	00NR	2	17SP	G14_059	TO->FROM	GR ISLD-LNX3345.00 - HOLT.CO3 345.00 345KV CKT 1	720	720	0.04238	112.7739	GEN659192 6-LYNN
FDNS	00NR	2	17SP	G14_059	TO->FROM	GR ISLD-LNX3345.00 - HOLT.CO3 345.00 345KV CKT 1	720	720	0.04238	112.7732	GEN659162 4-RED WLCK
FDNS	00NR	2	17SP	G14_059	TO->FROM	GR ISLD-LNX3345.00 - HOLT.CO3 345.00 345KV CKT 1	720	720	0.04238	112.7732	GEN659163 5-BLACK WDCK
FDNS	00NR	2	17SP	G14_059	TO->FROM	GR ISLD-LNX3345.00 - HOLT.CO3 345.00 345KV CKT 1	720	720	0.04238	112.7618	GEN600017 C-LS POWER CT
FDNS	00NR	2	17SP	G14_059	TO->FROM	GR ISLD-LNX3345.00 - HOLT.CO3 345.00 345KV CKT 1	720	720	0.04238	112.7608	GEN659031 1-G12_014IS_4 0.6900
FDNS	00NR	2	17SP	G14_059	TO->FROM	GR ISLD-LNX3345.00 - HOLT.CO3 345.00 345KV CKT 1	720	720	0.04274	112.7481	COOPER - FAIRPORT 345KV CKT 1
FDNS	00NR	2	17SP	G14_059	TO->FROM	GR ISLD-LNX3345.00 - HOLT.CO3 345.00 345KV CKT 1	720	720	0.04238	112.74	GEN681522 3-GENOA 3
FDNS	00NR	2	17SP	G14_059	TO->FROM	GR ISLD-LNX3345.00 - HOLT.CO3 345.00 345KV CKT 1	720	720	0.04238	112.7392	LANSING WEST 161/22.0KV TRANSFORMER CKT 1
FDNS	00NR	2	17SP	G14_059	TO->FROM	GR ISLD-LNX3345.00 - HOLT.CO3 345.00 345KV CKT 1	720	720	0.04192	112.734	GRAND ISLAND (GI KU1B) 345/230/13.8KV TRANSFORMER CKT 2
FDNS	00NR	2	17SP	G14_059	TO->FROM	GR ISLD-LNX3345.00 - HOLT.CO3 345.00 345KV CKT 1	720	720	0.04192	112.734	GRAND ISLAND (GI KU1B) 345/230/13.8KV TRANSFORMER CKT 2
FDNS	00NR	2	17SP	G14_059	TO->FROM	GR ISLD-LNX3345.00 - HOLT.CO3 345.00 345KV CKT 1	720	720	0.04191	112.7326	GRAND ISLAND (GI KU1A) 345/230/13.8KV TRANSFORMER CKT 1
FDNS	00NR	2	17SP	G14_059	TO->FROM	GR ISLD-LNX3345.00 - HOLT.CO3 345.00 345KV CKT 1	720	720	0.04191	112.7326	GRAND ISLAND (GI KU1A) 345/230/13.8KV TRANSFORMER CKT 1
FDNS	00NR	2	17SP	G14_059	TO->FROM	GR ISLD-LNX3345.00 - HOLT.CO3 345.00 345KV CKT 1	720	720	0.04238	112.7183	GEN615021 1-GRE-ER 14G 16.000
FDNS	00NR	2	17SP	G14_059	TO->FROM	GR ISLD-LNX3345.00 - HOLT.CO3 345.00 345KV CKT 1	720	720	0.04238	112.708	GEN 10648 1-G830_GEN 0.6900
FDNS	00NR	2	17SP	G14_059	TO->FROM	GR ISLD-LNX3345.00 - HOLT.CO3 345.00 345KV CKT 1	720	720	0.04238	112.7078	GEN615052 1-CAMBRIDGE GENERATING STATION
FDNS	00NR	2	17SP	G14_059	TO->FROM	GR ISLD-LNX3345.00 - HOLT.CO3 345.00 345KV CKT 1	720	720	0.04238	112.6976	GEN659353 1-DEERCREK CTG18.000
FDNS	00NR	2	17SP	G14_059	TO->FROM	GR ISLD-LNX3345.00 - HOLT.CO3 345.00 345KV CKT 1	720	720	0.04238	112.695	GEN659354 1-DEERCREK STG18.000
FDNS	00NR	2	17SP	G14_059	TO->FROM	GR ISLD-LNX3345.00 - HOLT.CO3 345.00 345KV CKT 1	720	720	0.04238	112.6802	GEN660016 1-B_H WIND 0.7000
FDNSLock	00NR	2	17SP	G14_059	TO->FROM	GR ISLD-LNX3345.00 - HOLT.CO3 345.00 345KV CKT 1	720	720	0.04184	112.6582	CENTRAL CITY - GRAND ISLAND 115KV CKT 1
FDNS	00NR	2	17SP	G14_059	TO->FROM	GR ISLD-LNX3345.00 - HOLT.CO3 345.00 345KV CKT 1	720	720	0.04236	112.6574	ANTELOP-LNX3345.00 - ANTELOPE VALLEY 345KV CKT Z
FDNS	00NR	2	17SP	G14_059	TO->FROM	GR ISLD-LNX3345.00 - HOLT.CO3 345.00 345KV CKT 1	720	720	0.04238	112.6564	GEN615015 1-GRE-SPRITWDG13.200
FDNS	00NR	2	17SP	G14_059	TO->FROM	GR ISLD-LNX3345.00 - HOLT.CO3 345.00 345KV CKT 1	720	720	0.04273	112.6278	OAHE - SULLEY BUTTE 230KV CKT 1
FDNSLock	00NR	2	17SP	G14_059	TO->FROM	GR ISLD-LNX3345.00 - HOLT.CO3 345.00 345KV CKT 1	720	720	0.04278	112.6188	COPSTJCPFRSJ

SOLUTION	GROUP	SCENARIO	SEASON	SOURCE	DIRECTION	MONITORED ELEMENT	RATEA (MVA)	RATEB(MVA)	TDF	TC%LOADING (% MVA)	CONTINGENCY
FDNSLock	00NR	2	17SP	G14_059	TO->FROM	GR ISLD-LNX3345.00 - HOLT.CO3 345.00 345KV CKT 1	720	720	0.04278	112.6188	STMDSJFAFACO
FDNS	00NR	2	17SP	G14_059	TO->FROM	GR ISLD-LNX3345.00 - HOLT.CO3 345.00 345KV CKT 1	720	720	0.04238	112.5415	GEN672303 3-BOUNDARY DAM GENERATOR 3
FDNS	00NR	2	17SP	G14_059	TO->FROM	GR ISLD-LNX3345.00 - HOLT.CO3 345.00 345KV CKT 1	720	720	0.04238	112.5415	GEN672305 5-BOUNDARY DAM GENERATOR 5
FDNS	00NR	2	17SP	G14_059	TO->FROM	GR ISLD-LNX3345.00 - HOLT.CO3 345.00 345KV CKT 1	720	720	0.04238	112.5373	GEN600067 9-HIGH BRIDGE
FDNS	00NR	2	17SP	G14_059	TO->FROM	GR ISLD-LNX3345.00 - HOLT.CO3 345.00 345KV CKT 1	720	720	0.04273	112.5265	SULLEY BUTTE - SULLYBT-LNX3230.00 230KV CKT Z
FDNS	00NR	2	17SP	G14_059	TO->FROM	GR ISLD-LNX3345.00 - HOLT.CO3 345.00 345KV CKT 1	720	720	0.04273	112.5261	SULLYBT-LNX3230.00 - WHITLOK 230KV CKT 1
FDNS	00NR	2	17SP	G14_059	TO->FROM	GR ISLD-LNX3345.00 - HOLT.CO3 345.00 345KV CKT 1	720	720	0.04238	112.5243	GEN672392 1-NBECGT1G 18.000
FDNS	00NR	2	17SP	G14_059	TO->FROM	GR ISLD-LNX3345.00 - HOLT.CO3 345.00 345KV CKT 1	720	720	0.04238	112.5218	GEN910006 1-G12_012IS_3 0.6900
FDNS	00NR	2	17SP	G14_059	TO->FROM	GR ISLD-LNX3345.00 - HOLT.CO3 345.00 345KV CKT 1	720	720	0.04238	112.5046	GEN662101 1-WESSINGTON190.5750
FDNS	00NR	2	17SP	G14_059	TO->FROM	GR ISLD-LNX3345.00 - HOLT.CO3 345.00 345KV CKT 1	720	720	0.04273	112.491	P12:230:UMZB:# 114 #: SB IN SD. SB-WK-GH
FDNS	00NR	2	17SP	G14_059	TO->FROM	GR ISLD-LNX3345.00 - HOLT.CO3 345.00 345KV CKT 1	720	720	0.04273	112.491	P12:230:UMZB:# 117 #: WK IN SD. SB-WK-GH
FDNS	00NR	2	17SP	G14_059	TO->FROM	GR ISLD-LNX3345.00 - HOLT.CO3 345.00 345KV CKT 1	720	720	0.04141	112.4691	103RD & ROKEBY - MOORE 345KV CKT 1
FDNS	00NR	2	17SP	G14_059	TO->FROM	GR ISLD-LNX3345.00 - HOLT.CO3 345.00 345KV CKT 1	720	720	0.04141	112.4691	103RD & ROKEBY - MOORE 345KV CKT 1
FDNS	00NR	2	17SP	G14_059	TO->FROM	GR ISLD-LNX3345.00 - HOLT.CO3 345.00 345KV CKT 1	720	720	0.04238	112.4585	BISONMP4 230.00 - SQUARE BUTTE 230KV CKT 1
FDNS	00NR	2	17SP	G14_059	TO->FROM	GR ISLD-LNX3345.00 - HOLT.CO3 345.00 345KV CKT 1	720	720	0.04273	112.4561	GLENHAM - WHITLOK 230KV CKT 1
FDNS	00NR	2	17SP	G14_059	TO->FROM	GR ISLD-LNX3345.00 - HOLT.CO3 345.00 345KV CKT 1	720	720	0.04295	112.4196	COOPER - ST JOE 345KV CKT 1
FDNS	00NR	2	17SP	G14_059	TO->FROM	GR ISLD-LNX3345.00 - HOLT.CO3 345.00 345KV CKT 1	720	720	0.04117	112.4091	AXTELL - POST ROCK 345KV CKT 1
FDNS	00NR	2	17SP	G14_059	TO->FROM	GR ISLD-LNX3345.00 - HOLT.CO3 345.00 345KV CKT 1	720	720	0.04169	112.4002	GRAND ISLAND (GI KU3A) 345/230/13.8KV TRANSFORMER CKT 3
FDNS	00NR	2	17SP	G14_059	TO->FROM	GR ISLD-LNX3345.00 - HOLT.CO3 345.00 345KV CKT 1	720	720	0.04169	112.4002	GRAND ISLAND (GI KU3A) 345/230/13.8KV TRANSFORMER CKT 3
FDNS	00NR	2	17SP	G14_059	TO->FROM	GR ISLD-LNX3345.00 - HOLT.CO3 345.00 345KV CKT 1	720	720	0.03881	112.3991	COLUMWEST - GRAND ISLAND 230KV CKT 1
FDNS	00NR	2	17SP	G14_059	TO->FROM	GR ISLD-LNX3345.00 - HOLT.CO3 345.00 345KV CKT 1	720	720	0.03947	112.3816	COOPER - MOORE 345KV CKT 1
FDNS	00NR	2	17SP	G14_059	TO->FROM	GR ISLD-LNX3345.00 - HOLT.CO3 345.00 345KV CKT 1	720	720	0.04256	112.3673	G14-021T 345.00 - MULLNCR7 345.00 345KV CKT 1
FDNS	00NR	2	17SP	G14_059	TO->FROM	GR ISLD-LNX3345.00 - HOLT.CO3 345.00 345KV CKT 1	720	720	0.04256	112.3664	G15-005T 345.00 - MULLNCR7 345.00 345KV CKT 1
FDNS	00NR	2	17SP	G14_059	TO->FROM	GR ISLD-LNX3345.00 - HOLT.CO3 345.00 345KV CKT 1	720	720	0.04238	112.3284	GEN652543 3-BIG BEND
FDNS	00NR	2	17SP	G14_059	TO->FROM	GR ISLD-LNX3345.00 - HOLT.CO3 345.00 345KV CKT 1	720	720	0.04238	112.3257	GEN659289 1-DAYCNTYWND W0.6900
FDNS	00NR	2	17SP	G14_059	TO->FROM	GR ISLD-LNX3345.00 - HOLT.CO3 345.00 345KV CKT 1	720	720	0.04238	112.3014	GEN563312 1-G15097_3 0.6900
FDNS	00NR	2	17SP	G14_059	TO->FROM	GR ISLD-LNX3345.00 - HOLT.CO3 345.00 345KV CKT 1	720	720	0.04238	112.2916	GEN659018 1-G14_003IS_3 0.6900
FDNS	00NR	2	17SP	G14_059	TO->FROM	GR ISLD-LNX3345.00 - HOLT.CO3 345.00 345KV CKT 1	720	720	0.04238	112.2811	GEN681542 6-JP MADGETT
FDNS	00NR	2	17SP	G14_059	TO->FROM	GR ISLD-LNX3345.00 - HOLT.CO3 345.00 345KV CKT 1	720	720	0.04256	112.2788	G15-005T 345.00 - SIBLEY 345KV CKT 1
FDNS	00NR	2	17SP	G14_059	TO->FROM	GR ISLD-LNX3345.00 - HOLT.CO3 345.00 345KV CKT 1	720	720	0.04238	112.2402	GEN562596 1-G14_059_3 0.6900
FDNS	00NR	2	17SP	G14_059	TO->FROM	GR ISLD-LNX3345.00 - HOLT.CO3 345.00 345KV CKT 1	720	720	0.04238	112.2319	SQUARE BUTTE - YNG2 4 230.00 230KV CKT 1
FDNS	00NR	2	17SP	G14_059	TO->FROM	GR ISLD-LNX3345.00 - HOLT.CO3 345.00 345KV CKT 1	720	720	0.04238	112.1908	GEN659194 1-NDPRAIRWND1W0.6900
FDNS	00NR	2	17SP	G14_059	TO->FROM	GR ISLD-LNX3345.00 - HOLT.CO3 345.00 345KV CKT 1	720	720	0.04238	112.1789	GEN659010 4-G07_027IS_2 0.6900
FDNS	00NR	2	17SP	G14_059	TO->FROM	GR ISLD-LNX3345.00 - HOLT.CO3 345.00 345KV CKT 1	720	720	0.04238	112.1747	GEN652460 4-GARRISON
FDNS	00NR	2	17SP	G14_059	TO->FROM	GR ISLD-LNX3345.00 - HOLT.CO3 345.00 345KV CKT 1	720	720	0.04238	112.1746	GEN652461 5-GARRISON
FDNS	00NR	2	17SP	G14_059	TO->FROM	GR ISLD-LNX3345.00 - HOLT.CO3 345.00 345KV CKT 1	720	720	0.04238	112.1409	GEN652906 1-G09_006IS_3 0.6900
FDNS	00NR	2	17SP	G14_059	TO->FROM	GR ISLD-LNX3345.00 - HOLT.CO3 345.00 345KV CKT 1	720	720	0.04238	112.1345	GEN652457 1-GARRISON
FDNS	00NR	2	17SP	G14_059	TO->FROM	GR ISLD-LNX3345.00 - HOLT.CO3 345.00 345KV CKT 1	720	720	0.04238	112.1345	GEN652458 2-GARRISON
FDNS	00NR	2	17SP	G14_059	TO->FROM	GR ISLD-LNX3345.00 - HOLT.CO3 345.00 345KV CKT 1	720	720	0.04238	112.1345	GEN652459 3-GARRISON
FDNS	00NR	2	17SP	G14_059	TO->FROM	GR ISLD-LNX3345.00 - HOLT.CO3 345.00 345KV CKT 1	720	720	0.04238	112.1255	GEN563342 1-G15098_3 0.6900
FDNS	00NR	2	17SP	G14_059	TO->FROM	GR ISLD-LNX3345.00 - HOLT.CO3 345.00 345KV CKT 1	720	720	0.04238	112.1155	GEN563282 1-G15094_3 0.6900
FDNS	00NR	2	17SP	G14_059	TO->FROM	GR ISLD-LNX3345.00 - HOLT.CO3 345.00 345KV CKT 1	720	720	0.04238	112.1066	GEN652542 1-BIG BEND
FDNS	00NR	2	17SP	G14_059	TO->FROM	GR ISLD-LNX3345.00 - HOLT.CO3 345.00 345KV CKT 1	720	720	0.04238	112.0933	GEN659403 1-NDSUNFLWR W0.6900
FDNS	00NR	2	17SP	G14_059	TO->FROM	GR ISLD-LNX3345.00 - HOLT.CO3 345.00 345KV CKT 1	720	720	0.04273	112.0258	GLENHAM - L3 HAWDON 230KV CKT 1
FDNS	00NR	2	17SP	G14_059	TO->FROM	GR ISLD-LNX3345.00 - HOLT.CO3 345.00 345KV CKT 1	720	720	0.04238	111.9881	GEN652907 1-G09_007IS_3 0.6900
FDNS	00NR	2	17SP	G14_059	TO->FROM	GR ISLD-LNX3345.00 - HOLT.CO3 345.00 345KV CKT 1	720	720	0.04238	111.896	CLAY BOSWELL 230/20.9KV TRANSFORMER CKT 1
FDNS	00NR	2	17SP	G14_059	TO->FROM	GR ISLD-LNX3345.00 - HOLT.CO3 345.00 345KV CKT 1	720	720	0.04238	111.8821	STANTON 230/18.0KV TRANSFORMER CKT 1
FDNS	00NR	2	17SP	G14_059	TO->FROM	GR ISLD-LNX3345.00 - HOLT.CO3 345.00 345KV CKT 1	720	720	0.04238	111.8063	GEN659411 1-CAMPBLCNTY W0.6900
FDNS	00NR	2	17SP	G14_059	TO->FROM	GR ISLD-LNX3345.00 - HOLT.CO3 345.00 345KV CKT 1	720	720	0.04238	111.6929	GEN652559 1-OAHE
FDNS	00NR	2	17SP	G14_059	TO->FROM	GR ISLD-LNX3345.00 - HOLT.CO3 345.00 345KV CKT 1	720	720	0.04238	111.6787	GEN659296 2-SDPRAIRWND1W0.6900
FDNS	00NR	2	17SP	G14_059	TO->FROM	GR ISLD-LNX3345.00 - HOLT.CO3 345.00 345KV CKT 1	720	720	0.04238	111.5125	GEN659453 1-GI1414GEN W0.6900
FDNS	00NR	2	17SP	G14_059	TO->FROM	GR ISLD-LNX3345.00 - HOLT.CO3 345.00 345KV CKT 1	720	720	0.04238	111.51	GEN563302 1-G15096_3 0.6900
FDNS	00NR	2	17SP	G14_059	TO->FROM	GR ISLD-LNX3345.00 - HOLT.CO3 345.00 345KV CKT 1	720	720	0.04238	111.5095	GEN672321 1-SHAND GENERATOR 1
FDNS	00NR	2	17SP	G14_059	TO->FROM	GR ISLD-LNX3345.00 - HOLT.CO3 345.00 345KV CKT 1	720	720	0.04238	111.4919	GEN672310 1-POPLAR RIVER GENERATOR 1
FDNS	00NR	2	17SP	G14_059	TO->FROM	GR ISLD-LNX3345.00 - HOLT.CO3 345.00 345KV CKT 1	720	720	0.04238	111.4919	GEN672311 2-POPLAR RIVER GENERATOR 2
FDNS	00NR	2	17SP	G14_059	TO->FROM	GR ISLD-LNX3345.00 - HOLT.CO3 345.00 345KV CKT 1	720	720	0.04238	111.4693	GEN600004 2-PRAIRIE ISLAND G2
FDNS	00NR	2	17SP	G14_059	TO->FROM	GR ISLD-LNX3345.00 - HOLT.CO3 345.00 345KV CKT 1	720	720	0.04238	111.4663	GEN600003 1-PRAIRIE ISLAND G1
FDNS	00NR	2	17SP	G14_059	TO->FROM	GR ISLD-LNX3345.00 - HOLT.CO3 345.00 345KV CKT 1	720	720	0.04238	111.458	GEN659141 1-K10215A
FDNS	00NR	2	17SP	G14_059	TO->FROM	GR ISLD-LNX3345.00 - HOLT.CO3 345.00 345KV CKT 1	720	720	0.04238	111.4485	GEN615010 1-STANTON4
FDNS	00NR	2	17SP	G14_059	TO->FROM	GR ISLD-LNX3345.00 - HOLT.CO3 345.00 345KV CKT 1	720	720	0.04238	111.441	GEN672306 6-BOUNDARY DAM GENERATOR 6
FDNS	00NR	2	17SP	G14_059	TO->FROM	GR ISLD-LNX3345.00 - HOLT.CO3 345.00 345KV CKT 1	720	720	0.04238	111.4295	GEN659110 1-LELAND OLDS UNIT1
FDNS	00NR	2	17SP	G14_059	TO->FROM	GR ISLD-LNX3345.00 - HOLT.CO3 345.00 345KV CKT 1	720	720	0.04238	111.4067	GEN652556 2-OAHE
FDNS	00NR	2	17SP	G14_059	TO->FROM	GR ISLD-LNX3345.00 - HOLT.CO3 345.00 345KV CKT 1	720	720	0.04238	111.4067	GEN652557 4-OAHE
FDNS	00NR	2	17SP	G14_059	TO->FROM	GR ISLD-LNX3345.00 - HOLT.CO3 345.00 345KV CKT 1	720	720	0.04238	111.4067	GEN652558 6-OAHE
FDNS	00NR	2	17SP	G14_059	TO->FROM	GR ISLD-LNX3345.00 - HOLT.CO3 345.00 345KV CKT 1	720	720	0.04238	111.3603	GEN652173 1-G09_001IS_2 0.6900
FDNS	00NR	2	17SP	G14_059	TO->FROM	GR ISLD-LNX3345.00 - HOLT.CO3 345.00 345KV CKT 1	720	720	0.04238	111.2446	GEN657749 1-YOUNG 1 GENERATOR
FDNS	00NR	2	17SP	G14_059	TO->FROM	GR ISLD-LNX3345.00 - HOLT.CO3 345.00 345KV CKT 1	720	720	0.04238	111.228	GEN600006 1-AS KING
FDNS	00NR	2	17SP	G14_059	TO->FROM	GR ISLD-LNX3345.00 - HOLT.CO3 345.00 345KV CKT 1	720	720	0.04238	111.2215	GEN640011 2-GERALD GENTLEMAN STATION UNIT 2
FDNS	00NR	2	17SP	G14_059	TO->FROM	GR ISLD-LNX3345.00 - HOLT.CO3 345.00 345KV CKT 1	720	720	0.04238	111.0952	GEN659407 1-ANTELPHILLSW0.6900
FDNS	00NR	2	17SP	G14_059	TO->FROM	GR ISLD-LNX3345.00 - HOLT.CO3 345.00 345KV CKT 1	720	720	0.04238	111.0838	RCDC EAST 4230.00 - RED CEDAR DC 230KV CKT 1
FDNS	00NR	2	17SP	G14_059	TO->FROM	GR ISLD-LNX3345.00 - HOLT.CO3 345.00 345KV CKT 1	720	720	0.04238	111.0811	P12:230:UMZB:# 112 #: NU IN SD. NU-RCDC & DRY CREEK XFMR
FDNS	00NR	2	17SP	G14_059	TO->FROM	GR ISLD-LNX3345.00 - HOLT.CO3 345.00 345KV CKT 1	720	720	0.04238	111.0086	GEN640010 1-GERALD GENTLEMAN STATION UNIT 1
FDNS	00NR	2	17SP	G14_059	TO->FROM	GR ISLD-LNX3345.00 - HOLT.CO3 345.00 345KV CKT 1	720	720	0.04238	110.8432	GEN600005 1-MONTICELLO
FDNS	00NR	2	17SP	G14_059	TO->FROM	GR ISLD-LNX3345.00 - HOLT.CO3 345.00 345KV CKT 1	720	720	0.04238	110.3476	GEN600000 1-SHERBURNECNTY G1
FDNS	00NR	2	17SP	G14_059	TO->FROM	GR ISLD-LNX3345.00 - HOLT.CO3 345.00 345KV CKT 1	720	720	0.04238	110.08	GEN600001 2-SHERBURNE CNTY G2
FDNS	00NR	2	17SP	G14_059	TO->FROM	GR ISLD-LNX3345.00 - HOLT.CO3 345.00 345KV CKT 1	720	720	0.04238	109.813	GEN620315 1-BIG STONE GEN
FDNS	00NR	2	17SP	G14_059	TO->FROM	GR ISLD-LNX3345.00 - HOLT.CO3 345.00 345KV CKT 1	720	720	0.04238	109.7305	GEN659118 1-LARAMIE RIVER UNIT1
FDNS	00NR	2	17SP	G14_059	TO->FROM	GR ISLD-LNX3345.00 - HOLT.CO3 345.00 345KV CKT 1	720	720	0.04238	109.7142	GEN661015 1-COYOTE
FDNS	00NR	2	17SP	G14_059	TO->FROM	GR ISLD-LNX3345.00 - HOLT.CO3 345.00 345KV CKT 1	720	720	0.04238	109.5769	GEN600002 3-SHERBURNE CNTY G3

SOLUTION	GROUP	SCENARIO	SEASON	SOURCE	DIRECTION	MONITORED ELEMENT	RATEA (MVA)	RATEB(MVA)	TDF	TC%LOADING (% MVA)	CONTINGENCY
FDNS	00NR	2	17SP	G14_059	TO->FROM	GR ISLD-LNX3345.00 - HOLT.CO3 345.00 345KV CKT 1	720	720	0.04238	109.5	GEN657748 1-YOUNG 2 GENERATOR
FDNS	00NR	2	17SP	G14_059	TO->FROM	GR ISLD-LNX3345.00 - HOLT.CO3 345.00 345KV CKT 1	720	720	0.04238	109.4582	GEN562872 1-G15046_3 0.6900
FDNS	00NR	2	17SP	G14_059	TO->FROM	GR ISLD-LNX3345.00 - HOLT.CO3 345.00 345KV CKT 1	720	720	0.04238	109.2696	GEN659111 2-LELAND OLDS UNIT2
FDNS	00NR	2	17SP	G14_059	TO->FROM	GR ISLD-LNX3345.00 - HOLT.CO3 345.00 345KV CKT 1	720	720	0.04238	109.0265	SHERBURNE CO 345/24.0KV TRANSFORMER CKT 1
FDNS	00NR	2	17SP	G14_059	TO->FROM	GR ISLD-LNX3345.00 - HOLT.CO3 345.00 345KV CKT 1	720	720	0.04238	108.9483	GEN659103 1-ANTELOPE VALLEY UNIT1
FDNS	00NR	2	17SP	G14_059	TO->FROM	GR ISLD-LNX3345.00 - HOLT.CO3 345.00 345KV CKT 1	720	720	0.04238	108.9483	GEN659107 2-ANTELOPE VALLEY UNIT2
FDNS	00NR	2	17SP	G14_059	TO->FROM	GR ISLD-LNX3345.00 - HOLT.CO3 345.00 345KV CKT 1	720	720	0.04238	108.7208	BIG STONE 230/24.0KV TRANSFORMER CKT 1
FDNS	00NR	2	17SP	G14_059	TO->FROM	GR ISLD-LNX3345.00 - HOLT.CO3 345.00 345KV CKT 1	720	720	0.04238	108.3029	GEN659125 1-COVEY
FDNS	00NR	2	17SP	G14_059	TO->FROM	GR ISLD-LNX3345.00 - HOLT.CO3 345.00 345KV CKT 1	720	720	0.04309	107.8557	FTTHOM1-LNX3345.00 - LELAND2-LNX3345.00 345KV CKT 1
FDNS	00NR	2	17SP	G14_059	TO->FROM	GR ISLD-LNX3345.00 - HOLT.CO3 345.00 345KV CKT 1	720	720	0.04309	107.6972	P12:345:UMZB:# 108 #: LOS FT IN ND. LOS FT
FDNS	00NR	2	17SP	G14_059	TO->FROM	GR ISLD-LNX3345.00 - HOLT.CO3 345.00 345KV CKT 1	720	720	0.04309	107.689	FT THOMPSON - FTTHOM1-LNX3345.00 345KV CKT Z
FDNS	00NR	2	17SP	G14_059	TO->FROM	GR ISLD-LNX3345.00 - HOLT.CO3 345.00 345KV CKT 1	720	720	0.04309	107.6182	LELAND OLDS - LELAND2-LNX3345.00 345KV CKT Z
FDNS	00NR	2	17SP	G14_059	TO->FROM	GR ISLD-LNX3345.00 - HOLT.CO3 345.00 345KV CKT 1	720	720	0.04238	107.3782	GEN615001 1-COAL CREEK
FDNS	00NR	2	17SP	G14_059	TO->FROM	GR ISLD-LNX3345.00 - HOLT.CO3 345.00 345KV CKT 1	720	720	0.04238	107.2904	GEN615002 2-COAL CREEK
FDNS	00NR	2	17SP	G14_059	TO->FROM	GR ISLD-LNX3345.00 - HOLT.CO3 345.00 345KV CKT 1	720	720	0.04238	102.5179	GEN562714 1-G15_023_4 0.6900
FDNS	00NR	2	17SP	G14_059	TO->FROM	GR ISLD-LNX3345.00 - HOLT.CO3 345.00 345KV CKT 1	720	720	0.04238	102.5179	GEN562715 1-G15_023_5 0.6900
FDNS	00NR	2	17SP	G14_059	FROM->TO	SIDNEY (SD KV1A) 230/115/13.8KV TRANSFORMER CKT 1	112	112	0.03781	104.5037	SIDNEY - SIDNEY1-LNX3345.00 345KV CKT Z
FDNS	00NR	2	17SP	G14_059	FROM->TO	SIDNEY (SD KV1A) 230/115/13.8KV TRANSFORMER CKT 1	112	112	0.03781	104.3265	KEYSTONE - SIDNEY1-LNX3345.00 345KV CKT 1
FDNS	00NR	2	17SP	G14_059	FROM->TO	SIDNEY (SD KV1A) 230/115/13.8KV TRANSFORMER CKT 1	112	112	0.03781	104.1752	SIDNEY - SIDNEY1-LNX3345.00 345KV CKT Z
FDNS	00NR	2	17SP	G14_059	FROM->TO	SIDNEY (SD KV1A) 230/115/13.8KV TRANSFORMER CKT 1	112	112	0.03781	104.0562	KEYSTONE - SIDNEY1-LNX3345.00 345KV CKT 1
FDNS	00NR	2	17SP	G14_059	FROM->TO	SIDNEY (SD KV1A) 230/115/13.8KV TRANSFORMER CKT 1	112	112	0.0303	104.009	P12:115:TSGT:GRANTNB7-OGALALA7_2
FDNS	00NR	2	17SP	G14_059	FROM->TO	SIDNEY (SD KV1A) 230/115/13.8KV TRANSFORMER CKT 1	112	112	0.0303	101.8042	P12:115:TSGT:GRANTNB7-OGALALA7_2
FDNS	00NR	3	25SP	G14_059	TO->FROM	CHAPPEL - COLTON 7 115.00 115KV CKT 1	109	109	0.0314	101.7534	P12:115:TSGT:GRANTNB7-OGALALA7_2
FDNS	00NR	3	25SP	G14_059	TO->FROM	COLTON 7 115.00 - SIDNEY 115KV CKT 1	109	109	0.0314	104.9313	P12:115:TSGT:GRANTNB7-OGALALA7_2
FDNS	00NR	3	17SP	G14_059	TO->FROM	COLTON 7 115.00 - SIDNEY 115KV CKT 1	109	109	0.03136	100.7969	P12:115:TSGT:GRANTNB7-OGALALA7_2
FDNS	00NR	3	20SP	G14_059	TO->FROM	COLTON 7 115.00 - SIDNEY 115KV CKT 1	109	109	0.03135	100.6119	P12:115:TSGT:GRANTNB7-OGALALA7_2
FDNS	09ALL	3	17G	G14_059	TO->FROM	GERALD GENTLEMAN STATION - OGALLALA 230KV CKT 1	320	320	0.66421	124.8715	GERALD GENTLEMAN STATION - KEYSTONE 345KV CKT 1
FDNS	09NR	3	17G	G14_059	TO->FROM	GERALD GENTLEMAN STATION - OGALLALA 230KV CKT 1	320	320	0.70812	124.6748	GERALD GENTLEMAN STATION - KEYSTONE 345KV CKT 1
FDNS	00NR	3	16WP	G14_059	TO->FROM	GERALD GENTLEMAN STATION - OGALLALA 230KV CKT 1	320	320	0.70742	119.0451	GERALD GENTLEMAN STATION - KEYSTONE 345KV CKT 1
FDNS	09ALL	3	16WP	G14_059	TO->FROM	GERALD GENTLEMAN STATION - OGALLALA 230KV CKT 1	320	320	0.66365	116.7458	GERALD GENTLEMAN STATION - KEYSTONE 345KV CKT 1
FDNS	00NR	3	17SP	G14_059	TO->FROM	GERALD GENTLEMAN STATION - OGALLALA 230KV CKT 1	320	320	0.69623	116.6787	GERALD GENTLEMAN STATION - KEYSTONE 345KV CKT 1
FDNS	00NR	3	20WP	G14_059	TO->FROM	GERALD GENTLEMAN STATION - OGALLALA 230KV CKT 1	320	320	0.70632	113.4992	GERALD GENTLEMAN STATION - KEYSTONE 345KV CKT 1
FDNS	09ALL	3	20WP	G14_059	TO->FROM	GERALD GENTLEMAN STATION - OGALLALA 230KV CKT 1	320	320	0.66174	110.3552	GERALD GENTLEMAN STATION - KEYSTONE 345KV CKT 1
FDNS	00NR	3	20SP	G14_059	TO->FROM	GERALD GENTLEMAN STATION - OGALLALA 230KV CKT 1	320	320	0.69605	107.7175	GERALD GENTLEMAN STATION - KEYSTONE 345KV CKT 1
FDNS	00NR	3	25SP	G14_059	TO->FROM	GERALD GENTLEMAN STATION - OGALLALA 230KV CKT 1	320	320	0.69568	103.1092	GERALD GENTLEMAN STATION - KEYSTONE 345KV CKT 1
FDNS	00NR	3	17SP	G14_059	FROM->TO	GR ISLD-LNX3345.00 - GRAND ISLAND 345KV CKT Z	720	720	0.0425	114.0157	ANTELOPE 3345.00 - HOLT.CO3 345.00 345KV CKT 1
FDNS	00NR	3	20SP	G14_059	FROM->TO	GR ISLD-LNX3345.00 - GRAND ISLAND 345KV CKT Z	720	720	0.04059	108.7079	ANTELOPE 3345.00 - HOLT.CO3 345.00 345KV CKT 1
FDNS	00NR	3	25SP	G14_059	FROM->TO	GR ISLD-LNX3345.00 - GRAND ISLAND 345KV CKT Z	720	720	0.04271	108.0055	ANTELOPE 3345.00 - HOLT.CO3 345.00 345KV CKT 1
FDNS	00NR	3	17SP	G14_059	TO->FROM	GR ISLD-LNX3345.00 - HOLT.CO3 345.00 345KV CKT 1	720	720	0.0425	113.1094	ANTELOPE 3345.00 - HOLT.CO3 345.00 345KV CKT 1
FDNS	00NR	3	20SP	G14_059	TO->FROM	GR ISLD-LNX3345.00 - HOLT.CO3 345.00 345KV CKT 1	720	720	0.04059	107.8972	ANTELOPE 3345.00 - HOLT.CO3 345.00 345KV CKT 1
FDNS	00NR	3	25SP	G14_059	TO->FROM	GR ISLD-LNX3345.00 - HOLT.CO3 345.00 345KV CKT 1	720	720	0.04271	107.2002	ANTELOPE 3345.00 - HOLT.CO3 345.00 345KV CKT 1
FDNS	00NR	3	25SP	G14_059	FROM->TO	SIDNEY (SD KV1A) 230/115/13.8KV TRANSFORMER CKT 1	112	112	0.0314	104.2056	P12:115:TSGT:GRANTNB7-OGALALA7_2
FDNS	00NR	3	25SP	G14_059	FROM->TO	SIDNEY (SD KV1A) 230/115/13.8KV TRANSFORMER CKT 1	112	112	0.0314	101.918	P12:115:TSGT:GRANTNB7-OGALALA7_2
FDNS	00NR	3	17SP	G14_059	FROM->TO	SIDNEY (SD KV1A) 230/115/13.8KV TRANSFORMER CKT 1	112	112	0.03136	100.1056	P12:115:TSGT:GRANTNB7-OGALALA7_2
FDNS	00NR	3	20SP	G14_059	FROM->TO	SIDNEY (SD KV1A) 230/115/13.8KV TRANSFORMER CKT 1	112	112	0.03135	99.9	P12:115:TSGT:GRANTNB7-OGALALA7_2
FDNS	00NR	4	25SP	G14_059	TO->FROM	CHAPPEL - COLTON 7 115.00 115KV CKT 1	109	109	0.0314	101.7381	P12:115:TSGT:GRANTNB7-OGALALA7_2
FDNS	00NR	4	25SP	G14_059	TO->FROM	COLTON 7 115.00 - SIDNEY 115KV CKT 1	109	109	0.0314	104.9157	P12:115:TSGT:GRANTNB7-OGALALA7_2
FDNS	00NR	4	17SP	G14_059	TO->FROM	COLTON 7 115.00 - SIDNEY 115KV CKT 1	109	109	0.03136	100.7865	P12:115:TSGT:GRANTNB7-OGALALA7_2
FDNS	00NR	4	20SP	G14_059	TO->FROM	COLTON 7 115.00 - SIDNEY 115KV CKT 1	109	109	0.03135	100.6003	P12:115:TSGT:GRANTNB7-OGALALA7_2
FDNS	00NR	4	17SP	G14_059	FROM->TO	GR ISLD-LNX3345.00 - GRAND ISLAND 345KV CKT Z	720	720	0.04248	114.0314	ANTELOPE 3345.00 - HOLT.CO3 345.00 345KV CKT 1
FDNS	00NR	4	20SP	G14_059	FROM->TO	GR ISLD-LNX3345.00 - GRAND ISLAND 345KV CKT Z	720	720	0.04056	108.7053	ANTELOPE 3345.00 - HOLT.CO3 345.00 345KV CKT 1
FDNS	00NR	4	25SP	G14_059	FROM->TO	GR ISLD-LNX3345.00 - GRAND ISLAND 345KV CKT Z	720	720	0.04269	108.0007	ANTELOPE 3345.00 - HOLT.CO3 345.00 345KV CKT 1
FDNS	00NR	4	17SP	G14_059	TO->FROM	GR ISLD-LNX3345.00 - HOLT.CO3 345.00 345KV CKT 1	720	720	0.04248	113.1255	ANTELOPE 3345.00 - HOLT.CO3 345.00 345KV CKT 1
FDNS	00NR	4	20SP	G14_059	TO->FROM	GR ISLD-LNX3345.00 - HOLT.CO3 345.00 345KV CKT 1	720	720	0.04056	107.8943	ANTELOPE 3345.00 - HOLT.CO3 345.00 345KV CKT 1
FDNS	00NR	4	25SP	G14_059	TO->FROM	GR ISLD-LNX3345.00 - HOLT.CO3 345.00 345KV CKT 1	720	720	0.04269	107.1954	ANTELOPE 3345.00 - HOLT.CO3 345.00 345KV CKT 1
FDNS	00NR	5	25SP	G14_059	TO->FROM	CHAPPEL - COLTON 7 115.00 115KV CKT 1	109	109	0.0314	101.7332	P12:115:TSGT:GRANTNB7-OGALALA7_2
FDNS	00NR	5	25SP	G14_059	TO->FROM	COLTON 7 115.00 - SIDNEY 115KV CKT 1	109	109	0.0314	104.9107	P12:115:TSGT:GRANTNB7-OGALALA7_2
FDNS	00NR	5	17SP	G14_059	TO->FROM	COLTON 7 115.00 - SIDNEY 115KV CKT 1	109	109	0.03136	100.7779	P12:115:TSGT:GRANTNB7-OGALALA7_2
FDNS	00NR	5	20SP	G14_059	TO->FROM	COLTON 7 115.00 - SIDNEY 115KV CKT 1	109	109	0.03135	100.5956	P12:115:TSGT:GRANTNB7-OGALALA7_2
FDNS	00NR	5	17SP	G14_059	FROM->TO	GR ISLD-LNX3345.00 - GRAND ISLAND 345KV CKT Z	720	720	0.04249	114.0067	ANTELOPE 3345.00 - HOLT.CO3 345.00 345KV CKT 1
FDNS	00NR	5	20SP	G14_059	FROM->TO	GR ISLD-LNX3345.00 - GRAND ISLAND 345KV CKT Z	720	720	0.04058	108.6894	ANTELOPE 3345.00 - HOLT.CO3 345.00 345KV CKT 1
FDNS	00NR	5	25SP	G14_059	FROM->TO	GR ISLD-LNX3345.00 - GRAND ISLAND 345KV CKT Z	720	720	0.0427	107.9883	ANTELOPE 3345.00 - HOLT.CO3 345.00 345KV CKT 1
FDNS	00NR	5	17SP	G14_059	TO->FROM	GR ISLD-LNX3345.00 - HOLT.CO3 345.00 345KV CKT 1	720	720	0.04249	113.1024	ANTELOPE 3345.00 - HOLT.CO3 345.00 345KV CKT 1
FDNS	00NR	5	20SP	G14_059	TO->FROM	GR ISLD-LNX3345.00 - HOLT.CO3 345.00 345KV CKT 1	720	720	0.04058	107.8784	ANTELOPE 3345.00 - HOLT.CO3 345.00 345KV CKT 1
FDNS	00NR	5	25SP	G14_059	TO->FROM	GR ISLD-LNX3345.00 - HOLT.CO3 345.00 345KV CKT 1	720	720	0.0427	107.1831	ANTELOPE 3345.00 - HOLT.CO3 345.00 345KV CKT 1
FDNSLock-Blown up	06ALL	0	16WP	G15_018		Non-Converged Contingency	552.14	607.52	0.21794	-	TOLK STATION EAST - TUCO INTERCHANGE 230KV CKT 1
FDNSLock-Blown up	06ALL	0	16WP	G15_018		Non-Converged Contingency	1022	1124	0.19062	-	G14-074T 345.00 - OKLAUNION 345KV CKT 1
FDNSLock-Blown up	06ALL	0	16WP	G15_018		Non-Converged Contingency	1022	1124	0.19062	-	G14-074T 345.00 - TUCO INTERCHANGE 345KV CKT 1
FDNSLock-Blown up	06ALL	0	16WP	G15_018		Non-Converged Contingency	1022	1124	0.19062	-	GEN509403 1-PIRKEY GENERATION
FDNSLock-Blown up	06ALL	0	16WP	G15_018		Non-Converged Contingency	1022	1124	0.19062	-	GEN509404 1-WELSH #1
FDNSLock-Blown up	06ALL	0	16WP	G15_018		Non-Converged Contingency	1022	1124	0.19062	-	GEN509406 1-WELSH #3
FDNSLock-Blown up	06ALL	0	16WP	G15_018		Non-Converged Contingency	1022	1124	0.19062	-	GEN509416 1-TURK GENERATION
FDNSLock-Blown up	06ALL	0	16WP	G15_018		Non-Converged Contingency	1022	1124	0.19062	-	GEN511848 1-SOUTHWESTERN STATION #3
FDNSLock-Blown up	06ALL	0	16WP	G15_018		Non-Converged Contingency	557	557	0.18685	-	BUSHLAND INTERCHANGE - DEAF SMITH COUNTY INTERCHANGE 230KV CKT 1
FDNSLock-Blown up	06ALL	0	16WP	G15_018		Non-Converged Contingency	987.16	1082.8	0.17959	-	G14_038T 345.00 - Hitchland Interchange 345KV CKT 1
FDNSLock-Blown up	06ALL	0	16WP	G15_018		Non-Converged Contingency	987.16	1082.8	0.17959	-	G14_038T 345.00 - POTTER COUNTY INTERCHANGE 345KV CKT 1
FDNSLock-Blown up	06ALL	0	16WP	G15_018		Non-Converged Contingency	560	560	0.17959	-	POTTER COUNTY INTERCHANGE (WAUK 90343-A) 345/230/13.2KV TRANSFORMER CKT 1
FDNSLock-Blown up	06ALL	0	16WP	G15_018		Non-Converged Contingency	560	560	0.17387	-	TUCO INTERCHANGE (GE M1022338) 345/230/13.2KV TRANSFORMER CKT 1
FDNSLock-Blown up	06ALL	0	16WP	G15_018		Non-Converged Contingency	956	956	0.17214	-	CIMARRON - MINCO 345KV CKT 1

SOLUTION	GROUP	SCENARIO	SEASON	SOURCE	DIRECTION	MONITORED ELEMENT	RATEA (MVA)	RATEB(MVA)	TDF	TC%LOADING (% MVA)	CONTINGENCY
FDNSLock-Blown up	06ALL	0	16WP	G15_018		Non-Converged Contingency	1195	1195	0.17214	-	GRACEMONT - MINCO 345KV CKT 1
FDNSLock-Blown up	06ALL	0	16WP	G15_018		Non-Converged Contingency	556.53	611.5	0.16659	-	NEWHART 230 - PLANT X STATION 230KV CKT 1
FDNSLock-Blown up	06ALL	0	16WP	G15_018		Non-Converged Contingency	329.05	360.92	0.16422	-	BUSHLAND INTERCHANGE - POTTER COUNTY INTERCHANGE 230KV CKT 1
FDNSLock-Blown up	06ALL	0	16WP	G15_018		Non-Converged Contingency	1330	1940	0.15914	-	CHISHOLM7 345.00 - GRACEMONT 345KV CKT 1
FDNSLock-Blown up	06ALL	0	16WP	G15_018		Non-Converged Contingency	560	560	0.1573	-	TUCO_2 345.00 (TUCO_2 XFMR) 345/230/13.2KV TRANSFORMER CKT 1
FDNSLock-Blown up	06ALL	0	16WP	G15_018		Non-Converged Contingency	616	700	0.15152	-	TUCO INTERCHANGE (SIEM 8743066) 345/230/13.2KV TRANSFORMER CKT 2
FDNSLock-Blown up	06ALL	0	16WP	G15_018		Non-Converged Contingency	1792	1792	0.14913	-	CHISHOLM7 345.00 - WOODWARD DISTRICT EHV 345KV CKT 1
FDNSLock-Blown up	06ALL	0	16WP	G15_018		Non-Converged Contingency	1792	1792	0.14603	-	BORDER 7345.00 - CHISHOLM7 345.00 345KV CKT 1
FDNSLock-Blown up	06ALL	0	16WP	G15_018		Non-Converged Contingency	1792	1792	0.14603	-	BORDER 7345.00 - CHISHOLM7 345.00 345KV CKT 2
FDNSLock-Blown up	06ALL	0	16WP	G15_018		Non-Converged Contingency	1792	1972	0.14603	-	BORDER 7345.00 - TUCO_2 345.00 345KV CKT 1
FDNSLock-Blown up	06ALL	0	16WP	G15_018		Non-Converged Contingency	1420	1775	0.14603	-	BORDER 7345.00 - TUCO_2 345.00 345KV CKT 2
FDNSLock-Blown up	06ALL	0	16WP	G15_018		Non-Converged Contingency	987.16	1082.8	0.14354	-	FINNEY SWITCHING STATION - Hitchland Interchange 345KV CKT 1
FDNSLock-Blown up	06ALL	0	16WP	G15_018		Non-Converged Contingency	956.09	1051.7	0.14354	-	FINNEY SWITCHING STATION - HOLCOMB 345KV CKT 1
FDNSLock-Blown up	06ALL	0	16WP	G15_018		Non-Converged Contingency	1792	1972	0.13477	-	TUCO INTERCHANGE - TUCO_2 345.00 345KV CKT 1
FDNSLock-Blown up	06ALL	0	16WP	G15_018		Non-Converged Contingency	717	789	0.12469	-	G14-057T 345.00 - LAWTON EASTSIDE 345KV CKT 1
FDNSLock-Blown up	06ALL	0	16WP	G15_018		Non-Converged Contingency	717	789	0.12469	-	G14-057T 345.00 - SUNNYSIDE 345KV CKT 1
FDNSLock-Blown up	06ALL	0	16WP	G15_018		Non-Converged Contingency	557	557	0.11706	-	NEWHART 230 - POTTER COUNTY INTERCHANGE 230KV CKT 1
FDNSLock-Blown up	06ALL	0	16WP	G15_018		Non-Converged Contingency	442	752	0.11543	-	PLANT X STATION - TOLK STATION WEST 230KV CKT 1
FDNSLock-Blown up	06ALL	0	16WP	G15_018		Non-Converged Contingency	442	752	0.11448	-	PLANT X STATION - TOLK STATION EAST 230KV CKT 2
FDNSLock-Blown up	06ALL	0	16WP	G15_018		Non-Converged Contingency	329.05	360.92	0.10528	-	DEAF SMITH COUNTY INTERCHANGE - G15039_T 230.00 230KV CKT 1
FDNSLock-Blown up	06ALL	0	16WP	G15_018		Non-Converged Contingency	329.05	360.92	0.10528	-	G15039_T 230.00 - PLANT X STATION 230KV CKT 1
FDNSLock-Blown up	06ALL	0	16WP	G15_018		Non-Converged Contingency	1420	1775	0.10344	-	G11_051T 345.00 - TATONGA7 345.00 345KV CKT 1
FDNSLock-Blown up	06ALL	0	16WP	G15_018		Non-Converged Contingency	1420	1775	0.10344	-	G11_051T 345.00 - WOODWARD DISTRICT EHV 345KV CKT 1
FDNSLock-Blown up	06ALL	0	16WP	G15_018		Non-Converged Contingency	1195	1195	0.10344	-	MATHWSN7 345.00 - TATONGA7 345.00 345KV CKT 1
FDNSLock-Blown up	06ALL	0	16WP	G15_018		Non-Converged Contingency	552	608	0.0998	-	TUCO INTERCHANGE - TUCO_2 230.00 230KV CKT 1
FDNSLock-Blown up	06ALL	0	16WP	G15_018		Non-Converged Contingency	1561	1793	0.09454	-	THISTLE7 345.00 - WOODWARD DISTRICT EHV 345KV CKT 1
FDNSLock-Blown up	06ALL	0	16WP	G15_018		Non-Converged Contingency	1561	1793	0.09454	-	THISTLE7 345.00 - WOODWARD DISTRICT EHV 345KV CKT 2
FDNSLock-Blown up	06ALL	0	16WP	G15_018		Non-Converged Contingency	1793	1793	0.08789	-	BVRCNTY7 345.00 - G11-14T 345.00 345KV CKT 1
FDNSLock-Blown up	06ALL	0	16WP	G15_018		Non-Converged Contingency	1716	1793	0.08789	-	BVRCNTY7 345.00 - G11-14T 345.00 345KV CKT 2
FDNSLock-Blown up	06ALL	0	16WP	G15_018		Non-Converged Contingency	1792	1792	0.08789	-	BVRCNTY7 345.00 - OPTIMA 345.00 345KV CKT 1
FDNSLock-Blown up	06ALL	0	16WP	G15_018		Non-Converged Contingency	1792	1792	0.08789	-	BVRCNTY7 345.00 - OPTIMA 345.00 345KV CKT 2
FDNSLock-Blown up	06ALL	0	16WP	G15_018		Non-Converged Contingency	1793	1793	0.08789	-	G11-14T 345.00 - WOODWARD DISTRICT EHV 345KV CKT 1
FDNSLock-Blown up	06ALL	0	16WP	G15_018		Non-Converged Contingency	1716	1793	0.08789	-	G11-14T 345.00 - WOODWARD DISTRICT EHV 345KV CKT 2
FDNSLock-Blown up	06ALL	0	16WP	G15_018		Non-Converged Contingency	427.05	427.05	0.08683	-	JONES STATION - TUCO INTERCHANGE 230KV CKT 1
FDNSLock-Blown up	06ALL	0	16WP	G15_018		Non-Converged Contingency	439	439	0.07983	-	CHISHOLM6 230.00 - SWEETWATER 230KV CKT 1
FDNSLock-Blown up	06ALL	0	16WP	G15_018		Non-Converged Contingency	435.02	457.73	0.07983	-	STATELINE INTERCHANGE - STLN-DEMARC6 230KV CKT 1
FDNSLock-Blown up	06ALL	0	16WP	G15_018		Non-Converged Contingency	439	439	0.07983	-	STLN-DEMARC6 - SWEETWATER 230KV CKT 1
FDNSLock-Blown up	06ALL	0	16WP	G15_018		Non-Converged Contingency	329.05	360.92	0.07924	-	AMARILLO SOUTH INTERCHANGE - G15031_T 230.00 230KV CKT 1
FDNSLock-Blown up	06ALL	0	16WP	G15_018		Non-Converged Contingency	1532	1793	0.07704	-	G1524G1525 345.00 - THISTLE7 345.00 345KV CKT 1
FDNSLock-Blown up	06ALL	0	16WP	G15_018		Non-Converged Contingency	1532	1793	0.07704	-	G1524G1525 345.00 - THISTLE7 345.00 345KV CKT 2
FDNSLock-Blown up	06ALL	0	16WP	G15_018		Non-Converged Contingency	1532	1793	0.07704	-	GEN532751 1-WOLF CREEK GENERATING STATION UNIT 1
FDNSLock-Blown up	06ALL	0	16WP	G15_018		Non-Converged Contingency	556.92	556.92	0.07619	-	HITCHLAND INTERCHANGE - MOORE COUNTY INTERCHANGE 230KV CKT 1
FDNSLock-Blown up	06ALL	0	16WP	G15_018		Non-Converged Contingency	717.1	717.1	0.06815	-	HOLCOMB - SETAB 345KV CKT 1
FDNSLock-Blown up	06ALL	0	16WP	G15_018		Non-Converged Contingency	557	557	0.06779	-	GRAPEVINE INTERCHANGE - STATELINE INTERCHANGE 230KV CKT 1
FDNSLock-Blown up	06ALL	0	16WP	G15_018		Non-Converged Contingency	557	557	0.06722	-	GRAPEVINE INTERCHANGE - NICHOLS STATION 230KV CKT 1
FDNSLock-Blown up	06ALL	0	16WP	G15_018		Non-Converged Contingency	762.5	762.5	0.06694	-	MINGO - SETAB 345KV CKT 1
FDNSLock-Blown up	06ALL	0	16WP	G15_018		Non-Converged Contingency	785	785	0.06687	-	MINGO - RED WILLOW 345KV CKT 1
FDNSLock-Blown up	06ALL	0	16WP	G15_018		Non-Converged Contingency	329.05	360.92	0.06513	-	MOORE COUNTY INTERCHANGE - POTTER COUNTY INTERCHANGE 230KV CKT 1
FDNSLock-Blown up	06ALL	0	16WP	G15_018		Non-Converged Contingency	717	717	0.06368	-	CIMARRON - DRAPER LAKE 345KV CKT 1
FDNSLock-Blown up	06ALL	0	16WP	G15_018		Non-Converged Contingency	439	439	0.06363	-	CHISHOLM6 230.00 - ELK CITY 230KV 230KV CKT 1
FDNSLock-Blown up	06ALL	0	16WP	G15_018		Non-Converged Contingency	450	450	0.06363	-	ELK CITY 230KV (ELKCTY-6) 230/138/13.8KV TRANSFORMER CKT 1
FDNSLock-Blown up	06ALL	0	16WP	G15_018		Non-Converged Contingency	726.6	726.6	0.05943	-	BUCKNER7 345.00 - HOLCOMB 345KV CKT 1
FDNSLock-Blown up	06ALL	0	16WP	G15_018		Non-Converged Contingency	1413	1517	0.05943	-	BUCKNER7 345.00 - SPEARVILLE 345KV CKT 1
FDNSLock-Blown up	06ALL	0	16WP	G15_018		Non-Converged Contingency	1793	1793	0.05756	-	G13-010T 345.00 - POST ROCK 345KV CKT 1
FDNSLock-Blown up	06ALL	0	16WP	G15_018		Non-Converged Contingency	1793	1793	0.05756	-	G13-010T 345.00 - SPEARVILLE 345KV CKT 1
FDNSLock-Blown up	06ALL	0	16WP	G15_018		Non-Converged Contingency	1195	1195	0.05634	-	GEN520947 1-HUGO1
FDNSLock-Blown up	06ALL	0	16WP	G15_018		Non-Converged Contingency	286	315	0.04454	-	CANYON E_TP3115.00 - CANYON WEST SUB 115KV CKT 1
FDNSLock-Blown up	06ALL	0	16WP	G15_018		Non-Converged Contingency	106	106	0.04454	-	CANYON WEST SUB - DAWN SUB 115KV CKT 1
FDNSLock-Blown up	06ALL	0	16WP	G15_018		Non-Converged Contingency	106	106	0.04454	-	DAWN SUB - Panda Energy Substation Hereford 115KV CKT 1
FDNSLock-Blown up	06ALL	0	16WP	G15_018		Non-Converged Contingency	106	106	0.04454	-	DEAF SMITH COUNTY INTERCHANGE - Panda Energy Substation Hereford 115KV CKT 1
FDNSLock-Blown up	06ALL	0	16WP	G15_018		Non-Converged Contingency	143.02	173.09	0.04446	-	WOLFFORTH INTERCHANGE - YUMA INTERCHANGE 115KV CKT 1
FDNSLock-Blown up	06ALL	0	16WP	G15_018		Non-Converged Contingency	483	483	0.03918	-	AMOCO SWITCHING STATION - YOAKUM COUNTY INTERCHANGE 230KV CKT 1
FDNSLock-Blown up	06ALL	0	16WP	G15_018		Non-Converged Contingency	717	789	0.03771	-	GRACEMONT - LAWTON EASTSIDE 345KV CKT 1
FDNSLock-Blown up	06ALL	0	16WP	G15_018		Non-Converged Contingency	164.53	177.08	0.03224	-	Hansford County Switch Station - SPEARMAN INTERCHANGE 115KV CKT 1
FDNSLock-Blown up	06ALL	0	16WP	G15_018		Non-Converged Contingency	177.08	177.08	0.03224	-	HITCHLAND INTERCHANGE - Hansford County Switch Station 115KV CKT 1
FDNSLock-Blown up	06NR	0	17G	G15_018		Non-Converged Contingency	478	502	0.12218	-	BUSHLAND INTERCHANGE - DEAF SMITH COUNTY INTERCHANGE 230KV CKT 1
FDNSLock-Blown up	06NR	0	17G	G15_018		Non-Converged Contingency	318.7	350.57	0.10192	-	BUSHLAND INTERCHANGE - POTTER COUNTY INTERCHANGE 230KV CKT 1
FDNSLock-Blown up	06NR	0	17G	G15_018		Non-Converged Contingency	478	502	0.07309	-	NEWHART 230 - POTTER COUNTY INTERCHANGE 230KV CKT 1
FDNSLock-Blown up	06NR	0	17G	G15_018		Non-Converged Contingency	318.7	350.57	0.06391	-	AMARILLO SOUTH INTERCHANGE - G15031_T 230.00 230KV CKT 1
FDNSLock-Blown up	06NR	0	17G	G15_018		Non-Converged Contingency	318.7	350.57	0.04648	-	DEAF SMITH COUNTY INTERCHANGE - G15039_T 230.00 230KV CKT 1
FDNSLock-Blown up	06NR	0	17G	G15_018		Non-Converged Contingency	318.7	350.57	0.04648	-	G15039_T 230.00 - PLANT X STATION 230KV CKT 1
FDNSLock-Blown up	06ALL	0	17SP	G15_018		Non-Converged Contingency	956	1042	0.18928	-	G14-074T 345.00 - OKLAUNION 345KV CKT 1
FDNSLock-Blown up	06ALL	0	17SP	G15_018		Non-Converged Contingency	956	1042	0.18928	-	G14-074T 345.00 - TUCO INTERCHANGE 345KV CKT 1
FDNSLock-Blown up	06ALL	0	17SP	G15_018		Non-Converged Contingency	956.09	1051.7	0.1786	-	G14_038T 345.00 - Hitchland Interchange 345KV CKT 1
FDNSLock-Blown up	06ALL	0	17SP	G15_018		Non-Converged Contingency	956.09	1051.7	0.1786	-	G14_038T 345.00 - POTTER COUNTY INTERCHANGE 345KV CKT 1
FDNSLock-Blown up	06ALL	0	17SP	G15_018		Non-Converged Contingency	560	560	0.1786	-	POTTER COUNTY INTERCHANGE (WAUK 90343-A) 345/230/13.2KV TRANSFORMER CKT 1
FDNSLock-Blown up	06ALL	0	17SP	G15_018		Non-Converged Contingency	1792	1972	0.14588	-	BORDER 7345.00 - TUCO_2 345.00 345KV CKT 1
FDNSLock-Blown up	06ALL	0	17SP	G15_018		Non-Converged Contingency	1420	1775	0.14588	-	BORDER 7345.00 - TUCO_2 345.00 345KV CKT 2
FDNSLock-Blown up	06ALL	0	20L	G15_018		Non-Converged Contingency	0	0	0.41015	-	P12:115:SPS:T59.1.CARGIL.CURRY

SOLUTION	GROUP	SCENARIO	SEASON	SOURCE	DIRECTION	MONITORED ELEMENT	RATEA (MVA)	RATEB(MVA)	TDF	TC%LOADING (% MVA)	CONTINGENCY
FDNSLock-Blown up	06ALL	0	20L	G15_018		Non-Converged Contingency	276	304	0.35078	-	BAILEY COUNTY INTERCHANGE - G15-018T 115.00 115KV CKT 1
FDNSLock-Blown up	06ALL	0	20L	G15_018		Non-Converged Contingency	0	0	0.30761	-	P12:115:SPS:T58.1.HERFRD.CARGIL
FDNSLock-Blown up	06ALL	0	20L	G15_018		Non-Converged Contingency	478.05	478.05	0.23063	-	Roosevelt County Interchange SOUTH - TOLK STATION EAST 230KV CKT 1
FDNSLock-Blown up	06ALL	0	20L	G15_018		Non-Converged Contingency	478.05	478.05	0.23063	-	Roosevelt County Interchange SOUTH - TOLK STATION EAST 230KV CKT 1
FDNSLock-Blown up	06ALL	0	20L	G15_018		Non-Converged Contingency	478.05	478.05	0.22828	-	ROOSEVELT COUNTY INTERCHANGE - TOLK STATION WEST 230KV CKT 2
FDNSLock-Blown up	06ALL	0	20L	G15_018		Non-Converged Contingency	478.05	478.05	0.22828	-	ROOSEVELT COUNTY INTERCHANGE - TOLK STATION WEST 230KV CKT 2
FDNSLock-Blown up	06ALL	0	20L	G15_018		Non-Converged Contingency	0	0	0.22298	-	P12:230:SPS:K51.1.OASIS.RSVLT
FDNSLock-Blown up	06ALL	0	20L	G15_018		Non-Converged Contingency	0	0	0.22107	-	P12:345:SPS:J07.1.FINN.HITCH
FDNSLock-Blown up	06ALL	0	20L	G15_018		Non-Converged Contingency	0	0	0.17467	-	P12:115:SPS:T28.1.LAMTON.PLANTX
FDNSLock-Blown up	06ALL	0	20L	G15_018		Non-Converged Contingency	478.05	546.96	0.16073	-	TOLK STATION EAST - TUCO INTERCHANGE 230KV CKT 1
FDNSLock-Blown up	06ALL	0	20L	G15_018		Non-Converged Contingency	478.05	546.96	0.16073	-	TOLK STATION EAST - TUCO INTERCHANGE 230KV CKT 1
FDNSLock-Blown up	06ALL	0	20L	G15_018		Non-Converged Contingency	1022	1124	0.1598	-	G14-074T 345.00 - OKLAUNION 345KV CKT 1
FDNSLock-Blown up	06ALL	0	20L	G15_018		Non-Converged Contingency	1022	1124	0.1598	-	G14-074T 345.00 - TUCO INTERCHANGE 345KV CKT 1
FDNSLock-Blown up	06ALL	0	20L	G15_018		Non-Converged Contingency	1022	1124	0.1598	-	GEN506754 1-LEBROCK STEAM 1
FDNSLock-Blown up	06ALL	0	20L	G15_018		Non-Converged Contingency	1022	1124	0.1598	-	GEN509394 1-FLINT CREEK
FDNSLock-Blown up	06ALL	0	20L	G15_018		Non-Converged Contingency	1022	1124	0.1598	-	GEN509403 1-PIRKEY GENERATION
FDNSLock-Blown up	06ALL	0	20L	G15_018		Non-Converged Contingency	1022	1124	0.1598	-	GEN509404 1-WELSH #1
FDNSLock-Blown up	06ALL	0	20L	G15_018		Non-Converged Contingency	1022	1124	0.1598	-	GEN509406 1-WELSH #3
FDNSLock-Blown up	06ALL	0	20L	G15_018		Non-Converged Contingency	1022	1124	0.1598	-	GEN509408 1-WILKES #2
FDNSLock-Blown up	06ALL	0	20L	G15_018		Non-Converged Contingency	1022	1124	0.1598	-	GEN509416 1-TURK GENERATION
FDNSLock-Blown up	06ALL	0	20L	G15_018		Non-Converged Contingency	1022	1124	0.1598	-	GEN511840 1-NORTHEASTERN STATION #3
FDNSLock-Blown up	06ALL	0	20L	G15_018		Non-Converged Contingency	1022	1124	0.1598	-	GEN511960 1-ROARK1 0.7000
FDNSLock-Blown up	06ALL	0	20L	G15_018		Non-Converged Contingency	1022	1124	0.1598	-	GEN562590 1-G14_057_3 0.6900
FDNSLock-Blown up	06ALL	0	20L	G15_018		Non-Converged Contingency	1022	1124	0.1598	-	OKLAUNION 345KV SWITCHED SHUNT
FDNSLock-Blown up	06ALL	0	20L	G15_018		Non-Converged Contingency	478	502	0.15955	-	BUSHLAND INTERCHANGE - DEAF SMITH COUNTY INTERCHANGE 230KV CKT 1
FDNSLock-Blown up	06ALL	0	20L	G15_018		Non-Converged Contingency	478	502	0.15955	-	BUSHLAND INTERCHANGE - DEAF SMITH COUNTY INTERCHANGE 230KV CKT 1
FDNSLock-Blown up	06ALL	0	20L	G15_018		Non-Converged Contingency	478	502	0.15955	-	BUSHLAND INTERCHANGE 230KV SWITCHED SHUNT
FDNSLock-Blown up	06ALL	0	20L	G15_018		Non-Converged Contingency	956	956	0.15171	-	CIMARRON - MINCO 345KV CKT 1
FDNSLock-Blown up	06ALL	0	20L	G15_018		Non-Converged Contingency	1195	1195	0.15171	-	GRACEMONT - MINCO 345KV CKT 1
FDNSLock-Blown up	06ALL	0	20L	G15_018		Non-Converged Contingency	1792	1972	0.15007	-	TUCO INTERCHANGE - TUCO_2 345.00 345KV CKT 1
FDNSLock-Blown up	06ALL	0	20L	G15_018		Non-Converged Contingency	318.7	350.57	0.14004	-	BUSHLAND INTERCHANGE - POTTER COUNTY INTERCHANGE 230KV CKT 1
FDNSLock-Blown up	06ALL	0	20L	G15_018		Non-Converged Contingency	318.7	350.57	0.14004	-	BUSHLAND INTERCHANGE - POTTER COUNTY INTERCHANGE 230KV CKT 1
FDNSLock-Blown up	06ALL	0	20L	G15_018		Non-Converged Contingency	956.09	1051.7	0.13601	-	G14_038T 345.00 - Hitchland Interchange 345KV CKT 1
FDNSLock-Blown up	06ALL	0	20L	G15_018		Non-Converged Contingency	956.09	1051.7	0.13601	-	G14_038T 345.00 - POTTER COUNTY INTERCHANGE 345KV CKT 1
FDNSLock-Blown up	06ALL	0	20L	G15_018		Non-Converged Contingency	560	560	0.13601	-	POTTER COUNTY INTERCHANGE (WAUK 90343-A) 345/230/13.2KV TRANSFORMER CKT 1
FDNSLock-Blown up	06ALL	0	20L	G15_018		Non-Converged Contingency	560	560	0.13601	-	POTTER COUNTY INTERCHANGE (WAUK 90343-A) 345/230/13.2KV TRANSFORMER CKT 1
FDNSLock-Blown up	06ALL	0	20L	G15_018		Non-Converged Contingency	478.05	547.36	0.13267	-	NEWHART 230 - PLANT X STATION 230KV CKT 1
FDNSLock-Blown up	06ALL	0	20L	G15_018		Non-Converged Contingency	0	0	0.13208	-	P12:115:SPS:W40.1.WCANYON.DFSMTH
FDNSLock-Blown up	06ALL	0	20L	G15_018		Non-Converged Contingency	1792	1792	0.13125	-	CHISHOLM7 345.00 - WOODWARD DISTRICT EHV 345KV CKT 1
FDNSLock-Blown up	06ALL	0	20L	G15_018		Non-Converged Contingency	1792	1792	0.12661	-	BORDER 7345.00 - CHISHOLM7 345.00 345KV CKT 1
FDNSLock-Blown up	06ALL	0	20L	G15_018		Non-Converged Contingency	1792	1792	0.12661	-	BORDER 7345.00 - CHISHOLM7 345.00 345KV CKT 2
FDNSLock-Blown up	06ALL	0	20L	G15_018		Non-Converged Contingency	1792	1972	0.12661	-	BORDER 7345.00 - TUCO_2 345.00 345KV CKT 1
FDNSLock-Blown up	06ALL	0	20L	G15_018		Non-Converged Contingency	1420	1775	0.12661	-	BORDER 7345.00 - TUCO_2 345.00 345KV CKT 2
FDNSLock-Blown up	06ALL	0	20L	G15_018		Non-Converged Contingency	1792	1972	0.12661	-	BORDER 7345.00 345KV SWITCHED SHUNT
FDNSLock-Blown up	06ALL	0	20L	G15_018		Non-Converged Contingency	1584	2098	0.12628	-	CHISHOLM7 345.00 - GRACEMONT 345KV CKT 1
FDNSLock-Blown up	06ALL	0	20L	G15_018		Non-Converged Contingency	1584	2098	0.12628	-	GEN514805 1-SOONER UNIT 1
FDNSLock-Blown up	06ALL	0	20L	G15_018		Non-Converged Contingency	1584	2098	0.12628	-	GEN514806 1-SOONER UNIT 2
FDNSLock-Blown up	06ALL	0	20L	G15_018		Non-Converged Contingency	1584	2098	0.12628	-	GEN515040 1-SEMINOLE 1G
FDNSLock-Blown up	06ALL	0	20L	G15_018		Non-Converged Contingency	1584	2098	0.12628	-	GEN515223 1-MUSKOGEE 4G
FDNSLock-Blown up	06ALL	0	20L	G15_018		Non-Converged Contingency	956.09	1051.7	0.11803	-	Hitchland Interchange - WALKTAP7 345.00 345KV CKT 1
FDNSLock-Blown up	06ALL	0	20L	G15_018		Non-Converged Contingency	956.09	1051.7	0.11803	-	Hitchland Interchange - WALKTAP7 345.00 345KV CKT 1
FDNSLock-Blown up	06ALL	0	20L	G15_018		Non-Converged Contingency	560	560	0.11325	-	TUCO INTERCHANGE (GE M1022338) 345/230/13.2KV TRANSFORMER CKT 1
FDNSLock-Blown up	06ALL	0	20L	G15_018		Non-Converged Contingency	560	560	0.11325	-	TUCO INTERCHANGE (GE M1022338) 345/230/13.2KV TRANSFORMER CKT 1
FDNSLock-Blown up	06ALL	0	20L	G15_018		Non-Converged Contingency	0	0	0.10807	-	P12:230:AEPW-SPS:SWEETWT6:WHEELER 6
FDNSLock-Blown up	06ALL	0	20L	G15_018		Non-Converged Contingency	0	0	0.10377	-	P12:230:AEPW:ELKCITY6:SWEETWT6
FDNSLock-Blown up	06ALL	0	20L	G15_018		Non-Converged Contingency	478	502	0.10329	-	NEWHART 230 - POTTER COUNTY INTERCHANGE 230KV CKT 1
FDNSLock-Blown up	06ALL	0	20L	G15_018		Non-Converged Contingency	560	560	0.10315	-	TUCO_2 345.00 (TUCO_2 XFMR) 345/230/13.2KV TRANSFORMER CKT 1
FDNSLock-Blown up	06NR	0	20L	G15_018		Non-Converged Contingency	318.7	350.57	0.10312	-	BUSHLAND INTERCHANGE - POTTER COUNTY INTERCHANGE 230KV CKT 1
FDNSLock-Blown up	06NR	0	20L	G15_018		Non-Converged Contingency	318.7	350.57	0.10312	-	BUSHLAND INTERCHANGE - POTTER COUNTY INTERCHANGE 230KV CKT 1
FDNSLock-Blown up	06ALL	0	20L	G15_018		Non-Converged Contingency	956.09	1051.7	0.10304	-	FINNEY SWITCHING STATION - HOLCOMB 345KV CKT 1
FDNSLock-Blown up	06ALL	0	20L	G15_018		Non-Converged Contingency	956.09	1051.7	0.10304	-	FINNEY SWITCHING STATION - HOLCOMB 345KV CKT 1
FDNSLock-Blown up	06ALL	0	20L	G15_018		Non-Converged Contingency	956.09	1051.7	0.10304	-	FINNEY SWITCHING STATION - WALKTAP7 345.00 345KV CKT 1
FDNSLock-Blown up	06ALL	0	20L	G15_018		Non-Converged Contingency	956.09	1051.7	0.10304	-	FINNEY SWITCHING STATION - WALKTAP7 345.00 345KV CKT 1
FDNSLock-Blown up	06ALL	0	20L	G15_018		Non-Converged Contingency	96	96	0.10254	-	CARGILL SUB - DEAF SMITH REC-#24 115KV CKT 1
FDNSLock-Blown up	06ALL	0	20L	G15_018		Non-Converged Contingency	96	96	0.10254	-	CARGILL SUB - FRIONA SUB 115KV CKT 1
FDNSLock-Blown up	06ALL	0	20L	G15_018		Non-Converged Contingency	96	96	0.10254	-	CURRY COUNTY INTERCHANGE - DEAF SMITH REC-#20 115KV CKT 1
FDNSLock-Blown up	06ALL	0	20L	G15_018		Non-Converged Contingency	96	96	0.10254	-	DEAF SMITH REC-#20 - PARMER COUNTY SUB 115KV CKT 1
FDNSLock-Blown up	06ALL	0	20L	G15_018		Non-Converged Contingency	96	96	0.10254	-	DEAF SMITH REC-#24 - PARMER COUNTY SUB 115KV CKT 1
FDNSLock-Blown up	06ALL	0	20L	G15_018		Non-Converged Contingency	96	96	0.10254	-	DEAF SMITH REC-#6 - FRIONA SUB 115KV CKT 1
FDNSLock-Blown up	06ALL	0	20L	G15_018		Non-Converged Contingency	96	96	0.10254	-	DEAF SMITH REC-#6 - HEREFORD INTERCHANGE 115KV CKT 1
FDNSLock-Blown up	06ALL	0	20L	G15_018		Non-Converged Contingency	96	96	0.10254	-	PARMER COUNTY SUB 115KV SWITCHED SHUNT
FDNSLock-Blown up	06ALL	0	20L	G15_018		Non-Converged Contingency	442	752	0.10019	-	PLANT X STATION - TOLK STATION WEST 230KV CKT 1
FDNSLock-Blown up	06ALL	0	20L	G15_018		Non-Converged Contingency	442	752	0.10019	-	PLANT X STATION - TOLK STATION WEST 230KV CKT 1
FDNSLock-Blown up	06ALL	0	20L	G15_018		Non-Converged Contingency	442	752	0.09913	-	PLANT X STATION - TOLK STATION EAST 230KV CKT 2
FDNSLock-Blown up	06ALL	0	20L	G15_018		Non-Converged Contingency	442	752	0.09913	-	PLANT X STATION - TOLK STATION EAST 230KV CKT 2
FDNSLock-Blown up	06ALL	0	20L	G15_018		Non-Converged Contingency	560	644	0.09869	-	TUCO INTERCHANGE (SIEM 8743066) 345/230/13.2KV TRANSFORMER CKT 2
FDNSLock-Blown up	06ALL	0	20L	G15_018		Non-Converged Contingency	560	644	0.09869	-	TUCO INTERCHANGE (SIEM 8743066) 345/230/13.2KV TRANSFORMER CKT 2
FDNSLock-Blown up	06ALL	0	20L	G15_018		Non-Converged Contingency	1792	1792	0.09793	-	TUCO INTERCHANGE - YOAKUM_345 345.00 345KV CKT 1
FDNSLock-Blown up	06ALL	0	20L	G15_018		Non-Converged Contingency	717	789	0.09764	-	G14-057T 345.00 - LAWTON EASTSIDE 345KV CKT 1

SOLUTION	GROUP	SCENARIO	SEASON	SOURCE	DIRECTION	MONITORED ELEMENT	RATEA (MVA)	RATEB(MVA)	TDF	TC%LOADING (% MVA)	CONTINGENCY
FDNSLock-Blown up	06ALL	0	20L	G15_018		Non-Converged Contingency	717	789	0.09764	-	G14-057T 345.00 - SUNNYSIDE 345KV CKT 1
FDNSLock-Blown up	06ALL	0	20L	G15_018		Non-Converged Contingency	478	478	0.09013	-	EDDY COUNTY INTERCHANGE - EDDY_NORTH 6230.00 230KV CKT @1
FDNSLock-Blown up	06ALL	0	20L	G15_018		Non-Converged Contingency	0	0	0.08806	-	P12:115:SPS:V05.1.OSAGE.WCANYON
FDNSLock-Blown up	06ALL	0	20L	G15_018		Non-Converged Contingency	318.7	350.57	0.08777	-	CHAVES COUNTY INTERCHANGE - SAN JUAN MESA TAP 230KV CKT 1
FDNSLock-Blown up	06ALL	0	20L	G15_018		Non-Converged Contingency	318.7	350.57	0.08777	-	CHAVES COUNTY INTERCHANGE - SAN JUAN MESA TAP 230KV CKT 1
FDNSLock-Blown up	06ALL	0	20L	G15_018		Non-Converged Contingency	318.7	350.57	0.08669	-	DEAF SMITH COUNTY INTERCHANGE - G15039_T 230.00 230KV CKT 1
FDNSLock-Blown up	06ALL	0	20L	G15_018		Non-Converged Contingency	318.7	350.57	0.08669	-	G15039_T 230.00 - PLANT X STATION 230KV CKT 1
FDNSLock-Blown up	06ALL	0	20L	G15_018		Non-Converged Contingency	1420	1775	0.08094	-	G11_051T 345.00 - TATONGA7 345.00 345KV CKT 1
FDNSLock-Blown up	06ALL	0	20L	G15_018		Non-Converged Contingency	1420	1775	0.08094	-	G11_051T 345.00 - WOODWARD DISTRICT EHV 345KV CKT 1
FDNSLock-Blown up	06ALL	0	20L	G15_018		Non-Converged Contingency	1195	1195	0.08094	-	MATHWSN7 345.00 - TATONGA7 345.00 345KV CKT 1
FDNSLock-Blown up	06NR	0	20L	G15_018		Non-Converged Contingency	478	502	0.07695	-	NEWHART 230 - POTTER COUNTY INTERCHANGE 230KV CKT 1
FDNSLock-Blown up	06ALL	0	20L	G15_018		Non-Converged Contingency	478.05	501.95	0.07647	-	PLANT X STATION - SUNDOWN INTERCHANGE 230KV CKT 1
FDNSLock-Blown up	06ALL	0	20L	G15_018		Non-Converged Contingency	478.05	501.95	0.07647	-	PLANT X STATION - SUNDOWN INTERCHANGE 230KV CKT 1
FDNSLock-Blown up	06ALL	0	20L	G15_018		Non-Converged Contingency	478	502	0.07618	-	AMARILLO SOUTH INTERCHANGE - G15031_T 230.00 230KV CKT 1
FDNSLock-Blown up	06ALL	0	20L	G15_018		Non-Converged Contingency	497	547	0.07608	-	TUCO INTERCHANGE - TUCO_2 230.00 230KV CKT 1
FDNSLock-Blown up	06ALL	0	20L	G15_018		Non-Converged Contingency	1561	1793	0.07607	-	THISTLE7 345.00 - WOODWARD DISTRICT EHV 345KV CKT 1
FDNSLock-Blown up	06ALL	0	20L	G15_018		Non-Converged Contingency	1561	1793	0.07607	-	THISTLE7 345.00 - WOODWARD DISTRICT EHV 345KV CKT 1
FDNSLock-Blown up	06ALL	0	20L	G15_018		Non-Converged Contingency	1561	1793	0.07607	-	THISTLE7 345.00 - WOODWARD DISTRICT EHV 345KV CKT 2
FDNSLock-Blown up	06ALL	0	20L	G15_018		Non-Converged Contingency	1561	1793	0.07607	-	THISTLE7 345.00 - WOODWARD DISTRICT EHV 345KV CKT 2
FDNSLock-Blown up	06ALL	0	20L	G15_018		Non-Converged Contingency	1195	1195	0.07186	-	ARCADIA - NORTHWEST 345KV CKT 1
FDNSLock-Blown up	06ALL	0	20L	G15_018		Non-Converged Contingency	319	351	0.06992	-	CHAVES COUNTY INTERCHANGE - EDDY_NORTH 6230.00 230KV CKT 1
FDNSLock-Blown up	06ALL	0	20L	G15_018		Non-Converged Contingency	319	351	0.06992	-	CHAVES COUNTY INTERCHANGE - EDDY_NORTH 6230.00 230KV CKT 1
FDNSLock-Blown up	06NR	0	20L	G15_018		Non-Converged Contingency	478	502	0.06863	-	AMARILLO SOUTH INTERCHANGE - G15031_T 230.00 230KV CKT 1
FDNSLock-Blown up	06ALL	0	20L	G15_018		Non-Converged Contingency	956	956	0.06669	-	CIMARRON - NORTHWEST 345KV CKT 1
FDNSLock-Blown up	06ALL	0	20L	G15_018		Non-Converged Contingency	1195	1195	0.06529	-	MATHWSN7 345.00 - NORTHWEST 345KV CKT 1
FDNSLock-Blown up	06ALL	0	20L	G15_018		Non-Converged Contingency	318.7	350.57	0.06327	-	G13_027T 230.00 - YOAKUM COUNTY INTERCHANGE 230KV CKT 1
FDNSLock-Blown up	06ALL	0	20L	G15_018		Non-Converged Contingency	1793	1793	0.06136	-	BVRCNTY7 345.00 - G11-14T 345.00 345KV CKT 1
FDNSLock-Blown up	06ALL	0	20L	G15_018		Non-Converged Contingency	1716	1793	0.06136	-	BVRCNTY7 345.00 - G11-14T 345.00 345KV CKT 2
FDNSLock-Blown up	06ALL	0	20L	G15_018		Non-Converged Contingency	1792	1792	0.06136	-	BVRCNTY7 345.00 - OPTIMA 345.00 345KV CKT 1
FDNSLock-Blown up	06ALL	0	20L	G15_018		Non-Converged Contingency	1792	1792	0.06136	-	BVRCNTY7 345.00 - OPTIMA 345.00 345KV CKT 2
FDNSLock-Blown up	06ALL	0	20L	G15_018		Non-Converged Contingency	1793	1793	0.06136	-	G11-14T 345.00 - WOODWARD DISTRICT EHV 345KV CKT 1
FDNSLock-Blown up	06ALL	0	20L	G15_018		Non-Converged Contingency	1716	1793	0.06136	-	G11-14T 345.00 - WOODWARD DISTRICT EHV 345KV CKT 2
FDNSLock-Blown up	06ALL	0	20L	G15_018		Non-Converged Contingency	1792	1792	0.06136	-	Hitchland Interchange - OPTIMA 345.00 345KV CKT 1
FDNSLock-Blown up	06ALL	0	20L	G15_018		Non-Converged Contingency	1792	1792	0.06136	-	Hitchland Interchange - OPTIMA 345.00 345KV CKT 2
FDNSLock-Blown up	06ALL	0	20L	G15_018		Non-Converged Contingency	435.82	501.55	0.0613	-	Harrington Station Mid Bus - RANDALL COUNTY INTERCHANGE 230KV CKT 1
FDNSLock-Blown up	06ALL	0	20L	G15_018		Non-Converged Contingency	435.82	501.55	0.0613	-	Harrington Station Mid Bus - RANDALL COUNTY INTERCHANGE 230KV CKT 1
FDNSLock-Blown up	06ALL	0	20L	G15_018		Non-Converged Contingency	0	0	0.05979	-	P12:138:AEPW-OGE:WTH_JCT4:JENSEN4
FDNSLock-Blown up	06ALL	0	20L	G15_018		Non-Converged Contingency	1532	1793	0.05942	-	G1524G1525 345.00 - THISTLE7 345.00 345KV CKT 1
FDNSLock-Blown up	06ALL	0	20L	G15_018		Non-Converged Contingency	1532	1793	0.05942	-	G1524G1525 345.00 - THISTLE7 345.00 345KV CKT 2
FDNSLock-Blown up	06ALL	0	20L	G15_018		Non-Converged Contingency	1532	1793	0.05942	-	G1524G1525 345.00 - WICHITA 345KV CKT 1
FDNSLock-Blown up	06ALL	0	20L	G15_018		Non-Converged Contingency	1532	1793	0.05942	-	G1524G1525 345.00 - WICHITA 345KV CKT 2
FDNSLock-Blown up	06ALL	0	20L	G15_018		Non-Converged Contingency	1532	1793	0.05942	-	GEN532653 1-JEFFREY ENERGY CENTER UNIT 3
FDNSLock-Blown up	06ALL	0	20L	G15_018		Non-Converged Contingency	1532	1793	0.05942	-	GEN532663 1-LAWRENCE ENERGY CENTER UNIT 5
FDNSLock-Blown up	06ALL	0	20L	G15_018		Non-Converged Contingency	1532	1793	0.05942	-	GEN532751 1-WOLF CREEK GENERATING STATION UNIT 1
FDNSLock-Blown up	06ALL	0	20L	G15_018		Non-Converged Contingency	501.95	501.95	0.0575	-	HITCHLAND INTERCHANGE - MOORE COUNTY INTERCHANGE 230KV CKT 1
FDNSLock-Blown up	06ALL	0	20L	G15_018		Non-Converged Contingency	501.95	501.95	0.0575	-	HITCHLAND INTERCHANGE - MOORE COUNTY INTERCHANGE 230KV CKT 1
FDNSLock-Blown up	06ALL	0	20L	G15_018		Non-Converged Contingency	560	644	0.05601	-	Hitchland Interchange (SIEM 8743067) 345/230/13.2KV TRANSFORMER CKT 2
FDNSLock-Blown up	06ALL	0	20L	G15_018		Non-Converged Contingency	560	644	0.05601	-	Hitchland Interchange (SIEM 8743067) 345/230/13.2KV TRANSFORMER CKT 2
FDNSLock-Blown up	06ALL	0	20L	G15_018		Non-Converged Contingency	956	956	0.05566	-	G15063_T 345.00 - MATHWSN7 345.00 345KV CKT 1
FDNSLock-Blown up	06ALL	0	20L	G15_018		Non-Converged Contingency	956	956	0.05566	-	G15063_T 345.00 - WOODRING 345KV CKT 1
FDNSLock-Blown up	06ALL	0	20L	G15_018		Non-Converged Contingency	785	785	0.05528	-	GEN640009 1-COOPER NUCLEAR STATION
FDNSLock-Blown up	06ALL	0	20L	G15_018		Non-Converged Contingency	785	785	0.05528	-	MINGO - RED WILLOW 345KV CKT 1
FDNSLock-Blown up	06ALL	0	20L	G15_018		Non-Converged Contingency	785	785	0.05528	-	MINGO - RED WILLOW 345KV CKT 1
FDNSLock-Blown up	06ALL	0	20L	G15_018		Non-Converged Contingency	1039	1195	0.05455	-	NORTHWEST - SPRING CREEK 345KV CKT 1
FDNSLock-Blown up	06ALL	0	20L	G15_018		Non-Converged Contingency	1039	1195	0.05455	-	SOONER - SPRING CREEK 345KV CKT 1
FDNSLock-Blown up	06ALL	0	20L	G15_018		Non-Converged Contingency	762.5	762.5	0.05416	-	MINGO - SETAB 345KV CKT 1
FDNSLock-Blown up	06ALL	0	20L	G15_018		Non-Converged Contingency	762.5	762.5	0.05416	-	MINGO - SETAB 345KV CKT 1
FDNSLock-Blown up	06ALL	0	20L	G15_018		Non-Converged Contingency	421	439	0.05403	-	CHISHOLM6 230.00 - SWEETWATER 230KV CKT 1
FDNSLock-Blown up	06ALL	0	20L	G15_018		Non-Converged Contingency	348.58	381.24	0.05403	-	STATELINE INTERCHANGE - STLN-DEMARC6 230KV CKT 1
FDNSLock-Blown up	06ALL	0	20L	G15_018		Non-Converged Contingency	353	353	0.05403	-	STLN-DEMARC6 - SWEETWATER 230KV CKT 1
FDNSLock-Blown up	06ALL	0	20L	G15_018		Non-Converged Contingency	717.1	717.1	0.05371	-	HOLCOMB - SETAB 345KV CKT 1
FDNSLock-Blown up	06ALL	0	20L	G15_018		Non-Converged Contingency	717.1	717.1	0.05371	-	HOLCOMB - SETAB 345KV CKT 1
FDNSLock-Blown up	06NR	0	20L	G15_018		Non-Converged Contingency	318.7	350.57	0.05357	-	DEAF SMITH COUNTY INTERCHANGE - G15039_T 230.00 230KV CKT 1
FDNSLock-Blown up	06ALL	0	20L	G15_018		Non-Converged Contingency	0	0	0.05357	-	P12:115:SPS:V26.1.RSWLL.EDDY_N
FDNSLock-Blown up	06ALL	0	20L	G15_018		Non-Converged Contingency	0	0	0.05075	-	P12:115:SPS:V03.1.NICHLS.EPLANT
FDNSLock-Blown up	06ALL	0	20L	G15_018		Non-Converged Contingency	0	0	0.05068	-	P12:345:SPS:J14.1.EDDY.XRDS
FDNSLock-Blown up	06ALL	0	20L	G15_018		Non-Converged Contingency	0	0	0.05056	-	P12:115:SPS:T66.1.RNDALL.HAPPY
FDNSLock-Blown up	06ALL	0	20L	G15_018		Non-Converged Contingency	0	0	0.05056	-	P12:115:SPS:T67.1.HAPPY.KRESS
FDNSLock-Blown up	06ALL	0	20L	G15_018		Non-Converged Contingency	1195	1195	0.05052	-	SOONER - WOODRING 345KV CKT 1
FDNSLock-Blown up	06ALL	0	20L	G15_018		Non-Converged Contingency	318.7	350.57	0.04974	-	MOORE COUNTY INTERCHANGE - POTTER COUNTY INTERCHANGE 230KV CKT 1
FDNSLock-Blown up	06ALL	0	20L	G15_018		Non-Converged Contingency	318.7	350.57	0.04974	-	MOORE COUNTY INTERCHANGE - POTTER COUNTY INTERCHANGE 230KV CKT 1
FDNSLock-Blown up	06ALL	0	20L	G15_018		Non-Converged Contingency	439	439	0.04973	-	CHISHOLM6 230.00 - ELK CITY 230KV 230KV CKT 1
FDNSLock-Blown up	06ALL	0	20L	G15_018		Non-Converged Contingency	450	450	0.04973	-	ELK CITY 230KV (ELKCTY-6) 230/138/13.8KV TRANSFORMER CKT 1
FDNSLock-Blown up	06ALL	0	20L	G15_018		Non-Converged Contingency	450	450	0.04973	-	ELK CITY 230KV (ELKCTY-6) 230/138/13.8KV TRANSFORMER CKT 1
FDNSLock-Blown up	06ALL	0	20L	G15_018		Non-Converged Contingency	0	0	0.04967	-	P12:138:AEPW:S.W.S.-4:L.E.S.-4
FDNSLock-Blown up	06ALL	0	20L	G15_018		Non-Converged Contingency	318.7	350.57	0.04964	-	CUNNINGHAM STATION - EDDY COUNTY INTERCHANGE 230KV CKT 1
FDNSLock-Blown up	06ALL	0	20L	G15_018		Non-Converged Contingency	318.7	350.57	0.04964	-	CUNNINGHAM STATION - EDDY COUNTY INTERCHANGE 230KV CKT 1
FDNSLock-Blown up	06ALL	0	20L	G15_018		Non-Converged Contingency	0	0	0.04904	-	P12:138:WFEC-AEPW:WASHITA4:CLINTJC4
FDNSLock-Blown up	06ALL	0	20L	G15_018		Non-Converged Contingency	478.05	501.55	0.04876	-	AMARILLO SOUTH INTERCHANGE - NICHOLS STATION 230KV CKT 1

SOLUTION	GROUP	SCENARIO	SEASON	SOURCE	DIRECTION	MONITORED ELEMENT	RATEA (MVA)	RATEB(MVA)	TDF	TC%LOADING (% MVA)	CONTINGENCY
FDNSLock-Blown up	06ALL	0	20L	G15_018		Non-Converged Contingency	478.05	501.55	0.04876	-	AMARILLO SOUTH INTERCHANGE - NICHOLS STATION 230KV CKT 1
FDNSLock-Blown up	06ALL	0	20L	G15_018		Non-Converged Contingency	560	644	0.04872	-	Hitchland Interchange (H TB80155502) 345/230/13.2KV TRANSFORMER CKT 1
FDNSLock-Blown up	06ALL	0	20L	G15_018		Non-Converged Contingency	560	644	0.04872	-	Hitchland Interchange (H TB80155502) 345/230/13.2KV TRANSFORMER CKT 1
FDNSLock-Blown up	06ALL	0	20L	G15_018		Non-Converged Contingency	878	956	0.04748	-	BENTON - WICHITA 345KV CKT 1
FDNSLock-Blown up	06ALL	0	20L	G15_018		Non-Converged Contingency	1792	1792	0.04668	-	HOBBS - YOAKUM_345 345.00 345KV CKT 1
FDNSLock-Blown up	06ALL	0	20L	G15_018		Non-Converged Contingency	1504	1792	0.04621	-	AXTELL - POST ROCK 345KV CKT 1
FDNSLock-Blown up	06ALL	0	20L	G15_018		Non-Converged Contingency	1505	1793	0.04598	-	G13-010T 345.00 - POST ROCK 345KV CKT 1
FDNSLock-Blown up	06ALL	0	20L	G15_018		Non-Converged Contingency	1505	1793	0.04598	-	G13-010T 345.00 - SPEARVILLE 345KV CKT 1
FDNSLock-Blown up	06ALL	0	20L	G15_018		Non-Converged Contingency	502	502	0.0459	-	GRAPEVINE INTERCHANGE - STATELINE INTERCHANGE 230KV CKT 1
FDNSLock-Blown up	06ALL	0	20L	G15_018		Non-Converged Contingency	502	502	0.0459	-	GRAPEVINE INTERCHANGE - STATELINE INTERCHANGE 230KV CKT 1
FDNSLock-Blown up	06ALL	0	20L	G15_018		Non-Converged Contingency	502	502	0.0456	-	GRAPEVINE INTERCHANGE - NICHOLS STATION 230KV CKT 1
FDNSLock-Blown up	06ALL	0	20L	G15_018		Non-Converged Contingency	502	502	0.0456	-	GRAPEVINE INTERCHANGE - NICHOLS STATION 230KV CKT 1
FDNSLock-Blown up	06ALL	0	20L	G15_018		Non-Converged Contingency	318.7	350.57	0.04466	-	LUBBOCK SOUTH INTERCHANGE - WOLFFORTH INTERCHANGE 230KV CKT 1
FDNSLock-Blown up	06ALL	0	20L	G15_018		Non-Converged Contingency	318.7	350.57	0.04466	-	LUBBOCK SOUTH INTERCHANGE - WOLFFORTH INTERCHANGE 230KV CKT 1
FDNSLock-Blown up	06ALL	0	20L	G15_018		Non-Converged Contingency	318.7	350.57	0.04466	-	LUBBOCK SOUTH INTERCHANGE 230KV SWITCHED SHUNT
FDNSLock-Blown up	06ALL	0	20L	G15_018		Non-Converged Contingency	1195	1195	0.04463	-	JOHNSON COUNTY - SUNNYSIDE 345KV CKT 1
FDNSLock-Blown up	06ALL	0	20L	G15_018		Non-Converged Contingency	1195	1195	0.04433	-	CIMARRON - DRAPER LAKE 345KV CKT 1
FDNSLock-Blown up	06ALL	0	20L	G15_018		Non-Converged Contingency	276	304	0.04403	-	CANYON E_TP3115.00 - CANYON WEST SUB 115KV CKT 1
FDNSLock-Blown up	06ALL	0	20L	G15_018		Non-Converged Contingency	160	160	0.04403	-	CANYON E_TP3115.00 - RANDALL COUNTY INTERCHANGE 115KV CKT 1
FDNSLock-Blown up	06ALL	0	20L	G15_018		Non-Converged Contingency	276	304	0.04403	-	CANYON WEST SUB - DAWN SUB 115KV CKT 1
FDNSLock-Blown up	06ALL	0	20L	G15_018		Non-Converged Contingency	276	304	0.04403	-	DAWN SUB - Panda Energy Substation Hereford 115KV CKT 1
FDNSLock-Blown up	06ALL	0	20L	G15_018		Non-Converged Contingency	276	304	0.04403	-	DEAF SMITH COUNTY INTERCHANGE - Panda Energy Substation Hereford 115KV CKT 1
FDNSLock-Blown up	06ALL	0	20L	G15_018		Non-Converged Contingency	478	502	0.0436	-	CARLISLE INTERCHANGE - TUCO INTERCHANGE 230KV CKT 1
FDNSLock-Blown up	06ALL	0	20L	G15_018		Non-Converged Contingency	478	502	0.0436	-	CARLISLE INTERCHANGE - TUCO INTERCHANGE 230KV CKT 1
FDNSLock-Blown up	06ALL	0	20L	G15_018		Non-Converged Contingency	956	956	0.04336	-	GERALD GENTLEMAN STATION - RED WILLOW 345KV CKT 1
FDNSLock-Blown up	06ALL	0	20L	G15_018		Non-Converged Contingency	726.6	726.6	0.04129	-	BUCKNER7 345.00 - HOLCOMB 345KV CKT 1
FDNSLock-Blown up	06ALL	0	20L	G15_018		Non-Converged Contingency	726.6	726.6	0.04129	-	BUCKNER7 345.00 - HOLCOMB 345KV CKT 1
FDNSLock-Blown up	06ALL	0	20L	G15_018		Non-Converged Contingency	1413	1517	0.04129	-	BUCKNER7 345.00 - SPEARVILLE 345KV CKT 1
FDNSLock-Blown up	06ALL	0	20L	G15_018		Non-Converged Contingency	1413	1517	0.04129	-	BUCKNER7 345.00 - SPEARVILLE 345KV CKT 1
FDNSLock-Blown up	06ALL	0	20L	G15_018		Non-Converged Contingency	1151	1195	0.04127	-	JOHNSON COUNTY - PITTSBURG 345KV CKT 1
FDNSLock-Blown up	06ALL	0	20L	G15_018		Non-Converged Contingency	1151	1195	0.04127	-	JOHNSON COUNTY - PITTSBURG 345KV CKT 1
FDNSLock-Blown up	06ALL	0	20L	G15_018		Non-Converged Contingency	717	789	0.04098	-	GRACEMONT - LAWTON EASTSIDE 345KV CKT 1
FDNSLock-Blown up	06ALL	0	20L	G15_018		Non-Converged Contingency	717	789	0.04098	-	GRACEMONT - LAWTON EASTSIDE 345KV CKT 1
FDNSLock-Blown up	06ALL	0	20L	G15_018		Non-Converged Contingency	1035	1035	0.04072	-	EMPORIA ENERGY CENTER - G14_001T 345.00 345KV CKT 1
FDNSLock-Blown up	06ALL	0	20L	G15_018		Non-Converged Contingency	1035	1035	0.04072	-	G14_001T 345.00 - WICHITA 345KV CKT 1
FDNSLock-Blown up	06ALL	0	20L	G15_018		Non-Converged Contingency	478	478	0.03981	-	CARLISLE INTERCHANGE - WOLFFORTH INTERCHANGE 230KV CKT 1
FDNSLock-Blown up	06ALL	0	20L	G15_018		Non-Converged Contingency	0	0	0.03965	-	P12:115:SPS:T71.1.CRLSLE.YUMA
FDNSLock-Blown up	06ALL	0	20L	G15_018		Non-Converged Contingency	139.23	159.95	0.03884	-	CASTRO COUNTY INTERCHANGE - NEWHART 115KV CKT 1
FDNSLock-Blown up	06ALL	0	20L	G15_018		Non-Converged Contingency	139.23	159.95	0.03884	-	CASTRO COUNTY INTERCHANGE - NEWHART 115KV CKT 1
FDNSLock-Blown up	06ALL	0	20L	G15_018		Non-Converged Contingency	1141	1195	0.03795	-	GEN542951 5-HAWTHORN UNIT #5
FDNSLock-Blown up	06ALL	0	20L	G15_018		Non-Converged Contingency	1141	1195	0.03795	-	LACYGNE - WAVERLY7 345.00 345KV CKT 1
FDNSLock-Blown up	06ALL	0	20L	G15_018		Non-Converged Contingency	1141	1195	0.03795	-	WAVERLY7 345.00 - WOLF CREEK 345KV CKT 1
FDNSLock-Blown up	06ALL	0	20L	G15_018		Non-Converged Contingency	0	0	0.0378	-	P12:115:SPS:W29.1.OCLTRE.SPRMN
FDNSLock-Blown up	06ALL	0	20L	G15_018		Non-Converged Contingency	1195	1195	0.03766	-	GEN520811 1-ANADRK4
FDNSLock-Blown up	06ALL	0	20L	G15_018		Non-Converged Contingency	1195	1195	0.03766	-	HUGO - SUNNYSIDE 345KV CKT 1
FDNSLock-Blown up	06ALL	0	20L	G15_018		Non-Converged Contingency	0	0	0.03752	-	P12:138:AEPW-OGE:CORNVIL4:CIMARON4
FDNSLock-Blown up	06ALL	0	20L	G15_018		Non-Converged Contingency	0	0	0.03735	-	P12:115:SPS:W08.1.HITCH.LASLEY
FDNSLock-Blown up	06ALL	0	20L	G15_018		Non-Converged Contingency	1076	1076	0.03594	-	G15074_T 345.00 - HOYT 345KV CKT 1
FDNSLock-Blown up	06ALL	0	20L	G15_018		Non-Converged Contingency	1076	1076	0.03594	-	G15074_T 345.00 - JEFFREY ENERGY CENTER 345KV CKT 1
FDNSLock-Blown up	06ALL	0	20L	G15_018		Non-Converged Contingency	0	0	0.03579	-	P12:230:SPS:K43.1.PRNGLE.HARR_E
FDNSLock-Blown up	06ALL	0	20L	G15_018		Non-Converged Contingency	1036	1195	0.03578	-	HOYT - STRANGER CREEK 345KV CKT 1
FDNSLock-Blown up	06ALL	0	20L	G15_018		Non-Converged Contingency	478.05	501.55	0.03521	-	EDDY COUNTY INTERCHANGE - SEVEN RIVERS INTERCHANGE 230KV CKT 1
FDNSLock-Blown up	06ALL	0	20L	G15_018		Non-Converged Contingency	478.05	501.55	0.03521	-	EDDY COUNTY INTERCHANGE - SEVEN RIVERS INTERCHANGE 230KV CKT 1
FDNSLock-Blown up	06ALL	0	20L	G15_018		Non-Converged Contingency	1195	1195	0.03492	-	MUSKOGEE - SEMINOLE 345KV CKT 1
FDNSLock-Blown up	06ALL	0	20L	G15_018		Non-Converged Contingency	478.05	501.55	0.0347	-	PECOS INTERCHANGE - SEVEN RIVERS INTERCHANGE 230KV CKT 1
FDNSLock-Blown up	06ALL	0	20L	G15_018		Non-Converged Contingency	478.05	501.55	0.0347	-	PECOS INTERCHANGE - SEVEN RIVERS INTERCHANGE 230KV CKT 1
FDNSLock-Blown up	06ALL	0	20L	G15_018		Non-Converged Contingency	343.79	343.79	0.03354	-	JONES STATION - TUCO INTERCHANGE 230KV CKT 1
FDNSLock-Blown up	06ALL	0	20L	G15_018		Non-Converged Contingency	343.79	343.79	0.03354	-	JONES STATION - TUCO INTERCHANGE 230KV CKT 1
FDNSLock-Blown up	06ALL	0	20L	G15_018		Non-Converged Contingency	0	0	0.03257	-	P12:138:OKGE:3TERM10
FDNSLock-Blown up	06ALL	0	20L	G15_018		Non-Converged Contingency	717	717	0.03222	-	EMPORIA ENERGY CENTER - SWISSVALE 345KV CKT 1
FDNSLock-Blown up	06ALL	0	20L	G15_018		Non-Converged Contingency	0	0	0.03086	-	P12:115:SPS:W24.1.MOOREE.LASLEY
FDNSLock-Blown up	06ALL	0	20L	G15_018		Non-Converged Contingency	717	717	0.03057	-	SWISSVALE - WEST GARDNER 345KV CKT 1
FDNSLock-Blown up	06ALL	0	20L	G15_018		Non-Converged Contingency	0	0	0.03025	-	P12:115:SPS:T43.1.SEVEN.EDDY_S
FDNSLock-Blown up	06ALL	0	20L	G15_018		Non-Converged Contingency	0	0	0.02997	-	P12:138:AEPW:REDROCKRD4:WTH_JCT4
FDNSLock-Blown up	06ALL	0	20L	G15_018		Non-Converged Contingency	0	0	0.02983	-	P12:138:OKGE-AEPW:JENSEN4:REDROCKRD4
FDNSLock-Blown up	06ALL	0	20SP	G15_018		Non-Converged Contingency	956	1042	0.19459	-	G14-074T 345.00 - OKLAUNION 345KV CKT 1
FDNSLock-Blown up	06ALL	0	20SP	G15_018		Non-Converged Contingency	956.09	1051.7	0.17028	-	G14_038T 345.00 - Hitchland Interchange 345KV CKT 1
FDNSLock-Blown up	06ALL	0	20SP	G15_018		Non-Converged Contingency	956.09	1051.7	0.17028	-	G14_038T 345.00 - POTTER COUNTY INTERCHANGE 345KV CKT 1
FDNSLock-Blown up	06ALL	0	20SP	G15_018		Non-Converged Contingency	1792	1972	0.15147	-	BORDER 7345.00 - TUCO_2 345.00 345KV CKT 1
FDNSLock-Blown up	06ALL	0	20SP	G15_018		Non-Converged Contingency	1420	1775	0.15147	-	BORDER 7345.00 - TUCO_2 345.00 345KV CKT 2
FDNSLock-Blown up	06ALL	0	20WP	G15_018		Non-Converged Contingency	0	0	0.26293	-	P12:345:SPS:J07.1.FINN.HITCH
FDNSLock-Blown up	06ALL	0	20WP	G15_018		Non-Converged Contingency	1022	1124	0.18976	-	G14-074T 345.00 - OKLAUNION 345KV CKT 1
FDNSLock-Blown up	06ALL	0	20WP	G15_018		Non-Converged Contingency	1022	1124	0.18976	-	G14-074T 345.00 - TUCO INTERCHANGE 345KV CKT 1
FDNSLock-Blown up	06ALL	0	20WP	G15_018		Non-Converged Contingency	1022	1124	0.18976	-	OKLAUNION 345KV SWITCHED SHUNT
FDNSLock-Blown up	06ALL	0	20WP	G15_018		Non-Converged Contingency	1792	1972	0.17838	-	TUCO INTERCHANGE - TUCO_2 345.00 345KV CKT 1
FDNSLock-Blown up	06ALL	0	20WP	G15_018		Non-Converged Contingency	956	956	0.16846	-	CIMARRON - MINCO 345KV CKT 1
FDNSLock-Blown up	06ALL	0	20WP	G15_018		Non-Converged Contingency	1195	1195	0.16846	-	GRACEMONT - MINCO 345KV CKT 1
FDNSLock-Blown up	06ALL	0	20WP	G15_018		Non-Converged Contingency	557	557	0.16787	-	BUSHLAND INTERCHANGE - DEAF SMITH COUNTY INTERCHANGE 230KV CKT 1
FDNSLock-Blown up	06ALL	0	20WP	G15_018		Non-Converged Contingency	557	557	0.16787	-	BUSHLAND INTERCHANGE - DEAF SMITH COUNTY INTERCHANGE 230KV CKT 1

SOLUTION	GROUP	SCENARIO	SEASON	SOURCE	DIRECTION	MONITORED ELEMENT	RATEA (MVA)	RATEB(MVA)	TDF	TC%LOADING (% MVA)	CONTINGENCY
FDNSLock-Blown up	06ALL	0	20WP	G15_018		Non-Converged Contingency	987.16	1082.8	0.16517	-	G14_038T 345.00 - Hitchland Interchange 345KV CKT 1
FDNSLock-Blown up	06ALL	0	20WP	G15_018		Non-Converged Contingency	987.16	1082.8	0.16517	-	G14_038T 345.00 - POTTER COUNTY INTERCHANGE 345KV CKT 1
FDNSLock-Blown up	06ALL	0	20WP	G15_018		Non-Converged Contingency	560	560	0.16517	-	POTTER COUNTY INTERCHANGE (WAUK 90343-A) 345/230/13.2KV TRANSFORMER CKT 1
FDNSLock-Blown up	06ALL	0	20WP	G15_018		Non-Converged Contingency	560	560	0.16517	-	POTTER COUNTY INTERCHANGE (WAUK 90343-A) 345/230/13.2KV TRANSFORMER CKT 1
FDNSLock-Blown up	06ALL	0	20WP	G15_018		Non-Converged Contingency	1584	2098	0.1524	-	CHISHOLM7 345.00 - GRACEMONT 345KV CKT 1
FDNSLock-Blown up	06ALL	0	20WP	G15_018		Non-Converged Contingency	1792	1792	0.1514	-	CHISHOLM7 345.00 - WOODWARD DISTRICT EHV 345KV CKT 1
FDNSLock-Blown up	06ALL	0	20WP	G15_018		Non-Converged Contingency	329.05	360.92	0.14809	-	BUSHLAND INTERCHANGE - POTTER COUNTY INTERCHANGE 230KV CKT 1
FDNSLock-Blown up	06ALL	0	20WP	G15_018		Non-Converged Contingency	329.05	360.92	0.14809	-	BUSHLAND INTERCHANGE - POTTER COUNTY INTERCHANGE 230KV CKT 1
FDNSLock-Blown up	06ALL	0	20WP	G15_018		Non-Converged Contingency	1792	1972	0.14783	-	BORDER 7345.00 - TUCO_2 345.00 345KV CKT 1
FDNSLock-Blown up	06ALL	0	20WP	G15_018		Non-Converged Contingency	1420	1775	0.14783	-	BORDER 7345.00 - TUCO_2 345.00 345KV CKT 2
FDNSLock-Blown up	06ALL	0	20WP	G15_018		Non-Converged Contingency	1792	1972	0.14783	-	BORDER 7345.00 345KV SWITCHED SHUNT
FDNSLock-Blown up	06ALL	0	20WP	G15_018		Non-Converged Contingency	987.16	1082.8	0.14014	-	Hitchland Interchange - WALKTAP7 345.00 345KV CKT 1
FDNSLock-Blown up	06ALL	0	20WP	G15_018		Non-Converged Contingency	987.16	1082.8	0.14014	-	Hitchland Interchange - WALKTAP7 345.00 345KV CKT 1
FDNSLock-Blown up	06ALL	0	20WP	G15_018		Non-Converged Contingency	0	0	0.139	-	P12:230:AEPW-SPS:SWEETWT6:WHEELER 6
FDNSLock-Blown up	06ALL	0	20WP	G15_018		Non-Converged Contingency	0	0	0.13086	-	P12:230:AEPW:ELKCITY6:SWEETWT6
FDNSLock-Blown up	06ALL	0	20WP	G15_018		Non-Converged Contingency	1792	1792	0.12838	-	TUCO INTERCHANGE - YOAKUM_345 345.00 345KV CKT 1
FDNSLock-Blown up	06ALL	0	20WP	G15_018		Non-Converged Contingency	956.09	1051.7	0.12279	-	FINNEY SWITCHING STATION - HOLCOMB 345KV CKT 1
FDNSLock-Blown up	06ALL	0	20WP	G15_018		Non-Converged Contingency	956.09	1051.7	0.12279	-	FINNEY SWITCHING STATION - HOLCOMB 345KV CKT 1
FDNSLock-Blown up	06ALL	0	20WP	G15_018		Non-Converged Contingency	987.16	1082.8	0.12279	-	FINNEY SWITCHING STATION - WALKTAP7 345.00 345KV CKT 1
FDNSLock-Blown up	06ALL	0	20WP	G15_018		Non-Converged Contingency	987.16	1082.8	0.12279	-	FINNEY SWITCHING STATION - WALKTAP7 345.00 345KV CKT 1
FDNSLock-Blown up	06ALL	0	20WP	G15_018		Non-Converged Contingency	717	789	0.12139	-	G14-057T 345.00 - LAWTON EASTSIDE 345KV CKT 1
FDNSLock-Blown up	06ALL	0	20WP	G15_018		Non-Converged Contingency	717	789	0.12139	-	G14-057T 345.00 - SUNNYSIDE 345KV CKT 1
FDNSLock-Blown up	06ALL	0	20WP	G15_018		Non-Converged Contingency	557	557	0.10914	-	NEWHART 230 - POTTER COUNTY INTERCHANGE 230KV CKT 1
FDNSLock-Blown up	06ALL	0	20WP	G15_018		Non-Converged Contingency	1420	1775	0.09536	-	G11_051T 345.00 - TATONGA7 345.00 345KV CKT 1
FDNSLock-Blown up	06ALL	0	20WP	G15_018		Non-Converged Contingency	1420	1775	0.09536	-	G11_051T 345.00 - WOODWARD DISTRICT EHV 345KV CKT 1
FDNSLock-Blown up	06ALL	0	20WP	G15_018		Non-Converged Contingency	1195	1195	0.09536	-	MATHWSN7 345.00 - TATONGA7 345.00 345KV CKT 1
FDNSLock-Blown up	06ALL	0	20WP	G15_018		Non-Converged Contingency	329.05	360.92	0.09473	-	DEAF SMITH COUNTY INTERCHANGE - G15039_T 230.00 230KV CKT 1
FDNSLock-Blown up	06ALL	0	20WP	G15_018		Non-Converged Contingency	329.05	360.92	0.09473	-	G15039_T 230.00 - PLANT X STATION 230KV CKT 1
FDNSLock-Blown up	06ALL	0	20WP	G15_018		Non-Converged Contingency	1561	1793	0.08993	-	THISTLE7 345.00 - WOODWARD DISTRICT EHV 345KV CKT 1
FDNSLock-Blown up	06ALL	0	20WP	G15_018		Non-Converged Contingency	1561	1793	0.08993	-	THISTLE7 345.00 - WOODWARD DISTRICT EHV 345KV CKT 1
FDNSLock-Blown up	06ALL	0	20WP	G15_018		Non-Converged Contingency	1561	1793	0.08993	-	THISTLE7 345.00 - WOODWARD DISTRICT EHV 345KV CKT 2
FDNSLock-Blown up	06ALL	0	20WP	G15_018		Non-Converged Contingency	1561	1793	0.08993	-	THISTLE7 345.00 - WOODWARD DISTRICT EHV 345KV CKT 2
FDNSLock-Blown up	06ALL	0	20WP	G15_018		Non-Converged Contingency	478	502	0.07805	-	AMARILLO SOUTH INTERCHANGE - G15031_T 230.00 230KV CKT 1
FDNSLock-Blown up	06ALL	0	20WP	G15_018		Non-Converged Contingency	1793	1793	0.07677	-	G11-14T 345.00 - WOODWARD DISTRICT EHV 345KV CKT 1
FDNSLock-Blown up	06ALL	0	20WP	G15_018		Non-Converged Contingency	1716	1793	0.07677	-	G11-14T 345.00 - WOODWARD DISTRICT EHV 345KV CKT 2
FDNSLock-Blown up	06ALL	0	20WP	G15_018		Non-Converged Contingency	556.92	556.92	0.07004	-	HITCHLAND INTERCHANGE - MOORE COUNTY INTERCHANGE 230KV CKT 1
FDNSLock-Blown up	06ALL	0	20WP	G15_018		Non-Converged Contingency	556.92	556.92	0.07004	-	HITCHLAND INTERCHANGE - MOORE COUNTY INTERCHANGE 230KV CKT 1
FDNSLock-Blown up	06ALL	0	20WP	G15_018		Non-Converged Contingency	421	439	0.0695	-	CHISHOLM6 230.00 - SWEETWATER 230KV CKT 1
FDNSLock-Blown up	06ALL	0	20WP	G15_018		Non-Converged Contingency	435.02	457.73	0.0695	-	STATELINE INTERCHANGE - STLN-DEMARC6 230KV CKT 1
FDNSLock-Blown up	06ALL	0	20WP	G15_018		Non-Converged Contingency	439	439	0.0695	-	STLN-DEMARC6 - SWEETWATER 230KV CKT 1
FDNSLock-Blown up	06ALL	0	20WP	G15_018		Non-Converged Contingency	329.05	360.92	0.05994	-	MOORE COUNTY INTERCHANGE - POTTER COUNTY INTERCHANGE 230KV CKT 1
FDNSLock-Blown up	06ALL	0	20WP	G15_018		Non-Converged Contingency	329.05	360.92	0.05994	-	MOORE COUNTY INTERCHANGE - POTTER COUNTY INTERCHANGE 230KV CKT 1
FDNSLock-Blown up	06ALL	0	20WP	G15_018		Non-Converged Contingency	557	557	0.05907	-	GRAPEVINE INTERCHANGE - STATELINE INTERCHANGE 230KV CKT 1
FDNSLock-Blown up	06ALL	0	20WP	G15_018		Non-Converged Contingency	557	557	0.05907	-	GRAPEVINE INTERCHANGE - STATELINE INTERCHANGE 230KV CKT 1
FDNSLock-Blown up	06ALL	0	20WP	G15_018		Non-Converged Contingency	557	557	0.05893	-	GRAPEVINE INTERCHANGE - NICHOLS STATION 230KV CKT 1
FDNSLock-Blown up	06ALL	0	20WP	G15_018		Non-Converged Contingency	557	557	0.05893	-	GRAPEVINE INTERCHANGE - NICHOLS STATION 230KV CKT 1
FDNSLock-Blown up	06ALL	2	16WP	G15_018		Non-Converged Contingency	1022	1124	0.19096	-	G14-074T 345.00 - OKLAUNION 345KV CKT 1
FDNSLock-Blown up	06ALL	2	16WP	G15_018		Non-Converged Contingency	1022	1124	0.19096	-	G14-074T 345.00 - TUCO INTERCHANGE 345KV CKT 1
FDNSLock-Blown up	06ALL	2	16WP	G15_018		Non-Converged Contingency	987.16	1082.8	0.17992	-	G14_038T 345.00 - Hitchland Interchange 345KV CKT 1
FDNSLock-Blown up	06ALL	2	16WP	G15_018		Non-Converged Contingency	987.16	1082.8	0.17992	-	G14_038T 345.00 - POTTER COUNTY INTERCHANGE 345KV CKT 1
FDNSLock-Blown up	06ALL	2	16WP	G15_018		Non-Converged Contingency	560	560	0.17992	-	POTTER COUNTY INTERCHANGE (WAUK 90343-A) 345/230/13.2KV TRANSFORMER CKT 1
FDNSLock-Blown up	06ALL	2	16WP	G15_018		Non-Converged Contingency	1792	1972	0.14631	-	BORDER 7345.00 - TUCO_2 345.00 345KV CKT 1
FDNSLock-Blown up	06ALL	2	16WP	G15_018		Non-Converged Contingency	1420	1775	0.14631	-	BORDER 7345.00 - TUCO_2 345.00 345KV CKT 2
FDNSLock-Blown up	06ALL	2	17G	G15_018		Non-Converged Contingency	1022	1124	0.18439	-	G14-074T 345.00 - OKLAUNION 345KV CKT 1
FDNSLock-Blown up	06ALL	2	17G	G15_018		Non-Converged Contingency	1022	1124	0.18439	-	G14-074T 345.00 - TUCO INTERCHANGE 345KV CKT 1
FDNSLock-Blown up	06ALL	2	17G	G15_018		Non-Converged Contingency	956.09	1051.7	0.17073	-	G14_038T 345.00 - Hitchland Interchange 345KV CKT 1
FDNSLock-Blown up	06ALL	2	17G	G15_018		Non-Converged Contingency	956.09	1051.7	0.17073	-	G14_038T 345.00 - POTTER COUNTY INTERCHANGE 345KV CKT 1
FDNSLock-Blown up	06ALL	2	17G	G15_018		Non-Converged Contingency	560	560	0.17073	-	POTTER COUNTY INTERCHANGE (WAUK 90343-A) 345/230/13.2KV TRANSFORMER CKT 1
FDNSLock-Blown up	06ALL	2	17G	G15_018		Non-Converged Contingency	1792	1972	0.14055	-	BORDER 7345.00 - TUCO_2 345.00 345KV CKT 1
FDNSLock-Blown up	06ALL	2	17G	G15_018		Non-Converged Contingency	1420	1775	0.14055	-	BORDER 7345.00 - TUCO_2 345.00 345KV CKT 2
FDNSLock-Blown up	06ALL	2	17SP	G15_018		Non-Converged Contingency	956	1042	0.18938	-	G14-074T 345.00 - OKLAUNION 345KV CKT 1
FDNSLock-Blown up	06ALL	2	20L	G15_018		Non-Converged Contingency	0	0	0.22238	-	P12:345:SPS:J07.1.FINN.HITCH
FDNSLock-Blown up	06ALL	2	20L	G15_018		Non-Converged Contingency	1022	1124	0.16053	-	G14-074T 345.00 - OKLAUNION 345KV CKT 1
FDNSLock-Blown up	06ALL	2	20L	G15_018		Non-Converged Contingency	1022	1124	0.16053	-	G14-074T 345.00 - TUCO INTERCHANGE 345KV CKT 1
FDNSLock-Blown up	06ALL	2	20L	G15_018		Non-Converged Contingency	1022	1124	0.16053	-	OKLAUNION 345KV SWITCHED SHUNT
FDNSLock-Blown up	06ALL	2	20L	G15_018		Non-Converged Contingency	956.09	1051.7	0.13665	-	G14_038T 345.00 - Hitchland Interchange 345KV CKT 1
FDNSLock-Blown up	06ALL	2	20L	G15_018		Non-Converged Contingency	956.09	1051.7	0.13665	-	G14_038T 345.00 - POTTER COUNTY INTERCHANGE 345KV CKT 1
FDNSLock-Blown up	06ALL	2	20L	G15_018		Non-Converged Contingency	560	560	0.13665	-	POTTER COUNTY INTERCHANGE (WAUK 90343-A) 345/230/13.2KV TRANSFORMER CKT 1
FDNSLock-Blown up	06ALL	2	20L	G15_018		Non-Converged Contingency	560	560	0.13665	-	POTTER COUNTY INTERCHANGE (WAUK 90343-A) 345/230/13.2KV TRANSFORMER CKT 1
FDNSLock-Blown up	06ALL	2	20L	G15_018		Non-Converged Contingency	1792	1972	0.12729	-	BORDER 7345.00 - TUCO_2 345.00 345KV CKT 1
FDNSLock-Blown up	06ALL	2	20L	G15_018		Non-Converged Contingency	1420	1775	0.12728	-	BORDER 7345.00 - TUCO_2 345.00 345KV CKT 2
FDNSLock-Blown up	06ALL	2	20L	G15_018		Non-Converged Contingency	1584	2098	0.12673	-	CHISHOLM7 345.00 - GRACEMONT 345KV CKT 1
FDNSLock-Blown up	06ALL	2	20L	G15_018		Non-Converged Contingency	956.09	1051.7	0.11871	-	Hitchland Interchange - WALKTAP7 345.00 345KV CKT 1
FDNSLock-Blown up	06ALL	2	20L	G15_018		Non-Converged Contingency	956.09	1051.7	0.11871	-	Hitchland Interchange - WALKTAP7 345.00 345KV CKT 1
FDNSLock-Blown up	06ALL	2	20L	G15_018		Non-Converged Contingency	0	0	0.10413	-	P12:230:AEPW:ELKCITY6:SWEETWT6
FDNSLock-Blown up	06NR	2	20L	G15_018		Non-Converged Contingency	318.7	350.57	0.10312	-	BUSHLAND INTERCHANGE - POTTER COUNTY INTERCHANGE 230KV CKT 1
FDNSLock-Blown up	06NR	2	20L	G15_018		Non-Converged Contingency	318.7	350.57	0.10312	-	BUSHLAND INTERCHANGE - POTTER COUNTY INTERCHANGE 230KV CKT 1
FDNSLock-Blown up	06ALL	2	20L	G15_018		Non-Converged Contingency	1195	1195	0.0812	-	MATHWSN7 345.00 - TATONGA7 345.00 345KV CKT 1
FDNSLock-Blown up	06NR	2	20L	G15_018		Non-Converged Contingency	478	502	0.07695	-	NEWHART 230 - POTTER COUNTY INTERCHANGE 230KV CKT 1

SOLUTION	GROUP	SCENARIO	SEASON	SOURCE	DIRECTION	MONITORED ELEMENT	RATEA (MVA)	RATEB(MVA)	TDF	TC%LOADING (% MVA)	CONTINGENCY
FDNSLock-Blown up	06NR	2	20L	G15_018		Non-Converged Contingency	478	502	0.06863	-	AMARILLO SOUTH INTERCHANGE - G15031_T 230.00 230KV CKT 1
FDNSLock-Blown up	06ALL	2	20L	G15_018		Non-Converged Contingency	421	439	0.0542	-	CHISHOLM6 230.00 - SWEETWATER 230KV CKT 1
FDNSLock-Blown up	06NR	2	20L	G15_018		Non-Converged Contingency	318.7	350.57	0.05357	-	DEAF SMITH COUNTY INTERCHANGE - G15039_T 230.00 230KV CKT 1
FDNSLock-Blown up	06ALL	2	20SP	G15_018		Non-Converged Contingency	956	1042	0.19468	-	G14-074T 345.00 - OKLAUNION 345KV CKT 1
FDNSLock-Blown up	06ALL	2	20WP	G15_018		Non-Converged Contingency	1022	1124	0.19	-	G14-074T 345.00 - OKLAUNION 345KV CKT 1
FDNSLock-Blown up	06ALL	2	20WP	G15_018		Non-Converged Contingency	1022	1124	0.19	-	G14-074T 345.00 - TUCO INTERCHANGE 345KV CKT 1
FDNSLock-Blown up	06ALL	2	20WP	G15_018		Non-Converged Contingency	987.16	1082.8	0.16539	-	G14_038T 345.00 - Hitchland Interchange 345KV CKT 1
FDNSLock-Blown up	06ALL	2	20WP	G15_018		Non-Converged Contingency	987.16	1082.8	0.16539	-	G14_038T 345.00 - POTTER COUNTY INTERCHANGE 345KV CKT 1
FDNSLock-Blown up	06ALL	2	20WP	G15_018		Non-Converged Contingency	560	560	0.16539	-	POTTER COUNTY INTERCHANGE (WAUK 90343-A) 345/230/13.2KV TRANSFORMER CKT 1
FDNSLock-Blown up	06ALL	2	20WP	G15_018		Non-Converged Contingency	560	560	0.16539	-	POTTER COUNTY INTERCHANGE (WAUK 90343-A) 345/230/13.2KV TRANSFORMER CKT 1
FDNSLock-Blown up	06ALL	2	20WP	G15_018		Non-Converged Contingency	1792	1972	0.14804	-	BORDER 7345.00 - TUCO_2 345.00 345KV CKT 1
FDNSLock-Blown up	06ALL	2	20WP	G15_018		Non-Converged Contingency	1420	1775	0.14804	-	BORDER 7345.00 - TUCO_2 345.00 345KV CKT 2
FDNSLock-Blown up	06ALL	3	16WP	G15_018		Non-Converged Contingency	1022	1124	0.20391	-	G14-074T 345.00 - OKLAUNION 345KV CKT 1
FDNSLock-Blown up	06ALL	3	16WP	G15_018		Non-Converged Contingency	1022	1124	0.20391	-	G14-074T 345.00 - TUCO INTERCHANGE 345KV CKT 1
FDNSLock-Blown up	06ALL	3	17SP	G15_018		Non-Converged Contingency	956	1042	0.2013	-	G14-074T 345.00 - OKLAUNION 345KV CKT 1
FDNSLock-Blown up	06ALL	3	20L	G15_018		Non-Converged Contingency	1022	1124	0.16875	-	G14-074T 345.00 - OKLAUNION 345KV CKT 1
FDNSLock-Blown up	06ALL	3	20L	G15_018		Non-Converged Contingency	1022	1124	0.16875	-	G14-074T 345.00 - TUCO INTERCHANGE 345KV CKT 1
FDNSLock-Blown up	06ALL	3	20L	G15_018		Non-Converged Contingency	1792	1972	0.13691	-	BORDER 7345.00 - TUCO_2 345.00 345KV CKT 1
FDNSLock-Blown up	06ALL	3	20L	G15_018		Non-Converged Contingency	1420	1775	0.13691	-	BORDER 7345.00 - TUCO_2 345.00 345KV CKT 2
FDNSLock-Blown up	06ALL	3	20L	G15_018		Non-Converged Contingency	1584	2098	0.129	-	CHISHOLM7 345.00 - GRACEMONT 345KV CKT 1
FDNSLock-Blown up	06ALL	3	20L	G15_018		Non-Converged Contingency	956.09	1051.7	0.12814	-	G14_038T 345.00 - Hitchland Interchange 345KV CKT 1
FDNSLock-Blown up	06ALL	3	20L	G15_018		Non-Converged Contingency	956.09	1051.7	0.12814	-	G14_038T 345.00 - POTTER COUNTY INTERCHANGE 345KV CKT 1
FDNSLock-Blown up	06ALL	3	20L	G15_018		Non-Converged Contingency	560	560	0.12814	-	POTTER COUNTY INTERCHANGE (WAUK 90343-A) 345/230/13.2KV TRANSFORMER CKT 1
FDNSLock-Blown up	06ALL	3	20L	G15_018		Non-Converged Contingency	956.09	1051.7	0.11522	-	Hitchland Interchange - WALKTAP7 345.00 345KV CKT 1
FDNSLock-Blown up	06ALL	3	20L	G15_018		Non-Converged Contingency	1195	1195	0.07932	-	MATHWSN7 345.00 - TATONGA7 345.00 345KV CKT 1
FDNSLock-Blown up	06ALL	3	20L	G15_018		Non-Converged Contingency	421	439	0.04718	-	CHISHOLM6 230.00 - SWEETWATER 230KV CKT 1
FDNSLock-Blown up	06NR	3	20L	G15_018		Non-Converged Contingency	1022	1124	0.03213	-	G14-074T 345.00 - OKLAUNION 345KV CKT 1
FDNSLock-Blown up	06NR	3	20L	G15_018		Non-Converged Contingency	1022	1124	0.03213	-	G14-074T 345.00 - TUCO INTERCHANGE 345KV CKT 1
FDNSLock-Blown up	06NR	3	20L	G15_018		Non-Converged Contingency	1022	1124	0.03213	-	OKLAUNION 345KV SWITCHED SHUNT
FDNSLock-Blown up	06NR	3	20L	G15_018		Non-Converged Contingency	1792	1972	0.03107	-	BORDER 7345.00 - TUCO_2 345.00 345KV CKT 1
FDNSLock-Blown up	06NR	3	20L	G15_018		Non-Converged Contingency	1792	1792	0.03107	-	BORDER 7345.00 - WOODWARD DISTRICT EHV 345KV CKT 1
FDNSLock-Blown up	06NR	3	20L	G15_018		Non-Converged Contingency	1792	1972	0.03107	-	BORDER 7345.00 345KV SWITCHED SHUNT
FDNSLock-Blown up	06ALL	3	20SP	G15_018		Non-Converged Contingency	956	1042	0.20301	-	G14-074T 345.00 - OKLAUNION 345KV CKT 1
FDNSLock-Blown up	06ALL	3	20WP	G15_018		Non-Converged Contingency	1022	1124	0.19845	-	G14-074T 345.00 - OKLAUNION 345KV CKT 1
FDNSLock-Blown up	06ALL	3	20WP	G15_018		Non-Converged Contingency	1022	1124	0.19845	-	G14-074T 345.00 - TUCO INTERCHANGE 345KV CKT 1
FDNSLock-Blown up	06ALL	3	20WP	G15_018		Non-Converged Contingency	1792	1972	0.15816	-	BORDER 7345.00 - TUCO_2 345.00 345KV CKT 1
FDNSLock-Blown up	06ALL	3	20WP	G15_018		Non-Converged Contingency	1420	1775	0.15815	-	BORDER 7345.00 - TUCO_2 345.00 345KV CKT 2
FDNSLock-Blown up	06ALL	3	20WP	G15_018		Non-Converged Contingency	987.16	1082.8	0.15554	-	G14_038T 345.00 - Hitchland Interchange 345KV CKT 1
FDNSLock-Blown up	06ALL	3	20WP	G15_018		Non-Converged Contingency	987.16	1082.8	0.15554	-	G14_038T 345.00 - POTTER COUNTY INTERCHANGE 345KV CKT 1
FDNSLock-Blown up	06ALL	4	16WP	G15_018		Non-Converged Contingency	1022	1124	0.18565	-	G14-074T 345.00 - OKLAUNION 345KV CKT 1
FDNSLock-Blown up	06ALL	4	17G	G15_018		Non-Converged Contingency	956.09	1051.7	0.20326	-	G14_038T 345.00 - Hitchland Interchange 345KV CKT 1
FDNSLock-Blown up	06ALL	4	17G	G15_018		Non-Converged Contingency	956.09	1051.7	0.20326	-	G14_038T 345.00 - POTTER COUNTY INTERCHANGE 345KV CKT 1
FDNSLock-Blown up	06ALL	4	17G	G15_018		Non-Converged Contingency	1022	1124	0.17912	-	G14-074T 345.00 - OKLAUNION 345KV CKT 1
FDNSLock-Blown up	06ALL	4	17G	G15_018		Non-Converged Contingency	1022	1124	0.17912	-	G14-074T 345.00 - TUCO INTERCHANGE 345KV CKT 1
FDNSLock-Blown up	06ALL	4	20L	G15_018		Non-Converged Contingency	0	0	0.23702	-	P12:345:SPS:J07.1.FINN.HITCH
FDNSLock-Blown up	06ALL	4	20L	G15_018		Non-Converged Contingency	956.09	1051.7	0.1719	-	G14_038T 345.00 - Hitchland Interchange 345KV CKT 1
FDNSLock-Blown up	06ALL	4	20L	G15_018		Non-Converged Contingency	956.09	1051.7	0.1719	-	G14_038T 345.00 - POTTER COUNTY INTERCHANGE 345KV CKT 1
FDNSLock-Blown up	06ALL	4	20L	G15_018		Non-Converged Contingency	1022	1124	0.15266	-	G14-074T 345.00 - OKLAUNION 345KV CKT 1
FDNSLock-Blown up	06ALL	4	20L	G15_018		Non-Converged Contingency	1022	1124	0.15266	-	G14-074T 345.00 - TUCO INTERCHANGE 345KV CKT 1
FDNSLock-Blown up	06ALL	4	20L	G15_018		Non-Converged Contingency	956.09	1051.7	0.12653	-	Hitchland Interchange - WALKTAP7 345.00 345KV CKT 1
FDNSLock-Blown up	06ALL	4	20L	G15_018		Non-Converged Contingency	956.09	1051.7	0.12653	-	Hitchland Interchange - WALKTAP7 345.00 345KV CKT 1
FDNSLock-Blown up	06ALL	4	20L	G15_018		Non-Converged Contingency	1584	2098	0.12564	-	CHISHOLM7 345.00 - GRACEMONT 345KV CKT 1
FDNSLock-Blown up	06ALL	4	20L	G15_018		Non-Converged Contingency	1792	1972	0.11955	-	BORDER 7345.00 - TUCO_2 345.00 345KV CKT 1
FDNSLock-Blown up	06ALL	4	20L	G15_018		Non-Converged Contingency	1420	1775	0.11955	-	BORDER 7345.00 - TUCO_2 345.00 345KV CKT 2
FDNSLock-Blown up	06ALL	4	20L	G15_018		Non-Converged Contingency	0	0	0.10493	-	P12:230:AEPW:ELKCITY6:SWEETWT6
FDNSLock-Blown up	06ALL	4	20WP	G15_018		Non-Converged Contingency	987.16	1082.8	0.20241	-	G14_038T 345.00 - Hitchland Interchange 345KV CKT 1
FDNSLock-Blown up	06ALL	4	20WP	G15_018		Non-Converged Contingency	1022	1124	0.18061	-	G14-074T 345.00 - OKLAUNION 345KV CKT 1
FDNSLock-Blown up	06ALL	4	20WP	G15_018		Non-Converged Contingency	1022	1124	0.18061	-	G14-074T 345.00 - TUCO INTERCHANGE 345KV CKT 1
FDNSLock-Blown up	06ALL	5	16WP	G15_018		Non-Converged Contingency	1022	1124	0.17743	-	G14-074T 345.00 - OKLAUNION 345KV CKT 1
FDNSLock-Blown up	06ALL	5	17G	G15_018		Non-Converged Contingency	1022	1124	0.17138	-	G14-074T 345.00 - OKLAUNION 345KV CKT 1
FDNSLock-Blown up	06ALL	5	20L	G15_018		Non-Converged Contingency	1022	1124	0.14742	-	G14-074T 345.00 - OKLAUNION 345KV CKT 1
FDNSLock-Blown up	06ALL	5	20WP	G15_018		Non-Converged Contingency	1022	1124	0.17255	-	G14-074T 345.00 - OKLAUNION 345KV CKT 1
FDNSLock-Blown up	06ALL	6	17G	G15_018		Non-Converged Contingency	1022	1124	0.16427	-	G14-074T 345.00 - OKLAUNION 345KV CKT 1
FDNSLock-Blown up	06ALL	6	20L	G15_018		Non-Converged Contingency	1022	1124	0.14127	-	G14-074T 345.00 - OKLAUNION 345KV CKT 1
FDNSLock-Blown up	06ALL	6	20WP	G15_018		Non-Converged Contingency	1022	1124	0.16557	-	G14-074T 345.00 - OKLAUNION 345KV CKT 1
FDNS	06ALL	0	16WP	G15_018	FROM->TO	BUSHLAND INTERCHANGE - POTTER COUNTY INTERCHANGE 230KV CKT 1	329.05	360.92	0.16422	103.4995	BASE CASE
FDNS	06NR	0	17G	G15_018	FROM->TO	BUSHLAND INTERCHANGE - POTTER COUNTY INTERCHANGE 230KV CKT 1	318.7	350.57	0.11755	101.2444	BUSHLAND INTERCHANGE - HILLSIDE 115KV CKT 1
FDNS	06NR	0	17G	G15_018	FROM->TO	BUSHLAND INTERCHANGE - POTTER COUNTY INTERCHANGE 230KV CKT 1	318.7	350.57	0.11755	101.1735	BUSHLAND INTERCHANGE (WH 7001795) 230/115/13.2KV TRANSFORMER CKT 1
FDNS	06NR	0	17G	G15_018	FROM->TO	BUSHLAND INTERCHANGE - POTTER COUNTY INTERCHANGE 230KV CKT 1	318.7	350.57	0.11755	101.1735	BUSHLAND INTERCHANGE (WH 7001795) 230/115/13.2KV TRANSFORMER CKT 1
FDNS	06NR	0	17G	G15_018	FROM->TO	BUSHLAND INTERCHANGE - POTTER COUNTY INTERCHANGE 230KV CKT 1	318.7	350.57	0.11755	100.4335	P12:115:SPS:V52.1.COLTR.BSHLND
FDNS	06NR	0	20L	G15_018	TO->FROM	CARGILL SUB - DEAF SMITH REC-#24 115KV CKT 1	96	96	0.10257	102.4809	G15039_T 230.00 - PLANT X STATION 230KV CKT 1
FDNS	06ALL	0	20SP	G15_018	FROM->TO	CHISHOLM6 230.00 - ELK CITY 230KV 230KV CKT 1	353	353	0.06306	106.4803	BASE CASE
FDNS	06ALL	0	17SP	G15_018	FROM->TO	CHISHOLM6 230.00 - ELK CITY 230KV 230KV CKT 1	353	353	0.06318	104.7427	BASE CASE
FDNS	06ALL	0	17SP	G15_018	TO->FROM	CIMARRON - MINCO 345KV CKT 1	956	956	0.23102	123.2446	G14-057T 345.00 - SUNNYSIDE 345KV CKT 1
FDNS	06ALL	0	20SP	G15_018	TO->FROM	CIMARRON - MINCO 345KV CKT 1	956	956	0.23391	120.5642	G14-057T 345.00 - SUNNYSIDE 345KV CKT 1
FDNS	06ALL	0	17SP	G15_018	TO->FROM	CIMARRON - MINCO 345KV CKT 1	956	956	0.23102	117.8925	G14-057T 345.00 - LAWTON EASTSIDE 345KV CKT 1
FDNS	06ALL	0	20SP	G15_018	TO->FROM	CIMARRON - MINCO 345KV CKT 1	956	956	0.23391	115.1699	G14-057T 345.00 - LAWTON EASTSIDE 345KV CKT 1
FDNS	06ALL	0	17SP	G15_018	TO->FROM	CIMARRON - MINCO 345KV CKT 1	956	956	0.19926	105.5731	MATHWSN7 345.00 - TATONGA7 345.00 345KV CKT 1
FDNS	06ALL	0	20SP	G15_018	TO->FROM	CIMARRON - MINCO 345KV CKT 1	956	956	0.20102	104.5241	MATHWSN7 345.00 - TATONGA7 345.00 345KV CKT 1

SOLUTION	GROUP	SCENARIO	SEASON	SOURCE	DIRECTION	MONITORED ELEMENT	RATEA (MVA)	RATEB(MVA)	TDF	TC%LOADING (% MVA)	CONTINGENCY
FDNS	06ALL	0	20SP	G15_018	TO->FROM	CIMARRON - MINCO 345KV CKT 1	956	956	0.23067	102.9387	CHISHOLM7 345.00 - WOODWARD DISTRICT EHV 345KV CKT 1
FDNS	06ALL	0	17SP	G15_018	TO->FROM	CIMARRON - MINCO 345KV CKT 1	956	956	0.22656	102.0892	CHISHOLM7 345.00 - WOODWARD DISTRICT EHV 345KV CKT 1
FDNS	06ALL	0	17SP	G15_018	TO->FROM	CIMARRON - MINCO 345KV CKT 1	956	956	0.19926	100.3376	G11_051T 345.00 - TATONGA7 345.00 345KV CKT 1
FDNS	06NR	0	20L	G15_018	FROM->TO	CURRY COUNTY INTERCHANGE - DEAF SMITH REC-#20 115KV CKT 1	96	96	0.10257	120.2948	G15039_T 230.00 - PLANT X STATION 230KV CKT 1
FDNS	06ALL	0	20SP	G15_018	TO->FROM	DEAF SMITH COUNTY INTERCHANGE - G15039_T 230.00 230KV CKT 1	318.7	350.57	0.09575	110.3343	BASE CASE
FDNS	06NR	0	17G	G15_018	TO->FROM	DEAF SMITH COUNTY INTERCHANGE - G15039_T 230.00 230KV CKT 1	318.7	350.57	0.06883	110.3216	NEWHART 230 - PLANT X STATION 230KV CKT 1
FDNS	06ALL	0	17SP	G15_018	TO->FROM	DEAF SMITH COUNTY INTERCHANGE - G15039_T 230.00 230KV CKT 1	318.7	350.57	0.10266	108.4885	BASE CASE
FDNS	06NR	0	17G	G15_018	TO->FROM	DEAF SMITH COUNTY INTERCHANGE - G15039_T 230.00 230KV CKT 1	318.7	350.57	0.0515	103.1436	P12:115:SPS:T04.1.DFSMTH.CASTRO
FDNS	06NR	0	17G	G15_018	TO->FROM	DEAF SMITH COUNTY INTERCHANGE - G15039_T 230.00 230KV CKT 1	318.7	350.57	0.09224	101.0528	CURRY COUNTY INTERCHANGE - DEAF SMITH REC-#20 115KV CKT 1
FDNS	06NR	0	17G	G15_018	TO->FROM	DEAF SMITH COUNTY INTERCHANGE - G15039_T 230.00 230KV CKT 1	318.7	350.57	0.06139	100.4761	TOLK STATION EAST - TUCO INTERCHANGE 230KV CKT 1
FDNS	06NR	0	17G	G15_018	TO->FROM	DEAF SMITH COUNTY INTERCHANGE - G15039_T 230.00 230KV CKT 1	318.7	350.57	0.06139	100.4761	TOLK STATION EAST - TUCO INTERCHANGE 230KV CKT 1
FDNS	06NR	0	17G	G15_018	TO->FROM	DEAF SMITH COUNTY INTERCHANGE - G15039_T 230.00 230KV CKT 1	318.7	350.57	0.04648	99.9	P12:230:SPS:CL.1.BSHLND.WLDRDO
FDNS	06NR	0	17G	G15_018	TO->FROM	DEAF SMITH COUNTY INTERCHANGE - G15039_T 230.00 230KV CKT 1	318.7	350.57	0.09224	99.6	DEAF SMITH REC-#20 - PARMER COUNTY SUB 115KV CKT 1
FDNS	06NR	0	20L	G15_018	FROM->TO	DEAF SMITH REC-#20 - PARMER COUNTY SUB 115KV CKT 1	96	96	0.10257	112.8529	G15039_T 230.00 - PLANT X STATION 230KV CKT 1
FDNS	06NR	0	20L	G15_018	TO->FROM	DEAF SMITH REC-#24 - PARMER COUNTY SUB 115KV CKT 1	96	96	0.10257	107.7543	G15039_T 230.00 - PLANT X STATION 230KV CKT 1
FDNSLock	06ALL	0	20WP	G15_018		ELK CITY 230KV (ELKCTY-6) 230/138/13.8KV TRANSFORMER CKT 1	450	450	0.06136	87.66341	BASE CASE
FDNSLock	06ALL	0	20WP	G15_018		ELK CITY 230KV (ELKCTY-6) 230/138/13.8KV TRANSFORMER CKT 1	450	450	0.06136	87.66341	BASE CASE
FDNS	06ALL	0	20L	G15_018	TO->FROM	G14-057T 345.00 - LAWTON EASTSIDE 345KV CKT 1	717	789	0.09764	108.0268	BASE CASE
FDNS	06ALL	0	20L	G15_018	FROM->TO	G14-057T 345.00 - SUNNYSIDE 345KV CKT 1	717	789	0.09764	120.8788	BASE CASE
FDNS	06ALL	0	20WP	G15_018	FROM->TO	G14-057T 345.00 - SUNNYSIDE 345KV CKT 1	717	789	0.12139	107.5634	BASE CASE
FDNS	06ALL	0	17G	G15_018	FROM->TO	G14-057T 345.00 - SUNNYSIDE 345KV CKT 1	717	789	0.1214	106.9763	BASE CASE
FDNS	06ALL	0	16WP	G15_018	FROM->TO	G14-057T 345.00 - SUNNYSIDE 345KV CKT 1	717	789	0.12469	105.0999	BASE CASE
FDNS	06NR	0	20L	G15_018	FROM->TO	G14-074T 345.00 - OKLAUNION 345KV CKT 1	1022	1124	0.04142	101.2851	BUSHLAND INTERCHANGE - DEAF SMITH COUNTY INTERCHANGE 230KV CKT 1
FDNS	06NR	0	20L	G15_018	FROM->TO	G14-074T 345.00 - OKLAUNION 345KV CKT 1	1022	1124	0.04142	101.2851	BUSHLAND INTERCHANGE - DEAF SMITH COUNTY INTERCHANGE 230KV CKT 1
FDNS	00NR	0	25SP	G15_018	TO->FROM	JONES STATION - TUCO INTERCHANGE 230KV CKT 1	343.79	343.79	0.06494	139.3518	CARLISLE INTERCHANGE - TUCO INTERCHANGE 230KV CKT 1
FDNS	00NR	0	25SP	G15_018	TO->FROM	JONES STATION - TUCO INTERCHANGE 230KV CKT 1	343.79	343.79	0.06494	139.3518	CARLISLE INTERCHANGE - TUCO INTERCHANGE 230KV CKT 1
FDNS	00NR	0	25SP	G15_018	TO->FROM	JONES STATION - TUCO INTERCHANGE 230KV CKT 1	343.79	343.79	0.06221	123.0773	TUCO INTERCHANGE - YOAKUM_345 345.00 345KV CKT 1
FDNS	00NR	0	25SP	G15_018	TO->FROM	JONES STATION - TUCO INTERCHANGE 230KV CKT 1	343.79	343.79	0.0568	119.4572	GEN526333 1-JONES GEN #3 21 KV
FDNS	00NR	0	25SP	G15_018	TO->FROM	JONES STATION - TUCO INTERCHANGE 230KV CKT 1	343.79	343.79	0.0568	119.0504	GEN526334 1-JONES_4 116.500
FDNS	00NR	0	25SP	G15_018	TO->FROM	JONES STATION - TUCO INTERCHANGE 230KV CKT 1	343.79	343.79	0.05971	111.1942	CARLISLE INTERCHANGE - WOLFFORTH INTERCHANGE 230KV CKT 1
FDNS	00NR	0	25SP	G15_018	TO->FROM	JONES STATION - TUCO INTERCHANGE 230KV CKT 1	343.79	343.79	0.05604	107.2791	TUCO INTERCHANGE (ENRCO 136401) 230/115/13.2KV TRANSFORMER CKT 1
FDNS	00NR	0	25SP	G15_018	TO->FROM	JONES STATION - TUCO INTERCHANGE 230KV CKT 1	343.79	343.79	0.05604	107.2791	TUCO INTERCHANGE (ENRCO 136401) 230/115/13.2KV TRANSFORMER CKT 1
FDNS	00NR	0	25SP	G15_018	TO->FROM	JONES STATION - TUCO INTERCHANGE 230KV CKT 1	343.79	343.79	0.05604	107.2791	TUCO INTERCHANGE (ENRCO 136401) 230/115/13.2KV TRANSFORMER CKT 2
FDNS	00NR	0	25SP	G15_018	TO->FROM	JONES STATION - TUCO INTERCHANGE 230KV CKT 1	343.79	343.79	0.05604	107.2791	TUCO INTERCHANGE (ENRCO 136401) 230/115/13.2KV TRANSFORMER CKT 2
FDNS	00NR	0	25SP	G15_018	TO->FROM	JONES STATION - TUCO INTERCHANGE 230KV CKT 1	343.79	343.79	0.0568	106.7618	GEN526332 1-JONES GEN #2 21 KV
FDNS	00NR	0	25SP	G15_018	TO->FROM	JONES STATION - TUCO INTERCHANGE 230KV CKT 1	343.79	343.79	0.0568	106.7593	GEN526331 1-JONES GEN #1 22 KV
FDNS	00NR	0	25SP	G15_018	TO->FROM	JONES STATION - TUCO INTERCHANGE 230KV CKT 1	343.79	343.79	0.07025	105.7876	PLANT X STATION - SUNDOWN INTERCHANGE 230KV CKT 1
FDNS	00NR	0	25SP	G15_018	TO->FROM	JONES STATION - TUCO INTERCHANGE 230KV CKT 1	343.79	343.79	0.07025	105.7876	PLANT X STATION - SUNDOWN INTERCHANGE 230KV CKT 1
FDNS	00NR	0	25SP	G15_018	TO->FROM	JONES STATION - TUCO INTERCHANGE 230KV CKT 1	343.79	343.79	0.0631	105.7418	LUBBOCK EAST INTERCHANGE - TUCO INTERCHANGE 115KV CKT 1
FDNS	00NR	0	25SP	G15_018	TO->FROM	JONES STATION - TUCO INTERCHANGE 230KV CKT 1	343.79	343.79	0.0631	105.7418	LUBBOCK EAST INTERCHANGE - TUCO INTERCHANGE 115KV CKT 1
FDNS	00NR	0	25SP	G15_018	TO->FROM	JONES STATION - TUCO INTERCHANGE 230KV CKT 1	343.79	343.79	0.05867	102.5912	STANTON SUB - TUCO INTERCHANGE 115KV CKT 1
FDNS	00NR	0	25SP	G15_018	TO->FROM	JONES STATION - TUCO INTERCHANGE 230KV CKT 1	343.79	343.79	0.05888	102.3658	P12:230:LPL:K39.1.CRLSLE.LP-MLWK
FDNS	00NR	0	25SP	G15_018	TO->FROM	JONES STATION - TUCO INTERCHANGE 230KV CKT 1	343.79	343.79	0.05888	102.3646	CARLISLE INTERCHANGE - LUBBOCK POWER & LIGHT-MILWAUKEE 230KV CKT 1
FDNS	00NR	0	25SP	G15_018	TO->FROM	JONES STATION - TUCO INTERCHANGE 230KV CKT 1	343.79	343.79	0.05888	102.363	LUBBOCK POWER & LIGHT-MILWAUKEE (M-E C0681251) 230/69/13.5KV TRANSFORMER CKT 1
FDNS	00NR	0	25SP	G15_018	TO->FROM	JONES STATION - TUCO INTERCHANGE 230KV CKT 1	343.79	343.79	0.05888	102.363	LUBBOCK POWER & LIGHT-MILWAUKEE (M-E C0681251) 230/69/13.5KV TRANSFORMER CKT 1
FDNS	00NR	0	25SP	G15_018	TO->FROM	JONES STATION - TUCO INTERCHANGE 230KV CKT 1	343.79	343.79	0.0447	102.0923	TOLK STATION EAST - TUCO INTERCHANGE 230KV CKT 1
FDNS	00NR	0	25SP	G15_018	TO->FROM	JONES STATION - TUCO INTERCHANGE 230KV CKT 1	343.79	343.79	0.0447	102.0923	TOLK STATION EAST - TUCO INTERCHANGE 230KV CKT 1
FDNS	00NR	0	25SP	G15_018	TO->FROM	JONES STATION - TUCO INTERCHANGE 230KV CKT 1	343.79	343.79	0.05867	101.6363	P12:115:SPS:V15.1.TUCO.INDANA
FDNS	00NR	0	25SP	G15_018	TO->FROM	JONES STATION - TUCO INTERCHANGE 230KV CKT 1	343.79	343.79	0.05867	101.6061	INDIANA SUB - STANTON SUB 115KV CKT 1
FDNS	00NR	0	25SP	G15_018	TO->FROM	JONES STATION - TUCO INTERCHANGE 230KV CKT 1	343.79	343.79	0.0568	101.0841	GEN527903 1-HOBBS PLANT #3 (ST)
FDNS	00NR	0	25SP	G15_018	TO->FROM	JONES STATION - TUCO INTERCHANGE 230KV CKT 1	343.79	343.79	0.0568	101.0701	GEN527166 1-MUSTANG_6 118.000
FDNS	00NR	0	25SP	G15_018	TO->FROM	JONES STATION - TUCO INTERCHANGE 230KV CKT 1	343.79	343.79	0.0568	100.6214	GEN528501 1-G14_012 24.000
FDNS	00NR	0	25SP	G15_018	TO->FROM	JONES STATION - TUCO INTERCHANGE 230KV CKT 1	343.79	343.79	0.0561	100.6076	KRESS INTERCHANGE - SWISHER COUNTY INTERCHANGE 115KV CKT 1
FDNS	00NR	0	25SP	G15_018	TO->FROM	JONES STATION - TUCO INTERCHANGE 230KV CKT 1	343.79	343.79	0.0561	100.6076	KRESS INTERCHANGE - SWISHER COUNTY INTERCHANGE 115KV CKT 1
FDNS	00NR	0	25SP	G15_018	TO->FROM	JONES STATION - TUCO INTERCHANGE 230KV CKT 1	343.79	343.79	0.05897	100.4516	CARLISLE INTERCHANGE - MURPHY SUB 115KV CKT 1
FDNS	00NR	0	25SP	G15_018	TO->FROM	JONES STATION - TUCO INTERCHANGE 230KV CKT 1	343.79	343.79	0.05897	100.4516	CARLISLE INTERCHANGE - MURPHY SUB 115KV CKT 1
FDNS	00NR	0	25SP	G15_018	TO->FROM	JONES STATION - TUCO INTERCHANGE 230KV CKT 1	343.79	343.79	0.05773	100.2532	YOAKUM_345 345.00 (UPDATE DATA) 345/230/13.2KV TRANSFORMER CKT 1
FDNS	00NR	0	25SP	G15_018	TO->FROM	JONES STATION - TUCO INTERCHANGE 230KV CKT 1	343.79	343.79	0.05682	100	POTTER COUNTY INTERCHANGE (WAUK 90343-A) 345/230/13.2KV TRANSFORMER CKT 1
FDNS	00NR	0	25SP	G15_018	TO->FROM	JONES STATION - TUCO INTERCHANGE 230KV CKT 1	343.79	343.79	0.05682	100	POTTER COUNTY INTERCHANGE (WAUK 90343-A) 345/230/13.2KV TRANSFORMER CKT 1
FDNS	00NR	0	25SP	G15_018	TO->FROM	JONES STATION - TUCO INTERCHANGE 230KV CKT 1	343.79	343.79	0.0568	100	GEN563122 1-G15077_3 0.3850
FDNS	00NR	0	25SP	G15_018	TO->FROM	JONES STATION - TUCO INTERCHANGE 230KV CKT 1	343.79	343.79	0.05867	99.9	INDIANA SUB - SOUTH PLAINS REC-ERSKINE 115KV CKT 1
FDNS	00NR	0	25SP	G15_018	TO->FROM	JONES STATION - TUCO INTERCHANGE 230KV CKT 1	343.79	343.79	0.0568	99.9	GEN527901 1-HOBBS PLANT #1 (CT)
FDNS	00NR	0	25SP	G15_018	TO->FROM	JONES STATION - TUCO INTERCHANGE 230KV CKT 1	343.79	343.79	0.0568	99.9	GEN527902 1-HOBBS PLANT #2 (CT)
FDNS	00NR	0	25SP	G15_018	TO->FROM	JONES STATION - TUCO INTERCHANGE 230KV CKT 1	343.79	343.79	0.0568	99.9	GEN563102 1-G15075_3 0.5500
FDNS	00NR	0	25SP	G15_018	TO->FROM	JONES STATION - TUCO INTERCHANGE 230KV CKT 1	343.79	343.79	0.05729	99.7	HOBBS - YOAKUM_345 345.00 345KV CKT 1
FDNS	00NR	0	25SP	G15_018	TO->FROM	JONES STATION - TUCO INTERCHANGE 230KV CKT 1	343.79	343.79	0.05631	99.7	FLOYD COUNTY INTERCHANGE - TUCO INTERCHANGE 115KV CKT 1
FDNS	00NR	0	25SP	G15_018	TO->FROM	JONES STATION - TUCO INTERCHANGE 230KV CKT 1	343.79	343.79	0.05631	99.7	FLOYD COUNTY INTERCHANGE - TUCO INTERCHANGE 115KV CKT 1
FDNS	00NR	0	25SP	G15_018	TO->FROM	JONES STATION - TUCO INTERCHANGE 230KV CKT 1	343.79	343.79	0.05698	99.6	P12:345:SPS:J02.1.TOLK.EDDY
FDNS	00NR	0	25SP	G15_018	TO->FROM	JONES STATION - TUCO INTERCHANGE 230KV CKT 1	343.79	343.79	0.05682	99.6	G14_038T 345.00 - POTTER COUNTY INTERCHANGE 345KV CKT 1
FDNS	00NR	0	25SP	G15_018	TO->FROM	JONES STATION - TUCO INTERCHANGE 230KV CKT 1	343.79	343.79	0.0568	99.6	GEN563142 1-G15079_3 0.5500
FDNS	00NR	0	25SP	G15_018	TO->FROM	JONES STATION - TUCO INTERCHANGE 230KV CKT 1	343.79	343.79	0.0568	99.6	GEN563151 1-G15080_2 0.5500
FDNS	00NR	0	25SP	G15_018	TO->FROM	JONES STATION - TUCO INTERCHANGE 230KV CKT 1	343.79	343.79	0.05326	99.6	BUSHLAND INTERCHANGE - DEAF SMITH COUNTY INTERCHANGE 230KV CKT 1
FDNS	00NR	0	25SP	G15_018	TO->FROM	JONES STATION - TUCO INTERCHANGE 230KV CKT 1	343.79	343.79	0.05326	99.6	BUSHLAND INTERCHANGE - DEAF SMITH COUNTY INTERCHANGE 230KV CKT 1
FDNS	00NR	0	25SP	G15_018	FROM->TO	LUBBOCK POWER & LIGHT-HOLLY PLANT (SHIH T101039) 230/69/13.5KV TRANSFORMER CKT 1	224	224	0.03578	104.8294	LUBBOCK POWER & LIGHT-SOUTHEAST - LUBBOCK SOUTH INTERCHANGE 230KV CKT 1
FDNS	00NR	0	25SP	G15_018	FROM->TO	LUBBOCK POWER & LIGHT-HOLLY PLANT (SHIH T101039) 230/69/13.5KV TRANSFORMER CKT 1	224	224	0.03578	104.8165	P12:LPL:SPS:K64.1.LP-SE.LUBBS
FDNS	00NR	0	25SP	G15_018	FROM->TO	LUBBOCK POWER & LIGHT-HOLLY PLANT (SHIH T101039) 230/69/13.5KV TRANSFORMER CKT 1	224	224	0.03434	101.9053	LUBBOCK EAST INTERCHANGE - LUBBOCK POWER & LIGHT-WADSWORTH 230KV CKT 1
FDNS	00NR	0	25SP	G15_018	FROM->TO	LUBBOCK POWER & LIGHT-HOLLY PLANT (SHIH T101039) 230/69/13.5KV TRANSFORMER CKT 1	224	224	0.03434	101.8957	P12:230:LPL:K57.1.LP-WADS.LUBBE
FDNS	00NR	0	25SP	G15_018	FROM->TO	LUBBOCK POWER & LIGHT-HOLLY PLANT (SHIH T101039) 230/69/13.5KV TRANSFORMER CKT 1	224	224	0.03434	101.8956	LUBBOCK POWER & LIGHT-WADSWORTH (SHIH T101038) 230/69/13.5KV TRANSFORMER CKT 1
FDNS	00NR	0	25SP	G15_018	FROM->TO	LUBBOCK POWER & LIGHT-HOLLY PLANT (SHIH T101039) 230/69/13.5KV TRANSFORMER CKT 1	224	224	0.03434	101.8956	LUBBOCK POWER & LIGHT-WADSWORTH (SHIH T101038) 230/69/13.5KV TRANSFORMER CKT 1

SOLUTION	GROUP	SCENARIO	SEASON	SOURCE	DIRECTION	MONITORED ELEMENT	RATEA (MVA)	RATEB(MVA)	TDF	TC%LOADING (% MVA)	CONTINGENCY
FDNSLock	06ALL	0	20WP	G15_018		Non-Converged Contingency	1792	1792	0.14783	-	BORDER 7345.00 - CHISHOLM7 345.00 345KV CKT 1
FDNSLock	06ALL	0	20WP	G15_018		Non-Converged Contingency	1792	1792	0.14783	-	BORDER 7345.00 - CHISHOLM7 345.00 345KV CKT 2
FDNSLock	06ALL	0	20WP	G15_018		Non-Converged Contingency	439	439	0.06136	-	CHISHOLM6 230.00 - ELK CITY 230KV 230KV CKT 1
FDNS	06ALL	0	20WP	G15_018	FROM->TO	POTTER COUNTY INTERCHANGE (WAUK 90343-A) 345/230/13.2KV TRANSFORMER CKT 1	560	560	0.16517	101.9937	BASE CASE
FDNS	06ALL	0	20WP	G15_018	FROM->TO	POTTER COUNTY INTERCHANGE (WAUK 90343-A) 345/230/13.2KV TRANSFORMER CKT 1	560	560	0.16517	100.9471	BASE CASE
FDNS	06ALL	0	17SP	G15_018	FROM->TO	POTTER COUNTY INTERCHANGE (WAUK 90343-A) 345/230/13.2KV TRANSFORMER CKT 1	560	560	0.19855	99.9	CHISHOLM6 230.00 - SWEETWATER 230KV CKT 1
FDNS	06ALL	0	17SP	G15_018	FROM->TO	SUNDOWN INTERCHANGE - WOLFFORTH INTERCHANGE 230KV CKT 1	318.7	350.57	0.20274	100	TOLK STATION EAST - TUCO INTERCHANGE 230KV CKT 1
FDNS	06ALL	0	17SP	G15_018	FROM->TO	SUNDOWN INTERCHANGE - WOLFFORTH INTERCHANGE 230KV CKT 1	318.7	350.57	0.20274	100	TOLK STATION EAST - TUCO INTERCHANGE 230KV CKT 1
FDNS	06ALL	0	20SP	G15_018	FROM->TO	TUCO INTERCHANGE - TUCO_2 230.00 230KV CKT 1	497	547	0.23736	176.1131	TUCO INTERCHANGE - TUCO_2 345.00 345KV CKT 1
FDNS	06ALL	0	17SP	G15_018	FROM->TO	TUCO INTERCHANGE - TUCO_2 230.00 230KV CKT 1	497	547	0.21662	172.1789	TUCO INTERCHANGE - TUCO_2 345.00 345KV CKT 1
FDNS	06ALL	0	25SP	G15_018	FROM->TO	TUCO INTERCHANGE - TUCO_2 230.00 230KV CKT 1	497	547	0.24806	101.2227615	TUCO INTERCHANGE - TUCO_2 345.00 345KV CKT 1
FDNS	06ALL	0	20SP	G15_018	FROM->TO	TUCO_2 345.00 (TUCO_2 XFMR) 345/230/13.2KV TRANSFORMER CKT 1	560	560	0.27224	168.9327	TUCO INTERCHANGE - TUCO_2 345.00 345KV CKT 1
FDNS	06ALL	0	17SP	G15_018	FROM->TO	TUCO_2 345.00 (TUCO_2 XFMR) 345/230/13.2KV TRANSFORMER CKT 1	560	560	0.26932	168.0719	TUCO INTERCHANGE - TUCO_2 345.00 345KV CKT 1
FDNS	06ALL	0	20SP	G15_018	FROM->TO	TUCO_2 345.00 (TUCO_2 XFMR) 345/230/13.2KV TRANSFORMER CKT 1	560	560	0.27224	162.4281	TUCO INTERCHANGE - TUCO_2 345.00 345KV CKT 1
FDNS	06ALL	0	17SP	G15_018	FROM->TO	TUCO_2 345.00 (TUCO_2 XFMR) 345/230/13.2KV TRANSFORMER CKT 1	560	560	0.26932	161.5424	TUCO INTERCHANGE - TUCO_2 345.00 345KV CKT 1
FDNS	06NR	2	17G	G15_018	TO->FROM	AMARILLO SOUTH INTERCHANGE - G15031_T 230.00 230KV CKT 1	318.7	350.57	0.0883	103.4449	NEWHART 230 - POTTER COUNTY INTERCHANGE 230KV CKT 1
FDNS	06NR	2	17G	G15_018	FROM->TO	BUSHLAND INTERCHANGE - HILLSIDE 115KV CKT 1	159	160	0.06405	118.1849	BUSHLAND INTERCHANGE - POTTER COUNTY INTERCHANGE 230KV CKT 1
FDNS	06NR	2	17G	G15_018	FROM->TO	BUSHLAND INTERCHANGE - HILLSIDE 115KV CKT 1	159	160	0.06405	118.1849	BUSHLAND INTERCHANGE - POTTER COUNTY INTERCHANGE 230KV CKT 1
FDNS	06ALL	2	16WP	G15_018	FROM->TO	BUSHLAND INTERCHANGE - POTTER COUNTY INTERCHANGE 230KV CKT 1	329.05	360.92	0.19621	109.093	NEWHART 230 - POTTER COUNTY INTERCHANGE 230KV CKT 1
FDNS	06NR	2	17G	G15_018	FROM->TO	BUSHLAND INTERCHANGE - POTTER COUNTY INTERCHANGE 230KV CKT 1	318.7	350.57	0.12255	103.6906	NEWHART 230 - POTTER COUNTY INTERCHANGE 230KV CKT 1
FDNS	06NR	2	17G	G15_018	FROM->TO	BUSHLAND INTERCHANGE (WH 7001795) 230/115/13.2KV TRANSFORMER CKT 1	168	168	0.06405	116.5462	BUSHLAND INTERCHANGE - POTTER COUNTY INTERCHANGE 230KV CKT 1
FDNS	06NR	2	17G	G15_018	FROM->TO	BUSHLAND INTERCHANGE (WH 7001795) 230/115/13.2KV TRANSFORMER CKT 1	168	168	0.06405	116.5462	BUSHLAND INTERCHANGE - POTTER COUNTY INTERCHANGE 230KV CKT 1
FDNS	06NR	2	17G	G15_018	FROM->TO	BUSHLAND INTERCHANGE (WH 7001795) 230/115/13.2KV TRANSFORMER CKT 1	168	168	0.06405	114.0422	BUSHLAND INTERCHANGE - POTTER COUNTY INTERCHANGE 230KV CKT 1
FDNS	06NR	2	17G	G15_018	FROM->TO	BUSHLAND INTERCHANGE (WH 7001795) 230/115/13.2KV TRANSFORMER CKT 1	168	168	0.06405	114.0422	BUSHLAND INTERCHANGE - POTTER COUNTY INTERCHANGE 230KV CKT 1
FDNS	06NR	2	17G	G15_018	FROM->TO	CANYON E_TP3115.00 - RANDALL COUNTY INTERCHANGE 115KV CKT 1	96	96	0.05814	100.8119	BUSHLAND INTERCHANGE - DEAF SMITH COUNTY INTERCHANGE 230KV CKT 1
FDNS	06NR	2	17G	G15_018	FROM->TO	CANYON E_TP3115.00 - RANDALL COUNTY INTERCHANGE 115KV CKT 1	96	96	0.05814	100.8119	BUSHLAND INTERCHANGE - DEAF SMITH COUNTY INTERCHANGE 230KV CKT 1
FDNS	06NR	2	17G	G15_018	TO->FROM	CANYON WEST SUB - DAWN SUB 115KV CKT 1	96	96	0.05814	127.5172	BUSHLAND INTERCHANGE - DEAF SMITH COUNTY INTERCHANGE 230KV CKT 1
FDNS	06NR	2	17G	G15_018	TO->FROM	CANYON WEST SUB - DAWN SUB 115KV CKT 1	96	96	0.05814	127.5172	BUSHLAND INTERCHANGE - DEAF SMITH COUNTY INTERCHANGE 230KV CKT 1
FDNS	06NR	2	17G	G15_018	TO->FROM	CARGILL SUB - DEAF SMITH REC-#24 115KV CKT 1	96	96	0.10461	107.5549	DEAF SMITH COUNTY INTERCHANGE - G15039_T 230.00 230KV CKT 1
FDNS	06NR	2	20L	G15_018	TO->FROM	CARGILL SUB - DEAF SMITH REC-#24 115KV CKT 1	96	96	0.10257	102.4808	G15039_T 230.00 - PLANT X STATION 230KV CKT 1
FDNS	06NR	2	17G	G15_018	TO->FROM	CARGILL SUB - DEAF SMITH REC-#24 115KV CKT 1	96	96	0.10461	99.6	G15039_T 230.00 - PLANT X STATION 230KV CKT 1
FDNS	06NR	2	17G	G15_018	FROM->TO	CARGILL SUB - FRIONA SUB 115KV CKT 1	96	96	0.10461	100.202	DEAF SMITH COUNTY INTERCHANGE - G15039_T 230.00 230KV CKT 1
FDNS	06ALL	2	20SP	G15_018	FROM->TO	CHISHOLM6 230.00 - ELK CITY 230KV 230KV CKT 1	353	353	0.06309	103.9805	BASE CASE
FDNS	06ALL	2	17SP	G15_018	FROM->TO	CHISHOLM6 230.00 - ELK CITY 230KV 230KV CKT 1	353	353	0.06321	101.7938	BASE CASE
FDNS	06ALL	2	20L	G15_018	TO->FROM	CIMARRON - MINCO 345KV CKT 1	956	956	0.20037	140.1322	G14-057T 345.00 - SUNNYSIDE 345KV CKT 1
FDNS	06ALL	2	20L	G15_018	TO->FROM	CIMARRON - MINCO 345KV CKT 1	956	956	0.20037	133.5433	G14-057T 345.00 - LAWTON EASTSIDE 345KV CKT 1
FDNS	06ALL	2	17G	G15_018	TO->FROM	CIMARRON - MINCO 345KV CKT 1	956	956	0.2268	131.7687	G14-057T 345.00 - SUNNYSIDE 345KV CKT 1
FDNS	06ALL	2	20WP	G15_018	TO->FROM	CIMARRON - MINCO 345KV CKT 1	956	956	0.22785	130.9595	G14-057T 345.00 - SUNNYSIDE 345KV CKT 1
FDNS	06ALL	2	17G	G15_018	TO->FROM	CIMARRON - MINCO 345KV CKT 1	956	956	0.2268	126.2954	G14-057T 345.00 - LAWTON EASTSIDE 345KV CKT 1
FDNS	06ALL	2	20WP	G15_018	TO->FROM	CIMARRON - MINCO 345KV CKT 1	956	956	0.22785	125.3296	G14-057T 345.00 - LAWTON EASTSIDE 345KV CKT 1
FDNS	06ALL	2	16WP	G15_018	TO->FROM	CIMARRON - MINCO 345KV CKT 1	956	956	0.23337	123.9324	G14-057T 345.00 - SUNNYSIDE 345KV CKT 1
FDNS	06ALL	2	17SP	G15_018	TO->FROM	CIMARRON - MINCO 345KV CKT 1	956	956	0.23115	123.0412	G14-057T 345.00 - SUNNYSIDE 345KV CKT 1
FDNS	06ALL	2	20SP	G15_018	TO->FROM	CIMARRON - MINCO 345KV CKT 1	956	956	0.23403	120.4683	G14-057T 345.00 - SUNNYSIDE 345KV CKT 1
FDNS	06ALL	2	16WP	G15_018	TO->FROM	CIMARRON - MINCO 345KV CKT 1	956	956	0.23337	118.3934	G14-057T 345.00 - LAWTON EASTSIDE 345KV CKT 1
FDNS	06ALL	2	17SP	G15_018	TO->FROM	CIMARRON - MINCO 345KV CKT 1	956	956	0.23115	117.7499	G14-057T 345.00 - LAWTON EASTSIDE 345KV CKT 1
FDNS	06ALL	2	20SP	G15_018	TO->FROM	CIMARRON - MINCO 345KV CKT 1	956	956	0.23403	115.0256	G14-057T 345.00 - LAWTON EASTSIDE 345KV CKT 1
FDNS	06ALL	2	17G	G15_018	TO->FROM	CIMARRON - MINCO 345KV CKT 1	956	956	0.19552	111.0722	MATHWSN7 345.00 - TATONGA7 345.00 345KV CKT 1
FDNS	06ALL	2	20L	G15_018	TO->FROM	CIMARRON - MINCO 345KV CKT 1	956	956	0.20078	107.6011	CHISHOLM7 345.00 - WOODWARD DISTRICT EHV 345KV CKT 1
FDNS	06ALL	2	17G	G15_018	TO->FROM	CIMARRON - MINCO 345KV CKT 1	956	956	0.219	107.4004	CHISHOLM7 345.00 - WOODWARD DISTRICT EHV 345KV CKT 1
FDNSLock	06ALL	2	17G	G15_018	TO->FROM	CIMARRON - MINCO 345KV CKT 1	956	956	0.19552	105.1772	G11_051T 345.00 - TATONGA7 345.00 345KV CKT 1
FDNS	06ALL	2	17SP	G15_018	TO->FROM	CIMARRON - MINCO 345KV CKT 1	956	956	0.19938	104.7953	MATHWSN7 345.00 - TATONGA7 345.00 345KV CKT 1
FDNS	06ALL	2	20SP	G15_018	TO->FROM	CIMARRON - MINCO 345KV CKT 1	956	956	0.20114	104.2231	MATHWSN7 345.00 - TATONGA7 345.00 345KV CKT 1
FDNS	06ALL	2	16WP	G15_018	TO->FROM	CIMARRON - MINCO 345KV CKT 1	956	956	0.20053	104.0692	MATHWSN7 345.00 - TATONGA7 345.00 345KV CKT 1
FDNS	06ALL	2	20WP	G15_018	TO->FROM	CIMARRON - MINCO 345KV CKT 1	956	956	0.22389	103.712	CHISHOLM7 345.00 - WOODWARD DISTRICT EHV 345KV CKT 1
FDNSLock	06ALL	2	17G	G15_018	TO->FROM	CIMARRON - MINCO 345KV CKT 1	956	956	0.19552	103.655	G11_051T 345.00 - WOODWARD DISTRICT EHV 345KV CKT 1
FDNS	06ALL	2	20SP	G15_018	TO->FROM	CIMARRON - MINCO 345KV CKT 1	956	956	0.23081	102.1101	CHISHOLM7 345.00 - WOODWARD DISTRICT EHV 345KV CKT 1
FDNS	06ALL	2	17SP	G15_018	TO->FROM	CIMARRON - MINCO 345KV CKT 1	956	956	0.2267	100.969	CHISHOLM7 345.00 - WOODWARD DISTRICT EHV 345KV CKT 1
FDNS	06ALL	2	17SP	G15_018	TO->FROM	CIMARRON - MINCO 345KV CKT 1	956	956	0.19938	99.6	G11_051T 345.00 - TATONGA7 345.00 345KV CKT 1
FDNS	06NR	2	17G	G15_018	TO->FROM	COULTER INTERCHANGE - HILLSIDE 115KV CKT 1	159	159	0.06405	113.2181	BUSHLAND INTERCHANGE - POTTER COUNTY INTERCHANGE 230KV CKT 1
FDNS	06NR	2	17G	G15_018	TO->FROM	COULTER INTERCHANGE - HILLSIDE 115KV CKT 1	159	159	0.06405	113.2181	BUSHLAND INTERCHANGE - POTTER COUNTY INTERCHANGE 230KV CKT 1
FDNS	06NR	2	17G	G15_018	FROM->TO	CURRY COUNTY INTERCHANGE - DEAF SMITH REC-#20 115KV CKT 1	96	96	0.10461	129.1509	DEAF SMITH COUNTY INTERCHANGE - G15039_T 230.00 230KV CKT 1
FDNS	06NR	2	17G	G15_018	FROM->TO	CURRY COUNTY INTERCHANGE - DEAF SMITH REC-#20 115KV CKT 1	96	96	0.10461	121.3057	G15039_T 230.00 - PLANT X STATION 230KV CKT 1
FDNS	06NR	2	20L	G15_018	FROM->TO	CURRY COUNTY INTERCHANGE - DEAF SMITH REC-#20 115KV CKT 1	96	96	0.10257	120.2947	G15039_T 230.00 - PLANT X STATION 230KV CKT 1
FDNS	06NR	2	17G	G15_018	TO->FROM	DAWN SUB - Panda Energy Substation Hereford 115KV CKT 1	96	96	0.05814	130.9313	BUSHLAND INTERCHANGE - DEAF SMITH COUNTY INTERCHANGE 230KV CKT 1
FDNS	06NR	2	17G	G15_018	TO->FROM	DAWN SUB - Panda Energy Substation Hereford 115KV CKT 1	96	96	0.05814	130.9313	BUSHLAND INTERCHANGE - DEAF SMITH COUNTY INTERCHANGE 230KV CKT 1
FDNS	06NR	2	17G	G15_018	TO->FROM	DAWN SUB - Panda Energy Substation Hereford 115KV CKT 1	96	96	0.04388	102.1469	BUSHLAND INTERCHANGE - POTTER COUNTY INTERCHANGE 230KV CKT 1
FDNS	06NR	2	17G	G15_018	TO->FROM	DAWN SUB - Panda Energy Substation Hereford 115KV CKT 1	96	96	0.04388	102.1469	BUSHLAND INTERCHANGE - POTTER COUNTY INTERCHANGE 230KV CKT 1
FDNS	06ALL	2	20SP	G15_018	TO->FROM	DEAF SMITH COUNTY INTERCHANGE - G15039_T 230.00 230KV CKT 1	318.7	350.57	0.09582	106.1518	BASE CASE
FDNS	06NR	2	17G	G15_018	TO->FROM	DEAF SMITH COUNTY INTERCHANGE - G15039_T 230.00 230KV CKT 1	318.7	350.57	0.06883	104.2484	NEWHART 230 - PLANT X STATION 230KV CKT 1
FDNS	06ALL	2	17SP	G15_018	TO->FROM	DEAF SMITH COUNTY INTERCHANGE - G15039_T 230.00 230KV CKT 1	318.7	350.57	0.10275	104.2255	BASE CASE
FDNS	06NR	2	17G	G15_018	TO->FROM	DEAF SMITH COUNTY INTERCHANGE - G15039_T 230.00 230KV CKT 1	318.7	350.57	0.06156	103.9799	NEWHART 230 - POTTER COUNTY INTERCHANGE 230KV CKT 1
FDNS	06NR	2	17G	G15_018	TO->FROM	DEAF SMITH COUNTY INTERCHANGE - G15039_T 230.00 230KV CKT 1	318.7	350.57	0.05758	102.5424	AMARILLO SOUTH INTERCHANGE - G15031_T 230.00 230KV CKT 1
FDNS	06NR	2	17G	G15_018	FROM->TO	DEAF SMITH COUNTY INTERCHANGE - Panda Energy Substation Hereford 115KV CKT 1	96	96	0.05814	136.0663	BUSHLAND INTERCHANGE - DEAF SMITH COUNTY INTERCHANGE 230KV CKT 1
FDNS	06NR	2	17G	G15_018	FROM->TO	DEAF SMITH COUNTY INTERCHANGE - Panda Energy Substation Hereford 115KV CKT 1	96	96	0.05814	136.0663	BUSHLAND INTERCHANGE - DEAF SMITH COUNTY INTERCHANGE 230KV CKT 1
FDNS	06NR	2	17G	G15_018	FROM->TO	DEAF SMITH COUNTY INTERCHANGE - Panda Energy Substation Hereford 115KV CKT 1	96	96	0.04388	107.2414	BUSHLAND INTERCHANGE - POTTER COUNTY INTERCHANGE 230KV CKT 1
FDNS	06NR	2	17G	G15_018	FROM->TO	DEAF SMITH COUNTY INTERCHANGE - Panda Energy Substation Hereford 115KV CKT 1	96	96	0.04388	107.2414	BUSHLAND INTERCHANGE - POTTER COUNTY INTERCHANGE 230KV CKT 1
FDNS	06NR	2	17G	G15_018	FROM->TO	DEAF SMITH REC-#20 - PARMER COUNTY SUB 115KV CKT 1	96	96	0.10461	121.0569	DEAF SMITH COUNTY INTERCHANGE - G15039_T 230.00 230KV CKT 1
FDNS	06NR	2	17G	G15_018	FROM->TO	DEAF SMITH REC-#20 - PARMER COUNTY SUB 115KV CKT 1	96	96	0.10461	113.3561	G15039_T 230.00 - PLANT X STATION 230KV CKT 1
FDNS	06NR	2	20L	G15_018	FROM->TO	DEAF SMITH REC-#20 - PARMER COUNTY SUB 115KV CKT 1	96	96	0.10257	112.8528	G15039_T 230.00 - PLANT X STATION 230KV CKT 1

SOLUTION	GROUP	SCENARIO	SEASON	SOURCE	DIRECTION	MONITORED ELEMENT	RATEA (MVA)	RATEB(MVA)	TDF	TC%LOADING (% MVA)	CONTINGENCY
FDNS	06NR	2	17G	G15_018	TO->FROM	DEAF SMITH REC-#24 - PARMER COUNTY SUB 115KV CKT 1	96	96	0.10461	114.1557	DEAF SMITH COUNTY INTERCHANGE - G15039_T 230.00 230KV CKT 1
FDNS	06NR	2	20L	G15_018	TO->FROM	DEAF SMITH REC-#24 - PARMER COUNTY SUB 115KV CKT 1	96	96	0.10257	107.7543	G15039_T 230.00 - PLANT X STATION 230KV CKT 1
FDNS	06NR	2	17G	G15_018	TO->FROM	DEAF SMITH REC-#24 - PARMER COUNTY SUB 115KV CKT 1	96	96	0.10461	106.1261	G15039_T 230.00 - PLANT X STATION 230KV CKT 1
FDNS	06ALL	2	20L	G15_018	TO->FROM	G14-057T 345.00 - LAWTON EASTSIDE 345KV CKT 1	717	789	0.09792	105.4406	BASE CASE
FDNS	06ALL	2	20L	G15_018	FROM->TO	G14-057T 345.00 - SUNNYSIDE 345KV CKT 1	717	789	0.09792	118.6576	BASE CASE
FDNS	06ALL	2	20WP	G15_018	FROM->TO	G14-057T 345.00 - SUNNYSIDE 345KV CKT 1	717	789	0.12152	106.4822	BASE CASE
FDNS	06ALL	2	17G	G15_018	FROM->TO	G14-057T 345.00 - SUNNYSIDE 345KV CKT 1	717	789	0.12157	105.8626	BASE CASE
FDNS	06ALL	2	16WP	G15_018	FROM->TO	G14-057T 345.00 - SUNNYSIDE 345KV CKT 1	717	789	0.12487	104.4384	BASE CASE
FDNS	06NR	2	20L	G15_018	FROM->TO	G14-074T 345.00 - OKLAUNION 345KV CKT 1	1022	1124	0.04142	101.2851	BUSHLAND INTERCHANGE - DEAF SMITH COUNTY INTERCHANGE 230KV CKT 1
FDNS	06NR	2	20L	G15_018	FROM->TO	G14-074T 345.00 - OKLAUNION 345KV CKT 1	1022	1124	0.04142	101.2851	BUSHLAND INTERCHANGE - DEAF SMITH COUNTY INTERCHANGE 230KV CKT 1
FDNS	06ALL	2	20L	G15_018	FROM->TO	GRACEMONT - MINCO 345KV CKT 1	1195	1195	0.20037	101.0673	G14-057T 345.00 - SUNNYSIDE 345KV CKT 1
FDNS	00NR	2	25SP	G15_018	TO->FROM	JONES STATION - TUCO INTERCHANGE 230KV CKT 1	343.79	343.79	0.06494	139.1643	CARLISLE INTERCHANGE - TUCO INTERCHANGE 230KV CKT 1
FDNS	00NR	2	25SP	G15_018	TO->FROM	JONES STATION - TUCO INTERCHANGE 230KV CKT 1	343.79	343.79	0.06494	139.1643	CARLISLE INTERCHANGE - TUCO INTERCHANGE 230KV CKT 1
FDNS	00NR	2	25SP	G15_018	TO->FROM	JONES STATION - TUCO INTERCHANGE 230KV CKT 1	343.79	343.79	0.06221	122.6847	TUCO INTERCHANGE - YOAKUM_345 345.00 345KV CKT 1
FDNS	00NR	2	25SP	G15_018	TO->FROM	JONES STATION - TUCO INTERCHANGE 230KV CKT 1	343.79	343.79	0.0568	119.1138	GEN526333 1-JONES GEN #3 21 KV
FDNS	00NR	2	25SP	G15_018	TO->FROM	JONES STATION - TUCO INTERCHANGE 230KV CKT 1	343.79	343.79	0.0568	118.7159	GEN526334 1-JONES_4 116.500
FDNS	00NR	2	25SP	G15_018	TO->FROM	JONES STATION - TUCO INTERCHANGE 230KV CKT 1	343.79	343.79	0.05971	111.2162	CARLISLE INTERCHANGE - WOLFFORTH INTERCHANGE 230KV CKT 1
FDNS	00NR	2	25SP	G15_018	TO->FROM	JONES STATION - TUCO INTERCHANGE 230KV CKT 1	343.79	343.79	0.05604	106.9963	TUCO INTERCHANGE (ENRCO 136401) 230/115/13.2KV TRANSFORMER CKT 1
FDNS	00NR	2	25SP	G15_018	TO->FROM	JONES STATION - TUCO INTERCHANGE 230KV CKT 1	343.79	343.79	0.05604	106.9963	TUCO INTERCHANGE (ENRCO 136401) 230/115/13.2KV TRANSFORMER CKT 1
FDNS	00NR	2	25SP	G15_018	TO->FROM	JONES STATION - TUCO INTERCHANGE 230KV CKT 1	343.79	343.79	0.05604	106.9963	TUCO INTERCHANGE (ENRCO 136401) 230/115/13.2KV TRANSFORMER CKT 2
FDNS	00NR	2	25SP	G15_018	TO->FROM	JONES STATION - TUCO INTERCHANGE 230KV CKT 1	343.79	343.79	0.05604	106.9963	TUCO INTERCHANGE (ENRCO 136401) 230/115/13.2KV TRANSFORMER CKT 2
FDNS	00NR	2	25SP	G15_018	TO->FROM	JONES STATION - TUCO INTERCHANGE 230KV CKT 1	343.79	343.79	0.0568	106.4847	GEN526332 1-JONES GEN #2 21 KV
FDNS	00NR	2	25SP	G15_018	TO->FROM	JONES STATION - TUCO INTERCHANGE 230KV CKT 1	343.79	343.79	0.0568	106.4826	GEN526331 1-JONES GEN #1 22 KV
FDNS	00NR	2	25SP	G15_018	TO->FROM	JONES STATION - TUCO INTERCHANGE 230KV CKT 1	343.79	343.79	0.0631	105.6092	LUBBOCK EAST INTERCHANGE - TUCO INTERCHANGE 115KV CKT 1
FDNS	00NR	2	25SP	G15_018	TO->FROM	JONES STATION - TUCO INTERCHANGE 230KV CKT 1	343.79	343.79	0.0631	105.6092	LUBBOCK EAST INTERCHANGE - TUCO INTERCHANGE 115KV CKT 1
FDNS	00NR	2	25SP	G15_018	TO->FROM	JONES STATION - TUCO INTERCHANGE 230KV CKT 1	343.79	343.79	0.07025	105.4194	PLANT X STATION - SUNDOWN INTERCHANGE 230KV CKT 1
FDNS	00NR	2	25SP	G15_018	TO->FROM	JONES STATION - TUCO INTERCHANGE 230KV CKT 1	343.79	343.79	0.07025	105.4194	PLANT X STATION - SUNDOWN INTERCHANGE 230KV CKT 1
FDNS	00NR	2	25SP	G15_018	TO->FROM	JONES STATION - TUCO INTERCHANGE 230KV CKT 1	343.79	343.79	0.05867	102.5525	STANTON SUB - TUCO INTERCHANGE 115KV CKT 1
FDNS	00NR	2	25SP	G15_018	TO->FROM	JONES STATION - TUCO INTERCHANGE 230KV CKT 1	343.79	343.79	0.05888	102.3349	P12:230:LPL:K39.1.CRLSLE.LP-MLWK
FDNS	00NR	2	25SP	G15_018	TO->FROM	JONES STATION - TUCO INTERCHANGE 230KV CKT 1	343.79	343.79	0.05888	102.3335	LUBBOCK POWER & LIGHT-MILWAUKEE (M-E C0681251) 230/69/13.5KV TRANSFORMER CKT 1
FDNS	00NR	2	25SP	G15_018	TO->FROM	JONES STATION - TUCO INTERCHANGE 230KV CKT 1	343.79	343.79	0.05888	102.3335	LUBBOCK POWER & LIGHT-MILWAUKEE (M-E C0681251) 230/69/13.5KV TRANSFORMER CKT 1
FDNS	00NR	2	25SP	G15_018	TO->FROM	JONES STATION - TUCO INTERCHANGE 230KV CKT 1	343.79	343.79	0.05888	102.3328	CARLISLE INTERCHANGE - LUBBOCK POWER & LIGHT-MILWAUKEE 230KV CKT 1
FDNS	00NR	2	25SP	G15_018	TO->FROM	JONES STATION - TUCO INTERCHANGE 230KV CKT 1	343.79	343.79	0.0447	101.8206	TOLK STATION EAST - TUCO INTERCHANGE 230KV CKT 1
FDNS	00NR	2	25SP	G15_018	TO->FROM	JONES STATION - TUCO INTERCHANGE 230KV CKT 1	343.79	343.79	0.0447	101.8206	TOLK STATION EAST - TUCO INTERCHANGE 230KV CKT 1
FDNS	00NR	2	25SP	G15_018	TO->FROM	JONES STATION - TUCO INTERCHANGE 230KV CKT 1	343.79	343.79	0.05867	101.6251	P12:115:SPS:V15.1.TUCO.INDANA
FDNS	00NR	2	25SP	G15_018	TO->FROM	JONES STATION - TUCO INTERCHANGE 230KV CKT 1	343.79	343.79	0.05867	101.5793	INDIANA SUB - STANTON SUB 115KV CKT 1
FDNS	00NR	2	25SP	G15_018	TO->FROM	JONES STATION - TUCO INTERCHANGE 230KV CKT 1	343.79	343.79	0.0568	100.7469	GEN527166 1-MUSTANG_6 118.000
FDNS	00NR	2	25SP	G15_018	TO->FROM	JONES STATION - TUCO INTERCHANGE 230KV CKT 1	343.79	343.79	0.0568	100.7466	GEN527903 1-HOBBS PLANT #3 (ST)
FDNS	00NR	2	25SP	G15_018	TO->FROM	JONES STATION - TUCO INTERCHANGE 230KV CKT 1	343.79	343.79	0.05897	100.3452	CARLISLE INTERCHANGE - MURPHY SUB 115KV CKT 1
FDNS	00NR	2	25SP	G15_018	TO->FROM	JONES STATION - TUCO INTERCHANGE 230KV CKT 1	343.79	343.79	0.05897	100.3452	CARLISLE INTERCHANGE - MURPHY SUB 115KV CKT 1
FDNS	00NR	2	25SP	G15_018	TO->FROM	JONES STATION - TUCO INTERCHANGE 230KV CKT 1	343.79	343.79	0.0561	100.3228	KRESS INTERCHANGE - SWISHER COUNTY INTERCHANGE 115KV CKT 1
FDNS	00NR	2	25SP	G15_018	TO->FROM	JONES STATION - TUCO INTERCHANGE 230KV CKT 1	343.79	343.79	0.0561	100.3228	KRESS INTERCHANGE - SWISHER COUNTY INTERCHANGE 115KV CKT 1
FDNS	00NR	2	25SP	G15_018	TO->FROM	JONES STATION - TUCO INTERCHANGE 230KV CKT 1	343.79	343.79	0.0568	100.2967	GEN528501 1-G14_012 24.000
FDNS	00NR	2	25SP	G15_018	TO->FROM	JONES STATION - TUCO INTERCHANGE 230KV CKT 1	343.79	343.79	0.05773	100.1964	YOAKUM_345 345.00 (UPDATE DATA) 345/230/13.2KV TRANSFORMER CKT 1
FDNS	00NR	2	25SP	G15_018	TO->FROM	JONES STATION - TUCO INTERCHANGE 230KV CKT 1	343.79	343.79	0.05867	99.9	INDIANA SUB - SOUTH PLAINS REC-ERSKINE 115KV CKT 1
FDNS	00NR	2	25SP	G15_018	TO->FROM	JONES STATION - TUCO INTERCHANGE 230KV CKT 1	343.79	343.79	0.05631	99.8	FLOYD COUNTY INTERCHANGE - TUCO INTERCHANGE 115KV CKT 1
FDNS	00NR	2	25SP	G15_018	TO->FROM	JONES STATION - TUCO INTERCHANGE 230KV CKT 1	343.79	343.79	0.05631	99.8	FLOYD COUNTY INTERCHANGE - TUCO INTERCHANGE 115KV CKT 1
FDNS	00NR	2	25SP	G15_018	TO->FROM	JONES STATION - TUCO INTERCHANGE 230KV CKT 1	343.79	343.79	0.05682	99.7	POTTER COUNTY INTERCHANGE (WAUK 90343-A) 345/230/13.2KV TRANSFORMER CKT 1
FDNS	00NR	2	25SP	G15_018	TO->FROM	JONES STATION - TUCO INTERCHANGE 230KV CKT 1	343.79	343.79	0.05682	99.7	POTTER COUNTY INTERCHANGE (WAUK 90343-A) 345/230/13.2KV TRANSFORMER CKT 1
FDNS	00NR	2	25SP	G15_018	TO->FROM	JONES STATION - TUCO INTERCHANGE 230KV CKT 1	343.79	343.79	0.0568	99.7	GEN563122 1-G15077_3 0.3850
FDNS	00NR	2	25SP	G15_018	TO->FROM	JONES STATION - TUCO INTERCHANGE 230KV CKT 1	343.79	343.79	0.0568	99.6	GEN527901 1-HOBBS PLANT #1 (CT)
FDNS	00NR	2	25SP	G15_018	TO->FROM	JONES STATION - TUCO INTERCHANGE 230KV CKT 1	343.79	343.79	0.0568	99.6	GEN527902 1-HOBBS PLANT #2 (CT)
FDNS	00NR	2	25SP	G15_018	TO->FROM	JONES STATION - TUCO INTERCHANGE 230KV CKT 1	343.79	343.79	0.0568	99.6	GEN563102 1-G15075_3 0.5500
FDNS	00NR	2	25SP	G15_018	FROM->TO	LUBBOCK POWER & LIGHT-HOLLY PLANT (SHIH T101039) 230/69/13.5KV TRANSFORMER CKT 1	224	224	0.03578	104.7613	LUBBOCK POWER & LIGHT-SOUTHEAST - LUBBOCK SOUTH INTERCHANGE 230KV CKT 1
FDNS	00NR	2	25SP	G15_018	FROM->TO	LUBBOCK POWER & LIGHT-HOLLY PLANT (SHIH T101039) 230/69/13.5KV TRANSFORMER CKT 1	224	224	0.03578	104.7484	P12:LPL:SPS:K64.1.LP-SE.LUBBS
FDNS	00NR	2	25SP	G15_018	FROM->TO	LUBBOCK POWER & LIGHT-HOLLY PLANT (SHIH T101039) 230/69/13.5KV TRANSFORMER CKT 1	224	224	0.03434	102.133	P12:230:LPL:K57.1.LP-WADS.LUBBE
FDNS	00NR	2	25SP	G15_018	FROM->TO	LUBBOCK POWER & LIGHT-HOLLY PLANT (SHIH T101039) 230/69/13.5KV TRANSFORMER CKT 1	224	224	0.03434	102.1329	LUBBOCK POWER & LIGHT-WADSWORTH (SHIH T101038) 230/69/13.5KV TRANSFORMER CKT 1
FDNS	00NR	2	25SP	G15_018	FROM->TO	LUBBOCK POWER & LIGHT-HOLLY PLANT (SHIH T101039) 230/69/13.5KV TRANSFORMER CKT 1	224	224	0.03434	102.1329	LUBBOCK POWER & LIGHT-WADSWORTH (SHIH T101038) 230/69/13.5KV TRANSFORMER CKT 1
FDNS	00NR	2	25SP	G15_018	FROM->TO	LUBBOCK POWER & LIGHT-HOLLY PLANT (SHIH T101039) 230/69/13.5KV TRANSFORMER CKT 1	224	224	0.03434	101.829	LUBBOCK EAST INTERCHANGE - LUBBOCK POWER & LIGHT-WADSWORTH 230KV CKT 1
FDNSLock	06ALL	2	20WP	G15_018		P12:230:AEPW:ELKCITY6:SWEETWT6	0	0	0.13101	9999	BASE CASE
FDNS	06ALL	2	17G	G15_018	FROM->TO	POTTER COUNTY INTERCHANGE (WAUK 90343-A) 345/230/13.2KV TRANSFORMER CKT 1	560	560	0.19898	111.3301	HITCHLAND INTERCHANGE - MOORE COUNTY INTERCHANGE 230KV CKT 1
FDNS	06ALL	2	17G	G15_018	FROM->TO	POTTER COUNTY INTERCHANGE (WAUK 90343-A) 345/230/13.2KV TRANSFORMER CKT 1	560	560	0.19898	109.9541	HITCHLAND INTERCHANGE - MOORE COUNTY INTERCHANGE 230KV CKT 1
FDNS	06ALL	2	16WP	G15_018	FROM->TO	POTTER COUNTY INTERCHANGE (WAUK 90343-A) 345/230/13.2KV TRANSFORMER CKT 1	560	560	0.20129	106.7175	P12:230:AEPW:ELKCITY6:SWEETWT6
FDNS	06ALL	2	16WP	G15_018	FROM->TO	POTTER COUNTY INTERCHANGE (WAUK 90343-A) 345/230/13.2KV TRANSFORMER CKT 1	560	560	0.20044	106.2613	CHISHOLM6 230.00 - SWEETWATER 230KV CKT 1
FDNS	06ALL	2	16WP	G15_018	FROM->TO	POTTER COUNTY INTERCHANGE (WAUK 90343-A) 345/230/13.2KV TRANSFORMER CKT 1	560	560	0.20129	105.3389	P12:230:AEPW:ELKCITY6:SWEETWT6
FDNS	06ALL	2	16WP	G15_018	FROM->TO	POTTER COUNTY INTERCHANGE (WAUK 90343-A) 345/230/13.2KV TRANSFORMER CKT 1	560	560	0.20044	105.0083	CHISHOLM6 230.00 - SWEETWATER 230KV CKT 1
FDNS	06ALL	2	16WP	G15_018	FROM->TO	POTTER COUNTY INTERCHANGE (WAUK 90343-A) 345/230/13.2KV TRANSFORMER CKT 1	560	560	0.20976	102.0618	HITCHLAND INTERCHANGE - MOORE COUNTY INTERCHANGE 230KV CKT 1
FDNS	06ALL	2	16WP	G15_018	FROM->TO	POTTER COUNTY INTERCHANGE (WAUK 90343-A) 345/230/13.2KV TRANSFORMER CKT 1	560	560	0.20976	102.0618	HITCHLAND INTERCHANGE - MOORE COUNTY INTERCHANGE 230KV CKT 1
FDNS	06ALL	2	16WP	G15_018	FROM->TO	POTTER COUNTY INTERCHANGE (WAUK 90343-A) 345/230/13.2KV TRANSFORMER CKT 1	560	560	0.20976	101.6956	HITCHLAND INTERCHANGE - MOORE COUNTY INTERCHANGE 230KV CKT 1
FDNS	06ALL	2	16WP	G15_018	FROM->TO	POTTER COUNTY INTERCHANGE (WAUK 90343-A) 345/230/13.2KV TRANSFORMER CKT 1	560	560	0.20976	101.6956	HITCHLAND INTERCHANGE - MOORE COUNTY INTERCHANGE 230KV CKT 1
FDNS	06ALL	2	16WP	G15_018	FROM->TO	POTTER COUNTY INTERCHANGE (WAUK 90343-A) 345/230/13.2KV TRANSFORMER CKT 1	560	560	0.19906	101.1885	MOORE COUNTY INTERCHANGE - POTTER COUNTY INTERCHANGE 230KV CKT 1
FDNS	06ALL	2	16WP	G15_018	FROM->TO	POTTER COUNTY INTERCHANGE (WAUK 90343-A) 345/230/13.2KV TRANSFORMER CKT 1	560	560	0.19906	101.1885	MOORE COUNTY INTERCHANGE - POTTER COUNTY INTERCHANGE 230KV CKT 1
FDNS	06ALL	2	16WP	G15_018	FROM->TO	POTTER COUNTY INTERCHANGE (WAUK 90343-A) 345/230/13.2KV TRANSFORMER CKT 1	560	560	0.20044	100.866	STLN-DEMARC6 - SWEETWATER 230KV CKT 1
FDNS	06ALL	2	16WP	G15_018	FROM->TO	POTTER COUNTY INTERCHANGE (WAUK 90343-A) 345/230/13.2KV TRANSFORMER CKT 1	560	560	0.20044	100.8556	STATELINE INTERCHANGE - STLN-DEMARC6 230KV CKT 1
FDNS	06ALL	2	16WP	G15_018	FROM->TO	POTTER COUNTY INTERCHANGE (WAUK 90343-A) 345/230/13.2KV TRANSFORMER CKT 1	560	560	0.20044	100.8266	P12:230:AEPW-SPS:SWEETWT6:WHEELER 6
FDNS	06ALL	2	16WP	G15_018	FROM->TO	POTTER COUNTY INTERCHANGE (WAUK 90343-A) 345/230/13.2KV TRANSFORMER CKT 1	560	560	0.19906	100.8228	MOORE COUNTY INTERCHANGE - POTTER COUNTY INTERCHANGE 230KV CKT 1
FDNS	06ALL	2	16WP	G15_018	FROM->TO	POTTER COUNTY INTERCHANGE (WAUK 90343-A) 345/230/13.2KV TRANSFORMER CKT 1	560	560	0.19906	100.8228	MOORE COUNTY INTERCHANGE - POTTER COUNTY INTERCHANGE 230KV CKT 1
FDNS	06ALL	2	16WP	G15_018	FROM->TO	POTTER COUNTY INTERCHANGE (WAUK 90343-A) 345/230/13.2KV TRANSFORMER CKT 1	560	560	0.20044	100.1775	STLN-DEMARC6 - SWEETWATER 230KV CKT 1
FDNS	06ALL	2	16WP	G15_018	FROM->TO	POTTER COUNTY INTERCHANGE (WAUK 90343-A) 345/230/13.2KV TRANSFORMER CKT 1	560	560	0.20044	100.1653	STATELINE INTERCHANGE - STLN-DEMARC6 230KV CKT 1

SOLUTION	GROUP	SCENARIO	SEASON	SOURCE	DIRECTION	MONITORED ELEMENT	RATEA (MVA)	RATEB(MVA)	TDF	TC%LOADING (% MVA)	CONTINGENCY
FDNS	06ALL	2	16WP	G15_018	FROM->TO	POTTER COUNTY INTERCHANGE (WAUK 90343-A) 345/230/13.2KV TRANSFORMER CKT 1	560	560	0.20044	100.1388	P12:230:AEPW-SPS:SWEETWT6:WHEELER 6
FDNS	06ALL	2	17SP	G15_018	FROM->TO	SUNDOWN INTERCHANGE - WOLFFORTH INTERCHANGE 230KV CKT 1	318.7	350.57	0.20286	101.6908	TOLK STATION EAST - TUCO INTERCHANGE 230KV CKT 1
FDNS	06ALL	2	17SP	G15_018	FROM->TO	SUNDOWN INTERCHANGE - WOLFFORTH INTERCHANGE 230KV CKT 1	318.7	350.57	0.20286	101.6908	TOLK STATION EAST - TUCO INTERCHANGE 230KV CKT 1
FDNS	06ALL	2	20L	G15_018	FROM->TO	TUCO INTERCHANGE - TUCO_2 230.00 230KV CKT 1	497	547	0.20033	181.2199	TUCO INTERCHANGE - TUCO_2 345.00 345KV CKT 1
FDNS	06ALL	2	17G	G15_018	FROM->TO	TUCO INTERCHANGE - TUCO_2 230.00 230KV CKT 1	497	547	0.20277	176.0864	TUCO INTERCHANGE - TUCO_2 345.00 345KV CKT 1
FDNS	06ALL	2	20SP	G15_018	FROM->TO	TUCO INTERCHANGE - TUCO_2 230.00 230KV CKT 1	497	547	0.23749	166.2483	TUCO INTERCHANGE - TUCO_2 345.00 345KV CKT 1
FDNS	06ALL	2	17SP	G15_018	FROM->TO	TUCO INTERCHANGE - TUCO_2 230.00 230KV CKT 1	497	547	0.21675	159.9768	TUCO INTERCHANGE - TUCO_2 345.00 345KV CKT 1
FDNS	06ALL	2	20WP	G15_018	FROM->TO	TUCO INTERCHANGE - TUCO_2 230.00 230KV CKT 1	552	608	0.23212	155.2742	TUCO INTERCHANGE - TUCO_2 345.00 345KV CKT 1
FDNS	06ALL	2	16WP	G15_018	FROM->TO	TUCO INTERCHANGE - TUCO_2 230.00 230KV CKT 1	552	608	0.21252	142.7524	TUCO INTERCHANGE - TUCO_2 345.00 345KV CKT 1
FDNS	06ALL	2	25SP	G15_018	FROM->TO	TUCO INTERCHANGE - TUCO_2 230.00 230KV CKT 1	497	547	0.24807	102.0482993	TUCO INTERCHANGE - TUCO_2 345.00 345KV CKT 1
FDNS	06ALL	2	16WP	G15_018	FROM->TO	TUCO INTERCHANGE (GE M1022338) 345/230/13.2KV TRANSFORMER CKT 1	560	560	0.25531	120.5418	TUCO INTERCHANGE (SIEM 8743066) 345/230/13.2KV TRANSFORMER CKT 2
FDNS	06ALL	2	16WP	G15_018	FROM->TO	TUCO INTERCHANGE (GE M1022338) 345/230/13.2KV TRANSFORMER CKT 1	560	560	0.25531	120.5418	TUCO INTERCHANGE (SIEM 8743066) 345/230/13.2KV TRANSFORMER CKT 2
FDNS	06ALL	2	16WP	G15_018	FROM->TO	TUCO INTERCHANGE (GE M1022338) 345/230/13.2KV TRANSFORMER CKT 1	560	560	0.25219	120.3223	TUCO_2 345.00 (TUCO_2 XFMR) 345/230/13.2KV TRANSFORMER CKT 1
FDNS	06ALL	2	16WP	G15_018	FROM->TO	TUCO INTERCHANGE (GE M1022338) 345/230/13.2KV TRANSFORMER CKT 1	560	560	0.25531	118.6764	TUCO INTERCHANGE (SIEM 8743066) 345/230/13.2KV TRANSFORMER CKT 2
FDNS	06ALL	2	16WP	G15_018	FROM->TO	TUCO INTERCHANGE (GE M1022338) 345/230/13.2KV TRANSFORMER CKT 1	560	560	0.25531	118.6764	TUCO INTERCHANGE (SIEM 8743066) 345/230/13.2KV TRANSFORMER CKT 2
FDNS	06ALL	2	16WP	G15_018	FROM->TO	TUCO INTERCHANGE (GE M1022338) 345/230/13.2KV TRANSFORMER CKT 1	560	560	0.25219	118.6764	TUCO_2 345.00 (TUCO_2 XFMR) 345/230/13.2KV TRANSFORMER CKT 1
FDNS	06ALL	2	17G	G15_018	FROM->TO	TUCO INTERCHANGE (GE M1022338) 345/230/13.2KV TRANSFORMER CKT 1	560	560	0.24563	114.4569	TUCO INTERCHANGE (SIEM 8743066) 345/230/13.2KV TRANSFORMER CKT 2
FDNS	06ALL	2	17G	G15_018	FROM->TO	TUCO INTERCHANGE (GE M1022338) 345/230/13.2KV TRANSFORMER CKT 1	560	560	0.24274	114.4414	TUCO_2 345.00 (TUCO_2 XFMR) 345/230/13.2KV TRANSFORMER CKT 1
FDNS	06ALL	2	17G	G15_018	FROM->TO	TUCO INTERCHANGE (GE M1022338) 345/230/13.2KV TRANSFORMER CKT 1	560	560	0.24274	112.333	TUCO_2 345.00 (TUCO_2 XFMR) 345/230/13.2KV TRANSFORMER CKT 1
FDNS	06ALL	2	17G	G15_018	FROM->TO	TUCO INTERCHANGE (GE M1022338) 345/230/13.2KV TRANSFORMER CKT 1	560	560	0.24563	112.1874	TUCO INTERCHANGE (SIEM 8743066) 345/230/13.2KV TRANSFORMER CKT 2
FDNS	06ALL	2	16WP	G15_018	FROM->TO	TUCO INTERCHANGE (GE M1022338) 345/230/13.2KV TRANSFORMER CKT 1	560	560	0.21876	103.9349	TUCO INTERCHANGE - TUCO_2 230.00 230KV CKT 1
FDNS	06ALL	2	16WP	G15_018	FROM->TO	TUCO INTERCHANGE (GE M1022338) 345/230/13.2KV TRANSFORMER CKT 1	560	560	0.21876	102.2603	TUCO INTERCHANGE - TUCO_2 230.00 230KV CKT 1
FDNS	06ALL	2	17G	G15_018	FROM->TO	TUCO INTERCHANGE (GE M1022338) 345/230/13.2KV TRANSFORMER CKT 1	560	560	0.20996	100.6861	TUCO INTERCHANGE - TUCO_2 230.00 230KV CKT 1
FDNS	06ALL	2	20L	G15_018	FROM->TO	TUCO_2 345.00 (TUCO_2 XFMR) 345/230/13.2KV TRANSFORMER CKT 1	560	560	0.22926	190.1451	TUCO INTERCHANGE - TUCO_2 345.00 345KV CKT 1
FDNS	06ALL	2	20WP	G15_018	FROM->TO	TUCO_2 345.00 (TUCO_2 XFMR) 345/230/13.2KV TRANSFORMER CKT 1	560	560	0.26611	189.4604	TUCO INTERCHANGE - TUCO_2 345.00 345KV CKT 1
FDNS	06ALL	2	17G	G15_018	FROM->TO	TUCO_2 345.00 (TUCO_2 XFMR) 345/230/13.2KV TRANSFORMER CKT 1	560	560	0.25975	187.4581	TUCO INTERCHANGE - TUCO_2 345.00 345KV CKT 1
FDNS	06ALL	2	20WP	G15_018	FROM->TO	TUCO_2 345.00 (TUCO_2 XFMR) 345/230/13.2KV TRANSFORMER CKT 1	560	560	0.26611	184.0471	TUCO INTERCHANGE - TUCO_2 345.00 345KV CKT 1
FDNS	06ALL	2	20L	G15_018	FROM->TO	TUCO_2 345.00 (TUCO_2 XFMR) 345/230/13.2KV TRANSFORMER CKT 1	560	560	0.22926	184.0031	TUCO INTERCHANGE - TUCO_2 345.00 345KV CKT 1
FDNS	06ALL	2	17G	G15_018	FROM->TO	TUCO_2 345.00 (TUCO_2 XFMR) 345/230/13.2KV TRANSFORMER CKT 1	560	560	0.25975	182.4703	TUCO INTERCHANGE - TUCO_2 345.00 345KV CKT 1
FDNS	06ALL	2	16WP	G15_018	FROM->TO	TUCO_2 345.00 (TUCO_2 XFMR) 345/230/13.2KV TRANSFORMER CKT 1	560	560	0.27033	175.5009	TUCO INTERCHANGE - TUCO_2 345.00 345KV CKT 1
FDNS	06ALL	2	16WP	G15_018	FROM->TO	TUCO_2 345.00 (TUCO_2 XFMR) 345/230/13.2KV TRANSFORMER CKT 1	560	560	0.27033	172.6087	TUCO INTERCHANGE - TUCO_2 345.00 345KV CKT 1
FDNS	06ALL	2	20SP	G15_018	FROM->TO	TUCO_2 345.00 (TUCO_2 XFMR) 345/230/13.2KV TRANSFORMER CKT 1	560	560	0.27238	166.4217	TUCO INTERCHANGE - TUCO_2 345.00 345KV CKT 1
FDNS	06ALL	2	17SP	G15_018	FROM->TO	TUCO_2 345.00 (TUCO_2 XFMR) 345/230/13.2KV TRANSFORMER CKT 1	560	560	0.26947	164.6979	TUCO INTERCHANGE - TUCO_2 345.00 345KV CKT 1
FDNS	06ALL	2	20SP	G15_018	FROM->TO	TUCO_2 345.00 (TUCO_2 XFMR) 345/230/13.2KV TRANSFORMER CKT 1	560	560	0.27238	163.5805	TUCO INTERCHANGE - TUCO_2 345.00 345KV CKT 1
FDNS	06ALL	2	17SP	G15_018	FROM->TO	TUCO_2 345.00 (TUCO_2 XFMR) 345/230/13.2KV TRANSFORMER CKT 1	560	560	0.26947	162.1713	TUCO INTERCHANGE - TUCO_2 345.00 345KV CKT 1
FDNS	06ALL	2	16WP	G15_018	FROM->TO	TUCO_2 345.00 (TUCO_2 XFMR) 345/230/13.2KV TRANSFORMER CKT 1	560	560	0.23427	112.6263	TUCO INTERCHANGE (GE M1022338) 345/230/13.2KV TRANSFORMER CKT 1
FDNS	06ALL	2	16WP	G15_018	FROM->TO	TUCO_2 345.00 (TUCO_2 XFMR) 345/230/13.2KV TRANSFORMER CKT 1	560	560	0.23427	112.6263	TUCO INTERCHANGE (GE M1022338) 345/230/13.2KV TRANSFORMER CKT 1
FDNS	06ALL	2	16WP	G15_018	FROM->TO	TUCO_2 345.00 (TUCO_2 XFMR) 345/230/13.2KV TRANSFORMER CKT 1	560	560	0.23427	111.4972	TUCO INTERCHANGE (GE M1022338) 345/230/13.2KV TRANSFORMER CKT 1
FDNS	06ALL	2	16WP	G15_018	FROM->TO	TUCO_2 345.00 (TUCO_2 XFMR) 345/230/13.2KV TRANSFORMER CKT 1	560	560	0.23427	111.4972	TUCO INTERCHANGE (GE M1022338) 345/230/13.2KV TRANSFORMER CKT 1
FDNS	06ALL	2	17G	G15_018	FROM->TO	TUCO_2 345.00 (TUCO_2 XFMR) 345/230/13.2KV TRANSFORMER CKT 1	560	560	0.22562	107.1719	TUCO INTERCHANGE (GE M1022338) 345/230/13.2KV TRANSFORMER CKT 1
FDNS	06ALL	2	16WP	G15_018	FROM->TO	TUCO_2 345.00 (TUCO_2 XFMR) 345/230/13.2KV TRANSFORMER CKT 1	560	560	0.21983	105.8242	TUCO INTERCHANGE (SIEM 8743066) 345/230/13.2KV TRANSFORMER CKT 2
FDNS	06ALL	2	16WP	G15_018	FROM->TO	TUCO_2 345.00 (TUCO_2 XFMR) 345/230/13.2KV TRANSFORMER CKT 1	560	560	0.21983	105.8242	TUCO INTERCHANGE (SIEM 8743066) 345/230/13.2KV TRANSFORMER CKT 2
FDNS	06ALL	2	17G	G15_018	FROM->TO	TUCO_2 345.00 (TUCO_2 XFMR) 345/230/13.2KV TRANSFORMER CKT 1	560	560	0.22562	105.6097	TUCO INTERCHANGE (GE M1022338) 345/230/13.2KV TRANSFORMER CKT 1
FDNS	06ALL	2	16WP	G15_018	FROM->TO	TUCO_2 345.00 (TUCO_2 XFMR) 345/230/13.2KV TRANSFORMER CKT 1	560	560	0.21983	104.8168	TUCO INTERCHANGE (SIEM 8743066) 345/230/13.2KV TRANSFORMER CKT 2
FDNS	06ALL	2	16WP	G15_018	FROM->TO	TUCO_2 345.00 (TUCO_2 XFMR) 345/230/13.2KV TRANSFORMER CKT 1	560	560	0.21983	104.8168	TUCO INTERCHANGE (SIEM 8743066) 345/230/13.2KV TRANSFORMER CKT 2
FDNS	06ALL	2	17G	G15_018	FROM->TO	TUCO_2 345.00 (TUCO_2 XFMR) 345/230/13.2KV TRANSFORMER CKT 1	560	560	0.21172	100.7205	TUCO INTERCHANGE (SIEM 8743066) 345/230/13.2KV TRANSFORMER CKT 2
FDNS	06NR	3	17G	G15_018	TO->FROM	AMARILLO SOUTH INTERCHANGE - G15031_T 230.00 230KV CKT 1	318.7	350.57	0.08827	103.2239	NEWHART 230 - POTTER COUNTY INTERCHANGE 230KV CKT 1
FDNS	06NR	3	20L	G15_018	FROM->TO	BUSHLAND INTERCHANGE - HILLSIDE 115KV CKT 1	159	160	0.05925	108.1399	BUSHLAND INTERCHANGE - POTTER COUNTY INTERCHANGE 230KV CKT 1
FDNS	06NR	3	20L	G15_018	FROM->TO	BUSHLAND INTERCHANGE - HILLSIDE 115KV CKT 1	159	160	0.05925	108.1399	BUSHLAND INTERCHANGE - POTTER COUNTY INTERCHANGE 230KV CKT 1
FDNS	06NR	3	17G	G15_018	FROM->TO	BUSHLAND INTERCHANGE - HILLSIDE 115KV CKT 1	159	160	0.05913	105.508	BUSHLAND INTERCHANGE - POTTER COUNTY INTERCHANGE 230KV CKT 1
FDNS	06NR	3	17G	G15_018	FROM->TO	BUSHLAND INTERCHANGE - HILLSIDE 115KV CKT 1	159	160	0.05913	105.508	BUSHLAND INTERCHANGE - POTTER COUNTY INTERCHANGE 230KV CKT 1
FDNS	06NR	3	20L	G15_018	FROM->TO	BUSHLAND INTERCHANGE - POTTER COUNTY INTERCHANGE 230KV CKT 1	318.7	350.57	0.11724	102.6252	NEWHART 230 - POTTER COUNTY INTERCHANGE 230KV CKT 1
FDNS	06NR	3	20L	G15_018	FROM->TO	BUSHLAND INTERCHANGE (WH 7001795) 230/115/13.2KV TRANSFORMER CKT 1	168	168	0.05925	106.6189	BUSHLAND INTERCHANGE - POTTER COUNTY INTERCHANGE 230KV CKT 1
FDNS	06NR	3	20L	G15_018	FROM->TO	BUSHLAND INTERCHANGE (WH 7001795) 230/115/13.2KV TRANSFORMER CKT 1	168	168	0.05925	106.6189	BUSHLAND INTERCHANGE - POTTER COUNTY INTERCHANGE 230KV CKT 1
FDNS	06NR	3	17G	G15_018	FROM->TO	BUSHLAND INTERCHANGE (WH 7001795) 230/115/13.2KV TRANSFORMER CKT 1	168	168	0.05913	104.9286	BUSHLAND INTERCHANGE - POTTER COUNTY INTERCHANGE 230KV CKT 1
FDNS	06NR	3	17G	G15_018	FROM->TO	BUSHLAND INTERCHANGE (WH 7001795) 230/115/13.2KV TRANSFORMER CKT 1	168	168	0.05913	104.9286	BUSHLAND INTERCHANGE - POTTER COUNTY INTERCHANGE 230KV CKT 1
FDNS	06NR	3	20L	G15_018	FROM->TO	BUSHLAND INTERCHANGE (WH 7001795) 230/115/13.2KV TRANSFORMER CKT 1	168	168	0.05925	104.4653	BUSHLAND INTERCHANGE - POTTER COUNTY INTERCHANGE 230KV CKT 1
FDNS	06NR	3	20L	G15_018	FROM->TO	BUSHLAND INTERCHANGE (WH 7001795) 230/115/13.2KV TRANSFORMER CKT 1	168	168	0.05925	104.4653	BUSHLAND INTERCHANGE - POTTER COUNTY INTERCHANGE 230KV CKT 1
FDNS	06NR	3	17G	G15_018	FROM->TO	BUSHLAND INTERCHANGE (WH 7001795) 230/115/13.2KV TRANSFORMER CKT 1	168	168	0.05913	102.648	BUSHLAND INTERCHANGE - POTTER COUNTY INTERCHANGE 230KV CKT 1
FDNS	06NR	3	17G	G15_018	FROM->TO	BUSHLAND INTERCHANGE (WH 7001795) 230/115/13.2KV TRANSFORMER CKT 1	168	168	0.05913	102.648	BUSHLAND INTERCHANGE - POTTER COUNTY INTERCHANGE 230KV CKT 1
FDNS	06NR	3	17G	G15_018	TO->FROM	CANYON WEST SUB - DAWN SUB 115KV CKT 1	96	96	0.05371	109.382	BUSHLAND INTERCHANGE - DEAF SMITH COUNTY INTERCHANGE 230KV CKT 1
FDNS	06NR	3	17G	G15_018	TO->FROM	CANYON WEST SUB - DAWN SUB 115KV CKT 1	96	96	0.05371	109.382	BUSHLAND INTERCHANGE - DEAF SMITH COUNTY INTERCHANGE 230KV CKT 1
FDNS	06ALL	3	20SP	G15_018	FROM->TO	CHISHOLM6 230.00 - ELK CITY 230KV 230KV CKT 1	353	353	0.06341	104.1963	BASE CASE
FDNS	06ALL	3	17SP	G15_018	FROM->TO	CHISHOLM6 230.00 - ELK CITY 230KV 230KV CKT 1	353	353	0.06363	101.9728	BASE CASE
FDNS	06ALL	3	20L	G15_018	TO->FROM	CIMARRON - MINCO 345KV CKT 1	956	956	0.20671	140.6921	G14-057T 345.00 - SUNNYSIDE 345KV CKT 1
FDNS	06ALL	3	20L	G15_018	TO->FROM	CIMARRON - MINCO 345KV CKT 1	956	956	0.20671	134.2883	G14-057T 345.00 - LAWTON EASTSIDE 345KV CKT 1
FDNS	06ALL	3	17G	G15_018	TO->FROM	CIMARRON - MINCO 345KV CKT 1	956	956	0.23577	132.797	G14-057T 345.00 - SUNNYSIDE 345KV CKT 1
FDNS	06ALL	3	20WP	G15_018	TO->FROM	CIMARRON - MINCO 345KV CKT 1	956	956	0.23405	131.9094	G14-057T 345.00 - SUNNYSIDE 345KV CKT 1
FDNS	06ALL	3	17G	G15_018	TO->FROM	CIMARRON - MINCO 345KV CKT 1	956	956	0.23577	127.3481	G14-057T 345.00 - LAWTON EASTSIDE 345KV CKT 1
FDNS	06ALL	3	20WP	G15_018	TO->FROM	CIMARRON - MINCO 345KV CKT 1	956	956	0.23405	126.3057	G14-057T 345.00 - LAWTON EASTSIDE 345KV CKT 1
FDNS	06ALL	3	16WP	G15_018	TO->FROM	CIMARRON - MINCO 345KV CKT 1	956	956	0.24271	125.3645	G14-057T 345.00 - SUNNYSIDE 345KV CKT 1
FDNS	06ALL	3	17SP	G15_018	TO->FROM	CIMARRON - MINCO 345KV CKT 1	956	956	0.23961	124.3731	G14-057T 345.00 - SUNNYSIDE 345KV CKT 1
FDNS	06ALL	3	20SP	G15_018	TO->FROM	CIMARRON - MINCO 345KV CKT 1	956	956	0.24004	121.3286	G14-057T 345.00 - SUNNYSIDE 345KV CKT 1
FDNS	06ALL	3	16WP	G15_018	TO->FROM	CIMARRON - MINCO 345KV CKT 1	956	956	0.24271	119.9255	G14-057T 345.00 - LAWTON EASTSIDE 345KV CKT 1
FDNS	06ALL	3	17SP	G15_018	TO->FROM	CIMARRON - MINCO 345KV CKT 1	956	956	0.23961	118.8978	G14-057T 345.00 - LAWTON EASTSIDE 345KV CKT 1
FDNS	06ALL	3	20SP	G15_018	TO->FROM	CIMARRON - MINCO 345KV CKT 1	956	956	0.24004	116.0894	G14-057T 345.00 - LAWTON EASTSIDE 345KV CKT 1
FDNS	06ALL	3	20WP	G15_018	TO->FROM	CIMARRON - MINCO 345KV CKT 1	956	956	0.19866	111.5734	MATHWSN7 345.00 - TATONGA7 345.00 345KV CKT 1
FDNS	06ALL	3	20L	G15_018	TO->FROM	CIMARRON - MINCO 345KV CKT 1	956	956	0.20894	109.488	CHISHOLM7 345.00 - WOODWARD DISTRICT EHV 345KV CKT 1
FDNS	06ALL	3	17G	G15_018	TO->FROM	CIMARRON - MINCO 345KV CKT 1	956	956	0.23085	109.1031	CHISHOLM7 345.00 - WOODWARD DISTRICT EHV 345KV CKT 1

SOLUTION	GROUP	SCENARIO	SEASON	SOURCE	DIRECTION	MONITORED ELEMENT	RATEA (MVA)	RATEB(MVA)	TDF	TC%LOADING (% MVA)	CONTINGENCY
FDNS	06ALL	3	20WP	G15_018	TO->FROM	CIMARRON - MINCO 345KV CKT 1	956	956	0.19866	106.2571	G11_051T 345.00 - TATONGA7 345.00 345KV CKT 1
FDNS	06ALL	3	17G	G15_018	TO->FROM	CIMARRON - MINCO 345KV CKT 1	956	956	0.20158	106.016	G11_051T 345.00 - TATONGA7 345.00 345KV CKT 1
FDNS	06ALL	3	17SP	G15_018	TO->FROM	CIMARRON - MINCO 345KV CKT 1	956	956	0.20508	105.6361	MATHWSN7 345.00 - TATONGA7 345.00 345KV CKT 1
FDNS	06ALL	3	20WP	G15_018	TO->FROM	CIMARRON - MINCO 345KV CKT 1	956	956	0.23206	105.2058	CHISHOLM7 345.00 - WOODWARD DISTRICT EHV 345KV CKT 1
FDNS	06ALL	3	16WP	G15_018	TO->FROM	CIMARRON - MINCO 345KV CKT 1	956	956	0.20686	105.1594	MATHWSN7 345.00 - TATONGA7 345.00 345KV CKT 1
FDNS	06ALL	3	20SP	G15_018	TO->FROM	CIMARRON - MINCO 345KV CKT 1	956	956	0.2052	104.8651	MATHWSN7 345.00 - TATONGA7 345.00 345KV CKT 1
FDNS	06ALL	3	20WP	G15_018	TO->FROM	CIMARRON - MINCO 345KV CKT 1	956	956	0.19866	104.6601	G11_051T 345.00 - WOODWARD DISTRICT EHV 345KV CKT 1
FDNS	06ALL	3	17G	G15_018	TO->FROM	CIMARRON - MINCO 345KV CKT 1	956	956	0.20158	104.4511	G11_051T 345.00 - WOODWARD DISTRICT EHV 345KV CKT 1
FDNS	06ALL	3	20SP	G15_018	TO->FROM	CIMARRON - MINCO 345KV CKT 1	956	956	0.23882	103.3967	CHISHOLM7 345.00 - WOODWARD DISTRICT EHV 345KV CKT 1
FDNS	06ALL	3	17SP	G15_018	TO->FROM	CIMARRON - MINCO 345KV CKT 1	956	956	0.23794	102.6701	CHISHOLM7 345.00 - WOODWARD DISTRICT EHV 345KV CKT 1
FDNS	06ALL	3	17SP	G15_018	TO->FROM	CIMARRON - MINCO 345KV CKT 1	956	956	0.20508	100.4546	G11_051T 345.00 - TATONGA7 345.00 345KV CKT 1
FDNS	06ALL	3	16WP	G15_018	TO->FROM	CIMARRON - MINCO 345KV CKT 1	956	956	0.20686	99.8	G11_051T 345.00 - TATONGA7 345.00 345KV CKT 1
FDNS	06ALL	3	20SP	G15_018	TO->FROM	CIMARRON - MINCO 345KV CKT 1	956	956	0.2052	99.7	G11_051T 345.00 - TATONGA7 345.00 345KV CKT 1
FDNS	06NR	3	20L	G15_018	TO->FROM	COULTER INTERCHANGE - HILLSIDE 115KV CKT 1	159	159	0.05925	105.531	BUSHLAND INTERCHANGE - POTTER COUNTY INTERCHANGE 230KV CKT 1
FDNS	06NR	3	20L	G15_018	TO->FROM	COULTER INTERCHANGE - HILLSIDE 115KV CKT 1	159	159	0.05925	105.531	BUSHLAND INTERCHANGE - POTTER COUNTY INTERCHANGE 230KV CKT 1
FDNS	06NR	3	17G	G15_018	TO->FROM	COULTER INTERCHANGE - HILLSIDE 115KV CKT 1	159	159	0.05913	100.454	BUSHLAND INTERCHANGE - POTTER COUNTY INTERCHANGE 230KV CKT 1
FDNS	06NR	3	17G	G15_018	TO->FROM	COULTER INTERCHANGE - HILLSIDE 115KV CKT 1	159	159	0.05913	100.454	BUSHLAND INTERCHANGE - POTTER COUNTY INTERCHANGE 230KV CKT 1
FDNS	06NR	3	20L	G15_018	FROM->TO	CURRY COUNTY INTERCHANGE - DEAF SMITH REC-#20 115KV CKT 1	96	96	0.09945	115.2042	DEAF SMITH COUNTY INTERCHANGE - G15039_T 230.00 230KV CKT 1
FDNS	06NR	3	17G	G15_018	FROM->TO	CURRY COUNTY INTERCHANGE - DEAF SMITH REC-#20 115KV CKT 1	96	96	0.10096	112.5719	DEAF SMITH COUNTY INTERCHANGE - G15039_T 230.00 230KV CKT 1
FDNS	06NR	3	20L	G15_018	FROM->TO	CURRY COUNTY INTERCHANGE - DEAF SMITH REC-#20 115KV CKT 1	96	96	0.09945	107.0377	G15039_T 230.00 - PLANT X STATION 230KV CKT 1
FDNS	06NR	3	17G	G15_018	FROM->TO	CURRY COUNTY INTERCHANGE - DEAF SMITH REC-#20 115KV CKT 1	96	96	0.10096	104.7125	G15039_T 230.00 - PLANT X STATION 230KV CKT 1
FDNS	06NR	3	17G	G15_018	TO->FROM	DAWN SUB - Panda Energy Substation Hereford 115KV CKT 1	96	96	0.05371	112.7612	BUSHLAND INTERCHANGE - DEAF SMITH COUNTY INTERCHANGE 230KV CKT 1
FDNS	06NR	3	17G	G15_018	TO->FROM	DAWN SUB - Panda Energy Substation Hereford 115KV CKT 1	96	96	0.05371	112.7612	BUSHLAND INTERCHANGE - DEAF SMITH COUNTY INTERCHANGE 230KV CKT 1
FDNS	06NR	3	17G	G15_018	FROM->TO	DEAF SMITH COUNTY INTERCHANGE - Panda Energy Substation Hereford 115KV CKT 1	96	96	0.05371	117.8354	BUSHLAND INTERCHANGE - DEAF SMITH COUNTY INTERCHANGE 230KV CKT 1
FDNS	06NR	3	17G	G15_018	FROM->TO	DEAF SMITH COUNTY INTERCHANGE - Panda Energy Substation Hereford 115KV CKT 1	96	96	0.05371	117.8354	BUSHLAND INTERCHANGE - DEAF SMITH COUNTY INTERCHANGE 230KV CKT 1
FDNS	06NR	3	20L	G15_018	FROM->TO	DEAF SMITH REC-#20 - PARMER COUNTY SUB 115KV CKT 1	96	96	0.09945	107.8332	DEAF SMITH COUNTY INTERCHANGE - G15039_T 230.00 230KV CKT 1
FDNS	06NR	3	17G	G15_018	FROM->TO	DEAF SMITH REC-#20 - PARMER COUNTY SUB 115KV CKT 1	96	96	0.10096	104.6652	DEAF SMITH COUNTY INTERCHANGE - G15039_T 230.00 230KV CKT 1
FDNS	06NR	3	20L	G15_018	FROM->TO	DEAF SMITH REC-#20 - PARMER COUNTY SUB 115KV CKT 1	96	96	0.09945	99.8	G15039_T 230.00 - PLANT X STATION 230KV CKT 1
FDNS	06NR	3	20L	G15_018	TO->FROM	DEAF SMITH REC-#24 - PARMER COUNTY SUB 115KV CKT 1	96	96	0.09945	102.5777	DEAF SMITH COUNTY INTERCHANGE - G15039_T 230.00 230KV CKT 1
FDNS	06ALL	3	20L	G15_018	TO->FROM	G14-057T 345.00 - LAWTON EASTSIDE 345KV CKT 1	717	789	0.10086	106.0801	BASE CASE
FDNS	06ALL	3	20L	G15_018	FROM->TO	G14-057T 345.00 - SUNNYSIDE 345KV CKT 1	717	789	0.10086	119.3111	BASE CASE
FDNS	06ALL	3	20WP	G15_018	FROM->TO	G14-057T 345.00 - SUNNYSIDE 345KV CKT 1	717	789	0.1244	107.198	BASE CASE
FDNS	06ALL	3	17G	G15_018	FROM->TO	G14-057T 345.00 - SUNNYSIDE 345KV CKT 1	717	789	0.12575	106.7167	BASE CASE
FDNS	06ALL	3	16WP	G15_018	FROM->TO	G14-057T 345.00 - SUNNYSIDE 345KV CKT 1	717	789	0.12923	105.3992	BASE CASE
FDNS	06NR	3	20L	G15_018	FROM->TO	G14-074T 345.00 - OKLAUNION 345KV CKT 1	1022	1124	0.03213	108.2612	BASE CASE
FDNS	06NR	3	20L	G15_018	FROM->TO	G14-074T 345.00 - OKLAUNION 345KV CKT 1	1022	1124	0.0305	103.3966	CHISHOLM7 345.00 - GRACEMONT 345KV CKT 1
FDNS	06NR	3	20L	G15_018	FROM->TO	G14-074T 345.00 - OKLAUNION 345KV CKT 1	1022	1124	0.0305	102.9036	CHISHOLM7 345.00 () 345/230/13.2KV TRANSFORMER CKT 1
FDNS	06NR	3	20L	G15_018	FROM->TO	G14-074T 345.00 - OKLAUNION 345KV CKT 1	1022	1124	0.04137	102.6829	AMARILLO SOUTH INTERCHANGE - G15031_T 230.00 230KV CKT 1
FDNS	06NR	3	20L	G15_018	FROM->TO	G14-074T 345.00 - OKLAUNION 345KV CKT 1	1022	1124	0.04161	102.2907	NEWHART 230 - POTTER COUNTY INTERCHANGE 230KV CKT 1
FDNS	06NR	3	20L	G15_018	FROM->TO	G14-074T 345.00 - OKLAUNION 345KV CKT 1	1022	1124	0.03698	101.9316	DEAF SMITH COUNTY INTERCHANGE - G15039_T 230.00 230KV CKT 1
FDNS	06NR	3	20L	G15_018	FROM->TO	G14-074T 345.00 - OKLAUNION 345KV CKT 1	1022	1124	0.03698	100.8261	G15039_T 230.00 - PLANT X STATION 230KV CKT 1
FDNS	06NR	3	20L	G15_018	FROM->TO	G14-074T 345.00 - OKLAUNION 345KV CKT 1	1022	1124	0.03203	100.637	MINGO - RED WILLOW 345KV CKT 1
FDNS	06NR	3	20L	G15_018	FROM->TO	G14-074T 345.00 - OKLAUNION 345KV CKT 1	1022	1124	0.03203	100.637	MINGO - RED WILLOW 345KV CKT 1
FDNS	06NR	3	20L	G15_018	FROM->TO	G14-074T 345.00 - OKLAUNION 345KV CKT 1	1022	1124	0.03166	100.065	CHILDRESS - LAKE PAULINE 138KV CKT 1
FDNS	06NR	3	20L	G15_018	FROM->TO	G14-074T 345.00 - OKLAUNION 345KV CKT 1	1022	1124	0.03166	100.065	CHILDRESS - LAKE PAULINE 138KV CKT 1
FDNS	06NR	3	20L	G15_018	FROM->TO	G14-074T 345.00 - OKLAUNION 345KV CKT 1	1022	1124	0.03189	100	CONWAY SUB - NICHOLS STATION 115KV CKT 1
FDNS	06NR	3	20L	G15_018	FROM->TO	G14-074T 345.00 - OKLAUNION 345KV CKT 1	1022	1124	0.03189	99.9	CONWAY SUB - KIRBY SWITCHING STATION 115KV CKT 1
FDNS	06NR	3	17G	G15_018	FROM->TO	G14-074T 345.00 - OKLAUNION 345KV CKT 1	1022	1124	0.03815	99.8	AMARILLO SOUTH INTERCHANGE - G15031_T 230.00 230KV CKT 1
FDNS	06NR	3	20L	G15_018	FROM->TO	G14-074T 345.00 - OKLAUNION 345KV CKT 1	1022	1124	0.03189	99.8	P12:115:SPS:T53.1.NICHLS.KIRBY
FDNS	06NR	3	20L	G15_018	FROM->TO	G14-074T 345.00 - OKLAUNION 345KV CKT 1	1022	1124	0.03212	99.7	IODINE - WOODWARD EHV 138KV CKT 1
FDNS	06NR	3	20L	G15_018	FROM->TO	G14-074T 345.00 - OKLAUNION 345KV CKT 1	1022	1124	0.03213	99.6	WOODWARD - WWPAR4 138.00 138KV CKT 1
FDNS	06NR	3	20L	G15_018	FROM->TO	G14-074T 345.00 - OKLAUNION 345KV CKT 1	1022	1124	0.03213	99.6	WOODWARD EHV - WWPAR4 138.00 138KV CKT 1
FDNS	06NR	3	20L	G15_018	FROM->TO	G14-074T 345.00 - OKLAUNION 345KV CKT 1	1022	1124	0.03212	99.6	DEWEY - IODINE 138KV CKT 1
FDNS	06NR	3	20L	G15_018	FROM->TO	G14-074T 345.00 - OKLAUNION 345KV CKT 1	1022	1124	0.03188	99.5	KIRBY SWITCHING STATION - MCCLELLAN SUB 115KV CKT 1
FDNS	06NR	3	20L	G15_018	FROM->TO	G14-074T 345.00 - OKLAUNION 345KV CKT 1	1022	1124	0.03188	99.5	MCCLELLAN SUB - MCLEAN RURAL SUB 115KV CKT 1
FDNS	06ALL	3	20L	G15_018	FROM->TO	GRACEMONT - MINCO 345KV CKT 1	1195	1195	0.20671	101.53	G14-057T 345.00 - SUNNYSIDE 345KV CKT 1
FDNS	00NR	3	25SP	G15_018	TO->FROM	JONES STATION - TUCO INTERCHANGE 230KV CKT 1	343.79	343.79	0.07521	130.1614	CARLISLE INTERCHANGE - TUCO INTERCHANGE 230KV CKT 1
FDNS	00NR	3	25SP	G15_018	TO->FROM	JONES STATION - TUCO INTERCHANGE 230KV CKT 1	343.79	343.79	0.07521	130.1614	CARLISLE INTERCHANGE - TUCO INTERCHANGE 230KV CKT 1
FDNS	00NR	3	25SP	G15_018	TO->FROM	JONES STATION - TUCO INTERCHANGE 230KV CKT 1	343.79	343.79	0.06401	113.3309	GEN526333 1-JONES GEN #3 21 KV
FDNS	00NR	3	25SP	G15_018	TO->FROM	JONES STATION - TUCO INTERCHANGE 230KV CKT 1	343.79	343.79	0.06401	112.9359	GEN526334 1-JONES_4 116.500
FDNS	00NR	3	25SP	G15_018	TO->FROM	JONES STATION - TUCO INTERCHANGE 230KV CKT 1	343.79	343.79	0.07104	108.5941	TUCO INTERCHANGE - YOAKUM_345 345.00 345KV CKT 1
FDNS	00NR	3	25SP	G15_018	TO->FROM	JONES STATION - TUCO INTERCHANGE 230KV CKT 1	343.79	343.79	0.06888	103.864	CARLISLE INTERCHANGE - WOLFFORTH INTERCHANGE 230KV CKT 1
FDNS	00NR	3	25SP	G15_018	TO->FROM	JONES STATION - TUCO INTERCHANGE 230KV CKT 1	343.79	343.79	0.07649	101.6819	PLANT X STATION - SUNDOWN INTERCHANGE 230KV CKT 1
FDNS	00NR	3	25SP	G15_018	TO->FROM	JONES STATION - TUCO INTERCHANGE 230KV CKT 1	343.79	343.79	0.07649	101.6819	PLANT X STATION - SUNDOWN INTERCHANGE 230KV CKT 1
FDNS	00NR	3	25SP	G15_018	TO->FROM	JONES STATION - TUCO INTERCHANGE 230KV CKT 1	343.79	343.79	0.06401	100.8779	GEN526332 1-JONES GEN #2 21 KV
FDNS	00NR	3	25SP	G15_018	TO->FROM	JONES STATION - TUCO INTERCHANGE 230KV CKT 1	343.79	343.79	0.06401	100.876	GEN526331 1-JONES GEN #1 22 KV
FDNS	00NR	3	25SP	G15_018	TO->FROM	JONES STATION - TUCO INTERCHANGE 230KV CKT 1	343.79	343.79	0.06386	100.7208	TUCO INTERCHANGE (ENRCO 136401) 230/115/13.2KV TRANSFORMER CKT 1
FDNS	00NR	3	25SP	G15_018	TO->FROM	JONES STATION - TUCO INTERCHANGE 230KV CKT 1	343.79	343.79	0.06386	100.7208	TUCO INTERCHANGE (ENRCO 136401) 230/115/13.2KV TRANSFORMER CKT 1
FDNS	00NR	3	25SP	G15_018	TO->FROM	JONES STATION - TUCO INTERCHANGE 230KV CKT 1	343.79	343.79	0.06386	100.7208	TUCO INTERCHANGE (ENRCO 136401) 230/115/13.2KV TRANSFORMER CKT 2
FDNS	00NR	3	25SP	G15_018	TO->FROM	JONES STATION - TUCO INTERCHANGE 230KV CKT 1	343.79	343.79	0.06386	100.7208	TUCO INTERCHANGE (ENRCO 136401) 230/115/13.2KV TRANSFORMER CKT 2
FDNS	00NR	3	25SP	G15_018	TO->FROM	JONES STATION - TUCO INTERCHANGE 230KV CKT 1	343.79	343.79	0.07061	99.8	LUBBOCK EAST INTERCHANGE - TUCO INTERCHANGE 115KV CKT 1
FDNS	00NR	3	25SP	G15_018	TO->FROM	JONES STATION - TUCO INTERCHANGE 230KV CKT 1	343.79	343.79	0.07061	99.8	LUBBOCK EAST INTERCHANGE - TUCO INTERCHANGE 115KV CKT 1
FDNS	00NR	3	25SP	G15_018	FROM->TO	LUBBOCK POWER & LIGHT-HOLLY PLANT (SHIH T101039) 230/69/13.5KV TRANSFORMER CKT 1	224	224	0.03579	104.7002	LUBBOCK POWER & LIGHT-SOUTHEAST - LUBBOCK SOUTH INTERCHANGE 230KV CKT 1
FDNS	00NR	3	25SP	G15_018	FROM->TO	LUBBOCK POWER & LIGHT-HOLLY PLANT (SHIH T101039) 230/69/13.5KV TRANSFORMER CKT 1	224	224	0.03579	104.6872	P12:LPL:SPS:K64.1.LP-SE.LUBBS
FDNS	00NR	3	25SP	G15_018	FROM->TO	LUBBOCK POWER & LIGHT-HOLLY PLANT (SHIH T101039) 230/69/13.5KV TRANSFORMER CKT 1	224	224	0.03445	101.9683	LUBBOCK EAST INTERCHANGE - LUBBOCK POWER & LIGHT-WADSWORTH 230KV CKT 1
FDNS	00NR	3	25SP	G15_018	FROM->TO	LUBBOCK POWER & LIGHT-HOLLY PLANT (SHIH T101039) 230/69/13.5KV TRANSFORMER CKT 1	224	224	0.03445	101.9535	P12:230:LPL:K57.1.LP-WADS.LUBBE
FDNS	00NR	3	25SP	G15_018	FROM->TO	LUBBOCK POWER & LIGHT-HOLLY PLANT (SHIH T101039) 230/69/13.5KV TRANSFORMER CKT 1	224	224	0.03445	101.9534	LUBBOCK POWER & LIGHT-WADSWORTH (SHIH T101038) 230/69/13.5KV TRANSFORMER CKT 1
FDNS	00NR	3	25SP	G15_018	FROM->TO	LUBBOCK POWER & LIGHT-HOLLY PLANT (SHIH T101039) 230/69/13.5KV TRANSFORMER CKT 1	224	224	0.03445	101.9534	LUBBOCK POWER & LIGHT-WADSWORTH (SHIH T101038) 230/69/13.5KV TRANSFORMER CKT 1
FDNS	06ALL	4	20SP	G15_018	FROM->TO	CHISHOLM6 230.00 - ELK CITY 230KV 230KV CKT 1	353	353	0.06184	103.152	BASE CASE

SOLUTION	GROUP	SCENARIO	SEASON	SOURCE	DIRECTION	MONITORED ELEMENT	RATEA (MVA)	RATEB(MVA)	TDF	TC%LOADING (% MVA)	CONTINGENCY
FDNS	06ALL	4	17SP	G15_018	FROM->TO	CHISHOLM6 230.00 - ELK CITY 230KV 230KV CKT 1	353	353	0.06204	100.7007	BASE CASE
FDNS	06ALL	4	17G	G15_018	TO->FROM	CIMARRON - MINCO 345KV CKT 1	956	956	0.22179	129.7974	G14-057T 345.00 - SUNNYSIDE 345KV CKT 1
FDNS	06ALL	4	20WP	G15_018	TO->FROM	CIMARRON - MINCO 345KV CKT 1	956	956	0.22	128.511	G14-057T 345.00 - SUNNYSIDE 345KV CKT 1
FDNS	06ALL	4	17G	G15_018	TO->FROM	CIMARRON - MINCO 345KV CKT 1	956	956	0.22179	124.286	G14-057T 345.00 - LAWTON EASTSIDE 345KV CKT 1
FDNS	06ALL	4	20WP	G15_018	TO->FROM	CIMARRON - MINCO 345KV CKT 1	956	956	0.22	123.0537	G14-057T 345.00 - LAWTON EASTSIDE 345KV CKT 1
FDNS	06ALL	4	16WP	G15_018	TO->FROM	CIMARRON - MINCO 345KV CKT 1	956	956	0.22837	122.1275	G14-057T 345.00 - SUNNYSIDE 345KV CKT 1
FDNS	06ALL	4	17SP	G15_018	TO->FROM	CIMARRON - MINCO 345KV CKT 1	956	956	0.22512	121.005	G14-057T 345.00 - SUNNYSIDE 345KV CKT 1
FDNS	06ALL	4	20SP	G15_018	TO->FROM	CIMARRON - MINCO 345KV CKT 1	956	956	0.22573	117.7968	G14-057T 345.00 - SUNNYSIDE 345KV CKT 1
FDNS	06ALL	4	16WP	G15_018	TO->FROM	CIMARRON - MINCO 345KV CKT 1	956	956	0.22837	116.5578	G14-057T 345.00 - LAWTON EASTSIDE 345KV CKT 1
FDNS	06ALL	4	17SP	G15_018	TO->FROM	CIMARRON - MINCO 345KV CKT 1	956	956	0.22512	115.6625	G14-057T 345.00 - LAWTON EASTSIDE 345KV CKT 1
FDNS	06ALL	4	20SP	G15_018	TO->FROM	CIMARRON - MINCO 345KV CKT 1	956	956	0.22573	112.5931	G14-057T 345.00 - LAWTON EASTSIDE 345KV CKT 1
FDNS	06ALL	4	17G	G15_018	TO->FROM	CIMARRON - MINCO 345KV CKT 1	956	956	0.20975	104.4362	CHISHOLM7 345.00 - WOODWARD DISTRICT EHV 345KV CKT 1
FDNS	06ALL	4	17SP	G15_018	TO->FROM	CIMARRON - MINCO 345KV CKT 1	956	956	0.19605	103.6969	MATHWSN7 345.00 - TATONGA7 345.00 345KV CKT 1
FDNS	06ALL	4	16WP	G15_018	TO->FROM	CIMARRON - MINCO 345KV CKT 1	956	956	0.19802	103.3746	MATHWSN7 345.00 - TATONGA7 345.00 345KV CKT 1
FDNS	06ALL	4	20SP	G15_018	TO->FROM	CIMARRON - MINCO 345KV CKT 1	956	956	0.19628	102.8303	MATHWSN7 345.00 - TATONGA7 345.00 345KV CKT 1
FDNS	06ALL	4	20WP	G15_018	TO->FROM	CIMARRON - MINCO 345KV CKT 1	956	956	0.21085	100.3052	CHISHOLM7 345.00 - WOODWARD DISTRICT EHV 345KV CKT 1
FDNSLock	06ALL	4	16WP	G15_018		G14_001T 345.00 - WICHITA 345KV CKT 1	1035	1035	0.05406	25.24282	BASE CASE
FDNS	06ALL	4	20L	G15_018	TO->FROM	G14-057T 345.00 - LAWTON EASTSIDE 345KV CKT 1	717	789	0.09542	104.3251	BASE CASE
FDNS	06ALL	4	20L	G15_018	FROM->TO	G14-057T 345.00 - SUNNYSIDE 345KV CKT 1	717	789	0.09542	117.5276	BASE CASE
FDNS	06ALL	4	20WP	G15_018	FROM->TO	G14-057T 345.00 - SUNNYSIDE 345KV CKT 1	717	789	0.11832	105.3579	BASE CASE
FDNS	06ALL	4	17G	G15_018	FROM->TO	G14-057T 345.00 - SUNNYSIDE 345KV CKT 1	717	789	0.11971	105.0325	BASE CASE
FDNS	06ALL	4	16WP	G15_018	FROM->TO	G14-057T 345.00 - SUNNYSIDE 345KV CKT 1	717	789	0.12304	103.6585	BASE CASE
FDNS	00NR	4	25SP	G15_018	TO->FROM	JONES STATION - TUCO INTERCHANGE 230KV CKT 1	343.79	343.79	0.07542	129.809	CARLISLE INTERCHANGE - TUCO INTERCHANGE 230KV CKT 1
FDNS	00NR	4	25SP	G15_018	TO->FROM	JONES STATION - TUCO INTERCHANGE 230KV CKT 1	343.79	343.79	0.07542	129.809	CARLISLE INTERCHANGE - TUCO INTERCHANGE 230KV CKT 1
FDNS	00NR	4	25SP	G15_018	TO->FROM	JONES STATION - TUCO INTERCHANGE 230KV CKT 1	343.79	343.79	0.0641	113.028	GEN526333 1-JONES GEN #3 21 KV
FDNS	00NR	4	25SP	G15_018	TO->FROM	JONES STATION - TUCO INTERCHANGE 230KV CKT 1	343.79	343.79	0.0641	112.6359	GEN526334 1-JONES_4 116.500
FDNS	00NR	4	25SP	G15_018	TO->FROM	JONES STATION - TUCO INTERCHANGE 230KV CKT 1	343.79	343.79	0.07135	108.0461	TUCO INTERCHANGE - YOAKUM_345 345.00 345KV CKT 1
FDNS	00NR	4	25SP	G15_018	TO->FROM	JONES STATION - TUCO INTERCHANGE 230KV CKT 1	343.79	343.79	0.06907	103.563	CARLISLE INTERCHANGE - WOLFFORTH INTERCHANGE 230KV CKT 1
FDNS	00NR	4	25SP	G15_018	TO->FROM	JONES STATION - TUCO INTERCHANGE 230KV CKT 1	343.79	343.79	0.07668	101.3715	PLANT X STATION - SUNDOWN INTERCHANGE 230KV CKT 1
FDNS	00NR	4	25SP	G15_018	TO->FROM	JONES STATION - TUCO INTERCHANGE 230KV CKT 1	343.79	343.79	0.07668	101.3715	PLANT X STATION - SUNDOWN INTERCHANGE 230KV CKT 1
FDNS	00NR	4	25SP	G15_018	TO->FROM	JONES STATION - TUCO INTERCHANGE 230KV CKT 1	343.79	343.79	0.05645	100.6898	P12:345:SPS:J02.1.TOLK.EDDY
FDNS	00NR	4	25SP	G15_018	TO->FROM	JONES STATION - TUCO INTERCHANGE 230KV CKT 1	343.79	343.79	0.0641	100.6764	GEN526332 1-JONES GEN #2 21 KV
FDNS	00NR	4	25SP	G15_018	TO->FROM	JONES STATION - TUCO INTERCHANGE 230KV CKT 1	343.79	343.79	0.0641	100.6745	GEN526331 1-JONES GEN #1 22 KV
FDNS	00NR	4	25SP	G15_018	TO->FROM	JONES STATION - TUCO INTERCHANGE 230KV CKT 1	343.79	343.79	0.06383	100.6429	TUCO INTERCHANGE (ENRCO 136401) 230/115/13.2KV TRANSFORMER CKT 1
FDNS	00NR	4	25SP	G15_018	TO->FROM	JONES STATION - TUCO INTERCHANGE 230KV CKT 1	343.79	343.79	0.06383	100.6429	TUCO INTERCHANGE (ENRCO 136401) 230/115/13.2KV TRANSFORMER CKT 1
FDNS	00NR	4	25SP	G15_018	TO->FROM	JONES STATION - TUCO INTERCHANGE 230KV CKT 1	343.79	343.79	0.06383	100.6429	TUCO INTERCHANGE (ENRCO 136401) 230/115/13.2KV TRANSFORMER CKT 2
FDNS	00NR	4	25SP	G15_018	TO->FROM	JONES STATION - TUCO INTERCHANGE 230KV CKT 1	343.79	343.79	0.06383	100.6429	TUCO INTERCHANGE (ENRCO 136401) 230/115/13.2KV TRANSFORMER CKT 2
FDNS	00NR	4	25SP	G15_018	TO->FROM	JONES STATION - TUCO INTERCHANGE 230KV CKT 1	343.79	343.79	0.07079	99.8	LUBBOCK EAST INTERCHANGE - TUCO INTERCHANGE 115KV CKT 1
FDNS	00NR	4	25SP	G15_018	TO->FROM	JONES STATION - TUCO INTERCHANGE 230KV CKT 1	343.79	343.79	0.07079	99.8	LUBBOCK EAST INTERCHANGE - TUCO INTERCHANGE 115KV CKT 1
FDNS	00NR	4	25SP	G15_018	FROM->TO	LUBBOCK POWER & LIGHT-HOLLY PLANT (SHIH T101039) 230/69/13.5KV TRANSFORMER CKT 1	224	224	0.03579	104.6928	LUBBOCK POWER & LIGHT-SOUTHEAST - LUBBOCK SOUTH INTERCHANGE 230KV CKT 1
FDNS	00NR	4	25SP	G15_018	FROM->TO	LUBBOCK POWER & LIGHT-HOLLY PLANT (SHIH T101039) 230/69/13.5KV TRANSFORMER CKT 1	224	224	0.03579	104.6926	P12:LPL:SPS:K64.1.LP-SE.LUBBS
FDNS	00NR	4	25SP	G15_018	FROM->TO	LUBBOCK POWER & LIGHT-HOLLY PLANT (SHIH T101039) 230/69/13.5KV TRANSFORMER CKT 1	224	224	0.03446	101.9377	LUBBOCK EAST INTERCHANGE - LUBBOCK POWER & LIGHT-WADSWORTH 230KV CKT 1
FDNS	00NR	4	25SP	G15_018	FROM->TO	LUBBOCK POWER & LIGHT-HOLLY PLANT (SHIH T101039) 230/69/13.5KV TRANSFORMER CKT 1	224	224	0.03446	101.923	P12:230:LPL:K57.1.LP-WADS.LUBBE
FDNS	00NR	4	25SP	G15_018	FROM->TO	LUBBOCK POWER & LIGHT-HOLLY PLANT (SHIH T101039) 230/69/13.5KV TRANSFORMER CKT 1	224	224	0.03446	101.9229	LUBBOCK POWER & LIGHT-WADSWORTH (SHIH T101038) 230/69/13.5KV TRANSFORMER CKT 1
FDNS	00NR	4	25SP	G15_018	FROM->TO	LUBBOCK POWER & LIGHT-HOLLY PLANT (SHIH T101039) 230/69/13.5KV TRANSFORMER CKT 1	224	224	0.03446	101.9229	LUBBOCK POWER & LIGHT-WADSWORTH (SHIH T101038) 230/69/13.5KV TRANSFORMER CKT 1
FDNSLock	06ALL	4	20L	G15_018		OKLAUNION 345KV SWITCHED SHUNT	1022	1124	0.15266	86.37846	BASE CASE
FDNS	06ALL	4	16WP	G15_018	FROM->TO	TOLK STATION (ABBXNL844501) 345/230/13.2KV TRANSFORMER CKT 1	560	560	0.31794	113.0515	CROSSROADS 7345.00 - TOLK STATION 345KV CKT 1
FDNS	06ALL	4	16WP	G15_018	FROM->TO	TOLK STATION (ABBXNL844501) 345/230/13.2KV TRANSFORMER CKT 1	560	560	0.31794	110.3257	CROSSROADS 7345.00 - TOLK STATION 345KV CKT 1
FDNS	06ALL	4	20WP	G15_018	FROM->TO	TOLK STATION (ABBXNL844501) 345/230/13.2KV TRANSFORMER CKT 1	560	560	0.28519	105.1552	CROSSROADS 7345.00 - TOLK STATION 345KV CKT 1
FDNS	06ALL	4	20WP	G15_018	FROM->TO	TOLK STATION (ABBXNL844501) 345/230/13.2KV TRANSFORMER CKT 1	560	560	0.28519	102.8567	CROSSROADS 7345.00 - TOLK STATION 345KV CKT 1
FDNS	06ALL	5	20SP	G15_018	FROM->TO	CHISHOLM6 230.00 - ELK CITY 230KV 230KV CKT 1	353	353	0.06676	107.7212	BASE CASE
FDNS	06ALL	5	17SP	G15_018	FROM->TO	CHISHOLM6 230.00 - ELK CITY 230KV 230KV CKT 1	353	353	0.06713	105.7594	BASE CASE
FDNS	06ALL	5	20L	G15_018	TO->FROM	CIMARRON - MINCO 345KV CKT 1	956	956	0.20285	139.1694	G14-057T 345.00 - SUNNYSIDE 345KV CKT 1
FDNS	06ALL	5	20L	G15_018	TO->FROM	CIMARRON - MINCO 345KV CKT 1	956	956	0.20285	133.4583	G14-057T 345.00 - LAWTON EASTSIDE 345KV CKT 1
FDNS	06ALL	5	17G	G15_018	TO->FROM	CIMARRON - MINCO 345KV CKT 1	956	956	0.23093	132.5137	G14-057T 345.00 - SUNNYSIDE 345KV CKT 1
FDNS	06ALL	5	20WP	G15_018	TO->FROM	CIMARRON - MINCO 345KV CKT 1	956	956	0.22802	131.4126	G14-057T 345.00 - SUNNYSIDE 345KV CKT 1
FDNS	06ALL	5	17G	G15_018	TO->FROM	CIMARRON - MINCO 345KV CKT 1	956	956	0.23093	127.0859	G14-057T 345.00 - LAWTON EASTSIDE 345KV CKT 1
FDNS	06ALL	5	20WP	G15_018	TO->FROM	CIMARRON - MINCO 345KV CKT 1	956	956	0.22802	126.0182	G14-057T 345.00 - LAWTON EASTSIDE 345KV CKT 1
FDNS	06ALL	5	16WP	G15_018	TO->FROM	CIMARRON - MINCO 345KV CKT 1	956	956	0.2377	125.0103	G14-057T 345.00 - SUNNYSIDE 345KV CKT 1
FDNS	06ALL	5	17SP	G15_018	TO->FROM	CIMARRON - MINCO 345KV CKT 1	956	956	0.23402	123.5221	G14-057T 345.00 - SUNNYSIDE 345KV CKT 1
FDNS	06ALL	5	20SP	G15_018	TO->FROM	CIMARRON - MINCO 345KV CKT 1	956	956	0.2342	120.476	G14-057T 345.00 - SUNNYSIDE 345KV CKT 1
FDNS	06ALL	5	16WP	G15_018	TO->FROM	CIMARRON - MINCO 345KV CKT 1	956	956	0.2377	119.6144	G14-057T 345.00 - LAWTON EASTSIDE 345KV CKT 1
FDNS	06ALL	5	17SP	G15_018	TO->FROM	CIMARRON - MINCO 345KV CKT 1	956	956	0.23402	118.2604	G14-057T 345.00 - LAWTON EASTSIDE 345KV CKT 1
FDNS	06ALL	5	20SP	G15_018	TO->FROM	CIMARRON - MINCO 345KV CKT 1	956	956	0.2342	115.0864	G14-057T 345.00 - LAWTON EASTSIDE 345KV CKT 1
FDNS	06ALL	5	17G	G15_018	TO->FROM	CIMARRON - MINCO 345KV CKT 1	956	956	0.20097	113.1247	MATHWSN7 345.00 - TATONGA7 345.00 345KV CKT 1
FDNS	06ALL	5	20WP	G15_018	TO->FROM	CIMARRON - MINCO 345KV CKT 1	956	956	0.197	112.7231	MATHWSN7 345.00 - TATONGA7 345.00 345KV CKT 1
FDNS	06ALL	5	20L	G15_018	TO->FROM	CIMARRON - MINCO 345KV CKT 1	956	956	0.20184	110.4804	CHISHOLM7 345.00 - WOODWARD DISTRICT EHV 345KV CKT 1
FDNS	06ALL	5	17G	G15_018	TO->FROM	CIMARRON - MINCO 345KV CKT 1	956	956	0.22391	110.4087	CHISHOLM7 345.00 - WOODWARD DISTRICT EHV 345KV CKT 1
FDNS	06ALL	5	20WP	G15_018	TO->FROM	CIMARRON - MINCO 345KV CKT 1	956	956	0.197	107.3503	G11_051T 345.00 - TATONGA7 345.00 345KV CKT 1
FDNS	06ALL	5	17G	G15_018	TO->FROM	CIMARRON - MINCO 345KV CKT 1	956	956	0.20097	107.1655	G11_051T 345.00 - TATONGA7 345.00 345KV CKT 1
FDNS	06ALL	5	20WP	G15_018	TO->FROM	CIMARRON - MINCO 345KV CKT 1	956	956	0.22323	106.6912	CHISHOLM7 345.00 - WOODWARD DISTRICT EHV 345KV CKT 1
FDNS	06ALL	5	16WP	G15_018	TO->FROM	CIMARRON - MINCO 345KV CKT 1	956	956	0.20619	106.1194	MATHWSN7 345.00 - TATONGA7 345.00 345KV CKT 1
FDNS	06ALL	5	17SP	G15_018	TO->FROM	CIMARRON - MINCO 345KV CKT 1	956	956	0.20388	106.0588	MATHWSN7 345.00 - TATONGA7 345.00 345KV CKT 1
FDNS	06ALL	5	20WP	G15_018	TO->FROM	CIMARRON - MINCO 345KV CKT 1	956	956	0.197	105.6974	G11_051T 345.00 - WOODWARD DISTRICT EHV 345KV CKT 1
FDNS	06ALL	5	17G	G15_018	TO->FROM	CIMARRON - MINCO 345KV CKT 1	956	956	0.20097	105.5499	G11_051T 345.00 - WOODWARD DISTRICT EHV 345KV CKT 1
FDNS	06ALL	5	20SP	G15_018	TO->FROM	CIMARRON - MINCO 345KV CKT 1	956	956	0.20376	105.1459	MATHWSN7 345.00 - TATONGA7 345.00 345KV CKT 1
FDNS	06ALL	5	20SP	G15_018	TO->FROM	CIMARRON - MINCO 345KV CKT 1	956	956	0.23026	102.6282	CHISHOLM7 345.00 - WOODWARD DISTRICT EHV 345KV CKT 1
FDNS	06ALL	5	17SP	G15_018	TO->FROM	CIMARRON - MINCO 345KV CKT 1	956	956	0.22994	102.3712	CHISHOLM7 345.00 - WOODWARD DISTRICT EHV 345KV CKT 1
FDNS	06ALL	5	17SP	G15_018	TO->FROM	CIMARRON - MINCO 345KV CKT 1	956	956	0.20388	100.8538	G11_051T 345.00 - TATONGA7 345.00 345KV CKT 1

SOLUTION	GROUP	SCENARIO	SEASON	SOURCE	DIRECTION	MONITORED ELEMENT	RATEA (MVA)	RATEB(MVA)	TDF	TC%LOADING (% MVA)	CONTINGENCY
FDNS	06ALL	5	16WP	G15_018	TO->FROM	CIMARRON - MINCO 345KV CKT 1	956	956	0.20619	100.7286	G11_051T 345.00 - TATONGA7 345.00 345KV CKT 1
FDNS	06ALL	5	20SP	G15_018	TO->FROM	CIMARRON - MINCO 345KV CKT 1	956	956	0.20376	100	G11_051T 345.00 - TATONGA7 345.00 345KV CKT 1
FDNS	06ALL	5	16WP	G15_018	TO->FROM	CIMARRON - MINCO 345KV CKT 1	956	956	0.23208	99.9	CHISHOLM7 345.00 - WOODWARD DISTRICT EHV 345KV CKT 1
FDNS	06ALL	5	20L	G15_018	TO->FROM	G14-057T 345.00 - LAWTON EASTSIDE 345KV CKT 1	717	789	0.09726	104.5834	BASE CASE
FDNS	06ALL	5	20L	G15_018	FROM->TO	G14-057T 345.00 - SUNNYSIDE 345KV CKT 1	717	789	0.09726	117.7866	BASE CASE
FDNS	06ALL	5	20WP	G15_018	FROM->TO	G14-057T 345.00 - SUNNYSIDE 345KV CKT 1	717	789	0.11924	105.6059	BASE CASE
FDNS	06ALL	5	17G	G15_018	FROM->TO	G14-057T 345.00 - SUNNYSIDE 345KV CKT 1	717	789	0.12107	105.2883	BASE CASE
FDNS	06ALL	5	16WP	G15_018	FROM->TO	G14-057T 345.00 - SUNNYSIDE 345KV CKT 1	717	789	0.12434	103.9305	BASE CASE
FDNS	06ALL	5	20L	G15_018	FROM->TO	GRACEMONT - MINCO 345KV CKT 1	1195	1195	0.20285	100.3039	G14-057T 345.00 - SUNNYSIDE 345KV CKT 1
FDNS	00NR	5	25SP	G15_018	TO->FROM	JONES STATION - TUCO INTERCHANGE 230KV CKT 1	343.79	343.79	0.07549	129.641	CARLISLE INTERCHANGE - TUCO INTERCHANGE 230KV CKT 1
FDNS	00NR	5	25SP	G15_018	TO->FROM	JONES STATION - TUCO INTERCHANGE 230KV CKT 1	343.79	343.79	0.07549	129.641	CARLISLE INTERCHANGE - TUCO INTERCHANGE 230KV CKT 1
FDNS	00NR	5	25SP	G15_018	TO->FROM	JONES STATION - TUCO INTERCHANGE 230KV CKT 1	343.79	343.79	0.06415	112.7964	GEN526333 1-JONES GEN #3 21 KV
FDNS	00NR	5	25SP	G15_018	TO->FROM	JONES STATION - TUCO INTERCHANGE 230KV CKT 1	343.79	343.79	0.06415	112.4061	GEN526334 1-JONES_4 116.500
FDNS	00NR	5	25SP	G15_018	TO->FROM	JONES STATION - TUCO INTERCHANGE 230KV CKT 1	343.79	343.79	0.0714	107.7831	TUCO INTERCHANGE - YOAKUM_345 345.00 345KV CKT 1
FDNS	00NR	5	25SP	G15_018	TO->FROM	JONES STATION - TUCO INTERCHANGE 230KV CKT 1	343.79	343.79	0.06913	103.4197	CARLISLE INTERCHANGE - WOLFFORTH INTERCHANGE 230KV CKT 1
FDNS	00NR	5	25SP	G15_018	TO->FROM	JONES STATION - TUCO INTERCHANGE 230KV CKT 1	343.79	343.79	0.07673	101.2834	PLANT X STATION - SUNDOWN INTERCHANGE 230KV CKT 1
FDNS	00NR	5	25SP	G15_018	TO->FROM	JONES STATION - TUCO INTERCHANGE 230KV CKT 1	343.79	343.79	0.07673	101.2834	PLANT X STATION - SUNDOWN INTERCHANGE 230KV CKT 1
FDNS	00NR	5	25SP	G15_018	TO->FROM	JONES STATION - TUCO INTERCHANGE 230KV CKT 1	343.79	343.79	0.05646	100.5886	P12:345:SPS:J02.1.TOLK.EDDY
FDNS	00NR	5	25SP	G15_018	TO->FROM	JONES STATION - TUCO INTERCHANGE 230KV CKT 1	343.79	343.79	0.06415	100.5344	GEN526332 1-JONES GEN #2 21 KV
FDNS	00NR	5	25SP	G15_018	TO->FROM	JONES STATION - TUCO INTERCHANGE 230KV CKT 1	343.79	343.79	0.06415	100.5324	GEN526331 1-JONES GEN #1 22 KV
FDNS	00NR	5	25SP	G15_018	TO->FROM	JONES STATION - TUCO INTERCHANGE 230KV CKT 1	343.79	343.79	0.06389	100.5232	TUCO INTERCHANGE (ENRCO 136401) 230/115/13.2KV TRANSFORMER CKT 1
FDNS	00NR	5	25SP	G15_018	TO->FROM	JONES STATION - TUCO INTERCHANGE 230KV CKT 1	343.79	343.79	0.06389	100.5232	TUCO INTERCHANGE (ENRCO 136401) 230/115/13.2KV TRANSFORMER CKT 1
FDNS	00NR	5	25SP	G15_018	TO->FROM	JONES STATION - TUCO INTERCHANGE 230KV CKT 1	343.79	343.79	0.06389	100.5232	TUCO INTERCHANGE (ENRCO 136401) 230/115/13.2KV TRANSFORMER CKT 2
FDNS	00NR	5	25SP	G15_018	TO->FROM	JONES STATION - TUCO INTERCHANGE 230KV CKT 1	343.79	343.79	0.06389	100.5232	TUCO INTERCHANGE (ENRCO 136401) 230/115/13.2KV TRANSFORMER CKT 2
FDNS	00NR	5	25SP	G15_018	TO->FROM	JONES STATION - TUCO INTERCHANGE 230KV CKT 1	343.79	343.79	0.07084	99.6	LUBBOCK EAST INTERCHANGE - TUCO INTERCHANGE 115KV CKT 1
FDNS	00NR	5	25SP	G15_018	TO->FROM	JONES STATION - TUCO INTERCHANGE 230KV CKT 1	343.79	343.79	0.07084	99.6	LUBBOCK EAST INTERCHANGE - TUCO INTERCHANGE 115KV CKT 1
FDNS	00NR	5	25SP	G15_018	FROM->TO	LUBBOCK POWER & LIGHT-HOLLY PLANT (SHIH T101039) 230/69/13.5KV TRANSFORMER CKT 1	224	224	0.03579	104.6927	LUBBOCK POWER & LIGHT-SOUTHEAST - LUBBOCK SOUTH INTERCHANGE 230KV CKT 1
FDNS	00NR	5	25SP	G15_018	FROM->TO	LUBBOCK POWER & LIGHT-HOLLY PLANT (SHIH T101039) 230/69/13.5KV TRANSFORMER CKT 1	224	224	0.03579	104.6925	P12:LPL:SPS:K64.1.LP-SE.LUBBS
FDNS	00NR	5	25SP	G15_018	FROM->TO	LUBBOCK POWER & LIGHT-HOLLY PLANT (SHIH T101039) 230/69/13.5KV TRANSFORMER CKT 1	224	224	0.03447	101.9351	LUBBOCK EAST INTERCHANGE - LUBBOCK POWER & LIGHT-WADSWORTH 230KV CKT 1
FDNS	00NR	5	25SP	G15_018	FROM->TO	LUBBOCK POWER & LIGHT-HOLLY PLANT (SHIH T101039) 230/69/13.5KV TRANSFORMER CKT 1	224	224	0.03447	101.9204	P12:230:LPL:K57.1.LP-WADS.LUBBE
FDNS	00NR	5	25SP	G15_018	FROM->TO	LUBBOCK POWER & LIGHT-HOLLY PLANT (SHIH T101039) 230/69/13.5KV TRANSFORMER CKT 1	224	224	0.03447	101.9203	LUBBOCK POWER & LIGHT-WADSWORTH (SHIH T101038) 230/69/13.5KV TRANSFORMER CKT 1
FDNS	00NR	5	25SP	G15_018	FROM->TO	LUBBOCK POWER & LIGHT-HOLLY PLANT (SHIH T101039) 230/69/13.5KV TRANSFORMER CKT 1	224	224	0.03447	101.9203	LUBBOCK POWER & LIGHT-WADSWORTH (SHIH T101038) 230/69/13.5KV TRANSFORMER CKT 1
FDNS	06ALL	5	20WP	G15_018	FROM->TO	POTTER COUNTY INTERCHANGE (WAUK 90343-A) 345/230/13.2KV TRANSFORMER CKT 1	560	560	0.2081	134.3002	P12:345:SPS:J15.1.XRDS.TOLK
FDNS	06ALL	5	20WP	G15_018	FROM->TO	POTTER COUNTY INTERCHANGE (WAUK 90343-A) 345/230/13.2KV TRANSFORMER CKT 1	560	560	0.2081	134.2067	P12:345:SPS:J15.1.XRDS.TOLK
FDNS	06ALL	5	17G	G15_018	FROM->TO	POTTER COUNTY INTERCHANGE (WAUK 90343-A) 345/230/13.2KV TRANSFORMER CKT 1	560	560	0.21918	131.4477	P12:345:SPS:J15.1.XRDS.TOLK
FDNS	06ALL	5	17G	G15_018	FROM->TO	POTTER COUNTY INTERCHANGE (WAUK 90343-A) 345/230/13.2KV TRANSFORMER CKT 1	560	560	0.21918	130.9697	P12:345:SPS:J15.1.XRDS.TOLK
FDNS	06ALL	5	16WP	G15_018	FROM->TO	POTTER COUNTY INTERCHANGE (WAUK 90343-A) 345/230/13.2KV TRANSFORMER CKT 1	560	560	0.23039	123.3278	P12:345:SPS:J15.1.XRDS.TOLK
FDNS	06ALL	5	16WP	G15_018	FROM->TO	POTTER COUNTY INTERCHANGE (WAUK 90343-A) 345/230/13.2KV TRANSFORMER CKT 1	560	560	0.23039	122.0001	P12:345:SPS:J15.1.XRDS.TOLK
FDNS	06ALL	5	16WP	G15_018	FROM->TO	POTTER COUNTY INTERCHANGE (WAUK 90343-A) 345/230/13.2KV TRANSFORMER CKT 1	560	560	0.2053	115.1938	POTTER COUNTY INTERCHANGE - TOLK STATION 345KV CKT 1
FDNS	06ALL	5	16WP	G15_018	FROM->TO	POTTER COUNTY INTERCHANGE (WAUK 90343-A) 345/230/13.2KV TRANSFORMER CKT 1	560	560	0.2053	114.0847	POTTER COUNTY INTERCHANGE - TOLK STATION 345KV CKT 1
FDNS	06ALL	5	17SP	G15_018	FROM->TO	POTTER COUNTY INTERCHANGE (WAUK 90343-A) 345/230/13.2KV TRANSFORMER CKT 1	560	560	0.22658	108.8592	P12:345:SPS:J15.1.XRDS.TOLK
FDNS	06ALL	5	17SP	G15_018	FROM->TO	POTTER COUNTY INTERCHANGE (WAUK 90343-A) 345/230/13.2KV TRANSFORMER CKT 1	560	560	0.22658	107.3735	P12:345:SPS:J15.1.XRDS.TOLK
FDNS	06ALL	5	16WP	G15_018	FROM->TO	POTTER COUNTY INTERCHANGE (WAUK 90343-A) 345/230/13.2KV TRANSFORMER CKT 1	560	560	0.1961	104.3006	P12:345:SPS:J02.1.TOLK.EDDY
FDNS	06ALL	5	16WP	G15_018	FROM->TO	POTTER COUNTY INTERCHANGE (WAUK 90343-A) 345/230/13.2KV TRANSFORMER CKT 1	560	560	0.1961	103.7897	P12:345:SPS:J02.1.TOLK.EDDY
FDNS	06ALL	5	20SP	G15_018	FROM->TO	POTTER COUNTY INTERCHANGE (WAUK 90343-A) 345/230/13.2KV TRANSFORMER CKT 1	560	560	0.21447	102.363	P12:345:SPS:J15.1.XRDS.TOLK
FDNS	06ALL	5	17SP	G15_018	FROM->TO	POTTER COUNTY INTERCHANGE (WAUK 90343-A) 345/230/13.2KV TRANSFORMER CKT 1	560	560	0.20295	102.3103	POTTER COUNTY INTERCHANGE - TOLK STATION 345KV CKT 1
FDNS	06ALL	5	20SP	G15_018	FROM->TO	POTTER COUNTY INTERCHANGE (WAUK 90343-A) 345/230/13.2KV TRANSFORMER CKT 1	560	560	0.21447	101.0624	P12:345:SPS:J15.1.XRDS.TOLK
FDNS	06ALL	5	17SP	G15_018	FROM->TO	POTTER COUNTY INTERCHANGE (WAUK 90343-A) 345/230/13.2KV TRANSFORMER CKT 1	560	560	0.20295	101.0142	POTTER COUNTY INTERCHANGE - TOLK STATION 345KV CKT 1
FDNS	06ALL	5	16WP	G15_018	FROM->TO	TOLK STATION (ABBXNL844501) 345/230/13.2KV TRANSFORMER CKT 1	560	560	0.32358	113.0248	CROSSROADS 7345.00 - TOLK STATION 345KV CKT 1
FDNS	06ALL	5	16WP	G15_018	FROM->TO	TOLK STATION (ABBXNL844501) 345/230/13.2KV TRANSFORMER CKT 1	560	560	0.32358	110.571	CROSSROADS 7345.00 - TOLK STATION 345KV CKT 1
FDNS	06ALL	5	20WP	G15_018	FROM->TO	TOLK STATION (ABBXNL844501) 345/230/13.2KV TRANSFORMER CKT 1	560	560	0.2907	106.1712	CROSSROADS 7345.00 - TOLK STATION 345KV CKT 1
FDNS	06ALL	5	20WP	G15_018	FROM->TO	TOLK STATION (ABBXNL844501) 345/230/13.2KV TRANSFORMER CKT 1	560	560	0.2907	104.0137	CROSSROADS 7345.00 - TOLK STATION 345KV CKT 1
FDNS	06ALL	5	20WP	G15_018	FROM->TO	TOLK STATION (ABBXNL844501) 345/230/13.2KV TRANSFORMER CKT 1	560	560	0.29745	100.9733	POTTER COUNTY INTERCHANGE (WAUK 90343-A) 345/230/13.2KV TRANSFORMER CKT 1
FDNS	06ALL	5	20WP	G15_018	FROM->TO	TOLK STATION (ABBXNL844501) 345/230/13.2KV TRANSFORMER CKT 1	560	560	0.29745	100.9733	POTTER COUNTY INTERCHANGE (WAUK 90343-A) 345/230/13.2KV TRANSFORMER CKT 1
FDNS	06ALL	6	20SP	G15_018	FROM->TO	CHISHOLM6 230.00 - ELK CITY 230KV 230KV CKT 1	353	353	0.05981	102.8848	BASE CASE
FDNS	06ALL	6	17SP	G15_018	FROM->TO	CHISHOLM6 230.00 - ELK CITY 230KV 230KV CKT 1	353	353	0.0601	100.6562	BASE CASE
FDNS	06ALL	6	17G	G15_018	TO->FROM	CIMARRON - MINCO 345KV CKT 1	956	956	0.20421	121.6178	G14-057T 345.00 - SUNNYSIDE 345KV CKT 1
FDNS	06ALL	6	20WP	G15_018	TO->FROM	CIMARRON - MINCO 345KV CKT 1	956	956	0.20205	119.7395	G14-057T 345.00 - SUNNYSIDE 345KV CKT 1
FDNS	06ALL	6	17G	G15_018	TO->FROM	CIMARRON - MINCO 345KV CKT 1	956	956	0.20421	116.437	G14-057T 345.00 - LAWTON EASTSIDE 345KV CKT 1
FDNS	06ALL	6	20WP	G15_018	TO->FROM	CIMARRON - MINCO 345KV CKT 1	956	956	0.20205	114.5016	G14-057T 345.00 - LAWTON EASTSIDE 345KV CKT 1
FDNS	06ALL	6	17SP	G15_018	TO->FROM	CIMARRON - MINCO 345KV CKT 1	956	956	0.207	114.4047	G14-057T 345.00 - SUNNYSIDE 345KV CKT 1
FDNS	06ALL	6	16WP	G15_018	TO->FROM	CIMARRON - MINCO 345KV CKT 1	956	956	0.21036	114.352	G14-057T 345.00 - SUNNYSIDE 345KV CKT 1
FDNS	06ALL	6	20SP	G15_018	TO->FROM	CIMARRON - MINCO 345KV CKT 1	956	956	0.20746	111.5632	G14-057T 345.00 - SUNNYSIDE 345KV CKT 1
FDNS	06ALL	6	17SP	G15_018	TO->FROM	CIMARRON - MINCO 345KV CKT 1	956	956	0.207	109.1774	G14-057T 345.00 - LAWTON EASTSIDE 345KV CKT 1
FDNS	06ALL	6	16WP	G15_018	TO->FROM	CIMARRON - MINCO 345KV CKT 1	956	956	0.21036	108.975	G14-057T 345.00 - LAWTON EASTSIDE 345KV CKT 1
FDNS	06ALL	6	20SP	G15_018	TO->FROM	CIMARRON - MINCO 345KV CKT 1	956	956	0.20746	106.5254	G14-057T 345.00 - LAWTON EASTSIDE 345KV CKT 1
FDNS	06ALL	6	20L	G15_018	TO->FROM	G14-057T 345.00 - LAWTON EASTSIDE 345KV CKT 1	717	789	0.09255	102.0743	BASE CASE
FDNS	06ALL	6	20L	G15_018	FROM->TO	G14-057T 345.00 - SUNNYSIDE 345KV CKT 1	717	789	0.09255	115.279	BASE CASE
FDNS	06ALL	6	20WP	G15_018	FROM->TO	G14-057T 345.00 - SUNNYSIDE 345KV CKT 1	717	789	0.11405	103.5944	BASE CASE
FDNS	06ALL	6	17G	G15_018	FROM->TO	G14-057T 345.00 - SUNNYSIDE 345KV CKT 1	717	789	0.11584	103.4014	BASE CASE
FDNS	06ALL	6	16WP	G15_018	FROM->TO	G14-057T 345.00 - SUNNYSIDE 345KV CKT 1	717	789	0.11895	102.0868	BASE CASE
FDNS	00NR	6	25SP	G15_018	TO->FROM	JONES STATION - TUCO INTERCHANGE 230KV CKT 1	343.79	343.79	0.0755	129.6325	CARLISLE INTERCHANGE - TUCO INTERCHANGE 230KV CKT 1
FDNS	00NR	6	25SP	G15_018	TO->FROM	JONES STATION - TUCO INTERCHANGE 230KV CKT 1	343.79	343.79	0.0755	129.6325	CARLISLE INTERCHANGE - TUCO INTERCHANGE 230KV CKT 1
FDNS	00NR	6	25SP	G15_018	TO->FROM	JONES STATION - TUCO INTERCHANGE 230KV CKT 1	343.79	343.79	0.06416	112.7855	GEN526333 1-JONES GEN #3 21 KV
FDNS	00NR	6	25SP	G15_018	TO->FROM	JONES STATION - TUCO INTERCHANGE 230KV CKT 1	343.79	343.79	0.06416	112.3951	GEN526334 1-JONES_4 116.500
FDNS	00NR	6	25SP	G15_018	TO->FROM	JONES STATION - TUCO INTERCHANGE 230KV CKT 1	343.79	343.79	0.07142	107.7709	TUCO INTERCHANGE - YOAKUM_345 345.00 345KV CKT 1
FDNS	00NR	6	25SP	G15_018	TO->FROM	JONES STATION - TUCO INTERCHANGE 230KV CKT 1	343.79	343.79	0.06914	103.4125	CARLISLE INTERCHANGE - WOLFFORTH INTERCHANGE 230KV CKT 1
FDNS	00NR	6	25SP	G15_018	TO->FROM	JONES STATION - TUCO INTERCHANGE 230KV CKT 1	343.79	343.79	0.07673	101.2811	PLANT X STATION - SUNDOWN INTERCHANGE 230KV CKT 1
FDNS	00NR	6	25SP	G15_018	TO->FROM	JONES STATION - TUCO INTERCHANGE 230KV CKT 1	343.79	343.79	0.07673	101.2811	PLANT X STATION - SUNDOWN INTERCHANGE 230KV CKT 1

SOLUTION	GROUP	SCENARIO	SEASON	SOURCE	DIRECTION	MONITORED ELEMENT	RATEA (MVA)	RATEB(MVA)	TDF	TC%LOADING (% MVA)	CONTINGENCY
FDNS	00NR	6	25SP	G15_018	TO->FROM	JONES STATION - TUCO INTERCHANGE 230KV CKT 1	343.79	343.79	0.05646	100.5783	P12:345:SPS:J02.1.TOLK.EDDY
FDNS	00NR	6	25SP	G15_018	TO->FROM	JONES STATION - TUCO INTERCHANGE 230KV CKT 1	343.79	343.79	0.06416	100.5273	GEN526332 1-JONES GEN #2 21 KV
FDNS	00NR	6	25SP	G15_018	TO->FROM	JONES STATION - TUCO INTERCHANGE 230KV CKT 1	343.79	343.79	0.06416	100.5254	GEN526331 1-JONES GEN #1 22 KV
FDNS	00NR	6	25SP	G15_018	TO->FROM	JONES STATION - TUCO INTERCHANGE 230KV CKT 1	343.79	343.79	0.0639	100.5163	TUCO INTERCHANGE (ENRCO 136401) 230/115/13.2KV TRANSFORMER CKT 1
FDNS	00NR	6	25SP	G15_018	TO->FROM	JONES STATION - TUCO INTERCHANGE 230KV CKT 1	343.79	343.79	0.0639	100.5163	TUCO INTERCHANGE (ENRCO 136401) 230/115/13.2KV TRANSFORMER CKT 1
FDNS	00NR	6	25SP	G15_018	TO->FROM	JONES STATION - TUCO INTERCHANGE 230KV CKT 1	343.79	343.79	0.0639	100.5163	TUCO INTERCHANGE (ENRCO 136401) 230/115/13.2KV TRANSFORMER CKT 2
FDNS	00NR	6	25SP	G15_018	TO->FROM	JONES STATION - TUCO INTERCHANGE 230KV CKT 1	343.79	343.79	0.0639	100.5163	TUCO INTERCHANGE (ENRCO 136401) 230/115/13.2KV TRANSFORMER CKT 2
FDNS	00NR	6	25SP	G15_018	TO->FROM	JONES STATION - TUCO INTERCHANGE 230KV CKT 1	343.79	343.79	0.07085	99.6	LUBBOCK EAST INTERCHANGE - TUCO INTERCHANGE 115KV CKT 1
FDNS	00NR	6	25SP	G15_018	TO->FROM	JONES STATION - TUCO INTERCHANGE 230KV CKT 1	343.79	343.79	0.07085	99.6	LUBBOCK EAST INTERCHANGE - TUCO INTERCHANGE 115KV CKT 1
FDNS	00NR	6	25SP	G15_018	FROM->TO	LUBBOCK POWER & LIGHT-HOLLY PLANT (SHIH T101039) 230/69/13.5KV TRANSFORMER CKT 1	224	224	0.03579	104.6926	LUBBOCK POWER & LIGHT-SOUTHEAST - LUBBOCK SOUTH INTERCHANGE 230KV CKT 1
FDNS	00NR	6	25SP	G15_018	FROM->TO	LUBBOCK POWER & LIGHT-HOLLY PLANT (SHIH T101039) 230/69/13.5KV TRANSFORMER CKT 1	224	224	0.03579	104.6924	P12:LPL:SPS:K64.1.LP-SE.LUBBS
FDNS	00NR	6	25SP	G15_018	FROM->TO	LUBBOCK POWER & LIGHT-HOLLY PLANT (SHIH T101039) 230/69/13.5KV TRANSFORMER CKT 1	224	224	0.03447	101.9349	LUBBOCK EAST INTERCHANGE - LUBBOCK POWER & LIGHT-WADSWORTH 230KV CKT 1
FDNS	00NR	6	25SP	G15_018	FROM->TO	LUBBOCK POWER & LIGHT-HOLLY PLANT (SHIH T101039) 230/69/13.5KV TRANSFORMER CKT 1	224	224	0.03447	101.9202	LUBBOCK POWER & LIGHT-WADSWORTH (SHIH T101038) 230/69/13.5KV TRANSFORMER CKT 1
FDNS	00NR	6	25SP	G15_018	FROM->TO	LUBBOCK POWER & LIGHT-HOLLY PLANT (SHIH T101039) 230/69/13.5KV TRANSFORMER CKT 1	224	224	0.03447	101.9202	LUBBOCK POWER & LIGHT-WADSWORTH (SHIH T101038) 230/69/13.5KV TRANSFORMER CKT 1
FDNS	00NR	6	25SP	G15_018	FROM->TO	LUBBOCK POWER & LIGHT-HOLLY PLANT (SHIH T101039) 230/69/13.5KV TRANSFORMER CKT 1	224	224	0.03447	101.9202	P12:230:LPL:K57.1.LP-WADS.LUBBE
FDNS	06ALL	6	20WP	G15_018	FROM->TO	POTTER COUNTY INTERCHANGE (WAUK 90343-A) 345/230/13.2KV TRANSFORMER CKT 1	560	560	0.22174	135.6418	P12:345:SPS:J15.1.XRDS.TOLK
FDNS	06ALL	6	20WP	G15_018	FROM->TO	POTTER COUNTY INTERCHANGE (WAUK 90343-A) 345/230/13.2KV TRANSFORMER CKT 1	560	560	0.22174	135.4792	P12:345:SPS:J15.1.XRDS.TOLK
FDNS	06ALL	6	20WP	G15_018	FROM->TO	POTTER COUNTY INTERCHANGE (WAUK 90343-A) 345/230/13.2KV TRANSFORMER CKT 1	560	560	0.20441	130.4565	POTTER COUNTY INTERCHANGE - TOLK STATION 345KV CKT 1
FDNS	06ALL	6	20WP	G15_018	FROM->TO	POTTER COUNTY INTERCHANGE (WAUK 90343-A) 345/230/13.2KV TRANSFORMER CKT 1	560	560	0.20441	130.3259	POTTER COUNTY INTERCHANGE - TOLK STATION 345KV CKT 1
FDNS	06ALL	6	17G	G15_018	FROM->TO	POTTER COUNTY INTERCHANGE (WAUK 90343-A) 345/230/13.2KV TRANSFORMER CKT 1	560	560	0.208	126.2728	POTTER COUNTY INTERCHANGE - TOLK STATION 345KV CKT 1
FDNS	06ALL	6	17G	G15_018	FROM->TO	POTTER COUNTY INTERCHANGE (WAUK 90343-A) 345/230/13.2KV TRANSFORMER CKT 1	560	560	0.208	125.8889	POTTER COUNTY INTERCHANGE - TOLK STATION 345KV CKT 1
FDNS	06ALL	6	16WP	G15_018	FROM->TO	POTTER COUNTY INTERCHANGE (WAUK 90343-A) 345/230/13.2KV TRANSFORMER CKT 1	560	560	0.24461	124.5835	P12:345:SPS:J15.1.XRDS.TOLK
FDNS	06ALL	6	16WP	G15_018	FROM->TO	POTTER COUNTY INTERCHANGE (WAUK 90343-A) 345/230/13.2KV TRANSFORMER CKT 1	560	560	0.24461	123.2053	P12:345:SPS:J15.1.XRDS.TOLK
FDNS	06ALL	6	16WP	G15_018	FROM->TO	POTTER COUNTY INTERCHANGE (WAUK 90343-A) 345/230/13.2KV TRANSFORMER CKT 1	560	560	0.21953	116.5159	POTTER COUNTY INTERCHANGE - TOLK STATION 345KV CKT 1
FDNS	06ALL	6	16WP	G15_018	FROM->TO	POTTER COUNTY INTERCHANGE (WAUK 90343-A) 345/230/13.2KV TRANSFORMER CKT 1	560	560	0.21953	115.3558	POTTER COUNTY INTERCHANGE - TOLK STATION 345KV CKT 1
FDNS	06ALL	6	17SP	G15_018	FROM->TO	POTTER COUNTY INTERCHANGE (WAUK 90343-A) 345/230/13.2KV TRANSFORMER CKT 1	560	560	0.24079	109.9868	P12:345:SPS:J15.1.XRDS.TOLK
FDNS	06ALL	6	17SP	G15_018	FROM->TO	POTTER COUNTY INTERCHANGE (WAUK 90343-A) 345/230/13.2KV TRANSFORMER CKT 1	560	560	0.24079	108.4833	P12:345:SPS:J15.1.XRDS.TOLK
FDNS	06ALL	6	16WP	G15_018	FROM->TO	POTTER COUNTY INTERCHANGE (WAUK 90343-A) 345/230/13.2KV TRANSFORMER CKT 1	560	560	0.209	104.8403	P12:345:SPS:J02.1.TOLK.EDDY
FDNS	06ALL	6	16WP	G15_018	FROM->TO	POTTER COUNTY INTERCHANGE (WAUK 90343-A) 345/230/13.2KV TRANSFORMER CKT 1	560	560	0.209	104.3479	P12:345:SPS:J02.1.TOLK.EDDY
FDNS	06ALL	6	20SP	G15_018	FROM->TO	POTTER COUNTY INTERCHANGE (WAUK 90343-A) 345/230/13.2KV TRANSFORMER CKT 1	560	560	0.22854	103.5013	P12:345:SPS:J15.1.XRDS.TOLK
FDNS	06ALL	6	17SP	G15_018	FROM->TO	POTTER COUNTY INTERCHANGE (WAUK 90343-A) 345/230/13.2KV TRANSFORMER CKT 1	560	560	0.21715	103.4959	POTTER COUNTY INTERCHANGE - TOLK STATION 345KV CKT 1
FDNS	06ALL	6	20SP	G15_018	FROM->TO	POTTER COUNTY INTERCHANGE (WAUK 90343-A) 345/230/13.2KV TRANSFORMER CKT 1	560	560	0.22854	102.1921	P12:345:SPS:J15.1.XRDS.TOLK
FDNS	06ALL	6	17SP	G15_018	FROM->TO	POTTER COUNTY INTERCHANGE (WAUK 90343-A) 345/230/13.2KV TRANSFORMER CKT 1	560	560	0.21715	102.1846	POTTER COUNTY INTERCHANGE - TOLK STATION 345KV CKT 1
FDNS	06ALL	6	20SP	G15_018	FROM->TO	POTTER COUNTY INTERCHANGE (WAUK 90343-A) 345/230/13.2KV TRANSFORMER CKT 1	560	560	0.21101	99.5	POTTER COUNTY INTERCHANGE - TOLK STATION 345KV CKT 1
FDNS	06ALL	6	16WP	G15_018	FROM->TO	TOLK STATION (ABBXNL844501) 345/230/13.2KV TRANSFORMER CKT 1	560	560	0.32522	112.8509	CROSSROADS 7345.00 - TOLK STATION 345KV CKT 1
FDNS	06ALL	6	16WP	G15_018	FROM->TO	TOLK STATION (ABBXNL844501) 345/230/13.2KV TRANSFORMER CKT 1	560	560	0.32522	110.425	CROSSROADS 7345.00 - TOLK STATION 345KV CKT 1
FDNS	06ALL	6	20WP	G15_018	FROM->TO	TOLK STATION (ABBXNL844501) 345/230/13.2KV TRANSFORMER CKT 1	560	560	0.29229	106.0959	CROSSROADS 7345.00 - TOLK STATION 345KV CKT 1
FDNS	06ALL	6	20WP	G15_018	FROM->TO	TOLK STATION (ABBXNL844501) 345/230/13.2KV TRANSFORMER CKT 1	560	560	0.29229	103.968	CROSSROADS 7345.00 - TOLK STATION 345KV CKT 1
FDNS	06ALL	6	20WP	G15_018	FROM->TO	TOLK STATION (ABBXNL844501) 345/230/13.2KV TRANSFORMER CKT 1	560	560	0.30127	101.0022	POTTER COUNTY INTERCHANGE (WAUK 90343-A) 345/230/13.2KV TRANSFORMER CKT 1
FDNS	06ALL	6	20WP	G15_018	FROM->TO	TOLK STATION (ABBXNL844501) 345/230/13.2KV TRANSFORMER CKT 1	560	560	0.30127	101.0022	POTTER COUNTY INTERCHANGE (WAUK 90343-A) 345/230/13.2KV TRANSFORMER CKT 1
FDNS	06ALL	7	20SP	G15_018	FROM->TO	CHISHOLM6 230.00 - ELK CITY 230KV 230KV CKT 1	353	353	0.05981	100.158	BASE CASE
FDNS	06ALL	7	17G	G15_018	TO->FROM	CIMARRON - MINCO 345KV CKT 1	956	956	0.20423	117.9395	G14-057T 345.00 - SUNNYSIDE 345KV CKT 1
FDNS	06ALL	7	20WP	G15_018	TO->FROM	CIMARRON - MINCO 345KV CKT 1	956	956	0.20205	116.4002	G14-057T 345.00 - SUNNYSIDE 345KV CKT 1
FDNS	06ALL	7	17G	G15_018	TO->FROM	CIMARRON - MINCO 345KV CKT 1	956	956	0.20423	112.8925	G14-057T 345.00 - LAWTON EASTSIDE 345KV CKT 1
FDNS	06ALL	7	16WP	G15_018	TO->FROM	CIMARRON - MINCO 345KV CKT 1	956	956	0.21038	111.0593	G14-057T 345.00 - SUNNYSIDE 345KV CKT 1
FDNS	06ALL	7	20WP	G15_018	TO->FROM	CIMARRON - MINCO 345KV CKT 1	956	956	0.20205	111.0342	G14-057T 345.00 - LAWTON EASTSIDE 345KV CKT 1
FDNS	06ALL	7	17SP	G15_018	TO->FROM	CIMARRON - MINCO 345KV CKT 1	956	956	0.20701	111.0288	G14-057T 345.00 - SUNNYSIDE 345KV CKT 1
FDNS	06ALL	7	20SP	G15_018	TO->FROM	CIMARRON - MINCO 345KV CKT 1	956	956	0.20747	108.4281	G14-057T 345.00 - SUNNYSIDE 345KV CKT 1
FDNS	06ALL	7	17SP	G15_018	TO->FROM	CIMARRON - MINCO 345KV CKT 1	956	956	0.20701	106.172	G14-057T 345.00 - LAWTON EASTSIDE 345KV CKT 1
FDNS	06ALL	7	16WP	G15_018	TO->FROM	CIMARRON - MINCO 345KV CKT 1	956	956	0.21038	105.9627	G14-057T 345.00 - LAWTON EASTSIDE 345KV CKT 1
FDNS	06ALL	7	20SP	G15_018	TO->FROM	CIMARRON - MINCO 345KV CKT 1	956	956	0.20747	103.5061	G14-057T 345.00 - LAWTON EASTSIDE 345KV CKT 1
FDNS	06ALL	7	20L	G15_018	TO->FROM	G14-057T 345.00 - LAWTON EASTSIDE 345KV CKT 1	717	789	0.09257	100.7791	BASE CASE
FDNS	06ALL	7	20L	G15_018	FROM->TO	G14-057T 345.00 - SUNNYSIDE 345KV CKT 1	717	789	0.09257	114.0012	BASE CASE
FDNS	06ALL	7	20WP	G15_018	FROM->TO	G14-057T 345.00 - SUNNYSIDE 345KV CKT 1	717	789	0.11405	102.5888	BASE CASE
FDNS	06ALL	7	17G	G15_018	FROM->TO	G14-057T 345.00 - SUNNYSIDE 345KV CKT 1	717	789	0.11585	102.2119	BASE CASE
FDNS	06ALL	7	16WP	G15_018	FROM->TO	G14-057T 345.00 - SUNNYSIDE 345KV CKT 1	717	789	0.11896	101.1576	BASE CASE
FDNS	00NR	7	25SP	G15_018	TO->FROM	JONES STATION - TUCO INTERCHANGE 230KV CKT 1	343.79	343.79	0.0755	129.1537	CARLISLE INTERCHANGE - TUCO INTERCHANGE 230KV CKT 1
FDNS	00NR	7	25SP	G15_018	TO->FROM	JONES STATION - TUCO INTERCHANGE 230KV CKT 1	343.79	343.79	0.0755	129.1537	CARLISLE INTERCHANGE - TUCO INTERCHANGE 230KV CKT 1
FDNS	00NR	7	25SP	G15_018	TO->FROM	JONES STATION - TUCO INTERCHANGE 230KV CKT 1	343.79	343.79	0.06416	112.419	GEN526333 1-JONES GEN #3 21 KV
FDNS	00NR	7	25SP	G15_018	TO->FROM	JONES STATION - TUCO INTERCHANGE 230KV CKT 1	343.79	343.79	0.06416	112.036	GEN526334 1-JONES_4 116.500
FDNS	00NR	7	25SP	G15_018	TO->FROM	JONES STATION - TUCO INTERCHANGE 230KV CKT 1	343.79	343.79	0.07142	107.2187	TUCO INTERCHANGE - YOAKUM_345 345.00 345KV CKT 1
FDNS	00NR	7	25SP	G15_018	TO->FROM	JONES STATION - TUCO INTERCHANGE 230KV CKT 1	343.79	343.79	0.06914	103.0013	CARLISLE INTERCHANGE - WOLFFORTH INTERCHANGE 230KV CKT 1
FDNS	00NR	7	25SP	G15_018	TO->FROM	JONES STATION - TUCO INTERCHANGE 230KV CKT 1	343.79	343.79	0.07673	101.0414	PLANT X STATION - SUNDOWN INTERCHANGE 230KV CKT 1
FDNS	00NR	7	25SP	G15_018	TO->FROM	JONES STATION - TUCO INTERCHANGE 230KV CKT 1	343.79	343.79	0.07673	101.0414	PLANT X STATION - SUNDOWN INTERCHANGE 230KV CKT 1
FDNS	00NR	7	25SP	G15_018	TO->FROM	JONES STATION - TUCO INTERCHANGE 230KV CKT 1	343.79	343.79	0.05646	100.2536	P12:345:SPS:J02.1.TOLK.EDDY
FDNS	00NR	7	25SP	G15_018	TO->FROM	JONES STATION - TUCO INTERCHANGE 230KV CKT 1	343.79	343.79	0.06416	100.1954	GEN526332 1-JONES GEN #2 21 KV
FDNS	00NR	7	25SP	G15_018	TO->FROM	JONES STATION - TUCO INTERCHANGE 230KV CKT 1	343.79	343.79	0.06416	100.1934	GEN526331 1-JONES GEN #1 22 KV
FDNS	00NR	7	25SP	G15_018	TO->FROM	JONES STATION - TUCO INTERCHANGE 230KV CKT 1	343.79	343.79	0.0639	100.1486	TUCO INTERCHANGE (ENRCO 136401) 230/115/13.2KV TRANSFORMER CKT 1
FDNS	00NR	7	25SP	G15_018	TO->FROM	JONES STATION - TUCO INTERCHANGE 230KV CKT 1	343.79	343.79	0.0639	100.1486	TUCO INTERCHANGE (ENRCO 136401) 230/115/13.2KV TRANSFORMER CKT 1
FDNS	00NR	7	25SP	G15_018	TO->FROM	JONES STATION - TUCO INTERCHANGE 230KV CKT 1	343.79	343.79	0.0639	100.1486	TUCO INTERCHANGE (ENRCO 136401) 230/115/13.2KV TRANSFORMER CKT 2
FDNS	00NR	7	25SP	G15_018	TO->FROM	JONES STATION - TUCO INTERCHANGE 230KV CKT 1	343.79	343.79	0.0639	100.1486	TUCO INTERCHANGE (ENRCO 136401) 230/115/13.2KV TRANSFORMER CKT 2
FDNS	00NR	7	25SP	G15_018	FROM->TO	LUBBOCK POWER & LIGHT-HOLLY PLANT (SHIH T101039) 230/69/13.5KV TRANSFORMER CKT 1	224	224	0.03579	104.7009	LUBBOCK POWER & LIGHT-SOUTHEAST - LUBBOCK SOUTH INTERCHANGE 230KV CKT 1
FDNS	00NR	7	25SP	G15_018	FROM->TO	LUBBOCK POWER & LIGHT-HOLLY PLANT (SHIH T101039) 230/69/13.5KV TRANSFORMER CKT 1	224	224	0.03579	104.6879	P12:LPL:SPS:K64.1.LP-SE.LUBBS
FDNS	00NR	7	25SP	G15_018	FROM->TO	LUBBOCK POWER & LIGHT-HOLLY PLANT (SHIH T101039) 230/69/13.5KV TRANSFORMER CKT 1	224	224	0.03447	101.9255	LUBBOCK EAST INTERCHANGE - LUBBOCK POWER & LIGHT-WADSWORTH 230KV CKT 1
FDNS	00NR	7	25SP	G15_018	FROM->TO	LUBBOCK POWER & LIGHT-HOLLY PLANT (SHIH T101039) 230/69/13.5KV TRANSFORMER CKT 1	224	224	0.03447	101.9108	P12:230:LPL:K57.1.LP-WADS.LUBBE
FDNS	00NR	7	25SP	G15_018	FROM->TO	LUBBOCK POWER & LIGHT-HOLLY PLANT (SHIH T101039) 230/69/13.5KV TRANSFORMER CKT 1	224	224	0.03447	101.9107	LUBBOCK POWER & LIGHT-WADSWORTH (SHIH T101038) 230/69/13.5KV TRANSFORMER CKT 1
FDNS	00NR	7	25SP	G15_018	FROM->TO	LUBBOCK POWER & LIGHT-HOLLY PLANT (SHIH T101039) 230/69/13.5KV TRANSFORMER CKT 1	224	224	0.03447	101.9107	LUBBOCK POWER & LIGHT-WADSWORTH (SHIH T101038) 230/69/13.5KV TRANSFORMER CKT 1
FDNS	06ALL	7	20WP	G15_018	FROM->TO	POTTER COUNTY INTERCHANGE (WAUK 90343-A) 345/230/13.2KV TRANSFORMER CKT 1	560	560	0.22173	145.2357	P12:345:SPS:J15.1.XRDS.TOLK
FDNS	06ALL	7	20WP	G15_018	FROM->TO	POTTER COUNTY INTERCHANGE (WAUK 90343-A) 345/230/13.2KV TRANSFORMER CKT 1	560	560	0.22173	143.2694	P12:345:SPS:J15.1.XRDS.TOLK

SOLUTION	GROUP	SCENARIO	SEASON	SOURCE	DIRECTION	MONITORED ELEMENT	RATEA (MVA)	RATEB(MVA)	TDF	TC%LOADING (% MVA)	CONTINGENCY
FDNS	06ALL	7	20WP	G15_018	FROM->TO	POTTER COUNTY INTERCHANGE (WAUK 90343-A) 345/230/13.2KV TRANSFORMER CKT 1	560	560	0.20441	139.6579	POTTER COUNTY INTERCHANGE - TOLK STATION 345KV CKT 1
FDNS	06ALL	7	20WP	G15_018	FROM->TO	POTTER COUNTY INTERCHANGE (WAUK 90343-A) 345/230/13.2KV TRANSFORMER CKT 1	560	560	0.20441	137.9216	POTTER COUNTY INTERCHANGE - TOLK STATION 345KV CKT 1
FDNS	06ALL	7	17G	G15_018	FROM->TO	POTTER COUNTY INTERCHANGE (WAUK 90343-A) 345/230/13.2KV TRANSFORMER CKT 1	560	560	0.20802	135.7702	POTTER COUNTY INTERCHANGE - TOLK STATION 345KV CKT 1
FDNS	06ALL	7	16WP	G15_018	FROM->TO	POTTER COUNTY INTERCHANGE (WAUK 90343-A) 345/230/13.2KV TRANSFORMER CKT 1	560	560	0.24463	133.795	P12:345:SPS:J15.1.XRDS.TOLK
FDNS	06ALL	7	17G	G15_018	FROM->TO	POTTER COUNTY INTERCHANGE (WAUK 90343-A) 345/230/13.2KV TRANSFORMER CKT 1	560	560	0.20802	133.7386	POTTER COUNTY INTERCHANGE - TOLK STATION 345KV CKT 1
FDNS	06ALL	7	16WP	G15_018	FROM->TO	POTTER COUNTY INTERCHANGE (WAUK 90343-A) 345/230/13.2KV TRANSFORMER CKT 1	560	560	0.24463	130.8152	P12:345:SPS:J15.1.XRDS.TOLK
FDNS	06ALL	7	16WP	G15_018	FROM->TO	POTTER COUNTY INTERCHANGE (WAUK 90343-A) 345/230/13.2KV TRANSFORMER CKT 1	560	560	0.21955	125.2874	POTTER COUNTY INTERCHANGE - TOLK STATION 345KV CKT 1
FDNS	06ALL	7	16WP	G15_018	FROM->TO	POTTER COUNTY INTERCHANGE (WAUK 90343-A) 345/230/13.2KV TRANSFORMER CKT 1	560	560	0.21955	122.7478	POTTER COUNTY INTERCHANGE - TOLK STATION 345KV CKT 1
FDNS	06ALL	7	17SP	G15_018	FROM->TO	POTTER COUNTY INTERCHANGE (WAUK 90343-A) 345/230/13.2KV TRANSFORMER CKT 1	560	560	0.2408	118.7065	P12:345:SPS:J15.1.XRDS.TOLK
FDNS	06ALL	7	17SP	G15_018	FROM->TO	POTTER COUNTY INTERCHANGE (WAUK 90343-A) 345/230/13.2KV TRANSFORMER CKT 1	560	560	0.2408	115.9022	P12:345:SPS:J15.1.XRDS.TOLK
FDNS	06ALL	7	16WP	G15_018	FROM->TO	POTTER COUNTY INTERCHANGE (WAUK 90343-A) 345/230/13.2KV TRANSFORMER CKT 1	560	560	0.20902	113.2535	P12:345:SPS:J02.1.TOLK.EDDY
FDNS	06ALL	7	17SP	G15_018	FROM->TO	POTTER COUNTY INTERCHANGE (WAUK 90343-A) 345/230/13.2KV TRANSFORMER CKT 1	560	560	0.21717	112.021	POTTER COUNTY INTERCHANGE - TOLK STATION 345KV CKT 1
FDNS	06ALL	7	20SP	G15_018	FROM->TO	POTTER COUNTY INTERCHANGE (WAUK 90343-A) 345/230/13.2KV TRANSFORMER CKT 1	560	560	0.22854	111.9416	P12:345:SPS:J15.1.XRDS.TOLK
FDNS	06ALL	7	16WP	G15_018	FROM->TO	POTTER COUNTY INTERCHANGE (WAUK 90343-A) 345/230/13.2KV TRANSFORMER CKT 1	560	560	0.20902	111.4742	P12:345:SPS:J02.1.TOLK.EDDY
FDNS	06ALL	7	17SP	G15_018	FROM->TO	POTTER COUNTY INTERCHANGE (WAUK 90343-A) 345/230/13.2KV TRANSFORMER CKT 1	560	560	0.21717	109.5353	POTTER COUNTY INTERCHANGE - TOLK STATION 345KV CKT 1
FDNS	06ALL	7	20SP	G15_018	FROM->TO	POTTER COUNTY INTERCHANGE (WAUK 90343-A) 345/230/13.2KV TRANSFORMER CKT 1	560	560	0.22854	109.4721	P12:345:SPS:J15.1.XRDS.TOLK
FDNS	06ALL	7	20SP	G15_018	FROM->TO	POTTER COUNTY INTERCHANGE (WAUK 90343-A) 345/230/13.2KV TRANSFORMER CKT 1	560	560	0.21101	107.7296	POTTER COUNTY INTERCHANGE - TOLK STATION 345KV CKT 1
FDNS	06ALL	7	20SP	G15_018	FROM->TO	POTTER COUNTY INTERCHANGE (WAUK 90343-A) 345/230/13.2KV TRANSFORMER CKT 1	560	560	0.21101	105.4506	POTTER COUNTY INTERCHANGE - TOLK STATION 345KV CKT 1
FDNS	06ALL	7	16WP	G15_018	FROM->TO	TOLK STATION (ABBXNL844501) 345/230/13.2KV TRANSFORMER CKT 1	560	560	0.32526	112.9883	CROSSROADS 7345.00 - TOLK STATION 345KV CKT 1
FDNS	06ALL	7	16WP	G15_018	FROM->TO	TOLK STATION (ABBXNL844501) 345/230/13.2KV TRANSFORMER CKT 1	560	560	0.32526	110.8952	CROSSROADS 7345.00 - TOLK STATION 345KV CKT 1
FDNS	06ALL	7	20WP	G15_018	FROM->TO	TOLK STATION (ABBXNL844501) 345/230/13.2KV TRANSFORMER CKT 1	560	560	0.29229	106.354	CROSSROADS 7345.00 - TOLK STATION 345KV CKT 1
FDNS	06ALL	7	20WP	G15_018	FROM->TO	TOLK STATION (ABBXNL844501) 345/230/13.2KV TRANSFORMER CKT 1	560	560	0.29229	104.5262	CROSSROADS 7345.00 - TOLK STATION 345KV CKT 1
FDNS	06ALL	7	20WP	G15_018	FROM->TO	TOLK STATION (ABBXNL844501) 345/230/13.2KV TRANSFORMER CKT 1	560	560	0.30127	102.5293	POTTER COUNTY INTERCHANGE (WAUK 90343-A) 345/230/13.2KV TRANSFORMER CKT 1
FDNS	06ALL	7	20WP	G15_018	FROM->TO	TOLK STATION (ABBXNL844501) 345/230/13.2KV TRANSFORMER CKT 1	560	560	0.30127	102.5293	POTTER COUNTY INTERCHANGE (WAUK 90343-A) 345/230/13.2KV TRANSFORMER CKT 1
FDNS	06ALL	7	20WP	G15_018	FROM->TO	TOLK STATION (ABBXNL844501) 345/230/13.2KV TRANSFORMER CKT 1	560	560	0.30127	99.7	POTTER COUNTY INTERCHANGE (WAUK 90343-A) 345/230/13.2KV TRANSFORMER CKT 1
FDNS	06ALL	7	20WP	G15_018	FROM->TO	TOLK STATION (ABBXNL844501) 345/230/13.2KV TRANSFORMER CKT 1	560	560	0.30127	99.7	POTTER COUNTY INTERCHANGE (WAUK 90343-A) 345/230/13.2KV TRANSFORMER CKT 1
FDNS	00NR	8	25SP	G15_018	TO->FROM	JONES STATION - TUCO INTERCHANGE 230KV CKT 1	343.79	343.79	0.07787	128.3131	CARLISLE INTERCHANGE - TUCO INTERCHANGE 230KV CKT 1
FDNS	00NR	8	25SP	G15_018	TO->FROM	JONES STATION - TUCO INTERCHANGE 230KV CKT 1	343.79	343.79	0.07787	128.3131	CARLISLE INTERCHANGE - TUCO INTERCHANGE 230KV CKT 1
FDNS	00NR	8	25SP	G15_018	TO->FROM	JONES STATION - TUCO INTERCHANGE 230KV CKT 1	343.79	343.79	0.06577	111.8492	GEN526333 1-JONES GEN #3 21 KV
FDNS	00NR	8	25SP	G15_018	TO->FROM	JONES STATION - TUCO INTERCHANGE 230KV CKT 1	343.79	343.79	0.06577	111.4668	GEN526334 1-JONES_4 116.500
FDNS	00NR	8	25SP	G15_018	TO->FROM	JONES STATION - TUCO INTERCHANGE 230KV CKT 1	343.79	343.79	0.07343	106.1183	TUCO_2 345.00 - YOAKUM_345 345.00 345KV CKT 1
FDNS	00NR	8	25SP	G15_018	TO->FROM	JONES STATION - TUCO INTERCHANGE 230KV CKT 1	343.79	343.79	0.07126	102.3279	CARLISLE INTERCHANGE - WOLFFORTH INTERCHANGE 230KV CKT 1
FDNS	00NR	8	25SP	G15_018	TO->FROM	JONES STATION - TUCO INTERCHANGE 230KV CKT 1	343.79	343.79	0.07777	100.9491	PLANT X STATION - SUNDOWN INTERCHANGE 230KV CKT 1
FDNS	00NR	8	25SP	G15_018	TO->FROM	JONES STATION - TUCO INTERCHANGE 230KV CKT 1	343.79	343.79	0.07777	100.9491	PLANT X STATION - SUNDOWN INTERCHANGE 230KV CKT 1
FDNS	00NR	8	25SP	G15_018	TO->FROM	JONES STATION - TUCO INTERCHANGE 230KV CKT 1	343.79	343.79	0.05711	99.7	P12:345:SPS:J02.1.TOLK.EDDY
FDNS	00NR	8	25SP	G15_018	TO->FROM	JONES STATION - TUCO INTERCHANGE 230KV CKT 1	343.79	343.79	0.06577	99.5	GEN526331 1-JONES GEN #1 22 KV
FDNS	00NR	8	25SP	G15_018	TO->FROM	JONES STATION - TUCO INTERCHANGE 230KV CKT 1	343.79	343.79	0.06577	99.5	GEN526332 1-JONES GEN #2 21 KV
FDNS	00NR	8	25SP	G15_018	TO->FROM	JONES STATION - TUCO INTERCHANGE 230KV CKT 1	343.79	343.79	0.06558	99.5	TUCO INTERCHANGE (ENRCO 136401) 230/115/13.2KV TRANSFORMER CKT 1
FDNS	00NR	8	25SP	G15_018	TO->FROM	JONES STATION - TUCO INTERCHANGE 230KV CKT 1	343.79	343.79	0.06558	99.5	TUCO INTERCHANGE (ENRCO 136401) 230/115/13.2KV TRANSFORMER CKT 1
FDNS	00NR	8	25SP	G15_018	TO->FROM	JONES STATION - TUCO INTERCHANGE 230KV CKT 1	343.79	343.79	0.06558	99.5	TUCO INTERCHANGE (ENRCO 136401) 230/115/13.2KV TRANSFORMER CKT 2
FDNS	00NR	8	25SP	G15_018	TO->FROM	JONES STATION - TUCO INTERCHANGE 230KV CKT 1	343.79	343.79	0.06558	99.5	TUCO INTERCHANGE (ENRCO 136401) 230/115/13.2KV TRANSFORMER CKT 2
FDNS	00NR	8	25SP	G15_018	FROM->TO	LUBBOCK POWER & LIGHT-HOLLY PLANT (SHIH T101039) 230/69/13.5KV TRANSFORMER CKT 1	224	224	0.03579	104.7109	LUBBOCK POWER & LIGHT-SOUTHEAST - LUBBOCK SOUTH INTERCHANGE 230KV CKT 1
FDNS	00NR	8	25SP	G15_018	FROM->TO	LUBBOCK POWER & LIGHT-HOLLY PLANT (SHIH T101039) 230/69/13.5KV TRANSFORMER CKT 1	224	224	0.03579	104.6979	P12:LPL:SPS:K64.1.LP-SE.LUBBS
FDNS	00NR	8	25SP	G15_018	FROM->TO	LUBBOCK POWER & LIGHT-HOLLY PLANT (SHIH T101039) 230/69/13.5KV TRANSFORMER CKT 1	224	224	0.0345	101.953	LUBBOCK EAST INTERCHANGE - LUBBOCK POWER & LIGHT-WADSWORTH 230KV CKT 1
FDNS	00NR	8	25SP	G15_018	FROM->TO	LUBBOCK POWER & LIGHT-HOLLY PLANT (SHIH T101039) 230/69/13.5KV TRANSFORMER CKT 1	224	224	0.0345	101.9381	P12:230:LPL:K57.1.LP-WADS.LUBBE
FDNS	00NR	8	25SP	G15_018	FROM->TO	LUBBOCK POWER & LIGHT-HOLLY PLANT (SHIH T101039) 230/69/13.5KV TRANSFORMER CKT 1	224	224	0.0345	101.938	LUBBOCK POWER & LIGHT-WADSWORTH (SHIH T101038) 230/69/13.5KV TRANSFORMER CKT 1
FDNS	00NR	8	25SP	G15_018	FROM->TO	LUBBOCK POWER & LIGHT-HOLLY PLANT (SHIH T101039) 230/69/13.5KV TRANSFORMER CKT 1	224	224	0.0345	101.938	LUBBOCK POWER & LIGHT-WADSWORTH (SHIH T101038) 230/69/13.5KV TRANSFORMER CKT 1
FDNS	00NR	9	25SP	G15_018	FROM->TO	LUBBOCK POWER & LIGHT-HOLLY PLANT (SHIH T101039) 230/69/13.5KV TRANSFORMER CKT 1	224	224	0.0358	104.6637	LUBBOCK POWER & LIGHT-SOUTHEAST - LUBBOCK SOUTH INTERCHANGE 230KV CKT 1
FDNS	00NR	9	25SP	G15_018	FROM->TO	LUBBOCK POWER & LIGHT-HOLLY PLANT (SHIH T101039) 230/69/13.5KV TRANSFORMER CKT 1	224	224	0.0358	104.6507	P12:LPL:SPS:K64.1.LP-SE.LUBBS
FDNS	00NR	9	25SP	G15_018	FROM->TO	LUBBOCK POWER & LIGHT-HOLLY PLANT (SHIH T101039) 230/69/13.5KV TRANSFORMER CKT 1	224	224	0.03449	101.7729	LUBBOCK EAST INTERCHANGE - LUBBOCK POWER & LIGHT-WADSWORTH 230KV CKT 1
FDNS	00NR	9	25SP	G15_018	FROM->TO	LUBBOCK POWER & LIGHT-HOLLY PLANT (SHIH T101039) 230/69/13.5KV TRANSFORMER CKT 1	224	224	0.03449	101.758	P12:230:LPL:K57.1.LP-WADS.LUBBE
FDNS	00NR	9	25SP	G15_018	FROM->TO	LUBBOCK POWER & LIGHT-HOLLY PLANT (SHIH T101039) 230/69/13.5KV TRANSFORMER CKT 1	224	224	0.03449	101.7579	LUBBOCK POWER & LIGHT-WADSWORTH (SHIH T101038) 230/69/13.5KV TRANSFORMER CKT 1
FDNS	00NR	9	25SP	G15_018	FROM->TO	LUBBOCK POWER & LIGHT-HOLLY PLANT (SHIH T101039) 230/69/13.5KV TRANSFORMER CKT 1	224	224	0.03449	101.7579	LUBBOCK POWER & LIGHT-WADSWORTH (SHIH T101038) 230/69/13.5KV TRANSFORMER CKT 1
FDNSLock-Blown up	06ALL	0	16WP	G15_020		Non-Converged Contingency	552.14	607.52	0.24075	-	TOLK STATION EAST - TUCO INTERCHANGE 230KV CKT 1
FDNSLock-Blown up	06ALL	0	16WP	G15_020		Non-Converged Contingency	1022	1124	0.19245	-	G14-074T 345.00 - OKLAUNION 345KV CKT 1
FDNSLock-Blown up	06ALL	0	16WP	G15_020		Non-Converged Contingency	1022	1124	0.19245	-	G14-074T 345.00 - TUCO INTERCHANGE 345KV CKT 1
FDNSLock-Blown up	06ALL	0	16WP	G15_020		Non-Converged Contingency	1022	1124	0.19245	-	GEN509403 1-PIRKEY GENERATION
FDNSLock-Blown up	06ALL	0	16WP	G15_020		Non-Converged Contingency	1022	1124	0.19245	-	GEN509404 1-WELSH #1
FDNSLock-Blown up	06ALL	0	16WP	G15_020		Non-Converged Contingency	1022	1124	0.19245	-	GEN509406 1-WELSH #3
FDNSLock-Blown up	06ALL	0	16WP	G15_020		Non-Converged Contingency	1022	1124	0.19245	-	GEN509416 1-TURK GENERATION
FDNSLock-Blown up	06ALL	0	16WP	G15_020		Non-Converged Contingency	1022	1124	0.19245	-	GEN511848 1-SOUTHWESTERN STATION #3
FDNSLock-Blown up	06ALL	0	16WP	G15_020		Non-Converged Contingency	442	752	0.1906	-	PLANT X STATION - TOLK STATION WEST 230KV CKT 1
FDNSLock-Blown up	06ALL	0	16WP	G15_020		Non-Converged Contingency	442	752	0.1897	-	PLANT X STATION - TOLK STATION EAST 230KV CKT 2
FDNSLock-Blown up	06ALL	0	16WP	G15_020		Non-Converged Contingency	556.53	611.5	0.18677	-	NEWHART 230 - PLANT X STATION 230KV CKT 1
FDNSLock-Blown up	06ALL	0	16WP	G15_020		Non-Converged Contingency	557	557	0.1863	-	BUSHLAND INTERCHANGE - DEAF SMITH COUNTY INTERCHANGE 230KV CKT 1
FDNSLock-Blown up	06ALL	0	16WP	G15_020		Non-Converged Contingency	987.16	1082.8	0.17753	-	G14_038T 345.00 - Hitchland Interchange 345KV CKT 1
FDNSLock-Blown up	06ALL	0	16WP	G15_020		Non-Converged Contingency	987.16	1082.8	0.17753	-	G14_038T 345.00 - POTTER COUNTY INTERCHANGE 345KV CKT 1
FDNSLock-Blown up	06ALL	0	16WP	G15_020		Non-Converged Contingency	560	560	0.17753	-	POTTER COUNTY INTERCHANGE (WAUK 90343-A) 345/230/13.2KV TRANSFORMER CKT 1
FDNSLock-Blown up	06ALL	0	16WP	G15_020		Non-Converged Contingency	560	560	0.17674	-	TUCO INTERCHANGE (GE M1022338) 345/230/13.2KV TRANSFORMER CKT 1
FDNSLock-Blown up	06ALL	0	16WP	G15_020		Non-Converged Contingency	956	956	0.17309	-	CIMARRON - MINCO 345KV CKT 1
FDNSLock-Blown up	06ALL	0	16WP	G15_020		Non-Converged Contingency	1195	1195	0.17309	-	GRACEMONT - MINCO 345KV CKT 1
FDNSLock-Blown up	06ALL	0	16WP	G15_020		Non-Converged Contingency	329.05	360.92	0.16354	-	BUSHLAND INTERCHANGE - POTTER COUNTY INTERCHANGE 230KV CKT 1
FDNSLock-Blown up	06ALL	0	16WP	G15_020		Non-Converged Contingency	1330	1940	0.1594	-	CHISHOLM7 345.00 - GRACEMONT 345KV CKT 1
FDNSLock-Blown up	06ALL	0	16WP	G15_020		Non-Converged Contingency	560	560	0.15771	-	TUCO_2 345.00 (TUCO_2 XFMR) 345/230/13.2KV TRANSFORMER CKT 1
FDNSLock-Blown up	06ALL	0	16WP	G15_020		Non-Converged Contingency	616	700	0.15402	-	TUCO INTERCHANGE (SIEM 8743066) 345/230/13.2KV TRANSFORMER CKT 2
FDNSLock-Blown up	06ALL	0	16WP	G15_020		Non-Converged Contingency	1792	1792	0.15106	-	CHISHOLM7 345.00 - WOODWARD DISTRICT EHV 345KV CKT 1
FDNSLock-Blown up	06ALL	0	16WP	G15_020		Non-Converged Contingency	1792	1792	0.14801	-	BORDER 7345.00 - CHISHOLM7 345.00 345KV CKT 1
FDNSLock-Blown up	06ALL	0	16WP	G15_020		Non-Converged Contingency	1792	1792	0.14801	-	BORDER 7345.00 - CHISHOLM7 345.00 345KV CKT 2
FDNSLock-Blown up	06ALL	0	16WP	G15_020		Non-Converged Contingency	1792	1972	0.14801	-	BORDER 7345.00 - TUCO_2 345.00 345KV CKT 1

SOLUTION	GROUP	SCENARIO	SEASON	SOURCE	DIRECTION	MONITORED ELEMENT	RATEA (MVA)	RATEB(MVA)	TDF	TC%LOADING (% MVA)	CONTINGENCY
FDNSLock-Blown up	06ALL	0	16WP	G15_020		Non-Converged Contingency	1420	1775	0.14801	-	BORDER 7345.00 - TUCO_2 345.00 345KV CKT 2
FDNSLock-Blown up	06ALL	0	16WP	G15_020		Non-Converged Contingency	987.16	1082.8	0.14262	-	FINNEY SWITCHING STATION - Hitchland Interchange 345KV CKT 1
FDNSLock-Blown up	06ALL	0	16WP	G15_020		Non-Converged Contingency	956.09	1051.7	0.14262	-	FINNEY SWITCHING STATION - HOLCOMB 345KV CKT 1
FDNSLock-Blown up	06ALL	0	16WP	G15_020		Non-Converged Contingency	1792	1972	0.13832	-	TUCO INTERCHANGE - TUCO_2 345.00 345KV CKT 1
FDNSLock-Blown up	06ALL	0	16WP	G15_020		Non-Converged Contingency	717	789	0.12525	-	G14-057T 345.00 - LAWTON EASTSIDE 345KV CKT 1
FDNSLock-Blown up	06ALL	0	16WP	G15_020		Non-Converged Contingency	717	789	0.12525	-	G14-057T 345.00 - SUNNYSIDE 345KV CKT 1
FDNSLock-Blown up	06ALL	0	16WP	G15_020		Non-Converged Contingency	329.05	360.92	0.12053	-	DEAF SMITH COUNTY INTERCHANGE - G15039_T 230.00 230KV CKT 1
FDNSLock-Blown up	06ALL	0	16WP	G15_020		Non-Converged Contingency	329.05	360.92	0.12053	-	G15039_T 230.00 - PLANT X STATION 230KV CKT 1
FDNSLock-Blown up	06ALL	0	16WP	G15_020		Non-Converged Contingency	557	557	0.11548	-	NEWHART 230 - POTTER COUNTY INTERCHANGE 230KV CKT 1
FDNSLock-Blown up	06ALL	0	16WP	G15_020		Non-Converged Contingency	552	608	0.11094	-	TUCO INTERCHANGE - TUCO_2 230.00 230KV CKT 1
FDNSLock-Blown up	06ALL	0	16WP	G15_020		Non-Converged Contingency	1420	1775	0.10287	-	G11_051T 345.00 - TATONGA7 345.00 345KV CKT 1
FDNSLock-Blown up	06ALL	0	16WP	G15_020		Non-Converged Contingency	1420	1775	0.10287	-	G11_051T 345.00 - WOODWARD DISTRICT EHV 345KV CKT 1
FDNSLock-Blown up	06ALL	0	16WP	G15_020		Non-Converged Contingency	1195	1195	0.10287	-	MATHWSN7 345.00 - TATONGA7 345.00 345KV CKT 1
FDNSLock-Blown up	06ALL	0	16WP	G15_020		Non-Converged Contingency	1561	1793	0.09448	-	THISTLE7 345.00 - WOODWARD DISTRICT EHV 345KV CKT 1
FDNSLock-Blown up	06ALL	0	16WP	G15_020		Non-Converged Contingency	1561	1793	0.09448	-	THISTLE7 345.00 - WOODWARD DISTRICT EHV 345KV CKT 2
FDNSLock-Blown up	06ALL	0	16WP	G15_020		Non-Converged Contingency	427.05	427.05	0.09032	-	JONES STATION - TUCO INTERCHANGE 230KV CKT 1
FDNSLock-Blown up	06ALL	0	16WP	G15_020		Non-Converged Contingency	1793	1793	0.0865	-	BVRCNTY7 345.00 - G11-14T 345.00 345KV CKT 1
FDNSLock-Blown up	06ALL	0	16WP	G15_020		Non-Converged Contingency	1716	1793	0.0865	-	BVRCNTY7 345.00 - G11-14T 345.00 345KV CKT 2
FDNSLock-Blown up	06ALL	0	16WP	G15_020		Non-Converged Contingency	1792	1792	0.0865	-	BVRCNTY7 345.00 - OPTIMA 345.00 345KV CKT 1
FDNSLock-Blown up	06ALL	0	16WP	G15_020		Non-Converged Contingency	1792	1792	0.0865	-	BVRCNTY7 345.00 - OPTIMA 345.00 345KV CKT 2
FDNSLock-Blown up	06ALL	0	16WP	G15_020		Non-Converged Contingency	1793	1793	0.0865	-	G11-14T 345.00 - WOODWARD DISTRICT EHV 345KV CKT 1
FDNSLock-Blown up	06ALL	0	16WP	G15_020		Non-Converged Contingency	1716	1793	0.0865	-	G11-14T 345.00 - WOODWARD DISTRICT EHV 345KV CKT 2
FDNSLock-Blown up	06ALL	0	16WP	G15_020		Non-Converged Contingency	329.05	360.92	0.07871	-	AMARILLO SOUTH INTERCHANGE - G15031_T 230.00 230KV CKT 1
FDNSLock-Blown up	06ALL	0	16WP	G15_020		Non-Converged Contingency	439	439	0.07809	-	CHISHOLM6 230.00 - SWEETWATER 230KV CKT 1
FDNSLock-Blown up	06ALL	0	16WP	G15_020		Non-Converged Contingency	435.02	457.73	0.07809	-	STATELINE INTERCHANGE - STLN-DEMARC6 230KV CKT 1
FDNSLock-Blown up	06ALL	0	16WP	G15_020		Non-Converged Contingency	439	439	0.07809	-	STLN-DEMARC6 - SWEETWATER 230KV CKT 1
FDNSLock-Blown up	06ALL	0	16WP	G15_020		Non-Converged Contingency	1532	1793	0.07679	-	G1524G1525 345.00 - THISTLE7 345.00 345KV CKT 1
FDNSLock-Blown up	06ALL	0	16WP	G15_020		Non-Converged Contingency	1532	1793	0.07679	-	G1524G1525 345.00 - THISTLE7 345.00 345KV CKT 2
FDNSLock-Blown up	06ALL	0	16WP	G15_020		Non-Converged Contingency	1532	1793	0.07679	-	GEN532751 1-WOLF CREEK GENERATING STATION UNIT 1
FDNSLock-Blown up	06ALL	0	16WP	G15_020		Non-Converged Contingency	556.92	556.92	0.0753	-	HITCHLAND INTERCHANGE - MOORE COUNTY INTERCHANGE 230KV CKT 1
FDNSLock-Blown up	06ALL	0	16WP	G15_020		Non-Converged Contingency	717.1	717.1	0.06787	-	HOLCOMB - SETAB 345KV CKT 1
FDNSLock-Blown up	06ALL	0	16WP	G15_020		Non-Converged Contingency	762.5	762.5	0.06668	-	MINGO - SETAB 345KV CKT 1
FDNSLock-Blown up	06ALL	0	16WP	G15_020		Non-Converged Contingency	785	785	0.06664	-	MINGO - RED WILLOW 345KV CKT 1
FDNSLock-Blown up	06ALL	0	16WP	G15_020		Non-Converged Contingency	557	557	0.06632	-	GRAPEVINE INTERCHANGE - STATELINE INTERCHANGE 230KV CKT 1
FDNSLock-Blown up	06ALL	0	16WP	G15_020		Non-Converged Contingency	557	557	0.06584	-	GRAPEVINE INTERCHANGE - NICHOLS STATION 230KV CKT 1
FDNSLock-Blown up	06ALL	0	16WP	G15_020		Non-Converged Contingency	329.05	360.92	0.0644	-	MOORE COUNTY INTERCHANGE - POTTER COUNTY INTERCHANGE 230KV CKT 1
FDNSLock-Blown up	06ALL	0	16WP	G15_020		Non-Converged Contingency	439	439	0.06365	-	CHISHOLM6 230.00 - ELK CITY 230KV 230KV CKT 1
FDNSLock-Blown up	06ALL	0	16WP	G15_020		Non-Converged Contingency	717	717	0.06365	-	CIMARRON - DRAPER LAKE 345KV CKT 1
FDNSLock-Blown up	06ALL	0	16WP	G15_020		Non-Converged Contingency	450	450	0.06365	-	ELK CITY 230KV (ELKCTY-6) 230/138/13.8KV TRANSFORMER CKT 1
FDNSLock-Blown up	06ALL	0	16WP	G15_020		Non-Converged Contingency	726.6	726.6	0.05884	-	BUCKNER7 345.00 - HOLCOMB 345KV CKT 1
FDNSLock-Blown up	06ALL	0	16WP	G15_020		Non-Converged Contingency	1413	1517	0.05884	-	BUCKNER7 345.00 - SPEARVILLE 345KV CKT 1
FDNSLock-Blown up	06ALL	0	16WP	G15_020		Non-Converged Contingency	1793	1793	0.05741	-	G13-010T 345.00 - POST ROCK 345KV CKT 1
FDNSLock-Blown up	06ALL	0	16WP	G15_020		Non-Converged Contingency	1793	1793	0.05741	-	G13-010T 345.00 - SPEARVILLE 345KV CKT 1
FDNSLock-Blown up	06ALL	0	16WP	G15_020		Non-Converged Contingency	1195	1195	0.05652	-	GEN520947 1-HUGO1
FDNSLock-Blown up	06ALL	0	16WP	G15_020		Non-Converged Contingency	483	483	0.05281	-	AMOCO SWITCHING STATION - YOAKUM COUNTY INTERCHANGE 230KV CKT 1
FDNSLock-Blown up	06ALL	0	16WP	G15_020		Non-Converged Contingency	143.02	173.09	0.04898	-	WOLFFORTH INTERCHANGE - YUMA INTERCHANGE 115KV CKT 1
FDNSLock-Blown up	06ALL	0	16WP	G15_020		Non-Converged Contingency	286	315	0.04333	-	CANYON E_TP3115.00 - CANYON WEST SUB 115KV CKT 1
FDNSLock-Blown up	06ALL	0	16WP	G15_020		Non-Converged Contingency	106	106	0.04333	-	CANYON WEST SUB - DAWN SUB 115KV CKT 1
FDNSLock-Blown up	06ALL	0	16WP	G15_020		Non-Converged Contingency	106	106	0.04333	-	DAWN SUB - Panda Energy Substation Hereford 115KV CKT 1
FDNSLock-Blown up	06ALL	0	16WP	G15_020		Non-Converged Contingency	106	106	0.04333	-	DEAF SMITH COUNTY INTERCHANGE - Panda Energy Substation Hereford 115KV CKT 1
FDNSLock-Blown up	06ALL	0	16WP	G15_020		Non-Converged Contingency	717	789	0.03853	-	GRACEMONT - LAWTON EASTSIDE 345KV CKT 1
FDNSLock-Blown up	06ALL	0	16WP	G15_020		Non-Converged Contingency	164.53	177.08	0.03185	-	Hansford County Switch Station - SPEARMAN INTERCHANGE 115KV CKT 1
FDNSLock-Blown up	06ALL	0	16WP	G15_020		Non-Converged Contingency	177.08	177.08	0.03185	-	HITCHLAND INTERCHANGE - Hansford County Switch Station 115KV CKT 1
FDNSLock-Blown up	06NR	0	17G	G15_020		Non-Converged Contingency	478	502	0.12179	-	BUSHLAND INTERCHANGE - DEAF SMITH COUNTY INTERCHANGE 230KV CKT 1
FDNSLock-Blown up	06NR	0	17G	G15_020		Non-Converged Contingency	318.7	350.57	0.10139	-	BUSHLAND INTERCHANGE - POTTER COUNTY INTERCHANGE 230KV CKT 1
FDNSLock-Blown up	06NR	0	17G	G15_020		Non-Converged Contingency	478	502	0.07175	-	NEWHART 230 - POTTER COUNTY INTERCHANGE 230KV CKT 1
FDNSLock-Blown up	06NR	0	17G	G15_020		Non-Converged Contingency	318.7	350.57	0.06366	-	AMARILLO SOUTH INTERCHANGE - G15031_T 230.00 230KV CKT 1
FDNSLock-Blown up	06NR	0	17G	G15_020		Non-Converged Contingency	318.7	350.57	0.06203	-	DEAF SMITH COUNTY INTERCHANGE - G15039_T 230.00 230KV CKT 1
FDNSLock-Blown up	06NR	0	17G	G15_020		Non-Converged Contingency	318.7	350.57	0.06203	-	G15039_T 230.00 - PLANT X STATION 230KV CKT 1
FDNSLock-Blown up	06ALL	0	17SP	G15_020		Non-Converged Contingency	956	1042	0.19119	-	G14-074T 345.00 - OKLAUNION 345KV CKT 1
FDNSLock-Blown up	06ALL	0	17SP	G15_020		Non-Converged Contingency	956	1042	0.19119	-	G14-074T 345.00 - TUCO INTERCHANGE 345KV CKT 1
FDNSLock-Blown up	06ALL	0	17SP	G15_020		Non-Converged Contingency	956.09	1051.7	0.17644	-	G14_038T 345.00 - Hitchland Interchange 345KV CKT 1
FDNSLock-Blown up	06ALL	0	17SP	G15_020		Non-Converged Contingency	956.09	1051.7	0.17644	-	G14_038T 345.00 - POTTER COUNTY INTERCHANGE 345KV CKT 1
FDNSLock-Blown up	06ALL	0	17SP	G15_020		Non-Converged Contingency	560	560	0.17644	-	POTTER COUNTY INTERCHANGE (WAUK 90343-A) 345/230/13.2KV TRANSFORMER CKT 1
FDNSLock-Blown up	06ALL	0	17SP	G15_020		Non-Converged Contingency	1792	1972	0.14794	-	BORDER 7345.00 - TUCO_2 345.00 345KV CKT 1
FDNSLock-Blown up	06ALL	0	17SP	G15_020		Non-Converged Contingency	1420	1775	0.14793	-	BORDER 7345.00 - TUCO_2 345.00 345KV CKT 2
FDNSLock-Blown up	06ALL	0	20L	G15_020		Non-Converged Contingency	0	0	1	-	OASIS INTERCHANGE 115KV SWITCHED SHUNT
FDNSLock-Blown up	06ALL	0	20L	G15_020		Non-Converged Contingency	0	0	0.69651	-	P12:230:SPS:K51.1.OASIS.RSVLT
FDNSLock-Blown up	06ALL	0	20L	G15_020		Non-Converged Contingency	0	0	0.61412	-	P12:115:SPS:T45.1.NORRIS.OASIS
FDNSLock-Blown up	06ALL	0	20L	G15_020		Non-Converged Contingency	0	0	0.40099	-	P12:115:SPS:T59.1.CARGIL.CURRY
FDNSLock-Blown up	06ALL	0	20L	G15_020		Non-Converged Contingency	0	0	0.33687	-	P12:115:SPS:W32.1.PRMTR.FE-CLSIN
FDNSLock-Blown up	06ALL	0	20L	G15_020		Non-Converged Contingency	478.05	478.05	0.33638	-	Roosevelt County Interchange SOUTH - TOLK STATION EAST 230KV CKT 1
FDNSLock-Blown up	06ALL	0	20L	G15_020		Non-Converged Contingency	478.05	478.05	0.33638	-	Roosevelt County Interchange SOUTH - TOLK STATION EAST 230KV CKT 1
FDNSLock-Blown up	06ALL	0	20L	G15_020		Non-Converged Contingency	478.05	478.05	0.33288	-	ROOSEVELT COUNTY INTERCHANGE - TOLK STATION WEST 230KV CKT 2
FDNSLock-Blown up	06ALL	0	20L	G15_020		Non-Converged Contingency	478.05	478.05	0.33288	-	ROOSEVELT COUNTY INTERCHANGE - TOLK STATION WEST 230KV CKT 2
FDNSLock-Blown up	06ALL	0	20L	G15_020		Non-Converged Contingency	0	0	0.30074	-	P12:115:SPS:T58.1.HERFRD.CARGIL
FDNSLock-Blown up	06ALL	0	20L	G15_020		Non-Converged Contingency	0	0	0.21904	-	P12:345:SPS:J07.1.FINN.HITCH
FDNSLock-Blown up	06ALL	0	20L	G15_020		Non-Converged Contingency	478.05	546.96	0.17858	-	TOLK STATION EAST - TUCO INTERCHANGE 230KV CKT 1
FDNSLock-Blown up	06ALL	0	20L	G15_020		Non-Converged Contingency	478.05	546.96	0.17858	-	TOLK STATION EAST - TUCO INTERCHANGE 230KV CKT 1

SOLUTION	GROUP	SCENARIO	SEASON	SOURCE	DIRECTION	MONITORED ELEMENT	RATEA (MVA)	RATEB(MVA)	TDF	TC%LOADING (% MVA)	CONTINGENCY
FDNSLock-Blown up	06ALL	0	20L	G15_020		Non-Converged Contingency	442	752	0.16711	-	PLANT X STATION - TOLK STATION WEST 230KV CKT 1
FDNSLock-Blown up	06ALL	0	20L	G15_020		Non-Converged Contingency	442	752	0.16711	-	PLANT X STATION - TOLK STATION WEST 230KV CKT 1
FDNSLock-Blown up	06ALL	0	20L	G15_020		Non-Converged Contingency	442	752	0.16631	-	PLANT X STATION - TOLK STATION EAST 230KV CKT 2
FDNSLock-Blown up	06ALL	0	20L	G15_020		Non-Converged Contingency	442	752	0.16631	-	PLANT X STATION - TOLK STATION EAST 230KV CKT 2
FDNSLock-Blown up	06ALL	0	20L	G15_020		Non-Converged Contingency	1022	1124	0.16189	-	G14-074T 345.00 - OKLAUNION 345KV CKT 1
FDNSLock-Blown up	06ALL	0	20L	G15_020		Non-Converged Contingency	1022	1124	0.16189	-	G14-074T 345.00 - TUCO INTERCHANGE 345KV CKT 1
FDNSLock-Blown up	06ALL	0	20L	G15_020		Non-Converged Contingency	1022	1124	0.16189	-	GEN506754 1-LEBROCK STEAM 1
FDNSLock-Blown up	06ALL	0	20L	G15_020		Non-Converged Contingency	1022	1124	0.16189	-	GEN509394 1-FLINT CREEK
FDNSLock-Blown up	06ALL	0	20L	G15_020		Non-Converged Contingency	1022	1124	0.16189	-	GEN509403 1-PIRKEY GENERATION
FDNSLock-Blown up	06ALL	0	20L	G15_020		Non-Converged Contingency	1022	1124	0.16189	-	GEN509404 1-WELSH #1
FDNSLock-Blown up	06ALL	0	20L	G15_020		Non-Converged Contingency	1022	1124	0.16189	-	GEN509406 1-WELSH #3
FDNSLock-Blown up	06ALL	0	20L	G15_020		Non-Converged Contingency	1022	1124	0.16189	-	GEN509408 1-WILKES #2
FDNSLock-Blown up	06ALL	0	20L	G15_020		Non-Converged Contingency	1022	1124	0.16189	-	GEN509416 1-TURK GENERATION
FDNSLock-Blown up	06ALL	0	20L	G15_020		Non-Converged Contingency	1022	1124	0.16189	-	GEN511840 1-NORTHEASTERN STATION #3
FDNSLock-Blown up	06ALL	0	20L	G15_020		Non-Converged Contingency	1022	1124	0.16189	-	GEN511960 1-ROARK1 0.7000
FDNSLock-Blown up	06ALL	0	20L	G15_020		Non-Converged Contingency	1022	1124	0.16189	-	GEN562590 1-G14_057_3 0.6900
FDNSLock-Blown up	06ALL	0	20L	G15_020		Non-Converged Contingency	1022	1124	0.16189	-	OKLAUNION 345KV SWITCHED SHUNT
FDNSLock-Blown up	06ALL	0	20L	G15_020		Non-Converged Contingency	478	502	0.15861	-	BUSHLAND INTERCHANGE - DEAF SMITH COUNTY INTERCHANGE 230KV CKT 1
FDNSLock-Blown up	06ALL	0	20L	G15_020		Non-Converged Contingency	478	502	0.15861	-	BUSHLAND INTERCHANGE - DEAF SMITH COUNTY INTERCHANGE 230KV CKT 1
FDNSLock-Blown up	06ALL	0	20L	G15_020		Non-Converged Contingency	478	502	0.15861	-	BUSHLAND INTERCHANGE 230KV SWITCHED SHUNT
FDNSLock-Blown up	06ALL	0	20L	G15_020		Non-Converged Contingency	1792	1972	0.15787	-	TUCO INTERCHANGE - TUCO_2 345.00 345KV CKT 1
FDNSLock-Blown up	06ALL	0	20L	G15_020		Non-Converged Contingency	956	956	0.15278	-	CIMARRON - MINCO 345KV CKT 1
FDNSLock-Blown up	06ALL	0	20L	G15_020		Non-Converged Contingency	1195	1195	0.15278	-	GRACEMONT - MINCO 345KV CKT 1
FDNSLock-Blown up	06ALL	0	20L	G15_020		Non-Converged Contingency	478.05	547.36	0.14884	-	NEWHART 230 - PLANT X STATION 230KV CKT 1
FDNSLock-Blown up	06ALL	0	20L	G15_020		Non-Converged Contingency	318.7	350.57	0.13905	-	BUSHLAND INTERCHANGE - POTTER COUNTY INTERCHANGE 230KV CKT 1
FDNSLock-Blown up	06ALL	0	20L	G15_020		Non-Converged Contingency	318.7	350.57	0.13905	-	BUSHLAND INTERCHANGE - POTTER COUNTY INTERCHANGE 230KV CKT 1
FDNSLock-Blown up	06ALL	0	20L	G15_020		Non-Converged Contingency	956.09	1051.7	0.13366	-	G14_038T 345.00 - Hitchland Interchange 345KV CKT 1
FDNSLock-Blown up	06ALL	0	20L	G15_020		Non-Converged Contingency	956.09	1051.7	0.13366	-	G14_038T 345.00 - POTTER COUNTY INTERCHANGE 345KV CKT 1
FDNSLock-Blown up	06ALL	0	20L	G15_020		Non-Converged Contingency	560	560	0.13366	-	POTTER COUNTY INTERCHANGE (WAUK 90343-A) 345/230/13.2KV TRANSFORMER CKT 1
FDNSLock-Blown up	06ALL	0	20L	G15_020		Non-Converged Contingency	560	560	0.13366	-	POTTER COUNTY INTERCHANGE (WAUK 90343-A) 345/230/13.2KV TRANSFORMER CKT 1
FDNSLock-Blown up	06ALL	0	20L	G15_020		Non-Converged Contingency	1792	1792	0.13342	-	CHISHOLM7 345.00 - WOODWARD DISTRICT EHV 345KV CKT 1
FDNSLock-Blown up	06ALL	0	20L	G15_020		Non-Converged Contingency	1792	1792	0.12884	-	BORDER 7345.00 - CHISHOLM7 345.00 345KV CKT 1
FDNSLock-Blown up	06ALL	0	20L	G15_020		Non-Converged Contingency	1792	1792	0.12884	-	BORDER 7345.00 - CHISHOLM7 345.00 345KV CKT 2
FDNSLock-Blown up	06ALL	0	20L	G15_020		Non-Converged Contingency	1792	1972	0.12884	-	BORDER 7345.00 - TUCO_2 345.00 345KV CKT 1
FDNSLock-Blown up	06ALL	0	20L	G15_020		Non-Converged Contingency	1420	1775	0.12884	-	BORDER 7345.00 - TUCO_2 345.00 345KV CKT 2
FDNSLock-Blown up	06ALL	0	20L	G15_020		Non-Converged Contingency	1792	1972	0.12884	-	BORDER 7345.00 345KV SWITCHED SHUNT
FDNSLock-Blown up	06ALL	0	20L	G15_020		Non-Converged Contingency	0	0	0.12843	-	P12:115:SPS:W40.1.WCANYON.DFSMTH
FDNSLock-Blown up	06ALL	0	20L	G15_020		Non-Converged Contingency	318.7	350.57	0.12824	-	CHAVES COUNTY INTERCHANGE - SAN JUAN MESA TAP 230KV CKT 1
FDNSLock-Blown up	06ALL	0	20L	G15_020		Non-Converged Contingency	318.7	350.57	0.12824	-	CHAVES COUNTY INTERCHANGE - SAN JUAN MESA TAP 230KV CKT 1
FDNSLock-Blown up	06ALL	0	20L	G15_020		Non-Converged Contingency	1584	2098	0.12658	-	CHISHOLM7 345.00 - GRACEMONT 345KV CKT 1
FDNSLock-Blown up	06ALL	0	20L	G15_020		Non-Converged Contingency	1584	2098	0.12658	-	GEN514805 1-SOONER UNIT 1
FDNSLock-Blown up	06ALL	0	20L	G15_020		Non-Converged Contingency	1584	2098	0.12658	-	GEN514806 1-SOONER UNIT 2
FDNSLock-Blown up	06ALL	0	20L	G15_020		Non-Converged Contingency	1584	2098	0.12658	-	GEN515040 1-SEMINOLE 1G
FDNSLock-Blown up	06ALL	0	20L	G15_020		Non-Converged Contingency	1584	2098	0.12658	-	GEN515223 1-MUSKOGEE 4G
FDNSLock-Blown up	06ALL	0	20L	G15_020		Non-Converged Contingency	956.09	1051.7	0.11695	-	Hitchland Interchange - WALKTAP7 345.00 345KV CKT 1
FDNSLock-Blown up	06ALL	0	20L	G15_020		Non-Converged Contingency	956.09	1051.7	0.11695	-	Hitchland Interchange - WALKTAP7 345.00 345KV CKT 1
FDNSLock-Blown up	06ALL	0	20L	G15_020		Non-Converged Contingency	478	478	0.11291	-	EDDY COUNTY INTERCHANGE - EDDY_NORTH 6230.00 230KV CKT @1
FDNSLock-Blown up	06ALL	0	20L	G15_020		Non-Converged Contingency	1792	1792	0.11151	-	TUCO INTERCHANGE - YOAKUM_345 345.00 345KV CKT 1
FDNSLock-Blown up	06ALL	0	20L	G15_020		Non-Converged Contingency	560	560	0.11127	-	TUCO INTERCHANGE (GE M1022338) 345/230/13.2KV TRANSFORMER CKT 1
FDNSLock-Blown up	06ALL	0	20L	G15_020		Non-Converged Contingency	560	560	0.11127	-	TUCO INTERCHANGE (GE M1022338) 345/230/13.2KV TRANSFORMER CKT 1
FDNSLock-Blown up	06ALL	0	20L	G15_020		Non-Converged Contingency	0	0	0.11085	-	P12:115:SPS:T28.1.LAMTON.PLANTX
FDNSLock-Blown up	06ALL	0	20L	G15_020		Non-Converged Contingency	0	0	0.10416	-	P12:230:AEPW-SPS:SWEETWT6:WHEELER 6
FDNSLock-Blown up	06ALL	0	20L	G15_020		Non-Converged Contingency	319	351	0.10245	-	CHAVES COUNTY INTERCHANGE - EDDY_NORTH 6230.00 230KV CKT 1
FDNSLock-Blown up	06ALL	0	20L	G15_020		Non-Converged Contingency	319	351	0.10245	-	CHAVES COUNTY INTERCHANGE - EDDY_NORTH 6230.00 230KV CKT 1
FDNSLock-Blown up	06NR	0	20L	G15_020		Non-Converged Contingency	318.7	350.57	0.10235	-	BUSHLAND INTERCHANGE - POTTER COUNTY INTERCHANGE 230KV CKT 1
FDNSLock-Blown up	06NR	0	20L	G15_020		Non-Converged Contingency	318.7	350.57	0.10235	-	BUSHLAND INTERCHANGE - POTTER COUNTY INTERCHANGE 230KV CKT 1
FDNSLock-Blown up	06ALL	0	20L	G15_020		Non-Converged Contingency	276	304	0.10225	-	BAILEY COUNTY INTERCHANGE - G15-018T 115.00 115KV CKT 1
FDNSLock-Blown up	06ALL	0	20L	G15_020		Non-Converged Contingency	956.09	1051.7	0.10209	-	FINNEY SWITCHING STATION - HOLCOMB 345KV CKT 1
FDNSLock-Blown up	06ALL	0	20L	G15_020		Non-Converged Contingency	956.09	1051.7	0.10209	-	FINNEY SWITCHING STATION - HOLCOMB 345KV CKT 1
FDNSLock-Blown up	06ALL	0	20L	G15_020		Non-Converged Contingency	956.09	1051.7	0.10209	-	FINNEY SWITCHING STATION - WALKTAP7 345.00 345KV CKT 1
FDNSLock-Blown up	06ALL	0	20L	G15_020		Non-Converged Contingency	956.09	1051.7	0.10209	-	FINNEY SWITCHING STATION - WALKTAP7 345.00 345KV CKT 1
FDNSLock-Blown up	06ALL	0	20L	G15_020		Non-Converged Contingency	0	0	0.10184	-	P12:230:AEPW:ELKCITY6:SWEETWT6
FDNSLock-Blown up	06ALL	0	20L	G15_020		Non-Converged Contingency	478	502	0.10134	-	NEWHART 230 - POTTER COUNTY INTERCHANGE 230KV CKT 1
FDNSLock-Blown up	06ALL	0	20L	G15_020		Non-Converged Contingency	96	96	0.10025	-	CARGILL SUB - DEAF SMITH REC-#24 115KV CKT 1
FDNSLock-Blown up	06ALL	0	20L	G15_020		Non-Converged Contingency	96	96	0.10025	-	CARGILL SUB - FRIONA SUB 115KV CKT 1
FDNSLock-Blown up	06ALL	0	20L	G15_020		Non-Converged Contingency	96	96	0.10025	-	CURRY COUNTY INTERCHANGE - DEAF SMITH REC-#20 115KV CKT 1
FDNSLock-Blown up	06ALL	0	20L	G15_020		Non-Converged Contingency	96	96	0.10025	-	DEAF SMITH REC-#20 - PARMER COUNTY SUB 115KV CKT 1
FDNSLock-Blown up	06ALL	0	20L	G15_020		Non-Converged Contingency	96	96	0.10025	-	DEAF SMITH REC-#24 - PARMER COUNTY SUB 115KV CKT 1
FDNSLock-Blown up	06ALL	0	20L	G15_020		Non-Converged Contingency	96	96	0.10025	-	DEAF SMITH REC-#6 - FRIONA SUB 115KV CKT 1
FDNSLock-Blown up	06ALL	0	20L	G15_020		Non-Converged Contingency	96	96	0.10025	-	DEAF SMITH REC-#6 - HEREFORD INTERCHANGE 115KV CKT 1
FDNSLock-Blown up	06ALL	0	20L	G15_020		Non-Converged Contingency	96	96	0.10025	-	PARMER COUNTY SUB 115KV SWITCHED SHUNT
FDNSLock-Blown up	06ALL	0	20L	G15_020		Non-Converged Contingency	560	560	0.0998	-	TUCO_2 345.00 (TUCO_2 XFMR) 345/230/13.2KV TRANSFORMER CKT 1
FDNSLock-Blown up	06ALL	0	20L	G15_020		Non-Converged Contingency	318.7	350.57	0.0985	-	DEAF SMITH COUNTY INTERCHANGE - G15039_T 230.00 230KV CKT 1
FDNSLock-Blown up	06ALL	0	20L	G15_020		Non-Converged Contingency	318.7	350.57	0.0985	-	G15039_T 230.00 - PLANT X STATION 230KV CKT 1
FDNSLock-Blown up	06ALL	0	20L	G15_020		Non-Converged Contingency	717	789	0.09828	-	G14-057T 345.00 - LAWTON EASTSIDE 345KV CKT 1
FDNSLock-Blown up	06ALL	0	20L	G15_020		Non-Converged Contingency	717	789	0.09828	-	G14-057T 345.00 - SUNNYSIDE 345KV CKT 1
FDNSLock-Blown up	06ALL	0	20L	G15_020		Non-Converged Contingency	560	644	0.09697	-	TUCO INTERCHANGE (SIEM 8743066) 345/230/13.2KV TRANSFORMER CKT 2
FDNSLock-Blown up	06ALL	0	20L	G15_020		Non-Converged Contingency	560	644	0.09697	-	TUCO INTERCHANGE (SIEM 8743066) 345/230/13.2KV TRANSFORMER CKT 2
FDNSLock-Blown up	06ALL	0	20L	G15_020		Non-Converged Contingency	0	0	0.08562	-	P12:115:SPS:V05.1.OSAGE.WCANYON

SOLUTION	GROUP	SCENARIO	SEASON	SOURCE	DIRECTION	MONITORED ELEMENT	RATEA (MVA)	RATEB(MVA)	TDF	TC%LOADING (% MVA)	CONTINGENCY
FDNSLock-Blown up	06ALL	0	20L	G15_020		Non-Converged Contingency	497	547	0.08361	-	TUCO INTERCHANGE - TUCO_2 230.00 230KV CKT 1
FDNSLock-Blown up	06ALL	0	20L	G15_020		Non-Converged Contingency	1420	1775	0.0803	-	G11_051T 345.00 - TATONGA7 345.00 345KV CKT 1
FDNSLock-Blown up	06ALL	0	20L	G15_020		Non-Converged Contingency	1420	1775	0.0803	-	G11_051T 345.00 - WOODWARD DISTRICT EHV 345KV CKT 1
FDNSLock-Blown up	06ALL	0	20L	G15_020		Non-Converged Contingency	1195	1195	0.0803	-	MATHWSN7 345.00 - TATONGA7 345.00 345KV CKT 1
FDNSLock-Blown up	06ALL	0	20L	G15_020		Non-Converged Contingency	478.05	501.95	0.07809	-	PLANT X STATION - SUNDOWN INTERCHANGE 230KV CKT 1
FDNSLock-Blown up	06ALL	0	20L	G15_020		Non-Converged Contingency	478.05	501.95	0.07809	-	PLANT X STATION - SUNDOWN INTERCHANGE 230KV CKT 1
FDNSLock-Blown up	06ALL	0	20L	G15_020		Non-Converged Contingency	0	0	0.07735	-	P12:115:SPS:V26.1.RSWLL.EDDY_N
FDNSLock-Blown up	06ALL	0	20L	G15_020		Non-Converged Contingency	1561	1793	0.076	-	THISTLE7 345.00 - WOODWARD DISTRICT EHV 345KV CKT 1
FDNSLock-Blown up	06ALL	0	20L	G15_020		Non-Converged Contingency	1561	1793	0.076	-	THISTLE7 345.00 - WOODWARD DISTRICT EHV 345KV CKT 1
FDNSLock-Blown up	06ALL	0	20L	G15_020		Non-Converged Contingency	1561	1793	0.076	-	THISTLE7 345.00 - WOODWARD DISTRICT EHV 345KV CKT 2
FDNSLock-Blown up	06ALL	0	20L	G15_020		Non-Converged Contingency	1561	1793	0.076	-	THISTLE7 345.00 - WOODWARD DISTRICT EHV 345KV CKT 2
FDNSLock-Blown up	06ALL	0	20L	G15_020		Non-Converged Contingency	478	502	0.07555	-	AMARILLO SOUTH INTERCHANGE - G15031_T 230.00 230KV CKT 1
FDNSLock-Blown up	06NR	0	20L	G15_020		Non-Converged Contingency	478	502	0.07527	-	NEWHART 230 - POTTER COUNTY INTERCHANGE 230KV CKT 1
FDNSLock-Blown up	06ALL	0	20L	G15_020		Non-Converged Contingency	1195	1195	0.07186	-	ARCADIA - NORTHWEST 345KV CKT 1
FDNSLock-Blown up	06ALL	0	20L	G15_020		Non-Converged Contingency	318.7	350.57	0.06844	-	G13_027T 230.00 - YOAKUM COUNTY INTERCHANGE 230KV CKT 1
FDNSLock-Blown up	06NR	0	20L	G15_020		Non-Converged Contingency	478	502	0.0683	-	AMARILLO SOUTH INTERCHANGE - G15031_T 230.00 230KV CKT 1
FDNSLock-Blown up	06ALL	0	20L	G15_020		Non-Converged Contingency	956	956	0.067	-	CIMARRON - NORTHWEST 345KV CKT 1
FDNSLock-Blown up	06NR	0	20L	G15_020		Non-Converged Contingency	318.7	350.57	0.06559	-	DEAF SMITH COUNTY INTERCHANGE - G15039_T 230.00 230KV CKT 1
FDNSLock-Blown up	06ALL	0	20L	G15_020		Non-Converged Contingency	1195	1195	0.06514	-	MATHWSN7 345.00 - NORTHWEST 345KV CKT 1
FDNSLock-Blown up	06ALL	0	20L	G15_020		Non-Converged Contingency	318.7	350.57	0.06299	-	CUNNINGHAM STATION - EDDY COUNTY INTERCHANGE 230KV CKT 1
FDNSLock-Blown up	06ALL	0	20L	G15_020		Non-Converged Contingency	318.7	350.57	0.06299	-	CUNNINGHAM STATION - EDDY COUNTY INTERCHANGE 230KV CKT 1
FDNSLock-Blown up	06ALL	0	20L	G15_020		Non-Converged Contingency	1792	1792	0.06228	-	HOBBS - YOAKUM_345 345.00 345KV CKT 1
FDNSLock-Blown up	06ALL	0	20L	G15_020		Non-Converged Contingency	435.82	501.55	0.05996	-	Harrington Station Mid Bus - RANDALL COUNTY INTERCHANGE 230KV CKT 1
FDNSLock-Blown up	06ALL	0	20L	G15_020		Non-Converged Contingency	435.82	501.55	0.05996	-	Harrington Station Mid Bus - RANDALL COUNTY INTERCHANGE 230KV CKT 1
FDNSLock-Blown up	06ALL	0	20L	G15_020		Non-Converged Contingency	0	0	0.05981	-	P12:138:AEPW-OGE:WTH_JCT4:JENSEN4
FDNSLock-Blown up	06ALL	0	20L	G15_020		Non-Converged Contingency	1793	1793	0.0598	-	BVRCNTY7 345.00 - G11-14T 345.00 345KV CKT 1
FDNSLock-Blown up	06ALL	0	20L	G15_020		Non-Converged Contingency	1716	1793	0.0598	-	BVRCNTY7 345.00 - G11-14T 345.00 345KV CKT 2
FDNSLock-Blown up	06ALL	0	20L	G15_020		Non-Converged Contingency	1792	1792	0.0598	-	BVRCNTY7 345.00 - OPTIMA 345.00 345KV CKT 1
FDNSLock-Blown up	06ALL	0	20L	G15_020		Non-Converged Contingency	1792	1792	0.0598	-	BVRCNTY7 345.00 - OPTIMA 345.00 345KV CKT 2
FDNSLock-Blown up	06ALL	0	20L	G15_020		Non-Converged Contingency	1793	1793	0.0598	-	G11-14T 345.00 - WOODWARD DISTRICT EHV 345KV CKT 1
FDNSLock-Blown up	06ALL	0	20L	G15_020		Non-Converged Contingency	1716	1793	0.0598	-	G11-14T 345.00 - WOODWARD DISTRICT EHV 345KV CKT 2
FDNSLock-Blown up	06ALL	0	20L	G15_020		Non-Converged Contingency	1792	1792	0.0598	-	Hitchland Interchange - OPTIMA 345.00 345KV CKT 1
FDNSLock-Blown up	06ALL	0	20L	G15_020		Non-Converged Contingency	1792	1792	0.0598	-	Hitchland Interchange - OPTIMA 345.00 345KV CKT 2
FDNSLock-Blown up	06ALL	0	20L	G15_020		Non-Converged Contingency	1532	1793	0.05914	-	G1524G1525 345.00 - THISTLE7 345.00 345KV CKT 1
FDNSLock-Blown up	06ALL	0	20L	G15_020		Non-Converged Contingency	1532	1793	0.05914	-	G1524G1525 345.00 - THISTLE7 345.00 345KV CKT 2
FDNSLock-Blown up	06ALL	0	20L	G15_020		Non-Converged Contingency	1532	1793	0.05914	-	G1524G1525 345.00 - WICHITA 345KV CKT 1
FDNSLock-Blown up	06ALL	0	20L	G15_020		Non-Converged Contingency	1532	1793	0.05914	-	G1524G1525 345.00 - WICHITA 345KV CKT 2
FDNSLock-Blown up	06ALL	0	20L	G15_020		Non-Converged Contingency	1532	1793	0.05914	-	GEN532653 1-JEFFREY ENERGY CENTER UNIT 3
FDNSLock-Blown up	06ALL	0	20L	G15_020		Non-Converged Contingency	1532	1793	0.05914	-	GEN532663 1-LAWRENCE ENERGY CENTER UNIT 5
FDNSLock-Blown up	06ALL	0	20L	G15_020		Non-Converged Contingency	1532	1793	0.05914	-	GEN532751 1-WOLF CREEK GENERATING STATION UNIT 1
FDNSLock-Blown up	06ALL	0	20L	G15_020		Non-Converged Contingency	501.95	501.95	0.0565	-	HITCHLAND INTERCHANGE - MOORE COUNTY INTERCHANGE 230KV CKT 1
FDNSLock-Blown up	06ALL	0	20L	G15_020		Non-Converged Contingency	501.95	501.95	0.0565	-	HITCHLAND INTERCHANGE - MOORE COUNTY INTERCHANGE 230KV CKT 1
FDNSLock-Blown up	06ALL	0	20L	G15_020		Non-Converged Contingency	956	956	0.05597	-	G15063_T 345.00 - MATHWSN7 345.00 345KV CKT 1
FDNSLock-Blown up	06ALL	0	20L	G15_020		Non-Converged Contingency	956	956	0.05597	-	G15063_T 345.00 - WOODRING 345KV CKT 1
FDNSLock-Blown up	06ALL	0	20L	G15_020		Non-Converged Contingency	560	644	0.05502	-	Hitchland Interchange (SIEM 8743067) 345/230/13.2KV TRANSFORMER CKT 2
FDNSLock-Blown up	06ALL	0	20L	G15_020		Non-Converged Contingency	560	644	0.05502	-	Hitchland Interchange (SIEM 8743067) 345/230/13.2KV TRANSFORMER CKT 2
FDNSLock-Blown up	06ALL	0	20L	G15_020		Non-Converged Contingency	785	785	0.05501	-	GEN640009 1-COOPER NUCLEAR STATION
FDNSLock-Blown up	06ALL	0	20L	G15_020		Non-Converged Contingency	785	785	0.05501	-	MINGO - RED WILLOW 345KV CKT 1
FDNSLock-Blown up	06ALL	0	20L	G15_020		Non-Converged Contingency	785	785	0.05501	-	MINGO - RED WILLOW 345KV CKT 1
FDNSLock-Blown up	06ALL	0	20L	G15_020		Non-Converged Contingency	1039	1195	0.05475	-	NORTHWEST - SPRING CREEK 345KV CKT 1
FDNSLock-Blown up	06ALL	0	20L	G15_020		Non-Converged Contingency	1039	1195	0.05475	-	SOONER - SPRING CREEK 345KV CKT 1
FDNSLock-Blown up	06ALL	0	20L	G15_020		Non-Converged Contingency	762.5	762.5	0.05386	-	MINGO - SETAB 345KV CKT 1
FDNSLock-Blown up	06ALL	0	20L	G15_020		Non-Converged Contingency	762.5	762.5	0.05386	-	MINGO - SETAB 345KV CKT 1
FDNSLock-Blown up	06ALL	0	20L	G15_020		Non-Converged Contingency	717.1	717.1	0.05341	-	HOLCOMB - SETAB 345KV CKT 1
FDNSLock-Blown up	06ALL	0	20L	G15_020		Non-Converged Contingency	717.1	717.1	0.05341	-	HOLCOMB - SETAB 345KV CKT 1
FDNSLock-Blown up	06ALL	0	20L	G15_020		Non-Converged Contingency	421	439	0.05208	-	CHISHOLM6 230.00 - SWEETWATER 230KV CKT 1
FDNSLock-Blown up	06ALL	0	20L	G15_020		Non-Converged Contingency	348.58	381.24	0.05208	-	STATELINE INTERCHANGE - STLN-DEMARC6 230KV CKT 1
FDNSLock-Blown up	06ALL	0	20L	G15_020		Non-Converged Contingency	353	353	0.05208	-	STLN-DEMARC6 - SWEETWATER 230KV CKT 1
FDNSLock-Blown up	06ALL	0	20L	G15_020		Non-Converged Contingency	1195	1195	0.05052	-	SOONER - WOODRING 345KV CKT 1
FDNSLock-Blown up	06ALL	0	20L	G15_020		Non-Converged Contingency	0	0	0.04994	-	P12:138:AEPW:S.W.S.-4:L.E.S.-4
FDNSLock-Blown up	06ALL	0	20L	G15_020		Non-Converged Contingency	439	439	0.04976	-	CHISHOLM6 230.00 - ELK CITY 230KV 230KV CKT 1
FDNSLock-Blown up	06ALL	0	20L	G15_020		Non-Converged Contingency	450	450	0.04976	-	ELK CITY 230KV (ELKCTY-6) 230/138/13.8KV TRANSFORMER CKT 1
FDNSLock-Blown up	06ALL	0	20L	G15_020		Non-Converged Contingency	450	450	0.04976	-	ELK CITY 230KV (ELKCTY-6) 230/138/13.8KV TRANSFORMER CKT 1
FDNSLock-Blown up	06ALL	0	20L	G15_020		Non-Converged Contingency	0	0	0.04936	-	P12:115:SPS:V03.1.NICHLS.EPLANT
FDNSLock-Blown up	06ALL	0	20L	G15_020		Non-Converged Contingency	318.7	350.57	0.0489	-	MOORE COUNTY INTERCHANGE - POTTER COUNTY INTERCHANGE 230KV CKT 1
FDNSLock-Blown up	06ALL	0	20L	G15_020		Non-Converged Contingency	318.7	350.57	0.0489	-	MOORE COUNTY INTERCHANGE - POTTER COUNTY INTERCHANGE 230KV CKT 1
FDNSLock-Blown up	06ALL	0	20L	G15_020		Non-Converged Contingency	0	0	0.04863	-	P12:138:WFEC-AEPW:WASHITA4:CLINTJC4
FDNSLock-Blown up	06ALL	0	20L	G15_020		Non-Converged Contingency	478.05	501.55	0.04795	-	AMARILLO SOUTH INTERCHANGE - NICHOLS STATION 230KV CKT 1
FDNSLock-Blown up	06ALL	0	20L	G15_020		Non-Converged Contingency	478.05	501.55	0.04795	-	AMARILLO SOUTH INTERCHANGE - NICHOLS STATION 230KV CKT 1
FDNSLock-Blown up	06ALL	0	20L	G15_020		Non-Converged Contingency	560	644	0.04786	-	Hitchland Interchange (H TB80155502) 345/230/13.2KV TRANSFORMER CKT 1
FDNSLock-Blown up	06ALL	0	20L	G15_020		Non-Converged Contingency	560	644	0.04786	-	Hitchland Interchange (H TB80155502) 345/230/13.2KV TRANSFORMER CKT 1
FDNSLock-Blown up	06ALL	0	20L	G15_020		Non-Converged Contingency	878	956	0.04719	-	BENTON - WICHITA 345KV CKT 1
FDNSLock-Blown up	06ALL	0	20L	G15_020		Non-Converged Contingency	0	0	0.04695	-	P12:115:SPS:T66.1.RNDALL.HAPPY
FDNSLock-Blown up	06ALL	0	20L	G15_020		Non-Converged Contingency	0	0	0.04695	-	P12:115:SPS:T67.1.HAPPY.KRESS
FDNSLock-Blown up	06ALL	0	20L	G15_020		Non-Converged Contingency	318.7	350.57	0.04662	-	LUBBOCK SOUTH INTERCHANGE - WOLFFORTH INTERCHANGE 230KV CKT 1
FDNSLock-Blown up	06ALL	0	20L	G15_020		Non-Converged Contingency	318.7	350.57	0.04662	-	LUBBOCK SOUTH INTERCHANGE - WOLFFORTH INTERCHANGE 230KV CKT 1
FDNSLock-Blown up	06ALL	0	20L	G15_020		Non-Converged Contingency	318.7	350.57	0.04662	-	LUBBOCK SOUTH INTERCHANGE 230KV SWITCHED SHUNT
FDNSLock-Blown up	06ALL	0	20L	G15_020		Non-Converged Contingency	1504	1792	0.0461	-	AXTELL - POST ROCK 345KV CKT 1
FDNSLock-Blown up	06ALL	0	20L	G15_020		Non-Converged Contingency	1505	1793	0.04581	-	G13-010T 345.00 - POST ROCK 345KV CKT 1

SOLUTION	GROUP	SCENARIO	SEASON	SOURCE	DIRECTION	MONITORED ELEMENT	RATEA (MVA)	RATEB(MVA)	TDF	TC%LOADING (% MVA)	CONTINGENCY
FDNSLock-Blown up	06ALL	0	20L	G15_020		Non-Converged Contingency	1505	1793	0.04581	-	G13-010T 345.00 - SPEARVILLE 345KV CKT 1
FDNSLock-Blown up	06ALL	0	20L	G15_020		Non-Converged Contingency	1195	1195	0.04495	-	JOHNSON COUNTY - SUNNYSIDE 345KV CKT 1
FDNSLock-Blown up	06ALL	0	20L	G15_020		Non-Converged Contingency	478.05	501.55	0.04444	-	EDDY COUNTY INTERCHANGE - SEVEN RIVERS INTERCHANGE 230KV CKT 1
FDNSLock-Blown up	06ALL	0	20L	G15_020		Non-Converged Contingency	478.05	501.55	0.04444	-	EDDY COUNTY INTERCHANGE - SEVEN RIVERS INTERCHANGE 230KV CKT 1
FDNSLock-Blown up	06ALL	0	20L	G15_020		Non-Converged Contingency	1195	1195	0.0443	-	CIMARRON - DRAPER LAKE 345KV CKT 1
FDNSLock-Blown up	06ALL	0	20L	G15_020		Non-Converged Contingency	502	502	0.04425	-	GRAPEVINE INTERCHANGE - STATELINE INTERCHANGE 230KV CKT 1
FDNSLock-Blown up	06ALL	0	20L	G15_020		Non-Converged Contingency	502	502	0.04425	-	GRAPEVINE INTERCHANGE - STATELINE INTERCHANGE 230KV CKT 1
FDNSLock-Blown up	06ALL	0	20L	G15_020		Non-Converged Contingency	478.05	501.55	0.04406	-	PECOS INTERCHANGE - SEVEN RIVERS INTERCHANGE 230KV CKT 1
FDNSLock-Blown up	06ALL	0	20L	G15_020		Non-Converged Contingency	478.05	501.55	0.04406	-	PECOS INTERCHANGE - SEVEN RIVERS INTERCHANGE 230KV CKT 1
FDNSLock-Blown up	06ALL	0	20L	G15_020		Non-Converged Contingency	502	502	0.04405	-	GRAPEVINE INTERCHANGE - NICHOLS STATION 230KV CKT 1
FDNSLock-Blown up	06ALL	0	20L	G15_020		Non-Converged Contingency	502	502	0.04405	-	GRAPEVINE INTERCHANGE - NICHOLS STATION 230KV CKT 1
FDNSLock-Blown up	06ALL	0	20L	G15_020		Non-Converged Contingency	0	0	0.0434	-	P12:115:SPS:T71.1.CRLSLE.YUMA
FDNSLock-Blown up	06ALL	0	20L	G15_020		Non-Converged Contingency	956	956	0.04315	-	GERALD GENTLEMAN STATION - RED WILLOW 345KV CKT 1
FDNSLock-Blown up	06ALL	0	20L	G15_020		Non-Converged Contingency	478	502	0.04311	-	CARLISLE INTERCHANGE - TUCO INTERCHANGE 230KV CKT 1
FDNSLock-Blown up	06ALL	0	20L	G15_020		Non-Converged Contingency	478	502	0.04311	-	CARLISLE INTERCHANGE - TUCO INTERCHANGE 230KV CKT 1
FDNSLock-Blown up	06ALL	0	20L	G15_020		Non-Converged Contingency	276	304	0.04281	-	CANYON E_TP3115.00 - CANYON WEST SUB 115KV CKT 1
FDNSLock-Blown up	06ALL	0	20L	G15_020		Non-Converged Contingency	160	160	0.04281	-	CANYON E_TP3115.00 - RANDALL COUNTY INTERCHANGE 115KV CKT 1
FDNSLock-Blown up	06ALL	0	20L	G15_020		Non-Converged Contingency	276	304	0.04281	-	CANYON WEST SUB - DAWN SUB 115KV CKT 1
FDNSLock-Blown up	06ALL	0	20L	G15_020		Non-Converged Contingency	276	304	0.04281	-	DAWN SUB - Panda Energy Substation Hereford 115KV CKT 1
FDNSLock-Blown up	06ALL	0	20L	G15_020		Non-Converged Contingency	276	304	0.04281	-	DEAF SMITH COUNTY INTERCHANGE - Panda Energy Substation Hereford 115KV CKT 1
FDNSLock-Blown up	06ALL	0	20L	G15_020		Non-Converged Contingency	717	789	0.04191	-	GRACEMONT - LAWTON EASTSIDE 345KV CKT 1
FDNSLock-Blown up	06ALL	0	20L	G15_020		Non-Converged Contingency	717	789	0.04191	-	GRACEMONT - LAWTON EASTSIDE 345KV CKT 1
FDNSLock-Blown up	06ALL	0	20L	G15_020		Non-Converged Contingency	1151	1195	0.04155	-	JOHNSON COUNTY - PITTSBURG 345KV CKT 1
FDNSLock-Blown up	06ALL	0	20L	G15_020		Non-Converged Contingency	1151	1195	0.04155	-	JOHNSON COUNTY - PITTSBURG 345KV CKT 1
FDNSLock-Blown up	06ALL	0	20L	G15_020		Non-Converged Contingency	1035	1035	0.0407	-	EMPORIA ENERGY CENTER - G14_001T 345.00 345KV CKT 1
FDNSLock-Blown up	06ALL	0	20L	G15_020		Non-Converged Contingency	1035	1035	0.0407	-	G14_001T 345.00 - WICHITA 345KV CKT 1
FDNSLock-Blown up	06ALL	0	20L	G15_020		Non-Converged Contingency	726.6	726.6	0.04064	-	BUCKNER7 345.00 - HOLCOMB 345KV CKT 1
FDNSLock-Blown up	06ALL	0	20L	G15_020		Non-Converged Contingency	726.6	726.6	0.04064	-	BUCKNER7 345.00 - HOLCOMB 345KV CKT 1
FDNSLock-Blown up	06ALL	0	20L	G15_020		Non-Converged Contingency	1413	1517	0.04064	-	BUCKNER7 345.00 - SPEARVILLE 345KV CKT 1
FDNSLock-Blown up	06ALL	0	20L	G15_020		Non-Converged Contingency	1413	1517	0.04064	-	BUCKNER7 345.00 - SPEARVILLE 345KV CKT 1
FDNSLock-Blown up	06ALL	0	20L	G15_020		Non-Converged Contingency	478	478	0.04015	-	CARLISLE INTERCHANGE - WOLFFORTH INTERCHANGE 230KV CKT 1
FDNSLock-Blown up	06ALL	0	20L	G15_020		Non-Converged Contingency	0	0	0.03946	-	P12:115:SPS:T43.1.SEVEN.EDDY_S
FDNSLock-Blown up	06ALL	0	20L	G15_020		Non-Converged Contingency	1141	1195	0.03794	-	GEN542951 5-HAWTHORN UNIT #5
FDNSLock-Blown up	06ALL	0	20L	G15_020		Non-Converged Contingency	1141	1195	0.03794	-	LACYGNE - WAVERLY7 345.00 345KV CKT 1
FDNSLock-Blown up	06ALL	0	20L	G15_020		Non-Converged Contingency	1141	1195	0.03794	-	WAVERLY7 345.00 - WOLF CREEK 345KV CKT 1
FDNSLock-Blown up	06ALL	0	20L	G15_020		Non-Converged Contingency	1195	1195	0.03786	-	GEN520811 1-ANADRK4
FDNSLock-Blown up	06ALL	0	20L	G15_020		Non-Converged Contingency	1195	1195	0.03786	-	HUGO - SUNNYSIDE 345KV CKT 1
FDNSLock-Blown up	06ALL	0	20L	G15_020		Non-Converged Contingency	0	0	0.03781	-	P12:138:AEPW-OGE:CORNVIL4:CIMARON4
FDNSLock-Blown up	06ALL	0	20L	G15_020		Non-Converged Contingency	0	0	0.0371	-	P12:115:SPS:W29.1.OCLTRE.SPRMN
FDNSLock-Blown up	06ALL	0	20L	G15_020		Non-Converged Contingency	0	0	0.0367	-	P12:115:SPS:W08.1.HITCH.LASLEY
FDNSLock-Blown up	06ALL	0	20L	G15_020		Non-Converged Contingency	1076	1076	0.03588	-	G15074_T 345.00 - HOYT 345KV CKT 1
FDNSLock-Blown up	06ALL	0	20L	G15_020		Non-Converged Contingency	1076	1076	0.03588	-	G15074_T 345.00 - JEFFREY ENERGY CENTER 345KV CKT 1
FDNSLock-Blown up	06ALL	0	20L	G15_020		Non-Converged Contingency	1036	1195	0.03572	-	HOYT - STRANGER CREEK 345KV CKT 1
FDNSLock-Blown up	06ALL	0	20L	G15_020		Non-Converged Contingency	0	0	0.03514	-	P12:230:SPS:K43.1.PRNGLE.HARR_E
FDNSLock-Blown up	06ALL	0	20L	G15_020		Non-Converged Contingency	1195	1195	0.03502	-	MUSKOGEE - SEMINOLE 345KV CKT 1
FDNSLock-Blown up	06ALL	0	20L	G15_020		Non-Converged Contingency	0	0	0.03256	-	P12:138:OKGE:3TERM10
FDNSLock-Blown up	06ALL	0	20L	G15_020		Non-Converged Contingency	343.79	343.79	0.03227	-	JONES STATION - TUCO INTERCHANGE 230KV CKT 1
FDNSLock-Blown up	06ALL	0	20L	G15_020		Non-Converged Contingency	343.79	343.79	0.03227	-	JONES STATION - TUCO INTERCHANGE 230KV CKT 1
FDNSLock-Blown up	06ALL	0	20L	G15_020		Non-Converged Contingency	717	717	0.03217	-	EMPORIA ENERGY CENTER - SWISSVALE 345KV CKT 1
FDNSLock-Blown up	06ALL	0	20L	G15_020		Non-Converged Contingency	0	0	0.03164	-	P12:345:SPS:J14.1.EDDY.XRDS
FDNSLock-Blown up	06ALL	0	20L	G15_020		Non-Converged Contingency	717	717	0.03049	-	SWISSVALE - WEST GARDNER 345KV CKT 1
FDNSLock-Blown up	06ALL	0	20L	G15_020		Non-Converged Contingency	0	0	0.03031	-	P12:115:SPS:W24.1.MOOREE.LASLEY
FDNSLock-Blown up	06ALL	0	20L	G15_020		Non-Converged Contingency	0	0	0.03001	-	P12:138:AEPW:REDROCKRD4:WTH_JCT4
FDNSLock-Blown up	06ALL	0	20L	G15_020		Non-Converged Contingency	0	0	0.0298	-	P12:138:OKGE-AEPW:JENSEN4:REDROCKRD4
FDNSLock-Blown up	06NR	0	20L	G15_020		Non-Converged Contingency	1022	1124	0.0297	-	G14-074T 345.00 - OKLAUNION 345KV CKT 1
FDNSLock-Blown up	06NR	0	20L	G15_020		Non-Converged Contingency	1022	1124	0.0297	-	G14-074T 345.00 - TUCO INTERCHANGE 345KV CKT 1
FDNSLock-Blown up	06NR	0	20L	G15_020		Non-Converged Contingency	1022	1124	0.0297	-	OKLAUNION 345KV SWITCHED SHUNT
FDNSLock-Blown up	06ALL	0	20L	G15_020		Non-Converged Contingency	0	0	0.0297	-	P12:230:SPS:K37.1.TOLK.LAMB
FDNSLock-Blown up	06ALL	0	20SP	G15_020		Non-Converged Contingency	956	1042	0.19668	-	G14-074T 345.00 - OKLAUNION 345KV CKT 1
FDNSLock-Blown up	06ALL	0	20SP	G15_020		Non-Converged Contingency	956.09	1051.7	0.16793	-	G14_038T 345.00 - Hitchland Interchange 345KV CKT 1
FDNSLock-Blown up	06ALL	0	20SP	G15_020		Non-Converged Contingency	956.09	1051.7	0.16793	-	G14_038T 345.00 - POTTER COUNTY INTERCHANGE 345KV CKT 1
FDNSLock-Blown up	06ALL	0	20SP	G15_020		Non-Converged Contingency	1792	1972	0.1537	-	BORDER 7345.00 - TUCO_2 345.00 345KV CKT 1
FDNSLock-Blown up	06ALL	0	20SP	G15_020		Non-Converged Contingency	1420	1775	0.1537	-	BORDER 7345.00 - TUCO_2 345.00 345KV CKT 2
FDNSLock-Blown up	06ALL	0	20WP	G15_020		Non-Converged Contingency	0	0	0.26092	-	P12:345:SPS:J07.1.FINN.HITCH
FDNSLock-Blown up	06ALL	0	20WP	G15_020		Non-Converged Contingency	1022	1124	0.19184	-	G14-074T 345.00 - OKLAUNION 345KV CKT 1
FDNSLock-Blown up	06ALL	0	20WP	G15_020		Non-Converged Contingency	1022	1124	0.19184	-	G14-074T 345.00 - TUCO INTERCHANGE 345KV CKT 1
FDNSLock-Blown up	06ALL	0	20WP	G15_020		Non-Converged Contingency	1022	1124	0.19184	-	OKLAUNION 345KV SWITCHED SHUNT
FDNSLock-Blown up	06ALL	0	20WP	G15_020		Non-Converged Contingency	1792	1972	0.18615	-	TUCO INTERCHANGE - TUCO_2 345.00 345KV CKT 1
FDNSLock-Blown up	06ALL	0	20WP	G15_020		Non-Converged Contingency	956	956	0.16952	-	CIMARRON - MINCO 345KV CKT 1
FDNSLock-Blown up	06ALL	0	20WP	G15_020		Non-Converged Contingency	1195	1195	0.16952	-	GRACEMONT - MINCO 345KV CKT 1
FDNSLock-Blown up	06ALL	0	20WP	G15_020		Non-Converged Contingency	557	557	0.16697	-	BUSHLAND INTERCHANGE - DEAF SMITH COUNTY INTERCHANGE 230KV CKT 1
FDNSLock-Blown up	06ALL	0	20WP	G15_020		Non-Converged Contingency	557	557	0.16697	-	BUSHLAND INTERCHANGE - DEAF SMITH COUNTY INTERCHANGE 230KV CKT 1
FDNSLock-Blown up	06ALL	0	20WP	G15_020		Non-Converged Contingency	987.16	1082.8	0.16284	-	G14_038T 345.00 - Hitchland Interchange 345KV CKT 1
FDNSLock-Blown up	06ALL	0	20WP	G15_020		Non-Converged Contingency	987.16	1082.8	0.16284	-	G14_038T 345.00 - POTTER COUNTY INTERCHANGE 345KV CKT 1
FDNSLock-Blown up	06ALL	0	20WP	G15_020		Non-Converged Contingency	560	560	0.16284	-	POTTER COUNTY INTERCHANGE (WAUK 90343-A) 345/230/13.2KV TRANSFORMER CKT 1
FDNSLock-Blown up	06ALL	0	20WP	G15_020		Non-Converged Contingency	560	560	0.16284	-	POTTER COUNTY INTERCHANGE (WAUK 90343-A) 345/230/13.2KV TRANSFORMER CKT 1
FDNSLock-Blown up	06ALL	0	20WP	G15_020		Non-Converged Contingency	1792	1792	0.15356	-	CHISHOLM7 345.00 - WOODWARD DISTRICT EHV 345KV CKT 1
FDNSLock-Blown up	06ALL	0	20WP	G15_020		Non-Converged Contingency	1584	2098	0.1527	-	CHISHOLM7 345.00 - GRACEMONT 345KV CKT 1
FDNSLock-Blown up	06ALL	0	20WP	G15_020		Non-Converged Contingency	1792	1972	0.15005	-	BORDER 7345.00 - TUCO_2 345.00 345KV CKT 1

SOLUTION	GROUP	SCENARIO	SEASON	SOURCE	DIRECTION	MONITORED ELEMENT	RATEA (MVA)	RATEB(MVA)	TDF	TC%LOADING (% MVA)	CONTINGENCY
FDNSLock-Blown up	06ALL	0	20WP	G15_020		Non-Converged Contingency	1420	1775	0.15005	-	BORDER 7345.00 - TUCO_2 345.00 345KV CKT 2
FDNSLock-Blown up	06ALL	0	20WP	G15_020		Non-Converged Contingency	1792	1972	0.15005	-	BORDER 7345.00 345KV SWITCHED SHUNT
FDNSLock-Blown up	06ALL	0	20WP	G15_020		Non-Converged Contingency	329.05	360.92	0.14713	-	BUSHLAND INTERCHANGE - POTTER COUNTY INTERCHANGE 230KV CKT 1
FDNSLock-Blown up	06ALL	0	20WP	G15_020		Non-Converged Contingency	329.05	360.92	0.14713	-	BUSHLAND INTERCHANGE - POTTER COUNTY INTERCHANGE 230KV CKT 1
FDNSLock-Blown up	06ALL	0	20WP	G15_020		Non-Converged Contingency	1792	1792	0.14193	-	TUCO INTERCHANGE - YOAKUM_345 345.00 345KV CKT 1
FDNSLock-Blown up	06ALL	0	20WP	G15_020		Non-Converged Contingency	987.16	1082.8	0.13907	-	Hitchland Interchange - WALKTAP7 345.00 345KV CKT 1
FDNSLock-Blown up	06ALL	0	20WP	G15_020		Non-Converged Contingency	987.16	1082.8	0.13907	-	Hitchland Interchange - WALKTAP7 345.00 345KV CKT 1
FDNSLock-Blown up	06ALL	0	20WP	G15_020		Non-Converged Contingency	0	0	0.13511	-	P12:230:AEPW-SPS:SWEETWT6:WHEELER 6
FDNSLock-Blown up	06ALL	0	20WP	G15_020		Non-Converged Contingency	0	0	0.12894	-	P12:230:AEPW:ELKCITY6:SWEETWT6
FDNSLock-Blown up	06ALL	0	20WP	G15_020		Non-Converged Contingency	717	789	0.12204	-	G14-057T 345.00 - LAWTON EASTSIDE 345KV CKT 1
FDNSLock-Blown up	06ALL	0	20WP	G15_020		Non-Converged Contingency	717	789	0.12204	-	G14-057T 345.00 - SUNNYSIDE 345KV CKT 1
FDNSLock-Blown up	06ALL	0	20WP	G15_020		Non-Converged Contingency	956.09	1051.7	0.12185	-	FINNEY SWITCHING STATION - HOLCOMB 345KV CKT 1
FDNSLock-Blown up	06ALL	0	20WP	G15_020		Non-Converged Contingency	956.09	1051.7	0.12185	-	FINNEY SWITCHING STATION - HOLCOMB 345KV CKT 1
FDNSLock-Blown up	06ALL	0	20WP	G15_020		Non-Converged Contingency	987.16	1082.8	0.12185	-	FINNEY SWITCHING STATION - WALKTAP7 345.00 345KV CKT 1
FDNSLock-Blown up	06ALL	0	20WP	G15_020		Non-Converged Contingency	987.16	1082.8	0.12185	-	FINNEY SWITCHING STATION - WALKTAP7 345.00 345KV CKT 1
FDNSLock-Blown up	06ALL	0	20WP	G15_020		Non-Converged Contingency	557	557	0.10718	-	NEWHART 230 - POTTER COUNTY INTERCHANGE 230KV CKT 1
FDNSLock-Blown up	06ALL	0	20WP	G15_020		Non-Converged Contingency	329.05	360.92	0.10643	-	DEAF SMITH COUNTY INTERCHANGE - G15039_T 230.00 230KV CKT 1
FDNSLock-Blown up	06ALL	0	20WP	G15_020		Non-Converged Contingency	329.05	360.92	0.10643	-	G15039_T 230.00 - PLANT X STATION 230KV CKT 1
FDNSLock-Blown up	06ALL	0	20WP	G15_020		Non-Converged Contingency	1420	1775	0.09473	-	G11_051T 345.00 - TATONGA7 345.00 345KV CKT 1
FDNSLock-Blown up	06ALL	0	20WP	G15_020		Non-Converged Contingency	1420	1775	0.09473	-	G11_051T 345.00 - WOODWARD DISTRICT EHV 345KV CKT 1
FDNSLock-Blown up	06ALL	0	20WP	G15_020		Non-Converged Contingency	1195	1195	0.09473	-	MATHWSN7 345.00 - TATONGA7 345.00 345KV CKT 1
FDNSLock-Blown up	06ALL	0	20WP	G15_020		Non-Converged Contingency	1561	1793	0.08986	-	THISTLE7 345.00 - WOODWARD DISTRICT EHV 345KV CKT 1
FDNSLock-Blown up	06ALL	0	20WP	G15_020		Non-Converged Contingency	1561	1793	0.08986	-	THISTLE7 345.00 - WOODWARD DISTRICT EHV 345KV CKT 1
FDNSLock-Blown up	06ALL	0	20WP	G15_020		Non-Converged Contingency	1561	1793	0.08986	-	THISTLE7 345.00 - WOODWARD DISTRICT EHV 345KV CKT 2
FDNSLock-Blown up	06ALL	0	20WP	G15_020		Non-Converged Contingency	1561	1793	0.08986	-	THISTLE7 345.00 - WOODWARD DISTRICT EHV 345KV CKT 2
FDNSLock-Blown up	06ALL	0	20WP	G15_020		Non-Converged Contingency	478	502	0.07741	-	AMARILLO SOUTH INTERCHANGE - G15031_T 230.00 230KV CKT 1
FDNSLock-Blown up	06ALL	0	20WP	G15_020		Non-Converged Contingency	1793	1793	0.07521	-	G11-14T 345.00 - WOODWARD DISTRICT EHV 345KV CKT 1
FDNSLock-Blown up	06ALL	0	20WP	G15_020		Non-Converged Contingency	1716	1793	0.07521	-	G11-14T 345.00 - WOODWARD DISTRICT EHV 345KV CKT 2
FDNSLock-Blown up	06ALL	0	20WP	G15_020		Non-Converged Contingency	556.92	556.92	0.06904	-	HITCHLAND INTERCHANGE - MOORE COUNTY INTERCHANGE 230KV CKT 1
FDNSLock-Blown up	06ALL	0	20WP	G15_020		Non-Converged Contingency	556.92	556.92	0.06904	-	HITCHLAND INTERCHANGE - MOORE COUNTY INTERCHANGE 230KV CKT 1
FDNSLock-Blown up	06ALL	0	20WP	G15_020		Non-Converged Contingency	421	439	0.06755	-	CHISHOLM6 230.00 - SWEETWATER 230KV CKT 1
FDNSLock-Blown up	06ALL	0	20WP	G15_020		Non-Converged Contingency	435.02	457.73	0.06755	-	STATELINE INTERCHANGE - STLN-DEMARC6 230KV CKT 1
FDNSLock-Blown up	06ALL	0	20WP	G15_020		Non-Converged Contingency	439	439	0.06755	-	STLN-DEMARC6 - SWEETWATER 230KV CKT 1
FDNSLock-Blown up	06ALL	0	20WP	G15_020		Non-Converged Contingency	329.05	360.92	0.05911	-	MOORE COUNTY INTERCHANGE - POTTER COUNTY INTERCHANGE 230KV CKT 1
FDNSLock-Blown up	06ALL	0	20WP	G15_020		Non-Converged Contingency	329.05	360.92	0.05911	-	MOORE COUNTY INTERCHANGE - POTTER COUNTY INTERCHANGE 230KV CKT 1
FDNSLock-Blown up	06ALL	0	20WP	G15_020		Non-Converged Contingency	557	557	0.05743	-	GRAPEVINE INTERCHANGE - STATELINE INTERCHANGE 230KV CKT 1
FDNSLock-Blown up	06ALL	0	20WP	G15_020		Non-Converged Contingency	557	557	0.05743	-	GRAPEVINE INTERCHANGE - STATELINE INTERCHANGE 230KV CKT 1
FDNSLock-Blown up	06ALL	0	20WP	G15_020		Non-Converged Contingency	557	557	0.05739	-	GRAPEVINE INTERCHANGE - NICHOLS STATION 230KV CKT 1
FDNSLock-Blown up	06ALL	0	20WP	G15_020		Non-Converged Contingency	557	557	0.05739	-	GRAPEVINE INTERCHANGE - NICHOLS STATION 230KV CKT 1
FDNSLock-Blown up	06ALL	2	16WP	G15_020		Non-Converged Contingency	1022	1124	0.19279	-	G14-074T 345.00 - OKLAUNION 345KV CKT 1
FDNSLock-Blown up	06ALL	2	16WP	G15_020		Non-Converged Contingency	1022	1124	0.19279	-	G14-074T 345.00 - TUCO INTERCHANGE 345KV CKT 1
FDNSLock-Blown up	06ALL	2	16WP	G15_020		Non-Converged Contingency	987.16	1082.8	0.17786	-	G14_038T 345.00 - Hitchland Interchange 345KV CKT 1
FDNSLock-Blown up	06ALL	2	16WP	G15_020		Non-Converged Contingency	987.16	1082.8	0.17786	-	G14_038T 345.00 - POTTER COUNTY INTERCHANGE 345KV CKT 1
FDNSLock-Blown up	06ALL	2	16WP	G15_020		Non-Converged Contingency	560	560	0.17786	-	POTTER COUNTY INTERCHANGE (WAUK 90343-A) 345/230/13.2KV TRANSFORMER CKT 1
FDNSLock-Blown up	06ALL	2	16WP	G15_020		Non-Converged Contingency	1792	1972	0.14829	-	BORDER 7345.00 - TUCO_2 345.00 345KV CKT 1
FDNSLock-Blown up	06ALL	2	16WP	G15_020		Non-Converged Contingency	1420	1775	0.14829	-	BORDER 7345.00 - TUCO_2 345.00 345KV CKT 2
FDNSLock-Blown up	06ALL	2	17G	G15_020		Non-Converged Contingency	1022	1124	0.18623	-	G14-074T 345.00 - OKLAUNION 345KV CKT 1
FDNSLock-Blown up	06ALL	2	17G	G15_020		Non-Converged Contingency	1022	1124	0.18623	-	G14-074T 345.00 - TUCO INTERCHANGE 345KV CKT 1
FDNSLock-Blown up	06ALL	2	17G	G15_020		Non-Converged Contingency	956.09	1051.7	0.16865	-	G14_038T 345.00 - Hitchland Interchange 345KV CKT 1
FDNSLock-Blown up	06ALL	2	17G	G15_020		Non-Converged Contingency	956.09	1051.7	0.16865	-	G14_038T 345.00 - POTTER COUNTY INTERCHANGE 345KV CKT 1
FDNSLock-Blown up	06ALL	2	17G	G15_020		Non-Converged Contingency	560	560	0.16865	-	POTTER COUNTY INTERCHANGE (WAUK 90343-A) 345/230/13.2KV TRANSFORMER CKT 1
FDNSLock-Blown up	06ALL	2	17G	G15_020		Non-Converged Contingency	1792	1972	0.14254	-	BORDER 7345.00 - TUCO_2 345.00 345KV CKT 1
FDNSLock-Blown up	06ALL	2	17G	G15_020		Non-Converged Contingency	1420	1775	0.14254	-	BORDER 7345.00 - TUCO_2 345.00 345KV CKT 2
FDNSLock-Blown up	06ALL	2	17SP	G15_020		Non-Converged Contingency	956	1042	0.19129	-	G14-074T 345.00 - OKLAUNION 345KV CKT 1
FDNSLock-Blown up	06ALL	2	20L	G15_020		Non-Converged Contingency	0	0	0.22035	-	P12:345:SPS:J07.1.FINN.HITCH
FDNSLock-Blown up	06ALL	2	20L	G15_020		Non-Converged Contingency	1022	1124	0.16262	-	G14-074T 345.00 - OKLAUNION 345KV CKT 1
FDNSLock-Blown up	06ALL	2	20L	G15_020		Non-Converged Contingency	1022	1124	0.16262	-	G14-074T 345.00 - TUCO INTERCHANGE 345KV CKT 1
FDNSLock-Blown up	06ALL	2	20L	G15_020		Non-Converged Contingency	1022	1124	0.16262	-	OKLAUNION 345KV SWITCHED SHUNT
FDNSLock-Blown up	06ALL	2	20L	G15_020		Non-Converged Contingency	956.09	1051.7	0.13431	-	G14_038T 345.00 - Hitchland Interchange 345KV CKT 1
FDNSLock-Blown up	06ALL	2	20L	G15_020		Non-Converged Contingency	956.09	1051.7	0.13431	-	G14_038T 345.00 - POTTER COUNTY INTERCHANGE 345KV CKT 1
FDNSLock-Blown up	06ALL	2	20L	G15_020		Non-Converged Contingency	560	560	0.13431	-	POTTER COUNTY INTERCHANGE (WAUK 90343-A) 345/230/13.2KV TRANSFORMER CKT 1
FDNSLock-Blown up	06ALL	2	20L	G15_020		Non-Converged Contingency	560	560	0.13431	-	POTTER COUNTY INTERCHANGE (WAUK 90343-A) 345/230/13.2KV TRANSFORMER CKT 1
FDNSLock-Blown up	06ALL	2	20L	G15_020		Non-Converged Contingency	1792	1972	0.12951	-	BORDER 7345.00 - TUCO_2 345.00 345KV CKT 1
FDNSLock-Blown up	06ALL	2	20L	G15_020		Non-Converged Contingency	1420	1775	0.12951	-	BORDER 7345.00 - TUCO_2 345.00 345KV CKT 2
FDNSLock-Blown up	06ALL	2	20L	G15_020		Non-Converged Contingency	1584	2098	0.12703	-	CHISHOLM7 345.00 - GRACEMONT 345KV CKT 1
FDNSLock-Blown up	06ALL	2	20L	G15_020		Non-Converged Contingency	956.09	1051.7	0.11763	-	Hitchland Interchange - WALKTAP7 345.00 345KV CKT 1
FDNSLock-Blown up	06ALL	2	20L	G15_020		Non-Converged Contingency	956.09	1051.7	0.11763	-	Hitchland Interchange - WALKTAP7 345.00 345KV CKT 1
FDNSLock-Blown up	06NR	2	20L	G15_020		Non-Converged Contingency	318.7	350.57	0.10235	-	BUSHLAND INTERCHANGE - POTTER COUNTY INTERCHANGE 230KV CKT 1
FDNSLock-Blown up	06NR	2	20L	G15_020		Non-Converged Contingency	318.7	350.57	0.10235	-	BUSHLAND INTERCHANGE - POTTER COUNTY INTERCHANGE 230KV CKT 1
FDNSLock-Blown up	06ALL	2	20L	G15_020		Non-Converged Contingency	0	0	0.1022	-	P12:230:AEPW:ELKCITY6:SWEETWT6
FDNSLock-Blown up	06ALL	2	20L	G15_020		Non-Converged Contingency	1195	1195	0.08057	-	MATHWSN7 345.00 - TATONGA7 345.00 345KV CKT 1
FDNSLock-Blown up	06NR	2	20L	G15_020		Non-Converged Contingency	478	502	0.07527	-	NEWHART 230 - POTTER COUNTY INTERCHANGE 230KV CKT 1
FDNSLock-Blown up	06NR	2	20L	G15_020		Non-Converged Contingency	478	502	0.0683	-	AMARILLO SOUTH INTERCHANGE - G15031_T 230.00 230KV CKT 1
FDNSLock-Blown up	06NR	2	20L	G15_020		Non-Converged Contingency	318.7	350.57	0.06559	-	DEAF SMITH COUNTY INTERCHANGE - G15039_T 230.00 230KV CKT 1
FDNSLock-Blown up	06ALL	2	20L	G15_020		Non-Converged Contingency	421	439	0.05225	-	CHISHOLM6 230.00 - SWEETWATER 230KV CKT 1
FDNSLock-Blown up	06NR	2	20L	G15_020		Non-Converged Contingency	1022	1124	0.0297	-	G14-074T 345.00 - OKLAUNION 345KV CKT 1
FDNSLock-Blown up	06NR	2	20L	G15_020		Non-Converged Contingency	1022	1124	0.0297	-	G14-074T 345.00 - TUCO INTERCHANGE 345KV CKT 1
FDNSLock-Blown up	06NR	2	20L	G15_020		Non-Converged Contingency	1022	1124	0.0297	-	OKLAUNION 345KV SWITCHED SHUNT
FDNSLock-Blown up	06ALL	2	20SP	G15_020		Non-Converged Contingency	956	1042	0.19677	-	G14-074T 345.00 - OKLAUNION 345KV CKT 1

SOLUTION	GROUP	SCENARIO	SEASON	SOURCE	DIRECTION	MONITORED ELEMENT	RATEA (MVA)	RATEB(MVA)	TDF	TC%LOADING (% MVA)	CONTINGENCY
FDNSLock-Blown up	06ALL	2	20WP	G15_020		Non-Converged Contingency	1022	1124	0.19208	-	G14-074T 345.00 - OKLAUNION 345KV CKT 1
FDNSLock-Blown up	06ALL	2	20WP	G15_020		Non-Converged Contingency	1022	1124	0.19208	-	G14-074T 345.00 - TUCO INTERCHANGE 345KV CKT 1
FDNSLock-Blown up	06ALL	2	20WP	G15_020		Non-Converged Contingency	987.16	1082.8	0.16305	-	G14_038T 345.00 - Hitchland Interchange 345KV CKT 1
FDNSLock-Blown up	06ALL	2	20WP	G15_020		Non-Converged Contingency	987.16	1082.8	0.16305	-	G14_038T 345.00 - POTTER COUNTY INTERCHANGE 345KV CKT 1
FDNSLock-Blown up	06ALL	2	20WP	G15_020		Non-Converged Contingency	560	560	0.16305	-	POTTER COUNTY INTERCHANGE (WAUK 90343-A) 345/230/13.2KV TRANSFORMER CKT 1
FDNSLock-Blown up	06ALL	2	20WP	G15_020		Non-Converged Contingency	560	560	0.16305	-	POTTER COUNTY INTERCHANGE (WAUK 90343-A) 345/230/13.2KV TRANSFORMER CKT 1
FDNSLock-Blown up	06ALL	2	20WP	G15_020		Non-Converged Contingency	1792	1972	0.15025	-	BORDER 7345.00 - TUCO_2 345.00 345KV CKT 1
FDNSLock-Blown up	06ALL	2	20WP	G15_020		Non-Converged Contingency	1420	1775	0.15025	-	BORDER 7345.00 - TUCO_2 345.00 345KV CKT 2
FDNSLock-Blown up	06ALL	3	16WP	G15_020		Non-Converged Contingency	1022	1124	0.20702	-	G14-074T 345.00 - OKLAUNION 345KV CKT 1
FDNSLock-Blown up	06ALL	3	16WP	G15_020		Non-Converged Contingency	1022	1124	0.20702	-	G14-074T 345.00 - TUCO INTERCHANGE 345KV CKT 1
FDNSLock-Blown up	06NR	3	17G	G15_020		Non-Converged Contingency	1022	1124	0.0338	-	G14-074T 345.00 - OKLAUNION 345KV CKT 1
FDNSLock-Blown up	06NR	3	17G	G15_020		Non-Converged Contingency	1022	1124	0.0338	-	G14-074T 345.00 - TUCO INTERCHANGE 345KV CKT 1
FDNSLock-Blown up	06NR	3	17G	G15_020		Non-Converged Contingency	1792	1972	0.03257	-	BORDER 7345.00 - TUCO_2 345.00 345KV CKT 1
FDNSLock-Blown up	06NR	3	17G	G15_020		Non-Converged Contingency	1792	1792	0.03257	-	BORDER 7345.00 - WOODWARD DISTRICT EHV 345KV CKT 1
FDNSLock-Blown up	06ALL	3	17SP	G15_020		Non-Converged Contingency	956	1042	0.20444	-	G14-074T 345.00 - OKLAUNION 345KV CKT 1
FDNSLock-Blown up	06ALL	3	20L	G15_020		Non-Converged Contingency	1022	1124	0.17164	-	G14-074T 345.00 - OKLAUNION 345KV CKT 1
FDNSLock-Blown up	06ALL	3	20L	G15_020		Non-Converged Contingency	1022	1124	0.17164	-	G14-074T 345.00 - TUCO INTERCHANGE 345KV CKT 1
FDNSLock-Blown up	06ALL	3	20L	G15_020		Non-Converged Contingency	1792	1972	0.14011	-	BORDER 7345.00 - TUCO_2 345.00 345KV CKT 1
FDNSLock-Blown up	06ALL	3	20L	G15_020		Non-Converged Contingency	1420	1775	0.14011	-	BORDER 7345.00 - TUCO_2 345.00 345KV CKT 2
FDNSLock-Blown up	06ALL	3	20L	G15_020		Non-Converged Contingency	1584	2098	0.12947	-	CHISHOLM7 345.00 - GRACEMONT 345KV CKT 1
FDNSLock-Blown up	06ALL	3	20L	G15_020		Non-Converged Contingency	956.09	1051.7	0.12477	-	G14_038T 345.00 - Hitchland Interchange 345KV CKT 1
FDNSLock-Blown up	06ALL	3	20L	G15_020		Non-Converged Contingency	956.09	1051.7	0.12477	-	G14_038T 345.00 - POTTER COUNTY INTERCHANGE 345KV CKT 1
FDNSLock-Blown up	06ALL	3	20L	G15_020		Non-Converged Contingency	560	560	0.12477	-	POTTER COUNTY INTERCHANGE (WAUK 90343-A) 345/230/13.2KV TRANSFORMER CKT 1
FDNSLock-Blown up	06ALL	3	20L	G15_020		Non-Converged Contingency	956.09	1051.7	0.11368	-	Hitchland Interchange - WALKTAP7 345.00 345KV CKT 1
FDNSLock-Blown up	06ALL	3	20L	G15_020		Non-Converged Contingency	1195	1195	0.07843	-	MATHWSN7 345.00 - TATONGA7 345.00 345KV CKT 1
FDNSLock-Blown up	06ALL	3	20L	G15_020		Non-Converged Contingency	421	439	0.04442	-	CHISHOLM6 230.00 - SWEETWATER 230KV CKT 1
FDNSLock-Blown up	06NR	3	20L	G15_020		Non-Converged Contingency	1022	1124	0.03611	-	G14-074T 345.00 - OKLAUNION 345KV CKT 1
FDNSLock-Blown up	06NR	3	20L	G15_020		Non-Converged Contingency	1022	1124	0.03611	-	G14-074T 345.00 - TUCO INTERCHANGE 345KV CKT 1
FDNSLock-Blown up	06NR	3	20L	G15_020		Non-Converged Contingency	1022	1124	0.03611	-	OKLAUNION 345KV SWITCHED SHUNT
FDNSLock-Blown up	06NR	3	20L	G15_020		Non-Converged Contingency	1792	1972	0.03497	-	BORDER 7345.00 - TUCO_2 345.00 345KV CKT 1
FDNSLock-Blown up	06NR	3	20L	G15_020		Non-Converged Contingency	1792	1792	0.03497	-	BORDER 7345.00 - WOODWARD DISTRICT EHV 345KV CKT 1
FDNSLock-Blown up	06NR	3	20L	G15_020		Non-Converged Contingency	1792	1972	0.03497	-	BORDER 7345.00 345KV SWITCHED SHUNT
FDNSLock-Blown up	06ALL	3	20SP	G15_020		Non-Converged Contingency	956	1042	0.2059	-	G14-074T 345.00 - OKLAUNION 345KV CKT 1
FDNSLock-Blown up	06ALL	3	20WP	G15_020		Non-Converged Contingency	1022	1124	0.20133	-	G14-074T 345.00 - OKLAUNION 345KV CKT 1
FDNSLock-Blown up	06ALL	3	20WP	G15_020		Non-Converged Contingency	1022	1124	0.20133	-	G14-074T 345.00 - TUCO INTERCHANGE 345KV CKT 1
FDNSLock-Blown up	06ALL	3	20WP	G15_020		Non-Converged Contingency	1792	1972	0.16134	-	BORDER 7345.00 - TUCO_2 345.00 345KV CKT 1
FDNSLock-Blown up	06ALL	3	20WP	G15_020		Non-Converged Contingency	1420	1775	0.16134	-	BORDER 7345.00 - TUCO_2 345.00 345KV CKT 2
FDNSLock-Blown up	06ALL	3	20WP	G15_020		Non-Converged Contingency	987.16	1082.8	0.15218	-	G14_038T 345.00 - Hitchland Interchange 345KV CKT 1
FDNSLock-Blown up	06ALL	3	20WP	G15_020		Non-Converged Contingency	987.16	1082.8	0.15218	-	G14_038T 345.00 - POTTER COUNTY INTERCHANGE 345KV CKT 1
FDNSLock-Blown up	06ALL	4	16WP	G15_020		Non-Converged Contingency	1022	1124	0.18702	-	G14-074T 345.00 - OKLAUNION 345KV CKT 1
FDNSLock-Blown up	06ALL	4	17G	G15_020		Non-Converged Contingency	956.09	1051.7	0.20411	-	G14_038T 345.00 - Hitchland Interchange 345KV CKT 1
FDNSLock-Blown up	06ALL	4	17G	G15_020		Non-Converged Contingency	956.09	1051.7	0.20411	-	G14_038T 345.00 - POTTER COUNTY INTERCHANGE 345KV CKT 1
FDNSLock-Blown up	06ALL	4	17G	G15_020		Non-Converged Contingency	1022	1124	0.1805	-	G14-074T 345.00 - OKLAUNION 345KV CKT 1
FDNSLock-Blown up	06ALL	4	17G	G15_020		Non-Converged Contingency	1022	1124	0.1805	-	G14-074T 345.00 - TUCO INTERCHANGE 345KV CKT 1
FDNSLock-Blown up	06ALL	4	20L	G15_020		Non-Converged Contingency	0	0	0.23598	-	P12:345:SPS:J07.1.FINN.HITCH
FDNSLock-Blown up	06ALL	4	20L	G15_020		Non-Converged Contingency	956.09	1051.7	0.17247	-	G14_038T 345.00 - Hitchland Interchange 345KV CKT 1
FDNSLock-Blown up	06ALL	4	20L	G15_020		Non-Converged Contingency	956.09	1051.7	0.17247	-	G14_038T 345.00 - POTTER COUNTY INTERCHANGE 345KV CKT 1
FDNSLock-Blown up	06ALL	4	20L	G15_020		Non-Converged Contingency	1022	1124	0.15402	-	G14-074T 345.00 - OKLAUNION 345KV CKT 1
FDNSLock-Blown up	06ALL	4	20L	G15_020		Non-Converged Contingency	1022	1124	0.15402	-	G14-074T 345.00 - TUCO INTERCHANGE 345KV CKT 1
FDNSLock-Blown up	06ALL	4	20L	G15_020		Non-Converged Contingency	956.09	1051.7	0.12597	-	Hitchland Interchange - WALKTAP7 345.00 345KV CKT 1
FDNSLock-Blown up	06ALL	4	20L	G15_020		Non-Converged Contingency	956.09	1051.7	0.12597	-	Hitchland Interchange - WALKTAP7 345.00 345KV CKT 1
FDNSLock-Blown up	06ALL	4	20L	G15_020		Non-Converged Contingency	1584	2098	0.12575	-	CHISHOLM7 345.00 - GRACEMONT 345KV CKT 1
FDNSLock-Blown up	06ALL	4	20L	G15_020		Non-Converged Contingency	1792	1972	0.12112	-	BORDER 7345.00 - TUCO_2 345.00 345KV CKT 1
FDNSLock-Blown up	06ALL	4	20L	G15_020		Non-Converged Contingency	1420	1775	0.12112	-	BORDER 7345.00 - TUCO_2 345.00 345KV CKT 2
FDNSLock-Blown up	06ALL	4	20L	G15_020		Non-Converged Contingency	0	0	0.10285	-	P12:230:AEPW:ELKCITY6:SWEETWT6
FDNSLock-Blown up	06ALL	4	20WP	G15_020		Non-Converged Contingency	987.16	1082.8	0.20299	-	G14_038T 345.00 - Hitchland Interchange 345KV CKT 1
FDNSLock-Blown up	06ALL	4	20WP	G15_020		Non-Converged Contingency	1022	1124	0.18196	-	G14-074T 345.00 - OKLAUNION 345KV CKT 1
FDNSLock-Blown up	06ALL	4	20WP	G15_020		Non-Converged Contingency	1022	1124	0.18196	-	G14-074T 345.00 - TUCO INTERCHANGE 345KV CKT 1
FDNSLock-Blown up	06ALL	5	16WP	G15_020		Non-Converged Contingency	1022	1124	0.17882	-	G14-074T 345.00 - OKLAUNION 345KV CKT 1
FDNSLock-Blown up	06ALL	5	17G	G15_020		Non-Converged Contingency	1022	1124	0.17278	-	G14-074T 345.00 - OKLAUNION 345KV CKT 1
FDNSLock-Blown up	06ALL	5	20L	G15_020		Non-Converged Contingency	1022	1124	0.14882	-	G14-074T 345.00 - OKLAUNION 345KV CKT 1
FDNSLock-Blown up	06ALL	5	20WP	G15_020		Non-Converged Contingency	1022	1124	0.17394	-	G14-074T 345.00 - OKLAUNION 345KV CKT 1
FDNSLock-Blown up	06ALL	6	17G	G15_020		Non-Converged Contingency	1022	1124	0.16566	-	G14-074T 345.00 - OKLAUNION 345KV CKT 1
FDNSLock-Blown up	06ALL	6	20L	G15_020		Non-Converged Contingency	1022	1124	0.14265	-	G14-074T 345.00 - OKLAUNION 345KV CKT 1
FDNSLock-Blown up	06ALL	6	20WP	G15_020		Non-Converged Contingency	1022	1124	0.16695	-	G14-074T 345.00 - OKLAUNION 345KV CKT 1
FDNS	06ALL	0	16WP	G15_020	FROM->TO	BUSHLAND INTERCHANGE - POTTER COUNTY INTERCHANGE 230KV CKT 1	329.05	360.92	0.16354	103.4995	BASE CASE
FDNS	06NR	0	17G	G15_020	FROM->TO	BUSHLAND INTERCHANGE - POTTER COUNTY INTERCHANGE 230KV CKT 1	318.7	350.57	0.11713	101.2444	BUSHLAND INTERCHANGE - HILLSIDE 115KV CKT 1
FDNS	06NR	0	17G	G15_020	FROM->TO	BUSHLAND INTERCHANGE - POTTER COUNTY INTERCHANGE 230KV CKT 1	318.7	350.57	0.11713	101.1735	BUSHLAND INTERCHANGE (WH 7001795) 230/115/13.2KV TRANSFORMER CKT 1
FDNS	06NR	0	17G	G15_020	FROM->TO	BUSHLAND INTERCHANGE - POTTER COUNTY INTERCHANGE 230KV CKT 1	318.7	350.57	0.11713	101.1735	BUSHLAND INTERCHANGE (WH 7001795) 230/115/13.2KV TRANSFORMER CKT 1
FDNS	06NR	0	17G	G15_020	FROM->TO	BUSHLAND INTERCHANGE - POTTER COUNTY INTERCHANGE 230KV CKT 1	318.7	350.57	0.11713	100.4335	P12:115:SPS:V52.1.COLTR.BSHLND
FDNS	06NR	0	20L	G15_020	TO->FROM	CARGILL SUB - DEAF SMITH REC-#24 115KV CKT 1	96	96	0.10201	102.4809	G15039_T 230.00 - PLANT X STATION 230KV CKT 1
FDNS	06ALL	0	20SP	G15_020	FROM->TO	CHISHOLM6 230.00 - ELK CITY 230KV 230KV CKT 1	353	353	0.06308	106.4803	BASE CASE
FDNS	06ALL	0	17SP	G15_020	FROM->TO	CHISHOLM6 230.00 - ELK CITY 230KV 230KV CKT 1	353	353	0.06321	104.7427	BASE CASE
FDNS	06ALL	0	17SP	G15_020	TO->FROM	CIMARRON - MINCO 345KV CKT 1	956	956	0.23229	123.2446	G14-057T 345.00 - SUNNYSIDE 345KV CKT 1
FDNS	06ALL	0	20SP	G15_020	TO->FROM	CIMARRON - MINCO 345KV CKT 1	956	956	0.23529	120.5642	G14-057T 345.00 - SUNNYSIDE 345KV CKT 1
FDNS	06ALL	0	17SP	G15_020	TO->FROM	CIMARRON - MINCO 345KV CKT 1	956	956	0.23229	117.8925	G14-057T 345.00 - LAWTON EASTSIDE 345KV CKT 1
FDNS	06ALL	0	20SP	G15_020	TO->FROM	CIMARRON - MINCO 345KV CKT 1	956	956	0.23529	115.1699	G14-057T 345.00 - LAWTON EASTSIDE 345KV CKT 1
FDNS	06ALL	0	17SP	G15_020	TO->FROM	CIMARRON - MINCO 345KV CKT 1	956	956	0.20008	105.5731	MATHWSN7 345.00 - TATONGA7 345.00 345KV CKT 1
FDNS	06ALL	0	20SP	G15_020	TO->FROM	CIMARRON - MINCO 345KV CKT 1	956	956	0.20192	104.5241	MATHWSN7 345.00 - TATONGA7 345.00 345KV CKT 1

SOLUTION	GROUP	SCENARIO	SEASON	SOURCE	DIRECTION	MONITORED ELEMENT	RATEA (MVA)	RATEB(MVA)	TDF	TC%LOADING (% MVA)	CONTINGENCY
FDNS	06ALL	0	20SP	G15_020	TO->FROM	CIMARRON - MINCO 345KV CKT 1	956	956	0.23253	102.9387	CHISHOLM7 345.00 - WOODWARD DISTRICT EHV 345KV CKT 1
FDNS	06ALL	0	17SP	G15_020	TO->FROM	CIMARRON - MINCO 345KV CKT 1	956	956	0.22827	102.0892	CHISHOLM7 345.00 - WOODWARD DISTRICT EHV 345KV CKT 1
FDNS	06ALL	0	17SP	G15_020	TO->FROM	CIMARRON - MINCO 345KV CKT 1	956	956	0.20008	100.3376	G11_051T 345.00 - TATONGA7 345.00 345KV CKT 1
FDNS	06NR	0	20L	G15_020	FROM->TO	CURRY COUNTY INTERCHANGE - DEAF SMITH REC-#20 115KV CKT 1	96	96	0.10201	120.2948	G15039_T 230.00 - PLANT X STATION 230KV CKT 1
FDNS	06ALL	0	20SP	G15_020	TO->FROM	DEAF SMITH COUNTY INTERCHANGE - G15039_T 230.00 230KV CKT 1	318.7	350.57	0.10755	110.3343	BASE CASE
FDNS	06NR	0	17G	G15_020	TO->FROM	DEAF SMITH COUNTY INTERCHANGE - G15039_T 230.00 230KV CKT 1	318.7	350.57	0.08972	110.3216	NEWHART 230 - PLANT X STATION 230KV CKT 1
FDNS	06ALL	0	17SP	G15_020	TO->FROM	DEAF SMITH COUNTY INTERCHANGE - G15039_T 230.00 230KV CKT 1	318.7	350.57	0.1179	108.4885	BASE CASE
FDNS	06NR	0	17G	G15_020	TO->FROM	DEAF SMITH COUNTY INTERCHANGE - G15039_T 230.00 230KV CKT 1	318.7	350.57	0.06147	103.1436	P12:115:SPS:T04.1.DFSMTH.CASTRO
FDNS	06NR	0	17G	G15_020	TO->FROM	DEAF SMITH COUNTY INTERCHANGE - G15039_T 230.00 230KV CKT 1	318.7	350.57	0.10568	101.0528	CURRY COUNTY INTERCHANGE - DEAF SMITH REC-#20 115KV CKT 1
FDNS	06NR	0	17G	G15_020	TO->FROM	DEAF SMITH COUNTY INTERCHANGE - G15039_T 230.00 230KV CKT 1	318.7	350.57	0.08015	100.4761	TOLK STATION EAST - TUCO INTERCHANGE 230KV CKT 1
FDNS	06NR	0	17G	G15_020	TO->FROM	DEAF SMITH COUNTY INTERCHANGE - G15039_T 230.00 230KV CKT 1	318.7	350.57	0.08015	100.4761	TOLK STATION EAST - TUCO INTERCHANGE 230KV CKT 1
FDNS	06NR	0	17G	G15_020	TO->FROM	DEAF SMITH COUNTY INTERCHANGE - G15039_T 230.00 230KV CKT 1	318.7	350.57	0.06203	99.9	P12:230:SPS:CL.1.BSHLND.WLDRDO
FDNS	06NR	0	17G	G15_020	TO->FROM	DEAF SMITH COUNTY INTERCHANGE - G15039_T 230.00 230KV CKT 1	318.7	350.57	0.10568	99.6	DEAF SMITH REC-#20 - PARMER COUNTY SUB 115KV CKT 1
FDNS	06NR	0	20L	G15_020	FROM->TO	DEAF SMITH REC-#20 - PARMER COUNTY SUB 115KV CKT 1	96	96	0.10201	112.8529	G15039_T 230.00 - PLANT X STATION 230KV CKT 1
FDNS	06NR	0	20L	G15_020	TO->FROM	DEAF SMITH REC-#24 - PARMER COUNTY SUB 115KV CKT 1	96	96	0.10201	107.7543	G15039_T 230.00 - PLANT X STATION 230KV CKT 1
FDNSLock	06ALL	0	20WP	G15_020		ELK CITY 230KV (ELKCTY-6) 230/138/13.8KV TRANSFORMER CKT 1	450	450	0.06139	87.66341	BASE CASE
FDNSLock	06ALL	0	20WP	G15_020		ELK CITY 230KV (ELKCTY-6) 230/138/13.8KV TRANSFORMER CKT 1	450	450	0.06139	87.66341	BASE CASE
FDNS	06ALL	0	20L	G15_020	TO->FROM	G14-057T 345.00 - LAWTON EASTSIDE 345KV CKT 1	717	789	0.09828	108.0268	BASE CASE
FDNS	06ALL	0	20L	G15_020	FROM->TO	G14-057T 345.00 - SUNNYSIDE 345KV CKT 1	717	789	0.09828	120.8788	BASE CASE
FDNS	06ALL	0	20WP	G15_020	FROM->TO	G14-057T 345.00 - SUNNYSIDE 345KV CKT 1	717	789	0.12204	107.5634	BASE CASE
FDNS	06ALL	0	17G	G15_020	FROM->TO	G14-057T 345.00 - SUNNYSIDE 345KV CKT 1	717	789	0.12197	106.9763	BASE CASE
FDNS	06ALL	0	16WP	G15_020	FROM->TO	G14-057T 345.00 - SUNNYSIDE 345KV CKT 1	717	789	0.12525	105.0999	BASE CASE
FDNS	06NR	0	20L	G15_020	FROM->TO	G14-074T 345.00 - OKLAUNION 345KV CKT 1	1022	1124	0.0297	106.9322	BASE CASE
FDNS	06NR	0	20L	G15_020	FROM->TO	G14-074T 345.00 - OKLAUNION 345KV CKT 1	1022	1124	0.02994	101.4902	TUCO INTERCHANGE - TUCO_2 345.00 345KV CKT 1
FDNS	06NR	0	20L	G15_020	FROM->TO	G14-074T 345.00 - OKLAUNION 345KV CKT 1	1022	1124	0.0442	101.2851	BUSHLAND INTERCHANGE - DEAF SMITH COUNTY INTERCHANGE 230KV CKT 1
FDNS	06NR	0	20L	G15_020	FROM->TO	G14-074T 345.00 - OKLAUNION 345KV CKT 1	1022	1124	0.0442	101.2851	BUSHLAND INTERCHANGE - DEAF SMITH COUNTY INTERCHANGE 230KV CKT 1
FDNS	06NR	0	20L	G15_020	FROM->TO	G14-074T 345.00 - OKLAUNION 345KV CKT 1	1022	1124	0.02983	101.2671	MOORE COUNTY INTERCHANGE - POTTER COUNTY INTERCHANGE 230KV CKT 1
FDNS	06NR	0	20L	G15_020	FROM->TO	G14-074T 345.00 - OKLAUNION 345KV CKT 1	1022	1124	0.02983	101.2671	MOORE COUNTY INTERCHANGE - POTTER COUNTY INTERCHANGE 230KV CKT 1
FDNS	00NR	0	25SP	G15_020	TO->FROM	JONES STATION - TUCO INTERCHANGE 230KV CKT 1	343.79	343.79	0.06653	139.3518	CARLISLE INTERCHANGE - TUCO INTERCHANGE 230KV CKT 1
FDNS	00NR	0	25SP	G15_020	TO->FROM	JONES STATION - TUCO INTERCHANGE 230KV CKT 1	343.79	343.79	0.06653	139.3518	CARLISLE INTERCHANGE - TUCO INTERCHANGE 230KV CKT 1
FDNS	00NR	0	25SP	G15_020	TO->FROM	JONES STATION - TUCO INTERCHANGE 230KV CKT 1	343.79	343.79	0.06131	123.0773	TUCO INTERCHANGE - YOAKUM_345 345.00 345KV CKT 1
FDNS	00NR	0	25SP	G15_020	TO->FROM	JONES STATION - TUCO INTERCHANGE 230KV CKT 1	343.79	343.79	0.05817	119.4572	GEN526333 1-JONES GEN #3 21 KV
FDNS	00NR	0	25SP	G15_020	TO->FROM	JONES STATION - TUCO INTERCHANGE 230KV CKT 1	343.79	343.79	0.05817	119.0504	GEN526334 1-JONES_4 116.500
FDNS	00NR	0	25SP	G15_020	TO->FROM	JONES STATION - TUCO INTERCHANGE 230KV CKT 1	343.79	343.79	0.061	111.1942	CARLISLE INTERCHANGE - WOLFFORTH INTERCHANGE 230KV CKT 1
FDNS	00NR	0	25SP	G15_020	TO->FROM	JONES STATION - TUCO INTERCHANGE 230KV CKT 1	343.79	343.79	0.05831	107.2791	TUCO INTERCHANGE (ENRCO 136401) 230/115/13.2KV TRANSFORMER CKT 1
FDNS	00NR	0	25SP	G15_020	TO->FROM	JONES STATION - TUCO INTERCHANGE 230KV CKT 1	343.79	343.79	0.05831	107.2791	TUCO INTERCHANGE (ENRCO 136401) 230/115/13.2KV TRANSFORMER CKT 1
FDNS	00NR	0	25SP	G15_020	TO->FROM	JONES STATION - TUCO INTERCHANGE 230KV CKT 1	343.79	343.79	0.05831	107.2791	TUCO INTERCHANGE (ENRCO 136401) 230/115/13.2KV TRANSFORMER CKT 2
FDNS	00NR	0	25SP	G15_020	TO->FROM	JONES STATION - TUCO INTERCHANGE 230KV CKT 1	343.79	343.79	0.05831	107.2791	TUCO INTERCHANGE (ENRCO 136401) 230/115/13.2KV TRANSFORMER CKT 2
FDNS	00NR	0	25SP	G15_020	TO->FROM	JONES STATION - TUCO INTERCHANGE 230KV CKT 1	343.79	343.79	0.05817	106.7618	GEN526332 1-JONES GEN #2 21 KV
FDNS	00NR	0	25SP	G15_020	TO->FROM	JONES STATION - TUCO INTERCHANGE 230KV CKT 1	343.79	343.79	0.05817	106.7593	GEN526331 1-JONES GEN #1 22 KV
FDNS	00NR	0	25SP	G15_020	TO->FROM	JONES STATION - TUCO INTERCHANGE 230KV CKT 1	343.79	343.79	0.07184	105.7876	PLANT X STATION - SUNDOWN INTERCHANGE 230KV CKT 1
FDNS	00NR	0	25SP	G15_020	TO->FROM	JONES STATION - TUCO INTERCHANGE 230KV CKT 1	343.79	343.79	0.07184	105.7876	PLANT X STATION - SUNDOWN INTERCHANGE 230KV CKT 1
FDNS	00NR	0	25SP	G15_020	TO->FROM	JONES STATION - TUCO INTERCHANGE 230KV CKT 1	343.79	343.79	0.06392	105.7418	LUBBOCK EAST INTERCHANGE - TUCO INTERCHANGE 115KV CKT 1
FDNS	00NR	0	25SP	G15_020	TO->FROM	JONES STATION - TUCO INTERCHANGE 230KV CKT 1	343.79	343.79	0.06392	105.7418	LUBBOCK EAST INTERCHANGE - TUCO INTERCHANGE 115KV CKT 1
FDNS	00NR	0	25SP	G15_020	TO->FROM	JONES STATION - TUCO INTERCHANGE 230KV CKT 1	343.79	343.79	0.05966	102.5912	STANTON SUB - TUCO INTERCHANGE 115KV CKT 1
FDNS	00NR	0	25SP	G15_020	TO->FROM	JONES STATION - TUCO INTERCHANGE 230KV CKT 1	343.79	343.79	0.06027	102.3658	P12:230:LPL:K39.1.CRLSLE.LP-MLWK
FDNS	00NR	0	25SP	G15_020	TO->FROM	JONES STATION - TUCO INTERCHANGE 230KV CKT 1	343.79	343.79	0.06027	102.3646	CARLISLE INTERCHANGE - LUBBOCK POWER & LIGHT-MILWAUKEE 230KV CKT 1
FDNS	00NR	0	25SP	G15_020	TO->FROM	JONES STATION - TUCO INTERCHANGE 230KV CKT 1	343.79	343.79	0.06027	102.363	LUBBOCK POWER & LIGHT-MILWAUKEE (M-E C0681251) 230/69/13.5KV TRANSFORMER CKT 1
FDNS	00NR	0	25SP	G15_020	TO->FROM	JONES STATION - TUCO INTERCHANGE 230KV CKT 1	343.79	343.79	0.06027	102.363	LUBBOCK POWER & LIGHT-MILWAUKEE (M-E C0681251) 230/69/13.5KV TRANSFORMER CKT 1
FDNS	00NR	0	25SP	G15_020	TO->FROM	JONES STATION - TUCO INTERCHANGE 230KV CKT 1	343.79	343.79	0.04388	102.0923	TOLK STATION EAST - TUCO INTERCHANGE 230KV CKT 1
FDNS	00NR	0	25SP	G15_020	TO->FROM	JONES STATION - TUCO INTERCHANGE 230KV CKT 1	343.79	343.79	0.04388	102.0923	TOLK STATION EAST - TUCO INTERCHANGE 230KV CKT 1
FDNS	00NR	0	25SP	G15_020	TO->FROM	JONES STATION - TUCO INTERCHANGE 230KV CKT 1	343.79	343.79	0.05966	101.6363	P12:115:SPS:V15.1.TUCO.INDANA
FDNS	00NR	0	25SP	G15_020	TO->FROM	JONES STATION - TUCO INTERCHANGE 230KV CKT 1	343.79	343.79	0.05966	101.6061	INDIANA SUB - STANTON SUB 115KV CKT 1
FDNS	00NR	0	25SP	G15_020	TO->FROM	JONES STATION - TUCO INTERCHANGE 230KV CKT 1	343.79	343.79	0.05817	101.0841	GEN527903 1-HOBBS PLANT #3 (ST)
FDNS	00NR	0	25SP	G15_020	TO->FROM	JONES STATION - TUCO INTERCHANGE 230KV CKT 1	343.79	343.79	0.05817	101.0701	GEN527166 1-MUSTANG_6 118.000
FDNS	00NR	0	25SP	G15_020	TO->FROM	JONES STATION - TUCO INTERCHANGE 230KV CKT 1	343.79	343.79	0.05817	100.6214	GEN528501 1-G14_012 24.000
FDNS	00NR	0	25SP	G15_020	TO->FROM	JONES STATION - TUCO INTERCHANGE 230KV CKT 1	343.79	343.79	0.0578	100.6076	KRESS INTERCHANGE - SWISHER COUNTY INTERCHANGE 115KV CKT 1
FDNS	00NR	0	25SP	G15_020	TO->FROM	JONES STATION - TUCO INTERCHANGE 230KV CKT 1	343.79	343.79	0.0578	100.6076	KRESS INTERCHANGE - SWISHER COUNTY INTERCHANGE 115KV CKT 1
FDNS	00NR	0	25SP	G15_020	TO->FROM	JONES STATION - TUCO INTERCHANGE 230KV CKT 1	343.79	343.79	0.06037	100.4516	CARLISLE INTERCHANGE - MURPHY SUB 115KV CKT 1
FDNS	00NR	0	25SP	G15_020	TO->FROM	JONES STATION - TUCO INTERCHANGE 230KV CKT 1	343.79	343.79	0.06037	100.4516	CARLISLE INTERCHANGE - MURPHY SUB 115KV CKT 1
FDNS	00NR	0	25SP	G15_020	TO->FROM	JONES STATION - TUCO INTERCHANGE 230KV CKT 1	343.79	343.79	0.05926	100.2532	YOAKUM_345 345.00 (UPDATE DATA) 345/230/13.2KV TRANSFORMER CKT 1
FDNS	00NR	0	25SP	G15_020	TO->FROM	JONES STATION - TUCO INTERCHANGE 230KV CKT 1	343.79	343.79	0.05823	100	POTTER COUNTY INTERCHANGE (WAUK 90343-A) 345/230/13.2KV TRANSFORMER CKT 1
FDNS	00NR	0	25SP	G15_020	TO->FROM	JONES STATION - TUCO INTERCHANGE 230KV CKT 1	343.79	343.79	0.05823	100	POTTER COUNTY INTERCHANGE (WAUK 90343-A) 345/230/13.2KV TRANSFORMER CKT 1
FDNS	00NR	0	25SP	G15_020	TO->FROM	JONES STATION - TUCO INTERCHANGE 230KV CKT 1	343.79	343.79	0.05817	100	GEN563122 1-G15077_3 0.3850
FDNS	00NR	0	25SP	G15_020	TO->FROM	JONES STATION - TUCO INTERCHANGE 230KV CKT 1	343.79	343.79	0.05966	99.9	INDIANA SUB - SOUTH PLAINS REC-ERSKINE 115KV CKT 1
FDNS	00NR	0	25SP	G15_020	TO->FROM	JONES STATION - TUCO INTERCHANGE 230KV CKT 1	343.79	343.79	0.05817	99.9	GEN527901 1-HOBBS PLANT #1 (CT)
FDNS	00NR	0	25SP	G15_020	TO->FROM	JONES STATION - TUCO INTERCHANGE 230KV CKT 1	343.79	343.79	0.05817	99.9	GEN527902 1-HOBBS PLANT #2 (CT)
FDNS	00NR	0	25SP	G15_020	TO->FROM	JONES STATION - TUCO INTERCHANGE 230KV CKT 1	343.79	343.79	0.05817	99.9	GEN563102 1-G15075_3 0.5500
FDNS	00NR	0	25SP	G15_020	TO->FROM	JONES STATION - TUCO INTERCHANGE 230KV CKT 1	343.79	343.79	0.05828	99.7	HOBBS - YOAKUM_345 345.00 345KV CKT 1
FDNS	00NR	0	25SP	G15_020	TO->FROM	JONES STATION - TUCO INTERCHANGE 230KV CKT 1	343.79	343.79	0.05798	99.7	FLOYD COUNTY INTERCHANGE - TUCO INTERCHANGE 115KV CKT 1
FDNS	00NR	0	25SP	G15_020	TO->FROM	JONES STATION - TUCO INTERCHANGE 230KV CKT 1	343.79	343.79	0.05798	99.7	FLOYD COUNTY INTERCHANGE - TUCO INTERCHANGE 115KV CKT 1
FDNS	00NR	0	25SP	G15_020	TO->FROM	JONES STATION - TUCO INTERCHANGE 230KV CKT 1	343.79	343.79	0.05862	99.6	P12:345:SPS:J02.1.TOLK.EDDY
FDNS	00NR	0	25SP	G15_020	TO->FROM	JONES STATION - TUCO INTERCHANGE 230KV CKT 1	343.79	343.79	0.05823	99.6	G14_038T 345.00 - POTTER COUNTY INTERCHANGE 345KV CKT 1
FDNS	00NR	0	25SP	G15_020	TO->FROM	JONES STATION - TUCO INTERCHANGE 230KV CKT 1	343.79	343.79	0.05817	99.6	GEN563142 1-G15079_3 0.5500
FDNS	00NR	0	25SP	G15_020	TO->FROM	JONES STATION - TUCO INTERCHANGE 230KV CKT 1	343.79	343.79	0.05817	99.6	GEN563151 1-G15080_2 0.5500
FDNS	00NR	0	25SP	G15_020	TO->FROM	JONES STATION - TUCO INTERCHANGE 230KV CKT 1	343.79	343.79	0.05465	99.6	BUSHLAND INTERCHANGE - DEAF SMITH COUNTY INTERCHANGE 230KV CKT 1
FDNS	00NR	0	25SP	G15_020	TO->FROM	JONES STATION - TUCO INTERCHANGE 230KV CKT 1	343.79	343.79	0.05465	99.6	BUSHLAND INTERCHANGE - DEAF SMITH COUNTY INTERCHANGE 230KV CKT 1
FDNS	00NR	0	25SP	G15_020	FROM->TO	LUBBOCK POWER & LIGHT-HOLLY PLANT (SHIH T101039) 230/69/13.5KV TRANSFORMER CKT 1	224	224	0.03579	104.8294	LUBBOCK POWER & LIGHT-SOUTHEAST - LUBBOCK SOUTH INTERCHANGE 230KV CKT 1
FDNS	00NR	0	25SP	G15_020	FROM->TO	LUBBOCK POWER & LIGHT-HOLLY PLANT (SHIH T101039) 230/69/13.5KV TRANSFORMER CKT 1	224	224	0.03579	104.8165	P12:LPL:SPS:K64.1.LP-SE.LUBBS

SOLUTION	GROUP	SCENARIO	SEASON	SOURCE	DIRECTION	MONITORED ELEMENT	RATEA (MVA)	RATEB(MVA)	TDF	TC%LOADING (% MVA)	CONTINGENCY
FDNS	00NR	0	25SP	G15_020	FROM->TO	LUBBOCK POWER & LIGHT-HOLLY PLANT (SHIH T101039) 230/69/13.5KV TRANSFORMER CKT 1	224	224	0.03431	101.9053	LUBBOCK EAST INTERCHANGE - LUBBOCK POWER & LIGHT-WADSWORTH 230KV CKT 1
FDNS	00NR	0	25SP	G15_020	FROM->TO	LUBBOCK POWER & LIGHT-HOLLY PLANT (SHIH T101039) 230/69/13.5KV TRANSFORMER CKT 1	224	224	0.03431	101.8957	P12:230:LPL:K57.1.LP-WADS.LUBBE
FDNS	00NR	0	25SP	G15_020	FROM->TO	LUBBOCK POWER & LIGHT-HOLLY PLANT (SHIH T101039) 230/69/13.5KV TRANSFORMER CKT 1	224	224	0.03431	101.8956	LUBBOCK POWER & LIGHT-WADSWORTH (SHIH T101038) 230/69/13.5KV TRANSFORMER CKT 1
FDNS	00NR	0	25SP	G15_020	FROM->TO	LUBBOCK POWER & LIGHT-HOLLY PLANT (SHIH T101039) 230/69/13.5KV TRANSFORMER CKT 1	224	224	0.03431	101.8956	LUBBOCK POWER & LIGHT-WADSWORTH (SHIH T101038) 230/69/13.5KV TRANSFORMER CKT 1
FDNSLock	06ALL	0	20WP	G15_020		Non-Converged Contingency	1792	1792	0.15005	-	BORDER 7345.00 - CHISHOLM7 345.00 345KV CKT 1
FDNSLock	06ALL	0	20WP	G15_020		Non-Converged Contingency	1792	1792	0.15005	-	BORDER 7345.00 - CHISHOLM7 345.00 345KV CKT 2
FDNSLock	06ALL	0	20WP	G15_020		Non-Converged Contingency	439	439	0.06139	-	CHISHOLM6 230.00 - ELK CITY 230KV 230KV CKT 1
FDNS	06ALL	0	20WP	G15_020	FROM->TO	POTTER COUNTY INTERCHANGE (WAUK 90343-A) 345/230/13.2KV TRANSFORMER CKT 1	560	560	0.16284	101.9937	BASE CASE
FDNS	06ALL	0	20WP	G15_020	FROM->TO	POTTER COUNTY INTERCHANGE (WAUK 90343-A) 345/230/13.2KV TRANSFORMER CKT 1	560	560	0.16284	100.9471	BASE CASE
FDNS	06ALL	0	17SP	G15_020	FROM->TO	POTTER COUNTY INTERCHANGE (WAUK 90343-A) 345/230/13.2KV TRANSFORMER CKT 1	560	560	0.19593	99.9	CHISHOLM6 230.00 - SWEETWATER 230KV CKT 1
FDNS	06ALL	0	17SP	G15_020	FROM->TO	SUNDOWN INTERCHANGE - WOLFFORTH INTERCHANGE 230KV CKT 1	318.7	350.57	0.21952	100	TOLK STATION EAST - TUCO INTERCHANGE 230KV CKT 1
FDNS	06ALL	0	17SP	G15_020	FROM->TO	SUNDOWN INTERCHANGE - WOLFFORTH INTERCHANGE 230KV CKT 1	318.7	350.57	0.21952	100	TOLK STATION EAST - TUCO INTERCHANGE 230KV CKT 1
FDNS	06ALL	0	20SP	G15_020	FROM->TO	TUCO INTERCHANGE - TUCO_2 230.00 230KV CKT 1	497	547	0.2513	176.1131	TUCO INTERCHANGE - TUCO_2 345.00 345KV CKT 1
FDNS	06ALL	0	17SP	G15_020	FROM->TO	TUCO INTERCHANGE - TUCO_2 230.00 230KV CKT 1	497	547	0.23116	172.1789	TUCO INTERCHANGE - TUCO_2 345.00 345KV CKT 1
FDNS	06NR	0	20L	G15_020	FROM->TO	TUCO INTERCHANGE - TUCO_2 230.00 230KV CKT 1	497	547	0.03313	110.6573	TUCO INTERCHANGE - TUCO_2 345.00 345KV CKT 1
FDNS	06ALL	0	25SP	G15_020	FROM->TO	TUCO INTERCHANGE - TUCO_2 230.00 230KV CKT 1	497	547	0.26199	101.2227615	TUCO INTERCHANGE - TUCO_2 345.00 345KV CKT 1
FDNS	06ALL	0	20SP	G15_020	FROM->TO	TUCO_2 345.00 (TUCO_2 XFMR) 345/230/13.2KV TRANSFORMER CKT 1	560	560	0.27538	168.9327	TUCO INTERCHANGE - TUCO_2 345.00 345KV CKT 1
FDNS	06ALL	0	17SP	G15_020	FROM->TO	TUCO_2 345.00 (TUCO_2 XFMR) 345/230/13.2KV TRANSFORMER CKT 1	560	560	0.27283	168.0719	TUCO INTERCHANGE - TUCO_2 345.00 345KV CKT 1
FDNS	06ALL	0	20SP	G15_020	FROM->TO	TUCO_2 345.00 (TUCO_2 XFMR) 345/230/13.2KV TRANSFORMER CKT 1	560	560	0.27538	162.4281	TUCO INTERCHANGE - TUCO_2 345.00 345KV CKT 1
FDNS	06ALL	0	17SP	G15_020	FROM->TO	TUCO_2 345.00 (TUCO_2 XFMR) 345/230/13.2KV TRANSFORMER CKT 1	560	560	0.27283	161.5424	TUCO INTERCHANGE - TUCO_2 345.00 345KV CKT 1
FDNS	06NR	2	17G	G15_020	TO->FROM	AMARILLO SOUTH INTERCHANGE - G15031_T 230.00 230KV CKT 1	318.7	350.57	0.0876	103.4449	NEWHART 230 - POTTER COUNTY INTERCHANGE 230KV CKT 1
FDNS	06NR	2	17G	G15_020	FROM->TO	BUSHLAND INTERCHANGE - HILLSIDE 115KV CKT 1	159	160	0.06397	118.1849	BUSHLAND INTERCHANGE - POTTER COUNTY INTERCHANGE 230KV CKT 1
FDNS	06NR	2	17G	G15_020	FROM->TO	BUSHLAND INTERCHANGE - HILLSIDE 115KV CKT 1	159	160	0.06397	118.1849	BUSHLAND INTERCHANGE - POTTER COUNTY INTERCHANGE 230KV CKT 1
FDNS	06ALL	2	16WP	G15_020	FROM->TO	BUSHLAND INTERCHANGE - POTTER COUNTY INTERCHANGE 230KV CKT 1	329.05	360.92	0.1951	109.093	NEWHART 230 - POTTER COUNTY INTERCHANGE 230KV CKT 1
FDNS	06NR	2	17G	G15_020	FROM->TO	BUSHLAND INTERCHANGE - POTTER COUNTY INTERCHANGE 230KV CKT 1	318.7	350.57	0.12164	103.6906	NEWHART 230 - POTTER COUNTY INTERCHANGE 230KV CKT 1
FDNS	06NR	2	17G	G15_020	FROM->TO	BUSHLAND INTERCHANGE (WH 7001795) 230/115/13.2KV TRANSFORMER CKT 1	168	168	0.06397	116.5462	BUSHLAND INTERCHANGE - POTTER COUNTY INTERCHANGE 230KV CKT 1
FDNS	06NR	2	17G	G15_020	FROM->TO	BUSHLAND INTERCHANGE (WH 7001795) 230/115/13.2KV TRANSFORMER CKT 1	168	168	0.06397	116.5462	BUSHLAND INTERCHANGE - POTTER COUNTY INTERCHANGE 230KV CKT 1
FDNS	06NR	2	17G	G15_020	FROM->TO	BUSHLAND INTERCHANGE (WH 7001795) 230/115/13.2KV TRANSFORMER CKT 1	168	168	0.06397	114.0422	BUSHLAND INTERCHANGE - POTTER COUNTY INTERCHANGE 230KV CKT 1
FDNS	06NR	2	17G	G15_020	FROM->TO	BUSHLAND INTERCHANGE (WH 7001795) 230/115/13.2KV TRANSFORMER CKT 1	168	168	0.06397	114.0422	BUSHLAND INTERCHANGE - POTTER COUNTY INTERCHANGE 230KV CKT 1
FDNS	06NR	2	17G	G15_020	FROM->TO	CANYON E_TP3115.00 - RANDALL COUNTY INTERCHANGE 115KV CKT 1	96	96	0.05688	100.8119	BUSHLAND INTERCHANGE - DEAF SMITH COUNTY INTERCHANGE 230KV CKT 1
FDNS	06NR	2	17G	G15_020	FROM->TO	CANYON E_TP3115.00 - RANDALL COUNTY INTERCHANGE 115KV CKT 1	96	96	0.05688	100.8119	BUSHLAND INTERCHANGE - DEAF SMITH COUNTY INTERCHANGE 230KV CKT 1
FDNS	06NR	2	17G	G15_020	TO->FROM	CANYON WEST SUB - DAWN SUB 115KV CKT 1	96	96	0.05688	127.5172	BUSHLAND INTERCHANGE - DEAF SMITH COUNTY INTERCHANGE 230KV CKT 1
FDNS	06NR	2	17G	G15_020	TO->FROM	CANYON WEST SUB - DAWN SUB 115KV CKT 1	96	96	0.05688	127.5172	BUSHLAND INTERCHANGE - DEAF SMITH COUNTY INTERCHANGE 230KV CKT 1
FDNS	06NR	2	17G	G15_020	TO->FROM	CARGILL SUB - DEAF SMITH REC-#24 115KV CKT 1	96	96	0.10232	107.5549	DEAF SMITH COUNTY INTERCHANGE - G15039_T 230.00 230KV CKT 1
FDNS	06NR	2	20L	G15_020	TO->FROM	CARGILL SUB - DEAF SMITH REC-#24 115KV CKT 1	96	96	0.10201	102.4808	G15039_T 230.00 - PLANT X STATION 230KV CKT 1
FDNS	06NR	2	17G	G15_020	TO->FROM	CARGILL SUB - DEAF SMITH REC-#24 115KV CKT 1	96	96	0.10232	99.6	G15039_T 230.00 - PLANT X STATION 230KV CKT 1
FDNS	06NR	2	17G	G15_020	FROM->TO	CARGILL SUB - FRIONA SUB 115KV CKT 1	96	96	0.10232	100.202	DEAF SMITH COUNTY INTERCHANGE - G15039_T 230.00 230KV CKT 1
FDNS	06ALL	2	20SP	G15_020	FROM->TO	CHISHOLM6 230.00 - ELK CITY 230KV 230KV CKT 1	353	353	0.06311	103.9805	BASE CASE
FDNS	06ALL	2	17SP	G15_020	FROM->TO	CHISHOLM6 230.00 - ELK CITY 230KV 230KV CKT 1	353	353	0.06324	101.7938	BASE CASE
FDNS	06ALL	2	20L	G15_020	TO->FROM	CIMARRON - MINCO 345KV CKT 1	956	956	0.20175	140.1322	G14-057T 345.00 - SUNNYSIDE 345KV CKT 1
FDNS	06ALL	2	20L	G15_020	TO->FROM	CIMARRON - MINCO 345KV CKT 1	956	956	0.20175	133.5433	G14-057T 345.00 - LAWTON EASTSIDE 345KV CKT 1
FDNS	06ALL	2	17G	G15_020	TO->FROM	CIMARRON - MINCO 345KV CKT 1	956	956	0.22803	131.7687	G14-057T 345.00 - SUNNYSIDE 345KV CKT 1
FDNS	06ALL	2	20WP	G15_020	TO->FROM	CIMARRON - MINCO 345KV CKT 1	956	956	0.22923	130.9595	G14-057T 345.00 - SUNNYSIDE 345KV CKT 1
FDNS	06ALL	2	17G	G15_020	TO->FROM	CIMARRON - MINCO 345KV CKT 1	956	956	0.22803	126.2954	G14-057T 345.00 - LAWTON EASTSIDE 345KV CKT 1
FDNS	06ALL	2	20WP	G15_020	TO->FROM	CIMARRON - MINCO 345KV CKT 1	956	956	0.22923	125.3296	G14-057T 345.00 - LAWTON EASTSIDE 345KV CKT 1
FDNS	06ALL	2	16WP	G15_020	TO->FROM	CIMARRON - MINCO 345KV CKT 1	956	956	0.23459	123.9324	G14-057T 345.00 - SUNNYSIDE 345KV CKT 1
FDNS	06ALL	2	17SP	G15_020	TO->FROM	CIMARRON - MINCO 345KV CKT 1	956	956	0.23242	123.0412	G14-057T 345.00 - SUNNYSIDE 345KV CKT 1
FDNS	06ALL	2	20SP	G15_020	TO->FROM	CIMARRON - MINCO 345KV CKT 1	956	956	0.23542	120.4683	G14-057T 345.00 - SUNNYSIDE 345KV CKT 1
FDNS	06ALL	2	16WP	G15_020	TO->FROM	CIMARRON - MINCO 345KV CKT 1	956	956	0.23459	118.3934	G14-057T 345.00 - LAWTON EASTSIDE 345KV CKT 1
FDNS	06ALL	2	17SP	G15_020	TO->FROM	CIMARRON - MINCO 345KV CKT 1	956	956	0.23242	117.7499	G14-057T 345.00 - LAWTON EASTSIDE 345KV CKT 1
FDNS	06ALL	2	20SP	G15_020	TO->FROM	CIMARRON - MINCO 345KV CKT 1	956	956	0.23542	115.0256	G14-057T 345.00 - LAWTON EASTSIDE 345KV CKT 1
FDNS	06ALL	2	17G	G15_020	TO->FROM	CIMARRON - MINCO 345KV CKT 1	956	956	0.19631	111.0722	MATHWSN7 345.00 - TATONGA7 345.00 345KV CKT 1
FDNS	06ALL	2	20WP	G15_020	TO->FROM	CIMARRON - MINCO 345KV CKT 1	956	956	0.19532	110.8109	MATHWSN7 345.00 - TATONGA7 345.00 345KV CKT 1
FDNS	06ALL	2	20L	G15_020	TO->FROM	CIMARRON - MINCO 345KV CKT 1	956	956	0.20264	107.6011	CHISHOLM7 345.00 - WOODWARD DISTRICT EHV 345KV CKT 1
FDNS	06ALL	2	17G	G15_020	TO->FROM	CIMARRON - MINCO 345KV CKT 1	956	956	0.22066	107.4004	CHISHOLM7 345.00 - WOODWARD DISTRICT EHV 345KV CKT 1
FDNS	06ALL	2	20WP	G15_020	TO->FROM	CIMARRON - MINCO 345KV CKT 1	956	956	0.19532	105.5266	G11_051T 345.00 - TATONGA7 345.00 345KV CKT 1
FDNSLock	06ALL	2	17G	G15_020	TO->FROM	CIMARRON - MINCO 345KV CKT 1	956	956	0.19631	105.1772	G11_051T 345.00 - TATONGA7 345.00 345KV CKT 1
FDNS	06ALL	2	17SP	G15_020	TO->FROM	CIMARRON - MINCO 345KV CKT 1	956	956	0.2002	104.7953	MATHWSN7 345.00 - TATONGA7 345.00 345KV CKT 1
FDNS	06ALL	2	20SP	G15_020	TO->FROM	CIMARRON - MINCO 345KV CKT 1	956	956	0.20204	104.2231	MATHWSN7 345.00 - TATONGA7 345.00 345KV CKT 1
FDNS	06ALL	2	16WP	G15_020	TO->FROM	CIMARRON - MINCO 345KV CKT 1	956	956	0.20131	104.0692	MATHWSN7 345.00 - TATONGA7 345.00 345KV CKT 1
FDNS	06ALL	2	20WP	G15_020	TO->FROM	CIMARRON - MINCO 345KV CKT 1	956	956	0.19532	103.9402	G11_051T 345.00 - WOODWARD DISTRICT EHV 345KV CKT 1
FDNS	06ALL	2	20WP	G15_020	TO->FROM	CIMARRON - MINCO 345KV CKT 1	956	956	0.22574	103.712	CHISHOLM7 345.00 - WOODWARD DISTRICT EHV 345KV CKT 1
FDNSLock	06ALL	2	17G	G15_020	TO->FROM	CIMARRON - MINCO 345KV CKT 1	956	956	0.19631	103.655	G11_051T 345.00 - WOODWARD DISTRICT EHV 345KV CKT 1
FDNS	06ALL	2	20SP	G15_020	TO->FROM	CIMARRON - MINCO 345KV CKT 1	956	956	0.23267	102.1101	CHISHOLM7 345.00 - WOODWARD DISTRICT EHV 345KV CKT 1
FDNS	06ALL	2	17SP	G15_020	TO->FROM	CIMARRON - MINCO 345KV CKT 1	956	956	0.22841	100.969	CHISHOLM7 345.00 - WOODWARD DISTRICT EHV 345KV CKT 1
FDNS	06ALL	2	17SP	G15_020	TO->FROM	CIMARRON - MINCO 345KV CKT 1	956	956	0.2002	99.6	G11_051T 345.00 - TATONGA7 345.00 345KV CKT 1
FDNS	06NR	2	17G	G15_020	TO->FROM	COULTER INTERCHANGE - HILLSIDE 115KV CKT 1	159	159	0.06397	113.2181	BUSHLAND INTERCHANGE - POTTER COUNTY INTERCHANGE 230KV CKT 1
FDNS	06NR	2	17G	G15_020	TO->FROM	COULTER INTERCHANGE - HILLSIDE 115KV CKT 1	159	159	0.06397	113.2181	BUSHLAND INTERCHANGE - POTTER COUNTY INTERCHANGE 230KV CKT 1
FDNS	06NR	2	17G	G15_020	FROM->TO	CURRY COUNTY INTERCHANGE - DEAF SMITH REC-#20 115KV CKT 1	96	96	0.10232	129.1509	DEAF SMITH COUNTY INTERCHANGE - G15039_T 230.00 230KV CKT 1
FDNS	06NR	2	17G	G15_020	FROM->TO	CURRY COUNTY INTERCHANGE - DEAF SMITH REC-#20 115KV CKT 1	96	96	0.10232	121.3057	G15039_T 230.00 - PLANT X STATION 230KV CKT 1
FDNS	06NR	2	20L	G15_020	FROM->TO	CURRY COUNTY INTERCHANGE - DEAF SMITH REC-#20 115KV CKT 1	96	96	0.10201	120.2947	G15039_T 230.00 - PLANT X STATION 230KV CKT 1
FDNS	06NR	2	17G	G15_020	TO->FROM	DAWN SUB - Panda Energy Substation Hereford 115KV CKT 1	96	96	0.05688	130.9313	BUSHLAND INTERCHANGE - DEAF SMITH COUNTY INTERCHANGE 230KV CKT 1
FDNS	06NR	2	17G	G15_020	TO->FROM	DAWN SUB - Panda Energy Substation Hereford 115KV CKT 1	96	96	0.05688	130.9313	BUSHLAND INTERCHANGE - DEAF SMITH COUNTY INTERCHANGE 230KV CKT 1
FDNS	06NR	2	17G	G15_020	TO->FROM	DAWN SUB - Panda Energy Substation Hereford 115KV CKT 1	96	96	0.04264	102.1469	BUSHLAND INTERCHANGE - POTTER COUNTY INTERCHANGE 230KV CKT 1
FDNS	06NR	2	17G	G15_020	TO->FROM	DAWN SUB - Panda Energy Substation Hereford 115KV CKT 1	96	96	0.04264	102.1469	BUSHLAND INTERCHANGE - POTTER COUNTY INTERCHANGE 230KV CKT 1
FDNS	06ALL	2	20SP	G15_020	TO->FROM	DEAF SMITH COUNTY INTERCHANGE - G15039_T 230.00 230KV CKT 1	318.7	350.57	0.10763	106.1518	BASE CASE
FDNS	06NR	2	17G	G15_020	TO->FROM	DEAF SMITH COUNTY INTERCHANGE - G15039_T 230.00 230KV CKT 1	318.7	350.57	0.08972	104.2484	NEWHART 230 - PLANT X STATION 230KV CKT 1
FDNS	06ALL	2	17SP	G15_020	TO->FROM	DEAF SMITH COUNTY INTERCHANGE - G15039_T 230.00 230KV CKT 1	318.7	350.57	0.11799	104.2255	BASE CASE
FDNS	06NR	2	17G	G15_020	TO->FROM	DEAF SMITH COUNTY INTERCHANGE - G15039_T 230.00 230KV CKT 1	318.7	350.57	0.07685	103.9799	NEWHART 230 - POTTER COUNTY INTERCHANGE 230KV CKT 1

SOLUTION	GROUP	SCENARIO	SEASON	SOURCE	DIRECTION	MONITORED ELEMENT	RATEA (MVA)	RATEB(MVA)	TDF	TC%LOADING (% MVA)	CONTINGENCY
FDNS	06NR	2	17G	G15_020	TO->FROM	DEAF SMITH COUNTY INTERCHANGE - G15039_T 230.00 230KV CKT 1	318.7	350.57	0.07309	102.5424	AMARILLO SOUTH INTERCHANGE - G15031_T 230.00 230KV CKT 1
FDNS	06NR	2	17G	G15_020	FROM->TO	DEAF SMITH COUNTY INTERCHANGE - Panda Energy Substation Hereford 115KV CKT 1	96	96	0.05688	136.0663	BUSHLAND INTERCHANGE - DEAF SMITH COUNTY INTERCHANGE 230KV CKT 1
FDNS	06NR	2	17G	G15_020	FROM->TO	DEAF SMITH COUNTY INTERCHANGE - Panda Energy Substation Hereford 115KV CKT 1	96	96	0.05688	136.0663	BUSHLAND INTERCHANGE - DEAF SMITH COUNTY INTERCHANGE 230KV CKT 1
FDNS	06NR	2	17G	G15_020	FROM->TO	DEAF SMITH COUNTY INTERCHANGE - Panda Energy Substation Hereford 115KV CKT 1	96	96	0.04264	107.2414	BUSHLAND INTERCHANGE - POTTER COUNTY INTERCHANGE 230KV CKT 1
FDNS	06NR	2	17G	G15_020	FROM->TO	DEAF SMITH COUNTY INTERCHANGE - Panda Energy Substation Hereford 115KV CKT 1	96	96	0.04264	107.2414	BUSHLAND INTERCHANGE - POTTER COUNTY INTERCHANGE 230KV CKT 1
FDNS	06NR	2	17G	G15_020	FROM->TO	DEAF SMITH REC-#20 - PARMER COUNTY SUB 115KV CKT 1	96	96	0.10232	121.0569	DEAF SMITH COUNTY INTERCHANGE - G15039_T 230.00 230KV CKT 1
FDNS	06NR	2	17G	G15_020	FROM->TO	DEAF SMITH REC-#20 - PARMER COUNTY SUB 115KV CKT 1	96	96	0.10232	113.3561	G15039_T 230.00 - PLANT X STATION 230KV CKT 1
FDNS	06NR	2	20L	G15_020	FROM->TO	DEAF SMITH REC-#20 - PARMER COUNTY SUB 115KV CKT 1	96	96	0.10201	112.8528	G15039_T 230.00 - PLANT X STATION 230KV CKT 1
FDNS	06NR	2	17G	G15_020	TO->FROM	DEAF SMITH REC-#24 - PARMER COUNTY SUB 115KV CKT 1	96	96	0.10232	114.1557	DEAF SMITH COUNTY INTERCHANGE - G15039_T 230.00 230KV CKT 1
FDNS	06NR	2	20L	G15_020	TO->FROM	DEAF SMITH REC-#24 - PARMER COUNTY SUB 115KV CKT 1	96	96	0.10201	107.7543	G15039_T 230.00 - PLANT X STATION 230KV CKT 1
FDNS	06NR	2	17G	G15_020	TO->FROM	DEAF SMITH REC-#24 - PARMER COUNTY SUB 115KV CKT 1	96	96	0.10232	106.1261	G15039_T 230.00 - PLANT X STATION 230KV CKT 1
FDNS	06ALL	2	20L	G15_020	TO->FROM	G14-057T 345.00 - LAWTON EASTSIDE 345KV CKT 1	717	789	0.09857	105.4406	BASE CASE
FDNS	06ALL	2	20L	G15_020	FROM->TO	G14-057T 345.00 - SUNNYSIDE 345KV CKT 1	717	789	0.09857	118.6576	BASE CASE
FDNS	06ALL	2	20WP	G15_020	FROM->TO	G14-057T 345.00 - SUNNYSIDE 345KV CKT 1	717	789	0.12217	106.4822	BASE CASE
FDNS	06ALL	2	17G	G15_020	FROM->TO	G14-057T 345.00 - SUNNYSIDE 345KV CKT 1	717	789	0.12214	105.8626	BASE CASE
FDNS	06ALL	2	16WP	G15_020	FROM->TO	G14-057T 345.00 - SUNNYSIDE 345KV CKT 1	717	789	0.12544	104.4384	BASE CASE
FDNS	06NR	2	20L	G15_020	FROM->TO	G14-074T 345.00 - OKLAUNION 345KV CKT 1	1022	1124	0.0297	106.9322	BASE CASE
FDNS	06NR	2	20L	G15_020	FROM->TO	G14-074T 345.00 - OKLAUNION 345KV CKT 1	1022	1124	0.02994	101.4902	TUCO INTERCHANGE - TUCO_2 345.00 345KV CKT 1
FDNS	06NR	2	20L	G15_020	FROM->TO	G14-074T 345.00 - OKLAUNION 345KV CKT 1	1022	1124	0.0442	101.2851	BUSHLAND INTERCHANGE - DEAF SMITH COUNTY INTERCHANGE 230KV CKT 1
FDNS	06NR	2	20L	G15_020	FROM->TO	G14-074T 345.00 - OKLAUNION 345KV CKT 1	1022	1124	0.0442	101.2851	BUSHLAND INTERCHANGE - DEAF SMITH COUNTY INTERCHANGE 230KV CKT 1
FDNS	06NR	2	20L	G15_020	FROM->TO	G14-074T 345.00 - OKLAUNION 345KV CKT 1	1022	1124	0.02983	101.2671	MOORE COUNTY INTERCHANGE - POTTER COUNTY INTERCHANGE 230KV CKT 1
FDNS	06NR	2	20L	G15_020	FROM->TO	G14-074T 345.00 - OKLAUNION 345KV CKT 1	1022	1124	0.02983	101.2671	MOORE COUNTY INTERCHANGE - POTTER COUNTY INTERCHANGE 230KV CKT 1
FDNS	06ALL	2	20L	G15_020	FROM->TO	GRACEMONT - MINCO 345KV CKT 1	1195	1195	0.20175	101.0673	G14-057T 345.00 - SUNNYSIDE 345KV CKT 1
FDNS	00NR	2	25SP	G15_020	TO->FROM	JONES STATION - TUCO INTERCHANGE 230KV CKT 1	343.79	343.79	0.06653	139.1643	CARLISLE INTERCHANGE - TUCO INTERCHANGE 230KV CKT 1
FDNS	00NR	2	25SP	G15_020	TO->FROM	JONES STATION - TUCO INTERCHANGE 230KV CKT 1	343.79	343.79	0.06653	139.1643	CARLISLE INTERCHANGE - TUCO INTERCHANGE 230KV CKT 1
FDNS	00NR	2	25SP	G15_020	TO->FROM	JONES STATION - TUCO INTERCHANGE 230KV CKT 1	343.79	343.79	0.06131	122.6847	TUCO INTERCHANGE - YOAKUM_345 345.00 345KV CKT 1
FDNS	00NR	2	25SP	G15_020	TO->FROM	JONES STATION - TUCO INTERCHANGE 230KV CKT 1	343.79	343.79	0.05817	119.1138	GEN526333 1-JONES GEN #3 21 KV
FDNS	00NR	2	25SP	G15_020	TO->FROM	JONES STATION - TUCO INTERCHANGE 230KV CKT 1	343.79	343.79	0.05817	118.7159	GEN526334 1-JONES_4 116.500
FDNS	00NR	2	25SP	G15_020	TO->FROM	JONES STATION - TUCO INTERCHANGE 230KV CKT 1	343.79	343.79	0.061	111.2162	CARLISLE INTERCHANGE - WOLFFORTH INTERCHANGE 230KV CKT 1
FDNS	00NR	2	25SP	G15_020	TO->FROM	JONES STATION - TUCO INTERCHANGE 230KV CKT 1	343.79	343.79	0.05831	106.9963	TUCO INTERCHANGE (ENRCO 136401) 230/115/13.2KV TRANSFORMER CKT 1
FDNS	00NR	2	25SP	G15_020	TO->FROM	JONES STATION - TUCO INTERCHANGE 230KV CKT 1	343.79	343.79	0.05831	106.9963	TUCO INTERCHANGE (ENRCO 136401) 230/115/13.2KV TRANSFORMER CKT 1
FDNS	00NR	2	25SP	G15_020	TO->FROM	JONES STATION - TUCO INTERCHANGE 230KV CKT 1	343.79	343.79	0.05831	106.9963	TUCO INTERCHANGE (ENRCO 136401) 230/115/13.2KV TRANSFORMER CKT 2
FDNS	00NR	2	25SP	G15_020	TO->FROM	JONES STATION - TUCO INTERCHANGE 230KV CKT 1	343.79	343.79	0.05831	106.9963	TUCO INTERCHANGE (ENRCO 136401) 230/115/13.2KV TRANSFORMER CKT 2
FDNS	00NR	2	25SP	G15_020	TO->FROM	JONES STATION - TUCO INTERCHANGE 230KV CKT 1	343.79	343.79	0.05817	106.4847	GEN526332 1-JONES GEN #2 21 KV
FDNS	00NR	2	25SP	G15_020	TO->FROM	JONES STATION - TUCO INTERCHANGE 230KV CKT 1	343.79	343.79	0.05817	106.4826	GEN526331 1-JONES GEN #1 22 KV
FDNS	00NR	2	25SP	G15_020	TO->FROM	JONES STATION - TUCO INTERCHANGE 230KV CKT 1	343.79	343.79	0.06392	105.6092	LUBBOCK EAST INTERCHANGE - TUCO INTERCHANGE 115KV CKT 1
FDNS	00NR	2	25SP	G15_020	TO->FROM	JONES STATION - TUCO INTERCHANGE 230KV CKT 1	343.79	343.79	0.06392	105.6092	LUBBOCK EAST INTERCHANGE - TUCO INTERCHANGE 115KV CKT 1
FDNS	00NR	2	25SP	G15_020	TO->FROM	JONES STATION - TUCO INTERCHANGE 230KV CKT 1	343.79	343.79	0.07184	105.4194	PLANT X STATION - SUNDOWN INTERCHANGE 230KV CKT 1
FDNS	00NR	2	25SP	G15_020	TO->FROM	JONES STATION - TUCO INTERCHANGE 230KV CKT 1	343.79	343.79	0.07184	105.4194	PLANT X STATION - SUNDOWN INTERCHANGE 230KV CKT 1
FDNS	00NR	2	25SP	G15_020	TO->FROM	JONES STATION - TUCO INTERCHANGE 230KV CKT 1	343.79	343.79	0.05966	102.5525	STANTON SUB - TUCO INTERCHANGE 115KV CKT 1
FDNS	00NR	2	25SP	G15_020	TO->FROM	JONES STATION - TUCO INTERCHANGE 230KV CKT 1	343.79	343.79	0.06027	102.3349	P12:230:LPL:K39.1.CRLSLE.LP-MLWK
FDNS	00NR	2	25SP	G15_020	TO->FROM	JONES STATION - TUCO INTERCHANGE 230KV CKT 1	343.79	343.79	0.06027	102.3335	LUBBOCK POWER & LIGHT-MILWAUKEE (M-E C0681251) 230/69/13.5KV TRANSFORMER CKT 1
FDNS	00NR	2	25SP	G15_020	TO->FROM	JONES STATION - TUCO INTERCHANGE 230KV CKT 1	343.79	343.79	0.06027	102.3335	LUBBOCK POWER & LIGHT-MILWAUKEE (M-E C0681251) 230/69/13.5KV TRANSFORMER CKT 1
FDNS	00NR	2	25SP	G15_020	TO->FROM	JONES STATION - TUCO INTERCHANGE 230KV CKT 1	343.79	343.79	0.06027	102.3328	CARLISLE INTERCHANGE - LUBBOCK POWER & LIGHT-MILWAUKEE 230KV CKT 1
FDNS	00NR	2	25SP	G15_020	TO->FROM	JONES STATION - TUCO INTERCHANGE 230KV CKT 1	343.79	343.79	0.04388	101.8206	TOLK STATION EAST - TUCO INTERCHANGE 230KV CKT 1
FDNS	00NR	2	25SP	G15_020	TO->FROM	JONES STATION - TUCO INTERCHANGE 230KV CKT 1	343.79	343.79	0.04388	101.8206	TOLK STATION EAST - TUCO INTERCHANGE 230KV CKT 1
FDNS	00NR	2	25SP	G15_020	TO->FROM	JONES STATION - TUCO INTERCHANGE 230KV CKT 1	343.79	343.79	0.05966	101.6251	P12:115:SPS:V15.1.TUCO.INDANA
FDNS	00NR	2	25SP	G15_020	TO->FROM	JONES STATION - TUCO INTERCHANGE 230KV CKT 1	343.79	343.79	0.05966	101.5793	INDIANA SUB - STANTON SUB 115KV CKT 1
FDNS	00NR	2	25SP	G15_020	TO->FROM	JONES STATION - TUCO INTERCHANGE 230KV CKT 1	343.79	343.79	0.05817	100.7469	GEN527166 1-MUSTANG_6 118.000
FDNS	00NR	2	25SP	G15_020	TO->FROM	JONES STATION - TUCO INTERCHANGE 230KV CKT 1	343.79	343.79	0.05817	100.7466	GEN527903 1-HOBBS PLANT #3 (ST)
FDNS	00NR	2	25SP	G15_020	TO->FROM	JONES STATION - TUCO INTERCHANGE 230KV CKT 1	343.79	343.79	0.06037	100.3452	CARLISLE INTERCHANGE - MURPHY SUB 115KV CKT 1
FDNS	00NR	2	25SP	G15_020	TO->FROM	JONES STATION - TUCO INTERCHANGE 230KV CKT 1	343.79	343.79	0.06037	100.3452	CARLISLE INTERCHANGE - MURPHY SUB 115KV CKT 1
FDNS	00NR	2	25SP	G15_020	TO->FROM	JONES STATION - TUCO INTERCHANGE 230KV CKT 1	343.79	343.79	0.0578	100.3228	KRESS INTERCHANGE - SWISHER COUNTY INTERCHANGE 115KV CKT 1
FDNS	00NR	2	25SP	G15_020	TO->FROM	JONES STATION - TUCO INTERCHANGE 230KV CKT 1	343.79	343.79	0.0578	100.3228	KRESS INTERCHANGE - SWISHER COUNTY INTERCHANGE 115KV CKT 1
FDNS	00NR	2	25SP	G15_020	TO->FROM	JONES STATION - TUCO INTERCHANGE 230KV CKT 1	343.79	343.79	0.05817	100.2967	GEN528501 1-G14_012 24.000
FDNS	00NR	2	25SP	G15_020	TO->FROM	JONES STATION - TUCO INTERCHANGE 230KV CKT 1	343.79	343.79	0.05926	100.1964	YOAKUM_345 345.00 (UPDATE DATA) 345/230/13.2KV TRANSFORMER CKT 1
FDNS	00NR	2	25SP	G15_020	TO->FROM	JONES STATION - TUCO INTERCHANGE 230KV CKT 1	343.79	343.79	0.05966	99.9	INDIANA SUB - SOUTH PLAINS REC-ERSKINE 115KV CKT 1
FDNS	00NR	2	25SP	G15_020	TO->FROM	JONES STATION - TUCO INTERCHANGE 230KV CKT 1	343.79	343.79	0.05798	99.8	FLOYD COUNTY INTERCHANGE - TUCO INTERCHANGE 115KV CKT 1
FDNS	00NR	2	25SP	G15_020	TO->FROM	JONES STATION - TUCO INTERCHANGE 230KV CKT 1	343.79	343.79	0.05798	99.8	FLOYD COUNTY INTERCHANGE - TUCO INTERCHANGE 115KV CKT 1
FDNS	00NR	2	25SP	G15_020	TO->FROM	JONES STATION - TUCO INTERCHANGE 230KV CKT 1	343.79	343.79	0.05823	99.7	POTTER COUNTY INTERCHANGE (WAUK 90343-A) 345/230/13.2KV TRANSFORMER CKT 1
FDNS	00NR	2	25SP	G15_020	TO->FROM	JONES STATION - TUCO INTERCHANGE 230KV CKT 1	343.79	343.79	0.05823	99.7	POTTER COUNTY INTERCHANGE (WAUK 90343-A) 345/230/13.2KV TRANSFORMER CKT 1
FDNS	00NR	2	25SP	G15_020	TO->FROM	JONES STATION - TUCO INTERCHANGE 230KV CKT 1	343.79	343.79	0.05817	99.7	GEN563122 1-G15077_3 0.3850
FDNS	00NR	2	25SP	G15_020	TO->FROM	JONES STATION - TUCO INTERCHANGE 230KV CKT 1	343.79	343.79	0.05817	99.6	GEN527901 1-HOBBS PLANT #1 (CT)
FDNS	00NR	2	25SP	G15_020	TO->FROM	JONES STATION - TUCO INTERCHANGE 230KV CKT 1	343.79	343.79	0.05817	99.6	GEN527902 1-HOBBS PLANT #2 (CT)
FDNS	00NR	2	25SP	G15_020	TO->FROM	JONES STATION - TUCO INTERCHANGE 230KV CKT 1	343.79	343.79	0.05817	99.6	GEN563102 1-G15075_3 0.5500
FDNS	00NR	2	25SP	G15_020	FROM->TO	LUBBOCK POWER & LIGHT-HOLLY PLANT (SHIH T101039) 230/69/13.5KV TRANSFORMER CKT 1	224	224	0.03579	104.7613	LUBBOCK POWER & LIGHT-SOUTHEAST - LUBBOCK SOUTH INTERCHANGE 230KV CKT 1
FDNS	00NR	2	25SP	G15_020	FROM->TO	LUBBOCK POWER & LIGHT-HOLLY PLANT (SHIH T101039) 230/69/13.5KV TRANSFORMER CKT 1	224	224	0.03579	104.7484	P12:LPL:SPS:K64.1.LP-SE.LUBBS
FDNS	00NR	2	25SP	G15_020	FROM->TO	LUBBOCK POWER & LIGHT-HOLLY PLANT (SHIH T101039) 230/69/13.5KV TRANSFORMER CKT 1	224	224	0.03431	102.133	P12:230:LPL:K57.1.LP-WADS.LUBBE
FDNS	00NR	2	25SP	G15_020	FROM->TO	LUBBOCK POWER & LIGHT-HOLLY PLANT (SHIH T101039) 230/69/13.5KV TRANSFORMER CKT 1	224	224	0.03431	102.1329	LUBBOCK POWER & LIGHT-WADSWORTH (SHIH T101038) 230/69/13.5KV TRANSFORMER CKT 1
FDNS	00NR	2	25SP	G15_020	FROM->TO	LUBBOCK POWER & LIGHT-HOLLY PLANT (SHIH T101039) 230/69/13.5KV TRANSFORMER CKT 1	224	224	0.03431	102.1329	LUBBOCK POWER & LIGHT-WADSWORTH (SHIH T101038) 230/69/13.5KV TRANSFORMER CKT 1
FDNS	00NR	2	25SP	G15_020	FROM->TO	LUBBOCK POWER & LIGHT-HOLLY PLANT (SHIH T101039) 230/69/13.5KV TRANSFORMER CKT 1	224	224	0.03431	101.829	LUBBOCK EAST INTERCHANGE - LUBBOCK POWER & LIGHT-WADSWORTH 230KV CKT 1
FDNSLock	06ALL	2	20WP	G15_020		P12:230:AEPW:ELKCITY6:SWEETWT6	0	0	0.12909	9999	BASE CASE
FDNS	06ALL	2	17G	G15_020	FROM->TO	POTTER COUNTY INTERCHANGE (WAUK 90343-A) 345/230/13.2KV TRANSFORMER CKT 1	560	560	0.19655	111.3301	HITCHLAND INTERCHANGE - MOORE COUNTY INTERCHANGE 230KV CKT 1
FDNS	06ALL	2	17G	G15_020	FROM->TO	POTTER COUNTY INTERCHANGE (WAUK 90343-A) 345/230/13.2KV TRANSFORMER CKT 1	560	560	0.19655	109.9541	HITCHLAND INTERCHANGE - MOORE COUNTY INTERCHANGE 230KV CKT 1
FDNS	06ALL	2	16WP	G15_020	FROM->TO	POTTER COUNTY INTERCHANGE (WAUK 90343-A) 345/230/13.2KV TRANSFORMER CKT 1	560	560	0.19879	106.7175	P12:230:AEPW:ELKCITY6:SWEETWT6
FDNS	06ALL	2	16WP	G15_020	FROM->TO	POTTER COUNTY INTERCHANGE (WAUK 90343-A) 345/230/13.2KV TRANSFORMER CKT 1	560	560	0.19793	106.2613	CHISHOLM6 230.00 - SWEETWATER 230KV CKT 1
FDNS	06ALL	2	16WP	G15_020	FROM->TO	POTTER COUNTY INTERCHANGE (WAUK 90343-A) 345/230/13.2KV TRANSFORMER CKT 1	560	560	0.19879	105.3389	P12:230:AEPW:ELKCITY6:SWEETWT6
FDNS	06ALL	2	16WP	G15_020	FROM->TO	POTTER COUNTY INTERCHANGE (WAUK 90343-A) 345/230/13.2KV TRANSFORMER CKT 1	560	560	0.19793	105.0083	CHISHOLM6 230.00 - SWEETWATER 230KV CKT 1
FDNS	06ALL	2	16WP	G15_020	FROM->TO	POTTER COUNTY INTERCHANGE (WAUK 90343-A) 345/230/13.2KV TRANSFORMER CKT 1	560	560	0.20734	102.0618	HITCHLAND INTERCHANGE - MOORE COUNTY INTERCHANGE 230KV CKT 1

SOLUTION	GROUP	SCENARIO	SEASON	SOURCE	DIRECTION	MONITORED ELEMENT	RATEA (MVA)	RATEB(MVA)	TDF	TC%LOADING (% MVA)	CONTINGENCY
FDNS	06ALL	2	16WP	G15_020	FROM->TO	POTTER COUNTY INTERCHANGE (WAUK 90343-A) 345/230/13.2KV TRANSFORMER CKT 1	560	560	0.20734	102.0618	HITCHLAND INTERCHANGE - MOORE COUNTY INTERCHANGE 230KV CKT 1
FDNS	06ALL	2	16WP	G15_020	FROM->TO	POTTER COUNTY INTERCHANGE (WAUK 90343-A) 345/230/13.2KV TRANSFORMER CKT 1	560	560	0.20734	101.6956	HITCHLAND INTERCHANGE - MOORE COUNTY INTERCHANGE 230KV CKT 1
FDNS	06ALL	2	16WP	G15_020	FROM->TO	POTTER COUNTY INTERCHANGE (WAUK 90343-A) 345/230/13.2KV TRANSFORMER CKT 1	560	560	0.20734	101.6956	HITCHLAND INTERCHANGE - MOORE COUNTY INTERCHANGE 230KV CKT 1
FDNS	06ALL	2	16WP	G15_020	FROM->TO	POTTER COUNTY INTERCHANGE (WAUK 90343-A) 345/230/13.2KV TRANSFORMER CKT 1	560	560	0.19678	101.1885	MOORE COUNTY INTERCHANGE - POTTER COUNTY INTERCHANGE 230KV CKT 1
FDNS	06ALL	2	16WP	G15_020	FROM->TO	POTTER COUNTY INTERCHANGE (WAUK 90343-A) 345/230/13.2KV TRANSFORMER CKT 1	560	560	0.19678	101.1885	MOORE COUNTY INTERCHANGE - POTTER COUNTY INTERCHANGE 230KV CKT 1
FDNS	06ALL	2	16WP	G15_020	FROM->TO	POTTER COUNTY INTERCHANGE (WAUK 90343-A) 345/230/13.2KV TRANSFORMER CKT 1	560	560	0.19793	100.866	STLN-DEMARC6 - SWEETWATER 230KV CKT 1
FDNS	06ALL	2	16WP	G15_020	FROM->TO	POTTER COUNTY INTERCHANGE (WAUK 90343-A) 345/230/13.2KV TRANSFORMER CKT 1	560	560	0.19793	100.8556	STATELINE INTERCHANGE - STLN-DEMARC6 230KV CKT 1
FDNS	06ALL	2	16WP	G15_020	FROM->TO	POTTER COUNTY INTERCHANGE (WAUK 90343-A) 345/230/13.2KV TRANSFORMER CKT 1	560	560	0.19793	100.8266	P12:230:AEPW-SPS:SWEETWT6:WHEELER 6
FDNS	06ALL	2	16WP	G15_020	FROM->TO	POTTER COUNTY INTERCHANGE (WAUK 90343-A) 345/230/13.2KV TRANSFORMER CKT 1	560	560	0.19678	100.8228	MOORE COUNTY INTERCHANGE - POTTER COUNTY INTERCHANGE 230KV CKT 1
FDNS	06ALL	2	16WP	G15_020	FROM->TO	POTTER COUNTY INTERCHANGE (WAUK 90343-A) 345/230/13.2KV TRANSFORMER CKT 1	560	560	0.19678	100.8228	MOORE COUNTY INTERCHANGE - POTTER COUNTY INTERCHANGE 230KV CKT 1
FDNS	06ALL	2	16WP	G15_020	FROM->TO	POTTER COUNTY INTERCHANGE (WAUK 90343-A) 345/230/13.2KV TRANSFORMER CKT 1	560	560	0.19793	100.1775	STLN-DEMARC6 - SWEETWATER 230KV CKT 1
FDNS	06ALL	2	16WP	G15_020	FROM->TO	POTTER COUNTY INTERCHANGE (WAUK 90343-A) 345/230/13.2KV TRANSFORMER CKT 1	560	560	0.19793	100.1653	STATELINE INTERCHANGE - STLN-DEMARC6 230KV CKT 1
FDNS	06ALL	2	16WP	G15_020	FROM->TO	POTTER COUNTY INTERCHANGE (WAUK 90343-A) 345/230/13.2KV TRANSFORMER CKT 1	560	560	0.19793	100.1388	P12:230:AEPW-SPS:SWEETWT6:WHEELER 6
FDNS	06ALL	2	17SP	G15_020	FROM->TO	SUNDOWN INTERCHANGE - WOLFFORTH INTERCHANGE 230KV CKT 1	318.7	350.57	0.21964	101.6908	TOLK STATION EAST - TUCO INTERCHANGE 230KV CKT 1
FDNS	06ALL	2	17SP	G15_020	FROM->TO	SUNDOWN INTERCHANGE - WOLFFORTH INTERCHANGE 230KV CKT 1	318.7	350.57	0.21964	101.6908	TOLK STATION EAST - TUCO INTERCHANGE 230KV CKT 1
FDNS	06ALL	2	20L	G15_020	FROM->TO	TUCO INTERCHANGE - TUCO_2 230.00 230KV CKT 1	497	547	0.21425	181.2199	TUCO INTERCHANGE - TUCO_2 345.00 345KV CKT 1
FDNS	06ALL	2	17G	G15_020	FROM->TO	TUCO INTERCHANGE - TUCO_2 230.00 230KV CKT 1	497	547	0.21692	176.0864	TUCO INTERCHANGE - TUCO_2 345.00 345KV CKT 1
FDNS	06ALL	2	20SP	G15_020	FROM->TO	TUCO INTERCHANGE - TUCO_2 230.00 230KV CKT 1	497	547	0.25143	166.2483	TUCO INTERCHANGE - TUCO_2 345.00 345KV CKT 1
FDNS	06ALL	2	17SP	G15_020	FROM->TO	TUCO INTERCHANGE - TUCO_2 230.00 230KV CKT 1	497	547	0.23129	159.9768	TUCO INTERCHANGE - TUCO_2 345.00 345KV CKT 1
FDNS	06ALL	2	20WP	G15_020	FROM->TO	TUCO INTERCHANGE - TUCO_2 230.00 230KV CKT 1	552	608	0.24602	155.2742	TUCO INTERCHANGE - TUCO_2 345.00 345KV CKT 1
FDNS	06ALL	2	16WP	G15_020	FROM->TO	TUCO INTERCHANGE - TUCO_2 230.00 230KV CKT 1	552	608	0.22662	142.7524	TUCO INTERCHANGE - TUCO_2 345.00 345KV CKT 1
FDNS	06NR	2	20L	G15_020	FROM->TO	TUCO INTERCHANGE - TUCO_2 230.00 230KV CKT 1	497	547	0.03313	110.6574	TUCO INTERCHANGE - TUCO_2 345.00 345KV CKT 1
FDNS	06ALL	2	25SP	G15_020	FROM->TO	TUCO INTERCHANGE - TUCO_2 230.00 230KV CKT 1	497	547	0.262	102.0482993	TUCO INTERCHANGE - TUCO_2 345.00 345KV CKT 1
FDNS	06ALL	2	16WP	G15_020	FROM->TO	TUCO INTERCHANGE (GE M1022338) 345/230/13.2KV TRANSFORMER CKT 1	560	560	0.25953	120.5418	TUCO INTERCHANGE (SIEM 8743066) 345/230/13.2KV TRANSFORMER CKT 2
FDNS	06ALL	2	16WP	G15_020	FROM->TO	TUCO INTERCHANGE (GE M1022338) 345/230/13.2KV TRANSFORMER CKT 1	560	560	0.25953	120.5418	TUCO INTERCHANGE (SIEM 8743066) 345/230/13.2KV TRANSFORMER CKT 2
FDNS	06ALL	2	16WP	G15_020	FROM->TO	TUCO INTERCHANGE (GE M1022338) 345/230/13.2KV TRANSFORMER CKT 1	560	560	0.25527	120.3223	TUCO_2 345.00 (TUCO_2 XFMR) 345/230/13.2KV TRANSFORMER CKT 1
FDNS	06ALL	2	16WP	G15_020	FROM->TO	TUCO INTERCHANGE (GE M1022338) 345/230/13.2KV TRANSFORMER CKT 1	560	560	0.25953	118.6764	TUCO INTERCHANGE (SIEM 8743066) 345/230/13.2KV TRANSFORMER CKT 2
FDNS	06ALL	2	16WP	G15_020	FROM->TO	TUCO INTERCHANGE (GE M1022338) 345/230/13.2KV TRANSFORMER CKT 1	560	560	0.25953	118.6764	TUCO INTERCHANGE (SIEM 8743066) 345/230/13.2KV TRANSFORMER CKT 2
FDNS	06ALL	2	16WP	G15_020	FROM->TO	TUCO INTERCHANGE (GE M1022338) 345/230/13.2KV TRANSFORMER CKT 1	560	560	0.25527	118.6764	TUCO_2 345.00 (TUCO_2 XFMR) 345/230/13.2KV TRANSFORMER CKT 1
FDNS	06ALL	2	17G	G15_020	FROM->TO	TUCO INTERCHANGE (GE M1022338) 345/230/13.2KV TRANSFORMER CKT 1	560	560	0.24987	114.4569	TUCO INTERCHANGE (SIEM 8743066) 345/230/13.2KV TRANSFORMER CKT 2
FDNS	06ALL	2	17G	G15_020	FROM->TO	TUCO INTERCHANGE (GE M1022338) 345/230/13.2KV TRANSFORMER CKT 1	560	560	0.24584	114.4414	TUCO_2 345.00 (TUCO_2 XFMR) 345/230/13.2KV TRANSFORMER CKT 1
FDNS	06ALL	2	17G	G15_020	FROM->TO	TUCO INTERCHANGE (GE M1022338) 345/230/13.2KV TRANSFORMER CKT 1	560	560	0.24584	112.333	TUCO_2 345.00 (TUCO_2 XFMR) 345/230/13.2KV TRANSFORMER CKT 1
FDNS	06ALL	2	17G	G15_020	FROM->TO	TUCO INTERCHANGE (GE M1022338) 345/230/13.2KV TRANSFORMER CKT 1	560	560	0.24987	112.1874	TUCO INTERCHANGE (SIEM 8743066) 345/230/13.2KV TRANSFORMER CKT 2
FDNS	06ALL	2	16WP	G15_020	FROM->TO	TUCO INTERCHANGE (GE M1022338) 345/230/13.2KV TRANSFORMER CKT 1	560	560	0.22661	103.9349	TUCO INTERCHANGE - TUCO_2 230.00 230KV CKT 1
FDNS	06ALL	2	16WP	G15_020	FROM->TO	TUCO INTERCHANGE (GE M1022338) 345/230/13.2KV TRANSFORMER CKT 1	560	560	0.22661	102.2603	TUCO INTERCHANGE - TUCO_2 230.00 230KV CKT 1
FDNS	06ALL	2	17G	G15_020	FROM->TO	TUCO INTERCHANGE (GE M1022338) 345/230/13.2KV TRANSFORMER CKT 1	560	560	0.21784	100.6861	TUCO INTERCHANGE - TUCO_2 230.00 230KV CKT 1
FDNS	06ALL	2	20L	G15_020	FROM->TO	TUCO_2 345.00 (TUCO_2 XFMR) 345/230/13.2KV TRANSFORMER CKT 1	560	560	0.2324	190.1451	TUCO INTERCHANGE - TUCO_2 345.00 345KV CKT 1
FDNS	06ALL	2	20WP	G15_020	FROM->TO	TUCO_2 345.00 (TUCO_2 XFMR) 345/230/13.2KV TRANSFORMER CKT 1	560	560	0.26923	189.4604	TUCO INTERCHANGE - TUCO_2 345.00 345KV CKT 1
FDNS	06ALL	2	17G	G15_020	FROM->TO	TUCO_2 345.00 (TUCO_2 XFMR) 345/230/13.2KV TRANSFORMER CKT 1	560	560	0.26315	187.4581	TUCO INTERCHANGE - TUCO_2 345.00 345KV CKT 1
FDNS	06ALL	2	20WP	G15_020	FROM->TO	TUCO_2 345.00 (TUCO_2 XFMR) 345/230/13.2KV TRANSFORMER CKT 1	560	560	0.26923	184.0471	TUCO INTERCHANGE - TUCO_2 345.00 345KV CKT 1
FDNS	06ALL	2	20L	G15_020	FROM->TO	TUCO_2 345.00 (TUCO_2 XFMR) 345/230/13.2KV TRANSFORMER CKT 1	560	560	0.2324	184.0031	TUCO INTERCHANGE - TUCO_2 345.00 345KV CKT 1
FDNS	06ALL	2	17G	G15_020	FROM->TO	TUCO_2 345.00 (TUCO_2 XFMR) 345/230/13.2KV TRANSFORMER CKT 1	560	560	0.26315	182.4703	TUCO INTERCHANGE - TUCO_2 345.00 345KV CKT 1
FDNS	06ALL	2	16WP	G15_020	FROM->TO	TUCO_2 345.00 (TUCO_2 XFMR) 345/230/13.2KV TRANSFORMER CKT 1	560	560	0.2737	175.5009	TUCO INTERCHANGE - TUCO_2 345.00 345KV CKT 1
FDNS	06ALL	2	16WP	G15_020	FROM->TO	TUCO_2 345.00 (TUCO_2 XFMR) 345/230/13.2KV TRANSFORMER CKT 1	560	560	0.2737	172.6087	TUCO INTERCHANGE - TUCO_2 345.00 345KV CKT 1
FDNS	06ALL	2	20SP	G15_020	FROM->TO	TUCO_2 345.00 (TUCO_2 XFMR) 345/230/13.2KV TRANSFORMER CKT 1	560	560	0.27552	166.4217	TUCO INTERCHANGE - TUCO_2 345.00 345KV CKT 1
FDNS	06ALL	2	17SP	G15_020	FROM->TO	TUCO_2 345.00 (TUCO_2 XFMR) 345/230/13.2KV TRANSFORMER CKT 1	560	560	0.27298	164.6979	TUCO INTERCHANGE - TUCO_2 345.00 345KV CKT 1
FDNS	06ALL	2	20SP	G15_020	FROM->TO	TUCO_2 345.00 (TUCO_2 XFMR) 345/230/13.2KV TRANSFORMER CKT 1	560	560	0.27552	163.5805	TUCO INTERCHANGE - TUCO_2 345.00 345KV CKT 1
FDNS	06ALL	2	17SP	G15_020	FROM->TO	TUCO_2 345.00 (TUCO_2 XFMR) 345/230/13.2KV TRANSFORMER CKT 1	560	560	0.27298	162.1713	TUCO INTERCHANGE - TUCO_2 345.00 345KV CKT 1
FDNS	06ALL	2	16WP	G15_020	FROM->TO	TUCO_2 345.00 (TUCO_2 XFMR) 345/230/13.2KV TRANSFORMER CKT 1	560	560	0.23595	112.6263	TUCO INTERCHANGE (GE M1022338) 345/230/13.2KV TRANSFORMER CKT 1
FDNS	06ALL	2	16WP	G15_020	FROM->TO	TUCO_2 345.00 (TUCO_2 XFMR) 345/230/13.2KV TRANSFORMER CKT 1	560	560	0.23595	112.6263	TUCO INTERCHANGE (GE M1022338) 345/230/13.2KV TRANSFORMER CKT 1
FDNS	06ALL	2	16WP	G15_020	FROM->TO	TUCO_2 345.00 (TUCO_2 XFMR) 345/230/13.2KV TRANSFORMER CKT 1	560	560	0.23595	111.4972	TUCO INTERCHANGE (GE M1022338) 345/230/13.2KV TRANSFORMER CKT 1
FDNS	06ALL	2	16WP	G15_020	FROM->TO	TUCO_2 345.00 (TUCO_2 XFMR) 345/230/13.2KV TRANSFORMER CKT 1	560	560	0.23595	111.4972	TUCO INTERCHANGE (GE M1022338) 345/230/13.2KV TRANSFORMER CKT 1
FDNS	06ALL	2	17G	G15_020	FROM->TO	TUCO_2 345.00 (TUCO_2 XFMR) 345/230/13.2KV TRANSFORMER CKT 1	560	560	0.22731	107.1719	TUCO INTERCHANGE (GE M1022338) 345/230/13.2KV TRANSFORMER CKT 1
FDNS	06ALL	2	16WP	G15_020	FROM->TO	TUCO_2 345.00 (TUCO_2 XFMR) 345/230/13.2KV TRANSFORMER CKT 1	560	560	0.22126	105.8242	TUCO INTERCHANGE (SIEM 8743066) 345/230/13.2KV TRANSFORMER CKT 2
FDNS	06ALL	2	16WP	G15_020	FROM->TO	TUCO_2 345.00 (TUCO_2 XFMR) 345/230/13.2KV TRANSFORMER CKT 1	560	560	0.22126	105.8242	TUCO INTERCHANGE (SIEM 8743066) 345/230/13.2KV TRANSFORMER CKT 2
FDNS	06ALL	2	17G	G15_020	FROM->TO	TUCO_2 345.00 (TUCO_2 XFMR) 345/230/13.2KV TRANSFORMER CKT 1	560	560	0.22731	105.6097	TUCO INTERCHANGE (GE M1022338) 345/230/13.2KV TRANSFORMER CKT 1
FDNS	06ALL	2	16WP	G15_020	FROM->TO	TUCO_2 345.00 (TUCO_2 XFMR) 345/230/13.2KV TRANSFORMER CKT 1	560	560	0.22126	104.8168	TUCO INTERCHANGE (SIEM 8743066) 345/230/13.2KV TRANSFORMER CKT 2
FDNS	06ALL	2	16WP	G15_020	FROM->TO	TUCO_2 345.00 (TUCO_2 XFMR) 345/230/13.2KV TRANSFORMER CKT 1	560	560	0.22126	104.8168	TUCO INTERCHANGE (SIEM 8743066) 345/230/13.2KV TRANSFORMER CKT 2
FDNS	06ALL	2	17G	G15_020	FROM->TO	TUCO_2 345.00 (TUCO_2 XFMR) 345/230/13.2KV TRANSFORMER CKT 1	560	560	0.21317	100.7205	TUCO INTERCHANGE (SIEM 8743066) 345/230/13.2KV TRANSFORMER CKT 2
FDNS	06NR	3	17G	G15_020	TO->FROM	AMARILLO SOUTH INTERCHANGE - G15031_T 230.00 230KV CKT 1	318.7	350.57	0.08757	103.2239	NEWHART 230 - POTTER COUNTY INTERCHANGE 230KV CKT 1
FDNS	06NR	3	20L	G15_020	FROM->TO	BUSHLAND INTERCHANGE - HILLSIDE 115KV CKT 1	159	160	0.05822	108.1399	BUSHLAND INTERCHANGE - POTTER COUNTY INTERCHANGE 230KV CKT 1
FDNS	06NR	3	20L	G15_020	FROM->TO	BUSHLAND INTERCHANGE - HILLSIDE 115KV CKT 1	159	160	0.05822	108.1399	BUSHLAND INTERCHANGE - POTTER COUNTY INTERCHANGE 230KV CKT 1
FDNS	06NR	3	17G	G15_020	FROM->TO	BUSHLAND INTERCHANGE - HILLSIDE 115KV CKT 1	159	160	0.05779	105.508	BUSHLAND INTERCHANGE - POTTER COUNTY INTERCHANGE 230KV CKT 1
FDNS	06NR	3	17G	G15_020	FROM->TO	BUSHLAND INTERCHANGE - HILLSIDE 115KV CKT 1	159	160	0.05779	105.508	BUSHLAND INTERCHANGE - POTTER COUNTY INTERCHANGE 230KV CKT 1
FDNS	06NR	3	20L	G15_020	FROM->TO	BUSHLAND INTERCHANGE - POTTER COUNTY INTERCHANGE 230KV CKT 1	318.7	350.57	0.11454	102.6252	NEWHART 230 - POTTER COUNTY INTERCHANGE 230KV CKT 1
FDNS	06NR	3	20L	G15_020	FROM->TO	BUSHLAND INTERCHANGE (WH 7001795) 230/115/13.2KV TRANSFORMER CKT 1	168	168	0.05822	106.6189	BUSHLAND INTERCHANGE - POTTER COUNTY INTERCHANGE 230KV CKT 1
FDNS	06NR	3	20L	G15_020	FROM->TO	BUSHLAND INTERCHANGE (WH 7001795) 230/115/13.2KV TRANSFORMER CKT 1	168	168	0.05822	106.6189	BUSHLAND INTERCHANGE - POTTER COUNTY INTERCHANGE 230KV CKT 1
FDNS	06NR	3	17G	G15_020	FROM->TO	BUSHLAND INTERCHANGE (WH 7001795) 230/115/13.2KV TRANSFORMER CKT 1	168	168	0.05779	104.9286	BUSHLAND INTERCHANGE - POTTER COUNTY INTERCHANGE 230KV CKT 1
FDNS	06NR	3	17G	G15_020	FROM->TO	BUSHLAND INTERCHANGE (WH 7001795) 230/115/13.2KV TRANSFORMER CKT 1	168	168	0.05779	104.9286	BUSHLAND INTERCHANGE - POTTER COUNTY INTERCHANGE 230KV CKT 1
FDNS	06NR	3	20L	G15_020	FROM->TO	BUSHLAND INTERCHANGE (WH 7001795) 230/115/13.2KV TRANSFORMER CKT 1	168	168	0.05822	104.4653	BUSHLAND INTERCHANGE - POTTER COUNTY INTERCHANGE 230KV CKT 1
FDNS	06NR	3	20L	G15_020	FROM->TO	BUSHLAND INTERCHANGE (WH 7001795) 230/115/13.2KV TRANSFORMER CKT 1	168	168	0.05822	104.4653	BUSHLAND INTERCHANGE - POTTER COUNTY INTERCHANGE 230KV CKT 1
FDNS	06NR	3	17G	G15_020	FROM->TO	BUSHLAND INTERCHANGE (WH 7001795) 230/115/13.2KV TRANSFORMER CKT 1	168	168	0.05779	102.648	BUSHLAND INTERCHANGE - POTTER COUNTY INTERCHANGE 230KV CKT 1
FDNS	06NR	3	17G	G15_020	FROM->TO	BUSHLAND INTERCHANGE (WH 7001795) 230/115/13.2KV TRANSFORMER CKT 1	168	168	0.05779	102.648	BUSHLAND INTERCHANGE - POTTER COUNTY INTERCHANGE 230KV CKT 1
FDNS	06NR	3	17G	G15_020	TO->FROM	CANYON WEST SUB - DAWN SUB 115KV CKT 1	96	96	0.05143	109.382	BUSHLAND INTERCHANGE - DEAF SMITH COUNTY INTERCHANGE 230KV CKT 1
FDNS	06NR	3	17G	G15_020	TO->FROM	CANYON WEST SUB - DAWN SUB 115KV CKT 1	96	96	0.05143	109.382	BUSHLAND INTERCHANGE - DEAF SMITH COUNTY INTERCHANGE 230KV CKT 1
FDNS	06ALL	3	20SP	G15_020	FROM->TO	CHISHOLM6 230.00 - ELK CITY 230KV 230KV CKT 1	353	353	0.06346	104.1963	BASE CASE
FDNS	06ALL	3	17SP	G15_020	FROM->TO	CHISHOLM6 230.00 - ELK CITY 230KV 230KV CKT 1	353	353	0.06369	101.9728	BASE CASE
FDNS	06ALL	3	20L	G15_020	TO->FROM	CIMARRON - MINCO 345KV CKT 1	956	956	0.20867	140.6921	G14-057T 345.00 - SUNNYSIDE 345KV CKT 1
FDNS	06ALL	3	20L	G15_020	TO->FROM	CIMARRON - MINCO 345KV CKT 1	956	956	0.20867	134.2883	G14-057T 345.00 - LAWTON EASTSIDE 345KV CKT 1

SOLUTION	GROUP	SCENARIO	SEASON	SOURCE	DIRECTION	MONITORED ELEMENT	RATEA (MVA)	RATEB(MVA)	TDF	TC%LOADING (% MVA)	CONTINGENCY
FDNS	06ALL	3	17G	G15_020	TO->FROM	CIMARRON - MINCO 345KV CKT 1	956	956	0.23789	132.797	G14-057T 345.00 - SUNNYSIDE 345KV CKT 1
FDNS	06ALL	3	20WP	G15_020	TO->FROM	CIMARRON - MINCO 345KV CKT 1	956	956	0.236	131.9094	G14-057T 345.00 - SUNNYSIDE 345KV CKT 1
FDNS	06ALL	3	17G	G15_020	TO->FROM	CIMARRON - MINCO 345KV CKT 1	956	956	0.23789	127.3481	G14-057T 345.00 - LAWTON EASTSIDE 345KV CKT 1
FDNS	06ALL	3	20WP	G15_020	TO->FROM	CIMARRON - MINCO 345KV CKT 1	956	956	0.236	126.3057	G14-057T 345.00 - LAWTON EASTSIDE 345KV CKT 1
FDNS	06ALL	3	16WP	G15_020	TO->FROM	CIMARRON - MINCO 345KV CKT 1	956	956	0.24482	125.3645	G14-057T 345.00 - SUNNYSIDE 345KV CKT 1
FDNS	06ALL	3	17SP	G15_020	TO->FROM	CIMARRON - MINCO 345KV CKT 1	956	956	0.24175	124.3731	G14-057T 345.00 - SUNNYSIDE 345KV CKT 1
FDNS	06ALL	3	20SP	G15_020	TO->FROM	CIMARRON - MINCO 345KV CKT 1	956	956	0.24199	121.3286	G14-057T 345.00 - SUNNYSIDE 345KV CKT 1
FDNS	06ALL	3	16WP	G15_020	TO->FROM	CIMARRON - MINCO 345KV CKT 1	956	956	0.24482	119.9255	G14-057T 345.00 - LAWTON EASTSIDE 345KV CKT 1
FDNS	06ALL	3	17SP	G15_020	TO->FROM	CIMARRON - MINCO 345KV CKT 1	956	956	0.24175	118.8978	G14-057T 345.00 - LAWTON EASTSIDE 345KV CKT 1
FDNS	06ALL	3	20SP	G15_020	TO->FROM	CIMARRON - MINCO 345KV CKT 1	956	956	0.24199	116.0894	G14-057T 345.00 - LAWTON EASTSIDE 345KV CKT 1
FDNS	06ALL	3	20WP	G15_020	TO->FROM	CIMARRON - MINCO 345KV CKT 1	956	956	0.19993	111.5734	MATHWSN7 345.00 - TATONGA7 345.00 345KV CKT 1
FDNS	06ALL	3	20L	G15_020	TO->FROM	CIMARRON - MINCO 345KV CKT 1	956	956	0.21158	109.488	CHISHOLM7 345.00 - WOODWARD DISTRICT EHV 345KV CKT 1
FDNS	06ALL	3	17G	G15_020	TO->FROM	CIMARRON - MINCO 345KV CKT 1	956	956	0.23374	109.1031	CHISHOLM7 345.00 - WOODWARD DISTRICT EHV 345KV CKT 1
FDNS	06ALL	3	20WP	G15_020	TO->FROM	CIMARRON - MINCO 345KV CKT 1	956	956	0.19993	106.2571	G11_051T 345.00 - TATONGA7 345.00 345KV CKT 1
FDNS	06ALL	3	17G	G15_020	TO->FROM	CIMARRON - MINCO 345KV CKT 1	956	956	0.20296	106.016	G11_051T 345.00 - TATONGA7 345.00 345KV CKT 1
FDNS	06ALL	3	17SP	G15_020	TO->FROM	CIMARRON - MINCO 345KV CKT 1	956	956	0.20647	105.6361	MATHWSN7 345.00 - TATONGA7 345.00 345KV CKT 1
FDNS	06ALL	3	20WP	G15_020	TO->FROM	CIMARRON - MINCO 345KV CKT 1	956	956	0.2347	105.2058	CHISHOLM7 345.00 - WOODWARD DISTRICT EHV 345KV CKT 1
FDNS	06ALL	3	16WP	G15_020	TO->FROM	CIMARRON - MINCO 345KV CKT 1	956	956	0.20824	105.1594	MATHWSN7 345.00 - TATONGA7 345.00 345KV CKT 1
FDNS	06ALL	3	20SP	G15_020	TO->FROM	CIMARRON - MINCO 345KV CKT 1	956	956	0.20647	104.8651	MATHWSN7 345.00 - TATONGA7 345.00 345KV CKT 1
FDNS	06ALL	3	20WP	G15_020	TO->FROM	CIMARRON - MINCO 345KV CKT 1	956	956	0.19993	104.6601	G11_051T 345.00 - WOODWARD DISTRICT EHV 345KV CKT 1
FDNS	06ALL	3	17G	G15_020	TO->FROM	CIMARRON - MINCO 345KV CKT 1	956	956	0.20296	104.4511	G11_051T 345.00 - WOODWARD DISTRICT EHV 345KV CKT 1
FDNS	06ALL	3	20SP	G15_020	TO->FROM	CIMARRON - MINCO 345KV CKT 1	956	956	0.24146	103.3967	CHISHOLM7 345.00 - WOODWARD DISTRICT EHV 345KV CKT 1
FDNS	06ALL	3	17SP	G15_020	TO->FROM	CIMARRON - MINCO 345KV CKT 1	956	956	0.24084	102.6701	CHISHOLM7 345.00 - WOODWARD DISTRICT EHV 345KV CKT 1
FDNS	06ALL	3	17SP	G15_020	TO->FROM	CIMARRON - MINCO 345KV CKT 1	956	956	0.20647	100.4546	G11_051T 345.00 - TATONGA7 345.00 345KV CKT 1
FDNS	06ALL	3	16WP	G15_020	TO->FROM	CIMARRON - MINCO 345KV CKT 1	956	956	0.20824	99.8	G11_051T 345.00 - TATONGA7 345.00 345KV CKT 1
FDNS	06ALL	3	20SP	G15_020	TO->FROM	CIMARRON - MINCO 345KV CKT 1	956	956	0.20647	99.7	G11_051T 345.00 - TATONGA7 345.00 345KV CKT 1
FDNS	06ALL	3	17SP	G15_020	TO->FROM	CIMARRON - MINCO 345KV CKT 1	956	956	0.19558	99.6	P12:138:WFEC:MSL03
FDNS	06ALL	3	20SP	G15_020	TO->FROM	CIMARRON - MINCO 345KV CKT 1	956	956	0.19592	99.6	P12:138:WFEC:MSL03
FDNS	06NR	3	20L	G15_020	TO->FROM	COULTER INTERCHANGE - HILLSIDE 115KV CKT 1	159	159	0.05822	105.531	BUSHLAND INTERCHANGE - POTTER COUNTY INTERCHANGE 230KV CKT 1
FDNS	06NR	3	20L	G15_020	TO->FROM	COULTER INTERCHANGE - HILLSIDE 115KV CKT 1	159	159	0.05822	105.531	BUSHLAND INTERCHANGE - POTTER COUNTY INTERCHANGE 230KV CKT 1
FDNS	06NR	3	17G	G15_020	TO->FROM	COULTER INTERCHANGE - HILLSIDE 115KV CKT 1	159	159	0.05779	100.454	BUSHLAND INTERCHANGE - POTTER COUNTY INTERCHANGE 230KV CKT 1
FDNS	06NR	3	17G	G15_020	TO->FROM	COULTER INTERCHANGE - HILLSIDE 115KV CKT 1	159	159	0.05779	100.454	BUSHLAND INTERCHANGE - POTTER COUNTY INTERCHANGE 230KV CKT 1
FDNS	06NR	3	20L	G15_020	FROM->TO	CURRY COUNTY INTERCHANGE - DEAF SMITH REC-#20 115KV CKT 1	96	96	0.09822	115.2042	DEAF SMITH COUNTY INTERCHANGE - G15039_T 230.00 230KV CKT 1
FDNS	06NR	3	17G	G15_020	FROM->TO	CURRY COUNTY INTERCHANGE - DEAF SMITH REC-#20 115KV CKT 1	96	96	0.09762	112.5719	DEAF SMITH COUNTY INTERCHANGE - G15039_T 230.00 230KV CKT 1
FDNS	06NR	3	20L	G15_020	FROM->TO	CURRY COUNTY INTERCHANGE - DEAF SMITH REC-#20 115KV CKT 1	96	96	0.09822	107.0377	G15039_T 230.00 - PLANT X STATION 230KV CKT 1
FDNS	06NR	3	17G	G15_020	FROM->TO	CURRY COUNTY INTERCHANGE - DEAF SMITH REC-#20 115KV CKT 1	96	96	0.09762	104.7125	G15039_T 230.00 - PLANT X STATION 230KV CKT 1
FDNS	06NR	3	17G	G15_020	TO->FROM	DAWN SUB - Panda Energy Substation Hereford 115KV CKT 1	96	96	0.05143	112.7612	BUSHLAND INTERCHANGE - DEAF SMITH COUNTY INTERCHANGE 230KV CKT 1
FDNS	06NR	3	17G	G15_020	TO->FROM	DAWN SUB - Panda Energy Substation Hereford 115KV CKT 1	96	96	0.05143	112.7612	BUSHLAND INTERCHANGE - DEAF SMITH COUNTY INTERCHANGE 230KV CKT 1
FDNS	06NR	3	17G	G15_020	FROM->TO	DEAF SMITH COUNTY INTERCHANGE - Panda Energy Substation Hereford 115KV CKT 1	96	96	0.05143	117.8354	BUSHLAND INTERCHANGE - DEAF SMITH COUNTY INTERCHANGE 230KV CKT 1
FDNS	06NR	3	17G	G15_020	FROM->TO	DEAF SMITH COUNTY INTERCHANGE - Panda Energy Substation Hereford 115KV CKT 1	96	96	0.05143	117.8354	BUSHLAND INTERCHANGE - DEAF SMITH COUNTY INTERCHANGE 230KV CKT 1
FDNS	06NR	3	20L	G15_020	FROM->TO	DEAF SMITH REC-#20 - PARMER COUNTY SUB 115KV CKT 1	96	96	0.09822	107.8332	DEAF SMITH COUNTY INTERCHANGE - G15039_T 230.00 230KV CKT 1
FDNS	06NR	3	17G	G15_020	FROM->TO	DEAF SMITH REC-#20 - PARMER COUNTY SUB 115KV CKT 1	96	96	0.09762	104.6652	DEAF SMITH COUNTY INTERCHANGE - G15039_T 230.00 230KV CKT 1
FDNS	06NR	3	20L	G15_020	FROM->TO	DEAF SMITH REC-#20 - PARMER COUNTY SUB 115KV CKT 1	96	96	0.09822	99.8	G15039_T 230.00 - PLANT X STATION 230KV CKT 1
FDNS	06NR	3	20L	G15_020	TO->FROM	DEAF SMITH REC-#24 - PARMER COUNTY SUB 115KV CKT 1	96	96	0.09822	102.5777	DEAF SMITH COUNTY INTERCHANGE - G15039_T 230.00 230KV CKT 1
FDNS	06ALL	3	20L	G15_020	TO->FROM	G14-057T 345.00 - LAWTON EASTSIDE 345KV CKT 1	717	789	0.10177	106.0801	BASE CASE
FDNS	06ALL	3	20L	G15_020	FROM->TO	G14-057T 345.00 - SUNNYSIDE 345KV CKT 1	717	789	0.10177	119.3111	BASE CASE
FDNS	06ALL	3	20WP	G15_020	FROM->TO	G14-057T 345.00 - SUNNYSIDE 345KV CKT 1	717	789	0.1253	107.198	BASE CASE
FDNS	06ALL	3	17G	G15_020	FROM->TO	G14-057T 345.00 - SUNNYSIDE 345KV CKT 1	717	789	0.12672	106.7167	BASE CASE
FDNS	06ALL	3	16WP	G15_020	FROM->TO	G14-057T 345.00 - SUNNYSIDE 345KV CKT 1	717	789	0.1302	105.3992	BASE CASE
FDNS	06NR	3	20L	G15_020	FROM->TO	G14-074T 345.00 - OKLAUNION 345KV CKT 1	1022	1124	0.03611	108.2612	BASE CASE
FDNS	06NR	3	17G	G15_020	FROM->TO	G14-074T 345.00 - OKLAUNION 345KV CKT 1	1022	1124	0.03345	106.9843	G11_051T 345.00 - WOODWARD DISTRICT EHV 345KV CKT 1
FDNS	06NR	3	17G	G15_020	FROM->TO	G14-074T 345.00 - OKLAUNION 345KV CKT 1	1022	1124	0.0338	105.0698	BASE CASE
FDNS	06NR	3	20L	G15_020	FROM->TO	G14-074T 345.00 - OKLAUNION 345KV CKT 1	1022	1124	0.03429	103.3966	CHISHOLM7 345.00 - GRACEMONT 345KV CKT 1
FDNS	06NR	3	20L	G15_020	FROM->TO	G14-074T 345.00 - OKLAUNION 345KV CKT 1	1022	1124	0.03429	102.9036	CHISHOLM7 345.00 () 345/230/13.2KV TRANSFORMER CKT 1
FDNS	06NR	3	20L	G15_020	FROM->TO	G14-074T 345.00 - OKLAUNION 345KV CKT 1	1022	1124	0.04533	102.6829	AMARILLO SOUTH INTERCHANGE - G15031_T 230.00 230KV CKT 1
FDNS	06NR	3	20L	G15_020	FROM->TO	G14-074T 345.00 - OKLAUNION 345KV CKT 1	1022	1124	0.0453	102.2907	NEWHART 230 - POTTER COUNTY INTERCHANGE 230KV CKT 1
FDNS	06NR	3	20L	G15_020	FROM->TO	G14-074T 345.00 - OKLAUNION 345KV CKT 1	1022	1124	0.04205	101.9316	DEAF SMITH COUNTY INTERCHANGE - G15039_T 230.00 230KV CKT 1
FDNS	06NR	3	20L	G15_020	FROM->TO	G14-074T 345.00 - OKLAUNION 345KV CKT 1	1022	1124	0.04205	100.8261	G15039_T 230.00 - PLANT X STATION 230KV CKT 1
FDNS	06NR	3	20L	G15_020	FROM->TO	G14-074T 345.00 - OKLAUNION 345KV CKT 1	1022	1124	0.03599	100.637	MINGO - RED WILLOW 345KV CKT 1
FDNS	06NR	3	20L	G15_020	FROM->TO	G14-074T 345.00 - OKLAUNION 345KV CKT 1	1022	1124	0.03599	100.637	MINGO - RED WILLOW 345KV CKT 1
FDNS	06NR	3	20L	G15_020	FROM->TO	G14-074T 345.00 - OKLAUNION 345KV CKT 1	1022	1124	0.03559	100.065	CHILDRESS - LAKE PAULINE 138KV CKT 1
FDNS	06NR	3	20L	G15_020	FROM->TO	G14-074T 345.00 - OKLAUNION 345KV CKT 1	1022	1124	0.03559	100.065	CHILDRESS - LAKE PAULINE 138KV CKT 1
FDNS	06NR	3	20L	G15_020	FROM->TO	G14-074T 345.00 - OKLAUNION 345KV CKT 1	1022	1124	0.03583	100	CONWAY SUB - NICHOLS STATION 115KV CKT 1
FDNS	06NR	3	20L	G15_020	FROM->TO	G14-074T 345.00 - OKLAUNION 345KV CKT 1	1022	1124	0.03583	99.9	CONWAY SUB - KIRBY SWITCHING STATION 115KV CKT 1
FDNS	06NR	3	17G	G15_020	FROM->TO	G14-074T 345.00 - OKLAUNION 345KV CKT 1	1022	1124	0.04248	99.8	AMARILLO SOUTH INTERCHANGE - G15031_T 230.00 230KV CKT 1
FDNS	06NR	3	20L	G15_020	FROM->TO	G14-074T 345.00 - OKLAUNION 345KV CKT 1	1022	1124	0.03583	99.8	P12:115:SPS:T53.1.NICHLS.KIRBY
FDNS	06NR	3	20L	G15_020	FROM->TO	G14-074T 345.00 - OKLAUNION 345KV CKT 1	1022	1124	0.0361	99.7	IODINE - WOODWARD EHV 138KV CKT 1
FDNS	06NR	3	20L	G15_020	FROM->TO	G14-074T 345.00 - OKLAUNION 345KV CKT 1	1022	1124	0.0361	99.6	DEWEY - IODINE 138KV CKT 1
FDNS	06NR	3	20L	G15_020	FROM->TO	G14-074T 345.00 - OKLAUNION 345KV CKT 1	1022	1124	0.0361	99.6	WOODWARD - WWPAR4 138.00 138KV CKT 1
FDNS	06NR	3	20L	G15_020	FROM->TO	G14-074T 345.00 - OKLAUNION 345KV CKT 1	1022	1124	0.0361	99.6	WOODWARD EHV - WWPAR4 138.00 138KV CKT 1
FDNS	06NR	3	17G	G15_020	FROM->TO	G14-074T 345.00 - OKLAUNION 345KV CKT 1	1022	1124	0.03203	99.5	CHISHOLM7 345.00 - GRACEMONT 345KV CKT 1
FDNS	06NR	3	20L	G15_020	FROM->TO	G14-074T 345.00 - OKLAUNION 345KV CKT 1	1022	1124	0.03582	99.5	KIRBY SWITCHING STATION - MCCLELLAN SUB 115KV CKT 1
FDNS	06NR	3	20L	G15_020	FROM->TO	G14-074T 345.00 - OKLAUNION 345KV CKT 1	1022	1124	0.03582	99.5	MCCLELLAN SUB - MCLEAN RURAL SUB 115KV CKT 1
FDNS	06ALL	3	20L	G15_020	FROM->TO	GRACEMONT - MINCO 345KV CKT 1	1195	1195	0.20867	101.53	G14-057T 345.00 - SUNNYSIDE 345KV CKT 1
FDNS	00NR	3	25SP	G15_020	TO->FROM	JONES STATION - TUCO INTERCHANGE 230KV CKT 1	343.79	343.79	0.07909	130.1614	CARLISLE INTERCHANGE - TUCO INTERCHANGE 230KV CKT 1
FDNS	00NR	3	25SP	G15_020	TO->FROM	JONES STATION - TUCO INTERCHANGE 230KV CKT 1	343.79	343.79	0.07909	130.1614	CARLISLE INTERCHANGE - TUCO INTERCHANGE 230KV CKT 1
FDNS	00NR	3	25SP	G15_020	TO->FROM	JONES STATION - TUCO INTERCHANGE 230KV CKT 1	343.79	343.79	0.06695	113.3309	GEN526333 1-JONES GEN #3 21 KV
FDNS	00NR	3	25SP	G15_020	TO->FROM	JONES STATION - TUCO INTERCHANGE 230KV CKT 1	343.79	343.79	0.06695	112.9359	GEN526334 1-JONES_4 116.500
FDNS	00NR	3	25SP	G15_020	TO->FROM	JONES STATION - TUCO INTERCHANGE 230KV CKT 1	343.79	343.79	0.07287	108.5941	TUCO INTERCHANGE - YOAKUM_345 345.00 345KV CKT 1

SOLUTION	GROUP	SCENARIO	SEASON	SOURCE	DIRECTION	MONITORED ELEMENT	RATEA (MVA)	RATEB(MVA)	TDF	TC%LOADING (% MVA)	CONTINGENCY
FDNS	00NR	3	25SP	G15_020	TO->FROM	JONES STATION - TUCO INTERCHANGE 230KV CKT 1	343.79	343.79	0.07219	103.864	CARLISLE INTERCHANGE - WOLFFORTH INTERCHANGE 230KV CKT 1
FDNS	00NR	3	25SP	G15_020	TO->FROM	JONES STATION - TUCO INTERCHANGE 230KV CKT 1	343.79	343.79	0.07927	101.6819	PLANT X STATION - SUNDOWN INTERCHANGE 230KV CKT 1
FDNS	00NR	3	25SP	G15_020	TO->FROM	JONES STATION - TUCO INTERCHANGE 230KV CKT 1	343.79	343.79	0.07927	101.6819	PLANT X STATION - SUNDOWN INTERCHANGE 230KV CKT 1
FDNS	00NR	3	25SP	G15_020	TO->FROM	JONES STATION - TUCO INTERCHANGE 230KV CKT 1	343.79	343.79	0.06695	100.8779	GEN526332 1-JONES GEN #2 21 KV
FDNS	00NR	3	25SP	G15_020	TO->FROM	JONES STATION - TUCO INTERCHANGE 230KV CKT 1	343.79	343.79	0.06695	100.876	GEN526331 1-JONES GEN #1 22 KV
FDNS	00NR	3	25SP	G15_020	TO->FROM	JONES STATION - TUCO INTERCHANGE 230KV CKT 1	343.79	343.79	0.0678	100.7208	TUCO INTERCHANGE (ENRCO 136401) 230/115/13.2KV TRANSFORMER CKT 1
FDNS	00NR	3	25SP	G15_020	TO->FROM	JONES STATION - TUCO INTERCHANGE 230KV CKT 1	343.79	343.79	0.0678	100.7208	TUCO INTERCHANGE (ENRCO 136401) 230/115/13.2KV TRANSFORMER CKT 1
FDNS	00NR	3	25SP	G15_020	TO->FROM	JONES STATION - TUCO INTERCHANGE 230KV CKT 1	343.79	343.79	0.0678	100.7208	TUCO INTERCHANGE (ENRCO 136401) 230/115/13.2KV TRANSFORMER CKT 2
FDNS	00NR	3	25SP	G15_020	TO->FROM	JONES STATION - TUCO INTERCHANGE 230KV CKT 1	343.79	343.79	0.0678	100.7208	TUCO INTERCHANGE (ENRCO 136401) 230/115/13.2KV TRANSFORMER CKT 2
FDNS	00NR	3	25SP	G15_020	TO->FROM	JONES STATION - TUCO INTERCHANGE 230KV CKT 1	343.79	343.79	0.07308	99.8	LUBBOCK EAST INTERCHANGE - TUCO INTERCHANGE 115KV CKT 1
FDNS	00NR	3	25SP	G15_020	TO->FROM	JONES STATION - TUCO INTERCHANGE 230KV CKT 1	343.79	343.79	0.07308	99.8	LUBBOCK EAST INTERCHANGE - TUCO INTERCHANGE 115KV CKT 1
FDNS	00NR	3	25SP	G15_020	FROM->TO	LUBBOCK POWER & LIGHT-HOLLY PLANT (SHIH T101039) 230/69/13.5KV TRANSFORMER CKT 1	224	224	0.03581	104.7002	LUBBOCK POWER & LIGHT-SOUTHEAST - LUBBOCK SOUTH INTERCHANGE 230KV CKT 1
FDNS	00NR	3	25SP	G15_020	FROM->TO	LUBBOCK POWER & LIGHT-HOLLY PLANT (SHIH T101039) 230/69/13.5KV TRANSFORMER CKT 1	224	224	0.03581	104.6872	P12:LPL:SPS:K64.1.LP-SE.LUBBS
FDNS	00NR	3	25SP	G15_020	FROM->TO	LUBBOCK POWER & LIGHT-HOLLY PLANT (SHIH T101039) 230/69/13.5KV TRANSFORMER CKT 1	224	224	0.03444	101.9683	LUBBOCK EAST INTERCHANGE - LUBBOCK POWER & LIGHT-WADSWORTH 230KV CKT 1
FDNS	00NR	3	25SP	G15_020	FROM->TO	LUBBOCK POWER & LIGHT-HOLLY PLANT (SHIH T101039) 230/69/13.5KV TRANSFORMER CKT 1	224	224	0.03444	101.9535	P12:230:LPL:K57.1.LP-WADS.LUBBE
FDNS	00NR	3	25SP	G15_020	FROM->TO	LUBBOCK POWER & LIGHT-HOLLY PLANT (SHIH T101039) 230/69/13.5KV TRANSFORMER CKT 1	224	224	0.03444	101.9534	LUBBOCK POWER & LIGHT-WADSWORTH (SHIH T101038) 230/69/13.5KV TRANSFORMER CKT 1
FDNS	00NR	3	25SP	G15_020	FROM->TO	LUBBOCK POWER & LIGHT-HOLLY PLANT (SHIH T101039) 230/69/13.5KV TRANSFORMER CKT 1	224	224	0.03444	101.9534	LUBBOCK POWER & LIGHT-WADSWORTH (SHIH T101038) 230/69/13.5KV TRANSFORMER CKT 1
FDNS	06ALL	4	20SP	G15_020	FROM->TO	CHISHOLM6 230.00 - ELK CITY 230KV 230KV CKT 1	353	353	0.06176	103.152	BASE CASE
FDNS	06ALL	4	17SP	G15_020	FROM->TO	CHISHOLM6 230.00 - ELK CITY 230KV 230KV CKT 1	353	353	0.06194	100.7007	BASE CASE
FDNS	06ALL	4	20L	G15_020	TO->FROM	CIMARRON - MINCO 345KV CKT 1	956	956	0.19505	136.9659	G14-057T 345.00 - SUNNYSIDE 345KV CKT 1
FDNS	06ALL	4	20L	G15_020	TO->FROM	CIMARRON - MINCO 345KV CKT 1	956	956	0.19505	130.9905	G14-057T 345.00 - LAWTON EASTSIDE 345KV CKT 1
FDNS	06ALL	4	17G	G15_020	TO->FROM	CIMARRON - MINCO 345KV CKT 1	956	956	0.22257	129.7974	G14-057T 345.00 - SUNNYSIDE 345KV CKT 1
FDNS	06ALL	4	20WP	G15_020	TO->FROM	CIMARRON - MINCO 345KV CKT 1	956	956	0.22077	128.511	G14-057T 345.00 - SUNNYSIDE 345KV CKT 1
FDNS	06ALL	4	17G	G15_020	TO->FROM	CIMARRON - MINCO 345KV CKT 1	956	956	0.22257	124.286	G14-057T 345.00 - LAWTON EASTSIDE 345KV CKT 1
FDNS	06ALL	4	20WP	G15_020	TO->FROM	CIMARRON - MINCO 345KV CKT 1	956	956	0.22077	123.0537	G14-057T 345.00 - LAWTON EASTSIDE 345KV CKT 1
FDNS	06ALL	4	16WP	G15_020	TO->FROM	CIMARRON - MINCO 345KV CKT 1	956	956	0.22914	122.1275	G14-057T 345.00 - SUNNYSIDE 345KV CKT 1
FDNS	06ALL	4	17SP	G15_020	TO->FROM	CIMARRON - MINCO 345KV CKT 1	956	956	0.2259	121.005	G14-057T 345.00 - SUNNYSIDE 345KV CKT 1
FDNS	06ALL	4	20SP	G15_020	TO->FROM	CIMARRON - MINCO 345KV CKT 1	956	956	0.22651	117.7968	G14-057T 345.00 - SUNNYSIDE 345KV CKT 1
FDNS	06ALL	4	16WP	G15_020	TO->FROM	CIMARRON - MINCO 345KV CKT 1	956	956	0.22914	116.5578	G14-057T 345.00 - LAWTON EASTSIDE 345KV CKT 1
FDNS	06ALL	4	17SP	G15_020	TO->FROM	CIMARRON - MINCO 345KV CKT 1	956	956	0.2259	115.6625	G14-057T 345.00 - LAWTON EASTSIDE 345KV CKT 1
FDNS	06ALL	4	20SP	G15_020	TO->FROM	CIMARRON - MINCO 345KV CKT 1	956	956	0.22651	112.5931	G14-057T 345.00 - LAWTON EASTSIDE 345KV CKT 1
FDNS	06ALL	4	17G	G15_020	TO->FROM	CIMARRON - MINCO 345KV CKT 1	956	956	0.21073	104.4362	CHISHOLM7 345.00 - WOODWARD DISTRICT EHV 345KV CKT 1
FDNS	06ALL	4	17SP	G15_020	TO->FROM	CIMARRON - MINCO 345KV CKT 1	956	956	0.19655	103.6969	MATHWSN7 345.00 - TATONGA7 345.00 345KV CKT 1
FDNS	06ALL	4	16WP	G15_020	TO->FROM	CIMARRON - MINCO 345KV CKT 1	956	956	0.19851	103.3746	MATHWSN7 345.00 - TATONGA7 345.00 345KV CKT 1
FDNS	06ALL	4	20SP	G15_020	TO->FROM	CIMARRON - MINCO 345KV CKT 1	956	956	0.19678	102.8303	MATHWSN7 345.00 - TATONGA7 345.00 345KV CKT 1
FDNS	06ALL	4	20WP	G15_020	TO->FROM	CIMARRON - MINCO 345KV CKT 1	956	956	0.21182	100.3052	CHISHOLM7 345.00 - WOODWARD DISTRICT EHV 345KV CKT 1
FDNSLock	06ALL	4	16WP	G15_020		G14_001T 345.00 - WICHITA 345KV CKT 1	1035	1035	0.05405	25.24282	BASE CASE
FDNS	06ALL	4	20L	G15_020	TO->FROM	G14-057T 345.00 - LAWTON EASTSIDE 345KV CKT 1	717	789	0.0958	104.3251	BASE CASE
FDNS	06ALL	4	20L	G15_020	FROM->TO	G14-057T 345.00 - SUNNYSIDE 345KV CKT 1	717	789	0.0958	117.5276	BASE CASE
FDNS	06ALL	4	20WP	G15_020	FROM->TO	G14-057T 345.00 - SUNNYSIDE 345KV CKT 1	717	789	0.11869	105.3579	BASE CASE
FDNS	06ALL	4	17G	G15_020	FROM->TO	G14-057T 345.00 - SUNNYSIDE 345KV CKT 1	717	789	0.12009	105.0325	BASE CASE
FDNS	06ALL	4	16WP	G15_020	FROM->TO	G14-057T 345.00 - SUNNYSIDE 345KV CKT 1	717	789	0.12342	103.6585	BASE CASE
FDNS	00NR	4	25SP	G15_020	TO->FROM	JONES STATION - TUCO INTERCHANGE 230KV CKT 1	343.79	343.79	0.07934	129.809	CARLISLE INTERCHANGE - TUCO INTERCHANGE 230KV CKT 1
FDNS	00NR	4	25SP	G15_020	TO->FROM	JONES STATION - TUCO INTERCHANGE 230KV CKT 1	343.79	343.79	0.07934	129.809	CARLISLE INTERCHANGE - TUCO INTERCHANGE 230KV CKT 1
FDNS	00NR	4	25SP	G15_020	TO->FROM	JONES STATION - TUCO INTERCHANGE 230KV CKT 1	343.79	343.79	0.06706	113.028	GEN526333 1-JONES GEN #3 21 KV
FDNS	00NR	4	25SP	G15_020	TO->FROM	JONES STATION - TUCO INTERCHANGE 230KV CKT 1	343.79	343.79	0.06706	112.6359	GEN526334 1-JONES_4 116.500
FDNS	00NR	4	25SP	G15_020	TO->FROM	JONES STATION - TUCO INTERCHANGE 230KV CKT 1	343.79	343.79	0.07326	108.0461	TUCO INTERCHANGE - YOAKUM_345 345.00 345KV CKT 1
FDNS	00NR	4	25SP	G15_020	TO->FROM	JONES STATION - TUCO INTERCHANGE 230KV CKT 1	343.79	343.79	0.07242	103.563	CARLISLE INTERCHANGE - WOLFFORTH INTERCHANGE 230KV CKT 1
FDNS	00NR	4	25SP	G15_020	TO->FROM	JONES STATION - TUCO INTERCHANGE 230KV CKT 1	343.79	343.79	0.07951	101.3715	PLANT X STATION - SUNDOWN INTERCHANGE 230KV CKT 1
FDNS	00NR	4	25SP	G15_020	TO->FROM	JONES STATION - TUCO INTERCHANGE 230KV CKT 1	343.79	343.79	0.07951	101.3715	PLANT X STATION - SUNDOWN INTERCHANGE 230KV CKT 1
FDNS	00NR	4	25SP	G15_020	TO->FROM	JONES STATION - TUCO INTERCHANGE 230KV CKT 1	343.79	343.79	0.0579	100.6898	P12:345:SPS:J02.1.TOLK.EDDY
FDNS	00NR	4	25SP	G15_020	TO->FROM	JONES STATION - TUCO INTERCHANGE 230KV CKT 1	343.79	343.79	0.06706	100.6764	GEN526332 1-JONES GEN #2 21 KV
FDNS	00NR	4	25SP	G15_020	TO->FROM	JONES STATION - TUCO INTERCHANGE 230KV CKT 1	343.79	343.79	0.06706	100.6745	GEN526331 1-JONES GEN #1 22 KV
FDNS	00NR	4	25SP	G15_020	TO->FROM	JONES STATION - TUCO INTERCHANGE 230KV CKT 1	343.79	343.79	0.06777	100.6429	TUCO INTERCHANGE (ENRCO 136401) 230/115/13.2KV TRANSFORMER CKT 1
FDNS	00NR	4	25SP	G15_020	TO->FROM	JONES STATION - TUCO INTERCHANGE 230KV CKT 1	343.79	343.79	0.06777	100.6429	TUCO INTERCHANGE (ENRCO 136401) 230/115/13.2KV TRANSFORMER CKT 1
FDNS	00NR	4	25SP	G15_020	TO->FROM	JONES STATION - TUCO INTERCHANGE 230KV CKT 1	343.79	343.79	0.06777	100.6429	TUCO INTERCHANGE (ENRCO 136401) 230/115/13.2KV TRANSFORMER CKT 2
FDNS	00NR	4	25SP	G15_020	TO->FROM	JONES STATION - TUCO INTERCHANGE 230KV CKT 1	343.79	343.79	0.06777	100.6429	TUCO INTERCHANGE (ENRCO 136401) 230/115/13.2KV TRANSFORMER CKT 2
FDNS	00NR	4	25SP	G15_020	TO->FROM	JONES STATION - TUCO INTERCHANGE 230KV CKT 1	343.79	343.79	0.0733	99.8	LUBBOCK EAST INTERCHANGE - TUCO INTERCHANGE 115KV CKT 1
FDNS	00NR	4	25SP	G15_020	TO->FROM	JONES STATION - TUCO INTERCHANGE 230KV CKT 1	343.79	343.79	0.0733	99.8	LUBBOCK EAST INTERCHANGE - TUCO INTERCHANGE 115KV CKT 1
FDNS	00NR	4	25SP	G15_020	FROM->TO	LUBBOCK POWER & LIGHT-HOLLY PLANT (SHIH T101039) 230/69/13.5KV TRANSFORMER CKT 1	224	224	0.03581	104.6928	LUBBOCK POWER & LIGHT-SOUTHEAST - LUBBOCK SOUTH INTERCHANGE 230KV CKT 1
FDNS	00NR	4	25SP	G15_020	FROM->TO	LUBBOCK POWER & LIGHT-HOLLY PLANT (SHIH T101039) 230/69/13.5KV TRANSFORMER CKT 1	224	224	0.03581	104.6926	P12:LPL:SPS:K64.1.LP-SE.LUBBS
FDNS	00NR	4	25SP	G15_020	FROM->TO	LUBBOCK POWER & LIGHT-HOLLY PLANT (SHIH T101039) 230/69/13.5KV TRANSFORMER CKT 1	224	224	0.03446	101.9377	LUBBOCK EAST INTERCHANGE - LUBBOCK POWER & LIGHT-WADSWORTH 230KV CKT 1
FDNS	00NR	4	25SP	G15_020	FROM->TO	LUBBOCK POWER & LIGHT-HOLLY PLANT (SHIH T101039) 230/69/13.5KV TRANSFORMER CKT 1	224	224	0.03446	101.923	P12:230:LPL:K57.1.LP-WADS.LUBBE
FDNS	00NR	4	25SP	G15_020	FROM->TO	LUBBOCK POWER & LIGHT-HOLLY PLANT (SHIH T101039) 230/69/13.5KV TRANSFORMER CKT 1	224	224	0.03446	101.9229	LUBBOCK POWER & LIGHT-WADSWORTH (SHIH T101038) 230/69/13.5KV TRANSFORMER CKT 1
FDNS	00NR	4	25SP	G15_020	FROM->TO	LUBBOCK POWER & LIGHT-HOLLY PLANT (SHIH T101039) 230/69/13.5KV TRANSFORMER CKT 1	224	224	0.03446	101.9229	LUBBOCK POWER & LIGHT-WADSWORTH (SHIH T101038) 230/69/13.5KV TRANSFORMER CKT 1
FDNSLock	06ALL	4	20L	G15_020		OKLAUNION 345KV SWITCHED SHUNT	1022	1124	0.15402	86.37846	BASE CASE
FDNS	06ALL	4	16WP	G15_020	FROM->TO	TOLK STATION (ABBXNL844501) 345/230/13.2KV TRANSFORMER CKT 1	560	560	0.34521	113.0515	CROSSROADS 7345.00 - TOLK STATION 345KV CKT 1
FDNS	06ALL	4	16WP	G15_020	FROM->TO	TOLK STATION (ABBXNL844501) 345/230/13.2KV TRANSFORMER CKT 1	560	560	0.34521	110.3257	CROSSROADS 7345.00 - TOLK STATION 345KV CKT 1
FDNS	06ALL	4	20WP	G15_020	FROM->TO	TOLK STATION (ABBXNL844501) 345/230/13.2KV TRANSFORMER CKT 1	560	560	0.30659	105.1552	CROSSROADS 7345.00 - TOLK STATION 345KV CKT 1
FDNS	06ALL	4	20WP	G15_020	FROM->TO	TOLK STATION (ABBXNL844501) 345/230/13.2KV TRANSFORMER CKT 1	560	560	0.30659	102.8567	CROSSROADS 7345.00 - TOLK STATION 345KV CKT 1
FDNS	06ALL	5	20SP	G15_020	FROM->TO	CHISHOLM6 230.00 - ELK CITY 230KV 230KV CKT 1	353	353	0.06665	107.7212	BASE CASE
FDNS	06ALL	5	17SP	G15_020	FROM->TO	CHISHOLM6 230.00 - ELK CITY 230KV 230KV CKT 1	353	353	0.06702	105.7594	BASE CASE
FDNS	06ALL	5	20L	G15_020	TO->FROM	CIMARRON - MINCO 345KV CKT 1	956	956	0.20358	139.1694	G14-057T 345.00 - SUNNYSIDE 345KV CKT 1
FDNS	06ALL	5	20L	G15_020	TO->FROM	CIMARRON - MINCO 345KV CKT 1	956	956	0.20358	133.4583	G14-057T 345.00 - LAWTON EASTSIDE 345KV CKT 1
FDNS	06ALL	5	17G	G15_020	TO->FROM	CIMARRON - MINCO 345KV CKT 1	956	956	0.23168	132.5137	G14-057T 345.00 - SUNNYSIDE 345KV CKT 1
FDNS	06ALL	5	20WP	G15_020	TO->FROM	CIMARRON - MINCO 345KV CKT 1	956	956	0.22875	131.4126	G14-057T 345.00 - SUNNYSIDE 345KV CKT 1
FDNS	06ALL	5	17G	G15_020	TO->FROM	CIMARRON - MINCO 345KV CKT 1	956	956	0.23168	127.0859	G14-057T 345.00 - LAWTON EASTSIDE 345KV CKT 1
FDNS	06ALL	5	20WP	G15_020	TO->FROM	CIMARRON - MINCO 345KV CKT 1	956	956	0.22875	126.0182	G14-057T 345.00 - LAWTON EASTSIDE 345KV CKT 1
FDNS	06ALL	5	16WP	G15_020	TO->FROM	CIMARRON - MINCO 345KV CKT 1	956	956	0.23844	125.0103	G14-057T 345.00 - SUNNYSIDE 345KV CKT 1

SOLUTION	GROUP	SCENARIO	SEASON	SOURCE	DIRECTION	MONITORED ELEMENT	RATEA (MVA)	RATEB(MVA)	TDF	TC%LOADING (% MVA)	CONTINGENCY
FDNS	06ALL	5	17SP	G15_020	TO->FROM	CIMARRON - MINCO 345KV CKT 1	956	956	0.23478	123.5221	G14-057T 345.00 - SUNNYSIDE 345KV CKT 1
FDNS	06ALL	5	20SP	G15_020	TO->FROM	CIMARRON - MINCO 345KV CKT 1	956	956	0.23494	120.476	G14-057T 345.00 - SUNNYSIDE 345KV CKT 1
FDNS	06ALL	5	16WP	G15_020	TO->FROM	CIMARRON - MINCO 345KV CKT 1	956	956	0.23844	119.6144	G14-057T 345.00 - LAWTON EASTSIDE 345KV CKT 1
FDNS	06ALL	5	17SP	G15_020	TO->FROM	CIMARRON - MINCO 345KV CKT 1	956	956	0.23478	118.2604	G14-057T 345.00 - LAWTON EASTSIDE 345KV CKT 1
FDNS	06ALL	5	20SP	G15_020	TO->FROM	CIMARRON - MINCO 345KV CKT 1	956	956	0.23494	115.0864	G14-057T 345.00 - LAWTON EASTSIDE 345KV CKT 1
FDNS	06ALL	5	17G	G15_020	TO->FROM	CIMARRON - MINCO 345KV CKT 1	956	956	0.20144	113.1247	MATHWSN7 345.00 - TATONGA7 345.00 345KV CKT 1
FDNS	06ALL	5	20WP	G15_020	TO->FROM	CIMARRON - MINCO 345KV CKT 1	956	956	0.19746	112.7231	MATHWSN7 345.00 - TATONGA7 345.00 345KV CKT 1
FDNS	06ALL	5	20L	G15_020	TO->FROM	CIMARRON - MINCO 345KV CKT 1	956	956	0.20268	110.4804	CHISHOLM7 345.00 - WOODWARD DISTRICT EHV 345KV CKT 1
FDNS	06ALL	5	17G	G15_020	TO->FROM	CIMARRON - MINCO 345KV CKT 1	956	956	0.22478	110.4087	CHISHOLM7 345.00 - WOODWARD DISTRICT EHV 345KV CKT 1
FDNS	06ALL	5	20WP	G15_020	TO->FROM	CIMARRON - MINCO 345KV CKT 1	956	956	0.19746	107.3503	G11_051T 345.00 - TATONGA7 345.00 345KV CKT 1
FDNS	06ALL	5	17G	G15_020	TO->FROM	CIMARRON - MINCO 345KV CKT 1	956	956	0.20144	107.1655	G11_051T 345.00 - TATONGA7 345.00 345KV CKT 1
FDNS	06ALL	5	20WP	G15_020	TO->FROM	CIMARRON - MINCO 345KV CKT 1	956	956	0.22407	106.6912	CHISHOLM7 345.00 - WOODWARD DISTRICT EHV 345KV CKT 1
FDNS	06ALL	5	16WP	G15_020	TO->FROM	CIMARRON - MINCO 345KV CKT 1	956	956	0.20666	106.1194	MATHWSN7 345.00 - TATONGA7 345.00 345KV CKT 1
FDNS	06ALL	5	17SP	G15_020	TO->FROM	CIMARRON - MINCO 345KV CKT 1	956	956	0.20436	106.0588	MATHWSN7 345.00 - TATONGA7 345.00 345KV CKT 1
FDNS	06ALL	5	20WP	G15_020	TO->FROM	CIMARRON - MINCO 345KV CKT 1	956	956	0.19746	105.6974	G11_051T 345.00 - WOODWARD DISTRICT EHV 345KV CKT 1
FDNS	06ALL	5	17G	G15_020	TO->FROM	CIMARRON - MINCO 345KV CKT 1	956	956	0.20144	105.5499	G11_051T 345.00 - WOODWARD DISTRICT EHV 345KV CKT 1
FDNS	06ALL	5	20SP	G15_020	TO->FROM	CIMARRON - MINCO 345KV CKT 1	956	956	0.20423	105.1459	MATHWSN7 345.00 - TATONGA7 345.00 345KV CKT 1
FDNS	06ALL	5	20SP	G15_020	TO->FROM	CIMARRON - MINCO 345KV CKT 1	956	956	0.23111	102.6282	CHISHOLM7 345.00 - WOODWARD DISTRICT EHV 345KV CKT 1
FDNS	06ALL	5	17SP	G15_020	TO->FROM	CIMARRON - MINCO 345KV CKT 1	956	956	0.23082	102.3712	CHISHOLM7 345.00 - WOODWARD DISTRICT EHV 345KV CKT 1
FDNS	06ALL	5	17SP	G15_020	TO->FROM	CIMARRON - MINCO 345KV CKT 1	956	956	0.20436	100.8538	G11_051T 345.00 - TATONGA7 345.00 345KV CKT 1
FDNS	06ALL	5	16WP	G15_020	TO->FROM	CIMARRON - MINCO 345KV CKT 1	956	956	0.20666	100.7286	G11_051T 345.00 - TATONGA7 345.00 345KV CKT 1
FDNS	06ALL	5	20SP	G15_020	TO->FROM	CIMARRON - MINCO 345KV CKT 1	956	956	0.20423	100	G11_051T 345.00 - TATONGA7 345.00 345KV CKT 1
FDNS	06ALL	5	16WP	G15_020	TO->FROM	CIMARRON - MINCO 345KV CKT 1	956	956	0.23295	99.9	CHISHOLM7 345.00 - WOODWARD DISTRICT EHV 345KV CKT 1
FDNS	06ALL	5	20L	G15_020	TO->FROM	G14-057T 345.00 - LAWTON EASTSIDE 345KV CKT 1	717	789	0.09764	104.5834	BASE CASE
FDNS	06ALL	5	20L	G15_020	FROM->TO	G14-057T 345.00 - SUNNYSIDE 345KV CKT 1	717	789	0.09764	117.7866	BASE CASE
FDNS	06ALL	5	20WP	G15_020	FROM->TO	G14-057T 345.00 - SUNNYSIDE 345KV CKT 1	717	789	0.11961	105.6059	BASE CASE
FDNS	06ALL	5	17G	G15_020	FROM->TO	G14-057T 345.00 - SUNNYSIDE 345KV CKT 1	717	789	0.12145	105.2883	BASE CASE
FDNS	06ALL	5	16WP	G15_020	FROM->TO	G14-057T 345.00 - SUNNYSIDE 345KV CKT 1	717	789	0.12471	103.9305	BASE CASE
FDNS	06ALL	5	20L	G15_020	FROM->TO	GRACEMONT - MINCO 345KV CKT 1	1195	1195	0.20358	100.3039	G14-057T 345.00 - SUNNYSIDE 345KV CKT 1
FDNS	00NR	5	25SP	G15_020	TO->FROM	JONES STATION - TUCO INTERCHANGE 230KV CKT 1	343.79	343.79	0.07942	129.641	CARLISLE INTERCHANGE - TUCO INTERCHANGE 230KV CKT 1
FDNS	00NR	5	25SP	G15_020	TO->FROM	JONES STATION - TUCO INTERCHANGE 230KV CKT 1	343.79	343.79	0.07942	129.641	CARLISLE INTERCHANGE - TUCO INTERCHANGE 230KV CKT 1
FDNS	00NR	5	25SP	G15_020	TO->FROM	JONES STATION - TUCO INTERCHANGE 230KV CKT 1	343.79	343.79	0.06711	112.7964	GEN526333 1-JONES GEN #3 21 KV
FDNS	00NR	5	25SP	G15_020	TO->FROM	JONES STATION - TUCO INTERCHANGE 230KV CKT 1	343.79	343.79	0.06711	112.4061	GEN526334 1-JONES_4 116.500
FDNS	00NR	5	25SP	G15_020	TO->FROM	JONES STATION - TUCO INTERCHANGE 230KV CKT 1	343.79	343.79	0.07332	107.7831	TUCO INTERCHANGE - YOAKUM_345 345.00 345KV CKT 1
FDNS	00NR	5	25SP	G15_020	TO->FROM	JONES STATION - TUCO INTERCHANGE 230KV CKT 1	343.79	343.79	0.07249	103.4197	CARLISLE INTERCHANGE - WOLFFORTH INTERCHANGE 230KV CKT 1
FDNS	00NR	5	25SP	G15_020	TO->FROM	JONES STATION - TUCO INTERCHANGE 230KV CKT 1	343.79	343.79	0.07956	101.2834	PLANT X STATION - SUNDOWN INTERCHANGE 230KV CKT 1
FDNS	00NR	5	25SP	G15_020	TO->FROM	JONES STATION - TUCO INTERCHANGE 230KV CKT 1	343.79	343.79	0.07956	101.2834	PLANT X STATION - SUNDOWN INTERCHANGE 230KV CKT 1
FDNS	00NR	5	25SP	G15_020	TO->FROM	JONES STATION - TUCO INTERCHANGE 230KV CKT 1	343.79	343.79	0.0579	100.5886	P12:345:SPS:J02.1.TOLK.EDDY
FDNS	00NR	5	25SP	G15_020	TO->FROM	JONES STATION - TUCO INTERCHANGE 230KV CKT 1	343.79	343.79	0.06711	100.5344	GEN526332 1-JONES GEN #2 21 KV
FDNS	00NR	5	25SP	G15_020	TO->FROM	JONES STATION - TUCO INTERCHANGE 230KV CKT 1	343.79	343.79	0.06711	100.5324	GEN526331 1-JONES GEN #1 22 KV
FDNS	00NR	5	25SP	G15_020	TO->FROM	JONES STATION - TUCO INTERCHANGE 230KV CKT 1	343.79	343.79	0.06783	100.5232	TUCO INTERCHANGE (ENRCO 136401) 230/115/13.2KV TRANSFORMER CKT 1
FDNS	00NR	5	25SP	G15_020	TO->FROM	JONES STATION - TUCO INTERCHANGE 230KV CKT 1	343.79	343.79	0.06783	100.5232	TUCO INTERCHANGE (ENRCO 136401) 230/115/13.2KV TRANSFORMER CKT 1
FDNS	00NR	5	25SP	G15_020	TO->FROM	JONES STATION - TUCO INTERCHANGE 230KV CKT 1	343.79	343.79	0.06783	100.5232	TUCO INTERCHANGE (ENRCO 136401) 230/115/13.2KV TRANSFORMER CKT 2
FDNS	00NR	5	25SP	G15_020	TO->FROM	JONES STATION - TUCO INTERCHANGE 230KV CKT 1	343.79	343.79	0.06783	100.5232	TUCO INTERCHANGE (ENRCO 136401) 230/115/13.2KV TRANSFORMER CKT 2
FDNS	00NR	5	25SP	G15_020	TO->FROM	JONES STATION - TUCO INTERCHANGE 230KV CKT 1	343.79	343.79	0.07336	99.6	LUBBOCK EAST INTERCHANGE - TUCO INTERCHANGE 115KV CKT 1
FDNS	00NR	5	25SP	G15_020	TO->FROM	JONES STATION - TUCO INTERCHANGE 230KV CKT 1	343.79	343.79	0.07336	99.6	LUBBOCK EAST INTERCHANGE - TUCO INTERCHANGE 115KV CKT 1
FDNS	00NR	5	25SP	G15_020	FROM->TO	LUBBOCK POWER & LIGHT-HOLLY PLANT (SHIH T101039) 230/69/13.5KV TRANSFORMER CKT 1	224	224	0.03581	104.6927	LUBBOCK POWER & LIGHT-SOUTHEAST - LUBBOCK SOUTH INTERCHANGE 230KV CKT 1
FDNS	00NR	5	25SP	G15_020	FROM->TO	LUBBOCK POWER & LIGHT-HOLLY PLANT (SHIH T101039) 230/69/13.5KV TRANSFORMER CKT 1	224	224	0.03581	104.6925	P12:LPL:SPS:K64.1.LP-SE.LUBBS
FDNS	00NR	5	25SP	G15_020	FROM->TO	LUBBOCK POWER & LIGHT-HOLLY PLANT (SHIH T101039) 230/69/13.5KV TRANSFORMER CKT 1	224	224	0.03446	101.9351	LUBBOCK EAST INTERCHANGE - LUBBOCK POWER & LIGHT-WADSWORTH 230KV CKT 1
FDNS	00NR	5	25SP	G15_020	FROM->TO	LUBBOCK POWER & LIGHT-HOLLY PLANT (SHIH T101039) 230/69/13.5KV TRANSFORMER CKT 1	224	224	0.03446	101.9204	P12:230:LPL:K57.1.LP-WADS.LUBBE
FDNS	00NR	5	25SP	G15_020	FROM->TO	LUBBOCK POWER & LIGHT-HOLLY PLANT (SHIH T101039) 230/69/13.5KV TRANSFORMER CKT 1	224	224	0.03446	101.9203	LUBBOCK POWER & LIGHT-WADSWORTH (SHIH T101038) 230/69/13.5KV TRANSFORMER CKT 1
FDNS	00NR	5	25SP	G15_020	FROM->TO	LUBBOCK POWER & LIGHT-HOLLY PLANT (SHIH T101039) 230/69/13.5KV TRANSFORMER CKT 1	224	224	0.03446	101.9203	LUBBOCK POWER & LIGHT-WADSWORTH (SHIH T101038) 230/69/13.5KV TRANSFORMER CKT 1
FDNS	06ALL	5	20WP	G15_020	FROM->TO	POTTER COUNTY INTERCHANGE (WAUK 90343-A) 345/230/13.2KV TRANSFORMER CKT 1	560	560	0.20385	134.3002	P12:345:SPS:J15.1.XRDS.TOLK
FDNS	06ALL	5	20WP	G15_020	FROM->TO	POTTER COUNTY INTERCHANGE (WAUK 90343-A) 345/230/13.2KV TRANSFORMER CKT 1	560	560	0.20385	134.2067	P12:345:SPS:J15.1.XRDS.TOLK
FDNS	06ALL	5	17G	G15_020	FROM->TO	POTTER COUNTY INTERCHANGE (WAUK 90343-A) 345/230/13.2KV TRANSFORMER CKT 1	560	560	0.21562	131.4477	P12:345:SPS:J15.1.XRDS.TOLK
FDNS	06ALL	5	17G	G15_020	FROM->TO	POTTER COUNTY INTERCHANGE (WAUK 90343-A) 345/230/13.2KV TRANSFORMER CKT 1	560	560	0.21562	130.9697	P12:345:SPS:J15.1.XRDS.TOLK
FDNS	06ALL	5	16WP	G15_020	FROM->TO	POTTER COUNTY INTERCHANGE (WAUK 90343-A) 345/230/13.2KV TRANSFORMER CKT 1	560	560	0.22685	123.3278	P12:345:SPS:J15.1.XRDS.TOLK
FDNS	06ALL	5	16WP	G15_020	FROM->TO	POTTER COUNTY INTERCHANGE (WAUK 90343-A) 345/230/13.2KV TRANSFORMER CKT 1	560	560	0.22685	122.0001	P12:345:SPS:J15.1.XRDS.TOLK
FDNS	06ALL	5	16WP	G15_020	FROM->TO	POTTER COUNTY INTERCHANGE (WAUK 90343-A) 345/230/13.2KV TRANSFORMER CKT 1	560	560	0.19935	115.1938	POTTER COUNTY INTERCHANGE - TOLK STATION 345KV CKT 1
FDNS	06ALL	5	16WP	G15_020	FROM->TO	POTTER COUNTY INTERCHANGE (WAUK 90343-A) 345/230/13.2KV TRANSFORMER CKT 1	560	560	0.19935	114.0847	POTTER COUNTY INTERCHANGE - TOLK STATION 345KV CKT 1
FDNS	06ALL	5	17SP	G15_020	FROM->TO	POTTER COUNTY INTERCHANGE (WAUK 90343-A) 345/230/13.2KV TRANSFORMER CKT 1	560	560	0.22289	108.8592	P12:345:SPS:J15.1.XRDS.TOLK
FDNS	06ALL	5	17SP	G15_020	FROM->TO	POTTER COUNTY INTERCHANGE (WAUK 90343-A) 345/230/13.2KV TRANSFORMER CKT 1	560	560	0.22289	107.3735	P12:345:SPS:J15.1.XRDS.TOLK
FDNS	06ALL	5	20SP	G15_020	FROM->TO	POTTER COUNTY INTERCHANGE (WAUK 90343-A) 345/230/13.2KV TRANSFORMER CKT 1	560	560	0.2102	102.363	P12:345:SPS:J15.1.XRDS.TOLK
FDNS	06ALL	5	17SP	G15_020	FROM->TO	POTTER COUNTY INTERCHANGE (WAUK 90343-A) 345/230/13.2KV TRANSFORMER CKT 1	560	560	0.19694	102.3103	POTTER COUNTY INTERCHANGE - TOLK STATION 345KV CKT 1
FDNS	06ALL	5	20SP	G15_020	FROM->TO	POTTER COUNTY INTERCHANGE (WAUK 90343-A) 345/230/13.2KV TRANSFORMER CKT 1	560	560	0.2102	101.0624	P12:345:SPS:J15.1.XRDS.TOLK
FDNS	06ALL	5	17SP	G15_020	FROM->TO	POTTER COUNTY INTERCHANGE (WAUK 90343-A) 345/230/13.2KV TRANSFORMER CKT 1	560	560	0.19694	101.0142	POTTER COUNTY INTERCHANGE - TOLK STATION 345KV CKT 1
FDNS	06ALL	5	16WP	G15_020	FROM->TO	TOLK STATION (ABBXNL844501) 345/230/13.2KV TRANSFORMER CKT 1	560	560	0.35082	113.0248	CROSSROADS 7345.00 - TOLK STATION 345KV CKT 1
FDNS	06ALL	5	16WP	G15_020	FROM->TO	TOLK STATION (ABBXNL844501) 345/230/13.2KV TRANSFORMER CKT 1	560	560	0.35082	110.571	CROSSROADS 7345.00 - TOLK STATION 345KV CKT 1
FDNS	06ALL	5	20WP	G15_020	FROM->TO	TOLK STATION (ABBXNL844501) 345/230/13.2KV TRANSFORMER CKT 1	560	560	0.31204	106.1712	CROSSROADS 7345.00 - TOLK STATION 345KV CKT 1
FDNS	06ALL	5	20WP	G15_020	FROM->TO	TOLK STATION (ABBXNL844501) 345/230/13.2KV TRANSFORMER CKT 1	560	560	0.31204	104.0137	CROSSROADS 7345.00 - TOLK STATION 345KV CKT 1
FDNS	06ALL	5	20WP	G15_020	FROM->TO	TOLK STATION (ABBXNL844501) 345/230/13.2KV TRANSFORMER CKT 1	560	560	0.30857	100.9733	POTTER COUNTY INTERCHANGE (WAUK 90343-A) 345/230/13.2KV TRANSFORMER CKT 1
FDNS	06ALL	5	20WP	G15_020	FROM->TO	TOLK STATION (ABBXNL844501) 345/230/13.2KV TRANSFORMER CKT 1	560	560	0.30857	100.9733	POTTER COUNTY INTERCHANGE (WAUK 90343-A) 345/230/13.2KV TRANSFORMER CKT 1
FDNS	06ALL	6	20SP	G15_020	FROM->TO	CHISHOLM6 230.00 - ELK CITY 230KV 230KV CKT 1	353	353	0.05969	102.8848	BASE CASE
FDNS	06ALL	6	17SP	G15_020	FROM->TO	CHISHOLM6 230.00 - ELK CITY 230KV 230KV CKT 1	353	353	0.05997	100.6562	BASE CASE
FDNS	06ALL	6	17G	G15_020	TO->FROM	CIMARRON - MINCO 345KV CKT 1	956	956	0.20491	121.6178	G14-057T 345.00 - SUNNYSIDE 345KV CKT 1
FDNS	06ALL	6	20WP	G15_020	TO->FROM	CIMARRON - MINCO 345KV CKT 1	956	956	0.20275	119.7395	G14-057T 345.00 - SUNNYSIDE 345KV CKT 1
FDNS	06ALL	6	17G	G15_020	TO->FROM	CIMARRON - MINCO 345KV CKT 1	956	956	0.20491	116.437	G14-057T 345.00 - LAWTON EASTSIDE 345KV CKT 1
FDNS	06ALL	6	20WP	G15_020	TO->FROM	CIMARRON - MINCO 345KV CKT 1	956	956	0.20275	114.5016	G14-057T 345.00 - LAWTON EASTSIDE 345KV CKT 1
FDNS	06ALL	6	17SP	G15_020	TO->FROM	CIMARRON - MINCO 345KV CKT 1	956	956	0.20771	114.4047	G14-057T 345.00 - SUNNYSIDE 345KV CKT 1

SOLUTION	GROUP	SCENARIO	SEASON	SOURCE	DIRECTION	MONITORED ELEMENT	RATEA (MVA)	RATEB(MVA)	TDF	TC%LOADING (% MVA)	CONTINGENCY
FDNS	06ALL	6	16WP	G15_020	TO->FROM	CIMARRON - MINCO 345KV CKT 1	956	956	0.21105	114.352	G14-057T 345.00 - SUNNYSIDE 345KV CKT 1
FDNS	06ALL	6	20SP	G15_020	TO->FROM	CIMARRON - MINCO 345KV CKT 1	956	956	0.20817	111.5632	G14-057T 345.00 - SUNNYSIDE 345KV CKT 1
FDNS	06ALL	6	17SP	G15_020	TO->FROM	CIMARRON - MINCO 345KV CKT 1	956	956	0.20771	109.1774	G14-057T 345.00 - LAWTON EASTSIDE 345KV CKT 1
FDNS	06ALL	6	16WP	G15_020	TO->FROM	CIMARRON - MINCO 345KV CKT 1	956	956	0.21105	108.975	G14-057T 345.00 - LAWTON EASTSIDE 345KV CKT 1
FDNS	06ALL	6	20SP	G15_020	TO->FROM	CIMARRON - MINCO 345KV CKT 1	956	956	0.20817	106.5254	G14-057T 345.00 - LAWTON EASTSIDE 345KV CKT 1
FDNS	06ALL	6	20L	G15_020	TO->FROM	G14-057T 345.00 - LAWTON EASTSIDE 345KV CKT 1	717	789	0.09291	102.0743	BASE CASE
FDNS	06ALL	6	20L	G15_020	FROM->TO	G14-057T 345.00 - SUNNYSIDE 345KV CKT 1	717	789	0.09291	115.279	BASE CASE
FDNS	06ALL	6	20WP	G15_020	FROM->TO	G14-057T 345.00 - SUNNYSIDE 345KV CKT 1	717	789	0.11441	103.5944	BASE CASE
FDNS	06ALL	6	17G	G15_020	FROM->TO	G14-057T 345.00 - SUNNYSIDE 345KV CKT 1	717	789	0.1162	103.4014	BASE CASE
FDNS	06ALL	6	16WP	G15_020	FROM->TO	G14-057T 345.00 - SUNNYSIDE 345KV CKT 1	717	789	0.11931	102.0868	BASE CASE
FDNS	00NR	6	25SP	G15_020	TO->FROM	JONES STATION - TUCO INTERCHANGE 230KV CKT 1	343.79	343.79	0.07944	129.6325	CARLISLE INTERCHANGE - TUCO INTERCHANGE 230KV CKT 1
FDNS	00NR	6	25SP	G15_020	TO->FROM	JONES STATION - TUCO INTERCHANGE 230KV CKT 1	343.79	343.79	0.07944	129.6325	CARLISLE INTERCHANGE - TUCO INTERCHANGE 230KV CKT 1
FDNS	00NR	6	25SP	G15_020	TO->FROM	JONES STATION - TUCO INTERCHANGE 230KV CKT 1	343.79	343.79	0.06712	112.7855	GEN526333 1-JONES GEN #3 21 KV
FDNS	00NR	6	25SP	G15_020	TO->FROM	JONES STATION - TUCO INTERCHANGE 230KV CKT 1	343.79	343.79	0.06712	112.3951	GEN526334 1-JONES_4 116.500
FDNS	00NR	6	25SP	G15_020	TO->FROM	JONES STATION - TUCO INTERCHANGE 230KV CKT 1	343.79	343.79	0.07333	107.7709	TUCO INTERCHANGE - YOAKUM_345 345.00 345KV CKT 1
FDNS	00NR	6	25SP	G15_020	TO->FROM	JONES STATION - TUCO INTERCHANGE 230KV CKT 1	343.79	343.79	0.0725	103.4125	CARLISLE INTERCHANGE - WOLFFORTH INTERCHANGE 230KV CKT 1
FDNS	00NR	6	25SP	G15_020	TO->FROM	JONES STATION - TUCO INTERCHANGE 230KV CKT 1	343.79	343.79	0.07957	101.2811	PLANT X STATION - SUNDOWN INTERCHANGE 230KV CKT 1
FDNS	00NR	6	25SP	G15_020	TO->FROM	JONES STATION - TUCO INTERCHANGE 230KV CKT 1	343.79	343.79	0.07957	101.2811	PLANT X STATION - SUNDOWN INTERCHANGE 230KV CKT 1
FDNS	00NR	6	25SP	G15_020	TO->FROM	JONES STATION - TUCO INTERCHANGE 230KV CKT 1	343.79	343.79	0.0579	100.5783	P12:345:SPS:J02.1.TOLK.EDDY
FDNS	00NR	6	25SP	G15_020	TO->FROM	JONES STATION - TUCO INTERCHANGE 230KV CKT 1	343.79	343.79	0.06712	100.5273	GEN526332 1-JONES GEN #2 21 KV
FDNS	00NR	6	25SP	G15_020	TO->FROM	JONES STATION - TUCO INTERCHANGE 230KV CKT 1	343.79	343.79	0.06712	100.5254	GEN526331 1-JONES GEN #1 22 KV
FDNS	00NR	6	25SP	G15_020	TO->FROM	JONES STATION - TUCO INTERCHANGE 230KV CKT 1	343.79	343.79	0.06784	100.5163	TUCO INTERCHANGE (ENRCO 136401) 230/115/13.2KV TRANSFORMER CKT 1
FDNS	00NR	6	25SP	G15_020	TO->FROM	JONES STATION - TUCO INTERCHANGE 230KV CKT 1	343.79	343.79	0.06784	100.5163	TUCO INTERCHANGE (ENRCO 136401) 230/115/13.2KV TRANSFORMER CKT 1
FDNS	00NR	6	25SP	G15_020	TO->FROM	JONES STATION - TUCO INTERCHANGE 230KV CKT 1	343.79	343.79	0.06784	100.5163	TUCO INTERCHANGE (ENRCO 136401) 230/115/13.2KV TRANSFORMER CKT 2
FDNS	00NR	6	25SP	G15_020	TO->FROM	JONES STATION - TUCO INTERCHANGE 230KV CKT 1	343.79	343.79	0.06784	100.5163	TUCO INTERCHANGE (ENRCO 136401) 230/115/13.2KV TRANSFORMER CKT 2
FDNS	00NR	6	25SP	G15_020	TO->FROM	JONES STATION - TUCO INTERCHANGE 230KV CKT 1	343.79	343.79	0.07337	99.6	LUBBOCK EAST INTERCHANGE - TUCO INTERCHANGE 115KV CKT 1
FDNS	00NR	6	25SP	G15_020	TO->FROM	JONES STATION - TUCO INTERCHANGE 230KV CKT 1	343.79	343.79	0.07337	99.6	LUBBOCK EAST INTERCHANGE - TUCO INTERCHANGE 115KV CKT 1
FDNS	00NR	6	25SP	G15_020	FROM->TO	LUBBOCK POWER & LIGHT-HOLLY PLANT (SHIH T101039) 230/69/13.5KV TRANSFORMER CKT 1	224	224	0.03581	104.6926	LUBBOCK POWER & LIGHT-SOUTHEAST - LUBBOCK SOUTH INTERCHANGE 230KV CKT 1
FDNS	00NR	6	25SP	G15_020	FROM->TO	LUBBOCK POWER & LIGHT-HOLLY PLANT (SHIH T101039) 230/69/13.5KV TRANSFORMER CKT 1	224	224	0.03581	104.6924	P12:LPL:SPS:K64.1.LP-SE.LUBBS
FDNS	00NR	6	25SP	G15_020	FROM->TO	LUBBOCK POWER & LIGHT-HOLLY PLANT (SHIH T101039) 230/69/13.5KV TRANSFORMER CKT 1	224	224	0.03446	101.9349	LUBBOCK EAST INTERCHANGE - LUBBOCK POWER & LIGHT-WADSWORTH 230KV CKT 1
FDNS	00NR	6	25SP	G15_020	FROM->TO	LUBBOCK POWER & LIGHT-HOLLY PLANT (SHIH T101039) 230/69/13.5KV TRANSFORMER CKT 1	224	224	0.03446	101.9202	LUBBOCK POWER & LIGHT-WADSWORTH (SHIH T101038) 230/69/13.5KV TRANSFORMER CKT 1
FDNS	00NR	6	25SP	G15_020	FROM->TO	LUBBOCK POWER & LIGHT-HOLLY PLANT (SHIH T101039) 230/69/13.5KV TRANSFORMER CKT 1	224	224	0.03446	101.9202	LUBBOCK POWER & LIGHT-WADSWORTH (SHIH T101038) 230/69/13.5KV TRANSFORMER CKT 1
FDNS	00NR	6	25SP	G15_020	FROM->TO	LUBBOCK POWER & LIGHT-HOLLY PLANT (SHIH T101039) 230/69/13.5KV TRANSFORMER CKT 1	224	224	0.03446	101.9202	P12:230:LPL:K57.1.LP-WADS.LUBBE
FDNS	06ALL	6	20WP	G15_020	FROM->TO	POTTER COUNTY INTERCHANGE (WAUK 90343-A) 345/230/13.2KV TRANSFORMER CKT 1	560	560	0.21747	135.6418	P12:345:SPS:J15.1.XRDS.TOLK
FDNS	06ALL	6	20WP	G15_020	FROM->TO	POTTER COUNTY INTERCHANGE (WAUK 90343-A) 345/230/13.2KV TRANSFORMER CKT 1	560	560	0.21747	135.4792	P12:345:SPS:J15.1.XRDS.TOLK
FDNS	06ALL	6	20WP	G15_020	FROM->TO	POTTER COUNTY INTERCHANGE (WAUK 90343-A) 345/230/13.2KV TRANSFORMER CKT 1	560	560	0.19893	130.4565	POTTER COUNTY INTERCHANGE - TOLK STATION 345KV CKT 1
FDNS	06ALL	6	20WP	G15_020	FROM->TO	POTTER COUNTY INTERCHANGE (WAUK 90343-A) 345/230/13.2KV TRANSFORMER CKT 1	560	560	0.19893	130.3259	POTTER COUNTY INTERCHANGE - TOLK STATION 345KV CKT 1
FDNS	06ALL	6	17G	G15_020	FROM->TO	POTTER COUNTY INTERCHANGE (WAUK 90343-A) 345/230/13.2KV TRANSFORMER CKT 1	560	560	0.202	126.2728	POTTER COUNTY INTERCHANGE - TOLK STATION 345KV CKT 1
FDNS	06ALL	6	17G	G15_020	FROM->TO	POTTER COUNTY INTERCHANGE (WAUK 90343-A) 345/230/13.2KV TRANSFORMER CKT 1	560	560	0.202	125.8889	POTTER COUNTY INTERCHANGE - TOLK STATION 345KV CKT 1
FDNS	06ALL	6	16WP	G15_020	FROM->TO	POTTER COUNTY INTERCHANGE (WAUK 90343-A) 345/230/13.2KV TRANSFORMER CKT 1	560	560	0.24107	124.5835	P12:345:SPS:J15.1.XRDS.TOLK
FDNS	06ALL	6	16WP	G15_020	FROM->TO	POTTER COUNTY INTERCHANGE (WAUK 90343-A) 345/230/13.2KV TRANSFORMER CKT 1	560	560	0.24107	123.2053	P12:345:SPS:J15.1.XRDS.TOLK
FDNS	06ALL	6	16WP	G15_020	FROM->TO	POTTER COUNTY INTERCHANGE (WAUK 90343-A) 345/230/13.2KV TRANSFORMER CKT 1	560	560	0.21356	116.5159	POTTER COUNTY INTERCHANGE - TOLK STATION 345KV CKT 1
FDNS	06ALL	6	16WP	G15_020	FROM->TO	POTTER COUNTY INTERCHANGE (WAUK 90343-A) 345/230/13.2KV TRANSFORMER CKT 1	560	560	0.21356	115.3558	POTTER COUNTY INTERCHANGE - TOLK STATION 345KV CKT 1
FDNS	06ALL	6	17SP	G15_020	FROM->TO	POTTER COUNTY INTERCHANGE (WAUK 90343-A) 345/230/13.2KV TRANSFORMER CKT 1	560	560	0.23709	109.9868	P12:345:SPS:J15.1.XRDS.TOLK
FDNS	06ALL	6	17SP	G15_020	FROM->TO	POTTER COUNTY INTERCHANGE (WAUK 90343-A) 345/230/13.2KV TRANSFORMER CKT 1	560	560	0.23709	108.4833	P12:345:SPS:J15.1.XRDS.TOLK
FDNS	06ALL	6	16WP	G15_020	FROM->TO	POTTER COUNTY INTERCHANGE (WAUK 90343-A) 345/230/13.2KV TRANSFORMER CKT 1	560	560	0.20386	104.8403	P12:345:SPS:J02.1.TOLK.EDDY
FDNS	06ALL	6	16WP	G15_020	FROM->TO	POTTER COUNTY INTERCHANGE (WAUK 90343-A) 345/230/13.2KV TRANSFORMER CKT 1	560	560	0.20386	104.3479	P12:345:SPS:J02.1.TOLK.EDDY
FDNS	06ALL	6	20SP	G15_020	FROM->TO	POTTER COUNTY INTERCHANGE (WAUK 90343-A) 345/230/13.2KV TRANSFORMER CKT 1	560	560	0.22425	103.5013	P12:345:SPS:J15.1.XRDS.TOLK
FDNS	06ALL	6	17SP	G15_020	FROM->TO	POTTER COUNTY INTERCHANGE (WAUK 90343-A) 345/230/13.2KV TRANSFORMER CKT 1	560	560	0.21113	103.4959	POTTER COUNTY INTERCHANGE - TOLK STATION 345KV CKT 1
FDNS	06ALL	6	20SP	G15_020	FROM->TO	POTTER COUNTY INTERCHANGE (WAUK 90343-A) 345/230/13.2KV TRANSFORMER CKT 1	560	560	0.22425	102.1921	P12:345:SPS:J15.1.XRDS.TOLK
FDNS	06ALL	6	17SP	G15_020	FROM->TO	POTTER COUNTY INTERCHANGE (WAUK 90343-A) 345/230/13.2KV TRANSFORMER CKT 1	560	560	0.21113	102.1846	POTTER COUNTY INTERCHANGE - TOLK STATION 345KV CKT 1
FDNS	06ALL	6	20SP	G15_020	FROM->TO	POTTER COUNTY INTERCHANGE (WAUK 90343-A) 345/230/13.2KV TRANSFORMER CKT 1	560	560	0.2055	99.5	POTTER COUNTY INTERCHANGE - TOLK STATION 345KV CKT 1
FDNS	06ALL	6	16WP	G15_020	FROM->TO	TOLK STATION (ABBXNL844501) 345/230/13.2KV TRANSFORMER CKT 1	560	560	0.35248	112.8509	CROSSROADS 7345.00 - TOLK STATION 345KV CKT 1
FDNS	06ALL	6	16WP	G15_020	FROM->TO	TOLK STATION (ABBXNL844501) 345/230/13.2KV TRANSFORMER CKT 1	560	560	0.35248	110.425	CROSSROADS 7345.00 - TOLK STATION 345KV CKT 1
FDNS	06ALL	6	20WP	G15_020	FROM->TO	TOLK STATION (ABBXNL844501) 345/230/13.2KV TRANSFORMER CKT 1	560	560	0.31364	106.0959	CROSSROADS 7345.00 - TOLK STATION 345KV CKT 1
FDNS	06ALL	6	20WP	G15_020	FROM->TO	TOLK STATION (ABBXNL844501) 345/230/13.2KV TRANSFORMER CKT 1	560	560	0.31364	103.968	CROSSROADS 7345.00 - TOLK STATION 345KV CKT 1
FDNS	06ALL	6	20WP	G15_020	FROM->TO	TOLK STATION (ABBXNL844501) 345/230/13.2KV TRANSFORMER CKT 1	560	560	0.3125	101.0022	POTTER COUNTY INTERCHANGE (WAUK 90343-A) 345/230/13.2KV TRANSFORMER CKT 1
FDNS	06ALL	6	20WP	G15_020	FROM->TO	TOLK STATION (ABBXNL844501) 345/230/13.2KV TRANSFORMER CKT 1	560	560	0.3125	101.0022	POTTER COUNTY INTERCHANGE (WAUK 90343-A) 345/230/13.2KV TRANSFORMER CKT 1
FDNS	06ALL	7	20SP	G15_020	FROM->TO	CHISHOLM6 230.00 - ELK CITY 230KV 230KV CKT 1	353	353	0.05969	100.158	BASE CASE
FDNS	06ALL	7	17G	G15_020	TO->FROM	CIMARRON - MINCO 345KV CKT 1	956	956	0.20493	117.9395	G14-057T 345.00 - SUNNYSIDE 345KV CKT 1
FDNS	06ALL	7	20WP	G15_020	TO->FROM	CIMARRON - MINCO 345KV CKT 1	956	956	0.20275	116.4002	G14-057T 345.00 - SUNNYSIDE 345KV CKT 1
FDNS	06ALL	7	17G	G15_020	TO->FROM	CIMARRON - MINCO 345KV CKT 1	956	956	0.20493	112.8925	G14-057T 345.00 - LAWTON EASTSIDE 345KV CKT 1
FDNS	06ALL	7	16WP	G15_020	TO->FROM	CIMARRON - MINCO 345KV CKT 1	956	956	0.21108	111.0593	G14-057T 345.00 - SUNNYSIDE 345KV CKT 1
FDNS	06ALL	7	20WP	G15_020	TO->FROM	CIMARRON - MINCO 345KV CKT 1	956	956	0.20275	111.0342	G14-057T 345.00 - LAWTON EASTSIDE 345KV CKT 1
FDNS	06ALL	7	17SP	G15_020	TO->FROM	CIMARRON - MINCO 345KV CKT 1	956	956	0.20773	111.0288	G14-057T 345.00 - SUNNYSIDE 345KV CKT 1
FDNS	06ALL	7	20SP	G15_020	TO->FROM	CIMARRON - MINCO 345KV CKT 1	956	956	0.20817	108.4281	G14-057T 345.00 - SUNNYSIDE 345KV CKT 1
FDNS	06ALL	7	17SP	G15_020	TO->FROM	CIMARRON - MINCO 345KV CKT 1	956	956	0.20773	106.172	G14-057T 345.00 - LAWTON EASTSIDE 345KV CKT 1
FDNS	06ALL	7	16WP	G15_020	TO->FROM	CIMARRON - MINCO 345KV CKT 1	956	956	0.21108	105.9627	G14-057T 345.00 - LAWTON EASTSIDE 345KV CKT 1
FDNS	06ALL	7	20SP	G15_020	TO->FROM	CIMARRON - MINCO 345KV CKT 1	956	956	0.20817	103.5061	G14-057T 345.00 - LAWTON EASTSIDE 345KV CKT 1
FDNS	06ALL	7	20L	G15_020	TO->FROM	G14-057T 345.00 - LAWTON EASTSIDE 345KV CKT 1	717	789	0.09293	100.7791	BASE CASE
FDNS	06ALL	7	20L	G15_020	FROM->TO	G14-057T 345.00 - SUNNYSIDE 345KV CKT 1	717	789	0.09293	114.0012	BASE CASE
FDNS	06ALL	7	20WP	G15_020	FROM->TO	G14-057T 345.00 - SUNNYSIDE 345KV CKT 1	717	789	0.11441	102.5888	BASE CASE
FDNS	06ALL	7	17G	G15_020	FROM->TO	G14-057T 345.00 - SUNNYSIDE 345KV CKT 1	717	789	0.1162	102.2119	BASE CASE
FDNS	06ALL	7	16WP	G15_020	FROM->TO	G14-057T 345.00 - SUNNYSIDE 345KV CKT 1	717	789	0.11932	101.1576	BASE CASE
FDNS	00NR	7	25SP	G15_020	TO->FROM	JONES STATION - TUCO INTERCHANGE 230KV CKT 1	343.79	343.79	0.07944	129.1537	CARLISLE INTERCHANGE - TUCO INTERCHANGE 230KV CKT 1
FDNS	00NR	7	25SP	G15_020	TO->FROM	JONES STATION - TUCO INTERCHANGE 230KV CKT 1	343.79	343.79	0.07944	129.1537	CARLISLE INTERCHANGE - TUCO INTERCHANGE 230KV CKT 1
FDNS	00NR	7	25SP	G15_020	TO->FROM	JONES STATION - TUCO INTERCHANGE 230KV CKT 1	343.79	343.79	0.06712	112.419	GEN526333 1-JONES GEN #3 21 KV
FDNS	00NR	7	25SP	G15_020	TO->FROM	JONES STATION - TUCO INTERCHANGE 230KV CKT 1	343.79	343.79	0.06712	112.036	GEN526334 1-JONES_4 116.500
FDNS	00NR	7	25SP	G15_020	TO->FROM	JONES STATION - TUCO INTERCHANGE 230KV CKT 1	343.79	343.79	0.07333	107.2187	TUCO INTERCHANGE - YOAKUM_345 345.00 345KV CKT 1

SOLUTION	GROUP	SCENARIO	SEASON	SOURCE	DIRECTION	MONITORED ELEMENT	RATEA (MVA)	RATEB(MVA)	TDF	TC%LOADING (% MVA)	CONTINGENCY
FDNS	00NR	7	25SP	G15_020	TO->FROM	JONES STATION - TUCO INTERCHANGE 230KV CKT 1	343.79	343.79	0.0725	103.0013	CARLISLE INTERCHANGE - WOLFFORTH INTERCHANGE 230KV CKT 1
FDNS	00NR	7	25SP	G15_020	TO->FROM	JONES STATION - TUCO INTERCHANGE 230KV CKT 1	343.79	343.79	0.07957	101.0414	PLANT X STATION - SUNDOWN INTERCHANGE 230KV CKT 1
FDNS	00NR	7	25SP	G15_020	TO->FROM	JONES STATION - TUCO INTERCHANGE 230KV CKT 1	343.79	343.79	0.07957	101.0414	PLANT X STATION - SUNDOWN INTERCHANGE 230KV CKT 1
FDNS	00NR	7	25SP	G15_020	TO->FROM	JONES STATION - TUCO INTERCHANGE 230KV CKT 1	343.79	343.79	0.0579	100.2536	P12:345:SPS:J02.1.TOLK.EDDY
FDNS	00NR	7	25SP	G15_020	TO->FROM	JONES STATION - TUCO INTERCHANGE 230KV CKT 1	343.79	343.79	0.06712	100.1954	GEN526332 1-JONES GEN #2 21 KV
FDNS	00NR	7	25SP	G15_020	TO->FROM	JONES STATION - TUCO INTERCHANGE 230KV CKT 1	343.79	343.79	0.06712	100.1934	GEN526331 1-JONES GEN #1 22 KV
FDNS	00NR	7	25SP	G15_020	TO->FROM	JONES STATION - TUCO INTERCHANGE 230KV CKT 1	343.79	343.79	0.06784	100.1486	TUCO INTERCHANGE (ENRCO 136401) 230/115/13.2KV TRANSFORMER CKT 1
FDNS	00NR	7	25SP	G15_020	TO->FROM	JONES STATION - TUCO INTERCHANGE 230KV CKT 1	343.79	343.79	0.06784	100.1486	TUCO INTERCHANGE (ENRCO 136401) 230/115/13.2KV TRANSFORMER CKT 1
FDNS	00NR	7	25SP	G15_020	TO->FROM	JONES STATION - TUCO INTERCHANGE 230KV CKT 1	343.79	343.79	0.06784	100.1486	TUCO INTERCHANGE (ENRCO 136401) 230/115/13.2KV TRANSFORMER CKT 2
FDNS	00NR	7	25SP	G15_020	TO->FROM	JONES STATION - TUCO INTERCHANGE 230KV CKT 1	343.79	343.79	0.06784	100.1486	TUCO INTERCHANGE (ENRCO 136401) 230/115/13.2KV TRANSFORMER CKT 2
FDNS	00NR	7	25SP	G15_020	FROM->TO	LUBBOCK POWER & LIGHT-HOLLY PLANT (SHIH T101039) 230/69/13.5KV TRANSFORMER CKT 1	224	224	0.03581	104.7009	LUBBOCK POWER & LIGHT-SOUTHEAST - LUBBOCK SOUTH INTERCHANGE 230KV CKT 1
FDNS	00NR	7	25SP	G15_020	FROM->TO	LUBBOCK POWER & LIGHT-HOLLY PLANT (SHIH T101039) 230/69/13.5KV TRANSFORMER CKT 1	224	224	0.03581	104.6879	P12:LPL:SPS:K64.1.LP-SE.LUBBS
FDNS	00NR	7	25SP	G15_020	FROM->TO	LUBBOCK POWER & LIGHT-HOLLY PLANT (SHIH T101039) 230/69/13.5KV TRANSFORMER CKT 1	224	224	0.03446	101.9255	LUBBOCK EAST INTERCHANGE - LUBBOCK POWER & LIGHT-WADSWORTH 230KV CKT 1
FDNS	00NR	7	25SP	G15_020	FROM->TO	LUBBOCK POWER & LIGHT-HOLLY PLANT (SHIH T101039) 230/69/13.5KV TRANSFORMER CKT 1	224	224	0.03446	101.9108	P12:230:LPL:K57.1.LP-WADS.LUBBE
FDNS	00NR	7	25SP	G15_020	FROM->TO	LUBBOCK POWER & LIGHT-HOLLY PLANT (SHIH T101039) 230/69/13.5KV TRANSFORMER CKT 1	224	224	0.03446	101.9107	LUBBOCK POWER & LIGHT-WADSWORTH (SHIH T101038) 230/69/13.5KV TRANSFORMER CKT 1
FDNS	00NR	7	25SP	G15_020	FROM->TO	LUBBOCK POWER & LIGHT-HOLLY PLANT (SHIH T101039) 230/69/13.5KV TRANSFORMER CKT 1	224	224	0.03446	101.9107	LUBBOCK POWER & LIGHT-WADSWORTH (SHIH T101038) 230/69/13.5KV TRANSFORMER CKT 1
FDNS	06ALL	7	20WP	G15_020	FROM->TO	POTTER COUNTY INTERCHANGE (WAUK 90343-A) 345/230/13.2KV TRANSFORMER CKT 1	560	560	0.21747	145.2357	P12:345:SPS:J15.1.XRDS.TOLK
FDNS	06ALL	7	20WP	G15_020	FROM->TO	POTTER COUNTY INTERCHANGE (WAUK 90343-A) 345/230/13.2KV TRANSFORMER CKT 1	560	560	0.21747	143.2694	P12:345:SPS:J15.1.XRDS.TOLK
FDNS	06ALL	7	20WP	G15_020	FROM->TO	POTTER COUNTY INTERCHANGE (WAUK 90343-A) 345/230/13.2KV TRANSFORMER CKT 1	560	560	0.19893	139.6579	POTTER COUNTY INTERCHANGE - TOLK STATION 345KV CKT 1
FDNS	06ALL	7	20WP	G15_020	FROM->TO	POTTER COUNTY INTERCHANGE (WAUK 90343-A) 345/230/13.2KV TRANSFORMER CKT 1	560	560	0.19893	137.9216	POTTER COUNTY INTERCHANGE - TOLK STATION 345KV CKT 1
FDNS	06ALL	7	17G	G15_020	FROM->TO	POTTER COUNTY INTERCHANGE (WAUK 90343-A) 345/230/13.2KV TRANSFORMER CKT 1	560	560	0.20203	135.7702	POTTER COUNTY INTERCHANGE - TOLK STATION 345KV CKT 1
FDNS	06ALL	7	16WP	G15_020	FROM->TO	POTTER COUNTY INTERCHANGE (WAUK 90343-A) 345/230/13.2KV TRANSFORMER CKT 1	560	560	0.24109	133.795	P12:345:SPS:J15.1.XRDS.TOLK
FDNS	06ALL	7	17G	G15_020	FROM->TO	POTTER COUNTY INTERCHANGE (WAUK 90343-A) 345/230/13.2KV TRANSFORMER CKT 1	560	560	0.20203	133.7386	POTTER COUNTY INTERCHANGE - TOLK STATION 345KV CKT 1
FDNS	06ALL	7	16WP	G15_020	FROM->TO	POTTER COUNTY INTERCHANGE (WAUK 90343-A) 345/230/13.2KV TRANSFORMER CKT 1	560	560	0.24109	130.8152	P12:345:SPS:J15.1.XRDS.TOLK
FDNS	06ALL	7	16WP	G15_020	FROM->TO	POTTER COUNTY INTERCHANGE (WAUK 90343-A) 345/230/13.2KV TRANSFORMER CKT 1	560	560	0.21357	125.2874	POTTER COUNTY INTERCHANGE - TOLK STATION 345KV CKT 1
FDNS	06ALL	7	16WP	G15_020	FROM->TO	POTTER COUNTY INTERCHANGE (WAUK 90343-A) 345/230/13.2KV TRANSFORMER CKT 1	560	560	0.21357	122.7478	POTTER COUNTY INTERCHANGE - TOLK STATION 345KV CKT 1
FDNS	06ALL	7	17SP	G15_020	FROM->TO	POTTER COUNTY INTERCHANGE (WAUK 90343-A) 345/230/13.2KV TRANSFORMER CKT 1	560	560	0.2371	118.7065	P12:345:SPS:J15.1.XRDS.TOLK
FDNS	06ALL	7	17SP	G15_020	FROM->TO	POTTER COUNTY INTERCHANGE (WAUK 90343-A) 345/230/13.2KV TRANSFORMER CKT 1	560	560	0.2371	115.9022	P12:345:SPS:J15.1.XRDS.TOLK
FDNS	06ALL	7	16WP	G15_020	FROM->TO	POTTER COUNTY INTERCHANGE (WAUK 90343-A) 345/230/13.2KV TRANSFORMER CKT 1	560	560	0.20388	113.2535	P12:345:SPS:J02.1.TOLK.EDDY
FDNS	06ALL	7	17SP	G15_020	FROM->TO	POTTER COUNTY INTERCHANGE (WAUK 90343-A) 345/230/13.2KV TRANSFORMER CKT 1	560	560	0.21114	112.021	POTTER COUNTY INTERCHANGE - TOLK STATION 345KV CKT 1
FDNS	06ALL	7	20SP	G15_020	FROM->TO	POTTER COUNTY INTERCHANGE (WAUK 90343-A) 345/230/13.2KV TRANSFORMER CKT 1	560	560	0.22426	111.9416	P12:345:SPS:J15.1.XRDS.TOLK
FDNS	06ALL	7	16WP	G15_020	FROM->TO	POTTER COUNTY INTERCHANGE (WAUK 90343-A) 345/230/13.2KV TRANSFORMER CKT 1	560	560	0.20388	111.4742	P12:345:SPS:J02.1.TOLK.EDDY
FDNS	06ALL	7	17SP	G15_020	FROM->TO	POTTER COUNTY INTERCHANGE (WAUK 90343-A) 345/230/13.2KV TRANSFORMER CKT 1	560	560	0.21114	109.5353	POTTER COUNTY INTERCHANGE - TOLK STATION 345KV CKT 1
FDNS	06ALL	7	20SP	G15_020	FROM->TO	POTTER COUNTY INTERCHANGE (WAUK 90343-A) 345/230/13.2KV TRANSFORMER CKT 1	560	560	0.22426	109.4721	P12:345:SPS:J15.1.XRDS.TOLK
FDNS	06ALL	7	20SP	G15_020	FROM->TO	POTTER COUNTY INTERCHANGE (WAUK 90343-A) 345/230/13.2KV TRANSFORMER CKT 1	560	560	0.20551	107.7296	POTTER COUNTY INTERCHANGE - TOLK STATION 345KV CKT 1
FDNS	06ALL	7	20SP	G15_020	FROM->TO	POTTER COUNTY INTERCHANGE (WAUK 90343-A) 345/230/13.2KV TRANSFORMER CKT 1	560	560	0.20551	105.4506	POTTER COUNTY INTERCHANGE - TOLK STATION 345KV CKT 1
FDNS	06ALL	7	16WP	G15_020	FROM->TO	TOLK STATION (ABBXNL844501) 345/230/13.2KV TRANSFORMER CKT 1	560	560	0.35251	112.9883	CROSSROADS 7345.00 - TOLK STATION 345KV CKT 1
FDNS	06ALL	7	16WP	G15_020	FROM->TO	TOLK STATION (ABBXNL844501) 345/230/13.2KV TRANSFORMER CKT 1	560	560	0.35251	110.8952	CROSSROADS 7345.00 - TOLK STATION 345KV CKT 1
FDNS	06ALL	7	20WP	G15_020	FROM->TO	TOLK STATION (ABBXNL844501) 345/230/13.2KV TRANSFORMER CKT 1	560	560	0.31364	106.354	CROSSROADS 7345.00 - TOLK STATION 345KV CKT 1
FDNS	06ALL	7	20WP	G15_020	FROM->TO	TOLK STATION (ABBXNL844501) 345/230/13.2KV TRANSFORMER CKT 1	560	560	0.31364	104.5262	CROSSROADS 7345.00 - TOLK STATION 345KV CKT 1
FDNS	06ALL	7	20WP	G15_020	FROM->TO	TOLK STATION (ABBXNL844501) 345/230/13.2KV TRANSFORMER CKT 1	560	560	0.3125	102.5293	POTTER COUNTY INTERCHANGE (WAUK 90343-A) 345/230/13.2KV TRANSFORMER CKT 1
FDNS	06ALL	7	20WP	G15_020	FROM->TO	TOLK STATION (ABBXNL844501) 345/230/13.2KV TRANSFORMER CKT 1	560	560	0.3125	102.5293	POTTER COUNTY INTERCHANGE (WAUK 90343-A) 345/230/13.2KV TRANSFORMER CKT 1
FDNS	06ALL	7	20WP	G15_020	FROM->TO	TOLK STATION (ABBXNL844501) 345/230/13.2KV TRANSFORMER CKT 1	560	560	0.3125	99.7	POTTER COUNTY INTERCHANGE (WAUK 90343-A) 345/230/13.2KV TRANSFORMER CKT 1
FDNS	06ALL	7	20WP	G15_020	FROM->TO	TOLK STATION (ABBXNL844501) 345/230/13.2KV TRANSFORMER CKT 1	560	560	0.3125	99.7	POTTER COUNTY INTERCHANGE (WAUK 90343-A) 345/230/13.2KV TRANSFORMER CKT 1
FDNS	00NR	8	25SP	G15_020	TO->FROM	JONES STATION - TUCO INTERCHANGE 230KV CKT 1	343.79	343.79	0.08208	128.3131	CARLISLE INTERCHANGE - TUCO INTERCHANGE 230KV CKT 1
FDNS	00NR	8	25SP	G15_020	TO->FROM	JONES STATION - TUCO INTERCHANGE 230KV CKT 1	343.79	343.79	0.08208	128.3131	CARLISLE INTERCHANGE - TUCO INTERCHANGE 230KV CKT 1
FDNS	00NR	8	25SP	G15_020	TO->FROM	JONES STATION - TUCO INTERCHANGE 230KV CKT 1	343.79	343.79	0.06892	111.8492	GEN526333 1-JONES GEN #3 21 KV
FDNS	00NR	8	25SP	G15_020	TO->FROM	JONES STATION - TUCO INTERCHANGE 230KV CKT 1	343.79	343.79	0.06892	111.4668	GEN526334 1-JONES_4 116.500
FDNS	00NR	8	25SP	G15_020	TO->FROM	JONES STATION - TUCO INTERCHANGE 230KV CKT 1	343.79	343.79	0.07564	106.1183	TUCO_2 345.00 - YOAKUM_345 345.00 345KV CKT 1
FDNS	00NR	8	25SP	G15_020	TO->FROM	JONES STATION - TUCO INTERCHANGE 230KV CKT 1	343.79	343.79	0.07486	102.3279	CARLISLE INTERCHANGE - WOLFFORTH INTERCHANGE 230KV CKT 1
FDNS	00NR	8	25SP	G15_020	TO->FROM	JONES STATION - TUCO INTERCHANGE 230KV CKT 1	343.79	343.79	0.08073	100.9491	PLANT X STATION - SUNDOWN INTERCHANGE 230KV CKT 1
FDNS	00NR	8	25SP	G15_020	TO->FROM	JONES STATION - TUCO INTERCHANGE 230KV CKT 1	343.79	343.79	0.08073	100.9491	PLANT X STATION - SUNDOWN INTERCHANGE 230KV CKT 1
FDNS	00NR	8	25SP	G15_020	TO->FROM	JONES STATION - TUCO INTERCHANGE 230KV CKT 1	343.79	343.79	0.05873	99.7	P12:345:SPS:J02.1.TOLK.EDDY
FDNS	00NR	8	25SP	G15_020	TO->FROM	JONES STATION - TUCO INTERCHANGE 230KV CKT 1	343.79	343.79	0.0697	99.5	TUCO INTERCHANGE (ENRCO 136401) 230/115/13.2KV TRANSFORMER CKT 1
FDNS	00NR	8	25SP	G15_020	TO->FROM	JONES STATION - TUCO INTERCHANGE 230KV CKT 1	343.79	343.79	0.0697	99.5	TUCO INTERCHANGE (ENRCO 136401) 230/115/13.2KV TRANSFORMER CKT 1
FDNS	00NR	8	25SP	G15_020	TO->FROM	JONES STATION - TUCO INTERCHANGE 230KV CKT 1	343.79	343.79	0.0697	99.5	TUCO INTERCHANGE (ENRCO 136401) 230/115/13.2KV TRANSFORMER CKT 2
FDNS	00NR	8	25SP	G15_020	TO->FROM	JONES STATION - TUCO INTERCHANGE 230KV CKT 1	343.79	343.79	0.0697	99.5	TUCO INTERCHANGE (ENRCO 136401) 230/115/13.2KV TRANSFORMER CKT 2
FDNS	00NR	8	25SP	G15_020	TO->FROM	JONES STATION - TUCO INTERCHANGE 230KV CKT 1	343.79	343.79	0.06892	99.5	GEN526331 1-JONES GEN #1 22 KV
FDNS	00NR	8	25SP	G15_020	TO->FROM	JONES STATION - TUCO INTERCHANGE 230KV CKT 1	343.79	343.79	0.06892	99.5	GEN526332 1-JONES GEN #2 21 KV
FDNS	00NR	8	25SP	G15_020	FROM->TO	LUBBOCK POWER & LIGHT-HOLLY PLANT (SHIH T101039) 230/69/13.5KV TRANSFORMER CKT 1	224	224	0.03581	104.7109	LUBBOCK POWER & LIGHT-SOUTHEAST - LUBBOCK SOUTH INTERCHANGE 230KV CKT 1
FDNS	00NR	8	25SP	G15_020	FROM->TO	LUBBOCK POWER & LIGHT-HOLLY PLANT (SHIH T101039) 230/69/13.5KV TRANSFORMER CKT 1	224	224	0.03581	104.6979	P12:LPL:SPS:K64.1.LP-SE.LUBBS
FDNS	00NR	8	25SP	G15_020	FROM->TO	LUBBOCK POWER & LIGHT-HOLLY PLANT (SHIH T101039) 230/69/13.5KV TRANSFORMER CKT 1	224	224	0.03449	101.953	LUBBOCK EAST INTERCHANGE - LUBBOCK POWER & LIGHT-WADSWORTH 230KV CKT 1
FDNS	00NR	8	25SP	G15_020	FROM->TO	LUBBOCK POWER & LIGHT-HOLLY PLANT (SHIH T101039) 230/69/13.5KV TRANSFORMER CKT 1	224	224	0.03449	101.9381	P12:230:LPL:K57.1.LP-WADS.LUBBE
FDNS	00NR	8	25SP	G15_020	FROM->TO	LUBBOCK POWER & LIGHT-HOLLY PLANT (SHIH T101039) 230/69/13.5KV TRANSFORMER CKT 1	224	224	0.03449	101.938	LUBBOCK POWER & LIGHT-WADSWORTH (SHIH T101038) 230/69/13.5KV TRANSFORMER CKT 1
FDNS	00NR	8	25SP	G15_020	FROM->TO	LUBBOCK POWER & LIGHT-HOLLY PLANT (SHIH T101039) 230/69/13.5KV TRANSFORMER CKT 1	224	224	0.03449	101.938	LUBBOCK POWER & LIGHT-WADSWORTH (SHIH T101038) 230/69/13.5KV TRANSFORMER CKT 1
FDNS	00NR	9	25SP	G15_020	FROM->TO	LUBBOCK POWER & LIGHT-HOLLY PLANT (SHIH T101039) 230/69/13.5KV TRANSFORMER CKT 1	224	224	0.03582	104.6637	LUBBOCK POWER & LIGHT-SOUTHEAST - LUBBOCK SOUTH INTERCHANGE 230KV CKT 1
FDNS	00NR	9	25SP	G15_020	FROM->TO	LUBBOCK POWER & LIGHT-HOLLY PLANT (SHIH T101039) 230/69/13.5KV TRANSFORMER CKT 1	224	224	0.03582	104.6507	P12:LPL:SPS:K64.1.LP-SE.LUBBS
FDNS	00NR	9	25SP	G15_020	FROM->TO	LUBBOCK POWER & LIGHT-HOLLY PLANT (SHIH T101039) 230/69/13.5KV TRANSFORMER CKT 1	224	224	0.03449	101.7729	LUBBOCK EAST INTERCHANGE - LUBBOCK POWER & LIGHT-WADSWORTH 230KV CKT 1
FDNS	00NR	9	25SP	G15_020	FROM->TO	LUBBOCK POWER & LIGHT-HOLLY PLANT (SHIH T101039) 230/69/13.5KV TRANSFORMER CKT 1	224	224	0.03449	101.758	P12:230:LPL:K57.1.LP-WADS.LUBBE
FDNS	00NR	9	25SP	G15_020	FROM->TO	LUBBOCK POWER & LIGHT-HOLLY PLANT (SHIH T101039) 230/69/13.5KV TRANSFORMER CKT 1	224	224	0.03449	101.7579	LUBBOCK POWER & LIGHT-WADSWORTH (SHIH T101038) 230/69/13.5KV TRANSFORMER CKT 1
FDNS	00NR	9	25SP	G15_020	FROM->TO	LUBBOCK POWER & LIGHT-HOLLY PLANT (SHIH T101039) 230/69/13.5KV TRANSFORMER CKT 1	224	224	0.03449	101.7579	LUBBOCK POWER & LIGHT-WADSWORTH (SHIH T101038) 230/69/13.5KV TRANSFORMER CKT 1
FDNSLock-Blown up	06ALL	0	16WP	G15_031		Non-Converged Contingency	329.05	360.92	0.28166	-	AMARILLO SOUTH INTERCHANGE - G15031_T 230.00 230KV CKT 1
FDNSLock-Blown up	06ALL	0	16WP	G15_031		Non-Converged Contingency	987.16	1082.8	0.18908	-	G14_038T 345.00 - Hitchland Interchange 345KV CKT 1
FDNSLock-Blown up	06ALL	0	16WP	G15_031		Non-Converged Contingency	987.16	1082.8	0.18908	-	G14_038T 345.00 - POTTER COUNTY INTERCHANGE 345KV CKT 1
FDNSLock-Blown up	06ALL	0	16WP	G15_031		Non-Converged Contingency	560	560	0.18908	-	POTTER COUNTY INTERCHANGE (WAUK 90343-A) 345/230/13.2KV TRANSFORMER CKT 1
FDNSLock-Blown up	06ALL	0	16WP	G15_031		Non-Converged Contingency	560	560	0.18079	-	TUCO_2 345.00 (TUCO_2 XFMR) 345/230/13.2KV TRANSFORMER CKT 1
FDNSLock-Blown up	06ALL	0	16WP	G15_031		Non-Converged Contingency	1022	1124	0.1785	-	G14-074T 345.00 - OKLAUNION 345KV CKT 1
FDNSLock-Blown up	06ALL	0	16WP	G15_031		Non-Converged Contingency	1022	1124	0.1785	-	G14-074T 345.00 - TUCO INTERCHANGE 345KV CKT 1
FDNSLock-Blown up	06ALL	0	16WP	G15_031		Non-Converged Contingency	1022	1124	0.1785	-	GEN509403 1-PIRKEY GENERATION

SOLUTION	GROUP	SCENARIO	SEASON	SOURCE	DIRECTION	MONITORED ELEMENT	RATEA (MVA)	RATEB(MVA)	TDF	TC%LOADING (% MVA)	CONTINGENCY
FDNSLock-Blown up	06ALL	0	16WP	G15_031		Non-Converged Contingency	1022	1124	0.1785	-	GEN509404 1-WELSH #1
FDNSLock-Blown up	06ALL	0	16WP	G15_031		Non-Converged Contingency	1022	1124	0.1785	-	GEN509406 1-WELSH #3
FDNSLock-Blown up	06ALL	0	16WP	G15_031		Non-Converged Contingency	1022	1124	0.1785	-	GEN509416 1-TURK GENERATION
FDNSLock-Blown up	06ALL	0	16WP	G15_031		Non-Converged Contingency	1022	1124	0.1785	-	GEN511848 1-SOUTHWESTERN STATION #3
FDNSLock-Blown up	06ALL	0	16WP	G15_031		Non-Converged Contingency	956	956	0.16648	-	CIMARRON - MINCO 345KV CKT 1
FDNSLock-Blown up	06ALL	0	16WP	G15_031		Non-Converged Contingency	1195	1195	0.16648	-	GRACEMONT - MINCO 345KV CKT 1
FDNSLock-Blown up	06ALL	0	16WP	G15_031		Non-Converged Contingency	1330	1940	0.15794	-	CHISHOLM7 345.00 - GRACEMONT 345KV CKT 1
FDNSLock-Blown up	06ALL	0	16WP	G15_031		Non-Converged Contingency	987.16	1082.8	0.14892	-	FINNEY SWITCHING STATION - Hitchland Interchange 345KV CKT 1
FDNSLock-Blown up	06ALL	0	16WP	G15_031		Non-Converged Contingency	956.09	1051.7	0.14892	-	FINNEY SWITCHING STATION - HOLCOMB 345KV CKT 1
FDNSLock-Blown up	06ALL	0	16WP	G15_031		Non-Converged Contingency	560	560	0.14085	-	TUCO INTERCHANGE (GE M1022338) 345/230/13.2KV TRANSFORMER CKT 1
FDNSLock-Blown up	06ALL	0	16WP	G15_031		Non-Converged Contingency	1792	1792	0.13808	-	CHISHOLM7 345.00 - WOODWARD DISTRICT EHV 345KV CKT 1
FDNSLock-Blown up	06ALL	0	16WP	G15_031		Non-Converged Contingency	1792	1792	0.13295	-	BORDER 7345.00 - CHISHOLM7 345.00 345KV CKT 1
FDNSLock-Blown up	06ALL	0	16WP	G15_031		Non-Converged Contingency	1792	1792	0.13295	-	BORDER 7345.00 - CHISHOLM7 345.00 345KV CKT 2
FDNSLock-Blown up	06ALL	0	16WP	G15_031		Non-Converged Contingency	1792	1972	0.13295	-	BORDER 7345.00 - TUCO_2 345.00 345KV CKT 1
FDNSLock-Blown up	06ALL	0	16WP	G15_031		Non-Converged Contingency	1420	1775	0.13295	-	BORDER 7345.00 - TUCO_2 345.00 345KV CKT 2
FDNSLock-Blown up	06ALL	0	16WP	G15_031		Non-Converged Contingency	557	557	0.12553	-	NEWHART 230 - POTTER COUNTY INTERCHANGE 230KV CKT 1
FDNSLock-Blown up	06ALL	0	16WP	G15_031		Non-Converged Contingency	616	700	0.12275	-	TUCO INTERCHANGE (SIEM 8743066) 345/230/13.2KV TRANSFORMER CKT 2
FDNSLock-Blown up	06ALL	0	16WP	G15_031		Non-Converged Contingency	717	789	0.12114	-	G14-057T 345.00 - LAWTON EASTSIDE 345KV CKT 1
FDNSLock-Blown up	06ALL	0	16WP	G15_031		Non-Converged Contingency	717	789	0.12114	-	G14-057T 345.00 - SUNNYSIDE 345KV CKT 1
FDNSLock-Blown up	06ALL	0	16WP	G15_031		Non-Converged Contingency	1420	1775	0.10682	-	G11_051T 345.00 - TATONGA7 345.00 345KV CKT 1
FDNSLock-Blown up	06ALL	0	16WP	G15_031		Non-Converged Contingency	1420	1775	0.10682	-	G11_051T 345.00 - WOODWARD DISTRICT EHV 345KV CKT 1
FDNSLock-Blown up	06ALL	0	16WP	G15_031		Non-Converged Contingency	1195	1195	0.10682	-	MATHWSN7 345.00 - TATONGA7 345.00 345KV CKT 1
FDNSLock-Blown up	06ALL	0	16WP	G15_031		Non-Converged Contingency	1793	1793	0.09595	-	BVRCNTY7 345.00 - G11-14T 345.00 345KV CKT 1
FDNSLock-Blown up	06ALL	0	16WP	G15_031		Non-Converged Contingency	1716	1793	0.09595	-	BVRCNTY7 345.00 - G11-14T 345.00 345KV CKT 2
FDNSLock-Blown up	06ALL	0	16WP	G15_031		Non-Converged Contingency	1792	1792	0.09595	-	BVRCNTY7 345.00 - OPTIMA 345.00 345KV CKT 1
FDNSLock-Blown up	06ALL	0	16WP	G15_031		Non-Converged Contingency	1792	1792	0.09595	-	BVRCNTY7 345.00 - OPTIMA 345.00 345KV CKT 2
FDNSLock-Blown up	06ALL	0	16WP	G15_031		Non-Converged Contingency	1793	1793	0.09595	-	G11-14T 345.00 - WOODWARD DISTRICT EHV 345KV CKT 1
FDNSLock-Blown up	06ALL	0	16WP	G15_031		Non-Converged Contingency	1716	1793	0.09595	-	G11-14T 345.00 - WOODWARD DISTRICT EHV 345KV CKT 2
FDNSLock-Blown up	06ALL	0	16WP	G15_031		Non-Converged Contingency	1561	1793	0.09496	-	THISTLE7 345.00 - WOODWARD DISTRICT EHV 345KV CKT 1
FDNSLock-Blown up	06ALL	0	16WP	G15_031		Non-Converged Contingency	1561	1793	0.09496	-	THISTLE7 345.00 - WOODWARD DISTRICT EHV 345KV CKT 2
FDNSLock-Blown up	06ALL	0	16WP	G15_031		Non-Converged Contingency	439	439	0.09408	-	CHISHOLM6 230.00 - SWEETWATER 230KV CKT 1
FDNSLock-Blown up	06ALL	0	16WP	G15_031		Non-Converged Contingency	435.02	457.73	0.09408	-	STATELINE INTERCHANGE - STLN-DEMARC6 230KV CKT 1
FDNSLock-Blown up	06ALL	0	16WP	G15_031		Non-Converged Contingency	439	439	0.09408	-	STLN-DEMARC6 - SWEETWATER 230KV CKT 1
FDNSLock-Blown up	06ALL	0	16WP	G15_031		Non-Converged Contingency	1792	1972	0.0851	-	TUCO INTERCHANGE - TUCO_2 345.00 345KV CKT 1
FDNSLock-Blown up	06ALL	0	16WP	G15_031		Non-Converged Contingency	556.92	556.92	0.08105	-	HITCHLAND INTERCHANGE - MOORE COUNTY INTERCHANGE 230KV CKT 1
FDNSLock-Blown up	06ALL	0	16WP	G15_031		Non-Converged Contingency	557	557	0.07987	-	GRAPEVINE INTERCHANGE - STATELINE INTERCHANGE 230KV CKT 1
FDNSLock-Blown up	06ALL	0	16WP	G15_031		Non-Converged Contingency	557	557	0.079	-	GRAPEVINE INTERCHANGE - NICHOLS STATION 230KV CKT 1
FDNSLock-Blown up	06ALL	0	16WP	G15_031		Non-Converged Contingency	1532	1793	0.07849	-	G1524G1525 345.00 - THISTLE7 345.00 345KV CKT 1
FDNSLock-Blown up	06ALL	0	16WP	G15_031		Non-Converged Contingency	1532	1793	0.07849	-	G1524G1525 345.00 - THISTLE7 345.00 345KV CKT 2
FDNSLock-Blown up	06ALL	0	16WP	G15_031		Non-Converged Contingency	1532	1793	0.07849	-	GEN532751 1-WOLF CREEK GENERATING STATION UNIT 1
FDNSLock-Blown up	06ALL	0	16WP	G15_031		Non-Converged Contingency	717.1	717.1	0.06974	-	HOLCOMB - SETAB 345KV CKT 1
FDNSLock-Blown up	06ALL	0	16WP	G15_031		Non-Converged Contingency	762.5	762.5	0.06843	-	MINGO - SETAB 345KV CKT 1
FDNSLock-Blown up	06ALL	0	16WP	G15_031		Non-Converged Contingency	785	785	0.06819	-	MINGO - RED WILLOW 345KV CKT 1
FDNSLock-Blown up	06ALL	0	16WP	G15_031		Non-Converged Contingency	329.05	360.92	0.06679	-	MOORE COUNTY INTERCHANGE - POTTER COUNTY INTERCHANGE 230KV CKT 1
FDNSLock-Blown up	06ALL	0	16WP	G15_031		Non-Converged Contingency	439	439	0.06396	-	CHISHOLM6 230.00 - ELK CITY 230KV 230KV CKT 1
FDNSLock-Blown up	06ALL	0	16WP	G15_031		Non-Converged Contingency	450	450	0.06396	-	ELK CITY 230KV (ELKCTY-6) 230/138/13.8KV TRANSFORMER CKT 1
FDNSLock-Blown up	06ALL	0	16WP	G15_031		Non-Converged Contingency	717	717	0.06389	-	CIMARRON - DRAPER LAKE 345KV CKT 1
FDNSLock-Blown up	06ALL	0	16WP	G15_031		Non-Converged Contingency	726.6	726.6	0.06288	-	BUCKNER7 345.00 - HOLCOMB 345KV CKT 1
FDNSLock-Blown up	06ALL	0	16WP	G15_031		Non-Converged Contingency	1413	1517	0.06288	-	BUCKNER7 345.00 - SPEARVILLE 345KV CKT 1
FDNSLock-Blown up	06ALL	0	16WP	G15_031		Non-Converged Contingency	1793	1793	0.05846	-	G13-010T 345.00 - POST ROCK 345KV CKT 1
FDNSLock-Blown up	06ALL	0	16WP	G15_031		Non-Converged Contingency	1793	1793	0.05846	-	G13-010T 345.00 - SPEARVILLE 345KV CKT 1
FDNSLock-Blown up	06ALL	0	16WP	G15_031		Non-Converged Contingency	1195	1195	0.05527	-	GEN520947 1-HUGO1
FDNSLock-Blown up	06ALL	0	16WP	G15_031		Non-Converged Contingency	329.05	360.92	0.05397	-	BUSHLAND INTERCHANGE - POTTER COUNTY INTERCHANGE 230KV CKT 1
FDNSLock-Blown up	06ALL	0	16WP	G15_031		Non-Converged Contingency	557	557	0.04814	-	BUSHLAND INTERCHANGE - DEAF SMITH COUNTY INTERCHANGE 230KV CKT 1
FDNSLock-Blown up	06ALL	0	16WP	G15_031		Non-Converged Contingency	329.05	360.92	0.04497	-	Harrington Station East Bus - POTTER COUNTY INTERCHANGE 230KV CKT 1
FDNSLock-Blown up	06ALL	0	16WP	G15_031		Non-Converged Contingency	557	557	0.03885	-	CHERRY1 - HARRINGTON STATION 230KV CKT 1
FDNSLock-Blown up	06ALL	0	16WP	G15_031		Non-Converged Contingency	552.14	607.52	0.03849	-	TOLK STATION EAST - TUCO INTERCHANGE 230KV CKT 1
FDNSLock-Blown up	06ALL	0	16WP	G15_031		Non-Converged Contingency	164.53	177.08	0.03637	-	Hansford County Switch Station - SPEARMAN INTERCHANGE 115KV CKT 1
FDNSLock-Blown up	06ALL	0	16WP	G15_031		Non-Converged Contingency	177.08	177.08	0.03637	-	HITCHLAND INTERCHANGE - Hansford County Switch Station 115KV CKT 1
FDNSLock-Blown up	06ALL	0	16WP	G15_031		Non-Converged Contingency	277	304	0.03298	-	HAPPY INTERCHANGE - PALO DURO SUB 115KV CKT 1
FDNSLock-Blown up	06ALL	0	16WP	G15_031		Non-Converged Contingency	276	304	0.03298	-	HAPPY INTERCHANGE - TULIA TAP 115KV CKT 1
FDNSLock-Blown up	06ALL	0	16WP	G15_031		Non-Converged Contingency	278	278	0.03298	-	KRESS INTERCHANGE - TULIA TAP 115KV CKT 1
FDNSLock-Blown up	06ALL	0	16WP	G15_031		Non-Converged Contingency	278	278	0.03298	-	PALO DURO SUB - RANDALL COUNTY INTERCHANGE 115KV CKT 1
FDNSLock-Blown up	06ALL	0	16WP	G15_031		Non-Converged Contingency	717	789	0.03226	-	GRACEMONT - LAWTON EASTSIDE 345KV CKT 1
FDNSLock-Blown up	06ALL	0	16WP	G15_031		Non-Converged Contingency	164.53	177.08	0.03225	-	PRINGLE INTERCHANGE - SPEARMAN INTERCHANGE 115KV CKT 1
FDNSLock-Blown up	06NR	0	17G	G15_031		Non-Converged Contingency	318.7	350.57	0.26456	-	AMARILLO SOUTH INTERCHANGE - G15031_T 230.00 230KV CKT 1
FDNSLock-Blown up	06NR	0	17G	G15_031		Non-Converged Contingency	478	502	0.08003	-	NEWHART 230 - POTTER COUNTY INTERCHANGE 230KV CKT 1
FDNSLock-Blown up	06ALL	0	17SP	G15_031		Non-Converged Contingency	956.09	1051.7	0.18904	-	G14_038T 345.00 - Hitchland Interchange 345KV CKT 1
FDNSLock-Blown up	06ALL	0	17SP	G15_031		Non-Converged Contingency	956.09	1051.7	0.18904	-	G14_038T 345.00 - POTTER COUNTY INTERCHANGE 345KV CKT 1
FDNSLock-Blown up	06ALL	0	17SP	G15_031		Non-Converged Contingency	560	560	0.18904	-	POTTER COUNTY INTERCHANGE (WAUK 90343-A) 345/230/13.2KV TRANSFORMER CKT 1
FDNSLock-Blown up	06ALL	0	17SP	G15_031		Non-Converged Contingency	956	1042	0.17636	-	G14-074T 345.00 - OKLAUNION 345KV CKT 1
FDNSLock-Blown up	06ALL	0	17SP	G15_031		Non-Converged Contingency	956	1042	0.17636	-	G14-074T 345.00 - TUCO INTERCHANGE 345KV CKT 1
FDNSLock-Blown up	06ALL	0	17SP	G15_031		Non-Converged Contingency	1792	1972	0.13194	-	BORDER 7345.00 - TUCO_2 345.00 345KV CKT 1
FDNSLock-Blown up	06ALL	0	17SP	G15_031		Non-Converged Contingency	1420	1775	0.13194	-	BORDER 7345.00 - TUCO_2 345.00 345KV CKT 2
FDNSLock-Blown up	06ALL	0	20L	G15_031		Non-Converged Contingency	478	502	0.72117	-	SWISHER COUNTY INTERCHANGE 230KV SWITCHED SHUNT
FDNSLock-Blown up	06ALL	0	20L	G15_031		Non-Converged Contingency	478	502	0.27883	-	AMARILLO SOUTH INTERCHANGE - G15031_T 230.00 230KV CKT 1
FDNSLock-Blown up	06NR	0	20L	G15_031		Non-Converged Contingency	478	502	0.26871	-	AMARILLO SOUTH INTERCHANGE - G15031_T 230.00 230KV CKT 1
FDNSLock-Blown up	06ALL	0	20L	G15_031		Non-Converged Contingency	0	0	0.23705	-	P12:345:SPS:J07.1.FINN.HITCH
FDNSLock-Blown up	06ALL	0	20L	G15_031		Non-Converged Contingency	560	560	0.15362	-	TUCO_2 345.00 (TUCO_2 XFMR) 345/230/13.2KV TRANSFORMER CKT 1

SOLUTION	GROUP	SCENARIO	SEASON	SOURCE	DIRECTION	MONITORED ELEMENT	RATEA (MVA)	RATEB(MVA)	TDF	TC%LOADING (% MVA)	CONTINGENCY
FDNSLock-Blown up	06ALL	0	20L	G15_031		Non-Converged Contingency	956.09	1051.7	0.15212	-	G14_038T 345.00 - Hitchland Interchange 345KV CKT 1
FDNSLock-Blown up	06ALL	0	20L	G15_031		Non-Converged Contingency	956.09	1051.7	0.15212	-	G14_038T 345.00 - POTTER COUNTY INTERCHANGE 345KV CKT 1
FDNSLock-Blown up	06ALL	0	20L	G15_031		Non-Converged Contingency	560	560	0.15212	-	POTTER COUNTY INTERCHANGE (WAUK 90343-A) 345/230/13.2KV TRANSFORMER CKT 1
FDNSLock-Blown up	06ALL	0	20L	G15_031		Non-Converged Contingency	560	560	0.15212	-	POTTER COUNTY INTERCHANGE (WAUK 90343-A) 345/230/13.2KV TRANSFORMER CKT 1
FDNSLock-Blown up	06ALL	0	20L	G15_031		Non-Converged Contingency	0	0	0.14663	-	P12:230:AEPW-SPS:SWEETWT6:WHEELER 6
FDNSLock-Blown up	06ALL	0	20L	G15_031		Non-Converged Contingency	956	956	0.14311	-	CIMARRON - MINCO 345KV CKT 1
FDNSLock-Blown up	06ALL	0	20L	G15_031		Non-Converged Contingency	1195	1195	0.14311	-	GRACEMONT - MINCO 345KV CKT 1
FDNSLock-Blown up	06ALL	0	20L	G15_031		Non-Converged Contingency	1022	1124	0.14197	-	G14-074T 345.00 - OKLAUNION 345KV CKT 1
FDNSLock-Blown up	06ALL	0	20L	G15_031		Non-Converged Contingency	1022	1124	0.14197	-	G14-074T 345.00 - TUCO INTERCHANGE 345KV CKT 1
FDNSLock-Blown up	06ALL	0	20L	G15_031		Non-Converged Contingency	1022	1124	0.14197	-	GEN506754 1-LEBROCK STEAM 1
FDNSLock-Blown up	06ALL	0	20L	G15_031		Non-Converged Contingency	1022	1124	0.14197	-	GEN509394 1-FLINT CREEK
FDNSLock-Blown up	06ALL	0	20L	G15_031		Non-Converged Contingency	1022	1124	0.14197	-	GEN509403 1-PIRKEY GENERATION
FDNSLock-Blown up	06ALL	0	20L	G15_031		Non-Converged Contingency	1022	1124	0.14197	-	GEN509404 1-WELSH #1
FDNSLock-Blown up	06ALL	0	20L	G15_031		Non-Converged Contingency	1022	1124	0.14197	-	GEN509406 1-WELSH #3
FDNSLock-Blown up	06ALL	0	20L	G15_031		Non-Converged Contingency	1022	1124	0.14197	-	GEN509408 1-WILKES #2
FDNSLock-Blown up	06ALL	0	20L	G15_031		Non-Converged Contingency	1022	1124	0.14197	-	GEN509416 1-TURK GENERATION
FDNSLock-Blown up	06ALL	0	20L	G15_031		Non-Converged Contingency	1022	1124	0.14197	-	GEN511840 1-NORTHEASTERN STATION #3
FDNSLock-Blown up	06ALL	0	20L	G15_031		Non-Converged Contingency	1022	1124	0.14197	-	GEN511960 1-ROARK1 0.7000
FDNSLock-Blown up	06ALL	0	20L	G15_031		Non-Converged Contingency	1022	1124	0.14197	-	GEN562590 1-G14_057_3 0.6900
FDNSLock-Blown up	06ALL	0	20L	G15_031		Non-Converged Contingency	1022	1124	0.14197	-	OKLAUNION 345KV SWITCHED SHUNT
FDNSLock-Blown up	06ALL	0	20L	G15_031		Non-Converged Contingency	956.09	1051.7	0.12654	-	Hitchland Interchange - WALKTAP7 345.00 345KV CKT 1
FDNSLock-Blown up	06ALL	0	20L	G15_031		Non-Converged Contingency	956.09	1051.7	0.12654	-	Hitchland Interchange - WALKTAP7 345.00 345KV CKT 1
FDNSLock-Blown up	06ALL	0	20L	G15_031		Non-Converged Contingency	497.17	546.96	0.12453	-	AMARILLO SOUTH INTERCHANGE - RANDALL COUNTY INTERCHANGE 230KV CKT 1
FDNSLock-Blown up	06ALL	0	20L	G15_031		Non-Converged Contingency	497.17	546.96	0.12453	-	AMARILLO SOUTH INTERCHANGE - RANDALL COUNTY INTERCHANGE 230KV CKT 1
FDNSLock-Blown up	06ALL	0	20L	G15_031		Non-Converged Contingency	1584	2098	0.12425	-	CHISHOLM7 345.00 - GRACEMONT 345KV CKT 1
FDNSLock-Blown up	06ALL	0	20L	G15_031		Non-Converged Contingency	1584	2098	0.12425	-	GEN514805 1-SOONER UNIT 1
FDNSLock-Blown up	06ALL	0	20L	G15_031		Non-Converged Contingency	1584	2098	0.12425	-	GEN514806 1-SOONER UNIT 2
FDNSLock-Blown up	06ALL	0	20L	G15_031		Non-Converged Contingency	1584	2098	0.12425	-	GEN515040 1-SEMINOLE 1G
FDNSLock-Blown up	06ALL	0	20L	G15_031		Non-Converged Contingency	1584	2098	0.12425	-	GEN515223 1-MUSKOGEE 4G
FDNSLock-Blown up	06ALL	0	20L	G15_031		Non-Converged Contingency	0	0	0.1233	-	P12:230:AEPW:ELKCITY6:SWEETWT6
FDNSLock-Blown up	06ALL	0	20L	G15_031		Non-Converged Contingency	478.05	501.55	0.12289	-	AMARILLO SOUTH INTERCHANGE - NICHOLS STATION 230KV CKT 1
FDNSLock-Blown up	06ALL	0	20L	G15_031		Non-Converged Contingency	478.05	501.55	0.12289	-	AMARILLO SOUTH INTERCHANGE - NICHOLS STATION 230KV CKT 1
FDNSLock-Blown up	06ALL	0	20L	G15_031		Non-Converged Contingency	435.82	501.55	0.12053	-	Harrington Station Mid Bus - RANDALL COUNTY INTERCHANGE 230KV CKT 1
FDNSLock-Blown up	06ALL	0	20L	G15_031		Non-Converged Contingency	435.82	501.55	0.12053	-	Harrington Station Mid Bus - RANDALL COUNTY INTERCHANGE 230KV CKT 1
FDNSLock-Blown up	06ALL	0	20L	G15_031		Non-Converged Contingency	478	502	0.11657	-	NEWHART 230 - POTTER COUNTY INTERCHANGE 230KV CKT 1
FDNSLock-Blown up	06ALL	0	20L	G15_031		Non-Converged Contingency	218	239	0.1158	-	KRESS INTERCHANGE - SWISHER COUNTY INTERCHANGE 115KV CKT 1
FDNSLock-Blown up	06ALL	0	20L	G15_031		Non-Converged Contingency	218	239	0.1158	-	KRESS INTERCHANGE - SWISHER COUNTY INTERCHANGE 115KV CKT 1
FDNSLock-Blown up	06ALL	0	20L	G15_031		Non-Converged Contingency	1792	1792	0.11429	-	CHISHOLM7 345.00 - WOODWARD DISTRICT EHV 345KV CKT 1
FDNSLock-Blown up	06ALL	0	20L	G15_031		Non-Converged Contingency	560	560	0.111	-	TUCO INTERCHANGE (GE M1022338) 345/230/13.2KV TRANSFORMER CKT 1
FDNSLock-Blown up	06ALL	0	20L	G15_031		Non-Converged Contingency	560	560	0.111	-	TUCO INTERCHANGE (GE M1022338) 345/230/13.2KV TRANSFORMER CKT 1
FDNSLock-Blown up	06ALL	0	20L	G15_031		Non-Converged Contingency	956.09	1051.7	0.1105	-	FINNEY SWITCHING STATION - HOLCOMB 345KV CKT 1
FDNSLock-Blown up	06ALL	0	20L	G15_031		Non-Converged Contingency	956.09	1051.7	0.1105	-	FINNEY SWITCHING STATION - HOLCOMB 345KV CKT 1
FDNSLock-Blown up	06ALL	0	20L	G15_031		Non-Converged Contingency	956.09	1051.7	0.1105	-	FINNEY SWITCHING STATION - WALKTAP7 345.00 345KV CKT 1
FDNSLock-Blown up	06ALL	0	20L	G15_031		Non-Converged Contingency	956.09	1051.7	0.1105	-	FINNEY SWITCHING STATION - WALKTAP7 345.00 345KV CKT 1
FDNSLock-Blown up	06ALL	0	20L	G15_031		Non-Converged Contingency	1792	1792	0.1076	-	BORDER 7345.00 - CHISHOLM7 345.00 345KV CKT 1
FDNSLock-Blown up	06ALL	0	20L	G15_031		Non-Converged Contingency	1792	1792	0.1076	-	BORDER 7345.00 - CHISHOLM7 345.00 345KV CKT 2
FDNSLock-Blown up	06ALL	0	20L	G15_031		Non-Converged Contingency	1792	1972	0.1076	-	BORDER 7345.00 - TUCO_2 345.00 345KV CKT 1
FDNSLock-Blown up	06ALL	0	20L	G15_031		Non-Converged Contingency	1420	1775	0.1076	-	BORDER 7345.00 - TUCO_2 345.00 345KV CKT 2
FDNSLock-Blown up	06ALL	0	20L	G15_031		Non-Converged Contingency	1792	1972	0.1076	-	BORDER 7345.00 345KV SWITCHED SHUNT
FDNSLock-Blown up	06ALL	0	20L	G15_031		Non-Converged Contingency	560	644	0.09673	-	TUCO INTERCHANGE (SIEM 8743066) 345/230/13.2KV TRANSFORMER CKT 2
FDNSLock-Blown up	06ALL	0	20L	G15_031		Non-Converged Contingency	560	644	0.09673	-	TUCO INTERCHANGE (SIEM 8743066) 345/230/13.2KV TRANSFORMER CKT 2
FDNSLock-Blown up	06ALL	0	20L	G15_031		Non-Converged Contingency	717	789	0.0923	-	G14-057T 345.00 - LAWTON EASTSIDE 345KV CKT 1
FDNSLock-Blown up	06ALL	0	20L	G15_031		Non-Converged Contingency	717	789	0.0923	-	G14-057T 345.00 - SUNNYSIDE 345KV CKT 1
FDNSLock-Blown up	06NR	0	20L	G15_031		Non-Converged Contingency	478	502	0.08794	-	NEWHART 230 - POTTER COUNTY INTERCHANGE 230KV CKT 1
FDNSLock-Blown up	06ALL	0	20L	G15_031		Non-Converged Contingency	1420	1775	0.086	-	G11_051T 345.00 - TATONGA7 345.00 345KV CKT 1
FDNSLock-Blown up	06ALL	0	20L	G15_031		Non-Converged Contingency	1420	1775	0.086	-	G11_051T 345.00 - WOODWARD DISTRICT EHV 345KV CKT 1
FDNSLock-Blown up	06ALL	0	20L	G15_031		Non-Converged Contingency	1195	1195	0.086	-	MATHWSN7 345.00 - TATONGA7 345.00 345KV CKT 1
FDNSLock-Blown up	06ALL	0	20L	G15_031		Non-Converged Contingency	1561	1793	0.07663	-	THISTLE7 345.00 - WOODWARD DISTRICT EHV 345KV CKT 1
FDNSLock-Blown up	06ALL	0	20L	G15_031		Non-Converged Contingency	1561	1793	0.07663	-	THISTLE7 345.00 - WOODWARD DISTRICT EHV 345KV CKT 1
FDNSLock-Blown up	06ALL	0	20L	G15_031		Non-Converged Contingency	1561	1793	0.07663	-	THISTLE7 345.00 - WOODWARD DISTRICT EHV 345KV CKT 2
FDNSLock-Blown up	06ALL	0	20L	G15_031		Non-Converged Contingency	1561	1793	0.07663	-	THISTLE7 345.00 - WOODWARD DISTRICT EHV 345KV CKT 2
FDNSLock-Blown up	06ALL	0	20L	G15_031		Non-Converged Contingency	1793	1793	0.07361	-	BVRCNTY7 345.00 - G11-14T 345.00 345KV CKT 1
FDNSLock-Blown up	06ALL	0	20L	G15_031		Non-Converged Contingency	1716	1793	0.07361	-	BVRCNTY7 345.00 - G11-14T 345.00 345KV CKT 2
FDNSLock-Blown up	06ALL	0	20L	G15_031		Non-Converged Contingency	1792	1792	0.07361	-	BVRCNTY7 345.00 - OPTIMA 345.00 345KV CKT 1
FDNSLock-Blown up	06ALL	0	20L	G15_031		Non-Converged Contingency	1792	1792	0.07361	-	BVRCNTY7 345.00 - OPTIMA 345.00 345KV CKT 2
FDNSLock-Blown up	06ALL	0	20L	G15_031		Non-Converged Contingency	1793	1793	0.07361	-	G11-14T 345.00 - WOODWARD DISTRICT EHV 345KV CKT 1
FDNSLock-Blown up	06ALL	0	20L	G15_031		Non-Converged Contingency	1716	1793	0.07361	-	G11-14T 345.00 - WOODWARD DISTRICT EHV 345KV CKT 2
FDNSLock-Blown up	06ALL	0	20L	G15_031		Non-Converged Contingency	1792	1792	0.07361	-	Hitchland Interchange - OPTIMA 345.00 345KV CKT 1
FDNSLock-Blown up	06ALL	0	20L	G15_031		Non-Converged Contingency	1792	1792	0.07361	-	Hitchland Interchange - OPTIMA 345.00 345KV CKT 2
FDNSLock-Blown up	06ALL	0	20L	G15_031		Non-Converged Contingency	421	439	0.07332	-	CHISHOLM6 230.00 - SWEETWATER 230KV CKT 1
FDNSLock-Blown up	06ALL	0	20L	G15_031		Non-Converged Contingency	348.58	381.24	0.07332	-	STATELINE INTERCHANGE - STLN-DEMARC6 230KV CKT 1
FDNSLock-Blown up	06ALL	0	20L	G15_031		Non-Converged Contingency	353	353	0.07332	-	STLN-DEMARC6 - SWEETWATER 230KV CKT 1
FDNSLock-Blown up	06ALL	0	20L	G15_031		Non-Converged Contingency	1195	1195	0.07187	-	ARCADIA - NORTHWEST 345KV CKT 1
FDNSLock-Blown up	06ALL	0	20L	G15_031		Non-Converged Contingency	1195	1195	0.06647	-	MATHWSN7 345.00 - NORTHWEST 345KV CKT 1
FDNSLock-Blown up	06ALL	0	20L	G15_031		Non-Converged Contingency	501.95	501.95	0.06513	-	HITCHLAND INTERCHANGE - MOORE COUNTY INTERCHANGE 230KV CKT 1
FDNSLock-Blown up	06ALL	0	20L	G15_031		Non-Converged Contingency	501.95	501.95	0.06513	-	HITCHLAND INTERCHANGE - MOORE COUNTY INTERCHANGE 230KV CKT 1
FDNSLock-Blown up	06ALL	0	20L	G15_031		Non-Converged Contingency	560	644	0.06505	-	Hitchland Interchange (SIEM 8743067) 345/230/13.2KV TRANSFORMER CKT 2
FDNSLock-Blown up	06ALL	0	20L	G15_031		Non-Converged Contingency	560	644	0.06505	-	Hitchland Interchange (SIEM 8743067) 345/230/13.2KV TRANSFORMER CKT 2
FDNSLock-Blown up	06ALL	0	20L	G15_031		Non-Converged Contingency	956	956	0.06423	-	CIMARRON - NORTHWEST 345KV CKT 1

SOLUTION	GROUP	SCENARIO	SEASON	SOURCE	DIRECTION	MONITORED ELEMENT	RATEA (MVA)	RATEB(MVA)	TDF	TC%LOADING (% MVA)	CONTINGENCY
FDNSLock-Blown up	06ALL	0	20L	G15_031		Non-Converged Contingency	0	0	0.06336	-	P12:115:SPS:T66.1.RNDALL.HAPPY
FDNSLock-Blown up	06ALL	0	20L	G15_031		Non-Converged Contingency	0	0	0.06336	-	P12:115:SPS:T67.1.HAPPY.KRESS
FDNSLock-Blown up	06ALL	0	20L	G15_031		Non-Converged Contingency	502	502	0.06223	-	GRAPEVINE INTERCHANGE - STATELINE INTERCHANGE 230KV CKT 1
FDNSLock-Blown up	06ALL	0	20L	G15_031		Non-Converged Contingency	502	502	0.06223	-	GRAPEVINE INTERCHANGE - STATELINE INTERCHANGE 230KV CKT 1
FDNSLock-Blown up	06ALL	0	20L	G15_031		Non-Converged Contingency	1532	1793	0.0616	-	G1524G1525 345.00 - THISTLE7 345.00 345KV CKT 1
FDNSLock-Blown up	06ALL	0	20L	G15_031		Non-Converged Contingency	1532	1793	0.0616	-	G1524G1525 345.00 - THISTLE7 345.00 345KV CKT 2
FDNSLock-Blown up	06ALL	0	20L	G15_031		Non-Converged Contingency	1532	1793	0.0616	-	G1524G1525 345.00 - WICHITA 345KV CKT 1
FDNSLock-Blown up	06ALL	0	20L	G15_031		Non-Converged Contingency	1532	1793	0.0616	-	G1524G1525 345.00 - WICHITA 345KV CKT 2
FDNSLock-Blown up	06ALL	0	20L	G15_031		Non-Converged Contingency	1532	1793	0.0616	-	GEN532653 1-JEFFREY ENERGY CENTER UNIT 3
FDNSLock-Blown up	06ALL	0	20L	G15_031		Non-Converged Contingency	1532	1793	0.0616	-	GEN532663 1-LAWRENCE ENERGY CENTER UNIT 5
FDNSLock-Blown up	06ALL	0	20L	G15_031		Non-Converged Contingency	1532	1793	0.0616	-	GEN532751 1-WOLF CREEK GENERATING STATION UNIT 1
FDNSLock-Blown up	06ALL	0	20L	G15_031		Non-Converged Contingency	1792	1972	0.06159	-	TUCO INTERCHANGE - TUCO_2 345.00 345KV CKT 1
FDNSLock-Blown up	06ALL	0	20L	G15_031		Non-Converged Contingency	502	502	0.06142	-	GRAPEVINE INTERCHANGE - NICHOLS STATION 230KV CKT 1
FDNSLock-Blown up	06ALL	0	20L	G15_031		Non-Converged Contingency	502	502	0.06142	-	GRAPEVINE INTERCHANGE - NICHOLS STATION 230KV CKT 1
FDNSLock-Blown up	06ALL	0	20L	G15_031		Non-Converged Contingency	0	0	0.06061	-	P12:115:SPS:V03.1.NICHLS.EPLANT
FDNSLock-Blown up	06ALL	0	20L	G15_031		Non-Converged Contingency	0	0	0.06006	-	P12:138:AEPW-OGE:WTH_JCT4:JENSEN4
FDNSLock-Blown up	06ALL	0	20L	G15_031		Non-Converged Contingency	785	785	0.05741	-	GEN640009 1-COOPER NUCLEAR STATION
FDNSLock-Blown up	06ALL	0	20L	G15_031		Non-Converged Contingency	785	785	0.05741	-	MINGO - RED WILLOW 345KV CKT 1
FDNSLock-Blown up	06ALL	0	20L	G15_031		Non-Converged Contingency	785	785	0.05741	-	MINGO - RED WILLOW 345KV CKT 1
FDNSLock-Blown up	06ALL	0	20L	G15_031		Non-Converged Contingency	560	644	0.05659	-	Hitchland Interchange (H TB80155502) 345/230/13.2KV TRANSFORMER CKT 1
FDNSLock-Blown up	06ALL	0	20L	G15_031		Non-Converged Contingency	560	644	0.05659	-	Hitchland Interchange (H TB80155502) 345/230/13.2KV TRANSFORMER CKT 1
FDNSLock-Blown up	06ALL	0	20L	G15_031		Non-Converged Contingency	762.5	762.5	0.05652	-	MINGO - SETAB 345KV CKT 1
FDNSLock-Blown up	06ALL	0	20L	G15_031		Non-Converged Contingency	762.5	762.5	0.05652	-	MINGO - SETAB 345KV CKT 1
FDNSLock-Blown up	06ALL	0	20L	G15_031		Non-Converged Contingency	717.1	717.1	0.0561	-	HOLCOMB - SETAB 345KV CKT 1
FDNSLock-Blown up	06ALL	0	20L	G15_031		Non-Converged Contingency	717.1	717.1	0.0561	-	HOLCOMB - SETAB 345KV CKT 1
FDNSLock-Blown up	06ALL	0	20L	G15_031		Non-Converged Contingency	318.7	350.57	0.05391	-	MOORE COUNTY INTERCHANGE - POTTER COUNTY INTERCHANGE 230KV CKT 1
FDNSLock-Blown up	06ALL	0	20L	G15_031		Non-Converged Contingency	318.7	350.57	0.05391	-	MOORE COUNTY INTERCHANGE - POTTER COUNTY INTERCHANGE 230KV CKT 1
FDNSLock-Blown up	06ALL	0	20L	G15_031		Non-Converged Contingency	956	956	0.0532	-	G15063_T 345.00 - MATHWSN7 345.00 345KV CKT 1
FDNSLock-Blown up	06ALL	0	20L	G15_031		Non-Converged Contingency	956	956	0.0532	-	G15063_T 345.00 - WOODRING 345KV CKT 1
FDNSLock-Blown up	06ALL	0	20L	G15_031		Non-Converged Contingency	0	0	0.05307	-	P12:138:WFEC-AEPW:WASHITA4:CLINTJC4
FDNSLock-Blown up	06ALL	0	20L	G15_031		Non-Converged Contingency	1039	1195	0.05289	-	NORTHWEST - SPRING CREEK 345KV CKT 1
FDNSLock-Blown up	06ALL	0	20L	G15_031		Non-Converged Contingency	1039	1195	0.05289	-	SOONER - SPRING CREEK 345KV CKT 1
FDNSLock-Blown up	06ALL	0	20L	G15_031		Non-Converged Contingency	1195	1195	0.0505	-	SOONER - WOODRING 345KV CKT 1
FDNSLock-Blown up	06ALL	0	20L	G15_031		Non-Converged Contingency	439	439	0.04998	-	CHISHOLM6 230.00 - ELK CITY 230KV 230KV CKT 1
FDNSLock-Blown up	06ALL	0	20L	G15_031		Non-Converged Contingency	450	450	0.04998	-	ELK CITY 230KV (ELKCTY-6) 230/138/13.8KV TRANSFORMER CKT 1
FDNSLock-Blown up	06ALL	0	20L	G15_031		Non-Converged Contingency	450	450	0.04998	-	ELK CITY 230KV (ELKCTY-6) 230/138/13.8KV TRANSFORMER CKT 1
FDNSLock-Blown up	06ALL	0	20L	G15_031		Non-Converged Contingency	878	956	0.04977	-	BENTON - WICHITA 345KV CKT 1
FDNSLock-Blown up	06ALL	0	20L	G15_031		Non-Converged Contingency	0	0	0.04917	-	P12:115:SPS:T04.1.DFSMTH.CASTRO
FDNSLock-Blown up	06ALL	0	20L	G15_031		Non-Converged Contingency	0	0	0.04762	-	P12:138:AEPW:S.W.S.-4:L.E.S.-4
FDNSLock-Blown up	06ALL	0	20L	G15_031		Non-Converged Contingency	1505	1793	0.04738	-	G13-010T 345.00 - POST ROCK 345KV CKT 1
FDNSLock-Blown up	06ALL	0	20L	G15_031		Non-Converged Contingency	1505	1793	0.04738	-	G13-010T 345.00 - SPEARVILLE 345KV CKT 1
FDNSLock-Blown up	06ALL	0	20L	G15_031		Non-Converged Contingency	1504	1792	0.04705	-	AXTELL - POST ROCK 345KV CKT 1
FDNSLock-Blown up	06ALL	0	20L	G15_031		Non-Converged Contingency	726.6	726.6	0.04643	-	BUCKNER7 345.00 - HOLCOMB 345KV CKT 1
FDNSLock-Blown up	06ALL	0	20L	G15_031		Non-Converged Contingency	726.6	726.6	0.04643	-	BUCKNER7 345.00 - HOLCOMB 345KV CKT 1
FDNSLock-Blown up	06ALL	0	20L	G15_031		Non-Converged Contingency	1413	1517	0.04643	-	BUCKNER7 345.00 - SPEARVILLE 345KV CKT 1
FDNSLock-Blown up	06ALL	0	20L	G15_031		Non-Converged Contingency	1413	1517	0.04643	-	BUCKNER7 345.00 - SPEARVILLE 345KV CKT 1
FDNSLock-Blown up	06ALL	0	20L	G15_031		Non-Converged Contingency	0	0	0.04591	-	P12:115:SPS:W29.1.OCLTRE.SPRMN
FDNSLock-Blown up	06ALL	0	20L	G15_031		Non-Converged Contingency	956	956	0.04505	-	GERALD GENTLEMAN STATION - RED WILLOW 345KV CKT 1
FDNSLock-Blown up	06ALL	0	20L	G15_031		Non-Converged Contingency	1195	1195	0.04461	-	CIMARRON - DRAPER LAKE 345KV CKT 1
FDNSLock-Blown up	06ALL	0	20L	G15_031		Non-Converged Contingency	0	0	0.04414	-	P12:230:SPS:K43.1.PRNGLE.HARR_E
FDNSLock-Blown up	06ALL	0	20L	G15_031		Non-Converged Contingency	0	0	0.04256	-	P12:115:SPS:W08.1.HITCH.LASLEY
FDNSLock-Blown up	06ALL	0	20L	G15_031		Non-Converged Contingency	1195	1195	0.04202	-	JOHNSON COUNTY - SUNNYSIDE 345KV CKT 1
FDNSLock-Blown up	06ALL	0	20L	G15_031		Non-Converged Contingency	1035	1035	0.04088	-	EMPORIA ENERGY CENTER - G14_001T 345.00 345KV CKT 1
FDNSLock-Blown up	06ALL	0	20L	G15_031		Non-Converged Contingency	1035	1035	0.04088	-	G14_001T 345.00 - WICHITA 345KV CKT 1
FDNSLock-Blown up	06ALL	0	20L	G15_031		Non-Converged Contingency	318.7	350.57	0.04077	-	BUSHLAND INTERCHANGE - POTTER COUNTY INTERCHANGE 230KV CKT 1
FDNSLock-Blown up	06ALL	0	20L	G15_031		Non-Converged Contingency	318.7	350.57	0.04077	-	BUSHLAND INTERCHANGE - POTTER COUNTY INTERCHANGE 230KV CKT 1
FDNSLock-Blown up	06ALL	0	20L	G15_031		Non-Converged Contingency	1151	1195	0.03903	-	JOHNSON COUNTY - PITTSBURG 345KV CKT 1
FDNSLock-Blown up	06ALL	0	20L	G15_031		Non-Converged Contingency	1151	1195	0.03903	-	JOHNSON COUNTY - PITTSBURG 345KV CKT 1
FDNSLock-Blown up	06ALL	0	20L	G15_031		Non-Converged Contingency	1141	1195	0.03805	-	GEN542951 5-HAWTHORN UNIT #5
FDNSLock-Blown up	06ALL	0	20L	G15_031		Non-Converged Contingency	1141	1195	0.03805	-	LACYGNE - WAVERLY7 345.00 345KV CKT 1
FDNSLock-Blown up	06ALL	0	20L	G15_031		Non-Converged Contingency	1141	1195	0.03805	-	WAVERLY7 345.00 - WOLF CREEK 345KV CKT 1
FDNSLock-Blown up	06ALL	0	20L	G15_031		Non-Converged Contingency	0	0	0.03741	-	P12:345:SPS:J14.1.EDDY.XRD$
FDNSLock-Blown up	06ALL	0	20L	G15_031		Non-Converged Contingency	1076	1076	0.03639	-	G15074_T 345.00 - HOYT 345KV CKT 1
FDNSLock-Blown up	06ALL	0	20L	G15_031		Non-Converged Contingency	1076	1076	0.03639	-	G15074_T 345.00 - JEFFREY ENERGY CENTER 345KV CKT 1
FDNSLock-Blown up	06ALL	0	20L	G15_031		Non-Converged Contingency	1036	1195	0.03624	-	HOYT - STRANGER CREEK 345KV CKT 1
FDNSLock-Blown up	06ALL	0	20L	G15_031		Non-Converged Contingency	1195	1195	0.03604	-	GEN520811 1-ANADRK4
FDNSLock-Blown up	06ALL	0	20L	G15_031		Non-Converged Contingency	1195	1195	0.03604	-	HUGO - SUNNYSIDE 345KV CKT 1
FDNSLock-Blown up	06ALL	0	20L	G15_031		Non-Converged Contingency	0	0	0.03593	-	P12:115:SPS:W24.1.MOOREE.LASLEY
FDNSLock-Blown up	06ALL	0	20L	G15_031		Non-Converged Contingency	0	0	0.03522	-	P12:138:AEPW-OGE:CORNVIL4:CIMARON4
FDNSLock-Blown up	06ALL	0	20L	G15_031		Non-Converged Contingency	478	502	0.03408	-	BUSHLAND INTERCHANGE - DEAF SMITH COUNTY INTERCHANGE 230KV CKT 1
FDNSLock-Blown up	06ALL	0	20L	G15_031		Non-Converged Contingency	478	502	0.03408	-	BUSHLAND INTERCHANGE - DEAF SMITH COUNTY INTERCHANGE 230KV CKT 1
FDNSLock-Blown up	06ALL	0	20L	G15_031		Non-Converged Contingency	478	502	0.03408	-	BUSHLAND INTERCHANGE 230KV SWITCHED SHUNT
FDNSLock-Blown up	06ALL	0	20L	G15_031		Non-Converged Contingency	1195	1195	0.03408	-	MUSKOGEE - SEMINOLE 345KV CKT 1
FDNSLock-Blown up	06ALL	0	20L	G15_031		Non-Converged Contingency	0	0	0.03322	-	P12:115:SPS:V37.1.CASTRO.PLANTX
FDNSLock-Blown up	06ALL	0	20L	G15_031		Non-Converged Contingency	478	502	0.03301	-	CHERRY1 - POTTER COUNTY INTERCHANGE 230KV CKT 1
FDNSLock-Blown up	06ALL	0	20L	G15_031		Non-Converged Contingency	478	502	0.03301	-	CHERRY1 - POTTER COUNTY INTERCHANGE 230KV CKT 1
FDNSLock-Blown up	06ALL	0	20L	G15_031		Non-Converged Contingency	717	789	0.03297	-	GRACEMONT - LAWTON EASTSIDE 345KV CKT 1
FDNSLock-Blown up	06ALL	0	20L	G15_031		Non-Converged Contingency	717	789	0.03297	-	GRACEMONT - LAWTON EASTSIDE 345KV CKT 1
FDNSLock-Blown up	06ALL	0	20L	G15_031		Non-Converged Contingency	0	0	0.03281	-	P12:138:OKGE:3TERM10

SOLUTION	GROUP	SCENARIO	SEASON	SOURCE	DIRECTION	MONITORED ELEMENT	RATEA (MVA)	RATEB(MVA)	TDF	TC%LOADING (% MVA)	CONTINGENCY
FDNSLock-Blown up	06ALL	0	20L	G15_031		Non-Converged Contingency	717	717	0.03262	-	EMPORIA ENERGY CENTER - SWISSVALE 345KV CKT 1
FDNSLock-Blown up	06ALL	0	20L	G15_031		Non-Converged Contingency	0	0	0.0325	-	P12:115:SPS:T53.1.NICHLS.KIRBY
FDNSLock-Blown up	06ALL	0	20L	G15_031		Non-Converged Contingency	0	0	0.0318	-	P12:115:SPS:T27.1.NICHLS.DUMAS19
FDNSLock-Blown up	06ALL	0	20L	G15_031		Non-Converged Contingency	249	274	0.03168	-	HAPPY INTERCHANGE - PALO DURO SUB 115KV CKT 1
FDNSLock-Blown up	06ALL	0	20L	G15_031		Non-Converged Contingency	249	273	0.03168	-	HAPPY INTERCHANGE - TULIA TAP 115KV CKT 1
FDNSLock-Blown up	06ALL	0	20L	G15_031		Non-Converged Contingency	251	251	0.03168	-	KRESS INTERCHANGE - TULIA TAP 115KV CKT 1
FDNSLock-Blown up	06ALL	0	20L	G15_031		Non-Converged Contingency	251	251	0.03168	-	PALO DURO SUB - RANDALL COUNTY INTERCHANGE 115KV CKT 1
FDNSLock-Blown up	06ALL	0	20L	G15_031		Non-Converged Contingency	717	717	0.03126	-	SWISSVALE - WEST GARDNER 345KV CKT 1
FDNSLock-Blown up	06ALL	0	20L	G15_031		Non-Converged Contingency	0	0	0.03027	-	P12:138:OKGE-AEPW:JENSEN4:REDROCKRD4
FDNSLock-Blown up	06ALL	0	20L	G15_031		Non-Converged Contingency	478.05	501.95	0.0302	-	PLANT X STATION - SUNDOWN INTERCHANGE 230KV CKT 1
FDNSLock-Blown up	06ALL	0	20L	G15_031		Non-Converged Contingency	478.05	501.95	0.0302	-	PLANT X STATION - SUNDOWN INTERCHANGE 230KV CKT 1
FDNSLock-Blown up	06ALL	0	20L	G15_031		Non-Converged Contingency	956	956	0.02989	-	BENTON - ROSE HILL 345KV CKT 1
FDNSLock-Blown up	06ALL	0	20L	G15_031		Non-Converged Contingency	0	0	0.02979	-	P12:138:AEPW:REDROCKRD4:WTH_JCT4
FDNSLock-Blown up	06ALL	0	20SP	G15_031		Non-Converged Contingency	956.09	1051.7	0.18639	-	G14_038T 345.00 - Hitchland Interchange 345KV CKT 1
FDNSLock-Blown up	06ALL	0	20SP	G15_031		Non-Converged Contingency	956.09	1051.7	0.18639	-	G14_038T 345.00 - POTTER COUNTY INTERCHANGE 345KV CKT 1
FDNSLock-Blown up	06ALL	0	20SP	G15_031		Non-Converged Contingency	956	1042	0.17677	-	G14-074T 345.00 - OKLAUNION 345KV CKT 1
FDNSLock-Blown up	06ALL	0	20SP	G15_031		Non-Converged Contingency	1792	1972	0.13246	-	BORDER 7345.00 - TUCO_2 345.00 345KV CKT 1
FDNSLock-Blown up	06ALL	0	20SP	G15_031		Non-Converged Contingency	1420	1775	0.13246	-	BORDER 7345.00 - TUCO_2 345.00 345KV CKT 2
FDNSLock-Blown up	06ALL	0	20WP	G15_031		Non-Converged Contingency	478	502	0.28067	-	AMARILLO SOUTH INTERCHANGE - G15031_T 230.00 230KV CKT 1
FDNSLock-Blown up	06ALL	0	20WP	G15_031		Non-Converged Contingency	0	0	0.27894	-	P12:345:SPS:J07.1.FINN.HITCH
FDNSLock-Blown up	06ALL	0	20WP	G15_031		Non-Converged Contingency	987.16	1082.8	0.18132	-	G14_038T 345.00 - Hitchland Interchange 345KV CKT 1
FDNSLock-Blown up	06ALL	0	20WP	G15_031		Non-Converged Contingency	987.16	1082.8	0.18132	-	G14_038T 345.00 - POTTER COUNTY INTERCHANGE 345KV CKT 1
FDNSLock-Blown up	06ALL	0	20WP	G15_031		Non-Converged Contingency	560	560	0.18132	-	POTTER COUNTY INTERCHANGE (WAUK 90343-A) 345/230/13.2KV TRANSFORMER CKT 1
FDNSLock-Blown up	06ALL	0	20WP	G15_031		Non-Converged Contingency	560	560	0.18132	-	POTTER COUNTY INTERCHANGE (WAUK 90343-A) 345/230/13.2KV TRANSFORMER CKT 1
FDNSLock-Blown up	06ALL	0	20WP	G15_031		Non-Converged Contingency	0	0	0.1776	-	P12:230:AEPW-SPS:SWEETWT6:WHEELER 6
FDNSLock-Blown up	06ALL	0	20WP	G15_031		Non-Converged Contingency	1022	1124	0.17191	-	G14-074T 345.00 - OKLAUNION 345KV CKT 1
FDNSLock-Blown up	06ALL	0	20WP	G15_031		Non-Converged Contingency	1022	1124	0.17191	-	G14-074T 345.00 - TUCO INTERCHANGE 345KV CKT 1
FDNSLock-Blown up	06ALL	0	20WP	G15_031		Non-Converged Contingency	1022	1124	0.17191	-	OKLAUNION 345KV SWITCHED SHUNT
FDNSLock-Blown up	06ALL	0	20WP	G15_031		Non-Converged Contingency	956	956	0.15984	-	CIMARRON - MINCO 345KV CKT 1
FDNSLock-Blown up	06ALL	0	20WP	G15_031		Non-Converged Contingency	1195	1195	0.15984	-	GRACEMONT - MINCO 345KV CKT 1
FDNSLock-Blown up	06ALL	0	20WP	G15_031		Non-Converged Contingency	0	0	0.15041	-	P12:230:AEPW:ELKCITY6:SWEETWT6
FDNSLock-Blown up	06ALL	0	20WP	G15_031		Non-Converged Contingency	1584	2098	0.15037	-	CHISHOLM7 345.00 - GRACEMONT 345KV CKT 1
FDNSLock-Blown up	06ALL	0	20WP	G15_031		Non-Converged Contingency	987.16	1082.8	0.14867	-	Hitchland Interchange - WALKTAP7 345.00 345KV CKT 1
FDNSLock-Blown up	06ALL	0	20WP	G15_031		Non-Converged Contingency	987.16	1082.8	0.14867	-	Hitchland Interchange - WALKTAP7 345.00 345KV CKT 1
FDNSLock-Blown up	06ALL	0	20WP	G15_031		Non-Converged Contingency	1792	1792	0.13442	-	CHISHOLM7 345.00 - WOODWARD DISTRICT EHV 345KV CKT 1
FDNSLock-Blown up	06ALL	0	20WP	G15_031		Non-Converged Contingency	956.09	1051.7	0.13027	-	FINNEY SWITCHING STATION - HOLCOMB 345KV CKT 1
FDNSLock-Blown up	06ALL	0	20WP	G15_031		Non-Converged Contingency	956.09	1051.7	0.13027	-	FINNEY SWITCHING STATION - HOLCOMB 345KV CKT 1
FDNSLock-Blown up	06ALL	0	20WP	G15_031		Non-Converged Contingency	987.16	1082.8	0.13027	-	FINNEY SWITCHING STATION - WALKTAP7 345.00 345KV CKT 1
FDNSLock-Blown up	06ALL	0	20WP	G15_031		Non-Converged Contingency	987.16	1082.8	0.13027	-	FINNEY SWITCHING STATION - WALKTAP7 345.00 345KV CKT 1
FDNSLock-Blown up	06ALL	0	20WP	G15_031		Non-Converged Contingency	1792	1972	0.1288	-	BORDER 7345.00 - TUCO_2 345.00 345KV CKT 1
FDNSLock-Blown up	06ALL	0	20WP	G15_031		Non-Converged Contingency	1420	1775	0.1288	-	BORDER 7345.00 - TUCO_2 345.00 345KV CKT 2
FDNSLock-Blown up	06ALL	0	20WP	G15_031		Non-Converged Contingency	1792	1972	0.1288	-	BORDER 7345.00 345KV SWITCHED SHUNT
FDNSLock-Blown up	06ALL	0	20WP	G15_031		Non-Converged Contingency	557	557	0.12239	-	NEWHART 230 - POTTER COUNTY INTERCHANGE 230KV CKT 1
FDNSLock-Blown up	06ALL	0	20WP	G15_031		Non-Converged Contingency	717	789	0.11605	-	G14-057T 345.00 - LAWTON EASTSIDE 345KV CKT 1
FDNSLock-Blown up	06ALL	0	20WP	G15_031		Non-Converged Contingency	717	789	0.11605	-	G14-057T 345.00 - SUNNYSIDE 345KV CKT 1
FDNSLock-Blown up	06ALL	0	20WP	G15_031		Non-Converged Contingency	1420	1775	0.10044	-	G11_051T 345.00 - TATONGA7 345.00 345KV CKT 1
FDNSLock-Blown up	06ALL	0	20WP	G15_031		Non-Converged Contingency	1420	1775	0.10044	-	G11_051T 345.00 - WOODWARD DISTRICT EHV 345KV CKT 1
FDNSLock-Blown up	06ALL	0	20WP	G15_031		Non-Converged Contingency	1195	1195	0.10044	-	MATHWSN7 345.00 - TATONGA7 345.00 345KV CKT 1
FDNSLock-Blown up	06ALL	0	20WP	G15_031		Non-Converged Contingency	1561	1793	0.09049	-	THISTLE7 345.00 - WOODWARD DISTRICT EHV 345KV CKT 1
FDNSLock-Blown up	06ALL	0	20WP	G15_031		Non-Converged Contingency	1561	1793	0.09049	-	THISTLE7 345.00 - WOODWARD DISTRICT EHV 345KV CKT 1
FDNSLock-Blown up	06ALL	0	20WP	G15_031		Non-Converged Contingency	1561	1793	0.09049	-	THISTLE7 345.00 - WOODWARD DISTRICT EHV 345KV CKT 2
FDNSLock-Blown up	06ALL	0	20WP	G15_031		Non-Converged Contingency	1561	1793	0.09049	-	THISTLE7 345.00 - WOODWARD DISTRICT EHV 345KV CKT 2
FDNSLock-Blown up	06ALL	0	20WP	G15_031		Non-Converged Contingency	1792	1972	0.08983	-	TUCO INTERCHANGE - TUCO_2 345.00 345KV CKT 1
FDNSLock-Blown up	06ALL	0	20WP	G15_031		Non-Converged Contingency	1793	1793	0.08904	-	G11-14T 345.00 - WOODWARD DISTRICT EHV 345KV CKT 1
FDNSLock-Blown up	06ALL	0	20WP	G15_031		Non-Converged Contingency	1716	1793	0.08904	-	G11-14T 345.00 - WOODWARD DISTRICT EHV 345KV CKT 2
FDNSLock-Blown up	06ALL	0	20WP	G15_031		Non-Converged Contingency	421	439	0.0888	-	CHISHOLM6 230.00 - SWEETWATER 230KV CKT 1
FDNSLock-Blown up	06ALL	0	20WP	G15_031		Non-Converged Contingency	435.02	457.73	0.0888	-	STATELINE INTERCHANGE - STLN-DEMARC6 230KV CKT 1
FDNSLock-Blown up	06ALL	0	20WP	G15_031		Non-Converged Contingency	439	439	0.0888	-	STLN-DEMARC6 - SWEETWATER 230KV CKT 1
FDNSLock-Blown up	06ALL	0	20WP	G15_031		Non-Converged Contingency	556.92	556.92	0.07767	-	HITCHLAND INTERCHANGE - MOORE COUNTY INTERCHANGE 230KV CKT 1
FDNSLock-Blown up	06ALL	0	20WP	G15_031		Non-Converged Contingency	556.92	556.92	0.07767	-	HITCHLAND INTERCHANGE - MOORE COUNTY INTERCHANGE 230KV CKT 1
FDNSLock-Blown up	06ALL	0	20WP	G15_031		Non-Converged Contingency	557	557	0.07542	-	GRAPEVINE INTERCHANGE - STATELINE INTERCHANGE 230KV CKT 1
FDNSLock-Blown up	06ALL	0	20WP	G15_031		Non-Converged Contingency	557	557	0.07542	-	GRAPEVINE INTERCHANGE - STATELINE INTERCHANGE 230KV CKT 1
FDNSLock-Blown up	06ALL	0	20WP	G15_031		Non-Converged Contingency	557	557	0.07477	-	GRAPEVINE INTERCHANGE - NICHOLS STATION 230KV CKT 1
FDNSLock-Blown up	06ALL	0	20WP	G15_031		Non-Converged Contingency	557	557	0.07477	-	GRAPEVINE INTERCHANGE - NICHOLS STATION 230KV CKT 1
FDNSLock-Blown up	06ALL	0	20WP	G15_031		Non-Converged Contingency	329.05	360.92	0.06413	-	MOORE COUNTY INTERCHANGE - POTTER COUNTY INTERCHANGE 230KV CKT 1
FDNSLock-Blown up	06ALL	0	20WP	G15_031		Non-Converged Contingency	329.05	360.92	0.06413	-	MOORE COUNTY INTERCHANGE - POTTER COUNTY INTERCHANGE 230KV CKT 1
FDNSLock-Blown up	06ALL	0	20WP	G15_031		Non-Converged Contingency	329.05	360.92	0.0489	-	BUSHLAND INTERCHANGE - POTTER COUNTY INTERCHANGE 230KV CKT 1
FDNSLock-Blown up	06ALL	0	20WP	G15_031		Non-Converged Contingency	329.05	360.92	0.0489	-	BUSHLAND INTERCHANGE - POTTER COUNTY INTERCHANGE 230KV CKT 1
FDNSLock-Blown up	06ALL	0	20WP	G15_031		Non-Converged Contingency	557	557	0.0425	-	BUSHLAND INTERCHANGE - DEAF SMITH COUNTY INTERCHANGE 230KV CKT 1
FDNSLock-Blown up	06ALL	0	20WP	G15_031		Non-Converged Contingency	557	557	0.0425	-	BUSHLAND INTERCHANGE - DEAF SMITH COUNTY INTERCHANGE 230KV CKT 1
FDNSLock-Blown up	06ALL	2	16WP	G15_031		Non-Converged Contingency	987.16	1082.8	0.18941	-	G14_038T 345.00 - Hitchland Interchange 345KV CKT 1
FDNSLock-Blown up	06ALL	2	16WP	G15_031		Non-Converged Contingency	987.16	1082.8	0.18941	-	G14_038T 345.00 - POTTER COUNTY INTERCHANGE 345KV CKT 1
FDNSLock-Blown up	06ALL	2	16WP	G15_031		Non-Converged Contingency	560	560	0.18941	-	POTTER COUNTY INTERCHANGE (WAUK 90343-A) 345/230/13.2KV TRANSFORMER CKT 1
FDNSLock-Blown up	06ALL	2	16WP	G15_031		Non-Converged Contingency	1022	1124	0.17884	-	G14-074T 345.00 - OKLAUNION 345KV CKT 1
FDNSLock-Blown up	06ALL	2	16WP	G15_031		Non-Converged Contingency	1022	1124	0.17884	-	G14-074T 345.00 - TUCO INTERCHANGE 345KV CKT 1
FDNSLock-Blown up	06ALL	2	16WP	G15_031		Non-Converged Contingency	1792	1972	0.13323	-	BORDER 7345.00 - TUCO_2 345.00 345KV CKT 1
FDNSLock-Blown up	06ALL	2	16WP	G15_031		Non-Converged Contingency	1420	1775	0.13323	-	BORDER 7345.00 - TUCO_2 345.00 345KV CKT 2
FDNSLock-Blown up	06ALL	2	17G	G15_031		Non-Converged Contingency	956.09	1051.7	0.18018	-	G14_038T 345.00 - Hitchland Interchange 345KV CKT 1
FDNSLock-Blown up	06ALL	2	17G	G15_031		Non-Converged Contingency	956.09	1051.7	0.18018	-	G14_038T 345.00 - POTTER COUNTY INTERCHANGE 345KV CKT 1

SOLUTION	GROUP	SCENARIO	SEASON	SOURCE	DIRECTION	MONITORED ELEMENT	RATEA (MVA)	RATEB(MVA)	TDF	TC%LOADING (% MVA)	CONTINGENCY
FDNSLock-Blown up	06ALL	2	17G	G15_031		Non-Converged Contingency	560	560	0.18018	-	POTTER COUNTY INTERCHANGE (WAUK 90343-A) 345/230/13.2KV TRANSFORMER CKT 1
FDNSLock-Blown up	06ALL	2	17G	G15_031		Non-Converged Contingency	1022	1124	0.1723	-	G14-074T 345.00 - OKLAUNION 345KV CKT 1
FDNSLock-Blown up	06ALL	2	17G	G15_031		Non-Converged Contingency	1022	1124	0.1723	-	G14-074T 345.00 - TUCO INTERCHANGE 345KV CKT 1
FDNSLock-Blown up	06ALL	2	17G	G15_031		Non-Converged Contingency	1792	1972	0.12749	-	BORDER 7345.00 - TUCO_2 345.00 345KV CKT 1
FDNSLock-Blown up	06ALL	2	17G	G15_031		Non-Converged Contingency	1420	1775	0.12749	-	BORDER 7345.00 - TUCO_2 345.00 345KV CKT 2
FDNSLock-Blown up	06ALL	2	17SP	G15_031		Non-Converged Contingency	956	1042	0.17645	-	G14-074T 345.00 - OKLAUNION 345KV CKT 1
FDNSLock-Blown up	06NR	2	20L	G15_031		Non-Converged Contingency	478	502	0.26871	-	AMARILLO SOUTH INTERCHANGE - G15031_T 230.00 230KV CKT 1
FDNSLock-Blown up	06ALL	2	20L	G15_031		Non-Converged Contingency	0	0	0.23836	-	P12:345:SPS:J07.1.FINN.HITCH
FDNSLock-Blown up	06ALL	2	20L	G15_031		Non-Converged Contingency	956.09	1051.7	0.15277	-	G14_038T 345.00 - Hitchland Interchange 345KV CKT 1
FDNSLock-Blown up	06ALL	2	20L	G15_031		Non-Converged Contingency	956.09	1051.7	0.15277	-	G14_038T 345.00 - POTTER COUNTY INTERCHANGE 345KV CKT 1
FDNSLock-Blown up	06ALL	2	20L	G15_031		Non-Converged Contingency	560	560	0.15277	-	POTTER COUNTY INTERCHANGE (WAUK 90343-A) 345/230/13.2KV TRANSFORMER CKT 1
FDNSLock-Blown up	06ALL	2	20L	G15_031		Non-Converged Contingency	560	560	0.15277	-	POTTER COUNTY INTERCHANGE (WAUK 90343-A) 345/230/13.2KV TRANSFORMER CKT 1
FDNSLock-Blown up	06ALL	2	20L	G15_031		Non-Converged Contingency	1022	1124	0.14271	-	G14-074T 345.00 - OKLAUNION 345KV CKT 1
FDNSLock-Blown up	06ALL	2	20L	G15_031		Non-Converged Contingency	1022	1124	0.14271	-	G14-074T 345.00 - TUCO INTERCHANGE 345KV CKT 1
FDNSLock-Blown up	06ALL	2	20L	G15_031		Non-Converged Contingency	1022	1124	0.14271	-	OKLAUNION 345KV SWITCHED SHUNT
FDNSLock-Blown up	06ALL	2	20L	G15_031		Non-Converged Contingency	956.09	1051.7	0.12723	-	Hitchland Interchange - WALKTAP7 345.00 345KV CKT 1
FDNSLock-Blown up	06ALL	2	20L	G15_031		Non-Converged Contingency	956.09	1051.7	0.12723	-	Hitchland Interchange - WALKTAP7 345.00 345KV CKT 1
FDNSLock-Blown up	06ALL	2	20L	G15_031		Non-Converged Contingency	1584	2098	0.1247	-	CHISHOLM7 345.00 - GRACEMONT 345KV CKT 1
FDNSLock-Blown up	06ALL	2	20L	G15_031		Non-Converged Contingency	0	0	0.12366	-	P12:230:AEPW:ELKCITY6:SWEETWT6
FDNSLock-Blown up	06ALL	2	20L	G15_031		Non-Converged Contingency	1792	1972	0.10827	-	BORDER 7345.00 - TUCO_2 345.00 345KV CKT 1
FDNSLock-Blown up	06ALL	2	20L	G15_031		Non-Converged Contingency	1420	1775	0.10827	-	BORDER 7345.00 - TUCO_2 345.00 345KV CKT 2
FDNSLock-Blown up	06NR	2	20L	G15_031		Non-Converged Contingency	478	502	0.08794	-	NEWHART 230 - POTTER COUNTY INTERCHANGE 230KV CKT 1
FDNSLock-Blown up	06ALL	2	20L	G15_031		Non-Converged Contingency	1195	1195	0.08627	-	MATHWSN7 345.00 - TATONGA7 345.00 345KV CKT 1
FDNSLock-Blown up	06ALL	2	20L	G15_031		Non-Converged Contingency	421	439	0.07349	-	CHISHOLM6 230.00 - SWEETWATER 230KV CKT 1
FDNSLock-Blown up	06ALL	2	20SP	G15_031		Non-Converged Contingency	956	1042	0.17686	-	G14-074T 345.00 - OKLAUNION 345KV CKT 1
FDNSLock-Blown up	06ALL	2	20WP	G15_031		Non-Converged Contingency	987.16	1082.8	0.18153	-	G14_038T 345.00 - Hitchland Interchange 345KV CKT 1
FDNSLock-Blown up	06ALL	2	20WP	G15_031		Non-Converged Contingency	987.16	1082.8	0.18153	-	G14_038T 345.00 - POTTER COUNTY INTERCHANGE 345KV CKT 1
FDNSLock-Blown up	06ALL	2	20WP	G15_031		Non-Converged Contingency	560	560	0.18153	-	POTTER COUNTY INTERCHANGE (WAUK 90343-A) 345/230/13.2KV TRANSFORMER CKT 1
FDNSLock-Blown up	06ALL	2	20WP	G15_031		Non-Converged Contingency	560	560	0.18153	-	POTTER COUNTY INTERCHANGE (WAUK 90343-A) 345/230/13.2KV TRANSFORMER CKT 1
FDNSLock-Blown up	06ALL	2	20WP	G15_031		Non-Converged Contingency	1022	1124	0.17215	-	G14-074T 345.00 - OKLAUNION 345KV CKT 1
FDNSLock-Blown up	06ALL	2	20WP	G15_031		Non-Converged Contingency	1022	1124	0.17215	-	G14-074T 345.00 - TUCO INTERCHANGE 345KV CKT 1
FDNSLock-Blown up	06ALL	2	20WP	G15_031		Non-Converged Contingency	1792	1972	0.129	-	BORDER 7345.00 - TUCO_2 345.00 345KV CKT 1
FDNSLock-Blown up	06ALL	2	20WP	G15_031		Non-Converged Contingency	1420	1775	0.129	-	BORDER 7345.00 - TUCO_2 345.00 345KV CKT 2
FDNSLock-Blown up	06ALL	3	16WP	G15_031		Non-Converged Contingency	1022	1124	0.18275	-	G14-074T 345.00 - OKLAUNION 345KV CKT 1
FDNSLock-Blown up	06ALL	3	16WP	G15_031		Non-Converged Contingency	1022	1124	0.18275	-	G14-074T 345.00 - TUCO INTERCHANGE 345KV CKT 1
FDNSLock-Blown up	06ALL	3	17SP	G15_031		Non-Converged Contingency	956	1042	0.17979	-	G14-074T 345.00 - OKLAUNION 345KV CKT 1
FDNSLock-Blown up	06ALL	3	20L	G15_031		Non-Converged Contingency	956.09	1051.7	0.15184	-	G14_038T 345.00 - Hitchland Interchange 345KV CKT 1
FDNSLock-Blown up	06ALL	3	20L	G15_031		Non-Converged Contingency	956.09	1051.7	0.15184	-	G14_038T 345.00 - POTTER COUNTY INTERCHANGE 345KV CKT 1
FDNSLock-Blown up	06ALL	3	20L	G15_031		Non-Converged Contingency	560	560	0.15184	-	POTTER COUNTY INTERCHANGE (WAUK 90343-A) 345/230/13.2KV TRANSFORMER CKT 1
FDNSLock-Blown up	06ALL	3	20L	G15_031		Non-Converged Contingency	1022	1124	0.14498	-	G14-074T 345.00 - OKLAUNION 345KV CKT 1
FDNSLock-Blown up	06ALL	3	20L	G15_031		Non-Converged Contingency	1022	1124	0.14498	-	G14-074T 345.00 - TUCO INTERCHANGE 345KV CKT 1
FDNSLock-Blown up	06ALL	3	20L	G15_031		Non-Converged Contingency	956.09	1051.7	0.12714	-	Hitchland Interchange - WALKTAP7 345.00 345KV CKT 1
FDNSLock-Blown up	06ALL	3	20L	G15_031		Non-Converged Contingency	1584	2098	0.12572	-	CHISHOLM7 345.00 - GRACEMONT 345KV CKT 1
FDNSLock-Blown up	06ALL	3	20L	G15_031		Non-Converged Contingency	1792	1972	0.11064	-	BORDER 7345.00 - TUCO_2 345.00 345KV CKT 1
FDNSLock-Blown up	06ALL	3	20L	G15_031		Non-Converged Contingency	1420	1775	0.11064	-	BORDER 7345.00 - TUCO_2 345.00 345KV CKT 2
FDNSLock-Blown up	06ALL	3	20L	G15_031		Non-Converged Contingency	1195	1195	0.08631	-	MATHWSN7 345.00 - TATONGA7 345.00 345KV CKT 1
FDNSLock-Blown up	06ALL	3	20L	G15_031		Non-Converged Contingency	421	439	0.07245	-	CHISHOLM6 230.00 - SWEETWATER 230KV CKT 1
FDNSLock-Blown up	06ALL	3	20SP	G15_031		Non-Converged Contingency	956	1042	0.17924	-	G14-074T 345.00 - OKLAUNION 345KV CKT 1
FDNSLock-Blown up	06ALL	3	20WP	G15_031		Non-Converged Contingency	987.16	1082.8	0.17928	-	G14_038T 345.00 - Hitchland Interchange 345KV CKT 1
FDNSLock-Blown up	06ALL	3	20WP	G15_031		Non-Converged Contingency	987.16	1082.8	0.17928	-	G14_038T 345.00 - POTTER COUNTY INTERCHANGE 345KV CKT 1
FDNSLock-Blown up	06ALL	3	20WP	G15_031		Non-Converged Contingency	1022	1124	0.17465	-	G14-074T 345.00 - OKLAUNION 345KV CKT 1
FDNSLock-Blown up	06ALL	3	20WP	G15_031		Non-Converged Contingency	1022	1124	0.17465	-	G14-074T 345.00 - TUCO INTERCHANGE 345KV CKT 1
FDNSLock-Blown up	06ALL	3	20WP	G15_031		Non-Converged Contingency	1792	1972	0.13185	-	BORDER 7345.00 - TUCO_2 345.00 345KV CKT 1
FDNSLock-Blown up	06ALL	3	20WP	G15_031		Non-Converged Contingency	1420	1775	0.13185	-	BORDER 7345.00 - TUCO_2 345.00 345KV CKT 2
FDNSLock-Blown up	06ALL	4	16WP	G15_031		Non-Converged Contingency	1022	1124	0.17624	-	G14-074T 345.00 - OKLAUNION 345KV CKT 1
FDNSLock-Blown up	06ALL	4	17G	G15_031		Non-Converged Contingency	956.09	1051.7	0.19358	-	G14_038T 345.00 - Hitchland Interchange 345KV CKT 1
FDNSLock-Blown up	06ALL	4	17G	G15_031		Non-Converged Contingency	956.09	1051.7	0.19358	-	G14_038T 345.00 - POTTER COUNTY INTERCHANGE 345KV CKT 1
FDNSLock-Blown up	06ALL	4	17G	G15_031		Non-Converged Contingency	1022	1124	0.16973	-	G14-074T 345.00 - OKLAUNION 345KV CKT 1
FDNSLock-Blown up	06ALL	4	17G	G15_031		Non-Converged Contingency	1022	1124	0.16973	-	G14-074T 345.00 - TUCO INTERCHANGE 345KV CKT 1
FDNSLock-Blown up	06ALL	4	20L	G15_031		Non-Converged Contingency	0	0	0.2453	-	P12:345:SPS:J07.1.FINN.HITCH
FDNSLock-Blown up	06ALL	4	20L	G15_031		Non-Converged Contingency	956.09	1051.7	0.16554	-	G14_038T 345.00 - Hitchland Interchange 345KV CKT 1
FDNSLock-Blown up	06ALL	4	20L	G15_031		Non-Converged Contingency	956.09	1051.7	0.16554	-	G14_038T 345.00 - POTTER COUNTY INTERCHANGE 345KV CKT 1
FDNSLock-Blown up	06ALL	4	20L	G15_031		Non-Converged Contingency	1022	1124	0.14056	-	G14-074T 345.00 - OKLAUNION 345KV CKT 1
FDNSLock-Blown up	06ALL	4	20L	G15_031		Non-Converged Contingency	1022	1124	0.14056	-	G14-074T 345.00 - TUCO INTERCHANGE 345KV CKT 1
FDNSLock-Blown up	06ALL	4	20L	G15_031		Non-Converged Contingency	956.09	1051.7	0.13094	-	Hitchland Interchange - WALKTAP7 345.00 345KV CKT 1
FDNSLock-Blown up	06ALL	4	20L	G15_031		Non-Converged Contingency	956.09	1051.7	0.13094	-	Hitchland Interchange - WALKTAP7 345.00 345KV CKT 1
FDNSLock-Blown up	06ALL	4	20L	G15_031		Non-Converged Contingency	0	0	0.12543	-	P12:230:AEPW:ELKCITY6:SWEETWT6
FDNSLock-Blown up	06ALL	4	20L	G15_031		Non-Converged Contingency	1584	2098	0.12504	-	CHISHOLM7 345.00 - GRACEMONT 345KV CKT 1
FDNSLock-Blown up	06ALL	4	20L	G15_031		Non-Converged Contingency	1792	1972	0.10576	-	BORDER 7345.00 - TUCO_2 345.00 345KV CKT 1
FDNSLock-Blown up	06ALL	4	20L	G15_031		Non-Converged Contingency	1420	1775	0.10576	-	BORDER 7345.00 - TUCO_2 345.00 345KV CKT 2
FDNSLock-Blown up	06ALL	4	20WP	G15_031		Non-Converged Contingency	987.16	1082.8	0.19606	-	G14_038T 345.00 - Hitchland Interchange 345KV CKT 1
FDNSLock-Blown up	06ALL	4	20WP	G15_031		Non-Converged Contingency	1022	1124	0.16849	-	G14-074T 345.00 - OKLAUNION 345KV CKT 1
FDNSLock-Blown up	06ALL	4	20WP	G15_031		Non-Converged Contingency	1022	1124	0.16849	-	G14-074T 345.00 - TUCO INTERCHANGE 345KV CKT 1
FDNSLock-Blown up	06ALL	5	16WP	G15_031		Non-Converged Contingency	1022	1124	0.16805	-	G14-074T 345.00 - OKLAUNION 345KV CKT 1
FDNSLock-Blown up	06ALL	5	17G	G15_031		Non-Converged Contingency	1022	1124	0.16201	-	G14-074T 345.00 - OKLAUNION 345KV CKT 1
FDNSLock-Blown up	06ALL	5	20L	G15_031		Non-Converged Contingency	1022	1124	0.13507	-	G14-074T 345.00 - OKLAUNION 345KV CKT 1
FDNSLock-Blown up	06ALL	5	20WP	G15_031		Non-Converged Contingency	1022	1124	0.16019	-	G14-074T 345.00 - OKLAUNION 345KV CKT 1
FDNSLock-Blown up	06ALL	6	17G	G15_031		Non-Converged Contingency	1022	1124	0.15503	-	G14-074T 345.00 - OKLAUNION 345KV CKT 1
FDNSLock-Blown up	06ALL	6	20L	G15_031		Non-Converged Contingency	1022	1124	0.12901	-	G14-074T 345.00 - OKLAUNION 345KV CKT 1

SOLUTION	GROUP	SCENARIO	SEASON	SOURCE	DIRECTION	MONITORED ELEMENT	RATEA (MVA)	RATEB(MVA)	TDF	TC%LOADING (% MVA)	CONTINGENCY
FDNSLock-Blown up	06ALL	6	20WP	G15_031		Non-Converged Contingency	1022	1124	0.1533	-	G14-074T 345.00 - OKLAUNION 345KV CKT 1
FDNS	06ALL	0	16WP	G15_031	FROM->TO	BUSHLAND INTERCHANGE - POTTER COUNTY INTERCHANGE 230KV CKT 1	329.05	360.92	0.05397	103.4995	BASE CASE
FDNS	00NR	0	25SP	G15_031	FROM->TO	CARLISLE INTERCHANGE - LP-DOUD_TP 3115.00 115KV CKT 1	159	160	0.03448	99.9	TUCO INTERCHANGE - YOAKUM_345 345.00 345KV CKT 1
FDNS	06ALL	0	20SP	G15_031	FROM->TO	CHISHOLM6 230.00 - ELK CITY 230KV 230KV CKT 1	353	353	0.06331	106.4803	BASE CASE
FDNS	06ALL	0	17SP	G15_031	FROM->TO	CHISHOLM6 230.00 - ELK CITY 230KV 230KV CKT 1	353	353	0.06351	104.7427	BASE CASE
FDNS	06ALL	0	17SP	G15_031	TO->FROM	CIMARRON - MINCO 345KV CKT 1	956	956	0.22306	123.2446	G14-057T 345.00 - SUNNYSIDE 345KV CKT 1
FDNS	06ALL	0	20SP	G15_031	TO->FROM	CIMARRON - MINCO 345KV CKT 1	956	956	0.2227	120.5642	G14-057T 345.00 - SUNNYSIDE 345KV CKT 1
FDNS	06ALL	0	17SP	G15_031	TO->FROM	CIMARRON - MINCO 345KV CKT 1	956	956	0.22306	117.8925	G14-057T 345.00 - LAWTON EASTSIDE 345KV CKT 1
FDNS	06ALL	0	20SP	G15_031	TO->FROM	CIMARRON - MINCO 345KV CKT 1	956	956	0.2227	115.1699	G14-057T 345.00 - LAWTON EASTSIDE 345KV CKT 1
FDNS	06ALL	0	20SP	G15_031	TO->FROM	CIMARRON - MINCO 345KV CKT 1	956	956	0.2159	102.9387	CHISHOLM7 345.00 - WOODWARD DISTRICT EHV 345KV CKT 1
FDNS	06ALL	0	17SP	G15_031	TO->FROM	CIMARRON - MINCO 345KV CKT 1	956	956	0.21612	102.0892	CHISHOLM7 345.00 - WOODWARD DISTRICT EHV 345KV CKT 1
FDNSLock	06ALL	0	20WP	G15_031		ELK CITY 230KV (ELKCTY-6) 230/138/13.8KV TRANSFORMER CKT 1	450	450	0.06161	87.66341	BASE CASE
FDNSLock	06ALL	0	20WP	G15_031		ELK CITY 230KV (ELKCTY-6) 230/138/13.8KV TRANSFORMER CKT 1	450	450	0.06161	87.66341	BASE CASE
FDNS	06ALL	0	20L	G15_031	TO->FROM	G14-057T 345.00 - LAWTON EASTSIDE 345KV CKT 1	717	789	0.0923	108.0268	BASE CASE
FDNS	06ALL	0	20L	G15_031	FROM->TO	G14-057T 345.00 - SUNNYSIDE 345KV CKT 1	717	789	0.0923	120.8788	BASE CASE
FDNS	06ALL	0	20WP	G15_031	FROM->TO	G14-057T 345.00 - SUNNYSIDE 345KV CKT 1	717	789	0.11605	107.5634	BASE CASE
FDNS	06ALL	0	17G	G15_031	FROM->TO	G14-057T 345.00 - SUNNYSIDE 345KV CKT 1	717	789	0.11785	106.9763	BASE CASE
FDNS	06ALL	0	16WP	G15_031	FROM->TO	G14-057T 345.00 - SUNNYSIDE 345KV CKT 1	717	789	0.12114	105.0999	BASE CASE
FDNS	00NR	0	25SP	G15_031	TO->FROM	JONES STATION - TUCO INTERCHANGE 230KV CKT 1	343.79	343.79	0.11873	139.3518	CARLISLE INTERCHANGE - TUCO INTERCHANGE 230KV CKT 1
FDNS	00NR	0	25SP	G15_031	TO->FROM	JONES STATION - TUCO INTERCHANGE 230KV CKT 1	343.79	343.79	0.11873	139.3518	CARLISLE INTERCHANGE - TUCO INTERCHANGE 230KV CKT 1
FDNS	00NR	0	25SP	G15_031	TO->FROM	JONES STATION - TUCO INTERCHANGE 230KV CKT 1	343.79	343.79	0.11488	123.0773	TUCO INTERCHANGE - YOAKUM_345 345.00 345KV CKT 1
FDNS	00NR	0	25SP	G15_031	TO->FROM	JONES STATION - TUCO INTERCHANGE 230KV CKT 1	343.79	343.79	0.09252	119.4572	GEN526333 1-JONES GEN #3 21 KV
FDNS	00NR	0	25SP	G15_031	TO->FROM	JONES STATION - TUCO INTERCHANGE 230KV CKT 1	343.79	343.79	0.09252	119.0504	GEN526334 1-JONES_4 116.500
FDNS	00NR	0	25SP	G15_031	TO->FROM	JONES STATION - TUCO INTERCHANGE 230KV CKT 1	343.79	343.79	0.10721	111.1942	CARLISLE INTERCHANGE - WOLFFORTH INTERCHANGE 230KV CKT 1
FDNS	00NR	0	25SP	G15_031	TO->FROM	JONES STATION - TUCO INTERCHANGE 230KV CKT 1	343.79	343.79	0.09272	107.2791	TUCO INTERCHANGE (ENRCO 136401) 230/115/13.2KV TRANSFORMER CKT 1
FDNS	00NR	0	25SP	G15_031	TO->FROM	JONES STATION - TUCO INTERCHANGE 230KV CKT 1	343.79	343.79	0.09272	107.2791	TUCO INTERCHANGE (ENRCO 136401) 230/115/13.2KV TRANSFORMER CKT 1
FDNS	00NR	0	25SP	G15_031	TO->FROM	JONES STATION - TUCO INTERCHANGE 230KV CKT 1	343.79	343.79	0.09272	107.2791	TUCO INTERCHANGE (ENRCO 136401) 230/115/13.2KV TRANSFORMER CKT 2
FDNS	00NR	0	25SP	G15_031	TO->FROM	JONES STATION - TUCO INTERCHANGE 230KV CKT 1	343.79	343.79	0.09272	107.2791	TUCO INTERCHANGE (ENRCO 136401) 230/115/13.2KV TRANSFORMER CKT 2
FDNS	00NR	0	25SP	G15_031	TO->FROM	JONES STATION - TUCO INTERCHANGE 230KV CKT 1	343.79	343.79	0.09252	106.7618	GEN526332 1-JONES GEN #2 21 KV
FDNS	00NR	0	25SP	G15_031	TO->FROM	JONES STATION - TUCO INTERCHANGE 230KV CKT 1	343.79	343.79	0.09252	106.7593	GEN526331 1-JONES GEN #1 22 KV
FDNS	00NR	0	25SP	G15_031	TO->FROM	JONES STATION - TUCO INTERCHANGE 230KV CKT 1	343.79	343.79	0.09892	105.7876	PLANT X STATION - SUNDOWN INTERCHANGE 230KV CKT 1
FDNS	00NR	0	25SP	G15_031	TO->FROM	JONES STATION - TUCO INTERCHANGE 230KV CKT 1	343.79	343.79	0.09892	105.7876	PLANT X STATION - SUNDOWN INTERCHANGE 230KV CKT 1
FDNS	00NR	0	25SP	G15_031	TO->FROM	JONES STATION - TUCO INTERCHANGE 230KV CKT 1	343.79	343.79	0.10181	105.7418	LUBBOCK EAST INTERCHANGE - TUCO INTERCHANGE 115KV CKT 1
FDNS	00NR	0	25SP	G15_031	TO->FROM	JONES STATION - TUCO INTERCHANGE 230KV CKT 1	343.79	343.79	0.10181	105.7418	LUBBOCK EAST INTERCHANGE - TUCO INTERCHANGE 115KV CKT 1
FDNS	00NR	0	25SP	G15_031	TO->FROM	JONES STATION - TUCO INTERCHANGE 230KV CKT 1	343.79	343.79	0.09686	102.5912	STANTON SUB - TUCO INTERCHANGE 115KV CKT 1
FDNS	00NR	0	25SP	G15_031	TO->FROM	JONES STATION - TUCO INTERCHANGE 230KV CKT 1	343.79	343.79	0.09451	102.3658	P12:230:LPL:K39.1.CRLSLE.LP-MLWK
FDNS	00NR	0	25SP	G15_031	TO->FROM	JONES STATION - TUCO INTERCHANGE 230KV CKT 1	343.79	343.79	0.09451	102.3646	CARLISLE INTERCHANGE - LUBBOCK POWER & LIGHT-MILWAUKEE 230KV CKT 1
FDNS	00NR	0	25SP	G15_031	TO->FROM	JONES STATION - TUCO INTERCHANGE 230KV CKT 1	343.79	343.79	0.09451	102.363	LUBBOCK POWER & LIGHT-MILWAUKEE (M-E C0681251) 230/69/13.5KV TRANSFORMER CKT 1
FDNS	00NR	0	25SP	G15_031	TO->FROM	JONES STATION - TUCO INTERCHANGE 230KV CKT 1	343.79	343.79	0.09451	102.363	LUBBOCK POWER & LIGHT-MILWAUKEE (M-E C0681251) 230/69/13.5KV TRANSFORMER CKT 1
FDNS	00NR	0	25SP	G15_031	TO->FROM	JONES STATION - TUCO INTERCHANGE 230KV CKT 1	343.79	343.79	0.09865	102.0923	TOLK STATION EAST - TUCO INTERCHANGE 230KV CKT 1
FDNS	00NR	0	25SP	G15_031	TO->FROM	JONES STATION - TUCO INTERCHANGE 230KV CKT 1	343.79	343.79	0.09865	102.0923	TOLK STATION EAST - TUCO INTERCHANGE 230KV CKT 1
FDNS	00NR	0	25SP	G15_031	TO->FROM	JONES STATION - TUCO INTERCHANGE 230KV CKT 1	343.79	343.79	0.09686	101.6363	P12:115:SPS:V15.1.TUCO.INDANA
FDNS	00NR	0	25SP	G15_031	TO->FROM	JONES STATION - TUCO INTERCHANGE 230KV CKT 1	343.79	343.79	0.09686	101.6061	INDIANA SUB - STANTON SUB 115KV CKT 1
FDNS	00NR	0	25SP	G15_031	TO->FROM	JONES STATION - TUCO INTERCHANGE 230KV CKT 1	343.79	343.79	0.09252	101.0841	GEN527903 1-HOBBS PLANT #3 (ST)
FDNS	00NR	0	25SP	G15_031	TO->FROM	JONES STATION - TUCO INTERCHANGE 230KV CKT 1	343.79	343.79	0.09252	101.0701	GEN527166 1-MUSTANG_6 118.000
FDNS	00NR	0	25SP	G15_031	TO->FROM	JONES STATION - TUCO INTERCHANGE 230KV CKT 1	343.79	343.79	0.09252	100.6214	GEN528501 1-G14_012 24.000
FDNS	00NR	0	25SP	G15_031	TO->FROM	JONES STATION - TUCO INTERCHANGE 230KV CKT 1	343.79	343.79	0.09764	100.6076	KRESS INTERCHANGE - SWISHER COUNTY INTERCHANGE 115KV CKT 1
FDNS	00NR	0	25SP	G15_031	TO->FROM	JONES STATION - TUCO INTERCHANGE 230KV CKT 1	343.79	343.79	0.09764	100.6076	KRESS INTERCHANGE - SWISHER COUNTY INTERCHANGE 115KV CKT 1
FDNS	00NR	0	25SP	G15_031	TO->FROM	JONES STATION - TUCO INTERCHANGE 230KV CKT 1	343.79	343.79	0.09378	100.4516	CARLISLE INTERCHANGE - MURPHY SUB 115KV CKT 1
FDNS	00NR	0	25SP	G15_031	TO->FROM	JONES STATION - TUCO INTERCHANGE 230KV CKT 1	343.79	343.79	0.09378	100.4516	CARLISLE INTERCHANGE - MURPHY SUB 115KV CKT 1
FDNS	00NR	0	25SP	G15_031	TO->FROM	JONES STATION - TUCO INTERCHANGE 230KV CKT 1	343.79	343.79	0.09691	100.2532	YOAKUM_345 345.00 (UPDATE DATA) 345/230/13.2KV TRANSFORMER CKT 1
FDNS	00NR	0	25SP	G15_031	TO->FROM	JONES STATION - TUCO INTERCHANGE 230KV CKT 1	343.79	343.79	0.09252	100	GEN563122 1-G15077_3 0.3850
FDNS	00NR	0	25SP	G15_031	TO->FROM	JONES STATION - TUCO INTERCHANGE 230KV CKT 1	343.79	343.79	0.09226	100	POTTER COUNTY INTERCHANGE (WAUK 90343-A) 345/230/13.2KV TRANSFORMER CKT 1
FDNS	00NR	0	25SP	G15_031	TO->FROM	JONES STATION - TUCO INTERCHANGE 230KV CKT 1	343.79	343.79	0.09226	100	POTTER COUNTY INTERCHANGE (WAUK 90343-A) 345/230/13.2KV TRANSFORMER CKT 1
FDNS	00NR	0	25SP	G15_031	TO->FROM	JONES STATION - TUCO INTERCHANGE 230KV CKT 1	343.79	343.79	0.09686	99.9	INDIANA SUB - SOUTH PLAINS REC-ERSKINE 115KV CKT 1
FDNS	00NR	0	25SP	G15_031	TO->FROM	JONES STATION - TUCO INTERCHANGE 230KV CKT 1	343.79	343.79	0.09252	99.9	GEN527901 1-HOBBS PLANT #1 (CT)
FDNS	00NR	0	25SP	G15_031	TO->FROM	JONES STATION - TUCO INTERCHANGE 230KV CKT 1	343.79	343.79	0.09252	99.9	GEN527902 1-HOBBS PLANT #2 (CT)
FDNS	00NR	0	25SP	G15_031	TO->FROM	JONES STATION - TUCO INTERCHANGE 230KV CKT 1	343.79	343.79	0.09252	99.9	GEN563102 1-G15075_3 0.5500
FDNS	00NR	0	25SP	G15_031	TO->FROM	JONES STATION - TUCO INTERCHANGE 230KV CKT 1	343.79	343.79	0.09435	99.7	HOBBS - YOAKUM_345 345.00 345KV CKT 1
FDNS	00NR	0	25SP	G15_031	TO->FROM	JONES STATION - TUCO INTERCHANGE 230KV CKT 1	343.79	343.79	0.09138	99.7	FLOYD COUNTY INTERCHANGE - TUCO INTERCHANGE 115KV CKT 1
FDNS	00NR	0	25SP	G15_031	TO->FROM	JONES STATION - TUCO INTERCHANGE 230KV CKT 1	343.79	343.79	0.09138	99.7	FLOYD COUNTY INTERCHANGE - TUCO INTERCHANGE 115KV CKT 1
FDNS	00NR	0	25SP	G15_031	TO->FROM	JONES STATION - TUCO INTERCHANGE 230KV CKT 1	343.79	343.79	0.09385	99.6	P12:345:SPS:J02.1.TOLK.EDDY
FDNS	00NR	0	25SP	G15_031	TO->FROM	JONES STATION - TUCO INTERCHANGE 230KV CKT 1	343.79	343.79	0.09351	99.6	BUSHLAND INTERCHANGE - DEAF SMITH COUNTY INTERCHANGE 230KV CKT 1
FDNS	00NR	0	25SP	G15_031	TO->FROM	JONES STATION - TUCO INTERCHANGE 230KV CKT 1	343.79	343.79	0.09351	99.6	BUSHLAND INTERCHANGE - DEAF SMITH COUNTY INTERCHANGE 230KV CKT 1
FDNS	00NR	0	25SP	G15_031	TO->FROM	JONES STATION - TUCO INTERCHANGE 230KV CKT 1	343.79	343.79	0.09252	99.6	GEN563142 1-G15079_3 0.5500
FDNS	00NR	0	25SP	G15_031	TO->FROM	JONES STATION - TUCO INTERCHANGE 230KV CKT 1	343.79	343.79	0.09252	99.6	GEN563151 1-G15080_2 0.5500
FDNS	00NR	0	25SP	G15_031	TO->FROM	JONES STATION - TUCO INTERCHANGE 230KV CKT 1	343.79	343.79	0.09226	99.6	G14_038T 345.00 - POTTER COUNTY INTERCHANGE 345KV CKT 1
FDNS	00NR	0	25SP	G15_031	TO->FROM	KRESS INTERCHANGE - SWISHER COUNTY INTERCHANGE 115KV CKT 1	218	239	0.22142	118.9572	NEWHART 230 - SWISHER COUNTY INTERCHANGE 230KV CKT 1
FDNS	00NR	0	25SP	G15_031	TO->FROM	KRESS INTERCHANGE - SWISHER COUNTY INTERCHANGE 115KV CKT 1	218	239	0.11342	106.9073	PALO DURO SUB - RANDALL COUNTY INTERCHANGE 115KV CKT 1
FDNS	00NR	0	25SP	G15_031	TO->FROM	KRESS INTERCHANGE - SWISHER COUNTY INTERCHANGE 115KV CKT 1	218	239	0.12328	106.801	BASE CASE
FDNS	00NR	0	25SP	G15_031	TO->FROM	KRESS INTERCHANGE - SWISHER COUNTY INTERCHANGE 115KV CKT 1	218	239	0.11342	105.5965	P12:115:SPS:T66.1.RNDALL.HAPPY
FDNS	00NR	0	25SP	G15_031	TO->FROM	KRESS INTERCHANGE - SWISHER COUNTY INTERCHANGE 115KV CKT 1	218	239	0.11342	105.4678	HAPPY INTERCHANGE - PALO DURO SUB 115KV CKT 1
FDNS	00NR	0	17SP	G15_031	TO->FROM	KRESS INTERCHANGE - SWISHER COUNTY INTERCHANGE 115KV CKT 1	218	239	0.23152	103.7156	NEWHART 230 - SWISHER COUNTY INTERCHANGE 230KV CKT 1
FDNS	00NR	0	25SP	G15_031	TO->FROM	KRESS INTERCHANGE - SWISHER COUNTY INTERCHANGE 115KV CKT 1	218	239	0.12181	102.9886	FLOYD COUNTY INTERCHANGE - TUCO INTERCHANGE 115KV CKT 1
FDNS	00NR	0	25SP	G15_031	TO->FROM	KRESS INTERCHANGE - SWISHER COUNTY INTERCHANGE 115KV CKT 1	218	239	0.12181	102.9886	FLOYD COUNTY INTERCHANGE - TUCO INTERCHANGE 115KV CKT 1
FDNS	00NR	0	25SP	G15_031	TO->FROM	KRESS INTERCHANGE - SWISHER COUNTY INTERCHANGE 115KV CKT 1	218	239	0.13507	102.588	TUCO INTERCHANGE - TUCO_2 230.00 230KV CKT 1
FDNS	00NR	0	25SP	G15_031	TO->FROM	KRESS INTERCHANGE - SWISHER COUNTY INTERCHANGE 115KV CKT 1	218	239	0.12336	102.2781	TUCO INTERCHANGE (ENRCO 136401) 230/115/13.2KV TRANSFORMER CKT 1
FDNS	00NR	0	25SP	G15_031	TO->FROM	KRESS INTERCHANGE - SWISHER COUNTY INTERCHANGE 115KV CKT 1	218	239	0.12336	102.2781	TUCO INTERCHANGE (ENRCO 136401) 230/115/13.2KV TRANSFORMER CKT 1
FDNS	00NR	0	25SP	G15_031	TO->FROM	KRESS INTERCHANGE - SWISHER COUNTY INTERCHANGE 115KV CKT 1	218	239	0.12336	102.2781	TUCO INTERCHANGE (ENRCO 136401) 230/115/13.2KV TRANSFORMER CKT 2

SOLUTION	GROUP	SCENARIO	SEASON	SOURCE	DIRECTION	MONITORED ELEMENT	RATEA (MVA)	RATEB(MVA)	TDF	TC%LOADING (% MVA)	CONTINGENCY
FDNS	00NR	0	25SP	G15_031	TO->FROM	KRESS INTERCHANGE - SWISHER COUNTY INTERCHANGE 115KV CKT 1	218	239	0.12336	102.2781	TUCO INTERCHANGE (ENRCO 136401) 230/115/13.2KV TRANSFORMER CKT 2
FDNS	00NR	0	25SP	G15_031	TO->FROM	KRESS INTERCHANGE - SWISHER COUNTY INTERCHANGE 115KV CKT 1	218	239	0.12623	102.2588	NEWHART 230 (UPDATE LATER) 230/115/13.2KV TRANSFORMER CKT 2
FDNS	00NR	0	25SP	G15_031	TO->FROM	KRESS INTERCHANGE - SWISHER COUNTY INTERCHANGE 115KV CKT 1	218	239	0.12623	102.2588	NEWHART 230 (UPDATE LATER) 230/115/13.2KV TRANSFORMER CKT 2
FDNS	00NR	0	25SP	G15_031	TO->FROM	KRESS INTERCHANGE - SWISHER COUNTY INTERCHANGE 115KV CKT 1	218	239	0.12623	102.2588	NEWHART 230 (WAUK WT01105) 230/115/13.2KV TRANSFORMER CKT 1
FDNS	00NR	0	25SP	G15_031	TO->FROM	KRESS INTERCHANGE - SWISHER COUNTY INTERCHANGE 115KV CKT 1	218	239	0.12623	102.2588	NEWHART 230 (WAUK WT01105) 230/115/13.2KV TRANSFORMER CKT 1
FDNS	00NR	0	25SP	G15_031	TO->FROM	KRESS INTERCHANGE - SWISHER COUNTY INTERCHANGE 115KV CKT 1	218	239	0.11563	102.122	HALE CO INTERCHANGE - TUCO INTERCHANGE 115KV CKT 1
FDNS	00NR	0	25SP	G15_031	TO->FROM	KRESS INTERCHANGE - SWISHER COUNTY INTERCHANGE 115KV CKT 1	218	239	0.11563	102.122	HALE CO INTERCHANGE - TUCO INTERCHANGE 115KV CKT 1
FDNS	00NR	0	25SP	G15_031	TO->FROM	KRESS INTERCHANGE - SWISHER COUNTY INTERCHANGE 115KV CKT 1	218	239	0.12589	101.992	TUCO INTERCHANGE - YOAKUM_345 345.00 345KV CKT 1
FDNS	00NR	0	20SP	G15_031	TO->FROM	KRESS INTERCHANGE - SWISHER COUNTY INTERCHANGE 115KV CKT 1	218	239	0.22212	101.9578	NEWHART 230 - SWISHER COUNTY INTERCHANGE 230KV CKT 1
FDNS	00NR	0	25SP	G15_031	TO->FROM	KRESS INTERCHANGE - SWISHER COUNTY INTERCHANGE 115KV CKT 1	218	239	0.12046	101.7551	PLANT X STATION (WH ALM20171) 230/115/13.2KV TRANSFORMER CKT 1
FDNS	00NR	0	25SP	G15_031	TO->FROM	KRESS INTERCHANGE - SWISHER COUNTY INTERCHANGE 115KV CKT 1	218	239	0.12046	101.7551	PLANT X STATION (WH ALM20171) 230/115/13.2KV TRANSFORMER CKT 1
FDNS	00NR	0	25SP	G15_031	TO->FROM	KRESS INTERCHANGE - SWISHER COUNTY INTERCHANGE 115KV CKT 1	218	239	0.12556	100.9781	JONES STATION - TUCO INTERCHANGE 230KV CKT 1
FDNS	00NR	0	25SP	G15_031	TO->FROM	KRESS INTERCHANGE - SWISHER COUNTY INTERCHANGE 115KV CKT 1	218	239	0.12556	100.9781	JONES STATION - TUCO INTERCHANGE 230KV CKT 1
FDNS	00NR	0	25SP	G15_031	TO->FROM	KRESS INTERCHANGE - SWISHER COUNTY INTERCHANGE 115KV CKT 1	218	239	0.13472	100.9424	NEWHART 230 - PLANT X STATION 230KV CKT 1
FDNS	00NR	0	25SP	G15_031	TO->FROM	KRESS INTERCHANGE - SWISHER COUNTY INTERCHANGE 115KV CKT 1	218	239	0.12413	100.3955	BUSHLAND INTERCHANGE - DEAF SMITH COUNTY INTERCHANGE 230KV CKT 1
FDNS	00NR	0	25SP	G15_031	TO->FROM	KRESS INTERCHANGE - SWISHER COUNTY INTERCHANGE 115KV CKT 1	218	239	0.12413	100.3955	BUSHLAND INTERCHANGE - DEAF SMITH COUNTY INTERCHANGE 230KV CKT 1
FDNS	00NR	0	25SP	G15_031	TO->FROM	KRESS INTERCHANGE - SWISHER COUNTY INTERCHANGE 115KV CKT 1	218	239	0.12453	100.1417	CARLISLE INTERCHANGE - TUCO INTERCHANGE 230KV CKT 1
FDNS	00NR	0	25SP	G15_031	TO->FROM	KRESS INTERCHANGE - SWISHER COUNTY INTERCHANGE 115KV CKT 1	218	239	0.12453	100.1417	CARLISLE INTERCHANGE - TUCO INTERCHANGE 230KV CKT 1
FDNS	00NR	0	25SP	G15_031	TO->FROM	KRESS INTERCHANGE - SWISHER COUNTY INTERCHANGE 115KV CKT 1	218	239	0.12296	100	LAMB COUNTY INTERCHANGE - TOLK STATION WEST 230KV CKT 1
FDNS	00NR	0	25SP	G15_031	TO->FROM	KRESS INTERCHANGE - SWISHER COUNTY INTERCHANGE 115KV CKT 1	218	239	0.11259	100	KRESS INTERCHANGE - NEWHART 115KV CKT 1
FDNS	00NR	0	25SP	G15_031	TO->FROM	KRESS INTERCHANGE - SWISHER COUNTY INTERCHANGE 115KV CKT 1	218	239	0.11259	100	KRESS INTERCHANGE - NEWHART 115KV CKT 1
FDNS	00NR	0	25SP	G15_031	TO->FROM	KRESS INTERCHANGE - SWISHER COUNTY INTERCHANGE 115KV CKT 1	218	239	0.12496	99.9	HART INDUSTRIAL - NEWHART 115KV CKT 1
FDNS	00NR	0	25SP	G15_031	TO->FROM	KRESS INTERCHANGE - SWISHER COUNTY INTERCHANGE 115KV CKT 1	218	239	0.12296	99.9	LAMB COUNTY INTERCHANGE (WH ALM20172) 230/115/13.2KV TRANSFORMER CKT 1
FDNS	00NR	0	25SP	G15_031	TO->FROM	KRESS INTERCHANGE - SWISHER COUNTY INTERCHANGE 115KV CKT 1	218	239	0.12296	99.9	LAMB COUNTY INTERCHANGE (WH ALM20172) 230/115/13.2KV TRANSFORMER CKT 1
FDNS	00NR	0	25SP	G15_031	TO->FROM	KRESS INTERCHANGE - SWISHER COUNTY INTERCHANGE 115KV CKT 1	218	239	0.12296	99.9	P12:230:SPS:K37.1.TOLK.LAMB
FDNS	00NR	0	25SP	G15_031	TO->FROM	KRESS INTERCHANGE - SWISHER COUNTY INTERCHANGE 115KV CKT 1	218	239	0.12496	99.6	HART INDUSTRIAL - LAMTON INTERCHANGE 115KV CKT 1
FDNS	00NR	0	25SP	G15_031	TO->FROM	KRESS INTERCHANGE - SWISHER COUNTY INTERCHANGE 115KV CKT 1	218	239	0.12145	99.6	CROSBY COUNTY INTERCHANGE - LUBBOCK EAST INTERCHANGE 115KV CKT 1
FDNS	00NR	0	25SP	G15_031	TO->FROM	KRESS INTERCHANGE - SWISHER COUNTY INTERCHANGE 115KV CKT 1	218	239	0.12145	99.6	CROSBY COUNTY INTERCHANGE - LUBBOCK EAST INTERCHANGE 115KV CKT 1
FDNS	00NR	0	25SP	G15_031	FROM->TO	LUBBOCK POWER & LIGHT-HOLLY PLANT (SHIH T101039) 230/69/13.5KV TRANSFORMER CKT 1	224	224	0.03581	104.8294	LUBBOCK POWER & LIGHT-SOUTHEAST - LUBBOCK SOUTH INTERCHANGE 230KV CKT 1
FDNS	00NR	0	25SP	G15_031	FROM->TO	LUBBOCK POWER & LIGHT-HOLLY PLANT (SHIH T101039) 230/69/13.5KV TRANSFORMER CKT 1	224	224	0.03581	104.8165	P12:LPL:SPS:K64.1.LP-SE.LUBBS
FDNS	00NR	0	25SP	G15_031	FROM->TO	LUBBOCK POWER & LIGHT-HOLLY PLANT (SHIH T101039) 230/69/13.5KV TRANSFORMER CKT 1	224	224	0.03508	101.9053	LUBBOCK EAST INTERCHANGE - LUBBOCK POWER & LIGHT-WADSWORTH 230KV CKT 1
FDNS	00NR	0	25SP	G15_031	FROM->TO	LUBBOCK POWER & LIGHT-HOLLY PLANT (SHIH T101039) 230/69/13.5KV TRANSFORMER CKT 1	224	224	0.03508	101.8957	P12:230:LPL:K57.1.LP-WADS.LUBBE
FDNS	00NR	0	25SP	G15_031	FROM->TO	LUBBOCK POWER & LIGHT-HOLLY PLANT (SHIH T101039) 230/69/13.5KV TRANSFORMER CKT 1	224	224	0.03508	101.8956	LUBBOCK POWER & LIGHT-WADSWORTH (SHIH T101038) 230/69/13.5KV TRANSFORMER CKT 1
FDNS	00NR	0	25SP	G15_031	FROM->TO	LUBBOCK POWER & LIGHT-HOLLY PLANT (SHIH T101039) 230/69/13.5KV TRANSFORMER CKT 1	224	224	0.03508	101.8956	LUBBOCK POWER & LIGHT-WADSWORTH (SHIH T101038) 230/69/13.5KV TRANSFORMER CKT 1
FDNSLock	06ALL	0	20WP	G15_031		Non-Converged Contingency	1792	1792	0.1288	-	BORDER 7345.00 - CHISHOLM7 345.00 345KV CKT 1
FDNSLock	06ALL	0	20WP	G15_031		Non-Converged Contingency	1792	1792	0.1288	-	BORDER 7345.00 - CHISHOLM7 345.00 345KV CKT 2
FDNSLock	06ALL	0	20WP	G15_031		Non-Converged Contingency	439	439	0.06161	-	CHISHOLM6 230.00 - ELK CITY 230KV 230KV CKT 1
FDNS	06ALL	0	20WP	G15_031	FROM->TO	POTTER COUNTY INTERCHANGE (WAUK 90343-A) 345/230/13.2KV TRANSFORMER CKT 1	560	560	0.21559	103.6226	SWISHER COUNTY INTERCHANGE - TUCO_2 230.00 230KV CKT 1
FDNS	06ALL	0	20WP	G15_031	FROM->TO	POTTER COUNTY INTERCHANGE (WAUK 90343-A) 345/230/13.2KV TRANSFORMER CKT 1	560	560	0.21559	102.4716	SWISHER COUNTY INTERCHANGE - TUCO_2 230.00 230KV CKT 1
FDNS	06ALL	0	20WP	G15_031	FROM->TO	POTTER COUNTY INTERCHANGE (WAUK 90343-A) 345/230/13.2KV TRANSFORMER CKT 1	560	560	0.18132	101.9937	BASE CASE
FDNS	06ALL	0	20WP	G15_031	FROM->TO	POTTER COUNTY INTERCHANGE (WAUK 90343-A) 345/230/13.2KV TRANSFORMER CKT 1	560	560	0.18132	100.9471	BASE CASE
FDNS	06ALL	0	17G	G15_031	FROM->TO	POTTER COUNTY INTERCHANGE (WAUK 90343-A) 345/230/13.2KV TRANSFORMER CKT 1	560	560	0.21793	100.3247	SWISHER COUNTY INTERCHANGE - TUCO_2 230.00 230KV CKT 1
FDNS	06ALL	0	17SP	G15_031	FROM->TO	POTTER COUNTY INTERCHANGE (WAUK 90343-A) 345/230/13.2KV TRANSFORMER CKT 1	560	560	0.21283	99.9	CHISHOLM6 230.00 - SWEETWATER 230KV CKT 1
FDNS	06ALL	0	20WP	G15_031	FROM->TO	TUCO INTERCHANGE (GE M1022338) 345/230/13.2KV TRANSFORMER CKT 1	560	560	0.20397	109.5718	TUCO_2 345.00 (TUCO_2 XFMR) 345/230/13.2KV TRANSFORMER CKT 1
FDNS	06ALL	0	20WP	G15_031	FROM->TO	TUCO INTERCHANGE (GE M1022338) 345/230/13.2KV TRANSFORMER CKT 1	560	560	0.20397	106.1247	TUCO_2 345.00 (TUCO_2 XFMR) 345/230/13.2KV TRANSFORMER CKT 1
FDNS	06ALL	0	20SP	G15_031	FROM->TO	TUCO_2 345.00 (TUCO_2 XFMR) 345/230/13.2KV TRANSFORMER CKT 1	560	560	0.24906	168.9327	TUCO INTERCHANGE - TUCO_2 345.00 345KV CKT 1
FDNS	06ALL	0	17SP	G15_031	FROM->TO	TUCO_2 345.00 (TUCO_2 XFMR) 345/230/13.2KV TRANSFORMER CKT 1	560	560	0.24989	168.0719	TUCO INTERCHANGE - TUCO_2 345.00 345KV CKT 1
FDNS	06ALL	0	20SP	G15_031	FROM->TO	TUCO_2 345.00 (TUCO_2 XFMR) 345/230/13.2KV TRANSFORMER CKT 1	560	560	0.24906	162.4281	TUCO INTERCHANGE - TUCO_2 345.00 345KV CKT 1
FDNS	06ALL	0	17SP	G15_031	FROM->TO	TUCO_2 345.00 (TUCO_2 XFMR) 345/230/13.2KV TRANSFORMER CKT 1	560	560	0.24989	161.5424	TUCO INTERCHANGE - TUCO_2 345.00 345KV CKT 1
FDNS	06ALL	0	20WP	G15_031	FROM->TO	TUCO_2 345.00 (TUCO_2 XFMR) 345/230/13.2KV TRANSFORMER CKT 1	560	560	0.21964	102.6075	TUCO INTERCHANGE (GE M1022338) 345/230/13.2KV TRANSFORMER CKT 1
FDNS	06ALL	0	20WP	G15_031	FROM->TO	TUCO_2 345.00 (TUCO_2 XFMR) 345/230/13.2KV TRANSFORMER CKT 1	560	560	0.21964	102.6075	TUCO INTERCHANGE (GE M1022338) 345/230/13.2KV TRANSFORMER CKT 1
FDNS	06ALL	0	20WP	G15_031	FROM->TO	TUCO_2 345.00 (TUCO_2 XFMR) 345/230/13.2KV TRANSFORMER CKT 1	560	560	0.21964	99.8	TUCO INTERCHANGE (GE M1022338) 345/230/13.2KV TRANSFORMER CKT 1
FDNS	06ALL	0	20WP	G15_031	FROM->TO	TUCO_2 345.00 (TUCO_2 XFMR) 345/230/13.2KV TRANSFORMER CKT 1	560	560	0.21964	99.8	TUCO INTERCHANGE (GE M1022338) 345/230/13.2KV TRANSFORMER CKT 1
FDNS	06NR	2	17G	G15_031	TO->FROM	AMARILLO SOUTH INTERCHANGE - G15031_T 230.00 230KV CKT 1	318.7	350.57	0.29126	103.4449	NEWHART 230 - POTTER COUNTY INTERCHANGE 230KV CKT 1
FDNS	00NR	2	25SP	G15_031	FROM->TO	CARLISLE INTERCHANGE - LP-DOUD_TP 3115.00 115KV CKT 1	159	160	0.03448	100	TUCO INTERCHANGE - YOAKUM_345 345.00 345KV CKT 1
FDNS	06ALL	2	20SP	G15_031	FROM->TO	CHISHOLM6 230.00 - ELK CITY 230KV 230KV CKT 1	353	353	0.06334	103.9805	BASE CASE
FDNS	06ALL	2	17SP	G15_031	FROM->TO	CHISHOLM6 230.00 - ELK CITY 230KV 230KV CKT 1	353	353	0.06354	101.7938	BASE CASE
FDNS	06ALL	2	17G	G15_031	TO->FROM	CIMARRON - MINCO 345KV CKT 1	956	956	0.21942	131.7687	G14-057T 345.00 - SUNNYSIDE 345KV CKT 1
FDNS	06ALL	2	20WP	G15_031	TO->FROM	CIMARRON - MINCO 345KV CKT 1	956	956	0.21663	130.9595	G14-057T 345.00 - SUNNYSIDE 345KV CKT 1
FDNS	06ALL	2	17G	G15_031	TO->FROM	CIMARRON - MINCO 345KV CKT 1	956	956	0.21942	126.2954	G14-057T 345.00 - LAWTON EASTSIDE 345KV CKT 1
FDNS	06ALL	2	20WP	G15_031	TO->FROM	CIMARRON - MINCO 345KV CKT 1	956	956	0.21663	125.3296	G14-057T 345.00 - LAWTON EASTSIDE 345KV CKT 1
FDNS	06ALL	2	16WP	G15_031	TO->FROM	CIMARRON - MINCO 345KV CKT 1	956	956	0.22598	123.9324	G14-057T 345.00 - SUNNYSIDE 345KV CKT 1
FDNS	06ALL	2	17SP	G15_031	TO->FROM	CIMARRON - MINCO 345KV CKT 1	956	956	0.22319	123.0412	G14-057T 345.00 - SUNNYSIDE 345KV CKT 1
FDNS	06ALL	2	20SP	G15_031	TO->FROM	CIMARRON - MINCO 345KV CKT 1	956	956	0.22283	120.4683	G14-057T 345.00 - SUNNYSIDE 345KV CKT 1
FDNS	06ALL	2	16WP	G15_031	TO->FROM	CIMARRON - MINCO 345KV CKT 1	956	956	0.22598	118.3934	G14-057T 345.00 - LAWTON EASTSIDE 345KV CKT 1
FDNS	06ALL	2	17SP	G15_031	TO->FROM	CIMARRON - MINCO 345KV CKT 1	956	956	0.22319	117.7499	G14-057T 345.00 - LAWTON EASTSIDE 345KV CKT 1
FDNS	06ALL	2	20SP	G15_031	TO->FROM	CIMARRON - MINCO 345KV CKT 1	956	956	0.22283	115.0256	G14-057T 345.00 - LAWTON EASTSIDE 345KV CKT 1
FDNS	06ALL	2	17G	G15_031	TO->FROM	CIMARRON - MINCO 345KV CKT 1	956	956	0.20933	107.4004	CHISHOLM7 345.00 - WOODWARD DISTRICT EHV 345KV CKT 1
FDNS	06ALL	2	16WP	G15_031	TO->FROM	CIMARRON - MINCO 345KV CKT 1	956	956	0.19578	104.0692	MATHWSN7 345.00 - TATONGA7 345.00 345KV CKT 1
FDNS	06ALL	2	20WP	G15_031	TO->FROM	CIMARRON - MINCO 345KV CKT 1	956	956	0.20909	103.712	CHISHOLM7 345.00 - WOODWARD DISTRICT EHV 345KV CKT 1
FDNS	06ALL	2	20SP	G15_031	TO->FROM	CIMARRON - MINCO 345KV CKT 1	956	956	0.21603	102.1101	CHISHOLM7 345.00 - WOODWARD DISTRICT EHV 345KV CKT 1
FDNS	06ALL	2	17SP	G15_031	TO->FROM	CIMARRON - MINCO 345KV CKT 1	956	956	0.21626	100.969	CHISHOLM7 345.00 - WOODWARD DISTRICT EHV 345KV CKT 1
FDNS	06ALL	2	20L	G15_031	TO->FROM	G14-057T 345.00 - LAWTON EASTSIDE 345KV CKT 1	717	789	0.09258	105.4406	BASE CASE
FDNS	06ALL	2	20L	G15_031	FROM->TO	G14-057T 345.00 - SUNNYSIDE 345KV CKT 1	717	789	0.09258	118.6576	BASE CASE
FDNS	06ALL	2	20WP	G15_031	FROM->TO	G14-057T 345.00 - SUNNYSIDE 345KV CKT 1	717	789	0.11618	106.4822	BASE CASE
FDNS	06ALL	2	17G	G15_031	FROM->TO	G14-057T 345.00 - SUNNYSIDE 345KV CKT 1	717	789	0.11803	105.8626	BASE CASE
FDNS	06ALL	2	16WP	G15_031	FROM->TO	G14-057T 345.00 - SUNNYSIDE 345KV CKT 1	717	789	0.12132	104.4384	BASE CASE
FDNS	00NR	2	25SP	G15_031	TO->FROM	JONES STATION - TUCO INTERCHANGE 230KV CKT 1	343.79	343.79	0.11873	139.1643	CARLISLE INTERCHANGE - TUCO INTERCHANGE 230KV CKT 1
FDNS	00NR	2	25SP	G15_031	TO->FROM	JONES STATION - TUCO INTERCHANGE 230KV CKT 1	343.79	343.79	0.11873	139.1643	CARLISLE INTERCHANGE - TUCO INTERCHANGE 230KV CKT 1

SOLUTION	GROUP	SCENARIO	SEASON	SOURCE	DIRECTION	MONITORED ELEMENT	RATEA (MVA)	RATEB(MVA)	TDF	TC%LOADING (% MVA)	CONTINGENCY
FDNS	00NR	2	25SP	G15_031	TO->FROM	JONES STATION - TUCO INTERCHANGE 230KV CKT 1	343.79	343.79	0.11488	122.6847	TUCO INTERCHANGE - YOAKUM_345 345.00 345KV CKT 1
FDNS	00NR	2	25SP	G15_031	TO->FROM	JONES STATION - TUCO INTERCHANGE 230KV CKT 1	343.79	343.79	0.09252	119.1138	GEN526333 1-JONES GEN #3 21 KV
FDNS	00NR	2	25SP	G15_031	TO->FROM	JONES STATION - TUCO INTERCHANGE 230KV CKT 1	343.79	343.79	0.09252	118.7159	GEN526334 1-JONES_4 116.500
FDNS	00NR	2	25SP	G15_031	TO->FROM	JONES STATION - TUCO INTERCHANGE 230KV CKT 1	343.79	343.79	0.10721	111.2162	CARLISLE INTERCHANGE - WOLFFORTH INTERCHANGE 230KV CKT 1
FDNS	00NR	2	25SP	G15_031	TO->FROM	JONES STATION - TUCO INTERCHANGE 230KV CKT 1	343.79	343.79	0.09272	106.9963	TUCO INTERCHANGE (ENRCO 136401) 230/115/13.2KV TRANSFORMER CKT 1
FDNS	00NR	2	25SP	G15_031	TO->FROM	JONES STATION - TUCO INTERCHANGE 230KV CKT 1	343.79	343.79	0.09272	106.9963	TUCO INTERCHANGE (ENRCO 136401) 230/115/13.2KV TRANSFORMER CKT 1
FDNS	00NR	2	25SP	G15_031	TO->FROM	JONES STATION - TUCO INTERCHANGE 230KV CKT 1	343.79	343.79	0.09272	106.9963	TUCO INTERCHANGE (ENRCO 136401) 230/115/13.2KV TRANSFORMER CKT 2
FDNS	00NR	2	25SP	G15_031	TO->FROM	JONES STATION - TUCO INTERCHANGE 230KV CKT 1	343.79	343.79	0.09272	106.9963	TUCO INTERCHANGE (ENRCO 136401) 230/115/13.2KV TRANSFORMER CKT 2
FDNS	00NR	2	25SP	G15_031	TO->FROM	JONES STATION - TUCO INTERCHANGE 230KV CKT 1	343.79	343.79	0.09252	106.4847	GEN526332 1-JONES GEN #2 21 KV
FDNS	00NR	2	25SP	G15_031	TO->FROM	JONES STATION - TUCO INTERCHANGE 230KV CKT 1	343.79	343.79	0.09252	106.4826	GEN526331 1-JONES GEN #1 22 KV
FDNS	00NR	2	25SP	G15_031	TO->FROM	JONES STATION - TUCO INTERCHANGE 230KV CKT 1	343.79	343.79	0.10181	105.6092	LUBBOCK EAST INTERCHANGE - TUCO INTERCHANGE 115KV CKT 1
FDNS	00NR	2	25SP	G15_031	TO->FROM	JONES STATION - TUCO INTERCHANGE 230KV CKT 1	343.79	343.79	0.10181	105.6092	LUBBOCK EAST INTERCHANGE - TUCO INTERCHANGE 115KV CKT 1
FDNS	00NR	2	25SP	G15_031	TO->FROM	JONES STATION - TUCO INTERCHANGE 230KV CKT 1	343.79	343.79	0.09892	105.4194	PLANT X STATION - SUNDOWN INTERCHANGE 230KV CKT 1
FDNS	00NR	2	25SP	G15_031	TO->FROM	JONES STATION - TUCO INTERCHANGE 230KV CKT 1	343.79	343.79	0.09892	105.4194	PLANT X STATION - SUNDOWN INTERCHANGE 230KV CKT 1
FDNS	00NR	2	25SP	G15_031	TO->FROM	JONES STATION - TUCO INTERCHANGE 230KV CKT 1	343.79	343.79	0.09686	102.5525	STANTON SUB - TUCO INTERCHANGE 115KV CKT 1
FDNS	00NR	2	25SP	G15_031	TO->FROM	JONES STATION - TUCO INTERCHANGE 230KV CKT 1	343.79	343.79	0.09451	102.3349	P12:230:LPL:K39.1.CRLSLE.LP-MLWK
FDNS	00NR	2	25SP	G15_031	TO->FROM	JONES STATION - TUCO INTERCHANGE 230KV CKT 1	343.79	343.79	0.09451	102.3335	LUBBOCK POWER & LIGHT-MILWAUKEE (M-E C0681251) 230/69/13.5KV TRANSFORMER CKT 1
FDNS	00NR	2	25SP	G15_031	TO->FROM	JONES STATION - TUCO INTERCHANGE 230KV CKT 1	343.79	343.79	0.09451	102.3335	LUBBOCK POWER & LIGHT-MILWAUKEE (M-E C0681251) 230/69/13.5KV TRANSFORMER CKT 1
FDNS	00NR	2	25SP	G15_031	TO->FROM	JONES STATION - TUCO INTERCHANGE 230KV CKT 1	343.79	343.79	0.09451	102.3328	CARLISLE INTERCHANGE - LUBBOCK POWER & LIGHT-MILWAUKEE 230KV CKT 1
FDNS	00NR	2	25SP	G15_031	TO->FROM	JONES STATION - TUCO INTERCHANGE 230KV CKT 1	343.79	343.79	0.09865	101.8206	TOLK STATION EAST - TUCO INTERCHANGE 230KV CKT 1
FDNS	00NR	2	25SP	G15_031	TO->FROM	JONES STATION - TUCO INTERCHANGE 230KV CKT 1	343.79	343.79	0.09865	101.8206	TOLK STATION EAST - TUCO INTERCHANGE 230KV CKT 1
FDNS	00NR	2	25SP	G15_031	TO->FROM	JONES STATION - TUCO INTERCHANGE 230KV CKT 1	343.79	343.79	0.09686	101.6251	P12:115:SPS:V15.1.TUCO.INDANA
FDNS	00NR	2	25SP	G15_031	TO->FROM	JONES STATION - TUCO INTERCHANGE 230KV CKT 1	343.79	343.79	0.09686	101.5793	INDIANA SUB - STANTON SUB 115KV CKT 1
FDNS	00NR	2	25SP	G15_031	TO->FROM	JONES STATION - TUCO INTERCHANGE 230KV CKT 1	343.79	343.79	0.09252	100.7469	GEN527166 1-MUSTANG_6 118.000
FDNS	00NR	2	25SP	G15_031	TO->FROM	JONES STATION - TUCO INTERCHANGE 230KV CKT 1	343.79	343.79	0.09252	100.7466	GEN527903 1-HOBBS PLANT #3 (ST)
FDNS	00NR	2	25SP	G15_031	TO->FROM	JONES STATION - TUCO INTERCHANGE 230KV CKT 1	343.79	343.79	0.09378	100.3452	CARLISLE INTERCHANGE - MURPHY SUB 115KV CKT 1
FDNS	00NR	2	25SP	G15_031	TO->FROM	JONES STATION - TUCO INTERCHANGE 230KV CKT 1	343.79	343.79	0.09378	100.3452	CARLISLE INTERCHANGE - MURPHY SUB 115KV CKT 1
FDNS	00NR	2	25SP	G15_031	TO->FROM	JONES STATION - TUCO INTERCHANGE 230KV CKT 1	343.79	343.79	0.09764	100.3228	KRESS INTERCHANGE - SWISHER COUNTY INTERCHANGE 115KV CKT 1
FDNS	00NR	2	25SP	G15_031	TO->FROM	JONES STATION - TUCO INTERCHANGE 230KV CKT 1	343.79	343.79	0.09764	100.3228	KRESS INTERCHANGE - SWISHER COUNTY INTERCHANGE 115KV CKT 1
FDNS	00NR	2	25SP	G15_031	TO->FROM	JONES STATION - TUCO INTERCHANGE 230KV CKT 1	343.79	343.79	0.09252	100.2967	GEN528501 1-G14_012 24.000
FDNS	00NR	2	25SP	G15_031	TO->FROM	JONES STATION - TUCO INTERCHANGE 230KV CKT 1	343.79	343.79	0.09691	100.1964	YOAKUM_345 345.00 (UPDATE DATA) 345/230/13.2KV TRANSFORMER CKT 1
FDNS	00NR	2	25SP	G15_031	TO->FROM	JONES STATION - TUCO INTERCHANGE 230KV CKT 1	343.79	343.79	0.09686	99.9	INDIANA SUB - SOUTH PLAINS REC-ERSKINE 115KV CKT 1
FDNS	00NR	2	25SP	G15_031	TO->FROM	JONES STATION - TUCO INTERCHANGE 230KV CKT 1	343.79	343.79	0.09138	99.8	FLOYD COUNTY INTERCHANGE - TUCO INTERCHANGE 115KV CKT 1
FDNS	00NR	2	25SP	G15_031	TO->FROM	JONES STATION - TUCO INTERCHANGE 230KV CKT 1	343.79	343.79	0.09138	99.8	FLOYD COUNTY INTERCHANGE - TUCO INTERCHANGE 115KV CKT 1
FDNS	00NR	2	25SP	G15_031	TO->FROM	JONES STATION - TUCO INTERCHANGE 230KV CKT 1	343.79	343.79	0.09252	99.7	GEN563122 1-G15077_3 0.3850
FDNS	00NR	2	25SP	G15_031	TO->FROM	JONES STATION - TUCO INTERCHANGE 230KV CKT 1	343.79	343.79	0.09226	99.7	POTTER COUNTY INTERCHANGE (WAUK 90343-A) 345/230/13.2KV TRANSFORMER CKT 1
FDNS	00NR	2	25SP	G15_031	TO->FROM	JONES STATION - TUCO INTERCHANGE 230KV CKT 1	343.79	343.79	0.09226	99.7	POTTER COUNTY INTERCHANGE (WAUK 90343-A) 345/230/13.2KV TRANSFORMER CKT 1
FDNS	00NR	2	25SP	G15_031	TO->FROM	JONES STATION - TUCO INTERCHANGE 230KV CKT 1	343.79	343.79	0.09252	99.6	GEN527901 1-HOBBS PLANT #1 (CT)
FDNS	00NR	2	25SP	G15_031	TO->FROM	JONES STATION - TUCO INTERCHANGE 230KV CKT 1	343.79	343.79	0.09252	99.6	GEN527902 1-HOBBS PLANT #2 (CT)
FDNS	00NR	2	25SP	G15_031	TO->FROM	JONES STATION - TUCO INTERCHANGE 230KV CKT 1	343.79	343.79	0.09252	99.6	GEN563102 1-G15075_3 0.5500
FDNS	00NR	2	25SP	G15_031	TO->FROM	KRESS INTERCHANGE - SWISHER COUNTY INTERCHANGE 115KV CKT 1	218	239	0.22142	118.9382	NEWHART 230 - SWISHER COUNTY INTERCHANGE 230KV CKT 1
FDNS	00NR	2	25SP	G15_031	TO->FROM	KRESS INTERCHANGE - SWISHER COUNTY INTERCHANGE 115KV CKT 1	218	239	0.12328	106.6803	BASE CASE
FDNS	00NR	2	25SP	G15_031	TO->FROM	KRESS INTERCHANGE - SWISHER COUNTY INTERCHANGE 115KV CKT 1	218	239	0.11342	106.6348	PALO DURO SUB - RANDALL COUNTY INTERCHANGE 115KV CKT 1
FDNS	00NR	2	25SP	G15_031	TO->FROM	KRESS INTERCHANGE - SWISHER COUNTY INTERCHANGE 115KV CKT 1	218	239	0.11342	105.3261	P12:115:SPS:T66.1.RNDALL.HAPPY
FDNS	00NR	2	25SP	G15_031	TO->FROM	KRESS INTERCHANGE - SWISHER COUNTY INTERCHANGE 115KV CKT 1	218	239	0.11342	105.1999	HAPPY INTERCHANGE - PALO DURO SUB 115KV CKT 1
FDNS	00NR	2	17SP	G15_031	TO->FROM	KRESS INTERCHANGE - SWISHER COUNTY INTERCHANGE 115KV CKT 1	218	239	0.23152	103.6501	NEWHART 230 - SWISHER COUNTY INTERCHANGE 230KV CKT 1
FDNS	00NR	2	25SP	G15_031	TO->FROM	KRESS INTERCHANGE - SWISHER COUNTY INTERCHANGE 115KV CKT 1	218	239	0.12181	103.1719	FLOYD COUNTY INTERCHANGE - TUCO INTERCHANGE 115KV CKT 1
FDNS	00NR	2	25SP	G15_031	TO->FROM	KRESS INTERCHANGE - SWISHER COUNTY INTERCHANGE 115KV CKT 1	218	239	0.12181	103.1719	FLOYD COUNTY INTERCHANGE - TUCO INTERCHANGE 115KV CKT 1
FDNS	00NR	2	25SP	G15_031	TO->FROM	KRESS INTERCHANGE - SWISHER COUNTY INTERCHANGE 115KV CKT 1	218	239	0.13507	102.5314	TUCO INTERCHANGE - TUCO_2 230.00 230KV CKT 1
FDNS	00NR	2	25SP	G15_031	TO->FROM	KRESS INTERCHANGE - SWISHER COUNTY INTERCHANGE 115KV CKT 1	218	239	0.12336	102.2473	TUCO INTERCHANGE (ENRCO 136401) 230/115/13.2KV TRANSFORMER CKT 1
FDNS	00NR	2	25SP	G15_031	TO->FROM	KRESS INTERCHANGE - SWISHER COUNTY INTERCHANGE 115KV CKT 1	218	239	0.12336	102.2473	TUCO INTERCHANGE (ENRCO 136401) 230/115/13.2KV TRANSFORMER CKT 1
FDNS	00NR	2	25SP	G15_031	TO->FROM	KRESS INTERCHANGE - SWISHER COUNTY INTERCHANGE 115KV CKT 1	218	239	0.12336	102.2473	TUCO INTERCHANGE (ENRCO 136401) 230/115/13.2KV TRANSFORMER CKT 2
FDNS	00NR	2	25SP	G15_031	TO->FROM	KRESS INTERCHANGE - SWISHER COUNTY INTERCHANGE 115KV CKT 1	218	239	0.12336	102.2473	TUCO INTERCHANGE (ENRCO 136401) 230/115/13.2KV TRANSFORMER CKT 2
FDNS	00NR	2	25SP	G15_031	TO->FROM	KRESS INTERCHANGE - SWISHER COUNTY INTERCHANGE 115KV CKT 1	218	239	0.11563	102.1895	HALE CO INTERCHANGE - TUCO INTERCHANGE 115KV CKT 1
FDNS	00NR	2	25SP	G15_031	TO->FROM	KRESS INTERCHANGE - SWISHER COUNTY INTERCHANGE 115KV CKT 1	218	239	0.11563	102.1895	HALE CO INTERCHANGE - TUCO INTERCHANGE 115KV CKT 1
FDNS	00NR	2	25SP	G15_031	TO->FROM	KRESS INTERCHANGE - SWISHER COUNTY INTERCHANGE 115KV CKT 1	218	239	0.12623	102.1221	NEWHART 230 (UPDATE LATER) 230/115/13.2KV TRANSFORMER CKT 2
FDNS	00NR	2	25SP	G15_031	TO->FROM	KRESS INTERCHANGE - SWISHER COUNTY INTERCHANGE 115KV CKT 1	218	239	0.12623	102.1221	NEWHART 230 (UPDATE LATER) 230/115/13.2KV TRANSFORMER CKT 2
FDNS	00NR	2	25SP	G15_031	TO->FROM	KRESS INTERCHANGE - SWISHER COUNTY INTERCHANGE 115KV CKT 1	218	239	0.12623	102.1221	NEWHART 230 (WAUK WT01105) 230/115/13.2KV TRANSFORMER CKT 1
FDNS	00NR	2	25SP	G15_031	TO->FROM	KRESS INTERCHANGE - SWISHER COUNTY INTERCHANGE 115KV CKT 1	218	239	0.12623	102.1221	NEWHART 230 (WAUK WT01105) 230/115/13.2KV TRANSFORMER CKT 1
FDNS	00NR	2	25SP	G15_031	TO->FROM	KRESS INTERCHANGE - SWISHER COUNTY INTERCHANGE 115KV CKT 1	218	239	0.12589	101.8414	TUCO INTERCHANGE - YOAKUM_345 345.00 345KV CKT 1
FDNS	00NR	2	20SP	G15_031	TO->FROM	KRESS INTERCHANGE - SWISHER COUNTY INTERCHANGE 115KV CKT 1	218	239	0.22212	101.6807	NEWHART 230 - SWISHER COUNTY INTERCHANGE 230KV CKT 1
FDNS	00NR	2	25SP	G15_031	TO->FROM	KRESS INTERCHANGE - SWISHER COUNTY INTERCHANGE 115KV CKT 1	218	239	0.12046	101.6568	PLANT X STATION (WH ALM20171) 230/115/13.2KV TRANSFORMER CKT 1
FDNS	00NR	2	25SP	G15_031	TO->FROM	KRESS INTERCHANGE - SWISHER COUNTY INTERCHANGE 115KV CKT 1	218	239	0.12046	101.6568	PLANT X STATION (WH ALM20171) 230/115/13.2KV TRANSFORMER CKT 1
FDNS	00NR	2	25SP	G15_031	TO->FROM	KRESS INTERCHANGE - SWISHER COUNTY INTERCHANGE 115KV CKT 1	218	239	0.12556	100.8634	JONES STATION - TUCO INTERCHANGE 230KV CKT 1
FDNS	00NR	2	25SP	G15_031	TO->FROM	KRESS INTERCHANGE - SWISHER COUNTY INTERCHANGE 115KV CKT 1	218	239	0.12556	100.8634	JONES STATION - TUCO INTERCHANGE 230KV CKT 1
FDNS	00NR	2	25SP	G15_031	TO->FROM	KRESS INTERCHANGE - SWISHER COUNTY INTERCHANGE 115KV CKT 1	218	239	0.13472	100.7561	NEWHART 230 - PLANT X STATION 230KV CKT 1
FDNS	00NR	2	25SP	G15_031	TO->FROM	KRESS INTERCHANGE - SWISHER COUNTY INTERCHANGE 115KV CKT 1	218	239	0.12413	100.2673	BUSHLAND INTERCHANGE - DEAF SMITH COUNTY INTERCHANGE 230KV CKT 1
FDNS	00NR	2	25SP	G15_031	TO->FROM	KRESS INTERCHANGE - SWISHER COUNTY INTERCHANGE 115KV CKT 1	218	239	0.12413	100.2673	BUSHLAND INTERCHANGE - DEAF SMITH COUNTY INTERCHANGE 230KV CKT 1
FDNS	00NR	2	25SP	G15_031	TO->FROM	KRESS INTERCHANGE - SWISHER COUNTY INTERCHANGE 115KV CKT 1	218	239	0.12453	100.0861	CARLISLE INTERCHANGE - TUCO INTERCHANGE 230KV CKT 1
FDNS	00NR	2	25SP	G15_031	TO->FROM	KRESS INTERCHANGE - SWISHER COUNTY INTERCHANGE 115KV CKT 1	218	239	0.12453	100.0861	CARLISLE INTERCHANGE - TUCO INTERCHANGE 230KV CKT 1
FDNS	00NR	2	25SP	G15_031	TO->FROM	KRESS INTERCHANGE - SWISHER COUNTY INTERCHANGE 115KV CKT 1	218	239	0.12496	100.0569	HART INDUSTRIAL - NEWHART 115KV CKT 1
FDNS	00NR	2	25SP	G15_031	TO->FROM	KRESS INTERCHANGE - SWISHER COUNTY INTERCHANGE 115KV CKT 1	218	239	0.12296	99.8	LAMB COUNTY INTERCHANGE - TOLK STATION WEST 230KV CKT 1
FDNS	00NR	2	25SP	G15_031	TO->FROM	KRESS INTERCHANGE - SWISHER COUNTY INTERCHANGE 115KV CKT 1	218	239	0.12296	99.8	LAMB COUNTY INTERCHANGE (WH ALM20172) 230/115/13.2KV TRANSFORMER CKT 1
FDNS	00NR	2	25SP	G15_031	TO->FROM	KRESS INTERCHANGE - SWISHER COUNTY INTERCHANGE 115KV CKT 1	218	239	0.12296	99.8	LAMB COUNTY INTERCHANGE (WH ALM20172) 230/115/13.2KV TRANSFORMER CKT 1
FDNS	00NR	2	25SP	G15_031	TO->FROM	KRESS INTERCHANGE - SWISHER COUNTY INTERCHANGE 115KV CKT 1	218	239	0.12296	99.8	P12:230:SPS:K37.1.TOLK.LAMB
FDNS	00NR	2	25SP	G15_031	TO->FROM	KRESS INTERCHANGE - SWISHER COUNTY INTERCHANGE 115KV CKT 1	218	239	0.11259	99.8	KRESS INTERCHANGE - NEWHART 115KV CKT 1
FDNS	00NR	2	25SP	G15_031	TO->FROM	KRESS INTERCHANGE - SWISHER COUNTY INTERCHANGE 115KV CKT 1	218	239	0.11259	99.8	KRESS INTERCHANGE - NEWHART 115KV CKT 1
FDNS	00NR	2	25SP	G15_031	TO->FROM	KRESS INTERCHANGE - SWISHER COUNTY INTERCHANGE 115KV CKT 1	218	239	0.12145	99.5	CROSBY COUNTY INTERCHANGE - LUBBOCK EAST INTERCHANGE 115KV CKT 1
FDNS	00NR	2	25SP	G15_031	TO->FROM	KRESS INTERCHANGE - SWISHER COUNTY INTERCHANGE 115KV CKT 1	218	239	0.12145	99.5	CROSBY COUNTY INTERCHANGE - LUBBOCK EAST INTERCHANGE 115KV CKT 1

SOLUTION	GROUP	SCENARIO	SEASON	SOURCE	DIRECTION	MONITORED ELEMENT	RATEA (MVA)	RATEB(MVA)	TDF	TC%LOADING (% MVA)	CONTINGENCY
FDNS	00NR	2	25SP	G15_031	FROM->TO	LUBBOCK POWER & LIGHT-HOLLY PLANT (SHIH T101039) 230/69/13.5KV TRANSFORMER CKT 1	224	224	0.03581	104.7613	LUBBOCK POWER & LIGHT-SOUTHEAST - LUBBOCK SOUTH INTERCHANGE 230KV CKT 1
FDNS	00NR	2	25SP	G15_031	FROM->TO	LUBBOCK POWER & LIGHT-HOLLY PLANT (SHIH T101039) 230/69/13.5KV TRANSFORMER CKT 1	224	224	0.03581	104.7484	P12:LPL:SPS:K64.1.LP-SE.LUBBS
FDNS	00NR	2	25SP	G15_031	FROM->TO	LUBBOCK POWER & LIGHT-HOLLY PLANT (SHIH T101039) 230/69/13.5KV TRANSFORMER CKT 1	224	224	0.03508	102.133	P12:230:LPL:K57.1.LP-WADS.LUBBE
FDNS	00NR	2	25SP	G15_031	FROM->TO	LUBBOCK POWER & LIGHT-HOLLY PLANT (SHIH T101039) 230/69/13.5KV TRANSFORMER CKT 1	224	224	0.03508	102.1329	LUBBOCK POWER & LIGHT-WADSWORTH (SHIH T101038) 230/69/13.5KV TRANSFORMER CKT 1
FDNS	00NR	2	25SP	G15_031	FROM->TO	LUBBOCK POWER & LIGHT-HOLLY PLANT (SHIH T101039) 230/69/13.5KV TRANSFORMER CKT 1	224	224	0.03508	102.1329	LUBBOCK POWER & LIGHT-WADSWORTH (SHIH T101038) 230/69/13.5KV TRANSFORMER CKT 1
FDNS	00NR	2	25SP	G15_031	FROM->TO	LUBBOCK POWER & LIGHT-HOLLY PLANT (SHIH T101039) 230/69/13.5KV TRANSFORMER CKT 1	224	224	0.03508	101.829	LUBBOCK EAST INTERCHANGE - LUBBOCK POWER & LIGHT-WADSWORTH 230KV CKT 1
FDNSLock	06ALL	2	20WP	G15_031		P12:230:AEPW:ELKCITY6:SWEETWT6	0	0	0.15056	9999	BASE CASE
FDNS	06ALL	2	20WP	G15_031	FROM->TO	POTTER COUNTY INTERCHANGE (WAUK 90343-A) 345/230/13.2KV TRANSFORMER CKT 1	560	560	0.20396	118.0007	CHISHOLM6 230.00 - SWEETWATER 230KV CKT 1
FDNS	06ALL	2	17G	G15_031	FROM->TO	POTTER COUNTY INTERCHANGE (WAUK 90343-A) 345/230/13.2KV TRANSFORMER CKT 1	560	560	0.20327	116.6736	CHISHOLM6 230.00 - SWEETWATER 230KV CKT 1
FDNS	06ALL	2	20WP	G15_031	FROM->TO	POTTER COUNTY INTERCHANGE (WAUK 90343-A) 345/230/13.2KV TRANSFORMER CKT 1	560	560	0.20396	115.2061	CHISHOLM6 230.00 - SWEETWATER 230KV CKT 1
FDNS	06ALL	2	20WP	G15_031	FROM->TO	POTTER COUNTY INTERCHANGE (WAUK 90343-A) 345/230/13.2KV TRANSFORMER CKT 1	560	560	0.21174	113.9333	HITCHLAND INTERCHANGE - MOORE COUNTY INTERCHANGE 230KV CKT 1
FDNS	06ALL	2	20WP	G15_031	FROM->TO	POTTER COUNTY INTERCHANGE (WAUK 90343-A) 345/230/13.2KV TRANSFORMER CKT 1	560	560	0.21174	113.9333	HITCHLAND INTERCHANGE - MOORE COUNTY INTERCHANGE 230KV CKT 1
FDNS	06ALL	2	17G	G15_031	FROM->TO	POTTER COUNTY INTERCHANGE (WAUK 90343-A) 345/230/13.2KV TRANSFORMER CKT 1	560	560	0.20327	113.1991	CHISHOLM6 230.00 - SWEETWATER 230KV CKT 1
FDNS	06ALL	2	20WP	G15_031	FROM->TO	POTTER COUNTY INTERCHANGE (WAUK 90343-A) 345/230/13.2KV TRANSFORMER CKT 1	560	560	0.20026	112.6437	MOORE COUNTY INTERCHANGE - POTTER COUNTY INTERCHANGE 230KV CKT 1
FDNS	06ALL	2	20WP	G15_031	FROM->TO	POTTER COUNTY INTERCHANGE (WAUK 90343-A) 345/230/13.2KV TRANSFORMER CKT 1	560	560	0.20026	112.6437	MOORE COUNTY INTERCHANGE - POTTER COUNTY INTERCHANGE 230KV CKT 1
FDNS	06ALL	2	20WP	G15_031	FROM->TO	POTTER COUNTY INTERCHANGE (WAUK 90343-A) 345/230/13.2KV TRANSFORMER CKT 1	560	560	0.21174	112.5017	HITCHLAND INTERCHANGE - MOORE COUNTY INTERCHANGE 230KV CKT 1
FDNS	06ALL	2	20WP	G15_031	FROM->TO	POTTER COUNTY INTERCHANGE (WAUK 90343-A) 345/230/13.2KV TRANSFORMER CKT 1	560	560	0.21174	112.5017	HITCHLAND INTERCHANGE - MOORE COUNTY INTERCHANGE 230KV CKT 1
FDNS	06ALL	2	20WP	G15_031	FROM->TO	POTTER COUNTY INTERCHANGE (WAUK 90343-A) 345/230/13.2KV TRANSFORMER CKT 1	560	560	0.20396	112.2902	STLN-DEMARC6 - SWEETWATER 230KV CKT 1
FDNS	06ALL	2	20WP	G15_031	FROM->TO	POTTER COUNTY INTERCHANGE (WAUK 90343-A) 345/230/13.2KV TRANSFORMER CKT 1	560	560	0.20396	112.2286	P12:230:AEPW-SPS:SWEETWT6:WHEELER 6
FDNS	06ALL	2	20WP	G15_031	FROM->TO	POTTER COUNTY INTERCHANGE (WAUK 90343-A) 345/230/13.2KV TRANSFORMER CKT 1	560	560	0.20396	112.2225	STATELINE INTERCHANGE - STLN-DEMARC6 230KV CKT 1
FDNS	06ALL	2	17G	G15_031	FROM->TO	POTTER COUNTY INTERCHANGE (WAUK 90343-A) 345/230/13.2KV TRANSFORMER CKT 1	560	560	0.21033	111.3301	HITCHLAND INTERCHANGE - MOORE COUNTY INTERCHANGE 230KV CKT 1
FDNS	06ALL	2	20WP	G15_031	FROM->TO	POTTER COUNTY INTERCHANGE (WAUK 90343-A) 345/230/13.2KV TRANSFORMER CKT 1	560	560	0.20026	111.2241	MOORE COUNTY INTERCHANGE - POTTER COUNTY INTERCHANGE 230KV CKT 1
FDNS	06ALL	2	20WP	G15_031	FROM->TO	POTTER COUNTY INTERCHANGE (WAUK 90343-A) 345/230/13.2KV TRANSFORMER CKT 1	560	560	0.20026	111.2241	MOORE COUNTY INTERCHANGE - POTTER COUNTY INTERCHANGE 230KV CKT 1
FDNS	06ALL	2	20WP	G15_031	FROM->TO	POTTER COUNTY INTERCHANGE (WAUK 90343-A) 345/230/13.2KV TRANSFORMER CKT 1	560	560	0.1955	110.9145	GRAPEVINE INTERCHANGE - NICHOLS STATION 230KV CKT 1
FDNS	06ALL	2	20WP	G15_031	FROM->TO	POTTER COUNTY INTERCHANGE (WAUK 90343-A) 345/230/13.2KV TRANSFORMER CKT 1	560	560	0.1955	110.9145	GRAPEVINE INTERCHANGE - NICHOLS STATION 230KV CKT 1
FDNS	06ALL	2	20WP	G15_031	FROM->TO	POTTER COUNTY INTERCHANGE (WAUK 90343-A) 345/230/13.2KV TRANSFORMER CKT 1	560	560	0.20396	110.3881	STLN-DEMARC6 - SWEETWATER 230KV CKT 1
FDNS	06ALL	2	20WP	G15_031	FROM->TO	POTTER COUNTY INTERCHANGE (WAUK 90343-A) 345/230/13.2KV TRANSFORMER CKT 1	560	560	0.20396	110.3353	P12:230:AEPW-SPS:SWEETWT6:WHEELER 6
FDNS	06ALL	2	20WP	G15_031	FROM->TO	POTTER COUNTY INTERCHANGE (WAUK 90343-A) 345/230/13.2KV TRANSFORMER CKT 1	560	560	0.20396	110.3307	STATELINE INTERCHANGE - STLN-DEMARC6 230KV CKT 1
FDNS	06ALL	2	17G	G15_031	FROM->TO	POTTER COUNTY INTERCHANGE (WAUK 90343-A) 345/230/13.2KV TRANSFORMER CKT 1	560	560	0.20327	110.0362	STLN-DEMARC6 - SWEETWATER 230KV CKT 1
FDNS	06ALL	2	17G	G15_031	FROM->TO	POTTER COUNTY INTERCHANGE (WAUK 90343-A) 345/230/13.2KV TRANSFORMER CKT 1	560	560	0.20327	110.0305	P12:230:AEPW-SPS:SWEETWT6:WHEELER 6
FDNS	06ALL	2	17G	G15_031	FROM->TO	POTTER COUNTY INTERCHANGE (WAUK 90343-A) 345/230/13.2KV TRANSFORMER CKT 1	560	560	0.20327	110.0227	STATELINE INTERCHANGE - STLN-DEMARC6 230KV CKT 1
FDNS	06ALL	2	17G	G15_031	FROM->TO	POTTER COUNTY INTERCHANGE (WAUK 90343-A) 345/230/13.2KV TRANSFORMER CKT 1	560	560	0.21033	109.9541	HITCHLAND INTERCHANGE - MOORE COUNTY INTERCHANGE 230KV CKT 1
FDNS	06ALL	2	20WP	G15_031	FROM->TO	POTTER COUNTY INTERCHANGE (WAUK 90343-A) 345/230/13.2KV TRANSFORMER CKT 1	560	560	0.1955	109.1891	GRAPEVINE INTERCHANGE - NICHOLS STATION 230KV CKT 1
FDNS	06ALL	2	20WP	G15_031	FROM->TO	POTTER COUNTY INTERCHANGE (WAUK 90343-A) 345/230/13.2KV TRANSFORMER CKT 1	560	560	0.1955	109.1891	GRAPEVINE INTERCHANGE - NICHOLS STATION 230KV CKT 1
FDNS	06ALL	2	17G	G15_031	FROM->TO	POTTER COUNTY INTERCHANGE (WAUK 90343-A) 345/230/13.2KV TRANSFORMER CKT 1	560	560	0.19891	108.9863	MOORE COUNTY INTERCHANGE - POTTER COUNTY INTERCHANGE 230KV CKT 1
FDNS	06ALL	2	17G	G15_031	FROM->TO	POTTER COUNTY INTERCHANGE (WAUK 90343-A) 345/230/13.2KV TRANSFORMER CKT 1	560	560	0.19891	108.9863	MOORE COUNTY INTERCHANGE - POTTER COUNTY INTERCHANGE 230KV CKT 1
FDNS	06ALL	2	20WP	G15_031	FROM->TO	POTTER COUNTY INTERCHANGE (WAUK 90343-A) 345/230/13.2KV TRANSFORMER CKT 1	560	560	0.20287	108.4047	CHISHOLM7 345.00 - WOODWARD DISTRICT EHV 345KV CKT 1
FDNS	06ALL	2	17G	G15_031	FROM->TO	POTTER COUNTY INTERCHANGE (WAUK 90343-A) 345/230/13.2KV TRANSFORMER CKT 1	560	560	0.20327	107.8708	STLN-DEMARC6 - SWEETWATER 230KV CKT 1
FDNS	06ALL	2	17G	G15_031	FROM->TO	POTTER COUNTY INTERCHANGE (WAUK 90343-A) 345/230/13.2KV TRANSFORMER CKT 1	560	560	0.20327	107.8659	P12:230:AEPW-SPS:SWEETWT6:WHEELER 6
FDNS	06ALL	2	17G	G15_031	FROM->TO	POTTER COUNTY INTERCHANGE (WAUK 90343-A) 345/230/13.2KV TRANSFORMER CKT 1	560	560	0.20327	107.8605	STATELINE INTERCHANGE - STLN-DEMARC6 230KV CKT 1
FDNS	06ALL	2	20WP	G15_031	FROM->TO	POTTER COUNTY INTERCHANGE (WAUK 90343-A) 345/230/13.2KV TRANSFORMER CKT 1	560	560	0.19523	107.7705	GRAPEVINE INTERCHANGE - STATELINE INTERCHANGE 230KV CKT 1
FDNS	06ALL	2	20WP	G15_031	FROM->TO	POTTER COUNTY INTERCHANGE (WAUK 90343-A) 345/230/13.2KV TRANSFORMER CKT 1	560	560	0.19523	107.7705	GRAPEVINE INTERCHANGE - STATELINE INTERCHANGE 230KV CKT 1
FDNS	06ALL	2	17G	G15_031	FROM->TO	POTTER COUNTY INTERCHANGE (WAUK 90343-A) 345/230/13.2KV TRANSFORMER CKT 1	560	560	0.19891	107.6376	MOORE COUNTY INTERCHANGE - POTTER COUNTY INTERCHANGE 230KV CKT 1
FDNS	06ALL	2	17G	G15_031	FROM->TO	POTTER COUNTY INTERCHANGE (WAUK 90343-A) 345/230/13.2KV TRANSFORMER CKT 1	560	560	0.19891	107.6376	MOORE COUNTY INTERCHANGE - POTTER COUNTY INTERCHANGE 230KV CKT 1
FDNS	06ALL	2	20WP	G15_031	FROM->TO	POTTER COUNTY INTERCHANGE (WAUK 90343-A) 345/230/13.2KV TRANSFORMER CKT 1	560	560	0.20287	107.092	CHISHOLM7 345.00 - WOODWARD DISTRICT EHV 345KV CKT 1
FDNS	06ALL	2	16WP	G15_031	FROM->TO	POTTER COUNTY INTERCHANGE (WAUK 90343-A) 345/230/13.2KV TRANSFORMER CKT 1	560	560	0.2144	106.7175	P12:230:AEPW:ELKCITY6:SWEETWT6
FDNS	06ALL	2	20WP	G15_031	FROM->TO	POTTER COUNTY INTERCHANGE (WAUK 90343-A) 345/230/13.2KV TRANSFORMER CKT 1	560	560	0.19523	106.372	GRAPEVINE INTERCHANGE - STATELINE INTERCHANGE 230KV CKT 1
FDNS	06ALL	2	20WP	G15_031	FROM->TO	POTTER COUNTY INTERCHANGE (WAUK 90343-A) 345/230/13.2KV TRANSFORMER CKT 1	560	560	0.19523	106.372	GRAPEVINE INTERCHANGE - STATELINE INTERCHANGE 230KV CKT 1
FDNS	06ALL	2	16WP	G15_031	FROM->TO	POTTER COUNTY INTERCHANGE (WAUK 90343-A) 345/230/13.2KV TRANSFORMER CKT 1	560	560	0.21358	106.2613	CHISHOLM6 230.00 - SWEETWATER 230KV CKT 1
FDNS	06ALL	2	17G	G15_031	FROM->TO	POTTER COUNTY INTERCHANGE (WAUK 90343-A) 345/230/13.2KV TRANSFORMER CKT 1	560	560	0.20064	106.135	CHISHOLM7 345.00 - WOODWARD DISTRICT EHV 345KV CKT 1
FDNS	06ALL	2	16WP	G15_031	FROM->TO	POTTER COUNTY INTERCHANGE (WAUK 90343-A) 345/230/13.2KV TRANSFORMER CKT 1	560	560	0.2144	105.3389	P12:230:AEPW:ELKCITY6:SWEETWT6
FDNS	06ALL	2	16WP	G15_031	FROM->TO	POTTER COUNTY INTERCHANGE (WAUK 90343-A) 345/230/13.2KV TRANSFORMER CKT 1	560	560	0.21358	105.0083	CHISHOLM6 230.00 - SWEETWATER 230KV CKT 1
FDNS	06ALL	2	17G	G15_031	FROM->TO	POTTER COUNTY INTERCHANGE (WAUK 90343-A) 345/230/13.2KV TRANSFORMER CKT 1	560	560	0.20064	104.6763	CHISHOLM7 345.00 - WOODWARD DISTRICT EHV 345KV CKT 1
FDNS	06ALL	2	16WP	G15_031	FROM->TO	POTTER COUNTY INTERCHANGE (WAUK 90343-A) 345/230/13.2KV TRANSFORMER CKT 1	560	560	0.22114	102.0618	HITCHLAND INTERCHANGE - MOORE COUNTY INTERCHANGE 230KV CKT 1
FDNS	06ALL	2	16WP	G15_031	FROM->TO	POTTER COUNTY INTERCHANGE (WAUK 90343-A) 345/230/13.2KV TRANSFORMER CKT 1	560	560	0.22114	102.0618	HITCHLAND INTERCHANGE - MOORE COUNTY INTERCHANGE 230KV CKT 1
FDNS	06ALL	2	16WP	G15_031	FROM->TO	POTTER COUNTY INTERCHANGE (WAUK 90343-A) 345/230/13.2KV TRANSFORMER CKT 1	560	560	0.22114	101.6956	HITCHLAND INTERCHANGE - MOORE COUNTY INTERCHANGE 230KV CKT 1
FDNS	06ALL	2	16WP	G15_031	FROM->TO	POTTER COUNTY INTERCHANGE (WAUK 90343-A) 345/230/13.2KV TRANSFORMER CKT 1	560	560	0.22114	101.6956	HITCHLAND INTERCHANGE - MOORE COUNTY INTERCHANGE 230KV CKT 1
FDNS	06ALL	2	16WP	G15_031	FROM->TO	POTTER COUNTY INTERCHANGE (WAUK 90343-A) 345/230/13.2KV TRANSFORMER CKT 1	560	560	0.20903	101.1885	MOORE COUNTY INTERCHANGE - POTTER COUNTY INTERCHANGE 230KV CKT 1
FDNS	06ALL	2	16WP	G15_031	FROM->TO	POTTER COUNTY INTERCHANGE (WAUK 90343-A) 345/230/13.2KV TRANSFORMER CKT 1	560	560	0.20903	101.1885	MOORE COUNTY INTERCHANGE - POTTER COUNTY INTERCHANGE 230KV CKT 1
FDNS	06ALL	2	16WP	G15_031	FROM->TO	POTTER COUNTY INTERCHANGE (WAUK 90343-A) 345/230/13.2KV TRANSFORMER CKT 1	560	560	0.21358	100.866	STLN-DEMARC6 - SWEETWATER 230KV CKT 1
FDNS	06ALL	2	16WP	G15_031	FROM->TO	POTTER COUNTY INTERCHANGE (WAUK 90343-A) 345/230/13.2KV TRANSFORMER CKT 1	560	560	0.21358	100.8556	STATELINE INTERCHANGE - STLN-DEMARC6 230KV CKT 1
FDNS	06ALL	2	16WP	G15_031	FROM->TO	POTTER COUNTY INTERCHANGE (WAUK 90343-A) 345/230/13.2KV TRANSFORMER CKT 1	560	560	0.21358	100.8266	P12:230:AEPW-SPS:SWEETWT6:WHEELER 6
FDNS	06ALL	2	16WP	G15_031	FROM->TO	POTTER COUNTY INTERCHANGE (WAUK 90343-A) 345/230/13.2KV TRANSFORMER CKT 1	560	560	0.20903	100.8228	MOORE COUNTY INTERCHANGE - POTTER COUNTY INTERCHANGE 230KV CKT 1
FDNS	06ALL	2	16WP	G15_031	FROM->TO	POTTER COUNTY INTERCHANGE (WAUK 90343-A) 345/230/13.2KV TRANSFORMER CKT 1	560	560	0.20903	100.8228	MOORE COUNTY INTERCHANGE - POTTER COUNTY INTERCHANGE 230KV CKT 1
FDNS	06ALL	2	16WP	G15_031	FROM->TO	POTTER COUNTY INTERCHANGE (WAUK 90343-A) 345/230/13.2KV TRANSFORMER CKT 1	560	560	0.21358	100.1775	STLN-DEMARC6 - SWEETWATER 230KV CKT 1
FDNS	06ALL	2	16WP	G15_031	FROM->TO	POTTER COUNTY INTERCHANGE (WAUK 90343-A) 345/230/13.2KV TRANSFORMER CKT 1	560	560	0.21358	100.1653	STATELINE INTERCHANGE - STLN-DEMARC6 230KV CKT 1
FDNS	06ALL	2	16WP	G15_031	FROM->TO	POTTER COUNTY INTERCHANGE (WAUK 90343-A) 345/230/13.2KV TRANSFORMER CKT 1	560	560	0.21358	100.1388	P12:230:AEPW-SPS:SWEETWT6:WHEELER 6
FDNS	06ALL	2	20WP	G15_031	FROM->TO	POTTER COUNTY INTERCHANGE (WAUK 90343-A) 345/230/13.2KV TRANSFORMER CKT 1	560	560	0.21581	100.0866	SWISHER COUNTY INTERCHANGE - TUCO_2 230.00 230KV CKT 1
FDNS	06ALL	2	16WP	G15_031	FROM->TO	POTTER COUNTY INTERCHANGE (WAUK 90343-A) 345/230/13.2KV TRANSFORMER CKT 1	560	560	0.20438	100	GRAPEVINE INTERCHANGE - NICHOLS STATION 230KV CKT 1
FDNS	06ALL	2	16WP	G15_031	FROM->TO	POTTER COUNTY INTERCHANGE (WAUK 90343-A) 345/230/13.2KV TRANSFORMER CKT 1	560	560	0.20438	100	GRAPEVINE INTERCHANGE - NICHOLS STATION 230KV CKT 1
FDNS	06ALL	2	16WP	G15_031	FROM->TO	TUCO INTERCHANGE (GE M1022338) 345/230/13.2KV TRANSFORMER CKT 1	560	560	0.20692	120.5418	TUCO INTERCHANGE (SIEM 8743066) 345/230/13.2KV TRANSFORMER CKT 2
FDNS	06ALL	2	16WP	G15_031	FROM->TO	TUCO INTERCHANGE (GE M1022338) 345/230/13.2KV TRANSFORMER CKT 1	560	560	0.20692	120.5418	TUCO INTERCHANGE (SIEM 8743066) 345/230/13.2KV TRANSFORMER CKT 2
FDNS	06ALL	2	16WP	G15_031	FROM->TO	TUCO INTERCHANGE (GE M1022338) 345/230/13.2KV TRANSFORMER CKT 1	560	560	0.2308	120.3223	TUCO_2 345.00 (TUCO_2 XFMR) 345/230/13.2KV TRANSFORMER CKT 1
FDNS	06ALL	2	16WP	G15_031	FROM->TO	TUCO INTERCHANGE (GE M1022338) 345/230/13.2KV TRANSFORMER CKT 1	560	560	0.2308	118.6764	TUCO_2 345.00 (TUCO_2 XFMR) 345/230/13.2KV TRANSFORMER CKT 1
FDNS	06ALL	2	16WP	G15_031	FROM->TO	TUCO INTERCHANGE (GE M1022338) 345/230/13.2KV TRANSFORMER CKT 1	560	560	0.20692	118.6764	TUCO INTERCHANGE (SIEM 8743066) 345/230/13.2KV TRANSFORMER CKT 2
FDNS	06ALL	2	16WP	G15_031	FROM->TO	TUCO INTERCHANGE (GE M1022338) 345/230/13.2KV TRANSFORMER CKT 1	560	560	0.20692	118.6764	TUCO INTERCHANGE (SIEM 8743066) 345/230/13.2KV TRANSFORMER CKT 2
FDNS	06ALL	2	17G	G15_031	FROM->TO	TUCO INTERCHANGE (GE M1022338) 345/230/13.2KV TRANSFORMER CKT 1	560	560	0.19729	114.4569	TUCO INTERCHANGE (SIEM 8743066) 345/230/13.2KV TRANSFORMER CKT 2
FDNS	06ALL	2	17G	G15_031	FROM->TO	TUCO INTERCHANGE (GE M1022338) 345/230/13.2KV TRANSFORMER CKT 1	560	560	0.2214	114.4414	TUCO_2 345.00 (TUCO_2 XFMR) 345/230/13.2KV TRANSFORMER CKT 1
FDNS	06ALL	2	17G	G15_031	FROM->TO	TUCO INTERCHANGE (GE M1022338) 345/230/13.2KV TRANSFORMER CKT 1	560	560	0.2214	112.333	TUCO_2 345.00 (TUCO_2 XFMR) 345/230/13.2KV TRANSFORMER CKT 1

SOLUTION	GROUP	SCENARIO	SEASON	SOURCE	DIRECTION	MONITORED ELEMENT	RATEA (MVA)	RATEB(MVA)	TDF	TC%LOADING (% MVA)	CONTINGENCY
FDNS	06ALL	2	17G	G15_031	FROM->TO	TUCO INTERCHANGE (GE M1022338) 345/230/13.2KV TRANSFORMER CKT 1	560	560	0.19729	112.1874	TUCO INTERCHANGE (SIEM 8743066) 345/230/13.2KV TRANSFORMER CKT 2
FDNS	06ALL	2	20WP	G15_031	FROM->TO	TUCO INTERCHANGE (GE M1022338) 345/230/13.2KV TRANSFORMER CKT 1	560	560	0.20422	109.1954	TUCO_2 345.00 (TUCO_2 XFMR) 345/230/13.2KV TRANSFORMER CKT 1
FDNS	06ALL	2	20WP	G15_031	FROM->TO	TUCO INTERCHANGE (GE M1022338) 345/230/13.2KV TRANSFORMER CKT 1	560	560	0.20422	107.4489	TUCO_2 345.00 (TUCO_2 XFMR) 345/230/13.2KV TRANSFORMER CKT 1
FDNS	06ALL	2	20L	G15_031	FROM->TO	TUCO_2 345.00 (TUCO_2 XFMR) 345/230/13.2KV TRANSFORMER CKT 1	560	560	0.20608	190.1451	TUCO INTERCHANGE - TUCO_2 345.00 345KV CKT 1
FDNS	06ALL	2	20WP	G15_031	FROM->TO	TUCO_2 345.00 (TUCO_2 XFMR) 345/230/13.2KV TRANSFORMER CKT 1	560	560	0.24289	189.4604	TUCO INTERCHANGE - TUCO_2 345.00 345KV CKT 1
FDNS	06ALL	2	17G	G15_031	FROM->TO	TUCO_2 345.00 (TUCO_2 XFMR) 345/230/13.2KV TRANSFORMER CKT 1	560	560	0.24183	187.4581	TUCO INTERCHANGE - TUCO_2 345.00 345KV CKT 1
FDNS	06ALL	2	20WP	G15_031	FROM->TO	TUCO_2 345.00 (TUCO_2 XFMR) 345/230/13.2KV TRANSFORMER CKT 1	560	560	0.24289	184.0471	TUCO INTERCHANGE - TUCO_2 345.00 345KV CKT 1
FDNS	06ALL	2	20L	G15_031	FROM->TO	TUCO_2 345.00 (TUCO_2 XFMR) 345/230/13.2KV TRANSFORMER CKT 1	560	560	0.20608	184.0031	TUCO INTERCHANGE - TUCO_2 345.00 345KV CKT 1
FDNS	06ALL	2	17G	G15_031	FROM->TO	TUCO_2 345.00 (TUCO_2 XFMR) 345/230/13.2KV TRANSFORMER CKT 1	560	560	0.24183	182.4703	TUCO INTERCHANGE - TUCO_2 345.00 345KV CKT 1
FDNS	06ALL	2	16WP	G15_031	FROM->TO	TUCO_2 345.00 (TUCO_2 XFMR) 345/230/13.2KV TRANSFORMER CKT 1	560	560	0.25235	175.5009	TUCO INTERCHANGE - TUCO_2 345.00 345KV CKT 1
FDNS	06ALL	2	16WP	G15_031	FROM->TO	TUCO_2 345.00 (TUCO_2 XFMR) 345/230/13.2KV TRANSFORMER CKT 1	560	560	0.25235	172.6087	TUCO INTERCHANGE - TUCO_2 345.00 345KV CKT 1
FDNS	06ALL	2	20SP	G15_031	FROM->TO	TUCO_2 345.00 (TUCO_2 XFMR) 345/230/13.2KV TRANSFORMER CKT 1	560	560	0.2492	166.4217	TUCO INTERCHANGE - TUCO_2 345.00 345KV CKT 1
FDNS	06ALL	2	17SP	G15_031	FROM->TO	TUCO_2 345.00 (TUCO_2 XFMR) 345/230/13.2KV TRANSFORMER CKT 1	560	560	0.25003	164.6979	TUCO INTERCHANGE - TUCO_2 345.00 345KV CKT 1
FDNS	06ALL	2	20SP	G15_031	FROM->TO	TUCO_2 345.00 (TUCO_2 XFMR) 345/230/13.2KV TRANSFORMER CKT 1	560	560	0.2492	163.5805	TUCO INTERCHANGE - TUCO_2 345.00 345KV CKT 1
FDNS	06ALL	2	17SP	G15_031	FROM->TO	TUCO_2 345.00 (TUCO_2 XFMR) 345/230/13.2KV TRANSFORMER CKT 1	560	560	0.25003	162.1713	TUCO INTERCHANGE - TUCO_2 345.00 345KV CKT 1
FDNS	06ALL	2	16WP	G15_031	FROM->TO	TUCO_2 345.00 (TUCO_2 XFMR) 345/230/13.2KV TRANSFORMER CKT 1	560	560	0.24323	112.6263	TUCO INTERCHANGE (GE M1022338) 345/230/13.2KV TRANSFORMER CKT 1
FDNS	06ALL	2	16WP	G15_031	FROM->TO	TUCO_2 345.00 (TUCO_2 XFMR) 345/230/13.2KV TRANSFORMER CKT 1	560	560	0.24323	112.6263	TUCO INTERCHANGE (GE M1022338) 345/230/13.2KV TRANSFORMER CKT 1
FDNS	06ALL	2	16WP	G15_031	FROM->TO	TUCO_2 345.00 (TUCO_2 XFMR) 345/230/13.2KV TRANSFORMER CKT 1	560	560	0.24323	111.4972	TUCO INTERCHANGE (GE M1022338) 345/230/13.2KV TRANSFORMER CKT 1
FDNS	06ALL	2	16WP	G15_031	FROM->TO	TUCO_2 345.00 (TUCO_2 XFMR) 345/230/13.2KV TRANSFORMER CKT 1	560	560	0.24323	111.4972	TUCO INTERCHANGE (GE M1022338) 345/230/13.2KV TRANSFORMER CKT 1
FDNS	06ALL	2	17G	G15_031	FROM->TO	TUCO_2 345.00 (TUCO_2 XFMR) 345/230/13.2KV TRANSFORMER CKT 1	560	560	0.23462	107.1719	TUCO INTERCHANGE (GE M1022338) 345/230/13.2KV TRANSFORMER CKT 1
FDNS	06ALL	2	16WP	G15_031	FROM->TO	TUCO_2 345.00 (TUCO_2 XFMR) 345/230/13.2KV TRANSFORMER CKT 1	560	560	0.23153	105.8242	TUCO INTERCHANGE (SIEM 8743066) 345/230/13.2KV TRANSFORMER CKT 2
FDNS	06ALL	2	16WP	G15_031	FROM->TO	TUCO_2 345.00 (TUCO_2 XFMR) 345/230/13.2KV TRANSFORMER CKT 1	560	560	0.23153	105.8242	TUCO INTERCHANGE (SIEM 8743066) 345/230/13.2KV TRANSFORMER CKT 2
FDNS	06ALL	2	17G	G15_031	FROM->TO	TUCO_2 345.00 (TUCO_2 XFMR) 345/230/13.2KV TRANSFORMER CKT 1	560	560	0.23462	105.6097	TUCO INTERCHANGE (GE M1022338) 345/230/13.2KV TRANSFORMER CKT 1
FDNS	06ALL	2	16WP	G15_031	FROM->TO	TUCO_2 345.00 (TUCO_2 XFMR) 345/230/13.2KV TRANSFORMER CKT 1	560	560	0.23153	104.8168	TUCO INTERCHANGE (SIEM 8743066) 345/230/13.2KV TRANSFORMER CKT 2
FDNS	06ALL	2	16WP	G15_031	FROM->TO	TUCO_2 345.00 (TUCO_2 XFMR) 345/230/13.2KV TRANSFORMER CKT 1	560	560	0.23153	104.8168	TUCO INTERCHANGE (SIEM 8743066) 345/230/13.2KV TRANSFORMER CKT 2
FDNS	06ALL	2	20WP	G15_031	FROM->TO	TUCO_2 345.00 (TUCO_2 XFMR) 345/230/13.2KV TRANSFORMER CKT 1	560	560	0.21987	102.7774	TUCO INTERCHANGE (GE M1022338) 345/230/13.2KV TRANSFORMER CKT 1
FDNS	06ALL	2	20WP	G15_031	FROM->TO	TUCO_2 345.00 (TUCO_2 XFMR) 345/230/13.2KV TRANSFORMER CKT 1	560	560	0.21987	102.7774	TUCO INTERCHANGE (GE M1022338) 345/230/13.2KV TRANSFORMER CKT 1
FDNS	06ALL	2	20WP	G15_031	FROM->TO	TUCO_2 345.00 (TUCO_2 XFMR) 345/230/13.2KV TRANSFORMER CKT 1	560	560	0.21987	101.4823	TUCO INTERCHANGE (GE M1022338) 345/230/13.2KV TRANSFORMER CKT 1
FDNS	06ALL	2	20WP	G15_031	FROM->TO	TUCO_2 345.00 (TUCO_2 XFMR) 345/230/13.2KV TRANSFORMER CKT 1	560	560	0.21987	101.4823	TUCO INTERCHANGE (GE M1022338) 345/230/13.2KV TRANSFORMER CKT 1
FDNS	06ALL	2	17G	G15_031	FROM->TO	TUCO_2 345.00 (TUCO_2 XFMR) 345/230/13.2KV TRANSFORMER CKT 1	560	560	0.22345	100.7205	TUCO INTERCHANGE (SIEM 8743066) 345/230/13.2KV TRANSFORMER CKT 2
FDNS	06ALL	2	20L	G15_031	FROM->TO	TUCO_2 345.00 (TUCO_2 XFMR) 345/230/13.2KV TRANSFORMER CKT 1	560	560	0.20016	100.3358	TUCO INTERCHANGE (GE M1022338) 345/230/13.2KV TRANSFORMER CKT 1
FDNS	06ALL	2	20L	G15_031	FROM->TO	TUCO_2 345.00 (TUCO_2 XFMR) 345/230/13.2KV TRANSFORMER CKT 1	560	560	0.20016	100.3358	TUCO INTERCHANGE (GE M1022338) 345/230/13.2KV TRANSFORMER CKT 1
FDNS	06NR	3	17G	G15_031	TO->FROM	AMARILLO SOUTH INTERCHANGE - G15031_T 230.00 230KV CKT 1	318.7	350.57	0.29129	103.2239	NEWHART 230 - POTTER COUNTY INTERCHANGE 230KV CKT 1
FDNS	06NR	3	20L	G15_031	FROM->TO	BUSHLAND INTERCHANGE - POTTER COUNTY INTERCHANGE 230KV CKT 1	318.7	350.57	0.02993	102.6252	NEWHART 230 - POTTER COUNTY INTERCHANGE 230KV CKT 1
FDNS	06ALL	3	20SP	G15_031	FROM->TO	CHISHOLM6 230.00 - ELK CITY 230KV 230KV CKT 1	353	353	0.06347	104.1963	BASE CASE
FDNS	06ALL	3	17SP	G15_031	FROM->TO	CHISHOLM6 230.00 - ELK CITY 230KV 230KV CKT 1	353	353	0.06371	101.9728	BASE CASE
FDNS	06ALL	3	17G	G15_031	TO->FROM	CIMARRON - MINCO 345KV CKT 1	956	956	0.22207	132.797	G14-057T 345.00 - SUNNYSIDE 345KV CKT 1
FDNS	06ALL	3	20WP	G15_031	TO->FROM	CIMARRON - MINCO 345KV CKT 1	956	956	0.21858	131.9094	G14-057T 345.00 - SUNNYSIDE 345KV CKT 1
FDNS	06ALL	3	17G	G15_031	TO->FROM	CIMARRON - MINCO 345KV CKT 1	956	956	0.22207	127.3481	G14-057T 345.00 - LAWTON EASTSIDE 345KV CKT 1
FDNS	06ALL	3	20WP	G15_031	TO->FROM	CIMARRON - MINCO 345KV CKT 1	956	956	0.21858	126.3057	G14-057T 345.00 - LAWTON EASTSIDE 345KV CKT 1
FDNS	06ALL	3	16WP	G15_031	TO->FROM	CIMARRON - MINCO 345KV CKT 1	956	956	0.22898	125.3645	G14-057T 345.00 - SUNNYSIDE 345KV CKT 1
FDNS	06ALL	3	17SP	G15_031	TO->FROM	CIMARRON - MINCO 345KV CKT 1	956	956	0.22562	124.3731	G14-057T 345.00 - SUNNYSIDE 345KV CKT 1
FDNS	06ALL	3	20SP	G15_031	TO->FROM	CIMARRON - MINCO 345KV CKT 1	956	956	0.22459	121.3286	G14-057T 345.00 - SUNNYSIDE 345KV CKT 1
FDNS	06ALL	3	16WP	G15_031	TO->FROM	CIMARRON - MINCO 345KV CKT 1	956	956	0.22898	119.9255	G14-057T 345.00 - LAWTON EASTSIDE 345KV CKT 1
FDNS	06ALL	3	17SP	G15_031	TO->FROM	CIMARRON - MINCO 345KV CKT 1	956	956	0.22562	118.8978	G14-057T 345.00 - LAWTON EASTSIDE 345KV CKT 1
FDNS	06ALL	3	20SP	G15_031	TO->FROM	CIMARRON - MINCO 345KV CKT 1	956	956	0.22459	116.0894	G14-057T 345.00 - LAWTON EASTSIDE 345KV CKT 1
FDNS	06ALL	3	17G	G15_031	TO->FROM	CIMARRON - MINCO 345KV CKT 1	956	956	0.21248	109.1031	CHISHOLM7 345.00 - WOODWARD DISTRICT EHV 345KV CKT 1
FDNS	06ALL	3	17SP	G15_031	TO->FROM	CIMARRON - MINCO 345KV CKT 1	956	956	0.19599	105.6361	MATHWSN7 345.00 - TATONGA7 345.00 345KV CKT 1
FDNS	06ALL	3	20WP	G15_031	TO->FROM	CIMARRON - MINCO 345KV CKT 1	956	956	0.21141	105.2058	CHISHOLM7 345.00 - WOODWARD DISTRICT EHV 345KV CKT 1
FDNS	06ALL	3	16WP	G15_031	TO->FROM	CIMARRON - MINCO 345KV CKT 1	956	956	0.19798	105.1594	MATHWSN7 345.00 - TATONGA7 345.00 345KV CKT 1
FDNS	06ALL	3	20SP	G15_031	TO->FROM	CIMARRON - MINCO 345KV CKT 1	956	956	0.19516	104.8651	MATHWSN7 345.00 - TATONGA7 345.00 345KV CKT 1
FDNS	06ALL	3	20SP	G15_031	TO->FROM	CIMARRON - MINCO 345KV CKT 1	956	956	0.21819	103.3967	CHISHOLM7 345.00 - WOODWARD DISTRICT EHV 345KV CKT 1
FDNS	06ALL	3	17SP	G15_031	TO->FROM	CIMARRON - MINCO 345KV CKT 1	956	956	0.21922	102.6701	CHISHOLM7 345.00 - WOODWARD DISTRICT EHV 345KV CKT 1
FDNS	06ALL	3	17SP	G15_031	TO->FROM	CIMARRON - MINCO 345KV CKT 1	956	956	0.19599	100.4546	G11_051T 345.00 - TATONGA7 345.00 345KV CKT 1
FDNS	06ALL	3	16WP	G15_031	TO->FROM	CIMARRON - MINCO 345KV CKT 1	956	956	0.19798	99.8	G11_051T 345.00 - TATONGA7 345.00 345KV CKT 1
FDNS	06ALL	3	20SP	G15_031	TO->FROM	CIMARRON - MINCO 345KV CKT 1	956	956	0.19516	99.7	G11_051T 345.00 - TATONGA7 345.00 345KV CKT 1
FDNS	06ALL	3	20L	G15_031	TO->FROM	G14-057T 345.00 - LAWTON EASTSIDE 345KV CKT 1	717	789	0.0936	106.0801	BASE CASE
FDNS	06ALL	3	20L	G15_031	FROM->TO	G14-057T 345.00 - SUNNYSIDE 345KV CKT 1	717	789	0.0936	119.3111	BASE CASE
FDNS	06ALL	3	20WP	G15_031	FROM->TO	G14-057T 345.00 - SUNNYSIDE 345KV CKT 1	717	789	0.11713	107.198	BASE CASE
FDNS	06ALL	3	17G	G15_031	FROM->TO	G14-057T 345.00 - SUNNYSIDE 345KV CKT 1	717	789	0.11932	106.7167	BASE CASE
FDNS	06ALL	3	16WP	G15_031	FROM->TO	G14-057T 345.00 - SUNNYSIDE 345KV CKT 1	717	789	0.12279	105.3992	BASE CASE
FDNS	06NR	3	20L	G15_031	FROM->TO	G14-074T 345.00 - OKLAUNION 345KV CKT 1	1022	1124	0.03478	102.6829	AMARILLO SOUTH INTERCHANGE - G15031_T 230.00 230KV CKT 1
FDNS	06NR	3	17G	G15_031	FROM->TO	G14-074T 345.00 - OKLAUNION 345KV CKT 1	1022	1124	0.03517	99.8	AMARILLO SOUTH INTERCHANGE - G15031_T 230.00 230KV CKT 1
FDNS	00NR	3	25SP	G15_031	TO->FROM	JONES STATION - TUCO INTERCHANGE 230KV CKT 1	343.79	343.79	0.11152	130.1614	CARLISLE INTERCHANGE - TUCO INTERCHANGE 230KV CKT 1
FDNS	00NR	3	25SP	G15_031	TO->FROM	JONES STATION - TUCO INTERCHANGE 230KV CKT 1	343.79	343.79	0.11152	130.1614	CARLISLE INTERCHANGE - TUCO INTERCHANGE 230KV CKT 1
FDNS	00NR	3	25SP	G15_031	TO->FROM	JONES STATION - TUCO INTERCHANGE 230KV CKT 1	343.79	343.79	0.08803	113.3309	GEN526333 1-JONES GEN #3 21 KV
FDNS	00NR	3	25SP	G15_031	TO->FROM	JONES STATION - TUCO INTERCHANGE 230KV CKT 1	343.79	343.79	0.08803	112.9359	GEN526334 1-JONES_4 116.500
FDNS	00NR	3	25SP	G15_031	TO->FROM	JONES STATION - TUCO INTERCHANGE 230KV CKT 1	343.79	343.79	0.10346	108.5941	TUCO INTERCHANGE - YOAKUM_345 345.00 345KV CKT 1
FDNS	00NR	3	25SP	G15_031	TO->FROM	JONES STATION - TUCO INTERCHANGE 230KV CKT 1	343.79	343.79	0.10108	103.864	CARLISLE INTERCHANGE - WOLFFORTH INTERCHANGE 230KV CKT 1
FDNS	00NR	3	25SP	G15_031	TO->FROM	JONES STATION - TUCO INTERCHANGE 230KV CKT 1	343.79	343.79	0.09601	101.6819	PLANT X STATION - SUNDOWN INTERCHANGE 230KV CKT 1
FDNS	00NR	3	25SP	G15_031	TO->FROM	JONES STATION - TUCO INTERCHANGE 230KV CKT 1	343.79	343.79	0.09601	101.6819	PLANT X STATION - SUNDOWN INTERCHANGE 230KV CKT 1
FDNS	00NR	3	25SP	G15_031	TO->FROM	JONES STATION - TUCO INTERCHANGE 230KV CKT 1	343.79	343.79	0.08803	100.8779	GEN526332 1-JONES GEN #2 21 KV
FDNS	00NR	3	25SP	G15_031	TO->FROM	JONES STATION - TUCO INTERCHANGE 230KV CKT 1	343.79	343.79	0.08803	100.876	GEN526331 1-JONES GEN #1 22 KV
FDNS	00NR	3	25SP	G15_031	TO->FROM	JONES STATION - TUCO INTERCHANGE 230KV CKT 1	343.79	343.79	0.08786	100.7208	TUCO INTERCHANGE (ENRCO 136401) 230/115/13.2KV TRANSFORMER CKT 1
FDNS	00NR	3	25SP	G15_031	TO->FROM	JONES STATION - TUCO INTERCHANGE 230KV CKT 1	343.79	343.79	0.08786	100.7208	TUCO INTERCHANGE (ENRCO 136401) 230/115/13.2KV TRANSFORMER CKT 1
FDNS	00NR	3	25SP	G15_031	TO->FROM	JONES STATION - TUCO INTERCHANGE 230KV CKT 1	343.79	343.79	0.08786	100.7208	TUCO INTERCHANGE (ENRCO 136401) 230/115/13.2KV TRANSFORMER CKT 2
FDNS	00NR	3	25SP	G15_031	TO->FROM	JONES STATION - TUCO INTERCHANGE 230KV CKT 1	343.79	343.79	0.08786	100.7208	TUCO INTERCHANGE (ENRCO 136401) 230/115/13.2KV TRANSFORMER CKT 2
FDNS	00NR	3	25SP	G15_031	TO->FROM	JONES STATION - TUCO INTERCHANGE 230KV CKT 1	343.79	343.79	0.09708	99.8	LUBBOCK EAST INTERCHANGE - TUCO INTERCHANGE 115KV CKT 1
FDNS	00NR	3	25SP	G15_031	TO->FROM	JONES STATION - TUCO INTERCHANGE 230KV CKT 1	343.79	343.79	0.09708	99.8	LUBBOCK EAST INTERCHANGE - TUCO INTERCHANGE 115KV CKT 1

SOLUTION	GROUP	SCENARIO	SEASON	SOURCE	DIRECTION	MONITORED ELEMENT	RATEA (MVA)	RATEB(MVA)	TDF	TC%LOADING (% MVA)	CONTINGENCY
FDNS	00NR	3	25SP	G15_031	TO->FROM	KRESS INTERCHANGE - SWISHER COUNTY INTERCHANGE 115KV CKT 1	218	239	0.21621	113.2766	NEWHART 230 - SWISHER COUNTY INTERCHANGE 230KV CKT 1
FDNS	00NR	3	25SP	G15_031	TO->FROM	KRESS INTERCHANGE - SWISHER COUNTY INTERCHANGE 115KV CKT 1	218	239	0.1125	104.9891	PALO DURO SUB - RANDALL COUNTY INTERCHANGE 115KV CKT 1
FDNS	00NR	3	25SP	G15_031	TO->FROM	KRESS INTERCHANGE - SWISHER COUNTY INTERCHANGE 115KV CKT 1	218	239	0.12235	104.8662	BASE CASE
FDNS	00NR	3	25SP	G15_031	TO->FROM	KRESS INTERCHANGE - SWISHER COUNTY INTERCHANGE 115KV CKT 1	218	239	0.1125	103.6722	P12:115:SPS:T66.1.RNDALL.HAPPY
FDNS	00NR	3	25SP	G15_031	TO->FROM	KRESS INTERCHANGE - SWISHER COUNTY INTERCHANGE 115KV CKT 1	218	239	0.1125	103.5618	HAPPY INTERCHANGE - PALO DURO SUB 115KV CKT 1
FDNS	00NR	3	25SP	G15_031	TO->FROM	KRESS INTERCHANGE - SWISHER COUNTY INTERCHANGE 115KV CKT 1	218	239	0.12076	101.0718	FLOYD COUNTY INTERCHANGE - TUCO INTERCHANGE 115KV CKT 1
FDNS	00NR	3	25SP	G15_031	TO->FROM	KRESS INTERCHANGE - SWISHER COUNTY INTERCHANGE 115KV CKT 1	218	239	0.12076	101.0718	FLOYD COUNTY INTERCHANGE - TUCO INTERCHANGE 115KV CKT 1
FDNS	00NR	3	25SP	G15_031	TO->FROM	KRESS INTERCHANGE - SWISHER COUNTY INTERCHANGE 115KV CKT 1	218	239	0.12529	100.4344	NEWHART 230 (UPDATE LATER) 230/115/13.2KV TRANSFORMER CKT 2
FDNS	00NR	3	25SP	G15_031	TO->FROM	KRESS INTERCHANGE - SWISHER COUNTY INTERCHANGE 115KV CKT 1	218	239	0.12529	100.4344	NEWHART 230 (UPDATE LATER) 230/115/13.2KV TRANSFORMER CKT 2
FDNS	00NR	3	25SP	G15_031	TO->FROM	KRESS INTERCHANGE - SWISHER COUNTY INTERCHANGE 115KV CKT 1	218	239	0.12529	100.4344	NEWHART 230 (WAUK WT01105) 230/115/13.2KV TRANSFORMER CKT 1
FDNS	00NR	3	25SP	G15_031	TO->FROM	KRESS INTERCHANGE - SWISHER COUNTY INTERCHANGE 115KV CKT 1	218	239	0.12529	100.4344	NEWHART 230 (WAUK WT01105) 230/115/13.2KV TRANSFORMER CKT 1
FDNS	00NR	3	25SP	G15_031	TO->FROM	KRESS INTERCHANGE - SWISHER COUNTY INTERCHANGE 115KV CKT 1	218	239	0.11973	100.3853	PLANT X STATION (WH ALM20171) 230/115/13.2KV TRANSFORMER CKT 1
FDNS	00NR	3	25SP	G15_031	TO->FROM	KRESS INTERCHANGE - SWISHER COUNTY INTERCHANGE 115KV CKT 1	218	239	0.11973	100.3853	PLANT X STATION (WH ALM20171) 230/115/13.2KV TRANSFORMER CKT 1
FDNS	00NR	3	25SP	G15_031	TO->FROM	KRESS INTERCHANGE - SWISHER COUNTY INTERCHANGE 115KV CKT 1	218	239	0.13369	100.3709	TUCO INTERCHANGE - TUCO_2 230.00 230KV CKT 1
FDNS	00NR	3	25SP	G15_031	TO->FROM	KRESS INTERCHANGE - SWISHER COUNTY INTERCHANGE 115KV CKT 1	218	239	0.12229	100.3039	TUCO INTERCHANGE (ENRCO 136401) 230/115/13.2KV TRANSFORMER CKT 1
FDNS	00NR	3	25SP	G15_031	TO->FROM	KRESS INTERCHANGE - SWISHER COUNTY INTERCHANGE 115KV CKT 1	218	239	0.12229	100.3039	TUCO INTERCHANGE (ENRCO 136401) 230/115/13.2KV TRANSFORMER CKT 1
FDNS	00NR	3	25SP	G15_031	TO->FROM	KRESS INTERCHANGE - SWISHER COUNTY INTERCHANGE 115KV CKT 1	218	239	0.12229	100.3039	TUCO INTERCHANGE (ENRCO 136401) 230/115/13.2KV TRANSFORMER CKT 2
FDNS	00NR	3	25SP	G15_031	TO->FROM	KRESS INTERCHANGE - SWISHER COUNTY INTERCHANGE 115KV CKT 1	218	239	0.12229	100.3039	TUCO INTERCHANGE (ENRCO 136401) 230/115/13.2KV TRANSFORMER CKT 2
FDNS	00NR	3	20SP	G15_031	TO->FROM	KRESS INTERCHANGE - SWISHER COUNTY INTERCHANGE 115KV CKT 1	218	239	0.21689	100.2669	NEWHART 230 - SWISHER COUNTY INTERCHANGE 230KV CKT 1
FDNS	00NR	3	17SP	G15_031	TO->FROM	KRESS INTERCHANGE - SWISHER COUNTY INTERCHANGE 115KV CKT 1	218	239	0.22147	100.0801	NEWHART 230 - SWISHER COUNTY INTERCHANGE 230KV CKT 1
FDNS	00NR	3	25SP	G15_031	TO->FROM	KRESS INTERCHANGE - SWISHER COUNTY INTERCHANGE 115KV CKT 1	218	239	0.20112	99.8	SWISHER COUNTY INTERCHANGE - TUCO_2 230.00 230KV CKT 1
FDNS	00NR	3	25SP	G15_031	TO->FROM	KRESS INTERCHANGE - SWISHER COUNTY INTERCHANGE 115KV CKT 1	218	239	0.11419	99.5	HALE CO INTERCHANGE - TUCO INTERCHANGE 115KV CKT 1
FDNS	00NR	3	25SP	G15_031	TO->FROM	KRESS INTERCHANGE - SWISHER COUNTY INTERCHANGE 115KV CKT 1	218	239	0.11419	99.5	HALE CO INTERCHANGE - TUCO INTERCHANGE 115KV CKT 1
FDNS	00NR	3	25SP	G15_031	FROM->TO	LUBBOCK POWER & LIGHT-HOLLY PLANT (SHIH T101039) 230/69/13.5KV TRANSFORMER CKT 1	224	224	0.0358	104.7002	LUBBOCK POWER & LIGHT-SOUTHEAST - LUBBOCK SOUTH INTERCHANGE 230KV CKT 1
FDNS	00NR	3	25SP	G15_031	FROM->TO	LUBBOCK POWER & LIGHT-HOLLY PLANT (SHIH T101039) 230/69/13.5KV TRANSFORMER CKT 1	224	224	0.0358	104.6872	P12:LPL:SPS:K64.1.LP-SE.LUBBS
FDNS	00NR	3	25SP	G15_031	FROM->TO	LUBBOCK POWER & LIGHT-HOLLY PLANT (SHIH T101039) 230/69/13.5KV TRANSFORMER CKT 1	224	224	0.03501	101.9683	LUBBOCK EAST INTERCHANGE - LUBBOCK POWER & LIGHT-WADSWORTH 230KV CKT 1
FDNS	00NR	3	25SP	G15_031	FROM->TO	LUBBOCK POWER & LIGHT-HOLLY PLANT (SHIH T101039) 230/69/13.5KV TRANSFORMER CKT 1	224	224	0.03501	101.9535	P12:230:LPL:K57.1.LP-WADS.LUBBE
FDNS	00NR	3	25SP	G15_031	FROM->TO	LUBBOCK POWER & LIGHT-HOLLY PLANT (SHIH T101039) 230/69/13.5KV TRANSFORMER CKT 1	224	224	0.03501	101.9534	LUBBOCK POWER & LIGHT-WADSWORTH (SHIH T101038) 230/69/13.5KV TRANSFORMER CKT 1
FDNS	00NR	3	25SP	G15_031	FROM->TO	LUBBOCK POWER & LIGHT-HOLLY PLANT (SHIH T101039) 230/69/13.5KV TRANSFORMER CKT 1	224	224	0.03501	101.9534	LUBBOCK POWER & LIGHT-WADSWORTH (SHIH T101038) 230/69/13.5KV TRANSFORMER CKT 1
FDNS	06ALL	3	20WP	G15_031	FROM->TO	POTTER COUNTY INTERCHANGE (WAUK 90343-A) 345/230/13.2KV TRANSFORMER CKT 1	560	560	0.20162	113.6922	P12:230:AEPW:ELKCITY6:SWEETWT6
FDNS	06ALL	3	20WP	G15_031	FROM->TO	POTTER COUNTY INTERCHANGE (WAUK 90343-A) 345/230/13.2KV TRANSFORMER CKT 1	560	560	0.20072	112.4685	CHISHOLM6 230.00 - SWEETWATER 230KV CKT 1
FDNS	06ALL	3	20WP	G15_031	FROM->TO	POTTER COUNTY INTERCHANGE (WAUK 90343-A) 345/230/13.2KV TRANSFORMER CKT 1	560	560	0.20162	111.2858	P12:230:AEPW:ELKCITY6:SWEETWT6
FDNS	06ALL	3	20WP	G15_031	FROM->TO	POTTER COUNTY INTERCHANGE (WAUK 90343-A) 345/230/13.2KV TRANSFORMER CKT 1	560	560	0.20072	110.3491	CHISHOLM6 230.00 - SWEETWATER 230KV CKT 1
FDNS	06ALL	3	17G	G15_031	FROM->TO	POTTER COUNTY INTERCHANGE (WAUK 90343-A) 345/230/13.2KV TRANSFORMER CKT 1	560	560	0.19851	109.1858	CHISHOLM6 230.00 - SWEETWATER 230KV CKT 1
FDNS	06ALL	3	20WP	G15_031	FROM->TO	POTTER COUNTY INTERCHANGE (WAUK 90343-A) 345/230/13.2KV TRANSFORMER CKT 1	560	560	0.20893	109.0577	HITCHLAND INTERCHANGE - MOORE COUNTY INTERCHANGE 230KV CKT 1
FDNS	06ALL	3	20WP	G15_031	FROM->TO	POTTER COUNTY INTERCHANGE (WAUK 90343-A) 345/230/13.2KV TRANSFORMER CKT 1	560	560	0.20893	109.0577	HITCHLAND INTERCHANGE - MOORE COUNTY INTERCHANGE 230KV CKT 1
FDNS	06ALL	3	20WP	G15_031	FROM->TO	POTTER COUNTY INTERCHANGE (WAUK 90343-A) 345/230/13.2KV TRANSFORMER CKT 1	560	560	0.19764	108.0277	MOORE COUNTY INTERCHANGE - POTTER COUNTY INTERCHANGE 230KV CKT 1
FDNS	06ALL	3	20WP	G15_031	FROM->TO	POTTER COUNTY INTERCHANGE (WAUK 90343-A) 345/230/13.2KV TRANSFORMER CKT 1	560	560	0.19764	108.0277	MOORE COUNTY INTERCHANGE - POTTER COUNTY INTERCHANGE 230KV CKT 1
FDNS	06ALL	3	20WP	G15_031	FROM->TO	POTTER COUNTY INTERCHANGE (WAUK 90343-A) 345/230/13.2KV TRANSFORMER CKT 1	560	560	0.20893	107.8874	HITCHLAND INTERCHANGE - MOORE COUNTY INTERCHANGE 230KV CKT 1
FDNS	06ALL	3	20WP	G15_031	FROM->TO	POTTER COUNTY INTERCHANGE (WAUK 90343-A) 345/230/13.2KV TRANSFORMER CKT 1	560	560	0.20893	107.8874	HITCHLAND INTERCHANGE - MOORE COUNTY INTERCHANGE 230KV CKT 1
FDNS	06ALL	3	20WP	G15_031	FROM->TO	POTTER COUNTY INTERCHANGE (WAUK 90343-A) 345/230/13.2KV TRANSFORMER CKT 1	560	560	0.20072	107.0531	STLN-DEMARC6 - SWEETWATER 230KV CKT 1
FDNS	06ALL	3	20WP	G15_031	FROM->TO	POTTER COUNTY INTERCHANGE (WAUK 90343-A) 345/230/13.2KV TRANSFORMER CKT 1	560	560	0.20072	107.0383	P12:230:AEPW-SPS:SWEETWT6:WHEELER 6
FDNS	06ALL	3	20WP	G15_031	FROM->TO	POTTER COUNTY INTERCHANGE (WAUK 90343-A) 345/230/13.2KV TRANSFORMER CKT 1	560	560	0.20072	107.0324	STATELINE INTERCHANGE - STLN-DEMARC6 230KV CKT 1
FDNS	06ALL	3	17G	G15_031	FROM->TO	POTTER COUNTY INTERCHANGE (WAUK 90343-A) 345/230/13.2KV TRANSFORMER CKT 1	560	560	0.19851	106.8923	CHISHOLM6 230.00 - SWEETWATER 230KV CKT 1
FDNS	06ALL	3	20WP	G15_031	FROM->TO	POTTER COUNTY INTERCHANGE (WAUK 90343-A) 345/230/13.2KV TRANSFORMER CKT 1	560	560	0.19764	106.8592	MOORE COUNTY INTERCHANGE - POTTER COUNTY INTERCHANGE 230KV CKT 1
FDNS	06ALL	3	20WP	G15_031	FROM->TO	POTTER COUNTY INTERCHANGE (WAUK 90343-A) 345/230/13.2KV TRANSFORMER CKT 1	560	560	0.19764	106.8592	MOORE COUNTY INTERCHANGE - POTTER COUNTY INTERCHANGE 230KV CKT 1
FDNS	06ALL	3	20WP	G15_031	FROM->TO	POTTER COUNTY INTERCHANGE (WAUK 90343-A) 345/230/13.2KV TRANSFORMER CKT 1	560	560	0.20072	105.6262	STLN-DEMARC6 - SWEETWATER 230KV CKT 1
FDNS	06ALL	3	20WP	G15_031	FROM->TO	POTTER COUNTY INTERCHANGE (WAUK 90343-A) 345/230/13.2KV TRANSFORMER CKT 1	560	560	0.20072	105.6147	P12:230:AEPW-SPS:SWEETWT6:WHEELER 6
FDNS	06ALL	3	20WP	G15_031	FROM->TO	POTTER COUNTY INTERCHANGE (WAUK 90343-A) 345/230/13.2KV TRANSFORMER CKT 1	560	560	0.20072	105.61	STATELINE INTERCHANGE - STLN-DEMARC6 230KV CKT 1
FDNS	06ALL	3	17G	G15_031	FROM->TO	POTTER COUNTY INTERCHANGE (WAUK 90343-A) 345/230/13.2KV TRANSFORMER CKT 1	560	560	0.20621	105.5093	HITCHLAND INTERCHANGE - MOORE COUNTY INTERCHANGE 230KV CKT 1
FDNS	06ALL	3	17G	G15_031	FROM->TO	POTTER COUNTY INTERCHANGE (WAUK 90343-A) 345/230/13.2KV TRANSFORMER CKT 1	560	560	0.20621	105.5093	HITCHLAND INTERCHANGE - MOORE COUNTY INTERCHANGE 230KV CKT 1
FDNS	06ALL	3	20WP	G15_031	FROM->TO	POTTER COUNTY INTERCHANGE (WAUK 90343-A) 345/230/13.2KV TRANSFORMER CKT 1	560	560	0.20131	105.3556	CHISHOLM7 345.00 - WOODWARD DISTRICT EHV 345KV CKT 1
FDNS	06ALL	3	17G	G15_031	FROM->TO	POTTER COUNTY INTERCHANGE (WAUK 90343-A) 345/230/13.2KV TRANSFORMER CKT 1	560	560	0.20621	104.5149	HITCHLAND INTERCHANGE - MOORE COUNTY INTERCHANGE 230KV CKT 1
FDNS	06ALL	3	17G	G15_031	FROM->TO	POTTER COUNTY INTERCHANGE (WAUK 90343-A) 345/230/13.2KV TRANSFORMER CKT 1	560	560	0.20621	104.5149	HITCHLAND INTERCHANGE - MOORE COUNTY INTERCHANGE 230KV CKT 1
FDNS	06ALL	3	20WP	G15_031	FROM->TO	POTTER COUNTY INTERCHANGE (WAUK 90343-A) 345/230/13.2KV TRANSFORMER CKT 1	560	560	0.20131	104.2423	CHISHOLM7 345.00 - WOODWARD DISTRICT EHV 345KV CKT 1
FDNS	06ALL	3	17G	G15_031	FROM->TO	POTTER COUNTY INTERCHANGE (WAUK 90343-A) 345/230/13.2KV TRANSFORMER CKT 1	560	560	0.19508	103.5147	MOORE COUNTY INTERCHANGE - POTTER COUNTY INTERCHANGE 230KV CKT 1
FDNS	06ALL	3	17G	G15_031	FROM->TO	POTTER COUNTY INTERCHANGE (WAUK 90343-A) 345/230/13.2KV TRANSFORMER CKT 1	560	560	0.19508	103.5147	MOORE COUNTY INTERCHANGE - POTTER COUNTY INTERCHANGE 230KV CKT 1
FDNS	06ALL	3	17G	G15_031	FROM->TO	POTTER COUNTY INTERCHANGE (WAUK 90343-A) 345/230/13.2KV TRANSFORMER CKT 1	560	560	0.19851	103.4344	STLN-DEMARC6 - SWEETWATER 230KV CKT 1
FDNS	06ALL	3	17G	G15_031	FROM->TO	POTTER COUNTY INTERCHANGE (WAUK 90343-A) 345/230/13.2KV TRANSFORMER CKT 1	560	560	0.19831	102.5758	CHISHOLM7 345.00 - WOODWARD DISTRICT EHV 345KV CKT 1
FDNS	06ALL	3	17G	G15_031	FROM->TO	POTTER COUNTY INTERCHANGE (WAUK 90343-A) 345/230/13.2KV TRANSFORMER CKT 1	560	560	0.19508	102.5028	MOORE COUNTY INTERCHANGE - POTTER COUNTY INTERCHANGE 230KV CKT 1
FDNS	06ALL	3	17G	G15_031	FROM->TO	POTTER COUNTY INTERCHANGE (WAUK 90343-A) 345/230/13.2KV TRANSFORMER CKT 1	560	560	0.19508	102.5028	MOORE COUNTY INTERCHANGE - POTTER COUNTY INTERCHANGE 230KV CKT 1
FDNS	06ALL	3	17G	G15_031	FROM->TO	POTTER COUNTY INTERCHANGE (WAUK 90343-A) 345/230/13.2KV TRANSFORMER CKT 1	560	560	0.19851	102.0101	STLN-DEMARC6 - SWEETWATER 230KV CKT 1
FDNS	06ALL	3	17G	G15_031	FROM->TO	POTTER COUNTY INTERCHANGE (WAUK 90343-A) 345/230/13.2KV TRANSFORMER CKT 1	560	560	0.19831	101.4359	CHISHOLM7 345.00 - WOODWARD DISTRICT EHV 345KV CKT 1
FDNS	06ALL	4	20SP	G15_031	FROM->TO	CHISHOLM6 230.00 - ELK CITY 230KV 230KV CKT 1	353	353	0.06294	103.152	BASE CASE
FDNS	06ALL	4	17SP	G15_031	FROM->TO	CHISHOLM6 230.00 - ELK CITY 230KV 230KV CKT 1	353	353	0.06317	100.7007	BASE CASE
FDNS	06NR	4	17G	G15_031	TO->FROM	CHISHOLM6 230.00 - SWEETWATER 230KV CKT 1	439	439	0.04786	113.3716	G15031_T 230.00 - SWISHER COUNTY INTERCHANGE 230KV CKT 1
FDNS	06ALL	4	17G	G15_031	TO->FROM	CIMARRON - MINCO 345KV CKT 1	956	956	0.21715	129.7974	G14-057T 345.00 - SUNNYSIDE 345KV CKT 1
FDNS	06ALL	4	20WP	G15_031	TO->FROM	CIMARRON - MINCO 345KV CKT 1	956	956	0.21357	128.511	G14-057T 345.00 - SUNNYSIDE 345KV CKT 1
FDNS	06ALL	4	17G	G15_031	TO->FROM	CIMARRON - MINCO 345KV CKT 1	956	956	0.21715	124.286	G14-057T 345.00 - LAWTON EASTSIDE 345KV CKT 1
FDNS	06ALL	4	20WP	G15_031	TO->FROM	CIMARRON - MINCO 345KV CKT 1	956	956	0.21357	123.0537	G14-057T 345.00 - LAWTON EASTSIDE 345KV CKT 1
FDNS	06ALL	4	16WP	G15_031	TO->FROM	CIMARRON - MINCO 345KV CKT 1	956	956	0.22372	122.1275	G14-057T 345.00 - SUNNYSIDE 345KV CKT 1
FDNS	06ALL	4	17SP	G15_031	TO->FROM	CIMARRON - MINCO 345KV CKT 1	956	956	0.22022	121.005	G14-057T 345.00 - SUNNYSIDE 345KV CKT 1
FDNS	06ALL	4	20SP	G15_031	TO->FROM	CIMARRON - MINCO 345KV CKT 1	956	956	0.21931	117.7968	G14-057T 345.00 - SUNNYSIDE 345KV CKT 1
FDNS	06ALL	4	16WP	G15_031	TO->FROM	CIMARRON - MINCO 345KV CKT 1	956	956	0.22372	116.5578	G14-057T 345.00 - LAWTON EASTSIDE 345KV CKT 1
FDNS	06ALL	4	17SP	G15_031	TO->FROM	CIMARRON - MINCO 345KV CKT 1	956	956	0.22022	115.6625	G14-057T 345.00 - LAWTON EASTSIDE 345KV CKT 1
FDNS	06ALL	4	20SP	G15_031	TO->FROM	CIMARRON - MINCO 345KV CKT 1	956	956	0.21931	112.5931	G14-057T 345.00 - LAWTON EASTSIDE 345KV CKT 1
FDNS	06ALL	4	17G	G15_031	TO->FROM	CIMARRON - MINCO 345KV CKT 1	956	956	0.2042	104.4362	CHISHOLM7 345.00 - WOODWARD DISTRICT EHV 345KV CKT 1
FDNS	06ALL	4	16WP	G15_031	TO->FROM	CIMARRON - MINCO 345KV CKT 1	956	956	0.19507	103.3746	MATHWSN7 345.00 - TATONGA7 345.00 345KV CKT 1
FDNS	06ALL	4	20WP	G15_031	TO->FROM	CIMARRON - MINCO 345KV CKT 1	956	956	0.20296	100.3052	CHISHOLM7 345.00 - WOODWARD DISTRICT EHV 345KV CKT 1

SOLUTION	GROUP	SCENARIO	SEASON	SOURCE	DIRECTION	MONITORED ELEMENT	RATEA (MVA)	RATEB(MVA)	TDF	TC%LOADING (% MVA)	CONTINGENCY
FDNSLock	06ALL	4	16WP	G15_031		G14_001T 345.00 - WICHITA 345KV CKT 1	1035	1035	0.05415	25.24282	BASE CASE
FDNS	06ALL	4	20L	G15_031	TO->FROM	G14-057T 345.00 - LAWTON EASTSIDE 345KV CKT 1	717	789	0.09217	104.3251	BASE CASE
FDNS	06ALL	4	20L	G15_031	FROM->TO	G14-057T 345.00 - SUNNYSIDE 345KV CKT 1	717	789	0.09217	117.5276	BASE CASE
FDNS	06ALL	4	20WP	G15_031	FROM->TO	G14-057T 345.00 - SUNNYSIDE 345KV CKT 1	717	789	0.11506	105.3579	BASE CASE
FDNS	06ALL	4	17G	G15_031	FROM->TO	G14-057T 345.00 - SUNNYSIDE 345KV CKT 1	717	789	0.1173	105.0325	BASE CASE
FDNS	06ALL	4	16WP	G15_031	FROM->TO	G14-057T 345.00 - SUNNYSIDE 345KV CKT 1	717	789	0.12063	103.6585	BASE CASE
FDNS	00NR	4	25SP	G15_031	TO->FROM	JONES STATION - TUCO INTERCHANGE 230KV CKT 1	343.79	343.79	0.11135	129.809	CARLISLE INTERCHANGE - TUCO INTERCHANGE 230KV CKT 1
FDNS	00NR	4	25SP	G15_031	TO->FROM	JONES STATION - TUCO INTERCHANGE 230KV CKT 1	343.79	343.79	0.11135	129.809	CARLISLE INTERCHANGE - TUCO INTERCHANGE 230KV CKT 1
FDNS	00NR	4	25SP	G15_031	TO->FROM	JONES STATION - TUCO INTERCHANGE 230KV CKT 1	343.79	343.79	0.08795	113.028	GEN526333 1-JONES GEN #3 21 KV
FDNS	00NR	4	25SP	G15_031	TO->FROM	JONES STATION - TUCO INTERCHANGE 230KV CKT 1	343.79	343.79	0.08795	112.6359	GEN526334 1-JONES_4 116.500
FDNS	00NR	4	25SP	G15_031	TO->FROM	JONES STATION - TUCO INTERCHANGE 230KV CKT 1	343.79	343.79	0.10317	108.0461	TUCO INTERCHANGE - YOAKUM_345 345.00 345KV CKT 1
FDNS	00NR	4	25SP	G15_031	TO->FROM	JONES STATION - TUCO INTERCHANGE 230KV CKT 1	343.79	343.79	0.10092	103.563	CARLISLE INTERCHANGE - WOLFFORTH INTERCHANGE 230KV CKT 1
FDNS	00NR	4	25SP	G15_031	TO->FROM	JONES STATION - TUCO INTERCHANGE 230KV CKT 1	343.79	343.79	0.09585	101.3715	PLANT X STATION - SUNDOWN INTERCHANGE 230KV CKT 1
FDNS	00NR	4	25SP	G15_031	TO->FROM	JONES STATION - TUCO INTERCHANGE 230KV CKT 1	343.79	343.79	0.09585	101.3715	PLANT X STATION - SUNDOWN INTERCHANGE 230KV CKT 1
FDNS	00NR	4	25SP	G15_031	TO->FROM	JONES STATION - TUCO INTERCHANGE 230KV CKT 1	343.79	343.79	0.09467	100.6898	P12:345:SPS:J02.1.TOLK.EDDY
FDNS	00NR	4	25SP	G15_031	TO->FROM	JONES STATION - TUCO INTERCHANGE 230KV CKT 1	343.79	343.79	0.08795	100.6764	GEN526332 1-JONES GEN #2 21 KV
FDNS	00NR	4	25SP	G15_031	TO->FROM	JONES STATION - TUCO INTERCHANGE 230KV CKT 1	343.79	343.79	0.08795	100.6745	GEN526331 1-JONES GEN #1 22 KV
FDNS	00NR	4	25SP	G15_031	TO->FROM	JONES STATION - TUCO INTERCHANGE 230KV CKT 1	343.79	343.79	0.08788	100.6429	TUCO INTERCHANGE (ENRCO 136401) 230/115/13.2KV TRANSFORMER CKT 1
FDNS	00NR	4	25SP	G15_031	TO->FROM	JONES STATION - TUCO INTERCHANGE 230KV CKT 1	343.79	343.79	0.08788	100.6429	TUCO INTERCHANGE (ENRCO 136401) 230/115/13.2KV TRANSFORMER CKT 1
FDNS	00NR	4	25SP	G15_031	TO->FROM	JONES STATION - TUCO INTERCHANGE 230KV CKT 1	343.79	343.79	0.08788	100.6429	TUCO INTERCHANGE (ENRCO 136401) 230/115/13.2KV TRANSFORMER CKT 2
FDNS	00NR	4	25SP	G15_031	TO->FROM	JONES STATION - TUCO INTERCHANGE 230KV CKT 1	343.79	343.79	0.08788	100.6429	TUCO INTERCHANGE (ENRCO 136401) 230/115/13.2KV TRANSFORMER CKT 2
FDNS	00NR	4	25SP	G15_031	TO->FROM	JONES STATION - TUCO INTERCHANGE 230KV CKT 1	343.79	343.79	0.09692	99.8	LUBBOCK EAST INTERCHANGE - TUCO INTERCHANGE 115KV CKT 1
FDNS	00NR	4	25SP	G15_031	TO->FROM	JONES STATION - TUCO INTERCHANGE 230KV CKT 1	343.79	343.79	0.09692	99.8	LUBBOCK EAST INTERCHANGE - TUCO INTERCHANGE 115KV CKT 1
FDNS	00NR	4	25SP	G15_031	TO->FROM	KRESS INTERCHANGE - SWISHER COUNTY INTERCHANGE 115KV CKT 1	218	239	0.21585	112.5508	NEWHART 230 - SWISHER COUNTY INTERCHANGE 230KV CKT 1
FDNS	00NR	4	25SP	G15_031	TO->FROM	KRESS INTERCHANGE - SWISHER COUNTY INTERCHANGE 115KV CKT 1	218	239	0.12194	104.0573	BASE CASE
FDNS	00NR	4	25SP	G15_031	TO->FROM	KRESS INTERCHANGE - SWISHER COUNTY INTERCHANGE 115KV CKT 1	218	239	0.11114	102.2737	PALO DURO SUB - RANDALL COUNTY INTERCHANGE 115KV CKT 1
FDNS	00NR	4	25SP	G15_031	TO->FROM	KRESS INTERCHANGE - SWISHER COUNTY INTERCHANGE 115KV CKT 1	218	239	0.11114	100.9417	P12:115:SPS:T66.1.RNDALL.HAPPY
FDNS	00NR	4	25SP	G15_031	TO->FROM	KRESS INTERCHANGE - SWISHER COUNTY INTERCHANGE 115KV CKT 1	218	239	0.11114	100.8559	HAPPY INTERCHANGE - PALO DURO SUB 115KV CKT 1
FDNS	00NR	4	25SP	G15_031	TO->FROM	KRESS INTERCHANGE - SWISHER COUNTY INTERCHANGE 115KV CKT 1	218	239	0.12042	100.6787	FLOYD COUNTY INTERCHANGE - TUCO INTERCHANGE 115KV CKT 1
FDNS	00NR	4	25SP	G15_031	TO->FROM	KRESS INTERCHANGE - SWISHER COUNTY INTERCHANGE 115KV CKT 1	218	239	0.12042	100.6787	FLOYD COUNTY INTERCHANGE - TUCO INTERCHANGE 115KV CKT 1
FDNS	00NR	4	20SP	G15_031	TO->FROM	KRESS INTERCHANGE - SWISHER COUNTY INTERCHANGE 115KV CKT 1	218	239	0.21655	100.293	NEWHART 230 - SWISHER COUNTY INTERCHANGE 230KV CKT 1
FDNS	00NR	4	17SP	G15_031	TO->FROM	KRESS INTERCHANGE - SWISHER COUNTY INTERCHANGE 115KV CKT 1	218	239	0.22105	100.1066	NEWHART 230 - SWISHER COUNTY INTERCHANGE 230KV CKT 1
FDNS	00NR	4	25SP	G15_031	TO->FROM	KRESS INTERCHANGE - SWISHER COUNTY INTERCHANGE 115KV CKT 1	218	239	0.11944	99.8	PLANT X STATION (WH ALM20171) 230/115/13.2KV TRANSFORMER CKT 1
FDNS	00NR	4	25SP	G15_031	TO->FROM	KRESS INTERCHANGE - SWISHER COUNTY INTERCHANGE 115KV CKT 1	218	239	0.11944	99.8	PLANT X STATION (WH ALM20171) 230/115/13.2KV TRANSFORMER CKT 1
FDNS	00NR	4	25SP	G15_031	TO->FROM	KRESS INTERCHANGE - SWISHER COUNTY INTERCHANGE 115KV CKT 1	218	239	0.12191	99.6	TUCO INTERCHANGE (ENRCO 136401) 230/115/13.2KV TRANSFORMER CKT 1
FDNS	00NR	4	25SP	G15_031	TO->FROM	KRESS INTERCHANGE - SWISHER COUNTY INTERCHANGE 115KV CKT 1	218	239	0.12191	99.6	TUCO INTERCHANGE (ENRCO 136401) 230/115/13.2KV TRANSFORMER CKT 1
FDNS	00NR	4	25SP	G15_031	TO->FROM	KRESS INTERCHANGE - SWISHER COUNTY INTERCHANGE 115KV CKT 1	218	239	0.12191	99.6	TUCO INTERCHANGE (ENRCO 136401) 230/115/13.2KV TRANSFORMER CKT 2
FDNS	00NR	4	25SP	G15_031	TO->FROM	KRESS INTERCHANGE - SWISHER COUNTY INTERCHANGE 115KV CKT 1	218	239	0.12191	99.6	TUCO INTERCHANGE (ENRCO 136401) 230/115/13.2KV TRANSFORMER CKT 2
FDNS	00NR	4	25SP	G15_031	TO->FROM	KRESS INTERCHANGE - SWISHER COUNTY INTERCHANGE 115KV CKT 1	218	239	0.12479	99.5	NEWHART 230 (UPDATE LATER) 230/115/13.2KV TRANSFORMER CKT 2
FDNS	00NR	4	25SP	G15_031	TO->FROM	KRESS INTERCHANGE - SWISHER COUNTY INTERCHANGE 115KV CKT 1	218	239	0.12479	99.5	NEWHART 230 (UPDATE LATER) 230/115/13.2KV TRANSFORMER CKT 2
FDNS	00NR	4	25SP	G15_031	TO->FROM	KRESS INTERCHANGE - SWISHER COUNTY INTERCHANGE 115KV CKT 1	218	239	0.12479	99.5	NEWHART 230 (WAUK WT01105) 230/115/13.2KV TRANSFORMER CKT 1
FDNS	00NR	4	25SP	G15_031	TO->FROM	KRESS INTERCHANGE - SWISHER COUNTY INTERCHANGE 115KV CKT 1	218	239	0.12479	99.5	NEWHART 230 (WAUK WT01105) 230/115/13.2KV TRANSFORMER CKT 1
FDNS	00NR	4	25SP	G15_031	FROM->TO	LUBBOCK POWER & LIGHT-HOLLY PLANT (SHIH T101039) 230/69/13.5KV TRANSFORMER CKT 1	224	224	0.0358	104.6928	LUBBOCK POWER & LIGHT-SOUTHEAST - LUBBOCK SOUTH INTERCHANGE 230KV CKT 1
FDNS	00NR	4	25SP	G15_031	FROM->TO	LUBBOCK POWER & LIGHT-HOLLY PLANT (SHIH T101039) 230/69/13.5KV TRANSFORMER CKT 1	224	224	0.0358	104.6926	P12:LPL:SPS:K64.1.LP-SE.LUBBS
FDNS	00NR	4	25SP	G15_031	FROM->TO	LUBBOCK POWER & LIGHT-HOLLY PLANT (SHIH T101039) 230/69/13.5KV TRANSFORMER CKT 1	224	224	0.035	101.9377	LUBBOCK EAST INTERCHANGE - LUBBOCK POWER & LIGHT-WADSWORTH 230KV CKT 1
FDNS	00NR	4	25SP	G15_031	FROM->TO	LUBBOCK POWER & LIGHT-HOLLY PLANT (SHIH T101039) 230/69/13.5KV TRANSFORMER CKT 1	224	224	0.035	101.923	P12:230:LPL:K57.1.LP-WADS.LUBBE
FDNS	00NR	4	25SP	G15_031	FROM->TO	LUBBOCK POWER & LIGHT-HOLLY PLANT (SHIH T101039) 230/69/13.5KV TRANSFORMER CKT 1	224	224	0.035	101.9229	LUBBOCK POWER & LIGHT-WADSWORTH (SHIH T101038) 230/69/13.5KV TRANSFORMER CKT 1
FDNS	00NR	4	25SP	G15_031	FROM->TO	LUBBOCK POWER & LIGHT-HOLLY PLANT (SHIH T101039) 230/69/13.5KV TRANSFORMER CKT 1	224	224	0.035	101.9229	LUBBOCK POWER & LIGHT-WADSWORTH (SHIH T101038) 230/69/13.5KV TRANSFORMER CKT 1
FDNSLock	06ALL	4	20L	G15_031		OKLAUNION 345KV SWITCHED SHUNT	1022	1124	0.14056	86.37846	BASE CASE
FDNS	06NR	4	20L	G15_031	FROM->TO	STATELINE INTERCHANGE - STLN-DEMARC6 230KV CKT 1	348.58	381.24	0.04808	127.0717	G15031_T 230.00 - SWISHER COUNTY INTERCHANGE 230KV CKT 1
FDNS	06NR	4	17G	G15_031	FROM->TO	STATELINE INTERCHANGE - STLN-DEMARC6 230KV CKT 1	348.58	381.24	0.04786	120.6269	G15031_T 230.00 - SWISHER COUNTY INTERCHANGE 230KV CKT 1
FDNS	06NR	4	20L	G15_031	FROM->TO	STLN-DEMARC6 - SWEETWATER 230KV CKT 1	353	353	0.04808	136.8203	G15031_T 230.00 - SWISHER COUNTY INTERCHANGE 230KV CKT 1
FDNS	06NR	4	17G	G15_031	FROM->TO	STLN-DEMARC6 - SWEETWATER 230KV CKT 1	353	353	0.04786	129.8347	G15031_T 230.00 - SWISHER COUNTY INTERCHANGE 230KV CKT 1
FDNS	06ALL	4	17G	G15_031	FROM->TO	TUCO_2 345.00 (TUCO_2 XFMR) 345/230/13.2KV TRANSFORMER CKT 1	560	560	0.1963	116.3962	TUCO INTERCHANGE - TUCO_2 345.00 345KV CKT 1
FDNS	06ALL	4	17G	G15_031	FROM->TO	TUCO_2 345.00 (TUCO_2 XFMR) 345/230/13.2KV TRANSFORMER CKT 1	560	560	0.1963	113.9028	TUCO INTERCHANGE - TUCO_2 345.00 345KV CKT 1
FDNS	06ALL	4	20WP	G15_031	FROM->TO	TUCO_2 345.00 (TUCO_2 XFMR) 345/230/13.2KV TRANSFORMER CKT 1	560	560	0.19865	111.7671	TUCO INTERCHANGE - TUCO_2 345.00 345KV CKT 1
FDNS	06ALL	4	20WP	G15_031	FROM->TO	TUCO_2 345.00 (TUCO_2 XFMR) 345/230/13.2KV TRANSFORMER CKT 1	560	560	0.19865	109.2949	TUCO INTERCHANGE - TUCO_2 345.00 345KV CKT 1
FDNS	06ALL	4	16WP	G15_031	FROM->TO	TUCO_2 345.00 (TUCO_2 XFMR) 345/230/13.2KV TRANSFORMER CKT 1	560	560	0.20305	99.9	TUCO INTERCHANGE - TUCO_2 345.00 345KV CKT 1
FDNS	06ALL	5	20SP	G15_031	FROM->TO	CHISHOLM6 230.00 - ELK CITY 230KV 230KV CKT 1	353	353	0.068	107.7212	BASE CASE
FDNS	06ALL	5	17SP	G15_031	FROM->TO	CHISHOLM6 230.00 - ELK CITY 230KV 230KV CKT 1	353	353	0.06827	105.7594	BASE CASE
FDNS	06ALL	5	20L	G15_031	TO->FROM	CIMARRON - MINCO 345KV CKT 1	956	956	0.19668	139.1694	G14-057T 345.00 - SUNNYSIDE 345KV CKT 1
FDNS	06ALL	5	20L	G15_031	TO->FROM	CIMARRON - MINCO 345KV CKT 1	956	956	0.19668	133.4583	G14-057T 345.00 - LAWTON EASTSIDE 345KV CKT 1
FDNS	06ALL	5	17G	G15_031	TO->FROM	CIMARRON - MINCO 345KV CKT 1	956	956	0.22626	132.5137	G14-057T 345.00 - SUNNYSIDE 345KV CKT 1
FDNS	06ALL	5	20WP	G15_031	TO->FROM	CIMARRON - MINCO 345KV CKT 1	956	956	0.22183	131.4126	G14-057T 345.00 - SUNNYSIDE 345KV CKT 1
FDNS	06ALL	5	17G	G15_031	TO->FROM	CIMARRON - MINCO 345KV CKT 1	956	956	0.22626	127.0859	G14-057T 345.00 - LAWTON EASTSIDE 345KV CKT 1
FDNS	06ALL	5	20WP	G15_031	TO->FROM	CIMARRON - MINCO 345KV CKT 1	956	956	0.22183	126.0182	G14-057T 345.00 - LAWTON EASTSIDE 345KV CKT 1
FDNS	06ALL	5	16WP	G15_031	TO->FROM	CIMARRON - MINCO 345KV CKT 1	956	956	0.23302	125.0103	G14-057T 345.00 - SUNNYSIDE 345KV CKT 1
FDNS	06ALL	5	17SP	G15_031	TO->FROM	CIMARRON - MINCO 345KV CKT 1	956	956	0.22914	123.5221	G14-057T 345.00 - SUNNYSIDE 345KV CKT 1
FDNS	06ALL	5	20SP	G15_031	TO->FROM	CIMARRON - MINCO 345KV CKT 1	956	956	0.22803	120.476	G14-057T 345.00 - SUNNYSIDE 345KV CKT 1
FDNS	06ALL	5	16WP	G15_031	TO->FROM	CIMARRON - MINCO 345KV CKT 1	956	956	0.23302	119.6144	G14-057T 345.00 - LAWTON EASTSIDE 345KV CKT 1
FDNS	06ALL	5	17SP	G15_031	TO->FROM	CIMARRON - MINCO 345KV CKT 1	956	956	0.22914	118.2604	G14-057T 345.00 - LAWTON EASTSIDE 345KV CKT 1
FDNS	06ALL	5	20SP	G15_031	TO->FROM	CIMARRON - MINCO 345KV CKT 1	956	956	0.22803	115.0864	G14-057T 345.00 - LAWTON EASTSIDE 345KV CKT 1
FDNS	06ALL	5	17G	G15_031	TO->FROM	CIMARRON - MINCO 345KV CKT 1	956	956	0.198	113.1247	MATHWSN7 345.00 - TATONGA7 345.00 345KV CKT 1
FDNS	06ALL	5	17G	G15_031	TO->FROM	CIMARRON - MINCO 345KV CKT 1	956	956	0.21852	110.4087	CHISHOLM7 345.00 - WOODWARD DISTRICT EHV 345KV CKT 1
FDNS	06ALL	5	17G	G15_031	TO->FROM	CIMARRON - MINCO 345KV CKT 1	956	956	0.198	107.1655	G11_051T 345.00 - TATONGA7 345.00 345KV CKT 1
FDNS	06ALL	5	20WP	G15_031	TO->FROM	CIMARRON - MINCO 345KV CKT 1	956	956	0.21621	106.6912	CHISHOLM7 345.00 - WOODWARD DISTRICT EHV 345KV CKT 1
FDNS	06ALL	5	16WP	G15_031	TO->FROM	CIMARRON - MINCO 345KV CKT 1	956	956	0.20322	106.1194	MATHWSN7 345.00 - TATONGA7 345.00 345KV CKT 1
FDNS	06ALL	5	17SP	G15_031	TO->FROM	CIMARRON - MINCO 345KV CKT 1	956	956	0.20077	106.0588	MATHWSN7 345.00 - TATONGA7 345.00 345KV CKT 1
FDNS	06ALL	5	17G	G15_031	TO->FROM	CIMARRON - MINCO 345KV CKT 1	956	956	0.198	105.5499	G11_051T 345.00 - WOODWARD DISTRICT EHV 345KV CKT 1

SOLUTION	GROUP	SCENARIO	SEASON	SOURCE	DIRECTION	MONITORED ELEMENT	RATEA (MVA)	RATEB(MVA)	TDF	TC%LOADING (% MVA)	CONTINGENCY
FDNS	06ALL	5	20SP	G15_031	TO->FROM	CIMARRON - MINCO 345KV CKT 1	956	956	0.19987	105.1459	MATHWSN7 345.00 - TATONGA7 345.00 345KV CKT 1
FDNS	06ALL	5	20SP	G15_031	TO->FROM	CIMARRON - MINCO 345KV CKT 1	956	956	0.22326	102.6282	CHISHOLM7 345.00 - WOODWARD DISTRICT EHV 345KV CKT 1
FDNS	06ALL	5	17SP	G15_031	TO->FROM	CIMARRON - MINCO 345KV CKT 1	956	956	0.22431	102.3712	CHISHOLM7 345.00 - WOODWARD DISTRICT EHV 345KV CKT 1
FDNS	06ALL	5	17SP	G15_031	TO->FROM	CIMARRON - MINCO 345KV CKT 1	956	956	0.20077	100.8538	G11_051T 345.00 - TATONGA7 345.00 345KV CKT 1
FDNS	06ALL	5	16WP	G15_031	TO->FROM	CIMARRON - MINCO 345KV CKT 1	956	956	0.20322	100.7286	G11_051T 345.00 - TATONGA7 345.00 345KV CKT 1
FDNS	06ALL	5	20SP	G15_031	TO->FROM	CIMARRON - MINCO 345KV CKT 1	956	956	0.19987	100	G11_051T 345.00 - TATONGA7 345.00 345KV CKT 1
FDNS	06ALL	5	16WP	G15_031	TO->FROM	CIMARRON - MINCO 345KV CKT 1	956	956	0.22668	99.9	CHISHOLM7 345.00 - WOODWARD DISTRICT EHV 345KV CKT 1
FDNS	06ALL	5	20L	G15_031	TO->FROM	G14-057T 345.00 - LAWTON EASTSIDE 345KV CKT 1	717	789	0.09404	104.5834	BASE CASE
FDNS	06ALL	5	20L	G15_031	FROM->TO	G14-057T 345.00 - SUNNYSIDE 345KV CKT 1	717	789	0.09404	117.7866	BASE CASE
FDNS	06ALL	5	20WP	G15_031	FROM->TO	G14-057T 345.00 - SUNNYSIDE 345KV CKT 1	717	789	0.11601	105.6059	BASE CASE
FDNS	06ALL	5	17G	G15_031	FROM->TO	G14-057T 345.00 - SUNNYSIDE 345KV CKT 1	717	789	0.11866	105.2883	BASE CASE
FDNS	06ALL	5	16WP	G15_031	FROM->TO	G14-057T 345.00 - SUNNYSIDE 345KV CKT 1	717	789	0.12192	103.9305	BASE CASE
FDNS	06ALL	5	20L	G15_031	FROM->TO	GRACEMONT - MINCO 345KV CKT 1	1195	1195	0.19668	100.3039	G14-057T 345.00 - SUNNYSIDE 345KV CKT 1
FDNS	00NR	5	25SP	G15_031	TO->FROM	JONES STATION - TUCO INTERCHANGE 230KV CKT 1	343.79	343.79	0.11136	129.641	CARLISLE INTERCHANGE - TUCO INTERCHANGE 230KV CKT 1
FDNS	00NR	5	25SP	G15_031	TO->FROM	JONES STATION - TUCO INTERCHANGE 230KV CKT 1	343.79	343.79	0.11136	129.641	CARLISLE INTERCHANGE - TUCO INTERCHANGE 230KV CKT 1
FDNS	00NR	5	25SP	G15_031	TO->FROM	JONES STATION - TUCO INTERCHANGE 230KV CKT 1	343.79	343.79	0.08796	112.7964	GEN526333 1-JONES GEN #3 21 KV
FDNS	00NR	5	25SP	G15_031	TO->FROM	JONES STATION - TUCO INTERCHANGE 230KV CKT 1	343.79	343.79	0.08796	112.4061	GEN526334 1-JONES_4 116.500
FDNS	00NR	5	25SP	G15_031	TO->FROM	JONES STATION - TUCO INTERCHANGE 230KV CKT 1	343.79	343.79	0.10315	107.7831	TUCO INTERCHANGE - YOAKUM_345 345.00 345KV CKT 1
FDNS	00NR	5	25SP	G15_031	TO->FROM	JONES STATION - TUCO INTERCHANGE 230KV CKT 1	343.79	343.79	0.10093	103.4197	CARLISLE INTERCHANGE - WOLFFORTH INTERCHANGE 230KV CKT 1
FDNS	00NR	5	25SP	G15_031	TO->FROM	JONES STATION - TUCO INTERCHANGE 230KV CKT 1	343.79	343.79	0.09586	101.2834	PLANT X STATION - SUNDOWN INTERCHANGE 230KV CKT 1
FDNS	00NR	5	25SP	G15_031	TO->FROM	JONES STATION - TUCO INTERCHANGE 230KV CKT 1	343.79	343.79	0.09586	101.2834	PLANT X STATION - SUNDOWN INTERCHANGE 230KV CKT 1
FDNS	00NR	5	25SP	G15_031	TO->FROM	JONES STATION - TUCO INTERCHANGE 230KV CKT 1	343.79	343.79	0.09469	100.5886	P12:345:SPS:J02.1.TOLK.EDDY
FDNS	00NR	5	25SP	G15_031	TO->FROM	JONES STATION - TUCO INTERCHANGE 230KV CKT 1	343.79	343.79	0.08796	100.5344	GEN526332 1-JONES GEN #2 21 KV
FDNS	00NR	5	25SP	G15_031	TO->FROM	JONES STATION - TUCO INTERCHANGE 230KV CKT 1	343.79	343.79	0.08796	100.5324	GEN526331 1-JONES GEN #1 22 KV
FDNS	00NR	5	25SP	G15_031	TO->FROM	JONES STATION - TUCO INTERCHANGE 230KV CKT 1	343.79	343.79	0.08789	100.5232	TUCO INTERCHANGE (ENRCO 136401) 230/115/13.2KV TRANSFORMER CKT 1
FDNS	00NR	5	25SP	G15_031	TO->FROM	JONES STATION - TUCO INTERCHANGE 230KV CKT 1	343.79	343.79	0.08789	100.5232	TUCO INTERCHANGE (ENRCO 136401) 230/115/13.2KV TRANSFORMER CKT 1
FDNS	00NR	5	25SP	G15_031	TO->FROM	JONES STATION - TUCO INTERCHANGE 230KV CKT 1	343.79	343.79	0.08789	100.5232	TUCO INTERCHANGE (ENRCO 136401) 230/115/13.2KV TRANSFORMER CKT 2
FDNS	00NR	5	25SP	G15_031	TO->FROM	JONES STATION - TUCO INTERCHANGE 230KV CKT 1	343.79	343.79	0.08789	100.5232	TUCO INTERCHANGE (ENRCO 136401) 230/115/13.2KV TRANSFORMER CKT 2
FDNS	00NR	5	25SP	G15_031	TO->FROM	JONES STATION - TUCO INTERCHANGE 230KV CKT 1	343.79	343.79	0.09694	99.6	LUBBOCK EAST INTERCHANGE - TUCO INTERCHANGE 115KV CKT 1
FDNS	00NR	5	25SP	G15_031	TO->FROM	JONES STATION - TUCO INTERCHANGE 230KV CKT 1	343.79	343.79	0.09694	99.6	LUBBOCK EAST INTERCHANGE - TUCO INTERCHANGE 115KV CKT 1
FDNS	00NR	5	25SP	G15_031	TO->FROM	KRESS INTERCHANGE - SWISHER COUNTY INTERCHANGE 115KV CKT 1	218	239	0.21582	112.4791	NEWHART 230 - SWISHER COUNTY INTERCHANGE 230KV CKT 1
FDNS	00NR	5	25SP	G15_031	TO->FROM	KRESS INTERCHANGE - SWISHER COUNTY INTERCHANGE 115KV CKT 1	218	239	0.12194	104.2375	BASE CASE
FDNS	00NR	5	25SP	G15_031	TO->FROM	KRESS INTERCHANGE - SWISHER COUNTY INTERCHANGE 115KV CKT 1	218	239	0.11114	102.5063	PALO DURO SUB - RANDALL COUNTY INTERCHANGE 115KV CKT 1
FDNS	00NR	5	25SP	G15_031	TO->FROM	KRESS INTERCHANGE - SWISHER COUNTY INTERCHANGE 115KV CKT 1	218	239	0.11114	101.1663	P12:115:SPS:T66.1.RNDALL.HAPPY
FDNS	00NR	5	25SP	G15_031	TO->FROM	KRESS INTERCHANGE - SWISHER COUNTY INTERCHANGE 115KV CKT 1	218	239	0.11114	101.0806	HAPPY INTERCHANGE - PALO DURO SUB 115KV CKT 1
FDNS	00NR	5	20SP	G15_031	TO->FROM	KRESS INTERCHANGE - SWISHER COUNTY INTERCHANGE 115KV CKT 1	218	239	0.21652	101.0551	NEWHART 230 - SWISHER COUNTY INTERCHANGE 230KV CKT 1
FDNS	00NR	5	17SP	G15_031	TO->FROM	KRESS INTERCHANGE - SWISHER COUNTY INTERCHANGE 115KV CKT 1	218	239	0.22098	100.9898	NEWHART 230 - SWISHER COUNTY INTERCHANGE 230KV CKT 1
FDNS	00NR	5	25SP	G15_031	TO->FROM	KRESS INTERCHANGE - SWISHER COUNTY INTERCHANGE 115KV CKT 1	218	239	0.12042	100.8644	FLOYD COUNTY INTERCHANGE - TUCO INTERCHANGE 115KV CKT 1
FDNS	00NR	5	25SP	G15_031	TO->FROM	KRESS INTERCHANGE - SWISHER COUNTY INTERCHANGE 115KV CKT 1	218	239	0.12042	100.8644	FLOYD COUNTY INTERCHANGE - TUCO INTERCHANGE 115KV CKT 1
FDNS	00NR	5	25SP	G15_031	TO->FROM	KRESS INTERCHANGE - SWISHER COUNTY INTERCHANGE 115KV CKT 1	218	239	0.11944	100	PLANT X STATION (WH ALM20171) 230/115/13.2KV TRANSFORMER CKT 1
FDNS	00NR	5	25SP	G15_031	TO->FROM	KRESS INTERCHANGE - SWISHER COUNTY INTERCHANGE 115KV CKT 1	218	239	0.11944	100	PLANT X STATION (WH ALM20171) 230/115/13.2KV TRANSFORMER CKT 1
FDNS	00NR	5	25SP	G15_031	TO->FROM	KRESS INTERCHANGE - SWISHER COUNTY INTERCHANGE 115KV CKT 1	218	239	0.12191	99.8	TUCO INTERCHANGE (ENRCO 136401) 230/115/13.2KV TRANSFORMER CKT 1
FDNS	00NR	5	25SP	G15_031	TO->FROM	KRESS INTERCHANGE - SWISHER COUNTY INTERCHANGE 115KV CKT 1	218	239	0.12191	99.8	TUCO INTERCHANGE (ENRCO 136401) 230/115/13.2KV TRANSFORMER CKT 1
FDNS	00NR	5	25SP	G15_031	TO->FROM	KRESS INTERCHANGE - SWISHER COUNTY INTERCHANGE 115KV CKT 1	218	239	0.12191	99.8	TUCO INTERCHANGE (ENRCO 136401) 230/115/13.2KV TRANSFORMER CKT 2
FDNS	00NR	5	25SP	G15_031	TO->FROM	KRESS INTERCHANGE - SWISHER COUNTY INTERCHANGE 115KV CKT 1	218	239	0.12191	99.8	TUCO INTERCHANGE (ENRCO 136401) 230/115/13.2KV TRANSFORMER CKT 2
FDNS	00NR	5	25SP	G15_031	TO->FROM	KRESS INTERCHANGE - SWISHER COUNTY INTERCHANGE 115KV CKT 1	218	239	0.12479	99.6	NEWHART 230 (UPDATE LATER) 230/115/13.2KV TRANSFORMER CKT 2
FDNS	00NR	5	25SP	G15_031	TO->FROM	KRESS INTERCHANGE - SWISHER COUNTY INTERCHANGE 115KV CKT 1	218	239	0.12479	99.6	NEWHART 230 (UPDATE LATER) 230/115/13.2KV TRANSFORMER CKT 2
FDNS	00NR	5	25SP	G15_031	TO->FROM	KRESS INTERCHANGE - SWISHER COUNTY INTERCHANGE 115KV CKT 1	218	239	0.12479	99.6	NEWHART 230 (WAUK WT01105) 230/115/13.2KV TRANSFORMER CKT 1
FDNS	00NR	5	25SP	G15_031	TO->FROM	KRESS INTERCHANGE - SWISHER COUNTY INTERCHANGE 115KV CKT 1	218	239	0.12479	99.6	NEWHART 230 (WAUK WT01105) 230/115/13.2KV TRANSFORMER CKT 1
FDNS	00NR	5	25SP	G15_031	FROM->TO	LUBBOCK POWER & LIGHT-HOLLY PLANT (SHIH T101039) 230/69/13.5KV TRANSFORMER CKT 1	224	224	0.0358	104.6927	LUBBOCK POWER & LIGHT-SOUTHEAST - LUBBOCK SOUTH INTERCHANGE 230KV CKT 1
FDNS	00NR	5	25SP	G15_031	FROM->TO	LUBBOCK POWER & LIGHT-HOLLY PLANT (SHIH T101039) 230/69/13.5KV TRANSFORMER CKT 1	224	224	0.0358	104.6925	P12:LPL:SPS:K64.1.LP-SE.LUBBS
FDNS	00NR	5	25SP	G15_031	FROM->TO	LUBBOCK POWER & LIGHT-HOLLY PLANT (SHIH T101039) 230/69/13.5KV TRANSFORMER CKT 1	224	224	0.035	101.9351	LUBBOCK EAST INTERCHANGE - LUBBOCK POWER & LIGHT-WADSWORTH 230KV CKT 1
FDNS	00NR	5	25SP	G15_031	FROM->TO	LUBBOCK POWER & LIGHT-HOLLY PLANT (SHIH T101039) 230/69/13.5KV TRANSFORMER CKT 1	224	224	0.035	101.9204	P12:230:LPL:K57.1.LP-WADS.LUBBE
FDNS	00NR	5	25SP	G15_031	FROM->TO	LUBBOCK POWER & LIGHT-HOLLY PLANT (SHIH T101039) 230/69/13.5KV TRANSFORMER CKT 1	224	224	0.035	101.9203	LUBBOCK POWER & LIGHT-WADSWORTH (SHIH T101038) 230/69/13.5KV TRANSFORMER CKT 1
FDNS	00NR	5	25SP	G15_031	FROM->TO	LUBBOCK POWER & LIGHT-HOLLY PLANT (SHIH T101039) 230/69/13.5KV TRANSFORMER CKT 1	224	224	0.035	101.9203	LUBBOCK POWER & LIGHT-WADSWORTH (SHIH T101038) 230/69/13.5KV TRANSFORMER CKT 1
FDNS	06ALL	5	20WP	G15_031	FROM->TO	POTTER COUNTY INTERCHANGE (WAUK 90343-A) 345/230/13.2KV TRANSFORMER CKT 1	560	560	0.23448	134.3002	P12:345:SPS:J15.1.XRDS.TOLK
FDNS	06ALL	5	20WP	G15_031	FROM->TO	POTTER COUNTY INTERCHANGE (WAUK 90343-A) 345/230/13.2KV TRANSFORMER CKT 1	560	560	0.23448	134.2067	P12:345:SPS:J15.1.XRDS.TOLK
FDNS	06ALL	5	17G	G15_031	FROM->TO	POTTER COUNTY INTERCHANGE (WAUK 90343-A) 345/230/13.2KV TRANSFORMER CKT 1	560	560	0.23478	131.4477	P12:345:SPS:J15.1.XRDS.TOLK
FDNS	06ALL	5	17G	G15_031	FROM->TO	POTTER COUNTY INTERCHANGE (WAUK 90343-A) 345/230/13.2KV TRANSFORMER CKT 1	560	560	0.23478	130.9697	P12:345:SPS:J15.1.XRDS.TOLK
FDNS	06ALL	5	20L	G15_031	FROM->TO	POTTER COUNTY INTERCHANGE (WAUK 90343-A) 345/230/13.2KV TRANSFORMER CKT 1	560	560	0.19952	129.9636	P12:345:SPS:J15.1.XRDS.TOLK
FDNS	06ALL	5	20L	G15_031	FROM->TO	POTTER COUNTY INTERCHANGE (WAUK 90343-A) 345/230/13.2KV TRANSFORMER CKT 1	560	560	0.19952	129.8782	P12:345:SPS:J15.1.XRDS.TOLK
FDNS	06ALL	5	20WP	G15_031	FROM->TO	POTTER COUNTY INTERCHANGE (WAUK 90343-A) 345/230/13.2KV TRANSFORMER CKT 1	560	560	0.2303	129.0373	POTTER COUNTY INTERCHANGE - TOLK STATION 345KV CKT 1
FDNS	06ALL	5	20WP	G15_031	FROM->TO	POTTER COUNTY INTERCHANGE (WAUK 90343-A) 345/230/13.2KV TRANSFORMER CKT 1	560	560	0.2303	128.967	POTTER COUNTY INTERCHANGE - TOLK STATION 345KV CKT 1
FDNS	06ALL	5	20L	G15_031	FROM->TO	POTTER COUNTY INTERCHANGE (WAUK 90343-A) 345/230/13.2KV TRANSFORMER CKT 1	560	560	0.19626	126.0722	POTTER COUNTY INTERCHANGE - TOLK STATION 345KV CKT 1
FDNS	06ALL	5	20L	G15_031	FROM->TO	POTTER COUNTY INTERCHANGE (WAUK 90343-A) 345/230/13.2KV TRANSFORMER CKT 1	560	560	0.19626	125.9146	POTTER COUNTY INTERCHANGE - TOLK STATION 345KV CKT 1
FDNS	06ALL	5	17G	G15_031	FROM->TO	POTTER COUNTY INTERCHANGE (WAUK 90343-A) 345/230/13.2KV TRANSFORMER CKT 1	560	560	0.22912	124.9996	POTTER COUNTY INTERCHANGE - TOLK STATION 345KV CKT 1
FDNS	06ALL	5	17G	G15_031	FROM->TO	POTTER COUNTY INTERCHANGE (WAUK 90343-A) 345/230/13.2KV TRANSFORMER CKT 1	560	560	0.22912	124.6782	POTTER COUNTY INTERCHANGE - TOLK STATION 345KV CKT 1
FDNS	06ALL	5	16WP	G15_031	FROM->TO	POTTER COUNTY INTERCHANGE (WAUK 90343-A) 345/230/13.2KV TRANSFORMER CKT 1	560	560	0.24604	123.3278	P12:345:SPS:J15.1.XRDS.TOLK
FDNS	06ALL	5	16WP	G15_031	FROM->TO	POTTER COUNTY INTERCHANGE (WAUK 90343-A) 345/230/13.2KV TRANSFORMER CKT 1	560	560	0.24604	122.0001	P12:345:SPS:J15.1.XRDS.TOLK
FDNS	06ALL	5	20WP	G15_031	FROM->TO	POTTER COUNTY INTERCHANGE (WAUK 90343-A) 345/230/13.2KV TRANSFORMER CKT 1	560	560	0.2089	115.8937	P12:345:SPS:J02.1.TOLK.EDDY
FDNS	06ALL	5	20WP	G15_031	FROM->TO	POTTER COUNTY INTERCHANGE (WAUK 90343-A) 345/230/13.2KV TRANSFORMER CKT 1	560	560	0.2089	115.4156	P12:345:SPS:J02.1.TOLK.EDDY
FDNS	06ALL	5	16WP	G15_031	FROM->TO	POTTER COUNTY INTERCHANGE (WAUK 90343-A) 345/230/13.2KV TRANSFORMER CKT 1	560	560	0.24003	115.1938	POTTER COUNTY INTERCHANGE - TOLK STATION 345KV CKT 1
FDNS	06ALL	5	16WP	G15_031	FROM->TO	POTTER COUNTY INTERCHANGE (WAUK 90343-A) 345/230/13.2KV TRANSFORMER CKT 1	560	560	0.24003	114.0847	POTTER COUNTY INTERCHANGE - TOLK STATION 345KV CKT 1
FDNS	06ALL	5	17G	G15_031	FROM->TO	POTTER COUNTY INTERCHANGE (WAUK 90343-A) 345/230/13.2KV TRANSFORMER CKT 1	560	560	0.21076	111.2395	P12:345:SPS:J02.1.TOLK.EDDY
FDNS	06ALL	5	17G	G15_031	FROM->TO	POTTER COUNTY INTERCHANGE (WAUK 90343-A) 345/230/13.2KV TRANSFORMER CKT 1	560	560	0.21076	111.0607	P12:345:SPS:J02.1.TOLK.EDDY
FDNS	06ALL	5	17SP	G15_031	FROM->TO	POTTER COUNTY INTERCHANGE (WAUK 90343-A) 345/230/13.2KV TRANSFORMER CKT 1	560	560	0.24385	108.8592	P12:345:SPS:J15.1.XRDS.TOLK
FDNS	06ALL	5	20WP	G15_031	FROM->TO	POTTER COUNTY INTERCHANGE (WAUK 90343-A) 345/230/13.2KV TRANSFORMER CKT 1	560	560	0.21751	107.5602	CHISHOLM6 230.00 - SWEETWATER 230KV CKT 1
FDNS	06ALL	5	17SP	G15_031	FROM->TO	POTTER COUNTY INTERCHANGE (WAUK 90343-A) 345/230/13.2KV TRANSFORMER CKT 1	560	560	0.24385	107.3735	P12:345:SPS:J15.1.XRDS.TOLK
FDNS	06ALL	5	20WP	G15_031	FROM->TO	POTTER COUNTY INTERCHANGE (WAUK 90343-A) 345/230/13.2KV TRANSFORMER CKT 1	560	560	0.21751	105.6378	CHISHOLM6 230.00 - SWEETWATER 230KV CKT 1

SOLUTION	GROUP	SCENARIO	SEASON	SOURCE	DIRECTION	MONITORED ELEMENT	RATEA (MVA)	RATEB(MVA)	TDF	TC%LOADING (% MVA)	CONTINGENCY
FDNS	06ALL	5	17G	G15_031	FROM->TO	POTTER COUNTY INTERCHANGE (WAUK 90343-A) 345/230/13.2KV TRANSFORMER CKT 1	560	560	0.21592	104.919	CHISHOLM6 230.00 - SWEETWATER 230KV CKT 1
FDNS	06ALL	5	20WP	G15_031	FROM->TO	POTTER COUNTY INTERCHANGE (WAUK 90343-A) 345/230/13.2KV TRANSFORMER CKT 1	560	560	0.21527	104.8114	P12:230:AEPW:ELKCITY6:SWEETWT6
FDNS	06ALL	5	16WP	G15_031	FROM->TO	POTTER COUNTY INTERCHANGE (WAUK 90343-A) 345/230/13.2KV TRANSFORMER CKT 1	560	560	0.22071	104.3006	P12:345:SPS:J02.1.TOLK.EDDY
FDNS	06ALL	5	16WP	G15_031	FROM->TO	POTTER COUNTY INTERCHANGE (WAUK 90343-A) 345/230/13.2KV TRANSFORMER CKT 1	560	560	0.22071	103.7897	P12:345:SPS:J02.1.TOLK.EDDY
FDNS	06ALL	5	17G	G15_031	FROM->TO	POTTER COUNTY INTERCHANGE (WAUK 90343-A) 345/230/13.2KV TRANSFORMER CKT 1	560	560	0.21592	103.2944	CHISHOLM6 230.00 - SWEETWATER 230KV CKT 1
FDNS	06ALL	5	20WP	G15_031	FROM->TO	POTTER COUNTY INTERCHANGE (WAUK 90343-A) 345/230/13.2KV TRANSFORMER CKT 1	560	560	0.21527	102.8847	P12:230:AEPW:ELKCITY6:SWEETWT6
FDNS	06ALL	5	17G	G15_031	FROM->TO	POTTER COUNTY INTERCHANGE (WAUK 90343-A) 345/230/13.2KV TRANSFORMER CKT 1	560	560	0.21367	102.502	P12:230:AEPW:ELKCITY6:SWEETWT6
FDNS	06ALL	5	20SP	G15_031	FROM->TO	POTTER COUNTY INTERCHANGE (WAUK 90343-A) 345/230/13.2KV TRANSFORMER CKT 1	560	560	0.2408	102.363	P12:345:SPS:J15.1.XRDS.TOLK
FDNS	06ALL	5	17SP	G15_031	FROM->TO	POTTER COUNTY INTERCHANGE (WAUK 90343-A) 345/230/13.2KV TRANSFORMER CKT 1	560	560	0.23825	102.3103	POTTER COUNTY INTERCHANGE - TOLK STATION 345KV CKT 1
FDNS	06ALL	5	20SP	G15_031	FROM->TO	POTTER COUNTY INTERCHANGE (WAUK 90343-A) 345/230/13.2KV TRANSFORMER CKT 1	560	560	0.2408	101.0624	P12:345:SPS:J15.1.XRDS.TOLK
FDNS	06ALL	5	17SP	G15_031	FROM->TO	POTTER COUNTY INTERCHANGE (WAUK 90343-A) 345/230/13.2KV TRANSFORMER CKT 1	560	560	0.23825	101.0142	POTTER COUNTY INTERCHANGE - TOLK STATION 345KV CKT 1
FDNS	06ALL	5	20WP	G15_031	FROM->TO	POTTER COUNTY INTERCHANGE (WAUK 90343-A) 345/230/13.2KV TRANSFORMER CKT 1	560	560	0.21751	100.8474	STATELINE INTERCHANGE - STLN-DEMARC6 230KV CKT 1
FDNS	06ALL	5	20WP	G15_031	FROM->TO	POTTER COUNTY INTERCHANGE (WAUK 90343-A) 345/230/13.2KV TRANSFORMER CKT 1	560	560	0.21751	100.8471	P12:230:AEPW-SPS:SWEETWT6:WHEELER 6
FDNS	06ALL	5	20WP	G15_031	FROM->TO	POTTER COUNTY INTERCHANGE (WAUK 90343-A) 345/230/13.2KV TRANSFORMER CKT 1	560	560	0.21751	100.8335	STLN-DEMARC6 - SWEETWATER 230KV CKT 1
FDNS	06ALL	5	17G	G15_031	FROM->TO	POTTER COUNTY INTERCHANGE (WAUK 90343-A) 345/230/13.2KV TRANSFORMER CKT 1	560	560	0.21367	100.8109	P12:230:AEPW:ELKCITY6:SWEETWT6
FDNS	06ALL	5	20WP	G15_031	FROM->TO	POTTER COUNTY INTERCHANGE (WAUK 90343-A) 345/230/13.2KV TRANSFORMER CKT 1	560	560	0.20595	100.2787	GRAPEVINE INTERCHANGE - NICHOLS STATION 230KV CKT 1
FDNS	06ALL	5	20WP	G15_031	FROM->TO	POTTER COUNTY INTERCHANGE (WAUK 90343-A) 345/230/13.2KV TRANSFORMER CKT 1	560	560	0.20595	100.2787	GRAPEVINE INTERCHANGE - NICHOLS STATION 230KV CKT 1
FDNS	06ALL	5	20WP	G15_031	FROM->TO	POTTER COUNTY INTERCHANGE (WAUK 90343-A) 345/230/13.2KV TRANSFORMER CKT 1	560	560	0.21751	99.5	P12:230:AEPW-SPS:SWEETWT6:WHEELER 6
FDNS	06ALL	5	20WP	G15_031	FROM->TO	POTTER COUNTY INTERCHANGE (WAUK 90343-A) 345/230/13.2KV TRANSFORMER CKT 1	560	560	0.21751	99.5	STATELINE INTERCHANGE - STLN-DEMARC6 230KV CKT 1
FDNS	06ALL	6	20SP	G15_031	FROM->TO	CHISHOLM6 230.00 - ELK CITY 230KV 230KV CKT 1	353	353	0.06122	102.8848	BASE CASE
FDNS	06ALL	6	17SP	G15_031	FROM->TO	CHISHOLM6 230.00 - ELK CITY 230KV 230KV CKT 1	353	353	0.06143	100.6562	BASE CASE
FDNS	06ALL	6	17G	G15_031	TO->FROM	CIMARRON - MINCO 345KV CKT 1	956	956	0.19995	121.6178	G14-057T 345.00 - SUNNYSIDE 345KV CKT 1
FDNS	06ALL	6	20WP	G15_031	TO->FROM	CIMARRON - MINCO 345KV CKT 1	956	956	0.19616	119.7395	G14-057T 345.00 - SUNNYSIDE 345KV CKT 1
FDNS	06ALL	6	17G	G15_031	TO->FROM	CIMARRON - MINCO 345KV CKT 1	956	956	0.19995	116.437	G14-057T 345.00 - LAWTON EASTSIDE 345KV CKT 1
FDNS	06ALL	6	20WP	G15_031	TO->FROM	CIMARRON - MINCO 345KV CKT 1	956	956	0.19616	114.5016	G14-057T 345.00 - LAWTON EASTSIDE 345KV CKT 1
FDNS	06ALL	6	17SP	G15_031	TO->FROM	CIMARRON - MINCO 345KV CKT 1	956	956	0.20251	114.4047	G14-057T 345.00 - SUNNYSIDE 345KV CKT 1
FDNS	06ALL	6	16WP	G15_031	TO->FROM	CIMARRON - MINCO 345KV CKT 1	956	956	0.20609	114.352	G14-057T 345.00 - SUNNYSIDE 345KV CKT 1
FDNS	06ALL	6	20SP	G15_031	TO->FROM	CIMARRON - MINCO 345KV CKT 1	956	956	0.20159	111.5632	G14-057T 345.00 - SUNNYSIDE 345KV CKT 1
FDNS	06ALL	6	17SP	G15_031	TO->FROM	CIMARRON - MINCO 345KV CKT 1	956	956	0.20251	109.1774	G14-057T 345.00 - LAWTON EASTSIDE 345KV CKT 1
FDNS	06ALL	6	16WP	G15_031	TO->FROM	CIMARRON - MINCO 345KV CKT 1	956	956	0.20609	108.975	G14-057T 345.00 - LAWTON EASTSIDE 345KV CKT 1
FDNS	06ALL	6	20SP	G15_031	TO->FROM	CIMARRON - MINCO 345KV CKT 1	956	956	0.20159	106.5254	G14-057T 345.00 - LAWTON EASTSIDE 345KV CKT 1
FDNS	06ALL	6	20L	G15_031	TO->FROM	G14-057T 345.00 - LAWTON EASTSIDE 345KV CKT 1	717	789	0.08946	102.0743	BASE CASE
FDNS	06ALL	6	20L	G15_031	FROM->TO	G14-057T 345.00 - SUNNYSIDE 345KV CKT 1	717	789	0.08946	115.279	BASE CASE
FDNS	06ALL	6	20WP	G15_031	FROM->TO	G14-057T 345.00 - SUNNYSIDE 345KV CKT 1	717	789	0.11096	103.5944	BASE CASE
FDNS	06ALL	6	17G	G15_031	FROM->TO	G14-057T 345.00 - SUNNYSIDE 345KV CKT 1	717	789	0.11358	103.4014	BASE CASE
FDNS	06ALL	6	16WP	G15_031	FROM->TO	G14-057T 345.00 - SUNNYSIDE 345KV CKT 1	717	789	0.11669	102.0868	BASE CASE
FDNS	00NR	6	25SP	G15_031	TO->FROM	JONES STATION - TUCO INTERCHANGE 230KV CKT 1	343.79	343.79	0.11137	129.6325	CARLISLE INTERCHANGE - TUCO INTERCHANGE 230KV CKT 1
FDNS	00NR	6	25SP	G15_031	TO->FROM	JONES STATION - TUCO INTERCHANGE 230KV CKT 1	343.79	343.79	0.11137	129.6325	CARLISLE INTERCHANGE - TUCO INTERCHANGE 230KV CKT 1
FDNS	00NR	6	25SP	G15_031	TO->FROM	JONES STATION - TUCO INTERCHANGE 230KV CKT 1	343.79	343.79	0.08797	112.7855	GEN526333 1-JONES GEN #3 21 KV
FDNS	00NR	6	25SP	G15_031	TO->FROM	JONES STATION - TUCO INTERCHANGE 230KV CKT 1	343.79	343.79	0.08797	112.3951	GEN526334 1-JONES_4 116.500
FDNS	00NR	6	25SP	G15_031	TO->FROM	JONES STATION - TUCO INTERCHANGE 230KV CKT 1	343.79	343.79	0.10315	107.7709	TUCO INTERCHANGE - YOAKUM_345 345.00 345KV CKT 1
FDNS	00NR	6	25SP	G15_031	TO->FROM	JONES STATION - TUCO INTERCHANGE 230KV CKT 1	343.79	343.79	0.10094	103.4125	CARLISLE INTERCHANGE - WOLFFORTH INTERCHANGE 230KV CKT 1
FDNS	00NR	6	25SP	G15_031	TO->FROM	JONES STATION - TUCO INTERCHANGE 230KV CKT 1	343.79	343.79	0.09587	101.2811	PLANT X STATION - SUNDOWN INTERCHANGE 230KV CKT 1
FDNS	00NR	6	25SP	G15_031	TO->FROM	JONES STATION - TUCO INTERCHANGE 230KV CKT 1	343.79	343.79	0.09587	101.2811	PLANT X STATION - SUNDOWN INTERCHANGE 230KV CKT 1
FDNS	00NR	6	25SP	G15_031	TO->FROM	JONES STATION - TUCO INTERCHANGE 230KV CKT 1	343.79	343.79	0.0947	100.5783	P12:345:SPS:J02.1.TOLK.EDDY
FDNS	00NR	6	25SP	G15_031	TO->FROM	JONES STATION - TUCO INTERCHANGE 230KV CKT 1	343.79	343.79	0.08797	100.5273	GEN526332 1-JONES GEN #2 21 KV
FDNS	00NR	6	25SP	G15_031	TO->FROM	JONES STATION - TUCO INTERCHANGE 230KV CKT 1	343.79	343.79	0.08797	100.5254	GEN526331 1-JONES GEN #1 22 KV
FDNS	00NR	6	25SP	G15_031	TO->FROM	JONES STATION - TUCO INTERCHANGE 230KV CKT 1	343.79	343.79	0.0879	100.5163	TUCO INTERCHANGE (ENRCO 136401) 230/115/13.2KV TRANSFORMER CKT 1
FDNS	00NR	6	25SP	G15_031	TO->FROM	JONES STATION - TUCO INTERCHANGE 230KV CKT 1	343.79	343.79	0.0879	100.5163	TUCO INTERCHANGE (ENRCO 136401) 230/115/13.2KV TRANSFORMER CKT 1
FDNS	00NR	6	25SP	G15_031	TO->FROM	JONES STATION - TUCO INTERCHANGE 230KV CKT 1	343.79	343.79	0.0879	100.5163	TUCO INTERCHANGE (ENRCO 136401) 230/115/13.2KV TRANSFORMER CKT 2
FDNS	00NR	6	25SP	G15_031	TO->FROM	JONES STATION - TUCO INTERCHANGE 230KV CKT 1	343.79	343.79	0.0879	100.5163	TUCO INTERCHANGE (ENRCO 136401) 230/115/13.2KV TRANSFORMER CKT 2
FDNS	00NR	6	25SP	G15_031	TO->FROM	JONES STATION - TUCO INTERCHANGE 230KV CKT 1	343.79	343.79	0.09694	99.6	LUBBOCK EAST INTERCHANGE - TUCO INTERCHANGE 115KV CKT 1
FDNS	00NR	6	25SP	G15_031	TO->FROM	JONES STATION - TUCO INTERCHANGE 230KV CKT 1	343.79	343.79	0.09694	99.6	LUBBOCK EAST INTERCHANGE - TUCO INTERCHANGE 115KV CKT 1
FDNS	00NR	6	25SP	G15_031	TO->FROM	KRESS INTERCHANGE - SWISHER COUNTY INTERCHANGE 115KV CKT 1	218	239	0.21582	112.4738	NEWHART 230 - SWISHER COUNTY INTERCHANGE 230KV CKT 1
FDNS	00NR	6	25SP	G15_031	TO->FROM	KRESS INTERCHANGE - SWISHER COUNTY INTERCHANGE 115KV CKT 1	218	239	0.12194	104.2348	BASE CASE
FDNS	00NR	6	25SP	G15_031	TO->FROM	KRESS INTERCHANGE - SWISHER COUNTY INTERCHANGE 115KV CKT 1	218	239	0.11114	102.5233	PALO DURO SUB - RANDALL COUNTY INTERCHANGE 115KV CKT 1
FDNS	00NR	6	25SP	G15_031	TO->FROM	KRESS INTERCHANGE - SWISHER COUNTY INTERCHANGE 115KV CKT 1	218	239	0.11114	101.1727	P12:115:SPS:T66.1.RNDALL.HAPPY
FDNS	00NR	6	20SP	G15_031	TO->FROM	KRESS INTERCHANGE - SWISHER COUNTY INTERCHANGE 115KV CKT 1	218	239	0.21652	101.1214	NEWHART 230 - SWISHER COUNTY INTERCHANGE 230KV CKT 1
FDNS	00NR	6	25SP	G15_031	TO->FROM	KRESS INTERCHANGE - SWISHER COUNTY INTERCHANGE 115KV CKT 1	218	239	0.11114	101.0872	HAPPY INTERCHANGE - PALO DURO SUB 115KV CKT 1
FDNS	00NR	6	17SP	G15_031	TO->FROM	KRESS INTERCHANGE - SWISHER COUNTY INTERCHANGE 115KV CKT 1	218	239	0.22097	101.0606	NEWHART 230 - SWISHER COUNTY INTERCHANGE 230KV CKT 1
FDNS	00NR	6	25SP	G15_031	TO->FROM	KRESS INTERCHANGE - SWISHER COUNTY INTERCHANGE 115KV CKT 1	218	239	0.12042	100.8613	FLOYD COUNTY INTERCHANGE - TUCO INTERCHANGE 115KV CKT 1
FDNS	00NR	6	25SP	G15_031	TO->FROM	KRESS INTERCHANGE - SWISHER COUNTY INTERCHANGE 115KV CKT 1	218	239	0.12042	100.8613	FLOYD COUNTY INTERCHANGE - TUCO INTERCHANGE 115KV CKT 1
FDNS	00NR	6	25SP	G15_031	TO->FROM	KRESS INTERCHANGE - SWISHER COUNTY INTERCHANGE 115KV CKT 1	218	239	0.11944	100	PLANT X STATION (WH ALM20171) 230/115/13.2KV TRANSFORMER CKT 1
FDNS	00NR	6	25SP	G15_031	TO->FROM	KRESS INTERCHANGE - SWISHER COUNTY INTERCHANGE 115KV CKT 1	218	239	0.11944	100	PLANT X STATION (WH ALM20171) 230/115/13.2KV TRANSFORMER CKT 1
FDNS	00NR	6	25SP	G15_031	TO->FROM	KRESS INTERCHANGE - SWISHER COUNTY INTERCHANGE 115KV CKT 1	218	239	0.12192	99.7	TUCO INTERCHANGE (ENRCO 136401) 230/115/13.2KV TRANSFORMER CKT 1
FDNS	00NR	6	25SP	G15_031	TO->FROM	KRESS INTERCHANGE - SWISHER COUNTY INTERCHANGE 115KV CKT 1	218	239	0.12192	99.7	TUCO INTERCHANGE (ENRCO 136401) 230/115/13.2KV TRANSFORMER CKT 1
FDNS	00NR	6	25SP	G15_031	TO->FROM	KRESS INTERCHANGE - SWISHER COUNTY INTERCHANGE 115KV CKT 1	218	239	0.12192	99.7	TUCO INTERCHANGE (ENRCO 136401) 230/115/13.2KV TRANSFORMER CKT 2
FDNS	00NR	6	25SP	G15_031	TO->FROM	KRESS INTERCHANGE - SWISHER COUNTY INTERCHANGE 115KV CKT 1	218	239	0.12192	99.7	TUCO INTERCHANGE (ENRCO 136401) 230/115/13.2KV TRANSFORMER CKT 2
FDNS	00NR	6	25SP	G15_031	TO->FROM	KRESS INTERCHANGE - SWISHER COUNTY INTERCHANGE 115KV CKT 1	218	239	0.12479	99.6	NEWHART 230 (UPDATE LATER) 230/115/13.2KV TRANSFORMER CKT 2
FDNS	00NR	6	25SP	G15_031	TO->FROM	KRESS INTERCHANGE - SWISHER COUNTY INTERCHANGE 115KV CKT 1	218	239	0.12479	99.6	NEWHART 230 (UPDATE LATER) 230/115/13.2KV TRANSFORMER CKT 2
FDNS	00NR	6	25SP	G15_031	TO->FROM	KRESS INTERCHANGE - SWISHER COUNTY INTERCHANGE 115KV CKT 1	218	239	0.12479	99.6	NEWHART 230 (WAUK WT01105) 230/115/13.2KV TRANSFORMER CKT 1
FDNS	00NR	6	25SP	G15_031	TO->FROM	KRESS INTERCHANGE - SWISHER COUNTY INTERCHANGE 115KV CKT 1	218	239	0.12479	99.6	NEWHART 230 (WAUK WT01105) 230/115/13.2KV TRANSFORMER CKT 1
FDNS	00NR	6	25SP	G15_031	FROM->TO	LUBBOCK POWER & LIGHT-HOLLY PLANT (SHIH T101039) 230/69/13.5KV TRANSFORMER CKT 1	224	224	0.0358	104.6926	LUBBOCK POWER & LIGHT-SOUTHEAST - LUBBOCK SOUTH INTERCHANGE 230KV CKT 1
FDNS	00NR	6	25SP	G15_031	FROM->TO	LUBBOCK POWER & LIGHT-HOLLY PLANT (SHIH T101039) 230/69/13.5KV TRANSFORMER CKT 1	224	224	0.0358	104.6924	P12:LPL:SPS:K64.1.LP-SE.LUBBS
FDNS	00NR	6	25SP	G15_031	FROM->TO	LUBBOCK POWER & LIGHT-HOLLY PLANT (SHIH T101039) 230/69/13.5KV TRANSFORMER CKT 1	224	224	0.035	101.9349	LUBBOCK EAST INTERCHANGE - LUBBOCK POWER & LIGHT-WADSWORTH 230KV CKT 1
FDNS	00NR	6	25SP	G15_031	FROM->TO	LUBBOCK POWER & LIGHT-HOLLY PLANT (SHIH T101039) 230/69/13.5KV TRANSFORMER CKT 1	224	224	0.035	101.9202	LUBBOCK POWER & LIGHT-WADSWORTH (SHIH T101038) 230/69/13.5KV TRANSFORMER CKT 1
FDNS	00NR	6	25SP	G15_031	FROM->TO	LUBBOCK POWER & LIGHT-HOLLY PLANT (SHIH T101039) 230/69/13.5KV TRANSFORMER CKT 1	224	224	0.035	101.9202	LUBBOCK POWER & LIGHT-WADSWORTH (SHIH T101038) 230/69/13.5KV TRANSFORMER CKT 1
FDNS	00NR	6	25SP	G15_031	FROM->TO	LUBBOCK POWER & LIGHT-HOLLY PLANT (SHIH T101039) 230/69/13.5KV TRANSFORMER CKT 1	224	224	0.035	101.9202	P12:230:LPL:K57.1.LP-WADS.LUBBE
FDNS	06ALL	6	20WP	G15_031	FROM->TO	POTTER COUNTY INTERCHANGE (WAUK 90343-A) 345/230/13.2KV TRANSFORMER CKT 1	560	560	0.24806	135.6418	P12:345:SPS:J15.1.XRDS.TOLK

SOLUTION	GROUP	SCENARIO	SEASON	SOURCE	DIRECTION	MONITORED ELEMENT	RATEA (MVA)	RATEB(MVA)	TDF	TC%LOADING (% MVA)	CONTINGENCY
FDNS	06ALL	6	20WP	G15_031	FROM->TO	POTTER COUNTY INTERCHANGE (WAUK 90343-A) 345/230/13.2KV TRANSFORMER CKT 1	560	560	0.24806	135.4792	P12:345:SPS:J15.1.XRDS.TOLK
FDNS	06ALL	6	20L	G15_031	FROM->TO	POTTER COUNTY INTERCHANGE (WAUK 90343-A) 345/230/13.2KV TRANSFORMER CKT 1	560	560	0.21121	131.3504	P12:345:SPS:J15.1.XRDS.TOLK
FDNS	06ALL	6	20L	G15_031	FROM->TO	POTTER COUNTY INTERCHANGE (WAUK 90343-A) 345/230/13.2KV TRANSFORMER CKT 1	560	560	0.21121	131.3347	P12:345:SPS:J15.1.XRDS.TOLK
FDNS	06ALL	6	20WP	G15_031	FROM->TO	POTTER COUNTY INTERCHANGE (WAUK 90343-A) 345/230/13.2KV TRANSFORMER CKT 1	560	560	0.24392	130.4565	POTTER COUNTY INTERCHANGE - TOLK STATION 345KV CKT 1
FDNS	06ALL	6	20WP	G15_031	FROM->TO	POTTER COUNTY INTERCHANGE (WAUK 90343-A) 345/230/13.2KV TRANSFORMER CKT 1	560	560	0.24392	130.3259	POTTER COUNTY INTERCHANGE - TOLK STATION 345KV CKT 1
FDNS	06ALL	6	20L	G15_031	FROM->TO	POTTER COUNTY INTERCHANGE (WAUK 90343-A) 345/230/13.2KV TRANSFORMER CKT 1	560	560	0.20797	127.4784	POTTER COUNTY INTERCHANGE - TOLK STATION 345KV CKT 1
FDNS	06ALL	6	20L	G15_031	FROM->TO	POTTER COUNTY INTERCHANGE (WAUK 90343-A) 345/230/13.2KV TRANSFORMER CKT 1	560	560	0.20797	127.4227	POTTER COUNTY INTERCHANGE - TOLK STATION 345KV CKT 1
FDNS	06ALL	6	17G	G15_031	FROM->TO	POTTER COUNTY INTERCHANGE (WAUK 90343-A) 345/230/13.2KV TRANSFORMER CKT 1	560	560	0.24263	126.2728	POTTER COUNTY INTERCHANGE - TOLK STATION 345KV CKT 1
FDNS	06ALL	6	17G	G15_031	FROM->TO	POTTER COUNTY INTERCHANGE (WAUK 90343-A) 345/230/13.2KV TRANSFORMER CKT 1	560	560	0.24263	125.8889	POTTER COUNTY INTERCHANGE - TOLK STATION 345KV CKT 1
FDNS	06ALL	6	16WP	G15_031	FROM->TO	POTTER COUNTY INTERCHANGE (WAUK 90343-A) 345/230/13.2KV TRANSFORMER CKT 1	560	560	0.26018	124.5835	P12:345:SPS:J15.1.XRDS.TOLK
FDNS	06ALL	6	16WP	G15_031	FROM->TO	POTTER COUNTY INTERCHANGE (WAUK 90343-A) 345/230/13.2KV TRANSFORMER CKT 1	560	560	0.26018	123.2053	P12:345:SPS:J15.1.XRDS.TOLK
FDNS	06ALL	6	20WP	G15_031	FROM->TO	POTTER COUNTY INTERCHANGE (WAUK 90343-A) 345/230/13.2KV TRANSFORMER CKT 1	560	560	0.2211	116.5549	P12:345:SPS:J02.1.TOLK.EDDY
FDNS	06ALL	6	16WP	G15_031	FROM->TO	POTTER COUNTY INTERCHANGE (WAUK 90343-A) 345/230/13.2KV TRANSFORMER CKT 1	560	560	0.25422	116.5159	POTTER COUNTY INTERCHANGE - TOLK STATION 345KV CKT 1
FDNS	06ALL	6	20WP	G15_031	FROM->TO	POTTER COUNTY INTERCHANGE (WAUK 90343-A) 345/230/13.2KV TRANSFORMER CKT 1	560	560	0.2211	116.109	P12:345:SPS:J02.1.TOLK.EDDY
FDNS	06ALL	6	16WP	G15_031	FROM->TO	POTTER COUNTY INTERCHANGE (WAUK 90343-A) 345/230/13.2KV TRANSFORMER CKT 1	560	560	0.25422	115.3558	POTTER COUNTY INTERCHANGE - TOLK STATION 345KV CKT 1
FDNS	06ALL	6	17SP	G15_031	FROM->TO	POTTER COUNTY INTERCHANGE (WAUK 90343-A) 345/230/13.2KV TRANSFORMER CKT 1	560	560	0.25798	109.9868	P12:345:SPS:J15.1.XRDS.TOLK
FDNS	06ALL	6	17SP	G15_031	FROM->TO	POTTER COUNTY INTERCHANGE (WAUK 90343-A) 345/230/13.2KV TRANSFORMER CKT 1	560	560	0.25798	108.4833	P12:345:SPS:J15.1.XRDS.TOLK
FDNS	06ALL	6	20L	G15_031	FROM->TO	POTTER COUNTY INTERCHANGE (WAUK 90343-A) 345/230/13.2KV TRANSFORMER CKT 1	560	560	0.19599	108.2575	CHISHOLM6 230.00 - SWEETWATER 230KV CKT 1
FDNS	06ALL	6	20WP	G15_031	FROM->TO	POTTER COUNTY INTERCHANGE (WAUK 90343-A) 345/230/13.2KV TRANSFORMER CKT 1	560	560	0.22939	107.975	CHISHOLM6 230.00 - SWEETWATER 230KV CKT 1
FDNS	06ALL	6	20L	G15_031	FROM->TO	POTTER COUNTY INTERCHANGE (WAUK 90343-A) 345/230/13.2KV TRANSFORMER CKT 1	560	560	0.19599	106.231	CHISHOLM6 230.00 - SWEETWATER 230KV CKT 1
FDNS	06ALL	6	20WP	G15_031	FROM->TO	POTTER COUNTY INTERCHANGE (WAUK 90343-A) 345/230/13.2KV TRANSFORMER CKT 1	560	560	0.22939	106.1183	CHISHOLM6 230.00 - SWEETWATER 230KV CKT 1
FDNS	06ALL	6	20WP	G15_031	FROM->TO	POTTER COUNTY INTERCHANGE (WAUK 90343-A) 345/230/13.2KV TRANSFORMER CKT 1	560	560	0.22816	105.4175	P12:230:AEPW:ELKCITY6:SWEETWT6
FDNS	06ALL	6	17G	G15_031	FROM->TO	POTTER COUNTY INTERCHANGE (WAUK 90343-A) 345/230/13.2KV TRANSFORMER CKT 1	560	560	0.22761	105.3722	CHISHOLM6 230.00 - SWEETWATER 230KV CKT 1
FDNS	06ALL	6	16WP	G15_031	FROM->TO	POTTER COUNTY INTERCHANGE (WAUK 90343-A) 345/230/13.2KV TRANSFORMER CKT 1	560	560	0.23339	104.8403	P12:345:SPS:J02.1.TOLK.EDDY
FDNS	06ALL	6	16WP	G15_031	FROM->TO	POTTER COUNTY INTERCHANGE (WAUK 90343-A) 345/230/13.2KV TRANSFORMER CKT 1	560	560	0.23339	104.3479	P12:345:SPS:J02.1.TOLK.EDDY
FDNS	06ALL	6	17G	G15_031	FROM->TO	POTTER COUNTY INTERCHANGE (WAUK 90343-A) 345/230/13.2KV TRANSFORMER CKT 1	560	560	0.22761	103.8192	CHISHOLM6 230.00 - SWEETWATER 230KV CKT 1
FDNS	06ALL	6	20WP	G15_031	FROM->TO	POTTER COUNTY INTERCHANGE (WAUK 90343-A) 345/230/13.2KV TRANSFORMER CKT 1	560	560	0.22816	103.6014	P12:230:AEPW:ELKCITY6:SWEETWT6
FDNS	06ALL	6	20SP	G15_031	FROM->TO	POTTER COUNTY INTERCHANGE (WAUK 90343-A) 345/230/13.2KV TRANSFORMER CKT 1	560	560	0.25481	103.5013	P12:345:SPS:J15.1.XRDS.TOLK
FDNS	06ALL	6	17SP	G15_031	FROM->TO	POTTER COUNTY INTERCHANGE (WAUK 90343-A) 345/230/13.2KV TRANSFORMER CKT 1	560	560	0.25242	103.4959	POTTER COUNTY INTERCHANGE - TOLK STATION 345KV CKT 1
FDNS	06ALL	6	20SP	G15_031	FROM->TO	POTTER COUNTY INTERCHANGE (WAUK 90343-A) 345/230/13.2KV TRANSFORMER CKT 1	560	560	0.25481	102.1921	P12:345:SPS:J15.1.XRDS.TOLK
FDNS	06ALL	6	17SP	G15_031	FROM->TO	POTTER COUNTY INTERCHANGE (WAUK 90343-A) 345/230/13.2KV TRANSFORMER CKT 1	560	560	0.25242	102.1846	POTTER COUNTY INTERCHANGE - TOLK STATION 345KV CKT 1
FDNS	06ALL	6	20L	G15_031	FROM->TO	POTTER COUNTY INTERCHANGE (WAUK 90343-A) 345/230/13.2KV TRANSFORMER CKT 1	560	560	0.19599	101.6285	STATELINE INTERCHANGE - STLN-DEMARC6 230KV CKT 1
FDNS	06ALL	6	20L	G15_031	FROM->TO	POTTER COUNTY INTERCHANGE (WAUK 90343-A) 345/230/13.2KV TRANSFORMER CKT 1	560	560	0.19599	101.6284	P12:230:AEPW-SPS:SWEETWT6:WHEELER 6
FDNS	06ALL	6	20L	G15_031	FROM->TO	POTTER COUNTY INTERCHANGE (WAUK 90343-A) 345/230/13.2KV TRANSFORMER CKT 1	560	560	0.19599	101.623	STLN-DEMARC6 - SWEETWATER 230KV CKT 1
FDNS	06ALL	6	20WP	G15_031	FROM->TO	POTTER COUNTY INTERCHANGE (WAUK 90343-A) 345/230/13.2KV TRANSFORMER CKT 1	560	560	0.22939	101.2389	STLN-DEMARC6 - SWEETWATER 230KV CKT 1
FDNS	06ALL	6	20WP	G15_031	FROM->TO	POTTER COUNTY INTERCHANGE (WAUK 90343-A) 345/230/13.2KV TRANSFORMER CKT 1	560	560	0.22939	101.206	STATELINE INTERCHANGE - STLN-DEMARC6 230KV CKT 1
FDNS	06ALL	6	20WP	G15_031	FROM->TO	POTTER COUNTY INTERCHANGE (WAUK 90343-A) 345/230/13.2KV TRANSFORMER CKT 1	560	560	0.22939	101.2051	P12:230:AEPW-SPS:SWEETWT6:WHEELER 6
FDNS	06ALL	6	20WP	G15_031	FROM->TO	POTTER COUNTY INTERCHANGE (WAUK 90343-A) 345/230/13.2KV TRANSFORMER CKT 1	560	560	0.21782	100.8002	GRAPEVINE INTERCHANGE - NICHOLS STATION 230KV CKT 1
FDNS	06ALL	6	20WP	G15_031	FROM->TO	POTTER COUNTY INTERCHANGE (WAUK 90343-A) 345/230/13.2KV TRANSFORMER CKT 1	560	560	0.21782	100.8002	GRAPEVINE INTERCHANGE - NICHOLS STATION 230KV CKT 1
FDNS	06ALL	6	20L	G15_031	FROM->TO	POTTER COUNTY INTERCHANGE (WAUK 90343-A) 345/230/13.2KV TRANSFORMER CKT 1	560	560	0.19599	100.138	STATELINE INTERCHANGE - STLN-DEMARC6 230KV CKT 1
FDNS	06ALL	6	20L	G15_031	FROM->TO	POTTER COUNTY INTERCHANGE (WAUK 90343-A) 345/230/13.2KV TRANSFORMER CKT 1	560	560	0.19599	100.1364	P12:230:AEPW-SPS:SWEETWT6:WHEELER 6
FDNS	06ALL	6	20L	G15_031	FROM->TO	POTTER COUNTY INTERCHANGE (WAUK 90343-A) 345/230/13.2KV TRANSFORMER CKT 1	560	560	0.19599	100.1246	STLN-DEMARC6 - SWEETWATER 230KV CKT 1
FDNS	06ALL	6	20WP	G15_031	FROM->TO	POTTER COUNTY INTERCHANGE (WAUK 90343-A) 345/230/13.2KV TRANSFORMER CKT 1	560	560	0.22939	99.9	STLN-DEMARC6 - SWEETWATER 230KV CKT 1
FDNS	06ALL	6	20WP	G15_031	FROM->TO	POTTER COUNTY INTERCHANGE (WAUK 90343-A) 345/230/13.2KV TRANSFORMER CKT 1	560	560	0.22939	99.8	P12:230:AEPW-SPS:SWEETWT6:WHEELER 6
FDNS	06ALL	6	20WP	G15_031	FROM->TO	POTTER COUNTY INTERCHANGE (WAUK 90343-A) 345/230/13.2KV TRANSFORMER CKT 1	560	560	0.22939	99.8	STATELINE INTERCHANGE - STLN-DEMARC6 230KV CKT 1
FDNS	06ALL	6	20SP	G15_031	FROM->TO	POTTER COUNTY INTERCHANGE (WAUK 90343-A) 345/230/13.2KV TRANSFORMER CKT 1	560	560	0.25046	99.5	POTTER COUNTY INTERCHANGE - TOLK STATION 345KV CKT 1
FDNS	06ALL	6	20WP	G15_031	FROM->TO	POTTER COUNTY INTERCHANGE (WAUK 90343-A) 345/230/13.2KV TRANSFORMER CKT 1	560	560	0.22736	99.5	HITCHLAND INTERCHANGE - MOORE COUNTY INTERCHANGE 230KV CKT 1
FDNS	06ALL	6	20WP	G15_031	FROM->TO	POTTER COUNTY INTERCHANGE (WAUK 90343-A) 345/230/13.2KV TRANSFORMER CKT 1	560	560	0.22736	99.5	HITCHLAND INTERCHANGE - MOORE COUNTY INTERCHANGE 230KV CKT 1
FDNS	06ALL	7	20SP	G15_031	FROM->TO	CHISHOLM6 230.00 - ELK CITY 230KV 230KV CKT 1	353	353	0.06122	100.158	BASE CASE
FDNS	06ALL	7	17G	G15_031	TO->FROM	CIMARRON - MINCO 345KV CKT 1	956	956	0.19997	117.9395	G14-057T 345.00 - SUNNYSIDE 345KV CKT 1
FDNS	06ALL	7	20WP	G15_031	TO->FROM	CIMARRON - MINCO 345KV CKT 1	956	956	0.19616	116.4002	G14-057T 345.00 - SUNNYSIDE 345KV CKT 1
FDNS	06ALL	7	17G	G15_031	TO->FROM	CIMARRON - MINCO 345KV CKT 1	956	956	0.19997	112.8925	G14-057T 345.00 - LAWTON EASTSIDE 345KV CKT 1
FDNS	06ALL	7	16WP	G15_031	TO->FROM	CIMARRON - MINCO 345KV CKT 1	956	956	0.20611	111.0593	G14-057T 345.00 - SUNNYSIDE 345KV CKT 1
FDNS	06ALL	7	20WP	G15_031	TO->FROM	CIMARRON - MINCO 345KV CKT 1	956	956	0.19616	111.0342	G14-057T 345.00 - LAWTON EASTSIDE 345KV CKT 1
FDNS	06ALL	7	17SP	G15_031	TO->FROM	CIMARRON - MINCO 345KV CKT 1	956	956	0.20252	111.0288	G14-057T 345.00 - SUNNYSIDE 345KV CKT 1
FDNS	06ALL	7	20SP	G15_031	TO->FROM	CIMARRON - MINCO 345KV CKT 1	956	956	0.20159	108.4281	G14-057T 345.00 - SUNNYSIDE 345KV CKT 1
FDNS	06ALL	7	17SP	G15_031	TO->FROM	CIMARRON - MINCO 345KV CKT 1	956	956	0.20252	106.172	G14-057T 345.00 - LAWTON EASTSIDE 345KV CKT 1
FDNS	06ALL	7	16WP	G15_031	TO->FROM	CIMARRON - MINCO 345KV CKT 1	956	956	0.20611	105.9627	G14-057T 345.00 - LAWTON EASTSIDE 345KV CKT 1
FDNS	06ALL	7	20SP	G15_031	TO->FROM	CIMARRON - MINCO 345KV CKT 1	956	956	0.20159	103.5061	G14-057T 345.00 - LAWTON EASTSIDE 345KV CKT 1
FDNS	06ALL	7	20L	G15_031	TO->FROM	G14-057T 345.00 - LAWTON EASTSIDE 345KV CKT 1	717	789	0.08947	100.7791	BASE CASE
FDNS	06ALL	7	20L	G15_031	FROM->TO	G14-057T 345.00 - SUNNYSIDE 345KV CKT 1	717	789	0.08947	114.0012	BASE CASE
FDNS	06ALL	7	20WP	G15_031	FROM->TO	G14-057T 345.00 - SUNNYSIDE 345KV CKT 1	717	789	0.11095	102.5888	BASE CASE
FDNS	06ALL	7	17G	G15_031	FROM->TO	G14-057T 345.00 - SUNNYSIDE 345KV CKT 1	717	789	0.11359	102.2119	BASE CASE
FDNS	06ALL	7	16WP	G15_031	FROM->TO	G14-057T 345.00 - SUNNYSIDE 345KV CKT 1	717	789	0.1167	101.1576	BASE CASE
FDNS	00NR	7	25SP	G15_031	TO->FROM	JONES STATION - TUCO INTERCHANGE 230KV CKT 1	343.79	343.79	0.11137	129.1537	CARLISLE INTERCHANGE - TUCO INTERCHANGE 230KV CKT 1
FDNS	00NR	7	25SP	G15_031	TO->FROM	JONES STATION - TUCO INTERCHANGE 230KV CKT 1	343.79	343.79	0.11137	129.1537	CARLISLE INTERCHANGE - TUCO INTERCHANGE 230KV CKT 1
FDNS	00NR	7	25SP	G15_031	TO->FROM	JONES STATION - TUCO INTERCHANGE 230KV CKT 1	343.79	343.79	0.08797	112.419	GEN526333 1-JONES GEN #3 21 KV
FDNS	00NR	7	25SP	G15_031	TO->FROM	JONES STATION - TUCO INTERCHANGE 230KV CKT 1	343.79	343.79	0.08797	112.036	GEN526334 1-JONES_4 116.500
FDNS	00NR	7	25SP	G15_031	TO->FROM	JONES STATION - TUCO INTERCHANGE 230KV CKT 1	343.79	343.79	0.10315	107.2187	TUCO INTERCHANGE - YOAKUM_345 345.00 345KV CKT 1
FDNS	00NR	7	25SP	G15_031	TO->FROM	JONES STATION - TUCO INTERCHANGE 230KV CKT 1	343.79	343.79	0.10094	103.0013	CARLISLE INTERCHANGE - WOLFFORTH INTERCHANGE 230KV CKT 1
FDNS	00NR	7	25SP	G15_031	TO->FROM	JONES STATION - TUCO INTERCHANGE 230KV CKT 1	343.79	343.79	0.09587	101.0414	PLANT X STATION - SUNDOWN INTERCHANGE 230KV CKT 1
FDNS	00NR	7	25SP	G15_031	TO->FROM	JONES STATION - TUCO INTERCHANGE 230KV CKT 1	343.79	343.79	0.09587	101.0414	PLANT X STATION - SUNDOWN INTERCHANGE 230KV CKT 1
FDNS	00NR	7	25SP	G15_031	TO->FROM	JONES STATION - TUCO INTERCHANGE 230KV CKT 1	343.79	343.79	0.0947	100.2536	P12:345:SPS:J02.1.TOLK.EDDY
FDNS	00NR	7	25SP	G15_031	TO->FROM	JONES STATION - TUCO INTERCHANGE 230KV CKT 1	343.79	343.79	0.08797	100.1954	GEN526332 1-JONES GEN #2 21 KV
FDNS	00NR	7	25SP	G15_031	TO->FROM	JONES STATION - TUCO INTERCHANGE 230KV CKT 1	343.79	343.79	0.08797	100.1934	GEN526331 1-JONES GEN #1 22 KV
FDNS	00NR	7	25SP	G15_031	TO->FROM	JONES STATION - TUCO INTERCHANGE 230KV CKT 1	343.79	343.79	0.0879	100.1486	TUCO INTERCHANGE (ENRCO 136401) 230/115/13.2KV TRANSFORMER CKT 1
FDNS	00NR	7	25SP	G15_031	TO->FROM	JONES STATION - TUCO INTERCHANGE 230KV CKT 1	343.79	343.79	0.0879	100.1486	TUCO INTERCHANGE (ENRCO 136401) 230/115/13.2KV TRANSFORMER CKT 1
FDNS	00NR	7	25SP	G15_031	TO->FROM	JONES STATION - TUCO INTERCHANGE 230KV CKT 1	343.79	343.79	0.0879	100.1486	TUCO INTERCHANGE (ENRCO 136401) 230/115/13.2KV TRANSFORMER CKT 2
FDNS	00NR	7	25SP	G15_031	TO->FROM	JONES STATION - TUCO INTERCHANGE 230KV CKT 1	343.79	343.79	0.0879	100.1486	TUCO INTERCHANGE (ENRCO 136401) 230/115/13.2KV TRANSFORMER CKT 2

SOLUTION	GROUP	SCENARIO	SEASON	SOURCE	DIRECTION	MONITORED ELEMENT	RATEA (MVA)	RATEB(MVA)	TDF	TC%LOADING (% MVA)	CONTINGENCY
FDNS	00NR	7	25SP	G15_031	TO->FROM	KRESS INTERCHANGE - SWISHER COUNTY INTERCHANGE 115KV CKT 1	218	239	0.21582	112.1112	NEWHART 230 - SWISHER COUNTY INTERCHANGE 230KV CKT 1
FDNS	00NR	7	25SP	G15_031	TO->FROM	KRESS INTERCHANGE - SWISHER COUNTY INTERCHANGE 115KV CKT 1	218	239	0.12194	104.12	BASE CASE
FDNS	00NR	7	25SP	G15_031	TO->FROM	KRESS INTERCHANGE - SWISHER COUNTY INTERCHANGE 115KV CKT 1	218	239	0.11114	102.5625	PALO DURO SUB - RANDALL COUNTY INTERCHANGE 115KV CKT 1
FDNS	00NR	7	25SP	G15_031	TO->FROM	KRESS INTERCHANGE - SWISHER COUNTY INTERCHANGE 115KV CKT 1	218	239	0.11114	101.2237	P12:115:SPS:T66.1.RNDALL.HAPPY
FDNS	00NR	7	25SP	G15_031	TO->FROM	KRESS INTERCHANGE - SWISHER COUNTY INTERCHANGE 115KV CKT 1	218	239	0.11114	101.1403	HAPPY INTERCHANGE - PALO DURO SUB 115KV CKT 1
FDNS	00NR	7	20SP	G15_031	TO->FROM	KRESS INTERCHANGE - SWISHER COUNTY INTERCHANGE 115KV CKT 1	218	239	0.21652	100.9086	NEWHART 230 - SWISHER COUNTY INTERCHANGE 230KV CKT 1
FDNS	00NR	7	17SP	G15_031	TO->FROM	KRESS INTERCHANGE - SWISHER COUNTY INTERCHANGE 115KV CKT 1	218	239	0.22097	100.8335	NEWHART 230 - SWISHER COUNTY INTERCHANGE 230KV CKT 1
FDNS	00NR	7	25SP	G15_031	TO->FROM	KRESS INTERCHANGE - SWISHER COUNTY INTERCHANGE 115KV CKT 1	218	239	0.12042	100.7231	FLOYD COUNTY INTERCHANGE - TUCO INTERCHANGE 115KV CKT 1
FDNS	00NR	7	25SP	G15_031	TO->FROM	KRESS INTERCHANGE - SWISHER COUNTY INTERCHANGE 115KV CKT 1	218	239	0.12042	100.7231	FLOYD COUNTY INTERCHANGE - TUCO INTERCHANGE 115KV CKT 1
FDNS	00NR	7	25SP	G15_031	TO->FROM	KRESS INTERCHANGE - SWISHER COUNTY INTERCHANGE 115KV CKT 1	218	239	0.11944	99.9	PLANT X STATION (WH ALM20171) 230/115/13.2KV TRANSFORMER CKT 1
FDNS	00NR	7	25SP	G15_031	TO->FROM	KRESS INTERCHANGE - SWISHER COUNTY INTERCHANGE 115KV CKT 1	218	239	0.11944	99.9	PLANT X STATION (WH ALM20171) 230/115/13.2KV TRANSFORMER CKT 1
FDNS	00NR	7	25SP	G15_031	TO->FROM	KRESS INTERCHANGE - SWISHER COUNTY INTERCHANGE 115KV CKT 1	218	239	0.12192	99.6	TUCO INTERCHANGE (ENRCO 136401) 230/115/13.2KV TRANSFORMER CKT 1
FDNS	00NR	7	25SP	G15_031	TO->FROM	KRESS INTERCHANGE - SWISHER COUNTY INTERCHANGE 115KV CKT 1	218	239	0.12192	99.6	TUCO INTERCHANGE (ENRCO 136401) 230/115/13.2KV TRANSFORMER CKT 1
FDNS	00NR	7	25SP	G15_031	TO->FROM	KRESS INTERCHANGE - SWISHER COUNTY INTERCHANGE 115KV CKT 1	218	239	0.12192	99.6	TUCO INTERCHANGE (ENRCO 136401) 230/115/13.2KV TRANSFORMER CKT 2
FDNS	00NR	7	25SP	G15_031	TO->FROM	KRESS INTERCHANGE - SWISHER COUNTY INTERCHANGE 115KV CKT 1	218	239	0.12192	99.6	TUCO INTERCHANGE (ENRCO 136401) 230/115/13.2KV TRANSFORMER CKT 2
FDNS	00NR	7	25SP	G15_031	TO->FROM	KRESS INTERCHANGE - SWISHER COUNTY INTERCHANGE 115KV CKT 1	218	239	0.12479	99.5	NEWHART 230 (UPDATE LATER) 230/115/13.2KV TRANSFORMER CKT 2
FDNS	00NR	7	25SP	G15_031	TO->FROM	KRESS INTERCHANGE - SWISHER COUNTY INTERCHANGE 115KV CKT 1	218	239	0.12479	99.5	NEWHART 230 (UPDATE LATER) 230/115/13.2KV TRANSFORMER CKT 2
FDNS	00NR	7	25SP	G15_031	TO->FROM	KRESS INTERCHANGE - SWISHER COUNTY INTERCHANGE 115KV CKT 1	218	239	0.12479	99.5	NEWHART 230 (WAUK WT01105) 230/115/13.2KV TRANSFORMER CKT 1
FDNS	00NR	7	25SP	G15_031	TO->FROM	KRESS INTERCHANGE - SWISHER COUNTY INTERCHANGE 115KV CKT 1	218	239	0.12479	99.5	NEWHART 230 (WAUK WT01105) 230/115/13.2KV TRANSFORMER CKT 1
FDNS	00NR	7	25SP	G15_031	FROM->TO	LUBBOCK POWER & LIGHT-HOLLY PLANT (SHIH T101039) 230/69/13.5KV TRANSFORMER CKT 1	224	224	0.0358	104.7009	LUBBOCK POWER & LIGHT-SOUTHEAST - LUBBOCK SOUTH INTERCHANGE 230KV CKT 1
FDNS	00NR	7	25SP	G15_031	FROM->TO	LUBBOCK POWER & LIGHT-HOLLY PLANT (SHIH T101039) 230/69/13.5KV TRANSFORMER CKT 1	224	224	0.0358	104.6879	P12:LPL:SPS:K64.1.LP-SE.LUBBS
FDNS	00NR	7	25SP	G15_031	FROM->TO	LUBBOCK POWER & LIGHT-HOLLY PLANT (SHIH T101039) 230/69/13.5KV TRANSFORMER CKT 1	224	224	0.035	101.9255	LUBBOCK EAST INTERCHANGE - LUBBOCK POWER & LIGHT-WADSWORTH 230KV CKT 1
FDNS	00NR	7	25SP	G15_031	FROM->TO	LUBBOCK POWER & LIGHT-HOLLY PLANT (SHIH T101039) 230/69/13.5KV TRANSFORMER CKT 1	224	224	0.035	101.9108	P12:230:LPL:K57.1.LP-WADS.LUBBE
FDNS	00NR	7	25SP	G15_031	FROM->TO	LUBBOCK POWER & LIGHT-HOLLY PLANT (SHIH T101039) 230/69/13.5KV TRANSFORMER CKT 1	224	224	0.035	101.9107	LUBBOCK POWER & LIGHT-WADSWORTH (SHIH T101038) 230/69/13.5KV TRANSFORMER CKT 1
FDNS	00NR	7	25SP	G15_031	FROM->TO	LUBBOCK POWER & LIGHT-HOLLY PLANT (SHIH T101039) 230/69/13.5KV TRANSFORMER CKT 1	224	224	0.035	101.9107	LUBBOCK POWER & LIGHT-WADSWORTH (SHIH T101038) 230/69/13.5KV TRANSFORMER CKT 1
FDNS	06ALL	7	20WP	G15_031	FROM->TO	POTTER COUNTY INTERCHANGE (WAUK 90343-A) 345/230/13.2KV TRANSFORMER CKT 1	560	560	0.24806	145.2357	P12:345:SPS:J15.1.XRDS.TOLK
FDNS	06ALL	7	20WP	G15_031	FROM->TO	POTTER COUNTY INTERCHANGE (WAUK 90343-A) 345/230/13.2KV TRANSFORMER CKT 1	560	560	0.24806	143.2694	P12:345:SPS:J15.1.XRDS.TOLK
FDNS	06ALL	7	20L	G15_031	FROM->TO	POTTER COUNTY INTERCHANGE (WAUK 90343-A) 345/230/13.2KV TRANSFORMER CKT 1	560	560	0.21128	140.9722	P12:345:SPS:J15.1.XRDS.TOLK
FDNS	06ALL	7	20WP	G15_031	FROM->TO	POTTER COUNTY INTERCHANGE (WAUK 90343-A) 345/230/13.2KV TRANSFORMER CKT 1	560	560	0.24392	139.6579	POTTER COUNTY INTERCHANGE - TOLK STATION 345KV CKT 1
FDNS	06ALL	7	20L	G15_031	FROM->TO	POTTER COUNTY INTERCHANGE (WAUK 90343-A) 345/230/13.2KV TRANSFORMER CKT 1	560	560	0.21128	139.1603	P12:345:SPS:J15.1.XRDS.TOLK
FDNS	06ALL	7	20WP	G15_031	FROM->TO	POTTER COUNTY INTERCHANGE (WAUK 90343-A) 345/230/13.2KV TRANSFORMER CKT 1	560	560	0.24392	137.9216	POTTER COUNTY INTERCHANGE - TOLK STATION 345KV CKT 1
FDNS	06ALL	7	20L	G15_031	FROM->TO	POTTER COUNTY INTERCHANGE (WAUK 90343-A) 345/230/13.2KV TRANSFORMER CKT 1	560	560	0.20803	136.7701	POTTER COUNTY INTERCHANGE - TOLK STATION 345KV CKT 1
FDNS	06ALL	7	17G	G15_031	FROM->TO	POTTER COUNTY INTERCHANGE (WAUK 90343-A) 345/230/13.2KV TRANSFORMER CKT 1	560	560	0.24265	135.7702	POTTER COUNTY INTERCHANGE - TOLK STATION 345KV CKT 1
FDNS	06ALL	7	20L	G15_031	FROM->TO	POTTER COUNTY INTERCHANGE (WAUK 90343-A) 345/230/13.2KV TRANSFORMER CKT 1	560	560	0.20803	135.1875	POTTER COUNTY INTERCHANGE - TOLK STATION 345KV CKT 1
FDNS	06ALL	7	16WP	G15_031	FROM->TO	POTTER COUNTY INTERCHANGE (WAUK 90343-A) 345/230/13.2KV TRANSFORMER CKT 1	560	560	0.2602	133.795	P12:345:SPS:J15.1.XRDS.TOLK
FDNS	06ALL	7	17G	G15_031	FROM->TO	POTTER COUNTY INTERCHANGE (WAUK 90343-A) 345/230/13.2KV TRANSFORMER CKT 1	560	560	0.24265	133.7386	POTTER COUNTY INTERCHANGE - TOLK STATION 345KV CKT 1
FDNS	06ALL	7	16WP	G15_031	FROM->TO	POTTER COUNTY INTERCHANGE (WAUK 90343-A) 345/230/13.2KV TRANSFORMER CKT 1	560	560	0.2602	130.8152	P12:345:SPS:J15.1.XRDS.TOLK
FDNS	06ALL	7	16WP	G15_031	FROM->TO	POTTER COUNTY INTERCHANGE (WAUK 90343-A) 345/230/13.2KV TRANSFORMER CKT 1	560	560	0.25423	125.2874	POTTER COUNTY INTERCHANGE - TOLK STATION 345KV CKT 1
FDNS	06ALL	7	20WP	G15_031	FROM->TO	POTTER COUNTY INTERCHANGE (WAUK 90343-A) 345/230/13.2KV TRANSFORMER CKT 1	560	560	0.2211	124.8912	P12:345:SPS:J02.1.TOLK.EDDY
FDNS	06ALL	7	20WP	G15_031	FROM->TO	POTTER COUNTY INTERCHANGE (WAUK 90343-A) 345/230/13.2KV TRANSFORMER CKT 1	560	560	0.2211	123.9005	P12:345:SPS:J02.1.TOLK.EDDY
FDNS	06ALL	7	16WP	G15_031	FROM->TO	POTTER COUNTY INTERCHANGE (WAUK 90343-A) 345/230/13.2KV TRANSFORMER CKT 1	560	560	0.25423	122.7478	POTTER COUNTY INTERCHANGE - TOLK STATION 345KV CKT 1
FDNS	06ALL	7	17SP	G15_031	FROM->TO	POTTER COUNTY INTERCHANGE (WAUK 90343-A) 345/230/13.2KV TRANSFORMER CKT 1	560	560	0.25799	118.7065	P12:345:SPS:J15.1.XRDS.TOLK
FDNS	06ALL	7	17SP	G15_031	FROM->TO	POTTER COUNTY INTERCHANGE (WAUK 90343-A) 345/230/13.2KV TRANSFORMER CKT 1	560	560	0.25799	115.9022	P12:345:SPS:J15.1.XRDS.TOLK
FDNS	06ALL	7	20L	G15_031	FROM->TO	POTTER COUNTY INTERCHANGE (WAUK 90343-A) 345/230/13.2KV TRANSFORMER CKT 1	560	560	0.19601	115.2026	CHISHOLM6 230.00 - SWEETWATER 230KV CKT 1
FDNS	06ALL	7	20WP	G15_031	FROM->TO	POTTER COUNTY INTERCHANGE (WAUK 90343-A) 345/230/13.2KV TRANSFORMER CKT 1	560	560	0.22939	114.9482	CHISHOLM6 230.00 - SWEETWATER 230KV CKT 1
FDNS	06ALL	7	20L	G15_031	FROM->TO	POTTER COUNTY INTERCHANGE (WAUK 90343-A) 345/230/13.2KV TRANSFORMER CKT 1	560	560	0.19601	114.9062	CHISHOLM6 230.00 - SWEETWATER 230KV CKT 1
FDNS	06ALL	7	20WP	G15_031	FROM->TO	POTTER COUNTY INTERCHANGE (WAUK 90343-A) 345/230/13.2KV TRANSFORMER CKT 1	560	560	0.22939	114.7145	CHISHOLM6 230.00 - SWEETWATER 230KV CKT 1
FDNS	06ALL	7	20WP	G15_031	FROM->TO	POTTER COUNTY INTERCHANGE (WAUK 90343-A) 345/230/13.2KV TRANSFORMER CKT 1	560	560	0.22815	113.3767	P12:230:AEPW:ELKCITY6:SWEETWT6
FDNS	06ALL	7	16WP	G15_031	FROM->TO	POTTER COUNTY INTERCHANGE (WAUK 90343-A) 345/230/13.2KV TRANSFORMER CKT 1	560	560	0.2334	113.2535	P12:345:SPS:J02.1.TOLK.EDDY
FDNS	06ALL	7	20WP	G15_031	FROM->TO	POTTER COUNTY INTERCHANGE (WAUK 90343-A) 345/230/13.2KV TRANSFORMER CKT 1	560	560	0.22815	113.142	P12:230:AEPW:ELKCITY6:SWEETWT6
FDNS	06ALL	7	17G	G15_031	FROM->TO	POTTER COUNTY INTERCHANGE (WAUK 90343-A) 345/230/13.2KV TRANSFORMER CKT 1	560	560	0.22762	112.9017	CHISHOLM6 230.00 - SWEETWATER 230KV CKT 1
FDNS	06ALL	7	17G	G15_031	FROM->TO	POTTER COUNTY INTERCHANGE (WAUK 90343-A) 345/230/13.2KV TRANSFORMER CKT 1	560	560	0.22762	112.7906	CHISHOLM6 230.00 - SWEETWATER 230KV CKT 1
FDNS	06ALL	7	17SP	G15_031	FROM->TO	POTTER COUNTY INTERCHANGE (WAUK 90343-A) 345/230/13.2KV TRANSFORMER CKT 1	560	560	0.25244	112.021	POTTER COUNTY INTERCHANGE - TOLK STATION 345KV CKT 1
FDNS	06ALL	7	20SP	G15_031	FROM->TO	POTTER COUNTY INTERCHANGE (WAUK 90343-A) 345/230/13.2KV TRANSFORMER CKT 1	560	560	0.25482	111.9416	P12:345:SPS:J15.1.XRDS.TOLK
FDNS	06ALL	7	16WP	G15_031	FROM->TO	POTTER COUNTY INTERCHANGE (WAUK 90343-A) 345/230/13.2KV TRANSFORMER CKT 1	560	560	0.2334	111.4742	P12:345:SPS:J02.1.TOLK.EDDY
FDNS	06ALL	7	17SP	G15_031	FROM->TO	POTTER COUNTY INTERCHANGE (WAUK 90343-A) 345/230/13.2KV TRANSFORMER CKT 1	560	560	0.25244	109.5353	POTTER COUNTY INTERCHANGE - TOLK STATION 345KV CKT 1
FDNS	06ALL	7	20SP	G15_031	FROM->TO	POTTER COUNTY INTERCHANGE (WAUK 90343-A) 345/230/13.2KV TRANSFORMER CKT 1	560	560	0.25482	109.4721	P12:345:SPS:J15.1.XRDS.TOLK
FDNS	06ALL	7	20L	G15_031	FROM->TO	POTTER COUNTY INTERCHANGE (WAUK 90343-A) 345/230/13.2KV TRANSFORMER CKT 1	560	560	0.19601	108.6444	STLN-DEMARC6 - SWEETWATER 230KV CKT 1
FDNS	06ALL	7	20L	G15_031	FROM->TO	POTTER COUNTY INTERCHANGE (WAUK 90343-A) 345/230/13.2KV TRANSFORMER CKT 1	560	560	0.19601	108.5909	STATELINE INTERCHANGE - STLN-DEMARC6 230KV CKT 1
FDNS	06ALL	7	20L	G15_031	FROM->TO	POTTER COUNTY INTERCHANGE (WAUK 90343-A) 345/230/13.2KV TRANSFORMER CKT 1	560	560	0.19601	108.5908	P12:230:AEPW-SPS:SWEETWT6:WHEELER 6
FDNS	06ALL	7	20L	G15_031	FROM->TO	POTTER COUNTY INTERCHANGE (WAUK 90343-A) 345/230/13.2KV TRANSFORMER CKT 1	560	560	0.19601	108.4467	STLN-DEMARC6 - SWEETWATER 230KV CKT 1
FDNS	06ALL	7	20L	G15_031	FROM->TO	POTTER COUNTY INTERCHANGE (WAUK 90343-A) 345/230/13.2KV TRANSFORMER CKT 1	560	560	0.19601	108.3997	STATELINE INTERCHANGE - STLN-DEMARC6 230KV CKT 1
FDNS	06ALL	7	20L	G15_031	FROM->TO	POTTER COUNTY INTERCHANGE (WAUK 90343-A) 345/230/13.2KV TRANSFORMER CKT 1	560	560	0.19601	108.3995	P12:230:AEPW-SPS:SWEETWT6:WHEELER 6
FDNS	06ALL	7	20WP	G15_031	FROM->TO	POTTER COUNTY INTERCHANGE (WAUK 90343-A) 345/230/13.2KV TRANSFORMER CKT 1	560	560	0.22939	108.2091	STLN-DEMARC6 - SWEETWATER 230KV CKT 1
FDNS	06ALL	7	20WP	G15_031	FROM->TO	POTTER COUNTY INTERCHANGE (WAUK 90343-A) 345/230/13.2KV TRANSFORMER CKT 1	560	560	0.22939	108.2049	STATELINE INTERCHANGE - STLN-DEMARC6 230KV CKT 1
FDNS	06ALL	7	20WP	G15_031	FROM->TO	POTTER COUNTY INTERCHANGE (WAUK 90343-A) 345/230/13.2KV TRANSFORMER CKT 1	560	560	0.22939	108.2045	P12:230:AEPW-SPS:SWEETWT6:WHEELER 6
FDNS	06ALL	7	20WP	G15_031	FROM->TO	POTTER COUNTY INTERCHANGE (WAUK 90343-A) 345/230/13.2KV TRANSFORMER CKT 1	560	560	0.22939	108.0584	STATELINE INTERCHANGE - STLN-DEMARC6 230KV CKT 1
FDNS	06ALL	7	20WP	G15_031	FROM->TO	POTTER COUNTY INTERCHANGE (WAUK 90343-A) 345/230/13.2KV TRANSFORMER CKT 1	560	560	0.22939	108.0581	P12:230:AEPW-SPS:SWEETWT6:WHEELER 6
FDNS	06ALL	7	20WP	G15_031	FROM->TO	POTTER COUNTY INTERCHANGE (WAUK 90343-A) 345/230/13.2KV TRANSFORMER CKT 1	560	560	0.22939	108.0528	STLN-DEMARC6 - SWEETWATER 230KV CKT 1
FDNS	06ALL	7	20WP	G15_031	FROM->TO	POTTER COUNTY INTERCHANGE (WAUK 90343-A) 345/230/13.2KV TRANSFORMER CKT 1	560	560	0.21781	107.9264	GRAPEVINE INTERCHANGE - NICHOLS STATION 230KV CKT 1
FDNS	06ALL	7	20WP	G15_031	FROM->TO	POTTER COUNTY INTERCHANGE (WAUK 90343-A) 345/230/13.2KV TRANSFORMER CKT 1	560	560	0.21781	107.9264	GRAPEVINE INTERCHANGE - NICHOLS STATION 230KV CKT 1
FDNS	06ALL	7	20WP	G15_031	FROM->TO	POTTER COUNTY INTERCHANGE (WAUK 90343-A) 345/230/13.2KV TRANSFORMER CKT 1	560	560	0.21781	107.8549	GRAPEVINE INTERCHANGE - NICHOLS STATION 230KV CKT 1
FDNS	06ALL	7	20WP	G15_031	FROM->TO	POTTER COUNTY INTERCHANGE (WAUK 90343-A) 345/230/13.2KV TRANSFORMER CKT 1	560	560	0.21781	107.8549	GRAPEVINE INTERCHANGE - NICHOLS STATION 230KV CKT 1
FDNS	06ALL	7	20SP	G15_031	FROM->TO	POTTER COUNTY INTERCHANGE (WAUK 90343-A) 345/230/13.2KV TRANSFORMER CKT 1	560	560	0.25046	107.7296	POTTER COUNTY INTERCHANGE - TOLK STATION 345KV CKT 1
FDNS	06ALL	7	20WP	G15_031	FROM->TO	POTTER COUNTY INTERCHANGE (WAUK 90343-A) 345/230/13.2KV TRANSFORMER CKT 1	560	560	0.21756	106.7295	TOLK STATION (ABBXNL844501) 345/230/13.2KV TRANSFORMER CKT 1
FDNS	06ALL	7	20WP	G15_031	FROM->TO	POTTER COUNTY INTERCHANGE (WAUK 90343-A) 345/230/13.2KV TRANSFORMER CKT 1	560	560	0.21756	106.7295	TOLK STATION (ABBXNL844501) 345/230/13.2KV TRANSFORMER CKT 1
FDNS	06ALL	7	20WP	G15_031	FROM->TO	POTTER COUNTY INTERCHANGE (WAUK 90343-A) 345/230/13.2KV TRANSFORMER CKT 1	560	560	0.21196	106.6242	G14-074T 345.00 - OKLAUNION 345KV CKT 1
FDNS	06ALL	7	20WP	G15_031	FROM->TO	POTTER COUNTY INTERCHANGE (WAUK 90343-A) 345/230/13.2KV TRANSFORMER CKT 1	560	560	0.21756	106.4379	TOLK STATION (ABBXNL844501) 345/230/13.2KV TRANSFORMER CKT 1
FDNS	06ALL	7	20WP	G15_031	FROM->TO	POTTER COUNTY INTERCHANGE (WAUK 90343-A) 345/230/13.2KV TRANSFORMER CKT 1	560	560	0.21756	106.4379	TOLK STATION (ABBXNL844501) 345/230/13.2KV TRANSFORMER CKT 1

SOLUTION	GROUP	SCENARIO	SEASON	SOURCE	DIRECTION	MONITORED ELEMENT	RATEA (MVA)	RATEB(MVA)	TDF	TC%LOADING (% MVA)	CONTINGENCY
FDNS	06ALL	7	17G	G15_031	FROM->TO	POTTER COUNTY INTERCHANGE (WAUK 90343-A) 345/230/13.2KV TRANSFORMER CKT 1	560	560	0.22762	106.3525	STATELINE INTERCHANGE - STLN-DEMARC6 230KV CKT 1
FDNS	06ALL	7	17G	G15_031	FROM->TO	POTTER COUNTY INTERCHANGE (WAUK 90343-A) 345/230/13.2KV TRANSFORMER CKT 1	560	560	0.22762	106.3244	STLN-DEMARC6 - SWEETWATER 230KV CKT 1
FDNS	06ALL	7	17G	G15_031	FROM->TO	POTTER COUNTY INTERCHANGE (WAUK 90343-A) 345/230/13.2KV TRANSFORMER CKT 1	560	560	0.22762	106.171	STATELINE INTERCHANGE - STLN-DEMARC6 230KV CKT 1
FDNS	06ALL	7	17G	G15_031	FROM->TO	POTTER COUNTY INTERCHANGE (WAUK 90343-A) 345/230/13.2KV TRANSFORMER CKT 1	560	560	0.22762	106.1508	STLN-DEMARC6 - SWEETWATER 230KV CKT 1
FDNS	06ALL	7	20WP	G15_031	FROM->TO	POTTER COUNTY INTERCHANGE (WAUK 90343-A) 345/230/13.2KV TRANSFORMER CKT 1	560	560	0.2167	105.788	MOORE COUNTY INTERCHANGE - POTTER COUNTY INTERCHANGE 230KV CKT 1
FDNS	06ALL	7	20WP	G15_031	FROM->TO	POTTER COUNTY INTERCHANGE (WAUK 90343-A) 345/230/13.2KV TRANSFORMER CKT 1	560	560	0.2167	105.788	MOORE COUNTY INTERCHANGE - POTTER COUNTY INTERCHANGE 230KV CKT 1
FDNS	06ALL	7	20WP	G15_031	FROM->TO	POTTER COUNTY INTERCHANGE (WAUK 90343-A) 345/230/13.2KV TRANSFORMER CKT 1	560	560	0.2167	105.5516	MOORE COUNTY INTERCHANGE - POTTER COUNTY INTERCHANGE 230KV CKT 1
FDNS	06ALL	7	20WP	G15_031	FROM->TO	POTTER COUNTY INTERCHANGE (WAUK 90343-A) 345/230/13.2KV TRANSFORMER CKT 1	560	560	0.2167	105.5516	MOORE COUNTY INTERCHANGE - POTTER COUNTY INTERCHANGE 230KV CKT 1
FDNS	06ALL	7	20SP	G15_031	FROM->TO	POTTER COUNTY INTERCHANGE (WAUK 90343-A) 345/230/13.2KV TRANSFORMER CKT 1	560	560	0.25046	105.4506	POTTER COUNTY INTERCHANGE - TOLK STATION 345KV CKT 1
FDNS	06ALL	7	20WP	G15_031	FROM->TO	POTTER COUNTY INTERCHANGE (WAUK 90343-A) 345/230/13.2KV TRANSFORMER CKT 1	560	560	0.22735	105.4502	HITCHLAND INTERCHANGE - MOORE COUNTY INTERCHANGE 230KV CKT 1
FDNS	06ALL	7	20WP	G15_031	FROM->TO	POTTER COUNTY INTERCHANGE (WAUK 90343-A) 345/230/13.2KV TRANSFORMER CKT 1	560	560	0.22735	105.4502	HITCHLAND INTERCHANGE - MOORE COUNTY INTERCHANGE 230KV CKT 1
FDNS	06ALL	7	20WP	G15_031	FROM->TO	POTTER COUNTY INTERCHANGE (WAUK 90343-A) 345/230/13.2KV TRANSFORMER CKT 1	560	560	0.22735	105.2772	HITCHLAND INTERCHANGE - MOORE COUNTY INTERCHANGE 230KV CKT 1
FDNS	06ALL	7	20WP	G15_031	FROM->TO	POTTER COUNTY INTERCHANGE (WAUK 90343-A) 345/230/13.2KV TRANSFORMER CKT 1	560	560	0.22735	105.2772	HITCHLAND INTERCHANGE - MOORE COUNTY INTERCHANGE 230KV CKT 1
FDNS	06ALL	7	20WP	G15_031	FROM->TO	POTTER COUNTY INTERCHANGE (WAUK 90343-A) 345/230/13.2KV TRANSFORMER CKT 1	560	560	0.21196	105.2313	G14-074T 345.00 - OKLAUNION 345KV CKT 1
FDNS	06ALL	7	17G	G15_031	FROM->TO	POTTER COUNTY INTERCHANGE (WAUK 90343-A) 345/230/13.2KV TRANSFORMER CKT 1	560	560	0.21599	105.0086	GRAPEVINE INTERCHANGE - NICHOLS STATION 230KV CKT 1
FDNS	06ALL	7	17G	G15_031	FROM->TO	POTTER COUNTY INTERCHANGE (WAUK 90343-A) 345/230/13.2KV TRANSFORMER CKT 1	560	560	0.21599	104.7674	GRAPEVINE INTERCHANGE - NICHOLS STATION 230KV CKT 1
FDNS	06ALL	7	20WP	G15_031	FROM->TO	POTTER COUNTY INTERCHANGE (WAUK 90343-A) 345/230/13.2KV TRANSFORMER CKT 1	560	560	0.21764	104.0764	GRAPEVINE INTERCHANGE - STATELINE INTERCHANGE 230KV CKT 1
FDNS	06ALL	7	20WP	G15_031	FROM->TO	POTTER COUNTY INTERCHANGE (WAUK 90343-A) 345/230/13.2KV TRANSFORMER CKT 1	560	560	0.21764	104.0764	GRAPEVINE INTERCHANGE - STATELINE INTERCHANGE 230KV CKT 1
FDNS	06ALL	7	20WP	G15_031	FROM->TO	POTTER COUNTY INTERCHANGE (WAUK 90343-A) 345/230/13.2KV TRANSFORMER CKT 1	560	560	0.21764	104.0137	GRAPEVINE INTERCHANGE - STATELINE INTERCHANGE 230KV CKT 1
FDNS	06ALL	7	20WP	G15_031	FROM->TO	POTTER COUNTY INTERCHANGE (WAUK 90343-A) 345/230/13.2KV TRANSFORMER CKT 1	560	560	0.21764	104.0137	GRAPEVINE INTERCHANGE - STATELINE INTERCHANGE 230KV CKT 1
FDNS	06ALL	7	17G	G15_031	FROM->TO	POTTER COUNTY INTERCHANGE (WAUK 90343-A) 345/230/13.2KV TRANSFORMER CKT 1	560	560	0.20999	103.894	G14-074T 345.00 - OKLAUNION 345KV CKT 1
FDNS	06ALL	7	17G	G15_031	FROM->TO	POTTER COUNTY INTERCHANGE (WAUK 90343-A) 345/230/13.2KV TRANSFORMER CKT 1	560	560	0.22515	103.4347	HITCHLAND INTERCHANGE - MOORE COUNTY INTERCHANGE 230KV CKT 1
FDNS	06ALL	7	17G	G15_031	FROM->TO	POTTER COUNTY INTERCHANGE (WAUK 90343-A) 345/230/13.2KV TRANSFORMER CKT 1	560	560	0.22515	103.2583	HITCHLAND INTERCHANGE - MOORE COUNTY INTERCHANGE 230KV CKT 1
FDNS	06ALL	7	17G	G15_031	FROM->TO	POTTER COUNTY INTERCHANGE (WAUK 90343-A) 345/230/13.2KV TRANSFORMER CKT 1	560	560	0.21464	102.6929	MOORE COUNTY INTERCHANGE - POTTER COUNTY INTERCHANGE 230KV CKT 1
FDNS	06ALL	7	17G	G15_031	FROM->TO	POTTER COUNTY INTERCHANGE (WAUK 90343-A) 345/230/13.2KV TRANSFORMER CKT 1	560	560	0.21464	102.6376	MOORE COUNTY INTERCHANGE - POTTER COUNTY INTERCHANGE 230KV CKT 1
FDNS	06ALL	7	17G	G15_031	FROM->TO	POTTER COUNTY INTERCHANGE (WAUK 90343-A) 345/230/13.2KV TRANSFORMER CKT 1	560	560	0.20999	102.6293	G14-074T 345.00 - OKLAUNION 345KV CKT 1
FDNS	06ALL	7	17G	G15_031	FROM->TO	POTTER COUNTY INTERCHANGE (WAUK 90343-A) 345/230/13.2KV TRANSFORMER CKT 1	560	560	0.21581	101.8723	GRAPEVINE INTERCHANGE - STATELINE INTERCHANGE 230KV CKT 1
FDNS	06ALL	7	17G	G15_031	FROM->TO	POTTER COUNTY INTERCHANGE (WAUK 90343-A) 345/230/13.2KV TRANSFORMER CKT 1	560	560	0.21581	101.6451	GRAPEVINE INTERCHANGE - STATELINE INTERCHANGE 230KV CKT 1
FDNS	06ALL	7	20WP	G15_031	FROM->TO	POTTER COUNTY INTERCHANGE (WAUK 90343-A) 345/230/13.2KV TRANSFORMER CKT 1	560	560	0.20755	100.1059	BORDER 7345.00 - TUCO_2 345.00 345KV CKT 1
FDNS	06ALL	7	20WP	G15_031	FROM->TO	POTTER COUNTY INTERCHANGE (WAUK 90343-A) 345/230/13.2KV TRANSFORMER CKT 1	560	560	0.20755	100.1058	BORDER 7345.00 - TUCO_2 345.00 345KV CKT 2
FDNS	06ALL	7	20WP	G15_031	FROM->TO	POTTER COUNTY INTERCHANGE (WAUK 90343-A) 345/230/13.2KV TRANSFORMER CKT 1	560	560	0.20755	99.8	BORDER 7345.00 - TUCO_2 345.00 345KV CKT 1
FDNS	06ALL	7	20WP	G15_031	FROM->TO	POTTER COUNTY INTERCHANGE (WAUK 90343-A) 345/230/13.2KV TRANSFORMER CKT 1	560	560	0.20755	99.8	BORDER 7345.00 - TUCO_2 345.00 345KV CKT 2
FDNS	00NR	8	25SP	G15_031	TO->FROM	JONES STATION - TUCO INTERCHANGE 230KV CKT 1	343.79	343.79	0.111	128.3131	CARLISLE INTERCHANGE - TUCO INTERCHANGE 230KV CKT 1
FDNS	00NR	8	25SP	G15_031	TO->FROM	JONES STATION - TUCO INTERCHANGE 230KV CKT 1	343.79	343.79	0.111	128.3131	CARLISLE INTERCHANGE - TUCO INTERCHANGE 230KV CKT 1
FDNS	00NR	8	25SP	G15_031	TO->FROM	JONES STATION - TUCO INTERCHANGE 230KV CKT 1	343.79	343.79	0.08776	111.8492	GEN526333 1-JONES GEN #3 21 KV
FDNS	00NR	8	25SP	G15_031	TO->FROM	JONES STATION - TUCO INTERCHANGE 230KV CKT 1	343.79	343.79	0.08776	111.4668	GEN526334 1-JONES_4 116.500
FDNS	00NR	8	25SP	G15_031	TO->FROM	JONES STATION - TUCO INTERCHANGE 230KV CKT 1	343.79	343.79	0.10249	106.1183	TUCO_2 345.00 - YOAKUM_345 345.00 345KV CKT 1
FDNS	00NR	8	25SP	G15_031	TO->FROM	JONES STATION - TUCO INTERCHANGE 230KV CKT 1	343.79	343.79	0.10062	102.3279	CARLISLE INTERCHANGE - WOLFFORTH INTERCHANGE 230KV CKT 1
FDNS	00NR	8	25SP	G15_031	TO->FROM	JONES STATION - TUCO INTERCHANGE 230KV CKT 1	343.79	343.79	0.09581	100.9491	PLANT X STATION - SUNDOWN INTERCHANGE 230KV CKT 1
FDNS	00NR	8	25SP	G15_031	TO->FROM	JONES STATION - TUCO INTERCHANGE 230KV CKT 1	343.79	343.79	0.09581	100.9491	PLANT X STATION - SUNDOWN INTERCHANGE 230KV CKT 1
FDNS	00NR	8	25SP	G15_031	TO->FROM	JONES STATION - TUCO INTERCHANGE 230KV CKT 1	343.79	343.79	0.09469	99.7	P12:345:SPS:J02.1.TOLK.EDDY
FDNS	00NR	8	25SP	G15_031	TO->FROM	JONES STATION - TUCO INTERCHANGE 230KV CKT 1	343.79	343.79	0.08776	99.5	GEN526331 1-JONES GEN #1 22 KV
FDNS	00NR	8	25SP	G15_031	TO->FROM	JONES STATION - TUCO INTERCHANGE 230KV CKT 1	343.79	343.79	0.08776	99.5	GEN526332 1-JONES GEN #2 21 KV
FDNS	00NR	8	25SP	G15_031	TO->FROM	JONES STATION - TUCO INTERCHANGE 230KV CKT 1	343.79	343.79	0.0877	99.5	TUCO INTERCHANGE (ENRCO 136401) 230/115/13.2KV TRANSFORMER CKT 1
FDNS	00NR	8	25SP	G15_031	TO->FROM	JONES STATION - TUCO INTERCHANGE 230KV CKT 1	343.79	343.79	0.0877	99.5	TUCO INTERCHANGE (ENRCO 136401) 230/115/13.2KV TRANSFORMER CKT 1
FDNS	00NR	8	25SP	G15_031	TO->FROM	JONES STATION - TUCO INTERCHANGE 230KV CKT 1	343.79	343.79	0.0877	99.5	TUCO INTERCHANGE (ENRCO 136401) 230/115/13.2KV TRANSFORMER CKT 2
FDNS	00NR	8	25SP	G15_031	TO->FROM	JONES STATION - TUCO INTERCHANGE 230KV CKT 1	343.79	343.79	0.0877	99.5	TUCO INTERCHANGE (ENRCO 136401) 230/115/13.2KV TRANSFORMER CKT 2
FDNS	00NR	8	25SP	G15_031	TO->FROM	KRESS INTERCHANGE - SWISHER COUNTY INTERCHANGE 115KV CKT 1	218	239	0.21505	111.2319	NEWHART 230 - SWISHER COUNTY INTERCHANGE 230KV CKT 1
FDNS	00NR	8	25SP	G15_031	TO->FROM	KRESS INTERCHANGE - SWISHER COUNTY INTERCHANGE 115KV CKT 1	218	239	0.12168	103.99	BASE CASE
FDNS	00NR	8	25SP	G15_031	TO->FROM	KRESS INTERCHANGE - SWISHER COUNTY INTERCHANGE 115KV CKT 1	218	239	0.11058	102.8113	PALO DURO SUB - RANDALL COUNTY INTERCHANGE 115KV CKT 1
FDNS	00NR	8	25SP	G15_031	TO->FROM	KRESS INTERCHANGE - SWISHER COUNTY INTERCHANGE 115KV CKT 1	218	239	0.11058	101.4675	P12:115:SPS:T66.1.RNDALL.HAPPY
FDNS	00NR	8	25SP	G15_031	TO->FROM	KRESS INTERCHANGE - SWISHER COUNTY INTERCHANGE 115KV CKT 1	218	239	0.11058	101.3931	HAPPY INTERCHANGE - PALO DURO SUB 115KV CKT 1
FDNS	00NR	8	20SP	G15_031	TO->FROM	KRESS INTERCHANGE - SWISHER COUNTY INTERCHANGE 115KV CKT 1	218	239	0.21579	100.8435	NEWHART 230 - SWISHER COUNTY INTERCHANGE 230KV CKT 1
FDNS	00NR	8	17SP	G15_031	TO->FROM	KRESS INTERCHANGE - SWISHER COUNTY INTERCHANGE 115KV CKT 1	218	239	0.21995	100.6782	NEWHART 230 - SWISHER COUNTY INTERCHANGE 230KV CKT 1
FDNS	00NR	8	25SP	G15_031	TO->FROM	KRESS INTERCHANGE - SWISHER COUNTY INTERCHANGE 115KV CKT 1	218	239	0.12018	100.3339	FLOYD COUNTY INTERCHANGE - TUCO INTERCHANGE 115KV CKT 1
FDNS	00NR	8	25SP	G15_031	TO->FROM	KRESS INTERCHANGE - SWISHER COUNTY INTERCHANGE 115KV CKT 1	218	239	0.12018	100.3339	FLOYD COUNTY INTERCHANGE - TUCO INTERCHANGE 115KV CKT 1
FDNS	00NR	8	25SP	G15_031	TO->FROM	KRESS INTERCHANGE - SWISHER COUNTY INTERCHANGE 115KV CKT 1	218	239	0.11923	99.8	PLANT X STATION (WH ALM20171) 230/115/13.2KV TRANSFORMER CKT 1
FDNS	00NR	8	25SP	G15_031	TO->FROM	KRESS INTERCHANGE - SWISHER COUNTY INTERCHANGE 115KV CKT 1	218	239	0.11923	99.8	PLANT X STATION (WH ALM20171) 230/115/13.2KV TRANSFORMER CKT 1
FDNS	00NR	8	25SP	G15_031	TO->FROM	KRESS INTERCHANGE - SWISHER COUNTY INTERCHANGE 115KV CKT 1	218	239	0.12449	99.5	NEWHART 230 (UPDATE LATER) 230/115/13.2KV TRANSFORMER CKT 2
FDNS	00NR	8	25SP	G15_031	TO->FROM	KRESS INTERCHANGE - SWISHER COUNTY INTERCHANGE 115KV CKT 1	218	239	0.12449	99.5	NEWHART 230 (UPDATE LATER) 230/115/13.2KV TRANSFORMER CKT 2
FDNS	00NR	8	25SP	G15_031	TO->FROM	KRESS INTERCHANGE - SWISHER COUNTY INTERCHANGE 115KV CKT 1	218	239	0.12449	99.5	NEWHART 230 (WAUK WT01105) 230/115/13.2KV TRANSFORMER CKT 1
FDNS	00NR	8	25SP	G15_031	TO->FROM	KRESS INTERCHANGE - SWISHER COUNTY INTERCHANGE 115KV CKT 1	218	239	0.12449	99.5	NEWHART 230 (WAUK WT01105) 230/115/13.2KV TRANSFORMER CKT 1
FDNS	00NR	8	25SP	G15_031	TO->FROM	KRESS INTERCHANGE - SWISHER COUNTY INTERCHANGE 115KV CKT 1	218	239	0.12166	99.5	TUCO INTERCHANGE (ENRCO 136401) 230/115/13.2KV TRANSFORMER CKT 1
FDNS	00NR	8	25SP	G15_031	TO->FROM	KRESS INTERCHANGE - SWISHER COUNTY INTERCHANGE 115KV CKT 1	218	239	0.12166	99.5	TUCO INTERCHANGE (ENRCO 136401) 230/115/13.2KV TRANSFORMER CKT 1
FDNS	00NR	8	25SP	G15_031	TO->FROM	KRESS INTERCHANGE - SWISHER COUNTY INTERCHANGE 115KV CKT 1	218	239	0.12166	99.5	TUCO INTERCHANGE (ENRCO 136401) 230/115/13.2KV TRANSFORMER CKT 2
FDNS	00NR	8	25SP	G15_031	TO->FROM	KRESS INTERCHANGE - SWISHER COUNTY INTERCHANGE 115KV CKT 1	218	239	0.12166	99.5	TUCO INTERCHANGE (ENRCO 136401) 230/115/13.2KV TRANSFORMER CKT 2
FDNS	00NR	8	25SP	G15_031	FROM->TO	LUBBOCK POWER & LIGHT-HOLLY PLANT (SHIH T101039) 230/69/13.5KV TRANSFORMER CKT 1	224	224	0.0358	104.7109	LUBBOCK POWER & LIGHT-SOUTHEAST - LUBBOCK SOUTH INTERCHANGE 230KV CKT 1
FDNS	00NR	8	25SP	G15_031	FROM->TO	LUBBOCK POWER & LIGHT-HOLLY PLANT (SHIH T101039) 230/69/13.5KV TRANSFORMER CKT 1	224	224	0.0358	104.6979	P12:LPL:SPS:K64.1.LP-SE.LUBBS
FDNS	00NR	8	25SP	G15_031	FROM->TO	LUBBOCK POWER & LIGHT-HOLLY PLANT (SHIH T101039) 230/69/13.5KV TRANSFORMER CKT 1	224	224	0.035	101.953	LUBBOCK EAST INTERCHANGE - LUBBOCK POWER & LIGHT-WADSWORTH 230KV CKT 1
FDNS	00NR	8	25SP	G15_031	FROM->TO	LUBBOCK POWER & LIGHT-HOLLY PLANT (SHIH T101039) 230/69/13.5KV TRANSFORMER CKT 1	224	224	0.035	101.9381	P12:230:LPL:K57.1.LP-WADS.LUBBE
FDNS	00NR	8	25SP	G15_031	FROM->TO	LUBBOCK POWER & LIGHT-HOLLY PLANT (SHIH T101039) 230/69/13.5KV TRANSFORMER CKT 1	224	224	0.035	101.938	LUBBOCK POWER & LIGHT-WADSWORTH (SHIH T101038) 230/69/13.5KV TRANSFORMER CKT 1
FDNS	00NR	8	25SP	G15_031	FROM->TO	LUBBOCK POWER & LIGHT-HOLLY PLANT (SHIH T101039) 230/69/13.5KV TRANSFORMER CKT 1	224	224	0.035	101.938	LUBBOCK POWER & LIGHT-WADSWORTH (SHIH T101038) 230/69/13.5KV TRANSFORMER CKT 1
FDNS	00NR	9	25SP	G15_031	TO->FROM	KRESS INTERCHANGE - SWISHER COUNTY INTERCHANGE 115KV CKT 1	218	239	0.21373	111.3586	NEWHART 230 - SWISHER COUNTY INTERCHANGE 230KV CKT 1
FDNS	00NR	9	25SP	G15_031	TO->FROM	KRESS INTERCHANGE - SWISHER COUNTY INTERCHANGE 115KV CKT 1	218	239	0.12076	104.1194	BASE CASE
FDNS	00NR	9	25SP	G15_031	TO->FROM	KRESS INTERCHANGE - SWISHER COUNTY INTERCHANGE 115KV CKT 1	218	239	0.10956	102.9596	PALO DURO SUB - RANDALL COUNTY INTERCHANGE 115KV CKT 1
FDNS	00NR	9	25SP	G15_031	TO->FROM	KRESS INTERCHANGE - SWISHER COUNTY INTERCHANGE 115KV CKT 1	218	239	0.10956	101.6045	P12:115:SPS:T66.1.RNDALL.HAPPY
FDNS	00NR	9	25SP	G15_031	TO->FROM	KRESS INTERCHANGE - SWISHER COUNTY INTERCHANGE 115KV CKT 1	218	239	0.10956	101.5271	HAPPY INTERCHANGE - PALO DURO SUB 115KV CKT 1
FDNS	00NR	9	20SP	G15_031	TO->FROM	KRESS INTERCHANGE - SWISHER COUNTY INTERCHANGE 115KV CKT 1	218	239	0.2145	100.9086	NEWHART 230 - SWISHER COUNTY INTERCHANGE 230KV CKT 1
FDNS	00NR	9	17SP	G15_031	TO->FROM	KRESS INTERCHANGE - SWISHER COUNTY INTERCHANGE 115KV CKT 1	218	239	0.21846	100.7426	NEWHART 230 - SWISHER COUNTY INTERCHANGE 230KV CKT 1

SOLUTION	GROUP	SCENARIO	SEASON	SOURCE	DIRECTION	MONITORED ELEMENT	RATEA (MVA)	RATEB(MVA)	TDF	TC%LOADING (% MVA)	CONTINGENCY
FDNS	00NR	9	25SP	G15_031	TO->FROM	KRESS INTERCHANGE - SWISHER COUNTY INTERCHANGE 115KV CKT 1	218	239	0.11899	100.4463	FLOYD COUNTY INTERCHANGE - TUCO INTERCHANGE 115KV CKT 1
FDNS	00NR	9	25SP	G15_031	TO->FROM	KRESS INTERCHANGE - SWISHER COUNTY INTERCHANGE 115KV CKT 1	218	239	0.11899	100.4463	FLOYD COUNTY INTERCHANGE - TUCO INTERCHANGE 115KV CKT 1
FDNS	00NR	9	25SP	G15_031	TO->FROM	KRESS INTERCHANGE - SWISHER COUNTY INTERCHANGE 115KV CKT 1	218	239	0.11826	100	PLANT X STATION (WH ALM20171) 230/115/13.2KV TRANSFORMER CKT 1
FDNS	00NR	9	25SP	G15_031	TO->FROM	KRESS INTERCHANGE - SWISHER COUNTY INTERCHANGE 115KV CKT 1	218	239	0.11826	100	PLANT X STATION (WH ALM20171) 230/115/13.2KV TRANSFORMER CKT 1
FDNS	00NR	9	25SP	G15_031	TO->FROM	KRESS INTERCHANGE - SWISHER COUNTY INTERCHANGE 115KV CKT 1	218	239	0.12351	99.6	NEWHART 230 (UPDATE LATER) 230/115/13.2KV TRANSFORMER CKT 2
FDNS	00NR	9	25SP	G15_031	TO->FROM	KRESS INTERCHANGE - SWISHER COUNTY INTERCHANGE 115KV CKT 1	218	239	0.12351	99.6	NEWHART 230 (UPDATE LATER) 230/115/13.2KV TRANSFORMER CKT 2
FDNS	00NR	9	25SP	G15_031	TO->FROM	KRESS INTERCHANGE - SWISHER COUNTY INTERCHANGE 115KV CKT 1	218	239	0.12351	99.6	NEWHART 230 (WAUK WT01105) 230/115/13.2KV TRANSFORMER CKT 1
FDNS	00NR	9	25SP	G15_031	TO->FROM	KRESS INTERCHANGE - SWISHER COUNTY INTERCHANGE 115KV CKT 1	218	239	0.12351	99.6	NEWHART 230 (WAUK WT01105) 230/115/13.2KV TRANSFORMER CKT 1
FDNS	00NR	9	25SP	G15_031	TO->FROM	KRESS INTERCHANGE - SWISHER COUNTY INTERCHANGE 115KV CKT 1	218	239	0.12083	99.6	TUCO INTERCHANGE (ENRCO 136401) 230/115/13.2KV TRANSFORMER CKT 1
FDNS	00NR	9	25SP	G15_031	TO->FROM	KRESS INTERCHANGE - SWISHER COUNTY INTERCHANGE 115KV CKT 1	218	239	0.12083	99.6	TUCO INTERCHANGE (ENRCO 136401) 230/115/13.2KV TRANSFORMER CKT 1
FDNS	00NR	9	25SP	G15_031	TO->FROM	KRESS INTERCHANGE - SWISHER COUNTY INTERCHANGE 115KV CKT 1	218	239	0.12083	99.6	TUCO INTERCHANGE (ENRCO 136401) 230/115/13.2KV TRANSFORMER CKT 2
FDNS	00NR	9	25SP	G15_031	TO->FROM	KRESS INTERCHANGE - SWISHER COUNTY INTERCHANGE 115KV CKT 1	218	239	0.12083	99.6	TUCO INTERCHANGE (ENRCO 136401) 230/115/13.2KV TRANSFORMER CKT 2
FDNS	00NR	9	25SP	G15_031	FROM->TO	LUBBOCK POWER & LIGHT-HOLLY PLANT (SHIH T101039) 230/69/13.5KV TRANSFORMER CKT 1	224	224	0.03581	104.6637	LUBBOCK POWER & LIGHT-SOUTHEAST - LUBBOCK SOUTH INTERCHANGE 230KV CKT 1
FDNS	00NR	9	25SP	G15_031	FROM->TO	LUBBOCK POWER & LIGHT-HOLLY PLANT (SHIH T101039) 230/69/13.5KV TRANSFORMER CKT 1	224	224	0.03581	104.6507	P12:LPL:SPS:K64.1.LP-SE.LUBBS
FDNS	00NR	9	25SP	G15_031	FROM->TO	LUBBOCK POWER & LIGHT-HOLLY PLANT (SHIH T101039) 230/69/13.5KV TRANSFORMER CKT 1	224	224	0.03499	101.7729	LUBBOCK EAST INTERCHANGE - LUBBOCK POWER & LIGHT-WADSWORTH 230KV CKT 1
FDNS	00NR	9	25SP	G15_031	FROM->TO	LUBBOCK POWER & LIGHT-HOLLY PLANT (SHIH T101039) 230/69/13.5KV TRANSFORMER CKT 1	224	224	0.03499	101.758	P12:230:LPL:K57.1.LP-WADS.LUBBE
FDNS	00NR	9	25SP	G15_031	FROM->TO	LUBBOCK POWER & LIGHT-HOLLY PLANT (SHIH T101039) 230/69/13.5KV TRANSFORMER CKT 1	224	224	0.03499	101.7579	LUBBOCK POWER & LIGHT-WADSWORTH (SHIH T101038) 230/69/13.5KV TRANSFORMER CKT 1
FDNS	00NR	9	25SP	G15_031	FROM->TO	LUBBOCK POWER & LIGHT-HOLLY PLANT (SHIH T101039) 230/69/13.5KV TRANSFORMER CKT 1	224	224	0.03499	101.7579	LUBBOCK POWER & LIGHT-WADSWORTH (SHIH T101038) 230/69/13.5KV TRANSFORMER CKT 1
FDNSLock-Blown up	06ALL	0	16WP	G15_033		Non-Converged Contingency	1792	1972	0.42501	-	TUCO INTERCHANGE - TUCO_2 345.00 345KV CKT 1
FDNSLock-Blown up	06ALL	0	16WP	G15_033		Non-Converged Contingency	1022	1124	0.37273	-	G14-074T 345.00 - OKLAUNION 345KV CKT 1
FDNSLock-Blown up	06ALL	0	16WP	G15_033		Non-Converged Contingency	1022	1124	0.37273	-	GEN509403 1-PIRKEY GENERATION
FDNSLock-Blown up	06ALL	0	16WP	G15_033		Non-Converged Contingency	1022	1124	0.37273	-	GEN509404 1-WELSH #1
FDNSLock-Blown up	06ALL	0	16WP	G15_033		Non-Converged Contingency	1022	1124	0.37273	-	GEN509406 1-WELSH #3
FDNSLock-Blown up	06ALL	0	16WP	G15_033		Non-Converged Contingency	1022	1124	0.37273	-	GEN509416 1-TURK GENERATION
FDNSLock-Blown up	06ALL	0	16WP	G15_033		Non-Converged Contingency	1022	1124	0.37273	-	GEN511848 1-SOUTHWESTERN STATION #3
FDNSLock-Blown up	06ALL	0	16WP	G15_033		Non-Converged Contingency	956	956	0.22239	-	CIMARRON - MINCO 345KV CKT 1
FDNSLock-Blown up	06ALL	0	16WP	G15_033		Non-Converged Contingency	1195	1195	0.22239	-	GRACEMONT - MINCO 345KV CKT 1
FDNSLock-Blown up	06ALL	0	16WP	G15_033		Non-Converged Contingency	1792	1792	0.18932	-	CHISHOLM7 345.00 - WOODWARD DISTRICT EHV 345KV CKT 1
FDNSLock-Blown up	06ALL	0	16WP	G15_033		Non-Converged Contingency	717	789	0.16909	-	G14-057T 345.00 - LAWTON EASTSIDE 345KV CKT 1
FDNSLock-Blown up	06ALL	0	16WP	G15_033		Non-Converged Contingency	717	789	0.16909	-	G14-057T 345.00 - SUNNYSIDE 345KV CKT 1
FDNSLock-Blown up	06ALL	0	16WP	G15_033		Non-Converged Contingency	1792	1792	0.16724	-	BORDER 7345.00 - CHISHOLM7 345.00 345KV CKT 1
FDNSLock-Blown up	06ALL	0	16WP	G15_033		Non-Converged Contingency	1792	1792	0.16724	-	BORDER 7345.00 - CHISHOLM7 345.00 345KV CKT 2
FDNSLock-Blown up	06ALL	0	16WP	G15_033		Non-Converged Contingency	1792	1972	0.16724	-	BORDER 7345.00 - TUCO_2 345.00 345KV CKT 1
FDNSLock-Blown up	06ALL	0	16WP	G15_033		Non-Converged Contingency	1420	1775	0.16724	-	BORDER 7345.00 - TUCO_2 345.00 345KV CKT 2
FDNSLock-Blown up	06ALL	0	16WP	G15_033		Non-Converged Contingency	717	789	0.13615	-	GRACEMONT - LAWTON EASTSIDE 345KV CKT 1
FDNSLock-Blown up	06ALL	0	16WP	G15_033		Non-Converged Contingency	1330	1940	0.1144	-	CHISHOLM7 345.00 - GRACEMONT 345KV CKT 1
FDNSLock-Blown up	06ALL	0	16WP	G15_033		Non-Converged Contingency	987.16	1082.8	0.10268	-	FINNEY SWITCHING STATION - Hitchland Interchange 345KV CKT 1
FDNSLock-Blown up	06ALL	0	16WP	G15_033		Non-Converged Contingency	956.09	1051.7	0.10268	-	FINNEY SWITCHING STATION - HOLCOMB 345KV CKT 1
FDNSLock-Blown up	06ALL	0	16WP	G15_033		Non-Converged Contingency	987.16	1082.8	0.09482	-	G14_038T 345.00 - Hitchland Interchange 345KV CKT 1
FDNSLock-Blown up	06ALL	0	16WP	G15_033		Non-Converged Contingency	987.16	1082.8	0.09482	-	G14_038T 345.00 - POTTER COUNTY INTERCHANGE 345KV CKT 1
FDNSLock-Blown up	06ALL	0	16WP	G15_033		Non-Converged Contingency	560	560	0.09482	-	POTTER COUNTY INTERCHANGE (WAUK 90343-A) 345/230/13.2KV TRANSFORMER CKT 1
FDNSLock-Blown up	06ALL	0	16WP	G15_033		Non-Converged Contingency	1561	1793	0.08502	-	THISTLE7 345.00 - WOODWARD DISTRICT EHV 345KV CKT 1
FDNSLock-Blown up	06ALL	0	16WP	G15_033		Non-Converged Contingency	1561	1793	0.08502	-	THISTLE7 345.00 - WOODWARD DISTRICT EHV 345KV CKT 2
FDNSLock-Blown up	06ALL	0	16WP	G15_033		Non-Converged Contingency	329.05	360.92	0.07373	-	AMARILLO SOUTH INTERCHANGE - G15031_T 230.00 230KV CKT 1
FDNSLock-Blown up	06ALL	0	16WP	G15_033		Non-Converged Contingency	1195	1195	0.06923	-	GEN520947 1-HUGO1
FDNSLock-Blown up	06ALL	0	16WP	G15_033		Non-Converged Contingency	557	557	0.0669	-	NEWHART 230 - POTTER COUNTY INTERCHANGE 230KV CKT 1
FDNSLock-Blown up	06ALL	0	16WP	G15_033		Non-Converged Contingency	1420	1775	0.06532	-	G11_051T 345.00 - TATONGA7 345.00 345KV CKT 1
FDNSLock-Blown up	06ALL	0	16WP	G15_033		Non-Converged Contingency	1420	1775	0.06532	-	G11_051T 345.00 - WOODWARD DISTRICT EHV 345KV CKT 1
FDNSLock-Blown up	06ALL	0	16WP	G15_033		Non-Converged Contingency	1195	1195	0.06532	-	MATHWSN7 345.00 - TATONGA7 345.00 345KV CKT 1
FDNSLock-Blown up	06ALL	0	16WP	G15_033		Non-Converged Contingency	1532	1793	0.06146	-	G1524G1525 345.00 - THISTLE7 345.00 345KV CKT 1
FDNSLock-Blown up	06ALL	0	16WP	G15_033		Non-Converged Contingency	1532	1793	0.06146	-	G1524G1525 345.00 - THISTLE7 345.00 345KV CKT 2
FDNSLock-Blown up	06ALL	0	16WP	G15_033		Non-Converged Contingency	1532	1793	0.06146	-	GEN532751 1-WOLF CREEK GENERATING STATION UNIT 1
FDNSLock-Blown up	06ALL	0	16WP	G15_033		Non-Converged Contingency	557	557	0.0583	-	BUSHLAND INTERCHANGE - DEAF SMITH COUNTY INTERCHANGE 230KV CKT 1
FDNSLock-Blown up	06ALL	0	16WP	G15_033		Non-Converged Contingency	717	717	0.05802	-	CIMARRON - DRAPER LAKE 345KV CKT 1
FDNSLock-Blown up	06ALL	0	16WP	G15_033		Non-Converged Contingency	785	785	0.05592	-	MINGO - RED WILLOW 345KV CKT 1
FDNSLock-Blown up	06ALL	0	16WP	G15_033		Non-Converged Contingency	717.1	717.1	0.05527	-	HOLCOMB - SETAB 345KV CKT 1
FDNSLock-Blown up	06ALL	0	16WP	G15_033		Non-Converged Contingency	762.5	762.5	0.05477	-	MINGO - SETAB 345KV CKT 1
FDNSLock-Blown up	06ALL	0	16WP	G15_033		Non-Converged Contingency	329.05	360.92	0.054	-	BUSHLAND INTERCHANGE - POTTER COUNTY INTERCHANGE 230KV CKT 1
FDNSLock-Blown up	06ALL	0	16WP	G15_033		Non-Converged Contingency	439	439	0.04998	-	CHISHOLM6 230.00 - ELK CITY 230KV 230KV CKT 1
FDNSLock-Blown up	06ALL	0	16WP	G15_033		Non-Converged Contingency	450	450	0.04998	-	ELK CITY 230KV (ELKCTY-6) 230/138/13.8KV TRANSFORMER CKT 1
FDNSLock-Blown up	06ALL	0	16WP	G15_033		Non-Converged Contingency	1793	1793	0.04933	-	G13-010T 345.00 - POST ROCK 345KV CKT 1
FDNSLock-Blown up	06ALL	0	16WP	G15_033		Non-Converged Contingency	1793	1793	0.04933	-	G13-010T 345.00 - SPEARVILLE 345KV CKT 1
FDNSLock-Blown up	06ALL	0	16WP	G15_033		Non-Converged Contingency	329.05	360.92	0.04806	-	DEAF SMITH COUNTY INTERCHANGE - G15039_T 230.00 230KV CKT 1
FDNSLock-Blown up	06ALL	0	16WP	G15_033		Non-Converged Contingency	329.05	360.92	0.04806	-	G15039_T 230.00 - PLANT X STATION 230KV CKT 1
FDNSLock-Blown up	06ALL	0	16WP	G15_033		Non-Converged Contingency	556.92	556.92	0.04049	-	HITCHLAND INTERCHANGE - MOORE COUNTY INTERCHANGE 230KV CKT 1
FDNSLock-Blown up	06ALL	0	16WP	G15_033		Non-Converged Contingency	726.6	726.6	0.03405	-	BUCKNER7 345.00 - HOLCOMB 345KV CKT 1
FDNSLock-Blown up	06ALL	0	16WP	G15_033		Non-Converged Contingency	1413	1517	0.03405	-	BUCKNER7 345.00 - SPEARVILLE 345KV CKT 1
FDNSLock-Blown up	06ALL	0	16WP	G15_033		Non-Converged Contingency	329.05	360.92	0.0338	-	MOORE COUNTY INTERCHANGE - POTTER COUNTY INTERCHANGE 230KV CKT 1
FDNSLock-Blown up	06ALL	0	16WP	G15_033		Non-Converged Contingency	1793	1793	0.03377	-	BVRCNTY7 345.00 - G11-14T 345.00 345KV CKT 1
FDNSLock-Blown up	06ALL	0	16WP	G15_033		Non-Converged Contingency	1716	1793	0.03377	-	BVRCNTY7 345.00 - G11-14T 345.00 345KV CKT 2
FDNSLock-Blown up	06ALL	0	16WP	G15_033		Non-Converged Contingency	1792	1792	0.03377	-	BVRCNTY7 345.00 - OPTIMA 345.00 345KV CKT 1
FDNSLock-Blown up	06ALL	0	16WP	G15_033		Non-Converged Contingency	1792	1792	0.03377	-	BVRCNTY7 345.00 - OPTIMA 345.00 345KV CKT 2
FDNSLock-Blown up	06ALL	0	16WP	G15_033		Non-Converged Contingency	1793	1793	0.03377	-	G11-14T 345.00 - WOODWARD DISTRICT EHV 345KV CKT 1
FDNSLock-Blown up	06ALL	0	16WP	G15_033		Non-Converged Contingency	1716	1793	0.03377	-	G11-14T 345.00 - WOODWARD DISTRICT EHV 345KV CKT 2
FDNSLock-Blown up	06NR	0	17G	G15_033		Non-Converged Contingency	1022	1124	0.2097	-	G14-074T 345.00 - OKLAUNION 345KV CKT 1
FDNSLock-Blown up	06NR	0	17G	G15_033		Non-Converged Contingency	318.7	350.57	0.06068	-	AMARILLO SOUTH INTERCHANGE - G15031_T 230.00 230KV CKT 1
FDNSLock-Blown up	06NR	0	17G	G15_033		Non-Converged Contingency	1792	1972	0.05274	-	BORDER 7345.00 - TUCO_2 345.00 345KV CKT 1
FDNSLock-Blown up	06NR	0	17G	G15_033		Non-Converged Contingency	1792	1792	0.05274	-	BORDER 7345.00 - WOODWARD DISTRICT EHV 345KV CKT 1
FDNSLock-Blown up	06ALL	0	17SP	G15_033		Non-Converged Contingency	956	1042	0.3702	-	G14-074T 345.00 - OKLAUNION 345KV CKT 1

SOLUTION	GROUP	SCENARIO	SEASON	SOURCE	DIRECTION	MONITORED ELEMENT	RATEA (MVA)	RATEB(MVA)	TDF	TC%LOADING (% MVA)	CONTINGENCY
FDNSLock-Blown up	06ALL	0	17SP	G15_033		Non-Converged Contingency	1792	1972	0.16565	-	BORDER 7345.00 - TUCO_2 345.00 345KV CKT 1
FDNSLock-Blown up	06ALL	0	17SP	G15_033		Non-Converged Contingency	1420	1775	0.16565	-	BORDER 7345.00 - TUCO_2 345.00 345KV CKT 2
FDNSLock-Blown up	06ALL	0	17SP	G15_033		Non-Converged Contingency	956.09	1051.7	0.09521	-	G14_038T 345.00 - Hitchland Interchange 345KV CKT 1
FDNSLock-Blown up	06ALL	0	17SP	G15_033		Non-Converged Contingency	956.09	1051.7	0.09521	-	G14_038T 345.00 - POTTER COUNTY INTERCHANGE 345KV CKT 1
FDNSLock-Blown up	06ALL	0	17SP	G15_033		Non-Converged Contingency	560	560	0.09521	-	POTTER COUNTY INTERCHANGE (WAUK 90343-A) 345/230/13.2KV TRANSFORMER CKT 1
FDNSLock-Blown up	06ALL	0	20L	G15_033		Non-Converged Contingency	1792	1972	0.36788	-	TUCO INTERCHANGE - TUCO_2 345.00 345KV CKT 1
FDNSLock-Blown up	06ALL	0	20L	G15_033		Non-Converged Contingency	1022	1124	0.33179	-	G14-074T 345.00 - OKLAUNION 345KV CKT 1
FDNSLock-Blown up	06ALL	0	20L	G15_033		Non-Converged Contingency	1022	1124	0.33179	-	GEN506754 1-LEBROCK STEAM 1
FDNSLock-Blown up	06ALL	0	20L	G15_033		Non-Converged Contingency	1022	1124	0.33179	-	GEN509394 1-FLINT CREEK
FDNSLock-Blown up	06ALL	0	20L	G15_033		Non-Converged Contingency	1022	1124	0.33179	-	GEN509403 1-PIRKEY GENERATION
FDNSLock-Blown up	06ALL	0	20L	G15_033		Non-Converged Contingency	1022	1124	0.33179	-	GEN509404 1-WELSH #1
FDNSLock-Blown up	06ALL	0	20L	G15_033		Non-Converged Contingency	1022	1124	0.33179	-	GEN509406 1-WELSH #3
FDNSLock-Blown up	06ALL	0	20L	G15_033		Non-Converged Contingency	1022	1124	0.33179	-	GEN509408 1-WILKES #2
FDNSLock-Blown up	06ALL	0	20L	G15_033		Non-Converged Contingency	1022	1124	0.33179	-	GEN509416 1-TURK GENERATION
FDNSLock-Blown up	06ALL	0	20L	G15_033		Non-Converged Contingency	1022	1124	0.33179	-	GEN511840 1-NORTHEASTERN STATION #3
FDNSLock-Blown up	06ALL	0	20L	G15_033		Non-Converged Contingency	1022	1124	0.33179	-	GEN511960 1-ROARK1 0.7000
FDNSLock-Blown up	06ALL	0	20L	G15_033		Non-Converged Contingency	1022	1124	0.33179	-	GEN562590 1-G14_057_3 0.6900
FDNSLock-Blown up	06ALL	0	20L	G15_033		Non-Converged Contingency	1022	1124	0.33179	-	OKLAUNION 345KV SWITCHED SHUNT
FDNSLock-Blown up	06NR	0	20L	G15_033		Non-Converged Contingency	1022	1124	0.1994	-	G14-074T 345.00 - OKLAUNION 345KV CKT 1
FDNSLock-Blown up	06NR	0	20L	G15_033		Non-Converged Contingency	1022	1124	0.1994	-	OKLAUNION 345KV SWITCHED SHUNT
FDNSLock-Blown up	06ALL	0	20L	G15_033		Non-Converged Contingency	956	956	0.19685	-	CIMARRON - MINCO 345KV CKT 1
FDNSLock-Blown up	06ALL	0	20L	G15_033		Non-Converged Contingency	1195	1195	0.19685	-	GRACEMONT - MINCO 345KV CKT 1
FDNSLock-Blown up	06ALL	0	20L	G15_033		Non-Converged Contingency	1792	1792	0.16068	-	CHISHOLM7 345.00 - WOODWARD DISTRICT EHV 345KV CKT 1
FDNSLock-Blown up	06ALL	0	20L	G15_033		Non-Converged Contingency	0	0	0.15164	-	P12:345:SPS:J07.1.FINN.HITCH
FDNSLock-Blown up	06ALL	0	20L	G15_033		Non-Converged Contingency	717	789	0.13899	-	G14-057T 345.00 - LAWTON EASTSIDE 345KV CKT 1
FDNSLock-Blown up	06ALL	0	20L	G15_033		Non-Converged Contingency	717	789	0.13899	-	G14-057T 345.00 - SUNNYSIDE 345KV CKT 1
FDNSLock-Blown up	06ALL	0	20L	G15_033		Non-Converged Contingency	1792	1792	0.13714	-	BORDER 7345.00 - CHISHOLM7 345.00 345KV CKT 1
FDNSLock-Blown up	06ALL	0	20L	G15_033		Non-Converged Contingency	1792	1792	0.13714	-	BORDER 7345.00 - CHISHOLM7 345.00 345KV CKT 2
FDNSLock-Blown up	06ALL	0	20L	G15_033		Non-Converged Contingency	1792	1972	0.13714	-	BORDER 7345.00 - TUCO_2 345.00 345KV CKT 1
FDNSLock-Blown up	06ALL	0	20L	G15_033		Non-Converged Contingency	1420	1775	0.13714	-	BORDER 7345.00 - TUCO_2 345.00 345KV CKT 2
FDNSLock-Blown up	06ALL	0	20L	G15_033		Non-Converged Contingency	1792	1972	0.13714	-	BORDER 7345.00 345KV SWITCHED SHUNT
FDNSLock-Blown up	06ALL	0	20L	G15_033		Non-Converged Contingency	717	789	0.13478	-	GRACEMONT - LAWTON EASTSIDE 345KV CKT 1
FDNSLock-Blown up	06ALL	0	20L	G15_033		Non-Converged Contingency	717	789	0.13478	-	GRACEMONT - LAWTON EASTSIDE 345KV CKT 1
FDNSLock-Blown up	06ALL	0	20L	G15_033		Non-Converged Contingency	956.09	1051.7	0.08103	-	Hitchland Interchange - WALKTAP7 345.00 345KV CKT 1
FDNSLock-Blown up	06ALL	0	20L	G15_033		Non-Converged Contingency	956.09	1051.7	0.08103	-	Hitchland Interchange - WALKTAP7 345.00 345KV CKT 1
FDNSLock-Blown up	06ALL	0	20L	G15_033		Non-Converged Contingency	1584	2098	0.08052	-	CHISHOLM7 345.00 - GRACEMONT 345KV CKT 1
FDNSLock-Blown up	06ALL	0	20L	G15_033		Non-Converged Contingency	1584	2098	0.08052	-	GEN514805 1-SOONER UNIT 1
FDNSLock-Blown up	06ALL	0	20L	G15_033		Non-Converged Contingency	1584	2098	0.08052	-	GEN514806 1-SOONER UNIT 2
FDNSLock-Blown up	06ALL	0	20L	G15_033		Non-Converged Contingency	1584	2098	0.08052	-	GEN515040 1-SEMINOLE 1G
FDNSLock-Blown up	06ALL	0	20L	G15_033		Non-Converged Contingency	1584	2098	0.08052	-	GEN515223 1-MUSKOGEE 4G
FDNSLock-Blown up	06ALL	0	20L	G15_033		Non-Converged Contingency	956	956	0.07962	-	CIMARRON - NORTHWEST 345KV CKT 1
FDNSLock-Blown up	06ALL	0	20L	G15_033		Non-Converged Contingency	0	0	0.07199	-	P12:138:AEPW:S.W.S.-4:L.E.S.-4
FDNSLock-Blown up	06ALL	0	20L	G15_033		Non-Converged Contingency	956.09	1051.7	0.07061	-	FINNEY SWITCHING STATION - HOLCOMB 345KV CKT 1
FDNSLock-Blown up	06ALL	0	20L	G15_033		Non-Converged Contingency	956.09	1051.7	0.07061	-	FINNEY SWITCHING STATION - HOLCOMB 345KV CKT 1
FDNSLock-Blown up	06ALL	0	20L	G15_033		Non-Converged Contingency	956.09	1051.7	0.07061	-	FINNEY SWITCHING STATION - WALKTAP7 345.00 345KV CKT 1
FDNSLock-Blown up	06ALL	0	20L	G15_033		Non-Converged Contingency	956.09	1051.7	0.07061	-	FINNEY SWITCHING STATION - WALKTAP7 345.00 345KV CKT 1
FDNSLock-Blown up	06ALL	0	20L	G15_033		Non-Converged Contingency	478	502	0.07044	-	AMARILLO SOUTH INTERCHANGE - G15031_T 230.00 230KV CKT 1
FDNSLock-Blown up	06ALL	0	20L	G15_033		Non-Converged Contingency	1195	1195	0.06937	-	ARCADIA - NORTHWEST 345KV CKT 1
FDNSLock-Blown up	06ALL	0	20L	G15_033		Non-Converged Contingency	956	956	0.06879	-	G15063_T 345.00 - MATHWSN7 345.00 345KV CKT 1
FDNSLock-Blown up	06ALL	0	20L	G15_033		Non-Converged Contingency	956	956	0.06879	-	G15063_T 345.00 - WOODRING 345KV CKT 1
FDNSLock-Blown up	06ALL	0	20L	G15_033		Non-Converged Contingency	1561	1793	0.06711	-	THISTLE7 345.00 - WOODWARD DISTRICT EHV 345KV CKT 1
FDNSLock-Blown up	06ALL	0	20L	G15_033		Non-Converged Contingency	1561	1793	0.06711	-	THISTLE7 345.00 - WOODWARD DISTRICT EHV 345KV CKT 1
FDNSLock-Blown up	06ALL	0	20L	G15_033		Non-Converged Contingency	1561	1793	0.06711	-	THISTLE7 345.00 - WOODWARD DISTRICT EHV 345KV CKT 2
FDNSLock-Blown up	06ALL	0	20L	G15_033		Non-Converged Contingency	1561	1793	0.06711	-	THISTLE7 345.00 - WOODWARD DISTRICT EHV 345KV CKT 2
FDNSLock-Blown up	06ALL	0	20L	G15_033		Non-Converged Contingency	1195	1195	0.06503	-	JOHNSON COUNTY - SUNNYSIDE 345KV CKT 1
FDNSLock-Blown up	06NR	0	20L	G15_033		Non-Converged Contingency	478	502	0.06371	-	AMARILLO SOUTH INTERCHANGE - G15031_T 230.00 230KV CKT 1
FDNSLock-Blown up	06ALL	0	20L	G15_033		Non-Converged Contingency	1039	1195	0.06334	-	NORTHWEST - SPRING CREEK 345KV CKT 1
FDNSLock-Blown up	06ALL	0	20L	G15_033		Non-Converged Contingency	1039	1195	0.06334	-	SOONER - SPRING CREEK 345KV CKT 1
FDNSLock-Blown up	06ALL	0	20L	G15_033		Non-Converged Contingency	956.09	1051.7	0.06291	-	G14_038T 345.00 - Hitchland Interchange 345KV CKT 1
FDNSLock-Blown up	06ALL	0	20L	G15_033		Non-Converged Contingency	956.09	1051.7	0.06291	-	G14_038T 345.00 - POTTER COUNTY INTERCHANGE 345KV CKT 1
FDNSLock-Blown up	06ALL	0	20L	G15_033		Non-Converged Contingency	560	560	0.06291	-	POTTER COUNTY INTERCHANGE (WAUK 90343-A) 345/230/13.2KV TRANSFORMER CKT 1
FDNSLock-Blown up	06ALL	0	20L	G15_033		Non-Converged Contingency	560	560	0.06291	-	POTTER COUNTY INTERCHANGE (WAUK 90343-A) 345/230/13.2KV TRANSFORMER CKT 1
FDNSLock-Blown up	06ALL	0	20L	G15_033		Non-Converged Contingency	478	502	0.06129	-	NEWHART 230 - POTTER COUNTY INTERCHANGE 230KV CKT 1
FDNSLock-Blown up	06ALL	0	20L	G15_033		Non-Converged Contingency	1151	1195	0.05843	-	JOHNSON COUNTY - PITTSBURG 345KV CKT 1
FDNSLock-Blown up	06ALL	0	20L	G15_033		Non-Converged Contingency	1151	1195	0.05843	-	JOHNSON COUNTY - PITTSBURG 345KV CKT 1
FDNSLock-Blown up	06ALL	0	20L	G15_033		Non-Converged Contingency	1195	1195	0.05562	-	MATHWSN7 345.00 - NORTHWEST 345KV CKT 1
FDNSLock-Blown up	06ALL	0	20L	G15_033		Non-Converged Contingency	0	0	0.05399	-	P12:138:AEPW-OGE:CORNVIL4:CIMARON4
FDNSLock-Blown up	06ALL	0	20L	G15_033		Non-Converged Contingency	478	502	0.05223	-	BUSHLAND INTERCHANGE - DEAF SMITH COUNTY INTERCHANGE 230KV CKT 1
FDNSLock-Blown up	06ALL	0	20L	G15_033		Non-Converged Contingency	478	502	0.05223	-	BUSHLAND INTERCHANGE - DEAF SMITH COUNTY INTERCHANGE 230KV CKT 1
FDNSLock-Blown up	06ALL	0	20L	G15_033		Non-Converged Contingency	478	502	0.05223	-	BUSHLAND INTERCHANGE 230KV SWITCHED SHUNT
FDNSLock-Blown up	06ALL	0	20L	G15_033		Non-Converged Contingency	0	0	0.05199	-	P12:138:AEPW-OGE:WTH_JCT4:JENSEN4
FDNSLock-Blown up	06ALL	0	20L	G15_033		Non-Converged Contingency	1195	1195	0.04965	-	SOONER - WOODRING 345KV CKT 1
FDNSLock-Blown up	06ALL	0	20L	G15_033		Non-Converged Contingency	1195	1195	0.04963	-	GEN520811 1-ANADRK4
FDNSLock-Blown up	06ALL	0	20L	G15_033		Non-Converged Contingency	1195	1195	0.04963	-	HUGO - SUNNYSIDE 345KV CKT 1
FDNSLock-Blown up	06ALL	0	20L	G15_033		Non-Converged Contingency	318.7	350.57	0.04765	-	BUSHLAND INTERCHANGE - POTTER COUNTY INTERCHANGE 230KV CKT 1
FDNSLock-Blown up	06ALL	0	20L	G15_033		Non-Converged Contingency	318.7	350.57	0.04765	-	BUSHLAND INTERCHANGE - POTTER COUNTY INTERCHANGE 230KV CKT 1
FDNSLock-Blown up	06ALL	0	20L	G15_033		Non-Converged Contingency	0	0	0.04721	-	P12:138:AEPW:DUNCAN-4:L.E.S.-4
FDNSLock-Blown up	06ALL	0	20L	G15_033		Non-Converged Contingency	1420	1775	0.04638	-	G11_051T 345.00 - TATONGA7 345.00 345KV CKT 1
FDNSLock-Blown up	06ALL	0	20L	G15_033		Non-Converged Contingency	1420	1775	0.04638	-	G11_051T 345.00 - WOODWARD DISTRICT EHV 345KV CKT 1

SOLUTION	GROUP	SCENARIO	SEASON	SOURCE	DIRECTION	MONITORED ELEMENT	RATEA (MVA)	RATEB(MVA)	TDF	TC%LOADING (% MVA)	CONTINGENCY
FDNSLock-Blown up	06ALL	0	20L	G15_033		Non-Converged Contingency	1195	1195	0.04638	-	MATHWSN7 345.00 - TATONGA7 345.00 345KV CKT 1
FDNSLock-Blown up	06ALL	0	20L	G15_033		Non-Converged Contingency	1532	1793	0.04537	-	G1524G1525 345.00 - THISTLE7 345.00 345KV CKT 1
FDNSLock-Blown up	06ALL	0	20L	G15_033		Non-Converged Contingency	1532	1793	0.04537	-	G1524G1525 345.00 - THISTLE7 345.00 345KV CKT 2
FDNSLock-Blown up	06ALL	0	20L	G15_033		Non-Converged Contingency	1532	1793	0.04537	-	G1524G1525 345.00 - WICHITA 345KV CKT 1
FDNSLock-Blown up	06ALL	0	20L	G15_033		Non-Converged Contingency	1532	1793	0.04537	-	G1524G1525 345.00 - WICHITA 345KV CKT 2
FDNSLock-Blown up	06ALL	0	20L	G15_033		Non-Converged Contingency	1532	1793	0.04537	-	GEN532653 1-JEFFREY ENERGY CENTER UNIT 3
FDNSLock-Blown up	06ALL	0	20L	G15_033		Non-Converged Contingency	1532	1793	0.04537	-	GEN532663 1-LAWRENCE ENERGY CENTER UNIT 5
FDNSLock-Blown up	06ALL	0	20L	G15_033		Non-Converged Contingency	1532	1793	0.04537	-	GEN532751 1-WOLF CREEK GENERATING STATION UNIT 1
FDNSLock-Blown up	06ALL	0	20L	G15_033		Non-Converged Contingency	785	785	0.04512	-	GEN640009 1-COOPER NUCLEAR STATION
FDNSLock-Blown up	06ALL	0	20L	G15_033		Non-Converged Contingency	785	785	0.04512	-	MINGO - RED WILLOW 345KV CKT 1
FDNSLock-Blown up	06ALL	0	20L	G15_033		Non-Converged Contingency	785	785	0.04512	-	MINGO - RED WILLOW 345KV CKT 1
FDNSLock-Blown up	06ALL	0	20L	G15_033		Non-Converged Contingency	318.7	350.57	0.04387	-	DEAF SMITH COUNTY INTERCHANGE - G15039_T 230.00 230KV CKT 1
FDNSLock-Blown up	06ALL	0	20L	G15_033		Non-Converged Contingency	318.7	350.57	0.04387	-	G15039_T 230.00 - PLANT X STATION 230KV CKT 1
FDNSLock-Blown up	06NR	0	20L	G15_033		Non-Converged Contingency	1792	1972	0.04306	-	BORDER 7345.00 - TUCO_2 345.00 345KV CKT 1
FDNSLock-Blown up	06NR	0	20L	G15_033		Non-Converged Contingency	1792	1792	0.04306	-	BORDER 7345.00 - WOODWARD DISTRICT EHV 345KV CKT 1
FDNSLock-Blown up	06NR	0	20L	G15_033		Non-Converged Contingency	1792	1972	0.04306	-	BORDER 7345.00 345KV SWITCHED SHUNT
FDNSLock-Blown up	06ALL	0	20L	G15_033		Non-Converged Contingency	762.5	762.5	0.04306	-	MINGO - SETAB 345KV CKT 1
FDNSLock-Blown up	06ALL	0	20L	G15_033		Non-Converged Contingency	762.5	762.5	0.04306	-	MINGO - SETAB 345KV CKT 1
FDNSLock-Blown up	06ALL	0	20L	G15_033		Non-Converged Contingency	717.1	717.1	0.04252	-	HOLCOMB - SETAB 345KV CKT 1
FDNSLock-Blown up	06ALL	0	20L	G15_033		Non-Converged Contingency	717.1	717.1	0.04252	-	HOLCOMB - SETAB 345KV CKT 1
FDNSLock-Blown up	06ALL	0	20L	G15_033		Non-Converged Contingency	435.82	501.55	0.042	-	Harrington Station Mid Bus - RANDALL COUNTY INTERCHANGE 230KV CKT 1
FDNSLock-Blown up	06ALL	0	20L	G15_033		Non-Converged Contingency	435.82	501.55	0.042	-	Harrington Station Mid Bus - RANDALL COUNTY INTERCHANGE 230KV CKT 1
FDNSLock-Blown up	06ALL	0	20L	G15_033		Non-Converged Contingency	1504	1792	0.04135	-	AXTELL - POST ROCK 345KV CKT 1
FDNSLock-Blown up	06ALL	0	20L	G15_033		Non-Converged Contingency	1195	1195	0.03964	-	MUSKOGEE - SEMINOLE 345KV CKT 1
FDNSLock-Blown up	06ALL	0	20L	G15_033		Non-Converged Contingency	0	0	0.0392	-	P12:115:SPS:T66.1.RNDALL.HAPPY
FDNSLock-Blown up	06ALL	0	20L	G15_033		Non-Converged Contingency	0	0	0.0392	-	P12:115:SPS:T67.1.HAPPY.KRESS
FDNSLock-Blown up	06ALL	0	20L	G15_033		Non-Converged Contingency	1195	1195	0.03901	-	CIMARRON - DRAPER LAKE 345KV CKT 1
FDNSLock-Blown up	06ALL	0	20L	G15_033		Non-Converged Contingency	1035	1035	0.03882	-	EMPORIA ENERGY CENTER - G14_001T 345.00 345KV CKT 1
FDNSLock-Blown up	06ALL	0	20L	G15_033		Non-Converged Contingency	1035	1035	0.03882	-	G14_001T 345.00 - WICHITA 345KV CKT 1
FDNSLock-Blown up	06ALL	0	20L	G15_033		Non-Converged Contingency	0	0	0.03852	-	P12:230:AEPW:ELKCITY6:SWEETWT6
FDNSLock-Blown up	06ALL	0	20L	G15_033		Non-Converged Contingency	1505	1793	0.03846	-	G13-010T 345.00 - POST ROCK 345KV CKT 1
FDNSLock-Blown up	06ALL	0	20L	G15_033		Non-Converged Contingency	1505	1793	0.03846	-	G13-010T 345.00 - SPEARVILLE 345KV CKT 1
FDNSLock-Blown up	06ALL	0	20L	G15_033		Non-Converged Contingency	1141	1195	0.0366	-	GEN542951 5-HAWTHORN UNIT #5
FDNSLock-Blown up	06ALL	0	20L	G15_033		Non-Converged Contingency	1141	1195	0.0366	-	LACYGNE - WAVERLY7 345.00 345KV CKT 1
FDNSLock-Blown up	06ALL	0	20L	G15_033		Non-Converged Contingency	1141	1195	0.0366	-	WAVERLY7 345.00 - WOLF CREEK 345KV CKT 1
FDNSLock-Blown up	06ALL	0	20L	G15_033		Non-Converged Contingency	478.05	501.55	0.03659	-	AMARILLO SOUTH INTERCHANGE - NICHOLS STATION 230KV CKT 1
FDNSLock-Blown up	06ALL	0	20L	G15_033		Non-Converged Contingency	478.05	501.55	0.03659	-	AMARILLO SOUTH INTERCHANGE - NICHOLS STATION 230KV CKT 1
FDNSLock-Blown up	06NR	0	20L	G15_033		Non-Converged Contingency	478	502	0.03584	-	NEWHART 230 - POTTER COUNTY INTERCHANGE 230KV CKT 1
FDNSLock-Blown up	06ALL	0	20L	G15_033		Non-Converged Contingency	439	439	0.0358	-	CHISHOLM6 230.00 - ELK CITY 230KV 230KV CKT 1
FDNSLock-Blown up	06ALL	0	20L	G15_033		Non-Converged Contingency	450	450	0.0358	-	ELK CITY 230KV (ELKCTY-6) 230/138/13.8KV TRANSFORMER CKT 1
FDNSLock-Blown up	06ALL	0	20L	G15_033		Non-Converged Contingency	450	450	0.0358	-	ELK CITY 230KV (ELKCTY-6) 230/138/13.8KV TRANSFORMER CKT 1
FDNSLock-Blown up	06ALL	0	20L	G15_033		Non-Converged Contingency	956	956	0.03529	-	GERALD GENTLEMAN STATION - RED WILLOW 345KV CKT 1
FDNSLock-Blown up	06ALL	0	20L	G15_033		Non-Converged Contingency	0	0	0.03519	-	P12:115:SPS:W40.1.WCANYON.DFSMTH
FDNSLock-Blown up	06ALL	0	20L	G15_033		Non-Converged Contingency	530	590	0.03491	-	LAWTON EASTSIDE (LES 5) 345/138/13.8KV TRANSFORMER CKT 2
FDNSLock-Blown up	06ALL	0	20L	G15_033		Non-Converged Contingency	530	590	0.03491	-	LAWTON EASTSIDE (LES 5) 345/138/13.8KV TRANSFORMER CKT 2
FDNSLock-Blown up	06ALL	0	20L	G15_033		Non-Converged Contingency	878	956	0.03349	-	BENTON - WICHITA 345KV CKT 1
FDNSLock-Blown up	06ALL	0	20L	G15_033		Non-Converged Contingency	1076	1076	0.03302	-	G15074_T 345.00 - HOYT 345KV CKT 1
FDNSLock-Blown up	06ALL	0	20L	G15_033		Non-Converged Contingency	1076	1076	0.03302	-	G15074_T 345.00 - JEFFREY ENERGY CENTER 345KV CKT 1
FDNSLock-Blown up	06ALL	0	20L	G15_033		Non-Converged Contingency	1036	1195	0.0328	-	HOYT - STRANGER CREEK 345KV CKT 1
FDNSLock-Blown up	06ALL	0	20L	G15_033		Non-Converged Contingency	1022	1143	0.03048	-	REDBUD - RIVERSIDE STATION 345KV CKT 1
FDNSLock-Blown up	06ALL	0	20L	G15_033		Non-Converged Contingency	1022	1143	0.03048	-	REDBUD - RIVERSIDE STATION 345KV CKT 1
FDNSLock-Blown up	06ALL	0	20L	G15_033		Non-Converged Contingency	497.17	546.96	0.02972	-	AMARILLO SOUTH INTERCHANGE - RANDALL COUNTY INTERCHANGE 230KV CKT 1
FDNSLock-Blown up	06ALL	0	20L	G15_033		Non-Converged Contingency	497.17	546.96	0.02972	-	AMARILLO SOUTH INTERCHANGE - RANDALL COUNTY INTERCHANGE 230KV CKT 1
FDNSLock-Blown up	06ALL	0	20L	G15_033		Non-Converged Contingency	0	0	0.0297	-	P12:115:SPS:T59.1.CARGIL.CURRY
FDNSLock-Blown up	06ALL	0	20L	G15_033		Non-Converged Contingency	0	0	0.02968	-	P12:138:AEPW:CORNVIL4:S.W.S.-4
FDNSLock-Blown up	06ALL	0	20SP	G15_033		Non-Converged Contingency	956	1042	0.3666	-	G14-074T 345.00 - OKLAUNION 345KV CKT 1
FDNSLock-Blown up	06ALL	0	20SP	G15_033		Non-Converged Contingency	1792	1972	0.16201	-	BORDER 7345.00 - TUCO_2 345.00 345KV CKT 1
FDNSLock-Blown up	06ALL	0	20SP	G15_033		Non-Converged Contingency	1420	1775	0.16201	-	BORDER 7345.00 - TUCO_2 345.00 345KV CKT 2
FDNSLock-Blown up	06ALL	0	20SP	G15_033		Non-Converged Contingency	956.09	1051.7	0.09716	-	G14_038T 345.00 - Hitchland Interchange 345KV CKT 1
FDNSLock-Blown up	06ALL	0	20SP	G15_033		Non-Converged Contingency	956.09	1051.7	0.09716	-	G14_038T 345.00 - POTTER COUNTY INTERCHANGE 345KV CKT 1
FDNSLock-Blown up	06ALL	0	20WP	G15_033		Non-Converged Contingency	1792	1972	0.39613	-	TUCO INTERCHANGE - TUCO_2 345.00 345KV CKT 1
FDNSLock-Blown up	06ALL	0	20WP	G15_033		Non-Converged Contingency	1022	1124	0.36174	-	G14-074T 345.00 - OKLAUNION 345KV CKT 1
FDNSLock-Blown up	06ALL	0	20WP	G15_033		Non-Converged Contingency	1022	1124	0.36174	-	OKLAUNION 345KV SWITCHED SHUNT
FDNSLock-Blown up	06ALL	0	20WP	G15_033		Non-Converged Contingency	956	956	0.21359	-	CIMARRON - MINCO 345KV CKT 1
FDNSLock-Blown up	06ALL	0	20WP	G15_033		Non-Converged Contingency	1195	1195	0.21359	-	GRACEMONT - MINCO 345KV CKT 1
FDNSLock-Blown up	06ALL	0	20WP	G15_033		Non-Converged Contingency	0	0	0.19352	-	P12:345:SPS:J07.1.FINN.HITCH
FDNSLock-Blown up	06ALL	0	20WP	G15_033		Non-Converged Contingency	1792	1792	0.18082	-	CHISHOLM7 345.00 - WOODWARD DISTRICT EHV 345KV CKT 1
FDNSLock-Blown up	06ALL	0	20WP	G15_033		Non-Converged Contingency	717	789	0.16275	-	G14-057T 345.00 - LAWTON EASTSIDE 345KV CKT 1
FDNSLock-Blown up	06ALL	0	20WP	G15_033		Non-Converged Contingency	717	789	0.16275	-	G14-057T 345.00 - SUNNYSIDE 345KV CKT 1
FDNSLock-Blown up	06ALL	0	20WP	G15_033		Non-Converged Contingency	1792	1972	0.15835	-	BORDER 7345.00 - TUCO_2 345.00 345KV CKT 1
FDNSLock-Blown up	06ALL	0	20WP	G15_033		Non-Converged Contingency	1420	1775	0.15835	-	BORDER 7345.00 - TUCO_2 345.00 345KV CKT 2
FDNSLock-Blown up	06ALL	0	20WP	G15_033		Non-Converged Contingency	1792	1972	0.15835	-	BORDER 7345.00 345KV SWITCHED SHUNT
FDNSLock-Blown up	06ALL	0	20WP	G15_033		Non-Converged Contingency	1584	2098	0.10664	-	CHISHOLM7 345.00 - GRACEMONT 345KV CKT 1
FDNSLock-Blown up	06ALL	0	20WP	G15_033		Non-Converged Contingency	987.16	1082.8	0.10315	-	Hitchland Interchange - WALKTAP7 345.00 345KV CKT 1
FDNSLock-Blown up	06ALL	0	20WP	G15_033		Non-Converged Contingency	987.16	1082.8	0.10315	-	Hitchland Interchange - WALKTAP7 345.00 345KV CKT 1
FDNSLock-Blown up	06ALL	0	20WP	G15_033		Non-Converged Contingency	987.16	1082.8	0.09208	-	G14_038T 345.00 - Hitchland Interchange 345KV CKT 1
FDNSLock-Blown up	06ALL	0	20WP	G15_033		Non-Converged Contingency	987.16	1082.8	0.09208	-	G14_038T 345.00 - POTTER COUNTY INTERCHANGE 345KV CKT 1
FDNSLock-Blown up	06ALL	0	20WP	G15_033		Non-Converged Contingency	560	560	0.09208	-	POTTER COUNTY INTERCHANGE (WAUK 90343-A) 345/230/13.2KV TRANSFORMER CKT 1
FDNSLock-Blown up	06ALL	0	20WP	G15_033		Non-Converged Contingency	560	560	0.09208	-	POTTER COUNTY INTERCHANGE (WAUK 90343-A) 345/230/13.2KV TRANSFORMER CKT 1

SOLUTION	GROUP	SCENARIO	SEASON	SOURCE	DIRECTION	MONITORED ELEMENT	RATEA (MVA)	RATEB(MVA)	TDF	TC%LOADING (% MVA)	CONTINGENCY
FDNSLock-Blown up	06ALL	0	20WP	G15_033		Non-Converged Contingency	956.09	1051.7	0.09037	-	FINNEY SWITCHING STATION - HOLCOMB 345KV CKT 1
FDNSLock-Blown up	06ALL	0	20WP	G15_033		Non-Converged Contingency	956.09	1051.7	0.09037	-	FINNEY SWITCHING STATION - HOLCOMB 345KV CKT 1
FDNSLock-Blown up	06ALL	0	20WP	G15_033		Non-Converged Contingency	987.16	1082.8	0.09037	-	FINNEY SWITCHING STATION - WALKTAP7 345.00 345KV CKT 1
FDNSLock-Blown up	06ALL	0	20WP	G15_033		Non-Converged Contingency	987.16	1082.8	0.09037	-	FINNEY SWITCHING STATION - WALKTAP7 345.00 345KV CKT 1
FDNSLock-Blown up	06ALL	0	20WP	G15_033		Non-Converged Contingency	1561	1793	0.08096	-	THISTLE7 345.00 - WOODWARD DISTRICT EHV 345KV CKT 1
FDNSLock-Blown up	06ALL	0	20WP	G15_033		Non-Converged Contingency	1561	1793	0.08096	-	THISTLE7 345.00 - WOODWARD DISTRICT EHV 345KV CKT 1
FDNSLock-Blown up	06ALL	0	20WP	G15_033		Non-Converged Contingency	1561	1793	0.08096	-	THISTLE7 345.00 - WOODWARD DISTRICT EHV 345KV CKT 2
FDNSLock-Blown up	06ALL	0	20WP	G15_033		Non-Converged Contingency	1561	1793	0.08096	-	THISTLE7 345.00 - WOODWARD DISTRICT EHV 345KV CKT 2
FDNSLock-Blown up	06ALL	0	20WP	G15_033		Non-Converged Contingency	478	502	0.07227	-	AMARILLO SOUTH INTERCHANGE - G15031_T 230.00 230KV CKT 1
FDNSLock-Blown up	06ALL	0	20WP	G15_033		Non-Converged Contingency	557	557	0.06709	-	NEWHART 230 - POTTER COUNTY INTERCHANGE 230KV CKT 1
FDNSLock-Blown up	06ALL	0	20WP	G15_033		Non-Converged Contingency	0	0	0.06562	-	P12:230:AEPW:ELKCITY6:SWEETWT6
FDNSLock-Blown up	06ALL	0	20WP	G15_033		Non-Converged Contingency	1420	1775	0.06082	-	G11_051T 345.00 - TATONGA7 345.00 345KV CKT 1
FDNSLock-Blown up	06ALL	0	20WP	G15_033		Non-Converged Contingency	1420	1775	0.06082	-	G11_051T 345.00 - WOODWARD DISTRICT EHV 345KV CKT 1
FDNSLock-Blown up	06ALL	0	20WP	G15_033		Non-Converged Contingency	1195	1195	0.06082	-	MATHWSN7 345.00 - TATONGA7 345.00 345KV CKT 1
FDNSLock-Blown up	06ALL	0	20WP	G15_033		Non-Converged Contingency	557	557	0.06065	-	BUSHLAND INTERCHANGE - DEAF SMITH COUNTY INTERCHANGE 230KV CKT 1
FDNSLock-Blown up	06ALL	0	20WP	G15_033		Non-Converged Contingency	557	557	0.06065	-	BUSHLAND INTERCHANGE - DEAF SMITH COUNTY INTERCHANGE 230KV CKT 1
FDNSLock-Blown up	06ALL	0	20WP	G15_033		Non-Converged Contingency	329.05	360.92	0.05578	-	BUSHLAND INTERCHANGE - POTTER COUNTY INTERCHANGE 230KV CKT 1
FDNSLock-Blown up	06ALL	0	20WP	G15_033		Non-Converged Contingency	329.05	360.92	0.05578	-	BUSHLAND INTERCHANGE - POTTER COUNTY INTERCHANGE 230KV CKT 1
FDNSLock-Blown up	06ALL	0	20WP	G15_033		Non-Converged Contingency	329.05	360.92	0.05165	-	DEAF SMITH COUNTY INTERCHANGE - G15039_T 230.00 230KV CKT 1
FDNSLock-Blown up	06ALL	0	20WP	G15_033		Non-Converged Contingency	329.05	360.92	0.05165	-	G15039_T 230.00 - PLANT X STATION 230KV CKT 1
FDNSLock-Blown up	06ALL	0	20WP	G15_033		Non-Converged Contingency	556.92	556.92	0.03923	-	HITCHLAND INTERCHANGE - MOORE COUNTY INTERCHANGE 230KV CKT 1
FDNSLock-Blown up	06ALL	0	20WP	G15_033		Non-Converged Contingency	556.92	556.92	0.03923	-	HITCHLAND INTERCHANGE - MOORE COUNTY INTERCHANGE 230KV CKT 1
FDNSLock-Blown up	06ALL	0	20WP	G15_033		Non-Converged Contingency	0	0	0.03639	-	P12:230:AEPW-SPS:SWEETWT6:WHEELER 6
FDNSLock-Blown up	06ALL	0	20WP	G15_033		Non-Converged Contingency	329.05	360.92	0.033	-	MOORE COUNTY INTERCHANGE - POTTER COUNTY INTERCHANGE 230KV CKT 1
FDNSLock-Blown up	06ALL	0	20WP	G15_033		Non-Converged Contingency	329.05	360.92	0.033	-	MOORE COUNTY INTERCHANGE - POTTER COUNTY INTERCHANGE 230KV CKT 1
FDNSLock-Blown up	06ALL	0	20WP	G15_033		Non-Converged Contingency	1793	1793	0.03089	-	G11-14T 345.00 - WOODWARD DISTRICT EHV 345KV CKT 1
FDNSLock-Blown up	06ALL	0	20WP	G15_033		Non-Converged Contingency	1716	1793	0.03089	-	G11-14T 345.00 - WOODWARD DISTRICT EHV 345KV CKT 2
FDNSLock-Blown up	06ALL	2	16WP	G15_033		Non-Converged Contingency	1022	1124	0.37307	-	G14-074T 345.00 - OKLAUNION 345KV CKT 1
FDNSLock-Blown up	06ALL	2	16WP	G15_033		Non-Converged Contingency	1792	1972	0.16752	-	BORDER 7345.00 - TUCO_2 345.00 345KV CKT 1
FDNSLock-Blown up	06ALL	2	16WP	G15_033		Non-Converged Contingency	1420	1775	0.16752	-	BORDER 7345.00 - TUCO_2 345.00 345KV CKT 2
FDNSLock-Blown up	06ALL	2	16WP	G15_033		Non-Converged Contingency	987.16	1082.8	0.09515	-	G14_038T 345.00 - Hitchland Interchange 345KV CKT 1
FDNSLock-Blown up	06ALL	2	16WP	G15_033		Non-Converged Contingency	987.16	1082.8	0.09515	-	G14_038T 345.00 - POTTER COUNTY INTERCHANGE 345KV CKT 1
FDNSLock-Blown up	06ALL	2	16WP	G15_033		Non-Converged Contingency	560	560	0.09515	-	POTTER COUNTY INTERCHANGE (WAUK 90343-A) 345/230/13.2KV TRANSFORMER CKT 1
FDNSLock-Blown up	06ALL	2	17G	G15_033		Non-Converged Contingency	1022	1124	0.36653	-	G14-074T 345.00 - OKLAUNION 345KV CKT 1
FDNSLock-Blown up	06NR	2	17G	G15_033		Non-Converged Contingency	1022	1124	0.2097	-	G14-074T 345.00 - OKLAUNION 345KV CKT 1
FDNSLock-Blown up	06ALL	2	17G	G15_033		Non-Converged Contingency	1792	1972	0.16178	-	BORDER 7345.00 - TUCO_2 345.00 345KV CKT 1
FDNSLock-Blown up	06ALL	2	17G	G15_033		Non-Converged Contingency	1420	1775	0.16178	-	BORDER 7345.00 - TUCO_2 345.00 345KV CKT 2
FDNSLock-Blown up	06ALL	2	17G	G15_033		Non-Converged Contingency	956.09	1051.7	0.08593	-	G14_038T 345.00 - Hitchland Interchange 345KV CKT 1
FDNSLock-Blown up	06ALL	2	17G	G15_033		Non-Converged Contingency	956.09	1051.7	0.08593	-	G14_038T 345.00 - POTTER COUNTY INTERCHANGE 345KV CKT 1
FDNSLock-Blown up	06ALL	2	17G	G15_033		Non-Converged Contingency	560	560	0.08593	-	POTTER COUNTY INTERCHANGE (WAUK 90343-A) 345/230/13.2KV TRANSFORMER CKT 1
FDNSLock-Blown up	06NR	2	17G	G15_033		Non-Converged Contingency	1792	1972	0.05274	-	BORDER 7345.00 - TUCO_2 345.00 345KV CKT 1
FDNSLock-Blown up	06NR	2	17G	G15_033		Non-Converged Contingency	1792	1792	0.05274	-	BORDER 7345.00 - WOODWARD DISTRICT EHV 345KV CKT 1
FDNSLock-Blown up	06ALL	2	17SP	G15_033		Non-Converged Contingency	956	1042	0.37029	-	G14-074T 345.00 - OKLAUNION 345KV CKT 1
FDNSLock-Blown up	06ALL	2	20L	G15_033		Non-Converged Contingency	1022	1124	0.33252	-	G14-074T 345.00 - OKLAUNION 345KV CKT 1
FDNSLock-Blown up	06ALL	2	20L	G15_033		Non-Converged Contingency	1022	1124	0.33252	-	OKLAUNION 345KV SWITCHED SHUNT
FDNSLock-Blown up	06NR	2	20L	G15_033		Non-Converged Contingency	1022	1124	0.1994	-	G14-074T 345.00 - OKLAUNION 345KV CKT 1
FDNSLock-Blown up	06NR	2	20L	G15_033		Non-Converged Contingency	1022	1124	0.1994	-	OKLAUNION 345KV SWITCHED SHUNT
FDNSLock-Blown up	06ALL	2	20L	G15_033		Non-Converged Contingency	0	0	0.15295	-	P12:345:SPS:J07.1.FINN.HITCH
FDNSLock-Blown up	06ALL	2	20L	G15_033		Non-Converged Contingency	1792	1972	0.13781	-	BORDER 7345.00 - TUCO_2 345.00 345KV CKT 1
FDNSLock-Blown up	06ALL	2	20L	G15_033		Non-Converged Contingency	1420	1775	0.13781	-	BORDER 7345.00 - TUCO_2 345.00 345KV CKT 2
FDNSLock-Blown up	06ALL	2	20L	G15_033		Non-Converged Contingency	956.09	1051.7	0.08172	-	Hitchland Interchange - WALKTAP7 345.00 345KV CKT 1
FDNSLock-Blown up	06ALL	2	20L	G15_033		Non-Converged Contingency	956.09	1051.7	0.08172	-	Hitchland Interchange - WALKTAP7 345.00 345KV CKT 1
FDNSLock-Blown up	06ALL	2	20L	G15_033		Non-Converged Contingency	1584	2098	0.08097	-	CHISHOLM7 345.00 - GRACEMONT 345KV CKT 1
FDNSLock-Blown up	06NR	2	20L	G15_033		Non-Converged Contingency	478	502	0.06371	-	AMARILLO SOUTH INTERCHANGE - G15031_T 230.00 230KV CKT 1
FDNSLock-Blown up	06ALL	2	20L	G15_033		Non-Converged Contingency	956.09	1051.7	0.06355	-	G14_038T 345.00 - Hitchland Interchange 345KV CKT 1
FDNSLock-Blown up	06ALL	2	20L	G15_033		Non-Converged Contingency	956.09	1051.7	0.06355	-	G14_038T 345.00 - POTTER COUNTY INTERCHANGE 345KV CKT 1
FDNSLock-Blown up	06ALL	2	20L	G15_033		Non-Converged Contingency	560	560	0.06355	-	POTTER COUNTY INTERCHANGE (WAUK 90343-A) 345/230/13.2KV TRANSFORMER CKT 1
FDNSLock-Blown up	06ALL	2	20L	G15_033		Non-Converged Contingency	560	560	0.06355	-	POTTER COUNTY INTERCHANGE (WAUK 90343-A) 345/230/13.2KV TRANSFORMER CKT 1
FDNSLock-Blown up	06ALL	2	20L	G15_033		Non-Converged Contingency	1195	1195	0.04665	-	MATHWSN7 345.00 - TATONGA7 345.00 345KV CKT 1
FDNSLock-Blown up	06NR	2	20L	G15_033		Non-Converged Contingency	1792	1972	0.04306	-	BORDER 7345.00 - TUCO_2 345.00 345KV CKT 1
FDNSLock-Blown up	06NR	2	20L	G15_033		Non-Converged Contingency	1792	1792	0.04306	-	BORDER 7345.00 - WOODWARD DISTRICT EHV 345KV CKT 1
FDNSLock-Blown up	06NR	2	20L	G15_033		Non-Converged Contingency	1792	1972	0.04306	-	BORDER 7345.00 345KV SWITCHED SHUNT
FDNSLock-Blown up	06ALL	2	20L	G15_033		Non-Converged Contingency	0	0	0.03887	-	P12:230:AEPW:ELKCITY6:SWEETWT6
FDNSLock-Blown up	06NR	2	20L	G15_033		Non-Converged Contingency	478	502	0.03584	-	NEWHART 230 - POTTER COUNTY INTERCHANGE 230KV CKT 1
FDNSLock-Blown up	06ALL	2	20SP	G15_033		Non-Converged Contingency	956	1042	0.36669	-	G14-074T 345.00 - OKLAUNION 345KV CKT 1
FDNSLock-Blown up	06ALL	2	20WP	G15_033		Non-Converged Contingency	1022	1124	0.36198	-	G14-074T 345.00 - OKLAUNION 345KV CKT 1
FDNSLock-Blown up	06ALL	2	20WP	G15_033		Non-Converged Contingency	1792	1972	0.15855	-	BORDER 7345.00 - TUCO_2 345.00 345KV CKT 1
FDNSLock-Blown up	06ALL	2	20WP	G15_033		Non-Converged Contingency	1420	1775	0.15855	-	BORDER 7345.00 - TUCO_2 345.00 345KV CKT 2
FDNSLock-Blown up	06ALL	2	20WP	G15_033		Non-Converged Contingency	987.16	1082.8	0.0923	-	G14_038T 345.00 - Hitchland Interchange 345KV CKT 1
FDNSLock-Blown up	06ALL	2	20WP	G15_033		Non-Converged Contingency	987.16	1082.8	0.0923	-	G14_038T 345.00 - POTTER COUNTY INTERCHANGE 345KV CKT 1
FDNSLock-Blown up	06ALL	2	20WP	G15_033		Non-Converged Contingency	560	560	0.0923	-	POTTER COUNTY INTERCHANGE (WAUK 90343-A) 345/230/13.2KV TRANSFORMER CKT 1
FDNSLock-Blown up	06ALL	2	20WP	G15_033		Non-Converged Contingency	560	560	0.0923	-	POTTER COUNTY INTERCHANGE (WAUK 90343-A) 345/230/13.2KV TRANSFORMER CKT 1
FDNSLock-Blown up	06ALL	3	16WP	G15_033		Non-Converged Contingency	1022	1124	0.36953	-	G14-074T 345.00 - OKLAUNION 345KV CKT 1
FDNSLock-Blown up	06NR	3	17G	G15_033		Non-Converged Contingency	1022	1124	0.19262	-	G14-074T 345.00 - OKLAUNION 345KV CKT 1
FDNSLock-Blown up	06NR	3	17G	G15_033		Non-Converged Contingency	1792	1972	0.0352	-	BORDER 7345.00 - TUCO_2 345.00 345KV CKT 1
FDNSLock-Blown up	06NR	3	17G	G15_033		Non-Converged Contingency	1792	1792	0.0352	-	BORDER 7345.00 - WOODWARD DISTRICT EHV 345KV CKT 1
FDNSLock-Blown up	06ALL	3	17SP	G15_033		Non-Converged Contingency	956	1042	0.36653	-	G14-074T 345.00 - OKLAUNION 345KV CKT 1
FDNSLock-Blown up	06ALL	3	20L	G15_033		Non-Converged Contingency	1022	1124	0.32994	-	G14-074T 345.00 - OKLAUNION 345KV CKT 1
FDNSLock-Blown up	06NR	3	20L	G15_033		Non-Converged Contingency	1022	1124	0.18936	-	G14-074T 345.00 - OKLAUNION 345KV CKT 1

SOLUTION	GROUP	SCENARIO	SEASON	SOURCE	DIRECTION	MONITORED ELEMENT	RATEA (MVA)	RATEB(MVA)	TDF	TC%LOADING (% MVA)	CONTINGENCY
FDNSLock-Blown up	06NR	3	20L	G15_033		Non-Converged Contingency	1022	1124	0.18936	-	OKLAUNION 345KV SWITCHED SHUNT
FDNSLock-Blown up	06ALL	3	20L	G15_033		Non-Converged Contingency	1792	1972	0.13426	-	BORDER 7345.00 - TUCO_2 345.00 345KV CKT 1
FDNSLock-Blown up	06ALL	3	20L	G15_033		Non-Converged Contingency	1420	1775	0.13426	-	BORDER 7345.00 - TUCO_2 345.00 345KV CKT 2
FDNSLock-Blown up	06ALL	3	20L	G15_033		Non-Converged Contingency	956.09	1051.7	0.0844	-	Hitchland Interchange - WALKTAP7 345.00 345KV CKT 1
FDNSLock-Blown up	06ALL	3	20L	G15_033		Non-Converged Contingency	1584	2098	0.08096	-	CHISHOLM7 345.00 - GRACEMONT 345KV CKT 1
FDNSLock-Blown up	06ALL	3	20L	G15_033		Non-Converged Contingency	956.09	1051.7	0.06882	-	G14_038T 345.00 - Hitchland Interchange 345KV CKT 1
FDNSLock-Blown up	06ALL	3	20L	G15_033		Non-Converged Contingency	956.09	1051.7	0.06882	-	G14_038T 345.00 - POTTER COUNTY INTERCHANGE 345KV CKT 1
FDNSLock-Blown up	06ALL	3	20L	G15_033		Non-Converged Contingency	560	560	0.06882	-	POTTER COUNTY INTERCHANGE (WAUK 90343-A) 345/230/13.2KV TRANSFORMER CKT 1
FDNSLock-Blown up	06ALL	3	20L	G15_033		Non-Converged Contingency	1195	1195	0.04825	-	MATHWSN7 345.00 - TATONGA7 345.00 345KV CKT 1
FDNSLock-Blown up	06NR	3	20L	G15_033		Non-Converged Contingency	1792	1972	0.03251	-	BORDER 7345.00 - TUCO_2 345.00 345KV CKT 1
FDNSLock-Blown up	06NR	3	20L	G15_033		Non-Converged Contingency	1792	1792	0.03251	-	BORDER 7345.00 - WOODWARD DISTRICT EHV 345KV CKT 1
FDNSLock-Blown up	06NR	3	20L	G15_033		Non-Converged Contingency	1792	1972	0.03251	-	BORDER 7345.00 345KV SWITCHED SHUNT
FDNSLock-Blown up	06ALL	3	20SP	G15_033		Non-Converged Contingency	956	1042	0.36421	-	G14-074T 345.00 - OKLAUNION 345KV CKT 1
FDNSLock-Blown up	06ALL	3	20WP	G15_033		Non-Converged Contingency	1022	1124	0.35962	-	G14-074T 345.00 - OKLAUNION 345KV CKT 1
FDNSLock-Blown up	06ALL	3	20WP	G15_033		Non-Converged Contingency	1792	1972	0.15548	-	BORDER 7345.00 - TUCO_2 345.00 345KV CKT 1
FDNSLock-Blown up	06ALL	3	20WP	G15_033		Non-Converged Contingency	1420	1775	0.15548	-	BORDER 7345.00 - TUCO_2 345.00 345KV CKT 2
FDNSLock-Blown up	06ALL	3	20WP	G15_033		Non-Converged Contingency	987.16	1082.8	0.09624	-	G14_038T 345.00 - Hitchland Interchange 345KV CKT 1
FDNSLock-Blown up	06ALL	3	20WP	G15_033		Non-Converged Contingency	987.16	1082.8	0.09624	-	G14_038T 345.00 - POTTER COUNTY INTERCHANGE 345KV CKT 1
FDNSLock-Blown up	06ALL	4	16WP	G15_033		Non-Converged Contingency	1022	1124	0.35553	-	G14-074T 345.00 - OKLAUNION 345KV CKT 1
FDNSLock-Blown up	06ALL	4	17G	G15_033		Non-Converged Contingency	1022	1124	0.34901	-	G14-074T 345.00 - OKLAUNION 345KV CKT 1
FDNSLock-Blown up	06NR	4	17G	G15_033		Non-Converged Contingency	1022	1124	0.18676	-	G14-074T 345.00 - OKLAUNION 345KV CKT 1
FDNSLock-Blown up	06ALL	4	17G	G15_033		Non-Converged Contingency	956.09	1051.7	0.12801	-	G14_038T 345.00 - Hitchland Interchange 345KV CKT 1
FDNSLock-Blown up	06ALL	4	17G	G15_033		Non-Converged Contingency	956.09	1051.7	0.12801	-	G14_038T 345.00 - POTTER COUNTY INTERCHANGE 345KV CKT 1
FDNSLock-Blown up	06ALL	4	20L	G15_033		Non-Converged Contingency	1022	1124	0.31768	-	G14-074T 345.00 - OKLAUNION 345KV CKT 1
FDNSLock-Blown up	06NR	4	20L	G15_033		Non-Converged Contingency	1022	1124	0.18183	-	G14-074T 345.00 - OKLAUNION 345KV CKT 1
FDNSLock-Blown up	06NR	4	20L	G15_033		Non-Converged Contingency	1022	1124	0.18183	-	OKLAUNION 345KV SWITCHED SHUNT
FDNSLock-Blown up	06ALL	4	20L	G15_033		Non-Converged Contingency	0	0	0.17456	-	P12:345:SPS:J07.1.FINN.HITCH
FDNSLock-Blown up	06ALL	4	20L	G15_033		Non-Converged Contingency	1792	1972	0.12099	-	BORDER 7345.00 - TUCO_2 345.00 345KV CKT 1
FDNSLock-Blown up	06ALL	4	20L	G15_033		Non-Converged Contingency	1420	1775	0.12099	-	BORDER 7345.00 - TUCO_2 345.00 345KV CKT 2
FDNSLock-Blown up	06ALL	4	20L	G15_033		Non-Converged Contingency	956.09	1051.7	0.10272	-	G14_038T 345.00 - Hitchland Interchange 345KV CKT 1
FDNSLock-Blown up	06ALL	4	20L	G15_033		Non-Converged Contingency	956.09	1051.7	0.10272	-	G14_038T 345.00 - POTTER COUNTY INTERCHANGE 345KV CKT 1
FDNSLock-Blown up	06ALL	4	20L	G15_033		Non-Converged Contingency	956.09	1051.7	0.09324	-	Hitchland Interchange - WALKTAP7 345.00 345KV CKT 1
FDNSLock-Blown up	06ALL	4	20L	G15_033		Non-Converged Contingency	956.09	1051.7	0.09324	-	Hitchland Interchange - WALKTAP7 345.00 345KV CKT 1
FDNSLock-Blown up	06ALL	4	20L	G15_033		Non-Converged Contingency	1584	2098	0.07848	-	CHISHOLM7 345.00 - GRACEMONT 345KV CKT 1
FDNSLock-Blown up	06ALL	4	20L	G15_033		Non-Converged Contingency	0	0	0.04863	-	P12:230:AEPW:ELKCITY6:SWEETWT6
FDNSLock-Blown up	06ALL	4	20WP	G15_033		Non-Converged Contingency	1022	1124	0.34562	-	G14-074T 345.00 - OKLAUNION 345KV CKT 1
FDNSLock-Blown up	06ALL	4	20WP	G15_033		Non-Converged Contingency	987.16	1082.8	0.13323	-	G14_038T 345.00 - Hitchland Interchange 345KV CKT 1
FDNSLock-Blown up	06ALL	5	16WP	G15_033		Non-Converged Contingency	1022	1124	0.35265	-	G14-074T 345.00 - OKLAUNION 345KV CKT 1
FDNSLock-Blown up	06ALL	5	17G	G15_033		Non-Converged Contingency	1022	1124	0.34662	-	G14-074T 345.00 - OKLAUNION 345KV CKT 1
FDNSLock-Blown up	06NR	5	17G	G15_033		Non-Converged Contingency	1022	1124	0.19764	-	G14-074T 345.00 - OKLAUNION 345KV CKT 1
FDNSLock-Blown up	06NR	5	17G	G15_033		Non-Converged Contingency	1792	1792	0.03324	-	BORDER 7345.00 - WOODWARD DISTRICT EHV 345KV CKT 1
FDNSLock-Blown up	06ALL	5	20L	G15_033		Non-Converged Contingency	1022	1124	0.31736	-	G14-074T 345.00 - OKLAUNION 345KV CKT 1
FDNSLock-Blown up	06NR	5	20L	G15_033		Non-Converged Contingency	1022	1124	0.19198	-	G14-074T 345.00 - OKLAUNION 345KV CKT 1
FDNSLock-Blown up	06ALL	5	20WP	G15_033		Non-Converged Contingency	1022	1124	0.34248	-	G14-074T 345.00 - OKLAUNION 345KV CKT 1
FDNSLock-Blown up	06ALL	6	17G	G15_033		Non-Converged Contingency	1022	1124	0.34124	-	G14-074T 345.00 - OKLAUNION 345KV CKT 1
FDNSLock-Blown up	06NR	6	17G	G15_033		Non-Converged Contingency	1022	1124	0.19922	-	G14-074T 345.00 - OKLAUNION 345KV CKT 1
FDNSLock-Blown up	06ALL	6	20L	G15_033		Non-Converged Contingency	1022	1124	0.31285	-	G14-074T 345.00 - OKLAUNION 345KV CKT 1
FDNSLock-Blown up	06NR	6	20L	G15_033		Non-Converged Contingency	1022	1124	0.19351	-	G14-074T 345.00 - OKLAUNION 345KV CKT 1
FDNSLock-Blown up	06ALL	6	20WP	G15_033		Non-Converged Contingency	1022	1124	0.33715	-	G14-074T 345.00 - OKLAUNION 345KV CKT 1
FDNSLock-Blown up	06NR	7	20L	G15_033		Non-Converged Contingency	1022	1124	0.19351	-	G14-074T 345.00 - OKLAUNION 345KV CKT 1
FDNS	06ALL	0	16WP	G15_033	FROM->TO	BUSHLAND INTERCHANGE - POTTER COUNTY INTERCHANGE 230KV CKT 1	329.05	360.92	0.054	103.4995	BASE CASE
FDNS	00NR	0	25SP	G15_033	FROM->TO	CARLISLE INTERCHANGE - LP-DOUD_TP 3115.00 115KV CKT 1	159	160	0.03221	110.1627	WOLFFORTH INTERCHANGE (WH 7001668) 230/115/13.2KV TRANSFORMER CKT 1
FDNS	00NR	0	25SP	G15_033	FROM->TO	CARLISLE INTERCHANGE - LP-DOUD_TP 3115.00 115KV CKT 1	159	160	0.03221	110.1627	WOLFFORTH INTERCHANGE (WH 7001668) 230/115/13.2KV TRANSFORMER CKT 1
FDNS	00NR	0	25SP	G15_033	FROM->TO	CARLISLE INTERCHANGE - LP-DOUD_TP 3115.00 115KV CKT 1	159	160	0.04805	99.9	TUCO INTERCHANGE - YOAKUM_345 345.00 345KV CKT 1
FDNS	06ALL	0	20SP	G15_033	FROM->TO	CHISHOLM6 230.00 - ELK CITY 230KV 230KV CKT 1	353	353	0.04912	106.4803	BASE CASE
FDNS	06ALL	0	17SP	G15_033	FROM->TO	CHISHOLM6 230.00 - ELK CITY 230KV 230KV CKT 1	353	353	0.04938	104.7427	BASE CASE
FDNS	06ALL	0	17SP	G15_033	TO->FROM	CIMARRON - MINCO 345KV CKT 1	956	956	0.30222	123.2446	G14-057T 345.00 - SUNNYSIDE 345KV CKT 1
FDNS	06ALL	0	20SP	G15_033	TO->FROM	CIMARRON - MINCO 345KV CKT 1	956	956	0.29918	120.5642	G14-057T 345.00 - SUNNYSIDE 345KV CKT 1
FDNS	06ALL	0	17SP	G15_033	TO->FROM	CIMARRON - MINCO 345KV CKT 1	956	956	0.30222	117.8925	G14-057T 345.00 - LAWTON EASTSIDE 345KV CKT 1
FDNS	06ALL	0	20SP	G15_033	TO->FROM	CIMARRON - MINCO 345KV CKT 1	956	956	0.29918	115.1699	G14-057T 345.00 - LAWTON EASTSIDE 345KV CKT 1
FDNS	00NR	0	20WP	G15_033	TO->FROM	CIMARRON - MINCO 345KV CKT 1	956	956	0.07514	112.5554	G14-057T 345.00 - SUNNYSIDE 345KV CKT 1
FDNS	00NR	0	16WP	G15_033	TO->FROM	CIMARRON - MINCO 345KV CKT 1	956	956	0.08037	111.6875	G14-057T 345.00 - SUNNYSIDE 345KV CKT 1
FDNS	06NR	0	20L	G15_033	TO->FROM	CIMARRON - MINCO 345KV CKT 1	956	956	0.078	108.4796	G14-057T 345.00 - SUNNYSIDE 345KV CKT 1
FDNS	06ALL	0	17SP	G15_033	TO->FROM	CIMARRON - MINCO 345KV CKT 1	956	956	0.2389	105.5731	MATHWSN7 345.00 - TATONGA7 345.00 345KV CKT 1
FDNS	06ALL	0	20SP	G15_033	TO->FROM	CIMARRON - MINCO 345KV CKT 1	956	956	0.23687	104.5241	MATHWSN7 345.00 - TATONGA7 345.00 345KV CKT 1
FDNS	06NR	0	17G	G15_033	TO->FROM	CIMARRON - MINCO 345KV CKT 1	956	956	0.08088	103.8817	G14-057T 345.00 - SUNNYSIDE 345KV CKT 1
FDNS	06ALL	0	20SP	G15_033	TO->FROM	CIMARRON - MINCO 345KV CKT 1	956	956	0.28653	102.9387	CHISHOLM7 345.00 - WOODWARD DISTRICT EHV 345KV CKT 1
FDNS	06ALL	0	17SP	G15_033	TO->FROM	CIMARRON - MINCO 345KV CKT 1	956	956	0.29041	102.0892	CHISHOLM7 345.00 - WOODWARD DISTRICT EHV 345KV CKT 1
FDNS	06NR	0	20L	G15_033	TO->FROM	CIMARRON - MINCO 345KV CKT 1	956	956	0.078	102.0698	G14-057T 345.00 - LAWTON EASTSIDE 345KV CKT 1
FDNS	06ALL	0	20WP	G15_033	TO->FROM	CIMARRON - MINCO 345KV CKT 1	956	956	0.23163	100.5381	P12:138:WFEC:MSL03
FDNS	06ALL	0	17SP	G15_033	TO->FROM	CIMARRON - MINCO 345KV CKT 1	956	956	0.2389	100.3376	G11_051T 345.00 - TATONGA7 345.00 345KV CKT 1
FDNS	06ALL	0	20SP	G15_033	TO->FROM	DEAF SMITH COUNTY INTERCHANGE - G15039_T 230.00 230KV CKT 1	318.7	350.57	0.05292	110.3343	BASE CASE
FDNS	06ALL	0	17SP	G15_033	TO->FROM	DEAF SMITH COUNTY INTERCHANGE - G15039_T 230.00 230KV CKT 1	318.7	350.57	0.04887	108.4885	BASE CASE
FDNSLock	06ALL	0	20WP	G15_033		ELK CITY 230KV (ELKCTY-6) 230/138/13.8KV TRANSFORMER CKT 1	450	450	0.04743	87.66341	BASE CASE
FDNSLock	06ALL	0	20WP	G15_033		ELK CITY 230KV (ELKCTY-6) 230/138/13.8KV TRANSFORMER CKT 1	450	450	0.04743	87.66341	BASE CASE
FDNS	06NR	0	20L	G15_033	TO->FROM	G14-057T 345.00 - LAWTON EASTSIDE 345KV CKT 1	717	789	0.06564	114.6721	CIMARRON - MINCO 345KV CKT 1
FDNS	06NR	0	20L	G15_033	TO->FROM	G14-057T 345.00 - LAWTON EASTSIDE 345KV CKT 1	717	789	0.06564	108.272	GRACEMONT - MINCO 345KV CKT 1
FDNS	06ALL	0	20L	G15_033	TO->FROM	G14-057T 345.00 - LAWTON EASTSIDE 345KV CKT 1	717	789	0.13899	108.0268	BASE CASE
FDNS	06ALL	0	17SP	G15_033	TO->FROM	G14-057T 345.00 - LAWTON EASTSIDE 345KV CKT 1	717	789	0.22829	106.8675	CIMARRON - MINCO 345KV CKT 1

SOLUTION	GROUP	SCENARIO	SEASON	SOURCE	DIRECTION	MONITORED ELEMENT	RATEA (MVA)	RATEB(MVA)	TDF	TC%LOADING (% MVA)	CONTINGENCY
FDNS	06NR	0	17G	G15_033	TO->FROM	G14-057T 345.00 - LAWTON EASTSIDE 345KV CKT 1	717	789	0.06836	104.6856	CIMARRON - MINCO 345KV CKT 1
FDNS	06ALL	0	17SP	G15_033	TO->FROM	G14-057T 345.00 - LAWTON EASTSIDE 345KV CKT 1	717	789	0.22829	101.8214	GRACEMONT - MINCO 345KV CKT 1
FDNS	06ALL	0	20SP	G15_033	TO->FROM	G14-057T 345.00 - LAWTON EASTSIDE 345KV CKT 1	717	789	0.22606	100	CIMARRON - MINCO 345KV CKT 1
FDNS	00NR	0	16WP	G15_033	FROM->TO	G14-057T 345.00 - SUNNYSIDE 345KV CKT 1	717	789	0.06784	141.6368	CIMARRON - MINCO 345KV CKT 1
FDNS	00NR	0	20WP	G15_033	FROM->TO	G14-057T 345.00 - SUNNYSIDE 345KV CKT 1	717	789	0.06295	139.8087	CIMARRON - MINCO 345KV CKT 1
FDNS	00NR	0	16WP	G15_033	FROM->TO	G14-057T 345.00 - SUNNYSIDE 345KV CKT 1	717	789	0.06784	130.6085	GRACEMONT - MINCO 345KV CKT 1
FDNS	00NR	0	20WP	G15_033	FROM->TO	G14-057T 345.00 - SUNNYSIDE 345KV CKT 1	717	789	0.06295	128.6292	GRACEMONT - MINCO 345KV CKT 1
FDNS	06NR	0	20L	G15_033	FROM->TO	G14-057T 345.00 - SUNNYSIDE 345KV CKT 1	717	789	0.06564	128.196	CIMARRON - MINCO 345KV CKT 1
FDNS	00NR	0	16WP	G15_033	FROM->TO	G14-057T 345.00 - SUNNYSIDE 345KV CKT 1	717	789	0.04785	127.2961	PITTSBURG - SEMINOLE 345KV CKT 1
FDNS	00NR	0	16WP	G15_033	FROM->TO	G14-057T 345.00 - SUNNYSIDE 345KV CKT 1	717	789	0.04785	127.2961	PITTSBURG - SEMINOLE 345KV CKT 1
FDNS	00NR	0	16WP	G15_033	FROM->TO	G14-057T 345.00 - SUNNYSIDE 345KV CKT 1	717	789	0.0498	126.8401	BASE CASE
FDNS	00NR	0	16WP	G15_033	FROM->TO	G14-057T 345.00 - SUNNYSIDE 345KV CKT 1	717	789	0.04921	124.2897	CIMARRON - DRAPER LAKE 345KV CKT 1
FDNS	00NR	0	20WP	G15_033	FROM->TO	G14-057T 345.00 - SUNNYSIDE 345KV CKT 1	717	789	0.04601	123.8696	BASE CASE
FDNS	00NR	0	20WP	G15_033	FROM->TO	G14-057T 345.00 - SUNNYSIDE 345KV CKT 1	717	789	0.04422	123.481	PITTSBURG - SEMINOLE 345KV CKT 1
FDNS	00NR	0	20WP	G15_033	FROM->TO	G14-057T 345.00 - SUNNYSIDE 345KV CKT 1	717	789	0.04422	123.481	PITTSBURG - SEMINOLE 345KV CKT 1
FDNS	06NR	0	20L	G15_033	FROM->TO	G14-057T 345.00 - SUNNYSIDE 345KV CKT 1	717	789	0.06564	121.5503	GRACEMONT - MINCO 345KV CKT 1
FDNS	00NR	0	16WP	G15_033	FROM->TO	G14-057T 345.00 - SUNNYSIDE 345KV CKT 1	717	789	0.05224	121.5485	P12:138:WFEC:MSL03
FDNS	00NR	0	20WP	G15_033	FROM->TO	G14-057T 345.00 - SUNNYSIDE 345KV CKT 1	717	789	0.04547	121.2133	CIMARRON - DRAPER LAKE 345KV CKT 1
FDNS	00NR	0	16WP	G15_033	FROM->TO	G14-057T 345.00 - SUNNYSIDE 345KV CKT 1	717	789	0.04977	120.9122	PITTSBURG - VALLIANT 345KV CKT 1
FDNS	00NR	0	16WP	G15_033	FROM->TO	G14-057T 345.00 - SUNNYSIDE 345KV CKT 1	717	789	0.04977	120.9122	PITTSBURG - VALLIANT 345KV CKT 1
FDNS	06ALL	0	20L	G15_033	FROM->TO	G14-057T 345.00 - SUNNYSIDE 345KV CKT 1	717	789	0.13899	120.8788	BASE CASE
FDNS	00NR	0	16WP	G15_033	FROM->TO	G14-057T 345.00 - SUNNYSIDE 345KV CKT 1	717	789	0.0498	120.4075	GEN509403 1-PIRKEY GENERATION
FDNS	00NR	0	16WP	G15_033	FROM->TO	G14-057T 345.00 - SUNNYSIDE 345KV CKT 1	717	789	0.0498	120.3109	GEN509416 1-TURK GENERATION
FDNS	00NR	0	16WP	G15_033	FROM->TO	G14-057T 345.00 - SUNNYSIDE 345KV CKT 1	717	789	0.04967	120.1483	CLEVELAND - G15066_T 345.00 345KV CKT 1
FDNS	00NR	0	16WP	G15_033	FROM->TO	G14-057T 345.00 - SUNNYSIDE 345KV CKT 1	717	789	0.04967	119.8485	G15066_T 345.00 - SOONER 345KV CKT 1
FDNS	00NR	0	16WP	G15_033	FROM->TO	G14-057T 345.00 - SUNNYSIDE 345KV CKT 1	717	789	0.0498	119.4219	GEN501801 1-DOLET HILLS UNIT1
FDNS	06ALL	0	17SP	G15_033	FROM->TO	G14-057T 345.00 - SUNNYSIDE 345KV CKT 1	717	789	0.22829	119.3728	CIMARRON - MINCO 345KV CKT 1
FDNS	00NR	0	16WP	G15_033	FROM->TO	G14-057T 345.00 - SUNNYSIDE 345KV CKT 1	717	789	0.0498	119.0388	GEN509404 1-WELSH #1
FDNS	00NR	0	16WP	G15_033	FROM->TO	G14-057T 345.00 - SUNNYSIDE 345KV CKT 1	717	789	0.0498	119.0388	GEN509406 1-WELSH #3
FDNS	00NR	0	20WP	G15_033	FROM->TO	G14-057T 345.00 - SUNNYSIDE 345KV CKT 1	717	789	0.04828	118.7744	P12:138:WFEC:MSL03
FDNS	00NR	0	16WP	G15_033	FROM->TO	G14-057T 345.00 - SUNNYSIDE 345KV CKT 1	717	789	0.05648	118.5917	BORDER 7345.00 - WOODWARD DISTRICT EHV 345KV CKT 1
FDNS	00NR	0	16WP	G15_033	FROM->TO	G14-057T 345.00 - SUNNYSIDE 345KV CKT 1	717	789	0.05023	118.4383	CORN TAP - NAPLESTP 138.00 138KV CKT 1
FDNS	00NR	0	16WP	G15_033	FROM->TO	G14-057T 345.00 - SUNNYSIDE 345KV CKT 1	717	789	0.05023	118.3531	NAPLESTP 138.00 - PAYNE 138.00 138KV CKT 1
FDNS	00NR	0	16WP	G15_033	FROM->TO	G14-057T 345.00 - SUNNYSIDE 345KV CKT 1	717	789	0.04955	118.2426	7SAREPTA% 345.00 - LONGWOOD 345KV CKT 1
FDNS	00NR	0	16WP	G15_033	FROM->TO	G14-057T 345.00 - SUNNYSIDE 345KV CKT 1	717	789	0.04955	118.2426	7SAREPTA% 345.00 - LONGWOOD 345KV CKT 1
FDNS	00NR	0	16WP	G15_033	FROM->TO	G14-057T 345.00 - SUNNYSIDE 345KV CKT 1	717	789	0.0498	118.1594	GEN336821 1-GRAND GULF UNIT
FDNS	00NR	0	16WP	G15_033	FROM->TO	G14-057T 345.00 - SUNNYSIDE 345KV CKT 1	717	789	0.04973	118.1389	CLEVELAND - TULSA NORTH 345KV CKT 1
FDNS	00NR	0	16WP	G15_033	FROM->TO	G14-057T 345.00 - SUNNYSIDE 345KV CKT 1	717	789	0.04973	118.1389	CLEVELAND - TULSA NORTH 345KV CKT 1
FDNS	00NR	0	16WP	G15_033	FROM->TO	G14-057T 345.00 - SUNNYSIDE 345KV CKT 1	717	789	0.04969	118.0972	DOLET HILLS - SOUTHWEST SHREVEPORT 345KV CKT 1
FDNS	00NR	0	16WP	G15_033	FROM->TO	G14-057T 345.00 - SUNNYSIDE 345KV CKT 1	717	789	0.04969	118.0972	DOLET HILLS - SOUTHWEST SHREVEPORT 345KV CKT 1
FDNS	00NR	0	16WP	G15_033	FROM->TO	G14-057T 345.00 - SUNNYSIDE 345KV CKT 1	717	789	0.0503	118.0833	ANADARKO - POCASSETT 138KV CKT 1
FDNS	00NR	0	16WP	G15_033	FROM->TO	G14-057T 345.00 - SUNNYSIDE 345KV CKT 1	717	789	0.04866	118.0715	CANADIAN RIVER - MUSKOGEE 345KV CKT 1
FDNS	00NR	0	16WP	G15_033	FROM->TO	G14-057T 345.00 - SUNNYSIDE 345KV CKT 1	717	789	0.0498	118.0667	GEN336153 1-WATERFORD UNIT#3
FDNS	00NR	0	16WP	G15_033	FROM->TO	G14-057T 345.00 - SUNNYSIDE 345KV CKT 1	717	789	0.05011	118.0445	COMANCHE - LOCO 138KV CKT 1
FDNS	00NR	0	16WP	G15_033	FROM->TO	G14-057T 345.00 - SUNNYSIDE 345KV CKT 1	717	789	0.0503	117.9379	POCASSETT - TUTTLE 138KV CKT 1
FDNS	00NR	0	16WP	G15_033	FROM->TO	G14-057T 345.00 - SUNNYSIDE 345KV CKT 1	717	789	0.04965	117.8798	ARCADIA - NORTHWEST 345KV CKT 1
FDNS	00NR	0	16WP	G15_033	FROM->TO	G14-057T 345.00 - SUNNYSIDE 345KV CKT 1	717	789	0.0498	117.7674	GEN335831 1-RIVERBEND UNIT#1
FDNS	00NR	0	16WP	G15_033	FROM->TO	G14-057T 345.00 - SUNNYSIDE 345KV CKT 1	717	789	0.0498	117.7647	GRAND GULF 500/22.0KV TRANSFORMER CKT 1
FDNS	00NR	0	16WP	G15_033	FROM->TO	G14-057T 345.00 - SUNNYSIDE 345KV CKT 1	717	789	0.04936	117.7594	ARCADIA - SEMINOLE 345KV CKT 1
FDNS	00NR	0	16WP	G15_033	FROM->TO	G14-057T 345.00 - SUNNYSIDE 345KV CKT 1	717	789	0.0498	117.6887	GEN515577 1-ARBWND11 0.6900
FDNS	00NR	0	16WP	G15_033	FROM->TO	G14-057T 345.00 - SUNNYSIDE 345KV CKT 1	717	789	0.0498	117.6725	GEN509409 1-WILKES #3
FDNS	00NR	0	16WP	G15_033	FROM->TO	G14-057T 345.00 - SUNNYSIDE 345KV CKT 1	717	789	0.05648	117.6629	BORDER 7345.00 - TUCO_2 345.00 345KV CKT 1
FDNS	00NR	0	16WP	G15_033	FROM->TO	G14-057T 345.00 - SUNNYSIDE 345KV CKT 1	717	789	0.04885	117.6393	MATHWSN7 345.00 - TATONGA7 345.00 345KV CKT 1
FDNS	00NR	0	16WP	G15_033	FROM->TO	G14-057T 345.00 - SUNNYSIDE 345KV CKT 1	717	789	0.05115	117.6117	P12:138:AEPW:DUNCAN-4:L.E.S.-4
FDNS	00NR	0	16WP	G15_033	FROM->TO	G14-057T 345.00 - SUNNYSIDE 345KV CKT 1	717	789	0.04966	117.6051	7SAREPTA% 345.00 - ELDORADO EHV 345KV CKT 1
FDNS	00NR	0	16WP	G15_033	FROM->TO	G14-057T 345.00 - SUNNYSIDE 345KV CKT 1	717	789	0.04966	117.6049	3TR3AR8EL7EL
FDNS	06NR	0	17G	G15_033	FROM->TO	G14-057T 345.00 - SUNNYSIDE 345KV CKT 1	717	789	0.06836	117.5962	CIMARRON - MINCO 345KV CKT 1
FDNS	00NR	0	16WP	G15_033	FROM->TO	G14-057T 345.00 - SUNNYSIDE 345KV CKT 1	717	789	0.04966	117.5943	ELDORADO EHV 500/345KV TRANSFORMER CKT 1
FDNS	00NR	0	20WP	G15_033	FROM->TO	G14-057T 345.00 - SUNNYSIDE 345KV CKT 1	717	789	0.04601	117.5819	GEN509403 1-PIRKEY GENERATION
FDNS	00NR	0	16WP	G15_033	FROM->TO	G14-057T 345.00 - SUNNYSIDE 345KV CKT 1	717	789	0.0503	117.5607	BRIDGECR 138.00 - TUTTLE 138KV CKT 1
FDNS	00NR	0	16WP	G15_033	FROM->TO	G14-057T 345.00 - SUNNYSIDE 345KV CKT 1	717	789	0.04989	117.5339	HEALDTON - LOCO 138KV CKT 1
FDNS	00NR	0	20WP	G15_033	FROM->TO	G14-057T 345.00 - SUNNYSIDE 345KV CKT 1	717	789	0.04601	117.5035	GEN509416 1-TURK GENERATION
FDNS	00NR	0	16WP	G15_033	FROM->TO	G14-057T 345.00 - SUNNYSIDE 345KV CKT 1	717	789	0.05115	117.5006	COMANCHE TAP - OMPA-DUNCAN 840 138KV CKT 1
FDNS	00NR	0	16WP	G15_033	FROM->TO	G14-057T 345.00 - SUNNYSIDE 345KV CKT 1	717	789	0.04989	117.3949	HEALDTON - RINGLING 138KV CKT 1
FDNS	00NR	0	16WP	G15_033	FROM->TO	G14-057T 345.00 - SUNNYSIDE 345KV CKT 1	717	789	0.0498	117.3736	GEN501813 1-RODEMACHER UNIT 3
FDNS	00NR	0	16WP	G15_033	FROM->TO	G14-057T 345.00 - SUNNYSIDE 345KV CKT 1	717	789	0.0498	117.3664	GEN300006 1-NEW MADRID UNIT 1
FDNS	00NR	0	16WP	G15_033	FROM->TO	G14-057T 345.00 - SUNNYSIDE 345KV CKT 1	717	789	0.04977	117.357	LACYGNE - WAVERLY7 345.00 345KV CKT 1
FDNS	00NR	0	16WP	G15_033	FROM->TO	G14-057T 345.00 - SUNNYSIDE 345KV CKT 1	717	789	0.0498	117.3547	GEN300007 1-NEW MADRID UNIT 2
FDNS	00NR	0	16WP	G15_033	FROM->TO	G14-057T 345.00 - SUNNYSIDE 345KV CKT 1	717	789	0.04672	117.331	FINNEY SWITCHING STATION - HOLCOMB 345KV CKT 1
FDNS	00NR	0	16WP	G15_033	FROM->TO	G14-057T 345.00 - SUNNYSIDE 345KV CKT 1	717	789	0.04672	117.331	FINNEY SWITCHING STATION - HOLCOMB 345KV CKT 1
FDNS	00NR	0	20WP	G15_033	FROM->TO	G14-057T 345.00 - SUNNYSIDE 345KV CKT 1	717	789	0.04589	117.3306	CLEVELAND - G15066_T 345.00 345KV CKT 1
FDNS	00NR	0	16WP	G15_033	FROM->TO	G14-057T 345.00 - SUNNYSIDE 345KV CKT 1	717	789	0.0503	117.2904	P12:138:WFEC:MSL01
FDNS	00NR	0	16WP	G15_033	FROM->TO	G14-057T 345.00 - SUNNYSIDE 345KV CKT 1	717	789	0.0503	117.2899	BRIDGECR 138.00 - SUNSHINE CANYON 138KV CKT 1
FDNS	00NR	0	20WP	G15_033	FROM->TO	G14-057T 345.00 - SUNNYSIDE 345KV CKT 1	717	789	0.04599	117.2828	PITTSBURG - VALLIANT 345KV CKT 1
FDNS	00NR	0	20WP	G15_033	FROM->TO	G14-057T 345.00 - SUNNYSIDE 345KV CKT 1	717	789	0.04599	117.2828	PITTSBURG - VALLIANT 345KV CKT 1
FDNS	00NR	0	16WP	G15_033	FROM->TO	G14-057T 345.00 - SUNNYSIDE 345KV CKT 1	717	789	0.0498	117.2551	GEN520947 1-HUGO1
FDNS	00NR	0	16WP	G15_033	FROM->TO	G14-057T 345.00 - SUNNYSIDE 345KV CKT 1	717	789	0.04977	117.2406	WAVERLY7 345.00 - WOLF CREEK 345KV CKT 1
FDNS	00NR	0	16WP	G15_033	FROM->TO	G14-057T 345.00 - SUNNYSIDE 345KV CKT 1	717	789	0.04989	117.23	RINGLING - SOUTH WILSON 138KV CKT 1
FDNS	00NR	0	16WP	G15_033	FROM->TO	G14-057T 345.00 - SUNNYSIDE 345KV CKT 1	717	789	0.05115	117.2191	DUNCAN - OMPA-DUNCAN 840 138KV CKT 1

SOLUTION	GROUP	SCENARIO	SEASON	SOURCE	DIRECTION	MONITORED ELEMENT	RATEA (MVA)	RATEB(MVA)	TDF	TC%LOADING (% MVA)	CONTINGENCY
FDNS	00NR	0	16WP	G15_033	FROM->TO	G14-057T 345.00 - SUNNYSIDE 345KV CKT 1	717	789	0.05115	117.2191	DUNCAN - OMPA-DUNCAN 840 138KV CKT 1
FDNS	00NR	0	16WP	G15_033	FROM->TO	G14-057T 345.00 - SUNNYSIDE 345KV CKT 1	717	789	0.0498	117.1733	GEN335206 1-NELSON UNIT 6
FDNS	00NR	0	16WP	G15_033	FROM->TO	G14-057T 345.00 - SUNNYSIDE 345KV CKT 1	717	789	0.0498	117.0655	DOLET HILLS 345/24.0KV TRANSFORMER CKT 1
FDNS	00NR	0	16WP	G15_033	FROM->TO	G14-057T 345.00 - SUNNYSIDE 345KV CKT 1	717	789	0.04951	117.0424	PARK LANE - SEMINOLE 138KV CKT 1
FDNS	00NR	0	20WP	G15_033	FROM->TO	G14-057T 345.00 - SUNNYSIDE 345KV CKT 1	717	789	0.04589	117.0379	G15066_T 345.00 - SOONER 345KV CKT 1
FDNS	00NR	0	16WP	G15_033	FROM->TO	G14-057T 345.00 - SUNNYSIDE 345KV CKT 1	717	789	0.04988	117.0085	P12:138:AEPW:SHERID4:112GORE4
FDNS	00NR	0	16WP	G15_033	FROM->TO	G14-057T 345.00 - SUNNYSIDE 345KV CKT 1	717	789	0.04965	117.0036	CANEYRV7 345.00 - NEOSHO 345KV CKT 1
FDNS	00NR	0	16WP	G15_033	FROM->TO	G14-057T 345.00 - SUNNYSIDE 345KV CKT 1	717	789	0.0498	116.9868	GEN501812 1-RODEMACHER UNIT 2
FDNS	00NR	0	16WP	G15_033	FROM->TO	G14-057T 345.00 - SUNNYSIDE 345KV CKT 1	717	789	0.0498	116.9782	GEN590011 2-ERCOT EQUIVALENCE
FDNS	00NR	0	16WP	G15_033	FROM->TO	G14-057T 345.00 - SUNNYSIDE 345KV CKT 1	717	789	0.04989	116.9532	MARIETTA - SOUTH WILSON 138KV CKT 1
FDNS	00NR	0	16WP	G15_033	FROM->TO	G14-057T 345.00 - SUNNYSIDE 345KV CKT 1	717	789	0.04672	116.95	FINNEY SWITCHING STATION - Hitchland Interchange 345KV CKT 1
FDNS	00NR	0	16WP	G15_033	FROM->TO	G14-057T 345.00 - SUNNYSIDE 345KV CKT 1	717	789	0.0498	116.9263	GEN515564 1-ORIGIN11 0.6900
FDNS	00NR	0	16WP	G15_033	FROM->TO	G14-057T 345.00 - SUNNYSIDE 345KV CKT 1	717	789	0.0498	116.9263	GEN515565 1-ORIGIN21 0.6900
FDNS	00NR	0	16WP	G15_033	FROM->TO	G14-057T 345.00 - SUNNYSIDE 345KV CKT 1	717	789	0.0498	116.9041	GEN590010 1-ERCOT EQUIVALENCE
FDNS	00NR	0	16WP	G15_033	FROM->TO	G14-057T 345.00 - SUNNYSIDE 345KV CKT 1	717	789	0.0498	116.8838	GEN509408 1-WILKES #2
FDNS	00NR	0	16WP	G15_033	FROM->TO	G14-057T 345.00 - SUNNYSIDE 345KV CKT 1	717	789	0.04949	116.8836	THISTLE7 345.00 - WOODWARD DISTRICT EHV 345KV CKT 1
FDNS	00NR	0	16WP	G15_033	FROM->TO	G14-057T 345.00 - SUNNYSIDE 345KV CKT 1	717	789	0.04949	116.8836	THISTLE7 345.00 - WOODWARD DISTRICT EHV 345KV CKT 1
FDNS	00NR	0	16WP	G15_033	FROM->TO	G14-057T 345.00 - SUNNYSIDE 345KV CKT 1	717	789	0.04949	116.8836	THISTLE7 345.00 - WOODWARD DISTRICT EHV 345KV CKT 2
FDNS	00NR	0	16WP	G15_033	FROM->TO	G14-057T 345.00 - SUNNYSIDE 345KV CKT 1	717	789	0.04949	116.8836	THISTLE7 345.00 - WOODWARD DISTRICT EHV 345KV CKT 2
FDNS	00NR	0	16WP	G15_033	FROM->TO	G14-057T 345.00 - SUNNYSIDE 345KV CKT 1	717	789	0.04989	116.8563	P12:138:WFEC:MSL17
FDNS	00NR	0	16WP	G15_033	FROM->TO	G14-057T 345.00 - SUNNYSIDE 345KV CKT 1	717	789	0.04965	116.8184	CANEYRV7 345.00 - LATHAMS7 345.00 345KV CKT 1
FDNS	00NR	0	20WP	G15_033	FROM->TO	G14-057T 345.00 - SUNNYSIDE 345KV CKT 1	717	789	0.04601	116.8056	GEN501801 1-DOLET HILLS UNIT1
FDNS	00NR	0	16WP	G15_033	FROM->TO	G14-057T 345.00 - SUNNYSIDE 345KV CKT 1	717	789	0.04995	116.7597	REDBUD - RIVERSIDE STATION 345KV CKT 1
FDNS	00NR	0	16WP	G15_033	FROM->TO	G14-057T 345.00 - SUNNYSIDE 345KV CKT 1	717	789	0.04995	116.7597	REDBUD - RIVERSIDE STATION 345KV CKT 1
FDNS	00NR	0	16WP	G15_033	FROM->TO	G14-057T 345.00 - SUNNYSIDE 345KV CKT 1	717	789	0.04997	116.7588	CIVIT - PAOLI 138KV CKT 1
FDNS	00NR	0	16WP	G15_033	FROM->TO	G14-057T 345.00 - SUNNYSIDE 345KV CKT 1	717	789	0.0498	116.7523	GEN506754 1-LEBROCK STEAM 1
FDNS	00NR	0	16WP	G15_033	FROM->TO	G14-057T 345.00 - SUNNYSIDE 345KV CKT 1	717	789	0.0498	116.7444	P12:69:AEPW:L.E.S.-2:LAW WC2
FDNS	00NR	0	16WP	G15_033	FROM->TO	G14-057T 345.00 - SUNNYSIDE 345KV CKT 1	717	789	0.0498	116.7274	P12:161:AEPW:DYESS 5:HYLAND 5
FDNS	00NR	0	16WP	G15_033	FROM->TO	G14-057T 345.00 - SUNNYSIDE 345KV CKT 1	717	789	0.04978	116.7253	P12:138:WFEC:MSL02
FDNS	00NR	0	16WP	G15_033	FROM->TO	G14-057T 345.00 - SUNNYSIDE 345KV CKT 1	717	789	0.04976	116.7112	PAOLI - PAYNE 138.00 138KV CKT 1
FDNS	00NR	0	16WP	G15_033	FROM->TO	G14-057T 345.00 - SUNNYSIDE 345KV CKT 1	717	789	0.04976	116.7092	ELDORADO EHV - MOUNT OLIVE 500KV CKT 1
FDNS	00NR	0	16WP	G15_033	FROM->TO	G14-057T 345.00 - SUNNYSIDE 345KV CKT 1	717	789	0.0498	116.7036	GEN334440 1-SABINE UNIT 4
FDNS	00NR	0	16WP	G15_033	FROM->TO	G14-057T 345.00 - SUNNYSIDE 345KV CKT 1	717	789	0.04964	116.6605	MATHWSN7 345.00 - NORTHWEST 345KV CKT 1
FDNS	00NR	0	16WP	G15_033	FROM->TO	G14-057T 345.00 - SUNNYSIDE 345KV CKT 1	717	789	0.04974	116.6588	ELDORADO EHV - SHERIDAN EHV 500KV CKT 1
FDNS	00NR	0	16WP	G15_033	FROM->TO	G14-057T 345.00 - SUNNYSIDE 345KV CKT 1	717	789	0.04987	116.6441	P12:138:AEPW:112GORE4:L.E.S.-4
FDNS	00NR	0	16WP	G15_033	FROM->TO	G14-057T 345.00 - SUNNYSIDE 345KV CKT 1	717	789	0.0498	116.6369	NEW MADRID 161/22.0KV TRANSFORMER CKT 1
FDNS	00NR	0	16WP	G15_033	FROM->TO	G14-057T 345.00 - SUNNYSIDE 345KV CKT 1	717	789	0.0498	116.6341	ANADARKO - GEORGIA 138KV CKT 1
FDNS	00NR	0	16WP	G15_033	FROM->TO	G14-057T 345.00 - SUNNYSIDE 345KV CKT 1	717	789	0.05017	116.6297	P12:138:AEPW-OGE:CORNVIL4:MAUD 4
FDNS	00NR	0	16WP	G15_033	FROM->TO	G14-057T 345.00 - SUNNYSIDE 345KV CKT 1	717	789	0.0498	116.6238	NEW MADRID 345/22.0KV TRANSFORMER CKT 1
FDNS	00NR	0	16WP	G15_033	FROM->TO	G14-057T 345.00 - SUNNYSIDE 345KV CKT 1	717	789	0.04997	116.616	CIVIT - STRATFORD 138KV CKT 1
FDNS	00NR	0	16WP	G15_033	FROM->TO	G14-057T 345.00 - SUNNYSIDE 345KV CKT 1	717	789	0.04965	116.601	LATHAMS7 345.00 - ROSE HILL 345KV CKT 1
FDNS	00NR	0	16WP	G15_033	FROM->TO	G14-057T 345.00 - SUNNYSIDE 345KV CKT 1	717	789	0.04986	116.5869	TUPELO - TUPELO TAP 138KV CKT 1
FDNS	00NR	0	16WP	G15_033	FROM->TO	G14-057T 345.00 - SUNNYSIDE 345KV CKT 1	717	789	0.0498	116.5712	GEN503909 1-FULTONU1 1 16.000
FDNS	00NR	0	16WP	G15_033	FROM->TO	G14-057T 345.00 - SUNNYSIDE 345KV CKT 1	717	789	0.0498	116.5618	FRONTIER - GRIMES 345KV CKT 1
FDNS	00NR	0	16WP	G15_033	FROM->TO	G14-057T 345.00 - SUNNYSIDE 345KV CKT 1	717	789	0.05017	116.5579	BLANCHARD - CORNVILLE 138KV CKT 1
FDNS	00NR	0	16WP	G15_033	FROM->TO	G14-057T 345.00 - SUNNYSIDE 345KV CKT 1	717	789	0.05203	116.5565	LAWTON EASTSIDE (LES 5) 345/138/13.8KV TRANSFORMER CKT 2
FDNS	00NR	0	16WP	G15_033	FROM->TO	G14-057T 345.00 - SUNNYSIDE 345KV CKT 1	717	789	0.05203	116.5565	LAWTON EASTSIDE (LES 5) 345/138/13.8KV TRANSFORMER CKT 2
FDNS	00NR	0	16WP	G15_033	FROM->TO	G14-057T 345.00 - SUNNYSIDE 345KV CKT 1	717	789	0.04973	116.5529	WEBRE - WELLS 500KV CKT 1
FDNS	00NR	0	16WP	G15_033	FROM->TO	G14-057T 345.00 - SUNNYSIDE 345KV CKT 1	717	789	0.0498	116.5505	FLETCHER - GEORGIA 138KV CKT 1
FDNS	00NR	0	16WP	G15_033	FROM->TO	G14-057T 345.00 - SUNNYSIDE 345KV CKT 1	717	789	0.04977	116.5273	EMPIRE - FLETCHER 138KV CKT 1
FDNS	00NR	0	16WP	G15_033	FROM->TO	G14-057T 345.00 - SUNNYSIDE 345KV CKT 1	717	789	0.04997	116.4968	OIL CENTER - STRATFORD 138KV CKT 1
FDNS	00NR	0	16WP	G15_033	FROM->TO	G14-057T 345.00 - SUNNYSIDE 345KV CKT 1	717	789	0.0498	116.4483	GEN509393 S1-ARSENAL HILL GENS #4 (STALL)
FDNS	00NR	0	16WP	G15_033	FROM->TO	G14-057T 345.00 - SUNNYSIDE 345KV CKT 1	717	789	0.04977	116.4422	COMANCHE - EMPIRE 138KV CKT 1
FDNS	00NR	0	16WP	G15_033	FROM->TO	G14-057T 345.00 - SUNNYSIDE 345KV CKT 1	717	789	0.0498	116.4295	DELL 500 - ESSEX UNIT 2 500KV CKT Z1
FDNS	00NR	0	16WP	G15_033	FROM->TO	G14-057T 345.00 - SUNNYSIDE 345KV CKT 1	717	789	0.0498	116.4209	GEN509392 G2-ARSENAL HILL GENS #3 (STALL)
FDNS	00NR	0	16WP	G15_033	FROM->TO	G14-057T 345.00 - SUNNYSIDE 345KV CKT 1	717	789	0.0498	116.4207	GEN509391 G1-ARSENAL HILL GENS #2 (STALL)
FDNS	00NR	0	16WP	G15_033	FROM->TO	G14-057T 345.00 - SUNNYSIDE 345KV CKT 1	717	789	0.04952	116.4114	G1524G1525 345.00 - THISTLE7 345.00 345KV CKT 1
FDNS	00NR	0	16WP	G15_033	FROM->TO	G14-057T 345.00 - SUNNYSIDE 345KV CKT 1	717	789	0.04952	116.4114	G1524G1525 345.00 - THISTLE7 345.00 345KV CKT 2
FDNS	00NR	0	16WP	G15_033	FROM->TO	G14-057T 345.00 - SUNNYSIDE 345KV CKT 1	717	789	0.0498	116.409	GEN336252 1-NINEMILE POINT UNIT#5
FDNS	00NR	0	16WP	G15_033	FROM->TO	G14-057T 345.00 - SUNNYSIDE 345KV CKT 1	717	789	0.0498	116.3938	GEN334071 1-LEWIS CREEK 2
FDNS	00NR	0	16WP	G15_033	FROM->TO	G14-057T 345.00 - SUNNYSIDE 345KV CKT 1	717	789	0.04977	116.3886	G15074_T 345.00 - HOYT 345KV CKT 1
FDNS	00NR	0	16WP	G15_033	FROM->TO	G14-057T 345.00 - SUNNYSIDE 345KV CKT 1	717	789	0.0498	116.3847	GEN334070 1-LEWIS CREEK 1
FDNS	00NR	0	20WP	G15_033	FROM->TO	G14-057T 345.00 - SUNNYSIDE 345KV CKT 1	717	789	0.05039	116.3825	BORDER 7345.00 - WOODWARD DISTRICT EHV 345KV CKT 1
FDNS	00NR	0	16WP	G15_033	FROM->TO	G14-057T 345.00 - SUNNYSIDE 345KV CKT 1	717	789	0.0498	116.3824	GEN335204 1-NELSON UNIT 4
FDNS	00NR	0	16WP	G15_033	FROM->TO	G14-057T 345.00 - SUNNYSIDE 345KV CKT 1	717	789	0.05017	116.3614	BLANCHARD - MAUD 138KV CKT 1
FDNS	00NR	0	16WP	G15_033	FROM->TO	G14-057T 345.00 - SUNNYSIDE 345KV CKT 1	717	789	0.05004	116.356	DUNCAN (DUNCAN) 138/69/13.8KV TRANSFORMER CKT 1
FDNS	00NR	0	16WP	G15_033	FROM->TO	G14-057T 345.00 - SUNNYSIDE 345KV CKT 1	717	789	0.05004	116.356	DUNCAN (DUNCAN) 138/69/13.8KV TRANSFORMER CKT 1
FDNS	00NR	0	16WP	G15_033	FROM->TO	G14-057T 345.00 - SUNNYSIDE 345KV CKT 1	717	789	0.0498	116.3474	GEN334441 1-SABINE UNIT 5
FDNS	00NR	0	16WP	G15_033	FROM->TO	G14-057T 345.00 - SUNNYSIDE 345KV CKT 1	717	789	0.04997	116.3242	LATTA JCT - OIL CENTER 138KV CKT 1
FDNS	00NR	0	16WP	G15_033	FROM->TO	G14-057T 345.00 - SUNNYSIDE 345KV CKT 1	717	789	0.0498	116.3101	P12:161:AEPW-SWPA:BEAVER5:EROGERS5
FDNS	00NR	0	16WP	G15_033	FROM->TO	G14-057T 345.00 - SUNNYSIDE 345KV CKT 1	717	789	0.0498	116.3075	GEN300003 1-THOMAS HILL UNIT 3
FDNS	00NR	0	16WP	G15_033	FROM->TO	G14-057T 345.00 - SUNNYSIDE 345KV CKT 1	717	789	0.0498	116.3024	GEN515040 1-SEMINOLE 1G
FDNS	00NR	0	16WP	G15_033	FROM->TO	G14-057T 345.00 - SUNNYSIDE 345KV CKT 1	717	789	0.0498	116.2944	GEN334030 1-FRONTIER UNIT 1
FDNS	00NR	0	16WP	G15_033	FROM->TO	G14-057T 345.00 - SUNNYSIDE 345KV CKT 1	717	789	0.0498	116.2927	GEN334031 1-FRONTIER UNIT 2
FDNS	00NR	0	16WP	G15_033	FROM->TO	G14-057T 345.00 - SUNNYSIDE 345KV CKT 1	717	789	0.0498	116.2917	GEN337653 1-WHITE BLUFF UNIT #2
FDNS	00NR	0	16WP	G15_033	FROM->TO	G14-057T 345.00 - SUNNYSIDE 345KV CKT 1	717	789	0.0498	116.2912	P12:138:AEPW:CATOOSA4:T.S.E.-4
FDNS	00NR	0	16WP	G15_033	FROM->TO	G14-057T 345.00 - SUNNYSIDE 345KV CKT 1	717	789	0.0498	116.2752	GEN506752 1-LEBROCK GAS 1
FDNS	00NR	0	16WP	G15_033	FROM->TO	G14-057T 345.00 - SUNNYSIDE 345KV CKT 1	717	789	0.0498	116.2749	GEN506753 1-LEBROCK GAS 2
FDNS	00NR	0	16WP	G15_033	FROM->TO	G14-057T 345.00 - SUNNYSIDE 345KV CKT 1	717	789	0.05039	116.2743	TUTTLE - TUTTLE CONOCO TAP 138KV CKT 1

SOLUTION	GROUP	SCENARIO	SEASON	SOURCE	DIRECTION	MONITORED ELEMENT	RATEA (MVA)	RATEB(MVA)	TDF	TC%LOADING (% MVA)	CONTINGENCY
FDNS	00NR	0	20WP	G15_033	FROM->TO	G14-057T 345.00 - SUNNYSIDE 345KV CKT 1	717	789	0.04601	116.2669	GEN509406 1-WELSH #3
FDNS	00NR	0	20WP	G15_033	FROM->TO	G14-057T 345.00 - SUNNYSIDE 345KV CKT 1	717	789	0.04601	116.2666	GEN509404 1-WELSH #1
FDNS	00NR	0	16WP	G15_033	FROM->TO	G14-057T 345.00 - SUNNYSIDE 345KV CKT 1	717	789	0.04972	116.2603	6LAYFLD 230.00 - CARROLL 230KV CKT 1
FDNS	00NR	0	16WP	G15_033	FROM->TO	G14-057T 345.00 - SUNNYSIDE 345KV CKT 1	717	789	0.04979	116.252	8DANIEL8 500.00 - MCKNIGHT 500KV CKT 1
FDNS	00NR	0	16WP	G15_033	FROM->TO	G14-057T 345.00 - SUNNYSIDE 345KV CKT 1	717	789	0.0498	116.2455	GEN515226 1-MUSKOGEE 6G
FDNS	00NR	0	16WP	G15_033	FROM->TO	G14-057T 345.00 - SUNNYSIDE 345KV CKT 1	717	789	0.0498	116.2437	GEN337911 1-ARKANSAS NUCLEAR ONE UNIT #2
FDNS	00NR	0	16WP	G15_033	FROM->TO	G14-057T 345.00 - SUNNYSIDE 345KV CKT 1	717	789	0.05017	116.2426	BAILEY4 138.00 - SUNSHINE CANYON 138KV CKT 1
FDNS	00NR	0	16WP	G15_033	FROM->TO	G14-057T 345.00 - SUNNYSIDE 345KV CKT 1	717	789	0.04964	116.2391	P12:138:AEPW-OGE:WTH_JCT4:JENSEN4
FDNS	00NR	0	16WP	G15_033	FROM->TO	G14-057T 345.00 - SUNNYSIDE 345KV CKT 1	717	789	0.0498	116.237	P12:161:AEPW:DYESS5:ELMSPRNG:TONTITN5
FDNS	00NR	0	16WP	G15_033	FROM->TO	G14-057T 345.00 - SUNNYSIDE 345KV CKT 1	717	789	0.0497	116.2353	FULTON 115 - HOPE 115KV CKT 1
FDNS	00NR	0	16WP	G15_033	FROM->TO	G14-057T 345.00 - SUNNYSIDE 345KV CKT 1	717	789	0.0497	116.2353	FULTON 115 - HOPE 115KV CKT 1
FDNS	00NR	0	16WP	G15_033	FROM->TO	G14-057T 345.00 - SUNNYSIDE 345KV CKT 1	717	789	0.0498	116.2351	GEN300015 1-1SGPDEL 18.000
FDNS	00NR	0	16WP	G15_033	FROM->TO	G14-057T 345.00 - SUNNYSIDE 345KV CKT 1	717	789	0.04974	116.2277	G15088_T 345.00 - MOORE 345KV CKT 1
FDNS	00NR	0	16WP	G15_033	FROM->TO	G14-057T 345.00 - SUNNYSIDE 345KV CKT 1	717	789	0.0498	116.2274	GEN501811 1-RODEMACHER UNIT 1
FDNS	00NR	0	16WP	G15_033	FROM->TO	G14-057T 345.00 - SUNNYSIDE 345KV CKT 1	717	789	0.0498	116.2101	GEN337652 1-WHITE BLUFF UNIT #1
FDNS	00NR	0	16WP	G15_033	FROM->TO	G14-057T 345.00 - SUNNYSIDE 345KV CKT 1	717	789	0.0498	116.209	GEN336251 1-NINEMILE POINT UNIT#4
FDNS	00NR	0	16WP	G15_033	FROM->TO	G14-057T 345.00 - SUNNYSIDE 345KV CKT 1	717	789	0.0498	116.2056	GEN334433 1-SABINE UNIT 3
FDNS	00NR	0	16WP	G15_033	FROM->TO	G14-057T 345.00 - SUNNYSIDE 345KV CKT 1	717	789	0.0498	116.2031	GEN336831 1-BAXTER WILSON SES
FDNS	00NR	0	16WP	G15_033	FROM->TO	G14-057T 345.00 - SUNNYSIDE 345KV CKT 1	717	789	0.04989	116.1983	P12:138:AEPW:CORNVIL4:S.W.S.-4
FDNS	00NR	0	16WP	G15_033	FROM->TO	G14-057T 345.00 - SUNNYSIDE 345KV CKT 1	717	789	0.05039	116.1936	CIMARRON - TUTTLE CONOCO TAP 138KV CKT 1
FDNS	00NR	0	16WP	G15_033	FROM->TO	G14-057T 345.00 - SUNNYSIDE 345KV CKT 1	717	789	0.05054	116.1934	P12:138:AEPW:CORNVIL4:DUNCAN-4
FDNS	00NR	0	16WP	G15_033	FROM->TO	G14-057T 345.00 - SUNNYSIDE 345KV CKT 1	717	789	0.04918	116.1804	BUCKNER7 345.00 - SPEARVILLE 345KV CKT 1
FDNS	00NR	0	16WP	G15_033	FROM->TO	G14-057T 345.00 - SUNNYSIDE 345KV CKT 1	717	789	0.04918	116.1804	BUCKNER7 345.00 - SPEARVILLE 345KV CKT 1
FDNS	00NR	0	16WP	G15_033	FROM->TO	G14-057T 345.00 - SUNNYSIDE 345KV CKT 1	717	789	0.05004	116.1728	P12:69:WFEC-AEPW:COMANCH2:DUNCAN-2
FDNS	00NR	0	16WP	G15_033	FROM->TO	G14-057T 345.00 - SUNNYSIDE 345KV CKT 1	717	789	0.0498	116.1725	GEN562783 1-G15036_4 0.6900
FDNS	00NR	0	16WP	G15_033	FROM->TO	G14-057T 345.00 - SUNNYSIDE 345KV CKT 1	717	789	0.0498	116.1725	GEN562784 1-G15036_5 0.6900
FDNS	00NR	0	16WP	G15_033	FROM->TO	G14-057T 345.00 - SUNNYSIDE 345KV CKT 1	717	789	0.04851	116.1645	CANADIAN RIVER - PITTSBURG 345KV CKT 1
FDNS	00NR	0	16WP	G15_033	FROM->TO	G14-057T 345.00 - SUNNYSIDE 345KV CKT 1	717	789	0.04851	116.1645	CANADIAN RIVER - PITTSBURG 345KV CKT 1
FDNS	00NR	0	16WP	G15_033	FROM->TO	G14-057T 345.00 - SUNNYSIDE 345KV CKT 1	717	789	0.0498	116.1607	GEN505432 1-SIKESTON
FDNS	00NR	0	16WP	G15_033	FROM->TO	G14-057T 345.00 - SUNNYSIDE 345KV CKT 1	717	789	0.04981	116.16	CIMARRON - CZECH HALL 138KV CKT 1
FDNS	00NR	0	16WP	G15_033	FROM->TO	G14-057T 345.00 - SUNNYSIDE 345KV CKT 1	717	789	0.0498	116.1487	GEN515223 1-MUSKOGEE 4G
FDNS	00NR	0	16WP	G15_033	FROM->TO	G14-057T 345.00 - SUNNYSIDE 345KV CKT 1	717	789	0.0498	116.1487	GEN515225 1-MUSKOGEE 5G
FDNS	00NR	0	16WP	G15_033	FROM->TO	G14-057T 345.00 - SUNNYSIDE 345KV CKT 1	717	789	0.04971	116.147	P12:138:AEPW:WTHWF4:CLINTJC4
FDNS	00NR	0	16WP	G15_033	FROM->TO	G14-057T 345.00 - SUNNYSIDE 345KV CKT 1	717	789	0.0498	116.1455	WHITE BLUFF 500/26.0KV TRANSFORMER CKT 1
FDNS	00NR	0	16WP	G15_033	FROM->TO	G14-057T 345.00 - SUNNYSIDE 345KV CKT 1	717	789	0.04977	116.1402	HOYT - STRANGER CREEK 345KV CKT 1
FDNS	00NR	0	16WP	G15_033	FROM->TO	G14-057T 345.00 - SUNNYSIDE 345KV CKT 1	717	789	0.04977	116.1352	G15074_T 345.00 - JEFFREY ENERGY CENTER 345KV CKT 1
FDNS	00NR	0	16WP	G15_033	FROM->TO	G14-057T 345.00 - SUNNYSIDE 345KV CKT 1	717	789	0.0498	116.1317	P12:161:AEPW:EROGERS5:ECNTRTN5
FDNS	00NR	0	16WP	G15_033	FROM->TO	G14-057T 345.00 - SUNNYSIDE 345KV CKT 1	717	789	0.04977	116.1296	LAYFLD8 500.00 - MOUNT OLIVE 500KV CKT 1
FDNS	00NR	0	16WP	G15_033	FROM->TO	G14-057T 345.00 - SUNNYSIDE 345KV CKT 1	717	789	0.04977	116.1296	LAYFLD8 500.00 - MOUNT OLIVE 500KV CKT 1
FDNS	00NR	0	16WP	G15_033	FROM->TO	G14-057T 345.00 - SUNNYSIDE 345KV CKT 1	717	789	0.04976	116.1276	CIMARRON - SARA 138KV CKT 1
FDNS	00NR	0	16WP	G15_033	FROM->TO	G14-057T 345.00 - SUNNYSIDE 345KV CKT 1	717	789	0.0498	116.1253	RODEMACHER 230/22.0KV TRANSFORMER CKT 1
FDNS	00NR	0	16WP	G15_033	FROM->TO	G14-057T 345.00 - SUNNYSIDE 345KV CKT 1	717	789	0.05004	116.122	DUNCAN - TOSCO 69KV CKT 1
FDNS	00NR	0	16WP	G15_033	FROM->TO	G14-057T 345.00 - SUNNYSIDE 345KV CKT 1	717	789	0.04944	116.1219	ARBWIND4 138.00 - CARTER 138KV CKT 1
FDNS	00NR	0	16WP	G15_033	FROM->TO	G14-057T 345.00 - SUNNYSIDE 345KV CKT 1	717	789	0.04978	116.1119	HOT SPRINGS EHV - MAGNET COVE 500KV CKT 1
FDNS	00NR	0	16WP	G15_033	FROM->TO	G14-057T 345.00 - SUNNYSIDE 345KV CKT 1	717	789	0.0498	116.1118	GEN303007 1-1BC2 U2
FDNS	00NR	0	16WP	G15_033	FROM->TO	G14-057T 345.00 - SUNNYSIDE 345KV CKT 1	717	789	0.04971	116.1104	P12:138:AEPW:WTHWF4:WTH_SE4
FDNS	00NR	0	16WP	G15_033	FROM->TO	G14-057T 345.00 - SUNNYSIDE 345KV CKT 1	717	789	0.04955	116.1083	SEMINOLE - VANOSTP4 138.00 138KV CKT 1
FDNS	00NR	0	16WP	G15_033	FROM->TO	G14-057T 345.00 - SUNNYSIDE 345KV CKT 1	717	789	0.0498	116.1071	GEN303006 1-1BC2 U1
FDNS	00NR	0	16WP	G15_033	FROM->TO	G14-057T 345.00 - SUNNYSIDE 345KV CKT 1	717	789	0.04977	116.1039	MC NIEL 500/115KV TRANSFORMER CKT 1
FDNS	00NR	0	16WP	G15_033	FROM->TO	G14-057T 345.00 - SUNNYSIDE 345KV CKT 1	717	789	0.0498	116.1005	GEN337910 1-ARKANSAS NUCLEAR ONE UNIT #1
FDNS	00NR	0	16WP	G15_033	FROM->TO	G14-057T 345.00 - SUNNYSIDE 345KV CKT 1	717	789	0.04972	116.0979	CLEO CORNER - CLEOPLT4 138.00 138KV CKT 1
FDNS	00NR	0	16WP	G15_033	FROM->TO	G14-057T 345.00 - SUNNYSIDE 345KV CKT 1	717	789	0.05014	116.095	P12:69:AEPW-OMPA:COMANC-2:OMWALTR2
FDNS	00NR	0	16WP	G15_033	FROM->TO	G14-057T 345.00 - SUNNYSIDE 345KV CKT 1	717	789	0.04973	116.0928	BISMARK - HOT SPRINGS WEST BUS 115KV CKT 1
FDNS	00NR	0	16WP	G15_033	FROM->TO	G14-057T 345.00 - SUNNYSIDE 345KV CKT 1	717	789	0.04975	116.0894	G15095_T 138.00 - ROSE_VALLEY 138.00 138KV CKT 1
FDNS	00NR	0	16WP	G15_033	FROM->TO	G14-057T 345.00 - SUNNYSIDE 345KV CKT 1	717	789	0.0498	116.0879	NELSON 230/20.0KV TRANSFORMER CKT 1
FDNS	00NR	0	16WP	G15_033	FROM->TO	G14-057T 345.00 - SUNNYSIDE 345KV CKT 1	717	789	0.0498	116.0848	GEN336191 1-LITTLE GYPSY UNIT#3
FDNS	00NR	0	16WP	G15_033	FROM->TO	G14-057T 345.00 - SUNNYSIDE 345KV CKT 1	717	789	0.04972	116.0841	CLEOPLT4 138.00 - MEN TAP 138KV CKT 1
FDNS	00NR	0	16WP	G15_033	FROM->TO	G14-057T 345.00 - SUNNYSIDE 345KV CKT 1	717	789	0.0498	116.0827	GEN300010 1-ST FRANCIS UNIT 1
FDNS	00NR	0	16WP	G15_033	FROM->TO	G14-057T 345.00 - SUNNYSIDE 345KV CKT 1	717	789	0.04981	116.0767	CZECH HALL - XEROX 138KV CKT 1
FDNS	00NR	0	16WP	G15_033	FROM->TO	G14-057T 345.00 - SUNNYSIDE 345KV CKT 1	717	789	0.05017	116.0749	BAILEY4 138.00 - WESTMOORE 138KV CKT 1
FDNS	00NR	0	16WP	G15_033	FROM->TO	G14-057T 345.00 - SUNNYSIDE 345KV CKT 1	717	789	0.04981	116.0723	MORGAN - XEROX 138KV CKT 1
FDNS	00NR	0	16WP	G15_033	FROM->TO	G14-057T 345.00 - SUNNYSIDE 345KV CKT 1	717	789	0.04972	116.0722	IMO TAP - MEN TAP 138KV CKT 1
FDNS	00NR	0	16WP	G15_033	FROM->TO	G14-057T 345.00 - SUNNYSIDE 345KV CKT 1	717	789	0.04958	116.0683	BENTON - WICHITA 345KV CKT 1
FDNS	00NR	0	16WP	G15_033	FROM->TO	G14-057T 345.00 - SUNNYSIDE 345KV CKT 1	717	789	0.0498	116.0654	P12:138:AEPW:N.E.S.-4:CATOOSA4
FDNS	00NR	0	16WP	G15_033	FROM->TO	G14-057T 345.00 - SUNNYSIDE 345KV CKT 1	717	789	0.0498	116.0582	GEN335614 1-WILLOW GLENN UNIT#4
FDNS	00NR	0	16WP	G15_033	FROM->TO	G14-057T 345.00 - SUNNYSIDE 345KV CKT 1	717	789	0.05004	116.0523	COMANCHE TAP - TOSCO 69KV CKT 1
FDNS	00NR	0	16WP	G15_033	FROM->TO	G14-057T 345.00 - SUNNYSIDE 345KV CKT 1	717	789	0.04981	116.0486	MORGAN - MUSTANG 138KV CKT 1
FDNS	00NR	0	16WP	G15_033	FROM->TO	G14-057T 345.00 - SUNNYSIDE 345KV CKT 1	717	789	0.04997	116.0475	LASALLE - LATTA JCT 138KV CKT 1
FDNS	00NR	0	16WP	G15_033	FROM->TO	G14-057T 345.00 - SUNNYSIDE 345KV CKT 1	717	789	0.0498	116.0474	GEN303008 1-1BC2 U3
FDNS	00NR	0	16WP	G15_033	FROM->TO	G14-057T 345.00 - SUNNYSIDE 345KV CKT 1	717	789	0.04973	116.0404	ALPINE AECC - BISMARK 115KV CKT 1
FDNS	00NR	0	16WP	G15_033	FROM->TO	G14-057T 345.00 - SUNNYSIDE 345KV CKT 1	717	789	0.0498	116.0326	GEN300011 1-ST FRANCIS UNIT 2
FDNS	00NR	0	16WP	G15_033	FROM->TO	G14-057T 345.00 - SUNNYSIDE 345KV CKT 1	717	789	0.04943	116.0221	CANADIAN - NOBLE 138KV CKT 1
FDNS	00NR	0	16WP	G15_033	FROM->TO	G14-057T 345.00 - SUNNYSIDE 345KV CKT 1	717	789	0.04975	116.0217	NOEL_SW 138.00 - ROSE_VALLEY 138.00 138KV CKT 1
FDNS	00NR	0	16WP	G15_033	FROM->TO	G14-057T 345.00 - SUNNYSIDE 345KV CKT 1	717	789	0.0498	116.0207	GEN336170 1-GULF OXY U4
FDNS	00NR	0	16WP	G15_033	FROM->TO	G14-057T 345.00 - SUNNYSIDE 345KV CKT 1	717	789	0.0498	116.0145	GEN336464 1-MICHOUD UNIT #3
FDNS	00NR	0	16WP	G15_033	FROM->TO	G14-057T 345.00 - SUNNYSIDE 345KV CKT 1	717	789	0.04981	116.0109	7JASPER 345.00 - BLACKBERRY 345KV CKT 1
FDNS	00NR	0	16WP	G15_033	FROM->TO	G14-057T 345.00 - SUNNYSIDE 345KV CKT 1	717	789	0.04979	116.0107	CYPRESS - HARTBURG 500KV CKT 1
FDNS	00NR	0	16WP	G15_033	FROM->TO	G14-057T 345.00 - SUNNYSIDE 345KV CKT 1	717	789	0.04964	116.0055	WEATHERFORD JCT. - WEATHERFORD SOUTHEAST 138KV CKT 1
FDNS	00NR	0	16WP	G15_033	FROM->TO	G14-057T 345.00 - SUNNYSIDE 345KV CKT 1	717	789	0.04964	116.0055	WEATHERFORD JCT. - WEATHERFORD SOUTHEAST 138KV CKT 1

SOLUTION	GROUP	SCENARIO	SEASON	SOURCE	DIRECTION	MONITORED ELEMENT	RATEA (MVA)	RATEB(MVA)	TDF	TC%LOADING (% MVA)	CONTINGENCY
FDNS	00NR	0	16WP	G15_033	FROM->TO	G14-057T 345.00 - SUNNYSIDE 345KV CKT 1	717	789	0.0491	116.0021	CHISHOLM6 230.00 - ELK CITY 230KV 230KV CKT 1
FDNS	00NR	0	16WP	G15_033	FROM->TO	G14-057T 345.00 - SUNNYSIDE 345KV CKT 1	717	789	0.04945	116.0005	P12:138:OKGE:3TERM27
FDNS	00NR	0	16WP	G15_033	FROM->TO	G14-057T 345.00 - SUNNYSIDE 345KV CKT 1	717	789	0.0491	116.0004	ELK CITY 230KV (ELKCTY-6) 230/138/13.8KV TRANSFORMER CKT 1
FDNS	00NR	0	16WP	G15_033	FROM->TO	G14-057T 345.00 - SUNNYSIDE 345KV CKT 1	717	789	0.0491	116.0004	ELK CITY 230KV (ELKCTY-6) 230/138/13.8KV TRANSFORMER CKT 1
FDNS	00NR	0	16WP	G15_033	FROM->TO	G14-057T 345.00 - SUNNYSIDE 345KV CKT 1	717	789	0.0498	115.9993	GEN300016 1-1G1GPDEL 18.000
FDNS	00NR	0	16WP	G15_033	FROM->TO	G14-057T 345.00 - SUNNYSIDE 345KV CKT 1	717	789	0.05004	115.9982	COMANCHE - COMANCHE TAP 69KV CKT 1
FDNS	00NR	0	16WP	G15_033	FROM->TO	G14-057T 345.00 - SUNNYSIDE 345KV CKT 1	717	789	0.0498	115.997	8CAJUN2 500/24.0KV TRANSFORMER CKT 1
FDNS	00NR	0	16WP	G15_033	FROM->TO	G14-057T 345.00 - SUNNYSIDE 345KV CKT 1	717	789	0.04973	115.9968	ALPINE AECC - AMITY SS 115KV CKT 1
FDNS	00NR	0	16WP	G15_033	FROM->TO	G14-057T 345.00 - SUNNYSIDE 345KV CKT 1	717	789	0.04987	115.9966	ANADARKO - SEQUOYAHJ4 138.00 138KV CKT 1
FDNS	00NR	0	16WP	G15_033	FROM->TO	G14-057T 345.00 - SUNNYSIDE 345KV CKT 1	717	789	0.04987	115.9953	CORN TAP - SEQUOYAHJ4 138.00 138KV CKT 1
FDNS	00NR	0	16WP	G15_033	FROM->TO	G14-057T 345.00 - SUNNYSIDE 345KV CKT 1	717	789	0.04966	115.9874	P12:138:OKGE-AEPW:JENSEN4:REDROCKRD4
FDNS	00NR	0	16WP	G15_033	FROM->TO	G14-057T 345.00 - SUNNYSIDE 345KV CKT 1	717	789	0.04975	115.9797	SWISSVALE - WEST GARDNER 345KV CKT 1
FDNS	00NR	0	16WP	G15_033	FROM->TO	G14-057T 345.00 - SUNNYSIDE 345KV CKT 1	717	789	0.04974	115.9738	BLACKBERRY - NEOSHO 345KV CKT 1
FDNS	00NR	0	16WP	G15_033	FROM->TO	G14-057T 345.00 - SUNNYSIDE 345KV CKT 1	717	789	0.04974	115.9738	BLACKBERRY - NEOSHO 345KV CKT 1
FDNS	00NR	0	16WP	G15_033	FROM->TO	G14-057T 345.00 - SUNNYSIDE 345KV CKT 1	717	789	0.0498	115.9724	GEN501910 1-ACADIA UNIT ST1
FDNS	00NR	0	16WP	G15_033	FROM->TO	G14-057T 345.00 - SUNNYSIDE 345KV CKT 1	717	789	0.04973	115.97	DRAPER LAKE - SEMINOLE 345KV CKT 1
FDNS	00NR	0	16WP	G15_033	FROM->TO	G14-057T 345.00 - SUNNYSIDE 345KV CKT 1	717	789	0.04973	115.97	DRAPER LAKE - SEMINOLE 345KV CKT 2
FDNS	00NR	0	16WP	G15_033	FROM->TO	G14-057T 345.00 - SUNNYSIDE 345KV CKT 1	717	789	0.0498	115.9681	P12:138:AEPW:R.S.S.-4:S.HUD.-4
FDNS	00NR	0	16WP	G15_033	FROM->TO	G14-057T 345.00 - SUNNYSIDE 345KV CKT 1	717	789	0.0498	115.961	GEN337041 1-GERALD ANDRUS
FDNS	00NR	0	16WP	G15_033	FROM->TO	G14-057T 345.00 - SUNNYSIDE 345KV CKT 1	717	789	0.04994	115.9557	WALTERS - WALTERS 69KV CKT 1
FDNS	00NR	0	16WP	G15_033	FROM->TO	G14-057T 345.00 - SUNNYSIDE 345KV CKT 1	717	789	0.04978	115.954	7LUTESVIL 345.00 - 7ST FRANC 345.00 345KV CKT 1
FDNS	00NR	0	16WP	G15_033	FROM->TO	G14-057T 345.00 - SUNNYSIDE 345KV CKT 1	717	789	0.04964	115.9528	P12:138:AEPW:REDROCKRD4:WTH_JCT4
FDNS	00NR	0	16WP	G15_033	FROM->TO	G14-057T 345.00 - SUNNYSIDE 345KV CKT 1	717	789	0.04978	115.9432	ETTA (DUKE HOTSPRINGS) - MC NIEL 500KV CKT 1
FDNS	00NR	0	16WP	G15_033	FROM->TO	G14-057T 345.00 - SUNNYSIDE 345KV CKT 1	717	789	0.04976	115.9398	SARA - STHLAKE4 138.00 138KV CKT 1
FDNS	00NR	0	16WP	G15_033	FROM->TO	G14-057T 345.00 - SUNNYSIDE 345KV CKT 1	717	789	0.04943	115.9306	NOBLE - PURCELL4 138.00 138KV CKT 1
FDNS	00NR	0	16WP	G15_033	FROM->TO	G14-057T 345.00 - SUNNYSIDE 345KV CKT 1	717	789	0.0498	115.9293	P12:138:AEPW:YARCH-S4:T.S.E.-4
FDNS	00NR	0	16WP	G15_033	FROM->TO	G14-057T 345.00 - SUNNYSIDE 345KV CKT 1	717	789	0.04989	115.9283	NORGE ROAD - SOUTHWESTERN STATION 138KV CKT 1
FDNS	00NR	0	16WP	G15_033	FROM->TO	G14-057T 345.00 - SUNNYSIDE 345KV CKT 1	717	789	0.04989	115.9283	NORGE ROAD - SOUTHWESTERN STATION 138KV CKT 1
FDNS	00NR	0	16WP	G15_033	FROM->TO	G14-057T 345.00 - SUNNYSIDE 345KV CKT 1	717	789	0.05014	115.926	LAWTON RELIFT TAP - OMPA-WALTERS 69KV CKT 1
FDNS	00NR	0	16WP	G15_033	FROM->TO	G14-057T 345.00 - SUNNYSIDE 345KV CKT 1	717	789	0.0498	115.9231	P12:138:AEPW:BA_71ST4:T.S.E.-4
FDNS	00NR	0	16WP	G15_033	FROM->TO	G14-057T 345.00 - SUNNYSIDE 345KV CKT 1	717	789	0.0498	115.9227	P12:69:AEPW:NROGERS2:ECNTRTN2
FDNS	00NR	0	16WP	G15_033	FROM->TO	G14-057T 345.00 - SUNNYSIDE 345KV CKT 1	717	789	0.0498	115.9219	GEN336801 1-BAXTER WILSON UNIT #1
FDNS	00NR	0	16WP	G15_033	FROM->TO	G14-057T 345.00 - SUNNYSIDE 345KV CKT 1	717	789	0.0498	115.9198	SABINE 230/24.0KV TRANSFORMER CKT 1
FDNS	00NR	0	16WP	G15_033	FROM->TO	G14-057T 345.00 - SUNNYSIDE 345KV CKT 1	717	789	0.05017	115.919	FRANKLIN SW - WESTMOORE 138KV CKT 1
FDNS	00NR	0	16WP	G15_033	FROM->TO	G14-057T 345.00 - SUNNYSIDE 345KV CKT 1	717	789	0.04977	115.9167	8WNEWMADRID 500.00 - DELL 500 500KV CKT 1
FDNS	00NR	0	16WP	G15_033	FROM->TO	G14-057T 345.00 - SUNNYSIDE 345KV CKT 1	717	789	0.04976	115.9108	MCCLAIN - STHLAKE4 138.00 138KV CKT 1
FDNS	00NR	0	16WP	G15_033	FROM->TO	G14-057T 345.00 - SUNNYSIDE 345KV CKT 1	717	789	0.04934	115.9103	ARBUCKLE - VANOSTP4 138.00 138KV CKT 1
FDNS	00NR	0	16WP	G15_033	FROM->TO	G14-057T 345.00 - SUNNYSIDE 345KV CKT 1	717	789	0.04976	115.9088	ENOWILT - LONE OAK 138KV CKT 1
FDNS	00NR	0	16WP	G15_033	FROM->TO	G14-057T 345.00 - SUNNYSIDE 345KV CKT 1	717	789	0.04978	115.904	P12:138:AEPW-OGE:SHIDLER4:OSAGE 4
FDNS	00NR	0	16WP	G15_033	FROM->TO	G14-057T 345.00 - SUNNYSIDE 345KV CKT 1	717	789	0.0498	115.9018	FRONTIER 345/18.0KV TRANSFORMER CKT 1
FDNS	00NR	0	16WP	G15_033	FROM->TO	G14-057T 345.00 - SUNNYSIDE 345KV CKT 1	717	789	0.0498	115.9002	FRONTIER 345/18.0KV TRANSFORMER CKT 1
FDNS	00NR	0	16WP	G15_033	FROM->TO	G14-057T 345.00 - SUNNYSIDE 345KV CKT 1	717	789	0.04976	115.8998	ENOWILT - SARDIS 138KV CKT 1
FDNS	00NR	0	16WP	G15_033	FROM->TO	G14-057T 345.00 - SUNNYSIDE 345KV CKT 1	717	789	0.0498	115.8945	ESSEX UNIT 2 500/18.0KV TRANSFORMER CKT 1
FDNS	00NR	0	16WP	G15_033	FROM->TO	G14-057T 345.00 - SUNNYSIDE 345KV CKT 1	717	789	0.0498	115.8914	P12:161:AEPW:CHAMSPR5:FARMING5
FDNS	00NR	0	16WP	G15_033	FROM->TO	G14-057T 345.00 - SUNNYSIDE 345KV CKT 1	717	789	0.04977	115.8885	EMPORIA ENERGY CENTER - SWISSVALE 345KV CKT 1
FDNS	00NR	0	16WP	G15_033	FROM->TO	G14-057T 345.00 - SUNNYSIDE 345KV CKT 1	717	789	0.04997	115.8881	LASALLE - STONEWAL LH138.00 138KV CKT 1
FDNS	00NR	0	16WP	G15_033	FROM->TO	G14-057T 345.00 - SUNNYSIDE 345KV CKT 1	717	789	0.04964	115.8755	HINTON - WEATHERFORD JCT. 138KV CKT 1
FDNS	00NR	0	16WP	G15_033	FROM->TO	G14-057T 345.00 - SUNNYSIDE 345KV CKT 1	717	789	0.04997	115.8727	STONEWAL LH138.00 - TUPELO TAP 138KV CKT 1
FDNS	00NR	0	16WP	G15_033	FROM->TO	G14-057T 345.00 - SUNNYSIDE 345KV CKT 1	717	789	0.0498	115.872	GEN505616 1-BROKEN BOW
FDNS	00NR	0	16WP	G15_033	FROM->TO	G14-057T 345.00 - SUNNYSIDE 345KV CKT 1	717	789	0.04971	115.8712	WEATHERFORD TAP - WEATHERFORD WIND FARM 138KV CKT 1
FDNS	00NR	0	16WP	G15_033	FROM->TO	G14-057T 345.00 - SUNNYSIDE 345KV CKT 1	717	789	0.04948	115.8701	CLINTON JUNCTION - ELK CITY 138KV CKT 1
FDNS	00NR	0	16WP	G15_033	FROM->TO	G14-057T 345.00 - SUNNYSIDE 345KV CKT 1	717	789	0.04948	115.8701	CLINTON JUNCTION - ELK CITY 138KV CKT 1
FDNS	00NR	0	16WP	G15_033	FROM->TO	G14-057T 345.00 - SUNNYSIDE 345KV CKT 1	717	789	0.0497	115.8677	HOPE - MCNAB REC 115KV CKT 1
FDNS	00NR	0	16WP	G15_033	FROM->TO	G14-057T 345.00 - SUNNYSIDE 345KV CKT 1	717	789	0.0498	115.8648	LEWIS CREEK SWITCHYARD 138/22.0KV TRANSFORMER CKT 1
FDNS	00NR	0	16WP	G15_033	FROM->TO	G14-057T 345.00 - SUNNYSIDE 345KV CKT 1	717	789	0.04976	115.8625	CLAYTON - SARDIS 138KV CKT 1
FDNS	00NR	0	16WP	G15_033	FROM->TO	G14-057T 345.00 - SUNNYSIDE 345KV CKT 1	717	789	0.0498	115.8599	LEWIS CREEK SWITCHYARD 138/22.0KV TRANSFORMER CKT 1
FDNS	00NR	0	16WP	G15_033	FROM->TO	G14-057T 345.00 - SUNNYSIDE 345KV CKT 1	717	789	0.05014	115.8591	OMPA-WALTERS - WALTERS 69KV CKT 1
FDNS	00NR	0	16WP	G15_033	FROM->TO	G14-057T 345.00 - SUNNYSIDE 345KV CKT 1	717	789	0.05014	115.8591	OMPA-WALTERS - WALTERS 69KV CKT 1
FDNS	00NR	0	16WP	G15_033	FROM->TO	G14-057T 345.00 - SUNNYSIDE 345KV CKT 1	717	789	0.04989	115.8588	SOUTHWESTERN STATION - VERDEN 138KV CKT 1
FDNS	00NR	0	16WP	G15_033	FROM->TO	G14-057T 345.00 - SUNNYSIDE 345KV CKT 1	717	789	0.0497	115.8587	P12:115:AEPW:TURK3:HOPE3
FDNS	00NR	0	16WP	G15_033	FROM->TO	G14-057T 345.00 - SUNNYSIDE 345KV CKT 1	717	789	0.04976	115.8523	EMPORIA ENERGY CENTER - G14_001T 345.00 345KV CKT 1
FDNS	00NR	0	16WP	G15_033	FROM->TO	G14-057T 345.00 - SUNNYSIDE 345KV CKT 1	717	789	0.04977	115.8516	MORISNT4 138.00 - STILLWATER 138KV CKT 1
FDNS	00NR	0	16WP	G15_033	FROM->TO	G14-057T 345.00 - SUNNYSIDE 345KV CKT 1	717	789	0.0498	115.8466	GEN501970 1-EVANGELINE UNIT 7
FDNS	00NR	0	16WP	G15_033	FROM->TO	G14-057T 345.00 - SUNNYSIDE 345KV CKT 1	717	789	0.04977	115.8461	P12:138:OKGE:3TERM2
FDNS	00NR	0	16WP	G15_033	FROM->TO	G14-057T 345.00 - SUNNYSIDE 345KV CKT 1	717	789	0.04994	115.8413	P12:69:WFEC-AEPW:COMANCH2:WALTRS-2
FDNS	00NR	0	16WP	G15_033	FROM->TO	G14-057T 345.00 - SUNNYSIDE 345KV CKT 1	717	789	0.04974	115.8385	COUCH SES - MC NIEL 115KV CKT 1
FDNS	00NR	0	16WP	G15_033	FROM->TO	G14-057T 345.00 - SUNNYSIDE 345KV CKT 1	717	789	0.04989	115.8384	NORTH 29TH CHICKASHA - VERDEN 138KV CKT 1
FDNS	00NR	0	16WP	G15_033	FROM->TO	G14-057T 345.00 - SUNNYSIDE 345KV CKT 1	717	789	0.04972	115.8372	CLARKSVILLE - ONETA 345KV CKT 1
FDNS	00NR	0	16WP	G15_033	FROM->TO	G14-057T 345.00 - SUNNYSIDE 345KV CKT 1	717	789	0.04972	115.8372	CLARKSVILLE - ONETA 345KV CKT 1
FDNS	00NR	0	16WP	G15_033	FROM->TO	G14-057T 345.00 - SUNNYSIDE 345KV CKT 1	717	789	0.04976	115.8369	P12:138:AEPW-SWPA:LONEOAK4:BRKNBW4
FDNS	00NR	0	16WP	G15_033	FROM->TO	G14-057T 345.00 - SUNNYSIDE 345KV CKT 1	717	789	0.0497	115.8362	MCNAB REC - Turk 115 115KV CKT 1
FDNS	00NR	0	16WP	G15_033	FROM->TO	G14-057T 345.00 - SUNNYSIDE 345KV CKT 1	717	789	0.0497	115.8362	TURK (TURK 1) 138/115/13.2KV TRANSFORMER CKT 1
FDNS	00NR	0	16WP	G15_033	FROM->TO	G14-057T 345.00 - SUNNYSIDE 345KV CKT 1	717	789	0.0497	115.8362	TURK (TURK 1) 138/115/13.2KV TRANSFORMER CKT 1
FDNS	00NR	0	16WP	G15_033	FROM->TO	G14-057T 345.00 - SUNNYSIDE 345KV CKT 1	717	789	0.0498	115.8349	GEN334392 1-EXXON MOBIL IPP 1
FDNS	00NR	0	16WP	G15_033	FROM->TO	G14-057T 345.00 - SUNNYSIDE 345KV CKT 1	717	789	0.0498	115.8273	GEN334393 1-EXXON MOBIL IPP 2
FDNS	00NR	0	16WP	G15_033	FROM->TO	G14-057T 345.00 - SUNNYSIDE 345KV CKT 1	717	789	0.0498	115.8273	GEN334394 1-EXXON MOBIL IPP 3
FDNS	00NR	0	16WP	G15_033	FROM->TO	G14-057T 345.00 - SUNNYSIDE 345KV CKT 1	717	789	0.04964	115.8245	HINTON - REDROCKRD4 138.00 138KV CKT 1
FDNS	00NR	0	16WP	G15_033	FROM->TO	G14-057T 345.00 - SUNNYSIDE 345KV CKT 1	717	789	0.04976	115.8219	CLAYTON - NASHOBA 138KV CKT 1
FDNS	00NR	0	16WP	G15_033	FROM->TO	G14-057T 345.00 - SUNNYSIDE 345KV CKT 1	717	789	0.04981	115.8217	P12:138:OKGE:3TERM12

SOLUTION	GROUP	SCENARIO	SEASON	SOURCE	DIRECTION	MONITORED ELEMENT	RATEA (MVA)	RATEB(MVA)	TDF	TC%LOADING (% MVA)	CONTINGENCY
FDNS	00NR	0	16WP	G15_033	FROM->TO	G14-057T 345.00 - SUNNYSIDE 345KV CKT 1	717	789	0.0498	115.8198	GEN336222 1-LITTLE GYPSY UNIT#2
FDNS	00NR	0	16WP	G15_033	FROM->TO	G14-057T 345.00 - SUNNYSIDE 345KV CKT 1	717	789	0.04989	115.8179	MARIETTA - MARIETTA4 138.00 138KV CKT 1
FDNS	00NR	0	16WP	G15_033	FROM->TO	G14-057T 345.00 - SUNNYSIDE 345KV CKT 1	717	789	0.0498	115.8089	7JASPER 345.00 - MORGAN 345KV CKT 1
FDNS	00NR	0	16WP	G15_033	FROM->TO	G14-057T 345.00 - SUNNYSIDE 345KV CKT 1	717	789	0.04976	115.8088	BETHEL - NASHOBA 138KV CKT 1
FDNS	00NR	0	16WP	G15_033	FROM->TO	G14-057T 345.00 - SUNNYSIDE 345KV CKT 1	717	789	0.0498	115.802	P12:138:AEPW:R.S.S-4:T.P.S.-4
FDNS	00NR	0	16WP	G15_033	FROM->TO	G14-057T 345.00 - SUNNYSIDE 345KV CKT 1	717	789	0.04983	115.7996	FRANKLIN - FRANKLIN SW 138KV CKT 1
FDNS	00NR	0	16WP	G15_033	FROM->TO	G14-057T 345.00 - SUNNYSIDE 345KV CKT 1	717	789	0.0498	115.7994	GEN506749 1-EASTMAN GENERATION A
FDNS	00NR	0	16WP	G15_033	FROM->TO	G14-057T 345.00 - SUNNYSIDE 345KV CKT 1	717	789	0.0498	115.7979	GEN334431 1-SABINE UNIT 1
FDNS	00NR	0	16WP	G15_033	FROM->TO	G14-057T 345.00 - SUNNYSIDE 345KV CKT 1	717	789	0.0498	115.7978	GEN334432 1-SABINE UNIT 2
FDNS	00NR	0	16WP	G15_033	FROM->TO	G14-057T 345.00 - SUNNYSIDE 345KV CKT 1	717	789	0.04976	115.7934	G14_001T 345.00 - WICHITA 345KV CKT 1
FDNS	00NR	0	16WP	G15_033	FROM->TO	G14-057T 345.00 - SUNNYSIDE 345KV CKT 1	717	789	0.0498	115.7899	GEN501971 1-EVANGELINE UNIT 7-1
FDNS	00NR	0	16WP	G15_033	FROM->TO	G14-057T 345.00 - SUNNYSIDE 345KV CKT 1	717	789	0.0498	115.7899	GEN501972 1-EVANGELINE UNIT 7-2
FDNS	00NR	0	16WP	G15_033	FROM->TO	G14-057T 345.00 - SUNNYSIDE 345KV CKT 1	717	789	0.0498	115.7896	GEN336152 1-WATERFORD UNIT#2
FDNS	00NR	0	16WP	G15_033	FROM->TO	G14-057T 345.00 - SUNNYSIDE 345KV CKT 1	717	789	0.0498	115.7885	GEN336151 1-WATERFORD UNIT#1
FDNS	00NR	0	16WP	G15_033	FROM->TO	G14-057T 345.00 - SUNNYSIDE 345KV CKT 1	717	789	0.0498	115.7879	FLETCHER - MARLOW JCT 69KV CKT 1
FDNS	00NR	0	16WP	G15_033	FROM->TO	G14-057T 345.00 - SUNNYSIDE 345KV CKT 1	717	789	0.04971	115.7843	WEATHERFORD SOUTHEAST - WEATHERFORD TAP 138KV CKT 1
FDNS	00NR	0	16WP	G15_033	FROM->TO	G14-057T 345.00 - SUNNYSIDE 345KV CKT 1	717	789	0.04989	115.7829	CORNVILLE - NORGE ROAD 138KV CKT 1
FDNS	00NR	0	16WP	G15_033	FROM->TO	G14-057T 345.00 - SUNNYSIDE 345KV CKT 1	717	789	0.04989	115.7829	CORNVILLE - NORGE ROAD 138KV CKT 1
FDNS	00NR	0	16WP	G15_033	FROM->TO	G14-057T 345.00 - SUNNYSIDE 345KV CKT 1	717	789	0.09441	115.7778	GRACEMONT - LAWTON EASTSIDE 345KV CKT 1
FDNS	00NR	0	16WP	G15_033	FROM->TO	G14-057T 345.00 - SUNNYSIDE 345KV CKT 1	717	789	0.09441	115.7778	GRACEMONT - LAWTON EASTSIDE 345KV CKT 1
FDNS	00NR	0	16WP	G15_033	FROM->TO	G14-057T 345.00 - SUNNYSIDE 345KV CKT 1	717	789	0.04989	115.7745	CORNVILLE - NORTH 29TH CHICKASHA 138KV CKT 1
FDNS	00NR	0	16WP	G15_033	FROM->TO	G14-057T 345.00 - SUNNYSIDE 345KV CKT 1	717	789	0.04966	115.7403	Canadian Pump Station - REDROCKRD4 138.00 138KV CKT 1
FDNS	00NR	0	16WP	G15_033	FROM->TO	G14-057T 345.00 - SUNNYSIDE 345KV CKT 1	717	789	0.04981	115.7322	P12:138:OKGE:3TERM47
FDNS	00NR	0	16WP	G15_033	FROM->TO	G14-057T 345.00 - SUNNYSIDE 345KV CKT 1	717	789	0.04971	115.7304	CLINTON JUNCTION - CLINTON NATURAL GAS TAP 138KV CKT 1
FDNS	00NR	0	16WP	G15_033	FROM->TO	G14-057T 345.00 - SUNNYSIDE 345KV CKT 1	717	789	0.04943	115.7216	PURCELL4 138.00 - WALNUT CREEK 138KV CKT 1
FDNS	00NR	0	16WP	G15_033	FROM->TO	G14-057T 345.00 - SUNNYSIDE 345KV CKT 1	717	789	0.04981	115.7197	HAMMETT TAP - HORSESHOE LAKE 138KV CKT 1
FDNS	00NR	0	20WP	G15_033	FROM->TO	G14-057T 345.00 - SUNNYSIDE 345KV CKT 1	717	789	0.04641	115.7085	CORN TAP - NAPLESTP 138.00 138KV CKT 1
FDNS	00NR	0	16WP	G15_033	FROM->TO	G14-057T 345.00 - SUNNYSIDE 345KV CKT 1	717	789	0.04994	115.6692	COMANCHE - WALTERS 69KV CKT 1
FDNS	00NR	0	20WP	G15_033	FROM->TO	G14-057T 345.00 - SUNNYSIDE 345KV CKT 1	717	789	0.04577	115.6541	7SAREPTA% 345.00 - LONGWOOD 345KV CKT 1
FDNS	00NR	0	20WP	G15_033	FROM->TO	G14-057T 345.00 - SUNNYSIDE 345KV CKT 1	717	789	0.04577	115.6541	7SAREPTA% 345.00 - LONGWOOD 345KV CKT 1
FDNS	00NR	0	20WP	G15_033	FROM->TO	G14-057T 345.00 - SUNNYSIDE 345KV CKT 1	717	789	0.04641	115.6237	NAPLESTP 138.00 - PAYNE 138.00 138KV CKT 1
FDNS	00NR	0	20WP	G15_033	FROM->TO	G14-057T 345.00 - SUNNYSIDE 345KV CKT 1	717	789	0.04601	115.5383	GEN336821 1-GRAND GULF UNIT
FDNS	00NR	0	20WP	G15_033	FROM->TO	G14-057T 345.00 - SUNNYSIDE 345KV CKT 1	717	789	0.05039	115.4791	BORDER 7345.00 - TUCO_2 345.00 345KV CKT 1
FDNS	00NR	0	20WP	G15_033	FROM->TO	G14-057T 345.00 - SUNNYSIDE 345KV CKT 1	717	789	0.04647	115.441	ANADARKO - POCASSETT 138KV CKT 1
FDNS	00NR	0	20WP	G15_033	FROM->TO	G14-057T 345.00 - SUNNYSIDE 345KV CKT 1	717	789	0.04601	115.4317	GEN336153 1-WATERFORD UNIT#3
FDNS	00NR	0	20WP	G15_033	FROM->TO	G14-057T 345.00 - SUNNYSIDE 345KV CKT 1	717	789	0.0463	115.3645	COMANCHE - LOCO 138KV CKT 1
FDNS	00NR	0	20WP	G15_033	FROM->TO	G14-057T 345.00 - SUNNYSIDE 345KV CKT 1	717	789	0.04595	115.36	CLEVELAND - TULSA NORTH 345KV CKT 1
FDNS	00NR	0	20WP	G15_033	FROM->TO	G14-057T 345.00 - SUNNYSIDE 345KV CKT 1	717	789	0.04595	115.36	CLEVELAND - TULSA NORTH 345KV CKT 1
FDNS	00NR	0	20WP	G15_033	FROM->TO	G14-057T 345.00 - SUNNYSIDE 345KV CKT 1	717	789	0.04647	115.2933	POCASSETT - TUTTLE 138KV CKT 1
FDNS	00NR	0	16WP	G15_033	FROM->TO	G14-057T 345.00 - SUNNYSIDE 345KV CKT 1	717	789	0.0498	115.2654	803-OKLAUNION
FDNS	00NR	0	20WP	G15_033	FROM->TO	G14-057T 345.00 - SUNNYSIDE 345KV CKT 1	717	789	0.0459	115.2528	DOLET HILLS - SOUTHWEST SHREVEPORT 345KV CKT 1
FDNS	00NR	0	20WP	G15_033	FROM->TO	G14-057T 345.00 - SUNNYSIDE 345KV CKT 1	717	789	0.0459	115.2528	DOLET HILLS - SOUTHWEST SHREVEPORT 345KV CKT 1
FDNS	00NR	0	16WP	G15_033	FROM->TO	G14-057T 345.00 - SUNNYSIDE 345KV CKT 1	717	789	0.04911	115.142	P12:138:OKGE:3TERM39
FDNS	00NR	0	20WP	G15_033	FROM->TO	G14-057T 345.00 - SUNNYSIDE 345KV CKT 1	717	789	0.04601	115.135	GEN335831 1-RIVERBEND UNIT#1
FDNS	00NR	0	20WP	G15_033	FROM->TO	G14-057T 345.00 - SUNNYSIDE 345KV CKT 1	717	789	0.04587	115.0999	ARCADIA - NORTHWEST 345KV CKT 1
FDNS	00NR	0	20WP	G15_033	FROM->TO	G14-057T 345.00 - SUNNYSIDE 345KV CKT 1	717	789	0.04601	115.0972	GRAND GULF 500/22.0KV TRANSFORMER CKT 1
FDNS	00NR	0	20WP	G15_033	FROM->TO	G14-057T 345.00 - SUNNYSIDE 345KV CKT 1	717	789	0.04588	115.0303	7SAREPTA% 345.00 - ELDORADO EHV 345KV CKT 1
FDNS	00NR	0	20WP	G15_033	FROM->TO	G14-057T 345.00 - SUNNYSIDE 345KV CKT 1	717	789	0.04588	115.0301	3TR3AR8EL7EL
FDNS	00NR	0	20WP	G15_033	FROM->TO	G14-057T 345.00 - SUNNYSIDE 345KV CKT 1	717	789	0.04588	115.0196	ELDORADO EHV 500/345KV TRANSFORMER CKT 1
FDNS	00NR	0	20WP	G15_033	FROM->TO	G14-057T 345.00 - SUNNYSIDE 345KV CKT 1	717	789	0.04725	115.0113	P12:138:AEPW:DUNCAN-4:L.E.S.-4
FDNS	00NR	0	20WP	G15_033	FROM->TO	G14-057T 345.00 - SUNNYSIDE 345KV CKT 1	717	789	0.04601	114.9624	GEN515577 1-ARBWND11 0.6900
FDNS	00NR	0	16WP	G15_033	FROM->TO	G14-057T 345.00 - SUNNYSIDE 345KV CKT 1	717	789	0.04987	114.9333	RANCHRD7 345.00 - SOONER 345KV CKT 1
FDNS	00NR	0	20WP	G15_033	FROM->TO	G14-057T 345.00 - SUNNYSIDE 345KV CKT 1	717	789	0.04496	114.9295	CANADIAN RIVER - MUSKOGEE 345KV CKT 1
FDNS	00NR	0	20WP	G15_033	FROM->TO	G14-057T 345.00 - SUNNYSIDE 345KV CKT 1	717	789	0.08664	114.9223	GRACEMONT - LAWTON EASTSIDE 345KV CKT 1
FDNS	00NR	0	20WP	G15_033	FROM->TO	G14-057T 345.00 - SUNNYSIDE 345KV CKT 1	717	789	0.08664	114.9223	GRACEMONT - LAWTON EASTSIDE 345KV CKT 1
FDNS	00NR	0	20WP	G15_033	FROM->TO	G14-057T 345.00 - SUNNYSIDE 345KV CKT 1	717	789	0.04513	114.9079	MATHWSN7 345.00 - TATONGA7 345.00 345KV CKT 1
FDNS	00NR	0	20WP	G15_033	FROM->TO	G14-057T 345.00 - SUNNYSIDE 345KV CKT 1	717	789	0.04725	114.8947	COMANCHE TAP - OMPA-DUNCAN 840 138KV CKT 1
FDNS	00NR	0	20WP	G15_033	FROM->TO	G14-057T 345.00 - SUNNYSIDE 345KV CKT 1	717	789	0.04647	114.8899	BRIDGECR 138.00 - TUTTLE 138KV CKT 1
FDNS	00NR	0	16WP	G15_033	FROM->TO	G14-057T 345.00 - SUNNYSIDE 345KV CKT 1	717	789	0.04979	114.8851	JOHNSON COUNTY - RUSSETT 138KV CKT 1
FDNS	00NR	0	16WP	G15_033	FROM->TO	G14-057T 345.00 - SUNNYSIDE 345KV CKT 1	717	789	0.04978	114.8666	GLASSES - MADILL INDUSTRIAL TAP 138KV CKT 1
FDNS	00NR	0	16WP	G15_033	FROM->TO	G14-057T 345.00 - SUNNYSIDE 345KV CKT 1	717	789	0.04986	114.8615	DRAPER LAKE - MIDWEST TAP 138KV CKT 1
FDNS	00NR	0	16WP	G15_033	FROM->TO	G14-057T 345.00 - SUNNYSIDE 345KV CKT 1	717	789	0.04907	114.8583	MAYSVLT4 138.00 - PRAIRIE POINT 138KV CKT 1
FDNS	00NR	0	16WP	G15_033	FROM->TO	G14-057T 345.00 - SUNNYSIDE 345KV CKT 1	717	789	0.0498	114.8546	GEN562691 1-G15_015_3 0.6900
FDNS	00NR	0	16WP	G15_033	FROM->TO	G14-057T 345.00 - SUNNYSIDE 345KV CKT 1	717	789	0.0498	114.8501	GEN562772 1-G15034_3 0.6900
FDNS	00NR	0	16WP	G15_033	FROM->TO	G14-057T 345.00 - SUNNYSIDE 345KV CKT 1	717	789	0.05	114.8451	CIMARRON - MATHWSN7 345.00 345KV CKT 1
FDNS	00NR	0	16WP	G15_033	FROM->TO	G14-057T 345.00 - SUNNYSIDE 345KV CKT 1	717	789	0.05	114.8451	CIMARRON - MATHWSN7 345.00 345KV CKT 2
FDNS	00NR	0	16WP	G15_033	FROM->TO	G14-057T 345.00 - SUNNYSIDE 345KV CKT 1	717	789	0.04975	114.8417	HUGO (HUGO 1) 345/138/13.8KV TRANSFORMER CKT 1
FDNS	00NR	0	16WP	G15_033	FROM->TO	G14-057T 345.00 - SUNNYSIDE 345KV CKT 1	717	789	0.04988	114.8404	P12:138:OKGE:3TERM21
FDNS	00NR	0	16WP	G15_033	FROM->TO	G14-057T 345.00 - SUNNYSIDE 345KV CKT 1	717	789	0.0498	114.8235	GEN521103 1-BLUE CANYON WIND FARM
FDNS	00NR	0	16WP	G15_033	FROM->TO	G14-057T 345.00 - SUNNYSIDE 345KV CKT 1	717	789	0.0498	114.8218	GEN520812 1-ANADRK5
FDNS	00NR	0	16WP	G15_033	FROM->TO	G14-057T 345.00 - SUNNYSIDE 345KV CKT 1	717	789	0.0498	114.8217	GEN520813 1-ANADRK6
FDNS	00NR	0	20WP	G15_033	FROM->TO	G14-057T 345.00 - SUNNYSIDE 345KV CKT 1	717	789	0.04601	114.8097	GEN509409 1-WILKES #3
FDNS	00NR	0	16WP	G15_033	FROM->TO	G14-057T 345.00 - SUNNYSIDE 345KV CKT 1	717	789	0.04944	114.809	ARBUCKLE - SULPHR 4 138.00 138KV CKT 1
FDNS	00NR	0	16WP	G15_033	FROM->TO	G14-057T 345.00 - SUNNYSIDE 345KV CKT 1	717	789	0.04978	114.8069	GLASSES - RUSSETT 138KV CKT 1
FDNS	00NR	0	20WP	G15_033	FROM->TO	G14-057T 345.00 - SUNNYSIDE 345KV CKT 1	717	789	0.0456	114.7999	ARCADIA - SEMINOLE 345KV CKT 1
FDNS	00NR	0	16WP	G15_033	FROM->TO	G14-057T 345.00 - SUNNYSIDE 345KV CKT 1	717	789	0.04977	114.7931	P12:138:WFEC:MSL11
FDNS	00NR	0	16WP	G15_033	FROM->TO	G14-057T 345.00 - SUNNYSIDE 345KV CKT 1	717	789	0.04977	114.7931	P12:138:WFEC-AEPW:PHAROAH4:LONEOAK4
FDNS	00NR	0	20WP	G15_033	FROM->TO	G14-057T 345.00 - SUNNYSIDE 345KV CKT 1	717	789	0.0461	114.7869	HEALDTON - LOCO 138KV CKT 1
FDNS	00NR	0	16WP	G15_033	FROM->TO	G14-057T 345.00 - SUNNYSIDE 345KV CKT 1	717	789	0.0498	114.7787	GEN511961 1-DEMPSEY-WTG10.7000

SOLUTION	GROUP	SCENARIO	SEASON	SOURCE	DIRECTION	MONITORED ELEMENT	RATEA (MVA)	RATEB(MVA)	TDF	TC%LOADING (% MVA)	CONTINGENCY
FDNS	00NR	0	16WP	G15_033	FROM->TO	G14-057T 345.00 - SUNNYSIDE 345KV CKT 1	717	789	0.0498	114.7674	P12:069:OKGE:3TERM42
FDNS	00NR	0	16WP	G15_033	FROM->TO	G14-057T 345.00 - SUNNYSIDE 345KV CKT 1	717	789	0.04907	114.7607	PRAIRIE POINT - RATLIFF 138KV CKT 1
FDNS	00NR	0	20WP	G15_033	FROM->TO	G14-057T 345.00 - SUNNYSIDE 345KV CKT 1	717	789	0.04601	114.7552	GEN501813 1-RODEMACHER UNIT 3
FDNS	00NR	0	16WP	G15_033	FROM->TO	G14-057T 345.00 - SUNNYSIDE 345KV CKT 1	717	789	0.04978	114.7484	CANEY CREEK - JOHNSON COUNTY 138KV CKT 1
FDNS	00NR	0	16WP	G15_033	FROM->TO	G14-057T 345.00 - SUNNYSIDE 345KV CKT 1	717	789	0.04978	114.7466	DELL 500 - INDEPENDENCE 500KV CKT 1
FDNS	00NR	0	16WP	G15_033	FROM->TO	G14-057T 345.00 - SUNNYSIDE 345KV CKT 1	717	789	0.04983	114.7396	P12:138:WFEC:MSL08
FDNS	00NR	0	16WP	G15_033	FROM->TO	G14-057T 345.00 - SUNNYSIDE 345KV CKT 1	717	789	0.0498	114.7303	GEN515443 1-MNCOWND1 0.7000
FDNS	00NR	0	16WP	G15_033	FROM->TO	G14-057T 345.00 - SUNNYSIDE 345KV CKT 1	717	789	0.0498	114.7275	INDEPENDENCE 500/26.0KV TRANSFORMER CKT 1
FDNS	00NR	0	16WP	G15_033	FROM->TO	G14-057T 345.00 - SUNNYSIDE 345KV CKT 1	717	789	0.04974	114.7167	CARTER - CHICKASAW 138KV CKT 1
FDNS	00NR	0	16WP	G15_033	FROM->TO	G14-057T 345.00 - SUNNYSIDE 345KV CKT 1	717	789	0.0498	114.7159	GEN532653 1-JEFFREY ENERGY CENTER UNIT 3
FDNS	00NR	0	16WP	G15_033	FROM->TO	G14-057T 345.00 - SUNNYSIDE 345KV CKT 1	717	789	0.0498	114.713	GEN563242 1-G15090_3 0.6900
FDNS	00NR	0	16WP	G15_033	FROM->TO	G14-057T 345.00 - SUNNYSIDE 345KV CKT 1	717	789	0.0498	114.7124	GEN562902 1-G15052_3 0.6900
FDNS	00NR	0	16WP	G15_033	FROM->TO	G14-057T 345.00 - SUNNYSIDE 345KV CKT 1	717	789	0.0498	114.7108	GEN560183 1-REDHIL-WTG1 12.000
FDNS	00NR	0	16WP	G15_033	FROM->TO	G14-057T 345.00 - SUNNYSIDE 345KV CKT 1	717	789	0.04985	114.7082	ARKANSAS NUCLEAR ONE - FT SMITH 500KV CKT 1
FDNS	00NR	0	16WP	G15_033	FROM->TO	G14-057T 345.00 - SUNNYSIDE 345KV CKT 1	717	789	0.04985	114.7082	ARKANSAS NUCLEAR ONE - FT SMITH 500KV CKT 1
FDNS	00NR	0	16WP	G15_033	FROM->TO	G14-057T 345.00 - SUNNYSIDE 345KV CKT 1	717	789	0.0498	114.7038	GEN629071 1-BURLINGTON GENERATOR FOR UNIT NO 1 E
FDNS	00NR	0	16WP	G15_033	FROM->TO	G14-057T 345.00 - SUNNYSIDE 345KV CKT 1	717	789	0.04978	114.7034	CANADIAN RIVER - MCALESTER SOUTH 138KV CKT 1
FDNS	00NR	0	16WP	G15_033	FROM->TO	G14-057T 345.00 - SUNNYSIDE 345KV CKT 1	717	789	0.04978	114.7034	CANADIAN RIVER - MCALESTER SOUTH 138KV CKT 1
FDNS	00NR	0	16WP	G15_033	FROM->TO	G14-057T 345.00 - SUNNYSIDE 345KV CKT 1	717	789	0.04962	114.703	ROCKY POINT - SPRINGDALE 138KV CKT 1
FDNS	00NR	0	16WP	G15_033	FROM->TO	G14-057T 345.00 - SUNNYSIDE 345KV CKT 1	717	789	0.04978	114.7019	CANADIAN RIVER () 345/138/13.8KV TRANSFORMER CKT 1
FDNS	00NR	0	16WP	G15_033	FROM->TO	G14-057T 345.00 - SUNNYSIDE 345KV CKT 1	717	789	0.04978	114.7019	CANADIAN RIVER () 345/138/13.8KV TRANSFORMER CKT 1
FDNS	00NR	0	16WP	G15_033	FROM->TO	G14-057T 345.00 - SUNNYSIDE 345KV CKT 1	717	789	0.05012	114.6917	ALTUS JUNCTION - RUSSELL 138KV CKT 1
FDNS	00NR	0	16WP	G15_033	FROM->TO	G14-057T 345.00 - SUNNYSIDE 345KV CKT 1	717	789	0.05012	114.6917	ALTUS JUNCTION - RUSSELL 138KV CKT 1
FDNS	00NR	0	20WP	G15_033	FROM->TO	G14-057T 345.00 - SUNNYSIDE 345KV CKT 1	717	789	0.04318	114.6836	Hitchland Interchange - WALKTAP7 345.00 345KV CKT 1
FDNS	00NR	0	20WP	G15_033	FROM->TO	G14-057T 345.00 - SUNNYSIDE 345KV CKT 1	717	789	0.04318	114.6836	Hitchland Interchange - WALKTAP7 345.00 345KV CKT 1
FDNS	00NR	0	16WP	G15_033	FROM->TO	G14-057T 345.00 - SUNNYSIDE 345KV CKT 1	717	789	0.04983	114.6801	MOREWOOD SW - NINE MILE 138KV CKT 1
FDNS	00NR	0	16WP	G15_033	FROM->TO	G14-057T 345.00 - SUNNYSIDE 345KV CKT 1	717	789	0.0498	114.6731	BURLINGTON NO1 + NO 2 + NO 3 161/20.0KV TRANSFORMER CKT 1
FDNS	00NR	0	16WP	G15_033	FROM->TO	G14-057T 345.00 - SUNNYSIDE 345KV CKT 1	717	789	0.0498	114.668	GEN514805 1-SOONER UNIT 1
FDNS	00NR	0	16WP	G15_033	FROM->TO	G14-057T 345.00 - SUNNYSIDE 345KV CKT 1	717	789	0.05008	114.6668	NORTHWEST - SPRING CREEK 345KV CKT 1
FDNS	00NR	0	16WP	G15_033	FROM->TO	G14-057T 345.00 - SUNNYSIDE 345KV CKT 1	717	789	0.04976	114.6641	CHAMBER SPRINGS - CLARKSVILLE 345KV CKT 1
FDNS	00NR	0	16WP	G15_033	FROM->TO	G14-057T 345.00 - SUNNYSIDE 345KV CKT 1	717	789	0.0498	114.6632	P12:230:UMZB:# 112 #: NU IN SD. NU-RCDC & DRY CREEK XFMR
FDNS	00NR	0	16WP	G15_033	FROM->TO	G14-057T 345.00 - SUNNYSIDE 345KV CKT 1	717	789	0.0498	114.6627	RCDC EAST 4230.00 - RED CEDAR DC 230KV CKT 1
FDNS	00NR	0	16WP	G15_033	FROM->TO	G14-057T 345.00 - SUNNYSIDE 345KV CKT 1	717	789	0.05008	114.6588	SOONER - SPRING CREEK 345KV CKT 1
FDNS	00NR	0	16WP	G15_033	FROM->TO	G14-057T 345.00 - SUNNYSIDE 345KV CKT 1	717	789	0.0498	114.6582	GEN514806 1-SOONER UNIT 2
FDNS	00NR	0	16WP	G15_033	FROM->TO	G14-057T 345.00 - SUNNYSIDE 345KV CKT 1	717	789	0.04975	114.6573	NORTHWEST TEXARKANA - WELSH 345KV CKT 1
FDNS	00NR	0	16WP	G15_033	FROM->TO	G14-057T 345.00 - SUNNYSIDE 345KV CKT 1	717	789	0.04975	114.6573	NORTHWEST TEXARKANA - WELSH 345KV CKT 1
FDNS	00NR	0	16WP	G15_033	FROM->TO	G14-057T 345.00 - SUNNYSIDE 345KV CKT 1	717	789	0.04944	114.6569	JOLLYVILLE - SULPHR 4 138.00 138KV CKT 1
FDNS	00NR	0	20WP	G15_033	FROM->TO	G14-057T 345.00 - SUNNYSIDE 345KV CKT 1	717	789	0.04318	114.6429	P12:345:SPS:J07.1.FINN.HITCH
FDNS	00NR	0	20WP	G15_033	FROM->TO	G14-057T 345.00 - SUNNYSIDE 345KV CKT 1	717	789	0.0461	114.6424	HEALDTON - RINGLING 138KV CKT 1
FDNS	00NR	0	16WP	G15_033	FROM->TO	G14-057T 345.00 - SUNNYSIDE 345KV CKT 1	717	789	0.0498	114.6336	THOMAS HILL 161/22.0KV TRANSFORMER CKT 1
FDNS	00NR	0	16WP	G15_033	FROM->TO	G14-057T 345.00 - SUNNYSIDE 345KV CKT 1	717	789	0.0498	114.6328	GEN562078 1-G11_051_3 0.6900
FDNS	00NR	0	16WP	G15_033	FROM->TO	G14-057T 345.00 - SUNNYSIDE 345KV CKT 1	717	789	0.0498	114.6215	GEN562802 1-G15039_3 0.3570
FDNS	00NR	0	16WP	G15_033	FROM->TO	G14-057T 345.00 - SUNNYSIDE 345KV CKT 1	717	789	0.0498	114.6151	GEN524285 1-WILDORADO WIND GEN
FDNS	00NR	0	20WP	G15_033	FROM->TO	G14-057T 345.00 - SUNNYSIDE 345KV CKT 1	717	789	0.04601	114.6127	GEN300006 1-NEW MADRID UNIT 1
FDNS	00NR	0	16WP	G15_033	FROM->TO	G14-057T 345.00 - SUNNYSIDE 345KV CKT 1	717	789	0.04976	114.6082	KEO EHV - WEST MEMPHIS 500 500KV CKT 1
FDNS	00NR	0	20WP	G15_033	FROM->TO	G14-057T 345.00 - SUNNYSIDE 345KV CKT 1	717	789	0.04725	114.6043	DUNCAN - OMPA-DUNCAN 840 138KV CKT 1
FDNS	00NR	0	20WP	G15_033	FROM->TO	G14-057T 345.00 - SUNNYSIDE 345KV CKT 1	717	789	0.04725	114.6043	DUNCAN - OMPA-DUNCAN 840 138KV CKT 1
FDNS	00NR	0	16WP	G15_033	FROM->TO	G14-057T 345.00 - SUNNYSIDE 345KV CKT 1	717	789	0.0498	114.6	GEN629072 4-LANSING GENERATOR FOR UNITS NO4 EIA CODE 1
FDNS	00NR	0	20WP	G15_033	FROM->TO	G14-057T 345.00 - SUNNYSIDE 345KV CKT 1	717	789	0.04647	114.5997	BRIDGECR 138.00 - SUNSHINE CANYON 138KV CKT 1
FDNS	00NR	0	16WP	G15_033	FROM->TO	G14-057T 345.00 - SUNNYSIDE 345KV CKT 1	717	789	0.0498	114.5946	GEN562587 1-G14_056_3 0.6900
FDNS	00NR	0	16WP	G15_033	FROM->TO	G14-057T 345.00 - SUNNYSIDE 345KV CKT 1	717	789	0.0498	114.5945	GEN524295 1-SPNSPUR_WND10.6900
FDNS	00NR	0	20WP	G15_033	FROM->TO	G14-057T 345.00 - SUNNYSIDE 345KV CKT 1	717	789	0.04601	114.593	GEN300007 1-NEW MADRID UNIT 2
FDNS	00NR	0	20WP	G15_033	FROM->TO	G14-057T 345.00 - SUNNYSIDE 345KV CKT 1	717	789	0.04598	114.5927	LACYGNE - WAVERLY7 345.00 345KV CKT 1
FDNS	00NR	0	20WP	G15_033	FROM->TO	G14-057T 345.00 - SUNNYSIDE 345KV CKT 1	717	789	0.04647	114.589	P12:138:WFEC:MSL01
FDNS	00NR	0	16WP	G15_033	FROM->TO	G14-057T 345.00 - SUNNYSIDE 345KV CKT 1	717	789	0.04944	114.5882	JOLLYVILLE - KERR MCGEE CIMARRON 138KV CKT 1
FDNS	00NR	0	16WP	G15_033	FROM->TO	G14-057T 345.00 - SUNNYSIDE 345KV CKT 1	717	789	0.0498	114.5875	GEN560331 1-G10-46 13.800
FDNS	00NR	0	16WP	G15_033	FROM->TO	G14-057T 345.00 - SUNNYSIDE 345KV CKT 1	717	789	0.0498	114.5795	GEN657749 1-YOUNG 1 GENERATOR
FDNS	00NR	0	16WP	G15_033	FROM->TO	G14-057T 345.00 - SUNNYSIDE 345KV CKT 1	717	789	0.04959	114.5669	CLARKSVILLE - MUSKOGEE 345KV CKT 1
FDNS	00NR	0	16WP	G15_033	FROM->TO	G14-057T 345.00 - SUNNYSIDE 345KV CKT 1	717	789	0.04959	114.5669	CLARKSVILLE - MUSKOGEE 345KV CKT 1
FDNS	00NR	0	16WP	G15_033	FROM->TO	G14-057T 345.00 - SUNNYSIDE 345KV CKT 1	717	789	0.0498	114.5606	GEN562882 1-G15047_3 0.6900
FDNS	00NR	0	16WP	G15_033	FROM->TO	G14-057T 345.00 - SUNNYSIDE 345KV CKT 1	717	789	0.0498	114.5566	GEN562269 1-G12-020-1 0.6900
FDNS	00NR	0	16WP	G15_033	FROM->TO	G14-057T 345.00 - SUNNYSIDE 345KV CKT 1	717	789	0.04983	114.5457	BEARCAT 138.00 - NINE MILE 138KV CKT 1
FDNS	00NR	0	20WP	G15_033	FROM->TO	G14-057T 345.00 - SUNNYSIDE 345KV CKT 1	717	789	0.04601	114.5438	GEN335206 1-NELSON UNIT 6
FDNS	00NR	0	16WP	G15_033	FROM->TO	G14-057T 345.00 - SUNNYSIDE 345KV CKT 1	717	789	0.04944	114.5375	ARBWIND4 138.00 - KERR MCGEE CIMARRON 138KV CKT 1
FDNS	00NR	0	16WP	G15_033	FROM->TO	G14-057T 345.00 - SUNNYSIDE 345KV CKT 1	717	789	0.0498	114.5113	GEN562270 1-G12-020-2 0.6900
FDNS	00NR	0	16WP	G15_033	FROM->TO	G14-057T 345.00 - SUNNYSIDE 345KV CKT 1	717	789	0.0498	114.5107	GEN681522 3-GENOA 3
FDNS	00NR	0	16WP	G15_033	FROM->TO	G14-057T 345.00 - SUNNYSIDE 345KV CKT 1	717	789	0.0498	114.5063	GEN562812 1-G15040_3 0.3570
FDNS	00NR	0	16WP	G15_033	FROM->TO	G14-057T 345.00 - SUNNYSIDE 345KV CKT 1	717	789	0.0498	114.5002	GEN563102 1-G15075_3 0.5500
FDNS	00NR	0	16WP	G15_033	FROM->TO	G14-057T 345.00 - SUNNYSIDE 345KV CKT 1	717	789	0.0498	114.4984	GEN563062 1-G15071_3 0.6900
FDNS	00NR	0	16WP	G15_033	FROM->TO	G14-057T 345.00 - SUNNYSIDE 345KV CKT 1	717	789	0.0498	114.4959	GEN563132 1-G15078_3 0.3570
FDNS	00NR	0	16WP	G15_033	FROM->TO	G14-057T 345.00 - SUNNYSIDE 345KV CKT 1	717	789	0.05138	114.4939	P12:138:AEPW:112GORE4:SNYDER-4
FDNS	00NR	0	20WP	G15_033	FROM->TO	G14-057T 345.00 - SUNNYSIDE 345KV CKT 1	717	789	0.04601	114.4852	GEN520947 1-HUGO1
FDNS	00NR	0	16WP	G15_033	FROM->TO	G14-057T 345.00 - SUNNYSIDE 345KV CKT 1	717	789	0.0498	114.4838	GEN562974 1-G15060_5 0.6900
FDNS	00NR	0	16WP	G15_033	FROM->TO	G14-057T 345.00 - SUNNYSIDE 345KV CKT 1	717	789	0.0498	114.4743	GEN562973 1-G15060_4 0.6900
FDNS	00NR	0	20WP	G15_033	FROM->TO	G14-057T 345.00 - SUNNYSIDE 345KV CKT 1	717	789	0.04598	114.4711	WAVERLY7 345.00 - WOLF CREEK 345KV CKT 1
FDNS	00NR	0	20WP	G15_033	FROM->TO	G14-057T 345.00 - SUNNYSIDE 345KV CKT 1	717	789	0.0461	114.4699	RINGLING - SOUTH WILSON 138KV CKT 1
FDNS	00NR	0	16WP	G15_033	FROM->TO	G14-057T 345.00 - SUNNYSIDE 345KV CKT 1	717	789	0.04983	114.4625	P12:138:WFEC:MSL14
FDNS	00NR	0	16WP	G15_033	FROM->TO	G14-057T 345.00 - SUNNYSIDE 345KV CKT 1	717	789	0.04948	114.4551	CHICKASAW - TOTAL 138KV CKT 1
FDNS	00NR	0	16WP	G15_033	FROM->TO	G14-057T 345.00 - SUNNYSIDE 345KV CKT 1	717	789	0.04983	114.4504	BEARCAT 138.00 - MOORELAND 138KV CKT 1

SOLUTION	GROUP	SCENARIO	SEASON	SOURCE	DIRECTION	MONITORED ELEMENT	RATEA (MVA)	RATEB(MVA)	TDF	TC%LOADING (% MVA)	CONTINGENCY
FDNS	00NR	0	16WP	G15_033	FROM->TO	G14-057T 345.00 - SUNNYSIDE 345KV CKT 1	717	789	0.0497	114.4494	BROWN - RUSSETT 138KV CKT 1
FDNS	00NR	0	16WP	G15_033	FROM->TO	G14-057T 345.00 - SUNNYSIDE 345KV CKT 1	717	789	0.0498	114.442	GEN345671 2-1RUSH G2 18.000
FDNS	00NR	0	16WP	G15_033	FROM->TO	G14-057T 345.00 - SUNNYSIDE 345KV CKT 1	717	789	0.0498	114.4401	GEN345670 1-1RUSH G1 18.000
FDNS	00NR	0	16WP	G15_033	FROM->TO	G14-057T 345.00 - SUNNYSIDE 345KV CKT 1	717	789	0.04965	114.4315	RUSSETT - SPRINGDALE 138KV CKT 1
FDNS	00NR	0	16WP	G15_033	FROM->TO	G14-057T 345.00 - SUNNYSIDE 345KV CKT 1	717	789	0.0498	114.4131	GEN526331 1-JONES GEN #1 22 KV
FDNS	00NR	0	16WP	G15_033	FROM->TO	G14-057T 345.00 - SUNNYSIDE 345KV CKT 1	717	789	0.0498	114.413	GEN526332 1-JONES GEN #2 21 KV
FDNS	00NR	0	16WP	G15_033	FROM->TO	G14-057T 345.00 - SUNNYSIDE 345KV CKT 1	717	789	0.04956	114.4107	ROCKY POINT - SUNNYSIDE 138KV CKT 1
FDNS	00NR	0	16WP	G15_033	FROM->TO	G14-057T 345.00 - SUNNYSIDE 345KV CKT 1	717	789	0.0498	114.4037	GEN560105 1-G08-22 0.6900
FDNS	00NR	0	16WP	G15_033	FROM->TO	G14-057T 345.00 - SUNNYSIDE 345KV CKT 1	717	789	0.0498	114.4003	GEN562550 1-G14_040_3 0.6900
FDNS	00NR	0	16WP	G15_033	FROM->TO	G14-057T 345.00 - SUNNYSIDE 345KV CKT 1	717	789	0.04978	114.3936	P12:138:WFEC:MSL07
FDNS	00NR	0	16WP	G15_033	FROM->TO	G14-057T 345.00 - SUNNYSIDE 345KV CKT 1	717	789	0.04978	114.3936	P12:138:WFEC-AEPW:HUGOPP4:ATOKA--4
FDNS	00NR	0	16WP	G15_033	FROM->TO	G14-057T 345.00 - SUNNYSIDE 345KV CKT 1	717	789	0.0498	114.3865	4SIOUX 1 138.00 138/18.0KV TRANSFORMER CKT 1
FDNS	00NR	0	16WP	G15_033	FROM->TO	G14-057T 345.00 - SUNNYSIDE 345KV CKT 1	717	789	0.0497	114.3812	RUSSETT - RUSSETT 138KV CKT 1
FDNS	00NR	0	20WP	G15_033	FROM->TO	G14-057T 345.00 - SUNNYSIDE 345KV CKT 1	717	789	0.04513	114.3781	G11_051T 345.00 - TATONGA7 345.00 345KV CKT 1
FDNS	00NR	0	20WP	G15_033	FROM->TO	G14-057T 345.00 - SUNNYSIDE 345KV CKT 1	717	789	0.04597	114.3761	ELDORADO EHV - MOUNT OLIVE 500KV CKT 1
FDNS	00NR	0	16WP	G15_033	FROM->TO	G14-057T 345.00 - SUNNYSIDE 345KV CKT 1	717	789	0.0498	114.3717	CLAY BOSWELL 230/20.9KV TRANSFORMER CKT 1
FDNS	00NR	0	16WP	G15_033	FROM->TO	G14-057T 345.00 - SUNNYSIDE 345KV CKT 1	717	789	0.0498	114.3653	GEN521112 1-ORME3 13.800
FDNS	00NR	0	16WP	G15_033	FROM->TO	G14-057T 345.00 - SUNNYSIDE 345KV CKT 1	717	789	0.0498	114.3636	GEN511962 2-RKYRDGW2-1 0.7000
FDNS	00NR	0	16WP	G15_033	FROM->TO	G14-057T 345.00 - SUNNYSIDE 345KV CKT 1	717	789	0.04929	114.3543	ARDMORE WEST - CARTER 138KV CKT 1
FDNS	00NR	0	16WP	G15_033	FROM->TO	G14-057T 345.00 - SUNNYSIDE 345KV CKT 1	717	789	0.0498	114.354	GEN527882 1-CUNNINGHAM GEN #2 20 KV
FDNS	00NR	0	20WP	G15_033	FROM->TO	G14-057T 345.00 - SUNNYSIDE 345KV CKT 1	717	789	0.04601	114.3526	GEN501812 1-RODEMACHER UNIT 2
FDNS	00NR	0	20WP	G15_033	FROM->TO	G14-057T 345.00 - SUNNYSIDE 345KV CKT 1	717	789	0.04608	114.3477	P12:138:AEPW:SHERID4:112GORE4
FDNS	00NR	0	16WP	G15_033	FROM->TO	G14-057T 345.00 - SUNNYSIDE 345KV CKT 1	717	789	0.0498	114.3476	GEN672321 1-SHAND GENERATOR 1
FDNS	00NR	0	20WP	G15_033	FROM->TO	G14-057T 345.00 - SUNNYSIDE 345KV CKT 1	717	789	0.04601	114.3471	DOLET HILLS 345/24.0KV TRANSFORMER CKT 1
FDNS	00NR	0	16WP	G15_033	FROM->TO	G14-057T 345.00 - SUNNYSIDE 345KV CKT 1	717	789	0.0498	114.3429	GEN562892 1-G15048_3 0.6900
FDNS	00NR	0	16WP	G15_033	FROM->TO	G14-057T 345.00 - SUNNYSIDE 345KV CKT 1	717	789	0.0498	114.3236	GEN672310 1-POPLAR RIVER GENERATOR 1
FDNS	00NR	0	16WP	G15_033	FROM->TO	G14-057T 345.00 - SUNNYSIDE 345KV CKT 1	717	789	0.0498	114.3236	GEN672311 2-POPLAR RIVER GENERATOR 2
FDNS	00NR	0	16WP	G15_033	FROM->TO	G14-057T 345.00 - SUNNYSIDE 345KV CKT 1	717	789	0.0498	114.3194	GEN563192 1-G15084_3 0.5500
FDNS	00NR	0	16WP	G15_033	FROM->TO	G14-057T 345.00 - SUNNYSIDE 345KV CKT 1	717	789	0.0498	114.3156	GEN672306 6-BOUNDARY DAM GENERATOR 6
FDNS	00NR	0	16WP	G15_033	FROM->TO	G14-057T 345.00 - SUNNYSIDE 345KV CKT 1	717	789	0.04927	114.3112	SUNNYSIDE (SUNNYSD5) 345/138/13.8KV TRANSFORMER CKT 1
FDNS	00NR	0	16WP	G15_033	FROM->TO	G14-057T 345.00 - SUNNYSIDE 345KV CKT 1	717	789	0.0498	114.3069	GEN562512 1-G14_020_3 0.6900
FDNS	00NR	0	16WP	G15_033	FROM->TO	G14-057T 345.00 - SUNNYSIDE 345KV CKT 1	717	789	0.0498	114.3062	GEN511853 1-COMANCHE #3
FDNS	00NR	0	16WP	G15_033	FROM->TO	G14-057T 345.00 - SUNNYSIDE 345KV CKT 1	717	789	0.04983	114.3029	P12:138:WFEC:MSL16
FDNS	00NR	0	16WP	G15_033	FROM->TO	G14-057T 345.00 - SUNNYSIDE 345KV CKT 1	717	789	0.04977	114.2883	P12:138:WFEC-AEPW:GOLDENSW4:CRAIGJT4
FDNS	00NR	0	20WP	G15_033	FROM->TO	G14-057T 345.00 - SUNNYSIDE 345KV CKT 1	717	789	0.04574	114.2843	PARK LANE - SEMINOLE 138KV CKT 1
FDNS	00NR	0	16WP	G15_033	FROM->TO	G14-057T 345.00 - SUNNYSIDE 345KV CKT 1	717	789	0.0498	114.2575	GEN523461 1-BLACKHAWK GEN #1
FDNS	00NR	0	16WP	G15_033	FROM->TO	G14-057T 345.00 - SUNNYSIDE 345KV CKT 1	717	789	0.0498	114.2574	GEN523462 1-BLACKHAWK GEN #2
FDNS	00NR	0	20WP	G15_033	FROM->TO	G14-057T 345.00 - SUNNYSIDE 345KV CKT 1	717	789	0.0457	114.2545	THISTLE7 345.00 - WOODWARD DISTRICT EHV 345KV CKT 1
FDNS	00NR	0	20WP	G15_033	FROM->TO	G14-057T 345.00 - SUNNYSIDE 345KV CKT 1	717	789	0.0457	114.2545	THISTLE7 345.00 - WOODWARD DISTRICT EHV 345KV CKT 1
FDNS	00NR	0	20WP	G15_033	FROM->TO	G14-057T 345.00 - SUNNYSIDE 345KV CKT 1	717	789	0.0457	114.2545	THISTLE7 345.00 - WOODWARD DISTRICT EHV 345KV CKT 2
FDNS	00NR	0	20WP	G15_033	FROM->TO	G14-057T 345.00 - SUNNYSIDE 345KV CKT 1	717	789	0.0457	114.2545	THISTLE7 345.00 - WOODWARD DISTRICT EHV 345KV CKT 2
FDNS	00NR	0	16WP	G15_033	FROM->TO	G14-057T 345.00 - SUNNYSIDE 345KV CKT 1	717	789	0.0498	114.2527	GEN344895 2-1LAB G2 20.000
FDNS	00NR	0	16WP	G15_033	FROM->TO	G14-057T 345.00 - SUNNYSIDE 345KV CKT 1	717	789	0.0498	114.2498	GEN511852 1-COMANCHE #2
FDNS	00NR	0	16WP	G15_033	FROM->TO	G14-057T 345.00 - SUNNYSIDE 345KV CKT 1	717	789	0.04929	114.2376	ARDMORE WEST - UNIROYAL 138KV CKT 1
FDNS	00NR	0	16WP	G15_033	FROM->TO	G14-057T 345.00 - SUNNYSIDE 345KV CKT 1	717	789	0.0498	114.2201	GEN344896 3-1LAB G3 20.000
FDNS	00NR	0	16WP	G15_033	FROM->TO	G14-057T 345.00 - SUNNYSIDE 345KV CKT 1	717	789	0.0498	114.2187	GEN344894 1-1LAB G1 20.000
FDNS	00NR	0	16WP	G15_033	FROM->TO	G14-057T 345.00 - SUNNYSIDE 345KV CKT 1	717	789	0.0498	114.2172	GEN344897 4-1LAB G4 20.000
FDNS	00NR	0	20WP	G15_033	FROM->TO	G14-057T 345.00 - SUNNYSIDE 345KV CKT 1	717	789	0.04587	114.215	CANEYRV7 345.00 - NEOSHO 345KV CKT 1
FDNS	00NR	0	16WP	G15_033	FROM->TO	G14-057T 345.00 - SUNNYSIDE 345KV CKT 1	717	789	0.04979	114.2146	P12:138:AEPW-SWPA:LONEOAK4:TUPELO4
FDNS	00NR	0	16WP	G15_033	FROM->TO	G14-057T 345.00 - SUNNYSIDE 345KV CKT 1	717	789	0.04979	114.2146	P12:138:WFEC:MSL06
FDNS	00NR	0	20WP	G15_033	FROM->TO	G14-057T 345.00 - SUNNYSIDE 345KV CKT 1	717	789	0.04601	114.2108	GEN515564 1-ORIGIN11 0.6900
FDNS	00NR	0	20WP	G15_033	FROM->TO	G14-057T 345.00 - SUNNYSIDE 345KV CKT 1	717	789	0.04601	114.2108	GEN515565 1-ORIGIN21 0.6900
FDNS	00NR	0	16WP	G15_033	FROM->TO	G14-057T 345.00 - SUNNYSIDE 345KV CKT 1	717	789	0.0498	114.2097	GEN681542 6-JP MADGETT
FDNS	00NR	0	16WP	G15_033	FROM->TO	G14-057T 345.00 - SUNNYSIDE 345KV CKT 1	717	789	0.04955	114.207	P12:138:OKGE:3TERM40
FDNS	00NR	0	16WP	G15_033	FROM->TO	G14-057T 345.00 - SUNNYSIDE 345KV CKT 1	717	789	0.04932	114.2012	CARTRCO4 138.00 - RATLIFF 138KV CKT 1
FDNS	00NR	0	20WP	G15_033	FROM->TO	G14-057T 345.00 - SUNNYSIDE 345KV CKT 1	717	789	0.04594	114.1947	WEBRE - WELLS 500KV CKT 1
FDNS	00NR	0	20WP	G15_033	FROM->TO	G14-057T 345.00 - SUNNYSIDE 345KV CKT 1	717	789	0.04601	114.193	GEN334440 1-SABINE UNIT 4
FDNS	00NR	0	16WP	G15_033	FROM->TO	G14-057T 345.00 - SUNNYSIDE 345KV CKT 1	717	789	0.0498	114.1885	GEN563162 1-G15081_3 0.6900
FDNS	00NR	0	16WP	G15_033	FROM->TO	G14-057T 345.00 - SUNNYSIDE 345KV CKT 1	717	789	0.0498	114.1846	GEN521110 1-ORME1 13.800
FDNS	00NR	0	16WP	G15_033	FROM->TO	G14-057T 345.00 - SUNNYSIDE 345KV CKT 1	717	789	0.0498	114.1846	GEN521111 1-ORME2 13.800
FDNS	00NR	0	16WP	G15_033	FROM->TO	G14-057T 345.00 - SUNNYSIDE 345KV CKT 1	717	789	0.05017	114.1812	G15085_T 138.00 - RUSSELL 138KV CKT 1
FDNS	00NR	0	20WP	G15_033	FROM->TO	G14-057T 345.00 - SUNNYSIDE 345KV CKT 1	717	789	0.0461	114.1812	MARIETTA - SOUTH WILSON 138KV CKT 1
FDNS	00NR	0	16WP	G15_033	FROM->TO	G14-057T 345.00 - SUNNYSIDE 345KV CKT 1	717	789	0.0498	114.1693	GEN562699 1-G15_018_3 0.6900
FDNS	00NR	0	16WP	G15_033	FROM->TO	G14-057T 345.00 - SUNNYSIDE 345KV CKT 1	717	789	0.0498	114.1677	GEN563292 1-G15095_3 0.6900
FDNS	00NR	0	20WP	G15_033	FROM->TO	G14-057T 345.00 - SUNNYSIDE 345KV CKT 1	717	789	0.04601	114.1435	DELL 500 - ESSEX UNIT 2 500KV CKT Z1
FDNS	00NR	0	20WP	G15_033	FROM->TO	G14-057T 345.00 - SUNNYSIDE 345KV CKT 1	717	789	0.04601	114.1355	P12:161:AEPW:DYESS 5:HYLAND 5
FDNS	06ALL	0	17SP	G15_033	FROM->TO	G14-057T 345.00 - SUNNYSIDE 345KV CKT 1	717	789	0.22829	114.1303	GRACEMONT - MINCO 345KV CKT 1
FDNS	00NR	0	20WP	G15_033	FROM->TO	G14-057T 345.00 - SUNNYSIDE 345KV CKT 1	717	789	0.04615	114.1298	REDBUD - RIVERSIDE STATION 345KV CKT 1
FDNS	00NR	0	20WP	G15_033	FROM->TO	G14-057T 345.00 - SUNNYSIDE 345KV CKT 1	717	789	0.04615	114.1298	REDBUD - RIVERSIDE STATION 345KV CKT 1
FDNS	00NR	0	20WP	G15_033	FROM->TO	G14-057T 345.00 - SUNNYSIDE 345KV CKT 1	717	789	0.04601	114.1212	GEN590011 2-ERCOT EQUIVALENCE
FDNS	00NR	0	16WP	G15_033	FROM->TO	G14-057T 345.00 - SUNNYSIDE 345KV CKT 1	717	789	0.0498	114.1146	ALMA 161 161/24.0KV TRANSFORMER CKT 1
FDNS	00NR	0	16WP	G15_033	FROM->TO	G14-057T 345.00 - SUNNYSIDE 345KV CKT 1	717	789	0.05138	114.11	CACHE - SNYDER 138KV CKT 1
FDNS	00NR	0	16WP	G15_033	FROM->TO	G14-057T 345.00 - SUNNYSIDE 345KV CKT 1	717	789	0.0498	114.1019	GEN661015 1-COYOTE
FDNS	00NR	0	20WP	G15_033	FROM->TO	G14-057T 345.00 - SUNNYSIDE 345KV CKT 1	717	789	0.04601	114.0866	P12:69:AEPW:L.E.S.-2:LAW WC2
FDNS	00NR	0	16WP	G15_033	FROM->TO	G14-057T 345.00 - SUNNYSIDE 345KV CKT 1	717	789	0.0498	114.083	GEN520811 1-ANADRK4
FDNS	00NR	0	20WP	G15_033	FROM->TO	G14-057T 345.00 - SUNNYSIDE 345KV CKT 1	717	789	0.0461	114.0746	P12:138:WFEC:MSL17
FDNS	00NR	0	20WP	G15_033	FROM->TO	G14-057T 345.00 - SUNNYSIDE 345KV CKT 1	717	789	0.04587	114.0675	CANEYRV7 345.00 - LATHAMS7 345.00 345KV CKT 1
FDNS	00NR	0	20WP	G15_033	FROM->TO	G14-057T 345.00 - SUNNYSIDE 345KV CKT 1	717	789	0.04601	114.0666	GEN590010 1-ERCOT EQUIVALENCE
FDNS	00NR	0	16WP	G15_033	FROM->TO	G14-057T 345.00 - SUNNYSIDE 345KV CKT 1	717	789	0.0498	114.0663	GEN563122 1-G15077_3 0.3850

SOLUTION	GROUP	SCENARIO	SEASON	SOURCE	DIRECTION	MONITORED ELEMENT	RATEA (MVA)	RATEB(MVA)	TDF	TC%LOADING (% MVA)	CONTINGENCY
FDNS	00NR	0	16WP	G15_033	FROM->TO	G14-057T 345.00 - SUNNYSIDE 345KV CKT 1	717	789	0.05024	114.0653	G15063_T 345.00 - MATHWSN7 345.00 345KV CKT 1
FDNS	00NR	0	20WP	G15_033	FROM->TO	G14-057T 345.00 - SUNNYSIDE 345KV CKT 1	717	789	0.04599	114.0616	P12:138:WFEC:MSL02
FDNS	00NR	0	16WP	G15_033	FROM->TO	G14-057T 345.00 - SUNNYSIDE 345KV CKT 1	717	789	0.0498	114.0597	GEN562861 1-G15045_2 0.4800
FDNS	00NR	0	20WP	G15_033	FROM->TO	G14-057T 345.00 - SUNNYSIDE 345KV CKT 1	717	789	0.04803	114.059	LAWTON EASTSIDE (LES 5) 345/138/13.8KV TRANSFORMER CKT 2
FDNS	00NR	0	20WP	G15_033	FROM->TO	G14-057T 345.00 - SUNNYSIDE 345KV CKT 1	717	789	0.04803	114.059	LAWTON EASTSIDE (LES 5) 345/138/13.8KV TRANSFORMER CKT 2
FDNS	00NR	0	20WP	G15_033	FROM->TO	G14-057T 345.00 - SUNNYSIDE 345KV CKT 1	717	789	0.04601	114.0373	GEN509408 1-WILKES #2
FDNS	00NR	0	16WP	G15_033	FROM->TO	G14-057T 345.00 - SUNNYSIDE 345KV CKT 1	717	789	0.04977	114.0333	P12:138:WFEC:MSL15
FDNS	00NR	0	20WP	G15_033	FROM->TO	G14-057T 345.00 - SUNNYSIDE 345KV CKT 1	717	789	0.04595	114.0218	ELDORADO EHV - SHERIDAN EHV 500KV CKT 1
FDNS	00NR	0	16WP	G15_033	FROM->TO	G14-057T 345.00 - SUNNYSIDE 345KV CKT 1	717	789	0.04929	114.0152	SUNNYSIDE - UNIROYAL 138KV CKT 1
FDNS	00NR	0	20WP	G15_033	FROM->TO	G14-057T 345.00 - SUNNYSIDE 345KV CKT 1	717	789	0.04597	114.0055	PAOLI - PAYNE 138.00 138KV CKT 1
FDNS	00NR	0	20WP	G15_033	FROM->TO	G14-057T 345.00 - SUNNYSIDE 345KV CKT 1	717	789	0.04601	114.0013	GEN506754 1-LEBROCK STEAM 1
FDNS	00NR	0	20WP	G15_033	FROM->TO	G14-057T 345.00 - SUNNYSIDE 345KV CKT 1	717	789	0.04601	113.9884	ANADARKO - GEORGIA 138KV CKT 1
FDNS	00NR	0	16WP	G15_033	FROM->TO	G14-057T 345.00 - SUNNYSIDE 345KV CKT 1	717	789	0.0498	113.986	GEN657748 1-YOUNG 2 GENERATOR
FDNS	00NR	0	16WP	G15_033	FROM->TO	G14-057T 345.00 - SUNNYSIDE 345KV CKT 1	717	789	0.04989	113.9715	CANEY CREEK - TEXOMA JCT 138KV CKT 1
FDNS	00NR	0	16WP	G15_033	FROM->TO	G14-057T 345.00 - SUNNYSIDE 345KV CKT 1	717	789	0.0498	113.9701	GEN562992 1-G15063_3 0.6900
FDNS	00NR	0	16WP	G15_033	FROM->TO	G14-057T 345.00 - SUNNYSIDE 345KV CKT 1	717	789	0.05188	113.9624	GRAPEVINE INTERCHANGE - STATELINE INTERCHANGE 230KV CKT 1
FDNS	00NR	0	16WP	G15_033	FROM->TO	G14-057T 345.00 - SUNNYSIDE 345KV CKT 1	717	789	0.05188	113.9624	GRAPEVINE INTERCHANGE - STATELINE INTERCHANGE 230KV CKT 1
FDNS	00NR	0	20WP	G15_033	FROM->TO	G14-057T 345.00 - SUNNYSIDE 345KV CKT 1	717	789	0.04607	113.9545	P12:138:AEPW:112GORE4:L.E.S.-4
FDNS	00NR	0	16WP	G15_033	FROM->TO	G14-057T 345.00 - SUNNYSIDE 345KV CKT 1	717	789	0.0498	113.9498	GEN532751 1-WOLF CREEK GENERATING STATION UNIT 1
FDNS	00NR	0	20WP	G15_033	FROM->TO	G14-057T 345.00 - SUNNYSIDE 345KV CKT 1	717	789	0.04617	113.9497	CIVIT - PAOLI 138KV CKT 1
FDNS	00NR	0	20WP	G15_033	FROM->TO	G14-057T 345.00 - SUNNYSIDE 345KV CKT 1	717	789	0.04586	113.9382	MATHWSN7 345.00 - NORTHWEST 345KV CKT 1
FDNS	00NR	0	16WP	G15_033	FROM->TO	G14-057T 345.00 - SUNNYSIDE 345KV CKT 1	717	789	0.05019	113.9211	P12:138:AEPW:SHAM4WT:CHILD4WT
FDNS	00NR	0	20WP	G15_033	FROM->TO	G14-057T 345.00 - SUNNYSIDE 345KV CKT 1	717	789	0.04601	113.9068	GEN336252 1-NINEMILE POINT UNIT#5
FDNS	00NR	0	20WP	G15_033	FROM->TO	G14-057T 345.00 - SUNNYSIDE 345KV CKT 1	717	789	0.04601	113.8867	FLETCHER - GEORGIA 138KV CKT 1
FDNS	00NR	0	20WP	G15_033	FROM->TO	G14-057T 345.00 - SUNNYSIDE 345KV CKT 1	717	789	0.04635	113.8825	P12:138:AEPW-OGE:CORNVIL4:MAUD 4
FDNS	00NR	0	16WP	G15_033	FROM->TO	G14-057T 345.00 - SUNNYSIDE 345KV CKT 1	717	789	0.0498	113.8763	GEN562952 1-G15057_3 0.6500
FDNS	00NR	0	16WP	G15_033	FROM->TO	G14-057T 345.00 - SUNNYSIDE 345KV CKT 1	717	789	0.0498	113.8729	GEN562704 1-G15_020_3 0.3550
FDNS	00NR	0	20WP	G15_033	FROM->TO	G14-057T 345.00 - SUNNYSIDE 345KV CKT 1	717	789	0.04601	113.8632	FRONTIER - GRIMES 345KV CKT 1
FDNS	00NR	0	16WP	G15_033	FROM->TO	G14-057T 345.00 - SUNNYSIDE 345KV CKT 1	717	789	0.0498	113.8575	GEN563173 1-G15082_3 0.6900
FDNS	00NR	0	20WP	G15_033	FROM->TO	G14-057T 345.00 - SUNNYSIDE 345KV CKT 1	717	789	0.04601	113.8574	GEN503909 1-FULTONU1 1 16.000
FDNS	00NR	0	20WP	G15_033	FROM->TO	G14-057T 345.00 - SUNNYSIDE 345KV CKT 1	717	789	0.04601	113.8514	GEN335204 1-NELSON UNIT 4
FDNS	00NR	0	20WP	G15_033	FROM->TO	G14-057T 345.00 - SUNNYSIDE 345KV CKT 1	717	789	0.04587	113.8496	LATHAMS7 345.00 - ROSE HILL 345KV CKT 1
FDNS	00NR	0	20WP	G15_033	FROM->TO	G14-057T 345.00 - SUNNYSIDE 345KV CKT 1	717	789	0.04598	113.8466	EMPIRE - FLETCHER 138KV CKT 1
FDNS	00NR	0	16WP	G15_033	FROM->TO	G14-057T 345.00 - SUNNYSIDE 345KV CKT 1	717	789	0.05186	113.8455	GRAPEVINE INTERCHANGE - NICHOLS STATION 230KV CKT 1
FDNS	00NR	0	16WP	G15_033	FROM->TO	G14-057T 345.00 - SUNNYSIDE 345KV CKT 1	717	789	0.05186	113.8455	GRAPEVINE INTERCHANGE - NICHOLS STATION 230KV CKT 1
FDNS	00NR	0	20WP	G15_033	FROM->TO	G14-057T 345.00 - SUNNYSIDE 345KV CKT 1	717	789	0.04601	113.844	GEN334441 1-SABINE UNIT 5
FDNS	00NR	0	20WP	G15_033	FROM->TO	G14-057T 345.00 - SUNNYSIDE 345KV CKT 1	717	789	0.04606	113.8355	TUPELO - TUPELO TAP 138KV CKT 1
FDNS	00NR	0	16WP	G15_033	FROM->TO	G14-057T 345.00 - SUNNYSIDE 345KV CKT 1	717	789	0.0498	113.82	GEN620315 1-BIG STONE GEN
FDNS	00NR	0	20WP	G15_033	FROM->TO	G14-057T 345.00 - SUNNYSIDE 345KV CKT 1	717	789	0.04617	113.8083	CIVIT - STRATFORD 138KV CKT 1
FDNS	00NR	0	20WP	G15_033	FROM->TO	G14-057T 345.00 - SUNNYSIDE 345KV CKT 1	717	789	0.04635	113.8081	BLANCHARD - CORNVILLE 138KV CKT 1
FDNS	00NR	0	16WP	G15_033	FROM->TO	G14-057T 345.00 - SUNNYSIDE 345KV CKT 1	717	789	0.0498	113.7852	GEN562710 1-G15_022_3 0.5500
FDNS	00NR	0	20WP	G15_033	FROM->TO	G14-057T 345.00 - SUNNYSIDE 345KV CKT 1	717	789	0.04575	113.7681	G1524G1525 345.00 - THISTLE7 345.00 345KV CKT 1
FDNS	00NR	0	20WP	G15_033	FROM->TO	G14-057T 345.00 - SUNNYSIDE 345KV CKT 1	717	789	0.04575	113.7681	G1524G1525 345.00 - THISTLE7 345.00 345KV CKT 2
FDNS	00NR	0	20WP	G15_033	FROM->TO	G14-057T 345.00 - SUNNYSIDE 345KV CKT 1	717	789	0.04598	113.7637	COMANCHE - EMPIRE 138KV CKT 1
FDNS	00NR	0	16WP	G15_033	FROM->TO	G14-057T 345.00 - SUNNYSIDE 345KV CKT 1	717	789	0.0498	113.7632	GEN600004 2-PRAIRIE ISLAND G2
FDNS	00NR	0	20WP	G15_033	FROM->TO	G14-057T 345.00 - SUNNYSIDE 345KV CKT 1	717	789	0.04598	113.7628	LAYFLD8 500.00 - MOUNT OLIVE 500KV CKT 1
FDNS	00NR	0	20WP	G15_033	FROM->TO	G14-057T 345.00 - SUNNYSIDE 345KV CKT 1	717	789	0.04598	113.7628	LAYFLD8 500.00 - MOUNT OLIVE 500KV CKT 1
FDNS	00NR	0	16WP	G15_033	FROM->TO	G14-057T 345.00 - SUNNYSIDE 345KV CKT 1	717	789	0.0498	113.7604	GEN600003 1-PRAIRIE ISLAND G1
FDNS	00NR	0	16WP	G15_033	FROM->TO	G14-057T 345.00 - SUNNYSIDE 345KV CKT 1	717	789	0.0498	113.7577	GEN511851 1-COMANCHE #1
FDNS	00NR	0	20WP	G15_033	FROM->TO	G14-057T 345.00 - SUNNYSIDE 345KV CKT 1	717	789	0.04601	113.7524	GEN334071 1-LEWIS CREEK 2
FDNS	00NR	0	16WP	G15_033	FROM->TO	G14-057T 345.00 - SUNNYSIDE 345KV CKT 1	717	789	0.0498	113.7523	GEN600006 1-AS KING
FDNS	00NR	0	20WP	G15_033	FROM->TO	G14-057T 345.00 - SUNNYSIDE 345KV CKT 1	717	789	0.04601	113.744	GEN334070 1-LEWIS CREEK 1
FDNS	00NR	0	20WP	G15_033	FROM->TO	G14-057T 345.00 - SUNNYSIDE 345KV CKT 1	717	789	0.04601	113.7346	GEN336251 1-NINEMILE POINT UNIT#4
FDNS	00NR	0	20WP	G15_033	FROM->TO	G14-057T 345.00 - SUNNYSIDE 345KV CKT 1	717	789	0.04601	113.7145	GEN509393 S1-ARSENAL HILL GENS #4 (STALL)
FDNS	00NR	0	20WP	G15_033	FROM->TO	G14-057T 345.00 - SUNNYSIDE 345KV CKT 1	717	789	0.04601	113.713	GEN509392 G2-ARSENAL HILL GENS #3 (STALL)
FDNS	00NR	0	20WP	G15_033	FROM->TO	G14-057T 345.00 - SUNNYSIDE 345KV CKT 1	717	789	0.04601	113.7129	GEN509391 G1-ARSENAL HILL GENS #2 (STALL)
FDNS	00NR	0	20WP	G15_033	FROM->TO	G14-057T 345.00 - SUNNYSIDE 345KV CKT 1	717	789	0.04601	113.7078	P12:161:AEPW-SWPA:BEAVER5:EROGERS5
FDNS	00NR	0	20WP	G15_033	FROM->TO	G14-057T 345.00 - SUNNYSIDE 345KV CKT 1	717	789	0.04617	113.6904	OIL CENTER - STRATFORD 138KV CKT 1
FDNS	00NR	0	16WP	G15_033	FROM->TO	G14-057T 345.00 - SUNNYSIDE 345KV CKT 1	717	789	0.0498	113.6876	P12:138:WFEC:MSL09
FDNS	00NR	0	20WP	G15_033	FROM->TO	G14-057T 345.00 - SUNNYSIDE 345KV CKT 1	717	789	0.04601	113.6862	GEN334433 1-SABINE UNIT 3
FDNS	00NR	0	20WP	G15_033	FROM->TO	G14-057T 345.00 - SUNNYSIDE 345KV CKT 1	717	789	0.04601	113.6699	GEN337653 1-WHITE BLUFF UNIT #2
FDNS	00NR	0	16WP	G15_033	FROM->TO	G14-057T 345.00 - SUNNYSIDE 345KV CKT 1	717	789	0.0498	113.6636	GEN636641 1-LOUISA UNIT 1
FDNS	00NR	0	16WP	G15_033	FROM->TO	G14-057T 345.00 - SUNNYSIDE 345KV CKT 1	717	789	0.05039	113.6599	P12:138:AEPW-OGE:CORNVIL4:CIMARON4
FDNS	00NR	0	20WP	G15_033	FROM->TO	G14-057T 345.00 - SUNNYSIDE 345KV CKT 1	717	789	0.04601	113.6599	GEN336831 1-BAXTER WILSON SES
FDNS	00NR	0	20WP	G15_033	FROM->TO	G14-057T 345.00 - SUNNYSIDE 345KV CKT 1	717	789	0.04431	113.6541	FINNEY SWITCHING STATION - HOLCOMB 345KV CKT 1
FDNS	00NR	0	20WP	G15_033	FROM->TO	G14-057T 345.00 - SUNNYSIDE 345KV CKT 1	717	789	0.04431	113.6541	FINNEY SWITCHING STATION - HOLCOMB 345KV CKT 1
FDNS	00NR	0	20WP	G15_033	FROM->TO	G14-057T 345.00 - SUNNYSIDE 345KV CKT 1	717	789	0.04601	113.6458	GEN515040 1-SEMINOLE 1G
FDNS	00NR	0	20WP	G15_033	FROM->TO	G14-057T 345.00 - SUNNYSIDE 345KV CKT 1	717	789	0.04601	113.6432	P12:161:AEPW:DYESS5:ELMSPRNG:TONTITN5
FDNS	00NR	0	20WP	G15_033	FROM->TO	G14-057T 345.00 - SUNNYSIDE 345KV CKT 1	717	789	0.04623	113.6336	DUNCAN (DUNCAN) 138/69/13.8KV TRANSFORMER CKT 1
FDNS	00NR	0	20WP	G15_033	FROM->TO	G14-057T 345.00 - SUNNYSIDE 345KV CKT 1	717	789	0.04623	113.6336	DUNCAN (DUNCAN) 138/69/13.8KV TRANSFORMER CKT 1
FDNS	00NR	0	16WP	G15_033	FROM->TO	G14-057T 345.00 - SUNNYSIDE 345KV CKT 1	717	789	0.0498	113.6211	GEN600005 1-MONTICELLO
FDNS	00NR	0	20WP	G15_033	FROM->TO	G14-057T 345.00 - SUNNYSIDE 345KV CKT 1	717	789	0.04601	113.6167	GEN337911 1-ARKANSAS NUCLEAR ONE UNIT #2
FDNS	00NR	0	20WP	G15_033	FROM->TO	G14-057T 345.00 - SUNNYSIDE 345KV CKT 1	717	789	0.04601	113.6116	GEN334030 1-FRONTIER UNIT 1
FDNS	00NR	0	20WP	G15_033	FROM->TO	G14-057T 345.00 - SUNNYSIDE 345KV CKT 1	717	789	0.04601	113.6093	GEN334031 1-FRONTIER UNIT 2
FDNS	00NR	0	20WP	G15_033	FROM->TO	G14-057T 345.00 - SUNNYSIDE 345KV CKT 1	717	789	0.046	113.5913	P12:138:AEPW:CATOOSA4:T.S.E.-4
FDNS	00NR	0	20WP	G15_033	FROM->TO	G14-057T 345.00 - SUNNYSIDE 345KV CKT 1	717	789	0.04655	113.5874	TUTTLE - TUTTLE CONOCO TAP 138KV CKT 1
FDNS	00NR	0	20WP	G15_033	FROM->TO	G14-057T 345.00 - SUNNYSIDE 345KV CKT 1	717	789	0.04635	113.5864	BLANCHARD - MAUD 138KV CKT 1
FDNS	00NR	0	20WP	G15_033	FROM->TO	G14-057T 345.00 - SUNNYSIDE 345KV CKT 1	717	789	0.04601	113.5692	GEN506752 1-LEBROCK GAS 1
FDNS	00NR	0	20WP	G15_033	FROM->TO	G14-057T 345.00 - SUNNYSIDE 345KV CKT 1	717	789	0.04601	113.5689	GEN506753 1-LEBROCK GAS 2

SOLUTION	GROUP	SCENARIO	SEASON	SOURCE	DIRECTION	MONITORED ELEMENT	RATEA (MVA)	RATEB(MVA)	TDF	TC%LOADING (% MVA)	CONTINGENCY
FDNS	00NR	0	20WP	G15_033	FROM->TO	G14-057T 345.00 - SUNNYSIDE 345KV CKT 1	717	789	0.04601	113.5686	GEN501811 1-RODEMACHER UNIT 1
FDNS	00NR	0	20WP	G15_033	FROM->TO	G14-057T 345.00 - SUNNYSIDE 345KV CKT 1	717	789	0.04588	113.5678	P12:138:AEPW-OGE:WTH_JCT4:JENSEN4
FDNS	00NR	0	20WP	G15_033	FROM->TO	G14-057T 345.00 - SUNNYSIDE 345KV CKT 1	717	789	0.04601	113.5664	GEN337652 1-WHITE BLUFF UNIT #1
FDNS	00NR	0	20WP	G15_033	FROM->TO	G14-057T 345.00 - SUNNYSIDE 345KV CKT 1	717	789	0.04669	113.5634	P12:138:AEPW:CORNVIL4:DUNCAN-4
FDNS	00NR	0	16WP	G15_033	FROM->TO	G14-057T 345.00 - SUNNYSIDE 345KV CKT 1	717	789	0.05331	113.5617	CHISHOLM7 345.00 (CHISHOLM) 345/230/13.2KV TRANSFORMER CKT 1
FDNS	00NR	0	20WP	G15_033	FROM->TO	G14-057T 345.00 - SUNNYSIDE 345KV CKT 1	717	789	0.04591	113.559	FULTON 115 - HOPE 115KV CKT 1
FDNS	00NR	0	20WP	G15_033	FROM->TO	G14-057T 345.00 - SUNNYSIDE 345KV CKT 1	717	789	0.04591	113.559	FULTON 115 - HOPE 115KV CKT 1
FDNS	00NR	0	20WP	G15_033	FROM->TO	G14-057T 345.00 - SUNNYSIDE 345KV CKT 1	717	789	0.04145	113.538	G14_038T 345.00 - Hitchland Interchange 345KV CKT 1
FDNS	00NR	0	16WP	G15_033	FROM->TO	G14-057T 345.00 - SUNNYSIDE 345KV CKT 1	717	789	0.0498	113.536	GEN635213 3-NEAL UNIT 3
FDNS	00NR	0	20WP	G15_033	FROM->TO	G14-057T 345.00 - SUNNYSIDE 345KV CKT 1	717	789	0.04601	113.5345	GEN336191 1-LITTLE GYPSY UNIT#3
FDNS	00NR	0	20WP	G15_033	FROM->TO	G14-057T 345.00 - SUNNYSIDE 345KV CKT 1	717	789	0.04601	113.5341	GEN300015 1-1SGPDEL 18.000
FDNS	00NR	0	16WP	G15_033	FROM->TO	G14-057T 345.00 - SUNNYSIDE 345KV CKT 1	717	789	0.0498	113.5331	GEN562754 1-G15031_5 0.6900
FDNS	00NR	0	20WP	G15_033	FROM->TO	G14-057T 345.00 - SUNNYSIDE 345KV CKT 1	717	789	0.04617	113.5177	LATTA JCT - OIL CENTER 138KV CKT 1
FDNS	00NR	0	20WP	G15_033	FROM->TO	G14-057T 345.00 - SUNNYSIDE 345KV CKT 1	717	789	0.04609	113.5164	P12:138:AEPW:CORNVIL4:S.W.S.-4
FDNS	00NR	0	20WP	G15_033	FROM->TO	G14-057T 345.00 - SUNNYSIDE 345KV CKT 1	717	789	0.04601	113.5154	GEN515226 1-MUSKOGEE 6G
FDNS	00NR	0	16WP	G15_033	FROM->TO	G14-057T 345.00 - SUNNYSIDE 345KV CKT 1	717	789	0.0498	113.5076	GEN629074 1-ARNOLD LOWSIDE OF GSU XFMR
FDNS	00NR	0	20WP	G15_033	FROM->TO	G14-057T 345.00 - SUNNYSIDE 345KV CKT 1	717	789	0.04601	113.5041	GEN335614 1-WILLOW GLENN UNIT#4
FDNS	00NR	0	20WP	G15_033	FROM->TO	G14-057T 345.00 - SUNNYSIDE 345KV CKT 1	717	789	0.04601	113.5006	GEN300003 1-THOMAS HILL UNIT 3
FDNS	00NR	0	20WP	G15_033	FROM->TO	G14-057T 345.00 - SUNNYSIDE 345KV CKT 1	717	789	0.04593	113.4965	6LAYFLD 230.00 - CARROLL 230KV CKT 1
FDNS	00NR	0	20WP	G15_033	FROM->TO	G14-057T 345.00 - SUNNYSIDE 345KV CKT 1	717	789	0.04655	113.4953	CIMARRON - TUTTLE CONOCO TAP 138KV CKT 1
FDNS	00NR	0	20WP	G15_033	FROM->TO	G14-057T 345.00 - SUNNYSIDE 345KV CKT 1	717	789	0.046	113.4935	8DANIEL8 500.00 - MCKNIGHT 500KV CKT 1
FDNS	00NR	0	20WP	G15_033	FROM->TO	G14-057T 345.00 - SUNNYSIDE 345KV CKT 1	717	789	0.04636	113.4759	BAILEY4 138.00 - SUNSHINE CANYON 138KV CKT 1
FDNS	00NR	0	16WP	G15_033	FROM->TO	G14-057T 345.00 - SUNNYSIDE 345KV CKT 1	717	789	0.0498	113.4741	GEN562756 1-G15031_7 0.6900
FDNS	00NR	0	20WP	G15_033	FROM->TO	G14-057T 345.00 - SUNNYSIDE 345KV CKT 1	717	789	0.04601	113.4652	P12:161:AEPW:EROGERS5:ECNTRTN5
FDNS	00NR	0	20WP	G15_033	FROM->TO	G14-057T 345.00 - SUNNYSIDE 345KV CKT 1	717	789	0.04596	113.4622	G15095_T 138.00 - ROSE_VALLEY 138.00 138KV CKT 1
FDNS	00NR	0	16WP	G15_033	FROM->TO	G14-057T 345.00 - SUNNYSIDE 345KV CKT 1	717	789	0.0498	113.4614	BIG STONE 230/24.0KV TRANSFORMER CKT 1
FDNS	00NR	0	20WP	G15_033	FROM->TO	G14-057T 345.00 - SUNNYSIDE 345KV CKT 1	717	789	0.04601	113.4607	GEN337910 1-ARKANSAS NUCLEAR ONE UNIT #1
FDNS	00NR	0	20WP	G15_033	FROM->TO	G14-057T 345.00 - SUNNYSIDE 345KV CKT 1	717	789	0.04601	113.4596	GEN303007 1-1BC2 U2
FDNS	00NR	0	20WP	G15_033	FROM->TO	G14-057T 345.00 - SUNNYSIDE 345KV CKT 1	717	789	0.04623	113.4595	P12:69:WFEC-AEPW:COMANCH2:DUNCAN-2
FDNS	00NR	0	16WP	G15_033	FROM->TO	G14-057T 345.00 - SUNNYSIDE 345KV CKT 1	717	789	0.0498	113.4548	GEN562023 1-G11_020_3 0.6900
FDNS	00NR	0	16WP	G15_033	FROM->TO	G14-057T 345.00 - SUNNYSIDE 345KV CKT 1	717	789	0.0498	113.4548	GEN562026 1-G11_019_3 0.6900
FDNS	00NR	0	20WP	G15_033	FROM->TO	G14-057T 345.00 - SUNNYSIDE 345KV CKT 1	717	789	0.04601	113.4538	GEN303006 1-1BC2 U1
FDNS	00NR	0	20WP	G15_033	FROM->TO	G14-057T 345.00 - SUNNYSIDE 345KV CKT 1	717	789	0.04594	113.4533	P12:138:AEPW:WTHWF4:CLINTJC4
FDNS	00NR	0	20WP	G15_033	FROM->TO	G14-057T 345.00 - SUNNYSIDE 345KV CKT 1	717	789	0.04601	113.4532	GEN336464 1-MICHOUD UNIT #3
FDNS	00NR	0	20WP	G15_033	FROM->TO	G14-057T 345.00 - SUNNYSIDE 345KV CKT 1	717	789	0.04601	113.453	WHITE BLUFF 500/26.0KV TRANSFORMER CKT 1
FDNS	00NR	0	20WP	G15_033	FROM->TO	G14-057T 345.00 - SUNNYSIDE 345KV CKT 1	717	789	0.04551	113.451	BUCKNER7 345.00 - SPEARVILLE 345KV CKT 1
FDNS	00NR	0	20WP	G15_033	FROM->TO	G14-057T 345.00 - SUNNYSIDE 345KV CKT 1	717	789	0.04551	113.451	BUCKNER7 345.00 - SPEARVILLE 345KV CKT 1
FDNS	00NR	0	20WP	G15_033	FROM->TO	G14-057T 345.00 - SUNNYSIDE 345KV CKT 1	717	789	0.04601	113.4497	GEN562783 1-G15036_4 0.6900
FDNS	00NR	0	20WP	G15_033	FROM->TO	G14-057T 345.00 - SUNNYSIDE 345KV CKT 1	717	789	0.04601	113.4497	GEN562784 1-G15036_5 0.6900
FDNS	00NR	0	20WP	G15_033	FROM->TO	G14-057T 345.00 - SUNNYSIDE 345KV CKT 1	717	789	0.04601	113.4447	RODEMACHER 230/22.0KV TRANSFORMER CKT 1
FDNS	00NR	0	20WP	G15_033	FROM->TO	G14-057T 345.00 - SUNNYSIDE 345KV CKT 1	717	789	0.04632	113.4435	P12:69:AEPW-OMPA:COMANC-2:OMWALTR2
FDNS	00NR	0	20WP	G15_033	FROM->TO	G14-057T 345.00 - SUNNYSIDE 345KV CKT 1	717	789	0.04602	113.4374	CIMARRON - CZECH HALL 138KV CKT 1
FDNS	00NR	0	16WP	G15_033	FROM->TO	G14-057T 345.00 - SUNNYSIDE 345KV CKT 1	717	789	0.05331	113.4352	CHISHOLM7 345.00 - GRACEMONT 345KV CKT 1
FDNS	00NR	0	20WP	G15_033	FROM->TO	G14-057T 345.00 - SUNNYSIDE 345KV CKT 1	717	789	0.04596	113.4339	G15088_T 345.00 - MOORE 345KV CKT 1
FDNS	00NR	0	20WP	G15_033	FROM->TO	G14-057T 345.00 - SUNNYSIDE 345KV CKT 1	717	789	0.04601	113.4338	GEN515225 1-MUSKOGEE 5G
FDNS	00NR	0	20WP	G15_033	FROM->TO	G14-057T 345.00 - SUNNYSIDE 345KV CKT 1	717	789	0.04601	113.4337	GEN515223 1-MUSKOGEE 4G
FDNS	00NR	0	16WP	G15_033	FROM->TO	G14-057T 345.00 - SUNNYSIDE 345KV CKT 1	717	789	0.0498	113.4308	GEN562556 1-G14_046_3 0.3420
FDNS	00NR	0	20WP	G15_033	FROM->TO	G14-057T 345.00 - SUNNYSIDE 345KV CKT 1	717	789	0.04594	113.4308	BISMARK - HOT SPRINGS WEST BUS 115KV CKT 1
FDNS	00NR	0	20WP	G15_033	FROM->TO	G14-057T 345.00 - SUNNYSIDE 345KV CKT 1	717	789	0.04623	113.427	DUNCAN - TOSCO 69KV CKT 1
FDNS	00NR	0	20WP	G15_033	FROM->TO	G14-057T 345.00 - SUNNYSIDE 345KV CKT 1	717	789	0.04594	113.427	P12:138:AEPW:WTHWF4:WTH_SE4
FDNS	00NR	0	20WP	G15_033	FROM->TO	G14-057T 345.00 - SUNNYSIDE 345KV CKT 1	717	789	0.04597	113.4262	MC NIEL 500/115KV TRANSFORMER CKT 1
FDNS	00NR	0	20WP	G15_033	FROM->TO	G14-057T 345.00 - SUNNYSIDE 345KV CKT 1	717	789	0.04598	113.4235	G15074_T 345.00 - HOYT 345KV CKT 1
FDNS	00NR	0	20WP	G15_033	FROM->TO	G14-057T 345.00 - SUNNYSIDE 345KV CKT 1	717	789	0.04598	113.4158	HOT SPRINGS EHV - MAGNET COVE 500KV CKT 1
FDNS	00NR	0	20WP	G15_033	FROM->TO	G14-057T 345.00 - SUNNYSIDE 345KV CKT 1	717	789	0.04601	113.4072	GEN300010 1-ST FRANCIS UNIT 1
FDNS	00NR	0	20WP	G15_033	FROM->TO	G14-057T 345.00 - SUNNYSIDE 345KV CKT 1	717	789	0.04594	113.4038	CLEO CORNER - CLEOPLT4 138.00 138KV CKT 1
FDNS	00NR	0	20WP	G15_033	FROM->TO	G14-057T 345.00 - SUNNYSIDE 345KV CKT 1	717	789	0.04601	113.3966	GEN337041 1-GERALD ANDRUS
FDNS	00NR	0	20WP	G15_033	FROM->TO	G14-057T 345.00 - SUNNYSIDE 345KV CKT 1	717	789	0.04601	113.3929	GEN303008 1-1BC2 U3
FDNS	00NR	0	20WP	G15_033	FROM->TO	G14-057T 345.00 - SUNNYSIDE 345KV CKT 1	717	789	0.04597	113.3855	CIMARRON - SARA 138KV CKT 1
FDNS	00NR	0	20WP	G15_033	FROM->TO	G14-057T 345.00 - SUNNYSIDE 345KV CKT 1	717	789	0.04594	113.3828	CLEOPLT4 138.00 - MEN TAP 138KV CKT 1
FDNS	00NR	0	20WP	G15_033	FROM->TO	G14-057T 345.00 - SUNNYSIDE 345KV CKT 1	717	789	0.04601	113.3807	GEN505432 1-SIKESTON
FDNS	00NR	0	20WP	G15_033	FROM->TO	G14-057T 345.00 - SUNNYSIDE 345KV CKT 1	717	789	0.04431	113.3806	FINNEY SWITCHING STATION - WALKTAP7 345.00 345KV CKT 1
FDNS	00NR	0	20WP	G15_033	FROM->TO	G14-057T 345.00 - SUNNYSIDE 345KV CKT 1	717	789	0.04431	113.3806	FINNEY SWITCHING STATION - WALKTAP7 345.00 345KV CKT 1
FDNS	00NR	0	20WP	G15_033	FROM->TO	G14-057T 345.00 - SUNNYSIDE 345KV CKT 1	717	789	0.04596	113.3803	NOEL_SW 138.00 - ROSE_VALLEY 138.00 138KV CKT 1
FDNS	00NR	0	20WP	G15_033	FROM->TO	G14-057T 345.00 - SUNNYSIDE 345KV CKT 1	717	789	0.0454	113.3796	ELK CITY 230KV (ELKCTY-6) 230/138/13.8KV TRANSFORMER CKT 1
FDNS	00NR	0	20WP	G15_033	FROM->TO	G14-057T 345.00 - SUNNYSIDE 345KV CKT 1	717	789	0.0454	113.3796	ELK CITY 230KV (ELKCTY-6) 230/138/13.8KV TRANSFORMER CKT 1
FDNS	00NR	0	20WP	G15_033	FROM->TO	G14-057T 345.00 - SUNNYSIDE 345KV CKT 1	717	789	0.04594	113.379	ALPINE AECC - BISMARK 115KV CKT 1
FDNS	00NR	0	20WP	G15_033	FROM->TO	G14-057T 345.00 - SUNNYSIDE 345KV CKT 1	717	789	0.04578	113.3733	SEMINOLE - VANOSTP4 138.00 138KV CKT 1
FDNS	00NR	0	20WP	G15_033	FROM->TO	G14-057T 345.00 - SUNNYSIDE 345KV CKT 1	717	789	0.04594	113.3709	IMO TAP - MEN TAP 138KV CKT 1
FDNS	00NR	0	20WP	G15_033	FROM->TO	G14-057T 345.00 - SUNNYSIDE 345KV CKT 1	717	789	0.04602	113.3682	CZECH HALL - XEROX 138KV CKT 1
FDNS	00NR	0	20WP	G15_033	FROM->TO	G14-057T 345.00 - SUNNYSIDE 345KV CKT 1	717	789	0.0454	113.3668	CHISHOLM6 230.00 - ELK CITY 230KV 230KV CKT 1
FDNS	00NR	0	20WP	G15_033	FROM->TO	G14-057T 345.00 - SUNNYSIDE 345KV CKT 1	717	789	0.04601	113.3644	P12:138:AEPW:N.E.S.-4:CATOOSA4
FDNS	00NR	0	20WP	G15_033	FROM->TO	G14-057T 345.00 - SUNNYSIDE 345KV CKT 1	717	789	0.04602	113.3642	MORGAN - XEROX 138KV CKT 1
FDNS	00NR	0	20WP	G15_033	FROM->TO	G14-057T 345.00 - SUNNYSIDE 345KV CKT 1	717	789	0.04601	113.3642	GEN336170 1-GULF OXY U4
FDNS	00NR	0	20WP	G15_033	FROM->TO	G14-057T 345.00 - SUNNYSIDE 345KV CKT 1	717	789	0.04623	113.3638	COMANCHE TAP - TOSCO 69KV CKT 1
FDNS	00NR	0	20WP	G15_033	FROM->TO	G14-057T 345.00 - SUNNYSIDE 345KV CKT 1	717	789	0.04601	113.3586	NELSON 230/20.0KV TRANSFORMER CKT 1
FDNS	00NR	0	20WP	G15_033	FROM->TO	G14-057T 345.00 - SUNNYSIDE 345KV CKT 1	717	789	0.04601	113.35	GEN300011 1-ST FRANCIS UNIT 2
FDNS	00NR	0	20WP	G15_033	FROM->TO	G14-057T 345.00 - SUNNYSIDE 345KV CKT 1	717	789	0.04567	113.3485	ARBWIND4 138.00 - CARTER 138KV CKT 1
FDNS	00NR	0	16WP	G15_033	FROM->TO	G14-057T 345.00 - SUNNYSIDE 345KV CKT 1	717	789	0.0498	113.3423	GEN563142 1-G15079_3 0.5500
FDNS	00NR	0	16WP	G15_033	FROM->TO	G14-057T 345.00 - SUNNYSIDE 345KV CKT 1	717	789	0.0498	113.3423	GEN563151 1-G15080_2 0.5500

SOLUTION	GROUP	SCENARIO	SEASON	SOURCE	DIRECTION	MONITORED ELEMENT	RATEA (MVA)	RATEB(MVA)	TDF	TC%LOADING (% MVA)	CONTINGENCY
FDNS	00NR	0	20WP	G15_033	FROM->TO	G14-057T 345.00 - SUNNYSIDE 345KV CKT 1	717	789	0.04601	113.3417	GEN336801 1-BAXTER WILSON UNIT #1
FDNS	00NR	0	20WP	G15_033	FROM->TO	G14-057T 345.00 - SUNNYSIDE 345KV CKT 1	717	789	0.04602	113.3413	MORGAN - MUSTANG 138KV CKT 1
FDNS	00NR	0	20WP	G15_033	FROM->TO	G14-057T 345.00 - SUNNYSIDE 345KV CKT 1	717	789	0.04594	113.3302	ALPINE AECC - AMITY SS 115KV CKT 1
FDNS	00NR	0	20WP	G15_033	FROM->TO	G14-057T 345.00 - SUNNYSIDE 345KV CKT 1	717	789	0.04589	113.3242	WEATHERFORD JCT. - WEATHERFORD SOUTHEAST 138KV CKT 1
FDNS	00NR	0	20WP	G15_033	FROM->TO	G14-057T 345.00 - SUNNYSIDE 345KV CKT 1	717	789	0.04589	113.3242	WEATHERFORD JCT. - WEATHERFORD SOUTHEAST 138KV CKT 1
FDNS	00NR	0	20WP	G15_033	FROM->TO	G14-057T 345.00 - SUNNYSIDE 345KV CKT 1	717	789	0.04601	113.3189	8CAJUN2 500/24.0KV TRANSFORMER CKT 1
FDNS	00NR	0	20WP	G15_033	FROM->TO	G14-057T 345.00 - SUNNYSIDE 345KV CKT 1	717	789	0.04601	113.3146	GEN501910 1-ACADIA UNIT ST1
FDNS	00NR	0	16WP	G15_033	FROM->TO	G14-057T 345.00 - SUNNYSIDE 345KV CKT 1	717	789	0.0498	113.3117	GEN523971 1-HARRINGTON GEN #1 24 KV
FDNS	00NR	0	16WP	G15_033	FROM->TO	G14-057T 345.00 - SUNNYSIDE 345KV CKT 1	717	789	0.0498	113.3117	GEN523973 1-HARRINGTON GEN #3 24 KV
FDNS	00NR	0	16WP	G15_033	FROM->TO	G14-057T 345.00 - SUNNYSIDE 345KV CKT 1	717	789	0.0498	113.3116	GEN523972 1-HARRINGTON GEN #2 24 KV
FDNS	00NR	0	20WP	G15_033	FROM->TO	G14-057T 345.00 - SUNNYSIDE 345KV CKT 1	717	789	0.04623	113.3102	COMANCHE - COMANCHE TAP 69KV CKT 1
FDNS	00NR	0	16WP	G15_033	FROM->TO	G14-057T 345.00 - SUNNYSIDE 345KV CKT 1	717	789	0.0498	113.3067	GEN600000 1-SHERBURNECNTY G1
FDNS	00NR	0	20WP	G15_033	FROM->TO	G14-057T 345.00 - SUNNYSIDE 345KV CKT 1	717	789	0.04607	113.3027	ANADARKO - SEQUOYAHJ4 138.00 138KV CKT 1
FDNS	00NR	0	20WP	G15_033	FROM->TO	G14-057T 345.00 - SUNNYSIDE 345KV CKT 1	717	789	0.04607	113.3012	CORN TAP - SEQUOYAHJ4 138.00 138KV CKT 1
FDNS	00NR	0	20WP	G15_033	FROM->TO	G14-057T 345.00 - SUNNYSIDE 345KV CKT 1	717	789	0.04636	113.2991	BAILEY4 138.00 - WESTMOORE 138KV CKT 1
FDNS	00NR	0	20WP	G15_033	FROM->TO	G14-057T 345.00 - SUNNYSIDE 345KV CKT 1	717	789	0.04589	113.29	P12:138:OKGE-AEPW:JENSEN4:REDROCKRD4
FDNS	00NR	0	20WP	G15_033	FROM->TO	G14-057T 345.00 - SUNNYSIDE 345KV CKT 1	717	789	0.04589	113.279	P12:138:AEPW:REDROCKRD4:WTH_JCT4
FDNS	00NR	0	20WP	G15_033	FROM->TO	G14-057T 345.00 - SUNNYSIDE 345KV CKT 1	717	789	0.04601	113.2786	SABINE 230/24.0KV TRANSFORMER CKT 1
FDNS	00NR	0	20WP	G15_033	FROM->TO	G14-057T 345.00 - SUNNYSIDE 345KV CKT 1	717	789	0.04597	113.276	SARA - STHLAKE4 138.00 138KV CKT 1
FDNS	00NR	0	20WP	G15_033	FROM->TO	G14-057T 345.00 - SUNNYSIDE 345KV CKT 1	717	789	0.04614	113.2756	WALTERS - WALTERS 69KV CKT 1
FDNS	00NR	0	20WP	G15_033	FROM->TO	G14-057T 345.00 - SUNNYSIDE 345KV CKT 1	717	789	0.04599	113.2703	ETTA (DUKE HOTSPRINGS) - MC NIEL 500KV CKT 1
FDNS	00NR	0	20WP	G15_033	FROM->TO	G14-057T 345.00 - SUNNYSIDE 345KV CKT 1	717	789	0.04601	113.2697	P12:138:AEPW:R.S.S.-4:S.HUD.-4
FDNS	00NR	0	20WP	G15_033	FROM->TO	G14-057T 345.00 - SUNNYSIDE 345KV CKT 1	717	789	0.04601	113.2607	GEN336222 1-LITTLE GYPSY UNIT#2
FDNS	00NR	0	20WP	G15_033	FROM->TO	G14-057T 345.00 - SUNNYSIDE 345KV CKT 1	717	789	0.04601	113.2597	GEN300016 1-1G1GPDEL 18.000
FDNS	00NR	0	20WP	G15_033	FROM->TO	G14-057T 345.00 - SUNNYSIDE 345KV CKT 1	717	789	0.04632	113.249	LAWTON RELIFT TAP - OMPA-WALTERS 69KV CKT 1
FDNS	00NR	0	20WP	G15_033	FROM->TO	G14-057T 345.00 - SUNNYSIDE 345KV CKT 1	717	789	0.04597	113.2459	MCCLAIN - STHLAKE4 138.00 138KV CKT 1
FDNS	00NR	0	16WP	G15_033	FROM->TO	G14-057T 345.00 - SUNNYSIDE 345KV CKT 1	717	789	0.05347	113.2448	STLN-DEMARC6 - SWEETWATER 230KV CKT 1
FDNS	00NR	0	20WP	G15_033	FROM->TO	G14-057T 345.00 - SUNNYSIDE 345KV CKT 1	717	789	0.04601	113.2379	P12:69:AEPW:NROGERS2:ECNTRTN2
FDNS	00NR	0	16WP	G15_033	FROM->TO	G14-057T 345.00 - SUNNYSIDE 345KV CKT 1	717	789	0.05347	113.2375	P12:230:AEPW-SPS:SWEETWT6:WHEELER 6
FDNS	00NR	0	16WP	G15_033	FROM->TO	G14-057T 345.00 - SUNNYSIDE 345KV CKT 1	717	789	0.05347	113.2358	STATELINE INTERCHANGE - STLN-DEMARC6 230KV CKT 1
FDNS	00NR	0	20WP	G15_033	FROM->TO	G14-057T 345.00 - SUNNYSIDE 345KV CKT 1	717	789	0.04609	113.2337	NORGE ROAD - SOUTHWESTERN STATION 138KV CKT 1
FDNS	00NR	0	20WP	G15_033	FROM->TO	G14-057T 345.00 - SUNNYSIDE 345KV CKT 1	717	789	0.04609	113.2337	NORGE ROAD - SOUTHWESTERN STATION 138KV CKT 1
FDNS	00NR	0	20WP	G15_033	FROM->TO	G14-057T 345.00 - SUNNYSIDE 345KV CKT 1	717	789	0.04601	113.2278	P12:138:AEPW:BA_71ST4:T.S.E.-4
FDNS	00NR	0	20WP	G15_033	FROM->TO	G14-057T 345.00 - SUNNYSIDE 345KV CKT 1	717	789	0.04601	113.2251	GEN336152 1-WATERFORD UNIT#2
FDNS	00NR	0	20WP	G15_033	FROM->TO	G14-057T 345.00 - SUNNYSIDE 345KV CKT 1	717	789	0.04617	113.2249	LASALLE - LATTA JCT 138KV CKT 1
FDNS	00NR	0	20WP	G15_033	FROM->TO	G14-057T 345.00 - SUNNYSIDE 345KV CKT 1	717	789	0.04601	113.2243	GEN336151 1-WATERFORD UNIT#1
FDNS	00NR	0	20WP	G15_033	FROM->TO	G14-057T 345.00 - SUNNYSIDE 345KV CKT 1	717	789	0.04601	113.2231	P12:138:AEPW:YARCH-S4:T.S.E.-4
FDNS	00NR	0	20WP	G15_033	FROM->TO	G14-057T 345.00 - SUNNYSIDE 345KV CKT 1	717	789	0.04599	113.2206	P12:138:AEPW-OGE:SHIDLER4:OSAGE 4
FDNS	00NR	0	16WP	G15_033	FROM->TO	G14-057T 345.00 - SUNNYSIDE 345KV CKT 1	717	789	0.04961	113.22	NORTHWEST TEXARKANA - VALLIANT 345KV CKT 1
FDNS	00NR	0	16WP	G15_033	FROM->TO	G14-057T 345.00 - SUNNYSIDE 345KV CKT 1	717	789	0.04961	113.22	NORTHWEST TEXARKANA - VALLIANT 345KV CKT 1
FDNS	00NR	0	20WP	G15_033	FROM->TO	G14-057T 345.00 - SUNNYSIDE 345KV CKT 1	717	789	0.04597	113.2197	MORISNT4 138.00 - STILLWATER 138KV CKT 1
FDNS	00NR	0	20WP	G15_033	FROM->TO	G14-057T 345.00 - SUNNYSIDE 345KV CKT 1	717	789	0.04601	113.2158	FRONTIER 345/18.0KV TRANSFORMER CKT 1
FDNS	00NR	0	16WP	G15_033	FROM->TO	G14-057T 345.00 - SUNNYSIDE 345KV CKT 1	717	789	0.0498	113.2157	GEN600001 2-SHERBURNE CNTY G2
FDNS	00NR	0	20WP	G15_033	FROM->TO	G14-057T 345.00 - SUNNYSIDE 345KV CKT 1	717	789	0.04597	113.2143	P12:138:OKGE:3TERM2
FDNS	00NR	0	20WP	G15_033	FROM->TO	G14-057T 345.00 - SUNNYSIDE 345KV CKT 1	717	789	0.04601	113.2136	FRONTIER 345/18.0KV TRANSFORMER CKT 1
FDNS	00NR	0	20WP	G15_033	FROM->TO	G14-057T 345.00 - SUNNYSIDE 345KV CKT 1	717	789	0.04597	113.2053	HOYT - STRANGER CREEK 345KV CKT 1
FDNS	00NR	0	20WP	G15_033	FROM->TO	G14-057T 345.00 - SUNNYSIDE 345KV CKT 1	717	789	0.04596	113.2033	BLACKBERRY - NEOSHO 345KV CKT 1
FDNS	00NR	0	20WP	G15_033	FROM->TO	G14-057T 345.00 - SUNNYSIDE 345KV CKT 1	717	789	0.04601	113.2021	GEN300017 1-1G2GPDEL 18.000
FDNS	00NR	0	20WP	G15_033	FROM->TO	G14-057T 345.00 - SUNNYSIDE 345KV CKT 1	717	789	0.04573	113.2006	CLINTON JUNCTION - ELK CITY 138KV CKT 1
FDNS	00NR	0	20WP	G15_033	FROM->TO	G14-057T 345.00 - SUNNYSIDE 345KV CKT 1	717	789	0.04573	113.2006	CLINTON JUNCTION - ELK CITY 138KV CKT 1
FDNS	00NR	0	20WP	G15_033	FROM->TO	G14-057T 345.00 - SUNNYSIDE 345KV CKT 1	717	789	0.04601	113.2001	7JASPER 345.00 - BLACKBERRY 345KV CKT 1
FDNS	00NR	0	16WP	G15_033	FROM->TO	G14-057T 345.00 - SUNNYSIDE 345KV CKT 1	717	789	0.0498	113.2	GEN511848 1-SOUTHWESTERN STATION #3
FDNS	00NR	0	20WP	G15_033	FROM->TO	G14-057T 345.00 - SUNNYSIDE 345KV CKT 1	717	789	0.04581	113.198	BENTON - WICHITA 345KV CKT 1
FDNS	00NR	0	20WP	G15_033	FROM->TO	G14-057T 345.00 - SUNNYSIDE 345KV CKT 1	717	789	0.04591	113.1911	HOPE - MCNAB REC 115KV CKT 1
FDNS	00NR	0	20WP	G15_033	FROM->TO	G14-057T 345.00 - SUNNYSIDE 345KV CKT 1	717	789	0.04582	113.1899	G13-010T 345.00 - POST ROCK 345KV CKT 1
FDNS	00NR	0	20WP	G15_033	FROM->TO	G14-057T 345.00 - SUNNYSIDE 345KV CKT 1	717	789	0.04594	113.1892	WEATHERFORD TAP - WEATHERFORD WIND FARM 138KV CKT 1
FDNS	00NR	0	20WP	G15_033	FROM->TO	G14-057T 345.00 - SUNNYSIDE 345KV CKT 1	717	789	0.04598	113.1862	G15074_T 345.00 - JEFFREY ENERGY CENTER 345KV CKT 1
FDNS	00NR	0	20WP	G15_033	FROM->TO	G14-057T 345.00 - SUNNYSIDE 345KV CKT 1	717	789	0.04601	113.1852	GEN501823 1-TECHE UNIT 3
FDNS	00NR	0	20WP	G15_033	FROM->TO	G14-057T 345.00 - SUNNYSIDE 345KV CKT 1	717	789	0.04601	113.1847	LEWIS CREEK SWITCHYARD 138/22.0KV TRANSFORMER CKT 1
FDNS	00NR	0	20WP	G15_033	FROM->TO	G14-057T 345.00 - SUNNYSIDE 345KV CKT 1	717	789	0.04589	113.1844	HINTON - WEATHERFORD JCT. 138KV CKT 1
FDNS	00NR	0	20WP	G15_033	FROM->TO	G14-057T 345.00 - SUNNYSIDE 345KV CKT 1	717	789	0.04601	113.1832	GEN501970 1-EVANGELINE UNIT 7
FDNS	00NR	0	20WP	G15_033	FROM->TO	G14-057T 345.00 - SUNNYSIDE 345KV CKT 1	717	789	0.04591	113.1824	P12:115:AEPW:TURK3:HOPE3
FDNS	00NR	0	20WP	G15_033	FROM->TO	G14-057T 345.00 - SUNNYSIDE 345KV CKT 1	717	789	0.04601	113.1802	LEWIS CREEK SWITCHYARD 138/22.0KV TRANSFORMER CKT 1
FDNS	00NR	0	20WP	G15_033	FROM->TO	G14-057T 345.00 - SUNNYSIDE 345KV CKT 1	717	789	0.04595	113.1793	COUCH SES - MC NIEL 115KV CKT 1
FDNS	00NR	0	20WP	G15_033	FROM->TO	G14-057T 345.00 - SUNNYSIDE 345KV CKT 1	717	789	0.04558	113.178	ARBUCKLE - VANOSTP4 138.00 138KV CKT 1
FDNS	00NR	0	20WP	G15_033	FROM->TO	G14-057T 345.00 - SUNNYSIDE 345KV CKT 1	717	789	0.04632	113.1755	OMPA-WALTERS - WALTERS 69KV CKT 1
FDNS	00NR	0	20WP	G15_033	FROM->TO	G14-057T 345.00 - SUNNYSIDE 345KV CKT 1	717	789	0.04632	113.1755	OMPA-WALTERS - WALTERS 69KV CKT 1
FDNS	00NR	0	20WP	G15_033	FROM->TO	G14-057T 345.00 - SUNNYSIDE 345KV CKT 1	717	789	0.046	113.1754	CYPRESS - HARTBURG 500KV CKT 1
FDNS	00NR	0	20WP	G15_033	FROM->TO	G14-057T 345.00 - SUNNYSIDE 345KV CKT 1	717	789	0.04609	113.1728	SOUTHWESTERN STATION - VERDEN 138KV CKT 1
FDNS	00NR	0	20WP	G15_033	FROM->TO	G14-057T 345.00 - SUNNYSIDE 345KV CKT 1	717	789	0.04601	113.1715	GEN334432 1-SABINE UNIT 2
FDNS	00NR	0	20WP	G15_033	FROM->TO	G14-057T 345.00 - SUNNYSIDE 345KV CKT 1	717	789	0.04601	113.1713	GEN334431 1-SABINE UNIT 1
FDNS	00NR	0	20WP	G15_033	FROM->TO	G14-057T 345.00 - SUNNYSIDE 345KV CKT 1	717	789	0.04567	113.168	CANADIAN - NOBLE 138KV CKT 1
FDNS	00NR	0	20WP	G15_033	FROM->TO	G14-057T 345.00 - SUNNYSIDE 345KV CKT 1	717	789	0.04599	113.1665	7LUTESVIL 345.00 - 7ST FRANC 345.00 345KV CKT 1
FDNS	00NR	0	20WP	G15_033	FROM->TO	G14-057T 345.00 - SUNNYSIDE 345KV CKT 1	717	789	0.04597	113.1642	EMPORIA ENERGY CENTER - G14_001T 345.00 345KV CKT 1
FDNS	00NR	0	20WP	G15_033	FROM->TO	G14-057T 345.00 - SUNNYSIDE 345KV CKT 1	717	789	0.04601	113.1584	GEN505616 1-BROKEN BOW
FDNS	00NR	0	20WP	G15_033	FROM->TO	G14-057T 345.00 - SUNNYSIDE 345KV CKT 1	717	789	0.04591	113.1552	TURK (TURK 1) 138/115/13.2KV TRANSFORMER CKT 1
FDNS	00NR	0	20WP	G15_033	FROM->TO	G14-057T 345.00 - SUNNYSIDE 345KV CKT 1	717	789	0.04591	113.1552	TURK (TURK 1) 138/115/13.2KV TRANSFORMER CKT 1
FDNS	00NR	0	20WP	G15_033	FROM->TO	G14-057T 345.00 - SUNNYSIDE 345KV CKT 1	717	789	0.04591	113.1551	MCNAB REC - Turk 115 115KV CKT 1
FDNS	00NR	0	20WP	G15_033	FROM->TO	G14-057T 345.00 - SUNNYSIDE 345KV CKT 1	717	789	0.04614	113.1547	P12:69:WFEC-AEPW:COMANCH2:WALTRS-2

SOLUTION	GROUP	SCENARIO	SEASON	SOURCE	DIRECTION	MONITORED ELEMENT	RATEA (MVA)	RATEB(MVA)	TDF	TC%LOADING (% MVA)	CONTINGENCY
FDNS	00NR	0	20WP	G15_033	FROM->TO	G14-057T 345.00 - SUNNYSIDE 345KV CKT 1	717	789	0.04601	113.1509	P12:161:AEPW:CHAMSPR5:FARMING5
FDNS	00NR	0	20WP	G15_033	FROM->TO	G14-057T 345.00 - SUNNYSIDE 345KV CKT 1	717	789	0.04609	113.1508	NORTH 29TH CHICKASHA - VERDEN 138KV CKT 1
FDNS	00NR	0	20WP	G15_033	FROM->TO	G14-057T 345.00 - SUNNYSIDE 345KV CKT 1	717	789	0.04601	113.1437	GEN334392 1-EXXON MOBIL IPP 1
FDNS	00NR	0	20WP	G15_033	FROM->TO	G14-057T 345.00 - SUNNYSIDE 345KV CKT 1	717	789	0.04569	113.1437	P12:138:OKGE:3TERM27
FDNS	00NR	0	20WP	G15_033	FROM->TO	G14-057T 345.00 - SUNNYSIDE 345KV CKT 1	717	789	0.04582	113.1415	G13-010T 345.00 - SPEARVILLE 345KV CKT 1
FDNS	00NR	0	20WP	G15_033	FROM->TO	G14-057T 345.00 - SUNNYSIDE 345KV CKT 1	717	789	0.04601	113.137	GEN334393 1-EXXON MOBIL IPP 2
FDNS	00NR	0	20WP	G15_033	FROM->TO	G14-057T 345.00 - SUNNYSIDE 345KV CKT 1	717	789	0.04601	113.137	GEN334394 1-EXXON MOBIL IPP 3
FDNS	00NR	0	20WP	G15_033	FROM->TO	G14-057T 345.00 - SUNNYSIDE 345KV CKT 1	717	789	0.04636	113.1333	FRANKLIN SW - WESTMOORE 138KV CKT 1
FDNS	00NR	0	20WP	G15_033	FROM->TO	G14-057T 345.00 - SUNNYSIDE 345KV CKT 1	717	789	0.04596	113.1327	SWISSVALE - WEST GARDNER 345KV CKT 1
FDNS	00NR	0	16WP	G15_033	FROM->TO	G14-057T 345.00 - SUNNYSIDE 345KV CKT 1	717	789	0.0498	113.1315	GEN563042 1-G15068_3 0.6900
FDNS	00NR	0	20WP	G15_033	FROM->TO	G14-057T 345.00 - SUNNYSIDE 345KV CKT 1	717	789	0.04601	113.1266	FLETCHER - MARLOW JCT 69KV CKT 1
FDNS	00NR	0	20WP	G15_033	FROM->TO	G14-057T 345.00 - SUNNYSIDE 345KV CKT 1	717	789	0.04601	113.1202	ST FRANCIS - ST FRANCIS 1 161KV CKT Z1
FDNS	00NR	0	20WP	G15_033	FROM->TO	G14-057T 345.00 - SUNNYSIDE 345KV CKT 1	717	789	0.04598	113.1201	LAKEOVER - MCADAMS 500KV CKT 1
FDNS	00NR	0	20WP	G15_033	FROM->TO	G14-057T 345.00 - SUNNYSIDE 345KV CKT 1	717	789	0.04601	113.1195	SABINE 230/22.0KV TRANSFORMER CKT 1
FDNS	00NR	0	20WP	G15_033	FROM->TO	G14-057T 345.00 - SUNNYSIDE 345KV CKT 1	717	789	0.04598	113.1171	EMPORIA ENERGY CENTER - SWISSVALE 345KV CKT 1
FDNS	00NR	0	16WP	G15_033	FROM->TO	G14-057T 345.00 - SUNNYSIDE 345KV CKT 1	717	789	0.0498	113.1143	GEN527901 1-HOBBS PLANT #1 (CT)
FDNS	00NR	0	16WP	G15_033	FROM->TO	G14-057T 345.00 - SUNNYSIDE 345KV CKT 1	717	789	0.0498	113.1143	GEN527902 1-HOBBS PLANT #2 (CT)
FDNS	00NR	0	20WP	G15_033	FROM->TO	G14-057T 345.00 - SUNNYSIDE 345KV CKT 1	717	789	0.04589	113.1084	HINTON - REDROCKRD4 138.00 138KV CKT 1
FDNS	00NR	0	20WP	G15_033	FROM->TO	G14-057T 345.00 - SUNNYSIDE 345KV CKT 1	717	789	0.04597	113.1065	ENOWILT - LONE OAK 138KV CKT 1
FDNS	00NR	0	20WP	G15_033	FROM->TO	G14-057T 345.00 - SUNNYSIDE 345KV CKT 1	717	789	0.04597	113.1061	G14_001T 345.00 - WICHITA 345KV CKT 1
FDNS	00NR	0	20WP	G15_033	FROM->TO	G14-057T 345.00 - SUNNYSIDE 345KV CKT 1	717	789	0.04601	113.1057	GEN501972 1-EVANGELINE UNIT 7-2
FDNS	00NR	0	20WP	G15_033	FROM->TO	G14-057T 345.00 - SUNNYSIDE 345KV CKT 1	717	789	0.04601	113.1056	GEN501971 1-EVANGELINE UNIT 7-1
FDNS	00NR	0	20WP	G15_033	FROM->TO	G14-057T 345.00 - SUNNYSIDE 345KV CKT 1	717	789	0.04609	113.1014	CORNVILLE - NORGE ROAD 138KV CKT 1
FDNS	00NR	0	20WP	G15_033	FROM->TO	G14-057T 345.00 - SUNNYSIDE 345KV CKT 1	717	789	0.04609	113.1014	CORNVILLE - NORGE ROAD 138KV CKT 1
FDNS	00NR	0	20WP	G15_033	FROM->TO	G14-057T 345.00 - SUNNYSIDE 345KV CKT 1	717	789	0.04601	113.1012	P12:138:AEPW:R.S.S-4:T.P.S.-4
FDNS	00NR	0	20WP	G15_033	FROM->TO	G14-057T 345.00 - SUNNYSIDE 345KV CKT 1	717	789	0.04597	113.0978	ENOWILT - SARDIS 138KV CKT 1
FDNS	00NR	0	20WP	G15_033	FROM->TO	G14-057T 345.00 - SUNNYSIDE 345KV CKT 1	717	789	0.04601	113.0957	P12:138:OKGE:3TERM12
FDNS	00NR	0	20WP	G15_033	FROM->TO	G14-057T 345.00 - SUNNYSIDE 345KV CKT 1	717	789	0.04595	113.093	MCADAMS - WOLF CREEK 500KV CKT 1
FDNS	00NR	0	16WP	G15_033	FROM->TO	G14-057T 345.00 - SUNNYSIDE 345KV CKT 1	717	789	0.0498	113.0888	GEN629075 1-OTTUMWA GENERATOR FOR OTTUMWA UNIT NO 1
FDNS	00NR	0	20WP	G15_033	FROM->TO	G14-057T 345.00 - SUNNYSIDE 345KV CKT 1	717	789	0.04594	113.0883	WEATHERFORD SOUTHEAST - WEATHERFORD TAP 138KV CKT 1
FDNS	00NR	0	20WP	G15_033	FROM->TO	G14-057T 345.00 - SUNNYSIDE 345KV CKT 1	717	789	0.04603	113.0876	FRANKLIN - FRANKLIN SW 138KV CKT 1
FDNS	00NR	0	20WP	G15_033	FROM->TO	G14-057T 345.00 - SUNNYSIDE 345KV CKT 1	717	789	0.04617	113.0866	LASALLE - STONEWAL LH138.00 138KV CKT 1
FDNS	00NR	0	20WP	G15_033	FROM->TO	G14-057T 345.00 - SUNNYSIDE 345KV CKT 1	717	789	0.04601	113.0823	GEN501912 1-ACADIA UNIT CT1B
FDNS	00NR	0	20WP	G15_033	FROM->TO	G14-057T 345.00 - SUNNYSIDE 345KV CKT 1	717	789	0.04601	113.0821	P12:138:WFEC-AEPW:ELKCTY-4:ERICK4
FDNS	00NR	0	20WP	G15_033	FROM->TO	G14-057T 345.00 - SUNNYSIDE 345KV CKT 1	717	789	0.04601	113.0816	GEN501911 1-ACADIA UNIT CT1A
FDNS	00NR	0	20WP	G15_033	FROM->TO	G14-057T 345.00 - SUNNYSIDE 345KV CKT 1	717	789	0.04598	113.0761	8WNEWMADRID 500.00 - DELL 500 500KV CKT 1
FDNS	00NR	0	20WP	G15_033	FROM->TO	G14-057T 345.00 - SUNNYSIDE 345KV CKT 1	717	789	0.04601	113.0752	P12:138:AEPW:R.S.S.-4:R:96YALE-4
FDNS	00NR	0	20WP	G15_033	FROM->TO	G14-057T 345.00 - SUNNYSIDE 345KV CKT 1	717	789	0.04567	113.0747	NOBLE - PURCELL4 138.00 138KV CKT 1
FDNS	00NR	0	20WP	G15_033	FROM->TO	G14-057T 345.00 - SUNNYSIDE 345KV CKT 1	717	789	0.04617	113.0712	STONEWAL LH138.00 - TUPELO TAP 138KV CKT 1
FDNS	00NR	0	20WP	G15_033	FROM->TO	G14-057T 345.00 - SUNNYSIDE 345KV CKT 1	717	789	0.04609	113.0668	CORNVILLE - NORTH 29TH CHICKASHA 138KV CKT 1
FDNS	00NR	0	20WP	G15_033	FROM->TO	G14-057T 345.00 - SUNNYSIDE 345KV CKT 1	717	789	0.04597	113.0625	CLAYTON - SARDIS 138KV CKT 1
FDNS	00NR	0	20WP	G15_033	FROM->TO	G14-057T 345.00 - SUNNYSIDE 345KV CKT 1	717	789	0.04589	113.04	Canadian Pump Station - REDROCKRD4 138.00 138KV CKT 1
FDNS	00NR	0	20WP	G15_033	FROM->TO	G14-057T 345.00 - SUNNYSIDE 345KV CKT 1	717	789	0.04631	113.0387	CIMARRON - NORTHWEST 345KV CKT 1
FDNS	00NR	0	20WP	G15_033	FROM->TO	G14-057T 345.00 - SUNNYSIDE 345KV CKT 1	717	789	0.04594	113.0375	CLINTON JUNCTION - CLINTON NATURAL GAS TAP 138KV CKT 1
FDNS	00NR	0	20WP	G15_033	FROM->TO	G14-057T 345.00 - SUNNYSIDE 345KV CKT 1	717	789	0.04625	113.0069	CRINER - PAYNE 138.00 138KV CKT 1
FDNS	00NR	0	20WP	G15_033	FROM->TO	G14-057T 345.00 - SUNNYSIDE 345KV CKT 1	717	789	0.04614	112.978	COMANCHE - WALTERS 69KV CKT 1
FDNS	00NR	0	20WP	G15_033	FROM->TO	G14-057T 345.00 - SUNNYSIDE 345KV CKT 1	717	789	0.046	112.9762	P12:138:OKGE:3TERM20
FDNS	00NR	0	16WP	G15_033	FROM->TO	G14-057T 345.00 - SUNNYSIDE 345KV CKT 1	717	789	0.0498	112.9469	GEN635214 4-NEAL UNIT 4
FDNS	00NR	0	16WP	G15_033	FROM->TO	G14-057T 345.00 - SUNNYSIDE 345KV CKT 1	717	789	0.0498	112.9141	SHERBURNE CO 345/24.0KV TRANSFORMER CKT 1
FDNS	00NR	0	16WP	G15_033	FROM->TO	G14-057T 345.00 - SUNNYSIDE 345KV CKT 1	717	789	0.0498	112.8505	GEN563043 1-G15068_4 0.6900
FDNS	00NR	0	16WP	G15_033	FROM->TO	G14-057T 345.00 - SUNNYSIDE 345KV CKT 1	717	789	0.0498	112.8432	GEN563273 2-G15093_4 0.6900
FDNS	00NR	0	16WP	G15_033	FROM->TO	G14-057T 345.00 - SUNNYSIDE 345KV CKT 1	717	789	0.0498	112.8228	GEN526333 1-JONES GEN #3 21 KV
FDNS	00NR	0	16WP	G15_033	FROM->TO	G14-057T 345.00 - SUNNYSIDE 345KV CKT 1	717	789	0.0498	112.8228	GEN526334 1-JONES_4 116.500
FDNS	00NR	0	16WP	G15_033	FROM->TO	G14-057T 345.00 - SUNNYSIDE 345KV CKT 1	717	789	0.0498	112.7951	GEN600002 3-SHERBURNE CNTY G3
FDNS	00NR	0	16WP	G15_033	FROM->TO	G14-057T 345.00 - SUNNYSIDE 345KV CKT 1	717	789	0.0498	112.7748	GEN525844 1-ELK_1 118.000
FDNS	00NR	0	16WP	G15_033	FROM->TO	G14-057T 345.00 - SUNNYSIDE 345KV CKT 1	717	789	0.0498	112.768	GEN525845 1-ELK_2 1 138.00
FDNS	00NR	0	16WP	G15_033	FROM->TO	G14-057T 345.00 - SUNNYSIDE 345KV CKT 1	717	789	0.05398	112.7313	P12:230:AEPW:ELKCITY6:SWEETWT6
FDNS	00NR	0	16WP	G15_033	FROM->TO	G14-057T 345.00 - SUNNYSIDE 345KV CKT 1	717	789	0.0498	112.7011	GEN344225 1-1CAL G1 25.000
FDNS	00NR	0	16WP	G15_033	FROM->TO	G14-057T 345.00 - SUNNYSIDE 345KV CKT 1	717	789	0.0498	112.6306	GEN525562 1-TOLK GEN #2 24 KV
FDNS	00NR	0	16WP	G15_033	FROM->TO	G14-057T 345.00 - SUNNYSIDE 345KV CKT 1	717	789	0.0498	112.6222	GEN563202 1-G15085_3 0.5500
FDNS	00NR	0	16WP	G15_033	FROM->TO	G14-057T 345.00 - SUNNYSIDE 345KV CKT 1	717	789	0.0498	112.5874	GEN527166 1-MUSTANG_6 118.000
FDNS	00NR	0	16WP	G15_033	FROM->TO	G14-057T 345.00 - SUNNYSIDE 345KV CKT 1	717	789	0.04932	112.5679	JOHNSON COUNTY (JOHNCO) 345/138/13.8KV TRANSFORMER CKT 1
FDNS	00NR	0	20WP	G15_033	FROM->TO	G14-057T 345.00 - SUNNYSIDE 345KV CKT 1	717	789	0.04601	112.5659	803-OKLAUNION
FDNS	00NR	0	16WP	G15_033	FROM->TO	G14-057T 345.00 - SUNNYSIDE 345KV CKT 1	717	789	0.0498	112.5489	GEN635023 3-WALTER SCOTT UNIT 3
FDNS	00NR	0	16WP	G15_033	FROM->TO	G14-057T 345.00 - SUNNYSIDE 345KV CKT 1	717	789	0.05347	112.533	CHISHOLM6 230.00 - SWEETWATER 230KV CKT 1
FDNS	00NR	0	16WP	G15_033	FROM->TO	G14-057T 345.00 - SUNNYSIDE 345KV CKT 1	717	789	0.0498	112.5126	GEN562590 1-G14_057_3 0.6900
FDNS	00NR	0	16WP	G15_033	FROM->TO	G14-057T 345.00 - SUNNYSIDE 345KV CKT 1	717	789	0.04954	112.4979	LYDIA - WELSH 345KV CKT 1
FDNS	00NR	0	16WP	G15_033	FROM->TO	G14-057T 345.00 - SUNNYSIDE 345KV CKT 1	717	789	0.04954	112.4979	LYDIA - WELSH 345KV CKT 1
FDNS	00NR	0	16WP	G15_033	FROM->TO	G14-057T 345.00 - SUNNYSIDE 345KV CKT 1	717	789	0.0498	112.4088	GEN562762 1-G15033_3 0.6900
FDNS	00NR	0	16WP	G15_033	FROM->TO	G14-057T 345.00 - SUNNYSIDE 345KV CKT 1	717	789	0.0498	112.3978	GEN562655 1-G14_074_3 0.6900
FDNS	06ALL	0	20SP	G15_033	FROM->TO	G14-057T 345.00 - SUNNYSIDE 345KV CKT 1	717	789	0.22606	112.386	CIMARRON - MINCO 345KV CKT 1
FDNS	00NR	0	16WP	G15_033	FROM->TO	G14-057T 345.00 - SUNNYSIDE 345KV CKT 1	717	789	0.0498	112.3256	GEN562685 1-G15_013_3 0.3550
FDNS	00NR	0	20WP	G15_033	FROM->TO	G14-057T 345.00 - SUNNYSIDE 345KV CKT 1	717	789	0.04537	112.3082	P12:138:OKGE:3TERM39
FDNS	00NR	0	20WP	G15_033	FROM->TO	G14-057T 345.00 - SUNNYSIDE 345KV CKT 1	717	789	0.04607	112.2413	RANCHRD7 345.00 - SOONER 345KV CKT 1
FDNS	00NR	0	20WP	G15_033	FROM->TO	G14-057T 345.00 - SUNNYSIDE 345KV CKT 1	717	789	0.04663	112.2316	CHILDRESS - LAKE PAULINE 138KV CKT 1
FDNS	00NR	0	20WP	G15_033	FROM->TO	G14-057T 345.00 - SUNNYSIDE 345KV CKT 1	717	789	0.04663	112.2316	CHILDRESS - LAKE PAULINE 138KV CKT 1
FDNS	00NR	0	20WP	G15_033	FROM->TO	G14-057T 345.00 - SUNNYSIDE 345KV CKT 1	717	789	0.04635	112.2234	CHILDRESS - HOLLIS TAP 138KV CKT 1
FDNS	00NR	0	16WP	G15_033	FROM->TO	G14-057T 345.00 - SUNNYSIDE 345KV CKT 1	717	789	0.0498	112.2195	GEN525561 1-TOLK GEN #1 24 KV
FDNS	00NR	0	16WP	G15_033	FROM->TO	G14-057T 345.00 - SUNNYSIDE 345KV CKT 1	717	789	0.0498	112.2163	GEN563272 1-G15093_3 0.6900

SOLUTION	GROUP	SCENARIO	SEASON	SOURCE	DIRECTION	MONITORED ELEMENT	RATEA (MVA)	RATEB(MVA)	TDF	TC%LOADING (% MVA)	CONTINGENCY
FDNS	00NR	0	20WP	G15_033	FROM->TO	G14-057T 345.00 - SUNNYSIDE 345KV CKT 1	717	789	0.04534	112.2086	MAYSVILLE - PAOLI 138KV CKT 1
FDNS	00NR	0	20WP	G15_033	FROM->TO	G14-057T 345.00 - SUNNYSIDE 345KV CKT 1	717	789	0.04601	112.203	GEN562084 1-G11_050_3 0.6900
FDNS	00NR	0	16WP	G15_033	FROM->TO	G14-057T 345.00 - SUNNYSIDE 345KV CKT 1	717	789	0.0498	112.1939	GEN527903 1-HOBBS PLANT #3 (ST)
FDNS	00NR	0	20WP	G15_033	FROM->TO	G14-057T 345.00 - SUNNYSIDE 345KV CKT 1	717	789	0.04601	112.1735	GEN560187 1-WTH WIND 0.5750
FDNS	00NR	0	20WP	G15_033	FROM->TO	G14-057T 345.00 - SUNNYSIDE 345KV CKT 1	717	789	0.04601	112.1542	GEN560112 1-G08_037_3 0.6900
FDNS	00NR	0	20WP	G15_033	FROM->TO	G14-057T 345.00 - SUNNYSIDE 345KV CKT 1	717	789	0.0462	112.1541	CIMARRON - MATHWSN7 345.00 345KV CKT 1
FDNS	00NR	0	20WP	G15_033	FROM->TO	G14-057T 345.00 - SUNNYSIDE 345KV CKT 1	717	789	0.0462	112.1541	CIMARRON - MATHWSN7 345.00 345KV CKT 2
FDNS	00NR	0	20WP	G15_033	FROM->TO	G14-057T 345.00 - SUNNYSIDE 345KV CKT 1	717	789	0.04534	112.1331	MAYSVILLE - MAYSVLT4 138.00 138KV CKT 1
FDNS	00NR	0	16WP	G15_033	FROM->TO	G14-057T 345.00 - SUNNYSIDE 345KV CKT 1	717	789	0.0498	112.1285	GEN635024 4-WALTER SCOTT UNIT 4
FDNS	00NR	0	20WP	G15_033	FROM->TO	G14-057T 345.00 - SUNNYSIDE 345KV CKT 1	717	789	0.04601	112.1176	GEN521103 1-BLUE CANYON WIND FARM
FDNS	00NR	0	20WP	G15_033	FROM->TO	G14-057T 345.00 - SUNNYSIDE 345KV CKT 1	717	789	0.04606	112.1131	DRAPER LAKE - MIDWEST TAP 138KV CKT 1
FDNS	00NR	0	20WP	G15_033	FROM->TO	G14-057T 345.00 - SUNNYSIDE 345KV CKT 1	717	789	0.04601	112.1129	GEN520812 1-ANADRK5
FDNS	00NR	0	20WP	G15_033	FROM->TO	G14-057T 345.00 - SUNNYSIDE 345KV CKT 1	717	789	0.04601	112.1128	GEN520813 1-ANADRK6
FDNS	00NR	0	20WP	G15_033	FROM->TO	G14-057T 345.00 - SUNNYSIDE 345KV CKT 1	717	789	0.04601	112.1065	GEN562691 1-G15_015_3 0.6900
FDNS	00NR	0	20WP	G15_033	FROM->TO	G14-057T 345.00 - SUNNYSIDE 345KV CKT 1	717	789	0.04609	112.1011	P12:138:OKGE:3TERM21
FDNS	00NR	0	20WP	G15_033	FROM->TO	G14-057T 345.00 - SUNNYSIDE 345KV CKT 1	717	789	0.04601	112.0978	GEN562772 1-G15034_3 0.6900
FDNS	00NR	0	20WP	G15_033	FROM->TO	G14-057T 345.00 - SUNNYSIDE 345KV CKT 1	717	789	0.04601	112.0945	GEN563052 1-G15069_3 0.6900
FDNS	00NR	0	20WP	G15_033	FROM->TO	G14-057T 345.00 - SUNNYSIDE 345KV CKT 1	717	789	0.04601	112.0755	GEN511961 1-DEMPSEY-WTG10.7000
FDNS	00NR	0	20WP	G15_033	FROM->TO	G14-057T 345.00 - SUNNYSIDE 345KV CKT 1	717	789	0.04567	112.0716	ARBUCKLE - SULPHR 4 138.00 138KV CKT 1
FDNS	00NR	0	20WP	G15_033	FROM->TO	G14-057T 345.00 - SUNNYSIDE 345KV CKT 1	717	789	0.04534	112.067	MAYSVLT4 138.00 - PRAIRIE POINT 138KV CKT 1
FDNS	00NR	0	20WP	G15_033	FROM->TO	G14-057T 345.00 - SUNNYSIDE 345KV CKT 1	717	789	0.04601	112.0656	P12:069:OKGE:3TERM42
FDNS	00NR	0	20WP	G15_033	FROM->TO	G14-057T 345.00 - SUNNYSIDE 345KV CKT 1	717	789	0.04626	112.0489	SOONER - SPRING CREEK 345KV CKT 1
FDNS	00NR	0	20WP	G15_033	FROM->TO	G14-057T 345.00 - SUNNYSIDE 345KV CKT 1	717	789	0.04626	112.0457	NORTHWEST - SPRING CREEK 345KV CKT 1
FDNS	00NR	0	20WP	G15_033	FROM->TO	G14-057T 345.00 - SUNNYSIDE 345KV CKT 1	717	789	0.04601	112.045	BURLINGTON NO1 + NO 2 + NO 3 161/20.0KV TRANSFORMER CKT 1
FDNS	00NR	0	20WP	G15_033	FROM->TO	G14-057T 345.00 - SUNNYSIDE 345KV CKT 1	717	789	0.04598	112.0432	GLASSES - MADILL INDUSTRIAL TAP 138KV CKT 1
FDNS	00NR	0	20WP	G15_033	FROM->TO	G14-057T 345.00 - SUNNYSIDE 345KV CKT 1	717	789	0.04598	112.0426	P12:138:WFEC:MSL11
FDNS	00NR	0	20WP	G15_033	FROM->TO	G14-057T 345.00 - SUNNYSIDE 345KV CKT 1	717	789	0.04598	112.0426	P12:138:WFEC-AEPW:PHAROAH4:LONEOAK4
FDNS	00NR	0	20WP	G15_033	FROM->TO	G14-057T 345.00 - SUNNYSIDE 345KV CKT 1	717	789	0.04599	112.0352	CANEY CREEK - JOHNSON COUNTY 138KV CKT 1
FDNS	00NR	0	20WP	G15_033	FROM->TO	G14-057T 345.00 - SUNNYSIDE 345KV CKT 1	717	789	0.04597	112.0342	OVEXFRMCCOVE
FDNS	00NR	0	20WP	G15_033	FROM->TO	G14-057T 345.00 - SUNNYSIDE 345KV CKT 1	717	789	0.04601	112.025	GEN515443 1-MNCOWND1 0.7000
FDNS	00NR	0	20WP	G15_033	FROM->TO	G14-057T 345.00 - SUNNYSIDE 345KV CKT 1	717	789	0.04629	112.0114	ALTUS JUNCTION - RUSSELL 138KV CKT 1
FDNS	00NR	0	20WP	G15_033	FROM->TO	G14-057T 345.00 - SUNNYSIDE 345KV CKT 1	717	789	0.04629	112.0114	ALTUS JUNCTION - RUSSELL 138KV CKT 1
FDNS	00NR	0	20WP	G15_033	FROM->TO	G14-057T 345.00 - SUNNYSIDE 345KV CKT 1	717	789	0.04607	112.0092	MOREWOOD SW - NINE MILE 138KV CKT 1
FDNS	00NR	0	20WP	G15_033	FROM->TO	G14-057T 345.00 - SUNNYSIDE 345KV CKT 1	717	789	0.04601	112.0048	GEN560183 1-REDHIL-WTG1 12.000
FDNS	00NR	0	20WP	G15_033	FROM->TO	G14-057T 345.00 - SUNNYSIDE 345KV CKT 1	717	789	0.04601	112.0028	INDEPENDENCE 500/26.0KV TRANSFORMER CKT 1
FDNS	00NR	0	20WP	G15_033	FROM->TO	G14-057T 345.00 - SUNNYSIDE 345KV CKT 1	717	789	0.04601	111.9949	GEN600067 9-HIGH BRIDGE
FDNS	00NR	0	20WP	G15_033	FROM->TO	G14-057T 345.00 - SUNNYSIDE 345KV CKT 1	717	789	0.04598	111.9908	GLASSES - RUSSETT 138KV CKT 1
FDNS	00NR	0	20WP	G15_033	FROM->TO	G14-057T 345.00 - SUNNYSIDE 345KV CKT 1	717	789	0.04595	111.9864	CARTER - CHICKASAW 138KV CKT 1
FDNS	00NR	0	20WP	G15_033	FROM->TO	G14-057T 345.00 - SUNNYSIDE 345KV CKT 1	717	789	0.0461	111.9822	LEBANON - TEXOMA JCT 138KV CKT 1
FDNS	00NR	0	20WP	G15_033	FROM->TO	G14-057T 345.00 - SUNNYSIDE 345KV CKT 1	717	789	0.04603	111.9819	P12:138:WFEC:MSL08
FDNS	00NR	0	20WP	G15_033	FROM->TO	G14-057T 345.00 - SUNNYSIDE 345KV CKT 1	717	789	0.04599	111.9794	CANADIAN RIVER - MCALESTER SOUTH 138KV CKT 1
FDNS	00NR	0	20WP	G15_033	FROM->TO	G14-057T 345.00 - SUNNYSIDE 345KV CKT 1	717	789	0.04599	111.9794	CANADIAN RIVER - MCALESTER SOUTH 138KV CKT 1
FDNS	00NR	0	20WP	G15_033	FROM->TO	G14-057T 345.00 - SUNNYSIDE 345KV CKT 1	717	789	0.04599	111.9773	CANADIAN RIVER () 345/138/13.8KV TRANSFORMER CKT 1
FDNS	00NR	0	20WP	G15_033	FROM->TO	G14-057T 345.00 - SUNNYSIDE 345KV CKT 1	717	789	0.04599	111.9773	CANADIAN RIVER () 345/138/13.8KV TRANSFORMER CKT 1
FDNS	00NR	0	20WP	G15_033	FROM->TO	G14-057T 345.00 - SUNNYSIDE 345KV CKT 1	717	789	0.04534	111.9747	PRAIRIE POINT - RATLIFF 138KV CKT 1
FDNS	00NR	0	20WP	G15_033	FROM->TO	G14-057T 345.00 - SUNNYSIDE 345KV CKT 1	717	789	0.04601	111.9663	P12:230:UMZB:# 112 #: NU IN SD. NU-RCDC & DRY CREEK XFMR
FDNS	00NR	0	20WP	G15_033	FROM->TO	G14-057T 345.00 - SUNNYSIDE 345KV CKT 1	717	789	0.04601	111.9661	RCDC EAST 4230.00 - RED CEDAR DC 230KV CKT 1
FDNS	00NR	0	20WP	G15_033	FROM->TO	G14-057T 345.00 - SUNNYSIDE 345KV CKT 1	717	789	0.04596	111.9654	HUGO (HUGO 1) 345/138/13.8KV TRANSFORMER CKT 1
FDNS	00NR	0	20WP	G15_033	FROM->TO	G14-057T 345.00 - SUNNYSIDE 345KV CKT 1	717	789	0.04584	111.9643	ROCKY POINT - SPRINGDALE 138KV CKT 1
FDNS	00NR	0	20WP	G15_033	FROM->TO	G14-057T 345.00 - SUNNYSIDE 345KV CKT 1	717	789	0.04601	111.9618	GEN563242 1-G15090_3 0.6900
FDNS	00NR	0	20WP	G15_033	FROM->TO	G14-057T 345.00 - SUNNYSIDE 345KV CKT 1	717	789	0.04597	111.9538	CHAMBER SPRINGS - CLARKSVILLE 345KV CKT 1
FDNS	00NR	0	20WP	G15_033	FROM->TO	G14-057T 345.00 - SUNNYSIDE 345KV CKT 1	717	789	0.04598	111.9489	GRPRAR1-LNX3345.00 - HOLT.CO3 345.00 345KV CKT 1
FDNS	00NR	0	20WP	G15_033	FROM->TO	G14-057T 345.00 - SUNNYSIDE 345KV CKT 1	717	789	0.04598	111.941	GRPRAR1-LNX3345.00 - YANKTON 345KV CKT Z
FDNS	00NR	0	20WP	G15_033	FROM->TO	G14-057T 345.00 - SUNNYSIDE 345KV CKT 1	717	789	0.04601	111.9342	GEN629072 4-LANSING GENERATOR FOR UNITS NO4 EIA CODE 1
FDNS	00NR	0	20WP	G15_033	FROM->TO	G14-057T 345.00 - SUNNYSIDE 345KV CKT 1	717	789	0.04567	111.9258	JOLLYVILLE - SULPHR 4 138.00 138KV CKT 1
FDNS	00NR	0	20WP	G15_033	FROM->TO	G14-057T 345.00 - SUNNYSIDE 345KV CKT 1	717	789	0.04601	111.9232	GEN562902 1-G15052_3 0.6900
FDNS	00NR	0	20WP	G15_033	FROM->TO	G14-057T 345.00 - SUNNYSIDE 345KV CKT 1	717	789	0.04601	111.912	GEN562078 1-G11_051_3 0.6900
FDNS	00NR	0	20WP	G15_033	FROM->TO	G14-057T 345.00 - SUNNYSIDE 345KV CKT 1	717	789	0.0474	111.9069	P12:138:AEPW:112GORE4:SNYDER-4
FDNS	00NR	0	20WP	G15_033	FROM->TO	G14-057T 345.00 - SUNNYSIDE 345KV CKT 1	717	789	0.04601	111.9062	GEN524285 1-WILDORADO WIND GEN
FDNS	00NR	0	20WP	G15_033	FROM->TO	G14-057T 345.00 - SUNNYSIDE 345KV CKT 1	717	789	0.04601	111.8874	GEN562587 1-G14_056_3 0.6900
FDNS	00NR	0	20WP	G15_033	FROM->TO	G14-057T 345.00 - SUNNYSIDE 345KV CKT 1	717	789	0.04601	111.8805	GEN524295 1-SPNSPUR_WND10.6900
FDNS	00NR	0	20WP	G15_033	FROM->TO	G14-057T 345.00 - SUNNYSIDE 345KV CKT 1	717	789	0.04601	111.8798	GEN657749 1-YOUNG 1 GENERATOR
FDNS	00NR	0	20WP	G15_033	FROM->TO	G14-057T 345.00 - SUNNYSIDE 345KV CKT 1	717	789	0.04607	111.8759	BEARCAT 138.00 - NINE MILE 138KV CKT 1
FDNS	00NR	0	20WP	G15_033	FROM->TO	G14-057T 345.00 - SUNNYSIDE 345KV CKT 1	717	789	0.04601	111.8654	GEN514805 1-SOONER UNIT 1
FDNS	00NR	0	20WP	G15_033	FROM->TO	G14-057T 345.00 - SUNNYSIDE 345KV CKT 1	717	789	0.04601	111.8559	GEN562269 1-G12-020-1 0.6900
FDNS	00NR	0	20WP	G15_033	FROM->TO	G14-057T 345.00 - SUNNYSIDE 345KV CKT 1	717	789	0.04601	111.8508	GEN524023 1-NICHOLS GEN #3 22 KV
FDNS	00NR	0	20WP	G15_033	FROM->TO	G14-057T 345.00 - SUNNYSIDE 345KV CKT 1	717	789	0.04567	111.8366	JOLLYVILLE - KERR MCGEE CIMARRON 138KV CKT 1
FDNS	00NR	0	20WP	G15_033	FROM->TO	G14-057T 345.00 - SUNNYSIDE 345KV CKT 1	717	789	0.04595	111.8334	CROCKETT - TENASKA RUSK COUNTY 345KV CKT 1
FDNS	00NR	0	20WP	G15_033	FROM->TO	G14-057T 345.00 - SUNNYSIDE 345KV CKT 1	717	789	0.04601	111.8333	GEN514806 1-SOONER UNIT 2
FDNS	00NR	0	20WP	G15_033	FROM->TO	G14-057T 345.00 - SUNNYSIDE 345KV CKT 1	717	789	0.04595	111.8287	LEBROCK - TENASKA RUSK COUNTY 345KV CKT 1
FDNS	00NR	0	20WP	G15_033	FROM->TO	G14-057T 345.00 - SUNNYSIDE 345KV CKT 1	717	789	0.04601	111.8154	GEN562812 1-G15040_3 0.3570
FDNS	00NR	0	20WP	G15_033	FROM->TO	G14-057T 345.00 - SUNNYSIDE 345KV CKT 1	717	789	0.04601	111.8105	GEN562270 1-G12-020-2 0.6900
FDNS	00NR	0	20WP	G15_033	FROM->TO	G14-057T 345.00 - SUNNYSIDE 345KV CKT 1	717	789	0.04601	111.8085	GEN563132 1-G15078_3 0.3570
FDNS	00NR	0	20WP	G15_033	FROM->TO	G14-057T 345.00 - SUNNYSIDE 345KV CKT 1	717	789	0.04601	111.7996	GEN563102 1-G15075_3 0.5500
FDNS	00NR	0	20WP	G15_033	FROM->TO	G14-057T 345.00 - SUNNYSIDE 345KV CKT 1	717	789	0.04601	111.7899	GEN563062 1-G15071_3 0.6900
FDNS	00NR	0	20WP	G15_033	FROM->TO	G14-057T 345.00 - SUNNYSIDE 345KV CKT 1	717	789	0.04567	111.786	ARBWIND4 138.00 - KERR MCGEE CIMARRON 138KV CKT 1
FDNS	00NR	0	20WP	G15_033	FROM->TO	G14-057T 345.00 - SUNNYSIDE 345KV CKT 1	717	789	0.04607	111.7811	BEARCAT 138.00 - MOORELAND 138KV CKT 1
FDNS	00NR	0	20WP	G15_033	FROM->TO	G14-057T 345.00 - SUNNYSIDE 345KV CKT 1	717	789	0.04601	111.7786	GEN562882 1-G15047_3 0.6900
FDNS	00NR	0	20WP	G15_033	FROM->TO	G14-057T 345.00 - SUNNYSIDE 345KV CKT 1	717	789	0.04607	111.7748	P12:138:WFEC:MSL14

SOLUTION	GROUP	SCENARIO	SEASON	SOURCE	DIRECTION	MONITORED ELEMENT	RATEA (MVA)	RATEB(MVA)	TDF	TC%LOADING (% MVA)	CONTINGENCY
FDNS	00NR	0	20WP	G15_033	FROM->TO	G14-057T 345.00 - SUNNYSIDE 345KV CKT 1	717	789	0.04601	111.7695	GEN345671 2-1RUSH G2 18.000
FDNS	00NR	0	20WP	G15_033	FROM->TO	G14-057T 345.00 - SUNNYSIDE 345KV CKT 1	717	789	0.04601	111.768	GEN562974 1-G15060_5 0.6900
FDNS	00NR	0	20WP	G15_033	FROM->TO	G14-057T 345.00 - SUNNYSIDE 345KV CKT 1	717	789	0.04601	111.7676	GEN345670 1-1RUSH G1 18.000
FDNS	00NR	0	20WP	G15_033	FROM->TO	G14-057T 345.00 - SUNNYSIDE 345KV CKT 1	717	789	0.04601	111.758	GEN562973 1-G15060_4 0.6900
FDNS	00NR	0	20WP	G15_033	FROM->TO	G14-057T 345.00 - SUNNYSIDE 345KV CKT 1	717	789	0.04591	111.7553	BROWN - RUSSETT 138KV CKT 1
FDNS	00NR	0	20WP	G15_033	FROM->TO	G14-057T 345.00 - SUNNYSIDE 345KV CKT 1	717	789	0.04601	111.7522	GEN521112 1-ORME3 13.800
FDNS	00NR	0	20WP	G15_033	FROM->TO	G14-057T 345.00 - SUNNYSIDE 345KV CKT 1	717	789	0.04571	111.7434	CHICKASAW - TOTAL 138KV CKT 1
FDNS	00NR	0	20WP	G15_033	FROM->TO	G14-057T 345.00 - SUNNYSIDE 345KV CKT 1	717	789	0.04601	111.7235	4SIOUX 1 138.00 138/18.0KV TRANSFORMER CKT 1
FDNS	00NR	0	20WP	G15_033	FROM->TO	G14-057T 345.00 - SUNNYSIDE 345KV CKT 1	717	789	0.04601	111.7154	GEN560105 1-G08-22 0.6900
FDNS	00NR	0	20WP	G15_033	FROM->TO	G14-057T 345.00 - SUNNYSIDE 345KV CKT 1	717	789	0.04591	111.7098	RUSSETT - RUSSETT 138KV CKT 1
FDNS	00NR	0	20WP	G15_033	FROM->TO	G14-057T 345.00 - SUNNYSIDE 345KV CKT 1	717	789	0.04601	111.7038	GEN681522 3-GENOA 3
FDNS	00NR	0	20WP	G15_033	FROM->TO	G14-057T 345.00 - SUNNYSIDE 345KV CKT 1	717	789	0.04601	111.6987	GEN562550 1-G14_040_3 0.6900
FDNS	00NR	0	20WP	G15_033	FROM->TO	G14-057T 345.00 - SUNNYSIDE 345KV CKT 1	717	789	0.04578	111.665	ROCKY POINT - SUNNYSIDE 138KV CKT 1
FDNS	00NR	0	20WP	G15_033	FROM->TO	G14-057T 345.00 - SUNNYSIDE 345KV CKT 1	717	789	0.04601	111.6559	GEN511853 1-COMANCHE #3
FDNS	00NR	0	20WP	G15_033	FROM->TO	G14-057T 345.00 - SUNNYSIDE 345KV CKT 1	717	789	0.04601	111.6535	EASTDC - ERCOT EQUIVALENCE 345KV CKT 1
FDNS	00NR	0	20WP	G15_033	FROM->TO	G14-057T 345.00 - SUNNYSIDE 345KV CKT 1	717	789	0.04601	111.6489	GEN527161 1-MUSTANG GEN #1
FDNS	00NR	0	20WP	G15_033	FROM->TO	G14-057T 345.00 - SUNNYSIDE 345KV CKT 1	717	789	0.04601	111.6489	GEN527162 1-MUSTANG GEN #2
FDNS	00NR	0	20WP	G15_033	FROM->TO	G14-057T 345.00 - SUNNYSIDE 345KV CKT 1	717	789	0.04601	111.6465	GEN511962 2-RKYRDGW2-1 0.7000
FDNS	00NR	0	20WP	G15_033	FROM->TO	G14-057T 345.00 - SUNNYSIDE 345KV CKT 1	717	789	0.04601	111.64	GEN672321 1-SHAND GENERATOR 1
FDNS	00NR	0	20WP	G15_033	FROM->TO	G14-057T 345.00 - SUNNYSIDE 345KV CKT 1	717	789	0.04587	111.6366	RUSSETT - SPRINGDALE 138KV CKT 1
FDNS	00NR	0	20WP	G15_033	FROM->TO	G14-057T 345.00 - SUNNYSIDE 345KV CKT 1	717	789	0.04606	111.6212	ARKANSAS NUCLEAR ONE - FT SMITH 500KV CKT 1
FDNS	00NR	0	20WP	G15_033	FROM->TO	G14-057T 345.00 - SUNNYSIDE 345KV CKT 1	717	789	0.04606	111.6212	ARKANSAS NUCLEAR ONE - FT SMITH 500KV CKT 1
FDNS	00NR	0	20WP	G15_033	FROM->TO	G14-057T 345.00 - SUNNYSIDE 345KV CKT 1	717	789	0.04601	111.6168	GEN672310 1-POPLAR RIVER GENERATOR 1
FDNS	00NR	0	20WP	G15_033	FROM->TO	G14-057T 345.00 - SUNNYSIDE 345KV CKT 1	717	789	0.04601	111.6168	GEN672311 2-POPLAR RIVER GENERATOR 2
FDNS	00NR	0	20WP	G15_033	FROM->TO	G14-057T 345.00 - SUNNYSIDE 345KV CKT 1	717	789	0.04601	111.616	GEN525494 1-PLANT X GEN #4 20 KV
FDNS	00NR	0	20WP	G15_033	FROM->TO	G14-057T 345.00 - SUNNYSIDE 345KV CKT 1	717	789	0.04601	111.6094	GEN562512 1-G14_020_3 0.6900
FDNS	00NR	0	20WP	G15_033	FROM->TO	G14-057T 345.00 - SUNNYSIDE 345KV CKT 1	717	789	0.04601	111.6075	GEN672306 6-BOUNDARY DAM GENERATOR 6
FDNS	00NR	0	20WP	G15_033	FROM->TO	G14-057T 345.00 - SUNNYSIDE 345KV CKT 1	717	789	0.04601	111.6015	GEN563192 1-G15084_3 0.5500
FDNS	00NR	0	20WP	G15_033	FROM->TO	G14-057T 345.00 - SUNNYSIDE 345KV CKT 1	717	789	0.04601	111.5999	GEN527882 1-CUNNINGHAM GEN #2 20 KV
FDNS	00NR	0	20WP	G15_033	FROM->TO	G14-057T 345.00 - SUNNYSIDE 345KV CKT 1	717	789	0.04601	111.5953	GEN344895 2-1LAB G2 20.000
FDNS	00NR	0	20WP	G15_033	FROM->TO	G14-057T 345.00 - SUNNYSIDE 345KV CKT 1	717	789	0.04601	111.5905	GEN511852 1-COMANCHE #2
FDNS	00NR	0	20WP	G15_033	FROM->TO	G14-057T 345.00 - SUNNYSIDE 345KV CKT 1	717	789	0.04598	111.588	P12:138:WFEC-AEPW:GOLDENSW4:CRAIGJT4
FDNS	00NR	0	20WP	G15_033	FROM->TO	G14-057T 345.00 - SUNNYSIDE 345KV CKT 1	717	789	0.04601	111.5853	GEN562892 1-G15048_3 0.6900
FDNS	00NR	0	20WP	G15_033	FROM->TO	G14-057T 345.00 - SUNNYSIDE 345KV CKT 1	717	789	0.04601	111.5834	GEN527163 1-MUSTANG GEN #3 22 KV
FDNS	00NR	0	20WP	G15_033	FROM->TO	G14-057T 345.00 - SUNNYSIDE 345KV CKT 1	717	789	0.04601	111.5767	GEN681542 6-JP MADGETT
FDNS	00NR	0	20WP	G15_033	FROM->TO	G14-057T 345.00 - SUNNYSIDE 345KV CKT 1	717	789	0.04642	111.573	G15063_T 345.00 - MATHWSN7 345.00 345KV CKT 1
FDNS	00NR	0	20WP	G15_033	FROM->TO	G14-057T 345.00 - SUNNYSIDE 345KV CKT 1	717	789	0.04601	111.5723	CLAY BOSWELL 230/20.9KV TRANSFORMER CKT 1
FDNS	00NR	0	20WP	G15_033	FROM->TO	G14-057T 345.00 - SUNNYSIDE 345KV CKT 1	717	789	0.04553	111.5708	ARDMORE WEST - CARTER 138KV CKT 1
FDNS	00NR	0	20WP	G15_033	FROM->TO	G14-057T 345.00 - SUNNYSIDE 345KV CKT 1	717	789	0.04601	111.5658	GEN344896 3-1LAB G3 20.000
FDNS	00NR	0	20WP	G15_033	FROM->TO	G14-057T 345.00 - SUNNYSIDE 345KV CKT 1	717	789	0.04601	111.5646	GEN344897 4-1LAB G4 20.000
FDNS	00NR	0	20WP	G15_033	FROM->TO	G14-057T 345.00 - SUNNYSIDE 345KV CKT 1	717	789	0.04601	111.5644	GEN344894 1-1LAB G1 20.000
FDNS	00NR	0	20WP	G15_033	FROM->TO	G14-057T 345.00 - SUNNYSIDE 345KV CKT 1	717	789	0.04603	111.5548	P12:138:WFEC:MSL16
FDNS	00NR	0	20WP	G15_033	FROM->TO	G14-057T 345.00 - SUNNYSIDE 345KV CKT 1	717	789	0.04601	111.536	GEN523461 1-BLACKHAWK GEN #1
FDNS	00NR	0	20WP	G15_033	FROM->TO	G14-057T 345.00 - SUNNYSIDE 345KV CKT 1	717	789	0.04601	111.5359	GEN523462 1-BLACKHAWK GEN #2
FDNS	00NR	0	20WP	G15_033	FROM->TO	G14-057T 345.00 - SUNNYSIDE 345KV CKT 1	717	789	0.0474	111.5113	CACHE - SNYDER 138KV CKT 1
FDNS	00NR	0	20WP	G15_033	FROM->TO	G14-057T 345.00 - SUNNYSIDE 345KV CKT 1	717	789	0.04582	111.4993	CLARKSVILLE - MUSKOGEE 345KV CKT 1
FDNS	00NR	0	20WP	G15_033	FROM->TO	G14-057T 345.00 - SUNNYSIDE 345KV CKT 1	717	789	0.04582	111.4993	CLARKSVILLE - MUSKOGEE 345KV CKT 1
FDNS	00NR	0	20WP	G15_033	FROM->TO	G14-057T 345.00 - SUNNYSIDE 345KV CKT 1	717	789	0.04599	111.499	P12:138:WFEC:MSL07
FDNS	00NR	0	20WP	G15_033	FROM->TO	G14-057T 345.00 - SUNNYSIDE 345KV CKT 1	717	789	0.04599	111.499	P12:138:WFEC-AEPW:HUGOPP4:ATOKA--4
FDNS	00NR	0	20WP	G15_033	FROM->TO	G14-057T 345.00 - SUNNYSIDE 345KV CKT 1	717	789	0.046	111.494	P12:138:AEPW-SWPA:LONEOAK4:TUPELO4
FDNS	00NR	0	20WP	G15_033	FROM->TO	G14-057T 345.00 - SUNNYSIDE 345KV CKT 1	717	789	0.046	111.4939	P12:138:WFEC:MSL06
FDNS	00NR	0	20WP	G15_033	FROM->TO	G14-057T 345.00 - SUNNYSIDE 345KV CKT 1	717	789	0.04551	111.488	SUNNYSIDE (SUNNYSD5) 345/138/13.8KV TRANSFORMER CKT 1
FDNS	00NR	0	20WP	G15_033	FROM->TO	G14-057T 345.00 - SUNNYSIDE 345KV CKT 1	717	789	0.04601	111.4866	GEN521111 1-ORME2 13.800
FDNS	00NR	0	20WP	G15_033	FROM->TO	G14-057T 345.00 - SUNNYSIDE 345KV CKT 1	717	789	0.04601	111.4763	GEN562699 1-G15_018_3 0.6900
FDNS	00NR	0	20WP	G15_033	FROM->TO	G14-057T 345.00 - SUNNYSIDE 345KV CKT 1	717	789	0.04601	111.4734	GEN521110 1-ORME1 13.800
FDNS	00NR	0	20WP	G15_033	FROM->TO	G14-057T 345.00 - SUNNYSIDE 345KV CKT 1	717	789	0.04633	111.4689	G15085_T 138.00 - RUSSELL 138KV CKT 1
FDNS	00NR	0	20WP	G15_033	FROM->TO	G14-057T 345.00 - SUNNYSIDE 345KV CKT 1	717	789	0.04553	111.458	ARDMORE WEST - UNIROYAL 138KV CKT 1
FDNS	00NR	0	20WP	G15_033	FROM->TO	G14-057T 345.00 - SUNNYSIDE 345KV CKT 1	717	789	0.04601	111.4374	GEN563162 1-G15081_3 0.6900
FDNS	00NR	0	20WP	G15_033	FROM->TO	G14-057T 345.00 - SUNNYSIDE 345KV CKT 1	717	789	0.04601	111.4198	GEN520811 1-ANADRK4
FDNS	00NR	0	20WP	G15_033	FROM->TO	G14-057T 345.00 - SUNNYSIDE 345KV CKT 1	717	789	0.04601	111.4124	GEN661015 1-COYOTE
FDNS	00NR	0	20WP	G15_033	FROM->TO	G14-057T 345.00 - SUNNYSIDE 345KV CKT 1	717	789	0.04601	111.4088	GEN563292 1-G15095_3 0.6900
FDNS	00NR	0	20WP	G15_033	FROM->TO	G14-057T 345.00 - SUNNYSIDE 345KV CKT 1	717	789	0.04556	111.4066	CARTRCO4 138.00 - RATLIFF 138KV CKT 1
FDNS	00NR	0	20WP	G15_033	FROM->TO	G14-057T 345.00 - SUNNYSIDE 345KV CKT 1	717	789	0.04577	111.4025	P12:138:OKGE:3TERM40
FDNS	00NR	0	20WP	G15_033	FROM->TO	G14-057T 345.00 - SUNNYSIDE 345KV CKT 1	717	789	0.04601	111.3704	GEN563122 1-G15077_3 0.3850
FDNS	00NR	0	20WP	G15_033	FROM->TO	G14-057T 345.00 - SUNNYSIDE 345KV CKT 1	717	789	0.04601	111.3507	GEN562861 1-G15045_2 0.4800
FDNS	00NR	0	16WP	G15_033	FROM->TO	G14-057T 345.00 - SUNNYSIDE 345KV CKT 1	717	789	0.04943	111.3277	LYDIA - VALLIANT 345KV CKT 1
FDNS	00NR	0	16WP	G15_033	FROM->TO	G14-057T 345.00 - SUNNYSIDE 345KV CKT 1	717	789	0.04943	111.3277	LYDIA - VALLIANT 345KV CKT 1
FDNS	00NR	0	20WP	G15_033	FROM->TO	G14-057T 345.00 - SUNNYSIDE 345KV CKT 1	717	789	0.04601	111.2997	GEN657748 1-YOUNG 2 GENERATOR
FDNS	00NR	0	20WP	G15_033	FROM->TO	G14-057T 345.00 - SUNNYSIDE 345KV CKT 1	717	789	0.04601	111.2613	GEN527883 1-CUNNINGHAM GEN #3 22 KV
FDNS	00NR	0	20WP	G15_033	FROM->TO	G14-057T 345.00 - SUNNYSIDE 345KV CKT 1	717	789	0.04598	111.2589	P12:138:WFEC:MSL15
FDNS	00NR	0	20WP	G15_033	FROM->TO	G14-057T 345.00 - SUNNYSIDE 345KV CKT 1	717	789	0.04601	111.2583	GEN527884 1-CUNNINGHAM GEN #4 22 KV
FDNS	00NR	0	20WP	G15_033	FROM->TO	G14-057T 345.00 - SUNNYSIDE 345KV CKT 1	717	789	0.04553	111.222	SUNNYSIDE - UNIROYAL 138KV CKT 1
FDNS	00NR	0	20WP	G15_033	FROM->TO	G14-057T 345.00 - SUNNYSIDE 345KV CKT 1	717	789	0.04601	111.2084	GEN620315 1-BIG STONE GEN
FDNS	00NR	0	20WP	G15_033	FROM->TO	G14-057T 345.00 - SUNNYSIDE 345KV CKT 1	717	789	0.04635	111.2073	P12:138:AEPW:SHAM4WT:CHILD4WT
FDNS	00NR	0	20WP	G15_033	FROM->TO	G14-057T 345.00 - SUNNYSIDE 345KV CKT 1	717	789	0.04601	111.1958	GEN562992 1-G15063_3 0.6900
FDNS	00NR	0	20WP	G15_033	FROM->TO	G14-057T 345.00 - SUNNYSIDE 345KV CKT 1	717	789	0.04601	111.1914	GEN562704 1-G15_020_3 0.3550
FDNS	00NR	0	20WP	G15_033	FROM->TO	G14-057T 345.00 - SUNNYSIDE 345KV CKT 1	717	789	0.04601	111.1832	GEN526331 1-JONES GEN #1 22 KV
FDNS	00NR	0	20WP	G15_033	FROM->TO	G14-057T 345.00 - SUNNYSIDE 345KV CKT 1	717	789	0.04601	111.183	GEN526332 1-JONES GEN #2 21 KV
FDNS	00NR	0	20WP	G15_033	FROM->TO	G14-057T 345.00 - SUNNYSIDE 345KV CKT 1	717	789	0.04601	111.1776	GEN562952 1-G15057_3 0.6500

SOLUTION	GROUP	SCENARIO	SEASON	SOURCE	DIRECTION	MONITORED ELEMENT	RATEA (MVA)	RATEB(MVA)	TDF	TC%LOADING (% MVA)	CONTINGENCY
FDNS	00NR	0	20WP	G15_033	FROM->TO	G14-057T 345.00 - SUNNYSIDE 345KV CKT 1	717	789	0.04601	111.1344	GEN600004 2-PRAIRIE ISLAND G2
FDNS	00NR	0	20WP	G15_033	FROM->TO	G14-057T 345.00 - SUNNYSIDE 345KV CKT 1	717	789	0.04601	111.1319	GEN600003 1-PRAIRIE ISLAND G1
FDNS	00NR	0	20WP	G15_033	FROM->TO	G14-057T 345.00 - SUNNYSIDE 345KV CKT 1	717	789	0.04601	111.115	GEN511851 1-COMANCHE #1
FDNS	00NR	0	20WP	G15_033	FROM->TO	G14-057T 345.00 - SUNNYSIDE 345KV CKT 1	717	789	0.04601	111.1111	GEN600006 1-AS KING
FDNS	00NR	0	20WP	G15_033	FROM->TO	G14-057T 345.00 - SUNNYSIDE 345KV CKT 1	717	789	0.04601	111.0995	GEN563173 1-G15082_3 0.6900
FDNS	00NR	0	20WP	G15_033	FROM->TO	G14-057T 345.00 - SUNNYSIDE 345KV CKT 1	717	789	0.0461	111.0934	CANEY CREEK - TEXOMA JCT 138KV CKT 1
FDNS	00NR	0	20WP	G15_033	FROM->TO	G14-057T 345.00 - SUNNYSIDE 345KV CKT 1	717	789	0.04781	111.092	GRAPEVINE INTERCHANGE - STATELINE INTERCHANGE 230KV CKT 1
FDNS	00NR	0	20WP	G15_033	FROM->TO	G14-057T 345.00 - SUNNYSIDE 345KV CKT 1	717	789	0.04781	111.092	GRAPEVINE INTERCHANGE - STATELINE INTERCHANGE 230KV CKT 1
FDNS	00NR	0	20WP	G15_033	FROM->TO	G14-057T 345.00 - SUNNYSIDE 345KV CKT 1	717	789	0.04601	111.091	GEN562710 1-G15_022_3 0.5500
FDNS	06NR	0	17G	G15_033	FROM->TO	G14-057T 345.00 - SUNNYSIDE 345KV CKT 1	717	789	0.06836	111.0502	GRACEMONT - MINCO 345KV CKT 1
FDNS	00NR	0	20WP	G15_033	FROM->TO	G14-057T 345.00 - SUNNYSIDE 345KV CKT 1	717	789	0.04655	111.0004	P12:138:AEPW-OGE:CORNVIL4:CIMARON4
FDNS	00NR	0	20WP	G15_033	FROM->TO	G14-057T 345.00 - SUNNYSIDE 345KV CKT 1	717	789	0.04601	110.9695	GEN532751 1-WOLF CREEK GENERATING STATION UNIT 1
FDNS	00NR	0	20WP	G15_033	FROM->TO	G14-057T 345.00 - SUNNYSIDE 345KV CKT 1	717	789	0.0478	110.9578	GRAPEVINE INTERCHANGE - NICHOLS STATION 230KV CKT 1
FDNS	00NR	0	20WP	G15_033	FROM->TO	G14-057T 345.00 - SUNNYSIDE 345KV CKT 1	717	789	0.0478	110.9578	GRAPEVINE INTERCHANGE - NICHOLS STATION 230KV CKT 1
FDNS	00NR	0	20WP	G15_033	FROM->TO	G14-057T 345.00 - SUNNYSIDE 345KV CKT 1	717	789	0.04601	110.9379	GEN629074 1-ARNOLD LOWSIDE OF GSU XFMR
FDNS	00NR	0	20WP	G15_033	FROM->TO	G14-057T 345.00 - SUNNYSIDE 345KV CKT 1	717	789	0.04601	110.9331	GEN615001 1-COAL CREEK
FDNS	00NR	0	20WP	G15_033	FROM->TO	G14-057T 345.00 - SUNNYSIDE 345KV CKT 1	717	789	0.04601	110.9313	GEN635213 3-NEAL UNIT 3
FDNS	00NR	0	20WP	G15_033	FROM->TO	G14-057T 345.00 - SUNNYSIDE 345KV CKT 1	717	789	0.04601	110.9078	GEN615002 2-COAL CREEK
FDNS	00NR	0	20WP	G15_033	FROM->TO	G14-057T 345.00 - SUNNYSIDE 345KV CKT 1	717	789	0.04601	110.8843	BIG STONE 230/24.0KV TRANSFORMER CKT 1
FDNS	00NR	0	20WP	G15_033	FROM->TO	G14-057T 345.00 - SUNNYSIDE 345KV CKT 1	717	789	0.046	110.8668	P12:138:WFEC:MSL09
FDNS	00NR	0	20WP	G15_033	FROM->TO	G14-057T 345.00 - SUNNYSIDE 345KV CKT 1	717	789	0.04601	110.8438	GEN636641 1-LOUISA UNIT 1
FDNS	00NR	0	20WP	G15_033	FROM->TO	G14-057T 345.00 - SUNNYSIDE 345KV CKT 1	717	789	0.04601	110.8394	GEN562754 1-G15031_5 0.6900
FDNS	00NR	0	20WP	G15_033	FROM->TO	G14-057T 345.00 - SUNNYSIDE 345KV CKT 1	717	789	0.04583	110.8309	NORTHWEST TEXARKANA - VALLIANT 345KV CKT 1
FDNS	00NR	0	20WP	G15_033	FROM->TO	G14-057T 345.00 - SUNNYSIDE 345KV CKT 1	717	789	0.04583	110.8309	NORTHWEST TEXARKANA - VALLIANT 345KV CKT 1
FDNS	00NR	0	20WP	G15_033	FROM->TO	G14-057T 345.00 - SUNNYSIDE 345KV CKT 1	717	789	0.04907	110.8147	CHISHOLM7 345.00 () 345/230/13.2KV TRANSFORMER CKT 1
FDNS	00NR	0	20WP	G15_033	FROM->TO	G14-057T 345.00 - SUNNYSIDE 345KV CKT 1	717	789	0.04601	110.8126	GEN600005 1-MONTICELLO
FDNS	00NR	0	20WP	G15_033	FROM->TO	G14-057T 345.00 - SUNNYSIDE 345KV CKT 1	717	789	0.04601	110.7807	GEN562556 1-G14_046_3 0.3420
FDNS	00NR	0	20WP	G15_033	FROM->TO	G14-057T 345.00 - SUNNYSIDE 345KV CKT 1	717	789	0.04601	110.7798	GEN562756 1-G15031_7 0.6900
FDNS	00NR	0	20WP	G15_033	FROM->TO	G14-057T 345.00 - SUNNYSIDE 345KV CKT 1	717	789	0.04907	110.7266	CHISHOLM7 345.00 - GRACEMONT 345KV CKT 1
FDNS	06NR	0	20L	G15_033	FROM->TO	G14-057T 345.00 - SUNNYSIDE 345KV CKT 1	717	789	0.09084	110.7164	GRACEMONT - LAWTON EASTSIDE 345KV CKT 1
FDNS	06NR	0	20L	G15_033	FROM->TO	G14-057T 345.00 - SUNNYSIDE 345KV CKT 1	717	789	0.09084	110.7164	GRACEMONT - LAWTON EASTSIDE 345KV CKT 1
FDNS	00NR	0	20WP	G15_033	FROM->TO	G14-057T 345.00 - SUNNYSIDE 345KV CKT 1	717	789	0.04601	110.6962	GEN563142 1-G15079_3 0.5500
FDNS	00NR	0	20WP	G15_033	FROM->TO	G14-057T 345.00 - SUNNYSIDE 345KV CKT 1	717	789	0.04601	110.6962	GEN563151 1-G15080_2 0.5500
FDNS	00NR	0	20WP	G15_033	FROM->TO	G14-057T 345.00 - SUNNYSIDE 345KV CKT 1	717	789	0.04601	110.6876	GEN600000 1-SHERBURNECNTY G1
FDNS	00NR	0	20WP	G15_033	FROM->TO	G14-057T 345.00 - SUNNYSIDE 345KV CKT 1	717	789	0.04601	110.6759	GEN562023 1-G11_020_3 0.6900
FDNS	00NR	0	20WP	G15_033	FROM->TO	G14-057T 345.00 - SUNNYSIDE 345KV CKT 1	717	789	0.04601	110.6759	GEN562026 1-G11_019_3 0.6900
FDNS	00NR	0	20WP	G15_033	FROM->TO	G14-057T 345.00 - SUNNYSIDE 345KV CKT 1	717	789	0.04601	110.6503	GEN629075 1-OTTUMWA GENERATOR FOR OTTUMWA UNIT NO 1
FDNS	00NR	0	20WP	G15_033	FROM->TO	G14-057T 345.00 - SUNNYSIDE 345KV CKT 1	717	789	0.04601	110.6347	GEN600001 2-SHERBURNE CNTY G2
FDNS	00NR	0	20WP	G15_033	FROM->TO	G14-057T 345.00 - SUNNYSIDE 345KV CKT 1	717	789	0.04601	110.5948	GEN523971 1-HARRINGTON GEN #1 24 KV
FDNS	00NR	0	20WP	G15_033	FROM->TO	G14-057T 345.00 - SUNNYSIDE 345KV CKT 1	717	789	0.04601	110.5948	GEN523972 1-HARRINGTON GEN #2 24 KV
FDNS	00NR	0	20WP	G15_033	FROM->TO	G14-057T 345.00 - SUNNYSIDE 345KV CKT 1	717	789	0.04601	110.5948	GEN523973 1-HARRINGTON GEN #3 24 KV
FDNS	00NR	0	20WP	G15_033	FROM->TO	G14-057T 345.00 - SUNNYSIDE 345KV CKT 1	717	789	0.04601	110.5682	GEN511848 1-SOUTHWESTERN STATION #3
FDNS	00NR	0	20WP	G15_033	FROM->TO	G14-057T 345.00 - SUNNYSIDE 345KV CKT 1	717	789	0.04601	110.4952	GEN527901 1-HOBBS PLANT #1 (CT)
FDNS	00NR	0	20WP	G15_033	FROM->TO	G14-057T 345.00 - SUNNYSIDE 345KV CKT 1	717	789	0.04601	110.4952	GEN527902 1-HOBBS PLANT #2 (CT)
FDNS	00NR	0	16WP	G15_033	FROM->TO	G14-057T 345.00 - SUNNYSIDE 345KV CKT 1	717	789	0.0498	110.4622	EASTDC - ERCOT EQUIVALENCE 345KV CKT 1
FDNS	00NR	0	20WP	G15_033	FROM->TO	G14-057T 345.00 - SUNNYSIDE 345KV CKT 1	717	789	0.04601	110.4587	GEN563042 1-G15068_3 0.6900
FDNS	00NR	0	20WP	G15_033	FROM->TO	G14-057T 345.00 - SUNNYSIDE 345KV CKT 1	717	789	0.04576	110.4581	LYDIA - WELSH 345KV CKT 1
FDNS	00NR	0	20WP	G15_033	FROM->TO	G14-057T 345.00 - SUNNYSIDE 345KV CKT 1	717	789	0.04576	110.4581	LYDIA - WELSH 345KV CKT 1
FDNS	00NR	0	20WP	G15_033	FROM->TO	G14-057T 345.00 - SUNNYSIDE 345KV CKT 1	717	789	0.04601	110.3783	GEN635214 4-NEAL UNIT 4
FDNS	00NR	0	20WP	G15_033	FROM->TO	G14-057T 345.00 - SUNNYSIDE 345KV CKT 1	717	789	0.04601	110.3726	SHERBURNE CO 345/24.0KV TRANSFORMER CKT 1
FDNS	00NR	0	20WP	G15_033	FROM->TO	G14-057T 345.00 - SUNNYSIDE 345KV CKT 1	717	789	0.0492	110.3131	P12:230:AEPW-SPS:SWEETWT6:WHEELER 6
FDNS	00NR	0	20WP	G15_033	FROM->TO	G14-057T 345.00 - SUNNYSIDE 345KV CKT 1	717	789	0.0492	110.3112	STATELINE INTERCHANGE - STLN-DEMARC6 230KV CKT 1
FDNS	00NR	0	20WP	G15_033	FROM->TO	G14-057T 345.00 - SUNNYSIDE 345KV CKT 1	717	789	0.0492	110.3099	STLN-DEMARC6 - SWEETWATER 230KV CKT 1
FDNS	00NR	0	20WP	G15_033	FROM->TO	G14-057T 345.00 - SUNNYSIDE 345KV CKT 1	717	789	0.04601	110.2086	GEN600002 3-SHERBURNE CNTY G3
FDNS	00NR	0	17SP	G15_033	FROM->TO	G14-057T 345.00 - SUNNYSIDE 345KV CKT 1	717	789	0.06654	110.1692	CIMARRON - MINCO 345KV CKT 1
FDNS	00NR	0	20WP	G15_033	FROM->TO	G14-057T 345.00 - SUNNYSIDE 345KV CKT 1	717	789	0.04601	110.1565	GEN563043 1-G15068_4 0.6900
FDNS	00NR	0	20WP	G15_033	FROM->TO	G14-057T 345.00 - SUNNYSIDE 345KV CKT 1	717	789	0.04601	110.1318	GEN563273 2-G15093_4 0.6900
FDNS	00NR	0	20WP	G15_033	FROM->TO	G14-057T 345.00 - SUNNYSIDE 345KV CKT 1	717	789	0.04601	110.1257	GEN526333 1-JONES GEN #3 21 KV
FDNS	00NR	0	20WP	G15_033	FROM->TO	G14-057T 345.00 - SUNNYSIDE 345KV CKT 1	717	789	0.04601	110.1255	GEN526334 1-JONES_4 116.500
FDNS	00NR	0	20WP	G15_033	FROM->TO	G14-057T 345.00 - SUNNYSIDE 345KV CKT 1	717	789	0.04601	110.1092	GEN344225 1-1CAL G1 25.000
FDNS	00NR	0	20WP	G15_033	FROM->TO	G14-057T 345.00 - SUNNYSIDE 345KV CKT 1	717	789	0.04601	110.0925	GEN525844 1-ELK_1 118.000
FDNS	00NR	0	20WP	G15_033	FROM->TO	G14-057T 345.00 - SUNNYSIDE 345KV CKT 1	717	789	0.04601	110.0744	GEN525845 1-ELK_2 1 18.000
FDNS	00NR	0	20WP	G15_033	FROM->TO	G14-057T 345.00 - SUNNYSIDE 345KV CKT 1	717	789	0.04601	109.9402	GEN527166 1-MUSTANG_6 118.000
FDNS	00NR	0	20WP	G15_033	FROM->TO	G14-057T 345.00 - SUNNYSIDE 345KV CKT 1	717	789	0.04965	109.9293	P12:230:AEPW:ELKCITY6:SWEETWT6
FDNS	00NR	0	20WP	G15_033	FROM->TO	G14-057T 345.00 - SUNNYSIDE 345KV CKT 1	717	789	0.04601	109.9216	GEN635023 3-WALTER SCOTT UNIT 3
FDNS	00NR	0	20WP	G15_033	FROM->TO	G14-057T 345.00 - SUNNYSIDE 345KV CKT 1	717	789	0.04601	109.8989	GEN563202 1-G15085_3 0.5500
FDNS	00NR	0	20WP	G15_033	FROM->TO	G14-057T 345.00 - SUNNYSIDE 345KV CKT 1	717	789	0.04601	109.8758	GEN528501 1-G14_012 24.000
FDNS	00NR	0	20WP	G15_033	FROM->TO	G14-057T 345.00 - SUNNYSIDE 345KV CKT 1	717	789	0.04601	109.8267	GEN562590 1-G14_057_3 0.6900
FDNS	06NR	0	20L	G15_033	FROM->TO	G14-057T 345.00 - SUNNYSIDE 345KV CKT 1	717	789	0.04811	109.7538	BASE CASE
FDNS	00NR	0	20WP	G15_033	FROM->TO	G14-057T 345.00 - SUNNYSIDE 345KV CKT 1	717	789	0.04601	109.7108	GEN562762 1-G15033_3 0.6900
FDNS	00NR	0	20WP	G15_033	FROM->TO	G14-057T 345.00 - SUNNYSIDE 345KV CKT 1	717	789	0.04601	109.6995	GEN562655 1-G14_074_3 0.6900
FDNS	00NR	0	20WP	G15_033	FROM->TO	G14-057T 345.00 - SUNNYSIDE 345KV CKT 1	717	789	0.0492	109.6711	CHISHOLM6 230.00 - SWEETWATER 230KV CKT 1
FDNS	00NR	0	20WP	G15_033	FROM->TO	G14-057T 345.00 - SUNNYSIDE 345KV CKT 1	717	789	0.04601	109.6711	GEN525562 1-TOLK GEN #2 24 KV
FDNS	00NR	0	20WP	G15_033	FROM->TO	G14-057T 345.00 - SUNNYSIDE 345KV CKT 1	717	789	0.04556	109.6242	JOHNSON COUNTY (JOHNCO) 345/138/13.8KV TRANSFORMER CKT 1
FDNS	00NR	0	20WP	G15_033	FROM->TO	G14-057T 345.00 - SUNNYSIDE 345KV CKT 1	717	789	0.04601	109.6154	GEN562685 1-G15_013_3 0.3550
FDNS	00NR	0	20WP	G15_033	FROM->TO	G14-057T 345.00 - SUNNYSIDE 345KV CKT 1	717	789	0.04601	109.5881	GEN527903 1-HOBBS PLANT #3 (ST)
FDNS	00NR	0	20WP	G15_033	FROM->TO	G14-057T 345.00 - SUNNYSIDE 345KV CKT 1	717	789	0.04601	109.5189	GEN635024 4-WALTER SCOTT UNIT 4
FDNS	00NR	0	20WP	G15_033	FROM->TO	G14-057T 345.00 - SUNNYSIDE 345KV CKT 1	717	789	0.04601	109.4698	GEN563272 1-G15093_3 0.6900
FDNS	00NR	0	20WP	G15_033	FROM->TO	G14-057T 345.00 - SUNNYSIDE 345KV CKT 1	717	789	0.04566	109.3905	LYDIA - VALLIANT 345KV CKT 1

SOLUTION	GROUP	SCENARIO	SEASON	SOURCE	DIRECTION	MONITORED ELEMENT	RATEA (MVA)	RATEB(MVA)	TDF	TC%LOADING (% MVA)	CONTINGENCY
FDNS	00NR	0	20WP	G15_033	FROM->TO	G14-057T 345.00 - SUNNYSIDE 345KV CKT 1	717	789	0.04566	109.3905	LYDIA - VALLIANT 345KV CKT 1
FDNS	00NR	0	16WP	G15_033	FROM->TO	G14-057T 345.00 - SUNNYSIDE 345KV CKT 1	717	789	0.04361	109.3734	JOHNSON COUNTY - PITTSBURG 345KV CKT 1
FDNS	00NR	0	16WP	G15_033	FROM->TO	G14-057T 345.00 - SUNNYSIDE 345KV CKT 1	717	789	0.04361	109.3734	JOHNSON COUNTY - PITTSBURG 345KV CKT 1
FDNS	00NR	0	20WP	G15_033	FROM->TO	G14-057T 345.00 - SUNNYSIDE 345KV CKT 1	717	789	0.04601	109.1215	GEN525561 1-TOLK GEN #1 24 KV
FDNS	00NR	0	16WP	G15_033	FROM->TO	G14-057T 345.00 - SUNNYSIDE 345KV CKT 1	717	789	0.0498	109.0304	GEN563263 1-G15092_4 0.6900
FDNS	00NR	0	16WP	G15_033	FROM->TO	G14-057T 345.00 - SUNNYSIDE 345KV CKT 1	717	789	0.04818	108.4262	HUGO - VALLIANT 345KV CKT 1
FDNS	00NR	0	16WP	G15_033	FROM->TO	G14-057T 345.00 - SUNNYSIDE 345KV CKT 1	717	789	0.04818	108.4262	HUGO - VALLIANT 345KV CKT 1
FDNS	06NR	0	20L	G15_033	FROM->TO	G14-057T 345.00 - SUNNYSIDE 345KV CKT 1	717	789	0.04624	107.6315	PITTSBURG - SEMINOLE 345KV CKT 1
FDNS	06NR	0	20L	G15_033	FROM->TO	G14-057T 345.00 - SUNNYSIDE 345KV CKT 1	717	789	0.04624	107.6315	PITTSBURG - SEMINOLE 345KV CKT 1
FDNS	06ALL	0	20WP	G15_033	FROM->TO	G14-057T 345.00 - SUNNYSIDE 345KV CKT 1	717	789	0.16275	107.5634	BASE CASE
FDNS	00NR	0	16WP	G15_033	FROM->TO	G14-057T 345.00 - SUNNYSIDE 345KV CKT 1	717	789	0.0498	107.3751	GEN563262 1-G15092_3 0.6900
FDNS	00NR	0	20WP	G15_033	FROM->TO	G14-057T 345.00 - SUNNYSIDE 345KV CKT 1	717	789	0.04029	107.2115	JOHNSON COUNTY - PITTSBURG 345KV CKT 1
FDNS	00NR	0	20WP	G15_033	FROM->TO	G14-057T 345.00 - SUNNYSIDE 345KV CKT 1	717	789	0.04029	107.2115	JOHNSON COUNTY - PITTSBURG 345KV CKT 1
FDNS	06ALL	0	20SP	G15_033	FROM->TO	G14-057T 345.00 - SUNNYSIDE 345KV CKT 1	717	789	0.22606	107.1738	GRACEMONT - MINCO 345KV CKT 1
FDNS	06ALL	0	17G	G15_033	FROM->TO	G14-057T 345.00 - SUNNYSIDE 345KV CKT 1	717	789	0.1658	106.9763	BASE CASE
FDNS	00NR	0	20WP	G15_033	FROM->TO	G14-057T 345.00 - SUNNYSIDE 345KV CKT 1	717	789	0.04451	106.8236	HUGO - VALLIANT 345KV CKT 1
FDNS	00NR	0	20WP	G15_033	FROM->TO	G14-057T 345.00 - SUNNYSIDE 345KV CKT 1	717	789	0.04451	106.8236	HUGO - VALLIANT 345KV CKT 1
FDNS	06NR	0	20L	G15_033	FROM->TO	G14-057T 345.00 - SUNNYSIDE 345KV CKT 1	717	789	0.04756	106.6102	CIMARRON - DRAPER LAKE 345KV CKT 1
FDNS	00NR	0	20WP	G15_033	FROM->TO	G14-057T 345.00 - SUNNYSIDE 345KV CKT 1	717	789	0.04601	106.3421	GEN563263 1-G15092_4 0.6900
FDNS	00NR	0	16WP	G15_033	FROM->TO	G14-057T 345.00 - SUNNYSIDE 345KV CKT 1	717	789	0.25618	105.9541	G14-074T 345.00 - TUCO INTERCHANGE 345KV CKT 1
FDNS	06ALL	0	16WP	G15_033	FROM->TO	G14-057T 345.00 - SUNNYSIDE 345KV CKT 1	717	789	0.16909	105.0999	BASE CASE
FDNS	06NR	0	20L	G15_033	FROM->TO	G14-057T 345.00 - SUNNYSIDE 345KV CKT 1	717	789	0.05047	104.7932	P12:138:WFEC:MSL03
FDNS	00NR	0	20WP	G15_033	FROM->TO	G14-057T 345.00 - SUNNYSIDE 345KV CKT 1	717	789	0.04601	104.6622	GEN563262 1-G15092_3 0.6900
FDNS	06NR	0	20L	G15_033	FROM->TO	G14-057T 345.00 - SUNNYSIDE 345KV CKT 1	717	789	0.04799	103.996	CLEVELAND - G15066_T 345.00 345KV CKT 1
FDNS	06NR	0	20L	G15_033	FROM->TO	G14-057T 345.00 - SUNNYSIDE 345KV CKT 1	717	789	0.04799	103.6906	G15066_T 345.00 - SOONER 345KV CKT 1
FDNS	00NR	0	16WP	G15_033	FROM->TO	G14-057T 345.00 - SUNNYSIDE 345KV CKT 1	717	789	0.04161	103.684	JOHNSON COUNTY - SUNNYSIDE 345KV CKT 1
FDNS	06NR	0	20L	G15_033	FROM->TO	G14-057T 345.00 - SUNNYSIDE 345KV CKT 1	717	789	0.04811	103.6806	GEN501801 1-DOLET HILLS UNIT1
FDNS	06NR	0	20L	G15_033	FROM->TO	G14-057T 345.00 - SUNNYSIDE 345KV CKT 1	717	789	0.04811	103.4801	GEN509416 1-TURK GENERATION
FDNS	06NR	0	20L	G15_033	FROM->TO	G14-057T 345.00 - SUNNYSIDE 345KV CKT 1	717	789	0.04811	103.3192	GEN509403 1-PIRKEY GENERATION
FDNS	06NR	0	20L	G15_033	FROM->TO	G14-057T 345.00 - SUNNYSIDE 345KV CKT 1	717	789	0.04811	102.9735	GEN336821 1-GRAND GULF UNIT
FDNS	06NR	0	20L	G15_033	FROM->TO	G14-057T 345.00 - SUNNYSIDE 345KV CKT 1	717	789	0.04811	102.8427	GEN336153 1-WATERFORD UNIT#3
FDNS	06NR	0	20L	G15_033	FROM->TO	G14-057T 345.00 - SUNNYSIDE 345KV CKT 1	717	789	0.04809	102.65	PITTSBURG - VALLIANT 345KV CKT 1
FDNS	06NR	0	20L	G15_033	FROM->TO	G14-057T 345.00 - SUNNYSIDE 345KV CKT 1	717	789	0.04809	102.65	PITTSBURG - VALLIANT 345KV CKT 1
FDNS	06NR	0	20L	G15_033	FROM->TO	G14-057T 345.00 - SUNNYSIDE 345KV CKT 1	717	789	0.04797	102.5597	ARCADIA - NORTHWEST 345KV CKT 1
FDNS	06NR	0	20L	G15_033	FROM->TO	G14-057T 345.00 - SUNNYSIDE 345KV CKT 1	717	789	0.04811	102.5091	GEN335831 1-RIVERBEND UNIT#1
FDNS	06NR	0	20L	G15_033	FROM->TO	G14-057T 345.00 - SUNNYSIDE 345KV CKT 1	717	789	0.04805	102.4228	CLEVELAND - TULSA NORTH 345KV CKT 1
FDNS	06NR	0	20L	G15_033	FROM->TO	G14-057T 345.00 - SUNNYSIDE 345KV CKT 1	717	789	0.04805	102.4228	CLEVELAND - TULSA NORTH 345KV CKT 1
FDNS	00NR	0	20WP	G15_033	FROM->TO	G14-057T 345.00 - SUNNYSIDE 345KV CKT 1	717	789	0.2571	102.2257	G14-074T 345.00 - TUCO INTERCHANGE 345KV CKT 1
FDNS	06NR	0	20L	G15_033	FROM->TO	G14-057T 345.00 - SUNNYSIDE 345KV CKT 1	717	789	0.04811	102.1789	GRAND GULF 500/22.0KV TRANSFORMER CKT 1
FDNS	06NR	0	20L	G15_033	FROM->TO	G14-057T 345.00 - SUNNYSIDE 345KV CKT 1	717	789	0.04809	102.026	LACYGNE - WAVERLY7 345.00 345KV CKT 1
FDNS	06NR	0	20L	G15_033	FROM->TO	G14-057T 345.00 - SUNNYSIDE 345KV CKT 1	717	789	0.04942	101.8913	P12:138:AEPW:DUNCAN-4:L.E.S.-4
FDNS	06NR	0	20L	G15_033	FROM->TO	G14-057T 345.00 - SUNNYSIDE 345KV CKT 1	717	789	0.04853	101.8528	CORN TAP - NAPLESTP 138.00 138KV CKT 1
FDNS	06NR	0	20L	G15_033	FROM->TO	G14-057T 345.00 - SUNNYSIDE 345KV CKT 1	717	789	0.04809	101.8515	WAVERLY7 345.00 - WOLF CREEK 345KV CKT 1
FDNS	06NR	0	20L	G15_033	FROM->TO	G14-057T 345.00 - SUNNYSIDE 345KV CKT 1	717	789	0.04811	101.7789	GEN335206 1-NELSON UNIT 6
FDNS	06NR	0	20L	G15_033	FROM->TO	G14-057T 345.00 - SUNNYSIDE 345KV CKT 1	717	789	0.04853	101.7704	NAPLESTP 138.00 - PAYNE 138.00 138KV CKT 1
FDNS	06NR	0	20L	G15_033	FROM->TO	G14-057T 345.00 - SUNNYSIDE 345KV CKT 1	717	789	0.04841	101.768	COMANCHE - LOCO 138KV CKT 1
FDNS	06NR	0	20L	G15_033	FROM->TO	G14-057T 345.00 - SUNNYSIDE 345KV CKT 1	717	789	0.04941	101.7646	COMANCHE TAP - OMPA-DUNCAN 840 138KV CKT 1
FDNS	06NR	0	20L	G15_033	FROM->TO	G14-057T 345.00 - SUNNYSIDE 345KV CKT 1	717	789	0.04826	101.7226	REDBUD - RIVERSIDE STATION 345KV CKT 1
FDNS	06NR	0	20L	G15_033	FROM->TO	G14-057T 345.00 - SUNNYSIDE 345KV CKT 1	717	789	0.04826	101.7226	REDBUD - RIVERSIDE STATION 345KV CKT 1
FDNS	06NR	0	20L	G15_033	FROM->TO	G14-057T 345.00 - SUNNYSIDE 345KV CKT 1	717	789	0.05024	101.5874	LAWTON EASTSIDE (LES 5) 345/138/13.8KV TRANSFORMER CKT 2
FDNS	06NR	0	20L	G15_033	FROM->TO	G14-057T 345.00 - SUNNYSIDE 345KV CKT 1	717	789	0.05024	101.5874	LAWTON EASTSIDE (LES 5) 345/138/13.8KV TRANSFORMER CKT 2
FDNS	06NR	0	20L	G15_033	FROM->TO	G14-057T 345.00 - SUNNYSIDE 345KV CKT 1	717	789	0.04811	101.5558	GEN509406 1-WELSH #3
FDNS	06NR	0	20L	G15_033	FROM->TO	G14-057T 345.00 - SUNNYSIDE 345KV CKT 1	717	789	0.04811	101.5557	GEN509404 1-WELSH #1
FDNS	06NR	0	20L	G15_033	FROM->TO	G14-057T 345.00 - SUNNYSIDE 345KV CKT 1	717	789	0.0509	101.5074	P12:138:AEPW:S.W.S.-4:L.E.S.-4
FDNS	06NR	0	20L	G15_033	FROM->TO	G14-057T 345.00 - SUNNYSIDE 345KV CKT 1	717	789	0.04941	101.4627	DUNCAN - OMPA-DUNCAN 840 138KV CKT 1
FDNS	06NR	0	20L	G15_033	FROM->TO	G14-057T 345.00 - SUNNYSIDE 345KV CKT 1	717	789	0.04941	101.4627	DUNCAN - OMPA-DUNCAN 840 138KV CKT 1
FDNS	06NR	0	20L	G15_033	FROM->TO	G14-057T 345.00 - SUNNYSIDE 345KV CKT 1	717	789	0.0482	101.4605	HEALDTON - LOCO 138KV CKT 1
FDNS	06NR	0	20L	G15_033	FROM->TO	G14-057T 345.00 - SUNNYSIDE 345KV CKT 1	717	789	0.04769	101.4485	ARCADIA - SEMINOLE 345KV CKT 1
FDNS	06NR	0	20L	G15_033	FROM->TO	G14-057T 345.00 - SUNNYSIDE 345KV CKT 1	717	789	0.04859	101.4188	ANADARKO - POCASSETT 138KV CKT 1
FDNS	06NR	0	20L	G15_033	FROM->TO	G14-057T 345.00 - SUNNYSIDE 345KV CKT 1	717	789	0.0482	101.372	HEALDTON - RINGLING 138KV CKT 1
FDNS	06NR	0	17G	G15_033	FROM->TO	G14-057T 345.00 - SUNNYSIDE 345KV CKT 1	717	789	0.09532	101.3715	GRACEMONT - LAWTON EASTSIDE 345KV CKT 1
FDNS	06NR	0	17G	G15_033	FROM->TO	G14-057T 345.00 - SUNNYSIDE 345KV CKT 1	717	789	0.09532	101.3715	GRACEMONT - LAWTON EASTSIDE 345KV CKT 1
FDNS	06NR	0	20L	G15_033	FROM->TO	G14-057T 345.00 - SUNNYSIDE 345KV CKT 1	717	789	0.04805	101.3579	WEBRE - WELLS 500KV CKT 1
FDNS	06NR	0	20L	G15_033	FROM->TO	G14-057T 345.00 - SUNNYSIDE 345KV CKT 1	717	789	0.04859	101.3508	POCASSETT - TUTTLE 138KV CKT 1
FDNS	06NR	0	20L	G15_033	FROM->TO	G14-057T 345.00 - SUNNYSIDE 345KV CKT 1	717	789	0.0482	101.3069	RINGLING - SOUTH WILSON 138KV CKT 1
FDNS	06NR	0	20L	G15_033	FROM->TO	G14-057T 345.00 - SUNNYSIDE 345KV CKT 1	717	789	0.04811	101.2917	DOLET HILLS 345/24.0KV TRANSFORMER CKT 1
FDNS	06NR	0	20L	G15_033	FROM->TO	G14-057T 345.00 - SUNNYSIDE 345KV CKT 1	717	789	0.04811	101.2598	GEN501813 1-RODEMACHER UNIT 3
FDNS	06ALL	0	20WP	G15_033	FROM->TO	G14-057T 345.00 - SUNNYSIDE 345KV CKT 1	717	789	0.21448	101.2524	GRACEMONT - LAWTON EASTSIDE 345KV CKT 1
FDNS	06ALL	0	20WP	G15_033	FROM->TO	G14-057T 345.00 - SUNNYSIDE 345KV CKT 1	717	789	0.21448	101.2524	GRACEMONT - LAWTON EASTSIDE 345KV CKT 1
FDNS	06NR	0	20L	G15_033	FROM->TO	G14-057T 345.00 - SUNNYSIDE 345KV CKT 1	717	789	0.04811	101.2211	GEN501812 1-RODEMACHER UNIT 2
FDNS	06NR	0	20L	G15_033	FROM->TO	G14-057T 345.00 - SUNNYSIDE 345KV CKT 1	717	789	0.04797	101.218	CANEYRV7 345.00 - NEOSHO 345KV CKT 1
FDNS	06NR	0	20L	G15_033	FROM->TO	G14-057T 345.00 - SUNNYSIDE 345KV CKT 1	717	789	0.0482	101.1897	MARIETTA - SOUTH WILSON 138KV CKT 1
FDNS	06NR	0	20L	G15_033	FROM->TO	G14-057T 345.00 - SUNNYSIDE 345KV CKT 1	717	789	0.04859	101.1814	BRIDGECR 138.00 - TUTTLE 138KV CKT 1
FDNS	06NR	0	20L	G15_033	FROM->TO	G14-057T 345.00 - SUNNYSIDE 345KV CKT 1	717	789	0.0482	101.1589	P12:138:WFEC:MSL17
FDNS	06NR	0	20L	G15_033	FROM->TO	G14-057T 345.00 - SUNNYSIDE 345KV CKT 1	717	789	0.048	101.1404	DOLET HILLS - SOUTHWEST SHREVEPORT 345KV CKT 1
FDNS	06NR	0	20L	G15_033	FROM->TO	G14-057T 345.00 - SUNNYSIDE 345KV CKT 1	717	789	0.048	101.1404	DOLET HILLS - SOUTHWEST SHREVEPORT 345KV CKT 1
FDNS	06NR	0	20L	G15_033	FROM->TO	G14-057T 345.00 - SUNNYSIDE 345KV CKT 1	717	789	0.04811	101.114	GEN509408 1-WILKES #2
FDNS	06NR	0	20L	G15_033	FROM->TO	G14-057T 345.00 - SUNNYSIDE 345KV CKT 1	717	789	0.04859	101.0874	P12:138:WFEC:MSL01
FDNS	06NR	0	20L	G15_033	FROM->TO	G14-057T 345.00 - SUNNYSIDE 345KV CKT 1	717	789	0.04797	101.0747	CANEYRV7 345.00 - LATHAMS7 345.00 345KV CKT 1

SOLUTION	GROUP	SCENARIO	SEASON	SOURCE	DIRECTION	MONITORED ELEMENT	RATEA (MVA)	RATEB(MVA)	TDF	TC%LOADING (% MVA)	CONTINGENCY
FDNS	06NR	0	20L	G15_033	FROM->TO	G14-057T 345.00 - SUNNYSIDE 345KV CKT 1	717	789	0.04859	101.0683	BRIDGECR 138.00 - SUNSHINE CANYON 138KV CKT 1
FDNS	06NR	0	20L	G15_033	FROM->TO	G14-057T 345.00 - SUNNYSIDE 345KV CKT 1	717	789	0.04811	101.047	GEN337652 1-WHITE BLUFF UNIT #1
FDNS	06NR	0	20L	G15_033	FROM->TO	G14-057T 345.00 - SUNNYSIDE 345KV CKT 1	717	789	0.04811	101.0249	GEN337653 1-WHITE BLUFF UNIT #2
FDNS	06NR	0	20L	G15_033	FROM->TO	G14-057T 345.00 - SUNNYSIDE 345KV CKT 1	717	789	0.04795	101.0239	AXTELL - POST ROCK 345KV CKT 1
FDNS	06NR	0	20L	G15_033	FROM->TO	G14-057T 345.00 - SUNNYSIDE 345KV CKT 1	717	789	0.04811	101.0219	GEN337911 1-ARKANSAS NUCLEAR ONE UNIT #2
FDNS	06NR	0	20L	G15_033	FROM->TO	G14-057T 345.00 - SUNNYSIDE 345KV CKT 1	717	789	0.04797	100.9913	P12:138:AEPW-OGE:WTH_JCT4:JENSEN4
FDNS	06NR	0	20L	G15_033	FROM->TO	G14-057T 345.00 - SUNNYSIDE 345KV CKT 1	717	789	0.04811	100.9679	NEW MADRID 345/22.0KV TRANSFORMER CKT 1
FDNS	06NR	0	20L	G15_033	FROM->TO	G14-057T 345.00 - SUNNYSIDE 345KV CKT 1	717	789	0.04828	100.9361	CIVIT - PAOLI 138KV CKT 1
FDNS	06NR	0	20L	G15_033	FROM->TO	G14-057T 345.00 - SUNNYSIDE 345KV CKT 1	717	789	0.04811	100.8887	FRONTIER - GRIMES 345KV CKT 1
FDNS	06NR	0	20L	G15_033	FROM->TO	G14-057T 345.00 - SUNNYSIDE 345KV CKT 1	717	789	0.04828	100.8864	CIVIT - STRATFORD 138KV CKT 1
FDNS	06NR	0	20L	G15_033	FROM->TO	G14-057T 345.00 - SUNNYSIDE 345KV CKT 1	717	789	0.04828	100.8429	OIL CENTER - STRATFORD 138KV CKT 1
FDNS	06NR	0	20L	G15_033	FROM->TO	G14-057T 345.00 - SUNNYSIDE 345KV CKT 1	717	789	0.04796	100.8373	MATHWSN7 345.00 - NORTHWEST 345KV CKT 1
FDNS	06NR	0	20L	G15_033	FROM->TO	G14-057T 345.00 - SUNNYSIDE 345KV CKT 1	717	789	0.04806	100.8372	ELDORADO EHV - SHERIDAN EHV 500KV CKT 1
FDNS	06NR	0	20L	G15_033	FROM->TO	G14-057T 345.00 - SUNNYSIDE 345KV CKT 1	717	789	0.04847	100.8314	P12:138:AEPW-OGE:CORNVIL4:MAUD 4
FDNS	06NR	0	20L	G15_033	FROM->TO	G14-057T 345.00 - SUNNYSIDE 345KV CKT 1	717	789	0.04811	100.8289	GEN337910 1-ARKANSAS NUCLEAR ONE UNIT #1
FDNS	06NR	0	20L	G15_033	FROM->TO	G14-057T 345.00 - SUNNYSIDE 345KV CKT 1	717	789	0.04847	100.8287	BLANCHARD - CORNVILLE 138KV CKT 1
FDNS	06NR	0	20L	G15_033	FROM->TO	G14-057T 345.00 - SUNNYSIDE 345KV CKT 1	717	789	0.04848	100.8019	BAILEY4 138.00 - SUNSHINE CANYON 138KV CKT 1
FDNS	06NR	0	20L	G15_033	FROM->TO	G14-057T 345.00 - SUNNYSIDE 345KV CKT 1	717	789	0.04797	100.7934	LATHAMS7 345.00 - ROSE HILL 345KV CKT 1
FDNS	06NR	0	20L	G15_033	FROM->TO	G14-057T 345.00 - SUNNYSIDE 345KV CKT 1	717	789	0.04811	100.7922	GEN334440 1-SABINE UNIT 4
FDNS	06NR	0	20L	G15_033	FROM->TO	G14-057T 345.00 - SUNNYSIDE 345KV CKT 1	717	789	0.04811	100.784	GEN506754 1-LEBROCK STEAM 1
FDNS	06NR	0	20L	G15_033	FROM->TO	G14-057T 345.00 - SUNNYSIDE 345KV CKT 1	717	789	0.04828	100.7762	LATTA JCT - OIL CENTER 138KV CKT 1
FDNS	06NR	0	20L	G15_033	FROM->TO	G14-057T 345.00 - SUNNYSIDE 345KV CKT 1	717	789	0.04775	100.7565	CANADIAN - NOBLE 138KV CKT 1
FDNS	06NR	0	20L	G15_033	FROM->TO	G14-057T 345.00 - SUNNYSIDE 345KV CKT 1	717	789	0.04778	100.7526	P12:138:OKGE:3TERM27
FDNS	06NR	0	20L	G15_033	FROM->TO	G14-057T 345.00 - SUNNYSIDE 345KV CKT 1	717	789	0.04811	100.7475	GEN334030 1-FRONTIER UNIT 1
FDNS	06NR	0	20L	G15_033	FROM->TO	G14-057T 345.00 - SUNNYSIDE 345KV CKT 1	717	789	0.04811	100.7451	GEN334031 1-FRONTIER UNIT 2
FDNS	06NR	0	20L	G15_033	FROM->TO	G14-057T 345.00 - SUNNYSIDE 345KV CKT 1	717	789	0.04883	100.7415	P12:138:AEPW:CORNVIL4:DUNCAN-4
FDNS	06NR	0	20L	G15_033	FROM->TO	G14-057T 345.00 - SUNNYSIDE 345KV CKT 1	717	789	0.04848	100.7321	BAILEY4 138.00 - WESTMOORE 138KV CKT 1
FDNS	06NR	0	20L	G15_033	FROM->TO	G14-057T 345.00 - SUNNYSIDE 345KV CKT 1	717	789	0.04798	100.729	WEATHERFORD JCT. - WEATHERFORD SOUTHEAST 138KV CKT 1
FDNS	06NR	0	20L	G15_033	FROM->TO	G14-057T 345.00 - SUNNYSIDE 345KV CKT 1	717	789	0.04798	100.729	WEATHERFORD JCT. - WEATHERFORD SOUTHEAST 138KV CKT 1
FDNS	06NR	0	20L	G15_033	FROM->TO	G14-057T 345.00 - SUNNYSIDE 345KV CKT 1	717	789	0.04775	100.7166	NOBLE - PURCELL4 138.00 138KV CKT 1
FDNS	06NR	0	20L	G15_033	FROM->TO	G14-057T 345.00 - SUNNYSIDE 345KV CKT 1	717	789	0.04798	100.7129	P12:138:AEPW:REDROCKRD4:WTH_JCT4
FDNS	06NR	0	20L	G15_033	FROM->TO	G14-057T 345.00 - SUNNYSIDE 345KV CKT 1	717	789	0.04783	100.71	PARK LANE - SEMINOLE 138KV CKT 1
FDNS	06NR	0	20L	G15_033	FROM->TO	G14-057T 345.00 - SUNNYSIDE 345KV CKT 1	717	789	0.04847	100.7085	BLANCHARD - MAUD 138KV CKT 1
FDNS	06NR	0	20L	G15_033	FROM->TO	G14-057T 345.00 - SUNNYSIDE 345KV CKT 1	717	789	0.05272	100.6987	TUCO INTERCHANGE - TUCO_2 345.00 345KV CKT 1
FDNS	00NR	0	20WP	G15_033	FROM->TO	G14-057T 345.00 - SUNNYSIDE 345KV CKT 1	717	789	0.03844	100.6926	JOHNSON COUNTY - SUNNYSIDE 345KV CKT 1
FDNS	06NR	0	20L	G15_033	FROM->TO	G14-057T 345.00 - SUNNYSIDE 345KV CKT 1	717	789	0.04817	100.6915	TUPELO - TUPELO TAP 138KV CKT 1
FDNS	06NR	0	20L	G15_033	FROM->TO	G14-057T 345.00 - SUNNYSIDE 345KV CKT 1	717	789	0.04811	100.6776	NEW MADRID 161/22.0KV TRANSFORMER CKT 1
FDNS	06NR	0	20L	G15_033	FROM->TO	G14-057T 345.00 - SUNNYSIDE 345KV CKT 1	717	789	0.04809	100.6768	P12:138:WFEC:MSL02
FDNS	06NR	0	20L	G15_033	FROM->TO	G14-057T 345.00 - SUNNYSIDE 345KV CKT 1	717	789	0.04798	100.6705	HINTON - WEATHERFORD JCT. 138KV CKT 1
FDNS	06NR	0	20L	G15_033	FROM->TO	G14-057T 345.00 - SUNNYSIDE 345KV CKT 1	717	789	0.04803	100.6669	P12:138:AEPW:WTHWF4:CLINTJC4
FDNS	06NR	0	20L	G15_033	FROM->TO	G14-057T 345.00 - SUNNYSIDE 345KV CKT 1	717	789	0.04916	100.6622	LAWTON EASTSIDE (LES 4) 345/138/13.8KV TRANSFORMER CKT 1
FDNS	06NR	0	20L	G15_033	FROM->TO	G14-057T 345.00 - SUNNYSIDE 345KV CKT 1	717	789	0.04916	100.6622	LAWTON EASTSIDE (LES 4) 345/138/13.8KV TRANSFORMER CKT 1
FDNS	06NR	0	20L	G15_033	FROM->TO	G14-057T 345.00 - SUNNYSIDE 345KV CKT 1	717	789	0.04811	100.6612	GEN335204 1-NELSON UNIT 4
FDNS	06NR	0	20L	G15_033	FROM->TO	G14-057T 345.00 - SUNNYSIDE 345KV CKT 1	717	789	0.04808	100.6587	ELDORADO EHV - MOUNT OLIVE 500KV CKT 1
FDNS	06NR	0	20L	G15_033	FROM->TO	G14-057T 345.00 - SUNNYSIDE 345KV CKT 1	717	789	0.04848	100.6534	FRANKLIN SW - WESTMOORE 138KV CKT 1
FDNS	00NR	0	20SP	G15_033	FROM->TO	G14-057T 345.00 - SUNNYSIDE 345KV CKT 1	717	789	0.06204	100.6496	CIMARRON - MINCO 345KV CKT 1
FDNS	06NR	0	20L	G15_033	FROM->TO	G14-057T 345.00 - SUNNYSIDE 345KV CKT 1	717	789	0.04735	100.6395	G11-14T 345.00 - WOODWARD DISTRICT EHV 345KV CKT 1
FDNS	06NR	0	20L	G15_033	FROM->TO	G14-057T 345.00 - SUNNYSIDE 345KV CKT 1	717	789	0.04735	100.6395	G11-14T 345.00 - WOODWARD DISTRICT EHV 345KV CKT 2
FDNS	06NR	0	20L	G15_033	FROM->TO	G14-057T 345.00 - SUNNYSIDE 345KV CKT 1	717	789	0.04756	100.6383	MOORE COUNTY INTERCHANGE - POTTER COUNTY INTERCHANGE 230KV CKT 1
FDNS	06NR	0	20L	G15_033	FROM->TO	G14-057T 345.00 - SUNNYSIDE 345KV CKT 1	717	789	0.04756	100.6383	MOORE COUNTY INTERCHANGE - POTTER COUNTY INTERCHANGE 230KV CKT 1
FDNS	06NR	0	20L	G15_033	FROM->TO	G14-057T 345.00 - SUNNYSIDE 345KV CKT 1	717	789	0.04798	100.6348	HINTON - REDROCKRD4 138.00 138KV CKT 1
FDNS	06NR	0	20L	G15_033	FROM->TO	G14-057T 345.00 - SUNNYSIDE 345KV CKT 1	717	789	0.04811	100.6324	WHITE BLUFF 500/26.0KV TRANSFORMER CKT 1
FDNS	06NR	0	20L	G15_033	FROM->TO	G14-057T 345.00 - SUNNYSIDE 345KV CKT 1	717	789	0.04805	100.63	DRAPER LAKE - SEMINOLE 345KV CKT 2
FDNS	06NR	0	20L	G15_033	FROM->TO	G14-057T 345.00 - SUNNYSIDE 345KV CKT 1	717	789	0.04805	100.6299	DRAPER LAKE - SEMINOLE 345KV CKT 1
FDNS	06NR	0	20L	G15_033	FROM->TO	G14-057T 345.00 - SUNNYSIDE 345KV CKT 1	717	789	0.04811	100.6268	GEN336170 1-GULF OXY U4
FDNS	06NR	0	20L	G15_033	FROM->TO	G14-057T 345.00 - SUNNYSIDE 345KV CKT 1	717	789	0.04807	100.6165	PAOLI - PAYNE 138.00 138KV CKT 1
FDNS	06NR	0	20L	G15_033	FROM->TO	G14-057T 345.00 - SUNNYSIDE 345KV CKT 1	717	789	0.04811	100.6116	GEN336252 1-NINEMILE POINT UNIT#5
FDNS	06NR	0	20L	G15_033	FROM->TO	G14-057T 345.00 - SUNNYSIDE 345KV CKT 1	717	789	0.04828	100.6086	LASALLE - LATTA JCT 138KV CKT 1
FDNS	06NR	0	20L	G15_033	FROM->TO	G14-057T 345.00 - SUNNYSIDE 345KV CKT 1	717	789	0.04819	100.6047	P12:138:AEPW:SHERID4:112GORE4
FDNS	06NR	0	20L	G15_033	FROM->TO	G14-057T 345.00 - SUNNYSIDE 345KV CKT 1	717	789	0.04808	100.5992	EMPORIA ENERGY CENTER - G14_001T 345.00 345KV CKT 1
FDNS	06NR	0	20L	G15_033	FROM->TO	G14-057T 345.00 - SUNNYSIDE 345KV CKT 1	717	789	0.0482	100.5796	MARIETTA - MARIETTA4 138.00 138KV CKT 1
FDNS	06NR	0	20L	G15_033	FROM->TO	G14-057T 345.00 - SUNNYSIDE 345KV CKT 1	717	789	0.04811	100.5432	GEN336831 1-BAXTER WILSON SES
FDNS	06NR	0	20L	G15_033	FROM->TO	G14-057T 345.00 - SUNNYSIDE 345KV CKT 1	717	789	0.04828	100.5415	LASALLE - STONEWAL LH138.00 138KV CKT 1
FDNS	06NR	0	20L	G15_033	FROM->TO	G14-057T 345.00 - SUNNYSIDE 345KV CKT 1	717	789	0.04811	100.5372	ANADARKO - GEORGIA 138KV CKT 1
FDNS	06NR	0	20L	G15_033	FROM->TO	G14-057T 345.00 - SUNNYSIDE 345KV CKT 1	717	789	0.04798	100.5293	P12:138:OKGE-AEPW:JENSEN4:REDROCKRD4
FDNS	06NR	0	20L	G15_033	FROM->TO	G14-057T 345.00 - SUNNYSIDE 345KV CKT 1	717	789	0.04828	100.5249	STONEWAL LH138.00 - TUPELO TAP 138KV CKT 1
FDNS	06NR	0	20L	G15_033	FROM->TO	G14-057T 345.00 - SUNNYSIDE 345KV CKT 1	717	789	0.04803	100.5145	P12:138:AEPW:WTHWF4:WTH_SE4
FDNS	06NR	0	20L	G15_033	FROM->TO	G14-057T 345.00 - SUNNYSIDE 345KV CKT 1	717	789	0.04775	100.5053	PURCELL4 138.00 - WALNUT CREEK 138KV CKT 1
FDNS	06NR	0	20L	G15_033	FROM->TO	G14-057T 345.00 - SUNNYSIDE 345KV CKT 1	717	789	0.04811	100.5051	FLETCHER - GEORGIA 138KV CKT 1
FDNS	06NR	0	20L	G15_033	FROM->TO	G14-057T 345.00 - SUNNYSIDE 345KV CKT 1	717	789	0.0483	100.5043	GRACEMONT (BANK 1) 345/138/13.8KV TRANSFORMER CKT 1
FDNS	06NR	0	20L	G15_033	FROM->TO	G14-057T 345.00 - SUNNYSIDE 345KV CKT 1	717	789	0.04811	100.489	GEN562783 1-G15036_4 0.6900
FDNS	06NR	0	20L	G15_033	FROM->TO	G14-057T 345.00 - SUNNYSIDE 345KV CKT 1	717	789	0.04811	100.489	GEN562784 1-G15036_5 0.6900
FDNS	06NR	0	20L	G15_033	FROM->TO	G14-057T 345.00 - SUNNYSIDE 345KV CKT 1	717	789	0.04808	100.4836	EMPIRE - FLETCHER 138KV CKT 1
FDNS	06NR	0	20L	G15_033	FROM->TO	G14-057T 345.00 - SUNNYSIDE 345KV CKT 1	717	789	0.04811	100.4808	NELSON 230/20.0KV TRANSFORMER CKT 1
FDNS	06NR	0	20L	G15_033	FROM->TO	G14-057T 345.00 - SUNNYSIDE 345KV CKT 1	717	789	0.04811	100.4804	GEN506752 1-LEBROCK GAS 1
FDNS	06NR	0	20L	G15_033	FROM->TO	G14-057T 345.00 - SUNNYSIDE 345KV CKT 1	717	789	0.04811	100.4797	GEN506753 1-LEBROCK GAS 2
FDNS	06NR	0	20L	G15_033	FROM->TO	G14-057T 345.00 - SUNNYSIDE 345KV CKT 1	717	789	0.04811	100.4769	GEN338146 1-INDEPENDENCE UNIT #2
FDNS	06NR	0	20L	G15_033	FROM->TO	G14-057T 345.00 - SUNNYSIDE 345KV CKT 1	717	789	0.04781	100.4624	CLINTON JUNCTION - ELK CITY 138KV CKT 1
FDNS	06NR	0	20L	G15_033	FROM->TO	G14-057T 345.00 - SUNNYSIDE 345KV CKT 1	717	789	0.04781	100.4624	CLINTON JUNCTION - ELK CITY 138KV CKT 1

SOLUTION	GROUP	SCENARIO	SEASON	SOURCE	DIRECTION	MONITORED ELEMENT	RATEA (MVA)	RATEB(MVA)	TDF	TC%LOADING (% MVA)	CONTINGENCY
FDNS	06NR	0	20L	G15_033	FROM->TO	G14-057T 345.00 - SUNNYSIDE 345KV CKT 1	717	789	0.0481	100.4574	8DANIEL8 500.00 - MCKNIGHT 500KV CKT 1
FDNS	06NR	0	20L	G15_033	FROM->TO	G14-057T 345.00 - SUNNYSIDE 345KV CKT 1	717	789	0.04808	100.4524	COMANCHE - EMPIRE 138KV CKT 1
FDNS	06NR	0	20L	G15_033	FROM->TO	G14-057T 345.00 - SUNNYSIDE 345KV CKT 1	717	789	0.04834	100.4497	DUNCAN (DUNCAN) 138/69/13.8KV TRANSFORMER CKT 1
FDNS	06NR	0	20L	G15_033	FROM->TO	G14-057T 345.00 - SUNNYSIDE 345KV CKT 1	717	789	0.04834	100.4497	DUNCAN (DUNCAN) 138/69/13.8KV TRANSFORMER CKT 1
FDNS	06NR	0	20L	G15_033	FROM->TO	G14-057T 345.00 - SUNNYSIDE 345KV CKT 1	717	789	0.04843	100.4495	CIMARRON - NORTHWEST 345KV CKT 1
FDNS	06NR	0	20L	G15_033	FROM->TO	G14-057T 345.00 - SUNNYSIDE 345KV CKT 1	717	789	0.04811	100.4107	GEN515577 1-ARBWND11 0.6900
FDNS	06NR	0	20L	G15_033	FROM->TO	G14-057T 345.00 - SUNNYSIDE 345KV CKT 1	717	789	0.04803	100.4099	WEATHERFORD TAP - WEATHERFORD WIND FARM 138KV CKT 1
FDNS	06NR	0	20L	G15_033	FROM->TO	G14-057T 345.00 - SUNNYSIDE 345KV CKT 1	717	789	0.04811	100.4	GEN334441 1-SABINE UNIT 5
FDNS	06NR	0	20L	G15_033	FROM->TO	G14-057T 345.00 - SUNNYSIDE 345KV CKT 1	717	789	0.0482	100.3996	ENVILLE 138.00 - MARIETTA4 138.00 138KV CKT 1
FDNS	06NR	0	20L	G15_033	FROM->TO	G14-057T 345.00 - SUNNYSIDE 345KV CKT 1	717	789	0.04811	100.3904	GEN335614 1-WILLOW GLENN UNIT#4
FDNS	06NR	0	20L	G15_033	FROM->TO	G14-057T 345.00 - SUNNYSIDE 345KV CKT 1	717	789	0.04813	100.385	GRDA1 - GREC TAP5 345.00 345KV CKT 1
FDNS	06NR	0	20L	G15_033	FROM->TO	G14-057T 345.00 - SUNNYSIDE 345KV CKT 1	717	789	0.04837	100.3841	G15039_T 230.00 - PLANT X STATION 230KV CKT 1
FDNS	06NR	0	20L	G15_033	FROM->TO	G14-057T 345.00 - SUNNYSIDE 345KV CKT 1	717	789	0.04811	100.381	P12:69:AEPW:L.E.S.-2:LAW WC2
FDNS	06NR	0	20L	G15_033	FROM->TO	G14-057T 345.00 - SUNNYSIDE 345KV CKT 1	717	789	0.04811	100.3799	GEN515040 1-SEMINOLE 1G
FDNS	06NR	0	20L	G15_033	FROM->TO	G14-057T 345.00 - SUNNYSIDE 345KV CKT 1	717	789	0.04811	100.3779	GEN334392 1-EXXON MOBIL IPP 1
FDNS	06NR	0	20L	G15_033	FROM->TO	G14-057T 345.00 - SUNNYSIDE 345KV CKT 1	717	789	0.04811	100.3763	GEN334393 1-EXXON MOBIL IPP 2
FDNS	06NR	0	20L	G15_033	FROM->TO	G14-057T 345.00 - SUNNYSIDE 345KV CKT 1	717	789	0.04811	100.3763	GEN334394 1-EXXON MOBIL IPP 3
FDNS	06NR	0	20L	G15_033	FROM->TO	G14-057T 345.00 - SUNNYSIDE 345KV CKT 1	717	789	0.04808	100.3691	LAYFLD8 500.00 - MOUNT OLIVE 500KV CKT 1
FDNS	06NR	0	20L	G15_033	FROM->TO	G14-057T 345.00 - SUNNYSIDE 345KV CKT 1	717	789	0.04808	100.3691	LAYFLD8 500.00 - MOUNT OLIVE 500KV CKT 1
FDNS	06NR	0	20L	G15_033	FROM->TO	G14-057T 345.00 - SUNNYSIDE 345KV CKT 1	717	789	0.04819	100.3661	P12:138:AEPW:CORNVIL4:S.W.S.-4
FDNS	06NR	0	20L	G15_033	FROM->TO	G14-057T 345.00 - SUNNYSIDE 345KV CKT 1	717	789	0.04803	100.366	WEATHERFORD SOUTHEAST - WEATHERFORD TAP 138KV CKT 1
FDNS	06NR	0	20L	G15_033	FROM->TO	G14-057T 345.00 - SUNNYSIDE 345KV CKT 1	717	789	0.04811	100.3659	GEN336191 1-LITTLE GYPSY UNIT#3
FDNS	06NR	0	20L	G15_033	FROM->TO	G14-057T 345.00 - SUNNYSIDE 345KV CKT 1	717	789	0.04811	100.3647	GEN337041 1-GERALD ANDRUS
FDNS	06NR	0	20L	G15_033	FROM->TO	G14-057T 345.00 - SUNNYSIDE 345KV CKT 1	717	789	0.04811	100.3609	GEN336464 1-MICHOUD UNIT #3
FDNS	06NR	0	20L	G15_033	FROM->TO	G14-057T 345.00 - SUNNYSIDE 345KV CKT 1	717	789	0.04811	100.3604	P12:161:AEPW:DYESS 5:HYLAND 5
FDNS	06NR	0	20L	G15_033	FROM->TO	G14-057T 345.00 - SUNNYSIDE 345KV CKT 1	717	789	0.04818	100.3602	P12:138:AEPW:112GORE4:L.E.S.-4
FDNS	06NR	0	20L	G15_033	FROM->TO	G14-057T 345.00 - SUNNYSIDE 345KV CKT 1	717	789	0.0482	100.3497	ENVILLE 138.00 - LEBANON 138KV CKT 1
FDNS	06NR	0	20L	G15_033	FROM->TO	G14-057T 345.00 - SUNNYSIDE 345KV CKT 1	717	789	0.04811	100.3428	GEN334433 1-SABINE UNIT 3
FDNS	06NR	0	20L	G15_033	FROM->TO	G14-057T 345.00 - SUNNYSIDE 345KV CKT 1	717	789	0.04828	100.3375	P12:138:WFEC:MSL05
FDNS	06NR	0	20L	G15_033	FROM->TO	G14-057T 345.00 - SUNNYSIDE 345KV CKT 1	717	789	0.04883	100.3361	DUNCAN - DUNCHERTP4 138.00 138KV CKT 1
FDNS	06NR	0	20L	G15_033	FROM->TO	G14-057T 345.00 - SUNNYSIDE 345KV CKT 1	717	789	0.04883	100.3361	DUNCAN - DUNCHERTP4 138.00 138KV CKT 1
FDNS	06NR	0	20L	G15_033	FROM->TO	G14-057T 345.00 - SUNNYSIDE 345KV CKT 1	717	789	0.04883	100.335	DUNCAN EASTSIDE - DUNCHERTP4 138.00 138KV CKT 1
FDNS	06NR	0	20L	G15_033	FROM->TO	G14-057T 345.00 - SUNNYSIDE 345KV CKT 1	717	789	0.04925	100.3345	ELGIN JUNCTION - LAWTON EASTSIDE 138KV CKT 1
FDNS	06NR	0	20L	G15_033	FROM->TO	G14-057T 345.00 - SUNNYSIDE 345KV CKT 1	717	789	0.04811	100.3302	GEN303007 1-1BC2 U2
FDNS	06NR	0	20L	G15_033	FROM->TO	G14-057T 345.00 - SUNNYSIDE 345KV CKT 1	717	789	0.04811	100.3278	P12:161:AEPW:EROGERS5:ECNTRTN5
FDNS	06NR	0	20L	G15_033	FROM->TO	G14-057T 345.00 - SUNNYSIDE 345KV CKT 1	717	789	0.04834	100.3207	P12:69:WFEC-AEPW:COMANCH2:DUNCAN-2
FDNS	06NR	0	20L	G15_033	FROM->TO	G14-057T 345.00 - SUNNYSIDE 345KV CKT 1	717	789	0.04811	100.3201	FRONTIER 345/18.0KV TRANSFORMER CKT 1
FDNS	06NR	0	20L	G15_033	FROM->TO	G14-057T 345.00 - SUNNYSIDE 345KV CKT 1	717	789	0.04811	100.3185	GEN336242 1-1NMIL ST1 18.000
FDNS	06NR	0	20L	G15_033	FROM->TO	G14-057T 345.00 - SUNNYSIDE 345KV CKT 1	717	789	0.04811	100.3184	FRONTIER 345/18.0KV TRANSFORMER CKT 1
FDNS	06NR	0	20L	G15_033	FROM->TO	G14-057T 345.00 - SUNNYSIDE 345KV CKT 1	717	789	0.04856	100.3183	BUSHLAND INTERCHANGE - DEAF SMITH COUNTY INTERCHANGE 230KV CKT 1
FDNS	06NR	0	20L	G15_033	FROM->TO	G14-057T 345.00 - SUNNYSIDE 345KV CKT 1	717	789	0.04856	100.3183	BUSHLAND INTERCHANGE - DEAF SMITH COUNTY INTERCHANGE 230KV CKT 1
FDNS	06NR	0	20L	G15_033	FROM->TO	G14-057T 345.00 - SUNNYSIDE 345KV CKT 1	717	789	0.04811	100.3171	GEN303006 1-1BC2 U1
FDNS	06NR	0	20L	G15_033	FROM->TO	G14-057T 345.00 - SUNNYSIDE 345KV CKT 1	717	789	0.04811	100.2945	GEN336801 1-BAXTER WILSON UNIT #1
FDNS	06NR	0	20L	G15_033	FROM->TO	G14-057T 345.00 - SUNNYSIDE 345KV CKT 1	717	789	0.04812	100.2886	CIMARRON - CZECH HALL 138KV CKT 1
FDNS	06NR	0	20L	G15_033	FROM->TO	G14-057T 345.00 - SUNNYSIDE 345KV CKT 1	717	789	0.04809	100.2882	MAGNET COVE - SHERIDAN EHV 500KV CKT 1
FDNS	06NR	0	20L	G15_033	FROM->TO	G14-057T 345.00 - SUNNYSIDE 345KV CKT 1	717	789	0.04809	100.2847	HOT SPRINGS EHV - MAGNET COVE 500KV CKT 1
FDNS	06NR	0	20L	G15_033	FROM->TO	G14-057T 345.00 - SUNNYSIDE 345KV CKT 1	717	789	0.04834	100.2821	DUNCAN - TOSCO 69KV CKT 1
FDNS	06NR	0	20L	G15_033	FROM->TO	G14-057T 345.00 - SUNNYSIDE 345KV CKT 1	717	789	0.04798	100.2772	Canadian Pump Station - REDROCKRD4 138.00 138KV CKT 1
FDNS	06NR	0	20L	G15_033	FROM->TO	G14-057T 345.00 - SUNNYSIDE 345KV CKT 1	717	789	0.04803	100.2746	CLINTON JUNCTION - CLINTON NATURAL GAS TAP 138KV CKT 1
FDNS	06NR	0	20L	G15_033	FROM->TO	G14-057T 345.00 - SUNNYSIDE 345KV CKT 1	717	789	0.04807	100.268	CIMARRON - SARA 138KV CKT 1
FDNS	06NR	0	20L	G15_033	FROM->TO	G14-057T 345.00 - SUNNYSIDE 345KV CKT 1	717	789	0.04834	100.2654	COMANCHE TAP - TOSCO 69KV CKT 1
FDNS	06NR	0	20L	G15_033	FROM->TO	G14-057T 345.00 - SUNNYSIDE 345KV CKT 1	717	789	0.04775	100.2632	PAOLI - WALNUT CREEK 138KV CKT 1
FDNS	06NR	0	20L	G15_033	FROM->TO	G14-057T 345.00 - SUNNYSIDE 345KV CKT 1	717	789	0.0482	100.2502	NORGE ROAD - SOUTHWESTERN STATION 138KV CKT 1
FDNS	06NR	0	20L	G15_033	FROM->TO	G14-057T 345.00 - SUNNYSIDE 345KV CKT 1	717	789	0.0482	100.2502	NORGE ROAD - SOUTHWESTERN STATION 138KV CKT 1
FDNS	06NR	0	20L	G15_033	FROM->TO	G14-057T 345.00 - SUNNYSIDE 345KV CKT 1	717	789	0.04818	100.2421	CORN TAP - SEQUOYAHJ4 138.00 138KV CKT 1
FDNS	06NR	0	20L	G15_033	FROM->TO	G14-057T 345.00 - SUNNYSIDE 345KV CKT 1	717	789	0.04818	100.2358	ANADARKO - SEQUOYAHJ4 138.00 138KV CKT 1
FDNS	06NR	0	20L	G15_033	FROM->TO	G14-057T 345.00 - SUNNYSIDE 345KV CKT 1	717	789	0.04812	100.2273	CZECH HALL - XEROX 138KV CKT 1
FDNS	06NR	0	20L	G15_033	FROM->TO	G14-057T 345.00 - SUNNYSIDE 345KV CKT 1	717	789	0.04812	100.2257	MORGAN - XEROX 138KV CKT 1
FDNS	06NR	0	20L	G15_033	FROM->TO	G14-057T 345.00 - SUNNYSIDE 345KV CKT 1	717	789	0.04844	100.2226	P12:69:AEPW-OMPA:COMANC-2:OMWALTR2
FDNS	06NR	0	20L	G15_033	FROM->TO	G14-057T 345.00 - SUNNYSIDE 345KV CKT 1	717	789	0.04812	100.2163	MORGAN - MUSTANG 138KV CKT 1
FDNS	06NR	0	20L	G15_033	FROM->TO	G14-057T 345.00 - SUNNYSIDE 345KV CKT 1	717	789	0.04807	100.2149	SARA - STHLAKE4 138.00 138KV CKT 1
FDNS	06NR	0	20L	G15_033	FROM->TO	G14-057T 345.00 - SUNNYSIDE 345KV CKT 1	717	789	0.04834	100.2053	COMANCHE - COMANCHE TAP 69KV CKT 1
FDNS	06NR	0	20L	G15_033	FROM->TO	G14-057T 345.00 - SUNNYSIDE 345KV CKT 1	717	789	0.04819	100.1982	SOUTHWESTERN STATION - VERDEN 138KV CKT 1
FDNS	06NR	0	20L	G15_033	FROM->TO	G14-057T 345.00 - SUNNYSIDE 345KV CKT 1	717	789	0.04813	100.1946	CUSTER4 138.00 - RED HILLS WIND 138KV CKT 1
FDNS	06NR	0	20L	G15_033	FROM->TO	G14-057T 345.00 - SUNNYSIDE 345KV CKT 1	717	789	0.04819	100.1862	NORTH 29TH CHICKASHA - VERDEN 138KV CKT 1
FDNS	06NR	0	20L	G15_033	FROM->TO	G14-057T 345.00 - SUNNYSIDE 345KV CKT 1	717	789	0.04868	100.179	TUTTLE - TUTTLE CONOCO TAP 138KV CKT 1
FDNS	06NR	0	20L	G15_033	FROM->TO	G14-057T 345.00 - SUNNYSIDE 345KV CKT 1	717	789	0.04811	100.1101	P12:230:SPS:CL.1.BSHLND.WLDRDO
FDNS	06NR	0	20L	G15_033	FROM->TO	G14-057T 345.00 - SUNNYSIDE 345KV CKT 1	717	789	0.04811	100	SUNNYSIDE 1 13KV SWITCHED SHUNT
FDNSLock	06NR	0	20L	G15_033	FROM->TO	G14-057T 345.00 - SUNNYSIDE 345KV CKT 1	717	789	0.04811	100	SUNNYSIDE 1 13KV SWITCHED SHUNT
FDNS	00NR	0	17SP	G15_033	FROM->TO	G14-057T 345.00 - SUNNYSIDE 345KV CKT 1	717	789	0.06654	99.9	GRACEMONT - MINCO 345KV CKT 1
FDNS	06NR	0	20L	G15_033	FROM->TO	G14-057T 345.00 - SUNNYSIDE 345KV CKT 1	717	789	0.04814	99.8	P12:115:SPS:V29.1.NICHLS.KNGSMLL
FDNS	06NR	0	20L	G15_033	FROM->TO	G14-057T 345.00 - SUNNYSIDE 345KV CKT 1	717	789	0.04813	99.7	FPL SWITCH - MOORELAND 138KV CKT 1
FDNS	06NR	0	20L	G15_033	FROM->TO	G14-057T 345.00 - SUNNYSIDE 345KV CKT 1	717	789	0.04813	99.7	FPL SWITCH - WOODWARD 138KV CKT 1
FDNS	06NR	0	20L	G15_033	FROM->TO	G14-057T 345.00 - SUNNYSIDE 345KV CKT 1	717	789	0.04811	99.7	TUCO INTERCHANGE 230/13.0KV TRANSFORMER CKT 1
FDNS	06NR	0	20L	G15_033	FROM->TO	G14-057T 345.00 - SUNNYSIDE 345KV CKT 1	717	789	0.04959	99.6	P12:138:AEPW:112GORE4:SNYDER-4
FDNS	06NR	0	20L	G15_033	FROM->TO	G14-057T 345.00 - SUNNYSIDE 345KV CKT 1	717	789	0.04845	99.6	G15085_T 138.00 - LAKE PAULINE 138KV CKT 1
FDNS	06NR	0	20L	G15_033	FROM->TO	G14-057T 345.00 - SUNNYSIDE 345KV CKT 1	717	789	0.04841	99.6	ALTUS JUNCTION - RUSSELL 138KV CKT 1
FDNS	06NR	0	20L	G15_033	FROM->TO	G14-057T 345.00 - SUNNYSIDE 345KV CKT 1	717	789	0.04841	99.6	ALTUS JUNCTION - RUSSELL 138KV CKT 1
FDNS	06NR	0	20L	G15_033	FROM->TO	G14-057T 345.00 - SUNNYSIDE 345KV CKT 1	717	789	0.04832	99.6	BOWERS INTERCHANGE - MCCULLOUGH SUB 69KV CKT 1

SOLUTION	GROUP	SCENARIO	SEASON	SOURCE	DIRECTION	MONITORED ELEMENT	RATEA (MVA)	RATEB(MVA)	TDF	TC%LOADING (% MVA)	CONTINGENCY
FDNS	06NR	0	20L	G15_033	FROM->TO	G14-057T 345.00 - SUNNYSIDE 345KV CKT 1	717	789	0.04815	99.6	WOODWARD - WWPAR4 138.00 138KV CKT 1
FDNS	06NR	0	20L	G15_033	FROM->TO	G14-057T 345.00 - SUNNYSIDE 345KV CKT 1	717	789	0.04815	99.6	WOODWARD EHV - WWPAR4 138.00 138KV CKT 1
FDNS	06NR	0	20L	G15_033	FROM->TO	G14-057T 345.00 - SUNNYSIDE 345KV CKT 1	717	789	0.04814	99.6	DEWEY - IODINE 138KV CKT 1
FDNS	06NR	0	20L	G15_033	FROM->TO	G14-057T 345.00 - SUNNYSIDE 345KV CKT 1	717	789	0.04814	99.6	IODINE - WOODWARD EHV 138KV CKT 1
FDNS	06NR	0	20L	G15_033	FROM->TO	G14-057T 345.00 - SUNNYSIDE 345KV CKT 1	717	789	0.04811	99.6	GEN525820 1-TUCO Interchange SVC Bus
FDNS	06NR	0	20L	G15_033	FROM->TO	G14-057T 345.00 - SUNNYSIDE 345KV CKT 1	717	789	0.04811	99.6	GEN525820 1-TUCO Interchange SVC Bus
FDNS	06NR	0	20L	G15_033	FROM->TO	G14-057T 345.00 - SUNNYSIDE 345KV CKT 1	717	789	0.05121	99.5	TUCO INTERCHANGE - YOAKUM_345 345.00 345KV CKT 1
FDNS	06NR	0	20L	G15_033	FROM->TO	G14-057T 345.00 - SUNNYSIDE 345KV CKT 1	717	789	0.04959	99.5	CACHE - SNYDER 138KV CKT 1
FDNS	06NR	0	20L	G15_033	FROM->TO	G14-057T 345.00 - SUNNYSIDE 345KV CKT 1	717	789	0.04845	99.5	G15085_T 138.00 - RUSSELL 138KV CKT 1
FDNS	06NR	0	20L	G15_033	FROM->TO	G14-057T 345.00 - SUNNYSIDE 345KV CKT 1	717	789	0.04841	99.5	CONWAY SUB - KIRBY SWITCHING STATION 115KV CKT 1
FDNS	06NR	0	20L	G15_033	FROM->TO	G14-057T 345.00 - SUNNYSIDE 345KV CKT 1	717	789	0.04841	99.5	CONWAY SUB - NICHOLS STATION 115KV CKT 1
FDNS	06NR	0	20L	G15_033	FROM->TO	G14-057T 345.00 - SUNNYSIDE 345KV CKT 1	717	789	0.04841	99.5	P12:115:SPS:T53.1.NICHLS.KIRBY
FDNS	06NR	0	20L	G15_033	FROM->TO	G14-057T 345.00 - SUNNYSIDE 345KV CKT 1	717	789	0.04832	99.5	KINGSMILL INTERCHANGE - MCCULLOUGH SUB 69KV CKT 1
FDNS	06NR	0	20L	G15_033	FROM->TO	G14-057T 345.00 - SUNNYSIDE 345KV CKT 1	717	789	0.04825	99.5	BOWERS INTERCHANGE - Graves Sub 115KV CKT 1
FDNS	06NR	0	20L	G15_033	FROM->TO	G14-074T 345.00 - OKLAUNION 345KV CKT 1	1022	1124	0.1994	106.9322	BASE CASE
FDNS	06NR	0	17G	G15_033	FROM->TO	G14-074T 345.00 - OKLAUNION 345KV CKT 1	1022	1124	0.2097	102.2735	BASE CASE
FDNS	06NR	0	20L	G15_033	FROM->TO	G14-074T 345.00 - OKLAUNION 345KV CKT 1	1022	1124	0.19286	102.2532	CHISHOLM7 345.00 - GRACEMONT 345KV CKT 1
FDNS	06NR	0	20L	G15_033	FROM->TO	G14-074T 345.00 - OKLAUNION 345KV CKT 1	1022	1124	0.19286	101.8896	CHISHOLM7 345.00 () 345/230/13.2KV TRANSFORMER CKT 1
FDNS	06NR	0	20L	G15_033	FROM->TO	G14-074T 345.00 - OKLAUNION 345KV CKT 1	1022	1124	0.21532	101.4902	TUCO INTERCHANGE - TUCO_2 345.00 345KV CKT 1
FDNS	06NR	0	20L	G15_033	FROM->TO	G14-074T 345.00 - OKLAUNION 345KV CKT 1	1022	1124	0.20133	101.2851	BUSHLAND INTERCHANGE - DEAF SMITH COUNTY INTERCHANGE 230KV CKT 1
FDNS	06NR	0	20L	G15_033	FROM->TO	G14-074T 345.00 - OKLAUNION 345KV CKT 1	1022	1124	0.20133	101.2851	BUSHLAND INTERCHANGE - DEAF SMITH COUNTY INTERCHANGE 230KV CKT 1
FDNS	06NR	0	20L	G15_033	FROM->TO	G14-074T 345.00 - OKLAUNION 345KV CKT 1	1022	1124	0.19823	101.2671	MOORE COUNTY INTERCHANGE - POTTER COUNTY INTERCHANGE 230KV CKT 1
FDNS	06NR	0	20L	G15_033	FROM->TO	G14-074T 345.00 - OKLAUNION 345KV CKT 1	1022	1124	0.19823	101.2671	MOORE COUNTY INTERCHANGE - POTTER COUNTY INTERCHANGE 230KV CKT 1
FDNS	06NR	0	20L	G15_033	FROM->TO	G14-074T 345.00 - OKLAUNION 345KV CKT 1	1022	1124	0.19752	101.2654	G11-14T 345.00 - WOODWARD DISTRICT EHV 345KV CKT 1
FDNS	06NR	0	20L	G15_033	FROM->TO	G14-074T 345.00 - OKLAUNION 345KV CKT 1	1022	1124	0.19752	101.2654	G11-14T 345.00 - WOODWARD DISTRICT EHV 345KV CKT 2
FDNS	00NR	0	25SP	G15_033	FROM->TO	Hitchland Interchange (H TB80155502) 345/230/13.2KV TRANSFORMER CKT 1	560	644	0.06665	100	Hitchland Interchange (SIEM 8743067) 345/230/13.2KV TRANSFORMER CKT 2
FDNS	00NR	0	25SP	G15_033	FROM->TO	Hitchland Interchange (H TB80155502) 345/230/13.2KV TRANSFORMER CKT 1	560	644	0.06665	100	Hitchland Interchange (SIEM 8743067) 345/230/13.2KV TRANSFORMER CKT 2
FDNS	00NR	0	25SP	G15_033	FROM->TO	Hitchland Interchange (SIEM 8743067) 345/230/13.2KV TRANSFORMER CKT 2	560	644	0.06804	102.3531	Hitchland Interchange (H TB80155502) 345/230/13.2KV TRANSFORMER CKT 1
FDNS	00NR	0	25SP	G15_033	FROM->TO	Hitchland Interchange (SIEM 8743067) 345/230/13.2KV TRANSFORMER CKT 2	560	644	0.06804	102.3531	Hitchland Interchange (H TB80155502) 345/230/13.2KV TRANSFORMER CKT 1
FDNS	00NR	0	25SP	G15_033	FROM->TO	Hitchland Interchange (SIEM 8743067) 345/230/13.2KV TRANSFORMER CKT 2	560	644	0.06804	100.5303	Hitchland Interchange (H TB80155502) 345/230/13.2KV TRANSFORMER CKT 1
FDNS	00NR	0	25SP	G15_033	FROM->TO	Hitchland Interchange (SIEM 8743067) 345/230/13.2KV TRANSFORMER CKT 2	560	644	0.06804	100.5303	Hitchland Interchange (H TB80155502) 345/230/13.2KV TRANSFORMER CKT 1
FDNS	00NR	0	25SP	G15_033	TO->FROM	JONES STATION - TUCO INTERCHANGE 230KV CKT 1	343.79	343.79	0.1678	139.3518	CARLISLE INTERCHANGE - TUCO INTERCHANGE 230KV CKT 1
FDNS	00NR	0	25SP	G15_033	TO->FROM	JONES STATION - TUCO INTERCHANGE 230KV CKT 1	343.79	343.79	0.1678	139.3518	CARLISLE INTERCHANGE - TUCO INTERCHANGE 230KV CKT 1
FDNS	00NR	0	25SP	G15_033	TO->FROM	JONES STATION - TUCO INTERCHANGE 230KV CKT 1	343.79	343.79	0.16515	123.0773	TUCO INTERCHANGE - YOAKUM_345 345.00 345KV CKT 1
FDNS	00NR	0	25SP	G15_033	TO->FROM	JONES STATION - TUCO INTERCHANGE 230KV CKT 1	343.79	343.79	0.12726	119.4572	GEN526333 1-JONES GEN #3 21 KV
FDNS	00NR	0	25SP	G15_033	TO->FROM	JONES STATION - TUCO INTERCHANGE 230KV CKT 1	343.79	343.79	0.12726	119.0504	GEN526334 1-JONES_4 116.500
FDNS	00NR	0	25SP	G15_033	TO->FROM	JONES STATION - TUCO INTERCHANGE 230KV CKT 1	343.79	343.79	0.15003	111.1942	CARLISLE INTERCHANGE - WOLFFORTH INTERCHANGE 230KV CKT 1
FDNS	00NR	0	25SP	G15_033	TO->FROM	JONES STATION - TUCO INTERCHANGE 230KV CKT 1	343.79	343.79	0.13343	107.2791	TUCO INTERCHANGE (ENRCO 136401) 230/115/13.2KV TRANSFORMER CKT 1
FDNS	00NR	0	25SP	G15_033	TO->FROM	JONES STATION - TUCO INTERCHANGE 230KV CKT 1	343.79	343.79	0.13343	107.2791	TUCO INTERCHANGE (ENRCO 136401) 230/115/13.2KV TRANSFORMER CKT 1
FDNS	00NR	0	25SP	G15_033	TO->FROM	JONES STATION - TUCO INTERCHANGE 230KV CKT 1	343.79	343.79	0.13343	107.2791	TUCO INTERCHANGE (ENRCO 136401) 230/115/13.2KV TRANSFORMER CKT 2
FDNS	00NR	0	25SP	G15_033	TO->FROM	JONES STATION - TUCO INTERCHANGE 230KV CKT 1	343.79	343.79	0.13343	107.2791	TUCO INTERCHANGE (ENRCO 136401) 230/115/13.2KV TRANSFORMER CKT 2
FDNS	00NR	0	25SP	G15_033	TO->FROM	JONES STATION - TUCO INTERCHANGE 230KV CKT 1	343.79	343.79	0.12726	106.7618	GEN526332 1-JONES GEN #2 21 KV
FDNS	00NR	0	25SP	G15_033	TO->FROM	JONES STATION - TUCO INTERCHANGE 230KV CKT 1	343.79	343.79	0.12726	106.7593	GEN526331 1-JONES GEN #1 22 KV
FDNS	00NR	0	25SP	G15_033	TO->FROM	JONES STATION - TUCO INTERCHANGE 230KV CKT 1	343.79	343.79	0.12392	105.7876	PLANT X STATION - SUNDOWN INTERCHANGE 230KV CKT 1
FDNS	00NR	0	25SP	G15_033	TO->FROM	JONES STATION - TUCO INTERCHANGE 230KV CKT 1	343.79	343.79	0.12392	105.7876	PLANT X STATION - SUNDOWN INTERCHANGE 230KV CKT 1
FDNS	00NR	0	25SP	G15_033	TO->FROM	JONES STATION - TUCO INTERCHANGE 230KV CKT 1	343.79	343.79	0.13605	105.7418	LUBBOCK EAST INTERCHANGE - TUCO INTERCHANGE 115KV CKT 1
FDNS	00NR	0	25SP	G15_033	TO->FROM	JONES STATION - TUCO INTERCHANGE 230KV CKT 1	343.79	343.79	0.13605	105.7418	LUBBOCK EAST INTERCHANGE - TUCO INTERCHANGE 115KV CKT 1
FDNS	00NR	0	25SP	G15_033	TO->FROM	JONES STATION - TUCO INTERCHANGE 230KV CKT 1	343.79	343.79	0.13118	102.5912	STANTON SUB - TUCO INTERCHANGE 115KV CKT 1
FDNS	00NR	0	25SP	G15_033	TO->FROM	JONES STATION - TUCO INTERCHANGE 230KV CKT 1	343.79	343.79	0.12934	102.3658	P12:230:LPL:K39.1.CRLSLE.LP-MLWK
FDNS	00NR	0	25SP	G15_033	TO->FROM	JONES STATION - TUCO INTERCHANGE 230KV CKT 1	343.79	343.79	0.12934	102.3646	CARLISLE INTERCHANGE - LUBBOCK POWER & LIGHT-MILWAUKEE 230KV CKT 1
FDNS	00NR	0	25SP	G15_033	TO->FROM	JONES STATION - TUCO INTERCHANGE 230KV CKT 1	343.79	343.79	0.12934	102.363	LUBBOCK POWER & LIGHT-MILWAUKEE (M-E C0681251) 230/69/13.5KV TRANSFORMER CKT 1
FDNS	00NR	0	25SP	G15_033	TO->FROM	JONES STATION - TUCO INTERCHANGE 230KV CKT 1	343.79	343.79	0.12934	102.363	LUBBOCK POWER & LIGHT-MILWAUKEE (M-E C0681251) 230/69/13.5KV TRANSFORMER CKT 1
FDNS	00NR	0	25SP	G15_033	TO->FROM	JONES STATION - TUCO INTERCHANGE 230KV CKT 1	343.79	343.79	0.14407	102.0923	TOLK STATION EAST - TUCO INTERCHANGE 230KV CKT 1
FDNS	00NR	0	25SP	G15_033	TO->FROM	JONES STATION - TUCO INTERCHANGE 230KV CKT 1	343.79	343.79	0.14407	102.0923	TOLK STATION EAST - TUCO INTERCHANGE 230KV CKT 1
FDNS	00NR	0	25SP	G15_033	TO->FROM	JONES STATION - TUCO INTERCHANGE 230KV CKT 1	343.79	343.79	0.13118	101.6363	P12:115:SPS:V15.1.TUCO.INDANA
FDNS	00NR	0	25SP	G15_033	TO->FROM	JONES STATION - TUCO INTERCHANGE 230KV CKT 1	343.79	343.79	0.13118	101.6061	INDIANA SUB - STANTON SUB 115KV CKT 1
FDNS	00NR	0	25SP	G15_033	TO->FROM	JONES STATION - TUCO INTERCHANGE 230KV CKT 1	343.79	343.79	0.12726	101.0841	GEN527903 1-HOBBS PLANT #3 (ST)
FDNS	00NR	0	25SP	G15_033	TO->FROM	JONES STATION - TUCO INTERCHANGE 230KV CKT 1	343.79	343.79	0.12726	101.0701	GEN527166 1-MUSTANG_6 118.000
FDNS	00NR	0	25SP	G15_033	TO->FROM	JONES STATION - TUCO INTERCHANGE 230KV CKT 1	343.79	343.79	0.12726	100.6214	GEN528501 1-G14_012 24.000
FDNS	00NR	0	25SP	G15_033	TO->FROM	JONES STATION - TUCO INTERCHANGE 230KV CKT 1	343.79	343.79	0.12766	100.6076	KRESS INTERCHANGE - SWISHER COUNTY INTERCHANGE 115KV CKT 1
FDNS	00NR	0	25SP	G15_033	TO->FROM	JONES STATION - TUCO INTERCHANGE 230KV CKT 1	343.79	343.79	0.12766	100.6076	KRESS INTERCHANGE - SWISHER COUNTY INTERCHANGE 115KV CKT 1
FDNS	00NR	0	25SP	G15_033	TO->FROM	JONES STATION - TUCO INTERCHANGE 230KV CKT 1	343.79	343.79	0.12827	100.4516	CARLISLE INTERCHANGE - MURPHY SUB 115KV CKT 1
FDNS	00NR	0	25SP	G15_033	TO->FROM	JONES STATION - TUCO INTERCHANGE 230KV CKT 1	343.79	343.79	0.12827	100.4516	CARLISLE INTERCHANGE - MURPHY SUB 115KV CKT 1
FDNS	00NR	0	25SP	G15_033	TO->FROM	JONES STATION - TUCO INTERCHANGE 230KV CKT 1	343.79	343.79	0.13615	100.2532	YOAKUM_345 345.00 (UPDATE DATA) 345/230/13.2KV TRANSFORMER CKT 1
FDNS	00NR	0	25SP	G15_033	TO->FROM	JONES STATION - TUCO INTERCHANGE 230KV CKT 1	343.79	343.79	0.12865	100	POTTER COUNTY INTERCHANGE (WAUK 90343-A) 345/230/13.2KV TRANSFORMER CKT 1
FDNS	00NR	0	25SP	G15_033	TO->FROM	JONES STATION - TUCO INTERCHANGE 230KV CKT 1	343.79	343.79	0.12865	100	POTTER COUNTY INTERCHANGE (WAUK 90343-A) 345/230/13.2KV TRANSFORMER CKT 1
FDNS	00NR	0	25SP	G15_033	TO->FROM	JONES STATION - TUCO INTERCHANGE 230KV CKT 1	343.79	343.79	0.12726	100	GEN563122 1-G15077_3 0.3850
FDNS	00NR	0	25SP	G15_033	TO->FROM	JONES STATION - TUCO INTERCHANGE 230KV CKT 1	343.79	343.79	0.13118	99.9	INDIANA SUB - SOUTH PLAINS REC-ERSKINE 115KV CKT 1
FDNS	00NR	0	25SP	G15_033	TO->FROM	JONES STATION - TUCO INTERCHANGE 230KV CKT 1	343.79	343.79	0.12726	99.9	GEN527901 1-HOBBS PLANT #1 (CT)
FDNS	00NR	0	25SP	G15_033	TO->FROM	JONES STATION - TUCO INTERCHANGE 230KV CKT 1	343.79	343.79	0.12726	99.9	GEN527902 1-HOBBS PLANT #2 (CT)
FDNS	00NR	0	25SP	G15_033	TO->FROM	JONES STATION - TUCO INTERCHANGE 230KV CKT 1	343.79	343.79	0.12726	99.9	GEN563102 1-G15075_3 0.5500
FDNS	00NR	0	25SP	G15_033	TO->FROM	JONES STATION - TUCO INTERCHANGE 230KV CKT 1	343.79	343.79	0.12992	99.7	HOBBS - YOAKUM_345 345.00 345KV CKT 1
FDNS	00NR	0	25SP	G15_033	TO->FROM	JONES STATION - TUCO INTERCHANGE 230KV CKT 1	343.79	343.79	0.12866	99.7	FLOYD COUNTY INTERCHANGE - TUCO INTERCHANGE 115KV CKT 1
FDNS	00NR	0	25SP	G15_033	TO->FROM	JONES STATION - TUCO INTERCHANGE 230KV CKT 1	343.79	343.79	0.12866	99.7	FLOYD COUNTY INTERCHANGE - TUCO INTERCHANGE 115KV CKT 1
FDNS	00NR	0	25SP	G15_033	TO->FROM	JONES STATION - TUCO INTERCHANGE 230KV CKT 1	343.79	343.79	0.12869	99.6	P12:345:SPS:J02.1.TOLK.EDDY
FDNS	00NR	0	25SP	G15_033	TO->FROM	JONES STATION - TUCO INTERCHANGE 230KV CKT 1	343.79	343.79	0.12865	99.6	G14_038T 345.00 - POTTER COUNTY INTERCHANGE 345KV CKT 1
FDNS	00NR	0	25SP	G15_033	TO->FROM	JONES STATION - TUCO INTERCHANGE 230KV CKT 1	343.79	343.79	0.12751	99.6	BUSHLAND INTERCHANGE - DEAF SMITH COUNTY INTERCHANGE 230KV CKT 1
FDNS	00NR	0	25SP	G15_033	TO->FROM	JONES STATION - TUCO INTERCHANGE 230KV CKT 1	343.79	343.79	0.12751	99.6	BUSHLAND INTERCHANGE - DEAF SMITH COUNTY INTERCHANGE 230KV CKT 1
FDNS	00NR	0	25SP	G15_033	TO->FROM	JONES STATION - TUCO INTERCHANGE 230KV CKT 1	343.79	343.79	0.12726	99.6	GEN563142 1-G15079_3 0.5500

SOLUTION	GROUP	SCENARIO	SEASON	SOURCE	DIRECTION	MONITORED ELEMENT	RATEA (MVA)	RATEB(MVA)	TDF	TC%LOADING (% MVA)	CONTINGENCY
FDNS	00NR	0	25SP	G15_033	TO->FROM	JONES STATION - TUCO INTERCHANGE 230KV CKT 1	343.79	343.79	0.12726	99.6	GEN563151 1-G15080_2 0.5500
FDNS	00NR	0	17SP	G15_033	TO->FROM	KRESS INTERCHANGE - SWISHER COUNTY INTERCHANGE 115KV CKT 1	218	239	0.04288	103.7156	NEWHART 230 - SWISHER COUNTY INTERCHANGE 230KV CKT 1
FDNS	00NR	0	20SP	G15_033	TO->FROM	KRESS INTERCHANGE - SWISHER COUNTY INTERCHANGE 115KV CKT 1	218	239	0.02953	101.9578	NEWHART 230 - SWISHER COUNTY INTERCHANGE 230KV CKT 1
FDNS	00NR	0	25SP	G15_033	FROM->TO	LUBBOCK POWER & LIGHT-HOLLY PLANT (SHIH T101039) 230/69/13.5KV TRANSFORMER CKT 1	224	224	0.03595	104.8294	LUBBOCK POWER & LIGHT-SOUTHEAST - LUBBOCK SOUTH INTERCHANGE 230KV CKT 1
FDNS	00NR	0	25SP	G15_033	FROM->TO	LUBBOCK POWER & LIGHT-HOLLY PLANT (SHIH T101039) 230/69/13.5KV TRANSFORMER CKT 1	224	224	0.03595	104.8165	P12:LPL:SPS:K64.1.LP-SE.LUBBS
FDNS	00NR	0	25SP	G15_033	FROM->TO	LUBBOCK POWER & LIGHT-HOLLY PLANT (SHIH T101039) 230/69/13.5KV TRANSFORMER CKT 1	224	224	0.03535	101.9053	LUBBOCK EAST INTERCHANGE - LUBBOCK POWER & LIGHT-WADSWORTH 230KV CKT 1
FDNS	00NR	0	25SP	G15_033	FROM->TO	LUBBOCK POWER & LIGHT-HOLLY PLANT (SHIH T101039) 230/69/13.5KV TRANSFORMER CKT 1	224	224	0.03535	101.8957	P12:230:LPL:K57.1.LP-WADS.LUBBE
FDNS	00NR	0	25SP	G15_033	FROM->TO	LUBBOCK POWER & LIGHT-HOLLY PLANT (SHIH T101039) 230/69/13.5KV TRANSFORMER CKT 1	224	224	0.03535	101.8956	LUBBOCK POWER & LIGHT-WADSWORTH (SHIH T101038) 230/69/13.5KV TRANSFORMER CKT 1
FDNS	00NR	0	25SP	G15_033	FROM->TO	LUBBOCK POWER & LIGHT-HOLLY PLANT (SHIH T101039) 230/69/13.5KV TRANSFORMER CKT 1	224	224	0.03535	101.8956	LUBBOCK POWER & LIGHT-WADSWORTH (SHIH T101038) 230/69/13.5KV TRANSFORMER CKT 1
FDNSLock	06ALL	0	20WP	G15_033		Non-Converged Contingency	1792	1792	0.15835	-	BORDER 7345.00 - CHISHOLM7 345.00 345KV CKT 1
FDNSLock	06ALL	0	20WP	G15_033		Non-Converged Contingency	1792	1792	0.15835	-	BORDER 7345.00 - CHISHOLM7 345.00 345KV CKT 2
FDNSLock	06ALL	0	20WP	G15_033		Non-Converged Contingency	439	439	0.04743	-	CHISHOLM6 230.00 - ELK CITY 230KV 230KV CKT 1
FDNS	00NR	0	25SP	G15_033	FROM->TO	POTTER COUNTY INTERCHANGE (WAUK 90343-A) 345/230/13.2KV TRANSFORMER CKT 1	560	560	0.2387	106.174	G14-074T 345.00 - TUCO INTERCHANGE 345KV CKT 1
FDNS	00NR	0	25SP	G15_033	FROM->TO	POTTER COUNTY INTERCHANGE (WAUK 90343-A) 345/230/13.2KV TRANSFORMER CKT 1	560	560	0.08591	105.4342	HITCHLAND INTERCHANGE - MOORE COUNTY INTERCHANGE 230KV CKT 1
FDNS	00NR	0	25SP	G15_033	FROM->TO	POTTER COUNTY INTERCHANGE (WAUK 90343-A) 345/230/13.2KV TRANSFORMER CKT 1	560	560	0.08591	105.4342	HITCHLAND INTERCHANGE - MOORE COUNTY INTERCHANGE 230KV CKT 1
FDNS	00NR	0	25SP	G15_033	FROM->TO	POTTER COUNTY INTERCHANGE (WAUK 90343-A) 345/230/13.2KV TRANSFORMER CKT 1	560	560	0.2387	104.1075	G14-074T 345.00 - TUCO INTERCHANGE 345KV CKT 1
FDNS	00NR	0	25SP	G15_033	FROM->TO	POTTER COUNTY INTERCHANGE (WAUK 90343-A) 345/230/13.2KV TRANSFORMER CKT 1	560	560	0.08591	103.6189	HITCHLAND INTERCHANGE - MOORE COUNTY INTERCHANGE 230KV CKT 1
FDNS	00NR	0	25SP	G15_033	FROM->TO	POTTER COUNTY INTERCHANGE (WAUK 90343-A) 345/230/13.2KV TRANSFORMER CKT 1	560	560	0.08591	103.6189	HITCHLAND INTERCHANGE - MOORE COUNTY INTERCHANGE 230KV CKT 1
FDNS	00NR	0	25SP	G15_033	FROM->TO	POTTER COUNTY INTERCHANGE (WAUK 90343-A) 345/230/13.2KV TRANSFORMER CKT 1	560	560	0.0658	103.6147	BORDER 7345.00 - TUCO_2 345.00 345KV CKT 1
FDNS	06ALL	0	20WP	G15_033	FROM->TO	POTTER COUNTY INTERCHANGE (WAUK 90343-A) 345/230/13.2KV TRANSFORMER CKT 1	560	560	0.09208	101.9937	BASE CASE
FDNS	00NR	0	25SP	G15_033	FROM->TO	POTTER COUNTY INTERCHANGE (WAUK 90343-A) 345/230/13.2KV TRANSFORMER CKT 1	560	560	0.0658	101.7534	BORDER 7345.00 - TUCO_2 345.00 345KV CKT 1
FDNS	06ALL	0	20WP	G15_033	FROM->TO	POTTER COUNTY INTERCHANGE (WAUK 90343-A) 345/230/13.2KV TRANSFORMER CKT 1	560	560	0.09208	100.9471	BASE CASE
FDNS	00NR	0	25SP	G15_033	FROM->TO	POTTER COUNTY INTERCHANGE (WAUK 90343-A) 345/230/13.2KV TRANSFORMER CKT 1	560	560	0.0658	100.8317	BORDER 7345.00 - WOODWARD DISTRICT EHV 345KV CKT 1
FDNS	06ALL	0	20SP	G15_033	FROM->TO	TUCO INTERCHANGE - TUCO_2 230.00 230KV CKT 1	497	547	0.35463	176.1131	TUCO INTERCHANGE - TUCO_2 345.00 345KV CKT 1
FDNS	06ALL	0	17SP	G15_033	FROM->TO	TUCO INTERCHANGE - TUCO_2 230.00 230KV CKT 1	497	547	0.37122	172.1789	TUCO INTERCHANGE - TUCO_2 345.00 345KV CKT 1
FDNS	06NR	0	17G	G15_033	FROM->TO	TUCO INTERCHANGE - TUCO_2 230.00 230KV CKT 1	497	547	0.17678	120.0923	TUCO INTERCHANGE - TUCO_2 345.00 345KV CKT 1
FDNS	06NR	0	20L	G15_033	FROM->TO	TUCO INTERCHANGE - TUCO_2 230.00 230KV CKT 1	497	547	0.14544	110.6573	TUCO INTERCHANGE - TUCO_2 345.00 345KV CKT 1
FDNS	06ALL	0	25SP	G15_033	FROM->TO	TUCO INTERCHANGE - TUCO_2 230.00 230KV CKT 1	497	547	0.36467	101.2227615	TUCO INTERCHANGE - TUCO_2 345.00 345KV CKT 1
FDNS	00NR	0	25SP	G15_033	FROM->TO	TUCO INTERCHANGE (ENRCO 136401) 230/115/13.2KV TRANSFORMER CKT 1	250	288	0.0647	123.8204	TUCO INTERCHANGE (ENRCO 136401) 230/115/13.2KV TRANSFORMER CKT 2
FDNS	00NR	0	25SP	G15_033	FROM->TO	TUCO INTERCHANGE (ENRCO 136401) 230/115/13.2KV TRANSFORMER CKT 1	250	288	0.0647	123.8204	TUCO INTERCHANGE (ENRCO 136401) 230/115/13.2KV TRANSFORMER CKT 2
FDNS	00NR	0	25SP	G15_033	FROM->TO	TUCO INTERCHANGE (ENRCO 136401) 230/115/13.2KV TRANSFORMER CKT 1	250	288	0.0647	115.7916	TUCO INTERCHANGE (ENRCO 136401) 230/115/13.2KV TRANSFORMER CKT 2
FDNS	00NR	0	25SP	G15_033	FROM->TO	TUCO INTERCHANGE (ENRCO 136401) 230/115/13.2KV TRANSFORMER CKT 1	250	288	0.0647	115.7916	TUCO INTERCHANGE (ENRCO 136401) 230/115/13.2KV TRANSFORMER CKT 2
FDNS	00NR	0	25SP	G15_033	FROM->TO	TUCO INTERCHANGE (ENRCO 136401) 230/115/13.2KV TRANSFORMER CKT 2	250	288	0.0647	123.8204	TUCO INTERCHANGE (ENRCO 136401) 230/115/13.2KV TRANSFORMER CKT 1
FDNS	00NR	0	25SP	G15_033	FROM->TO	TUCO INTERCHANGE (ENRCO 136401) 230/115/13.2KV TRANSFORMER CKT 2	250	288	0.0647	123.8204	TUCO INTERCHANGE (ENRCO 136401) 230/115/13.2KV TRANSFORMER CKT 1
FDNS	00NR	0	25SP	G15_033	FROM->TO	TUCO INTERCHANGE (ENRCO 136401) 230/115/13.2KV TRANSFORMER CKT 2	250	288	0.0647	115.7916	TUCO INTERCHANGE (ENRCO 136401) 230/115/13.2KV TRANSFORMER CKT 1
FDNS	00NR	0	25SP	G15_033	FROM->TO	TUCO INTERCHANGE (ENRCO 136401) 230/115/13.2KV TRANSFORMER CKT 2	250	288	0.0647	115.7916	TUCO INTERCHANGE (ENRCO 136401) 230/115/13.2KV TRANSFORMER CKT 1
FDNS	00NR	0	17SP	G15_033	FROM->TO	TUCO INTERCHANGE (GE M102345) 230/115/13.2KV TRANSFORMER CKT 1	242	252	0.08916	103.022	TUCO INTERCHANGE (ENRCO 136401) 230/115/13.2KV TRANSFORMER CKT 2
FDNS	00NR	0	17SP	G15_033	FROM->TO	TUCO INTERCHANGE (GE M102345) 230/115/13.2KV TRANSFORMER CKT 1	242	252	0.08916	103.022	TUCO INTERCHANGE (ENRCO 136401) 230/115/13.2KV TRANSFORMER CKT 2
FDNS	00NR	0	17SP	G15_033	FROM->TO	TUCO INTERCHANGE (GE M102345) 230/115/13.2KV TRANSFORMER CKT 1	242	252	0.08916	102.376	TUCO INTERCHANGE (ENRCO 136401) 230/115/13.2KV TRANSFORMER CKT 2
FDNS	00NR	0	17SP	G15_033	FROM->TO	TUCO INTERCHANGE (GE M102345) 230/115/13.2KV TRANSFORMER CKT 1	242	252	0.08916	102.376	TUCO INTERCHANGE (ENRCO 136401) 230/115/13.2KV TRANSFORMER CKT 2
FDNS	06ALL	0	20SP	G15_033	FROM->TO	TUCO_2 345.00 (TUCO_2 XFMR) 345/230/13.2KV TRANSFORMER CKT 1	560	560	0.25678	168.9327	TUCO INTERCHANGE - TUCO_2 345.00 345KV CKT 1
FDNS	06ALL	0	17SP	G15_033	FROM->TO	TUCO_2 345.00 (TUCO_2 XFMR) 345/230/13.2KV TRANSFORMER CKT 1	560	560	0.26126	168.0719	TUCO INTERCHANGE - TUCO_2 345.00 345KV CKT 1
FDNS	06ALL	0	20SP	G15_033	FROM->TO	TUCO_2 345.00 (TUCO_2 XFMR) 345/230/13.2KV TRANSFORMER CKT 1	560	560	0.25678	162.4281	TUCO INTERCHANGE - TUCO_2 345.00 345KV CKT 1
FDNS	06ALL	0	17SP	G15_033	FROM->TO	TUCO_2 345.00 (TUCO_2 XFMR) 345/230/13.2KV TRANSFORMER CKT 1	560	560	0.26126	161.5424	TUCO INTERCHANGE - TUCO_2 345.00 345KV CKT 1
FDNS	06NR	2	17G	G15_033	TO->FROM	AMARILLO SOUTH INTERCHANGE - G15031_T 230.00 230KV CKT 1	318.7	350.57	0.06905	103.4449	NEWHART 230 - POTTER COUNTY INTERCHANGE 230KV CKT 1
FDNS	00NR	2	25SP	G15_033	FROM->TO	CARLISLE INTERCHANGE - LP-DOUD_TP 3115.00 115KV CKT 1	159	160	0.03221	110.2252	WOLFFORTH INTERCHANGE (WH 7001668) 230/115/13.2KV TRANSFORMER CKT 1
FDNS	00NR	2	25SP	G15_033	FROM->TO	CARLISLE INTERCHANGE - LP-DOUD_TP 3115.00 115KV CKT 1	159	160	0.03221	110.2252	WOLFFORTH INTERCHANGE (WH 7001668) 230/115/13.2KV TRANSFORMER CKT 1
FDNS	00NR	2	25SP	G15_033	FROM->TO	CARLISLE INTERCHANGE - LP-DOUD_TP 3115.00 115KV CKT 1	159	160	0.04805	100	TUCO INTERCHANGE - YOAKUM_345 345.00 345KV CKT 1
FDNS	06ALL	2	20SP	G15_033	FROM->TO	CHISHOLM6 230.00 - ELK CITY 230KV 230KV CKT 1	353	353	0.04915	103.9805	BASE CASE
FDNS	06ALL	2	17SP	G15_033	FROM->TO	CHISHOLM6 230.00 - ELK CITY 230KV 230KV CKT 1	353	353	0.04941	101.7938	BASE CASE
FDNS	06ALL	2	20L	G15_033	TO->FROM	CIMARRON - MINCO 345KV CKT 1	956	956	0.26563	140.1322	G14-057T 345.00 - SUNNYSIDE 345KV CKT 1
FDNS	06ALL	2	20L	G15_033	TO->FROM	CIMARRON - MINCO 345KV CKT 1	956	956	0.26563	133.5433	G14-057T 345.00 - LAWTON EASTSIDE 345KV CKT 1
FDNS	06ALL	2	17G	G15_033	TO->FROM	CIMARRON - MINCO 345KV CKT 1	956	956	0.29871	131.7687	G14-057T 345.00 - SUNNYSIDE 345KV CKT 1
FDNS	06ALL	2	20WP	G15_033	TO->FROM	CIMARRON - MINCO 345KV CKT 1	956	956	0.2931	130.9595	G14-057T 345.00 - SUNNYSIDE 345KV CKT 1
FDNS	06ALL	2	17G	G15_033	TO->FROM	CIMARRON - MINCO 345KV CKT 1	956	956	0.29871	126.2954	G14-057T 345.00 - LAWTON EASTSIDE 345KV CKT 1
FDNS	06ALL	2	20WP	G15_033	TO->FROM	CIMARRON - MINCO 345KV CKT 1	956	956	0.2931	125.3296	G14-057T 345.00 - LAWTON EASTSIDE 345KV CKT 1
FDNS	06ALL	2	16WP	G15_033	TO->FROM	CIMARRON - MINCO 345KV CKT 1	956	956	0.30526	123.9324	G14-057T 345.00 - SUNNYSIDE 345KV CKT 1
FDNS	06ALL	2	17SP	G15_033	TO->FROM	CIMARRON - MINCO 345KV CKT 1	956	956	0.30234	123.0412	G14-057T 345.00 - SUNNYSIDE 345KV CKT 1
FDNS	06ALL	2	20SP	G15_033	TO->FROM	CIMARRON - MINCO 345KV CKT 1	956	956	0.2993	120.4683	G14-057T 345.00 - SUNNYSIDE 345KV CKT 1
FDNS	06ALL	2	16WP	G15_033	TO->FROM	CIMARRON - MINCO 345KV CKT 1	956	956	0.30526	118.3934	G14-057T 345.00 - LAWTON EASTSIDE 345KV CKT 1
FDNS	06ALL	2	17SP	G15_033	TO->FROM	CIMARRON - MINCO 345KV CKT 1	956	956	0.30234	117.7499	G14-057T 345.00 - LAWTON EASTSIDE 345KV CKT 1
FDNS	06ALL	2	20SP	G15_033	TO->FROM	CIMARRON - MINCO 345KV CKT 1	956	956	0.2993	115.0256	G14-057T 345.00 - LAWTON EASTSIDE 345KV CKT 1
FDNS	00NR	2	20WP	G15_033	TO->FROM	CIMARRON - MINCO 345KV CKT 1	956	956	0.07514	113.0629	G14-057T 345.00 - SUNNYSIDE 345KV CKT 1
FDNS	00NR	2	16WP	G15_033	TO->FROM	CIMARRON - MINCO 345KV CKT 1	956	956	0.08037	112.0352	G14-057T 345.00 - SUNNYSIDE 345KV CKT 1
FDNS	06ALL	2	17G	G15_033	TO->FROM	CIMARRON - MINCO 345KV CKT 1	956	956	0.23547	111.0722	MATHWSN7 345.00 - TATONGA7 345.00 345KV CKT 1
FDNS	06ALL	2	20WP	G15_033	TO->FROM	CIMARRON - MINCO 345KV CKT 1	956	956	0.23026	110.8109	MATHWSN7 345.00 - TATONGA7 345.00 345KV CKT 1
FDNS	06NR	2	20L	G15_033	TO->FROM	CIMARRON - MINCO 345KV CKT 1	956	956	0.078	108.4795	G14-057T 345.00 - SUNNYSIDE 345KV CKT 1
FDNS	06ALL	2	20L	G15_033	TO->FROM	CIMARRON - MINCO 345KV CKT 1	956	956	0.21043	108.2408	G11_051T 345.00 - TATONGA7 345.00 345KV CKT 1
FDNS	06ALL	2	20L	G15_033	TO->FROM	CIMARRON - MINCO 345KV CKT 1	956	956	0.25663	107.6011	CHISHOLM7 345.00 - WOODWARD DISTRICT EHV 345KV CKT 1
FDNS	06ALL	2	17G	G15_033	TO->FROM	CIMARRON - MINCO 345KV CKT 1	956	956	0.28395	107.4004	CHISHOLM7 345.00 - WOODWARD DISTRICT EHV 345KV CKT 1
FDNS	06ALL	2	20L	G15_033	TO->FROM	CIMARRON - MINCO 345KV CKT 1	956	956	0.21043	106.7129	G11_051T 345.00 - WOODWARD DISTRICT EHV 345KV CKT 1
FDNS	06ALL	2	20WP	G15_033	TO->FROM	CIMARRON - MINCO 345KV CKT 1	956	956	0.23026	105.5266	G11_051T 345.00 - TATONGA7 345.00 345KV CKT 1
FDNSLock	06ALL	2	17G	G15_033	TO->FROM	CIMARRON - MINCO 345KV CKT 1	956	956	0.23547	105.1772	G11_051T 345.00 - TATONGA7 345.00 345KV CKT 1
FDNS	06ALL	2	17SP	G15_033	TO->FROM	CIMARRON - MINCO 345KV CKT 1	956	956	0.23901	104.7953	MATHWSN7 345.00 - TATONGA7 345.00 345KV CKT 1
FDNS	06NR	2	17G	G15_033	TO->FROM	CIMARRON - MINCO 345KV CKT 1	956	956	0.08088	104.6584	G14-057T 345.00 - SUNNYSIDE 345KV CKT 1
FDNS	06ALL	2	20SP	G15_033	TO->FROM	CIMARRON - MINCO 345KV CKT 1	956	956	0.23698	104.2231	MATHWSN7 345.00 - TATONGA7 345.00 345KV CKT 1
FDNS	06ALL	2	16WP	G15_033	TO->FROM	CIMARRON - MINCO 345KV CKT 1	956	956	0.24047	104.0692	MATHWSN7 345.00 - TATONGA7 345.00 345KV CKT 1
FDNS	06ALL	2	20WP	G15_033	TO->FROM	CIMARRON - MINCO 345KV CKT 1	956	956	0.23026	103.9402	G11_051T 345.00 - WOODWARD DISTRICT EHV 345KV CKT 1
FDNS	06ALL	2	20WP	G15_033	TO->FROM	CIMARRON - MINCO 345KV CKT 1	956	956	0.27972	103.712	CHISHOLM7 345.00 - WOODWARD DISTRICT EHV 345KV CKT 1

SOLUTION	GROUP	SCENARIO	SEASON	SOURCE	DIRECTION	MONITORED ELEMENT	RATEA (MVA)	RATEB(MVA)	TDF	TC%LOADING (% MVA)	CONTINGENCY
FDNSLock	06ALL	2	17G	G15_033	TO->FROM	CIMARRON - MINCO 345KV CKT 1	956	956	0.23547	103.655	G11_051T 345.00 - WOODWARD DISTRICT EHV 345KV CKT 1
FDNS	06ALL	2	20SP	G15_033	TO->FROM	CIMARRON - MINCO 345KV CKT 1	956	956	0.28666	102.1101	CHISHOLM7 345.00 - WOODWARD DISTRICT EHV 345KV CKT 1
FDNS	06NR	2	20L	G15_033	TO->FROM	CIMARRON - MINCO 345KV CKT 1	956	956	0.078	102.0698	G14-057T 345.00 - LAWTON EASTSIDE 345KV CKT 1
FDNS	06ALL	2	17SP	G15_033	TO->FROM	CIMARRON - MINCO 345KV CKT 1	956	956	0.29055	100.969	CHISHOLM7 345.00 - WOODWARD DISTRICT EHV 345KV CKT 1
FDNS	06ALL	2	17SP	G15_033	TO->FROM	CIMARRON - MINCO 345KV CKT 1	956	956	0.23901	99.6	G11_051T 345.00 - TATONGA7 345.00 345KV CKT 1
FDNS	06ALL	2	20SP	G15_033	TO->FROM	DEAF SMITH COUNTY INTERCHANGE - G15039_T 230.00 230KV CKT 1	318.7	350.57	0.053	106.1518	BASE CASE
FDNS	06ALL	2	17SP	G15_033	TO->FROM	DEAF SMITH COUNTY INTERCHANGE - G15039_T 230.00 230KV CKT 1	318.7	350.57	0.04896	104.2255	BASE CASE
FDNS	06ALL	2	20L	G15_033	TO->FROM	G14-057T 345.00 - LAWTON EASTSIDE 345KV CKT 1	717	789	0.19541	131.3199	CIMARRON - MINCO 345KV CKT 1
FDNS	06ALL	2	20L	G15_033	TO->FROM	G14-057T 345.00 - LAWTON EASTSIDE 345KV CKT 1	717	789	0.19541	125.5345	GRACEMONT - MINCO 345KV CKT 1
FDNS	06ALL	2	17G	G15_033	TO->FROM	G14-057T 345.00 - LAWTON EASTSIDE 345KV CKT 1	717	789	0.22791	118.2994	CIMARRON - MINCO 345KV CKT 1
FDNS	06ALL	2	20WP	G15_033	TO->FROM	G14-057T 345.00 - LAWTON EASTSIDE 345KV CKT 1	717	789	0.22355	118.2558	CIMARRON - MINCO 345KV CKT 1
FDNS	06NR	2	20L	G15_033	TO->FROM	G14-057T 345.00 - LAWTON EASTSIDE 345KV CKT 1	717	789	0.06564	114.6721	CIMARRON - MINCO 345KV CKT 1
FDNS	06ALL	2	16WP	G15_033	TO->FROM	G14-057T 345.00 - LAWTON EASTSIDE 345KV CKT 1	717	789	0.23262	113.4595	CIMARRON - MINCO 345KV CKT 1
FDNS	06ALL	2	17G	G15_033	TO->FROM	G14-057T 345.00 - LAWTON EASTSIDE 345KV CKT 1	717	789	0.22791	112.8183	GRACEMONT - MINCO 345KV CKT 1
FDNS	06ALL	2	20WP	G15_033	TO->FROM	G14-057T 345.00 - LAWTON EASTSIDE 345KV CKT 1	717	789	0.22355	112.814	GRACEMONT - MINCO 345KV CKT 1
FDNS	06NR	2	20L	G15_033	TO->FROM	G14-057T 345.00 - LAWTON EASTSIDE 345KV CKT 1	717	789	0.06564	108.272	GRACEMONT - MINCO 345KV CKT 1
FDNS	06ALL	2	16WP	G15_033	TO->FROM	G14-057T 345.00 - LAWTON EASTSIDE 345KV CKT 1	717	789	0.23262	108.2342	GRACEMONT - MINCO 345KV CKT 1
FDNS	06ALL	2	17SP	G15_033	TO->FROM	G14-057T 345.00 - LAWTON EASTSIDE 345KV CKT 1	717	789	0.22836	105.8621	CIMARRON - MINCO 345KV CKT 1
FDNS	06ALL	2	20L	G15_033	TO->FROM	G14-057T 345.00 - LAWTON EASTSIDE 345KV CKT 1	717	789	0.13928	105.4406	BASE CASE
FDNS	06NR	2	17G	G15_033	TO->FROM	G14-057T 345.00 - LAWTON EASTSIDE 345KV CKT 1	717	789	0.06836	104.6587	CIMARRON - MINCO 345KV CKT 1
FDNS	06ALL	2	17SP	G15_033	TO->FROM	G14-057T 345.00 - LAWTON EASTSIDE 345KV CKT 1	717	789	0.22836	100.8378	GRACEMONT - MINCO 345KV CKT 1
FDNS	00NR	2	16WP	G15_033	TO->FROM	G14-057T 345.00 - LAWTON EASTSIDE 345KV CKT 1	717	789	0.06784	99.9	CIMARRON - MINCO 345KV CKT 1
FDNS	06ALL	2	20L	G15_033	FROM->TO	G14-057T 345.00 - SUNNYSIDE 345KV CKT 1	717	789	0.19541	144.5024	CIMARRON - MINCO 345KV CKT 1
FDNS	00NR	2	16WP	G15_033	FROM->TO	G14-057T 345.00 - SUNNYSIDE 345KV CKT 1	717	789	0.06784	141.4962	CIMARRON - MINCO 345KV CKT 1
FDNS	00NR	2	20WP	G15_033	FROM->TO	G14-057T 345.00 - SUNNYSIDE 345KV CKT 1	717	789	0.06295	139.5623	CIMARRON - MINCO 345KV CKT 1
FDNS	06ALL	2	20L	G15_033	FROM->TO	G14-057T 345.00 - SUNNYSIDE 345KV CKT 1	717	789	0.19541	138.4793	GRACEMONT - MINCO 345KV CKT 1
FDNS	06ALL	2	17G	G15_033	FROM->TO	G14-057T 345.00 - SUNNYSIDE 345KV CKT 1	717	789	0.22791	131.1423	CIMARRON - MINCO 345KV CKT 1
FDNS	06ALL	2	20WP	G15_033	FROM->TO	G14-057T 345.00 - SUNNYSIDE 345KV CKT 1	717	789	0.22355	131.1089	CIMARRON - MINCO 345KV CKT 1
FDNS	00NR	2	16WP	G15_033	FROM->TO	G14-057T 345.00 - SUNNYSIDE 345KV CKT 1	717	789	0.06784	130.7191	GRACEMONT - MINCO 345KV CKT 1
FDNS	00NR	2	20WP	G15_033	FROM->TO	G14-057T 345.00 - SUNNYSIDE 345KV CKT 1	717	789	0.06295	128.7351	GRACEMONT - MINCO 345KV CKT 1
FDNS	06NR	2	20L	G15_033	FROM->TO	G14-057T 345.00 - SUNNYSIDE 345KV CKT 1	717	789	0.06564	128.196	CIMARRON - MINCO 345KV CKT 1
FDNS	00NR	2	16WP	G15_033	FROM->TO	G14-057T 345.00 - SUNNYSIDE 345KV CKT 1	717	789	0.04785	127.4553	PITTSBURG - SEMINOLE 345KV CKT 1
FDNS	00NR	2	16WP	G15_033	FROM->TO	G14-057T 345.00 - SUNNYSIDE 345KV CKT 1	717	789	0.04785	127.4553	PITTSBURG - SEMINOLE 345KV CKT 1
FDNS	00NR	2	16WP	G15_033	FROM->TO	G14-057T 345.00 - SUNNYSIDE 345KV CKT 1	717	789	0.0498	127.1716	BASE CASE
FDNS	06ALL	2	16WP	G15_033	FROM->TO	G14-057T 345.00 - SUNNYSIDE 345KV CKT 1	717	789	0.23262	126.2328	CIMARRON - MINCO 345KV CKT 1
FDNS	06ALL	2	20WP	G15_033	FROM->TO	G14-057T 345.00 - SUNNYSIDE 345KV CKT 1	717	789	0.22355	125.5047	GRACEMONT - MINCO 345KV CKT 1
FDNS	06ALL	2	17G	G15_033	FROM->TO	G14-057T 345.00 - SUNNYSIDE 345KV CKT 1	717	789	0.22791	125.4979	GRACEMONT - MINCO 345KV CKT 1
FDNS	00NR	2	16WP	G15_033	FROM->TO	G14-057T 345.00 - SUNNYSIDE 345KV CKT 1	717	789	0.04921	124.4037	CIMARRON - DRAPER LAKE 345KV CKT 1
FDNS	00NR	2	20WP	G15_033	FROM->TO	G14-057T 345.00 - SUNNYSIDE 345KV CKT 1	717	789	0.04601	124.0505	BASE CASE
FDNS	00NR	2	20WP	G15_033	FROM->TO	G14-057T 345.00 - SUNNYSIDE 345KV CKT 1	717	789	0.04422	123.5342	PITTSBURG - SEMINOLE 345KV CKT 1
FDNS	00NR	2	20WP	G15_033	FROM->TO	G14-057T 345.00 - SUNNYSIDE 345KV CKT 1	717	789	0.04422	123.5342	PITTSBURG - SEMINOLE 345KV CKT 1
FDNS	00NR	2	16WP	G15_033	FROM->TO	G14-057T 345.00 - SUNNYSIDE 345KV CKT 1	717	789	0.05224	121.7792	P12:138:WFEC:MSL03
FDNS	06NR	2	20L	G15_033	FROM->TO	G14-057T 345.00 - SUNNYSIDE 345KV CKT 1	717	789	0.06564	121.5502	GRACEMONT - MINCO 345KV CKT 1
FDNS	00NR	2	20WP	G15_033	FROM->TO	G14-057T 345.00 - SUNNYSIDE 345KV CKT 1	717	789	0.04547	121.2217	CIMARRON - DRAPER LAKE 345KV CKT 1
FDNS	00NR	2	16WP	G15_033	FROM->TO	G14-057T 345.00 - SUNNYSIDE 345KV CKT 1	717	789	0.04977	121.0436	PITTSBURG - VALLIANT 345KV CKT 1
FDNS	00NR	2	16WP	G15_033	FROM->TO	G14-057T 345.00 - SUNNYSIDE 345KV CKT 1	717	789	0.04977	121.0436	PITTSBURG - VALLIANT 345KV CKT 1
FDNS	06ALL	2	16WP	G15_033	FROM->TO	G14-057T 345.00 - SUNNYSIDE 345KV CKT 1	717	789	0.23262	120.863	GRACEMONT - MINCO 345KV CKT 1
FDNS	00NR	2	16WP	G15_033	FROM->TO	G14-057T 345.00 - SUNNYSIDE 345KV CKT 1	717	789	0.0498	120.6492	GEN509403 1-PIRKEY GENERATION
FDNS	00NR	2	16WP	G15_033	FROM->TO	G14-057T 345.00 - SUNNYSIDE 345KV CKT 1	717	789	0.0498	120.5571	GEN509416 1-TURK GENERATION
FDNS	00NR	2	16WP	G15_033	FROM->TO	G14-057T 345.00 - SUNNYSIDE 345KV CKT 1	717	789	0.04967	120.3678	CLEVELAND - G15066_T 345.00 345KV CKT 1
FDNS	00NR	2	16WP	G15_033	FROM->TO	G14-057T 345.00 - SUNNYSIDE 345KV CKT 1	717	789	0.04967	120.0778	G15066_T 345.00 - SOONER 345KV CKT 1
FDNS	00NR	2	16WP	G15_033	FROM->TO	G14-057T 345.00 - SUNNYSIDE 345KV CKT 1	717	789	0.0498	119.684	GEN501801 1-DOLET HILLS UNIT1
FDNS	00NR	2	16WP	G15_033	FROM->TO	G14-057T 345.00 - SUNNYSIDE 345KV CKT 1	717	789	0.0498	119.2912	GEN509404 1-WELSH #1
FDNS	00NR	2	16WP	G15_033	FROM->TO	G14-057T 345.00 - SUNNYSIDE 345KV CKT 1	717	789	0.0498	119.2912	GEN509406 1-WELSH #3
FDNS	00NR	2	20WP	G15_033	FROM->TO	G14-057T 345.00 - SUNNYSIDE 345KV CKT 1	717	789	0.04828	118.9529	P12:138:WFEC:MSL03
FDNS	00NR	2	16WP	G15_033	FROM->TO	G14-057T 345.00 - SUNNYSIDE 345KV CKT 1	717	789	0.05023	118.7218	CORN TAP - NAPLESTP 138.00 138KV CKT 1
FDNS	00NR	2	16WP	G15_033	FROM->TO	G14-057T 345.00 - SUNNYSIDE 345KV CKT 1	717	789	0.05648	118.7202	BORDER 7345.00 - WOODWARD DISTRICT EHV 345KV CKT 1
FDNS	06ALL	2	20L	G15_033	FROM->TO	G14-057T 345.00 - SUNNYSIDE 345KV CKT 1	717	789	0.13928	118.6576	BASE CASE
FDNS	00NR	2	16WP	G15_033	FROM->TO	G14-057T 345.00 - SUNNYSIDE 345KV CKT 1	717	789	0.05023	118.6388	NAPLESTP 138.00 - PAYNE 138.00 138KV CKT 1
FDNS	00NR	2	16WP	G15_033	FROM->TO	G14-057T 345.00 - SUNNYSIDE 345KV CKT 1	717	789	0.04955	118.5339	7SAREPTA% 345.00 - LONGWOOD 345KV CKT 1
FDNS	00NR	2	16WP	G15_033	FROM->TO	G14-057T 345.00 - SUNNYSIDE 345KV CKT 1	717	789	0.04955	118.5339	7SAREPTA% 345.00 - LONGWOOD 345KV CKT 1
FDNS	06ALL	2	17SP	G15_033	FROM->TO	G14-057T 345.00 - SUNNYSIDE 345KV CKT 1	717	789	0.22836	118.456	CIMARRON - MINCO 345KV CKT 1
FDNS	00NR	2	16WP	G15_033	FROM->TO	G14-057T 345.00 - SUNNYSIDE 345KV CKT 1	717	789	0.0498	118.4163	GEN336821 1-GRAND GULF UNIT
FDNS	00NR	2	16WP	G15_033	FROM->TO	G14-057T 345.00 - SUNNYSIDE 345KV CKT 1	717	789	0.04969	118.3949	DOLET HILLS - SOUTHWEST SHREVEPORT 345KV CKT 1
FDNS	00NR	2	16WP	G15_033	FROM->TO	G14-057T 345.00 - SUNNYSIDE 345KV CKT 1	717	789	0.04969	118.3949	DOLET HILLS - SOUTHWEST SHREVEPORT 345KV CKT 1
FDNS	00NR	2	16WP	G15_033	FROM->TO	G14-057T 345.00 - SUNNYSIDE 345KV CKT 1	717	789	0.04973	118.3921	CLEVELAND - TULSA NORTH 345KV CKT 1
FDNS	00NR	2	16WP	G15_033	FROM->TO	G14-057T 345.00 - SUNNYSIDE 345KV CKT 1	717	789	0.04973	118.3921	CLEVELAND - TULSA NORTH 345KV CKT 1
FDNS	00NR	2	16WP	G15_033	FROM->TO	G14-057T 345.00 - SUNNYSIDE 345KV CKT 1	717	789	0.05011	118.358	COMANCHE - LOCO 138KV CKT 1
FDNS	00NR	2	16WP	G15_033	FROM->TO	G14-057T 345.00 - SUNNYSIDE 345KV CKT 1	717	789	0.0503	118.3293	ANADARKO - POCASSETT 138KV CKT 1
FDNS	00NR	2	16WP	G15_033	FROM->TO	G14-057T 345.00 - SUNNYSIDE 345KV CKT 1	717	789	0.0498	118.328	GEN336153 1-WATERFORD UNIT#3
FDNS	00NR	2	16WP	G15_033	FROM->TO	G14-057T 345.00 - SUNNYSIDE 345KV CKT 1	717	789	0.04866	118.3052	CANADIAN RIVER - MUSKOGEE 345KV CKT 1
FDNS	00NR	2	16WP	G15_033	FROM->TO	G14-057T 345.00 - SUNNYSIDE 345KV CKT 1	717	789	0.0503	118.1877	POCASSETT - TUTTLE 138KV CKT 1
FDNS	00NR	2	16WP	G15_033	FROM->TO	G14-057T 345.00 - SUNNYSIDE 345KV CKT 1	717	789	0.0498	118.0376	GRAND GULF 500/22.0KV TRANSFORMER CKT 1
FDNS	00NR	2	16WP	G15_033	FROM->TO	G14-057T 345.00 - SUNNYSIDE 345KV CKT 1	717	789	0.0498	118.0366	GEN335831 1-RIVERBEND UNIT#1
FDNS	00NR	2	16WP	G15_033	FROM->TO	G14-057T 345.00 - SUNNYSIDE 345KV CKT 1	717	789	0.04965	118.0305	ARCADIA - NORTHWEST 345KV CKT 1
FDNS	00NR	2	16WP	G15_033	FROM->TO	G14-057T 345.00 - SUNNYSIDE 345KV CKT 1	717	789	0.04936	118.0115	ARCADIA - SEMINOLE 345KV CKT 1
FDNS	00NR	2	16WP	G15_033	FROM->TO	G14-057T 345.00 - SUNNYSIDE 345KV CKT 1	717	789	0.0498	117.9618	GEN515577 1-ARBWND11 0.6900
FDNS	00NR	2	16WP	G15_033	FROM->TO	G14-057T 345.00 - SUNNYSIDE 345KV CKT 1	717	789	0.05115	117.9524	P12:138:AEPW:DUNCAN-4:L.E.S.-4
FDNS	00NR	2	16WP	G15_033	FROM->TO	G14-057T 345.00 - SUNNYSIDE 345KV CKT 1	717	789	0.0498	117.9409	GEN509409 1-WILKES #3

SOLUTION	GROUP	SCENARIO	SEASON	SOURCE	DIRECTION	MONITORED ELEMENT	RATEA (MVA)	RATEB(MVA)	TDF	TC%LOADING (% MVA)	CONTINGENCY
FDNS	00NR	2	16WP	G15_033	FROM->TO	G14-057T 345.00 - SUNNYSIDE 345KV CKT 1	717	789	0.04885	117.9394	MATHWSN7 345.00 - TATONGA7 345.00 345KV CKT 1
FDNS	00NR	2	16WP	G15_033	FROM->TO	G14-057T 345.00 - SUNNYSIDE 345KV CKT 1	717	789	0.04966	117.8872	7SAREPTA% 345.00 - ELDORADO EHV 345KV CKT 1
FDNS	00NR	2	16WP	G15_033	FROM->TO	G14-057T 345.00 - SUNNYSIDE 345KV CKT 1	717	789	0.04966	117.887	3TR3AR8EL7EL
FDNS	00NR	2	16WP	G15_033	FROM->TO	G14-057T 345.00 - SUNNYSIDE 345KV CKT 1	717	789	0.04966	117.8766	ELDORADO EHV 500/345KV TRANSFORMER CKT 1
FDNS	00NR	2	16WP	G15_033	FROM->TO	G14-057T 345.00 - SUNNYSIDE 345KV CKT 1	717	789	0.04989	117.8342	HEALDTON - LOCO 138KV CKT 1
FDNS	00NR	2	16WP	G15_033	FROM->TO	G14-057T 345.00 - SUNNYSIDE 345KV CKT 1	717	789	0.0503	117.8209	BRIDGECR 138.00 - TUTTLE 138KV CKT 1
FDNS	00NR	2	16WP	G15_033	FROM->TO	G14-057T 345.00 - SUNNYSIDE 345KV CKT 1	717	789	0.05115	117.8032	COMANCHE TAP - OMPA-DUNCAN 840 138KV CKT 1
FDNS	00NR	2	16WP	G15_033	FROM->TO	G14-057T 345.00 - SUNNYSIDE 345KV CKT 1	717	789	0.05648	117.7383	BORDER 7345.00 - TUCO_2 345.00 345KV CKT 1
FDNS	00NR	2	20WP	G15_033	FROM->TO	G14-057T 345.00 - SUNNYSIDE 345KV CKT 1	717	789	0.04601	117.7131	GEN509403 1-PIRKEY GENERATION
FDNS	00NR	2	16WP	G15_033	FROM->TO	G14-057T 345.00 - SUNNYSIDE 345KV CKT 1	717	789	0.04989	117.6897	HEALDTON - RINGLING 138KV CKT 1
FDNS	06NR	2	17G	G15_033	FROM->TO	G14-057T 345.00 - SUNNYSIDE 345KV CKT 1	717	789	0.06836	117.6729	CIMARRON - MINCO 345KV CKT 1
FDNS	00NR	2	20WP	G15_033	FROM->TO	G14-057T 345.00 - SUNNYSIDE 345KV CKT 1	717	789	0.04601	117.657	GEN509416 1-TURK GENERATION
FDNS	00NR	2	16WP	G15_033	FROM->TO	G14-057T 345.00 - SUNNYSIDE 345KV CKT 1	717	789	0.0498	117.6547	GEN501813 1-RODEMACHER UNIT 3
FDNS	00NR	2	16WP	G15_033	FROM->TO	G14-057T 345.00 - SUNNYSIDE 345KV CKT 1	717	789	0.04977	117.6169	LACYGNE - WAVERLY7 345.00 345KV CKT 1
FDNS	00NR	2	16WP	G15_033	FROM->TO	G14-057T 345.00 - SUNNYSIDE 345KV CKT 1	717	789	0.0498	117.6138	GEN300006 1-NEW MADRID UNIT 1
FDNS	00NR	2	16WP	G15_033	FROM->TO	G14-057T 345.00 - SUNNYSIDE 345KV CKT 1	717	789	0.0498	117.6022	GEN300007 1-NEW MADRID UNIT 2
FDNS	00NR	2	16WP	G15_033	FROM->TO	G14-057T 345.00 - SUNNYSIDE 345KV CKT 1	717	789	0.0503	117.5653	P12:138:WFEC:MSL01
FDNS	00NR	2	16WP	G15_033	FROM->TO	G14-057T 345.00 - SUNNYSIDE 345KV CKT 1	717	789	0.0503	117.5577	BRIDGECR 138.00 - SUNSHINE CANYON 138KV CKT 1
FDNS	00NR	2	16WP	G15_033	FROM->TO	G14-057T 345.00 - SUNNYSIDE 345KV CKT 1	717	789	0.0498	117.541	GEN520947 1-HUGO1
FDNS	00NR	2	16WP	G15_033	FROM->TO	G14-057T 345.00 - SUNNYSIDE 345KV CKT 1	717	789	0.05115	117.529	DUNCAN - OMPA-DUNCAN 840 138KV CKT 1
FDNS	00NR	2	16WP	G15_033	FROM->TO	G14-057T 345.00 - SUNNYSIDE 345KV CKT 1	717	789	0.05115	117.529	DUNCAN - OMPA-DUNCAN 840 138KV CKT 1
FDNS	00NR	2	16WP	G15_033	FROM->TO	G14-057T 345.00 - SUNNYSIDE 345KV CKT 1	717	789	0.04989	117.5239	RINGLING - SOUTH WILSON 138KV CKT 1
FDNS	00NR	2	16WP	G15_033	FROM->TO	G14-057T 345.00 - SUNNYSIDE 345KV CKT 1	717	789	0.04977	117.5012	WAVERLY7 345.00 - WOLF CREEK 345KV CKT 1
FDNS	00NR	2	20WP	G15_033	FROM->TO	G14-057T 345.00 - SUNNYSIDE 345KV CKT 1	717	789	0.04599	117.4597	PITTSBURG - VALLIANT 345KV CKT 1
FDNS	00NR	2	20WP	G15_033	FROM->TO	G14-057T 345.00 - SUNNYSIDE 345KV CKT 1	717	789	0.04599	117.4597	PITTSBURG - VALLIANT 345KV CKT 1
FDNS	00NR	2	16WP	G15_033	FROM->TO	G14-057T 345.00 - SUNNYSIDE 345KV CKT 1	717	789	0.0498	117.456	GEN335206 1-NELSON UNIT 6
FDNS	00NR	2	16WP	G15_033	FROM->TO	G14-057T 345.00 - SUNNYSIDE 345KV CKT 1	717	789	0.04672	117.4382	FINNEY SWITCHING STATION - HOLCOMB 345KV CKT 1
FDNS	00NR	2	16WP	G15_033	FROM->TO	G14-057T 345.00 - SUNNYSIDE 345KV CKT 1	717	789	0.04672	117.4382	FINNEY SWITCHING STATION - HOLCOMB 345KV CKT 1
FDNS	00NR	2	20WP	G15_033	FROM->TO	G14-057T 345.00 - SUNNYSIDE 345KV CKT 1	717	789	0.04589	117.4275	CLEVELAND - G15066_T 345.00 345KV CKT 1
FDNS	00NR	2	16WP	G15_033	FROM->TO	G14-057T 345.00 - SUNNYSIDE 345KV CKT 1	717	789	0.04885	117.4184	G11_051T 345.00 - TATONGA7 345.00 345KV CKT 1
FDNS	00NR	2	16WP	G15_033	FROM->TO	G14-057T 345.00 - SUNNYSIDE 345KV CKT 1	717	789	0.0498	117.3495	DOLET HILLS 345/24.0KV TRANSFORMER CKT 1
FDNS	00NR	2	16WP	G15_033	FROM->TO	G14-057T 345.00 - SUNNYSIDE 345KV CKT 1	717	789	0.04988	117.2999	P12:138:AEPW:SHERID4:112GORE4
FDNS	00NR	2	16WP	G15_033	FROM->TO	G14-057T 345.00 - SUNNYSIDE 345KV CKT 1	717	789	0.04951	117.2937	PARK LANE - SEMINOLE 138KV CKT 1
FDNS	00NR	2	16WP	G15_033	FROM->TO	G14-057T 345.00 - SUNNYSIDE 345KV CKT 1	717	789	0.0498	117.2713	GEN501812 1-RODEMACHER UNIT 2
FDNS	00NR	2	16WP	G15_033	FROM->TO	G14-057T 345.00 - SUNNYSIDE 345KV CKT 1	717	789	0.04989	117.2459	MARIETTA - SOUTH WILSON 138KV CKT 1
FDNS	00NR	2	16WP	G15_033	FROM->TO	G14-057T 345.00 - SUNNYSIDE 345KV CKT 1	717	789	0.0498	117.2373	GEN590011 2-ERCOT EQUIVALENCE
FDNS	00NR	2	16WP	G15_033	FROM->TO	G14-057T 345.00 - SUNNYSIDE 345KV CKT 1	717	789	0.04965	117.2268	CANEYRV7 345.00 - NEOSHO 345KV CKT 1
FDNS	00NR	2	16WP	G15_033	FROM->TO	G14-057T 345.00 - SUNNYSIDE 345KV CKT 1	717	789	0.0498	117.2027	GEN515564 1-ORIGIN11 0.6900
FDNS	00NR	2	16WP	G15_033	FROM->TO	G14-057T 345.00 - SUNNYSIDE 345KV CKT 1	717	789	0.0498	117.2027	GEN515565 1-ORIGIN21 0.6900
FDNS	00NR	2	16WP	G15_033	FROM->TO	G14-057T 345.00 - SUNNYSIDE 345KV CKT 1	717	789	0.0498	117.1645	GEN590010 1-ERCOT EQUIVALENCE
FDNS	00NR	2	16WP	G15_033	FROM->TO	G14-057T 345.00 - SUNNYSIDE 345KV CKT 1	717	789	0.04989	117.1634	P12:138:WFEC:MSL17
FDNS	00NR	2	20WP	G15_033	FROM->TO	G14-057T 345.00 - SUNNYSIDE 345KV CKT 1	717	789	0.04589	117.1341	G15066_T 345.00 - SOONER 345KV CKT 1
FDNS	00NR	2	16WP	G15_033	FROM->TO	G14-057T 345.00 - SUNNYSIDE 345KV CKT 1	717	789	0.04949	117.0966	THISTLE7 345.00 - WOODWARD DISTRICT EHV 345KV CKT 1
FDNS	00NR	2	16WP	G15_033	FROM->TO	G14-057T 345.00 - SUNNYSIDE 345KV CKT 1	717	789	0.04949	117.0966	THISTLE7 345.00 - WOODWARD DISTRICT EHV 345KV CKT 1
FDNS	00NR	2	16WP	G15_033	FROM->TO	G14-057T 345.00 - SUNNYSIDE 345KV CKT 1	717	789	0.04949	117.0966	THISTLE7 345.00 - WOODWARD DISTRICT EHV 345KV CKT 2
FDNS	00NR	2	16WP	G15_033	FROM->TO	G14-057T 345.00 - SUNNYSIDE 345KV CKT 1	717	789	0.04949	117.0966	THISTLE7 345.00 - WOODWARD DISTRICT EHV 345KV CKT 2
FDNS	00NR	2	16WP	G15_033	FROM->TO	G14-057T 345.00 - SUNNYSIDE 345KV CKT 1	717	789	0.0498	117.096	GEN509408 1-WILKES #2
FDNS	00NR	2	16WP	G15_033	FROM->TO	G14-057T 345.00 - SUNNYSIDE 345KV CKT 1	717	789	0.04965	117.0836	CANEYRV7 345.00 - LATHAMS7 345.00 345KV CKT 1
FDNS	00NR	2	16WP	G15_033	FROM->TO	G14-057T 345.00 - SUNNYSIDE 345KV CKT 1	717	789	0.04997	117.0744	CIVIT - PAOLI 138KV CKT 1
FDNS	00NR	2	16WP	G15_033	FROM->TO	G14-057T 345.00 - SUNNYSIDE 345KV CKT 1	717	789	0.04995	117.072	REDBUD - RIVERSIDE STATION 345KV CKT 1
FDNS	00NR	2	16WP	G15_033	FROM->TO	G14-057T 345.00 - SUNNYSIDE 345KV CKT 1	717	789	0.04995	117.072	REDBUD - RIVERSIDE STATION 345KV CKT 1
FDNS	00NR	2	16WP	G15_033	FROM->TO	G14-057T 345.00 - SUNNYSIDE 345KV CKT 1	717	789	0.04672	117.0694	FINNEY SWITCHING STATION - Hitchland Interchange 345KV CKT 1
FDNS	00NR	2	16WP	G15_033	FROM->TO	G14-057T 345.00 - SUNNYSIDE 345KV CKT 1	717	789	0.0498	117.0457	P12:69:AEPW:L.E.S.-2:LAW WC2
FDNS	00NR	2	16WP	G15_033	FROM->TO	G14-057T 345.00 - SUNNYSIDE 345KV CKT 1	717	789	0.0498	117.0274	P12:161:AEPW:DYESS 5:HYLAND 5
FDNS	00NR	2	16WP	G15_033	FROM->TO	G14-057T 345.00 - SUNNYSIDE 345KV CKT 1	717	789	0.04976	117.005	ELDORADO EHV - MOUNT OLIVE 500KV CKT 1
FDNS	00NR	2	16WP	G15_033	FROM->TO	G14-057T 345.00 - SUNNYSIDE 345KV CKT 1	717	789	0.0498	117.0035	GEN506754 1-LEBROCK STEAM 1
FDNS	00NR	2	16WP	G15_033	FROM->TO	G14-057T 345.00 - SUNNYSIDE 345KV CKT 1	717	789	0.0498	116.9911	GEN334440 1-SABINE UNIT 4
FDNS	00NR	2	16WP	G15_033	FROM->TO	G14-057T 345.00 - SUNNYSIDE 345KV CKT 1	717	789	0.04978	116.9839	P12:138:WFEC:MSL02
FDNS	00NR	2	16WP	G15_033	FROM->TO	G14-057T 345.00 - SUNNYSIDE 345KV CKT 1	717	789	0.04976	116.9747	PAOLI - PAYNE 138.00 138KV CKT 1
FDNS	00NR	2	16WP	G15_033	FROM->TO	G14-057T 345.00 - SUNNYSIDE 345KV CKT 1	717	789	0.04987	116.9648	P12:138:AEPW:112GORE4:L.E.S.-4
FDNS	00NR	2	16WP	G15_033	FROM->TO	G14-057T 345.00 - SUNNYSIDE 345KV CKT 1	717	789	0.04974	116.9554	ELDORADO EHV - SHERIDAN EHV 500KV CKT 1
FDNS	00NR	2	16WP	G15_033	FROM->TO	G14-057T 345.00 - SUNNYSIDE 345KV CKT 1	717	789	0.04997	116.9308	CIVIT - STRATFORD 138KV CKT 1
FDNS	00NR	2	16WP	G15_033	FROM->TO	G14-057T 345.00 - SUNNYSIDE 345KV CKT 1	717	789	0.0498	116.9201	NEW MADRID 161/22.0KV TRANSFORMER CKT 1
FDNS	00NR	2	20WP	G15_033	FROM->TO	G14-057T 345.00 - SUNNYSIDE 345KV CKT 1	717	789	0.04601	116.9166	GEN501801 1-DOLET HILLS UNIT1
FDNS	00NR	2	16WP	G15_033	FROM->TO	G14-057T 345.00 - SUNNYSIDE 345KV CKT 1	717	789	0.0498	116.9071	NEW MADRID 345/22.0KV TRANSFORMER CKT 1
FDNS	00NR	2	16WP	G15_033	FROM->TO	G14-057T 345.00 - SUNNYSIDE 345KV CKT 1	717	789	0.04964	116.9062	MATHWSN7 345.00 - NORTHWEST 345KV CKT 1
FDNS	00NR	2	16WP	G15_033	FROM->TO	G14-057T 345.00 - SUNNYSIDE 345KV CKT 1	717	789	0.04986	116.9037	TUPELO - TUPELO TAP 138KV CKT 1
FDNS	00NR	2	16WP	G15_033	FROM->TO	G14-057T 345.00 - SUNNYSIDE 345KV CKT 1	717	789	0.05017	116.901	P12:138:AEPW-OGE:CORNVIL4:MAUD 4
FDNS	00NR	2	16WP	G15_033	FROM->TO	G14-057T 345.00 - SUNNYSIDE 345KV CKT 1	717	789	0.0498	116.8979	ANADARKO - GEORGIA 138KV CKT 1
FDNS	00NR	2	16WP	G15_033	FROM->TO	G14-057T 345.00 - SUNNYSIDE 345KV CKT 1	717	789	0.0498	116.884	FRONTIER - GRIMES 345KV CKT 1
FDNS	00NR	2	16WP	G15_033	FROM->TO	G14-057T 345.00 - SUNNYSIDE 345KV CKT 1	717	789	0.04965	116.8719	LATHAMS7 345.00 - ROSE HILL 345KV CKT 1
FDNS	00NR	2	16WP	G15_033	FROM->TO	G14-057T 345.00 - SUNNYSIDE 345KV CKT 1	717	789	0.0498	116.8559	GEN503909 1-FULTONU1 1 16.000
FDNS	00NR	2	16WP	G15_033	FROM->TO	G14-057T 345.00 - SUNNYSIDE 345KV CKT 1	717	789	0.04973	116.8425	WEBRE - WELLS 500KV CKT 1
FDNS	00NR	2	16WP	G15_033	FROM->TO	G14-057T 345.00 - SUNNYSIDE 345KV CKT 1	717	789	0.05203	116.8279	LAWTON EASTSIDE (LES 5) 345/138/13.8KV TRANSFORMER CKT 2
FDNS	00NR	2	16WP	G15_033	FROM->TO	G14-057T 345.00 - SUNNYSIDE 345KV CKT 1	717	789	0.05203	116.8279	LAWTON EASTSIDE (LES 5) 345/138/13.8KV TRANSFORMER CKT 2
FDNS	00NR	2	16WP	G15_033	FROM->TO	G14-057T 345.00 - SUNNYSIDE 345KV CKT 1	717	789	0.05017	116.8267	BLANCHARD - CORNVILLE 138KV CKT 1
FDNS	00NR	2	16WP	G15_033	FROM->TO	G14-057T 345.00 - SUNNYSIDE 345KV CKT 1	717	789	0.04885	116.8234	G11_051T 345.00 - WOODWARD DISTRICT EHV 345KV CKT 1
FDNS	00NR	2	16WP	G15_033	FROM->TO	G14-057T 345.00 - SUNNYSIDE 345KV CKT 1	717	789	0.0498	116.8199	FLETCHER - GEORGIA 138KV CKT 1
FDNS	00NR	2	16WP	G15_033	FROM->TO	G14-057T 345.00 - SUNNYSIDE 345KV CKT 1	717	789	0.04997	116.8103	OIL CENTER - STRATFORD 138KV CKT 1

SOLUTION	GROUP	SCENARIO	SEASON	SOURCE	DIRECTION	MONITORED ELEMENT	RATEA (MVA)	RATEB(MVA)	TDF	TC%LOADING (% MVA)	CONTINGENCY
FDNS	00NR	2	16WP	G15_033	FROM->TO	G14-057T 345.00 - SUNNYSIDE 345KV CKT 1	717	789	0.04977	116.782	EMPIRE - FLETCHER 138KV CKT 1
FDNS	00NR	2	16WP	G15_033	FROM->TO	G14-057T 345.00 - SUNNYSIDE 345KV CKT 1	717	789	0.0498	116.7334	GEN509393 S1-ARSENAL HILL GENS #4 (STALL)
FDNS	00NR	2	16WP	G15_033	FROM->TO	G14-057T 345.00 - SUNNYSIDE 345KV CKT 1	717	789	0.04977	116.7065	COMANCHE - EMPIRE 138KV CKT 1
FDNS	00NR	2	16WP	G15_033	FROM->TO	G14-057T 345.00 - SUNNYSIDE 345KV CKT 1	717	789	0.0498	116.7063	GEN509392 G2-ARSENAL HILL GENS #3 (STALL)
FDNS	00NR	2	16WP	G15_033	FROM->TO	G14-057T 345.00 - SUNNYSIDE 345KV CKT 1	717	789	0.0498	116.7062	GEN509391 G1-ARSENAL HILL GENS #2 (STALL)
FDNS	00NR	2	16WP	G15_033	FROM->TO	G14-057T 345.00 - SUNNYSIDE 345KV CKT 1	717	789	0.0498	116.697	GEN336252 1-NINEMILE POINT UNIT#5
FDNS	00NR	2	16WP	G15_033	FROM->TO	G14-057T 345.00 - SUNNYSIDE 345KV CKT 1	717	789	0.0498	116.6846	GEN334071 1-LEWIS CREEK 2
FDNS	00NR	2	16WP	G15_033	FROM->TO	G14-057T 345.00 - SUNNYSIDE 345KV CKT 1	717	789	0.0498	116.6757	GEN334070 1-LEWIS CREEK 1
FDNS	00NR	2	16WP	G15_033	FROM->TO	G14-057T 345.00 - SUNNYSIDE 345KV CKT 1	717	789	0.0498	116.6723	GEN335204 1-NELSON UNIT 4
FDNS	00NR	2	16WP	G15_033	FROM->TO	G14-057T 345.00 - SUNNYSIDE 345KV CKT 1	717	789	0.04977	116.6665	G15074_T 345.00 - HOYT 345KV CKT 1
FDNS	00NR	2	16WP	G15_033	FROM->TO	G14-057T 345.00 - SUNNYSIDE 345KV CKT 1	717	789	0.0498	116.6658	DELL 500 - ESSEX UNIT 2 500KV CKT Z1
FDNS	00NR	2	16WP	G15_033	FROM->TO	G14-057T 345.00 - SUNNYSIDE 345KV CKT 1	717	789	0.05004	116.6572	DUNCAN (DUNCAN) 138/69/13.8KV TRANSFORMER CKT 1
FDNS	00NR	2	16WP	G15_033	FROM->TO	G14-057T 345.00 - SUNNYSIDE 345KV CKT 1	717	789	0.05004	116.6572	DUNCAN (DUNCAN) 138/69/13.8KV TRANSFORMER CKT 1
FDNS	00NR	2	16WP	G15_033	FROM->TO	G14-057T 345.00 - SUNNYSIDE 345KV CKT 1	717	789	0.04952	116.6465	G1524G1525 345.00 - THISTLE7 345.00 345KV CKT 1
FDNS	00NR	2	16WP	G15_033	FROM->TO	G14-057T 345.00 - SUNNYSIDE 345KV CKT 1	717	789	0.04952	116.6465	G1524G1525 345.00 - THISTLE7 345.00 345KV CKT 2
FDNS	00NR	2	16WP	G15_033	FROM->TO	G14-057T 345.00 - SUNNYSIDE 345KV CKT 1	717	789	0.0498	116.6379	GEN334441 1-SABINE UNIT 5
FDNS	00NR	2	16WP	G15_033	FROM->TO	G14-057T 345.00 - SUNNYSIDE 345KV CKT 1	717	789	0.04997	116.6361	LATTA JCT - OIL CENTER 138KV CKT 1
FDNS	00NR	2	16WP	G15_033	FROM->TO	G14-057T 345.00 - SUNNYSIDE 345KV CKT 1	717	789	0.05017	116.6338	BLANCHARD - MAUD 138KV CKT 1
FDNS	00NR	2	16WP	G15_033	FROM->TO	G14-057T 345.00 - SUNNYSIDE 345KV CKT 1	717	789	0.0498	116.6107	P12:161:AEPW-SWPA:BEAVER5:EROGERS5
FDNS	00NR	2	16WP	G15_033	FROM->TO	G14-057T 345.00 - SUNNYSIDE 345KV CKT 1	717	789	0.0498	116.6001	P12:138:AEPW:CATOOSA4:T.S.E.-4
FDNS	00NR	2	16WP	G15_033	FROM->TO	G14-057T 345.00 - SUNNYSIDE 345KV CKT 1	717	789	0.0498	116.5867	GEN334030 1-FRONTIER UNIT 1
FDNS	00NR	2	16WP	G15_033	FROM->TO	G14-057T 345.00 - SUNNYSIDE 345KV CKT 1	717	789	0.0498	116.585	GEN334031 1-FRONTIER UNIT 2
FDNS	00NR	2	16WP	G15_033	FROM->TO	G14-057T 345.00 - SUNNYSIDE 345KV CKT 1	717	789	0.0498	116.5729	GEN337653 1-WHITE BLUFF UNIT #2
FDNS	00NR	2	16WP	G15_033	FROM->TO	G14-057T 345.00 - SUNNYSIDE 345KV CKT 1	717	789	0.04979	116.5719	8DANIEL8 500.00 - MCKNIGHT 500KV CKT 1
FDNS	00NR	2	16WP	G15_033	FROM->TO	G14-057T 345.00 - SUNNYSIDE 345KV CKT 1	717	789	0.0498	116.5649	GEN506752 1-LEBROCK GAS 1
FDNS	00NR	2	16WP	G15_033	FROM->TO	G14-057T 345.00 - SUNNYSIDE 345KV CKT 1	717	789	0.0498	116.5647	GEN506753 1-LEBROCK GAS 2
FDNS	00NR	2	16WP	G15_033	FROM->TO	G14-057T 345.00 - SUNNYSIDE 345KV CKT 1	717	789	0.05039	116.562	TUTTLE - TUTTLE CONOCO TAP 138KV CKT 1
FDNS	00NR	2	16WP	G15_033	FROM->TO	G14-057T 345.00 - SUNNYSIDE 345KV CKT 1	717	789	0.0498	116.5596	GEN300003 1-THOMAS HILL UNIT 3
FDNS	00NR	2	16WP	G15_033	FROM->TO	G14-057T 345.00 - SUNNYSIDE 345KV CKT 1	717	789	0.04972	116.5528	6LAYFLD 230.00 - CARROLL 230KV CKT 1
FDNS	00NR	2	16WP	G15_033	FROM->TO	G14-057T 345.00 - SUNNYSIDE 345KV CKT 1	717	789	0.0498	116.5452	P12:161:AEPW:DYESS5:ELMSPRNG:TONTITN5
FDNS	00NR	2	16WP	G15_033	FROM->TO	G14-057T 345.00 - SUNNYSIDE 345KV CKT 1	717	789	0.05017	116.5313	BAILEY4 138.00 - SUNSHINE CANYON 138KV CKT 1
FDNS	00NR	2	16WP	G15_033	FROM->TO	G14-057T 345.00 - SUNNYSIDE 345KV CKT 1	717	789	0.04964	116.5277	P12:138:AEPW-OGE:WTH_JCT4:JENSEN4
FDNS	00NR	2	16WP	G15_033	FROM->TO	G14-057T 345.00 - SUNNYSIDE 345KV CKT 1	717	789	0.0497	116.5276	FULTON 115 - HOPE 115KV CKT 1
FDNS	00NR	2	16WP	G15_033	FROM->TO	G14-057T 345.00 - SUNNYSIDE 345KV CKT 1	717	789	0.0497	116.5276	FULTON 115 - HOPE 115KV CKT 1
FDNS	00NR	2	16WP	G15_033	FROM->TO	G14-057T 345.00 - SUNNYSIDE 345KV CKT 1	717	789	0.0498	116.5203	GEN515040 1-SEMINOLE 1G
FDNS	00NR	2	16WP	G15_033	FROM->TO	G14-057T 345.00 - SUNNYSIDE 345KV CKT 1	717	789	0.04989	116.5194	P12:138:AEPW:CORNVIL4:S.W.S.-4
FDNS	00NR	2	16WP	G15_033	FROM->TO	G14-057T 345.00 - SUNNYSIDE 345KV CKT 1	717	789	0.0498	116.5187	GEN501811 1-RODEMACHER UNIT 1
FDNS	00NR	2	16WP	G15_033	FROM->TO	G14-057T 345.00 - SUNNYSIDE 345KV CKT 1	717	789	0.0498	116.5093	GEN300015 1-1SGPDEL 18.000
FDNS	00NR	2	16WP	G15_033	FROM->TO	G14-057T 345.00 - SUNNYSIDE 345KV CKT 1	717	789	0.0498	116.5073	GEN337911 1-ARKANSAS NUCLEAR ONE UNIT #2
FDNS	00NR	2	16WP	G15_033	FROM->TO	G14-057T 345.00 - SUNNYSIDE 345KV CKT 1	717	789	0.05054	116.5069	P12:138:AEPW:CORNVIL4:DUNCAN-4
FDNS	00NR	2	16WP	G15_033	FROM->TO	G14-057T 345.00 - SUNNYSIDE 345KV CKT 1	717	789	0.0498	116.5017	GEN515226 1-MUSKOGEE 6G
FDNS	00NR	2	16WP	G15_033	FROM->TO	G14-057T 345.00 - SUNNYSIDE 345KV CKT 1	717	789	0.0498	116.4992	GEN336251 1-NINEMILE POINT UNIT#4
FDNS	00NR	2	16WP	G15_033	FROM->TO	G14-057T 345.00 - SUNNYSIDE 345KV CKT 1	717	789	0.0498	116.498	GEN334433 1-SABINE UNIT 3
FDNS	00NR	2	16WP	G15_033	FROM->TO	G14-057T 345.00 - SUNNYSIDE 345KV CKT 1	717	789	0.05004	116.4947	P12:69:WFEC-AEPW:COMANCH2:DUNCAN-2
FDNS	00NR	2	16WP	G15_033	FROM->TO	G14-057T 345.00 - SUNNYSIDE 345KV CKT 1	717	789	0.0498	116.4929	GEN337652 1-WHITE BLUFF UNIT #1
FDNS	00NR	2	16WP	G15_033	FROM->TO	G14-057T 345.00 - SUNNYSIDE 345KV CKT 1	717	789	0.0498	116.4921	GEN336831 1-BAXTER WILSON SES
FDNS	00NR	2	16WP	G15_033	FROM->TO	G14-057T 345.00 - SUNNYSIDE 345KV CKT 1	717	789	0.04974	116.4865	G15088_T 345.00 - MOORE 345KV CKT 1
FDNS	00NR	2	16WP	G15_033	FROM->TO	G14-057T 345.00 - SUNNYSIDE 345KV CKT 1	717	789	0.05039	116.4812	CIMARRON - TUTTLE CONOCO TAP 138KV CKT 1
FDNS	00NR	2	16WP	G15_033	FROM->TO	G14-057T 345.00 - SUNNYSIDE 345KV CKT 1	717	789	0.0498	116.4642	GEN562783 1-G15036_4 0.6900
FDNS	00NR	2	16WP	G15_033	FROM->TO	G14-057T 345.00 - SUNNYSIDE 345KV CKT 1	717	789	0.0498	116.4642	GEN562784 1-G15036_5 0.6900
FDNS	00NR	2	16WP	G15_033	FROM->TO	G14-057T 345.00 - SUNNYSIDE 345KV CKT 1	717	789	0.04981	116.4444	CIMARRON - CZECH HALL 138KV CKT 1
FDNS	00NR	2	16WP	G15_033	FROM->TO	G14-057T 345.00 - SUNNYSIDE 345KV CKT 1	717	789	0.04971	116.4435	P12:138:AEPW:WTHWF4:CLINTJC4
FDNS	00NR	2	16WP	G15_033	FROM->TO	G14-057T 345.00 - SUNNYSIDE 345KV CKT 1	717	789	0.05004	116.4349	DUNCAN - TOSCO 69KV CKT 1
FDNS	00NR	2	16WP	G15_033	FROM->TO	G14-057T 345.00 - SUNNYSIDE 345KV CKT 1	717	789	0.0498	116.4347	GEN505432 1-SIKESTON
FDNS	00NR	2	16WP	G15_033	FROM->TO	G14-057T 345.00 - SUNNYSIDE 345KV CKT 1	717	789	0.0498	116.4306	P12:161:AEPW:EROGERS5:ECNTRTN5
FDNS	00NR	2	16WP	G15_033	FROM->TO	G14-057T 345.00 - SUNNYSIDE 345KV CKT 1	717	789	0.04977	116.4277	LAYFLD8 500.00 - MOUNT OLIVE 500KV CKT 1
FDNS	00NR	2	16WP	G15_033	FROM->TO	G14-057T 345.00 - SUNNYSIDE 345KV CKT 1	717	789	0.04977	116.4277	LAYFLD8 500.00 - MOUNT OLIVE 500KV CKT 1
FDNS	00NR	2	16WP	G15_033	FROM->TO	G14-057T 345.00 - SUNNYSIDE 345KV CKT 1	717	789	0.0498	116.4268	WHITE BLUFF 500/26.0KV TRANSFORMER CKT 1
FDNS	00NR	2	16WP	G15_033	FROM->TO	G14-057T 345.00 - SUNNYSIDE 345KV CKT 1	717	789	0.04851	116.4261	CANADIAN RIVER - PITTSBURG 345KV CKT 1
FDNS	00NR	2	16WP	G15_033	FROM->TO	G14-057T 345.00 - SUNNYSIDE 345KV CKT 1	717	789	0.04851	116.4261	CANADIAN RIVER - PITTSBURG 345KV CKT 1
FDNS	00NR	2	16WP	G15_033	FROM->TO	G14-057T 345.00 - SUNNYSIDE 345KV CKT 1	717	789	0.04977	116.4223	HOYT - STRANGER CREEK 345KV CKT 1
FDNS	00NR	2	16WP	G15_033	FROM->TO	G14-057T 345.00 - SUNNYSIDE 345KV CKT 1	717	789	0.0498	116.4215	RODEMACHER 230/22.0KV TRANSFORMER CKT 1
FDNS	00NR	2	16WP	G15_033	FROM->TO	G14-057T 345.00 - SUNNYSIDE 345KV CKT 1	717	789	0.04977	116.4172	G15074_T 345.00 - JEFFREY ENERGY CENTER 345KV CKT 1
FDNS	00NR	2	16WP	G15_033	FROM->TO	G14-057T 345.00 - SUNNYSIDE 345KV CKT 1	717	789	0.04976	116.4161	CIMARRON - SARA 138KV CKT 1
FDNS	00NR	2	16WP	G15_033	FROM->TO	G14-057T 345.00 - SUNNYSIDE 345KV CKT 1	717	789	0.04944	116.4141	ARBWIND4 138.00 - CARTER 138KV CKT 1
FDNS	00NR	2	16WP	G15_033	FROM->TO	G14-057T 345.00 - SUNNYSIDE 345KV CKT 1	717	789	0.04978	116.41	HOT SPRINGS EHV - MAGNET COVE 500KV CKT 1
FDNS	00NR	2	16WP	G15_033	FROM->TO	G14-057T 345.00 - SUNNYSIDE 345KV CKT 1	717	789	0.0498	116.409	GEN515223 1-MUSKOGEE 4G
FDNS	00NR	2	16WP	G15_033	FROM->TO	G14-057T 345.00 - SUNNYSIDE 345KV CKT 1	717	789	0.0498	116.409	GEN515225 1-MUSKOGEE 5G
FDNS	00NR	2	16WP	G15_033	FROM->TO	G14-057T 345.00 - SUNNYSIDE 345KV CKT 1	717	789	0.0498	116.4032	GEN303007 1-1BC2 U2
FDNS	00NR	2	16WP	G15_033	FROM->TO	G14-057T 345.00 - SUNNYSIDE 345KV CKT 1	717	789	0.04977	116.4006	MC NIEL 500/115KV TRANSFORMER CKT 1
FDNS	00NR	2	20WP	G15_033	FROM->TO	G14-057T 345.00 - SUNNYSIDE 345KV CKT 1	717	789	0.05039	116.4	BORDER 7345.00 - WOODWARD DISTRICT EHV 345KV CKT 1
FDNS	00NR	2	16WP	G15_033	FROM->TO	G14-057T 345.00 - SUNNYSIDE 345KV CKT 1	717	789	0.0498	116.3985	GEN303006 1-1BC2 U1
FDNS	00NR	2	16WP	G15_033	FROM->TO	G14-057T 345.00 - SUNNYSIDE 345KV CKT 1	717	789	0.05004	116.3953	COMANCHE TAP - TOSCO 69KV CKT 1
FDNS	00NR	2	16WP	G15_033	FROM->TO	G14-057T 345.00 - SUNNYSIDE 345KV CKT 1	717	789	0.04971	116.3935	P12:138:AEPW:WTHWF4:WTH_SE4
FDNS	00NR	2	16WP	G15_033	FROM->TO	G14-057T 345.00 - SUNNYSIDE 345KV CKT 1	717	789	0.04955	116.391	SEMINOLE - VANOSTP4 138.00 138KV CKT 1
FDNS	00NR	2	20WP	G15_033	FROM->TO	G14-057T 345.00 - SUNNYSIDE 345KV CKT 1	717	789	0.04601	116.3905	GEN509406 1-WELSH #3
FDNS	00NR	2	20WP	G15_033	FROM->TO	G14-057T 345.00 - SUNNYSIDE 345KV CKT 1	717	789	0.04601	116.3902	GEN509404 1-WELSH #1
FDNS	00NR	2	16WP	G15_033	FROM->TO	G14-057T 345.00 - SUNNYSIDE 345KV CKT 1	717	789	0.04973	116.3862	BISMARK - HOT SPRINGS WEST BUS 115KV CKT 1
FDNS	00NR	2	16WP	G15_033	FROM->TO	G14-057T 345.00 - SUNNYSIDE 345KV CKT 1	717	789	0.05014	116.3831	P12:69:AEPW-OMPA:COMANC-2:OMWALTR2

SOLUTION	GROUP	SCENARIO	SEASON	SOURCE	DIRECTION	MONITORED ELEMENT	RATEA (MVA)	RATEB(MVA)	TDF	TC%LOADING (% MVA)	CONTINGENCY
FDNS	00NR	2	16WP	G15_033	FROM->TO	G14-057T 345.00 - SUNNYSIDE 345KV CKT 1	717	789	0.04918	116.3828	BUCKNER7 345.00 - SPEARVILLE 345KV CKT 1
FDNS	00NR	2	16WP	G15_033	FROM->TO	G14-057T 345.00 - SUNNYSIDE 345KV CKT 1	717	789	0.04918	116.3828	BUCKNER7 345.00 - SPEARVILLE 345KV CKT 1
FDNS	00NR	2	16WP	G15_033	FROM->TO	G14-057T 345.00 - SUNNYSIDE 345KV CKT 1	717	789	0.0498	116.3782	NELSON 230/20.0KV TRANSFORMER CKT 1
FDNS	00NR	2	16WP	G15_033	FROM->TO	G14-057T 345.00 - SUNNYSIDE 345KV CKT 1	717	789	0.0498	116.3764	GEN336191 1-LITTLE GYPSY UNIT#3
FDNS	00NR	2	16WP	G15_033	FROM->TO	G14-057T 345.00 - SUNNYSIDE 345KV CKT 1	717	789	0.04981	116.367	CZECH HALL - XEROX 138KV CKT 1
FDNS	00NR	2	16WP	G15_033	FROM->TO	G14-057T 345.00 - SUNNYSIDE 345KV CKT 1	717	789	0.0498	116.3642	P12:138:AEPW:N.E.S.-4:CATOOSA4
FDNS	00NR	2	16WP	G15_033	FROM->TO	G14-057T 345.00 - SUNNYSIDE 345KV CKT 1	717	789	0.05017	116.3641	BAILEY4 138.00 - WESTMOORE 138KV CKT 1
FDNS	00NR	2	16WP	G15_033	FROM->TO	G14-057T 345.00 - SUNNYSIDE 345KV CKT 1	717	789	0.04981	116.3626	MORGAN - XEROX 138KV CKT 1
FDNS	00NR	2	16WP	G15_033	FROM->TO	G14-057T 345.00 - SUNNYSIDE 345KV CKT 1	717	789	0.04972	116.3592	CLEO CORNER - CLEOPLT4 138.00 138KV CKT 1
FDNS	00NR	2	16WP	G15_033	FROM->TO	G14-057T 345.00 - SUNNYSIDE 345KV CKT 1	717	789	0.0498	116.3585	GEN300010 1-ST FRANCIS UNIT 1
FDNS	00NR	2	16WP	G15_033	FROM->TO	G14-057T 345.00 - SUNNYSIDE 345KV CKT 1	717	789	0.04997	116.3543	LASALLE - LATTA JCT 138KV CKT 1
FDNS	00NR	2	16WP	G15_033	FROM->TO	G14-057T 345.00 - SUNNYSIDE 345KV CKT 1	717	789	0.0498	116.3501	GEN335614 1-WILLOW GLENN UNIT#4
FDNS	00NR	2	16WP	G15_033	FROM->TO	G14-057T 345.00 - SUNNYSIDE 345KV CKT 1	717	789	0.04972	116.3465	CLEOPLT4 138.00 - MEN TAP 138KV CKT 1
FDNS	00NR	2	16WP	G15_033	FROM->TO	G14-057T 345.00 - SUNNYSIDE 345KV CKT 1	717	789	0.04981	116.3395	MORGAN - MUSTANG 138KV CKT 1
FDNS	00NR	2	16WP	G15_033	FROM->TO	G14-057T 345.00 - SUNNYSIDE 345KV CKT 1	717	789	0.0498	116.3395	GEN303008 1-1BCZ U3
FDNS	00NR	2	16WP	G15_033	FROM->TO	G14-057T 345.00 - SUNNYSIDE 345KV CKT 1	717	789	0.0498	116.3395	GEN337910 1-ARKANSAS NUCLEAR ONE UNIT #1
FDNS	00NR	2	16WP	G15_033	FROM->TO	G14-057T 345.00 - SUNNYSIDE 345KV CKT 1	717	789	0.04975	116.3374	G15095_T 138.00 - ROSE_VALLEY 138.00 138KV CKT 1
FDNS	00NR	2	16WP	G15_033	FROM->TO	G14-057T 345.00 - SUNNYSIDE 345KV CKT 1	717	789	0.04958	116.337	BENTON - WICHITA 345KV CKT 1
FDNS	00NR	2	16WP	G15_033	FROM->TO	G14-057T 345.00 - SUNNYSIDE 345KV CKT 1	717	789	0.04972	116.3357	IMO TAP - MEN TAP 138KV CKT 1
FDNS	00NR	2	16WP	G15_033	FROM->TO	G14-057T 345.00 - SUNNYSIDE 345KV CKT 1	717	789	0.05271	116.3342	P12:138:AEPW:S.W.S.-4:L.E.S.-4
FDNS	00NR	2	16WP	G15_033	FROM->TO	G14-057T 345.00 - SUNNYSIDE 345KV CKT 1	717	789	0.04973	116.3341	ALPINE AECC - BISMARK 115KV CKT 1
FDNS	00NR	2	16WP	G15_033	FROM->TO	G14-057T 345.00 - SUNNYSIDE 345KV CKT 1	717	789	0.05004	116.3312	COMANCHE - COMANCHE TAP 69KV CKT 1
FDNS	00NR	2	16WP	G15_033	FROM->TO	G14-057T 345.00 - SUNNYSIDE 345KV CKT 1	717	789	0.04943	116.3177	CANADIAN - NOBLE 138KV CKT 1
FDNS	00NR	2	16WP	G15_033	FROM->TO	G14-057T 345.00 - SUNNYSIDE 345KV CKT 1	717	789	0.0498	116.313	GEN336170 1-GULF OXY U4
FDNS	00NR	2	16WP	G15_033	FROM->TO	G14-057T 345.00 - SUNNYSIDE 345KV CKT 1	717	789	0.0498	116.309	GEN300011 1-ST FRANCIS UNIT 2
FDNS	00NR	2	16WP	G15_033	FROM->TO	G14-057T 345.00 - SUNNYSIDE 345KV CKT 1	717	789	0.04979	116.3073	CYPRESS - HARTBURG 500KV CKT 1
FDNS	00NR	2	16WP	G15_033	FROM->TO	G14-057T 345.00 - SUNNYSIDE 345KV CKT 1	717	789	0.0498	116.3068	GEN336464 1-MICHOUD UNIT #3
FDNS	00NR	2	16WP	G15_033	FROM->TO	G14-057T 345.00 - SUNNYSIDE 345KV CKT 1	717	789	0.0498	116.2962	8CAJUN2 500/24.0KV TRANSFORMER CKT 1
FDNS	00NR	2	16WP	G15_033	FROM->TO	G14-057T 345.00 - SUNNYSIDE 345KV CKT 1	717	789	0.04945	116.2928	P12:138:OKGE:3TERM27
FDNS	00NR	2	16WP	G15_033	FROM->TO	G14-057T 345.00 - SUNNYSIDE 345KV CKT 1	717	789	0.04973	116.2907	ALPINE AECC - AMITY SS 115KV CKT 1
FDNS	00NR	2	16WP	G15_033	FROM->TO	G14-057T 345.00 - SUNNYSIDE 345KV CKT 1	717	789	0.04964	116.2865	WEATHERFORD JCT. - WEATHERFORD SOUTHEAST 138KV CKT 1
FDNS	00NR	2	16WP	G15_033	FROM->TO	G14-057T 345.00 - SUNNYSIDE 345KV CKT 1	717	789	0.04964	116.2865	WEATHERFORD JCT. - WEATHERFORD SOUTHEAST 138KV CKT 1
FDNS	00NR	2	16WP	G15_033	FROM->TO	G14-057T 345.00 - SUNNYSIDE 345KV CKT 1	717	789	0.04966	116.2784	P12:138:OKGE-AEPW:JENSEN4:REDROCKRD4
FDNS	00NR	2	16WP	G15_033	FROM->TO	G14-057T 345.00 - SUNNYSIDE 345KV CKT 1	717	789	0.0498	116.2778	GEN300016 1-1G1GPDEL 18.000
FDNS	00NR	2	16WP	G15_033	FROM->TO	G14-057T 345.00 - SUNNYSIDE 345KV CKT 1	717	789	0.04975	116.2762	NOEL_SW 138.00 - ROSE_VALLEY 138.00 138KV CKT 1
FDNS	00NR	2	16WP	G15_033	FROM->TO	G14-057T 345.00 - SUNNYSIDE 345KV CKT 1	717	789	0.04981	116.2703	7JASPER 345.00 - BLACKBERRY 345KV CKT 1
FDNS	00NR	2	16WP	G15_033	FROM->TO	G14-057T 345.00 - SUNNYSIDE 345KV CKT 1	717	789	0.0498	116.2693	P12:138:AEPW:R.S.S.-4:S.HUD.-4
FDNS	00NR	2	16WP	G15_033	FROM->TO	G14-057T 345.00 - SUNNYSIDE 345KV CKT 1	717	789	0.0498	116.266	GEN501910 1-ACADIA UNIT ST1
FDNS	00NR	2	16WP	G15_033	FROM->TO	G14-057T 345.00 - SUNNYSIDE 345KV CKT 1	717	789	0.04975	116.2651	SWISSVALE - WEST GARDNER 345KV CKT 1
FDNS	00NR	2	16WP	G15_033	FROM->TO	G14-057T 345.00 - SUNNYSIDE 345KV CKT 1	717	789	0.04974	116.2634	BLACKBERRY - NEOSHO 345KV CKT 1
FDNS	00NR	2	16WP	G15_033	FROM->TO	G14-057T 345.00 - SUNNYSIDE 345KV CKT 1	717	789	0.04974	116.2634	BLACKBERRY - NEOSHO 345KV CKT 1
FDNS	00NR	2	16WP	G15_033	FROM->TO	G14-057T 345.00 - SUNNYSIDE 345KV CKT 1	717	789	0.0498	116.2518	GEN337041 1-GERALD ANDRUS
FDNS	00NR	2	16WP	G15_033	FROM->TO	G14-057T 345.00 - SUNNYSIDE 345KV CKT 1	717	789	0.0491	116.2499	ELK CITY 230KV (ELKCTY-6) 230/138/13.8KV TRANSFORMER CKT 1
FDNS	00NR	2	16WP	G15_033	FROM->TO	G14-057T 345.00 - SUNNYSIDE 345KV CKT 1	717	789	0.0491	116.2499	ELK CITY 230KV (ELKCTY-6) 230/138/13.8KV TRANSFORMER CKT 1
FDNS	00NR	2	16WP	G15_033	FROM->TO	G14-057T 345.00 - SUNNYSIDE 345KV CKT 1	717	789	0.0491	116.2497	CHISHOLM6 230.00 - ELK CITY 230KV 230KV CKT 1
FDNS	00NR	2	16WP	G15_033	FROM->TO	G14-057T 345.00 - SUNNYSIDE 345KV CKT 1	717	789	0.04978	116.2487	7LUTESVIL 345.00 - 7ST FRANC 345.00 345KV CKT 1
FDNS	00NR	2	16WP	G15_033	FROM->TO	G14-057T 345.00 - SUNNYSIDE 345KV CKT 1	717	789	0.0498	116.2434	SABINE 230/24.0KV TRANSFORMER CKT 1
FDNS	00NR	2	16WP	G15_033	FROM->TO	G14-057T 345.00 - SUNNYSIDE 345KV CKT 1	717	789	0.04987	116.243	ANADARKO - SEQUOYAHJ4 138.00 138KV CKT 1
FDNS	00NR	2	16WP	G15_033	FROM->TO	G14-057T 345.00 - SUNNYSIDE 345KV CKT 1	717	789	0.04978	116.2428	ETTA (DUKE HOTSPRINGS) - MC NIEL 500KV CKT 1
FDNS	00NR	2	16WP	G15_033	FROM->TO	G14-057T 345.00 - SUNNYSIDE 345KV CKT 1	717	789	0.04987	116.239	CORN TAP - SEQUOYAHJ4 138.00 138KV CKT 1
FDNS	00NR	2	16WP	G15_033	FROM->TO	G14-057T 345.00 - SUNNYSIDE 345KV CKT 1	717	789	0.04964	116.2367	P12:138:AEPW:REDROCKRD4:WTH_JCT4
FDNS	00NR	2	16WP	G15_033	FROM->TO	G14-057T 345.00 - SUNNYSIDE 345KV CKT 1	717	789	0.04976	116.2333	SARA - STHLAKE4 138.00 138KV CKT 1
FDNS	00NR	2	16WP	G15_033	FROM->TO	G14-057T 345.00 - SUNNYSIDE 345KV CKT 1	717	789	0.0498	116.2303	P12:138:AEPW:YARCH-S4:T.S.E.-4
FDNS	00NR	2	16WP	G15_033	FROM->TO	G14-057T 345.00 - SUNNYSIDE 345KV CKT 1	717	789	0.04943	116.2261	NOBLE - PURCELL4 138.00 138KV CKT 1
FDNS	00NR	2	16WP	G15_033	FROM->TO	G14-057T 345.00 - SUNNYSIDE 345KV CKT 1	717	789	0.04994	116.2256	WALTERS - WALTERS 69KV CKT 1
FDNS	00NR	2	16WP	G15_033	FROM->TO	G14-057T 345.00 - SUNNYSIDE 345KV CKT 1	717	789	0.04973	116.2244	DRAPER LAKE - SEMINOLE 345KV CKT 1
FDNS	00NR	2	16WP	G15_033	FROM->TO	G14-057T 345.00 - SUNNYSIDE 345KV CKT 1	717	789	0.04973	116.2244	DRAPER LAKE - SEMINOLE 345KV CKT 2
FDNS	00NR	2	16WP	G15_033	FROM->TO	G14-057T 345.00 - SUNNYSIDE 345KV CKT 1	717	789	0.0498	116.224	P12:138:AEPW:BA_71ST4:T.S.E.-4
FDNS	00NR	2	16WP	G15_033	FROM->TO	G14-057T 345.00 - SUNNYSIDE 345KV CKT 1	717	789	0.0498	116.2225	P12:69:AEPW:NROGERS2:ECNTRTN2
FDNS	00NR	2	16WP	G15_033	FROM->TO	G14-057T 345.00 - SUNNYSIDE 345KV CKT 1	717	789	0.0498	116.2144	GEN336801 1-BAXTER WILSON UNIT #1
FDNS	00NR	2	16WP	G15_033	FROM->TO	G14-057T 345.00 - SUNNYSIDE 345KV CKT 1	717	789	0.04977	116.2113	8WNEWMADRID 500.00 - DELL 500 500KV CKT 1
FDNS	00NR	2	16WP	G15_033	FROM->TO	G14-057T 345.00 - SUNNYSIDE 345KV CKT 1	717	789	0.04976	116.2109	ENOWILT - LONE OAK 138KV CKT 1
FDNS	00NR	2	16WP	G15_033	FROM->TO	G14-057T 345.00 - SUNNYSIDE 345KV CKT 1	717	789	0.05017	116.207	FRANKLIN SW - WESTMOORE 138KV CKT 1
FDNS	00NR	2	16WP	G15_033	FROM->TO	G14-057T 345.00 - SUNNYSIDE 345KV CKT 1	717	789	0.04976	116.205	MCCLAIN - STHLAKE4 138.00 138KV CKT 1
FDNS	00NR	2	16WP	G15_033	FROM->TO	G14-057T 345.00 - SUNNYSIDE 345KV CKT 1	717	789	0.04976	116.202	ENOWILT - SARDIS 138KV CKT 1
FDNS	00NR	2	16WP	G15_033	FROM->TO	G14-057T 345.00 - SUNNYSIDE 345KV CKT 1	717	789	0.05014	116.2017	LAWTON RELIFT TAP - OMPA-WALTERS 69KV CKT 1
FDNS	00NR	2	16WP	G15_033	FROM->TO	G14-057T 345.00 - SUNNYSIDE 345KV CKT 1	717	789	0.0498	116.1994	FRONTIER 345/18.0KV TRANSFORMER CKT 1
FDNS	00NR	2	16WP	G15_033	FROM->TO	G14-057T 345.00 - SUNNYSIDE 345KV CKT 1	717	789	0.04978	116.1978	P12:138:AEPW-OGE:SHIDLER4:OSAGE 4
FDNS	00NR	2	16WP	G15_033	FROM->TO	G14-057T 345.00 - SUNNYSIDE 345KV CKT 1	717	789	0.0498	116.1977	FRONTIER 345/18.0KV TRANSFORMER CKT 1
FDNS	00NR	2	16WP	G15_033	FROM->TO	G14-057T 345.00 - SUNNYSIDE 345KV CKT 1	717	789	0.04997	116.1964	LASALLE - STONEWAL LH138.00 138KV CKT 1
FDNS	00NR	2	16WP	G15_033	FROM->TO	G14-057T 345.00 - SUNNYSIDE 345KV CKT 1	717	789	0.04989	116.1944	NORGE ROAD - SOUTHWESTERN STATION 138KV CKT 1
FDNS	00NR	2	16WP	G15_033	FROM->TO	G14-057T 345.00 - SUNNYSIDE 345KV CKT 1	717	789	0.04989	116.1944	NORGE ROAD - SOUTHWESTERN STATION 138KV CKT 1
FDNS	00NR	2	16WP	G15_033	FROM->TO	G14-057T 345.00 - SUNNYSIDE 345KV CKT 1	717	789	0.0498	116.1916	P12:161:AEPW:CHAMSPR5:FARMING5
FDNS	00NR	2	16WP	G15_033	FROM->TO	G14-057T 345.00 - SUNNYSIDE 345KV CKT 1	717	789	0.0498	116.1908	ESSEX UNIT 2 500/18.0KV TRANSFORMER CKT 1
FDNS	00NR	2	16WP	G15_033	FROM->TO	G14-057T 345.00 - SUNNYSIDE 345KV CKT 1	717	789	0.04934	116.1872	ARBUCKLE - VANOSTP4 138.00 138KV CKT 1
FDNS	00NR	2	16WP	G15_033	FROM->TO	G14-057T 345.00 - SUNNYSIDE 345KV CKT 1	717	789	0.0509	116.1846	LAWTON EASTSIDE (LES 4) 345/138/13.8KV TRANSFORMER CKT 1
FDNS	00NR	2	16WP	G15_033	FROM->TO	G14-057T 345.00 - SUNNYSIDE 345KV CKT 1	717	789	0.0509	116.1846	LAWTON EASTSIDE (LES 4) 345/138/13.8KV TRANSFORMER CKT 1
FDNS	00NR	2	16WP	G15_033	FROM->TO	G14-057T 345.00 - SUNNYSIDE 345KV CKT 1	717	789	0.04998	116.1824	GRACEMONT (BANK 1) 345/138/13.8KV TRANSFORMER CKT 1
FDNS	00NR	2	16WP	G15_033	FROM->TO	G14-057T 345.00 - SUNNYSIDE 345KV CKT 1	717	789	0.04997	116.1817	STONEWAL LH138.00 - TUPELO TAP 138KV CKT 1

SOLUTION	GROUP	SCENARIO	SEASON	SOURCE	DIRECTION	MONITORED ELEMENT	RATEA (MVA)	RATEB(MVA)	TDF	TC%LOADING (% MVA)	CONTINGENCY
FDNS	00NR	2	16WP	G15_033	FROM->TO	G14-057T 345.00 - SUNNYSIDE 345KV CKT 1	717	789	0.04977	116.1799	EMPORIA ENERGY CENTER - SWISSVALE 345KV CKT 1
FDNS	00NR	2	16WP	G15_033	FROM->TO	G14-057T 345.00 - SUNNYSIDE 345KV CKT 1	717	789	0.04989	116.178	SOUTHWESTERN STATION - VERDEN 138KV CKT 1
FDNS	00NR	2	16WP	G15_033	FROM->TO	G14-057T 345.00 - SUNNYSIDE 345KV CKT 1	717	789	0.0498	116.1693	GEN512688 2-GRDA1 GSU2 22
FDNS	00NR	2	16WP	G15_033	FROM->TO	G14-057T 345.00 - SUNNYSIDE 345KV CKT 1	717	789	0.04976	116.167	CLAYTON - SARDIS 138KV CKT 1
FDNS	00NR	2	16WP	G15_033	FROM->TO	G14-057T 345.00 - SUNNYSIDE 345KV CKT 1	717	789	0.0498	116.1664	GEN505616 1-BROKEN BOW
FDNS	00NR	2	16WP	G15_033	FROM->TO	G14-057T 345.00 - SUNNYSIDE 345KV CKT 1	717	789	0.0498	116.1625	LEWIS CREEK SWITCHYARD 138/22.0KV TRANSFORMER CKT 1
FDNS	00NR	2	16WP	G15_033	FROM->TO	G14-057T 345.00 - SUNNYSIDE 345KV CKT 1	717	789	0.0497	116.1615	HOPE - MCNAB REC 115KV CKT 1
FDNS	00NR	2	16WP	G15_033	FROM->TO	G14-057T 345.00 - SUNNYSIDE 345KV CKT 1	717	789	0.04994	116.1604	P12:69:WFEC-AEPW:COMANCH2:WALTRS-2
FDNS	00NR	2	16WP	G15_033	FROM->TO	G14-057T 345.00 - SUNNYSIDE 345KV CKT 1	717	789	0.04964	116.1594	HINTON - WEATHERFORD JCT. 138KV CKT 1
FDNS	00NR	2	16WP	G15_033	FROM->TO	G14-057T 345.00 - SUNNYSIDE 345KV CKT 1	717	789	0.04989	116.1579	NORTH 29TH CHICKASHA - VERDEN 138KV CKT 1
FDNS	00NR	2	16WP	G15_033	FROM->TO	G14-057T 345.00 - SUNNYSIDE 345KV CKT 1	717	789	0.0498	116.1577	LEWIS CREEK SWITCHYARD 138/22.0KV TRANSFORMER CKT 1
FDNS	00NR	2	16WP	G15_033	FROM->TO	G14-057T 345.00 - SUNNYSIDE 345KV CKT 1	717	789	0.04971	116.1532	WEATHERFORD TAP - WEATHERFORD WIND FARM 138KV CKT 1
FDNS	00NR	2	16WP	G15_033	FROM->TO	G14-057T 345.00 - SUNNYSIDE 345KV CKT 1	717	789	0.0497	116.1528	P12:115:AEPW:TURK3:HOPE3
FDNS	00NR	2	16WP	G15_033	FROM->TO	G14-057T 345.00 - SUNNYSIDE 345KV CKT 1	717	789	0.04976	116.1449	EMPORIA ENERGY CENTER - G14_001T 345.00 345KV CKT 1
FDNS	00NR	2	16WP	G15_033	FROM->TO	G14-057T 345.00 - SUNNYSIDE 345KV CKT 1	717	789	0.0498	116.1417	GEN501970 1-EVANGELINE UNIT 7
FDNS	00NR	2	16WP	G15_033	FROM->TO	G14-057T 345.00 - SUNNYSIDE 345KV CKT 1	717	789	0.04976	116.1404	P12:138:AEPW-SWPA:LONEOAK4:BRKNBW4
FDNS	00NR	2	16WP	G15_033	FROM->TO	G14-057T 345.00 - SUNNYSIDE 345KV CKT 1	717	789	0.04974	116.1373	COUCH SES - MC NIEL 115KV CKT 1
FDNS	00NR	2	16WP	G15_033	FROM->TO	G14-057T 345.00 - SUNNYSIDE 345KV CKT 1	717	789	0.05014	116.1372	OMPA-WALTERS - WALTERS 69KV CKT 1
FDNS	00NR	2	16WP	G15_033	FROM->TO	G14-057T 345.00 - SUNNYSIDE 345KV CKT 1	717	789	0.05014	116.1372	OMPA-WALTERS - WALTERS 69KV CKT 1
FDNS	00NR	2	16WP	G15_033	FROM->TO	G14-057T 345.00 - SUNNYSIDE 345KV CKT 1	717	789	0.04972	116.1333	CLARKSVILLE - ONETA 345KV CKT 1
FDNS	00NR	2	16WP	G15_033	FROM->TO	G14-057T 345.00 - SUNNYSIDE 345KV CKT 1	717	789	0.04972	116.1333	CLARKSVILLE - ONETA 345KV CKT 1
FDNS	00NR	2	16WP	G15_033	FROM->TO	G14-057T 345.00 - SUNNYSIDE 345KV CKT 1	717	789	0.04977	116.1312	MORISNT4 138.00 - STILLWATER 138KV CKT 1
FDNS	00NR	2	16WP	G15_033	FROM->TO	G14-057T 345.00 - SUNNYSIDE 345KV CKT 1	717	789	0.0498	116.1305	GEN334392 1-EXXON MOBIL IPP 1
FDNS	00NR	2	16WP	G15_033	FROM->TO	G14-057T 345.00 - SUNNYSIDE 345KV CKT 1	717	789	0.0497	116.1305	MCNAB REC - Turk 115 115KV CKT 1
FDNS	00NR	2	16WP	G15_033	FROM->TO	G14-057T 345.00 - SUNNYSIDE 345KV CKT 1	717	789	0.0497	116.1305	TURK (TURK 1) 138/115/13.2KV TRANSFORMER CKT 1
FDNS	00NR	2	16WP	G15_033	FROM->TO	G14-057T 345.00 - SUNNYSIDE 345KV CKT 1	717	789	0.0497	116.1305	TURK (TURK 1) 138/115/13.2KV TRANSFORMER CKT 1
FDNS	00NR	2	16WP	G15_033	FROM->TO	G14-057T 345.00 - SUNNYSIDE 345KV CKT 1	717	789	0.04981	116.1272	P12:138:OKGE:3TERM12
FDNS	00NR	2	16WP	G15_033	FROM->TO	G14-057T 345.00 - SUNNYSIDE 345KV CKT 1	717	789	0.04976	116.127	CLAYTON - NASHOBA 138KV CKT 1
FDNS	00NR	2	16WP	G15_033	FROM->TO	G14-057T 345.00 - SUNNYSIDE 345KV CKT 1	717	789	0.04948	116.1263	CLINTON JUNCTION - ELK CITY 138KV CKT 1
FDNS	00NR	2	16WP	G15_033	FROM->TO	G14-057T 345.00 - SUNNYSIDE 345KV CKT 1	717	789	0.04948	116.1263	CLINTON JUNCTION - ELK CITY 138KV CKT 1
FDNS	00NR	2	16WP	G15_033	FROM->TO	G14-057T 345.00 - SUNNYSIDE 345KV CKT 1	717	789	0.04989	116.1257	MARIETTA - MARIETTA4 138.00 138KV CKT 1
FDNS	00NR	2	16WP	G15_033	FROM->TO	G14-057T 345.00 - SUNNYSIDE 345KV CKT 1	717	789	0.04977	116.1257	P12:138:OKGE:3TERM2
FDNS	00NR	2	16WP	G15_033	FROM->TO	G14-057T 345.00 - SUNNYSIDE 345KV CKT 1	717	789	0.0498	116.1229	GEN334393 1-EXXON MOBIL IPP 2
FDNS	00NR	2	16WP	G15_033	FROM->TO	G14-057T 345.00 - SUNNYSIDE 345KV CKT 1	717	789	0.0498	116.1229	GEN334394 1-EXXON MOBIL IPP 3
FDNS	00NR	2	16WP	G15_033	FROM->TO	G14-057T 345.00 - SUNNYSIDE 345KV CKT 1	717	789	0.0496	116.1221	G13-010T 345.00 - POST ROCK 345KV CKT 1
FDNS	00NR	2	16WP	G15_033	FROM->TO	G14-057T 345.00 - SUNNYSIDE 345KV CKT 1	717	789	0.0498	116.1165	GEN659125 1-COVEY
FDNS	00NR	2	16WP	G15_033	FROM->TO	G14-057T 345.00 - SUNNYSIDE 345KV CKT 1	717	789	0.0498	116.1145	GEN336222 1-LITTLE GYPSY UNIT#2
FDNS	00NR	2	16WP	G15_033	FROM->TO	G14-057T 345.00 - SUNNYSIDE 345KV CKT 1	717	789	0.04976	116.114	BETHEL - NASHOBA 138KV CKT 1
FDNS	00NR	2	16WP	G15_033	FROM->TO	G14-057T 345.00 - SUNNYSIDE 345KV CKT 1	717	789	0.0498	116.1104	7JASPER 345.00 - MORGAN 345KV CKT 1
FDNS	00NR	2	16WP	G15_033	FROM->TO	G14-057T 345.00 - SUNNYSIDE 345KV CKT 1	717	789	0.04918	116.1094	BUCKNER7 345.00 - HOLCOMB 345KV CKT 1
FDNS	00NR	2	16WP	G15_033	FROM->TO	G14-057T 345.00 - SUNNYSIDE 345KV CKT 1	717	789	0.04918	116.1094	BUCKNER7 345.00 - HOLCOMB 345KV CKT 1
FDNS	00NR	2	16WP	G15_033	FROM->TO	G14-057T 345.00 - SUNNYSIDE 345KV CKT 1	717	789	0.04983	116.1087	FRANKLIN - FRANKLIN SW 138KV CKT 1
FDNS	00NR	2	16WP	G15_033	FROM->TO	G14-057T 345.00 - SUNNYSIDE 345KV CKT 1	717	789	0.0498	116.1036	P12:138:AEPW:R.S.S-4:T.P.S.-4
FDNS	00NR	2	16WP	G15_033	FROM->TO	G14-057T 345.00 - SUNNYSIDE 345KV CKT 1	717	789	0.04964	116.103	HINTON - REDROCKRD4 138.00 138KV CKT 1
FDNS	00NR	2	16WP	G15_033	FROM->TO	G14-057T 345.00 - SUNNYSIDE 345KV CKT 1	717	789	0.0498	116.0959	GEN509394 1-FLINT CREEK
FDNS	00NR	2	16WP	G15_033	FROM->TO	G14-057T 345.00 - SUNNYSIDE 345KV CKT 1	717	789	0.04989	116.0957	CORNVILLE - NORGE ROAD 138KV CKT 1
FDNS	00NR	2	16WP	G15_033	FROM->TO	G14-057T 345.00 - SUNNYSIDE 345KV CKT 1	717	789	0.04989	116.0957	CORNVILLE - NORGE ROAD 138KV CKT 1
FDNS	00NR	2	16WP	G15_033	FROM->TO	G14-057T 345.00 - SUNNYSIDE 345KV CKT 1	717	789	0.0498	116.094	GEN506749 1-EASTMAN GENERATION A
FDNS	00NR	2	16WP	G15_033	FROM->TO	G14-057T 345.00 - SUNNYSIDE 345KV CKT 1	717	789	0.0498	116.0939	GEN334432 1-SABINE UNIT 2
FDNS	00NR	2	16WP	G15_033	FROM->TO	G14-057T 345.00 - SUNNYSIDE 345KV CKT 1	717	789	0.0498	116.0938	GEN334431 1-SABINE UNIT 1
FDNS	00NR	2	16WP	G15_033	FROM->TO	G14-057T 345.00 - SUNNYSIDE 345KV CKT 1	717	789	0.04989	116.0892	CORNVILLE - NORTH 29TH CHICKASHA 138KV CKT 1
FDNS	00NR	2	16WP	G15_033	FROM->TO	G14-057T 345.00 - SUNNYSIDE 345KV CKT 1	717	789	0.0498	116.0856	GEN501971 1-EVANGELINE UNIT 7-1
FDNS	00NR	2	16WP	G15_033	FROM->TO	G14-057T 345.00 - SUNNYSIDE 345KV CKT 1	717	789	0.0498	116.0856	GEN501972 1-EVANGELINE UNIT 7-2
FDNS	00NR	2	16WP	G15_033	FROM->TO	G14-057T 345.00 - SUNNYSIDE 345KV CKT 1	717	789	0.0498	116.0846	GEN336152 1-WATERFORD UNIT#2
FDNS	00NR	2	16WP	G15_033	FROM->TO	G14-057T 345.00 - SUNNYSIDE 345KV CKT 1	717	789	0.0498	116.0835	GEN336151 1-WATERFORD UNIT#1
FDNS	00NR	2	16WP	G15_033	FROM->TO	G14-057T 345.00 - SUNNYSIDE 345KV CKT 1	717	789	0.04976	116.0796	G14_001T 345.00 - WICHITA 345KV CKT 1
FDNS	00NR	2	16WP	G15_033	FROM->TO	G14-057T 345.00 - SUNNYSIDE 345KV CKT 1	717	789	0.0498	116.0793	P12:138:AEPW:R.S.S.-4:R:96YALE-4
FDNS	00NR	2	16WP	G15_033	FROM->TO	G14-057T 345.00 - SUNNYSIDE 345KV CKT 1	717	789	0.04974	116.0682	P12:138:AEPW:OKMULGE4:R.S.S-4
FDNS	00NR	2	16WP	G15_033	FROM->TO	G14-057T 345.00 - SUNNYSIDE 345KV CKT 1	717	789	0.04971	116.0669	WEATHERFORD SOUTHEAST - WEATHERFORD TAP 138KV CKT 1
FDNS	00NR	2	16WP	G15_033	FROM->TO	G14-057T 345.00 - SUNNYSIDE 345KV CKT 1	717	789	0.0498	116.0623	P12:138:AEPW:MOHAWK4:T.NO--4
FDNS	00NR	2	16WP	G15_033	FROM->TO	G14-057T 345.00 - SUNNYSIDE 345KV CKT 1	717	789	0.0498	116.062	GEN501912 1-ACADIA UNIT CT1B
FDNS	00NR	2	16WP	G15_033	FROM->TO	G14-057T 345.00 - SUNNYSIDE 345KV CKT 1	717	789	0.0498	116.0612	GEN501911 1-ACADIA UNIT CT1A
FDNS	00NR	2	16WP	G15_033	FROM->TO	G14-057T 345.00 - SUNNYSIDE 345KV CKT 1	717	789	0.0498	116.06	ST FRANCIS - ST FRANCIS 1 161KV CKT Z1
FDNS	00NR	2	16WP	G15_033	FROM->TO	G14-057T 345.00 - SUNNYSIDE 345KV CKT 1	717	789	0.0498	116.06	ST FRANCIS 161/16.0KV TRANSFORMER CKT 1
FDNS	00NR	2	16WP	G15_033	FROM->TO	G14-057T 345.00 - SUNNYSIDE 345KV CKT 1	717	789	0.04976	116.0582	BETHEL - BROKEN BOW 138KV CKT 1
FDNS	00NR	2	16WP	G15_033	FROM->TO	G14-057T 345.00 - SUNNYSIDE 345KV CKT 1	717	789	0.04455	116.0536	G14_038T 345.00 - Hitchland Interchange 345KV CKT 1
FDNS	00NR	2	16WP	G15_033	FROM->TO	G14-057T 345.00 - SUNNYSIDE 345KV CKT 1	717	789	0.0498	116.0469	AS KING - EAU CLAIRE 345KV CKT 1
FDNS	00NR	2	16WP	G15_033	FROM->TO	G14-057T 345.00 - SUNNYSIDE 345KV CKT 1	717	789	0.0498	116.0469	SABINE 230/22.0KV TRANSFORMER CKT 1
FDNS	00NR	2	16WP	G15_033	FROM->TO	G14-057T 345.00 - SUNNYSIDE 345KV CKT 1	717	789	0.04978	116.0448	GRAND ISLAND - MCCOOL 345KV CKT 1
FDNS	00NR	2	16WP	G15_033	FROM->TO	G14-057T 345.00 - SUNNYSIDE 345KV CKT 1	717	789	0.0496	116.0432	G13-010T 345.00 - SPEARVILLE 345KV CKT 1
FDNS	00NR	2	16WP	G15_033	FROM->TO	G14-057T 345.00 - SUNNYSIDE 345KV CKT 1	717	789	0.04976	116.0418	LAYFLD8 500.00 (LAYFLD AUTO) 500/230/13.8KV TRANSFORMER CKT 1
FDNS	00NR	2	16WP	G15_033	FROM->TO	G14-057T 345.00 - SUNNYSIDE 345KV CKT 1	717	789	0.04976	116.0418	LAYFLD8 500.00 (LAYFLD AUTO) 500/230/13.8KV TRANSFORMER CKT 1
FDNS	00NR	2	16WP	G15_033	FROM->TO	G14-057T 345.00 - SUNNYSIDE 345KV CKT 1	717	789	0.04952	116.0415	ARBUCKLE - MILLCREEK 138KV CKT 1
FDNS	00NR	2	16WP	G15_033	FROM->TO	G14-057T 345.00 - SUNNYSIDE 345KV CKT 1	717	789	0.04981	116.0384	HAMMETT TAP - HORSESHOE LAKE 138KV CKT 1
FDNS	00NR	2	16WP	G15_033	FROM->TO	G14-057T 345.00 - SUNNYSIDE 345KV CKT 1	717	789	0.0498	116.0384	FLETCHER - MARLOW JCT 69KV CKT 1
FDNS	00NR	2	16WP	G15_033	FROM->TO	G14-057T 345.00 - SUNNYSIDE 345KV CKT 1	717	789	0.0498	116.037	GEN336242 1-1NMIL ST1 18.000
FDNS	00NR	2	16WP	G15_033	FROM->TO	G14-057T 345.00 - SUNNYSIDE 345KV CKT 1	717	789	0.0498	116.0321	ESSEX UNIT 2 500/18.0KV TRANSFORMER CKT 1
FDNS	00NR	2	16WP	G15_033	FROM->TO	G14-057T 345.00 - SUNNYSIDE 345KV CKT 1	717	789	0.04973	116.0307	AMITY SS - MURFREESBORO EAST (AECC) 115KV CKT 1
FDNS	00NR	2	16WP	G15_033	FROM->TO	G14-057T 345.00 - SUNNYSIDE 345KV CKT 1	717	789	0.04981	116.0275	P12:138:OKGE:3TERM47

SOLUTION	GROUP	SCENARIO	SEASON	SOURCE	DIRECTION	MONITORED ELEMENT	RATEA (MVA)	RATEB(MVA)	TDF	TC%LOADING (% MVA)	CONTINGENCY
FDNS	00NR	2	16WP	G15_033	FROM->TO	G14-057T 345.00 - SUNNYSIDE 345KV CKT 1	717	789	0.04966	116.0256	Canadian Pump Station - REDROCKRD4 138.00 138KV CKT 1
FDNS	00NR	2	16WP	G15_033	FROM->TO	G14-057T 345.00 - SUNNYSIDE 345KV CKT 1	717	789	0.04971	116.0218	CLINTON JUNCTION - CLINTON NATURAL GAS TAP 138KV CKT 1
FDNS	00NR	2	16WP	G15_033	FROM->TO	G14-057T 345.00 - SUNNYSIDE 345KV CKT 1	717	789	0.0498	116.0216	P12:138:WFEC-AEPW:ELKCTY-4:ERICK4
FDNS	00NR	2	16WP	G15_033	FROM->TO	G14-057T 345.00 - SUNNYSIDE 345KV CKT 1	717	789	0.04943	116.0161	PURCELL4 138.00 - WALNUT CREEK 138KV CKT 1
FDNS	00NR	2	16WP	G15_033	FROM->TO	G14-057T 345.00 - SUNNYSIDE 345KV CKT 1	717	789	0.05054	116.0147	DUNCAN - DUNCHERTP4 138.00 138KV CKT 1
FDNS	00NR	2	16WP	G15_033	FROM->TO	G14-057T 345.00 - SUNNYSIDE 345KV CKT 1	717	789	0.05054	116.0147	DUNCAN - DUNCHERTP4 138.00 138KV CKT 1
FDNS	00NR	2	16WP	G15_033	FROM->TO	G14-057T 345.00 - SUNNYSIDE 345KV CKT 1	717	789	0.05054	116.0146	DUNCAN EASTSIDE - DUNCHERTP4 138.00 138KV CKT 1
FDNS	00NR	2	16WP	G15_033	FROM->TO	G14-057T 345.00 - SUNNYSIDE 345KV CKT 1	717	789	0.05013	115.999	CIMARRON - NORTHWEST 345KV CKT 1
FDNS	00NR	2	16WP	G15_033	FROM->TO	G14-057T 345.00 - SUNNYSIDE 345KV CKT 1	717	789	0.05006	115.9967	CRINER - PAYNE 138.00 138KV CKT 1
FDNS	00NR	2	16WP	G15_033	FROM->TO	G14-057T 345.00 - SUNNYSIDE 345KV CKT 1	717	789	0.04994	115.993	COMANCHE - WALTERS 69KV CKT 1
FDNS	00NR	2	16WP	G15_033	FROM->TO	G14-057T 345.00 - SUNNYSIDE 345KV CKT 1	717	789	0.04971	115.9755	SEMINOLE (SEMINOL2) 345/138/14.4KV TRANSFORMER CKT 1
FDNS	00NR	2	20WP	G15_033	FROM->TO	G14-057T 345.00 - SUNNYSIDE 345KV CKT 1	717	789	0.04641	115.925	CORN TAP - NAPLESTP 138.00 138KV CKT 1
FDNS	00NR	2	20WP	G15_033	FROM->TO	G14-057T 345.00 - SUNNYSIDE 345KV CKT 1	717	789	0.04641	115.8369	NAPLESTP 138.00 - PAYNE 138.00 138KV CKT 1
FDNS	00NR	2	20WP	G15_033	FROM->TO	G14-057T 345.00 - SUNNYSIDE 345KV CKT 1	717	789	0.04577	115.7767	7SAREPTA% 345.00 - LONGWOOD 345KV CKT 1
FDNS	00NR	2	20WP	G15_033	FROM->TO	G14-057T 345.00 - SUNNYSIDE 345KV CKT 1	717	789	0.04577	115.7767	7SAREPTA% 345.00 - LONGWOOD 345KV CKT 1
FDNS	00NR	2	20WP	G15_033	FROM->TO	G14-057T 345.00 - SUNNYSIDE 345KV CKT 1	717	789	0.04601	115.6599	GEN336821 1-GRAND GULF UNIT
FDNS	00NR	2	16WP	G15_033	FROM->TO	G14-057T 345.00 - SUNNYSIDE 345KV CKT 1	717	789	0.0498	115.5666	803-OKLAUNION
FDNS	00NR	2	20WP	G15_033	FROM->TO	G14-057T 345.00 - SUNNYSIDE 345KV CKT 1	717	789	0.04647	115.5604	ANADARKO - POCASSETT 138KV CKT 1
FDNS	00NR	2	20WP	G15_033	FROM->TO	G14-057T 345.00 - SUNNYSIDE 345KV CKT 1	717	789	0.04601	115.5551	GEN336153 1-WATERFORD UNIT#3
FDNS	00NR	2	20WP	G15_033	FROM->TO	G14-057T 345.00 - SUNNYSIDE 345KV CKT 1	717	789	0.0463	115.5327	COMANCHE - LOCO 138KV CKT 1
FDNS	00NR	2	20WP	G15_033	FROM->TO	G14-057T 345.00 - SUNNYSIDE 345KV CKT 1	717	789	0.04595	115.4815	CLEVELAND - TULSA NORTH 345KV CKT 1
FDNS	00NR	2	20WP	G15_033	FROM->TO	G14-057T 345.00 - SUNNYSIDE 345KV CKT 1	717	789	0.04595	115.4815	CLEVELAND - TULSA NORTH 345KV CKT 1
FDNS	00NR	2	16WP	G15_033	FROM->TO	G14-057T 345.00 - SUNNYSIDE 345KV CKT 1	717	789	0.09441	115.4668	GRACEMONT - LAWTON EASTSIDE 345KV CKT 1
FDNS	00NR	2	16WP	G15_033	FROM->TO	G14-057T 345.00 - SUNNYSIDE 345KV CKT 1	717	789	0.09441	115.4668	GRACEMONT - LAWTON EASTSIDE 345KV CKT 1
FDNS	00NR	2	20WP	G15_033	FROM->TO	G14-057T 345.00 - SUNNYSIDE 345KV CKT 1	717	789	0.05039	115.4201	BORDER 7345.00 - TUCO_2 345.00 345KV CKT 1
FDNS	00NR	2	20WP	G15_033	FROM->TO	G14-057T 345.00 - SUNNYSIDE 345KV CKT 1	717	789	0.04647	115.4137	POCASSETT - TUTTLE 138KV CKT 1
FDNS	00NR	2	20WP	G15_033	FROM->TO	G14-057T 345.00 - SUNNYSIDE 345KV CKT 1	717	789	0.0459	115.3755	DOLET HILLS - SOUTHWEST SHREVEPORT 345KV CKT 1
FDNS	00NR	2	20WP	G15_033	FROM->TO	G14-057T 345.00 - SUNNYSIDE 345KV CKT 1	717	789	0.0459	115.3755	DOLET HILLS - SOUTHWEST SHREVEPORT 345KV CKT 1
FDNS	00NR	2	16WP	G15_033	FROM->TO	G14-057T 345.00 - SUNNYSIDE 345KV CKT 1	717	789	0.0498	115.3499	OKLAUNION 345KV SWITCHED SHUNT
FDNS	00NR	2	20WP	G15_033	FROM->TO	G14-057T 345.00 - SUNNYSIDE 345KV CKT 1	717	789	0.04601	115.261	GEN335831 1-RIVERBEND UNIT#1
FDNS	00NR	2	20WP	G15_033	FROM->TO	G14-057T 345.00 - SUNNYSIDE 345KV CKT 1	717	789	0.04725	115.2349	P12:138:AEPW:DUNCAN-4:L.E.S.-4
FDNS	00NR	2	20WP	G15_033	FROM->TO	G14-057T 345.00 - SUNNYSIDE 345KV CKT 1	717	789	0.04601	115.2305	GRAND GULF 500/22.0KV TRANSFORMER CKT 1
FDNS	00NR	2	16WP	G15_033	FROM->TO	G14-057T 345.00 - SUNNYSIDE 345KV CKT 1	717	789	0.04907	115.2039	MAYSVILLE - MAYSVLT4 138.00 138KV CKT 1
FDNS	00NR	2	16WP	G15_033	FROM->TO	G14-057T 345.00 - SUNNYSIDE 345KV CKT 1	717	789	0.04979	115.1845	JOHNSON COUNTY - RUSSETT 138KV CKT 1
FDNS	00NR	2	16WP	G15_033	FROM->TO	G14-057T 345.00 - SUNNYSIDE 345KV CKT 1	717	789	0.04975	115.1711	HUGO (HUGO 1) 345/138/13.8KV TRANSFORMER CKT 1
FDNS	00NR	2	16WP	G15_033	FROM->TO	G14-057T 345.00 - SUNNYSIDE 345KV CKT 1	717	789	0.04978	115.1699	GLASSES - MADILL INDUSTRIAL TAP 138KV CKT 1
FDNS	00NR	2	16WP	G15_033	FROM->TO	G14-057T 345.00 - SUNNYSIDE 345KV CKT 1	717	789	0.0498	115.1583	GEN560112 1-G08_037_3 0.6900
FDNS	00NR	2	20WP	G15_033	FROM->TO	G14-057T 345.00 - SUNNYSIDE 345KV CKT 1	717	789	0.04588	115.1534	7SAREPTA% 345.00 - ELDORADO EHV 345KV CKT 1
FDNS	00NR	2	20WP	G15_033	FROM->TO	G14-057T 345.00 - SUNNYSIDE 345KV CKT 1	717	789	0.04588	115.1532	3TR3AR8EL7EL
FDNS	00NR	2	16WP	G15_033	FROM->TO	G14-057T 345.00 - SUNNYSIDE 345KV CKT 1	717	789	0.05	115.1441	CIMARRON - MATHWSN7 345.00 345KV CKT 1
FDNS	00NR	2	16WP	G15_033	FROM->TO	G14-057T 345.00 - SUNNYSIDE 345KV CKT 1	717	789	0.05	115.1441	CIMARRON - MATHWSN7 345.00 345KV CKT 2
FDNS	00NR	2	20WP	G15_033	FROM->TO	G14-057T 345.00 - SUNNYSIDE 345KV CKT 1	717	789	0.04588	115.1429	ELDORADO EHV 500/345KV TRANSFORMER CKT 1
FDNS	00NR	2	16WP	G15_033	FROM->TO	G14-057T 345.00 - SUNNYSIDE 345KV CKT 1	717	789	0.04907	115.1425	MAYSVLT4 138.00 - PRAIRIE POINT 138KV CKT 1
FDNS	00NR	2	16WP	G15_033	FROM->TO	G14-057T 345.00 - SUNNYSIDE 345KV CKT 1	717	789	0.04986	115.1417	DRAPER LAKE - MIDWEST TAP 138KV CKT 1
FDNS	00NR	2	16WP	G15_033	FROM->TO	G14-057T 345.00 - SUNNYSIDE 345KV CKT 1	717	789	0.0498	115.1402	GEN562772 1-G15034_3 0.6900
FDNS	00NR	2	16WP	G15_033	FROM->TO	G14-057T 345.00 - SUNNYSIDE 345KV CKT 1	717	789	0.0498	115.137	GEN521103 1-BLUE CANYON WIND FARM
FDNS	00NR	2	16WP	G15_033	FROM->TO	G14-057T 345.00 - SUNNYSIDE 345KV CKT 1	717	789	0.04977	115.1273	HUGO POWER PLANT - VALLENT 138KV CKT 1
FDNS	00NR	2	20WP	G15_033	FROM->TO	G14-057T 345.00 - SUNNYSIDE 345KV CKT 1	717	789	0.04513	115.1269	MATHWSN7 345.00 - TATONGA7 345.00 345KV CKT 1
FDNS	00NR	2	20WP	G15_033	FROM->TO	G14-057T 345.00 - SUNNYSIDE 345KV CKT 1	717	789	0.04587	115.1242	ARCADIA - NORTHWEST 345KV CKT 1
FDNS	00NR	2	16WP	G15_033	FROM->TO	G14-057T 345.00 - SUNNYSIDE 345KV CKT 1	717	789	0.0498	115.1187	GEN562691 1-G15_015_3 0.6900
FDNS	00NR	2	16WP	G15_033	FROM->TO	G14-057T 345.00 - SUNNYSIDE 345KV CKT 1	717	789	0.04988	115.1106	P12:138:OKGE:3TERM21
FDNS	00NR	2	16WP	G15_033	FROM->TO	G14-057T 345.00 - SUNNYSIDE 345KV CKT 1	717	789	0.04978	115.1102	GLASSES - RUSSETT 138KV CKT 1
FDNS	00NR	2	16WP	G15_033	FROM->TO	G14-057T 345.00 - SUNNYSIDE 345KV CKT 1	717	789	0.0498	115.104	GEN520812 1-ANADRK5
FDNS	00NR	2	16WP	G15_033	FROM->TO	G14-057T 345.00 - SUNNYSIDE 345KV CKT 1	717	789	0.0498	115.104	GEN520813 1-ANADRK6
FDNS	00NR	2	16WP	G15_033	FROM->TO	G14-057T 345.00 - SUNNYSIDE 345KV CKT 1	717	789	0.04944	115.104	ARBUCKLE - SULPHR 4 138.00 138KV CKT 1
FDNS	00NR	2	16WP	G15_033	FROM->TO	G14-057T 345.00 - SUNNYSIDE 345KV CKT 1	717	789	0.04977	115.1011	P12:138:WFEC:MSL11
FDNS	00NR	2	16WP	G15_033	FROM->TO	G14-057T 345.00 - SUNNYSIDE 345KV CKT 1	717	789	0.04977	115.1011	P12:138:WFEC-AEPW:PHAROAH4:LONEOAK4
FDNS	00NR	2	16WP	G15_033	FROM->TO	G14-057T 345.00 - SUNNYSIDE 345KV CKT 1	717	789	0.0498	115.0975	GEN511961 1-DEMPSEY-WTG10.7000
FDNS	00NR	2	16WP	G15_033	FROM->TO	G14-057T 345.00 - SUNNYSIDE 345KV CKT 1	717	789	0.04974	115.0913	CROCKETT - TENASKA RUSK COUNTY 345KV CKT 1
FDNS	00NR	2	16WP	G15_033	FROM->TO	G14-057T 345.00 - SUNNYSIDE 345KV CKT 1	717	789	0.0498	115.0895	GEN672392 1-NBECGT1G 18.000
FDNS	00NR	2	16WP	G15_033	FROM->TO	G14-057T 345.00 - SUNNYSIDE 345KV CKT 1	717	789	0.0498	115.0868	OKLAUNION 345/13.2KV TRANSFORMER CKT 1
FDNS	00NR	2	16WP	G15_033	FROM->TO	G14-057T 345.00 - SUNNYSIDE 345KV CKT 1	717	789	0.04974	115.0861	LEBROCK - TENASKA RUSK COUNTY 345KV CKT 1
FDNS	00NR	2	16WP	G15_033	FROM->TO	G14-057T 345.00 - SUNNYSIDE 345KV CKT 1	717	789	0.0498	115.0851	GEN562074 1-G1149G1504 0.6900
FDNS	00NR	2	20WP	G15_033	FROM->TO	G14-057T 345.00 - SUNNYSIDE 345KV CKT 1	717	789	0.04601	115.0839	GEN515577 1-ARBWND11 0.6900
FDNS	00NR	2	16WP	G15_033	FROM->TO	G14-057T 345.00 - SUNNYSIDE 345KV CKT 1	717	789	0.0498	115.0792	P12:069:OKGE:3TERM42
FDNS	00NR	2	16WP	G15_033	FROM->TO	G14-057T 345.00 - SUNNYSIDE 345KV CKT 1	717	789	0.04983	115.0688	P12:138:WFEC:MSL08
FDNS	00NR	2	16WP	G15_033	FROM->TO	G14-057T 345.00 - SUNNYSIDE 345KV CKT 1	717	789	0.0498	115.0666	GEN615010 1-STANTON4
FDNS	00NR	2	20WP	G15_033	FROM->TO	G14-057T 345.00 - SUNNYSIDE 345KV CKT 1	717	789	0.04725	115.0641	COMANCHE TAP - OMPA-DUNCAN 840 138KV CKT 1
FDNS	00NR	2	16WP	G15_033	FROM->TO	G14-057T 345.00 - SUNNYSIDE 345KV CKT 1	717	789	0.04978	115.0592	GRPRAR1-LNX3345.00 - YANKTON 345KV CKT Z
FDNS	00NR	2	16WP	G15_033	FROM->TO	G14-057T 345.00 - SUNNYSIDE 345KV CKT 1	717	789	0.04978	115.0566	GRPRAR1-LNX3345.00 - HOLT.CO3 345.00 345KV CKT 1
FDNS	00NR	2	16WP	G15_033	FROM->TO	G14-057T 345.00 - SUNNYSIDE 345KV CKT 1	717	789	0.04978	115.0562	DELL 500 - INDEPENDENCE 500KV CKT 1
FDNS	00NR	2	16WP	G15_033	FROM->TO	G14-057T 345.00 - SUNNYSIDE 345KV CKT 1	717	789	0.0498	115.0478	GEN615021 1-GRE-ER 14G 16.000
FDNS	00NR	2	16WP	G15_033	FROM->TO	G14-057T 345.00 - SUNNYSIDE 345KV CKT 1	717	789	0.0498	115.0477	GEN528361 1-MADDOX GEN #1
FDNS	00NR	2	16WP	G15_033	FROM->TO	G14-057T 345.00 - SUNNYSIDE 345KV CKT 1	717	789	0.04907	115.0461	PRAIRIE POINT - RATLIFF 138KV CKT 1
FDNS	00NR	2	16WP	G15_033	FROM->TO	G14-057T 345.00 - SUNNYSIDE 345KV CKT 1	717	789	0.04978	115.0443	CANEY CREEK - JOHNSON COUNTY 138KV CKT 1
FDNS	00NR	2	20WP	G15_033	FROM->TO	G14-057T 345.00 - SUNNYSIDE 345KV CKT 1	717	789	0.04496	115.0381	CANADIAN RIVER - MUSKOGEE 345KV CKT 1
FDNS	00NR	2	16WP	G15_033	FROM->TO	G14-057T 345.00 - SUNNYSIDE 345KV CKT 1	717	789	0.0498	115.0344	GEN629070 2-BEAVER CHANNEL GENERATORFOR UNIT NO 2
FDNS	00NR	2	16WP	G15_033	FROM->TO	G14-057T 345.00 - SUNNYSIDE 345KV CKT 1	717	789	0.0498	115.0296	INDEPENDENCE 500/26.0KV TRANSFORMER CKT 1
FDNS	00NR	2	16WP	G15_033	FROM->TO	G14-057T 345.00 - SUNNYSIDE 345KV CKT 1	717	789	0.04974	115.0284	CARTER - CHICKASAW 138KV CKT 1

SOLUTION	GROUP	SCENARIO	SEASON	SOURCE	DIRECTION	MONITORED ELEMENT	RATEA (MVA)	RATEB(MVA)	TDF	TC%LOADING (% MVA)	CONTINGENCY
FDNS	00NR	2	20WP	G15_033	FROM->TO	G14-057T 345.00 - SUNNYSIDE 345KV CKT 1	717	789	0.04647	115.0215	BRIDGECR 138.00 - TUTTLE 138KV CKT 1
FDNS	00NR	2	16WP	G15_033	FROM->TO	G14-057T 345.00 - SUNNYSIDE 345KV CKT 1	717	789	0.0498	115.0204	GEN560183 1-REDHIL-WTG1 12.000
FDNS	00NR	2	16WP	G15_033	FROM->TO	G14-057T 345.00 - SUNNYSIDE 345KV CKT 1	717	789	0.0498	115.0181	GEN515443 1-MNCOWND1 0.7000
FDNS	00NR	2	16WP	G15_033	FROM->TO	G14-057T 345.00 - SUNNYSIDE 345KV CKT 1	717	789	0.0498	115.0115	GEN629071 1-BURLINGTON GENERATOR FOR UNIT NO 1 E
FDNS	00NR	2	16WP	G15_033	FROM->TO	G14-057T 345.00 - SUNNYSIDE 345KV CKT 1	717	789	0.04933	115.0102	MINGO - SETAB 345KV CKT 1
FDNS	00NR	2	16WP	G15_033	FROM->TO	G14-057T 345.00 - SUNNYSIDE 345KV CKT 1	717	789	0.04933	115.0102	MINGO - SETAB 345KV CKT 1
FDNS	00NR	2	16WP	G15_033	FROM->TO	G14-057T 345.00 - SUNNYSIDE 345KV CKT 1	717	789	0.0498	115.0077	GEN563242 1-G15090_3 0.6900
FDNS	00NR	2	16WP	G15_033	FROM->TO	G14-057T 345.00 - SUNNYSIDE 345KV CKT 1	717	789	0.04962	115.0051	ROCKY POINT - SPRINGDALE 138KV CKT 1
FDNS	00NR	2	16WP	G15_033	FROM->TO	G14-057T 345.00 - SUNNYSIDE 345KV CKT 1	717	789	0.04983	115.004	MOREWOOD SW - NINE MILE 138KV CKT 1
FDNS	00NR	2	16WP	G15_033	FROM->TO	G14-057T 345.00 - SUNNYSIDE 345KV CKT 1	717	789	0.04978	115.004	CANADIAN RIVER - MCALESTER SOUTH 138KV CKT 1
FDNS	00NR	2	16WP	G15_033	FROM->TO	G14-057T 345.00 - SUNNYSIDE 345KV CKT 1	717	789	0.04978	115.004	CANADIAN RIVER - MCALESTER SOUTH 138KV CKT 1
FDNS	00NR	2	16WP	G15_033	FROM->TO	G14-057T 345.00 - SUNNYSIDE 345KV CKT 1	717	789	0.04978	115.0026	CANADIAN RIVER () 345/138/13.8KV TRANSFORMER CKT 1
FDNS	00NR	2	16WP	G15_033	FROM->TO	G14-057T 345.00 - SUNNYSIDE 345KV CKT 1	717	789	0.04978	115.0026	CANADIAN RIVER () 345/138/13.8KV TRANSFORMER CKT 1
FDNS	00NR	2	16WP	G15_033	FROM->TO	G14-057T 345.00 - SUNNYSIDE 345KV CKT 1	717	789	0.04985	114.9973	ARKANSAS NUCLEAR ONE - FT SMITH 500KV CKT 1
FDNS	00NR	2	16WP	G15_033	FROM->TO	G14-057T 345.00 - SUNNYSIDE 345KV CKT 1	717	789	0.04985	114.9973	ARKANSAS NUCLEAR ONE - FT SMITH 500KV CKT 1
FDNS	00NR	2	16WP	G15_033	FROM->TO	G14-057T 345.00 - SUNNYSIDE 345KV CKT 1	717	789	0.0498	114.9952	GEN562902 1-G15052_3 0.6900
FDNS	00NR	2	16WP	G15_033	FROM->TO	G14-057T 345.00 - SUNNYSIDE 345KV CKT 1	717	789	0.0498	114.9945	GEN532653 1-JEFFREY ENERGY CENTER UNIT 3
FDNS	00NR	2	16WP	G15_033	FROM->TO	G14-057T 345.00 - SUNNYSIDE 345KV CKT 1	717	789	0.0498	114.9846	BURLINGTON NO1 + NO 2 + NO 3 161/20.0KV TRANSFORMER CKT 1
FDNS	00NR	2	16WP	G15_033	FROM->TO	G14-057T 345.00 - SUNNYSIDE 345KV CKT 1	717	789	0.04976	114.981	CHAMBER SPRINGS - CLARKSVILLE 345KV CKT 1
FDNS	00NR	2	16WP	G15_033	FROM->TO	G14-057T 345.00 - SUNNYSIDE 345KV CKT 1	717	789	0.05012	114.9748	ALTUS JUNCTION - RUSSELL 138KV CKT 1
FDNS	00NR	2	16WP	G15_033	FROM->TO	G14-057T 345.00 - SUNNYSIDE 345KV CKT 1	717	789	0.05012	114.9748	ALTUS JUNCTION - RUSSELL 138KV CKT 1
FDNS	00NR	2	16WP	G15_033	FROM->TO	G14-057T 345.00 - SUNNYSIDE 345KV CKT 1	717	789	0.0498	114.9714	P12:230:UMZB:# 112 #: NU IN SD. NU-RCDC & DRY CREEK XFMR
FDNS	00NR	2	16WP	G15_033	FROM->TO	G14-057T 345.00 - SUNNYSIDE 345KV CKT 1	717	789	0.0498	114.9709	RCDC EAST 4230.00 - RED CEDAR DC 230KV CKT 1
FDNS	00NR	2	16WP	G15_033	FROM->TO	G14-057T 345.00 - SUNNYSIDE 345KV CKT 1	717	789	0.04975	114.9628	NORTHWEST TEXARKANA - WELSH 345KV CKT 1
FDNS	00NR	2	16WP	G15_033	FROM->TO	G14-057T 345.00 - SUNNYSIDE 345KV CKT 1	717	789	0.04975	114.9628	NORTHWEST TEXARKANA - WELSH 345KV CKT 1
FDNS	00NR	2	20WP	G15_033	FROM->TO	G14-057T 345.00 - SUNNYSIDE 345KV CKT 1	717	789	0.0461	114.9604	HEALDTON - LOCO 138KV CKT 1
FDNS	00NR	2	16WP	G15_033	FROM->TO	G14-057T 345.00 - SUNNYSIDE 345KV CKT 1	717	789	0.04944	114.9531	JOLLYVILLE - SULPHR 4 138.00 138KV CKT 1
FDNS	00NR	2	16WP	G15_033	FROM->TO	G14-057T 345.00 - SUNNYSIDE 345KV CKT 1	717	789	0.0498	114.9485	GEN562802 1-G15039_3 0.3570
FDNS	00NR	2	16WP	G15_033	FROM->TO	G14-057T 345.00 - SUNNYSIDE 345KV CKT 1	717	789	0.0498	114.9471	GEN562078 1-G11_051_3 0.6900
FDNS	00NR	2	16WP	G15_033	FROM->TO	G14-057T 345.00 - SUNNYSIDE 345KV CKT 1	717	789	0.0498	114.943	GEN524285 1-WILDORADO WIND GEN
FDNS	00NR	2	16WP	G15_033	FROM->TO	G14-057T 345.00 - SUNNYSIDE 345KV CKT 1	717	789	0.0498	114.9376	THOMAS HILL 161/22.0KV TRANSFORMER CKT 1
FDNS	00NR	2	20WP	G15_033	FROM->TO	G14-057T 345.00 - SUNNYSIDE 345KV CKT 1	717	789	0.04601	114.9372	GEN509409 1-WILKES #3
FDNS	00NR	2	16WP	G15_033	FROM->TO	G14-057T 345.00 - SUNNYSIDE 345KV CKT 1	717	789	0.0498	114.9288	GEN514805 1-SOONER UNIT 1
FDNS	00NR	2	16WP	G15_033	FROM->TO	G14-057T 345.00 - SUNNYSIDE 345KV CKT 1	717	789	0.05008	114.9261	NORTHWEST - SPRING CREEK 345KV CKT 1
FDNS	00NR	2	16WP	G15_033	FROM->TO	G14-057T 345.00 - SUNNYSIDE 345KV CKT 1	717	789	0.0498	114.9232	GEN524295 1-SPNSPUR_WND10.6900
FDNS	00NR	2	20WP	G15_033	FROM->TO	G14-057T 345.00 - SUNNYSIDE 345KV CKT 1	717	789	0.0456	114.9227	ARCADIA - SEMINOLE 345KV CKT 1
FDNS	00NR	2	16WP	G15_033	FROM->TO	G14-057T 345.00 - SUNNYSIDE 345KV CKT 1	717	789	0.05008	114.9196	SOONER - SPRING CREEK 345KV CKT 1
FDNS	00NR	2	16WP	G15_033	FROM->TO	G14-057T 345.00 - SUNNYSIDE 345KV CKT 1	717	789	0.04976	114.9185	KEO EHV - WEST MEMPHIS 500 500KV CKT 1
FDNS	00NR	2	16WP	G15_033	FROM->TO	G14-057T 345.00 - SUNNYSIDE 345KV CKT 1	717	789	0.0498	114.9151	GEN560331 1-G10-46 13.800
FDNS	00NR	2	16WP	G15_033	FROM->TO	G14-057T 345.00 - SUNNYSIDE 345KV CKT 1	717	789	0.0498	114.9095	GEN514806 1-SOONER UNIT 2
FDNS	00NR	2	16WP	G15_033	FROM->TO	G14-057T 345.00 - SUNNYSIDE 345KV CKT 1	717	789	0.0498	114.9045	GEN629072 4-LANSING GENERATOR FOR UNITS NO4 EIA CODE 1
FDNS	00NR	2	20WP	G15_033	FROM->TO	G14-057T 345.00 - SUNNYSIDE 345KV CKT 1	717	789	0.04601	114.8871	GEN501813 1-RODEMACHER UNIT 3
FDNS	00NR	2	16WP	G15_033	FROM->TO	G14-057T 345.00 - SUNNYSIDE 345KV CKT 1	717	789	0.0498	114.8859	GEN657749 1-YOUNG 1 GENERATOR
FDNS	00NR	2	16WP	G15_033	FROM->TO	G14-057T 345.00 - SUNNYSIDE 345KV CKT 1	717	789	0.04944	114.8853	JOLLYVILLE - KERR MCGEE CIMARRON 138KV CKT 1
FDNS	00NR	2	16WP	G15_033	FROM->TO	G14-057T 345.00 - SUNNYSIDE 345KV CKT 1	717	789	0.0498	114.8805	GEN562269 1-G12-020-1 0.6900
FDNS	00NR	2	16WP	G15_033	FROM->TO	G14-057T 345.00 - SUNNYSIDE 345KV CKT 1	717	789	0.0498	114.8805	GEN562587 1-G14_056_3 0.6900
FDNS	00NR	2	16WP	G15_033	FROM->TO	G14-057T 345.00 - SUNNYSIDE 345KV CKT 1	717	789	0.04959	114.8707	CLARKSVILLE - MUSKOGEE 345KV CKT 1
FDNS	00NR	2	16WP	G15_033	FROM->TO	G14-057T 345.00 - SUNNYSIDE 345KV CKT 1	717	789	0.04959	114.8707	CLARKSVILLE - MUSKOGEE 345KV CKT 1
FDNS	00NR	2	16WP	G15_033	FROM->TO	G14-057T 345.00 - SUNNYSIDE 345KV CKT 1	717	789	0.04983	114.8697	BEARCAT 138.00 - NINE MILE 138KV CKT 1
FDNS	00NR	2	16WP	G15_033	FROM->TO	G14-057T 345.00 - SUNNYSIDE 345KV CKT 1	717	789	0.0498	114.8367	GEN562270 1-G12-020-2 0.6900
FDNS	00NR	2	16WP	G15_033	FROM->TO	G14-057T 345.00 - SUNNYSIDE 345KV CKT 1	717	789	0.0498	114.8362	GEN562882 1-G15047_3 0.6900
FDNS	00NR	2	16WP	G15_033	FROM->TO	G14-057T 345.00 - SUNNYSIDE 345KV CKT 1	717	789	0.0498	114.8361	GEN562812 1-G15040_3 0.3570
FDNS	00NR	2	16WP	G15_033	FROM->TO	G14-057T 345.00 - SUNNYSIDE 345KV CKT 1	717	789	0.04944	114.8351	ARBWIND4 138.00 - KERR MCGEE CIMARRON 138KV CKT 1
FDNS	00NR	2	16WP	G15_033	FROM->TO	G14-057T 345.00 - SUNNYSIDE 345KV CKT 1	717	789	0.0498	114.8294	GEN563102 1-G15075_3 0.5500
FDNS	00NR	2	16WP	G15_033	FROM->TO	G14-057T 345.00 - SUNNYSIDE 345KV CKT 1	717	789	0.0498	114.8261	GEN563132 1-G15078_3 0.3570
FDNS	00NR	2	16WP	G15_033	FROM->TO	G14-057T 345.00 - SUNNYSIDE 345KV CKT 1	717	789	0.0498	114.8166	GEN681522 3-GENOA 3
FDNS	00NR	2	16WP	G15_033	FROM->TO	G14-057T 345.00 - SUNNYSIDE 345KV CKT 1	717	789	0.0498	114.8121	GEN562974 1-G15060_5 0.6900
FDNS	00NR	2	20WP	G15_033	FROM->TO	G14-057T 345.00 - SUNNYSIDE 345KV CKT 1	717	789	0.0461	114.8104	HEALDTON - RINGLING 138KV CKT 1
FDNS	00NR	2	16WP	G15_033	FROM->TO	G14-057T 345.00 - SUNNYSIDE 345KV CKT 1	717	789	0.0498	114.8029	GEN562973 1-G15060_4 0.6900
FDNS	00NR	2	16WP	G15_033	FROM->TO	G14-057T 345.00 - SUNNYSIDE 345KV CKT 1	717	789	0.0498	114.7996	GEN563062 1-G15071_3 0.6900
FDNS	00NR	2	16WP	G15_033	FROM->TO	G14-057T 345.00 - SUNNYSIDE 345KV CKT 1	717	789	0.04983	114.7849	P12:138:WFEC:MSL14
FDNS	00NR	2	20WP	G15_033	FROM->TO	G14-057T 345.00 - SUNNYSIDE 345KV CKT 1	717	789	0.04725	114.7822	DUNCAN - OMPA-DUNCAN 840 138KV CKT 1
FDNS	00NR	2	20WP	G15_033	FROM->TO	G14-057T 345.00 - SUNNYSIDE 345KV CKT 1	717	789	0.04725	114.7822	DUNCAN - OMPA-DUNCAN 840 138KV CKT 1
FDNS	00NR	2	16WP	G15_033	FROM->TO	G14-057T 345.00 - SUNNYSIDE 345KV CKT 1	717	789	0.04983	114.7705	BEARCAT 138.00 - MOORELAND 138KV CKT 1
FDNS	00NR	2	16WP	G15_033	FROM->TO	G14-057T 345.00 - SUNNYSIDE 345KV CKT 1	717	789	0.05138	114.7552	P12:138:AEPW:112GORE4:SNYDER-4
FDNS	00NR	2	16WP	G15_033	FROM->TO	G14-057T 345.00 - SUNNYSIDE 345KV CKT 1	717	789	0.0497	114.7531	BROWN - RUSSETT 138KV CKT 1
FDNS	00NR	2	16WP	G15_033	FROM->TO	G14-057T 345.00 - SUNNYSIDE 345KV CKT 1	717	789	0.04948	114.7508	CHICKASAW - TOTAL 138KV CKT 1
FDNS	00NR	2	20WP	G15_033	FROM->TO	G14-057T 345.00 - SUNNYSIDE 345KV CKT 1	717	789	0.04647	114.7475	P12:138:WFEC:MSL01
FDNS	00NR	2	16WP	G15_033	FROM->TO	G14-057T 345.00 - SUNNYSIDE 345KV CKT 1	717	789	0.0498	114.7442	GEN526331 1-JONES GEN #1 22 KV
FDNS	00NR	2	16WP	G15_033	FROM->TO	G14-057T 345.00 - SUNNYSIDE 345KV CKT 1	717	789	0.0498	114.7441	GEN526332 1-JONES GEN #2 21 KV
FDNS	00NR	2	20WP	G15_033	FROM->TO	G14-057T 345.00 - SUNNYSIDE 345KV CKT 1	717	789	0.04601	114.7422	GEN300006 1-NEW MADRID UNIT 1
FDNS	00NR	2	20WP	G15_033	FROM->TO	G14-057T 345.00 - SUNNYSIDE 345KV CKT 1	717	789	0.04647	114.7396	BRIDGECR 138.00 - SUNSHINE CANYON 138KV CKT 1
FDNS	00NR	2	16WP	G15_033	FROM->TO	G14-057T 345.00 - SUNNYSIDE 345KV CKT 1	717	789	0.0498	114.7375	GEN560105 1-G08-22 0.6900
FDNS	00NR	2	16WP	G15_033	FROM->TO	G14-057T 345.00 - SUNNYSIDE 345KV CKT 1	717	789	0.04965	114.7374	RUSSETT - SPRINGDALE 138KV CKT 1
FDNS	00NR	2	16WP	G15_033	FROM->TO	G14-057T 345.00 - SUNNYSIDE 345KV CKT 1	717	789	0.0498	114.7352	GEN562550 1-G14_040_3 0.6900
FDNS	00NR	2	20WP	G15_033	FROM->TO	G14-057T 345.00 - SUNNYSIDE 345KV CKT 1	717	789	0.04601	114.7226	GEN300007 1-NEW MADRID UNIT 2
FDNS	00NR	2	16WP	G15_033	FROM->TO	G14-057T 345.00 - SUNNYSIDE 345KV CKT 1	717	789	0.04956	114.7144	ROCKY POINT - SUNNYSIDE 138KV CKT 1
FDNS	00NR	2	16WP	G15_033	FROM->TO	G14-057T 345.00 - SUNNYSIDE 345KV CKT 1	717	789	0.04978	114.712	P12:138:WFEC:MSL07
FDNS	00NR	2	16WP	G15_033	FROM->TO	G14-057T 345.00 - SUNNYSIDE 345KV CKT 1	717	789	0.04978	114.712	P12:138:WFEC-AEPW:HUGOPP4:ATOKA--4

SOLUTION	GROUP	SCENARIO	SEASON	SOURCE	DIRECTION	MONITORED ELEMENT	RATEA (MVA)	RATEB(MVA)	TDF	TC%LOADING (% MVA)	CONTINGENCY
FDNS	00NR	2	16WP	G15_033	FROM->TO	G14-057T 345.00 - SUNNYSIDE 345KV CKT 1	717	789	0.0498	114.7118	GEN345671 2-1RUSH G2 18.000
FDNS	00NR	2	16WP	G15_033	FROM->TO	G14-057T 345.00 - SUNNYSIDE 345KV CKT 1	717	789	0.0498	114.71	GEN345670 1-1RUSH G1 18.000
FDNS	00NR	2	20WP	G15_033	FROM->TO	G14-057T 345.00 - SUNNYSIDE 345KV CKT 1	717	789	0.04598	114.7074	LACYGNE - WAVERLY7 345.00 345KV CKT 1
FDNS	00NR	2	16WP	G15_033	FROM->TO	G14-057T 345.00 - SUNNYSIDE 345KV CKT 1	717	789	0.0498	114.6992	4SIOUX 1 138.00 138/18.0KV TRANSFORMER CKT 1
FDNS	00NR	2	16WP	G15_033	FROM->TO	G14-057T 345.00 - SUNNYSIDE 345KV CKT 1	717	789	0.0498	114.6889	GEN511962 2-RKYRDGW2-1 0.7000
FDNS	00NR	2	16WP	G15_033	FROM->TO	G14-057T 345.00 - SUNNYSIDE 345KV CKT 1	717	789	0.0498	114.6876	GEN527882 1-CUNNINGHAM GEN #2 20 KV
FDNS	00NR	2	16WP	G15_033	FROM->TO	G14-057T 345.00 - SUNNYSIDE 345KV CKT 1	717	789	0.0497	114.6852	RUSSETT - RUSSETT 138KV CKT 1
FDNS	00NR	2	16WP	G15_033	FROM->TO	G14-057T 345.00 - SUNNYSIDE 345KV CKT 1	717	789	0.0498	114.6837	CLAY BOSWELL 230/20.9KV TRANSFORMER CKT 1
FDNS	00NR	2	20WP	G15_033	FROM->TO	G14-057T 345.00 - SUNNYSIDE 345KV CKT 1	717	789	0.04601	114.6772	GEN335206 1-NELSON UNIT 6
FDNS	00NR	2	16WP	G15_033	FROM->TO	G14-057T 345.00 - SUNNYSIDE 345KV CKT 1	717	789	0.04983	114.6764	P12:138:WFEC:MSL16
FDNS	00NR	2	20WP	G15_033	FROM->TO	G14-057T 345.00 - SUNNYSIDE 345KV CKT 1	717	789	0.04601	114.6679	GEN520947 1-HUGO1
FDNS	00NR	2	16WP	G15_033	FROM->TO	G14-057T 345.00 - SUNNYSIDE 345KV CKT 1	717	789	0.0498	114.6663	GEN563192 1-G15084_3 0.5500
FDNS	00NR	2	16WP	G15_033	FROM->TO	G14-057T 345.00 - SUNNYSIDE 345KV CKT 1	717	789	0.0498	114.6601	GEN521112 1-ORME3 13.800
FDNS	00NR	2	16WP	G15_033	FROM->TO	G14-057T 345.00 - SUNNYSIDE 345KV CKT 1	717	789	0.0498	114.6571	GEN672321 1-SHAND GENERATOR 1
FDNS	00NR	2	16WP	G15_033	FROM->TO	G14-057T 345.00 - SUNNYSIDE 345KV CKT 1	717	789	0.04929	114.6536	ARDMORE WEST - CARTER 138KV CKT 1
FDNS	00NR	2	16WP	G15_033	FROM->TO	G14-057T 345.00 - SUNNYSIDE 345KV CKT 1	717	789	0.0498	114.6493	GEN562892 1-G15048_3 0.6900
FDNS	00NR	2	20WP	G15_033	FROM->TO	G14-057T 345.00 - SUNNYSIDE 345KV CKT 1	717	789	0.04318	114.6442	Hitchland Interchange - WALKTAP7 345.00 345KV CKT 1
FDNS	00NR	2	20WP	G15_033	FROM->TO	G14-057T 345.00 - SUNNYSIDE 345KV CKT 1	717	789	0.04318	114.6442	Hitchland Interchange - WALKTAP7 345.00 345KV CKT 1
FDNS	00NR	2	20WP	G15_033	FROM->TO	G14-057T 345.00 - SUNNYSIDE 345KV CKT 1	717	789	0.0461	114.6364	RINGLING - SOUTH WILSON 138KV CKT 1
FDNS	00NR	2	16WP	G15_033	FROM->TO	G14-057T 345.00 - SUNNYSIDE 345KV CKT 1	717	789	0.0498	114.6334	GEN672310 1-POPLAR RIVER GENERATOR 1
FDNS	00NR	2	16WP	G15_033	FROM->TO	G14-057T 345.00 - SUNNYSIDE 345KV CKT 1	717	789	0.0498	114.6334	GEN672311 2-POPLAR RIVER GENERATOR 2
FDNS	00NR	2	20WP	G15_033	FROM->TO	G14-057T 345.00 - SUNNYSIDE 345KV CKT 1	717	789	0.04318	114.6312	P12:345:SPS:J07.1.FINN.HITCH
FDNS	00NR	2	16WP	G15_033	FROM->TO	G14-057T 345.00 - SUNNYSIDE 345KV CKT 1	717	789	0.0498	114.6256	GEN672306 6-BOUNDARY DAM GENERATOR 6
FDNS	00NR	2	20WP	G15_033	FROM->TO	G14-057T 345.00 - SUNNYSIDE 345KV CKT 1	717	789	0.04513	114.6153	G11_051T 345.00 - TATONGA7 345.00 345KV CKT 1
FDNS	00NR	2	16WP	G15_033	FROM->TO	G14-057T 345.00 - SUNNYSIDE 345KV CKT 1	717	789	0.0498	114.5993	GEN523461 1-BLACKHAWK GEN #1
FDNS	00NR	2	16WP	G15_033	FROM->TO	G14-057T 345.00 - SUNNYSIDE 345KV CKT 1	717	789	0.0498	114.5992	GEN523462 1-BLACKHAWK GEN #2
FDNS	00NR	2	16WP	G15_033	FROM->TO	G14-057T 345.00 - SUNNYSIDE 345KV CKT 1	717	789	0.04927	114.5978	SUNNYSIDE (SUNNYSD5) 345/138/13.8KV TRANSFORMER CKT 1
FDNS	00NR	2	16WP	G15_033	FROM->TO	G14-057T 345.00 - SUNNYSIDE 345KV CKT 1	717	789	0.04977	114.5965	P12:138:WFEC-AEPW:GOLDENSW4:CRAIGJT4
FDNS	00NR	2	16WP	G15_033	FROM->TO	G14-057T 345.00 - SUNNYSIDE 345KV CKT 1	717	789	0.0498	114.5936	GEN562512 1-G14_020_3 0.6900
FDNS	00NR	2	20WP	G15_033	FROM->TO	G14-057T 345.00 - SUNNYSIDE 345KV CKT 1	717	789	0.04598	114.5912	WAVERLY7 345.00 - WOLF CREEK 345KV CKT 1
FDNS	00NR	2	16WP	G15_033	FROM->TO	G14-057T 345.00 - SUNNYSIDE 345KV CKT 1	717	789	0.0498	114.5599	GEN344895 2-1LAB G2 20.000
FDNS	00NR	2	16WP	G15_033	FROM->TO	G14-057T 345.00 - SUNNYSIDE 345KV CKT 1	717	789	0.04929	114.5381	ARDMORE WEST - UNIROYAL 138KV CKT 1
FDNS	00NR	2	16WP	G15_033	FROM->TO	G14-057T 345.00 - SUNNYSIDE 345KV CKT 1	717	789	0.04979	114.5279	P12:138:AEPW-SWPA:LONEOAK4:TUPELO4
FDNS	00NR	2	16WP	G15_033	FROM->TO	G14-057T 345.00 - SUNNYSIDE 345KV CKT 1	717	789	0.04979	114.5278	P12:138:WFEC:MSL06
FDNS	00NR	2	16WP	G15_033	FROM->TO	G14-057T 345.00 - SUNNYSIDE 345KV CKT 1	717	789	0.0498	114.5275	GEN344896 3-1LAB G3 20.000
FDNS	00NR	2	20WP	G15_033	FROM->TO	G14-057T 345.00 - SUNNYSIDE 345KV CKT 1	717	789	0.04597	114.5275	ELDORADO EHV - MOUNT OLIVE 500KV CKT 1
FDNS	00NR	2	16WP	G15_033	FROM->TO	G14-057T 345.00 - SUNNYSIDE 345KV CKT 1	717	789	0.0498	114.5263	GEN344894 1-1LAB G1 20.000
FDNS	00NR	2	16WP	G15_033	FROM->TO	G14-057T 345.00 - SUNNYSIDE 345KV CKT 1	717	789	0.0498	114.5248	GEN344897 4-1LAB G4 20.000
FDNS	00NR	2	16WP	G15_033	FROM->TO	G14-057T 345.00 - SUNNYSIDE 345KV CKT 1	717	789	0.0498	114.5166	GEN681542 6-JP MADGETT
FDNS	00NR	2	16WP	G15_033	FROM->TO	G14-057T 345.00 - SUNNYSIDE 345KV CKT 1	717	789	0.04955	114.5154	P12:138:OKGE:3TERM40
FDNS	00NR	2	20WP	G15_033	FROM->TO	G14-057T 345.00 - SUNNYSIDE 345KV CKT 1	717	789	0.04608	114.5096	P12:138:AEPW:SHERID4:112GORE4
FDNS	00NR	2	16WP	G15_033	FROM->TO	G14-057T 345.00 - SUNNYSIDE 345KV CKT 1	717	789	0.0498	114.5049	GEN562699 1-G15_018_3 0.6900
FDNS	00NR	2	16WP	G15_033	FROM->TO	G14-057T 345.00 - SUNNYSIDE 345KV CKT 1	717	789	0.04932	114.5028	CARTRCO4 138.00 - RATLIFF 138KV CKT 1
FDNS	00NR	2	20WP	G15_033	FROM->TO	G14-057T 345.00 - SUNNYSIDE 345KV CKT 1	717	789	0.04601	114.4934	GEN501812 1-RODEMACHER UNIT 2
FDNS	00NR	2	20WP	G15_033	FROM->TO	G14-057T 345.00 - SUNNYSIDE 345KV CKT 1	717	789	0.04601	114.4862	DOLET HILLS 345/24.0KV TRANSFORMER CKT 1
FDNS	00NR	2	16WP	G15_033	FROM->TO	G14-057T 345.00 - SUNNYSIDE 345KV CKT 1	717	789	0.0498	114.4857	GEN563162 1-G15081_3 0.6900
FDNS	00NR	2	16WP	G15_033	FROM->TO	G14-057T 345.00 - SUNNYSIDE 345KV CKT 1	717	789	0.0498	114.4837	GEN511853 1-COMANCHE #3
FDNS	00NR	2	16WP	G15_033	FROM->TO	G14-057T 345.00 - SUNNYSIDE 345KV CKT 1	717	789	0.0498	114.4825	GEN521110 1-ORME1 13.800
FDNS	00NR	2	16WP	G15_033	FROM->TO	G14-057T 345.00 - SUNNYSIDE 345KV CKT 1	717	789	0.0498	114.4825	GEN521111 1-ORME2 13.800
FDNS	00NR	2	16WP	G15_033	FROM->TO	G14-057T 345.00 - SUNNYSIDE 345KV CKT 1	717	789	0.0498	114.4633	GEN563292 1-G15095_3 0.6900
FDNS	00NR	2	16WP	G15_033	FROM->TO	G14-057T 345.00 - SUNNYSIDE 345KV CKT 1	717	789	0.05017	114.4602	G15085_T 138.00 - RUSSELL 138KV CKT 1
FDNS	00NR	2	16WP	G15_033	FROM->TO	G14-057T 345.00 - SUNNYSIDE 345KV CKT 1	717	789	0.0498	114.4345	GEN511852 1-COMANCHE #2
FDNS	00NR	2	16WP	G15_033	FROM->TO	G14-057T 345.00 - SUNNYSIDE 345KV CKT 1	717	789	0.0498	114.431	ALMA 161 161/24.0KV TRANSFORMER CKT 1
FDNS	00NR	2	16WP	G15_033	FROM->TO	G14-057T 345.00 - SUNNYSIDE 345KV CKT 1	717	789	0.0498	114.4181	GEN562861 1-G15045_2 0.4800
FDNS	00NR	2	16WP	G15_033	FROM->TO	G14-057T 345.00 - SUNNYSIDE 345KV CKT 1	717	789	0.0498	114.4156	GEN661015 1-COYOTE
FDNS	00NR	2	20WP	G15_033	FROM->TO	G14-057T 345.00 - SUNNYSIDE 345KV CKT 1	717	789	0.04574	114.4088	PARK LANE - SEMINOLE 138KV CKT 1
FDNS	00NR	2	16WP	G15_033	FROM->TO	G14-057T 345.00 - SUNNYSIDE 345KV CKT 1	717	789	0.0498	114.4001	GEN563122 1-G15077_3 0.3850
FDNS	00NR	2	16WP	G15_033	FROM->TO	G14-057T 345.00 - SUNNYSIDE 345KV CKT 1	717	789	0.0498	114.3855	GEN520811 1-ANADRK4
FDNS	00NR	2	20WP	G15_033	FROM->TO	G14-057T 345.00 - SUNNYSIDE 345KV CKT 1	717	789	0.0457	114.3736	THISTLE7 345.00 - WOODWARD DISTRICT EHV 345KV CKT 1
FDNS	00NR	2	20WP	G15_033	FROM->TO	G14-057T 345.00 - SUNNYSIDE 345KV CKT 1	717	789	0.0457	114.3736	THISTLE7 345.00 - WOODWARD DISTRICT EHV 345KV CKT 1
FDNS	00NR	2	20WP	G15_033	FROM->TO	G14-057T 345.00 - SUNNYSIDE 345KV CKT 1	717	789	0.0457	114.3736	THISTLE7 345.00 - WOODWARD DISTRICT EHV 345KV CKT 2
FDNS	00NR	2	20WP	G15_033	FROM->TO	G14-057T 345.00 - SUNNYSIDE 345KV CKT 1	717	789	0.0457	114.3736	THISTLE7 345.00 - WOODWARD DISTRICT EHV 345KV CKT 2
FDNS	00NR	2	16WP	G15_033	FROM->TO	G14-057T 345.00 - SUNNYSIDE 345KV CKT 1	717	789	0.05138	114.356	CACHE - SNYDER 138KV CKT 1
FDNS	00NR	2	20WP	G15_033	FROM->TO	G14-057T 345.00 - SUNNYSIDE 345KV CKT 1	717	789	0.04601	114.3501	GEN515564 1-ORIGIN11 0.6900
FDNS	00NR	2	20WP	G15_033	FROM->TO	G14-057T 345.00 - SUNNYSIDE 345KV CKT 1	717	789	0.04601	114.3501	GEN515565 1-ORIGIN21 0.6900
FDNS	00NR	2	20WP	G15_033	FROM->TO	G14-057T 345.00 - SUNNYSIDE 345KV CKT 1	717	789	0.0461	114.3451	MARIETTA - SOUTH WILSON 138KV CKT 1
FDNS	00NR	2	20WP	G15_033	FROM->TO	G14-057T 345.00 - SUNNYSIDE 345KV CKT 1	717	789	0.04594	114.3421	WEBRE - WELLS 500KV CKT 1
FDNS	00NR	2	16WP	G15_033	FROM->TO	G14-057T 345.00 - SUNNYSIDE 345KV CKT 1	717	789	0.05188	114.3417	GRAPEVINE INTERCHANGE - STATELINE INTERCHANGE 230KV CKT 1
FDNS	00NR	2	16WP	G15_033	FROM->TO	G14-057T 345.00 - SUNNYSIDE 345KV CKT 1	717	789	0.05188	114.3417	GRAPEVINE INTERCHANGE - STATELINE INTERCHANGE 230KV CKT 1
FDNS	00NR	2	20WP	G15_033	FROM->TO	G14-057T 345.00 - SUNNYSIDE 345KV CKT 1	717	789	0.04601	114.3361	GEN334440 1-SABINE UNIT 4
FDNS	00NR	2	20WP	G15_033	FROM->TO	G14-057T 345.00 - SUNNYSIDE 345KV CKT 1	717	789	0.04587	114.3348	CANEYRV7 345.00 - NEOSHO 345KV CKT 1
FDNS	00NR	2	16WP	G15_033	FROM->TO	G14-057T 345.00 - SUNNYSIDE 345KV CKT 1	717	789	0.04977	114.3262	P12:138:WFEC:MSL15
FDNS	00NR	2	16WP	G15_033	FROM->TO	G14-057T 345.00 - SUNNYSIDE 345KV CKT 1	717	789	0.04929	114.317	SUNNYSIDE - UNIROYAL 138KV CKT 1
FDNS	00NR	2	20WP	G15_033	FROM->TO	G14-057T 345.00 - SUNNYSIDE 345KV CKT 1	717	789	0.04615	114.3134	REDBUD - RIVERSIDE STATION 345KV CKT 1
FDNS	00NR	2	20WP	G15_033	FROM->TO	G14-057T 345.00 - SUNNYSIDE 345KV CKT 1	717	789	0.04615	114.3134	REDBUD - RIVERSIDE STATION 345KV CKT 1
FDNS	00NR	2	16WP	G15_033	FROM->TO	G14-057T 345.00 - SUNNYSIDE 345KV CKT 1	717	789	0.0498	114.3016	GEN657748 1-YOUNG 2 GENERATOR
FDNS	00NR	2	20WP	G15_033	FROM->TO	G14-057T 345.00 - SUNNYSIDE 345KV CKT 1	717	789	0.04601	114.2962	P12:161:AEPW:DYESS 5:HYLAND 5
FDNS	00NR	2	16WP	G15_033	FROM->TO	G14-057T 345.00 - SUNNYSIDE 345KV CKT 1	717	789	0.05024	114.2864	G15063_T 345.00 - MATHWSN7 345.00 345KV CKT 1
FDNS	00NR	2	20WP	G15_033	FROM->TO	G14-057T 345.00 - SUNNYSIDE 345KV CKT 1	717	789	0.04601	114.2824	DELL 500 - ESSEX UNIT 2 500KV CKT Z1

SOLUTION	GROUP	SCENARIO	SEASON	SOURCE	DIRECTION	MONITORED ELEMENT	RATEA (MVA)	RATEB(MVA)	TDF	TC%LOADING (% MVA)	CONTINGENCY
FDNS	00NR	2	16WP	G15_033	FROM->TO	G14-057T 345.00 - SUNNYSIDE 345KV CKT 1	717	789	0.05019	114.2745	P12:138:AEPW:SHAM4WT:CHILD4WT
FDNS	00NR	2	20WP	G15_033	FROM->TO	G14-057T 345.00 - SUNNYSIDE 345KV CKT 1	717	789	0.04601	114.2615	P12:69:AEPW:L.E.S.-2:LAW WC2
FDNS	00NR	2	20WP	G15_033	FROM->TO	G14-057T 345.00 - SUNNYSIDE 345KV CKT 1	717	789	0.04601	114.2611	GEN590011 2-ERCOT EQUIVALENCE
FDNS	00NR	2	20WP	G15_033	FROM->TO	G14-057T 345.00 - SUNNYSIDE 345KV CKT 1	717	789	0.0461	114.2573	P12:138:WFEC:MSL17
FDNS	00NR	2	16WP	G15_033	FROM->TO	G14-057T 345.00 - SUNNYSIDE 345KV CKT 1	717	789	0.0498	114.2359	GEN562992 1-G15063_3 0.6900
FDNS	00NR	2	16WP	G15_033	FROM->TO	G14-057T 345.00 - SUNNYSIDE 345KV CKT 1	717	789	0.05186	114.2307	GRAPEVINE INTERCHANGE - NICHOLS STATION 230KV CKT 1
FDNS	00NR	2	16WP	G15_033	FROM->TO	G14-057T 345.00 - SUNNYSIDE 345KV CKT 1	717	789	0.05186	114.2307	GRAPEVINE INTERCHANGE - NICHOLS STATION 230KV CKT 1
FDNS	00NR	2	20WP	G15_033	FROM->TO	G14-057T 345.00 - SUNNYSIDE 345KV CKT 1	717	789	0.08664	114.2225	GRACEMONT - LAWTON EASTSIDE 345KV CKT 1
FDNS	00NR	2	20WP	G15_033	FROM->TO	G14-057T 345.00 - SUNNYSIDE 345KV CKT 1	717	789	0.08664	114.2225	GRACEMONT - LAWTON EASTSIDE 345KV CKT 1
FDNS	00NR	2	16WP	G15_033	FROM->TO	G14-057T 345.00 - SUNNYSIDE 345KV CKT 1	717	789	0.0498	114.2098	GEN562704 1-G15_020_3 0.3550
FDNS	00NR	2	16WP	G15_033	FROM->TO	G14-057T 345.00 - SUNNYSIDE 345KV CKT 1	717	789	0.04989	114.2021	CANEY CREEK - TEXOMA JCT 138KV CKT 1
FDNS	00NR	2	20WP	G15_033	FROM->TO	G14-057T 345.00 - SUNNYSIDE 345KV CKT 1	717	789	0.04803	114.1959	LAWTON EASTSIDE (LES 5) 345/138/13.8KV TRANSFORMER CKT 2
FDNS	00NR	2	20WP	G15_033	FROM->TO	G14-057T 345.00 - SUNNYSIDE 345KV CKT 1	717	789	0.04803	114.1959	LAWTON EASTSIDE (LES 5) 345/138/13.8KV TRANSFORMER CKT 2
FDNS	00NR	2	20WP	G15_033	FROM->TO	G14-057T 345.00 - SUNNYSIDE 345KV CKT 1	717	789	0.04601	114.1938	GEN590010 1-ERCOT EQUIVALENCE
FDNS	00NR	2	16WP	G15_033	FROM->TO	G14-057T 345.00 - SUNNYSIDE 345KV CKT 1	717	789	0.0498	114.1895	GEN532751 1-WOLF CREEK GENERATING STATION UNIT 1
FDNS	00NR	2	16WP	G15_033	FROM->TO	G14-057T 345.00 - SUNNYSIDE 345KV CKT 1	717	789	0.0498	114.1893	GEN563173 1-G15082_3 0.6900
FDNS	00NR	2	20WP	G15_033	FROM->TO	G14-057T 345.00 - SUNNYSIDE 345KV CKT 1	717	789	0.04595	114.1838	ELDORADO EHV - SHERIDAN EHV 500KV CKT 1
FDNS	00NR	2	20WP	G15_033	FROM->TO	G14-057T 345.00 - SUNNYSIDE 345KV CKT 1	717	789	0.04587	114.1771	CANEYRV7 345.00 - LATHAMS7 345.00 345KV CKT 1
FDNS	00NR	2	20WP	G15_033	FROM->TO	G14-057T 345.00 - SUNNYSIDE 345KV CKT 1	717	789	0.04597	114.168	PAOLI - PAYNE 138.00 138KV CKT 1
FDNS	00NR	2	20WP	G15_033	FROM->TO	G14-057T 345.00 - SUNNYSIDE 345KV CKT 1	717	789	0.04599	114.1679	P12:138:WFEC:MSL02
FDNS	00NR	2	16WP	G15_033	FROM->TO	G14-057T 345.00 - SUNNYSIDE 345KV CKT 1	717	789	0.0498	114.1653	GEN562952 1-G15057_3 0.6500
FDNS	00NR	2	20WP	G15_033	FROM->TO	G14-057T 345.00 - SUNNYSIDE 345KV CKT 1	717	789	0.04607	114.145	P12:138:AEPW:112GORE4:L.E.S.-4
FDNS	00NR	2	20WP	G15_033	FROM->TO	G14-057T 345.00 - SUNNYSIDE 345KV CKT 1	717	789	0.04601	114.1439	GEN506754 1-LEBROCK STEAM 1
FDNS	00NR	2	16WP	G15_033	FROM->TO	G14-057T 345.00 - SUNNYSIDE 345KV CKT 1	717	789	0.0498	114.1376	GEN620315 1-BIG STONE GEN
FDNS	00NR	2	20WP	G15_033	FROM->TO	G14-057T 345.00 - SUNNYSIDE 345KV CKT 1	717	789	0.04601	114.1371	GEN509408 1-WILKES #2
FDNS	00NR	2	20WP	G15_033	FROM->TO	G14-057T 345.00 - SUNNYSIDE 345KV CKT 1	717	789	0.04617	114.1358	CIVIT - PAOLI 138KV CKT 1
FDNS	00NR	2	16WP	G15_033	FROM->TO	G14-057T 345.00 - SUNNYSIDE 345KV CKT 1	717	789	0.0498	114.1265	GEN562710 1-G15_022_3 0.5500
FDNS	00NR	2	20WP	G15_033	FROM->TO	G14-057T 345.00 - SUNNYSIDE 345KV CKT 1	717	789	0.04601	114.0936	ANADARKO - GEORGIA 138KV CKT 1
FDNS	00NR	2	16WP	G15_033	FROM->TO	G14-057T 345.00 - SUNNYSIDE 345KV CKT 1	717	789	0.0498	114.0804	GEN600004 2-PRAIRIE ISLAND G2
FDNS	00NR	2	16WP	G15_033	FROM->TO	G14-057T 345.00 - SUNNYSIDE 345KV CKT 1	717	789	0.0498	114.0778	GEN600003 1-PRAIRIE ISLAND G1
FDNS	00NR	2	16WP	G15_033	FROM->TO	G14-057T 345.00 - SUNNYSIDE 345KV CKT 1	717	789	0.0498	114.0699	GEN600006 1-AS KING
FDNS	00NR	2	20WP	G15_033	FROM->TO	G14-057T 345.00 - SUNNYSIDE 345KV CKT 1	717	789	0.04601	114.0507	GEN336252 1-NINEMILE POINT UNIT#5
FDNS	00NR	2	20WP	G15_033	FROM->TO	G14-057T 345.00 - SUNNYSIDE 345KV CKT 1	717	789	0.04586	114.0475	MATHWSN7 345.00 - NORTHWEST 345KV CKT 1
FDNS	00NR	2	16WP	G15_033	FROM->TO	G14-057T 345.00 - SUNNYSIDE 345KV CKT 1	717	789	0.0498	114.0251	P12:138:WFEC:MSL09
FDNS	00NR	2	20WP	G15_033	FROM->TO	G14-057T 345.00 - SUNNYSIDE 345KV CKT 1	717	789	0.04635	114.0206	P12:138:AEPW-OGE:CORNVIL4:MAUD 4
FDNS	00NR	2	20WP	G15_033	FROM->TO	G14-057T 345.00 - SUNNYSIDE 345KV CKT 1	717	789	0.04601	114.0173	FRONTIER - GRIMES 345KV CKT 1
FDNS	00NR	2	20WP	G15_033	FROM->TO	G14-057T 345.00 - SUNNYSIDE 345KV CKT 1	717	789	0.04601	114.0109	FLETCHER - GEORGIA 138KV CKT 1
FDNS	00NR	2	20WP	G15_033	FROM->TO	G14-057T 345.00 - SUNNYSIDE 345KV CKT 1	717	789	0.04606	114.0053	TUPELO - TUPELO TAP 138KV CKT 1
FDNS	00NR	2	20WP	G15_033	FROM->TO	G14-057T 345.00 - SUNNYSIDE 345KV CKT 1	717	789	0.04601	114.0012	GEN503909 1-FULTONU1 1 16.000
FDNS	00NR	2	20WP	G15_033	FROM->TO	G14-057T 345.00 - SUNNYSIDE 345KV CKT 1	717	789	0.04601	113.998	GEN335204 1-NELSON UNIT 4
FDNS	00NR	2	20WP	G15_033	FROM->TO	G14-057T 345.00 - SUNNYSIDE 345KV CKT 1	717	789	0.04617	113.993	CIVIT - STRATFORD 138KV CKT 1
FDNS	00NR	2	20WP	G15_033	FROM->TO	G14-057T 345.00 - SUNNYSIDE 345KV CKT 1	717	789	0.04601	113.9911	GEN334441 1-SABINE UNIT 5
FDNS	00NR	2	20WP	G15_033	FROM->TO	G14-057T 345.00 - SUNNYSIDE 345KV CKT 1	717	789	0.04513	113.9854	G11_051T 345.00 - WOODWARD DISTRICT EHV 345KV CKT 1
FDNS	00NR	2	16WP	G15_033	FROM->TO	G14-057T 345.00 - SUNNYSIDE 345KV CKT 1	717	789	0.0498	113.9788	GEN636641 1-LOUISA UNIT 1
FDNS	00NR	2	20WP	G15_033	FROM->TO	G14-057T 345.00 - SUNNYSIDE 345KV CKT 1	717	789	0.04587	113.968	LATHAMS7 345.00 - ROSE HILL 345KV CKT 1
FDNS	00NR	2	16WP	G15_033	FROM->TO	G14-057T 345.00 - SUNNYSIDE 345KV CKT 1	717	789	0.05039	113.9556	P12:138:AEPW-OGE:CORNVIL4:CIMARON4
FDNS	00NR	2	20WP	G15_033	FROM->TO	G14-057T 345.00 - SUNNYSIDE 345KV CKT 1	717	789	0.04598	113.9548	EMPIRE - FLETCHER 138KV CKT 1
FDNS	00NR	2	20WP	G15_033	FROM->TO	G14-057T 345.00 - SUNNYSIDE 345KV CKT 1	717	789	0.04635	113.9412	BLANCHARD - CORNVILLE 138KV CKT 1
FDNS	00NR	2	16WP	G15_033	FROM->TO	G14-057T 345.00 - SUNNYSIDE 345KV CKT 1	717	789	0.0498	113.9406	GEN600005 1-MONTICELLO
FDNS	00NR	2	16WP	G15_033	FROM->TO	G14-057T 345.00 - SUNNYSIDE 345KV CKT 1	717	789	0.05331	113.9265	CHISHOLM7 345.00 (CHISHOLM) 345/230/13.2KV TRANSFORMER CKT 1
FDNS	00NR	2	20WP	G15_033	FROM->TO	G14-057T 345.00 - SUNNYSIDE 345KV CKT 1	717	789	0.04598	113.9242	LAYFLD8 500.00 - MOUNT OLIVE 500KV CKT 1
FDNS	00NR	2	20WP	G15_033	FROM->TO	G14-057T 345.00 - SUNNYSIDE 345KV CKT 1	717	789	0.04598	113.9242	LAYFLD8 500.00 - MOUNT OLIVE 500KV CKT 1
FDNS	00NR	2	16WP	G15_033	FROM->TO	G14-057T 345.00 - SUNNYSIDE 345KV CKT 1	717	789	0.0498	113.9163	GEN511851 1-COMANCHE #1
FDNS	00NR	2	20WP	G15_033	FROM->TO	G14-057T 345.00 - SUNNYSIDE 345KV CKT 1	717	789	0.04601	113.8878	GEN334071 1-LEWIS CREEK 2
FDNS	00NR	2	20WP	G15_033	FROM->TO	G14-057T 345.00 - SUNNYSIDE 345KV CKT 1	717	789	0.04601	113.8809	GEN336251 1-NINEMILE POINT UNIT#4
FDNS	00NR	2	20WP	G15_033	FROM->TO	G14-057T 345.00 - SUNNYSIDE 345KV CKT 1	717	789	0.04601	113.8794	GEN334070 1-LEWIS CREEK 1
FDNS	00NR	2	20WP	G15_033	FROM->TO	G14-057T 345.00 - SUNNYSIDE 345KV CKT 1	717	789	0.04598	113.8772	COMANCHE - EMPIRE 138KV CKT 1
FDNS	00NR	2	20WP	G15_033	FROM->TO	G14-057T 345.00 - SUNNYSIDE 345KV CKT 1	717	789	0.04601	113.8757	P12:161:AEPW-SWPA:BEAVER5:EROGERS5
FDNS	00NR	2	20WP	G15_033	FROM->TO	G14-057T 345.00 - SUNNYSIDE 345KV CKT 1	717	789	0.04617	113.8735	OIL CENTER - STRATFORD 138KV CKT 1
FDNS	00NR	2	16WP	G15_033	FROM->TO	G14-057T 345.00 - SUNNYSIDE 345KV CKT 1	717	789	0.0498	113.8721	GEN562754 1-G15031_5 0.6900
FDNS	00NR	2	20WP	G15_033	FROM->TO	G14-057T 345.00 - SUNNYSIDE 345KV CKT 1	717	789	0.04623	113.8599	DUNCAN (DUNCAN) 138/69/13.8KV TRANSFORMER CKT 1
FDNS	00NR	2	20WP	G15_033	FROM->TO	G14-057T 345.00 - SUNNYSIDE 345KV CKT 1	717	789	0.04623	113.8599	DUNCAN (DUNCAN) 138/69/13.8KV TRANSFORMER CKT 1
FDNS	00NR	2	20WP	G15_033	FROM->TO	G14-057T 345.00 - SUNNYSIDE 345KV CKT 1	717	789	0.04601	113.8598	GEN509393 S1-ARSENAL HILL GENS #4 (STALL)
FDNS	00NR	2	20WP	G15_033	FROM->TO	G14-057T 345.00 - SUNNYSIDE 345KV CKT 1	717	789	0.04601	113.8583	GEN509392 G2-ARSENAL HILL GENS #3 (STALL)
FDNS	00NR	2	20WP	G15_033	FROM->TO	G14-057T 345.00 - SUNNYSIDE 345KV CKT 1	717	789	0.04601	113.8582	GEN509391 G1-ARSENAL HILL GENS #2 (STALL)
FDNS	00NR	2	16WP	G15_033	FROM->TO	G14-057T 345.00 - SUNNYSIDE 345KV CKT 1	717	789	0.0498	113.8579	GEN635213 3-NEAL UNIT 3
FDNS	00NR	2	20WP	G15_033	FROM->TO	G14-057T 345.00 - SUNNYSIDE 345KV CKT 1	717	789	0.04575	113.852	G1524G1525 345.00 - THISTLE7 345.00 345KV CKT 1
FDNS	00NR	2	20WP	G15_033	FROM->TO	G14-057T 345.00 - SUNNYSIDE 345KV CKT 1	717	789	0.04575	113.852	G1524G1525 345.00 - THISTLE7 345.00 345KV CKT 2
FDNS	00NR	2	20WP	G15_033	FROM->TO	G14-057T 345.00 - SUNNYSIDE 345KV CKT 1	717	789	0.04601	113.8342	GEN334433 1-SABINE UNIT 3
FDNS	00NR	2	16WP	G15_033	FROM->TO	G14-057T 345.00 - SUNNYSIDE 345KV CKT 1	717	789	0.0498	113.8259	GEN629074 1-ARNOLD LOWSIDE OF GSU XFMR
FDNS	00NR	2	20WP	G15_033	FROM->TO	G14-057T 345.00 - SUNNYSIDE 345KV CKT 1	717	789	0.04601	113.818	P12:161:AEPW:DYESS5:ELMSPRNG:TONTITN5
FDNS	00NR	2	16WP	G15_033	FROM->TO	G14-057T 345.00 - SUNNYSIDE 345KV CKT 1	717	789	0.0498	113.8118	GEN562756 1-G15031_7 0.6900
FDNS	00NR	2	20WP	G15_033	FROM->TO	G14-057T 345.00 - SUNNYSIDE 345KV CKT 1	717	789	0.04601	113.8089	GEN337653 1-WHITE BLUFF UNIT #2
FDNS	00NR	2	20WP	G15_033	FROM->TO	G14-057T 345.00 - SUNNYSIDE 345KV CKT 1	717	789	0.04601	113.8058	GEN336831 1-BAXTER WILSON SES
FDNS	00NR	2	16WP	G15_033	FROM->TO	G14-057T 345.00 - SUNNYSIDE 345KV CKT 1	717	789	0.0498	113.7941	GEN562023 1-G11_020_3 0.6900
FDNS	00NR	2	16WP	G15_033	FROM->TO	G14-057T 345.00 - SUNNYSIDE 345KV CKT 1	717	789	0.0498	113.7941	GEN562026 1-G11_019_3 0.6900
FDNS	00NR	2	16WP	G15_033	FROM->TO	G14-057T 345.00 - SUNNYSIDE 345KV CKT 1	717	789	0.0498	113.7875	BIG STONE 230/24.0KV TRANSFORMER CKT 1
FDNS	00NR	2	20WP	G15_033	FROM->TO	G14-057T 345.00 - SUNNYSIDE 345KV CKT 1	717	789	0.04601	113.7676	GEN334030 1-FRONTIER UNIT 1
FDNS	00NR	2	20WP	G15_033	FROM->TO	G14-057T 345.00 - SUNNYSIDE 345KV CKT 1	717	789	0.046	113.7662	P12:138:AEPW:CATOOSA4:T.S.E.-4

SOLUTION	GROUP	SCENARIO	SEASON	SOURCE	DIRECTION	MONITORED ELEMENT	RATEA (MVA)	RATEB(MVA)	TDF	TC%LOADING (% MVA)	CONTINGENCY
FDNS	00NR	2	20WP	G15_033	FROM->TO	G14-057T 345.00 - SUNNYSIDE 345KV CKT 1	717	789	0.04601	113.7652	GEN334031 1-FRONTIER UNIT 2
FDNS	00NR	2	16WP	G15_033	FROM->TO	G14-057T 345.00 - SUNNYSIDE 345KV CKT 1	717	789	0.0498	113.761	GEN562556 1-G14_046_3 0.3420
FDNS	00NR	2	20WP	G15_033	FROM->TO	G14-057T 345.00 - SUNNYSIDE 345KV CKT 1	717	789	0.04601	113.7448	GEN337911 1-ARKANSAS NUCLEAR ONE UNIT #2
FDNS	00NR	2	20WP	G15_033	FROM->TO	G14-057T 345.00 - SUNNYSIDE 345KV CKT 1	717	789	0.04635	113.7344	BLANCHARD - MAUD 138KV CKT 1
FDNS	00NR	2	20WP	G15_033	FROM->TO	G14-057T 345.00 - SUNNYSIDE 345KV CKT 1	717	789	0.04655	113.7334	TUTTLE - TUTTLE CONOCO TAP 138KV CKT 1
FDNS	00NR	2	20WP	G15_033	FROM->TO	G14-057T 345.00 - SUNNYSIDE 345KV CKT 1	717	789	0.04669	113.7327	P12:138:AEPW:CORNVIL4:DUNCAN-4
FDNS	00NR	2	20WP	G15_033	FROM->TO	G14-057T 345.00 - SUNNYSIDE 345KV CKT 1	717	789	0.04588	113.7274	P12:138:AEPW-OGE:WTH_JCT4:JENSEN4
FDNS	00NR	2	20WP	G15_033	FROM->TO	G14-057T 345.00 - SUNNYSIDE 345KV CKT 1	717	789	0.04867	113.7234	P12:138:AEPW:S.W.S.-4:L.E.S.-4
FDNS	00NR	2	20WP	G15_033	FROM->TO	G14-057T 345.00 - SUNNYSIDE 345KV CKT 1	717	789	0.04431	113.7203	FINNEY SWITCHING STATION - HOLCOMB 345KV CKT 1
FDNS	00NR	2	20WP	G15_033	FROM->TO	G14-057T 345.00 - SUNNYSIDE 345KV CKT 1	717	789	0.04431	113.7203	FINNEY SWITCHING STATION - HOLCOMB 345KV CKT 1
FDNS	00NR	2	20WP	G15_033	FROM->TO	G14-057T 345.00 - SUNNYSIDE 345KV CKT 1	717	789	0.04601	113.7178	GEN501811 1-RODEMACHER UNIT 1
FDNS	00NR	2	20WP	G15_033	FROM->TO	G14-057T 345.00 - SUNNYSIDE 345KV CKT 1	717	789	0.04591	113.7175	FULTON 115 - HOPE 115KV CKT 1
FDNS	00NR	2	20WP	G15_033	FROM->TO	G14-057T 345.00 - SUNNYSIDE 345KV CKT 1	717	789	0.04591	113.7175	FULTON 115 - HOPE 115KV CKT 1
FDNS	00NR	2	20WP	G15_033	FROM->TO	G14-057T 345.00 - SUNNYSIDE 345KV CKT 1	717	789	0.04601	113.7078	GEN337652 1-WHITE BLUFF UNIT #1
FDNS	00NR	2	20WP	G15_033	FROM->TO	G14-057T 345.00 - SUNNYSIDE 345KV CKT 1	717	789	0.04601	113.7029	GEN506752 1-LEBROCK GAS 1
FDNS	00NR	2	20WP	G15_033	FROM->TO	G14-057T 345.00 - SUNNYSIDE 345KV CKT 1	717	789	0.04601	113.7026	GEN506753 1-LEBROCK GAS 2
FDNS	00NR	2	20WP	G15_033	FROM->TO	G14-057T 345.00 - SUNNYSIDE 345KV CKT 1	717	789	0.04609	113.6989	P12:138:AEPW:CORNVIL4:S.W.S.-4
FDNS	00NR	2	20WP	G15_033	FROM->TO	G14-057T 345.00 - SUNNYSIDE 345KV CKT 1	717	789	0.04617	113.6944	LATTA JCT - OIL CENTER 138KV CKT 1
FDNS	00NR	2	16WP	G15_033	FROM->TO	G14-057T 345.00 - SUNNYSIDE 345KV CKT 1	717	789	0.05347	113.6919	STLN-DEMARC6 - SWEETWATER 230KV CKT 1
FDNS	00NR	2	16WP	G15_033	FROM->TO	G14-057T 345.00 - SUNNYSIDE 345KV CKT 1	717	789	0.05347	113.6893	P12:230:AEPW-SPS:SWEETWT6:WHEELER 6
FDNS	00NR	2	16WP	G15_033	FROM->TO	G14-057T 345.00 - SUNNYSIDE 345KV CKT 1	717	789	0.05347	113.6885	STATELINE INTERCHANGE - STLN-DEMARC6 230KV CKT 1
FDNS	00NR	2	20WP	G15_033	FROM->TO	G14-057T 345.00 - SUNNYSIDE 345KV CKT 1	717	789	0.04623	113.6842	P12:69:WFEC-AEPW:COMANCH2:DUNCAN-2
FDNS	00NR	2	20WP	G15_033	FROM->TO	G14-057T 345.00 - SUNNYSIDE 345KV CKT 1	717	789	0.04601	113.6835	GEN336191 1-LITTLE GYPSY UNIT#3
FDNS	00NR	2	20WP	G15_033	FROM->TO	G14-057T 345.00 - SUNNYSIDE 345KV CKT 1	717	789	0.04601	113.6708	GEN300015 1-1SGPDEL 18.000
FDNS	00NR	2	16WP	G15_033	FROM->TO	G14-057T 345.00 - SUNNYSIDE 345KV CKT 1	717	789	0.0498	113.6693	GEN563142 1-G15079_3 0.5500
FDNS	00NR	2	16WP	G15_033	FROM->TO	G14-057T 345.00 - SUNNYSIDE 345KV CKT 1	717	789	0.0498	113.6693	GEN563151 1-G15080_2 0.5500
FDNS	00NR	2	16WP	G15_033	FROM->TO	G14-057T 345.00 - SUNNYSIDE 345KV CKT 1	717	789	0.0498	113.6675	GEN523971 1-HARRINGTON GEN #1 24 KV
FDNS	00NR	2	16WP	G15_033	FROM->TO	G14-057T 345.00 - SUNNYSIDE 345KV CKT 1	717	789	0.0498	113.6675	GEN523973 1-HARRINGTON GEN #3 24 KV
FDNS	00NR	2	16WP	G15_033	FROM->TO	G14-057T 345.00 - SUNNYSIDE 345KV CKT 1	717	789	0.0498	113.6674	GEN523972 1-HARRINGTON GEN #2 24 KV
FDNS	00NR	2	20WP	G15_033	FROM->TO	G14-057T 345.00 - SUNNYSIDE 345KV CKT 1	717	789	0.04601	113.6663	GEN515040 1-SEMINOLE 1G
FDNS	00NR	2	20WP	G15_033	FROM->TO	G14-057T 345.00 - SUNNYSIDE 345KV CKT 1	717	789	0.04593	113.656	6LAYFLD 230.00 - CARROLL 230KV CKT 1
FDNS	00NR	2	20WP	G15_033	FROM->TO	G14-057T 345.00 - SUNNYSIDE 345KV CKT 1	717	789	0.04655	113.6545	CIMARRON - TUTTLE CONOCO TAP 138KV CKT 1
FDNS	00NR	2	20WP	G15_033	FROM->TO	G14-057T 345.00 - SUNNYSIDE 345KV CKT 1	717	789	0.04601	113.6536	GEN335614 1-WILLOW GLENN UNIT#4
FDNS	00NR	2	20WP	G15_033	FROM->TO	G14-057T 345.00 - SUNNYSIDE 345KV CKT 1	717	789	0.04601	113.6497	GEN515226 1-MUSKOGEE 6G
FDNS	00NR	2	20WP	G15_033	FROM->TO	G14-057T 345.00 - SUNNYSIDE 345KV CKT 1	717	789	0.046	113.6486	8DANIEL8 500.00 - MCKNIGHT 500KV CKT 1
FDNS	00NR	2	16WP	G15_033	FROM->TO	G14-057T 345.00 - SUNNYSIDE 345KV CKT 1	717	789	0.05331	113.6384	CHISHOLM7 345.00 - GRACEMONT 345KV CKT 1
FDNS	00NR	2	20WP	G15_033	FROM->TO	G14-057T 345.00 - SUNNYSIDE 345KV CKT 1	717	789	0.04601	113.6359	GEN300003 1-THOMAS HILL UNIT 3
FDNS	00NR	2	20WP	G15_033	FROM->TO	G14-057T 345.00 - SUNNYSIDE 345KV CKT 1	717	789	0.04636	113.6356	BAILEY4 138.00 - SUNSHINE CANYON 138KV CKT 1
FDNS	00NR	2	20WP	G15_033	FROM->TO	G14-057T 345.00 - SUNNYSIDE 345KV CKT 1	717	789	0.04623	113.6312	DUNCAN - TOSCO 69KV CKT 1
FDNS	00NR	2	16WP	G15_033	FROM->TO	G14-057T 345.00 - SUNNYSIDE 345KV CKT 1	717	789	0.0498	113.6307	GEN600000 1-SHERBURNECNTY G1
FDNS	00NR	2	20WP	G15_033	FROM->TO	G14-057T 345.00 - SUNNYSIDE 345KV CKT 1	717	789	0.04601	113.6306	P12:161:AEPW:EROGERS5:ECNTRTN5
FDNS	00NR	2	20WP	G15_033	FROM->TO	G14-057T 345.00 - SUNNYSIDE 345KV CKT 1	717	789	0.04594	113.6204	P12:138:AEPW:WTHWF4:CLINTJC4
FDNS	00NR	2	20WP	G15_033	FROM->TO	G14-057T 345.00 - SUNNYSIDE 345KV CKT 1	717	789	0.04601	113.6095	GEN303007 1-1BC2 U2
FDNS	00NR	2	20WP	G15_033	FROM->TO	G14-057T 345.00 - SUNNYSIDE 345KV CKT 1	717	789	0.04601	113.6054	GEN562783 1-G15036_4 0.6900
FDNS	00NR	2	20WP	G15_033	FROM->TO	G14-057T 345.00 - SUNNYSIDE 345KV CKT 1	717	789	0.04601	113.6054	GEN562784 1-G15036_5 0.6900
FDNS	00NR	2	20WP	G15_033	FROM->TO	G14-057T 345.00 - SUNNYSIDE 345KV CKT 1	717	789	0.04601	113.604	WHITE BLUFF 500/26.0KV TRANSFORMER CKT 1
FDNS	00NR	2	20WP	G15_033	FROM->TO	G14-057T 345.00 - SUNNYSIDE 345KV CKT 1	717	789	0.04601	113.6038	GEN303006 1-1BC2 U1
FDNS	00NR	2	20WP	G15_033	FROM->TO	G14-057T 345.00 - SUNNYSIDE 345KV CKT 1	717	789	0.04601	113.603	GEN336464 1-MICHOUD UNIT #3
FDNS	00NR	2	20WP	G15_033	FROM->TO	G14-057T 345.00 - SUNNYSIDE 345KV CKT 1	717	789	0.04601	113.6017	RODEMACHER 230/22.0KV TRANSFORMER CKT 1
FDNS	00NR	2	20WP	G15_033	FROM->TO	G14-057T 345.00 - SUNNYSIDE 345KV CKT 1	717	789	0.04601	113.5936	GEN337910 1-ARKANSAS NUCLEAR ONE UNIT #1
FDNS	00NR	2	20WP	G15_033	FROM->TO	G14-057T 345.00 - SUNNYSIDE 345KV CKT 1	717	789	0.04602	113.5912	CIMARRON - CZECH HALL 138KV CKT 1
FDNS	00NR	2	20WP	G15_033	FROM->TO	G14-057T 345.00 - SUNNYSIDE 345KV CKT 1	717	789	0.04594	113.5911	BISMARK - HOT SPRINGS WEST BUS 115KV CKT 1
FDNS	00NR	2	20WP	G15_033	FROM->TO	G14-057T 345.00 - SUNNYSIDE 345KV CKT 1	717	789	0.04597	113.5888	MC NIEL 500/115KV TRANSFORMER CKT 1
FDNS	00NR	2	20WP	G15_033	FROM->TO	G14-057T 345.00 - SUNNYSIDE 345KV CKT 1	717	789	0.04596	113.5879	G15088_T 345.00 - MOORE 345KV CKT 1
FDNS	00NR	2	20WP	G15_033	FROM->TO	G14-057T 345.00 - SUNNYSIDE 345KV CKT 1	717	789	0.04623	113.584	COMANCHE TAP - TOSCO 69KV CKT 1
FDNS	00NR	2	20WP	G15_033	FROM->TO	G14-057T 345.00 - SUNNYSIDE 345KV CKT 1	717	789	0.04598	113.5802	HOT SPRINGS EHV - MAGNET COVE 500KV CKT 1
FDNS	00NR	2	20WP	G15_033	FROM->TO	G14-057T 345.00 - SUNNYSIDE 345KV CKT 1	717	789	0.04632	113.5772	P12:69:AEPW-OMPA:COMANC-2:OMWALTR2
FDNS	00NR	2	20WP	G15_033	FROM->TO	G14-057T 345.00 - SUNNYSIDE 345KV CKT 1	717	789	0.04596	113.5768	G15095_T 138.00 - ROSE_VALLEY 138.00 138KV CKT 1
FDNS	00NR	2	20WP	G15_033	FROM->TO	G14-057T 345.00 - SUNNYSIDE 345KV CKT 1	717	789	0.04598	113.5721	G15074_T 345.00 - HOYT 345KV CKT 1
FDNS	00NR	2	20WP	G15_033	FROM->TO	G14-057T 345.00 - SUNNYSIDE 345KV CKT 1	717	789	0.04594	113.5717	P12:138:AEPW:WTHWF4:WTH_SE4
FDNS	00NR	2	20WP	G15_033	FROM->TO	G14-057T 345.00 - SUNNYSIDE 345KV CKT 1	717	789	0.04601	113.5573	GEN515223 1-MUSKOGEE 4G
FDNS	00NR	2	20WP	G15_033	FROM->TO	G14-057T 345.00 - SUNNYSIDE 345KV CKT 1	717	789	0.04601	113.5573	GEN515225 1-MUSKOGEE 5G
FDNS	00NR	2	20WP	G15_033	FROM->TO	G14-057T 345.00 - SUNNYSIDE 345KV CKT 1	717	789	0.04551	113.5506	BUCKNER7 345.00 - SPEARVILLE 345KV CKT 1
FDNS	00NR	2	20WP	G15_033	FROM->TO	G14-057T 345.00 - SUNNYSIDE 345KV CKT 1	717	789	0.04551	113.5506	BUCKNER7 345.00 - SPEARVILLE 345KV CKT 1
FDNS	00NR	2	20WP	G15_033	FROM->TO	G14-057T 345.00 - SUNNYSIDE 345KV CKT 1	717	789	0.04597	113.5453	CIMARRON - SARA 138KV CKT 1
FDNS	00NR	2	20WP	G15_033	FROM->TO	G14-057T 345.00 - SUNNYSIDE 345KV CKT 1	717	789	0.04601	113.5448	GEN300010 1-ST FRANCIS UNIT 1
FDNS	00NR	2	20WP	G15_033	FROM->TO	G14-057T 345.00 - SUNNYSIDE 345KV CKT 1	717	789	0.04601	113.5445	GEN337041 1-GERALD ANDRUS
FDNS	00NR	2	20WP	G15_033	FROM->TO	G14-057T 345.00 - SUNNYSIDE 345KV CKT 1	717	789	0.04601	113.5427	GEN303008 1-1BC2 U3
FDNS	00NR	2	16WP	G15_033	FROM->TO	G14-057T 345.00 - SUNNYSIDE 345KV CKT 1	717	789	0.0498	113.5414	GEN600001 2-SHERBURNE CNTY G2
FDNS	00NR	2	20WP	G15_033	FROM->TO	G14-057T 345.00 - SUNNYSIDE 345KV CKT 1	717	789	0.04145	113.539	G14_038T 345.00 - Hitchland Interchange 345KV CKT 1
FDNS	00NR	2	20WP	G15_033	FROM->TO	G14-057T 345.00 - SUNNYSIDE 345KV CKT 1	717	789	0.04594	113.5365	ALPINE AECC - BISMARK 115KV CKT 1
FDNS	00NR	2	16WP	G15_033	FROM->TO	G14-057T 345.00 - SUNNYSIDE 345KV CKT 1	717	789	0.04961	113.5359	NORTHWEST TEXARKANA - VALLIANT 345KV CKT 1
FDNS	00NR	2	16WP	G15_033	FROM->TO	G14-057T 345.00 - SUNNYSIDE 345KV CKT 1	717	789	0.04961	113.5359	NORTHWEST TEXARKANA - VALLIANT 345KV CKT 1
FDNS	00NR	2	20WP	G15_033	FROM->TO	G14-057T 345.00 - SUNNYSIDE 345KV CKT 1	717	789	0.04578	113.533	SEMINOLE - VANOSTP4 138.00 138KV CKT 1
FDNS	00NR	2	20WP	G15_033	FROM->TO	G14-057T 345.00 - SUNNYSIDE 345KV CKT 1	717	789	0.04601	113.53	P12:138:AEPW:N.E.S.-4:CATOOSA4
FDNS	00NR	2	20WP	G15_033	FROM->TO	G14-057T 345.00 - SUNNYSIDE 345KV CKT 1	717	789	0.04567	113.5288	ARBWIND4 138.00 - CARTER 138KV CKT 1
FDNS	00NR	2	20WP	G15_033	FROM->TO	G14-057T 345.00 - SUNNYSIDE 345KV CKT 1	717	789	0.04594	113.5264	CLEO CORNER - CLEOPLT4 138.00 138KV CKT 1
FDNS	00NR	2	20WP	G15_033	FROM->TO	G14-057T 345.00 - SUNNYSIDE 345KV CKT 1	717	789	0.04602	113.521	CZECH HALL - XEROX 138KV CKT 1
FDNS	00NR	2	20WP	G15_033	FROM->TO	G14-057T 345.00 - SUNNYSIDE 345KV CKT 1	717	789	0.04601	113.5192	GEN505432 1-SIKESTON

SOLUTION	GROUP	SCENARIO	SEASON	SOURCE	DIRECTION	MONITORED ELEMENT	RATEA (MVA)	RATEB(MVA)	TDF	TC%LOADING (% MVA)	CONTINGENCY
FDNS	00NR	2	20WP	G15_033	FROM->TO	G14-057T 345.00 - SUNNYSIDE 345KV CKT 1	717	789	0.04623	113.5172	COMANCHE - COMANCHE TAP 69KV CKT 1
FDNS	00NR	2	20WP	G15_033	FROM->TO	G14-057T 345.00 - SUNNYSIDE 345KV CKT 1	717	789	0.04602	113.5168	MORGAN - XEROX 138KV CKT 1
FDNS	00NR	2	20WP	G15_033	FROM->TO	G14-057T 345.00 - SUNNYSIDE 345KV CKT 1	717	789	0.04601	113.5165	NELSON 230/20.0KV TRANSFORMER CKT 1
FDNS	00NR	2	20WP	G15_033	FROM->TO	G14-057T 345.00 - SUNNYSIDE 345KV CKT 1	717	789	0.04601	113.5142	GEN336170 1-GULF OXY U4
FDNS	00NR	2	20WP	G15_033	FROM->TO	G14-057T 345.00 - SUNNYSIDE 345KV CKT 1	717	789	0.04594	113.5091	CLEOPLT4 138.00 - MEN TAP 138KV CKT 1
FDNS	00NR	2	20WP	G15_033	FROM->TO	G14-057T 345.00 - SUNNYSIDE 345KV CKT 1	717	789	0.04596	113.5046	NOEL_SW 138.00 - ROSE_VALLEY 138.00 138KV CKT 1
FDNS	00NR	2	20WP	G15_033	FROM->TO	G14-057T 345.00 - SUNNYSIDE 345KV CKT 1	717	789	0.04594	113.4985	IMO TAP - MEN TAP 138KV CKT 1
FDNS	00NR	2	20WP	G15_033	FROM->TO	G14-057T 345.00 - SUNNYSIDE 345KV CKT 1	717	789	0.04602	113.4945	MORGAN - MUSTANG 138KV CKT 1
FDNS	00NR	2	20WP	G15_033	FROM->TO	G14-057T 345.00 - SUNNYSIDE 345KV CKT 1	717	789	0.0454	113.4945	ELK CITY 230KV (ELKCTY-6) 230/138/13.8KV TRANSFORMER CKT 1
FDNS	00NR	2	20WP	G15_033	FROM->TO	G14-057T 345.00 - SUNNYSIDE 345KV CKT 1	717	789	0.0454	113.4945	ELK CITY 230KV (ELKCTY-6) 230/138/13.8KV TRANSFORMER CKT 1
FDNS	00NR	2	20WP	G15_033	FROM->TO	G14-057T 345.00 - SUNNYSIDE 345KV CKT 1	717	789	0.0454	113.4944	CHISHOLM6 230.00 - ELK CITY 230KV 230KV CKT 1
FDNS	00NR	2	20WP	G15_033	FROM->TO	G14-057T 345.00 - SUNNYSIDE 345KV CKT 1	717	789	0.04601	113.4919	GEN336801 1-BAXTER WILSON UNIT #1
FDNS	00NR	2	20WP	G15_033	FROM->TO	G14-057T 345.00 - SUNNYSIDE 345KV CKT 1	717	789	0.04601	113.4883	GEN300011 1-ST FRANCIS UNIT 2
FDNS	00NR	2	20WP	G15_033	FROM->TO	G14-057T 345.00 - SUNNYSIDE 345KV CKT 1	717	789	0.04594	113.488	ALPINE AECC - AMITY SS 115KV CKT 1
FDNS	00NR	2	20WP	G15_033	FROM->TO	G14-057T 345.00 - SUNNYSIDE 345KV CKT 1	717	789	0.04601	113.4765	8CAJUN2 500/24.0KV TRANSFORMER CKT 1
FDNS	00NR	2	20WP	G15_033	FROM->TO	G14-057T 345.00 - SUNNYSIDE 345KV CKT 1	717	789	0.04601	113.4659	GEN501910 1-ACADIA UNIT ST1
FDNS	00NR	2	20WP	G15_033	FROM->TO	G14-057T 345.00 - SUNNYSIDE 345KV CKT 1	717	789	0.04431	113.4618	FINNEY SWITCHING STATION - WALKTAP7 345.00 345KV CKT 1
FDNS	00NR	2	20WP	G15_033	FROM->TO	G14-057T 345.00 - SUNNYSIDE 345KV CKT 1	717	789	0.04431	113.4618	FINNEY SWITCHING STATION - WALKTAP7 345.00 345KV CKT 1
FDNS	00NR	2	20WP	G15_033	FROM->TO	G14-057T 345.00 - SUNNYSIDE 345KV CKT 1	717	789	0.04589	113.4616	WEATHERFORD JCT. - WEATHERFORD SOUTHEAST 138KV CKT 1
FDNS	00NR	2	20WP	G15_033	FROM->TO	G14-057T 345.00 - SUNNYSIDE 345KV CKT 1	717	789	0.04589	113.4616	WEATHERFORD JCT. - WEATHERFORD SOUTHEAST 138KV CKT 1
FDNS	00NR	2	20WP	G15_033	FROM->TO	G14-057T 345.00 - SUNNYSIDE 345KV CKT 1	717	789	0.04636	113.457	BAILEY4 138.00 - WESTMOORE 138KV CKT 1
FDNS	00NR	2	20WP	G15_033	FROM->TO	G14-057T 345.00 - SUNNYSIDE 345KV CKT 1	717	789	0.04589	113.452	P12:138:OKGE-AEPW:JENSEN4:REDROCKRD4
FDNS	00NR	2	20WP	G15_033	FROM->TO	G14-057T 345.00 - SUNNYSIDE 345KV CKT 1	717	789	0.04701	113.4499	LAWTON EASTSIDE (LES 4) 345/138/13.8KV TRANSFORMER CKT 1
FDNS	00NR	2	20WP	G15_033	FROM->TO	G14-057T 345.00 - SUNNYSIDE 345KV CKT 1	717	789	0.04701	113.4499	LAWTON EASTSIDE (LES 4) 345/138/13.8KV TRANSFORMER CKT 1
FDNS	00NR	2	16WP	G15_033	FROM->TO	G14-057T 345.00 - SUNNYSIDE 345KV CKT 1	717	789	0.0498	113.444	GEN563042 1-G15068_3 0.6900
FDNS	00NR	2	20WP	G15_033	FROM->TO	G14-057T 345.00 - SUNNYSIDE 345KV CKT 1	717	789	0.04601	113.4377	P12:138:AEPW:R.S.S.-4:S.HUD.-4
FDNS	00NR	2	20WP	G15_033	FROM->TO	G14-057T 345.00 - SUNNYSIDE 345KV CKT 1	717	789	0.04597	113.4375	SARA - STHLAKE4 138.00 138KV CKT 1
FDNS	00NR	2	20WP	G15_033	FROM->TO	G14-057T 345.00 - SUNNYSIDE 345KV CKT 1	717	789	0.04601	113.4372	SABINE 230/24.0KV TRANSFORMER CKT 1
FDNS	00NR	2	16WP	G15_033	FROM->TO	G14-057T 345.00 - SUNNYSIDE 345KV CKT 1	717	789	0.0498	113.4362	GEN527901 1-HOBBS PLANT #1 (CT)
FDNS	00NR	2	16WP	G15_033	FROM->TO	G14-057T 345.00 - SUNNYSIDE 345KV CKT 1	717	789	0.0498	113.4362	GEN527902 1-HOBBS PLANT #2 (CT)
FDNS	00NR	2	20WP	G15_033	FROM->TO	G14-057T 345.00 - SUNNYSIDE 345KV CKT 1	717	789	0.04599	113.4362	ETTA (DUKE HOTSPRINGS) - MC NIEL 500KV CKT 1
FDNS	00NR	2	20WP	G15_033	FROM->TO	G14-057T 345.00 - SUNNYSIDE 345KV CKT 1	717	789	0.04618	113.4281	GRACEMONT (BANK 1) 345/138/13.8KV TRANSFORMER CKT 1
FDNS	00NR	2	20WP	G15_033	FROM->TO	G14-057T 345.00 - SUNNYSIDE 345KV CKT 1	717	789	0.04589	113.4271	P12:138:AEPW:REDROCKRD4:WTH_JCT4
FDNS	00NR	2	20WP	G15_033	FROM->TO	G14-057T 345.00 - SUNNYSIDE 345KV CKT 1	717	789	0.04601	113.4119	GEN336222 1-LITTLE GYPSY UNIT#2
FDNS	00NR	2	20WP	G15_033	FROM->TO	G14-057T 345.00 - SUNNYSIDE 345KV CKT 1	717	789	0.04597	113.4083	MCCLAIN - STHLAKE4 138.00 138KV CKT 1
FDNS	00NR	2	20WP	G15_033	FROM->TO	G14-057T 345.00 - SUNNYSIDE 345KV CKT 1	717	789	0.04607	113.4075	ANADARKO - SEQUOYAHJ4 138.00 138KV CKT 1
FDNS	00NR	2	20WP	G15_033	FROM->TO	G14-057T 345.00 - SUNNYSIDE 345KV CKT 1	717	789	0.04617	113.4058	LASALLE - LATTA JCT 138KV CKT 1
FDNS	00NR	2	20WP	G15_033	FROM->TO	G14-057T 345.00 - SUNNYSIDE 345KV CKT 1	717	789	0.04614	113.4057	WALTERS - WALTERS 69KV CKT 1
FDNS	00NR	2	20WP	G15_033	FROM->TO	G14-057T 345.00 - SUNNYSIDE 345KV CKT 1	717	789	0.04601	113.4045	P12:69:AEPW:NROGERS2:ECNTRTN2
FDNS	00NR	2	20WP	G15_033	FROM->TO	G14-057T 345.00 - SUNNYSIDE 345KV CKT 1	717	789	0.04607	113.4031	CORN TAP - SEQUOYAHJ4 138.00 138KV CKT 1
FDNS	00NR	2	20WP	G15_033	FROM->TO	G14-057T 345.00 - SUNNYSIDE 345KV CKT 1	717	789	0.04601	113.4031	ESSEX UNIT 2 500/18.0KV TRANSFORMER CKT 1
FDNS	00NR	2	20WP	G15_033	FROM->TO	G14-057T 345.00 - SUNNYSIDE 345KV CKT 1	717	789	0.04601	113.4029	GEN300016 1-1G1GPDEL 18.000
FDNS	00NR	2	16WP	G15_033	FROM->TO	G14-057T 345.00 - SUNNYSIDE 345KV CKT 1	717	789	0.0498	113.4	GEN629075 1-OTTUMWA GENERATOR FOR OTTUMWA UNIT NO 1
FDNS	00NR	2	20WP	G15_033	FROM->TO	G14-057T 345.00 - SUNNYSIDE 345KV CKT 1	717	789	0.04601	113.3956	P12:138:AEPW:BA_71ST4:T.S.E.-4
FDNS	00NR	2	20WP	G15_033	FROM->TO	G14-057T 345.00 - SUNNYSIDE 345KV CKT 1	717	789	0.04601	113.3909	P12:138:AEPW:YARCH-S4:T.S.E.-4
FDNS	00NR	2	20WP	G15_033	FROM->TO	G14-057T 345.00 - SUNNYSIDE 345KV CKT 1	717	789	0.04632	113.3897	LAWTON RELIFT TAP - OMPA-WALTERS 69KV CKT 1
FDNS	00NR	2	20WP	G15_033	FROM->TO	G14-057T 345.00 - SUNNYSIDE 345KV CKT 1	717	789	0.04599	113.3824	P12:138:AEPW-OGE:SHIDLER4:OSAGE 4
FDNS	00NR	2	20WP	G15_033	FROM->TO	G14-057T 345.00 - SUNNYSIDE 345KV CKT 1	717	789	0.04601	113.3767	GEN336152 1-WATERFORD UNIT#2
FDNS	00NR	2	20WP	G15_033	FROM->TO	G14-057T 345.00 - SUNNYSIDE 345KV CKT 1	717	789	0.04601	113.3759	GEN336151 1-WATERFORD UNIT#1
FDNS	00NR	2	20WP	G15_033	FROM->TO	G14-057T 345.00 - SUNNYSIDE 345KV CKT 1	717	789	0.04601	113.3755	FRONTIER 345/18.0KV TRANSFORMER CKT 1
FDNS	00NR	2	20WP	G15_033	FROM->TO	G14-057T 345.00 - SUNNYSIDE 345KV CKT 1	717	789	0.04601	113.3733	FRONTIER 345/18.0KV TRANSFORMER CKT 1
FDNS	00NR	2	20WP	G15_033	FROM->TO	G14-057T 345.00 - SUNNYSIDE 345KV CKT 1	717	789	0.04597	113.3714	HOYT - STRANGER CREEK 345KV CKT 1
FDNS	00NR	2	20WP	G15_033	FROM->TO	G14-057T 345.00 - SUNNYSIDE 345KV CKT 1	717	789	0.04601	113.37	7JASPER 345.00 - BLACKBERRY 345KV CKT 1
FDNS	00NR	2	20WP	G15_033	FROM->TO	G14-057T 345.00 - SUNNYSIDE 345KV CKT 1	717	789	0.04609	113.3667	NORGE ROAD - SOUTHWESTERN STATION 138KV CKT 1
FDNS	00NR	2	20WP	G15_033	FROM->TO	G14-057T 345.00 - SUNNYSIDE 345KV CKT 1	717	789	0.04609	113.3667	NORGE ROAD - SOUTHWESTERN STATION 138KV CKT 1
FDNS	00NR	2	20WP	G15_033	FROM->TO	G14-057T 345.00 - SUNNYSIDE 345KV CKT 1	717	789	0.04582	113.3607	G13-010T 345.00 - POST ROCK 345KV CKT 1
FDNS	00NR	2	20WP	G15_033	FROM->TO	G14-057T 345.00 - SUNNYSIDE 345KV CKT 1	717	789	0.04596	113.3594	BLACKBERRY - NEOSHO 345KV CKT 1
FDNS	00NR	2	20WP	G15_033	FROM->TO	G14-057T 345.00 - SUNNYSIDE 345KV CKT 1	717	789	0.04597	113.3569	MORISNT4 138.00 - STILLWATER 138KV CKT 1
FDNS	00NR	2	16WP	G15_033	FROM->TO	G14-057T 345.00 - SUNNYSIDE 345KV CKT 1	717	789	0.0498	113.3553	GEN511848 1-SOUTHWESTERN STATION #3
FDNS	00NR	2	20WP	G15_033	FROM->TO	G14-057T 345.00 - SUNNYSIDE 345KV CKT 1	717	789	0.04591	113.3519	HOPE - MCNAB REC 115KV CKT 1
FDNS	00NR	2	20WP	G15_033	FROM->TO	G14-057T 345.00 - SUNNYSIDE 345KV CKT 1	717	789	0.04597	113.3512	P12:138:OKGE:3TERM2
FDNS	00NR	2	20WP	G15_033	FROM->TO	G14-057T 345.00 - SUNNYSIDE 345KV CKT 1	717	789	0.04581	113.3484	BENTON - WICHITA 345KV CKT 1
FDNS	00NR	2	20WP	G15_033	FROM->TO	G14-057T 345.00 - SUNNYSIDE 345KV CKT 1	717	789	0.04609	113.3474	SOUTHWESTERN STATION - VERDEN 138KV CKT 1
FDNS	00NR	2	20WP	G15_033	FROM->TO	G14-057T 345.00 - SUNNYSIDE 345KV CKT 1	717	789	0.04601	113.3467	GEN300017 1-1G2GPDEL 18.000
FDNS	00NR	2	20WP	G15_033	FROM->TO	G14-057T 345.00 - SUNNYSIDE 345KV CKT 1	717	789	0.04601	113.3455	LEWIS CREEK SWITCHYARD 138/22.0KV TRANSFORMER CKT 1
FDNS	00NR	2	20WP	G15_033	FROM->TO	G14-057T 345.00 - SUNNYSIDE 345KV CKT 1	717	789	0.04595	113.3426	COUCH SES - MC NIEL 115KV CKT 1
FDNS	00NR	2	20WP	G15_033	FROM->TO	G14-057T 345.00 - SUNNYSIDE 345KV CKT 1	717	789	0.04591	113.342	P12:115:AEPW:TURK3:HOPE3
FDNS	00NR	2	20WP	G15_033	FROM->TO	G14-057T 345.00 - SUNNYSIDE 345KV CKT 1	717	789	0.046	113.3411	CYPRESS - HARTBURG 500KV CKT 1
FDNS	00NR	2	20WP	G15_033	FROM->TO	G14-057T 345.00 - SUNNYSIDE 345KV CKT 1	717	789	0.04601	113.3409	LEWIS CREEK SWITCHYARD 138/22.0KV TRANSFORMER CKT 1
FDNS	00NR	2	20WP	G15_033	FROM->TO	G14-057T 345.00 - SUNNYSIDE 345KV CKT 1	717	789	0.04598	113.339	G15074_T 345.00 - JEFFREY ENERGY CENTER 345KV CKT 1
FDNS	00NR	2	20WP	G15_033	FROM->TO	G14-057T 345.00 - SUNNYSIDE 345KV CKT 1	717	789	0.04594	113.3324	WEATHERFORD TAP - WEATHERFORD WIND FARM 138KV CKT 1
FDNS	00NR	2	20WP	G15_033	FROM->TO	G14-057T 345.00 - SUNNYSIDE 345KV CKT 1	717	789	0.04589	113.3316	HINTON - WEATHERFORD JCT. 138KV CKT 1
FDNS	00NR	2	20WP	G15_033	FROM->TO	G14-057T 345.00 - SUNNYSIDE 345KV CKT 1	717	789	0.04601	113.3304	GEN334432 1-SABINE UNIT 2
FDNS	00NR	2	20WP	G15_033	FROM->TO	G14-057T 345.00 - SUNNYSIDE 345KV CKT 1	717	789	0.04601	113.3302	GEN334431 1-SABINE UNIT 1
FDNS	00NR	2	20WP	G15_033	FROM->TO	G14-057T 345.00 - SUNNYSIDE 345KV CKT 1	717	789	0.04597	113.3293	EMPORIA ENERGY CENTER - G14_001T 345.00 345KV CKT 1
FDNS	00NR	2	20WP	G15_033	FROM->TO	G14-057T 345.00 - SUNNYSIDE 345KV CKT 1	717	789	0.04609	113.3273	NORTH 29TH CHICKASHA - VERDEN 138KV CKT 1
FDNS	00NR	2	20WP	G15_033	FROM->TO	G14-057T 345.00 - SUNNYSIDE 345KV CKT 1	717	789	0.04567	113.3263	CANADIAN - NOBLE 138KV CKT 1
FDNS	00NR	2	20WP	G15_033	FROM->TO	G14-057T 345.00 - SUNNYSIDE 345KV CKT 1	717	789	0.04632	113.3257	OMPA-WALTERS - WALTERS 69KV CKT 1
FDNS	00NR	2	20WP	G15_033	FROM->TO	G14-057T 345.00 - SUNNYSIDE 345KV CKT 1	717	789	0.04632	113.3257	OMPA-WALTERS - WALTERS 69KV CKT 1

SOLUTION	GROUP	SCENARIO	SEASON	SOURCE	DIRECTION	MONITORED ELEMENT	RATEA (MVA)	RATEB(MVA)	TDF	TC%LOADING (% MVA)	CONTINGENCY
FDNS	00NR	2	20WP	G15_033	FROM->TO	G14-057T 345.00 - SUNNYSIDE 345KV CKT 1	717	789	0.04601	113.3245	GEN501823 1-TECHE UNIT 3
FDNS	00NR	2	20WP	G15_033	FROM->TO	G14-057T 345.00 - SUNNYSIDE 345KV CKT 1	717	789	0.04601	113.3227	GEN501970 1-EVANGELINE UNIT 7
FDNS	00NR	2	20WP	G15_033	FROM->TO	G14-057T 345.00 - SUNNYSIDE 345KV CKT 1	717	789	0.04599	113.322	7LUTESVIL 345.00 - 7ST FRANC 345.00 345KV CKT 1
FDNS	00NR	2	20WP	G15_033	FROM->TO	G14-057T 345.00 - SUNNYSIDE 345KV CKT 1	717	789	0.04558	113.3196	ARBUCKLE - VANOSTP4 138.00 138KV CKT 1
FDNS	00NR	2	20WP	G15_033	FROM->TO	G14-057T 345.00 - SUNNYSIDE 345KV CKT 1	717	789	0.04601	113.3182	P12:161:AEPW:CHAMSPR5:FARMING5
FDNS	00NR	2	20WP	G15_033	FROM->TO	G14-057T 345.00 - SUNNYSIDE 345KV CKT 1	717	789	0.04573	113.3163	CLINTON JUNCTION - ELK CITY 138KV CKT 1
FDNS	00NR	2	20WP	G15_033	FROM->TO	G14-057T 345.00 - SUNNYSIDE 345KV CKT 1	717	789	0.04573	113.3163	CLINTON JUNCTION - ELK CITY 138KV CKT 1
FDNS	00NR	2	20WP	G15_033	FROM->TO	G14-057T 345.00 - SUNNYSIDE 345KV CKT 1	717	789	0.04591	113.3161	TURK (TURK 1) 138/115/13.2KV TRANSFORMER CKT 1
FDNS	00NR	2	20WP	G15_033	FROM->TO	G14-057T 345.00 - SUNNYSIDE 345KV CKT 1	717	789	0.04591	113.3161	TURK (TURK 1) 138/115/13.2KV TRANSFORMER CKT 1
FDNS	00NR	2	20WP	G15_033	FROM->TO	G14-057T 345.00 - SUNNYSIDE 345KV CKT 1	717	789	0.04601	113.316	GEN505616 1-BROKEN BOW
FDNS	00NR	2	20WP	G15_033	FROM->TO	G14-057T 345.00 - SUNNYSIDE 345KV CKT 1	717	789	0.04591	113.316	MCNAB REC - Turk 115 115KV CKT 1
FDNS	00NR	2	20WP	G15_033	FROM->TO	G14-057T 345.00 - SUNNYSIDE 345KV CKT 1	717	789	0.04614	113.3063	P12:69:WFEC-AEPW:COMANCH2:WALTRS-2
FDNS	00NR	2	20WP	G15_033	FROM->TO	G14-057T 345.00 - SUNNYSIDE 345KV CKT 1	717	789	0.04582	113.3061	G13-010T 345.00 - SPEARVILLE 345KV CKT 1
FDNS	00NR	2	20WP	G15_033	FROM->TO	G14-057T 345.00 - SUNNYSIDE 345KV CKT 1	717	789	0.04601	113.3029	GEN334392 1-EXXON MOBIL IPP 1
FDNS	06ALL	2	17SP	G15_033	FROM->TO	G14-057T 345.00 - SUNNYSIDE 345KV CKT 1	717	789	0.22836	113.2999	GRACEMONT - MINCO 345KV CKT 1
FDNS	00NR	2	20WP	G15_033	FROM->TO	G14-057T 345.00 - SUNNYSIDE 345KV CKT 1	717	789	0.04569	113.2973	P12:138:OKGE:3TERM27
FDNS	00NR	2	20WP	G15_033	FROM->TO	G14-057T 345.00 - SUNNYSIDE 345KV CKT 1	717	789	0.04601	113.2957	GEN334393 1-EXXON MOBIL IPP 2
FDNS	00NR	2	20WP	G15_033	FROM->TO	G14-057T 345.00 - SUNNYSIDE 345KV CKT 1	717	789	0.04601	113.2957	GEN334394 1-EXXON MOBIL IPP 3
FDNS	00NR	2	20WP	G15_033	FROM->TO	G14-057T 345.00 - SUNNYSIDE 345KV CKT 1	717	789	0.04636	113.2895	FRANKLIN SW - WESTMOORE 138KV CKT 1
FDNS	00NR	2	20WP	G15_033	FROM->TO	G14-057T 345.00 - SUNNYSIDE 345KV CKT 1	717	789	0.04603	113.2847	FRANKLIN - FRANKLIN SW 138KV CKT 1
FDNS	00NR	2	20WP	G15_033	FROM->TO	G14-057T 345.00 - SUNNYSIDE 345KV CKT 1	717	789	0.04596	113.2846	SWISSVALE - WEST GARDNER 345KV CKT 1
FDNS	00NR	2	20WP	G15_033	FROM->TO	G14-057T 345.00 - SUNNYSIDE 345KV CKT 1	717	789	0.04551	113.2833	BUCKNER7 345.00 - HOLCOMB 345KV CKT 1
FDNS	00NR	2	20WP	G15_033	FROM->TO	G14-057T 345.00 - SUNNYSIDE 345KV CKT 1	717	789	0.04551	113.2833	BUCKNER7 345.00 - HOLCOMB 345KV CKT 1
FDNS	00NR	2	20WP	G15_033	FROM->TO	G14-057T 345.00 - SUNNYSIDE 345KV CKT 1	717	789	0.04601	113.2826	ST FRANCIS - ST FRANCIS 1 161KV CKT Z1
FDNS	00NR	2	20WP	G15_033	FROM->TO	G14-057T 345.00 - SUNNYSIDE 345KV CKT 1	717	789	0.04601	113.2803	SABINE 230/22.0KV TRANSFORMER CKT 1
FDNS	00NR	2	20WP	G15_033	FROM->TO	G14-057T 345.00 - SUNNYSIDE 345KV CKT 1	717	789	0.04598	113.2779	LAKEOVER - MCADAMS 500KV CKT 1
FDNS	00NR	2	20WP	G15_033	FROM->TO	G14-057T 345.00 - SUNNYSIDE 345KV CKT 1	717	789	0.04597	113.2757	ENOWILT - LONE OAK 138KV CKT 1
FDNS	00NR	2	16WP	G15_033	FROM->TO	G14-057T 345.00 - SUNNYSIDE 345KV CKT 1	717	789	0.0498	113.2755	GEN635214 4-NEAL UNIT 4
FDNS	00NR	2	20WP	G15_033	FROM->TO	G14-057T 345.00 - SUNNYSIDE 345KV CKT 1	717	789	0.04598	113.274	EMPORIA ENERGY CENTER - SWISSVALE 345KV CKT 1
FDNS	00NR	2	20WP	G15_033	FROM->TO	G14-057T 345.00 - SUNNYSIDE 345KV CKT 1	717	789	0.04601	113.2698	P12:138:AEPW:R.S.S-4:T.P.S.-4
FDNS	00NR	2	20WP	G15_033	FROM->TO	G14-057T 345.00 - SUNNYSIDE 345KV CKT 1	717	789	0.04145	113.2692	G14_038T 345.00 - POTTER COUNTY INTERCHANGE 345KV CKT 1
FDNS	00NR	2	20WP	G15_033	FROM->TO	G14-057T 345.00 - SUNNYSIDE 345KV CKT 1	717	789	0.04601	113.2681	P12:138:OKGE:3TERM12
FDNS	00NR	2	20WP	G15_033	FROM->TO	G14-057T 345.00 - SUNNYSIDE 345KV CKT 1	717	789	0.04597	113.2671	ENOWILT - SARDIS 138KV CKT 1
FDNS	00NR	2	20WP	G15_033	FROM->TO	G14-057T 345.00 - SUNNYSIDE 345KV CKT 1	717	789	0.04601	113.2649	GEN501971 1-EVANGELINE UNIT 7-1
FDNS	00NR	2	20WP	G15_033	FROM->TO	G14-057T 345.00 - SUNNYSIDE 345KV CKT 1	717	789	0.04601	113.2649	GEN501972 1-EVANGELINE UNIT 7-2
FDNS	00NR	2	20WP	G15_033	FROM->TO	G14-057T 345.00 - SUNNYSIDE 345KV CKT 1	717	789	0.04617	113.2631	LASALLE - STONEWAL LH138.00 138KV CKT 1
FDNS	00NR	2	20WP	G15_033	FROM->TO	G14-057T 345.00 - SUNNYSIDE 345KV CKT 1	717	789	0.04609	113.2614	CORNVILLE - NORGE ROAD 138KV CKT 1
FDNS	00NR	2	20WP	G15_033	FROM->TO	G14-057T 345.00 - SUNNYSIDE 345KV CKT 1	717	789	0.04609	113.2614	CORNVILLE - NORGE ROAD 138KV CKT 1
FDNS	00NR	2	20WP	G15_033	FROM->TO	G14-057T 345.00 - SUNNYSIDE 345KV CKT 1	717	789	0.04589	113.2599	HINTON - REDROCKRD4 138.00 138KV CKT 1
FDNS	00NR	2	20WP	G15_033	FROM->TO	G14-057T 345.00 - SUNNYSIDE 345KV CKT 1	717	789	0.04601	113.2584	FLETCHER - MARLOW JCT 69KV CKT 1
FDNS	00NR	2	20WP	G15_033	FROM->TO	G14-057T 345.00 - SUNNYSIDE 345KV CKT 1	717	789	0.04597	113.258	G14_001T 345.00 - WICHITA 345KV CKT 1
FDNS	00NR	2	20WP	G15_033	FROM->TO	G14-057T 345.00 - SUNNYSIDE 345KV CKT 1	717	789	0.04609	113.2567	CORNVILLE - NORTH 29TH CHICKASHA 138KV CKT 1
FDNS	00NR	2	16WP	G15_033	FROM->TO	G14-057T 345.00 - SUNNYSIDE 345KV CKT 1	717	789	0.0498	113.2502	SHERBURNE CO 345/24.0KV TRANSFORMER CKT 1
FDNS	00NR	2	20WP	G15_033	FROM->TO	G14-057T 345.00 - SUNNYSIDE 345KV CKT 1	717	789	0.04595	113.2496	MCADAMS - WOLF CREEK 500KV CKT 1
FDNS	00NR	2	20WP	G15_033	FROM->TO	G14-057T 345.00 - SUNNYSIDE 345KV CKT 1	717	789	0.04594	113.2486	DRAPER LAKE - SEMINOLE 345KV CKT 1
FDNS	00NR	2	20WP	G15_033	FROM->TO	G14-057T 345.00 - SUNNYSIDE 345KV CKT 1	717	789	0.04594	113.2486	DRAPER LAKE - SEMINOLE 345KV CKT 2
FDNS	00NR	2	20WP	G15_033	FROM->TO	G14-057T 345.00 - SUNNYSIDE 345KV CKT 1	717	789	0.04617	113.2484	STONEWAL LH138.00 - TUPELO TAP 138KV CKT 1
FDNS	00NR	2	20WP	G15_033	FROM->TO	G14-057T 345.00 - SUNNYSIDE 345KV CKT 1	717	789	0.04601	113.2458	GEN515042 1-SEMINOLE 3G
FDNS	00NR	2	20WP	G15_033	FROM->TO	G14-057T 345.00 - SUNNYSIDE 345KV CKT 1	717	789	0.04601	113.2443	P12:138:AEPW:R.S.S.-4:R:96YALE-4
FDNS	00NR	2	20WP	G15_033	FROM->TO	G14-057T 345.00 - SUNNYSIDE 345KV CKT 1	717	789	0.04601	113.242	GEN506749 1-EASTMAN GENERATION A
FDNS	00NR	2	20WP	G15_033	FROM->TO	G14-057T 345.00 - SUNNYSIDE 345KV CKT 1	717	789	0.04594	113.242	WEATHERFORD SOUTHEAST - WEATHERFORD TAP 138KV CKT 1
FDNS	00NR	2	20WP	G15_033	FROM->TO	G14-057T 345.00 - SUNNYSIDE 345KV CKT 1	717	789	0.04601	113.2417	GEN501912 1-ACADIA UNIT CT1B
FDNS	00NR	2	20WP	G15_033	FROM->TO	G14-057T 345.00 - SUNNYSIDE 345KV CKT 1	717	789	0.04601	113.2409	GEN501911 1-ACADIA UNIT CT1A
FDNS	00NR	2	20WP	G15_033	FROM->TO	G14-057T 345.00 - SUNNYSIDE 345KV CKT 1	717	789	0.04601	113.2393	NELSON 230/24.0KV TRANSFORMER CKT 1
FDNS	00NR	2	20WP	G15_033	FROM->TO	G14-057T 345.00 - SUNNYSIDE 345KV CKT 1	717	789	0.04598	113.2381	8WNEWMADRID 500.00 - DELL 500 500KV CKT 1
FDNS	00NR	2	20WP	G15_033	FROM->TO	G14-057T 345.00 - SUNNYSIDE 345KV CKT 1	717	789	0.04567	113.233	NOBLE - PURCELL4 138.00 138KV CKT 1
FDNS	00NR	2	20WP	G15_033	FROM->TO	G14-057T 345.00 - SUNNYSIDE 345KV CKT 1	717	789	0.04601	113.2318	P12:138:WFEC-AEPW:ELKCTY-4:ERICK4
FDNS	00NR	2	20WP	G15_033	FROM->TO	G14-057T 345.00 - SUNNYSIDE 345KV CKT 1	717	789	0.04594	113.2314	AMITY SS - MURFREESBORO EAST (AECC) 115KV CKT 1
FDNS	00NR	2	20WP	G15_033	FROM->TO	G14-057T 345.00 - SUNNYSIDE 345KV CKT 1	717	789	0.04601	113.2291	GEN336242 1-1NMIL ST1 18.000
FDNS	00NR	2	20WP	G15_033	FROM->TO	G14-057T 345.00 - SUNNYSIDE 345KV CKT 1	717	789	0.04597	113.2275	CLAYTON - SARDIS 138KV CKT 1
FDNS	00NR	2	20WP	G15_033	FROM->TO	G14-057T 345.00 - SUNNYSIDE 345KV CKT 1	717	789	0.04601	113.2206	P12:138:AEPW:MOHAWK4:T.NO--4
FDNS	00NR	2	20WP	G15_033	FROM->TO	G14-057T 345.00 - SUNNYSIDE 345KV CKT 1	717	789	0.04601	113.2188	ST FRANCIS 345/161KV TRANSFORMER CKT 1
FDNS	00NR	2	20WP	G15_033	FROM->TO	G14-057T 345.00 - SUNNYSIDE 345KV CKT 1	717	789	0.04597	113.2137	LAYFLD8 500.00 (LAYFLD AUTO) 500/230/13.8KV TRANSFORMER CKT 1
FDNS	00NR	2	20WP	G15_033	FROM->TO	G14-057T 345.00 - SUNNYSIDE 345KV CKT 1	717	789	0.04597	113.2137	LAYFLD8 500.00 (LAYFLD AUTO) 500/230/13.8KV TRANSFORMER CKT 1
FDNS	00NR	2	20WP	G15_033	FROM->TO	G14-057T 345.00 - SUNNYSIDE 345KV CKT 1	717	789	0.04598	113.2118	GRAND ISLAND - MCCOOL 345KV CKT 1
FDNS	00NR	2	20WP	G15_033	FROM->TO	G14-057T 345.00 - SUNNYSIDE 345KV CKT 1	717	789	0.04601	113.211	SABINE 138/22.0KV TRANSFORMER CKT 1
FDNS	00NR	2	20WP	G15_033	FROM->TO	G14-057T 345.00 - SUNNYSIDE 345KV CKT 1	717	789	0.04601	113.2104	ESSEX UNIT 2 500/18.0KV TRANSFORMER CKT 1
FDNS	00NR	2	20WP	G15_033	FROM->TO	G14-057T 345.00 - SUNNYSIDE 345KV CKT 1	717	789	0.04669	113.2087	DUNCAN - DUNCHERTP4 138.00 138KV CKT 1
FDNS	00NR	2	20WP	G15_033	FROM->TO	G14-057T 345.00 - SUNNYSIDE 345KV CKT 1	717	789	0.04669	113.2087	DUNCAN - DUNCHERTP4 138.00 138KV CKT 1
FDNS	00NR	2	20WP	G15_033	FROM->TO	G14-057T 345.00 - SUNNYSIDE 345KV CKT 1	717	789	0.04669	113.2086	DUNCAN EASTSIDE - DUNCHERTP4 138.00 138KV CKT 1
FDNS	00NR	2	20WP	G15_033	FROM->TO	G14-057T 345.00 - SUNNYSIDE 345KV CKT 1	717	789	0.04597	113.2056	P12:138:AEPW-SWPA:LONEOAK4:BRKNBW4
FDNS	00NR	2	20WP	G15_033	FROM->TO	G14-057T 345.00 - SUNNYSIDE 345KV CKT 1	717	789	0.04594	113.2009	CLINTON JUNCTION - CLINTON NATURAL GAS TAP 138KV CKT 1
FDNS	00NR	2	20WP	G15_033	FROM->TO	G14-057T 345.00 - SUNNYSIDE 345KV CKT 1	717	789	0.046	113.1987	7JASPER 345.00 - MORGAN 345KV CKT 1
FDNS	00NR	2	20WP	G15_033	FROM->TO	G14-057T 345.00 - SUNNYSIDE 345KV CKT 1	717	789	0.04594	113.1987	LACYGNE - NEOSHO 345KV CKT 1
FDNS	00NR	2	20WP	G15_033	FROM->TO	G14-057T 345.00 - SUNNYSIDE 345KV CKT 1	717	789	0.04597	113.1937	CLAYTON - NASHOBA 138KV CKT 1
FDNS	00NR	2	20WP	G15_033	FROM->TO	G14-057T 345.00 - SUNNYSIDE 345KV CKT 1	717	789	0.04589	113.1911	Canadian Pump Station - REDROCKRD4 138.00 138KV CKT 1
FDNS	00NR	2	20WP	G15_033	FROM->TO	G14-057T 345.00 - SUNNYSIDE 345KV CKT 1	717	789	0.04574	113.1889	ARBUCKLE - MILLCREEK 138KV CKT 1
FDNS	00NR	2	20WP	G15_033	FROM->TO	G14-057T 345.00 - SUNNYSIDE 345KV CKT 1	717	789	0.04594	113.1847	MURFREESBORO 138/115KV TRANSFORMER CKT 1
FDNS	00NR	2	20WP	G15_033	FROM->TO	G14-057T 345.00 - SUNNYSIDE 345KV CKT 1	717	789	0.04594	113.1845	MURFREESBORO EAST (AECC) - MURFREESBORO SOUTH 115KV CKT 1

SOLUTION	GROUP	SCENARIO	SEASON	SOURCE	DIRECTION	MONITORED ELEMENT	RATEA (MVA)	RATEB(MVA)	TDF	TC%LOADING (% MVA)	CONTINGENCY
FDNS	00NR	2	20WP	G15_033	FROM->TO	G14-057T 345.00 - SUNNYSIDE 345KV CKT 1	717	789	0.04594	113.1837	MURFREESBORO - SOUTH NASHVILLE 138KV CKT 1
FDNS	00NR	2	20WP	G15_033	FROM->TO	G14-057T 345.00 - SUNNYSIDE 345KV CKT 1	717	789	0.04594	113.1837	MURFREESBORO - SOUTH NASHVILLE 138KV CKT 1
FDNS	00NR	2	20WP	G15_033	FROM->TO	G14-057T 345.00 - SUNNYSIDE 345KV CKT 1	717	789	0.04597	113.1808	BETHEL - NASHOBA 138KV CKT 1
FDNS	00NR	2	16WP	G15_033	FROM->TO	G14-057T 345.00 - SUNNYSIDE 345KV CKT 1	717	789	0.0498	113.1758	GEN563273 2-G15093_4 0.6900
FDNS	00NR	2	20WP	G15_033	FROM->TO	G14-057T 345.00 - SUNNYSIDE 345KV CKT 1	717	789	0.04601	113.1748	GEN338146 1-INDEPENDENCE UNIT #2
FDNS	00NR	2	20WP	G15_033	FROM->TO	G14-057T 345.00 - SUNNYSIDE 345KV CKT 1	717	789	0.04625	113.1683	CRINER - PAYNE 138.00 138KV CKT 1
FDNS	00NR	2	20WP	G15_033	FROM->TO	G14-057T 345.00 - SUNNYSIDE 345KV CKT 1	717	789	0.04631	113.1663	CIMARRON - NORTHWEST 345KV CKT 1
FDNS	00NR	2	20WP	G15_033	FROM->TO	G14-057T 345.00 - SUNNYSIDE 345KV CKT 1	717	789	0.0461	113.1527	MARIETTA - MARIETTA4 138.00 138KV CKT 1
FDNS	00NR	2	20WP	G15_033	FROM->TO	G14-057T 345.00 - SUNNYSIDE 345KV CKT 1	717	789	0.04592	113.1497	SEMINOLE (SEMINOL2) 345/138/14.4KV TRANSFORMER CKT 1
FDNS	00NR	2	20WP	G15_033	FROM->TO	G14-057T 345.00 - SUNNYSIDE 345KV CKT 1	717	789	0.046	113.1484	P12:138:OKGE:3TERM20
FDNS	00NR	2	20WP	G15_033	FROM->TO	G14-057T 345.00 - SUNNYSIDE 345KV CKT 1	717	789	0.04669	113.1449	DUNCAN EASTSIDE - OMPA-DUNCAN 821 138KV CKT 1
FDNS	00NR	2	16WP	G15_033	FROM->TO	G14-057T 345.00 - SUNNYSIDE 345KV CKT 1	717	789	0.05398	113.1392	P12:230:AEPW:ELKCITY6:SWEETWT6
FDNS	00NR	2	20WP	G15_033	FROM->TO	G14-057T 345.00 - SUNNYSIDE 345KV CKT 1	717	789	0.04614	113.1334	COMANCHE - WALTERS 69KV CKT 1
FDNS	00NR	2	16WP	G15_033	FROM->TO	G14-057T 345.00 - SUNNYSIDE 345KV CKT 1	717	789	0.0498	113.1331	GEN563043 1-G15068_4 0.6900
FDNS	00NR	2	16WP	G15_033	FROM->TO	G14-057T 345.00 - SUNNYSIDE 345KV CKT 1	717	789	0.0498	113.1219	GEN600002 3-SHERBURNE CNTY G3
FDNS	00NR	2	16WP	G15_033	FROM->TO	G14-057T 345.00 - SUNNYSIDE 345KV CKT 1	717	789	0.0498	113.1098	GEN526333 1-JONES GEN #3 21 KV
FDNS	00NR	2	16WP	G15_033	FROM->TO	G14-057T 345.00 - SUNNYSIDE 345KV CKT 1	717	789	0.0498	113.1098	GEN526334 1-JONES_4 116.500
FDNS	00NR	2	16WP	G15_033	FROM->TO	G14-057T 345.00 - SUNNYSIDE 345KV CKT 1	717	789	0.0498	113.0587	GEN525844 1-ELK_1 118.000
FDNS	00NR	2	16WP	G15_033	FROM->TO	G14-057T 345.00 - SUNNYSIDE 345KV CKT 1	717	789	0.0498	113.0492	GEN525845 1-ELK_2 1 138.00
FDNS	00NR	2	16WP	G15_033	FROM->TO	G14-057T 345.00 - SUNNYSIDE 345KV CKT 1	717	789	0.0498	113.0181	GEN344225 1-1CAL G1 25.000
FDNS	00NR	2	16WP	G15_033	FROM->TO	G14-057T 345.00 - SUNNYSIDE 345KV CKT 1	717	789	0.0498	113.0123	GEN563202 1-G15085_3 0.5500
FDNS	00NR	2	16WP	G15_033	FROM->TO	G14-057T 345.00 - SUNNYSIDE 345KV CKT 1	717	789	0.05347	112.931	CHISHOLM6 230.00 - SWEETWATER 230KV CKT 1
FDNS	00NR	2	16WP	G15_033	FROM->TO	G14-057T 345.00 - SUNNYSIDE 345KV CKT 1	717	789	0.0498	112.9253	GEN525562 1-TOLK GEN #2 24 KV
FDNS	00NR	2	16WP	G15_033	FROM->TO	G14-057T 345.00 - SUNNYSIDE 345KV CKT 1	717	789	0.0498	112.8781	GEN527166 1-MUSTANG_6 118.000
FDNS	00NR	2	16WP	G15_033	FROM->TO	G14-057T 345.00 - SUNNYSIDE 345KV CKT 1	717	789	0.0498	112.8737	GEN635023 3-WALTER SCOTT UNIT 3
FDNS	00NR	2	16WP	G15_033	FROM->TO	G14-057T 345.00 - SUNNYSIDE 345KV CKT 1	717	789	0.04932	112.8273	JOHNSON COUNTY (JOHNCO) 345/138/13.8KV TRANSFORMER CKT 1
FDNS	00NR	2	16WP	G15_033	FROM->TO	G14-057T 345.00 - SUNNYSIDE 345KV CKT 1	717	789	0.04954	112.8132	LYDIA - WELSH 345KV CKT 1
FDNS	00NR	2	16WP	G15_033	FROM->TO	G14-057T 345.00 - SUNNYSIDE 345KV CKT 1	717	789	0.04954	112.8132	LYDIA - WELSH 345KV CKT 1
FDNS	00NR	2	16WP	G15_033	FROM->TO	G14-057T 345.00 - SUNNYSIDE 345KV CKT 1	717	789	0.0498	112.7778	GEN562590 1-G14_057_3 0.6900
FDNS	00NR	2	20WP	G15_033	FROM->TO	G14-057T 345.00 - SUNNYSIDE 345KV CKT 1	717	789	0.04601	112.7303	803-OKLAUNION
FDNS	00NR	2	16WP	G15_033	FROM->TO	G14-057T 345.00 - SUNNYSIDE 345KV CKT 1	717	789	0.0498	112.6892	GEN562762 1-G15033_3 0.6900
FDNS	00NR	2	16WP	G15_033	FROM->TO	G14-057T 345.00 - SUNNYSIDE 345KV CKT 1	717	789	0.0498	112.6805	GEN562655 1-G14_074_3 0.6900
FDNS	00NR	2	16WP	G15_033	FROM->TO	G14-057T 345.00 - SUNNYSIDE 345KV CKT 1	717	789	0.0498	112.6674	GEN562685 1-G15_013_3 0.3550
FDNS	00NR	2	16WP	G15_033	FROM->TO	G14-057T 345.00 - SUNNYSIDE 345KV CKT 1	717	789	0.0498	112.5649	GEN525561 1-TOLK GEN #1 24 KV
FDNS	00NR	2	16WP	G15_033	FROM->TO	G14-057T 345.00 - SUNNYSIDE 345KV CKT 1	717	789	0.0498	112.5237	GEN563272 1-G15093_3 0.6900
FDNS	00NR	2	20WP	G15_033	FROM->TO	G14-057T 345.00 - SUNNYSIDE 345KV CKT 1	717	789	0.04537	112.4829	P12:138:OKGE:3TERM39
FDNS	00NR	2	16WP	G15_033	FROM->TO	G14-057T 345.00 - SUNNYSIDE 345KV CKT 1	717	789	0.0498	112.4792	GEN527903 1-HOBBS PLANT #3 (ST)
FDNS	00NR	2	16WP	G15_033	FROM->TO	G14-057T 345.00 - SUNNYSIDE 345KV CKT 1	717	789	0.0498	112.4495	GEN635024 4-WALTER SCOTT UNIT 4
FDNS	00NR	2	20WP	G15_033	FROM->TO	G14-057T 345.00 - SUNNYSIDE 345KV CKT 1	717	789	0.04534	112.355	MAYSVILLE - PAOLI 138KV CKT 1
FDNS	00NR	2	20WP	G15_033	FROM->TO	G14-057T 345.00 - SUNNYSIDE 345KV CKT 1	717	789	0.046	112.3451	JOHNSON COUNTY - RUSSETT 138KV CKT 1
FDNS	00NR	2	20WP	G15_033	FROM->TO	G14-057T 345.00 - SUNNYSIDE 345KV CKT 1	717	789	0.04601	112.3397	OKLAUNION 345/13.2KV TRANSFORMER CKT 1
FDNS	00NR	2	20WP	G15_033	FROM->TO	G14-057T 345.00 - SUNNYSIDE 345KV CKT 1	717	789	0.0462	112.3263	CIMARRON - MATHWSN7 345.00 345KV CKT 1
FDNS	00NR	2	20WP	G15_033	FROM->TO	G14-057T 345.00 - SUNNYSIDE 345KV CKT 1	717	789	0.0462	112.3263	CIMARRON - MATHWSN7 345.00 345KV CKT 2
FDNS	00NR	2	20WP	G15_033	FROM->TO	G14-057T 345.00 - SUNNYSIDE 345KV CKT 1	717	789	0.04601	112.3237	GEN560187 1-WTH WIND 0.5750
FDNS	00NR	2	20WP	G15_033	FROM->TO	G14-057T 345.00 - SUNNYSIDE 345KV CKT 1	717	789	0.04601	112.3166	GEN560112 1-G08_037_3 0.6900
FDNS	00NR	2	20WP	G15_033	FROM->TO	G14-057T 345.00 - SUNNYSIDE 345KV CKT 1	717	789	0.04598	112.3067	HUGO POWER PLANT - VALLENT 138KV CKT 1
FDNS	00NR	2	20WP	G15_033	FROM->TO	G14-057T 345.00 - SUNNYSIDE 345KV CKT 1	717	789	0.04596	112.3037	NORTHWEST TEXARKANA - WELSH 345KV CKT 1
FDNS	00NR	2	20WP	G15_033	FROM->TO	G14-057T 345.00 - SUNNYSIDE 345KV CKT 1	717	789	0.04596	112.3037	NORTHWEST TEXARKANA - WELSH 345KV CKT 1
FDNS	00NR	2	20WP	G15_033	FROM->TO	G14-057T 345.00 - SUNNYSIDE 345KV CKT 1	717	789	0.04601	112.2949	GEN521103 1-BLUE CANYON WIND FARM
FDNS	00NR	2	20WP	G15_033	FROM->TO	G14-057T 345.00 - SUNNYSIDE 345KV CKT 1	717	789	0.04601	112.2816	GEN530690 1-PRWINDG1 0.6900
FDNS	00NR	2	20WP	G15_033	FROM->TO	G14-057T 345.00 - SUNNYSIDE 345KV CKT 1	717	789	0.04599	112.2809	DIANA - WELSH 345KV CKT 1
FDNS	00NR	2	20WP	G15_033	FROM->TO	G14-057T 345.00 - SUNNYSIDE 345KV CKT 1	717	789	0.04599	112.2809	DIANA - WELSH 345KV CKT 1
FDNS	00NR	2	20WP	G15_033	FROM->TO	G14-057T 345.00 - SUNNYSIDE 345KV CKT 1	717	789	0.04534	112.2801	MAYSVILLE - MAYSVLT4 138.00 138KV CKT 1
FDNS	00NR	2	20WP	G15_033	FROM->TO	G14-057T 345.00 - SUNNYSIDE 345KV CKT 1	717	789	0.04601	112.2744	GEN672392 1-NBECGT1G 18.000
FDNS	00NR	2	20WP	G15_033	FROM->TO	G14-057T 345.00 - SUNNYSIDE 345KV CKT 1	717	789	0.04594	112.2663	WELSH - WILKES 345KV CKT 1
FDNS	00NR	2	20WP	G15_033	FROM->TO	G14-057T 345.00 - SUNNYSIDE 345KV CKT 1	717	789	0.04594	112.2663	WELSH - WILKES 345KV CKT 1
FDNS	00NR	2	20WP	G15_033	FROM->TO	G14-057T 345.00 - SUNNYSIDE 345KV CKT 1	717	789	0.04601	112.2654	GEN600046 1-MECST
FDNS	00NR	2	20WP	G15_033	FROM->TO	G14-057T 345.00 - SUNNYSIDE 345KV CKT 1	717	789	0.04601	112.2648	GEN562691 1-G15_015_3 0.6900
FDNS	00NR	2	20WP	G15_033	FROM->TO	G14-057T 345.00 - SUNNYSIDE 345KV CKT 1	717	789	0.04606	112.2616	DRAPER LAKE - MIDWEST TAP 138KV CKT 1
FDNS	00NR	2	20WP	G15_033	FROM->TO	G14-057T 345.00 - SUNNYSIDE 345KV CKT 1	717	789	0.04601	112.2563	GEN520812 1-ANADRK5
FDNS	00NR	2	20WP	G15_033	FROM->TO	G14-057T 345.00 - SUNNYSIDE 345KV CKT 1	717	789	0.04601	112.2562	GEN520813 1-ANADRK6
FDNS	00NR	2	20WP	G15_033	FROM->TO	G14-057T 345.00 - SUNNYSIDE 345KV CKT 1	717	789	0.04601	112.2557	GEN629071 1-BURLINGTON GENERATOR FOR UNIT NO 1 E
FDNS	00NR	2	20WP	G15_033	FROM->TO	G14-057T 345.00 - SUNNYSIDE 345KV CKT 1	717	789	0.04601	112.2537	GEN511961 1-DEMPSEY-WTG10.7000
FDNS	00NR	2	20WP	G15_033	FROM->TO	G14-057T 345.00 - SUNNYSIDE 345KV CKT 1	717	789	0.04601	112.2523	GEN629070 2-BEAVER CHANNEL GENERATORFOR UNIT NO 2
FDNS	00NR	2	20WP	G15_033	FROM->TO	G14-057T 345.00 - SUNNYSIDE 345KV CKT 1	717	789	0.04601	112.2516	GEN600047 1-MECCT1
FDNS	00NR	2	20WP	G15_033	FROM->TO	G14-057T 345.00 - SUNNYSIDE 345KV CKT 1	717	789	0.04601	112.2504	GEN524022 1-NICHOLS GEN #2
FDNS	00NR	2	20WP	G15_033	FROM->TO	G14-057T 345.00 - SUNNYSIDE 345KV CKT 1	717	789	0.04601	112.2489	GEN563052 1-G15069_3 0.6900
FDNS	00NR	2	20WP	G15_033	FROM->TO	G14-057T 345.00 - SUNNYSIDE 345KV CKT 1	717	789	0.04601	112.2477	GEN562772 1-G15034_3 0.6900
FDNS	00NR	2	20WP	G15_033	FROM->TO	G14-057T 345.00 - SUNNYSIDE 345KV CKT 1	717	789	0.04601	112.2456	P12:069:OKGE:3TERM42
FDNS	00NR	2	20WP	G15_033	FROM->TO	G14-057T 345.00 - SUNNYSIDE 345KV CKT 1	717	789	0.04601	112.239	GEN562074 1-G1149G1504 0.6900
FDNS	00NR	2	20WP	G15_033	FROM->TO	G14-057T 345.00 - SUNNYSIDE 345KV CKT 1	717	789	0.04567	112.2293	ARBUCKLE - SULPHR 4 138.00 138KV CKT 1
FDNS	00NR	2	20WP	G15_033	FROM->TO	G14-057T 345.00 - SUNNYSIDE 345KV CKT 1	717	789	0.04601	112.2274	GEN615010 1-STANTON4
FDNS	00NR	2	20WP	G15_033	FROM->TO	G14-057T 345.00 - SUNNYSIDE 345KV CKT 1	717	789	0.04601	112.2265	GEN528361 1-MADDOX GEN #1
FDNS	00NR	2	20WP	G15_033	FROM->TO	G14-057T 345.00 - SUNNYSIDE 345KV CKT 1	717	789	0.04601	112.2223	GEN615021 1-GRE-ER 14G 16.000
FDNS	00NR	2	20WP	G15_033	FROM->TO	G14-057T 345.00 - SUNNYSIDE 345KV CKT 1	717	789	0.04598	112.2203	P12:138:WFEC:MSL11
FDNS	00NR	2	20WP	G15_033	FROM->TO	G14-057T 345.00 - SUNNYSIDE 345KV CKT 1	717	789	0.04598	112.2203	P12:138:WFEC-AEPW:PHAROAH4:LONEOAK4
FDNS	00NR	2	20WP	G15_033	FROM->TO	G14-057T 345.00 - SUNNYSIDE 345KV CKT 1	717	789	0.04601	112.2192	BURLINGTON NO1 + NO 2 + NO 3 161/20.0KV TRANSFORMER CKT 1
FDNS	00NR	2	20WP	G15_033	FROM->TO	G14-057T 345.00 - SUNNYSIDE 345KV CKT 1	717	789	0.04609	112.2176	P12:138:OKGE:3TERM21
FDNS	00NR	2	20WP	G15_033	FROM->TO	G14-057T 345.00 - SUNNYSIDE 345KV CKT 1	717	789	0.04534	112.2142	MAYSVLT4 138.00 - PRAIRIE POINT 138KV CKT 1

SOLUTION	GROUP	SCENARIO	SEASON	SOURCE	DIRECTION	MONITORED ELEMENT	RATEA (MVA)	RATEB(MVA)	TDF	TC%LOADING (% MVA)	CONTINGENCY
FDNS	00NR	2	20WP	G15_033	FROM->TO	G14-057T 345.00 - SUNNYSIDE 345KV CKT 1	717	789	0.04598	112.2113	GLASSES - MADILL INDUSTRIAL TAP 138KV CKT 1
FDNS	00NR	2	20WP	G15_033	FROM->TO	G14-057T 345.00 - SUNNYSIDE 345KV CKT 1	717	789	0.04597	112.2053	OVEXFRMCCOVE
FDNS	00NR	2	20WP	G15_033	FROM->TO	G14-057T 345.00 - SUNNYSIDE 345KV CKT 1	717	789	0.04607	112.2031	MOREWOOD SW - NINE MILE 138KV CKT 1
FDNS	00NR	2	20WP	G15_033	FROM->TO	G14-057T 345.00 - SUNNYSIDE 345KV CKT 1	717	789	0.04603	112.1835	P12:138:WFEC:MSL08
FDNS	00NR	2	20WP	G15_033	FROM->TO	G14-057T 345.00 - SUNNYSIDE 345KV CKT 1	717	789	0.04601	112.1818	GEN531447 1-HOLCOMB GENERATOR
FDNS	00NR	2	20WP	G15_033	FROM->TO	G14-057T 345.00 - SUNNYSIDE 345KV CKT 1	717	789	0.04626	112.1759	SOONER - SPRING CREEK 345KV CKT 1
FDNS	00NR	2	20WP	G15_033	FROM->TO	G14-057T 345.00 - SUNNYSIDE 345KV CKT 1	717	789	0.04601	112.1756	INDEPENDENCE 500/26.0KV TRANSFORMER CKT 1
FDNS	00NR	2	20WP	G15_033	FROM->TO	G14-057T 345.00 - SUNNYSIDE 345KV CKT 1	717	789	0.04601	112.1745	GEN515443 1-MNCOWND1 0.7000
FDNS	00NR	2	20WP	G15_033	FROM->TO	G14-057T 345.00 - SUNNYSIDE 345KV CKT 1	717	789	0.04601	112.1744	GEN560183 1-REDHIL-WTG1 12.000
FDNS	00NR	2	20WP	G15_033	FROM->TO	G14-057T 345.00 - SUNNYSIDE 345KV CKT 1	717	789	0.04626	112.1697	NORTHWEST - SPRING CREEK 345KV CKT 1
FDNS	00NR	2	20WP	G15_033	FROM->TO	G14-057T 345.00 - SUNNYSIDE 345KV CKT 1	717	789	0.04596	112.1697	HUGO (HUGO 1) 345/138/13.8KV TRANSFORMER CKT 1
FDNS	00NR	2	20WP	G15_033	FROM->TO	G14-057T 345.00 - SUNNYSIDE 345KV CKT 1	717	789	0.04595	112.1657	CARTER - CHICKASAW 138KV CKT 1
FDNS	00NR	2	20WP	G15_033	FROM->TO	G14-057T 345.00 - SUNNYSIDE 345KV CKT 1	717	789	0.04601	112.1627	GEN600067 9-HIGH BRIDGE
FDNS	00NR	2	20WP	G15_033	FROM->TO	G14-057T 345.00 - SUNNYSIDE 345KV CKT 1	717	789	0.04599	112.1611	CANEY CREEK - JOHNSON COUNTY 138KV CKT 1
FDNS	00NR	2	20WP	G15_033	FROM->TO	G14-057T 345.00 - SUNNYSIDE 345KV CKT 1	717	789	0.0461	112.1562	LEBANON - TEXOMA JCT 138KV CKT 1
FDNS	00NR	2	20WP	G15_033	FROM->TO	G14-057T 345.00 - SUNNYSIDE 345KV CKT 1	717	789	0.04598	112.1517	GLASSES - RUSSETT 138KV CKT 1
FDNS	00NR	2	20WP	G15_033	FROM->TO	G14-057T 345.00 - SUNNYSIDE 345KV CKT 1	717	789	0.04601	112.1467	P12:230:UMZB:# 112 #: NU IN SD. NU-RCDC & DRY CREEK XFMR
FDNS	00NR	2	20WP	G15_033	FROM->TO	G14-057T 345.00 - SUNNYSIDE 345KV CKT 1	717	789	0.04601	112.1464	RCDC EAST 4230.00 - RED CEDAR DC 230KV CKT 1
FDNS	00NR	2	20WP	G15_033	FROM->TO	G14-057T 345.00 - SUNNYSIDE 345KV CKT 1	717	789	0.04599	112.1439	CANADIAN RIVER - MCALESTER SOUTH 138KV CKT 1
FDNS	00NR	2	20WP	G15_033	FROM->TO	G14-057T 345.00 - SUNNYSIDE 345KV CKT 1	717	789	0.04599	112.1439	CANADIAN RIVER - MCALESTER SOUTH 138KV CKT 1
FDNS	00NR	2	20WP	G15_033	FROM->TO	G14-057T 345.00 - SUNNYSIDE 345KV CKT 1	717	789	0.04599	112.1421	CANADIAN RIVER () 345/138/13.8KV TRANSFORMER CKT 1
FDNS	00NR	2	20WP	G15_033	FROM->TO	G14-057T 345.00 - SUNNYSIDE 345KV CKT 1	717	789	0.04599	112.1421	CANADIAN RIVER () 345/138/13.8KV TRANSFORMER CKT 1
FDNS	00NR	2	20WP	G15_033	FROM->TO	G14-057T 345.00 - SUNNYSIDE 345KV CKT 1	717	789	0.04597	112.1392	CHAMBER SPRINGS - CLARKSVILLE 345KV CKT 1
FDNS	00NR	2	20WP	G15_033	FROM->TO	G14-057T 345.00 - SUNNYSIDE 345KV CKT 1	717	789	0.04598	112.1345	GRPRAR1-LNX3345.00 - HOLT.CO3 345.00 345KV CKT 1
FDNS	00NR	2	20WP	G15_033	FROM->TO	G14-057T 345.00 - SUNNYSIDE 345KV CKT 1	717	789	0.04629	112.1301	ALTUS JUNCTION - RUSSELL 138KV CKT 1
FDNS	00NR	2	20WP	G15_033	FROM->TO	G14-057T 345.00 - SUNNYSIDE 345KV CKT 1	717	789	0.04629	112.1301	ALTUS JUNCTION - RUSSELL 138KV CKT 1
FDNS	00NR	2	20WP	G15_033	FROM->TO	G14-057T 345.00 - SUNNYSIDE 345KV CKT 1	717	789	0.04584	112.1291	ROCKY POINT - SPRINGDALE 138KV CKT 1
FDNS	00NR	2	20WP	G15_033	FROM->TO	G14-057T 345.00 - SUNNYSIDE 345KV CKT 1	717	789	0.04598	112.1269	GRPRAR1-LNX3345.00 - YANKTON 345KV CKT Z
FDNS	00NR	2	20WP	G15_033	FROM->TO	G14-057T 345.00 - SUNNYSIDE 345KV CKT 1	717	789	0.04534	112.123	PRAIRIE POINT - RATLIFF 138KV CKT 1
FDNS	00NR	2	20WP	G15_033	FROM->TO	G14-057T 345.00 - SUNNYSIDE 345KV CKT 1	717	789	0.04601	112.1197	GEN563242 1-G15090_3 0.6900
FDNS	00NR	2	20WP	G15_033	FROM->TO	G14-057T 345.00 - SUNNYSIDE 345KV CKT 1	717	789	0.04601	112.1126	GEN562802 1-G15039_3 0.3570
FDNS	00NR	2	20WP	G15_033	FROM->TO	G14-057T 345.00 - SUNNYSIDE 345KV CKT 1	717	789	0.04601	112.1023	GEN629072 4-LANSING GENERATOR FOR UNITS NO4 EIA CODE 1
FDNS	00NR	2	20WP	G15_033	FROM->TO	G14-057T 345.00 - SUNNYSIDE 345KV CKT 1	717	789	0.04601	112.1014	GEN524285 1-WILDORADO WIND GEN
FDNS	00NR	2	20WP	G15_033	FROM->TO	G14-057T 345.00 - SUNNYSIDE 345KV CKT 1	717	789	0.04601	112.0909	GEN562078 1-G11_051_3 0.6900
FDNS	00NR	2	20WP	G15_033	FROM->TO	G14-057T 345.00 - SUNNYSIDE 345KV CKT 1	717	789	0.04601	112.0853	GEN562902 1-G15052_3 0.6900
FDNS	00NR	2	20WP	G15_033	FROM->TO	G14-057T 345.00 - SUNNYSIDE 345KV CKT 1	717	789	0.04567	112.0845	JOLLYVILLE - SULPHR 4 138.00 138KV CKT 1
FDNS	00NR	2	20WP	G15_033	FROM->TO	G14-057T 345.00 - SUNNYSIDE 345KV CKT 1	717	789	0.04601	112.0815	GEN560331 1-G10-46 13.800
FDNS	00NR	2	20WP	G15_033	FROM->TO	G14-057T 345.00 - SUNNYSIDE 345KV CKT 1	717	789	0.04601	112.0768	GEN524295 1-SPNSPUR_WND10.6900
FDNS	00NR	2	20WP	G15_033	FROM->TO	G14-057T 345.00 - SUNNYSIDE 345KV CKT 1	717	789	0.04607	112.0684	BEARCAT 138.00 - NINE MILE 138KV CKT 1
FDNS	00NR	2	20WP	G15_033	FROM->TO	G14-057T 345.00 - SUNNYSIDE 345KV CKT 1	717	789	0.04601	112.0518	GEN562269 1-G12-020-1 0.6900
FDNS	00NR	2	20WP	G15_033	FROM->TO	G14-057T 345.00 - SUNNYSIDE 345KV CKT 1	717	789	0.04601	112.0504	GEN657749 1-YOUNG 1 GENERATOR
FDNS	00NR	2	20WP	G15_033	FROM->TO	G14-057T 345.00 - SUNNYSIDE 345KV CKT 1	717	789	0.04601	112.0447	GEN524023 1-NICHOLS GEN #3 22 KV
FDNS	00NR	2	20WP	G15_033	FROM->TO	G14-057T 345.00 - SUNNYSIDE 345KV CKT 1	717	789	0.04601	112.035	GEN562587 1-G14_056_3 0.6900
FDNS	00NR	2	20WP	G15_033	FROM->TO	G14-057T 345.00 - SUNNYSIDE 345KV CKT 1	717	789	0.0474	112.0318	P12:138:AEPW:112GORE4:SNYDER-4
FDNS	00NR	2	20WP	G15_033	FROM->TO	G14-057T 345.00 - SUNNYSIDE 345KV CKT 1	717	789	0.04567	112.0203	JOLLYVILLE - KERR MCGEE CIMARRON 138KV CKT 1
FDNS	00NR	2	20WP	G15_033	FROM->TO	G14-057T 345.00 - SUNNYSIDE 345KV CKT 1	717	789	0.04601	112.0124	GEN562812 1-G15040_3 0.3570
FDNS	00NR	2	20WP	G15_033	FROM->TO	G14-057T 345.00 - SUNNYSIDE 345KV CKT 1	717	789	0.04601	112.0084	GEN562270 1-G12-020-2 0.6900
FDNS	00NR	2	20WP	G15_033	FROM->TO	G14-057T 345.00 - SUNNYSIDE 345KV CKT 1	717	789	0.04601	112.0075	GEN514805 1-SOONER UNIT 1
FDNS	00NR	2	20WP	G15_033	FROM->TO	G14-057T 345.00 - SUNNYSIDE 345KV CKT 1	717	789	0.04595	112.0065	CROCKETT - TENASKA RUSK COUNTY 345KV CKT 1
FDNS	00NR	2	20WP	G15_033	FROM->TO	G14-057T 345.00 - SUNNYSIDE 345KV CKT 1	717	789	0.04601	112.0059	GEN563132 1-G15078_3 0.3570
FDNS	00NR	2	20WP	G15_033	FROM->TO	G14-057T 345.00 - SUNNYSIDE 345KV CKT 1	717	789	0.04595	112.0019	LEBROCK - TENASKA RUSK COUNTY 345KV CKT 1
FDNS	00NR	2	20WP	G15_033	FROM->TO	G14-057T 345.00 - SUNNYSIDE 345KV CKT 1	717	789	0.04601	111.997	GEN563102 1-G15075_3 0.5500
FDNS	00NR	2	20WP	G15_033	FROM->TO	G14-057T 345.00 - SUNNYSIDE 345KV CKT 1	717	789	0.04607	111.9848	P12:138:WFEC:MSL14
FDNS	00NR	2	20WP	G15_033	FROM->TO	G14-057T 345.00 - SUNNYSIDE 345KV CKT 1	717	789	0.04607	111.9735	BEARCAT 138.00 - MOORELAND 138KV CKT 1
FDNS	00NR	2	20WP	G15_033	FROM->TO	G14-057T 345.00 - SUNNYSIDE 345KV CKT 1	717	789	0.04567	111.9722	ARBWIND4 138.00 - KERR MCGEE CIMARRON 138KV CKT 1
FDNS	00NR	2	20WP	G15_033	FROM->TO	G14-057T 345.00 - SUNNYSIDE 345KV CKT 1	717	789	0.04601	111.9687	GEN514806 1-SOONER UNIT 2
FDNS	00NR	2	20WP	G15_033	FROM->TO	G14-057T 345.00 - SUNNYSIDE 345KV CKT 1	717	789	0.04601	111.9529	GEN563062 1-G15071_3 0.6900
FDNS	00NR	2	20WP	G15_033	FROM->TO	G14-057T 345.00 - SUNNYSIDE 345KV CKT 1	717	789	0.04601	111.9491	GEN562974 1-G15060_5 0.6900
FDNS	00NR	2	20WP	G15_033	FROM->TO	G14-057T 345.00 - SUNNYSIDE 345KV CKT 1	717	789	0.04601	111.9396	GEN562973 1-G15060_4 0.6900
FDNS	00NR	2	20WP	G15_033	FROM->TO	G14-057T 345.00 - SUNNYSIDE 345KV CKT 1	717	789	0.04601	111.9324	GEN562882 1-G15047_3 0.6900
FDNS	00NR	2	20WP	G15_033	FROM->TO	G14-057T 345.00 - SUNNYSIDE 345KV CKT 1	717	789	0.04591	111.9264	BROWN - RUSSETT 138KV CKT 1
FDNS	00NR	2	20WP	G15_033	FROM->TO	G14-057T 345.00 - SUNNYSIDE 345KV CKT 1	717	789	0.04601	111.9171	GEN560105 1-G08-22 0.6900
FDNS	00NR	2	20WP	G15_033	FROM->TO	G14-057T 345.00 - SUNNYSIDE 345KV CKT 1	717	789	0.04601	111.916	GEN345671 2-1RUSH G2 18.000
FDNS	00NR	2	20WP	G15_033	FROM->TO	G14-057T 345.00 - SUNNYSIDE 345KV CKT 1	717	789	0.04601	111.9142	GEN345670 1-1RUSH G1 18.000
FDNS	00NR	2	20WP	G15_033	FROM->TO	G14-057T 345.00 - SUNNYSIDE 345KV CKT 1	717	789	0.04571	111.9083	CHICKASAW - TOTAL 138KV CKT 1
FDNS	00NR	2	20WP	G15_033	FROM->TO	G14-057T 345.00 - SUNNYSIDE 345KV CKT 1	717	789	0.04601	111.9064	GEN521112 1-ORME3 13.800
FDNS	00NR	2	20WP	G15_033	FROM->TO	G14-057T 345.00 - SUNNYSIDE 345KV CKT 1	717	789	0.04601	111.9024	GEN562550 1-G14_040_3 0.6900
FDNS	00NR	2	20WP	G15_033	FROM->TO	G14-057T 345.00 - SUNNYSIDE 345KV CKT 1	717	789	0.04601	111.9001	4SIOUX 1 138.00 138/18.0KV TRANSFORMER CKT 1
FDNS	00NR	2	20WP	G15_033	FROM->TO	G14-057T 345.00 - SUNNYSIDE 345KV CKT 1	717	789	0.04601	111.8754	GEN681522 3-GENOA 3
FDNS	00NR	2	20WP	G15_033	FROM->TO	G14-057T 345.00 - SUNNYSIDE 345KV CKT 1	717	789	0.04591	111.8581	RUSSETT - RUSSETT 138KV CKT 1
FDNS	00NR	2	20WP	G15_033	FROM->TO	G14-057T 345.00 - SUNNYSIDE 345KV CKT 1	717	789	0.04601	111.8532	GEN527161 1-MUSTANG GEN #1
FDNS	00NR	2	20WP	G15_033	FROM->TO	G14-057T 345.00 - SUNNYSIDE 345KV CKT 1	717	789	0.04601	111.8532	GEN527162 1-MUSTANG GEN #2
FDNS	00NR	2	20WP	G15_033	FROM->TO	G14-057T 345.00 - SUNNYSIDE 345KV CKT 1	717	789	0.04601	111.8353	GEN511962 2-RKYRDGW2-1 0.7000
FDNS	00NR	2	20WP	G15_033	FROM->TO	G14-057T 345.00 - SUNNYSIDE 345KV CKT 1	717	789	0.04601	111.8339	EASTDC - ERCOT EQUIVALENCE 345KV CKT 1
FDNS	00NR	2	20WP	G15_033	FROM->TO	G14-057T 345.00 - SUNNYSIDE 345KV CKT 1	717	789	0.04578	111.8311	ROCKY POINT - SUNNYSIDE 138KV CKT 1
FDNS	00NR	2	20WP	G15_033	FROM->TO	G14-057T 345.00 - SUNNYSIDE 345KV CKT 1	717	789	0.04601	111.8226	GEN525494 1-PLANT X GEN #4 20 KV
FDNS	00NR	2	20WP	G15_033	FROM->TO	G14-057T 345.00 - SUNNYSIDE 345KV CKT 1	717	789	0.04601	111.8169	GEN563192 1-G15084_3 0.5500
FDNS	00NR	2	20WP	G15_033	FROM->TO	G14-057T 345.00 - SUNNYSIDE 345KV CKT 1	717	789	0.04601	111.8142	GEN672321 1-SHAND GENERATOR 1
FDNS	00NR	2	20WP	G15_033	FROM->TO	G14-057T 345.00 - SUNNYSIDE 345KV CKT 1	717	789	0.04587	111.81	RUSSETT - SPRINGDALE 138KV CKT 1

SOLUTION	GROUP	SCENARIO	SEASON	SOURCE	DIRECTION	MONITORED ELEMENT	RATEA (MVA)	RATEB(MVA)	TDF	TC%LOADING (% MVA)	CONTINGENCY
FDNS	00NR	2	20WP	G15_033	FROM->TO	G14-057T 345.00 - SUNNYSIDE 345KV CKT 1	717	789	0.04601	111.8064	GEN527882 1-CUNNINGHAM GEN #2 20 KV
FDNS	00NR	2	20WP	G15_033	FROM->TO	G14-057T 345.00 - SUNNYSIDE 345KV CKT 1	717	789	0.04601	111.7914	GEN672310 1-POPLAR RIVER GENERATOR 1
FDNS	00NR	2	20WP	G15_033	FROM->TO	G14-057T 345.00 - SUNNYSIDE 345KV CKT 1	717	789	0.04601	111.7914	GEN672311 2-POPLAR RIVER GENERATOR 2
FDNS	00NR	2	20WP	G15_033	FROM->TO	G14-057T 345.00 - SUNNYSIDE 345KV CKT 1	717	789	0.04601	111.7906	GEN527163 1-MUSTANG GEN #3 22 KV
FDNS	00NR	2	20WP	G15_033	FROM->TO	G14-057T 345.00 - SUNNYSIDE 345KV CKT 1	717	789	0.04601	111.7822	GEN672306 6-BOUNDARY DAM GENERATOR 6
FDNS	00NR	2	20WP	G15_033	FROM->TO	G14-057T 345.00 - SUNNYSIDE 345KV CKT 1	717	789	0.04603	111.774	P12:138:WFEC:MSL16
FDNS	00NR	2	20WP	G15_033	FROM->TO	G14-057T 345.00 - SUNNYSIDE 345KV CKT 1	717	789	0.04606	111.7688	ARKANSAS NUCLEAR ONE - FT SMITH 500KV CKT 1
FDNS	00NR	2	20WP	G15_033	FROM->TO	G14-057T 345.00 - SUNNYSIDE 345KV CKT 1	717	789	0.04606	111.7688	ARKANSAS NUCLEAR ONE - FT SMITH 500KV CKT 1
FDNS	00NR	2	20WP	G15_033	FROM->TO	G14-057T 345.00 - SUNNYSIDE 345KV CKT 1	717	789	0.04598	111.7667	P12:138:WFEC-AEPW:GOLDENSW4:CRAIGJT4
FDNS	00NR	2	20WP	G15_033	FROM->TO	G14-057T 345.00 - SUNNYSIDE 345KV CKT 1	717	789	0.04601	111.7658	GEN344895 2-1LAB G2 20.000
FDNS	00NR	2	20WP	G15_033	FROM->TO	G14-057T 345.00 - SUNNYSIDE 345KV CKT 1	717	789	0.04601	111.7578	CLAY BOSWELL 230/20.9KV TRANSFORMER CKT 1
FDNS	00NR	2	20WP	G15_033	FROM->TO	G14-057T 345.00 - SUNNYSIDE 345KV CKT 1	717	789	0.04601	111.7564	GEN562892 1-G15048_3 0.6900
FDNS	00NR	2	20WP	G15_033	FROM->TO	G14-057T 345.00 - SUNNYSIDE 345KV CKT 1	717	789	0.04601	111.7505	GEN681542 6-JP MADGETT
FDNS	00NR	2	20WP	G15_033	FROM->TO	G14-057T 345.00 - SUNNYSIDE 345KV CKT 1	717	789	0.04601	111.7482	GEN523461 1-BLACKHAWK GEN #1
FDNS	00NR	2	20WP	G15_033	FROM->TO	G14-057T 345.00 - SUNNYSIDE 345KV CKT 1	717	789	0.04601	111.7481	GEN523462 1-BLACKHAWK GEN #2
FDNS	06ALL	2	20SP	G15_033	FROM->TO	G14-057T 345.00 - SUNNYSIDE 345KV CKT 1	717	789	0.22613	111.7453	CIMARRON - MINCO 345KV CKT 1
FDNS	00NR	2	20WP	G15_033	FROM->TO	G14-057T 345.00 - SUNNYSIDE 345KV CKT 1	717	789	0.04601	111.7365	GEN344896 3-1LAB G3 20.000
FDNS	00NR	2	20WP	G15_033	FROM->TO	G14-057T 345.00 - SUNNYSIDE 345KV CKT 1	717	789	0.04601	111.7357	GEN562512 1-G14_020_3 0.6900
FDNS	00NR	2	20WP	G15_033	FROM->TO	G14-057T 345.00 - SUNNYSIDE 345KV CKT 1	717	789	0.04601	111.7354	GEN344897 4-1LAB G4 20.000
FDNS	00NR	2	20WP	G15_033	FROM->TO	G14-057T 345.00 - SUNNYSIDE 345KV CKT 1	717	789	0.04601	111.7351	GEN344894 1-1LAB G1 20.000
FDNS	00NR	2	20WP	G15_033	FROM->TO	G14-057T 345.00 - SUNNYSIDE 345KV CKT 1	717	789	0.04553	111.7332	ARDMORE WEST - CARTER 138KV CKT 1
FDNS	00NR	2	20WP	G15_033	FROM->TO	G14-057T 345.00 - SUNNYSIDE 345KV CKT 1	717	789	0.04599	111.6896	P12:138:WFEC:MSL07
FDNS	00NR	2	20WP	G15_033	FROM->TO	G14-057T 345.00 - SUNNYSIDE 345KV CKT 1	717	789	0.04599	111.6896	P12:138:WFEC-AEPW:HUGOPP4:ATOKA--4
FDNS	00NR	2	20WP	G15_033	FROM->TO	G14-057T 345.00 - SUNNYSIDE 345KV CKT 1	717	789	0.04601	111.6884	GEN562699 1-G15_018_3 0.6900
FDNS	00NR	2	20WP	G15_033	FROM->TO	G14-057T 345.00 - SUNNYSIDE 345KV CKT 1	717	789	0.04601	111.6765	ALMA 161 161/24.0KV TRANSFORMER CKT 1
FDNS	00NR	2	20WP	G15_033	FROM->TO	G14-057T 345.00 - SUNNYSIDE 345KV CKT 1	717	789	0.04582	111.6758	CLARKSVILLE - MUSKOGEE 345KV CKT 1
FDNS	00NR	2	20WP	G15_033	FROM->TO	G14-057T 345.00 - SUNNYSIDE 345KV CKT 1	717	789	0.04582	111.6758	CLARKSVILLE - MUSKOGEE 345KV CKT 1
FDNS	00NR	2	20WP	G15_033	FROM->TO	G14-057T 345.00 - SUNNYSIDE 345KV CKT 1	717	789	0.046	111.6736	P12:138:AEPW-SWPA:LONEOAK4:TUPELO4
FDNS	00NR	2	20WP	G15_033	FROM->TO	G14-057T 345.00 - SUNNYSIDE 345KV CKT 1	717	789	0.046	111.6736	P12:138:WFEC:MSL06
FDNS	00NR	2	20WP	G15_033	FROM->TO	G14-057T 345.00 - SUNNYSIDE 345KV CKT 1	717	789	0.04642	111.6706	G15063_T 345.00 - MATHWSN7 345.00 345KV CKT 1
FDNS	00NR	2	20WP	G15_033	FROM->TO	G14-057T 345.00 - SUNNYSIDE 345KV CKT 1	717	789	0.04601	111.6678	GEN511853 1-COMANCHE #3
FDNS	00NR	2	16WP	G15_033	FROM->TO	G14-057T 345.00 - SUNNYSIDE 345KV CKT 1	717	789	0.04943	111.6542	LYDIA - VALLIANT 345KV CKT 1
FDNS	00NR	2	16WP	G15_033	FROM->TO	G14-057T 345.00 - SUNNYSIDE 345KV CKT 1	717	789	0.04943	111.6542	LYDIA - VALLIANT 345KV CKT 1
FDNS	00NR	2	20WP	G15_033	FROM->TO	G14-057T 345.00 - SUNNYSIDE 345KV CKT 1	717	789	0.04551	111.6531	SUNNYSIDE (SUNNYSD5) 345/138/13.8KV TRANSFORMER CKT 1
FDNS	00NR	2	20WP	G15_033	FROM->TO	G14-057T 345.00 - SUNNYSIDE 345KV CKT 1	717	789	0.04601	111.6501	GEN511852 1-COMANCHE #2
FDNS	00NR	2	20WP	G15_033	FROM->TO	G14-057T 345.00 - SUNNYSIDE 345KV CKT 1	717	789	0.04601	111.643	GEN521111 1-ORME2 13.800
FDNS	00NR	2	20WP	G15_033	FROM->TO	G14-057T 345.00 - SUNNYSIDE 345KV CKT 1	717	789	0.04601	111.6299	GEN521110 1-ORME1 13.800
FDNS	00NR	2	20WP	G15_033	FROM->TO	G14-057T 345.00 - SUNNYSIDE 345KV CKT 1	717	789	0.04601	111.6266	GEN563162 1-G15081_3 0.6900
FDNS	00NR	2	20WP	G15_033	FROM->TO	G14-057T 345.00 - SUNNYSIDE 345KV CKT 1	717	789	0.04553	111.6215	ARDMORE WEST - UNIROYAL 138KV CKT 1
FDNS	00NR	2	20WP	G15_033	FROM->TO	G14-057T 345.00 - SUNNYSIDE 345KV CKT 1	717	789	0.04633	111.6159	G15085_T 138.00 - RUSSELL 138KV CKT 1
FDNS	00NR	2	20WP	G15_033	FROM->TO	G14-057T 345.00 - SUNNYSIDE 345KV CKT 1	717	789	0.0474	111.6077	CACHE - SNYDER 138KV CKT 1
FDNS	00NR	2	20WP	G15_033	FROM->TO	G14-057T 345.00 - SUNNYSIDE 345KV CKT 1	717	789	0.04601	111.5932	GEN563292 1-G15095_3 0.6900
FDNS	00NR	2	20WP	G15_033	FROM->TO	G14-057T 345.00 - SUNNYSIDE 345KV CKT 1	717	789	0.04601	111.591	GEN661015 1-COYOTE
FDNS	00NR	2	20WP	G15_033	FROM->TO	G14-057T 345.00 - SUNNYSIDE 345KV CKT 1	717	789	0.04601	111.5865	GEN563122 1-G15077_3 0.3850
FDNS	00NR	2	20WP	G15_033	FROM->TO	G14-057T 345.00 - SUNNYSIDE 345KV CKT 1	717	789	0.04601	111.5815	GEN520811 1-ANADRK4
FDNS	00NR	2	20WP	G15_033	FROM->TO	G14-057T 345.00 - SUNNYSIDE 345KV CKT 1	717	789	0.04577	111.5775	P12:138:OKGE:3TERM40
FDNS	00NR	2	20WP	G15_033	FROM->TO	G14-057T 345.00 - SUNNYSIDE 345KV CKT 1	717	789	0.04601	111.5766	GEN562861 1-G15045_2 0.4800
FDNS	00NR	2	20WP	G15_033	FROM->TO	G14-057T 345.00 - SUNNYSIDE 345KV CKT 1	717	789	0.04556	111.5732	CARTRCO4 138.00 - RATLIFF 138KV CKT 1
FDNS	00NR	2	20WP	G15_033	FROM->TO	G14-057T 345.00 - SUNNYSIDE 345KV CKT 1	717	789	0.04601	111.4801	GEN657748 1-YOUNG 2 GENERATOR
FDNS	00NR	2	20WP	G15_033	FROM->TO	G14-057T 345.00 - SUNNYSIDE 345KV CKT 1	717	789	0.04601	111.4787	GEN527883 1-CUNNINGHAM GEN #3 22 KV
FDNS	00NR	2	20WP	G15_033	FROM->TO	G14-057T 345.00 - SUNNYSIDE 345KV CKT 1	717	789	0.04601	111.4757	GEN527884 1-CUNNINGHAM GEN #4 22 KV
FDNS	00NR	2	20WP	G15_033	FROM->TO	G14-057T 345.00 - SUNNYSIDE 345KV CKT 1	717	789	0.04598	111.4307	P12:138:WFEC:MSL15
FDNS	00NR	2	20WP	G15_033	FROM->TO	G14-057T 345.00 - SUNNYSIDE 345KV CKT 1	717	789	0.04635	111.4283	P12:138:AEPW:SHAM4WT:CHILD4WT
FDNS	00NR	2	20WP	G15_033	FROM->TO	G14-057T 345.00 - SUNNYSIDE 345KV CKT 1	717	789	0.04601	111.4102	GEN562704 1-G15_020_3 0.3550
FDNS	00NR	2	20WP	G15_033	FROM->TO	G14-057T 345.00 - SUNNYSIDE 345KV CKT 1	717	789	0.04553	111.4062	SUNNYSIDE - UNIROYAL 138KV CKT 1
FDNS	00NR	2	20WP	G15_033	FROM->TO	G14-057T 345.00 - SUNNYSIDE 345KV CKT 1	717	789	0.04601	111.4	GEN526331 1-JONES GEN #1 22 KV
FDNS	00NR	2	20WP	G15_033	FROM->TO	G14-057T 345.00 - SUNNYSIDE 345KV CKT 1	717	789	0.04601	111.3998	GEN526332 1-JONES GEN #2 21 KV
FDNS	00NR	2	20WP	G15_033	FROM->TO	G14-057T 345.00 - SUNNYSIDE 345KV CKT 1	717	789	0.04601	111.3898	GEN620315 1-BIG STONE GEN
FDNS	00NR	2	20WP	G15_033	FROM->TO	G14-057T 345.00 - SUNNYSIDE 345KV CKT 1	717	789	0.04781	111.3832	GRAPEVINE INTERCHANGE - STATELINE INTERCHANGE 230KV CKT 1
FDNS	00NR	2	20WP	G15_033	FROM->TO	G14-057T 345.00 - SUNNYSIDE 345KV CKT 1	717	789	0.04781	111.3832	GRAPEVINE INTERCHANGE - STATELINE INTERCHANGE 230KV CKT 1
FDNS	00NR	2	20WP	G15_033	FROM->TO	G14-057T 345.00 - SUNNYSIDE 345KV CKT 1	717	789	0.04601	111.3405	GEN562992 1-G15063_3 0.6900
FDNS	00NR	2	20WP	G15_033	FROM->TO	G14-057T 345.00 - SUNNYSIDE 345KV CKT 1	717	789	0.04601	111.3194	GEN563173 1-G15082_3 0.6900
FDNS	00NR	2	20WP	G15_033	FROM->TO	G14-057T 345.00 - SUNNYSIDE 345KV CKT 1	717	789	0.04601	111.3155	GEN600004 2-PRAIRIE ISLAND G2
FDNS	00NR	2	20WP	G15_033	FROM->TO	G14-057T 345.00 - SUNNYSIDE 345KV CKT 1	717	789	0.04601	111.313	GEN600003 1-PRAIRIE ISLAND G1
FDNS	00NR	2	20WP	G15_033	FROM->TO	G14-057T 345.00 - SUNNYSIDE 345KV CKT 1	717	789	0.04601	111.3087	GEN562952 1-G15057_3 0.6500
FDNS	00NR	2	20WP	G15_033	FROM->TO	G14-057T 345.00 - SUNNYSIDE 345KV CKT 1	717	789	0.04601	111.3029	GEN562710 1-G15_022_3 0.5500
FDNS	00NR	2	20WP	G15_033	FROM->TO	G14-057T 345.00 - SUNNYSIDE 345KV CKT 1	717	789	0.04601	111.2928	GEN600006 1-AS KING
FDNS	00NR	2	20WP	G15_033	FROM->TO	G14-057T 345.00 - SUNNYSIDE 345KV CKT 1	717	789	0.0478	111.2574	GRAPEVINE INTERCHANGE - NICHOLS STATION 230KV CKT 1
FDNS	00NR	2	20WP	G15_033	FROM->TO	G14-057T 345.00 - SUNNYSIDE 345KV CKT 1	717	789	0.0478	111.2574	GRAPEVINE INTERCHANGE - NICHOLS STATION 230KV CKT 1
FDNS	00NR	2	20WP	G15_033	FROM->TO	G14-057T 345.00 - SUNNYSIDE 345KV CKT 1	717	789	0.0461	111.1882	CANEY CREEK - TEXOMA JCT 138KV CKT 1
FDNS	00NR	2	20WP	G15_033	FROM->TO	G14-057T 345.00 - SUNNYSIDE 345KV CKT 1	717	789	0.04601	111.158	GEN511851 1-COMANCHE #1
FDNS	00NR	2	20WP	G15_033	FROM->TO	G14-057T 345.00 - SUNNYSIDE 345KV CKT 1	717	789	0.04655	111.1537	P12:138:AEPW-OGE:CORNVIL4:CIMARON4
FDNS	00NR	2	20WP	G15_033	FROM->TO	G14-057T 345.00 - SUNNYSIDE 345KV CKT 1	717	789	0.04601	111.1201	GEN615001 1-COAL CREEK
FDNS	00NR	2	20WP	G15_033	FROM->TO	G14-057T 345.00 - SUNNYSIDE 345KV CKT 1	717	789	0.04601	111.1193	GEN629074 1-ARNOLD LOWSIDE OF GSU XFMR
FDNS	06NR	2	17G	G15_033	FROM->TO	G14-057T 345.00 - SUNNYSIDE 345KV CKT 1	717	789	0.06836	111.1182	GRACEMONT - MINCO 345KV CKT 1
FDNS	00NR	2	20WP	G15_033	FROM->TO	G14-057T 345.00 - SUNNYSIDE 345KV CKT 1	717	789	0.04601	111.1175	GEN635213 3-NEAL UNIT 3
FDNS	00NR	2	20WP	G15_033	FROM->TO	G14-057T 345.00 - SUNNYSIDE 345KV CKT 1	717	789	0.04601	111.0954	GEN615002 2-COAL CREEK
FDNS	00NR	2	20WP	G15_033	FROM->TO	G14-057T 345.00 - SUNNYSIDE 345KV CKT 1	717	789	0.04601	111.0851	BIG STONE 230/24.0KV TRANSFORMER CKT 1
FDNS	00NR	2	20WP	G15_033	FROM->TO	G14-057T 345.00 - SUNNYSIDE 345KV CKT 1	717	789	0.04601	111.0757	GEN532751 1-WOLF CREEK GENERATING STATION UNIT 1

SOLUTION	GROUP	SCENARIO	SEASON	SOURCE	DIRECTION	MONITORED ELEMENT	RATEA (MVA)	RATEB(MVA)	TDF	TC%LOADING (% MVA)	CONTINGENCY
FDNS	00NR	2	20WP	G15_033	FROM->TO	G14-057T 345.00 - SUNNYSIDE 345KV CKT 1	717	789	0.04907	111.0755	CHISHOLM7 345.00 () 345/230/13.2KV TRANSFORMER CKT 1
FDNS	00NR	2	20WP	G15_033	FROM->TO	G14-057T 345.00 - SUNNYSIDE 345KV CKT 1	717	789	0.046	111.0721	P12:138:WFEC:MSL09
FDNS	00NR	2	20WP	G15_033	FROM->TO	G14-057T 345.00 - SUNNYSIDE 345KV CKT 1	717	789	0.04601	111.0549	GEN562754 1-G15031_5 0.6900
FDNS	00NR	2	20WP	G15_033	FROM->TO	G14-057T 345.00 - SUNNYSIDE 345KV CKT 1	717	789	0.04601	111.0248	GEN636641 1-LOUISA UNIT 1
FDNS	00NR	2	20WP	G15_033	FROM->TO	G14-057T 345.00 - SUNNYSIDE 345KV CKT 1	717	789	0.04583	111.0111	NORTHWEST TEXARKANA - VALLIANT 345KV CKT 1
FDNS	00NR	2	20WP	G15_033	FROM->TO	G14-057T 345.00 - SUNNYSIDE 345KV CKT 1	717	789	0.04583	111.0111	NORTHWEST TEXARKANA - VALLIANT 345KV CKT 1
FDNS	00NR	2	20WP	G15_033	FROM->TO	G14-057T 345.00 - SUNNYSIDE 345KV CKT 1	717	789	0.04601	111.0004	GEN562756 1-G15031_7 0.6900
FDNS	00NR	2	20WP	G15_033	FROM->TO	G14-057T 345.00 - SUNNYSIDE 345KV CKT 1	717	789	0.04601	110.9994	GEN600005 1-MONTICELLO
FDNS	00NR	2	20WP	G15_033	FROM->TO	G14-057T 345.00 - SUNNYSIDE 345KV CKT 1	717	789	0.04601	110.9912	GEN562556 1-G14_046_3 0.3420
FDNS	00NR	2	20WP	G15_033	FROM->TO	G14-057T 345.00 - SUNNYSIDE 345KV CKT 1	717	789	0.04601	110.9063	GEN563142 1-G15079_3 0.5500
FDNS	00NR	2	20WP	G15_033	FROM->TO	G14-057T 345.00 - SUNNYSIDE 345KV CKT 1	717	789	0.04601	110.9063	GEN563151 1-G15080_2 0.5500
FDNS	00NR	2	20WP	G15_033	FROM->TO	G14-057T 345.00 - SUNNYSIDE 345KV CKT 1	717	789	0.04601	110.8858	GEN562023 1-G11_020_3 0.6900
FDNS	00NR	2	20WP	G15_033	FROM->TO	G14-057T 345.00 - SUNNYSIDE 345KV CKT 1	717	789	0.04601	110.8858	GEN562026 1-G11_019_3 0.6900
FDNS	00NR	2	20WP	G15_033	FROM->TO	G14-057T 345.00 - SUNNYSIDE 345KV CKT 1	717	789	0.04601	110.8767	GEN600000 1-SHERBURNECNTY G1
FDNS	00NR	2	20WP	G15_033	FROM->TO	G14-057T 345.00 - SUNNYSIDE 345KV CKT 1	717	789	0.04907	110.8662	CHISHOLM7 345.00 - GRACEMONT 345KV CKT 1
FDNS	00NR	2	20WP	G15_033	FROM->TO	G14-057T 345.00 - SUNNYSIDE 345KV CKT 1	717	789	0.04601	110.8346	GEN629075 1-OTTUMWA GENERATOR FOR OTTUMWA UNIT NO 1
FDNS	00NR	2	20WP	G15_033	FROM->TO	G14-057T 345.00 - SUNNYSIDE 345KV CKT 1	717	789	0.04601	110.8265	GEN523971 1-HARRINGTON GEN #1 24 KV
FDNS	00NR	2	20WP	G15_033	FROM->TO	G14-057T 345.00 - SUNNYSIDE 345KV CKT 1	717	789	0.04601	110.8265	GEN523972 1-HARRINGTON GEN #2 24 KV
FDNS	00NR	2	20WP	G15_033	FROM->TO	G14-057T 345.00 - SUNNYSIDE 345KV CKT 1	717	789	0.04601	110.8265	GEN523973 1-HARRINGTON GEN #3 24 KV
FDNS	00NR	2	20WP	G15_033	FROM->TO	G14-057T 345.00 - SUNNYSIDE 345KV CKT 1	717	789	0.04601	110.8252	GEN600001 2-SHERBURNE CNTY G2
FDNS	00NR	2	16WP	G15_033	FROM->TO	G14-057T 345.00 - SUNNYSIDE 345KV CKT 1	717	789	0.0498	110.7462	EASTDC - ERCOT EQUIVALENCE 345KV CKT 1
FDNS	06NR	2	20L	G15_033	FROM->TO	G14-057T 345.00 - SUNNYSIDE 345KV CKT 1	717	789	0.09084	110.7164	GRACEMONT - LAWTON EASTSIDE 345KV CKT 1
FDNS	06NR	2	20L	G15_033	FROM->TO	G14-057T 345.00 - SUNNYSIDE 345KV CKT 1	717	789	0.09084	110.7164	GRACEMONT - LAWTON EASTSIDE 345KV CKT 1
FDNS	00NR	2	20WP	G15_033	FROM->TO	G14-057T 345.00 - SUNNYSIDE 345KV CKT 1	717	789	0.04601	110.7121	GEN527901 1-HOBBS PLANT #1 (CT)
FDNS	00NR	2	20WP	G15_033	FROM->TO	G14-057T 345.00 - SUNNYSIDE 345KV CKT 1	717	789	0.04601	110.7121	GEN527902 1-HOBBS PLANT #2 (CT)
FDNS	00NR	2	20WP	G15_033	FROM->TO	G14-057T 345.00 - SUNNYSIDE 345KV CKT 1	717	789	0.04601	110.6751	GEN563042 1-G15068_3 0.6900
FDNS	00NR	2	20WP	G15_033	FROM->TO	G14-057T 345.00 - SUNNYSIDE 345KV CKT 1	717	789	0.0492	110.6578	P12:230:AEPW-SPS:SWEETWT6:WHEELER 6
FDNS	00NR	2	20WP	G15_033	FROM->TO	G14-057T 345.00 - SUNNYSIDE 345KV CKT 1	717	789	0.0492	110.6567	STATELINE INTERCHANGE - STLN-DEMARC6 230KV CKT 1
FDNS	00NR	2	20WP	G15_033	FROM->TO	G14-057T 345.00 - SUNNYSIDE 345KV CKT 1	717	789	0.0492	110.6552	STLN-DEMARC6 - SWEETWATER 230KV CKT 1
FDNS	00NR	2	20WP	G15_033	FROM->TO	G14-057T 345.00 - SUNNYSIDE 345KV CKT 1	717	789	0.04576	110.6338	LYDIA - WELSH 345KV CKT 1
FDNS	00NR	2	20WP	G15_033	FROM->TO	G14-057T 345.00 - SUNNYSIDE 345KV CKT 1	717	789	0.04576	110.6338	LYDIA - WELSH 345KV CKT 1
FDNS	00NR	2	20WP	G15_033	FROM->TO	G14-057T 345.00 - SUNNYSIDE 345KV CKT 1	717	789	0.04601	110.608	GEN511848 1-SOUTHWESTERN STATION #3
FDNS	00NR	2	20WP	G15_033	FROM->TO	G14-057T 345.00 - SUNNYSIDE 345KV CKT 1	717	789	0.04601	110.5788	SHERBURNE CO 345/24.0KV TRANSFORMER CKT 1
FDNS	00NR	2	20WP	G15_033	FROM->TO	G14-057T 345.00 - SUNNYSIDE 345KV CKT 1	717	789	0.04601	110.57	GEN635214 4-NEAL UNIT 4
FDNS	00NR	2	20WP	G15_033	FROM->TO	G14-057T 345.00 - SUNNYSIDE 345KV CKT 1	717	789	0.04601	110.3983	GEN600002 3-SHERBURNE CNTY G3
FDNS	00NR	2	20WP	G15_033	FROM->TO	G14-057T 345.00 - SUNNYSIDE 345KV CKT 1	717	789	0.04601	110.3743	GEN563043 1-G15068_4 0.6900
FDNS	00NR	2	20WP	G15_033	FROM->TO	G14-057T 345.00 - SUNNYSIDE 345KV CKT 1	717	789	0.04601	110.3428	GEN526333 1-JONES GEN #3 21 KV
FDNS	00NR	2	20WP	G15_033	FROM->TO	G14-057T 345.00 - SUNNYSIDE 345KV CKT 1	717	789	0.04601	110.3427	GEN526334 1-JONES_4 116.500
FDNS	00NR	2	20WP	G15_033	FROM->TO	G14-057T 345.00 - SUNNYSIDE 345KV CKT 1	717	789	0.04601	110.3106	GEN525844 1-ELK_1 118.000
FDNS	00NR	2	20WP	G15_033	FROM->TO	G14-057T 345.00 - SUNNYSIDE 345KV CKT 1	717	789	0.04601	110.3104	GEN563273 2-G15093_4 0.6900
FDNS	00NR	2	20WP	G15_033	FROM->TO	G14-057T 345.00 - SUNNYSIDE 345KV CKT 1	717	789	0.04601	110.2951	GEN525845 1-ELK_2 1 18.000
FDNS	00NR	2	20WP	G15_033	FROM->TO	G14-057T 345.00 - SUNNYSIDE 345KV CKT 1	717	789	0.04601	110.2874	GEN344225 1-1CAL G1 25.000
FDNS	00NR	2	20WP	G15_033	FROM->TO	G14-057T 345.00 - SUNNYSIDE 345KV CKT 1	717	789	0.04965	110.238	P12:230:AEPW:ELKCITY6:SWEETWT6
FDNS	00NR	2	17SP	G15_033	FROM->TO	G14-057T 345.00 - SUNNYSIDE 345KV CKT 1	717	789	0.06654	110.1643	CIMARRON - MINCO 345KV CKT 1
FDNS	00NR	2	20WP	G15_033	FROM->TO	G14-057T 345.00 - SUNNYSIDE 345KV CKT 1	717	789	0.04601	110.1598	GEN527166 1-MUSTANG_6 118.000
FDNS	00NR	2	20WP	G15_033	FROM->TO	G14-057T 345.00 - SUNNYSIDE 345KV CKT 1	717	789	0.04601	110.1511	GEN563202 1-G15085_3 0.5500
FDNS	00NR	2	20WP	G15_033	FROM->TO	G14-057T 345.00 - SUNNYSIDE 345KV CKT 1	717	789	0.04601	110.1094	GEN635023 3-WALTER SCOTT UNIT 3
FDNS	00NR	2	20WP	G15_033	FROM->TO	G14-057T 345.00 - SUNNYSIDE 345KV CKT 1	717	789	0.04601	110.0943	GEN528501 1-G14_012 24.000
FDNS	00NR	2	20WP	G15_033	FROM->TO	G14-057T 345.00 - SUNNYSIDE 345KV CKT 1	717	789	0.04601	109.948	GEN562590 1-G14_057_3 0.6900
FDNS	00NR	2	20WP	G15_033	FROM->TO	G14-057T 345.00 - SUNNYSIDE 345KV CKT 1	717	789	0.0492	109.9462	CHISHOLM6 230.00 - SWEETWATER 230KV CKT 1
FDNS	00NR	2	20WP	G15_033	FROM->TO	G14-057T 345.00 - SUNNYSIDE 345KV CKT 1	717	789	0.04601	109.9349	GEN562762 1-G15033_3 0.6900
FDNS	00NR	2	20WP	G15_033	FROM->TO	G14-057T 345.00 - SUNNYSIDE 345KV CKT 1	717	789	0.04601	109.9266	GEN562655 1-G14_074_3 0.6900
FDNS	00NR	2	20WP	G15_033	FROM->TO	G14-057T 345.00 - SUNNYSIDE 345KV CKT 1	717	789	0.04601	109.8898	GEN525562 1-TOLK GEN #2 24 KV
FDNS	00NR	2	20WP	G15_033	FROM->TO	G14-057T 345.00 - SUNNYSIDE 345KV CKT 1	717	789	0.04601	109.8018	GEN527903 1-HOBBS PLANT #3 (ST)
FDNS	00NR	2	20WP	G15_033	FROM->TO	G14-057T 345.00 - SUNNYSIDE 345KV CKT 1	717	789	0.04601	109.8011	GEN562685 1-G15_013_3 0.3550
FDNS	00NR	2	20WP	G15_033	FROM->TO	G14-057T 345.00 - SUNNYSIDE 345KV CKT 1	717	789	0.04556	109.7613	JOHNSON COUNTY (JOHNCO) 345/138/13.8KV TRANSFORMER CKT 1
FDNS	06NR	2	20L	G15_033	FROM->TO	G14-057T 345.00 - SUNNYSIDE 345KV CKT 1	717	789	0.04811	109.7538	BASE CASE
FDNS	00NR	2	20WP	G15_033	FROM->TO	G14-057T 345.00 - SUNNYSIDE 345KV CKT 1	717	789	0.04601	109.7041	GEN635024 4-WALTER SCOTT UNIT 4
FDNS	00NR	2	20WP	G15_033	FROM->TO	G14-057T 345.00 - SUNNYSIDE 345KV CKT 1	717	789	0.04601	109.662	GEN563272 1-G15093_3 0.6900
FDNS	00NR	2	16WP	G15_033	FROM->TO	G14-057T 345.00 - SUNNYSIDE 345KV CKT 1	717	789	0.04361	109.578	JOHNSON COUNTY - PITTSBURG 345KV CKT 1
FDNS	00NR	2	16WP	G15_033	FROM->TO	G14-057T 345.00 - SUNNYSIDE 345KV CKT 1	717	789	0.04361	109.578	JOHNSON COUNTY - PITTSBURG 345KV CKT 1
FDNS	00NR	2	20WP	G15_033	FROM->TO	G14-057T 345.00 - SUNNYSIDE 345KV CKT 1	717	789	0.04566	109.5614	LYDIA - VALLIANT 345KV CKT 1
FDNS	00NR	2	20WP	G15_033	FROM->TO	G14-057T 345.00 - SUNNYSIDE 345KV CKT 1	717	789	0.04566	109.5614	LYDIA - VALLIANT 345KV CKT 1
FDNS	00NR	2	20WP	G15_033	FROM->TO	G14-057T 345.00 - SUNNYSIDE 345KV CKT 1	717	789	0.04601	109.4052	GEN525561 1-TOLK GEN #1 24 KV
FDNS	00NR	2	16WP	G15_033	FROM->TO	G14-057T 345.00 - SUNNYSIDE 345KV CKT 1	717	789	0.0498	109.3073	GEN563263 1-G15092_4 0.6900
FDNS	00NR	2	16WP	G15_033	FROM->TO	G14-057T 345.00 - SUNNYSIDE 345KV CKT 1	717	789	0.04818	108.66	HUGO - VALLIANT 345KV CKT 1
FDNS	00NR	2	16WP	G15_033	FROM->TO	G14-057T 345.00 - SUNNYSIDE 345KV CKT 1	717	789	0.04818	108.66	HUGO - VALLIANT 345KV CKT 1
FDNS	06NR	2	20L	G15_033	FROM->TO	G14-057T 345.00 - SUNNYSIDE 345KV CKT 1	717	789	0.04624	107.6315	PITTSBURG - SEMINOLE 345KV CKT 1
FDNS	06NR	2	20L	G15_033	FROM->TO	G14-057T 345.00 - SUNNYSIDE 345KV CKT 1	717	789	0.04624	107.6315	PITTSBURG - SEMINOLE 345KV CKT 1
FDNS	00NR	2	16WP	G15_033	FROM->TO	G14-057T 345.00 - SUNNYSIDE 345KV CKT 1	717	789	0.0498	107.6085	GEN563262 1-G15092_3 0.6900
FDNS	00NR	2	20WP	G15_033	FROM->TO	G14-057T 345.00 - SUNNYSIDE 345KV CKT 1	717	789	0.04029	107.3077	JOHNSON COUNTY - PITTSBURG 345KV CKT 1
FDNS	00NR	2	20WP	G15_033	FROM->TO	G14-057T 345.00 - SUNNYSIDE 345KV CKT 1	717	789	0.04029	107.3077	JOHNSON COUNTY - PITTSBURG 345KV CKT 1
FDNS	00NR	2	20WP	G15_033	FROM->TO	G14-057T 345.00 - SUNNYSIDE 345KV CKT 1	717	789	0.04451	106.9078	HUGO - VALLIANT 345KV CKT 1
FDNS	00NR	2	20WP	G15_033	FROM->TO	G14-057T 345.00 - SUNNYSIDE 345KV CKT 1	717	789	0.04451	106.9078	HUGO - VALLIANT 345KV CKT 1
FDNS	06NR	2	20L	G15_033	FROM->TO	G14-057T 345.00 - SUNNYSIDE 345KV CKT 1	717	789	0.04756	106.6102	CIMARRON - DRAPER LAKE 345KV CKT 1
FDNS	06ALL	2	20SP	G15_033	FROM->TO	G14-057T 345.00 - SUNNYSIDE 345KV CKT 1	717	789	0.22613	106.5458	GRACEMONT - MINCO 345KV CKT 1
FDNS	06ALL	2	20WP	G15_033	FROM->TO	G14-057T 345.00 - SUNNYSIDE 345KV CKT 1	717	789	0.16288	106.4822	BASE CASE
FDNS	00NR	2	20WP	G15_033	FROM->TO	G14-057T 345.00 - SUNNYSIDE 345KV CKT 1	717	789	0.04601	106.4529	GEN563263 1-G15092_4 0.6900
FDNS	06ALL	2	17G	G15_033	FROM->TO	G14-057T 345.00 - SUNNYSIDE 345KV CKT 1	717	789	0.16598	105.8626	BASE CASE

SOLUTION	GROUP	SCENARIO	SEASON	SOURCE	DIRECTION	MONITORED ELEMENT	RATEA (MVA)	RATEB(MVA)	TDF	TC%LOADING (% MVA)	CONTINGENCY
FDNS	00NR	2	16WP	G15_033	FROM->TO	G14-057T 345.00 - SUNNYSIDE 345KV CKT 1	717	789	0.25618	105.7909	G14-074T 345.00 - TUCO INTERCHANGE 345KV CKT 1
FDNS	06NR	2	20L	G15_033	FROM->TO	G14-057T 345.00 - SUNNYSIDE 345KV CKT 1	717	789	0.05047	104.7932	P12:138:WFEC:MSL03
FDNS	00NR	2	20WP	G15_033	FROM->TO	G14-057T 345.00 - SUNNYSIDE 345KV CKT 1	717	789	0.04601	104.7609	GEN563262 1-G15092_3 0.6900
FDNS	06ALL	2	16WP	G15_033	FROM->TO	G14-057T 345.00 - SUNNYSIDE 345KV CKT 1	717	789	0.16928	104.4384	BASE CASE
FDNS	06NR	2	20L	G15_033	FROM->TO	G14-057T 345.00 - SUNNYSIDE 345KV CKT 1	717	789	0.04799	103.996	CLEVELAND - G15066_T 345.00 345KV CKT 1
FDNS	00NR	2	16WP	G15_033	FROM->TO	G14-057T 345.00 - SUNNYSIDE 345KV CKT 1	717	789	0.04161	103.9572	JOHNSON COUNTY - SUNNYSIDE 345KV CKT 1
FDNS	06NR	2	20L	G15_033	FROM->TO	G14-057T 345.00 - SUNNYSIDE 345KV CKT 1	717	789	0.04799	103.6906	G15066_T 345.00 - SOONER 345KV CKT 1
FDNS	06NR	2	20L	G15_033	FROM->TO	G14-057T 345.00 - SUNNYSIDE 345KV CKT 1	717	789	0.04811	103.6806	GEN501801 1-DOLET HILLS UNIT1
FDNS	06NR	2	20L	G15_033	FROM->TO	G14-057T 345.00 - SUNNYSIDE 345KV CKT 1	717	789	0.04811	103.4801	GEN509416 1-TURK GENERATION
FDNS	06NR	2	20L	G15_033	FROM->TO	G14-057T 345.00 - SUNNYSIDE 345KV CKT 1	717	789	0.04811	103.3192	GEN509403 1-PIRKEY GENERATION
FDNS	06NR	2	20L	G15_033	FROM->TO	G14-057T 345.00 - SUNNYSIDE 345KV CKT 1	717	789	0.04811	102.9735	GEN336821 1-GRAND GULF UNIT
FDNS	06NR	2	20L	G15_033	FROM->TO	G14-057T 345.00 - SUNNYSIDE 345KV CKT 1	717	789	0.04811	102.8428	GEN336153 1-WATERFORD UNIT#3
FDNS	06NR	2	20L	G15_033	FROM->TO	G14-057T 345.00 - SUNNYSIDE 345KV CKT 1	717	789	0.04809	102.65	PITTSBURG - VALLIANT 345KV CKT 1
FDNS	06NR	2	20L	G15_033	FROM->TO	G14-057T 345.00 - SUNNYSIDE 345KV CKT 1	717	789	0.04809	102.65	PITTSBURG - VALLIANT 345KV CKT 1
FDNS	06NR	2	20L	G15_033	FROM->TO	G14-057T 345.00 - SUNNYSIDE 345KV CKT 1	717	789	0.04797	102.5597	ARCADIA - NORTHWEST 345KV CKT 1
FDNS	06NR	2	20L	G15_033	FROM->TO	G14-057T 345.00 - SUNNYSIDE 345KV CKT 1	717	789	0.04811	102.5091	GEN335831 1-RIVERBEND UNIT#1
FDNS	06NR	2	20L	G15_033	FROM->TO	G14-057T 345.00 - SUNNYSIDE 345KV CKT 1	717	789	0.04805	102.4228	CLEVELAND - TULSA NORTH 345KV CKT 1
FDNS	06NR	2	20L	G15_033	FROM->TO	G14-057T 345.00 - SUNNYSIDE 345KV CKT 1	717	789	0.04805	102.4228	CLEVELAND - TULSA NORTH 345KV CKT 1
FDNS	06NR	2	20L	G15_033	FROM->TO	G14-057T 345.00 - SUNNYSIDE 345KV CKT 1	717	789	0.04811	102.179	GRAND GULF 500/22.0KV TRANSFORMER CKT 1
FDNS	06NR	2	20L	G15_033	FROM->TO	G14-057T 345.00 - SUNNYSIDE 345KV CKT 1	717	789	0.04809	102.026	LACYGNE - WAVERLY7 345.00 345KV CKT 1
FDNS	00NR	2	20WP	G15_033	FROM->TO	G14-057T 345.00 - SUNNYSIDE 345KV CKT 1	717	789	0.2571	101.9936	G14-074T 345.00 - TUCO INTERCHANGE 345KV CKT 1
FDNS	06NR	2	20L	G15_033	FROM->TO	G14-057T 345.00 - SUNNYSIDE 345KV CKT 1	717	789	0.04942	101.8913	P12:138:AEPW:DUNCAN-4:L.E.S.-4
FDNS	06NR	2	20L	G15_033	FROM->TO	G14-057T 345.00 - SUNNYSIDE 345KV CKT 1	717	789	0.04853	101.8528	CORN TAP - NAPLESTP 138.00 138KV CKT 1
FDNS	06NR	2	20L	G15_033	FROM->TO	G14-057T 345.00 - SUNNYSIDE 345KV CKT 1	717	789	0.04809	101.8515	WAVERLY7 345.00 - WOLF CREEK 345KV CKT 1
FDNS	06NR	2	20L	G15_033	FROM->TO	G14-057T 345.00 - SUNNYSIDE 345KV CKT 1	717	789	0.04811	101.7789	GEN335206 1-NELSON UNIT 6
FDNS	06NR	2	20L	G15_033	FROM->TO	G14-057T 345.00 - SUNNYSIDE 345KV CKT 1	717	789	0.04853	101.7704	NAPLESTP 138.00 - PAYNE 138.00 138KV CKT 1
FDNS	06NR	2	20L	G15_033	FROM->TO	G14-057T 345.00 - SUNNYSIDE 345KV CKT 1	717	789	0.04841	101.768	COMANCHE - LOCO 138KV CKT 1
FDNS	06NR	2	20L	G15_033	FROM->TO	G14-057T 345.00 - SUNNYSIDE 345KV CKT 1	717	789	0.04941	101.7646	COMANCHE TAP - OMPA-DUNCAN 840 138KV CKT 1
FDNS	06NR	2	20L	G15_033	FROM->TO	G14-057T 345.00 - SUNNYSIDE 345KV CKT 1	717	789	0.04826	101.7226	REDBUD - RIVERSIDE STATION 345KV CKT 1
FDNS	06NR	2	20L	G15_033	FROM->TO	G14-057T 345.00 - SUNNYSIDE 345KV CKT 1	717	789	0.04826	101.7226	REDBUD - RIVERSIDE STATION 345KV CKT 1
FDNS	06NR	2	20L	G15_033	FROM->TO	G14-057T 345.00 - SUNNYSIDE 345KV CKT 1	717	789	0.05024	101.5874	LAWTON EASTSIDE (LES 5) 345/138/13.8KV TRANSFORMER CKT 2
FDNS	06NR	2	20L	G15_033	FROM->TO	G14-057T 345.00 - SUNNYSIDE 345KV CKT 1	717	789	0.05024	101.5874	LAWTON EASTSIDE (LES 5) 345/138/13.8KV TRANSFORMER CKT 2
FDNS	06NR	2	20L	G15_033	FROM->TO	G14-057T 345.00 - SUNNYSIDE 345KV CKT 1	717	789	0.04811	101.5558	GEN509406 1-WELSH #3
FDNS	06NR	2	20L	G15_033	FROM->TO	G14-057T 345.00 - SUNNYSIDE 345KV CKT 1	717	789	0.04811	101.5557	GEN509404 1-WELSH #1
FDNS	06NR	2	20L	G15_033	FROM->TO	G14-057T 345.00 - SUNNYSIDE 345KV CKT 1	717	789	0.0509	101.5074	P12:138:AEPW:S.W.S.-4:L.E.S.-4
FDNS	06NR	2	20L	G15_033	FROM->TO	G14-057T 345.00 - SUNNYSIDE 345KV CKT 1	717	789	0.04941	101.4627	DUNCAN - OMPA-DUNCAN 840 138KV CKT 1
FDNS	06NR	2	20L	G15_033	FROM->TO	G14-057T 345.00 - SUNNYSIDE 345KV CKT 1	717	789	0.04941	101.4627	DUNCAN - OMPA-DUNCAN 840 138KV CKT 1
FDNS	06NR	2	20L	G15_033	FROM->TO	G14-057T 345.00 - SUNNYSIDE 345KV CKT 1	717	789	0.0482	101.4605	HEALDTON - LOCO 138KV CKT 1
FDNS	06NR	2	20L	G15_033	FROM->TO	G14-057T 345.00 - SUNNYSIDE 345KV CKT 1	717	789	0.04769	101.4485	ARCADIA - SEMINOLE 345KV CKT 1
FDNS	06NR	2	20L	G15_033	FROM->TO	G14-057T 345.00 - SUNNYSIDE 345KV CKT 1	717	789	0.04859	101.4188	ANADARKO - POCASSETT 138KV CKT 1
FDNS	06NR	2	20L	G15_033	FROM->TO	G14-057T 345.00 - SUNNYSIDE 345KV CKT 1	717	789	0.0482	101.372	HEALDTON - RINGLING 138KV CKT 1
FDNS	06NR	2	20L	G15_033	FROM->TO	G14-057T 345.00 - SUNNYSIDE 345KV CKT 1	717	789	0.04805	101.3579	WEBRE - WELLS 500KV CKT 1
FDNS	06NR	2	20L	G15_033	FROM->TO	G14-057T 345.00 - SUNNYSIDE 345KV CKT 1	717	789	0.04859	101.3507	POCASSETT - TUTTLE 138KV CKT 1
FDNS	06NR	2	20L	G15_033	FROM->TO	G14-057T 345.00 - SUNNYSIDE 345KV CKT 1	717	789	0.0482	101.3069	RINGLING - SOUTH WILSON 138KV CKT 1
FDNS	06NR	2	20L	G15_033	FROM->TO	G14-057T 345.00 - SUNNYSIDE 345KV CKT 1	717	789	0.04811	101.2917	DOLET HILLS 345/24.0KV TRANSFORMER CKT 1
FDNS	06NR	2	20L	G15_033	FROM->TO	G14-057T 345.00 - SUNNYSIDE 345KV CKT 1	717	789	0.04811	101.2598	GEN501813 1-RODEMACHER UNIT 3
FDNS	06NR	2	20L	G15_033	FROM->TO	G14-057T 345.00 - SUNNYSIDE 345KV CKT 1	717	789	0.04811	101.2211	GEN501812 1-RODEMACHER UNIT 2
FDNS	06NR	2	20L	G15_033	FROM->TO	G14-057T 345.00 - SUNNYSIDE 345KV CKT 1	717	789	0.04797	101.218	CANEYRV7 345.00 - NEOSHO 345KV CKT 1
FDNS	06NR	2	20L	G15_033	FROM->TO	G14-057T 345.00 - SUNNYSIDE 345KV CKT 1	717	789	0.0482	101.1897	MARIETTA - SOUTH WILSON 138KV CKT 1
FDNS	06NR	2	20L	G15_033	FROM->TO	G14-057T 345.00 - SUNNYSIDE 345KV CKT 1	717	789	0.04859	101.1814	BRIDGECR 138.00 - TUTTLE 138KV CKT 1
FDNS	06NR	2	20L	G15_033	FROM->TO	G14-057T 345.00 - SUNNYSIDE 345KV CKT 1	717	789	0.0482	101.1589	P12:138:WFEC:MSL17
FDNS	06NR	2	20L	G15_033	FROM->TO	G14-057T 345.00 - SUNNYSIDE 345KV CKT 1	717	789	0.048	101.1404	DOLET HILLS - SOUTHWEST SHREVEPORT 345KV CKT 1
FDNS	06NR	2	20L	G15_033	FROM->TO	G14-057T 345.00 - SUNNYSIDE 345KV CKT 1	717	789	0.048	101.1404	DOLET HILLS - SOUTHWEST SHREVEPORT 345KV CKT 1
FDNS	06NR	2	17G	G15_033	FROM->TO	G14-057T 345.00 - SUNNYSIDE 345KV CKT 1	717	789	0.09532	101.117	GRACEMONT - LAWTON EASTSIDE 345KV CKT 1
FDNS	06NR	2	17G	G15_033	FROM->TO	G14-057T 345.00 - SUNNYSIDE 345KV CKT 1	717	789	0.09532	101.117	GRACEMONT - LAWTON EASTSIDE 345KV CKT 1
FDNS	06NR	2	20L	G15_033	FROM->TO	G14-057T 345.00 - SUNNYSIDE 345KV CKT 1	717	789	0.04811	101.114	GEN509408 1-WILKES #2
FDNS	06NR	2	20L	G15_033	FROM->TO	G14-057T 345.00 - SUNNYSIDE 345KV CKT 1	717	789	0.04859	101.0874	P12:138:WFEC:MSL01
FDNS	06NR	2	20L	G15_033	FROM->TO	G14-057T 345.00 - SUNNYSIDE 345KV CKT 1	717	789	0.04797	101.0747	CANEYRV7 345.00 - LATHAMS7 345.00 345KV CKT 1
FDNS	06NR	2	20L	G15_033	FROM->TO	G14-057T 345.00 - SUNNYSIDE 345KV CKT 1	717	789	0.04859	101.0683	BRIDGECR 138.00 - SUNSHINE CANYON 138KV CKT 1
FDNS	06NR	2	20L	G15_033	FROM->TO	G14-057T 345.00 - SUNNYSIDE 345KV CKT 1	717	789	0.04811	101.047	GEN337652 1-WHITE BLUFF UNIT #1
FDNS	06NR	2	20L	G15_033	FROM->TO	G14-057T 345.00 - SUNNYSIDE 345KV CKT 1	717	789	0.04811	101.0249	GEN337653 1-WHITE BLUFF UNIT #2
FDNS	06NR	2	20L	G15_033	FROM->TO	G14-057T 345.00 - SUNNYSIDE 345KV CKT 1	717	789	0.04795	101.0239	AXTELL - POST ROCK 345KV CKT 1
FDNS	06NR	2	20L	G15_033	FROM->TO	G14-057T 345.00 - SUNNYSIDE 345KV CKT 1	717	789	0.04811	101.0219	GEN337911 1-ARKANSAS NUCLEAR ONE UNIT #2
FDNS	06NR	2	20L	G15_033	FROM->TO	G14-057T 345.00 - SUNNYSIDE 345KV CKT 1	717	789	0.04797	100.9913	P12:138:AEPW-OGE:WTH_JCT4:JENSEN4
FDNS	06NR	2	20L	G15_033	FROM->TO	G14-057T 345.00 - SUNNYSIDE 345KV CKT 1	717	789	0.04811	100.9679	NEW MADRID 345/22.0KV TRANSFORMER CKT 1
FDNS	06NR	2	20L	G15_033	FROM->TO	G14-057T 345.00 - SUNNYSIDE 345KV CKT 1	717	789	0.04828	100.9361	CIVIT - PAOLI 138KV CKT 1
FDNS	06NR	2	20L	G15_033	FROM->TO	G14-057T 345.00 - SUNNYSIDE 345KV CKT 1	717	789	0.04811	100.8887	FRONTIER - GRIMES 345KV CKT 1
FDNS	06NR	2	20L	G15_033	FROM->TO	G14-057T 345.00 - SUNNYSIDE 345KV CKT 1	717	789	0.04828	100.8864	CIVIT - STRATFORD 138KV CKT 1
FDNS	06NR	2	20L	G15_033	FROM->TO	G14-057T 345.00 - SUNNYSIDE 345KV CKT 1	717	789	0.04828	100.8429	OIL CENTER - STRATFORD 138KV CKT 1
FDNS	06NR	2	20L	G15_033	FROM->TO	G14-057T 345.00 - SUNNYSIDE 345KV CKT 1	717	789	0.04796	100.8373	MATHWSN7 345.00 - NORTHWEST 345KV CKT 1
FDNS	06NR	2	20L	G15_033	FROM->TO	G14-057T 345.00 - SUNNYSIDE 345KV CKT 1	717	789	0.04806	100.8371	ELDORADO EHV - SHERIDAN EHV 500KV CKT 1
FDNS	06NR	2	20L	G15_033	FROM->TO	G14-057T 345.00 - SUNNYSIDE 345KV CKT 1	717	789	0.04847	100.8314	P12:138:AEPW-OGE:CORNVIL4:MAUD 4
FDNS	06NR	2	20L	G15_033	FROM->TO	G14-057T 345.00 - SUNNYSIDE 345KV CKT 1	717	789	0.04811	100.8289	GEN337910 1-ARKANSAS NUCLEAR ONE UNIT #1
FDNS	06NR	2	20L	G15_033	FROM->TO	G14-057T 345.00 - SUNNYSIDE 345KV CKT 1	717	789	0.04847	100.8287	BLANCHARD - CORNVILLE 138KV CKT 1
FDNS	00NR	2	20WP	G15_033	FROM->TO	G14-057T 345.00 - SUNNYSIDE 345KV CKT 1	717	789	0.03844	100.814	JOHNSON COUNTY - SUNNYSIDE 345KV CKT 1
FDNS	06NR	2	20L	G15_033	FROM->TO	G14-057T 345.00 - SUNNYSIDE 345KV CKT 1	717	789	0.04848	100.8019	BAILEY4 138.00 - SUNSHINE CANYON 138KV CKT 1
FDNS	06NR	2	20L	G15_033	FROM->TO	G14-057T 345.00 - SUNNYSIDE 345KV CKT 1	717	789	0.04797	100.7934	LATHAMS7 345.00 - ROSE HILL 345KV CKT 1
FDNS	06NR	2	20L	G15_033	FROM->TO	G14-057T 345.00 - SUNNYSIDE 345KV CKT 1	717	789	0.04811	100.7922	GEN334440 1-SABINE UNIT 4
FDNS	06NR	2	20L	G15_033	FROM->TO	G14-057T 345.00 - SUNNYSIDE 345KV CKT 1	717	789	0.04811	100.784	GEN506754 1-LEBROCK STEAM 1

SOLUTION	GROUP	SCENARIO	SEASON	SOURCE	DIRECTION	MONITORED ELEMENT	RATEA (MVA)	RATEB(MVA)	TDF	TC%LOADING (% MVA)	CONTINGENCY
FDNS	06NR	2	20L	G15_033	FROM->TO	G14-057T 345.00 - SUNNYSIDE 345KV CKT 1	717	789	0.04828	100.7762	LATTA JCT - OIL CENTER 138KV CKT 1
FDNS	06NR	2	20L	G15_033	FROM->TO	G14-057T 345.00 - SUNNYSIDE 345KV CKT 1	717	789	0.04775	100.7564	CANADIAN - NOBLE 138KV CKT 1
FDNS	06NR	2	20L	G15_033	FROM->TO	G14-057T 345.00 - SUNNYSIDE 345KV CKT 1	717	789	0.04778	100.7526	P12:138:OKGE:3TERM27
FDNS	06NR	2	20L	G15_033	FROM->TO	G14-057T 345.00 - SUNNYSIDE 345KV CKT 1	717	789	0.04811	100.7475	GEN334030 1-FRONTIER UNIT 1
FDNS	06NR	2	20L	G15_033	FROM->TO	G14-057T 345.00 - SUNNYSIDE 345KV CKT 1	717	789	0.04811	100.7451	GEN334031 1-FRONTIER UNIT 2
FDNS	06NR	2	20L	G15_033	FROM->TO	G14-057T 345.00 - SUNNYSIDE 345KV CKT 1	717	789	0.04883	100.7415	P12:138:AEPW:CORNVIL4:DUNCAN-4
FDNS	06NR	2	20L	G15_033	FROM->TO	G14-057T 345.00 - SUNNYSIDE 345KV CKT 1	717	789	0.04848	100.7321	BAILEY4 138.00 - WESTMOORE 138KV CKT 1
FDNS	06NR	2	20L	G15_033	FROM->TO	G14-057T 345.00 - SUNNYSIDE 345KV CKT 1	717	789	0.04798	100.729	WEATHERFORD JCT. - WEATHERFORD SOUTHEAST 138KV CKT 1
FDNS	06NR	2	20L	G15_033	FROM->TO	G14-057T 345.00 - SUNNYSIDE 345KV CKT 1	717	789	0.04798	100.729	WEATHERFORD JCT. - WEATHERFORD SOUTHEAST 138KV CKT 1
FDNS	06NR	2	20L	G15_033	FROM->TO	G14-057T 345.00 - SUNNYSIDE 345KV CKT 1	717	789	0.04775	100.7166	NOBLE - PURCELL4 138.00 138KV CKT 1
FDNS	06NR	2	20L	G15_033	FROM->TO	G14-057T 345.00 - SUNNYSIDE 345KV CKT 1	717	789	0.04798	100.713	P12:138:AEPW:REDROCKRD4:WTH_JCT4
FDNS	06NR	2	20L	G15_033	FROM->TO	G14-057T 345.00 - SUNNYSIDE 345KV CKT 1	717	789	0.04783	100.71	PARK LANE - SEMINOLE 138KV CKT 1
FDNS	06NR	2	20L	G15_033	FROM->TO	G14-057T 345.00 - SUNNYSIDE 345KV CKT 1	717	789	0.04847	100.7085	BLANCHARD - MAUD 138KV CKT 1
FDNS	06NR	2	20L	G15_033	FROM->TO	G14-057T 345.00 - SUNNYSIDE 345KV CKT 1	717	789	0.05272	100.6987	TUCO INTERCHANGE - TUCO_2 345.00 345KV CKT 1
FDNS	06NR	2	20L	G15_033	FROM->TO	G14-057T 345.00 - SUNNYSIDE 345KV CKT 1	717	789	0.04817	100.6915	TUPELO - TUPELO TAP 138KV CKT 1
FDNS	06NR	2	20L	G15_033	FROM->TO	G14-057T 345.00 - SUNNYSIDE 345KV CKT 1	717	789	0.04811	100.6777	NEW MADRID 161/22.0KV TRANSFORMER CKT 1
FDNS	06NR	2	20L	G15_033	FROM->TO	G14-057T 345.00 - SUNNYSIDE 345KV CKT 1	717	789	0.04809	100.6769	P12:138:WFEC:MSL02
FDNS	06NR	2	20L	G15_033	FROM->TO	G14-057T 345.00 - SUNNYSIDE 345KV CKT 1	717	789	0.04798	100.6705	HINTON - WEATHERFORD JCT. 138KV CKT 1
FDNS	06NR	2	20L	G15_033	FROM->TO	G14-057T 345.00 - SUNNYSIDE 345KV CKT 1	717	789	0.04803	100.6669	P12:138:AEPW:WTHWF4:CLINTJC4
FDNS	06NR	2	20L	G15_033	FROM->TO	G14-057T 345.00 - SUNNYSIDE 345KV CKT 1	717	789	0.04916	100.6622	LAWTON EASTSIDE (LES 4) 345/138/13.8KV TRANSFORMER CKT 1
FDNS	06NR	2	20L	G15_033	FROM->TO	G14-057T 345.00 - SUNNYSIDE 345KV CKT 1	717	789	0.04916	100.6622	LAWTON EASTSIDE (LES 4) 345/138/13.8KV TRANSFORMER CKT 1
FDNS	06NR	2	20L	G15_033	FROM->TO	G14-057T 345.00 - SUNNYSIDE 345KV CKT 1	717	789	0.04811	100.6612	GEN335204 1-NELSON UNIT 4
FDNS	06NR	2	20L	G15_033	FROM->TO	G14-057T 345.00 - SUNNYSIDE 345KV CKT 1	717	789	0.04808	100.6587	ELDORADO EHV - MOUNT OLIVE 500KV CKT 1
FDNS	06NR	2	20L	G15_033	FROM->TO	G14-057T 345.00 - SUNNYSIDE 345KV CKT 1	717	789	0.04848	100.6534	FRANKLIN SW - WESTMOORE 138KV CKT 1
FDNS	06NR	2	20L	G15_033	FROM->TO	G14-057T 345.00 - SUNNYSIDE 345KV CKT 1	717	789	0.04735	100.6395	G11-14T 345.00 - WOODWARD DISTRICT EHV 345KV CKT 1
FDNS	06NR	2	20L	G15_033	FROM->TO	G14-057T 345.00 - SUNNYSIDE 345KV CKT 1	717	789	0.04735	100.6395	G11-14T 345.00 - WOODWARD DISTRICT EHV 345KV CKT 2
FDNS	06NR	2	20L	G15_033	FROM->TO	G14-057T 345.00 - SUNNYSIDE 345KV CKT 1	717	789	0.04756	100.6383	MOORE COUNTY INTERCHANGE - POTTER COUNTY INTERCHANGE 230KV CKT 1
FDNS	06NR	2	20L	G15_033	FROM->TO	G14-057T 345.00 - SUNNYSIDE 345KV CKT 1	717	789	0.04756	100.6383	MOORE COUNTY INTERCHANGE - POTTER COUNTY INTERCHANGE 230KV CKT 1
FDNS	06NR	2	20L	G15_033	FROM->TO	G14-057T 345.00 - SUNNYSIDE 345KV CKT 1	717	789	0.04798	100.6348	HINTON - REDROCKRD4 138.00 138KV CKT 1
FDNS	06NR	2	20L	G15_033	FROM->TO	G14-057T 345.00 - SUNNYSIDE 345KV CKT 1	717	789	0.04811	100.6324	WHITE BLUFF 500/26.0KV TRANSFORMER CKT 1
FDNS	06NR	2	20L	G15_033	FROM->TO	G14-057T 345.00 - SUNNYSIDE 345KV CKT 1	717	789	0.04805	100.63	DRAPER LAKE - SEMINOLE 345KV CKT 2
FDNS	06NR	2	20L	G15_033	FROM->TO	G14-057T 345.00 - SUNNYSIDE 345KV CKT 1	717	789	0.04805	100.6299	DRAPER LAKE - SEMINOLE 345KV CKT 1
FDNS	06NR	2	20L	G15_033	FROM->TO	G14-057T 345.00 - SUNNYSIDE 345KV CKT 1	717	789	0.04811	100.6268	GEN336170 1-GULF OXY U4
FDNS	06NR	2	20L	G15_033	FROM->TO	G14-057T 345.00 - SUNNYSIDE 345KV CKT 1	717	789	0.04807	100.6165	PAOLI - PAYNE 138.00 138KV CKT 1
FDNS	06NR	2	20L	G15_033	FROM->TO	G14-057T 345.00 - SUNNYSIDE 345KV CKT 1	717	789	0.04811	100.6116	GEN336252 1-NINEMILE POINT UNIT#5
FDNS	06NR	2	20L	G15_033	FROM->TO	G14-057T 345.00 - SUNNYSIDE 345KV CKT 1	717	789	0.04828	100.6086	LASALLE - LATTA JCT 138KV CKT 1
FDNS	00NR	2	20SP	G15_033	FROM->TO	G14-057T 345.00 - SUNNYSIDE 345KV CKT 1	717	789	0.06204	100.6052	CIMARRON - MINCO 345KV CKT 1
FDNS	06NR	2	20L	G15_033	FROM->TO	G14-057T 345.00 - SUNNYSIDE 345KV CKT 1	717	789	0.04819	100.6047	P12:138:AEPW:SHERID4:112GORE4
FDNS	06NR	2	20L	G15_033	FROM->TO	G14-057T 345.00 - SUNNYSIDE 345KV CKT 1	717	789	0.04808	100.5992	EMPORIA ENERGY CENTER - G14_001T 345.00 345KV CKT 1
FDNS	06NR	2	20L	G15_033	FROM->TO	G14-057T 345.00 - SUNNYSIDE 345KV CKT 1	717	789	0.0482	100.5796	MARIETTA - MARIETTA4 138.00 138KV CKT 1
FDNS	06NR	2	20L	G15_033	FROM->TO	G14-057T 345.00 - SUNNYSIDE 345KV CKT 1	717	789	0.04811	100.5432	GEN336831 1-BAXTER WILSON SES
FDNS	06NR	2	20L	G15_033	FROM->TO	G14-057T 345.00 - SUNNYSIDE 345KV CKT 1	717	789	0.04828	100.5415	LASALLE - STONEWAL LH138.00 138KV CKT 1
FDNS	06NR	2	20L	G15_033	FROM->TO	G14-057T 345.00 - SUNNYSIDE 345KV CKT 1	717	789	0.04811	100.5371	ANADARKO - GEORGIA 138KV CKT 1
FDNS	06NR	2	20L	G15_033	FROM->TO	G14-057T 345.00 - SUNNYSIDE 345KV CKT 1	717	789	0.04798	100.5293	P12:138:OKGE-AEPW:JENSEN4:REDROCKRD4
FDNS	06NR	2	20L	G15_033	FROM->TO	G14-057T 345.00 - SUNNYSIDE 345KV CKT 1	717	789	0.04828	100.5249	STONEWAL LH138.00 - TUPELO TAP 138KV CKT 1
FDNS	06NR	2	20L	G15_033	FROM->TO	G14-057T 345.00 - SUNNYSIDE 345KV CKT 1	717	789	0.04803	100.5145	P12:138:AEPW:WTHWF4:WTH_SE4
FDNS	06NR	2	20L	G15_033	FROM->TO	G14-057T 345.00 - SUNNYSIDE 345KV CKT 1	717	789	0.04775	100.5053	PURCELL4 138.00 - WALNUT CREEK 138KV CKT 1
FDNS	06NR	2	20L	G15_033	FROM->TO	G14-057T 345.00 - SUNNYSIDE 345KV CKT 1	717	789	0.04811	100.5051	FLETCHER - GEORGIA 138KV CKT 1
FDNS	06NR	2	20L	G15_033	FROM->TO	G14-057T 345.00 - SUNNYSIDE 345KV CKT 1	717	789	0.0483	100.5043	GRACEMONT (BANK 1) 345/138/13.8KV TRANSFORMER CKT 1
FDNS	06NR	2	20L	G15_033	FROM->TO	G14-057T 345.00 - SUNNYSIDE 345KV CKT 1	717	789	0.04811	100.489	GEN562783 1-G15036_4 0.6900
FDNS	06NR	2	20L	G15_033	FROM->TO	G14-057T 345.00 - SUNNYSIDE 345KV CKT 1	717	789	0.04811	100.489	GEN562784 1-G15036_5 0.6900
FDNS	06NR	2	20L	G15_033	FROM->TO	G14-057T 345.00 - SUNNYSIDE 345KV CKT 1	717	789	0.04808	100.4836	EMPIRE - FLETCHER 138KV CKT 1
FDNS	06NR	2	20L	G15_033	FROM->TO	G14-057T 345.00 - SUNNYSIDE 345KV CKT 1	717	789	0.04811	100.4808	NELSON 230/20.0KV TRANSFORMER CKT 1
FDNS	06NR	2	20L	G15_033	FROM->TO	G14-057T 345.00 - SUNNYSIDE 345KV CKT 1	717	789	0.04811	100.4804	GEN506752 1-LEBROCK GAS 1
FDNS	06NR	2	20L	G15_033	FROM->TO	G14-057T 345.00 - SUNNYSIDE 345KV CKT 1	717	789	0.04811	100.4797	GEN506753 1-LEBROCK GAS 2
FDNS	06NR	2	20L	G15_033	FROM->TO	G14-057T 345.00 - SUNNYSIDE 345KV CKT 1	717	789	0.04811	100.4769	GEN338146 1-INDEPENDENCE UNIT #2
FDNS	06NR	2	20L	G15_033	FROM->TO	G14-057T 345.00 - SUNNYSIDE 345KV CKT 1	717	789	0.04781	100.4623	CLINTON JUNCTION - ELK CITY 138KV CKT 1
FDNS	06NR	2	20L	G15_033	FROM->TO	G14-057T 345.00 - SUNNYSIDE 345KV CKT 1	717	789	0.04781	100.4623	CLINTON JUNCTION - ELK CITY 138KV CKT 1
FDNS	06NR	2	20L	G15_033	FROM->TO	G14-057T 345.00 - SUNNYSIDE 345KV CKT 1	717	789	0.0481	100.4574	8DANIEL8 500.00 - MCKNIGHT 500KV CKT 1
FDNS	06NR	2	20L	G15_033	FROM->TO	G14-057T 345.00 - SUNNYSIDE 345KV CKT 1	717	789	0.04808	100.4525	COMANCHE - EMPIRE 138KV CKT 1
FDNS	06NR	2	20L	G15_033	FROM->TO	G14-057T 345.00 - SUNNYSIDE 345KV CKT 1	717	789	0.04834	100.4497	DUNCAN (DUNCAN) 138/69/13.8KV TRANSFORMER CKT 1
FDNS	06NR	2	20L	G15_033	FROM->TO	G14-057T 345.00 - SUNNYSIDE 345KV CKT 1	717	789	0.04834	100.4497	DUNCAN (DUNCAN) 138/69/13.8KV TRANSFORMER CKT 1
FDNS	06NR	2	20L	G15_033	FROM->TO	G14-057T 345.00 - SUNNYSIDE 345KV CKT 1	717	789	0.04843	100.4495	CIMARRON - NORTHWEST 345KV CKT 1
FDNS	06NR	2	20L	G15_033	FROM->TO	G14-057T 345.00 - SUNNYSIDE 345KV CKT 1	717	789	0.04811	100.4107	GEN515577 1-ARBWND11 0.6900
FDNS	06NR	2	20L	G15_033	FROM->TO	G14-057T 345.00 - SUNNYSIDE 345KV CKT 1	717	789	0.04803	100.4099	WEATHERFORD TAP - WEATHERFORD WIND FARM 138KV CKT 1
FDNS	06NR	2	20L	G15_033	FROM->TO	G14-057T 345.00 - SUNNYSIDE 345KV CKT 1	717	789	0.04811	100.4	GEN334441 1-SABINE UNIT 5
FDNS	06NR	2	20L	G15_033	FROM->TO	G14-057T 345.00 - SUNNYSIDE 345KV CKT 1	717	789	0.0482	100.3996	ENVILLE 138.00 - MARIETTA4 138.00 138KV CKT 1
FDNS	06NR	2	20L	G15_033	FROM->TO	G14-057T 345.00 - SUNNYSIDE 345KV CKT 1	717	789	0.04811	100.3904	GEN335614 1-WILLOW GLENN UNIT#4
FDNS	06NR	2	20L	G15_033	FROM->TO	G14-057T 345.00 - SUNNYSIDE 345KV CKT 1	717	789	0.04813	100.385	GRDA1 - GREC TAP5 345.00 345KV CKT 1
FDNS	06NR	2	20L	G15_033	FROM->TO	G14-057T 345.00 - SUNNYSIDE 345KV CKT 1	717	789	0.04837	100.3841	G15039_T 230.00 - PLANT X STATION 230KV CKT 1
FDNS	06NR	2	20L	G15_033	FROM->TO	G14-057T 345.00 - SUNNYSIDE 345KV CKT 1	717	789	0.04811	100.381	P12:69:AEPW:L.E.S.-2:LAW WC2
FDNS	06NR	2	20L	G15_033	FROM->TO	G14-057T 345.00 - SUNNYSIDE 345KV CKT 1	717	789	0.04811	100.3799	GEN515040 1-SEMINOLE 1G
FDNS	06NR	2	20L	G15_033	FROM->TO	G14-057T 345.00 - SUNNYSIDE 345KV CKT 1	717	789	0.04811	100.3779	GEN334392 1-EXXON MOBIL IPP 1
FDNS	06NR	2	20L	G15_033	FROM->TO	G14-057T 345.00 - SUNNYSIDE 345KV CKT 1	717	789	0.04811	100.3763	GEN334393 1-EXXON MOBIL IPP 2
FDNS	06NR	2	20L	G15_033	FROM->TO	G14-057T 345.00 - SUNNYSIDE 345KV CKT 1	717	789	0.04811	100.3763	GEN334394 1-EXXON MOBIL IPP 3
FDNS	06NR	2	20L	G15_033	FROM->TO	G14-057T 345.00 - SUNNYSIDE 345KV CKT 1	717	789	0.04808	100.3691	LAYFLD8 500.00 - MOUNT OLIVE 500KV CKT 1
FDNS	06NR	2	20L	G15_033	FROM->TO	G14-057T 345.00 - SUNNYSIDE 345KV CKT 1	717	789	0.04808	100.3691	LAYFLD8 500.00 - MOUNT OLIVE 500KV CKT 1
FDNS	06NR	2	20L	G15_033	FROM->TO	G14-057T 345.00 - SUNNYSIDE 345KV CKT 1	717	789	0.04819	100.3661	P12:138:AEPW:CORNVIL4:S.W.S.-4
FDNS	06NR	2	20L	G15_033	FROM->TO	G14-057T 345.00 - SUNNYSIDE 345KV CKT 1	717	789	0.04803	100.366	WEATHERFORD SOUTHEAST - WEATHERFORD TAP 138KV CKT 1

SOLUTION	GROUP	SCENARIO	SEASON	SOURCE	DIRECTION	MONITORED ELEMENT	RATEA (MVA)	RATEB(MVA)	TDF	TC%LOADING (% MVA)	CONTINGENCY
FDNS	06NR	2	20L	G15_033	FROM->TO	G14-057T 345.00 - SUNNYSIDE 345KV CKT 1	717	789	0.04811	100.3659	GEN336191 1-LITTLE GYPSY UNIT#3
FDNS	06NR	2	20L	G15_033	FROM->TO	G14-057T 345.00 - SUNNYSIDE 345KV CKT 1	717	789	0.04811	100.3647	GEN337041 1-GERALD ANDRUS
FDNS	06NR	2	20L	G15_033	FROM->TO	G14-057T 345.00 - SUNNYSIDE 345KV CKT 1	717	789	0.04811	100.3609	GEN336464 1-MICHOUD UNIT #3
FDNS	06NR	2	20L	G15_033	FROM->TO	G14-057T 345.00 - SUNNYSIDE 345KV CKT 1	717	789	0.04811	100.3604	P12:161:AEPW:DYESS 5:HYLAND 5
FDNS	06NR	2	20L	G15_033	FROM->TO	G14-057T 345.00 - SUNNYSIDE 345KV CKT 1	717	789	0.04818	100.3602	P12:138:AEPW:112GORE4:L.E.S.-4
FDNS	06NR	2	20L	G15_033	FROM->TO	G14-057T 345.00 - SUNNYSIDE 345KV CKT 1	717	789	0.0482	100.3497	ENVILLE 138.00 - LEBANON 138KV CKT 1
FDNS	06NR	2	20L	G15_033	FROM->TO	G14-057T 345.00 - SUNNYSIDE 345KV CKT 1	717	789	0.04811	100.3428	GEN334433 1-SABINE UNIT 3
FDNS	06NR	2	20L	G15_033	FROM->TO	G14-057T 345.00 - SUNNYSIDE 345KV CKT 1	717	789	0.04828	100.3375	P12:138:WFEC:MSL05
FDNS	06NR	2	20L	G15_033	FROM->TO	G14-057T 345.00 - SUNNYSIDE 345KV CKT 1	717	789	0.04883	100.3361	DUNCAN - DUNCHERTP4 138.00 138KV CKT 1
FDNS	06NR	2	20L	G15_033	FROM->TO	G14-057T 345.00 - SUNNYSIDE 345KV CKT 1	717	789	0.04883	100.3361	DUNCAN - DUNCHERTP4 138.00 138KV CKT 1
FDNS	06NR	2	20L	G15_033	FROM->TO	G14-057T 345.00 - SUNNYSIDE 345KV CKT 1	717	789	0.04883	100.335	DUNCAN EASTSIDE - DUNCHERTP4 138.00 138KV CKT 1
FDNS	06NR	2	20L	G15_033	FROM->TO	G14-057T 345.00 - SUNNYSIDE 345KV CKT 1	717	789	0.04925	100.3345	ELGIN JUNCTION - LAWTON EASTSIDE 138KV CKT 1
FDNS	06NR	2	20L	G15_033	FROM->TO	G14-057T 345.00 - SUNNYSIDE 345KV CKT 1	717	789	0.04811	100.3302	GEN303007 1-1BC2 U2
FDNS	06NR	2	20L	G15_033	FROM->TO	G14-057T 345.00 - SUNNYSIDE 345KV CKT 1	717	789	0.04811	100.3278	P12:161:AEPW:EROGERS5:ECNTRTN5
FDNS	06NR	2	20L	G15_033	FROM->TO	G14-057T 345.00 - SUNNYSIDE 345KV CKT 1	717	789	0.04834	100.3207	P12:69:WFEC-AEPW:COMANCH2:DUNCAN-2
FDNS	06NR	2	20L	G15_033	FROM->TO	G14-057T 345.00 - SUNNYSIDE 345KV CKT 1	717	789	0.04811	100.3201	FRONTIER 345/18.0KV TRANSFORMER CKT 1
FDNS	06NR	2	20L	G15_033	FROM->TO	G14-057T 345.00 - SUNNYSIDE 345KV CKT 1	717	789	0.04811	100.3185	GEN336242 1-1NMIL ST1 18.000
FDNS	06NR	2	20L	G15_033	FROM->TO	G14-057T 345.00 - SUNNYSIDE 345KV CKT 1	717	789	0.04811	100.3184	FRONTIER 345/18.0KV TRANSFORMER CKT 1
FDNS	06NR	2	20L	G15_033	FROM->TO	G14-057T 345.00 - SUNNYSIDE 345KV CKT 1	717	789	0.04856	100.3182	BUSHLAND INTERCHANGE - DEAF SMITH COUNTY INTERCHANGE 230KV CKT 1
FDNS	06NR	2	20L	G15_033	FROM->TO	G14-057T 345.00 - SUNNYSIDE 345KV CKT 1	717	789	0.04856	100.3182	BUSHLAND INTERCHANGE - DEAF SMITH COUNTY INTERCHANGE 230KV CKT 1
FDNS	06NR	2	20L	G15_033	FROM->TO	G14-057T 345.00 - SUNNYSIDE 345KV CKT 1	717	789	0.04811	100.3171	GEN303006 1-1BC2 U1
FDNS	06NR	2	20L	G15_033	FROM->TO	G14-057T 345.00 - SUNNYSIDE 345KV CKT 1	717	789	0.04811	100.2945	GEN336801 1-BAXTER WILSON UNIT #1
FDNS	06NR	2	20L	G15_033	FROM->TO	G14-057T 345.00 - SUNNYSIDE 345KV CKT 1	717	789	0.04812	100.2886	CIMARRON - CZECH HALL 138KV CKT 1
FDNS	06NR	2	20L	G15_033	FROM->TO	G14-057T 345.00 - SUNNYSIDE 345KV CKT 1	717	789	0.04809	100.2882	MAGNET COVE - SHERIDAN EHV 500KV CKT 1
FDNS	06NR	2	20L	G15_033	FROM->TO	G14-057T 345.00 - SUNNYSIDE 345KV CKT 1	717	789	0.04809	100.2847	HOT SPRINGS EHV - MAGNET COVE 500KV CKT 1
FDNS	06NR	2	20L	G15_033	FROM->TO	G14-057T 345.00 - SUNNYSIDE 345KV CKT 1	717	789	0.04834	100.2821	DUNCAN - TOSCO 69KV CKT 1
FDNS	06NR	2	20L	G15_033	FROM->TO	G14-057T 345.00 - SUNNYSIDE 345KV CKT 1	717	789	0.04798	100.2772	Canadian Pump Station - REDROCKRD4 138.00 138KV CKT 1
FDNS	06NR	2	20L	G15_033	FROM->TO	G14-057T 345.00 - SUNNYSIDE 345KV CKT 1	717	789	0.04803	100.2746	CLINTON JUNCTION - CLINTON NATURAL GAS TAP 138KV CKT 1
FDNS	06NR	2	20L	G15_033	FROM->TO	G14-057T 345.00 - SUNNYSIDE 345KV CKT 1	717	789	0.04807	100.268	CIMARRON - SARA 138KV CKT 1
FDNS	06NR	2	20L	G15_033	FROM->TO	G14-057T 345.00 - SUNNYSIDE 345KV CKT 1	717	789	0.04834	100.2654	COMANCHE TAP - TOSCO 69KV CKT 1
FDNS	06NR	2	20L	G15_033	FROM->TO	G14-057T 345.00 - SUNNYSIDE 345KV CKT 1	717	789	0.04775	100.2632	PAOLI - WALNUT CREEK 138KV CKT 1
FDNS	06NR	2	20L	G15_033	FROM->TO	G14-057T 345.00 - SUNNYSIDE 345KV CKT 1	717	789	0.0482	100.2502	NORGE ROAD - SOUTHWESTERN STATION 138KV CKT 1
FDNS	06NR	2	20L	G15_033	FROM->TO	G14-057T 345.00 - SUNNYSIDE 345KV CKT 1	717	789	0.0482	100.2502	NORGE ROAD - SOUTHWESTERN STATION 138KV CKT 1
FDNS	06NR	2	20L	G15_033	FROM->TO	G14-057T 345.00 - SUNNYSIDE 345KV CKT 1	717	789	0.04818	100.2421	CORN TAP - SEQUOYAHJ4 138.00 138KV CKT 1
FDNS	06NR	2	20L	G15_033	FROM->TO	G14-057T 345.00 - SUNNYSIDE 345KV CKT 1	717	789	0.04818	100.2358	ANADARKO - SEQUOYAHJ4 138.00 138KV CKT 1
FDNS	06NR	2	20L	G15_033	FROM->TO	G14-057T 345.00 - SUNNYSIDE 345KV CKT 1	717	789	0.04812	100.2273	CZECH HALL - XEROX 138KV CKT 1
FDNS	06NR	2	20L	G15_033	FROM->TO	G14-057T 345.00 - SUNNYSIDE 345KV CKT 1	717	789	0.04812	100.2257	MORGAN - XEROX 138KV CKT 1
FDNS	06NR	2	20L	G15_033	FROM->TO	G14-057T 345.00 - SUNNYSIDE 345KV CKT 1	717	789	0.04844	100.2226	P12:69:AEPW-OMPA:COMANC-2:OMWALTR2
FDNS	06NR	2	20L	G15_033	FROM->TO	G14-057T 345.00 - SUNNYSIDE 345KV CKT 1	717	789	0.04812	100.2163	MORGAN - MUSTANG 138KV CKT 1
FDNS	06NR	2	20L	G15_033	FROM->TO	G14-057T 345.00 - SUNNYSIDE 345KV CKT 1	717	789	0.04807	100.2149	SARA - STHLAKE4 138.00 138KV CKT 1
FDNS	06NR	2	20L	G15_033	FROM->TO	G14-057T 345.00 - SUNNYSIDE 345KV CKT 1	717	789	0.04834	100.2053	COMANCHE - COMANCHE TAP 69KV CKT 1
FDNS	06NR	2	20L	G15_033	FROM->TO	G14-057T 345.00 - SUNNYSIDE 345KV CKT 1	717	789	0.04819	100.1982	SOUTHWESTERN STATION - VERDEN 138KV CKT 1
FDNS	06NR	2	20L	G15_033	FROM->TO	G14-057T 345.00 - SUNNYSIDE 345KV CKT 1	717	789	0.04813	100.1946	CUSTER4 138.00 - RED HILLS WIND 138KV CKT 1
FDNS	06NR	2	20L	G15_033	FROM->TO	G14-057T 345.00 - SUNNYSIDE 345KV CKT 1	717	789	0.04819	100.1862	NORTH 29TH CHICKASHA - VERDEN 138KV CKT 1
FDNS	06NR	2	20L	G15_033	FROM->TO	G14-057T 345.00 - SUNNYSIDE 345KV CKT 1	717	789	0.04868	100.179	TUTTLE - TUTTLE CONOCO TAP 138KV CKT 1
FDNS	06NR	2	20L	G15_033	FROM->TO	G14-057T 345.00 - SUNNYSIDE 345KV CKT 1	717	789	0.04811	100.1101	P12:230:SPS:CL.1.BSHLND.WLDRDO
FDNS	06NR	2	20L	G15_033	FROM->TO	G14-057T 345.00 - SUNNYSIDE 345KV CKT 1	717	789	0.04811	100	SUNNYSIDE 1 13KV SWITCHED SHUNT
FDNSLock	06NR	2	20L	G15_033	FROM->TO	G14-057T 345.00 - SUNNYSIDE 345KV CKT 1	717	789	0.04811	100	SUNNYSIDE 1 13KV SWITCHED SHUNT
FDNS	00NR	2	17SP	G15_033	FROM->TO	G14-057T 345.00 - SUNNYSIDE 345KV CKT 1	717	789	0.06654	99.9	GRACEMONT - MINCO 345KV CKT 1
FDNS	06ALL	2	20WP	G15_033	FROM->TO	G14-057T 345.00 - SUNNYSIDE 345KV CKT 1	717	789	0.21464	99.9	GRACEMONT - LAWTON EASTSIDE 345KV CKT 1
FDNS	06ALL	2	20WP	G15_033	FROM->TO	G14-057T 345.00 - SUNNYSIDE 345KV CKT 1	717	789	0.21464	99.9	GRACEMONT - LAWTON EASTSIDE 345KV CKT 1
FDNS	06NR	2	20L	G15_033	FROM->TO	G14-057T 345.00 - SUNNYSIDE 345KV CKT 1	717	789	0.04814	99.8	P12:115:SPS:V29.1.NICHLS.KNGSMLL
FDNS	06NR	2	20L	G15_033	FROM->TO	G14-057T 345.00 - SUNNYSIDE 345KV CKT 1	717	789	0.04813	99.7	FPL SWITCH - MOORELAND 138KV CKT 1
FDNS	06NR	2	20L	G15_033	FROM->TO	G14-057T 345.00 - SUNNYSIDE 345KV CKT 1	717	789	0.04813	99.7	FPL SWITCH - WOODWARD 138KV CKT 1
FDNS	06NR	2	20L	G15_033	FROM->TO	G14-057T 345.00 - SUNNYSIDE 345KV CKT 1	717	789	0.04811	99.7	TUCO INTERCHANGE 230/13.0KV TRANSFORMER CKT 1
FDNS	06NR	2	20L	G15_033	FROM->TO	G14-057T 345.00 - SUNNYSIDE 345KV CKT 1	717	789	0.04959	99.6	P12:138:AEPW:112GORE4:SNYDER-4
FDNS	06NR	2	20L	G15_033	FROM->TO	G14-057T 345.00 - SUNNYSIDE 345KV CKT 1	717	789	0.04845	99.6	G15085_T 138.00 - LAKE PAULINE 138KV CKT 1
FDNS	06NR	2	20L	G15_033	FROM->TO	G14-057T 345.00 - SUNNYSIDE 345KV CKT 1	717	789	0.04841	99.6	ALTUS JUNCTION - RUSSELL 138KV CKT 1
FDNS	06NR	2	20L	G15_033	FROM->TO	G14-057T 345.00 - SUNNYSIDE 345KV CKT 1	717	789	0.04841	99.6	ALTUS JUNCTION - RUSSELL 138KV CKT 1
FDNS	06NR	2	20L	G15_033	FROM->TO	G14-057T 345.00 - SUNNYSIDE 345KV CKT 1	717	789	0.04832	99.6	BOWERS INTERCHANGE - MCCULLOUGH SUB 69KV CKT 1
FDNS	06NR	2	20L	G15_033	FROM->TO	G14-057T 345.00 - SUNNYSIDE 345KV CKT 1	717	789	0.04815	99.6	WOODWARD - WWPAR4 138.00 138KV CKT 1
FDNS	06NR	2	20L	G15_033	FROM->TO	G14-057T 345.00 - SUNNYSIDE 345KV CKT 1	717	789	0.04815	99.6	WOODWARD EHV - WWPAR4 138.00 138KV CKT 1
FDNS	06NR	2	20L	G15_033	FROM->TO	G14-057T 345.00 - SUNNYSIDE 345KV CKT 1	717	789	0.04814	99.6	DEWEY - IODINE 138KV CKT 1
FDNS	06NR	2	20L	G15_033	FROM->TO	G14-057T 345.00 - SUNNYSIDE 345KV CKT 1	717	789	0.04814	99.6	IODINE - WOODWARD EHV 138KV CKT 1
FDNS	06NR	2	20L	G15_033	FROM->TO	G14-057T 345.00 - SUNNYSIDE 345KV CKT 1	717	789	0.04811	99.6	GEN525820 1-TUCO Interchange SVC Bus
FDNS	06NR	2	20L	G15_033	FROM->TO	G14-057T 345.00 - SUNNYSIDE 345KV CKT 1	717	789	0.04811	99.6	GEN525820 1-TUCO Interchange SVC Bus
FDNS	06ALL	2	17G	G15_033	FROM->TO	G14-057T 345.00 - SUNNYSIDE 345KV CKT 1	717	789	0.21796	99.5	GRACEMONT - LAWTON EASTSIDE 345KV CKT 1
FDNS	06ALL	2	17G	G15_033	FROM->TO	G14-057T 345.00 - SUNNYSIDE 345KV CKT 1	717	789	0.21796	99.5	GRACEMONT - LAWTON EASTSIDE 345KV CKT 1
FDNS	06NR	2	20L	G15_033	FROM->TO	G14-057T 345.00 - SUNNYSIDE 345KV CKT 1	717	789	0.05121	99.5	TUCO INTERCHANGE - YOAKUM_345 345.00 345KV CKT 1
FDNS	06NR	2	20L	G15_033	FROM->TO	G14-057T 345.00 - SUNNYSIDE 345KV CKT 1	717	789	0.04959	99.5	CACHE - SNYDER 138KV CKT 1
FDNS	06NR	2	20L	G15_033	FROM->TO	G14-057T 345.00 - SUNNYSIDE 345KV CKT 1	717	789	0.04845	99.5	G15085_T 138.00 - RUSSELL 138KV CKT 1
FDNS	06NR	2	20L	G15_033	FROM->TO	G14-057T 345.00 - SUNNYSIDE 345KV CKT 1	717	789	0.04841	99.5	CONWAY SUB - KIRBY SWITCHING STATION 115KV CKT 1
FDNS	06NR	2	20L	G15_033	FROM->TO	G14-057T 345.00 - SUNNYSIDE 345KV CKT 1	717	789	0.04841	99.5	CONWAY SUB - NICHOLS STATION 115KV CKT 1
FDNS	06NR	2	20L	G15_033	FROM->TO	G14-057T 345.00 - SUNNYSIDE 345KV CKT 1	717	789	0.04841	99.5	P12:115:SPS:T53.1.NICHLS.KIRBY
FDNS	06NR	2	20L	G15_033	FROM->TO	G14-057T 345.00 - SUNNYSIDE 345KV CKT 1	717	789	0.04832	99.5	KINGSMILL INTERCHANGE - MCCULLOUGH SUB 69KV CKT 1
FDNS	06NR	2	20L	G15_033	FROM->TO	G14-057T 345.00 - SUNNYSIDE 345KV CKT 1	717	789	0.04825	99.5	BOWERS INTERCHANGE - Graves Sub 115KV CKT 1
FDNS	06NR	2	20L	G15_033	FROM->TO	G14-074T 345.00 - OKLAUNION 345KV CKT 1	1022	1124	0.1994	106.9322	BASE CASE
FDNS	06NR	2	17G	G15_033	FROM->TO	G14-074T 345.00 - OKLAUNION 345KV CKT 1	1022	1124	0.2097	102.9455	BASE CASE
FDNS	06NR	2	20L	G15_033	FROM->TO	G14-074T 345.00 - OKLAUNION 345KV CKT 1	1022	1124	0.19286	102.2532	CHISHOLM7 345.00 - GRACEMONT 345KV CKT 1

SOLUTION	GROUP	SCENARIO	SEASON	SOURCE	DIRECTION	MONITORED ELEMENT	RATEA (MVA)	RATEB(MVA)	TDF	TC%LOADING (% MVA)	CONTINGENCY
FDNS	06NR	2	20L	G15_033	FROM->TO	G14-074T 345.00 - OKLAUNION 345KV CKT 1	1022	1124	0.19286	101.8896	CHISHOLM7 345.00 () 345/230/13.2KV TRANSFORMER CKT 1
FDNS	06NR	2	20L	G15_033	FROM->TO	G14-074T 345.00 - OKLAUNION 345KV CKT 1	1022	1124	0.21532	101.4902	TUCO INTERCHANGE - TUCO_2 345.00 345KV CKT 1
FDNS	06NR	2	20L	G15_033	FROM->TO	G14-074T 345.00 - OKLAUNION 345KV CKT 1	1022	1124	0.20133	101.2851	BUSHLAND INTERCHANGE - DEAF SMITH COUNTY INTERCHANGE 230KV CKT 1
FDNS	06NR	2	20L	G15_033	FROM->TO	G14-074T 345.00 - OKLAUNION 345KV CKT 1	1022	1124	0.20133	101.2851	BUSHLAND INTERCHANGE - DEAF SMITH COUNTY INTERCHANGE 230KV CKT 1
FDNS	06NR	2	20L	G15_033	FROM->TO	G14-074T 345.00 - OKLAUNION 345KV CKT 1	1022	1124	0.19823	101.2671	MOORE COUNTY INTERCHANGE - POTTER COUNTY INTERCHANGE 230KV CKT 1
FDNS	06NR	2	20L	G15_033	FROM->TO	G14-074T 345.00 - OKLAUNION 345KV CKT 1	1022	1124	0.19823	101.2671	MOORE COUNTY INTERCHANGE - POTTER COUNTY INTERCHANGE 230KV CKT 1
FDNS	06NR	2	20L	G15_033	FROM->TO	G14-074T 345.00 - OKLAUNION 345KV CKT 1	1022	1124	0.19752	101.2654	G11-14T 345.00 - WOODWARD DISTRICT EHV 345KV CKT 1
FDNS	06NR	2	20L	G15_033	FROM->TO	G14-074T 345.00 - OKLAUNION 345KV CKT 1	1022	1124	0.19752	101.2654	G11-14T 345.00 - WOODWARD DISTRICT EHV 345KV CKT 2
FDNS	06ALL	2	20L	G15_033	FROM->TO	GRACEMONT - MINCO 345KV CKT 1	1195	1195	0.26563	101.0673	G14-057T 345.00 - SUNNYSIDE 345KV CKT 1
FDNS	00NR	2	25SP	G15_033	FROM->TO	Hitchland Interchange (H TB80155502) 345/230/13.2KV TRANSFORMER CKT 1	560	644	0.06665	99.7	Hitchland Interchange (SIEM 8743067) 345/230/13.2KV TRANSFORMER CKT 2
FDNS	00NR	2	25SP	G15_033	FROM->TO	Hitchland Interchange (H TB80155502) 345/230/13.2KV TRANSFORMER CKT 1	560	644	0.06665	99.7	Hitchland Interchange (SIEM 8743067) 345/230/13.2KV TRANSFORMER CKT 2
FDNS	00NR	2	25SP	G15_033	FROM->TO	Hitchland Interchange (SIEM 8743067) 345/230/13.2KV TRANSFORMER CKT 2	560	644	0.06804	101.9783	Hitchland Interchange (H TB80155502) 345/230/13.2KV TRANSFORMER CKT 1
FDNS	00NR	2	25SP	G15_033	FROM->TO	Hitchland Interchange (SIEM 8743067) 345/230/13.2KV TRANSFORMER CKT 2	560	644	0.06804	101.9783	Hitchland Interchange (H TB80155502) 345/230/13.2KV TRANSFORMER CKT 1
FDNS	00NR	2	25SP	G15_033	FROM->TO	Hitchland Interchange (SIEM 8743067) 345/230/13.2KV TRANSFORMER CKT 2	560	644	0.06804	100.1637	Hitchland Interchange (H TB80155502) 345/230/13.2KV TRANSFORMER CKT 1
FDNS	00NR	2	25SP	G15_033	FROM->TO	Hitchland Interchange (SIEM 8743067) 345/230/13.2KV TRANSFORMER CKT 2	560	644	0.06804	100.1637	Hitchland Interchange (H TB80155502) 345/230/13.2KV TRANSFORMER CKT 1
FDNS	00NR	2	25SP	G15_033	TO->FROM	JONES STATION - TUCO INTERCHANGE 230KV CKT 1	343.79	343.79	0.1678	139.1643	CARLISLE INTERCHANGE - TUCO INTERCHANGE 230KV CKT 1
FDNS	00NR	2	25SP	G15_033	TO->FROM	JONES STATION - TUCO INTERCHANGE 230KV CKT 1	343.79	343.79	0.1678	139.1643	CARLISLE INTERCHANGE - TUCO INTERCHANGE 230KV CKT 1
FDNS	00NR	2	25SP	G15_033	TO->FROM	JONES STATION - TUCO INTERCHANGE 230KV CKT 1	343.79	343.79	0.16515	122.6847	TUCO INTERCHANGE - YOAKUM_345 345.00 345KV CKT 1
FDNS	00NR	2	25SP	G15_033	TO->FROM	JONES STATION - TUCO INTERCHANGE 230KV CKT 1	343.79	343.79	0.12726	119.1138	GEN526333 1-JONES GEN #3 21 KV
FDNS	00NR	2	25SP	G15_033	TO->FROM	JONES STATION - TUCO INTERCHANGE 230KV CKT 1	343.79	343.79	0.12726	118.7159	GEN526334 1-JONES_4 116.500
FDNS	00NR	2	25SP	G15_033	TO->FROM	JONES STATION - TUCO INTERCHANGE 230KV CKT 1	343.79	343.79	0.15003	111.2162	CARLISLE INTERCHANGE - WOLFFORTH INTERCHANGE 230KV CKT 1
FDNS	00NR	2	25SP	G15_033	TO->FROM	JONES STATION - TUCO INTERCHANGE 230KV CKT 1	343.79	343.79	0.13343	106.9963	TUCO INTERCHANGE (ENRCO 136401) 230/115/13.2KV TRANSFORMER CKT 1
FDNS	00NR	2	25SP	G15_033	TO->FROM	JONES STATION - TUCO INTERCHANGE 230KV CKT 1	343.79	343.79	0.13343	106.9963	TUCO INTERCHANGE (ENRCO 136401) 230/115/13.2KV TRANSFORMER CKT 1
FDNS	00NR	2	25SP	G15_033	TO->FROM	JONES STATION - TUCO INTERCHANGE 230KV CKT 1	343.79	343.79	0.13343	106.9963	TUCO INTERCHANGE (ENRCO 136401) 230/115/13.2KV TRANSFORMER CKT 2
FDNS	00NR	2	25SP	G15_033	TO->FROM	JONES STATION - TUCO INTERCHANGE 230KV CKT 1	343.79	343.79	0.13343	106.9963	TUCO INTERCHANGE (ENRCO 136401) 230/115/13.2KV TRANSFORMER CKT 2
FDNS	00NR	2	25SP	G15_033	TO->FROM	JONES STATION - TUCO INTERCHANGE 230KV CKT 1	343.79	343.79	0.12726	106.4847	GEN526332 1-JONES GEN #2 21 KV
FDNS	00NR	2	25SP	G15_033	TO->FROM	JONES STATION - TUCO INTERCHANGE 230KV CKT 1	343.79	343.79	0.12726	106.4826	GEN526331 1-JONES GEN #1 22 KV
FDNS	00NR	2	25SP	G15_033	TO->FROM	JONES STATION - TUCO INTERCHANGE 230KV CKT 1	343.79	343.79	0.13605	105.6092	LUBBOCK EAST INTERCHANGE - TUCO INTERCHANGE 115KV CKT 1
FDNS	00NR	2	25SP	G15_033	TO->FROM	JONES STATION - TUCO INTERCHANGE 230KV CKT 1	343.79	343.79	0.13605	105.6092	LUBBOCK EAST INTERCHANGE - TUCO INTERCHANGE 115KV CKT 1
FDNS	00NR	2	25SP	G15_033	TO->FROM	JONES STATION - TUCO INTERCHANGE 230KV CKT 1	343.79	343.79	0.12392	105.4194	PLANT X STATION - SUNDOWN INTERCHANGE 230KV CKT 1
FDNS	00NR	2	25SP	G15_033	TO->FROM	JONES STATION - TUCO INTERCHANGE 230KV CKT 1	343.79	343.79	0.12392	105.4194	PLANT X STATION - SUNDOWN INTERCHANGE 230KV CKT 1
FDNS	00NR	2	25SP	G15_033	TO->FROM	JONES STATION - TUCO INTERCHANGE 230KV CKT 1	343.79	343.79	0.13118	102.5525	STANTON SUB - TUCO INTERCHANGE 115KV CKT 1
FDNS	00NR	2	25SP	G15_033	TO->FROM	JONES STATION - TUCO INTERCHANGE 230KV CKT 1	343.79	343.79	0.12934	102.3349	P12:230:LPL:K39.1.CRLSLE.LP-MLWK
FDNS	00NR	2	25SP	G15_033	TO->FROM	JONES STATION - TUCO INTERCHANGE 230KV CKT 1	343.79	343.79	0.12934	102.3335	LUBBOCK POWER & LIGHT-MILWAUKEE (M-E C0681251) 230/69/13.5KV TRANSFORMER CKT 1
FDNS	00NR	2	25SP	G15_033	TO->FROM	JONES STATION - TUCO INTERCHANGE 230KV CKT 1	343.79	343.79	0.12934	102.3335	LUBBOCK POWER & LIGHT-MILWAUKEE (M-E C0681251) 230/69/13.5KV TRANSFORMER CKT 1
FDNS	00NR	2	25SP	G15_033	TO->FROM	JONES STATION - TUCO INTERCHANGE 230KV CKT 1	343.79	343.79	0.12934	102.3328	CARLISLE INTERCHANGE - LUBBOCK POWER & LIGHT-MILWAUKEE 230KV CKT 1
FDNS	00NR	2	25SP	G15_033	TO->FROM	JONES STATION - TUCO INTERCHANGE 230KV CKT 1	343.79	343.79	0.14407	101.8206	TOLK STATION EAST - TUCO INTERCHANGE 230KV CKT 1
FDNS	00NR	2	25SP	G15_033	TO->FROM	JONES STATION - TUCO INTERCHANGE 230KV CKT 1	343.79	343.79	0.14407	101.8206	TOLK STATION EAST - TUCO INTERCHANGE 230KV CKT 1
FDNS	00NR	2	25SP	G15_033	TO->FROM	JONES STATION - TUCO INTERCHANGE 230KV CKT 1	343.79	343.79	0.13118	101.6251	P12:115:SPS:V15.1.TUCO.INDANA
FDNS	00NR	2	25SP	G15_033	TO->FROM	JONES STATION - TUCO INTERCHANGE 230KV CKT 1	343.79	343.79	0.13118	101.5793	INDIANA SUB - STANTON SUB 115KV CKT 1
FDNS	00NR	2	25SP	G15_033	TO->FROM	JONES STATION - TUCO INTERCHANGE 230KV CKT 1	343.79	343.79	0.12726	100.7469	GEN527166 1-MUSTANG_6 118.000
FDNS	00NR	2	25SP	G15_033	TO->FROM	JONES STATION - TUCO INTERCHANGE 230KV CKT 1	343.79	343.79	0.12726	100.7466	GEN527903 1-HOBBS PLANT #3 (ST)
FDNS	00NR	2	25SP	G15_033	TO->FROM	JONES STATION - TUCO INTERCHANGE 230KV CKT 1	343.79	343.79	0.12827	100.3452	CARLISLE INTERCHANGE - MURPHY SUB 115KV CKT 1
FDNS	00NR	2	25SP	G15_033	TO->FROM	JONES STATION - TUCO INTERCHANGE 230KV CKT 1	343.79	343.79	0.12827	100.3452	CARLISLE INTERCHANGE - MURPHY SUB 115KV CKT 1
FDNS	00NR	2	25SP	G15_033	TO->FROM	JONES STATION - TUCO INTERCHANGE 230KV CKT 1	343.79	343.79	0.12766	100.3228	KRESS INTERCHANGE - SWISHER COUNTY INTERCHANGE 115KV CKT 1
FDNS	00NR	2	25SP	G15_033	TO->FROM	JONES STATION - TUCO INTERCHANGE 230KV CKT 1	343.79	343.79	0.12766	100.3228	KRESS INTERCHANGE - SWISHER COUNTY INTERCHANGE 115KV CKT 1
FDNS	00NR	2	25SP	G15_033	TO->FROM	JONES STATION - TUCO INTERCHANGE 230KV CKT 1	343.79	343.79	0.12726	100.2967	GEN528501 1-G14_012 24.000
FDNS	00NR	2	25SP	G15_033	TO->FROM	JONES STATION - TUCO INTERCHANGE 230KV CKT 1	343.79	343.79	0.13615	100.1964	YOAKUM_345 345.00 (UPDATE DATA) 345/230/13.2KV TRANSFORMER CKT 1
FDNS	00NR	2	25SP	G15_033	TO->FROM	JONES STATION - TUCO INTERCHANGE 230KV CKT 1	343.79	343.79	0.13118	99.9	INDIANA SUB - SOUTH PLAINS REC-ERSKINE 115KV CKT 1
FDNS	00NR	2	25SP	G15_033	TO->FROM	JONES STATION - TUCO INTERCHANGE 230KV CKT 1	343.79	343.79	0.12866	99.8	FLOYD COUNTY INTERCHANGE - TUCO INTERCHANGE 115KV CKT 1
FDNS	00NR	2	25SP	G15_033	TO->FROM	JONES STATION - TUCO INTERCHANGE 230KV CKT 1	343.79	343.79	0.12866	99.8	FLOYD COUNTY INTERCHANGE - TUCO INTERCHANGE 115KV CKT 1
FDNS	00NR	2	25SP	G15_033	TO->FROM	JONES STATION - TUCO INTERCHANGE 230KV CKT 1	343.79	343.79	0.12865	99.7	POTTER COUNTY INTERCHANGE (WAUK 90343-A) 345/230/13.2KV TRANSFORMER CKT 1
FDNS	00NR	2	25SP	G15_033	TO->FROM	JONES STATION - TUCO INTERCHANGE 230KV CKT 1	343.79	343.79	0.12865	99.7	POTTER COUNTY INTERCHANGE (WAUK 90343-A) 345/230/13.2KV TRANSFORMER CKT 1
FDNS	00NR	2	25SP	G15_033	TO->FROM	JONES STATION - TUCO INTERCHANGE 230KV CKT 1	343.79	343.79	0.12726	99.7	GEN563122 1-G15077_3 0.3850
FDNS	00NR	2	25SP	G15_033	TO->FROM	JONES STATION - TUCO INTERCHANGE 230KV CKT 1	343.79	343.79	0.12726	99.6	GEN527901 1-HOBBS PLANT #1 (CT)
FDNS	00NR	2	25SP	G15_033	TO->FROM	JONES STATION - TUCO INTERCHANGE 230KV CKT 1	343.79	343.79	0.12726	99.6	GEN527902 1-HOBBS PLANT #2 (CT)
FDNS	00NR	2	25SP	G15_033	TO->FROM	JONES STATION - TUCO INTERCHANGE 230KV CKT 1	343.79	343.79	0.12726	99.6	GEN563102 1-G15075_3 0.5500
FDNS	00NR	2	17SP	G15_033	TO->FROM	KRESS INTERCHANGE - SWISHER COUNTY INTERCHANGE 115KV CKT 1	218	239	0.04288	103.6501	NEWHART 230 - SWISHER COUNTY INTERCHANGE 230KV CKT 1
FDNS	00NR	2	20SP	G15_033	TO->FROM	KRESS INTERCHANGE - SWISHER COUNTY INTERCHANGE 115KV CKT 1	218	239	0.02953	101.6807	NEWHART 230 - SWISHER COUNTY INTERCHANGE 230KV CKT 1
FDNS	00NR	2	25SP	G15_033	FROM->TO	LUBBOCK POWER & LIGHT-HOLLY PLANT (SHIH T101039) 230/69/13.5KV TRANSFORMER CKT 1	224	224	0.03595	104.7613	LUBBOCK POWER & LIGHT-SOUTHEAST - LUBBOCK SOUTH INTERCHANGE 230KV CKT 1
FDNS	00NR	2	25SP	G15_033	FROM->TO	LUBBOCK POWER & LIGHT-HOLLY PLANT (SHIH T101039) 230/69/13.5KV TRANSFORMER CKT 1	224	224	0.03595	104.7484	P12:LPL:SPS:K64.1.LP-SE.LUBBS
FDNS	00NR	2	25SP	G15_033	FROM->TO	LUBBOCK POWER & LIGHT-HOLLY PLANT (SHIH T101039) 230/69/13.5KV TRANSFORMER CKT 1	224	224	0.03535	102.133	P12:230:LPL:K57.1.LP-WADS.LUBBE
FDNS	00NR	2	25SP	G15_033	FROM->TO	LUBBOCK POWER & LIGHT-HOLLY PLANT (SHIH T101039) 230/69/13.5KV TRANSFORMER CKT 1	224	224	0.03535	102.1329	LUBBOCK POWER & LIGHT-WADSWORTH (SHIH T101038) 230/69/13.5KV TRANSFORMER CKT 1
FDNS	00NR	2	25SP	G15_033	FROM->TO	LUBBOCK POWER & LIGHT-HOLLY PLANT (SHIH T101039) 230/69/13.5KV TRANSFORMER CKT 1	224	224	0.03535	102.1329	LUBBOCK POWER & LIGHT-WADSWORTH (SHIH T101038) 230/69/13.5KV TRANSFORMER CKT 1
FDNS	00NR	2	25SP	G15_033	FROM->TO	LUBBOCK POWER & LIGHT-HOLLY PLANT (SHIH T101039) 230/69/13.5KV TRANSFORMER CKT 1	224	224	0.03535	101.829	LUBBOCK EAST INTERCHANGE - LUBBOCK POWER & LIGHT-WADSWORTH 230KV CKT 1
FDNSLock	06ALL	2	20WP	G15_033		P12:230:AEPW:ELKCITY6:SWEETWT6	0	0	0.06577	9999	BASE CASE
FDNS	00NR	2	25SP	G15_033	FROM->TO	POTTER COUNTY INTERCHANGE (WAUK 90343-A) 345/230/13.2KV TRANSFORMER CKT 1	560	560	0.08591	104.4906	HITCHLAND INTERCHANGE - MOORE COUNTY INTERCHANGE 230KV CKT 1
FDNS	00NR	2	25SP	G15_033	FROM->TO	POTTER COUNTY INTERCHANGE (WAUK 90343-A) 345/230/13.2KV TRANSFORMER CKT 1	560	560	0.08591	104.4906	HITCHLAND INTERCHANGE - MOORE COUNTY INTERCHANGE 230KV CKT 1
FDNS	00NR	2	25SP	G15_033	FROM->TO	POTTER COUNTY INTERCHANGE (WAUK 90343-A) 345/230/13.2KV TRANSFORMER CKT 1	560	560	0.2387	104.4508	G14-074T 345.00 - TUCO INTERCHANGE 345KV CKT 1
FDNS	00NR	2	25SP	G15_033	FROM->TO	POTTER COUNTY INTERCHANGE (WAUK 90343-A) 345/230/13.2KV TRANSFORMER CKT 1	560	560	0.0658	103.5835	BORDER 7345.00 - TUCO_2 345.00 345KV CKT 1
FDNS	00NR	2	25SP	G15_033	FROM->TO	POTTER COUNTY INTERCHANGE (WAUK 90343-A) 345/230/13.2KV TRANSFORMER CKT 1	560	560	0.08591	102.7887	HITCHLAND INTERCHANGE - MOORE COUNTY INTERCHANGE 230KV CKT 1
FDNS	00NR	2	25SP	G15_033	FROM->TO	POTTER COUNTY INTERCHANGE (WAUK 90343-A) 345/230/13.2KV TRANSFORMER CKT 1	560	560	0.08591	102.7887	HITCHLAND INTERCHANGE - MOORE COUNTY INTERCHANGE 230KV CKT 1
FDNS	00NR	2	25SP	G15_033	FROM->TO	POTTER COUNTY INTERCHANGE (WAUK 90343-A) 345/230/13.2KV TRANSFORMER CKT 1	560	560	0.2387	102.5774	G14-074T 345.00 - TUCO INTERCHANGE 345KV CKT 1
FDNS	00NR	2	25SP	G15_033	FROM->TO	POTTER COUNTY INTERCHANGE (WAUK 90343-A) 345/230/13.2KV TRANSFORMER CKT 1	560	560	0.0658	101.7573	BORDER 7345.00 - TUCO_2 345.00 345KV CKT 1
FDNS	00NR	2	25SP	G15_033	FROM->TO	POTTER COUNTY INTERCHANGE (WAUK 90343-A) 345/230/13.2KV TRANSFORMER CKT 1	560	560	0.0658	100.8717	BORDER 7345.00 - WOODWARD DISTRICT EHV 345KV CKT 1
FDNS	06ALL	2	20L	G15_033	FROM->TO	TUCO INTERCHANGE - TUCO_2 230.00 230KV CKT 1	497	547	0.31747	181.2199	TUCO INTERCHANGE - TUCO_2 345.00 345KV CKT 1
FDNS	06ALL	2	17G	G15_033	FROM->TO	TUCO INTERCHANGE - TUCO_2 230.00 230KV CKT 1	497	547	0.36689	176.0864	TUCO INTERCHANGE - TUCO_2 345.00 345KV CKT 1
FDNS	06ALL	2	20SP	G15_033	FROM->TO	TUCO INTERCHANGE - TUCO_2 230.00 230KV CKT 1	497	547	0.35476	166.2483	TUCO INTERCHANGE - TUCO_2 345.00 345KV CKT 1
FDNS	06ALL	2	17SP	G15_033	FROM->TO	TUCO INTERCHANGE - TUCO_2 230.00 230KV CKT 1	497	547	0.37135	159.9768	TUCO INTERCHANGE - TUCO_2 345.00 345KV CKT 1

SOLUTION	GROUP	SCENARIO	SEASON	SOURCE	DIRECTION	MONITORED ELEMENT	RATEA (MVA)	RATEB(MVA)	TDF	TC%LOADING (% MVA)	CONTINGENCY
FDNS	06ALL	2	20WP	G15_033	FROM->TO	TUCO INTERCHANGE - TUCO_2 230.00 230KV CKT 1	552	608	0.34928	155.2742	TUCO INTERCHANGE - TUCO_2 345.00 345KV CKT 1
FDNS	06ALL	2	16WP	G15_033	FROM->TO	TUCO INTERCHANGE - TUCO_2 230.00 230KV CKT 1	552	608	0.37652	142.7524	TUCO INTERCHANGE - TUCO_2 345.00 345KV CKT 1
FDNS	06NR	2	20L	G15_033	FROM->TO	TUCO INTERCHANGE - TUCO_2 230.00 230KV CKT 1	497	547	0.14544	110.6574	TUCO INTERCHANGE - TUCO_2 345.00 345KV CKT 1
FDNS	06NR	2	17G	G15_033	FROM->TO	TUCO INTERCHANGE - TUCO_2 230.00 230KV CKT 1	497	547	0.17678	106.5066	TUCO INTERCHANGE - TUCO_2 345.00 345KV CKT 1
FDNS	06ALL	2	25SP	G15_033	FROM->TO	TUCO INTERCHANGE - TUCO_2 230.00 230KV CKT 1	497	547	0.36468	102.0482993	TUCO INTERCHANGE - TUCO_2 345.00 345KV CKT 1
FDNS	00NR	2	25SP	G15_033	FROM->TO	TUCO INTERCHANGE (ENRCO 136401) 230/115/13.2KV TRANSFORMER CKT 1	250	288	0.0647	123.4792	TUCO INTERCHANGE (ENRCO 136401) 230/115/13.2KV TRANSFORMER CKT 2
FDNS	00NR	2	25SP	G15_033	FROM->TO	TUCO INTERCHANGE (ENRCO 136401) 230/115/13.2KV TRANSFORMER CKT 1	250	288	0.0647	123.4792	TUCO INTERCHANGE (ENRCO 136401) 230/115/13.2KV TRANSFORMER CKT 2
FDNS	00NR	2	25SP	G15_033	FROM->TO	TUCO INTERCHANGE (ENRCO 136401) 230/115/13.2KV TRANSFORMER CKT 1	250	288	0.0647	115.8221	TUCO INTERCHANGE (ENRCO 136401) 230/115/13.2KV TRANSFORMER CKT 2
FDNS	00NR	2	25SP	G15_033	FROM->TO	TUCO INTERCHANGE (ENRCO 136401) 230/115/13.2KV TRANSFORMER CKT 1	250	288	0.0647	115.8221	TUCO INTERCHANGE (ENRCO 136401) 230/115/13.2KV TRANSFORMER CKT 2
FDNS	00NR	2	25SP	G15_033	FROM->TO	TUCO INTERCHANGE (ENRCO 136401) 230/115/13.2KV TRANSFORMER CKT 2	250	288	0.0647	123.4792	TUCO INTERCHANGE (ENRCO 136401) 230/115/13.2KV TRANSFORMER CKT 1
FDNS	00NR	2	25SP	G15_033	FROM->TO	TUCO INTERCHANGE (ENRCO 136401) 230/115/13.2KV TRANSFORMER CKT 2	250	288	0.0647	123.4792	TUCO INTERCHANGE (ENRCO 136401) 230/115/13.2KV TRANSFORMER CKT 1
FDNS	00NR	2	25SP	G15_033	FROM->TO	TUCO INTERCHANGE (ENRCO 136401) 230/115/13.2KV TRANSFORMER CKT 2	250	288	0.0647	115.8221	TUCO INTERCHANGE (ENRCO 136401) 230/115/13.2KV TRANSFORMER CKT 1
FDNS	00NR	2	25SP	G15_033	FROM->TO	TUCO INTERCHANGE (ENRCO 136401) 230/115/13.2KV TRANSFORMER CKT 2	250	288	0.0647	115.8221	TUCO INTERCHANGE (ENRCO 136401) 230/115/13.2KV TRANSFORMER CKT 1
FDNS	00NR	2	17SP	G15_033	FROM->TO	TUCO INTERCHANGE (GE M102345) 230/115/13.2KV TRANSFORMER CKT 1	242	252	0.08916	102.8207	TUCO INTERCHANGE (ENRCO 136401) 230/115/13.2KV TRANSFORMER CKT 2
FDNS	00NR	2	17SP	G15_033	FROM->TO	TUCO INTERCHANGE (GE M102345) 230/115/13.2KV TRANSFORMER CKT 1	242	252	0.08916	102.8207	TUCO INTERCHANGE (ENRCO 136401) 230/115/13.2KV TRANSFORMER CKT 2
FDNS	00NR	2	17SP	G15_033	FROM->TO	TUCO INTERCHANGE (GE M102345) 230/115/13.2KV TRANSFORMER CKT 1	242	252	0.08916	102.1676	TUCO INTERCHANGE (ENRCO 136401) 230/115/13.2KV TRANSFORMER CKT 2
FDNS	00NR	2	17SP	G15_033	FROM->TO	TUCO INTERCHANGE (GE M102345) 230/115/13.2KV TRANSFORMER CKT 1	242	252	0.08916	102.1676	TUCO INTERCHANGE (ENRCO 136401) 230/115/13.2KV TRANSFORMER CKT 2
FDNS	06ALL	2	20L	G15_033	FROM->TO	TUCO_2 345.00 (TUCO_2 XFMR) 345/230/13.2KV TRANSFORMER CKT 1	560	560	0.21377	190.1451	TUCO INTERCHANGE - TUCO_2 345.00 345KV CKT 1
FDNS	06ALL	2	20WP	G15_033	FROM->TO	TUCO_2 345.00 (TUCO_2 XFMR) 345/230/13.2KV TRANSFORMER CKT 1	560	560	0.2506	189.4604	TUCO INTERCHANGE - TUCO_2 345.00 345KV CKT 1
FDNS	06ALL	2	17G	G15_033	FROM->TO	TUCO_2 345.00 (TUCO_2 XFMR) 345/230/13.2KV TRANSFORMER CKT 1	560	560	0.25428	187.4581	TUCO INTERCHANGE - TUCO_2 345.00 345KV CKT 1
FDNS	06ALL	2	20WP	G15_033	FROM->TO	TUCO_2 345.00 (TUCO_2 XFMR) 345/230/13.2KV TRANSFORMER CKT 1	560	560	0.2506	184.0471	TUCO INTERCHANGE - TUCO_2 345.00 345KV CKT 1
FDNS	06ALL	2	20L	G15_033	FROM->TO	TUCO_2 345.00 (TUCO_2 XFMR) 345/230/13.2KV TRANSFORMER CKT 1	560	560	0.21377	184.0031	TUCO INTERCHANGE - TUCO_2 345.00 345KV CKT 1
FDNS	06ALL	2	17G	G15_033	FROM->TO	TUCO_2 345.00 (TUCO_2 XFMR) 345/230/13.2KV TRANSFORMER CKT 1	560	560	0.25428	182.4703	TUCO INTERCHANGE - TUCO_2 345.00 345KV CKT 1
FDNS	06ALL	2	16WP	G15_033	FROM->TO	TUCO_2 345.00 (TUCO_2 XFMR) 345/230/13.2KV TRANSFORMER CKT 1	560	560	0.26481	175.5009	TUCO INTERCHANGE - TUCO_2 345.00 345KV CKT 1
FDNS	06ALL	2	16WP	G15_033	FROM->TO	TUCO_2 345.00 (TUCO_2 XFMR) 345/230/13.2KV TRANSFORMER CKT 1	560	560	0.26481	172.6087	TUCO INTERCHANGE - TUCO_2 345.00 345KV CKT 1
FDNS	06ALL	2	20SP	G15_033	FROM->TO	TUCO_2 345.00 (TUCO_2 XFMR) 345/230/13.2KV TRANSFORMER CKT 1	560	560	0.25692	166.4217	TUCO INTERCHANGE - TUCO_2 345.00 345KV CKT 1
FDNS	06ALL	2	17SP	G15_033	FROM->TO	TUCO_2 345.00 (TUCO_2 XFMR) 345/230/13.2KV TRANSFORMER CKT 1	560	560	0.26141	164.6979	TUCO INTERCHANGE - TUCO_2 345.00 345KV CKT 1
FDNS	06ALL	2	20SP	G15_033	FROM->TO	TUCO_2 345.00 (TUCO_2 XFMR) 345/230/13.2KV TRANSFORMER CKT 1	560	560	0.25692	163.5805	TUCO INTERCHANGE - TUCO_2 345.00 345KV CKT 1
FDNS	06ALL	2	17SP	G15_033	FROM->TO	TUCO_2 345.00 (TUCO_2 XFMR) 345/230/13.2KV TRANSFORMER CKT 1	560	560	0.26141	162.1713	TUCO INTERCHANGE - TUCO_2 345.00 345KV CKT 1
FDNS	06NR	3	17G	G15_033	TO->FROM	AMARILLO SOUTH INTERCHANGE - G15031_T 230.00 230KV CKT 1	318.7	350.57	0.06913	103.2239	NEWHART 230 - POTTER COUNTY INTERCHANGE 230KV CKT 1
FDNS	06NR	3	20L	G15_033	FROM->TO	BUSHLAND INTERCHANGE - POTTER COUNTY INTERCHANGE 230KV CKT 1	318.7	350.57	0.03448	102.6252	NEWHART 230 - POTTER COUNTY INTERCHANGE 230KV CKT 1
FDNS	06ALL	3	20SP	G15_033	FROM->TO	CHISHOLM6 230.00 - ELK CITY 230KV 230KV CKT 1	353	353	0.04913	104.1963	BASE CASE
FDNS	06ALL	3	17SP	G15_033	FROM->TO	CHISHOLM6 230.00 - ELK CITY 230KV 230KV CKT 1	353	353	0.04939	101.9728	BASE CASE
FDNS	06ALL	3	20L	G15_033	TO->FROM	CIMARRON - MINCO 345KV CKT 1	956	956	0.26425	140.6921	G14-057T 345.00 - SUNNYSIDE 345KV CKT 1
FDNS	06ALL	3	20L	G15_033	TO->FROM	CIMARRON - MINCO 345KV CKT 1	956	956	0.26425	134.2883	G14-057T 345.00 - LAWTON EASTSIDE 345KV CKT 1
FDNS	06ALL	3	17G	G15_033	TO->FROM	CIMARRON - MINCO 345KV CKT 1	956	956	0.2961	132.797	G14-057T 345.00 - SUNNYSIDE 345KV CKT 1
FDNS	06ALL	3	20WP	G15_033	TO->FROM	CIMARRON - MINCO 345KV CKT 1	956	956	0.29157	131.9094	G14-057T 345.00 - SUNNYSIDE 345KV CKT 1
FDNS	06ALL	3	17G	G15_033	TO->FROM	CIMARRON - MINCO 345KV CKT 1	956	956	0.2961	127.3481	G14-057T 345.00 - LAWTON EASTSIDE 345KV CKT 1
FDNS	06ALL	3	20WP	G15_033	TO->FROM	CIMARRON - MINCO 345KV CKT 1	956	956	0.29157	126.3057	G14-057T 345.00 - LAWTON EASTSIDE 345KV CKT 1
FDNS	06ALL	3	16WP	G15_033	TO->FROM	CIMARRON - MINCO 345KV CKT 1	956	956	0.30301	125.3645	G14-057T 345.00 - SUNNYSIDE 345KV CKT 1
FDNS	06ALL	3	17SP	G15_033	TO->FROM	CIMARRON - MINCO 345KV CKT 1	956	956	0.29976	124.3731	G14-057T 345.00 - SUNNYSIDE 345KV CKT 1
FDNS	06ALL	3	20SP	G15_033	TO->FROM	CIMARRON - MINCO 345KV CKT 1	956	956	0.29757	121.3286	G14-057T 345.00 - SUNNYSIDE 345KV CKT 1
FDNS	06ALL	3	16WP	G15_033	TO->FROM	CIMARRON - MINCO 345KV CKT 1	956	956	0.30301	119.9255	G14-057T 345.00 - LAWTON EASTSIDE 345KV CKT 1
FDNS	06ALL	3	17SP	G15_033	TO->FROM	CIMARRON - MINCO 345KV CKT 1	956	956	0.29976	118.8978	G14-057T 345.00 - LAWTON EASTSIDE 345KV CKT 1
FDNS	06ALL	3	20SP	G15_033	TO->FROM	CIMARRON - MINCO 345KV CKT 1	956	956	0.29757	116.0894	G14-057T 345.00 - LAWTON EASTSIDE 345KV CKT 1
FDNS	00NR	3	20WP	G15_033	TO->FROM	CIMARRON - MINCO 345KV CKT 1	956	956	0.07201	113.0728	G14-057T 345.00 - SUNNYSIDE 345KV CKT 1
FDNS	00NR	3	16WP	G15_033	TO->FROM	CIMARRON - MINCO 345KV CKT 1	956	956	0.07497	111.8351	G14-057T 345.00 - SUNNYSIDE 345KV CKT 1
FDNS	06ALL	3	20WP	G15_033	TO->FROM	CIMARRON - MINCO 345KV CKT 1	956	956	0.22941	111.5734	MATHWSN7 345.00 - TATONGA7 345.00 345KV CKT 1
FDNS	06ALL	3	20L	G15_033	TO->FROM	CIMARRON - MINCO 345KV CKT 1	956	956	0.25406	109.488	CHISHOLM7 345.00 - WOODWARD DISTRICT EHV 345KV CKT 1
FDNS	06ALL	3	20L	G15_033	TO->FROM	CIMARRON - MINCO 345KV CKT 1	956	956	0.20981	109.1357	G11_051T 345.00 - TATONGA7 345.00 345KV CKT 1
FDNS	06ALL	3	17G	G15_033	TO->FROM	CIMARRON - MINCO 345KV CKT 1	956	956	0.27978	109.1031	CHISHOLM7 345.00 - WOODWARD DISTRICT EHV 345KV CKT 1
FDNS	06NR	3	20L	G15_033	TO->FROM	CIMARRON - MINCO 345KV CKT 1	956	956	0.075	108.8006	G14-057T 345.00 - SUNNYSIDE 345KV CKT 1
FDNS	06ALL	3	20L	G15_033	TO->FROM	CIMARRON - MINCO 345KV CKT 1	956	956	0.20981	107.5149	G11_051T 345.00 - WOODWARD DISTRICT EHV 345KV CKT 1
FDNS	06ALL	3	20WP	G15_033	TO->FROM	CIMARRON - MINCO 345KV CKT 1	956	956	0.22941	106.2571	G11_051T 345.00 - TATONGA7 345.00 345KV CKT 1
FDNS	06ALL	3	17G	G15_033	TO->FROM	CIMARRON - MINCO 345KV CKT 1	956	956	0.23398	106.016	G11_051T 345.00 - TATONGA7 345.00 345KV CKT 1
FDNS	06ALL	3	17SP	G15_033	TO->FROM	CIMARRON - MINCO 345KV CKT 1	956	956	0.23747	105.6361	MATHWSN7 345.00 - TATONGA7 345.00 345KV CKT 1
FDNS	06ALL	3	20WP	G15_033	TO->FROM	CIMARRON - MINCO 345KV CKT 1	956	956	0.27716	105.2058	CHISHOLM7 345.00 - WOODWARD DISTRICT EHV 345KV CKT 1
FDNS	06ALL	3	16WP	G15_033	TO->FROM	CIMARRON - MINCO 345KV CKT 1	956	956	0.23924	105.1594	MATHWSN7 345.00 - TATONGA7 345.00 345KV CKT 1
FDNS	06NR	3	17G	G15_033	TO->FROM	CIMARRON - MINCO 345KV CKT 1	956	956	0.07573	105.1241	G14-057T 345.00 - SUNNYSIDE 345KV CKT 1
FDNS	06ALL	3	20SP	G15_033	TO->FROM	CIMARRON - MINCO 345KV CKT 1	956	956	0.23595	104.8651	MATHWSN7 345.00 - TATONGA7 345.00 345KV CKT 1
FDNS	06ALL	3	20WP	G15_033	TO->FROM	CIMARRON - MINCO 345KV CKT 1	956	956	0.22941	104.6601	G11_051T 345.00 - WOODWARD DISTRICT EHV 345KV CKT 1
FDNS	06ALL	3	17G	G15_033	TO->FROM	CIMARRON - MINCO 345KV CKT 1	956	956	0.23398	104.4511	G11_051T 345.00 - WOODWARD DISTRICT EHV 345KV CKT 1
FDNS	06ALL	3	20SP	G15_033	TO->FROM	CIMARRON - MINCO 345KV CKT 1	956	956	0.28395	103.3967	CHISHOLM7 345.00 - WOODWARD DISTRICT EHV 345KV CKT 1
FDNS	06ALL	3	17SP	G15_033	TO->FROM	CIMARRON - MINCO 345KV CKT 1	956	956	0.28653	102.6701	CHISHOLM7 345.00 - WOODWARD DISTRICT EHV 345KV CKT 1
FDNS	06NR	3	20L	G15_033	TO->FROM	CIMARRON - MINCO 345KV CKT 1	956	956	0.075	102.327	G14-057T 345.00 - LAWTON EASTSIDE 345KV CKT 1
FDNS	06ALL	3	17SP	G15_033	TO->FROM	CIMARRON - MINCO 345KV CKT 1	956	956	0.23747	100.4546	G11_051T 345.00 - TATONGA7 345.00 345KV CKT 1
FDNS	06ALL	3	20WP	G15_033	TO->FROM	CIMARRON - MINCO 345KV CKT 1	956	956	0.23069	100.2954	P12:138:WFEC:MSL03
FDNS	06ALL	3	20L	G15_033	TO->FROM	CIMARRON - MINCO 345KV CKT 1	956	956	0.21394	100.2254	P12:138:WFEC:MSL03
FDNS	06ALL	3	16WP	G15_033	TO->FROM	CIMARRON - MINCO 345KV CKT 1	956	956	0.23924	99.8	G11_051T 345.00 - TATONGA7 345.00 345KV CKT 1
FDNS	06ALL	3	20SP	G15_033	TO->FROM	CIMARRON - MINCO 345KV CKT 1	956	956	0.23595	99.7	G11_051T 345.00 - TATONGA7 345.00 345KV CKT 1
FDNS	06ALL	3	17SP	G15_033	TO->FROM	CIMARRON - MINCO 345KV CKT 1	956	956	0.23853	99.6	P12:138:WFEC:MSL03
FDNS	06ALL	3	20SP	G15_033	TO->FROM	CIMARRON - MINCO 345KV CKT 1	956	956	0.23689	99.6	P12:138:WFEC:MSL03
FDNS	06ALL	3	17G	G15_033	TO->FROM	G14-057T 345.00 - LAWTON EASTSIDE 345KV CKT 1	717	789	0.22618	119.2011	CIMARRON - MINCO 345KV CKT 1
FDNS	06ALL	3	20WP	G15_033	TO->FROM	G14-057T 345.00 - LAWTON EASTSIDE 345KV CKT 1	717	789	0.22255	119.0644	CIMARRON - MINCO 345KV CKT 1
FDNS	06NR	3	20L	G15_033	TO->FROM	G14-057T 345.00 - LAWTON EASTSIDE 345KV CKT 1	717	789	0.06282	115.0958	CIMARRON - MINCO 345KV CKT 1
FDNS	06ALL	3	16WP	G15_033	TO->FROM	G14-057T 345.00 - LAWTON EASTSIDE 345KV CKT 1	717	789	0.23114	114.7254	CIMARRON - MINCO 345KV CKT 1
FDNS	06ALL	3	17G	G15_033	TO->FROM	G14-057T 345.00 - LAWTON EASTSIDE 345KV CKT 1	717	789	0.22618	113.7564	GRACEMONT - MINCO 345KV CKT 1
FDNS	06ALL	3	20WP	G15_033	TO->FROM	G14-057T 345.00 - LAWTON EASTSIDE 345KV CKT 1	717	789	0.22255	113.6582	GRACEMONT - MINCO 345KV CKT 1
FDNS	06ALL	3	16WP	G15_033	TO->FROM	G14-057T 345.00 - LAWTON EASTSIDE 345KV CKT 1	717	789	0.23114	109.5268	GRACEMONT - MINCO 345KV CKT 1

SOLUTION	GROUP	SCENARIO	SEASON	SOURCE	DIRECTION	MONITORED ELEMENT	RATEA (MVA)	RATEB(MVA)	TDF	TC%LOADING (% MVA)	CONTINGENCY
FDNS	06NR	3	20L	G15_033	TO->FROM	G14-057T 345.00 - LAWTON EASTSIDE 345KV CKT 1	717	789	0.06282	108.7354	GRACEMONT - MINCO 345KV CKT 1
FDNS	06ALL	3	17SP	G15_033	TO->FROM	G14-057T 345.00 - LAWTON EASTSIDE 345KV CKT 1	717	789	0.22662	106.8491	CIMARRON - MINCO 345KV CKT 1
FDNS	06ALL	3	20L	G15_033	TO->FROM	G14-057T 345.00 - LAWTON EASTSIDE 345KV CKT 1	717	789	0.13873	106.0801	BASE CASE
FDNS	06NR	3	17G	G15_033	TO->FROM	G14-057T 345.00 - LAWTON EASTSIDE 345KV CKT 1	717	789	0.06354	105.1707	CIMARRON - MINCO 345KV CKT 1
FDNS	06ALL	3	17SP	G15_033	TO->FROM	G14-057T 345.00 - LAWTON EASTSIDE 345KV CKT 1	717	789	0.22662	101.8333	GRACEMONT - MINCO 345KV CKT 1
FDNS	06ALL	3	20SP	G15_033	TO->FROM	G14-057T 345.00 - LAWTON EASTSIDE 345KV CKT 1	717	789	0.22497	100	CIMARRON - MINCO 345KV CKT 1
FDNS	00NR	3	16WP	G15_033	TO->FROM	G14-057T 345.00 - LAWTON EASTSIDE 345KV CKT 1	717	789	0.06279	99.7	CIMARRON - MINCO 345KV CKT 1
FDNS	00NR	3	16WP	G15_033	FROM->TO	G14-057T 345.00 - SUNNYSIDE 345KV CKT 1	717	789	0.06279	141.2789	CIMARRON - MINCO 345KV CKT 1
FDNS	00NR	3	20WP	G15_033	FROM->TO	G14-057T 345.00 - SUNNYSIDE 345KV CKT 1	717	789	0.06001	139.5912	CIMARRON - MINCO 345KV CKT 1
FDNS	06ALL	3	17G	G15_033	FROM->TO	G14-057T 345.00 - SUNNYSIDE 345KV CKT 1	717	789	0.22618	132.0665	CIMARRON - MINCO 345KV CKT 1
FDNS	06ALL	3	20WP	G15_033	FROM->TO	G14-057T 345.00 - SUNNYSIDE 345KV CKT 1	717	789	0.22255	131.9398	CIMARRON - MINCO 345KV CKT 1
FDNS	00NR	3	16WP	G15_033	FROM->TO	G14-057T 345.00 - SUNNYSIDE 345KV CKT 1	717	789	0.06279	130.5248	GRACEMONT - MINCO 345KV CKT 1
FDNS	00NR	3	20WP	G15_033	FROM->TO	G14-057T 345.00 - SUNNYSIDE 345KV CKT 1	717	789	0.06001	128.7674	GRACEMONT - MINCO 345KV CKT 1
FDNS	06NR	3	20L	G15_033	FROM->TO	G14-057T 345.00 - SUNNYSIDE 345KV CKT 1	717	789	0.06282	128.6249	CIMARRON - MINCO 345KV CKT 1
FDNS	06ALL	3	16WP	G15_033	FROM->TO	G14-057T 345.00 - SUNNYSIDE 345KV CKT 1	717	789	0.23114	127.524	CIMARRON - MINCO 345KV CKT 1
FDNS	00NR	3	16WP	G15_033	FROM->TO	G14-057T 345.00 - SUNNYSIDE 345KV CKT 1	717	789	0.04406	127.3356	PITTSBURG - SEMINOLE 345KV CKT 1
FDNS	00NR	3	16WP	G15_033	FROM->TO	G14-057T 345.00 - SUNNYSIDE 345KV CKT 1	717	789	0.04406	127.3356	PITTSBURG - SEMINOLE 345KV CKT 1
FDNS	00NR	3	16WP	G15_033	FROM->TO	G14-057T 345.00 - SUNNYSIDE 345KV CKT 1	717	789	0.04586	127.032	BASE CASE
FDNS	06ALL	3	17G	G15_033	FROM->TO	G14-057T 345.00 - SUNNYSIDE 345KV CKT 1	717	789	0.22618	126.4597	GRACEMONT - MINCO 345KV CKT 1
FDNS	06ALL	3	20WP	G15_033	FROM->TO	G14-057T 345.00 - SUNNYSIDE 345KV CKT 1	717	789	0.22255	126.3712	GRACEMONT - MINCO 345KV CKT 1
FDNS	00NR	3	16WP	G15_033	FROM->TO	G14-057T 345.00 - SUNNYSIDE 345KV CKT 1	717	789	0.0453	124.2827	CIMARRON - DRAPER LAKE 345KV CKT 1
FDNS	00NR	3	20WP	G15_033	FROM->TO	G14-057T 345.00 - SUNNYSIDE 345KV CKT 1	717	789	0.04371	124.0578	BASE CASE
FDNS	00NR	3	20WP	G15_033	FROM->TO	G14-057T 345.00 - SUNNYSIDE 345KV CKT 1	717	789	0.042	123.5614	PITTSBURG - SEMINOLE 345KV CKT 1
FDNS	00NR	3	20WP	G15_033	FROM->TO	G14-057T 345.00 - SUNNYSIDE 345KV CKT 1	717	789	0.042	123.5614	PITTSBURG - SEMINOLE 345KV CKT 1
FDNS	06ALL	3	16WP	G15_033	FROM->TO	G14-057T 345.00 - SUNNYSIDE 345KV CKT 1	717	789	0.23114	122.1796	GRACEMONT - MINCO 345KV CKT 1
FDNS	06NR	3	20L	G15_033	FROM->TO	G14-057T 345.00 - SUNNYSIDE 345KV CKT 1	717	789	0.06282	122.0135	GRACEMONT - MINCO 345KV CKT 1
FDNS	00NR	3	16WP	G15_033	FROM->TO	G14-057T 345.00 - SUNNYSIDE 345KV CKT 1	717	789	0.04814	121.6412	P12:138:WFEC:MSL03
FDNS	00NR	3	20WP	G15_033	FROM->TO	G14-057T 345.00 - SUNNYSIDE 345KV CKT 1	717	789	0.04319	121.2497	CIMARRON - DRAPER LAKE 345KV CKT 1
FDNS	00NR	3	16WP	G15_033	FROM->TO	G14-057T 345.00 - SUNNYSIDE 345KV CKT 1	717	789	0.04583	120.9213	PITTSBURG - VALLIANT 345KV CKT 1
FDNS	00NR	3	16WP	G15_033	FROM->TO	G14-057T 345.00 - SUNNYSIDE 345KV CKT 1	717	789	0.04583	120.9213	PITTSBURG - VALLIANT 345KV CKT 1
FDNS	00NR	3	16WP	G15_033	FROM->TO	G14-057T 345.00 - SUNNYSIDE 345KV CKT 1	717	789	0.04586	120.5371	GEN509403 1-PIRKEY GENERATION
FDNS	00NR	3	16WP	G15_033	FROM->TO	G14-057T 345.00 - SUNNYSIDE 345KV CKT 1	717	789	0.04586	120.4441	GEN509416 1-TURK GENERATION
FDNS	00NR	3	16WP	G15_033	FROM->TO	G14-057T 345.00 - SUNNYSIDE 345KV CKT 1	717	789	0.04573	120.2483	CLEVELAND - G15066_T 345.00 345KV CKT 1
FDNS	00NR	3	16WP	G15_033	FROM->TO	G14-057T 345.00 - SUNNYSIDE 345KV CKT 1	717	789	0.04573	119.9581	G15066_T 345.00 - SOONER 345KV CKT 1
FDNS	00NR	3	16WP	G15_033	FROM->TO	G14-057T 345.00 - SUNNYSIDE 345KV CKT 1	717	789	0.04586	119.5632	GEN501801 1-DOLET HILLS UNIT1
FDNS	06ALL	3	17SP	G15_033	FROM->TO	G14-057T 345.00 - SUNNYSIDE 345KV CKT 1	717	789	0.22662	119.4602	CIMARRON - MINCO 345KV CKT 1
FDNS	06ALL	3	20L	G15_033	FROM->TO	G14-057T 345.00 - SUNNYSIDE 345KV CKT 1	717	789	0.13873	119.3111	BASE CASE
FDNS	00NR	3	16WP	G15_033	FROM->TO	G14-057T 345.00 - SUNNYSIDE 345KV CKT 1	717	789	0.04586	119.1784	GEN509404 1-WELSH #1
FDNS	00NR	3	16WP	G15_033	FROM->TO	G14-057T 345.00 - SUNNYSIDE 345KV CKT 1	717	789	0.04586	119.1784	GEN509406 1-WELSH #3
FDNS	00NR	3	20WP	G15_033	FROM->TO	G14-057T 345.00 - SUNNYSIDE 345KV CKT 1	717	789	0.04589	118.982	P12:138:WFEC:MSL03
FDNS	00NR	3	16WP	G15_033	FROM->TO	G14-057T 345.00 - SUNNYSIDE 345KV CKT 1	717	789	0.04626	118.5963	CORN TAP - NAPLESTP 138.00 138KV CKT 1
FDNS	00NR	3	16WP	G15_033	FROM->TO	G14-057T 345.00 - SUNNYSIDE 345KV CKT 1	717	789	0.04626	118.5134	NAPLESTP 138.00 - PAYNE 138.00 138KV CKT 1
FDNS	00NR	3	16WP	G15_033	FROM->TO	G14-057T 345.00 - SUNNYSIDE 345KV CKT 1	717	789	0.04998	118.4261	BORDER 7345.00 - WOODWARD DISTRICT EHV 345KV CKT 1
FDNS	00NR	3	16WP	G15_033	FROM->TO	G14-057T 345.00 - SUNNYSIDE 345KV CKT 1	717	789	0.04562	118.416	7SAREPTA% 345.00 - LONGWOOD 345KV CKT 1
FDNS	00NR	3	16WP	G15_033	FROM->TO	G14-057T 345.00 - SUNNYSIDE 345KV CKT 1	717	789	0.04562	118.416	7SAREPTA% 345.00 - LONGWOOD 345KV CKT 1
FDNS	00NR	3	16WP	G15_033	FROM->TO	G14-057T 345.00 - SUNNYSIDE 345KV CKT 1	717	789	0.04586	118.2954	GEN336821 1-GRAND GULF UNIT
FDNS	00NR	3	16WP	G15_033	FROM->TO	G14-057T 345.00 - SUNNYSIDE 345KV CKT 1	717	789	0.04575	118.2755	DOLET HILLS - SOUTHWEST SHREVEPORT 345KV CKT 1
FDNS	00NR	3	16WP	G15_033	FROM->TO	G14-057T 345.00 - SUNNYSIDE 345KV CKT 1	717	789	0.04575	118.2755	DOLET HILLS - SOUTHWEST SHREVEPORT 345KV CKT 1
FDNS	00NR	3	16WP	G15_033	FROM->TO	G14-057T 345.00 - SUNNYSIDE 345KV CKT 1	717	789	0.04579	118.2699	CLEVELAND - TULSA NORTH 345KV CKT 1
FDNS	00NR	3	16WP	G15_033	FROM->TO	G14-057T 345.00 - SUNNYSIDE 345KV CKT 1	717	789	0.04579	118.2699	CLEVELAND - TULSA NORTH 345KV CKT 1
FDNS	00NR	3	16WP	G15_033	FROM->TO	G14-057T 345.00 - SUNNYSIDE 345KV CKT 1	717	789	0.04614	118.2334	COMANCHE - LOCO 138KV CKT 1
FDNS	00NR	3	16WP	G15_033	FROM->TO	G14-057T 345.00 - SUNNYSIDE 345KV CKT 1	717	789	0.04586	118.2069	GEN336153 1-WATERFORD UNIT#3
FDNS	00NR	3	16WP	G15_033	FROM->TO	G14-057T 345.00 - SUNNYSIDE 345KV CKT 1	717	789	0.04632	118.2028	ANADARKO - POCASSETT 138KV CKT 1
FDNS	06NR	3	17G	G15_033	FROM->TO	G14-057T 345.00 - SUNNYSIDE 345KV CKT 1	717	789	0.06354	118.1981	CIMARRON - MINCO 345KV CKT 1
FDNS	00NR	3	16WP	G15_033	FROM->TO	G14-057T 345.00 - SUNNYSIDE 345KV CKT 1	717	789	0.04481	118.1864	CANADIAN RIVER - MUSKOGEE 345KV CKT 1
FDNS	00NR	3	16WP	G15_033	FROM->TO	G14-057T 345.00 - SUNNYSIDE 345KV CKT 1	717	789	0.04632	118.0613	POCASSETT - TUTTLE 138KV CKT 1
FDNS	00NR	3	16WP	G15_033	FROM->TO	G14-057T 345.00 - SUNNYSIDE 345KV CKT 1	717	789	0.04586	117.9194	GRAND GULF 500/22.0KV TRANSFORMER CKT 1
FDNS	00NR	3	16WP	G15_033	FROM->TO	G14-057T 345.00 - SUNNYSIDE 345KV CKT 1	717	789	0.04586	117.915	GEN335831 1-RIVERBEND UNIT#1
FDNS	00NR	3	16WP	G15_033	FROM->TO	G14-057T 345.00 - SUNNYSIDE 345KV CKT 1	717	789	0.04571	117.9072	ARCADIA - NORTHWEST 345KV CKT 1
FDNS	00NR	3	16WP	G15_033	FROM->TO	G14-057T 345.00 - SUNNYSIDE 345KV CKT 1	717	789	0.04545	117.8902	ARCADIA - SEMINOLE 345KV CKT 1
FDNS	00NR	3	16WP	G15_033	FROM->TO	G14-057T 345.00 - SUNNYSIDE 345KV CKT 1	717	789	0.04494	117.8665	MATHWSN7 345.00 - TATONGA7 345.00 345KV CKT 1
FDNS	00NR	3	16WP	G15_033	FROM->TO	G14-057T 345.00 - SUNNYSIDE 345KV CKT 1	717	789	0.04586	117.8397	GEN515577 1-ARBWND11 0.6900
FDNS	00NR	3	16WP	G15_033	FROM->TO	G14-057T 345.00 - SUNNYSIDE 345KV CKT 1	717	789	0.04586	117.8233	GEN509409 1-WILKES #3
FDNS	00NR	3	16WP	G15_033	FROM->TO	G14-057T 345.00 - SUNNYSIDE 345KV CKT 1	717	789	0.0471	117.8223	P12:138:AEPW:DUNCAN-4:L.E.S.-4
FDNS	00NR	3	16WP	G15_033	FROM->TO	G14-057T 345.00 - SUNNYSIDE 345KV CKT 1	717	789	0.04573	117.7673	7SAREPTA% 345.00 - ELDORADO EHV 345KV CKT 1
FDNS	00NR	3	16WP	G15_033	FROM->TO	G14-057T 345.00 - SUNNYSIDE 345KV CKT 1	717	789	0.04573	117.7671	3TR3AR8EL7EL
FDNS	00NR	3	16WP	G15_033	FROM->TO	G14-057T 345.00 - SUNNYSIDE 345KV CKT 1	717	789	0.04573	117.7566	ELDORADO EHV 500/345KV TRANSFORMER CKT 1
FDNS	00NR	3	20WP	G15_033	FROM->TO	G14-057T 345.00 - SUNNYSIDE 345KV CKT 1	717	789	0.04371	117.7292	GEN509403 1-PIRKEY GENERATION
FDNS	00NR	3	16WP	G15_033	FROM->TO	G14-057T 345.00 - SUNNYSIDE 345KV CKT 1	717	789	0.04594	117.7104	HEALDTON - LOCO 138KV CKT 1
FDNS	00NR	3	16WP	G15_033	FROM->TO	G14-057T 345.00 - SUNNYSIDE 345KV CKT 1	717	789	0.04632	117.6949	BRIDGECR 138.00 - TUTTLE 138KV CKT 1
FDNS	00NR	3	16WP	G15_033	FROM->TO	G14-057T 345.00 - SUNNYSIDE 345KV CKT 1	717	789	0.0471	117.6747	COMANCHE TAP - OMPA-DUNCAN 840 138KV CKT 1
FDNS	00NR	3	20WP	G15_033	FROM->TO	G14-057T 345.00 - SUNNYSIDE 345KV CKT 1	717	789	0.04371	117.6721	GEN509416 1-TURK GENERATION
FDNS	00NR	3	16WP	G15_033	FROM->TO	G14-057T 345.00 - SUNNYSIDE 345KV CKT 1	717	789	0.04594	117.5658	HEALDTON - RINGLING 138KV CKT 1
FDNS	00NR	3	16WP	G15_033	FROM->TO	G14-057T 345.00 - SUNNYSIDE 345KV CKT 1	717	789	0.04586	117.531	GEN501813 1-RODEMACHER UNIT 3
FDNS	00NR	3	16WP	G15_033	FROM->TO	G14-057T 345.00 - SUNNYSIDE 345KV CKT 1	717	789	0.04586	117.5047	GEN300006 1-NEW MADRID UNIT 1
FDNS	00NR	3	16WP	G15_033	FROM->TO	G14-057T 345.00 - SUNNYSIDE 345KV CKT 1	717	789	0.04583	117.4955	LACYGNE - WAVERLY7 345.00 345KV CKT 1
FDNS	00NR	3	16WP	G15_033	FROM->TO	G14-057T 345.00 - SUNNYSIDE 345KV CKT 1	717	789	0.04586	117.4931	GEN300007 1-NEW MADRID UNIT 2
FDNS	00NR	3	20WP	G15_033	FROM->TO	G14-057T 345.00 - SUNNYSIDE 345KV CKT 1	717	789	0.04368	117.4883	PITTSBURG - VALLIANT 345KV CKT 1
FDNS	00NR	3	20WP	G15_033	FROM->TO	G14-057T 345.00 - SUNNYSIDE 345KV CKT 1	717	789	0.04368	117.4883	PITTSBURG - VALLIANT 345KV CKT 1

SOLUTION	GROUP	SCENARIO	SEASON	SOURCE	DIRECTION	MONITORED ELEMENT	RATEA (MVA)	RATEB(MVA)	TDF	TC%LOADING (% MVA)	CONTINGENCY
FDNS	00NR	3	16WP	G15_033	FROM->TO	G14-057T 345.00 - SUNNYSIDE 345KV CKT 1	717	789	0.04998	117.4598	BORDER 7345.00 - TUCO_2 345.00 345KV CKT 1
FDNS	00NR	3	20WP	G15_033	FROM->TO	G14-057T 345.00 - SUNNYSIDE 345KV CKT 1	717	789	0.04359	117.4571	CLEVELAND - G15066_T 345.00 345KV CKT 1
FDNS	00NR	3	16WP	G15_033	FROM->TO	G14-057T 345.00 - SUNNYSIDE 345KV CKT 1	717	789	0.04632	117.4393	P12:138:WFEC:MSL01
FDNS	00NR	3	16WP	G15_033	FROM->TO	G14-057T 345.00 - SUNNYSIDE 345KV CKT 1	717	789	0.04632	117.432	BRIDGECR 138.00 - SUNSHINE CANYON 138KV CKT 1
FDNS	00NR	3	16WP	G15_033	FROM->TO	G14-057T 345.00 - SUNNYSIDE 345KV CKT 1	717	789	0.04586	117.4221	GEN520947 1-HUGO1
FDNS	00NR	3	16WP	G15_033	FROM->TO	G14-057T 345.00 - SUNNYSIDE 345KV CKT 1	717	789	0.0471	117.4008	DUNCAN - OMPA-DUNCAN 840 138KV CKT 1
FDNS	00NR	3	16WP	G15_033	FROM->TO	G14-057T 345.00 - SUNNYSIDE 345KV CKT 1	717	789	0.0471	117.4008	DUNCAN - OMPA-DUNCAN 840 138KV CKT 1
FDNS	00NR	3	16WP	G15_033	FROM->TO	G14-057T 345.00 - SUNNYSIDE 345KV CKT 1	717	789	0.04594	117.4	RINGLING - SOUTH WILSON 138KV CKT 1
FDNS	00NR	3	16WP	G15_033	FROM->TO	G14-057T 345.00 - SUNNYSIDE 345KV CKT 1	717	789	0.04583	117.3797	WAVERLY7 345.00 - WOLF CREEK 345KV CKT 1
FDNS	00NR	3	16WP	G15_033	FROM->TO	G14-057T 345.00 - SUNNYSIDE 345KV CKT 1	717	789	0.04316	117.3454	FINNEY SWITCHING STATION - HOLCOMB 345KV CKT 1
FDNS	00NR	3	16WP	G15_033	FROM->TO	G14-057T 345.00 - SUNNYSIDE 345KV CKT 1	717	789	0.04316	117.3454	FINNEY SWITCHING STATION - HOLCOMB 345KV CKT 1
FDNS	00NR	3	16WP	G15_033	FROM->TO	G14-057T 345.00 - SUNNYSIDE 345KV CKT 1	717	789	0.04494	117.3372	G11_051T 345.00 - TATONGA7 345.00 345KV CKT 1
FDNS	00NR	3	16WP	G15_033	FROM->TO	G14-057T 345.00 - SUNNYSIDE 345KV CKT 1	717	789	0.04586	117.332	GEN335206 1-NELSON UNIT 6
FDNS	00NR	3	16WP	G15_033	FROM->TO	G14-057T 345.00 - SUNNYSIDE 345KV CKT 1	717	789	0.04586	117.2302	DOLET HILLS 345/24.0KV TRANSFORMER CKT 1
FDNS	00NR	3	16WP	G15_033	FROM->TO	G14-057T 345.00 - SUNNYSIDE 345KV CKT 1	717	789	0.04593	117.1755	P12:138:AEPW:SHERID4:112GORE4
FDNS	00NR	3	16WP	G15_033	FROM->TO	G14-057T 345.00 - SUNNYSIDE 345KV CKT 1	717	789	0.04559	117.1725	PARK LANE - SEMINOLE 138KV CKT 1
FDNS	00NR	3	20WP	G15_033	FROM->TO	G14-057T 345.00 - SUNNYSIDE 345KV CKT 1	717	789	0.04359	117.1639	G15066_T 345.00 - SOONER 345KV CKT 1
FDNS	00NR	3	16WP	G15_033	FROM->TO	G14-057T 345.00 - SUNNYSIDE 345KV CKT 1	717	789	0.04586	117.1471	GEN501812 1-RODEMACHER UNIT 2
FDNS	00NR	3	16WP	G15_033	FROM->TO	G14-057T 345.00 - SUNNYSIDE 345KV CKT 1	717	789	0.04586	117.1243	GEN590011 2-ERCOT EQUIVALENCE
FDNS	00NR	3	16WP	G15_033	FROM->TO	G14-057T 345.00 - SUNNYSIDE 345KV CKT 1	717	789	0.04594	117.1219	MARIETTA - SOUTH WILSON 138KV CKT 1
FDNS	00NR	3	16WP	G15_033	FROM->TO	G14-057T 345.00 - SUNNYSIDE 345KV CKT 1	717	789	0.04571	117.1067	CANEYRV7 345.00 - NEOSHO 345KV CKT 1
FDNS	00NR	3	16WP	G15_033	FROM->TO	G14-057T 345.00 - SUNNYSIDE 345KV CKT 1	717	789	0.04586	117.0779	GEN515564 1-ORIGIN11 0.6900
FDNS	00NR	3	16WP	G15_033	FROM->TO	G14-057T 345.00 - SUNNYSIDE 345KV CKT 1	717	789	0.04586	117.0779	GEN515565 1-ORIGIN21 0.6900
FDNS	00NR	3	16WP	G15_033	FROM->TO	G14-057T 345.00 - SUNNYSIDE 345KV CKT 1	717	789	0.04586	117.051	GEN590010 1-ERCOT EQUIVALENCE
FDNS	00NR	3	16WP	G15_033	FROM->TO	G14-057T 345.00 - SUNNYSIDE 345KV CKT 1	717	789	0.04594	117.0395	P12:138:WFEC:MSL17
FDNS	00NR	3	16WP	G15_033	FROM->TO	G14-057T 345.00 - SUNNYSIDE 345KV CKT 1	717	789	0.04554	116.9766	THISTLE7 345.00 - WOODWARD DISTRICT EHV 345KV CKT 1
FDNS	00NR	3	16WP	G15_033	FROM->TO	G14-057T 345.00 - SUNNYSIDE 345KV CKT 1	717	789	0.04554	116.9766	THISTLE7 345.00 - WOODWARD DISTRICT EHV 345KV CKT 1
FDNS	00NR	3	16WP	G15_033	FROM->TO	G14-057T 345.00 - SUNNYSIDE 345KV CKT 1	717	789	0.04554	116.9766	THISTLE7 345.00 - WOODWARD DISTRICT EHV 345KV CKT 2
FDNS	00NR	3	16WP	G15_033	FROM->TO	G14-057T 345.00 - SUNNYSIDE 345KV CKT 1	717	789	0.04554	116.9766	THISTLE7 345.00 - WOODWARD DISTRICT EHV 345KV CKT 2
FDNS	00NR	3	16WP	G15_033	FROM->TO	G14-057T 345.00 - SUNNYSIDE 345KV CKT 1	717	789	0.04586	116.9742	GEN509408 1-WILKES #2
FDNS	00NR	3	16WP	G15_033	FROM->TO	G14-057T 345.00 - SUNNYSIDE 345KV CKT 1	717	789	0.04316	116.9705	FINNEY SWITCHING STATION - Hitchland Interchange 345KV CKT 1
FDNS	00NR	3	16WP	G15_033	FROM->TO	G14-057T 345.00 - SUNNYSIDE 345KV CKT 1	717	789	0.04571	116.9634	CANEYRV7 345.00 - LATHAMS7 345.00 345KV CKT 1
FDNS	00NR	3	16WP	G15_033	FROM->TO	G14-057T 345.00 - SUNNYSIDE 345KV CKT 1	717	789	0.04602	116.9506	CIVIT - PAOLI 138KV CKT 1
FDNS	00NR	3	16WP	G15_033	FROM->TO	G14-057T 345.00 - SUNNYSIDE 345KV CKT 1	717	789	0.046	116.9476	REDBUD - RIVERSIDE STATION 345KV CKT 1
FDNS	00NR	3	16WP	G15_033	FROM->TO	G14-057T 345.00 - SUNNYSIDE 345KV CKT 1	717	789	0.046	116.9476	REDBUD - RIVERSIDE STATION 345KV CKT 1
FDNS	00NR	3	20WP	G15_033	FROM->TO	G14-057T 345.00 - SUNNYSIDE 345KV CKT 1	717	789	0.04371	116.9241	GEN501801 1-DOLET HILLS UNIT1
FDNS	00NR	3	16WP	G15_033	FROM->TO	G14-057T 345.00 - SUNNYSIDE 345KV CKT 1	717	789	0.04586	116.9216	P12:69:AEPW:L.E.S.-2:LAW WC2
FDNS	00NR	3	16WP	G15_033	FROM->TO	G14-057T 345.00 - SUNNYSIDE 345KV CKT 1	717	789	0.04586	116.9056	P12:161:AEPW:DYESS 5:HYLAND 5
FDNS	00NR	3	16WP	G15_033	FROM->TO	G14-057T 345.00 - SUNNYSIDE 345KV CKT 1	717	789	0.04582	116.8835	ELDORADO EHV - MOUNT OLIVE 500KV CKT 1
FDNS	00NR	3	16WP	G15_033	FROM->TO	G14-057T 345.00 - SUNNYSIDE 345KV CKT 1	717	789	0.04586	116.8817	GEN506754 1-LEBROCK STEAM 1
FDNS	00NR	3	16WP	G15_033	FROM->TO	G14-057T 345.00 - SUNNYSIDE 345KV CKT 1	717	789	0.04586	116.8664	GEN334440 1-SABINE UNIT 4
FDNS	00NR	3	16WP	G15_033	FROM->TO	G14-057T 345.00 - SUNNYSIDE 345KV CKT 1	717	789	0.04584	116.8608	P12:138:WFEC:MSL02
FDNS	00NR	3	16WP	G15_033	FROM->TO	G14-057T 345.00 - SUNNYSIDE 345KV CKT 1	717	789	0.04582	116.8519	PAOLI - PAYNE 138.00 138KV CKT 1
FDNS	00NR	3	16WP	G15_033	FROM->TO	G14-057T 345.00 - SUNNYSIDE 345KV CKT 1	717	789	0.04592	116.8405	P12:138:AEPW:112GORE4:L.E.S.-4
FDNS	00NR	3	16WP	G15_033	FROM->TO	G14-057T 345.00 - SUNNYSIDE 345KV CKT 1	717	789	0.0458	116.8338	ELDORADO EHV - SHERIDAN EHV 500KV CKT 1
FDNS	00NR	3	16WP	G15_033	FROM->TO	G14-057T 345.00 - SUNNYSIDE 345KV CKT 1	717	789	0.04602	116.807	CIVIT - STRATFORD 138KV CKT 1
FDNS	00NR	3	16WP	G15_033	FROM->TO	G14-057T 345.00 - SUNNYSIDE 345KV CKT 1	717	789	0.04586	116.8006	NEW MADRID 161/22.0KV TRANSFORMER CKT 1
FDNS	00NR	3	16WP	G15_033	FROM->TO	G14-057T 345.00 - SUNNYSIDE 345KV CKT 1	717	789	0.04586	116.7876	NEW MADRID 345/22.0KV TRANSFORMER CKT 1
FDNS	00NR	3	16WP	G15_033	FROM->TO	G14-057T 345.00 - SUNNYSIDE 345KV CKT 1	717	789	0.0457	116.7844	MATHWSN7 345.00 - NORTHWEST 345KV CKT 1
FDNS	00NR	3	16WP	G15_033	FROM->TO	G14-057T 345.00 - SUNNYSIDE 345KV CKT 1	717	789	0.04591	116.7806	TUPELO - TUPELO TAP 138KV CKT 1
FDNS	00NR	3	16WP	G15_033	FROM->TO	G14-057T 345.00 - SUNNYSIDE 345KV CKT 1	717	789	0.0462	116.7763	P12:138:AEPW-OGE:CORNVIL4:MAUD 4
FDNS	00NR	3	16WP	G15_033	FROM->TO	G14-057T 345.00 - SUNNYSIDE 345KV CKT 1	717	789	0.04586	116.7747	ANADARKO - GEORGIA 138KV CKT 1
FDNS	00NR	3	16WP	G15_033	FROM->TO	G14-057T 345.00 - SUNNYSIDE 345KV CKT 1	717	789	0.04586	116.7637	FRONTIER - GRIMES 345KV CKT 1
FDNS	00NR	3	16WP	G15_033	FROM->TO	G14-057T 345.00 - SUNNYSIDE 345KV CKT 1	717	789	0.04571	116.7512	LATHAMS7 345.00 - ROSE HILL 345KV CKT 1
FDNS	00NR	3	16WP	G15_033	FROM->TO	G14-057T 345.00 - SUNNYSIDE 345KV CKT 1	717	789	0.04586	116.7334	GEN503909 1-FULTONU1 1 16.000
FDNS	00NR	3	16WP	G15_033	FROM->TO	G14-057T 345.00 - SUNNYSIDE 345KV CKT 1	717	789	0.04494	116.7332	G11_051T 345.00 - WOODWARD DISTRICT EHV 345KV CKT 1
FDNS	00NR	3	16WP	G15_033	FROM->TO	G14-057T 345.00 - SUNNYSIDE 345KV CKT 1	717	789	0.0458	116.7211	WEBRE - WELLS 500KV CKT 1
FDNS	00NR	3	16WP	G15_033	FROM->TO	G14-057T 345.00 - SUNNYSIDE 345KV CKT 1	717	789	0.0462	116.7004	BLANCHARD - CORNVILLE 138KV CKT 1
FDNS	00NR	3	16WP	G15_033	FROM->TO	G14-057T 345.00 - SUNNYSIDE 345KV CKT 1	717	789	0.04586	116.6967	FLETCHER - GEORGIA 138KV CKT 1
FDNS	00NR	3	16WP	G15_033	FROM->TO	G14-057T 345.00 - SUNNYSIDE 345KV CKT 1	717	789	0.04788	116.6935	LAWTON EASTSIDE (LES 5) 345/138/13.8KV TRANSFORMER CKT 2
FDNS	00NR	3	16WP	G15_033	FROM->TO	G14-057T 345.00 - SUNNYSIDE 345KV CKT 1	717	789	0.04788	116.6935	LAWTON EASTSIDE (LES 5) 345/138/13.8KV TRANSFORMER CKT 2
FDNS	00NR	3	16WP	G15_033	FROM->TO	G14-057T 345.00 - SUNNYSIDE 345KV CKT 1	717	789	0.04602	116.6865	OIL CENTER - STRATFORD 138KV CKT 1
FDNS	00NR	3	16WP	G15_033	FROM->TO	G14-057T 345.00 - SUNNYSIDE 345KV CKT 1	717	789	0.04583	116.6609	EMPIRE - FLETCHER 138KV CKT 1
FDNS	00NR	3	16WP	G15_033	FROM->TO	G14-057T 345.00 - SUNNYSIDE 345KV CKT 1	717	789	0.04586	116.6107	GEN509393 S1-ARSENAL HILL GENS #4 (STALL)
FDNS	00NR	3	16WP	G15_033	FROM->TO	G14-057T 345.00 - SUNNYSIDE 345KV CKT 1	717	789	0.04586	116.5835	GEN509392 G2-ARSENAL HILL GENS #3 (STALL)
FDNS	00NR	3	16WP	G15_033	FROM->TO	G14-057T 345.00 - SUNNYSIDE 345KV CKT 1	717	789	0.04586	116.5834	GEN509391 G1-ARSENAL HILL GENS #2 (STALL)
FDNS	00NR	3	16WP	G15_033	FROM->TO	G14-057T 345.00 - SUNNYSIDE 345KV CKT 1	717	789	0.04583	116.5834	COMANCHE - EMPIRE 138KV CKT 1
FDNS	00NR	3	16WP	G15_033	FROM->TO	G14-057T 345.00 - SUNNYSIDE 345KV CKT 1	717	789	0.04586	116.572	GEN336252 1-NINEMILE POINT UNIT#5
FDNS	00NR	3	16WP	G15_033	FROM->TO	G14-057T 345.00 - SUNNYSIDE 345KV CKT 1	717	789	0.04586	116.5594	GEN334071 1-LEWIS CREEK 2
FDNS	00NR	3	16WP	G15_033	FROM->TO	G14-057T 345.00 - SUNNYSIDE 345KV CKT 1	717	789	0.04586	116.5504	GEN334070 1-LEWIS CREEK 1
FDNS	00NR	3	16WP	G15_033	FROM->TO	G14-057T 345.00 - SUNNYSIDE 345KV CKT 1	717	789	0.04586	116.5471	GEN335204 1-NELSON UNIT 4
FDNS	00NR	3	16WP	G15_033	FROM->TO	G14-057T 345.00 - SUNNYSIDE 345KV CKT 1	717	789	0.04583	116.5455	G15074_T 345.00 - HOYT 345KV CKT 1
FDNS	00NR	3	16WP	G15_033	FROM->TO	G14-057T 345.00 - SUNNYSIDE 345KV CKT 1	717	789	0.04586	116.5444	DELL 500 - ESSEX UNIT 2 500KV CKT Z1
FDNS	00NR	3	16WP	G15_033	FROM->TO	G14-057T 345.00 - SUNNYSIDE 345KV CKT 1	717	789	0.04607	116.533	DUNCAN (DUNCAN) 138/69/13.8KV TRANSFORMER CKT 1
FDNS	00NR	3	16WP	G15_033	FROM->TO	G14-057T 345.00 - SUNNYSIDE 345KV CKT 1	717	789	0.04607	116.533	DUNCAN (DUNCAN) 138/69/13.8KV TRANSFORMER CKT 1
FDNS	00NR	3	16WP	G15_033	FROM->TO	G14-057T 345.00 - SUNNYSIDE 345KV CKT 1	717	789	0.04559	116.529	G1524G1525 345.00 - THISTLE7 345.00 345KV CKT 1
FDNS	00NR	3	16WP	G15_033	FROM->TO	G14-057T 345.00 - SUNNYSIDE 345KV CKT 1	717	789	0.04559	116.529	G1524G1525 345.00 - THISTLE7 345.00 345KV CKT 2
FDNS	00NR	3	16WP	G15_033	FROM->TO	G14-057T 345.00 - SUNNYSIDE 345KV CKT 1	717	789	0.04586	116.5127	GEN334441 1-SABINE UNIT 5
FDNS	00NR	3	16WP	G15_033	FROM->TO	G14-057T 345.00 - SUNNYSIDE 345KV CKT 1	717	789	0.04602	116.5123	LATTA JCT - OIL CENTER 138KV CKT 1

SOLUTION	GROUP	SCENARIO	SEASON	SOURCE	DIRECTION	MONITORED ELEMENT	RATEA (MVA)	RATEB(MVA)	TDF	TC%LOADING (% MVA)	CONTINGENCY
FDNS	00NR	3	16WP	G15_033	FROM->TO	G14-057T 345.00 - SUNNYSIDE 345KV CKT 1	717	789	0.0462	116.509	BLANCHARD - MAUD 138KV CKT 1
FDNS	00NR	3	16WP	G15_033	FROM->TO	G14-057T 345.00 - SUNNYSIDE 345KV CKT 1	717	789	0.04586	116.4884	P12:161:AEPW-SWPA:BEAVER5:EROGERS5
FDNS	00NR	3	16WP	G15_033	FROM->TO	G14-057T 345.00 - SUNNYSIDE 345KV CKT 1	717	789	0.04585	116.4778	P12:138:AEPW:CATOOSA4:T.S.E.-4
FDNS	00NR	3	16WP	G15_033	FROM->TO	G14-057T 345.00 - SUNNYSIDE 345KV CKT 1	717	789	0.04586	116.4613	GEN334030 1-FRONTIER UNIT 1
FDNS	00NR	3	16WP	G15_033	FROM->TO	G14-057T 345.00 - SUNNYSIDE 345KV CKT 1	717	789	0.04586	116.4596	GEN334031 1-FRONTIER UNIT 2
FDNS	00NR	3	16WP	G15_033	FROM->TO	G14-057T 345.00 - SUNNYSIDE 345KV CKT 1	717	789	0.04586	116.4525	GEN300003 1-THOMAS HILL UNIT 3
FDNS	00NR	3	16WP	G15_033	FROM->TO	G14-057T 345.00 - SUNNYSIDE 345KV CKT 1	717	789	0.04585	116.4515	8DANIEL8 500.00 - MCKNIGHT 500KV CKT 1
FDNS	00NR	3	16WP	G15_033	FROM->TO	G14-057T 345.00 - SUNNYSIDE 345KV CKT 1	717	789	0.04586	116.4484	GEN337653 1-WHITE BLUFF UNIT #2
FDNS	00NR	3	16WP	G15_033	FROM->TO	G14-057T 345.00 - SUNNYSIDE 345KV CKT 1	717	789	0.04586	116.4415	GEN506752 1-LEBROCK GAS 1
FDNS	00NR	3	16WP	G15_033	FROM->TO	G14-057T 345.00 - SUNNYSIDE 345KV CKT 1	717	789	0.04586	116.4413	GEN506753 1-LEBROCK GAS 2
FDNS	00NR	3	16WP	G15_033	FROM->TO	G14-057T 345.00 - SUNNYSIDE 345KV CKT 1	717	789	0.0464	116.436	TUTTLE - TUTTLE CONOCO TAP 138KV CKT 1
FDNS	00NR	3	16WP	G15_033	FROM->TO	G14-057T 345.00 - SUNNYSIDE 345KV CKT 1	717	789	0.04578	116.4311	6LAYFLD 230.00 - CARROLL 230KV CKT 1
FDNS	00NR	3	16WP	G15_033	FROM->TO	G14-057T 345.00 - SUNNYSIDE 345KV CKT 1	717	789	0.04586	116.4225	P12:161:AEPW:DYESS5:ELMSPRNG:TONTITN5
FDNS	00NR	3	16WP	G15_033	FROM->TO	G14-057T 345.00 - SUNNYSIDE 345KV CKT 1	717	789	0.04621	116.4066	BAILEY4 138.00 - SUNSHINE CANYON 138KV CKT 1
FDNS	00NR	3	16WP	G15_033	FROM->TO	G14-057T 345.00 - SUNNYSIDE 345KV CKT 1	717	789	0.04576	116.406	FULTON 115 - HOPE 115KV CKT 1
FDNS	00NR	3	16WP	G15_033	FROM->TO	G14-057T 345.00 - SUNNYSIDE 345KV CKT 1	717	789	0.04576	116.406	FULTON 115 - HOPE 115KV CKT 1
FDNS	00NR	3	16WP	G15_033	FROM->TO	G14-057T 345.00 - SUNNYSIDE 345KV CKT 1	717	789	0.04573	116.4059	P12:138:AEPW-OGE:WTH_JCT4:JENSEN4
FDNS	00NR	3	20WP	G15_033	FROM->TO	G14-057T 345.00 - SUNNYSIDE 345KV CKT 1	717	789	0.04371	116.4038	GEN509406 1-WELSH #3
FDNS	00NR	3	20WP	G15_033	FROM->TO	G14-057T 345.00 - SUNNYSIDE 345KV CKT 1	717	789	0.04371	116.4035	GEN509404 1-WELSH #1
FDNS	00NR	3	16WP	G15_033	FROM->TO	G14-057T 345.00 - SUNNYSIDE 345KV CKT 1	717	789	0.04586	116.4011	GEN515040 1-SEMINOLE 1G
FDNS	00NR	3	16WP	G15_033	FROM->TO	G14-057T 345.00 - SUNNYSIDE 345KV CKT 1	717	789	0.04594	116.3955	P12:138:AEPW:CORNVIL4:S.W.S.-4
FDNS	00NR	3	16WP	G15_033	FROM->TO	G14-057T 345.00 - SUNNYSIDE 345KV CKT 1	717	789	0.04586	116.3932	GEN501811 1-RODEMACHER UNIT 1
FDNS	00NR	3	16WP	G15_033	FROM->TO	G14-057T 345.00 - SUNNYSIDE 345KV CKT 1	717	789	0.04586	116.3909	GEN300015 1-1SGPDEL 18.000
FDNS	00NR	3	16WP	G15_033	FROM->TO	G14-057T 345.00 - SUNNYSIDE 345KV CKT 1	717	789	0.04586	116.3855	GEN515226 1-MUSKOGEE 6G
FDNS	00NR	3	16WP	G15_033	FROM->TO	G14-057T 345.00 - SUNNYSIDE 345KV CKT 1	717	789	0.04586	116.3846	GEN337911 1-ARKANSAS NUCLEAR ONE UNIT #2
FDNS	00NR	3	16WP	G15_033	FROM->TO	G14-057T 345.00 - SUNNYSIDE 345KV CKT 1	717	789	0.04654	116.3809	P12:138:AEPW:CORNVIL4:DUNCAN-4
FDNS	00NR	3	20WP	G15_033	FROM->TO	G14-057T 345.00 - SUNNYSIDE 345KV CKT 1	717	789	0.0466	116.3787	BORDER 7345.00 - WOODWARD DISTRICT EHV 345KV CKT 1
FDNS	00NR	3	16WP	G15_033	FROM->TO	G14-057T 345.00 - SUNNYSIDE 345KV CKT 1	717	789	0.04586	116.3738	GEN336251 1-NINEMILE POINT UNIT#4
FDNS	00NR	3	16WP	G15_033	FROM->TO	G14-057T 345.00 - SUNNYSIDE 345KV CKT 1	717	789	0.04586	116.3725	GEN334433 1-SABINE UNIT 3
FDNS	00NR	3	16WP	G15_033	FROM->TO	G14-057T 345.00 - SUNNYSIDE 345KV CKT 1	717	789	0.04607	116.3705	P12:69:WFEC-AEPW:COMANCH2:DUNCAN-2
FDNS	00NR	3	16WP	G15_033	FROM->TO	G14-057T 345.00 - SUNNYSIDE 345KV CKT 1	717	789	0.0458	116.3691	G15088_T 345.00 - MOORE 345KV CKT 1
FDNS	00NR	3	16WP	G15_033	FROM->TO	G14-057T 345.00 - SUNNYSIDE 345KV CKT 1	717	789	0.04586	116.3682	GEN337652 1-WHITE BLUFF UNIT #1
FDNS	00NR	3	16WP	G15_033	FROM->TO	G14-057T 345.00 - SUNNYSIDE 345KV CKT 1	717	789	0.04586	116.3669	GEN336831 1-BAXTER WILSON SES
FDNS	00NR	3	16WP	G15_033	FROM->TO	G14-057T 345.00 - SUNNYSIDE 345KV CKT 1	717	789	0.0464	116.3553	CIMARRON - TUTTLE CONOCO TAP 138KV CKT 1
FDNS	00NR	3	16WP	G15_033	FROM->TO	G14-057T 345.00 - SUNNYSIDE 345KV CKT 1	717	789	0.04586	116.339	GEN562783 1-G15036_4 0.6900
FDNS	00NR	3	16WP	G15_033	FROM->TO	G14-057T 345.00 - SUNNYSIDE 345KV CKT 1	717	789	0.04586	116.339	GEN562784 1-G15036_5 0.6900
FDNS	00NR	3	16WP	G15_033	FROM->TO	G14-057T 345.00 - SUNNYSIDE 345KV CKT 1	717	789	0.04579	116.321	P12:138:AEPW:WTHWF4:CLINTJC4
FDNS	00NR	3	16WP	G15_033	FROM->TO	G14-057T 345.00 - SUNNYSIDE 345KV CKT 1	717	789	0.04586	116.3166	CIMARRON - CZECH HALL 138KV CKT 1
FDNS	00NR	3	16WP	G15_033	FROM->TO	G14-057T 345.00 - SUNNYSIDE 345KV CKT 1	717	789	0.04586	116.3166	GEN505432 1-SIKESTON
FDNS	00NR	3	16WP	G15_033	FROM->TO	G14-057T 345.00 - SUNNYSIDE 345KV CKT 1	717	789	0.04607	116.3107	DUNCAN - TOSCO 69KV CKT 1
FDNS	00NR	3	16WP	G15_033	FROM->TO	G14-057T 345.00 - SUNNYSIDE 345KV CKT 1	717	789	0.04586	116.3083	P12:161:AEPW:EROGERS5:ECNTRTN5
FDNS	00NR	3	16WP	G15_033	FROM->TO	G14-057T 345.00 - SUNNYSIDE 345KV CKT 1	717	789	0.04586	116.3067	WHITE BLUFF 500/26.0KV TRANSFORMER CKT 1
FDNS	00NR	3	16WP	G15_033	FROM->TO	G14-057T 345.00 - SUNNYSIDE 345KV CKT 1	717	789	0.04583	116.3055	LAYFLD8 500.00 - MOUNT OLIVE 500KV CKT 1
FDNS	00NR	3	16WP	G15_033	FROM->TO	G14-057T 345.00 - SUNNYSIDE 345KV CKT 1	717	789	0.04583	116.3055	LAYFLD8 500.00 - MOUNT OLIVE 500KV CKT 1
FDNS	00NR	3	16WP	G15_033	FROM->TO	G14-057T 345.00 - SUNNYSIDE 345KV CKT 1	717	789	0.04467	116.3032	CANADIAN RIVER - PITTSBURG 345KV CKT 1
FDNS	00NR	3	16WP	G15_033	FROM->TO	G14-057T 345.00 - SUNNYSIDE 345KV CKT 1	717	789	0.04467	116.3032	CANADIAN RIVER - PITTSBURG 345KV CKT 1
FDNS	00NR	3	16WP	G15_033	FROM->TO	G14-057T 345.00 - SUNNYSIDE 345KV CKT 1	717	789	0.04582	116.3008	HOYT - STRANGER CREEK 345KV CKT 1
FDNS	00NR	3	16WP	G15_033	FROM->TO	G14-057T 345.00 - SUNNYSIDE 345KV CKT 1	717	789	0.04586	116.2994	RODEMACHER 230/22.0KV TRANSFORMER CKT 1
FDNS	00NR	3	16WP	G15_033	FROM->TO	G14-057T 345.00 - SUNNYSIDE 345KV CKT 1	717	789	0.04583	116.2956	G15074_T 345.00 - JEFFREY ENERGY CENTER 345KV CKT 1
FDNS	00NR	3	16WP	G15_033	FROM->TO	G14-057T 345.00 - SUNNYSIDE 345KV CKT 1	717	789	0.04582	116.2932	CIMARRON - SARA 138KV CKT 1
FDNS	00NR	3	16WP	G15_033	FROM->TO	G14-057T 345.00 - SUNNYSIDE 345KV CKT 1	717	789	0.04586	116.2918	GEN515223 1-MUSKOGEE 4G
FDNS	00NR	3	16WP	G15_033	FROM->TO	G14-057T 345.00 - SUNNYSIDE 345KV CKT 1	717	789	0.04586	116.2918	GEN515225 1-MUSKOGEE 5G
FDNS	00NR	3	16WP	G15_033	FROM->TO	G14-057T 345.00 - SUNNYSIDE 345KV CKT 1	717	789	0.04552	116.2886	ARBWIND4 138.00 - CARTER 138KV CKT 1
FDNS	00NR	3	16WP	G15_033	FROM->TO	G14-057T 345.00 - SUNNYSIDE 345KV CKT 1	717	789	0.04583	116.2877	HOT SPRINGS EHV - MAGNET COVE 500KV CKT 1
FDNS	00NR	3	16WP	G15_033	FROM->TO	G14-057T 345.00 - SUNNYSIDE 345KV CKT 1	717	789	0.04582	116.2784	MC NIEL 500/115KV TRANSFORMER CKT 1
FDNS	00NR	3	16WP	G15_033	FROM->TO	G14-057T 345.00 - SUNNYSIDE 345KV CKT 1	717	789	0.04586	116.2776	GEN303007 1-1BC2 U2
FDNS	00NR	3	16WP	G15_033	FROM->TO	G14-057T 345.00 - SUNNYSIDE 345KV CKT 1	717	789	0.04531	116.2733	BUCKNER7 345.00 - SPEARVILLE 345KV CKT 1
FDNS	00NR	3	16WP	G15_033	FROM->TO	G14-057T 345.00 - SUNNYSIDE 345KV CKT 1	717	789	0.04531	116.2733	BUCKNER7 345.00 - SPEARVILLE 345KV CKT 1
FDNS	00NR	3	16WP	G15_033	FROM->TO	G14-057T 345.00 - SUNNYSIDE 345KV CKT 1	717	789	0.04586	116.273	GEN303006 1-1BC2 U1
FDNS	00NR	3	16WP	G15_033	FROM->TO	G14-057T 345.00 - SUNNYSIDE 345KV CKT 1	717	789	0.04607	116.2711	COMANCHE TAP - TOSCO 69KV CKT 1
FDNS	00NR	3	16WP	G15_033	FROM->TO	G14-057T 345.00 - SUNNYSIDE 345KV CKT 1	717	789	0.04579	116.271	P12:138:AEPW:WTHWF4:WTH_SE4
FDNS	00NR	3	16WP	G15_033	FROM->TO	G14-057T 345.00 - SUNNYSIDE 345KV CKT 1	717	789	0.04579	116.2649	BISMARK - HOT SPRINGS WEST BUS 115KV CKT 1
FDNS	00NR	3	16WP	G15_033	FROM->TO	G14-057T 345.00 - SUNNYSIDE 345KV CKT 1	717	789	0.04563	116.2649	SEMINOLE - VANOSTP4 138.00 138KV CKT 1
FDNS	00NR	3	16WP	G15_033	FROM->TO	G14-057T 345.00 - SUNNYSIDE 345KV CKT 1	717	789	0.04617	116.2581	P12:69:AEPW-OMPA:COMANC-2:OMWALTR2
FDNS	00NR	3	16WP	G15_033	FROM->TO	G14-057T 345.00 - SUNNYSIDE 345KV CKT 1	717	789	0.04586	116.2575	NELSON 230/20.0KV TRANSFORMER CKT 1
FDNS	00NR	3	16WP	G15_033	FROM->TO	G14-057T 345.00 - SUNNYSIDE 345KV CKT 1	717	789	0.04586	116.2509	GEN336191 1-LITTLE GYPSY UNIT#3
FDNS	00NR	3	16WP	G15_033	FROM->TO	G14-057T 345.00 - SUNNYSIDE 345KV CKT 1	717	789	0.04586	116.2436	CZECH HALL - XEROX 138KV CKT 1
FDNS	00NR	3	16WP	G15_033	FROM->TO	G14-057T 345.00 - SUNNYSIDE 345KV CKT 1	717	789	0.04586	116.2417	P12:138:AEPW:N.E.S.-4:CATOOSA4
FDNS	00NR	3	16WP	G15_033	FROM->TO	G14-057T 345.00 - SUNNYSIDE 345KV CKT 1	717	789	0.04586	116.2396	GEN300010 1-ST FRANCIS UNIT 1
FDNS	00NR	3	16WP	G15_033	FROM->TO	G14-057T 345.00 - SUNNYSIDE 345KV CKT 1	717	789	0.04621	116.2394	BAILEY4 138.00 - WESTMOORE 138KV CKT 1
FDNS	00NR	3	16WP	G15_033	FROM->TO	G14-057T 345.00 - SUNNYSIDE 345KV CKT 1	717	789	0.04586	116.2393	MORGAN - XEROX 138KV CKT 1
FDNS	00NR	3	16WP	G15_033	FROM->TO	G14-057T 345.00 - SUNNYSIDE 345KV CKT 1	717	789	0.04579	116.2377	CLEO CORNER - CLEOPLT4 138.00 138KV CKT 1
FDNS	00NR	3	16WP	G15_033	FROM->TO	G14-057T 345.00 - SUNNYSIDE 345KV CKT 1	717	789	0.04602	116.2305	LASALLE - LATTA JCT 138KV CKT 1
FDNS	00NR	3	16WP	G15_033	FROM->TO	G14-057T 345.00 - SUNNYSIDE 345KV CKT 1	717	789	0.04579	116.2249	CLEOPLT4 138.00 - MEN TAP 138KV CKT 1
FDNS	00NR	3	16WP	G15_033	FROM->TO	G14-057T 345.00 - SUNNYSIDE 345KV CKT 1	717	789	0.04586	116.2246	GEN335614 1-WILLOW GLENN UNIT#4
FDNS	00NR	3	16WP	G15_033	FROM->TO	G14-057T 345.00 - SUNNYSIDE 345KV CKT 1	717	789	0.04565	116.2176	BENTON - WICHITA 345KV CKT 1
FDNS	00NR	3	16WP	G15_033	FROM->TO	G14-057T 345.00 - SUNNYSIDE 345KV CKT 1	717	789	0.04586	116.2161	MORGAN - MUSTANG 138KV CKT 1
FDNS	00NR	3	16WP	G15_033	FROM->TO	G14-057T 345.00 - SUNNYSIDE 345KV CKT 1	717	789	0.04586	116.2152	GEN337910 1-ARKANSAS NUCLEAR ONE UNIT #1
FDNS	00NR	3	16WP	G15_033	FROM->TO	G14-057T 345.00 - SUNNYSIDE 345KV CKT 1	717	789	0.04581	116.2151	G15095_T 138.00 - ROSE_VALLEY 138.00 138KV CKT 1

SOLUTION	GROUP	SCENARIO	SEASON	SOURCE	DIRECTION	MONITORED ELEMENT	RATEA (MVA)	RATEB(MVA)	TDF	TC%LOADING (% MVA)	CONTINGENCY
FDNS	00NR	3	16WP	G15_033	FROM->TO	G14-057T 345.00 - SUNNYSIDE 345KV CKT 1	717	789	0.04579	116.2141	IMO TAP - MEN TAP 138KV CKT 1
FDNS	00NR	3	16WP	G15_033	FROM->TO	G14-057T 345.00 - SUNNYSIDE 345KV CKT 1	717	789	0.04586	116.2139	GEN303008 1-1BC2 U3
FDNS	00NR	3	16WP	G15_033	FROM->TO	G14-057T 345.00 - SUNNYSIDE 345KV CKT 1	717	789	0.04579	116.2119	ALPINE AECC - BISMARK 115KV CKT 1
FDNS	00NR	3	16WP	G15_033	FROM->TO	G14-057T 345.00 - SUNNYSIDE 345KV CKT 1	717	789	0.04607	116.2071	COMANCHE - COMANCHE TAP 69KV CKT 1
FDNS	00NR	3	16WP	G15_033	FROM->TO	G14-057T 345.00 - SUNNYSIDE 345KV CKT 1	717	789	0.04852	116.1959	P12:138:AEPW:S.W.S.-4:L.E.S.-4
FDNS	00NR	3	16WP	G15_033	FROM->TO	G14-057T 345.00 - SUNNYSIDE 345KV CKT 1	717	789	0.04551	116.1916	CANADIAN - NOBLE 138KV CKT 1
FDNS	00NR	3	16WP	G15_033	FROM->TO	G14-057T 345.00 - SUNNYSIDE 345KV CKT 1	717	789	0.04586	116.19	GEN300011 1-ST FRANCIS UNIT 2
FDNS	00NR	3	16WP	G15_033	FROM->TO	G14-057T 345.00 - SUNNYSIDE 345KV CKT 1	717	789	0.04586	116.1874	GEN336170 1-GULF OXY U4
FDNS	00NR	3	16WP	G15_033	FROM->TO	G14-057T 345.00 - SUNNYSIDE 345KV CKT 1	717	789	0.04586	116.1869	7JASPER 345.00 - BLACKBERRY 345KV CKT 1
FDNS	00NR	3	16WP	G15_033	FROM->TO	G14-057T 345.00 - SUNNYSIDE 345KV CKT 1	717	789	0.04585	116.1851	CYPRESS - HARTBURG 500KV CKT 1
FDNS	00NR	3	16WP	G15_033	FROM->TO	G14-057T 345.00 - SUNNYSIDE 345KV CKT 1	717	789	0.04586	116.1812	GEN336464 1-MICHOUD UNIT #3
FDNS	00NR	3	16WP	G15_033	FROM->TO	G14-057T 345.00 - SUNNYSIDE 345KV CKT 1	717	789	0.04586	116.1741	8CAJUN2 500/24.0KV TRANSFORMER CKT 1
FDNS	00NR	3	16WP	G15_033	FROM->TO	G14-057T 345.00 - SUNNYSIDE 345KV CKT 1	717	789	0.04579	116.1684	ALPINE AECC - AMITY SS 115KV CKT 1
FDNS	00NR	3	16WP	G15_033	FROM->TO	G14-057T 345.00 - SUNNYSIDE 345KV CKT 1	717	789	0.04554	116.1667	P12:138:OKGE:3TERM27
FDNS	00NR	3	16WP	G15_033	FROM->TO	G14-057T 345.00 - SUNNYSIDE 345KV CKT 1	717	789	0.04573	116.1643	WEATHERFORD JCT. - WEATHERFORD SOUTHEAST 138KV CKT 1
FDNS	00NR	3	16WP	G15_033	FROM->TO	G14-057T 345.00 - SUNNYSIDE 345KV CKT 1	717	789	0.04573	116.1643	WEATHERFORD JCT. - WEATHERFORD SOUTHEAST 138KV CKT 1
FDNS	00NR	3	16WP	G15_033	FROM->TO	G14-057T 345.00 - SUNNYSIDE 345KV CKT 1	717	789	0.04586	116.1575	GEN300016 1-1G1GPDEL 18.000
FDNS	00NR	3	16WP	G15_033	FROM->TO	G14-057T 345.00 - SUNNYSIDE 345KV CKT 1	717	789	0.04573	116.1561	P12:138:OKGE-AEPW:JENSEN4:REDROCKRD4
FDNS	00NR	3	16WP	G15_033	FROM->TO	G14-057T 345.00 - SUNNYSIDE 345KV CKT 1	717	789	0.04581	116.1539	NOEL_SW 138.00 - ROSE_VALLEY 138.00 138KV CKT 1
FDNS	00NR	3	16WP	G15_033	FROM->TO	G14-057T 345.00 - SUNNYSIDE 345KV CKT 1	717	789	0.04586	116.1466	P12:138:AEPW:R.S.S.-4:S.HUD.-4
FDNS	00NR	3	16WP	G15_033	FROM->TO	G14-057T 345.00 - SUNNYSIDE 345KV CKT 1	717	789	0.04581	116.1436	SWISSVALE - WEST GARDNER 345KV CKT 1
FDNS	00NR	3	16WP	G15_033	FROM->TO	G14-057T 345.00 - SUNNYSIDE 345KV CKT 1	717	789	0.0458	116.1414	BLACKBERRY - NEOSHO 345KV CKT 1
FDNS	00NR	3	16WP	G15_033	FROM->TO	G14-057T 345.00 - SUNNYSIDE 345KV CKT 1	717	789	0.0458	116.1414	BLACKBERRY - NEOSHO 345KV CKT 1
FDNS	00NR	3	16WP	G15_033	FROM->TO	G14-057T 345.00 - SUNNYSIDE 345KV CKT 1	717	789	0.04586	116.1402	GEN501910 1-ACADIA UNIT ST1
FDNS	00NR	3	16WP	G15_033	FROM->TO	G14-057T 345.00 - SUNNYSIDE 345KV CKT 1	717	789	0.04525	116.1335	ELK CITY 230KV (ELKCTY-6) 230/138/13.8KV TRANSFORMER CKT 1
FDNS	00NR	3	16WP	G15_033	FROM->TO	G14-057T 345.00 - SUNNYSIDE 345KV CKT 1	717	789	0.04525	116.1335	ELK CITY 230KV (ELKCTY-6) 230/138/13.8KV TRANSFORMER CKT 1
FDNS	00NR	3	16WP	G15_033	FROM->TO	G14-057T 345.00 - SUNNYSIDE 345KV CKT 1	717	789	0.04525	116.1333	CHISHOLM6 230.00 - ELK CITY 230KV 230KV CKT 1
FDNS	00NR	3	16WP	G15_033	FROM->TO	G14-057T 345.00 - SUNNYSIDE 345KV CKT 1	717	789	0.04584	116.1265	7LUTESVIL 345.00 - 7ST FRANC 345.00 345KV CKT 1
FDNS	00NR	3	16WP	G15_033	FROM->TO	G14-057T 345.00 - SUNNYSIDE 345KV CKT 1	717	789	0.04586	116.1262	GEN337041 1-GERALD ANDRUS
FDNS	00NR	3	16WP	G15_033	FROM->TO	G14-057T 345.00 - SUNNYSIDE 345KV CKT 1	717	789	0.04586	116.1226	SABINE 230/24.0KV TRANSFORMER CKT 1
FDNS	00NR	3	16WP	G15_033	FROM->TO	G14-057T 345.00 - SUNNYSIDE 345KV CKT 1	717	789	0.04584	116.1203	ETTA (DUKE HOTSPRINGS) - MC NIEL 500KV CKT 1
FDNS	00NR	3	16WP	G15_033	FROM->TO	G14-057T 345.00 - SUNNYSIDE 345KV CKT 1	717	789	0.04592	116.1194	ANADARKO - SEQUOYAHJ4 138.00 138KV CKT 1
FDNS	00NR	3	16WP	G15_033	FROM->TO	G14-057T 345.00 - SUNNYSIDE 345KV CKT 1	717	789	0.04592	116.1153	CORN TAP - SEQUOYAHJ4 138.00 138KV CKT 1
FDNS	00NR	3	16WP	G15_033	FROM->TO	G14-057T 345.00 - SUNNYSIDE 345KV CKT 1	717	789	0.04573	116.1145	P12:138:AEPW:REDROCKRD4:WTH_JCT4
FDNS	00NR	3	16WP	G15_033	FROM->TO	G14-057T 345.00 - SUNNYSIDE 345KV CKT 1	717	789	0.04582	116.1105	SARA - STHLAKE4 138.00 138KV CKT 1
FDNS	00NR	3	16WP	G15_033	FROM->TO	G14-057T 345.00 - SUNNYSIDE 345KV CKT 1	717	789	0.04586	116.1076	P12:138:AEPW:YARCH-S4:T.S.E.-4
FDNS	00NR	3	16WP	G15_033	FROM->TO	G14-057T 345.00 - SUNNYSIDE 345KV CKT 1	717	789	0.04599	116.1015	WALTERS - WALTERS 69KV CKT 1
FDNS	00NR	3	16WP	G15_033	FROM->TO	G14-057T 345.00 - SUNNYSIDE 345KV CKT 1	717	789	0.04586	116.1013	P12:138:AEPW:BA_71ST4:T.S.E.-4
FDNS	00NR	3	16WP	G15_033	FROM->TO	G14-057T 345.00 - SUNNYSIDE 345KV CKT 1	717	789	0.04551	116.1	NOBLE - PURCELL4 138.00 138KV CKT 1
FDNS	00NR	3	16WP	G15_033	FROM->TO	G14-057T 345.00 - SUNNYSIDE 345KV CKT 1	717	789	0.04586	116.0999	P12:69:AEPW:NROGERS2:ECNTRTN2
FDNS	00NR	3	16WP	G15_033	FROM->TO	G14-057T 345.00 - SUNNYSIDE 345KV CKT 1	717	789	0.04579	116.0975	DRAPER LAKE - SEMINOLE 345KV CKT 2
FDNS	00NR	3	16WP	G15_033	FROM->TO	G14-057T 345.00 - SUNNYSIDE 345KV CKT 1	717	789	0.04579	116.0974	DRAPER LAKE - SEMINOLE 345KV CKT 1
FDNS	00NR	3	16WP	G15_033	FROM->TO	G14-057T 345.00 - SUNNYSIDE 345KV CKT 1	717	789	0.04594	116.0909	NORGE ROAD - SOUTHWESTERN STATION 138KV CKT 1
FDNS	00NR	3	16WP	G15_033	FROM->TO	G14-057T 345.00 - SUNNYSIDE 345KV CKT 1	717	789	0.04594	116.0909	NORGE ROAD - SOUTHWESTERN STATION 138KV CKT 1
FDNS	00NR	3	16WP	G15_033	FROM->TO	G14-057T 345.00 - SUNNYSIDE 345KV CKT 1	717	789	0.04583	116.0891	8WNEWMADRID 500.00 - DELL 500 500KV CKT 1
FDNS	00NR	3	16WP	G15_033	FROM->TO	G14-057T 345.00 - SUNNYSIDE 345KV CKT 1	717	789	0.04586	116.0887	GEN336801 1-BAXTER WILSON UNIT #1
FDNS	00NR	3	16WP	G15_033	FROM->TO	G14-057T 345.00 - SUNNYSIDE 345KV CKT 1	717	789	0.04582	116.0869	ENOWILT - LONE OAK 138KV CKT 1
FDNS	00NR	3	16WP	G15_033	FROM->TO	G14-057T 345.00 - SUNNYSIDE 345KV CKT 1	717	789	0.04621	116.0825	FRANKLIN SW - WESTMOORE 138KV CKT 1
FDNS	00NR	3	16WP	G15_033	FROM->TO	G14-057T 345.00 - SUNNYSIDE 345KV CKT 1	717	789	0.04582	116.0819	MCCLAIN - STHLAKE4 138.00 138KV CKT 1
FDNS	00NR	3	16WP	G15_033	FROM->TO	G14-057T 345.00 - SUNNYSIDE 345KV CKT 1	717	789	0.04582	116.0793	ENOWILT - SARDIS 138KV CKT 1
FDNS	00NR	3	16WP	G15_033	FROM->TO	G14-057T 345.00 - SUNNYSIDE 345KV CKT 1	717	789	0.04586	116.077	FRONTIER 345/18.0KV TRANSFORMER CKT 1
FDNS	00NR	3	16WP	G15_033	FROM->TO	G14-057T 345.00 - SUNNYSIDE 345KV CKT 1	717	789	0.04586	116.0752	FRONTIER 345/18.0KV TRANSFORMER CKT 1
FDNS	00NR	3	16WP	G15_033	FROM->TO	G14-057T 345.00 - SUNNYSIDE 345KV CKT 1	717	789	0.04584	116.0751	P12:138:AEPW-OGE:SHIDLER4:OSAGE 4
FDNS	00NR	3	16WP	G15_033	FROM->TO	G14-057T 345.00 - SUNNYSIDE 345KV CKT 1	717	789	0.04617	116.0731	LAWTON RELIFT TAP - OMPA-WALTERS 69KV CKT 1
FDNS	00NR	3	16WP	G15_033	FROM->TO	G14-057T 345.00 - SUNNYSIDE 345KV CKT 1	717	789	0.04602	116.0726	LASALLE - STONEWAL LH138.00 138KV CKT 1
FDNS	00NR	3	16WP	G15_033	FROM->TO	G14-057T 345.00 - SUNNYSIDE 345KV CKT 1	717	789	0.04586	116.069	P12:161:AEPW:CHAMSPR5:FARMING5
FDNS	00NR	3	16WP	G15_033	FROM->TO	G14-057T 345.00 - SUNNYSIDE 345KV CKT 1	717	789	0.04586	116.0685	ESSEX UNIT 2 500/18.0KV TRANSFORMER CKT 1
FDNS	00NR	3	16WP	G15_033	FROM->TO	G14-057T 345.00 - SUNNYSIDE 345KV CKT 1	717	789	0.04543	116.0615	ARBUCKLE - VANOSTP4 138.00 138KV CKT 1
FDNS	00NR	3	16WP	G15_033	FROM->TO	G14-057T 345.00 - SUNNYSIDE 345KV CKT 1	717	789	0.04586	116.0593	GEN512688 2-GRDA1 GSU2 22
FDNS	00NR	3	16WP	G15_033	FROM->TO	G14-057T 345.00 - SUNNYSIDE 345KV CKT 1	717	789	0.04602	116.0579	STONEWAL LH138.00 - TUPELO TAP 138KV CKT 1
FDNS	00NR	3	16WP	G15_033	FROM->TO	G14-057T 345.00 - SUNNYSIDE 345KV CKT 1	717	789	0.04583	116.0577	EMPORIA ENERGY CENTER - SWISSVALE 345KV CKT 1
FDNS	00NR	3	16WP	G15_033	FROM->TO	G14-057T 345.00 - SUNNYSIDE 345KV CKT 1	717	789	0.04602	116.0575	GRACEMONT (BANK 1) 345/138/13.8KV TRANSFORMER CKT 1
FDNS	00NR	3	16WP	G15_033	FROM->TO	G14-057T 345.00 - SUNNYSIDE 345KV CKT 1	717	789	0.04686	116.0559	LAWTON EASTSIDE (LES 4) 345/138/13.8KV TRANSFORMER CKT 1
FDNS	00NR	3	16WP	G15_033	FROM->TO	G14-057T 345.00 - SUNNYSIDE 345KV CKT 1	717	789	0.04686	116.0559	LAWTON EASTSIDE (LES 4) 345/138/13.8KV TRANSFORMER CKT 1
FDNS	00NR	3	16WP	G15_033	FROM->TO	G14-057T 345.00 - SUNNYSIDE 345KV CKT 1	717	789	0.04594	116.0472	SOUTHWESTERN STATION - VERDEN 138KV CKT 1
FDNS	00NR	3	16WP	G15_033	FROM->TO	G14-057T 345.00 - SUNNYSIDE 345KV CKT 1	717	789	0.04582	116.0442	CLAYTON - SARDIS 138KV CKT 1
FDNS	00NR	3	16WP	G15_033	FROM->TO	G14-057T 345.00 - SUNNYSIDE 345KV CKT 1	717	789	0.04586	116.0415	GEN505616 1-BROKEN BOW
FDNS	00NR	3	16WP	G15_033	FROM->TO	G14-057T 345.00 - SUNNYSIDE 345KV CKT 1	717	789	0.04586	116.04	LEWIS CREEK SWITCHYARD 138/22.0KV TRANSFORMER CKT 1
FDNS	00NR	3	16WP	G15_033	FROM->TO	G14-057T 345.00 - SUNNYSIDE 345KV CKT 1	717	789	0.04576	116.0392	HOPE - MCNAB REC 115KV CKT 1
FDNS	00NR	3	16WP	G15_033	FROM->TO	G14-057T 345.00 - SUNNYSIDE 345KV CKT 1	717	789	0.04573	116.0372	HINTON - WEATHERFORD JCT. 138KV CKT 1
FDNS	00NR	3	16WP	G15_033	FROM->TO	G14-057T 345.00 - SUNNYSIDE 345KV CKT 1	717	789	0.04599	116.0362	P12:69:WFEC-AEPW:COMANCH2:WALTRS-2
FDNS	00NR	3	16WP	G15_033	FROM->TO	G14-057T 345.00 - SUNNYSIDE 345KV CKT 1	717	789	0.04586	116.0352	LEWIS CREEK SWITCHYARD 138/22.0KV TRANSFORMER CKT 1
FDNS	00NR	3	16WP	G15_033	FROM->TO	G14-057T 345.00 - SUNNYSIDE 345KV CKT 1	717	789	0.04579	116.0305	WEATHERFORD TAP - WEATHERFORD WIND FARM 138KV CKT 1
FDNS	00NR	3	16WP	G15_033	FROM->TO	G14-057T 345.00 - SUNNYSIDE 345KV CKT 1	717	789	0.04576	116.0305	P12:115:AEPW:TURK3:HOPE3
FDNS	00NR	3	16WP	G15_033	FROM->TO	G14-057T 345.00 - SUNNYSIDE 345KV CKT 1	717	789	0.04594	116.0271	NORTH 29TH CHICKASHA - VERDEN 138KV CKT 1
FDNS	00NR	3	16WP	G15_033	FROM->TO	G14-057T 345.00 - SUNNYSIDE 345KV CKT 1	717	789	0.04582	116.0222	EMPORIA ENERGY CENTER - G14_001T 345.00 345KV CKT 1
FDNS	00NR	3	16WP	G15_033	FROM->TO	G14-057T 345.00 - SUNNYSIDE 345KV CKT 1	717	789	0.04582	116.0176	P12:138:AEPW-SWPA:LONEOAK4:BRKNBW4
FDNS	00NR	3	16WP	G15_033	FROM->TO	G14-057T 345.00 - SUNNYSIDE 345KV CKT 1	717	789	0.04586	116.0157	GEN501970 1-EVANGELINE UNIT 7
FDNS	00NR	3	16WP	G15_033	FROM->TO	G14-057T 345.00 - SUNNYSIDE 345KV CKT 1	717	789	0.04581	116.0148	COUCH SES - MC NIEL 115KV CKT 1

SOLUTION	GROUP	SCENARIO	SEASON	SOURCE	DIRECTION	MONITORED ELEMENT	RATEA (MVA)	RATEB(MVA)	TDF	TC%LOADING (% MVA)	CONTINGENCY
FDNS	00NR	3	16WP	G15_033	FROM->TO	G14-057T 345.00 - SUNNYSIDE 345KV CKT 1	717	789	0.04578	116.0108	CLARKSVILLE - ONETA 345KV CKT 1
FDNS	00NR	3	16WP	G15_033	FROM->TO	G14-057T 345.00 - SUNNYSIDE 345KV CKT 1	717	789	0.04578	116.0108	CLARKSVILLE - ONETA 345KV CKT 1
FDNS	00NR	3	16WP	G15_033	FROM->TO	G14-057T 345.00 - SUNNYSIDE 345KV CKT 1	717	789	0.04617	116.0087	OMPA-WALTERS - WALTERS 69KV CKT 1
FDNS	00NR	3	16WP	G15_033	FROM->TO	G14-057T 345.00 - SUNNYSIDE 345KV CKT 1	717	789	0.04617	116.0087	OMPA-WALTERS - WALTERS 69KV CKT 1
FDNS	00NR	3	16WP	G15_033	FROM->TO	G14-057T 345.00 - SUNNYSIDE 345KV CKT 1	717	789	0.04583	116.0087	MORISNT4 138.00 - STILLWATER 138KV CKT 1
FDNS	00NR	3	16WP	G15_033	FROM->TO	G14-057T 345.00 - SUNNYSIDE 345KV CKT 1	717	789	0.04576	116.0081	MCNAB REC - Turk 115 115KV CKT 1
FDNS	00NR	3	16WP	G15_033	FROM->TO	G14-057T 345.00 - SUNNYSIDE 345KV CKT 1	717	789	0.04576	116.008	TURK (TURK 1) 138/115/13.2KV TRANSFORMER CKT 1
FDNS	00NR	3	16WP	G15_033	FROM->TO	G14-057T 345.00 - SUNNYSIDE 345KV CKT 1	717	789	0.04576	116.008	TURK (TURK 1) 138/115/13.2KV TRANSFORMER CKT 1
FDNS	00NR	3	16WP	G15_033	FROM->TO	G14-057T 345.00 - SUNNYSIDE 345KV CKT 1	717	789	0.04557	116.006	CLINTON JUNCTION - ELK CITY 138KV CKT 1
FDNS	00NR	3	16WP	G15_033	FROM->TO	G14-057T 345.00 - SUNNYSIDE 345KV CKT 1	717	789	0.04557	116.006	CLINTON JUNCTION - ELK CITY 138KV CKT 1
FDNS	00NR	3	16WP	G15_033	FROM->TO	G14-057T 345.00 - SUNNYSIDE 345KV CKT 1	717	789	0.04586	116.0044	GEN334392 1-EXXON MOBIL IPP 1
FDNS	00NR	3	16WP	G15_033	FROM->TO	G14-057T 345.00 - SUNNYSIDE 345KV CKT 1	717	789	0.04586	116.0042	P12:138:OKGE:3TERM12
FDNS	00NR	3	16WP	G15_033	FROM->TO	G14-057T 345.00 - SUNNYSIDE 345KV CKT 1	717	789	0.04582	116.004	CLAYTON - NASHOBA 138KV CKT 1
FDNS	00NR	3	16WP	G15_033	FROM->TO	G14-057T 345.00 - SUNNYSIDE 345KV CKT 1	717	789	0.04583	116.0032	P12:138:OKGE:3TERM2
FDNS	00NR	3	16WP	G15_033	FROM->TO	G14-057T 345.00 - SUNNYSIDE 345KV CKT 1	717	789	0.04594	116.0021	MARIETTA - MARIETTA4 138.00 138KV CKT 1
FDNS	00NR	3	16WP	G15_033	FROM->TO	G14-057T 345.00 - SUNNYSIDE 345KV CKT 1	717	789	0.04586	116.0012	GEN659125 1-COVEY
FDNS	00NR	3	16WP	G15_033	FROM->TO	G14-057T 345.00 - SUNNYSIDE 345KV CKT 1	717	789	0.04567	115.9993	G13-010T 345.00 - POST ROCK 345KV CKT 1
FDNS	00NR	3	16WP	G15_033	FROM->TO	G14-057T 345.00 - SUNNYSIDE 345KV CKT 1	717	789	0.04586	115.9968	GEN334393 1-EXXON MOBIL IPP 2
FDNS	00NR	3	16WP	G15_033	FROM->TO	G14-057T 345.00 - SUNNYSIDE 345KV CKT 1	717	789	0.04586	115.9968	GEN334394 1-EXXON MOBIL IPP 3
FDNS	00NR	3	16WP	G15_033	FROM->TO	G14-057T 345.00 - SUNNYSIDE 345KV CKT 1	717	789	0.04531	115.9965	BUCKNER7 345.00 - HOLCOMB 345KV CKT 1
FDNS	00NR	3	16WP	G15_033	FROM->TO	G14-057T 345.00 - SUNNYSIDE 345KV CKT 1	717	789	0.04531	115.9965	BUCKNER7 345.00 - HOLCOMB 345KV CKT 1
FDNS	00NR	3	16WP	G15_033	FROM->TO	G14-057T 345.00 - SUNNYSIDE 345KV CKT 1	717	789	0.04582	115.9911	BETHEL - NASHOBA 138KV CKT 1
FDNS	00NR	3	16WP	G15_033	FROM->TO	G14-057T 345.00 - SUNNYSIDE 345KV CKT 1	717	789	0.04586	115.9885	GEN336222 1-LITTLE GYPSY UNIT#2
FDNS	00NR	3	16WP	G15_033	FROM->TO	G14-057T 345.00 - SUNNYSIDE 345KV CKT 1	717	789	0.04585	115.9875	7JASPER 345.00 - MORGAN 345KV CKT 1
FDNS	00NR	3	16WP	G15_033	FROM->TO	G14-057T 345.00 - SUNNYSIDE 345KV CKT 1	717	789	0.04588	115.9853	FRANKLIN - FRANKLIN SW 138KV CKT 1
FDNS	00NR	3	16WP	G15_033	FROM->TO	G14-057T 345.00 - SUNNYSIDE 345KV CKT 1	717	789	0.04586	115.9817	GEN509394 1-FLINT CREEK
FDNS	00NR	3	16WP	G15_033	FROM->TO	G14-057T 345.00 - SUNNYSIDE 345KV CKT 1	717	789	0.04586	115.9808	P12:138:AEPW:R.S.S-4:T.P.S.-4
FDNS	00NR	3	16WP	G15_033	FROM->TO	G14-057T 345.00 - SUNNYSIDE 345KV CKT 1	717	789	0.04573	115.9807	HINTON - REDROCKRD4 138.00 138KV CKT 1
FDNS	00NR	3	16WP	G15_033	FROM->TO	G14-057T 345.00 - SUNNYSIDE 345KV CKT 1	717	789	0.04594	115.9718	CORNVILLE - NORGE ROAD 138KV CKT 1
FDNS	00NR	3	16WP	G15_033	FROM->TO	G14-057T 345.00 - SUNNYSIDE 345KV CKT 1	717	789	0.04594	115.9718	CORNVILLE - NORGE ROAD 138KV CKT 1
FDNS	00NR	3	16WP	G15_033	FROM->TO	G14-057T 345.00 - SUNNYSIDE 345KV CKT 1	717	789	0.04141	115.9706	G14_038T 345.00 - Hitchland Interchange 345KV CKT 1
FDNS	00NR	3	16WP	G15_033	FROM->TO	G14-057T 345.00 - SUNNYSIDE 345KV CKT 1	717	789	0.04586	115.9688	GEN506749 1-EASTMAN GENERATION A
FDNS	00NR	3	16WP	G15_033	FROM->TO	G14-057T 345.00 - SUNNYSIDE 345KV CKT 1	717	789	0.04586	115.9678	GEN334432 1-SABINE UNIT 2
FDNS	00NR	3	16WP	G15_033	FROM->TO	G14-057T 345.00 - SUNNYSIDE 345KV CKT 1	717	789	0.04586	115.9677	GEN334431 1-SABINE UNIT 1
FDNS	00NR	3	16WP	G15_033	FROM->TO	G14-057T 345.00 - SUNNYSIDE 345KV CKT 1	717	789	0.04594	115.9618	CORNVILLE - NORTH 29TH CHICKASHA 138KV CKT 1
FDNS	00NR	3	16WP	G15_033	FROM->TO	G14-057T 345.00 - SUNNYSIDE 345KV CKT 1	717	789	0.04586	115.9595	GEN501971 1-EVANGELINE UNIT 7-1
FDNS	00NR	3	16WP	G15_033	FROM->TO	G14-057T 345.00 - SUNNYSIDE 345KV CKT 1	717	789	0.04586	115.9595	GEN501972 1-EVANGELINE UNIT 7-2
FDNS	00NR	3	16WP	G15_033	FROM->TO	G14-057T 345.00 - SUNNYSIDE 345KV CKT 1	717	789	0.04586	115.9585	GEN336152 1-WATERFORD UNIT#2
FDNS	00NR	3	16WP	G15_033	FROM->TO	G14-057T 345.00 - SUNNYSIDE 345KV CKT 1	717	789	0.04586	115.9575	GEN336151 1-WATERFORD UNIT#1
FDNS	00NR	3	16WP	G15_033	FROM->TO	G14-057T 345.00 - SUNNYSIDE 345KV CKT 1	717	789	0.04582	115.9572	G14_001T 345.00 - WICHITA 345KV CKT 1
FDNS	00NR	3	16WP	G15_033	FROM->TO	G14-057T 345.00 - SUNNYSIDE 345KV CKT 1	717	789	0.04586	115.9564	P12:138:AEPW:R.S.S.-4:R:96YALE-4
FDNS	00NR	3	20WP	G15_033	FROM->TO	G14-057T 345.00 - SUNNYSIDE 345KV CKT 1	717	789	0.04409	115.9544	CORN TAP - NAPLESTP 138.00 138KV CKT 1
FDNS	00NR	3	16WP	G15_033	FROM->TO	G14-057T 345.00 - SUNNYSIDE 345KV CKT 1	717	789	0.0458	115.9458	P12:138:AEPW:OKMULGE4:R.S.S-4
FDNS	00NR	3	16WP	G15_033	FROM->TO	G14-057T 345.00 - SUNNYSIDE 345KV CKT 1	717	789	0.04579	115.9443	WEATHERFORD SOUTHEAST - WEATHERFORD TAP 138KV CKT 1
FDNS	00NR	3	16WP	G15_033	FROM->TO	G14-057T 345.00 - SUNNYSIDE 345KV CKT 1	717	789	0.04586	115.9395	P12:138:AEPW:MOHAWK4:T.NO--4
FDNS	00NR	3	16WP	G15_033	FROM->TO	G14-057T 345.00 - SUNNYSIDE 345KV CKT 1	717	789	0.04586	115.9376	ST FRANCIS - ST FRANCIS 1 161KV CKT Z1
FDNS	00NR	3	16WP	G15_033	FROM->TO	G14-057T 345.00 - SUNNYSIDE 345KV CKT 1	717	789	0.04586	115.9375	ST FRANCIS 161/16.0KV TRANSFORMER CKT 1
FDNS	00NR	3	16WP	G15_033	FROM->TO	G14-057T 345.00 - SUNNYSIDE 345KV CKT 1	717	789	0.04586	115.9359	GEN501912 1-ACADIA UNIT CT1B
FDNS	00NR	3	16WP	G15_033	FROM->TO	G14-057T 345.00 - SUNNYSIDE 345KV CKT 1	717	789	0.04582	115.9352	BETHEL - BROKEN BOW 138KV CKT 1
FDNS	00NR	3	16WP	G15_033	FROM->TO	G14-057T 345.00 - SUNNYSIDE 345KV CKT 1	717	789	0.04586	115.9351	GEN501911 1-ACADIA UNIT CT1A
FDNS	00NR	3	16WP	G15_033	FROM->TO	G14-057T 345.00 - SUNNYSIDE 345KV CKT 1	717	789	0.04585	115.9262	AS KING - EAU CLAIRE 345KV CKT 1
FDNS	00NR	3	16WP	G15_033	FROM->TO	G14-057T 345.00 - SUNNYSIDE 345KV CKT 1	717	789	0.04583	115.9255	GRAND ISLAND - MCCOOL 345KV CKT 1
FDNS	00NR	3	16WP	G15_033	FROM->TO	G14-057T 345.00 - SUNNYSIDE 345KV CKT 1	717	789	0.04586	115.9242	SABINE 230/22.0KV TRANSFORMER CKT 1
FDNS	00NR	3	16WP	G15_033	FROM->TO	G14-057T 345.00 - SUNNYSIDE 345KV CKT 1	717	789	0.04567	115.9226	G13-010T 345.00 - SPEARVILLE 345KV CKT 1
FDNS	00NR	3	16WP	G15_033	FROM->TO	G14-057T 345.00 - SUNNYSIDE 345KV CKT 1	717	789	0.04582	115.9192	LAYFLD8 500.00 (LAYFLD AUTO) 500/230/13.8KV TRANSFORMER CKT 1
FDNS	00NR	3	16WP	G15_033	FROM->TO	G14-057T 345.00 - SUNNYSIDE 345KV CKT 1	717	789	0.04582	115.9192	LAYFLD8 500.00 (LAYFLD AUTO) 500/230/13.8KV TRANSFORMER CKT 1
FDNS	00NR	3	16WP	G15_033	FROM->TO	G14-057T 345.00 - SUNNYSIDE 345KV CKT 1	717	789	0.04559	115.9154	ARBUCKLE - MILLCREEK 138KV CKT 1
FDNS	00NR	3	16WP	G15_033	FROM->TO	G14-057T 345.00 - SUNNYSIDE 345KV CKT 1	717	789	0.04586	115.9152	HAMMETT TAP - HORSESHOE LAKE 138KV CKT 1
FDNS	00NR	3	16WP	G15_033	FROM->TO	G14-057T 345.00 - SUNNYSIDE 345KV CKT 1	717	789	0.04586	115.915	FLETCHER - MARLOW JCT 69KV CKT 1
FDNS	00NR	3	16WP	G15_033	FROM->TO	G14-057T 345.00 - SUNNYSIDE 345KV CKT 1	717	789	0.04586	115.9109	GEN336242 1-1NMIL ST1 18.000
FDNS	00NR	3	16WP	G15_033	FROM->TO	G14-057T 345.00 - SUNNYSIDE 345KV CKT 1	717	789	0.04586	115.9096	ESSEX UNIT 2 500/18.0KV TRANSFORMER CKT 1
FDNS	00NR	3	16WP	G15_033	FROM->TO	G14-057T 345.00 - SUNNYSIDE 345KV CKT 1	717	789	0.04579	115.9081	AMITY SS - MURFREESBORO EAST (AECC) 115KV CKT 1
FDNS	00NR	3	16WP	G15_033	FROM->TO	G14-057T 345.00 - SUNNYSIDE 345KV CKT 1	717	789	0.04587	115.9044	P12:138:OKGE:3TERM47
FDNS	00NR	3	16WP	G15_033	FROM->TO	G14-057T 345.00 - SUNNYSIDE 345KV CKT 1	717	789	0.04586	115.903	GEN599951 1-PSCO LAMAR DC TIE
FDNS	00NR	3	16WP	G15_033	FROM->TO	G14-057T 345.00 - SUNNYSIDE 345KV CKT 1	717	789	0.04573	115.9019	Canadian Pump Station - REDROCKRD4 138.00 138KV CKT 1
FDNS	00NR	3	16WP	G15_033	FROM->TO	G14-057T 345.00 - SUNNYSIDE 345KV CKT 1	717	789	0.04579	115.899	CLINTON JUNCTION - CLINTON NATURAL GAS TAP 138KV CKT 1
FDNS	00NR	3	16WP	G15_033	FROM->TO	G14-057T 345.00 - SUNNYSIDE 345KV CKT 1	717	789	0.04586	115.8985	P12:138:WFEC-AEPW:ELKCTY-4:ERICK4
FDNS	00NR	3	16WP	G15_033	FROM->TO	G14-057T 345.00 - SUNNYSIDE 345KV CKT 1	717	789	0.04579	115.8939	LACYGNE - NEOSHO 345KV CKT 1
FDNS	00NR	3	16WP	G15_033	FROM->TO	G14-057T 345.00 - SUNNYSIDE 345KV CKT 1	717	789	0.04551	115.8899	PURCELL4 138.00 - WALNUT CREEK 138KV CKT 1
FDNS	00NR	3	16WP	G15_033	FROM->TO	G14-057T 345.00 - SUNNYSIDE 345KV CKT 1	717	789	0.04654	115.8857	DUNCAN - DUNCHERTP4 138.00 138KV CKT 1
FDNS	00NR	3	16WP	G15_033	FROM->TO	G14-057T 345.00 - SUNNYSIDE 345KV CKT 1	717	789	0.04654	115.8857	DUNCAN - DUNCHERTP4 138.00 138KV CKT 1
FDNS	00NR	3	16WP	G15_033	FROM->TO	G14-057T 345.00 - SUNNYSIDE 345KV CKT 1	717	789	0.04654	115.8855	DUNCAN EASTSIDE - DUNCHERTP4 138.00 138KV CKT 1
FDNS	00NR	3	16WP	G15_033	FROM->TO	G14-057T 345.00 - SUNNYSIDE 345KV CKT 1	717	789	0.0461	115.8723	CRINER - PAYNE 138.00 138KV CKT 1
FDNS	00NR	3	16WP	G15_033	FROM->TO	G14-057T 345.00 - SUNNYSIDE 345KV CKT 1	717	789	0.04616	115.8708	CIMARRON - NORTHWEST 345KV CKT 1
FDNS	00NR	3	16WP	G15_033	FROM->TO	G14-057T 345.00 - SUNNYSIDE 345KV CKT 1	717	789	0.04599	115.869	COMANCHE - WALTERS 69KV CKT 1
FDNS	00NR	3	20WP	G15_033	FROM->TO	G14-057T 345.00 - SUNNYSIDE 345KV CKT 1	717	789	0.04409	115.8663	NAPLESTP 138.00 - PAYNE 138.00 138KV CKT 1
FDNS	00NR	3	16WP	G15_033	FROM->TO	G14-057T 345.00 - SUNNYSIDE 345KV CKT 1	717	789	0.04577	115.8526	SEMINOLE (SEMINOL2) 345/138/14.4KV TRANSFORMER CKT 1
FDNS	00NR	3	20WP	G15_033	FROM->TO	G14-057T 345.00 - SUNNYSIDE 345KV CKT 1	717	789	0.04348	115.8065	7SAREPTA% 345.00 - LONGWOOD 345KV CKT 1
FDNS	00NR	3	20WP	G15_033	FROM->TO	G14-057T 345.00 - SUNNYSIDE 345KV CKT 1	717	789	0.04348	115.8065	7SAREPTA% 345.00 - LONGWOOD 345KV CKT 1

SOLUTION	GROUP	SCENARIO	SEASON	SOURCE	DIRECTION	MONITORED ELEMENT	RATEA (MVA)	RATEB(MVA)	TDF	TC%LOADING (% MVA)	CONTINGENCY
FDNS	00NR	3	20WP	G15_033	FROM->TO	G14-057T 345.00 - SUNNYSIDE 345KV CKT 1	717	789	0.04371	115.668	GEN336821 1-GRAND GULF UNIT
FDNS	00NR	3	20WP	G15_033	FROM->TO	G14-057T 345.00 - SUNNYSIDE 345KV CKT 1	717	789	0.04415	115.5877	ANADARKO - POCASSETT 138KV CKT 1
FDNS	00NR	3	20WP	G15_033	FROM->TO	G14-057T 345.00 - SUNNYSIDE 345KV CKT 1	717	789	0.04371	115.563	GEN336153 1-WATERFORD UNIT#3
FDNS	00NR	3	20WP	G15_033	FROM->TO	G14-057T 345.00 - SUNNYSIDE 345KV CKT 1	717	789	0.04398	115.5604	COMANCHE - LOCO 138KV CKT 1
FDNS	00NR	3	20WP	G15_033	FROM->TO	G14-057T 345.00 - SUNNYSIDE 345KV CKT 1	717	789	0.04364	115.5108	CLEVELAND - TULSA NORTH 345KV CKT 1
FDNS	00NR	3	20WP	G15_033	FROM->TO	G14-057T 345.00 - SUNNYSIDE 345KV CKT 1	717	789	0.04364	115.5108	CLEVELAND - TULSA NORTH 345KV CKT 1
FDNS	00NR	3	20WP	G15_033	FROM->TO	G14-057T 345.00 - SUNNYSIDE 345KV CKT 1	717	789	0.04415	115.4411	POCASSETT - TUTTLE 138KV CKT 1
FDNS	00NR	3	16WP	G15_033	FROM->TO	G14-057T 345.00 - SUNNYSIDE 345KV CKT 1	717	789	0.04586	115.4397	803-OKLAUNION
FDNS	00NR	3	20WP	G15_033	FROM->TO	G14-057T 345.00 - SUNNYSIDE 345KV CKT 1	717	789	0.0466	115.408	BORDER 7345.00 - TUCO_2 345.00 345KV CKT 1
FDNS	00NR	3	20WP	G15_033	FROM->TO	G14-057T 345.00 - SUNNYSIDE 345KV CKT 1	717	789	0.04361	115.4053	DOLET HILLS - SOUTHWEST SHREVEPORT 345KV CKT 1
FDNS	00NR	3	20WP	G15_033	FROM->TO	G14-057T 345.00 - SUNNYSIDE 345KV CKT 1	717	789	0.04361	115.4053	DOLET HILLS - SOUTHWEST SHREVEPORT 345KV CKT 1
FDNS	00NR	3	20WP	G15_033	FROM->TO	G14-057T 345.00 - SUNNYSIDE 345KV CKT 1	717	789	0.04371	115.2689	GEN335831 1-RIVERBEND UNIT#1
FDNS	00NR	3	20WP	G15_033	FROM->TO	G14-057T 345.00 - SUNNYSIDE 345KV CKT 1	717	789	0.04489	115.2624	P12:138:AEPW:DUNCAN-4:L.E.S.-4
FDNS	00NR	3	20WP	G15_033	FROM->TO	G14-057T 345.00 - SUNNYSIDE 345KV CKT 1	717	789	0.04371	115.2607	GRAND GULF 500/22.0KV TRANSFORMER CKT 1
FDNS	00NR	3	16WP	G15_033	FROM->TO	G14-057T 345.00 - SUNNYSIDE 345KV CKT 1	717	789	0.04586	115.2201	OKLAUNION 345KV SWITCHED SHUNT
FDNS	00NR	3	16WP	G15_033	FROM->TO	G14-057T 345.00 - SUNNYSIDE 345KV CKT 1	717	789	0.08646	115.1889	GRACEMONT - LAWTON EASTSIDE 345KV CKT 1
FDNS	00NR	3	16WP	G15_033	FROM->TO	G14-057T 345.00 - SUNNYSIDE 345KV CKT 1	717	789	0.08646	115.1889	GRACEMONT - LAWTON EASTSIDE 345KV CKT 1
FDNS	00NR	3	20WP	G15_033	FROM->TO	G14-057T 345.00 - SUNNYSIDE 345KV CKT 1	717	789	0.04358	115.183	7SAREPTA% 345.00 - ELDORADO EHV 345KV CKT 1
FDNS	00NR	3	20WP	G15_033	FROM->TO	G14-057T 345.00 - SUNNYSIDE 345KV CKT 1	717	789	0.04358	115.1828	3TR3AR8EL7EL
FDNS	00NR	3	20WP	G15_033	FROM->TO	G14-057T 345.00 - SUNNYSIDE 345KV CKT 1	717	789	0.04285	115.1731	MATHWSN7 345.00 - TATONGA7 345.00 345KV CKT 1
FDNS	00NR	3	20WP	G15_033	FROM->TO	G14-057T 345.00 - SUNNYSIDE 345KV CKT 1	717	789	0.04358	115.1726	ELDORADO EHV 500/345KV TRANSFORMER CKT 1
FDNS	00NR	3	20WP	G15_033	FROM->TO	G14-057T 345.00 - SUNNYSIDE 345KV CKT 1	717	789	0.04357	115.1537	ARCADIA - NORTHWEST 345KV CKT 1
FDNS	00NR	3	20WP	G15_033	FROM->TO	G14-057T 345.00 - SUNNYSIDE 345KV CKT 1	717	789	0.04371	115.0935	GEN515577 1-ARBWND11 0.6900
FDNS	00NR	3	20WP	G15_033	FROM->TO	G14-057T 345.00 - SUNNYSIDE 345KV CKT 1	717	789	0.04488	115.0919	COMANCHE TAP - OMPA-DUNCAN 840 138KV CKT 1
FDNS	00NR	3	16WP	G15_033	FROM->TO	G14-057T 345.00 - SUNNYSIDE 345KV CKT 1	717	789	0.04519	115.0783	MAYSVILLE - MAYSVLT4 138.00 138KV CKT 1
FDNS	00NR	3	20WP	G15_033	FROM->TO	G14-057T 345.00 - SUNNYSIDE 345KV CKT 1	717	789	0.04271	115.066	CANADIAN RIVER - MUSKOGEE 345KV CKT 1
FDNS	00NR	3	16WP	G15_033	FROM->TO	G14-057T 345.00 - SUNNYSIDE 345KV CKT 1	717	789	0.04585	115.0614	JOHNSON COUNTY - RUSSETT 138KV CKT 1
FDNS	00NR	3	20WP	G15_033	FROM->TO	G14-057T 345.00 - SUNNYSIDE 345KV CKT 1	717	789	0.04415	115.049	BRIDGECR 138.00 - TUTTLE 138KV CKT 1
FDNS	00NR	3	16WP	G15_033	FROM->TO	G14-057T 345.00 - SUNNYSIDE 345KV CKT 1	717	789	0.04581	115.0488	HUGO (HUGO 1) 345/138/13.8KV TRANSFORMER CKT 1
FDNS	00NR	3	16WP	G15_033	FROM->TO	G14-057T 345.00 - SUNNYSIDE 345KV CKT 1	717	789	0.04583	115.047	GLASSES - MADILL INDUSTRIAL TAP 138KV CKT 1
FDNS	00NR	3	16WP	G15_033	FROM->TO	G14-057T 345.00 - SUNNYSIDE 345KV CKT 1	717	789	0.04586	115.0324	GEN560112 1-G08_037_3 0.6900
FDNS	00NR	3	16WP	G15_033	FROM->TO	G14-057T 345.00 - SUNNYSIDE 345KV CKT 1	717	789	0.04605	115.0217	CIMARRON - MATHWSN7 345.00 345KV CKT 1
FDNS	00NR	3	16WP	G15_033	FROM->TO	G14-057T 345.00 - SUNNYSIDE 345KV CKT 1	717	789	0.04605	115.0217	CIMARRON - MATHWSN7 345.00 345KV CKT 2
FDNS	00NR	3	16WP	G15_033	FROM->TO	G14-057T 345.00 - SUNNYSIDE 345KV CKT 1	717	789	0.04586	115.0206	GEN562772 1-G15034_3 0.6900
FDNS	00NR	3	16WP	G15_033	FROM->TO	G14-057T 345.00 - SUNNYSIDE 345KV CKT 1	717	789	0.04591	115.0186	DRAPER LAKE - MIDWEST TAP 138KV CKT 1
FDNS	00NR	3	16WP	G15_033	FROM->TO	G14-057T 345.00 - SUNNYSIDE 345KV CKT 1	717	789	0.04519	115.0169	MAYSVLT4 138.00 - PRAIRIE POINT 138KV CKT 1
FDNS	00NR	3	16WP	G15_033	FROM->TO	G14-057T 345.00 - SUNNYSIDE 345KV CKT 1	717	789	0.04586	115.0111	GEN521103 1-BLUE CANYON WIND FARM
FDNS	00NR	3	16WP	G15_033	FROM->TO	G14-057T 345.00 - SUNNYSIDE 345KV CKT 1	717	789	0.04583	115.0038	HUGO POWER PLANT - VALLENT 138KV CKT 1
FDNS	00NR	3	16WP	G15_033	FROM->TO	G14-057T 345.00 - SUNNYSIDE 345KV CKT 1	717	789	0.04586	114.9963	GEN562691 1-G15_015_3 0.6900
FDNS	00NR	3	20WP	G15_033	FROM->TO	G14-057T 345.00 - SUNNYSIDE 345KV CKT 1	717	789	0.04379	114.9888	HEALDTON - LOCO 138KV CKT 1
FDNS	00NR	3	16WP	G15_033	FROM->TO	G14-057T 345.00 - SUNNYSIDE 345KV CKT 1	717	789	0.04594	114.9877	P12:138:OKGE:3TERM21
FDNS	00NR	3	16WP	G15_033	FROM->TO	G14-057T 345.00 - SUNNYSIDE 345KV CKT 1	717	789	0.04583	114.9873	GLASSES - RUSSETT 138KV CKT 1
FDNS	00NR	3	16WP	G15_033	FROM->TO	G14-057T 345.00 - SUNNYSIDE 345KV CKT 1	717	789	0.04583	114.9784	P12:138:WFEC:MSL11
FDNS	00NR	3	16WP	G15_033	FROM->TO	G14-057T 345.00 - SUNNYSIDE 345KV CKT 1	717	789	0.04583	114.9784	P12:138:WFEC-AEPW:PHAROAH4:LONEOAK4
FDNS	00NR	3	16WP	G15_033	FROM->TO	G14-057T 345.00 - SUNNYSIDE 345KV CKT 1	717	789	0.04586	114.9783	GEN520812 1-ANADRK5
FDNS	00NR	3	16WP	G15_033	FROM->TO	G14-057T 345.00 - SUNNYSIDE 345KV CKT 1	717	789	0.04586	114.9783	GEN520813 1-ANADRK6
FDNS	00NR	3	16WP	G15_033	FROM->TO	G14-057T 345.00 - SUNNYSIDE 345KV CKT 1	717	789	0.04552	114.9778	ARBUCKLE - SULPHR 4 138.00 138KV CKT 1
FDNS	00NR	3	16WP	G15_033	FROM->TO	G14-057T 345.00 - SUNNYSIDE 345KV CKT 1	717	789	0.04586	114.9705	GEN511961 1-DEMPSEY-WTG10.7000
FDNS	00NR	3	16WP	G15_033	FROM->TO	G14-057T 345.00 - SUNNYSIDE 345KV CKT 1	717	789	0.0458	114.9675	CROCKETT - TENASKA RUSK COUNTY 345KV CKT 1
FDNS	00NR	3	16WP	G15_033	FROM->TO	G14-057T 345.00 - SUNNYSIDE 345KV CKT 1	717	789	0.04586	114.9628	GEN672392 1-NBECGT1G 18.000
FDNS	00NR	3	16WP	G15_033	FROM->TO	G14-057T 345.00 - SUNNYSIDE 345KV CKT 1	717	789	0.0458	114.9623	LEBROCK - TENASKA RUSK COUNTY 345KV CKT 1
FDNS	00NR	3	16WP	G15_033	FROM->TO	G14-057T 345.00 - SUNNYSIDE 345KV CKT 1	717	789	0.04586	114.9592	GEN562074 1-G1149G1504 0.6900
FDNS	00NR	3	16WP	G15_033	FROM->TO	G14-057T 345.00 - SUNNYSIDE 345KV CKT 1	717	789	0.04586	114.9559	P12:069:OKGE:3TERM42
FDNS	00NR	3	20WP	G15_033	FROM->TO	G14-057T 345.00 - SUNNYSIDE 345KV CKT 1	717	789	0.04332	114.9517	ARCADIA - SEMINOLE 345KV CKT 1
FDNS	00NR	3	20WP	G15_033	FROM->TO	G14-057T 345.00 - SUNNYSIDE 345KV CKT 1	717	789	0.04371	114.9482	GEN509409 1-WILKES #3
FDNS	00NR	3	16WP	G15_033	FROM->TO	G14-057T 345.00 - SUNNYSIDE 345KV CKT 1	717	789	0.04588	114.9459	P12:138:WFEC:MSL08
FDNS	00NR	3	16WP	G15_033	FROM->TO	G14-057T 345.00 - SUNNYSIDE 345KV CKT 1	717	789	0.04586	114.9451	OKLAUNION 345/13.2KV TRANSFORMER CKT 1
FDNS	00NR	3	16WP	G15_033	FROM->TO	G14-057T 345.00 - SUNNYSIDE 345KV CKT 1	717	789	0.04586	114.9398	GEN615010 1-STANTON4
FDNS	00NR	3	16WP	G15_033	FROM->TO	G14-057T 345.00 - SUNNYSIDE 345KV CKT 1	717	789	0.04584	114.9362	GRPRAR1-LNX3345.00 - YANKTON 345KV CKT Z
FDNS	00NR	3	16WP	G15_033	FROM->TO	G14-057T 345.00 - SUNNYSIDE 345KV CKT 1	717	789	0.04584	114.933	GRPRAR1-LNX3345.00 - HOLT.CO3 345.00 345KV CKT 1
FDNS	00NR	3	16WP	G15_033	FROM->TO	G14-057T 345.00 - SUNNYSIDE 345KV CKT 1	717	789	0.04583	114.9323	DELL 500 - INDEPENDENCE 500KV CKT 1
FDNS	00NR	3	16WP	G15_033	FROM->TO	G14-057T 345.00 - SUNNYSIDE 345KV CKT 1	717	789	0.04586	114.9304	GEN629070 2-BEAVER CHANNEL GENERATORFOR UNIT NO 2
FDNS	00NR	3	16WP	G15_033	FROM->TO	G14-057T 345.00 - SUNNYSIDE 345KV CKT 1	717	789	0.04583	114.9212	CANEY CREEK - JOHNSON COUNTY 138KV CKT 1
FDNS	00NR	3	16WP	G15_033	FROM->TO	G14-057T 345.00 - SUNNYSIDE 345KV CKT 1	717	789	0.04586	114.9211	GEN615021 1-GRE-ER 14G 16.000
FDNS	00NR	3	16WP	G15_033	FROM->TO	G14-057T 345.00 - SUNNYSIDE 345KV CKT 1	717	789	0.04519	114.9205	PRAIRIE POINT - RATLIFF 138KV CKT 1
FDNS	00NR	3	16WP	G15_033	FROM->TO	G14-057T 345.00 - SUNNYSIDE 345KV CKT 1	717	789	0.04586	114.9073	INDEPENDENCE 500/26.0KV TRANSFORMER CKT 1
FDNS	00NR	3	16WP	G15_033	FROM->TO	G14-057T 345.00 - SUNNYSIDE 345KV CKT 1	717	789	0.04586	114.9024	GEN528361 1-MADDOX GEN #1
FDNS	00NR	3	16WP	G15_033	FROM->TO	G14-057T 345.00 - SUNNYSIDE 345KV CKT 1	717	789	0.0458	114.9019	CARTER - CHICKASAW 138KV CKT 1
FDNS	00NR	3	20WP	G15_033	FROM->TO	G14-057T 345.00 - SUNNYSIDE 345KV CKT 1	717	789	0.04371	114.8946	GEN501813 1-RODEMACHER UNIT 3
FDNS	00NR	3	16WP	G15_033	FROM->TO	G14-057T 345.00 - SUNNYSIDE 345KV CKT 1	717	789	0.04586	114.8942	GEN560183 1-REDHIL-WTG1 12.000
FDNS	00NR	3	16WP	G15_033	FROM->TO	G14-057T 345.00 - SUNNYSIDE 345KV CKT 1	717	789	0.04586	114.8927	GEN515443 1-MNCOWND1 0.7000
FDNS	00NR	3	16WP	G15_033	FROM->TO	G14-057T 345.00 - SUNNYSIDE 345KV CKT 1	717	789	0.04544	114.8871	MINGO - SETAB 345KV CKT 1
FDNS	00NR	3	16WP	G15_033	FROM->TO	G14-057T 345.00 - SUNNYSIDE 345KV CKT 1	717	789	0.04544	114.8871	MINGO - SETAB 345KV CKT 1
FDNS	00NR	3	16WP	G15_033	FROM->TO	G14-057T 345.00 - SUNNYSIDE 345KV CKT 1	717	789	0.04586	114.8869	GEN563242 1-G15090_3 0.6900
FDNS	00NR	3	16WP	G15_033	FROM->TO	G14-057T 345.00 - SUNNYSIDE 345KV CKT 1	717	789	0.04586	114.8836	GEN629071 1-BURLINGTON GENERATOR FOR UNIT NO 1 E
FDNS	00NR	3	16WP	G15_033	FROM->TO	G14-057T 345.00 - SUNNYSIDE 345KV CKT 1	717	789	0.04586	114.883	GEN532653 1-JEFFREY ENERGY CENTER UNIT 3
FDNS	00NR	3	16WP	G15_033	FROM->TO	G14-057T 345.00 - SUNNYSIDE 345KV CKT 1	717	789	0.04592	114.8826	MOREWOOD SW - NINE MILE 138KV CKT 1
FDNS	00NR	3	16WP	G15_033	FROM->TO	G14-057T 345.00 - SUNNYSIDE 345KV CKT 1	717	789	0.04584	114.8807	CANADIAN RIVER - MCALESTER SOUTH 138KV CKT 1
FDNS	00NR	3	16WP	G15_033	FROM->TO	G14-057T 345.00 - SUNNYSIDE 345KV CKT 1	717	789	0.04584	114.8807	CANADIAN RIVER - MCALESTER SOUTH 138KV CKT 1

SOLUTION	GROUP	SCENARIO	SEASON	SOURCE	DIRECTION	MONITORED ELEMENT	RATEA (MVA)	RATEB(MVA)	TDF	TC%LOADING (% MVA)	CONTINGENCY
FDNS	00NR	3	16WP	G15_033	FROM->TO	G14-057T 345.00 - SUNNYSIDE 345KV CKT 1	717	789	0.04584	114.8792	CANADIAN RIVER () 345/138/13.8KV TRANSFORMER CKT 1
FDNS	00NR	3	16WP	G15_033	FROM->TO	G14-057T 345.00 - SUNNYSIDE 345KV CKT 1	717	789	0.04584	114.8792	CANADIAN RIVER () 345/138/13.8KV TRANSFORMER CKT 1
FDNS	00NR	3	16WP	G15_033	FROM->TO	G14-057T 345.00 - SUNNYSIDE 345KV CKT 1	717	789	0.04569	114.879	ROCKY POINT - SPRINGDALE 138KV CKT 1
FDNS	00NR	3	16WP	G15_033	FROM->TO	G14-057T 345.00 - SUNNYSIDE 345KV CKT 1	717	789	0.04586	114.8779	GEN562902 1-G15052_3 0.6900
FDNS	00NR	3	16WP	G15_033	FROM->TO	G14-057T 345.00 - SUNNYSIDE 345KV CKT 1	717	789	0.0459	114.8755	ARKANSAS NUCLEAR ONE - FT SMITH 500KV CKT 1
FDNS	00NR	3	16WP	G15_033	FROM->TO	G14-057T 345.00 - SUNNYSIDE 345KV CKT 1	717	789	0.0459	114.8755	ARKANSAS NUCLEAR ONE - FT SMITH 500KV CKT 1
FDNS	00NR	3	16WP	G15_033	FROM->TO	G14-057T 345.00 - SUNNYSIDE 345KV CKT 1	717	789	0.04586	114.8602	BURLINGTON NO1 + NO 2 + NO 3 161/20.0KV TRANSFORMER CKT 1
FDNS	00NR	3	16WP	G15_033	FROM->TO	G14-057T 345.00 - SUNNYSIDE 345KV CKT 1	717	789	0.04613	114.8581	ALTUS JUNCTION - RUSSELL 138KV CKT 1
FDNS	00NR	3	16WP	G15_033	FROM->TO	G14-057T 345.00 - SUNNYSIDE 345KV CKT 1	717	789	0.04613	114.8581	ALTUS JUNCTION - RUSSELL 138KV CKT 1
FDNS	00NR	3	16WP	G15_033	FROM->TO	G14-057T 345.00 - SUNNYSIDE 345KV CKT 1	717	789	0.04582	114.8564	CHAMBER SPRINGS - CLARKSVILLE 345KV CKT 1
FDNS	00NR	3	16WP	G15_033	FROM->TO	G14-057T 345.00 - SUNNYSIDE 345KV CKT 1	717	789	0.04586	114.8485	P12:230:UMZB:# 112 #: NU IN SD. NU-RCDC & DRY CREEK XFMR
FDNS	00NR	3	16WP	G15_033	FROM->TO	G14-057T 345.00 - SUNNYSIDE 345KV CKT 1	717	789	0.04586	114.848	RCDC EAST 4230.00 - RED CEDAR DC 230KV CKT 1
FDNS	00NR	3	16WP	G15_033	FROM->TO	G14-057T 345.00 - SUNNYSIDE 345KV CKT 1	717	789	0.04581	114.8391	NORTHWEST TEXARKANA - WELSH 345KV CKT 1
FDNS	00NR	3	16WP	G15_033	FROM->TO	G14-057T 345.00 - SUNNYSIDE 345KV CKT 1	717	789	0.04581	114.8391	NORTHWEST TEXARKANA - WELSH 345KV CKT 1
FDNS	00NR	3	20WP	G15_033	FROM->TO	G14-057T 345.00 - SUNNYSIDE 345KV CKT 1	717	789	0.04379	114.8382	HEALDTON - RINGLING 138KV CKT 1
FDNS	00NR	3	16WP	G15_033	FROM->TO	G14-057T 345.00 - SUNNYSIDE 345KV CKT 1	717	789	0.04552	114.827	JOLLYVILLE - SULPHR 4 138.00 138KV CKT 1
FDNS	00NR	3	16WP	G15_033	FROM->TO	G14-057T 345.00 - SUNNYSIDE 345KV CKT 1	717	789	0.04586	114.8219	GEN562078 1-G11_051_3 0.6900
FDNS	00NR	3	16WP	G15_033	FROM->TO	G14-057T 345.00 - SUNNYSIDE 345KV CKT 1	717	789	0.04586	114.8146	THOMAS HILL 161/22.0KV TRANSFORMER CKT 1
FDNS	00NR	3	16WP	G15_033	FROM->TO	G14-057T 345.00 - SUNNYSIDE 345KV CKT 1	717	789	0.04586	114.8123	GEN514805 1-SOONER UNIT 1
FDNS	00NR	3	20WP	G15_033	FROM->TO	G14-057T 345.00 - SUNNYSIDE 345KV CKT 1	717	789	0.04488	114.8101	DUNCAN - OMPA-DUNCAN 840 138KV CKT 1
FDNS	00NR	3	20WP	G15_033	FROM->TO	G14-057T 345.00 - SUNNYSIDE 345KV CKT 1	717	789	0.04488	114.8101	DUNCAN - OMPA-DUNCAN 840 138KV CKT 1
FDNS	00NR	3	16WP	G15_033	FROM->TO	G14-057T 345.00 - SUNNYSIDE 345KV CKT 1	717	789	0.04586	114.8046	GEN562802 1-G15039_3 0.3570
FDNS	00NR	3	16WP	G15_033	FROM->TO	G14-057T 345.00 - SUNNYSIDE 345KV CKT 1	717	789	0.04586	114.8044	GEN524285 1-WILDORADO WIND GEN
FDNS	00NR	3	16WP	G15_033	FROM->TO	G14-057T 345.00 - SUNNYSIDE 345KV CKT 1	717	789	0.04612	114.8033	NORTHWEST - SPRING CREEK 345KV CKT 1
FDNS	00NR	3	16WP	G15_033	FROM->TO	G14-057T 345.00 - SUNNYSIDE 345KV CKT 1	717	789	0.04612	114.7966	SOONER - SPRING CREEK 345KV CKT 1
FDNS	00NR	3	16WP	G15_033	FROM->TO	G14-057T 345.00 - SUNNYSIDE 345KV CKT 1	717	789	0.04582	114.7941	KEO EHV - WEST MEMPHIS 500 500KV CKT 1
FDNS	00NR	3	16WP	G15_033	FROM->TO	G14-057T 345.00 - SUNNYSIDE 345KV CKT 1	717	789	0.04586	114.7932	GEN514806 1-SOONER UNIT 2
FDNS	00NR	3	16WP	G15_033	FROM->TO	G14-057T 345.00 - SUNNYSIDE 345KV CKT 1	717	789	0.04586	114.7881	GEN524295 1-SPNSPUR_WND10.6900
FDNS	00NR	3	16WP	G15_033	FROM->TO	G14-057T 345.00 - SUNNYSIDE 345KV CKT 1	717	789	0.04586	114.7787	GEN560331 1-G10-46 13.800
FDNS	00NR	3	16WP	G15_033	FROM->TO	G14-057T 345.00 - SUNNYSIDE 345KV CKT 1	717	789	0.04586	114.7776	GEN629072 4-LANSING GENERATOR FOR UNITS NO4 EIA CODE 1
FDNS	00NR	3	20WP	G15_033	FROM->TO	G14-057T 345.00 - SUNNYSIDE 345KV CKT 1	717	789	0.04415	114.7766	P12:138:WFEC:MSL01
FDNS	00NR	3	20WP	G15_033	FROM->TO	G14-057T 345.00 - SUNNYSIDE 345KV CKT 1	717	789	0.04415	114.7672	BRIDGECR 138.00 - SUNSHINE CANYON 138KV CKT 1
FDNS	00NR	3	20WP	G15_033	FROM->TO	G14-057T 345.00 - SUNNYSIDE 345KV CKT 1	717	789	0.04371	114.7619	GEN300006 1-NEW MADRID UNIT 1
FDNS	00NR	3	16WP	G15_033	FROM->TO	G14-057T 345.00 - SUNNYSIDE 345KV CKT 1	717	789	0.04552	114.7591	JOLLYVILLE - KERR MCGEE CIMARRON 138KV CKT 1
FDNS	00NR	3	16WP	G15_033	FROM->TO	G14-057T 345.00 - SUNNYSIDE 345KV CKT 1	717	789	0.04586	114.7587	GEN657749 1-YOUNG 1 GENERATOR
FDNS	00NR	3	16WP	G15_033	FROM->TO	G14-057T 345.00 - SUNNYSIDE 345KV CKT 1	717	789	0.04586	114.7556	GEN562587 1-G14_056_3 0.6900
FDNS	00NR	3	16WP	G15_033	FROM->TO	G14-057T 345.00 - SUNNYSIDE 345KV CKT 1	717	789	0.04592	114.7485	BEARCAT 138.00 - NINE MILE 138KV CKT 1
FDNS	00NR	3	16WP	G15_033	FROM->TO	G14-057T 345.00 - SUNNYSIDE 345KV CKT 1	717	789	0.04567	114.7475	CLARKSVILLE - MUSKOGEE 345KV CKT 1
FDNS	00NR	3	16WP	G15_033	FROM->TO	G14-057T 345.00 - SUNNYSIDE 345KV CKT 1	717	789	0.04567	114.7475	CLARKSVILLE - MUSKOGEE 345KV CKT 1
FDNS	00NR	3	16WP	G15_033	FROM->TO	G14-057T 345.00 - SUNNYSIDE 345KV CKT 1	717	789	0.04586	114.7447	GEN562269 1-G12-020-1 0.6900
FDNS	00NR	3	20WP	G15_033	FROM->TO	G14-057T 345.00 - SUNNYSIDE 345KV CKT 1	717	789	0.04371	114.7422	GEN300007 1-NEW MADRID UNIT 2
FDNS	00NR	3	20WP	G15_033	FROM->TO	G14-057T 345.00 - SUNNYSIDE 345KV CKT 1	717	789	0.04368	114.7368	LACYGNE - WAVERLY7 345.00 345KV CKT 1
FDNS	00NR	3	16WP	G15_033	FROM->TO	G14-057T 345.00 - SUNNYSIDE 345KV CKT 1	717	789	0.04586	114.72	GEN562882 1-G15047_3 0.6900
FDNS	00NR	3	16WP	G15_033	FROM->TO	G14-057T 345.00 - SUNNYSIDE 345KV CKT 1	717	789	0.04552	114.7089	ARBWIND4 138.00 - KERR MCGEE CIMARRON 138KV CKT 1
FDNS	00NR	3	16WP	G15_033	FROM->TO	G14-057T 345.00 - SUNNYSIDE 345KV CKT 1	717	789	0.04586	114.6995	GEN562270 1-G12-020-2 0.6900
FDNS	00NR	3	16WP	G15_033	FROM->TO	G14-057T 345.00 - SUNNYSIDE 345KV CKT 1	717	789	0.04586	114.6895	GEN681522 3-GENOA 3
FDNS	00NR	3	16WP	G15_033	FROM->TO	G14-057T 345.00 - SUNNYSIDE 345KV CKT 1	717	789	0.04586	114.687	GEN562974 1-G15060_5 0.6900
FDNS	00NR	3	16WP	G15_033	FROM->TO	G14-057T 345.00 - SUNNYSIDE 345KV CKT 1	717	789	0.04586	114.6858	GEN563102 1-G15075_3 0.5500
FDNS	00NR	3	20WP	G15_033	FROM->TO	G14-057T 345.00 - SUNNYSIDE 345KV CKT 1	717	789	0.04371	114.6847	GEN335206 1-NELSON UNIT 6
FDNS	00NR	3	16WP	G15_033	FROM->TO	G14-057T 345.00 - SUNNYSIDE 345KV CKT 1	717	789	0.04586	114.6816	GEN562812 1-G15040_3 0.3570
FDNS	00NR	3	20WP	G15_033	FROM->TO	G14-057T 345.00 - SUNNYSIDE 345KV CKT 1	717	789	0.04111	114.6797	Hitchland Interchange - WALKTAP7 345.00 345KV CKT 1
FDNS	00NR	3	20WP	G15_033	FROM->TO	G14-057T 345.00 - SUNNYSIDE 345KV CKT 1	717	789	0.04111	114.6797	Hitchland Interchange - WALKTAP7 345.00 345KV CKT 1
FDNS	00NR	3	16WP	G15_033	FROM->TO	G14-057T 345.00 - SUNNYSIDE 345KV CKT 1	717	789	0.04586	114.6778	GEN562973 1-G15060_4 0.6900
FDNS	00NR	3	20WP	G15_033	FROM->TO	G14-057T 345.00 - SUNNYSIDE 345KV CKT 1	717	789	0.04371	114.6774	GEN520947 1-HUGO1
FDNS	00NR	3	16WP	G15_033	FROM->TO	G14-057T 345.00 - SUNNYSIDE 345KV CKT 1	717	789	0.04586	114.6736	GEN563062 1-G15071_3 0.6900
FDNS	00NR	3	16WP	G15_033	FROM->TO	G14-057T 345.00 - SUNNYSIDE 345KV CKT 1	717	789	0.04586	114.6713	GEN563132 1-G15078_3 0.3570
FDNS	00NR	3	20WP	G15_033	FROM->TO	G14-057T 345.00 - SUNNYSIDE 345KV CKT 1	717	789	0.04111	114.6665	P12:345:SPS:J07.1.FINN.HITCH
FDNS	00NR	3	20WP	G15_033	FROM->TO	G14-057T 345.00 - SUNNYSIDE 345KV CKT 1	717	789	0.04379	114.6643	RINGLING - SOUTH WILSON 138KV CKT 1
FDNS	00NR	3	16WP	G15_033	FROM->TO	G14-057T 345.00 - SUNNYSIDE 345KV CKT 1	717	789	0.04592	114.6639	P12:138:WFEC:MSL14
FDNS	00NR	3	20WP	G15_033	FROM->TO	G14-057T 345.00 - SUNNYSIDE 345KV CKT 1	717	789	0.04285	114.6576	G11_051T 345.00 - TATONGA7 345.00 345KV CKT 1
FDNS	00NR	3	16WP	G15_033	FROM->TO	G14-057T 345.00 - SUNNYSIDE 345KV CKT 1	717	789	0.04592	114.6537	BEARCAT 138.00 - MOORELAND 138KV CKT 1
FDNS	00NR	3	16WP	G15_033	FROM->TO	G14-057T 345.00 - SUNNYSIDE 345KV CKT 1	717	789	0.04576	114.63	BROWN - RUSSETT 138KV CKT 1
FDNS	00NR	3	16WP	G15_033	FROM->TO	G14-057T 345.00 - SUNNYSIDE 345KV CKT 1	717	789	0.04728	114.6299	P12:138:AEPW:112GORE4:SNYDER-4
FDNS	00NR	3	16WP	G15_033	FROM->TO	G14-057T 345.00 - SUNNYSIDE 345KV CKT 1	717	789	0.04556	114.6278	CHICKASAW - TOTAL 138KV CKT 1
FDNS	00NR	3	20WP	G15_033	FROM->TO	G14-057T 345.00 - SUNNYSIDE 345KV CKT 1	717	789	0.04368	114.6206	WAVERLY7 345.00 - WOLF CREEK 345KV CKT 1
FDNS	00NR	3	16WP	G15_033	FROM->TO	G14-057T 345.00 - SUNNYSIDE 345KV CKT 1	717	789	0.04572	114.6147	RUSSETT - SPRINGDALE 138KV CKT 1
FDNS	00NR	3	16WP	G15_033	FROM->TO	G14-057T 345.00 - SUNNYSIDE 345KV CKT 1	717	789	0.04586	114.5995	GEN526331 1-JONES GEN #1 22 KV
FDNS	00NR	3	16WP	G15_033	FROM->TO	G14-057T 345.00 - SUNNYSIDE 345KV CKT 1	717	789	0.04586	114.5994	GEN526332 1-JONES GEN #2 21 KV
FDNS	00NR	3	16WP	G15_033	FROM->TO	G14-057T 345.00 - SUNNYSIDE 345KV CKT 1	717	789	0.04584	114.5891	P12:138:WFEC:MSL07
FDNS	00NR	3	16WP	G15_033	FROM->TO	G14-057T 345.00 - SUNNYSIDE 345KV CKT 1	717	789	0.04584	114.5891	P12:138:WFEC-AEPW:HUGOPP4:ATOKA--4
FDNS	00NR	3	16WP	G15_033	FROM->TO	G14-057T 345.00 - SUNNYSIDE 345KV CKT 1	717	789	0.04563	114.5887	ROCKY POINT - SUNNYSIDE 138KV CKT 1
FDNS	00NR	3	16WP	G15_033	FROM->TO	G14-057T 345.00 - SUNNYSIDE 345KV CKT 1	717	789	0.04586	114.584	GEN345671 2-1RUSH G2 18.000
FDNS	00NR	3	16WP	G15_033	FROM->TO	G14-057T 345.00 - SUNNYSIDE 345KV CKT 1	717	789	0.04586	114.5824	GEN562550 1-G14_040_3 0.6900
FDNS	00NR	3	16WP	G15_033	FROM->TO	G14-057T 345.00 - SUNNYSIDE 345KV CKT 1	717	789	0.04586	114.5822	GEN345670 1-1RUSH G1 18.000
FDNS	00NR	3	16WP	G15_033	FROM->TO	G14-057T 345.00 - SUNNYSIDE 345KV CKT 1	717	789	0.04586	114.5745	4SIOUX 1 138.00 138/18.0KV TRANSFORMER CKT 1
FDNS	00NR	3	16WP	G15_033	FROM->TO	G14-057T 345.00 - SUNNYSIDE 345KV CKT 1	717	789	0.04586	114.5635	GEN511962 2-RKYRDGW2-1 0.7000
FDNS	00NR	3	16WP	G15_033	FROM->TO	G14-057T 345.00 - SUNNYSIDE 345KV CKT 1	717	789	0.04576	114.562	RUSSETT - RUSSETT 138KV CKT 1
FDNS	00NR	3	16WP	G15_033	FROM->TO	G14-057T 345.00 - SUNNYSIDE 345KV CKT 1	717	789	0.04586	114.5598	CLAY BOSWELL 230/20.9KV TRANSFORMER CKT 1
FDNS	00NR	3	16WP	G15_033	FROM->TO	G14-057T 345.00 - SUNNYSIDE 345KV CKT 1	717	789	0.04586	114.5564	GEN560105 1-G08-22 0.6900

SOLUTION	GROUP	SCENARIO	SEASON	SOURCE	DIRECTION	MONITORED ELEMENT	RATEA (MVA)	RATEB(MVA)	TDF	TC%LOADING (% MVA)	CONTINGENCY
FDNS	00NR	3	20WP	G15_033	FROM->TO	G14-057T 345.00 - SUNNYSIDE 345KV CKT 1	717	789	0.04367	114.5559	ELDORADO EHV - MOUNT OLIVE 500KV CKT 1
FDNS	00NR	3	16WP	G15_033	FROM->TO	G14-057T 345.00 - SUNNYSIDE 345KV CKT 1	717	789	0.04588	114.5528	P12:138:WFEC:MSL16
FDNS	00NR	3	16WP	G15_033	FROM->TO	G14-057T 345.00 - SUNNYSIDE 345KV CKT 1	717	789	0.04586	114.5391	GEN563192 1-G15084_3 0.5500
FDNS	00NR	3	20WP	G15_033	FROM->TO	G14-057T 345.00 - SUNNYSIDE 345KV CKT 1	717	789	0.04377	114.5384	P12:138:AEPW:SHERID4:112GORE4
FDNS	00NR	3	16WP	G15_033	FROM->TO	G14-057T 345.00 - SUNNYSIDE 345KV CKT 1	717	789	0.04586	114.5355	GEN521112 1-ORME3 13.800
FDNS	00NR	3	16WP	G15_033	FROM->TO	G14-057T 345.00 - SUNNYSIDE 345KV CKT 1	717	789	0.04586	114.5296	GEN672321 1-SHAND GENERATOR 1
FDNS	00NR	3	16WP	G15_033	FROM->TO	G14-057T 345.00 - SUNNYSIDE 345KV CKT 1	717	789	0.04586	114.5292	GEN562892 1-G15048_3 0.6900
FDNS	00NR	3	16WP	G15_033	FROM->TO	G14-057T 345.00 - SUNNYSIDE 345KV CKT 1	717	789	0.04539	114.5279	ARDMORE WEST - CARTER 138KV CKT 1
FDNS	00NR	3	16WP	G15_033	FROM->TO	G14-057T 345.00 - SUNNYSIDE 345KV CKT 1	717	789	0.04586	114.523	GEN527882 1-CUNNINGHAM GEN #2 20 KV
FDNS	00NR	3	20WP	G15_033	FROM->TO	G14-057T 345.00 - SUNNYSIDE 345KV CKT 1	717	789	0.04371	114.5158	DOLET HILLS 345/24.0KV TRANSFORMER CKT 1
FDNS	00NR	3	16WP	G15_033	FROM->TO	G14-057T 345.00 - SUNNYSIDE 345KV CKT 1	717	789	0.04586	114.5059	GEN672310 1-POPLAR RIVER GENERATOR 1
FDNS	00NR	3	16WP	G15_033	FROM->TO	G14-057T 345.00 - SUNNYSIDE 345KV CKT 1	717	789	0.04586	114.5059	GEN672311 2-POPLAR RIVER GENERATOR 2
FDNS	00NR	3	20WP	G15_033	FROM->TO	G14-057T 345.00 - SUNNYSIDE 345KV CKT 1	717	789	0.04371	114.5008	GEN501812 1-RODEMACHER UNIT 2
FDNS	00NR	3	16WP	G15_033	FROM->TO	G14-057T 345.00 - SUNNYSIDE 345KV CKT 1	717	789	0.04586	114.498	GEN672306 6-BOUNDARY DAM GENERATOR 6
FDNS	00NR	3	16WP	G15_033	FROM->TO	G14-057T 345.00 - SUNNYSIDE 345KV CKT 1	717	789	0.04583	114.4734	P12:138:WFEC-AEPW:GOLDENSW4:CRAIGJT4
FDNS	00NR	3	16WP	G15_033	FROM->TO	G14-057T 345.00 - SUNNYSIDE 345KV CKT 1	717	789	0.04537	114.4716	SUNNYSIDE (SUNNYSD5) 345/138/13.8KV TRANSFORMER CKT 1
FDNS	00NR	3	16WP	G15_033	FROM->TO	G14-057T 345.00 - SUNNYSIDE 345KV CKT 1	717	789	0.04586	114.4707	GEN562512 1-G14_020_3 0.6900
FDNS	00NR	3	16WP	G15_033	FROM->TO	G14-057T 345.00 - SUNNYSIDE 345KV CKT 1	717	789	0.04586	114.4554	GEN523461 1-BLACKHAWK GEN #1
FDNS	00NR	3	16WP	G15_033	FROM->TO	G14-057T 345.00 - SUNNYSIDE 345KV CKT 1	717	789	0.04586	114.4553	GEN523462 1-BLACKHAWK GEN #2
FDNS	00NR	3	20WP	G15_033	FROM->TO	G14-057T 345.00 - SUNNYSIDE 345KV CKT 1	717	789	0.04345	114.4366	PARK LANE - SEMINOLE 138KV CKT 1
FDNS	00NR	3	16WP	G15_033	FROM->TO	G14-057T 345.00 - SUNNYSIDE 345KV CKT 1	717	789	0.04586	114.4319	GEN344895 2-1LAB G2 20.000
FDNS	00NR	3	16WP	G15_033	FROM->TO	G14-057T 345.00 - SUNNYSIDE 345KV CKT 1	717	789	0.04539	114.4124	ARDMORE WEST - UNIROYAL 138KV CKT 1
FDNS	00NR	3	16WP	G15_033	FROM->TO	G14-057T 345.00 - SUNNYSIDE 345KV CKT 1	717	789	0.04585	114.4048	P12:138:AEPW-SWPA:LONEOAK4:TUPELO4
FDNS	00NR	3	16WP	G15_033	FROM->TO	G14-057T 345.00 - SUNNYSIDE 345KV CKT 1	717	789	0.04585	114.4048	P12:138:WFEC:MSL06
FDNS	00NR	3	20WP	G15_033	FROM->TO	G14-057T 345.00 - SUNNYSIDE 345KV CKT 1	717	789	0.04339	114.4034	THISTLE7 345.00 - WOODWARD DISTRICT EHV 345KV CKT 1
FDNS	00NR	3	20WP	G15_033	FROM->TO	G14-057T 345.00 - SUNNYSIDE 345KV CKT 1	717	789	0.04339	114.4034	THISTLE7 345.00 - WOODWARD DISTRICT EHV 345KV CKT 1
FDNS	00NR	3	20WP	G15_033	FROM->TO	G14-057T 345.00 - SUNNYSIDE 345KV CKT 1	717	789	0.04339	114.4034	THISTLE7 345.00 - WOODWARD DISTRICT EHV 345KV CKT 2
FDNS	00NR	3	20WP	G15_033	FROM->TO	G14-057T 345.00 - SUNNYSIDE 345KV CKT 1	717	789	0.04339	114.4034	THISTLE7 345.00 - WOODWARD DISTRICT EHV 345KV CKT 2
FDNS	00NR	3	16WP	G15_033	FROM->TO	G14-057T 345.00 - SUNNYSIDE 345KV CKT 1	717	789	0.04586	114.3995	GEN344896 3-1LAB G3 20.000
FDNS	00NR	3	16WP	G15_033	FROM->TO	G14-057T 345.00 - SUNNYSIDE 345KV CKT 1	717	789	0.04586	114.3983	GEN344894 1-1LAB G1 20.000
FDNS	00NR	3	16WP	G15_033	FROM->TO	G14-057T 345.00 - SUNNYSIDE 345KV CKT 1	717	789	0.04586	114.3967	GEN344897 4-1LAB G4 20.000
FDNS	00NR	3	16WP	G15_033	FROM->TO	G14-057T 345.00 - SUNNYSIDE 345KV CKT 1	717	789	0.04562	114.393	P12:138:OKGE:3TERM40
FDNS	00NR	3	16WP	G15_033	FROM->TO	G14-057T 345.00 - SUNNYSIDE 345KV CKT 1	717	789	0.04586	114.3926	GEN681542 6-JP MADGETT
FDNS	00NR	3	16WP	G15_033	FROM->TO	G14-057T 345.00 - SUNNYSIDE 345KV CKT 1	717	789	0.04541	114.3804	CARTRCO4 138.00 - RATLIFF 138KV CKT 1
FDNS	00NR	3	20WP	G15_033	FROM->TO	G14-057T 345.00 - SUNNYSIDE 345KV CKT 1	717	789	0.04379	114.373	MARIETTA - SOUTH WILSON 138KV CKT 1
FDNS	00NR	3	20WP	G15_033	FROM->TO	G14-057T 345.00 - SUNNYSIDE 345KV CKT 1	717	789	0.04365	114.3717	WEBRE - WELLS 500KV CKT 1
FDNS	00NR	3	20WP	G15_033	FROM->TO	G14-057T 345.00 - SUNNYSIDE 345KV CKT 1	717	789	0.04357	114.3646	CANEYRV7 345.00 - NEOSHO 345KV CKT 1
FDNS	00NR	3	16WP	G15_033	FROM->TO	G14-057T 345.00 - SUNNYSIDE 345KV CKT 1	717	789	0.04586	114.362	GEN563162 1-G15081_3 0.6900
FDNS	00NR	3	16WP	G15_033	FROM->TO	G14-057T 345.00 - SUNNYSIDE 345KV CKT 1	717	789	0.04586	114.3586	GEN511853 1-COMANCHE #3
FDNS	00NR	3	20WP	G15_033	FROM->TO	G14-057T 345.00 - SUNNYSIDE 345KV CKT 1	717	789	0.04371	114.3584	GEN515564 1-ORIGIN11 0.6900
FDNS	00NR	3	20WP	G15_033	FROM->TO	G14-057T 345.00 - SUNNYSIDE 345KV CKT 1	717	789	0.04371	114.3584	GEN515565 1-ORIGIN21 0.6900
FDNS	00NR	3	16WP	G15_033	FROM->TO	G14-057T 345.00 - SUNNYSIDE 345KV CKT 1	717	789	0.04586	114.3583	GEN521110 1-ORME1 13.800
FDNS	00NR	3	16WP	G15_033	FROM->TO	G14-057T 345.00 - SUNNYSIDE 345KV CKT 1	717	789	0.04586	114.3583	GEN521111 1-ORME2 13.800
FDNS	00NR	3	16WP	G15_033	FROM->TO	G14-057T 345.00 - SUNNYSIDE 345KV CKT 1	717	789	0.04618	114.3481	G15085_T 138.00 - RUSSELL 138KV CKT 1
FDNS	00NR	3	20WP	G15_033	FROM->TO	G14-057T 345.00 - SUNNYSIDE 345KV CKT 1	717	789	0.04371	114.3434	GEN334440 1-SABINE UNIT 4
FDNS	00NR	3	20WP	G15_033	FROM->TO	G14-057T 345.00 - SUNNYSIDE 345KV CKT 1	717	789	0.04384	114.3423	REDBUD - RIVERSIDE STATION 345KV CKT 1
FDNS	00NR	3	20WP	G15_033	FROM->TO	G14-057T 345.00 - SUNNYSIDE 345KV CKT 1	717	789	0.04384	114.3423	REDBUD - RIVERSIDE STATION 345KV CKT 1
FDNS	00NR	3	16WP	G15_033	FROM->TO	G14-057T 345.00 - SUNNYSIDE 345KV CKT 1	717	789	0.04586	114.3406	GEN563292 1-G15095_3 0.6900
FDNS	00NR	3	16WP	G15_033	FROM->TO	G14-057T 345.00 - SUNNYSIDE 345KV CKT 1	717	789	0.04586	114.3402	GEN562699 1-G15_018_3 0.6900
FDNS	00NR	3	20WP	G15_033	FROM->TO	G14-057T 345.00 - SUNNYSIDE 345KV CKT 1	717	789	0.04371	114.3256	P12:161:AEPW:DYESS 5:HYLAND 5
FDNS	00NR	3	20WP	G15_033	FROM->TO	G14-057T 345.00 - SUNNYSIDE 345KV CKT 1	717	789	0.04371	114.3125	DELL 500 - ESSEX UNIT 2 500KV CKT Z1
FDNS	06ALL	3	17SP	G15_033	FROM->TO	G14-057T 345.00 - SUNNYSIDE 345KV CKT 1	717	789	0.22662	114.3089	GRACEMONT - MINCO 345KV CKT 1
FDNS	00NR	3	16WP	G15_033	FROM->TO	G14-057T 345.00 - SUNNYSIDE 345KV CKT 1	717	789	0.04586	114.3065	ALMA 161 161/24.0KV TRANSFORMER CKT 1
FDNS	00NR	3	16WP	G15_033	FROM->TO	G14-057T 345.00 - SUNNYSIDE 345KV CKT 1	717	789	0.04586	114.304	GEN511852 1-COMANCHE #2
FDNS	00NR	3	16WP	G15_033	FROM->TO	G14-057T 345.00 - SUNNYSIDE 345KV CKT 1	717	789	0.04586	114.2929	GEN562861 1-G15045_2 0.4800
FDNS	00NR	3	16WP	G15_033	FROM->TO	G14-057T 345.00 - SUNNYSIDE 345KV CKT 1	717	789	0.04586	114.2875	GEN661015 1-COYOTE
FDNS	00NR	3	20WP	G15_033	FROM->TO	G14-057T 345.00 - SUNNYSIDE 345KV CKT 1	717	789	0.04371	114.2873	P12:69:AEPW:L.E.S.-2:LAW WC2
FDNS	00NR	3	20WP	G15_033	FROM->TO	G14-057T 345.00 - SUNNYSIDE 345KV CKT 1	717	789	0.04379	114.2851	P12:138:WFEC:MSL17
FDNS	00NR	3	20WP	G15_033	FROM->TO	G14-057T 345.00 - SUNNYSIDE 345KV CKT 1	717	789	0.04371	114.2763	GEN590011 2-ERCOT EQUIVALENCE
FDNS	00NR	3	20WP	G15_033	FROM->TO	G14-057T 345.00 - SUNNYSIDE 345KV CKT 1	717	789	0.082	114.2681	GRACEMONT - LAWTON EASTSIDE 345KV CKT 1
FDNS	00NR	3	20WP	G15_033	FROM->TO	G14-057T 345.00 - SUNNYSIDE 345KV CKT 1	717	789	0.082	114.2681	GRACEMONT - LAWTON EASTSIDE 345KV CKT 1
FDNS	00NR	3	16WP	G15_033	FROM->TO	G14-057T 345.00 - SUNNYSIDE 345KV CKT 1	717	789	0.04586	114.2639	GEN520811 1-ANADRK4
FDNS	00NR	3	16WP	G15_033	FROM->TO	G14-057T 345.00 - SUNNYSIDE 345KV CKT 1	717	789	0.04586	114.2392	GEN563122 1-G15077_3 0.3850
FDNS	00NR	3	16WP	G15_033	FROM->TO	G14-057T 345.00 - SUNNYSIDE 345KV CKT 1	717	789	0.04763	114.2369	GRAPEVINE INTERCHANGE - STATELINE INTERCHANGE 230KV CKT 1
FDNS	00NR	3	16WP	G15_033	FROM->TO	G14-057T 345.00 - SUNNYSIDE 345KV CKT 1	717	789	0.04763	114.2369	GRAPEVINE INTERCHANGE - STATELINE INTERCHANGE 230KV CKT 1
FDNS	00NR	3	16WP	G15_033	FROM->TO	G14-057T 345.00 - SUNNYSIDE 345KV CKT 1	717	789	0.04728	114.2363	CACHE - SNYDER 138KV CKT 1
FDNS	00NR	3	20WP	G15_033	FROM->TO	G14-057T 345.00 - SUNNYSIDE 345KV CKT 1	717	789	0.04561	114.2253	LAWTON EASTSIDE (LES 5) 345/138/13.8KV TRANSFORMER CKT 2
FDNS	00NR	3	20WP	G15_033	FROM->TO	G14-057T 345.00 - SUNNYSIDE 345KV CKT 1	717	789	0.04561	114.2253	LAWTON EASTSIDE (LES 5) 345/138/13.8KV TRANSFORMER CKT 2
FDNS	00NR	3	20WP	G15_033	FROM->TO	G14-057T 345.00 - SUNNYSIDE 345KV CKT 1	717	789	0.04365	114.2119	ELDORADO EHV - SHERIDAN EHV 500KV CKT 1
FDNS	00NR	3	20WP	G15_033	FROM->TO	G14-057T 345.00 - SUNNYSIDE 345KV CKT 1	717	789	0.04371	114.2086	GEN590010 1-ERCOT EQUIVALENCE
FDNS	00NR	3	16WP	G15_033	FROM->TO	G14-057T 345.00 - SUNNYSIDE 345KV CKT 1	717	789	0.04582	114.2053	P12:138:WFEC:MSL15
FDNS	00NR	3	20WP	G15_033	FROM->TO	G14-057T 345.00 - SUNNYSIDE 345KV CKT 1	717	789	0.04357	114.2051	CANEYRV7 345.00 - LATHAMS7 345.00 345KV CKT 1
FDNS	00NR	3	20WP	G15_033	FROM->TO	G14-057T 345.00 - SUNNYSIDE 345KV CKT 1	717	789	0.04367	114.1959	PAOLI - PAYNE 138.00 138KV CKT 1
FDNS	00NR	3	20WP	G15_033	FROM->TO	G14-057T 345.00 - SUNNYSIDE 345KV CKT 1	717	789	0.04369	114.1958	P12:138:WFEC:MSL02
FDNS	00NR	3	16WP	G15_033	FROM->TO	G14-057T 345.00 - SUNNYSIDE 345KV CKT 1	717	789	0.04539	114.1912	SUNNYSIDE - UNIROYAL 138KV CKT 1
FDNS	00NR	3	20WP	G15_033	FROM->TO	G14-057T 345.00 - SUNNYSIDE 345KV CKT 1	717	789	0.04377	114.1737	P12:138:AEPW:112GORE4:L.E.S.-4
FDNS	00NR	3	16WP	G15_033	FROM->TO	G14-057T 345.00 - SUNNYSIDE 345KV CKT 1	717	789	0.04586	114.1733	GEN657748 1-YOUNG 2 GENERATOR
FDNS	00NR	3	20WP	G15_033	FROM->TO	G14-057T 345.00 - SUNNYSIDE 345KV CKT 1	717	789	0.04386	114.1651	CIVIT - PAOLI 138KV CKT 1
FDNS	00NR	3	16WP	G15_033	FROM->TO	G14-057T 345.00 - SUNNYSIDE 345KV CKT 1	717	789	0.04626	114.164	G15063_T 345.00 - MATHWSN7 345.00 345KV CKT 1

SOLUTION	GROUP	SCENARIO	SEASON	SOURCE	DIRECTION	MONITORED ELEMENT	RATEA (MVA)	RATEB(MVA)	TDF	TC%LOADING (% MVA)	CONTINGENCY
FDNS	00NR	3	20WP	G15_033	FROM->TO	G14-057T 345.00 - SUNNYSIDE 345KV CKT 1	717	789	0.04371	114.1555	GEN509408 1-WILKES #2
FDNS	00NR	3	20WP	G15_033	FROM->TO	G14-057T 345.00 - SUNNYSIDE 345KV CKT 1	717	789	0.04371	114.1534	GEN506754 1-LEBROCK STEAM 1
FDNS	00NR	3	16WP	G15_033	FROM->TO	G14-057T 345.00 - SUNNYSIDE 345KV CKT 1	717	789	0.0462	114.1498	P12:138:AEPW:SHAM4WT:CHILD4WT
FDNS	00NR	3	16WP	G15_033	FROM->TO	G14-057T 345.00 - SUNNYSIDE 345KV CKT 1	717	789	0.04761	114.1356	GRAPEVINE INTERCHANGE - NICHOLS STATION 230KV CKT 1
FDNS	00NR	3	16WP	G15_033	FROM->TO	G14-057T 345.00 - SUNNYSIDE 345KV CKT 1	717	789	0.04761	114.1356	GRAPEVINE INTERCHANGE - NICHOLS STATION 230KV CKT 1
FDNS	00NR	3	20WP	G15_033	FROM->TO	G14-057T 345.00 - SUNNYSIDE 345KV CKT 1	717	789	0.04371	114.121	ANADARKO - GEORGIA 138KV CKT 1
FDNS	00NR	3	16WP	G15_033	FROM->TO	G14-057T 345.00 - SUNNYSIDE 345KV CKT 1	717	789	0.04586	114.12	GEN562992 1-G15063_3 0.6900
FDNS	00NR	3	16WP	G15_033	FROM->TO	G14-057T 345.00 - SUNNYSIDE 345KV CKT 1	717	789	0.04586	114.094	GEN532751 1-WOLF CREEK GENERATING STATION UNIT 1
FDNS	00NR	3	16WP	G15_033	FROM->TO	G14-057T 345.00 - SUNNYSIDE 345KV CKT 1	717	789	0.04594	114.0782	CANEY CREEK - TEXOMA JCT 138KV CKT 1
FDNS	00NR	3	20WP	G15_033	FROM->TO	G14-057T 345.00 - SUNNYSIDE 345KV CKT 1	717	789	0.04356	114.0769	MATHWSN7 345.00 - NORTHWEST 345KV CKT 1
FDNS	00NR	3	20WP	G15_033	FROM->TO	G14-057T 345.00 - SUNNYSIDE 345KV CKT 1	717	789	0.04371	114.058	GEN336252 1-NINEMILE POINT UNIT#5
FDNS	00NR	3	20WP	G15_033	FROM->TO	G14-057T 345.00 - SUNNYSIDE 345KV CKT 1	717	789	0.04404	114.0499	P12:138:AEPW-OGE:CORNVIL4:MAUD 4
FDNS	00NR	3	16WP	G15_033	FROM->TO	G14-057T 345.00 - SUNNYSIDE 345KV CKT 1	717	789	0.04586	114.0474	GEN563173 1-G15082_3 0.6900
FDNS	00NR	3	20WP	G15_033	FROM->TO	G14-057T 345.00 - SUNNYSIDE 345KV CKT 1	717	789	0.04371	114.0465	FRONTIER - GRIMES 345KV CKT 1
FDNS	00NR	3	16WP	G15_033	FROM->TO	G14-057T 345.00 - SUNNYSIDE 345KV CKT 1	717	789	0.04586	114.0424	GEN562952 1-G15057_3 0.6500
FDNS	00NR	3	20WP	G15_033	FROM->TO	G14-057T 345.00 - SUNNYSIDE 345KV CKT 1	717	789	0.04371	114.0383	FLETCHER - GEORGIA 138KV CKT 1
FDNS	00NR	3	16WP	G15_033	FROM->TO	G14-057T 345.00 - SUNNYSIDE 345KV CKT 1	717	789	0.04586	114.0369	GEN562704 1-G15_020_3 0.3550
FDNS	00NR	3	20WP	G15_033	FROM->TO	G14-057T 345.00 - SUNNYSIDE 345KV CKT 1	717	789	0.04376	114.033	TUPELO - TUPELO TAP 138KV CKT 1
FDNS	00NR	3	20WP	G15_033	FROM->TO	G14-057T 345.00 - SUNNYSIDE 345KV CKT 1	717	789	0.04285	114.0235	G11_051T 345.00 - WOODWARD DISTRICT EHV 345KV CKT 1
FDNS	00NR	3	20WP	G15_033	FROM->TO	G14-057T 345.00 - SUNNYSIDE 345KV CKT 1	717	789	0.04386	114.0225	CIVIT - STRATFORD 138KV CKT 1
FDNS	00NR	3	20WP	G15_033	FROM->TO	G14-057T 345.00 - SUNNYSIDE 345KV CKT 1	717	789	0.04371	114.0102	GEN503909 1-FULTONU1 1 16.000
FDNS	00NR	3	16WP	G15_033	FROM->TO	G14-057T 345.00 - SUNNYSIDE 345KV CKT 1	717	789	0.04586	114.008	GEN620315 1-BIG STONE GEN
FDNS	00NR	3	20WP	G15_033	FROM->TO	G14-057T 345.00 - SUNNYSIDE 345KV CKT 1	717	789	0.04371	114.0052	GEN335204 1-NELSON UNIT 4
FDNS	00NR	3	20WP	G15_033	FROM->TO	G14-057T 345.00 - SUNNYSIDE 345KV CKT 1	717	789	0.04371	113.9982	GEN334441 1-SABINE UNIT 5
FDNS	00NR	3	20WP	G15_033	FROM->TO	G14-057T 345.00 - SUNNYSIDE 345KV CKT 1	717	789	0.04357	113.9966	LATHAMS7 345.00 - ROSE HILL 345KV CKT 1
FDNS	00NR	3	20WP	G15_033	FROM->TO	G14-057T 345.00 - SUNNYSIDE 345KV CKT 1	717	789	0.04368	113.9827	EMPIRE - FLETCHER 138KV CKT 1
FDNS	00NR	3	16WP	G15_033	FROM->TO	G14-057T 345.00 - SUNNYSIDE 345KV CKT 1	717	789	0.04586	113.9736	GEN562710 1-G15_022_3 0.5500
FDNS	00NR	3	20WP	G15_033	FROM->TO	G14-057T 345.00 - SUNNYSIDE 345KV CKT 1	717	789	0.04404	113.9692	BLANCHARD - CORNVILLE 138KV CKT 1
FDNS	00NR	3	20WP	G15_033	FROM->TO	G14-057T 345.00 - SUNNYSIDE 345KV CKT 1	717	789	0.04368	113.9524	LAYFLD8 500.00 - MOUNT OLIVE 500KV CKT 1
FDNS	00NR	3	20WP	G15_033	FROM->TO	G14-057T 345.00 - SUNNYSIDE 345KV CKT 1	717	789	0.04368	113.9524	LAYFLD8 500.00 - MOUNT OLIVE 500KV CKT 1
FDNS	00NR	3	16WP	G15_033	FROM->TO	G14-057T 345.00 - SUNNYSIDE 345KV CKT 1	717	789	0.04586	113.9509	GEN600004 2-PRAIRIE ISLAND G2
FDNS	00NR	3	16WP	G15_033	FROM->TO	G14-057T 345.00 - SUNNYSIDE 345KV CKT 1	717	789	0.04586	113.9481	GEN600003 1-PRAIRIE ISLAND G1
FDNS	00NR	3	16WP	G15_033	FROM->TO	G14-057T 345.00 - SUNNYSIDE 345KV CKT 1	717	789	0.04586	113.9402	GEN600006 1-AS KING
FDNS	00NR	3	20WP	G15_033	FROM->TO	G14-057T 345.00 - SUNNYSIDE 345KV CKT 1	717	789	0.04371	113.9052	P12:161:AEPW-SWPA:BEAVER5:EROGERS5
FDNS	00NR	3	20WP	G15_033	FROM->TO	G14-057T 345.00 - SUNNYSIDE 345KV CKT 1	717	789	0.04368	113.9051	COMANCHE - EMPIRE 138KV CKT 1
FDNS	00NR	3	20WP	G15_033	FROM->TO	G14-057T 345.00 - SUNNYSIDE 345KV CKT 1	717	789	0.04386	113.903	OIL CENTER - STRATFORD 138KV CKT 1
FDNS	00NR	3	16WP	G15_033	FROM->TO	G14-057T 345.00 - SUNNYSIDE 345KV CKT 1	717	789	0.04586	113.9027	P12:138:WFEC:MSL09
FDNS	00NR	3	20WP	G15_033	FROM->TO	G14-057T 345.00 - SUNNYSIDE 345KV CKT 1	717	789	0.04371	113.895	GEN334071 1-LEWIS CREEK 2
FDNS	00NR	3	20WP	G15_033	FROM->TO	G14-057T 345.00 - SUNNYSIDE 345KV CKT 1	717	789	0.04371	113.8881	GEN336251 1-NINEMILE POINT UNIT#4
FDNS	00NR	3	20WP	G15_033	FROM->TO	G14-057T 345.00 - SUNNYSIDE 345KV CKT 1	717	789	0.04391	113.8876	DUNCAN (DUNCAN) 138/69/13.8KV TRANSFORMER CKT 1
FDNS	00NR	3	20WP	G15_033	FROM->TO	G14-057T 345.00 - SUNNYSIDE 345KV CKT 1	717	789	0.04391	113.8876	DUNCAN (DUNCAN) 138/69/13.8KV TRANSFORMER CKT 1
FDNS	00NR	3	20WP	G15_033	FROM->TO	G14-057T 345.00 - SUNNYSIDE 345KV CKT 1	717	789	0.04371	113.8866	GEN334070 1-LEWIS CREEK 1
FDNS	00NR	3	20WP	G15_033	FROM->TO	G14-057T 345.00 - SUNNYSIDE 345KV CKT 1	717	789	0.04346	113.8818	G1524G1525 345.00 - THISTLE7 345.00 345KV CKT 1
FDNS	00NR	3	20WP	G15_033	FROM->TO	G14-057T 345.00 - SUNNYSIDE 345KV CKT 1	717	789	0.04346	113.8818	G1524G1525 345.00 - THISTLE7 345.00 345KV CKT 2
FDNS	00NR	3	20WP	G15_033	FROM->TO	G14-057T 345.00 - SUNNYSIDE 345KV CKT 1	717	789	0.04371	113.8688	GEN509393 S1-ARSENAL HILL GENS #4 (STALL)
FDNS	00NR	3	20WP	G15_033	FROM->TO	G14-057T 345.00 - SUNNYSIDE 345KV CKT 1	717	789	0.04371	113.8672	GEN509392 G2-ARSENAL HILL GENS #3 (STALL)
FDNS	00NR	3	20WP	G15_033	FROM->TO	G14-057T 345.00 - SUNNYSIDE 345KV CKT 1	717	789	0.04371	113.8671	GEN509391 G1-ARSENAL HILL GENS #2 (STALL)
FDNS	00NR	3	16WP	G15_033	FROM->TO	G14-057T 345.00 - SUNNYSIDE 345KV CKT 1	717	789	0.04586	113.85	GEN636641 1-LOUISA UNIT 1
FDNS	00NR	3	20WP	G15_033	FROM->TO	G14-057T 345.00 - SUNNYSIDE 345KV CKT 1	717	789	0.04371	113.8475	P12:161:AEPW:DYESS5:ELMSPRNG:TONTITN5
FDNS	00NR	3	20WP	G15_033	FROM->TO	G14-057T 345.00 - SUNNYSIDE 345KV CKT 1	717	789	0.04371	113.8413	GEN334433 1-SABINE UNIT 3
FDNS	00NR	3	16WP	G15_033	FROM->TO	G14-057T 345.00 - SUNNYSIDE 345KV CKT 1	717	789	0.0464	113.8328	P12:138:AEPW-OGE:CORNVIL4:CIMARON4
FDNS	00NR	3	20WP	G15_033	FROM->TO	G14-057T 345.00 - SUNNYSIDE 345KV CKT 1	717	789	0.04371	113.8164	GEN337653 1-WHITE BLUFF UNIT #2
FDNS	00NR	3	20WP	G15_033	FROM->TO	G14-057T 345.00 - SUNNYSIDE 345KV CKT 1	717	789	0.04371	113.813	GEN336831 1-BAXTER WILSON SES
FDNS	00NR	3	16WP	G15_033	FROM->TO	G14-057T 345.00 - SUNNYSIDE 345KV CKT 1	717	789	0.04586	113.8094	GEN600005 1-MONTICELLO
FDNS	00NR	3	16WP	G15_033	FROM->TO	G14-057T 345.00 - SUNNYSIDE 345KV CKT 1	717	789	0.04892	113.8027	CHISHOLM7 345.00 (CHISHOLM) 345/230/13.2KV TRANSFORMER CKT 1
FDNS	00NR	3	20WP	G15_033	FROM->TO	G14-057T 345.00 - SUNNYSIDE 345KV CKT 1	717	789	0.0437	113.7956	P12:138:AEPW:CATOOSA4:T.S.E.-4
FDNS	00NR	3	16WP	G15_033	FROM->TO	G14-057T 345.00 - SUNNYSIDE 345KV CKT 1	717	789	0.04586	113.7866	GEN511851 1-COMANCHE #1
FDNS	00NR	3	20WP	G15_033	FROM->TO	G14-057T 345.00 - SUNNYSIDE 345KV CKT 1	717	789	0.04371	113.7747	GEN334030 1-FRONTIER UNIT 1
FDNS	00NR	3	20WP	G15_033	FROM->TO	G14-057T 345.00 - SUNNYSIDE 345KV CKT 1	717	789	0.04371	113.7723	GEN334031 1-FRONTIER UNIT 2
FDNS	00NR	3	20WP	G15_033	FROM->TO	G14-057T 345.00 - SUNNYSIDE 345KV CKT 1	717	789	0.04423	113.763	TUTTLE - TUTTLE CONOCO TAP 138KV CKT 1
FDNS	00NR	3	20WP	G15_033	FROM->TO	G14-057T 345.00 - SUNNYSIDE 345KV CKT 1	717	789	0.04435	113.7627	P12:138:AEPW:CORNVIL4:DUNCAN-4
FDNS	00NR	3	20WP	G15_033	FROM->TO	G14-057T 345.00 - SUNNYSIDE 345KV CKT 1	717	789	0.04404	113.7624	BLANCHARD - MAUD 138KV CKT 1
FDNS	00NR	3	20WP	G15_033	FROM->TO	G14-057T 345.00 - SUNNYSIDE 345KV CKT 1	717	789	0.0436	113.7567	P12:138:AEPW-OGE:WTH_JCT4:JENSEN4
FDNS	00NR	3	20WP	G15_033	FROM->TO	G14-057T 345.00 - SUNNYSIDE 345KV CKT 1	717	789	0.04371	113.7529	GEN337911 1-ARKANSAS NUCLEAR ONE UNIT #2
FDNS	00NR	3	20WP	G15_033	FROM->TO	G14-057T 345.00 - SUNNYSIDE 345KV CKT 1	717	789	0.04622	113.7527	P12:138:AEPW:S.W.S.-4:L.E.S.-4
FDNS	00NR	3	20WP	G15_033	FROM->TO	G14-057T 345.00 - SUNNYSIDE 345KV CKT 1	717	789	0.04215	113.7512	FINNEY SWITCHING STATION - HOLCOMB 345KV CKT 1
FDNS	00NR	3	20WP	G15_033	FROM->TO	G14-057T 345.00 - SUNNYSIDE 345KV CKT 1	717	789	0.04215	113.7512	FINNEY SWITCHING STATION - HOLCOMB 345KV CKT 1
FDNS	00NR	3	20WP	G15_033	FROM->TO	G14-057T 345.00 - SUNNYSIDE 345KV CKT 1	717	789	0.04361	113.7479	FULTON 115 - HOPE 115KV CKT 1
FDNS	00NR	3	20WP	G15_033	FROM->TO	G14-057T 345.00 - SUNNYSIDE 345KV CKT 1	717	789	0.04361	113.7479	FULTON 115 - HOPE 115KV CKT 1
FDNS	00NR	3	20WP	G15_033	FROM->TO	G14-057T 345.00 - SUNNYSIDE 345KV CKT 1	717	789	0.04378	113.7267	P12:138:AEPW:CORNVIL4:S.W.S.-4
FDNS	00NR	3	16WP	G15_033	FROM->TO	G14-057T 345.00 - SUNNYSIDE 345KV CKT 1	717	789	0.04586	113.7252	GEN635213 3-NEAL UNIT 3
FDNS	00NR	3	20WP	G15_033	FROM->TO	G14-057T 345.00 - SUNNYSIDE 345KV CKT 1	717	789	0.04371	113.7248	GEN501811 1-RODEMACHER UNIT 1
FDNS	00NR	3	20WP	G15_033	FROM->TO	G14-057T 345.00 - SUNNYSIDE 345KV CKT 1	717	789	0.04386	113.7239	LATTA JCT - OIL CENTER 138KV CKT 1
FDNS	00NR	3	16WP	G15_033	FROM->TO	G14-057T 345.00 - SUNNYSIDE 345KV CKT 1	717	789	0.04586	113.7198	GEN562754 1-G15031_5 0.6900
FDNS	00NR	3	20WP	G15_033	FROM->TO	G14-057T 345.00 - SUNNYSIDE 345KV CKT 1	717	789	0.04371	113.7152	GEN337652 1-WHITE BLUFF UNIT #1
FDNS	00NR	3	20WP	G15_033	FROM->TO	G14-057T 345.00 - SUNNYSIDE 345KV CKT 1	717	789	0.04391	113.712	P12:69:WFEC-AEPW:COMANCH2:DUNCAN-2
FDNS	00NR	3	20WP	G15_033	FROM->TO	G14-057T 345.00 - SUNNYSIDE 345KV CKT 1	717	789	0.04371	113.7116	GEN506752 1-LEBROCK GAS 1
FDNS	00NR	3	20WP	G15_033	FROM->TO	G14-057T 345.00 - SUNNYSIDE 345KV CKT 1	717	789	0.04371	113.7113	GEN506753 1-LEBROCK GAS 2
FDNS	00NR	3	16WP	G15_033	FROM->TO	G14-057T 345.00 - SUNNYSIDE 345KV CKT 1	717	789	0.04586	113.6949	GEN629074 1-ARNOLD LOWSIDE OF GSU XFMR

SOLUTION	GROUP	SCENARIO	SEASON	SOURCE	DIRECTION	MONITORED ELEMENT	RATEA (MVA)	RATEB(MVA)	TDF	TC%LOADING (% MVA)	CONTINGENCY
FDNS	00NR	3	20WP	G15_033	FROM->TO	G14-057T 345.00 - SUNNYSIDE 345KV CKT 1	717	789	0.04371	113.6905	GEN336191 1-LITTLE GYPSY UNIT#3
FDNS	00NR	3	20WP	G15_033	FROM->TO	G14-057T 345.00 - SUNNYSIDE 345KV CKT 1	717	789	0.04363	113.6842	6LAYFLD 230.00 - CARROLL 230KV CKT 1
FDNS	00NR	3	20WP	G15_033	FROM->TO	G14-057T 345.00 - SUNNYSIDE 345KV CKT 1	717	789	0.04371	113.6827	GEN300015 1-1SGPDEL 18.000
FDNS	00NR	3	20WP	G15_033	FROM->TO	G14-057T 345.00 - SUNNYSIDE 345KV CKT 1	717	789	0.04423	113.6823	CIMARRON - TUTTLE CONOCO TAP 138KV CKT 1
FDNS	00NR	3	20WP	G15_033	FROM->TO	G14-057T 345.00 - SUNNYSIDE 345KV CKT 1	717	789	0.04369	113.6781	8DANIEL8 500.00 - MCKNIGHT 500KV CKT 1
FDNS	00NR	3	20WP	G15_033	FROM->TO	G14-057T 345.00 - SUNNYSIDE 345KV CKT 1	717	789	0.04371	113.6779	GEN515040 1-SEMINOLE 1G
FDNS	00NR	3	20WP	G15_033	FROM->TO	G14-057T 345.00 - SUNNYSIDE 345KV CKT 1	717	789	0.04405	113.6634	BAILEY4 138.00 - SUNSHINE CANYON 138KV CKT 1
FDNS	00NR	3	20WP	G15_033	FROM->TO	G14-057T 345.00 - SUNNYSIDE 345KV CKT 1	717	789	0.04371	113.6633	GEN515226 1-MUSKOGEE 6G
FDNS	00NR	3	20WP	G15_033	FROM->TO	G14-057T 345.00 - SUNNYSIDE 345KV CKT 1	717	789	0.04371	113.6606	GEN335614 1-WILLOW GLENN UNIT#4
FDNS	00NR	3	20WP	G15_033	FROM->TO	G14-057T 345.00 - SUNNYSIDE 345KV CKT 1	717	789	0.04371	113.6598	P12:161:AEPW:EROGERS5:ECNTRTN5
FDNS	00NR	3	20WP	G15_033	FROM->TO	G14-057T 345.00 - SUNNYSIDE 345KV CKT 1	717	789	0.04391	113.6594	DUNCAN - TOSCO 69KV CKT 1
FDNS	00NR	3	16WP	G15_033	FROM->TO	G14-057T 345.00 - SUNNYSIDE 345KV CKT 1	717	789	0.04586	113.6592	GEN562756 1-G15031_7 0.6900
FDNS	00NR	3	16WP	G15_033	FROM->TO	G14-057T 345.00 - SUNNYSIDE 345KV CKT 1	717	789	0.04586	113.659	GEN562023 1-G11_020_3 0.6900
FDNS	00NR	3	16WP	G15_033	FROM->TO	G14-057T 345.00 - SUNNYSIDE 345KV CKT 1	717	789	0.04586	113.659	GEN562026 1-G11_019_3 0.6900
FDNS	00NR	3	20WP	G15_033	FROM->TO	G14-057T 345.00 - SUNNYSIDE 345KV CKT 1	717	789	0.04371	113.6582	GEN300003 1-THOMAS HILL UNIT 3
FDNS	00NR	3	16WP	G15_033	FROM->TO	G14-057T 345.00 - SUNNYSIDE 345KV CKT 1	717	789	0.04586	113.6567	BIG STONE 230/24.0KV TRANSFORMER CKT 1
FDNS	00NR	3	20WP	G15_033	FROM->TO	G14-057T 345.00 - SUNNYSIDE 345KV CKT 1	717	789	0.04365	113.6496	P12:138:AEPW:WTHWF4:CLINTJC4
FDNS	00NR	3	20WP	G15_033	FROM->TO	G14-057T 345.00 - SUNNYSIDE 345KV CKT 1	717	789	0.04371	113.6338	WHITE BLUFF 500/26.0KV TRANSFORMER CKT 1
FDNS	00NR	3	20WP	G15_033	FROM->TO	G14-057T 345.00 - SUNNYSIDE 345KV CKT 1	717	789	0.04371	113.6311	RODEMACHER 230/22.0KV TRANSFORMER CKT 1
FDNS	00NR	3	20WP	G15_033	FROM->TO	G14-057T 345.00 - SUNNYSIDE 345KV CKT 1	717	789	0.04366	113.6237	G15088_T 345.00 - MOORE 345KV CKT 1
FDNS	00NR	3	20WP	G15_033	FROM->TO	G14-057T 345.00 - SUNNYSIDE 345KV CKT 1	717	789	0.04364	113.6192	BISMARK - HOT SPRINGS WEST BUS 115KV CKT 1
FDNS	00NR	3	20WP	G15_033	FROM->TO	G14-057T 345.00 - SUNNYSIDE 345KV CKT 1	717	789	0.04371	113.6191	CIMARRON - CZECH HALL 138KV CKT 1
FDNS	00NR	3	20WP	G15_033	FROM->TO	G14-057T 345.00 - SUNNYSIDE 345KV CKT 1	717	789	0.04367	113.6169	MC NIEL 500/115KV TRANSFORMER CKT 1
FDNS	00NR	3	20WP	G15_033	FROM->TO	G14-057T 345.00 - SUNNYSIDE 345KV CKT 1	717	789	0.04371	113.6165	GEN303007 1-1BC2 U2
FDNS	00NR	3	20WP	G15_033	FROM->TO	G14-057T 345.00 - SUNNYSIDE 345KV CKT 1	717	789	0.04371	113.613	GEN562783 1-G15036_4 0.6900
FDNS	00NR	3	20WP	G15_033	FROM->TO	G14-057T 345.00 - SUNNYSIDE 345KV CKT 1	717	789	0.04371	113.613	GEN562784 1-G15036_5 0.6900
FDNS	00NR	3	20WP	G15_033	FROM->TO	G14-057T 345.00 - SUNNYSIDE 345KV CKT 1	717	789	0.04391	113.6118	COMANCHE TAP - TOSCO 69KV CKT 1
FDNS	00NR	3	20WP	G15_033	FROM->TO	G14-057T 345.00 - SUNNYSIDE 345KV CKT 1	717	789	0.04371	113.6108	GEN303006 1-1BC2 U1
FDNS	00NR	3	20WP	G15_033	FROM->TO	G14-057T 345.00 - SUNNYSIDE 345KV CKT 1	717	789	0.04371	113.61	GEN336464 1-MICHOUD UNIT #3
FDNS	00NR	3	20WP	G15_033	FROM->TO	G14-057T 345.00 - SUNNYSIDE 345KV CKT 1	717	789	0.04368	113.6082	HOT SPRINGS EHV - MAGNET COVE 500KV CKT 1
FDNS	00NR	3	20WP	G15_033	FROM->TO	G14-057T 345.00 - SUNNYSIDE 345KV CKT 1	717	789	0.04366	113.6063	G15095_T 138.00 - ROSE_VALLEY 138.00 138KV CKT 1
FDNS	00NR	3	20WP	G15_033	FROM->TO	G14-057T 345.00 - SUNNYSIDE 345KV CKT 1	717	789	0.044	113.6051	P12:69:AEPW-OMPA:COMANC-2:OMWALTR2
FDNS	00NR	3	20WP	G15_033	FROM->TO	G14-057T 345.00 - SUNNYSIDE 345KV CKT 1	717	789	0.04367	113.6018	G15074_T 345.00 - HOYT 345KV CKT 1
FDNS	00NR	3	20WP	G15_033	FROM->TO	G14-057T 345.00 - SUNNYSIDE 345KV CKT 1	717	789	0.04371	113.6014	GEN337910 1-ARKANSAS NUCLEAR ONE UNIT #1
FDNS	00NR	3	20WP	G15_033	FROM->TO	G14-057T 345.00 - SUNNYSIDE 345KV CKT 1	717	789	0.04365	113.5995	P12:138:AEPW:WTHWF4:WTH_SE4
FDNS	00NR	3	16WP	G15_033	FROM->TO	G14-057T 345.00 - SUNNYSIDE 345KV CKT 1	717	789	0.04898	113.5893	STLN-DEMARC6 - SWEETWATER 230KV CKT 1
FDNS	00NR	3	16WP	G15_033	FROM->TO	G14-057T 345.00 - SUNNYSIDE 345KV CKT 1	717	789	0.04898	113.5866	P12:230:AEPW-SPS:SWEETWT6:WHEELER 6
FDNS	00NR	3	20WP	G15_033	FROM->TO	G14-057T 345.00 - SUNNYSIDE 345KV CKT 1	717	789	0.04325	113.5864	BUCKNER7 345.00 - SPEARVILLE 345KV CKT 1
FDNS	00NR	3	20WP	G15_033	FROM->TO	G14-057T 345.00 - SUNNYSIDE 345KV CKT 1	717	789	0.04325	113.5864	BUCKNER7 345.00 - SPEARVILLE 345KV CKT 1
FDNS	00NR	3	16WP	G15_033	FROM->TO	G14-057T 345.00 - SUNNYSIDE 345KV CKT 1	717	789	0.04898	113.5859	STATELINE INTERCHANGE - STLN-DEMARC6 230KV CKT 1
FDNS	00NR	3	20WP	G15_033	FROM->TO	G14-057T 345.00 - SUNNYSIDE 345KV CKT 1	717	789	0.04367	113.5754	CIMARRON - SARA 138KV CKT 1
FDNS	00NR	3	20WP	G15_033	FROM->TO	G14-057T 345.00 - SUNNYSIDE 345KV CKT 1	717	789	0.04371	113.5701	GEN515223 1-MUSKOGEE 4G
FDNS	00NR	3	20WP	G15_033	FROM->TO	G14-057T 345.00 - SUNNYSIDE 345KV CKT 1	717	789	0.04371	113.5701	GEN515225 1-MUSKOGEE 5G
FDNS	00NR	3	16WP	G15_033	FROM->TO	G14-057T 345.00 - SUNNYSIDE 345KV CKT 1	717	789	0.04586	113.5699	GEN562556 1-G14_046_3 0.3420
FDNS	00NR	3	20WP	G15_033	FROM->TO	G14-057T 345.00 - SUNNYSIDE 345KV CKT 1	717	789	0.03963	113.5698	G14_038T 345.00 - Hitchland Interchange 345KV CKT 1
FDNS	00NR	3	20WP	G15_033	FROM->TO	G14-057T 345.00 - SUNNYSIDE 345KV CKT 1	717	789	0.04364	113.5647	ALPINE AECC - BISMARK 115KV CKT 1
FDNS	00NR	3	20WP	G15_033	FROM->TO	G14-057T 345.00 - SUNNYSIDE 345KV CKT 1	717	789	0.0437	113.5592	P12:138:AEPW:N.E.S.-4:CATOOSA4
FDNS	00NR	3	20WP	G15_033	FROM->TO	G14-057T 345.00 - SUNNYSIDE 345KV CKT 1	717	789	0.04371	113.5567	GEN300010 1-ST FRANCIS UNIT 1
FDNS	00NR	3	20WP	G15_033	FROM->TO	G14-057T 345.00 - SUNNYSIDE 345KV CKT 1	717	789	0.04364	113.5567	CLEO CORNER - CLEOPLT4 138.00 138KV CKT 1
FDNS	00NR	3	20WP	G15_033	FROM->TO	G14-057T 345.00 - SUNNYSIDE 345KV CKT 1	717	789	0.04371	113.5517	GEN337041 1-GERALD ANDRUS
FDNS	00NR	3	20WP	G15_033	FROM->TO	G14-057T 345.00 - SUNNYSIDE 345KV CKT 1	717	789	0.04371	113.5497	GEN303008 1-1BC2 U3
FDNS	00NR	3	20WP	G15_033	FROM->TO	G14-057T 345.00 - SUNNYSIDE 345KV CKT 1	717	789	0.04371	113.5488	CZECH HALL - XEROX 138KV CKT 1
FDNS	00NR	3	20WP	G15_033	FROM->TO	G14-057T 345.00 - SUNNYSIDE 345KV CKT 1	717	789	0.04371	113.5459	NELSON 230/20.0KV TRANSFORMER CKT 1
FDNS	00NR	3	20WP	G15_033	FROM->TO	G14-057T 345.00 - SUNNYSIDE 345KV CKT 1	717	789	0.04391	113.545	COMANCHE - COMANCHE TAP 69KV CKT 1
FDNS	00NR	3	20WP	G15_033	FROM->TO	G14-057T 345.00 - SUNNYSIDE 345KV CKT 1	717	789	0.04371	113.5446	MORGAN - XEROX 138KV CKT 1
FDNS	00NR	3	20WP	G15_033	FROM->TO	G14-057T 345.00 - SUNNYSIDE 345KV CKT 1	717	789	0.04349	113.5396	SEMINOLE - VANOSTP4 138.00 138KV CKT 1
FDNS	00NR	3	20WP	G15_033	FROM->TO	G14-057T 345.00 - SUNNYSIDE 345KV CKT 1	717	789	0.04364	113.5385	CLEOPLT4 138.00 - MEN TAP 138KV CKT 1
FDNS	00NR	3	20WP	G15_033	FROM->TO	G14-057T 345.00 - SUNNYSIDE 345KV CKT 1	717	789	0.04338	113.5353	ARBWIND4 138.00 - CARTER 138KV CKT 1
FDNS	00NR	3	20WP	G15_033	FROM->TO	G14-057T 345.00 - SUNNYSIDE 345KV CKT 1	717	789	0.04366	113.5341	NOEL_SW 138.00 - ROSE_VALLEY 138.00 138KV CKT 1
FDNS	00NR	3	20WP	G15_033	FROM->TO	G14-057T 345.00 - SUNNYSIDE 345KV CKT 1	717	789	0.04371	113.531	GEN505432 1-SIKESTON
FDNS	00NR	3	20WP	G15_033	FROM->TO	G14-057T 345.00 - SUNNYSIDE 345KV CKT 1	717	789	0.04364	113.528	IMO TAP - MEN TAP 138KV CKT 1
FDNS	00NR	3	20WP	G15_033	FROM->TO	G14-057T 345.00 - SUNNYSIDE 345KV CKT 1	717	789	0.04315	113.5247	ELK CITY 230KV (ELKCTY-6) 230/138/13.8KV TRANSFORMER CKT 1
FDNS	00NR	3	20WP	G15_033	FROM->TO	G14-057T 345.00 - SUNNYSIDE 345KV CKT 1	717	789	0.04315	113.5247	ELK CITY 230KV (ELKCTY-6) 230/138/13.8KV TRANSFORMER CKT 1
FDNS	00NR	3	20WP	G15_033	FROM->TO	G14-057T 345.00 - SUNNYSIDE 345KV CKT 1	717	789	0.04315	113.5233	CHISHOLM6 230.00 - ELK CITY 230KV 230KV CKT 1
FDNS	00NR	3	20WP	G15_033	FROM->TO	G14-057T 345.00 - SUNNYSIDE 345KV CKT 1	717	789	0.04371	113.5223	MORGAN - MUSTANG 138KV CKT 1
FDNS	00NR	3	20WP	G15_033	FROM->TO	G14-057T 345.00 - SUNNYSIDE 345KV CKT 1	717	789	0.04371	113.5211	GEN336170 1-GULF OXY U4
FDNS	00NR	3	20WP	G15_033	FROM->TO	G14-057T 345.00 - SUNNYSIDE 345KV CKT 1	717	789	0.04364	113.5161	ALPINE AECC - AMITY SS 115KV CKT 1
FDNS	00NR	3	16WP	G15_033	FROM->TO	G14-057T 345.00 - SUNNYSIDE 345KV CKT 1	717	789	0.04586	113.511	GEN523973 1-HARRINGTON GEN #3 24 KV
FDNS	00NR	3	16WP	G15_033	FROM->TO	G14-057T 345.00 - SUNNYSIDE 345KV CKT 1	717	789	0.04892	113.5109	CHISHOLM7 345.00 - GRACEMONT 345KV CKT 1
FDNS	00NR	3	16WP	G15_033	FROM->TO	G14-057T 345.00 - SUNNYSIDE 345KV CKT 1	717	789	0.04586	113.5108	GEN523971 1-HARRINGTON GEN #1 24 KV
FDNS	00NR	3	16WP	G15_033	FROM->TO	G14-057T 345.00 - SUNNYSIDE 345KV CKT 1	717	789	0.04586	113.5107	GEN523972 1-HARRINGTON GEN #2 24 KV
FDNS	00NR	3	20WP	G15_033	FROM->TO	G14-057T 345.00 - SUNNYSIDE 345KV CKT 1	717	789	0.04371	113.5057	8CAJUN2 500/24.0KV TRANSFORMER CKT 1
FDNS	00NR	3	20WP	G15_033	FROM->TO	G14-057T 345.00 - SUNNYSIDE 345KV CKT 1	717	789	0.04371	113.5002	GEN300011 1-ST FRANCIS UNIT 2
FDNS	00NR	3	20WP	G15_033	FROM->TO	G14-057T 345.00 - SUNNYSIDE 345KV CKT 1	717	789	0.04371	113.4989	GEN336801 1-BAXTER WILSON UNIT #1
FDNS	00NR	3	16WP	G15_033	FROM->TO	G14-057T 345.00 - SUNNYSIDE 345KV CKT 1	717	789	0.04586	113.4961	GEN600000 1-SHERBURNECNTY G1
FDNS	00NR	3	20WP	G15_033	FROM->TO	G14-057T 345.00 - SUNNYSIDE 345KV CKT 1	717	789	0.04215	113.4912	FINNEY SWITCHING STATION - WALKTAP7 345.00 345KV CKT 1
FDNS	00NR	3	20WP	G15_033	FROM->TO	G14-057T 345.00 - SUNNYSIDE 345KV CKT 1	717	789	0.04215	113.4912	FINNEY SWITCHING STATION - WALKTAP7 345.00 345KV CKT 1
FDNS	00NR	3	20WP	G15_033	FROM->TO	G14-057T 345.00 - SUNNYSIDE 345KV CKT 1	717	789	0.04361	113.4893	WEATHERFORD JCT. - WEATHERFORD SOUTHEAST 138KV CKT 1
FDNS	00NR	3	20WP	G15_033	FROM->TO	G14-057T 345.00 - SUNNYSIDE 345KV CKT 1	717	789	0.04361	113.4893	WEATHERFORD JCT. - WEATHERFORD SOUTHEAST 138KV CKT 1

SOLUTION	GROUP	SCENARIO	SEASON	SOURCE	DIRECTION	MONITORED ELEMENT	RATEA (MVA)	RATEB(MVA)	TDF	TC%LOADING (% MVA)	CONTINGENCY
FDNS	00NR	3	16WP	G15_033	FROM->TO	G14-057T 345.00 - SUNNYSIDE 345KV CKT 1	717	789	0.04586	113.4865	GEN563142 1-G15079_3 0.5500
FDNS	00NR	3	16WP	G15_033	FROM->TO	G14-057T 345.00 - SUNNYSIDE 345KV CKT 1	717	789	0.04586	113.4865	GEN563151 1-G15080_2 0.5500
FDNS	00NR	3	20WP	G15_033	FROM->TO	G14-057T 345.00 - SUNNYSIDE 345KV CKT 1	717	789	0.04405	113.4849	BAILEY4 138.00 - WESTMOORE 138KV CKT 1
FDNS	00NR	3	20WP	G15_033	FROM->TO	G14-057T 345.00 - SUNNYSIDE 345KV CKT 1	717	789	0.04359	113.4814	P12:138:OKGE-AEPW:JENSEN4:REDROCKRD4
FDNS	00NR	3	20WP	G15_033	FROM->TO	G14-057T 345.00 - SUNNYSIDE 345KV CKT 1	717	789	0.04465	113.4791	LAWTON EASTSIDE (LES 4) 345/138/13.8KV TRANSFORMER CKT 1
FDNS	00NR	3	20WP	G15_033	FROM->TO	G14-057T 345.00 - SUNNYSIDE 345KV CKT 1	717	789	0.04465	113.4791	LAWTON EASTSIDE (LES 4) 345/138/13.8KV TRANSFORMER CKT 1
FDNS	00NR	3	20WP	G15_033	FROM->TO	G14-057T 345.00 - SUNNYSIDE 345KV CKT 1	717	789	0.04371	113.4728	GEN501910 1-ACADIA UNIT ST1
FDNS	00NR	3	20WP	G15_033	FROM->TO	G14-057T 345.00 - SUNNYSIDE 345KV CKT 1	717	789	0.04371	113.4669	P12:138:AEPW:R.S.S.-4:S.HUD.-4
FDNS	00NR	3	20WP	G15_033	FROM->TO	G14-057T 345.00 - SUNNYSIDE 345KV CKT 1	717	789	0.04371	113.4667	SABINE 230/24.0KV TRANSFORMER CKT 1
FDNS	00NR	3	20WP	G15_033	FROM->TO	G14-057T 345.00 - SUNNYSIDE 345KV CKT 1	717	789	0.04367	113.4655	SARA - STHLAKE4 138.00 138KV CKT 1
FDNS	00NR	3	20WP	G15_033	FROM->TO	G14-057T 345.00 - SUNNYSIDE 345KV CKT 1	717	789	0.04369	113.4642	ETTA (DUKE HOTSPRINGS) - MC NIEL 500KV CKT 1
FDNS	00NR	3	20WP	G15_033	FROM->TO	G14-057T 345.00 - SUNNYSIDE 345KV CKT 1	717	789	0.04387	113.457	GRACEMONT (BANK 1) 345/138/13.8KV TRANSFORMER CKT 1
FDNS	00NR	3	20WP	G15_033	FROM->TO	G14-057T 345.00 - SUNNYSIDE 345KV CKT 1	717	789	0.04361	113.4548	P12:138:AEPW:REDROCKRD4:WTH_JCT4
FDNS	00NR	3	20WP	G15_033	FROM->TO	G14-057T 345.00 - SUNNYSIDE 345KV CKT 1	717	789	0.04367	113.4362	MCCLAIN - STHLAKE4 138.00 138KV CKT 1
FDNS	00NR	3	20WP	G15_033	FROM->TO	G14-057T 345.00 - SUNNYSIDE 345KV CKT 1	717	789	0.04377	113.4354	ANADARKO - SEQUOYAHJ4 138.00 138KV CKT 1
FDNS	00NR	3	20WP	G15_033	FROM->TO	G14-057T 345.00 - SUNNYSIDE 345KV CKT 1	717	789	0.04371	113.4337	P12:69:AEPW:NROGERS2:ECNTRTN2
FDNS	00NR	3	20WP	G15_033	FROM->TO	G14-057T 345.00 - SUNNYSIDE 345KV CKT 1	717	789	0.04383	113.4335	WALTERS - WALTERS 69KV CKT 1
FDNS	00NR	3	20WP	G15_033	FROM->TO	G14-057T 345.00 - SUNNYSIDE 345KV CKT 1	717	789	0.04386	113.4333	LASALLE - LATTA JCT 138KV CKT 1
FDNS	00NR	3	20WP	G15_033	FROM->TO	G14-057T 345.00 - SUNNYSIDE 345KV CKT 1	717	789	0.04371	113.4327	ESSEX UNIT 2 500/18.0KV TRANSFORMER CKT 1
FDNS	00NR	3	20WP	G15_033	FROM->TO	G14-057T 345.00 - SUNNYSIDE 345KV CKT 1	717	789	0.04377	113.4309	CORN TAP - SEQUOYAHJ4 138.00 138KV CKT 1
FDNS	00NR	3	20WP	G15_033	FROM->TO	G14-057T 345.00 - SUNNYSIDE 345KV CKT 1	717	789	0.04371	113.4247	P12:138:AEPW:BA_71ST4:T.S.E.-4
FDNS	00NR	3	20WP	G15_033	FROM->TO	G14-057T 345.00 - SUNNYSIDE 345KV CKT 1	717	789	0.04371	113.4201	P12:138:AEPW:YARCH-S4:T.S.E.-4
FDNS	00NR	3	20WP	G15_033	FROM->TO	G14-057T 345.00 - SUNNYSIDE 345KV CKT 1	717	789	0.04371	113.4188	GEN336222 1-LITTLE GYPSY UNIT#2
FDNS	00NR	3	20WP	G15_033	FROM->TO	G14-057T 345.00 - SUNNYSIDE 345KV CKT 1	717	789	0.04379	113.4146	NORGE ROAD - SOUTHWESTERN STATION 138KV CKT 1
FDNS	00NR	3	20WP	G15_033	FROM->TO	G14-057T 345.00 - SUNNYSIDE 345KV CKT 1	717	789	0.04379	113.4146	NORGE ROAD - SOUTHWESTERN STATION 138KV CKT 1
FDNS	00NR	3	20WP	G15_033	FROM->TO	G14-057T 345.00 - SUNNYSIDE 345KV CKT 1	717	789	0.04371	113.4132	GEN300016 1-1G1GPDEL 18.000
FDNS	00NR	3	20WP	G15_033	FROM->TO	G14-057T 345.00 - SUNNYSIDE 345KV CKT 1	717	789	0.04369	113.4119	P12:138:AEPW-OGE:SHIDLER4:OSAGE 4
FDNS	00NR	3	16WP	G15_033	FROM->TO	G14-057T 345.00 - SUNNYSIDE 345KV CKT 1	717	789	0.04568	113.4117	NORTHWEST TEXARKANA - VALLIANT 345KV CKT 1
FDNS	00NR	3	16WP	G15_033	FROM->TO	G14-057T 345.00 - SUNNYSIDE 345KV CKT 1	717	789	0.04568	113.4117	NORTHWEST TEXARKANA - VALLIANT 345KV CKT 1
FDNS	00NR	3	16WP	G15_033	FROM->TO	G14-057T 345.00 - SUNNYSIDE 345KV CKT 1	717	789	0.04586	113.4057	GEN600001 2-SHERBURNE CNTY G2
FDNS	00NR	3	20WP	G15_033	FROM->TO	G14-057T 345.00 - SUNNYSIDE 345KV CKT 1	717	789	0.04371	113.4049	FRONTIER 345/18.0KV TRANSFORMER CKT 1
FDNS	00NR	3	20WP	G15_033	FROM->TO	G14-057T 345.00 - SUNNYSIDE 345KV CKT 1	717	789	0.04371	113.4026	FRONTIER 345/18.0KV TRANSFORMER CKT 1
FDNS	00NR	3	20WP	G15_033	FROM->TO	G14-057T 345.00 - SUNNYSIDE 345KV CKT 1	717	789	0.04367	113.401	HOYT - STRANGER CREEK 345KV CKT 1
FDNS	00NR	3	20WP	G15_033	FROM->TO	G14-057T 345.00 - SUNNYSIDE 345KV CKT 1	717	789	0.04371	113.3991	7JASPER 345.00 - BLACKBERRY 345KV CKT 1
FDNS	00NR	3	20WP	G15_033	FROM->TO	G14-057T 345.00 - SUNNYSIDE 345KV CKT 1	717	789	0.044	113.3962	LAWTON RELIFT TAP - OMPA-WALTERS 69KV CKT 1
FDNS	00NR	3	20WP	G15_033	FROM->TO	G14-057T 345.00 - SUNNYSIDE 345KV CKT 1	717	789	0.04352	113.3907	G13-010T 345.00 - POST ROCK 345KV CKT 1
FDNS	00NR	3	20WP	G15_033	FROM->TO	G14-057T 345.00 - SUNNYSIDE 345KV CKT 1	717	789	0.04366	113.3875	BLACKBERRY - NEOSHO 345KV CKT 1
FDNS	00NR	3	20WP	G15_033	FROM->TO	G14-057T 345.00 - SUNNYSIDE 345KV CKT 1	717	789	0.04367	113.3872	MORISNT4 138.00 - STILLWATER 138KV CKT 1
FDNS	00NR	3	20WP	G15_033	FROM->TO	G14-057T 345.00 - SUNNYSIDE 345KV CKT 1	717	789	0.04371	113.3836	GEN336152 1-WATERFORD UNIT#2
FDNS	00NR	3	20WP	G15_033	FROM->TO	G14-057T 345.00 - SUNNYSIDE 345KV CKT 1	717	789	0.04371	113.3828	GEN336151 1-WATERFORD UNIT#1
FDNS	00NR	3	20WP	G15_033	FROM->TO	G14-057T 345.00 - SUNNYSIDE 345KV CKT 1	717	789	0.04367	113.3809	P12:138:OKGE:3TERM2
FDNS	00NR	3	20WP	G15_033	FROM->TO	G14-057T 345.00 - SUNNYSIDE 345KV CKT 1	717	789	0.04361	113.38	HOPE - MCNAB REC 115KV CKT 1
FDNS	00NR	3	20WP	G15_033	FROM->TO	G14-057T 345.00 - SUNNYSIDE 345KV CKT 1	717	789	0.04352	113.3786	BENTON - WICHITA 345KV CKT 1
FDNS	00NR	3	20WP	G15_033	FROM->TO	G14-057T 345.00 - SUNNYSIDE 345KV CKT 1	717	789	0.04371	113.3748	LEWIS CREEK SWITCHYARD 138/22.0KV TRANSFORMER CKT 1
FDNS	00NR	3	20WP	G15_033	FROM->TO	G14-057T 345.00 - SUNNYSIDE 345KV CKT 1	717	789	0.04365	113.3707	COUCH SES - MC NIEL 115KV CKT 1
FDNS	00NR	3	20WP	G15_033	FROM->TO	G14-057T 345.00 - SUNNYSIDE 345KV CKT 1	717	789	0.0437	113.3706	CYPRESS - HARTBURG 500KV CKT 1
FDNS	00NR	3	20WP	G15_033	FROM->TO	G14-057T 345.00 - SUNNYSIDE 345KV CKT 1	717	789	0.04371	113.3704	LEWIS CREEK SWITCHYARD 138/22.0KV TRANSFORMER CKT 1
FDNS	00NR	3	20WP	G15_033	FROM->TO	G14-057T 345.00 - SUNNYSIDE 345KV CKT 1	717	789	0.04361	113.3702	P12:115:AEPW:TURK3:HOPE3
FDNS	00NR	3	20WP	G15_033	FROM->TO	G14-057T 345.00 - SUNNYSIDE 345KV CKT 1	717	789	0.04367	113.3688	G15074_T 345.00 - JEFFREY ENERGY CENTER 345KV CKT 1
FDNS	00NR	3	20WP	G15_033	FROM->TO	G14-057T 345.00 - SUNNYSIDE 345KV CKT 1	717	789	0.04365	113.3602	WEATHERFORD TAP - WEATHERFORD WIND FARM 138KV CKT 1
FDNS	00NR	3	20WP	G15_033	FROM->TO	G14-057T 345.00 - SUNNYSIDE 345KV CKT 1	717	789	0.04361	113.3593	HINTON - WEATHERFORD JCT. 138KV CKT 1
FDNS	00NR	3	20WP	G15_033	FROM->TO	G14-057T 345.00 - SUNNYSIDE 345KV CKT 1	717	789	0.04367	113.3573	EMPORIA ENERGY CENTER - G14_001T 345.00 345KV CKT 1
FDNS	00NR	3	20WP	G15_033	FROM->TO	G14-057T 345.00 - SUNNYSIDE 345KV CKT 1	717	789	0.04371	113.3568	GEN300017 1-1G2GPDEL 18.000
FDNS	00NR	3	20WP	G15_033	FROM->TO	G14-057T 345.00 - SUNNYSIDE 345KV CKT 1	717	789	0.04368	113.3515	7LUTESVIL 345.00 - 7ST FRANC 345.00 345KV CKT 1
FDNS	00NR	3	20WP	G15_033	FROM->TO	G14-057T 345.00 - SUNNYSIDE 345KV CKT 1	717	789	0.04378	113.3513	SOUTHWESTERN STATION - VERDEN 138KV CKT 1
FDNS	00NR	3	20WP	G15_033	FROM->TO	G14-057T 345.00 - SUNNYSIDE 345KV CKT 1	717	789	0.04371	113.3474	P12:161:AEPW:CHAMSPR5:FARMING5
FDNS	00NR	3	20WP	G15_033	FROM->TO	G14-057T 345.00 - SUNNYSIDE 345KV CKT 1	717	789	0.04345	113.3447	CLINTON JUNCTION - ELK CITY 138KV CKT 1
FDNS	00NR	3	20WP	G15_033	FROM->TO	G14-057T 345.00 - SUNNYSIDE 345KV CKT 1	717	789	0.04345	113.3447	CLINTON JUNCTION - ELK CITY 138KV CKT 1
FDNS	00NR	3	20WP	G15_033	FROM->TO	G14-057T 345.00 - SUNNYSIDE 345KV CKT 1	717	789	0.04361	113.3441	MCNAB REC - Turk 115 115KV CKT 1
FDNS	00NR	3	20WP	G15_033	FROM->TO	G14-057T 345.00 - SUNNYSIDE 345KV CKT 1	717	789	0.04361	113.3441	TURK (TURK 1) 138/115/13.2KV TRANSFORMER CKT 1
FDNS	00NR	3	20WP	G15_033	FROM->TO	G14-057T 345.00 - SUNNYSIDE 345KV CKT 1	717	789	0.04361	113.3441	TURK (TURK 1) 138/115/13.2KV TRANSFORMER CKT 1
FDNS	00NR	3	20WP	G15_033	FROM->TO	G14-057T 345.00 - SUNNYSIDE 345KV CKT 1	717	789	0.04371	113.3373	GEN334432 1-SABINE UNIT 2
FDNS	00NR	3	20WP	G15_033	FROM->TO	G14-057T 345.00 - SUNNYSIDE 345KV CKT 1	717	789	0.04371	113.3372	GEN334431 1-SABINE UNIT 1
FDNS	00NR	3	20WP	G15_033	FROM->TO	G14-057T 345.00 - SUNNYSIDE 345KV CKT 1	717	789	0.04352	113.3348	G13-010T 345.00 - SPEARVILLE 345KV CKT 1
FDNS	00NR	3	20WP	G15_033	FROM->TO	G14-057T 345.00 - SUNNYSIDE 345KV CKT 1	717	789	0.04383	113.3341	P12:69:WFEC-AEPW:COMANCH2:WALTRS-2
FDNS	00NR	3	20WP	G15_033	FROM->TO	G14-057T 345.00 - SUNNYSIDE 345KV CKT 1	717	789	0.04338	113.3326	CANADIAN - NOBLE 138KV CKT 1
FDNS	00NR	3	20WP	G15_033	FROM->TO	G14-057T 345.00 - SUNNYSIDE 345KV CKT 1	717	789	0.044	113.3323	OMPA-WALTERS - WALTERS 69KV CKT 1
FDNS	00NR	3	20WP	G15_033	FROM->TO	G14-057T 345.00 - SUNNYSIDE 345KV CKT 1	717	789	0.044	113.3323	OMPA-WALTERS - WALTERS 69KV CKT 1
FDNS	00NR	3	20WP	G15_033	FROM->TO	G14-057T 345.00 - SUNNYSIDE 345KV CKT 1	717	789	0.04371	113.3314	GEN501823 1-TECHE UNIT 3
FDNS	00NR	3	20WP	G15_033	FROM->TO	G14-057T 345.00 - SUNNYSIDE 345KV CKT 1	717	789	0.04378	113.3312	NORTH 29TH CHICKASHA - VERDEN 138KV CKT 1
FDNS	00NR	3	20WP	G15_033	FROM->TO	G14-057T 345.00 - SUNNYSIDE 345KV CKT 1	717	789	0.04371	113.3297	GEN501970 1-EVANGELINE UNIT 7
FDNS	00NR	3	20WP	G15_033	FROM->TO	G14-057T 345.00 - SUNNYSIDE 345KV CKT 1	717	789	0.0433	113.326	ARBUCKLE - VANOSTP4 138.00 138KV CKT 1
FDNS	00NR	3	16WP	G15_033	FROM->TO	G14-057T 345.00 - SUNNYSIDE 345KV CKT 1	717	789	0.04586	113.3246	GEN563042 1-G15068_3 0.6900
FDNS	00NR	3	20WP	G15_033	FROM->TO	G14-057T 345.00 - SUNNYSIDE 345KV CKT 1	717	789	0.04371	113.3237	GEN505616 1-BROKEN BOW
FDNS	00NR	3	20WP	G15_033	FROM->TO	G14-057T 345.00 - SUNNYSIDE 345KV CKT 1	717	789	0.04405	113.3174	FRANKLIN SW - WESTMOORE 138KV CKT 1
FDNS	00NR	3	20WP	G15_033	FROM->TO	G14-057T 345.00 - SUNNYSIDE 345KV CKT 1	717	789	0.04325	113.3155	BUCKNER7 345.00 - HOLCOMB 345KV CKT 1
FDNS	00NR	3	20WP	G15_033	FROM->TO	G14-057T 345.00 - SUNNYSIDE 345KV CKT 1	717	789	0.04325	113.3155	BUCKNER7 345.00 - HOLCOMB 345KV CKT 1
FDNS	00NR	3	20WP	G15_033	FROM->TO	G14-057T 345.00 - SUNNYSIDE 345KV CKT 1	717	789	0.04366	113.3151	SWISSVALE - WEST GARDNER 345KV CKT 1
FDNS	00NR	3	20WP	G15_033	FROM->TO	G14-057T 345.00 - SUNNYSIDE 345KV CKT 1	717	789	0.04373	113.3124	FRANKLIN - FRANKLIN SW 138KV CKT 1

SOLUTION	GROUP	SCENARIO	SEASON	SOURCE	DIRECTION	MONITORED ELEMENT	RATEA (MVA)	RATEB(MVA)	TDF	TC%LOADING (% MVA)	CONTINGENCY
FDNS	00NR	3	20WP	G15_033	FROM->TO	G14-057T 345.00 - SUNNYSIDE 345KV CKT 1	717	789	0.04371	113.3121	ST FRANCIS - ST FRANCIS 1 161KV CKT Z1
FDNS	00NR	3	20WP	G15_033	FROM->TO	G14-057T 345.00 - SUNNYSIDE 345KV CKT 1	717	789	0.04371	113.3099	GEN334392 1-EXXON MOBIL IPP 1
FDNS	00NR	3	20WP	G15_033	FROM->TO	G14-057T 345.00 - SUNNYSIDE 345KV CKT 1	717	789	0.04371	113.3097	SABINE 230/22.0KV TRANSFORMER CKT 1
FDNS	00NR	3	20WP	G15_033	FROM->TO	G14-057T 345.00 - SUNNYSIDE 345KV CKT 1	717	789	0.04368	113.3069	LAKEOVER - MCADAMS 500KV CKT 1
FDNS	00NR	3	20WP	G15_033	FROM->TO	G14-057T 345.00 - SUNNYSIDE 345KV CKT 1	717	789	0.0434	113.3036	P12:138:OKGE:3TERM27
FDNS	00NR	3	20WP	G15_033	FROM->TO	G14-057T 345.00 - SUNNYSIDE 345KV CKT 1	717	789	0.04367	113.303	ENOWILT - LONE OAK 138KV CKT 1
FDNS	00NR	3	20WP	G15_033	FROM->TO	G14-057T 345.00 - SUNNYSIDE 345KV CKT 1	717	789	0.04371	113.3026	GEN334393 1-EXXON MOBIL IPP 2
FDNS	00NR	3	20WP	G15_033	FROM->TO	G14-057T 345.00 - SUNNYSIDE 345KV CKT 1	717	789	0.04371	113.3026	GEN334394 1-EXXON MOBIL IPP 3
FDNS	00NR	3	20WP	G15_033	FROM->TO	G14-057T 345.00 - SUNNYSIDE 345KV CKT 1	717	789	0.04368	113.3022	EMPORIA ENERGY CENTER - SWISSVALE 345KV CKT 1
FDNS	00NR	3	16WP	G15_033	FROM->TO	G14-057T 345.00 - SUNNYSIDE 345KV CKT 1	717	789	0.04586	113.3	GEN629075 1-OTTUMWA GENERATOR FOR OTTUMWA UNIT NO 1
FDNS	00NR	3	20WP	G15_033	FROM->TO	G14-057T 345.00 - SUNNYSIDE 345KV CKT 1	717	789	0.04371	113.299	P12:138:AEPW:R.S.S-4:T.P.S.-4
FDNS	00NR	3	20WP	G15_033	FROM->TO	G14-057T 345.00 - SUNNYSIDE 345KV CKT 1	717	789	0.04371	113.2974	P12:138:OKGE:3TERM12
FDNS	00NR	3	20WP	G15_033	FROM->TO	G14-057T 345.00 - SUNNYSIDE 345KV CKT 1	717	789	0.03963	113.297	G14_038T 345.00 - POTTER COUNTY INTERCHANGE 345KV CKT 1
FDNS	00NR	3	20WP	G15_033	FROM->TO	G14-057T 345.00 - SUNNYSIDE 345KV CKT 1	717	789	0.04367	113.2945	ENOWILT - SARDIS 138KV CKT 1
FDNS	00NR	3	20WP	G15_033	FROM->TO	G14-057T 345.00 - SUNNYSIDE 345KV CKT 1	717	789	0.04386	113.2906	LASALLE - STONEWAL LH138.00 138KV CKT 1
FDNS	00NR	3	20WP	G15_033	FROM->TO	G14-057T 345.00 - SUNNYSIDE 345KV CKT 1	717	789	0.04379	113.2894	CORNVILLE - NORGE ROAD 138KV CKT 1
FDNS	00NR	3	20WP	G15_033	FROM->TO	G14-057T 345.00 - SUNNYSIDE 345KV CKT 1	717	789	0.04379	113.2894	CORNVILLE - NORGE ROAD 138KV CKT 1
FDNS	00NR	3	20WP	G15_033	FROM->TO	G14-057T 345.00 - SUNNYSIDE 345KV CKT 1	717	789	0.04361	113.2876	HINTON - REDROCKRD4 138.00 138KV CKT 1
FDNS	00NR	3	20WP	G15_033	FROM->TO	G14-057T 345.00 - SUNNYSIDE 345KV CKT 1	717	789	0.04367	113.2875	G14_001T 345.00 - WICHITA 345KV CKT 1
FDNS	00NR	3	20WP	G15_033	FROM->TO	G14-057T 345.00 - SUNNYSIDE 345KV CKT 1	717	789	0.04371	113.2863	FLETCHER - MARLOW JCT 69KV CKT 1
FDNS	00NR	3	20WP	G15_033	FROM->TO	G14-057T 345.00 - SUNNYSIDE 345KV CKT 1	717	789	0.04365	113.279	MCADAMS - WOLF CREEK 500KV CKT 1
FDNS	00NR	3	20WP	G15_033	FROM->TO	G14-057T 345.00 - SUNNYSIDE 345KV CKT 1	717	789	0.04386	113.2759	STONEWAL LH138.00 - TUPELO TAP 138KV CKT 1
FDNS	00NR	3	20WP	G15_033	FROM->TO	G14-057T 345.00 - SUNNYSIDE 345KV CKT 1	717	789	0.04365	113.2744	WEATHERFORD SOUTHEAST - WEATHERFORD TAP 138KV CKT 1
FDNS	00NR	3	20WP	G15_033	FROM->TO	G14-057T 345.00 - SUNNYSIDE 345KV CKT 1	717	789	0.04371	113.2734	P12:138:AEPW:R.S.S.-4:R:96YALE-4
FDNS	00NR	3	20WP	G15_033	FROM->TO	G14-057T 345.00 - SUNNYSIDE 345KV CKT 1	717	789	0.04371	113.2719	GEN501971 1-EVANGELINE UNIT 7-1
FDNS	00NR	3	20WP	G15_033	FROM->TO	G14-057T 345.00 - SUNNYSIDE 345KV CKT 1	717	789	0.04371	113.2719	GEN501972 1-EVANGELINE UNIT 7-2
FDNS	00NR	3	20WP	G15_033	FROM->TO	G14-057T 345.00 - SUNNYSIDE 345KV CKT 1	717	789	0.04371	113.2686	NELSON 230/24.0KV TRANSFORMER CKT 1
FDNS	00NR	3	20WP	G15_033	FROM->TO	G14-057T 345.00 - SUNNYSIDE 345KV CKT 1	717	789	0.04368	113.2662	8WNEWMADRID 500.00 - DELL 500 500KV CKT 1
FDNS	00NR	3	20WP	G15_033	FROM->TO	G14-057T 345.00 - SUNNYSIDE 345KV CKT 1	717	789	0.04378	113.2632	CORNVILLE - NORTH 29TH CHICKASHA 138KV CKT 1
FDNS	00NR	3	20WP	G15_033	FROM->TO	G14-057T 345.00 - SUNNYSIDE 345KV CKT 1	717	789	0.04371	113.2598	P12:138:WFEC-AEPW:ELKCTY-4:ERICK4
FDNS	00NR	3	20WP	G15_033	FROM->TO	G14-057T 345.00 - SUNNYSIDE 345KV CKT 1	717	789	0.04364	113.2594	AMITY SS - MURFREESBORO EAST (AECC) 115KV CKT 1
FDNS	00NR	3	20WP	G15_033	FROM->TO	G14-057T 345.00 - SUNNYSIDE 345KV CKT 1	717	789	0.04371	113.2566	GEN515042 1-SEMINOLE 3G
FDNS	00NR	3	20WP	G15_033	FROM->TO	G14-057T 345.00 - SUNNYSIDE 345KV CKT 1	717	789	0.04367	113.2553	CLAYTON - SARDIS 138KV CKT 1
FDNS	00NR	3	20WP	G15_033	FROM->TO	G14-057T 345.00 - SUNNYSIDE 345KV CKT 1	717	789	0.04364	113.255	DRAPER LAKE - SEMINOLE 345KV CKT 1
FDNS	00NR	3	20WP	G15_033	FROM->TO	G14-057T 345.00 - SUNNYSIDE 345KV CKT 1	717	789	0.04364	113.255	DRAPER LAKE - SEMINOLE 345KV CKT 2
FDNS	00NR	3	20WP	G15_033	FROM->TO	G14-057T 345.00 - SUNNYSIDE 345KV CKT 1	717	789	0.04371	113.2498	GEN506749 1-EASTMAN GENERATION A
FDNS	00NR	3	20WP	G15_033	FROM->TO	G14-057T 345.00 - SUNNYSIDE 345KV CKT 1	717	789	0.04371	113.2498	P12:138:AEPW:MOHAWK4:T.NO--4
FDNS	00NR	3	20WP	G15_033	FROM->TO	G14-057T 345.00 - SUNNYSIDE 345KV CKT 1	717	789	0.04371	113.2487	GEN501912 1-ACADIA UNIT CT1B
FDNS	00NR	3	20WP	G15_033	FROM->TO	G14-057T 345.00 - SUNNYSIDE 345KV CKT 1	717	789	0.04371	113.2483	ST FRANCIS 345/161KV TRANSFORMER CKT 1
FDNS	00NR	3	20WP	G15_033	FROM->TO	G14-057T 345.00 - SUNNYSIDE 345KV CKT 1	717	789	0.04371	113.2479	GEN501911 1-ACADIA UNIT CT1A
FDNS	00NR	3	16WP	G15_033	FROM->TO	G14-057T 345.00 - SUNNYSIDE 345KV CKT 1	717	789	0.04586	113.2473	GEN527901 1-HOBBS PLANT #1 (CT)
FDNS	00NR	3	16WP	G15_033	FROM->TO	G14-057T 345.00 - SUNNYSIDE 345KV CKT 1	717	789	0.04586	113.2473	GEN527902 1-HOBBS PLANT #2 (CT)
FDNS	00NR	3	20WP	G15_033	FROM->TO	G14-057T 345.00 - SUNNYSIDE 345KV CKT 1	717	789	0.04368	113.2421	GRAND ISLAND - MCCOOL 345KV CKT 1
FDNS	00NR	3	20WP	G15_033	FROM->TO	G14-057T 345.00 - SUNNYSIDE 345KV CKT 1	717	789	0.04367	113.2417	LAYFLD8 500.00 (LAYFLD AUTO) 500/230/13.8KV TRANSFORMER CKT 1
FDNS	00NR	3	20WP	G15_033	FROM->TO	G14-057T 345.00 - SUNNYSIDE 345KV CKT 1	717	789	0.04367	113.2417	LAYFLD8 500.00 (LAYFLD AUTO) 500/230/13.8KV TRANSFORMER CKT 1
FDNS	00NR	3	20WP	G15_033	FROM->TO	G14-057T 345.00 - SUNNYSIDE 345KV CKT 1	717	789	0.04371	113.2401	SABINE 138/22.0KV TRANSFORMER CKT 1
FDNS	00NR	3	20WP	G15_033	FROM->TO	G14-057T 345.00 - SUNNYSIDE 345KV CKT 1	717	789	0.04371	113.2398	ESSEX UNIT 2 500/18.0KV TRANSFORMER CKT 1
FDNS	00NR	3	20WP	G15_033	FROM->TO	G14-057T 345.00 - SUNNYSIDE 345KV CKT 1	717	789	0.04338	113.2392	NOBLE - PURCELL4 138.00 138KV CKT 1
FDNS	00NR	3	20WP	G15_033	FROM->TO	G14-057T 345.00 - SUNNYSIDE 345KV CKT 1	717	789	0.04371	113.2359	GEN336242 1-1NMIL ST1 18.000
FDNS	00NR	3	20WP	G15_033	FROM->TO	G14-057T 345.00 - SUNNYSIDE 345KV CKT 1	717	789	0.04367	113.2349	P12:138:AEPW-SWPA:LONEOAK4:BRKNBW4
FDNS	00NR	3	16WP	G15_033	FROM->TO	G14-057T 345.00 - SUNNYSIDE 345KV CKT 1	717	789	0.04586	113.2326	GEN511848 1-SOUTHWESTERN STATION #3
FDNS	00NR	3	20WP	G15_033	FROM->TO	G14-057T 345.00 - SUNNYSIDE 345KV CKT 1	717	789	0.04364	113.2274	LACYGNE - NEOSHO 345KV CKT 1
FDNS	00NR	3	20WP	G15_033	FROM->TO	G14-057T 345.00 - SUNNYSIDE 345KV CKT 1	717	789	0.0437	113.2265	7JASPER 345.00 - MORGAN 345KV CKT 1
FDNS	00NR	3	20WP	G15_033	FROM->TO	G14-057T 345.00 - SUNNYSIDE 345KV CKT 1	717	789	0.04367	113.2216	CLAYTON - NASHOBA 138KV CKT 1
FDNS	00NR	3	20WP	G15_033	FROM->TO	G14-057T 345.00 - SUNNYSIDE 345KV CKT 1	717	789	0.04359	113.2192	Canadian Pump Station - REDROCKRD4 138.00 138KV CKT 1
FDNS	00NR	3	20WP	G15_033	FROM->TO	G14-057T 345.00 - SUNNYSIDE 345KV CKT 1	717	789	0.04435	113.2155	DUNCAN - DUNCHERTP4 138.00 138KV CKT 1
FDNS	00NR	3	20WP	G15_033	FROM->TO	G14-057T 345.00 - SUNNYSIDE 345KV CKT 1	717	789	0.04435	113.2155	DUNCAN - DUNCHERTP4 138.00 138KV CKT 1
FDNS	00NR	3	20WP	G15_033	FROM->TO	G14-057T 345.00 - SUNNYSIDE 345KV CKT 1	717	789	0.04435	113.2153	DUNCAN EASTSIDE - DUNCHERTP4 138.00 138KV CKT 1
FDNS	00NR	3	20WP	G15_033	FROM->TO	G14-057T 345.00 - SUNNYSIDE 345KV CKT 1	717	789	0.04364	113.2127	MURFREESBORO 138/115KV TRANSFORMER CKT 1
FDNS	00NR	3	20WP	G15_033	FROM->TO	G14-057T 345.00 - SUNNYSIDE 345KV CKT 1	717	789	0.04364	113.2125	MURFREESBORO EAST (AECC) - MURFREESBORO SOUTH 115KV CKT 1
FDNS	00NR	3	20WP	G15_033	FROM->TO	G14-057T 345.00 - SUNNYSIDE 345KV CKT 1	717	789	0.04364	113.2117	MURFREESBORO - SOUTH NASHVILLE 138KV CKT 1
FDNS	00NR	3	20WP	G15_033	FROM->TO	G14-057T 345.00 - SUNNYSIDE 345KV CKT 1	717	789	0.04364	113.2117	MURFREESBORO - SOUTH NASHVILLE 138KV CKT 1
FDNS	00NR	3	20WP	G15_033	FROM->TO	G14-057T 345.00 - SUNNYSIDE 345KV CKT 1	717	789	0.04367	113.2086	BETHEL - NASHOBA 138KV CKT 1
FDNS	00NR	3	20WP	G15_033	FROM->TO	G14-057T 345.00 - SUNNYSIDE 345KV CKT 1	717	789	0.04365	113.2086	CLINTON JUNCTION - CLINTON NATURAL GAS TAP 138KV CKT 1
FDNS	00NR	3	20WP	G15_033	FROM->TO	G14-057T 345.00 - SUNNYSIDE 345KV CKT 1	717	789	0.04365	113.2	P12:138:AEPW:OKMULGE4:R.S.S-4
FDNS	00NR	3	20WP	G15_033	FROM->TO	G14-057T 345.00 - SUNNYSIDE 345KV CKT 1	717	789	0.04371	113.1998	ESSEX UNIT 2 500/18.0KV TRANSFORMER CKT 1
FDNS	00NR	3	20WP	G15_033	FROM->TO	G14-057T 345.00 - SUNNYSIDE 345KV CKT 1	717	789	0.044	113.1988	CIMARRON - NORTHWEST 345KV CKT 1
FDNS	00NR	3	20WP	G15_033	FROM->TO	G14-057T 345.00 - SUNNYSIDE 345KV CKT 1	717	789	0.04394	113.1962	CRINER - PAYNE 138.00 138KV CKT 1
FDNS	00NR	3	20WP	G15_033	FROM->TO	G14-057T 345.00 - SUNNYSIDE 345KV CKT 1	717	789	0.04345	113.1954	ARBUCKLE - MILLCREEK 138KV CKT 1
FDNS	00NR	3	20WP	G15_033	FROM->TO	G14-057T 345.00 - SUNNYSIDE 345KV CKT 1	717	789	0.04372	113.1826	GRDA1 - GREC TAP5 345.00 345KV CKT 1
FDNS	00NR	3	20WP	G15_033	FROM->TO	G14-057T 345.00 - SUNNYSIDE 345KV CKT 1	717	789	0.04371	113.182	GEN338146 1-INDEPENDENCE UNIT #2
FDNS	00NR	3	20WP	G15_033	FROM->TO	G14-057T 345.00 - SUNNYSIDE 345KV CKT 1	717	789	0.04379	113.1808	MARIETTA - MARIETTA4 138.00 138KV CKT 1
FDNS	00NR	3	20WP	G15_033	FROM->TO	G14-057T 345.00 - SUNNYSIDE 345KV CKT 1	717	789	0.04362	113.179	SEMINOLE (SEMINOL2) 345/138/14.4KV TRANSFORMER CKT 1
FDNS	00NR	3	20WP	G15_033	FROM->TO	G14-057T 345.00 - SUNNYSIDE 345KV CKT 1	717	789	0.0437	113.1781	HAMMETT TAP - HAMMETT2 138KV CKT 1
FDNS	00NR	3	20WP	G15_033	FROM->TO	G14-057T 345.00 - SUNNYSIDE 345KV CKT 1	717	789	0.0437	113.1777	P12:138:OKGE:3TERM20
FDNS	00NR	3	20WP	G15_033	FROM->TO	G14-057T 345.00 - SUNNYSIDE 345KV CKT 1	717	789	0.04373	113.1697	FRANKLIN - PINK SW 138KV CKT 1
FDNS	00NR	3	20WP	G15_033	FROM->TO	G14-057T 345.00 - SUNNYSIDE 345KV CKT 1	717	789	0.04383	113.1613	COMANCHE - WALTERS 69KV CKT 1
FDNS	00NR	3	20WP	G15_033	FROM->TO	G14-057T 345.00 - SUNNYSIDE 345KV CKT 1	717	789	0.04371	113.1598	GEN337766 1-TRACTEBEL UNIT S1
FDNS	00NR	3	20WP	G15_033	FROM->TO	G14-057T 345.00 - SUNNYSIDE 345KV CKT 1	717	789	0.04435	113.1517	DUNCAN EASTSIDE - OMPA-DUNCAN 821 138KV CKT 1

SOLUTION	GROUP	SCENARIO	SEASON	SOURCE	DIRECTION	MONITORED ELEMENT	RATEA (MVA)	RATEB(MVA)	TDF	TC%LOADING (% MVA)	CONTINGENCY
FDNS	00NR	3	16WP	G15_033	FROM->TO	G14-057T 345.00 - SUNNYSIDE 345KV CKT 1	717	789	0.04586	113.1368	GEN635214 4-NEAL UNIT 4
FDNS	00NR	3	16WP	G15_033	FROM->TO	G14-057T 345.00 - SUNNYSIDE 345KV CKT 1	717	789	0.04586	113.114	SHERBURNE CO 345/24.0KV TRANSFORMER CKT 1
FDNS	00NR	3	16WP	G15_033	FROM->TO	G14-057T 345.00 - SUNNYSIDE 345KV CKT 1	717	789	0.04586	113.0541	GEN563273 2-G15093_4 0.6900
FDNS	00NR	3	16WP	G15_033	FROM->TO	G14-057T 345.00 - SUNNYSIDE 345KV CKT 1	717	789	0.04944	113.0535	P12:230:AEPW:ELKCITY6:SWEETWT6
FDNS	00NR	3	16WP	G15_033	FROM->TO	G14-057T 345.00 - SUNNYSIDE 345KV CKT 1	717	789	0.04586	113.0172	GEN563043 1-G15068_4 0.6900
FDNS	00NR	3	16WP	G15_033	FROM->TO	G14-057T 345.00 - SUNNYSIDE 345KV CKT 1	717	789	0.04586	112.982	GEN600002 3-SHERBURNE CNTY G3
FDNS	00NR	3	16WP	G15_033	FROM->TO	G14-057T 345.00 - SUNNYSIDE 345KV CKT 1	717	789	0.04586	112.9613	GEN526333 1-JONES GEN #3 21 KV
FDNS	00NR	3	16WP	G15_033	FROM->TO	G14-057T 345.00 - SUNNYSIDE 345KV CKT 1	717	789	0.04586	112.9613	GEN526334 1-JONES_4 116.500
FDNS	00NR	3	16WP	G15_033	FROM->TO	G14-057T 345.00 - SUNNYSIDE 345KV CKT 1	717	789	0.04586	112.9458	GEN525844 1-ELK_1 118.000
FDNS	00NR	3	16WP	G15_033	FROM->TO	G14-057T 345.00 - SUNNYSIDE 345KV CKT 1	717	789	0.04586	112.9359	GEN525845 1-ELK_2 1 138.00
FDNS	00NR	3	16WP	G15_033	FROM->TO	G14-057T 345.00 - SUNNYSIDE 345KV CKT 1	717	789	0.04586	112.8887	GEN563202 1-G15085_3 0.5500
FDNS	00NR	3	16WP	G15_033	FROM->TO	G14-057T 345.00 - SUNNYSIDE 345KV CKT 1	717	789	0.04586	112.8859	GEN344225 1-1CAL G1 25.000
FDNS	00NR	3	16WP	G15_033	FROM->TO	G14-057T 345.00 - SUNNYSIDE 345KV CKT 1	717	789	0.04898	112.8448	CHISHOLM6 230.00 - SWEETWATER 230KV CKT 1
FDNS	00NR	3	20WP	G15_033	FROM->TO	G14-057T 345.00 - SUNNYSIDE 345KV CKT 1	717	789	0.04371	112.7369	803-OKLAUNION
FDNS	00NR	3	16WP	G15_033	FROM->TO	G14-057T 345.00 - SUNNYSIDE 345KV CKT 1	717	789	0.04586	112.7317	GEN635023 3-WALTER SCOTT UNIT 3
FDNS	00NR	3	16WP	G15_033	FROM->TO	G14-057T 345.00 - SUNNYSIDE 345KV CKT 1	717	789	0.04586	112.7248	GEN525562 1-TOLK GEN #2 24 KV
FDNS	00NR	3	16WP	G15_033	FROM->TO	G14-057T 345.00 - SUNNYSIDE 345KV CKT 1	717	789	0.04541	112.7045	JOHNSON COUNTY (JOHNCO) 345/138/13.8KV TRANSFORMER CKT 1
FDNS	00NR	3	16WP	G15_033	FROM->TO	G14-057T 345.00 - SUNNYSIDE 345KV CKT 1	717	789	0.04586	112.6872	GEN527166 1-MUSTANG_6 118.000
FDNS	00NR	3	16WP	G15_033	FROM->TO	G14-057T 345.00 - SUNNYSIDE 345KV CKT 1	717	789	0.04562	112.6872	LYDIA - WELSH 345KV CKT 1
FDNS	00NR	3	16WP	G15_033	FROM->TO	G14-057T 345.00 - SUNNYSIDE 345KV CKT 1	717	789	0.04562	112.6872	LYDIA - WELSH 345KV CKT 1
FDNS	00NR	3	16WP	G15_033	FROM->TO	G14-057T 345.00 - SUNNYSIDE 345KV CKT 1	717	789	0.04586	112.6545	GEN562590 1-G14_057_3 0.6900
FDNS	00NR	3	16WP	G15_033	FROM->TO	G14-057T 345.00 - SUNNYSIDE 345KV CKT 1	717	789	0.04586	112.5732	GEN562762 1-G15033_3 0.6900
FDNS	00NR	3	16WP	G15_033	FROM->TO	G14-057T 345.00 - SUNNYSIDE 345KV CKT 1	717	789	0.04586	112.5649	GEN562655 1-G14_074_3 0.6900
FDNS	00NR	3	16WP	G15_033	FROM->TO	G14-057T 345.00 - SUNNYSIDE 345KV CKT 1	717	789	0.04586	112.5446	GEN562685 1-G15_013_3 0.3550
FDNS	00NR	3	20WP	G15_033	FROM->TO	G14-057T 345.00 - SUNNYSIDE 345KV CKT 1	717	789	0.0431	112.4891	P12:138:OKGE:3TERM39
FDNS	06ALL	3	20SP	G15_033	FROM->TO	G14-057T 345.00 - SUNNYSIDE 345KV CKT 1	717	789	0.22497	112.4606	CIMARRON - MINCO 345KV CKT 1
FDNS	00NR	3	16WP	G15_033	FROM->TO	G14-057T 345.00 - SUNNYSIDE 345KV CKT 1	717	789	0.04586	112.4034	GEN563272 1-G15093_3 0.6900
FDNS	00NR	3	16WP	G15_033	FROM->TO	G14-057T 345.00 - SUNNYSIDE 345KV CKT 1	717	789	0.04586	112.3774	GEN525561 1-TOLK GEN #1 24 KV
FDNS	00NR	3	20WP	G15_033	FROM->TO	G14-057T 345.00 - SUNNYSIDE 345KV CKT 1	717	789	0.04371	112.3614	OKLAUNION 345/13.2KV TRANSFORMER CKT 1
FDNS	00NR	3	20WP	G15_033	FROM->TO	G14-057T 345.00 - SUNNYSIDE 345KV CKT 1	717	789	0.04307	112.3611	MAYSVILLE - PAOLI 138KV CKT 1
FDNS	00NR	3	20WP	G15_033	FROM->TO	G14-057T 345.00 - SUNNYSIDE 345KV CKT 1	717	789	0.04371	112.331	GEN560187 1-WTH WIND 0.5750
FDNS	00NR	3	20WP	G15_033	FROM->TO	G14-057T 345.00 - SUNNYSIDE 345KV CKT 1	717	789	0.04371	112.3239	GEN560112 1-G08_037_3 0.6900
FDNS	00NR	3	16WP	G15_033	FROM->TO	G14-057T 345.00 - SUNNYSIDE 345KV CKT 1	717	789	0.04586	112.3041	GEN635024 4-WALTER SCOTT UNIT 4
FDNS	00NR	3	20WP	G15_033	FROM->TO	G14-057T 345.00 - SUNNYSIDE 345KV CKT 1	717	789	0.04371	112.3022	GEN521103 1-BLUE CANYON WIND FARM
FDNS	00NR	3	20WP	G15_033	FROM->TO	G14-057T 345.00 - SUNNYSIDE 345KV CKT 1	717	789	0.04371	112.2917	GEN530690 1-PRWINDG1 0.6900
FDNS	00NR	3	20WP	G15_033	FROM->TO	G14-057T 345.00 - SUNNYSIDE 345KV CKT 1	717	789	0.04375	112.2896	DRAPER LAKE - MIDWEST TAP 138KV CKT 1
FDNS	00NR	3	16WP	G15_033	FROM->TO	G14-057T 345.00 - SUNNYSIDE 345KV CKT 1	717	789	0.04586	112.2878	GEN527903 1-HOBBS PLANT #3 (ST)
FDNS	00NR	3	20WP	G15_033	FROM->TO	G14-057T 345.00 - SUNNYSIDE 345KV CKT 1	717	789	0.04307	112.2863	MAYSVILLE - MAYSVLT4 138.00 138KV CKT 1
FDNS	00NR	3	20WP	G15_033	FROM->TO	G14-057T 345.00 - SUNNYSIDE 345KV CKT 1	717	789	0.04371	112.2805	GEN672392 1-NBECGT1G 18.000
FDNS	00NR	3	20WP	G15_033	FROM->TO	G14-057T 345.00 - SUNNYSIDE 345KV CKT 1	717	789	0.04371	112.275	P12:069:OKGE:3TERM42
FDNS	00NR	3	20WP	G15_033	FROM->TO	G14-057T 345.00 - SUNNYSIDE 345KV CKT 1	717	789	0.04371	112.2748	GEN562691 1-G15_015_3 0.6900
FDNS	00NR	3	20WP	G15_033	FROM->TO	G14-057T 345.00 - SUNNYSIDE 345KV CKT 1	717	789	0.04371	112.2715	GEN600046 1-MECST
FDNS	00NR	3	20WP	G15_033	FROM->TO	G14-057T 345.00 - SUNNYSIDE 345KV CKT 1	717	789	0.04371	112.2637	GEN520812 1-ANADRK5
FDNS	00NR	3	20WP	G15_033	FROM->TO	G14-057T 345.00 - SUNNYSIDE 345KV CKT 1	717	789	0.04371	112.2637	GEN520813 1-ANADRK6
FDNS	00NR	3	20WP	G15_033	FROM->TO	G14-057T 345.00 - SUNNYSIDE 345KV CKT 1	717	789	0.04371	112.2619	GEN629071 1-BURLINGTON GENERATOR FOR UNIT NO 1 E
FDNS	00NR	3	20WP	G15_033	FROM->TO	G14-057T 345.00 - SUNNYSIDE 345KV CKT 1	717	789	0.04371	112.2612	GEN563052 1-G15069_3 0.6900
FDNS	00NR	3	20WP	G15_033	FROM->TO	G14-057T 345.00 - SUNNYSIDE 345KV CKT 1	717	789	0.04371	112.2604	GEN511961 1-DEMPSEY-WTG10.7000
FDNS	00NR	3	20WP	G15_033	FROM->TO	G14-057T 345.00 - SUNNYSIDE 345KV CKT 1	717	789	0.04371	112.2589	GEN562772 1-G15034_3 0.6900
FDNS	00NR	3	20WP	G15_033	FROM->TO	G14-057T 345.00 - SUNNYSIDE 345KV CKT 1	717	789	0.04371	112.2585	GEN629070 2-BEAVER CHANNEL GENERATORFOR UNIT NO 2
FDNS	00NR	3	20WP	G15_033	FROM->TO	G14-057T 345.00 - SUNNYSIDE 345KV CKT 1	717	789	0.04371	112.2577	GEN600047 1-MECCT1
FDNS	00NR	3	20WP	G15_033	FROM->TO	G14-057T 345.00 - SUNNYSIDE 345KV CKT 1	717	789	0.04371	112.2543	GEN524022 1-NICHOLS GEN #2
FDNS	00NR	3	20WP	G15_033	FROM->TO	G14-057T 345.00 - SUNNYSIDE 345KV CKT 1	717	789	0.04368	112.2505	P12:138:WFEC:MSL11
FDNS	00NR	3	20WP	G15_033	FROM->TO	G14-057T 345.00 - SUNNYSIDE 345KV CKT 1	717	789	0.04368	112.2505	P12:138:WFEC-AEPW:PHAROAH4:LONEOAK4
FDNS	00NR	3	20WP	G15_033	FROM->TO	G14-057T 345.00 - SUNNYSIDE 345KV CKT 1	717	789	0.04371	112.249	GEN562074 1-G1149G1504 0.6900
FDNS	00NR	3	20WP	G15_033	FROM->TO	G14-057T 345.00 - SUNNYSIDE 345KV CKT 1	717	789	0.04371	112.2481	BURLINGTON NO1 + NO 2 + NO 3 161/20.0KV TRANSFORMER CKT 1
FDNS	00NR	3	20WP	G15_033	FROM->TO	G14-057T 345.00 - SUNNYSIDE 345KV CKT 1	717	789	0.04378	112.2461	P12:138:OKGE:3TERM21
FDNS	00NR	3	20WP	G15_033	FROM->TO	G14-057T 345.00 - SUNNYSIDE 345KV CKT 1	717	789	0.04368	112.2391	GLASSES - MADILL INDUSTRIAL TAP 138KV CKT 1
FDNS	00NR	3	20WP	G15_033	FROM->TO	G14-057T 345.00 - SUNNYSIDE 345KV CKT 1	717	789	0.04338	112.2357	ARBUCKLE - SULPHR 4 138.00 138KV CKT 1
FDNS	00NR	3	20WP	G15_033	FROM->TO	G14-057T 345.00 - SUNNYSIDE 345KV CKT 1	717	789	0.04367	112.2342	OVEXFRMCCOVE
FDNS	00NR	3	20WP	G15_033	FROM->TO	G14-057T 345.00 - SUNNYSIDE 345KV CKT 1	717	789	0.04371	112.2334	GEN615010 1-STANTON4
FDNS	00NR	3	20WP	G15_033	FROM->TO	G14-057T 345.00 - SUNNYSIDE 345KV CKT 1	717	789	0.04379	112.2332	MOREWOOD SW - NINE MILE 138KV CKT 1
FDNS	00NR	3	20WP	G15_033	FROM->TO	G14-057T 345.00 - SUNNYSIDE 345KV CKT 1	717	789	0.04371	112.2283	GEN615021 1-GRE-ER 14G 16.000
FDNS	00NR	3	20WP	G15_033	FROM->TO	G14-057T 345.00 - SUNNYSIDE 345KV CKT 1	717	789	0.04371	112.2271	GEN528361 1-MADDOX GEN #1
FDNS	00NR	3	20WP	G15_033	FROM->TO	G14-057T 345.00 - SUNNYSIDE 345KV CKT 1	717	789	0.04307	112.2204	MAYSVLT4 138.00 - PRAIRIE POINT 138KV CKT 1
FDNS	00NR	3	20WP	G15_033	FROM->TO	G14-057T 345.00 - SUNNYSIDE 345KV CKT 1	717	789	0.04373	112.2138	P12:138:WFEC:MSL08
FDNS	00NR	3	20WP	G15_033	FROM->TO	G14-057T 345.00 - SUNNYSIDE 345KV CKT 1	717	789	0.04371	112.2044	INDEPENDENCE 500/26.0KV TRANSFORMER CKT 1
FDNS	00NR	3	20WP	G15_033	FROM->TO	G14-057T 345.00 - SUNNYSIDE 345KV CKT 1	717	789	0.04395	112.2005	SOONER - SPRING CREEK 345KV CKT 1
FDNS	00NR	3	20WP	G15_033	FROM->TO	G14-057T 345.00 - SUNNYSIDE 345KV CKT 1	717	789	0.04395	112.1996	NORTHWEST - SPRING CREEK 345KV CKT 1
FDNS	00NR	3	20WP	G15_033	FROM->TO	G14-057T 345.00 - SUNNYSIDE 345KV CKT 1	717	789	0.04366	112.1996	HUGO (HUGO 1) 345/138/13.8KV TRANSFORMER CKT 1
FDNS	00NR	3	20WP	G15_033	FROM->TO	G14-057T 345.00 - SUNNYSIDE 345KV CKT 1	717	789	0.04365	112.195	CARTER - CHICKASAW 138KV CKT 1
FDNS	00NR	3	20WP	G15_033	FROM->TO	G14-057T 345.00 - SUNNYSIDE 345KV CKT 1	717	789	0.04368	112.189	CANEY CREEK - JOHNSON COUNTY 138KV CKT 1
FDNS	00NR	3	20WP	G15_033	FROM->TO	G14-057T 345.00 - SUNNYSIDE 345KV CKT 1	717	789	0.04371	112.1889	GEN531447 1-HOLCOMB GENERATOR
FDNS	00NR	3	20WP	G15_033	FROM->TO	G14-057T 345.00 - SUNNYSIDE 345KV CKT 1	717	789	0.04379	112.1841	LEBANON - TEXOMA JCT 138KV CKT 1
FDNS	00NR	3	20WP	G15_033	FROM->TO	G14-057T 345.00 - SUNNYSIDE 345KV CKT 1	717	789	0.04371	112.1823	GEN515443 1-MNCOWND1 0.7000
FDNS	00NR	3	20WP	G15_033	FROM->TO	G14-057T 345.00 - SUNNYSIDE 345KV CKT 1	717	789	0.04371	112.1817	GEN560183 1-REDHIL-WTG1 12.000
FDNS	00NR	3	20WP	G15_033	FROM->TO	G14-057T 345.00 - SUNNYSIDE 345KV CKT 1	717	789	0.04368	112.1796	GLASSES - RUSSETT 138KV CKT 1
FDNS	00NR	3	20WP	G15_033	FROM->TO	G14-057T 345.00 - SUNNYSIDE 345KV CKT 1	717	789	0.04371	112.1753	P12:230:UMZB:# 112 #: NU IN SD. NU-RCDC & DRY CREEK XFMR
FDNS	00NR	3	20WP	G15_033	FROM->TO	G14-057T 345.00 - SUNNYSIDE 345KV CKT 1	717	789	0.04371	112.175	RCDC EAST 4230.00 - RED CEDAR DC 230KV CKT 1
FDNS	00NR	3	20WP	G15_033	FROM->TO	G14-057T 345.00 - SUNNYSIDE 345KV CKT 1	717	789	0.04368	112.1717	CANADIAN RIVER - MCALESTER SOUTH 138KV CKT 1

SOLUTION	GROUP	SCENARIO	SEASON	SOURCE	DIRECTION	MONITORED ELEMENT	RATEA (MVA)	RATEB(MVA)	TDF	TC%LOADING (% MVA)	CONTINGENCY
FDNS	00NR	3	20WP	G15_033	FROM->TO	G14-057T 345.00 - SUNNYSIDE 345KV CKT 1	717	789	0.04368	112.1717	CANADIAN RIVER - MCALESTER SOUTH 138KV CKT 1
FDNS	00NR	3	20WP	G15_033	FROM->TO	G14-057T 345.00 - SUNNYSIDE 345KV CKT 1	717	789	0.04368	112.1699	CANADIAN RIVER () 345/138/13.8KV TRANSFORMER CKT 1
FDNS	00NR	3	20WP	G15_033	FROM->TO	G14-057T 345.00 - SUNNYSIDE 345KV CKT 1	717	789	0.04368	112.1699	CANADIAN RIVER () 345/138/13.8KV TRANSFORMER CKT 1
FDNS	00NR	3	20WP	G15_033	FROM->TO	G14-057T 345.00 - SUNNYSIDE 345KV CKT 1	717	789	0.04371	112.1687	GEN600067 9-HIGH BRIDGE
FDNS	00NR	3	20WP	G15_033	FROM->TO	G14-057T 345.00 - SUNNYSIDE 345KV CKT 1	717	789	0.04367	112.1665	CHAMBER SPRINGS - CLARKSVILLE 345KV CKT 1
FDNS	00NR	3	20WP	G15_033	FROM->TO	G14-057T 345.00 - SUNNYSIDE 345KV CKT 1	717	789	0.04368	112.1627	GRPRAR1-LNX3345.00 - HOLT.CO3 345.00 345KV CKT 1
FDNS	00NR	3	20WP	G15_033	FROM->TO	G14-057T 345.00 - SUNNYSIDE 345KV CKT 1	717	789	0.04396	112.1618	ALTUS JUNCTION - RUSSELL 138KV CKT 1
FDNS	00NR	3	20WP	G15_033	FROM->TO	G14-057T 345.00 - SUNNYSIDE 345KV CKT 1	717	789	0.04396	112.1618	ALTUS JUNCTION - RUSSELL 138KV CKT 1
FDNS	00NR	3	20WP	G15_033	FROM->TO	G14-057T 345.00 - SUNNYSIDE 345KV CKT 1	717	789	0.04368	112.155	GRPRAR1-LNX3345.00 - YANKTON 345KV CKT Z
FDNS	00NR	3	20WP	G15_033	FROM->TO	G14-057T 345.00 - SUNNYSIDE 345KV CKT 1	717	789	0.04355	112.1356	ROCKY POINT - SPRINGDALE 138KV CKT 1
FDNS	00NR	3	20WP	G15_033	FROM->TO	G14-057T 345.00 - SUNNYSIDE 345KV CKT 1	717	789	0.04371	112.1305	GEN563242 1-G15090_3 0.6900
FDNS	00NR	3	20WP	G15_033	FROM->TO	G14-057T 345.00 - SUNNYSIDE 345KV CKT 1	717	789	0.04307	112.1291	PRAIRIE POINT - RATLIFF 138KV CKT 1
FDNS	00NR	3	20WP	G15_033	FROM->TO	G14-057T 345.00 - SUNNYSIDE 345KV CKT 1	717	789	0.04371	112.1102	GEN562802 1-G15039_3 0.3570
FDNS	00NR	3	20WP	G15_033	FROM->TO	G14-057T 345.00 - SUNNYSIDE 345KV CKT 1	717	789	0.04371	112.1083	GEN629072 4-LANSING GENERATOR FOR UNITS NO4 EIA CODE 1
FDNS	00NR	3	20WP	G15_033	FROM->TO	G14-057T 345.00 - SUNNYSIDE 345KV CKT 1	717	789	0.04371	112.1022	GEN524285 1-WILDORADO WIND GEN
FDNS	00NR	3	20WP	G15_033	FROM->TO	G14-057T 345.00 - SUNNYSIDE 345KV CKT 1	717	789	0.04371	112.0997	GEN562078 1-G11_051_3 0.6900
FDNS	00NR	3	20WP	G15_033	FROM->TO	G14-057T 345.00 - SUNNYSIDE 345KV CKT 1	717	789	0.04379	112.0986	BEARCAT 138.00 - NINE MILE 138KV CKT 1
FDNS	00NR	3	20WP	G15_033	FROM->TO	G14-057T 345.00 - SUNNYSIDE 345KV CKT 1	717	789	0.04371	112.0984	GEN562902 1-G15052_3 0.6900
FDNS	00NR	3	20WP	G15_033	FROM->TO	G14-057T 345.00 - SUNNYSIDE 345KV CKT 1	717	789	0.04371	112.0919	GEN560331 1-G10-46 13.800
FDNS	00NR	3	20WP	G15_033	FROM->TO	G14-057T 345.00 - SUNNYSIDE 345KV CKT 1	717	789	0.04338	112.0909	JOLLYVILLE - SULPHR 4 138.00 138KV CKT 1
FDNS	00NR	3	20WP	G15_033	FROM->TO	G14-057T 345.00 - SUNNYSIDE 345KV CKT 1	717	789	0.04371	112.0797	GEN524295 1-SPNSPUR_WND10.6900
FDNS	00NR	3	20WP	G15_033	FROM->TO	G14-057T 345.00 - SUNNYSIDE 345KV CKT 1	717	789	0.04371	112.0627	GEN562269 1-G12-020-1 0.6900
FDNS	00NR	3	20WP	G15_033	FROM->TO	G14-057T 345.00 - SUNNYSIDE 345KV CKT 1	717	789	0.04501	112.0616	P12:138:AEPW:112GORE4:SNYDER-4
FDNS	00NR	3	20WP	G15_033	FROM->TO	G14-057T 345.00 - SUNNYSIDE 345KV CKT 1	717	789	0.04371	112.0563	GEN657749 1-YOUNG 1 GENERATOR
FDNS	00NR	3	20WP	G15_033	FROM->TO	G14-057T 345.00 - SUNNYSIDE 345KV CKT 1	717	789	0.04371	112.0474	GEN524023 1-NICHOLS GEN #3 22 KV
FDNS	00NR	3	20WP	G15_033	FROM->TO	G14-057T 345.00 - SUNNYSIDE 345KV CKT 1	717	789	0.04371	112.0431	GEN562587 1-G14_056_3 0.6900
FDNS	00NR	3	20WP	G15_033	FROM->TO	G14-057T 345.00 - SUNNYSIDE 345KV CKT 1	717	789	0.04365	112.0342	CROCKETT - TENASKA RUSK COUNTY 345KV CKT 1
FDNS	00NR	3	20WP	G15_033	FROM->TO	G14-057T 345.00 - SUNNYSIDE 345KV CKT 1	717	789	0.04365	112.0295	LEBROCK - TENASKA RUSK COUNTY 345KV CKT 1
FDNS	00NR	3	20WP	G15_033	FROM->TO	G14-057T 345.00 - SUNNYSIDE 345KV CKT 1	717	789	0.04338	112.0267	JOLLYVILLE - KERR MCGEE CIMARRON 138KV CKT 1
FDNS	00NR	3	20WP	G15_033	FROM->TO	G14-057T 345.00 - SUNNYSIDE 345KV CKT 1	717	789	0.04371	112.0213	GEN514805 1-SOONER UNIT 1
FDNS	00NR	3	20WP	G15_033	FROM->TO	G14-057T 345.00 - SUNNYSIDE 345KV CKT 1	717	789	0.04371	112.0195	GEN562270 1-G12-020-2 0.6900
FDNS	00NR	3	20WP	G15_033	FROM->TO	G14-057T 345.00 - SUNNYSIDE 345KV CKT 1	717	789	0.04379	112.0152	P12:138:WFEC:MSL14
FDNS	00NR	3	20WP	G15_033	FROM->TO	G14-057T 345.00 - SUNNYSIDE 345KV CKT 1	717	789	0.04371	112.0124	GEN562812 1-G15040_3 0.3570
FDNS	00NR	3	20WP	G15_033	FROM->TO	G14-057T 345.00 - SUNNYSIDE 345KV CKT 1	717	789	0.04371	112.0057	GEN563132 1-G15078_3 0.3570
FDNS	00NR	3	20WP	G15_033	FROM->TO	G14-057T 345.00 - SUNNYSIDE 345KV CKT 1	717	789	0.04371	112.0042	GEN563102 1-G15075_3 0.5500
FDNS	00NR	3	20WP	G15_033	FROM->TO	G14-057T 345.00 - SUNNYSIDE 345KV CKT 1	717	789	0.04379	112.0014	BEARCAT 138.00 - MOORELAND 138KV CKT 1
FDNS	00NR	3	20WP	G15_033	FROM->TO	G14-057T 345.00 - SUNNYSIDE 345KV CKT 1	717	789	0.04371	111.9826	GEN514806 1-SOONER UNIT 2
FDNS	00NR	3	20WP	G15_033	FROM->TO	G14-057T 345.00 - SUNNYSIDE 345KV CKT 1	717	789	0.04338	111.9786	ARBWIND4 138.00 - KERR MCGEE CIMARRON 138KV CKT 1
FDNS	00NR	3	20WP	G15_033	FROM->TO	G14-057T 345.00 - SUNNYSIDE 345KV CKT 1	717	789	0.04371	111.9602	GEN563062 1-G15071_3 0.6900
FDNS	00NR	3	20WP	G15_033	FROM->TO	G14-057T 345.00 - SUNNYSIDE 345KV CKT 1	717	789	0.04371	111.9581	GEN562974 1-G15060_5 0.6900
FDNS	00NR	3	20WP	G15_033	FROM->TO	G14-057T 345.00 - SUNNYSIDE 345KV CKT 1	717	789	0.04361	111.9556	BROWN - RUSSETT 138KV CKT 1
FDNS	00NR	3	20WP	G15_033	FROM->TO	G14-057T 345.00 - SUNNYSIDE 345KV CKT 1	717	789	0.04371	111.9486	GEN562973 1-G15060_4 0.6900
FDNS	00NR	3	20WP	G15_033	FROM->TO	G14-057T 345.00 - SUNNYSIDE 345KV CKT 1	717	789	0.04371	111.946	GEN562882 1-G15047_3 0.6900
FDNS	00NR	3	20WP	G15_033	FROM->TO	G14-057T 345.00 - SUNNYSIDE 345KV CKT 1	717	789	0.04343	111.9359	CHICKASAW - TOTAL 138KV CKT 1
FDNS	00NR	3	20WP	G15_033	FROM->TO	G14-057T 345.00 - SUNNYSIDE 345KV CKT 1	717	789	0.04371	111.9289	4SIOUX 1 138.00 138/18.0KV TRANSFORMER CKT 1
FDNS	00NR	3	20WP	G15_033	FROM->TO	G14-057T 345.00 - SUNNYSIDE 345KV CKT 1	717	789	0.04371	111.9226	GEN345671 2-1RUSH G2 18.000
FDNS	00NR	3	20WP	G15_033	FROM->TO	G14-057T 345.00 - SUNNYSIDE 345KV CKT 1	717	789	0.04371	111.9207	GEN345670 1-1RUSH G1 18.000
FDNS	00NR	3	20WP	G15_033	FROM->TO	G14-057T 345.00 - SUNNYSIDE 345KV CKT 1	717	789	0.04371	111.9144	GEN521112 1-ORME3 13.800
FDNS	00NR	3	20WP	G15_033	FROM->TO	G14-057T 345.00 - SUNNYSIDE 345KV CKT 1	717	789	0.04371	111.8984	GEN562550 1-G14_040_3 0.6900
FDNS	00NR	3	20WP	G15_033	FROM->TO	G14-057T 345.00 - SUNNYSIDE 345KV CKT 1	717	789	0.04371	111.8906	GEN560105 1-G08-22 0.6900
FDNS	00NR	3	20WP	G15_033	FROM->TO	G14-057T 345.00 - SUNNYSIDE 345KV CKT 1	717	789	0.04361	111.8858	RUSSETT - RUSSETT 138KV CKT 1
FDNS	00NR	3	20WP	G15_033	FROM->TO	G14-057T 345.00 - SUNNYSIDE 345KV CKT 1	717	789	0.04371	111.8813	GEN681522 3-GENOA 3
FDNS	00NR	3	20WP	G15_033	FROM->TO	G14-057T 345.00 - SUNNYSIDE 345KV CKT 1	717	789	0.04371	111.8617	EASTDC - ERCOT EQUIVALENCE 345KV CKT 1
FDNS	00NR	3	20WP	G15_033	FROM->TO	G14-057T 345.00 - SUNNYSIDE 345KV CKT 1	717	789	0.04371	111.8516	GEN527161 1-MUSTANG GEN #1
FDNS	00NR	3	20WP	G15_033	FROM->TO	G14-057T 345.00 - SUNNYSIDE 345KV CKT 1	717	789	0.04371	111.8516	GEN527162 1-MUSTANG GEN #2
FDNS	00NR	3	20WP	G15_033	FROM->TO	G14-057T 345.00 - SUNNYSIDE 345KV CKT 1	717	789	0.04371	111.8431	GEN511962 2-RKYRDGW2-1 0.7000
FDNS	00NR	3	20WP	G15_033	FROM->TO	G14-057T 345.00 - SUNNYSIDE 345KV CKT 1	717	789	0.04358	111.8397	RUSSETT - SPRINGDALE 138KV CKT 1
FDNS	00NR	3	20WP	G15_033	FROM->TO	G14-057T 345.00 - SUNNYSIDE 345KV CKT 1	717	789	0.04349	111.8375	ROCKY POINT - SUNNYSIDE 138KV CKT 1
FDNS	00NR	3	20WP	G15_033	FROM->TO	G14-057T 345.00 - SUNNYSIDE 345KV CKT 1	717	789	0.04371	111.8234	GEN563192 1-G15084_3 0.5500
FDNS	00NR	3	20WP	G15_033	FROM->TO	G14-057T 345.00 - SUNNYSIDE 345KV CKT 1	717	789	0.04371	111.8199	GEN672321 1-SHAND GENERATOR 1
FDNS	00NR	3	20WP	G15_033	FROM->TO	G14-057T 345.00 - SUNNYSIDE 345KV CKT 1	717	789	0.04371	111.8109	GEN525494 1-PLANT X GEN #4 20 KV
FDNS	00NR	3	20WP	G15_033	FROM->TO	G14-057T 345.00 - SUNNYSIDE 345KV CKT 1	717	789	0.04373	111.8036	P12:138:WFEC:MSL16
FDNS	00NR	3	20WP	G15_033	FROM->TO	G14-057T 345.00 - SUNNYSIDE 345KV CKT 1	717	789	0.04371	111.801	GEN527882 1-CUNNINGHAM GEN #2 20 KV
FDNS	00NR	3	20WP	G15_033	FROM->TO	G14-057T 345.00 - SUNNYSIDE 345KV CKT 1	717	789	0.04375	111.7986	ARKANSAS NUCLEAR ONE - FT SMITH 500KV CKT 1
FDNS	00NR	3	20WP	G15_033	FROM->TO	G14-057T 345.00 - SUNNYSIDE 345KV CKT 1	717	789	0.04375	111.7986	ARKANSAS NUCLEAR ONE - FT SMITH 500KV CKT 1
FDNS	00NR	3	20WP	G15_033	FROM->TO	G14-057T 345.00 - SUNNYSIDE 345KV CKT 1	717	789	0.04371	111.7971	GEN672310 1-POPLAR RIVER GENERATOR 1
FDNS	00NR	3	20WP	G15_033	FROM->TO	G14-057T 345.00 - SUNNYSIDE 345KV CKT 1	717	789	0.04371	111.7971	GEN672311 2-POPLAR RIVER GENERATOR 2
FDNS	00NR	3	20WP	G15_033	FROM->TO	G14-057T 345.00 - SUNNYSIDE 345KV CKT 1	717	789	0.04368	111.7968	P12:138:WFEC-AEPW:GOLDENSW4:CRAIGJT4
FDNS	00NR	3	20WP	G15_033	FROM->TO	G14-057T 345.00 - SUNNYSIDE 345KV CKT 1	717	789	0.04371	111.7885	GEN527163 1-MUSTANG GEN #3 22 KV
FDNS	00NR	3	20WP	G15_033	FROM->TO	G14-057T 345.00 - SUNNYSIDE 345KV CKT 1	717	789	0.04371	111.7879	GEN672306 6-BOUNDARY DAM GENERATOR 6
FDNS	00NR	3	20WP	G15_033	FROM->TO	G14-057T 345.00 - SUNNYSIDE 345KV CKT 1	717	789	0.04371	111.7862	CLAY BOSWELL 230/20.9KV TRANSFORMER CKT 1
FDNS	00NR	3	20WP	G15_033	FROM->TO	G14-057T 345.00 - SUNNYSIDE 345KV CKT 1	717	789	0.04371	111.7723	GEN344895 2-1LAB G2 20.000
FDNS	00NR	3	20WP	G15_033	FROM->TO	G14-057T 345.00 - SUNNYSIDE 345KV CKT 1	717	789	0.04371	111.7675	GEN562892 1-G15048_3 0.6900
FDNS	00NR	3	20WP	G15_033	FROM->TO	G14-057T 345.00 - SUNNYSIDE 345KV CKT 1	717	789	0.04371	111.7562	GEN681542 6-JP MADGETT
FDNS	00NR	3	20WP	G15_033	FROM->TO	G14-057T 345.00 - SUNNYSIDE 345KV CKT 1	717	789	0.04371	111.7494	GEN523461 1-BLACKHAWK GEN #1
FDNS	00NR	3	20WP	G15_033	FROM->TO	G14-057T 345.00 - SUNNYSIDE 345KV CKT 1	717	789	0.04371	111.7493	GEN523462 1-BLACKHAWK GEN #2
FDNS	00NR	3	20WP	G15_033	FROM->TO	G14-057T 345.00 - SUNNYSIDE 345KV CKT 1	717	789	0.04371	111.7451	GEN562512 1-G14_020_3 0.6900
FDNS	00NR	3	20WP	G15_033	FROM->TO	G14-057T 345.00 - SUNNYSIDE 345KV CKT 1	717	789	0.04371	111.7429	GEN344896 3-1LAB G3 20.000
FDNS	00NR	3	20WP	G15_033	FROM->TO	G14-057T 345.00 - SUNNYSIDE 345KV CKT 1	717	789	0.04371	111.7418	GEN344897 4-1LAB G4 20.000

SOLUTION	GROUP	SCENARIO	SEASON	SOURCE	DIRECTION	MONITORED ELEMENT	RATEA (MVA)	RATEB(MVA)	TDF	TC%LOADING (% MVA)	CONTINGENCY
FDNS	00NR	3	20WP	G15_033	FROM->TO	G14-057T 345.00 - SUNNYSIDE 345KV CKT 1	717	789	0.04371	111.7415	GEN344894 1-1LAB G1 20.000
FDNS	00NR	3	20WP	G15_033	FROM->TO	G14-057T 345.00 - SUNNYSIDE 345KV CKT 1	717	789	0.04326	111.7395	ARDMORE WEST - CARTER 138KV CKT 1
FDNS	00NR	3	20WP	G15_033	FROM->TO	G14-057T 345.00 - SUNNYSIDE 345KV CKT 1	717	789	0.04369	111.7199	P12:138:WFEC:MSL07
FDNS	00NR	3	20WP	G15_033	FROM->TO	G14-057T 345.00 - SUNNYSIDE 345KV CKT 1	717	789	0.04369	111.7199	P12:138:WFEC-AEPW:HUGOPP4:ATOKA--4
FDNS	00NR	3	20WP	G15_033	FROM->TO	G14-057T 345.00 - SUNNYSIDE 345KV CKT 1	717	789	0.04371	111.7048	ALMA 161 161/24.0KV TRANSFORMER CKT 1
FDNS	00NR	3	20WP	G15_033	FROM->TO	G14-057T 345.00 - SUNNYSIDE 345KV CKT 1	717	789	0.04352	111.7045	CLARKSVILLE - MUSKOGEE 345KV CKT 1
FDNS	00NR	3	20WP	G15_033	FROM->TO	G14-057T 345.00 - SUNNYSIDE 345KV CKT 1	717	789	0.04352	111.7045	CLARKSVILLE - MUSKOGEE 345KV CKT 1
FDNS	00NR	3	20WP	G15_033	FROM->TO	G14-057T 345.00 - SUNNYSIDE 345KV CKT 1	717	789	0.04369	111.7032	P12:138:AEPW-SWPA:LONEOAK4:TUPELO4
FDNS	00NR	3	20WP	G15_033	FROM->TO	G14-057T 345.00 - SUNNYSIDE 345KV CKT 1	717	789	0.04369	111.7032	P12:138:WFEC:MSL06
FDNS	00NR	3	20WP	G15_033	FROM->TO	G14-057T 345.00 - SUNNYSIDE 345KV CKT 1	717	789	0.04409	111.7023	G15063_T 345.00 - MATHWSN7 345.00 345KV CKT 1
FDNS	00NR	3	20WP	G15_033	FROM->TO	G14-057T 345.00 - SUNNYSIDE 345KV CKT 1	717	789	0.04324	111.6849	SUNNYSIDE (SUNNYSD5) 345/138/13.8KV TRANSFORMER CKT 1
FDNS	00NR	3	20WP	G15_033	FROM->TO	G14-057T 345.00 - SUNNYSIDE 345KV CKT 1	717	789	0.04371	111.6757	GEN511853 1-COMANCHE #3
FDNS	00NR	3	20WP	G15_033	FROM->TO	G14-057T 345.00 - SUNNYSIDE 345KV CKT 1	717	789	0.04371	111.6729	GEN562699 1-G15_018_3 0.6900
FDNS	00NR	3	20WP	G15_033	FROM->TO	G14-057T 345.00 - SUNNYSIDE 345KV CKT 1	717	789	0.04371	111.6577	GEN511852 1-COMANCHE #2
FDNS	00NR	3	20WP	G15_033	FROM->TO	G14-057T 345.00 - SUNNYSIDE 345KV CKT 1	717	789	0.044	111.6515	G15085_T 138.00 - RUSSELL 138KV CKT 1
FDNS	00NR	3	20WP	G15_033	FROM->TO	G14-057T 345.00 - SUNNYSIDE 345KV CKT 1	717	789	0.04371	111.6515	GEN521111 1-ORME2 13.800
FDNS	06NR	3	17G	G15_033	FROM->TO	G14-057T 345.00 - SUNNYSIDE 345KV CKT 1	717	789	0.06354	111.6407	GRACEMONT - MINCO 345KV CKT 1
FDNS	00NR	3	20WP	G15_033	FROM->TO	G14-057T 345.00 - SUNNYSIDE 345KV CKT 1	717	789	0.04371	111.6384	GEN521110 1-ORME1 13.800
FDNS	00NR	3	20WP	G15_033	FROM->TO	G14-057T 345.00 - SUNNYSIDE 345KV CKT 1	717	789	0.04501	111.6377	CACHE - SNYDER 138KV CKT 1
FDNS	00NR	3	20WP	G15_033	FROM->TO	G14-057T 345.00 - SUNNYSIDE 345KV CKT 1	717	789	0.04371	111.6367	GEN563162 1-G15081_3 0.6900
FDNS	00NR	3	20WP	G15_033	FROM->TO	G14-057T 345.00 - SUNNYSIDE 345KV CKT 1	717	789	0.04326	111.6278	ARDMORE WEST - UNIROYAL 138KV CKT 1
FDNS	00NR	3	20WP	G15_033	FROM->TO	G14-057T 345.00 - SUNNYSIDE 345KV CKT 1	717	789	0.04348	111.6071	P12:138:OKGE:3TERM40
FDNS	00NR	3	20WP	G15_033	FROM->TO	G14-057T 345.00 - SUNNYSIDE 345KV CKT 1	717	789	0.04371	111.6034	GEN563292 1-G15095_3 0.6900
FDNS	00NR	3	20WP	G15_033	FROM->TO	G14-057T 345.00 - SUNNYSIDE 345KV CKT 1	717	789	0.04328	111.6006	CARTRCO4 138.00 - RATLIFF 138KV CKT 1
FDNS	00NR	3	20WP	G15_033	FROM->TO	G14-057T 345.00 - SUNNYSIDE 345KV CKT 1	717	789	0.04371	111.5965	GEN661015 1-COYOTE
FDNS	00NR	3	20WP	G15_033	FROM->TO	G14-057T 345.00 - SUNNYSIDE 345KV CKT 1	717	789	0.04371	111.5916	GEN520811 1-ANADRK4
FDNS	00NR	3	20WP	G15_033	FROM->TO	G14-057T 345.00 - SUNNYSIDE 345KV CKT 1	717	789	0.04371	111.5842	GEN563122 1-G15077_3 0.3850
FDNS	00NR	3	20WP	G15_033	FROM->TO	G14-057T 345.00 - SUNNYSIDE 345KV CKT 1	717	789	0.04371	111.5841	GEN562861 1-G15045_2 0.4800
FDNS	06NR	3	20L	G15_033	FROM->TO	G14-057T 345.00 - SUNNYSIDE 345KV CKT 1	717	789	0.08638	111.5658	GRACEMONT - LAWTON EASTSIDE 345KV CKT 1
FDNS	06NR	3	20L	G15_033	FROM->TO	G14-057T 345.00 - SUNNYSIDE 345KV CKT 1	717	789	0.08638	111.5658	GRACEMONT - LAWTON EASTSIDE 345KV CKT 1
FDNS	00NR	3	16WP	G15_033	FROM->TO	G14-057T 345.00 - SUNNYSIDE 345KV CKT 1	717	789	0.04552	111.5235	LYDIA - VALLIANT 345KV CKT 1
FDNS	00NR	3	16WP	G15_033	FROM->TO	G14-057T 345.00 - SUNNYSIDE 345KV CKT 1	717	789	0.04552	111.5235	LYDIA - VALLIANT 345KV CKT 1
FDNS	00NR	3	20WP	G15_033	FROM->TO	G14-057T 345.00 - SUNNYSIDE 345KV CKT 1	717	789	0.04371	111.4854	GEN657748 1-YOUNG 2 GENERATOR
FDNS	00NR	3	20WP	G15_033	FROM->TO	G14-057T 345.00 - SUNNYSIDE 345KV CKT 1	717	789	0.04371	111.469	GEN527883 1-CUNNINGHAM GEN #3 22 KV
FDNS	00NR	3	20WP	G15_033	FROM->TO	G14-057T 345.00 - SUNNYSIDE 345KV CKT 1	717	789	0.04371	111.4671	GEN527884 1-CUNNINGHAM GEN #4 22 KV
FDNS	00NR	3	20WP	G15_033	FROM->TO	G14-057T 345.00 - SUNNYSIDE 345KV CKT 1	717	789	0.04368	111.4614	P12:138:WFEC:MSL15
FDNS	00NR	3	20WP	G15_033	FROM->TO	G14-057T 345.00 - SUNNYSIDE 345KV CKT 1	717	789	0.04402	111.4581	P12:138:AEPW:SHAM4WT:CHILD4WT
FDNS	00NR	3	20WP	G15_033	FROM->TO	G14-057T 345.00 - SUNNYSIDE 345KV CKT 1	717	789	0.04533	111.4324	GRAPEVINE INTERCHANGE - STATELINE INTERCHANGE 230KV CKT 1
FDNS	00NR	3	20WP	G15_033	FROM->TO	G14-057T 345.00 - SUNNYSIDE 345KV CKT 1	717	789	0.04533	111.4324	GRAPEVINE INTERCHANGE - STATELINE INTERCHANGE 230KV CKT 1
FDNS	00NR	3	20WP	G15_033	FROM->TO	G14-057T 345.00 - SUNNYSIDE 345KV CKT 1	717	789	0.04326	111.4125	SUNNYSIDE - UNIROYAL 138KV CKT 1
FDNS	00NR	3	20WP	G15_033	FROM->TO	G14-057T 345.00 - SUNNYSIDE 345KV CKT 1	717	789	0.04371	111.409	GEN526331 1-JONES GEN #1 22 KV
FDNS	00NR	3	20WP	G15_033	FROM->TO	G14-057T 345.00 - SUNNYSIDE 345KV CKT 1	717	789	0.04371	111.4088	GEN526332 1-JONES GEN #2 21 KV
FDNS	00NR	3	20WP	G15_033	FROM->TO	G14-057T 345.00 - SUNNYSIDE 345KV CKT 1	717	789	0.04371	111.3952	GEN620315 1-BIG STONE GEN
FDNS	00NR	3	20WP	G15_033	FROM->TO	G14-057T 345.00 - SUNNYSIDE 345KV CKT 1	717	789	0.04371	111.3866	GEN562704 1-G15_020_3 0.3550
FDNS	00NR	3	20WP	G15_033	FROM->TO	G14-057T 345.00 - SUNNYSIDE 345KV CKT 1	717	789	0.04371	111.3544	GEN562992 1-G15063_3 0.6900
FDNS	00NR	3	20WP	G15_033	FROM->TO	G14-057T 345.00 - SUNNYSIDE 345KV CKT 1	717	789	0.04371	111.3255	GEN563173 1-G15082_3 0.6900
FDNS	00NR	3	20WP	G15_033	FROM->TO	G14-057T 345.00 - SUNNYSIDE 345KV CKT 1	717	789	0.04371	111.3209	GEN600004 2-PRAIRIE ISLAND G2
FDNS	00NR	3	20WP	G15_033	FROM->TO	G14-057T 345.00 - SUNNYSIDE 345KV CKT 1	717	789	0.04371	111.3184	GEN600003 1-PRAIRIE ISLAND G1
FDNS	00NR	3	20WP	G15_033	FROM->TO	G14-057T 345.00 - SUNNYSIDE 345KV CKT 1	717	789	0.04371	111.3183	GEN562952 1-G15057_3 0.6500
FDNS	00NR	3	20WP	G15_033	FROM->TO	G14-057T 345.00 - SUNNYSIDE 345KV CKT 1	717	789	0.04532	111.3114	GRAPEVINE INTERCHANGE - NICHOLS STATION 230KV CKT 1
FDNS	00NR	3	20WP	G15_033	FROM->TO	G14-057T 345.00 - SUNNYSIDE 345KV CKT 1	717	789	0.04532	111.3114	GRAPEVINE INTERCHANGE - NICHOLS STATION 230KV CKT 1
FDNS	00NR	3	20WP	G15_033	FROM->TO	G14-057T 345.00 - SUNNYSIDE 345KV CKT 1	717	789	0.04371	111.3018	GEN562710 1-G15_022_3 0.5500
FDNS	00NR	3	20WP	G15_033	FROM->TO	G14-057T 345.00 - SUNNYSIDE 345KV CKT 1	717	789	0.04371	111.2981	GEN600006 1-AS KING
FDNS	00NR	3	20WP	G15_033	FROM->TO	G14-057T 345.00 - SUNNYSIDE 345KV CKT 1	717	789	0.04379	111.2161	CANEY CREEK - TEXOMA JCT 138KV CKT 1
FDNS	00NR	3	20WP	G15_033	FROM->TO	G14-057T 345.00 - SUNNYSIDE 345KV CKT 1	717	789	0.04423	111.1831	P12:138:AEPW-OGE:CORNVIL4:CIMARON4
FDNS	00NR	3	20WP	G15_033	FROM->TO	G14-057T 345.00 - SUNNYSIDE 345KV CKT 1	717	789	0.04371	111.1657	GEN511851 1-COMANCHE #1
FDNS	00NR	3	20WP	G15_033	FROM->TO	G14-057T 345.00 - SUNNYSIDE 345KV CKT 1	717	789	0.04371	111.1252	GEN615001 1-COAL CREEK
FDNS	00NR	3	20WP	G15_033	FROM->TO	G14-057T 345.00 - SUNNYSIDE 345KV CKT 1	717	789	0.04371	111.1247	GEN629074 1-ARNOLD LOWSIDE OF GSU XFMR
FDNS	00NR	3	20WP	G15_033	FROM->TO	G14-057T 345.00 - SUNNYSIDE 345KV CKT 1	717	789	0.04371	111.1227	GEN635213 3-NEAL UNIT 3
FDNS	00NR	3	20WP	G15_033	FROM->TO	G14-057T 345.00 - SUNNYSIDE 345KV CKT 1	717	789	0.04651	111.1209	CHISHOLM7 345.00 () 345/230/13.2KV TRANSFORMER CKT 1
FDNS	00NR	3	20WP	G15_033	FROM->TO	G14-057T 345.00 - SUNNYSIDE 345KV CKT 1	717	789	0.04371	111.1133	BIG STONE 230/24.0KV TRANSFORMER CKT 1
FDNS	00NR	3	20WP	G15_033	FROM->TO	G14-057T 345.00 - SUNNYSIDE 345KV CKT 1	717	789	0.04371	111.1093	GEN532751 1-WOLF CREEK GENERATING STATION UNIT 1
FDNS	00NR	3	20WP	G15_033	FROM->TO	G14-057T 345.00 - SUNNYSIDE 345KV CKT 1	717	789	0.0437	111.1022	P12:138:WFEC:MSL09
FDNS	00NR	3	20WP	G15_033	FROM->TO	G14-057T 345.00 - SUNNYSIDE 345KV CKT 1	717	789	0.04371	111.1005	GEN615002 2-COAL CREEK
FDNS	00NR	3	20WP	G15_033	FROM->TO	G14-057T 345.00 - SUNNYSIDE 345KV CKT 1	717	789	0.04371	111.0541	GEN562754 1-G15031_5 0.6900
FDNS	00NR	3	20WP	G15_033	FROM->TO	G14-057T 345.00 - SUNNYSIDE 345KV CKT 1	717	789	0.04354	111.0384	NORTHWEST TEXARKANA - VALLIANT 345KV CKT 1
FDNS	00NR	3	20WP	G15_033	FROM->TO	G14-057T 345.00 - SUNNYSIDE 345KV CKT 1	717	789	0.04354	111.0384	NORTHWEST TEXARKANA - VALLIANT 345KV CKT 1
FDNS	00NR	3	20WP	G15_033	FROM->TO	G14-057T 345.00 - SUNNYSIDE 345KV CKT 1	717	789	0.04371	111.0303	GEN636641 1-LOUISA UNIT 1
FDNS	00NR	3	20WP	G15_033	FROM->TO	G14-057T 345.00 - SUNNYSIDE 345KV CKT 1	717	789	0.04371	111.0045	GEN600005 1-MONTICELLO
FDNS	00NR	3	20WP	G15_033	FROM->TO	G14-057T 345.00 - SUNNYSIDE 345KV CKT 1	717	789	0.04371	110.999	GEN562756 1-G15031_7 0.6900
FDNS	00NR	3	20WP	G15_033	FROM->TO	G14-057T 345.00 - SUNNYSIDE 345KV CKT 1	717	789	0.04371	110.9595	GEN562556 1-G14_046_3 0.3420
FDNS	00NR	3	20WP	G15_033	FROM->TO	G14-057T 345.00 - SUNNYSIDE 345KV CKT 1	717	789	0.04651	110.9067	CHISHOLM7 345.00 - GRACEMONT 345KV CKT 1
FDNS	00NR	3	20WP	G15_033	FROM->TO	G14-057T 345.00 - SUNNYSIDE 345KV CKT 1	717	789	0.04371	110.8979	GEN562023 1-G11_020_3 0.6900
FDNS	00NR	3	20WP	G15_033	FROM->TO	G14-057T 345.00 - SUNNYSIDE 345KV CKT 1	717	789	0.04371	110.8979	GEN562026 1-G11_019_3 0.6900
FDNS	00NR	3	20WP	G15_033	FROM->TO	G14-057T 345.00 - SUNNYSIDE 345KV CKT 1	717	789	0.04371	110.893	GEN563142 1-G15079_3 0.5500
FDNS	00NR	3	20WP	G15_033	FROM->TO	G14-057T 345.00 - SUNNYSIDE 345KV CKT 1	717	789	0.04371	110.893	GEN563151 1-G15080_2 0.5500
FDNS	00NR	3	20WP	G15_033	FROM->TO	G14-057T 345.00 - SUNNYSIDE 345KV CKT 1	717	789	0.04371	110.8818	GEN600000 1-SHERBURNECNTY G1
FDNS	00NR	3	20WP	G15_033	FROM->TO	G14-057T 345.00 - SUNNYSIDE 345KV CKT 1	717	789	0.04371	110.84	GEN629075 1-OTTUMWA GENERATOR FOR OTTUMWA UNIT NO 1
FDNS	00NR	3	20WP	G15_033	FROM->TO	G14-057T 345.00 - SUNNYSIDE 345KV CKT 1	717	789	0.04371	110.8302	GEN600001 2-SHERBURNE CNTY G2

SOLUTION	GROUP	SCENARIO	SEASON	SOURCE	DIRECTION	MONITORED ELEMENT	RATEA (MVA)	RATEB(MVA)	TDF	TC%LOADING (% MVA)	CONTINGENCY
FDNS	00NR	3	20WP	G15_033	FROM->TO	G14-057T 345.00 - SUNNYSIDE 345KV CKT 1	717	789	0.04371	110.8212	GEN523971 1-HARRINGTON GEN #1 24 KV
FDNS	00NR	3	20WP	G15_033	FROM->TO	G14-057T 345.00 - SUNNYSIDE 345KV CKT 1	717	789	0.04371	110.8212	GEN523972 1-HARRINGTON GEN #2 24 KV
FDNS	00NR	3	20WP	G15_033	FROM->TO	G14-057T 345.00 - SUNNYSIDE 345KV CKT 1	717	789	0.04371	110.8212	GEN523973 1-HARRINGTON GEN #3 24 KV
FDNS	00NR	3	20WP	G15_033	FROM->TO	G14-057T 345.00 - SUNNYSIDE 345KV CKT 1	717	789	0.04657	110.7073	P12:230:AEPW-SPS:SWEETWT6:WHEELER 6
FDNS	00NR	3	20WP	G15_033	FROM->TO	G14-057T 345.00 - SUNNYSIDE 345KV CKT 1	717	789	0.04657	110.7062	STATELINE INTERCHANGE - STLN-DEMARC6 230KV CKT 1
FDNS	00NR	3	20WP	G15_033	FROM->TO	G14-057T 345.00 - SUNNYSIDE 345KV CKT 1	717	789	0.04657	110.7046	STLN-DEMARC6 - SWEETWATER 230KV CKT 1
FDNS	00NR	3	20WP	G15_033	FROM->TO	G14-057T 345.00 - SUNNYSIDE 345KV CKT 1	717	789	0.04371	110.7031	GEN563042 1-G15068_3 0.6900
FDNS	00NR	3	20WP	G15_033	FROM->TO	G14-057T 345.00 - SUNNYSIDE 345KV CKT 1	717	789	0.04371	110.6944	GEN527901 1-HOBBS PLANT #1 (CT)
FDNS	00NR	3	20WP	G15_033	FROM->TO	G14-057T 345.00 - SUNNYSIDE 345KV CKT 1	717	789	0.04371	110.6944	GEN527902 1-HOBBS PLANT #2 (CT)
FDNS	00NR	3	20WP	G15_033	FROM->TO	G14-057T 345.00 - SUNNYSIDE 345KV CKT 1	717	789	0.04347	110.661	LYDIA - WELSH 345KV CKT 1
FDNS	00NR	3	20WP	G15_033	FROM->TO	G14-057T 345.00 - SUNNYSIDE 345KV CKT 1	717	789	0.04347	110.661	LYDIA - WELSH 345KV CKT 1
FDNS	00NR	3	20WP	G15_033	FROM->TO	G14-057T 345.00 - SUNNYSIDE 345KV CKT 1	717	789	0.04371	110.6175	GEN511848 1-SOUTHWESTERN STATION #3
FDNS	00NR	3	16WP	G15_033	FROM->TO	G14-057T 345.00 - SUNNYSIDE 345KV CKT 1	717	789	0.04586	110.6064	EASTDC - ERCOT EQUIVALENCE 345KV CKT 1
FDNS	00NR	3	20WP	G15_033	FROM->TO	G14-057T 345.00 - SUNNYSIDE 345KV CKT 1	717	789	0.04371	110.6063	SHERBURNE CO 345/24.0KV TRANSFORMER CKT 1
FDNS	00NR	3	20WP	G15_033	FROM->TO	G14-057T 345.00 - SUNNYSIDE 345KV CKT 1	717	789	0.04371	110.5748	GEN635214 4-NEAL UNIT 4
FDNS	00NR	3	20WP	G15_033	FROM->TO	G14-057T 345.00 - SUNNYSIDE 345KV CKT 1	717	789	0.04371	110.4057	GEN563043 1-G15068_4 0.6900
FDNS	00NR	3	20WP	G15_033	FROM->TO	G14-057T 345.00 - SUNNYSIDE 345KV CKT 1	717	789	0.04371	110.403	GEN600002 3-SHERBURNE CNTY G3
FDNS	00NR	3	20WP	G15_033	FROM->TO	G14-057T 345.00 - SUNNYSIDE 345KV CKT 1	717	789	0.04371	110.3535	GEN526333 1-JONES GEN #3 21 KV
FDNS	00NR	3	20WP	G15_033	FROM->TO	G14-057T 345.00 - SUNNYSIDE 345KV CKT 1	717	789	0.04371	110.3534	GEN526334 1-JONES_4 116.500
FDNS	00NR	3	20WP	G15_033	FROM->TO	G14-057T 345.00 - SUNNYSIDE 345KV CKT 1	717	789	0.04371	110.3434	GEN525844 1-ELK_1 118.000
FDNS	00NR	3	20WP	G15_033	FROM->TO	G14-057T 345.00 - SUNNYSIDE 345KV CKT 1	717	789	0.04371	110.328	GEN525845 1-ELK_2 1 18.000
FDNS	00NR	3	20WP	G15_033	FROM->TO	G14-057T 345.00 - SUNNYSIDE 345KV CKT 1	717	789	0.04371	110.3205	GEN563273 2-G15093_4 0.6900
FDNS	00NR	3	20WP	G15_033	FROM->TO	G14-057T 345.00 - SUNNYSIDE 345KV CKT 1	717	789	0.04371	110.2934	GEN344225 1-1CAL G1 25.000
FDNS	00NR	3	20WP	G15_033	FROM->TO	G14-057T 345.00 - SUNNYSIDE 345KV CKT 1	717	789	0.047	110.2763	P12:230:AEPW:ELKCITY6:SWEETWT6
FDNS	06NR	3	20L	G15_033	FROM->TO	G14-057T 345.00 - SUNNYSIDE 345KV CKT 1	717	789	0.0459	110.1676	BASE CASE
FDNS	00NR	3	20WP	G15_033	FROM->TO	G14-057T 345.00 - SUNNYSIDE 345KV CKT 1	717	789	0.04371	110.1598	GEN563202 1-G15085_3 0.5500
FDNS	00NR	3	20WP	G15_033	FROM->TO	G14-057T 345.00 - SUNNYSIDE 345KV CKT 1	717	789	0.04371	110.1406	GEN527166 1-MUSTANG_6 118.000
FDNS	00NR	3	20WP	G15_033	FROM->TO	G14-057T 345.00 - SUNNYSIDE 345KV CKT 1	717	789	0.04371	110.1139	GEN635023 3-WALTER SCOTT UNIT 3
FDNS	00NR	3	20WP	G15_033	FROM->TO	G14-057T 345.00 - SUNNYSIDE 345KV CKT 1	717	789	0.04371	110.0663	GEN528501 1-G14_012 24.000
FDNS	00NR	3	20WP	G15_033	FROM->TO	G14-057T 345.00 - SUNNYSIDE 345KV CKT 1	717	789	0.04657	110.0157	CHISHOLM6 230.00 - SWEETWATER 230KV CKT 1
FDNS	00NR	3	20WP	G15_033	FROM->TO	G14-057T 345.00 - SUNNYSIDE 345KV CKT 1	717	789	0.04371	109.9638	GEN562762 1-G15033_3 0.6900
FDNS	00NR	3	20WP	G15_033	FROM->TO	G14-057T 345.00 - SUNNYSIDE 345KV CKT 1	717	789	0.04371	109.9565	GEN562590 1-G14_057_3 0.6900
FDNS	00NR	3	20WP	G15_033	FROM->TO	G14-057T 345.00 - SUNNYSIDE 345KV CKT 1	717	789	0.04371	109.9555	GEN562655 1-G14_074_3 0.6900
FDNS	00NR	3	17SP	G15_033	FROM->TO	G14-057T 345.00 - SUNNYSIDE 345KV CKT 1	717	789	0.06163	109.8744	CIMARRON - MINCO 345KV CKT 1
FDNS	00NR	3	20WP	G15_033	FROM->TO	G14-057T 345.00 - SUNNYSIDE 345KV CKT 1	717	789	0.04371	109.8276	GEN525562 1-TOLK GEN #2 24 KV
FDNS	00NR	3	20WP	G15_033	FROM->TO	G14-057T 345.00 - SUNNYSIDE 345KV CKT 1	717	789	0.04371	109.8112	GEN562685 1-G15_013_3 0.3550
FDNS	00NR	3	20WP	G15_033	FROM->TO	G14-057T 345.00 - SUNNYSIDE 345KV CKT 1	717	789	0.04328	109.7901	JOHNSON COUNTY (JOHNCO) 345/138/13.8KV TRANSFORMER CKT 1
FDNS	00NR	3	20WP	G15_033	FROM->TO	G14-057T 345.00 - SUNNYSIDE 345KV CKT 1	717	789	0.04371	109.7703	GEN527903 1-HOBBS PLANT #3 (ST)
FDNS	00NR	3	20WP	G15_033	FROM->TO	G14-057T 345.00 - SUNNYSIDE 345KV CKT 1	717	789	0.04371	109.7083	GEN635024 4-WALTER SCOTT UNIT 4
FDNS	00NR	3	20WP	G15_033	FROM->TO	G14-057T 345.00 - SUNNYSIDE 345KV CKT 1	717	789	0.04371	109.6728	GEN563272 1-G15093_3 0.6900
FDNS	00NR	3	20WP	G15_033	FROM->TO	G14-057T 345.00 - SUNNYSIDE 345KV CKT 1	717	789	0.04338	109.5882	LYDIA - VALLIANT 345KV CKT 1
FDNS	00NR	3	20WP	G15_033	FROM->TO	G14-057T 345.00 - SUNNYSIDE 345KV CKT 1	717	789	0.04338	109.5882	LYDIA - VALLIANT 345KV CKT 1
FDNS	00NR	3	16WP	G15_033	FROM->TO	G14-057T 345.00 - SUNNYSIDE 345KV CKT 1	717	789	0.04015	109.4695	JOHNSON COUNTY - PITTSBURG 345KV CKT 1
FDNS	00NR	3	16WP	G15_033	FROM->TO	G14-057T 345.00 - SUNNYSIDE 345KV CKT 1	717	789	0.04015	109.4695	JOHNSON COUNTY - PITTSBURG 345KV CKT 1
FDNS	00NR	3	20WP	G15_033	FROM->TO	G14-057T 345.00 - SUNNYSIDE 345KV CKT 1	717	789	0.04371	109.3486	GEN525561 1-TOLK GEN #1 24 KV
FDNS	00NR	3	16WP	G15_033	FROM->TO	G14-057T 345.00 - SUNNYSIDE 345KV CKT 1	717	789	0.04586	109.1892	GEN563263 1-G15092_4 0.6900
FDNS	00NR	3	16WP	G15_033	FROM->TO	G14-057T 345.00 - SUNNYSIDE 345KV CKT 1	717	789	0.04437	108.525	HUGO - VALLIANT 345KV CKT 1
FDNS	00NR	3	16WP	G15_033	FROM->TO	G14-057T 345.00 - SUNNYSIDE 345KV CKT 1	717	789	0.04437	108.525	HUGO - VALLIANT 345KV CKT 1
FDNS	06NR	3	20L	G15_033	FROM->TO	G14-057T 345.00 - SUNNYSIDE 345KV CKT 1	717	789	0.04412	107.9543	PITTSBURG - SEMINOLE 345KV CKT 1
FDNS	06NR	3	20L	G15_033	FROM->TO	G14-057T 345.00 - SUNNYSIDE 345KV CKT 1	717	789	0.04412	107.9543	PITTSBURG - SEMINOLE 345KV CKT 1
FDNS	00NR	3	16WP	G15_033	FROM->TO	G14-057T 345.00 - SUNNYSIDE 345KV CKT 1	717	789	0.04586	107.4925	GEN563262 1-G15092_3 0.6900
FDNS	00NR	3	20WP	G15_033	FROM->TO	G14-057T 345.00 - SUNNYSIDE 345KV CKT 1	717	789	0.03827	107.3328	JOHNSON COUNTY - PITTSBURG 345KV CKT 1
FDNS	00NR	3	20WP	G15_033	FROM->TO	G14-057T 345.00 - SUNNYSIDE 345KV CKT 1	717	789	0.03827	107.3328	JOHNSON COUNTY - PITTSBURG 345KV CKT 1
FDNS	06ALL	3	20SP	G15_033	FROM->TO	G14-057T 345.00 - SUNNYSIDE 345KV CKT 1	717	789	0.22497	107.2684	GRACEMONT - MINCO 345KV CKT 1
FDNS	06ALL	3	20WP	G15_033	FROM->TO	G14-057T 345.00 - SUNNYSIDE 345KV CKT 1	717	789	0.16226	107.198	BASE CASE
FDNS	06NR	3	20L	G15_033	FROM->TO	G14-057T 345.00 - SUNNYSIDE 345KV CKT 1	717	789	0.04537	106.9523	CIMARRON - DRAPER LAKE 345KV CKT 1
FDNS	00NR	3	20WP	G15_033	FROM->TO	G14-057T 345.00 - SUNNYSIDE 345KV CKT 1	717	789	0.04228	106.934	HUGO - VALLIANT 345KV CKT 1
FDNS	00NR	3	20WP	G15_033	FROM->TO	G14-057T 345.00 - SUNNYSIDE 345KV CKT 1	717	789	0.04228	106.934	HUGO - VALLIANT 345KV CKT 1
FDNS	06ALL	3	17G	G15_033	FROM->TO	G14-057T 345.00 - SUNNYSIDE 345KV CKT 1	717	789	0.16489	106.7167	BASE CASE
FDNS	00NR	3	20WP	G15_033	FROM->TO	G14-057T 345.00 - SUNNYSIDE 345KV CKT 1	717	789	0.04371	106.4638	GEN563263 1-G15092_4 0.6900
FDNS	00NR	3	16WP	G15_033	FROM->TO	G14-057T 345.00 - SUNNYSIDE 345KV CKT 1	717	789	0.25653	105.8242	G14-074T 345.00 - TUCO INTERCHANGE 345KV CKT 1
FDNS	06ALL	3	16WP	G15_033	FROM->TO	G14-057T 345.00 - SUNNYSIDE 345KV CKT 1	717	789	0.16837	105.3992	BASE CASE
FDNS	06NR	3	20L	G15_033	FROM->TO	G14-057T 345.00 - SUNNYSIDE 345KV CKT 1	717	789	0.04817	105.1726	P12:138:WFEC:MSL03
FDNS	00NR	3	20WP	G15_033	FROM->TO	G14-057T 345.00 - SUNNYSIDE 345KV CKT 1	717	789	0.04371	104.7727	GEN563262 1-G15092_3 0.6900
FDNS	06NR	3	20L	G15_033	FROM->TO	G14-057T 345.00 - SUNNYSIDE 345KV CKT 1	717	789	0.04578	104.3623	CLEVELAND - G15066_T 345.00 345KV CKT 1
FDNS	06NR	3	20L	G15_033	FROM->TO	G14-057T 345.00 - SUNNYSIDE 345KV CKT 1	717	789	0.04578	104.0681	G15066_T 345.00 - SOONER 345KV CKT 1
FDNS	06NR	3	20L	G15_033	FROM->TO	G14-057T 345.00 - SUNNYSIDE 345KV CKT 1	717	789	0.0459	104.0497	GEN501801 1-DOLET HILLS UNIT1
FDNS	06NR	3	20L	G15_033	FROM->TO	G14-057T 345.00 - SUNNYSIDE 345KV CKT 1	717	789	0.0459	103.8615	GEN509416 1-TURK GENERATION
FDNS	00NR	3	16WP	G15_033	FROM->TO	G14-057T 345.00 - SUNNYSIDE 345KV CKT 1	717	789	0.03831	103.8567	JOHNSON COUNTY - SUNNYSIDE 345KV CKT 1
FDNS	06NR	3	20L	G15_033	FROM->TO	G14-057T 345.00 - SUNNYSIDE 345KV CKT 1	717	789	0.0459	103.7018	GEN509403 1-PIRKEY GENERATION
FDNS	06NR	3	20L	G15_033	FROM->TO	G14-057T 345.00 - SUNNYSIDE 345KV CKT 1	717	789	0.0459	103.3464	GEN336821 1-GRAND GULF UNIT
FDNS	06NR	3	20L	G15_033	FROM->TO	G14-057T 345.00 - SUNNYSIDE 345KV CKT 1	717	789	0.0459	103.2147	GEN336153 1-WATERFORD UNIT#3
FDNS	06NR	3	20L	G15_033	FROM->TO	G14-057T 345.00 - SUNNYSIDE 345KV CKT 1	717	789	0.04588	102.9982	PITTSBURG - VALLIANT 345KV CKT 1
FDNS	06NR	3	20L	G15_033	FROM->TO	G14-057T 345.00 - SUNNYSIDE 345KV CKT 1	717	789	0.04588	102.9982	PITTSBURG - VALLIANT 345KV CKT 1
FDNS	06NR	3	20L	G15_033	FROM->TO	G14-057T 345.00 - SUNNYSIDE 345KV CKT 1	717	789	0.04577	102.9214	ARCADIA - NORTHWEST 345KV CKT 1
FDNS	06NR	3	20L	G15_033	FROM->TO	G14-057T 345.00 - SUNNYSIDE 345KV CKT 1	717	789	0.0459	102.8819	GEN335831 1-RIVERBEND UNIT#1
FDNS	06NR	3	20L	G15_033	FROM->TO	G14-057T 345.00 - SUNNYSIDE 345KV CKT 1	717	789	0.04584	102.8082	CLEVELAND - TULSA NORTH 345KV CKT 1
FDNS	06NR	3	20L	G15_033	FROM->TO	G14-057T 345.00 - SUNNYSIDE 345KV CKT 1	717	789	0.04584	102.8082	CLEVELAND - TULSA NORTH 345KV CKT 1
FDNS	06NR	3	20L	G15_033	FROM->TO	G14-057T 345.00 - SUNNYSIDE 345KV CKT 1	717	789	0.0459	102.5377	GRAND GULF 500/22.0KV TRANSFORMER CKT 1

SOLUTION	GROUP	SCENARIO	SEASON	SOURCE	DIRECTION	MONITORED ELEMENT	RATEA (MVA)	RATEB(MVA)	TDF	TC%LOADING (% MVA)	CONTINGENCY
FDNS	06NR	3	20L	G15_033	FROM->TO	G14-057T 345.00 - SUNNYSIDE 345KV CKT 1	717	789	0.04588	102.3832	LACYGNE - WAVERLY7 345.00 345KV CKT 1
FDNS	06NR	3	20L	G15_033	FROM->TO	G14-057T 345.00 - SUNNYSIDE 345KV CKT 1	717	789	0.04715	102.2644	P12:138:AEPW:DUNCAN-4:L.E.S.-4
FDNS	06NR	3	20L	G15_033	FROM->TO	G14-057T 345.00 - SUNNYSIDE 345KV CKT 1	717	789	0.04541	102.2213	MINGO - RED WILLOW 345KV CKT 1
FDNS	06NR	3	20L	G15_033	FROM->TO	G14-057T 345.00 - SUNNYSIDE 345KV CKT 1	717	789	0.04541	102.2213	MINGO - RED WILLOW 345KV CKT 1
FDNS	06NR	3	20L	G15_033	FROM->TO	G14-057T 345.00 - SUNNYSIDE 345KV CKT 1	717	789	0.0463	102.2086	CORN TAP - NAPLESTP 138.00 138KV CKT 1
FDNS	06NR	3	20L	G15_033	FROM->TO	G14-057T 345.00 - SUNNYSIDE 345KV CKT 1	717	789	0.04588	102.1917	WAVERLY7 345.00 - WOLF CREEK 345KV CKT 1
FDNS	06NR	3	20L	G15_033	FROM->TO	G14-057T 345.00 - SUNNYSIDE 345KV CKT 1	717	789	0.0459	102.185	GEN335206 1-NELSON UNIT 6
FDNS	06NR	3	20L	G15_033	FROM->TO	G14-057T 345.00 - SUNNYSIDE 345KV CKT 1	717	789	0.04714	102.1368	COMANCHE TAP - OMPA-DUNCAN 840 138KV CKT 1
FDNS	06NR	3	20L	G15_033	FROM->TO	G14-057T 345.00 - SUNNYSIDE 345KV CKT 1	717	789	0.04619	102.1277	COMANCHE - LOCO 138KV CKT 1
FDNS	06NR	3	20L	G15_033	FROM->TO	G14-057T 345.00 - SUNNYSIDE 345KV CKT 1	717	789	0.0463	102.1264	NAPLESTP 138.00 - PAYNE 138.00 138KV CKT 1
FDNS	06NR	3	17G	G15_033	FROM->TO	G14-057T 345.00 - SUNNYSIDE 345KV CKT 1	717	789	0.08773	102.1075	GRACEMONT - LAWTON EASTSIDE 345KV CKT 1
FDNS	06NR	3	17G	G15_033	FROM->TO	G14-057T 345.00 - SUNNYSIDE 345KV CKT 1	717	789	0.08773	102.1075	GRACEMONT - LAWTON EASTSIDE 345KV CKT 1
FDNS	06NR	3	20L	G15_033	FROM->TO	G14-057T 345.00 - SUNNYSIDE 345KV CKT 1	717	789	0.04604	102.0783	REDBUD - RIVERSIDE STATION 345KV CKT 1
FDNS	06NR	3	20L	G15_033	FROM->TO	G14-057T 345.00 - SUNNYSIDE 345KV CKT 1	717	789	0.04604	102.0783	REDBUD - RIVERSIDE STATION 345KV CKT 1
FDNS	00NR	3	20WP	G15_033	FROM->TO	G14-057T 345.00 - SUNNYSIDE 345KV CKT 1	717	789	0.25727	101.9985	G14-074T 345.00 - TUCO INTERCHANGE 345KV CKT 1
FDNS	06NR	3	20L	G15_033	FROM->TO	G14-057T 345.00 - SUNNYSIDE 345KV CKT 1	717	789	0.04792	101.9746	LAWTON EASTSIDE (LES 5) 345/138/13.8KV TRANSFORMER CKT 2
FDNS	06NR	3	20L	G15_033	FROM->TO	G14-057T 345.00 - SUNNYSIDE 345KV CKT 1	717	789	0.04792	101.9746	LAWTON EASTSIDE (LES 5) 345/138/13.8KV TRANSFORMER CKT 2
FDNS	06NR	3	20L	G15_033	FROM->TO	G14-057T 345.00 - SUNNYSIDE 345KV CKT 1	717	789	0.0459	101.9634	GEN509406 1-WELSH #3
FDNS	06NR	3	20L	G15_033	FROM->TO	G14-057T 345.00 - SUNNYSIDE 345KV CKT 1	717	789	0.0459	101.9632	GEN509404 1-WELSH #1
FDNS	06NR	3	20L	G15_033	FROM->TO	G14-057T 345.00 - SUNNYSIDE 345KV CKT 1	717	789	0.04855	101.9108	P12:138:AEPW:S.W.S.-4:L.E.S.-4
FDNS	06NR	3	20L	G15_033	FROM->TO	G14-057T 345.00 - SUNNYSIDE 345KV CKT 1	717	789	0.04714	101.8348	DUNCAN - OMPA-DUNCAN 840 138KV CKT 1
FDNS	06NR	3	20L	G15_033	FROM->TO	G14-057T 345.00 - SUNNYSIDE 345KV CKT 1	717	789	0.04714	101.8348	DUNCAN - OMPA-DUNCAN 840 138KV CKT 1
FDNS	06NR	3	20L	G15_033	FROM->TO	G14-057T 345.00 - SUNNYSIDE 345KV CKT 1	717	789	0.04599	101.8237	HEALDTON - LOCO 138KV CKT 1
FDNS	06NR	3	20L	G15_033	FROM->TO	G14-057T 345.00 - SUNNYSIDE 345KV CKT 1	717	789	0.0455	101.8034	ARCADIA - SEMINOLE 345KV CKT 1
FDNS	06NR	3	20L	G15_033	FROM->TO	G14-057T 345.00 - SUNNYSIDE 345KV CKT 1	717	789	0.04637	101.7848	ANADARKO - POCASSETT 138KV CKT 1
FDNS	06NR	3	20L	G15_033	FROM->TO	G14-057T 345.00 - SUNNYSIDE 345KV CKT 1	717	789	0.04599	101.7357	HEALDTON - RINGLING 138KV CKT 1
FDNS	06NR	3	20L	G15_033	FROM->TO	G14-057T 345.00 - SUNNYSIDE 345KV CKT 1	717	789	0.04637	101.7165	POCASSETT - TUTTLE 138KV CKT 1
FDNS	06NR	3	20L	G15_033	FROM->TO	G14-057T 345.00 - SUNNYSIDE 345KV CKT 1	717	789	0.04584	101.699	WEBRE - WELLS 500KV CKT 1
FDNS	06NR	3	20L	G15_033	FROM->TO	G14-057T 345.00 - SUNNYSIDE 345KV CKT 1	717	789	0.04599	101.6706	RINGLING - SOUTH WILSON 138KV CKT 1
FDNS	06NR	3	20L	G15_033	FROM->TO	G14-057T 345.00 - SUNNYSIDE 345KV CKT 1	717	789	0.0459	101.6467	DOLET HILLS 345/24.0KV TRANSFORMER CKT 1
FDNS	06NR	3	20L	G15_033	FROM->TO	G14-057T 345.00 - SUNNYSIDE 345KV CKT 1	717	789	0.0459	101.6414	GEN501813 1-RODEMACHER UNIT 3
FDNS	06NR	3	20L	G15_033	FROM->TO	G14-057T 345.00 - SUNNYSIDE 345KV CKT 1	717	789	0.0459	101.6026	GEN501812 1-RODEMACHER UNIT 2
FDNS	06NR	3	20L	G15_033	FROM->TO	G14-057T 345.00 - SUNNYSIDE 345KV CKT 1	717	789	0.04576	101.6018	CANEYRV7 345.00 - NEOSHO 345KV CKT 1
FDNS	06NR	3	20L	G15_033	FROM->TO	G14-057T 345.00 - SUNNYSIDE 345KV CKT 1	717	789	0.04599	101.5533	MARIETTA - SOUTH WILSON 138KV CKT 1
FDNS	06NR	3	20L	G15_033	FROM->TO	G14-057T 345.00 - SUNNYSIDE 345KV CKT 1	717	789	0.04637	101.5473	BRIDGECR 138.00 - TUTTLE 138KV CKT 1
FDNS	06NR	3	20L	G15_033	FROM->TO	G14-057T 345.00 - SUNNYSIDE 345KV CKT 1	717	789	0.04599	101.5235	P12:138:WFEC:MSL17
FDNS	06NR	3	20L	G15_033	FROM->TO	G14-057T 345.00 - SUNNYSIDE 345KV CKT 1	717	789	0.0458	101.5094	DOLET HILLS - SOUTHWEST SHREVEPORT 345KV CKT 1
FDNS	06NR	3	20L	G15_033	FROM->TO	G14-057T 345.00 - SUNNYSIDE 345KV CKT 1	717	789	0.0458	101.5094	DOLET HILLS - SOUTHWEST SHREVEPORT 345KV CKT 1
FDNS	06NR	3	20L	G15_033	FROM->TO	G14-057T 345.00 - SUNNYSIDE 345KV CKT 1	717	789	0.0459	101.5071	GEN509408 1-WILKES #2
FDNS	06NR	3	20L	G15_033	FROM->TO	G14-057T 345.00 - SUNNYSIDE 345KV CKT 1	717	789	0.04576	101.461	CANEYRV7 345.00 - LATHAMS7 345.00 345KV CKT 1
FDNS	06NR	3	20L	G15_033	FROM->TO	G14-057T 345.00 - SUNNYSIDE 345KV CKT 1	717	789	0.0459	101.4552	GEN337652 1-WHITE BLUFF UNIT #1
FDNS	06NR	3	20L	G15_033	FROM->TO	G14-057T 345.00 - SUNNYSIDE 345KV CKT 1	717	789	0.04637	101.447	P12:138:WFEC:MSL01
FDNS	06NR	3	20L	G15_033	FROM->TO	G14-057T 345.00 - SUNNYSIDE 345KV CKT 1	717	789	0.04637	101.4342	BRIDGECR 138.00 - SUNSHINE CANYON 138KV CKT 1
FDNS	06NR	3	20L	G15_033	FROM->TO	G14-057T 345.00 - SUNNYSIDE 345KV CKT 1	717	789	0.0459	101.4322	GEN337653 1-WHITE BLUFF UNIT #2
FDNS	06NR	3	20L	G15_033	FROM->TO	G14-057T 345.00 - SUNNYSIDE 345KV CKT 1	717	789	0.0459	101.4024	GEN337911 1-ARKANSAS NUCLEAR ONE UNIT #2
FDNS	06NR	3	20L	G15_033	FROM->TO	G14-057T 345.00 - SUNNYSIDE 345KV CKT 1	717	789	0.04575	101.3789	AXTELL - POST ROCK 345KV CKT 1
FDNS	06NR	3	20L	G15_033	FROM->TO	G14-057T 345.00 - SUNNYSIDE 345KV CKT 1	717	789	0.04578	101.35	P12:138:AEPW-OGE:WTH_JCT4:JENSEN4
FDNS	06NR	3	20L	G15_033	FROM->TO	G14-057T 345.00 - SUNNYSIDE 345KV CKT 1	717	789	0.0459	101.3206	NEW MADRID 345/22.0KV TRANSFORMER CKT 1
FDNS	06NR	3	20L	G15_033	FROM->TO	G14-057T 345.00 - SUNNYSIDE 345KV CKT 1	717	789	0.04607	101.2993	CIVIT - PAOLI 138KV CKT 1
FDNS	06NR	3	20L	G15_033	FROM->TO	G14-057T 345.00 - SUNNYSIDE 345KV CKT 1	717	789	0.04607	101.2496	CIVIT - STRATFORD 138KV CKT 1
FDNS	06NR	3	20L	G15_033	FROM->TO	G14-057T 345.00 - SUNNYSIDE 345KV CKT 1	717	789	0.0459	101.244	FRONTIER - GRIMES 345KV CKT 1
FDNS	06NR	3	20L	G15_033	FROM->TO	G14-057T 345.00 - SUNNYSIDE 345KV CKT 1	717	789	0.0459	101.238	GEN337910 1-ARKANSAS NUCLEAR ONE UNIT #1
FDNS	06NR	3	20L	G15_033	FROM->TO	G14-057T 345.00 - SUNNYSIDE 345KV CKT 1	717	789	0.04607	101.2063	OIL CENTER - STRATFORD 138KV CKT 1
FDNS	06NR	3	20L	G15_033	FROM->TO	G14-057T 345.00 - SUNNYSIDE 345KV CKT 1	717	789	0.04575	101.2054	MATHWSN7 345.00 - NORTHWEST 345KV CKT 1
FDNS	06NR	3	20L	G15_033	FROM->TO	G14-057T 345.00 - SUNNYSIDE 345KV CKT 1	717	789	0.04585	101.2016	ELDORADO EHV - SHERIDAN EHV 500KV CKT 1
FDNS	06NR	3	20L	G15_033	FROM->TO	G14-057T 345.00 - SUNNYSIDE 345KV CKT 1	717	789	0.04625	101.1963	P12:138:AEPW-OGE:CORNVIL4:MAUD 4
FDNS	06NR	3	20L	G15_033	FROM->TO	G14-057T 345.00 - SUNNYSIDE 345KV CKT 1	717	789	0.04625	101.1825	BLANCHARD - CORNVILLE 138KV CKT 1
FDNS	06NR	3	20L	G15_033	FROM->TO	G14-057T 345.00 - SUNNYSIDE 345KV CKT 1	717	789	0.04576	101.1813	LATHAMS7 345.00 - ROSE HILL 345KV CKT 1
FDNS	06NR	3	20L	G15_033	FROM->TO	G14-057T 345.00 - SUNNYSIDE 345KV CKT 1	717	789	0.04625	101.1683	BAILEY4 138.00 - SUNSHINE CANYON 138KV CKT 1
FDNS	06NR	3	20L	G15_033	FROM->TO	G14-057T 345.00 - SUNNYSIDE 345KV CKT 1	717	789	0.0459	101.163	GEN334440 1-SABINE UNIT 4
FDNS	06NR	3	20L	G15_033	FROM->TO	G14-057T 345.00 - SUNNYSIDE 345KV CKT 1	717	789	0.0459	101.1611	GEN506754 1-LEBROCK STEAM 1
FDNS	06NR	3	20L	G15_033	FROM->TO	G14-057T 345.00 - SUNNYSIDE 345KV CKT 1	717	789	0.04607	101.1397	LATTA JCT - OIL CENTER 138KV CKT 1
FDNS	06NR	3	20L	G15_033	FROM->TO	G14-057T 345.00 - SUNNYSIDE 345KV CKT 1	717	789	0.04556	101.1299	CANADIAN - NOBLE 138KV CKT 1
FDNS	06NR	3	20L	G15_033	FROM->TO	G14-057T 345.00 - SUNNYSIDE 345KV CKT 1	717	789	0.04558	101.1261	P12:138:OKGE:3TERM27
FDNS	06NR	3	20L	G15_033	FROM->TO	G14-057T 345.00 - SUNNYSIDE 345KV CKT 1	717	789	0.0459	101.122	GEN334030 1-FRONTIER UNIT 1
FDNS	06NR	3	20L	G15_033	FROM->TO	G14-057T 345.00 - SUNNYSIDE 345KV CKT 1	717	789	0.0459	101.1185	GEN334031 1-FRONTIER UNIT 2
FDNS	06NR	3	20L	G15_033	FROM->TO	G14-057T 345.00 - SUNNYSIDE 345KV CKT 1	717	789	0.04658	101.1076	P12:138:AEPW:CORNVIL4:DUNCAN-4
FDNS	06NR	3	20L	G15_033	FROM->TO	G14-057T 345.00 - SUNNYSIDE 345KV CKT 1	717	789	0.04625	101.0982	BAILEY4 138.00 - WESTMOORE 138KV CKT 1
FDNS	06NR	3	20L	G15_033	FROM->TO	G14-057T 345.00 - SUNNYSIDE 345KV CKT 1	717	789	0.04579	101.0924	WEATHERFORD JCT. - WEATHERFORD SOUTHEAST 138KV CKT 1
FDNS	06NR	3	20L	G15_033	FROM->TO	G14-057T 345.00 - SUNNYSIDE 345KV CKT 1	717	789	0.04579	101.0924	WEATHERFORD JCT. - WEATHERFORD SOUTHEAST 138KV CKT 1
FDNS	06NR	3	20L	G15_033	FROM->TO	G14-057T 345.00 - SUNNYSIDE 345KV CKT 1	717	789	0.04556	101.09	NOBLE - PURCELL4 138.00 138KV CKT 1
FDNS	06NR	3	20L	G15_033	FROM->TO	G14-057T 345.00 - SUNNYSIDE 345KV CKT 1	717	789	0.04579	101.0764	P12:138:AEPW:REDROCKRD4:WTH_JCT4
FDNS	06NR	3	20L	G15_033	FROM->TO	G14-057T 345.00 - SUNNYSIDE 345KV CKT 1	717	789	0.04625	101.0739	BLANCHARD - MAUD 138KV CKT 1
FDNS	06NR	3	20L	G15_033	FROM->TO	G14-057T 345.00 - SUNNYSIDE 345KV CKT 1	717	789	0.04596	101.0543	TUPELO - TUPELO TAP 138KV CKT 1
FDNS	06NR	3	20L	G15_033	FROM->TO	G14-057T 345.00 - SUNNYSIDE 345KV CKT 1	717	789	0.04564	101.0481	PARK LANE - SEMINOLE 138KV CKT 1
FDNS	06NR	3	20L	G15_033	FROM->TO	G14-057T 345.00 - SUNNYSIDE 345KV CKT 1	717	789	0.0459	101.0428	NEW MADRID 161/22.0KV TRANSFORMER CKT 1
FDNS	06NR	3	20L	G15_033	FROM->TO	G14-057T 345.00 - SUNNYSIDE 345KV CKT 1	717	789	0.04588	101.0414	P12:138:WFEC:MSL02
FDNS	06NR	3	20L	G15_033	FROM->TO	G14-057T 345.00 - SUNNYSIDE 345KV CKT 1	717	789	0.04579	101.0341	HINTON - WEATHERFORD JCT. 138KV CKT 1
FDNS	06NR	3	20L	G15_033	FROM->TO	G14-057T 345.00 - SUNNYSIDE 345KV CKT 1	717	789	0.0459	101.0323	GEN335204 1-NELSON UNIT 4

SOLUTION	GROUP	SCENARIO	SEASON	SOURCE	DIRECTION	MONITORED ELEMENT	RATEA (MVA)	RATEB(MVA)	TDF	TC%LOADING (% MVA)	CONTINGENCY
FDNS	06NR	3	20L	G15_033	FROM->TO	G14-057T 345.00 - SUNNYSIDE 345KV CKT 1	717	789	0.04583	101.0306	P12:138:AEPW:WTHWF4:CLINTJC4
FDNS	06NR	3	20L	G15_033	FROM->TO	G14-057T 345.00 - SUNNYSIDE 345KV CKT 1	717	789	0.0469	101.0295	LAWTON EASTSIDE (LES 4) 345/138/13.8KV TRANSFORMER CKT 1
FDNS	06NR	3	20L	G15_033	FROM->TO	G14-057T 345.00 - SUNNYSIDE 345KV CKT 1	717	789	0.0469	101.0295	LAWTON EASTSIDE (LES 4) 345/138/13.8KV TRANSFORMER CKT 1
FDNS	06NR	3	20L	G15_033	FROM->TO	G14-057T 345.00 - SUNNYSIDE 345KV CKT 1	717	789	0.04473	101.0246	HITCHLAND INTERCHANGE - MOORE COUNTY INTERCHANGE 230KV CKT 1
FDNS	06NR	3	20L	G15_033	FROM->TO	G14-057T 345.00 - SUNNYSIDE 345KV CKT 1	717	789	0.04473	101.0246	HITCHLAND INTERCHANGE - MOORE COUNTY INTERCHANGE 230KV CKT 1
FDNS	06NR	3	20L	G15_033	FROM->TO	G14-057T 345.00 - SUNNYSIDE 345KV CKT 1	717	789	0.04587	101.0236	ELDORADO EHV - MOUNT OLIVE 500KV CKT 1
FDNS	06NR	3	20L	G15_033	FROM->TO	G14-057T 345.00 - SUNNYSIDE 345KV CKT 1	717	789	0.04625	101.0198	FRANKLIN SW - WESTMOORE 138KV CKT 1
FDNS	06NR	3	20L	G15_033	FROM->TO	G14-057T 345.00 - SUNNYSIDE 345KV CKT 1	717	789	0.04579	100.9986	HINTON - REDROCKRD4 138.00 138KV CKT 1
FDNS	06NR	3	20L	G15_033	FROM->TO	G14-057T 345.00 - SUNNYSIDE 345KV CKT 1	717	789	0.0459	100.998	GEN336170 1-GULF OXY U4
FDNS	06NR	3	20L	G15_033	FROM->TO	G14-057T 345.00 - SUNNYSIDE 345KV CKT 1	717	789	0.0459	100.985	WHITE BLUFF 500/26.0KV TRANSFORMER CKT 1
FDNS	06NR	3	20L	G15_033	FROM->TO	G14-057T 345.00 - SUNNYSIDE 345KV CKT 1	717	789	0.04584	100.9832	DRAPER LAKE - SEMINOLE 345KV CKT 2
FDNS	06NR	3	20L	G15_033	FROM->TO	G14-057T 345.00 - SUNNYSIDE 345KV CKT 1	717	789	0.0459	100.9831	GEN336252 1-NINEMILE POINT UNIT#5
FDNS	06NR	3	20L	G15_033	FROM->TO	G14-057T 345.00 - SUNNYSIDE 345KV CKT 1	717	789	0.04584	100.9831	DRAPER LAKE - SEMINOLE 345KV CKT 1
FDNS	06NR	3	20L	G15_033	FROM->TO	G14-057T 345.00 - SUNNYSIDE 345KV CKT 1	717	789	0.04586	100.9821	PAOLI - PAYNE 138.00 138KV CKT 1
FDNS	06NR	3	20L	G15_033	FROM->TO	G14-057T 345.00 - SUNNYSIDE 345KV CKT 1	717	789	0.04587	100.9768	EMPORIA ENERGY CENTER - G14_001T 345.00 345KV CKT 1
FDNS	06NR	3	20L	G15_033	FROM->TO	G14-057T 345.00 - SUNNYSIDE 345KV CKT 1	717	789	0.04607	100.9728	LASALLE - LATTA JCT 138KV CKT 1
FDNS	06NR	3	20L	G15_033	FROM->TO	G14-057T 345.00 - SUNNYSIDE 345KV CKT 1	717	789	0.04597	100.9649	P12:138:AEPW:SHERID4:112GORE4
FDNS	06NR	3	20L	G15_033	FROM->TO	G14-057T 345.00 - SUNNYSIDE 345KV CKT 1	717	789	0.04599	100.9406	MARIETTA - MARIETTA4 138.00 138KV CKT 1
FDNS	06ALL	3	20WP	G15_033	FROM->TO	G14-057T 345.00 - SUNNYSIDE 345KV CKT 1	717	789	0.21356	100.9368	GRACEMONT - LAWTON EASTSIDE 345KV CKT 1
FDNS	06ALL	3	20WP	G15_033	FROM->TO	G14-057T 345.00 - SUNNYSIDE 345KV CKT 1	717	789	0.21356	100.9368	GRACEMONT - LAWTON EASTSIDE 345KV CKT 1
FDNS	06NR	3	20L	G15_033	FROM->TO	G14-057T 345.00 - SUNNYSIDE 345KV CKT 1	717	789	0.04587	100.9224	G14_001T 345.00 - WICHITA 345KV CKT 1
FDNS	06NR	3	20L	G15_033	FROM->TO	G14-057T 345.00 - SUNNYSIDE 345KV CKT 1	717	789	0.0459	100.915	GEN336831 1-BAXTER WILSON SES
FDNS	06NR	3	20L	G15_033	FROM->TO	G14-057T 345.00 - SUNNYSIDE 345KV CKT 1	717	789	0.0459	100.9062	ANADARKO - GEORGIA 138KV CKT 1
FDNS	06NR	3	20L	G15_033	FROM->TO	G14-057T 345.00 - SUNNYSIDE 345KV CKT 1	717	789	0.04607	100.9059	LASALLE - STONEWAL LH138.00 138KV CKT 1
FDNS	06NR	3	20L	G15_033	FROM->TO	G14-057T 345.00 - SUNNYSIDE 345KV CKT 1	717	789	0.04607	100.8893	STONEWAL LH138.00 - TUPELO TAP 138KV CKT 1
FDNS	06NR	3	20L	G15_033	FROM->TO	G14-057T 345.00 - SUNNYSIDE 345KV CKT 1	717	789	0.04578	100.8851	P12:138:OKGE-AEPW:JENSEN4:REDROCKRD4
FDNS	06NR	3	20L	G15_033	FROM->TO	G14-057T 345.00 - SUNNYSIDE 345KV CKT 1	717	789	0.04556	100.8794	PURCELL4 138.00 - WALNUT CREEK 138KV CKT 1
FDNS	06NR	3	20L	G15_033	FROM->TO	G14-057T 345.00 - SUNNYSIDE 345KV CKT 1	717	789	0.04608	100.878	GRACEMONT (BANK 1) 345/138/13.8KV TRANSFORMER CKT 1
FDNS	06NR	3	20L	G15_033	FROM->TO	G14-057T 345.00 - SUNNYSIDE 345KV CKT 1	717	789	0.0459	100.8743	FLETCHER - GEORGIA 138KV CKT 1
FDNS	06NR	3	20L	G15_033	FROM->TO	G14-057T 345.00 - SUNNYSIDE 345KV CKT 1	717	789	0.04583	100.8743	P12:138:AEPW:WTHWF4:WTH_SE4
FDNS	06NR	3	20L	G15_033	FROM->TO	G14-057T 345.00 - SUNNYSIDE 345KV CKT 1	717	789	0.0459	100.8613	GEN562783 1-G15036_4 0.6900
FDNS	06NR	3	20L	G15_033	FROM->TO	G14-057T 345.00 - SUNNYSIDE 345KV CKT 1	717	789	0.0459	100.8613	GEN562784 1-G15036_5 0.6900
FDNS	06NR	3	20L	G15_033	FROM->TO	G14-057T 345.00 - SUNNYSIDE 345KV CKT 1	717	789	0.0459	100.8608	GEN338146 1-INDEPENDENCE UNIT #2
FDNS	06NR	3	20L	G15_033	FROM->TO	G14-057T 345.00 - SUNNYSIDE 345KV CKT 1	717	789	0.0459	100.8543	GEN506752 1-LEBROCK GAS 1
FDNS	06NR	3	20L	G15_033	FROM->TO	G14-057T 345.00 - SUNNYSIDE 345KV CKT 1	717	789	0.0459	100.8537	GEN506753 1-LEBROCK GAS 2
FDNS	06NR	3	20L	G15_033	FROM->TO	G14-057T 345.00 - SUNNYSIDE 345KV CKT 1	717	789	0.04588	100.8533	EMPIRE - FLETCHER 138KV CKT 1
FDNS	06NR	3	20L	G15_033	FROM->TO	G14-057T 345.00 - SUNNYSIDE 345KV CKT 1	717	789	0.0452	100.839	G11-14T 345.00 - WOODWARD DISTRICT EHV 345KV CKT 1
FDNS	06NR	3	20L	G15_033	FROM->TO	G14-057T 345.00 - SUNNYSIDE 345KV CKT 1	717	789	0.0452	100.839	G11-14T 345.00 - WOODWARD DISTRICT EHV 345KV CKT 2
FDNS	06ALL	3	17G	G15_033	FROM->TO	G14-057T 345.00 - SUNNYSIDE 345KV CKT 1	717	789	0.21611	100.8384	GRACEMONT - LAWTON EASTSIDE 345KV CKT 1
FDNS	06ALL	3	17G	G15_033	FROM->TO	G14-057T 345.00 - SUNNYSIDE 345KV CKT 1	717	789	0.21611	100.8384	GRACEMONT - LAWTON EASTSIDE 345KV CKT 1
FDNS	06NR	3	20L	G15_033	FROM->TO	G14-057T 345.00 - SUNNYSIDE 345KV CKT 1	717	789	0.0459	100.8374	NELSON 230/20.0KV TRANSFORMER CKT 1
FDNS	00NR	3	20WP	G15_033	FROM->TO	G14-057T 345.00 - SUNNYSIDE 345KV CKT 1	717	789	0.03652	100.837	JOHNSON COUNTY - SUNNYSIDE 345KV CKT 1
FDNS	06NR	3	20L	G15_033	FROM->TO	G14-057T 345.00 - SUNNYSIDE 345KV CKT 1	717	789	0.04589	100.8224	8DANIEL8 500.00 - MCKNIGHT 500KV CKT 1
FDNS	06NR	3	20L	G15_033	FROM->TO	G14-057T 345.00 - SUNNYSIDE 345KV CKT 1	717	789	0.04588	100.8192	COMANCHE - EMPIRE 138KV CKT 1
FDNS	06NR	3	20L	G15_033	FROM->TO	G14-057T 345.00 - SUNNYSIDE 345KV CKT 1	717	789	0.04612	100.8167	DUNCAN (DUNCAN) 138/69/13.8KV TRANSFORMER CKT 1
FDNS	06NR	3	20L	G15_033	FROM->TO	G14-057T 345.00 - SUNNYSIDE 345KV CKT 1	717	789	0.04612	100.8167	DUNCAN (DUNCAN) 138/69/13.8KV TRANSFORMER CKT 1
FDNS	06NR	3	20L	G15_033	FROM->TO	G14-057T 345.00 - SUNNYSIDE 345KV CKT 1	717	789	0.04621	100.8105	CIMARRON - NORTHWEST 345KV CKT 1
FDNS	06NR	3	20L	G15_033	FROM->TO	G14-057T 345.00 - SUNNYSIDE 345KV CKT 1	717	789	0.04563	100.8051	CLINTON JUNCTION - ELK CITY 138KV CKT 1
FDNS	06NR	3	20L	G15_033	FROM->TO	G14-057T 345.00 - SUNNYSIDE 345KV CKT 1	717	789	0.04563	100.8051	CLINTON JUNCTION - ELK CITY 138KV CKT 1
FDNS	06NR	3	20L	G15_033	FROM->TO	G14-057T 345.00 - SUNNYSIDE 345KV CKT 1	717	789	0.0459	100.7836	GEN515577 1-ARBWND11 0.6900
FDNS	06NR	3	20L	G15_033	FROM->TO	G14-057T 345.00 - SUNNYSIDE 345KV CKT 1	717	789	0.04542	100.7762	MOORE COUNTY INTERCHANGE - POTTER COUNTY INTERCHANGE 230KV CKT 1
FDNS	06NR	3	20L	G15_033	FROM->TO	G14-057T 345.00 - SUNNYSIDE 345KV CKT 1	717	789	0.04542	100.7762	MOORE COUNTY INTERCHANGE - POTTER COUNTY INTERCHANGE 230KV CKT 1
FDNS	06NR	3	20L	G15_033	FROM->TO	G14-057T 345.00 - SUNNYSIDE 345KV CKT 1	717	789	0.04583	100.7729	WEATHERFORD TAP - WEATHERFORD WIND FARM 138KV CKT 1
FDNS	06NR	3	20L	G15_033	FROM->TO	G14-057T 345.00 - SUNNYSIDE 345KV CKT 1	717	789	0.0459	100.7714	P12:69:AEPW:L.E.S.-2:LAW WC2
FDNS	06NR	3	20L	G15_033	FROM->TO	G14-057T 345.00 - SUNNYSIDE 345KV CKT 1	717	789	0.0459	100.7709	GEN334441 1-SABINE UNIT 5
FDNS	06NR	3	20L	G15_033	FROM->TO	G14-057T 345.00 - SUNNYSIDE 345KV CKT 1	717	789	0.0459	100.762	GEN335614 1-WILLOW GLENN UNIT#4
FDNS	06NR	3	20L	G15_033	FROM->TO	G14-057T 345.00 - SUNNYSIDE 345KV CKT 1	717	789	0.04599	100.7612	ENVILLE 138.00 - MARIETTA4 138.00 138KV CKT 1
FDNS	06NR	3	20L	G15_033	FROM->TO	G14-057T 345.00 - SUNNYSIDE 345KV CKT 1	717	789	0.0459	100.7579	GEN515040 1-SEMINOLE 1G
FDNS	06NR	3	20L	G15_033	FROM->TO	G14-057T 345.00 - SUNNYSIDE 345KV CKT 1	717	789	0.0459	100.7491	GEN334392 1-EXXON MOBIL IPP 1
FDNS	06NR	3	20L	G15_033	FROM->TO	G14-057T 345.00 - SUNNYSIDE 345KV CKT 1	717	789	0.0459	100.7476	GEN334393 1-EXXON MOBIL IPP 2
FDNS	06NR	3	20L	G15_033	FROM->TO	G14-057T 345.00 - SUNNYSIDE 345KV CKT 1	717	789	0.0459	100.7476	GEN334394 1-EXXON MOBIL IPP 3
FDNS	06NR	3	20L	G15_033	FROM->TO	G14-057T 345.00 - SUNNYSIDE 345KV CKT 1	717	789	0.04592	100.7394	GRDA1 - GREC TAP5 345.00 345KV CKT 1
FDNS	06NR	3	20L	G15_033	FROM->TO	G14-057T 345.00 - SUNNYSIDE 345KV CKT 1	717	789	0.04583	100.7377	WEATHERFORD SOUTHEAST - WEATHERFORD TAP 138KV CKT 1
FDNS	06NR	3	20L	G15_033	FROM->TO	G14-057T 345.00 - SUNNYSIDE 345KV CKT 1	717	789	0.0459	100.7373	GEN336191 1-LITTLE GYPSY UNIT#3
FDNS	06NR	3	20L	G15_033	FROM->TO	G14-057T 345.00 - SUNNYSIDE 345KV CKT 1	717	789	0.0459	100.7365	GEN337041 1-GERALD ANDRUS
FDNS	06NR	3	20L	G15_033	FROM->TO	G14-057T 345.00 - SUNNYSIDE 345KV CKT 1	717	789	0.04587	100.7333	LAYFLD8 500.00 - MOUNT OLIVE 500KV CKT 1
FDNS	06NR	3	20L	G15_033	FROM->TO	G14-057T 345.00 - SUNNYSIDE 345KV CKT 1	717	789	0.04587	100.7333	LAYFLD8 500.00 - MOUNT OLIVE 500KV CKT 1
FDNS	06NR	3	20L	G15_033	FROM->TO	G14-057T 345.00 - SUNNYSIDE 345KV CKT 1	717	789	0.0459	100.7324	GEN336464 1-MICHOUD UNIT #3
FDNS	06NR	3	20L	G15_033	FROM->TO	G14-057T 345.00 - SUNNYSIDE 345KV CKT 1	717	789	0.04598	100.7275	P12:138:AEPW:CORNVIL4:S.W.S.-4
FDNS	06NR	3	20L	G15_033	FROM->TO	G14-057T 345.00 - SUNNYSIDE 345KV CKT 1	717	789	0.0459	100.7259	GEN338143 1-INDEPENDENCE UNIT #1
FDNS	06NR	3	20L	G15_033	FROM->TO	G14-057T 345.00 - SUNNYSIDE 345KV CKT 1	717	789	0.04597	100.7254	P12:138:AEPW:112GORE4:L.E.S.-4
FDNS	06NR	3	20L	G15_033	FROM->TO	G14-057T 345.00 - SUNNYSIDE 345KV CKT 1	717	789	0.0459	100.7205	P12:161:AEPW:DYESS 5:HYLAND 5
FDNS	06NR	3	20L	G15_033	FROM->TO	G14-057T 345.00 - SUNNYSIDE 345KV CKT 1	717	789	0.0476	100.7184	AMARILLO SOUTH INTERCHANGE - G15031_T 230.00 230KV CKT 1
FDNS	06NR	3	20L	G15_033	FROM->TO	G14-057T 345.00 - SUNNYSIDE 345KV CKT 1	717	789	0.04658	100.7173	DUNCAN - DUNCHERTP4 138.00 138KV CKT 1
FDNS	06NR	3	20L	G15_033	FROM->TO	G14-057T 345.00 - SUNNYSIDE 345KV CKT 1	717	789	0.04658	100.7173	DUNCAN - DUNCHERTP4 138.00 138KV CKT 1
FDNS	06NR	3	20L	G15_033	FROM->TO	G14-057T 345.00 - SUNNYSIDE 345KV CKT 1	717	789	0.04658	100.7162	DUNCAN EASTSIDE - DUNCHERTP4 138.00 138KV CKT 1
FDNS	06NR	3	20L	G15_033	FROM->TO	G14-057T 345.00 - SUNNYSIDE 345KV CKT 1	717	789	0.04713	100.7142	NEWHART 230 - POTTER COUNTY INTERCHANGE 230KV CKT 1
FDNS	06NR	3	20L	G15_033	FROM->TO	G14-057T 345.00 - SUNNYSIDE 345KV CKT 1	717	789	0.0459	100.714	GEN334433 1-SABINE UNIT 3
FDNS	06NR	3	20L	G15_033	FROM->TO	G14-057T 345.00 - SUNNYSIDE 345KV CKT 1	717	789	0.04599	100.7114	ENVILLE 138.00 - LEBANON 138KV CKT 1

SOLUTION	GROUP	SCENARIO	SEASON	SOURCE	DIRECTION	MONITORED ELEMENT	RATEA (MVA)	RATEB(MVA)	TDF	TC%LOADING (% MVA)	CONTINGENCY
FDNS	06NR	3	20L	G15_033	FROM->TO	G14-057T 345.00 - SUNNYSIDE 345KV CKT 1	717	789	0.0459	100.7017	GEN303007 1-1BC2 U2
FDNS	06NR	3	20L	G15_033	FROM->TO	G14-057T 345.00 - SUNNYSIDE 345KV CKT 1	717	789	0.04607	100.697	P12:138:WFEC:MSL05
FDNS	06NR	3	20L	G15_033	FROM->TO	G14-057T 345.00 - SUNNYSIDE 345KV CKT 1	717	789	0.0459	100.6899	GEN336242 1-1NMIL ST1 18.000
FDNS	06NR	3	20L	G15_033	FROM->TO	G14-057T 345.00 - SUNNYSIDE 345KV CKT 1	717	789	0.0459	100.6888	P12:161:AEPW:EROGERS5:ECNTRTN5
FDNS	06NR	3	20L	G15_033	FROM->TO	G14-057T 345.00 - SUNNYSIDE 345KV CKT 1	717	789	0.0459	100.6885	GEN303006 1-1BC2 U1
FDNS	06NR	3	20L	G15_033	FROM->TO	G14-057T 345.00 - SUNNYSIDE 345KV CKT 1	717	789	0.04612	100.6846	P12:69:WFEC-AEPW:COMANCH2:DUNCAN-2
FDNS	06NR	3	20L	G15_033	FROM->TO	G14-057T 345.00 - SUNNYSIDE 345KV CKT 1	717	789	0.0459	100.6806	FRONTIER 345/18.0KV TRANSFORMER CKT 1
FDNS	06NR	3	20L	G15_033	FROM->TO	G14-057T 345.00 - SUNNYSIDE 345KV CKT 1	717	789	0.0459	100.6794	FRONTIER 345/18.0KV TRANSFORMER CKT 1
FDNS	06NR	3	20L	G15_033	FROM->TO	G14-057T 345.00 - SUNNYSIDE 345KV CKT 1	717	789	0.04652	100.6762	DEAF SMITH COUNTY INTERCHANGE - G15039_T 230.00 230KV CKT 1
FDNS	06NR	3	20L	G15_033	FROM->TO	G14-057T 345.00 - SUNNYSIDE 345KV CKT 1	717	789	0.04637	100.6557	BUSHLAND INTERCHANGE - POTTER COUNTY INTERCHANGE 230KV CKT 1
FDNS	06NR	3	20L	G15_033	FROM->TO	G14-057T 345.00 - SUNNYSIDE 345KV CKT 1	717	789	0.04637	100.6557	BUSHLAND INTERCHANGE - POTTER COUNTY INTERCHANGE 230KV CKT 1
FDNS	06NR	3	20L	G15_033	FROM->TO	G14-057T 345.00 - SUNNYSIDE 345KV CKT 1	717	789	0.04591	100.6486	CIMARRON - CZECH HALL 138KV CKT 1
FDNS	06NR	3	20L	G15_033	FROM->TO	G14-057T 345.00 - SUNNYSIDE 345KV CKT 1	717	789	0.04612	100.6465	DUNCAN - TOSCO 69KV CKT 1
FDNS	06NR	3	20L	G15_033	FROM->TO	G14-057T 345.00 - SUNNYSIDE 345KV CKT 1	717	789	0.04578	100.643	Canadian Pump Station - REDROCKRD4 138.00 138KV CKT 1
FDNS	06NR	3	20L	G15_033	FROM->TO	G14-057T 345.00 - SUNNYSIDE 345KV CKT 1	717	789	0.04612	100.6298	COMANCHE TAP - TOSCO 69KV CKT 1
FDNS	06NR	3	20L	G15_033	FROM->TO	G14-057T 345.00 - SUNNYSIDE 345KV CKT 1	717	789	0.04583	100.625	CLINTON JUNCTION - CLINTON NATURAL GAS TAP 138KV CKT 1
FDNS	06NR	3	20L	G15_033	FROM->TO	G14-057T 345.00 - SUNNYSIDE 345KV CKT 1	717	789	0.04556	100.6203	PAOLI - WALNUT CREEK 138KV CKT 1
FDNS	06NR	3	20L	G15_033	FROM->TO	G14-057T 345.00 - SUNNYSIDE 345KV CKT 1	717	789	0.04599	100.614	NORGE ROAD - SOUTHWESTERN STATION 138KV CKT 1
FDNS	06NR	3	20L	G15_033	FROM->TO	G14-057T 345.00 - SUNNYSIDE 345KV CKT 1	717	789	0.04599	100.614	NORGE ROAD - SOUTHWESTERN STATION 138KV CKT 1
FDNS	06NR	3	20L	G15_033	FROM->TO	G14-057T 345.00 - SUNNYSIDE 345KV CKT 1	717	789	0.04678	100.6085	BUSHLAND INTERCHANGE - DEAF SMITH COUNTY INTERCHANGE 230KV CKT 1
FDNS	06NR	3	20L	G15_033	FROM->TO	G14-057T 345.00 - SUNNYSIDE 345KV CKT 1	717	789	0.04678	100.6085	BUSHLAND INTERCHANGE - DEAF SMITH COUNTY INTERCHANGE 230KV CKT 1
FDNS	06NR	3	20L	G15_033	FROM->TO	G14-057T 345.00 - SUNNYSIDE 345KV CKT 1	717	789	0.04586	100.6033	CIMARRON - SARA 138KV CKT 1
FDNS	06NR	3	20L	G15_033	FROM->TO	G14-057T 345.00 - SUNNYSIDE 345KV CKT 1	717	789	0.04591	100.603	CZECH HALL - XEROX 138KV CKT 1
FDNS	06NR	3	20L	G15_033	FROM->TO	G14-057T 345.00 - SUNNYSIDE 345KV CKT 1	717	789	0.04597	100.6025	ANADARKO - SEQUOYAHJ4 138.00 138KV CKT 1
FDNS	06NR	3	20L	G15_033	FROM->TO	G14-057T 345.00 - SUNNYSIDE 345KV CKT 1	717	789	0.04597	100.6014	CORN TAP - SEQUOYAHJ4 138.00 138KV CKT 1
FDNS	06NR	3	20L	G15_033	FROM->TO	G14-057T 345.00 - SUNNYSIDE 345KV CKT 1	717	789	0.04591	100.6014	MORGAN - XEROX 138KV CKT 1
FDNS	06NR	3	20L	G15_033	FROM->TO	G14-057T 345.00 - SUNNYSIDE 345KV CKT 1	717	789	0.04591	100.592	MORGAN - MUSTANG 138KV CKT 1
FDNS	06NR	3	20L	G15_033	FROM->TO	G14-057T 345.00 - SUNNYSIDE 345KV CKT 1	717	789	0.04621	100.5838	P12:69:AEPW-OMPA:COMANC-2:OMWALTR2
FDNS	06NR	3	20L	G15_033	FROM->TO	G14-057T 345.00 - SUNNYSIDE 345KV CKT 1	717	789	0.04598	100.5771	SOUTHWESTERN STATION - VERDEN 138KV CKT 1
FDNS	06NR	3	20L	G15_033	FROM->TO	G14-057T 345.00 - SUNNYSIDE 345KV CKT 1	717	789	0.04612	100.5696	COMANCHE - COMANCHE TAP 69KV CKT 1
FDNS	06NR	3	20L	G15_033	FROM->TO	G14-057T 345.00 - SUNNYSIDE 345KV CKT 1	717	789	0.04598	100.5649	NORTH 29TH CHICKASHA - VERDEN 138KV CKT 1
FDNS	06NR	3	20L	G15_033	FROM->TO	G14-057T 345.00 - SUNNYSIDE 345KV CKT 1	717	789	0.04645	100.5574	TUTTLE - TUTTLE CONOCO TAP 138KV CKT 1
FDNS	06NR	3	20L	G15_033	FROM->TO	G14-057T 345.00 - SUNNYSIDE 345KV CKT 1	717	789	0.04594	100.5558	CUSTER4 138.00 - RED HILLS WIND 138KV CKT 1
FDNS	06NR	3	20L	G15_033	FROM->TO	G14-057T 345.00 - SUNNYSIDE 345KV CKT 1	717	789	0.04594	100.5332	CUSTER4 138.00 - ELLIS 4 138.00 138KV CKT 1
FDNS	06NR	3	20L	G15_033	FROM->TO	G14-057T 345.00 - SUNNYSIDE 345KV CKT 1	717	789	0.04652	100.5234	G15039_T 230.00 - PLANT X STATION 230KV CKT 1
FDNS	00NR	3	20SP	G15_033	FROM->TO	G14-057T 345.00 - SUNNYSIDE 345KV CKT 1	717	789	0.05916	100.4959	CIMARRON - MINCO 345KV CKT 1
FDNS	06NR	3	20L	G15_033	FROM->TO	G14-057T 345.00 - SUNNYSIDE 345KV CKT 1	717	789	0.0459	100.4197	SUNNYSIDE 1 13KV SWITCHED SHUNT
FDNSLock	06NR	3	20L	G15_033	FROM->TO	G14-057T 345.00 - SUNNYSIDE 345KV CKT 1	717	789	0.0459	100.4	SUNNYSIDE 1 13KV SWITCHED SHUNT
FDNS	06NR	3	20L	G15_033	FROM->TO	G14-057T 345.00 - SUNNYSIDE 345KV CKT 1	717	789	0.04593	100.0869	P12:115:SPS:V29.1.NICHLS.KNGSMLL
FDNS	06NR	3	20L	G15_033	FROM->TO	G14-057T 345.00 - SUNNYSIDE 345KV CKT 1	717	789	0.04729	100	P12:138:AEPW:112GORE4:SNYDER-4
FDNS	06NR	3	20L	G15_033	FROM->TO	G14-057T 345.00 - SUNNYSIDE 345KV CKT 1	717	789	0.04618	100	ALTUS JUNCTION - RUSSELL 138KV CKT 1
FDNS	06NR	3	20L	G15_033	FROM->TO	G14-057T 345.00 - SUNNYSIDE 345KV CKT 1	717	789	0.04618	100	ALTUS JUNCTION - RUSSELL 138KV CKT 1
FDNS	06NR	3	20L	G15_033	FROM->TO	G14-057T 345.00 - SUNNYSIDE 345KV CKT 1	717	789	0.04594	100	WOODWARD - WWPAR4 138.00 138KV CKT 1
FDNS	06NR	3	20L	G15_033	FROM->TO	G14-057T 345.00 - SUNNYSIDE 345KV CKT 1	717	789	0.04594	100	WOODWARD EHV - WWPAR4 138.00 138KV CKT 1
FDNS	06NR	3	20L	G15_033	FROM->TO	G14-057T 345.00 - SUNNYSIDE 345KV CKT 1	717	789	0.04593	100	DEWEY - IODINE 138KV CKT 1
FDNS	06NR	3	20L	G15_033	FROM->TO	G14-057T 345.00 - SUNNYSIDE 345KV CKT 1	717	789	0.04593	100	IODINE - WOODWARD EHV 138KV CKT 1
FDNS	06NR	3	20L	G15_033	FROM->TO	G14-057T 345.00 - SUNNYSIDE 345KV CKT 1	717	789	0.04592	100	FPL SWITCH - MOORELAND 138KV CKT 1
FDNS	06NR	3	20L	G15_033	FROM->TO	G14-057T 345.00 - SUNNYSIDE 345KV CKT 1	717	789	0.04622	99.9	G15085_T 138.00 - RUSSELL 138KV CKT 1
FDNS	06NR	3	20L	G15_033	FROM->TO	G14-057T 345.00 - SUNNYSIDE 345KV CKT 1	717	789	0.0459	99.9	GEN520811 1-ANADRK4
FDNS	06NR	3	20L	G15_033	FROM->TO	G14-057T 345.00 - SUNNYSIDE 345KV CKT 1	717	789	0.04729	99.8	CACHE - SNYDER 138KV CKT 1
FDNS	06NR	3	20L	G15_033	FROM->TO	G14-057T 345.00 - SUNNYSIDE 345KV CKT 1	717	789	0.04624	99.8	HOLLIS TAP - WELLINGTON 138KV CKT 1
FDNS	06NR	3	20L	G15_033	FROM->TO	G14-057T 345.00 - SUNNYSIDE 345KV CKT 1	717	789	0.04617	99.8	CONWAY SUB - KIRBY SWITCHING STATION 115KV CKT 1
FDNS	06NR	3	20L	G15_033	FROM->TO	G14-057T 345.00 - SUNNYSIDE 345KV CKT 1	717	789	0.04617	99.8	CONWAY SUB - NICHOLS STATION 115KV CKT 1
FDNS	06NR	3	20L	G15_033	FROM->TO	G14-057T 345.00 - SUNNYSIDE 345KV CKT 1	717	789	0.04617	99.8	P12:115:SPS:T53.1.NICHLS.KIRBY
FDNS	06NR	3	20L	G15_033	FROM->TO	G14-057T 345.00 - SUNNYSIDE 345KV CKT 1	717	789	0.0459	99.8	GEN513601 1-GRECCTG_1 20.000
FDNS	06NR	3	20L	G15_033	FROM->TO	G14-057T 345.00 - SUNNYSIDE 345KV CKT 1	717	789	0.0459	99.8	GEN514905 1-REDBUD3S
FDNS	06NR	3	20L	G15_033	FROM->TO	G14-057T 345.00 - SUNNYSIDE 345KV CKT 1	717	789	0.04624	99.7	CHILDRESS - HOLLIS TAP 138KV CKT 1
FDNS	06NR	3	20L	G15_033	FROM->TO	G14-057T 345.00 - SUNNYSIDE 345KV CKT 1	717	789	0.04624	99.7	SHAMROCK - WELLINGTON 138KV CKT 1
FDNS	06NR	3	20L	G15_033	FROM->TO	G14-057T 345.00 - SUNNYSIDE 345KV CKT 1	717	789	0.04624	99.7	SHAMROCK (SHAMRCK2) 138/69/14.4KV TRANSFORMER CKT 1
FDNS	06NR	3	20L	G15_033	FROM->TO	G14-057T 345.00 - SUNNYSIDE 345KV CKT 1	717	789	0.04624	99.7	SHAMROCK (SHAMRCK2) 138/69/14.4KV TRANSFORMER CKT 1
FDNS	06NR	3	20L	G15_033	FROM->TO	G14-057T 345.00 - SUNNYSIDE 345KV CKT 1	717	789	0.0459	99.7	GEN509394 1-FLINT CREEK
FDNS	06NR	3	20L	G15_033	FROM->TO	G14-057T 345.00 - SUNNYSIDE 345KV CKT 1	717	789	0.0459	99.7	GEN511840 1-NORTHEASTERN STATION #3
FDNS	06NR	3	20L	G15_033	FROM->TO	G14-057T 345.00 - SUNNYSIDE 345KV CKT 1	717	789	0.0459	99.7	GEN511960 1-ROARK1 0.7000
FDNS	06NR	3	20L	G15_033	FROM->TO	G14-057T 345.00 - SUNNYSIDE 345KV CKT 1	717	789	0.0459	99.7	GEN514910 2-REDBUD GEN
FDNS	06NR	3	20L	G15_033	FROM->TO	G14-057T 345.00 - SUNNYSIDE 345KV CKT 1	717	789	0.0459	99.7	GEN514911 2-REDBUD GEN
FDNS	06NR	3	20L	G15_033	FROM->TO	G14-057T 345.00 - SUNNYSIDE 345KV CKT 1	717	789	0.0459	99.7	GEN514942 2-REDBUD4G
FDNS	06NR	3	20L	G15_033	FROM->TO	G14-057T 345.00 - SUNNYSIDE 345KV CKT 1	717	789	0.0459	99.7	GEN521129 1-BLUCAN5 4 138.00
FDNS	06NR	3	20L	G15_033	FROM->TO	G14-057T 345.00 - SUNNYSIDE 345KV CKT 1	717	789	0.0459	99.7	GEN560112 1-G08_037_3 0.6900
FDNS	06NR	3	20L	G15_033	FROM->TO	G14-057T 345.00 - SUNNYSIDE 345KV CKT 1	717	789	0.0459	99.7	GEN562084 1-G11_050_3 0.6900
FDNS	06NR	3	20L	G15_033	FROM->TO	G14-057T 345.00 - SUNNYSIDE 345KV CKT 1	717	789	0.0459	99.7	GEN562992 1-G15063_3 0.6900
FDNS	06NR	3	20L	G15_033	FROM->TO	G14-057T 345.00 - SUNNYSIDE 345KV CKT 1	717	789	0.0459	99.7	GEN659103 1-ANTELOPE VALLEY UNIT1
FDNS	06NR	3	20L	G15_033	FROM->TO	G14-057T 345.00 - SUNNYSIDE 345KV CKT 1	717	789	0.0459	99.7	GEN659107 2-ANTELOPE VALLEY UNIT2
FDNS	06NR	3	20L	G15_033	FROM->TO	G14-057T 345.00 - SUNNYSIDE 345KV CKT 1	717	789	0.04589	99.7	P12:138:AEPW-SWPA:LONEOAK4:TUPELO4
FDNS	06NR	3	20L	G15_033	FROM->TO	G14-057T 345.00 - SUNNYSIDE 345KV CKT 1	717	789	0.04589	99.7	P12:138:WFEC:MSL06
FDNS	06NR	3	20L	G15_033	FROM->TO	G14-057T 345.00 - SUNNYSIDE 345KV CKT 1	717	789	0.04581	99.7	BROWN - RUSSETT 138KV CKT 1
FDNS	06NR	3	20L	G15_033	FROM->TO	G14-057T 345.00 - SUNNYSIDE 345KV CKT 1	717	789	0.04574	99.7	ROCKY POINT - SPRINGDALE 138KV CKT 1
FDNS	06NR	3	20L	G15_033	FROM->TO	G14-057T 345.00 - SUNNYSIDE 345KV CKT 1	717	789	0.04486	99.7	CANADIAN RIVER - MUSKOGEE 345KV CKT 1
FDNS	00NR	3	17SP	G15_033	FROM->TO	G14-057T 345.00 - SUNNYSIDE 345KV CKT 1	717	789	0.06163	99.6	GRACEMONT - MINCO 345KV CKT 1
FDNS	06NR	3	20L	G15_033	FROM->TO	G14-057T 345.00 - SUNNYSIDE 345KV CKT 1	717	789	0.04652	99.6	CHILDRESS - LAKE PAULINE 138KV CKT 1

SOLUTION	GROUP	SCENARIO	SEASON	SOURCE	DIRECTION	MONITORED ELEMENT	RATEA (MVA)	RATEB(MVA)	TDF	TC%LOADING (% MVA)	CONTINGENCY
FDNS	06NR	3	20L	G15_033	FROM->TO	G14-057T 345.00 - SUNNYSIDE 345KV CKT 1	717	789	0.04652	99.6	CHILDRESS - LAKE PAULINE 138KV CKT 1
FDNS	06NR	3	20L	G15_033	FROM->TO	G14-057T 345.00 - SUNNYSIDE 345KV CKT 1	717	789	0.04624	99.6	KIRBY SWITCHING STATION - MCCLELLAN SUB 115KV CKT 1
FDNS	06NR	3	20L	G15_033	FROM->TO	G14-057T 345.00 - SUNNYSIDE 345KV CKT 1	717	789	0.04624	99.6	MCCLELLAN SUB - MCLEAN RURAL SUB 115KV CKT 1
FDNS	06NR	3	20L	G15_033	FROM->TO	G14-057T 345.00 - SUNNYSIDE 345KV CKT 1	717	789	0.04624	99.6	MCLEAN RURAL SUB - SHAMROCK 115KV CKT 1
FDNS	06NR	3	20L	G15_033	FROM->TO	G14-057T 345.00 - SUNNYSIDE 345KV CKT 1	717	789	0.04624	99.6	MCLEAN RURAL SUB - SHAMROCK 115KV CKT 1
FDNS	06NR	3	20L	G15_033	FROM->TO	G14-057T 345.00 - SUNNYSIDE 345KV CKT 1	717	789	0.04624	99.6	P12:115:SPS:T54.1.KIRBY.SHM(520)
FDNS	06NR	3	20L	G15_033	FROM->TO	G14-057T 345.00 - SUNNYSIDE 345KV CKT 1	717	789	0.04624	99.6	P12:115:SPS-AEPW:KIRBY3:SHAM3WT
FDNS	06NR	3	20L	G15_033	FROM->TO	G14-057T 345.00 - SUNNYSIDE 345KV CKT 1	717	789	0.04624	99.6	P12:138:AEPW:SHAM4WT:CHILD4WT
FDNS	06NR	3	20L	G15_033	FROM->TO	G14-057T 345.00 - SUNNYSIDE 345KV CKT 1	717	789	0.04624	99.6	SHAMROCK (SHAMRCK1) 115/69/14.4KV TRANSFORMER CKT 1
FDNS	06NR	3	20L	G15_033	FROM->TO	G14-057T 345.00 - SUNNYSIDE 345KV CKT 1	717	789	0.04624	99.6	SHAMROCK (SHAMRCK1) 115/69/14.4KV TRANSFORMER CKT 1
FDNS	06NR	3	20L	G15_033	FROM->TO	G14-057T 345.00 - SUNNYSIDE 345KV CKT 1	717	789	0.0459	99.6	GEN344894 1-1LAB G1 20.000
FDNS	06NR	3	20L	G15_033	FROM->TO	G14-057T 345.00 - SUNNYSIDE 345KV CKT 1	717	789	0.0459	99.6	GEN511961 1-DEMPSEY-WTG10.7000
FDNS	06NR	3	20L	G15_033	FROM->TO	G14-057T 345.00 - SUNNYSIDE 345KV CKT 1	717	789	0.0459	99.6	GEN532663 1-LAWRENCE ENERGY CENTER UNIT 5
FDNS	06NR	3	20L	G15_033	FROM->TO	G14-057T 345.00 - SUNNYSIDE 345KV CKT 1	717	789	0.0459	99.6	GEN560186 1-BLUCAN2-WTG10.7000
FDNS	06NR	3	20L	G15_033	FROM->TO	G14-057T 345.00 - SUNNYSIDE 345KV CKT 1	717	789	0.0459	99.6	GEN560187 1-WTH WIND 0.5750
FDNS	06NR	3	20L	G15_033	FROM->TO	G14-057T 345.00 - SUNNYSIDE 345KV CKT 1	717	789	0.0459	99.6	GEN563273 2-G15093_4 0.6900
FDNS	06NR	3	20L	G15_033	FROM->TO	G14-057T 345.00 - SUNNYSIDE 345KV CKT 1	717	789	0.04587	99.6	P12:138:WFEC-AEPW:GOLDENSW4:CRAIGJT4
FDNS	06NR	3	20L	G15_033	FROM->TO	G14-057T 345.00 - SUNNYSIDE 345KV CKT 1	717	789	0.04584	99.6	CARROLL - DOLET HILLS 230KV CKT 1
FDNS	06NR	3	20L	G15_033	FROM->TO	G14-057T 345.00 - SUNNYSIDE 345KV CKT 1	717	789	0.04583	99.6	WELSH - WILKES 345KV CKT 1
FDNS	06NR	3	20L	G15_033	FROM->TO	G14-057T 345.00 - SUNNYSIDE 345KV CKT 1	717	789	0.04583	99.6	WELSH - WILKES 345KV CKT 1
FDNS	06NR	3	20L	G15_033	FROM->TO	G14-057T 345.00 - SUNNYSIDE 345KV CKT 1	717	789	0.04581	99.6	MCNAB REC - Turk 115 115KV CKT 1
FDNS	06NR	3	20L	G15_033	FROM->TO	G14-057T 345.00 - SUNNYSIDE 345KV CKT 1	717	789	0.04581	99.6	P12:115:AEPW:TURK3:HOPE3
FDNS	06NR	3	20L	G15_033	FROM->TO	G14-057T 345.00 - SUNNYSIDE 345KV CKT 1	717	789	0.04581	99.6	RUSSETT - RUSSETT 138KV CKT 1
FDNS	06NR	3	20L	G15_033	FROM->TO	G14-057T 345.00 - SUNNYSIDE 345KV CKT 1	717	789	0.04581	99.6	TURK (TURK 1) 138/115/13.2KV TRANSFORMER CKT 1
FDNS	06NR	3	20L	G15_033	FROM->TO	G14-057T 345.00 - SUNNYSIDE 345KV CKT 1	717	789	0.04581	99.6	TURK (TURK 1) 138/115/13.2KV TRANSFORMER CKT 1
FDNS	06NR	3	20L	G15_033	FROM->TO	G14-057T 345.00 - SUNNYSIDE 345KV CKT 1	717	789	0.04577	99.6	RUSSETT - SPRINGDALE 138KV CKT 1
FDNS	06NR	3	20L	G15_033	FROM->TO	G14-057T 345.00 - SUNNYSIDE 345KV CKT 1	717	789	0.04568	99.6	ROCKY POINT - SUNNYSIDE 138KV CKT 1
FDNS	06NR	3	20L	G15_033	FROM->TO	G14-057T 345.00 - SUNNYSIDE 345KV CKT 1	717	789	0.04527	99.6	P12:138:OKGE:3TERM39
FDNS	06NR	3	20L	G15_033	FROM->TO	G14-057T 345.00 - SUNNYSIDE 345KV CKT 1	717	789	0.0459	99.5	ALMA 161 161/24.0KV TRANSFORMER CKT 1
FDNS	06NR	3	20L	G15_033	FROM->TO	G14-057T 345.00 - SUNNYSIDE 345KV CKT 1	717	789	0.0459	99.5	GEN515443 1-MNCOWND1 0.7000
FDNS	06NR	3	20L	G15_033	FROM->TO	G14-057T 345.00 - SUNNYSIDE 345KV CKT 1	717	789	0.0459	99.5	GEN562685 1-G15_013_3 0.3550
FDNS	06NR	3	20L	G15_033	FROM->TO	G14-057T 345.00 - SUNNYSIDE 345KV CKT 1	717	789	0.0459	99.5	GEN563202 1-G15085_3 0.5500
FDNS	06NR	3	20L	G15_033	FROM->TO	G14-057T 345.00 - SUNNYSIDE 345KV CKT 1	717	789	0.0459	99.5	GEN563272 1-G15093_3 0.6900
FDNS	06NR	3	20L	G15_033	FROM->TO	G14-057T 345.00 - SUNNYSIDE 345KV CKT 1	717	789	0.0459	99.5	GEN657748 1-YOUNG 2 GENERATOR
FDNS	06NR	3	20L	G15_033	FROM->TO	G14-057T 345.00 - SUNNYSIDE 345KV CKT 1	717	789	0.0459	99.5	GEN661015 1-COYOTE
FDNS	06NR	3	20L	G15_033	FROM->TO	G14-057T 345.00 - SUNNYSIDE 345KV CKT 1	717	789	0.0459	99.5	INDEPENDENCE 500/26.0KV TRANSFORMER CKT 1
FDNS	06NR	3	20L	G15_033	FROM->TO	G14-057T 345.00 - SUNNYSIDE 345KV CKT 1	717	789	0.04587	99.5	KEO EHV - WEST MEMPHIS 500 500KV CKT 1
FDNS	06NR	3	20L	G15_033	FROM->TO	G14-057T 345.00 - SUNNYSIDE 345KV CKT 1	717	789	0.04586	99.5	HUGO (HUGO 1) 345/138/13.8KV TRANSFORMER CKT 1
FDNS	06NR	3	20L	G15_033	FROM->TO	G14-057T 345.00 - SUNNYSIDE 345KV CKT 1	717	789	0.0458	99.5	LONGWOOD - WILKES 345KV CKT 1
FDNS	06NR	3	20L	G15_033	FROM->TO	G14-057T 345.00 - SUNNYSIDE 345KV CKT 1	717	789	0.0458	99.5	LONGWOOD - WILKES 345KV CKT 1
FDNS	06NR	3	20L	G15_033	FROM->TO	G14-057T 345.00 - SUNNYSIDE 345KV CKT 1	717	789	0.04571	99.5	CLARKSVILLE - MUSKOGEE 345KV CKT 1
FDNS	06NR	3	20L	G15_033	FROM->TO	G14-057T 345.00 - SUNNYSIDE 345KV CKT 1	717	789	0.04571	99.5	CLARKSVILLE - MUSKOGEE 345KV CKT 1
FDNS	06NR	3	20L	G15_033	FROM->TO	G14-057T 345.00 - SUNNYSIDE 345KV CKT 1	717	789	0.04567	99.5	P12:138:OKGE:3TERM40
FDNS	06NR	3	20L	G15_033	FROM->TO	G14-074T 345.00 - OKLAUNION 345KV CKT 1	1022	1124	0.18936	108.2612	BASE CASE
FDNS	06NR	3	17G	G15_033	FROM->TO	G14-074T 345.00 - OKLAUNION 345KV CKT 1	1022	1124	0.18762	106.9843	G11_051T 345.00 - WOODWARD DISTRICT EHV 345KV CKT 1
FDNS	06NR	3	17G	G15_033	FROM->TO	G14-074T 345.00 - OKLAUNION 345KV CKT 1	1022	1124	0.19262	105.0698	BASE CASE
FDNS	06NR	3	20L	G15_033	FROM->TO	G14-074T 345.00 - OKLAUNION 345KV CKT 1	1022	1124	0.18318	103.3966	CHISHOLM7 345.00 - GRACEMONT 345KV CKT 1
FDNS	06NR	3	20L	G15_033	FROM->TO	G14-074T 345.00 - OKLAUNION 345KV CKT 1	1022	1124	0.18318	102.9036	CHISHOLM7 345.00 () 345/230/13.2KV TRANSFORMER CKT 1
FDNS	06NR	3	20L	G15_033	FROM->TO	G14-074T 345.00 - OKLAUNION 345KV CKT 1	1022	1124	0.19759	102.6829	AMARILLO SOUTH INTERCHANGE - G15031_T 230.00 230KV CKT 1
FDNS	06NR	3	20L	G15_033	FROM->TO	G14-074T 345.00 - OKLAUNION 345KV CKT 1	1022	1124	0.19457	102.2907	NEWHART 230 - POTTER COUNTY INTERCHANGE 230KV CKT 1
FDNS	06NR	3	20L	G15_033	FROM->TO	G14-074T 345.00 - OKLAUNION 345KV CKT 1	1022	1124	0.19209	101.9316	DEAF SMITH COUNTY INTERCHANGE - G15039_T 230.00 230KV CKT 1
FDNS	06NR	3	20L	G15_033	FROM->TO	G14-074T 345.00 - OKLAUNION 345KV CKT 1	1022	1124	0.19209	100.8261	G15039_T 230.00 - PLANT X STATION 230KV CKT 1
FDNS	06NR	3	20L	G15_033	FROM->TO	G14-074T 345.00 - OKLAUNION 345KV CKT 1	1022	1124	0.18885	100.637	MINGO - RED WILLOW 345KV CKT 1
FDNS	06NR	3	20L	G15_033	FROM->TO	G14-074T 345.00 - OKLAUNION 345KV CKT 1	1022	1124	0.18885	100.637	MINGO - RED WILLOW 345KV CKT 1
FDNS	06NR	3	20L	G15_033	FROM->TO	G14-074T 345.00 - OKLAUNION 345KV CKT 1	1022	1124	0.18762	100.065	CHILDRESS - LAKE PAULINE 138KV CKT 1
FDNS	06NR	3	20L	G15_033	FROM->TO	G14-074T 345.00 - OKLAUNION 345KV CKT 1	1022	1124	0.18762	100.065	CHILDRESS - LAKE PAULINE 138KV CKT 1
FDNS	06NR	3	20L	G15_033	FROM->TO	G14-074T 345.00 - OKLAUNION 345KV CKT 1	1022	1124	0.18822	100	CONWAY SUB - NICHOLS STATION 115KV CKT 1
FDNS	06NR	3	20L	G15_033	FROM->TO	G14-074T 345.00 - OKLAUNION 345KV CKT 1	1022	1124	0.18822	99.9	CONWAY SUB - KIRBY SWITCHING STATION 115KV CKT 1
FDNS	06NR	3	17G	G15_033	FROM->TO	G14-074T 345.00 - OKLAUNION 345KV CKT 1	1022	1124	0.20036	99.8	AMARILLO SOUTH INTERCHANGE - G15031_T 230.00 230KV CKT 1
FDNS	06NR	3	20L	G15_033	FROM->TO	G14-074T 345.00 - OKLAUNION 345KV CKT 1	1022	1124	0.18822	99.8	P12:115:SPS:T53.1.NICHLS.KIRBY
FDNS	06NR	3	20L	G15_033	FROM->TO	G14-074T 345.00 - OKLAUNION 345KV CKT 1	1022	1124	0.18905	99.7	IODINE - WOODWARD EHV 138KV CKT 1
FDNS	06NR	3	20L	G15_033	FROM->TO	G14-074T 345.00 - OKLAUNION 345KV CKT 1	1022	1124	0.18905	99.6	DEWEY - IODINE 138KV CKT 1
FDNS	06NR	3	20L	G15_033	FROM->TO	G14-074T 345.00 - OKLAUNION 345KV CKT 1	1022	1124	0.18888	99.6	WOODWARD - WWPAR4 138.00 138KV CKT 1
FDNS	06NR	3	20L	G15_033	FROM->TO	G14-074T 345.00 - OKLAUNION 345KV CKT 1	1022	1124	0.18888	99.6	WOODWARD EHV - WWPAR4 138.00 138KV CKT 1
FDNS	06NR	3	17G	G15_033	FROM->TO	G14-074T 345.00 - OKLAUNION 345KV CKT 1	1022	1124	0.18619	99.5	CHISHOLM7 345.00 - GRACEMONT 345KV CKT 1
FDNS	06NR	3	20L	G15_033	FROM->TO	G14-074T 345.00 - OKLAUNION 345KV CKT 1	1022	1124	0.18841	99.5	KIRBY SWITCHING STATION - MCCLELLAN SUB 115KV CKT 1
FDNS	06NR	3	20L	G15_033	FROM->TO	G14-074T 345.00 - OKLAUNION 345KV CKT 1	1022	1124	0.18841	99.5	MCCLELLAN SUB - MCLEAN RURAL SUB 115KV CKT 1
FDNS	06ALL	3	20L	G15_033	FROM->TO	GRACEMONT - MINCO 345KV CKT 1	1195	1195	0.26425	101.53	G14-057T 345.00 - SUNNYSIDE 345KV CKT 1
FDNS	00NR	3	25SP	G15_033	FROM->TO	Hitchland Interchange (SIEM 8743067) 345/230/13.2KV TRANSFORMER CKT 2	560	644	0.0617	100.776	Hitchland Interchange (H TB80155502) 345/230/13.2KV TRANSFORMER CKT 1
FDNS	00NR	3	25SP	G15_033	FROM->TO	Hitchland Interchange (SIEM 8743067) 345/230/13.2KV TRANSFORMER CKT 2	560	644	0.0617	100.776	Hitchland Interchange (H TB80155502) 345/230/13.2KV TRANSFORMER CKT 1
FDNS	00NR	3	25SP	G15_033	TO->FROM	JONES STATION - TUCO INTERCHANGE 230KV CKT 1	343.79	343.79	0.14585	130.1614	CARLISLE INTERCHANGE - TUCO INTERCHANGE 230KV CKT 1
FDNS	00NR	3	25SP	G15_033	TO->FROM	JONES STATION - TUCO INTERCHANGE 230KV CKT 1	343.79	343.79	0.14585	130.1614	CARLISLE INTERCHANGE - TUCO INTERCHANGE 230KV CKT 1
FDNS	00NR	3	25SP	G15_033	TO->FROM	JONES STATION - TUCO INTERCHANGE 230KV CKT 1	343.79	343.79	0.1129	113.3309	GEN526333 1-JONES GEN #3 21 KV
FDNS	00NR	3	25SP	G15_033	TO->FROM	JONES STATION - TUCO INTERCHANGE 230KV CKT 1	343.79	343.79	0.1129	112.9359	GEN526334 1-JONES_4 116.500
FDNS	00NR	3	25SP	G15_033	TO->FROM	JONES STATION - TUCO INTERCHANGE 230KV CKT 1	343.79	343.79	0.13635	108.5941	TUCO INTERCHANGE - YOAKUM_345 345.00 345KV CKT 1
FDNS	00NR	3	25SP	G15_033	TO->FROM	JONES STATION - TUCO INTERCHANGE 230KV CKT 1	343.79	343.79	0.13102	103.864	CARLISLE INTERCHANGE - WOLFFORTH INTERCHANGE 230KV CKT 1
FDNS	00NR	3	25SP	G15_033	TO->FROM	JONES STATION - TUCO INTERCHANGE 230KV CKT 1	343.79	343.79	0.11303	101.6819	PLANT X STATION - SUNDOWN INTERCHANGE 230KV CKT 1
FDNS	00NR	3	25SP	G15_033	TO->FROM	JONES STATION - TUCO INTERCHANGE 230KV CKT 1	343.79	343.79	0.11303	101.6819	PLANT X STATION - SUNDOWN INTERCHANGE 230KV CKT 1
FDNS	00NR	3	25SP	G15_033	TO->FROM	JONES STATION - TUCO INTERCHANGE 230KV CKT 1	343.79	343.79	0.1129	100.8779	GEN526332 1-JONES GEN #2 21 KV

SOLUTION	GROUP	SCENARIO	SEASON	SOURCE	DIRECTION	MONITORED ELEMENT	RATEA (MVA)	RATEB(MVA)	TDF	TC%LOADING (% MVA)	CONTINGENCY
FDNS	00NR	3	25SP	G15_033	TO->FROM	JONES STATION - TUCO INTERCHANGE 230KV CKT 1	343.79	343.79	0.1129	100.876	GEN526331 1-JONES GEN #1 22 KV
FDNS	00NR	3	25SP	G15_033	TO->FROM	JONES STATION - TUCO INTERCHANGE 230KV CKT 1	343.79	343.79	0.11773	100.7208	TUCO INTERCHANGE (ENRCO 136401) 230/115/13.2KV TRANSFORMER CKT 1
FDNS	00NR	3	25SP	G15_033	TO->FROM	JONES STATION - TUCO INTERCHANGE 230KV CKT 1	343.79	343.79	0.11773	100.7208	TUCO INTERCHANGE (ENRCO 136401) 230/115/13.2KV TRANSFORMER CKT 1
FDNS	00NR	3	25SP	G15_033	TO->FROM	JONES STATION - TUCO INTERCHANGE 230KV CKT 1	343.79	343.79	0.11773	100.7208	TUCO INTERCHANGE (ENRCO 136401) 230/115/13.2KV TRANSFORMER CKT 2
FDNS	00NR	3	25SP	G15_033	TO->FROM	JONES STATION - TUCO INTERCHANGE 230KV CKT 1	343.79	343.79	0.11773	100.7208	TUCO INTERCHANGE (ENRCO 136401) 230/115/13.2KV TRANSFORMER CKT 2
FDNS	00NR	3	25SP	G15_033	TO->FROM	JONES STATION - TUCO INTERCHANGE 230KV CKT 1	343.79	343.79	0.12098	99.8	LUBBOCK EAST INTERCHANGE - TUCO INTERCHANGE 115KV CKT 1
FDNS	00NR	3	25SP	G15_033	TO->FROM	JONES STATION - TUCO INTERCHANGE 230KV CKT 1	343.79	343.79	0.12098	99.8	LUBBOCK EAST INTERCHANGE - TUCO INTERCHANGE 115KV CKT 1
FDNS	00NR	3	25SP	G15_033	FROM->TO	LUBBOCK POWER & LIGHT-HOLLY PLANT (SHIH T101039) 230/69/13.5KV TRANSFORMER CKT 1	224	224	0.03592	104.7002	LUBBOCK POWER & LIGHT-SOUTHEAST - LUBBOCK SOUTH INTERCHANGE 230KV CKT 1
FDNS	00NR	3	25SP	G15_033	FROM->TO	LUBBOCK POWER & LIGHT-HOLLY PLANT (SHIH T101039) 230/69/13.5KV TRANSFORMER CKT 1	224	224	0.03592	104.6872	P12:LPL:SPS:K64.1.LP-SE.LUBBS
FDNS	00NR	3	25SP	G15_033	FROM->TO	LUBBOCK POWER & LIGHT-HOLLY PLANT (SHIH T101039) 230/69/13.5KV TRANSFORMER CKT 1	224	224	0.03513	101.9683	LUBBOCK EAST INTERCHANGE - LUBBOCK POWER & LIGHT-WADSWORTH 230KV CKT 1
FDNS	00NR	3	25SP	G15_033	FROM->TO	LUBBOCK POWER & LIGHT-HOLLY PLANT (SHIH T101039) 230/69/13.5KV TRANSFORMER CKT 1	224	224	0.03513	101.9535	P12:230:LPL:K57.1.LP-WADS.LUBBE
FDNS	00NR	3	25SP	G15_033	FROM->TO	LUBBOCK POWER & LIGHT-HOLLY PLANT (SHIH T101039) 230/69/13.5KV TRANSFORMER CKT 1	224	224	0.03513	101.9534	LUBBOCK POWER & LIGHT-WADSWORTH (SHIH T101038) 230/69/13.5KV TRANSFORMER CKT 1
FDNS	00NR	3	25SP	G15_033	FROM->TO	LUBBOCK POWER & LIGHT-HOLLY PLANT (SHIH T101039) 230/69/13.5KV TRANSFORMER CKT 1	224	224	0.03513	101.9534	LUBBOCK POWER & LIGHT-WADSWORTH (SHIH T101038) 230/69/13.5KV TRANSFORMER CKT 1
FDNS	00NR	3	25SP	G15_033	FROM->TO	POTTER COUNTY INTERCHANGE (WAUK 90343-A) 345/230/13.2KV TRANSFORMER CKT 1	560	560	0.23616	103.4622	G14-074T 345.00 - TUCO INTERCHANGE 345KV CKT 1
FDNS	00NR	3	25SP	G15_033	FROM->TO	POTTER COUNTY INTERCHANGE (WAUK 90343-A) 345/230/13.2KV TRANSFORMER CKT 1	560	560	0.06011	102.6293	BORDER 7345.00 - TUCO_2 345.00 345KV CKT 1
FDNS	00NR	3	25SP	G15_033	FROM->TO	POTTER COUNTY INTERCHANGE (WAUK 90343-A) 345/230/13.2KV TRANSFORMER CKT 1	560	560	0.07601	102.244	HITCHLAND INTERCHANGE - MOORE COUNTY INTERCHANGE 230KV CKT 1
FDNS	00NR	3	25SP	G15_033	FROM->TO	POTTER COUNTY INTERCHANGE (WAUK 90343-A) 345/230/13.2KV TRANSFORMER CKT 1	560	560	0.07601	102.244	HITCHLAND INTERCHANGE - MOORE COUNTY INTERCHANGE 230KV CKT 1
FDNS	00NR	3	25SP	G15_033	FROM->TO	POTTER COUNTY INTERCHANGE (WAUK 90343-A) 345/230/13.2KV TRANSFORMER CKT 1	560	560	0.23616	101.6502	G14-074T 345.00 - TUCO INTERCHANGE 345KV CKT 1
FDNS	00NR	3	25SP	G15_033	FROM->TO	POTTER COUNTY INTERCHANGE (WAUK 90343-A) 345/230/13.2KV TRANSFORMER CKT 1	560	560	0.06011	100.8626	BORDER 7345.00 - TUCO_2 345.00 345KV CKT 1
FDNS	00NR	3	25SP	G15_033	FROM->TO	POTTER COUNTY INTERCHANGE (WAUK 90343-A) 345/230/13.2KV TRANSFORMER CKT 1	560	560	0.07601	100.6701	HITCHLAND INTERCHANGE - MOORE COUNTY INTERCHANGE 230KV CKT 1
FDNS	00NR	3	25SP	G15_033	FROM->TO	POTTER COUNTY INTERCHANGE (WAUK 90343-A) 345/230/13.2KV TRANSFORMER CKT 1	560	560	0.07601	100.6701	HITCHLAND INTERCHANGE - MOORE COUNTY INTERCHANGE 230KV CKT 1
FDNS	00NR	3	25SP	G15_033	FROM->TO	POTTER COUNTY INTERCHANGE (WAUK 90343-A) 345/230/13.2KV TRANSFORMER CKT 1	560	560	0.06011	99.8	BORDER 7345.00 - WOODWARD DISTRICT EHV 345KV CKT 1
FDNS	06ALL	3	17G	G15_033	FROM->TO	TUCO INTERCHANGE - TUCO_2 230.00 230KV CKT 1	497	547	0.37434	106.1901	TUCO INTERCHANGE - TUCO_2 345.00 345KV CKT 1
FDNS	06ALL	3	20L	G15_033	FROM->TO	TUCO INTERCHANGE - TUCO_2 230.00 230KV CKT 1	497	547	0.32414	105.0803	TUCO INTERCHANGE - TUCO_2 345.00 345KV CKT 1
FDNS	06ALL	3	20SP	G15_033	FROM->TO	TUCO INTERCHANGE - TUCO_2 230.00 230KV CKT 1	497	547	0.34349	99.5	TUCO INTERCHANGE - TUCO_2 345.00 345KV CKT 1
FDNS	00NR	3	25SP	G15_033	FROM->TO	TUCO INTERCHANGE (ENRCO 136401) 230/115/13.2KV TRANSFORMER CKT 1	250	288	0.052	118.111	TUCO INTERCHANGE (ENRCO 136401) 230/115/13.2KV TRANSFORMER CKT 2
FDNS	00NR	3	25SP	G15_033	FROM->TO	TUCO INTERCHANGE (ENRCO 136401) 230/115/13.2KV TRANSFORMER CKT 1	250	288	0.052	118.111	TUCO INTERCHANGE (ENRCO 136401) 230/115/13.2KV TRANSFORMER CKT 2
FDNS	00NR	3	25SP	G15_033	FROM->TO	TUCO INTERCHANGE (ENRCO 136401) 230/115/13.2KV TRANSFORMER CKT 1	250	288	0.052	110.7214	TUCO INTERCHANGE (ENRCO 136401) 230/115/13.2KV TRANSFORMER CKT 2
FDNS	00NR	3	25SP	G15_033	FROM->TO	TUCO INTERCHANGE (ENRCO 136401) 230/115/13.2KV TRANSFORMER CKT 1	250	288	0.052	110.7214	TUCO INTERCHANGE (ENRCO 136401) 230/115/13.2KV TRANSFORMER CKT 2
FDNS	00NR	3	25SP	G15_033	FROM->TO	TUCO INTERCHANGE (ENRCO 136401) 230/115/13.2KV TRANSFORMER CKT 2	250	288	0.052	118.111	TUCO INTERCHANGE (ENRCO 136401) 230/115/13.2KV TRANSFORMER CKT 1
FDNS	00NR	3	25SP	G15_033	FROM->TO	TUCO INTERCHANGE (ENRCO 136401) 230/115/13.2KV TRANSFORMER CKT 2	250	288	0.052	118.111	TUCO INTERCHANGE (ENRCO 136401) 230/115/13.2KV TRANSFORMER CKT 1
FDNS	00NR	3	25SP	G15_033	FROM->TO	TUCO INTERCHANGE (ENRCO 136401) 230/115/13.2KV TRANSFORMER CKT 2	250	288	0.052	110.7214	TUCO INTERCHANGE (ENRCO 136401) 230/115/13.2KV TRANSFORMER CKT 1
FDNS	00NR	3	25SP	G15_033	FROM->TO	TUCO INTERCHANGE (ENRCO 136401) 230/115/13.2KV TRANSFORMER CKT 2	250	288	0.052	110.7214	TUCO INTERCHANGE (ENRCO 136401) 230/115/13.2KV TRANSFORMER CKT 1
FDNS	06ALL	3	20L	G15_033	FROM->TO	TUCO_2 345.00 (TUCO_2 XFMR) 345/230/13.2KV TRANSFORMER CKT 1	560	560	0.22168	109.4409	TUCO INTERCHANGE - TUCO_2 345.00 345KV CKT 1
FDNS	06ALL	3	17G	G15_033	FROM->TO	TUCO_2 345.00 (TUCO_2 XFMR) 345/230/13.2KV TRANSFORMER CKT 1	560	560	0.26373	108.0493	TUCO INTERCHANGE - TUCO_2 345.00 345KV CKT 1
FDNS	06ALL	3	20L	G15_033	FROM->TO	TUCO_2 345.00 (TUCO_2 XFMR) 345/230/13.2KV TRANSFORMER CKT 1	560	560	0.22168	106.0962	TUCO INTERCHANGE - TUCO_2 345.00 345KV CKT 1
FDNS	06ALL	3	17G	G15_033	FROM->TO	TUCO_2 345.00 (TUCO_2 XFMR) 345/230/13.2KV TRANSFORMER CKT 1	560	560	0.26373	104.8896	TUCO INTERCHANGE - TUCO_2 345.00 345KV CKT 1
FDNS	06ALL	3	20WP	G15_033	FROM->TO	TUCO_2 345.00 (TUCO_2 XFMR) 345/230/13.2KV TRANSFORMER CKT 1	560	560	0.2399	104.2621	TUCO INTERCHANGE - TUCO_2 345.00 345KV CKT 1
FDNS	06ALL	3	20WP	G15_033	FROM->TO	TUCO_2 345.00 (TUCO_2 XFMR) 345/230/13.2KV TRANSFORMER CKT 1	560	560	0.2399	101.0986	TUCO INTERCHANGE - TUCO_2 345.00 345KV CKT 1
FDNS	06ALL	4	20SP	G15_033	FROM->TO	CHISHOLM6 230.00 - ELK CITY 230KV 230KV CKT 1	353	353	0.04791	103.152	BASE CASE
FDNS	06ALL	4	17SP	G15_033	FROM->TO	CHISHOLM6 230.00 - ELK CITY 230KV 230KV CKT 1	353	353	0.04817	100.7007	BASE CASE
FDNS	06ALL	4	20L	G15_033	TO->FROM	CIMARRON - MINCO 345KV CKT 1	956	956	0.25465	136.9659	G14-057T 345.00 - SUNNYSIDE 345KV CKT 1
FDNS	06ALL	4	20L	G15_033	TO->FROM	CIMARRON - MINCO 345KV CKT 1	956	956	0.25465	130.9905	G14-057T 345.00 - LAWTON EASTSIDE 345KV CKT 1
FDNS	06ALL	4	17G	G15_033	TO->FROM	CIMARRON - MINCO 345KV CKT 1	956	956	0.28528	129.7974	G14-057T 345.00 - SUNNYSIDE 345KV CKT 1
FDNS	06ALL	4	20WP	G15_033	TO->FROM	CIMARRON - MINCO 345KV CKT 1	956	956	0.28036	128.511	G14-057T 345.00 - SUNNYSIDE 345KV CKT 1
FDNS	06ALL	4	17G	G15_033	TO->FROM	CIMARRON - MINCO 345KV CKT 1	956	956	0.28528	124.286	G14-057T 345.00 - LAWTON EASTSIDE 345KV CKT 1
FDNS	06ALL	4	20WP	G15_033	TO->FROM	CIMARRON - MINCO 345KV CKT 1	956	956	0.28036	123.0537	G14-057T 345.00 - LAWTON EASTSIDE 345KV CKT 1
FDNS	06ALL	4	16WP	G15_033	TO->FROM	CIMARRON - MINCO 345KV CKT 1	956	956	0.29185	122.1275	G14-057T 345.00 - SUNNYSIDE 345KV CKT 1
FDNS	06ALL	4	17SP	G15_033	TO->FROM	CIMARRON - MINCO 345KV CKT 1	956	956	0.28841	121.005	G14-057T 345.00 - SUNNYSIDE 345KV CKT 1
FDNS	06ALL	4	20SP	G15_033	TO->FROM	CIMARRON - MINCO 345KV CKT 1	956	956	0.28611	117.7968	G14-057T 345.00 - SUNNYSIDE 345KV CKT 1
FDNS	06ALL	4	16WP	G15_033	TO->FROM	CIMARRON - MINCO 345KV CKT 1	956	956	0.29185	116.5578	G14-057T 345.00 - LAWTON EASTSIDE 345KV CKT 1
FDNS	06ALL	4	17SP	G15_033	TO->FROM	CIMARRON - MINCO 345KV CKT 1	956	956	0.28841	115.6625	G14-057T 345.00 - LAWTON EASTSIDE 345KV CKT 1
FDNS	06ALL	4	20L	G15_033	TO->FROM	CIMARRON - MINCO 345KV CKT 1	956	956	0.20408	115.4077	MATHWSN7 345.00 - TATONGA7 345.00 345KV CKT 1
FDNS	06ALL	4	20SP	G15_033	TO->FROM	CIMARRON - MINCO 345KV CKT 1	956	956	0.28611	112.5931	G14-057T 345.00 - LAWTON EASTSIDE 345KV CKT 1
FDNS	00NR	4	20WP	G15_033	TO->FROM	CIMARRON - MINCO 345KV CKT 1	956	956	0.06977	111.9944	G14-057T 345.00 - SUNNYSIDE 345KV CKT 1
FDNS	00NR	4	16WP	G15_033	TO->FROM	CIMARRON - MINCO 345KV CKT 1	956	956	0.07272	111.1607	G14-057T 345.00 - SUNNYSIDE 345KV CKT 1
FDNSLock	06ALL	4	17G	G15_033	TO->FROM	CIMARRON - MINCO 345KV CKT 1	956	956	0.22743	110.3749	MATHWSN7 345.00 - TATONGA7 345.00 345KV CKT 1
FDNS	06ALL	4	20WP	G15_033	TO->FROM	CIMARRON - MINCO 345KV CKT 1	956	956	0.22256	109.8635	MATHWSN7 345.00 - TATONGA7 345.00 345KV CKT 1
FDNS	06ALL	4	20L	G15_033	TO->FROM	CIMARRON - MINCO 345KV CKT 1	956	956	0.20408	107.0261	G11_051T 345.00 - TATONGA7 345.00 345KV CKT 1
FDNS	06NR	4	20L	G15_033	TO->FROM	CIMARRON - MINCO 345KV CKT 1	956	956	0.07134	106.4869	G14-057T 345.00 - SUNNYSIDE 345KV CKT 1
FDNS	06ALL	4	20L	G15_033	TO->FROM	CIMARRON - MINCO 345KV CKT 1	956	956	0.20408	105.401	G11_051T 345.00 - WOODWARD DISTRICT EHV 345KV CKT 1
FDNS	06ALL	4	20WP	G15_033	TO->FROM	CIMARRON - MINCO 345KV CKT 1	956	956	0.22256	104.457	G11_051T 345.00 - TATONGA7 345.00 345KV CKT 1
FDNS	06ALL	4	17G	G15_033	TO->FROM	CIMARRON - MINCO 345KV CKT 1	956	956	0.26292	104.4362	CHISHOLM7 345.00 - WOODWARD DISTRICT EHV 345KV CKT 1
FDNS	06ALL	4	17G	G15_033	TO->FROM	CIMARRON - MINCO 345KV CKT 1	956	956	0.22743	104.3067	G11_051T 345.00 - TATONGA7 345.00 345KV CKT 1
FDNS	06ALL	4	20L	G15_033	TO->FROM	CIMARRON - MINCO 345KV CKT 1	956	956	0.23894	103.7687	CHISHOLM7 345.00 - WOODWARD DISTRICT EHV 345KV CKT 1
FDNS	06ALL	4	17SP	G15_033	TO->FROM	CIMARRON - MINCO 345KV CKT 1	956	956	0.23052	103.6969	MATHWSN7 345.00 - TATONGA7 345.00 345KV CKT 1
FDNS	06ALL	4	16WP	G15_033	TO->FROM	CIMARRON - MINCO 345KV CKT 1	956	956	0.23248	103.3746	MATHWSN7 345.00 - TATONGA7 345.00 345KV CKT 1
FDNS	06ALL	4	20WP	G15_033	TO->FROM	CIMARRON - MINCO 345KV CKT 1	956	956	0.22256	102.8471	G11_051T 345.00 - WOODWARD DISTRICT EHV 345KV CKT 1
FDNS	06ALL	4	20SP	G15_033	TO->FROM	CIMARRON - MINCO 345KV CKT 1	956	956	0.22892	102.8303	MATHWSN7 345.00 - TATONGA7 345.00 345KV CKT 1
FDNS	06ALL	4	17G	G15_033	TO->FROM	CIMARRON - MINCO 345KV CKT 1	956	956	0.22743	102.7262	G11_051T 345.00 - WOODWARD DISTRICT EHV 345KV CKT 1
FDNS	06NR	4	17G	G15_033	TO->FROM	CIMARRON - MINCO 345KV CKT 1	956	956	0.07286	102.6257	G14-057T 345.00 - SUNNYSIDE 345KV CKT 1
FDNS	06ALL	4	20WP	G15_033	TO->FROM	CIMARRON - MINCO 345KV CKT 1	956	956	0.2598	100.3052	CHISHOLM7 345.00 - WOODWARD DISTRICT EHV 345KV CKT 1
FDNS	06NR	4	20L	G15_033	TO->FROM	CIMARRON - MINCO 345KV CKT 1	956	956	0.07134	100.2185	G14-057T 345.00 - LAWTON EASTSIDE 345KV CKT 1
FDNSLock	06ALL	4	16WP	G15_033		G14_001T 345.00 - WICHITA 345KV CKT 1	1035	1035	0.05215	25.24282	BASE CASE
FDNS	06ALL	4	17G	G15_033	TO->FROM	G14-057T 345.00 - LAWTON EASTSIDE 345KV CKT 1	717	789	0.21886	116.5841	CIMARRON - MINCO 345KV CKT 1
FDNS	06ALL	4	20WP	G15_033	TO->FROM	G14-057T 345.00 - LAWTON EASTSIDE 345KV CKT 1	717	789	0.21497	116.2207	CIMARRON - MINCO 345KV CKT 1
FDNS	06NR	4	20L	G15_033	TO->FROM	G14-057T 345.00 - LAWTON EASTSIDE 345KV CKT 1	717	789	0.0599	112.7177	CIMARRON - MINCO 345KV CKT 1
FDNS	06ALL	4	16WP	G15_033	TO->FROM	G14-057T 345.00 - LAWTON EASTSIDE 345KV CKT 1	717	789	0.2236	112.057	CIMARRON - MINCO 345KV CKT 1
FDNS	06ALL	4	17G	G15_033	TO->FROM	G14-057T 345.00 - LAWTON EASTSIDE 345KV CKT 1	717	789	0.21886	111.2253	GRACEMONT - MINCO 345KV CKT 1

SOLUTION	GROUP	SCENARIO	SEASON	SOURCE	DIRECTION	MONITORED ELEMENT	RATEA (MVA)	RATEB(MVA)	TDF	TC%LOADING (% MVA)	CONTINGENCY
FDNS	06ALL	4	20WP	G15_033	TO->FROM	G14-057T 345.00 - LAWTON EASTSIDE 345KV CKT 1	717	789	0.21497	110.866	GRACEMONT - MINCO 345KV CKT 1
FDNS	06ALL	4	16WP	G15_033	TO->FROM	G14-057T 345.00 - LAWTON EASTSIDE 345KV CKT 1	717	789	0.2236	106.8067	GRACEMONT - MINCO 345KV CKT 1
FDNS	06NR	4	20L	G15_033	TO->FROM	G14-057T 345.00 - LAWTON EASTSIDE 345KV CKT 1	717	789	0.0599	106.2696	GRACEMONT - MINCO 345KV CKT 1
FDNS	06ALL	4	20L	G15_033	TO->FROM	G14-057T 345.00 - LAWTON EASTSIDE 345KV CKT 1	717	789	0.13461	104.3251	BASE CASE
FDNS	06ALL	4	17SP	G15_033	TO->FROM	G14-057T 345.00 - LAWTON EASTSIDE 345KV CKT 1	717	789	0.21893	104.0953	CIMARRON - MINCO 345KV CKT 1
FDNS	06NR	4	17G	G15_033	TO->FROM	G14-057T 345.00 - LAWTON EASTSIDE 345KV CKT 1	717	789	0.06126	102.7989	CIMARRON - MINCO 345KV CKT 1
FDNS	00NR	4	16WP	G15_033	FROM->TO	G14-057T 345.00 - SUNNYSIDE 345KV CKT 1	717	789	0.06099	140.6983	CIMARRON - MINCO 345KV CKT 1
FDNS	00NR	4	20WP	G15_033	FROM->TO	G14-057T 345.00 - SUNNYSIDE 345KV CKT 1	717	789	0.05822	138.66	CIMARRON - MINCO 345KV CKT 1
FDNS	00NR	4	16WP	G15_033	FROM->TO	G14-057T 345.00 - SUNNYSIDE 345KV CKT 1	717	789	0.06099	129.9929	GRACEMONT - MINCO 345KV CKT 1
FDNS	06ALL	4	17G	G15_033	FROM->TO	G14-057T 345.00 - SUNNYSIDE 345KV CKT 1	717	789	0.21886	129.3839	CIMARRON - MINCO 345KV CKT 1
FDNS	06ALL	4	20WP	G15_033	FROM->TO	G14-057T 345.00 - SUNNYSIDE 345KV CKT 1	717	789	0.21497	129.0166	CIMARRON - MINCO 345KV CKT 1
FDNS	00NR	4	20WP	G15_033	FROM->TO	G14-057T 345.00 - SUNNYSIDE 345KV CKT 1	717	789	0.05822	127.8811	GRACEMONT - MINCO 345KV CKT 1
FDNS	00NR	4	16WP	G15_033	FROM->TO	G14-057T 345.00 - SUNNYSIDE 345KV CKT 1	717	789	0.04289	127.0545	PITTSBURG - SEMINOLE 345KV CKT 1
FDNS	00NR	4	16WP	G15_033	FROM->TO	G14-057T 345.00 - SUNNYSIDE 345KV CKT 1	717	789	0.04289	127.0545	PITTSBURG - SEMINOLE 345KV CKT 1
FDNS	00NR	4	16WP	G15_033	FROM->TO	G14-057T 345.00 - SUNNYSIDE 345KV CKT 1	717	789	0.04465	126.7077	BASE CASE
FDNS	06NR	4	20L	G15_033	FROM->TO	G14-057T 345.00 - SUNNYSIDE 345KV CKT 1	717	789	0.0599	126.2072	CIMARRON - MINCO 345KV CKT 1
FDNS	06ALL	4	16WP	G15_033	FROM->TO	G14-057T 345.00 - SUNNYSIDE 345KV CKT 1	717	789	0.2236	124.7959	CIMARRON - MINCO 345KV CKT 1
FDNS	00NR	4	16WP	G15_033	FROM->TO	G14-057T 345.00 - SUNNYSIDE 345KV CKT 1	717	789	0.0441	123.9817	CIMARRON - DRAPER LAKE 345KV CKT 1
FDNS	06ALL	4	17G	G15_033	FROM->TO	G14-057T 345.00 - SUNNYSIDE 345KV CKT 1	717	789	0.21886	123.8757	GRACEMONT - MINCO 345KV CKT 1
FDNS	06ALL	4	20WP	G15_033	FROM->TO	G14-057T 345.00 - SUNNYSIDE 345KV CKT 1	717	789	0.21497	123.5098	GRACEMONT - MINCO 345KV CKT 1
FDNS	00NR	4	20WP	G15_033	FROM->TO	G14-057T 345.00 - SUNNYSIDE 345KV CKT 1	717	789	0.0425	123.4547	BASE CASE
FDNS	00NR	4	20WP	G15_033	FROM->TO	G14-057T 345.00 - SUNNYSIDE 345KV CKT 1	717	789	0.04083	123.0123	PITTSBURG - SEMINOLE 345KV CKT 1
FDNS	00NR	4	20WP	G15_033	FROM->TO	G14-057T 345.00 - SUNNYSIDE 345KV CKT 1	717	789	0.04083	123.0123	PITTSBURG - SEMINOLE 345KV CKT 1
FDNS	00NR	4	16WP	G15_033	FROM->TO	G14-057T 345.00 - SUNNYSIDE 345KV CKT 1	717	789	0.04685	121.3093	P12:138:WFEC:MSL03
FDNS	00NR	4	20WP	G15_033	FROM->TO	G14-057T 345.00 - SUNNYSIDE 345KV CKT 1	717	789	0.04199	120.669	CIMARRON - DRAPER LAKE 345KV CKT 1
FDNS	00NR	4	16WP	G15_033	FROM->TO	G14-057T 345.00 - SUNNYSIDE 345KV CKT 1	717	789	0.04462	120.6493	PITTSBURG - VALLIANT 345KV CKT 1
FDNS	00NR	4	16WP	G15_033	FROM->TO	G14-057T 345.00 - SUNNYSIDE 345KV CKT 1	717	789	0.04462	120.6493	PITTSBURG - VALLIANT 345KV CKT 1
FDNS	00NR	4	16WP	G15_033	FROM->TO	G14-057T 345.00 - SUNNYSIDE 345KV CKT 1	717	789	0.04465	120.2416	GEN509403 1-PIRKEY GENERATION
FDNS	00NR	4	16WP	G15_033	FROM->TO	G14-057T 345.00 - SUNNYSIDE 345KV CKT 1	717	789	0.04465	120.1515	GEN509416 1-TURK GENERATION
FDNS	00NR	4	16WP	G15_033	FROM->TO	G14-057T 345.00 - SUNNYSIDE 345KV CKT 1	717	789	0.04452	119.9567	CLEVELAND - G15066_T 345.00 345KV CKT 1
FDNS	00NR	4	16WP	G15_033	FROM->TO	G14-057T 345.00 - SUNNYSIDE 345KV CKT 1	717	789	0.04452	119.6664	G15066_T 345.00 - SOONER 345KV CKT 1
FDNS	06NR	4	20L	G15_033	FROM->TO	G14-057T 345.00 - SUNNYSIDE 345KV CKT 1	717	789	0.0599	119.5333	GRACEMONT - MINCO 345KV CKT 1
FDNS	06ALL	4	16WP	G15_033	FROM->TO	G14-057T 345.00 - SUNNYSIDE 345KV CKT 1	717	789	0.2236	119.4076	GRACEMONT - MINCO 345KV CKT 1
FDNS	00NR	4	16WP	G15_033	FROM->TO	G14-057T 345.00 - SUNNYSIDE 345KV CKT 1	717	789	0.04465	119.2922	GEN501801 1-DOLET HILLS UNIT1
FDNS	00NR	4	16WP	G15_033	FROM->TO	G14-057T 345.00 - SUNNYSIDE 345KV CKT 1	717	789	0.04465	118.8864	GEN509404 1-WELSH #1
FDNS	00NR	4	16WP	G15_033	FROM->TO	G14-057T 345.00 - SUNNYSIDE 345KV CKT 1	717	789	0.04465	118.8864	GEN509406 1-WELSH #3
FDNS	00NR	4	20WP	G15_033	FROM->TO	G14-057T 345.00 - SUNNYSIDE 345KV CKT 1	717	789	0.0446	118.3529	P12:138:WFEC:MSL03
FDNS	00NR	4	16WP	G15_033	FROM->TO	G14-057T 345.00 - SUNNYSIDE 345KV CKT 1	717	789	0.04503	118.2849	CORN TAP - NAPLESTP 138.00 138KV CKT 1
FDNS	00NR	4	16WP	G15_033	FROM->TO	G14-057T 345.00 - SUNNYSIDE 345KV CKT 1	717	789	0.04503	118.202	NAPLESTP 138.00 - PAYNE 138.00 138KV CKT 1
FDNS	00NR	4	16WP	G15_033	FROM->TO	G14-057T 345.00 - SUNNYSIDE 345KV CKT 1	717	789	0.04442	118.0983	7SAREPTA% 345.00 - LONGWOOD 345KV CKT 1
FDNS	00NR	4	16WP	G15_033	FROM->TO	G14-057T 345.00 - SUNNYSIDE 345KV CKT 1	717	789	0.04442	118.0983	7SAREPTA% 345.00 - LONGWOOD 345KV CKT 1
FDNS	00NR	4	16WP	G15_033	FROM->TO	G14-057T 345.00 - SUNNYSIDE 345KV CKT 1	717	789	0.04465	118.0261	GEN336821 1-GRAND GULF UNIT
FDNS	00NR	4	16WP	G15_033	FROM->TO	G14-057T 345.00 - SUNNYSIDE 345KV CKT 1	717	789	0.04455	117.9903	DOLET HILLS - SOUTHWEST SHREVEPORT 345KV CKT 1
FDNS	00NR	4	16WP	G15_033	FROM->TO	G14-057T 345.00 - SUNNYSIDE 345KV CKT 1	717	789	0.04455	117.9903	DOLET HILLS - SOUTHWEST SHREVEPORT 345KV CKT 1
FDNS	00NR	4	16WP	G15_033	FROM->TO	G14-057T 345.00 - SUNNYSIDE 345KV CKT 1	717	789	0.04458	117.9735	CLEVELAND - TULSA NORTH 345KV CKT 1
FDNS	00NR	4	16WP	G15_033	FROM->TO	G14-057T 345.00 - SUNNYSIDE 345KV CKT 1	717	789	0.04458	117.9735	CLEVELAND - TULSA NORTH 345KV CKT 1
FDNS	00NR	4	16WP	G15_033	FROM->TO	G14-057T 345.00 - SUNNYSIDE 345KV CKT 1	717	789	0.04465	117.9355	GEN336153 1-WATERFORD UNIT#3
FDNS	00NR	4	16WP	G15_033	FROM->TO	G14-057T 345.00 - SUNNYSIDE 345KV CKT 1	717	789	0.04492	117.9263	COMANCHE - LOCO 138KV CKT 1
FDNS	00NR	4	16WP	G15_033	FROM->TO	G14-057T 345.00 - SUNNYSIDE 345KV CKT 1	717	789	0.04362	117.9095	CANADIAN RIVER - MUSKOGEE 345KV CKT 1
FDNS	00NR	4	16WP	G15_033	FROM->TO	G14-057T 345.00 - SUNNYSIDE 345KV CKT 1	717	789	0.04509	117.8866	ANADARKO - POCASSETT 138KV CKT 1
FDNS	00NR	4	16WP	G15_033	FROM->TO	G14-057T 345.00 - SUNNYSIDE 345KV CKT 1	717	789	0.04509	117.7455	POCASSETT - TUTTLE 138KV CKT 1
FDNS	00NR	4	16WP	G15_033	FROM->TO	G14-057T 345.00 - SUNNYSIDE 345KV CKT 1	717	789	0.04371	117.6618	MATHWSN7 345.00 - TATONGA7 345.00 345KV CKT 1
FDNS	00NR	4	16WP	G15_033	FROM->TO	G14-057T 345.00 - SUNNYSIDE 345KV CKT 1	717	789	0.04465	117.642	GEN335831 1-RIVERBEND UNIT#1
FDNS	00NR	4	16WP	G15_033	FROM->TO	G14-057T 345.00 - SUNNYSIDE 345KV CKT 1	717	789	0.04465	117.6341	GRAND GULF 500/22.0KV TRANSFORMER CKT 1
FDNS	00NR	4	16WP	G15_033	FROM->TO	G14-057T 345.00 - SUNNYSIDE 345KV CKT 1	717	789	0.0445	117.6082	ARCADIA - NORTHWEST 345KV CKT 1
FDNS	00NR	4	16WP	G15_033	FROM->TO	G14-057T 345.00 - SUNNYSIDE 345KV CKT 1	717	789	0.04424	117.5959	ARCADIA - SEMINOLE 345KV CKT 1
FDNS	00NR	4	16WP	G15_033	FROM->TO	G14-057T 345.00 - SUNNYSIDE 345KV CKT 1	717	789	0.04465	117.5502	GEN515577 1-ARBWND11 0.6900
FDNS	00NR	4	16WP	G15_033	FROM->TO	G14-057T 345.00 - SUNNYSIDE 345KV CKT 1	717	789	0.04767	117.5498	BORDER 7345.00 - WOODWARD DISTRICT EHV 345KV CKT 1
FDNS	00NR	4	16WP	G15_033	FROM->TO	G14-057T 345.00 - SUNNYSIDE 345KV CKT 1	717	789	0.04465	117.5322	GEN509409 1-WILKES #3
FDNS	06ALL	4	20L	G15_033	FROM->TO	G14-057T 345.00 - SUNNYSIDE 345KV CKT 1	717	789	0.13461	117.5276	BASE CASE
FDNS	00NR	4	16WP	G15_033	FROM->TO	G14-057T 345.00 - SUNNYSIDE 345KV CKT 1	717	789	0.04585	117.5033	P12:138:AEPW:DUNCAN-4:L.E.S.-4
FDNS	00NR	4	16WP	G15_033	FROM->TO	G14-057T 345.00 - SUNNYSIDE 345KV CKT 1	717	789	0.04452	117.4777	7SAREPTA% 345.00 - ELDORADO EHV 345KV CKT 1
FDNS	00NR	4	16WP	G15_033	FROM->TO	G14-057T 345.00 - SUNNYSIDE 345KV CKT 1	717	789	0.04452	117.4775	3TR3AR8EL7EL
FDNS	00NR	4	16WP	G15_033	FROM->TO	G14-057T 345.00 - SUNNYSIDE 345KV CKT 1	717	789	0.04452	117.467	ELDORADO EHV 500/345KV TRANSFORMER CKT 1
FDNS	00NR	4	16WP	G15_033	FROM->TO	G14-057T 345.00 - SUNNYSIDE 345KV CKT 1	717	789	0.04473	117.4075	HEALDTON - LOCO 138KV CKT 1
FDNS	00NR	4	16WP	G15_033	FROM->TO	G14-057T 345.00 - SUNNYSIDE 345KV CKT 1	717	789	0.04509	117.3802	BRIDGECR 138.00 - TUTTLE 138KV CKT 1
FDNS	00NR	4	16WP	G15_033	FROM->TO	G14-057T 345.00 - SUNNYSIDE 345KV CKT 1	717	789	0.04585	117.3524	COMANCHE TAP - OMPA-DUNCAN 840 138KV CKT 1
FDNS	00NR	4	16WP	G15_033	FROM->TO	G14-057T 345.00 - SUNNYSIDE 345KV CKT 1	717	789	0.04473	117.2618	HEALDTON - RINGLING 138KV CKT 1
FDNS	00NR	4	16WP	G15_033	FROM->TO	G14-057T 345.00 - SUNNYSIDE 345KV CKT 1	717	789	0.04465	117.2523	GEN501813 1-RODEMACHER UNIT 3
FDNS	00NR	4	16WP	G15_033	FROM->TO	G14-057T 345.00 - SUNNYSIDE 345KV CKT 1	717	789	0.04462	117.2003	LACYGNE - WAVERLY7 345.00 345KV CKT 1
FDNS	00NR	4	16WP	G15_033	FROM->TO	G14-057T 345.00 - SUNNYSIDE 345KV CKT 1	717	789	0.04465	117.1886	GEN300006 1-NEW MADRID UNIT 1
FDNS	00NR	4	16WP	G15_033	FROM->TO	G14-057T 345.00 - SUNNYSIDE 345KV CKT 1	717	789	0.04465	117.1769	GEN300007 1-NEW MADRID UNIT 2
FDNS	00NR	4	16WP	G15_033	FROM->TO	G14-057T 345.00 - SUNNYSIDE 345KV CKT 1	717	789	0.04195	117.1639	FINNEY SWITCHING STATION - HOLCOMB 345KV CKT 1
FDNS	00NR	4	16WP	G15_033	FROM->TO	G14-057T 345.00 - SUNNYSIDE 345KV CKT 1	717	789	0.04195	117.1639	FINNEY SWITCHING STATION - HOLCOMB 345KV CKT 1
FDNS	00NR	4	20WP	G15_033	FROM->TO	G14-057T 345.00 - SUNNYSIDE 345KV CKT 1	717	789	0.0425	117.1608	GEN509403 1-PIRKEY GENERATION
FDNS	00NR	4	16WP	G15_033	FROM->TO	G14-057T 345.00 - SUNNYSIDE 345KV CKT 1	717	789	0.04465	117.1337	GEN520947 1-HUGO1
FDNS	00NR	4	16WP	G15_033	FROM->TO	G14-057T 345.00 - SUNNYSIDE 345KV CKT 1	717	789	0.04509	117.1245	P12:138:WFEC:MSL01
FDNS	00NR	4	16WP	G15_033	FROM->TO	G14-057T 345.00 - SUNNYSIDE 345KV CKT 1	717	789	0.04509	117.118	BRIDGECR 138.00 - SUNSHINE CANYON 138KV CKT 1
FDNS	00NR	4	20WP	G15_033	FROM->TO	G14-057T 345.00 - SUNNYSIDE 345KV CKT 1	717	789	0.0425	117.1029	GEN509416 1-TURK GENERATION

SOLUTION	GROUP	SCENARIO	SEASON	SOURCE	DIRECTION	MONITORED ELEMENT	RATEA (MVA)	RATEB(MVA)	TDF	TC%LOADING (% MVA)	CONTINGENCY
FDNS	00NR	4	16WP	G15_033	FROM->TO	G14-057T 345.00 - SUNNYSIDE 345KV CKT 1	717	789	0.04473	117.096	RINGLING - SOUTH WILSON 138KV CKT 1
FDNS	00NR	4	16WP	G15_033	FROM->TO	G14-057T 345.00 - SUNNYSIDE 345KV CKT 1	717	789	0.04371	117.0947	G11_051T 345.00 - TATONGA7 345.00 345KV CKT 1
FDNS	00NR	4	16WP	G15_033	FROM->TO	G14-057T 345.00 - SUNNYSIDE 345KV CKT 1	717	789	0.04462	117.0841	WAVERLY7 345.00 - WOLF CREEK 345KV CKT 1
FDNS	00NR	4	16WP	G15_033	FROM->TO	G14-057T 345.00 - SUNNYSIDE 345KV CKT 1	717	789	0.04585	117.0801	DUNCAN - OMPA-DUNCAN 840 138KV CKT 1
FDNS	00NR	4	16WP	G15_033	FROM->TO	G14-057T 345.00 - SUNNYSIDE 345KV CKT 1	717	789	0.04585	117.0801	DUNCAN - OMPA-DUNCAN 840 138KV CKT 1
FDNS	00NR	4	16WP	G15_033	FROM->TO	G14-057T 345.00 - SUNNYSIDE 345KV CKT 1	717	789	0.04465	117.0524	GEN335206 1-NELSON UNIT 6
FDNS	00NR	4	16WP	G15_033	FROM->TO	G14-057T 345.00 - SUNNYSIDE 345KV CKT 1	717	789	0.04465	116.9409	DOLET HILLS 345/24.0KV TRANSFORMER CKT 1
FDNS	00NR	4	20WP	G15_033	FROM->TO	G14-057T 345.00 - SUNNYSIDE 345KV CKT 1	717	789	0.04247	116.923	PITTSBURG - VALLIANT 345KV CKT 1
FDNS	00NR	4	20WP	G15_033	FROM->TO	G14-057T 345.00 - SUNNYSIDE 345KV CKT 1	717	789	0.04247	116.923	PITTSBURG - VALLIANT 345KV CKT 1
FDNS	00NR	4	20WP	G15_033	FROM->TO	G14-057T 345.00 - SUNNYSIDE 345KV CKT 1	717	789	0.04238	116.8984	CLEVELAND - G15066_T 345.00 345KV CKT 1
FDNS	00NR	4	16WP	G15_033	FROM->TO	G14-057T 345.00 - SUNNYSIDE 345KV CKT 1	717	789	0.04439	116.8788	PARK LANE - SEMINOLE 138KV CKT 1
FDNS	00NR	4	16WP	G15_033	FROM->TO	G14-057T 345.00 - SUNNYSIDE 345KV CKT 1	717	789	0.04471	116.8686	P12:138:AEPW:SHERID4:112GORE4
FDNS	00NR	4	16WP	G15_033	FROM->TO	G14-057T 345.00 - SUNNYSIDE 345KV CKT 1	717	789	0.04465	116.8663	GEN501812 1-RODEMACHER UNIT 2
FDNS	00NR	4	16WP	G15_033	FROM->TO	G14-057T 345.00 - SUNNYSIDE 345KV CKT 1	717	789	0.04473	116.8177	MARIETTA - SOUTH WILSON 138KV CKT 1
FDNS	00NR	4	16WP	G15_033	FROM->TO	G14-057T 345.00 - SUNNYSIDE 345KV CKT 1	717	789	0.0445	116.8176	CANEYRV7 345.00 - NEOSHO 345KV CKT 1
FDNS	00NR	4	16WP	G15_033	FROM->TO	G14-057T 345.00 - SUNNYSIDE 345KV CKT 1	717	789	0.04465	116.817	GEN590011 2-ERCOT EQUIVALENCE
FDNS	00NR	4	16WP	G15_033	FROM->TO	G14-057T 345.00 - SUNNYSIDE 345KV CKT 1	717	789	0.04465	116.7881	GEN515564 1-ORIGIN11 0.6900
FDNS	00NR	4	16WP	G15_033	FROM->TO	G14-057T 345.00 - SUNNYSIDE 345KV CKT 1	717	789	0.04465	116.7881	GEN515565 1-ORIGIN21 0.6900
FDNS	00NR	4	16WP	G15_033	FROM->TO	G14-057T 345.00 - SUNNYSIDE 345KV CKT 1	717	789	0.04195	116.7739	FINNEY SWITCHING STATION - Hitchland Interchange 345KV CKT 1
FDNS	00NR	4	16WP	G15_033	FROM->TO	G14-057T 345.00 - SUNNYSIDE 345KV CKT 1	717	789	0.04465	116.7446	GEN590010 1-ERCOT EQUIVALENCE
FDNS	00NR	4	16WP	G15_033	FROM->TO	G14-057T 345.00 - SUNNYSIDE 345KV CKT 1	717	789	0.04473	116.7349	P12:138:WFEC:MSL17
FDNS	00NR	4	16WP	G15_033	FROM->TO	G14-057T 345.00 - SUNNYSIDE 345KV CKT 1	717	789	0.04767	116.7273	BORDER 7345.00 - TUCO_2 345.00 345KV CKT 1
FDNS	00NR	4	16WP	G15_033	FROM->TO	G14-057T 345.00 - SUNNYSIDE 345KV CKT 1	717	789	0.04433	116.6769	THISTLE7 345.00 - WOODWARD DISTRICT EHV 345KV CKT 1
FDNS	00NR	4	16WP	G15_033	FROM->TO	G14-057T 345.00 - SUNNYSIDE 345KV CKT 1	717	789	0.04433	116.6769	THISTLE7 345.00 - WOODWARD DISTRICT EHV 345KV CKT 1
FDNS	00NR	4	16WP	G15_033	FROM->TO	G14-057T 345.00 - SUNNYSIDE 345KV CKT 1	717	789	0.04433	116.6769	THISTLE7 345.00 - WOODWARD DISTRICT EHV 345KV CKT 2
FDNS	00NR	4	16WP	G15_033	FROM->TO	G14-057T 345.00 - SUNNYSIDE 345KV CKT 1	717	789	0.04433	116.6769	THISTLE7 345.00 - WOODWARD DISTRICT EHV 345KV CKT 2
FDNS	00NR	4	16WP	G15_033	FROM->TO	G14-057T 345.00 - SUNNYSIDE 345KV CKT 1	717	789	0.0445	116.6746	CANEYRV7 345.00 - LATHAMS7 345.00 345KV CKT 1
FDNS	00NR	4	16WP	G15_033	FROM->TO	G14-057T 345.00 - SUNNYSIDE 345KV CKT 1	717	789	0.04465	116.668	GEN509408 1-WILKES #2
FDNS	06ALL	4	17SP	G15_033	FROM->TO	G14-057T 345.00 - SUNNYSIDE 345KV CKT 1	717	789	0.21893	116.6474	CIMARRON - MINCO 345KV CKT 1
FDNS	00NR	4	16WP	G15_033	FROM->TO	G14-057T 345.00 - SUNNYSIDE 345KV CKT 1	717	789	0.0448	116.6462	CIVIT - PAOLI 138KV CKT 1
FDNS	00NR	4	16WP	G15_033	FROM->TO	G14-057T 345.00 - SUNNYSIDE 345KV CKT 1	717	789	0.04478	116.637	REDBUD - RIVERSIDE STATION 345KV CKT 1
FDNS	00NR	4	16WP	G15_033	FROM->TO	G14-057T 345.00 - SUNNYSIDE 345KV CKT 1	717	789	0.04478	116.637	REDBUD - RIVERSIDE STATION 345KV CKT 1
FDNS	00NR	4	16WP	G15_033	FROM->TO	G14-057T 345.00 - SUNNYSIDE 345KV CKT 1	717	789	0.04465	116.6157	P12:69:AEPW:L.E.S.-2:LAW WC2
FDNS	00NR	4	16WP	G15_033	FROM->TO	G14-057T 345.00 - SUNNYSIDE 345KV CKT 1	717	789	0.04465	116.6107	P12:161:AEPW:DYESS 5:HYLAND 5
FDNS	00NR	4	20WP	G15_033	FROM->TO	G14-057T 345.00 - SUNNYSIDE 345KV CKT 1	717	789	0.04238	116.6094	G15066_T 345.00 - SOONER 345KV CKT 1
FDNS	00NR	4	16WP	G15_033	FROM->TO	G14-057T 345.00 - SUNNYSIDE 345KV CKT 1	717	789	0.04461	116.5901	ELDORADO EHV - MOUNT OLIVE 500KV CKT 1
FDNS	00NR	4	16WP	G15_033	FROM->TO	G14-057T 345.00 - SUNNYSIDE 345KV CKT 1	717	789	0.04465	116.5893	GEN506754 1-LEBROCK STEAM 1
FDNS	00NR	4	16WP	G15_033	FROM->TO	G14-057T 345.00 - SUNNYSIDE 345KV CKT 1	717	789	0.04465	116.584	GEN334440 1-SABINE UNIT 4
FDNS	00NR	4	16WP	G15_033	FROM->TO	G14-057T 345.00 - SUNNYSIDE 345KV CKT 1	717	789	0.04462	116.5609	P12:138:WFEC:MSL02
FDNS	00NR	4	16WP	G15_033	FROM->TO	G14-057T 345.00 - SUNNYSIDE 345KV CKT 1	717	789	0.0446	116.5534	PAOLI - PAYNE 138.00 138KV CKT 1
FDNS	00NR	4	16WP	G15_033	FROM->TO	G14-057T 345.00 - SUNNYSIDE 345KV CKT 1	717	789	0.04459	116.5397	ELDORADO EHV - SHERIDAN EHV 500KV CKT 1
FDNS	00NR	4	16WP	G15_033	FROM->TO	G14-057T 345.00 - SUNNYSIDE 345KV CKT 1	717	789	0.04471	116.5307	P12:138:AEPW:112GORE4:L.E.S.-4
FDNS	00NR	4	16WP	G15_033	FROM->TO	G14-057T 345.00 - SUNNYSIDE 345KV CKT 1	717	789	0.04465	116.5131	NEW MADRID 161/22.0KV TRANSFORMER CKT 1
FDNS	00NR	4	16WP	G15_033	FROM->TO	G14-057T 345.00 - SUNNYSIDE 345KV CKT 1	717	789	0.0448	116.5026	CIVIT - STRATFORD 138KV CKT 1
FDNS	00NR	4	16WP	G15_033	FROM->TO	G14-057T 345.00 - SUNNYSIDE 345KV CKT 1	717	789	0.04465	116.5001	NEW MADRID 345/22.0KV TRANSFORMER CKT 1
FDNS	00NR	4	16WP	G15_033	FROM->TO	G14-057T 345.00 - SUNNYSIDE 345KV CKT 1	717	789	0.04371	116.4993	G11_051T 345.00 - WOODWARD DISTRICT EHV 345KV CKT 1
FDNS	00NR	4	16WP	G15_033	FROM->TO	G14-057T 345.00 - SUNNYSIDE 345KV CKT 1	717	789	0.04449	116.4901	MATHWSN7 345.00 - NORTHWEST 345KV CKT 1
FDNS	00NR	4	16WP	G15_033	FROM->TO	G14-057T 345.00 - SUNNYSIDE 345KV CKT 1	717	789	0.0447	116.4797	TUPELO - TUPELO TAP 138KV CKT 1
FDNS	00NR	4	16WP	G15_033	FROM->TO	G14-057T 345.00 - SUNNYSIDE 345KV CKT 1	717	789	0.04464	116.474	ANADARKO - GEORGIA 138KV CKT 1
FDNS	00NR	4	16WP	G15_033	FROM->TO	G14-057T 345.00 - SUNNYSIDE 345KV CKT 1	717	789	0.04465	116.4732	FRONTIER - GRIMES 345KV CKT 1
FDNS	00NR	4	16WP	G15_033	FROM->TO	G14-057T 345.00 - SUNNYSIDE 345KV CKT 1	717	789	0.04498	116.4673	P12:138:AEPW-OGE:CORNVIL4:MAUD 4
FDNS	00NR	4	16WP	G15_033	FROM->TO	G14-057T 345.00 - SUNNYSIDE 345KV CKT 1	717	789	0.0445	116.4614	LATHAMS7 345.00 - ROSE HILL 345KV CKT 1
FDNS	00NR	4	16WP	G15_033	FROM->TO	G14-057T 345.00 - SUNNYSIDE 345KV CKT 1	717	789	0.04465	116.4415	GEN503909 1-FULTONU1 1 16.000
FDNS	00NR	4	16WP	G15_033	FROM->TO	G14-057T 345.00 - SUNNYSIDE 345KV CKT 1	717	789	0.04459	116.4289	WEBRE - WELLS 500KV CKT 1
FDNS	00NR	4	16WP	G15_033	FROM->TO	G14-057T 345.00 - SUNNYSIDE 345KV CKT 1	717	789	0.04464	116.3957	FLETCHER - GEORGIA 138KV CKT 1
FDNS	00NR	4	16WP	G15_033	FROM->TO	G14-057T 345.00 - SUNNYSIDE 345KV CKT 1	717	789	0.04498	116.3935	BLANCHARD - CORNVILLE 138KV CKT 1
FDNS	00NR	4	20WP	G15_033	FROM->TO	G14-057T 345.00 - SUNNYSIDE 345KV CKT 1	717	789	0.0425	116.3916	GEN501801 1-DOLET HILLS UNIT1
FDNS	00NR	4	16WP	G15_033	FROM->TO	G14-057T 345.00 - SUNNYSIDE 345KV CKT 1	717	789	0.0448	116.3821	OIL CENTER - STRATFORD 138KV CKT 1
FDNS	00NR	4	16WP	G15_033	FROM->TO	G14-057T 345.00 - SUNNYSIDE 345KV CKT 1	717	789	0.04661	116.3723	LAWTON EASTSIDE (LES 5) 345/138/13.8KV TRANSFORMER CKT 2
FDNS	00NR	4	16WP	G15_033	FROM->TO	G14-057T 345.00 - SUNNYSIDE 345KV CKT 1	717	789	0.04661	116.3723	LAWTON EASTSIDE (LES 5) 345/138/13.8KV TRANSFORMER CKT 2
FDNS	00NR	4	16WP	G15_033	FROM->TO	G14-057T 345.00 - SUNNYSIDE 345KV CKT 1	717	789	0.04462	116.3565	EMPIRE - FLETCHER 138KV CKT 1
FDNS	00NR	4	16WP	G15_033	FROM->TO	G14-057T 345.00 - SUNNYSIDE 345KV CKT 1	717	789	0.04465	116.3199	GEN509393 S1-ARSENAL HILL GENS #4 (STALL)
FDNS	00NR	4	16WP	G15_033	FROM->TO	G14-057T 345.00 - SUNNYSIDE 345KV CKT 1	717	789	0.04465	116.2927	GEN509392 G2-ARSENAL HILL GENS #3 (STALL)
FDNS	00NR	4	16WP	G15_033	FROM->TO	G14-057T 345.00 - SUNNYSIDE 345KV CKT 1	717	789	0.04465	116.2926	GEN509391 G1-ARSENAL HILL GENS #2 (STALL)
FDNS	00NR	4	16WP	G15_033	FROM->TO	G14-057T 345.00 - SUNNYSIDE 345KV CKT 1	717	789	0.04465	116.2891	GEN336252 1-NINEMILE POINT UNIT#5
FDNS	00NR	4	16WP	G15_033	FROM->TO	G14-057T 345.00 - SUNNYSIDE 345KV CKT 1	717	789	0.04462	116.2837	COMANCHE - EMPIRE 138KV CKT 1
FDNS	00NR	4	16WP	G15_033	FROM->TO	G14-057T 345.00 - SUNNYSIDE 345KV CKT 1	717	789	0.04465	116.2752	GEN334071 1-LEWIS CREEK 2
FDNS	00NR	4	16WP	G15_033	FROM->TO	G14-057T 345.00 - SUNNYSIDE 345KV CKT 1	717	789	0.04465	116.2662	GEN334070 1-LEWIS CREEK 1
FDNS	00NR	4	16WP	G15_033	FROM->TO	G14-057T 345.00 - SUNNYSIDE 345KV CKT 1	717	789	0.04465	116.2633	GEN335204 1-NELSON UNIT 4
FDNS	00NR	4	16WP	G15_033	FROM->TO	G14-057T 345.00 - SUNNYSIDE 345KV CKT 1	717	789	0.04461	116.2551	G15074_T 345.00 - HOYT 345KV CKT 1
FDNS	00NR	4	16WP	G15_033	FROM->TO	G14-057T 345.00 - SUNNYSIDE 345KV CKT 1	717	789	0.04465	116.2529	DELL 500 - ESSEX UNIT 2 500KV CKT Z1
FDNS	00NR	4	16WP	G15_033	FROM->TO	G14-057T 345.00 - SUNNYSIDE 345KV CKT 1	717	789	0.04438	116.2508	G1524G1525 345.00 - THISTLE7 345.00 345KV CKT 1
FDNS	00NR	4	16WP	G15_033	FROM->TO	G14-057T 345.00 - SUNNYSIDE 345KV CKT 1	717	789	0.04438	116.2508	G1524G1525 345.00 - THISTLE7 345.00 345KV CKT 2
FDNS	00NR	4	16WP	G15_033	FROM->TO	G14-057T 345.00 - SUNNYSIDE 345KV CKT 1	717	789	0.04465	116.2285	GEN334441 1-SABINE UNIT 5
FDNS	00NR	4	16WP	G15_033	FROM->TO	G14-057T 345.00 - SUNNYSIDE 345KV CKT 1	717	789	0.04486	116.2261	DUNCAN (DUNCAN) 138/69/13.8KV TRANSFORMER CKT 1
FDNS	00NR	4	16WP	G15_033	FROM->TO	G14-057T 345.00 - SUNNYSIDE 345KV CKT 1	717	789	0.04486	116.2261	DUNCAN (DUNCAN) 138/69/13.8KV TRANSFORMER CKT 1
FDNS	00NR	4	16WP	G15_033	FROM->TO	G14-057T 345.00 - SUNNYSIDE 345KV CKT 1	717	789	0.0448	116.2074	LATTA JCT - OIL CENTER 138KV CKT 1
FDNS	00NR	4	16WP	G15_033	FROM->TO	G14-057T 345.00 - SUNNYSIDE 345KV CKT 1	717	789	0.04498	116.201	BLANCHARD - MAUD 138KV CKT 1
FDNS	00NR	4	16WP	G15_033	FROM->TO	G14-057T 345.00 - SUNNYSIDE 345KV CKT 1	717	789	0.04465	116.1923	P12:161:AEPW-SWPA:BEAVER5:EROGERS5

SOLUTION	GROUP	SCENARIO	SEASON	SOURCE	DIRECTION	MONITORED ELEMENT	RATEA (MVA)	RATEB(MVA)	TDF	TC%LOADING (% MVA)	CONTINGENCY
FDNS	00NR	4	16WP	G15_033	FROM->TO	G14-057T 345.00 - SUNNYSIDE 345KV CKT 1	717	789	0.04465	116.1763	GEN334030 1-FRONTIER UNIT 1
FDNS	00NR	4	16WP	G15_033	FROM->TO	G14-057T 345.00 - SUNNYSIDE 345KV CKT 1	717	789	0.04465	116.1746	GEN334031 1-FRONTIER UNIT 2
FDNS	00NR	4	16WP	G15_033	FROM->TO	G14-057T 345.00 - SUNNYSIDE 345KV CKT 1	717	789	0.04464	116.1731	P12:138:AEPW:CATOOSA4:T.S.E.-4
FDNS	00NR	4	16WP	G15_033	FROM->TO	G14-057T 345.00 - SUNNYSIDE 345KV CKT 1	717	789	0.04465	116.1684	GEN337653 1-WHITE BLUFF UNIT #2
FDNS	00NR	4	16WP	G15_033	FROM->TO	G14-057T 345.00 - SUNNYSIDE 345KV CKT 1	717	789	0.04463	116.1611	8DANIEL8 500.00 - MCKNIGHT 500KV CKT 1
FDNS	00NR	4	16WP	G15_033	FROM->TO	G14-057T 345.00 - SUNNYSIDE 345KV CKT 1	717	789	0.04465	116.1506	GEN506752 1-LEBROCK GAS 1
FDNS	00NR	4	16WP	G15_033	FROM->TO	G14-057T 345.00 - SUNNYSIDE 345KV CKT 1	717	789	0.04465	116.1505	GEN506753 1-LEBROCK GAS 2
FDNS	00NR	4	16WP	G15_033	FROM->TO	G14-057T 345.00 - SUNNYSIDE 345KV CKT 1	717	789	0.04457	116.1369	6LAYFLD 230.00 - CARROLL 230KV CKT 1
FDNS	00NR	4	16WP	G15_033	FROM->TO	G14-057T 345.00 - SUNNYSIDE 345KV CKT 1	717	789	0.04517	116.1206	TUTTLE - TUTTLE CONOCO TAP 138KV CKT 1
FDNS	00NR	4	16WP	G15_033	FROM->TO	G14-057T 345.00 - SUNNYSIDE 345KV CKT 1	717	789	0.04465	116.1197	GEN300003 1-THOMAS HILL UNIT 3
FDNS	00NR	4	16WP	G15_033	FROM->TO	G14-057T 345.00 - SUNNYSIDE 345KV CKT 1	717	789	0.04465	116.1188	P12:161:AEPW:DYESS5:ELMSPRNG:TONTITN5
FDNS	00NR	4	16WP	G15_033	FROM->TO	G14-057T 345.00 - SUNNYSIDE 345KV CKT 1	717	789	0.04455	116.1132	FULTON 115 - HOPE 115KV CKT 1
FDNS	00NR	4	16WP	G15_033	FROM->TO	G14-057T 345.00 - SUNNYSIDE 345KV CKT 1	717	789	0.04455	116.1132	FULTON 115 - HOPE 115KV CKT 1
FDNS	00NR	4	16WP	G15_033	FROM->TO	G14-057T 345.00 - SUNNYSIDE 345KV CKT 1	717	789	0.04465	116.1114	GEN337911 1-ARKANSAS NUCLEAR ONE UNIT #2
FDNS	00NR	4	16WP	G15_033	FROM->TO	G14-057T 345.00 - SUNNYSIDE 345KV CKT 1	717	789	0.04465	116.1103	GEN515040 1-SEMINOLE 1G
FDNS	00NR	4	16WP	G15_033	FROM->TO	G14-057T 345.00 - SUNNYSIDE 345KV CKT 1	717	789	0.04465	116.1087	GEN501811 1-RODEMACHER UNIT 1
FDNS	00NR	4	16WP	G15_033	FROM->TO	G14-057T 345.00 - SUNNYSIDE 345KV CKT 1	717	789	0.04451	116.1064	P12:138:AEPW-OGE:WTH_JCT4:JENSEN4
FDNS	00NR	4	16WP	G15_033	FROM->TO	G14-057T 345.00 - SUNNYSIDE 345KV CKT 1	717	789	0.04498	116.0977	BAILEY4 138.00 - SUNSHINE CANYON 138KV CKT 1
FDNS	00NR	4	16WP	G15_033	FROM->TO	G14-057T 345.00 - SUNNYSIDE 345KV CKT 1	717	789	0.04465	116.0925	GEN300015 1-1SGPDEL 18.000
FDNS	00NR	4	16WP	G15_033	FROM->TO	G14-057T 345.00 - SUNNYSIDE 345KV CKT 1	717	789	0.04459	116.0914	G15088_T 345.00 - MOORE 345KV CKT 1
FDNS	00NR	4	16WP	G15_033	FROM->TO	G14-057T 345.00 - SUNNYSIDE 345KV CKT 1	717	789	0.04472	116.0905	P12:138:AEPW:CORNVIL4:S.W.S.-4
FDNS	00NR	4	16WP	G15_033	FROM->TO	G14-057T 345.00 - SUNNYSIDE 345KV CKT 1	717	789	0.04465	116.0898	GEN336251 1-NINEMILE POINT UNIT#4
FDNS	00NR	4	16WP	G15_033	FROM->TO	G14-057T 345.00 - SUNNYSIDE 345KV CKT 1	717	789	0.04465	116.0888	GEN515226 1-MUSKOGEE 6G
FDNS	00NR	4	16WP	G15_033	FROM->TO	G14-057T 345.00 - SUNNYSIDE 345KV CKT 1	717	789	0.04465	116.0877	GEN334433 1-SABINE UNIT 3
FDNS	00NR	4	16WP	G15_033	FROM->TO	G14-057T 345.00 - SUNNYSIDE 345KV CKT 1	717	789	0.04465	116.0874	GEN337652 1-WHITE BLUFF UNIT #1
FDNS	00NR	4	16WP	G15_033	FROM->TO	G14-057T 345.00 - SUNNYSIDE 345KV CKT 1	717	789	0.04465	116.0833	GEN336831 1-BAXTER WILSON SES
FDNS	00NR	4	16WP	G15_033	FROM->TO	G14-057T 345.00 - SUNNYSIDE 345KV CKT 1	717	789	0.04531	116.0678	P12:138:AEPW:CORNVIL4:DUNCAN-4
FDNS	00NR	4	16WP	G15_033	FROM->TO	G14-057T 345.00 - SUNNYSIDE 345KV CKT 1	717	789	0.04486	116.0629	P12:69:WFEC-AEPW:COMANCH2:DUNCAN-2
FDNS	00NR	4	16WP	G15_033	FROM->TO	G14-057T 345.00 - SUNNYSIDE 345KV CKT 1	717	789	0.04465	116.0497	GEN562783 1-G15036_4 0.6900
FDNS	00NR	4	16WP	G15_033	FROM->TO	G14-057T 345.00 - SUNNYSIDE 345KV CKT 1	717	789	0.04465	116.0497	GEN562784 1-G15036_5 0.6900
FDNS	00NR	4	16WP	G15_033	FROM->TO	G14-057T 345.00 - SUNNYSIDE 345KV CKT 1	717	789	0.04409	116.044	BUCKNER7 345.00 - SPEARVILLE 345KV CKT 1
FDNS	00NR	4	16WP	G15_033	FROM->TO	G14-057T 345.00 - SUNNYSIDE 345KV CKT 1	717	789	0.04409	116.044	BUCKNER7 345.00 - SPEARVILLE 345KV CKT 1
FDNS	00NR	4	16WP	G15_033	FROM->TO	G14-057T 345.00 - SUNNYSIDE 345KV CKT 1	717	789	0.04517	116.0406	CIMARRON - TUTTLE CONOCO TAP 138KV CKT 1
FDNS	00NR	4	16WP	G15_033	FROM->TO	G14-057T 345.00 - SUNNYSIDE 345KV CKT 1	717	789	0.04465	116.0185	CIMARRON - CZECH HALL 138KV CKT 1
FDNS	00NR	4	16WP	G15_033	FROM->TO	G14-057T 345.00 - SUNNYSIDE 345KV CKT 1	717	789	0.04457	116.0184	P12:138:AEPW:WTHWF4:CLINTJC4
FDNS	00NR	4	16WP	G15_033	FROM->TO	G14-057T 345.00 - SUNNYSIDE 345KV CKT 1	717	789	0.04465	116.0176	WHITE BLUFF 500/26.0KV TRANSFORMER CKT 1
FDNS	00NR	4	16WP	G15_033	FROM->TO	G14-057T 345.00 - SUNNYSIDE 345KV CKT 1	717	789	0.04465	116.0166	GEN505432 1-SIKESTON
FDNS	00NR	4	16WP	G15_033	FROM->TO	G14-057T 345.00 - SUNNYSIDE 345KV CKT 1	717	789	0.04465	116.0127	P12:161:AEPW:EROGERS5:ECNTRTN5
FDNS	00NR	4	16WP	G15_033	FROM->TO	G14-057T 345.00 - SUNNYSIDE 345KV CKT 1	717	789	0.04462	116.0109	LAYFLD8 500.00 - MOUNT OLIVE 500KV CKT 1
FDNS	00NR	4	16WP	G15_033	FROM->TO	G14-057T 345.00 - SUNNYSIDE 345KV CKT 1	717	789	0.04462	116.0109	LAYFLD8 500.00 - MOUNT OLIVE 500KV CKT 1
FDNS	00NR	4	16WP	G15_033	FROM->TO	G14-057T 345.00 - SUNNYSIDE 345KV CKT 1	717	789	0.04349	116.0094	CANADIAN RIVER - PITTSBURG 345KV CKT 1
FDNS	00NR	4	16WP	G15_033	FROM->TO	G14-057T 345.00 - SUNNYSIDE 345KV CKT 1	717	789	0.04349	116.0094	CANADIAN RIVER - PITTSBURG 345KV CKT 1
FDNS	00NR	4	16WP	G15_033	FROM->TO	G14-057T 345.00 - SUNNYSIDE 345KV CKT 1	717	789	0.04461	116.0086	HOYT - STRANGER CREEK 345KV CKT 1
FDNS	00NR	4	16WP	G15_033	FROM->TO	G14-057T 345.00 - SUNNYSIDE 345KV CKT 1	717	789	0.04465	116.0056	RODEMACHER 230/22.0KV TRANSFORMER CKT 1
FDNS	00NR	4	16WP	G15_033	FROM->TO	G14-057T 345.00 - SUNNYSIDE 345KV CKT 1	717	789	0.04486	116.0037	DUNCAN - TOSCO 69KV CKT 1
FDNS	00NR	4	16WP	G15_033	FROM->TO	G14-057T 345.00 - SUNNYSIDE 345KV CKT 1	717	789	0.04461	116.0033	G15074_T 345.00 - JEFFREY ENERGY CENTER 345KV CKT 1
FDNS	00NR	4	16WP	G15_033	FROM->TO	G14-057T 345.00 - SUNNYSIDE 345KV CKT 1	717	789	0.04465	115.9961	GEN515223 1-MUSKOGEE 4G
FDNS	00NR	4	16WP	G15_033	FROM->TO	G14-057T 345.00 - SUNNYSIDE 345KV CKT 1	717	789	0.04465	115.9961	GEN515225 1-MUSKOGEE 5G
FDNS	00NR	4	16WP	G15_033	FROM->TO	G14-057T 345.00 - SUNNYSIDE 345KV CKT 1	717	789	0.04461	115.9937	CIMARRON - SARA 138KV CKT 1
FDNS	00NR	4	16WP	G15_033	FROM->TO	G14-057T 345.00 - SUNNYSIDE 345KV CKT 1	717	789	0.04465	115.993	GEN303007 1-1BC2 U2
FDNS	00NR	4	16WP	G15_033	FROM->TO	G14-057T 345.00 - SUNNYSIDE 345KV CKT 1	717	789	0.04462	115.9921	HOT SPRINGS EHV - MAGNET COVE 500KV CKT 1
FDNS	00NR	4	16WP	G15_033	FROM->TO	G14-057T 345.00 - SUNNYSIDE 345KV CKT 1	717	789	0.04465	115.9883	GEN303006 1-1BC2 U1
FDNS	00NR	4	16WP	G15_033	FROM->TO	G14-057T 345.00 - SUNNYSIDE 345KV CKT 1	717	789	0.04461	115.9841	MC NIEL 500/115KV TRANSFORMER CKT 1
FDNS	00NR	4	16WP	G15_033	FROM->TO	G14-057T 345.00 - SUNNYSIDE 345KV CKT 1	717	789	0.04432	115.9821	ARBWIND4 138.00 - CARTER 138KV CKT 1
FDNS	00NR	4	16WP	G15_033	FROM->TO	G14-057T 345.00 - SUNNYSIDE 345KV CKT 1	717	789	0.04442	115.9758	SEMINOLE - VANOSTP4 138.00 138KV CKT 1
FDNS	00NR	4	16WP	G15_033	FROM->TO	G14-057T 345.00 - SUNNYSIDE 345KV CKT 1	717	789	0.04457	115.9698	P12:138:AEPW:WTHWF4:WTH_SE4
FDNS	00NR	4	16WP	G15_033	FROM->TO	G14-057T 345.00 - SUNNYSIDE 345KV CKT 1	717	789	0.04458	115.9692	BISMARK - HOT SPRINGS WEST BUS 115KV CKT 1
FDNS	00NR	4	16WP	G15_033	FROM->TO	G14-057T 345.00 - SUNNYSIDE 345KV CKT 1	717	789	0.04465	115.9661	GEN336191 1-LITTLE GYPSY UNIT#3
FDNS	00NR	4	16WP	G15_033	FROM->TO	G14-057T 345.00 - SUNNYSIDE 345KV CKT 1	717	789	0.04465	115.9657	NELSON 230/20.0KV TRANSFORMER CKT 1
FDNS	00NR	4	16WP	G15_033	FROM->TO	G14-057T 345.00 - SUNNYSIDE 345KV CKT 1	717	789	0.04486	115.9645	COMANCHE TAP - TOSCO 69KV CKT 1
FDNS	00NR	4	16WP	G15_033	FROM->TO	G14-057T 345.00 - SUNNYSIDE 345KV CKT 1	717	789	0.04495	115.9485	P12:69:AEPW-OMPA:COMANC-2:OMWALTR2
FDNS	00NR	4	16WP	G15_033	FROM->TO	G14-057T 345.00 - SUNNYSIDE 345KV CKT 1	717	789	0.04464	115.9454	P12:138:AEPW:N.E.S.-4:CATOOSA4
FDNS	00NR	4	16WP	G15_033	FROM->TO	G14-057T 345.00 - SUNNYSIDE 345KV CKT 1	717	789	0.04457	115.943	CLEO CORNER - CLEOPLT4 138.00 138KV CKT 1
FDNS	00NR	4	16WP	G15_033	FROM->TO	G14-057T 345.00 - SUNNYSIDE 345KV CKT 1	717	789	0.04465	115.9413	GEN300010 1-ST FRANCIS UNIT 1
FDNS	00NR	4	16WP	G15_033	FROM->TO	G14-057T 345.00 - SUNNYSIDE 345KV CKT 1	717	789	0.04465	115.9404	CZECH HALL - XEROX 138KV CKT 1
FDNS	00NR	4	16WP	G15_033	FROM->TO	G14-057T 345.00 - SUNNYSIDE 345KV CKT 1	717	789	0.04465	115.9396	GEN335614 1-WILLOW GLENN UNIT#4
FDNS	00NR	4	16WP	G15_033	FROM->TO	G14-057T 345.00 - SUNNYSIDE 345KV CKT 1	717	789	0.04465	115.9376	GEN337910 1-ARKANSAS NUCLEAR ONE UNIT #1
FDNS	00NR	4	16WP	G15_033	FROM->TO	G14-057T 345.00 - SUNNYSIDE 345KV CKT 1	717	789	0.04465	115.9361	MORGAN - XEROX 138KV CKT 1
FDNS	00NR	4	16WP	G15_033	FROM->TO	G14-057T 345.00 - SUNNYSIDE 345KV CKT 1	717	789	0.04444	115.9325	BENTON - WICHITA 345KV CKT 1
FDNS	00NR	4	16WP	G15_033	FROM->TO	G14-057T 345.00 - SUNNYSIDE 345KV CKT 1	717	789	0.04498	115.931	BAILEY4 138.00 - WESTMOORE 138KV CKT 1
FDNS	00NR	4	16WP	G15_033	FROM->TO	G14-057T 345.00 - SUNNYSIDE 345KV CKT 1	717	789	0.04457	115.9302	CLEOPLT4 138.00 - MEN TAP 138KV CKT 1
FDNS	00NR	4	16WP	G15_033	FROM->TO	G14-057T 345.00 - SUNNYSIDE 345KV CKT 1	717	789	0.04465	115.9289	GEN303008 1-1BC2 U3
FDNS	00NR	4	16WP	G15_033	FROM->TO	G14-057T 345.00 - SUNNYSIDE 345KV CKT 1	717	789	0.0448	115.9259	LASALLE - LATTA JCT 138KV CKT 1
FDNS	00NR	4	16WP	G15_033	FROM->TO	G14-057T 345.00 - SUNNYSIDE 345KV CKT 1	717	789	0.0446	115.9196	G15095_T 138.00 - ROSE_VALLEY 138.00 138KV CKT 1
FDNS	00NR	4	16WP	G15_033	FROM->TO	G14-057T 345.00 - SUNNYSIDE 345KV CKT 1	717	789	0.04457	115.9194	IMO TAP - MEN TAP 138KV CKT 1
FDNS	00NR	4	16WP	G15_033	FROM->TO	G14-057T 345.00 - SUNNYSIDE 345KV CKT 1	717	789	0.04458	115.9164	ALPINE AECC - BISMARK 115KV CKT 1
FDNS	00NR	4	16WP	G15_033	FROM->TO	G14-057T 345.00 - SUNNYSIDE 345KV CKT 1	717	789	0.04465	115.913	MORGAN - MUSTANG 138KV CKT 1
FDNS	00NR	4	16WP	G15_033	FROM->TO	G14-057T 345.00 - SUNNYSIDE 345KV CKT 1	717	789	0.04465	115.9022	GEN336170 1-GULF OXY U4
FDNS	00NR	4	16WP	G15_033	FROM->TO	G14-057T 345.00 - SUNNYSIDE 345KV CKT 1	717	789	0.04486	115.9007	COMANCHE - COMANCHE TAP 69KV CKT 1

SOLUTION	GROUP	SCENARIO	SEASON	SOURCE	DIRECTION	MONITORED ELEMENT	RATEA (MVA)	RATEB(MVA)	TDF	TC%LOADING (% MVA)	CONTINGENCY
FDNS	00NR	4	16WP	G15_033	FROM->TO	G14-057T 345.00 - SUNNYSIDE 345KV CKT 1	717	789	0.04431	115.9005	CANADIAN - NOBLE 138KV CKT 1
FDNS	00NR	4	16WP	G15_033	FROM->TO	G14-057T 345.00 - SUNNYSIDE 345KV CKT 1	717	789	0.04465	115.896	GEN336464 1-MICHOUD UNIT #3
FDNS	00NR	4	16WP	G15_033	FROM->TO	G14-057T 345.00 - SUNNYSIDE 345KV CKT 1	717	789	0.04465	115.8914	GEN300011 1-ST FRANCIS UNIT 2
FDNS	00NR	4	16WP	G15_033	FROM->TO	G14-057T 345.00 - SUNNYSIDE 345KV CKT 1	717	789	0.04464	115.8903	CYPRESS - HARTBURG 500KV CKT 1
FDNS	00NR	4	16WP	G15_033	FROM->TO	G14-057T 345.00 - SUNNYSIDE 345KV CKT 1	717	789	0.04465	115.8877	7JASPER 345.00 - BLACKBERRY 345KV CKT 1
FDNS	00NR	4	16WP	G15_033	FROM->TO	G14-057T 345.00 - SUNNYSIDE 345KV CKT 1	717	789	0.04465	115.8784	8CAJUN2 500/24.0KV TRANSFORMER CKT 1
FDNS	00NR	4	16WP	G15_033	FROM->TO	G14-057T 345.00 - SUNNYSIDE 345KV CKT 1	717	789	0.04433	115.8756	P12:138:OKGE:3TERM27
FDNS	00NR	4	16WP	G15_033	FROM->TO	G14-057T 345.00 - SUNNYSIDE 345KV CKT 1	717	789	0.04458	115.8726	ALPINE AECC - AMITY SS 115KV CKT 1
FDNS	00NR	4	16WP	G15_033	FROM->TO	G14-057T 345.00 - SUNNYSIDE 345KV CKT 1	717	789	0.04027	115.8724	G14_038T 345.00 - Hitchland Interchange 345KV CKT 1
FDNS	00NR	4	16WP	G15_033	FROM->TO	G14-057T 345.00 - SUNNYSIDE 345KV CKT 1	717	789	0.04723	115.872	P12:138:AEPW:S.W.S.-4:L.E.S.-4
FDNS	00NR	4	16WP	G15_033	FROM->TO	G14-057T 345.00 - SUNNYSIDE 345KV CKT 1	717	789	0.04465	115.862	GEN300016 1-1G1GPDEL 18.000
FDNS	00NR	4	16WP	G15_033	FROM->TO	G14-057T 345.00 - SUNNYSIDE 345KV CKT 1	717	789	0.04452	115.8614	WEATHERFORD JCT. - WEATHERFORD SOUTHEAST 138KV CKT 1
FDNS	00NR	4	16WP	G15_033	FROM->TO	G14-057T 345.00 - SUNNYSIDE 345KV CKT 1	717	789	0.04452	115.8614	WEATHERFORD JCT. - WEATHERFORD SOUTHEAST 138KV CKT 1
FDNS	00NR	4	16WP	G15_033	FROM->TO	G14-057T 345.00 - SUNNYSIDE 345KV CKT 1	717	789	0.0446	115.8582	NOEL_SW 138.00 - ROSE_VALLEY 138.00 138KV CKT 1
FDNS	00NR	4	16WP	G15_033	FROM->TO	G14-057T 345.00 - SUNNYSIDE 345KV CKT 1	717	789	0.04452	115.8564	P12:138:OKGE-AEPW:JENSEN4:REDROCKRD4
FDNS	00NR	4	16WP	G15_033	FROM->TO	G14-057T 345.00 - SUNNYSIDE 345KV CKT 1	717	789	0.04465	115.8545	GEN501910 1-ACADIA UNIT ST1
FDNS	00NR	4	20WP	G15_033	FROM->TO	G14-057T 345.00 - SUNNYSIDE 345KV CKT 1	717	789	0.0425	115.8513	GEN509406 1-WELSH #3
FDNS	00NR	4	20WP	G15_033	FROM->TO	G14-057T 345.00 - SUNNYSIDE 345KV CKT 1	717	789	0.0425	115.8511	GEN509404 1-WELSH #1
FDNS	00NR	4	16WP	G15_033	FROM->TO	G14-057T 345.00 - SUNNYSIDE 345KV CKT 1	717	789	0.0446	115.8505	SWISSVALE - WEST GARDNER 345KV CKT 1
FDNS	00NR	4	16WP	G15_033	FROM->TO	G14-057T 345.00 - SUNNYSIDE 345KV CKT 1	717	789	0.04465	115.8484	P12:138:AEPW:R.S.S.-4:S.HUD.-4
FDNS	00NR	4	16WP	G15_033	FROM->TO	G14-057T 345.00 - SUNNYSIDE 345KV CKT 1	717	789	0.04459	115.8472	BLACKBERRY - NEOSHO 345KV CKT 1
FDNS	00NR	4	16WP	G15_033	FROM->TO	G14-057T 345.00 - SUNNYSIDE 345KV CKT 1	717	789	0.04459	115.8472	BLACKBERRY - NEOSHO 345KV CKT 1
FDNS	00NR	4	16WP	G15_033	FROM->TO	G14-057T 345.00 - SUNNYSIDE 345KV CKT 1	717	789	0.04404	115.8446	ELK CITY 230KV (ELKCTY-6) 230/138/13.8KV TRANSFORMER CKT 1
FDNS	00NR	4	16WP	G15_033	FROM->TO	G14-057T 345.00 - SUNNYSIDE 345KV CKT 1	717	789	0.04404	115.8446	ELK CITY 230KV (ELKCTY-6) 230/138/13.8KV TRANSFORMER CKT 1
FDNS	00NR	4	16WP	G15_033	FROM->TO	G14-057T 345.00 - SUNNYSIDE 345KV CKT 1	717	789	0.04404	115.8442	CHISHOLM6 230.00 - ELK CITY 230KV 230KV CKT 1
FDNS	00NR	4	16WP	G15_033	FROM->TO	G14-057T 345.00 - SUNNYSIDE 345KV CKT 1	717	789	0.04465	115.8416	GEN337041 1-GERALD ANDRUS
FDNS	00NR	4	16WP	G15_033	FROM->TO	G14-057T 345.00 - SUNNYSIDE 345KV CKT 1	717	789	0.04462	115.8342	7LUTESVIL 345.00 - 7ST FRANC 345.00 345KV CKT 1
FDNS	00NR	4	16WP	G15_033	FROM->TO	G14-057T 345.00 - SUNNYSIDE 345KV CKT 1	717	789	0.04463	115.823	ETTA (DUKE HOTSPRINGS) - MC NIEL 500KV CKT 1
FDNS	00NR	4	16WP	G15_033	FROM->TO	G14-057T 345.00 - SUNNYSIDE 345KV CKT 1	717	789	0.04471	115.8147	ANADARKO - SEQUOYAHJ4 138.00 138KV CKT 1
FDNS	00NR	4	16WP	G15_033	FROM->TO	G14-057T 345.00 - SUNNYSIDE 345KV CKT 1	717	789	0.04452	115.8117	P12:138:AEPW:REDROCKRD4:WTH_JCT4
FDNS	00NR	4	16WP	G15_033	FROM->TO	G14-057T 345.00 - SUNNYSIDE 345KV CKT 1	717	789	0.04471	115.8107	CORN TAP - SEQUOYAHJ4 138.00 138KV CKT 1
FDNS	00NR	4	16WP	G15_033	FROM->TO	G14-057T 345.00 - SUNNYSIDE 345KV CKT 1	717	789	0.04461	115.8095	SARA - STHLAKE4 138.00 138KV CKT 1
FDNS	00NR	4	16WP	G15_033	FROM->TO	G14-057T 345.00 - SUNNYSIDE 345KV CKT 1	717	789	0.04465	115.8094	P12:138:AEPW:YARCH-S4:T.S.E.-4
FDNS	00NR	4	16WP	G15_033	FROM->TO	G14-057T 345.00 - SUNNYSIDE 345KV CKT 1	717	789	0.04431	115.8087	NOBLE - PURCELL4 138.00 138KV CKT 1
FDNS	00NR	4	16WP	G15_033	FROM->TO	G14-057T 345.00 - SUNNYSIDE 345KV CKT 1	717	789	0.04458	115.8066	DRAPER LAKE - SEMINOLE 345KV CKT 1
FDNS	00NR	4	16WP	G15_033	FROM->TO	G14-057T 345.00 - SUNNYSIDE 345KV CKT 1	717	789	0.04458	115.8066	DRAPER LAKE - SEMINOLE 345KV CKT 2
FDNS	00NR	4	16WP	G15_033	FROM->TO	G14-057T 345.00 - SUNNYSIDE 345KV CKT 1	717	789	0.04465	115.8034	GEN336801 1-BAXTER WILSON UNIT #1
FDNS	00NR	4	16WP	G15_033	FROM->TO	G14-057T 345.00 - SUNNYSIDE 345KV CKT 1	717	789	0.04465	115.8032	P12:138:AEPW:BA_71ST4:T.S.E.-4
FDNS	00NR	4	16WP	G15_033	FROM->TO	G14-057T 345.00 - SUNNYSIDE 345KV CKT 1	717	789	0.04465	115.8026	P12:69:AEPW:NROGERS2:ECNTRTN2
FDNS	00NR	4	16WP	G15_033	FROM->TO	G14-057T 345.00 - SUNNYSIDE 345KV CKT 1	717	789	0.04465	115.7991	SABINE 230/24.0KV TRANSFORMER CKT 1
FDNS	00NR	4	16WP	G15_033	FROM->TO	G14-057T 345.00 - SUNNYSIDE 345KV CKT 1	717	789	0.04477	115.796	WALTERS - WALTERS 69KV CKT 1
FDNS	00NR	4	16WP	G15_033	FROM->TO	G14-057T 345.00 - SUNNYSIDE 345KV CKT 1	717	789	0.04462	115.7945	8WNEWMADRID 500.00 - DELL 500 500KV CKT 1
FDNS	00NR	4	16WP	G15_033	FROM->TO	G14-057T 345.00 - SUNNYSIDE 345KV CKT 1	717	789	0.04473	115.7896	NORGE ROAD - SOUTHWESTERN STATION 138KV CKT 1
FDNS	00NR	4	16WP	G15_033	FROM->TO	G14-057T 345.00 - SUNNYSIDE 345KV CKT 1	717	789	0.04473	115.7896	NORGE ROAD - SOUTHWESTERN STATION 138KV CKT 1
FDNS	00NR	4	16WP	G15_033	FROM->TO	G14-057T 345.00 - SUNNYSIDE 345KV CKT 1	717	789	0.04461	115.7887	ENOWILT - LONE OAK 138KV CKT 1
FDNS	00NR	4	16WP	G15_033	FROM->TO	G14-057T 345.00 - SUNNYSIDE 345KV CKT 1	717	789	0.04461	115.7815	MCCLAIN - STHLAKE4 138.00 138KV CKT 1
FDNS	00NR	4	16WP	G15_033	FROM->TO	G14-057T 345.00 - SUNNYSIDE 345KV CKT 1	717	789	0.0561	115.781	TUCO INTERCHANGE - TUCO_2 345.00 345KV CKT 1
FDNS	00NR	4	16WP	G15_033	FROM->TO	G14-057T 345.00 - SUNNYSIDE 345KV CKT 1	717	789	0.04465	115.7801	FRONTIER 345/18.0KV TRANSFORMER CKT 1
FDNS	00NR	4	16WP	G15_033	FROM->TO	G14-057T 345.00 - SUNNYSIDE 345KV CKT 1	717	789	0.04461	115.7798	ENOWILT - SARDIS 138KV CKT 1
FDNS	00NR	4	16WP	G15_033	FROM->TO	G14-057T 345.00 - SUNNYSIDE 345KV CKT 1	717	789	0.04465	115.7783	FRONTIER 345/18.0KV TRANSFORMER CKT 1
FDNS	00NR	4	16WP	G15_033	FROM->TO	G14-057T 345.00 - SUNNYSIDE 345KV CKT 1	717	789	0.04463	115.7766	P12:138:AEPW-OGE:SHIDLER4:OSAGE 4
FDNS	00NR	4	16WP	G15_033	FROM->TO	G14-057T 345.00 - SUNNYSIDE 345KV CKT 1	717	789	0.04465	115.7753	ESSEX UNIT 2 500/18.0KV TRANSFORMER CKT 1
FDNS	00NR	4	16WP	G15_033	FROM->TO	G14-057T 345.00 - SUNNYSIDE 345KV CKT 1	717	789	0.04498	115.7746	FRANKLIN SW - WESTMOORE 138KV CKT 1
FDNS	06NR	4	17G	G15_033	FROM->TO	G14-057T 345.00 - SUNNYSIDE 345KV CKT 1	717	789	0.06126	115.7733	CIMARRON - MINCO 345KV CKT 1
FDNS	00NR	4	16WP	G15_033	FROM->TO	G14-057T 345.00 - SUNNYSIDE 345KV CKT 1	717	789	0.04423	115.7731	ARBUCKLE - VANOSTP4 138.00 138KV CKT 1
FDNS	00NR	4	16WP	G15_033	FROM->TO	G14-057T 345.00 - SUNNYSIDE 345KV CKT 1	717	789	0.04465	115.7712	P12:161:AEPW:CHAMSPR5:FARMING5
FDNS	00NR	4	16WP	G15_033	FROM->TO	G14-057T 345.00 - SUNNYSIDE 345KV CKT 1	717	789	0.04495	115.7704	LAWTON RELIFT TAP - OMPA-WALTERS 69KV CKT 1
FDNS	00NR	4	16WP	G15_033	FROM->TO	G14-057T 345.00 - SUNNYSIDE 345KV CKT 1	717	789	0.0448	115.768	LASALLE - STONEWAL LH138.00 138KV CKT 1
FDNS	00NR	4	16WP	G15_033	FROM->TO	G14-057T 345.00 - SUNNYSIDE 345KV CKT 1	717	789	0.04462	115.7671	EMPORIA ENERGY CENTER - SWISSVALE 345KV CKT 1
FDNS	00NR	4	16WP	G15_033	FROM->TO	G14-057T 345.00 - SUNNYSIDE 345KV CKT 1	717	789	0.04481	115.7555	GRACEMONT (BANK 1) 345/138/13.8KV TRANSFORMER CKT 1
FDNS	00NR	4	16WP	G15_033	FROM->TO	G14-057T 345.00 - SUNNYSIDE 345KV CKT 1	717	789	0.0448	115.7532	STONEWAL LH138.00 - TUPELO TAP 138KV CKT 1
FDNS	00NR	4	16WP	G15_033	FROM->TO	G14-057T 345.00 - SUNNYSIDE 345KV CKT 1	717	789	0.04465	115.7517	GEN505616 1-BROKEN BOW
FDNS	00NR	4	16WP	G15_033	FROM->TO	G14-057T 345.00 - SUNNYSIDE 345KV CKT 1	717	789	0.04472	115.7495	SOUTHWESTERN STATION - VERDEN 138KV CKT 1
FDNS	00NR	4	16WP	G15_033	FROM->TO	G14-057T 345.00 - SUNNYSIDE 345KV CKT 1	717	789	0.04465	115.7481	GEN512688 2-GRDA1 GSU2 22
FDNS	00NR	4	16WP	G15_033	FROM->TO	G14-057T 345.00 - SUNNYSIDE 345KV CKT 1	717	789	0.04562	115.7478	LAWTON EASTSIDE (LES 4) 345/138/13.8KV TRANSFORMER CKT 1
FDNS	00NR	4	16WP	G15_033	FROM->TO	G14-057T 345.00 - SUNNYSIDE 345KV CKT 1	717	789	0.04562	115.7478	LAWTON EASTSIDE (LES 4) 345/138/13.8KV TRANSFORMER CKT 1
FDNS	00NR	4	16WP	G15_033	FROM->TO	G14-057T 345.00 - SUNNYSIDE 345KV CKT 1	717	789	0.04409	115.7469	BUCKNER7 345.00 - HOLCOMB 345KV CKT 1
FDNS	00NR	4	16WP	G15_033	FROM->TO	G14-057T 345.00 - SUNNYSIDE 345KV CKT 1	717	789	0.04409	115.7469	BUCKNER7 345.00 - HOLCOMB 345KV CKT 1
FDNS	00NR	4	16WP	G15_033	FROM->TO	G14-057T 345.00 - SUNNYSIDE 345KV CKT 1	717	789	0.04461	115.7446	CLAYTON - SARDIS 138KV CKT 1
FDNS	00NR	4	16WP	G15_033	FROM->TO	G14-057T 345.00 - SUNNYSIDE 345KV CKT 1	717	789	0.04465	115.7428	LEWIS CREEK SWITCHYARD 138/22.0KV TRANSFORMER CKT 1
FDNS	00NR	4	16WP	G15_033	FROM->TO	G14-057T 345.00 - SUNNYSIDE 345KV CKT 1	717	789	0.04455	115.7419	HOPE - MCNAB REC 115KV CKT 1
FDNS	00NR	4	16WP	G15_033	FROM->TO	G14-057T 345.00 - SUNNYSIDE 345KV CKT 1	717	789	0.04465	115.7379	LEWIS CREEK SWITCHYARD 138/22.0KV TRANSFORMER CKT 1
FDNS	00NR	4	16WP	G15_033	FROM->TO	G14-057T 345.00 - SUNNYSIDE 345KV CKT 1	717	789	0.04452	115.7342	HINTON - WEATHERFORD JCT. 138KV CKT 1
FDNS	00NR	4	16WP	G15_033	FROM->TO	G14-057T 345.00 - SUNNYSIDE 345KV CKT 1	717	789	0.04455	115.7332	P12:115:AEPW:TURK3:HOPE3
FDNS	00NR	4	16WP	G15_033	FROM->TO	G14-057T 345.00 - SUNNYSIDE 345KV CKT 1	717	789	0.04477	115.7321	P12:69:WFEC-AEPW:COMANCH2:WALTRS-2
FDNS	00NR	4	16WP	G15_033	FROM->TO	G14-057T 345.00 - SUNNYSIDE 345KV CKT 1	717	789	0.04472	115.7293	NORTH 29TH CHICKASHA - VERDEN 138KV CKT 1
FDNS	00NR	4	16WP	G15_033	FROM->TO	G14-057T 345.00 - SUNNYSIDE 345KV CKT 1	717	789	0.04465	115.729	GEN501970 1-EVANGELINE UNIT 7
FDNS	00NR	4	16WP	G15_033	FROM->TO	G14-057T 345.00 - SUNNYSIDE 345KV CKT 1	717	789	0.04457	115.7279	WEATHERFORD TAP - WEATHERFORD WIND FARM 138KV CKT 1
FDNS	00NR	4	16WP	G15_033	FROM->TO	G14-057T 345.00 - SUNNYSIDE 345KV CKT 1	717	789	0.04461	115.7264	EMPORIA ENERGY CENTER - G14_001T 345.00 345KV CKT 1

SOLUTION	GROUP	SCENARIO	SEASON	SOURCE	DIRECTION	MONITORED ELEMENT	RATEA (MVA)	RATEB(MVA)	TDF	TC%LOADING (% MVA)	CONTINGENCY
FDNS	00NR	4	16WP	G15_033	FROM->TO	G14-057T 345.00 - SUNNYSIDE 345KV CKT 1	717	789	0.04459	115.7182	COUCH SES - MC NIEL 115KV CKT 1
FDNS	00NR	4	16WP	G15_033	FROM->TO	G14-057T 345.00 - SUNNYSIDE 345KV CKT 1	717	789	0.04465	115.7173	GEN334392 1-EXXON MOBIL IPP 1
FDNS	00NR	4	16WP	G15_033	FROM->TO	G14-057T 345.00 - SUNNYSIDE 345KV CKT 1	717	789	0.04461	115.7173	P12:138:AEPW-SWPA:LONEOAK4:BRKNBW4
FDNS	00NR	4	16WP	G15_033	FROM->TO	G14-057T 345.00 - SUNNYSIDE 345KV CKT 1	717	789	0.04436	115.7167	CLINTON JUNCTION - ELK CITY 138KV CKT 1
FDNS	00NR	4	16WP	G15_033	FROM->TO	G14-057T 345.00 - SUNNYSIDE 345KV CKT 1	717	789	0.04436	115.7167	CLINTON JUNCTION - ELK CITY 138KV CKT 1
FDNS	00NR	4	16WP	G15_033	FROM->TO	G14-057T 345.00 - SUNNYSIDE 345KV CKT 1	717	789	0.04446	115.7142	G13-010T 345.00 - POST ROCK 345KV CKT 1
FDNS	00NR	4	16WP	G15_033	FROM->TO	G14-057T 345.00 - SUNNYSIDE 345KV CKT 1	717	789	0.04461	115.7138	MORISNT4 138.00 - STILLWATER 138KV CKT 1
FDNS	00NR	4	16WP	G15_033	FROM->TO	G14-057T 345.00 - SUNNYSIDE 345KV CKT 1	717	789	0.04457	115.7115	CLARKSVILLE - ONETA 345KV CKT 1
FDNS	00NR	4	16WP	G15_033	FROM->TO	G14-057T 345.00 - SUNNYSIDE 345KV CKT 1	717	789	0.04457	115.7115	CLARKSVILLE - ONETA 345KV CKT 1
FDNS	00NR	4	16WP	G15_033	FROM->TO	G14-057T 345.00 - SUNNYSIDE 345KV CKT 1	717	789	0.04455	115.7111	MCNAB REC - Turk 115 115KV CKT 1
FDNS	00NR	4	16WP	G15_033	FROM->TO	G14-057T 345.00 - SUNNYSIDE 345KV CKT 1	717	789	0.04455	115.7111	TURK (TURK 1) 138/115/13.2KV TRANSFORMER CKT 1
FDNS	00NR	4	16WP	G15_033	FROM->TO	G14-057T 345.00 - SUNNYSIDE 345KV CKT 1	717	789	0.04455	115.7111	TURK (TURK 1) 138/115/13.2KV TRANSFORMER CKT 1
FDNS	00NR	4	16WP	G15_033	FROM->TO	G14-057T 345.00 - SUNNYSIDE 345KV CKT 1	717	789	0.04465	115.7096	GEN334393 1-EXXON MOBIL IPP 2
FDNS	00NR	4	16WP	G15_033	FROM->TO	G14-057T 345.00 - SUNNYSIDE 345KV CKT 1	717	789	0.04465	115.7096	GEN334394 1-EXXON MOBIL IPP 3
FDNS	00NR	4	16WP	G15_033	FROM->TO	G14-057T 345.00 - SUNNYSIDE 345KV CKT 1	717	789	0.04495	115.7089	OMPA-WALTERS - WALTERS 69KV CKT 1
FDNS	00NR	4	16WP	G15_033	FROM->TO	G14-057T 345.00 - SUNNYSIDE 345KV CKT 1	717	789	0.04495	115.7089	OMPA-WALTERS - WALTERS 69KV CKT 1
FDNS	00NR	4	16WP	G15_033	FROM->TO	G14-057T 345.00 - SUNNYSIDE 345KV CKT 1	717	789	0.04461	115.7083	P12:138:OKGE:3TERM2
FDNS	00NR	4	16WP	G15_033	FROM->TO	G14-057T 345.00 - SUNNYSIDE 345KV CKT 1	717	789	0.04461	115.705	CLAYTON - NASHOBA 138KV CKT 1
FDNS	00NR	4	16WP	G15_033	FROM->TO	G14-057T 345.00 - SUNNYSIDE 345KV CKT 1	717	789	0.04465	115.7034	P12:138:OKGE:3TERM12
FDNS	00NR	4	16WP	G15_033	FROM->TO	G14-057T 345.00 - SUNNYSIDE 345KV CKT 1	717	789	0.04465	115.7021	GEN336222 1-LITTLE GYPSY UNIT#2
FDNS	00NR	4	16WP	G15_033	FROM->TO	G14-057T 345.00 - SUNNYSIDE 345KV CKT 1	717	789	0.04473	115.6985	MARIETTA - MARIETTA4 138.00 138KV CKT 1
FDNS	00NR	4	16WP	G15_033	FROM->TO	G14-057T 345.00 - SUNNYSIDE 345KV CKT 1	717	789	0.04461	115.6919	BETHEL - NASHOBA 138KV CKT 1
FDNS	00NR	4	16WP	G15_033	FROM->TO	G14-057T 345.00 - SUNNYSIDE 345KV CKT 1	717	789	0.04464	115.6861	7JASPER 345.00 - MORGAN 345KV CKT 1
FDNS	00NR	4	16WP	G15_033	FROM->TO	G14-057T 345.00 - SUNNYSIDE 345KV CKT 1	717	789	0.04465	115.6839	GEN659125 1-COVEY
FDNS	00NR	4	16WP	G15_033	FROM->TO	G14-057T 345.00 - SUNNYSIDE 345KV CKT 1	717	789	0.04465	115.6815	P12:138:AEPW:R.S.S-4:T.P.S.-4
FDNS	00NR	4	16WP	G15_033	FROM->TO	G14-057T 345.00 - SUNNYSIDE 345KV CKT 1	717	789	0.04467	115.6806	FRANKLIN - FRANKLIN SW 138KV CKT 1
FDNS	00NR	4	16WP	G15_033	FROM->TO	G14-057T 345.00 - SUNNYSIDE 345KV CKT 1	717	789	0.04465	115.6802	GEN334432 1-SABINE UNIT 2
FDNS	00NR	4	16WP	G15_033	FROM->TO	G14-057T 345.00 - SUNNYSIDE 345KV CKT 1	717	789	0.04465	115.6801	GEN334431 1-SABINE UNIT 1
FDNS	00NR	4	16WP	G15_033	FROM->TO	G14-057T 345.00 - SUNNYSIDE 345KV CKT 1	717	789	0.04465	115.6784	GEN506749 1-EASTMAN GENERATION A
FDNS	00NR	4	16WP	G15_033	FROM->TO	G14-057T 345.00 - SUNNYSIDE 345KV CKT 1	717	789	0.04465	115.6781	GEN509394 1-FLINT CREEK
FDNS	00NR	4	16WP	G15_033	FROM->TO	G14-057T 345.00 - SUNNYSIDE 345KV CKT 1	717	789	0.04452	115.6776	HINTON - REDROCKRD4 138.00 138KV CKT 1
FDNS	00NR	4	16WP	G15_033	FROM->TO	G14-057T 345.00 - SUNNYSIDE 345KV CKT 1	717	789	0.04465	115.6721	GEN501972 1-EVANGELINE UNIT 7-2
FDNS	00NR	4	16WP	G15_033	FROM->TO	G14-057T 345.00 - SUNNYSIDE 345KV CKT 1	717	789	0.04465	115.672	GEN501971 1-EVANGELINE UNIT 7-1
FDNS	00NR	4	16WP	G15_033	FROM->TO	G14-057T 345.00 - SUNNYSIDE 345KV CKT 1	717	789	0.04465	115.6716	GEN336152 1-WATERFORD UNIT#2
FDNS	00NR	4	16WP	G15_033	FROM->TO	G14-057T 345.00 - SUNNYSIDE 345KV CKT 1	717	789	0.04465	115.6706	GEN336151 1-WATERFORD UNIT#1
FDNS	00NR	4	16WP	G15_033	FROM->TO	G14-057T 345.00 - SUNNYSIDE 345KV CKT 1	717	789	0.04472	115.6645	CORNVILLE - NORTH 29TH CHICKASHA 138KV CKT 1
FDNS	00NR	4	16WP	G15_033	FROM->TO	G14-057T 345.00 - SUNNYSIDE 345KV CKT 1	717	789	0.04461	115.6598	G14_001T 345.00 - WICHITA 345KV CKT 1
FDNS	00NR	4	16WP	G15_033	FROM->TO	G14-057T 345.00 - SUNNYSIDE 345KV CKT 1	717	789	0.04465	115.6568	P12:138:AEPW:R.S.S.-4:R:96YALE-4
FDNS	00NR	4	16WP	G15_033	FROM->TO	G14-057T 345.00 - SUNNYSIDE 345KV CKT 1	717	789	0.04473	115.6526	CORNVILLE - NORGE ROAD 138KV CKT 1
FDNS	00NR	4	16WP	G15_033	FROM->TO	G14-057T 345.00 - SUNNYSIDE 345KV CKT 1	717	789	0.04473	115.6526	CORNVILLE - NORGE ROAD 138KV CKT 1
FDNS	00NR	4	16WP	G15_033	FROM->TO	G14-057T 345.00 - SUNNYSIDE 345KV CKT 1	717	789	0.04459	115.6493	P12:138:AEPW:OKMULGE4:R.S.S-4
FDNS	00NR	4	16WP	G15_033	FROM->TO	G14-057T 345.00 - SUNNYSIDE 345KV CKT 1	717	789	0.04465	115.6482	GEN501912 1-ACADIA UNIT CT1B
FDNS	00NR	4	16WP	G15_033	FROM->TO	G14-057T 345.00 - SUNNYSIDE 345KV CKT 1	717	789	0.04465	115.6474	GEN501911 1-ACADIA UNIT CT1A
FDNS	00NR	4	16WP	G15_033	FROM->TO	G14-057T 345.00 - SUNNYSIDE 345KV CKT 1	717	789	0.04465	115.6432	ST FRANCIS - ST FRANCIS 1 161KV CKT Z1
FDNS	00NR	4	16WP	G15_033	FROM->TO	G14-057T 345.00 - SUNNYSIDE 345KV CKT 1	717	789	0.04465	115.6432	ST FRANCIS 161/16.0KV TRANSFORMER CKT 1
FDNS	00NR	4	16WP	G15_033	FROM->TO	G14-057T 345.00 - SUNNYSIDE 345KV CKT 1	717	789	0.04462	115.6431	GRAND ISLAND - MCCOOL 345KV CKT 1
FDNS	00NR	4	16WP	G15_033	FROM->TO	G14-057T 345.00 - SUNNYSIDE 345KV CKT 1	717	789	0.04465	115.6403	P12:138:AEPW:MOHAWK4:T.NO--4
FDNS	00NR	4	16WP	G15_033	FROM->TO	G14-057T 345.00 - SUNNYSIDE 345KV CKT 1	717	789	0.04457	115.6378	WEATHERFORD SOUTHEAST - WEATHERFORD TAP 138KV CKT 1
FDNS	00NR	4	16WP	G15_033	FROM->TO	G14-057T 345.00 - SUNNYSIDE 345KV CKT 1	717	789	0.04464	115.6362	AS KING - EAU CLAIRE 345KV CKT 1
FDNS	00NR	4	16WP	G15_033	FROM->TO	G14-057T 345.00 - SUNNYSIDE 345KV CKT 1	717	789	0.04461	115.6351	BETHEL - BROKEN BOW 138KV CKT 1
FDNS	00NR	4	16WP	G15_033	FROM->TO	G14-057T 345.00 - SUNNYSIDE 345KV CKT 1	717	789	0.04446	115.6342	G13-010T 345.00 - SPEARVILLE 345KV CKT 1
FDNS	00NR	4	16WP	G15_033	FROM->TO	G14-057T 345.00 - SUNNYSIDE 345KV CKT 1	717	789	0.04465	115.6259	SABINE 230/22.0KV TRANSFORMER CKT 1
FDNS	00NR	4	16WP	G15_033	FROM->TO	G14-057T 345.00 - SUNNYSIDE 345KV CKT 1	717	789	0.04439	115.6246	ARBUCKLE - MILLCREEK 138KV CKT 1
FDNS	00NR	4	16WP	G15_033	FROM->TO	G14-057T 345.00 - SUNNYSIDE 345KV CKT 1	717	789	0.04465	115.6233	GEN336242 1-1NMIL ST1 18.000
FDNS	00NR	4	16WP	G15_033	FROM->TO	G14-057T 345.00 - SUNNYSIDE 345KV CKT 1	717	789	0.04461	115.6215	LAYFLD8 500.00 (LAYFLD AUTO) 500/230/13.8KV TRANSFORMER CKT 1
FDNS	00NR	4	16WP	G15_033	FROM->TO	G14-057T 345.00 - SUNNYSIDE 345KV CKT 1	717	789	0.04461	115.6215	LAYFLD8 500.00 (LAYFLD AUTO) 500/230/13.8KV TRANSFORMER CKT 1
FDNS	00NR	4	16WP	G15_033	FROM->TO	G14-057T 345.00 - SUNNYSIDE 345KV CKT 1	717	789	0.04465	115.6142	ESSEX UNIT 2 500/18.0KV TRANSFORMER CKT 1
FDNS	00NR	4	16WP	G15_033	FROM->TO	G14-057T 345.00 - SUNNYSIDE 345KV CKT 1	717	789	0.04465	115.6135	FLETCHER - MARLOW JCT 69KV CKT 1
FDNS	00NR	4	16WP	G15_033	FROM->TO	G14-057T 345.00 - SUNNYSIDE 345KV CKT 1	717	789	0.04465	115.6122	HAMMETT TAP - HORSESHOE LAKE 138KV CKT 1
FDNS	00NR	4	16WP	G15_033	FROM->TO	G14-057T 345.00 - SUNNYSIDE 345KV CKT 1	717	789	0.04465	115.6106	GEN599951 1-PSCO LAMAR DC TIE
FDNS	00NR	4	16WP	G15_033	FROM->TO	G14-057T 345.00 - SUNNYSIDE 345KV CKT 1	717	789	0.04458	115.6106	AMITY SS - MURFREESBORO EAST (AECC) 115KV CKT 1
FDNS	00NR	4	16WP	G15_033	FROM->TO	G14-057T 345.00 - SUNNYSIDE 345KV CKT 1	717	789	0.04458	115.6051	LACYGNE - NEOSHO 345KV CKT 1
FDNS	00NR	4	16WP	G15_033	FROM->TO	G14-057T 345.00 - SUNNYSIDE 345KV CKT 1	717	789	0.04452	115.6041	Canadian Pump Station - REDROCKRD4 138.00 138KV CKT 1
FDNS	00NR	4	16WP	G15_033	FROM->TO	G14-057T 345.00 - SUNNYSIDE 345KV CKT 1	717	789	0.04459	115.604	G15088_T 345.00 - PAULINE 345KV CKT 1
FDNS	00NR	4	16WP	G15_033	FROM->TO	G14-057T 345.00 - SUNNYSIDE 345KV CKT 1	717	789	0.04465	115.6037	P12:138:OKGE:3TERM47
FDNS	00NR	4	16WP	G15_033	FROM->TO	G14-057T 345.00 - SUNNYSIDE 345KV CKT 1	717	789	0.04462	115.5987	MCCOOL - MOORE 345KV CKT 1
FDNS	00NR	4	16WP	G15_033	FROM->TO	G14-057T 345.00 - SUNNYSIDE 345KV CKT 1	717	789	0.04465	115.598	NELSON 230/24.0KV TRANSFORMER CKT 1
FDNS	00NR	4	16WP	G15_033	FROM->TO	G14-057T 345.00 - SUNNYSIDE 345KV CKT 1	717	789	0.04431	115.5979	PURCELL4 138.00 - WALNUT CREEK 138KV CKT 1
FDNS	00NR	4	16WP	G15_033	FROM->TO	G14-057T 345.00 - SUNNYSIDE 345KV CKT 1	717	789	0.04465	115.5974	P12:138:WFEC-AEPW:ELKCTY-4:ERICK4
FDNS	00NR	4	16WP	G15_033	FROM->TO	G14-057T 345.00 - SUNNYSIDE 345KV CKT 1	717	789	0.04457	115.596	CLINTON JUNCTION - CLINTON NATURAL GAS TAP 138KV CKT 1
FDNS	00NR	4	16WP	G15_033	FROM->TO	G14-057T 345.00 - SUNNYSIDE 345KV CKT 1	717	789	0.04464	115.5903	ARPIN B4 345.00 - EAU CLAIRE 345KV CKT 1
FDNS	00NR	4	16WP	G15_033	FROM->TO	G14-057T 345.00 - SUNNYSIDE 345KV CKT 1	717	789	0.04465	115.5857	ST FRANCIS 2 161/16.0KV TRANSFORMER CKT 2
FDNS	00NR	4	16WP	G15_033	FROM->TO	G14-057T 345.00 - SUNNYSIDE 345KV CKT 1	717	789	0.04465	115.5857	ST FRANCIS 345/161KV TRANSFORMER CKT 1
FDNS	00NR	4	16WP	G15_033	FROM->TO	G14-057T 345.00 - SUNNYSIDE 345KV CKT 1	717	789	0.04531	115.5846	DUNCAN - DUNCHERTP4 138.00 138KV CKT 1
FDNS	00NR	4	16WP	G15_033	FROM->TO	G14-057T 345.00 - SUNNYSIDE 345KV CKT 1	717	789	0.04531	115.5846	DUNCAN - DUNCHERTP4 138.00 138KV CKT 1
FDNS	00NR	4	16WP	G15_033	FROM->TO	G14-057T 345.00 - SUNNYSIDE 345KV CKT 1	717	789	0.04531	115.5844	DUNCAN EASTSIDE - DUNCHERTP4 138.00 138KV CKT 1
FDNS	00NR	4	16WP	G15_033	FROM->TO	G14-057T 345.00 - SUNNYSIDE 345KV CKT 1	717	789	0.04488	115.5653	CRINER - PAYNE 138.00 138KV CKT 1
FDNS	00NR	4	16WP	G15_033	FROM->TO	G14-057T 345.00 - SUNNYSIDE 345KV CKT 1	717	789	0.04477	115.5643	COMANCHE - WALTERS 69KV CKT 1
FDNS	00NR	4	16WP	G15_033	FROM->TO	G14-057T 345.00 - SUNNYSIDE 345KV CKT 1	717	789	0.04456	115.5521	SEMINOLE (SEMINOL2) 345/138/14.4KV TRANSFORMER CKT 1

SOLUTION	GROUP	SCENARIO	SEASON	SOURCE	DIRECTION	MONITORED ELEMENT	RATEA (MVA)	RATEB(MVA)	TDF	TC%LOADING (% MVA)	CONTINGENCY
FDNS	00NR	4	20WP	G15_033	FROM->TO	G14-057T 345.00 - SUNNYSIDE 345KV CKT 1	717	789	0.04287	115.376	CORN TAP - NAPLESTP 138.00 138KV CKT 1
FDNS	00NR	4	20WP	G15_033	FROM->TO	G14-057T 345.00 - SUNNYSIDE 345KV CKT 1	717	789	0.04287	115.2929	NAPLESTP 138.00 - PAYNE 138.00 138KV CKT 1
FDNS	00NR	4	20WP	G15_033	FROM->TO	G14-057T 345.00 - SUNNYSIDE 345KV CKT 1	717	789	0.04227	115.2561	7SAREPTA% 345.00 - LONGWOOD 345KV CKT 1
FDNS	00NR	4	20WP	G15_033	FROM->TO	G14-057T 345.00 - SUNNYSIDE 345KV CKT 1	717	789	0.04227	115.2561	7SAREPTA% 345.00 - LONGWOOD 345KV CKT 1
FDNS	00NR	4	16WP	G15_033	FROM->TO	G14-057T 345.00 - SUNNYSIDE 345KV CKT 1	717	789	0.04465	115.145	803-OKLAUNION
FDNS	00NR	4	20WP	G15_033	FROM->TO	G14-057T 345.00 - SUNNYSIDE 345KV CKT 1	717	789	0.0425	115.1415	GEN336821 1-GRAND GULF UNIT
FDNS	00NR	4	20WP	G15_033	FROM->TO	G14-057T 345.00 - SUNNYSIDE 345KV CKT 1	717	789	0.0425	115.0363	GEN336153 1-WATERFORD UNIT#3
FDNS	00NR	4	20WP	G15_033	FROM->TO	G14-057T 345.00 - SUNNYSIDE 345KV CKT 1	717	789	0.04293	115.0121	ANADARKO - POCASSETT 138KV CKT 1
FDNS	00NR	4	20WP	G15_033	FROM->TO	G14-057T 345.00 - SUNNYSIDE 345KV CKT 1	717	789	0.04446	115.0101	BORDER 7345.00 - WOODWARD DISTRICT EHV 345KV CKT 1
FDNS	00NR	4	20WP	G15_033	FROM->TO	G14-057T 345.00 - SUNNYSIDE 345KV CKT 1	717	789	0.04276	114.9926	COMANCHE - LOCO 138KV CKT 1
FDNS	00NR	4	20WP	G15_033	FROM->TO	G14-057T 345.00 - SUNNYSIDE 345KV CKT 1	717	789	0.04243	114.9524	CLEVELAND - TULSA NORTH 345KV CKT 1
FDNS	00NR	4	20WP	G15_033	FROM->TO	G14-057T 345.00 - SUNNYSIDE 345KV CKT 1	717	789	0.04243	114.9524	CLEVELAND - TULSA NORTH 345KV CKT 1
FDNS	00NR	4	16WP	G15_033	FROM->TO	G14-057T 345.00 - SUNNYSIDE 345KV CKT 1	717	789	0.04465	114.9169	OKLAUNION 345KV SWITCHED SHUNT
FDNS	00NR	4	20WP	G15_033	FROM->TO	G14-057T 345.00 - SUNNYSIDE 345KV CKT 1	717	789	0.04293	114.8659	POCASSETT - TUTTLE 138KV CKT 1
FDNS	00NR	4	20WP	G15_033	FROM->TO	G14-057T 345.00 - SUNNYSIDE 345KV CKT 1	717	789	0.0424	114.8604	DOLET HILLS - SOUTHWEST SHREVEPORT 345KV CKT 1
FDNS	00NR	4	20WP	G15_033	FROM->TO	G14-057T 345.00 - SUNNYSIDE 345KV CKT 1	717	789	0.0424	114.8604	DOLET HILLS - SOUTHWEST SHREVEPORT 345KV CKT 1
FDNS	00NR	4	16WP	G15_033	FROM->TO	G14-057T 345.00 - SUNNYSIDE 345KV CKT 1	717	789	0.04399	114.7871	MAYSVILLE - MAYSVLT4 138.00 138KV CKT 1
FDNS	00NR	4	20WP	G15_033	FROM->TO	G14-057T 345.00 - SUNNYSIDE 345KV CKT 1	717	789	0.04162	114.7785	MATHWSN7 345.00 - TATONGA7 345.00 345KV CKT 1
FDNS	00NR	4	16WP	G15_033	FROM->TO	G14-057T 345.00 - SUNNYSIDE 345KV CKT 1	717	789	0.04464	114.7584	JOHNSON COUNTY - RUSSETT 138KV CKT 1
FDNS	00NR	4	16WP	G15_033	FROM->TO	G14-057T 345.00 - SUNNYSIDE 345KV CKT 1	717	789	0.0446	114.7494	HUGO (HUGO 1) 345/138/13.8KV TRANSFORMER CKT 1
FDNS	00NR	4	16WP	G15_033	FROM->TO	G14-057T 345.00 - SUNNYSIDE 345KV CKT 1	717	789	0.04462	114.7438	GLASSES - MADILL INDUSTRIAL TAP 138KV CKT 1
FDNS	00NR	4	20WP	G15_033	FROM->TO	G14-057T 345.00 - SUNNYSIDE 345KV CKT 1	717	789	0.0425	114.7406	GEN335831 1-RIVERBEND UNIT#1
FDNS	00NR	4	16WP	G15_033	FROM->TO	G14-057T 345.00 - SUNNYSIDE 345KV CKT 1	717	789	0.04399	114.7256	MAYSVLT4 138.00 - PRAIRIE POINT 138KV CKT 1
FDNS	00NR	4	16WP	G15_033	FROM->TO	G14-057T 345.00 - SUNNYSIDE 345KV CKT 1	717	789	0.04483	114.7235	CIMARRON - MATHWSN7 345.00 345KV CKT 1
FDNS	00NR	4	16WP	G15_033	FROM->TO	G14-057T 345.00 - SUNNYSIDE 345KV CKT 1	717	789	0.04483	114.7235	CIMARRON - MATHWSN7 345.00 345KV CKT 2
FDNS	00NR	4	16WP	G15_033	FROM->TO	G14-057T 345.00 - SUNNYSIDE 345KV CKT 1	717	789	0.04465	114.7223	GEN562772 1-G15034_3 0.6900
FDNS	00NR	4	16WP	G15_033	FROM->TO	G14-057T 345.00 - SUNNYSIDE 345KV CKT 1	717	789	0.04465	114.7192	GEN521103 1-BLUE CANYON WIND FARM
FDNS	00NR	4	16WP	G15_033	FROM->TO	G14-057T 345.00 - SUNNYSIDE 345KV CKT 1	717	789	0.04469	114.7183	DRAPER LAKE - MIDWEST TAP 138KV CKT 1
FDNS	00NR	4	20WP	G15_033	FROM->TO	G14-057T 345.00 - SUNNYSIDE 345KV CKT 1	717	789	0.0425	114.7158	GRAND GULF 500/22.0KV TRANSFORMER CKT 1
FDNS	00NR	4	16WP	G15_033	FROM->TO	G14-057T 345.00 - SUNNYSIDE 345KV CKT 1	717	789	0.04465	114.7107	GEN562688 1-G15_014_3 0.6900
FDNS	00NR	4	16WP	G15_033	FROM->TO	G14-057T 345.00 - SUNNYSIDE 345KV CKT 1	717	789	0.04462	114.6985	HUGO POWER PLANT - VALLENT 138KV CKT 1
FDNS	00NR	4	16WP	G15_033	FROM->TO	G14-057T 345.00 - SUNNYSIDE 345KV CKT 1	717	789	0.04465	114.6977	GEN562691 1-G15_015_3 0.6900
FDNS	00NR	4	16WP	G15_033	FROM->TO	G14-057T 345.00 - SUNNYSIDE 345KV CKT 1	717	789	0.04465	114.6913	GEN562432 1-G13-030 0.6900
FDNS	00NR	4	16WP	G15_033	FROM->TO	G14-057T 345.00 - SUNNYSIDE 345KV CKT 1	717	789	0.04472	114.689	P12:138:OKGE:3TERM21
FDNS	00NR	4	16WP	G15_033	FROM->TO	G14-057T 345.00 - SUNNYSIDE 345KV CKT 1	717	789	0.04465	114.6878	GEN600017 C-LS POWER CT
FDNS	00NR	4	16WP	G15_033	FROM->TO	G14-057T 345.00 - SUNNYSIDE 345KV CKT 1	717	789	0.04465	114.6872	GEN520812 1-ANADRK5
FDNS	00NR	4	16WP	G15_033	FROM->TO	G14-057T 345.00 - SUNNYSIDE 345KV CKT 1	717	789	0.04465	114.6872	GEN520813 1-ANADRK6
FDNS	00NR	4	16WP	G15_033	FROM->TO	G14-057T 345.00 - SUNNYSIDE 345KV CKT 1	717	789	0.04465	114.6846	GEN629067 1-EMERY GAS TURBINE 1
FDNS	00NR	4	16WP	G15_033	FROM->TO	G14-057T 345.00 - SUNNYSIDE 345KV CKT 1	717	789	0.04432	114.6843	ARBUCKLE - SULPHR 4 138.00 138KV CKT 1
FDNS	00NR	4	16WP	G15_033	FROM->TO	G14-057T 345.00 - SUNNYSIDE 345KV CKT 1	717	789	0.04462	114.6841	GLASSES - RUSSETT 138KV CKT 1
FDNS	00NR	4	16WP	G15_033	FROM->TO	G14-057T 345.00 - SUNNYSIDE 345KV CKT 1	717	789	0.04462	114.676	P12:138:WFEC:MSL11
FDNS	00NR	4	16WP	G15_033	FROM->TO	G14-057T 345.00 - SUNNYSIDE 345KV CKT 1	717	789	0.04462	114.676	P12:138:WFEC-AEPW:PHAROAH4:LONEOAK4
FDNS	00NR	4	16WP	G15_033	FROM->TO	G14-057T 345.00 - SUNNYSIDE 345KV CKT 1	717	789	0.04465	114.673	GEN511961 1-DEMPSEY-WTG10.7000
FDNS	00NR	4	20WP	G15_033	FROM->TO	G14-057T 345.00 - SUNNYSIDE 345KV CKT 1	717	789	0.04364	114.6705	P12:138:AEPW:DUNCAN-4:L.E.S.-4
FDNS	00NR	4	16WP	G15_033	FROM->TO	G14-057T 345.00 - SUNNYSIDE 345KV CKT 1	717	789	0.04465	114.6703	GEN562017 1-G11_022_3 0.6900
FDNS	00NR	4	16WP	G15_033	FROM->TO	G14-057T 345.00 - SUNNYSIDE 345KV CKT 1	717	789	0.04465	114.6631	GEN672392 1-NBECGT1G 18.000
FDNS	00NR	4	16WP	G15_033	FROM->TO	G14-057T 345.00 - SUNNYSIDE 345KV CKT 1	717	789	0.04465	114.6622	GEN562074 1-G1149G1504 0.6900
FDNS	00NR	4	16WP	G15_033	FROM->TO	G14-057T 345.00 - SUNNYSIDE 345KV CKT 1	717	789	0.04459	114.6613	CROCKETT - TENASKA RUSK COUNTY 345KV CKT 1
FDNS	00NR	4	16WP	G15_033	FROM->TO	G14-057T 345.00 - SUNNYSIDE 345KV CKT 1	717	789	0.04459	114.656	LEBROCK - TENASKA RUSK COUNTY 345KV CKT 1
FDNS	00NR	4	16WP	G15_033	FROM->TO	G14-057T 345.00 - SUNNYSIDE 345KV CKT 1	717	789	0.04465	114.6516	P12:069:OKGE:3TERM42
FDNS	00NR	4	16WP	G15_033	FROM->TO	G14-057T 345.00 - SUNNYSIDE 345KV CKT 1	717	789	0.04467	114.6419	P12:138:WFEC:MSL08
FDNS	00NR	4	16WP	G15_033	FROM->TO	G14-057T 345.00 - SUNNYSIDE 345KV CKT 1	717	789	0.04465	114.6394	GEN615010 1-STANTON4
FDNS	00NR	4	20WP	G15_033	FROM->TO	G14-057T 345.00 - SUNNYSIDE 345KV CKT 1	717	789	0.04237	114.6371	7SAREPTA% 345.00 - ELDORADO EHV 345KV CKT 1
FDNS	00NR	4	20WP	G15_033	FROM->TO	G14-057T 345.00 - SUNNYSIDE 345KV CKT 1	717	789	0.04237	114.6369	3TR3AR8EL7EL
FDNS	00NR	4	16WP	G15_033	FROM->TO	G14-057T 345.00 - SUNNYSIDE 345KV CKT 1	717	789	0.04465	114.6318	GEN629070 2-BEAVER CHANNEL GENERATORFOR UNIT NO 2
FDNS	00NR	4	16WP	G15_033	FROM->TO	G14-057T 345.00 - SUNNYSIDE 345KV CKT 1	717	789	0.04465	114.6304	GEN528361 1-MADDOX GEN #1
FDNS	00NR	4	20WP	G15_033	FROM->TO	G14-057T 345.00 - SUNNYSIDE 345KV CKT 1	717	789	0.04237	114.6266	ELDORADO EHV 500/345KV TRANSFORMER CKT 1
FDNS	00NR	4	16WP	G15_033	FROM->TO	G14-057T 345.00 - SUNNYSIDE 345KV CKT 1	717	789	0.04399	114.6234	PRAIRIE POINT - RATLIFF 138KV CKT 1
FDNS	00NR	4	16WP	G15_033	FROM->TO	G14-057T 345.00 - SUNNYSIDE 345KV CKT 1	717	789	0.04463	114.6228	GRPRAR1-LNX3345.00 - YANKTON 345KV CKT Z
FDNS	00NR	4	16WP	G15_033	FROM->TO	G14-057T 345.00 - SUNNYSIDE 345KV CKT 1	717	789	0.04462	114.6221	DELL 500 - INDEPENDENCE 500KV CKT 1
FDNS	00NR	4	16WP	G15_033	FROM->TO	G14-057T 345.00 - SUNNYSIDE 345KV CKT 1	717	789	0.04465	114.621	GEN615021 1-GRE-ER 14G 16.000
FDNS	00NR	4	16WP	G15_033	FROM->TO	G14-057T 345.00 - SUNNYSIDE 345KV CKT 1	717	789	0.04463	114.6194	GRPRAR1-LNX3345.00 - HOLT.CO3 345.00 345KV CKT 1
FDNS	00NR	4	16WP	G15_033	FROM->TO	G14-057T 345.00 - SUNNYSIDE 345KV CKT 1	717	789	0.04462	114.6178	CANEY CREEK - JOHNSON COUNTY 138KV CKT 1
FDNS	00NR	4	16WP	G15_033	FROM->TO	G14-057T 345.00 - SUNNYSIDE 345KV CKT 1	717	789	0.08398	114.6085	GRACEMONT - LAWTON EASTSIDE 345KV CKT 1
FDNS	00NR	4	16WP	G15_033	FROM->TO	G14-057T 345.00 - SUNNYSIDE 345KV CKT 1	717	789	0.08398	114.6085	GRACEMONT - LAWTON EASTSIDE 345KV CKT 1
FDNS	00NR	4	16WP	G15_033	FROM->TO	G14-057T 345.00 - SUNNYSIDE 345KV CKT 1	717	789	0.04459	114.6071	CARTER - CHICKASAW 138KV CKT 1
FDNS	00NR	4	16WP	G15_033	FROM->TO	G14-057T 345.00 - SUNNYSIDE 345KV CKT 1	717	789	0.04465	114.6028	GEN515443 1-MNCOWND1 0.7000
FDNS	00NR	4	16WP	G15_033	FROM->TO	G14-057T 345.00 - SUNNYSIDE 345KV CKT 1	717	789	0.04465	114.602	INDEPENDENCE 500/26.0KV TRANSFORMER CKT 1
FDNS	00NR	4	16WP	G15_033	FROM->TO	G14-057T 345.00 - SUNNYSIDE 345KV CKT 1	717	789	0.04465	114.5993	GEN560183 1-REDHIL-WTG1 12.000
FDNS	00NR	4	16WP	G15_033	FROM->TO	G14-057T 345.00 - SUNNYSIDE 345KV CKT 1	717	789	0.04465	114.5928	OKLAUNION 345/13.2KV TRANSFORMER CKT 1
FDNS	00NR	4	20WP	G15_033	FROM->TO	G14-057T 345.00 - SUNNYSIDE 345KV CKT 1	717	789	0.04236	114.587	ARCADIA - NORTHWEST 345KV CKT 1
FDNS	00NR	4	16WP	G15_033	FROM->TO	G14-057T 345.00 - SUNNYSIDE 345KV CKT 1	717	789	0.04448	114.584	ROCKY POINT - SPRINGDALE 138KV CKT 1
FDNS	00NR	4	16WP	G15_033	FROM->TO	G14-057T 345.00 - SUNNYSIDE 345KV CKT 1	717	789	0.04465	114.5814	GEN629071 1-BURLINGTON GENERATOR FOR UNIT NO 1 E
FDNS	00NR	4	16WP	G15_033	FROM->TO	G14-057T 345.00 - SUNNYSIDE 345KV CKT 1	717	789	0.0447	114.5803	MOREWOOD SW - NINE MILE 138KV CKT 1
FDNS	00NR	4	16WP	G15_033	FROM->TO	G14-057T 345.00 - SUNNYSIDE 345KV CKT 1	717	789	0.04469	114.5799	ARKANSAS NUCLEAR ONE - FT SMITH 500KV CKT 1
FDNS	00NR	4	16WP	G15_033	FROM->TO	G14-057T 345.00 - SUNNYSIDE 345KV CKT 1	717	789	0.04469	114.5799	ARKANSAS NUCLEAR ONE - FT SMITH 500KV CKT 1
FDNS	00NR	4	16WP	G15_033	FROM->TO	G14-057T 345.00 - SUNNYSIDE 345KV CKT 1	717	789	0.04465	114.5767	GEN563242 1-G15090_3 0.6900
FDNS	00NR	4	16WP	G15_033	FROM->TO	G14-057T 345.00 - SUNNYSIDE 345KV CKT 1	717	789	0.04462	114.5765	CANADIAN RIVER - MCALESTER SOUTH 138KV CKT 1
FDNS	00NR	4	16WP	G15_033	FROM->TO	G14-057T 345.00 - SUNNYSIDE 345KV CKT 1	717	789	0.04462	114.5765	CANADIAN RIVER - MCALESTER SOUTH 138KV CKT 1

SOLUTION	GROUP	SCENARIO	SEASON	SOURCE	DIRECTION	MONITORED ELEMENT	RATEA (MVA)	RATEB(MVA)	TDF	TC%LOADING (% MVA)	CONTINGENCY
FDNS	00NR	4	16WP	G15_033	FROM->TO	G14-057T 345.00 - SUNNYSIDE 345KV CKT 1	717	789	0.04462	114.5751	CANADIAN RIVER () 345/138/13.8KV TRANSFORMER CKT 1
FDNS	00NR	4	16WP	G15_033	FROM->TO	G14-057T 345.00 - SUNNYSIDE 345KV CKT 1	717	789	0.04462	114.5751	CANADIAN RIVER () 345/138/13.8KV TRANSFORMER CKT 1
FDNS	00NR	4	16WP	G15_033	FROM->TO	G14-057T 345.00 - SUNNYSIDE 345KV CKT 1	717	789	0.04491	114.5721	ALTUS JUNCTION - RUSSELL 138KV CKT 1
FDNS	00NR	4	16WP	G15_033	FROM->TO	G14-057T 345.00 - SUNNYSIDE 345KV CKT 1	717	789	0.04491	114.5721	ALTUS JUNCTION - RUSSELL 138KV CKT 1
FDNS	00NR	4	16WP	G15_033	FROM->TO	G14-057T 345.00 - SUNNYSIDE 345KV CKT 1	717	789	0.04465	114.5715	GEN562902 1-G15052_3 0.6900
FDNS	00NR	4	16WP	G15_033	FROM->TO	G14-057T 345.00 - SUNNYSIDE 345KV CKT 1	717	789	0.04423	114.5668	MINGO - SETAB 345KV CKT 1
FDNS	00NR	4	16WP	G15_033	FROM->TO	G14-057T 345.00 - SUNNYSIDE 345KV CKT 1	717	789	0.04423	114.5668	MINGO - SETAB 345KV CKT 1
FDNS	00NR	4	16WP	G15_033	FROM->TO	G14-057T 345.00 - SUNNYSIDE 345KV CKT 1	717	789	0.04465	114.549	BURLINGTON NO1 + NO 2 + NO 3 161/20.0KV TRANSFORMER CKT 1
FDNS	00NR	4	16WP	G15_033	FROM->TO	G14-057T 345.00 - SUNNYSIDE 345KV CKT 1	717	789	0.04465	114.5488	GEN532653 1-JEFFREY ENERGY CENTER UNIT 3
FDNS	00NR	4	20WP	G15_033	FROM->TO	G14-057T 345.00 - SUNNYSIDE 345KV CKT 1	717	789	0.0425	114.5485	GEN515577 1-ARBWND11 0.6900
FDNS	00NR	4	16WP	G15_033	FROM->TO	G14-057T 345.00 - SUNNYSIDE 345KV CKT 1	717	789	0.04461	114.5423	CHAMBER SPRINGS - CLARKSVILLE 345KV CKT 1
FDNS	00NR	4	16WP	G15_033	FROM->TO	G14-057T 345.00 - SUNNYSIDE 345KV CKT 1	717	789	0.04465	114.5366	P12:230:UMZB:# 112 #: NU IN SD. NU-RCDC & DRY CREEK XFMR
FDNS	00NR	4	16WP	G15_033	FROM->TO	G14-057T 345.00 - SUNNYSIDE 345KV CKT 1	717	789	0.04465	114.5361	RCDC EAST 4230.00 - RED CEDAR DC 230KV CKT 1
FDNS	00NR	4	16WP	G15_033	FROM->TO	G14-057T 345.00 - SUNNYSIDE 345KV CKT 1	717	789	0.0446	114.5325	NORTHWEST TEXARKANA - WELSH 345KV CKT 1
FDNS	00NR	4	16WP	G15_033	FROM->TO	G14-057T 345.00 - SUNNYSIDE 345KV CKT 1	717	789	0.0446	114.5325	NORTHWEST TEXARKANA - WELSH 345KV CKT 1
FDNS	00NR	4	16WP	G15_033	FROM->TO	G14-057T 345.00 - SUNNYSIDE 345KV CKT 1	717	789	0.04432	114.5279	JOLLYVILLE - SULPHR 4 138.00 138KV CKT 1
FDNS	00NR	4	20WP	G15_033	FROM->TO	G14-057T 345.00 - SUNNYSIDE 345KV CKT 1	717	789	0.04153	114.5251	CANADIAN RIVER - MUSKOGEE 345KV CKT 1
FDNS	00NR	4	16WP	G15_033	FROM->TO	G14-057T 345.00 - SUNNYSIDE 345KV CKT 1	717	789	0.04465	114.5132	GEN562802 1-G15039_3 0.3570
FDNS	00NR	4	16WP	G15_033	FROM->TO	G14-057T 345.00 - SUNNYSIDE 345KV CKT 1	717	789	0.04465	114.5115	GEN514805 1-SOONER UNIT 1
FDNS	00NR	4	20WP	G15_033	FROM->TO	G14-057T 345.00 - SUNNYSIDE 345KV CKT 1	717	789	0.04364	114.5104	COMANCHE TAP - OMPA-DUNCAN 840 138KV CKT 1
FDNS	00NR	4	16WP	G15_033	FROM->TO	G14-057T 345.00 - SUNNYSIDE 345KV CKT 1	717	789	0.04465	114.5103	GEN562078 1-G11_051_3 0.6900
FDNS	00NR	4	16WP	G15_033	FROM->TO	G14-057T 345.00 - SUNNYSIDE 345KV CKT 1	717	789	0.04489	114.5085	NORTHWEST - SPRING CREEK 345KV CKT 1
FDNS	00NR	4	16WP	G15_033	FROM->TO	G14-057T 345.00 - SUNNYSIDE 345KV CKT 1	717	789	0.04465	114.5078	THOMAS HILL 161/22.0KV TRANSFORMER CKT 1
FDNS	00NR	4	16WP	G15_033	FROM->TO	G14-057T 345.00 - SUNNYSIDE 345KV CKT 1	717	789	0.04465	114.5041	GEN560331 1-G10-46 13.800
FDNS	00NR	4	16WP	G15_033	FROM->TO	G14-057T 345.00 - SUNNYSIDE 345KV CKT 1	717	789	0.04489	114.501	SOONER - SPRING CREEK 345KV CKT 1
FDNS	00NR	4	16WP	G15_033	FROM->TO	G14-057T 345.00 - SUNNYSIDE 345KV CKT 1	717	789	0.04465	114.4926	GEN514806 1-SOONER UNIT 2
FDNS	00NR	4	16WP	G15_033	FROM->TO	G14-057T 345.00 - SUNNYSIDE 345KV CKT 1	717	789	0.04465	114.49	GEN524285 1-WILDORADO WIND GEN
FDNS	00NR	4	16WP	G15_033	FROM->TO	G14-057T 345.00 - SUNNYSIDE 345KV CKT 1	717	789	0.04461	114.4825	KEO EHV - WEST MEMPHIS 500 500KV CKT 1
FDNS	00NR	4	16WP	G15_033	FROM->TO	G14-057T 345.00 - SUNNYSIDE 345KV CKT 1	717	789	0.04465	114.4757	GEN629072 4-LANSING GENERATOR FOR UNITS NO4 EIA CODE 1
FDNS	00NR	4	20WP	G15_033	FROM->TO	G14-057T 345.00 - SUNNYSIDE 345KV CKT 1	717	789	0.04293	114.475	BRIDGECR 138.00 - TUTTLE 138KV CKT 1
FDNS	00NR	4	16WP	G15_033	FROM->TO	G14-057T 345.00 - SUNNYSIDE 345KV CKT 1	717	789	0.04465	114.4715	GEN562269 1-G12-020-1 0.6900
FDNS	00NR	4	16WP	G15_033	FROM->TO	G14-057T 345.00 - SUNNYSIDE 345KV CKT 1	717	789	0.04465	114.4656	GEN562587 1-G14_056_3 0.6900
FDNS	00NR	4	16WP	G15_033	FROM->TO	G14-057T 345.00 - SUNNYSIDE 345KV CKT 1	717	789	0.04465	114.4551	GEN657749 1-YOUNG 1 GENERATOR
FDNS	00NR	4	16WP	G15_033	FROM->TO	G14-057T 345.00 - SUNNYSIDE 345KV CKT 1	717	789	0.04432	114.4479	JOLLYVILLE - KERR MCGEE CIMARRON 138KV CKT 1
FDNS	00NR	4	16WP	G15_033	FROM->TO	G14-057T 345.00 - SUNNYSIDE 345KV CKT 1	717	789	0.0447	114.4467	BEARCAT 138.00 - NINE MILE 138KV CKT 1
FDNS	00NR	4	16WP	G15_033	FROM->TO	G14-057T 345.00 - SUNNYSIDE 345KV CKT 1	717	789	0.04446	114.4403	CLARKSVILLE - MUSKOGEE 345KV CKT 1
FDNS	00NR	4	16WP	G15_033	FROM->TO	G14-057T 345.00 - SUNNYSIDE 345KV CKT 1	717	789	0.04446	114.4403	CLARKSVILLE - MUSKOGEE 345KV CKT 1
FDNS	00NR	4	16WP	G15_033	FROM->TO	G14-057T 345.00 - SUNNYSIDE 345KV CKT 1	717	789	0.04465	114.4285	GEN562270 1-G12-020-2 0.6900
FDNS	00NR	4	20WP	G15_033	FROM->TO	G14-057T 345.00 - SUNNYSIDE 345KV CKT 1	717	789	0.04258	114.4246	HEALDTON - LOCO 138KV CKT 1
FDNS	00NR	4	16WP	G15_033	FROM->TO	G14-057T 345.00 - SUNNYSIDE 345KV CKT 1	717	789	0.04465	114.4208	GEN562812 1-G15040_3 0.3570
FDNS	00NR	4	16WP	G15_033	FROM->TO	G14-057T 345.00 - SUNNYSIDE 345KV CKT 1	717	789	0.04465	114.4189	GEN524295 1-SPNSPUR_WND10.6900
FDNS	00NR	4	16WP	G15_033	FROM->TO	G14-057T 345.00 - SUNNYSIDE 345KV CKT 1	717	789	0.04465	114.4188	GEN562882 1-G15047_3 0.6900
FDNS	00NR	4	16WP	G15_033	FROM->TO	G14-057T 345.00 - SUNNYSIDE 345KV CKT 1	717	789	0.04465	114.4174	GEN563102 1-G15075_3 0.5500
FDNS	00NR	4	16WP	G15_033	FROM->TO	G14-057T 345.00 - SUNNYSIDE 345KV CKT 1	717	789	0.04465	114.411	GEN563132 1-G15078_3 0.3570
FDNS	00NR	4	20WP	G15_033	FROM->TO	G14-057T 345.00 - SUNNYSIDE 345KV CKT 1	717	789	0.0425	114.4041	GEN509409 1-WILKES #3
FDNS	00NR	4	20WP	G15_033	FROM->TO	G14-057T 345.00 - SUNNYSIDE 345KV CKT 1	717	789	0.04212	114.3979	ARCADIA - SEMINOLE 345KV CKT 1
FDNS	00NR	4	16WP	G15_033	FROM->TO	G14-057T 345.00 - SUNNYSIDE 345KV CKT 1	717	789	0.04432	114.3957	ARBWIND4 138.00 - KERR MCGEE CIMARRON 138KV CKT 1
FDNS	00NR	4	16WP	G15_033	FROM->TO	G14-057T 345.00 - SUNNYSIDE 345KV CKT 1	717	789	0.04465	114.3862	GEN681522 3-GENOA 3
FDNS	00NR	4	16WP	G15_033	FROM->TO	G14-057T 345.00 - SUNNYSIDE 345KV CKT 1	717	789	0.04465	114.3801	GEN563062 1-G15071_3 0.6900
FDNS	00NR	4	16WP	G15_033	FROM->TO	G14-057T 345.00 - SUNNYSIDE 345KV CKT 1	717	789	0.04465	114.3677	GEN562974 1-G15060_5 0.6900
FDNS	00NR	4	16WP	G15_033	FROM->TO	G14-057T 345.00 - SUNNYSIDE 345KV CKT 1	717	789	0.0447	114.3634	P12:138:WFEC:MSL14
FDNS	00NR	4	20WP	G15_033	FROM->TO	G14-057T 345.00 - SUNNYSIDE 345KV CKT 1	717	789	0.0425	114.3625	GEN501813 1-RODEMACHER UNIT 3
FDNS	00NR	4	16WP	G15_033	FROM->TO	G14-057T 345.00 - SUNNYSIDE 345KV CKT 1	717	789	0.04465	114.3583	GEN562973 1-G15060_4 0.6900
FDNS	00NR	4	16WP	G15_033	FROM->TO	G14-057T 345.00 - SUNNYSIDE 345KV CKT 1	717	789	0.0447	114.3555	BEARCAT 138.00 - MOORELAND 138KV CKT 1
FDNS	00NR	4	16WP	G15_033	FROM->TO	G14-057T 345.00 - SUNNYSIDE 345KV CKT 1	717	789	0.04603	114.3412	P12:138:AEPW:112GORE4:SNYDER-4
FDNS	00NR	4	16WP	G15_033	FROM->TO	G14-057T 345.00 - SUNNYSIDE 345KV CKT 1	717	789	0.04465	114.3353	GEN526331 1-JONES GEN #1 22 KV
FDNS	00NR	4	16WP	G15_033	FROM->TO	G14-057T 345.00 - SUNNYSIDE 345KV CKT 1	717	789	0.04465	114.3352	GEN526332 1-JONES GEN #2 21 KV
FDNS	00NR	4	16WP	G15_033	FROM->TO	G14-057T 345.00 - SUNNYSIDE 345KV CKT 1	717	789	0.04465	114.325	GEN560105 1-G08-22 0.6900
FDNS	00NR	4	16WP	G15_033	FROM->TO	G14-057T 345.00 - SUNNYSIDE 345KV CKT 1	717	789	0.04455	114.3249	BROWN - RUSSETT 138KV CKT 1
FDNS	00NR	4	16WP	G15_033	FROM->TO	G14-057T 345.00 - SUNNYSIDE 345KV CKT 1	717	789	0.04436	114.3227	CHICKASAW - TOTAL 138KV CKT 1
FDNS	00NR	4	16WP	G15_033	FROM->TO	G14-057T 345.00 - SUNNYSIDE 345KV CKT 1	717	789	0.04451	114.3113	RUSSETT - SPRINGDALE 138KV CKT 1
FDNS	00NR	4	16WP	G15_033	FROM->TO	G14-057T 345.00 - SUNNYSIDE 345KV CKT 1	717	789	0.04465	114.3048	GEN562550 1-G14_040_3 0.6900
FDNS	00NR	4	16WP	G15_033	FROM->TO	G14-057T 345.00 - SUNNYSIDE 345KV CKT 1	717	789	0.04443	114.2952	ROCKY POINT - SUNNYSIDE 138KV CKT 1
FDNS	00NR	4	16WP	G15_033	FROM->TO	G14-057T 345.00 - SUNNYSIDE 345KV CKT 1	717	789	0.04462	114.2855	P12:138:WFEC:MSL07
FDNS	00NR	4	16WP	G15_033	FROM->TO	G14-057T 345.00 - SUNNYSIDE 345KV CKT 1	717	789	0.04462	114.2855	P12:138:WFEC-AEPW:HUGOPP4:ATOKA--4
FDNS	00NR	4	16WP	G15_033	FROM->TO	G14-057T 345.00 - SUNNYSIDE 345KV CKT 1	717	789	0.04465	114.2832	GEN345671 2-1RUSH G2 18.000
FDNS	00NR	4	16WP	G15_033	FROM->TO	G14-057T 345.00 - SUNNYSIDE 345KV CKT 1	717	789	0.04465	114.2813	GEN345670 1-1RUSH G1 18.000
FDNS	00NR	4	16WP	G15_033	FROM->TO	G14-057T 345.00 - SUNNYSIDE 345KV CKT 1	717	789	0.04465	114.2763	GEN527882 1-CUNNINGHAM GEN #2 20 KV
FDNS	00NR	4	20WP	G15_033	FROM->TO	G14-057T 345.00 - SUNNYSIDE 345KV CKT 1	717	789	0.04258	114.2741	HEALDTON - RINGLING 138KV CKT 1
FDNS	00NR	4	16WP	G15_033	FROM->TO	G14-057T 345.00 - SUNNYSIDE 345KV CKT 1	717	789	0.04465	114.2715	GEN511962 2-RKYRDGW2-1 0.7000
FDNS	00NR	4	16WP	G15_033	FROM->TO	G14-057T 345.00 - SUNNYSIDE 345KV CKT 1	717	789	0.04465	114.2617	4SIOUX 1 138.00 138/18.0KV TRANSFORMER CKT 1
FDNS	00NR	4	16WP	G15_033	FROM->TO	G14-057T 345.00 - SUNNYSIDE 345KV CKT 1	717	789	0.04455	114.2578	RUSSETT - RUSSETT 138KV CKT 1
FDNS	00NR	4	20WP	G15_033	FROM->TO	G14-057T 345.00 - SUNNYSIDE 345KV CKT 1	717	789	0.03992	114.2534	Hitchland Interchange - WALKTAP7 345.00 345KV CKT 1
FDNS	00NR	4	20WP	G15_033	FROM->TO	G14-057T 345.00 - SUNNYSIDE 345KV CKT 1	717	789	0.03992	114.2534	Hitchland Interchange - WALKTAP7 345.00 345KV CKT 1
FDNS	00NR	4	16WP	G15_033	FROM->TO	G14-057T 345.00 - SUNNYSIDE 345KV CKT 1	717	789	0.04467	114.2478	P12:138:WFEC:MSL16
FDNS	00NR	4	16WP	G15_033	FROM->TO	G14-057T 345.00 - SUNNYSIDE 345KV CKT 1	717	789	0.04465	114.2462	GEN521112 1-ORME3 13.800
FDNS	00NR	4	16WP	G15_033	FROM->TO	G14-057T 345.00 - SUNNYSIDE 345KV CKT 1	717	789	0.04465	114.2454	CLAY BOSWELL 230/20.9KV TRANSFORMER CKT 1
FDNS	00NR	4	20WP	G15_033	FROM->TO	G14-057T 345.00 - SUNNYSIDE 345KV CKT 1	717	789	0.03992	114.2403	P12:345:SPS:J07.1.FINN.HITCH
FDNS	00NR	4	16WP	G15_033	FROM->TO	G14-057T 345.00 - SUNNYSIDE 345KV CKT 1	717	789	0.04465	114.2381	GEN563192 1-G15084_3 0.5500

SOLUTION	GROUP	SCENARIO	SEASON	SOURCE	DIRECTION	MONITORED ELEMENT	RATEA (MVA)	RATEB(MVA)	TDF	TC%LOADING (% MVA)	CONTINGENCY
FDNS	00NR	4	16WP	G15_033	FROM->TO	G14-057T 345.00 - SUNNYSIDE 345KV CKT 1	717	789	0.04418	114.2352	ARDMORE WEST - CARTER 138KV CKT 1
FDNS	00NR	4	16WP	G15_033	FROM->TO	G14-057T 345.00 - SUNNYSIDE 345KV CKT 1	717	789	0.04465	114.2305	GEN562892 1-G15048_3 0.6900
FDNS	00NR	4	20WP	G15_033	FROM->TO	G14-057T 345.00 - SUNNYSIDE 345KV CKT 1	717	789	0.04364	114.2297	DUNCAN - OMPA-DUNCAN 840 138KV CKT 1
FDNS	00NR	4	20WP	G15_033	FROM->TO	G14-057T 345.00 - SUNNYSIDE 345KV CKT 1	717	789	0.04364	114.2297	DUNCAN - OMPA-DUNCAN 840 138KV CKT 1
FDNS	00NR	4	16WP	G15_033	FROM->TO	G14-057T 345.00 - SUNNYSIDE 345KV CKT 1	717	789	0.04465	114.2225	GEN672321 1-SHAND GENERATOR 1
FDNS	00NR	4	20WP	G15_033	FROM->TO	G14-057T 345.00 - SUNNYSIDE 345KV CKT 1	717	789	0.04293	114.2023	P12:138:WFEC:MSL01
FDNS	00NR	4	20WP	G15_033	FROM->TO	G14-057T 345.00 - SUNNYSIDE 345KV CKT 1	717	789	0.04162	114.2021	G11_051T 345.00 - TATONGA7 345.00 345KV CKT 1
FDNS	00NR	4	16WP	G15_033	FROM->TO	G14-057T 345.00 - SUNNYSIDE 345KV CKT 1	717	789	0.04465	114.1984	GEN672310 1-POPLAR RIVER GENERATOR 1
FDNS	00NR	4	16WP	G15_033	FROM->TO	G14-057T 345.00 - SUNNYSIDE 345KV CKT 1	717	789	0.04465	114.1984	GEN672311 2-POPLAR RIVER GENERATOR 2
FDNS	00NR	4	20WP	G15_033	FROM->TO	G14-057T 345.00 - SUNNYSIDE 345KV CKT 1	717	789	0.04293	114.194	BRIDGECR 138.00 - SUNSHINE CANYON 138KV CKT 1
FDNS	00NR	4	20WP	G15_033	FROM->TO	G14-057T 345.00 - SUNNYSIDE 345KV CKT 1	717	789	0.0425	114.1936	GEN300006 1-NEW MADRID UNIT 1
FDNS	00NR	4	16WP	G15_033	FROM->TO	G14-057T 345.00 - SUNNYSIDE 345KV CKT 1	717	789	0.04465	114.1904	GEN672306 6-BOUNDARY DAM GENERATOR 6
FDNS	00NR	4	20WP	G15_033	FROM->TO	G14-057T 345.00 - SUNNYSIDE 345KV CKT 1	717	789	0.04247	114.1826	LACYGNE - WAVERLY7 345.00 345KV CKT 1
FDNS	00NR	4	16WP	G15_033	FROM->TO	G14-057T 345.00 - SUNNYSIDE 345KV CKT 1	717	789	0.04465	114.1801	GEN562512 1-G14_020_3 0.6900
FDNS	00NR	4	16WP	G15_033	FROM->TO	G14-057T 345.00 - SUNNYSIDE 345KV CKT 1	717	789	0.04417	114.1771	SUNNYSIDE (SUNNYSD5) 345/138/13.8KV TRANSFORMER CKT 1
FDNS	00NR	4	20WP	G15_033	FROM->TO	G14-057T 345.00 - SUNNYSIDE 345KV CKT 1	717	789	0.0425	114.1741	GEN300007 1-NEW MADRID UNIT 2
FDNS	00NR	4	16WP	G15_033	FROM->TO	G14-057T 345.00 - SUNNYSIDE 345KV CKT 1	717	789	0.04462	114.1681	P12:138:WFEC-AEPW:GOLDENSW4:CRAIGJT4
FDNS	00NR	4	20WP	G15_033	FROM->TO	G14-057T 345.00 - SUNNYSIDE 345KV CKT 1	717	789	0.04446	114.1588	BORDER 7345.00 - TUCO_2 345.00 345KV CKT 1
FDNS	00NR	4	20WP	G15_033	FROM->TO	G14-057T 345.00 - SUNNYSIDE 345KV CKT 1	717	789	0.0425	114.1513	GEN335206 1-NELSON UNIT 6
FDNS	00NR	4	20WP	G15_033	FROM->TO	G14-057T 345.00 - SUNNYSIDE 345KV CKT 1	717	789	0.0425	114.1349	GEN520947 1-HUGO1
FDNS	00NR	4	16WP	G15_033	FROM->TO	G14-057T 345.00 - SUNNYSIDE 345KV CKT 1	717	789	0.04465	114.1292	GEN344895 2-1LAB G2 20.000
FDNS	00NR	4	16WP	G15_033	FROM->TO	G14-057T 345.00 - SUNNYSIDE 345KV CKT 1	717	789	0.04465	114.1234	GEN523461 1-BLACKHAWK GEN #1
FDNS	00NR	4	16WP	G15_033	FROM->TO	G14-057T 345.00 - SUNNYSIDE 345KV CKT 1	717	789	0.04465	114.1233	GEN523462 1-BLACKHAWK GEN #2
FDNS	00NR	4	16WP	G15_033	FROM->TO	G14-057T 345.00 - SUNNYSIDE 345KV CKT 1	717	789	0.04418	114.1193	ARDMORE WEST - UNIROYAL 138KV CKT 1
FDNS	00NR	4	16WP	G15_033	FROM->TO	G14-057T 345.00 - SUNNYSIDE 345KV CKT 1	717	789	0.04463	114.1031	P12:138:AEPW-SWPA:LONEOAK4:TUPELO4
FDNS	00NR	4	16WP	G15_033	FROM->TO	G14-057T 345.00 - SUNNYSIDE 345KV CKT 1	717	789	0.04463	114.1031	P12:138:WFEC:MSL06
FDNS	00NR	4	20WP	G15_033	FROM->TO	G14-057T 345.00 - SUNNYSIDE 345KV CKT 1	717	789	0.04258	114.1001	RINGLING - SOUTH WILSON 138KV CKT 1
FDNS	00NR	4	16WP	G15_033	FROM->TO	G14-057T 345.00 - SUNNYSIDE 345KV CKT 1	717	789	0.04465	114.0965	GEN344896 3-1LAB G3 20.000
FDNS	00NR	4	16WP	G15_033	FROM->TO	G14-057T 345.00 - SUNNYSIDE 345KV CKT 1	717	789	0.04465	114.0952	GEN344894 1-1LAB G1 20.000
FDNS	00NR	4	16WP	G15_033	FROM->TO	G14-057T 345.00 - SUNNYSIDE 345KV CKT 1	717	789	0.04465	114.0951	GEN562699 1-G15_018_3 0.6900
FDNS	00NR	4	16WP	G15_033	FROM->TO	G14-057T 345.00 - SUNNYSIDE 345KV CKT 1	717	789	0.04465	114.0936	GEN344897 4-1LAB G4 20.000
FDNS	00NR	4	16WP	G15_033	FROM->TO	G14-057T 345.00 - SUNNYSIDE 345KV CKT 1	717	789	0.04442	114.09	P12:138:OKGE:3TERM40
FDNS	00NR	4	16WP	G15_033	FROM->TO	G14-057T 345.00 - SUNNYSIDE 345KV CKT 1	717	789	0.04465	114.0843	GEN681542 6-JP MADGETT
FDNS	00NR	4	16WP	G15_033	FROM->TO	G14-057T 345.00 - SUNNYSIDE 345KV CKT 1	717	789	0.04421	114.0777	CARTRCO4 138.00 - RATLIFF 138KV CKT 1
FDNS	00NR	4	16WP	G15_033	FROM->TO	G14-057T 345.00 - SUNNYSIDE 345KV CKT 1	717	789	0.04465	114.0704	GEN511853 1-COMANCHE #3
FDNS	00NR	4	16WP	G15_033	FROM->TO	G14-057T 345.00 - SUNNYSIDE 345KV CKT 1	717	789	0.04465	114.0691	GEN521110 1-ORME1 13.800
FDNS	00NR	4	16WP	G15_033	FROM->TO	G14-057T 345.00 - SUNNYSIDE 345KV CKT 1	717	789	0.04465	114.0691	GEN521111 1-ORME2 13.800
FDNS	00NR	4	20WP	G15_033	FROM->TO	G14-057T 345.00 - SUNNYSIDE 345KV CKT 1	717	789	0.04247	114.0661	WAVERLY7 345.00 - WOLF CREEK 345KV CKT 1
FDNS	00NR	4	16WP	G15_033	FROM->TO	G14-057T 345.00 - SUNNYSIDE 345KV CKT 1	717	789	0.04495	114.0652	G15085_T 138.00 - RUSSELL 138KV CKT 1
FDNS	00NR	4	16WP	G15_033	FROM->TO	G14-057T 345.00 - SUNNYSIDE 345KV CKT 1	717	789	0.04465	114.0605	GEN563292 1-G15095_3 0.6900
FDNS	00NR	4	16WP	G15_033	FROM->TO	G14-057T 345.00 - SUNNYSIDE 345KV CKT 1	717	789	0.04465	114.039	GEN563162 1-G15081_3 0.6900
FDNS	00NR	4	16WP	G15_033	FROM->TO	G14-057T 345.00 - SUNNYSIDE 345KV CKT 1	717	789	0.04465	114.0088	GEN511852 1-COMANCHE #2
FDNS	00NR	4	20WP	G15_033	FROM->TO	G14-057T 345.00 - SUNNYSIDE 345KV CKT 1	717	789	0.04246	114.0032	ELDORADO EHV - MOUNT OLIVE 500KV CKT 1
FDNS	00NR	4	16WP	G15_033	FROM->TO	G14-057T 345.00 - SUNNYSIDE 345KV CKT 1	717	789	0.04465	114.003	GEN562861 1-G15045_2 0.4800
FDNS	00NR	4	16WP	G15_033	FROM->TO	G14-057T 345.00 - SUNNYSIDE 345KV CKT 1	717	789	0.04465	114.0009	GEN563122 1-G15077_3 0.3850
FDNS	00NR	4	16WP	G15_033	FROM->TO	G14-057T 345.00 - SUNNYSIDE 345KV CKT 1	717	789	0.04628	113.9886	GRAPEVINE INTERCHANGE - STATELINE INTERCHANGE 230KV CKT 1
FDNS	00NR	4	16WP	G15_033	FROM->TO	G14-057T 345.00 - SUNNYSIDE 345KV CKT 1	717	789	0.04628	113.9886	GRAPEVINE INTERCHANGE - STATELINE INTERCHANGE 230KV CKT 1
FDNS	00NR	4	16WP	G15_033	FROM->TO	G14-057T 345.00 - SUNNYSIDE 345KV CKT 1	717	789	0.04465	113.9885	ALMA 161 161/24.0KV TRANSFORMER CKT 1
FDNS	00NR	4	16WP	G15_033	FROM->TO	G14-057T 345.00 - SUNNYSIDE 345KV CKT 1	717	789	0.04465	113.9786	GEN520811 1-ANADRK4
FDNS	00NR	4	16WP	G15_033	FROM->TO	G14-057T 345.00 - SUNNYSIDE 345KV CKT 1	717	789	0.04465	113.9758	GEN661015 1-COYOTE
FDNS	00NR	4	20WP	G15_033	FROM->TO	G14-057T 345.00 - SUNNYSIDE 345KV CKT 1	717	789	0.04256	113.9732	P12:138:AEPW:SHERID4:112GORE4
FDNS	00NR	4	20WP	G15_033	FROM->TO	G14-057T 345.00 - SUNNYSIDE 345KV CKT 1	717	789	0.0425	113.9721	DOLET HILLS 345/24.0KV TRANSFORMER CKT 1
FDNS	00NR	4	20WP	G15_033	FROM->TO	G14-057T 345.00 - SUNNYSIDE 345KV CKT 1	717	789	0.0425	113.9663	GEN501812 1-RODEMACHER UNIT 2
FDNS	00NR	4	16WP	G15_033	FROM->TO	G14-057T 345.00 - SUNNYSIDE 345KV CKT 1	717	789	0.04603	113.9426	CACHE - SNYDER 138KV CKT 1
FDNS	00NR	4	16WP	G15_033	FROM->TO	G14-057T 345.00 - SUNNYSIDE 345KV CKT 1	717	789	0.04461	113.9149	P12:138:WFEC:MSL15
FDNS	00NR	4	16WP	G15_033	FROM->TO	G14-057T 345.00 - SUNNYSIDE 345KV CKT 1	717	789	0.04418	113.8972	SUNNYSIDE - UNIROYAL 138KV CKT 1
FDNS	00NR	4	16WP	G15_033	FROM->TO	G14-057T 345.00 - SUNNYSIDE 345KV CKT 1	717	789	0.04626	113.8854	GRAPEVINE INTERCHANGE - NICHOLS STATION 230KV CKT 1
FDNS	00NR	4	16WP	G15_033	FROM->TO	G14-057T 345.00 - SUNNYSIDE 345KV CKT 1	717	789	0.04626	113.8854	GRAPEVINE INTERCHANGE - NICHOLS STATION 230KV CKT 1
FDNS	00NR	4	20WP	G15_033	FROM->TO	G14-057T 345.00 - SUNNYSIDE 345KV CKT 1	717	789	0.04225	113.8838	PARK LANE - SEMINOLE 138KV CKT 1
FDNS	00NR	4	16WP	G15_033	FROM->TO	G14-057T 345.00 - SUNNYSIDE 345KV CKT 1	717	789	0.04503	113.8808	G15063_T 345.00 - MATHWSN7 345.00 345KV CKT 1
FDNS	00NR	4	16WP	G15_033	FROM->TO	G14-057T 345.00 - SUNNYSIDE 345KV CKT 1	717	789	0.04465	113.8596	GEN657748 1-YOUNG 2 GENERATOR
FDNS	00NR	4	16WP	G15_033	FROM->TO	G14-057T 345.00 - SUNNYSIDE 345KV CKT 1	717	789	0.04497	113.8455	P12:138:AEPW:SHAM4WT:CHILD4WT
FDNS	00NR	4	20WP	G15_033	FROM->TO	G14-057T 345.00 - SUNNYSIDE 345KV CKT 1	717	789	0.04244	113.8222	WEBRE - WELLS 500KV CKT 1
FDNS	00NR	4	16WP	G15_033	FROM->TO	G14-057T 345.00 - SUNNYSIDE 345KV CKT 1	717	789	0.04465	113.821	GEN562992 1-G15063_3 0.6900
FDNS	00NR	4	20WP	G15_033	FROM->TO	G14-057T 345.00 - SUNNYSIDE 345KV CKT 1	717	789	0.04236	113.8177	CANEYRV7 345.00 - NEOSHO 345KV CKT 1
FDNS	00NR	4	16WP	G15_033	FROM->TO	G14-057T 345.00 - SUNNYSIDE 345KV CKT 1	717	789	0.04465	113.8143	GEN562704 1-G15_020_3 0.3550
FDNS	00NR	4	20WP	G15_033	FROM->TO	G14-057T 345.00 - SUNNYSIDE 345KV CKT 1	717	789	0.0425	113.8108	GEN515564 1-ORIGIN11 0.6900
FDNS	00NR	4	20WP	G15_033	FROM->TO	G14-057T 345.00 - SUNNYSIDE 345KV CKT 1	717	789	0.0425	113.8108	GEN515565 1-ORIGIN21 0.6900
FDNS	00NR	4	20WP	G15_033	FROM->TO	G14-057T 345.00 - SUNNYSIDE 345KV CKT 1	717	789	0.04258	113.8089	MARIETTA - SOUTH WILSON 138KV CKT 1
FDNS	00NR	4	20WP	G15_033	FROM->TO	G14-057T 345.00 - SUNNYSIDE 345KV CKT 1	717	789	0.0425	113.8078	GEN334440 1-SABINE UNIT 4
FDNS	00NR	4	20WP	G15_033	FROM->TO	G14-057T 345.00 - SUNNYSIDE 345KV CKT 1	717	789	0.04218	113.7991	THISTLE7 345.00 - WOODWARD DISTRICT EHV 345KV CKT 1
FDNS	00NR	4	20WP	G15_033	FROM->TO	G14-057T 345.00 - SUNNYSIDE 345KV CKT 1	717	789	0.04218	113.7991	THISTLE7 345.00 - WOODWARD DISTRICT EHV 345KV CKT 1
FDNS	00NR	4	20WP	G15_033	FROM->TO	G14-057T 345.00 - SUNNYSIDE 345KV CKT 1	717	789	0.04218	113.7991	THISTLE7 345.00 - WOODWARD DISTRICT EHV 345KV CKT 2
FDNS	00NR	4	20WP	G15_033	FROM->TO	G14-057T 345.00 - SUNNYSIDE 345KV CKT 1	717	789	0.04218	113.7991	THISTLE7 345.00 - WOODWARD DISTRICT EHV 345KV CKT 2
FDNS	00NR	4	20WP	G15_033	FROM->TO	G14-057T 345.00 - SUNNYSIDE 345KV CKT 1	717	789	0.04262	113.7749	REDBUD - RIVERSIDE STATION 345KV CKT 1
FDNS	00NR	4	20WP	G15_033	FROM->TO	G14-057T 345.00 - SUNNYSIDE 345KV CKT 1	717	789	0.04262	113.7749	REDBUD - RIVERSIDE STATION 345KV CKT 1
FDNS	00NR	4	16WP	G15_033	FROM->TO	G14-057T 345.00 - SUNNYSIDE 345KV CKT 1	717	789	0.04473	113.7733	CANEY CREEK - TEXOMA JCT 138KV CKT 1
FDNS	00NR	4	20WP	G15_033	FROM->TO	G14-057T 345.00 - SUNNYSIDE 345KV CKT 1	717	789	0.0425	113.7694	P12:161:AEPW:DYESS 5:HYLAND 5
FDNS	00NR	4	20WP	G15_033	FROM->TO	G14-057T 345.00 - SUNNYSIDE 345KV CKT 1	717	789	0.0425	113.7644	DELL 500 - ESSEX UNIT 2 500KV CKT Z1

SOLUTION	GROUP	SCENARIO	SEASON	SOURCE	DIRECTION	MONITORED ELEMENT	RATEA (MVA)	RATEB(MVA)	TDF	TC%LOADING (% MVA)	CONTINGENCY
FDNS	00NR	4	16WP	G15_033	FROM->TO	G14-057T 345.00 - SUNNYSIDE 345KV CKT 1	717	789	0.04465	113.7515	GEN562952 1-G15057_3 0.6500
FDNS	00NR	4	20WP	G15_033	FROM->TO	G14-057T 345.00 - SUNNYSIDE 345KV CKT 1	717	789	0.0425	113.7263	P12:69:AEPW:L.E.S.-2:LAW WC2
FDNS	00NR	4	16WP	G15_033	FROM->TO	G14-057T 345.00 - SUNNYSIDE 345KV CKT 1	717	789	0.04465	113.7227	GEN532751 1-WOLF CREEK GENERATING STATION UNIT 1
FDNS	00NR	4	20WP	G15_033	FROM->TO	G14-057T 345.00 - SUNNYSIDE 345KV CKT 1	717	789	0.04258	113.7214	P12:138:WFEC:MSL17
FDNS	00NR	4	20WP	G15_033	FROM->TO	G14-057T 345.00 - SUNNYSIDE 345KV CKT 1	717	789	0.0425	113.718	GEN590011 2-ERCOT EQUIVALENCE
FDNS	00NR	4	16WP	G15_033	FROM->TO	G14-057T 345.00 - SUNNYSIDE 345KV CKT 1	717	789	0.04465	113.7122	GEN562710 1-G15_022_3 0.5500
FDNS	00NR	4	16WP	G15_033	FROM->TO	G14-057T 345.00 - SUNNYSIDE 345KV CKT 1	717	789	0.04465	113.6931	GEN620315 1-BIG STONE GEN
FDNS	00NR	4	16WP	G15_033	FROM->TO	G14-057T 345.00 - SUNNYSIDE 345KV CKT 1	717	789	0.04465	113.6843	GEN563173 1-G15082_3 0.6900
FDNS	00NR	4	20WP	G15_033	FROM->TO	G14-057T 345.00 - SUNNYSIDE 345KV CKT 1	717	789	0.04236	113.6752	CANEYRV7 345.00 - LATHAMS7 345.00 345KV CKT 1
FDNS	00NR	4	20WP	G15_033	FROM->TO	G14-057T 345.00 - SUNNYSIDE 345KV CKT 1	717	789	0.04244	113.6574	ELDORADO EHV - SHERIDAN EHV 500KV CKT 1
FDNS	00NR	4	20WP	G15_033	FROM->TO	G14-057T 345.00 - SUNNYSIDE 345KV CKT 1	717	789	0.0425	113.6508	GEN590010 1-ERCOT EQUIVALENCE
FDNS	00NR	4	20WP	G15_033	FROM->TO	G14-057T 345.00 - SUNNYSIDE 345KV CKT 1	717	789	0.04246	113.6367	PAOLI - PAYNE 138.00 138KV CKT 1
FDNS	00NR	4	16WP	G15_033	FROM->TO	G14-057T 345.00 - SUNNYSIDE 345KV CKT 1	717	789	0.04465	113.6362	GEN600004 2-PRAIRIE ISLAND G2
FDNS	00NR	4	20WP	G15_033	FROM->TO	G14-057T 345.00 - SUNNYSIDE 345KV CKT 1	717	789	0.04248	113.6353	P12:138:WFEC:MSL02
FDNS	00NR	4	16WP	G15_033	FROM->TO	G14-057T 345.00 - SUNNYSIDE 345KV CKT 1	717	789	0.04465	113.6334	GEN600003 1-PRAIRIE ISLAND G1
FDNS	00NR	4	16WP	G15_033	FROM->TO	G14-057T 345.00 - SUNNYSIDE 345KV CKT 1	717	789	0.04465	113.6254	GEN600006 1-AS KING
FDNS	00NR	4	20WP	G15_033	FROM->TO	G14-057T 345.00 - SUNNYSIDE 345KV CKT 1	717	789	0.04435	113.6241	LAWTON EASTSIDE (LES 5) 345/138/13.8KV TRANSFORMER CKT 2
FDNS	00NR	4	20WP	G15_033	FROM->TO	G14-057T 345.00 - SUNNYSIDE 345KV CKT 1	717	789	0.04435	113.6241	LAWTON EASTSIDE (LES 5) 345/138/13.8KV TRANSFORMER CKT 2
FDNS	00NR	4	20WP	G15_033	FROM->TO	G14-057T 345.00 - SUNNYSIDE 345KV CKT 1	717	789	0.04255	113.612	P12:138:AEPW:112GORE4:L.E.S.-4
FDNS	00NR	4	20WP	G15_033	FROM->TO	G14-057T 345.00 - SUNNYSIDE 345KV CKT 1	717	789	0.0425	113.6086	GEN506754 1-LEBROCK STEAM 1
FDNS	00NR	4	16WP	G15_033	FROM->TO	G14-057T 345.00 - SUNNYSIDE 345KV CKT 1	717	789	0.04464	113.6037	P12:138:WFEC:MSL09
FDNS	00NR	4	20WP	G15_033	FROM->TO	G14-057T 345.00 - SUNNYSIDE 345KV CKT 1	717	789	0.04265	113.6	CIVIT - PAOLI 138KV CKT 1
FDNS	00NR	4	20WP	G15_033	FROM->TO	G14-057T 345.00 - SUNNYSIDE 345KV CKT 1	717	789	0.0425	113.5887	GEN509408 1-WILKES #2
FDNS	00NR	4	20WP	G15_033	FROM->TO	G14-057T 345.00 - SUNNYSIDE 345KV CKT 1	717	789	0.04249	113.5604	ANADARKO - GEORGIA 138KV CKT 1
FDNS	00NR	4	20WP	G15_033	FROM->TO	G14-057T 345.00 - SUNNYSIDE 345KV CKT 1	717	789	0.04162	113.5373	G11_051T 345.00 - WOODWARD DISTRICT EHV 345KV CKT 1
FDNS	00NR	4	16WP	G15_033	FROM->TO	G14-057T 345.00 - SUNNYSIDE 345KV CKT 1	717	789	0.04465	113.5369	GEN636641 1-LOUISA UNIT 1
FDNS	00NR	4	16WP	G15_033	FROM->TO	G14-057T 345.00 - SUNNYSIDE 345KV CKT 1	717	789	0.04758	113.529	CHISHOLM7 345.00 (CHISHOLM) 345/230/13.2KV TRANSFORMER CKT 1
FDNS	00NR	4	16WP	G15_033	FROM->TO	G14-057T 345.00 - SUNNYSIDE 345KV CKT 1	717	789	0.04517	113.5222	P12:138:AEPW-OGE:CORNVIL4:CIMARON4
FDNS	00NR	4	20WP	G15_033	FROM->TO	G14-057T 345.00 - SUNNYSIDE 345KV CKT 1	717	789	0.0425	113.5215	GEN336252 1-NINEMILE POINT UNIT#5
FDNS	00NR	4	20WP	G15_033	FROM->TO	G14-057T 345.00 - SUNNYSIDE 345KV CKT 1	717	789	0.04235	113.5207	MATHWSN7 345.00 - NORTHWEST 345KV CKT 1
FDNS	00NR	4	20WP	G15_033	FROM->TO	G14-057T 345.00 - SUNNYSIDE 345KV CKT 1	717	789	0.0425	113.4941	FRONTIER - GRIMES 345KV CKT 1
FDNS	00NR	4	16WP	G15_033	FROM->TO	G14-057T 345.00 - SUNNYSIDE 345KV CKT 1	717	789	0.04465	113.4937	GEN600005 1-MONTICELLO
FDNS	00NR	4	16WP	G15_033	FROM->TO	G14-057T 345.00 - SUNNYSIDE 345KV CKT 1	717	789	0.04465	113.4921	GEN511851 1-COMANCHE #1
FDNS	00NR	4	20WP	G15_033	FROM->TO	G14-057T 345.00 - SUNNYSIDE 345KV CKT 1	717	789	0.04282	113.4808	P12:138:AEPW-OGE:CORNVIL4:MAUD 4
FDNS	00NR	4	20WP	G15_033	FROM->TO	G14-057T 345.00 - SUNNYSIDE 345KV CKT 1	717	789	0.04249	113.4777	FLETCHER - GEORGIA 138KV CKT 1
FDNS	00NR	4	20WP	G15_033	FROM->TO	G14-057T 345.00 - SUNNYSIDE 345KV CKT 1	717	789	0.04255	113.4724	TUPELO - TUPELO TAP 138KV CKT 1
FDNS	00NR	4	20WP	G15_033	FROM->TO	G14-057T 345.00 - SUNNYSIDE 345KV CKT 1	717	789	0.0425	113.4676	GEN335204 1-NELSON UNIT 4
FDNS	00NR	4	20WP	G15_033	FROM->TO	G14-057T 345.00 - SUNNYSIDE 345KV CKT 1	717	789	0.0425	113.4655	GEN503909 1-FULTONU1 1 16.000
FDNS	00NR	4	20WP	G15_033	FROM->TO	G14-057T 345.00 - SUNNYSIDE 345KV CKT 1	717	789	0.0425	113.4605	GEN334441 1-SABINE UNIT 5
FDNS	00NR	4	20WP	G15_033	FROM->TO	G14-057T 345.00 - SUNNYSIDE 345KV CKT 1	717	789	0.04265	113.4574	CIVIT - STRATFORD 138KV CKT 1
FDNS	00NR	4	16WP	G15_033	FROM->TO	G14-057T 345.00 - SUNNYSIDE 345KV CKT 1	717	789	0.04465	113.4565	GEN562754 1-G15031_5 0.6900
FDNS	00NR	4	20WP	G15_033	FROM->TO	G14-057T 345.00 - SUNNYSIDE 345KV CKT 1	717	789	0.04236	113.4455	LATHAMS7 345.00 - ROSE HILL 345KV CKT 1
FDNS	00NR	4	20WP	G15_033	FROM->TO	G14-057T 345.00 - SUNNYSIDE 345KV CKT 1	717	789	0.04247	113.422	EMPIRE - FLETCHER 138KV CKT 1
FDNS	00NR	4	16WP	G15_033	FROM->TO	G14-057T 345.00 - SUNNYSIDE 345KV CKT 1	717	789	0.04465	113.4084	GEN635213 3-NEAL UNIT 3
FDNS	00NR	4	20WP	G15_033	FROM->TO	G14-057T 345.00 - SUNNYSIDE 345KV CKT 1	717	789	0.04282	113.402	BLANCHARD - CORNVILLE 138KV CKT 1
FDNS	00NR	4	16WP	G15_033	FROM->TO	G14-057T 345.00 - SUNNYSIDE 345KV CKT 1	717	789	0.04465	113.3974	GEN562756 1-G15031_7 0.6900
FDNS	00NR	4	20WP	G15_033	FROM->TO	G14-057T 345.00 - SUNNYSIDE 345KV CKT 1	717	789	0.04247	113.3973	LAYFLD8 500.00 - MOUNT OLIVE 500KV CKT 1
FDNS	00NR	4	20WP	G15_033	FROM->TO	G14-057T 345.00 - SUNNYSIDE 345KV CKT 1	717	789	0.04247	113.3973	LAYFLD8 500.00 - MOUNT OLIVE 500KV CKT 1
FDNS	00NR	4	16WP	G15_033	FROM->TO	G14-057T 345.00 - SUNNYSIDE 345KV CKT 1	717	789	0.04465	113.392	GEN562556 1-G14_046_3 0.3420
FDNS	00NR	4	20WP	G15_033	FROM->TO	G14-057T 345.00 - SUNNYSIDE 345KV CKT 1	717	789	0.03853	113.3809	G14_038T 345.00 - Hitchland Interchange 345KV CKT 1
FDNS	00NR	4	16WP	G15_033	FROM->TO	G14-057T 345.00 - SUNNYSIDE 345KV CKT 1	717	789	0.04465	113.3801	GEN629074 1-ARNOLD LOWSIDE OF GSU XFMR
FDNS	00NR	4	16WP	G15_033	FROM->TO	G14-057T 345.00 - SUNNYSIDE 345KV CKT 1	717	789	0.04752	113.3761	STLN-DEMARC6 - SWEETWATER 230KV CKT 1
FDNS	00NR	4	16WP	G15_033	FROM->TO	G14-057T 345.00 - SUNNYSIDE 345KV CKT 1	717	789	0.04752	113.3735	P12:230:AEPW-SPS:SWEETWT6:WHEELER 6
FDNS	00NR	4	16WP	G15_033	FROM->TO	G14-057T 345.00 - SUNNYSIDE 345KV CKT 1	717	789	0.04752	113.3728	STATELINE INTERCHANGE - STLN-DEMARC6 230KV CKT 1
FDNS	00NR	4	20WP	G15_033	FROM->TO	G14-057T 345.00 - SUNNYSIDE 345KV CKT 1	717	789	0.0425	113.3536	GEN334071 1-LEWIS CREEK 2
FDNS	00NR	4	20WP	G15_033	FROM->TO	G14-057T 345.00 - SUNNYSIDE 345KV CKT 1	717	789	0.0425	113.3505	GEN336251 1-NINEMILE POINT UNIT#4
FDNS	00NR	4	20WP	G15_033	FROM->TO	G14-057T 345.00 - SUNNYSIDE 345KV CKT 1	717	789	0.0425	113.3472	P12:161:AEPW-SWPA:BEAVER5:EROGERS5
FDNS	00NR	4	20WP	G15_033	FROM->TO	G14-057T 345.00 - SUNNYSIDE 345KV CKT 1	717	789	0.04225	113.3463	G1524G1525 345.00 - THISTLE7 345.00 345KV CKT 1
FDNS	00NR	4	20WP	G15_033	FROM->TO	G14-057T 345.00 - SUNNYSIDE 345KV CKT 1	717	789	0.04225	113.3463	G1524G1525 345.00 - THISTLE7 345.00 345KV CKT 2
FDNS	00NR	4	20WP	G15_033	FROM->TO	G14-057T 345.00 - SUNNYSIDE 345KV CKT 1	717	789	0.0425	113.3452	GEN334070 1-LEWIS CREEK 1
FDNS	00NR	4	20WP	G15_033	FROM->TO	G14-057T 345.00 - SUNNYSIDE 345KV CKT 1	717	789	0.04247	113.345	COMANCHE - EMPIRE 138KV CKT 1
FDNS	00NR	4	20WP	G15_033	FROM->TO	G14-057T 345.00 - SUNNYSIDE 345KV CKT 1	717	789	0.04265	113.3379	OIL CENTER - STRATFORD 138KV CKT 1
FDNS	00NR	4	16WP	G15_033	FROM->TO	G14-057T 345.00 - SUNNYSIDE 345KV CKT 1	717	789	0.04465	113.3317	BIG STONE 230/24.0KV TRANSFORMER CKT 1
FDNS	00NR	4	20WP	G15_033	FROM->TO	G14-057T 345.00 - SUNNYSIDE 345KV CKT 1	717	789	0.0425	113.3236	GEN509393 S1-ARSENAL HILL GENS #4 (STALL)
FDNS	00NR	4	20WP	G15_033	FROM->TO	G14-057T 345.00 - SUNNYSIDE 345KV CKT 1	717	789	0.04269	113.323	DUNCAN (DUNCAN) 138/69/13.8KV TRANSFORMER CKT 1
FDNS	00NR	4	20WP	G15_033	FROM->TO	G14-057T 345.00 - SUNNYSIDE 345KV CKT 1	717	789	0.04269	113.323	DUNCAN (DUNCAN) 138/69/13.8KV TRANSFORMER CKT 1
FDNS	00NR	4	20WP	G15_033	FROM->TO	G14-057T 345.00 - SUNNYSIDE 345KV CKT 1	717	789	0.0425	113.3222	GEN509392 G2-ARSENAL HILL GENS #3 (STALL)
FDNS	00NR	4	20WP	G15_033	FROM->TO	G14-057T 345.00 - SUNNYSIDE 345KV CKT 1	717	789	0.0425	113.322	GEN509391 G1-ARSENAL HILL GENS #2 (STALL)
FDNS	00NR	4	16WP	G15_033	FROM->TO	G14-057T 345.00 - SUNNYSIDE 345KV CKT 1	717	789	0.04465	113.318	GEN562023 1-G11_020_3 0.6900
FDNS	00NR	4	16WP	G15_033	FROM->TO	G14-057T 345.00 - SUNNYSIDE 345KV CKT 1	717	789	0.04465	113.318	GEN562026 1-G11_019_3 0.6900
FDNS	00NR	4	16WP	G15_033	FROM->TO	G14-057T 345.00 - SUNNYSIDE 345KV CKT 1	717	789	0.04465	113.3041	GEN563142 1-G15079_3 0.5500
FDNS	00NR	4	16WP	G15_033	FROM->TO	G14-057T 345.00 - SUNNYSIDE 345KV CKT 1	717	789	0.04465	113.3041	GEN563151 1-G15080_2 0.5500
FDNS	00NR	4	20WP	G15_033	FROM->TO	G14-057T 345.00 - SUNNYSIDE 345KV CKT 1	717	789	0.0425	113.3026	GEN334433 1-SABINE UNIT 3
FDNS	00NR	4	20WP	G15_033	FROM->TO	G14-057T 345.00 - SUNNYSIDE 345KV CKT 1	717	789	0.0425	113.2896	P12:161:AEPW:DYESS5:ELMSPRNG:TONTITN5
FDNS	00NR	4	20WP	G15_033	FROM->TO	G14-057T 345.00 - SUNNYSIDE 345KV CKT 1	717	789	0.0425	113.2818	GEN337653 1-WHITE BLUFF UNIT #2
FDNS	00NR	4	20WP	G15_033	FROM->TO	G14-057T 345.00 - SUNNYSIDE 345KV CKT 1	717	789	0.04095	113.2785	FINNEY SWITCHING STATION - HOLCOMB 345KV CKT 1
FDNS	00NR	4	20WP	G15_033	FROM->TO	G14-057T 345.00 - SUNNYSIDE 345KV CKT 1	717	789	0.04095	113.2785	FINNEY SWITCHING STATION - HOLCOMB 345KV CKT 1
FDNS	00NR	4	20WP	G15_033	FROM->TO	G14-057T 345.00 - SUNNYSIDE 345KV CKT 1	717	789	0.0425	113.2754	GEN336831 1-BAXTER WILSON SES
FDNS	00NR	4	16WP	G15_033	FROM->TO	G14-057T 345.00 - SUNNYSIDE 345KV CKT 1	717	789	0.04758	113.2418	CHISHOLM7 345.00 - GRACEMONT 345KV CKT 1

SOLUTION	GROUP	SCENARIO	SEASON	SOURCE	DIRECTION	MONITORED ELEMENT	RATEA (MVA)	RATEB(MVA)	TDF	TC%LOADING (% MVA)	CONTINGENCY
FDNS	00NR	4	20WP	G15_033	FROM->TO	G14-057T 345.00 - SUNNYSIDE 345KV CKT 1	717	789	0.04249	113.2373	P12:138:AEPW:CATOOSA4:T.S.E.-4
FDNS	00NR	4	20WP	G15_033	FROM->TO	G14-057T 345.00 - SUNNYSIDE 345KV CKT 1	717	789	0.0425	113.2324	GEN334030 1-FRONTIER UNIT 1
FDNS	00NR	4	20WP	G15_033	FROM->TO	G14-057T 345.00 - SUNNYSIDE 345KV CKT 1	717	789	0.0425	113.23	GEN334031 1-FRONTIER UNIT 2
FDNS	00NR	4	20WP	G15_033	FROM->TO	G14-057T 345.00 - SUNNYSIDE 345KV CKT 1	717	789	0.0425	113.223	GEN337911 1-ARKANSAS NUCLEAR ONE UNIT #2
FDNS	00NR	4	20WP	G15_033	FROM->TO	G14-057T 345.00 - SUNNYSIDE 345KV CKT 1	717	789	0.04239	113.1957	P12:138:AEPW-OGE:WTH_JCT4:JENSEN4
FDNS	00NR	4	20WP	G15_033	FROM->TO	G14-057T 345.00 - SUNNYSIDE 345KV CKT 1	717	789	0.04282	113.1946	BLANCHARD - MAUD 138KV CKT 1
FDNS	00NR	4	20WP	G15_033	FROM->TO	G14-057T 345.00 - SUNNYSIDE 345KV CKT 1	717	789	0.04241	113.1913	FULTON 115 - HOPE 115KV CKT 1
FDNS	00NR	4	20WP	G15_033	FROM->TO	G14-057T 345.00 - SUNNYSIDE 345KV CKT 1	717	789	0.04241	113.1913	FULTON 115 - HOPE 115KV CKT 1
FDNS	00NR	4	20WP	G15_033	FROM->TO	G14-057T 345.00 - SUNNYSIDE 345KV CKT 1	717	789	0.043	113.1891	TUTTLE - TUTTLE CONOCO TAP 138KV CKT 1
FDNS	00NR	4	20WP	G15_033	FROM->TO	G14-057T 345.00 - SUNNYSIDE 345KV CKT 1	717	789	0.0425	113.1854	GEN501811 1-RODEMACHER UNIT 1
FDNS	00NR	4	20WP	G15_033	FROM->TO	G14-057T 345.00 - SUNNYSIDE 345KV CKT 1	717	789	0.04312	113.1848	P12:138:AEPW:CORNVIL4:DUNCAN-4
FDNS	00NR	4	20WP	G15_033	FROM->TO	G14-057T 345.00 - SUNNYSIDE 345KV CKT 1	717	789	0.0425	113.1797	GEN337652 1-WHITE BLUFF UNIT #1
FDNS	00NR	4	16WP	G15_033	FROM->TO	G14-057T 345.00 - SUNNYSIDE 345KV CKT 1	717	789	0.04465	113.1779	GEN600000 1-SHERBURNECNTY G1
FDNS	00NR	4	20WP	G15_033	FROM->TO	G14-057T 345.00 - SUNNYSIDE 345KV CKT 1	717	789	0.0425	113.1638	GEN506752 1-LEBROCK GAS 1
FDNS	00NR	4	20WP	G15_033	FROM->TO	G14-057T 345.00 - SUNNYSIDE 345KV CKT 1	717	789	0.0425	113.1635	GEN506753 1-LEBROCK GAS 2
FDNS	00NR	4	20WP	G15_033	FROM->TO	G14-057T 345.00 - SUNNYSIDE 345KV CKT 1	717	789	0.04257	113.163	P12:138:AEPW:CORNVIL4:S.W.S.-4
FDNS	00NR	4	16WP	G15_033	FROM->TO	G14-057T 345.00 - SUNNYSIDE 345KV CKT 1	717	789	0.04465	113.16	GEN523971 1-HARRINGTON GEN #1 24 KV
FDNS	00NR	4	16WP	G15_033	FROM->TO	G14-057T 345.00 - SUNNYSIDE 345KV CKT 1	717	789	0.04465	113.16	GEN523973 1-HARRINGTON GEN #3 24 KV
FDNS	00NR	4	16WP	G15_033	FROM->TO	G14-057T 345.00 - SUNNYSIDE 345KV CKT 1	717	789	0.04465	113.1599	GEN523972 1-HARRINGTON GEN #2 24 KV
FDNS	00NR	4	20WP	G15_033	FROM->TO	G14-057T 345.00 - SUNNYSIDE 345KV CKT 1	717	789	0.04265	113.1589	LATTA JCT - OIL CENTER 138KV CKT 1
FDNS	00NR	4	20WP	G15_033	FROM->TO	G14-057T 345.00 - SUNNYSIDE 345KV CKT 1	717	789	0.0425	113.1516	GEN336191 1-LITTLE GYPSY UNIT#3
FDNS	00NR	4	20WP	G15_033	FROM->TO	G14-057T 345.00 - SUNNYSIDE 345KV CKT 1	717	789	0.04269	113.1477	P12:69:WFEC-AEPW:COMANCH2:DUNCAN-2
FDNS	00NR	4	20WP	G15_033	FROM->TO	G14-057T 345.00 - SUNNYSIDE 345KV CKT 1	717	789	0.04493	113.1383	P12:138:AEPW:S.W.S.-4:L.E.S.-4
FDNS	00NR	4	20WP	G15_033	FROM->TO	G14-057T 345.00 - SUNNYSIDE 345KV CKT 1	717	789	0.0425	113.1327	GEN515040 1-SEMINOLE 1G
FDNS	00NR	4	20WP	G15_033	FROM->TO	G14-057T 345.00 - SUNNYSIDE 345KV CKT 1	717	789	0.0425	113.1295	GEN300015 1-1SGPDEL 18.000
FDNS	00NR	4	20WP	G15_033	FROM->TO	G14-057T 345.00 - SUNNYSIDE 345KV CKT 1	717	789	0.04243	113.1295	6LAYFLD 230.00 - CARROLL 230KV CKT 1
FDNS	00NR	4	20WP	G15_033	FROM->TO	G14-057T 345.00 - SUNNYSIDE 345KV CKT 1	717	789	0.04248	113.1249	8DANIEL8 500.00 - MCKNIGHT 500KV CKT 1
FDNS	00NR	4	16WP	G15_033	FROM->TO	G14-057T 345.00 - SUNNYSIDE 345KV CKT 1	717	789	0.04465	113.1227	GEN563042 1-G15068_3 0.6900
FDNS	00NR	4	20WP	G15_033	FROM->TO	G14-057T 345.00 - SUNNYSIDE 345KV CKT 1	717	789	0.0425	113.1214	GEN335614 1-WILLOW GLENN UNIT#4
FDNS	00NR	4	20WP	G15_033	FROM->TO	G14-057T 345.00 - SUNNYSIDE 345KV CKT 1	717	789	0.0425	113.1133	GEN515226 1-MUSKOGEE 6G
FDNS	00NR	4	20WP	G15_033	FROM->TO	G14-057T 345.00 - SUNNYSIDE 345KV CKT 1	717	789	0.043	113.1096	CIMARRON - TUTTLE CONOCO TAP 138KV CKT 1
FDNS	00NR	4	20WP	G15_033	FROM->TO	G14-057T 345.00 - SUNNYSIDE 345KV CKT 1	717	789	0.04203	113.105	BUCKNER7 345.00 - SPEARVILLE 345KV CKT 1
FDNS	00NR	4	20WP	G15_033	FROM->TO	G14-057T 345.00 - SUNNYSIDE 345KV CKT 1	717	789	0.04203	113.105	BUCKNER7 345.00 - SPEARVILLE 345KV CKT 1
FDNS	00NR	4	20WP	G15_033	FROM->TO	G14-057T 345.00 - SUNNYSIDE 345KV CKT 1	717	789	0.0425	113.1017	P12:161:AEPW:EROGERS5:ECNTRTN5
FDNS	00NR	4	16WP	G15_033	FROM->TO	G14-057T 345.00 - SUNNYSIDE 345KV CKT 1	717	789	0.04448	113.0968	NORTHWEST TEXARKANA - VALLIANT 345KV CKT 1
FDNS	00NR	4	16WP	G15_033	FROM->TO	G14-057T 345.00 - SUNNYSIDE 345KV CKT 1	717	789	0.04448	113.0968	NORTHWEST TEXARKANA - VALLIANT 345KV CKT 1
FDNS	00NR	4	20WP	G15_033	FROM->TO	G14-057T 345.00 - SUNNYSIDE 345KV CKT 1	717	789	0.04282	113.0951	BAILEY4 138.00 - SUNSHINE CANYON 138KV CKT 1
FDNS	00NR	4	20WP	G15_033	FROM->TO	G14-057T 345.00 - SUNNYSIDE 345KV CKT 1	717	789	0.04269	113.0947	DUNCAN - TOSCO 69KV CKT 1
FDNS	00NR	4	20WP	G15_033	FROM->TO	G14-057T 345.00 - SUNNYSIDE 345KV CKT 1	717	789	0.04244	113.088	P12:138:AEPW:WTHWF4:CLINTJC4
FDNS	00NR	4	16WP	G15_033	FROM->TO	G14-057T 345.00 - SUNNYSIDE 345KV CKT 1	717	789	0.04465	113.087	GEN600001 2-SHERBURNE CNTY G2
FDNS	00NR	4	16WP	G15_033	FROM->TO	G14-057T 345.00 - SUNNYSIDE 345KV CKT 1	717	789	0.04465	113.0831	GEN527901 1-HOBBS PLANT #1 (CT)
FDNS	00NR	4	16WP	G15_033	FROM->TO	G14-057T 345.00 - SUNNYSIDE 345KV CKT 1	717	789	0.04465	113.0831	GEN527902 1-HOBBS PLANT #2 (CT)
FDNS	00NR	4	20WP	G15_033	FROM->TO	G14-057T 345.00 - SUNNYSIDE 345KV CKT 1	717	789	0.04245	113.0829	G15088_T 345.00 - MOORE 345KV CKT 1
FDNS	00NR	4	20WP	G15_033	FROM->TO	G14-057T 345.00 - SUNNYSIDE 345KV CKT 1	717	789	0.0425	113.0824	WHITE BLUFF 500/26.0KV TRANSFORMER CKT 1
FDNS	00NR	4	20WP	G15_033	FROM->TO	G14-057T 345.00 - SUNNYSIDE 345KV CKT 1	717	789	0.0425	113.0773	RODEMACHER 230/22.0KV TRANSFORMER CKT 1
FDNS	00NR	4	20WP	G15_033	FROM->TO	G14-057T 345.00 - SUNNYSIDE 345KV CKT 1	717	789	0.0425	113.077	GEN303007 1-1BC2 U2
FDNS	00NR	4	20WP	G15_033	FROM->TO	G14-057T 345.00 - SUNNYSIDE 345KV CKT 1	717	789	0.0425	113.0764	GEN300003 1-THOMAS HILL UNIT 3
FDNS	00NR	4	20WP	G15_033	FROM->TO	G14-057T 345.00 - SUNNYSIDE 345KV CKT 1	717	789	0.03853	113.0755	G14_038T 345.00 - POTTER COUNTY INTERCHANGE 345KV CKT 1
FDNS	00NR	4	20WP	G15_033	FROM->TO	G14-057T 345.00 - SUNNYSIDE 345KV CKT 1	717	789	0.0425	113.0713	GEN303006 1-1BC2 U1
FDNS	00NR	4	20WP	G15_033	FROM->TO	G14-057T 345.00 - SUNNYSIDE 345KV CKT 1	717	789	0.0425	113.0706	GEN336464 1-MICHOUD UNIT #3
FDNS	00NR	4	20WP	G15_033	FROM->TO	G14-057T 345.00 - SUNNYSIDE 345KV CKT 1	717	789	0.0425	113.0693	GEN337910 1-ARKANSAS NUCLEAR ONE UNIT #1
FDNS	00NR	4	20WP	G15_033	FROM->TO	G14-057T 345.00 - SUNNYSIDE 345KV CKT 1	717	789	0.0425	113.0662	GEN562783 1-G15036_4 0.6900
FDNS	00NR	4	20WP	G15_033	FROM->TO	G14-057T 345.00 - SUNNYSIDE 345KV CKT 1	717	789	0.0425	113.0662	GEN562784 1-G15036_5 0.6900
FDNS	00NR	4	20WP	G15_033	FROM->TO	G14-057T 345.00 - SUNNYSIDE 345KV CKT 1	717	789	0.04243	113.0633	BISMARK - HOT SPRINGS WEST BUS 115KV CKT 1
FDNS	00NR	4	20WP	G15_033	FROM->TO	G14-057T 345.00 - SUNNYSIDE 345KV CKT 1	717	789	0.04246	113.0608	MC NIEL 500/115KV TRANSFORMER CKT 1
FDNS	00NR	4	20WP	G15_033	FROM->TO	G14-057T 345.00 - SUNNYSIDE 345KV CKT 1	717	789	0.0425	113.0579	CIMARRON - CZECH HALL 138KV CKT 1
FDNS	00NR	4	20WP	G15_033	FROM->TO	G14-057T 345.00 - SUNNYSIDE 345KV CKT 1	717	789	0.04247	113.0515	HOT SPRINGS EHV - MAGNET COVE 500KV CKT 1
FDNS	00NR	4	20WP	G15_033	FROM->TO	G14-057T 345.00 - SUNNYSIDE 345KV CKT 1	717	789	0.04246	113.0502	G15074_T 345.00 - HOYT 345KV CKT 1
FDNS	00NR	4	20WP	G15_033	FROM->TO	G14-057T 345.00 - SUNNYSIDE 345KV CKT 1	717	789	0.04245	113.0482	G15095_T 138.00 - ROSE_VALLEY 138.00 138KV CKT 1
FDNS	00NR	4	20WP	G15_033	FROM->TO	G14-057T 345.00 - SUNNYSIDE 345KV CKT 1	717	789	0.04269	113.0479	COMANCHE TAP - TOSCO 69KV CKT 1
FDNS	00NR	4	20WP	G15_033	FROM->TO	G14-057T 345.00 - SUNNYSIDE 345KV CKT 1	717	789	0.04278	113.0389	P12:69:AEPW-OMPA:COMANC-2:OMWALTR2
FDNS	00NR	4	20WP	G15_033	FROM->TO	G14-057T 345.00 - SUNNYSIDE 345KV CKT 1	717	789	0.04244	113.0384	P12:138:AEPW:WTHWF4:WTH_SE4
FDNS	00NR	4	20WP	G15_033	FROM->TO	G14-057T 345.00 - SUNNYSIDE 345KV CKT 1	717	789	0.0425	113.0206	GEN515223 1-MUSKOGEE 4G
FDNS	00NR	4	20WP	G15_033	FROM->TO	G14-057T 345.00 - SUNNYSIDE 345KV CKT 1	717	789	0.0425	113.0206	GEN515225 1-MUSKOGEE 5G
FDNS	00NR	4	20WP	G15_033	FROM->TO	G14-057T 345.00 - SUNNYSIDE 345KV CKT 1	717	789	0.04246	113.0139	CIMARRON - SARA 138KV CKT 1
FDNS	00NR	4	20WP	G15_033	FROM->TO	G14-057T 345.00 - SUNNYSIDE 345KV CKT 1	717	789	0.0425	113.0128	GEN337041 1-GERALD ANDRUS
FDNS	00NR	4	20WP	G15_033	FROM->TO	G14-057T 345.00 - SUNNYSIDE 345KV CKT 1	717	789	0.0425	113.0098	GEN303008 1-1BC2 U3
FDNS	00NR	4	20WP	G15_033	FROM->TO	G14-057T 345.00 - SUNNYSIDE 345KV CKT 1	717	789	0.04243	113.0085	ALPINE AECC - BISMARK 115KV CKT 1
FDNS	00NR	4	20WP	G15_033	FROM->TO	G14-057T 345.00 - SUNNYSIDE 345KV CKT 1	717	789	0.04095	113.007	FINNEY SWITCHING STATION - WALKTAP7 345.00 345KV CKT 1
FDNS	00NR	4	20WP	G15_033	FROM->TO	G14-057T 345.00 - SUNNYSIDE 345KV CKT 1	717	789	0.04095	113.007	FINNEY SWITCHING STATION - WALKTAP7 345.00 345KV CKT 1
FDNS	00NR	4	20WP	G15_033	FROM->TO	G14-057T 345.00 - SUNNYSIDE 345KV CKT 1	717	789	0.0425	113.0029	GEN300010 1-ST FRANCIS UNIT 1
FDNS	00NR	4	20WP	G15_033	FROM->TO	G14-057T 345.00 - SUNNYSIDE 345KV CKT 1	717	789	0.04243	113.0008	CLEO CORNER - CLEOPLT4 138.00 138KV CKT 1
FDNS	00NR	4	20WP	G15_033	FROM->TO	G14-057T 345.00 - SUNNYSIDE 345KV CKT 1	717	789	0.04249	113.0007	P12:138:AEPW:N.E.S.-4:CATOOSA4
FDNS	00NR	4	16WP	G15_033	FROM->TO	G14-057T 345.00 - SUNNYSIDE 345KV CKT 1	717	789	0.04465	113	GEN629075 1-OTTUMWA GENERATOR FOR OTTUMWA UNIT NO 1
FDNS	00NR	4	20WP	G15_033	FROM->TO	G14-057T 345.00 - SUNNYSIDE 345KV CKT 1	717	789	0.04228	112.9952	SEMINOLE - VANOSTP4 138.00 138KV CKT 1
FDNS	00NR	4	20WP	G15_033	FROM->TO	G14-057T 345.00 - SUNNYSIDE 345KV CKT 1	717	789	0.04218	112.993	ARBWIND4 138.00 - CARTER 138KV CKT 1
FDNS	00NR	4	20WP	G15_033	FROM->TO	G14-057T 345.00 - SUNNYSIDE 345KV CKT 1	717	789	0.0425	112.9913	NELSON 230/20.0KV TRANSFORMER CKT 1
FDNS	00NR	4	20WP	G15_033	FROM->TO	G14-057T 345.00 - SUNNYSIDE 345KV CKT 1	717	789	0.0425	112.9877	CZECH HALL - XEROX 138KV CKT 1
FDNS	00NR	4	20WP	G15_033	FROM->TO	G14-057T 345.00 - SUNNYSIDE 345KV CKT 1	717	789	0.0425	112.9835	MORGAN - XEROX 138KV CKT 1

SOLUTION	GROUP	SCENARIO	SEASON	SOURCE	DIRECTION	MONITORED ELEMENT	RATEA (MVA)	RATEB(MVA)	TDF	TC%LOADING (% MVA)	CONTINGENCY
FDNS	00NR	4	20WP	G15_033	FROM->TO	G14-057T 345.00 - SUNNYSIDE 345KV CKT 1	717	789	0.04243	112.9825	CLEOPLT4 138.00 - MEN TAP 138KV CKT 1
FDNS	00NR	4	20WP	G15_033	FROM->TO	G14-057T 345.00 - SUNNYSIDE 345KV CKT 1	717	789	0.04269	112.9812	COMANCHE - COMANCHE TAP 69KV CKT 1
FDNS	00NR	4	20WP	G15_033	FROM->TO	G14-057T 345.00 - SUNNYSIDE 345KV CKT 1	717	789	0.0425	112.981	GEN336170 1-GULF OXY U4
FDNS	00NR	4	20WP	G15_033	FROM->TO	G14-057T 345.00 - SUNNYSIDE 345KV CKT 1	717	789	0.04194	112.9776	ELK CITY 230KV (ELKCTY-6) 230/138/13.8KV TRANSFORMER CKT 1
FDNS	00NR	4	20WP	G15_033	FROM->TO	G14-057T 345.00 - SUNNYSIDE 345KV CKT 1	717	789	0.04194	112.9776	ELK CITY 230KV (ELKCTY-6) 230/138/13.8KV TRANSFORMER CKT 1
FDNS	00NR	4	20WP	G15_033	FROM->TO	G14-057T 345.00 - SUNNYSIDE 345KV CKT 1	717	789	0.04194	112.9773	CHISHOLM6 230.00 - ELK CITY 230KV 230KV CKT 1
FDNS	00NR	4	20WP	G15_033	FROM->TO	G14-057T 345.00 - SUNNYSIDE 345KV CKT 1	717	789	0.0425	112.977	GEN505432 1-SIKESTON
FDNS	00NR	4	20WP	G15_033	FROM->TO	G14-057T 345.00 - SUNNYSIDE 345KV CKT 1	717	789	0.04245	112.9741	NOEL_SW 138.00 - ROSE_VALLEY 138.00 138KV CKT 1
FDNS	00NR	4	20WP	G15_033	FROM->TO	G14-057T 345.00 - SUNNYSIDE 345KV CKT 1	717	789	0.04243	112.972	IMO TAP - MEN TAP 138KV CKT 1
FDNS	00NR	4	20WP	G15_033	FROM->TO	G14-057T 345.00 - SUNNYSIDE 345KV CKT 1	717	789	0.0425	112.9612	MORGAN - MUSTANG 138KV CKT 1
FDNS	00NR	4	20WP	G15_033	FROM->TO	G14-057T 345.00 - SUNNYSIDE 345KV CKT 1	717	789	0.04243	112.9597	ALPINE AECC - AMITY SS 115KV CKT 1
FDNS	00NR	4	20WP	G15_033	FROM->TO	G14-057T 345.00 - SUNNYSIDE 345KV CKT 1	717	789	0.0425	112.9591	GEN336801 1-BAXTER WILSON UNIT #1
FDNS	00NR	4	20WP	G15_033	FROM->TO	G14-057T 345.00 - SUNNYSIDE 345KV CKT 1	717	789	0.0425	112.9516	8CAJUN2 500/24.0KV TRANSFORMER CKT 1
FDNS	00NR	4	20WP	G15_033	FROM->TO	G14-057T 345.00 - SUNNYSIDE 345KV CKT 1	717	789	0.0425	112.9461	GEN300011 1-ST FRANCIS UNIT 2
FDNS	00NR	4	16WP	G15_033	FROM->TO	G14-057T 345.00 - SUNNYSIDE 345KV CKT 1	717	789	0.04465	112.9439	GEN511848 1-SOUTHWESTERN STATION #3
FDNS	00NR	4	20WP	G15_033	FROM->TO	G14-057T 345.00 - SUNNYSIDE 345KV CKT 1	717	789	0.0425	112.9321	GEN501910 1-ACADIA UNIT ST1
FDNS	00NR	4	20WP	G15_033	FROM->TO	G14-057T 345.00 - SUNNYSIDE 345KV CKT 1	717	789	0.0424	112.9273	WEATHERFORD JCT. - WEATHERFORD SOUTHEAST 138KV CKT 1
FDNS	00NR	4	20WP	G15_033	FROM->TO	G14-057T 345.00 - SUNNYSIDE 345KV CKT 1	717	789	0.0424	112.9273	WEATHERFORD JCT. - WEATHERFORD SOUTHEAST 138KV CKT 1
FDNS	00NR	4	20WP	G15_033	FROM->TO	G14-057T 345.00 - SUNNYSIDE 345KV CKT 1	717	789	0.04238	112.922	P12:138:OKGE-AEPW:JENSEN4:REDROCKRD4
FDNS	00NR	4	20WP	G15_033	FROM->TO	G14-057T 345.00 - SUNNYSIDE 345KV CKT 1	717	789	0.04282	112.917	BAILEY4 138.00 - WESTMOORE 138KV CKT 1
FDNS	00NR	4	20WP	G15_033	FROM->TO	G14-057T 345.00 - SUNNYSIDE 345KV CKT 1	717	789	0.0425	112.9117	SABINE 230/24.0KV TRANSFORMER CKT 1
FDNS	00NR	4	20WP	G15_033	FROM->TO	G14-057T 345.00 - SUNNYSIDE 345KV CKT 1	717	789	0.0425	112.9076	P12:138:AEPW:R.S.S.-4:S.HUD.-4
FDNS	00NR	4	20WP	G15_033	FROM->TO	G14-057T 345.00 - SUNNYSIDE 345KV CKT 1	717	789	0.04248	112.9067	ETTA (DUKE HOTSPRINGS) - MC NIEL 500KV CKT 1
FDNS	00NR	4	20WP	G15_033	FROM->TO	G14-057T 345.00 - SUNNYSIDE 345KV CKT 1	717	789	0.04246	112.906	SARA - STHLAKE4 138.00 138KV CKT 1
FDNS	00NR	4	20WP	G15_033	FROM->TO	G14-057T 345.00 - SUNNYSIDE 345KV CKT 1	717	789	0.04341	112.8983	LAWTON EASTSIDE (LES 4) 345/138/13.8KV TRANSFORMER CKT 1
FDNS	00NR	4	20WP	G15_033	FROM->TO	G14-057T 345.00 - SUNNYSIDE 345KV CKT 1	717	789	0.04341	112.8983	LAWTON EASTSIDE (LES 4) 345/138/13.8KV TRANSFORMER CKT 1
FDNS	00NR	4	20WP	G15_033	FROM->TO	G14-057T 345.00 - SUNNYSIDE 345KV CKT 1	717	789	0.0424	112.893	P12:138:AEPW:REDROCKRD4:WTH_JCT4
FDNS	00NR	4	20WP	G15_033	FROM->TO	G14-057T 345.00 - SUNNYSIDE 345KV CKT 1	717	789	0.04266	112.8892	GRACEMONT (BANK 1) 345/138/13.8KV TRANSFORMER CKT 1
FDNS	00NR	4	20WP	G15_033	FROM->TO	G14-057T 345.00 - SUNNYSIDE 345KV CKT 1	717	789	0.0425	112.8782	ESSEX UNIT 2 500/18.0KV TRANSFORMER CKT 1
FDNS	00NR	4	20WP	G15_033	FROM->TO	G14-057T 345.00 - SUNNYSIDE 345KV CKT 1	717	789	0.0425	112.878	GEN336222 1-LITTLE GYPSY UNIT#2
FDNS	00NR	4	20WP	G15_033	FROM->TO	G14-057T 345.00 - SUNNYSIDE 345KV CKT 1	717	789	0.04246	112.8768	MCCLAIN - STHLAKE4 138.00 138KV CKT 1
FDNS	00NR	4	20WP	G15_033	FROM->TO	G14-057T 345.00 - SUNNYSIDE 345KV CKT 1	717	789	0.0425	112.875	P12:69:AEPW:NROGERS2:ECNTRTN2
FDNS	00NR	4	20WP	G15_033	FROM->TO	G14-057T 345.00 - SUNNYSIDE 345KV CKT 1	717	789	0.04256	112.8729	ANADARKO - SEQUOYAHJ4 138.00 138KV CKT 1
FDNS	00NR	4	20WP	G15_033	FROM->TO	G14-057T 345.00 - SUNNYSIDE 345KV CKT 1	717	789	0.04265	112.8705	LASALLE - LATTA JCT 138KV CKT 1
FDNS	00NR	4	20WP	G15_033	FROM->TO	G14-057T 345.00 - SUNNYSIDE 345KV CKT 1	717	789	0.04262	112.8701	WALTERS - WALTERS 69KV CKT 1
FDNS	00NR	4	20WP	G15_033	FROM->TO	G14-057T 345.00 - SUNNYSIDE 345KV CKT 1	717	789	0.04256	112.8685	CORN TAP - SEQUOYAHJ4 138.00 138KV CKT 1
FDNS	00NR	4	20WP	G15_033	FROM->TO	G14-057T 345.00 - SUNNYSIDE 345KV CKT 1	717	789	0.0425	112.8655	P12:138:AEPW:BA_71ST4:T.S.E.-4
FDNS	00NR	4	20WP	G15_033	FROM->TO	G14-057T 345.00 - SUNNYSIDE 345KV CKT 1	717	789	0.0425	112.8623	GEN300016 1-1G1GPDEL 18.000
FDNS	00NR	4	20WP	G15_033	FROM->TO	G14-057T 345.00 - SUNNYSIDE 345KV CKT 1	717	789	0.0425	112.8608	P12:138:AEPW:YARCH-S4:T.S.E.-4
FDNS	00NR	4	16WP	G15_033	FROM->TO	G14-057T 345.00 - SUNNYSIDE 345KV CKT 1	717	789	0.04797	112.8603	P12:230:AEPW:ELKCITY6:SWEETWT6
FDNS	00NR	4	20WP	G15_033	FROM->TO	G14-057T 345.00 - SUNNYSIDE 345KV CKT 1	717	789	0.04257	112.8552	NORGE ROAD - SOUTHWESTERN STATION 138KV CKT 1
FDNS	00NR	4	20WP	G15_033	FROM->TO	G14-057T 345.00 - SUNNYSIDE 345KV CKT 1	717	789	0.04257	112.8552	NORGE ROAD - SOUTHWESTERN STATION 138KV CKT 1
FDNS	00NR	4	20WP	G15_033	FROM->TO	G14-057T 345.00 - SUNNYSIDE 345KV CKT 1	717	789	0.04248	112.8526	P12:138:AEPW-OGE:SHIDLER4:OSAGE 4
FDNS	00NR	4	20WP	G15_033	FROM->TO	G14-057T 345.00 - SUNNYSIDE 345KV CKT 1	717	789	0.0425	112.8496	FRONTIER 345/18.0KV TRANSFORMER CKT 1
FDNS	00NR	4	20WP	G15_033	FROM->TO	G14-057T 345.00 - SUNNYSIDE 345KV CKT 1	717	789	0.04246	112.8478	HOYT - STRANGER CREEK 345KV CKT 1
FDNS	00NR	4	20WP	G15_033	FROM->TO	G14-057T 345.00 - SUNNYSIDE 345KV CKT 1	717	789	0.0425	112.8474	FRONTIER 345/18.0KV TRANSFORMER CKT 1
FDNS	00NR	4	20WP	G15_033	FROM->TO	G14-057T 345.00 - SUNNYSIDE 345KV CKT 1	717	789	0.0425	112.8426	GEN336152 1-WATERFORD UNIT#2
FDNS	00NR	4	20WP	G15_033	FROM->TO	G14-057T 345.00 - SUNNYSIDE 345KV CKT 1	717	789	0.04278	112.8424	LAWTON RELIFT TAP - OMPA-WALTERS 69KV CKT 1
FDNS	00NR	4	20WP	G15_033	FROM->TO	G14-057T 345.00 - SUNNYSIDE 345KV CKT 1	717	789	0.0425	112.8418	GEN336151 1-WATERFORD UNIT#1
FDNS	00NR	4	20WP	G15_033	FROM->TO	G14-057T 345.00 - SUNNYSIDE 345KV CKT 1	717	789	0.0425	112.8392	7JASPER 345.00 - BLACKBERRY 345KV CKT 1
FDNS	00NR	4	20WP	G15_033	FROM->TO	G14-057T 345.00 - SUNNYSIDE 345KV CKT 1	717	789	0.04232	112.8349	G13-010T 345.00 - POST ROCK 345KV CKT 1
FDNS	00NR	4	20WP	G15_033	FROM->TO	G14-057T 345.00 - SUNNYSIDE 345KV CKT 1	717	789	0.04245	112.8313	BLACKBERRY - NEOSHO 345KV CKT 1
FDNS	00NR	4	16WP	G15_033	FROM->TO	G14-057T 345.00 - SUNNYSIDE 345KV CKT 1	717	789	0.04465	112.8307	GEN563043 1-G15068_4 0.6900
FDNS	00NR	4	20WP	G15_033	FROM->TO	G14-057T 345.00 - SUNNYSIDE 345KV CKT 1	717	789	0.04231	112.83	BENTON - WICHITA 345KV CKT 1
FDNS	00NR	4	20WP	G15_033	FROM->TO	G14-057T 345.00 - SUNNYSIDE 345KV CKT 1	717	789	0.04246	112.8296	MORISNT4 138.00 - STILLWATER 138KV CKT 1
FDNS	00NR	4	20WP	G15_033	FROM->TO	G14-057T 345.00 - SUNNYSIDE 345KV CKT 1	717	789	0.04246	112.8239	P12:138:OKGE:3TERM2
FDNS	00NR	4	20WP	G15_033	FROM->TO	G14-057T 345.00 - SUNNYSIDE 345KV CKT 1	717	789	0.04241	112.8236	HOPE - MCNAB REC 115KV CKT 1
FDNS	00NR	4	20WP	G15_033	FROM->TO	G14-057T 345.00 - SUNNYSIDE 345KV CKT 1	717	789	0.0425	112.8187	LEWIS CREEK SWITCHYARD 138/22.0KV TRANSFORMER CKT 1
FDNS	00NR	4	20WP	G15_033	FROM->TO	G14-057T 345.00 - SUNNYSIDE 345KV CKT 1	717	789	0.04257	112.8165	SOUTHWESTERN STATION - VERDEN 138KV CKT 1
FDNS	00NR	4	16WP	G15_033	FROM->TO	G14-057T 345.00 - SUNNYSIDE 345KV CKT 1	717	789	0.04465	112.8158	GEN635214 4-NEAL UNIT 4
FDNS	00NR	4	20WP	G15_033	FROM->TO	G14-057T 345.00 - SUNNYSIDE 345KV CKT 1	717	789	0.04246	112.8153	G15074_T 345.00 - JEFFREY ENERGY CENTER 345KV CKT 1
FDNS	00NR	4	20WP	G15_033	FROM->TO	G14-057T 345.00 - SUNNYSIDE 345KV CKT 1	717	789	0.0425	112.8143	LEWIS CREEK SWITCHYARD 138/22.0KV TRANSFORMER CKT 1
FDNS	00NR	4	20WP	G15_033	FROM->TO	G14-057T 345.00 - SUNNYSIDE 345KV CKT 1	717	789	0.04245	112.8139	COUCH SES - MC NIEL 115KV CKT 1
FDNS	00NR	4	20WP	G15_033	FROM->TO	G14-057T 345.00 - SUNNYSIDE 345KV CKT 1	717	789	0.04241	112.8137	P12:115:AEPW:TURK3:HOPE3
FDNS	00NR	4	20WP	G15_033	FROM->TO	G14-057T 345.00 - SUNNYSIDE 345KV CKT 1	717	789	0.04249	112.8125	CYPRESS - HARTBURG 500KV CKT 1
FDNS	00NR	4	20WP	G15_033	FROM->TO	G14-057T 345.00 - SUNNYSIDE 345KV CKT 1	717	789	0.04203	112.8113	BUCKNER7 345.00 - HOLCOMB 345KV CKT 1
FDNS	00NR	4	20WP	G15_033	FROM->TO	G14-057T 345.00 - SUNNYSIDE 345KV CKT 1	717	789	0.04203	112.8113	BUCKNER7 345.00 - HOLCOMB 345KV CKT 1
FDNS	00NR	4	20WP	G15_033	FROM->TO	G14-057T 345.00 - SUNNYSIDE 345KV CKT 1	717	789	0.0425	112.8062	GEN300017 1-1G2GPDEL 18.000
FDNS	00NR	4	20WP	G15_033	FROM->TO	G14-057T 345.00 - SUNNYSIDE 345KV CKT 1	717	789	0.04246	112.7988	EMPORIA ENERGY CENTER - G14_001T 345.00 345KV CKT 1
FDNS	00NR	4	20WP	G15_033	FROM->TO	G14-057T 345.00 - SUNNYSIDE 345KV CKT 1	717	789	0.04244	112.7988	WEATHERFORD TAP - WEATHERFORD WIND FARM 138KV CKT 1
FDNS	00NR	4	20WP	G15_033	FROM->TO	G14-057T 345.00 - SUNNYSIDE 345KV CKT 1	717	789	0.04247	112.7975	7LUTESVIL 345.00 - 7ST FRANC 345.00 345KV CKT 1
FDNS	00NR	4	20WP	G15_033	FROM->TO	G14-057T 345.00 - SUNNYSIDE 345KV CKT 1	717	789	0.0424	112.7974	HINTON - WEATHERFORD JCT. 138KV CKT 1
FDNS	00NR	4	20WP	G15_033	FROM->TO	G14-057T 345.00 - SUNNYSIDE 345KV CKT 1	717	789	0.0425	112.7929	GEN334432 1-SABINE UNIT 2
FDNS	00NR	4	20WP	G15_033	FROM->TO	G14-057T 345.00 - SUNNYSIDE 345KV CKT 1	717	789	0.0425	112.7927	GEN334431 1-SABINE UNIT 1
FDNS	00NR	4	20WP	G15_033	FROM->TO	G14-057T 345.00 - SUNNYSIDE 345KV CKT 1	717	789	0.04224	112.7904	CLINTON JUNCTION - ELK CITY 138KV CKT 1
FDNS	00NR	4	20WP	G15_033	FROM->TO	G14-057T 345.00 - SUNNYSIDE 345KV CKT 1	717	789	0.04224	112.7904	CLINTON JUNCTION - ELK CITY 138KV CKT 1
FDNS	00NR	4	20WP	G15_033	FROM->TO	G14-057T 345.00 - SUNNYSIDE 345KV CKT 1	717	789	0.0425	112.7883	P12:161:AEPW:CHAMSPR5:FARMING5
FDNS	00NR	4	20WP	G15_033	FROM->TO	G14-057T 345.00 - SUNNYSIDE 345KV CKT 1	717	789	0.04218	112.7877	CANADIAN - NOBLE 138KV CKT 1
FDNS	00NR	4	20WP	G15_033	FROM->TO	G14-057T 345.00 - SUNNYSIDE 345KV CKT 1	717	789	0.04241	112.7876	MCNAB REC - Turk 115 115KV CKT 1

SOLUTION	GROUP	SCENARIO	SEASON	SOURCE	DIRECTION	MONITORED ELEMENT	RATEA (MVA)	RATEB(MVA)	TDF	TC%LOADING (% MVA)	CONTINGENCY
FDNS	00NR	4	20WP	G15_033	FROM->TO	G14-057T 345.00 - SUNNYSIDE 345KV CKT 1	717	789	0.04241	112.7876	TURK (TURK 1) 138/115/13.2KV TRANSFORMER CKT 1
FDNS	00NR	4	20WP	G15_033	FROM->TO	G14-057T 345.00 - SUNNYSIDE 345KV CKT 1	717	789	0.04241	112.7876	TURK (TURK 1) 138/115/13.2KV TRANSFORMER CKT 1
FDNS	00NR	4	20WP	G15_033	FROM->TO	G14-057T 345.00 - SUNNYSIDE 345KV CKT 1	717	789	0.04232	112.7876	G13-010T 345.00 - SPEARVILLE 345KV CKT 1
FDNS	00NR	4	20WP	G15_033	FROM->TO	G14-057T 345.00 - SUNNYSIDE 345KV CKT 1	717	789	0.0425	112.7872	GEN501823 1-TECHE UNIT 3
FDNS	00NR	4	20WP	G15_033	FROM->TO	G14-057T 345.00 - SUNNYSIDE 345KV CKT 1	717	789	0.0425	112.7853	GEN501970 1-EVANGELINE UNIT 7
FDNS	00NR	4	16WP	G15_033	FROM->TO	G14-057T 345.00 - SUNNYSIDE 345KV CKT 1	717	789	0.04465	112.7847	SHERBURNE CO 345/24.0KV TRANSFORMER CKT 1
FDNS	00NR	4	20WP	G15_033	FROM->TO	G14-057T 345.00 - SUNNYSIDE 345KV CKT 1	717	789	0.0421	112.7834	ARBUCKLE - VANOSTP4 138.00 138KV CKT 1
FDNS	00NR	4	16WP	G15_033	FROM->TO	G14-057T 345.00 - SUNNYSIDE 345KV CKT 1	717	789	0.04465	112.781	GEN526333 1-JONES GEN #3 21 KV
FDNS	00NR	4	16WP	G15_033	FROM->TO	G14-057T 345.00 - SUNNYSIDE 345KV CKT 1	717	789	0.04465	112.781	GEN526334 1-JONES_4 116.500
FDNS	00NR	4	20WP	G15_033	FROM->TO	G14-057T 345.00 - SUNNYSIDE 345KV CKT 1	717	789	0.04257	112.7801	NORTH 29TH CHICKASHA - VERDEN 138KV CKT 1
FDNS	00NR	4	20WP	G15_033	FROM->TO	G14-057T 345.00 - SUNNYSIDE 345KV CKT 1	717	789	0.04278	112.7787	OMPA-WALTERS - WALTERS 69KV CKT 1
FDNS	00NR	4	20WP	G15_033	FROM->TO	G14-057T 345.00 - SUNNYSIDE 345KV CKT 1	717	789	0.04278	112.7787	OMPA-WALTERS - WALTERS 69KV CKT 1
FDNS	00NR	4	20WP	G15_033	FROM->TO	G14-057T 345.00 - SUNNYSIDE 345KV CKT 1	717	789	0.0425	112.7766	GEN505616 1-BROKEN BOW
FDNS	00NR	4	20WP	G15_033	FROM->TO	G14-057T 345.00 - SUNNYSIDE 345KV CKT 1	717	789	0.04262	112.7705	P12:69:WFEC-AEPW:COMANCH2:WALTRS-2
FDNS	00NR	4	16WP	G15_033	FROM->TO	G14-057T 345.00 - SUNNYSIDE 345KV CKT 1	717	789	0.04465	112.7671	GEN563273 2-G15093_4 0.6900
FDNS	00NR	4	20WP	G15_033	FROM->TO	G14-057T 345.00 - SUNNYSIDE 345KV CKT 1	717	789	0.0425	112.7652	GEN334392 1-EXXON MOBIL IPP 1
FDNS	00NR	4	16WP	G15_033	FROM->TO	G14-057T 345.00 - SUNNYSIDE 345KV CKT 1	717	789	0.04465	112.7612	GEN525844 1-ELK_1 118.000
FDNS	00NR	4	20WP	G15_033	FROM->TO	G14-057T 345.00 - SUNNYSIDE 345KV CKT 1	717	789	0.0422	112.7587	P12:138:OKGE:3TERM27
FDNS	00NR	4	20WP	G15_033	FROM->TO	G14-057T 345.00 - SUNNYSIDE 345KV CKT 1	717	789	0.04245	112.7583	SWISSVALE - WEST GARDNER 345KV CKT 1
FDNS	00NR	4	20WP	G15_033	FROM->TO	G14-057T 345.00 - SUNNYSIDE 345KV CKT 1	717	789	0.0425	112.7579	GEN334393 1-EXXON MOBIL IPP 2
FDNS	00NR	4	20WP	G15_033	FROM->TO	G14-057T 345.00 - SUNNYSIDE 345KV CKT 1	717	789	0.0425	112.7579	GEN334394 1-EXXON MOBIL IPP 3
FDNS	00NR	4	20WP	G15_033	FROM->TO	G14-057T 345.00 - SUNNYSIDE 345KV CKT 1	717	789	0.04371	112.7577	POTTER COUNTY INTERCHANGE - TOLK STATION 345KV CKT 1
FDNS	00NR	4	20WP	G15_033	FROM->TO	G14-057T 345.00 - SUNNYSIDE 345KV CKT 1	717	789	0.0425	112.7577	ST FRANCIS - ST FRANCIS 1 161KV CKT Z1
FDNS	00NR	4	20WP	G15_033	FROM->TO	G14-057T 345.00 - SUNNYSIDE 345KV CKT 1	717	789	0.0425	112.7539	SABINE 230/22.0KV TRANSFORMER CKT 1
FDNS	00NR	4	16WP	G15_033	FROM->TO	G14-057T 345.00 - SUNNYSIDE 345KV CKT 1	717	789	0.04465	112.7528	GEN525845 1-ELK_2 1 138.00
FDNS	00NR	4	20WP	G15_033	FROM->TO	G14-057T 345.00 - SUNNYSIDE 345KV CKT 1	717	789	0.04247	112.7525	LAKEOVER - MCADAMS 500KV CKT 1
FDNS	00NR	4	20WP	G15_033	FROM->TO	G14-057T 345.00 - SUNNYSIDE 345KV CKT 1	717	789	0.04252	112.751	FRANKLIN - FRANKLIN SW 138KV CKT 1
FDNS	00NR	4	20WP	G15_033	FROM->TO	G14-057T 345.00 - SUNNYSIDE 345KV CKT 1	717	789	0.04282	112.7499	FRANKLIN SW - WESTMOORE 138KV CKT 1
FDNS	00NR	4	20WP	G15_033	FROM->TO	G14-057T 345.00 - SUNNYSIDE 345KV CKT 1	717	789	0.04247	112.7454	EMPORIA ENERGY CENTER - SWISSVALE 345KV CKT 1
FDNS	00NR	4	20WP	G15_033	FROM->TO	G14-057T 345.00 - SUNNYSIDE 345KV CKT 1	717	789	0.04246	112.7442	ENOWILT - LONE OAK 138KV CKT 1
FDNS	00NR	4	20WP	G15_033	FROM->TO	G14-057T 345.00 - SUNNYSIDE 345KV CKT 1	717	789	0.04249	112.7393	P12:138:AEPW:R.S.S-4:T.P.S.-4
FDNS	00NR	4	20WP	G15_033	FROM->TO	G14-057T 345.00 - SUNNYSIDE 345KV CKT 1	717	789	0.0425	112.7373	P12:138:OKGE:3TERM12
FDNS	00NR	4	20WP	G15_033	FROM->TO	G14-057T 345.00 - SUNNYSIDE 345KV CKT 1	717	789	0.04246	112.7357	ENOWILT - SARDIS 138KV CKT 1
FDNS	00NR	4	20WP	G15_033	FROM->TO	G14-057T 345.00 - SUNNYSIDE 345KV CKT 1	717	789	0.04246	112.7284	G14_001T 345.00 - WICHITA 345KV CKT 1
FDNS	00NR	4	20WP	G15_033	FROM->TO	G14-057T 345.00 - SUNNYSIDE 345KV CKT 1	717	789	0.04265	112.7278	LASALLE - STONEWAL LH138.00 138KV CKT 1
FDNS	00NR	4	20WP	G15_033	FROM->TO	G14-057T 345.00 - SUNNYSIDE 345KV CKT 1	717	789	0.0425	112.7271	GEN501971 1-EVANGELINE UNIT 7-1
FDNS	00NR	4	20WP	G15_033	FROM->TO	G14-057T 345.00 - SUNNYSIDE 345KV CKT 1	717	789	0.0425	112.7271	GEN501972 1-EVANGELINE UNIT 7-2
FDNS	00NR	4	20WP	G15_033	FROM->TO	G14-057T 345.00 - SUNNYSIDE 345KV CKT 1	717	789	0.04257	112.7267	CORNVILLE - NORGE ROAD 138KV CKT 1
FDNS	00NR	4	20WP	G15_033	FROM->TO	G14-057T 345.00 - SUNNYSIDE 345KV CKT 1	717	789	0.04257	112.7267	CORNVILLE - NORGE ROAD 138KV CKT 1
FDNS	00NR	4	20WP	G15_033	FROM->TO	G14-057T 345.00 - SUNNYSIDE 345KV CKT 1	717	789	0.0425	112.7258	FLETCHER - MARLOW JCT 69KV CKT 1
FDNS	00NR	4	20WP	G15_033	FROM->TO	G14-057T 345.00 - SUNNYSIDE 345KV CKT 1	717	789	0.0424	112.7257	HINTON - REDROCKRD4 138.00 138KV CKT 1
FDNS	00NR	4	20WP	G15_033	FROM->TO	G14-057T 345.00 - SUNNYSIDE 345KV CKT 1	717	789	0.04245	112.7244	MCADAMS - WOLF CREEK 500KV CKT 1
FDNS	00NR	4	20WP	G15_033	FROM->TO	G14-057T 345.00 - SUNNYSIDE 345KV CKT 1	717	789	0.0425	112.7136	P12:138:AEPW:R.S.S.-4:R:96YALE-4
FDNS	00NR	4	20WP	G15_033	FROM->TO	G14-057T 345.00 - SUNNYSIDE 345KV CKT 1	717	789	0.04265	112.7132	STONEWAL LH138.00 - TUPELO TAP 138KV CKT 1
FDNS	00NR	4	20WP	G15_033	FROM->TO	G14-057T 345.00 - SUNNYSIDE 345KV CKT 1	717	789	0.0425	112.7126	NELSON 230/24.0KV TRANSFORMER CKT 1
FDNS	00NR	4	20WP	G15_033	FROM->TO	G14-057T 345.00 - SUNNYSIDE 345KV CKT 1	717	789	0.04257	112.7122	CORNVILLE - NORTH 29TH CHICKASHA 138KV CKT 1
FDNS	00NR	4	20WP	G15_033	FROM->TO	G14-057T 345.00 - SUNNYSIDE 345KV CKT 1	717	789	0.0425	112.7103	GEN515042 1-SEMINOLE 3G
FDNS	00NR	4	20WP	G15_033	FROM->TO	G14-057T 345.00 - SUNNYSIDE 345KV CKT 1	717	789	0.04247	112.7095	8WNEWMADRID 500.00 - DELL 500 500KV CKT 1
FDNS	00NR	4	20WP	G15_033	FROM->TO	G14-057T 345.00 - SUNNYSIDE 345KV CKT 1	717	789	0.04244	112.7085	WEATHERFORD SOUTHEAST - WEATHERFORD TAP 138KV CKT 1
FDNS	00NR	4	20WP	G15_033	FROM->TO	G14-057T 345.00 - SUNNYSIDE 345KV CKT 1	717	789	0.04243	112.7066	DRAPER LAKE - SEMINOLE 345KV CKT 1
FDNS	00NR	4	20WP	G15_033	FROM->TO	G14-057T 345.00 - SUNNYSIDE 345KV CKT 1	717	789	0.04243	112.7066	DRAPER LAKE - SEMINOLE 345KV CKT 2
FDNS	00NR	4	20WP	G15_033	FROM->TO	G14-057T 345.00 - SUNNYSIDE 345KV CKT 1	717	789	0.0425	112.7038	GEN501912 1-ACADIA UNIT CT1B
FDNS	00NR	4	20WP	G15_033	FROM->TO	G14-057T 345.00 - SUNNYSIDE 345KV CKT 1	717	789	0.0425	112.703	GEN501911 1-ACADIA UNIT CT1A
FDNS	00NR	4	20WP	G15_033	FROM->TO	G14-057T 345.00 - SUNNYSIDE 345KV CKT 1	717	789	0.04243	112.7021	AMITY SS - MURFREESBORO EAST (AECC) 115KV CKT 1
FDNS	00NR	4	20WP	G15_033	FROM->TO	G14-057T 345.00 - SUNNYSIDE 345KV CKT 1	717	789	0.0425	112.7019	GEN506749 1-EASTMAN GENERATION A
FDNS	00NR	4	20WP	G15_033	FROM->TO	G14-057T 345.00 - SUNNYSIDE 345KV CKT 1	717	789	0.0425	112.6996	P12:138:WFEC-AEPW:ELKCTY-4:ERICK4
FDNS	00NR	4	20WP	G15_033	FROM->TO	G14-057T 345.00 - SUNNYSIDE 345KV CKT 1	717	789	0.04247	112.6967	GRAND ISLAND - MCCOOL 345KV CKT 1
FDNS	00NR	4	20WP	G15_033	FROM->TO	G14-057T 345.00 - SUNNYSIDE 345KV CKT 1	717	789	0.04246	112.6966	CLAYTON - SARDIS 138KV CKT 1
FDNS	00NR	4	20WP	G15_033	FROM->TO	G14-057T 345.00 - SUNNYSIDE 345KV CKT 1	717	789	0.04218	112.6943	NOBLE - PURCELL4 138.00 138KV CKT 1
FDNS	00NR	4	20WP	G15_033	FROM->TO	G14-057T 345.00 - SUNNYSIDE 345KV CKT 1	717	789	0.0425	112.6939	GEN336242 1-1NMIL ST1 18.000
FDNS	00NR	4	20WP	G15_033	FROM->TO	G14-057T 345.00 - SUNNYSIDE 345KV CKT 1	717	789	0.0425	112.6936	ST FRANCIS 345/161KV TRANSFORMER CKT 1
FDNS	00NR	4	20WP	G15_033	FROM->TO	G14-057T 345.00 - SUNNYSIDE 345KV CKT 1	717	789	0.0425	112.6902	P12:138:AEPW:MOHAWK4:T.NO--4
FDNS	00NR	4	20WP	G15_033	FROM->TO	G14-057T 345.00 - SUNNYSIDE 345KV CKT 1	717	789	0.0425	112.6843	SABINE 138/22.0KV TRANSFORMER CKT 1
FDNS	00NR	4	20WP	G15_033	FROM->TO	G14-057T 345.00 - SUNNYSIDE 345KV CKT 1	717	789	0.04246	112.6843	LAYFLD8 500.00 (LAYFLD AUTO) 500/230/13.8KV TRANSFORMER CKT 1
FDNS	00NR	4	20WP	G15_033	FROM->TO	G14-057T 345.00 - SUNNYSIDE 345KV CKT 1	717	789	0.04246	112.6843	LAYFLD8 500.00 (LAYFLD AUTO) 500/230/13.8KV TRANSFORMER CKT 1
FDNS	00NR	4	20WP	G15_033	FROM->TO	G14-057T 345.00 - SUNNYSIDE 345KV CKT 1	717	789	0.04243	112.6776	LACYGNE - NEOSHO 345KV CKT 1
FDNS	00NR	4	20WP	G15_033	FROM->TO	G14-057T 345.00 - SUNNYSIDE 345KV CKT 1	717	789	0.04246	112.6751	P12:138:AEPW-SWPA:LONEOAK4:BRKNBW4
FDNS	00NR	4	20WP	G15_033	FROM->TO	G14-057T 345.00 - SUNNYSIDE 345KV CKT 1	717	789	0.04244	112.6674	CLINTON JUNCTION - CLINTON NATURAL GAS TAP 138KV CKT 1
FDNS	00NR	4	20WP	G15_033	FROM->TO	G14-057T 345.00 - SUNNYSIDE 345KV CKT 1	717	789	0.04249	112.6664	7JASPER 345.00 - MORGAN 345KV CKT 1
FDNS	00NR	4	20WP	G15_033	FROM->TO	G14-057T 345.00 - SUNNYSIDE 345KV CKT 1	717	789	0.04246	112.6628	CLAYTON - NASHOBA 138KV CKT 1
FDNS	00NR	4	20WP	G15_033	FROM->TO	G14-057T 345.00 - SUNNYSIDE 345KV CKT 1	717	789	0.04238	112.6613	Canadian Pump Station - REDROCKRD4 138.00 138KV CKT 1
FDNS	00NR	4	16WP	G15_033	FROM->TO	G14-057T 345.00 - SUNNYSIDE 345KV CKT 1	717	789	0.04465	112.6604	GEN600002 3-SHERBURNE CNTY G3
FDNS	00NR	4	20WP	G15_033	FROM->TO	G14-057T 345.00 - SUNNYSIDE 345KV CKT 1	717	789	0.04312	112.6583	DUNCAN - DUNCHERTP4 138.00 138KV CKT 1
FDNS	00NR	4	20WP	G15_033	FROM->TO	G14-057T 345.00 - SUNNYSIDE 345KV CKT 1	717	789	0.04312	112.6583	DUNCAN - DUNCHERTP4 138.00 138KV CKT 1
FDNS	00NR	4	20WP	G15_033	FROM->TO	G14-057T 345.00 - SUNNYSIDE 345KV CKT 1	717	789	0.04312	112.6582	DUNCAN EASTSIDE - DUNCHERTP4 138.00 138KV CKT 1
FDNS	00NR	4	20WP	G15_033	FROM->TO	G14-057T 345.00 - SUNNYSIDE 345KV CKT 1	717	789	0.04243	112.6552	MURFREESBORO 138/115KV TRANSFORMER CKT 1
FDNS	00NR	4	20WP	G15_033	FROM->TO	G14-057T 345.00 - SUNNYSIDE 345KV CKT 1	717	789	0.04243	112.655	MURFREESBORO EAST (AECC) - MURFREESBORO SOUTH 115KV CKT 1
FDNS	00NR	4	20WP	G15_033	FROM->TO	G14-057T 345.00 - SUNNYSIDE 345KV CKT 1	717	789	0.04243	112.6542	MURFREESBORO - SOUTH NASHVILLE 138KV CKT 1
FDNS	00NR	4	20WP	G15_033	FROM->TO	G14-057T 345.00 - SUNNYSIDE 345KV CKT 1	717	789	0.04243	112.6542	MURFREESBORO - SOUTH NASHVILLE 138KV CKT 1

SOLUTION	GROUP	SCENARIO	SEASON	SOURCE	DIRECTION	MONITORED ELEMENT	RATEA (MVA)	RATEB(MVA)	TDF	TC%LOADING (% MVA)	CONTINGENCY
FDNS	00NR	4	16WP	G15_033	FROM->TO	G14-057T 345.00 - SUNNYSIDE 345KV CKT 1	717	789	0.04752	112.6511	CHISHOLM6 230.00 - SWEETWATER 230KV CKT 1
FDNS	00NR	4	20WP	G15_033	FROM->TO	G14-057T 345.00 - SUNNYSIDE 345KV CKT 1	717	789	0.04225	112.6509	ARBUCKLE - MILLCREEK 138KV CKT 1
FDNS	00NR	4	20WP	G15_033	FROM->TO	G14-057T 345.00 - SUNNYSIDE 345KV CKT 1	717	789	0.04246	112.6498	BETHEL - NASHOBA 138KV CKT 1
FDNS	00NR	4	20WP	G15_033	FROM->TO	G14-057T 345.00 - SUNNYSIDE 345KV CKT 1	717	789	0.04278	112.644	CIMARRON - NORTHWEST 345KV CKT 1
FDNS	00NR	4	20WP	G15_033	FROM->TO	G14-057T 345.00 - SUNNYSIDE 345KV CKT 1	717	789	0.0425	112.6433	GEN338146 1-INDEPENDENCE UNIT #2
FDNS	00NR	4	20WP	G15_033	FROM->TO	G14-057T 345.00 - SUNNYSIDE 345KV CKT 1	717	789	0.04244	112.6427	P12:138:AEPW:OKMULGE4:R.S.S-4
FDNS	00NR	4	20WP	G15_033	FROM->TO	G14-057T 345.00 - SUNNYSIDE 345KV CKT 1	717	789	0.0425	112.6314	GEN337766 1-TRACTEBEL UNIT S1
FDNS	00NR	4	20WP	G15_033	FROM->TO	G14-057T 345.00 - SUNNYSIDE 345KV CKT 1	717	789	0.04272	112.6309	CRINER - PAYNE 138.00 138KV CKT 1
FDNS	00NR	4	20WP	G15_033	FROM->TO	G14-057T 345.00 - SUNNYSIDE 345KV CKT 1	717	789	0.04241	112.6194	SEMINOLE (SEMINOL2) 345/138/14.4KV TRANSFORMER CKT 1
FDNS	00NR	4	20WP	G15_033	FROM->TO	G14-057T 345.00 - SUNNYSIDE 345KV CKT 1	717	789	0.04251	112.6191	GRDA1 - GREC TAP5 345.00 345KV CKT 1
FDNS	00NR	4	20WP	G15_033	FROM->TO	G14-057T 345.00 - SUNNYSIDE 345KV CKT 1	717	789	0.04258	112.6177	MARIETTA - MARIETTA4 138.00 138KV CKT 1
FDNS	00NR	4	20WP	G15_033	FROM->TO	G14-057T 345.00 - SUNNYSIDE 345KV CKT 1	717	789	0.04249	112.6175	P12:138:OKGE:3TERM20
FDNS	00NR	4	20WP	G15_033	FROM->TO	G14-057T 345.00 - SUNNYSIDE 345KV CKT 1	717	789	0.04252	112.6086	FRANKLIN - PINK SW 138KV CKT 1
FDNS	00NR	4	20WP	G15_033	FROM->TO	G14-057T 345.00 - SUNNYSIDE 345KV CKT 1	717	789	0.04262	112.5984	COMANCHE - WALTERS 69KV CKT 1
FDNS	00NR	4	16WP	G15_033	FROM->TO	G14-057T 345.00 - SUNNYSIDE 345KV CKT 1	717	789	0.04465	112.5974	GEN563202 1-G15085_3 0.5500
FDNS	00NR	4	16WP	G15_033	FROM->TO	G14-057T 345.00 - SUNNYSIDE 345KV CKT 1	717	789	0.04465	112.5913	GEN525562 1-TOLK GEN #2 24 KV
FDNS	00NR	4	16WP	G15_033	FROM->TO	G14-057T 345.00 - SUNNYSIDE 345KV CKT 1	717	789	0.04465	112.5733	GEN344225 1-1CAL G1 25.000
FDNS	00NR	4	16WP	G15_033	FROM->TO	G14-057T 345.00 - SUNNYSIDE 345KV CKT 1	717	789	0.04465	112.5483	GEN527166 1-MUSTANG_6 118.000
FDNS	00NR	4	16WP	G15_033	FROM->TO	G14-057T 345.00 - SUNNYSIDE 345KV CKT 1	717	789	0.04465	112.4089	GEN635023 3-WALTER SCOTT UNIT 3
FDNS	00NR	4	16WP	G15_033	FROM->TO	G14-057T 345.00 - SUNNYSIDE 345KV CKT 1	717	789	0.04421	112.3947	JOHNSON COUNTY (JOHNCO) 345/138/13.8KV TRANSFORMER CKT 1
FDNS	00NR	4	16WP	G15_033	FROM->TO	G14-057T 345.00 - SUNNYSIDE 345KV CKT 1	717	789	0.04465	112.3681	GEN562590 1-G14_057_3 0.6900
FDNS	00NR	4	16WP	G15_033	FROM->TO	G14-057T 345.00 - SUNNYSIDE 345KV CKT 1	717	789	0.04441	112.3659	LYDIA - WELSH 345KV CKT 1
FDNS	00NR	4	16WP	G15_033	FROM->TO	G14-057T 345.00 - SUNNYSIDE 345KV CKT 1	717	789	0.04441	112.3659	LYDIA - WELSH 345KV CKT 1
FDNS	00NR	4	16WP	G15_033	FROM->TO	G14-057T 345.00 - SUNNYSIDE 345KV CKT 1	717	789	0.04465	112.359	GEN562762 1-G15033_3 0.6900
FDNS	00NR	4	16WP	G15_033	FROM->TO	G14-057T 345.00 - SUNNYSIDE 345KV CKT 1	717	789	0.04465	112.3508	GEN562655 1-G14_074_3 0.6900
FDNS	00NR	4	16WP	G15_033	FROM->TO	G14-057T 345.00 - SUNNYSIDE 345KV CKT 1	717	789	0.04465	112.2778	GEN525561 1-TOLK GEN #1 24 KV
FDNS	00NR	4	16WP	G15_033	FROM->TO	G14-057T 345.00 - SUNNYSIDE 345KV CKT 1	717	789	0.04465	112.2576	GEN562685 1-G15_013_3 0.3550
FDNS	00NR	4	16WP	G15_033	FROM->TO	G14-057T 345.00 - SUNNYSIDE 345KV CKT 1	717	789	0.04465	112.19	GEN527903 1-HOBBS PLANT #3 (ST)
FDNS	00NR	4	20WP	G15_033	FROM->TO	G14-057T 345.00 - SUNNYSIDE 345KV CKT 1	717	789	0.0425	112.1889	803-OKLAUNION
FDNS	00NR	4	16WP	G15_033	FROM->TO	G14-057T 345.00 - SUNNYSIDE 345KV CKT 1	717	789	0.04465	112.117	GEN563272 1-G15093_3 0.6900
FDNS	00NR	4	16WP	G15_033	FROM->TO	G14-057T 345.00 - SUNNYSIDE 345KV CKT 1	717	789	0.04465	111.9784	GEN635024 4-WALTER SCOTT UNIT 4
FDNS	00NR	4	20WP	G15_033	FROM->TO	G14-057T 345.00 - SUNNYSIDE 345KV CKT 1	717	789	0.04191	111.9604	P12:138:OKGE:3TERM39
FDNS	00NR	4	20WP	G15_033	FROM->TO	G14-057T 345.00 - SUNNYSIDE 345KV CKT 1	717	789	0.04187	111.8195	MAYSVILLE - PAOLI 138KV CKT 1
FDNS	00NR	4	20WP	G15_033	FROM->TO	G14-057T 345.00 - SUNNYSIDE 345KV CKT 1	717	789	0.04249	111.8137	JOHNSON COUNTY - RUSSETT 138KV CKT 1
FDNS	00NR	4	20WP	G15_033	FROM->TO	G14-057T 345.00 - SUNNYSIDE 345KV CKT 1	717	789	0.04267	111.7957	CIMARRON - MATHWSN7 345.00 345KV CKT 1
FDNS	00NR	4	20WP	G15_033	FROM->TO	G14-057T 345.00 - SUNNYSIDE 345KV CKT 1	717	789	0.04267	111.7957	CIMARRON - MATHWSN7 345.00 345KV CKT 2
FDNS	00NR	4	20WP	G15_033	FROM->TO	G14-057T 345.00 - SUNNYSIDE 345KV CKT 1	717	789	0.0425	111.7828	GEN560187 1-WTH WIND 0.5750
FDNS	00NR	4	20WP	G15_033	FROM->TO	G14-057T 345.00 - SUNNYSIDE 345KV CKT 1	717	789	0.0425	111.7767	GEN560112 1-G08_037_3 0.6900
FDNS	00NR	4	20WP	G15_033	FROM->TO	G14-057T 345.00 - SUNNYSIDE 345KV CKT 1	717	789	0.04245	111.7711	NORTHWEST TEXARKANA - WELSH 345KV CKT 1
FDNS	00NR	4	20WP	G15_033	FROM->TO	G14-057T 345.00 - SUNNYSIDE 345KV CKT 1	717	789	0.04245	111.7711	NORTHWEST TEXARKANA - WELSH 345KV CKT 1
FDNS	00NR	4	20WP	G15_033	FROM->TO	G14-057T 345.00 - SUNNYSIDE 345KV CKT 1	717	789	0.0425	111.7551	GEN521103 1-BLUE CANYON WIND FARM
FDNS	00NR	4	20WP	G15_033	FROM->TO	G14-057T 345.00 - SUNNYSIDE 345KV CKT 1	717	789	0.04187	111.7446	MAYSVILLE - MAYSVLT4 138.00 138KV CKT 1
FDNS	00NR	4	20WP	G15_033	FROM->TO	G14-057T 345.00 - SUNNYSIDE 345KV CKT 1	717	789	0.04243	111.7321	WELSH - WILKES 345KV CKT 1
FDNS	00NR	4	20WP	G15_033	FROM->TO	G14-057T 345.00 - SUNNYSIDE 345KV CKT 1	717	789	0.04243	111.7321	WELSH - WILKES 345KV CKT 1
FDNS	00NR	4	20WP	G15_033	FROM->TO	G14-057T 345.00 - SUNNYSIDE 345KV CKT 1	717	789	0.0425	111.7313	GEN672392 1-NBECGT1G 18.000
FDNS	00NR	4	20WP	G15_033	FROM->TO	G14-057T 345.00 - SUNNYSIDE 345KV CKT 1	717	789	0.04254	111.7294	DRAPER LAKE - MIDWEST TAP 138KV CKT 1
FDNS	00NR	4	20WP	G15_033	FROM->TO	G14-057T 345.00 - SUNNYSIDE 345KV CKT 1	717	789	0.0425	111.7291	GEN530690 1-PRWINDG1 0.6900
FDNS	00NR	4	20WP	G15_033	FROM->TO	G14-057T 345.00 - SUNNYSIDE 345KV CKT 1	717	789	0.0425	111.7256	OKLAUNION 345/13.2KV TRANSFORMER CKT 1
FDNS	00NR	4	20WP	G15_033	FROM->TO	G14-057T 345.00 - SUNNYSIDE 345KV CKT 1	717	789	0.0425	111.7228	GEN562691 1-G15_015_3 0.6900
FDNS	00NR	4	20WP	G15_033	FROM->TO	G14-057T 345.00 - SUNNYSIDE 345KV CKT 1	717	789	0.0425	111.7224	GEN600046 1-MECST
FDNS	00NR	4	20WP	G15_033	FROM->TO	G14-057T 345.00 - SUNNYSIDE 345KV CKT 1	717	789	0.0425	111.7171	GEN562017 1-G11_022_3 0.6900
FDNS	00NR	4	20WP	G15_033	FROM->TO	G14-057T 345.00 - SUNNYSIDE 345KV CKT 1	717	789	0.0425	111.7165	GEN520812 1-ANADRK5
FDNS	00NR	4	20WP	G15_033	FROM->TO	G14-057T 345.00 - SUNNYSIDE 345KV CKT 1	717	789	0.0425	111.7165	GEN520813 1-ANADRK6
FDNS	00NR	4	20WP	G15_033	FROM->TO	G14-057T 345.00 - SUNNYSIDE 345KV CKT 1	717	789	0.0425	111.7142	P12:069:OKGE:3TERM42
FDNS	00NR	4	20WP	G15_033	FROM->TO	G14-057T 345.00 - SUNNYSIDE 345KV CKT 1	717	789	0.0425	111.7137	GEN629071 1-BURLINGTON GENERATOR FOR UNIT NO 1 E
FDNS	00NR	4	20WP	G15_033	FROM->TO	G14-057T 345.00 - SUNNYSIDE 345KV CKT 1	717	789	0.0425	111.7108	GEN511961 1-DEMPSEY-WTG10.7000
FDNS	00NR	4	20WP	G15_033	FROM->TO	G14-057T 345.00 - SUNNYSIDE 345KV CKT 1	717	789	0.0425	111.7101	GEN629070 2-BEAVER CHANNEL GENERATORFOR UNIT NO 2
FDNS	00NR	4	20WP	G15_033	FROM->TO	G14-057T 345.00 - SUNNYSIDE 345KV CKT 1	717	789	0.0425	111.7093	GEN562074 1-G1149G1504 0.6900
FDNS	00NR	4	20WP	G15_033	FROM->TO	G14-057T 345.00 - SUNNYSIDE 345KV CKT 1	717	789	0.0425	111.7085	GEN600047 1-MECCT1
FDNS	00NR	4	20WP	G15_033	FROM->TO	G14-057T 345.00 - SUNNYSIDE 345KV CKT 1	717	789	0.0425	111.7055	GEN562772 1-G15034_3 0.6900
FDNS	00NR	4	20WP	G15_033	FROM->TO	G14-057T 345.00 - SUNNYSIDE 345KV CKT 1	717	789	0.0425	111.7036	GEN528361 1-MADDOX GEN #1
FDNS	00NR	4	20WP	G15_033	FROM->TO	G14-057T 345.00 - SUNNYSIDE 345KV CKT 1	717	789	0.0425	111.6971	GEN524022 1-NICHOLS GEN #2
FDNS	00NR	4	20WP	G15_033	FROM->TO	G14-057T 345.00 - SUNNYSIDE 345KV CKT 1	717	789	0.0425	111.6938	GEN563052 1-G15069_3 0.6900
FDNS	00NR	4	20WP	G15_033	FROM->TO	G14-057T 345.00 - SUNNYSIDE 345KV CKT 1	717	789	0.04218	111.6911	ARBUCKLE - SULPHR 4 138.00 138KV CKT 1
FDNS	00NR	4	20WP	G15_033	FROM->TO	G14-057T 345.00 - SUNNYSIDE 345KV CKT 1	717	789	0.04247	111.6903	P12:138:WFEC:MSL11
FDNS	00NR	4	20WP	G15_033	FROM->TO	G14-057T 345.00 - SUNNYSIDE 345KV CKT 1	717	789	0.04247	111.6903	P12:138:WFEC-AEPW:PHAROAH4:LONEOAK4
FDNS	00NR	4	20WP	G15_033	FROM->TO	G14-057T 345.00 - SUNNYSIDE 345KV CKT 1	717	789	0.04257	111.6891	P12:138:OKGE:3TERM21
FDNS	00NR	4	20WP	G15_033	FROM->TO	G14-057T 345.00 - SUNNYSIDE 345KV CKT 1	717	789	0.0425	111.688	BURLINGTON NO1 + NO 2 + NO 3 161/20.0KV TRANSFORMER CKT 1
FDNS	00NR	4	20WP	G15_033	FROM->TO	G14-057T 345.00 - SUNNYSIDE 345KV CKT 1	717	789	0.0425	111.6837	GEN615010 1-STANTON4
FDNS	00NR	4	20WP	G15_033	FROM->TO	G14-057T 345.00 - SUNNYSIDE 345KV CKT 1	717	789	0.04247	111.6794	GLASSES - MADILL INDUSTRIAL TAP 138KV CKT 1
FDNS	00NR	4	20WP	G15_033	FROM->TO	G14-057T 345.00 - SUNNYSIDE 345KV CKT 1	717	789	0.0425	111.679	GEN615021 1-GRE-ER 14G 16.000
FDNS	00NR	4	20WP	G15_033	FROM->TO	G14-057T 345.00 - SUNNYSIDE 345KV CKT 1	717	789	0.04187	111.6786	MAYSVLT4 138.00 - PRAIRIE POINT 138KV CKT 1
FDNS	00NR	4	20WP	G15_033	FROM->TO	G14-057T 345.00 - SUNNYSIDE 345KV CKT 1	717	789	0.04246	111.674	OVEXFRMCCOVE
FDNS	00NR	4	20WP	G15_033	FROM->TO	G14-057T 345.00 - SUNNYSIDE 345KV CKT 1	717	789	0.04257	111.6693	MOREWOOD SW - NINE MILE 138KV CKT 1
FDNS	00NR	4	20WP	G15_033	FROM->TO	G14-057T 345.00 - SUNNYSIDE 345KV CKT 1	717	789	0.04252	111.653	P12:138:WFEC:MSL08
FDNS	00NR	4	20WP	G15_033	FROM->TO	G14-057T 345.00 - SUNNYSIDE 345KV CKT 1	717	789	0.0425	111.6435	INDEPENDENCE 500/26.0KV TRANSFORMER CKT 1
FDNS	00NR	4	20WP	G15_033	FROM->TO	G14-057T 345.00 - SUNNYSIDE 345KV CKT 1	717	789	0.04245	111.6427	HUGO (HUGO 1) 345/138/13.8KV TRANSFORMER CKT 1
FDNS	00NR	4	20WP	G15_033	FROM->TO	G14-057T 345.00 - SUNNYSIDE 345KV CKT 1	717	789	0.04273	111.6384	NORTHWEST - SPRING CREEK 345KV CKT 1
FDNS	00NR	4	20WP	G15_033	FROM->TO	G14-057T 345.00 - SUNNYSIDE 345KV CKT 1	717	789	0.04244	111.6382	CARTER - CHICKASAW 138KV CKT 1

SOLUTION	GROUP	SCENARIO	SEASON	SOURCE	DIRECTION	MONITORED ELEMENT	RATEA (MVA)	RATEB(MVA)	TDF	TC%LOADING (% MVA)	CONTINGENCY
FDNS	00NR	4	20WP	G15_033	FROM->TO	G14-057T 345.00 - SUNNYSIDE 345KV CKT 1	717	789	0.04273	111.6375	SOONER - SPRING CREEK 345KV CKT 1
FDNS	00NR	4	20WP	G15_033	FROM->TO	G14-057T 345.00 - SUNNYSIDE 345KV CKT 1	717	789	0.0425	111.6345	GEN515443 1-MNCOWND1 0.7000
FDNS	00NR	4	20WP	G15_033	FROM->TO	G14-057T 345.00 - SUNNYSIDE 345KV CKT 1	717	789	0.0425	111.6329	GEN560183 1-REDHIL-WTG1 12.000
FDNS	00NR	4	20WP	G15_033	FROM->TO	G14-057T 345.00 - SUNNYSIDE 345KV CKT 1	717	789	0.04247	111.629	CANEY CREEK - JOHNSON COUNTY 138KV CKT 1
FDNS	00NR	4	20WP	G15_033	FROM->TO	G14-057T 345.00 - SUNNYSIDE 345KV CKT 1	717	789	0.04258	111.6208	LEBANON - TEXOMA JCT 138KV CKT 1
FDNS	00NR	4	20WP	G15_033	FROM->TO	G14-057T 345.00 - SUNNYSIDE 345KV CKT 1	717	789	0.04247	111.6199	GLASSES - RUSSETT 138KV CKT 1
FDNS	00NR	4	20WP	G15_033	FROM->TO	G14-057T 345.00 - SUNNYSIDE 345KV CKT 1	717	789	0.0425	111.6189	GEN600067 9-HIGH BRIDGE
FDNS	00NR	4	20WP	G15_033	FROM->TO	G14-057T 345.00 - SUNNYSIDE 345KV CKT 1	717	789	0.0425	111.6174	GEN531447 1-HOLCOMB GENERATOR
FDNS	00NR	4	20WP	G15_033	FROM->TO	G14-057T 345.00 - SUNNYSIDE 345KV CKT 1	717	789	0.04274	111.6157	ALTUS JUNCTION - RUSSELL 138KV CKT 1
FDNS	00NR	4	20WP	G15_033	FROM->TO	G14-057T 345.00 - SUNNYSIDE 345KV CKT 1	717	789	0.04274	111.6157	ALTUS JUNCTION - RUSSELL 138KV CKT 1
FDNS	00NR	4	20WP	G15_033	FROM->TO	G14-057T 345.00 - SUNNYSIDE 345KV CKT 1	717	789	0.04247	111.6111	CANADIAN RIVER - MCALESTER SOUTH 138KV CKT 1
FDNS	00NR	4	20WP	G15_033	FROM->TO	G14-057T 345.00 - SUNNYSIDE 345KV CKT 1	717	789	0.04247	111.6111	CANADIAN RIVER - MCALESTER SOUTH 138KV CKT 1
FDNS	00NR	4	20WP	G15_033	FROM->TO	G14-057T 345.00 - SUNNYSIDE 345KV CKT 1	717	789	0.0425	111.6104	P12:230:UMZB:# 112 #: NU IN SD. NU-RCDC & DRY CREEK XFMR
FDNS	00NR	4	20WP	G15_033	FROM->TO	G14-057T 345.00 - SUNNYSIDE 345KV CKT 1	717	789	0.0425	111.6102	RCDC EAST 4230.00 - RED CEDAR DC 230KV CKT 1
FDNS	00NR	4	20WP	G15_033	FROM->TO	G14-057T 345.00 - SUNNYSIDE 345KV CKT 1	717	789	0.04247	111.6093	CANADIAN RIVER () 345/138/13.8KV TRANSFORMER CKT 1
FDNS	00NR	4	20WP	G15_033	FROM->TO	G14-057T 345.00 - SUNNYSIDE 345KV CKT 1	717	789	0.04247	111.6093	CANADIAN RIVER () 345/138/13.8KV TRANSFORMER CKT 1
FDNS	00NR	4	20WP	G15_033	FROM->TO	G14-057T 345.00 - SUNNYSIDE 345KV CKT 1	717	789	0.04246	111.6012	CHAMBER SPRINGS - CLARKSVILLE 345KV CKT 1
FDNS	00NR	4	20WP	G15_033	FROM->TO	G14-057T 345.00 - SUNNYSIDE 345KV CKT 1	717	789	0.04247	111.5951	GRPRAR1-LNX3345.00 - HOLT.CO3 345.00 345KV CKT 1
FDNS	00NR	4	20WP	G15_033	FROM->TO	G14-057T 345.00 - SUNNYSIDE 345KV CKT 1	717	789	0.04234	111.5892	ROCKY POINT - SPRINGDALE 138KV CKT 1
FDNS	00NR	4	20WP	G15_033	FROM->TO	G14-057T 345.00 - SUNNYSIDE 345KV CKT 1	717	789	0.04187	111.5874	PRAIRIE POINT - RATLIFF 138KV CKT 1
FDNS	00NR	4	20WP	G15_033	FROM->TO	G14-057T 345.00 - SUNNYSIDE 345KV CKT 1	717	789	0.04247	111.5872	GRPRAR1-LNX3345.00 - YANKTON 345KV CKT Z
FDNS	00NR	4	20WP	G15_033	FROM->TO	G14-057T 345.00 - SUNNYSIDE 345KV CKT 1	717	789	0.0425	111.5733	GEN562802 1-G15039_3 0.3570
FDNS	06ALL	4	17SP	G15_033	FROM->TO	G14-057T 345.00 - SUNNYSIDE 345KV CKT 1	717	789	0.21893	111.5727	GRACEMONT - MINCO 345KV CKT 1
FDNS	00NR	4	20WP	G15_033	FROM->TO	G14-057T 345.00 - SUNNYSIDE 345KV CKT 1	717	789	0.0425	111.5695	GEN560331 1-G10-46 13.800
FDNS	00NR	4	20WP	G15_033	FROM->TO	G14-057T 345.00 - SUNNYSIDE 345KV CKT 1	717	789	0.0425	111.5687	GEN563242 1-G15090_3 0.6900
FDNS	00NR	4	20WP	G15_033	FROM->TO	G14-057T 345.00 - SUNNYSIDE 345KV CKT 1	717	789	0.0425	111.5583	GEN629072 4-LANSING GENERATOR FOR UNITS NO4 EIA CODE 1
FDNS	00NR	4	20WP	G15_033	FROM->TO	G14-057T 345.00 - SUNNYSIDE 345KV CKT 1	717	789	0.0425	111.547	GEN524285 1-WILDORADO WIND GEN
FDNS	00NR	4	20WP	G15_033	FROM->TO	G14-057T 345.00 - SUNNYSIDE 345KV CKT 1	717	789	0.04218	111.5463	JOLLYVILLE - SULPHR 4 138.00 138KV CKT 1
FDNS	00NR	4	20WP	G15_033	FROM->TO	G14-057T 345.00 - SUNNYSIDE 345KV CKT 1	717	789	0.0425	111.5421	GEN562078 1-G11_051_3 0.6900
FDNS	00NR	4	20WP	G15_033	FROM->TO	G14-057T 345.00 - SUNNYSIDE 345KV CKT 1	717	789	0.0425	111.5416	GEN562269 1-G12-020-1 0.6900
FDNS	00NR	4	20WP	G15_033	FROM->TO	G14-057T 345.00 - SUNNYSIDE 345KV CKT 1	717	789	0.0425	111.5383	GEN562902 1-G15052_3 0.6900
FDNS	00NR	4	20WP	G15_033	FROM->TO	G14-057T 345.00 - SUNNYSIDE 345KV CKT 1	717	789	0.04257	111.535	BEARCAT 138.00 - NINE MILE 138KV CKT 1
FDNS	00NR	4	20WP	G15_033	FROM->TO	G14-057T 345.00 - SUNNYSIDE 345KV CKT 1	717	789	0.0425	111.5051	GEN657749 1-YOUNG 1 GENERATOR
FDNS	00NR	4	20WP	G15_033	FROM->TO	G14-057T 345.00 - SUNNYSIDE 345KV CKT 1	717	789	0.0425	111.5001	GEN562270 1-G12-020-2 0.6900
FDNS	00NR	4	20WP	G15_033	FROM->TO	G14-057T 345.00 - SUNNYSIDE 345KV CKT 1	717	789	0.0425	111.4978	GEN562812 1-G15040_3 0.3570
FDNS	00NR	4	20WP	G15_033	FROM->TO	G14-057T 345.00 - SUNNYSIDE 345KV CKT 1	717	789	0.04376	111.4968	P12:138:AEPW:112GORE4:SNYDER-4
FDNS	00NR	4	20WP	G15_033	FROM->TO	G14-057T 345.00 - SUNNYSIDE 345KV CKT 1	717	789	0.0425	111.4953	GEN562587 1-G14_056_3 0.6900
FDNS	00NR	4	20WP	G15_033	FROM->TO	G14-057T 345.00 - SUNNYSIDE 345KV CKT 1	717	789	0.0425	111.4914	GEN563132 1-G15078_3 0.3570
FDNS	00NR	4	20WP	G15_033	FROM->TO	G14-057T 345.00 - SUNNYSIDE 345KV CKT 1	717	789	0.04218	111.4876	JOLLYVILLE - KERR MCGEE CIMARRON 138KV CKT 1
FDNS	00NR	4	20WP	G15_033	FROM->TO	G14-057T 345.00 - SUNNYSIDE 345KV CKT 1	717	789	0.0425	111.4859	GEN563102 1-G15075_3 0.5500
FDNS	00NR	4	20WP	G15_033	FROM->TO	G14-057T 345.00 - SUNNYSIDE 345KV CKT 1	717	789	0.0425	111.4842	GEN524023 1-NICHOLS GEN #3 22 KV
FDNS	00NR	4	20WP	G15_033	FROM->TO	G14-057T 345.00 - SUNNYSIDE 345KV CKT 1	717	789	0.0425	111.4753	GEN524295 1-SPNSPUR_WND10.6900
FDNS	00NR	4	20WP	G15_033	FROM->TO	G14-057T 345.00 - SUNNYSIDE 345KV CKT 1	717	789	0.04244	111.4721	CROCKETT - TENASKA RUSK COUNTY 345KV CKT 1
FDNS	00NR	4	20WP	G15_033	FROM->TO	G14-057T 345.00 - SUNNYSIDE 345KV CKT 1	717	789	0.04244	111.4674	LEBROCK - TENASKA RUSK COUNTY 345KV CKT 1
FDNS	00NR	4	20WP	G15_033	FROM->TO	G14-057T 345.00 - SUNNYSIDE 345KV CKT 1	717	789	0.0425	111.4659	GEN514805 1-SOONER UNIT 1
FDNS	00NR	4	20WP	G15_033	FROM->TO	G14-057T 345.00 - SUNNYSIDE 345KV CKT 1	717	789	0.04257	111.4529	P12:138:WFEC:MSL14
FDNS	00NR	4	20WP	G15_033	FROM->TO	G14-057T 345.00 - SUNNYSIDE 345KV CKT 1	717	789	0.04257	111.4403	BEARCAT 138.00 - MOORELAND 138KV CKT 1
FDNS	00NR	4	20WP	G15_033	FROM->TO	G14-057T 345.00 - SUNNYSIDE 345KV CKT 1	717	789	0.04218	111.4394	ARBWIND4 138.00 - KERR MCGEE CIMARRON 138KV CKT 1
FDNS	00NR	4	20WP	G15_033	FROM->TO	G14-057T 345.00 - SUNNYSIDE 345KV CKT 1	717	789	0.0425	111.4271	GEN514806 1-SOONER UNIT 2
FDNS	00NR	4	20WP	G15_033	FROM->TO	G14-057T 345.00 - SUNNYSIDE 345KV CKT 1	717	789	0.0425	111.4118	GEN563062 1-G15071_3 0.6900
FDNS	00NR	4	20WP	G15_033	FROM->TO	G14-057T 345.00 - SUNNYSIDE 345KV CKT 1	717	789	0.0425	111.4023	GEN560105 1-G08-22 0.6900
FDNS	00NR	4	20WP	G15_033	FROM->TO	G14-057T 345.00 - SUNNYSIDE 345KV CKT 1	717	789	0.0425	111.3973	GEN562974 1-G15060_5 0.6900
FDNS	00NR	4	20WP	G15_033	FROM->TO	G14-057T 345.00 - SUNNYSIDE 345KV CKT 1	717	789	0.0424	111.395	BROWN - RUSSETT 138KV CKT 1
FDNS	00NR	4	20WP	G15_033	FROM->TO	G14-057T 345.00 - SUNNYSIDE 345KV CKT 1	717	789	0.0425	111.3914	GEN562882 1-G15047_3 0.6900
FDNS	00NR	4	20WP	G15_033	FROM->TO	G14-057T 345.00 - SUNNYSIDE 345KV CKT 1	717	789	0.0425	111.3877	GEN562973 1-G15060_4 0.6900
FDNS	00NR	4	20WP	G15_033	FROM->TO	G14-057T 345.00 - SUNNYSIDE 345KV CKT 1	717	789	0.04222	111.3779	CHICKASAW - TOTAL 138KV CKT 1
FDNS	00NR	4	20WP	G15_033	FROM->TO	G14-057T 345.00 - SUNNYSIDE 345KV CKT 1	717	789	0.0425	111.3725	GEN562550 1-G14_040_3 0.6900
FDNS	00NR	4	20WP	G15_033	FROM->TO	G14-057T 345.00 - SUNNYSIDE 345KV CKT 1	717	789	0.0425	111.3722	GEN345671 2-1RUSH G2 18.000
FDNS	00NR	4	20WP	G15_033	FROM->TO	G14-057T 345.00 - SUNNYSIDE 345KV CKT 1	717	789	0.0425	111.3703	GEN345670 1-1RUSH G1 18.000
FDNS	00NR	4	20WP	G15_033	FROM->TO	G14-057T 345.00 - SUNNYSIDE 345KV CKT 1	717	789	0.0425	111.3679	GEN521112 1-ORME3 13.800
FDNS	00NR	4	20WP	G15_033	FROM->TO	G14-057T 345.00 - SUNNYSIDE 345KV CKT 1	717	789	0.0425	111.3662	4SIOUX 1 138.00 138/18.0KV TRANSFORMER CKT 1
FDNS	00NR	4	20WP	G15_033	FROM->TO	G14-057T 345.00 - SUNNYSIDE 345KV CKT 1	717	789	0.0425	111.3444	GEN527161 1-MUSTANG GEN #1
FDNS	00NR	4	20WP	G15_033	FROM->TO	G14-057T 345.00 - SUNNYSIDE 345KV CKT 1	717	789	0.0425	111.3444	GEN527162 1-MUSTANG GEN #2
FDNS	00NR	4	20WP	G15_033	FROM->TO	G14-057T 345.00 - SUNNYSIDE 345KV CKT 1	717	789	0.0425	111.3296	GEN681522 3-GENOA 3
FDNS	00NR	4	20WP	G15_033	FROM->TO	G14-057T 345.00 - SUNNYSIDE 345KV CKT 1	717	789	0.0424	111.326	RUSSETT - RUSSETT 138KV CKT 1
FDNS	00NR	4	20WP	G15_033	FROM->TO	G14-057T 345.00 - SUNNYSIDE 345KV CKT 1	717	789	0.04229	111.3067	ROCKY POINT - SUNNYSIDE 138KV CKT 1
FDNS	00NR	4	20WP	G15_033	FROM->TO	G14-057T 345.00 - SUNNYSIDE 345KV CKT 1	717	789	0.0425	111.3031	GEN525494 1-PLANT X GEN #4 20 KV
FDNS	00NR	4	20WP	G15_033	FROM->TO	G14-057T 345.00 - SUNNYSIDE 345KV CKT 1	717	789	0.0425	111.2993	GEN527882 1-CUNNINGHAM GEN #2 20 KV
FDNS	00NR	4	20WP	G15_033	FROM->TO	G14-057T 345.00 - SUNNYSIDE 345KV CKT 1	717	789	0.0425	111.2974	EASTDC - ERCOT EQUIVALENCE 345KV CKT 1
FDNS	00NR	4	20WP	G15_033	FROM->TO	G14-057T 345.00 - SUNNYSIDE 345KV CKT 1	717	789	0.0425	111.2957	GEN511962 2-RKYRDGW2-1 0.7000
FDNS	00NR	4	20WP	G15_033	FROM->TO	G14-057T 345.00 - SUNNYSIDE 345KV CKT 1	717	789	0.0425	111.2844	GEN527163 1-MUSTANG GEN #3 22 KV
FDNS	00NR	4	20WP	G15_033	FROM->TO	G14-057T 345.00 - SUNNYSIDE 345KV CKT 1	717	789	0.04237	111.2794	RUSSETT - SPRINGDALE 138KV CKT 1
FDNS	00NR	4	20WP	G15_033	FROM->TO	G14-057T 345.00 - SUNNYSIDE 345KV CKT 1	717	789	0.0425	111.2725	GEN563192 1-G15084_3 0.5500
FDNS	00NR	4	20WP	G15_033	FROM->TO	G14-057T 345.00 - SUNNYSIDE 345KV CKT 1	717	789	0.0425	111.2669	GEN672321 1-SHAND GENERATOR 1
FDNS	00NR	4	20WP	G15_033	FROM->TO	G14-057T 345.00 - SUNNYSIDE 345KV CKT 1	717	789	0.04254	111.2439	ARKANSAS NUCLEAR ONE - FT SMITH 500KV CKT 1
FDNS	00NR	4	20WP	G15_033	FROM->TO	G14-057T 345.00 - SUNNYSIDE 345KV CKT 1	717	789	0.04254	111.2439	ARKANSAS NUCLEAR ONE - FT SMITH 500KV CKT 1
FDNS	00NR	4	20WP	G15_033	FROM->TO	G14-057T 345.00 - SUNNYSIDE 345KV CKT 1	717	789	0.0425	111.2439	GEN672310 1-POPLAR RIVER GENERATOR 1
FDNS	00NR	4	20WP	G15_033	FROM->TO	G14-057T 345.00 - SUNNYSIDE 345KV CKT 1	717	789	0.0425	111.2439	GEN672311 2-POPLAR RIVER GENERATOR 2
FDNS	00NR	4	20WP	G15_033	FROM->TO	G14-057T 345.00 - SUNNYSIDE 345KV CKT 1	717	789	0.04252	111.2423	P12:138:WFEC:MSL16

SOLUTION	GROUP	SCENARIO	SEASON	SOURCE	DIRECTION	MONITORED ELEMENT	RATEA (MVA)	RATEB(MVA)	TDF	TC%LOADING (% MVA)	CONTINGENCY
FDNS	00NR	4	20WP	G15_033	FROM->TO	G14-057T 345.00 - SUNNYSIDE 345KV CKT 1	717	789	0.04247	111.2354	P12:138:WFEC-AEPW:GOLDENSW4:CRAIGJT4
FDNS	00NR	4	20WP	G15_033	FROM->TO	G14-057T 345.00 - SUNNYSIDE 345KV CKT 1	717	789	0.0425	111.2346	GEN672306 6-BOUNDARY DAM GENERATOR 6
FDNS	00NR	4	20WP	G15_033	FROM->TO	G14-057T 345.00 - SUNNYSIDE 345KV CKT 1	717	789	0.0425	111.221	GEN344895 2-1LAB G2 20.000
FDNS	00NR	4	20WP	G15_033	FROM->TO	G14-057T 345.00 - SUNNYSIDE 345KV CKT 1	717	789	0.0425	111.219	CLAY BOSWELL 230/20.9KV TRANSFORMER CKT 1
FDNS	00NR	4	20WP	G15_033	FROM->TO	G14-057T 345.00 - SUNNYSIDE 345KV CKT 1	717	789	0.0425	111.2132	GEN562892 1-G15048_3 0.6900
FDNS	00NR	4	20WP	G15_033	FROM->TO	G14-057T 345.00 - SUNNYSIDE 345KV CKT 1	717	789	0.0425	111.2036	GEN681542 6-JP MADGETT
FDNS	00NR	4	16WP	G15_033	FROM->TO	G14-057T 345.00 - SUNNYSIDE 345KV CKT 1	717	789	0.04432	111.2017	LYDIA - VALLIANT 345KV CKT 1
FDNS	00NR	4	16WP	G15_033	FROM->TO	G14-057T 345.00 - SUNNYSIDE 345KV CKT 1	717	789	0.04432	111.2017	LYDIA - VALLIANT 345KV CKT 1
FDNS	00NR	4	20WP	G15_033	FROM->TO	G14-057T 345.00 - SUNNYSIDE 345KV CKT 1	717	789	0.0425	111.198	GEN562512 1-G14_020_3 0.6900
FDNS	00NR	4	20WP	G15_033	FROM->TO	G14-057T 345.00 - SUNNYSIDE 345KV CKT 1	717	789	0.04206	111.1965	ARDMORE WEST - CARTER 138KV CKT 1
FDNS	00NR	4	20WP	G15_033	FROM->TO	G14-057T 345.00 - SUNNYSIDE 345KV CKT 1	717	789	0.0425	111.1916	GEN344896 3-1LAB G3 20.000
FDNS	00NR	4	20WP	G15_033	FROM->TO	G14-057T 345.00 - SUNNYSIDE 345KV CKT 1	717	789	0.0425	111.1905	GEN344897 4-1LAB G4 20.000
FDNS	00NR	4	20WP	G15_033	FROM->TO	G14-057T 345.00 - SUNNYSIDE 345KV CKT 1	717	789	0.0425	111.1902	GEN344894 1-1LAB G1 20.000
FDNS	00NR	4	20WP	G15_033	FROM->TO	G14-057T 345.00 - SUNNYSIDE 345KV CKT 1	717	789	0.0425	111.1788	GEN523461 1-BLACKHAWK GEN #1
FDNS	00NR	4	20WP	G15_033	FROM->TO	G14-057T 345.00 - SUNNYSIDE 345KV CKT 1	717	789	0.0425	111.1786	GEN523462 1-BLACKHAWK GEN #2
FDNS	00NR	4	20WP	G15_033	FROM->TO	G14-057T 345.00 - SUNNYSIDE 345KV CKT 1	717	789	0.0425	111.1719	GEN562699 1-G15_018_3 0.6900
FDNS	00NR	4	20WP	G15_033	FROM->TO	G14-057T 345.00 - SUNNYSIDE 345KV CKT 1	717	789	0.04248	111.1591	P12:138:WFEC:MSL07
FDNS	00NR	4	20WP	G15_033	FROM->TO	G14-057T 345.00 - SUNNYSIDE 345KV CKT 1	717	789	0.04248	111.1591	P12:138:WFEC-AEPW:HUGOPP4:ATOKA--4
FDNS	00NR	4	20WP	G15_033	FROM->TO	G14-057T 345.00 - SUNNYSIDE 345KV CKT 1	717	789	0.04248	111.1437	P12:138:AEPW-SWPA:LONEOAK4:TUPELO4
FDNS	00NR	4	20WP	G15_033	FROM->TO	G14-057T 345.00 - SUNNYSIDE 345KV CKT 1	717	789	0.04248	111.1437	P12:138:WFEC:MSL06
FDNS	00NR	4	20WP	G15_033	FROM->TO	G14-057T 345.00 - SUNNYSIDE 345KV CKT 1	717	789	0.04232	111.1426	CLARKSVILLE - MUSKOGEE 345KV CKT 1
FDNS	00NR	4	20WP	G15_033	FROM->TO	G14-057T 345.00 - SUNNYSIDE 345KV CKT 1	717	789	0.04232	111.1426	CLARKSVILLE - MUSKOGEE 345KV CKT 1
FDNS	00NR	4	20WP	G15_033	FROM->TO	G14-057T 345.00 - SUNNYSIDE 345KV CKT 1	717	789	0.04286	111.1416	G15063_T 345.00 - MATHWSN7 345.00 345KV CKT 1
FDNS	00NR	4	20WP	G15_033	FROM->TO	G14-057T 345.00 - SUNNYSIDE 345KV CKT 1	717	789	0.0425	111.1374	ALMA 161 161/24.0KV TRANSFORMER CKT 1
FDNS	00NR	4	20WP	G15_033	FROM->TO	G14-057T 345.00 - SUNNYSIDE 345KV CKT 1	717	789	0.0425	111.1293	GEN511853 1-COMANCHE #3
FDNS	00NR	4	20WP	G15_033	FROM->TO	G14-057T 345.00 - SUNNYSIDE 345KV CKT 1	717	789	0.04204	111.1151	SUNNYSIDE (SUNNYSD5) 345/138/13.8KV TRANSFORMER CKT 1
FDNS	00NR	4	20WP	G15_033	FROM->TO	G14-057T 345.00 - SUNNYSIDE 345KV CKT 1	717	789	0.04277	111.1088	G15085_T 138.00 - RUSSELL 138KV CKT 1
FDNS	00NR	4	20WP	G15_033	FROM->TO	G14-057T 345.00 - SUNNYSIDE 345KV CKT 1	717	789	0.0425	111.1056	GEN521111 1-ORME2 13.800
FDNS	00NR	4	20WP	G15_033	FROM->TO	G14-057T 345.00 - SUNNYSIDE 345KV CKT 1	717	789	0.0425	111.0942	GEN511852 1-COMANCHE #2
FDNS	00NR	4	20WP	G15_033	FROM->TO	G14-057T 345.00 - SUNNYSIDE 345KV CKT 1	717	789	0.0425	111.0926	GEN521110 1-ORME1 13.800
FDNS	00NR	4	20WP	G15_033	FROM->TO	G14-057T 345.00 - SUNNYSIDE 345KV CKT 1	717	789	0.0425	111.0875	GEN563122 1-G15077_3 0.3850
FDNS	00NR	4	20WP	G15_033	FROM->TO	G14-057T 345.00 - SUNNYSIDE 345KV CKT 1	717	789	0.04206	111.0848	ARDMORE WEST - UNIROYAL 138KV CKT 1
FDNS	00NR	4	20WP	G15_033	FROM->TO	G14-057T 345.00 - SUNNYSIDE 345KV CKT 1	717	789	0.0425	111.0748	GEN563162 1-G15081_3 0.6900
FDNS	00NR	4	20WP	G15_033	FROM->TO	G14-057T 345.00 - SUNNYSIDE 345KV CKT 1	717	789	0.04376	111.0742	CACHE - SNYDER 138KV CKT 1
FDNS	00NR	4	20WP	G15_033	FROM->TO	G14-057T 345.00 - SUNNYSIDE 345KV CKT 1	717	789	0.0425	111.0481	GEN563292 1-G15095_3 0.6900
FDNS	00NR	4	20WP	G15_033	FROM->TO	G14-057T 345.00 - SUNNYSIDE 345KV CKT 1	717	789	0.04228	111.048	P12:138:OKGE:3TERM40
FDNS	00NR	4	20WP	G15_033	FROM->TO	G14-057T 345.00 - SUNNYSIDE 345KV CKT 1	717	789	0.0425	111.0479	GEN520811 1-ANADRK4
FDNS	00NR	4	20WP	G15_033	FROM->TO	G14-057T 345.00 - SUNNYSIDE 345KV CKT 1	717	789	0.04208	111.0447	CARTRCO4 138.00 - RATLIFF 138KV CKT 1
FDNS	00NR	4	20WP	G15_033	FROM->TO	G14-057T 345.00 - SUNNYSIDE 345KV CKT 1	717	789	0.0425	111.0412	GEN661015 1-COYOTE
FDNS	00NR	4	20WP	G15_033	FROM->TO	G14-057T 345.00 - SUNNYSIDE 345KV CKT 1	717	789	0.0425	111.0393	GEN562861 1-G15045_2 0.4800
FDNS	00NR	4	20WP	G15_033	FROM->TO	G14-057T 345.00 - SUNNYSIDE 345KV CKT 1	717	789	0.0425	110.9842	GEN527883 1-CUNNINGHAM GEN #3 22 KV
FDNS	00NR	4	20WP	G15_033	FROM->TO	G14-057T 345.00 - SUNNYSIDE 345KV CKT 1	717	789	0.0425	110.9814	GEN527884 1-CUNNINGHAM GEN #4 22 KV
FDNS	00NR	4	20WP	G15_033	FROM->TO	G14-057T 345.00 - SUNNYSIDE 345KV CKT 1	717	789	0.0425	110.9292	GEN657748 1-YOUNG 2 GENERATOR
FDNS	00NR	4	20WP	G15_033	FROM->TO	G14-057T 345.00 - SUNNYSIDE 345KV CKT 1	717	789	0.04399	110.9291	GRAPEVINE INTERCHANGE - STATELINE INTERCHANGE 230KV CKT 1
FDNS	00NR	4	20WP	G15_033	FROM->TO	G14-057T 345.00 - SUNNYSIDE 345KV CKT 1	717	789	0.04399	110.9291	GRAPEVINE INTERCHANGE - STATELINE INTERCHANGE 230KV CKT 1
FDNS	00NR	4	20WP	G15_033	FROM->TO	G14-057T 345.00 - SUNNYSIDE 345KV CKT 1	717	789	0.0425	110.915	GEN526331 1-JONES GEN #1 22 KV
FDNS	00NR	4	20WP	G15_033	FROM->TO	G14-057T 345.00 - SUNNYSIDE 345KV CKT 1	717	789	0.0425	110.9148	GEN526332 1-JONES GEN #2 21 KV
FDNS	00NR	4	20WP	G15_033	FROM->TO	G14-057T 345.00 - SUNNYSIDE 345KV CKT 1	717	789	0.04246	110.9091	P12:138:WFEC:MSL15
FDNS	00NR	4	20WP	G15_033	FROM->TO	G14-057T 345.00 - SUNNYSIDE 345KV CKT 1	717	789	0.0425	110.9029	GEN562704 1-G15_020_3 0.3550
FDNS	00NR	4	20WP	G15_033	FROM->TO	G14-057T 345.00 - SUNNYSIDE 345KV CKT 1	717	789	0.04279	110.8974	P12:138:AEPW:SHAM4WT:CHILD4WT
FDNS	00NR	4	20WP	G15_033	FROM->TO	G14-057T 345.00 - SUNNYSIDE 345KV CKT 1	717	789	0.04206	110.8693	SUNNYSIDE - UNIROYAL 138KV CKT 1
FDNS	00NR	4	20WP	G15_033	FROM->TO	G14-057T 345.00 - SUNNYSIDE 345KV CKT 1	717	789	0.0425	110.8385	GEN620315 1-BIG STONE GEN
FDNS	00NR	4	20WP	G15_033	FROM->TO	G14-057T 345.00 - SUNNYSIDE 345KV CKT 1	717	789	0.04398	110.8067	GRAPEVINE INTERCHANGE - NICHOLS STATION 230KV CKT 1
FDNS	00NR	4	20WP	G15_033	FROM->TO	G14-057T 345.00 - SUNNYSIDE 345KV CKT 1	717	789	0.04398	110.8067	GRAPEVINE INTERCHANGE - NICHOLS STATION 230KV CKT 1
FDNS	00NR	4	20WP	G15_033	FROM->TO	G14-057T 345.00 - SUNNYSIDE 345KV CKT 1	717	789	0.0425	110.8018	GEN562992 1-G15063_3 0.6900
FDNS	00NR	4	20WP	G15_033	FROM->TO	G14-057T 345.00 - SUNNYSIDE 345KV CKT 1	717	789	0.0425	110.7889	GEN562710 1-G15_022_3 0.5500
FDNS	00NR	4	20WP	G15_033	FROM->TO	G14-057T 345.00 - SUNNYSIDE 345KV CKT 1	717	789	0.0425	110.7712	GEN562952 1-G15057_3 0.6500
FDNS	00NR	4	20WP	G15_033	FROM->TO	G14-057T 345.00 - SUNNYSIDE 345KV CKT 1	717	789	0.0425	110.7634	GEN600004 2-PRAIRIE ISLAND G2
FDNS	00NR	4	20WP	G15_033	FROM->TO	G14-057T 345.00 - SUNNYSIDE 345KV CKT 1	717	789	0.0425	110.7609	GEN600003 1-PRAIRIE ISLAND G1
FDNS	00NR	4	20WP	G15_033	FROM->TO	G14-057T 345.00 - SUNNYSIDE 345KV CKT 1	717	789	0.0425	110.7415	GEN600006 1-AS KING
FDNS	00NR	4	20WP	G15_033	FROM->TO	G14-057T 345.00 - SUNNYSIDE 345KV CKT 1	717	789	0.0425	110.7289	GEN563173 1-G15082_3 0.6900
FDNS	00NR	4	20WP	G15_033	FROM->TO	G14-057T 345.00 - SUNNYSIDE 345KV CKT 1	717	789	0.04258	110.6485	CANEY CREEK - TEXOMA JCT 138KV CKT 1
FDNS	00NR	4	20WP	G15_033	FROM->TO	G14-057T 345.00 - SUNNYSIDE 345KV CKT 1	717	789	0.043	110.6166	P12:138:AEPW-OGE:CORNVIL4:CIMARON4
FDNS	00NR	4	20WP	G15_033	FROM->TO	G14-057T 345.00 - SUNNYSIDE 345KV CKT 1	717	789	0.0425	110.5937	GEN511851 1-COMANCHE #1
FDNS	00NR	4	20WP	G15_033	FROM->TO	G14-057T 345.00 - SUNNYSIDE 345KV CKT 1	717	789	0.04518	110.5745	CHISHOLM7 345.00 () 345/230/13.2KV TRANSFORMER CKT 1
FDNS	00NR	4	20WP	G15_033	FROM->TO	G14-057T 345.00 - SUNNYSIDE 345KV CKT 1	717	789	0.0425	110.5683	GEN629074 1-ARNOLD LOWSIDE OF GSU XFMR
FDNS	00NR	4	20WP	G15_033	FROM->TO	G14-057T 345.00 - SUNNYSIDE 345KV CKT 1	717	789	0.0425	110.5658	GEN615001 1-COAL CREEK
FDNS	00NR	4	20WP	G15_033	FROM->TO	G14-057T 345.00 - SUNNYSIDE 345KV CKT 1	717	789	0.0425	110.564	GEN635213 3-NEAL UNIT 3
FDNS	00NR	4	20WP	G15_033	FROM->TO	G14-057T 345.00 - SUNNYSIDE 345KV CKT 1	717	789	0.0425	110.5462	GEN562754 1-G15031_5 0.6900
FDNS	00NR	4	20WP	G15_033	FROM->TO	G14-057T 345.00 - SUNNYSIDE 345KV CKT 1	717	789	0.04249	110.5452	P12:138:WFEC:MSL09
FDNS	00NR	4	20WP	G15_033	FROM->TO	G14-057T 345.00 - SUNNYSIDE 345KV CKT 1	717	789	0.0425	110.5408	GEN615002 2-COAL CREEK
FDNS	00NR	4	20WP	G15_033	FROM->TO	G14-057T 345.00 - SUNNYSIDE 345KV CKT 1	717	789	0.0425	110.5401	BIG STONE 230/24.0KV TRANSFORMER CKT 1
FDNS	00NR	4	20WP	G15_033	FROM->TO	G14-057T 345.00 - SUNNYSIDE 345KV CKT 1	717	789	0.0425	110.5079	GEN562556 1-G14_046_3 0.3420
FDNS	00NR	4	20WP	G15_033	FROM->TO	G14-057T 345.00 - SUNNYSIDE 345KV CKT 1	717	789	0.0425	110.4993	GEN532751 1-WOLF CREEK GENERATING STATION UNIT 1
FDNS	00NR	4	20WP	G15_033	FROM->TO	G14-057T 345.00 - SUNNYSIDE 345KV CKT 1	717	789	0.0425	110.488	GEN562756 1-G15031_7 0.6900
FDNS	00NR	4	20WP	G15_033	FROM->TO	G14-057T 345.00 - SUNNYSIDE 345KV CKT 1	717	789	0.04233	110.4751	NORTHWEST TEXARKANA - VALLIANT 345KV CKT 1
FDNS	00NR	4	20WP	G15_033	FROM->TO	G14-057T 345.00 - SUNNYSIDE 345KV CKT 1	717	789	0.04233	110.4751	NORTHWEST TEXARKANA - VALLIANT 345KV CKT 1
FDNS	00NR	4	20WP	G15_033	FROM->TO	G14-057T 345.00 - SUNNYSIDE 345KV CKT 1	717	789	0.0425	110.474	GEN636641 1-LOUISA UNIT 1
FDNS	00NR	4	20WP	G15_033	FROM->TO	G14-057T 345.00 - SUNNYSIDE 345KV CKT 1	717	789	0.0425	110.4453	GEN600005 1-MONTICELLO

SOLUTION	GROUP	SCENARIO	SEASON	SOURCE	DIRECTION	MONITORED ELEMENT	RATEA (MVA)	RATEB(MVA)	TDF	TC%LOADING (% MVA)	CONTINGENCY
FDNS	00NR	4	20WP	G15_033	FROM->TO	G14-057T 345.00 - SUNNYSIDE 345KV CKT 1	717	789	0.0425	110.4397	GEN563142 1-G15079_3 0.5500
FDNS	00NR	4	20WP	G15_033	FROM->TO	G14-057T 345.00 - SUNNYSIDE 345KV CKT 1	717	789	0.0425	110.4397	GEN563151 1-G15080_2 0.5500
FDNS	00NR	4	20WP	G15_033	FROM->TO	G14-057T 345.00 - SUNNYSIDE 345KV CKT 1	717	789	0.04518	110.3393	CHISHOLM7 345.00 - GRACEMONT 345KV CKT 1
FDNS	00NR	4	20WP	G15_033	FROM->TO	G14-057T 345.00 - SUNNYSIDE 345KV CKT 1	717	789	0.0425	110.3216	GEN600000 1-SHERBURNECNTY G1
FDNS	00NR	4	20WP	G15_033	FROM->TO	G14-057T 345.00 - SUNNYSIDE 345KV CKT 1	717	789	0.0425	110.319	GEN562023 1-G11_020_3 0.6900
FDNS	00NR	4	20WP	G15_033	FROM->TO	G14-057T 345.00 - SUNNYSIDE 345KV CKT 1	717	789	0.0425	110.319	GEN562026 1-G11_019_3 0.6900
FDNS	00NR	4	20WP	G15_033	FROM->TO	G14-057T 345.00 - SUNNYSIDE 345KV CKT 1	717	789	0.0425	110.2822	GEN629075 1-OTTUMWA GENERATOR FOR OTTUMWA UNIT NO 1
FDNS	00NR	4	16WP	G15_033	FROM->TO	G14-057T 345.00 - SUNNYSIDE 345KV CKT 1	717	789	0.04465	110.28	EASTDC - ERCOT EQUIVALENCE 345KV CKT 1
FDNS	00NR	4	20WP	G15_033	FROM->TO	G14-057T 345.00 - SUNNYSIDE 345KV CKT 1	717	789	0.0425	110.2695	GEN600001 2-SHERBURNE CNTY G2
FDNS	00NR	4	20WP	G15_033	FROM->TO	G14-057T 345.00 - SUNNYSIDE 345KV CKT 1	717	789	0.0425	110.2418	GEN527901 1-HOBBS PLANT #1 (CT)
FDNS	00NR	4	20WP	G15_033	FROM->TO	G14-057T 345.00 - SUNNYSIDE 345KV CKT 1	717	789	0.0425	110.2418	GEN527902 1-HOBBS PLANT #2 (CT)
FDNS	00NR	4	20WP	G15_033	FROM->TO	G14-057T 345.00 - SUNNYSIDE 345KV CKT 1	717	789	0.0425	110.2361	GEN523971 1-HARRINGTON GEN #1 24 KV
FDNS	00NR	4	20WP	G15_033	FROM->TO	G14-057T 345.00 - SUNNYSIDE 345KV CKT 1	717	789	0.0425	110.2361	GEN523973 1-HARRINGTON GEN #3 24 KV
FDNS	00NR	4	20WP	G15_033	FROM->TO	G14-057T 345.00 - SUNNYSIDE 345KV CKT 1	717	789	0.0425	110.236	GEN523972 1-HARRINGTON GEN #2 24 KV
FDNS	00NR	4	20WP	G15_033	FROM->TO	G14-057T 345.00 - SUNNYSIDE 345KV CKT 1	717	789	0.04513	110.2334	STLN-DEMARC6 - SWEETWATER 230KV CKT 1
FDNS	00NR	4	20WP	G15_033	FROM->TO	G14-057T 345.00 - SUNNYSIDE 345KV CKT 1	717	789	0.04513	110.2328	P12:230:AEPW-SPS:SWEETWT6:WHEELER 6
FDNS	00NR	4	20WP	G15_033	FROM->TO	G14-057T 345.00 - SUNNYSIDE 345KV CKT 1	717	789	0.04513	110.2319	STATELINE INTERCHANGE - STLN-DEMARC6 230KV CKT 1
FDNS	00NR	4	20WP	G15_033	FROM->TO	G14-057T 345.00 - SUNNYSIDE 345KV CKT 1	717	789	0.0425	110.2308	GEN563042 1-G15068_3 0.6900
FDNS	00NR	4	20WP	G15_033	FROM->TO	G14-057T 345.00 - SUNNYSIDE 345KV CKT 1	717	789	0.04227	110.096	LYDIA - WELSH 345KV CKT 1
FDNS	00NR	4	20WP	G15_033	FROM->TO	G14-057T 345.00 - SUNNYSIDE 345KV CKT 1	717	789	0.04227	110.096	LYDIA - WELSH 345KV CKT 1
FDNS	00NR	4	20WP	G15_033	FROM->TO	G14-057T 345.00 - SUNNYSIDE 345KV CKT 1	717	789	0.0425	110.0593	GEN511848 1-SOUTHWESTERN STATION #3
FDNS	00NR	4	20WP	G15_033	FROM->TO	G14-057T 345.00 - SUNNYSIDE 345KV CKT 1	717	789	0.0425	110.0291	SHERBURNE CO 345/24.0KV TRANSFORMER CKT 1
FDNS	00NR	4	20WP	G15_033	FROM->TO	G14-057T 345.00 - SUNNYSIDE 345KV CKT 1	717	789	0.0425	110.0117	GEN635214 4-NEAL UNIT 4
FDNS	00NR	4	20WP	G15_033	FROM->TO	G14-057T 345.00 - SUNNYSIDE 345KV CKT 1	717	789	0.0425	109.938	GEN563043 1-G15068_4 0.6900
FDNS	00NR	4	20WP	G15_033	FROM->TO	G14-057T 345.00 - SUNNYSIDE 345KV CKT 1	717	789	0.0425	109.8892	GEN526333 1-JONES GEN #3 21 KV
FDNS	00NR	4	20WP	G15_033	FROM->TO	G14-057T 345.00 - SUNNYSIDE 345KV CKT 1	717	789	0.0425	109.8891	GEN526334 1-JONES_4 116.500
FDNS	00NR	4	20WP	G15_033	FROM->TO	G14-057T 345.00 - SUNNYSIDE 345KV CKT 1	717	789	0.0425	109.8773	GEN525844 1-ELK_1 118.000
FDNS	00NR	4	20WP	G15_033	FROM->TO	G14-057T 345.00 - SUNNYSIDE 345KV CKT 1	717	789	0.0425	109.8632	GEN525845 1-ELK_2 1 18.000
FDNS	00NR	4	20WP	G15_033	FROM->TO	G14-057T 345.00 - SUNNYSIDE 345KV CKT 1	717	789	0.04554	109.8558	P12:230:AEPW:ELKCITY6:SWEETWT6
FDNS	00NR	4	20WP	G15_033	FROM->TO	G14-057T 345.00 - SUNNYSIDE 345KV CKT 1	717	789	0.0425	109.839	GEN600002 3-SHERBURNE CNTY G3
FDNS	00NR	4	20WP	G15_033	FROM->TO	G14-057T 345.00 - SUNNYSIDE 345KV CKT 1	717	789	0.0425	109.7775	GEN563273 2-G15093_4 0.6900
FDNS	00NR	4	20WP	G15_033	FROM->TO	G14-057T 345.00 - SUNNYSIDE 345KV CKT 1	717	789	0.0425	109.7371	GEN344225 1-1CAL G1 25.000
FDNS	00NR	4	20WP	G15_033	FROM->TO	G14-057T 345.00 - SUNNYSIDE 345KV CKT 1	717	789	0.0425	109.6994	GEN527166 1-MUSTANG_6 118.000
FDNS	00NR	4	17SP	G15_033	FROM->TO	G14-057T 345.00 - SUNNYSIDE 345KV CKT 1	717	789	0.06033	109.6781	CIMARRON - MINCO 345KV CKT 1
FDNS	00NR	4	20WP	G15_033	FROM->TO	G14-057T 345.00 - SUNNYSIDE 345KV CKT 1	717	789	0.0425	109.6367	GEN528501 1-G14_012 24.000
FDNS	00NR	4	20WP	G15_033	FROM->TO	G14-057T 345.00 - SUNNYSIDE 345KV CKT 1	717	789	0.0425	109.6153	GEN563202 1-G15085_3 0.5500
FDNS	00NR	4	20WP	G15_033	FROM->TO	G14-057T 345.00 - SUNNYSIDE 345KV CKT 1	717	789	0.04513	109.5702	CHISHOLM6 230.00 - SWEETWATER 230KV CKT 1
FDNS	00NR	4	20WP	G15_033	FROM->TO	G14-057T 345.00 - SUNNYSIDE 345KV CKT 1	717	789	0.0425	109.5483	GEN635023 3-WALTER SCOTT UNIT 3
FDNS	06ALL	4	20SP	G15_033	FROM->TO	G14-057T 345.00 - SUNNYSIDE 345KV CKT 1	717	789	0.21721	109.5106	CIMARRON - MINCO 345KV CKT 1
FDNS	00NR	4	20WP	G15_033	FROM->TO	G14-057T 345.00 - SUNNYSIDE 345KV CKT 1	717	789	0.0425	109.4706	GEN562762 1-G15033_3 0.6900
FDNS	00NR	4	20WP	G15_033	FROM->TO	G14-057T 345.00 - SUNNYSIDE 345KV CKT 1	717	789	0.0425	109.4625	GEN562655 1-G14_074_3 0.6900
FDNS	00NR	4	20WP	G15_033	FROM->TO	G14-057T 345.00 - SUNNYSIDE 345KV CKT 1	717	789	0.0425	109.415	GEN525562 1-TOLK GEN #2 24 KV
FDNS	00NR	4	20WP	G15_033	FROM->TO	G14-057T 345.00 - SUNNYSIDE 345KV CKT 1	717	789	0.0425	109.414	GEN562590 1-G14_057_3 0.6900
FDNS	00NR	4	20WP	G15_033	FROM->TO	G14-057T 345.00 - SUNNYSIDE 345KV CKT 1	717	789	0.0425	109.3556	GEN527903 1-HOBBS PLANT #3 (ST)
FDNS	00NR	4	20WP	G15_033	FROM->TO	G14-057T 345.00 - SUNNYSIDE 345KV CKT 1	717	789	0.0425	109.2807	GEN562685 1-G15_013_3 0.3550
FDNS	06NR	4	17G	G15_033	FROM->TO	G14-057T 345.00 - SUNNYSIDE 345KV CKT 1	717	789	0.06126	109.2586	GRACEMONT - MINCO 345KV CKT 1
FDNS	00NR	4	20WP	G15_033	FROM->TO	G14-057T 345.00 - SUNNYSIDE 345KV CKT 1	717	789	0.04208	109.2309	JOHNSON COUNTY (JOHNCO) 345/138/13.8KV TRANSFORMER CKT 1
FDNS	00NR	4	16WP	G15_033	FROM->TO	G14-057T 345.00 - SUNNYSIDE 345KV CKT 1	717	789	0.03908	109.1947	JOHNSON COUNTY - PITTSBURG 345KV CKT 1
FDNS	00NR	4	16WP	G15_033	FROM->TO	G14-057T 345.00 - SUNNYSIDE 345KV CKT 1	717	789	0.03908	109.1947	JOHNSON COUNTY - PITTSBURG 345KV CKT 1
FDNS	00NR	4	20WP	G15_033	FROM->TO	G14-057T 345.00 - SUNNYSIDE 345KV CKT 1	717	789	0.0425	109.1395	GEN635024 4-WALTER SCOTT UNIT 4
FDNS	00NR	4	20WP	G15_033	FROM->TO	G14-057T 345.00 - SUNNYSIDE 345KV CKT 1	717	789	0.0425	109.1336	GEN563272 1-G15093_3 0.6900
FDNS	00NR	4	20WP	G15_033	FROM->TO	G14-057T 345.00 - SUNNYSIDE 345KV CKT 1	717	789	0.04218	109.0219	LYDIA - VALLIANT 345KV CKT 1
FDNS	00NR	4	20WP	G15_033	FROM->TO	G14-057T 345.00 - SUNNYSIDE 345KV CKT 1	717	789	0.04218	109.0219	LYDIA - VALLIANT 345KV CKT 1
FDNS	00NR	4	20WP	G15_033	FROM->TO	G14-057T 345.00 - SUNNYSIDE 345KV CKT 1	717	789	0.0425	109.0117	GEN525561 1-TOLK GEN #1 24 KV
FDNS	00NR	4	16WP	G15_033	FROM->TO	G14-057T 345.00 - SUNNYSIDE 345KV CKT 1	717	789	0.04465	108.9092	GEN563263 1-G15092_4 0.6900
FDNS	06NR	4	20L	G15_033	FROM->TO	G14-057T 345.00 - SUNNYSIDE 345KV CKT 1	717	789	0.0439	108.4936	BASE CASE
FDNS	00NR	4	16WP	G15_033	FROM->TO	G14-057T 345.00 - SUNNYSIDE 345KV CKT 1	717	789	0.04319	108.2089	HUGO - VALLIANT 345KV CKT 1
FDNS	00NR	4	16WP	G15_033	FROM->TO	G14-057T 345.00 - SUNNYSIDE 345KV CKT 1	717	789	0.04319	108.2089	HUGO - VALLIANT 345KV CKT 1
FDNS	06NR	4	20L	G15_033	FROM->TO	G14-057T 345.00 - SUNNYSIDE 345KV CKT 1	717	789	0.08249	108.1216	GRACEMONT - LAWTON EASTSIDE 345KV CKT 1
FDNS	06NR	4	20L	G15_033	FROM->TO	G14-057T 345.00 - SUNNYSIDE 345KV CKT 1	717	789	0.08249	108.1216	GRACEMONT - LAWTON EASTSIDE 345KV CKT 1
FDNS	00NR	4	16WP	G15_033	FROM->TO	G14-057T 345.00 - SUNNYSIDE 345KV CKT 1	717	789	0.04465	107.2147	GEN563262 1-G15092_3 0.6900
FDNS	00NR	4	20WP	G15_033	FROM->TO	G14-057T 345.00 - SUNNYSIDE 345KV CKT 1	717	789	0.0372	106.8405	JOHNSON COUNTY - PITTSBURG 345KV CKT 1
FDNS	00NR	4	20WP	G15_033	FROM->TO	G14-057T 345.00 - SUNNYSIDE 345KV CKT 1	717	789	0.0372	106.8405	JOHNSON COUNTY - PITTSBURG 345KV CKT 1
FDNS	06NR	4	20L	G15_033	FROM->TO	G14-057T 345.00 - SUNNYSIDE 345KV CKT 1	717	789	0.04217	106.5045	PITTSBURG - SEMINOLE 345KV CKT 1
FDNS	06NR	4	20L	G15_033	FROM->TO	G14-057T 345.00 - SUNNYSIDE 345KV CKT 1	717	789	0.04217	106.5045	PITTSBURG - SEMINOLE 345KV CKT 1
FDNS	00NR	4	20WP	G15_033	FROM->TO	G14-057T 345.00 - SUNNYSIDE 345KV CKT 1	717	789	0.04111	106.3743	HUGO - VALLIANT 345KV CKT 1
FDNS	00NR	4	20WP	G15_033	FROM->TO	G14-057T 345.00 - SUNNYSIDE 345KV CKT 1	717	789	0.04111	106.3743	HUGO - VALLIANT 345KV CKT 1
FDNS	00NR	4	20WP	G15_033	FROM->TO	G14-057T 345.00 - SUNNYSIDE 345KV CKT 1	717	789	0.0425	105.9435	GEN563263 1-G15092_4 0.6900
FDNS	00NR	4	16WP	G15_033	FROM->TO	G14-057T 345.00 - SUNNYSIDE 345KV CKT 1	717	789	0.2567	105.8137	G14-074T 345.00 - TUCO INTERCHANGE 345KV CKT 1
FDNS	06NR	4	20L	G15_033	FROM->TO	G14-057T 345.00 - SUNNYSIDE 345KV CKT 1	717	789	0.04338	105.4706	CIMARRON - DRAPER LAKE 345KV CKT 1
FDNS	06ALL	4	20WP	G15_033	FROM->TO	G14-057T 345.00 - SUNNYSIDE 345KV CKT 1	717	789	0.1575	105.3579	BASE CASE
FDNS	06ALL	4	17G	G15_033	FROM->TO	G14-057T 345.00 - SUNNYSIDE 345KV CKT 1	717	789	0.16031	105.0325	BASE CASE
FDNS	06ALL	4	20SP	G15_033	FROM->TO	G14-057T 345.00 - SUNNYSIDE 345KV CKT 1	717	789	0.21721	104.3514	GRACEMONT - MINCO 345KV CKT 1
FDNS	00NR	4	20WP	G15_033	FROM->TO	G14-057T 345.00 - SUNNYSIDE 345KV CKT 1	717	789	0.0425	104.2457	GEN563262 1-G15092_3 0.6900
FDNS	06ALL	4	16WP	G15_033	FROM->TO	G14-057T 345.00 - SUNNYSIDE 345KV CKT 1	717	789	0.16364	103.6585	BASE CASE
FDNS	00NR	4	16WP	G15_033	FROM->TO	G14-057T 345.00 - SUNNYSIDE 345KV CKT 1	717	789	0.03729	103.5852	JOHNSON COUNTY - SUNNYSIDE 345KV CKT 1
FDNS	06NR	4	20L	G15_033	FROM->TO	G14-057T 345.00 - SUNNYSIDE 345KV CKT 1	717	789	0.04605	103.5826	P12:138:WFEC:MSL03
FDNS	06NR	4	20L	G15_033	FROM->TO	G14-057T 345.00 - SUNNYSIDE 345KV CKT 1	717	789	0.04378	102.8697	CLEVELAND - G15066_T 345.00 345KV CKT 1
FDNS	06NR	4	20L	G15_033	FROM->TO	G14-057T 345.00 - SUNNYSIDE 345KV CKT 1	717	789	0.0439	102.6704	GEN501801 1-DOLET HILLS UNIT1

SOLUTION	GROUP	SCENARIO	SEASON	SOURCE	DIRECTION	MONITORED ELEMENT	RATEA (MVA)	RATEB(MVA)	TDF	TC%LOADING (% MVA)	CONTINGENCY
FDNS	06NR	4	20L	G15_033	FROM->TO	G14-057T 345.00 - SUNNYSIDE 345KV CKT 1	717	789	0.04378	102.5757	G15066_T 345.00 - SOONER 345KV CKT 1
FDNS	06NR	4	20L	G15_033	FROM->TO	G14-057T 345.00 - SUNNYSIDE 345KV CKT 1	717	789	0.0439	102.5121	GEN509416 1-TURK GENERATION
FDNS	06NR	4	20L	G15_033	FROM->TO	G14-057T 345.00 - SUNNYSIDE 345KV CKT 1	717	789	0.0439	102.3545	GEN509403 1-PIRKEY GENERATION
FDNS	00NR	4	20WP	G15_033	FROM->TO	G14-057T 345.00 - SUNNYSIDE 345KV CKT 1	717	789	0.25747	101.986	G14-074T 345.00 - TUCO INTERCHANGE 345KV CKT 1
FDNS	06NR	4	20L	G15_033	FROM->TO	G14-057T 345.00 - SUNNYSIDE 345KV CKT 1	717	789	0.0439	101.95	GEN336821 1-GRAND GULF UNIT
FDNS	06NR	4	20L	G15_033	FROM->TO	G14-057T 345.00 - SUNNYSIDE 345KV CKT 1	717	789	0.0439	101.8155	GEN336153 1-WATERFORD UNIT#3
FDNS	06NR	4	20L	G15_033	FROM->TO	G14-057T 345.00 - SUNNYSIDE 345KV CKT 1	717	789	0.04226	101.6028	FINNEY SWITCHING STATION - WALKTAP7 345.00 345KV CKT 1
FDNS	06NR	4	20L	G15_033	FROM->TO	G14-057T 345.00 - SUNNYSIDE 345KV CKT 1	717	789	0.04226	101.6028	FINNEY SWITCHING STATION - WALKTAP7 345.00 345KV CKT 1
FDNS	06NR	4	20L	G15_033	FROM->TO	G14-057T 345.00 - SUNNYSIDE 345KV CKT 1	717	789	0.04387	101.5819	PITTSBURG - VALLIANT 345KV CKT 1
FDNS	06NR	4	20L	G15_033	FROM->TO	G14-057T 345.00 - SUNNYSIDE 345KV CKT 1	717	789	0.04387	101.5819	PITTSBURG - VALLIANT 345KV CKT 1
FDNS	06NR	4	20L	G15_033	FROM->TO	G14-057T 345.00 - SUNNYSIDE 345KV CKT 1	717	789	0.0439	101.4753	GEN335831 1-RIVERBEND UNIT#1
FDNS	06NR	4	20L	G15_033	FROM->TO	G14-057T 345.00 - SUNNYSIDE 345KV CKT 1	717	789	0.04376	101.3191	ARCADIA - NORTHWEST 345KV CKT 1
FDNS	06NR	4	20L	G15_033	FROM->TO	G14-057T 345.00 - SUNNYSIDE 345KV CKT 1	717	789	0.04383	101.2806	CLEVELAND - TULSA NORTH 345KV CKT 1
FDNS	06NR	4	20L	G15_033	FROM->TO	G14-057T 345.00 - SUNNYSIDE 345KV CKT 1	717	789	0.04383	101.2806	CLEVELAND - TULSA NORTH 345KV CKT 1
FDNS	06NR	4	20L	G15_033	FROM->TO	G14-057T 345.00 - SUNNYSIDE 345KV CKT 1	717	789	0.0439	101.0815	GRAND GULF 500/22.0KV TRANSFORMER CKT 1
FDNS	06NR	4	20L	G15_033	FROM->TO	G14-057T 345.00 - SUNNYSIDE 345KV CKT 1	717	789	0.04359	101.0648	THISTLE7 345.00 - WOODWARD DISTRICT EHV 345KV CKT 1
FDNS	06NR	4	20L	G15_033	FROM->TO	G14-057T 345.00 - SUNNYSIDE 345KV CKT 1	717	789	0.04359	101.0648	THISTLE7 345.00 - WOODWARD DISTRICT EHV 345KV CKT 1
FDNS	06NR	4	20L	G15_033	FROM->TO	G14-057T 345.00 - SUNNYSIDE 345KV CKT 1	717	789	0.04359	101.0648	THISTLE7 345.00 - WOODWARD DISTRICT EHV 345KV CKT 2
FDNS	06NR	4	20L	G15_033	FROM->TO	G14-057T 345.00 - SUNNYSIDE 345KV CKT 1	717	789	0.04359	101.0648	THISTLE7 345.00 - WOODWARD DISTRICT EHV 345KV CKT 2
FDNS	06NR	4	20L	G15_033	FROM->TO	G14-057T 345.00 - SUNNYSIDE 345KV CKT 1	717	789	0.04343	100.9681	MINGO - RED WILLOW 345KV CKT 1
FDNS	06NR	4	20L	G15_033	FROM->TO	G14-057T 345.00 - SUNNYSIDE 345KV CKT 1	717	789	0.04343	100.9681	MINGO - RED WILLOW 345KV CKT 1
FDNS	06NR	4	20L	G15_033	FROM->TO	G14-057T 345.00 - SUNNYSIDE 345KV CKT 1	717	789	0.04387	100.926	LACYGNE - WAVERLY7 345.00 345KV CKT 1
FDNS	06NR	4	20L	G15_033	FROM->TO	G14-057T 345.00 - SUNNYSIDE 345KV CKT 1	717	789	0.0439	100.7312	GEN335206 1-NELSON UNIT 6
FDNS	06NR	4	20L	G15_033	FROM->TO	G14-057T 345.00 - SUNNYSIDE 345KV CKT 1	717	789	0.04508	100.7109	P12:138:AEPW:DUNCAN-4:L.E.S.-4
FDNS	06NR	4	20L	G15_033	FROM->TO	G14-057T 345.00 - SUNNYSIDE 345KV CKT 1	717	789	0.04387	100.7028	WAVERLY7 345.00 - WOLF CREEK 345KV CKT 1
FDNS	06NR	4	20L	G15_033	FROM->TO	G14-057T 345.00 - SUNNYSIDE 345KV CKT 1	717	789	0.04427	100.6868	CORN TAP - NAPLESTP 138.00 138KV CKT 1
FDNS	06NR	4	20L	G15_033	FROM->TO	G14-057T 345.00 - SUNNYSIDE 345KV CKT 1	717	789	0.04427	100.6052	NAPLESTP 138.00 - PAYNE 138.00 138KV CKT 1
FDNS	06NR	4	20L	G15_033	FROM->TO	G14-057T 345.00 - SUNNYSIDE 345KV CKT 1	717	789	0.04417	100.6049	COMANCHE - LOCO 138KV CKT 1
FDNS	06NR	4	20L	G15_033	FROM->TO	G14-057T 345.00 - SUNNYSIDE 345KV CKT 1	717	789	0.04508	100.5829	COMANCHE TAP - OMPA-DUNCAN 840 138KV CKT 1
FDNS	06NR	4	20L	G15_033	FROM->TO	G14-057T 345.00 - SUNNYSIDE 345KV CKT 1	717	789	0.04402	100.5593	REDBUD - RIVERSIDE STATION 345KV CKT 1
FDNS	06NR	4	20L	G15_033	FROM->TO	G14-057T 345.00 - SUNNYSIDE 345KV CKT 1	717	789	0.04402	100.5593	REDBUD - RIVERSIDE STATION 345KV CKT 1
FDNS	06NR	4	20L	G15_033	FROM->TO	G14-057T 345.00 - SUNNYSIDE 345KV CKT 1	717	789	0.0439	100.5252	GEN509406 1-WELSH #3
FDNS	06NR	4	20L	G15_033	FROM->TO	G14-057T 345.00 - SUNNYSIDE 345KV CKT 1	717	789	0.0439	100.525	GEN509404 1-WELSH #1
FDNS	00NR	4	20WP	G15_033	FROM->TO	G14-057T 345.00 - SUNNYSIDE 345KV CKT 1	717	789	0.0355	100.36	JOHNSON COUNTY - SUNNYSIDE 345KV CKT 1
FDNS	06NR	4	20L	G15_033	FROM->TO	G14-057T 345.00 - SUNNYSIDE 345KV CKT 1	717	789	0.04583	100.3497	LAWTON EASTSIDE (LES 5) 345/138/13.8KV TRANSFORMER CKT 2
FDNS	06NR	4	20L	G15_033	FROM->TO	G14-057T 345.00 - SUNNYSIDE 345KV CKT 1	717	789	0.04583	100.3497	LAWTON EASTSIDE (LES 5) 345/138/13.8KV TRANSFORMER CKT 2
FDNS	06NR	4	20L	G15_033	FROM->TO	G14-057T 345.00 - SUNNYSIDE 345KV CKT 1	717	789	0.04398	100.3091	HEALDTON - LOCO 138KV CKT 1
FDNS	06NR	4	20L	G15_033	FROM->TO	G14-057T 345.00 - SUNNYSIDE 345KV CKT 1	717	789	0.04351	100.287	ARCADIA - SEMINOLE 345KV CKT 1
FDNS	06NR	4	20L	G15_033	FROM->TO	G14-057T 345.00 - SUNNYSIDE 345KV CKT 1	717	789	0.04508	100.2852	DUNCAN - OMPA-DUNCAN 840 138KV CKT 1
FDNS	06NR	4	20L	G15_033	FROM->TO	G14-057T 345.00 - SUNNYSIDE 345KV CKT 1	717	789	0.04508	100.2852	DUNCAN - OMPA-DUNCAN 840 138KV CKT 1
FDNS	06NR	4	20L	G15_033	FROM->TO	G14-057T 345.00 - SUNNYSIDE 345KV CKT 1	717	789	0.04348	100.283	MINGO - SETAB 345KV CKT 1
FDNS	06NR	4	20L	G15_033	FROM->TO	G14-057T 345.00 - SUNNYSIDE 345KV CKT 1	717	789	0.04348	100.283	MINGO - SETAB 345KV CKT 1
FDNS	00NR	4	20SP	G15_033	FROM->TO	G14-057T 345.00 - SUNNYSIDE 345KV CKT 1	717	789	0.05761	100.2694	CIMARRON - MINCO 345KV CKT 1
FDNS	06NR	4	20L	G15_033	FROM->TO	G14-057T 345.00 - SUNNYSIDE 345KV CKT 1	717	789	0.04643	100.2498	P12:138:AEPW:S.W.S.-4:L.E.S.-4
FDNS	06NR	4	20L	G15_033	FROM->TO	G14-057T 345.00 - SUNNYSIDE 345KV CKT 1	717	789	0.04434	100.2481	ANADARKO - POCASSETT 138KV CKT 1
FDNS	06NR	4	20L	G15_033	FROM->TO	G14-057T 345.00 - SUNNYSIDE 345KV CKT 1	717	789	0.04384	100.2214	WEBRE - WELLS 500KV CKT 1
FDNS	06NR	4	20L	G15_033	FROM->TO	G14-057T 345.00 - SUNNYSIDE 345KV CKT 1	717	789	0.04398	100.2192	HEALDTON - RINGLING 138KV CKT 1
FDNS	06NR	4	20L	G15_033	FROM->TO	G14-057T 345.00 - SUNNYSIDE 345KV CKT 1	717	789	0.0439	100.2	GEN337911 1-ARKANSAS NUCLEAR ONE UNIT #2
FDNS	06NR	4	20L	G15_033	FROM->TO	G14-057T 345.00 - SUNNYSIDE 345KV CKT 1	717	789	0.0439	100.1849	DOLET HILLS 345/24.0KV TRANSFORMER CKT 1
FDNS	06NR	4	20L	G15_033	FROM->TO	G14-057T 345.00 - SUNNYSIDE 345KV CKT 1	717	789	0.04434	100.1804	POCASSETT - TUTTLE 138KV CKT 1
FDNS	06NR	4	20L	G15_033	FROM->TO	G14-057T 345.00 - SUNNYSIDE 345KV CKT 1	717	789	0.0439	100.18	GEN501813 1-RODEMACHER UNIT 3
FDNS	06NR	4	20L	G15_033	FROM->TO	G14-057T 345.00 - SUNNYSIDE 345KV CKT 1	717	789	0.04398	100.1544	RINGLING - SOUTH WILSON 138KV CKT 1
FDNS	06NR	4	20L	G15_033	FROM->TO	G14-057T 345.00 - SUNNYSIDE 345KV CKT 1	717	789	0.0439	100.1405	GEN501812 1-RODEMACHER UNIT 2
FDNS	06NR	4	20L	G15_033	FROM->TO	G14-057T 345.00 - SUNNYSIDE 345KV CKT 1	717	789	0.0439	100.1	GEN337652 1-WHITE BLUFF UNIT #1
FDNS	06NR	4	20L	G15_033	FROM->TO	G14-057T 345.00 - SUNNYSIDE 345KV CKT 1	717	789	0.0439	100.1	GEN337653 1-WHITE BLUFF UNIT #2
FDNS	06NR	4	20L	G15_033	FROM->TO	G14-057T 345.00 - SUNNYSIDE 345KV CKT 1	717	789	0.0459	100.0916	POTTER COUNTY INTERCHANGE - TOLK STATION 345KV CKT 1
FDNS	06NR	4	20L	G15_033	FROM->TO	G14-057T 345.00 - SUNNYSIDE 345KV CKT 1	717	789	0.04376	100.0763	CANEYRV7 345.00 - NEOSHO 345KV CKT 1
FDNS	06NR	4	20L	G15_033	FROM->TO	G14-057T 345.00 - SUNNYSIDE 345KV CKT 1	717	789	0.04434	100	BRIDGECR 138.00 - TUTTLE 138KV CKT 1
FDNS	06NR	4	20L	G15_033	FROM->TO	G14-057T 345.00 - SUNNYSIDE 345KV CKT 1	717	789	0.04398	100	MARIETTA - SOUTH WILSON 138KV CKT 1
FDNS	06NR	4	20L	G15_033	FROM->TO	G14-057T 345.00 - SUNNYSIDE 345KV CKT 1	717	789	0.04398	100	P12:138:WFEC:MSL17
FDNS	06NR	4	20L	G15_033	FROM->TO	G14-057T 345.00 - SUNNYSIDE 345KV CKT 1	717	789	0.0439	100	GEN509408 1-WILKES #2
FDNS	06NR	4	20L	G15_033	FROM->TO	G14-057T 345.00 - SUNNYSIDE 345KV CKT 1	717	789	0.0438	100	DOLET HILLS - SOUTHWEST SHREVEPORT 345KV CKT 1
FDNS	06NR	4	20L	G15_033	FROM->TO	G14-057T 345.00 - SUNNYSIDE 345KV CKT 1	717	789	0.0438	100	DOLET HILLS - SOUTHWEST SHREVEPORT 345KV CKT 1
FDNS	06NR	4	20L	G15_033	FROM->TO	G14-057T 345.00 - SUNNYSIDE 345KV CKT 1	717	789	0.04376	100	CANEYRV7 345.00 - LATHAMS7 345.00 345KV CKT 1
FDNS	06NR	4	20L	G15_033	FROM->TO	G14-057T 345.00 - SUNNYSIDE 345KV CKT 1	717	789	0.04434	99.9	BRIDGECR 138.00 - SUNSHINE CANYON 138KV CKT 1
FDNS	06NR	4	20L	G15_033	FROM->TO	G14-057T 345.00 - SUNNYSIDE 345KV CKT 1	717	789	0.04434	99.9	P12:138:WFEC:MSL01
FDNS	06NR	4	20L	G15_033	FROM->TO	G14-057T 345.00 - SUNNYSIDE 345KV CKT 1	717	789	0.0439	99.9	GEN337910 1-ARKANSAS NUCLEAR ONE UNIT #1
FDNS	06NR	4	20L	G15_033	FROM->TO	G14-057T 345.00 - SUNNYSIDE 345KV CKT 1	717	789	0.04374	99.9	AXTELL - POST ROCK 345KV CKT 1
FDNS	06NR	4	20L	G15_033	FROM->TO	G14-057T 345.00 - SUNNYSIDE 345KV CKT 1	717	789	0.04371	99.9	G13-010T 345.00 - POST ROCK 345KV CKT 1
FDNS	06NR	4	20L	G15_033	FROM->TO	G14-057T 345.00 - SUNNYSIDE 345KV CKT 1	717	789	0.04371	99.9	G13-010T 345.00 - SPEARVILLE 345KV CKT 1
FDNS	06NR	4	20L	G15_033	FROM->TO	G14-057T 345.00 - SUNNYSIDE 345KV CKT 1	717	789	0.04358	99.9	HOLCOMB - SETAB 345KV CKT 1
FDNS	06NR	4	20L	G15_033	FROM->TO	G14-057T 345.00 - SUNNYSIDE 345KV CKT 1	717	789	0.04358	99.9	HOLCOMB - SETAB 345KV CKT 1
FDNS	06NR	4	20L	G15_033	FROM->TO	G14-057T 345.00 - SUNNYSIDE 345KV CKT 1	717	789	0.04799	99.8	P12:345:SPS:J15.1.XRDS.TOLK
FDNS	06NR	4	20L	G15_033	FROM->TO	G14-057T 345.00 - SUNNYSIDE 345KV CKT 1	717	789	0.04405	99.8	CIVIT - PAOLI 138KV CKT 1
FDNS	06NR	4	20L	G15_033	FROM->TO	G14-057T 345.00 - SUNNYSIDE 345KV CKT 1	717	789	0.0439	99.8	FRONTIER - GRIMES 345KV CKT 1
FDNS	06NR	4	20L	G15_033	FROM->TO	G14-057T 345.00 - SUNNYSIDE 345KV CKT 1	717	789	0.0439	99.8	NEW MADRID 345/22.0KV TRANSFORMER CKT 1
FDNS	06NR	4	20L	G15_033	FROM->TO	G14-057T 345.00 - SUNNYSIDE 345KV CKT 1	717	789	0.04377	99.8	P12:138:AEPW-OGE:WTH_JCT4:JENSEN4
FDNS	06NR	4	20L	G15_033	FROM->TO	G14-057T 345.00 - SUNNYSIDE 345KV CKT 1	717	789	0.04364	99.8	G1524G1525 345.00 - THISTLE7 345.00 345KV CKT 1
FDNS	06NR	4	20L	G15_033	FROM->TO	G14-057T 345.00 - SUNNYSIDE 345KV CKT 1	717	789	0.04364	99.8	G1524G1525 345.00 - THISTLE7 345.00 345KV CKT 2

SOLUTION	GROUP	SCENARIO	SEASON	SOURCE	DIRECTION	MONITORED ELEMENT	RATEA (MVA)	RATEB(MVA)	TDF	TC%LOADING (% MVA)	CONTINGENCY
FDNS	06NR	4	20L	G15_033	FROM->TO	G14-057T 345.00 - SUNNYSIDE 345KV CKT 1	717	789	0.04422	99.7	BLANCHARD - CORNVILLE 138KV CKT 1
FDNS	06NR	4	20L	G15_033	FROM->TO	G14-057T 345.00 - SUNNYSIDE 345KV CKT 1	717	789	0.04422	99.7	P12:138:AEPW-OGE:CORNVIL4:MAUD 4
FDNS	06NR	4	20L	G15_033	FROM->TO	G14-057T 345.00 - SUNNYSIDE 345KV CKT 1	717	789	0.04405	99.7	CIVIT - STRATFORD 138KV CKT 1
FDNS	06NR	4	20L	G15_033	FROM->TO	G14-057T 345.00 - SUNNYSIDE 345KV CKT 1	717	789	0.04405	99.7	OIL CENTER - STRATFORD 138KV CKT 1
FDNS	06NR	4	20L	G15_033	FROM->TO	G14-057T 345.00 - SUNNYSIDE 345KV CKT 1	717	789	0.0439	99.7	GEN334030 1-FRONTIER UNIT 1
FDNS	06NR	4	20L	G15_033	FROM->TO	G14-057T 345.00 - SUNNYSIDE 345KV CKT 1	717	789	0.0439	99.7	GEN334031 1-FRONTIER UNIT 2
FDNS	06NR	4	20L	G15_033	FROM->TO	G14-057T 345.00 - SUNNYSIDE 345KV CKT 1	717	789	0.0439	99.7	GEN334440 1-SABINE UNIT 4
FDNS	06NR	4	20L	G15_033	FROM->TO	G14-057T 345.00 - SUNNYSIDE 345KV CKT 1	717	789	0.0439	99.7	GEN506754 1-LEBROCK STEAM 1
FDNS	06NR	4	20L	G15_033	FROM->TO	G14-057T 345.00 - SUNNYSIDE 345KV CKT 1	717	789	0.04384	99.7	ELDORADO EHV - SHERIDAN EHV 500KV CKT 1
FDNS	06NR	4	20L	G15_033	FROM->TO	G14-057T 345.00 - SUNNYSIDE 345KV CKT 1	717	789	0.04375	99.7	MATHWSN7 345.00 - NORTHWEST 345KV CKT 1
FDNS	06NR	4	20L	G15_033	FROM->TO	G14-057T 345.00 - SUNNYSIDE 345KV CKT 1	717	789	0.04329	99.7	CHISHOLM6 230.00 - ELK CITY 230KV 230KV CKT 1
FDNS	06NR	4	20L	G15_033	FROM->TO	G14-057T 345.00 - SUNNYSIDE 345KV CKT 1	717	789	0.04329	99.7	ELK CITY 230KV (ELKCTY-6) 230/138/13.8KV TRANSFORMER CKT 1
FDNS	06NR	4	20L	G15_033	FROM->TO	G14-057T 345.00 - SUNNYSIDE 345KV CKT 1	717	789	0.04329	99.7	ELK CITY 230KV (ELKCTY-6) 230/138/13.8KV TRANSFORMER CKT 1
FDNS	06NR	4	20L	G15_033	FROM->TO	G14-057T 345.00 - SUNNYSIDE 345KV CKT 1	717	789	0.04455	99.6	P12:138:AEPW:CORNVIL4:DUNCAN-4
FDNS	06NR	4	20L	G15_033	FROM->TO	G14-057T 345.00 - SUNNYSIDE 345KV CKT 1	717	789	0.04423	99.6	BAILEY4 138.00 - SUNSHINE CANYON 138KV CKT 1
FDNS	06NR	4	20L	G15_033	FROM->TO	G14-057T 345.00 - SUNNYSIDE 345KV CKT 1	717	789	0.04423	99.6	BAILEY4 138.00 - WESTMOORE 138KV CKT 1
FDNS	06NR	4	20L	G15_033	FROM->TO	G14-057T 345.00 - SUNNYSIDE 345KV CKT 1	717	789	0.04422	99.6	BLANCHARD - MAUD 138KV CKT 1
FDNS	06NR	4	20L	G15_033	FROM->TO	G14-057T 345.00 - SUNNYSIDE 345KV CKT 1	717	789	0.04405	99.6	LATTA JCT - OIL CENTER 138KV CKT 1
FDNS	06NR	4	20L	G15_033	FROM->TO	G14-057T 345.00 - SUNNYSIDE 345KV CKT 1	717	789	0.04395	99.6	TUPELO - TUPELO TAP 138KV CKT 1
FDNS	06NR	4	20L	G15_033	FROM->TO	G14-057T 345.00 - SUNNYSIDE 345KV CKT 1	717	789	0.0439	99.6	GEN335204 1-NELSON UNIT 4
FDNS	06NR	4	20L	G15_033	FROM->TO	G14-057T 345.00 - SUNNYSIDE 345KV CKT 1	717	789	0.0439	99.6	GEN336170 1-GULF OXY U4
FDNS	06NR	4	20L	G15_033	FROM->TO	G14-057T 345.00 - SUNNYSIDE 345KV CKT 1	717	789	0.0439	99.6	GEN336252 1-NINEMILE POINT UNIT#5
FDNS	06NR	4	20L	G15_033	FROM->TO	G14-057T 345.00 - SUNNYSIDE 345KV CKT 1	717	789	0.04378	99.6	P12:138:AEPW:REDROCKRD4:WTH_JCT4
FDNS	06NR	4	20L	G15_033	FROM->TO	G14-057T 345.00 - SUNNYSIDE 345KV CKT 1	717	789	0.04378	99.6	WEATHERFORD JCT. - WEATHERFORD SOUTHEAST 138KV CKT 1
FDNS	06NR	4	20L	G15_033	FROM->TO	G14-057T 345.00 - SUNNYSIDE 345KV CKT 1	717	789	0.04378	99.6	WEATHERFORD JCT. - WEATHERFORD SOUTHEAST 138KV CKT 1
FDNS	06NR	4	20L	G15_033	FROM->TO	G14-057T 345.00 - SUNNYSIDE 345KV CKT 1	717	789	0.04376	99.6	LATHAMS7 345.00 - ROSE HILL 345KV CKT 1
FDNS	06NR	4	20L	G15_033	FROM->TO	G14-057T 345.00 - SUNNYSIDE 345KV CKT 1	717	789	0.04364	99.6	PARK LANE - SEMINOLE 138KV CKT 1
FDNS	06NR	4	20L	G15_033	FROM->TO	G14-057T 345.00 - SUNNYSIDE 345KV CKT 1	717	789	0.04359	99.6	P12:138:OKGE:3TERM27
FDNS	06NR	4	20L	G15_033	FROM->TO	G14-057T 345.00 - SUNNYSIDE 345KV CKT 1	717	789	0.04357	99.6	CANADIAN - NOBLE 138KV CKT 1
FDNS	06NR	4	20L	G15_033	FROM->TO	G14-057T 345.00 - SUNNYSIDE 345KV CKT 1	717	789	0.04357	99.6	NOBLE - PURCELL4 138.00 138KV CKT 1
FDNS	00NR	4	17SP	G15_033	FROM->TO	G14-057T 345.00 - SUNNYSIDE 345KV CKT 1	717	789	0.06033	99.5	GRACEMONT - MINCO 345KV CKT 1
FDNS	06NR	4	20L	G15_033	FROM->TO	G14-057T 345.00 - SUNNYSIDE 345KV CKT 1	717	789	0.04423	99.5	FRANKLIN SW - WESTMOORE 138KV CKT 1
FDNS	06NR	4	20L	G15_033	FROM->TO	G14-057T 345.00 - SUNNYSIDE 345KV CKT 1	717	789	0.04405	99.5	LASALLE - LATTA JCT 138KV CKT 1
FDNS	06NR	4	20L	G15_033	FROM->TO	G14-057T 345.00 - SUNNYSIDE 345KV CKT 1	717	789	0.04398	99.5	MARIETTA - MARIETTA4 138.00 138KV CKT 1
FDNS	06NR	4	20L	G15_033	FROM->TO	G14-057T 345.00 - SUNNYSIDE 345KV CKT 1	717	789	0.0439	99.5	GEN336831 1-BAXTER WILSON SES
FDNS	06NR	4	20L	G15_033	FROM->TO	G14-057T 345.00 - SUNNYSIDE 345KV CKT 1	717	789	0.0439	99.5	GEN338146 1-INDEPENDENCE UNIT #2
FDNS	06NR	4	20L	G15_033	FROM->TO	G14-057T 345.00 - SUNNYSIDE 345KV CKT 1	717	789	0.0439	99.5	NEW MADRID 161/22.0KV TRANSFORMER CKT 1
FDNS	06NR	4	20L	G15_033	FROM->TO	G14-057T 345.00 - SUNNYSIDE 345KV CKT 1	717	789	0.0439	99.5	WHITE BLUFF 500/26.0KV TRANSFORMER CKT 1
FDNS	06NR	4	20L	G15_033	FROM->TO	G14-057T 345.00 - SUNNYSIDE 345KV CKT 1	717	789	0.04387	99.5	P12:138:WFEC:MSL02
FDNS	06NR	4	20L	G15_033	FROM->TO	G14-057T 345.00 - SUNNYSIDE 345KV CKT 1	717	789	0.04386	99.5	ELDORADO EHV - MOUNT OLIVE 500KV CKT 1
FDNS	06NR	4	20L	G15_033	FROM->TO	G14-057T 345.00 - SUNNYSIDE 345KV CKT 1	717	789	0.04386	99.5	EMPORIA ENERGY CENTER - G14_001T 345.00 345KV CKT 1
FDNS	06NR	4	20L	G15_033	FROM->TO	G14-057T 345.00 - SUNNYSIDE 345KV CKT 1	717	789	0.04385	99.5	PAOLI - PAYNE 138.00 138KV CKT 1
FDNS	06NR	4	20L	G15_033	FROM->TO	G14-057T 345.00 - SUNNYSIDE 345KV CKT 1	717	789	0.04383	99.5	DRAPER LAKE - SEMINOLE 345KV CKT 1
FDNS	06NR	4	20L	G15_033	FROM->TO	G14-057T 345.00 - SUNNYSIDE 345KV CKT 1	717	789	0.04383	99.5	DRAPER LAKE - SEMINOLE 345KV CKT 2
FDNS	06NR	4	20L	G15_033	FROM->TO	G14-057T 345.00 - SUNNYSIDE 345KV CKT 1	717	789	0.04383	99.5	P12:138:AEPW:WTHWF4:CLINTJC4
FDNS	06NR	4	20L	G15_033	FROM->TO	G14-057T 345.00 - SUNNYSIDE 345KV CKT 1	717	789	0.04378	99.5	HINTON - REDROCKRD4 138.00 138KV CKT 1
FDNS	06NR	4	20L	G15_033	FROM->TO	G14-057T 345.00 - SUNNYSIDE 345KV CKT 1	717	789	0.04378	99.5	HINTON - WEATHERFORD JCT. 138KV CKT 1
FDNS	06NR	4	17G	G15_033	FROM->TO	G14-074T 345.00 - OKLAUNION 345KV CKT 1	1022	1124	0.16981	105.4861	STATELINE INTERCHANGE - STLN-DEMARC6 230KV CKT 1
FDNS	06NR	4	17G	G15_033	FROM->TO	G14-074T 345.00 - OKLAUNION 345KV CKT 1	1022	1124	0.16981	105.4832	P12:230:AEPW-SPS:SWEETWT6:WHEELER 6
FDNS	06NR	4	17G	G15_033	FROM->TO	G14-074T 345.00 - OKLAUNION 345KV CKT 1	1022	1124	0.16981	105.0392	STLN-DEMARC6 - SWEETWATER 230KV CKT 1
FDNS	06NR	4	20L	G15_033	FROM->TO	G14-074T 345.00 - OKLAUNION 345KV CKT 1	1022	1124	0.17258	103.8229	GRAPEVINE INTERCHANGE - STATELINE INTERCHANGE 230KV CKT 1
FDNS	06NR	4	20L	G15_033	FROM->TO	G14-074T 345.00 - OKLAUNION 345KV CKT 1	1022	1124	0.17258	103.8229	GRAPEVINE INTERCHANGE - STATELINE INTERCHANGE 230KV CKT 1
FDNS	06NR	4	17G	G15_033	FROM->TO	G14-074T 345.00 - OKLAUNION 345KV CKT 1	1022	1124	0.18177	102.9967	MATHWSN7 345.00 - TATONGA7 345.00 345KV CKT 1
FDNS	06NR	4	20L	G15_033	FROM->TO	G14-074T 345.00 - OKLAUNION 345KV CKT 1	1022	1124	0.18183	101.1904	BASE CASE
FDNS	06NR	4	17G	G15_033	FROM->TO	G14-074T 345.00 - OKLAUNION 345KV CKT 1	1022	1124	0.17773	101.0862	GRAPEVINE INTERCHANGE - NICHOLS STATION 230KV CKT 1
FDNS	06NR	4	17G	G15_033	FROM->TO	G14-074T 345.00 - OKLAUNION 345KV CKT 1	1022	1124	0.17773	101.0862	GRAPEVINE INTERCHANGE - NICHOLS STATION 230KV CKT 1
FDNS	06NR	4	17G	G15_033	FROM->TO	G14-074T 345.00 - OKLAUNION 345KV CKT 1	1022	1124	0.18177	99.8	G11_051T 345.00 - TATONGA7 345.00 345KV CKT 1
FDNS	00NR	4	25SP	G15_033	FROM->TO	Hitchland Interchange (SIEM 8743067) 345/230/13.2KV TRANSFORMER CKT 2	560	644	0.06192	100.255	Hitchland Interchange (H TB80155502) 345/230/13.2KV TRANSFORMER CKT 1
FDNS	00NR	4	25SP	G15_033	FROM->TO	Hitchland Interchange (SIEM 8743067) 345/230/13.2KV TRANSFORMER CKT 2	560	644	0.06192	100.255	Hitchland Interchange (H TB80155502) 345/230/13.2KV TRANSFORMER CKT 1
FDNS	00NR	4	25SP	G15_033	TO->FROM	JONES STATION - TUCO INTERCHANGE 230KV CKT 1	343.79	343.79	0.14593	129.809	CARLISLE INTERCHANGE - TUCO INTERCHANGE 230KV CKT 1
FDNS	00NR	4	25SP	G15_033	TO->FROM	JONES STATION - TUCO INTERCHANGE 230KV CKT 1	343.79	343.79	0.14593	129.809	CARLISLE INTERCHANGE - TUCO INTERCHANGE 230KV CKT 1
FDNS	00NR	4	25SP	G15_033	TO->FROM	JONES STATION - TUCO INTERCHANGE 230KV CKT 1	343.79	343.79	0.11293	113.028	GEN526333 1-JONES GEN #3 21 KV
FDNS	00NR	4	25SP	G15_033	TO->FROM	JONES STATION - TUCO INTERCHANGE 230KV CKT 1	343.79	343.79	0.11293	112.6359	GEN526334 1-JONES_4 116.500
FDNS	00NR	4	25SP	G15_033	TO->FROM	JONES STATION - TUCO INTERCHANGE 230KV CKT 1	343.79	343.79	0.13645	108.0461	TUCO INTERCHANGE - YOAKUM_345 345.00 345KV CKT 1
FDNS	00NR	4	25SP	G15_033	TO->FROM	JONES STATION - TUCO INTERCHANGE 230KV CKT 1	343.79	343.79	0.1311	103.563	CARLISLE INTERCHANGE - WOLFFORTH INTERCHANGE 230KV CKT 1
FDNS	00NR	4	25SP	G15_033	TO->FROM	JONES STATION - TUCO INTERCHANGE 230KV CKT 1	343.79	343.79	0.11311	101.3715	PLANT X STATION - SUNDOWN INTERCHANGE 230KV CKT 1
FDNS	00NR	4	25SP	G15_033	TO->FROM	JONES STATION - TUCO INTERCHANGE 230KV CKT 1	343.79	343.79	0.11311	101.3715	PLANT X STATION - SUNDOWN INTERCHANGE 230KV CKT 1
FDNS	00NR	4	25SP	G15_033	TO->FROM	JONES STATION - TUCO INTERCHANGE 230KV CKT 1	343.79	343.79	0.1255	100.6898	P12:345:SPS:J02.1.TOLK.EDDY
FDNS	00NR	4	25SP	G15_033	TO->FROM	JONES STATION - TUCO INTERCHANGE 230KV CKT 1	343.79	343.79	0.11293	100.6764	GEN526332 1-JONES GEN #2 21 KV
FDNS	00NR	4	25SP	G15_033	TO->FROM	JONES STATION - TUCO INTERCHANGE 230KV CKT 1	343.79	343.79	0.11293	100.6745	GEN526331 1-JONES GEN #1 22 KV
FDNS	00NR	4	25SP	G15_033	TO->FROM	JONES STATION - TUCO INTERCHANGE 230KV CKT 1	343.79	343.79	0.11772	100.6429	TUCO INTERCHANGE (ENRCO 136401) 230/115/13.2KV TRANSFORMER CKT 1
FDNS	00NR	4	25SP	G15_033	TO->FROM	JONES STATION - TUCO INTERCHANGE 230KV CKT 1	343.79	343.79	0.11772	100.6429	TUCO INTERCHANGE (ENRCO 136401) 230/115/13.2KV TRANSFORMER CKT 1
FDNS	00NR	4	25SP	G15_033	TO->FROM	JONES STATION - TUCO INTERCHANGE 230KV CKT 1	343.79	343.79	0.11772	100.6429	TUCO INTERCHANGE (ENRCO 136401) 230/115/13.2KV TRANSFORMER CKT 2
FDNS	00NR	4	25SP	G15_033	TO->FROM	JONES STATION - TUCO INTERCHANGE 230KV CKT 1	343.79	343.79	0.11772	100.6429	TUCO INTERCHANGE (ENRCO 136401) 230/115/13.2KV TRANSFORMER CKT 2
FDNS	00NR	4	25SP	G15_033	TO->FROM	JONES STATION - TUCO INTERCHANGE 230KV CKT 1	343.79	343.79	0.12105	99.8	LUBBOCK EAST INTERCHANGE - TUCO INTERCHANGE 115KV CKT 1
FDNS	00NR	4	25SP	G15_033	TO->FROM	JONES STATION - TUCO INTERCHANGE 230KV CKT 1	343.79	343.79	0.12105	99.8	LUBBOCK EAST INTERCHANGE - TUCO INTERCHANGE 115KV CKT 1
FDNS	00NR	4	25SP	G15_033	FROM->TO	LUBBOCK POWER & LIGHT-HOLLY PLANT (SHIH T101039) 230/69/13.5KV TRANSFORMER CKT 1	224	224	0.03592	104.6928	LUBBOCK POWER & LIGHT-SOUTHEAST - LUBBOCK SOUTH INTERCHANGE 230KV CKT 1
FDNS	00NR	4	25SP	G15_033	FROM->TO	LUBBOCK POWER & LIGHT-HOLLY PLANT (SHIH T101039) 230/69/13.5KV TRANSFORMER CKT 1	224	224	0.03592	104.6926	P12:LPL:SPS:K64.1.LP-SE.LUBBS
FDNS	00NR	4	25SP	G15_033	FROM->TO	LUBBOCK POWER & LIGHT-HOLLY PLANT (SHIH T101039) 230/69/13.5KV TRANSFORMER CKT 1	224	224	0.03513	101.9377	LUBBOCK EAST INTERCHANGE - LUBBOCK POWER & LIGHT-WADSWORTH 230KV CKT 1

SOLUTION	GROUP	SCENARIO	SEASON	SOURCE	DIRECTION	MONITORED ELEMENT	RATEA (MVA)	RATEB(MVA)	TDF	TC%LOADING (% MVA)	CONTINGENCY
FDNS	00NR	4	25SP	G15_033	FROM->TO	LUBBOCK POWER & LIGHT-HOLLY PLANT (SHIH T101039) 230/69/13.5KV TRANSFORMER CKT 1	224	224	0.03513	101.923	P12:230:LPL:K57.1.LP-WADS.LUBBE
FDNS	00NR	4	25SP	G15_033	FROM->TO	LUBBOCK POWER & LIGHT-HOLLY PLANT (SHIH T101039) 230/69/13.5KV TRANSFORMER CKT 1	224	224	0.03513	101.9229	LUBBOCK POWER & LIGHT-WADSWORTH (SHIH T101038) 230/69/13.5KV TRANSFORMER CKT 1
FDNS	00NR	4	25SP	G15_033	FROM->TO	LUBBOCK POWER & LIGHT-HOLLY PLANT (SHIH T101039) 230/69/13.5KV TRANSFORMER CKT 1	224	224	0.03513	101.9229	LUBBOCK POWER & LIGHT-WADSWORTH (SHIH T101038) 230/69/13.5KV TRANSFORMER CKT 1
FDNSLock	06ALL	4	20L	G15_033		OKLAUNION 345KV SWITCHED SHUNT	1022	1124	0.31768	86.37846	BASE CASE
FDNS	06ALL	4	17G	G15_033	FROM->TO	TUCO INTERCHANGE - TUCO_2 230.00 230KV CKT 1	497	547	0.37656	105.7922	TUCO INTERCHANGE - TUCO_2 345.00 345KV CKT 1
FDNS	06ALL	4	20L	G15_033	FROM->TO	TUCO INTERCHANGE - TUCO_2 230.00 230KV CKT 1	497	547	0.32458	103.1103	TUCO INTERCHANGE - TUCO_2 345.00 345KV CKT 1
FDNS	00NR	4	25SP	G15_033	FROM->TO	TUCO INTERCHANGE (ENRCO 136401) 230/115/13.2KV TRANSFORMER CKT 1	250	288	0.05151	119.2845	TUCO INTERCHANGE (ENRCO 136401) 230/115/13.2KV TRANSFORMER CKT 2
FDNS	00NR	4	25SP	G15_033	FROM->TO	TUCO INTERCHANGE (ENRCO 136401) 230/115/13.2KV TRANSFORMER CKT 1	250	288	0.05151	119.2845	TUCO INTERCHANGE (ENRCO 136401) 230/115/13.2KV TRANSFORMER CKT 2
FDNS	00NR	4	25SP	G15_033	FROM->TO	TUCO INTERCHANGE (ENRCO 136401) 230/115/13.2KV TRANSFORMER CKT 1	250	288	0.05151	111.9148	TUCO INTERCHANGE (ENRCO 136401) 230/115/13.2KV TRANSFORMER CKT 2
FDNS	00NR	4	25SP	G15_033	FROM->TO	TUCO INTERCHANGE (ENRCO 136401) 230/115/13.2KV TRANSFORMER CKT 1	250	288	0.05151	111.9148	TUCO INTERCHANGE (ENRCO 136401) 230/115/13.2KV TRANSFORMER CKT 2
FDNS	00NR	4	25SP	G15_033	FROM->TO	TUCO INTERCHANGE (ENRCO 136401) 230/115/13.2KV TRANSFORMER CKT 2	250	288	0.05151	119.2845	TUCO INTERCHANGE (ENRCO 136401) 230/115/13.2KV TRANSFORMER CKT 1
FDNS	00NR	4	25SP	G15_033	FROM->TO	TUCO INTERCHANGE (ENRCO 136401) 230/115/13.2KV TRANSFORMER CKT 2	250	288	0.05151	119.2845	TUCO INTERCHANGE (ENRCO 136401) 230/115/13.2KV TRANSFORMER CKT 1
FDNS	00NR	4	25SP	G15_033	FROM->TO	TUCO INTERCHANGE (ENRCO 136401) 230/115/13.2KV TRANSFORMER CKT 2	250	288	0.05151	111.9148	TUCO INTERCHANGE (ENRCO 136401) 230/115/13.2KV TRANSFORMER CKT 1
FDNS	00NR	4	25SP	G15_033	FROM->TO	TUCO INTERCHANGE (ENRCO 136401) 230/115/13.2KV TRANSFORMER CKT 2	250	288	0.05151	111.9148	TUCO INTERCHANGE (ENRCO 136401) 230/115/13.2KV TRANSFORMER CKT 1
FDNS	06ALL	4	20L	G15_033	FROM->TO	TUCO_2 345.00 (TUCO_2 XFMR) 345/230/13.2KV TRANSFORMER CKT 1	560	560	0.2357	116.7572	TUCO INTERCHANGE - TUCO_2 345.00 345KV CKT 1
FDNS	06ALL	4	17G	G15_033	FROM->TO	TUCO_2 345.00 (TUCO_2 XFMR) 345/230/13.2KV TRANSFORMER CKT 1	560	560	0.27968	116.3962	TUCO INTERCHANGE - TUCO_2 345.00 345KV CKT 1
FDNS	06ALL	4	20L	G15_033	FROM->TO	TUCO_2 345.00 (TUCO_2 XFMR) 345/230/13.2KV TRANSFORMER CKT 1	560	560	0.2357	114.2306	TUCO INTERCHANGE - TUCO_2 345.00 345KV CKT 1
FDNS	06ALL	4	17G	G15_033	FROM->TO	TUCO_2 345.00 (TUCO_2 XFMR) 345/230/13.2KV TRANSFORMER CKT 1	560	560	0.27968	113.9028	TUCO INTERCHANGE - TUCO_2 345.00 345KV CKT 1
FDNS	06ALL	4	20WP	G15_033	FROM->TO	TUCO_2 345.00 (TUCO_2 XFMR) 345/230/13.2KV TRANSFORMER CKT 1	560	560	0.25532	111.7671	TUCO INTERCHANGE - TUCO_2 345.00 345KV CKT 1
FDNS	06ALL	4	20WP	G15_033	FROM->TO	TUCO_2 345.00 (TUCO_2 XFMR) 345/230/13.2KV TRANSFORMER CKT 1	560	560	0.25532	109.2949	TUCO INTERCHANGE - TUCO_2 345.00 345KV CKT 1
FDNS	06ALL	4	16WP	G15_033	FROM->TO	TUCO_2 345.00 (TUCO_2 XFMR) 345/230/13.2KV TRANSFORMER CKT 1	560	560	0.28643	99.9	TUCO INTERCHANGE - TUCO_2 345.00 345KV CKT 1
FDNS	06ALL	5	20SP	G15_033	FROM->TO	CHISHOLM6 230.00 - ELK CITY 230KV 230KV CKT 1	353	353	0.04996	107.7212	BASE CASE
FDNS	06ALL	5	17SP	G15_033	FROM->TO	CHISHOLM6 230.00 - ELK CITY 230KV 230KV CKT 1	353	353	0.05014	105.7594	BASE CASE
FDNS	06ALL	5	20L	G15_033	TO->FROM	CIMARRON - MINCO 345KV CKT 1	956	956	0.2583	139.1694	G14-057T 345.00 - SUNNYSIDE 345KV CKT 1
FDNS	06ALL	5	20L	G15_033	TO->FROM	CIMARRON - MINCO 345KV CKT 1	956	956	0.2583	133.4583	G14-057T 345.00 - LAWTON EASTSIDE 345KV CKT 1
FDNS	06ALL	5	17G	G15_033	TO->FROM	CIMARRON - MINCO 345KV CKT 1	956	956	0.28894	132.5137	G14-057T 345.00 - SUNNYSIDE 345KV CKT 1
FDNS	06ALL	5	20WP	G15_033	TO->FROM	CIMARRON - MINCO 345KV CKT 1	956	956	0.28346	131.4126	G14-057T 345.00 - SUNNYSIDE 345KV CKT 1
FDNS	06ALL	5	17G	G15_033	TO->FROM	CIMARRON - MINCO 345KV CKT 1	956	956	0.28894	127.0859	G14-057T 345.00 - LAWTON EASTSIDE 345KV CKT 1
FDNS	06ALL	5	20WP	G15_033	TO->FROM	CIMARRON - MINCO 345KV CKT 1	956	956	0.28346	126.0182	G14-057T 345.00 - LAWTON EASTSIDE 345KV CKT 1
FDNS	06ALL	5	16WP	G15_033	TO->FROM	CIMARRON - MINCO 345KV CKT 1	956	956	0.2957	125.0103	G14-057T 345.00 - SUNNYSIDE 345KV CKT 1
FDNS	06NR	5	20L	G15_033	TO->FROM	CIMARRON - MINCO 345KV CKT 1	956	956	0.05523	124.6843	G14-057T 345.00 - SUNNYSIDE 345KV CKT 1
FDNS	00NR	5	20WP	G15_033	TO->FROM	CIMARRON - MINCO 345KV CKT 1	956	956	0.05378	123.8972	G14-057T 345.00 - SUNNYSIDE 345KV CKT 1
FDNS	06ALL	5	17SP	G15_033	TO->FROM	CIMARRON - MINCO 345KV CKT 1	956	956	0.29187	123.5221	G14-057T 345.00 - SUNNYSIDE 345KV CKT 1
FDNS	00NR	5	16WP	G15_033	TO->FROM	CIMARRON - MINCO 345KV CKT 1	956	956	0.05529	122.2244	G14-057T 345.00 - SUNNYSIDE 345KV CKT 1
FDNS	06ALL	5	20SP	G15_033	TO->FROM	CIMARRON - MINCO 345KV CKT 1	956	956	0.28965	120.476	G14-057T 345.00 - SUNNYSIDE 345KV CKT 1
FDNS	06NR	5	17G	G15_033	TO->FROM	CIMARRON - MINCO 345KV CKT 1	956	956	0.05557	120.3119	G14-057T 345.00 - SUNNYSIDE 345KV CKT 1
FDNS	06ALL	5	16WP	G15_033	TO->FROM	CIMARRON - MINCO 345KV CKT 1	956	956	0.2957	119.6144	G14-057T 345.00 - LAWTON EASTSIDE 345KV CKT 1
FDNS	06NR	5	20L	G15_033	TO->FROM	CIMARRON - MINCO 345KV CKT 1	956	956	0.05523	118.5095	G14-057T 345.00 - LAWTON EASTSIDE 345KV CKT 1
FDNS	06ALL	5	17SP	G15_033	TO->FROM	CIMARRON - MINCO 345KV CKT 1	956	956	0.29187	118.2604	G14-057T 345.00 - LAWTON EASTSIDE 345KV CKT 1
FDNS	06ALL	5	20L	G15_033	TO->FROM	CIMARRON - MINCO 345KV CKT 1	956	956	0.20731	118.1438	MATHWSN7 345.00 - TATONGA7 345.00 345KV CKT 1
FDNS	06ALL	5	20SP	G15_033	TO->FROM	CIMARRON - MINCO 345KV CKT 1	956	956	0.28965	115.0864	G14-057T 345.00 - LAWTON EASTSIDE 345KV CKT 1
FDNS	06NR	5	17G	G15_033	TO->FROM	CIMARRON - MINCO 345KV CKT 1	956	956	0.05557	114.3373	G14-057T 345.00 - LAWTON EASTSIDE 345KV CKT 1
FDNS	06ALL	5	17G	G15_033	TO->FROM	CIMARRON - MINCO 345KV CKT 1	956	956	0.23072	113.1247	MATHWSN7 345.00 - TATONGA7 345.00 345KV CKT 1
FDNS	06ALL	5	20WP	G15_033	TO->FROM	CIMARRON - MINCO 345KV CKT 1	956	956	0.22537	112.7231	MATHWSN7 345.00 - TATONGA7 345.00 345KV CKT 1
FDNS	06ALL	5	20L	G15_033	TO->FROM	CIMARRON - MINCO 345KV CKT 1	956	956	0.23928	110.4804	CHISHOLM7 345.00 - WOODWARD DISTRICT EHV 345KV CKT 1
FDNS	06ALL	5	17G	G15_033	TO->FROM	CIMARRON - MINCO 345KV CKT 1	956	956	0.26415	110.4087	CHISHOLM7 345.00 - WOODWARD DISTRICT EHV 345KV CKT 1
FDNS	06ALL	5	20L	G15_033	TO->FROM	CIMARRON - MINCO 345KV CKT 1	956	956	0.20731	109.9874	G11_051T 345.00 - TATONGA7 345.00 345KV CKT 1
FDNS	06ALL	5	20L	G15_033	TO->FROM	CIMARRON - MINCO 345KV CKT 1	956	956	0.20731	108.3093	G11_051T 345.00 - WOODWARD DISTRICT EHV 345KV CKT 1
FDNS	06ALL	5	20WP	G15_033	TO->FROM	CIMARRON - MINCO 345KV CKT 1	956	956	0.22537	107.3503	G11_051T 345.00 - TATONGA7 345.00 345KV CKT 1
FDNS	06ALL	5	17G	G15_033	TO->FROM	CIMARRON - MINCO 345KV CKT 1	956	956	0.23072	107.1655	G11_051T 345.00 - TATONGA7 345.00 345KV CKT 1
FDNS	06ALL	5	20WP	G15_033	TO->FROM	CIMARRON - MINCO 345KV CKT 1	956	956	0.26067	106.6912	CHISHOLM7 345.00 - WOODWARD DISTRICT EHV 345KV CKT 1
FDNS	06ALL	5	16WP	G15_033	TO->FROM	CIMARRON - MINCO 345KV CKT 1	956	956	0.23594	106.1194	MATHWSN7 345.00 - TATONGA7 345.00 345KV CKT 1
FDNS	06ALL	5	17SP	G15_033	TO->FROM	CIMARRON - MINCO 345KV CKT 1	956	956	0.23365	106.0588	MATHWSN7 345.00 - TATONGA7 345.00 345KV CKT 1
FDNS	00NR	5	20WP	G15_033	TO->FROM	CIMARRON - MINCO 345KV CKT 1	956	956	0.05378	105.7612	G14-057T 345.00 - LAWTON EASTSIDE 345KV CKT 1
FDNS	06ALL	5	20WP	G15_033	TO->FROM	CIMARRON - MINCO 345KV CKT 1	956	956	0.22537	105.6974	G11_051T 345.00 - WOODWARD DISTRICT EHV 345KV CKT 1
FDNS	06ALL	5	17G	G15_033	TO->FROM	CIMARRON - MINCO 345KV CKT 1	956	956	0.23072	105.5499	G11_051T 345.00 - WOODWARD DISTRICT EHV 345KV CKT 1
FDNS	06ALL	5	20SP	G15_033	TO->FROM	CIMARRON - MINCO 345KV CKT 1	956	956	0.23213	105.1459	MATHWSN7 345.00 - TATONGA7 345.00 345KV CKT 1
FDNS	00NR	5	16WP	G15_033	TO->FROM	CIMARRON - MINCO 345KV CKT 1	956	956	0.05529	104.0987	G14-057T 345.00 - LAWTON EASTSIDE 345KV CKT 1
FDNS	06ALL	5	20SP	G15_033	TO->FROM	CIMARRON - MINCO 345KV CKT 1	956	956	0.26771	102.6282	CHISHOLM7 345.00 - WOODWARD DISTRICT EHV 345KV CKT 1
FDNS	06ALL	5	17SP	G15_033	TO->FROM	CIMARRON - MINCO 345KV CKT 1	956	956	0.26999	102.3712	CHISHOLM7 345.00 - WOODWARD DISTRICT EHV 345KV CKT 1
FDNS	06ALL	5	17G	G15_033	TO->FROM	CIMARRON - MINCO 345KV CKT 1	956	956	0.22884	102.1215	P12:138:WFEC:MSL03
FDNS	06ALL	5	20L	G15_033	TO->FROM	CIMARRON - MINCO 345KV CKT 1	956	956	0.20376	101.9631	Hitchland Interchange - WALKTAP7 345.00 345KV CKT 1
FDNS	06ALL	5	20L	G15_033	TO->FROM	CIMARRON - MINCO 345KV CKT 1	956	956	0.20376	101.9631	Hitchland Interchange - WALKTAP7 345.00 345KV CKT 1
FDNS	06ALL	5	20L	G15_033	TO->FROM	CIMARRON - MINCO 345KV CKT 1	956	956	0.20376	101.4614	P12:345:SPS:J07.1.FINN.HITCH
FDNS	06ALL	5	20L	G15_033	TO->FROM	CIMARRON - MINCO 345KV CKT 1	956	956	0.20945	101.0989	P12:138:WFEC:MSL03
FDNS	06ALL	5	20WP	G15_033	TO->FROM	CIMARRON - MINCO 345KV CKT 1	956	956	0.22471	101.0162	P12:138:WFEC:MSL03
FDNS	06ALL	5	17SP	G15_033	TO->FROM	CIMARRON - MINCO 345KV CKT 1	956	956	0.23365	100.8538	G11_051T 345.00 - TATONGA7 345.00 345KV CKT 1
FDNS	06ALL	5	16WP	G15_033	TO->FROM	CIMARRON - MINCO 345KV CKT 1	956	956	0.23594	100.7286	G11_051T 345.00 - TATONGA7 345.00 345KV CKT 1
FDNS	06ALL	5	20SP	G15_033	TO->FROM	CIMARRON - MINCO 345KV CKT 1	956	956	0.23213	100	G11_051T 345.00 - TATONGA7 345.00 345KV CKT 1
FDNS	06ALL	5	16WP	G15_033	TO->FROM	CIMARRON - MINCO 345KV CKT 1	956	956	0.27231	99.9	CHISHOLM7 345.00 - WOODWARD DISTRICT EHV 345KV CKT 1
FDNS	06ALL	5	20L	G15_033	TO->FROM	CIMARRON - MINCO 345KV CKT 1	956	956	0.20478	99.8	G14_038T 345.00 - Hitchland Interchange 345KV CKT 1
FDNS	06ALL	5	17SP	G15_033	TO->FROM	CIMARRON - MINCO 345KV CKT 1	956	956	0.23277	99.5	P12:138:WFEC:MSL03
FDNS	06NR	5	20L	G15_033	TO->FROM	G14-057T 345.00 - LAWTON EASTSIDE 345KV CKT 1	717	789	0.05224	122.5952	CIMARRON - MINCO 345KV CKT 1
FDNS	06ALL	5	17G	G15_033	TO->FROM	G14-057T 345.00 - LAWTON EASTSIDE 345KV CKT 1	717	789	0.22036	117.429	CIMARRON - MINCO 345KV CKT 1
FDNS	06ALL	5	20WP	G15_033	TO->FROM	G14-057T 345.00 - LAWTON EASTSIDE 345KV CKT 1	717	789	0.21599	117.3092	CIMARRON - MINCO 345KV CKT 1
FDNS	06NR	5	20L	G15_033	TO->FROM	G14-057T 345.00 - LAWTON EASTSIDE 345KV CKT 1	717	789	0.05224	116.2583	GRACEMONT - MINCO 345KV CKT 1
FDNS	06ALL	5	16WP	G15_033	TO->FROM	G14-057T 345.00 - LAWTON EASTSIDE 345KV CKT 1	717	789	0.22508	113.2124	CIMARRON - MINCO 345KV CKT 1
FDNS	06ALL	5	17G	G15_033	TO->FROM	G14-057T 345.00 - LAWTON EASTSIDE 345KV CKT 1	717	789	0.22036	112.1555	GRACEMONT - MINCO 345KV CKT 1
FDNS	06NR	5	17G	G15_033	TO->FROM	G14-057T 345.00 - LAWTON EASTSIDE 345KV CKT 1	717	789	0.05307	112.0131	CIMARRON - MINCO 345KV CKT 1

SOLUTION	GROUP	SCENARIO	SEASON	SOURCE	DIRECTION	MONITORED ELEMENT	RATEA (MVA)	RATEB(MVA)	TDF	TC%LOADING (% MVA)	CONTINGENCY
FDNS	06ALL	5	20WP	G15_033	TO->FROM	G14-057T 345.00 - LAWTON EASTSIDE 345KV CKT 1	717	789	0.21599	111.9797	GRACEMONT - MINCO 345KV CKT 1
FDNS	06ALL	5	16WP	G15_033	TO->FROM	G14-057T 345.00 - LAWTON EASTSIDE 345KV CKT 1	717	789	0.22508	108.0342	GRACEMONT - MINCO 345KV CKT 1
FDNS	06NR	5	17G	G15_033	TO->FROM	G14-057T 345.00 - LAWTON EASTSIDE 345KV CKT 1	717	789	0.05307	105.9401	GRACEMONT - MINCO 345KV CKT 1
FDNS	06ALL	5	17SP	G15_033	TO->FROM	G14-057T 345.00 - LAWTON EASTSIDE 345KV CKT 1	717	789	0.22016	105.0733	CIMARRON - MINCO 345KV CKT 1
FDNS	00NR	5	16WP	G15_033	TO->FROM	G14-057T 345.00 - LAWTON EASTSIDE 345KV CKT 1	717	789	0.05274	104.6617	CIMARRON - MINCO 345KV CKT 1
FDNS	06ALL	5	20L	G15_033	TO->FROM	G14-057T 345.00 - LAWTON EASTSIDE 345KV CKT 1	717	789	0.13592	104.5834	BASE CASE
FDNS	00NR	5	20WP	G15_033	TO->FROM	G14-057T 345.00 - LAWTON EASTSIDE 345KV CKT 1	717	789	0.05062	103.1548	CIMARRON - MINCO 345KV CKT 1
FDNS	06ALL	5	17SP	G15_033	TO->FROM	G14-057T 345.00 - LAWTON EASTSIDE 345KV CKT 1	717	789	0.22016	100.1031	GRACEMONT - MINCO 345KV CKT 1
FDNS	00NR	5	16WP	G15_033	FROM->TO	G14-057T 345.00 - SUNNYSIDE 345KV CKT 1	717	789	0.05274	146.4623	CIMARRON - MINCO 345KV CKT 1
FDNS	00NR	5	20WP	G15_033	FROM->TO	G14-057T 345.00 - SUNNYSIDE 345KV CKT 1	717	789	0.05062	144.7754	CIMARRON - MINCO 345KV CKT 1
FDNS	06NR	5	20L	G15_033	FROM->TO	G14-057T 345.00 - SUNNYSIDE 345KV CKT 1	717	789	0.05224	136.3495	CIMARRON - MINCO 345KV CKT 1
FDNS	00NR	5	16WP	G15_033	FROM->TO	G14-057T 345.00 - SUNNYSIDE 345KV CKT 1	717	789	0.05274	136.0682	GRACEMONT - MINCO 345KV CKT 1
FDNS	00NR	5	20WP	G15_033	FROM->TO	G14-057T 345.00 - SUNNYSIDE 345KV CKT 1	717	789	0.05062	134.4078	GRACEMONT - MINCO 345KV CKT 1
FDNS	06ALL	5	17G	G15_033	FROM->TO	G14-057T 345.00 - SUNNYSIDE 345KV CKT 1	717	789	0.22036	130.2501	CIMARRON - MINCO 345KV CKT 1
FDNS	06ALL	5	20WP	G15_033	FROM->TO	G14-057T 345.00 - SUNNYSIDE 345KV CKT 1	717	789	0.21599	130.1389	CIMARRON - MINCO 345KV CKT 1
FDNS	06NR	5	20L	G15_033	FROM->TO	G14-057T 345.00 - SUNNYSIDE 345KV CKT 1	717	789	0.05224	129.8344	GRACEMONT - MINCO 345KV CKT 1
FDNS	00NR	5	16WP	G15_033	FROM->TO	G14-057T 345.00 - SUNNYSIDE 345KV CKT 1	717	789	0.04031	129.3856	PITTSBURG - SEMINOLE 345KV CKT 1
FDNS	00NR	5	16WP	G15_033	FROM->TO	G14-057T 345.00 - SUNNYSIDE 345KV CKT 1	717	789	0.04031	129.3856	PITTSBURG - SEMINOLE 345KV CKT 1
FDNS	00NR	5	16WP	G15_033	FROM->TO	G14-057T 345.00 - SUNNYSIDE 345KV CKT 1	717	789	0.04212	129.2325	BASE CASE
FDNS	00NR	5	16WP	G15_033	FROM->TO	G14-057T 345.00 - SUNNYSIDE 345KV CKT 1	717	789	0.04151	126.3972	CIMARRON - DRAPER LAKE 345KV CKT 1
FDNS	00NR	5	20WP	G15_033	FROM->TO	G14-057T 345.00 - SUNNYSIDE 345KV CKT 1	717	789	0.04018	126.213	BASE CASE
FDNS	06ALL	5	16WP	G15_033	FROM->TO	G14-057T 345.00 - SUNNYSIDE 345KV CKT 1	717	789	0.22508	125.9754	CIMARRON - MINCO 345KV CKT 1
FDNS	00NR	5	20WP	G15_033	FROM->TO	G14-057T 345.00 - SUNNYSIDE 345KV CKT 1	717	789	0.03846	125.5446	PITTSBURG - SEMINOLE 345KV CKT 1
FDNS	00NR	5	20WP	G15_033	FROM->TO	G14-057T 345.00 - SUNNYSIDE 345KV CKT 1	717	789	0.03846	125.5446	PITTSBURG - SEMINOLE 345KV CKT 1
FDNS	06NR	5	17G	G15_033	FROM->TO	G14-057T 345.00 - SUNNYSIDE 345KV CKT 1	717	789	0.05307	125.22	CIMARRON - MINCO 345KV CKT 1
FDNS	06ALL	5	17G	G15_033	FROM->TO	G14-057T 345.00 - SUNNYSIDE 345KV CKT 1	717	789	0.22036	124.8231	GRACEMONT - MINCO 345KV CKT 1
FDNS	06ALL	5	20WP	G15_033	FROM->TO	G14-057T 345.00 - SUNNYSIDE 345KV CKT 1	717	789	0.21599	124.6486	GRACEMONT - MINCO 345KV CKT 1
FDNS	00NR	5	16WP	G15_033	FROM->TO	G14-057T 345.00 - SUNNYSIDE 345KV CKT 1	717	789	0.04393	123.9239	P12:138:WFEC:MSL03
FDNS	00NR	5	20WP	G15_033	FROM->TO	G14-057T 345.00 - SUNNYSIDE 345KV CKT 1	717	789	0.03961	123.3071	CIMARRON - DRAPER LAKE 345KV CKT 1
FDNS	00NR	5	16WP	G15_033	FROM->TO	G14-057T 345.00 - SUNNYSIDE 345KV CKT 1	717	789	0.04207	122.8987	PITTSBURG - VALLIANT 345KV CKT 1
FDNS	00NR	5	16WP	G15_033	FROM->TO	G14-057T 345.00 - SUNNYSIDE 345KV CKT 1	717	789	0.04207	122.8987	PITTSBURG - VALLIANT 345KV CKT 1
FDNS	00NR	5	16WP	G15_033	FROM->TO	G14-057T 345.00 - SUNNYSIDE 345KV CKT 1	717	789	0.04212	122.6811	GEN509403 1-PIRKEY GENERATION
FDNS	00NR	5	16WP	G15_033	FROM->TO	G14-057T 345.00 - SUNNYSIDE 345KV CKT 1	717	789	0.04212	122.5816	GEN509416 1-TURK GENERATION
FDNS	00NR	5	16WP	G15_033	FROM->TO	G14-057T 345.00 - SUNNYSIDE 345KV CKT 1	717	789	0.042	122.254	CLEVELAND - G15066_T 345.00 345KV CKT 1
FDNS	00NR	5	16WP	G15_033	FROM->TO	G14-057T 345.00 - SUNNYSIDE 345KV CKT 1	717	789	0.042	121.96	G15066_T 345.00 - SOONER 345KV CKT 1
FDNS	00NR	5	16WP	G15_033	FROM->TO	G14-057T 345.00 - SUNNYSIDE 345KV CKT 1	717	789	0.04212	121.6697	GEN501801 1-DOLET HILLS UNIT1
FDNS	00NR	5	16WP	G15_033	FROM->TO	G14-057T 345.00 - SUNNYSIDE 345KV CKT 1	717	789	0.04212	121.2711	GEN509404 1-WELSH #1
FDNS	00NR	5	16WP	G15_033	FROM->TO	G14-057T 345.00 - SUNNYSIDE 345KV CKT 1	717	789	0.04212	121.2711	GEN509406 1-WELSH #3
FDNS	00NR	5	20WP	G15_033	FROM->TO	G14-057T 345.00 - SUNNYSIDE 345KV CKT 1	717	789	0.04191	121.2196	P12:138:WFEC:MSL03
FDNS	00NR	5	16WP	G15_033	FROM->TO	G14-057T 345.00 - SUNNYSIDE 345KV CKT 1	717	789	0.04129	120.7959	MATHWSN7 345.00 - TATONGA7 345.00 345KV CKT 1
FDNS	00NR	5	16WP	G15_033	FROM->TO	G14-057T 345.00 - SUNNYSIDE 345KV CKT 1	717	789	0.0424	120.6735	CORN TAP - NAPLESTP 138.00 138KV CKT 1
FDNS	06ALL	5	16WP	G15_033	FROM->TO	G14-057T 345.00 - SUNNYSIDE 345KV CKT 1	717	789	0.22508	120.6526	GRACEMONT - MINCO 345KV CKT 1
FDNS	00NR	5	16WP	G15_033	FROM->TO	G14-057T 345.00 - SUNNYSIDE 345KV CKT 1	717	789	0.0424	120.5908	NAPLESTP 138.00 - PAYNE 138.00 138KV CKT 1
FDNS	00NR	5	16WP	G15_033	FROM->TO	G14-057T 345.00 - SUNNYSIDE 345KV CKT 1	717	789	0.04192	120.4003	7SAREPTA% 345.00 - LONGWOOD 345KV CKT 1
FDNS	00NR	5	16WP	G15_033	FROM->TO	G14-057T 345.00 - SUNNYSIDE 345KV CKT 1	717	789	0.04192	120.4003	7SAREPTA% 345.00 - LONGWOOD 345KV CKT 1
FDNS	00NR	5	16WP	G15_033	FROM->TO	G14-057T 345.00 - SUNNYSIDE 345KV CKT 1	717	789	0.04212	120.3826	GEN336821 1-GRAND GULF UNIT
FDNS	00NR	5	16WP	G15_033	FROM->TO	G14-057T 345.00 - SUNNYSIDE 345KV CKT 1	717	789	0.04232	120.2911	COMANCHE - LOCO 138KV CKT 1
FDNS	00NR	5	16WP	G15_033	FROM->TO	G14-057T 345.00 - SUNNYSIDE 345KV CKT 1	717	789	0.04205	120.2897	CLEVELAND - TULSA NORTH 345KV CKT 1
FDNS	00NR	5	16WP	G15_033	FROM->TO	G14-057T 345.00 - SUNNYSIDE 345KV CKT 1	717	789	0.04205	120.2897	CLEVELAND - TULSA NORTH 345KV CKT 1
FDNS	00NR	5	16WP	G15_033	FROM->TO	G14-057T 345.00 - SUNNYSIDE 345KV CKT 1	717	789	0.04212	120.2812	GEN336153 1-WATERFORD UNIT#3
FDNS	00NR	5	16WP	G15_033	FROM->TO	G14-057T 345.00 - SUNNYSIDE 345KV CKT 1	717	789	0.04203	120.2781	DOLET HILLS - SOUTHWEST SHREVEPORT 345KV CKT 1
FDNS	00NR	5	16WP	G15_033	FROM->TO	G14-057T 345.00 - SUNNYSIDE 345KV CKT 1	717	789	0.04203	120.2781	DOLET HILLS - SOUTHWEST SHREVEPORT 345KV CKT 1
FDNS	00NR	5	16WP	G15_033	FROM->TO	G14-057T 345.00 - SUNNYSIDE 345KV CKT 1	717	789	0.04245	120.2748	ANADARKO - POCASSETT 138KV CKT 1
FDNS	00NR	5	16WP	G15_033	FROM->TO	G14-057T 345.00 - SUNNYSIDE 345KV CKT 1	717	789	0.04245	120.1341	POCASSETT - TUTTLE 138KV CKT 1
FDNS	00NR	5	16WP	G15_033	FROM->TO	G14-057T 345.00 - SUNNYSIDE 345KV CKT 1	717	789	0.04121	120.1328	CANADIAN RIVER - MUSKOGEE 345KV CKT 1
FDNS	00NR	5	16WP	G15_033	FROM->TO	G14-057T 345.00 - SUNNYSIDE 345KV CKT 1	717	789	0.04129	120.054	G11_051T 345.00 - TATONGA7 345.00 345KV CKT 1
FDNS	00NR	5	16WP	G15_033	FROM->TO	G14-057T 345.00 - SUNNYSIDE 345KV CKT 1	717	789	0.04212	119.9747	GEN335831 1-RIVERBEND UNIT#1
FDNS	00NR	5	16WP	G15_033	FROM->TO	G14-057T 345.00 - SUNNYSIDE 345KV CKT 1	717	789	0.04195	119.9493	ARCADIA - NORTHWEST 345KV CKT 1
FDNS	00NR	5	16WP	G15_033	FROM->TO	G14-057T 345.00 - SUNNYSIDE 345KV CKT 1	717	789	0.04212	119.9448	GRAND GULF 500/22.0KV TRANSFORMER CKT 1
FDNS	00NR	5	16WP	G15_033	FROM->TO	G14-057T 345.00 - SUNNYSIDE 345KV CKT 1	717	789	0.04212	119.8989	GEN515577 1-ARBWND11 0.6900
FDNS	00NR	5	16WP	G15_033	FROM->TO	G14-057T 345.00 - SUNNYSIDE 345KV CKT 1	717	789	0.04175	119.8974	ARCADIA - SEMINOLE 345KV CKT 1
FDNS	00NR	5	16WP	G15_033	FROM->TO	G14-057T 345.00 - SUNNYSIDE 345KV CKT 1	717	789	0.04212	119.8728	GEN509409 1-WILKES #3
FDNS	00NR	5	20WP	G15_033	FROM->TO	G14-057T 345.00 - SUNNYSIDE 345KV CKT 1	717	789	0.04018	119.8534	GEN509403 1-PIRKEY GENERATION
FDNS	00NR	5	16WP	G15_033	FROM->TO	G14-057T 345.00 - SUNNYSIDE 345KV CKT 1	717	789	0.04332	119.8203	P12:138:AEPW:DUNCAN-4:L.E.S.-4
FDNS	00NR	5	16WP	G15_033	FROM->TO	G14-057T 345.00 - SUNNYSIDE 345KV CKT 1	717	789	0.04201	119.7848	7SAREPTA% 345.00 - ELDORADO EHV 345KV CKT 1
FDNS	00NR	5	16WP	G15_033	FROM->TO	G14-057T 345.00 - SUNNYSIDE 345KV CKT 1	717	789	0.04201	119.7846	3TR3AR8EL7EL
FDNS	00NR	5	20WP	G15_033	FROM->TO	G14-057T 345.00 - SUNNYSIDE 345KV CKT 1	717	789	0.04018	119.7835	GEN509416 1-TURK GENERATION
FDNS	00NR	5	16WP	G15_033	FROM->TO	G14-057T 345.00 - SUNNYSIDE 345KV CKT 1	717	789	0.04212	119.7742	HEALDTON - LOCO 138KV CKT 1
FDNS	00NR	5	16WP	G15_033	FROM->TO	G14-057T 345.00 - SUNNYSIDE 345KV CKT 1	717	789	0.04201	119.7742	ELDORADO EHV 500/345KV TRANSFORMER CKT 1
FDNS	00NR	5	16WP	G15_033	FROM->TO	G14-057T 345.00 - SUNNYSIDE 345KV CKT 1	717	789	0.04245	119.7711	BRIDGECR 138.00 - TUTTLE 138KV CKT 1
FDNS	00NR	5	16WP	G15_033	FROM->TO	G14-057T 345.00 - SUNNYSIDE 345KV CKT 1	717	789	0.04573	119.7459	BORDER 7345.00 - WOODWARD DISTRICT EHV 345KV CKT 1
FDNS	00NR	5	16WP	G15_033	FROM->TO	G14-057T 345.00 - SUNNYSIDE 345KV CKT 1	717	789	0.04332	119.6698	COMANCHE TAP - OMPA-DUNCAN 840 138KV CKT 1
FDNS	00NR	5	16WP	G15_033	FROM->TO	G14-057T 345.00 - SUNNYSIDE 345KV CKT 1	717	789	0.04212	119.6299	HEALDTON - RINGLING 138KV CKT 1
FDNS	00NR	5	16WP	G15_033	FROM->TO	G14-057T 345.00 - SUNNYSIDE 345KV CKT 1	717	789	0.04212	119.6003	GEN300006 1-NEW MADRID UNIT 1
FDNS	00NR	5	16WP	G15_033	FROM->TO	G14-057T 345.00 - SUNNYSIDE 345KV CKT 1	717	789	0.04212	119.598	GEN501813 1-RODEMACHER UNIT 3
FDNS	00NR	5	16WP	G15_033	FROM->TO	G14-057T 345.00 - SUNNYSIDE 345KV CKT 1	717	789	0.04212	119.5883	GEN300007 1-NEW MADRID UNIT 2
FDNS	00NR	5	16WP	G15_033	FROM->TO	G14-057T 345.00 - SUNNYSIDE 345KV CKT 1	717	789	0.0421	119.5299	LACYGNE - WAVERLY7 345.00 345KV CKT 1
FDNS	00NR	5	16WP	G15_033	FROM->TO	G14-057T 345.00 - SUNNYSIDE 345KV CKT 1	717	789	0.04245	119.5181	P12:138:WFEC:MSL01
FDNS	00NR	5	16WP	G15_033	FROM->TO	G14-057T 345.00 - SUNNYSIDE 345KV CKT 1	717	789	0.04245	119.5104	BRIDGECR 138.00 - SUNSHINE CANYON 138KV CKT 1

SOLUTION	GROUP	SCENARIO	SEASON	SOURCE	DIRECTION	MONITORED ELEMENT	RATEA (MVA)	RATEB(MVA)	TDF	TC%LOADING (% MVA)	CONTINGENCY
FDNS	00NR	5	16WP	G15_033	FROM->TO	G14-057T 345.00 - SUNNYSIDE 345KV CKT 1	717	789	0.04212	119.4823	GEN520947 1-HUGO1
FDNS	00NR	5	16WP	G15_033	FROM->TO	G14-057T 345.00 - SUNNYSIDE 345KV CKT 1	717	789	0.04212	119.4644	RINGLING - SOUTH WILSON 138KV CKT 1
FDNS	00NR	5	20WP	G15_033	FROM->TO	G14-057T 345.00 - SUNNYSIDE 345KV CKT 1	717	789	0.04006	119.4422	CLEVELAND - G15066_T 345.00 345KV CKT 1
FDNS	00NR	5	20WP	G15_033	FROM->TO	G14-057T 345.00 - SUNNYSIDE 345KV CKT 1	717	789	0.04013	119.437	PITTSBURG - VALLIANT 345KV CKT 1
FDNS	00NR	5	20WP	G15_033	FROM->TO	G14-057T 345.00 - SUNNYSIDE 345KV CKT 1	717	789	0.04013	119.437	PITTSBURG - VALLIANT 345KV CKT 1
FDNS	00NR	5	16WP	G15_033	FROM->TO	G14-057T 345.00 - SUNNYSIDE 345KV CKT 1	717	789	0.0421	119.412	WAVERLY7 345.00 - WOLF CREEK 345KV CKT 1
FDNS	00NR	5	16WP	G15_033	FROM->TO	G14-057T 345.00 - SUNNYSIDE 345KV CKT 1	717	789	0.04332	119.3964	DUNCAN - OMPA-DUNCAN 840 138KV CKT 1
FDNS	00NR	5	16WP	G15_033	FROM->TO	G14-057T 345.00 - SUNNYSIDE 345KV CKT 1	717	789	0.04332	119.3964	DUNCAN - OMPA-DUNCAN 840 138KV CKT 1
FDNS	00NR	5	16WP	G15_033	FROM->TO	G14-057T 345.00 - SUNNYSIDE 345KV CKT 1	717	789	0.04212	119.3927	GEN335206 1-NELSON UNIT 6
FDNS	00NR	5	16WP	G15_033	FROM->TO	G14-057T 345.00 - SUNNYSIDE 345KV CKT 1	717	789	0.04212	119.2258	DOLET HILLS 345/24.0KV TRANSFORMER CKT 1
FDNS	00NR	5	16WP	G15_033	FROM->TO	G14-057T 345.00 - SUNNYSIDE 345KV CKT 1	717	789	0.04212	119.2017	GEN501812 1-RODEMACHER UNIT 2
FDNS	00NR	5	16WP	G15_033	FROM->TO	G14-057T 345.00 - SUNNYSIDE 345KV CKT 1	717	789	0.04212	119.1867	MARIETTA - SOUTH WILSON 138KV CKT 1
FDNS	00NR	5	16WP	G15_033	FROM->TO	G14-057T 345.00 - SUNNYSIDE 345KV CKT 1	717	789	0.04212	119.1826	GEN590011 2-ERCOT EQUIVALENCE
FDNS	00NR	5	16WP	G15_033	FROM->TO	G14-057T 345.00 - SUNNYSIDE 345KV CKT 1	717	789	0.04187	119.1718	PARK LANE - SEMINOLE 138KV CKT 1
FDNS	00NR	5	16WP	G15_033	FROM->TO	G14-057T 345.00 - SUNNYSIDE 345KV CKT 1	717	789	0.04219	119.1649	P12:138:AEPW:SHERID4:112GORE4
FDNS	00NR	5	16WP	G15_033	FROM->TO	G14-057T 345.00 - SUNNYSIDE 345KV CKT 1	717	789	0.03978	119.1642	FINNEY SWITCHING STATION - HOLCOMB 345KV CKT 1
FDNS	00NR	5	16WP	G15_033	FROM->TO	G14-057T 345.00 - SUNNYSIDE 345KV CKT 1	717	789	0.03978	119.1642	FINNEY SWITCHING STATION - HOLCOMB 345KV CKT 1
FDNS	00NR	5	16WP	G15_033	FROM->TO	G14-057T 345.00 - SUNNYSIDE 345KV CKT 1	717	789	0.04129	119.1611	G11_051T 345.00 - WOODWARD DISTRICT EHV 345KV CKT 1
FDNS	00NR	5	16WP	G15_033	FROM->TO	G14-057T 345.00 - SUNNYSIDE 345KV CKT 1	717	789	0.04201	119.157	CANEYRV7 345.00 - NEOSHO 345KV CKT 1
FDNS	00NR	5	20WP	G15_033	FROM->TO	G14-057T 345.00 - SUNNYSIDE 345KV CKT 1	717	789	0.04006	119.1504	G15066_T 345.00 - SOONER 345KV CKT 1
FDNS	00NR	5	16WP	G15_033	FROM->TO	G14-057T 345.00 - SUNNYSIDE 345KV CKT 1	717	789	0.04212	119.1207	GEN509408 1-WILKES #2
FDNS	00NR	5	16WP	G15_033	FROM->TO	G14-057T 345.00 - SUNNYSIDE 345KV CKT 1	717	789	0.04212	119.11	GEN515564 1-ORIGIN11 0.6900
FDNS	00NR	5	16WP	G15_033	FROM->TO	G14-057T 345.00 - SUNNYSIDE 345KV CKT 1	717	789	0.04212	119.11	GEN515565 1-ORIGIN21 0.6900
FDNS	00NR	5	16WP	G15_033	FROM->TO	G14-057T 345.00 - SUNNYSIDE 345KV CKT 1	717	789	0.04212	119.1054	GEN590010 1-ERCOT EQUIVALENCE
FDNS	00NR	5	16WP	G15_033	FROM->TO	G14-057T 345.00 - SUNNYSIDE 345KV CKT 1	717	789	0.04212	119.1048	P12:138:WFEC:MSL17
FDNS	00NR	5	16WP	G15_033	FROM->TO	G14-057T 345.00 - SUNNYSIDE 345KV CKT 1	717	789	0.04201	119.0087	CANEYRV7 345.00 - LATHAMS7 345.00 345KV CKT 1
FDNS	00NR	5	20WP	G15_033	FROM->TO	G14-057T 345.00 - SUNNYSIDE 345KV CKT 1	717	789	0.04018	118.9993	GEN501801 1-DOLET HILLS UNIT1
FDNS	00NR	5	16WP	G15_033	FROM->TO	G14-057T 345.00 - SUNNYSIDE 345KV CKT 1	717	789	0.04188	118.9905	THISTLE7 345.00 - WOODWARD DISTRICT EHV 345KV CKT 1
FDNS	00NR	5	16WP	G15_033	FROM->TO	G14-057T 345.00 - SUNNYSIDE 345KV CKT 1	717	789	0.04188	118.9905	THISTLE7 345.00 - WOODWARD DISTRICT EHV 345KV CKT 1
FDNS	00NR	5	16WP	G15_033	FROM->TO	G14-057T 345.00 - SUNNYSIDE 345KV CKT 1	717	789	0.04188	118.9905	THISTLE7 345.00 - WOODWARD DISTRICT EHV 345KV CKT 2
FDNS	00NR	5	16WP	G15_033	FROM->TO	G14-057T 345.00 - SUNNYSIDE 345KV CKT 1	717	789	0.04188	118.9905	THISTLE7 345.00 - WOODWARD DISTRICT EHV 345KV CKT 2
FDNS	00NR	5	16WP	G15_033	FROM->TO	G14-057T 345.00 - SUNNYSIDE 345KV CKT 1	717	789	0.04222	118.9849	CIVIT - PAOLI 138KV CKT 1
FDNS	00NR	5	16WP	G15_033	FROM->TO	G14-057T 345.00 - SUNNYSIDE 345KV CKT 1	717	789	0.04221	118.9576	REDBUD - RIVERSIDE STATION 345KV CKT 1
FDNS	00NR	5	16WP	G15_033	FROM->TO	G14-057T 345.00 - SUNNYSIDE 345KV CKT 1	717	789	0.04221	118.9576	REDBUD - RIVERSIDE STATION 345KV CKT 1
FDNS	06NR	5	17G	G15_033	FROM->TO	G14-057T 345.00 - SUNNYSIDE 345KV CKT 1	717	789	0.05307	118.9569	GRACEMONT - MINCO 345KV CKT 1
FDNS	00NR	5	16WP	G15_033	FROM->TO	G14-057T 345.00 - SUNNYSIDE 345KV CKT 1	717	789	0.04212	118.9294	GEN506754 1-LEBROCK STEAM 1
FDNS	00NR	5	16WP	G15_033	FROM->TO	G14-057T 345.00 - SUNNYSIDE 345KV CKT 1	717	789	0.04212	118.9216	P12:161:AEPW:DYESS 5:HYLAND 5
FDNS	00NR	5	16WP	G15_033	FROM->TO	G14-057T 345.00 - SUNNYSIDE 345KV CKT 1	717	789	0.04212	118.9164	P12:69:AEPW:L.E.S.-2:LAW WC2
FDNS	00NR	5	16WP	G15_033	FROM->TO	G14-057T 345.00 - SUNNYSIDE 345KV CKT 1	717	789	0.04212	118.9101	GEN334440 1-SABINE UNIT 4
FDNS	00NR	5	16WP	G15_033	FROM->TO	G14-057T 345.00 - SUNNYSIDE 345KV CKT 1	717	789	0.04209	118.9069	ELDORADO EHV - MOUNT OLIVE 500KV CKT 1
FDNS	00NR	5	16WP	G15_033	FROM->TO	G14-057T 345.00 - SUNNYSIDE 345KV CKT 1	717	789	0.04207	118.9057	PAOLI - PAYNE 138.00 138KV CKT 1
FDNS	00NR	5	16WP	G15_033	FROM->TO	G14-057T 345.00 - SUNNYSIDE 345KV CKT 1	717	789	0.04206	118.8854	P12:138:WFEC:MSL02
FDNS	00NR	5	16WP	G15_033	FROM->TO	G14-057T 345.00 - SUNNYSIDE 345KV CKT 1	717	789	0.04237	118.8462	P12:138:AEPW-OGE:CORNVIL4:MAUD 4
FDNS	00NR	5	16WP	G15_033	FROM->TO	G14-057T 345.00 - SUNNYSIDE 345KV CKT 1	717	789	0.04207	118.8441	ELDORADO EHV - SHERIDAN EHV 500KV CKT 1
FDNS	00NR	5	16WP	G15_033	FROM->TO	G14-057T 345.00 - SUNNYSIDE 345KV CKT 1	717	789	0.04222	118.8418	CIVIT - STRATFORD 138KV CKT 1
FDNS	00NR	5	16WP	G15_033	FROM->TO	G14-057T 345.00 - SUNNYSIDE 345KV CKT 1	717	789	0.04573	118.8307	BORDER 7345.00 - TUCO_2 345.00 345KV CKT 1
FDNS	00NR	5	16WP	G15_033	FROM->TO	G14-057T 345.00 - SUNNYSIDE 345KV CKT 1	717	789	0.04219	118.8287	P12:138:AEPW:112GORE4:L.E.S.-4
FDNS	00NR	5	16WP	G15_033	FROM->TO	G14-057T 345.00 - SUNNYSIDE 345KV CKT 1	717	789	0.04212	118.8019	NEW MADRID 161/22.0KV TRANSFORMER CKT 1
FDNS	00NR	5	16WP	G15_033	FROM->TO	G14-057T 345.00 - SUNNYSIDE 345KV CKT 1	717	789	0.04199	118.8003	MATHWSN7 345.00 - NORTHWEST 345KV CKT 1
FDNS	00NR	5	16WP	G15_033	FROM->TO	G14-057T 345.00 - SUNNYSIDE 345KV CKT 1	717	789	0.04214	118.7895	TUPELO - TUPELO TAP 138KV CKT 1
FDNS	00NR	5	16WP	G15_033	FROM->TO	G14-057T 345.00 - SUNNYSIDE 345KV CKT 1	717	789	0.04209	118.7895	ANADARKO - GEORGIA 138KV CKT 1
FDNS	00NR	5	16WP	G15_033	FROM->TO	G14-057T 345.00 - SUNNYSIDE 345KV CKT 1	717	789	0.04212	118.7883	NEW MADRID 345/22.0KV TRANSFORMER CKT 1
FDNS	00NR	5	16WP	G15_033	FROM->TO	G14-057T 345.00 - SUNNYSIDE 345KV CKT 1	717	789	0.04201	118.7877	LATHAMS7 345.00 - ROSE HILL 345KV CKT 1
FDNS	00NR	5	16WP	G15_033	FROM->TO	G14-057T 345.00 - SUNNYSIDE 345KV CKT 1	717	789	0.04212	118.774	GEN503909 1-FULTONU1 1 16.000
FDNS	00NR	5	16WP	G15_033	FROM->TO	G14-057T 345.00 - SUNNYSIDE 345KV CKT 1	717	789	0.04237	118.7708	BLANCHARD - CORNVILLE 138KV CKT 1
FDNS	00NR	5	16WP	G15_033	FROM->TO	G14-057T 345.00 - SUNNYSIDE 345KV CKT 1	717	789	0.04212	118.7566	FRONTIER - GRIMES 345KV CKT 1
FDNS	00NR	5	16WP	G15_033	FROM->TO	G14-057T 345.00 - SUNNYSIDE 345KV CKT 1	717	789	0.04207	118.7386	WEBRE - WELLS 500KV CKT 1
FDNS	00NR	5	16WP	G15_033	FROM->TO	G14-057T 345.00 - SUNNYSIDE 345KV CKT 1	717	789	0.03978	118.7371	FINNEY SWITCHING STATION - Hitchland Interchange 345KV CKT 1
FDNS	00NR	5	16WP	G15_033	FROM->TO	G14-057T 345.00 - SUNNYSIDE 345KV CKT 1	717	789	0.04222	118.7219	OIL CENTER - STRATFORD 138KV CKT 1
FDNS	00NR	5	16WP	G15_033	FROM->TO	G14-057T 345.00 - SUNNYSIDE 345KV CKT 1	717	789	0.04209	118.7117	FLETCHER - GEORGIA 138KV CKT 1
FDNS	00NR	5	16WP	G15_033	FROM->TO	G14-057T 345.00 - SUNNYSIDE 345KV CKT 1	717	789	0.04206	118.6818	EMPIRE - FLETCHER 138KV CKT 1
FDNS	00NR	5	16WP	G15_033	FROM->TO	G14-057T 345.00 - SUNNYSIDE 345KV CKT 1	717	789	0.04212	118.6491	GEN509393 S1-ARSENAL HILL GENS #4 (STALL)
FDNS	00NR	5	16WP	G15_033	FROM->TO	G14-057T 345.00 - SUNNYSIDE 345KV CKT 1	717	789	0.04212	118.621	GEN509392 G2-ARSENAL HILL GENS #3 (STALL)
FDNS	00NR	5	16WP	G15_033	FROM->TO	G14-057T 345.00 - SUNNYSIDE 345KV CKT 1	717	789	0.04212	118.6209	GEN509391 G1-ARSENAL HILL GENS #2 (STALL)
FDNS	00NR	5	16WP	G15_033	FROM->TO	G14-057T 345.00 - SUNNYSIDE 345KV CKT 1	717	789	0.04418	118.6171	LAWTON EASTSIDE (LES 5) 345/138/13.8KV TRANSFORMER CKT 2
FDNS	00NR	5	16WP	G15_033	FROM->TO	G14-057T 345.00 - SUNNYSIDE 345KV CKT 1	717	789	0.04418	118.6171	LAWTON EASTSIDE (LES 5) 345/138/13.8KV TRANSFORMER CKT 2
FDNS	00NR	5	16WP	G15_033	FROM->TO	G14-057T 345.00 - SUNNYSIDE 345KV CKT 1	717	789	0.04212	118.6134	GEN336252 1-NINEMILE POINT UNIT#5
FDNS	00NR	5	16WP	G15_033	FROM->TO	G14-057T 345.00 - SUNNYSIDE 345KV CKT 1	717	789	0.04206	118.6075	COMANCHE - EMPIRE 138KV CKT 1
FDNS	00NR	5	16WP	G15_033	FROM->TO	G14-057T 345.00 - SUNNYSIDE 345KV CKT 1	717	789	0.04191	118.6006	G1524G1525 345.00 - THISTLE7 345.00 345KV CKT 1
FDNS	00NR	5	16WP	G15_033	FROM->TO	G14-057T 345.00 - SUNNYSIDE 345KV CKT 1	717	789	0.04191	118.6006	G1524G1525 345.00 - THISTLE7 345.00 345KV CKT 2
FDNS	00NR	5	16WP	G15_033	FROM->TO	G14-057T 345.00 - SUNNYSIDE 345KV CKT 1	717	789	0.04212	118.5939	DELL 500 - ESSEX UNIT 2 500KV CKT Z1
FDNS	00NR	5	16WP	G15_033	FROM->TO	G14-057T 345.00 - SUNNYSIDE 345KV CKT 1	717	789	0.04212	118.591	GEN334071 1-LEWIS CREEK 2
FDNS	00NR	5	16WP	G15_033	FROM->TO	G14-057T 345.00 - SUNNYSIDE 345KV CKT 1	717	789	0.0421	118.5899	G15074_T 345.00 - HOYT 345KV CKT 1
FDNS	00NR	5	16WP	G15_033	FROM->TO	G14-057T 345.00 - SUNNYSIDE 345KV CKT 1	717	789	0.04212	118.5822	GEN335204 1-NELSON UNIT 4
FDNS	00NR	5	16WP	G15_033	FROM->TO	G14-057T 345.00 - SUNNYSIDE 345KV CKT 1	717	789	0.04212	118.5818	GEN334070 1-LEWIS CREEK 1
FDNS	00NR	5	16WP	G15_033	FROM->TO	G14-057T 345.00 - SUNNYSIDE 345KV CKT 1	717	789	0.04237	118.5806	BLANCHARD - MAUD 138KV CKT 1
FDNS	00NR	5	16WP	G15_033	FROM->TO	G14-057T 345.00 - SUNNYSIDE 345KV CKT 1	717	789	0.04181	118.5609	P12:138:AEPW-OGE:WTH_JCT4:JENSEN4
FDNS	00NR	5	16WP	G15_033	FROM->TO	G14-057T 345.00 - SUNNYSIDE 345KV CKT 1	717	789	0.04222	118.5489	LATTA JCT - OIL CENTER 138KV CKT 1
FDNS	00NR	5	16WP	G15_033	FROM->TO	G14-057T 345.00 - SUNNYSIDE 345KV CKT 1	717	789	0.04212	118.5456	GEN334441 1-SABINE UNIT 5

SOLUTION	GROUP	SCENARIO	SEASON	SOURCE	DIRECTION	MONITORED ELEMENT	RATEA (MVA)	RATEB(MVA)	TDF	TC%LOADING (% MVA)	CONTINGENCY
FDNS	00NR	5	16WP	G15_033	FROM->TO	G14-057T 345.00 - SUNNYSIDE 345KV CKT 1	717	789	0.04233	118.5405	DUNCAN (DUNCAN) 138/69/13.8KV TRANSFORMER CKT 1
FDNS	00NR	5	16WP	G15_033	FROM->TO	G14-057T 345.00 - SUNNYSIDE 345KV CKT 1	717	789	0.04233	118.5405	DUNCAN (DUNCAN) 138/69/13.8KV TRANSFORMER CKT 1
FDNS	00NR	5	16WP	G15_033	FROM->TO	G14-057T 345.00 - SUNNYSIDE 345KV CKT 1	717	789	0.04212	118.5166	GEN300003 1-THOMAS HILL UNIT 3
FDNS	00NR	5	16WP	G15_033	FROM->TO	G14-057T 345.00 - SUNNYSIDE 345KV CKT 1	717	789	0.04212	118.515	GEN337653 1-WHITE BLUFF UNIT #2
FDNS	00NR	5	16WP	G15_033	FROM->TO	G14-057T 345.00 - SUNNYSIDE 345KV CKT 1	717	789	0.04256	118.5024	TUTTLE - TUTTLE CONOCO TAP 138KV CKT 1
FDNS	00NR	5	16WP	G15_033	FROM->TO	G14-057T 345.00 - SUNNYSIDE 345KV CKT 1	717	789	0.04212	118.4986	P12:161:AEPW-SWPA:BEAVER5:EROGERS5
FDNS	00NR	5	16WP	G15_033	FROM->TO	G14-057T 345.00 - SUNNYSIDE 345KV CKT 1	717	789	0.04212	118.4878	GEN334030 1-FRONTIER UNIT 1
FDNS	00NR	5	16WP	G15_033	FROM->TO	G14-057T 345.00 - SUNNYSIDE 345KV CKT 1	717	789	0.04235	118.4874	BAILEY4 138.00 - SUNSHINE CANYON 138KV CKT 1
FDNS	00NR	5	20WP	G15_033	FROM->TO	G14-057T 345.00 - SUNNYSIDE 345KV CKT 1	717	789	0.04018	118.4864	GEN509406 1-WELSH #3
FDNS	00NR	5	20WP	G15_033	FROM->TO	G14-057T 345.00 - SUNNYSIDE 345KV CKT 1	717	789	0.04018	118.4861	GEN509404 1-WELSH #1
FDNS	00NR	5	16WP	G15_033	FROM->TO	G14-057T 345.00 - SUNNYSIDE 345KV CKT 1	717	789	0.04212	118.486	GEN334031 1-FRONTIER UNIT 2
FDNS	00NR	5	16WP	G15_033	FROM->TO	G14-057T 345.00 - SUNNYSIDE 345KV CKT 1	717	789	0.04212	118.4773	P12:138:AEPW:CATOOSA4:T.S.E.-4
FDNS	00NR	5	16WP	G15_033	FROM->TO	G14-057T 345.00 - SUNNYSIDE 345KV CKT 1	717	789	0.04212	118.4733	GEN506752 1-LEBROCK GAS 1
FDNS	00NR	5	16WP	G15_033	FROM->TO	G14-057T 345.00 - SUNNYSIDE 345KV CKT 1	717	789	0.04212	118.4731	GEN506753 1-LEBROCK GAS 2
FDNS	00NR	5	16WP	G15_033	FROM->TO	G14-057T 345.00 - SUNNYSIDE 345KV CKT 1	717	789	0.04212	118.4538	GEN515226 1-MUSKOGEE 6G
FDNS	00NR	5	16WP	G15_033	FROM->TO	G14-057T 345.00 - SUNNYSIDE 345KV CKT 1	717	789	0.04212	118.4497	GEN337911 1-ARKANSAS NUCLEAR ONE UNIT #2
FDNS	00NR	5	16WP	G15_033	FROM->TO	G14-057T 345.00 - SUNNYSIDE 345KV CKT 1	717	789	0.04211	118.4458	8DANIEL8 500.00 - MCKNIGHT 500KV CKT 1
FDNS	00NR	5	16WP	G15_033	FROM->TO	G14-057T 345.00 - SUNNYSIDE 345KV CKT 1	717	789	0.04206	118.4359	6LAYFLD 230.00 - CARROLL 230KV CKT 1
FDNS	00NR	5	16WP	G15_033	FROM->TO	G14-057T 345.00 - SUNNYSIDE 345KV CKT 1	717	789	0.04212	118.4257	P12:161:AEPW:DYESS5:ELMSPRNG:TONTITN5
FDNS	00NR	5	16WP	G15_033	FROM->TO	G14-057T 345.00 - SUNNYSIDE 345KV CKT 1	717	789	0.04212	118.4247	GEN337652 1-WHITE BLUFF UNIT #1
FDNS	00NR	5	16WP	G15_033	FROM->TO	G14-057T 345.00 - SUNNYSIDE 345KV CKT 1	717	789	0.04212	118.4233	GEN501811 1-RODEMACHER UNIT 1
FDNS	00NR	5	16WP	G15_033	FROM->TO	G14-057T 345.00 - SUNNYSIDE 345KV CKT 1	717	789	0.04256	118.4228	CIMARRON - TUTTLE CONOCO TAP 138KV CKT 1
FDNS	00NR	5	16WP	G15_033	FROM->TO	G14-057T 345.00 - SUNNYSIDE 345KV CKT 1	717	789	0.04216	118.4209	P12:138:AEPW:CORNVIL4:S.W.S.-4
FDNS	00NR	5	16WP	G15_033	FROM->TO	G14-057T 345.00 - SUNNYSIDE 345KV CKT 1	717	789	0.04212	118.4203	GEN515040 1-SEMINOLE 1G
FDNS	00NR	5	16WP	G15_033	FROM->TO	G14-057T 345.00 - SUNNYSIDE 345KV CKT 1	717	789	0.04212	118.4159	GEN300015 1-1SGPDEL 18.000
FDNS	00NR	5	16WP	G15_033	FROM->TO	G14-057T 345.00 - SUNNYSIDE 345KV CKT 1	717	789	0.04204	118.4116	FULTON 115 - HOPE 115KV CKT 1
FDNS	00NR	5	16WP	G15_033	FROM->TO	G14-057T 345.00 - SUNNYSIDE 345KV CKT 1	717	789	0.04204	118.4116	FULTON 115 - HOPE 115KV CKT 1
FDNS	00NR	5	16WP	G15_033	FROM->TO	G14-057T 345.00 - SUNNYSIDE 345KV CKT 1	717	789	0.04212	118.4079	GEN336251 1-NINEMILE POINT UNIT#4
FDNS	00NR	5	16WP	G15_033	FROM->TO	G14-057T 345.00 - SUNNYSIDE 345KV CKT 1	717	789	0.04162	118.4074	BUCKNER7 345.00 - SPEARVILLE 345KV CKT 1
FDNS	00NR	5	16WP	G15_033	FROM->TO	G14-057T 345.00 - SUNNYSIDE 345KV CKT 1	717	789	0.04162	118.4074	BUCKNER7 345.00 - SPEARVILLE 345KV CKT 1
FDNS	00NR	5	16WP	G15_033	FROM->TO	G14-057T 345.00 - SUNNYSIDE 345KV CKT 1	717	789	0.04212	118.4042	GEN336831 1-BAXTER WILSON SES
FDNS	00NR	5	16WP	G15_033	FROM->TO	G14-057T 345.00 - SUNNYSIDE 345KV CKT 1	717	789	0.04208	118.4018	G15088_T 345.00 - MOORE 345KV CKT 1
FDNS	00NR	5	16WP	G15_033	FROM->TO	G14-057T 345.00 - SUNNYSIDE 345KV CKT 1	717	789	0.04212	118.4013	GEN334433 1-SABINE UNIT 3
FDNS	00NR	5	16WP	G15_033	FROM->TO	G14-057T 345.00 - SUNNYSIDE 345KV CKT 1	717	789	0.04194	118.3995	P12:138:AEPW:WTHWF4:CLINTJC4
FDNS	00NR	5	16WP	G15_033	FROM->TO	G14-057T 345.00 - SUNNYSIDE 345KV CKT 1	717	789	0.04233	118.3722	P12:69:WFEC-AEPW:COMANCH2:DUNCAN-2
FDNS	00NR	5	16WP	G15_033	FROM->TO	G14-057T 345.00 - SUNNYSIDE 345KV CKT 1	717	789	0.04278	118.3691	P12:138:AEPW:CORNVIL4:DUNCAN-4
FDNS	00NR	5	16WP	G15_033	FROM->TO	G14-057T 345.00 - SUNNYSIDE 345KV CKT 1	717	789	0.04212	118.3588	GEN562783 1-G15036_4 0.6900
FDNS	00NR	5	16WP	G15_033	FROM->TO	G14-057T 345.00 - SUNNYSIDE 345KV CKT 1	717	789	0.04212	118.3588	GEN562784 1-G15036_5 0.6900
FDNS	00NR	5	16WP	G15_033	FROM->TO	G14-057T 345.00 - SUNNYSIDE 345KV CKT 1	717	789	0.04212	118.3504	GEN515223 1-MUSKOGEE 4G
FDNS	00NR	5	16WP	G15_033	FROM->TO	G14-057T 345.00 - SUNNYSIDE 345KV CKT 1	717	789	0.04212	118.3503	GEN515225 1-MUSKOGEE 5G
FDNS	00NR	5	16WP	G15_033	FROM->TO	G14-057T 345.00 - SUNNYSIDE 345KV CKT 1	717	789	0.04194	118.3436	P12:138:AEPW:WTHWF4:WTH_SE4
FDNS	00NR	5	16WP	G15_033	FROM->TO	G14-057T 345.00 - SUNNYSIDE 345KV CKT 1	717	789	0.04212	118.3404	GEN505432 1-SIKESTON
FDNS	00NR	5	16WP	G15_033	FROM->TO	G14-057T 345.00 - SUNNYSIDE 345KV CKT 1	717	789	0.04209	118.3336	HOYT - STRANGER CREEK 345KV CKT 1
FDNS	00NR	5	16WP	G15_033	FROM->TO	G14-057T 345.00 - SUNNYSIDE 345KV CKT 1	717	789	0.0421	118.3305	G15074_T 345.00 - JEFFREY ENERGY CENTER 345KV CKT 1
FDNS	00NR	5	16WP	G15_033	FROM->TO	G14-057T 345.00 - SUNNYSIDE 345KV CKT 1	717	789	0.04212	118.3302	CIMARRON - CZECH HALL 138KV CKT 1
FDNS	00NR	5	16WP	G15_033	FROM->TO	G14-057T 345.00 - SUNNYSIDE 345KV CKT 1	717	789	0.04235	118.3217	BAILEY4 138.00 - WESTMOORE 138KV CKT 1
FDNS	00NR	5	16WP	G15_033	FROM->TO	G14-057T 345.00 - SUNNYSIDE 345KV CKT 1	717	789	0.04212	118.32	P12:161:AEPW:EROGERS5:ECNTRTN5
FDNS	00NR	5	16WP	G15_033	FROM->TO	G14-057T 345.00 - SUNNYSIDE 345KV CKT 1	717	789	0.04212	118.3192	RODEMACHER 230/22.0KV TRANSFORMER CKT 1
FDNS	00NR	5	16WP	G15_033	FROM->TO	G14-057T 345.00 - SUNNYSIDE 345KV CKT 1	717	789	0.04233	118.3144	DUNCAN - TOSCO 69KV CKT 1
FDNS	00NR	5	16WP	G15_033	FROM->TO	G14-057T 345.00 - SUNNYSIDE 345KV CKT 1	717	789	0.0421	118.3128	LAYFLD8 500.00 - MOUNT OLIVE 500KV CKT 1
FDNS	00NR	5	16WP	G15_033	FROM->TO	G14-057T 345.00 - SUNNYSIDE 345KV CKT 1	717	789	0.0421	118.3128	LAYFLD8 500.00 - MOUNT OLIVE 500KV CKT 1
FDNS	00NR	5	16WP	G15_033	FROM->TO	G14-057T 345.00 - SUNNYSIDE 345KV CKT 1	717	789	0.04182	118.3124	WEATHERFORD JCT. - WEATHERFORD SOUTHEAST 138KV CKT 1
FDNS	00NR	5	16WP	G15_033	FROM->TO	G14-057T 345.00 - SUNNYSIDE 345KV CKT 1	717	789	0.04182	118.3124	WEATHERFORD JCT. - WEATHERFORD SOUTHEAST 138KV CKT 1
FDNS	00NR	5	16WP	G15_033	FROM->TO	G14-057T 345.00 - SUNNYSIDE 345KV CKT 1	717	789	0.04212	118.3077	GEN303007 1-1BC2 U2
FDNS	00NR	5	16WP	G15_033	FROM->TO	G14-057T 345.00 - SUNNYSIDE 345KV CKT 1	717	789	0.04212	118.3061	WHITE BLUFF 500/26.0KV TRANSFORMER CKT 1
FDNS	00NR	5	16WP	G15_033	FROM->TO	G14-057T 345.00 - SUNNYSIDE 345KV CKT 1	717	789	0.04212	118.303	GEN303006 1-1BC2 U1
FDNS	00NR	5	16WP	G15_033	FROM->TO	G14-057T 345.00 - SUNNYSIDE 345KV CKT 1	717	789	0.04208	118.3022	CIMARRON - SARA 138KV CKT 1
FDNS	00NR	5	16WP	G15_033	FROM->TO	G14-057T 345.00 - SUNNYSIDE 345KV CKT 1	717	789	0.0421	118.2977	HOT SPRINGS EHV - MAGNET COVE 500KV CKT 1
FDNS	00NR	5	16WP	G15_033	FROM->TO	G14-057T 345.00 - SUNNYSIDE 345KV CKT 1	717	789	0.04212	118.2967	GEN337910 1-ARKANSAS NUCLEAR ONE UNIT #1
FDNS	00NR	5	16WP	G15_033	FROM->TO	G14-057T 345.00 - SUNNYSIDE 345KV CKT 1	717	789	0.05298	118.296	TUCO INTERCHANGE - TUCO_2 345.00 345KV CKT 1
FDNS	00NR	5	16WP	G15_033	FROM->TO	G14-057T 345.00 - SUNNYSIDE 345KV CKT 1	717	789	0.04209	118.2876	MC NIEL 500/115KV TRANSFORMER CKT 1
FDNS	00NR	5	16WP	G15_033	FROM->TO	G14-057T 345.00 - SUNNYSIDE 345KV CKT 1	717	789	0.0418	118.281	ARBWIND4 138.00 - CARTER 138KV CKT 1
FDNS	00NR	5	16WP	G15_033	FROM->TO	G14-057T 345.00 - SUNNYSIDE 345KV CKT 1	717	789	0.04212	118.2804	GEN336191 1-LITTLE GYPSY UNIT#3
FDNS	00NR	5	16WP	G15_033	FROM->TO	G14-057T 345.00 - SUNNYSIDE 345KV CKT 1	717	789	0.04233	118.2748	COMANCHE TAP - TOSCO 69KV CKT 1
FDNS	00NR	5	16WP	G15_033	FROM->TO	G14-057T 345.00 - SUNNYSIDE 345KV CKT 1	717	789	0.04206	118.2718	BISMARK - HOT SPRINGS WEST BUS 115KV CKT 1
FDNS	00NR	5	16WP	G15_033	FROM->TO	G14-057T 345.00 - SUNNYSIDE 345KV CKT 1	717	789	0.04222	118.269	LASALLE - LATTA JCT 138KV CKT 1
FDNS	00NR	5	16WP	G15_033	FROM->TO	G14-057T 345.00 - SUNNYSIDE 345KV CKT 1	717	789	0.04182	118.2681	P12:138:AEPW:REDROCKRD4:WTH_JCT4
FDNS	00NR	5	16WP	G15_033	FROM->TO	G14-057T 345.00 - SUNNYSIDE 345KV CKT 1	717	789	0.04191	118.2597	SEMINOLE - VANOSTP4 138.00 138KV CKT 1
FDNS	00NR	5	16WP	G15_033	FROM->TO	G14-057T 345.00 - SUNNYSIDE 345KV CKT 1	717	789	0.04212	118.2593	GEN300010 1-ST FRANCIS UNIT 1
FDNS	00NR	5	16WP	G15_033	FROM->TO	G14-057T 345.00 - SUNNYSIDE 345KV CKT 1	717	789	0.04212	118.253	CZECH HALL - XEROX 138KV CKT 1
FDNS	00NR	5	16WP	G15_033	FROM->TO	G14-057T 345.00 - SUNNYSIDE 345KV CKT 1	717	789	0.04212	118.2528	GEN335614 1-WILLOW GLENN UNIT#4
FDNS	00NR	5	16WP	G15_033	FROM->TO	G14-057T 345.00 - SUNNYSIDE 345KV CKT 1	717	789	0.04212	118.2521	P12:138:AEPW:N.E.S.-4:CATOOSA4
FDNS	00NR	5	16WP	G15_033	FROM->TO	G14-057T 345.00 - SUNNYSIDE 345KV CKT 1	717	789	0.04243	118.2501	P12:69:AEPW-OMPA:COMANC-2:OMWALTR2
FDNS	00NR	5	16WP	G15_033	FROM->TO	G14-057T 345.00 - SUNNYSIDE 345KV CKT 1	717	789	0.04212	118.2487	MORGAN - XEROX 138KV CKT 1
FDNS	00NR	5	16WP	G15_033	FROM->TO	G14-057T 345.00 - SUNNYSIDE 345KV CKT 1	717	789	0.04195	118.2478	BENTON - WICHITA 345KV CKT 1
FDNS	00NR	5	16WP	G15_033	FROM->TO	G14-057T 345.00 - SUNNYSIDE 345KV CKT 1	717	789	0.04205	118.243	CLEO CORNER - CLEOPLT4 138.00 138KV CKT 1
FDNS	00NR	5	16WP	G15_033	FROM->TO	G14-057T 345.00 - SUNNYSIDE 345KV CKT 1	717	789	0.04212	118.2417	GEN303008 1-1BC2 U3
FDNS	00NR	5	16WP	G15_033	FROM->TO	G14-057T 345.00 - SUNNYSIDE 345KV CKT 1	717	789	0.04212	118.2394	NELSON 230/20.0KV TRANSFORMER CKT 1
FDNS	00NR	5	16WP	G15_033	FROM->TO	G14-057T 345.00 - SUNNYSIDE 345KV CKT 1	717	789	0.04205	118.2303	CLEOPLT4 138.00 - MEN TAP 138KV CKT 1

SOLUTION	GROUP	SCENARIO	SEASON	SOURCE	DIRECTION	MONITORED ELEMENT	RATEA (MVA)	RATEB(MVA)	TDF	TC%LOADING (% MVA)	CONTINGENCY
FDNS	00NR	5	16WP	G15_033	FROM->TO	G14-057T 345.00 - SUNNYSIDE 345KV CKT 1	717	789	0.04212	118.2256	MORGAN - MUSTANG 138KV CKT 1
FDNS	00NR	5	16WP	G15_033	FROM->TO	G14-057T 345.00 - SUNNYSIDE 345KV CKT 1	717	789	0.04205	118.2183	IMO TAP - MEN TAP 138KV CKT 1
FDNS	00NR	5	16WP	G15_033	FROM->TO	G14-057T 345.00 - SUNNYSIDE 345KV CKT 1	717	789	0.04206	118.218	ALPINE AECC - BISMARK 115KV CKT 1
FDNS	00NR	5	16WP	G15_033	FROM->TO	G14-057T 345.00 - SUNNYSIDE 345KV CKT 1	717	789	0.04212	118.2146	GEN336170 1-GULF OXY U4
FDNS	00NR	5	16WP	G15_033	FROM->TO	G14-057T 345.00 - SUNNYSIDE 345KV CKT 1	717	789	0.04177	118.211	CANADIAN - NOBLE 138KV CKT 1
FDNS	00NR	5	16WP	G15_033	FROM->TO	G14-057T 345.00 - SUNNYSIDE 345KV CKT 1	717	789	0.04233	118.2108	COMANCHE - COMANCHE TAP 69KV CKT 1
FDNS	00NR	5	16WP	G15_033	FROM->TO	G14-057T 345.00 - SUNNYSIDE 345KV CKT 1	717	789	0.04207	118.2089	G15095_T 138.00 - ROSE_VALLEY 138.00 138KV CKT 1
FDNS	00NR	5	16WP	G15_033	FROM->TO	G14-057T 345.00 - SUNNYSIDE 345KV CKT 1	717	789	0.04212	118.2083	GEN336464 1-MICHOUD UNIT #3
FDNS	00NR	5	16WP	G15_033	FROM->TO	G14-057T 345.00 - SUNNYSIDE 345KV CKT 1	717	789	0.04212	118.2079	GEN300011 1-ST FRANCIS UNIT 2
FDNS	00NR	5	16WP	G15_033	FROM->TO	G14-057T 345.00 - SUNNYSIDE 345KV CKT 1	717	789	0.04108	118.2077	CANADIAN RIVER - PITTSBURG 345KV CKT 1
FDNS	00NR	5	16WP	G15_033	FROM->TO	G14-057T 345.00 - SUNNYSIDE 345KV CKT 1	717	789	0.04108	118.2077	CANADIAN RIVER - PITTSBURG 345KV CKT 1
FDNS	00NR	5	16WP	G15_033	FROM->TO	G14-057T 345.00 - SUNNYSIDE 345KV CKT 1	717	789	0.04212	118.1974	CYPRESS - HARTBURG 500KV CKT 1
FDNS	00NR	5	16WP	G15_033	FROM->TO	G14-057T 345.00 - SUNNYSIDE 345KV CKT 1	717	789	0.04196	118.1949	P12:138:OKGE-AEPW:JENSEN4:REDROCKRD4
FDNS	00NR	5	16WP	G15_033	FROM->TO	G14-057T 345.00 - SUNNYSIDE 345KV CKT 1	717	789	0.04212	118.1914	8CAJUN2 500/24.0KV TRANSFORMER CKT 1
FDNS	00NR	5	16WP	G15_033	FROM->TO	G14-057T 345.00 - SUNNYSIDE 345KV CKT 1	717	789	0.04182	118.1911	HINTON - WEATHERFORD JCT. 138KV CKT 1
FDNS	00NR	5	16WP	G15_033	FROM->TO	G14-057T 345.00 - SUNNYSIDE 345KV CKT 1	717	789	0.04179	118.1906	P12:138:OKGE:3TERM27
FDNS	00NR	5	16WP	G15_033	FROM->TO	G14-057T 345.00 - SUNNYSIDE 345KV CKT 1	717	789	0.04212	118.1748	GEN512688 2-GRDA1 GSU2 22
FDNS	00NR	5	16WP	G15_033	FROM->TO	G14-057T 345.00 - SUNNYSIDE 345KV CKT 1	717	789	0.04208	118.1744	SWISSVALE - WEST GARDNER 345KV CKT 1
FDNS	00NR	5	16WP	G15_033	FROM->TO	G14-057T 345.00 - SUNNYSIDE 345KV CKT 1	717	789	0.04206	118.1739	ALPINE AECC - AMITY SS 115KV CKT 1
FDNS	00NR	5	16WP	G15_033	FROM->TO	G14-057T 345.00 - SUNNYSIDE 345KV CKT 1	717	789	0.04212	118.1693	GEN300016 1-1G1GPDEL 18.000
FDNS	00NR	5	16WP	G15_033	FROM->TO	G14-057T 345.00 - SUNNYSIDE 345KV CKT 1	717	789	0.04235	118.1662	FRANKLIN SW - WESTMOORE 138KV CKT 1
FDNS	00NR	5	16WP	G15_033	FROM->TO	G14-057T 345.00 - SUNNYSIDE 345KV CKT 1	717	789	0.04212	118.1635	GEN501910 1-ACADIA UNIT ST1
FDNS	00NR	5	16WP	G15_033	FROM->TO	G14-057T 345.00 - SUNNYSIDE 345KV CKT 1	717	789	0.04208	118.1621	BLACKBERRY - NEOSHO 345KV CKT 1
FDNS	00NR	5	16WP	G15_033	FROM->TO	G14-057T 345.00 - SUNNYSIDE 345KV CKT 1	717	789	0.04208	118.1621	BLACKBERRY - NEOSHO 345KV CKT 1
FDNS	00NR	5	16WP	G15_033	FROM->TO	G14-057T 345.00 - SUNNYSIDE 345KV CKT 1	717	789	0.04212	118.1575	GEN337041 1-GERALD ANDRUS
FDNS	00NR	5	16WP	G15_033	FROM->TO	G14-057T 345.00 - SUNNYSIDE 345KV CKT 1	717	789	0.04212	118.152	7JASPER 345.00 - BLACKBERRY 345KV CKT 1
FDNS	00NR	5	16WP	G15_033	FROM->TO	G14-057T 345.00 - SUNNYSIDE 345KV CKT 1	717	789	0.04212	118.1519	P12:138:AEPW:R.S.S.-4:S.HUD.-4
FDNS	00NR	5	16WP	G15_033	FROM->TO	G14-057T 345.00 - SUNNYSIDE 345KV CKT 1	717	789	0.04207	118.1481	NOEL_SW 138.00 - ROSE_VALLEY 138.00 138KV CKT 1
FDNS	00NR	5	16WP	G15_033	FROM->TO	G14-057T 345.00 - SUNNYSIDE 345KV CKT 1	717	789	0.0421	118.1472	7LUTESVIL 345.00 - 7ST FRANC 345.00 345KV CKT 1
FDNS	00NR	5	16WP	G15_033	FROM->TO	G14-057T 345.00 - SUNNYSIDE 345KV CKT 1	717	789	0.04141	118.1458	ELK CITY 230KV (ELKCTY-6) 230/138/13.8KV TRANSFORMER CKT 1
FDNS	00NR	5	16WP	G15_033	FROM->TO	G14-057T 345.00 - SUNNYSIDE 345KV CKT 1	717	789	0.04141	118.1458	ELK CITY 230KV (ELKCTY-6) 230/138/13.8KV TRANSFORMER CKT 1
FDNS	00NR	5	16WP	G15_033	FROM->TO	G14-057T 345.00 - SUNNYSIDE 345KV CKT 1	717	789	0.04141	118.1449	CHISHOLM6 230.00 - ELK CITY 230KV 230KV CKT 1
FDNS	00NR	5	16WP	G15_033	FROM->TO	G14-057T 345.00 - SUNNYSIDE 345KV CKT 1	717	789	0.04214	118.1414	GRACEMONT (BANK 1) 345/138/13.8KV TRANSFORMER CKT 1
FDNS	00NR	5	16WP	G15_033	FROM->TO	G14-057T 345.00 - SUNNYSIDE 345KV CKT 1	717	789	0.04214	118.1384	ANADARKO - SEQUOYAHJ4 138.00 138KV CKT 1
FDNS	00NR	5	16WP	G15_033	FROM->TO	G14-057T 345.00 - SUNNYSIDE 345KV CKT 1	717	789	0.04619	118.1372	P12:345:SPS:J15.1.XRDS.TOLK
FDNS	00NR	5	16WP	G15_033	FROM->TO	G14-057T 345.00 - SUNNYSIDE 345KV CKT 1	717	789	0.04182	118.1356	HINTON - REDROCKRD4 138.00 138KV CKT 1
FDNS	00NR	5	16WP	G15_033	FROM->TO	G14-057T 345.00 - SUNNYSIDE 345KV CKT 1	717	789	0.04214	118.1347	CORN TAP - SEQUOYAHJ4 138.00 138KV CKT 1
FDNS	00NR	5	16WP	G15_033	FROM->TO	G14-057T 345.00 - SUNNYSIDE 345KV CKT 1	717	789	0.04204	118.1281	DRAPER LAKE - SEMINOLE 345KV CKT 2
FDNS	00NR	5	16WP	G15_033	FROM->TO	G14-057T 345.00 - SUNNYSIDE 345KV CKT 1	717	789	0.04204	118.128	DRAPER LAKE - SEMINOLE 345KV CKT 1
FDNS	00NR	5	16WP	G15_033	FROM->TO	G14-057T 345.00 - SUNNYSIDE 345KV CKT 1	717	789	0.0421	118.1259	ETTA (DUKE HOTSPRINGS) - MC NIEL 500KV CKT 1
FDNS	00NR	5	16WP	G15_033	FROM->TO	G14-057T 345.00 - SUNNYSIDE 345KV CKT 1	717	789	0.04217	118.1232	NORGE ROAD - SOUTHWESTERN STATION 138KV CKT 1
FDNS	00NR	5	16WP	G15_033	FROM->TO	G14-057T 345.00 - SUNNYSIDE 345KV CKT 1	717	789	0.04217	118.1232	NORGE ROAD - SOUTHWESTERN STATION 138KV CKT 1
FDNS	00NR	5	16WP	G15_033	FROM->TO	G14-057T 345.00 - SUNNYSIDE 345KV CKT 1	717	789	0.04177	118.1193	NOBLE - PURCELL4 138.00 138KV CKT 1
FDNS	00NR	5	16WP	G15_033	FROM->TO	G14-057T 345.00 - SUNNYSIDE 345KV CKT 1	717	789	0.04208	118.1185	SARA - STHLAKE4 138.00 138KV CKT 1
FDNS	00NR	5	16WP	G15_033	FROM->TO	G14-057T 345.00 - SUNNYSIDE 345KV CKT 1	717	789	0.04212	118.1149	GEN336801 1-BAXTER WILSON UNIT #1
FDNS	00NR	5	16WP	G15_033	FROM->TO	G14-057T 345.00 - SUNNYSIDE 345KV CKT 1	717	789	0.04212	118.1139	P12:138:AEPW:YARCH-S4:T.S.E.-4
FDNS	00NR	5	16WP	G15_033	FROM->TO	G14-057T 345.00 - SUNNYSIDE 345KV CKT 1	717	789	0.04222	118.1116	LASALLE - STONEWAL LH138.00 138KV CKT 1
FDNS	00NR	5	16WP	G15_033	FROM->TO	G14-057T 345.00 - SUNNYSIDE 345KV CKT 1	717	789	0.04212	118.1092	P12:69:AEPW:NROGERS2:ECNTRTN2
FDNS	00NR	5	16WP	G15_033	FROM->TO	G14-057T 345.00 - SUNNYSIDE 345KV CKT 1	717	789	0.04212	118.108	P12:138:AEPW:BA_71ST4:T.S.E.-4
FDNS	00NR	5	16WP	G15_033	FROM->TO	G14-057T 345.00 - SUNNYSIDE 345KV CKT 1	717	789	0.04212	118.1076	SABINE 230/24.0KV TRANSFORMER CKT 1
FDNS	00NR	5	16WP	G15_033	FROM->TO	G14-057T 345.00 - SUNNYSIDE 345KV CKT 1	717	789	0.04224	118.1075	WALTERS - WALTERS 69KV CKT 1
FDNS	00NR	5	16WP	G15_033	FROM->TO	G14-057T 345.00 - SUNNYSIDE 345KV CKT 1	717	789	0.04194	118.105	WEATHERFORD TAP - WEATHERFORD WIND FARM 138KV CKT 1
FDNS	00NR	5	20WP	G15_033	FROM->TO	G14-057T 345.00 - SUNNYSIDE 345KV CKT 1	717	789	0.03938	118.1048	MATHWSN7 345.00 - TATONGA7 345.00 345KV CKT 1
FDNS	00NR	5	16WP	G15_033	FROM->TO	G14-057T 345.00 - SUNNYSIDE 345KV CKT 1	717	789	0.0421	118.1036	8WNEWMADRID 500.00 - DELL 500 500KV CKT 1
FDNS	00NR	5	16WP	G15_033	FROM->TO	G14-057T 345.00 - SUNNYSIDE 345KV CKT 1	717	789	0.04222	118.0969	STONEWAL LH138.00 - TUPELO TAP 138KV CKT 1
FDNS	00NR	5	16WP	G15_033	FROM->TO	G14-057T 345.00 - SUNNYSIDE 345KV CKT 1	717	789	0.04212	118.0918	ESSEX UNIT 2 500/18.0KV TRANSFORMER CKT 1
FDNS	00NR	5	16WP	G15_033	FROM->TO	G14-057T 345.00 - SUNNYSIDE 345KV CKT 1	717	789	0.04208	118.0901	MCCLAIN - STHLAKE4 138.00 138KV CKT 1
FDNS	00NR	5	16WP	G15_033	FROM->TO	G14-057T 345.00 - SUNNYSIDE 345KV CKT 1	717	789	0.04209	118.0898	ENOWILT - LONE OAK 138KV CKT 1
FDNS	00NR	5	16WP	G15_033	FROM->TO	G14-057T 345.00 - SUNNYSIDE 345KV CKT 1	717	789	0.04212	118.0891	FRONTIER 345/18.0KV TRANSFORMER CKT 1
FDNS	00NR	5	16WP	G15_033	FROM->TO	G14-057T 345.00 - SUNNYSIDE 345KV CKT 1	717	789	0.04212	118.0874	FRONTIER 345/18.0KV TRANSFORMER CKT 1
FDNS	00NR	5	16WP	G15_033	FROM->TO	G14-057T 345.00 - SUNNYSIDE 345KV CKT 1	717	789	0.04216	118.0861	SOUTHWESTERN STATION - VERDEN 138KV CKT 1
FDNS	00NR	5	16WP	G15_033	FROM->TO	G14-057T 345.00 - SUNNYSIDE 345KV CKT 1	717	789	0.04211	118.0826	P12:138:AEPW-OGE:SHIDLER4:OSAGE 4
FDNS	00NR	5	16WP	G15_033	FROM->TO	G14-057T 345.00 - SUNNYSIDE 345KV CKT 1	717	789	0.0421	118.0823	EMPORIA ENERGY CENTER - SWISSVALE 345KV CKT 1
FDNS	00NR	5	16WP	G15_033	FROM->TO	G14-057T 345.00 - SUNNYSIDE 345KV CKT 1	717	789	0.04209	118.0809	ENOWILT - SARDIS 138KV CKT 1
FDNS	00NR	5	16WP	G15_033	FROM->TO	G14-057T 345.00 - SUNNYSIDE 345KV CKT 1	717	789	0.04212	118.0771	P12:161:AEPW:CHAMSPR5:FARMING5
FDNS	00NR	5	16WP	G15_033	FROM->TO	G14-057T 345.00 - SUNNYSIDE 345KV CKT 1	717	789	0.04485	118.077	P12:138:AEPW:S.W.S.-4:L.E.S.-4
FDNS	00NR	5	16WP	G15_033	FROM->TO	G14-057T 345.00 - SUNNYSIDE 345KV CKT 1	717	789	0.04212	118.0679	MARIETTA - MARIETTA4 138.00 138KV CKT 1
FDNS	00NR	5	16WP	G15_033	FROM->TO	G14-057T 345.00 - SUNNYSIDE 345KV CKT 1	717	789	0.04243	118.0667	LAWTON RELIFT TAP - OMPA-WALTERS 69KV CKT 1
FDNS	00NR	5	16WP	G15_033	FROM->TO	G14-057T 345.00 - SUNNYSIDE 345KV CKT 1	717	789	0.04216	118.0662	NORTH 29TH CHICKASHA - VERDEN 138KV CKT 1
FDNS	00NR	5	16WP	G15_033	FROM->TO	G14-057T 345.00 - SUNNYSIDE 345KV CKT 1	717	789	0.04212	118.0605	GEN505616 1-BROKEN BOW
FDNS	00NR	5	16WP	G15_033	FROM->TO	G14-057T 345.00 - SUNNYSIDE 345KV CKT 1	717	789	0.04162	118.0595	BUCKNER7 345.00 - HOLCOMB 345KV CKT 1
FDNS	00NR	5	16WP	G15_033	FROM->TO	G14-057T 345.00 - SUNNYSIDE 345KV CKT 1	717	789	0.04162	118.0595	BUCKNER7 345.00 - HOLCOMB 345KV CKT 1
FDNS	00NR	5	16WP	G15_033	FROM->TO	G14-057T 345.00 - SUNNYSIDE 345KV CKT 1	717	789	0.04212	118.052	LEWIS CREEK SWITCHYARD 138/22.0KV TRANSFORMER CKT 1
FDNS	00NR	5	16WP	G15_033	FROM->TO	G14-057T 345.00 - SUNNYSIDE 345KV CKT 1	717	789	0.04212	118.0499	GEN509394 1-FLINT CREEK
FDNS	00NR	5	16WP	G15_033	FROM->TO	G14-057T 345.00 - SUNNYSIDE 345KV CKT 1	717	789	0.04212	118.047	LEWIS CREEK SWITCHYARD 138/22.0KV TRANSFORMER CKT 1
FDNS	00NR	5	16WP	G15_033	FROM->TO	G14-057T 345.00 - SUNNYSIDE 345KV CKT 1	717	789	0.04172	118.0467	ARBUCKLE - VANOSTP4 138.00 138KV CKT 1
FDNS	00NR	5	16WP	G15_033	FROM->TO	G14-057T 345.00 - SUNNYSIDE 345KV CKT 1	717	789	0.04209	118.0458	CLAYTON - SARDIS 138KV CKT 1
FDNS	00NR	5	16WP	G15_033	FROM->TO	G14-057T 345.00 - SUNNYSIDE 345KV CKT 1	717	789	0.04224	118.0455	P12:69:WFEC-AEPW:COMANCH2:WALTRS-2
FDNS	00NR	5	16WP	G15_033	FROM->TO	G14-057T 345.00 - SUNNYSIDE 345KV CKT 1	717	789	0.04204	118.0388	HOPE - MCNAB REC 115KV CKT 1

SOLUTION	GROUP	SCENARIO	SEASON	SOURCE	DIRECTION	MONITORED ELEMENT	RATEA (MVA)	RATEB(MVA)	TDF	TC%LOADING (% MVA)	CONTINGENCY
FDNS	00NR	5	16WP	G15_033	FROM->TO	G14-057T 345.00 - SUNNYSIDE 345KV CKT 1	717	789	0.04176	118.0377	CLINTON JUNCTION - ELK CITY 138KV CKT 1
FDNS	00NR	5	16WP	G15_033	FROM->TO	G14-057T 345.00 - SUNNYSIDE 345KV CKT 1	717	789	0.04176	118.0377	CLINTON JUNCTION - ELK CITY 138KV CKT 1
FDNS	00NR	5	16WP	G15_033	FROM->TO	G14-057T 345.00 - SUNNYSIDE 345KV CKT 1	717	789	0.04212	118.0343	GEN501970 1-EVANGELINE UNIT 7
FDNS	00NR	5	16WP	G15_033	FROM->TO	G14-057T 345.00 - SUNNYSIDE 345KV CKT 1	717	789	0.04209	118.0343	EMPORIA ENERGY CENTER - G14_001T 345.00 345KV CKT 1
FDNS	00NR	5	16WP	G15_033	FROM->TO	G14-057T 345.00 - SUNNYSIDE 345KV CKT 1	717	789	0.04204	118.0299	P12:115:AEPW:TURK3:HOPE3
FDNS	00NR	5	16WP	G15_033	FROM->TO	G14-057T 345.00 - SUNNYSIDE 345KV CKT 1	717	789	0.0421	118.0254	MORISNT4 138.00 - STILLWATER 138KV CKT 1
FDNS	00NR	5	16WP	G15_033	FROM->TO	G14-057T 345.00 - SUNNYSIDE 345KV CKT 1	717	789	0.04212	118.0216	GEN334392 1-EXXON MOBIL IPP 1
FDNS	00NR	5	16WP	G15_033	FROM->TO	G14-057T 345.00 - SUNNYSIDE 345KV CKT 1	717	789	0.04314	118.0203	LAWTON EASTSIDE (LES 4) 345/138/13.8KV TRANSFORMER CKT 1
FDNS	00NR	5	16WP	G15_033	FROM->TO	G14-057T 345.00 - SUNNYSIDE 345KV CKT 1	717	789	0.04314	118.0203	LAWTON EASTSIDE (LES 4) 345/138/13.8KV TRANSFORMER CKT 1
FDNS	00NR	5	16WP	G15_033	FROM->TO	G14-057T 345.00 - SUNNYSIDE 345KV CKT 1	717	789	0.0421	118.0202	P12:138:OKGE:3TERM2
FDNS	00NR	5	16WP	G15_033	FROM->TO	G14-057T 345.00 - SUNNYSIDE 345KV CKT 1	717	789	0.04194	118.0196	WEATHERFORD SOUTHEAST - WEATHERFORD TAP 138KV CKT 1
FDNS	00NR	5	16WP	G15_033	FROM->TO	G14-057T 345.00 - SUNNYSIDE 345KV CKT 1	717	789	0.04208	118.0187	COUCH SES - MC NIEL 115KV CKT 1
FDNS	00NR	5	16WP	G15_033	FROM->TO	G14-057T 345.00 - SUNNYSIDE 345KV CKT 1	717	789	0.04209	118.0182	P12:138:AEPW-SWPA:LONEOAK4:BRKNBW4
FDNS	00NR	5	16WP	G15_033	FROM->TO	G14-057T 345.00 - SUNNYSIDE 345KV CKT 1	717	789	0.04212	118.0137	GEN334393 1-EXXON MOBIL IPP 2
FDNS	00NR	5	16WP	G15_033	FROM->TO	G14-057T 345.00 - SUNNYSIDE 345KV CKT 1	717	789	0.04212	118.0137	GEN334394 1-EXXON MOBIL IPP 3
FDNS	00NR	5	16WP	G15_033	FROM->TO	G14-057T 345.00 - SUNNYSIDE 345KV CKT 1	717	789	0.04205	118.0122	CLARKSVILLE - ONETA 345KV CKT 1
FDNS	00NR	5	16WP	G15_033	FROM->TO	G14-057T 345.00 - SUNNYSIDE 345KV CKT 1	717	789	0.04205	118.0122	CLARKSVILLE - ONETA 345KV CKT 1
FDNS	00NR	5	16WP	G15_033	FROM->TO	G14-057T 345.00 - SUNNYSIDE 345KV CKT 1	717	789	0.04213	118.0093	P12:138:OKGE:3TERM12
FDNS	00NR	5	16WP	G15_033	FROM->TO	G14-057T 345.00 - SUNNYSIDE 345KV CKT 1	717	789	0.04212	118.0084	GEN336222 1-LITTLE GYPSY UNIT#2
FDNS	00NR	5	16WP	G15_033	FROM->TO	G14-057T 345.00 - SUNNYSIDE 345KV CKT 1	717	789	0.04204	118.0074	MCNAB REC - Turk 115 115KV CKT 1
FDNS	00NR	5	16WP	G15_033	FROM->TO	G14-057T 345.00 - SUNNYSIDE 345KV CKT 1	717	789	0.04204	118.0074	TURK (TURK 1) 138/115/13.2KV TRANSFORMER CKT 1
FDNS	00NR	5	16WP	G15_033	FROM->TO	G14-057T 345.00 - SUNNYSIDE 345KV CKT 1	717	789	0.04204	118.0074	TURK (TURK 1) 138/115/13.2KV TRANSFORMER CKT 1
FDNS	00NR	5	16WP	G15_033	FROM->TO	G14-057T 345.00 - SUNNYSIDE 345KV CKT 1	717	789	0.04209	118.006	CLAYTON - NASHOBA 138KV CKT 1
FDNS	00NR	5	16WP	G15_033	FROM->TO	G14-057T 345.00 - SUNNYSIDE 345KV CKT 1	717	789	0.04217	118.0041	CORNVILLE - NORGE ROAD 138KV CKT 1
FDNS	00NR	5	16WP	G15_033	FROM->TO	G14-057T 345.00 - SUNNYSIDE 345KV CKT 1	717	789	0.04217	118.0041	CORNVILLE - NORGE ROAD 138KV CKT 1
FDNS	00NR	5	16WP	G15_033	FROM->TO	G14-057T 345.00 - SUNNYSIDE 345KV CKT 1	717	789	0.04243	118.0025	OMPA-WALTERS - WALTERS 69KV CKT 1
FDNS	00NR	5	16WP	G15_033	FROM->TO	G14-057T 345.00 - SUNNYSIDE 345KV CKT 1	717	789	0.04243	118.0025	OMPA-WALTERS - WALTERS 69KV CKT 1
FDNS	00NR	5	16WP	G15_033	FROM->TO	G14-057T 345.00 - SUNNYSIDE 345KV CKT 1	717	789	0.04212	118.0008	GEN659125 1-COVEY
FDNS	00NR	5	16WP	G15_033	FROM->TO	G14-057T 345.00 - SUNNYSIDE 345KV CKT 1	717	789	0.04209	117.9929	BETHEL - NASHOBA 138KV CKT 1
FDNS	00NR	5	16WP	G15_033	FROM->TO	G14-057T 345.00 - SUNNYSIDE 345KV CKT 1	717	789	0.04212	117.9918	7JASPER 345.00 - MORGAN 345KV CKT 1
FDNS	00NR	5	16WP	G15_033	FROM->TO	G14-057T 345.00 - SUNNYSIDE 345KV CKT 1	717	789	0.04216	117.9863	CORNVILLE - NORTH 29TH CHICKASHA 138KV CKT 1
FDNS	00NR	5	16WP	G15_033	FROM->TO	G14-057T 345.00 - SUNNYSIDE 345KV CKT 1	717	789	0.04212	117.9855	GEN506749 1-EASTMAN GENERATION A
FDNS	00NR	5	16WP	G15_033	FROM->TO	G14-057T 345.00 - SUNNYSIDE 345KV CKT 1	717	789	0.0427	117.9854	POTTER COUNTY INTERCHANGE - TOLK STATION 345KV CKT 1
FDNS	00NR	5	16WP	G15_033	FROM->TO	G14-057T 345.00 - SUNNYSIDE 345KV CKT 1	717	789	0.04212	117.985	P12:138:AEPW:R.S.S-4:T.P.S.-4
FDNS	00NR	5	16WP	G15_033	FROM->TO	G14-057T 345.00 - SUNNYSIDE 345KV CKT 1	717	789	0.04212	117.9839	GEN334432 1-SABINE UNIT 2
FDNS	00NR	5	16WP	G15_033	FROM->TO	G14-057T 345.00 - SUNNYSIDE 345KV CKT 1	717	789	0.04212	117.9838	GEN334431 1-SABINE UNIT 1
FDNS	00NR	5	16WP	G15_033	FROM->TO	G14-057T 345.00 - SUNNYSIDE 345KV CKT 1	717	789	0.04194	117.9816	CLINTON JUNCTION - CLINTON NATURAL GAS TAP 138KV CKT 1
FDNS	00NR	5	16WP	G15_033	FROM->TO	G14-057T 345.00 - SUNNYSIDE 345KV CKT 1	717	789	0.04214	117.981	FRANKLIN - FRANKLIN SW 138KV CKT 1
FDNS	00NR	5	16WP	G15_033	FROM->TO	G14-057T 345.00 - SUNNYSIDE 345KV CKT 1	717	789	0.04212	117.9772	GEN336152 1-WATERFORD UNIT#2
FDNS	00NR	5	16WP	G15_033	FROM->TO	G14-057T 345.00 - SUNNYSIDE 345KV CKT 1	717	789	0.04197	117.9768	G13-010T 345.00 - POST ROCK 345KV CKT 1
FDNS	00NR	5	16WP	G15_033	FROM->TO	G14-057T 345.00 - SUNNYSIDE 345KV CKT 1	717	789	0.04212	117.9763	GEN501972 1-EVANGELINE UNIT 7-2
FDNS	00NR	5	16WP	G15_033	FROM->TO	G14-057T 345.00 - SUNNYSIDE 345KV CKT 1	717	789	0.04212	117.9762	GEN336151 1-WATERFORD UNIT#1
FDNS	00NR	5	16WP	G15_033	FROM->TO	G14-057T 345.00 - SUNNYSIDE 345KV CKT 1	717	789	0.04212	117.9762	GEN501971 1-EVANGELINE UNIT 7-1
FDNS	00NR	5	16WP	G15_033	FROM->TO	G14-057T 345.00 - SUNNYSIDE 345KV CKT 1	717	789	0.04209	117.971	G14_001T 345.00 - WICHITA 345KV CKT 1
FDNS	00NR	5	20WP	G15_033	FROM->TO	G14-057T 345.00 - SUNNYSIDE 345KV CKT 1	717	789	0.04045	117.9685	CORN TAP - NAPLESTP 138.00 138KV CKT 1
FDNS	00NR	5	16WP	G15_033	FROM->TO	G14-057T 345.00 - SUNNYSIDE 345KV CKT 1	717	789	0.04212	117.9603	P12:138:AEPW:R.S.S.-4:R:96YALE-4
FDNS	00NR	5	16WP	G15_033	FROM->TO	G14-057T 345.00 - SUNNYSIDE 345KV CKT 1	717	789	0.04212	117.9575	ST FRANCIS - ST FRANCIS 1 161KV CKT Z1
FDNS	00NR	5	16WP	G15_033	FROM->TO	G14-057T 345.00 - SUNNYSIDE 345KV CKT 1	717	789	0.04212	117.9575	ST FRANCIS 161/16.0KV TRANSFORMER CKT 1
FDNS	00NR	5	16WP	G15_033	FROM->TO	G14-057T 345.00 - SUNNYSIDE 345KV CKT 1	717	789	0.04207	117.9526	P12:138:AEPW:OKMULGE4:R.S.S-4
FDNS	00NR	5	16WP	G15_033	FROM->TO	G14-057T 345.00 - SUNNYSIDE 345KV CKT 1	717	789	0.04212	117.9525	FLETCHER - MARLOW JCT 69KV CKT 1
FDNS	00NR	5	16WP	G15_033	FROM->TO	G14-057T 345.00 - SUNNYSIDE 345KV CKT 1	717	789	0.04212	117.9523	GEN501912 1-ACADIA UNIT CT1B
FDNS	00NR	5	16WP	G15_033	FROM->TO	G14-057T 345.00 - SUNNYSIDE 345KV CKT 1	717	789	0.04212	117.9515	GEN501911 1-ACADIA UNIT CT1A
FDNS	00NR	5	16WP	G15_033	FROM->TO	G14-057T 345.00 - SUNNYSIDE 345KV CKT 1	717	789	0.04212	117.9456	P12:138:AEPW:MOHAWK4:T.NO--4
FDNS	00NR	5	16WP	G15_033	FROM->TO	G14-057T 345.00 - SUNNYSIDE 345KV CKT 1	717	789	0.04196	117.944	Canadian Pump Station - REDROCKRD4 138.00 138KV CKT 1
FDNS	00NR	5	16WP	G15_033	FROM->TO	G14-057T 345.00 - SUNNYSIDE 345KV CKT 1	717	789	0.04232	117.939	CIMARRON - NORTHWEST 345KV CKT 1
FDNS	00NR	5	16WP	G15_033	FROM->TO	G14-057T 345.00 - SUNNYSIDE 345KV CKT 1	717	789	0.04209	117.9366	BETHEL - BROKEN BOW 138KV CKT 1
FDNS	00NR	5	16WP	G15_033	FROM->TO	G14-057T 345.00 - SUNNYSIDE 345KV CKT 1	717	789	0.04212	117.9345	SABINE 230/22.0KV TRANSFORMER CKT 1
FDNS	00NR	5	16WP	G15_033	FROM->TO	G14-057T 345.00 - SUNNYSIDE 345KV CKT 1	717	789	0.0421	117.9325	GRAND ISLAND - MCCOOL 345KV CKT 1
FDNS	00NR	5	16WP	G15_033	FROM->TO	G14-057T 345.00 - SUNNYSIDE 345KV CKT 1	717	789	0.04207	117.9305	LACYGNE - NEOSHO 345KV CKT 1
FDNS	00NR	5	16WP	G15_033	FROM->TO	G14-057T 345.00 - SUNNYSIDE 345KV CKT 1	717	789	0.04212	117.928	GEN336242 1-1NMIL ST1 18.000
FDNS	00NR	5	16WP	G15_033	FROM->TO	G14-057T 345.00 - SUNNYSIDE 345KV CKT 1	717	789	0.04212	117.9276	ESSEX UNIT 2 500/18.0KV TRANSFORMER CKT 1
FDNS	00NR	5	16WP	G15_033	FROM->TO	G14-057T 345.00 - SUNNYSIDE 345KV CKT 1	717	789	0.04197	117.9249	G13-010T 345.00 - SPEARVILLE 345KV CKT 1
FDNS	00NR	5	16WP	G15_033	FROM->TO	G14-057T 345.00 - SUNNYSIDE 345KV CKT 1	717	789	0.04209	117.9223	LAYFLD8 500.00 (LAYFLD AUTO) 500/230/13.8KV TRANSFORMER CKT 1
FDNS	00NR	5	16WP	G15_033	FROM->TO	G14-057T 345.00 - SUNNYSIDE 345KV CKT 1	717	789	0.04209	117.9223	LAYFLD8 500.00 (LAYFLD AUTO) 500/230/13.8KV TRANSFORMER CKT 1
FDNS	00NR	5	16WP	G15_033	FROM->TO	G14-057T 345.00 - SUNNYSIDE 345KV CKT 1	717	789	0.04212	117.9207	AS KING - EAU CLAIRE 345KV CKT 1
FDNS	00NR	5	16WP	G15_033	FROM->TO	G14-057T 345.00 - SUNNYSIDE 345KV CKT 1	717	789	0.04212	117.9171	HAMMETT TAP - HORSESHOE LAKE 138KV CKT 1
FDNS	00NR	5	16WP	G15_033	FROM->TO	G14-057T 345.00 - SUNNYSIDE 345KV CKT 1	717	789	0.04212	117.9127	P12:138:OKGE:3TERM47
FDNS	00NR	5	16WP	G15_033	FROM->TO	G14-057T 345.00 - SUNNYSIDE 345KV CKT 1	717	789	0.04206	117.9103	AMITY SS - MURFREESBORO EAST (AECC) 115KV CKT 1
FDNS	00NR	5	16WP	G15_033	FROM->TO	G14-057T 345.00 - SUNNYSIDE 345KV CKT 1	717	789	0.04177	117.909	PURCELL4 138.00 - WALNUT CREEK 138KV CKT 1
FDNS	00NR	5	16WP	G15_033	FROM->TO	G14-057T 345.00 - SUNNYSIDE 345KV CKT 1	717	789	0.04187	117.9081	ARBUCKLE - MILLCREEK 138KV CKT 1
FDNS	00NR	5	16WP	G15_033	FROM->TO	G14-057T 345.00 - SUNNYSIDE 345KV CKT 1	717	789	0.04231	117.9076	CRINER - PAYNE 138.00 138KV CKT 1
FDNS	00NR	5	16WP	G15_033	FROM->TO	G14-057T 345.00 - SUNNYSIDE 345KV CKT 1	717	789	0.04212	117.9064	NELSON 230/24.0KV TRANSFORMER CKT 1
FDNS	00NR	5	16WP	G15_033	FROM->TO	G14-057T 345.00 - SUNNYSIDE 345KV CKT 1	717	789	0.04212	117.8994	ST FRANCIS 2 161/16.0KV TRANSFORMER CKT 2
FDNS	00NR	5	16WP	G15_033	FROM->TO	G14-057T 345.00 - SUNNYSIDE 345KV CKT 1	717	789	0.04212	117.8994	ST FRANCIS 345/161KV TRANSFORMER CKT 1
FDNS	00NR	5	16WP	G15_033	FROM->TO	G14-057T 345.00 - SUNNYSIDE 345KV CKT 1	717	789	0.04212	117.8993	GEN599951 1-PSCO LAMAR DC TIE
FDNS	00NR	5	16WP	G15_033	FROM->TO	G14-057T 345.00 - SUNNYSIDE 345KV CKT 1	717	789	0.04211	117.8927	P12:138:WFEC-AEPW:ELKCTY-4:ERICK4
FDNS	00NR	5	16WP	G15_033	FROM->TO	G14-057T 345.00 - SUNNYSIDE 345KV CKT 1	717	789	0.0421	117.89	MCCOOL - MOORE 345KV CKT 1
FDNS	00NR	5	20WP	G15_033	FROM->TO	G14-057T 345.00 - SUNNYSIDE 345KV CKT 1	717	789	0.04045	117.8853	NAPLESTP 138.00 - PAYNE 138.00 138KV CKT 1
FDNS	00NR	5	16WP	G15_033	FROM->TO	G14-057T 345.00 - SUNNYSIDE 345KV CKT 1	717	789	0.04208	117.883	G15088_T 345.00 - PAULINE 345KV CKT 1

SOLUTION	GROUP	SCENARIO	SEASON	SOURCE	DIRECTION	MONITORED ELEMENT	RATEA (MVA)	RATEB(MVA)	TDF	TC%LOADING (% MVA)	CONTINGENCY
FDNS	00NR	5	16WP	G15_033	FROM->TO	G14-057T 345.00 - SUNNYSIDE 345KV CKT 1	717	789	0.04278	117.8818	DUNCAN - DUNCHERTP4 138.00 138KV CKT 1
FDNS	00NR	5	16WP	G15_033	FROM->TO	G14-057T 345.00 - SUNNYSIDE 345KV CKT 1	717	789	0.04278	117.8818	DUNCAN - DUNCHERTP4 138.00 138KV CKT 1
FDNS	00NR	5	16WP	G15_033	FROM->TO	G14-057T 345.00 - SUNNYSIDE 345KV CKT 1	717	789	0.04278	117.8816	DUNCAN EASTSIDE - DUNCHERTP4 138.00 138KV CKT 1
FDNS	00NR	5	16WP	G15_033	FROM->TO	G14-057T 345.00 - SUNNYSIDE 345KV CKT 1	717	789	0.04206	117.8795	G1524G1525 345.00 - WICHITA 345KV CKT 1
FDNS	00NR	5	16WP	G15_033	FROM->TO	G14-057T 345.00 - SUNNYSIDE 345KV CKT 1	717	789	0.04206	117.8795	G1524G1525 345.00 - WICHITA 345KV CKT 2
FDNS	00NR	5	16WP	G15_033	FROM->TO	G14-057T 345.00 - SUNNYSIDE 345KV CKT 1	717	789	0.04212	117.8776	GEN515042 1-SEMINOLE 3G
FDNS	00NR	5	16WP	G15_033	FROM->TO	G14-057T 345.00 - SUNNYSIDE 345KV CKT 1	717	789	0.04224	117.8761	COMANCHE - WALTERS 69KV CKT 1
FDNS	00NR	5	16WP	G15_033	FROM->TO	G14-057T 345.00 - SUNNYSIDE 345KV CKT 1	717	789	0.04212	117.8701	GEN338146 1-INDEPENDENCE UNIT #2
FDNS	00NR	5	16WP	G15_033	FROM->TO	G14-057T 345.00 - SUNNYSIDE 345KV CKT 1	717	789	0.04212	117.8664	GEN511843 1-RIVERSIDE STATION #2
FDNS	00NR	5	16WP	G15_033	FROM->TO	G14-057T 345.00 - SUNNYSIDE 345KV CKT 1	717	789	0.04204	117.8621	SEMINOLE (SEMINOL2) 345/138/14.4KV TRANSFORMER CKT 1
FDNS	06ALL	5	20L	G15_033	FROM->TO	G14-057T 345.00 - SUNNYSIDE 345KV CKT 1	717	789	0.13592	117.7866	BASE CASE
FDNS	00NR	5	20WP	G15_033	FROM->TO	G14-057T 345.00 - SUNNYSIDE 345KV CKT 1	717	789	0.03998	117.7696	7SAREPTA% 345.00 - LONGWOOD 345KV CKT 1
FDNS	00NR	5	20WP	G15_033	FROM->TO	G14-057T 345.00 - SUNNYSIDE 345KV CKT 1	717	789	0.03998	117.7696	7SAREPTA% 345.00 - LONGWOOD 345KV CKT 1
FDNS	00NR	5	20WP	G15_033	FROM->TO	G14-057T 345.00 - SUNNYSIDE 345KV CKT 1	717	789	0.04018	117.7527	GEN336821 1-GRAND GULF UNIT
FDNS	06ALL	5	17SP	G15_033	FROM->TO	G14-057T 345.00 - SUNNYSIDE 345KV CKT 1	717	789	0.22016	117.6538	CIMARRON - MINCO 345KV CKT 1
FDNS	00NR	5	20WP	G15_033	FROM->TO	G14-057T 345.00 - SUNNYSIDE 345KV CKT 1	717	789	0.04018	117.6344	GEN336153 1-WATERFORD UNIT#3
FDNS	00NR	5	20WP	G15_033	FROM->TO	G14-057T 345.00 - SUNNYSIDE 345KV CKT 1	717	789	0.0405	117.6025	ANADARKO - POCASSETT 138KV CKT 1
FDNS	00NR	5	20WP	G15_033	FROM->TO	G14-057T 345.00 - SUNNYSIDE 345KV CKT 1	717	789	0.04037	117.5678	COMANCHE - LOCO 138KV CKT 1
FDNS	00NR	5	20WP	G15_033	FROM->TO	G14-057T 345.00 - SUNNYSIDE 345KV CKT 1	717	789	0.04011	117.4852	CLEVELAND - TULSA NORTH 345KV CKT 1
FDNS	00NR	5	20WP	G15_033	FROM->TO	G14-057T 345.00 - SUNNYSIDE 345KV CKT 1	717	789	0.04011	117.4852	CLEVELAND - TULSA NORTH 345KV CKT 1
FDNS	00NR	5	20WP	G15_033	FROM->TO	G14-057T 345.00 - SUNNYSIDE 345KV CKT 1	717	789	0.0405	117.458	POCASSETT - TUTTLE 138KV CKT 1
FDNS	00NR	5	20WP	G15_033	FROM->TO	G14-057T 345.00 - SUNNYSIDE 345KV CKT 1	717	789	0.04009	117.3753	DOLET HILLS - SOUTHWEST SHREVEPORT 345KV CKT 1
FDNS	00NR	5	20WP	G15_033	FROM->TO	G14-057T 345.00 - SUNNYSIDE 345KV CKT 1	717	789	0.04009	117.3753	DOLET HILLS - SOUTHWEST SHREVEPORT 345KV CKT 1
FDNS	00NR	5	20WP	G15_033	FROM->TO	G14-057T 345.00 - SUNNYSIDE 345KV CKT 1	717	789	0.04265	117.3742	BORDER 7345.00 - WOODWARD DISTRICT EHV 345KV CKT 1
FDNS	00NR	5	20WP	G15_033	FROM->TO	G14-057T 345.00 - SUNNYSIDE 345KV CKT 1	717	789	0.04018	117.327	GEN335831 1-RIVERBEND UNIT#1
FDNS	00NR	5	20WP	G15_033	FROM->TO	G14-057T 345.00 - SUNNYSIDE 345KV CKT 1	717	789	0.03938	117.3143	G11_051T 345.00 - TATONGA7 345.00 345KV CKT 1
FDNS	00NR	5	20WP	G15_033	FROM->TO	G14-057T 345.00 - SUNNYSIDE 345KV CKT 1	717	789	0.04018	117.2675	GRAND GULF 500/22.0KV TRANSFORMER CKT 1
FDNS	00NR	5	20WP	G15_033	FROM->TO	G14-057T 345.00 - SUNNYSIDE 345KV CKT 1	717	789	0.04132	117.2073	P12:138:AEPW:DUNCAN-4:L.E.S.-4
FDNS	00NR	5	20WP	G15_033	FROM->TO	G14-057T 345.00 - SUNNYSIDE 345KV CKT 1	717	789	0.04002	117.1579	ARCADIA - NORTHWEST 345KV CKT 1
FDNS	00NR	5	16WP	G15_033	FROM->TO	G14-057T 345.00 - SUNNYSIDE 345KV CKT 1	717	789	0.04212	117.1431	OKLAUNION 345/13.2KV TRANSFORMER CKT 1
FDNS	00NR	5	20WP	G15_033	FROM->TO	G14-057T 345.00 - SUNNYSIDE 345KV CKT 1	717	789	0.04007	117.1419	7SAREPTA% 345.00 - ELDORADO EHV 345KV CKT 1
FDNS	00NR	5	20WP	G15_033	FROM->TO	G14-057T 345.00 - SUNNYSIDE 345KV CKT 1	717	789	0.04007	117.1417	3TR3AR8EL7EL
FDNS	00NR	5	20WP	G15_033	FROM->TO	G14-057T 345.00 - SUNNYSIDE 345KV CKT 1	717	789	0.04007	117.1315	ELDORADO EHV 500/345KV TRANSFORMER CKT 1
FDNS	00NR	5	20WP	G15_033	FROM->TO	G14-057T 345.00 - SUNNYSIDE 345KV CKT 1	717	789	0.04018	117.1215	GEN515577 1-ARBWND11 0.6900
FDNS	00NR	5	20WP	G15_033	FROM->TO	G14-057T 345.00 - SUNNYSIDE 345KV CKT 1	717	789	0.0405	117.0689	BRIDGECR 138.00 - TUTTLE 138KV CKT 1
FDNS	00NR	5	16WP	G15_033	FROM->TO	G14-057T 345.00 - SUNNYSIDE 345KV CKT 1	717	789	0.04211	117.0651	JOHNSON COUNTY - RUSSETT 138KV CKT 1
FDNS	00NR	5	16WP	G15_033	FROM->TO	G14-057T 345.00 - SUNNYSIDE 345KV CKT 1	717	789	0.04149	117.0619	MAYSVILLE - MAYSVLT4 138.00 138KV CKT 1
FDNS	00NR	5	16WP	G15_033	FROM->TO	G14-057T 345.00 - SUNNYSIDE 345KV CKT 1	717	789	0.04209	117.0532	GLASSES - MADILL INDUSTRIAL TAP 138KV CKT 1
FDNS	00NR	5	16WP	G15_033	FROM->TO	G14-057T 345.00 - SUNNYSIDE 345KV CKT 1	717	789	0.04208	117.0462	HUGO (HUGO 1) 345/138/13.8KV TRANSFORMER CKT 1
FDNS	00NR	5	16WP	G15_033	FROM->TO	G14-057T 345.00 - SUNNYSIDE 345KV CKT 1	717	789	0.04216	117.045	DRAPER LAKE - MIDWEST TAP 138KV CKT 1
FDNS	00NR	5	20WP	G15_033	FROM->TO	G14-057T 345.00 - SUNNYSIDE 345KV CKT 1	717	789	0.04131	117.0421	COMANCHE TAP - OMPA-DUNCAN 840 138KV CKT 1
FDNS	00NR	5	16WP	G15_033	FROM->TO	G14-057T 345.00 - SUNNYSIDE 345KV CKT 1	717	789	0.04218	117.0177	P12:138:OKGE:3TERM21
FDNS	00NR	5	16WP	G15_033	FROM->TO	G14-057T 345.00 - SUNNYSIDE 345KV CKT 1	717	789	0.04212	117.0079	GEN511961 1-DEMPSEY-WTG10.7000
FDNS	00NR	5	16WP	G15_033	FROM->TO	G14-057T 345.00 - SUNNYSIDE 345KV CKT 1	717	789	0.04212	117.0031	GEN563052 1-G15069_3 0.6900
FDNS	00NR	5	16WP	G15_033	FROM->TO	G14-057T 345.00 - SUNNYSIDE 345KV CKT 1	717	789	0.04188	117.0015	BEARCAT 138.00 - MOORELAND 138KV CKT 1
FDNS	00NR	5	16WP	G15_033	FROM->TO	G14-057T 345.00 - SUNNYSIDE 345KV CKT 1	717	789	0.04149	117.0003	MAYSVLT4 138.00 - PRAIRIE POINT 138KV CKT 1
FDNS	00NR	5	16WP	G15_033	FROM->TO	G14-057T 345.00 - SUNNYSIDE 345KV CKT 1	717	789	0.0421	116.9982	HUGO POWER PLANT - VALLENT 138KV CKT 1
FDNS	00NR	5	16WP	G15_033	FROM->TO	G14-057T 345.00 - SUNNYSIDE 345KV CKT 1	717	789	0.04212	116.9972	GEN520812 1-ANADRK5
FDNS	00NR	5	16WP	G15_033	FROM->TO	G14-057T 345.00 - SUNNYSIDE 345KV CKT 1	717	789	0.04212	116.9972	GEN520813 1-ANADRK6
FDNS	00NR	5	16WP	G15_033	FROM->TO	G14-057T 345.00 - SUNNYSIDE 345KV CKT 1	717	789	0.04212	116.9967	GEN562483 1-G13_027_3 0.6900
FDNS	00NR	5	16WP	G15_033	FROM->TO	G14-057T 345.00 - SUNNYSIDE 345KV CKT 1	717	789	0.04209	116.994	GLASSES - RUSSETT 138KV CKT 1
FDNS	00NR	5	20WP	G15_033	FROM->TO	G14-057T 345.00 - SUNNYSIDE 345KV CKT 1	717	789	0.04018	116.9934	HEALDTON - LOCO 138KV CKT 1
FDNS	00NR	5	16WP	G15_033	FROM->TO	G14-057T 345.00 - SUNNYSIDE 345KV CKT 1	717	789	0.04188	116.9894	P12:138:WFEC:MSL14
FDNS	00NR	5	16WP	G15_033	FROM->TO	G14-057T 345.00 - SUNNYSIDE 345KV CKT 1	717	789	0.04212	116.9884	GEN600070 9-RIVER SIDE
FDNS	00NR	5	16WP	G15_033	FROM->TO	G14-057T 345.00 - SUNNYSIDE 345KV CKT 1	717	789	0.04212	116.9884	GEN600071 10-RIVER SIDE
FDNS	00NR	5	16WP	G15_033	FROM->TO	G14-057T 345.00 - SUNNYSIDE 345KV CKT 1	717	789	0.04212	116.9884	GEN672303 3-BOUNDARY DAM GENERATOR 3
FDNS	00NR	5	16WP	G15_033	FROM->TO	G14-057T 345.00 - SUNNYSIDE 345KV CKT 1	717	789	0.04212	116.9884	GEN672304 4-BOUNDARY DAM GENERATOR 4
FDNS	00NR	5	16WP	G15_033	FROM->TO	G14-057T 345.00 - SUNNYSIDE 345KV CKT 1	717	789	0.04212	116.9884	GEN672305 5-BOUNDARY DAM GENERATOR 5
FDNS	00NR	5	16WP	G15_033	FROM->TO	G14-057T 345.00 - SUNNYSIDE 345KV CKT 1	717	789	0.04209	116.985	P12:138:WFEC:MSL11
FDNS	00NR	5	16WP	G15_033	FROM->TO	G14-057T 345.00 - SUNNYSIDE 345KV CKT 1	717	789	0.04209	116.985	P12:138:WFEC-AEPW:PHAROAH4:LONEOAK4
FDNS	00NR	5	16WP	G15_033	FROM->TO	G14-057T 345.00 - SUNNYSIDE 345KV CKT 1	717	789	0.04212	116.9845	7CALAWY 1 345.00 345/25.0KV TRANSFORMER CKT 1
FDNS	00NR	5	20WP	G15_033	FROM->TO	G14-057T 345.00 - SUNNYSIDE 345KV CKT 1	717	789	0.04018	116.9833	GEN509409 1-WILKES #3
FDNS	00NR	5	16WP	G15_033	FROM->TO	G14-057T 345.00 - SUNNYSIDE 345KV CKT 1	717	789	0.04212	116.9827	GEN600007 7-RIVERSIDE GEN 7
FDNS	00NR	5	16WP	G15_033	FROM->TO	G14-057T 345.00 - SUNNYSIDE 345KV CKT 1	717	789	0.04212	116.9826	GEN531447 1-HOLCOMB GENERATOR
FDNS	00NR	5	16WP	G15_033	FROM->TO	G14-057T 345.00 - SUNNYSIDE 345KV CKT 1	717	789	0.04212	116.9822	GEN600067 9-HIGH BRIDGE
FDNS	00NR	5	16WP	G15_033	FROM->TO	G14-057T 345.00 - SUNNYSIDE 345KV CKT 1	717	789	0.04212	116.9809	GEN615052 1-CAMBRIDGE GENERATING STATION
FDNS	00NR	5	16WP	G15_033	FROM->TO	G14-057T 345.00 - SUNNYSIDE 345KV CKT 1	717	789	0.04212	116.9775	GEN600011 5-BLACK DOG GEN 1
FDNS	00NR	5	16WP	G15_033	FROM->TO	G14-057T 345.00 - SUNNYSIDE 345KV CKT 1	717	789	0.04212	116.9726	GEN562074 1-G1149G1504 0.6900
FDNS	00NR	5	16WP	G15_033	FROM->TO	G14-057T 345.00 - SUNNYSIDE 345KV CKT 1	717	789	0.04212	116.9719	GEN600014 4-BLACK DOG GEN 4
FDNS	00NR	5	16WP	G15_033	FROM->TO	G14-057T 345.00 - SUNNYSIDE 345KV CKT 1	717	789	0.04212	116.9683	GEN562688 1-G15_014_3 0.6900
FDNS	00NR	5	16WP	G15_033	FROM->TO	G14-057T 345.00 - SUNNYSIDE 345KV CKT 1	717	789	0.04212	116.9677	GEN629067 1-EMERY GAS TURBINE 1
FDNS	00NR	5	16WP	G15_033	FROM->TO	G14-057T 345.00 - SUNNYSIDE 345KV CKT 1	717	789	0.0418	116.9627	ARBUCKLE - SULPHR 4 138.00 138KV CKT 1
FDNS	00NR	5	16WP	G15_033	FROM->TO	G14-057T 345.00 - SUNNYSIDE 345KV CKT 1	717	789	0.04212	116.9623	GEN615032 2-PLEASANT VALLEY
FDNS	00NR	5	16WP	G15_033	FROM->TO	G14-057T 345.00 - SUNNYSIDE 345KV CKT 1	717	789	0.04212	116.9594	P12:069:OKGE:3TERM42
FDNS	00NR	5	16WP	G15_033	FROM->TO	G14-057T 345.00 - SUNNYSIDE 345KV CKT 1	717	789	0.04214	116.955	P12:138:WFEC:MSL08
FDNS	00NR	5	16WP	G15_033	FROM->TO	G14-057T 345.00 - SUNNYSIDE 345KV CKT 1	717	789	0.04207	116.9541	CROCKETT - TENASKA RUSK COUNTY 345KV CKT 1
FDNS	00NR	5	20WP	G15_033	FROM->TO	G14-057T 345.00 - SUNNYSIDE 345KV CKT 1	717	789	0.03931	116.9514	CANADIAN RIVER - MUSKOGEE 345KV CKT 1
FDNS	00NR	5	16WP	G15_033	FROM->TO	G14-057T 345.00 - SUNNYSIDE 345KV CKT 1	717	789	0.04207	116.9488	LEBROCK - TENASKA RUSK COUNTY 345KV CKT 1
FDNS	00NR	5	16WP	G15_033	FROM->TO	G14-057T 345.00 - SUNNYSIDE 345KV CKT 1	717	789	0.04212	116.9477	GEN562432 1-G13-030 0.6900

SOLUTION	GROUP	SCENARIO	SEASON	SOURCE	DIRECTION	MONITORED ELEMENT	RATEA (MVA)	RATEB(MVA)	TDF	TC%LOADING (% MVA)	CONTINGENCY
FDNS	00NR	5	16WP	G15_033	FROM->TO	G14-057T 345.00 - SUNNYSIDE 345KV CKT 1	717	789	0.04212	116.9389	GEN560183 1-REDHIL-WTG1 12.000
FDNS	00NR	5	16WP	G15_033	FROM->TO	G14-057T 345.00 - SUNNYSIDE 345KV CKT 1	717	789	0.04212	116.9365	GEN600017 C-LS POWER CT
FDNS	00NR	5	16WP	G15_033	FROM->TO	G14-057T 345.00 - SUNNYSIDE 345KV CKT 1	717	789	0.0421	116.9283	CANEY CREEK - JOHNSON COUNTY 138KV CKT 1
FDNS	00NR	5	16WP	G15_033	FROM->TO	G14-057T 345.00 - SUNNYSIDE 345KV CKT 1	717	789	0.04234	116.9257	ALTUS JUNCTION - RUSSELL 138KV CKT 1
FDNS	00NR	5	16WP	G15_033	FROM->TO	G14-057T 345.00 - SUNNYSIDE 345KV CKT 1	717	789	0.04234	116.9257	ALTUS JUNCTION - RUSSELL 138KV CKT 1
FDNS	00NR	5	20WP	G15_033	FROM->TO	G14-057T 345.00 - SUNNYSIDE 345KV CKT 1	717	789	0.04018	116.9256	GEN501813 1-RODEMACHER UNIT 3
FDNS	00NR	5	16WP	G15_033	FROM->TO	G14-057T 345.00 - SUNNYSIDE 345KV CKT 1	717	789	0.04212	116.9206	GEN515443 1-MNCOWND1 0.7000
FDNS	00NR	5	16WP	G15_033	FROM->TO	G14-057T 345.00 - SUNNYSIDE 345KV CKT 1	717	789	0.04212	116.9206	GEN562017 1-G11_022_3 0.6900
FDNS	00NR	5	16WP	G15_033	FROM->TO	G14-057T 345.00 - SUNNYSIDE 345KV CKT 1	717	789	0.0423	116.9192	NORTHWEST - SPRING CREEK 345KV CKT 1
FDNS	00NR	5	16WP	G15_033	FROM->TO	G14-057T 345.00 - SUNNYSIDE 345KV CKT 1	717	789	0.04212	116.9138	GEN672392 1-NBECGT1G 18.000
FDNS	00NR	5	16WP	G15_033	FROM->TO	G14-057T 345.00 - SUNNYSIDE 345KV CKT 1	717	789	0.0421	116.9114	DELL 500 - INDEPENDENCE 500KV CKT 1
FDNS	00NR	5	16WP	G15_033	FROM->TO	G14-057T 345.00 - SUNNYSIDE 345KV CKT 1	717	789	0.0423	116.9077	SOONER - SPRING CREEK 345KV CKT 1
FDNS	00NR	5	20WP	G15_033	FROM->TO	G14-057T 345.00 - SUNNYSIDE 345KV CKT 1	717	789	0.03982	116.9036	ARCADIA - SEMINOLE 345KV CKT 1
FDNS	00NR	5	16WP	G15_033	FROM->TO	G14-057T 345.00 - SUNNYSIDE 345KV CKT 1	717	789	0.04149	116.9035	PRAIRIE POINT - RATLIFF 138KV CKT 1
FDNS	00NR	5	16WP	G15_033	FROM->TO	G14-057T 345.00 - SUNNYSIDE 345KV CKT 1	717	789	0.04207	116.899	CARTER - CHICKASAW 138KV CKT 1
FDNS	00NR	5	16WP	G15_033	FROM->TO	G14-057T 345.00 - SUNNYSIDE 345KV CKT 1	717	789	0.04212	116.8904	GEN562902 1-G15052_3 0.6900
FDNS	00NR	5	16WP	G15_033	FROM->TO	G14-057T 345.00 - SUNNYSIDE 345KV CKT 1	717	789	0.04212	116.8889	GEN615010 1-STANTON4
FDNS	00NR	5	16WP	G15_033	FROM->TO	G14-057T 345.00 - SUNNYSIDE 345KV CKT 1	717	789	0.04212	116.8848	GEN629070 2-BEAVER CHANNEL GENERATORFOR UNIT NO 2
FDNS	00NR	5	16WP	G15_033	FROM->TO	G14-057T 345.00 - SUNNYSIDE 345KV CKT 1	717	789	0.0421	116.8806	CANADIAN RIVER - MCALESTER SOUTH 138KV CKT 1
FDNS	00NR	5	16WP	G15_033	FROM->TO	G14-057T 345.00 - SUNNYSIDE 345KV CKT 1	717	789	0.0421	116.8806	CANADIAN RIVER - MCALESTER SOUTH 138KV CKT 1
FDNS	00NR	5	16WP	G15_033	FROM->TO	G14-057T 345.00 - SUNNYSIDE 345KV CKT 1	717	789	0.04212	116.88	GEN528361 1-MADDOX GEN #1
FDNS	00NR	5	16WP	G15_033	FROM->TO	G14-057T 345.00 - SUNNYSIDE 345KV CKT 1	717	789	0.0421	116.8791	CANADIAN RIVER () 345/138/13.8KV TRANSFORMER CKT 1
FDNS	00NR	5	16WP	G15_033	FROM->TO	G14-057T 345.00 - SUNNYSIDE 345KV CKT 1	717	789	0.0421	116.8791	CANADIAN RIVER () 345/138/13.8KV TRANSFORMER CKT 1
FDNS	00NR	5	16WP	G15_033	FROM->TO	G14-057T 345.00 - SUNNYSIDE 345KV CKT 1	717	789	0.04212	116.8711	GEN615021 1-GRE-ER 14G 16.000
FDNS	00NR	5	16WP	G15_033	FROM->TO	G14-057T 345.00 - SUNNYSIDE 345KV CKT 1	717	789	0.04215	116.871	ARKANSAS NUCLEAR ONE - FT SMITH 500KV CKT 1
FDNS	00NR	5	16WP	G15_033	FROM->TO	G14-057T 345.00 - SUNNYSIDE 345KV CKT 1	717	789	0.04215	116.871	ARKANSAS NUCLEAR ONE - FT SMITH 500KV CKT 1
FDNS	00NR	5	16WP	G15_033	FROM->TO	G14-057T 345.00 - SUNNYSIDE 345KV CKT 1	717	789	0.04196	116.8707	ROCKY POINT - SPRINGDALE 138KV CKT 1
FDNS	00NR	5	16WP	G15_033	FROM->TO	G14-057T 345.00 - SUNNYSIDE 345KV CKT 1	717	789	0.04212	116.8658	GEN629071 1-BURLINGTON GENERATOR FOR UNIT NO 1 E
FDNS	00NR	5	16WP	G15_033	FROM->TO	G14-057T 345.00 - SUNNYSIDE 345KV CKT 1	717	789	0.04211	116.8645	GRPRAR1-LNX3345.00 - YANKTON 345KV CKT Z
FDNS	00NR	5	16WP	G15_033	FROM->TO	G14-057T 345.00 - SUNNYSIDE 345KV CKT 1	717	789	0.04212	116.8643	GEN532653 1-JEFFREY ENERGY CENTER UNIT 3
FDNS	00NR	5	16WP	G15_033	FROM->TO	G14-057T 345.00 - SUNNYSIDE 345KV CKT 1	717	789	0.04212	116.8629	GEN514805 1-SOONER UNIT 1
FDNS	00NR	5	16WP	G15_033	FROM->TO	G14-057T 345.00 - SUNNYSIDE 345KV CKT 1	717	789	0.04211	116.8625	GRPRAR1-LNX3345.00 - HOLT.CO3 345.00 345KV CKT 1
FDNS	00NR	5	16WP	G15_033	FROM->TO	G14-057T 345.00 - SUNNYSIDE 345KV CKT 1	717	789	0.04212	116.8595	INDEPENDENCE 500/26.0KV TRANSFORMER CKT 1
FDNS	00NR	5	20WP	G15_033	FROM->TO	G14-057T 345.00 - SUNNYSIDE 345KV CKT 1	717	789	0.04018	116.8559	GEN300006 1-NEW MADRID UNIT 1
FDNS	00NR	5	16WP	G15_033	FROM->TO	G14-057T 345.00 - SUNNYSIDE 345KV CKT 1	717	789	0.04212	116.8545	GEN514806 1-SOONER UNIT 2
FDNS	00NR	5	16WP	G15_033	FROM->TO	G14-057T 345.00 - SUNNYSIDE 345KV CKT 1	717	789	0.04212	116.8437	GEN563242 1-G15090_3 0.6900
FDNS	00NR	5	16WP	G15_033	FROM->TO	G14-057T 345.00 - SUNNYSIDE 345KV CKT 1	717	789	0.04212	116.8432	BURLINGTON NO1 + NO 2 + NO 3 161/20.0KV TRANSFORMER CKT 1
FDNS	00NR	5	20WP	G15_033	FROM->TO	G14-057T 345.00 - SUNNYSIDE 345KV CKT 1	717	789	0.04018	116.843	HEALDTON - RINGLING 138KV CKT 1
FDNS	00NR	5	20WP	G15_033	FROM->TO	G14-057T 345.00 - SUNNYSIDE 345KV CKT 1	717	789	0.04018	116.8353	GEN300007 1-NEW MADRID UNIT 2
FDNS	00NR	5	16WP	G15_033	FROM->TO	G14-057T 345.00 - SUNNYSIDE 345KV CKT 1	717	789	0.04208	116.8278	NORTHWEST TEXARKANA - WELSH 345KV CKT 1
FDNS	00NR	5	16WP	G15_033	FROM->TO	G14-057T 345.00 - SUNNYSIDE 345KV CKT 1	717	789	0.04208	116.8278	NORTHWEST TEXARKANA - WELSH 345KV CKT 1
FDNS	00NR	5	16WP	G15_033	FROM->TO	G14-057T 345.00 - SUNNYSIDE 345KV CKT 1	717	789	0.04209	116.8177	CHAMBER SPRINGS - CLARKSVILLE 345KV CKT 1
FDNS	00NR	5	16WP	G15_033	FROM->TO	G14-057T 345.00 - SUNNYSIDE 345KV CKT 1	717	789	0.0418	116.8115	JOLLYVILLE - SULPHR 4 138.00 138KV CKT 1
FDNS	00NR	5	20WP	G15_033	FROM->TO	G14-057T 345.00 - SUNNYSIDE 345KV CKT 1	717	789	0.0405	116.7981	P12:138:WFEC:MSL01
FDNS	00NR	5	16WP	G15_033	FROM->TO	G14-057T 345.00 - SUNNYSIDE 345KV CKT 1	717	789	0.043	116.7961	CHISHOLM6 230.00 - SWEETWATER 230KV CKT 1
FDNS	00NR	5	16WP	G15_033	FROM->TO	G14-057T 345.00 - SUNNYSIDE 345KV CKT 1	717	789	0.04212	116.7903	GEN562587 1-G14_056_3 0.6900
FDNS	00NR	5	20WP	G15_033	FROM->TO	G14-057T 345.00 - SUNNYSIDE 345KV CKT 1	717	789	0.0405	116.7896	BRIDGECR 138.00 - SUNSHINE CANYON 138KV CKT 1
FDNS	00NR	5	16WP	G15_033	FROM->TO	G14-057T 345.00 - SUNNYSIDE 345KV CKT 1	717	789	0.04212	116.7882	GEN562078 1-G11_051_3 0.6900
FDNS	00NR	5	16WP	G15_033	FROM->TO	G14-057T 345.00 - SUNNYSIDE 345KV CKT 1	717	789	0.04212	116.7868	P12:230:UMZB:# 112 #: NU IN SD. NU-RCDC & DRY CREEK XFMR
FDNS	00NR	5	16WP	G15_033	FROM->TO	G14-057T 345.00 - SUNNYSIDE 345KV CKT 1	717	789	0.04212	116.7861	RCDC EAST 4230.00 - RED CEDAR DC 230KV CKT 1
FDNS	00NR	5	16WP	G15_033	FROM->TO	G14-057T 345.00 - SUNNYSIDE 345KV CKT 1	717	789	0.03881	116.7849	G14_038T 345.00 - POTTER COUNTY INTERCHANGE 345KV CKT 1
FDNS	00NR	5	16WP	G15_033	FROM->TO	G14-057T 345.00 - SUNNYSIDE 345KV CKT 1	717	789	0.04212	116.7775	GEN562882 1-G15047_3 0.6900
FDNS	00NR	5	16WP	G15_033	FROM->TO	G14-057T 345.00 - SUNNYSIDE 345KV CKT 1	717	789	0.04209	116.767	KEO EHV - WEST MEMPHIS 500 500KV CKT 1
FDNS	00NR	5	16WP	G15_033	FROM->TO	G14-057T 345.00 - SUNNYSIDE 345KV CKT 1	717	789	0.04212	116.7667	THOMAS HILL 161/22.0KV TRANSFORMER CKT 1
FDNS	00NR	5	16WP	G15_033	FROM->TO	G14-057T 345.00 - SUNNYSIDE 345KV CKT 1	717	789	0.04212	116.7566	GEN563062 1-G15071_3 0.6900
FDNS	00NR	5	20WP	G15_033	FROM->TO	G14-057T 345.00 - SUNNYSIDE 345KV CKT 1	717	789	0.04131	116.7541	DUNCAN - OMPA-DUNCAN 840 138KV CKT 1
FDNS	00NR	5	20WP	G15_033	FROM->TO	G14-057T 345.00 - SUNNYSIDE 345KV CKT 1	717	789	0.04131	116.7541	DUNCAN - OMPA-DUNCAN 840 138KV CKT 1
FDNS	00NR	5	16WP	G15_033	FROM->TO	G14-057T 345.00 - SUNNYSIDE 345KV CKT 1	717	789	0.04212	116.7528	GEN560331 1-G10-46 13.800
FDNS	00NR	5	16WP	G15_033	FROM->TO	G14-057T 345.00 - SUNNYSIDE 345KV CKT 1	717	789	0.04212	116.7446	GEN562802 1-G15039_3 0.3570
FDNS	00NR	5	16WP	G15_033	FROM->TO	G14-057T 345.00 - SUNNYSIDE 345KV CKT 1	717	789	0.0418	116.7429	JOLLYVILLE - KERR MCGEE CIMARRON 138KV CKT 1
FDNS	00NR	5	20WP	G15_033	FROM->TO	G14-057T 345.00 - SUNNYSIDE 345KV CKT 1	717	789	0.04015	116.7222	LACYGNE - WAVERLY7 345.00 345KV CKT 1
FDNS	00NR	5	16WP	G15_033	FROM->TO	G14-057T 345.00 - SUNNYSIDE 345KV CKT 1	717	789	0.04212	116.7197	GEN629072 4-LANSING GENERATOR FOR UNITS NO4 EIA CODE 1
FDNS	00NR	5	16WP	G15_033	FROM->TO	G14-057T 345.00 - SUNNYSIDE 345KV CKT 1	717	789	0.04212	116.7194	GEN562269 1-G12-020-1 0.6900
FDNS	00NR	5	16WP	G15_033	FROM->TO	G14-057T 345.00 - SUNNYSIDE 345KV CKT 1	717	789	0.04196	116.7132	CLARKSVILLE - MUSKOGEE 345KV CKT 1
FDNS	00NR	5	16WP	G15_033	FROM->TO	G14-057T 345.00 - SUNNYSIDE 345KV CKT 1	717	789	0.04196	116.7132	CLARKSVILLE - MUSKOGEE 345KV CKT 1
FDNS	00NR	5	16WP	G15_033	FROM->TO	G14-057T 345.00 - SUNNYSIDE 345KV CKT 1	717	789	0.04212	116.7128	GEN524285 1-WILDORADO WIND GEN
FDNS	00NR	5	16WP	G15_033	FROM->TO	G14-057T 345.00 - SUNNYSIDE 345KV CKT 1	717	789	0.04177	116.7127	MINGO - SETAB 345KV CKT 1
FDNS	00NR	5	16WP	G15_033	FROM->TO	G14-057T 345.00 - SUNNYSIDE 345KV CKT 1	717	789	0.04177	116.7127	MINGO - SETAB 345KV CKT 1
FDNS	00NR	5	20WP	G15_033	FROM->TO	G14-057T 345.00 - SUNNYSIDE 345KV CKT 1	717	789	0.04018	116.7097	GEN520947 1-HUGO1
FDNS	00NR	5	20WP	G15_033	FROM->TO	G14-057T 345.00 - SUNNYSIDE 345KV CKT 1	717	789	0.04018	116.7073	GEN335206 1-NELSON UNIT 6
FDNS	00NR	5	16WP	G15_033	FROM->TO	G14-057T 345.00 - SUNNYSIDE 345KV CKT 1	717	789	0.04212	116.6995	GEN657749 1-YOUNG 1 GENERATOR
FDNS	00NR	5	16WP	G15_033	FROM->TO	G14-057T 345.00 - SUNNYSIDE 345KV CKT 1	717	789	0.0418	116.6925	ARBWIND4 138.00 - KERR MCGEE CIMARRON 138KV CKT 1
FDNS	00NR	5	16WP	G15_033	FROM->TO	G14-057T 345.00 - SUNNYSIDE 345KV CKT 1	717	789	0.04212	116.6758	GEN562974 1-G15060_5 0.6900
FDNS	00NR	5	16WP	G15_033	FROM->TO	G14-057T 345.00 - SUNNYSIDE 345KV CKT 1	717	789	0.04212	116.6734	GEN562270 1-G12-020-2 0.6900
FDNS	00NR	5	20WP	G15_033	FROM->TO	G14-057T 345.00 - SUNNYSIDE 345KV CKT 1	717	789	0.04018	116.671	RINGLING - SOUTH WILSON 138KV CKT 1
FDNS	00NR	5	16WP	G15_033	FROM->TO	G14-057T 345.00 - SUNNYSIDE 345KV CKT 1	717	789	0.04212	116.666	GEN562973 1-G15060_4 0.6900
FDNS	00NR	5	16WP	G15_033	FROM->TO	G14-057T 345.00 - SUNNYSIDE 345KV CKT 1	717	789	0.04212	116.6574	GEN563102 1-G15075_3 0.5500
FDNS	00NR	5	16WP	G15_033	FROM->TO	G14-057T 345.00 - SUNNYSIDE 345KV CKT 1	717	789	0.04212	116.6532	GEN562812 1-G15040_3 0.3570
FDNS	00NR	5	16WP	G15_033	FROM->TO	G14-057T 345.00 - SUNNYSIDE 345KV CKT 1	717	789	0.04212	116.6429	GEN563132 1-G15078_3 0.3570

SOLUTION	GROUP	SCENARIO	SEASON	SOURCE	DIRECTION	MONITORED ELEMENT	RATEA (MVA)	RATEB(MVA)	TDF	TC%LOADING (% MVA)	CONTINGENCY
FDNS	00NR	5	16WP	G15_033	FROM->TO	G14-057T 345.00 - SUNNYSIDE 345KV CKT 1	717	789	0.04212	116.6313	GEN681522 3-GENOA 3
FDNS	00NR	5	16WP	G15_033	FROM->TO	G14-057T 345.00 - SUNNYSIDE 345KV CKT 1	717	789	0.04203	116.6238	BROWN - RUSSETT 138KV CKT 1
FDNS	00NR	5	16WP	G15_033	FROM->TO	G14-057T 345.00 - SUNNYSIDE 345KV CKT 1	717	789	0.04185	116.6126	CHICKASAW - TOTAL 138KV CKT 1
FDNS	00NR	5	16WP	G15_033	FROM->TO	G14-057T 345.00 - SUNNYSIDE 345KV CKT 1	717	789	0.04199	116.6115	RUSSETT - SPRINGDALE 138KV CKT 1
FDNS	00NR	5	16WP	G15_033	FROM->TO	G14-057T 345.00 - SUNNYSIDE 345KV CKT 1	717	789	0.04212	116.6089	GEN511962 2-RKYRDGW2-1 0.7000
FDNS	00NR	5	20WP	G15_033	FROM->TO	G14-057T 345.00 - SUNNYSIDE 345KV CKT 1	717	789	0.04015	116.604	WAVERLY7 345.00 - WOLF CREEK 345KV CKT 1
FDNS	00NR	5	16WP	G15_033	FROM->TO	G14-057T 345.00 - SUNNYSIDE 345KV CKT 1	717	789	0.04212	116.5991	GEN524295 1-SPNSPUR_WND10.6900
FDNS	00NR	5	16WP	G15_033	FROM->TO	G14-057T 345.00 - SUNNYSIDE 345KV CKT 1	717	789	0.0421	116.5974	P12:138:WFEC:MSL07
FDNS	00NR	5	16WP	G15_033	FROM->TO	G14-057T 345.00 - SUNNYSIDE 345KV CKT 1	717	789	0.0421	116.5974	P12:138:WFEC-AEPW:HUGOPP4:ATOKA--4
FDNS	00NR	5	16WP	G15_033	FROM->TO	G14-057T 345.00 - SUNNYSIDE 345KV CKT 1	717	789	0.04212	116.5769	GEN345671 2-1RUSH G2 18.000
FDNS	00NR	5	16WP	G15_033	FROM->TO	G14-057T 345.00 - SUNNYSIDE 345KV CKT 1	717	789	0.04191	116.5769	ROCKY POINT - SUNNYSIDE 138KV CKT 1
FDNS	00NR	5	16WP	G15_033	FROM->TO	G14-057T 345.00 - SUNNYSIDE 345KV CKT 1	717	789	0.04212	116.575	GEN345670 1-1RUSH G1 18.000
FDNS	00NR	5	16WP	G15_033	FROM->TO	G14-057T 345.00 - SUNNYSIDE 345KV CKT 1	717	789	0.04212	116.5711	GEN521112 1-ORME3 13.800
FDNS	00NR	5	16WP	G15_033	FROM->TO	G14-057T 345.00 - SUNNYSIDE 345KV CKT 1	717	789	0.04212	116.5686	GEN526331 1-JONES GEN #1 22 KV
FDNS	00NR	5	16WP	G15_033	FROM->TO	G14-057T 345.00 - SUNNYSIDE 345KV CKT 1	717	789	0.04212	116.5685	GEN526332 1-JONES GEN #2 21 KV
FDNS	00NR	5	16WP	G15_033	FROM->TO	G14-057T 345.00 - SUNNYSIDE 345KV CKT 1	717	789	0.04359	116.5565	P12:138:AEPW:112GORE4:SNYDER-4
FDNS	00NR	5	16WP	G15_033	FROM->TO	G14-057T 345.00 - SUNNYSIDE 345KV CKT 1	717	789	0.04203	116.5555	RUSSETT - RUSSETT 138KV CKT 1
FDNS	00NR	5	16WP	G15_033	FROM->TO	G14-057T 345.00 - SUNNYSIDE 345KV CKT 1	717	789	0.04212	116.5539	4SIOUX 1 138.00 138/18.0KV TRANSFORMER CKT 1
FDNS	00NR	5	16WP	G15_033	FROM->TO	G14-057T 345.00 - SUNNYSIDE 345KV CKT 1	717	789	0.04214	116.5481	P12:138:WFEC:MSL16
FDNS	00NR	5	16WP	G15_033	FROM->TO	G14-057T 345.00 - SUNNYSIDE 345KV CKT 1	717	789	0.04212	116.5481	GEN563192 1-G15084_3 0.5500
FDNS	00NR	5	16WP	G15_033	FROM->TO	G14-057T 345.00 - SUNNYSIDE 345KV CKT 1	717	789	0.04212	116.5443	GEN560105 1-G08-22 0.6900
FDNS	00NR	5	16WP	G15_033	FROM->TO	G14-057T 345.00 - SUNNYSIDE 345KV CKT 1	717	789	0.04212	116.5404	GEN562892 1-G15048_3 0.6900
FDNS	00NR	5	20WP	G15_033	FROM->TO	G14-057T 345.00 - SUNNYSIDE 345KV CKT 1	717	789	0.04015	116.5255	ELDORADO EHV - MOUNT OLIVE 500KV CKT 1
FDNS	00NR	5	16WP	G15_033	FROM->TO	G14-057T 345.00 - SUNNYSIDE 345KV CKT 1	717	789	0.04212	116.5244	GEN562512 1-G14_020_3 0.6900
FDNS	00NR	5	16WP	G15_033	FROM->TO	G14-057T 345.00 - SUNNYSIDE 345KV CKT 1	717	789	0.04212	116.5202	GEN562550 1-G14_040_3 0.6900
FDNS	00NR	5	20WP	G15_033	FROM->TO	G14-057T 345.00 - SUNNYSIDE 345KV CKT 1	717	789	0.04018	116.516	GEN501812 1-RODEMACHER UNIT 2
FDNS	00NR	5	16WP	G15_033	FROM->TO	G14-057T 345.00 - SUNNYSIDE 345KV CKT 1	717	789	0.04168	116.5082	ARDMORE WEST - CARTER 138KV CKT 1
FDNS	00NR	5	16WP	G15_033	FROM->TO	G14-057T 345.00 - SUNNYSIDE 345KV CKT 1	717	789	0.04212	116.4951	GEN527882 1-CUNNINGHAM GEN #2 20 KV
FDNS	00NR	5	16WP	G15_033	FROM->TO	G14-057T 345.00 - SUNNYSIDE 345KV CKT 1	717	789	0.04212	116.4923	CLAY BOSWELL 230/20.9KV TRANSFORMER CKT 1
FDNS	00NR	5	20WP	G15_033	FROM->TO	G14-057T 345.00 - SUNNYSIDE 345KV CKT 1	717	789	0.04018	116.4901	DOLET HILLS 345/24.0KV TRANSFORMER CKT 1
FDNS	00NR	5	16WP	G15_033	FROM->TO	G14-057T 345.00 - SUNNYSIDE 345KV CKT 1	717	789	0.04209	116.4746	P12:138:WFEC-AEPW:GOLDENSW4:CRAIGJT4
FDNS	00NR	5	20WP	G15_033	FROM->TO	G14-057T 345.00 - SUNNYSIDE 345KV CKT 1	717	789	0.04024	116.4701	P12:138:AEPW:SHERID4:112GORE4
FDNS	00NR	5	16WP	G15_033	FROM->TO	G14-057T 345.00 - SUNNYSIDE 345KV CKT 1	717	789	0.04212	116.4612	GEN672321 1-SHAND GENERATOR 1
FDNS	00NR	5	20WP	G15_033	FROM->TO	G14-057T 345.00 - SUNNYSIDE 345KV CKT 1	717	789	0.04265	116.4552	BORDER 7345.00 - TUCO_2 345.00 345KV CKT 1
FDNS	00NR	5	16WP	G15_033	FROM->TO	G14-057T 345.00 - SUNNYSIDE 345KV CKT 1	717	789	0.04166	116.4525	SUNNYSIDE (SUNNYSD5) 345/138/13.8KV TRANSFORMER CKT 1
FDNS	00NR	5	16WP	G15_033	FROM->TO	G14-057T 345.00 - SUNNYSIDE 345KV CKT 1	717	789	0.04237	116.4492	G15085_T 138.00 - RUSSELL 138KV CKT 1
FDNS	00NR	5	16WP	G15_033	FROM->TO	G14-057T 345.00 - SUNNYSIDE 345KV CKT 1	717	789	0.04212	116.4365	GEN672310 1-POPLAR RIVER GENERATOR 1
FDNS	00NR	5	16WP	G15_033	FROM->TO	G14-057T 345.00 - SUNNYSIDE 345KV CKT 1	717	789	0.04212	116.4365	GEN672311 2-POPLAR RIVER GENERATOR 2
FDNS	00NR	5	20WP	G15_033	FROM->TO	G14-057T 345.00 - SUNNYSIDE 345KV CKT 1	717	789	0.03793	116.4313	Hitchland Interchange - WALKTAP7 345.00 345KV CKT 1
FDNS	00NR	5	20WP	G15_033	FROM->TO	G14-057T 345.00 - SUNNYSIDE 345KV CKT 1	717	789	0.03793	116.4313	Hitchland Interchange - WALKTAP7 345.00 345KV CKT 1
FDNS	00NR	5	16WP	G15_033	FROM->TO	G14-057T 345.00 - SUNNYSIDE 345KV CKT 1	717	789	0.04212	116.4282	GEN672306 6-BOUNDARY DAM GENERATOR 6
FDNS	00NR	5	20WP	G15_033	FROM->TO	G14-057T 345.00 - SUNNYSIDE 345KV CKT 1	717	789	0.03793	116.4206	P12:345:SPS:J07.1.FINN.HITCH
FDNS	00NR	5	16WP	G15_033	FROM->TO	G14-057T 345.00 - SUNNYSIDE 345KV CKT 1	717	789	0.04212	116.4155	GEN344895 2-1LAB G2 20.000
FDNS	00NR	5	16WP	G15_033	FROM->TO	G14-057T 345.00 - SUNNYSIDE 345KV CKT 1	717	789	0.04211	116.4124	P12:138:AEPW-SWPA:LONEOAK4:TUPELO4
FDNS	00NR	5	16WP	G15_033	FROM->TO	G14-057T 345.00 - SUNNYSIDE 345KV CKT 1	717	789	0.04211	116.4123	P12:138:WFEC:MSL06
FDNS	00NR	5	20WP	G15_033	FROM->TO	G14-057T 345.00 - SUNNYSIDE 345KV CKT 1	717	789	0.03994	116.4101	PARK LANE - SEMINOLE 138KV CKT 1
FDNS	00NR	5	16WP	G15_033	FROM->TO	G14-057T 345.00 - SUNNYSIDE 345KV CKT 1	717	789	0.04212	116.4008	GEN521110 1-ORME1 13.800
FDNS	00NR	5	16WP	G15_033	FROM->TO	G14-057T 345.00 - SUNNYSIDE 345KV CKT 1	717	789	0.04212	116.4008	GEN521111 1-ORME2 13.800
FDNS	00NR	5	16WP	G15_033	FROM->TO	G14-057T 345.00 - SUNNYSIDE 345KV CKT 1	717	789	0.04168	116.3919	ARDMORE WEST - UNIROYAL 138KV CKT 1
FDNS	00NR	5	20WP	G15_033	FROM->TO	G14-057T 345.00 - SUNNYSIDE 345KV CKT 1	717	789	0.03938	116.3888	G11_051T 345.00 - WOODWARD DISTRICT EHV 345KV CKT 1
FDNS	00NR	5	16WP	G15_033	FROM->TO	G14-057T 345.00 - SUNNYSIDE 345KV CKT 1	717	789	0.04212	116.3867	GEN511853 1-COMANCHE #3
FDNS	00NR	5	16WP	G15_033	FROM->TO	G14-057T 345.00 - SUNNYSIDE 345KV CKT 1	717	789	0.0419	116.3854	P12:138:OKGE:3TERM40
FDNS	00NR	5	16WP	G15_033	FROM->TO	G14-057T 345.00 - SUNNYSIDE 345KV CKT 1	717	789	0.04212	116.3825	GEN344896 3-1LAB G3 20.000
FDNS	00NR	5	16WP	G15_033	FROM->TO	G14-057T 345.00 - SUNNYSIDE 345KV CKT 1	717	789	0.04212	116.3811	GEN344894 1-1LAB G1 20.000
FDNS	00NR	5	20WP	G15_033	FROM->TO	G14-057T 345.00 - SUNNYSIDE 345KV CKT 1	717	789	0.04018	116.3806	MARIETTA - SOUTH WILSON 138KV CKT 1
FDNS	00NR	5	16WP	G15_033	FROM->TO	G14-057T 345.00 - SUNNYSIDE 345KV CKT 1	717	789	0.04212	116.3796	GEN344897 4-1LAB G4 20.000
FDNS	00NR	5	16WP	G15_033	FROM->TO	G14-057T 345.00 - SUNNYSIDE 345KV CKT 1	717	789	0.0417	116.3675	CARTRCO4 138.00 - RATLIFF 138KV CKT 1
FDNS	00NR	5	16WP	G15_033	FROM->TO	G14-057T 345.00 - SUNNYSIDE 345KV CKT 1	717	789	0.04212	116.3577	GEN563292 1-G15095_3 0.6900
FDNS	00NR	5	16WP	G15_033	FROM->TO	G14-057T 345.00 - SUNNYSIDE 345KV CKT 1	717	789	0.04212	116.3557	GEN523461 1-BLACKHAWK GEN #1
FDNS	00NR	5	16WP	G15_033	FROM->TO	G14-057T 345.00 - SUNNYSIDE 345KV CKT 1	717	789	0.04212	116.3556	GEN523462 1-BLACKHAWK GEN #2
FDNS	00NR	5	20WP	G15_033	FROM->TO	G14-057T 345.00 - SUNNYSIDE 345KV CKT 1	717	789	0.04007	116.3526	CANEYRV7 345.00 - NEOSHO 345KV CKT 1
FDNS	00NR	5	16WP	G15_033	FROM->TO	G14-057T 345.00 - SUNNYSIDE 345KV CKT 1	717	789	0.0424	116.351	G15063_T 345.00 - MATHWSN7 345.00 345KV CKT 1
FDNS	00NR	5	20WP	G15_033	FROM->TO	G14-057T 345.00 - SUNNYSIDE 345KV CKT 1	717	789	0.04018	116.3506	GEN334440 1-SABINE UNIT 4
FDNS	00NR	5	20WP	G15_033	FROM->TO	G14-057T 345.00 - SUNNYSIDE 345KV CKT 1	717	789	0.04018	116.3506	GEN515564 1-ORIGIN11 0.6900
FDNS	00NR	5	20WP	G15_033	FROM->TO	G14-057T 345.00 - SUNNYSIDE 345KV CKT 1	717	789	0.04018	116.3506	GEN515565 1-ORIGIN21 0.6900
FDNS	00NR	5	20WP	G15_033	FROM->TO	G14-057T 345.00 - SUNNYSIDE 345KV CKT 1	717	789	0.03993	116.3406	THISTLE7 345.00 - WOODWARD DISTRICT EHV 345KV CKT 1
FDNS	00NR	5	20WP	G15_033	FROM->TO	G14-057T 345.00 - SUNNYSIDE 345KV CKT 1	717	789	0.03993	116.3406	THISTLE7 345.00 - WOODWARD DISTRICT EHV 345KV CKT 1
FDNS	00NR	5	20WP	G15_033	FROM->TO	G14-057T 345.00 - SUNNYSIDE 345KV CKT 1	717	789	0.03993	116.3406	THISTLE7 345.00 - WOODWARD DISTRICT EHV 345KV CKT 2
FDNS	00NR	5	20WP	G15_033	FROM->TO	G14-057T 345.00 - SUNNYSIDE 345KV CKT 1	717	789	0.03993	116.3406	THISTLE7 345.00 - WOODWARD DISTRICT EHV 345KV CKT 2
FDNS	00NR	5	16WP	G15_033	FROM->TO	G14-057T 345.00 - SUNNYSIDE 345KV CKT 1	717	789	0.04212	116.3378	GEN511852 1-COMANCHE #2
FDNS	00NR	5	20WP	G15_033	FROM->TO	G14-057T 345.00 - SUNNYSIDE 345KV CKT 1	717	789	0.04012	116.3326	WEBRE - WELLS 500KV CKT 1
FDNS	00NR	5	16WP	G15_033	FROM->TO	G14-057T 345.00 - SUNNYSIDE 345KV CKT 1	717	789	0.04212	116.3309	GEN562699 1-G15_018_3 0.6900
FDNS	00NR	5	20WP	G15_033	FROM->TO	G14-057T 345.00 - SUNNYSIDE 345KV CKT 1	717	789	0.04018	116.3247	GEN590011 2-ERCOT EQUIVALENCE
FDNS	00NR	5	16WP	G15_033	FROM->TO	G14-057T 345.00 - SUNNYSIDE 345KV CKT 1	717	789	0.04212	116.3173	GEN681542 6-JP MADGETT
FDNS	00NR	5	16WP	G15_033	FROM->TO	G14-057T 345.00 - SUNNYSIDE 345KV CKT 1	717	789	0.04212	116.3048	GEN562861 1-G15045_2 0.4800
FDNS	00NR	5	20WP	G15_033	FROM->TO	G14-057T 345.00 - SUNNYSIDE 345KV CKT 1	717	789	0.04018	116.3045	DELL 500 - ESSEX UNIT 2 500KV CKT Z1
FDNS	00NR	5	16WP	G15_033	FROM->TO	G14-057T 345.00 - SUNNYSIDE 345KV CKT 1	717	789	0.04212	116.3027	GEN563162 1-G15081_3 0.6900
FDNS	00NR	5	16WP	G15_033	FROM->TO	G14-057T 345.00 - SUNNYSIDE 345KV CKT 1	717	789	0.04212	116.3006	GEN520811 1-ANADRK4
FDNS	00NR	5	20WP	G15_033	FROM->TO	G14-057T 345.00 - SUNNYSIDE 345KV CKT 1	717	789	0.04018	116.2963	P12:161:AEPW:DYESS 5:HYLAND 5

SOLUTION	GROUP	SCENARIO	SEASON	SOURCE	DIRECTION	MONITORED ELEMENT	RATEA (MVA)	RATEB(MVA)	TDF	TC%LOADING (% MVA)	CONTINGENCY
FDNS	00NR	5	20WP	G15_033	FROM->TO	G14-057T 345.00 - SUNNYSIDE 345KV CKT 1	717	789	0.04026	116.2909	REDBUD - RIVERSIDE STATION 345KV CKT 1
FDNS	00NR	5	20WP	G15_033	FROM->TO	G14-057T 345.00 - SUNNYSIDE 345KV CKT 1	717	789	0.04026	116.2909	REDBUD - RIVERSIDE STATION 345KV CKT 1
FDNS	00NR	5	20WP	G15_033	FROM->TO	G14-057T 345.00 - SUNNYSIDE 345KV CKT 1	717	789	0.04018	116.2895	P12:138:WFEC:MSL17
FDNS	00NR	5	20WP	G15_033	FROM->TO	G14-057T 345.00 - SUNNYSIDE 345KV CKT 1	717	789	0.04018	116.2524	GEN590010 1-ERCOT EQUIVALENCE
FDNS	00NR	5	16WP	G15_033	FROM->TO	G14-057T 345.00 - SUNNYSIDE 345KV CKT 1	717	789	0.04209	116.2483	P12:138:WFEC:MSL15
FDNS	00NR	5	20WP	G15_033	FROM->TO	G14-057T 345.00 - SUNNYSIDE 345KV CKT 1	717	789	0.04018	116.2468	GEN509408 1-WILKES #2
FDNS	00NR	5	16WP	G15_033	FROM->TO	G14-057T 345.00 - SUNNYSIDE 345KV CKT 1	717	789	0.04212	116.2374	GEN563122 1-G15077_3 0.3850
FDNS	00NR	5	16WP	G15_033	FROM->TO	G14-057T 345.00 - SUNNYSIDE 345KV CKT 1	717	789	0.04212	116.2277	ALMA 161 161/24.0KV TRANSFORMER CKT 1
FDNS	00NR	5	20WP	G15_033	FROM->TO	G14-057T 345.00 - SUNNYSIDE 345KV CKT 1	717	789	0.04018	116.2237	P12:69:AEPW:L.E.S.-2:LAW WC2
FDNS	00NR	5	16WP	G15_033	FROM->TO	G14-057T 345.00 - SUNNYSIDE 345KV CKT 1	717	789	0.04212	116.207	GEN661015 1-COYOTE
FDNS	00NR	5	20WP	G15_033	FROM->TO	G14-057T 345.00 - SUNNYSIDE 345KV CKT 1	717	789	0.04007	116.2024	CANEYRV7 345.00 - LATHAMS7 345.00 345KV CKT 1
FDNS	00NR	5	16WP	G15_033	FROM->TO	G14-057T 345.00 - SUNNYSIDE 345KV CKT 1	717	789	0.04212	116.1907	GEN562992 1-G15063_3 0.6900
FDNS	00NR	5	16WP	G15_033	FROM->TO	G14-057T 345.00 - SUNNYSIDE 345KV CKT 1	717	789	0.04238	116.1777	P12:138:AEPW:SHAM4WT:CHILD4WT
FDNS	00NR	5	20WP	G15_033	FROM->TO	G14-057T 345.00 - SUNNYSIDE 345KV CKT 1	717	789	0.04013	116.1729	ELDORADO EHV - SHERIDAN EHV 500KV CKT 1
FDNS	00NR	5	16WP	G15_033	FROM->TO	G14-057T 345.00 - SUNNYSIDE 345KV CKT 1	717	789	0.04168	116.169	SUNNYSIDE - UNIROYAL 138KV CKT 1
FDNS	00NR	5	16WP	G15_033	FROM->TO	G14-057T 345.00 - SUNNYSIDE 345KV CKT 1	717	789	0.04359	116.1654	CACHE - SNYDER 138KV CKT 1
FDNS	00NR	5	16WP	G15_033	FROM->TO	G14-057T 345.00 - SUNNYSIDE 345KV CKT 1	717	789	0.04212	116.1629	CANEY CREEK - TEXOMA JCT 138KV CKT 1
FDNS	00NR	5	20WP	G15_033	FROM->TO	G14-057T 345.00 - SUNNYSIDE 345KV CKT 1	717	789	0.04012	116.1597	P12:138:WFEC:MSL02
FDNS	00NR	5	20WP	G15_033	FROM->TO	G14-057T 345.00 - SUNNYSIDE 345KV CKT 1	717	789	0.04012	116.1585	PAOLI - PAYNE 138.00 138KV CKT 1
FDNS	00NR	5	20WP	G15_033	FROM->TO	G14-057T 345.00 - SUNNYSIDE 345KV CKT 1	717	789	0.04018	116.1562	GEN506754 1-LEBROCK STEAM 1
FDNS	00NR	5	16WP	G15_033	FROM->TO	G14-057T 345.00 - SUNNYSIDE 345KV CKT 1	717	789	0.04212	116.149	GEN532751 1-WOLF CREEK GENERATING STATION UNIT 1
FDNS	00NR	5	20WP	G15_033	FROM->TO	G14-057T 345.00 - SUNNYSIDE 345KV CKT 1	717	789	0.04027	116.1343	CIVIT - PAOLI 138KV CKT 1
FDNS	00NR	5	16WP	G15_033	FROM->TO	G14-057T 345.00 - SUNNYSIDE 345KV CKT 1	717	789	0.04212	116.1091	GEN562952 1-G15057_3 0.6500
FDNS	00NR	5	20WP	G15_033	FROM->TO	G14-057T 345.00 - SUNNYSIDE 345KV CKT 1	717	789	0.04024	116.1052	P12:138:AEPW:112GORE4:L.E.S.-4
FDNS	00NR	5	20WP	G15_033	FROM->TO	G14-057T 345.00 - SUNNYSIDE 345KV CKT 1	717	789	0.04018	116.0877	NEW MADRID 161/22.0KV TRANSFORMER CKT 1
FDNS	00NR	5	16WP	G15_033	FROM->TO	G14-057T 345.00 - SUNNYSIDE 345KV CKT 1	717	789	0.04212	116.0875	GEN657748 1-YOUNG 2 GENERATOR
FDNS	00NR	5	20WP	G15_033	FROM->TO	G14-057T 345.00 - SUNNYSIDE 345KV CKT 1	717	789	0.04015	116.0828	ANADARKO - GEORGIA 138KV CKT 1
FDNS	00NR	5	20WP	G15_033	FROM->TO	G14-057T 345.00 - SUNNYSIDE 345KV CKT 1	717	789	0.04042	116.0781	P12:138:AEPW-OGE:CORNVIL4:MAUD 4
FDNS	00NR	5	20WP	G15_033	FROM->TO	G14-057T 345.00 - SUNNYSIDE 345KV CKT 1	717	789	0.04018	116.0622	GEN336252 1-NINEMILE POINT UNIT#5
FDNS	00NR	5	20WP	G15_033	FROM->TO	G14-057T 345.00 - SUNNYSIDE 345KV CKT 1	717	789	0.04018	116.0601	NEW MADRID 345/22.0KV TRANSFORMER CKT 1
FDNS	00NR	5	20WP	G15_033	FROM->TO	G14-057T 345.00 - SUNNYSIDE 345KV CKT 1	717	789	0.04211	116.0516	LAWTON EASTSIDE (LES 5) 345/138/13.8KV TRANSFORMER CKT 2
FDNS	00NR	5	20WP	G15_033	FROM->TO	G14-057T 345.00 - SUNNYSIDE 345KV CKT 1	717	789	0.04211	116.0516	LAWTON EASTSIDE (LES 5) 345/138/13.8KV TRANSFORMER CKT 2
FDNS	00NR	5	20WP	G15_033	FROM->TO	G14-057T 345.00 - SUNNYSIDE 345KV CKT 1	717	789	0.04005	116.0436	MATHWSN7 345.00 - NORTHWEST 345KV CKT 1
FDNS	00NR	5	16WP	G15_033	FROM->TO	G14-057T 345.00 - SUNNYSIDE 345KV CKT 1	717	789	0.04212	116.025	GEN562704 1-G15_020_3 0.3550
FDNS	00NR	5	20WP	G15_033	FROM->TO	G14-057T 345.00 - SUNNYSIDE 345KV CKT 1	717	789	0.04018	116.0064	GEN503909 1-FULTONU1 1 16.000
FDNS	00NR	5	20WP	G15_033	FROM->TO	G14-057T 345.00 - SUNNYSIDE 345KV CKT 1	717	789	0.04018	116.0046	FRONTIER - GRIMES 345KV CKT 1
FDNS	00NR	5	20WP	G15_033	FROM->TO	G14-057T 345.00 - SUNNYSIDE 345KV CKT 1	717	789	0.04018	116.0005	GEN335204 1-NELSON UNIT 4
FDNS	00NR	5	20WP	G15_033	FROM->TO	G14-057T 345.00 - SUNNYSIDE 345KV CKT 1	717	789	0.04042	115.9989	BLANCHARD - CORNVILLE 138KV CKT 1
FDNS	00NR	5	20WP	G15_033	FROM->TO	G14-057T 345.00 - SUNNYSIDE 345KV CKT 1	717	789	0.04015	115.9988	FLETCHER - GEORGIA 138KV CKT 1
FDNS	00NR	5	20WP	G15_033	FROM->TO	G14-057T 345.00 - SUNNYSIDE 345KV CKT 1	717	789	0.04027	115.9935	CIVIT - STRATFORD 138KV CKT 1
FDNS	00NR	5	20WP	G15_033	FROM->TO	G14-057T 345.00 - SUNNYSIDE 345KV CKT 1	717	789	0.04018	115.9922	GEN334441 1-SABINE UNIT 5
FDNS	00NR	5	20WP	G15_033	FROM->TO	G14-057T 345.00 - SUNNYSIDE 345KV CKT 1	717	789	0.04007	115.984	LATHAMS7 345.00 - ROSE HILL 345KV CKT 1
FDNS	00NR	5	20WP	G15_033	FROM->TO	G14-057T 345.00 - SUNNYSIDE 345KV CKT 1	717	789	0.0402	115.9784	TUPELO - TUPELO TAP 138KV CKT 1
FDNS	00NR	5	20WP	G15_033	FROM->TO	G14-057T 345.00 - SUNNYSIDE 345KV CKT 1	717	789	0.04012	115.947	EMPIRE - FLETCHER 138KV CKT 1
FDNS	00NR	5	16WP	G15_033	FROM->TO	G14-057T 345.00 - SUNNYSIDE 345KV CKT 1	717	789	0.04212	115.9208	P12:138:WFEC:MSL09
FDNS	00NR	5	16WP	G15_033	FROM->TO	G14-057T 345.00 - SUNNYSIDE 345KV CKT 1	717	789	0.04256	115.9197	P12:138:AEPW-OGE:CORNVIL4:CIMARON4
FDNS	00NR	5	16WP	G15_033	FROM->TO	G14-057T 345.00 - SUNNYSIDE 345KV CKT 1	717	789	0.04212	115.918	GEN620315 1-BIG STONE GEN
FDNS	00NR	5	16WP	G15_033	FROM->TO	G14-057T 345.00 - SUNNYSIDE 345KV CKT 1	717	789	0.04212	115.9165	GEN562710 1-G15_022_3 0.5500
FDNS	00NR	5	20WP	G15_033	FROM->TO	G14-057T 345.00 - SUNNYSIDE 345KV CKT 1	717	789	0.03997	115.9151	G1524G1525 345.00 - THISTLE7 345.00 345KV CKT 1
FDNS	00NR	5	20WP	G15_033	FROM->TO	G14-057T 345.00 - SUNNYSIDE 345KV CKT 1	717	789	0.03997	115.9151	G1524G1525 345.00 - THISTLE7 345.00 345KV CKT 2
FDNS	00NR	5	20WP	G15_033	FROM->TO	G14-057T 345.00 - SUNNYSIDE 345KV CKT 1	717	789	0.04015	115.9119	LAYFLD8 500.00 - MOUNT OLIVE 500KV CKT 1
FDNS	00NR	5	20WP	G15_033	FROM->TO	G14-057T 345.00 - SUNNYSIDE 345KV CKT 1	717	789	0.04015	115.9119	LAYFLD8 500.00 - MOUNT OLIVE 500KV CKT 1
FDNS	00NR	5	16WP	G15_033	FROM->TO	G14-057T 345.00 - SUNNYSIDE 345KV CKT 1	717	789	0.04212	115.9016	GEN563173 1-G15082_3 0.6900
FDNS	00NR	5	20WP	G15_033	FROM->TO	G14-057T 345.00 - SUNNYSIDE 345KV CKT 1	717	789	0.04018	115.8947	GEN334071 1-LEWIS CREEK 2
FDNS	00NR	5	20WP	G15_033	FROM->TO	G14-057T 345.00 - SUNNYSIDE 345KV CKT 1	717	789	0.04018	115.886	GEN334070 1-LEWIS CREEK 1
FDNS	00NR	5	20WP	G15_033	FROM->TO	G14-057T 345.00 - SUNNYSIDE 345KV CKT 1	717	789	0.04018	115.8847	GEN336251 1-NINEMILE POINT UNIT#4
FDNS	00NR	5	20WP	G15_033	FROM->TO	G14-057T 345.00 - SUNNYSIDE 345KV CKT 1	717	789	0.04027	115.876	OIL CENTER - STRATFORD 138KV CKT 1
FDNS	00NR	5	20WP	G15_033	FROM->TO	G14-057T 345.00 - SUNNYSIDE 345KV CKT 1	717	789	0.04012	115.8727	COMANCHE - EMPIRE 138KV CKT 1
FDNS	00NR	5	20WP	G15_033	FROM->TO	G14-057T 345.00 - SUNNYSIDE 345KV CKT 1	717	789	0.04018	115.8636	P12:161:AEPW-SWPA:BEAVER5:EROGERS5
FDNS	00NR	5	20WP	G15_033	FROM->TO	G14-057T 345.00 - SUNNYSIDE 345KV CKT 1	717	789	0.04018	115.861	GEN509393 S1-ARSENAL HILL GENS #4 (STALL)
FDNS	00NR	5	16WP	G15_033	FROM->TO	G14-057T 345.00 - SUNNYSIDE 345KV CKT 1	717	789	0.04212	115.8609	GEN600004 2-PRAIRIE ISLAND G2
FDNS	00NR	5	20WP	G15_033	FROM->TO	G14-057T 345.00 - SUNNYSIDE 345KV CKT 1	717	789	0.04018	115.8595	GEN509392 G2-ARSENAL HILL GENS #3 (STALL)
FDNS	00NR	5	20WP	G15_033	FROM->TO	G14-057T 345.00 - SUNNYSIDE 345KV CKT 1	717	789	0.04018	115.8594	GEN509391 G1-ARSENAL HILL GENS #2 (STALL)
FDNS	00NR	5	16WP	G15_033	FROM->TO	G14-057T 345.00 - SUNNYSIDE 345KV CKT 1	717	789	0.04212	115.8582	GEN600003 1-PRAIRIE ISLAND G1
FDNS	00NR	5	20WP	G15_033	FROM->TO	G14-057T 345.00 - SUNNYSIDE 345KV CKT 1	717	789	0.03991	115.8552	P12:138:AEPW-OGE:WTH_JCT4:JENSEN4
FDNS	00NR	5	16WP	G15_033	FROM->TO	G14-057T 345.00 - SUNNYSIDE 345KV CKT 1	717	789	0.04212	115.8496	GEN600006 1-AS KING
FDNS	00NR	5	20WP	G15_033	FROM->TO	G14-057T 345.00 - SUNNYSIDE 345KV CKT 1	717	789	0.04037	115.8471	DUNCAN (DUNCAN) 138/69/13.8KV TRANSFORMER CKT 1
FDNS	00NR	5	20WP	G15_033	FROM->TO	G14-057T 345.00 - SUNNYSIDE 345KV CKT 1	717	789	0.04037	115.8471	DUNCAN (DUNCAN) 138/69/13.8KV TRANSFORMER CKT 1
FDNS	00NR	5	20WP	G15_033	FROM->TO	G14-057T 345.00 - SUNNYSIDE 345KV CKT 1	717	789	0.04018	115.837	GEN337653 1-WHITE BLUFF UNIT #2
FDNS	00NR	5	16WP	G15_033	FROM->TO	G14-057T 345.00 - SUNNYSIDE 345KV CKT 1	717	789	0.04212	115.8351	GEN511851 1-COMANCHE #1
FDNS	00NR	5	20WP	G15_033	FROM->TO	G14-057T 345.00 - SUNNYSIDE 345KV CKT 1	717	789	0.04018	115.8292	GEN334433 1-SABINE UNIT 3
FDNS	00NR	5	20WP	G15_033	FROM->TO	G14-057T 345.00 - SUNNYSIDE 345KV CKT 1	717	789	0.04018	115.8105	GEN336831 1-BAXTER WILSON SES
FDNS	00NR	5	20WP	G15_033	FROM->TO	G14-057T 345.00 - SUNNYSIDE 345KV CKT 1	717	789	0.04018	115.8081	GEN337911 1-ARKANSAS NUCLEAR ONE UNIT #2
FDNS	00NR	5	20WP	G15_033	FROM->TO	G14-057T 345.00 - SUNNYSIDE 345KV CKT 1	717	789	0.04018	115.8064	P12:161:AEPW:DYESS5:ELMSPRNG:TONTITN5
FDNS	00NR	5	20WP	G15_033	FROM->TO	G14-057T 345.00 - SUNNYSIDE 345KV CKT 1	717	789	0.04042	115.7945	BLANCHARD - MAUD 138KV CKT 1
FDNS	00NR	5	20WP	G15_033	FROM->TO	G14-057T 345.00 - SUNNYSIDE 345KV CKT 1	717	789	0.0406	115.7781	TUTTLE - TUTTLE CONOCO TAP 138KV CKT 1
FDNS	00NR	5	20WP	G15_033	FROM->TO	G14-057T 345.00 - SUNNYSIDE 345KV CKT 1	717	789	0.04018	115.7677	GEN334030 1-FRONTIER UNIT 1
FDNS	00NR	5	16WP	G15_033	FROM->TO	G14-057T 345.00 - SUNNYSIDE 345KV CKT 1	717	789	0.04212	115.7668	GEN636641 1-LOUISA UNIT 1
FDNS	00NR	5	20WP	G15_033	FROM->TO	G14-057T 345.00 - SUNNYSIDE 345KV CKT 1	717	789	0.04018	115.7654	GEN334031 1-FRONTIER UNIT 2

SOLUTION	GROUP	SCENARIO	SEASON	SOURCE	DIRECTION	MONITORED ELEMENT	RATEA (MVA)	RATEB(MVA)	TDF	TC%LOADING (% MVA)	CONTINGENCY
FDNS	00NR	5	20WP	G15_033	FROM->TO	G14-057T 345.00 - SUNNYSIDE 345KV CKT 1	717	789	0.04017	115.7404	P12:138:AEPW:CATOOSA4:T.S.E.-4
FDNS	00NR	5	20WP	G15_033	FROM->TO	G14-057T 345.00 - SUNNYSIDE 345KV CKT 1	717	789	0.04018	115.7288	GEN337652 1-WHITE BLUFF UNIT #1
FDNS	00NR	5	20WP	G15_033	FROM->TO	G14-057T 345.00 - SUNNYSIDE 345KV CKT 1	717	789	0.04018	115.7242	GEN515226 1-MUSKOGEE 6G
FDNS	00NR	5	20WP	G15_033	FROM->TO	G14-057T 345.00 - SUNNYSIDE 345KV CKT 1	717	789	0.04018	115.7152	GEN300003 1-THOMAS HILL UNIT 3
FDNS	00NR	5	16WP	G15_033	FROM->TO	G14-057T 345.00 - SUNNYSIDE 345KV CKT 1	717	789	0.04212	115.7143	GEN600005 1-MONTICELLO
FDNS	00NR	5	20WP	G15_033	FROM->TO	G14-057T 345.00 - SUNNYSIDE 345KV CKT 1	717	789	0.04018	115.7093	GEN506752 1-LEBROCK GAS 1
FDNS	00NR	5	20WP	G15_033	FROM->TO	G14-057T 345.00 - SUNNYSIDE 345KV CKT 1	717	789	0.04018	115.709	GEN506753 1-LEBROCK GAS 2
FDNS	00NR	5	20WP	G15_033	FROM->TO	G14-057T 345.00 - SUNNYSIDE 345KV CKT 1	717	789	0.04018	115.7087	GEN501811 1-RODEMACHER UNIT 1
FDNS	00NR	5	20WP	G15_033	FROM->TO	G14-057T 345.00 - SUNNYSIDE 345KV CKT 1	717	789	0.04027	115.7058	LATTA JCT - OIL CENTER 138KV CKT 1
FDNS	00NR	5	20WP	G15_033	FROM->TO	G14-057T 345.00 - SUNNYSIDE 345KV CKT 1	717	789	0.0401	115.7008	FULTON 115 - HOPE 115KV CKT 1
FDNS	00NR	5	20WP	G15_033	FROM->TO	G14-057T 345.00 - SUNNYSIDE 345KV CKT 1	717	789	0.0401	115.7008	FULTON 115 - HOPE 115KV CKT 1
FDNS	00NR	5	20WP	G15_033	FROM->TO	G14-057T 345.00 - SUNNYSIDE 345KV CKT 1	717	789	0.0406	115.6986	CIMARRON - TUTTLE CONOCO TAP 138KV CKT 1
FDNS	00NR	5	20WP	G15_033	FROM->TO	G14-057T 345.00 - SUNNYSIDE 345KV CKT 1	717	789	0.04018	115.6939	GEN300015 1-1SGPDEL 18.000
FDNS	00NR	5	20WP	G15_033	FROM->TO	G14-057T 345.00 - SUNNYSIDE 345KV CKT 1	717	789	0.04018	115.6927	GEN515040 1-SEMINOLE 1G
FDNS	00NR	5	20WP	G15_033	FROM->TO	G14-057T 345.00 - SUNNYSIDE 345KV CKT 1	717	789	0.04022	115.6918	P12:138:AEPW:CORNVIL4:S.W.S.-4
FDNS	00NR	5	20WP	G15_033	FROM->TO	G14-057T 345.00 - SUNNYSIDE 345KV CKT 1	717	789	0.0404	115.6915	BAILEY4 138.00 - SUNSHINE CANYON 138KV CKT 1
FDNS	00NR	5	20WP	G15_033	FROM->TO	G14-057T 345.00 - SUNNYSIDE 345KV CKT 1	717	789	0.0408	115.6844	P12:138:AEPW:CORNVIL4:DUNCAN-4
FDNS	00NR	5	20WP	G15_033	FROM->TO	G14-057T 345.00 - SUNNYSIDE 345KV CKT 1	717	789	0.04018	115.6792	GEN336191 1-LITTLE GYPSY UNIT#3
FDNS	00NR	5	20WP	G15_033	FROM->TO	G14-057T 345.00 - SUNNYSIDE 345KV CKT 1	717	789	0.03975	115.6722	BUCKNER7 345.00 - SPEARVILLE 345KV CKT 1
FDNS	00NR	5	20WP	G15_033	FROM->TO	G14-057T 345.00 - SUNNYSIDE 345KV CKT 1	717	789	0.03975	115.6722	BUCKNER7 345.00 - SPEARVILLE 345KV CKT 1
FDNS	00NR	5	20WP	G15_033	FROM->TO	G14-057T 345.00 - SUNNYSIDE 345KV CKT 1	717	789	0.04002	115.6717	P12:138:AEPW:WTHWF4:CLINTJC4
FDNS	00NR	5	20WP	G15_033	FROM->TO	G14-057T 345.00 - SUNNYSIDE 345KV CKT 1	717	789	0.04037	115.6588	P12:69:WFEC-AEPW:COMANCH2:DUNCAN-2
FDNS	00NR	5	20WP	G15_033	FROM->TO	G14-057T 345.00 - SUNNYSIDE 345KV CKT 1	717	789	0.04018	115.6473	GEN335614 1-WILLOW GLENN UNIT#4
FDNS	00NR	5	20WP	G15_033	FROM->TO	G14-057T 345.00 - SUNNYSIDE 345KV CKT 1	717	789	0.04018	115.6402	GEN337910 1-ARKANSAS NUCLEAR ONE UNIT #1
FDNS	00NR	5	16WP	G15_033	FROM->TO	G14-057T 345.00 - SUNNYSIDE 345KV CKT 1	717	789	0.04212	115.6385	GEN562754 1-G15031_5 0.6900
FDNS	00NR	5	20WP	G15_033	FROM->TO	G14-057T 345.00 - SUNNYSIDE 345KV CKT 1	717	789	0.04012	115.6335	6LAYFLD 230.00 - CARROLL 230KV CKT 1
FDNS	00NR	5	20WP	G15_033	FROM->TO	G14-057T 345.00 - SUNNYSIDE 345KV CKT 1	717	789	0.04017	115.6332	8DANIEL8 500.00 - MCKNIGHT 500KV CKT 1
FDNS	00NR	5	16WP	G15_033	FROM->TO	G14-057T 345.00 - SUNNYSIDE 345KV CKT 1	717	789	0.04212	115.627	GEN635213 3-NEAL UNIT 3
FDNS	00NR	5	20WP	G15_033	FROM->TO	G14-057T 345.00 - SUNNYSIDE 345KV CKT 1	717	789	0.04014	115.6254	G15088_T 345.00 - MOORE 345KV CKT 1
FDNS	00NR	5	20WP	G15_033	FROM->TO	G14-057T 345.00 - SUNNYSIDE 345KV CKT 1	717	789	0.04002	115.6232	P12:138:AEPW:WTHWF4:WTH_SE4
FDNS	00NR	5	20WP	G15_033	FROM->TO	G14-057T 345.00 - SUNNYSIDE 345KV CKT 1	717	789	0.04018	115.6193	GEN515223 1-MUSKOGEE 4G
FDNS	00NR	5	20WP	G15_033	FROM->TO	G14-057T 345.00 - SUNNYSIDE 345KV CKT 1	717	789	0.04018	115.6193	GEN515225 1-MUSKOGEE 5G
FDNS	00NR	5	20WP	G15_033	FROM->TO	G14-057T 345.00 - SUNNYSIDE 345KV CKT 1	717	789	0.04018	115.6172	P12:161:AEPW:EROGERS5:ECNTRTN5
FDNS	00NR	5	20WP	G15_033	FROM->TO	G14-057T 345.00 - SUNNYSIDE 345KV CKT 1	717	789	0.04037	115.6122	DUNCAN - TOSCO 69KV CKT 1
FDNS	00NR	5	20WP	G15_033	FROM->TO	G14-057T 345.00 - SUNNYSIDE 345KV CKT 1	717	789	0.04018	115.6046	WHITE BLUFF 500/26.0KV TRANSFORMER CKT 1
FDNS	00NR	5	16WP	G15_033	FROM->TO	G14-057T 345.00 - SUNNYSIDE 345KV CKT 1	717	789	0.04212	115.6037	GEN629074 1-ARNOLD LOWSIDE OF GSU XFMR
FDNS	00NR	5	20WP	G15_033	FROM->TO	G14-057T 345.00 - SUNNYSIDE 345KV CKT 1	717	789	0.03991	115.6032	WEATHERFORD JCT. - WEATHERFORD SOUTHEAST 138KV CKT 1
FDNS	00NR	5	20WP	G15_033	FROM->TO	G14-057T 345.00 - SUNNYSIDE 345KV CKT 1	717	789	0.03991	115.6032	WEATHERFORD JCT. - WEATHERFORD SOUTHEAST 138KV CKT 1
FDNS	00NR	5	20WP	G15_033	FROM->TO	G14-057T 345.00 - SUNNYSIDE 345KV CKT 1	717	789	0.04018	115.6002	GEN303007 1-1BC2 U2
FDNS	00NR	5	20WP	G15_033	FROM->TO	G14-057T 345.00 - SUNNYSIDE 345KV CKT 1	717	789	0.04018	115.5965	GEN562783 1-G15036_4 0.6900
FDNS	00NR	5	20WP	G15_033	FROM->TO	G14-057T 345.00 - SUNNYSIDE 345KV CKT 1	717	789	0.04018	115.5965	GEN562784 1-G15036_5 0.6900
FDNS	00NR	5	20WP	G15_033	FROM->TO	G14-057T 345.00 - SUNNYSIDE 345KV CKT 1	717	789	0.04018	115.5954	GEN336464 1-MICHOUD UNIT #3
FDNS	00NR	5	20WP	G15_033	FROM->TO	G14-057T 345.00 - SUNNYSIDE 345KV CKT 1	717	789	0.04018	115.5944	GEN303006 1-1BC2 U1
FDNS	00NR	5	20WP	G15_033	FROM->TO	G14-057T 345.00 - SUNNYSIDE 345KV CKT 1	717	789	0.03882	115.5932	FINNEY SWITCHING STATION - HOLCOMB 345KV CKT 1
FDNS	00NR	5	20WP	G15_033	FROM->TO	G14-057T 345.00 - SUNNYSIDE 345KV CKT 1	717	789	0.03882	115.5932	FINNEY SWITCHING STATION - HOLCOMB 345KV CKT 1
FDNS	00NR	5	20WP	G15_033	FROM->TO	G14-057T 345.00 - SUNNYSIDE 345KV CKT 1	717	789	0.04018	115.5855	RODEMACHER 230/22.0KV TRANSFORMER CKT 1
FDNS	00NR	5	16WP	G15_033	FROM->TO	G14-057T 345.00 - SUNNYSIDE 345KV CKT 1	717	789	0.04212	115.5742	GEN562756 1-G15031_7 0.6900
FDNS	00NR	5	20WP	G15_033	FROM->TO	G14-057T 345.00 - SUNNYSIDE 345KV CKT 1	717	789	0.04012	115.573	BISMARK - HOT SPRINGS WEST BUS 115KV CKT 1
FDNS	00NR	5	20WP	G15_033	FROM->TO	G14-057T 345.00 - SUNNYSIDE 345KV CKT 1	717	789	0.04015	115.5728	G15074_T 345.00 - HOYT 345KV CKT 1
FDNS	00NR	5	20WP	G15_033	FROM->TO	G14-057T 345.00 - SUNNYSIDE 345KV CKT 1	717	789	0.04015	115.5726	MC NIEL 500/115KV TRANSFORMER CKT 1
FDNS	00NR	5	20WP	G15_033	FROM->TO	G14-057T 345.00 - SUNNYSIDE 345KV CKT 1	717	789	0.04017	115.5717	CIMARRON - CZECH HALL 138KV CKT 1
FDNS	00NR	5	16WP	G15_033	FROM->TO	G14-057T 345.00 - SUNNYSIDE 345KV CKT 1	717	789	0.04212	115.5671	GEN562556 1-G14_046_3 0.3420
FDNS	00NR	5	20WP	G15_033	FROM->TO	G14-057T 345.00 - SUNNYSIDE 345KV CKT 1	717	789	0.04013	115.5656	G15095_T 138.00 - ROSE_VALLEY 138.00 138KV CKT 1
FDNS	00NR	5	20WP	G15_033	FROM->TO	G14-057T 345.00 - SUNNYSIDE 345KV CKT 1	717	789	0.04016	115.5645	HOT SPRINGS EHV - MAGNET COVE 500KV CKT 1
FDNS	00NR	5	20WP	G15_033	FROM->TO	G14-057T 345.00 - SUNNYSIDE 345KV CKT 1	717	789	0.04018	115.5636	GEN300010 1-ST FRANCIS UNIT 1
FDNS	00NR	5	20WP	G15_033	FROM->TO	G14-057T 345.00 - SUNNYSIDE 345KV CKT 1	717	789	0.04037	115.5619	COMANCHE TAP - TOSCO 69KV CKT 1
FDNS	00NR	5	20WP	G15_033	FROM->TO	G14-057T 345.00 - SUNNYSIDE 345KV CKT 1	717	789	0.03991	115.5612	P12:138:AEPW:REDROCKRD4:WTH_JCT4
FDNS	00NR	5	16WP	G15_033	FROM->TO	G14-057T 345.00 - SUNNYSIDE 345KV CKT 1	717	789	0.04212	115.5597	BIG STONE 230/24.0KV TRANSFORMER CKT 1
FDNS	00NR	5	16WP	G15_033	FROM->TO	G14-057T 345.00 - SUNNYSIDE 345KV CKT 1	717	789	0.04212	115.5534	GEN562023 1-G11_020_3 0.6900
FDNS	00NR	5	16WP	G15_033	FROM->TO	G14-057T 345.00 - SUNNYSIDE 345KV CKT 1	717	789	0.04212	115.5534	GEN562026 1-G11_019_3 0.6900
FDNS	00NR	5	20WP	G15_033	FROM->TO	G14-057T 345.00 - SUNNYSIDE 345KV CKT 1	717	789	0.04018	115.5412	GEN337041 1-GERALD ANDRUS
FDNS	00NR	5	20WP	G15_033	FROM->TO	G14-057T 345.00 - SUNNYSIDE 345KV CKT 1	717	789	0.04047	115.539	P12:69:AEPW-OMPA:COMANC-2:OMWALTR2
FDNS	00NR	5	20WP	G15_033	FROM->TO	G14-057T 345.00 - SUNNYSIDE 345KV CKT 1	717	789	0.04018	115.5353	GEN505432 1-SIKESTON
FDNS	00NR	5	20WP	G15_033	FROM->TO	G14-057T 345.00 - SUNNYSIDE 345KV CKT 1	717	789	0.04018	115.5306	GEN303008 1-1BC2 U3
FDNS	00NR	5	20WP	G15_033	FROM->TO	G14-057T 345.00 - SUNNYSIDE 345KV CKT 1	717	789	0.04014	115.527	CIMARRON - SARA 138KV CKT 1
FDNS	00NR	5	20WP	G15_033	FROM->TO	G14-057T 345.00 - SUNNYSIDE 345KV CKT 1	717	789	0.04275	115.5211	P12:138:AEPW:S.W.S.-4:L.E.S.-4
FDNS	00NR	5	20WP	G15_033	FROM->TO	G14-057T 345.00 - SUNNYSIDE 345KV CKT 1	717	789	0.04011	115.5175	CLEO CORNER - CLEOPLT4 138.00 138KV CKT 1
FDNS	00NR	5	20WP	G15_033	FROM->TO	G14-057T 345.00 - SUNNYSIDE 345KV CKT 1	717	789	0.04012	115.5171	ALPINE AECC - BISMARK 115KV CKT 1
FDNS	00NR	5	20WP	G15_033	FROM->TO	G14-057T 345.00 - SUNNYSIDE 345KV CKT 1	717	789	0.0404	115.5167	BAILEY4 138.00 - WESTMOORE 138KV CKT 1
FDNS	00NR	5	20WP	G15_033	FROM->TO	G14-057T 345.00 - SUNNYSIDE 345KV CKT 1	717	789	0.04017	115.5145	P12:138:AEPW:N.E.S.-4:CATOOSA4
FDNS	00NR	5	20WP	G15_033	FROM->TO	G14-057T 345.00 - SUNNYSIDE 345KV CKT 1	717	789	0.04018	115.5044	GEN300011 1-ST FRANCIS UNIT 2
FDNS	00NR	5	20WP	G15_033	FROM->TO	G14-057T 345.00 - SUNNYSIDE 345KV CKT 1	717	789	0.04017	115.5014	CZECH HALL - XEROX 138KV CKT 1
FDNS	00NR	5	20WP	G15_033	FROM->TO	G14-057T 345.00 - SUNNYSIDE 345KV CKT 1	717	789	0.04018	115.5011	GEN336170 1-GULF OXY U4
FDNS	00NR	5	20WP	G15_033	FROM->TO	G14-057T 345.00 - SUNNYSIDE 345KV CKT 1	717	789	0.04011	115.4989	CLEOPLT4 138.00 - MEN TAP 138KV CKT 1
FDNS	00NR	5	20WP	G15_033	FROM->TO	G14-057T 345.00 - SUNNYSIDE 345KV CKT 1	717	789	0.04017	115.4973	MORGAN - XEROX 138KV CKT 1
FDNS	00NR	5	20WP	G15_033	FROM->TO	G14-057T 345.00 - SUNNYSIDE 345KV CKT 1	717	789	0.03997	115.4959	SEMINOLE - VANOSTP4 138.00 138KV CKT 1
FDNS	00NR	5	20WP	G15_033	FROM->TO	G14-057T 345.00 - SUNNYSIDE 345KV CKT 1	717	789	0.04037	115.4947	COMANCHE - COMANCHE TAP 69KV CKT 1
FDNS	00NR	5	20WP	G15_033	FROM->TO	G14-057T 345.00 - SUNNYSIDE 345KV CKT 1	717	789	0.04018	115.4946	NELSON 230/20.0KV TRANSFORMER CKT 1
FDNS	00NR	5	20WP	G15_033	FROM->TO	G14-057T 345.00 - SUNNYSIDE 345KV CKT 1	717	789	0.04013	115.4916	NOEL_SW 138.00 - ROSE_VALLEY 138.00 138KV CKT 1

SOLUTION	GROUP	SCENARIO	SEASON	SOURCE	DIRECTION	MONITORED ELEMENT	RATEA (MVA)	RATEB(MVA)	TDF	TC%LOADING (% MVA)	CONTINGENCY
FDNS	00NR	5	20WP	G15_033	FROM->TO	G14-057T 345.00 - SUNNYSIDE 345KV CKT 1	717	789	0.03987	115.4891	ARBWIND4 138.00 - CARTER 138KV CKT 1
FDNS	00NR	5	20WP	G15_033	FROM->TO	G14-057T 345.00 - SUNNYSIDE 345KV CKT 1	717	789	0.04011	115.4881	IMO TAP - MEN TAP 138KV CKT 1
FDNS	00NR	5	20WP	G15_033	FROM->TO	G14-057T 345.00 - SUNNYSIDE 345KV CKT 1	717	789	0.04018	115.4821	GEN336801 1-BAXTER WILSON UNIT #1
FDNS	00NR	5	20WP	G15_033	FROM->TO	G14-057T 345.00 - SUNNYSIDE 345KV CKT 1	717	789	0.04078	115.4816	POTTER COUNTY INTERCHANGE - TOLK STATION 345KV CKT 1
FDNS	00NR	5	16WP	G15_033	FROM->TO	G14-057T 345.00 - SUNNYSIDE 345KV CKT 1	717	789	0.04212	115.4765	GEN563142 1-G15079_3 0.5500
FDNS	00NR	5	16WP	G15_033	FROM->TO	G14-057T 345.00 - SUNNYSIDE 345KV CKT 1	717	789	0.04212	115.4765	GEN563151 1-G15080_2 0.5500
FDNS	00NR	5	20WP	G15_033	FROM->TO	G14-057T 345.00 - SUNNYSIDE 345KV CKT 1	717	789	0.04021	115.4761	GRACEMONT (BANK 1) 345/138/13.8KV TRANSFORMER CKT 1
FDNS	00NR	5	20WP	G15_033	FROM->TO	G14-057T 345.00 - SUNNYSIDE 345KV CKT 1	717	789	0.04017	115.4751	MORGAN - MUSTANG 138KV CKT 1
FDNS	00NR	5	20WP	G15_033	FROM->TO	G14-057T 345.00 - SUNNYSIDE 345KV CKT 1	717	789	0.03953	115.4709	ELK CITY 230KV (ELKCTY-6) 230/138/13.8KV TRANSFORMER CKT 1
FDNS	00NR	5	20WP	G15_033	FROM->TO	G14-057T 345.00 - SUNNYSIDE 345KV CKT 1	717	789	0.03953	115.4709	ELK CITY 230KV (ELKCTY-6) 230/138/13.8KV TRANSFORMER CKT 1
FDNS	00NR	5	20WP	G15_033	FROM->TO	G14-057T 345.00 - SUNNYSIDE 345KV CKT 1	717	789	0.03953	115.4707	CHISHOLM6 230.00 - ELK CITY 230KV 230KV CKT 1
FDNS	00NR	5	20WP	G15_033	FROM->TO	G14-057T 345.00 - SUNNYSIDE 345KV CKT 1	717	789	0.04012	115.4675	ALPINE AECC - AMITY SS 115KV CKT 1
FDNS	00NR	5	20WP	G15_033	FROM->TO	G14-057T 345.00 - SUNNYSIDE 345KV CKT 1	717	789	0.03991	115.4658	HINTON - WEATHERFORD JCT. 138KV CKT 1
FDNS	00NR	5	20WP	G15_033	FROM->TO	G14-057T 345.00 - SUNNYSIDE 345KV CKT 1	717	789	0.04003	115.4632	P12:138:OKGE-AEPW:JENSEN4:REDROCKRD4
FDNS	00NR	5	20WP	G15_033	FROM->TO	G14-057T 345.00 - SUNNYSIDE 345KV CKT 1	717	789	0.04018	115.4611	8CAJUN2 500/24.0KV TRANSFORMER CKT 1
FDNS	00NR	5	20WP	G15_033	FROM->TO	G14-057T 345.00 - SUNNYSIDE 345KV CKT 1	717	789	0.04275	115.4594	P12:345:SPS:J15.1.XRDS.TOLK
FDNS	00NR	5	20WP	G15_033	FROM->TO	G14-057T 345.00 - SUNNYSIDE 345KV CKT 1	717	789	0.04018	115.4483	GEN501910 1-ACADIA UNIT ST1
FDNS	00NR	5	20WP	G15_033	FROM->TO	G14-057T 345.00 - SUNNYSIDE 345KV CKT 1	717	789	0.04014	115.418	SARA - STHLAKE4 138.00 138KV CKT 1
FDNS	00NR	5	20WP	G15_033	FROM->TO	G14-057T 345.00 - SUNNYSIDE 345KV CKT 1	717	789	0.04016	115.417	ETTA (DUKE HOTSPRINGS) - MC NIEL 500KV CKT 1
FDNS	00NR	5	20WP	G15_033	FROM->TO	G14-057T 345.00 - SUNNYSIDE 345KV CKT 1	717	789	0.04018	115.4155	P12:138:AEPW:R.S.S.-4:S.HUD.-4
FDNS	00NR	5	20WP	G15_033	FROM->TO	G14-057T 345.00 - SUNNYSIDE 345KV CKT 1	717	789	0.04018	115.4137	SABINE 230/24.0KV TRANSFORMER CKT 1
FDNS	00NR	5	20WP	G15_033	FROM->TO	G14-057T 345.00 - SUNNYSIDE 345KV CKT 1	717	789	0.04027	115.411	LASALLE - LATTA JCT 138KV CKT 1
FDNS	00NR	5	20WP	G15_033	FROM->TO	G14-057T 345.00 - SUNNYSIDE 345KV CKT 1	717	789	0.0402	115.4084	ANADARKO - SEQUOYAHJ4 138.00 138KV CKT 1
FDNS	00NR	5	20WP	G15_033	FROM->TO	G14-057T 345.00 - SUNNYSIDE 345KV CKT 1	717	789	0.0402	115.4056	CORN TAP - SEQUOYAHJ4 138.00 138KV CKT 1
FDNS	00NR	5	20WP	G15_033	FROM->TO	G14-057T 345.00 - SUNNYSIDE 345KV CKT 1	717	789	0.04018	115.4053	GEN300016 1-G1GPDEL 18.000
FDNS	00NR	5	20WP	G15_033	FROM->TO	G14-057T 345.00 - SUNNYSIDE 345KV CKT 1	717	789	0.03991	115.3961	HINTON - REDROCKRD4 138.00 138KV CKT 1
FDNS	00NR	5	20WP	G15_033	FROM->TO	G14-057T 345.00 - SUNNYSIDE 345KV CKT 1	717	789	0.04018	115.3943	GEN336222 1-LITTLE GYPSY UNIT#2
FDNS	00NR	5	16WP	G15_033	FROM->TO	G14-057T 345.00 - SUNNYSIDE 345KV CKT 1	717	789	0.04212	115.3907	GEN600000 1-SHERBURNECNTY G1
FDNS	00NR	5	20WP	G15_033	FROM->TO	G14-057T 345.00 - SUNNYSIDE 345KV CKT 1	717	789	0.04018	115.389	ESSEX UNIT 2 500/18.0KV TRANSFORMER CKT 1
FDNS	00NR	5	20WP	G15_033	FROM->TO	G14-057T 345.00 - SUNNYSIDE 345KV CKT 1	717	789	0.04014	115.3883	MCCLAIN - STHLAKE4 138.00 138KV CKT 1
FDNS	00NR	5	20WP	G15_033	FROM->TO	G14-057T 345.00 - SUNNYSIDE 345KV CKT 1	717	789	0.04018	115.3875	P12:69:AEPW:NROGERS2:ECNTRTN2
FDNS	00NR	5	20WP	G15_033	FROM->TO	G14-057T 345.00 - SUNNYSIDE 345KV CKT 1	717	789	0.04029	115.3873	WALTERS - WALTERS 69KV CKT 1
FDNS	00NR	5	20WP	G15_033	FROM->TO	G14-057T 345.00 - SUNNYSIDE 345KV CKT 1	717	789	0.04002	115.3857	WEATHERFORD TAP - WEATHERFORD WIND FARM 138KV CKT 1
FDNS	00NR	5	20WP	G15_033	FROM->TO	G14-057T 345.00 - SUNNYSIDE 345KV CKT 1	717	789	0.04022	115.3834	NORGE ROAD - SOUTHWESTERN STATION 138KV CKT 1
FDNS	00NR	5	20WP	G15_033	FROM->TO	G14-057T 345.00 - SUNNYSIDE 345KV CKT 1	717	789	0.04022	115.3834	NORGE ROAD - SOUTHWESTERN STATION 138KV CKT 1
FDNS	00NR	5	20WP	G15_033	FROM->TO	G14-057T 345.00 - SUNNYSIDE 345KV CKT 1	717	789	0.04018	115.3752	P12:138:AEPW:BA_71ST4:T.S.E.-4
FDNS	00NR	5	20WP	G15_033	FROM->TO	G14-057T 345.00 - SUNNYSIDE 345KV CKT 1	717	789	0.04018	115.3695	P12:138:AEPW:YARCH-S4:T.S.E.-4
FDNS	00NR	5	16WP	G15_033	FROM->TO	G14-057T 345.00 - SUNNYSIDE 345KV CKT 1	717	789	0.04197	115.3692	NORTHWEST TEXARKANA - VALLIANT 345KV CKT 1
FDNS	00NR	5	16WP	G15_033	FROM->TO	G14-057T 345.00 - SUNNYSIDE 345KV CKT 1	717	789	0.04197	115.3692	NORTHWEST TEXARKANA - VALLIANT 345KV CKT 1
FDNS	00NR	5	20WP	G15_033	FROM->TO	G14-057T 345.00 - SUNNYSIDE 345KV CKT 1	717	789	0.04113	115.3646	LAWTON EASTSIDE (LES 4) 345/138/13.8KV TRANSFORMER CKT 1
FDNS	00NR	5	20WP	G15_033	FROM->TO	G14-057T 345.00 - SUNNYSIDE 345KV CKT 1	717	789	0.04113	115.3646	LAWTON EASTSIDE (LES 4) 345/138/13.8KV TRANSFORMER CKT 1
FDNS	00NR	5	20WP	G15_033	FROM->TO	G14-057T 345.00 - SUNNYSIDE 345KV CKT 1	717	789	0.04016	115.3627	P12:138:AEPW-OGE:SHIDLER4:OSAGE 4
FDNS	00NR	5	20WP	G15_033	FROM->TO	G14-057T 345.00 - SUNNYSIDE 345KV CKT 1	717	789	0.04015	115.3605	HOYT - STRANGER CREEK 345KV CKT 1
FDNS	00NR	5	20WP	G15_033	FROM->TO	G14-057T 345.00 - SUNNYSIDE 345KV CKT 1	717	789	0.04002	115.3577	BENTON - WICHITA 345KV CKT 1
FDNS	00NR	5	20WP	G15_033	FROM->TO	G14-057T 345.00 - SUNNYSIDE 345KV CKT 1	717	789	0.04018	115.3574	GEN336152 1-WATERFORD UNIT#2
FDNS	00NR	5	20WP	G15_033	FROM->TO	G14-057T 345.00 - SUNNYSIDE 345KV CKT 1	717	789	0.04018	115.3566	GEN336151 1-WATERFORD UNIT#1
FDNS	00NR	5	20WP	G15_033	FROM->TO	G14-057T 345.00 - SUNNYSIDE 345KV CKT 1	717	789	0.04014	115.355	MORISNT4 138.00 - STILLWATER 138KV CKT 1
FDNS	00NR	5	20WP	G15_033	FROM->TO	G14-057T 345.00 - SUNNYSIDE 345KV CKT 1	717	789	0.0404	115.3537	FRANKLIN SW - WESTMOORE 138KV CKT 1
FDNS	00NR	5	20WP	G15_033	FROM->TO	G14-057T 345.00 - SUNNYSIDE 345KV CKT 1	717	789	0.04047	115.3533	LAWTON RELIFT TAP - OMPA-WALTERS 69KV CKT 1
FDNS	00NR	5	20WP	G15_033	FROM->TO	G14-057T 345.00 - SUNNYSIDE 345KV CKT 1	717	789	0.04014	115.3515	BLACKBERRY - NEOSHO 345KV CKT 1
FDNS	00NR	5	20WP	G15_033	FROM->TO	G14-057T 345.00 - SUNNYSIDE 345KV CKT 1	717	789	0.04018	115.3511	FRONTIER 345/18.0KV TRANSFORMER CKT 1
FDNS	00NR	5	20WP	G15_033	FROM->TO	G14-057T 345.00 - SUNNYSIDE 345KV CKT 1	717	789	0.04014	115.3497	P12:138:OKGE:3TERM2
FDNS	00NR	5	20WP	G15_033	FROM->TO	G14-057T 345.00 - SUNNYSIDE 345KV CKT 1	717	789	0.04018	115.3488	FRONTIER 345/18.0KV TRANSFORMER CKT 1
FDNS	00NR	5	20WP	G15_033	FROM->TO	G14-057T 345.00 - SUNNYSIDE 345KV CKT 1	717	789	0.03975	115.3469	BUCKNER7 345.00 - HOLCOMB 345KV CKT 1
FDNS	00NR	5	20WP	G15_033	FROM->TO	G14-057T 345.00 - SUNNYSIDE 345KV CKT 1	717	789	0.03975	115.3469	BUCKNER7 345.00 - HOLCOMB 345KV CKT 1
FDNS	00NR	5	20WP	G15_033	FROM->TO	G14-057T 345.00 - SUNNYSIDE 345KV CKT 1	717	789	0.04022	115.3461	SOUTHWESTERN STATION - VERDEN 138KV CKT 1
FDNS	00NR	5	20WP	G15_033	FROM->TO	G14-057T 345.00 - SUNNYSIDE 345KV CKT 1	717	789	0.04018	115.3448	GEN300017 1-1G2GPDEL 18.000
FDNS	00NR	5	16WP	G15_033	FROM->TO	G14-057T 345.00 - SUNNYSIDE 345KV CKT 1	717	789	0.04212	115.3445	GEN511848 1-SOUTHWESTERN STATION #3
FDNS	00NR	5	20WP	G15_033	FROM->TO	G14-057T 345.00 - SUNNYSIDE 345KV CKT 1	717	789	0.04003	115.3421	G13-010T 345.00 - POST ROCK 345KV CKT 1
FDNS	00NR	5	20WP	G15_033	FROM->TO	G14-057T 345.00 - SUNNYSIDE 345KV CKT 1	717	789	0.03986	115.3403	CLINTON JUNCTION - ELK CITY 138KV CKT 1
FDNS	00NR	5	20WP	G15_033	FROM->TO	G14-057T 345.00 - SUNNYSIDE 345KV CKT 1	717	789	0.03986	115.3403	CLINTON JUNCTION - ELK CITY 138KV CKT 1
FDNS	00NR	5	20WP	G15_033	FROM->TO	G14-057T 345.00 - SUNNYSIDE 345KV CKT 1	717	789	0.04018	115.3268	7JASPER 345.00 - BLACKBERRY 345KV CKT 1
FDNS	00NR	5	20WP	G15_033	FROM->TO	G14-057T 345.00 - SUNNYSIDE 345KV CKT 1	717	789	0.04015	115.3267	G15074_T 345.00 - JEFFREY ENERGY CENTER 345KV CKT 1
FDNS	00NR	5	20WP	G15_033	FROM->TO	G14-057T 345.00 - SUNNYSIDE 345KV CKT 1	717	789	0.04022	115.3262	NORTH 29TH CHICKASHA - VERDEN 138KV CKT 1
FDNS	00NR	5	20WP	G15_033	FROM->TO	G14-057T 345.00 - SUNNYSIDE 345KV CKT 1	717	789	0.04017	115.3251	CYPRESS - HARTBURG 500KV CKT 1
FDNS	00NR	5	20WP	G15_033	FROM->TO	G14-057T 345.00 - SUNNYSIDE 345KV CKT 1	717	789	0.0401	115.3249	HOPE - MCNAB REC 115KV CKT 1
FDNS	00NR	5	20WP	G15_033	FROM->TO	G14-057T 345.00 - SUNNYSIDE 345KV CKT 1	717	789	0.04018	115.3204	LEWIS CREEK SWITCHYARD 138/22.0KV TRANSFORMER CKT 1
FDNS	00NR	5	20WP	G15_033	FROM->TO	G14-057T 345.00 - SUNNYSIDE 345KV CKT 1	717	789	0.04013	115.3195	COUCH SES - MC NIEL 115KV CKT 1
FDNS	00NR	5	20WP	G15_033	FROM->TO	G14-057T 345.00 - SUNNYSIDE 345KV CKT 1	717	789	0.04018	115.3193	GEN334432 1-SABINE UNIT 2
FDNS	00NR	5	20WP	G15_033	FROM->TO	G14-057T 345.00 - SUNNYSIDE 345KV CKT 1	717	789	0.04018	115.3191	GEN334431 1-SABINE UNIT 1
FDNS	00NR	5	20WP	G15_033	FROM->TO	G14-057T 345.00 - SUNNYSIDE 345KV CKT 1	717	789	0.04015	115.3163	EMPORIA ENERGY CENTER - G14_001T 345.00 345KV CKT 1
FDNS	00NR	5	20WP	G15_033	FROM->TO	G14-057T 345.00 - SUNNYSIDE 345KV CKT 1	717	789	0.0401	115.3163	P12:115:AEPW:TURK3:HOPE3
FDNS	00NR	5	16WP	G15_033	FROM->TO	G14-057T 345.00 - SUNNYSIDE 345KV CKT 1	717	789	0.04212	115.3162	GEN563042 1-G15068_3 0.6900
FDNS	00NR	5	20WP	G15_033	FROM->TO	G14-057T 345.00 - SUNNYSIDE 345KV CKT 1	717	789	0.04018	115.3159	LEWIS CREEK SWITCHYARD 138/22.0KV TRANSFORMER CKT 1
FDNS	00NR	5	20WP	G15_033	FROM->TO	G14-057T 345.00 - SUNNYSIDE 345KV CKT 1	717	789	0.04018	115.315	GEN501823 1-TECHE UNIT 3
FDNS	00NR	5	20WP	G15_033	FROM->TO	G14-057T 345.00 - SUNNYSIDE 345KV CKT 1	717	789	0.04018	115.3125	GEN501970 1-EVANGELINE UNIT 7
FDNS	00NR	5	20WP	G15_033	FROM->TO	G14-057T 345.00 - SUNNYSIDE 345KV CKT 1	717	789	0.03985	115.3108	CANADIAN - NOBLE 138KV CKT 1
FDNS	00NR	5	20WP	G15_033	FROM->TO	G14-057T 345.00 - SUNNYSIDE 345KV CKT 1	717	789	0.04018	115.3071	GEN505616 1-BROKEN BOW
FDNS	00NR	5	20WP	G15_033	FROM->TO	G14-057T 345.00 - SUNNYSIDE 345KV CKT 1	717	789	0.04002	115.2996	WEATHERFORD SOUTHEAST - WEATHERFORD TAP 138KV CKT 1

SOLUTION	GROUP	SCENARIO	SEASON	SOURCE	DIRECTION	MONITORED ELEMENT	RATEA (MVA)	RATEB(MVA)	TDF	TC%LOADING (% MVA)	CONTINGENCY
FDNS	00NR	5	20WP	G15_033	FROM->TO	G14-057T 345.00 - SUNNYSIDE 345KV CKT 1	717	789	0.04016	115.2994	7LUTESVIL 345.00 - 7ST FRANC 345.00 345KV CKT 1
FDNS	00NR	5	16WP	G15_033	FROM->TO	G14-057T 345.00 - SUNNYSIDE 345KV CKT 1	717	789	0.04212	115.2993	GEN600001 2-SHERBURNE CNTY G2
FDNS	00NR	5	20WP	G15_033	FROM->TO	G14-057T 345.00 - SUNNYSIDE 345KV CKT 1	717	789	0.04018	115.2981	P12:161:AEPW:CHAMSPR5:FARMING5
FDNS	00NR	5	20WP	G15_033	FROM->TO	G14-057T 345.00 - SUNNYSIDE 345KV CKT 1	717	789	0.04018	115.2955	GEN515042 1-SEMINOLE 3G
FDNS	00NR	5	20WP	G15_033	FROM->TO	G14-057T 345.00 - SUNNYSIDE 345KV CKT 1	717	789	0.04018	115.2904	GEN334392 1-EXXON MOBIL IPP 1
FDNS	00NR	5	20WP	G15_033	FROM->TO	G14-057T 345.00 - SUNNYSIDE 345KV CKT 1	717	789	0.03986	115.2898	P12:138:OKGE:3TERM27
FDNS	00NR	5	20WP	G15_033	FROM->TO	G14-057T 345.00 - SUNNYSIDE 345KV CKT 1	717	789	0.04003	115.2889	G13-010T 345.00 - SPEARVILLE 345KV CKT 1
FDNS	00NR	5	20WP	G15_033	FROM->TO	G14-057T 345.00 - SUNNYSIDE 345KV CKT 1	717	789	0.04047	115.2884	OMPA-WALTERS - WALTERS 69KV CKT 1
FDNS	00NR	5	20WP	G15_033	FROM->TO	G14-057T 345.00 - SUNNYSIDE 345KV CKT 1	717	789	0.04047	115.2884	OMPA-WALTERS - WALTERS 69KV CKT 1
FDNS	00NR	5	20WP	G15_033	FROM->TO	G14-057T 345.00 - SUNNYSIDE 345KV CKT 1	717	789	0.0401	115.2883	MCNAB REC - Turk 115 115KV CKT 1
FDNS	00NR	5	20WP	G15_033	FROM->TO	G14-057T 345.00 - SUNNYSIDE 345KV CKT 1	717	789	0.0401	115.2883	TURK (TURK 1) 138/115/13.2KV TRANSFORMER CKT 1
FDNS	00NR	5	20WP	G15_033	FROM->TO	G14-057T 345.00 - SUNNYSIDE 345KV CKT 1	717	789	0.0401	115.2883	TURK (TURK 1) 138/115/13.2KV TRANSFORMER CKT 1
FDNS	00NR	5	20WP	G15_033	FROM->TO	G14-057T 345.00 - SUNNYSIDE 345KV CKT 1	717	789	0.03882	115.2839	FINNEY SWITCHING STATION - WALKTAP7 345.00 345KV CKT 1
FDNS	00NR	5	20WP	G15_033	FROM->TO	G14-057T 345.00 - SUNNYSIDE 345KV CKT 1	717	789	0.03882	115.2839	FINNEY SWITCHING STATION - WALKTAP7 345.00 345KV CKT 1
FDNS	00NR	5	20WP	G15_033	FROM->TO	G14-057T 345.00 - SUNNYSIDE 345KV CKT 1	717	789	0.04029	115.2834	P12:69:WFEC-AEPW:COMANCH2:WALTRS-2
FDNS	00NR	5	20WP	G15_033	FROM->TO	G14-057T 345.00 - SUNNYSIDE 345KV CKT 1	717	789	0.04018	115.2828	GEN334393 1-EXXON MOBIL IPP 2
FDNS	00NR	5	20WP	G15_033	FROM->TO	G14-057T 345.00 - SUNNYSIDE 345KV CKT 1	717	789	0.04018	115.2828	GEN334394 1-EXXON MOBIL IPP 3
FDNS	00NR	5	20WP	G15_033	FROM->TO	G14-057T 345.00 - SUNNYSIDE 345KV CKT 1	717	789	0.04014	115.2828	SWISSVALE - WEST GARDNER 345KV CKT 1
FDNS	00NR	5	16WP	G15_033	FROM->TO	G14-057T 345.00 - SUNNYSIDE 345KV CKT 1	717	789	0.04212	115.2793	GEN523971 1-HARRINGTON GEN #1 24 KV
FDNS	00NR	5	16WP	G15_033	FROM->TO	G14-057T 345.00 - SUNNYSIDE 345KV CKT 1	717	789	0.04212	115.2793	GEN523973 1-HARRINGTON GEN #3 24 KV
FDNS	00NR	5	16WP	G15_033	FROM->TO	G14-057T 345.00 - SUNNYSIDE 345KV CKT 1	717	789	0.04212	115.2792	GEN523972 1-HARRINGTON GEN #2 24 KV
FDNS	00NR	5	20WP	G15_033	FROM->TO	G14-057T 345.00 - SUNNYSIDE 345KV CKT 1	717	789	0.04027	115.2722	LASALLE - STONEWAL LH138.00 138KV CKT 1
FDNS	00NR	5	20WP	G15_033	FROM->TO	G14-057T 345.00 - SUNNYSIDE 345KV CKT 1	717	789	0.03979	115.2722	ARBUCKLE - VANOSTP4 138.00 138KV CKT 1
FDNS	00NR	5	20WP	G15_033	FROM->TO	G14-057T 345.00 - SUNNYSIDE 345KV CKT 1	717	789	0.04015	115.269	EMPORIA ENERGY CENTER - SWISSVALE 345KV CKT 1
FDNS	00NR	5	20WP	G15_033	FROM->TO	G14-057T 345.00 - SUNNYSIDE 345KV CKT 1	717	789	0.04022	115.2626	CORNVILLE - NORGE ROAD 138KV CKT 1
FDNS	00NR	5	20WP	G15_033	FROM->TO	G14-057T 345.00 - SUNNYSIDE 345KV CKT 1	717	789	0.04022	115.2626	CORNVILLE - NORGE ROAD 138KV CKT 1
FDNS	00NR	5	20WP	G15_033	FROM->TO	G14-057T 345.00 - SUNNYSIDE 345KV CKT 1	717	789	0.04778	115.2617	TUCO INTERCHANGE - TUCO_2 345.00 345KV CKT 1
FDNS	00NR	5	20WP	G15_033	FROM->TO	G14-057T 345.00 - SUNNYSIDE 345KV CKT 1	717	789	0.04015	115.2606	G14_001T 345.00 - WICHITA 345KV CKT 1
FDNS	00NR	5	20WP	G15_033	FROM->TO	G14-057T 345.00 - SUNNYSIDE 345KV CKT 1	717	789	0.04018	115.2597	ST FRANCIS - ST FRANCIS 1 161KV CKT Z1
FDNS	00NR	5	20WP	G15_033	FROM->TO	G14-057T 345.00 - SUNNYSIDE 345KV CKT 1	717	789	0.04018	115.2596	ST FRANCIS 161/16.0KV TRANSFORMER CKT 1
FDNS	00NR	5	20WP	G15_033	FROM->TO	G14-057T 345.00 - SUNNYSIDE 345KV CKT 1	717	789	0.04022	115.2593	CORNVILLE - NORTH 29TH CHICKASHA 138KV CKT 1
FDNS	00NR	5	20WP	G15_033	FROM->TO	G14-057T 345.00 - SUNNYSIDE 345KV CKT 1	717	789	0.0401	115.258	DRAPER LAKE - SEMINOLE 345KV CKT 1
FDNS	00NR	5	20WP	G15_033	FROM->TO	G14-057T 345.00 - SUNNYSIDE 345KV CKT 1	717	789	0.0401	115.258	DRAPER LAKE - SEMINOLE 345KV CKT 2
FDNS	00NR	5	20WP	G15_033	FROM->TO	G14-057T 345.00 - SUNNYSIDE 345KV CKT 1	717	789	0.04018	115.2574	GEN509394 1-FLINT CREEK
FDNS	00NR	5	20WP	G15_033	FROM->TO	G14-057T 345.00 - SUNNYSIDE 345KV CKT 1	717	789	0.04027	115.2572	STONEWAL LH138.00 - TUPELO TAP 138KV CKT 1
FDNS	00NR	5	20WP	G15_033	FROM->TO	G14-057T 345.00 - SUNNYSIDE 345KV CKT 1	717	789	0.04018	115.2568	SABINE 230/22.0KV TRANSFORMER CKT 1
FDNS	00NR	5	20WP	G15_033	FROM->TO	G14-057T 345.00 - SUNNYSIDE 345KV CKT 1	717	789	0.04002	115.2551	CLINTON JUNCTION - CLINTON NATURAL GAS TAP 138KV CKT 1
FDNS	00NR	5	20WP	G15_033	FROM->TO	G14-057T 345.00 - SUNNYSIDE 345KV CKT 1	717	789	0.04018	115.2523	GEN501972 1-EVANGELINE UNIT 7-2
FDNS	00NR	5	20WP	G15_033	FROM->TO	G14-057T 345.00 - SUNNYSIDE 345KV CKT 1	717	789	0.04018	115.2522	GEN501971 1-EVANGELINE UNIT 7-1
FDNS	00NR	5	20WP	G15_033	FROM->TO	G14-057T 345.00 - SUNNYSIDE 345KV CKT 1	717	789	0.04015	115.2502	LAKEOVER - MCADAMS 500KV CKT 1
FDNS	00NR	5	20WP	G15_033	FROM->TO	G14-057T 345.00 - SUNNYSIDE 345KV CKT 1	717	789	0.04014	115.2481	ENOWILT - LONE OAK 138KV CKT 1
FDNS	00NR	5	20WP	G15_033	FROM->TO	G14-057T 345.00 - SUNNYSIDE 345KV CKT 1	717	789	0.04019	115.2476	FRANKLIN - FRANKLIN SW 138KV CKT 1
FDNS	00NR	5	20WP	G15_033	FROM->TO	G14-057T 345.00 - SUNNYSIDE 345KV CKT 1	717	789	0.04017	115.2471	FLETCHER - MARLOW JCT 69KV CKT 1
FDNS	00NR	5	20WP	G15_033	FROM->TO	G14-057T 345.00 - SUNNYSIDE 345KV CKT 1	717	789	0.04018	115.2457	P12:138:AEPW:R.S.S-4:T.P.S.-4
FDNS	00NR	5	20WP	G15_033	FROM->TO	G14-057T 345.00 - SUNNYSIDE 345KV CKT 1	717	789	0.04018	115.2421	P12:138:OKGE:3TERM12
FDNS	00NR	5	20WP	G15_033	FROM->TO	G14-057T 345.00 - SUNNYSIDE 345KV CKT 1	717	789	0.04014	115.2395	ENOWILT - SARDIS 138KV CKT 1
FDNS	00NR	5	16WP	G15_033	FROM->TO	G14-057T 345.00 - SUNNYSIDE 345KV CKT 1	717	789	0.04212	115.2363	GEN527901 1-HOBBS PLANT #1 (CT)
FDNS	00NR	5	16WP	G15_033	FROM->TO	G14-057T 345.00 - SUNNYSIDE 345KV CKT 1	717	789	0.04212	115.2363	GEN527902 1-HOBBS PLANT #2 (CT)
FDNS	00NR	5	20WP	G15_033	FROM->TO	G14-057T 345.00 - SUNNYSIDE 345KV CKT 1	717	789	0.04037	115.2296	CIMARRON - NORTHWEST 345KV CKT 1
FDNS	00NR	5	20WP	G15_033	FROM->TO	G14-057T 345.00 - SUNNYSIDE 345KV CKT 1	717	789	0.04018	115.2287	GEN501912 1-ACADIA UNIT CT1B
FDNS	00NR	5	20WP	G15_033	FROM->TO	G14-057T 345.00 - SUNNYSIDE 345KV CKT 1	717	789	0.04018	115.2287	GEN506749 1-EASTMAN GENERATION A
FDNS	00NR	5	20WP	G15_033	FROM->TO	G14-057T 345.00 - SUNNYSIDE 345KV CKT 1	717	789	0.04018	115.2279	GEN501911 1-ACADIA UNIT CT1A
FDNS	00NR	5	20WP	G15_033	FROM->TO	G14-057T 345.00 - SUNNYSIDE 345KV CKT 1	717	789	0.04015	115.2242	8WNEWMADRID 500.00 - DELL 500 500KV CKT 1
FDNS	00NR	5	20WP	G15_033	FROM->TO	G14-057T 345.00 - SUNNYSIDE 345KV CKT 1	717	789	0.04018	115.222	P12:138:AEPW:R.S.S.-4:R:96YALE-4
FDNS	00NR	5	20WP	G15_033	FROM->TO	G14-057T 345.00 - SUNNYSIDE 345KV CKT 1	717	789	0.04016	115.2202	GRAND ISLAND - MCCOOL 345KV CKT 1
FDNS	00NR	5	20WP	G15_033	FROM->TO	G14-057T 345.00 - SUNNYSIDE 345KV CKT 1	717	789	0.04013	115.2189	MCADAMS - WOLF CREEK 500KV CKT 1
FDNS	00NR	5	20WP	G15_033	FROM->TO	G14-057T 345.00 - SUNNYSIDE 345KV CKT 1	717	789	0.03985	115.2176	NOBLE - PURCELL4 138.00 138KV CKT 1
FDNS	00NR	5	20WP	G15_033	FROM->TO	G14-057T 345.00 - SUNNYSIDE 345KV CKT 1	717	789	0.04013	115.217	LACYGNE - NEOSHO 345KV CKT 1
FDNS	00NR	5	20WP	G15_033	FROM->TO	G14-057T 345.00 - SUNNYSIDE 345KV CKT 1	717	789	0.04018	115.2151	NELSON 230/24.0KV TRANSFORMER CKT 1
FDNS	00NR	5	20WP	G15_033	FROM->TO	G14-057T 345.00 - SUNNYSIDE 345KV CKT 1	717	789	0.04012	115.2058	AMITY SS - MURFREESBORO EAST (AECC) 115KV CKT 1
FDNS	00NR	5	20WP	G15_033	FROM->TO	G14-057T 345.00 - SUNNYSIDE 345KV CKT 1	717	789	0.04018	115.2034	GEN336242 1-1NMIL ST1 18.000
FDNS	00NR	5	20WP	G15_033	FROM->TO	G14-057T 345.00 - SUNNYSIDE 345KV CKT 1	717	789	0.04003	115.2017	Canadian Pump Station - REDROCKRD4 138.00 138KV CKT 1
FDNS	00NR	5	20WP	G15_033	FROM->TO	G14-057T 345.00 - SUNNYSIDE 345KV CKT 1	717	789	0.04017	115.2015	P12:138:WFEC-AEPW:ELKCTY-4:ERICK4
FDNS	00NR	5	20WP	G15_033	FROM->TO	G14-057T 345.00 - SUNNYSIDE 345KV CKT 1	717	789	0.04018	115.2011	P12:138:AEPW:MOHAWK4:T.NO--4
FDNS	00NR	5	20WP	G15_033	FROM->TO	G14-057T 345.00 - SUNNYSIDE 345KV CKT 1	717	789	0.04014	115.1999	CLAYTON - SARDIS 138KV CKT 1
FDNS	00NR	5	20WP	G15_033	FROM->TO	G14-057T 345.00 - SUNNYSIDE 345KV CKT 1	717	789	0.04018	115.1989	ST FRANCIS 345/161KV TRANSFORMER CKT 1
FDNS	00NR	5	20WP	G15_033	FROM->TO	G14-057T 345.00 - SUNNYSIDE 345KV CKT 1	717	789	0.04018	115.1892	MARIETTA - MARIETTA4 138.00 138KV CKT 1
FDNS	00NR	5	20WP	G15_033	FROM->TO	G14-057T 345.00 - SUNNYSIDE 345KV CKT 1	717	789	0.04018	115.1886	ESSEX UNIT 2 500/18.0KV TRANSFORMER CKT 1
FDNS	00NR	5	20WP	G15_033	FROM->TO	G14-057T 345.00 - SUNNYSIDE 345KV CKT 1	717	789	0.04015	115.1885	LAYFLD8 500.00 (LAYFLD AUTO) 500/230/13.8KV TRANSFORMER CKT 1
FDNS	00NR	5	20WP	G15_033	FROM->TO	G14-057T 345.00 - SUNNYSIDE 345KV CKT 1	717	789	0.04015	115.1885	LAYFLD8 500.00 (LAYFLD AUTO) 500/230/13.8KV TRANSFORMER CKT 1
FDNS	00NR	5	20WP	G15_033	FROM->TO	G14-057T 345.00 - SUNNYSIDE 345KV CKT 1	717	789	0.04018	115.1818	GEN515041 1-SEMINOLE 2G
FDNS	00NR	5	20WP	G15_033	FROM->TO	G14-057T 345.00 - SUNNYSIDE 345KV CKT 1	717	789	0.04018	115.1814	SABINE 138/22.0KV TRANSFORMER CKT 1
FDNS	00NR	5	20WP	G15_033	FROM->TO	G14-057T 345.00 - SUNNYSIDE 345KV CKT 1	717	789	0.04036	115.1777	CRINER - PAYNE 138.00 138KV CKT 1
FDNS	00NR	5	20WP	G15_033	FROM->TO	G14-057T 345.00 - SUNNYSIDE 345KV CKT 1	717	789	0.04014	115.1761	P12:138:AEPW-SWPA:LONEOAK4:BRKNBW4
FDNS	00NR	5	16WP	G15_033	FROM->TO	G14-057T 345.00 - SUNNYSIDE 345KV CKT 1	717	789	0.04212	115.175	GEN629075 1-OTTUMWA GENERATOR FOR OTTUMWA UNIT NO 1
FDNS	00NR	5	20WP	G15_033	FROM->TO	G14-057T 345.00 - SUNNYSIDE 345KV CKT 1	717	789	0.04018	115.1747	GEN338146 1-INDEPENDENCE UNIT #2
FDNS	00NR	5	20WP	G15_033	FROM->TO	G14-057T 345.00 - SUNNYSIDE 345KV CKT 1	717	789	0.04017	115.173	7JASPER 345.00 - MORGAN 345KV CKT 1
FDNS	00NR	5	20WP	G15_033	FROM->TO	G14-057T 345.00 - SUNNYSIDE 345KV CKT 1	717	789	0.0408	115.1661	DUNCAN - DUNCHERTP4 138.00 138KV CKT 1
FDNS	00NR	5	20WP	G15_033	FROM->TO	G14-057T 345.00 - SUNNYSIDE 345KV CKT 1	717	789	0.0408	115.1661	DUNCAN - DUNCHERTP4 138.00 138KV CKT 1

SOLUTION	GROUP	SCENARIO	SEASON	SOURCE	DIRECTION	MONITORED ELEMENT	RATEA (MVA)	RATEB(MVA)	TDF	TC%LOADING (% MVA)	CONTINGENCY
FDNS	00NR	5	20WP	G15_033	FROM->TO	G14-057T 345.00 - SUNNYSIDE 345KV CKT 1	717	789	0.0408	115.1661	DUNCAN EASTSIDE - DUNCHERTP4 138.00 138KV CKT 1
FDNS	00NR	5	20WP	G15_033	FROM->TO	G14-057T 345.00 - SUNNYSIDE 345KV CKT 1	717	789	0.04014	115.166	CLAYTON - NASHOBA 138KV CKT 1
FDNS	00NR	5	20WP	G15_033	FROM->TO	G14-057T 345.00 - SUNNYSIDE 345KV CKT 1	717	789	0.04012	115.158	MURFREESBORO 138/115KV TRANSFORMER CKT 1
FDNS	00NR	5	20WP	G15_033	FROM->TO	G14-057T 345.00 - SUNNYSIDE 345KV CKT 1	717	789	0.04012	115.1578	MURFREESBORO EAST (AECC) - MURFREESBORO SOUTH 115KV CKT 1
FDNS	00NR	5	20WP	G15_033	FROM->TO	G14-057T 345.00 - SUNNYSIDE 345KV CKT 1	717	789	0.04012	115.1569	MURFREESBORO - SOUTH NASHVILLE 138KV CKT 1
FDNS	00NR	5	20WP	G15_033	FROM->TO	G14-057T 345.00 - SUNNYSIDE 345KV CKT 1	717	789	0.04012	115.1569	MURFREESBORO - SOUTH NASHVILLE 138KV CKT 1
FDNS	00NR	5	20WP	G15_033	FROM->TO	G14-057T 345.00 - SUNNYSIDE 345KV CKT 1	717	789	0.04012	115.1549	G1524G1525 345.00 - WICHITA 345KV CKT 1
FDNS	00NR	5	20WP	G15_033	FROM->TO	G14-057T 345.00 - SUNNYSIDE 345KV CKT 1	717	789	0.04012	115.1549	G1524G1525 345.00 - WICHITA 345KV CKT 2
FDNS	00NR	5	20WP	G15_033	FROM->TO	G14-057T 345.00 - SUNNYSIDE 345KV CKT 1	717	789	0.04014	115.1529	BETHEL - NASHOBA 138KV CKT 1
FDNS	00NR	5	20WP	G15_033	FROM->TO	G14-057T 345.00 - SUNNYSIDE 345KV CKT 1	717	789	0.04013	115.1514	P12:138:AEPW:OKMULGE4:R.S.S-4
FDNS	00NR	5	20WP	G15_033	FROM->TO	G14-057T 345.00 - SUNNYSIDE 345KV CKT 1	717	789	0.03994	115.1481	ARBUCKLE - MILLCREEK 138KV CKT 1
FDNS	00NR	5	20WP	G15_033	FROM->TO	G14-057T 345.00 - SUNNYSIDE 345KV CKT 1	717	789	0.04016	115.1475	MCCOOL - MOORE 345KV CKT 1
FDNS	00NR	5	20WP	G15_033	FROM->TO	G14-057T 345.00 - SUNNYSIDE 345KV CKT 1	717	789	0.04018	115.147	ESSEX UNIT 2 500/18.0KV TRANSFORMER CKT 1
FDNS	00NR	5	16WP	G15_033	FROM->TO	G14-057T 345.00 - SUNNYSIDE 345KV CKT 1	717	789	0.04465	115.1462	GRAPEVINE 345.00 - POTTER COUNTY INTERCHANGE 345KV CKT 1
FDNS	00NR	5	16WP	G15_033	FROM->TO	G14-057T 345.00 - SUNNYSIDE 345KV CKT 1	717	789	0.04212	115.145	GEN563273 2-G15093_4 0.6900
FDNS	00NR	5	20WP	G15_033	FROM->TO	G14-057T 345.00 - SUNNYSIDE 345KV CKT 1	717	789	0.04018	115.1444	GEN337766 1-TRACTEBEL UNIT S1
FDNS	00NR	5	16WP	G15_033	FROM->TO	G14-057T 345.00 - SUNNYSIDE 345KV CKT 1	717	789	0.04465	115.1436	CHISHOLM7 345.00 - GRAPEVINE 345.00 345KV CKT 1
FDNS	00NR	5	20WP	G15_033	FROM->TO	G14-057T 345.00 - SUNNYSIDE 345KV CKT 1	717	789	0.0401	115.13	SEMINOLE (SEMINOL2) 345/138/14.4KV TRANSFORMER CKT 1
FDNS	00NR	5	20WP	G15_033	FROM->TO	G14-057T 345.00 - SUNNYSIDE 345KV CKT 1	717	789	0.04017	115.1199	P12:138:OKGE:3TERM20
FDNS	00NR	5	20WP	G15_033	FROM->TO	G14-057T 345.00 - SUNNYSIDE 345KV CKT 1	717	789	0.04036	115.1158	COLE - CRINER 138KV CKT 1
FDNS	00NR	5	20WP	G15_033	FROM->TO	G14-057T 345.00 - SUNNYSIDE 345KV CKT 1	717	789	0.04029	115.1097	COMANCHE - WALTERS 69KV CKT 1
FDNS	00NR	5	16WP	G15_033	FROM->TO	G14-057T 345.00 - SUNNYSIDE 345KV CKT 1	717	789	0.04212	115.0168	GEN635214 4-NEAL UNIT 4
FDNS	00NR	5	16WP	G15_033	FROM->TO	G14-057T 345.00 - SUNNYSIDE 345KV CKT 1	717	789	0.04212	115.0043	SHERBURNE CO 345/24.0KV TRANSFORMER CKT 1
FDNS	00NR	5	16WP	G15_033	FROM->TO	G14-057T 345.00 - SUNNYSIDE 345KV CKT 1	717	789	0.04212	114.9962	GEN563043 1-G15068_4 0.6900
FDNS	00NR	5	16WP	G15_033	FROM->TO	G14-057T 345.00 - SUNNYSIDE 345KV CKT 1	717	789	0.04212	114.9688	GEN563202 1-G15085_3 0.5500
FDNS	00NR	5	16WP	G15_033	FROM->TO	G14-057T 345.00 - SUNNYSIDE 345KV CKT 1	717	789	0.04212	114.9261	GEN526333 1-JONES GEN #3 21 KV
FDNS	00NR	5	16WP	G15_033	FROM->TO	G14-057T 345.00 - SUNNYSIDE 345KV CKT 1	717	789	0.04212	114.9261	GEN526334 1-JONES_4 116.500
FDNS	00NR	5	16WP	G15_033	FROM->TO	G14-057T 345.00 - SUNNYSIDE 345KV CKT 1	717	789	0.04212	114.9216	GEN525844 1-ELK_1 118.000
FDNS	00NR	5	16WP	G15_033	FROM->TO	G14-057T 345.00 - SUNNYSIDE 345KV CKT 1	717	789	0.04212	114.9153	GEN525845 1-ELK_2 1 138.00
FDNS	00NR	5	16WP	G15_033	FROM->TO	G14-057T 345.00 - SUNNYSIDE 345KV CKT 1	717	789	0.04212	114.8604	GEN600002 3-SHERBURNE CNTY G3
FDNS	00NR	5	16WP	G15_033	FROM->TO	G14-057T 345.00 - SUNNYSIDE 345KV CKT 1	717	789	0.04212	114.8441	GEN344225 1-1CAL G1 25.000
FDNS	00NR	5	16WP	G15_033	FROM->TO	G14-057T 345.00 - SUNNYSIDE 345KV CKT 1	717	789	0.04168	114.6979	JOHNSON COUNTY (JOHNCO) 345/138/13.8KV TRANSFORMER CKT 1
FDNS	00NR	5	16WP	G15_033	FROM->TO	G14-057T 345.00 - SUNNYSIDE 345KV CKT 1	717	789	0.04212	114.6894	GEN562590 1-G14_057_3 0.6900
FDNS	00NR	5	16WP	G15_033	FROM->TO	G14-057T 345.00 - SUNNYSIDE 345KV CKT 1	717	789	0.04212	114.6836	GEN525562 1-TOLK GEN #2 24 KV
FDNS	00NR	5	16WP	G15_033	FROM->TO	G14-057T 345.00 - SUNNYSIDE 345KV CKT 1	717	789	0.04212	114.6486	GEN527166 1-MUSTANG_6 118.000
FDNS	00NR	5	16WP	G15_033	FROM->TO	G14-057T 345.00 - SUNNYSIDE 345KV CKT 1	717	789	0.04212	114.635	GEN562685 1-G15_013_3 0.3550
FDNS	00NR	5	16WP	G15_033	FROM->TO	G14-057T 345.00 - SUNNYSIDE 345KV CKT 1	717	789	0.04192	114.6297	LYDIA - WELSH 345KV CKT 1
FDNS	00NR	5	16WP	G15_033	FROM->TO	G14-057T 345.00 - SUNNYSIDE 345KV CKT 1	717	789	0.04192	114.6297	LYDIA - WELSH 345KV CKT 1
FDNS	00NR	5	16WP	G15_033	FROM->TO	G14-057T 345.00 - SUNNYSIDE 345KV CKT 1	717	789	0.04212	114.602	GEN635023 3-WALTER SCOTT UNIT 3
FDNS	00NR	5	16WP	G15_033	FROM->TO	G14-057T 345.00 - SUNNYSIDE 345KV CKT 1	717	789	0.04212	114.5723	GEN562762 1-G15033_3 0.6900
FDNS	00NR	5	16WP	G15_033	FROM->TO	G14-057T 345.00 - SUNNYSIDE 345KV CKT 1	717	789	0.04212	114.5649	GEN562655 1-G14_074_3 0.6900
FDNS	00NR	5	16WP	G15_033	FROM->TO	G14-057T 345.00 - SUNNYSIDE 345KV CKT 1	717	789	0.04212	114.5496	GEN525561 1-TOLK GEN #1 24 KV
FDNS	00NR	5	16WP	G15_033	FROM->TO	G14-057T 345.00 - SUNNYSIDE 345KV CKT 1	717	789	0.04212	114.5169	GEN563272 1-G15093_3 0.6900
FDNS	00NR	5	20WP	G15_033	FROM->TO	G14-057T 345.00 - SUNNYSIDE 345KV CKT 1	717	789	0.04018	114.4672	OKLAUNION 345/13.2KV TRANSFORMER CKT 1
FDNS	00NR	5	20WP	G15_033	FROM->TO	G14-057T 345.00 - SUNNYSIDE 345KV CKT 1	717	789	0.03961	114.4406	P12:138:OKGE:3TERM39
FDNS	00NR	5	20WP	G15_033	FROM->TO	G14-057T 345.00 - SUNNYSIDE 345KV CKT 1	717	789	0.03957	114.3046	MAYSVILLE - PAOLI 138KV CKT 1
FDNS	00NR	5	20WP	G15_033	FROM->TO	G14-057T 345.00 - SUNNYSIDE 345KV CKT 1	717	789	0.04099	114.2958	STLN-DEMARC6 - SWEETWATER 230KV CKT 1
FDNS	00NR	5	20WP	G15_033	FROM->TO	G14-057T 345.00 - SUNNYSIDE 345KV CKT 1	717	789	0.04021	114.2759	DRAPER LAKE - MIDWEST TAP 138KV CKT 1
FDNS	00NR	5	20WP	G15_033	FROM->TO	G14-057T 345.00 - SUNNYSIDE 345KV CKT 1	717	789	0.04074	114.2755	GRAPEVINE INTERCHANGE - NICHOLS STATION 230KV CKT 1
FDNS	00NR	5	20WP	G15_033	FROM->TO	G14-057T 345.00 - SUNNYSIDE 345KV CKT 1	717	789	0.04074	114.2755	GRAPEVINE INTERCHANGE - NICHOLS STATION 230KV CKT 1
FDNS	00NR	5	20WP	G15_033	FROM->TO	G14-057T 345.00 - SUNNYSIDE 345KV CKT 1	717	789	0.04018	114.2754	GEN521103 1-BLUE CANYON WIND FARM
FDNS	00NR	5	20WP	G15_033	FROM->TO	G14-057T 345.00 - SUNNYSIDE 345KV CKT 1	717	789	0.04015	114.2693	HUGO POWER PLANT - VALLENT 138KV CKT 1
FDNS	00NR	5	20WP	G15_033	FROM->TO	G14-057T 345.00 - SUNNYSIDE 345KV CKT 1	717	789	0.04034	114.2671	NORTHWEST - SPRING CREEK 345KV CKT 1
FDNS	00NR	5	20WP	G15_033	FROM->TO	G14-057T 345.00 - SUNNYSIDE 345KV CKT 1	717	789	0.04014	114.2632	NORTHWEST TEXARKANA - WELSH 345KV CKT 1
FDNS	00NR	5	20WP	G15_033	FROM->TO	G14-057T 345.00 - SUNNYSIDE 345KV CKT 1	717	789	0.04014	114.2632	NORTHWEST TEXARKANA - WELSH 345KV CKT 1
FDNS	00NR	5	20WP	G15_033	FROM->TO	G14-057T 345.00 - SUNNYSIDE 345KV CKT 1	717	789	0.04034	114.2603	SOONER - SPRING CREEK 345KV CKT 1
FDNS	00NR	5	20WP	G15_033	FROM->TO	G14-057T 345.00 - SUNNYSIDE 345KV CKT 1	717	789	0.04023	114.2575	P12:138:OKGE:3TERM21
FDNS	00NR	5	20WP	G15_033	FROM->TO	G14-057T 345.00 - SUNNYSIDE 345KV CKT 1	717	789	0.04015	114.257	KEO EHV - WEST MEMPHIS 500 500KV CKT 1
FDNS	00NR	5	20WP	G15_033	FROM->TO	G14-057T 345.00 - SUNNYSIDE 345KV CKT 1	717	789	0.04018	114.2548	GEN511961 1-DEMPSEY-WTG10.7000
FDNS	00NR	5	20WP	G15_033	FROM->TO	G14-057T 345.00 - SUNNYSIDE 345KV CKT 1	717	789	0.04018	114.2538	GEN520812 1-ANADRK5
FDNS	00NR	5	20WP	G15_033	FROM->TO	G14-057T 345.00 - SUNNYSIDE 345KV CKT 1	717	789	0.04018	114.2537	GEN520813 1-ANADRK6
FDNS	00NR	5	20WP	G15_033	FROM->TO	G14-057T 345.00 - SUNNYSIDE 345KV CKT 1	717	789	0.04016	114.2519	DIANA - WELSH 345KV CKT 2
FDNS	00NR	5	20WP	G15_033	FROM->TO	G14-057T 345.00 - SUNNYSIDE 345KV CKT 1	717	789	0.04016	114.2519	DIANA - WELSH 345KV CKT 2
FDNS	00NR	5	20WP	G15_033	FROM->TO	G14-057T 345.00 - SUNNYSIDE 345KV CKT 1	717	789	0.04018	114.2512	GEN562483 1-G13_027_3 0.6900
FDNS	00NR	5	20WP	G15_033	FROM->TO	G14-057T 345.00 - SUNNYSIDE 345KV CKT 1	717	789	0.04018	114.2511	GEN562691 1-G15_015_3 0.6900
FDNS	00NR	5	20WP	G15_033	FROM->TO	G14-057T 345.00 - SUNNYSIDE 345KV CKT 1	717	789	0.04018	114.2511	GEN600014 4-BLACK DOG GEN 4
FDNS	00NR	5	20WP	G15_033	FROM->TO	G14-057T 345.00 - SUNNYSIDE 345KV CKT 1	717	789	0.04009	114.251	DOLET HILLS 345/230KV TRANSFORMER CKT 1
FDNS	00NR	5	20WP	G15_033	FROM->TO	G14-057T 345.00 - SUNNYSIDE 345KV CKT 1	717	789	0.04018	114.2483	GEN629067 1-EMERY GAS TURBINE 1
FDNS	00NR	5	20WP	G15_033	FROM->TO	G14-057T 345.00 - SUNNYSIDE 345KV CKT 1	717	789	0.04018	114.247	GEN562772 1-G15034_3 0.6900
FDNS	00NR	5	20WP	G15_033	FROM->TO	G14-057T 345.00 - SUNNYSIDE 345KV CKT 1	717	789	0.04018	114.2444	GEN672303 3-BOUNDARY DAM GENERATOR 3
FDNS	00NR	5	20WP	G15_033	FROM->TO	G14-057T 345.00 - SUNNYSIDE 345KV CKT 1	717	789	0.04018	114.2444	GEN672304 4-BOUNDARY DAM GENERATOR 4
FDNS	00NR	5	20WP	G15_033	FROM->TO	G14-057T 345.00 - SUNNYSIDE 345KV CKT 1	717	789	0.04018	114.2444	GEN672305 5-BOUNDARY DAM GENERATOR 5
FDNS	00NR	5	20WP	G15_033	FROM->TO	G14-057T 345.00 - SUNNYSIDE 345KV CKT 1	717	789	0.04018	114.2442	GEN615032 2-PLEASANT VALLEY
FDNS	00NR	5	20WP	G15_033	FROM->TO	G14-057T 345.00 - SUNNYSIDE 345KV CKT 1	717	789	0.04018	114.2416	GEN525493 1-PLANT X GEN #3
FDNS	00NR	5	20WP	G15_033	FROM->TO	G14-057T 345.00 - SUNNYSIDE 345KV CKT 1	717	789	0.04016	114.2398	DIANA - WELSH 345KV CKT 1
FDNS	00NR	5	20WP	G15_033	FROM->TO	G14-057T 345.00 - SUNNYSIDE 345KV CKT 1	717	789	0.04016	114.2398	DIANA - WELSH 345KV CKT 1
FDNS	00NR	5	16WP	G15_033	FROM->TO	G14-057T 345.00 - SUNNYSIDE 345KV CKT 1	717	789	0.04212	114.2365	GEN527903 1-HOBBS PLANT #3 (ST)
FDNS	00NR	5	20WP	G15_033	FROM->TO	G14-057T 345.00 - SUNNYSIDE 345KV CKT 1	717	789	0.03957	114.2293	MAYSVILLE - MAYSVLT4 138.00 138KV CKT 1
FDNS	00NR	5	20WP	G15_033	FROM->TO	G14-057T 345.00 - SUNNYSIDE 345KV CKT 1	717	789	0.04012	114.2249	WELSH - WILKES 345KV CKT 1

SOLUTION	GROUP	SCENARIO	SEASON	SOURCE	DIRECTION	MONITORED ELEMENT	RATEA (MVA)	RATEB(MVA)	TDF	TC%LOADING (% MVA)	CONTINGENCY
FDNS	00NR	5	20WP	G15_033	FROM->TO	G14-057T 345.00 - SUNNYSIDE 345KV CKT 1	717	789	0.04012	114.2249	WELSH - WILKES 345KV CKT 1
FDNS	00NR	5	20WP	G15_033	FROM->TO	G14-057T 345.00 - SUNNYSIDE 345KV CKT 1	717	789	0.04018	114.2241	GEN562688 1-G15_014_3 0.6900
FDNS	00NR	5	20WP	G15_033	FROM->TO	G14-057T 345.00 - SUNNYSIDE 345KV CKT 1	717	789	0.04018	114.2216	GEN562074 1-G1149G1504 0.6900
FDNS	00NR	5	20WP	G15_033	FROM->TO	G14-057T 345.00 - SUNNYSIDE 345KV CKT 1	717	789	0.04018	114.2176	GEN530690 1-PRWINDG1 0.6900
FDNS	00NR	5	20WP	G15_033	FROM->TO	G14-057T 345.00 - SUNNYSIDE 345KV CKT 1	717	789	0.04018	114.2172	GEN600017 C-LS POWER CT
FDNS	00NR	5	20WP	G15_033	FROM->TO	G14-057T 345.00 - SUNNYSIDE 345KV CKT 1	717	789	0.04018	114.2169	P12:069:OKGE:3TERM42
FDNS	00NR	5	20WP	G15_033	FROM->TO	G14-057T 345.00 - SUNNYSIDE 345KV CKT 1	717	789	0.04018	114.208	LEBANON - TEXOMA JCT 138KV CKT 1
FDNS	00NR	5	20WP	G15_033	FROM->TO	G14-057T 345.00 - SUNNYSIDE 345KV CKT 1	717	789	0.04018	114.2019	GEN672392 1-NBECGT1G 18.000
FDNS	00NR	5	20WP	G15_033	FROM->TO	G14-057T 345.00 - SUNNYSIDE 345KV CKT 1	717	789	0.04018	114.2005	GEN563052 1-G15069_3 0.6900
FDNS	00NR	5	20WP	G15_033	FROM->TO	G14-057T 345.00 - SUNNYSIDE 345KV CKT 1	717	789	0.04015	114.1967	P12:138:WFEC:MSL11
FDNS	00NR	5	20WP	G15_033	FROM->TO	G14-057T 345.00 - SUNNYSIDE 345KV CKT 1	717	789	0.04015	114.1967	P12:138:WFEC-AEPW:PHAROAH4:LONEOAK4
FDNS	00NR	5	20WP	G15_033	FROM->TO	G14-057T 345.00 - SUNNYSIDE 345KV CKT 1	717	789	0.04018	114.1926	GEN600046 1-MECST
FDNS	00NR	5	20WP	G15_033	FROM->TO	G14-057T 345.00 - SUNNYSIDE 345KV CKT 1	717	789	0.04015	114.191	GLASSES - MADILL INDUSTRIAL TAP 138KV CKT 1
FDNS	00NR	5	20WP	G15_033	FROM->TO	G14-057T 345.00 - SUNNYSIDE 345KV CKT 1	717	789	0.04018	114.1903	GEN562432 1-G13-030 0.6900
FDNS	00NR	5	20WP	G15_033	FROM->TO	G14-057T 345.00 - SUNNYSIDE 345KV CKT 1	717	789	0.04018	114.1892	GEN629071 1-BURLINGTON GENERATOR FOR UNIT NO 1 E
FDNS	00NR	5	20WP	G15_033	FROM->TO	G14-057T 345.00 - SUNNYSIDE 345KV CKT 1	717	789	0.04018	114.1838	GEN560183 1-REDHIL-WTG1 12.000
FDNS	00NR	5	20WP	G15_033	FROM->TO	G14-057T 345.00 - SUNNYSIDE 345KV CKT 1	717	789	0.04018	114.1837	GEN629070 2-BEAVER CHANNEL GENERATORFOR UNIT NO 2
FDNS	00NR	5	20WP	G15_033	FROM->TO	G14-057T 345.00 - SUNNYSIDE 345KV CKT 1	717	789	0.03987	114.1796	ARBUCKLE - SULPHR 4 138.00 138KV CKT 1
FDNS	00NR	5	20WP	G15_033	FROM->TO	G14-057T 345.00 - SUNNYSIDE 345KV CKT 1	717	789	0.04018	114.1781	GEN600047 1-MECCT1
FDNS	00NR	5	20WP	G15_033	FROM->TO	G14-057T 345.00 - SUNNYSIDE 345KV CKT 1	717	789	0.04038	114.1751	ALTUS JUNCTION - RUSSELL 138KV CKT 1
FDNS	00NR	5	20WP	G15_033	FROM->TO	G14-057T 345.00 - SUNNYSIDE 345KV CKT 1	717	789	0.04038	114.1751	ALTUS JUNCTION - RUSSELL 138KV CKT 1
FDNS	00NR	5	20WP	G15_033	FROM->TO	G14-057T 345.00 - SUNNYSIDE 345KV CKT 1	717	789	0.04018	114.1724	GEN515443 1-MNCOWND1 0.7000
FDNS	00NR	5	20WP	G15_033	FROM->TO	G14-057T 345.00 - SUNNYSIDE 345KV CKT 1	717	789	0.04018	114.1636	GEN562017 1-G11_022_3 0.6900
FDNS	00NR	5	20WP	G15_033	FROM->TO	G14-057T 345.00 - SUNNYSIDE 345KV CKT 1	717	789	0.03957	114.1634	MAYSVLT4 138.00 - PRAIRIE POINT 138KV CKT 1
FDNS	00NR	5	16WP	G15_033	FROM->TO	G14-057T 345.00 - SUNNYSIDE 345KV CKT 1	717	789	0.04212	114.1611	GEN635024 4-WALTER SCOTT UNIT 4
FDNS	00NR	5	20WP	G15_033	FROM->TO	G14-057T 345.00 - SUNNYSIDE 345KV CKT 1	717	789	0.04019	114.1606	P12:138:WFEC:MSL08
FDNS	00NR	5	20WP	G15_033	FROM->TO	G14-057T 345.00 - SUNNYSIDE 345KV CKT 1	717	789	0.03992	114.1595	SUNNYSIDE (SUNNYSD3) 345/138/13.8KV TRANSFORMER CKT 1
FDNS	00NR	5	20WP	G15_033	FROM->TO	G14-057T 345.00 - SUNNYSIDE 345KV CKT 1	717	789	0.04018	114.1589	BURLINGTON NO1 + NO 2 + NO 3 161/20.0KV TRANSFORMER CKT 1
FDNS	00NR	5	20WP	G15_033	FROM->TO	G14-057T 345.00 - SUNNYSIDE 345KV CKT 1	717	789	0.04018	114.1506	GEN615010 1-STANTON4
FDNS	00NR	5	20WP	G15_033	FROM->TO	G14-057T 345.00 - SUNNYSIDE 345KV CKT 1	717	789	0.04018	114.1488	GEN528361 1-MADDOX GEN #1
FDNS	00NR	5	20WP	G15_033	FROM->TO	G14-057T 345.00 - SUNNYSIDE 345KV CKT 1	717	789	0.04013	114.1485	HUGO (HUGO 1) 345/138/13.8KV TRANSFORMER CKT 1
FDNS	00NR	5	20WP	G15_033	FROM->TO	G14-057T 345.00 - SUNNYSIDE 345KV CKT 1	717	789	0.04018	114.1475	GEN615021 1-GRE-ER 14G 16.000
FDNS	00NR	5	20WP	G15_033	FROM->TO	G14-057T 345.00 - SUNNYSIDE 345KV CKT 1	717	789	0.04015	114.1424	CANEY CREEK - JOHNSON COUNTY 138KV CKT 1
FDNS	00NR	5	20WP	G15_033	FROM->TO	G14-057T 345.00 - SUNNYSIDE 345KV CKT 1	717	789	0.04018	114.1407	GEN524022 1-NICHOLS GEN #2
FDNS	00NR	5	20WP	G15_033	FROM->TO	G14-057T 345.00 - SUNNYSIDE 345KV CKT 1	717	789	0.04014	114.1374	OVEXFRMCCOVE
FDNS	00NR	5	20WP	G15_033	FROM->TO	G14-057T 345.00 - SUNNYSIDE 345KV CKT 1	717	789	0.04015	114.1328	GLASSES - RUSSETT 138KV CKT 1
FDNS	00NR	5	20WP	G15_033	FROM->TO	G14-057T 345.00 - SUNNYSIDE 345KV CKT 1	717	789	0.04012	114.1315	CARTER - CHICKASAW 138KV CKT 1
FDNS	00NR	5	20WP	G15_033	FROM->TO	G14-057T 345.00 - SUNNYSIDE 345KV CKT 1	717	789	0.03983	114.1185	MINGO - SETAB 345KV CKT 1
FDNS	00NR	5	20WP	G15_033	FROM->TO	G14-057T 345.00 - SUNNYSIDE 345KV CKT 1	717	789	0.03983	114.1185	MINGO - SETAB 345KV CKT 1
FDNS	00NR	5	20WP	G15_033	FROM->TO	G14-057T 345.00 - SUNNYSIDE 345KV CKT 1	717	789	0.04016	114.1162	CANADIAN RIVER - MCALESTER SOUTH 138KV CKT 1
FDNS	00NR	5	20WP	G15_033	FROM->TO	G14-057T 345.00 - SUNNYSIDE 345KV CKT 1	717	789	0.04016	114.1162	CANADIAN RIVER - MCALESTER SOUTH 138KV CKT 1
FDNS	00NR	5	20WP	G15_033	FROM->TO	G14-057T 345.00 - SUNNYSIDE 345KV CKT 1	717	789	0.04018	114.1148	INDEPENDENCE 500/26.0KV TRANSFORMER CKT 1
FDNS	00NR	5	20WP	G15_033	FROM->TO	G14-057T 345.00 - SUNNYSIDE 345KV CKT 1	717	789	0.04016	114.1142	CANADIAN RIVER () 345/138/13.8KV TRANSFORMER CKT 1
FDNS	00NR	5	20WP	G15_033	FROM->TO	G14-057T 345.00 - SUNNYSIDE 345KV CKT 1	717	789	0.04016	114.1142	CANADIAN RIVER () 345/138/13.8KV TRANSFORMER CKT 1
FDNS	00NR	5	20WP	G15_033	FROM->TO	G14-057T 345.00 - SUNNYSIDE 345KV CKT 1	717	789	0.04003	114.0876	ROCKY POINT - SPRINGDALE 138KV CKT 1
FDNS	00NR	5	20WP	G15_033	FROM->TO	G14-057T 345.00 - SUNNYSIDE 345KV CKT 1	717	789	0.04018	114.0863	GEN562902 1-G15052_3 0.6900
FDNS	00NR	5	20WP	G15_033	FROM->TO	G14-057T 345.00 - SUNNYSIDE 345KV CKT 1	717	789	0.04018	114.0852	GEN600067 9-HIGH BRIDGE
FDNS	00NR	5	20WP	G15_033	FROM->TO	G14-057T 345.00 - SUNNYSIDE 345KV CKT 1	717	789	0.04018	114.0725	P12:230:UMZB:# 112 #: NU IN SD. NU-RCDC & DRY CREEK XFMR
FDNS	00NR	5	20WP	G15_033	FROM->TO	G14-057T 345.00 - SUNNYSIDE 345KV CKT 1	717	789	0.04018	114.0719	RCDC EAST 4230.00 - RED CEDAR DC 230KV CKT 1
FDNS	00NR	5	20WP	G15_033	FROM->TO	G14-057T 345.00 - SUNNYSIDE 345KV CKT 1	717	789	0.03957	114.0719	PRAIRIE POINT - RATLIFF 138KV CKT 1
FDNS	00NR	5	20WP	G15_033	FROM->TO	G14-057T 345.00 - SUNNYSIDE 345KV CKT 1	717	789	0.04018	114.0694	GEN531447 1-HOLCOMB GENERATOR
FDNS	00NR	5	20WP	G15_033	FROM->TO	G14-057T 345.00 - SUNNYSIDE 345KV CKT 1	717	789	0.04015	114.0657	CHAMBER SPRINGS - CLARKSVILLE 345KV CKT 1
FDNS	00NR	5	20WP	G15_033	FROM->TO	G14-057T 345.00 - SUNNYSIDE 345KV CKT 1	717	789	0.04018	114.0603	GEN514805 1-SOONER UNIT 1
FDNS	00NR	5	20WP	G15_033	FROM->TO	G14-057T 345.00 - SUNNYSIDE 345KV CKT 1	717	789	0.04018	114.0562	GEN563242 1-G15090_3 0.6900
FDNS	00NR	5	20WP	G15_033	FROM->TO	G14-057T 345.00 - SUNNYSIDE 345KV CKT 1	717	789	0.04018	114.0405	GEN562587 1-G14_056_3 0.6900
FDNS	00NR	5	20WP	G15_033	FROM->TO	G14-057T 345.00 - SUNNYSIDE 345KV CKT 1	717	789	0.04015	114.0397	GRPRAR1-LNX3345.00 - YANKTON 345KV CKT Z
FDNS	00NR	5	20WP	G15_033	FROM->TO	G14-057T 345.00 - SUNNYSIDE 345KV CKT 1	717	789	0.04015	114.0394	GRPRAR1-LNX3345.00 - HOLT.CO3 345.00 345KV CKT 1
FDNS	00NR	5	20WP	G15_033	FROM->TO	G14-057T 345.00 - SUNNYSIDE 345KV CKT 1	717	789	0.04099	114.0372	CHISHOLM6 230.00 - SWEETWATER 230KV CKT 1
FDNS	00NR	5	20WP	G15_033	FROM->TO	G14-057T 345.00 - SUNNYSIDE 345KV CKT 1	717	789	0.04018	114.0362	GEN514806 1-SOONER UNIT 2
FDNS	00NR	5	20WP	G15_033	FROM->TO	G14-057T 345.00 - SUNNYSIDE 345KV CKT 1	717	789	0.03987	114.0349	JOLLYVILLE - SULPHR 4 138.00 138KV CKT 1
FDNS	00NR	5	20WP	G15_033	FROM->TO	G14-057T 345.00 - SUNNYSIDE 345KV CKT 1	717	789	0.04018	114.0242	GEN629072 4-LANSING GENERATOR FOR UNITS NO4 EIA CODE 1
FDNS	00NR	5	20WP	G15_033	FROM->TO	G14-057T 345.00 - SUNNYSIDE 345KV CKT 1	717	789	0.04018	114.0196	GEN562078 1-G11_051_3 0.6900
FDNS	00NR	5	20WP	G15_033	FROM->TO	G14-057T 345.00 - SUNNYSIDE 345KV CKT 1	717	789	0.04018	114.0029	GEN560331 1-G10-46 13.800
FDNS	00NR	5	20WP	G15_033	FROM->TO	G14-057T 345.00 - SUNNYSIDE 345KV CKT 1	717	789	0.04018	114.0022	GEN563062 1-G15071_3 0.6900
FDNS	00NR	5	20WP	G15_033	FROM->TO	G14-057T 345.00 - SUNNYSIDE 345KV CKT 1	717	789	0.04018	113.9938	GEN562802 1-G15039_3 0.3570
FDNS	00NR	5	20WP	G15_033	FROM->TO	G14-057T 345.00 - SUNNYSIDE 345KV CKT 1	717	789	0.04018	113.9776	GEN562882 1-G15047_3 0.6900
FDNS	00NR	5	20WP	G15_033	FROM->TO	G14-057T 345.00 - SUNNYSIDE 345KV CKT 1	717	789	0.04018	113.9722	GEN562269 1-G12-020-1 0.6900
FDNS	00NR	5	20WP	G15_033	FROM->TO	G14-057T 345.00 - SUNNYSIDE 345KV CKT 1	717	789	0.03987	113.9701	JOLLYVILLE - KERR MCGEE CIMARRON 138KV CKT 1
FDNS	00NR	5	20WP	G15_033	FROM->TO	G14-057T 345.00 - SUNNYSIDE 345KV CKT 1	717	789	0.04018	113.9641	GEN657749 1-YOUNG 1 GENERATOR
FDNS	00NR	5	20WP	G15_033	FROM->TO	G14-057T 345.00 - SUNNYSIDE 345KV CKT 1	717	789	0.04018	113.9586	GEN524285 1-WILDORADO WIND GEN
FDNS	00NR	5	20WP	G15_033	FROM->TO	G14-057T 345.00 - SUNNYSIDE 345KV CKT 1	717	789	0.04013	113.9534	CROCKETT - TENASKA RUSK COUNTY 345KV CKT 1
FDNS	00NR	5	20WP	G15_033	FROM->TO	G14-057T 345.00 - SUNNYSIDE 345KV CKT 1	717	789	0.04013	113.9487	LEBROCK - TENASKA RUSK COUNTY 345KV CKT 1
FDNS	00NR	5	20WP	G15_033	FROM->TO	G14-057T 345.00 - SUNNYSIDE 345KV CKT 1	717	789	0.04152	113.9326	P12:138:AEPW:112GORE4:SNYDER-4
FDNS	00NR	5	20WP	G15_033	FROM->TO	G14-057T 345.00 - SUNNYSIDE 345KV CKT 1	717	789	0.03987	113.9263	ARBWIND4 138.00 - KERR MCGEE CIMARRON 138KV CKT 1
FDNS	00NR	5	20WP	G15_033	FROM->TO	G14-057T 345.00 - SUNNYSIDE 345KV CKT 1	717	789	0.04018	113.9261	GEN562270 1-G12-020-2 0.6900
FDNS	00NR	5	20WP	G15_033	FROM->TO	G14-057T 345.00 - SUNNYSIDE 345KV CKT 1	717	789	0.04018	113.9193	GEN562812 1-G15040_3 0.3570
FDNS	00NR	5	20WP	G15_033	FROM->TO	G14-057T 345.00 - SUNNYSIDE 345KV CKT 1	717	789	0.04018	113.9136	GEN521112 1-ORME3 13.800
FDNS	00NR	5	20WP	G15_033	FROM->TO	G14-057T 345.00 - SUNNYSIDE 345KV CKT 1	717	789	0.04018	113.9121	GEN563132 1-G15078_3 0.3570
FDNS	00NR	5	20WP	G15_033	FROM->TO	G14-057T 345.00 - SUNNYSIDE 345KV CKT 1	717	789	0.04018	113.9085	GEN563102 1-G15075_3 0.5500

SOLUTION	GROUP	SCENARIO	SEASON	SOURCE	DIRECTION	MONITORED ELEMENT	RATEA (MVA)	RATEB(MVA)	TDF	TC%LOADING (% MVA)	CONTINGENCY
FDNS	00NR	5	20WP	G15_033	FROM->TO	G14-057T 345.00 - SUNNYSIDE 345KV CKT 1	717	789	0.04018	113.9017	GEN524023 1-NICHOLS GEN #3 22 KV
FDNS	00NR	5	20WP	G15_033	FROM->TO	G14-057T 345.00 - SUNNYSIDE 345KV CKT 1	717	789	0.04009	113.8928	BROWN - RUSSETT 138KV CKT 1
FDNS	00NR	5	20WP	G15_033	FROM->TO	G14-057T 345.00 - SUNNYSIDE 345KV CKT 1	717	789	0.04018	113.8701	GEN345671 2-1RUSH G2 18.000
FDNS	00NR	5	20WP	G15_033	FROM->TO	G14-057T 345.00 - SUNNYSIDE 345KV CKT 1	717	789	0.04018	113.8682	GEN345670 1-1RUSH G1 18.000
FDNS	00NR	5	20WP	G15_033	FROM->TO	G14-057T 345.00 - SUNNYSIDE 345KV CKT 1	717	789	0.03991	113.8607	CHICKASAW - TOTAL 138KV CKT 1
FDNS	00NR	5	20WP	G15_033	FROM->TO	G14-057T 345.00 - SUNNYSIDE 345KV CKT 1	717	789	0.04018	113.8582	GEN562974 1-G15060_5 0.6900
FDNS	00NR	5	20WP	G15_033	FROM->TO	G14-057T 345.00 - SUNNYSIDE 345KV CKT 1	717	789	0.04018	113.8481	GEN562973 1-G15060_4 0.6900
FDNS	00NR	5	20WP	G15_033	FROM->TO	G14-057T 345.00 - SUNNYSIDE 345KV CKT 1	717	789	0.04018	113.8446	GEN511962 2-RKYRDGW2-1 0.7000
FDNS	00NR	5	20WP	G15_033	FROM->TO	G14-057T 345.00 - SUNNYSIDE 345KV CKT 1	717	789	0.04018	113.8433	GEN524295 1-SPNSPUR_WND10.6900
FDNS	00NR	5	20WP	G15_033	FROM->TO	G14-057T 345.00 - SUNNYSIDE 345KV CKT 1	717	789	0.04018	113.8311	4SIOUX 1 138.00 138/18.0KV TRANSFORMER CKT 1
FDNS	00NR	5	20WP	G15_033	FROM->TO	G14-057T 345.00 - SUNNYSIDE 345KV CKT 1	717	789	0.04009	113.8238	RUSSETT - RUSSETT 138KV CKT 1
FDNS	00NR	5	20WP	G15_033	FROM->TO	G14-057T 345.00 - SUNNYSIDE 345KV CKT 1	717	789	0.04045	113.817	G15063_T 345.00 - MATHWSN7 345.00 345KV CKT 1
FDNS	00NR	5	20WP	G15_033	FROM->TO	G14-057T 345.00 - SUNNYSIDE 345KV CKT 1	717	789	0.04018	113.8045	GEN560105 1-G08-22 0.6900
FDNS	00NR	5	20WP	G15_033	FROM->TO	G14-057T 345.00 - SUNNYSIDE 345KV CKT 1	717	789	0.04018	113.7892	GEN563192 1-G15084_3 0.5500
FDNS	00NR	5	20WP	G15_033	FROM->TO	G14-057T 345.00 - SUNNYSIDE 345KV CKT 1	717	789	0.04018	113.7869	GEN681522 3-GENOA 3
FDNS	00NR	5	20WP	G15_033	FROM->TO	G14-057T 345.00 - SUNNYSIDE 345KV CKT 1	717	789	0.03997	113.7869	ROCKY POINT - SUNNYSIDE 138KV CKT 1
FDNS	00NR	5	20WP	G15_033	FROM->TO	G14-057T 345.00 - SUNNYSIDE 345KV CKT 1	717	789	0.04018	113.7834	EASTDC - ERCOT EQUIVALENCE 345KV CKT 1
FDNS	00NR	5	20WP	G15_033	FROM->TO	G14-057T 345.00 - SUNNYSIDE 345KV CKT 1	717	789	0.04005	113.7785	RUSSETT - SPRINGDALE 138KV CKT 1
FDNS	00NR	5	20WP	G15_033	FROM->TO	G14-057T 345.00 - SUNNYSIDE 345KV CKT 1	717	789	0.04021	113.774	ARKANSAS NUCLEAR ONE - FT SMITH 500KV CKT 1
FDNS	00NR	5	20WP	G15_033	FROM->TO	G14-057T 345.00 - SUNNYSIDE 345KV CKT 1	717	789	0.04021	113.774	ARKANSAS NUCLEAR ONE - FT SMITH 500KV CKT 1
FDNS	00NR	5	20WP	G15_033	FROM->TO	G14-057T 345.00 - SUNNYSIDE 345KV CKT 1	717	789	0.04018	113.7697	GEN562550 1-G14_040_3 0.6900
FDNS	00NR	5	20WP	G15_033	FROM->TO	G14-057T 345.00 - SUNNYSIDE 345KV CKT 1	717	789	0.04018	113.7687	GEN562512 1-G14_020_3 0.6900
FDNS	00NR	5	20WP	G15_033	FROM->TO	G14-057T 345.00 - SUNNYSIDE 345KV CKT 1	717	789	0.04018	113.7506	GEN562892 1-G15048_3 0.6900
FDNS	00NR	5	20WP	G15_033	FROM->TO	G14-057T 345.00 - SUNNYSIDE 345KV CKT 1	717	789	0.04018	113.7486	GEN527161 1-MUSTANG GEN #1
FDNS	00NR	5	20WP	G15_033	FROM->TO	G14-057T 345.00 - SUNNYSIDE 345KV CKT 1	717	789	0.04018	113.7486	GEN527162 1-MUSTANG GEN #2
FDNS	00NR	5	20WP	G15_033	FROM->TO	G14-057T 345.00 - SUNNYSIDE 345KV CKT 1	717	789	0.04019	113.743	P12:138:WFEC:MSL16
FDNS	00NR	5	20WP	G15_033	FROM->TO	G14-057T 345.00 - SUNNYSIDE 345KV CKT 1	717	789	0.04015	113.7355	P12:138:WFEC-AEPW:GOLDENSW4:CRAIGJT4
FDNS	00NR	5	20WP	G15_033	FROM->TO	G14-057T 345.00 - SUNNYSIDE 345KV CKT 1	717	789	0.04018	113.7181	GEN672321 1-SHAND GENERATOR 1
FDNS	00NR	5	20WP	G15_033	FROM->TO	G14-057T 345.00 - SUNNYSIDE 345KV CKT 1	717	789	0.04041	113.7123	G15085_T 138.00 - RUSSELL 138KV CKT 1
FDNS	00NR	5	20WP	G15_033	FROM->TO	G14-057T 345.00 - SUNNYSIDE 345KV CKT 1	717	789	0.04018	113.71	GEN344895 2-1LAB G2 20.000
FDNS	00NR	5	20WP	G15_033	FROM->TO	G14-057T 345.00 - SUNNYSIDE 345KV CKT 1	717	789	0.04018	113.6966	GEN527882 1-CUNNINGHAM GEN #2 20 KV
FDNS	00NR	5	20WP	G15_033	FROM->TO	G14-057T 345.00 - SUNNYSIDE 345KV CKT 1	717	789	0.04018	113.6941	GEN672310 1-POPLAR RIVER GENERATOR 1
FDNS	00NR	5	20WP	G15_033	FROM->TO	G14-057T 345.00 - SUNNYSIDE 345KV CKT 1	717	789	0.04018	113.6941	GEN672311 2-POPLAR RIVER GENERATOR 2
FDNS	00NR	5	20WP	G15_033	FROM->TO	G14-057T 345.00 - SUNNYSIDE 345KV CKT 1	717	789	0.04018	113.6937	GEN525494 1-PLANT X GEN #4 20 KV
FDNS	00NR	5	20WP	G15_033	FROM->TO	G14-057T 345.00 - SUNNYSIDE 345KV CKT 1	717	789	0.04018	113.6845	GEN672306 6-BOUNDARY DAM GENERATOR 6
FDNS	00NR	5	20WP	G15_033	FROM->TO	G14-057T 345.00 - SUNNYSIDE 345KV CKT 1	717	789	0.04018	113.6817	GEN527163 1-MUSTANG GEN #3 22 KV
FDNS	00NR	5	20WP	G15_033	FROM->TO	G14-057T 345.00 - SUNNYSIDE 345KV CKT 1	717	789	0.03975	113.6807	ARDMORE WEST - CARTER 138KV CKT 1
FDNS	00NR	5	20WP	G15_033	FROM->TO	G14-057T 345.00 - SUNNYSIDE 345KV CKT 1	717	789	0.04018	113.6801	GEN344896 3-1LAB G3 20.000
FDNS	00NR	5	20WP	G15_033	FROM->TO	G14-057T 345.00 - SUNNYSIDE 345KV CKT 1	717	789	0.04018	113.6788	GEN344897 4-1LAB G4 20.000
FDNS	00NR	5	20WP	G15_033	FROM->TO	G14-057T 345.00 - SUNNYSIDE 345KV CKT 1	717	789	0.04018	113.6786	GEN344894 1-1LAB G1 20.000
FDNS	00NR	5	20WP	G15_033	FROM->TO	G14-057T 345.00 - SUNNYSIDE 345KV CKT 1	717	789	0.04018	113.6703	CLAY BOSWELL 230/20.9KV TRANSFORMER CKT 1
FDNS	00NR	5	20WP	G15_033	FROM->TO	G14-057T 345.00 - SUNNYSIDE 345KV CKT 1	717	789	0.04015	113.6665	P12:138:WFEC:MSL07
FDNS	00NR	5	20WP	G15_033	FROM->TO	G14-057T 345.00 - SUNNYSIDE 345KV CKT 1	717	789	0.04015	113.6665	P12:138:WFEC-AEPW:HUGOPP4:ATOKA--4
FDNS	00NR	5	20WP	G15_033	FROM->TO	G14-057T 345.00 - SUNNYSIDE 345KV CKT 1	717	789	0.04018	113.6626	GEN511853 1-COMANCHE #3
FDNS	00NR	5	20WP	G15_033	FROM->TO	G14-057T 345.00 - SUNNYSIDE 345KV CKT 1	717	789	0.04018	113.6613	GEN521111 1-ORME2 13.800
FDNS	00NR	5	20WP	G15_033	FROM->TO	G14-057T 345.00 - SUNNYSIDE 345KV CKT 1	717	789	0.04018	113.6554	GEN681542 6-JP MADGETT
FDNS	00NR	5	20WP	G15_033	FROM->TO	G14-057T 345.00 - SUNNYSIDE 345KV CKT 1	717	789	0.04017	113.6499	P12:138:AEPW-SWPA:LONEOAK4:TUPELO4
FDNS	00NR	5	20WP	G15_033	FROM->TO	G14-057T 345.00 - SUNNYSIDE 345KV CKT 1	717	789	0.04017	113.6499	P12:138:WFEC:MSL06
FDNS	00NR	5	20WP	G15_033	FROM->TO	G14-057T 345.00 - SUNNYSIDE 345KV CKT 1	717	789	0.04018	113.6487	GEN521110 1-ORME1 13.800
FDNS	00NR	5	20WP	G15_033	FROM->TO	G14-057T 345.00 - SUNNYSIDE 345KV CKT 1	717	789	0.04018	113.6353	GEN511852 1-COMANCHE #2
FDNS	00NR	5	20WP	G15_033	FROM->TO	G14-057T 345.00 - SUNNYSIDE 345KV CKT 1	717	789	0.04002	113.6002	CLARKSVILLE - MUSKOGEE 345KV CKT 1
FDNS	00NR	5	20WP	G15_033	FROM->TO	G14-057T 345.00 - SUNNYSIDE 345KV CKT 1	717	789	0.04002	113.6002	CLARKSVILLE - MUSKOGEE 345KV CKT 1
FDNS	00NR	5	20WP	G15_033	FROM->TO	G14-057T 345.00 - SUNNYSIDE 345KV CKT 1	717	789	0.04018	113.5984	GEN520811 1-ANADRK4
FDNS	00NR	5	20WP	G15_033	FROM->TO	G14-057T 345.00 - SUNNYSIDE 345KV CKT 1	717	789	0.03973	113.5981	SUNNYSIDE (SUNNYSD5) 345/138/13.8KV TRANSFORMER CKT 1
FDNS	00NR	5	20WP	G15_033	FROM->TO	G14-057T 345.00 - SUNNYSIDE 345KV CKT 1	717	789	0.04018	113.5874	ALMA 161 161/24.0KV TRANSFORMER CKT 1
FDNS	00NR	5	20WP	G15_033	FROM->TO	G14-057T 345.00 - SUNNYSIDE 345KV CKT 1	717	789	0.03975	113.5682	ARDMORE WEST - UNIROYAL 138KV CKT 1
FDNS	00NR	5	20WP	G15_033	FROM->TO	G14-057T 345.00 - SUNNYSIDE 345KV CKT 1	717	789	0.04018	113.5673	GEN563292 1-G15095_3 0.6900
FDNS	00NR	5	20WP	G15_033	FROM->TO	G14-057T 345.00 - SUNNYSIDE 345KV CKT 1	717	789	0.04018	113.5569	GEN562861 1-G15045_2 0.4800
FDNS	00NR	5	20WP	G15_033	FROM->TO	G14-057T 345.00 - SUNNYSIDE 345KV CKT 1	717	789	0.04018	113.5539	GEN523461 1-BLACKHAWK GEN #1
FDNS	00NR	5	20WP	G15_033	FROM->TO	G14-057T 345.00 - SUNNYSIDE 345KV CKT 1	717	789	0.04018	113.5538	GEN523462 1-BLACKHAWK GEN #2
FDNS	00NR	5	20WP	G15_033	FROM->TO	G14-057T 345.00 - SUNNYSIDE 345KV CKT 1	717	789	0.04018	113.5455	GEN562699 1-G15_018_3 0.6900
FDNS	00NR	5	20WP	G15_033	FROM->TO	G14-057T 345.00 - SUNNYSIDE 345KV CKT 1	717	789	0.03997	113.5421	P12:138:OKGE:3TERM40
FDNS	00NR	5	20WP	G15_033	FROM->TO	G14-057T 345.00 - SUNNYSIDE 345KV CKT 1	717	789	0.03977	113.5323	CARTRCO4 138.00 - RATLIFF 138KV CKT 1
FDNS	00NR	5	20WP	G15_033	FROM->TO	G14-057T 345.00 - SUNNYSIDE 345KV CKT 1	717	789	0.04018	113.5188	GEN563162 1-G15081_3 0.6900
FDNS	00NR	5	20WP	G15_033	FROM->TO	G14-057T 345.00 - SUNNYSIDE 345KV CKT 1	717	789	0.04152	113.5104	CACHE - SNYDER 138KV CKT 1
FDNS	00NR	5	20WP	G15_033	FROM->TO	G14-057T 345.00 - SUNNYSIDE 345KV CKT 1	717	789	0.04018	113.4816	GEN661015 1-COYOTE
FDNS	00NR	5	16WP	G15_033	FROM->TO	G14-057T 345.00 - SUNNYSIDE 345KV CKT 1	717	789	0.04734	113.4766	CHISHOLM7 345.00 - GRACEMONT 345KV CKT 1
FDNS	00NR	5	20WP	G15_033	FROM->TO	G14-057T 345.00 - SUNNYSIDE 345KV CKT 1	717	789	0.04018	113.4613	GEN563122 1-G15077_3 0.3850
FDNS	00NR	5	20WP	G15_033	FROM->TO	G14-057T 345.00 - SUNNYSIDE 345KV CKT 1	717	789	0.04014	113.4541	P12:138:WFEC:MSL15
FDNS	00NR	5	16WP	G15_033	FROM->TO	G14-057T 345.00 - SUNNYSIDE 345KV CKT 1	717	789	0.04184	113.4459	LYDIA - VALLIANT 345KV CKT 1
FDNS	00NR	5	16WP	G15_033	FROM->TO	G14-057T 345.00 - SUNNYSIDE 345KV CKT 1	717	789	0.04184	113.4459	LYDIA - VALLIANT 345KV CKT 1
FDNS	00NR	5	20WP	G15_033	FROM->TO	G14-057T 345.00 - SUNNYSIDE 345KV CKT 1	717	789	0.04042	113.4352	P12:138:AEPW:SHAM4WT:CHILD4WT
FDNS	00NR	5	20WP	G15_033	FROM->TO	G14-057T 345.00 - SUNNYSIDE 345KV CKT 1	717	789	0.04018	113.4061	GEN562992 1-G15063_3 0.6900
FDNS	00NR	5	20WP	G15_033	FROM->TO	G14-057T 345.00 - SUNNYSIDE 345KV CKT 1	717	789	0.04018	113.3652	GEN657748 1-YOUNG 2 GENERATOR
FDNS	00NR	5	20WP	G15_033	FROM->TO	G14-057T 345.00 - SUNNYSIDE 345KV CKT 1	717	789	0.03975	113.3508	SUNNYSIDE - UNIROYAL 138KV CKT 1
FDNS	00NR	5	20WP	G15_033	FROM->TO	G14-057T 345.00 - SUNNYSIDE 345KV CKT 1	717	789	0.04018	113.347	GEN562952 1-G15057_3 0.6500
FDNS	00NR	5	20WP	G15_033	FROM->TO	G14-057T 345.00 - SUNNYSIDE 345KV CKT 1	717	789	0.04018	113.3447	GEN527883 1-CUNNINGHAM GEN #3 22 KV
FDNS	00NR	5	20WP	G15_033	FROM->TO	G14-057T 345.00 - SUNNYSIDE 345KV CKT 1	717	789	0.04018	113.3419	GEN527884 1-CUNNINGHAM GEN #4 22 KV
FDNS	00NR	5	20WP	G15_033	FROM->TO	G14-057T 345.00 - SUNNYSIDE 345KV CKT 1	717	789	0.04018	113.3188	GEN526331 1-JONES GEN #1 22 KV

SOLUTION	GROUP	SCENARIO	SEASON	SOURCE	DIRECTION	MONITORED ELEMENT	RATEA (MVA)	RATEB(MVA)	TDF	TC%LOADING (% MVA)	CONTINGENCY
FDNS	00NR	5	20WP	G15_033	FROM->TO	G14-057T 345.00 - SUNNYSIDE 345KV CKT 1	717	789	0.04018	113.3186	GEN526332 1-JONES GEN #2 21 KV
FDNS	00NR	5	20WP	G15_033	FROM->TO	G14-057T 345.00 - SUNNYSIDE 345KV CKT 1	717	789	0.04018	113.2731	GEN620315 1-BIG STONE GEN
FDNS	00NR	5	20WP	G15_033	FROM->TO	G14-057T 345.00 - SUNNYSIDE 345KV CKT 1	717	789	0.04018	113.2522	CANEY CREEK - TEXOMA JCT 138KV CKT 1
FDNS	00NR	5	20WP	G15_033	FROM->TO	G14-057T 345.00 - SUNNYSIDE 345KV CKT 1	717	789	0.04018	113.2438	GEN562704 1-G15_020_3 0.3550
FDNS	00NR	5	20WP	G15_033	FROM->TO	G14-057T 345.00 - SUNNYSIDE 345KV CKT 1	717	789	0.0406	113.2124	P12:138:AEPW-OGE:CORNVIL4:CIMARON4
FDNS	00NR	5	20WP	G15_033	FROM->TO	G14-057T 345.00 - SUNNYSIDE 345KV CKT 1	717	789	0.04018	113.1988	GEN600004 2-PRAIRIE ISLAND G2
FDNS	00NR	5	20WP	G15_033	FROM->TO	G14-057T 345.00 - SUNNYSIDE 345KV CKT 1	717	789	0.04018	113.1962	GEN600003 1-PRAIRIE ISLAND G1
FDNS	00NR	5	20WP	G15_033	FROM->TO	G14-057T 345.00 - SUNNYSIDE 345KV CKT 1	717	789	0.04018	113.1748	GEN600006 1-AS KING
FDNS	00NR	5	20WP	G15_033	FROM->TO	G14-057T 345.00 - SUNNYSIDE 345KV CKT 1	717	789	0.04018	113.1703	GEN532751 1-WOLF CREEK GENERATING STATION UNIT 1
FDNS	00NR	5	20WP	G15_033	FROM->TO	G14-057T 345.00 - SUNNYSIDE 345KV CKT 1	717	789	0.04018	113.1631	GEN562710 1-G15_022_3 0.5500
FDNS	00NR	5	20WP	G15_033	FROM->TO	G14-057T 345.00 - SUNNYSIDE 345KV CKT 1	717	789	0.04018	113.1546	GEN511851 1-COMANCHE #1
FDNS	00NR	5	20WP	G15_033	FROM->TO	G14-057T 345.00 - SUNNYSIDE 345KV CKT 1	717	789	0.04018	113.1215	GEN563173 1-G15082_3 0.6900
FDNS	00NR	5	16WP	G15_033	FROM->TO	G14-057T 345.00 - SUNNYSIDE 345KV CKT 1	717	789	0.08569	113.0867	GRACEMONT - LAWTON EASTSIDE 345KV CKT 1
FDNS	00NR	5	16WP	G15_033	FROM->TO	G14-057T 345.00 - SUNNYSIDE 345KV CKT 1	717	789	0.08569	113.0867	GRACEMONT - LAWTON EASTSIDE 345KV CKT 1
FDNS	00NR	5	20WP	G15_033	FROM->TO	G14-057T 345.00 - SUNNYSIDE 345KV CKT 1	717	789	0.04017	113.06	P12:138:WFEC:MSL09
FDNS	00NR	5	20WP	G15_033	FROM->TO	G14-057T 345.00 - SUNNYSIDE 345KV CKT 1	717	789	0.04018	113.002	GEN629074 1-ARNOLD LOWSIDE OF GSU XFMR
FDNS	00NR	5	20WP	G15_033	FROM->TO	G14-057T 345.00 - SUNNYSIDE 345KV CKT 1	717	789	0.04018	112.9893	GEN635213 3-NEAL UNIT 3
FDNS	00NR	5	20WP	G15_033	FROM->TO	G14-057T 345.00 - SUNNYSIDE 345KV CKT 1	717	789	0.04018	112.9869	GEN615001 1-COAL CREEK
FDNS	00NR	5	20WP	G15_033	FROM->TO	G14-057T 345.00 - SUNNYSIDE 345KV CKT 1	717	789	0.04018	112.9668	BIG STONE 230/24.0KV TRANSFORMER CKT 1
FDNS	00NR	5	20WP	G15_033	FROM->TO	G14-057T 345.00 - SUNNYSIDE 345KV CKT 1	717	789	0.04018	112.9609	GEN615002 2-COAL CREEK
FDNS	00NR	5	20WP	G15_033	FROM->TO	G14-057T 345.00 - SUNNYSIDE 345KV CKT 1	717	789	0.04003	112.9382	NORTHWEST TEXARKANA - VALLIANT 345KV CKT 1
FDNS	00NR	5	20WP	G15_033	FROM->TO	G14-057T 345.00 - SUNNYSIDE 345KV CKT 1	717	789	0.04003	112.9382	NORTHWEST TEXARKANA - VALLIANT 345KV CKT 1
FDNS	00NR	5	20WP	G15_033	FROM->TO	G14-057T 345.00 - SUNNYSIDE 345KV CKT 1	717	789	0.04018	112.9092	GEN636641 1-LOUISA UNIT 1
FDNS	00NR	5	20WP	G15_033	FROM->TO	G14-057T 345.00 - SUNNYSIDE 345KV CKT 1	717	789	0.04018	112.8834	GEN562754 1-G15031_5 0.6900
FDNS	00NR	5	20WP	G15_033	FROM->TO	G14-057T 345.00 - SUNNYSIDE 345KV CKT 1	717	789	0.04018	112.8672	GEN600005 1-MONTICELLO
FDNS	00NR	5	20WP	G15_033	FROM->TO	G14-057T 345.00 - SUNNYSIDE 345KV CKT 1	717	789	0.04018	112.8503	GEN562556 1-G14_046_3 0.3420
FDNS	06NR	5	20L	G15_033	FROM->TO	G14-057T 345.00 - SUNNYSIDE 345KV CKT 1	717	789	0.04156	112.8165	BASE CASE
FDNS	00NR	5	20WP	G15_033	FROM->TO	G14-057T 345.00 - SUNNYSIDE 345KV CKT 1	717	789	0.04018	112.8096	GEN562756 1-G15031_7 0.6900
FDNS	00NR	5	20WP	G15_033	FROM->TO	G14-057T 345.00 - SUNNYSIDE 345KV CKT 1	717	789	0.04018	112.7784	GEN563142 1-G15079_3 0.5500
FDNS	00NR	5	20WP	G15_033	FROM->TO	G14-057T 345.00 - SUNNYSIDE 345KV CKT 1	717	789	0.04018	112.7784	GEN563151 1-G15080_2 0.5500
FDNS	00NR	5	20WP	G15_033	FROM->TO	G14-057T 345.00 - SUNNYSIDE 345KV CKT 1	717	789	0.04018	112.7435	GEN562023 1-G11_020_3 0.6900
FDNS	00NR	5	20WP	G15_033	FROM->TO	G14-057T 345.00 - SUNNYSIDE 345KV CKT 1	717	789	0.04018	112.7435	GEN562026 1-G11_019_3 0.6900
FDNS	00NR	5	20WP	G15_033	FROM->TO	G14-057T 345.00 - SUNNYSIDE 345KV CKT 1	717	789	0.04018	112.7384	GEN600000 1-SHERBURNECNTY G1
FDNS	00NR	5	20WP	G15_033	FROM->TO	G14-057T 345.00 - SUNNYSIDE 345KV CKT 1	717	789	0.04018	112.7095	GEN629075 1-OTTUMWA GENERATOR FOR OTTUMWA UNIT NO 1
FDNS	00NR	5	20WP	G15_033	FROM->TO	G14-057T 345.00 - SUNNYSIDE 345KV CKT 1	717	789	0.04018	112.6864	GEN600001 2-SHERBURNE CNTY G2
FDNS	00NR	5	17SP	G15_033	FROM->TO	G14-057T 345.00 - SUNNYSIDE 345KV CKT 1	717	789	0.05213	112.6554	CIMARRON - MINCO 345KV CKT 1
FDNS	00NR	5	20WP	G15_033	FROM->TO	G14-057T 345.00 - SUNNYSIDE 345KV CKT 1	717	789	0.04018	112.6533	GEN511848 1-SOUTHWESTERN STATION #3
FDNS	00NR	5	20WP	G15_033	FROM->TO	G14-057T 345.00 - SUNNYSIDE 345KV CKT 1	717	789	0.04018	112.5652	GEN527901 1-HOBBS PLANT #1 (CT)
FDNS	00NR	5	20WP	G15_033	FROM->TO	G14-057T 345.00 - SUNNYSIDE 345KV CKT 1	717	789	0.04018	112.5652	GEN527902 1-HOBBS PLANT #2 (CT)
FDNS	00NR	5	20WP	G15_033	FROM->TO	G14-057T 345.00 - SUNNYSIDE 345KV CKT 1	717	789	0.04018	112.5638	GEN563042 1-G15068_3 0.6900
FDNS	06ALL	5	17SP	G15_033	FROM->TO	G14-057T 345.00 - SUNNYSIDE 345KV CKT 1	717	789	0.22016	112.5544	GRACEMONT - MINCO 345KV CKT 1
FDNS	00NR	5	20WP	G15_033	FROM->TO	G14-057T 345.00 - SUNNYSIDE 345KV CKT 1	717	789	0.03998	112.5492	LYDIA - WELSH 345KV CKT 1
FDNS	00NR	5	20WP	G15_033	FROM->TO	G14-057T 345.00 - SUNNYSIDE 345KV CKT 1	717	789	0.03998	112.5492	LYDIA - WELSH 345KV CKT 1
FDNS	00NR	5	20WP	G15_033	FROM->TO	G14-057T 345.00 - SUNNYSIDE 345KV CKT 1	717	789	0.04018	112.5138	GEN523971 1-HARRINGTON GEN #1 24 KV
FDNS	00NR	5	20WP	G15_033	FROM->TO	G14-057T 345.00 - SUNNYSIDE 345KV CKT 1	717	789	0.04018	112.5138	GEN523972 1-HARRINGTON GEN #2 24 KV
FDNS	00NR	5	20WP	G15_033	FROM->TO	G14-057T 345.00 - SUNNYSIDE 345KV CKT 1	717	789	0.04018	112.5138	GEN523973 1-HARRINGTON GEN #3 24 KV
FDNS	00NR	5	16WP	G15_033	FROM->TO	G14-057T 345.00 - SUNNYSIDE 345KV CKT 1	717	789	0.04212	112.5085	EASTDC - ERCOT EQUIVALENCE 345KV CKT 1
FDNS	00NR	5	20WP	G15_033	FROM->TO	G14-057T 345.00 - SUNNYSIDE 345KV CKT 1	717	789	0.04018	112.4412	SHERBURNE CO 345/24.0KV TRANSFORMER CKT 1
FDNS	00NR	5	20WP	G15_033	FROM->TO	G14-057T 345.00 - SUNNYSIDE 345KV CKT 1	717	789	0.04018	112.4134	GEN635214 4-NEAL UNIT 4
FDNS	00NR	5	20WP	G15_033	FROM->TO	G14-057T 345.00 - SUNNYSIDE 345KV CKT 1	717	789	0.04018	112.3714	GEN563273 2-G15093_4 0.6900
FDNS	00NR	5	20WP	G15_033	FROM->TO	G14-057T 345.00 - SUNNYSIDE 345KV CKT 1	717	789	0.04018	112.2506	GEN563043 1-G15068_4 0.6900
FDNS	00NR	5	20WP	G15_033	FROM->TO	G14-057T 345.00 - SUNNYSIDE 345KV CKT 1	717	789	0.04018	112.2383	GEN600002 3-SHERBURNE CNTY G3
FDNS	00NR	5	20WP	G15_033	FROM->TO	G14-057T 345.00 - SUNNYSIDE 345KV CKT 1	717	789	0.0425	112.2009	GRAPEVINE 345.00 - POTTER COUNTY INTERCHANGE 345KV CKT 1
FDNS	00NR	5	20WP	G15_033	FROM->TO	G14-057T 345.00 - SUNNYSIDE 345KV CKT 1	717	789	0.04018	112.2007	GEN344225 1-1CAL G1 25.000
FDNS	00NR	5	20WP	G15_033	FROM->TO	G14-057T 345.00 - SUNNYSIDE 345KV CKT 1	717	789	0.0425	112.198	CHISHOLM7 345.00 - GRAPEVINE 345.00 345KV CKT 1
FDNS	00NR	5	20WP	G15_033	FROM->TO	G14-057T 345.00 - SUNNYSIDE 345KV CKT 1	717	789	0.04018	112.1902	GEN563202 1-G15085_3 0.5500
FDNS	00NR	5	20WP	G15_033	FROM->TO	G14-057T 345.00 - SUNNYSIDE 345KV CKT 1	717	789	0.04018	112.1875	GEN526333 1-JONES GEN #3 21 KV
FDNS	00NR	5	20WP	G15_033	FROM->TO	G14-057T 345.00 - SUNNYSIDE 345KV CKT 1	717	789	0.04018	112.1874	GEN526334 1-JONES_4 116.500
FDNS	00NR	5	20WP	G15_033	FROM->TO	G14-057T 345.00 - SUNNYSIDE 345KV CKT 1	717	789	0.04018	112.1851	GEN525844 1-ELK_1 118.000
FDNS	00NR	5	20WP	G15_033	FROM->TO	G14-057T 345.00 - SUNNYSIDE 345KV CKT 1	717	789	0.04018	112.1722	GEN525845 1-ELK_2 1 18.000
FDNS	00NR	5	20WP	G15_033	FROM->TO	G14-057T 345.00 - SUNNYSIDE 345KV CKT 1	717	789	0.04018	111.9722	GEN527166 1-MUSTANG_6 118.000
FDNS	00NR	5	20WP	G15_033	FROM->TO	G14-057T 345.00 - SUNNYSIDE 345KV CKT 1	717	789	0.04018	111.9546	GEN562590 1-G14_057_3 0.6900
FDNS	00NR	5	20WP	G15_033	FROM->TO	G14-057T 345.00 - SUNNYSIDE 345KV CKT 1	717	789	0.04018	111.9361	GEN635023 3-WALTER SCOTT UNIT 3
FDNS	00NR	5	20WP	G15_033	FROM->TO	G14-057T 345.00 - SUNNYSIDE 345KV CKT 1	717	789	0.04018	111.9022	GEN528501 1-G14_012 24.000
FDNS	00NR	5	20WP	G15_033	FROM->TO	G14-057T 345.00 - SUNNYSIDE 345KV CKT 1	717	789	0.04018	111.8623	GEN562685 1-G15_013_3 0.3550
FDNS	00NR	5	20WP	G15_033	FROM->TO	G14-057T 345.00 - SUNNYSIDE 345KV CKT 1	717	789	0.04018	111.8289	GEN562762 1-G15033_3 0.6900
FDNS	00NR	5	20WP	G15_033	FROM->TO	G14-057T 345.00 - SUNNYSIDE 345KV CKT 1	717	789	0.04018	111.8217	GEN562655 1-G14_074_3 0.6900
FDNS	00NR	5	20WP	G15_033	FROM->TO	G14-057T 345.00 - SUNNYSIDE 345KV CKT 1	717	789	0.04018	111.7365	GEN563272 1-G15093_3 0.6900
FDNS	00NR	5	20WP	G15_033	FROM->TO	G14-057T 345.00 - SUNNYSIDE 345KV CKT 1	717	789	0.03976	111.7355	JOHNSON COUNTY (JOHNCO) 345/138/13.8KV TRANSFORMER CKT 1
FDNS	00NR	5	20WP	G15_033	FROM->TO	G14-057T 345.00 - SUNNYSIDE 345KV CKT 1	717	789	0.04018	111.6381	GEN525562 1-TOLK GEN #2 24 KV
FDNS	00NR	5	20WP	G15_033	FROM->TO	G14-057T 345.00 - SUNNYSIDE 345KV CKT 1	717	789	0.04018	111.5984	GEN527903 1-HOBBS PLANT #3 (ST)
FDNS	00NR	5	20WP	G15_033	FROM->TO	G14-057T 345.00 - SUNNYSIDE 345KV CKT 1	717	789	0.0811	111.5525	GRACEMONT - LAWTON EASTSIDE 345KV CKT 1
FDNS	00NR	5	20WP	G15_033	FROM->TO	G14-057T 345.00 - SUNNYSIDE 345KV CKT 1	717	789	0.0811	111.5525	GRACEMONT - LAWTON EASTSIDE 345KV CKT 1
FDNS	00NR	5	20WP	G15_033	FROM->TO	G14-057T 345.00 - SUNNYSIDE 345KV CKT 1	717	789	0.04018	111.5117	GEN635024 4-WALTER SCOTT UNIT 4
FDNS	00NR	5	20WP	G15_033	FROM->TO	G14-057T 345.00 - SUNNYSIDE 345KV CKT 1	717	789	0.04018	111.4735	GEN525561 1-TOLK GEN #1 24 KV
FDNS	00NR	5	20WP	G15_033	FROM->TO	G14-057T 345.00 - SUNNYSIDE 345KV CKT 1	717	789	0.0399	111.4533	LYDIA - VALLIANT 345KV CKT 1
FDNS	00NR	5	20WP	G15_033	FROM->TO	G14-057T 345.00 - SUNNYSIDE 345KV CKT 1	717	789	0.0399	111.4533	LYDIA - VALLIANT 345KV CKT 1
FDNS	00NR	5	16WP	G15_033	FROM->TO	G14-057T 345.00 - SUNNYSIDE 345KV CKT 1	717	789	0.04212	111.2613	GEN563263 1-G15092_4 0.6900
FDNS	00NR	5	16WP	G15_033	FROM->TO	G14-057T 345.00 - SUNNYSIDE 345KV CKT 1	717	789	0.03691	111.1589	JOHNSON COUNTY - PITTSBURG 345KV CKT 1

SOLUTION	GROUP	SCENARIO	SEASON	SOURCE	DIRECTION	MONITORED ELEMENT	RATEA (MVA)	RATEB(MVA)	TDF	TC%LOADING (% MVA)	CONTINGENCY
FDNS	00NR	5	16WP	G15_033	FROM->TO	G14-057T 345.00 - SUNNYSIDE 345KV CKT 1	717	789	0.03691	111.1589	JOHNSON COUNTY - PITTSBURG 345KV CKT 1
FDNS	00NR	5	16WP	G15_033	FROM->TO	G14-057T 345.00 - SUNNYSIDE 345KV CKT 1	717	789	0.23086	111.1162	G14-074T 345.00 - TUCO INTERCHANGE 345KV CKT 1
FDNS	00NR	5	20WP	G15_033	FROM->TO	G14-057T 345.00 - SUNNYSIDE 345KV CKT 1	717	789	0.04495	110.5885	CHISHOLM7 345.00 - GRACEMONT 345KV CKT 1
FDNS	06ALL	5	20SP	G15_033	FROM->TO	G14-057T 345.00 - SUNNYSIDE 345KV CKT 1	717	789	0.21845	110.5476	CIMARRON - MINCO 345KV CKT 1
FDNS	00NR	5	16WP	G15_033	FROM->TO	G14-057T 345.00 - SUNNYSIDE 345KV CKT 1	717	789	0.04079	110.4029	HUGO - VALLIANT 345KV CKT 1
FDNS	00NR	5	16WP	G15_033	FROM->TO	G14-057T 345.00 - SUNNYSIDE 345KV CKT 1	717	789	0.04079	110.4029	HUGO - VALLIANT 345KV CKT 1
FDNS	06NR	5	20L	G15_033	FROM->TO	G14-057T 345.00 - SUNNYSIDE 345KV CKT 1	717	789	0.03979	110.3886	PITTSBURG - SEMINOLE 345KV CKT 1
FDNS	06NR	5	20L	G15_033	FROM->TO	G14-057T 345.00 - SUNNYSIDE 345KV CKT 1	717	789	0.03979	110.3886	PITTSBURG - SEMINOLE 345KV CKT 1
FDNS	00NR	5	16WP	G15_033	FROM->TO	G14-057T 345.00 - SUNNYSIDE 345KV CKT 1	717	789	0.04212	109.5834	GEN563262 1-G15092_3 0.6900
FDNS	06NR	5	20L	G15_033	FROM->TO	G14-057T 345.00 - SUNNYSIDE 345KV CKT 1	717	789	0.04098	109.4754	CIMARRON - DRAPER LAKE 345KV CKT 1
FDNS	00NR	5	20WP	G15_033	FROM->TO	G14-057T 345.00 - SUNNYSIDE 345KV CKT 1	717	789	0.03521	108.958	JOHNSON COUNTY - PITTSBURG 345KV CKT 1
FDNS	00NR	5	20WP	G15_033	FROM->TO	G14-057T 345.00 - SUNNYSIDE 345KV CKT 1	717	789	0.03521	108.958	JOHNSON COUNTY - PITTSBURG 345KV CKT 1
FDNS	00NR	5	20WP	G15_033	FROM->TO	G14-057T 345.00 - SUNNYSIDE 345KV CKT 1	717	789	0.0389	108.7229	HUGO - VALLIANT 345KV CKT 1
FDNS	00NR	5	20WP	G15_033	FROM->TO	G14-057T 345.00 - SUNNYSIDE 345KV CKT 1	717	789	0.0389	108.7229	HUGO - VALLIANT 345KV CKT 1
FDNS	00NR	5	20WP	G15_033	FROM->TO	G14-057T 345.00 - SUNNYSIDE 345KV CKT 1	717	789	0.04018	108.5029	GEN563263 1-G15092_4 0.6900
FDNS	06NR	5	20L	G15_033	FROM->TO	G14-057T 345.00 - SUNNYSIDE 345KV CKT 1	717	789	0.03917	108.1601	Hitchland Interchange - WALKTAP7 345.00 345KV CKT 1
FDNS	06NR	5	20L	G15_033	FROM->TO	G14-057T 345.00 - SUNNYSIDE 345KV CKT 1	717	789	0.03917	108.1601	Hitchland Interchange - WALKTAP7 345.00 345KV CKT 1
FDNS	06NR	5	20L	G15_033	FROM->TO	G14-057T 345.00 - SUNNYSIDE 345KV CKT 1	717	789	0.04334	108.0613	P12:138:WFEC:MSL03
FDNS	06NR	5	20L	G15_033	FROM->TO	G14-057T 345.00 - SUNNYSIDE 345KV CKT 1	717	789	0.03917	107.9767	P12:345:SPS:J07.1.FINN.HITCH
FDNS	00NR	5	20WP	G15_033	FROM->TO	G14-057T 345.00 - SUNNYSIDE 345KV CKT 1	717	789	0.23168	107.6874	G14-074T 345.00 - TUCO INTERCHANGE 345KV CKT 1
FDNS	06NR	5	20L	G15_033	FROM->TO	G14-057T 345.00 - SUNNYSIDE 345KV CKT 1	717	789	0.03869	107.686	G14_038T 345.00 - Hitchland Interchange 345KV CKT 1
FDNS	06NR	5	20L	G15_033	FROM->TO	G14-057T 345.00 - SUNNYSIDE 345KV CKT 1	717	789	0.03869	107.2305	G14_038T 345.00 - POTTER COUNTY INTERCHANGE 345KV CKT 1
FDNS	00NR	5	20WP	G15_033	FROM->TO	G14-057T 345.00 - SUNNYSIDE 345KV CKT 1	717	789	0.04018	106.823	GEN563262 1-G15092_3 0.6900
FDNS	06NR	5	20L	G15_033	FROM->TO	G14-057T 345.00 - SUNNYSIDE 345KV CKT 1	717	789	0.04144	106.7498	CLEVELAND - G15066_T 345.00 345KV CKT 1
FDNS	06NR	5	20L	G15_033	FROM->TO	G14-057T 345.00 - SUNNYSIDE 345KV CKT 1	717	789	0.04156	106.6874	GEN501801 1-DOLET HILLS UNIT1
FDNS	06NR	5	20L	G15_033	FROM->TO	G14-057T 345.00 - SUNNYSIDE 345KV CKT 1	717	789	0.04156	106.5857	GEN509416 1-TURK GENERATION
FDNS	06NR	5	20L	G15_033	FROM->TO	G14-057T 345.00 - SUNNYSIDE 345KV CKT 1	717	789	0.04144	106.4578	G15066_T 345.00 - SOONER 345KV CKT 1
FDNS	06NR	5	20L	G15_033	FROM->TO	G14-057T 345.00 - SUNNYSIDE 345KV CKT 1	717	789	0.04156	106.4402	GEN509403 1-PIRKEY GENERATION
FDNS	06NR	5	20L	G15_033	FROM->TO	G14-057T 345.00 - SUNNYSIDE 345KV CKT 1	717	789	0.04156	105.9955	GEN336821 1-GRAND GULF UNIT
FDNS	06NR	5	20L	G15_033	FROM->TO	G14-057T 345.00 - SUNNYSIDE 345KV CKT 1	717	789	0.04156	105.8391	GEN336153 1-WATERFORD UNIT#3
FDNS	06ALL	5	20WP	G15_033	FROM->TO	G14-057T 345.00 - SUNNYSIDE 345KV CKT 1	717	789	0.1579	105.6059	BASE CASE
FDNS	06NR	5	20L	G15_033	FROM->TO	G14-057T 345.00 - SUNNYSIDE 345KV CKT 1	717	789	0.04075	105.5498	MATHWSN7 345.00 - TATONGA7 345.00 345KV CKT 1
FDNS	06NR	5	20L	G15_033	FROM->TO	G14-057T 345.00 - SUNNYSIDE 345KV CKT 1	717	789	0.08405	105.5397	GRACEMONT - LAWTON EASTSIDE 345KV CKT 1
FDNS	06NR	5	20L	G15_033	FROM->TO	G14-057T 345.00 - SUNNYSIDE 345KV CKT 1	717	789	0.08405	105.5397	GRACEMONT - LAWTON EASTSIDE 345KV CKT 1
FDNS	00NR	5	16WP	G15_033	FROM->TO	G14-057T 345.00 - SUNNYSIDE 345KV CKT 1	717	789	0.03515	105.5119	JOHNSON COUNTY - SUNNYSIDE 345KV CKT 1
FDNS	06NR	5	20L	G15_033	FROM->TO	G14-057T 345.00 - SUNNYSIDE 345KV CKT 1	717	789	0.04156	105.4819	GEN335831 1-RIVERBEND UNIT#1
FDNS	06NR	5	20L	G15_033	FROM->TO	G14-057T 345.00 - SUNNYSIDE 345KV CKT 1	717	789	0.04012	105.4613	FINNEY SWITCHING STATION - HOLCOMB 345KV CKT 1
FDNS	06NR	5	20L	G15_033	FROM->TO	G14-057T 345.00 - SUNNYSIDE 345KV CKT 1	717	789	0.04012	105.4613	FINNEY SWITCHING STATION - HOLCOMB 345KV CKT 1
FDNS	06ALL	5	20SP	G15_033	FROM->TO	G14-057T 345.00 - SUNNYSIDE 345KV CKT 1	717	789	0.21845	105.3924	GRACEMONT - MINCO 345KV CKT 1
FDNS	06NR	5	20L	G15_033	FROM->TO	G14-057T 345.00 - SUNNYSIDE 345KV CKT 1	717	789	0.04151	105.3859	PITTSBURG - VALLIANT 345KV CKT 1
FDNS	06NR	5	20L	G15_033	FROM->TO	G14-057T 345.00 - SUNNYSIDE 345KV CKT 1	717	789	0.04151	105.3859	PITTSBURG - VALLIANT 345KV CKT 1
FDNS	06NR	5	20L	G15_033	FROM->TO	G14-057T 345.00 - SUNNYSIDE 345KV CKT 1	717	789	0.0414	105.3195	ARCADIA - NORTHWEST 345KV CKT 1
FDNS	06ALL	5	17G	G15_033	FROM->TO	G14-057T 345.00 - SUNNYSIDE 345KV CKT 1	717	789	0.16108	105.2883	BASE CASE
FDNS	06NR	5	20L	G15_033	FROM->TO	G14-057T 345.00 - SUNNYSIDE 345KV CKT 1	717	789	0.04149	105.2306	CLEVELAND - TULSA NORTH 345KV CKT 1
FDNS	06NR	5	20L	G15_033	FROM->TO	G14-057T 345.00 - SUNNYSIDE 345KV CKT 1	717	789	0.04149	105.2306	CLEVELAND - TULSA NORTH 345KV CKT 1
FDNS	06NR	5	20L	G15_033	FROM->TO	G14-057T 345.00 - SUNNYSIDE 345KV CKT 1	717	789	0.04012	105.0975	FINNEY SWITCHING STATION - WALKTAP7 345.00 345KV CKT 1
FDNS	06NR	5	20L	G15_033	FROM->TO	G14-057T 345.00 - SUNNYSIDE 345KV CKT 1	717	789	0.04012	105.0975	FINNEY SWITCHING STATION - WALKTAP7 345.00 345KV CKT 1
FDNS	06NR	5	20L	G15_033	FROM->TO	G14-057T 345.00 - SUNNYSIDE 345KV CKT 1	717	789	0.04156	105.0389	GRAND GULF 500/22.0KV TRANSFORMER CKT 1
FDNS	06NR	5	20L	G15_033	FROM->TO	G14-057T 345.00 - SUNNYSIDE 345KV CKT 1	717	789	0.04116	104.8286	MINGO - RED WILLOW 345KV CKT 1
FDNS	06NR	5	20L	G15_033	FROM->TO	G14-057T 345.00 - SUNNYSIDE 345KV CKT 1	717	789	0.04116	104.8286	MINGO - RED WILLOW 345KV CKT 1
FDNS	06NR	5	20L	G15_033	FROM->TO	G14-057T 345.00 - SUNNYSIDE 345KV CKT 1	717	789	0.04154	104.7934	LACYGNE - WAVERLY7 345.00 345KV CKT 1
FDNS	06NR	5	20L	G15_033	FROM->TO	G14-057T 345.00 - SUNNYSIDE 345KV CKT 1	717	789	0.04184	104.7679	CORN TAP - NAPLESTP 138.00 138KV CKT 1
FDNS	06NR	5	20L	G15_033	FROM->TO	G14-057T 345.00 - SUNNYSIDE 345KV CKT 1	717	789	0.04156	104.6925	GEN335206 1-NELSON UNIT 6
FDNS	06NR	5	20L	G15_033	FROM->TO	G14-057T 345.00 - SUNNYSIDE 345KV CKT 1	717	789	0.04184	104.6858	NAPLESTP 138.00 - PAYNE 138.00 138KV CKT 1
FDNS	06NR	5	20L	G15_033	FROM->TO	G14-057T 345.00 - SUNNYSIDE 345KV CKT 1	717	789	0.04132	104.6767	THISTLE7 345.00 - WOODWARD DISTRICT EHV 345KV CKT 1
FDNS	06NR	5	20L	G15_033	FROM->TO	G14-057T 345.00 - SUNNYSIDE 345KV CKT 1	717	789	0.04132	104.6767	THISTLE7 345.00 - WOODWARD DISTRICT EHV 345KV CKT 1
FDNS	06NR	5	20L	G15_033	FROM->TO	G14-057T 345.00 - SUNNYSIDE 345KV CKT 1	717	789	0.04132	104.6767	THISTLE7 345.00 - WOODWARD DISTRICT EHV 345KV CKT 2
FDNS	06NR	5	20L	G15_033	FROM->TO	G14-057T 345.00 - SUNNYSIDE 345KV CKT 1	717	789	0.04132	104.6767	THISTLE7 345.00 - WOODWARD DISTRICT EHV 345KV CKT 2
FDNS	06NR	5	20L	G15_033	FROM->TO	G14-057T 345.00 - SUNNYSIDE 345KV CKT 1	717	789	0.04176	104.6702	COMANCHE - LOCO 138KV CKT 1
FDNS	06NR	5	20L	G15_033	FROM->TO	G14-057T 345.00 - SUNNYSIDE 345KV CKT 1	717	789	0.04274	104.6539	P12:138:AEPW:DUNCAN-4:L.E.S.-4
FDNS	06NR	5	20L	G15_033	FROM->TO	G14-057T 345.00 - SUNNYSIDE 345KV CKT 1	717	789	0.04154	104.6496	WAVERLY7 345.00 - WOLF CREEK 345KV CKT 1
FDNS	06NR	5	20L	G15_033	FROM->TO	G14-057T 345.00 - SUNNYSIDE 345KV CKT 1	717	789	0.04274	104.5315	COMANCHE TAP - OMPA-DUNCAN 840 138KV CKT 1
FDNS	06NR	5	20L	G15_033	FROM->TO	G14-057T 345.00 - SUNNYSIDE 345KV CKT 1	717	789	0.04164	104.5193	REDBUD - RIVERSIDE STATION 345KV CKT 1
FDNS	06NR	5	20L	G15_033	FROM->TO	G14-057T 345.00 - SUNNYSIDE 345KV CKT 1	717	789	0.04164	104.5193	REDBUD - RIVERSIDE STATION 345KV CKT 1
FDNS	06NR	5	20L	G15_033	FROM->TO	G14-057T 345.00 - SUNNYSIDE 345KV CKT 1	717	789	0.04156	104.4938	GEN509406 1-WELSH #3
FDNS	06NR	5	20L	G15_033	FROM->TO	G14-057T 345.00 - SUNNYSIDE 345KV CKT 1	717	789	0.04156	104.4936	GEN509404 1-WELSH #1
FDNS	06NR	5	20L	G15_033	FROM->TO	G14-057T 345.00 - SUNNYSIDE 345KV CKT 1	717	789	0.04075	104.4929	G11_051T 345.00 - TATONGA7 345.00 345KV CKT 1
FDNS	06NR	5	20L	G15_033	FROM->TO	G14-057T 345.00 - SUNNYSIDE 345KV CKT 1	717	789	0.04278	104.4004	POTTER COUNTY INTERCHANGE - TOLK STATION 345KV CKT 1
FDNS	06NR	5	20L	G15_033	FROM->TO	G14-057T 345.00 - SUNNYSIDE 345KV CKT 1	717	789	0.04156	104.3587	HEALDTON - LOCO 138KV CKT 1
FDNS	06NR	5	20L	G15_033	FROM->TO	G14-057T 345.00 - SUNNYSIDE 345KV CKT 1	717	789	0.04189	104.3557	ANADARKO - POCASSETT 138KV CKT 1
FDNS	06NR	5	20L	G15_033	FROM->TO	G14-057T 345.00 - SUNNYSIDE 345KV CKT 1	717	789	0.04075	104.3282	G11_051T 345.00 - WOODWARD DISTRICT EHV 345KV CKT 1
FDNS	06NR	5	20L	G15_033	FROM->TO	G14-057T 345.00 - SUNNYSIDE 345KV CKT 1	717	789	0.04189	104.2887	POCASSETT - TUTTLE 138KV CKT 1
FDNS	06NR	5	20L	G15_033	FROM->TO	G14-057T 345.00 - SUNNYSIDE 345KV CKT 1	717	789	0.04156	104.2687	HEALDTON - RINGLING 138KV CKT 1
FDNS	06NR	5	20L	G15_033	FROM->TO	G14-057T 345.00 - SUNNYSIDE 345KV CKT 1	717	789	0.0412	104.2361	ARCADIA - SEMINOLE 345KV CKT 1
FDNS	06NR	5	20L	G15_033	FROM->TO	G14-057T 345.00 - SUNNYSIDE 345KV CKT 1	717	789	0.04274	104.232	DUNCAN - OMPA-DUNCAN 840 138KV CKT 1
FDNS	06NR	5	20L	G15_033	FROM->TO	G14-057T 345.00 - SUNNYSIDE 345KV CKT 1	717	789	0.04274	104.232	DUNCAN - OMPA-DUNCAN 840 138KV CKT 1
FDNS	06NR	5	20L	G15_033	FROM->TO	G14-057T 345.00 - SUNNYSIDE 345KV CKT 1	717	789	0.04458	104.2121	P12:345:SPS:J15.1.XRDS.TOLK
FDNS	06NR	5	20L	G15_033	FROM->TO	G14-057T 345.00 - SUNNYSIDE 345KV CKT 1	717	789	0.04156	104.2039	RINGLING - SOUTH WILSON 138KV CKT 1
FDNS	06NR	5	20L	G15_033	FROM->TO	G14-057T 345.00 - SUNNYSIDE 345KV CKT 1	717	789	0.04358	104.1803	LAWTON EASTSIDE (LES 5) 345/138/13.8KV TRANSFORMER CKT 2

SOLUTION	GROUP	SCENARIO	SEASON	SOURCE	DIRECTION	MONITORED ELEMENT	RATEA (MVA)	RATEB(MVA)	TDF	TC%LOADING (% MVA)	CONTINGENCY
FDNS	06NR	5	20L	G15_033	FROM->TO	G14-057T 345.00 - SUNNYSIDE 345KV CKT 1	717	789	0.04358	104.1803	LAWTON EASTSIDE (LES 5) 345/138/13.8KV TRANSFORMER CKT 2
FDNS	06NR	5	20L	G15_033	FROM->TO	G14-057T 345.00 - SUNNYSIDE 345KV CKT 1	717	789	0.04156	104.1433	GEN509408 1-WILKES #2
FDNS	06NR	5	20L	G15_033	FROM->TO	G14-057T 345.00 - SUNNYSIDE 345KV CKT 1	717	789	0.04151	104.1338	WEBRE - WELLS 500KV CKT 1
FDNS	06NR	5	20L	G15_033	FROM->TO	G14-057T 345.00 - SUNNYSIDE 345KV CKT 1	717	789	0.04189	104.1208	BRIDGECR 138.00 - TUTTLE 138KV CKT 1
FDNS	06NR	5	20L	G15_033	FROM->TO	G14-057T 345.00 - SUNNYSIDE 345KV CKT 1	717	789	0.04156	104.1164	GEN501813 1-RODEMACHER UNIT 3
FDNS	06NR	5	20L	G15_033	FROM->TO	G14-057T 345.00 - SUNNYSIDE 345KV CKT 1	717	789	0.0412	104.1046	MINGO - SETAB 345KV CKT 1
FDNS	06NR	5	20L	G15_033	FROM->TO	G14-057T 345.00 - SUNNYSIDE 345KV CKT 1	717	789	0.0412	104.1046	MINGO - SETAB 345KV CKT 1
FDNS	06NR	5	20L	G15_033	FROM->TO	G14-057T 345.00 - SUNNYSIDE 345KV CKT 1	717	789	0.04156	104.1037	DOLET HILLS 345/24.0KV TRANSFORMER CKT 1
FDNS	06NR	5	20L	G15_033	FROM->TO	G14-057T 345.00 - SUNNYSIDE 345KV CKT 1	717	789	0.04156	104.0871	MARIETTA - SOUTH WILSON 138KV CKT 1
FDNS	06NR	5	20L	G15_033	FROM->TO	G14-057T 345.00 - SUNNYSIDE 345KV CKT 1	717	789	0.04156	104.0753	GEN501812 1-RODEMACHER UNIT 2
FDNS	06NR	5	20L	G15_033	FROM->TO	G14-057T 345.00 - SUNNYSIDE 345KV CKT 1	717	789	0.04156	104.0591	P12:138:WFEC:MSL17
FDNS	06NR	5	20L	G15_033	FROM->TO	G14-057T 345.00 - SUNNYSIDE 345KV CKT 1	717	789	0.04127	104.037	P12:138:AEPW-OGE:WTH_JCT4:JENSEN4
FDNS	06NR	5	20L	G15_033	FROM->TO	G14-057T 345.00 - SUNNYSIDE 345KV CKT 1	717	789	0.04145	104.0284	CANEYRV7 345.00 - NEOSHO 345KV CKT 1
FDNS	06NR	5	20L	G15_033	FROM->TO	G14-057T 345.00 - SUNNYSIDE 345KV CKT 1	717	789	0.04189	104.0203	P12:138:WFEC:MSL01
FDNS	06NR	5	20L	G15_033	FROM->TO	G14-057T 345.00 - SUNNYSIDE 345KV CKT 1	717	789	0.04423	104.0177	P12:138:AEPW:S.W.S.-4:L.E.S.-4
FDNS	06NR	5	20L	G15_033	FROM->TO	G14-057T 345.00 - SUNNYSIDE 345KV CKT 1	717	789	0.04189	104.0088	BRIDGECR 138.00 - SUNSHINE CANYON 138KV CKT 1
FDNS	06NR	5	20L	G15_033	FROM->TO	G14-057T 345.00 - SUNNYSIDE 345KV CKT 1	717	789	0.04156	103.9846	GEN337911 1-ARKANSAS NUCLEAR ONE UNIT #2
FDNS	06NR	5	20L	G15_033	FROM->TO	G14-057T 345.00 - SUNNYSIDE 345KV CKT 1	717	789	0.04156	103.957	GEN337652 1-WHITE BLUFF UNIT #1
FDNS	06NR	5	20L	G15_033	FROM->TO	G14-057T 345.00 - SUNNYSIDE 345KV CKT 1	717	789	0.04147	103.9376	DOLET HILLS - SOUTHWEST SHREVEPORT 345KV CKT 1
FDNS	06NR	5	20L	G15_033	FROM->TO	G14-057T 345.00 - SUNNYSIDE 345KV CKT 1	717	789	0.04147	103.9376	DOLET HILLS - SOUTHWEST SHREVEPORT 345KV CKT 1
FDNS	06NR	5	20L	G15_033	FROM->TO	G14-057T 345.00 - SUNNYSIDE 345KV CKT 1	717	789	0.04156	103.9325	GEN337653 1-WHITE BLUFF UNIT #2
FDNS	06ALL	5	16WP	G15_033	FROM->TO	G14-057T 345.00 - SUNNYSIDE 345KV CKT 1	717	789	0.16435	103.9305	BASE CASE
FDNS	06NR	5	20L	G15_033	FROM->TO	G14-057T 345.00 - SUNNYSIDE 345KV CKT 1	717	789	0.04145	103.8755	CANEYRV7 345.00 - LATHAMS7 345.00 345KV CKT 1
FDNS	06NR	5	20L	G15_033	FROM->TO	G14-057T 345.00 - SUNNYSIDE 345KV CKT 1	717	789	0.04166	103.7919	CIVIT - PAOLI 138KV CKT 1
FDNS	06NR	5	20L	G15_033	FROM->TO	G14-057T 345.00 - SUNNYSIDE 345KV CKT 1	717	789	0.04143	103.7844	AXTELL - POST ROCK 345KV CKT 1
FDNS	06NR	5	20L	G15_033	FROM->TO	G14-057T 345.00 - SUNNYSIDE 345KV CKT 1	717	789	0.04128	103.7792	WEATHERFORD JCT. - WEATHERFORD SOUTHEAST 138KV CKT 1
FDNS	06NR	5	20L	G15_033	FROM->TO	G14-057T 345.00 - SUNNYSIDE 345KV CKT 1	717	789	0.04128	103.7792	WEATHERFORD JCT. - WEATHERFORD SOUTHEAST 138KV CKT 1
FDNS	06NR	5	20L	G15_033	FROM->TO	G14-057T 345.00 - SUNNYSIDE 345KV CKT 1	717	789	0.04156	103.7687	NEW MADRID 345/22.0KV TRANSFORMER CKT 1
FDNS	06NR	5	20L	G15_033	FROM->TO	G14-057T 345.00 - SUNNYSIDE 345KV CKT 1	717	789	0.04128	103.7654	P12:138:AEPW:REDROCKRD4:WTH_JCT4
FDNS	06NR	5	20L	G15_033	FROM->TO	G14-057T 345.00 - SUNNYSIDE 345KV CKT 1	717	789	0.04156	103.7618	GEN337910 1-ARKANSAS NUCLEAR ONE UNIT #1
FDNS	06NR	5	20L	G15_033	FROM->TO	G14-057T 345.00 - SUNNYSIDE 345KV CKT 1	717	789	0.04166	103.7423	CIVIT - STRATFORD 138KV CKT 1
FDNS	06NR	5	20L	G15_033	FROM->TO	G14-057T 345.00 - SUNNYSIDE 345KV CKT 1	717	789	0.0414	103.7363	G13-010T 345.00 - POST ROCK 345KV CKT 1
FDNS	06NR	5	20L	G15_033	FROM->TO	G14-057T 345.00 - SUNNYSIDE 345KV CKT 1	717	789	0.04179	103.7286	BAILEY4 138.00 - SUNSHINE CANYON 138KV CKT 1
FDNS	06NR	5	20L	G15_033	FROM->TO	G14-057T 345.00 - SUNNYSIDE 345KV CKT 1	717	789	0.04181	103.7281	P12:138:AEPW-OGE:CORNVIL4:MAUD 4
FDNS	06NR	5	20L	G15_033	FROM->TO	G14-057T 345.00 - SUNNYSIDE 345KV CKT 1	717	789	0.04135	103.7271	G1524G1525 345.00 - THISTLE7 345.00 345KV CKT 1
FDNS	06NR	5	20L	G15_033	FROM->TO	G14-057T 345.00 - SUNNYSIDE 345KV CKT 1	717	789	0.04135	103.7271	G1524G1525 345.00 - THISTLE7 345.00 345KV CKT 2
FDNS	06NR	5	20L	G15_033	FROM->TO	G14-057T 345.00 - SUNNYSIDE 345KV CKT 1	717	789	0.04128	103.7229	HINTON - WEATHERFORD JCT. 138KV CKT 1
FDNS	06NR	5	20L	G15_033	FROM->TO	G14-057T 345.00 - SUNNYSIDE 345KV CKT 1	717	789	0.04156	103.7194	FRONTIER - GRIMES 345KV CKT 1
FDNS	06NR	5	20L	G15_033	FROM->TO	G14-057T 345.00 - SUNNYSIDE 345KV CKT 1	717	789	0.04181	103.7189	BLANCHARD - CORNVILLE 138KV CKT 1
FDNS	06NR	5	20L	G15_033	FROM->TO	G14-057T 345.00 - SUNNYSIDE 345KV CKT 1	717	789	0.04129	103.7142	HOLCOMB - SETAB 345KV CKT 1
FDNS	06NR	5	20L	G15_033	FROM->TO	G14-057T 345.00 - SUNNYSIDE 345KV CKT 1	717	789	0.04129	103.7142	HOLCOMB - SETAB 345KV CKT 1
FDNS	06NR	5	20L	G15_033	FROM->TO	G14-057T 345.00 - SUNNYSIDE 345KV CKT 1	717	789	0.04166	103.6989	OIL CENTER - STRATFORD 138KV CKT 1
FDNS	06NR	5	20L	G15_033	FROM->TO	G14-057T 345.00 - SUNNYSIDE 345KV CKT 1	717	789	0.0414	103.6893	G13-010T 345.00 - SPEARVILLE 345KV CKT 1
FDNS	06NR	5	20L	G15_033	FROM->TO	G14-057T 345.00 - SUNNYSIDE 345KV CKT 1	717	789	0.04128	103.6719	HINTON - REDROCKRD4 138.00 138KV CKT 1
FDNS	06NR	5	20L	G15_033	FROM->TO	G14-057T 345.00 - SUNNYSIDE 345KV CKT 1	717	789	0.04088	103.6713	CHISHOLM6 230.00 - ELK CITY 230KV 230KV CKT 1
FDNS	06NR	5	20L	G15_033	FROM->TO	G14-057T 345.00 - SUNNYSIDE 345KV CKT 1	717	789	0.04088	103.6692	ELK CITY 230KV (ELKCTY-6) 230/138/13.8KV TRANSFORMER CKT 1
FDNS	06NR	5	20L	G15_033	FROM->TO	G14-057T 345.00 - SUNNYSIDE 345KV CKT 1	717	789	0.04088	103.6692	ELK CITY 230KV (ELKCTY-6) 230/138/13.8KV TRANSFORMER CKT 1
FDNS	06NR	5	20L	G15_033	FROM->TO	G14-057T 345.00 - SUNNYSIDE 345KV CKT 1	717	789	0.04179	103.659	BAILEY4 138.00 - WESTMOORE 138KV CKT 1
FDNS	06NR	5	20L	G15_033	FROM->TO	G14-057T 345.00 - SUNNYSIDE 345KV CKT 1	717	789	0.04151	103.6337	ELDORADO EHV - SHERIDAN EHV 500KV CKT 1
FDNS	06NR	5	20L	G15_033	FROM->TO	G14-057T 345.00 - SUNNYSIDE 345KV CKT 1	717	789	0.04166	103.6319	LATTA JCT - OIL CENTER 138KV CKT 1
FDNS	06NR	5	20L	G15_033	FROM->TO	G14-057T 345.00 - SUNNYSIDE 345KV CKT 1	717	789	0.04156	103.6293	GEN506754 1-LEBROCK STEAM 1
FDNS	06NR	5	20L	G15_033	FROM->TO	G14-057T 345.00 - SUNNYSIDE 345KV CKT 1	717	789	0.04144	103.6265	MATHWSN7 345.00 - NORTHWEST 345KV CKT 1
FDNS	06NR	5	20L	G15_033	FROM->TO	G14-057T 345.00 - SUNNYSIDE 345KV CKT 1	717	789	0.04145	103.6099	LATHAMS7 345.00 - ROSE HILL 345KV CKT 1
FDNS	06NR	5	20L	G15_033	FROM->TO	G14-057T 345.00 - SUNNYSIDE 345KV CKT 1	717	789	0.04181	103.6053	BLANCHARD - MAUD 138KV CKT 1
FDNS	06NR	5	20L	G15_033	FROM->TO	G14-057T 345.00 - SUNNYSIDE 345KV CKT 1	717	789	0.04156	103.6038	GEN334440 1-SABINE UNIT 4
FDNS	06NR	5	20L	G15_033	FROM->TO	G14-057T 345.00 - SUNNYSIDE 345KV CKT 1	717	789	0.04139	103.589	P12:138:AEPW:WTHWF4:CLINTJC4
FDNS	06NR	5	20L	G15_033	FROM->TO	G14-057T 345.00 - SUNNYSIDE 345KV CKT 1	717	789	0.04179	103.5802	FRANKLIN SW - WESTMOORE 138KV CKT 1
FDNS	06NR	5	20L	G15_033	FROM->TO	G14-057T 345.00 - SUNNYSIDE 345KV CKT 1	717	789	0.04123	103.5728	P12:138:OKGE:3TERM27
FDNS	06NR	5	20L	G15_033	FROM->TO	G14-057T 345.00 - SUNNYSIDE 345KV CKT 1	717	789	0.04122	103.5706	CANADIAN - NOBLE 138KV CKT 1
FDNS	06NR	5	20L	G15_033	FROM->TO	G14-057T 345.00 - SUNNYSIDE 345KV CKT 1	717	789	0.04156	103.5506	GEN334030 1-FRONTIER UNIT 1
FDNS	06NR	5	20L	G15_033	FROM->TO	G14-057T 345.00 - SUNNYSIDE 345KV CKT 1	717	789	0.04156	103.5469	GEN334031 1-FRONTIER UNIT 2
FDNS	06NR	5	20L	G15_033	FROM->TO	G14-057T 345.00 - SUNNYSIDE 345KV CKT 1	717	789	0.04122	103.5306	NOBLE - PURCELL4 138.00 138KV CKT 1
FDNS	06NR	5	20L	G15_033	FROM->TO	G14-057T 345.00 - SUNNYSIDE 345KV CKT 1	717	789	0.0404	103.5229	HITCHLAND INTERCHANGE - MOORE COUNTY INTERCHANGE 230KV CKT 1
FDNS	06NR	5	20L	G15_033	FROM->TO	G14-057T 345.00 - SUNNYSIDE 345KV CKT 1	717	789	0.0404	103.5229	HITCHLAND INTERCHANGE - MOORE COUNTY INTERCHANGE 230KV CKT 1
FDNS	06NR	5	20L	G15_033	FROM->TO	G14-057T 345.00 - SUNNYSIDE 345KV CKT 1	717	789	0.04082	103.5097	G11-14T 345.00 - WOODWARD DISTRICT EHV 345KV CKT 1
FDNS	06NR	5	20L	G15_033	FROM->TO	G14-057T 345.00 - SUNNYSIDE 345KV CKT 1	717	789	0.04082	103.5097	G11-14T 345.00 - WOODWARD DISTRICT EHV 345KV CKT 2
FDNS	06NR	5	20L	G15_033	FROM->TO	G14-057T 345.00 - SUNNYSIDE 345KV CKT 1	717	789	0.04221	103.5051	P12:138:AEPW:CORNVIL4:DUNCAN-4
FDNS	06NR	5	20L	G15_033	FROM->TO	G14-057T 345.00 - SUNNYSIDE 345KV CKT 1	717	789	0.04158	103.5001	TUPELO - TUPELO TAP 138KV CKT 1
FDNS	06NR	5	20L	G15_033	FROM->TO	G14-057T 345.00 - SUNNYSIDE 345KV CKT 1	717	789	0.04156	103.4893	MARIETTA - MARIETTA4 138.00 138KV CKT 1
FDNS	06NR	5	20L	G15_033	FROM->TO	G14-057T 345.00 - SUNNYSIDE 345KV CKT 1	717	789	0.0415	103.4881	P12:138:WFEC:MSL02
FDNS	06NR	5	20L	G15_033	FROM->TO	G14-057T 345.00 - SUNNYSIDE 345KV CKT 1	717	789	0.04131	103.4774	PARK LANE - SEMINOLE 138KV CKT 1
FDNS	06NR	5	20L	G15_033	FROM->TO	G14-057T 345.00 - SUNNYSIDE 345KV CKT 1	717	789	0.04156	103.4698	NEW MADRID 161/22.0KV TRANSFORMER CKT 1
FDNS	06NR	5	20L	G15_033	FROM->TO	G14-057T 345.00 - SUNNYSIDE 345KV CKT 1	717	789	0.04156	103.4663	GEN335204 1-NELSON UNIT 4
FDNS	06NR	5	20L	G15_033	FROM->TO	G14-057T 345.00 - SUNNYSIDE 345KV CKT 1	717	789	0.04153	103.4637	ELDORADO EHV - MOUNT OLIVE 500KV CKT 1
FDNS	06NR	5	20L	G15_033	FROM->TO	G14-057T 345.00 - SUNNYSIDE 345KV CKT 1	717	789	0.04166	103.4634	LASALLE - LATTA JCT 138KV CKT 1
FDNS	06NR	5	20L	G15_033	FROM->TO	G14-057T 345.00 - SUNNYSIDE 345KV CKT 1	717	789	0.04139	103.4369	P12:138:AEPW:WTHWF4:WTH_SE4
FDNS	06NR	5	20L	G15_033	FROM->TO	G14-057T 345.00 - SUNNYSIDE 345KV CKT 1	717	789	0.04156	103.4341	GEN336170 1-GULF OXY U4
FDNS	06NR	5	20L	G15_033	FROM->TO	G14-057T 345.00 - SUNNYSIDE 345KV CKT 1	717	789	0.04156	103.4229	WHITE BLUFF 500/26.0KV TRANSFORMER CKT 1
FDNS	06NR	5	20L	G15_033	FROM->TO	G14-057T 345.00 - SUNNYSIDE 345KV CKT 1	717	789	0.04156	103.4193	GEN336252 1-NINEMILE POINT UNIT#5

SOLUTION	GROUP	SCENARIO	SEASON	SOURCE	DIRECTION	MONITORED ELEMENT	RATEA (MVA)	RATEB(MVA)	TDF	TC%LOADING (% MVA)	CONTINGENCY
FDNS	06NR	5	20L	G15_033	FROM->TO	G14-057T 345.00 - SUNNYSIDE 345KV CKT 1	717	789	0.04151	103.4191	PAOLI - PAYNE 138.00 138KV CKT 1
FDNS	06NR	5	20L	G15_033	FROM->TO	G14-057T 345.00 - SUNNYSIDE 345KV CKT 1	717	789	0.04148	103.419	DRAPER LAKE - SEMINOLE 345KV CKT 2
FDNS	06NR	5	20L	G15_033	FROM->TO	G14-057T 345.00 - SUNNYSIDE 345KV CKT 1	717	789	0.04148	103.4189	DRAPER LAKE - SEMINOLE 345KV CKT 1
FDNS	06NR	5	20L	G15_033	FROM->TO	G14-057T 345.00 - SUNNYSIDE 345KV CKT 1	717	789	0.04153	103.414	EMPORIA ENERGY CENTER - G14_001T 345.00 345KV CKT 1
FDNS	06NR	5	20L	G15_033	FROM->TO	G14-057T 345.00 - SUNNYSIDE 345KV CKT 1	717	789	0.04166	103.3958	LASALLE - STONEWAL LH138.00 138KV CKT 1
FDNS	06NR	5	20L	G15_033	FROM->TO	G14-057T 345.00 - SUNNYSIDE 345KV CKT 1	717	789	0.04166	103.3793	STONEWAL LH138.00 - TUPELO TAP 138KV CKT 1
FDNS	06NR	5	20L	G15_033	FROM->TO	G14-057T 345.00 - SUNNYSIDE 345KV CKT 1	717	789	0.04163	103.3784	P12:138:AEPW:SHERID4:112GORE4
FDNS	06NR	5	20L	G15_033	FROM->TO	G14-057T 345.00 - SUNNYSIDE 345KV CKT 1	717	789	0.0416	103.377	GRACEMONT (BANK 1) 345/138/13.8KV TRANSFORMER CKT 1
FDNS	06NR	5	20L	G15_033	FROM->TO	G14-057T 345.00 - SUNNYSIDE 345KV CKT 1	717	789	0.0414	103.3633	P12:138:OKGE-AEPW:JENSEN4:REDROCKRD4
FDNS	06NR	5	20L	G15_033	FROM->TO	G14-057T 345.00 - SUNNYSIDE 345KV CKT 1	717	789	0.04156	103.3499	GEN336831 1-BAXTER WILSON SES
FDNS	06NR	5	20L	G15_033	FROM->TO	G14-057T 345.00 - SUNNYSIDE 345KV CKT 1	717	789	0.04153	103.3486	ANADARKO - GEORGIA 138KV CKT 1
FDNS	06NR	5	20L	G15_033	FROM->TO	G14-057T 345.00 - SUNNYSIDE 345KV CKT 1	717	789	0.04256	103.3464	LAWTON EASTSIDE (LES 4) 345/138/13.8KV TRANSFORMER CKT 1
FDNS	06NR	5	20L	G15_033	FROM->TO	G14-057T 345.00 - SUNNYSIDE 345KV CKT 1	717	789	0.04256	103.3464	LAWTON EASTSIDE (LES 4) 345/138/13.8KV TRANSFORMER CKT 1
FDNS	06NR	5	20L	G15_033	FROM->TO	G14-057T 345.00 - SUNNYSIDE 345KV CKT 1	717	789	0.04176	103.34	CIMARRON - NORTHWEST 345KV CKT 1
FDNS	06NR	5	20L	G15_033	FROM->TO	G14-057T 345.00 - SUNNYSIDE 345KV CKT 1	717	789	0.04139	103.3325	WEATHERFORD TAP - WEATHERFORD WIND FARM 138KV CKT 1
FDNS	06NR	5	20L	G15_033	FROM->TO	G14-057T 345.00 - SUNNYSIDE 345KV CKT 1	717	789	0.04138	103.3299	GERALD GENTLEMAN STATION - RED WILLOW 345KV CKT 1
FDNS	06NR	5	20L	G15_033	FROM->TO	G14-057T 345.00 - SUNNYSIDE 345KV CKT 1	717	789	0.04153	103.3298	G14_001T 345.00 - WICHITA 345KV CKT 1
FDNS	06NR	5	20L	G15_033	FROM->TO	G14-057T 345.00 - SUNNYSIDE 345KV CKT 1	717	789	0.04156	103.3276	GEN338146 1-INDEPENDENCE UNIT #2
FDNS	06NR	5	20L	G15_033	FROM->TO	G14-057T 345.00 - SUNNYSIDE 345KV CKT 1	717	789	0.04153	103.317	FLETCHER - GEORGIA 138KV CKT 1
FDNS	06NR	5	20L	G15_033	FROM->TO	G14-057T 345.00 - SUNNYSIDE 345KV CKT 1	717	789	0.04122	103.317	PURCELL4 138.00 - WALNUT CREEK 138KV CKT 1
FDNS	06NR	5	20L	G15_033	FROM->TO	G14-057T 345.00 - SUNNYSIDE 345KV CKT 1	717	789	0.04156	103.3147	GEN562783 1-G15036_4 0.6900
FDNS	06NR	5	20L	G15_033	FROM->TO	G14-057T 345.00 - SUNNYSIDE 345KV CKT 1	717	789	0.04156	103.3147	GEN562784 1-G15036_5 0.6900
FDNS	06NR	5	20L	G15_033	FROM->TO	G14-057T 345.00 - SUNNYSIDE 345KV CKT 1	717	789	0.04156	103.3118	NELSON 230/20.0KV TRANSFORMER CKT 1
FDNS	06NR	5	20L	G15_033	FROM->TO	G14-057T 345.00 - SUNNYSIDE 345KV CKT 1	717	789	0.04156	103.3078	ENVILLE 138.00 - MARIETTA4 138.00 138KV CKT 1
FDNS	06NR	5	20L	G15_033	FROM->TO	G14-057T 345.00 - SUNNYSIDE 345KV CKT 1	717	789	0.0411	103.3036	MOORE COUNTY INTERCHANGE - POTTER COUNTY INTERCHANGE 230KV CKT 1
FDNS	06NR	5	20L	G15_033	FROM->TO	G14-057T 345.00 - SUNNYSIDE 345KV CKT 1	717	789	0.0411	103.3036	MOORE COUNTY INTERCHANGE - POTTER COUNTY INTERCHANGE 230KV CKT 1
FDNS	06NR	5	20L	G15_033	FROM->TO	G14-057T 345.00 - SUNNYSIDE 345KV CKT 1	717	789	0.0415	103.2986	EMPIRE - FLETCHER 138KV CKT 1
FDNS	06NR	5	20L	G15_033	FROM->TO	G14-057T 345.00 - SUNNYSIDE 345KV CKT 1	717	789	0.04156	103.2913	GEN506752 1-LEBROCK GAS 1
FDNS	06NR	5	20L	G15_033	FROM->TO	G14-057T 345.00 - SUNNYSIDE 345KV CKT 1	717	789	0.04156	103.2906	GEN506753 1-LEBROCK GAS 2
FDNS	06NR	5	20L	G15_033	FROM->TO	G14-057T 345.00 - SUNNYSIDE 345KV CKT 1	717	789	0.04122	103.2884	CLINTON JUNCTION - ELK CITY 138KV CKT 1
FDNS	06NR	5	20L	G15_033	FROM->TO	G14-057T 345.00 - SUNNYSIDE 345KV CKT 1	717	789	0.04122	103.2884	CLINTON JUNCTION - ELK CITY 138KV CKT 1
FDNS	06NR	5	20L	G15_033	FROM->TO	G14-057T 345.00 - SUNNYSIDE 345KV CKT 1	717	789	0.04134	103.2824	MOREWOOD SW - NINE MILE 138KV CKT 1
FDNS	06NR	5	20L	G15_033	FROM->TO	G14-057T 345.00 - SUNNYSIDE 345KV CKT 1	717	789	0.04139	103.2809	WEATHERFORD SOUTHEAST - WEATHERFORD TAP 138KV CKT 1
FDNS	06NR	5	20L	G15_033	FROM->TO	G14-057T 345.00 - SUNNYSIDE 345KV CKT 1	717	789	0.04111	103.2708	BUCKNER7 345.00 - SPEARVILLE 345KV CKT 1
FDNS	06NR	5	20L	G15_033	FROM->TO	G14-057T 345.00 - SUNNYSIDE 345KV CKT 1	717	789	0.04111	103.2708	BUCKNER7 345.00 - SPEARVILLE 345KV CKT 1
FDNS	06NR	5	20L	G15_033	FROM->TO	G14-057T 345.00 - SUNNYSIDE 345KV CKT 1	717	789	0.0415	103.266	COMANCHE - EMPIRE 138KV CKT 1
FDNS	06NR	5	20L	G15_033	FROM->TO	G14-057T 345.00 - SUNNYSIDE 345KV CKT 1	717	789	0.04156	103.2578	ENVILLE 138.00 - LEBANON 138KV CKT 1
FDNS	06NR	5	20L	G15_033	FROM->TO	G14-057T 345.00 - SUNNYSIDE 345KV CKT 1	717	789	0.04184	103.2577	G15063_T 345.00 - WOODRING 345KV CKT 1
FDNS	06NR	5	20L	G15_033	FROM->TO	G14-057T 345.00 - SUNNYSIDE 345KV CKT 1	717	789	0.04156	103.2447	GEN515577 1-ARBWND11 0.6900
FDNS	06NR	5	20L	G15_033	FROM->TO	G14-057T 345.00 - SUNNYSIDE 345KV CKT 1	717	789	0.04176	103.2425	DUNCAN (DUNCAN) 138/69/13.8KV TRANSFORMER CKT 1
FDNS	06NR	5	20L	G15_033	FROM->TO	G14-057T 345.00 - SUNNYSIDE 345KV CKT 1	717	789	0.04176	103.2425	DUNCAN (DUNCAN) 138/69/13.8KV TRANSFORMER CKT 1
FDNS	06NR	5	20L	G15_033	FROM->TO	G14-057T 345.00 - SUNNYSIDE 345KV CKT 1	717	789	0.04155	103.2344	8DANIEL8 500.00 - MCKNIGHT 500KV CKT 1
FDNS	06NR	5	20L	G15_033	FROM->TO	G14-057T 345.00 - SUNNYSIDE 345KV CKT 1	717	789	0.04156	103.2141	GEN590011 2-ERCOT EQUIVALENCE
FDNS	06NR	5	20L	G15_033	FROM->TO	G14-057T 345.00 - SUNNYSIDE 345KV CKT 1	717	789	0.04156	103.2032	P12:69:AEPW:L.E.S.-2:LAW WC2
FDNS	06NR	5	20L	G15_033	FROM->TO	G14-057T 345.00 - SUNNYSIDE 345KV CKT 1	717	789	0.0416	103.1932	P12:138:AEPW:CORNVIL4:S.W.S.-4
FDNS	06NR	5	20L	G15_033	FROM->TO	G14-057T 345.00 - SUNNYSIDE 345KV CKT 1	717	789	0.04139	103.1894	CLINTON JUNCTION - CLINTON NATURAL GAS TAP 138KV CKT 1
FDNS	06NR	5	20L	G15_033	FROM->TO	G14-057T 345.00 - SUNNYSIDE 345KV CKT 1	717	789	0.04158	103.1891	ANADARKO - GRACMNT4 138.00 138KV CKT 1
FDNS	06NR	5	20L	G15_033	FROM->TO	G14-057T 345.00 - SUNNYSIDE 345KV CKT 1	717	789	0.04166	103.1881	P12:138:WFEC:MSL05
FDNS	06NR	5	20L	G15_033	FROM->TO	G14-057T 345.00 - SUNNYSIDE 345KV CKT 1	717	789	0.04156	103.1848	GEN338143 1-INDEPENDENCE UNIT #1
FDNS	06NR	5	20L	G15_033	FROM->TO	G14-057T 345.00 - SUNNYSIDE 345KV CKT 1	717	789	0.04156	103.1834	GEN590010 1-ERCOT EQUIVALENCE
FDNS	06NR	5	20L	G15_033	FROM->TO	G14-057T 345.00 - SUNNYSIDE 345KV CKT 1	717	789	0.04156	103.1822	GEN334441 1-SABINE UNIT 5
FDNS	06NR	5	20L	G15_033	FROM->TO	G14-057T 345.00 - SUNNYSIDE 345KV CKT 1	717	789	0.04156	103.1822	GEN335614 1-WILLOW GLENN UNIT#4
FDNS	06NR	5	20L	G15_033	FROM->TO	G14-057T 345.00 - SUNNYSIDE 345KV CKT 1	717	789	0.04156	103.1789	GEN300007 1-NEW MADRID UNIT 2
FDNS	00NR	5	20SP	G15_033	FROM->TO	G14-057T 345.00 - SUNNYSIDE 345KV CKT 1	717	789	0.05009	103.1624	CIMARRON - MINCO 345KV CKT 1
FDNS	06NR	5	20L	G15_033	FROM->TO	G14-057T 345.00 - SUNNYSIDE 345KV CKT 1	717	789	0.04156	103.1617	GEN337041 1-GERALD ANDRUS
FDNS	06NR	5	20L	G15_033	FROM->TO	G14-057T 345.00 - SUNNYSIDE 345KV CKT 1	717	789	0.04156	103.1612	GEN334392 1-EXXON MOBIL IPP 1
FDNS	06NR	5	20L	G15_033	FROM->TO	G14-057T 345.00 - SUNNYSIDE 345KV CKT 1	717	789	0.04153	103.1607	LAYFLD8 500.00 - MOUNT OLIVE 500KV CKT 1
FDNS	06NR	5	20L	G15_033	FROM->TO	G14-057T 345.00 - SUNNYSIDE 345KV CKT 1	717	789	0.04153	103.1607	LAYFLD8 500.00 - MOUNT OLIVE 500KV CKT 1
FDNS	06NR	5	20L	G15_033	FROM->TO	G14-057T 345.00 - SUNNYSIDE 345KV CKT 1	717	789	0.04156	103.1595	GEN334393 1-EXXON MOBIL IPP 2
FDNS	06NR	5	20L	G15_033	FROM->TO	G14-057T 345.00 - SUNNYSIDE 345KV CKT 1	717	789	0.04156	103.1595	GEN334394 1-EXXON MOBIL IPP 3
FDNS	06NR	5	20L	G15_033	FROM->TO	G14-057T 345.00 - SUNNYSIDE 345KV CKT 1	717	789	0.04162	103.1593	P12:138:AEPW:112GORE4:L.E.S.-4
FDNS	06NR	5	20L	G15_033	FROM->TO	G14-057T 345.00 - SUNNYSIDE 345KV CKT 1	717	789	0.04134	103.1592	BEARCAT 138.00 - NINE MILE 138KV CKT 1
FDNS	06NR	5	20L	G15_033	FROM->TO	G14-057T 345.00 - SUNNYSIDE 345KV CKT 1	717	789	0.04156	103.1547	GEN336191 1-LITTLE GYPSY UNIT#3
FDNS	06NR	5	20L	G15_033	FROM->TO	G14-057T 345.00 - SUNNYSIDE 345KV CKT 1	717	789	0.04156	103.1508	P12:161:AEPW:DYESS 5:HYLAND 5
FDNS	06NR	5	20L	G15_033	FROM->TO	G14-057T 345.00 - SUNNYSIDE 345KV CKT 1	717	789	0.04156	103.1504	GEN336464 1-MICHOUD UNIT #3
FDNS	06NR	5	20L	G15_033	FROM->TO	G14-057T 345.00 - SUNNYSIDE 345KV CKT 1	717	789	0.04157	103.1492	GRDA1 - GREC TAP5 345.00 345KV CKT 1
FDNS	06NR	5	20L	G15_033	FROM->TO	G14-057T 345.00 - SUNNYSIDE 345KV CKT 1	717	789	0.04145	103.1336	CUSTER4 138.00 - RED HILLS WIND 138KV CKT 1
FDNS	06NR	5	20L	G15_033	FROM->TO	G14-057T 345.00 - SUNNYSIDE 345KV CKT 1	717	789	0.04156	103.1297	LEBANON - TEXOMA JCT 138KV CKT 1
FDNS	06NR	5	20L	G15_033	FROM->TO	G14-057T 345.00 - SUNNYSIDE 345KV CKT 1	717	789	0.04156	103.1258	FRONTIER 345/18.0KV TRANSFORMER CKT 1
FDNS	06NR	5	20L	G15_033	FROM->TO	G14-057T 345.00 - SUNNYSIDE 345KV CKT 1	717	789	0.04914	103.1251	TUCO INTERCHANGE - TUCO_2 345.00 345KV CKT 1
FDNS	06NR	5	20L	G15_033	FROM->TO	G14-057T 345.00 - SUNNYSIDE 345KV CKT 1	717	789	0.04156	103.1244	GEN334433 1-SABINE UNIT 3
FDNS	06NR	5	20L	G15_033	FROM->TO	G14-057T 345.00 - SUNNYSIDE 345KV CKT 1	717	789	0.04176	103.1238	P12:69:WFEC-AEPW:COMANCH2:DUNCAN-2
FDNS	06NR	5	20L	G15_033	FROM->TO	G14-057T 345.00 - SUNNYSIDE 345KV CKT 1	717	789	0.04156	103.1221	FRONTIER 345/18.0KV TRANSFORMER CKT 1
FDNS	06NR	5	20L	G15_033	FROM->TO	G14-057T 345.00 - SUNNYSIDE 345KV CKT 1	717	789	0.04156	103.1207	P12:161:AEPW:EROGERS5:ECNTRTN5
FDNS	06NR	5	20L	G15_033	FROM->TO	G14-057T 345.00 - SUNNYSIDE 345KV CKT 1	717	789	0.04156	103.1169	GEN303007 1-1BC2 U2
FDNS	06NR	5	20L	G15_033	FROM->TO	G14-057T 345.00 - SUNNYSIDE 345KV CKT 1	717	789	0.0414	103.1139	Canadian Pump Station - REDROCKRD4 138.00 138KV CKT 1
FDNS	06NR	5	20L	G15_033	FROM->TO	G14-057T 345.00 - SUNNYSIDE 345KV CKT 1	717	789	0.04199	103.1128	TUTTLE - TUTTLE CONOCO TAP 138KV CKT 1
FDNS	06NR	5	20L	G15_033	FROM->TO	G14-057T 345.00 - SUNNYSIDE 345KV CKT 1	717	789	0.04156	103.1049	GEN336242 1-1NMIL ST1 18.000
FDNS	06NR	5	20L	G15_033	FROM->TO	G14-057T 345.00 - SUNNYSIDE 345KV CKT 1	717	789	0.04156	103.1029	GEN303006 1-1BC2 U1

SOLUTION	GROUP	SCENARIO	SEASON	SOURCE	DIRECTION	MONITORED ELEMENT	RATEA (MVA)	RATEB(MVA)	TDF	TC%LOADING (% MVA)	CONTINGENCY
FDNS	06NR	5	20L	G15_033	FROM->TO	G14-057T 345.00 - SUNNYSIDE 345KV CKT 1	717	789	0.04153	103.1026	G15074_T 345.00 - HOYT 345KV CKT 1
FDNS	06NR	5	20L	G15_033	FROM->TO	G14-057T 345.00 - SUNNYSIDE 345KV CKT 1	717	789	0.04221	103.1006	DUNCAN - DUNCHERTP4 138.00 138KV CKT 1
FDNS	06NR	5	20L	G15_033	FROM->TO	G14-057T 345.00 - SUNNYSIDE 345KV CKT 1	717	789	0.04221	103.1006	DUNCAN - DUNCHERTP4 138.00 138KV CKT 1
FDNS	06NR	5	20L	G15_033	FROM->TO	G14-057T 345.00 - SUNNYSIDE 345KV CKT 1	717	789	0.04221	103.0997	DUNCAN EASTSIDE - DUNCHERTP4 138.00 138KV CKT 1
FDNS	06NR	5	20L	G15_033	FROM->TO	G14-057T 345.00 - SUNNYSIDE 345KV CKT 1	717	789	0.04145	103.0934	CUSTER4 138.00 - ELLIS 4 138.00 138KV CKT 1
FDNS	06NR	5	20L	G15_033	FROM->TO	G14-057T 345.00 - SUNNYSIDE 345KV CKT 1	717	789	0.04176	103.085	DUNCAN - TOSCO 69KV CKT 1
FDNS	06NR	5	20L	G15_033	FROM->TO	G14-057T 345.00 - SUNNYSIDE 345KV CKT 1	717	789	0.0416	103.0833	NORGE ROAD - SOUTHWESTERN STATION 138KV CKT 1
FDNS	06NR	5	20L	G15_033	FROM->TO	G14-057T 345.00 - SUNNYSIDE 345KV CKT 1	717	789	0.0416	103.0833	NORGE ROAD - SOUTHWESTERN STATION 138KV CKT 1
FDNS	06NR	5	20L	G15_033	FROM->TO	G14-057T 345.00 - SUNNYSIDE 345KV CKT 1	717	789	0.04156	103.0826	CIMARRON - CZECH HALL 138KV CKT 1
FDNS	06NR	5	20L	G15_033	FROM->TO	G14-057T 345.00 - SUNNYSIDE 345KV CKT 1	717	789	0.04156	103.0824	GEN336801 1-BAXTER WILSON UNIT #1
FDNS	06NR	5	20L	G15_033	FROM->TO	G14-057T 345.00 - SUNNYSIDE 345KV CKT 1	717	789	0.04134	103.0794	BEARCAT 138.00 - MOORELAND 138KV CKT 1
FDNS	06NR	5	20L	G15_033	FROM->TO	G14-057T 345.00 - SUNNYSIDE 345KV CKT 1	717	789	0.04134	103.0747	P12:138:WFEC:MSL14
FDNS	06NR	5	20L	G15_033	FROM->TO	G14-057T 345.00 - SUNNYSIDE 345KV CKT 1	717	789	0.04154	103.0716	MAGNET COVE - SHERIDAN EHV 500KV CKT 1
FDNS	06NR	5	20L	G15_033	FROM->TO	G14-057T 345.00 - SUNNYSIDE 345KV CKT 1	717	789	0.04156	103.0713	GEN336251 1-NINEMILE POINT UNIT#4
FDNS	06NR	5	20L	G15_033	FROM->TO	G14-057T 345.00 - SUNNYSIDE 345KV CKT 1	717	789	0.04221	103.0701	DUNCAN EASTSIDE - OMPA-DUNCAN 821 138KV CKT 1
FDNS	06NR	5	20L	G15_033	FROM->TO	G14-057T 345.00 - SUNNYSIDE 345KV CKT 1	717	789	0.04158	103.07	CORN TAP - SEQUOYAHJ4 138.00 138KV CKT 1
FDNS	06NR	5	20L	G15_033	FROM->TO	G14-057T 345.00 - SUNNYSIDE 345KV CKT 1	717	789	0.04176	103.0681	COMANCHE TAP - TOSCO 69KV CKT 1
FDNS	06NR	5	20L	G15_033	FROM->TO	G14-057T 345.00 - SUNNYSIDE 345KV CKT 1	717	789	0.04154	103.0674	HOT SPRINGS EHV - MAGNET COVE 500KV CKT 1
FDNS	06NR	5	20L	G15_033	FROM->TO	G14-057T 345.00 - SUNNYSIDE 345KV CKT 1	717	789	0.04158	103.066	ANADARKO - SEQUOYAHJ4 138.00 138KV CKT 1
FDNS	06NR	5	20L	G15_033	FROM->TO	G14-057T 345.00 - SUNNYSIDE 345KV CKT 1	717	789	0.04151	103.0572	G15095_T 138.00 - ROSE_VALLEY 138.00 138KV CKT 1
FDNS	06NR	5	20L	G15_033	FROM->TO	G14-057T 345.00 - SUNNYSIDE 345KV CKT 1	717	789	0.04122	103.0541	PAOLI - WALNUT CREEK 138KV CKT 1
FDNS	06NR	5	20L	G15_033	FROM->TO	G14-057T 345.00 - SUNNYSIDE 345KV CKT 1	717	789	0.04156	103.05	OKLAUNION 345KV SWITCHED SHUNT
FDNS	06NR	5	20L	G15_033	FROM->TO	G14-057T 345.00 - SUNNYSIDE 345KV CKT 1	717	789	0.04152	103.0488	CIMARRON - SARA 138KV CKT 1
FDNS	06NR	5	20L	G15_033	FROM->TO	G14-057T 345.00 - SUNNYSIDE 345KV CKT 1	717	789	0.04156	103.0475	GEN334070 1-LEWIS CREEK 1
FDNS	06NR	5	20L	G15_033	FROM->TO	G14-057T 345.00 - SUNNYSIDE 345KV CKT 1	717	789	0.04156	103.0475	GEN334071 1-LEWIS CREEK 2
FDNS	06NR	5	20L	G15_033	FROM->TO	G14-057T 345.00 - SUNNYSIDE 345KV CKT 1	717	789	0.04199	103.0458	CIMARRON - TUTTLE CONOCO TAP 138KV CKT 1
FDNS	06NR	5	20L	G15_033	FROM->TO	G14-057T 345.00 - SUNNYSIDE 345KV CKT 1	717	789	0.04153	103.041	G15074_T 345.00 - JEFFREY ENERGY CENTER 345KV CKT 1
FDNS	06NR	5	20L	G15_033	FROM->TO	G14-057T 345.00 - SUNNYSIDE 345KV CKT 1	717	789	0.04152	103.0373	BLACKBERRY - NEOSHO 345KV CKT 1
FDNS	06NR	5	20L	G15_033	FROM->TO	G14-057T 345.00 - SUNNYSIDE 345KV CKT 1	717	789	0.04152	103.0373	BLACKBERRY - NEOSHO 345KV CKT 1
FDNS	06NR	5	20L	G15_033	FROM->TO	G14-057T 345.00 - SUNNYSIDE 345KV CKT 1	717	789	0.04139	103.0324	CLINTON NATURAL GAS TAP - WEATHERFORD WIND FARM 138KV CKT 1
FDNS	06NR	5	20L	G15_033	FROM->TO	G14-057T 345.00 - SUNNYSIDE 345KV CKT 1	717	789	0.04153	103.0256	HOYT - STRANGER CREEK 345KV CKT 1
FDNS	06NR	5	20L	G15_033	FROM->TO	G14-057T 345.00 - SUNNYSIDE 345KV CKT 1	717	789	0.04156	103.0209	CZECH HALL - XEROX 138KV CKT 1
FDNS	06NR	5	20L	G15_033	FROM->TO	G14-057T 345.00 - SUNNYSIDE 345KV CKT 1	717	789	0.0416	103.0193	SOUTHWESTERN STATION - VERDEN 138KV CKT 1
FDNS	06NR	5	20L	G15_033	FROM->TO	G14-057T 345.00 - SUNNYSIDE 345KV CKT 1	717	789	0.04156	103.0192	MORGAN - XEROX 138KV CKT 1
FDNS	06NR	5	20L	G15_033	FROM->TO	G14-057T 345.00 - SUNNYSIDE 345KV CKT 1	717	789	0.04156	103.017	GEN337430 1-PERYVILLE UNIT #3
FDNS	06NR	5	20L	G15_033	FROM->TO	G14-057T 345.00 - SUNNYSIDE 345KV CKT 1	717	789	0.04156	103.0159	GEN337428 1-PERYVILLE UNIT #1
FDNS	06NR	5	20L	G15_033	FROM->TO	G14-057T 345.00 - SUNNYSIDE 345KV CKT 1	717	789	0.04156	103.0143	GEN336240 1-1NMIL CT1 18.000
FDNS	06NR	5	20L	G15_033	FROM->TO	G14-057T 345.00 - SUNNYSIDE 345KV CKT 1	717	789	0.04156	103.0136	GEN336241 1-1NMIL CT2 18.000
FDNS	06NR	5	20L	G15_033	FROM->TO	G14-057T 345.00 - SUNNYSIDE 345KV CKT 1	717	789	0.04156	103.01	MORGAN - MUSTANG 138KV CKT 1
FDNS	06NR	5	20L	G15_033	FROM->TO	G14-057T 345.00 - SUNNYSIDE 345KV CKT 1	717	789	0.04154	103.0097	P12:138:AEPW-OGE:SHIDLER4:OSAGE 4
FDNS	06NR	5	20L	G15_033	FROM->TO	G14-057T 345.00 - SUNNYSIDE 345KV CKT 1	717	789	0.04145	103.0088	ELLIS 4 138.00 - MOREWOOD SW 138KV CKT 1
FDNS	06NR	5	20L	G15_033	FROM->TO	G14-057T 345.00 - SUNNYSIDE 345KV CKT 1	717	789	0.04176	103.008	COMANCHE - COMANCHE TAP 69KV CKT 1
FDNS	06NR	5	20L	G15_033	FROM->TO	G14-057T 345.00 - SUNNYSIDE 345KV CKT 1	717	789	0.0416	103.0078	NORTH 29TH CHICKASHA - VERDEN 138KV CKT 1
FDNS	06NR	5	20L	G15_033	FROM->TO	G14-057T 345.00 - SUNNYSIDE 345KV CKT 1	717	789	0.0416	103.0061	CORNVILLE - NORGE ROAD 138KV CKT 1
FDNS	06NR	5	20L	G15_033	FROM->TO	G14-057T 345.00 - SUNNYSIDE 345KV CKT 1	717	789	0.0416	103.0061	CORNVILLE - NORGE ROAD 138KV CKT 1
FDNS	06NR	5	20L	G15_033	FROM->TO	G14-057T 345.00 - SUNNYSIDE 345KV CKT 1	717	789	0.04186	103.0046	P12:69:AEPW-OMPA:COMANC-2:OMWALTR2
FDNS	06NR	5	20L	G15_033	FROM->TO	G14-057T 345.00 - SUNNYSIDE 345KV CKT 1	717	789	0.04156	103.0045	GEN335570 1-CARVILLE CTG
FDNS	06NR	5	20L	G15_033	FROM->TO	G14-057T 345.00 - SUNNYSIDE 345KV CKT 1	717	789	0.04156	103.0045	GEN335571 1-CARVILLE UNIT #1
FDNSLock	06NR	5	20L	G15_033	FROM->TO	G14-057T 345.00 - SUNNYSIDE 345KV CKT 1	717	789	0.04156	103	OKLAUNION 345KV SWITCHED SHUNT
FDNS	06NR	5	20L	G15_033	FROM->TO	G14-057T 345.00 - SUNNYSIDE 345KV CKT 1	717	789	0.04156	102.9943	GEN336167 1-GULF OXY U1
FDNS	06NR	5	20L	G15_033	FROM->TO	G14-057T 345.00 - SUNNYSIDE 345KV CKT 1	717	789	0.04156	102.9943	GEN336168 1-GULF OXY U2
FDNS	06NR	5	20L	G15_033	FROM->TO	G14-057T 345.00 - SUNNYSIDE 345KV CKT 1	717	789	0.04156	102.9943	GEN336169 1-GULF OXY U3
FDNS	06NR	5	20L	G15_033	FROM->TO	G14-057T 345.00 - SUNNYSIDE 345KV CKT 1	717	789	0.04156	102.9851	GEN303024 1-1G3INTHB 18.000
FDNS	06NR	5	20L	G15_033	FROM->TO	G14-057T 345.00 - SUNNYSIDE 345KV CKT 1	717	789	0.0414	102.9809	Canadian Pump Station - JENSEN ROAD 138KV CKT 1
FDNS	06NR	5	20L	G15_033	FROM->TO	G14-057T 345.00 - SUNNYSIDE 345KV CKT 1	717	789	0.0416	102.9762	CORNVILLE - NORTH 29TH CHICKASHA 138KV CKT 1
FDNS	06NR	5	20L	G15_033	FROM->TO	G14-057T 345.00 - SUNNYSIDE 345KV CKT 1	717	789	0.04152	102.9729	SARA - STHLAKE4 138.00 138KV CKT 1
FDNS	06NR	5	20L	G15_033	FROM->TO	G14-057T 345.00 - SUNNYSIDE 345KV CKT 1	717	789	0.04152	102.9592	MCCLAIN - STHLAKE4 138.00 138KV CKT 1
FDNS	06NR	5	20L	G15_033	FROM->TO	G14-057T 345.00 - SUNNYSIDE 345KV CKT 1	717	789	0.04168	102.9475	WALTERS - WALTERS 69KV CKT 1
FDNS	00NR	5	17SP	G15_033	FROM->TO	G14-057T 345.00 - SUNNYSIDE 345KV CKT 1	717	789	0.05213	102.9418	GRACEMONT - MINCO 345KV CKT 1
FDNSLock	06NR	5	20L	G15_033	FROM->TO	G14-057T 345.00 - SUNNYSIDE 345KV CKT 1	717	789	0.04156	102.8	SUNNYSIDE 1 13KV SWITCHED SHUNT
FDNS	06NR	5	20L	G15_033	FROM->TO	G14-057T 345.00 - SUNNYSIDE 345KV CKT 1	717	789	0.04156	102.7868	SUNNYSIDE 1 13KV SWITCHED SHUNT
FDNS	06NR	5	20L	G15_033	FROM->TO	G14-057T 345.00 - SUNNYSIDE 345KV CKT 1	717	789	0.04156	102.7103	OKLAUNION 345/13.2KV TRANSFORMER CKT 1
FDNS	06NR	5	20L	G15_033	FROM->TO	G14-057T 345.00 - SUNNYSIDE 345KV CKT 1	717	789	0.04202	102.524	P12:230:AEPW:ELKCITY6:SWEETWT6
FDNS	06NR	5	20L	G15_033	FROM->TO	G14-057T 345.00 - SUNNYSIDE 345KV CKT 1	717	789	0.04156	102.5215	803-OKLAUNION
FDNS	00NR	5	20WP	G15_033	FROM->TO	G14-057T 345.00 - SUNNYSIDE 345KV CKT 1	717	789	0.03353	102.4481	JOHNSON COUNTY - SUNNYSIDE 345KV CKT 1
FDNS	06NR	5	20L	G15_033	FROM->TO	G14-057T 345.00 - SUNNYSIDE 345KV CKT 1	717	789	0.04226	102.2865	CHISHOLM7 345.00 () 345/230/13.2KV TRANSFORMER CKT 1
FDNS	06NR	5	20L	G15_033	FROM->TO	G14-057T 345.00 - SUNNYSIDE 345KV CKT 1	717	789	0.04297	102.2671	P12:138:AEPW:112GORE4:SNYDER-4
FDNS	06NR	5	20L	G15_033	FROM->TO	G14-057T 345.00 - SUNNYSIDE 345KV CKT 1	717	789	0.04156	102.1712	GEN520811 1-ANADRK4
FDNS	06NR	5	20L	G15_033	FROM->TO	G14-057T 345.00 - SUNNYSIDE 345KV CKT 1	717	789	0.04156	102.1295	GEN562084 1-G11_050_3 0.6900
FDNS	06NR	5	20L	G15_033	FROM->TO	G14-057T 345.00 - SUNNYSIDE 345KV CKT 1	717	789	0.0414	102.1273	ROCKY POINT - SPRINGDALE 138KV CKT 1
FDNS	06NR	5	20L	G15_033	FROM->TO	G14-057T 345.00 - SUNNYSIDE 345KV CKT 1	717	789	0.04156	102.0993	GEN560187 1-WTH WIND 0.5750
FDNS	06NR	5	20L	G15_033	FROM->TO	G14-057T 345.00 - SUNNYSIDE 345KV CKT 1	717	789	0.04209	102.0949	CLINTON AIR FORCE BASE TAP - HOBART JUNCTION 138KV CKT 1
FDNS	06NR	5	20L	G15_033	FROM->TO	G14-057T 345.00 - SUNNYSIDE 345KV CKT 1	717	789	0.04147	102.0917	BROWN - RUSSETT 138KV CKT 1
FDNS	06NR	5	20L	G15_033	FROM->TO	G14-057T 345.00 - SUNNYSIDE 345KV CKT 1	717	789	0.04156	102.0873	GEN560112 1-G08_037_3 0.6900
FDNS	06NR	5	20L	G15_033	FROM->TO	G14-057T 345.00 - SUNNYSIDE 345KV CKT 1	717	789	0.04182	102.0859	P12:138:AEPW:SHAM4WT:CHILD4WT
FDNS	06NR	5	20L	G15_033	FROM->TO	G14-057T 345.00 - SUNNYSIDE 345KV CKT 1	717	789	0.04297	102.0857	CACHE - SNYDER 138KV CKT 1
FDNS	06NR	5	20L	G15_033	FROM->TO	G14-057T 345.00 - SUNNYSIDE 345KV CKT 1	717	789	0.04155	102.0813	P12:138:WFEC:MSL06
FDNS	06NR	5	20L	G15_033	FROM->TO	G14-057T 345.00 - SUNNYSIDE 345KV CKT 1	717	789	0.04155	102.0785	P12:138:AEPW-SWPA:LONEOAK4:TUPELO4
FDNS	06NR	5	20L	G15_033	FROM->TO	G14-057T 345.00 - SUNNYSIDE 345KV CKT 1	717	789	0.04209	102.0768	CLINTON AIR FORCE BASE TAP - ELK CITY 138KV CKT 1

SOLUTION	GROUP	SCENARIO	SEASON	SOURCE	DIRECTION	MONITORED ELEMENT	RATEA (MVA)	RATEB(MVA)	TDF	TC%LOADING (% MVA)	CONTINGENCY
FDNS	06NR	5	20L	G15_033	FROM->TO	G14-057T 345.00 - SUNNYSIDE 345KV CKT 1	717	789	0.04156	102.0766	GEN560186 1-BLUCAN2-WTG10.7000
FDNS	06NR	5	20L	G15_033	FROM->TO	G14-057T 345.00 - SUNNYSIDE 345KV CKT 1	717	789	0.04143	102.0711	RUSSETT - SPRINGDALE 138KV CKT 1
FDNS	06NR	5	20L	G15_033	FROM->TO	G14-057T 345.00 - SUNNYSIDE 345KV CKT 1	717	789	0.04147	102.0703	RUSSETT - RUSSETT 138KV CKT 1
FDNS	06NR	5	20L	G15_033	FROM->TO	G14-057T 345.00 - SUNNYSIDE 345KV CKT 1	717	789	0.04154	102.049	8BHAM STEEL 500.00 - WEST MEMPHIS 500 500KV CKT 1
FDNS	06NR	5	20L	G15_033	FROM->TO	G14-057T 345.00 - SUNNYSIDE 345KV CKT 1	717	789	0.04156	102.0378	GEN659103 1-ANTELOPE VALLEY UNIT1
FDNS	06NR	5	20L	G15_033	FROM->TO	G14-057T 345.00 - SUNNYSIDE 345KV CKT 1	717	789	0.04156	102.0378	GEN659107 2-ANTELOPE VALLEY UNIT2
FDNS	06NR	5	20L	G15_033	FROM->TO	G14-057T 345.00 - SUNNYSIDE 345KV CKT 1	717	789	0.04156	102.0192	GEN511961 1-DEMPSEY-WTG10.7000
FDNS	06NR	5	20L	G15_033	FROM->TO	G14-057T 345.00 - SUNNYSIDE 345KV CKT 1	717	789	0.04156	102.019	GEN563273 2-G15093_4 0.6900
FDNS	06NR	5	20L	G15_033	FROM->TO	G14-057T 345.00 - SUNNYSIDE 345KV CKT 1	717	789	0.04156	102.0187	GEN645012 2-NEBRASKA CITY 2
FDNS	06NR	5	20L	G15_033	FROM->TO	G14-057T 345.00 - SUNNYSIDE 345KV CKT 1	717	789	0.04156	102.0124	GEN530690 1-PRWINDG1 0.6900
FDNS	06NR	5	20L	G15_033	FROM->TO	G14-057T 345.00 - SUNNYSIDE 345KV CKT 1	717	789	0.04156	102.0084	GEN523815 1-LLANO ESTACADO WIND GEN
FDNS	06NR	5	20L	G15_033	FROM->TO	G14-057T 345.00 - SUNNYSIDE 345KV CKT 1	717	789	0.04156	102.004	GEN562559 1-G14_047_3 0.4800
FDNS	06NR	5	20L	G15_033	FROM->TO	G14-057T 345.00 - SUNNYSIDE 345KV CKT 1	717	789	0.04153	101.9954	P12:138:WFEC-AEPW:GOLDENSW4:CRAIGJT4
FDNS	06NR	5	20L	G15_033	FROM->TO	G14-057T 345.00 - SUNNYSIDE 345KV CKT 1	717	789	0.0421	101.9938	GRAPEVINE INTERCHANGE - STATELINE INTERCHANGE 230KV CKT 1
FDNS	06NR	5	20L	G15_033	FROM->TO	G14-057T 345.00 - SUNNYSIDE 345KV CKT 1	717	789	0.0421	101.9938	GRAPEVINE INTERCHANGE - STATELINE INTERCHANGE 230KV CKT 1
FDNS	06NR	5	20L	G15_033	FROM->TO	G14-057T 345.00 - SUNNYSIDE 345KV CKT 1	717	789	0.04097	101.9832	P12:138:OKGE:3TERM39
FDNS	06NR	5	20L	G15_033	FROM->TO	G14-057T 345.00 - SUNNYSIDE 345KV CKT 1	717	789	0.04156	101.9831	GEN539807 1-G05-12-1 0.6900
FDNS	06NR	5	20L	G15_033	FROM->TO	G14-057T 345.00 - SUNNYSIDE 345KV CKT 1	717	789	0.04156	101.9751	GEN562074 1-G1149G1504 0.6900
FDNS	06NR	5	20L	G15_033	FROM->TO	G14-057T 345.00 - SUNNYSIDE 345KV CKT 1	717	789	0.04156	101.9744	GEN515591 1-PALDRW11 0.6900
FDNS	06NR	5	20L	G15_033	FROM->TO	G14-057T 345.00 - SUNNYSIDE 345KV CKT 1	717	789	0.04218	101.9675	GRAPEVINE INTERCHANGE - NICHOLS STATION 230KV CKT 1
FDNS	06NR	5	20L	G15_033	FROM->TO	G14-057T 345.00 - SUNNYSIDE 345KV CKT 1	717	789	0.04218	101.9675	GRAPEVINE INTERCHANGE - NICHOLS STATION 230KV CKT 1
FDNS	06NR	5	20L	G15_033	FROM->TO	G14-057T 345.00 - SUNNYSIDE 345KV CKT 1	717	789	0.04148	101.964	P12:115:AEPW:TURK3:HOPE3
FDNS	06NR	5	20L	G15_033	FROM->TO	G14-057T 345.00 - SUNNYSIDE 345KV CKT 1	717	789	0.04156	101.9605	GEN532663 1-LAWRENCE ENERGY CENTER UNIT 5
FDNS	06NR	5	20L	G15_033	FROM->TO	G14-057T 345.00 - SUNNYSIDE 345KV CKT 1	717	789	0.04148	101.9591	HOPE - MCNAB REC 115KV CKT 1
FDNS	06NR	5	20L	G15_033	FROM->TO	G14-057T 345.00 - SUNNYSIDE 345KV CKT 1	717	789	0.0415	101.9579	WELSH - WILKES 345KV CKT 1
FDNS	06NR	5	20L	G15_033	FROM->TO	G14-057T 345.00 - SUNNYSIDE 345KV CKT 1	717	789	0.0415	101.9579	WELSH - WILKES 345KV CKT 1
FDNS	06NR	5	20L	G15_033	FROM->TO	G14-057T 345.00 - SUNNYSIDE 345KV CKT 1	717	789	0.04156	101.9575	GEN562023 1-G11_020_3 0.6900
FDNS	06NR	5	20L	G15_033	FROM->TO	G14-057T 345.00 - SUNNYSIDE 345KV CKT 1	717	789	0.04156	101.9575	GEN562026 1-G11_019_3 0.6900
FDNS	06NR	5	20L	G15_033	FROM->TO	G14-057T 345.00 - SUNNYSIDE 345KV CKT 1	717	789	0.04151	101.9506	CARROLL - DOLET HILLS 230KV CKT 1
FDNS	06NR	5	20L	G15_033	FROM->TO	G14-057T 345.00 - SUNNYSIDE 345KV CKT 1	717	789	0.04148	101.9499	MCNAB REC - Turk 115 115KV CKT 1
FDNS	06NR	5	20L	G15_033	FROM->TO	G14-057T 345.00 - SUNNYSIDE 345KV CKT 1	717	789	0.04135	101.9499	ROCKY POINT - SUNNYSIDE 138KV CKT 1
FDNS	06NR	5	20L	G15_033	FROM->TO	G14-057T 345.00 - SUNNYSIDE 345KV CKT 1	717	789	0.04148	101.9498	TURK (TURK 1) 138/115/13.2KV TRANSFORMER CKT 1
FDNS	06NR	5	20L	G15_033	FROM->TO	G14-057T 345.00 - SUNNYSIDE 345KV CKT 1	717	789	0.04148	101.9498	TURK (TURK 1) 138/115/13.2KV TRANSFORMER CKT 1
FDNS	06NR	5	20L	G15_033	FROM->TO	G14-057T 345.00 - SUNNYSIDE 345KV CKT 1	717	789	0.04067	101.9462	CANADIAN RIVER - MUSKOGEE 345KV CKT 1
FDNS	06NR	5	20L	G15_033	FROM->TO	G14-057T 345.00 - SUNNYSIDE 345KV CKT 1	717	789	0.04156	101.9459	GEN562627 1-ASGI14_002_30.8200
FDNS	06NR	5	20L	G15_033	FROM->TO	G14-057T 345.00 - SUNNYSIDE 345KV CKT 1	717	789	0.04156	101.9416	CLAY BOSWELL 230/20.9KV TRANSFORMER CKT 1
FDNS	06NR	5	20L	G15_033	FROM->TO	G14-057T 345.00 - SUNNYSIDE 345KV CKT 1	717	789	0.04152	101.9374	HUGO (HUGO 1) 345/138/13.8KV TRANSFORMER CKT 1
FDNS	06NR	5	20L	G15_033	FROM->TO	G14-057T 345.00 - SUNNYSIDE 345KV CKT 1	717	789	0.04147	101.9269	LONGWOOD - WILKES 345KV CKT 1
FDNS	06NR	5	20L	G15_033	FROM->TO	G14-057T 345.00 - SUNNYSIDE 345KV CKT 1	717	789	0.04147	101.9269	LONGWOOD - WILKES 345KV CKT 1
FDNS	06NR	5	20L	G15_033	FROM->TO	G14-057T 345.00 - SUNNYSIDE 345KV CKT 1	717	789	0.04156	101.9265	GEN515443 1-MNCOWND1 0.7000
FDNS	06NR	5	20L	G15_033	FROM->TO	G14-057T 345.00 - SUNNYSIDE 345KV CKT 1	717	789	0.04156	101.9161	GEN528361 1-MADDOX GEN #1
FDNS	06NR	5	20L	G15_033	FROM->TO	G14-057T 345.00 - SUNNYSIDE 345KV CKT 1	717	789	0.04156	101.9052	GEN563202 1-G15085_3 0.5500
FDNS	06NR	5	20L	G15_033	FROM->TO	G14-057T 345.00 - SUNNYSIDE 345KV CKT 1	717	789	0.0414	101.896	CLARKSVILLE - MUSKOGEE 345KV CKT 1
FDNS	06NR	5	20L	G15_033	FROM->TO	G14-057T 345.00 - SUNNYSIDE 345KV CKT 1	717	789	0.0414	101.896	CLARKSVILLE - MUSKOGEE 345KV CKT 1
FDNS	06NR	5	20L	G15_033	FROM->TO	G14-057T 345.00 - SUNNYSIDE 345KV CKT 1	717	789	0.04156	101.8951	GEN562685 1-G15_013_3 0.3550
FDNS	06NR	5	20L	G15_033	FROM->TO	G14-057T 345.00 - SUNNYSIDE 345KV CKT 1	717	789	0.04156	101.8913	GEN629072 4-LANSING GENERATOR FOR UNITS NO4 EIA CODE 1
FDNS	06NR	5	20L	G15_033	FROM->TO	G14-057T 345.00 - SUNNYSIDE 345KV CKT 1	717	789	0.04134	101.8839	P12:138:OKGE:3TERM40
FDNS	06NR	5	20L	G15_033	FROM->TO	G14-057T 345.00 - SUNNYSIDE 345KV CKT 1	717	789	0.04156	101.8824	GEN563272 1-G15093_3 0.6900
FDNS	06NR	5	20L	G15_033	FROM->TO	G14-057T 345.00 - SUNNYSIDE 345KV CKT 1	717	789	0.04156	101.8799	INDEPENDENCE 500/26.0KV TRANSFORMER CKT 1
FDNS	06NR	5	20L	G15_033	FROM->TO	G14-057T 345.00 - SUNNYSIDE 345KV CKT 1	717	789	0.04156	101.8752	GEN562432 1-G13-030 0.6900
FDNS	06NR	5	20L	G15_033	FROM->TO	G14-057T 345.00 - SUNNYSIDE 345KV CKT 1	717	789	0.04156	101.8639	GEN681542 6-JP MADGETT
FDNS	06NR	5	20L	G15_033	FROM->TO	G14-057T 345.00 - SUNNYSIDE 345KV CKT 1	717	789	0.04158	101.8539	P12:138:WFEC:MSL16
FDNS	06NR	5	20L	G15_033	FROM->TO	G14-057T 345.00 - SUNNYSIDE 345KV CKT 1	717	789	0.04156	101.8517	GEN562017 1-G11_022_3 0.6900
FDNS	06NR	5	20L	G15_033	FROM->TO	G14-057T 345.00 - SUNNYSIDE 345KV CKT 1	717	789	0.04156	101.8419	GEN562962 1-G15058_3 0.4180
FDNS	06NR	5	20L	G15_033	FROM->TO	G14-057T 345.00 - SUNNYSIDE 345KV CKT 1	717	789	0.04156	101.8312	GEN515393 1-OGEWND2G
FDNS	06NR	5	20L	G15_033	FROM->TO	G14-057T 345.00 - SUNNYSIDE 345KV CKT 1	717	789	0.04156	101.8224	GEN344894 1-1LAB G1 20.000
FDNS	06NR	5	20L	G15_033	FROM->TO	G14-057T 345.00 - SUNNYSIDE 345KV CKT 1	717	789	0.04156	101.8194	ALMA 161 161/24.0KV TRANSFORMER CKT 1
FDNS	06NR	5	20L	G15_033	FROM->TO	G14-057T 345.00 - SUNNYSIDE 345KV CKT 1	717	789	0.04155	101.8174	P12:138:WFEC:MSL09
FDNS	06NR	5	20L	G15_033	FROM->TO	G14-057T 345.00 - SUNNYSIDE 345KV CKT 1	717	789	0.04156	101.7949	GEN526678 1-CIRRUS_WND 10.6900
FDNS	06NR	5	20L	G15_033	FROM->TO	G14-057T 345.00 - SUNNYSIDE 345KV CKT 1	717	789	0.04156	101.7903	GEN562812 1-G15040_3 0.3570
FDNS	06NR	5	20L	G15_033	FROM->TO	G14-057T 345.00 - SUNNYSIDE 345KV CKT 1	717	789	0.04156	101.7883	GEN563132 1-G15078_3 0.3570
FDNS	06NR	5	20L	G15_033	FROM->TO	G14-057T 345.00 - SUNNYSIDE 345KV CKT 1	717	789	0.04154	101.7847	DELL 500 - INDEPENDENCE 500KV CKT 1
FDNS	06NR	5	20L	G15_033	FROM->TO	G14-057T 345.00 - SUNNYSIDE 345KV CKT 1	717	789	0.04129	101.7793	CHICKASAW - TOTAL 138KV CKT 1
FDNS	06NR	5	20L	G15_033	FROM->TO	G14-057T 345.00 - SUNNYSIDE 345KV CKT 1	717	789	0.04156	101.777	GEN562587 1-G14_056_3 0.6900
FDNS	06NR	5	20L	G15_033	FROM->TO	G14-057T 345.00 - SUNNYSIDE 345KV CKT 1	717	789	0.04156	101.7675	GEN562531 1-G14_033_3 0.3420
FDNS	06NR	5	20L	G15_033	FROM->TO	G14-057T 345.00 - SUNNYSIDE 345KV CKT 1	717	789	0.04156	101.7675	GEN562535 1-G14_034_3 0.3420
FDNS	06NR	5	20L	G15_033	FROM->TO	G14-057T 345.00 - SUNNYSIDE 345KV CKT 1	717	789	0.04153	101.7651	KEO EHV - WEST MEMPHIS 500 500KV CKT 1
FDNS	06NR	5	20L	G15_033	FROM->TO	G14-057T 345.00 - SUNNYSIDE 345KV CKT 1	717	789	0.04156	101.7631	GEN563102 1-G15075_3 0.5500
FDNS	06NR	5	20L	G15_033	FROM->TO	G14-057T 345.00 - SUNNYSIDE 345KV CKT 1	717	789	0.04156	101.7571	GEN661015 1-COYOTE
FDNS	06NR	5	20L	G15_033	FROM->TO	G14-057T 345.00 - SUNNYSIDE 345KV CKT 1	717	789	0.04156	101.7417	GEN657748 1-YOUNG 2 GENERATOR
FDNS	06NR	5	20L	G15_033	FROM->TO	G14-057T 345.00 - SUNNYSIDE 345KV CKT 1	717	789	0.04156	101.7264	GEN562802 1-G15039_3 0.3570
FDNS	06NR	5	20L	G15_033	FROM->TO	G14-057T 345.00 - SUNNYSIDE 345KV CKT 1	717	789	0.04112	101.726	ARDMORE WEST - CARTER 138KV CKT 1
FDNS	06NR	5	20L	G15_033	FROM->TO	G14-057T 345.00 - SUNNYSIDE 345KV CKT 1	717	789	0.04156	101.7206	GEN515449 1-CRSRDW11 0.6900
FDNS	06NR	5	20L	G15_033	FROM->TO	G14-057T 345.00 - SUNNYSIDE 345KV CKT 1	717	789	0.04156	101.7147	GEN563062 1-G15071_3 0.6900
FDNS	06NR	5	20L	G15_033	FROM->TO	G14-057T 345.00 - SUNNYSIDE 345KV CKT 1	717	789	0.04156	101.6822	4SIOUX 2 138.00 138/18.0KV TRANSFORMER CKT 1
FDNS	06NR	5	20L	G15_033	FROM->TO	G14-057T 345.00 - SUNNYSIDE 345KV CKT 1	717	789	0.04112	101.6802	ARDMORE WEST - UNIROYAL 138KV CKT 1
FDNS	06NR	5	20L	G15_033	FROM->TO	G14-057T 345.00 - SUNNYSIDE 345KV CKT 1	717	789	0.04156	101.6795	GEN672306 6-BOUNDARY DAM GENERATOR 6
FDNS	06NR	5	20L	G15_033	FROM->TO	G14-057T 345.00 - SUNNYSIDE 345KV CKT 1	717	789	0.04156	101.6583	GEN524485 1-CAPROCK WIND GEN
FDNS	06NR	5	20L	G15_033	FROM->TO	G14-057T 345.00 - SUNNYSIDE 345KV CKT 1	717	789	0.04156	101.6553	EASTDC - ERCOT EQUIVALENCE 345KV CKT 1

SOLUTION	GROUP	SCENARIO	SEASON	SOURCE	DIRECTION	MONITORED ELEMENT	RATEA (MVA)	RATEB(MVA)	TDF	TC%LOADING (% MVA)	CONTINGENCY
FDNS	06NR	5	20L	G15_033	FROM->TO	G14-057T 345.00 - SUNNYSIDE 345KV CKT 1	717	789	0.04156	101.6225	GEN672310 1-POPLAR RIVER GENERATOR 1
FDNS	06NR	5	20L	G15_033	FROM->TO	G14-057T 345.00 - SUNNYSIDE 345KV CKT 1	717	789	0.04151	101.6191	LEBROCK - TENASKA RUSK COUNTY 345KV CKT 1
FDNS	06NR	5	20L	G15_033	FROM->TO	G14-057T 345.00 - SUNNYSIDE 345KV CKT 1	717	789	0.04151	101.6186	CROCKETT - TENASKA RUSK COUNTY 345KV CKT 1
FDNS	06NR	5	20L	G15_033	FROM->TO	G14-057T 345.00 - SUNNYSIDE 345KV CKT 1	717	789	0.04112	101.6069	SUNNYSIDE - UNIROYAL 138KV CKT 1
FDNS	06NR	5	20L	G15_033	FROM->TO	G14-057T 345.00 - SUNNYSIDE 345KV CKT 1	717	789	0.04245	101.5849	P12:230:AEPW-SPS:SWEETWT6:WHEELER 6
FDNS	06NR	5	20L	G15_033	FROM->TO	G14-057T 345.00 - SUNNYSIDE 345KV CKT 1	717	789	0.04245	101.5839	STLN-DEMARC6 - SWEETWATER 230KV CKT 1
FDNS	06NR	5	20L	G15_033	FROM->TO	G14-057T 345.00 - SUNNYSIDE 345KV CKT 1	717	789	0.04245	101.5825	STATELINE INTERCHANGE - STLN-DEMARC6 230KV CKT 1
FDNS	06NR	5	20L	G15_033	FROM->TO	G14-057T 345.00 - SUNNYSIDE 345KV CKT 1	717	789	0.04156	101.5585	GEN562007 1-G11_025_3 0.6900
FDNS	06NR	5	20L	G15_033	FROM->TO	G14-057T 345.00 - SUNNYSIDE 345KV CKT 1	717	789	0.04245	101.5514	CHISHOLM6 230.00 - SWEETWATER 230KV CKT 1
FDNS	06NR	5	20L	G15_033	FROM->TO	G14-057T 345.00 - SUNNYSIDE 345KV CKT 1	717	789	0.04149	101.5258	CROCKETT - GRIMES 345KV CKT 1
FDNS	06NR	5	20L	G15_033	FROM->TO	G14-057T 345.00 - SUNNYSIDE 345KV CKT 1	717	789	0.04149	101.5258	CROCKETT - GRIMES 345KV CKT 1
FDNS	06NR	5	20L	G15_033	FROM->TO	G14-057T 345.00 - SUNNYSIDE 345KV CKT 1	717	789	0.04156	101.5123	GEN511962 2-RKYRDGW2-1 0.7000
FDNS	06NR	5	20L	G15_033	FROM->TO	G14-057T 345.00 - SUNNYSIDE 345KV CKT 1	717	789	0.04156	101.4672	GEN532653 1-JEFFREY ENERGY CENTER UNIT 3
FDNS	06NR	5	20L	G15_033	FROM->TO	G14-057T 345.00 - SUNNYSIDE 345KV CKT 1	717	789	0.04156	101.4292	GEN659118 1-LARAMIE RIVER UNIT1
FDNS	06NR	5	20L	G15_033	FROM->TO	G14-057T 345.00 - SUNNYSIDE 345KV CKT 1	717	789	0.04156	101.3828	GEN562699 1-G15_018_3 0.6900
FDNS	06NR	5	20L	G15_033	FROM->TO	G14-057T 345.00 - SUNNYSIDE 345KV CKT 1	717	789	0.04156	101.3749	GEN525844 1-ELK_1 118.000
FDNS	06NR	5	20L	G15_033	FROM->TO	G14-057T 345.00 - SUNNYSIDE 345KV CKT 1	717	789	0.04156	101.3742	GEN531447 1-HOLCOMB GENERATOR
FDNS	06NR	5	20L	G15_033	FROM->TO	G14-057T 345.00 - SUNNYSIDE 345KV CKT 1	717	789	0.04141	101.3661	NORTHWEST TEXARKANA - VALLIANT 345KV CKT 1
FDNS	06NR	5	20L	G15_033	FROM->TO	G14-057T 345.00 - SUNNYSIDE 345KV CKT 1	717	789	0.04141	101.3661	NORTHWEST TEXARKANA - VALLIANT 345KV CKT 1
FDNS	06NR	5	20L	G15_033	FROM->TO	G14-057T 345.00 - SUNNYSIDE 345KV CKT 1	717	789	0.0411	101.3643	SUNNYSIDE (SUNNYSD5) 345/138/13.8KV TRANSFORMER CKT 1
FDNS	06NR	5	20L	G15_033	FROM->TO	G14-057T 345.00 - SUNNYSIDE 345KV CKT 1	717	789	0.04156	101.3486	GEN600006 1-AS KING
FDNS	06NR	5	20L	G15_033	FROM->TO	G14-057T 345.00 - SUNNYSIDE 345KV CKT 1	717	789	0.04156	101.3354	GEN562942 1-G15056_3 0.6900
FDNS	06NR	5	20L	G15_033	FROM->TO	G14-057T 345.00 - SUNNYSIDE 345KV CKT 1	717	789	0.04156	101.2924	GEN563122 1-G15077_3 0.3850
FDNS	06NR	5	20L	G15_033	FROM->TO	G14-057T 345.00 - SUNNYSIDE 345KV CKT 1	717	789	0.04156	101.2847	GEN563263 1-G15092_4 0.6900
FDNS	06NR	5	20L	G15_033	FROM->TO	G14-057T 345.00 - SUNNYSIDE 345KV CKT 1	717	789	0.04156	101.2684	GEN645001 1-FORT CALHOUN 1
FDNS	06NR	5	20L	G15_033	FROM->TO	G14-057T 345.00 - SUNNYSIDE 345KV CKT 1	717	789	0.04156	101.2633	GEN640009 1-COOPER NUCLEAR STATION
FDNS	06NR	5	20L	G15_033	FROM->TO	G14-057T 345.00 - SUNNYSIDE 345KV CKT 1	717	789	0.04156	101.2525	GEN523461 1-BLACKHAWK GEN #1
FDNS	06NR	5	20L	G15_033	FROM->TO	G14-057T 345.00 - SUNNYSIDE 345KV CKT 1	717	789	0.04156	101.2523	GEN523462 1-BLACKHAWK GEN #2
FDNS	06NR	5	20L	G15_033	FROM->TO	G14-057T 345.00 - SUNNYSIDE 345KV CKT 1	717	789	0.04153	101.2386	P12:138:WFEC:MSL15
FDNS	06NR	5	20L	G15_033	FROM->TO	G14-057T 345.00 - SUNNYSIDE 345KV CKT 1	717	789	0.04156	101.2159	GEN524285 1-WILDORADO WIND GEN
FDNS	06NR	5	20L	G15_033	FROM->TO	G14-057T 345.00 - SUNNYSIDE 345KV CKT 1	717	789	0.04156	101.206	GEN620315 1-BIG STONE GEN
FDNS	06NR	5	20L	G15_033	FROM->TO	G14-057T 345.00 - SUNNYSIDE 345KV CKT 1	717	789	0.04156	101.1894	GEN521103 1-BLUE CANYON WIND FARM
FDNS	06NR	5	20L	G15_033	FROM->TO	G14-057T 345.00 - SUNNYSIDE 345KV CKT 1	717	789	0.04156	101.1623	GEN542951 5-HAWTHORN UNIT #5
FDNS	06NR	5	20L	G15_033	FROM->TO	G14-057T 345.00 - SUNNYSIDE 345KV CKT 1	717	789	0.04147	101.1005	DOLET HILLS 345/230KV TRANSFORMER CKT 1
FDNS	06NR	5	20L	G15_033	FROM->TO	G14-057T 345.00 - SUNNYSIDE 345KV CKT 1	717	789	0.04156	101.085	GEN562704 1-G15_020_3 0.3550
FDNS	06NR	5	20L	G15_033	FROM->TO	G14-057T 345.00 - SUNNYSIDE 345KV CKT 1	717	789	0.04156	101.0778	GEN600004 2-PRAIRIE ISLAND G2
FDNS	06NR	5	20L	G15_033	FROM->TO	G14-057T 345.00 - SUNNYSIDE 345KV CKT 1	717	789	0.04156	101.0752	GEN600003 1-PRAIRIE ISLAND G1
FDNS	06NR	5	20L	G15_033	FROM->TO	G14-057T 345.00 - SUNNYSIDE 345KV CKT 1	717	789	0.04156	101.0677	GEN527161 1-MUSTANG GEN #1
FDNS	06NR	5	20L	G15_033	FROM->TO	G14-057T 345.00 - SUNNYSIDE 345KV CKT 1	717	789	0.04156	101.0677	GEN527162 1-MUSTANG GEN #2
FDNS	06NR	5	20L	G15_033	FROM->TO	G14-057T 345.00 - SUNNYSIDE 345KV CKT 1	717	789	0.04156	101.0649	BIG STONE 230/24.0KV TRANSFORMER CKT 1
FDNS	06NR	5	20L	G15_033	FROM->TO	G14-057T 345.00 - SUNNYSIDE 345KV CKT 1	717	789	0.04136	101.036	LYDIA - WELSH 345KV CKT 1
FDNS	06NR	5	20L	G15_033	FROM->TO	G14-057T 345.00 - SUNNYSIDE 345KV CKT 1	717	789	0.04136	101.036	LYDIA - WELSH 345KV CKT 1
FDNS	06NR	5	20L	G15_033	FROM->TO	G14-057T 345.00 - SUNNYSIDE 345KV CKT 1	717	789	0.04156	100.9875	GEN514805 1-SOONER UNIT 1
FDNS	06NR	5	20L	G15_033	FROM->TO	G14-057T 345.00 - SUNNYSIDE 345KV CKT 1	717	789	0.04156	100.9725	GEN629074 1-ARNOLD LOWSIDE OF GSU XFMR
FDNS	06NR	5	20L	G15_033	FROM->TO	G14-057T 345.00 - SUNNYSIDE 345KV CKT 1	717	789	0.04156	100.9656	GEN514806 1-SOONER UNIT 2
FDNS	06NR	5	20L	G15_033	FROM->TO	G14-057T 345.00 - SUNNYSIDE 345KV CKT 1	717	789	0.04156	100.9576	GEN560183 1-REDHIL-WTG1 12.000
FDNS	06NR	5	20L	G15_033	FROM->TO	G14-057T 345.00 - SUNNYSIDE 345KV CKT 1	717	789	0.04156	100.9571	GEN524295 1-SPNSPUR_WND10.6900
FDNS	06NR	5	20L	G15_033	FROM->TO	G14-057T 345.00 - SUNNYSIDE 345KV CKT 1	717	789	0.04156	100.9489	GEN563262 1-G15092_3 0.6900
FDNS	06NR	5	20L	G15_033	FROM->TO	G14-057T 345.00 - SUNNYSIDE 345KV CKT 1	717	789	0.04156	100.942	GEN635213 3-NEAL UNIT 3
FDNS	06NR	5	20L	G15_033	FROM->TO	G14-057T 345.00 - SUNNYSIDE 345KV CKT 1	717	789	0.04156	100.9367	GEN636641 1-LOUISA UNIT 1
FDNS	06NR	5	17G	G15_033	FROM->TO	G14-057T 345.00 - SUNNYSIDE 345KV CKT 1	717	789	0.04241	100.9141	BASE CASE
FDNS	06NR	5	20L	G15_033	FROM->TO	G14-057T 345.00 - SUNNYSIDE 345KV CKT 1	717	789	0.04113	100.8642	JOHNSON COUNTY (JOHNCO) 345/138/13.8KV TRANSFORMER CKT 1
FDNS	06NR	5	20L	G15_033	FROM->TO	G14-057T 345.00 - SUNNYSIDE 345KV CKT 1	717	789	0.04156	100.8532	GEN600000 1-SHERBURNECNTY G1
FDNS	06NR	5	20L	G15_033	FROM->TO	G14-057T 345.00 - SUNNYSIDE 345KV CKT 1	717	789	0.04156	100.8487	GEN562710 1-G15_022_3 0.5500
FDNS	06NR	5	20L	G15_033	FROM->TO	G14-057T 345.00 - SUNNYSIDE 345KV CKT 1	717	789	0.04156	100.8206	GEN527163 1-MUSTANG GEN #3 22 KV
FDNS	06NR	5	20L	G15_033	FROM->TO	G14-057T 345.00 - SUNNYSIDE 345KV CKT 1	717	789	0.04054	100.7828	CANADIAN RIVER - PITTSBURG 345KV CKT 1
FDNS	06NR	5	20L	G15_033	FROM->TO	G14-057T 345.00 - SUNNYSIDE 345KV CKT 1	717	789	0.04054	100.7828	CANADIAN RIVER - PITTSBURG 345KV CKT 1
FDNS	06NR	5	20L	G15_033	FROM->TO	G14-057T 345.00 - SUNNYSIDE 345KV CKT 1	717	789	0.04156	100.7562	GEN600001 2-SHERBURNE CNTY G2
FDNS	06NR	5	20L	G15_033	FROM->TO	G14-057T 345.00 - SUNNYSIDE 345KV CKT 1	717	789	0.04156	100.7507	GEN629075 1-OTTUMWA GENERATOR FOR OTTUMWA UNIT NO 1
FDNS	06NR	5	20L	G15_033	FROM->TO	G14-057T 345.00 - SUNNYSIDE 345KV CKT 1	717	789	0.04156	100.7425	GEN600005 1-MONTICELLO
FDNS	06NR	5	20L	G15_033	FROM->TO	G14-057T 345.00 - SUNNYSIDE 345KV CKT 1	717	789	0.04156	100.6957	GEN562483 1-G13_027_3 0.6900
FDNS	06NR	5	20L	G15_033	FROM->TO	G14-057T 345.00 - SUNNYSIDE 345KV CKT 1	717	789	0.04156	100.6835	GEN562556 1-G14_046_3 0.3420
FDNS	06NR	5	20L	G15_033	FROM->TO	G14-057T 345.00 - SUNNYSIDE 345KV CKT 1	717	789	0.04156	100.6615	GEN562688 1-G15_014_3 0.6900
FDNS	06NR	5	20L	G15_033	FROM->TO	G14-057T 345.00 - SUNNYSIDE 345KV CKT 1	717	789	0.04156	100.6011	GEN527901 1-HOBBS PLANT #1 (CT)
FDNS	06NR	5	20L	G15_033	FROM->TO	G14-057T 345.00 - SUNNYSIDE 345KV CKT 1	717	789	0.04156	100.6011	GEN527902 1-HOBBS PLANT #2 (CT)
FDNS	06NR	5	20L	G15_033	FROM->TO	G14-057T 345.00 - SUNNYSIDE 345KV CKT 1	717	789	0.04156	100.592	SHERBURNE CO 345/24.0KV TRANSFORMER CKT 1
FDNS	06NR	5	20L	G15_033	FROM->TO	G14-057T 345.00 - SUNNYSIDE 345KV CKT 1	717	789	0.04156	100.5859	GEN615002 2-COAL CREEK
FDNS	06NR	5	20L	G15_033	FROM->TO	G14-057T 345.00 - SUNNYSIDE 345KV CKT 1	717	789	0.04156	100.5309	GEN635214 4-NEAL UNIT 4
FDNS	06NR	5	20L	G15_033	FROM->TO	G14-057T 345.00 - SUNNYSIDE 345KV CKT 1	717	789	0.04156	100.5235	GEN562754 1-G15031_5 0.6900
FDNS	06NR	5	20L	G15_033	FROM->TO	G14-057T 345.00 - SUNNYSIDE 345KV CKT 1	717	789	0.04156	100.5129	GEN344225 1-1CAL G1 25.000
FDNS	06NR	5	20L	G15_033	FROM->TO	G14-057T 345.00 - SUNNYSIDE 345KV CKT 1	717	789	0.04156	100.4807	GEN563142 1-G15079_3 0.5500
FDNS	06NR	5	20L	G15_033	FROM->TO	G14-057T 345.00 - SUNNYSIDE 345KV CKT 1	717	789	0.04156	100.4807	GEN563151 1-G15080_2 0.5500
FDNS	06NR	5	20L	G15_033	FROM->TO	G14-057T 345.00 - SUNNYSIDE 345KV CKT 1	717	789	0.04156	100.4501	GEN562756 1-G15031_7 0.6900
FDNS	06NR	5	20L	G15_033	FROM->TO	G14-057T 345.00 - SUNNYSIDE 345KV CKT 1	717	789	0.04156	100.4439	GEN600002 3-SHERBURNE CNTY G3
FDNS	06NR	5	20L	G15_033	FROM->TO	G14-057T 345.00 - SUNNYSIDE 345KV CKT 1	717	789	0.04156	100.4407	GEN526331 1-JONES GEN #1 22 KV
FDNS	06NR	5	20L	G15_033	FROM->TO	G14-057T 345.00 - SUNNYSIDE 345KV CKT 1	717	789	0.04127	100.3424	LYDIA - VALLIANT 345KV CKT 1
FDNS	06NR	5	20L	G15_033	FROM->TO	G14-057T 345.00 - SUNNYSIDE 345KV CKT 1	717	789	0.04127	100.3424	LYDIA - VALLIANT 345KV CKT 1
FDNS	06NR	5	20L	G15_033	FROM->TO	G14-057T 345.00 - SUNNYSIDE 345KV CKT 1	717	789	0.04156	100.1943	GEN563042 1-G15068_3 0.6900
FDNS	06NR	5	20L	G15_033	FROM->TO	G14-057T 345.00 - SUNNYSIDE 345KV CKT 1	717	789	0.04156	100.1	GEN635023 3-WALTER SCOTT UNIT 3

SOLUTION	GROUP	SCENARIO	SEASON	SOURCE	DIRECTION	MONITORED ELEMENT	RATEA (MVA)	RATEB(MVA)	TDF	TC%LOADING (% MVA)	CONTINGENCY
FDNS	06NR	5	20L	G15_033	FROM->TO	G14-057T 345.00 - SUNNYSIDE 345KV CKT 1	717	789	0.04156	99.8	GEN563043 1-G15068_4 0.6900
FDNS	06NR	5	20L	G15_033	FROM->TO	G14-057T 345.00 - SUNNYSIDE 345KV CKT 1	717	789	0.04156	99.8	GEN635024 4-WALTER SCOTT UNIT 4
FDNS	06NR	5	20L	G15_033	FROM->TO	G14-057T 345.00 - SUNNYSIDE 345KV CKT 1	717	789	0.04156	99.7	GEN527166 1-MUSTANG_6 118.000
FDNS	06NR	5	20L	G15_033	FROM->TO	G14-057T 345.00 - SUNNYSIDE 345KV CKT 1	717	789	0.04156	99.7	GEN562590 1-G14_057_3 0.6900
FDNS	06NR	5	17G	G15_033	FROM->TO	G14-057T 345.00 - SUNNYSIDE 345KV CKT 1	717	789	0.04619	99.6	BORDER 7345.00 - TUCO_2 345.00 345KV CKT 1
FDNS	06ALL	5	20L	G15_033	FROM->TO	GRACEMONT - MINCO 345KV CKT 1	1195	1195	0.2583	100.3039	G14-057T 345.00 - SUNNYSIDE 345KV CKT 1
FDNS	00NR	5	25SP	G15_033	FROM->TO	Hitchland Interchange (SIEM 8743067) 345/230/13.2KV TRANSFORMER CKT 2	560	644	0.05822	99.8	Hitchland Interchange (H TB80155502) 345/230/13.2KV TRANSFORMER CKT 1
FDNS	00NR	5	25SP	G15_033	FROM->TO	Hitchland Interchange (SIEM 8743067) 345/230/13.2KV TRANSFORMER CKT 2	560	644	0.05822	99.8	Hitchland Interchange (H TB80155502) 345/230/13.2KV TRANSFORMER CKT 1
FDNS	00NR	5	25SP	G15_033	TO->FROM	JONES STATION - TUCO INTERCHANGE 230KV CKT 1	343.79	343.79	0.14521	129.641	CARLISLE INTERCHANGE - TUCO INTERCHANGE 230KV CKT 1
FDNS	00NR	5	25SP	G15_033	TO->FROM	JONES STATION - TUCO INTERCHANGE 230KV CKT 1	343.79	343.79	0.14521	129.641	CARLISLE INTERCHANGE - TUCO INTERCHANGE 230KV CKT 1
FDNS	00NR	5	25SP	G15_033	TO->FROM	JONES STATION - TUCO INTERCHANGE 230KV CKT 1	343.79	343.79	0.11244	112.7964	GEN526333 1-JONES GEN #3 21 KV
FDNS	00NR	5	25SP	G15_033	TO->FROM	JONES STATION - TUCO INTERCHANGE 230KV CKT 1	343.79	343.79	0.11244	112.4061	GEN526334 1-JONES_4 116.500
FDNS	00NR	5	25SP	G15_033	TO->FROM	JONES STATION - TUCO INTERCHANGE 230KV CKT 1	343.79	343.79	0.13572	107.7831	TUCO INTERCHANGE - YOAKUM_345 345.00 345KV CKT 1
FDNS	00NR	5	25SP	G15_033	TO->FROM	JONES STATION - TUCO INTERCHANGE 230KV CKT 1	343.79	343.79	0.13047	103.4197	CARLISLE INTERCHANGE - WOLFFORTH INTERCHANGE 230KV CKT 1
FDNS	00NR	5	25SP	G15_033	TO->FROM	JONES STATION - TUCO INTERCHANGE 230KV CKT 1	343.79	343.79	0.11276	101.2834	PLANT X STATION - SUNDOWN INTERCHANGE 230KV CKT 1
FDNS	00NR	5	25SP	G15_033	TO->FROM	JONES STATION - TUCO INTERCHANGE 230KV CKT 1	343.79	343.79	0.11276	101.2834	PLANT X STATION - SUNDOWN INTERCHANGE 230KV CKT 1
FDNS	00NR	5	25SP	G15_033	TO->FROM	JONES STATION - TUCO INTERCHANGE 230KV CKT 1	343.79	343.79	0.12525	100.5886	P12:345:SPS:J02.1.TOLK.EDDY
FDNS	00NR	5	25SP	G15_033	TO->FROM	JONES STATION - TUCO INTERCHANGE 230KV CKT 1	343.79	343.79	0.11244	100.5344	GEN526332 1-JONES GEN #2 21 KV
FDNS	00NR	5	25SP	G15_033	TO->FROM	JONES STATION - TUCO INTERCHANGE 230KV CKT 1	343.79	343.79	0.11244	100.5324	GEN526331 1-JONES GEN #1 22 KV
FDNS	00NR	5	25SP	G15_033	TO->FROM	JONES STATION - TUCO INTERCHANGE 230KV CKT 1	343.79	343.79	0.11718	100.5232	TUCO INTERCHANGE (ENRCO 136401) 230/115/13.2KV TRANSFORMER CKT 1
FDNS	00NR	5	25SP	G15_033	TO->FROM	JONES STATION - TUCO INTERCHANGE 230KV CKT 1	343.79	343.79	0.11718	100.5232	TUCO INTERCHANGE (ENRCO 136401) 230/115/13.2KV TRANSFORMER CKT 1
FDNS	00NR	5	25SP	G15_033	TO->FROM	JONES STATION - TUCO INTERCHANGE 230KV CKT 1	343.79	343.79	0.11718	100.5232	TUCO INTERCHANGE (ENRCO 136401) 230/115/13.2KV TRANSFORMER CKT 2
FDNS	00NR	5	25SP	G15_033	TO->FROM	JONES STATION - TUCO INTERCHANGE 230KV CKT 1	343.79	343.79	0.11718	100.5232	TUCO INTERCHANGE (ENRCO 136401) 230/115/13.2KV TRANSFORMER CKT 2
FDNS	00NR	5	25SP	G15_033	TO->FROM	JONES STATION - TUCO INTERCHANGE 230KV CKT 1	343.79	343.79	0.12054	99.6	LUBBOCK EAST INTERCHANGE - TUCO INTERCHANGE 115KV CKT 1
FDNS	00NR	5	25SP	G15_033	TO->FROM	JONES STATION - TUCO INTERCHANGE 230KV CKT 1	343.79	343.79	0.12054	99.6	LUBBOCK EAST INTERCHANGE - TUCO INTERCHANGE 115KV CKT 1
FDNS	00NR	5	25SP	G15_033	FROM->TO	LUBBOCK POWER & LIGHT-HOLLY PLANT (SHIH T101039) 230/69/13.5KV TRANSFORMER CKT 1	224	224	0.03592	104.6927	LUBBOCK POWER & LIGHT-SOUTHEAST - LUBBOCK SOUTH INTERCHANGE 230KV CKT 1
FDNS	00NR	5	25SP	G15_033	FROM->TO	LUBBOCK POWER & LIGHT-HOLLY PLANT (SHIH T101039) 230/69/13.5KV TRANSFORMER CKT 1	224	224	0.03592	104.6925	P12:LPL:SPS:K64.1.LP-SE.LUBBS
FDNS	00NR	5	25SP	G15_033	FROM->TO	LUBBOCK POWER & LIGHT-HOLLY PLANT (SHIH T101039) 230/69/13.5KV TRANSFORMER CKT 1	224	224	0.03513	101.9351	LUBBOCK EAST INTERCHANGE - LUBBOCK POWER & LIGHT-WADSWORTH 230KV CKT 1
FDNS	00NR	5	25SP	G15_033	FROM->TO	LUBBOCK POWER & LIGHT-HOLLY PLANT (SHIH T101039) 230/69/13.5KV TRANSFORMER CKT 1	224	224	0.03513	101.9204	P12:230:LPL:K57.1.LP-WADS.LUBBE
FDNS	00NR	5	25SP	G15_033	FROM->TO	LUBBOCK POWER & LIGHT-HOLLY PLANT (SHIH T101039) 230/69/13.5KV TRANSFORMER CKT 1	224	224	0.03513	101.9203	LUBBOCK POWER & LIGHT-WADSWORTH (SHIH T101038) 230/69/13.5KV TRANSFORMER CKT 1
FDNS	00NR	5	25SP	G15_033	FROM->TO	LUBBOCK POWER & LIGHT-HOLLY PLANT (SHIH T101039) 230/69/13.5KV TRANSFORMER CKT 1	224	224	0.03513	101.9203	LUBBOCK POWER & LIGHT-WADSWORTH (SHIH T101038) 230/69/13.5KV TRANSFORMER CKT 1
FDNS	06ALL	5	17G	G15_033	FROM->TO	TUCO INTERCHANGE - TUCO_2 230.00 230KV CKT 1	497	547	0.37529	99.8	TUCO INTERCHANGE - TUCO_2 345.00 345KV CKT 1
FDNS	00NR	5	25SP	G15_033	FROM->TO	TUCO INTERCHANGE (ENRCO 136401) 230/115/13.2KV TRANSFORMER CKT 1	250	288	0.05095	119.1885	TUCO INTERCHANGE (ENRCO 136401) 230/115/13.2KV TRANSFORMER CKT 2
FDNS	00NR	5	25SP	G15_033	FROM->TO	TUCO INTERCHANGE (ENRCO 136401) 230/115/13.2KV TRANSFORMER CKT 1	250	288	0.05095	119.1885	TUCO INTERCHANGE (ENRCO 136401) 230/115/13.2KV TRANSFORMER CKT 2
FDNS	00NR	5	25SP	G15_033	FROM->TO	TUCO INTERCHANGE (ENRCO 136401) 230/115/13.2KV TRANSFORMER CKT 1	250	288	0.05095	111.8019	TUCO INTERCHANGE (ENRCO 136401) 230/115/13.2KV TRANSFORMER CKT 2
FDNS	00NR	5	25SP	G15_033	FROM->TO	TUCO INTERCHANGE (ENRCO 136401) 230/115/13.2KV TRANSFORMER CKT 1	250	288	0.05095	111.8019	TUCO INTERCHANGE (ENRCO 136401) 230/115/13.2KV TRANSFORMER CKT 2
FDNS	00NR	5	25SP	G15_033	FROM->TO	TUCO INTERCHANGE (ENRCO 136401) 230/115/13.2KV TRANSFORMER CKT 2	250	288	0.05095	119.1885	TUCO INTERCHANGE (ENRCO 136401) 230/115/13.2KV TRANSFORMER CKT 1
FDNS	00NR	5	25SP	G15_033	FROM->TO	TUCO INTERCHANGE (ENRCO 136401) 230/115/13.2KV TRANSFORMER CKT 2	250	288	0.05095	119.1885	TUCO INTERCHANGE (ENRCO 136401) 230/115/13.2KV TRANSFORMER CKT 1
FDNS	00NR	5	25SP	G15_033	FROM->TO	TUCO INTERCHANGE (ENRCO 136401) 230/115/13.2KV TRANSFORMER CKT 2	250	288	0.05095	111.8019	TUCO INTERCHANGE (ENRCO 136401) 230/115/13.2KV TRANSFORMER CKT 1
FDNS	00NR	5	25SP	G15_033	FROM->TO	TUCO INTERCHANGE (ENRCO 136401) 230/115/13.2KV TRANSFORMER CKT 2	250	288	0.05095	111.8019	TUCO INTERCHANGE (ENRCO 136401) 230/115/13.2KV TRANSFORMER CKT 1
FDNS	06ALL	5	17G	G15_033	FROM->TO	TUCO_2 345.00 (TUCO_2 XFMR) 345/230/13.2KV TRANSFORMER CKT 1	560	560	0.27514	105.5369	TUCO INTERCHANGE - TUCO_2 345.00 345KV CKT 1
FDNS	06ALL	5	20L	G15_033	FROM->TO	TUCO_2 345.00 (TUCO_2 XFMR) 345/230/13.2KV TRANSFORMER CKT 1	560	560	0.23285	104.6777	TUCO INTERCHANGE - TUCO_2 345.00 345KV CKT 1
FDNS	06ALL	5	17G	G15_033	FROM->TO	TUCO_2 345.00 (TUCO_2 XFMR) 345/230/13.2KV TRANSFORMER CKT 1	560	560	0.27514	104.079	TUCO INTERCHANGE - TUCO_2 345.00 345KV CKT 1
FDNS	06ALL	5	20L	G15_033	FROM->TO	TUCO_2 345.00 (TUCO_2 XFMR) 345/230/13.2KV TRANSFORMER CKT 1	560	560	0.23285	103.3194	TUCO INTERCHANGE - TUCO_2 345.00 345KV CKT 1
FDNS	06ALL	5	20WP	G15_033	FROM->TO	TUCO_2 345.00 (TUCO_2 XFMR) 345/230/13.2KV TRANSFORMER CKT 1	560	560	0.24975	99.7	TUCO INTERCHANGE - TUCO_2 345.00 345KV CKT 1
FDNS	06ALL	6	20SP	G15_033	FROM->TO	CHISHOLM6 230.00 - ELK CITY 230KV 230KV CKT 1	353	353	0.04447	102.8848	BASE CASE
FDNS	06ALL	6	17SP	G15_033	FROM->TO	CHISHOLM6 230.00 - ELK CITY 230KV 230KV CKT 1	353	353	0.04463	100.6562	BASE CASE
FDNS	06ALL	6	20L	G15_033	TO->FROM	CIMARRON - MINCO 345KV CKT 1	956	956	0.2416	125.6464	G14-057T 345.00 - SUNNYSIDE 345KV CKT 1
FDNS	06ALL	6	17G	G15_033	TO->FROM	CIMARRON - MINCO 345KV CKT 1	956	956	0.26799	121.6178	G14-057T 345.00 - SUNNYSIDE 345KV CKT 1
FDNS	06ALL	6	20L	G15_033	TO->FROM	CIMARRON - MINCO 345KV CKT 1	956	956	0.2416	120.3754	G14-057T 345.00 - LAWTON EASTSIDE 345KV CKT 1
FDNS	06ALL	6	20WP	G15_033	TO->FROM	CIMARRON - MINCO 345KV CKT 1	956	956	0.263	119.7395	G14-057T 345.00 - SUNNYSIDE 345KV CKT 1
FDNS	06ALL	6	17G	G15_033	TO->FROM	CIMARRON - MINCO 345KV CKT 1	956	956	0.26799	116.437	G14-057T 345.00 - LAWTON EASTSIDE 345KV CKT 1
FDNS	06NR	6	20L	G15_033	TO->FROM	CIMARRON - MINCO 345KV CKT 1	956	956	0.0603	115.8272	G14-057T 345.00 - SUNNYSIDE 345KV CKT 1
FDNS	06ALL	6	20WP	G15_033	TO->FROM	CIMARRON - MINCO 345KV CKT 1	956	956	0.263	114.5016	G14-057T 345.00 - LAWTON EASTSIDE 345KV CKT 1
FDNS	06ALL	6	17SP	G15_033	TO->FROM	CIMARRON - MINCO 345KV CKT 1	956	956	0.27058	114.4047	G14-057T 345.00 - SUNNYSIDE 345KV CKT 1
FDNS	06ALL	6	16WP	G15_033	TO->FROM	CIMARRON - MINCO 345KV CKT 1	956	956	0.27413	114.352	G14-057T 345.00 - SUNNYSIDE 345KV CKT 1
FDNS	00NR	6	20WP	G15_033	TO->FROM	CIMARRON - MINCO 345KV CKT 1	956	956	0.05893	113.1622	G14-057T 345.00 - SUNNYSIDE 345KV CKT 1
FDNS	06NR	6	17G	G15_033	TO->FROM	CIMARRON - MINCO 345KV CKT 1	956	956	0.06119	113.051	G14-057T 345.00 - SUNNYSIDE 345KV CKT 1
FDNS	00NR	6	16WP	G15_033	TO->FROM	CIMARRON - MINCO 345KV CKT 1	956	956	0.06097	111.5929	G14-057T 345.00 - SUNNYSIDE 345KV CKT 1
FDNS	06ALL	6	20SP	G15_033	TO->FROM	CIMARRON - MINCO 345KV CKT 1	956	956	0.26843	111.5632	G14-057T 345.00 - SUNNYSIDE 345KV CKT 1
FDNS	06NR	6	20L	G15_033	TO->FROM	CIMARRON - MINCO 345KV CKT 1	956	956	0.0603	109.8626	G14-057T 345.00 - LAWTON EASTSIDE 345KV CKT 1
FDNS	06ALL	6	17SP	G15_033	TO->FROM	CIMARRON - MINCO 345KV CKT 1	956	956	0.27058	109.1774	G14-057T 345.00 - LAWTON EASTSIDE 345KV CKT 1
FDNS	06ALL	6	16WP	G15_033	TO->FROM	CIMARRON - MINCO 345KV CKT 1	956	956	0.27413	108.975	G14-057T 345.00 - LAWTON EASTSIDE 345KV CKT 1
FDNS	06NR	6	17G	G15_033	TO->FROM	CIMARRON - MINCO 345KV CKT 1	956	956	0.06119	107.2775	G14-057T 345.00 - LAWTON EASTSIDE 345KV CKT 1
FDNS	06ALL	6	20SP	G15_033	TO->FROM	CIMARRON - MINCO 345KV CKT 1	956	956	0.26843	106.5254	G14-057T 345.00 - LAWTON EASTSIDE 345KV CKT 1
FDNS	06ALL	6	17G	G15_033	TO->FROM	CIMARRON - MINCO 345KV CKT 1	956	956	0.23883	105.9404	CHISHOLM7 345.00 - WOODWARD DISTRICT EHV 345KV CKT 1
FDNS	06ALL	6	20L	G15_033	TO->FROM	CIMARRON - MINCO 345KV CKT 1	956	956	0.21835	104.6976	CHISHOLM7 345.00 - WOODWARD DISTRICT EHV 345KV CKT 1
FDNS	06ALL	6	20WP	G15_033	TO->FROM	CIMARRON - MINCO 345KV CKT 1	956	956	0.23536	101.5954	CHISHOLM7 345.00 - WOODWARD DISTRICT EHV 345KV CKT 1
FDNS	06NR	6	20L	G15_033	TO->FROM	G14-057T 345.00 - LAWTON EASTSIDE 345KV CKT 1	717	789	0.05413	117.2912	CIMARRON - MINCO 345KV CKT 1
FDNS	06NR	6	20L	G15_033	TO->FROM	G14-057T 345.00 - LAWTON EASTSIDE 345KV CKT 1	717	789	0.05413	111.2655	GRACEMONT - MINCO 345KV CKT 1
FDNS	06ALL	6	17G	G15_033	TO->FROM	G14-057T 345.00 - LAWTON EASTSIDE 345KV CKT 1	717	789	0.20863	110.6391	CIMARRON - MINCO 345KV CKT 1
FDNS	06ALL	6	20WP	G15_033	TO->FROM	G14-057T 345.00 - LAWTON EASTSIDE 345KV CKT 1	717	789	0.20446	110.1245	CIMARRON - MINCO 345KV CKT 1
FDNS	06NR	6	17G	G15_033	TO->FROM	G14-057T 345.00 - LAWTON EASTSIDE 345KV CKT 1	717	789	0.05524	107.6916	CIMARRON - MINCO 345KV CKT 1
FDNS	06ALL	6	16WP	G15_033	TO->FROM	G14-057T 345.00 - LAWTON EASTSIDE 345KV CKT 1	717	789	0.213	106.9168	CIMARRON - MINCO 345KV CKT 1
FDNS	06ALL	6	17G	G15_033	TO->FROM	G14-057T 345.00 - LAWTON EASTSIDE 345KV CKT 1	717	789	0.20863	105.7374	GRACEMONT - MINCO 345KV CKT 1
FDNS	06ALL	6	20WP	G15_033	TO->FROM	G14-057T 345.00 - LAWTON EASTSIDE 345KV CKT 1	717	789	0.20446	105.1776	GRACEMONT - MINCO 345KV CKT 1
FDNS	06ALL	6	20L	G15_033	TO->FROM	G14-057T 345.00 - LAWTON EASTSIDE 345KV CKT 1	717	789	0.1323	102.0743	BASE CASE
FDNS	06ALL	6	16WP	G15_033	TO->FROM	G14-057T 345.00 - LAWTON EASTSIDE 345KV CKT 1	717	789	0.213	102.0118	GRACEMONT - MINCO 345KV CKT 1
FDNS	06NR	6	17G	G15_033	TO->FROM	G14-057T 345.00 - LAWTON EASTSIDE 345KV CKT 1	717	789	0.05524	101.8926	GRACEMONT - MINCO 345KV CKT 1

SOLUTION	GROUP	SCENARIO	SEASON	SOURCE	DIRECTION	MONITORED ELEMENT	RATEA (MVA)	RATEB(MVA)	TDF	TC%LOADING (% MVA)	CONTINGENCY
FDNS	06ALL	6	17SP	G15_033	TO->FROM	G14-057T 345.00 - LAWTON EASTSIDE 345KV CKT 1	717	789	0.20819	99.7	CIMARRON - MINCO 345KV CKT 1
FDNS	00NR	6	16WP	G15_033	FROM->TO	G14-057T 345.00 - SUNNYSIDE 345KV CKT 1	717	789	0.05495	140.3837	CIMARRON - MINCO 345KV CKT 1
FDNS	00NR	6	20WP	G15_033	FROM->TO	G14-057T 345.00 - SUNNYSIDE 345KV CKT 1	717	789	0.05256	138.6326	CIMARRON - MINCO 345KV CKT 1
FDNS	06NR	6	20L	G15_033	FROM->TO	G14-057T 345.00 - SUNNYSIDE 345KV CKT 1	717	789	0.05413	130.909	CIMARRON - MINCO 345KV CKT 1
FDNS	00NR	6	16WP	G15_033	FROM->TO	G14-057T 345.00 - SUNNYSIDE 345KV CKT 1	717	789	0.05495	130.5024	GRACEMONT - MINCO 345KV CKT 1
FDNS	00NR	6	20WP	G15_033	FROM->TO	G14-057T 345.00 - SUNNYSIDE 345KV CKT 1	717	789	0.05256	128.6693	GRACEMONT - MINCO 345KV CKT 1
FDNS	00NR	6	16WP	G15_033	FROM->TO	G14-057T 345.00 - SUNNYSIDE 345KV CKT 1	717	789	0.04135	128.625	PITTSBURG - SEMINOLE 345KV CKT 1
FDNS	00NR	6	16WP	G15_033	FROM->TO	G14-057T 345.00 - SUNNYSIDE 345KV CKT 1	717	789	0.04135	128.625	PITTSBURG - SEMINOLE 345KV CKT 1
FDNS	00NR	6	16WP	G15_033	FROM->TO	G14-057T 345.00 - SUNNYSIDE 345KV CKT 1	717	789	0.04332	127.7068	BASE CASE
FDNS	00NR	6	16WP	G15_033	FROM->TO	G14-057T 345.00 - SUNNYSIDE 345KV CKT 1	717	789	0.04257	125.5207	CIMARRON - DRAPER LAKE 345KV CKT 1
FDNS	00NR	6	20WP	G15_033	FROM->TO	G14-057T 345.00 - SUNNYSIDE 345KV CKT 1	717	789	0.03938	124.7734	PITTSBURG - SEMINOLE 345KV CKT 1
FDNS	00NR	6	20WP	G15_033	FROM->TO	G14-057T 345.00 - SUNNYSIDE 345KV CKT 1	717	789	0.03938	124.7734	PITTSBURG - SEMINOLE 345KV CKT 1
FDNS	06NR	6	20L	G15_033	FROM->TO	G14-057T 345.00 - SUNNYSIDE 345KV CKT 1	717	789	0.05413	124.702	GRACEMONT - MINCO 345KV CKT 1
FDNS	00NR	6	20WP	G15_033	FROM->TO	G14-057T 345.00 - SUNNYSIDE 345KV CKT 1	717	789	0.04125	124.6254	BASE CASE
FDNS	06ALL	6	17G	G15_033	FROM->TO	G14-057T 345.00 - SUNNYSIDE 345KV CKT 1	717	789	0.20863	123.3099	CIMARRON - MINCO 345KV CKT 1
FDNS	06ALL	6	20WP	G15_033	FROM->TO	G14-057T 345.00 - SUNNYSIDE 345KV CKT 1	717	789	0.20446	122.7788	CIMARRON - MINCO 345KV CKT 1
FDNS	00NR	6	20WP	G15_033	FROM->TO	G14-057T 345.00 - SUNNYSIDE 345KV CKT 1	717	789	0.04055	122.3643	CIMARRON - DRAPER LAKE 345KV CKT 1
FDNS	00NR	6	16WP	G15_033	FROM->TO	G14-057T 345.00 - SUNNYSIDE 345KV CKT 1	717	789	0.04525	122.1618	P12:138:WFEC:MSL03
FDNS	00NR	6	16WP	G15_033	FROM->TO	G14-057T 345.00 - SUNNYSIDE 345KV CKT 1	717	789	0.04325	121.6606	PITTSBURG - VALLIANT 345KV CKT 1
FDNS	00NR	6	16WP	G15_033	FROM->TO	G14-057T 345.00 - SUNNYSIDE 345KV CKT 1	717	789	0.04325	121.6606	PITTSBURG - VALLIANT 345KV CKT 1
FDNS	00NR	6	16WP	G15_033	FROM->TO	G14-057T 345.00 - SUNNYSIDE 345KV CKT 1	717	789	0.04332	121.294	GEN509403 1-PIRKEY GENERATION
FDNS	00NR	6	16WP	G15_033	FROM->TO	G14-057T 345.00 - SUNNYSIDE 345KV CKT 1	717	789	0.04332	121.1954	GEN509416 1-TURK GENERATION
FDNS	00NR	6	16WP	G15_033	FROM->TO	G14-057T 345.00 - SUNNYSIDE 345KV CKT 1	717	789	0.04318	120.9573	CLEVELAND - G15066_T 345.00 345KV CKT 1
FDNS	06NR	6	17G	G15_033	FROM->TO	G14-057T 345.00 - SUNNYSIDE 345KV CKT 1	717	789	0.05524	120.8046	CIMARRON - MINCO 345KV CKT 1
FDNS	00NR	6	16WP	G15_033	FROM->TO	G14-057T 345.00 - SUNNYSIDE 345KV CKT 1	717	789	0.04318	120.6628	G15066_T 345.00 - SOONER 345KV CKT 1
FDNS	00NR	6	16WP	G15_033	FROM->TO	G14-057T 345.00 - SUNNYSIDE 345KV CKT 1	717	789	0.04332	120.2809	GEN501801 1-DOLET HILLS UNIT1
FDNS	00NR	6	16WP	G15_033	FROM->TO	G14-057T 345.00 - SUNNYSIDE 345KV CKT 1	717	789	0.04332	119.885	GEN509406 1-WELSH #3
FDNS	00NR	6	16WP	G15_033	FROM->TO	G14-057T 345.00 - SUNNYSIDE 345KV CKT 1	717	789	0.04332	119.8849	GEN509404 1-WELSH #1
FDNS	06ALL	6	16WP	G15_033	FROM->TO	G14-057T 345.00 - SUNNYSIDE 345KV CKT 1	717	789	0.213	119.5489	CIMARRON - MINCO 345KV CKT 1
FDNS	00NR	6	20WP	G15_033	FROM->TO	G14-057T 345.00 - SUNNYSIDE 345KV CKT 1	717	789	0.0431	119.3643	P12:138:WFEC:MSL03
FDNS	00NR	6	16WP	G15_033	FROM->TO	G14-057T 345.00 - SUNNYSIDE 345KV CKT 1	717	789	0.04363	119.2052	CORN TAP - NAPLESTP 138.00 138KV CKT 1
FDNS	00NR	6	16WP	G15_033	FROM->TO	G14-057T 345.00 - SUNNYSIDE 345KV CKT 1	717	789	0.04363	119.1163	NAPLESTP 138.00 - PAYNE 138.00 138KV CKT 1
FDNS	00NR	6	16WP	G15_033	FROM->TO	G14-057T 345.00 - SUNNYSIDE 345KV CKT 1	717	789	0.04312	118.9935	7SAREPTA% 345.00 - LONGWOOD 345KV CKT 1
FDNS	00NR	6	16WP	G15_033	FROM->TO	G14-057T 345.00 - SUNNYSIDE 345KV CKT 1	717	789	0.04312	118.9935	7SAREPTA% 345.00 - LONGWOOD 345KV CKT 1
FDNS	00NR	6	16WP	G15_033	FROM->TO	G14-057T 345.00 - SUNNYSIDE 345KV CKT 1	717	789	0.04332	118.9884	GEN336821 1-GRAND GULF UNIT
FDNS	00NR	6	16WP	G15_033	FROM->TO	G14-057T 345.00 - SUNNYSIDE 345KV CKT 1	717	789	0.04324	118.9582	CLEVELAND - TULSA NORTH 345KV CKT 1
FDNS	00NR	6	16WP	G15_033	FROM->TO	G14-057T 345.00 - SUNNYSIDE 345KV CKT 1	717	789	0.04324	118.9582	CLEVELAND - TULSA NORTH 345KV CKT 1
FDNS	00NR	6	16WP	G15_033	FROM->TO	G14-057T 345.00 - SUNNYSIDE 345KV CKT 1	717	789	0.04663	118.9119	BORDER 7345.00 - WOODWARD DISTRICT EHV 345KV CKT 1
FDNS	00NR	6	16WP	G15_033	FROM->TO	G14-057T 345.00 - SUNNYSIDE 345KV CKT 1	717	789	0.04332	118.8865	GEN336153 1-WATERFORD UNIT#3
FDNS	00NR	6	16WP	G15_033	FROM->TO	G14-057T 345.00 - SUNNYSIDE 345KV CKT 1	717	789	0.04324	118.8791	DOLET HILLS - SOUTHWEST SHREVEPORT 345KV CKT 1
FDNS	00NR	6	16WP	G15_033	FROM->TO	G14-057T 345.00 - SUNNYSIDE 345KV CKT 1	717	789	0.04324	118.8791	DOLET HILLS - SOUTHWEST SHREVEPORT 345KV CKT 1
FDNS	00NR	6	16WP	G15_033	FROM->TO	G14-057T 345.00 - SUNNYSIDE 345KV CKT 1	717	789	0.04354	118.864	COMANCHE - LOCO 138KV CKT 1
FDNS	00NR	6	16WP	G15_033	FROM->TO	G14-057T 345.00 - SUNNYSIDE 345KV CKT 1	717	789	0.04307	118.8393	ARCADIA - NORTHWEST 345KV CKT 1
FDNS	00NR	6	16WP	G15_033	FROM->TO	G14-057T 345.00 - SUNNYSIDE 345KV CKT 1	717	789	0.04368	118.7637	ANADARKO - POCASSETT 138KV CKT 1
FDNS	00NR	6	16WP	G15_033	FROM->TO	G14-057T 345.00 - SUNNYSIDE 345KV CKT 1	717	789	0.04241	118.6633	CANADIAN RIVER - MUSKOGEE 345KV CKT 1
FDNS	00NR	6	16WP	G15_033	FROM->TO	G14-057T 345.00 - SUNNYSIDE 345KV CKT 1	717	789	0.04291	118.6291	ARCADIA - SEMINOLE 345KV CKT 1
FDNS	00NR	6	16WP	G15_033	FROM->TO	G14-057T 345.00 - SUNNYSIDE 345KV CKT 1	717	789	0.04368	118.6259	POCASSETT - TUTTLE 138KV CKT 1
FDNS	00NR	6	16WP	G15_033	FROM->TO	G14-057T 345.00 - SUNNYSIDE 345KV CKT 1	717	789	0.04332	118.584	GEN335831 1-RIVERBEND UNIT#1
FDNS	00NR	6	16WP	G15_033	FROM->TO	G14-057T 345.00 - SUNNYSIDE 345KV CKT 1	717	789	0.04332	118.5524	GRAND GULF 500/22.0KV TRANSFORMER CKT 1
FDNS	00NR	6	16WP	G15_033	FROM->TO	G14-057T 345.00 - SUNNYSIDE 345KV CKT 1	717	789	0.04332	118.5136	GEN515577 1-ARBWND11 0.6900
FDNS	00NR	6	16WP	G15_033	FROM->TO	G14-057T 345.00 - SUNNYSIDE 345KV CKT 1	717	789	0.04332	118.4877	GEN509409 1-WILKES #3
FDNS	00NR	6	20WP	G15_033	FROM->TO	G14-057T 345.00 - SUNNYSIDE 345KV CKT 1	717	789	0.04125	118.4065	GEN509403 1-PIRKEY GENERATION
FDNS	00NR	6	16WP	G15_033	FROM->TO	G14-057T 345.00 - SUNNYSIDE 345KV CKT 1	717	789	0.04333	118.3871	HEALDTON - LOCO 138KV CKT 1
FDNS	00NR	6	16WP	G15_033	FROM->TO	G14-057T 345.00 - SUNNYSIDE 345KV CKT 1	717	789	0.04321	118.3847	7SAREPTA% 345.00 - ELDORADO EHV 345KV CKT 1
FDNS	00NR	6	16WP	G15_033	FROM->TO	G14-057T 345.00 - SUNNYSIDE 345KV CKT 1	717	789	0.04321	118.3845	3TR3AR8EL7EL
FDNS	00NR	6	16WP	G15_033	FROM->TO	G14-057T 345.00 - SUNNYSIDE 345KV CKT 1	717	789	0.04321	118.3742	ELDORADO EHV 500/345KV TRANSFORMER CKT 1
FDNS	00NR	6	16WP	G15_033	FROM->TO	G14-057T 345.00 - SUNNYSIDE 345KV CKT 1	717	789	0.04455	118.3505	P12:138:AEPW:DUNCAN-4:L.E.S.-4
FDNS	00NR	6	20WP	G15_033	FROM->TO	G14-057T 345.00 - SUNNYSIDE 345KV CKT 1	717	789	0.04125	118.3261	GEN509416 1-TURK GENERATION
FDNS	06ALL	6	17G	G15_033	FROM->TO	G14-057T 345.00 - SUNNYSIDE 345KV CKT 1	717	789	0.20863	118.2899	GRACEMONT - MINCO 345KV CKT 1
FDNS	00NR	6	16WP	G15_033	FROM->TO	G14-057T 345.00 - SUNNYSIDE 345KV CKT 1	717	789	0.04368	118.2691	BRIDGECR 138.00 - TUTTLE 138KV CKT 1
FDNS	00NR	6	16WP	G15_033	FROM->TO	G14-057T 345.00 - SUNNYSIDE 345KV CKT 1	717	789	0.04333	118.2418	HEALDTON - RINGLING 138KV CKT 1
FDNS	00NR	6	16WP	G15_033	FROM->TO	G14-057T 345.00 - SUNNYSIDE 345KV CKT 1	717	789	0.04454	118.2111	COMANCHE TAP - OMPA-DUNCAN 840 138KV CKT 1
FDNS	00NR	6	16WP	G15_033	FROM->TO	G14-057T 345.00 - SUNNYSIDE 345KV CKT 1	717	789	0.04332	118.2104	GEN501813 1-RODEMACHER UNIT 3
FDNS	00NR	6	16WP	G15_033	FROM->TO	G14-057T 345.00 - SUNNYSIDE 345KV CKT 1	717	789	0.04332	118.2066	GEN300006 1-NEW MADRID UNIT 1
FDNS	00NR	6	16WP	G15_033	FROM->TO	G14-057T 345.00 - SUNNYSIDE 345KV CKT 1	717	789	0.04332	118.1944	GEN300007 1-NEW MADRID UNIT 2
FDNS	00NR	6	20WP	G15_033	FROM->TO	G14-057T 345.00 - SUNNYSIDE 345KV CKT 1	717	789	0.04118	118.1246	PITTSBURG - VALLIANT 345KV CKT 1
FDNS	00NR	6	20WP	G15_033	FROM->TO	G14-057T 345.00 - SUNNYSIDE 345KV CKT 1	717	789	0.04118	118.1246	PITTSBURG - VALLIANT 345KV CKT 1
FDNS	00NR	6	16WP	G15_033	FROM->TO	G14-057T 345.00 - SUNNYSIDE 345KV CKT 1	717	789	0.04332	118.1011	GEN520947 1-HUGO1
FDNS	00NR	6	16WP	G15_033	FROM->TO	G14-057T 345.00 - SUNNYSIDE 345KV CKT 1	717	789	0.0433	118.0989	LACYGNE - WAVERLY7 345.00 345KV CKT 1
FDNS	00NR	6	20WP	G15_033	FROM->TO	G14-057T 345.00 - SUNNYSIDE 345KV CKT 1	717	789	0.04111	118.0805	CLEVELAND - G15066_T 345.00 345KV CKT 1
FDNS	00NR	6	16WP	G15_033	FROM->TO	G14-057T 345.00 - SUNNYSIDE 345KV CKT 1	717	789	0.04333	118.0764	RINGLING - SOUTH WILSON 138KV CKT 1
FDNS	00NR	6	16WP	G15_033	FROM->TO	G14-057T 345.00 - SUNNYSIDE 345KV CKT 1	717	789	0.04368	118.0231	P12:138:WFEC:MSL01
FDNS	00NR	6	16WP	G15_033	FROM->TO	G14-057T 345.00 - SUNNYSIDE 345KV CKT 1	717	789	0.04368	118.0171	BRIDGECR 138.00 - SUNSHINE CANYON 138KV CKT 1
FDNS	00NR	6	16WP	G15_033	FROM->TO	G14-057T 345.00 - SUNNYSIDE 345KV CKT 1	717	789	0.04332	118.0052	GEN335206 1-NELSON UNIT 6
FDNS	00NR	6	16WP	G15_033	FROM->TO	G14-057T 345.00 - SUNNYSIDE 345KV CKT 1	717	789	0.0433	117.9908	WAVERLY7 345.00 - WOLF CREEK 345KV CKT 1
FDNS	00NR	6	16WP	G15_033	FROM->TO	G14-057T 345.00 - SUNNYSIDE 345KV CKT 1	717	789	0.04663	117.9722	BORDER 7345.00 - TUCO_2 345.00 345KV CKT 1
FDNS	00NR	6	16WP	G15_033	FROM->TO	G14-057T 345.00 - SUNNYSIDE 345KV CKT 1	717	789	0.04454	117.9391	DUNCAN - OMPA-DUNCAN 840 138KV CKT 1
FDNS	00NR	6	16WP	G15_033	FROM->TO	G14-057T 345.00 - SUNNYSIDE 345KV CKT 1	717	789	0.04454	117.9391	DUNCAN - OMPA-DUNCAN 840 138KV CKT 1
FDNS	00NR	6	16WP	G15_033	FROM->TO	G14-057T 345.00 - SUNNYSIDE 345KV CKT 1	717	789	0.04332	117.8397	DOLET HILLS 345/24.0KV TRANSFORMER CKT 1

SOLUTION	GROUP	SCENARIO	SEASON	SOURCE	DIRECTION	MONITORED ELEMENT	RATEA (MVA)	RATEB(MVA)	TDF	TC%LOADING (% MVA)	CONTINGENCY
FDNS	00NR	6	16WP	G15_033	FROM->TO	G14-057T 345.00 - SUNNYSIDE 345KV CKT 1	717	789	0.04306	117.8352	PARK LANE - SEMINOLE 138KV CKT 1
FDNS	00NR	6	16WP	G15_033	FROM->TO	G14-057T 345.00 - SUNNYSIDE 345KV CKT 1	717	789	0.04332	117.8143	GEN501812 1-RODEMACHER UNIT 2
FDNS	00NR	6	16WP	G15_033	FROM->TO	G14-057T 345.00 - SUNNYSIDE 345KV CKT 1	717	789	0.04333	117.7989	MARIETTA - SOUTH WILSON 138KV CKT 1
FDNS	00NR	6	16WP	G15_033	FROM->TO	G14-057T 345.00 - SUNNYSIDE 345KV CKT 1	717	789	0.04332	117.7925	GEN590011 2-ERCOT EQUIVALENCE
FDNS	00NR	6	20WP	G15_033	FROM->TO	G14-057T 345.00 - SUNNYSIDE 345KV CKT 1	717	789	0.04111	117.7912	G15066_T 345.00 - SOONER 345KV CKT 1
FDNS	00NR	6	16WP	G15_033	FROM->TO	G14-057T 345.00 - SUNNYSIDE 345KV CKT 1	717	789	0.04339	117.7724	P12:138:AEPW:SHERID4:112GORE4
FDNS	00NR	6	16WP	G15_033	FROM->TO	G14-057T 345.00 - SUNNYSIDE 345KV CKT 1	717	789	0.04332	117.7217	GEN515564 1-ORIGIN11 0.6900
FDNS	00NR	6	16WP	G15_033	FROM->TO	G14-057T 345.00 - SUNNYSIDE 345KV CKT 1	717	789	0.04332	117.7217	GEN515565 1-ORIGIN21 0.6900
FDNS	00NR	6	16WP	G15_033	FROM->TO	G14-057T 345.00 - SUNNYSIDE 345KV CKT 1	717	789	0.04338	117.7195	REDBUD - RIVERSIDE STATION 345KV CKT 1
FDNS	00NR	6	16WP	G15_033	FROM->TO	G14-057T 345.00 - SUNNYSIDE 345KV CKT 1	717	789	0.04338	117.7195	REDBUD - RIVERSIDE STATION 345KV CKT 1
FDNS	00NR	6	16WP	G15_033	FROM->TO	G14-057T 345.00 - SUNNYSIDE 345KV CKT 1	717	789	0.04333	117.7186	P12:138:WFEC:MSL17
FDNS	00NR	6	16WP	G15_033	FROM->TO	G14-057T 345.00 - SUNNYSIDE 345KV CKT 1	717	789	0.04332	117.7153	GEN590010 1-ERCOT EQUIVALENCE
FDNS	06ALL	6	20WP	G15_033	FROM->TO	G14-057T 345.00 - SUNNYSIDE 345KV CKT 1	717	789	0.20446	117.7125	GRACEMONT - MINCO 345KV CKT 1
FDNS	00NR	6	16WP	G15_033	FROM->TO	G14-057T 345.00 - SUNNYSIDE 345KV CKT 1	717	789	0.04322	117.6977	CANEYRV7 345.00 - NEOSHO 345KV CKT 1
FDNS	00NR	6	16WP	G15_033	FROM->TO	G14-057T 345.00 - SUNNYSIDE 345KV CKT 1	717	789	0.04311	117.6847	MATHWSN7 345.00 - NORTHWEST 345KV CKT 1
FDNS	00NR	6	16WP	G15_033	FROM->TO	G14-057T 345.00 - SUNNYSIDE 345KV CKT 1	717	789	0.04332	117.6553	GEN509408 1-WILKES #2
FDNS	00NR	6	16WP	G15_033	FROM->TO	G14-057T 345.00 - SUNNYSIDE 345KV CKT 1	717	789	0.04343	117.6089	CIVIT - PAOLI 138KV CKT 1
FDNS	00NR	6	20WP	G15_033	FROM->TO	G14-057T 345.00 - SUNNYSIDE 345KV CKT 1	717	789	0.04125	117.5611	GEN501801 1-DOLET HILLS UNIT1
FDNS	00NR	6	16WP	G15_033	FROM->TO	G14-057T 345.00 - SUNNYSIDE 345KV CKT 1	717	789	0.04322	117.5524	CANEYRV7 345.00 - LATHAMS7 345.00 345KV CKT 1
FDNS	00NR	6	16WP	G15_033	FROM->TO	G14-057T 345.00 - SUNNYSIDE 345KV CKT 1	717	789	0.04332	117.5436	GEN506754 1-LEBROCK STEAM 1
FDNS	00NR	6	16WP	G15_033	FROM->TO	G14-057T 345.00 - SUNNYSIDE 345KV CKT 1	717	789	0.04332	117.5418	P12:161:AEPW:DYESS 5:HYLAND 5
FDNS	00NR	6	16WP	G15_033	FROM->TO	G14-057T 345.00 - SUNNYSIDE 345KV CKT 1	717	789	0.04332	117.5232	GEN334440 1-SABINE UNIT 4
FDNS	00NR	6	16WP	G15_033	FROM->TO	G14-057T 345.00 - SUNNYSIDE 345KV CKT 1	717	789	0.04332	117.5232	P12:69:AEPW:L.E.S.-2:LAW WC2
FDNS	00NR	6	16WP	G15_033	FROM->TO	G14-057T 345.00 - SUNNYSIDE 345KV CKT 1	717	789	0.04329	117.52	ELDORADO EHV - MOUNT OLIVE 500KV CKT 1
FDNS	00NR	6	16WP	G15_033	FROM->TO	G14-057T 345.00 - SUNNYSIDE 345KV CKT 1	717	789	0.04327	117.4964	PAOLI - PAYNE 138.00 138KV CKT 1
FDNS	00NR	6	16WP	G15_033	FROM->TO	G14-057T 345.00 - SUNNYSIDE 345KV CKT 1	717	789	0.04327	117.4833	P12:138:WFEC:MSL02
FDNS	00NR	6	16WP	G15_033	FROM->TO	G14-057T 345.00 - SUNNYSIDE 345KV CKT 1	717	789	0.04343	117.4661	CIVIT - STRATFORD 138KV CKT 1
FDNS	00NR	6	16WP	G15_033	FROM->TO	G14-057T 345.00 - SUNNYSIDE 345KV CKT 1	717	789	0.04327	117.4609	ELDORADO EHV - SHERIDAN EHV 500KV CKT 1
FDNS	00NR	6	16WP	G15_033	FROM->TO	G14-057T 345.00 - SUNNYSIDE 345KV CKT 1	717	789	0.04339	117.4376	P12:138:AEPW:112GORE4:L.E.S.-4
FDNS	00NR	6	16WP	G15_033	FROM->TO	G14-057T 345.00 - SUNNYSIDE 345KV CKT 1	717	789	0.04334	117.4376	TUPELO - TUPELO TAP 138KV CKT 1
FDNS	00NR	6	16WP	G15_033	FROM->TO	G14-057T 345.00 - SUNNYSIDE 345KV CKT 1	717	789	0.04087	117.4285	FINNEY SWITCHING STATION - HOLCOMB 345KV CKT 1
FDNS	00NR	6	16WP	G15_033	FROM->TO	G14-057T 345.00 - SUNNYSIDE 345KV CKT 1	717	789	0.04087	117.4285	FINNEY SWITCHING STATION - HOLCOMB 345KV CKT 1
FDNS	00NR	6	16WP	G15_033	FROM->TO	G14-057T 345.00 - SUNNYSIDE 345KV CKT 1	717	789	0.04359	117.4194	P12:138:AEPW-OGE:CORNVIL4:MAUD 4
FDNS	00NR	6	16WP	G15_033	FROM->TO	G14-057T 345.00 - SUNNYSIDE 345KV CKT 1	717	789	0.04332	117.4042	NEW MADRID 161/22.0KV TRANSFORMER CKT 1
FDNS	00NR	6	16WP	G15_033	FROM->TO	G14-057T 345.00 - SUNNYSIDE 345KV CKT 1	717	789	0.04332	117.3903	NEW MADRID 345/22.0KV TRANSFORMER CKT 1
FDNS	00NR	6	16WP	G15_033	FROM->TO	G14-057T 345.00 - SUNNYSIDE 345KV CKT 1	717	789	0.0433	117.3881	ANADARKO - GEORGIA 138KV CKT 1
FDNS	00NR	6	16WP	G15_033	FROM->TO	G14-057T 345.00 - SUNNYSIDE 345KV CKT 1	717	789	0.04332	117.3875	GEN503909 1-FULTONU1 1 16.000
FDNS	00NR	6	16WP	G15_033	FROM->TO	G14-057T 345.00 - SUNNYSIDE 345KV CKT 1	717	789	0.04332	117.369	FRONTIER - GRIMES 345KV CKT 1
FDNS	00NR	6	16WP	G15_033	FROM->TO	G14-057T 345.00 - SUNNYSIDE 345KV CKT 1	717	789	0.04343	117.3464	OIL CENTER - STRATFORD 138KV CKT 1
FDNS	00NR	6	16WP	G15_033	FROM->TO	G14-057T 345.00 - SUNNYSIDE 345KV CKT 1	717	789	0.04359	117.3436	BLANCHARD - CORNVILLE 138KV CKT 1
FDNS	00NR	6	16WP	G15_033	FROM->TO	G14-057T 345.00 - SUNNYSIDE 345KV CKT 1	717	789	0.04327	117.3404	WEBRE - WELLS 500KV CKT 1
FDNS	00NR	6	16WP	G15_033	FROM->TO	G14-057T 345.00 - SUNNYSIDE 345KV CKT 1	717	789	0.04322	117.3316	LATHAMS7 345.00 - ROSE HILL 345KV CKT 1
FDNS	00NR	6	16WP	G15_033	FROM->TO	G14-057T 345.00 - SUNNYSIDE 345KV CKT 1	717	789	0.0433	117.3109	FLETCHER - GEORGIA 138KV CKT 1
FDNS	00NR	6	16WP	G15_033	FROM->TO	G14-057T 345.00 - SUNNYSIDE 345KV CKT 1	717	789	0.04327	117.2802	EMPIRE - FLETCHER 138KV CKT 1
FDNS	00NR	6	16WP	G15_033	FROM->TO	G14-057T 345.00 - SUNNYSIDE 345KV CKT 1	717	789	0.04332	117.2645	GEN509393 S1-ARSENAL HILL GENS #4 (STALL)
FDNS	00NR	6	16WP	G15_033	FROM->TO	G14-057T 345.00 - SUNNYSIDE 345KV CKT 1	717	789	0.04332	117.2363	GEN509392 G2-ARSENAL HILL GENS #3 (STALL)
FDNS	00NR	6	16WP	G15_033	FROM->TO	G14-057T 345.00 - SUNNYSIDE 345KV CKT 1	717	789	0.04332	117.2362	GEN509391 G1-ARSENAL HILL GENS #2 (STALL)
FDNS	00NR	6	16WP	G15_033	FROM->TO	G14-057T 345.00 - SUNNYSIDE 345KV CKT 1	717	789	0.04332	117.2248	GEN336252 1-NINEMILE POINT UNIT#5
FDNS	00NR	6	16WP	G15_033	FROM->TO	G14-057T 345.00 - SUNNYSIDE 345KV CKT 1	717	789	0.04327	117.2051	COMANCHE - EMPIRE 138KV CKT 1
FDNS	00NR	6	16WP	G15_033	FROM->TO	G14-057T 345.00 - SUNNYSIDE 345KV CKT 1	717	789	0.04332	117.2046	GEN334071 1-LEWIS CREEK 2
FDNS	00NR	6	16WP	G15_033	FROM->TO	G14-057T 345.00 - SUNNYSIDE 345KV CKT 1	717	789	0.04332	117.1984	DELL 500 - ESSEX UNIT 2 500KV CKT Z1
FDNS	00NR	6	16WP	G15_033	FROM->TO	G14-057T 345.00 - SUNNYSIDE 345KV CKT 1	717	789	0.04332	117.1954	GEN334070 1-LEWIS CREEK 1
FDNS	00NR	6	16WP	G15_033	FROM->TO	G14-057T 345.00 - SUNNYSIDE 345KV CKT 1	717	789	0.04332	117.1952	GEN335204 1-NELSON UNIT 4
FDNS	00NR	6	16WP	G15_033	FROM->TO	G14-057T 345.00 - SUNNYSIDE 345KV CKT 1	717	789	0.04539	117.1866	LAWTON EASTSIDE (LES 5) 345/138/13.8KV TRANSFORMER CKT 2
FDNS	00NR	6	16WP	G15_033	FROM->TO	G14-057T 345.00 - SUNNYSIDE 345KV CKT 1	717	789	0.04539	117.1866	LAWTON EASTSIDE (LES 5) 345/138/13.8KV TRANSFORMER CKT 2
FDNS	00NR	6	16WP	G15_033	FROM->TO	G14-057T 345.00 - SUNNYSIDE 345KV CKT 1	717	789	0.04343	117.173	LATTA JCT - OIL CENTER 138KV CKT 1
FDNS	00NR	6	16WP	G15_033	FROM->TO	G14-057T 345.00 - SUNNYSIDE 345KV CKT 1	717	789	0.0433	117.1603	G15074_T 345.00 - HOYT 345KV CKT 1
FDNS	00NR	6	16WP	G15_033	FROM->TO	G14-057T 345.00 - SUNNYSIDE 345KV CKT 1	717	789	0.04332	117.1588	GEN334441 1-SABINE UNIT 5
FDNS	00NR	6	16WP	G15_033	FROM->TO	G14-057T 345.00 - SUNNYSIDE 345KV CKT 1	717	789	0.04359	117.1557	BLANCHARD - MAUD 138KV CKT 1
FDNS	00NR	6	16WP	G15_033	FROM->TO	G14-057T 345.00 - SUNNYSIDE 345KV CKT 1	717	789	0.04353	117.1412	DUNCAN (DUNCAN) 138/69/13.8KV TRANSFORMER CKT 1
FDNS	00NR	6	16WP	G15_033	FROM->TO	G14-057T 345.00 - SUNNYSIDE 345KV CKT 1	717	789	0.04353	117.1412	DUNCAN (DUNCAN) 138/69/13.8KV TRANSFORMER CKT 1
FDNS	00NR	6	16WP	G15_033	FROM->TO	G14-057T 345.00 - SUNNYSIDE 345KV CKT 1	717	789	0.04332	117.1235	GEN300003 1-THOMAS HILL UNIT 3
FDNS	00NR	6	16WP	G15_033	FROM->TO	G14-057T 345.00 - SUNNYSIDE 345KV CKT 1	717	789	0.04332	117.1201	P12:161:AEPW-SWPA:BEAVER5:EROGERS5
FDNS	00NR	6	16WP	G15_033	FROM->TO	G14-057T 345.00 - SUNNYSIDE 345KV CKT 1	717	789	0.04332	117.119	GEN337653 1-WHITE BLUFF UNIT #2
FDNS	00NR	6	16WP	G15_033	FROM->TO	G14-057T 345.00 - SUNNYSIDE 345KV CKT 1	717	789	0.04332	117.1016	GEN334030 1-FRONTIER UNIT 1
FDNS	00NR	6	16WP	G15_033	FROM->TO	G14-057T 345.00 - SUNNYSIDE 345KV CKT 1	717	789	0.04332	117.0999	GEN334031 1-FRONTIER UNIT 2
FDNS	00NR	6	16WP	G15_033	FROM->TO	G14-057T 345.00 - SUNNYSIDE 345KV CKT 1	717	789	0.04317	117.0984	THISTLE7 345.00 - WOODWARD DISTRICT EHV 345KV CKT 1
FDNS	00NR	6	16WP	G15_033	FROM->TO	G14-057T 345.00 - SUNNYSIDE 345KV CKT 1	717	789	0.04317	117.0984	THISTLE7 345.00 - WOODWARD DISTRICT EHV 345KV CKT 1
FDNS	00NR	6	16WP	G15_033	FROM->TO	G14-057T 345.00 - SUNNYSIDE 345KV CKT 1	717	789	0.04317	117.0984	THISTLE7 345.00 - WOODWARD DISTRICT EHV 345KV CKT 2
FDNS	00NR	6	16WP	G15_033	FROM->TO	G14-057T 345.00 - SUNNYSIDE 345KV CKT 1	717	789	0.04317	117.0984	THISTLE7 345.00 - WOODWARD DISTRICT EHV 345KV CKT 2
FDNS	00NR	6	16WP	G15_033	FROM->TO	G14-057T 345.00 - SUNNYSIDE 345KV CKT 1	717	789	0.04332	117.0937	P12:138:AEPW:CATOOSA4:T.S.E.-4
FDNS	00NR	6	16WP	G15_033	FROM->TO	G14-057T 345.00 - SUNNYSIDE 345KV CKT 1	717	789	0.04332	117.088	GEN506752 1-LEBROCK GAS 1
FDNS	00NR	6	16WP	G15_033	FROM->TO	G14-057T 345.00 - SUNNYSIDE 345KV CKT 1	717	789	0.04332	117.0868	GEN506753 1-LEBROCK GAS 2
FDNS	00NR	6	16WP	G15_033	FROM->TO	G14-057T 345.00 - SUNNYSIDE 345KV CKT 1	717	789	0.04308	117.063	P12:138:AEPW-OGE:WTH_JCT4:JENSEN4
FDNS	00NR	6	16WP	G15_033	FROM->TO	G14-057T 345.00 - SUNNYSIDE 345KV CKT 1	717	789	0.04331	117.054	8DANIEL8 500.00 - MCKNIGHT 500KV CKT 1
FDNS	00NR	6	16WP	G15_033	FROM->TO	G14-057T 345.00 - SUNNYSIDE 345KV CKT 1	717	789	0.04332	117.0507	GEN515226 1-MUSKOGEE 6G
FDNS	00NR	6	16WP	G15_033	FROM->TO	G14-057T 345.00 - SUNNYSIDE 345KV CKT 1	717	789	0.04332	117.0431	P12:161:AEPW:DYESS5:ELMSPRNG:TONTITN5
FDNS	00NR	6	20WP	G15_033	FROM->TO	G14-057T 345.00 - SUNNYSIDE 345KV CKT 1	717	789	0.04125	117.0427	GEN509406 1-WELSH #3
FDNS	00NR	6	20WP	G15_033	FROM->TO	G14-057T 345.00 - SUNNYSIDE 345KV CKT 1	717	789	0.04125	117.0424	GEN509404 1-WELSH #1

SOLUTION	GROUP	SCENARIO	SEASON	SOURCE	DIRECTION	MONITORED ELEMENT	RATEA (MVA)	RATEB(MVA)	TDF	TC%LOADING (% MVA)	CONTINGENCY
FDNS	00NR	6	16WP	G15_033	FROM->TO	G14-057T 345.00 - SUNNYSIDE 345KV CKT 1	717	789	0.04332	117.0422	GEN337911 1-ARKANSAS NUCLEAR ONE UNIT #2
FDNS	00NR	6	16WP	G15_033	FROM->TO	G14-057T 345.00 - SUNNYSIDE 345KV CKT 1	717	789	0.04326	117.0399	6LAYFLD 230.00 - CARROLL 230KV CKT 1
FDNS	00NR	6	16WP	G15_033	FROM->TO	G14-057T 345.00 - SUNNYSIDE 345KV CKT 1	717	789	0.04332	117.0361	GEN501811 1-RODEMACHER UNIT 1
FDNS	00NR	6	16WP	G15_033	FROM->TO	G14-057T 345.00 - SUNNYSIDE 345KV CKT 1	717	789	0.04301	117.0295	MATHWSN7 345.00 - TATONGA7 345.00 345KV CKT 1
FDNS	00NR	6	16WP	G15_033	FROM->TO	G14-057T 345.00 - SUNNYSIDE 345KV CKT 1	717	789	0.04301	117.0295	MATHWSN7 345.00 - TATONGA7 345.00 345KV CKT 2
FDNS	00NR	6	16WP	G15_033	FROM->TO	G14-057T 345.00 - SUNNYSIDE 345KV CKT 1	717	789	0.04332	117.0293	GEN337652 1-WHITE BLUFF UNIT #1
FDNS	00NR	6	16WP	G15_033	FROM->TO	G14-057T 345.00 - SUNNYSIDE 345KV CKT 1	717	789	0.04332	117.0265	GEN300015 1-1SGPDEL 18.000
FDNS	00NR	6	16WP	G15_033	FROM->TO	G14-057T 345.00 - SUNNYSIDE 345KV CKT 1	717	789	0.04332	117.0197	GEN336251 1-NINEMILE POINT UNIT#4
FDNS	00NR	6	16WP	G15_033	FROM->TO	G14-057T 345.00 - SUNNYSIDE 345KV CKT 1	717	789	0.04332	117.0151	GEN336831 1-BAXTER WILSON SES
FDNS	00NR	6	16WP	G15_033	FROM->TO	G14-057T 345.00 - SUNNYSIDE 345KV CKT 1	717	789	0.05421	117.0146	TUCO INTERCHANGE - TUCO_2 345.00 345KV CKT 1
FDNS	00NR	6	16WP	G15_033	FROM->TO	G14-057T 345.00 - SUNNYSIDE 345KV CKT 1	717	789	0.04332	117.0144	GEN334433 1-SABINE UNIT 3
FDNS	00NR	6	16WP	G15_033	FROM->TO	G14-057T 345.00 - SUNNYSIDE 345KV CKT 1	717	789	0.04359	117.0135	BAILEY4 138.00 - SUNSHINE CANYON 138KV CKT 1
FDNS	00NR	6	16WP	G15_033	FROM->TO	G14-057T 345.00 - SUNNYSIDE 345KV CKT 1	717	789	0.04324	117.0129	FULTON 115 - HOPE 115KV CKT 1
FDNS	00NR	6	16WP	G15_033	FROM->TO	G14-057T 345.00 - SUNNYSIDE 345KV CKT 1	717	789	0.04324	117.0129	FULTON 115 - HOPE 115KV CKT 1
FDNS	00NR	6	16WP	G15_033	FROM->TO	G14-057T 345.00 - SUNNYSIDE 345KV CKT 1	717	789	0.04338	117.0021	P12:138:AEPW:CORNVIL4:S.W.S.-4
FDNS	00NR	6	16WP	G15_033	FROM->TO	G14-057T 345.00 - SUNNYSIDE 345KV CKT 1	717	789	0.04379	116.9843	TUTTLE - TUTTLE CONOCO TAP 138KV CKT 1
FDNS	00NR	6	16WP	G15_033	FROM->TO	G14-057T 345.00 - SUNNYSIDE 345KV CKT 1	717	789	0.04277	116.9834	BUCKNER7 345.00 - SPEARVILLE 345KV CKT 1
FDNS	00NR	6	16WP	G15_033	FROM->TO	G14-057T 345.00 - SUNNYSIDE 345KV CKT 1	717	789	0.04277	116.9834	BUCKNER7 345.00 - SPEARVILLE 345KV CKT 1
FDNS	00NR	6	16WP	G15_033	FROM->TO	G14-057T 345.00 - SUNNYSIDE 345KV CKT 1	717	789	0.04332	116.9745	GEN562783 1-G15036_4 0.6900
FDNS	00NR	6	16WP	G15_033	FROM->TO	G14-057T 345.00 - SUNNYSIDE 345KV CKT 1	717	789	0.04332	116.9745	GEN562784 1-G15036_5 0.6900
FDNS	00NR	6	16WP	G15_033	FROM->TO	G14-057T 345.00 - SUNNYSIDE 345KV CKT 1	717	789	0.04353	116.9743	P12:69:WFEC-AEPW:COMANCH2:DUNCAN-2
FDNS	00NR	6	16WP	G15_033	FROM->TO	G14-057T 345.00 - SUNNYSIDE 345KV CKT 1	717	789	0.04332	116.9702	GEN515040 1-SEMINOLE 1G
FDNS	00NR	6	16WP	G15_033	FROM->TO	G14-057T 345.00 - SUNNYSIDE 345KV CKT 1	717	789	0.04328	116.964	G15088_T 345.00 - MOORE 345KV CKT 1
FDNS	00NR	6	16WP	G15_033	FROM->TO	G14-057T 345.00 - SUNNYSIDE 345KV CKT 1	717	789	0.04318	116.9582	P12:138:AEPW:WTHWF4:CLINTJC4
FDNS	00NR	6	16WP	G15_033	FROM->TO	G14-057T 345.00 - SUNNYSIDE 345KV CKT 1	717	789	0.04332	116.9509	GEN505432 1-SIKESTON
FDNS	00NR	6	16WP	G15_033	FROM->TO	G14-057T 345.00 - SUNNYSIDE 345KV CKT 1	717	789	0.04332	116.9489	GEN515223 1-MUSKOGEE 4G
FDNS	00NR	6	16WP	G15_033	FROM->TO	G14-057T 345.00 - SUNNYSIDE 345KV CKT 1	717	789	0.04332	116.9489	GEN515225 1-MUSKOGEE 5G
FDNS	00NR	6	16WP	G15_033	FROM->TO	G14-057T 345.00 - SUNNYSIDE 345KV CKT 1	717	789	0.04315	116.9474	G1524G1525 345.00 - THISTLE7 345.00 345KV CKT 1
FDNS	00NR	6	16WP	G15_033	FROM->TO	G14-057T 345.00 - SUNNYSIDE 345KV CKT 1	717	789	0.04315	116.9474	G1524G1525 345.00 - THISTLE7 345.00 345KV CKT 2
FDNS	00NR	6	16WP	G15_033	FROM->TO	G14-057T 345.00 - SUNNYSIDE 345KV CKT 1	717	789	0.04399	116.9389	P12:138:AEPW:CORNVIL4:DUNCAN-4
FDNS	00NR	6	16WP	G15_033	FROM->TO	G14-057T 345.00 - SUNNYSIDE 345KV CKT 1	717	789	0.04332	116.9387	CIMARRON - CZECH HALL 138KV CKT 1
FDNS	00NR	6	16WP	G15_033	FROM->TO	G14-057T 345.00 - SUNNYSIDE 345KV CKT 1	717	789	0.04332	116.9369	P12:161:AEPW:EROGERS5:ECNTRTN5
FDNS	00NR	6	16WP	G15_033	FROM->TO	G14-057T 345.00 - SUNNYSIDE 345KV CKT 1	717	789	0.04087	116.9303	FINNEY SWITCHING STATION - Hitchland Interchange 345KV CKT 1
FDNS	00NR	6	16WP	G15_033	FROM->TO	G14-057T 345.00 - SUNNYSIDE 345KV CKT 1	717	789	0.04332	116.9302	RODEMACHER 230/22.0KV TRANSFORMER CKT 1
FDNS	00NR	6	16WP	G15_033	FROM->TO	G14-057T 345.00 - SUNNYSIDE 345KV CKT 1	717	789	0.04299	116.9285	ARBWIND4 138.00 - CARTER 138KV CKT 1
FDNS	00NR	6	16WP	G15_033	FROM->TO	G14-057T 345.00 - SUNNYSIDE 345KV CKT 1	717	789	0.04328	116.9277	CIMARRON - SARA 138KV CKT 1
FDNS	00NR	6	16WP	G15_033	FROM->TO	G14-057T 345.00 - SUNNYSIDE 345KV CKT 1	717	789	0.0433	116.925	LAYFLD8 500.00 - MOUNT OLIVE 500KV CKT 1
FDNS	00NR	6	16WP	G15_033	FROM->TO	G14-057T 345.00 - SUNNYSIDE 345KV CKT 1	717	789	0.0433	116.925	LAYFLD8 500.00 - MOUNT OLIVE 500KV CKT 1
FDNS	00NR	6	16WP	G15_033	FROM->TO	G14-057T 345.00 - SUNNYSIDE 345KV CKT 1	717	789	0.04332	116.9196	GEN303007 1-1BC2 U2
FDNS	00NR	6	16WP	G15_033	FROM->TO	G14-057T 345.00 - SUNNYSIDE 345KV CKT 1	717	789	0.04353	116.9164	DUNCAN - TOSCO 69KV CKT 1
FDNS	00NR	6	16WP	G15_033	FROM->TO	G14-057T 345.00 - SUNNYSIDE 345KV CKT 1	717	789	0.04332	116.9151	GEN303006 1-1BC2 U1
FDNS	00NR	6	16WP	G15_033	FROM->TO	G14-057T 345.00 - SUNNYSIDE 345KV CKT 1	717	789	0.0433	116.9141	HOYT - STRANGER CREEK 345KV CKT 1
FDNS	00NR	6	16WP	G15_033	FROM->TO	G14-057T 345.00 - SUNNYSIDE 345KV CKT 1	717	789	0.04332	116.9113	WHITE BLUFF 500/26.0KV TRANSFORMER CKT 1
FDNS	00NR	6	16WP	G15_033	FROM->TO	G14-057T 345.00 - SUNNYSIDE 345KV CKT 1	717	789	0.0433	116.9107	HOT SPRINGS EHV - MAGNET COVE 500KV CKT 1
FDNS	00NR	6	16WP	G15_033	FROM->TO	G14-057T 345.00 - SUNNYSIDE 345KV CKT 1	717	789	0.0433	116.9073	G15074_T 345.00 - JEFFREY ENERGY CENTER 345KV CKT 1
FDNS	00NR	6	16WP	G15_033	FROM->TO	G14-057T 345.00 - SUNNYSIDE 345KV CKT 1	717	789	0.04379	116.9071	CIMARRON - TUTTLE CONOCO TAP 138KV CKT 1
FDNS	00NR	6	16WP	G15_033	FROM->TO	G14-057T 345.00 - SUNNYSIDE 345KV CKT 1	717	789	0.04309	116.901	SEMINOLE - VANOSTP4 138.00 138KV CKT 1
FDNS	00NR	6	16WP	G15_033	FROM->TO	G14-057T 345.00 - SUNNYSIDE 345KV CKT 1	717	789	0.04296	116.9005	CANADIAN - NOBLE 138KV CKT 1
FDNS	00NR	6	16WP	G15_033	FROM->TO	G14-057T 345.00 - SUNNYSIDE 345KV CKT 1	717	789	0.04329	116.8966	MC NIEL 500/115KV TRANSFORMER CKT 1
FDNS	00NR	6	16WP	G15_033	FROM->TO	G14-057T 345.00 - SUNNYSIDE 345KV CKT 1	717	789	0.04318	116.8964	P12:138:AEPW:WTHWF4:WTH_SE4
FDNS	00NR	6	16WP	G15_033	FROM->TO	G14-057T 345.00 - SUNNYSIDE 345KV CKT 1	717	789	0.04343	116.8934	LASALLE - LATTA JCT 138KV CKT 1
FDNS	00NR	6	16WP	G15_033	FROM->TO	G14-057T 345.00 - SUNNYSIDE 345KV CKT 1	717	789	0.04332	116.8928	GEN337910 1-ARKANSAS NUCLEAR ONE UNIT #1
FDNS	00NR	6	16WP	G15_033	FROM->TO	G14-057T 345.00 - SUNNYSIDE 345KV CKT 1	717	789	0.04332	116.8924	GEN336191 1-LITTLE GYPSY UNIT#3
FDNS	00NR	6	16WP	G15_033	FROM->TO	G14-057T 345.00 - SUNNYSIDE 345KV CKT 1	717	789	0.04327	116.8776	BISMARK - HOT SPRINGS WEST BUS 115KV CKT 1
FDNS	00NR	6	16WP	G15_033	FROM->TO	G14-057T 345.00 - SUNNYSIDE 345KV CKT 1	717	789	0.04353	116.8771	COMANCHE TAP - TOSCO 69KV CKT 1
FDNS	00NR	6	16WP	G15_033	FROM->TO	G14-057T 345.00 - SUNNYSIDE 345KV CKT 1	717	789	0.04297	116.8759	P12:138:OKGE:3TERM27
FDNS	00NR	6	16WP	G15_033	FROM->TO	G14-057T 345.00 - SUNNYSIDE 345KV CKT 1	717	789	0.04332	116.8697	GEN300010 1-ST FRANCIS UNIT 1
FDNS	00NR	6	16WP	G15_033	FROM->TO	G14-057T 345.00 - SUNNYSIDE 345KV CKT 1	717	789	0.04332	116.8679	P12:138:AEPW:N.E.S.-4:CATOOSA4
FDNS	00NR	6	16WP	G15_033	FROM->TO	G14-057T 345.00 - SUNNYSIDE 345KV CKT 1	717	789	0.04332	116.8649	GEN335614 1-WILLOW GLENN UNIT#4
FDNS	00NR	6	16WP	G15_033	FROM->TO	G14-057T 345.00 - SUNNYSIDE 345KV CKT 1	717	789	0.04332	116.8629	CZECH HALL - XEROX 138KV CKT 1
FDNS	00NR	6	16WP	G15_033	FROM->TO	G14-057T 345.00 - SUNNYSIDE 345KV CKT 1	717	789	0.04332	116.8585	MORGAN - XEROX 138KV CKT 1
FDNS	00NR	6	16WP	G15_033	FROM->TO	G14-057T 345.00 - SUNNYSIDE 345KV CKT 1	717	789	0.04363	116.8544	P12:69:AEPW-OMPA:COMANC-2:OMWALTR2
FDNS	00NR	6	16WP	G15_033	FROM->TO	G14-057T 345.00 - SUNNYSIDE 345KV CKT 1	717	789	0.04332	116.8539	GEN303008 1-1BC2 U3
FDNS	00NR	6	16WP	G15_033	FROM->TO	G14-057T 345.00 - SUNNYSIDE 345KV CKT 1	717	789	0.04332	116.8519	NELSON 230/20.0KV TRANSFORMER CKT 1
FDNS	00NR	6	16WP	G15_033	FROM->TO	G14-057T 345.00 - SUNNYSIDE 345KV CKT 1	717	789	0.04359	116.8501	BAILEY4 138.00 - WESTMOORE 138KV CKT 1
FDNS	00NR	6	16WP	G15_033	FROM->TO	G14-057T 345.00 - SUNNYSIDE 345KV CKT 1	717	789	0.04332	116.8358	MORGAN - MUSTANG 138KV CKT 1
FDNS	00NR	6	16WP	G15_033	FROM->TO	G14-057T 345.00 - SUNNYSIDE 345KV CKT 1	717	789	0.04332	116.8267	GEN336170 1-GULF OXY U4
FDNS	00NR	6	16WP	G15_033	FROM->TO	G14-057T 345.00 - SUNNYSIDE 345KV CKT 1	717	789	0.04327	116.8236	ALPINE AECC - BISMARK 115KV CKT 1
FDNS	00NR	6	16WP	G15_033	FROM->TO	G14-057T 345.00 - SUNNYSIDE 345KV CKT 1	717	789	0.04309	116.8228	WEATHERFORD JCT. - WEATHERFORD SOUTHEAST 138KV CKT 1
FDNS	00NR	6	16WP	G15_033	FROM->TO	G14-057T 345.00 - SUNNYSIDE 345KV CKT 1	717	789	0.04309	116.8228	WEATHERFORD JCT. - WEATHERFORD SOUTHEAST 138KV CKT 1
FDNS	00NR	6	16WP	G15_033	FROM->TO	G14-057T 345.00 - SUNNYSIDE 345KV CKT 1	717	789	0.04332	116.8204	GEN336464 1-MICHOUD UNIT #3
FDNS	00NR	6	16WP	G15_033	FROM->TO	G14-057T 345.00 - SUNNYSIDE 345KV CKT 1	717	789	0.04332	116.8183	GEN300011 1-ST FRANCIS UNIT 2
FDNS	00NR	6	16WP	G15_033	FROM->TO	G14-057T 345.00 - SUNNYSIDE 345KV CKT 1	717	789	0.04353	116.8136	COMANCHE - COMANCHE TAP 69KV CKT 1
FDNS	00NR	6	16WP	G15_033	FROM->TO	G14-057T 345.00 - SUNNYSIDE 345KV CKT 1	717	789	0.04332	116.8088	CYPRESS - HARTBURG 500KV CKT 1
FDNS	00NR	6	16WP	G15_033	FROM->TO	G14-057T 345.00 - SUNNYSIDE 345KV CKT 1	717	789	0.04296	116.8087	NOBLE - PURCELL4 138.00 138KV CKT 1
FDNS	00NR	6	16WP	G15_033	FROM->TO	G14-057T 345.00 - SUNNYSIDE 345KV CKT 1	717	789	0.04322	116.8068	DRAPER LAKE - SEMINOLE 345KV CKT 2
FDNS	00NR	6	16WP	G15_033	FROM->TO	G14-057T 345.00 - SUNNYSIDE 345KV CKT 1	717	789	0.04322	116.8067	DRAPER LAKE - SEMINOLE 345KV CKT 1
FDNS	00NR	6	16WP	G15_033	FROM->TO	G14-057T 345.00 - SUNNYSIDE 345KV CKT 1	717	789	0.04332	116.8026	8CAJUN2 500/24.0KV TRANSFORMER CKT 1
FDNS	00NR	6	16WP	G15_033	FROM->TO	G14-057T 345.00 - SUNNYSIDE 345KV CKT 1	717	789	0.04332	116.7821	7JASPER 345.00 - BLACKBERRY 345KV CKT 1

SOLUTION	GROUP	SCENARIO	SEASON	SOURCE	DIRECTION	MONITORED ELEMENT	RATEA (MVA)	RATEB(MVA)	TDF	TC%LOADING (% MVA)	CONTINGENCY
FDNS	00NR	6	16WP	G15_033	FROM->TO	G14-057T 345.00 - SUNNYSIDE 345KV CKT 1	717	789	0.04309	116.7821	P12:138:AEPW:REDROCKRD4:WTH_JCT4
FDNS	00NR	6	16WP	G15_033	FROM->TO	G14-057T 345.00 - SUNNYSIDE 345KV CKT 1	717	789	0.04769	116.782	P12:345:SPS:J15.1.XRDS.TOLK
FDNS	00NR	6	16WP	G15_033	FROM->TO	G14-057T 345.00 - SUNNYSIDE 345KV CKT 1	717	789	0.04332	116.7807	GEN300016 1-1G1GPDEL 18.000
FDNS	00NR	6	16WP	G15_033	FROM->TO	G14-057T 345.00 - SUNNYSIDE 345KV CKT 1	717	789	0.04327	116.7794	ALPINE AECC - AMITY SS 115KV CKT 1
FDNS	00NR	6	16WP	G15_033	FROM->TO	G14-057T 345.00 - SUNNYSIDE 345KV CKT 1	717	789	0.04332	116.7763	GEN501910 1-ACADIA UNIT ST1
FDNS	00NR	6	16WP	G15_033	FROM->TO	G14-057T 345.00 - SUNNYSIDE 345KV CKT 1	717	789	0.04332	116.7683	P12:138:AEPW:R.S.S.-4:S.HUD.-4
FDNS	00NR	6	16WP	G15_033	FROM->TO	G14-057T 345.00 - SUNNYSIDE 345KV CKT 1	717	789	0.04332	116.7678	GEN337041 1-GERALD ANDRUS
FDNS	00NR	6	16WP	G15_033	FROM->TO	G14-057T 345.00 - SUNNYSIDE 345KV CKT 1	717	789	0.04332	116.7613	GEN512688 2-GRDA1 GSU2 22
FDNS	00NR	6	16WP	G15_033	FROM->TO	G14-057T 345.00 - SUNNYSIDE 345KV CKT 1	717	789	0.04335	116.7595	GRACEMONT (BANK 1) 345/138/13.8KV TRANSFORMER CKT 1
FDNS	00NR	6	16WP	G15_033	FROM->TO	G14-057T 345.00 - SUNNYSIDE 345KV CKT 1	717	789	0.04328	116.7548	BLACKBERRY - NEOSHO 345KV CKT 1
FDNS	00NR	6	16WP	G15_033	FROM->TO	G14-057T 345.00 - SUNNYSIDE 345KV CKT 1	717	789	0.04328	116.7548	BLACKBERRY - NEOSHO 345KV CKT 1
FDNS	00NR	6	16WP	G15_033	FROM->TO	G14-057T 345.00 - SUNNYSIDE 345KV CKT 1	717	789	0.04329	116.7498	SWISSVALE - WEST GARDNER 345KV CKT 1
FDNS	00NR	6	16WP	G15_033	FROM->TO	G14-057T 345.00 - SUNNYSIDE 345KV CKT 1	717	789	0.04331	116.7494	7LUTESVIL 345.00 - 7ST FRANC 345.00 345KV CKT 1
FDNS	00NR	6	16WP	G15_033	FROM->TO	G14-057T 345.00 - SUNNYSIDE 345KV CKT 1	717	789	0.04328	116.7426	SARA - STHLAKE4 138.00 138KV CKT 1
FDNS	00NR	6	16WP	G15_033	FROM->TO	G14-057T 345.00 - SUNNYSIDE 345KV CKT 1	717	789	0.04331	116.7397	ETTA (DUKE HOTSPRINGS) - MC NIEL 500KV CKT 1
FDNS	00NR	6	16WP	G15_033	FROM->TO	G14-057T 345.00 - SUNNYSIDE 345KV CKT 1	717	789	0.04343	116.7367	LASALLE - STONEWAL LH138.00 138KV CKT 1
FDNS	00NR	6	16WP	G15_033	FROM->TO	G14-057T 345.00 - SUNNYSIDE 345KV CKT 1	717	789	0.04228	116.7356	CANADIAN RIVER - PITTSBURG 345KV CKT 1
FDNS	00NR	6	16WP	G15_033	FROM->TO	G14-057T 345.00 - SUNNYSIDE 345KV CKT 1	717	789	0.04228	116.7356	CANADIAN RIVER - PITTSBURG 345KV CKT 1
FDNS	00NR	6	16WP	G15_033	FROM->TO	G14-057T 345.00 - SUNNYSIDE 345KV CKT 1	717	789	0.04332	116.73	P12:138:AEPW:YARCH-S4:T.S.E.-4
FDNS	00NR	6	16WP	G15_033	FROM->TO	G14-057T 345.00 - SUNNYSIDE 345KV CKT 1	717	789	0.04332	116.7265	GEN336801 1-BAXTER WILSON UNIT #1
FDNS	00NR	6	16WP	G15_033	FROM->TO	G14-057T 345.00 - SUNNYSIDE 345KV CKT 1	717	789	0.04327	116.7253	CLEO CORNER - CLEOPLT4 138.00 138KV CKT 1
FDNS	00NR	6	16WP	G15_033	FROM->TO	G14-057T 345.00 - SUNNYSIDE 345KV CKT 1	717	789	0.04335	116.7247	ANADARKO - SEQUOYAHJ4 138.00 138KV CKT 1
FDNS	00NR	6	16WP	G15_033	FROM->TO	G14-057T 345.00 - SUNNYSIDE 345KV CKT 1	717	789	0.04332	116.7247	P12:69:AEPW:NROGERS2:ECNTRTN2
FDNS	00NR	6	16WP	G15_033	FROM->TO	G14-057T 345.00 - SUNNYSIDE 345KV CKT 1	717	789	0.04332	116.7242	P12:138:AEPW:BA_71ST4:T.S.E.-4
FDNS	00NR	6	16WP	G15_033	FROM->TO	G14-057T 345.00 - SUNNYSIDE 345KV CKT 1	717	789	0.04343	116.7221	STONEWAL LH138.00 - TUPELO TAP 138KV CKT 1
FDNS	00NR	6	16WP	G15_033	FROM->TO	G14-057T 345.00 - SUNNYSIDE 345KV CKT 1	717	789	0.04335	116.7209	CORN TAP - SEQUOYAHJ4 138.00 138KV CKT 1
FDNS	00NR	6	16WP	G15_033	FROM->TO	G14-057T 345.00 - SUNNYSIDE 345KV CKT 1	717	789	0.04332	116.7198	SABINE 230/24.0KV TRANSFORMER CKT 1
FDNS	00NR	6	16WP	G15_033	FROM->TO	G14-057T 345.00 - SUNNYSIDE 345KV CKT 1	717	789	0.04292	116.7161	CHISHOLM6 230.00 - ELK CITY 230KV 230KV CKT 1
FDNS	00NR	6	16WP	G15_033	FROM->TO	G14-057T 345.00 - SUNNYSIDE 345KV CKT 1	717	789	0.04329	116.7149	ENOWILT - LONE OAK 138KV CKT 1
FDNS	00NR	6	16WP	G15_033	FROM->TO	G14-057T 345.00 - SUNNYSIDE 345KV CKT 1	717	789	0.04328	116.7148	MCCLAIN - STHLAKE4 138.00 138KV CKT 1
FDNS	00NR	6	16WP	G15_033	FROM->TO	G14-057T 345.00 - SUNNYSIDE 345KV CKT 1	717	789	0.04319	116.713	P12:138:OKGE-AEPW:JENSEN4:REDROCKRD4
FDNS	00NR	6	16WP	G15_033	FROM->TO	G14-057T 345.00 - SUNNYSIDE 345KV CKT 1	717	789	0.04329	116.7125	G15095_T 138.00 - ROSE_VALLEY 138.00 138KV CKT 1
FDNS	00NR	6	16WP	G15_033	FROM->TO	G14-057T 345.00 - SUNNYSIDE 345KV CKT 1	717	789	0.04318	116.711	BENTON - WICHITA 345KV CKT 1
FDNS	00NR	6	16WP	G15_033	FROM->TO	G14-057T 345.00 - SUNNYSIDE 345KV CKT 1	717	789	0.04292	116.7105	ELK CITY 230KV (ELKCTY-6) 230/138/13.8KV TRANSFORMER CKT 1
FDNS	00NR	6	16WP	G15_033	FROM->TO	G14-057T 345.00 - SUNNYSIDE 345KV CKT 1	717	789	0.04292	116.7105	ELK CITY 230KV (ELKCTY-6) 230/138/13.8KV TRANSFORMER CKT 1
FDNS	00NR	6	16WP	G15_033	FROM->TO	G14-057T 345.00 - SUNNYSIDE 345KV CKT 1	717	789	0.04345	116.7078	WALTERS - WALTERS 69KV CKT 1
FDNS	00NR	6	16WP	G15_033	FROM->TO	G14-057T 345.00 - SUNNYSIDE 345KV CKT 1	717	789	0.0433	116.707	8WNEWMADRID 500.00 - DELL 500 500KV CKT 1
FDNS	00NR	6	16WP	G15_033	FROM->TO	G14-057T 345.00 - SUNNYSIDE 345KV CKT 1	717	789	0.04329	116.7059	ENOWILT - SARDIS 138KV CKT 1
FDNS	00NR	6	16WP	G15_033	FROM->TO	G14-057T 345.00 - SUNNYSIDE 345KV CKT 1	717	789	0.04309	116.7038	HINTON - WEATHERFORD JCT. 138KV CKT 1
FDNS	00NR	6	16WP	G15_033	FROM->TO	G14-057T 345.00 - SUNNYSIDE 345KV CKT 1	717	789	0.04332	116.7011	FRONTIER 345/18.0KV TRANSFORMER CKT 1
FDNS	00NR	6	16WP	G15_033	FROM->TO	G14-057T 345.00 - SUNNYSIDE 345KV CKT 1	717	789	0.04338	116.6998	NORGE ROAD - SOUTHWESTERN STATION 138KV CKT 1
FDNS	00NR	6	16WP	G15_033	FROM->TO	G14-057T 345.00 - SUNNYSIDE 345KV CKT 1	717	789	0.04338	116.6998	NORGE ROAD - SOUTHWESTERN STATION 138KV CKT 1
FDNS	00NR	6	16WP	G15_033	FROM->TO	G14-057T 345.00 - SUNNYSIDE 345KV CKT 1	717	789	0.04332	116.6998	ESSEX UNIT 2 500/18.0KV TRANSFORMER CKT 1
FDNS	00NR	6	16WP	G15_033	FROM->TO	G14-057T 345.00 - SUNNYSIDE 345KV CKT 1	717	789	0.04332	116.6993	FRONTIER 345/18.0KV TRANSFORMER CKT 1
FDNS	00NR	6	16WP	G15_033	FROM->TO	G14-057T 345.00 - SUNNYSIDE 345KV CKT 1	717	789	0.0429	116.6984	ARBUCKLE - VANOSTP4 138.00 138KV CKT 1
FDNS	00NR	6	16WP	G15_033	FROM->TO	G14-057T 345.00 - SUNNYSIDE 345KV CKT 1	717	789	0.04359	116.6967	FRANKLIN SW - WESTMOORE 138KV CKT 1
FDNS	00NR	6	16WP	G15_033	FROM->TO	G14-057T 345.00 - SUNNYSIDE 345KV CKT 1	717	789	0.04332	116.6927	P12:161:AEPW:CHAMSPR5:FARMING5
FDNS	00NR	6	16WP	G15_033	FROM->TO	G14-057T 345.00 - SUNNYSIDE 345KV CKT 1	717	789	0.04327	116.6926	CLEOPLT4 138.00 - MEN TAP 138KV CKT 1
FDNS	00NR	6	16WP	G15_033	FROM->TO	G14-057T 345.00 - SUNNYSIDE 345KV CKT 1	717	789	0.04331	116.6904	P12:138:AEPW-OGE:SHIDLER4:OSAGE 4
FDNS	00NR	6	16WP	G15_033	FROM->TO	G14-057T 345.00 - SUNNYSIDE 345KV CKT 1	717	789	0.04333	116.6841	MARIETTA - MARIETTA4 138.00 138KV CKT 1
FDNS	00NR	6	16WP	G15_033	FROM->TO	G14-057T 345.00 - SUNNYSIDE 345KV CKT 1	717	789	0.04327	116.6832	IMO TAP - MEN TAP 138KV CKT 1
FDNS	00NR	6	16WP	G15_033	FROM->TO	G14-057T 345.00 - SUNNYSIDE 345KV CKT 1	717	789	0.04332	116.675	GEN505616 1-BROKEN BOW
FDNS	00NR	6	16WP	G15_033	FROM->TO	G14-057T 345.00 - SUNNYSIDE 345KV CKT 1	717	789	0.0433	116.6722	EMPORIA ENERGY CENTER - SWISSVALE 345KV CKT 1
FDNS	00NR	6	16WP	G15_033	FROM->TO	G14-057T 345.00 - SUNNYSIDE 345KV CKT 1	717	789	0.04363	116.672	LAWTON RELIFT TAP - OMPA-WALTERS 69KV CKT 1
FDNS	00NR	6	16WP	G15_033	FROM->TO	G14-057T 345.00 - SUNNYSIDE 345KV CKT 1	717	789	0.04329	116.6705	CLAYTON - SARDIS 138KV CKT 1
FDNS	00NR	6	16WP	G15_033	FROM->TO	G14-057T 345.00 - SUNNYSIDE 345KV CKT 1	717	789	0.04318	116.6675	WEATHERFORD TAP - WEATHERFORD WIND FARM 138KV CKT 1
FDNS	00NR	6	16WP	G15_033	FROM->TO	G14-057T 345.00 - SUNNYSIDE 345KV CKT 1	717	789	0.04332	116.664	LEWIS CREEK SWITCHYARD 138/22.0KV TRANSFORMER CKT 1
FDNS	00NR	6	16WP	G15_033	FROM->TO	G14-057T 345.00 - SUNNYSIDE 345KV CKT 1	717	789	0.04332	116.659	LEWIS CREEK SWITCHYARD 138/22.0KV TRANSFORMER CKT 1
FDNS	00NR	6	16WP	G15_033	FROM->TO	G14-057T 345.00 - SUNNYSIDE 345KV CKT 1	717	789	0.04329	116.6576	NOEL_SW 138.00 - ROSE_VALLEY 138.00 138KV CKT 1
FDNS	00NR	6	16WP	G15_033	FROM->TO	G14-057T 345.00 - SUNNYSIDE 345KV CKT 1	717	789	0.04338	116.6535	SOUTHWESTERN STATION - VERDEN 138KV CKT 1
FDNS	00NR	6	16WP	G15_033	FROM->TO	G14-057T 345.00 - SUNNYSIDE 345KV CKT 1	717	789	0.04309	116.6509	HINTON - REDROCKRD4 138.00 138KV CKT 1
FDNS	00NR	6	16WP	G15_033	FROM->TO	G14-057T 345.00 - SUNNYSIDE 345KV CKT 1	717	789	0.04332	116.6474	GEN501970 1-EVANGELINE UNIT 7
FDNS	00NR	6	16WP	G15_033	FROM->TO	G14-057T 345.00 - SUNNYSIDE 345KV CKT 1	717	789	0.04345	116.6463	P12:69:WFEC-AEPW:COMANCH2:WALTRS-2
FDNS	00NR	6	16WP	G15_033	FROM->TO	G14-057T 345.00 - SUNNYSIDE 345KV CKT 1	717	789	0.04332	116.6438	GEN509394 1-FLINT CREEK
FDNS	00NR	6	16WP	G15_033	FROM->TO	G14-057T 345.00 - SUNNYSIDE 345KV CKT 1	717	789	0.04329	116.6428	P12:138:AEPW-SWPA:LONEOAK4:BRKNBW4
FDNS	00NR	6	16WP	G15_033	FROM->TO	G14-057T 345.00 - SUNNYSIDE 345KV CKT 1	717	789	0.04324	116.6388	HOPE - MCNAB REC 115KV CKT 1
FDNS	00NR	6	16WP	G15_033	FROM->TO	G14-057T 345.00 - SUNNYSIDE 345KV CKT 1	717	789	0.04277	116.6373	BUCKNER7 345.00 - HOLCOMB 345KV CKT 1
FDNS	00NR	6	16WP	G15_033	FROM->TO	G14-057T 345.00 - SUNNYSIDE 345KV CKT 1	717	789	0.04277	116.6373	BUCKNER7 345.00 - HOLCOMB 345KV CKT 1
FDNS	00NR	6	16WP	G15_033	FROM->TO	G14-057T 345.00 - SUNNYSIDE 345KV CKT 1	717	789	0.04332	116.6349	GEN334392 1-EXXON MOBIL IPP 1
FDNS	00NR	6	16WP	G15_033	FROM->TO	G14-057T 345.00 - SUNNYSIDE 345KV CKT 1	717	789	0.04338	116.634	NORTH 29TH CHICKASHA - VERDEN 138KV CKT 1
FDNS	00NR	6	16WP	G15_033	FROM->TO	G14-057T 345.00 - SUNNYSIDE 345KV CKT 1	717	789	0.04329	116.6304	CLAYTON - NASHOBA 138KV CKT 1
FDNS	00NR	6	16WP	G15_033	FROM->TO	G14-057T 345.00 - SUNNYSIDE 345KV CKT 1	717	789	0.04324	116.63	P12:115:AEPW:TURK3:HOPE3
FDNS	00NR	6	16WP	G15_033	FROM->TO	G14-057T 345.00 - SUNNYSIDE 345KV CKT 1	717	789	0.04332	116.6271	GEN334393 1-EXXON MOBIL IPP 2
FDNS	00NR	6	16WP	G15_033	FROM->TO	G14-057T 345.00 - SUNNYSIDE 345KV CKT 1	717	789	0.04332	116.6271	GEN334394 1-EXXON MOBIL IPP 3
FDNS	00NR	6	16WP	G15_033	FROM->TO	G14-057T 345.00 - SUNNYSIDE 345KV CKT 1	717	789	0.04333	116.6253	P12:138:OKGE:3TERM12
FDNS	00NR	6	16WP	G15_033	FROM->TO	G14-057T 345.00 - SUNNYSIDE 345KV CKT 1	717	789	0.04325	116.625	CLARKSVILLE - ONETA 345KV CKT 1
FDNS	00NR	6	16WP	G15_033	FROM->TO	G14-057T 345.00 - SUNNYSIDE 345KV CKT 1	717	789	0.04325	116.625	CLARKSVILLE - ONETA 345KV CKT 1
FDNS	00NR	6	16WP	G15_033	FROM->TO	G14-057T 345.00 - SUNNYSIDE 345KV CKT 1	717	789	0.04328	116.624	COUCH SES - MC NIEL 115KV CKT 1
FDNS	00NR	6	16WP	G15_033	FROM->TO	G14-057T 345.00 - SUNNYSIDE 345KV CKT 1	717	789	0.04332	116.6209	GEN336222 1-LITTLE GYPSY UNIT#2

SOLUTION	GROUP	SCENARIO	SEASON	SOURCE	DIRECTION	MONITORED ELEMENT	RATEA (MVA)	RATEB(MVA)	TDF	TC%LOADING (% MVA)	CONTINGENCY
FDNS	00NR	6	16WP	G15_033	FROM->TO	G14-057T 345.00 - SUNNYSIDE 345KV CKT 1	717	789	0.04332	116.6193	GEN659125 1-COVEY
FDNS	00NR	6	16WP	G15_033	FROM->TO	G14-057T 345.00 - SUNNYSIDE 345KV CKT 1	717	789	0.04329	116.6173	BETHEL - NASHOBA 138KV CKT 1
FDNS	00NR	6	16WP	G15_033	FROM->TO	G14-057T 345.00 - SUNNYSIDE 345KV CKT 1	717	789	0.0433	116.6166	MORISNT4 138.00 - STILLWATER 138KV CKT 1
FDNS	00NR	6	16WP	G15_033	FROM->TO	G14-057T 345.00 - SUNNYSIDE 345KV CKT 1	717	789	0.04332	116.6138	7JASPER 345.00 - MORGAN 345KV CKT 1
FDNS	00NR	6	16WP	G15_033	FROM->TO	G14-057T 345.00 - SUNNYSIDE 345KV CKT 1	717	789	0.0433	116.6127	EMPORIA ENERGY CENTER - G14_001T 345.00 345KV CKT 1
FDNS	00NR	6	16WP	G15_033	FROM->TO	G14-057T 345.00 - SUNNYSIDE 345KV CKT 1	717	789	0.04394	116.6125	POTTER COUNTY INTERCHANGE - TOLK STATION 345KV CKT 1
FDNS	00NR	6	16WP	G15_033	FROM->TO	G14-057T 345.00 - SUNNYSIDE 345KV CKT 1	717	789	0.0433	116.6114	P12:138:OKGE:3TERM2
FDNS	00NR	6	16WP	G15_033	FROM->TO	G14-057T 345.00 - SUNNYSIDE 345KV CKT 1	717	789	0.04434	116.609	LAWTON EASTSIDE (LES 4) 345/138/13.8KV TRANSFORMER CKT 1
FDNS	00NR	6	16WP	G15_033	FROM->TO	G14-057T 345.00 - SUNNYSIDE 345KV CKT 1	717	789	0.04434	116.609	LAWTON EASTSIDE (LES 4) 345/138/13.8KV TRANSFORMER CKT 1
FDNS	00NR	6	16WP	G15_033	FROM->TO	G14-057T 345.00 - SUNNYSIDE 345KV CKT 1	717	789	0.04363	116.6077	OMPA-WALTERS - WALTERS 69KV CKT 1
FDNS	00NR	6	16WP	G15_033	FROM->TO	G14-057T 345.00 - SUNNYSIDE 345KV CKT 1	717	789	0.04363	116.6077	OMPA-WALTERS - WALTERS 69KV CKT 1
FDNS	00NR	6	16WP	G15_033	FROM->TO	G14-057T 345.00 - SUNNYSIDE 345KV CKT 1	717	789	0.04324	116.6077	MCNAB REC - Turk 115 115KV CKT 1
FDNS	00NR	6	16WP	G15_033	FROM->TO	G14-057T 345.00 - SUNNYSIDE 345KV CKT 1	717	789	0.04324	116.6077	TURK (TURK 1) 138/115/13.2KV TRANSFORMER CKT 1
FDNS	00NR	6	16WP	G15_033	FROM->TO	G14-057T 345.00 - SUNNYSIDE 345KV CKT 1	717	789	0.04324	116.6077	TURK (TURK 1) 138/115/13.2KV TRANSFORMER CKT 1
FDNS	00NR	6	16WP	G15_033	FROM->TO	G14-057T 345.00 - SUNNYSIDE 345KV CKT 1	717	789	0.04334	116.603	FRANKLIN - FRANKLIN SW 138KV CKT 1
FDNS	00NR	6	16WP	G15_033	FROM->TO	G14-057T 345.00 - SUNNYSIDE 345KV CKT 1	717	789	0.04332	116.6001	P12:138:AEPW:R.S.S-4:T.P.S.-4
FDNS	00NR	6	16WP	G15_033	FROM->TO	G14-057T 345.00 - SUNNYSIDE 345KV CKT 1	717	789	0.04332	116.5991	GEN506749 1-EASTMAN GENERATION A
FDNS	00NR	6	16WP	G15_033	FROM->TO	G14-057T 345.00 - SUNNYSIDE 345KV CKT 1	717	789	0.04296	116.5975	PURCELL4 138.00 - WALNUT CREEK 138KV CKT 1
FDNS	00NR	6	16WP	G15_033	FROM->TO	G14-057T 345.00 - SUNNYSIDE 345KV CKT 1	717	789	0.04332	116.5973	GEN334432 1-SABINE UNIT 2
FDNS	00NR	6	16WP	G15_033	FROM->TO	G14-057T 345.00 - SUNNYSIDE 345KV CKT 1	717	789	0.04332	116.5971	GEN334431 1-SABINE UNIT 1
FDNS	00NR	6	16WP	G15_033	FROM->TO	G14-057T 345.00 - SUNNYSIDE 345KV CKT 1	717	789	0.04306	116.5919	CLINTON JUNCTION - ELK CITY 138KV CKT 1
FDNS	00NR	6	16WP	G15_033	FROM->TO	G14-057T 345.00 - SUNNYSIDE 345KV CKT 1	717	789	0.04306	116.5919	CLINTON JUNCTION - ELK CITY 138KV CKT 1
FDNS	00NR	6	16WP	G15_033	FROM->TO	G14-057T 345.00 - SUNNYSIDE 345KV CKT 1	717	789	0.04332	116.5898	GEN336152 1-WATERFORD UNIT#2
FDNS	00NR	6	16WP	G15_033	FROM->TO	G14-057T 345.00 - SUNNYSIDE 345KV CKT 1	717	789	0.04332	116.5894	GEN501972 1-EVANGELINE UNIT 7-2
FDNS	00NR	6	16WP	G15_033	FROM->TO	G14-057T 345.00 - SUNNYSIDE 345KV CKT 1	717	789	0.04332	116.5893	GEN501971 1-EVANGELINE UNIT 7-1
FDNS	00NR	6	16WP	G15_033	FROM->TO	G14-057T 345.00 - SUNNYSIDE 345KV CKT 1	717	789	0.04332	116.5887	GEN336151 1-WATERFORD UNIT#1
FDNS	00NR	6	16WP	G15_033	FROM->TO	G14-057T 345.00 - SUNNYSIDE 345KV CKT 1	717	789	0.04338	116.5833	CORNVILLE - NORGE ROAD 138KV CKT 1
FDNS	00NR	6	16WP	G15_033	FROM->TO	G14-057T 345.00 - SUNNYSIDE 345KV CKT 1	717	789	0.04338	116.5833	CORNVILLE - NORGE ROAD 138KV CKT 1
FDNS	00NR	6	16WP	G15_033	FROM->TO	G14-057T 345.00 - SUNNYSIDE 345KV CKT 1	717	789	0.04209	116.5779	G11-14T 345.00 - WOODWARD DISTRICT EHV 345KV CKT 1
FDNS	00NR	6	16WP	G15_033	FROM->TO	G14-057T 345.00 - SUNNYSIDE 345KV CKT 1	717	789	0.04209	116.5779	G11-14T 345.00 - WOODWARD DISTRICT EHV 345KV CKT 2
FDNS	00NR	6	16WP	G15_033	FROM->TO	G14-057T 345.00 - SUNNYSIDE 345KV CKT 1	717	789	0.04332	116.5754	P12:138:AEPW:R.S.S.-4:R:96YALE-4
FDNS	00NR	6	16WP	G15_033	FROM->TO	G14-057T 345.00 - SUNNYSIDE 345KV CKT 1	717	789	0.04338	116.5703	CORNVILLE - NORTH 29TH CHICKASHA 138KV CKT 1
FDNS	00NR	6	16WP	G15_033	FROM->TO	G14-057T 345.00 - SUNNYSIDE 345KV CKT 1	717	789	0.04318	116.5655	WEATHERFORD SOUTHEAST - WEATHERFORD TAP 138KV CKT 1
FDNS	00NR	6	16WP	G15_033	FROM->TO	G14-057T 345.00 - SUNNYSIDE 345KV CKT 1	717	789	0.04332	116.5653	GEN501912 1-ACADIA UNIT CT1B
FDNS	00NR	6	16WP	G15_033	FROM->TO	G14-057T 345.00 - SUNNYSIDE 345KV CKT 1	717	789	0.04332	116.5653	ST FRANCIS - ST FRANCIS 1 161KV CKT Z1
FDNS	00NR	6	16WP	G15_033	FROM->TO	G14-057T 345.00 - SUNNYSIDE 345KV CKT 1	717	789	0.04332	116.5653	ST FRANCIS 161/16.0KV TRANSFORMER CKT 1
FDNS	00NR	6	16WP	G15_033	FROM->TO	G14-057T 345.00 - SUNNYSIDE 345KV CKT 1	717	789	0.04332	116.5645	GEN501911 1-ACADIA UNIT CT1A
FDNS	00NR	6	16WP	G15_033	FROM->TO	G14-057T 345.00 - SUNNYSIDE 345KV CKT 1	717	789	0.04332	116.5608	P12:138:AEPW:MOHAWK4:T.NO--4
FDNS	00NR	6	16WP	G15_033	FROM->TO	G14-057T 345.00 - SUNNYSIDE 345KV CKT 1	717	789	0.04329	116.5607	BETHEL - BROKEN BOW 138KV CKT 1
FDNS	00NR	6	16WP	G15_033	FROM->TO	G14-057T 345.00 - SUNNYSIDE 345KV CKT 1	717	789	0.04306	116.5576	ARBUCKLE - MILLCREEK 138KV CKT 1
FDNS	00NR	6	16WP	G15_033	FROM->TO	G14-057T 345.00 - SUNNYSIDE 345KV CKT 1	717	789	0.04327	116.5573	P12:138:AEPW:OKMULGE4:R.S.S-4
FDNS	00NR	6	16WP	G15_033	FROM->TO	G14-057T 345.00 - SUNNYSIDE 345KV CKT 1	717	789	0.04332	116.5529	HAMMETT TAP - HORSESHOE LAKE 138KV CKT 1
FDNS	00NR	6	16WP	G15_033	FROM->TO	G14-057T 345.00 - SUNNYSIDE 345KV CKT 1	717	789	0.04353	116.5487	CIMARRON - NORTHWEST 345KV CKT 1
FDNS	00NR	6	16WP	G15_033	FROM->TO	G14-057T 345.00 - SUNNYSIDE 345KV CKT 1	717	789	0.04332	116.5465	SABINE 230/22.0KV TRANSFORMER CKT 1
FDNS	00NR	6	20WP	G15_033	FROM->TO	G14-057T 345.00 - SUNNYSIDE 345KV CKT 1	717	789	0.04349	116.5416	BORDER 7345.00 - WOODWARD DISTRICT EHV 345KV CKT 1
FDNS	00NR	6	16WP	G15_033	FROM->TO	G14-057T 345.00 - SUNNYSIDE 345KV CKT 1	717	789	0.04332	116.5406	GEN336242 1-1NMIL ST1 18.000
FDNS	00NR	6	16WP	G15_033	FROM->TO	G14-057T 345.00 - SUNNYSIDE 345KV CKT 1	717	789	0.04332	116.5399	FLETCHER - MARLOW JCT 69KV CKT 1
FDNS	00NR	6	16WP	G15_033	FROM->TO	G14-057T 345.00 - SUNNYSIDE 345KV CKT 1	717	789	0.0433	116.5395	G14_001T 345.00 - WICHITA 345KV CKT 1
FDNS	00NR	6	16WP	G15_033	FROM->TO	G14-057T 345.00 - SUNNYSIDE 345KV CKT 1	717	789	0.04332	116.5366	ESSEX UNIT 2 500/18.0KV TRANSFORMER CKT 1
FDNS	00NR	6	16WP	G15_033	FROM->TO	G14-057T 345.00 - SUNNYSIDE 345KV CKT 1	717	789	0.04332	116.5316	P12:138:OKGE:3TERM47
FDNS	00NR	6	16WP	G15_033	FROM->TO	G14-057T 345.00 - SUNNYSIDE 345KV CKT 1	717	789	0.04329	116.5301	LAYFLD8 500.00 (LAYFLD AUTO) 500/230/13.8KV TRANSFORMER CKT 1
FDNS	00NR	6	16WP	G15_033	FROM->TO	G14-057T 345.00 - SUNNYSIDE 345KV CKT 1	717	789	0.04329	116.5301	LAYFLD8 500.00 (LAYFLD AUTO) 500/230/13.8KV TRANSFORMER CKT 1
FDNS	00NR	6	16WP	G15_033	FROM->TO	G14-057T 345.00 - SUNNYSIDE 345KV CKT 1	717	789	0.04318	116.5239	CLINTON JUNCTION - CLINTON NATURAL GAS TAP 138KV CKT 1
FDNS	00NR	6	16WP	G15_033	FROM->TO	G14-057T 345.00 - SUNNYSIDE 345KV CKT 1	717	789	0.04332	116.5233	AS KING - EAU CLAIRE 345KV CKT 1
FDNS	00NR	6	16WP	G15_033	FROM->TO	G14-057T 345.00 - SUNNYSIDE 345KV CKT 1	717	789	0.0433	116.5202	GRAND ISLAND - MCCOOL 345KV CKT 1
FDNS	00NR	6	16WP	G15_033	FROM->TO	G14-057T 345.00 - SUNNYSIDE 345KV CKT 1	717	789	0.04332	116.5184	NELSON 230/24.0KV TRANSFORMER CKT 1
FDNS	00NR	6	16WP	G15_033	FROM->TO	G14-057T 345.00 - SUNNYSIDE 345KV CKT 1	717	789	0.04327	116.5154	AMITY SS - MURFREESBORO EAST (AECC) 115KV CKT 1
FDNS	00NR	6	16WP	G15_033	FROM->TO	G14-057T 345.00 - SUNNYSIDE 345KV CKT 1	717	789	0.04332	116.5119	GEN599951 1-PSCO LAMAR DC TIE
FDNS	00NR	6	16WP	G15_033	FROM->TO	G14-057T 345.00 - SUNNYSIDE 345KV CKT 1	717	789	0.04332	116.509	P12:138:WFEC-AEPW:ELKCTY-4:ERICK4
FDNS	00NR	6	16WP	G15_033	FROM->TO	G14-057T 345.00 - SUNNYSIDE 345KV CKT 1	717	789	0.04332	116.5075	ST FRANCIS 2 161/16.0KV TRANSFORMER CKT 2
FDNS	00NR	6	16WP	G15_033	FROM->TO	G14-057T 345.00 - SUNNYSIDE 345KV CKT 1	717	789	0.04332	116.5075	ST FRANCIS 345/161KV TRANSFORMER CKT 1
FDNS	00NR	6	16WP	G15_033	FROM->TO	G14-057T 345.00 - SUNNYSIDE 345KV CKT 1	717	789	0.04323	116.5007	SEMINOLE (SEMINOL2) 345/138/14.4KV TRANSFORMER CKT 1
FDNS	00NR	6	16WP	G15_033	FROM->TO	G14-057T 345.00 - SUNNYSIDE 345KV CKT 1	717	789	0.04318	116.4892	G13-010T 345.00 - POST ROCK 345KV CKT 1
FDNS	00NR	6	16WP	G15_033	FROM->TO	G14-057T 345.00 - SUNNYSIDE 345KV CKT 1	717	789	0.04954	116.489	TOLK STATION - TUCO_2 345.00 345KV CKT 1
FDNS	00NR	6	16WP	G15_033	FROM->TO	G14-057T 345.00 - SUNNYSIDE 345KV CKT 1	717	789	0.04327	116.4829	LACYGNE - NEOSHO 345KV CKT 1
FDNS	00NR	6	16WP	G15_033	FROM->TO	G14-057T 345.00 - SUNNYSIDE 345KV CKT 1	717	789	0.04332	116.4804	GEN515042 1-SEMINOLE 3G
FDNS	00NR	6	16WP	G15_033	FROM->TO	G14-057T 345.00 - SUNNYSIDE 345KV CKT 1	717	789	0.04345	116.4758	COMANCHE - WALTERS 69KV CKT 1
FDNS	00NR	6	16WP	G15_033	FROM->TO	G14-057T 345.00 - SUNNYSIDE 345KV CKT 1	717	789	0.04332	116.4749	GEN338146 1-INDEPENDENCE UNIT #2
FDNS	00NR	6	16WP	G15_033	FROM->TO	G14-057T 345.00 - SUNNYSIDE 345KV CKT 1	717	789	0.04317	116.4741	CARTRCO4 138.00 - SUNNYSIDE 138KV CKT 1
FDNS	00NR	6	16WP	G15_033	FROM->TO	G14-057T 345.00 - SUNNYSIDE 345KV CKT 1	717	789	0.04353	116.4739	CRINER - PAYNE 138.00 138KV CKT 1
FDNS	00NR	6	16WP	G15_033	FROM->TO	G14-057T 345.00 - SUNNYSIDE 345KV CKT 1	717	789	0.04332	116.4631	GEN511843 1-RIVERSIDE STATION #2
FDNS	00NR	6	20WP	G15_033	FROM->TO	G14-057T 345.00 - SUNNYSIDE 345KV CKT 1	717	789	0.04155	116.4438	CORN TAP - NAPLESTP 138.00 138KV CKT 1
FDNS	00NR	6	20WP	G15_033	FROM->TO	G14-057T 345.00 - SUNNYSIDE 345KV CKT 1	717	789	0.04155	116.3567	NAPLESTP 138.00 - PAYNE 138.00 138KV CKT 1
FDNS	00NR	6	20WP	G15_033	FROM->TO	G14-057T 345.00 - SUNNYSIDE 345KV CKT 1	717	789	0.04106	116.2977	7SAREPTA% 345.00 - LONGWOOD 345KV CKT 1
FDNS	00NR	6	20WP	G15_033	FROM->TO	G14-057T 345.00 - SUNNYSIDE 345KV CKT 1	717	789	0.04106	116.2977	7SAREPTA% 345.00 - LONGWOOD 345KV CKT 1
FDNS	00NR	6	20WP	G15_033	FROM->TO	G14-057T 345.00 - SUNNYSIDE 345KV CKT 1	717	789	0.04125	116.2909	GEN336821 1-GRAND GULF UNIT
FDNS	00NR	6	20WP	G15_033	FROM->TO	G14-057T 345.00 - SUNNYSIDE 345KV CKT 1	717	789	0.04125	116.178	GEN336153 1-WATERFORD UNIT#3
FDNS	00NR	6	20WP	G15_033	FROM->TO	G14-057T 345.00 - SUNNYSIDE 345KV CKT 1	717	789	0.04117	116.0981	CLEVELAND - TULSA NORTH 345KV CKT 1
FDNS	00NR	6	20WP	G15_033	FROM->TO	G14-057T 345.00 - SUNNYSIDE 345KV CKT 1	717	789	0.04117	116.0981	CLEVELAND - TULSA NORTH 345KV CKT 1

SOLUTION	GROUP	SCENARIO	SEASON	SOURCE	DIRECTION	MONITORED ELEMENT	RATEA (MVA)	RATEB(MVA)	TDF	TC%LOADING (% MVA)	CONTINGENCY
FDNS	00NR	6	20WP	G15_033	FROM->TO	G14-057T 345.00 - SUNNYSIDE 345KV CKT 1	717	789	0.04146	116.076	COMANCHE - LOCO 138KV CKT 1
FDNS	00NR	6	20WP	G15_033	FROM->TO	G14-057T 345.00 - SUNNYSIDE 345KV CKT 1	717	789	0.0416	116.0459	ANADARKO - POCASSETT 138KV CKT 1
FDNS	00NR	6	20WP	G15_033	FROM->TO	G14-057T 345.00 - SUNNYSIDE 345KV CKT 1	717	789	0.04101	115.9675	ARCADIA - NORTHWEST 345KV CKT 1
FDNS	00NR	6	20WP	G15_033	FROM->TO	G14-057T 345.00 - SUNNYSIDE 345KV CKT 1	717	789	0.04116	115.912	DOLET HILLS - SOUTHWEST SHREVEPORT 345KV CKT 1
FDNS	00NR	6	20WP	G15_033	FROM->TO	G14-057T 345.00 - SUNNYSIDE 345KV CKT 1	717	789	0.04116	115.912	DOLET HILLS - SOUTHWEST SHREVEPORT 345KV CKT 1
FDNS	00NR	6	20WP	G15_033	FROM->TO	G14-057T 345.00 - SUNNYSIDE 345KV CKT 1	717	789	0.0416	115.8979	POCASSETT - TUTTLE 138KV CKT 1
FDNS	00NR	6	20WP	G15_033	FROM->TO	G14-057T 345.00 - SUNNYSIDE 345KV CKT 1	717	789	0.04125	115.8723	GEN335831 1-RIVERBEND UNIT#1
FDNS	00NR	6	20WP	G15_033	FROM->TO	G14-057T 345.00 - SUNNYSIDE 345KV CKT 1	717	789	0.04125	115.8103	GRAND GULF 500/22.0KV TRANSFORMER CKT 1
FDNS	00NR	6	16WP	G15_033	FROM->TO	G14-057T 345.00 - SUNNYSIDE 345KV CKT 1	717	789	0.04332	115.7521	OKLAUNION 345/13.2KV TRANSFORMER CKT 1
FDNS	00NR	6	20WP	G15_033	FROM->TO	G14-057T 345.00 - SUNNYSIDE 345KV CKT 1	717	789	0.04114	115.6806	7SAREPTA% 345.00 - ELDORADO EHV 345KV CKT 1
FDNS	00NR	6	20WP	G15_033	FROM->TO	G14-057T 345.00 - SUNNYSIDE 345KV CKT 1	717	789	0.04114	115.6804	3TR3AR8EL7EL
FDNS	00NR	6	16WP	G15_033	FROM->TO	G14-057T 345.00 - SUNNYSIDE 345KV CKT 1	717	789	0.04266	115.6803	MAYSVLT4 138.00 - PRAIRIE POINT 138KV CKT 1
FDNS	00NR	6	16WP	G15_033	FROM->TO	G14-057T 345.00 - SUNNYSIDE 345KV CKT 1	717	789	0.04331	115.6775	JOHNSON COUNTY - RUSSETT 138KV CKT 1
FDNS	00NR	6	20WP	G15_033	FROM->TO	G14-057T 345.00 - SUNNYSIDE 345KV CKT 1	717	789	0.04125	115.6759	GEN515577 1-ARBWND11 0.6900
FDNS	00NR	6	20WP	G15_033	FROM->TO	G14-057T 345.00 - SUNNYSIDE 345KV CKT 1	717	789	0.04114	115.6703	ELDORADO EHV 500/345KV TRANSFORMER CKT 1
FDNS	00NR	6	16WP	G15_033	FROM->TO	G14-057T 345.00 - SUNNYSIDE 345KV CKT 1	717	789	0.0433	115.6653	GLASSES - MADILL INDUSTRIAL TAP 138KV CKT 1
FDNS	00NR	6	16WP	G15_033	FROM->TO	G14-057T 345.00 - SUNNYSIDE 345KV CKT 1	717	789	0.04328	115.6641	HUGO (HUGO 1) 345/138/13.8KV TRANSFORMER CKT 1
FDNS	00NR	6	20WP	G15_033	FROM->TO	G14-057T 345.00 - SUNNYSIDE 345KV CKT 1	717	789	0.04241	115.655	P12:138:AEPW:DUNCAN-4:L.E.S.-4
FDNS	00NR	6	16WP	G15_033	FROM->TO	G14-057T 345.00 - SUNNYSIDE 345KV CKT 1	717	789	0.04336	115.6467	DRAPER LAKE - MIDWEST TAP 138KV CKT 1
FDNS	00NR	6	16WP	G15_033	FROM->TO	G14-057T 345.00 - SUNNYSIDE 345KV CKT 1	717	789	0.04346	115.6336	CIMARRON - MATHWSN7 345.00 345KV CKT 1
FDNS	00NR	6	16WP	G15_033	FROM->TO	G14-057T 345.00 - SUNNYSIDE 345KV CKT 1	717	789	0.04346	115.6336	CIMARRON - MATHWSN7 345.00 345KV CKT 2
FDNS	00NR	6	16WP	G15_033	FROM->TO	G14-057T 345.00 - SUNNYSIDE 345KV CKT 1	717	789	0.04332	115.625	GEN511961 1-DEMPSEY-WTG10.7000
FDNS	00NR	6	16WP	G15_033	FROM->TO	G14-057T 345.00 - SUNNYSIDE 345KV CKT 1	717	789	0.04339	115.6195	P12:138:OKGE:3TERM21
FDNS	00NR	6	16WP	G15_033	FROM->TO	G14-057T 345.00 - SUNNYSIDE 345KV CKT 1	717	789	0.04332	115.613	GEN520812 1-ANADRK5
FDNS	00NR	6	16WP	G15_033	FROM->TO	G14-057T 345.00 - SUNNYSIDE 345KV CKT 1	717	789	0.04332	115.613	GEN520813 1-ANADRK6
FDNS	00NR	6	16WP	G15_033	FROM->TO	G14-057T 345.00 - SUNNYSIDE 345KV CKT 1	717	789	0.04332	115.6121	GEN562483 1-G13_027_3 0.6900
FDNS	00NR	6	16WP	G15_033	FROM->TO	G14-057T 345.00 - SUNNYSIDE 345KV CKT 1	717	789	0.0433	115.6061	GLASSES - RUSSETT 138KV CKT 1
FDNS	00NR	6	16WP	G15_033	FROM->TO	G14-057T 345.00 - SUNNYSIDE 345KV CKT 1	717	789	0.0433	115.6056	HUGO POWER PLANT - VALLENT 138KV CKT 1
FDNS	00NR	6	16WP	G15_033	FROM->TO	G14-057T 345.00 - SUNNYSIDE 345KV CKT 1	717	789	0.04332	115.6046	GEN672303 3-BOUNDARY DAM GENERATOR 3
FDNS	00NR	6	16WP	G15_033	FROM->TO	G14-057T 345.00 - SUNNYSIDE 345KV CKT 1	717	789	0.04332	115.6046	GEN672304 4-BOUNDARY DAM GENERATOR 4
FDNS	00NR	6	16WP	G15_033	FROM->TO	G14-057T 345.00 - SUNNYSIDE 345KV CKT 1	717	789	0.04332	115.6046	GEN672305 5-BOUNDARY DAM GENERATOR 5
FDNS	00NR	6	16WP	G15_033	FROM->TO	G14-057T 345.00 - SUNNYSIDE 345KV CKT 1	717	789	0.04332	115.6042	GEN600071 10-RIVER SIDE
FDNS	00NR	6	16WP	G15_033	FROM->TO	G14-057T 345.00 - SUNNYSIDE 345KV CKT 1	717	789	0.04332	115.6041	GEN600070 9-RIVER SIDE
FDNS	00NR	6	16WP	G15_033	FROM->TO	G14-057T 345.00 - SUNNYSIDE 345KV CKT 1	717	789	0.04299	115.6039	ARBUCKLE - SULPHR 4 138.00 138KV CKT 1
FDNS	00NR	6	16WP	G15_033	FROM->TO	G14-057T 345.00 - SUNNYSIDE 345KV CKT 1	717	789	0.04328	115.6038	OVEXFRMCCOVE
FDNS	00NR	6	16WP	G15_033	FROM->TO	G14-057T 345.00 - SUNNYSIDE 345KV CKT 1	717	789	0.04329	115.6019	P12:138:WFEC:MSL11
FDNS	00NR	6	16WP	G15_033	FROM->TO	G14-057T 345.00 - SUNNYSIDE 345KV CKT 1	717	789	0.04329	115.6019	P12:138:WFEC-AEPW:PHAROAH4:LONEOAK4
FDNS	00NR	6	16WP	G15_033	FROM->TO	G14-057T 345.00 - SUNNYSIDE 345KV CKT 1	717	789	0.04332	115.5985	GEN600007 7-RIVERSIDE GEN 7
FDNS	00NR	6	16WP	G15_033	FROM->TO	G14-057T 345.00 - SUNNYSIDE 345KV CKT 1	717	789	0.04332	115.598	GEN600067 9-HIGH BRIDGE
FDNS	00NR	6	16WP	G15_033	FROM->TO	G14-057T 345.00 - SUNNYSIDE 345KV CKT 1	717	789	0.04332	115.5945	7CALAWY 1 345.00 345/25.0KV TRANSFORMER CKT 1
FDNS	00NR	6	16WP	G15_033	FROM->TO	G14-057T 345.00 - SUNNYSIDE 345KV CKT 1	717	789	0.04332	115.5938	GEN615052 1-CAMBRIDGE GENERATING STATION
FDNS	00NR	6	16WP	G15_033	FROM->TO	G14-057T 345.00 - SUNNYSIDE 345KV CKT 1	717	789	0.04332	115.5934	GEN600011 5-BLACK DOG GEN 1
FDNS	00NR	6	16WP	G15_033	FROM->TO	G14-057T 345.00 - SUNNYSIDE 345KV CKT 1	717	789	0.04332	115.5878	GEN600014 4-BLACK DOG GEN 4
FDNS	00NR	6	20WP	G15_033	FROM->TO	G14-057T 345.00 - SUNNYSIDE 345KV CKT 1	717	789	0.04349	115.5854	BORDER 7345.00 - TUCO_2 345.00 345KV CKT 1
FDNS	00NR	6	16WP	G15_033	FROM->TO	G14-057T 345.00 - SUNNYSIDE 345KV CKT 1	717	789	0.04332	115.5836	GEN562688 1-G15_014_3 0.6900
FDNS	00NR	6	16WP	G15_033	FROM->TO	G14-057T 345.00 - SUNNYSIDE 345KV CKT 1	717	789	0.04266	115.5833	PRAIRIE POINT - RATLIFF 138KV CKT 1
FDNS	00NR	6	16WP	G15_033	FROM->TO	G14-057T 345.00 - SUNNYSIDE 345KV CKT 1	717	789	0.04332	115.583	GEN629067 1-EMERY GAS TURBINE 1
FDNS	00NR	6	16WP	G15_033	FROM->TO	G14-057T 345.00 - SUNNYSIDE 345KV CKT 1	717	789	0.04334	115.5821	P12:138:WFEC:MSL08
FDNS	00NR	6	16WP	G15_033	FROM->TO	G14-057T 345.00 - SUNNYSIDE 345KV CKT 1	717	789	0.04332	115.5779	GEN615032 2-PLEASANT VALLEY
FDNS	00NR	6	20WP	G15_033	FROM->TO	G14-057T 345.00 - SUNNYSIDE 345KV CKT 1	717	789	0.04086	115.5766	ARCADIA - SEMINOLE 345KV CKT 1
FDNS	00NR	6	16WP	G15_033	FROM->TO	G14-057T 345.00 - SUNNYSIDE 345KV CKT 1	717	789	0.04332	115.5722	P12:069:OKGE:3TERM42
FDNS	00NR	6	16WP	G15_033	FROM->TO	G14-057T 345.00 - SUNNYSIDE 345KV CKT 1	717	789	0.04332	115.5717	GEN562432 1-G13-030 0.6900
FDNS	00NR	6	16WP	G15_033	FROM->TO	G14-057T 345.00 - SUNNYSIDE 345KV CKT 1	717	789	0.04327	115.5581	CROCKETT - TENASKA RUSK COUNTY 345KV CKT 1
FDNS	00NR	6	16WP	G15_033	FROM->TO	G14-057T 345.00 - SUNNYSIDE 345KV CKT 1	717	789	0.04332	115.5561	GEN560183 1-REDHIL-WTG1 12.000
FDNS	00NR	6	16WP	G15_033	FROM->TO	G14-057T 345.00 - SUNNYSIDE 345KV CKT 1	717	789	0.04332	115.5546	GEN562074 1-G1149G1504 0.6900
FDNS	00NR	6	20WP	G15_033	FROM->TO	G14-057T 345.00 - SUNNYSIDE 345KV CKT 1	717	789	0.04126	115.5536	HEALDTON - LOCO 138KV CKT 1
FDNS	00NR	6	16WP	G15_033	FROM->TO	G14-057T 345.00 - SUNNYSIDE 345KV CKT 1	717	789	0.04327	115.5528	LEBROCK - TENASKA RUSK COUNTY 345KV CKT 1
FDNS	00NR	6	16WP	G15_033	FROM->TO	G14-057T 345.00 - SUNNYSIDE 345KV CKT 1	717	789	0.04332	115.5525	GEN600017 C-LS POWER CT
FDNS	00NR	6	16WP	G15_033	FROM->TO	G14-057T 345.00 - SUNNYSIDE 345KV CKT 1	717	789	0.04332	115.5436	GEN562017 1-G11_022_3 0.6900
FDNS	00NR	6	16WP	G15_033	FROM->TO	G14-057T 345.00 - SUNNYSIDE 345KV CKT 1	717	789	0.0433	115.5397	CANEY CREEK - JOHNSON COUNTY 138KV CKT 1
FDNS	00NR	6	16WP	G15_033	FROM->TO	G14-057T 345.00 - SUNNYSIDE 345KV CKT 1	717	789	0.04355	115.5361	ALTUS JUNCTION - RUSSELL 138KV CKT 1
FDNS	00NR	6	16WP	G15_033	FROM->TO	G14-057T 345.00 - SUNNYSIDE 345KV CKT 1	717	789	0.04355	115.5361	ALTUS JUNCTION - RUSSELL 138KV CKT 1
FDNS	00NR	6	20WP	G15_033	FROM->TO	G14-057T 345.00 - SUNNYSIDE 345KV CKT 1	717	789	0.04125	115.5343	GEN509409 1-WILKES #3
FDNS	00NR	6	16WP	G15_033	FROM->TO	G14-057T 345.00 - SUNNYSIDE 345KV CKT 1	717	789	0.04332	115.5322	GEN515443 1-MNCOWND1 0.7000
FDNS	00NR	6	16WP	G15_033	FROM->TO	G14-057T 345.00 - SUNNYSIDE 345KV CKT 1	717	789	0.04332	115.5288	GEN672392 1-NBECGT1G 18.000
FDNS	00NR	6	16WP	G15_033	FROM->TO	G14-057T 345.00 - SUNNYSIDE 345KV CKT 1	717	789	0.0433	115.5199	DELL 500 - INDEPENDENCE 500KV CKT 1
FDNS	00NR	6	16WP	G15_033	FROM->TO	G14-057T 345.00 - SUNNYSIDE 345KV CKT 1	717	789	0.04327	115.516	CARTER - CHICKASAW 138KV CKT 1
FDNS	00NR	6	20WP	G15_033	FROM->TO	G14-057T 345.00 - SUNNYSIDE 345KV CKT 1	717	789	0.0416	115.5149	BRIDGECR 138.00 - TUTTLE 138KV CKT 1
FDNS	00NR	6	20WP	G15_033	FROM->TO	G14-057T 345.00 - SUNNYSIDE 345KV CKT 1	717	789	0.0424	115.5059	COMANCHE TAP - OMPA-DUNCAN 840 138KV CKT 1
FDNS	00NR	6	16WP	G15_033	FROM->TO	G14-057T 345.00 - SUNNYSIDE 345KV CKT 1	717	789	0.04332	115.5056	GEN615010 1-STANTON4
FDNS	00NR	6	16WP	G15_033	FROM->TO	G14-057T 345.00 - SUNNYSIDE 345KV CKT 1	717	789	0.04335	115.5012	ARKANSAS NUCLEAR ONE - FT SMITH 500KV CKT 1
FDNS	00NR	6	16WP	G15_033	FROM->TO	G14-057T 345.00 - SUNNYSIDE 345KV CKT 1	717	789	0.04335	115.5012	ARKANSAS NUCLEAR ONE - FT SMITH 500KV CKT 1
FDNS	00NR	6	16WP	G15_033	FROM->TO	G14-057T 345.00 - SUNNYSIDE 345KV CKT 1	717	789	0.04332	115.4997	GEN629070 2-BEAVER CHANNEL GENERATORFOR UNIT NO 2
FDNS	00NR	6	16WP	G15_033	FROM->TO	G14-057T 345.00 - SUNNYSIDE 345KV CKT 1	717	789	0.04332	115.4981	GEN562902 1-G15052_3 0.6900
FDNS	00NR	6	16WP	G15_033	FROM->TO	G14-057T 345.00 - SUNNYSIDE 345KV CKT 1	717	789	0.04332	115.4957	GEN528361 1-MADDOX GEN #1
FDNS	00NR	6	16WP	G15_033	FROM->TO	G14-057T 345.00 - SUNNYSIDE 345KV CKT 1	717	789	0.04316	115.4933	ROCKY POINT - SPRINGDALE 138KV CKT 1
FDNS	00NR	6	16WP	G15_033	FROM->TO	G14-057T 345.00 - SUNNYSIDE 345KV CKT 1	717	789	0.0433	115.4912	CANADIAN RIVER - MCALESTER SOUTH 138KV CKT 1
FDNS	00NR	6	16WP	G15_033	FROM->TO	G14-057T 345.00 - SUNNYSIDE 345KV CKT 1	717	789	0.0433	115.4912	CANADIAN RIVER - MCALESTER SOUTH 138KV CKT 1
FDNS	00NR	6	16WP	G15_033	FROM->TO	G14-057T 345.00 - SUNNYSIDE 345KV CKT 1	717	789	0.0433	115.4897	CANADIAN RIVER () 345/138/13.8KV TRANSFORMER CKT 1

SOLUTION	GROUP	SCENARIO	SEASON	SOURCE	DIRECTION	MONITORED ELEMENT	RATEA (MVA)	RATEB(MVA)	TDF	TC%LOADING (% MVA)	CONTINGENCY
FDNS	00NR	6	16WP	G15_033	FROM->TO	G14-057T 345.00 - SUNNYSIDE 345KV CKT 1	717	789	0.0433	115.4897	CANADIAN RIVER () 345/138/13.8KV TRANSFORMER CKT 1
FDNS	00NR	6	16WP	G15_033	FROM->TO	G14-057T 345.00 - SUNNYSIDE 345KV CKT 1	717	789	0.04331	115.4894	GRPRAR1-LNX3345.00 - YANKTON 345KV CKT Z
FDNS	00NR	6	16WP	G15_033	FROM->TO	G14-057T 345.00 - SUNNYSIDE 345KV CKT 1	717	789	0.04331	115.4892	GRPRAR1-LNX3345.00 - HOLT.CO3 345.00 345KV CKT 1
FDNS	00NR	6	16WP	G15_033	FROM->TO	G14-057T 345.00 - SUNNYSIDE 345KV CKT 1	717	789	0.04332	115.4844	GEN615021 1-GRE-ER 14G 16.000
FDNS	00NR	6	16WP	G15_033	FROM->TO	G14-057T 345.00 - SUNNYSIDE 345KV CKT 1	717	789	0.04332	115.4812	GEN629071 1-BURLINGTON GENERATOR FOR UNIT NO 1 E
FDNS	00NR	6	16WP	G15_033	FROM->TO	G14-057T 345.00 - SUNNYSIDE 345KV CKT 1	717	789	0.04332	115.4805	GEN532653 1-JEFFREY ENERGY CENTER UNIT 3
FDNS	00NR	6	20WP	G15_033	FROM->TO	G14-057T 345.00 - SUNNYSIDE 345KV CKT 1	717	789	0.04125	115.4754	GEN501813 1-RODEMACHER UNIT 3
FDNS	00NR	6	16WP	G15_033	FROM->TO	G14-057T 345.00 - SUNNYSIDE 345KV CKT 1	717	789	0.04332	115.4726	INDEPENDENCE 500/26.0KV TRANSFORMER CKT 1
FDNS	00NR	6	16WP	G15_033	FROM->TO	G14-057T 345.00 - SUNNYSIDE 345KV CKT 1	717	789	0.04332	115.4632	GEN563242 1-G15090_3 0.6900
FDNS	00NR	6	16WP	G15_033	FROM->TO	G14-057T 345.00 - SUNNYSIDE 345KV CKT 1	717	789	0.04332	115.4613	BURLINGTON NO1 + NO 2 + NO 3 161/20.0KV TRANSFORMER CKT 1
FDNS	00NR	6	16WP	G15_033	FROM->TO	G14-057T 345.00 - SUNNYSIDE 345KV CKT 1	717	789	0.04397	115.4588	CHISHOLM6 230.00 - SWEETWATER 230KV CKT 1
FDNS	00NR	6	16WP	G15_033	FROM->TO	G14-057T 345.00 - SUNNYSIDE 345KV CKT 1	717	789	0.04299	115.4521	JOLLYVILLE - SULPHR 4 138.00 138KV CKT 1
FDNS	00NR	6	16WP	G15_033	FROM->TO	G14-057T 345.00 - SUNNYSIDE 345KV CKT 1	717	789	0.04332	115.4484	GEN514805 1-SOONER UNIT 1
FDNS	00NR	6	16WP	G15_033	FROM->TO	G14-057T 345.00 - SUNNYSIDE 345KV CKT 1	717	789	0.04332	115.4406	GEN514806 1-SOONER UNIT 2
FDNS	00NR	6	20WP	G15_033	FROM->TO	G14-057T 345.00 - SUNNYSIDE 345KV CKT 1	717	789	0.04038	115.4321	CANADIAN RIVER - MUSKOGEE 345KV CKT 1
FDNS	00NR	6	16WP	G15_033	FROM->TO	G14-057T 345.00 - SUNNYSIDE 345KV CKT 1	717	789	0.04328	115.4281	NORTHWEST TEXARKANA - WELSH 345KV CKT 1
FDNS	00NR	6	16WP	G15_033	FROM->TO	G14-057T 345.00 - SUNNYSIDE 345KV CKT 1	717	789	0.04328	115.4281	NORTHWEST TEXARKANA - WELSH 345KV CKT 1
FDNS	00NR	6	16WP	G15_033	FROM->TO	G14-057T 345.00 - SUNNYSIDE 345KV CKT 1	717	789	0.0433	115.4272	CHAMBER SPRINGS - CLARKSVILLE 345KV CKT 1
FDNS	00NR	6	16WP	G15_033	FROM->TO	G14-057T 345.00 - SUNNYSIDE 345KV CKT 1	717	789	0.04332	115.425	GEN562078 1-G11_051_3 0.6900
FDNS	00NR	6	16WP	G15_033	FROM->TO	G14-057T 345.00 - SUNNYSIDE 345KV CKT 1	717	789	0.04332	115.4096	P12:230:UMZB:# 112 #: NU IN SD. NU-RCDC & DRY CREEK XFMR
FDNS	00NR	6	16WP	G15_033	FROM->TO	G14-057T 345.00 - SUNNYSIDE 345KV CKT 1	717	789	0.04332	115.4089	RCDC EAST 4230.00 - RED CEDAR DC 230KV CKT 1
FDNS	00NR	6	20WP	G15_033	FROM->TO	G14-057T 345.00 - SUNNYSIDE 345KV CKT 1	717	789	0.04126	115.4021	HEALDTON - RINGLING 138KV CKT 1
FDNS	00NR	6	16WP	G15_033	FROM->TO	G14-057T 345.00 - SUNNYSIDE 345KV CKT 1	717	789	0.04332	115.4017	GEN562587 1-G14_056_3 0.6900
FDNS	00NR	6	20WP	G15_033	FROM->TO	G14-057T 345.00 - SUNNYSIDE 345KV CKT 1	717	789	0.04125	115.395	GEN300006 1-NEW MADRID UNIT 1
FDNS	00NR	6	16WP	G15_033	FROM->TO	G14-057T 345.00 - SUNNYSIDE 345KV CKT 1	717	789	0.04332	115.3932	THOMAS HILL 161/22.0KV TRANSFORMER CKT 1
FDNS	00NR	6	16WP	G15_033	FROM->TO	G14-057T 345.00 - SUNNYSIDE 345KV CKT 1	717	789	0.04299	115.3836	JOLLYVILLE - KERR MCGEE CIMARRON 138KV CKT 1
FDNS	00NR	6	16WP	G15_033	FROM->TO	G14-057T 345.00 - SUNNYSIDE 345KV CKT 1	717	789	0.04332	115.3784	GEN562882 1-G15047_3 0.6900
FDNS	00NR	6	16WP	G15_033	FROM->TO	G14-057T 345.00 - SUNNYSIDE 345KV CKT 1	717	789	0.04332	115.3763	GEN563062 1-G15071_3 0.6900
FDNS	00NR	6	20WP	G15_033	FROM->TO	G14-057T 345.00 - SUNNYSIDE 345KV CKT 1	717	789	0.04125	115.3745	GEN300007 1-NEW MADRID UNIT 2
FDNS	00NR	6	16WP	G15_033	FROM->TO	G14-057T 345.00 - SUNNYSIDE 345KV CKT 1	717	789	0.0433	115.3731	KEO EHV - WEST MEMPHIS 500 500KV CKT 1
FDNS	00NR	6	16WP	G15_033	FROM->TO	G14-057T 345.00 - SUNNYSIDE 345KV CKT 1	717	789	0.04332	115.3683	GEN560331 1-G10-46 13.800
FDNS	00NR	6	16WP	G15_033	FROM->TO	G14-057T 345.00 - SUNNYSIDE 345KV CKT 1	717	789	0.04332	115.3618	GEN562802 1-G15039_3 0.3570
FDNS	00NR	6	16WP	G15_033	FROM->TO	G14-057T 345.00 - SUNNYSIDE 345KV CKT 1	717	789	0.04332	115.3361	GEN629072 4-LANSING GENERATOR FOR UNITS NO4 EIA CODE 1
FDNS	00NR	6	16WP	G15_033	FROM->TO	G14-057T 345.00 - SUNNYSIDE 345KV CKT 1	717	789	0.04332	115.3358	GEN562269 1-G12-020-1 0.6900
FDNS	00NR	6	16WP	G15_033	FROM->TO	G14-057T 345.00 - SUNNYSIDE 345KV CKT 1	717	789	0.04299	115.3328	ARBWIND4 138.00 - KERR MCGEE CIMARRON 138KV CKT 1
FDNS	00NR	6	16WP	G15_033	FROM->TO	G14-057T 345.00 - SUNNYSIDE 345KV CKT 1	717	789	0.04332	115.331	GEN524285 1-WILDORADO WIND GEN
FDNS	00NR	6	16WP	G15_033	FROM->TO	G14-057T 345.00 - SUNNYSIDE 345KV CKT 1	717	789	0.04332	115.3177	GEN657749 1-YOUNG 1 GENERATOR
FDNS	00NR	6	16WP	G15_033	FROM->TO	G14-057T 345.00 - SUNNYSIDE 345KV CKT 1	717	789	0.04353	115.3166	G15063_T 345.00 - MATHWSN7 345.00 345KV CKT 1
FDNS	00NR	6	16WP	G15_033	FROM->TO	G14-057T 345.00 - SUNNYSIDE 345KV CKT 1	717	789	0.04316	115.2927	CLARKSVILLE - MUSKOGEE 345KV CKT 1
FDNS	00NR	6	16WP	G15_033	FROM->TO	G14-057T 345.00 - SUNNYSIDE 345KV CKT 1	717	789	0.04316	115.2927	CLARKSVILLE - MUSKOGEE 345KV CKT 1
FDNS	00NR	6	16WP	G15_033	FROM->TO	G14-057T 345.00 - SUNNYSIDE 345KV CKT 1	717	789	0.04332	115.2899	GEN562270 1-G12-020-2 0.6900
FDNS	06ALL	6	20L	G15_033	FROM->TO	G14-057T 345.00 - SUNNYSIDE 345KV CKT 1	717	789	0.1323	115.279	BASE CASE
FDNS	00NR	6	16WP	G15_033	FROM->TO	G14-057T 345.00 - SUNNYSIDE 345KV CKT 1	717	789	0.04332	115.2771	GEN562974 1-G15060_5 0.6900
FDNS	00NR	6	16WP	G15_033	FROM->TO	G14-057T 345.00 - SUNNYSIDE 345KV CKT 1	717	789	0.04332	115.2732	GEN563102 1-G15075_3 0.5500
FDNS	00NR	6	16WP	G15_033	FROM->TO	G14-057T 345.00 - SUNNYSIDE 345KV CKT 1	717	789	0.04332	115.2694	GEN562812 1-G15040_3 0.3570
FDNS	00NR	6	16WP	G15_033	FROM->TO	G14-057T 345.00 - SUNNYSIDE 345KV CKT 1	717	789	0.04332	115.2676	GEN562973 1-G15060_4 0.6900
FDNS	00NR	6	20WP	G15_033	FROM->TO	G14-057T 345.00 - SUNNYSIDE 345KV CKT 1	717	789	0.04125	115.2618	GEN520947 1-HUGO1
FDNS	00NR	6	16WP	G15_033	FROM->TO	G14-057T 345.00 - SUNNYSIDE 345KV CKT 1	717	789	0.04332	115.2591	GEN563132 1-G15078_3 0.3570
FDNS	00NR	6	20WP	G15_033	FROM->TO	G14-057T 345.00 - SUNNYSIDE 345KV CKT 1	717	789	0.04125	115.2588	GEN335206 1-NELSON UNIT 6
FDNS	00NR	6	16WP	G15_033	FROM->TO	G14-057T 345.00 - SUNNYSIDE 345KV CKT 1	717	789	0.04297	115.2538	MINGO - SETAB 345KV CKT 1
FDNS	00NR	6	16WP	G15_033	FROM->TO	G14-057T 345.00 - SUNNYSIDE 345KV CKT 1	717	789	0.04297	115.2538	MINGO - SETAB 345KV CKT 1
FDNS	00NR	6	20WP	G15_033	FROM->TO	G14-057T 345.00 - SUNNYSIDE 345KV CKT 1	717	789	0.0416	115.2465	P12:138:WFEC:MSL01
FDNS	00NR	6	16WP	G15_033	FROM->TO	G14-057T 345.00 - SUNNYSIDE 345KV CKT 1	717	789	0.04303	115.2462	CHICKASAW - TOTAL 138KV CKT 1
FDNS	00NR	6	16WP	G15_033	FROM->TO	G14-057T 345.00 - SUNNYSIDE 345KV CKT 1	717	789	0.04332	115.2447	GEN681522 3-GENOA 3
FDNS	00NR	6	20WP	G15_033	FROM->TO	G14-057T 345.00 - SUNNYSIDE 345KV CKT 1	717	789	0.0416	115.2398	BRIDGECR 138.00 - SUNSHINE CANYON 138KV CKT 1
FDNS	00NR	6	20WP	G15_033	FROM->TO	G14-057T 345.00 - SUNNYSIDE 345KV CKT 1	717	789	0.04123	115.2342	LACYGNE - WAVERLY7 345.00 345KV CKT 1
FDNS	00NR	6	16WP	G15_033	FROM->TO	G14-057T 345.00 - SUNNYSIDE 345KV CKT 1	717	789	0.04323	115.2329	BROWN - RUSSETT 138KV CKT 1
FDNS	00NR	6	16WP	G15_033	FROM->TO	G14-057T 345.00 - SUNNYSIDE 345KV CKT 1	717	789	0.04329	115.2308	P12:138:WFEC:MSL07
FDNS	00NR	6	16WP	G15_033	FROM->TO	G14-057T 345.00 - SUNNYSIDE 345KV CKT 1	717	789	0.04329	115.2308	P12:138:WFEC-AEPW:HUGOPP4:ATOKA--4
FDNS	00NR	6	20WP	G15_033	FROM->TO	G14-057T 345.00 - SUNNYSIDE 345KV CKT 1	717	789	0.04126	115.2283	RINGLING - SOUTH WILSON 138KV CKT 1
FDNS	00NR	6	16WP	G15_033	FROM->TO	G14-057T 345.00 - SUNNYSIDE 345KV CKT 1	717	789	0.04332	115.2282	GEN511962 2-RKYRDGW2-1 0.7000
FDNS	00NR	6	20WP	G15_033	FROM->TO	G14-057T 345.00 - SUNNYSIDE 345KV CKT 1	717	789	0.0424	115.2263	DUNCAN - OMPA-DUNCAN 840 138KV CKT 1
FDNS	00NR	6	20WP	G15_033	FROM->TO	G14-057T 345.00 - SUNNYSIDE 345KV CKT 1	717	789	0.0424	115.2263	DUNCAN - OMPA-DUNCAN 840 138KV CKT 1
FDNS	00NR	6	16WP	G15_033	FROM->TO	G14-057T 345.00 - SUNNYSIDE 345KV CKT 1	717	789	0.04319	115.223	RUSSETT - SPRINGDALE 138KV CKT 1
FDNS	00NR	6	16WP	G15_033	FROM->TO	G14-057T 345.00 - SUNNYSIDE 345KV CKT 1	717	789	0.04332	115.219	GEN524295 1-SPNSPUR_WND10.6900
FDNS	00NR	6	16WP	G15_033	FROM->TO	G14-057T 345.00 - SUNNYSIDE 345KV CKT 1	717	789	0.04478	115.2063	P12:138:AEPW:112GORE4:SNYDER-4
FDNS	00NR	6	16WP	G15_033	FROM->TO	G14-057T 345.00 - SUNNYSIDE 345KV CKT 1	717	789	0.0431	115.2033	ROCKY POINT - SUNNYSIDE 138KV CKT 1
FDNS	00NR	6	16WP	G15_033	FROM->TO	G14-057T 345.00 - SUNNYSIDE 345KV CKT 1	717	789	0.04332	115.1902	GEN521112 1-ORME3 13.800
FDNS	00NR	6	16WP	G15_033	FROM->TO	G14-057T 345.00 - SUNNYSIDE 345KV CKT 1	717	789	0.04332	115.1859	GEN345671 2-1RUSH G2 18.000
FDNS	00NR	6	16WP	G15_033	FROM->TO	G14-057T 345.00 - SUNNYSIDE 345KV CKT 1	717	789	0.04332	115.1847	GEN526331 1-JONES GEN #1 22 KV
FDNS	00NR	6	16WP	G15_033	FROM->TO	G14-057T 345.00 - SUNNYSIDE 345KV CKT 1	717	789	0.04332	115.1846	GEN526332 1-JONES GEN #2 21 KV
FDNS	00NR	6	16WP	G15_033	FROM->TO	G14-057T 345.00 - SUNNYSIDE 345KV CKT 1	717	789	0.04332	115.184	GEN345670 1-1RUSH G1 18.000
FDNS	00NR	6	16WP	G15_033	FROM->TO	G14-057T 345.00 - SUNNYSIDE 345KV CKT 1	717	789	0.04334	115.1719	P12:138:WFEC:MSL16
FDNS	00NR	6	16WP	G15_033	FROM->TO	G14-057T 345.00 - SUNNYSIDE 345KV CKT 1	717	789	0.04332	115.1718	GEN562892 1-G15048_3 0.6900
FDNS	00NR	6	16WP	G15_033	FROM->TO	G14-057T 345.00 - SUNNYSIDE 345KV CKT 1	717	789	0.04332	115.1692	4SIOUX 1 138.00 138/18.0KV TRANSFORMER CKT 1
FDNS	00NR	6	16WP	G15_033	FROM->TO	G14-057T 345.00 - SUNNYSIDE 345KV CKT 1	717	789	0.04332	115.1676	GEN563192 1-G15084_3 0.5500
FDNS	00NR	6	16WP	G15_033	FROM->TO	G14-057T 345.00 - SUNNYSIDE 345KV CKT 1	717	789	0.04323	115.1649	RUSSETT - RUSSETT 138KV CKT 1
FDNS	00NR	6	16WP	G15_033	FROM->TO	G14-057T 345.00 - SUNNYSIDE 345KV CKT 1	717	789	0.04332	115.1613	GEN560105 1-G08-22 0.6900
FDNS	00NR	6	16WP	G15_033	FROM->TO	G14-057T 345.00 - SUNNYSIDE 345KV CKT 1	717	789	0.04286	115.153	ARDMORE WEST - CARTER 138KV CKT 1

SOLUTION	GROUP	SCENARIO	SEASON	SOURCE	DIRECTION	MONITORED ELEMENT	RATEA (MVA)	RATEB(MVA)	TDF	TC%LOADING (% MVA)	CONTINGENCY
FDNS	00NR	6	16WP	G15_033	FROM->TO	G14-057T 345.00 - SUNNYSIDE 345KV CKT 1	717	789	0.04332	115.1384	GEN562512 1-G14_020_3 0.6900
FDNS	00NR	6	16WP	G15_033	FROM->TO	G14-057T 345.00 - SUNNYSIDE 345KV CKT 1	717	789	0.04332	115.1376	GEN562550 1-G14_040_3 0.6900
FDNS	00NR	6	20WP	G15_033	FROM->TO	G14-057T 345.00 - SUNNYSIDE 345KV CKT 1	717	789	0.04123	115.1197	WAVERLY7 345.00 - WOLF CREEK 345KV CKT 1
FDNS	00NR	6	16WP	G15_033	FROM->TO	G14-057T 345.00 - SUNNYSIDE 345KV CKT 1	717	789	0.04332	115.1163	CLAY BOSWELL 230/20.9KV TRANSFORMER CKT 1
FDNS	00NR	6	16WP	G15_033	FROM->TO	G14-057T 345.00 - SUNNYSIDE 345KV CKT 1	717	789	0.04332	115.1117	GEN527882 1-CUNNINGHAM GEN #2 20 KV
FDNS	00NR	6	16WP	G15_033	FROM->TO	G14-057T 345.00 - SUNNYSIDE 345KV CKT 1	717	789	0.04284	115.0993	SUNNYSIDE (SUNNYSD5) 345/138/13.8KV TRANSFORMER CKT 1
FDNS	00NR	6	16WP	G15_033	FROM->TO	G14-057T 345.00 - SUNNYSIDE 345KV CKT 1	717	789	0.0433	115.084	P12:138:WFEC-AEPW:GOLDENSW4:CRAIGJT4
FDNS	00NR	6	16WP	G15_033	FROM->TO	G14-057T 345.00 - SUNNYSIDE 345KV CKT 1	717	789	0.04358	115.0821	G15085_T 138.00 - RUSSELL 138KV CKT 1
FDNS	00NR	6	16WP	G15_033	FROM->TO	G14-057T 345.00 - SUNNYSIDE 345KV CKT 1	717	789	0.04332	115.0803	GEN672321 1-SHAND GENERATOR 1
FDNS	00NR	6	20WP	G15_033	FROM->TO	G14-057T 345.00 - SUNNYSIDE 345KV CKT 1	717	789	0.04122	115.0781	ELDORADO EHV - MOUNT OLIVE 500KV CKT 1
FDNS	00NR	6	20WP	G15_033	FROM->TO	G14-057T 345.00 - SUNNYSIDE 345KV CKT 1	717	789	0.04125	115.0681	GEN501812 1-RODEMACHER UNIT 2
FDNS	00NR	6	16WP	G15_033	FROM->TO	G14-057T 345.00 - SUNNYSIDE 345KV CKT 1	717	789	0.04332	115.0558	GEN672310 1-POPLAR RIVER GENERATOR 1
FDNS	00NR	6	16WP	G15_033	FROM->TO	G14-057T 345.00 - SUNNYSIDE 345KV CKT 1	717	789	0.04332	115.0558	GEN672311 2-POPLAR RIVER GENERATOR 2
FDNS	00NR	6	16WP	G15_033	FROM->TO	G14-057T 345.00 - SUNNYSIDE 345KV CKT 1	717	789	0.04332	115.0475	GEN672306 6-BOUNDARY DAM GENERATOR 6
FDNS	00NR	6	20WP	G15_033	FROM->TO	G14-057T 345.00 - SUNNYSIDE 345KV CKT 1	717	789	0.04125	115.0376	DOLET HILLS 345/24.0KV TRANSFORMER CKT 1
FDNS	00NR	6	16WP	G15_033	FROM->TO	G14-057T 345.00 - SUNNYSIDE 345KV CKT 1	717	789	0.04286	115.0364	ARDMORE WEST - UNIROYAL 138KV CKT 1
FDNS	00NR	6	16WP	G15_033	FROM->TO	G14-057T 345.00 - SUNNYSIDE 345KV CKT 1	717	789	0.04331	115.0281	P12:138:AEPW-SWPA:LONEOAK4:TUPELO4
FDNS	00NR	6	16WP	G15_033	FROM->TO	G14-057T 345.00 - SUNNYSIDE 345KV CKT 1	717	789	0.04331	115.028	P12:138:WFEC:MSL06
FDNS	00NR	6	16WP	G15_033	FROM->TO	G14-057T 345.00 - SUNNYSIDE 345KV CKT 1	717	789	0.04332	115.0243	GEN344895 2-1LAB G2 20.000
FDNS	00NR	6	16WP	G15_033	FROM->TO	G14-057T 345.00 - SUNNYSIDE 345KV CKT 1	717	789	0.04288	115.0224	CARTRCO4 138.00 - RATLIFF 138KV CKT 1
FDNS	00NR	6	16WP	G15_033	FROM->TO	G14-057T 345.00 - SUNNYSIDE 345KV CKT 1	717	789	0.04332	115.0213	GEN520811 1-ANADRK4
FDNS	00NR	6	16WP	G15_033	FROM->TO	G14-057T 345.00 - SUNNYSIDE 345KV CKT 1	717	789	0.04332	115.0211	GEN521110 1-ORME1 13.800
FDNS	00NR	6	16WP	G15_033	FROM->TO	G14-057T 345.00 - SUNNYSIDE 345KV CKT 1	717	789	0.04332	115.0211	GEN521111 1-ORME2 13.800
FDNS	00NR	6	20WP	G15_033	FROM->TO	G14-057T 345.00 - SUNNYSIDE 345KV CKT 1	717	789	0.04131	115.0173	P12:138:AEPW:SHERID4:112GORE4
FDNS	00NR	6	16WP	G15_033	FROM->TO	G14-057T 345.00 - SUNNYSIDE 345KV CKT 1	717	789	0.0431	115.0041	P12:138:OKGE:3TERM40
FDNS	00NR	6	16WP	G15_033	FROM->TO	G14-057T 345.00 - SUNNYSIDE 345KV CKT 1	717	789	0.04332	115.003	GEN511853 1-COMANCHE #3
FDNS	00NR	6	20WP	G15_033	FROM->TO	G14-057T 345.00 - SUNNYSIDE 345KV CKT 1	717	789	0.0413	114.9997	REDBUD - RIVERSIDE STATION 345KV CKT 1
FDNS	00NR	6	20WP	G15_033	FROM->TO	G14-057T 345.00 - SUNNYSIDE 345KV CKT 1	717	789	0.0413	114.9997	REDBUD - RIVERSIDE STATION 345KV CKT 1
FDNS	00NR	6	20WP	G15_033	FROM->TO	G14-057T 345.00 - SUNNYSIDE 345KV CKT 1	717	789	0.04099	114.9944	PARK LANE - SEMINOLE 138KV CKT 1
FDNS	00NR	6	16WP	G15_033	FROM->TO	G14-057T 345.00 - SUNNYSIDE 345KV CKT 1	717	789	0.04332	114.9912	GEN344896 3-1LAB G3 20.000
FDNS	00NR	6	16WP	G15_033	FROM->TO	G14-057T 345.00 - SUNNYSIDE 345KV CKT 1	717	789	0.04332	114.9896	GEN344894 1-1LAB G1 20.000
FDNS	00NR	6	16WP	G15_033	FROM->TO	G14-057T 345.00 - SUNNYSIDE 345KV CKT 1	717	789	0.04332	114.9883	GEN344897 4-1LAB G4 20.000
FDNS	00NR	6	16WP	G15_033	FROM->TO	G14-057T 345.00 - SUNNYSIDE 345KV CKT 1	717	789	0.04332	114.984	GEN563292 1-G15095_3 0.6900
FDNS	00NR	6	16WP	G15_033	FROM->TO	G14-057T 345.00 - SUNNYSIDE 345KV CKT 1	717	789	0.04332	114.9542	GEN563162 1-G15081_3 0.6900
FDNS	00NR	6	16WP	G15_033	FROM->TO	G14-057T 345.00 - SUNNYSIDE 345KV CKT 1	717	789	0.04332	114.9412	GEN523461 1-BLACKHAWK GEN #1
FDNS	00NR	6	16WP	G15_033	FROM->TO	G14-057T 345.00 - SUNNYSIDE 345KV CKT 1	717	789	0.04332	114.9411	GEN523462 1-BLACKHAWK GEN #2
FDNS	00NR	6	20WP	G15_033	FROM->TO	G14-057T 345.00 - SUNNYSIDE 345KV CKT 1	717	789	0.04126	114.9373	MARIETTA - SOUTH WILSON 138KV CKT 1
FDNS	00NR	6	16WP	G15_033	FROM->TO	G14-057T 345.00 - SUNNYSIDE 345KV CKT 1	717	789	0.04332	114.9367	GEN681542 6-JP MADGETT
FDNS	00NR	6	16WP	G15_033	FROM->TO	G14-057T 345.00 - SUNNYSIDE 345KV CKT 1	717	789	0.04332	114.9304	GEN511852 1-COMANCHE #2
FDNS	00NR	6	16WP	G15_033	FROM->TO	G14-057T 345.00 - SUNNYSIDE 345KV CKT 1	717	789	0.04332	114.9232	GEN562861 1-G15045_2 0.4800
FDNS	00NR	6	20WP	G15_033	FROM->TO	G14-057T 345.00 - SUNNYSIDE 345KV CKT 1	717	789	0.04104	114.9194	MATHWSN7 345.00 - NORTHWEST 345KV CKT 1
FDNS	00NR	6	16WP	G15_033	FROM->TO	G14-057T 345.00 - SUNNYSIDE 345KV CKT 1	717	789	0.04332	114.9112	GEN562699 1-G15_018_3 0.6900
FDNS	00NR	6	20WP	G15_033	FROM->TO	G14-057T 345.00 - SUNNYSIDE 345KV CKT 1	717	789	0.04125	114.9055	GEN515564 1-ORIGIN11 0.6900
FDNS	00NR	6	20WP	G15_033	FROM->TO	G14-057T 345.00 - SUNNYSIDE 345KV CKT 1	717	789	0.04125	114.9055	GEN515565 1-ORIGIN21 0.6900
FDNS	00NR	6	20WP	G15_033	FROM->TO	G14-057T 345.00 - SUNNYSIDE 345KV CKT 1	717	789	0.04125	114.9026	GEN334440 1-SABINE UNIT 4
FDNS	00NR	6	20WP	G15_033	FROM->TO	G14-057T 345.00 - SUNNYSIDE 345KV CKT 1	717	789	0.0412	114.8736	WEBRE - WELLS 500KV CKT 1
FDNS	00NR	6	20WP	G15_033	FROM->TO	G14-057T 345.00 - SUNNYSIDE 345KV CKT 1	717	789	0.04125	114.8706	GEN590011 2-ERCOT EQUIVALENCE
FDNS	00NR	6	20WP	G15_033	FROM->TO	G14-057T 345.00 - SUNNYSIDE 345KV CKT 1	717	789	0.04125	114.8571	P12:161:AEPW:DYESS 5:HYLAND 5
FDNS	00NR	6	16WP	G15_033	FROM->TO	G14-057T 345.00 - SUNNYSIDE 345KV CKT 1	717	789	0.04332	114.8528	ALMA 161 161/24.0KV TRANSFORMER CKT 1
FDNS	00NR	6	20WP	G15_033	FROM->TO	G14-057T 345.00 - SUNNYSIDE 345KV CKT 1	717	789	0.04126	114.8519	P12:138:WFEC:MSL17
FDNS	00NR	6	20WP	G15_033	FROM->TO	G14-057T 345.00 - SUNNYSIDE 345KV CKT 1	717	789	0.04125	114.8472	DELL 500 - ESSEX UNIT 2 500KV CKT Z1
FDNS	00NR	6	20WP	G15_033	FROM->TO	G14-057T 345.00 - SUNNYSIDE 345KV CKT 1	717	789	0.04115	114.8355	CANEYRV7 345.00 - NEOSHO 345KV CKT 1
FDNS	00NR	6	16WP	G15_033	FROM->TO	G14-057T 345.00 - SUNNYSIDE 345KV CKT 1	717	789	0.04332	114.8279	GEN661015 1-COYOTE
FDNS	00NR	6	16WP	G15_033	FROM->TO	G14-057T 345.00 - SUNNYSIDE 345KV CKT 1	717	789	0.0433	114.8258	P12:138:WFEC:MSL15
FDNS	06NR	6	17G	G15_033	FROM->TO	G14-057T 345.00 - SUNNYSIDE 345KV CKT 1	717	789	0.05524	114.8241	GRACEMONT - MINCO 345KV CKT 1
FDNS	00NR	6	16WP	G15_033	FROM->TO	G14-057T 345.00 - SUNNYSIDE 345KV CKT 1	717	789	0.04332	114.8177	GEN563122 1-G15077_3 0.3850
FDNS	00NR	6	16WP	G15_033	FROM->TO	G14-057T 345.00 - SUNNYSIDE 345KV CKT 1	717	789	0.04478	114.8162	CACHE - SNYDER 138KV CKT 1
FDNS	00NR	6	16WP	G15_033	FROM->TO	G14-057T 345.00 - SUNNYSIDE 345KV CKT 1	717	789	0.04286	114.8129	SUNNYSIDE - UNIROYAL 138KV CKT 1
FDNS	00NR	6	16WP	G15_033	FROM->TO	G14-057T 345.00 - SUNNYSIDE 345KV CKT 1	717	789	0.0436	114.8085	P12:138:AEPW:SHAM4WT:CHILD4WT
FDNS	00NR	6	20WP	G15_033	FROM->TO	G14-057T 345.00 - SUNNYSIDE 345KV CKT 1	717	789	0.04125	114.7988	GEN590010 1-ERCOT EQUIVALENCE
FDNS	00NR	6	16WP	G15_033	FROM->TO	G14-057T 345.00 - SUNNYSIDE 345KV CKT 1	717	789	0.04332	114.7737	GEN562992 1-G15063_3 0.6900
FDNS	00NR	6	20WP	G15_033	FROM->TO	G14-057T 345.00 - SUNNYSIDE 345KV CKT 1	717	789	0.04125	114.7718	P12:69:AEPW:L.E.S.-2:LAW WC2
FDNS	00NR	6	16WP	G15_033	FROM->TO	G14-057T 345.00 - SUNNYSIDE 345KV CKT 1	717	789	0.04333	114.7634	CANEY CREEK - TEXOMA JCT 138KV CKT 1
FDNS	00NR	6	20WP	G15_033	FROM->TO	G14-057T 345.00 - SUNNYSIDE 345KV CKT 1	717	789	0.04119	114.7388	PAOLI - PAYNE 138.00 138KV CKT 1
FDNS	00NR	6	16WP	G15_033	FROM->TO	G14-057T 345.00 - SUNNYSIDE 345KV CKT 1	717	789	0.04332	114.7319	GEN532751 1-WOLF CREEK GENERATING STATION UNIT 1
FDNS	00NR	6	20WP	G15_033	FROM->TO	G14-057T 345.00 - SUNNYSIDE 345KV CKT 1	717	789	0.0412	114.7303	ELDORADO EHV - SHERIDAN EHV 500KV CKT 1
FDNS	00NR	6	16WP	G15_033	FROM->TO	G14-057T 345.00 - SUNNYSIDE 345KV CKT 1	717	789	0.04332	114.7213	GEN562952 1-G15057_3 0.6500
FDNS	00NR	6	20WP	G15_033	FROM->TO	G14-057T 345.00 - SUNNYSIDE 345KV CKT 1	717	789	0.04135	114.7102	CIVIT - PAOLI 138KV CKT 1
FDNS	00NR	6	20WP	G15_033	FROM->TO	G14-057T 345.00 - SUNNYSIDE 345KV CKT 1	717	789	0.04125	114.7092	GEN506754 1-LEBROCK STEAM 1
FDNS	00NR	6	16WP	G15_033	FROM->TO	G14-057T 345.00 - SUNNYSIDE 345KV CKT 1	717	789	0.04332	114.7091	GEN657748 1-YOUNG 2 GENERATOR
FDNS	00NR	6	20WP	G15_033	FROM->TO	G14-057T 345.00 - SUNNYSIDE 345KV CKT 1	717	789	0.04125	114.7084	GEN509408 1-WILKES #2
FDNS	00NR	6	20WP	G15_033	FROM->TO	G14-057T 345.00 - SUNNYSIDE 345KV CKT 1	717	789	0.0412	114.7061	P12:138:WFEC:MSL02
FDNS	00NR	6	20WP	G15_033	FROM->TO	G14-057T 345.00 - SUNNYSIDE 345KV CKT 1	717	789	0.04115	114.6918	CANEYRV7 345.00 - LATHAMS7 345.00 345KV CKT 1
FDNS	00NR	6	20WP	G15_033	FROM->TO	G14-057T 345.00 - SUNNYSIDE 345KV CKT 1	717	789	0.04131	114.6563	P12:138:AEPW:112GORE4:L.E.S.-4
FDNS	00NR	6	20WP	G15_033	FROM->TO	G14-057T 345.00 - SUNNYSIDE 345KV CKT 1	717	789	0.04122	114.6239	ANADARKO - GEORGIA 138KV CKT 1
FDNS	00NR	6	20WP	G15_033	FROM->TO	G14-057T 345.00 - SUNNYSIDE 345KV CKT 1	717	789	0.04125	114.6136	NEW MADRID 161/22.0KV TRANSFORMER CKT 1
FDNS	00NR	6	20WP	G15_033	FROM->TO	G14-057T 345.00 - SUNNYSIDE 345KV CKT 1	717	789	0.04125	114.6132	GEN336252 1-NINEMILE POINT UNIT#5
FDNS	00NR	6	16WP	G15_033	FROM->TO	G14-057T 345.00 - SUNNYSIDE 345KV CKT 1	717	789	0.04332	114.6063	GEN562704 1-G15_020_3 0.3550
FDNS	00NR	6	20WP	G15_033	FROM->TO	G14-057T 345.00 - SUNNYSIDE 345KV CKT 1	717	789	0.04125	114.5997	NEW MADRID 345/22.0KV TRANSFORMER CKT 1

SOLUTION	GROUP	SCENARIO	SEASON	SOURCE	DIRECTION	MONITORED ELEMENT	RATEA (MVA)	RATEB(MVA)	TDF	TC%LOADING (% MVA)	CONTINGENCY
FDNS	00NR	6	20WP	G15_033	FROM->TO	G14-057T 345.00 - SUNNYSIDE 345KV CKT 1	717	789	0.03891	114.5928	Hitchland Interchange - WALKTAP7 345.00 345KV CKT 1
FDNS	00NR	6	20WP	G15_033	FROM->TO	G14-057T 345.00 - SUNNYSIDE 345KV CKT 1	717	789	0.03891	114.5928	Hitchland Interchange - WALKTAP7 345.00 345KV CKT 1
FDNS	00NR	6	20WP	G15_033	FROM->TO	G14-057T 345.00 - SUNNYSIDE 345KV CKT 1	717	789	0.03891	114.5841	P12:345:SPS:J07.1.FINN.HITCH
FDNS	00NR	6	20WP	G15_033	FROM->TO	G14-057T 345.00 - SUNNYSIDE 345KV CKT 1	717	789	0.04151	114.5818	P12:138:AEPW-OGE:CORNVIL4:MAUD 4
FDNS	00NR	6	20WP	G15_033	FROM->TO	G14-057T 345.00 - SUNNYSIDE 345KV CKT 1	717	789	0.04127	114.5771	TUPELO - TUPELO TAP 138KV CKT 1
FDNS	00NR	6	20WP	G15_033	FROM->TO	G14-057T 345.00 - SUNNYSIDE 345KV CKT 1	717	789	0.04135	114.5683	CIVIT - STRATFORD 138KV CKT 1
FDNS	00NR	6	20WP	G15_033	FROM->TO	G14-057T 345.00 - SUNNYSIDE 345KV CKT 1	717	789	0.04319	114.5628	LAWTON EASTSIDE (LES 5) 345/138/13.8KV TRANSFORMER CKT 2
FDNS	00NR	6	20WP	G15_033	FROM->TO	G14-057T 345.00 - SUNNYSIDE 345KV CKT 1	717	789	0.04319	114.5628	LAWTON EASTSIDE (LES 5) 345/138/13.8KV TRANSFORMER CKT 2
FDNS	00NR	6	20WP	G15_033	FROM->TO	G14-057T 345.00 - SUNNYSIDE 345KV CKT 1	717	789	0.04125	114.5597	GEN503909 1-FULTONU1 1 16.000
FDNS	00NR	6	16WP	G15_033	FROM->TO	G14-057T 345.00 - SUNNYSIDE 345KV CKT 1	717	789	0.04332	114.5589	P12:138:WFEC:MSL09
FDNS	00NR	6	20WP	G15_033	FROM->TO	G14-057T 345.00 - SUNNYSIDE 345KV CKT 1	717	789	0.04125	114.5572	FRONTIER - GRIMES 345KV CKT 1
FDNS	00NR	6	20WP	G15_033	FROM->TO	G14-057T 345.00 - SUNNYSIDE 345KV CKT 1	717	789	0.04125	114.5534	GEN335204 1-NELSON UNIT 4
FDNS	00NR	6	20WP	G15_033	FROM->TO	G14-057T 345.00 - SUNNYSIDE 345KV CKT 1	717	789	0.04125	114.5453	GEN334441 1-SABINE UNIT 5
FDNS	00NR	6	20WP	G15_033	FROM->TO	G14-057T 345.00 - SUNNYSIDE 345KV CKT 1	717	789	0.04122	114.5419	FLETCHER - GEORGIA 138KV CKT 1
FDNS	00NR	6	16WP	G15_033	FROM->TO	G14-057T 345.00 - SUNNYSIDE 345KV CKT 1	717	789	0.04332	114.5375	GEN620315 1-BIG STONE GEN
FDNS	06ALL	6	16WP	G15_033	FROM->TO	G14-057T 345.00 - SUNNYSIDE 345KV CKT 1	717	789	0.213	114.5159	GRACEMONT - MINCO 345KV CKT 1
FDNS	00NR	6	16WP	G15_033	FROM->TO	G14-057T 345.00 - SUNNYSIDE 345KV CKT 1	717	789	0.04332	114.5142	GEN563173 1-G15082_3 0.6900
FDNS	00NR	6	20WP	G15_033	FROM->TO	G14-057T 345.00 - SUNNYSIDE 345KV CKT 1	717	789	0.04151	114.5024	BLANCHARD - CORNVILLE 138KV CKT 1
FDNS	00NR	6	16WP	G15_033	FROM->TO	G14-057T 345.00 - SUNNYSIDE 345KV CKT 1	717	789	0.04332	114.498	GEN562710 1-G15_022_3 0.5500
FDNS	00NR	6	20WP	G15_033	FROM->TO	G14-057T 345.00 - SUNNYSIDE 345KV CKT 1	717	789	0.0412	114.493	EMPIRE - FLETCHER 138KV CKT 1
FDNS	00NR	6	16WP	G15_033	FROM->TO	G14-057T 345.00 - SUNNYSIDE 345KV CKT 1	717	789	0.04332	114.4811	GEN600004 2-PRAIRIE ISLAND G2
FDNS	00NR	6	16WP	G15_033	FROM->TO	G14-057T 345.00 - SUNNYSIDE 345KV CKT 1	717	789	0.04332	114.4783	GEN600003 1-PRAIRIE ISLAND G1
FDNS	00NR	6	20WP	G15_033	FROM->TO	G14-057T 345.00 - SUNNYSIDE 345KV CKT 1	717	789	0.04115	114.4745	LATHAMS7 345.00 - ROSE HILL 345KV CKT 1
FDNS	00NR	6	16WP	G15_033	FROM->TO	G14-057T 345.00 - SUNNYSIDE 345KV CKT 1	717	789	0.04332	114.4678	GEN600006 1-AS KING
FDNS	00NR	6	20WP	G15_033	FROM->TO	G14-057T 345.00 - SUNNYSIDE 345KV CKT 1	717	789	0.04122	114.4651	LAYFLD8 500.00 - MOUNT OLIVE 500KV CKT 1
FDNS	00NR	6	20WP	G15_033	FROM->TO	G14-057T 345.00 - SUNNYSIDE 345KV CKT 1	717	789	0.04122	114.4651	LAYFLD8 500.00 - MOUNT OLIVE 500KV CKT 1
FDNS	00NR	6	20WP	G15_033	FROM->TO	G14-057T 345.00 - SUNNYSIDE 345KV CKT 1	717	789	0.04135	114.4495	OIL CENTER - STRATFORD 138KV CKT 1
FDNS	00NR	6	20WP	G15_033	FROM->TO	G14-057T 345.00 - SUNNYSIDE 345KV CKT 1	717	789	0.04125	114.4488	GEN334071 1-LEWIS CREEK 2
FDNS	00NR	6	20WP	G15_033	FROM->TO	G14-057T 345.00 - SUNNYSIDE 345KV CKT 1	717	789	0.04125	114.4401	GEN334070 1-LEWIS CREEK 1
FDNS	00NR	6	20WP	G15_033	FROM->TO	G14-057T 345.00 - SUNNYSIDE 345KV CKT 1	717	789	0.04125	114.4365	GEN336251 1-NINEMILE POINT UNIT#4
FDNS	00NR	6	16WP	G15_033	FROM->TO	G14-057T 345.00 - SUNNYSIDE 345KV CKT 1	717	789	0.04332	114.4271	GEN511851 1-COMANCHE #1
FDNS	00NR	6	20WP	G15_033	FROM->TO	G14-057T 345.00 - SUNNYSIDE 345KV CKT 1	717	789	0.04125	114.4253	P12:161:AEPW-SWPA:BEAVER5:EROGERS5
FDNS	00NR	6	20WP	G15_033	FROM->TO	G14-057T 345.00 - SUNNYSIDE 345KV CKT 1	717	789	0.0412	114.4159	COMANCHE - EMPIRE 138KV CKT 1
FDNS	00NR	6	16WP	G15_033	FROM->TO	G14-057T 345.00 - SUNNYSIDE 345KV CKT 1	717	789	0.04379	114.4148	P12:138:AEPW-OGE:CORNVIL4:CIMARON4
FDNS	00NR	6	20WP	G15_033	FROM->TO	G14-057T 345.00 - SUNNYSIDE 345KV CKT 1	717	789	0.04125	114.4147	GEN509393 S1-ARSENAL HILL GENS #4 (STALL)
FDNS	00NR	6	20WP	G15_033	FROM->TO	G14-057T 345.00 - SUNNYSIDE 345KV CKT 1	717	789	0.04125	114.4132	GEN509392 G2-ARSENAL HILL GENS #3 (STALL)
FDNS	00NR	6	20WP	G15_033	FROM->TO	G14-057T 345.00 - SUNNYSIDE 345KV CKT 1	717	789	0.04125	114.4131	GEN509391 G1-ARSENAL HILL GENS #2 (STALL)
FDNS	00NR	6	20WP	G15_033	FROM->TO	G14-057T 345.00 - SUNNYSIDE 345KV CKT 1	717	789	0.04125	114.3829	GEN334433 1-SABINE UNIT 3
FDNS	00NR	6	16WP	G15_033	FROM->TO	G14-057T 345.00 - SUNNYSIDE 345KV CKT 1	717	789	0.04332	114.381	GEN636641 1-LOUISA UNIT 1
FDNS	00NR	6	20WP	G15_033	FROM->TO	G14-057T 345.00 - SUNNYSIDE 345KV CKT 1	717	789	0.04125	114.3804	GEN337653 1-WHITE BLUFF UNIT #2
FDNS	00NR	6	20WP	G15_033	FROM->TO	G14-057T 345.00 - SUNNYSIDE 345KV CKT 1	717	789	0.04145	114.3785	DUNCAN (DUNCAN) 138/69/13.8KV TRANSFORMER CKT 1
FDNS	00NR	6	20WP	G15_033	FROM->TO	G14-057T 345.00 - SUNNYSIDE 345KV CKT 1	717	789	0.04145	114.3785	DUNCAN (DUNCAN) 138/69/13.8KV TRANSFORMER CKT 1
FDNS	00NR	6	20WP	G15_033	FROM->TO	G14-057T 345.00 - SUNNYSIDE 345KV CKT 1	717	789	0.04125	114.3651	P12:161:AEPW:DYESS5:ELMSPRNG:TONTITN5
FDNS	00NR	6	20WP	G15_033	FROM->TO	G14-057T 345.00 - SUNNYSIDE 345KV CKT 1	717	789	0.04125	114.3615	GEN336831 1-BAXTER WILSON SES
FDNS	00NR	6	20WP	G15_033	FROM->TO	G14-057T 345.00 - SUNNYSIDE 345KV CKT 1	717	789	0.04109	114.3583	THISTLE7 345.00 - WOODWARD DISTRICT EHV 345KV CKT 1
FDNS	00NR	6	20WP	G15_033	FROM->TO	G14-057T 345.00 - SUNNYSIDE 345KV CKT 1	717	789	0.04109	114.3583	THISTLE7 345.00 - WOODWARD DISTRICT EHV 345KV CKT 1
FDNS	00NR	6	20WP	G15_033	FROM->TO	G14-057T 345.00 - SUNNYSIDE 345KV CKT 1	717	789	0.04109	114.3583	THISTLE7 345.00 - WOODWARD DISTRICT EHV 345KV CKT 2
FDNS	00NR	6	20WP	G15_033	FROM->TO	G14-057T 345.00 - SUNNYSIDE 345KV CKT 1	717	789	0.04109	114.3583	THISTLE7 345.00 - WOODWARD DISTRICT EHV 345KV CKT 2
FDNS	00NR	6	20WP	G15_033	FROM->TO	G14-057T 345.00 - SUNNYSIDE 345KV CKT 1	717	789	0.04125	114.3398	GEN337911 1-ARKANSAS NUCLEAR ONE UNIT #2
FDNS	00NR	6	16WP	G15_033	FROM->TO	G14-057T 345.00 - SUNNYSIDE 345KV CKT 1	717	789	0.04332	114.3329	GEN600005 1-MONTICELLO
FDNS	00NR	6	20WP	G15_033	FROM->TO	G14-057T 345.00 - SUNNYSIDE 345KV CKT 1	717	789	0.04125	114.3219	GEN334030 1-FRONTIER UNIT 1
FDNS	00NR	6	20WP	G15_033	FROM->TO	G14-057T 345.00 - SUNNYSIDE 345KV CKT 1	717	789	0.04125	114.3195	GEN334031 1-FRONTIER UNIT 2
FDNS	00NR	6	20WP	G15_033	FROM->TO	G14-057T 345.00 - SUNNYSIDE 345KV CKT 1	717	789	0.04104	114.3054	P12:138:AEPW-OGE:WTH_JCT4:JENSEN4
FDNS	00NR	6	20WP	G15_033	FROM->TO	G14-057T 345.00 - SUNNYSIDE 345KV CKT 1	717	789	0.04151	114.2989	BLANCHARD - MAUD 138KV CKT 1
FDNS	00NR	6	20WP	G15_033	FROM->TO	G14-057T 345.00 - SUNNYSIDE 345KV CKT 1	717	789	0.04124	114.2978	P12:138:AEPW:CATOOSA4:T.S.E.-4
FDNS	00NR	6	20WP	G15_033	FROM->TO	G14-057T 345.00 - SUNNYSIDE 345KV CKT 1	717	789	0.04094	114.2938	MATHWSN7 345.00 - TATONGA7 345.00 345KV CKT 1
FDNS	00NR	6	20WP	G15_033	FROM->TO	G14-057T 345.00 - SUNNYSIDE 345KV CKT 1	717	789	0.04094	114.2938	MATHWSN7 345.00 - TATONGA7 345.00 345KV CKT 2
FDNS	00NR	6	20WP	G15_033	FROM->TO	G14-057T 345.00 - SUNNYSIDE 345KV CKT 1	717	789	0.04135	114.2758	LATTA JCT - OIL CENTER 138KV CKT 1
FDNS	00NR	6	20WP	G15_033	FROM->TO	G14-057T 345.00 - SUNNYSIDE 345KV CKT 1	717	789	0.04125	114.2737	GEN337652 1-WHITE BLUFF UNIT #1
FDNS	00NR	6	20WP	G15_033	FROM->TO	G14-057T 345.00 - SUNNYSIDE 345KV CKT 1	717	789	0.04125	114.2636	GEN506752 1-LEBROCK GAS 1
FDNS	00NR	6	20WP	G15_033	FROM->TO	G14-057T 345.00 - SUNNYSIDE 345KV CKT 1	717	789	0.04125	114.2632	GEN506753 1-LEBROCK GAS 2
FDNS	00NR	6	20WP	G15_033	FROM->TO	G14-057T 345.00 - SUNNYSIDE 345KV CKT 1	717	789	0.04125	114.2625	GEN501811 1-RODEMACHER UNIT 1
FDNS	00NR	6	20WP	G15_033	FROM->TO	G14-057T 345.00 - SUNNYSIDE 345KV CKT 1	717	789	0.04125	114.2582	GEN515226 1-MUSKOGEE 6G
FDNS	00NR	6	20WP	G15_033	FROM->TO	G14-057T 345.00 - SUNNYSIDE 345KV CKT 1	717	789	0.04125	114.2567	GEN300003 1-THOMAS HILL UNIT 3
FDNS	00NR	6	16WP	G15_033	FROM->TO	G14-057T 345.00 - SUNNYSIDE 345KV CKT 1	717	789	0.04332	114.2525	GEN635213 3-NEAL UNIT 3
FDNS	00NR	6	20WP	G15_033	FROM->TO	G14-057T 345.00 - SUNNYSIDE 345KV CKT 1	717	789	0.04117	114.2436	FULTON 115 - HOPE 115KV CKT 1
FDNS	00NR	6	20WP	G15_033	FROM->TO	G14-057T 345.00 - SUNNYSIDE 345KV CKT 1	717	789	0.04117	114.2436	FULTON 115 - HOPE 115KV CKT 1
FDNS	00NR	6	20WP	G15_033	FROM->TO	G14-057T 345.00 - SUNNYSIDE 345KV CKT 1	717	789	0.04125	114.2432	GEN300015 1-1SGPDEL 18.000
FDNS	00NR	6	20WP	G15_033	FROM->TO	G14-057T 345.00 - SUNNYSIDE 345KV CKT 1	717	789	0.04125	114.2319	GEN336191 1-LITTLE GYPSY UNIT#3
FDNS	00NR	6	16WP	G15_033	FROM->TO	G14-057T 345.00 - SUNNYSIDE 345KV CKT 1	717	789	0.04332	114.2207	GEN562754 1-G15031_5 0.6900
FDNS	00NR	6	16WP	G15_033	FROM->TO	G14-057T 345.00 - SUNNYSIDE 345KV CKT 1	717	789	0.04332	114.2192	GEN629074 1-ARNOLD LOWSIDE OF GSU XFMR
FDNS	00NR	6	20WP	G15_033	FROM->TO	G14-057T 345.00 - SUNNYSIDE 345KV CKT 1	717	789	0.0413	114.2187	P12:138:AEPW:CORNVIL4:S.W.S.-4
FDNS	00NR	6	16WP	G15_033	FROM->TO	G14-057T 345.00 - SUNNYSIDE 345KV CKT 1	717	789	0.04332	114.205	GEN562023 1-G11_020_3 0.6900
FDNS	00NR	6	16WP	G15_033	FROM->TO	G14-057T 345.00 - SUNNYSIDE 345KV CKT 1	717	789	0.04332	114.205	GEN562026 1-G11_019_3 0.6900
FDNS	00NR	6	20WP	G15_033	FROM->TO	G14-057T 345.00 - SUNNYSIDE 345KV CKT 1	717	789	0.04108	114.2045	G1524G1525 345.00 - THISTLE7 345.00 345KV CKT 1
FDNS	00NR	6	20WP	G15_033	FROM->TO	G14-057T 345.00 - SUNNYSIDE 345KV CKT 1	717	789	0.04108	114.2045	G1524G1525 345.00 - THISTLE7 345.00 345KV CKT 2
FDNS	00NR	6	20WP	G15_033	FROM->TO	G14-057T 345.00 - SUNNYSIDE 345KV CKT 1	717	789	0.04145	114.2008	P12:69:WFEC-AEPW:COMANCH2:DUNCAN-2
FDNS	00NR	6	20WP	G15_033	FROM->TO	G14-057T 345.00 - SUNNYSIDE 345KV CKT 1	717	789	0.04125	114.2004	GEN335614 1-WILLOW GLENN UNIT#4
FDNS	00NR	6	20WP	G15_033	FROM->TO	G14-057T 345.00 - SUNNYSIDE 345KV CKT 1	717	789	0.04169	114.1963	TUTTLE - TUTTLE CONOCO TAP 138KV CKT 1

SOLUTION	GROUP	SCENARIO	SEASON	SOURCE	DIRECTION	MONITORED ELEMENT	RATEA (MVA)	RATEB(MVA)	TDF	TC%LOADING (% MVA)	CONTINGENCY
FDNS	00NR	6	20WP	G15_033	FROM->TO	G14-057T 345.00 - SUNNYSIDE 345KV CKT 1	717	789	0.04188	114.1937	P12:138:AEPW:CORNVIL4:DUNCAN-4
FDNS	00NR	6	16WP	G15_033	FROM->TO	G14-057T 345.00 - SUNNYSIDE 345KV CKT 1	717	789	0.04332	114.1924	BIG STONE 230/24.0KV TRANSFORMER CKT 1
FDNS	00NR	6	20WP	G15_033	FROM->TO	G14-057T 345.00 - SUNNYSIDE 345KV CKT 1	717	789	0.04124	114.1826	8DANIEL8 500.00 - MCKNIGHT 500KV CKT 1
FDNS	00NR	6	20WP	G15_033	FROM->TO	G14-057T 345.00 - SUNNYSIDE 345KV CKT 1	717	789	0.04078	114.1778	BUCKNER7 345.00 - SPEARVILLE 345KV CKT 1
FDNS	00NR	6	20WP	G15_033	FROM->TO	G14-057T 345.00 - SUNNYSIDE 345KV CKT 1	717	789	0.04078	114.1778	BUCKNER7 345.00 - SPEARVILLE 345KV CKT 1
FDNS	00NR	6	20WP	G15_033	FROM->TO	G14-057T 345.00 - SUNNYSIDE 345KV CKT 1	717	789	0.04119	114.1775	6LAYFLD 230.00 - CARROLL 230KV CKT 1
FDNS	00NR	6	20WP	G15_033	FROM->TO	G14-057T 345.00 - SUNNYSIDE 345KV CKT 1	717	789	0.04125	114.1774	GEN515040 1-SEMINOLE 1G
FDNS	00NR	6	20WP	G15_033	FROM->TO	G14-057T 345.00 - SUNNYSIDE 345KV CKT 1	717	789	0.04113	114.176	P12:138:AEPW:WTHWF4:CLINTJC4
FDNS	00NR	6	20WP	G15_033	FROM->TO	G14-057T 345.00 - SUNNYSIDE 345KV CKT 1	717	789	0.04125	114.1755	GEN337910 1-ARKANSAS NUCLEAR ONE UNIT #1
FDNS	00NR	6	20WP	G15_033	FROM->TO	G14-057T 345.00 - SUNNYSIDE 345KV CKT 1	717	789	0.04125	114.1754	P12:161:AEPW:EROGERS5:ECNTRTN5
FDNS	00NR	6	20WP	G15_033	FROM->TO	G14-057T 345.00 - SUNNYSIDE 345KV CKT 1	717	789	0.04151	114.1602	BAILEY4 138.00 - SUNSHINE CANYON 138KV CKT 1
FDNS	00NR	6	16WP	G15_033	FROM->TO	G14-057T 345.00 - SUNNYSIDE 345KV CKT 1	717	789	0.04332	114.1567	GEN562756 1-G15031_7 0.6900
FDNS	00NR	6	20WP	G15_033	FROM->TO	G14-057T 345.00 - SUNNYSIDE 345KV CKT 1	717	789	0.04125	114.1557	GEN515223 1-MUSKOGEE 4G
FDNS	00NR	6	20WP	G15_033	FROM->TO	G14-057T 345.00 - SUNNYSIDE 345KV CKT 1	717	789	0.04125	114.1557	GEN515225 1-MUSKOGEE 5G
FDNS	00NR	6	20WP	G15_033	FROM->TO	G14-057T 345.00 - SUNNYSIDE 345KV CKT 1	717	789	0.04125	114.154	GEN562783 1-G15036_4 0.6900
FDNS	00NR	6	20WP	G15_033	FROM->TO	G14-057T 345.00 - SUNNYSIDE 345KV CKT 1	717	789	0.04125	114.154	GEN562784 1-G15036_5 0.6900
FDNS	00NR	6	20WP	G15_033	FROM->TO	G14-057T 345.00 - SUNNYSIDE 345KV CKT 1	717	789	0.04125	114.1533	GEN303007 1-1BC2 U2
FDNS	00NR	6	20WP	G15_033	FROM->TO	G14-057T 345.00 - SUNNYSIDE 345KV CKT 1	717	789	0.04145	114.1504	DUNCAN - TOSCO 69KV CKT 1
FDNS	00NR	6	16WP	G15_033	FROM->TO	G14-057T 345.00 - SUNNYSIDE 345KV CKT 1	717	789	0.04332	114.1498	GEN562556 1-G14_046_3 0.3420
FDNS	00NR	6	20WP	G15_033	FROM->TO	G14-057T 345.00 - SUNNYSIDE 345KV CKT 1	717	789	0.04125	114.1494	WHITE BLUFF 500/26.0KV TRANSFORMER CKT 1
FDNS	00NR	6	20WP	G15_033	FROM->TO	G14-057T 345.00 - SUNNYSIDE 345KV CKT 1	717	789	0.04125	114.1484	GEN336464 1-MICHOUD UNIT #3
FDNS	00NR	6	20WP	G15_033	FROM->TO	G14-057T 345.00 - SUNNYSIDE 345KV CKT 1	717	789	0.04125	114.1477	GEN303006 1-1BC2 U1
FDNS	00NR	6	20WP	G15_033	FROM->TO	G14-057T 345.00 - SUNNYSIDE 345KV CKT 1	717	789	0.04125	114.1402	RODEMACHER 230/22.0KV TRANSFORMER CKT 1
FDNS	00NR	6	20WP	G15_033	FROM->TO	G14-057T 345.00 - SUNNYSIDE 345KV CKT 1	717	789	0.04124	114.1247	CIMARRON - CZECH HALL 138KV CKT 1
FDNS	00NR	6	20WP	G15_033	FROM->TO	G14-057T 345.00 - SUNNYSIDE 345KV CKT 1	717	789	0.04122	114.1233	MC NIEL 500/115KV TRANSFORMER CKT 1
FDNS	00NR	6	20WP	G15_033	FROM->TO	G14-057T 345.00 - SUNNYSIDE 345KV CKT 1	717	789	0.04119	114.1201	BISMARK - HOT SPRINGS WEST BUS 115KV CKT 1
FDNS	00NR	6	20WP	G15_033	FROM->TO	G14-057T 345.00 - SUNNYSIDE 345KV CKT 1	717	789	0.04121	114.1198	G15088_T 345.00 - MOORE 345KV CKT 1
FDNS	00NR	6	20WP	G15_033	FROM->TO	G14-057T 345.00 - SUNNYSIDE 345KV CKT 1	717	789	0.04123	114.1193	HOT SPRINGS EHV - MAGNET COVE 500KV CKT 1
FDNS	00NR	6	20WP	G15_033	FROM->TO	G14-057T 345.00 - SUNNYSIDE 345KV CKT 1	717	789	0.04113	114.119	P12:138:AEPW:WTHWF4:WTH_SE4
FDNS	00NR	6	20WP	G15_033	FROM->TO	G14-057T 345.00 - SUNNYSIDE 345KV CKT 1	717	789	0.04169	114.1174	CIMARRON - TUTTLE CONOCO TAP 138KV CKT 1
FDNS	00NR	6	20WP	G15_033	FROM->TO	G14-057T 345.00 - SUNNYSIDE 345KV CKT 1	717	789	0.04125	114.1127	GEN300010 1-ST FRANCIS UNIT 1
FDNS	00NR	6	20WP	G15_033	FROM->TO	G14-057T 345.00 - SUNNYSIDE 345KV CKT 1	717	789	0.04145	114.1031	COMANCHE TAP - TOSCO 69KV CKT 1
FDNS	00NR	6	20WP	G15_033	FROM->TO	G14-057T 345.00 - SUNNYSIDE 345KV CKT 1	717	789	0.0412	114.0932	CIMARRON - SARA 138KV CKT 1
FDNS	00NR	6	20WP	G15_033	FROM->TO	G14-057T 345.00 - SUNNYSIDE 345KV CKT 1	717	789	0.04125	114.0923	GEN337041 1-GERALD ANDRUS
FDNS	00NR	6	20WP	G15_033	FROM->TO	G14-057T 345.00 - SUNNYSIDE 345KV CKT 1	717	789	0.04122	114.0922	G15074_T 345.00 - HOYT 345KV CKT 1
FDNS	00NR	6	20WP	G15_033	FROM->TO	G14-057T 345.00 - SUNNYSIDE 345KV CKT 1	717	789	0.04125	114.0852	GEN505432 1-SIKESTON
FDNS	00NR	6	20WP	G15_033	FROM->TO	G14-057T 345.00 - SUNNYSIDE 345KV CKT 1	717	789	0.04125	114.0842	GEN303008 1-1BC2 U3
FDNS	00NR	6	20WP	G15_033	FROM->TO	G14-057T 345.00 - SUNNYSIDE 345KV CKT 1	717	789	0.04154	114.0833	P12:69:AEPW-OMPA:COMANC-2:OMWALTR2
FDNS	00NR	6	20WP	G15_033	FROM->TO	G14-057T 345.00 - SUNNYSIDE 345KV CKT 1	717	789	0.04093	114.0797	ARBWIND4 138.00 - CARTER 138KV CKT 1
FDNS	00NR	6	20WP	G15_033	FROM->TO	G14-057T 345.00 - SUNNYSIDE 345KV CKT 1	717	789	0.04103	114.0791	SEMINOLE - VANOSTP4 138.00 138KV CKT 1
FDNS	00NR	6	20WP	G15_033	FROM->TO	G14-057T 345.00 - SUNNYSIDE 345KV CKT 1	717	789	0.04125	114.072	P12:138:AEPW:N.E.S.-4:CATOOSA4
FDNS	00NR	6	20WP	G15_033	FROM->TO	G14-057T 345.00 - SUNNYSIDE 345KV CKT 1	717	789	0.04119	114.0671	ALPINE AECC - BISMARK 115KV CKT 1
FDNS	00NR	6	16WP	G15_033	FROM->TO	G14-057T 345.00 - SUNNYSIDE 345KV CKT 1	717	789	0.04332	114.0596	GEN563142 1-G15079_3 0.5500
FDNS	00NR	6	16WP	G15_033	FROM->TO	G14-057T 345.00 - SUNNYSIDE 345KV CKT 1	717	789	0.04332	114.0596	GEN563151 1-G15080_2 0.5500
FDNS	00NR	6	20WP	G15_033	FROM->TO	G14-057T 345.00 - SUNNYSIDE 345KV CKT 1	717	789	0.04124	114.0555	CZECH HALL - XEROX 138KV CKT 1
FDNS	00NR	6	20WP	G15_033	FROM->TO	G14-057T 345.00 - SUNNYSIDE 345KV CKT 1	717	789	0.04125	114.0547	GEN336170 1-GULF OXY U4
FDNS	00NR	6	20WP	G15_033	FROM->TO	G14-057T 345.00 - SUNNYSIDE 345KV CKT 1	717	789	0.04125	114.0539	GEN300011 1-ST FRANCIS UNIT 2
FDNS	00NR	6	20WP	G15_033	FROM->TO	G14-057T 345.00 - SUNNYSIDE 345KV CKT 1	717	789	0.0419	114.0534	POTTER COUNTY INTERCHANGE - TOLK STATION 345KV CKT 1
FDNS	00NR	6	20WP	G15_033	FROM->TO	G14-057T 345.00 - SUNNYSIDE 345KV CKT 1	717	789	0.04124	114.0513	MORGAN - XEROX 138KV CKT 1
FDNS	00NR	6	20WP	G15_033	FROM->TO	G14-057T 345.00 - SUNNYSIDE 345KV CKT 1	717	789	0.04125	114.0488	NELSON 230/20.0KV TRANSFORMER CKT 1
FDNS	00NR	6	20WP	G15_033	FROM->TO	G14-057T 345.00 - SUNNYSIDE 345KV CKT 1	717	789	0.04104	114.0482	WEATHERFORD JCT. - WEATHERFORD SOUTHEAST 138KV CKT 1
FDNS	00NR	6	20WP	G15_033	FROM->TO	G14-057T 345.00 - SUNNYSIDE 345KV CKT 1	717	789	0.04104	114.0482	WEATHERFORD JCT. - WEATHERFORD SOUTHEAST 138KV CKT 1
FDNS	00NR	6	20WP	G15_033	FROM->TO	G14-057T 345.00 - SUNNYSIDE 345KV CKT 1	717	789	0.04129	114.0413	GRACEMONT (BANK 1) 345/138/13.8KV TRANSFORMER CKT 1
FDNS	00NR	6	20WP	G15_033	FROM->TO	G14-057T 345.00 - SUNNYSIDE 345KV CKT 1	717	789	0.04145	114.0368	COMANCHE - COMANCHE TAP 69KV CKT 1
FDNS	00NR	6	20WP	G15_033	FROM->TO	G14-057T 345.00 - SUNNYSIDE 345KV CKT 1	717	789	0.04125	114.0349	GEN336801 1-BAXTER WILSON UNIT #1
FDNS	00NR	6	20WP	G15_033	FROM->TO	G14-057T 345.00 - SUNNYSIDE 345KV CKT 1	717	789	0.04402	114.0342	P12:345:SPS:J15.1.XRDS.TOLK
FDNS	00NR	6	20WP	G15_033	FROM->TO	G14-057T 345.00 - SUNNYSIDE 345KV CKT 1	717	789	0.04124	114.0294	MORGAN - MUSTANG 138KV CKT 1
FDNS	00NR	6	20WP	G15_033	FROM->TO	G14-057T 345.00 - SUNNYSIDE 345KV CKT 1	717	789	0.04104	114.0217	P12:138:AEPW:REDROCKRD4:WTH_JCT4
FDNS	00NR	6	20WP	G15_033	FROM->TO	G14-057T 345.00 - SUNNYSIDE 345KV CKT 1	717	789	0.04125	114.0182	8CAJUN2 500/24.0KV TRANSFORMER CKT 1
FDNS	00NR	6	16WP	G15_033	FROM->TO	G14-057T 345.00 - SUNNYSIDE 345KV CKT 1	717	789	0.04332	114.0146	GEN600000 1-SHERBURNECNTY G1
FDNS	00NR	6	20WP	G15_033	FROM->TO	G14-057T 345.00 - SUNNYSIDE 345KV CKT 1	717	789	0.04119	114.0146	ALPINE AECC - AMITY SS 115KV CKT 1
FDNS	00NR	6	20WP	G15_033	FROM->TO	G14-057T 345.00 - SUNNYSIDE 345KV CKT 1	717	789	0.04125	114.0028	GEN501910 1-ACADIA UNIT ST1
FDNS	00NR	6	20WP	G15_033	FROM->TO	G14-057T 345.00 - SUNNYSIDE 345KV CKT 1	717	789	0.04121	113.9892	G15095_T 138.00 - ROSE_VALLEY 138.00 138KV CKT 1
FDNS	00NR	6	20WP	G15_033	FROM->TO	G14-057T 345.00 - SUNNYSIDE 345KV CKT 1	717	789	0.04151	113.986	BAILEY4 138.00 - WESTMOORE 138KV CKT 1
FDNS	00NR	6	20WP	G15_033	FROM->TO	G14-057T 345.00 - SUNNYSIDE 345KV CKT 1	717	789	0.0412	113.9854	SARA - STHLAKE4 138.00 138KV CKT 1
FDNS	00NR	6	16WP	G15_033	FROM->TO	G14-057T 345.00 - SUNNYSIDE 345KV CKT 1	717	789	0.04302	113.9846	GRAPEVINE 345.00 - POTTER COUNTY INTERCHANGE 345KV CKT 1
FDNS	00NR	6	20WP	G15_033	FROM->TO	G14-057T 345.00 - SUNNYSIDE 345KV CKT 1	717	789	0.04135	113.9839	LASALLE - LATTA JCT 138KV CKT 1
FDNS	00NR	6	16WP	G15_033	FROM->TO	G14-057T 345.00 - SUNNYSIDE 345KV CKT 1	717	789	0.04649	113.9833	CHISHOLM7 345.00 - GRAPEVINE 345.00 345KV CKT 1
FDNS	00NR	6	20WP	G15_033	FROM->TO	G14-057T 345.00 - SUNNYSIDE 345KV CKT 1	717	789	0.04088	113.978	ELK CITY 230KV (ELKCTY-6) 230/138/13.8KV TRANSFORMER CKT 1
FDNS	00NR	6	20WP	G15_033	FROM->TO	G14-057T 345.00 - SUNNYSIDE 345KV CKT 1	717	789	0.04088	113.978	ELK CITY 230KV (ELKCTY-6) 230/138/13.8KV TRANSFORMER CKT 1
FDNS	00NR	6	20WP	G15_033	FROM->TO	G14-057T 345.00 - SUNNYSIDE 345KV CKT 1	717	789	0.04088	113.9776	CHISHOLM6 230.00 - ELK CITY 230KV 230KV CKT 1
FDNS	00NR	6	20WP	G15_033	FROM->TO	G14-057T 345.00 - SUNNYSIDE 345KV CKT 1	717	789	0.04125	113.9739	P12:138:AEPW:R.S.S.-4:S.HUD.-4
FDNS	00NR	6	20WP	G15_033	FROM->TO	G14-057T 345.00 - SUNNYSIDE 345KV CKT 1	717	789	0.04123	113.9732	ETTA (DUKE HOTSPRINGS) - MC NIEL 500KV CKT 1
FDNS	00NR	6	20WP	G15_033	FROM->TO	G14-057T 345.00 - SUNNYSIDE 345KV CKT 1	717	789	0.04125	113.9681	SABINE 230/24.0KV TRANSFORMER CKT 1
FDNS	00NR	6	20WP	G15_033	FROM->TO	G14-057T 345.00 - SUNNYSIDE 345KV CKT 1	717	789	0.04125	113.9569	GEN300016 1-1G1GPDEL 18.000
FDNS	00NR	6	20WP	G15_033	FROM->TO	G14-057T 345.00 - SUNNYSIDE 345KV CKT 1	717	789	0.0412	113.9562	MCCLAIN - STHLAKE4 138.00 138KV CKT 1
FDNS	00NR	6	20WP	G15_033	FROM->TO	G14-057T 345.00 - SUNNYSIDE 345KV CKT 1	717	789	0.04125	113.9484	GEN336222 1-LITTLE GYPSY UNIT#2
FDNS	00NR	6	20WP	G15_033	FROM->TO	G14-057T 345.00 - SUNNYSIDE 345KV CKT 1	717	789	0.04885	113.9468	TUCO INTERCHANGE - TUCO_2 345.00 345KV CKT 1
FDNS	00NR	6	20WP	G15_033	FROM->TO	G14-057T 345.00 - SUNNYSIDE 345KV CKT 1	717	789	0.0409	113.946	CANADIAN - NOBLE 138KV CKT 1

SOLUTION	GROUP	SCENARIO	SEASON	SOURCE	DIRECTION	MONITORED ELEMENT	RATEA (MVA)	RATEB(MVA)	TDF	TC%LOADING (% MVA)	CONTINGENCY
FDNS	00NR	6	20WP	G15_033	FROM->TO	G14-057T 345.00 - SUNNYSIDE 345KV CKT 1	717	789	0.04125	113.945	P12:69:AEPW:NROGERS2:ECNTRTN2
FDNS	00NR	6	16WP	G15_033	FROM->TO	G14-057T 345.00 - SUNNYSIDE 345KV CKT 1	717	789	0.04318	113.9434	NORTHWEST TEXARKANA - VALLIANT 345KV CKT 1
FDNS	00NR	6	16WP	G15_033	FROM->TO	G14-057T 345.00 - SUNNYSIDE 345KV CKT 1	717	789	0.04318	113.9434	NORTHWEST TEXARKANA - VALLIANT 345KV CKT 1
FDNS	00NR	6	20WP	G15_033	FROM->TO	G14-057T 345.00 - SUNNYSIDE 345KV CKT 1	717	789	0.04125	113.9375	ESSEX UNIT 2 500/18.0KV TRANSFORMER CKT 1
FDNS	00NR	6	16WP	G15_033	FROM->TO	G14-057T 345.00 - SUNNYSIDE 345KV CKT 1	717	789	0.04332	113.937	GEN511848 1-SOUTHWESTERN STATION #3
FDNS	00NR	6	20WP	G15_033	FROM->TO	G14-057T 345.00 - SUNNYSIDE 345KV CKT 1	717	789	0.04125	113.9334	P12:138:AEPW:BA_71ST4:T.S.E.-4
FDNS	00NR	6	20WP	G15_033	FROM->TO	G14-057T 345.00 - SUNNYSIDE 345KV CKT 1	717	789	0.0412	113.9333	CLEO CORNER - CLEOPLT4 138.00 138KV CKT 1
FDNS	00NR	6	20WP	G15_033	FROM->TO	G14-057T 345.00 - SUNNYSIDE 345KV CKT 1	717	789	0.04386	113.9314	P12:138:AEPW:S.W.S.-4:L.E.S.-4
FDNS	00NR	6	20WP	G15_033	FROM->TO	G14-057T 345.00 - SUNNYSIDE 345KV CKT 1	717	789	0.04128	113.928	ANADARKO - SEQUOYAHJ4 138.00 138KV CKT 1
FDNS	00NR	6	20WP	G15_033	FROM->TO	G14-057T 345.00 - SUNNYSIDE 345KV CKT 1	717	789	0.04125	113.9276	P12:138:AEPW:YARCH-S4:T.S.E.-4
FDNS	00NR	6	16WP	G15_033	FROM->TO	G14-057T 345.00 - SUNNYSIDE 345KV CKT 1	717	789	0.04332	113.9261	GEN600001 2-SHERBURNE CNTY G2
FDNS	00NR	6	20WP	G15_033	FROM->TO	G14-057T 345.00 - SUNNYSIDE 345KV CKT 1	717	789	0.04104	113.9249	HINTON - WEATHERFORD JCT. 138KV CKT 1
FDNS	00NR	6	20WP	G15_033	FROM->TO	G14-057T 345.00 - SUNNYSIDE 345KV CKT 1	717	789	0.04113	113.9248	P12:138:OKGE-AEPW:JENSEN4:REDROCKRD4
FDNS	00NR	6	20WP	G15_033	FROM->TO	G14-057T 345.00 - SUNNYSIDE 345KV CKT 1	717	789	0.04128	113.9238	CORN TAP - SEQUOYAHJ4 138.00 138KV CKT 1
FDNS	00NR	6	20WP	G15_033	FROM->TO	G14-057T 345.00 - SUNNYSIDE 345KV CKT 1	717	789	0.04137	113.9236	WALTERS - WALTERS 69KV CKT 1
FDNS	00NR	6	20WP	G15_033	FROM->TO	G14-057T 345.00 - SUNNYSIDE 345KV CKT 1	717	789	0.04121	113.9181	NOEL_SW 138.00 - ROSE_VALLEY 138.00 138KV CKT 1
FDNS	00NR	6	20WP	G15_033	FROM->TO	G14-057T 345.00 - SUNNYSIDE 345KV CKT 1	717	789	0.04092	113.918	P12:138:OKGE:3TERM27
FDNS	00NR	6	20WP	G15_033	FROM->TO	G14-057T 345.00 - SUNNYSIDE 345KV CKT 1	717	789	0.0412	113.9165	CLEOPLT4 138.00 - MEN TAP 138KV CKT 1
FDNS	00NR	6	20WP	G15_033	FROM->TO	G14-057T 345.00 - SUNNYSIDE 345KV CKT 1	717	789	0.04123	113.9144	P12:138:AEPW-OGE:SHIDLER4:OSAGE 4
FDNS	00NR	6	20WP	G15_033	FROM->TO	G14-057T 345.00 - SUNNYSIDE 345KV CKT 1	717	789	0.03983	113.9133	FINNEY SWITCHING STATION - HOLCOMB 345KV CKT 1
FDNS	00NR	6	20WP	G15_033	FROM->TO	G14-057T 345.00 - SUNNYSIDE 345KV CKT 1	717	789	0.03983	113.9133	FINNEY SWITCHING STATION - HOLCOMB 345KV CKT 1
FDNS	00NR	6	20WP	G15_033	FROM->TO	G14-057T 345.00 - SUNNYSIDE 345KV CKT 1	717	789	0.04125	113.9117	GEN336152 1-WATERFORD UNIT#2
FDNS	00NR	6	20WP	G15_033	FROM->TO	G14-057T 345.00 - SUNNYSIDE 345KV CKT 1	717	789	0.04125	113.9109	GEN336151 1-WATERFORD UNIT#1
FDNS	00NR	6	20WP	G15_033	FROM->TO	G14-057T 345.00 - SUNNYSIDE 345KV CKT 1	717	789	0.0413	113.9091	NORGE ROAD - SOUTHWESTERN STATION 138KV CKT 1
FDNS	00NR	6	20WP	G15_033	FROM->TO	G14-057T 345.00 - SUNNYSIDE 345KV CKT 1	717	789	0.0413	113.9091	NORGE ROAD - SOUTHWESTERN STATION 138KV CKT 1
FDNS	00NR	6	20WP	G15_033	FROM->TO	G14-057T 345.00 - SUNNYSIDE 345KV CKT 1	717	789	0.04125	113.9052	FRONTIER 345/18.0KV TRANSFORMER CKT 1
FDNS	00NR	6	20WP	G15_033	FROM->TO	G14-057T 345.00 - SUNNYSIDE 345KV CKT 1	717	789	0.04125	113.9028	FRONTIER 345/18.0KV TRANSFORMER CKT 1
FDNS	00NR	6	20WP	G15_033	FROM->TO	G14-057T 345.00 - SUNNYSIDE 345KV CKT 1	717	789	0.04125	113.9013	7JASPER 345.00 - BLACKBERRY 345KV CKT 1
FDNS	00NR	6	20WP	G15_033	FROM->TO	G14-057T 345.00 - SUNNYSIDE 345KV CKT 1	717	789	0.04221	113.8969	LAWTON EASTSIDE (LES 4) 345/138/13.8KV TRANSFORMER CKT 1
FDNS	00NR	6	20WP	G15_033	FROM->TO	G14-057T 345.00 - SUNNYSIDE 345KV CKT 1	717	789	0.04221	113.8969	LAWTON EASTSIDE (LES 4) 345/138/13.8KV TRANSFORMER CKT 1
FDNS	00NR	6	20WP	G15_033	FROM->TO	G14-057T 345.00 - SUNNYSIDE 345KV CKT 1	717	789	0.04125	113.8969	GEN300017 1-1G2GPDEL 18.000
FDNS	00NR	6	16WP	G15_033	FROM->TO	G14-057T 345.00 - SUNNYSIDE 345KV CKT 1	717	789	0.04332	113.896	GEN563042 1-G15068_3 0.6900
FDNS	00NR	6	20WP	G15_033	FROM->TO	G14-057T 345.00 - SUNNYSIDE 345KV CKT 1	717	789	0.04154	113.8958	LAWTON RELIFT TAP - OMPA-WALTERS 69KV CKT 1
FDNS	00NR	6	20WP	G15_033	FROM->TO	G14-057T 345.00 - SUNNYSIDE 345KV CKT 1	717	789	0.04121	113.8871	BLACKBERRY - NEOSHO 345KV CKT 1
FDNS	00NR	6	20WP	G15_033	FROM->TO	G14-057T 345.00 - SUNNYSIDE 345KV CKT 1	717	789	0.04121	113.8871	BLACKBERRY - NEOSHO 345KV CKT 1
FDNS	00NR	6	20WP	G15_033	FROM->TO	G14-057T 345.00 - SUNNYSIDE 345KV CKT 1	717	789	0.04122	113.8858	HOYT - STRANGER CREEK 345KV CKT 1
FDNS	00NR	6	20WP	G15_033	FROM->TO	G14-057T 345.00 - SUNNYSIDE 345KV CKT 1	717	789	0.0412	113.8855	IMO TAP - MEN TAP 138KV CKT 1
FDNS	00NR	6	20WP	G15_033	FROM->TO	G14-057T 345.00 - SUNNYSIDE 345KV CKT 1	717	789	0.04122	113.882	MORISNT4 138.00 - STILLWATER 138KV CKT 1
FDNS	00NR	6	20WP	G15_033	FROM->TO	G14-057T 345.00 - SUNNYSIDE 345KV CKT 1	717	789	0.04113	113.8816	WEATHERFORD TAP - WEATHERFORD WIND FARM 138KV CKT 1
FDNS	00NR	6	20WP	G15_033	FROM->TO	G14-057T 345.00 - SUNNYSIDE 345KV CKT 1	717	789	0.04124	113.8787	CYPRESS - HARTBURG 500KV CKT 1
FDNS	00NR	6	20WP	G15_033	FROM->TO	G14-057T 345.00 - SUNNYSIDE 345KV CKT 1	717	789	0.04122	113.8765	P12:138:OKGE:3TERM2
FDNS	00NR	6	20WP	G15_033	FROM->TO	G14-057T 345.00 - SUNNYSIDE 345KV CKT 1	717	789	0.04115	113.8749	DRAPER LAKE - SEMINOLE 345KV CKT 2
FDNS	00NR	6	20WP	G15_033	FROM->TO	G14-057T 345.00 - SUNNYSIDE 345KV CKT 1	717	789	0.04115	113.8748	DRAPER LAKE - SEMINOLE 345KV CKT 1
FDNS	00NR	6	20WP	G15_033	FROM->TO	G14-057T 345.00 - SUNNYSIDE 345KV CKT 1	717	789	0.04125	113.8746	GEN334432 1-SABINE UNIT 2
FDNS	00NR	6	20WP	G15_033	FROM->TO	G14-057T 345.00 - SUNNYSIDE 345KV CKT 1	717	789	0.04125	113.8746	LEWIS CREEK SWITCHYARD 138/22.0KV TRANSFORMER CKT 1
FDNS	00NR	6	20WP	G15_033	FROM->TO	G14-057T 345.00 - SUNNYSIDE 345KV CKT 1	717	789	0.04125	113.8744	GEN334431 1-SABINE UNIT 1
FDNS	00NR	6	20WP	G15_033	FROM->TO	G14-057T 345.00 - SUNNYSIDE 345KV CKT 1	717	789	0.0413	113.8742	SOUTHWESTERN STATION - VERDEN 138KV CKT 1
FDNS	00NR	6	16WP	G15_033	FROM->TO	G14-057T 345.00 - SUNNYSIDE 345KV CKT 1	717	789	0.04332	113.87	GEN523971 1-HARRINGTON GEN #1 24 KV
FDNS	00NR	6	16WP	G15_033	FROM->TO	G14-057T 345.00 - SUNNYSIDE 345KV CKT 1	717	789	0.04332	113.87	GEN523973 1-HARRINGTON GEN #3 24 KV
FDNS	00NR	6	20WP	G15_033	FROM->TO	G14-057T 345.00 - SUNNYSIDE 345KV CKT 1	717	789	0.04125	113.87	LEWIS CREEK SWITCHYARD 138/22.0KV TRANSFORMER CKT 1
FDNS	00NR	6	16WP	G15_033	FROM->TO	G14-057T 345.00 - SUNNYSIDE 345KV CKT 1	717	789	0.04332	113.8699	GEN523972 1-HARRINGTON GEN #2 24 KV
FDNS	00NR	6	20WP	G15_033	FROM->TO	G14-057T 345.00 - SUNNYSIDE 345KV CKT 1	717	789	0.04125	113.8699	GEN501823 1-TECHE UNIT 3
FDNS	00NR	6	20WP	G15_033	FROM->TO	G14-057T 345.00 - SUNNYSIDE 345KV CKT 1	717	789	0.04125	113.8676	GEN501970 1-EVANGELINE UNIT 7
FDNS	00NR	6	20WP	G15_033	FROM->TO	G14-057T 345.00 - SUNNYSIDE 345KV CKT 1	717	789	0.04117	113.8663	HOPE - MCNAB REC 115KV CKT 1
FDNS	00NR	6	20WP	G15_033	FROM->TO	G14-057T 345.00 - SUNNYSIDE 345KV CKT 1	717	789	0.04085	113.8662	ARBUCKLE - VANOSTP4 138.00 138KV CKT 1
FDNS	00NR	6	20WP	G15_033	FROM->TO	G14-057T 345.00 - SUNNYSIDE 345KV CKT 1	717	789	0.0412	113.8654	COUCH SES - MC NIEL 115KV CKT 1
FDNS	00NR	6	20WP	G15_033	FROM->TO	G14-057T 345.00 - SUNNYSIDE 345KV CKT 1	717	789	0.04125	113.8628	GEN505616 1-BROKEN BOW
FDNS	00NR	6	20WP	G15_033	FROM->TO	G14-057T 345.00 - SUNNYSIDE 345KV CKT 1	717	789	0.04078	113.8614	BUCKNER7 345.00 - HOLCOMB 345KV CKT 1
FDNS	00NR	6	20WP	G15_033	FROM->TO	G14-057T 345.00 - SUNNYSIDE 345KV CKT 1	717	789	0.04078	113.8614	BUCKNER7 345.00 - HOLCOMB 345KV CKT 1
FDNS	00NR	6	20WP	G15_033	FROM->TO	G14-057T 345.00 - SUNNYSIDE 345KV CKT 1	717	789	0.04104	113.8575	HINTON - REDROCKRD4 138.00 138KV CKT 1
FDNS	00NR	6	20WP	G15_033	FROM->TO	G14-057T 345.00 - SUNNYSIDE 345KV CKT 1	717	789	0.04117	113.8566	P12:115:AEPW:TURK3:HOPE3
FDNS	00NR	6	20WP	G15_033	FROM->TO	G14-057T 345.00 - SUNNYSIDE 345KV CKT 1	717	789	0.04125	113.8565	P12:161:AEPW:CHAMSPR5:FARMING5
FDNS	00NR	6	20WP	G15_033	FROM->TO	G14-057T 345.00 - SUNNYSIDE 345KV CKT 1	717	789	0.04122	113.8537	G15074_T 345.00 - JEFFREY ENERGY CENTER 345KV CKT 1
FDNS	00NR	6	20WP	G15_033	FROM->TO	G14-057T 345.00 - SUNNYSIDE 345KV CKT 1	717	789	0.0409	113.8523	NOBLE - PURCELL4 138.00 138KV CKT 1
FDNS	00NR	6	20WP	G15_033	FROM->TO	G14-057T 345.00 - SUNNYSIDE 345KV CKT 1	717	789	0.04125	113.8458	GEN334392 1-EXXON MOBIL IPP 1
FDNS	00NR	6	20WP	G15_033	FROM->TO	G14-057T 345.00 - SUNNYSIDE 345KV CKT 1	717	789	0.04123	113.8439	7LUTESVIL 345.00 - 7ST FRANC 345.00 345KV CKT 1
FDNS	00NR	6	20WP	G15_033	FROM->TO	G14-057T 345.00 - SUNNYSIDE 345KV CKT 1	717	789	0.04135	113.8422	LASALLE - STONEWAL LH138.00 138KV CKT 1
FDNS	00NR	6	20WP	G15_033	FROM->TO	G14-057T 345.00 - SUNNYSIDE 345KV CKT 1	717	789	0.0413	113.8413	NORTH 29TH CHICKASHA - VERDEN 138KV CKT 1
FDNS	00NR	6	20WP	G15_033	FROM->TO	G14-057T 345.00 - SUNNYSIDE 345KV CKT 1	717	789	0.04125	113.8383	GEN334393 1-EXXON MOBIL IPP 2
FDNS	00NR	6	20WP	G15_033	FROM->TO	G14-057T 345.00 - SUNNYSIDE 345KV CKT 1	717	789	0.04125	113.8383	GEN334394 1-EXXON MOBIL IPP 3
FDNS	00NR	6	20WP	G15_033	FROM->TO	G14-057T 345.00 - SUNNYSIDE 345KV CKT 1	717	789	0.04122	113.8357	EMPORIA ENERGY CENTER - G14_001T 345.00 345KV CKT 1
FDNS	00NR	6	20WP	G15_033	FROM->TO	G14-057T 345.00 - SUNNYSIDE 345KV CKT 1	717	789	0.04144	113.8349	G15063_T 345.00 - WOODRING 345KV CKT 1
FDNS	00NR	6	20WP	G15_033	FROM->TO	G14-057T 345.00 - SUNNYSIDE 345KV CKT 1	717	789	0.04154	113.8307	OMPA-WALTERS - WALTERS 69KV CKT 1
FDNS	00NR	6	20WP	G15_033	FROM->TO	G14-057T 345.00 - SUNNYSIDE 345KV CKT 1	717	789	0.04154	113.8307	OMPA-WALTERS - WALTERS 69KV CKT 1
FDNS	00NR	6	20WP	G15_033	FROM->TO	G14-057T 345.00 - SUNNYSIDE 345KV CKT 1	717	789	0.04117	113.8299	MCNAB REC - Turk 115 115KV CKT 1
FDNS	00NR	6	20WP	G15_033	FROM->TO	G14-057T 345.00 - SUNNYSIDE 345KV CKT 1	717	789	0.04117	113.8298	TURK (TURK 1) 138/115/13.2KV TRANSFORMER CKT 1
FDNS	00NR	6	20WP	G15_033	FROM->TO	G14-057T 345.00 - SUNNYSIDE 345KV CKT 1	717	789	0.04117	113.8298	TURK (TURK 1) 138/115/13.2KV TRANSFORMER CKT 1
FDNS	00NR	6	20WP	G15_033	FROM->TO	G14-057T 345.00 - SUNNYSIDE 345KV CKT 1	717	789	0.04135	113.8276	STONEWAL LH138.00 - TUPELO TAP 138KV CKT 1
FDNS	00NR	6	20WP	G15_033	FROM->TO	G14-057T 345.00 - SUNNYSIDE 345KV CKT 1	717	789	0.04125	113.8276	GEN515042 1-SEMINOLE 3G

SOLUTION	GROUP	SCENARIO	SEASON	SOURCE	DIRECTION	MONITORED ELEMENT	RATEA (MVA)	RATEB(MVA)	TDF	TC%LOADING (% MVA)	CONTINGENCY
FDNS	00NR	6	20WP	G15_033	FROM->TO	G14-057T 345.00 - SUNNYSIDE 345KV CKT 1	717	789	0.04137	113.8259	P12:69:WFEC-AEPW:COMANCH2:WALTRS-2
FDNS	00NR	6	20WP	G15_033	FROM->TO	G14-057T 345.00 - SUNNYSIDE 345KV CKT 1	717	789	0.04151	113.8226	FRANKLIN SW - WESTMOORE 138KV CKT 1
FDNS	00NR	6	16WP	G15_033	FROM->TO	G14-057T 345.00 - SUNNYSIDE 345KV CKT 1	717	789	0.04332	113.8201	GEN527901 1-HOBBS PLANT #1 (CT)
FDNS	00NR	6	16WP	G15_033	FROM->TO	G14-057T 345.00 - SUNNYSIDE 345KV CKT 1	717	789	0.04332	113.8201	GEN527902 1-HOBBS PLANT #2 (CT)
FDNS	00NR	6	20WP	G15_033	FROM->TO	G14-057T 345.00 - SUNNYSIDE 345KV CKT 1	717	789	0.04101	113.8201	CLINTON JUNCTION - ELK CITY 138KV CKT 1
FDNS	00NR	6	20WP	G15_033	FROM->TO	G14-057T 345.00 - SUNNYSIDE 345KV CKT 1	717	789	0.04101	113.8201	CLINTON JUNCTION - ELK CITY 138KV CKT 1
FDNS	00NR	6	20WP	G15_033	FROM->TO	G14-057T 345.00 - SUNNYSIDE 345KV CKT 1	717	789	0.04126	113.8172	FRANKLIN - FRANKLIN SW 138KV CKT 1
FDNS	00NR	6	20WP	G15_033	FROM->TO	G14-057T 345.00 - SUNNYSIDE 345KV CKT 1	717	789	0.04121	113.8163	ENOWILT - LONE OAK 138KV CKT 1
FDNS	00NR	6	20WP	G15_033	FROM->TO	G14-057T 345.00 - SUNNYSIDE 345KV CKT 1	717	789	0.04125	113.8141	ST FRANCIS - ST FRANCIS 1 161KV CKT Z1
FDNS	00NR	6	20WP	G15_033	FROM->TO	G14-057T 345.00 - SUNNYSIDE 345KV CKT 1	717	789	0.04125	113.8141	ST FRANCIS 161/16.0KV TRANSFORMER CKT 1
FDNS	00NR	6	20WP	G15_033	FROM->TO	G14-057T 345.00 - SUNNYSIDE 345KV CKT 1	717	789	0.04125	113.8106	SABINE 230/22.0KV TRANSFORMER CKT 1
FDNS	00NR	6	20WP	G15_033	FROM->TO	G14-057T 345.00 - SUNNYSIDE 345KV CKT 1	717	789	0.04121	113.8077	ENOWILT - SARDIS 138KV CKT 1
FDNS	00NR	6	20WP	G15_033	FROM->TO	G14-057T 345.00 - SUNNYSIDE 345KV CKT 1	717	789	0.04125	113.8076	GEN501972 1-EVANGELINE UNIT 7-2
FDNS	00NR	6	20WP	G15_033	FROM->TO	G14-057T 345.00 - SUNNYSIDE 345KV CKT 1	717	789	0.04125	113.8075	GEN501971 1-EVANGELINE UNIT 7-1
FDNS	00NR	6	20WP	G15_033	FROM->TO	G14-057T 345.00 - SUNNYSIDE 345KV CKT 1	717	789	0.04121	113.8065	SWISSVALE - WEST GARDNER 345KV CKT 1
FDNS	00NR	6	20WP	G15_033	FROM->TO	G14-057T 345.00 - SUNNYSIDE 345KV CKT 1	717	789	0.04125	113.8042	P12:138:OKGE:3TERM12
FDNS	00NR	6	20WP	G15_033	FROM->TO	G14-057T 345.00 - SUNNYSIDE 345KV CKT 1	717	789	0.04123	113.8042	EMPORIA ENERGY CENTER - SWISSVALE 345KV CKT 1
FDNS	00NR	6	20WP	G15_033	FROM->TO	G14-057T 345.00 - SUNNYSIDE 345KV CKT 1	717	789	0.04125	113.8033	P12:138:AEPW:R.S.S-4:T.P.S.-4
FDNS	00NR	6	20WP	G15_033	FROM->TO	G14-057T 345.00 - SUNNYSIDE 345KV CKT 1	717	789	0.04123	113.8007	LAKEOVER - MCADAMS 500KV CKT 1
FDNS	00NR	6	20WP	G15_033	FROM->TO	G14-057T 345.00 - SUNNYSIDE 345KV CKT 1	717	789	0.04113	113.7964	WEATHERFORD SOUTHEAST - WEATHERFORD TAP 138KV CKT 1
FDNS	00NR	6	20WP	G15_033	FROM->TO	G14-057T 345.00 - SUNNYSIDE 345KV CKT 1	717	789	0.04017	113.7959	G11-14T 345.00 - WOODWARD DISTRICT EHV 345KV CKT 1
FDNS	00NR	6	20WP	G15_033	FROM->TO	G14-057T 345.00 - SUNNYSIDE 345KV CKT 1	717	789	0.04017	113.7959	G11-14T 345.00 - WOODWARD DISTRICT EHV 345KV CKT 2
FDNS	00NR	6	16WP	G15_033	FROM->TO	G14-057T 345.00 - SUNNYSIDE 345KV CKT 1	717	789	0.04332	113.7943	GEN629075 1-OTTUMWA GENERATOR FOR OTTUMWA UNIT NO 1
FDNS	00NR	6	20WP	G15_033	FROM->TO	G14-057T 345.00 - SUNNYSIDE 345KV CKT 1	717	789	0.04125	113.7895	GEN509394 1-FLINT CREEK
FDNS	00NR	6	20WP	G15_033	FROM->TO	G14-057T 345.00 - SUNNYSIDE 345KV CKT 1	717	789	0.0413	113.7865	CORNVILLE - NORGE ROAD 138KV CKT 1
FDNS	00NR	6	20WP	G15_033	FROM->TO	G14-057T 345.00 - SUNNYSIDE 345KV CKT 1	717	789	0.0413	113.7865	CORNVILLE - NORGE ROAD 138KV CKT 1
FDNS	00NR	6	20WP	G15_033	FROM->TO	G14-057T 345.00 - SUNNYSIDE 345KV CKT 1	717	789	0.04125	113.7844	GEN506749 1-EASTMAN GENERATION A
FDNS	00NR	6	20WP	G15_033	FROM->TO	G14-057T 345.00 - SUNNYSIDE 345KV CKT 1	717	789	0.04111	113.7844	G13-010T 345.00 - POST ROCK 345KV CKT 1
FDNS	00NR	6	20WP	G15_033	FROM->TO	G14-057T 345.00 - SUNNYSIDE 345KV CKT 1	717	789	0.04125	113.7839	GEN501912 1-ACADIA UNIT CT1B
FDNS	00NR	6	20WP	G15_033	FROM->TO	G14-057T 345.00 - SUNNYSIDE 345KV CKT 1	717	789	0.04124	113.7839	FLETCHER - MARLOW JCT 69KV CKT 1
FDNS	00NR	6	20WP	G15_033	FROM->TO	G14-057T 345.00 - SUNNYSIDE 345KV CKT 1	717	789	0.04125	113.7831	GEN501911 1-ACADIA UNIT CT1A
FDNS	00NR	6	20WP	G15_033	FROM->TO	G14-057T 345.00 - SUNNYSIDE 345KV CKT 1	717	789	0.04145	113.7799	CIMARRON - NORTHWEST 345KV CKT 1
FDNS	00NR	6	20WP	G15_033	FROM->TO	G14-057T 345.00 - SUNNYSIDE 345KV CKT 1	717	789	0.04125	113.7773	P12:138:AEPW:R.S.S.-4:R:96YALE-4
FDNS	00NR	6	20WP	G15_033	FROM->TO	G14-057T 345.00 - SUNNYSIDE 345KV CKT 1	717	789	0.0413	113.7751	CORNVILLE - NORTH 29TH CHICKASHA 138KV CKT 1
FDNS	00NR	6	20WP	G15_033	FROM->TO	G14-057T 345.00 - SUNNYSIDE 345KV CKT 1	717	789	0.04122	113.774	G14_001T 345.00 - WICHITA 345KV CKT 1
FDNS	00NR	6	16WP	G15_033	FROM->TO	G14-057T 345.00 - SUNNYSIDE 345KV CKT 1	717	789	0.04332	113.7731	GEN563273 2-G15093_4 0.6900
FDNS	00NR	6	20WP	G15_033	FROM->TO	G14-057T 345.00 - SUNNYSIDE 345KV CKT 1	717	789	0.03974	113.7718	G14_038T 345.00 - Hitchland Interchange 345KV CKT 1
FDNS	00NR	6	20WP	G15_033	FROM->TO	G14-057T 345.00 - SUNNYSIDE 345KV CKT 1	717	789	0.04123	113.7696	8WNEWMADRID 500.00 - DELL 500 500KV CKT 1
FDNS	00NR	6	20WP	G15_033	FROM->TO	G14-057T 345.00 - SUNNYSIDE 345KV CKT 1	717	789	0.04125	113.7686	NELSON 230/24.0KV TRANSFORMER CKT 1
FDNS	00NR	6	20WP	G15_033	FROM->TO	G14-057T 345.00 - SUNNYSIDE 345KV CKT 1	717	789	0.04121	113.7673	CLAYTON - SARDIS 138KV CKT 1
FDNS	00NR	6	20WP	G15_033	FROM->TO	G14-057T 345.00 - SUNNYSIDE 345KV CKT 1	717	789	0.04112	113.7656	BENTON - WICHITA 345KV CKT 1
FDNS	00NR	6	20WP	G15_033	FROM->TO	G14-057T 345.00 - SUNNYSIDE 345KV CKT 1	717	789	0.04125	113.7587	P12:138:AEPW:MOHAWK4:T.NO--4
FDNS	00NR	6	20WP	G15_033	FROM->TO	G14-057T 345.00 - SUNNYSIDE 345KV CKT 1	717	789	0.04121	113.7586	MCADAMS - WOLF CREEK 500KV CKT 1
FDNS	00NR	6	20WP	G15_033	FROM->TO	G14-057T 345.00 - SUNNYSIDE 345KV CKT 1	717	789	0.04125	113.7583	GEN336242 1-1NMIL ST1 18.000
FDNS	00NR	6	20WP	G15_033	FROM->TO	G14-057T 345.00 - SUNNYSIDE 345KV CKT 1	717	789	0.04113	113.7574	CLINTON JUNCTION - CLINTON NATURAL GAS TAP 138KV CKT 1
FDNS	00NR	6	20WP	G15_033	FROM->TO	G14-057T 345.00 - SUNNYSIDE 345KV CKT 1	717	789	0.04124	113.7543	P12:138:WFEC-AEPW:ELKCTY-4:ERICK4
FDNS	00NR	6	20WP	G15_033	FROM->TO	G14-057T 345.00 - SUNNYSIDE 345KV CKT 1	717	789	0.04119	113.7536	AMITY SS - MURFREESBORO EAST (AECC) 115KV CKT 1
FDNS	00NR	6	20WP	G15_033	FROM->TO	G14-057T 345.00 - SUNNYSIDE 345KV CKT 1	717	789	0.04126	113.7513	MARIETTA - MARIETTA4 138.00 138KV CKT 1
FDNS	00NR	6	20WP	G15_033	FROM->TO	G14-057T 345.00 - SUNNYSIDE 345KV CKT 1	717	789	0.04125	113.7487	ST FRANCIS 345/161KV TRANSFORMER CKT 1
FDNS	00NR	6	20WP	G15_033	FROM->TO	G14-057T 345.00 - SUNNYSIDE 345KV CKT 1	717	789	0.04121	113.7443	P12:138:AEPW-SWPA:LONEOAK4:BRKNBW4
FDNS	00NR	6	20WP	G15_033	FROM->TO	G14-057T 345.00 - SUNNYSIDE 345KV CKT 1	717	789	0.04125	113.7442	ST FRANCIS 2 161/16.0KV TRANSFORMER CKT 2
FDNS	00NR	6	20WP	G15_033	FROM->TO	G14-057T 345.00 - SUNNYSIDE 345KV CKT 1	717	789	0.041	113.7408	ARBUCKLE - MILLCREEK 138KV CKT 1
FDNS	00NR	6	20WP	G15_033	FROM->TO	G14-057T 345.00 - SUNNYSIDE 345KV CKT 1	717	789	0.04123	113.7398	GRAND ISLAND - MCCOOL 345KV CKT 1
FDNS	00NR	6	20WP	G15_033	FROM->TO	G14-057T 345.00 - SUNNYSIDE 345KV CKT 1	717	789	0.04125	113.7396	ESSEX UNIT 2 500/18.0KV TRANSFORMER CKT 1
FDNS	00NR	6	20WP	G15_033	FROM->TO	G14-057T 345.00 - SUNNYSIDE 345KV CKT 1	717	789	0.04122	113.7394	LAYFLD8 500.00 (LAYFLD AUTO) 500/230/13.8KV TRANSFORMER CKT 1
FDNS	00NR	6	20WP	G15_033	FROM->TO	G14-057T 345.00 - SUNNYSIDE 345KV CKT 1	717	789	0.04122	113.7394	LAYFLD8 500.00 (LAYFLD AUTO) 500/230/13.8KV TRANSFORMER CKT 1
FDNS	00NR	6	20WP	G15_033	FROM->TO	G14-057T 345.00 - SUNNYSIDE 345KV CKT 1	717	789	0.04124	113.7372	7JASPER 345.00 - MORGAN 345KV CKT 1
FDNS	00NR	6	20WP	G15_033	FROM->TO	G14-057T 345.00 - SUNNYSIDE 345KV CKT 1	717	789	0.04125	113.7352	SABINE 138/22.0KV TRANSFORMER CKT 1
FDNS	00NR	6	20WP	G15_033	FROM->TO	G14-057T 345.00 - SUNNYSIDE 345KV CKT 1	717	789	0.04121	113.7332	CLAYTON - NASHOBA 138KV CKT 1
FDNS	00NR	6	20WP	G15_033	FROM->TO	G14-057T 345.00 - SUNNYSIDE 345KV CKT 1	717	789	0.04111	113.7314	G13-010T 345.00 - SPEARVILLE 345KV CKT 1
FDNS	00NR	6	20WP	G15_033	FROM->TO	G14-057T 345.00 - SUNNYSIDE 345KV CKT 1	717	789	0.04125	113.721	GEN338146 1-INDEPENDENCE UNIT #2
FDNS	00NR	6	20WP	G15_033	FROM->TO	G14-057T 345.00 - SUNNYSIDE 345KV CKT 1	717	789	0.04121	113.72	BETHEL - NASHOBA 138KV CKT 1
FDNS	00NR	6	20WP	G15_033	FROM->TO	G14-057T 345.00 - SUNNYSIDE 345KV CKT 1	717	789	0.04125	113.7179	GEN515041 1-SEMINOLE 2G
FDNS	00NR	6	20WP	G15_033	FROM->TO	G14-057T 345.00 - SUNNYSIDE 345KV CKT 1	717	789	0.04116	113.7131	SEMINOLE (SEMINOL2) 345/138/14.4KV TRANSFORMER CKT 1
FDNS	00NR	6	20WP	G15_033	FROM->TO	G14-057T 345.00 - SUNNYSIDE 345KV CKT 1	717	789	0.0412	113.7108	LACYGNE - NEOSHO 345KV CKT 1
FDNS	00NR	6	20WP	G15_033	FROM->TO	G14-057T 345.00 - SUNNYSIDE 345KV CKT 1	717	789	0.04119	113.7057	MURFREESBORO 138/115KV TRANSFORMER CKT 1
FDNS	00NR	6	20WP	G15_033	FROM->TO	G14-057T 345.00 - SUNNYSIDE 345KV CKT 1	717	789	0.04119	113.7055	MURFREESBORO EAST (AECC) - MURFREESBORO SOUTH 115KV CKT 1
FDNS	00NR	6	20WP	G15_033	FROM->TO	G14-057T 345.00 - SUNNYSIDE 345KV CKT 1	717	789	0.04119	113.7046	MURFREESBORO - SOUTH NASHVILLE 138KV CKT 1
FDNS	00NR	6	20WP	G15_033	FROM->TO	G14-057T 345.00 - SUNNYSIDE 345KV CKT 1	717	789	0.04119	113.7046	MURFREESBORO - SOUTH NASHVILLE 138KV CKT 1
FDNS	00NR	6	20WP	G15_033	FROM->TO	G14-057T 345.00 - SUNNYSIDE 345KV CKT 1	717	789	0.04125	113.698	ESSEX UNIT 2 500/18.0KV TRANSFORMER CKT 1
FDNS	00NR	6	20WP	G15_033	FROM->TO	G14-057T 345.00 - SUNNYSIDE 345KV CKT 1	717	789	0.04125	113.6976	GEN337766 1-TRACTEBEL UNIT S1
FDNS	00NR	6	20WP	G15_033	FROM->TO	G14-057T 345.00 - SUNNYSIDE 345KV CKT 1	717	789	0.0412	113.6974	P12:138:AEPW:OKMULGE4:R.S.S-4
FDNS	00NR	6	20WP	G15_033	FROM->TO	G14-057T 345.00 - SUNNYSIDE 345KV CKT 1	717	789	0.04124	113.692	HAMMETT TAP - HAMMETT2 138KV CKT 1
FDNS	00NR	6	20WP	G15_033	FROM->TO	G14-057T 345.00 - SUNNYSIDE 345KV CKT 1	717	789	0.04125	113.6903	GEN659125 1-COVEY
FDNS	00NR	6	20WP	G15_033	FROM->TO	G14-057T 345.00 - SUNNYSIDE 345KV CKT 1	717	789	0.04126	113.6884	GRDA1 - GREC TAP5 345.00 345KV CKT 1
FDNS	00NR	6	20WP	G15_033	FROM->TO	G14-057T 345.00 - SUNNYSIDE 345KV CKT 1	717	789	0.04188	113.6855	DUNCAN - DUNCHERTP4 138.00 138KV CKT 1
FDNS	00NR	6	20WP	G15_033	FROM->TO	G14-057T 345.00 - SUNNYSIDE 345KV CKT 1	717	789	0.04188	113.6855	DUNCAN - DUNCHERTP4 138.00 138KV CKT 1
FDNS	00NR	6	20WP	G15_033	FROM->TO	G14-057T 345.00 - SUNNYSIDE 345KV CKT 1	717	789	0.04188	113.6853	DUNCAN EASTSIDE - DUNCHERTP4 138.00 138KV CKT 1
FDNS	00NR	6	20WP	G15_033	FROM->TO	G14-057T 345.00 - SUNNYSIDE 345KV CKT 1	717	789	0.04125	113.6817	GEN336240 1-1NMIL CT1 18.000

SOLUTION	GROUP	SCENARIO	SEASON	SOURCE	DIRECTION	MONITORED ELEMENT	RATEA (MVA)	RATEB(MVA)	TDF	TC%LOADING (% MVA)	CONTINGENCY
FDNS	00NR	6	20WP	G15_033	FROM->TO	G14-057T 345.00 - SUNNYSIDE 345KV CKT 1	717	789	0.04125	113.6817	GEN336241 1-1NMIL CT2 18.000
FDNS	00NR	6	20WP	G15_033	FROM->TO	G14-057T 345.00 - SUNNYSIDE 345KV CKT 1	717	789	0.04124	113.6816	P12:138:OKGE:3TERM20
FDNS	00NR	6	20WP	G15_033	FROM->TO	G14-057T 345.00 - SUNNYSIDE 345KV CKT 1	717	789	0.04145	113.68	CRINER - PAYNE 138.00 138KV CKT 1
FDNS	00NR	6	20WP	G15_033	FROM->TO	G14-057T 345.00 - SUNNYSIDE 345KV CKT 1	717	789	0.04126	113.6758	FRANKLIN - PINK SW 138KV CKT 1
FDNS	00NR	6	20WP	G15_033	FROM->TO	G14-057T 345.00 - SUNNYSIDE 345KV CKT 1	717	789	0.04137	113.6531	COMANCHE - WALTERS 69KV CKT 1
FDNS	00NR	6	16WP	G15_033	FROM->TO	G14-057T 345.00 - SUNNYSIDE 345KV CKT 1	717	789	0.04332	113.6499	SHERBURNE CO 345/24.0KV TRANSFORMER CKT 1
FDNS	00NR	6	16WP	G15_033	FROM->TO	G14-057T 345.00 - SUNNYSIDE 345KV CKT 1	717	789	0.04332	113.6409	GEN635214 4-NEAL UNIT 4
FDNS	00NR	6	16WP	G15_033	FROM->TO	G14-057T 345.00 - SUNNYSIDE 345KV CKT 1	717	789	0.04332	113.5994	GEN563202 1-G15085_3 0.5500
FDNS	00NR	6	16WP	G15_033	FROM->TO	G14-057T 345.00 - SUNNYSIDE 345KV CKT 1	717	789	0.04332	113.5768	GEN563043 1-G15068_4 0.6900
FDNS	00NR	6	16WP	G15_033	FROM->TO	G14-057T 345.00 - SUNNYSIDE 345KV CKT 1	717	789	0.04332	113.5096	GEN526333 1-JONES GEN #3 21 KV
FDNS	00NR	6	16WP	G15_033	FROM->TO	G14-057T 345.00 - SUNNYSIDE 345KV CKT 1	717	789	0.04332	113.5096	GEN526334 1-JONES_4 116.500
FDNS	00NR	6	16WP	G15_033	FROM->TO	G14-057T 345.00 - SUNNYSIDE 345KV CKT 1	717	789	0.04332	113.5023	GEN525844 1-ELK_1 118.000
FDNS	00NR	6	16WP	G15_033	FROM->TO	G14-057T 345.00 - SUNNYSIDE 345KV CKT 1	717	789	0.04332	113.4989	GEN525845 1-ELK_2 1 138.00
FDNS	00NR	6	16WP	G15_033	FROM->TO	G14-057T 345.00 - SUNNYSIDE 345KV CKT 1	717	789	0.04332	113.4857	GEN600002 3-SHERBURNE CNTY G3
FDNS	00NR	6	16WP	G15_033	FROM->TO	G14-057T 345.00 - SUNNYSIDE 345KV CKT 1	717	789	0.04332	113.4429	GEN344225 1-1CAL G1 25.000
FDNS	00NR	6	16WP	G15_033	FROM->TO	G14-057T 345.00 - SUNNYSIDE 345KV CKT 1	717	789	0.04287	113.3397	JOHNSON COUNTY (JOHNCO) 345/138/13.8KV TRANSFORMER CKT 1
FDNS	00NR	6	16WP	G15_033	FROM->TO	G14-057T 345.00 - SUNNYSIDE 345KV CKT 1	717	789	0.04332	113.3089	GEN562590 1-G14_057_3 0.6900
FDNS	00NR	6	16WP	G15_033	FROM->TO	G14-057T 345.00 - SUNNYSIDE 345KV CKT 1	717	789	0.04332	113.2694	GEN525562 1-TOLK GEN #2 24 KV
FDNS	00NR	6	16WP	G15_033	FROM->TO	G14-057T 345.00 - SUNNYSIDE 345KV CKT 1	717	789	0.04332	113.2665	GEN562685 1-G15_013_3 0.3550
FDNS	00NR	6	16WP	G15_033	FROM->TO	G14-057T 345.00 - SUNNYSIDE 345KV CKT 1	717	789	0.04332	113.2344	GEN527166 1-MUSTANG_6 118.000
FDNS	00NR	6	16WP	G15_033	FROM->TO	G14-057T 345.00 - SUNNYSIDE 345KV CKT 1	717	789	0.04332	113.2244	GEN635023 3-WALTER SCOTT UNIT 3
FDNS	00NR	6	16WP	G15_033	FROM->TO	G14-057T 345.00 - SUNNYSIDE 345KV CKT 1	717	789	0.04332	113.2189	GEN525561 1-TOLK GEN #1 24 KV
FDNS	00NR	6	16WP	G15_033	FROM->TO	G14-057T 345.00 - SUNNYSIDE 345KV CKT 1	717	789	0.04312	113.1912	LYDIA - WELSH 345KV CKT 1
FDNS	00NR	6	16WP	G15_033	FROM->TO	G14-057T 345.00 - SUNNYSIDE 345KV CKT 1	717	789	0.04312	113.1912	LYDIA - WELSH 345KV CKT 1
FDNS	00NR	6	16WP	G15_033	FROM->TO	G14-057T 345.00 - SUNNYSIDE 345KV CKT 1	717	789	0.04332	113.1565	GEN562762 1-G15033_3 0.6900
FDNS	00NR	6	16WP	G15_033	FROM->TO	G14-057T 345.00 - SUNNYSIDE 345KV CKT 1	717	789	0.04332	113.1497	GEN562655 1-G14_074_3 0.6900
FDNS	00NR	6	16WP	G15_033	FROM->TO	G14-057T 345.00 - SUNNYSIDE 345KV CKT 1	717	789	0.04332	113.1485	GEN563272 1-G15093_3 0.6900
FDNS	00NR	6	20WP	G15_033	FROM->TO	G14-057T 345.00 - SUNNYSIDE 345KV CKT 1	717	789	0.04125	112.9605	OKLAUNION 345/13.2KV TRANSFORMER CKT 1
FDNS	00NR	6	20WP	G15_033	FROM->TO	G14-057T 345.00 - SUNNYSIDE 345KV CKT 1	717	789	0.04124	112.8768	JOHNSON COUNTY - RUSSETT 138KV CKT 1
FDNS	00NR	6	20WP	G15_033	FROM->TO	G14-057T 345.00 - SUNNYSIDE 345KV CKT 1	717	789	0.04061	112.8548	MAYSVILLE - MAYSVLT4 138.00 138KV CKT 1
FDNS	00NR	6	20WP	G15_033	FROM->TO	G14-057T 345.00 - SUNNYSIDE 345KV CKT 1	717	789	0.04138	112.854	CIMARRON - MATHWSN7 345.00 345KV CKT 1
FDNS	00NR	6	20WP	G15_033	FROM->TO	G14-057T 345.00 - SUNNYSIDE 345KV CKT 1	717	789	0.04138	112.854	CIMARRON - MATHWSN7 345.00 345KV CKT 2
FDNS	00NR	6	20WP	G15_033	FROM->TO	G14-057T 345.00 - SUNNYSIDE 345KV CKT 1	717	789	0.04171	112.8476	GRAPEVINE INTERCHANGE - NICHOLS STATION 230KV CKT 1
FDNS	00NR	6	20WP	G15_033	FROM->TO	G14-057T 345.00 - SUNNYSIDE 345KV CKT 1	717	789	0.04171	112.8476	GRAPEVINE INTERCHANGE - NICHOLS STATION 230KV CKT 1
FDNS	00NR	6	20WP	G15_033	FROM->TO	G14-057T 345.00 - SUNNYSIDE 345KV CKT 1	717	789	0.04125	112.8383	GEN521103 1-BLUE CANYON WIND FARM
FDNS	00NR	6	16WP	G15_033	FROM->TO	G14-057T 345.00 - SUNNYSIDE 345KV CKT 1	717	789	0.04332	112.8246	GEN527903 1-HOBBS PLANT #3 (ST)
FDNS	00NR	6	20WP	G15_033	FROM->TO	G14-057T 345.00 - SUNNYSIDE 345KV CKT 1	717	789	0.04122	112.8209	HUGO POWER PLANT - VALLENT 138KV CKT 1
FDNS	00NR	6	20WP	G15_033	FROM->TO	G14-057T 345.00 - SUNNYSIDE 345KV CKT 1	717	789	0.04122	112.8203	7MCCREDIE 345.00 - 7MONTGMRY 345.00 345KV CKT 1
FDNS	00NR	6	20WP	G15_033	FROM->TO	G14-057T 345.00 - SUNNYSIDE 345KV CKT 1	717	789	0.04125	112.8183	GEN511961 1-DEMPSEY-WTG10.7000
FDNS	00NR	6	20WP	G15_033	FROM->TO	G14-057T 345.00 - SUNNYSIDE 345KV CKT 1	717	789	0.04125	112.8179	7CALAWY 1 345.00 345/25.0KV TRANSFORMER CKT 1
FDNS	00NR	6	20WP	G15_033	FROM->TO	G14-057T 345.00 - SUNNYSIDE 345KV CKT 1	717	789	0.04123	112.8166	7MCCREDIE 345.00 - 7OVERTON 345.00 345KV CKT 1
FDNS	00NR	6	20WP	G15_033	FROM->TO	G14-057T 345.00 - SUNNYSIDE 345KV CKT 1	717	789	0.04125	112.8131	GEN629068 1-EMERY GAS TURBINE 2
FDNS	00NR	6	20WP	G15_033	FROM->TO	G14-057T 345.00 - SUNNYSIDE 345KV CKT 1	717	789	0.04125	112.8117	GEN600014 4-BLACK DOG GEN 4
FDNS	00NR	6	20WP	G15_033	FROM->TO	G14-057T 345.00 - SUNNYSIDE 345KV CKT 1	717	789	0.04125	112.8084	GEN629067 1-EMERY GAS TURBINE 1
FDNS	00NR	6	20WP	G15_033	FROM->TO	G14-057T 345.00 - SUNNYSIDE 345KV CKT 1	717	789	0.04121	112.8076	NORTHWEST TEXARKANA - WELSH 345KV CKT 1
FDNS	00NR	6	20WP	G15_033	FROM->TO	G14-057T 345.00 - SUNNYSIDE 345KV CKT 1	717	789	0.04121	112.8076	NORTHWEST TEXARKANA - WELSH 345KV CKT 1
FDNS	00NR	6	20WP	G15_033	FROM->TO	G14-057T 345.00 - SUNNYSIDE 345KV CKT 1	717	789	0.04122	112.8059	KEO EHV - WEST MEMPHIS 500 500KV CKT 1
FDNS	00NR	6	20WP	G15_033	FROM->TO	G14-057T 345.00 - SUNNYSIDE 345KV CKT 1	717	789	0.04125	112.8054	GEN562772 1-G15034_3 0.6900
FDNS	00NR	6	20WP	G15_033	FROM->TO	G14-057T 345.00 - SUNNYSIDE 345KV CKT 1	717	789	0.04125	112.8053	GEN672303 3-BOUNDARY DAM GENERATOR 3
FDNS	00NR	6	20WP	G15_033	FROM->TO	G14-057T 345.00 - SUNNYSIDE 345KV CKT 1	717	789	0.04125	112.8053	GEN672304 4-BOUNDARY DAM GENERATOR 4
FDNS	00NR	6	20WP	G15_033	FROM->TO	G14-057T 345.00 - SUNNYSIDE 345KV CKT 1	717	789	0.04125	112.8053	GEN672305 5-BOUNDARY DAM GENERATOR 5
FDNS	00NR	6	20WP	G15_033	FROM->TO	G14-057T 345.00 - SUNNYSIDE 345KV CKT 1	717	789	0.04129	112.8051	DRAPER LAKE - MIDWEST TAP 138KV CKT 1
FDNS	00NR	6	20WP	G15_033	FROM->TO	G14-057T 345.00 - SUNNYSIDE 345KV CKT 1	717	789	0.04125	112.8045	GEN615032 2-PLEASANT VALLEY
FDNS	00NR	6	20WP	G15_033	FROM->TO	G14-057T 345.00 - SUNNYSIDE 345KV CKT 1	717	789	0.04123	112.8032	DIANA - WELSH 345KV CKT 2
FDNS	00NR	6	20WP	G15_033	FROM->TO	G14-057T 345.00 - SUNNYSIDE 345KV CKT 1	717	789	0.04123	112.8032	DIANA - WELSH 345KV CKT 2
FDNS	00NR	6	20WP	G15_033	FROM->TO	G14-057T 345.00 - SUNNYSIDE 345KV CKT 1	717	789	0.04125	112.8023	GEN520812 1-ANADRK5
FDNS	00NR	6	20WP	G15_033	FROM->TO	G14-057T 345.00 - SUNNYSIDE 345KV CKT 1	717	789	0.04125	112.8023	GEN520813 1-ANADRK6
FDNS	00NR	6	20WP	G15_033	FROM->TO	G14-057T 345.00 - SUNNYSIDE 345KV CKT 1	717	789	0.04125	112.7998	GEN562691 1-G15_015_3 0.6900
FDNS	00NR	6	20WP	G15_033	FROM->TO	G14-057T 345.00 - SUNNYSIDE 345KV CKT 1	717	789	0.04116	112.7987	DOLET HILLS 345/230KV TRANSFORMER CKT 1
FDNS	00NR	6	20WP	G15_033	FROM->TO	G14-057T 345.00 - SUNNYSIDE 345KV CKT 1	717	789	0.04125	112.7978	GEN562074 1-G1149G1504 0.6900
FDNS	00NR	6	20WP	G15_033	FROM->TO	G14-057T 345.00 - SUNNYSIDE 345KV CKT 1	717	789	0.04123	112.791	DIANA - WELSH 345KV CKT 1
FDNS	00NR	6	20WP	G15_033	FROM->TO	G14-057T 345.00 - SUNNYSIDE 345KV CKT 1	717	789	0.04123	112.791	DIANA - WELSH 345KV CKT 1
FDNS	00NR	6	20WP	G15_033	FROM->TO	G14-057T 345.00 - SUNNYSIDE 345KV CKT 1	717	789	0.04061	112.7884	MAYSVLT4 138.00 - PRAIRIE POINT 138KV CKT 1
FDNS	00NR	6	16WP	G15_033	FROM->TO	G14-057T 345.00 - SUNNYSIDE 345KV CKT 1	717	789	0.04332	112.7842	GEN635024 4-WALTER SCOTT UNIT 4
FDNS	00NR	6	20WP	G15_033	FROM->TO	G14-057T 345.00 - SUNNYSIDE 345KV CKT 1	717	789	0.04125	112.7814	GEN530690 1-PRWINDG1 0.6900
FDNS	00NR	6	20WP	G15_033	FROM->TO	G14-057T 345.00 - SUNNYSIDE 345KV CKT 1	717	789	0.04125	112.7779	GEN600017 C-LS POWER CT
FDNS	00NR	6	20WP	G15_033	FROM->TO	G14-057T 345.00 - SUNNYSIDE 345KV CKT 1	717	789	0.04125	112.7743	P12:069:OKGE:3TERM42
FDNS	00NR	6	20WP	G15_033	FROM->TO	G14-057T 345.00 - SUNNYSIDE 345KV CKT 1	717	789	0.04131	112.7726	P12:138:OKGE:3TERM21
FDNS	00NR	6	20WP	G15_033	FROM->TO	G14-057T 345.00 - SUNNYSIDE 345KV CKT 1	717	789	0.04119	112.7656	WELSH - WILKES 345KV CKT 1
FDNS	00NR	6	20WP	G15_033	FROM->TO	G14-057T 345.00 - SUNNYSIDE 345KV CKT 1	717	789	0.04119	112.7656	WELSH - WILKES 345KV CKT 1
FDNS	00NR	6	20WP	G15_033	FROM->TO	G14-057T 345.00 - SUNNYSIDE 345KV CKT 1	717	789	0.04125	112.7648	GEN528361 1-MADDOX GEN #1
FDNS	00NR	6	20WP	G15_033	FROM->TO	G14-057T 345.00 - SUNNYSIDE 345KV CKT 1	717	789	0.04093	112.7642	ARBUCKLE - SULPHR 4 138.00 138KV CKT 1
FDNS	00NR	6	20WP	G15_033	FROM->TO	G14-057T 345.00 - SUNNYSIDE 345KV CKT 1	717	789	0.04125	112.763	GEN672392 1-NBECGT1G 18.000
FDNS	00NR	6	20WP	G15_033	FROM->TO	G14-057T 345.00 - SUNNYSIDE 345KV CKT 1	717	789	0.04125	112.7595	GEN562432 1-G13-030 0.6900
FDNS	00NR	6	20WP	G15_033	FROM->TO	G14-057T 345.00 - SUNNYSIDE 345KV CKT 1	717	789	0.04125	112.7593	GEN524022 1-NICHOLS GEN #2
FDNS	00NR	6	20WP	G15_033	FROM->TO	G14-057T 345.00 - SUNNYSIDE 345KV CKT 1	717	789	0.04125	112.7588	GEN563052 1-G15069_3 0.6900
FDNS	00NR	6	20WP	G15_033	FROM->TO	G14-057T 345.00 - SUNNYSIDE 345KV CKT 1	717	789	0.04122	112.7576	P12:138:WFEC:MSL11
FDNS	00NR	6	20WP	G15_033	FROM->TO	G14-057T 345.00 - SUNNYSIDE 345KV CKT 1	717	789	0.04122	112.7576	P12:138:WFEC-AEPW:PHAROAH4:LONEOAK4
FDNS	00NR	6	20WP	G15_033	FROM->TO	G14-057T 345.00 - SUNNYSIDE 345KV CKT 1	717	789	0.04126	112.7551	LEBANON - TEXOMA JCT 138KV CKT 1

SOLUTION	GROUP	SCENARIO	SEASON	SOURCE	DIRECTION	MONITORED ELEMENT	RATEA (MVA)	RATEB(MVA)	TDF	TC%LOADING (% MVA)	CONTINGENCY
FDNS	00NR	6	20WP	G15_033	FROM->TO	G14-057T 345.00 - SUNNYSIDE 345KV CKT 1	717	789	0.04125	112.7536	GEN600046 1-MECST
FDNS	00NR	6	20WP	G15_033	FROM->TO	G14-057T 345.00 - SUNNYSIDE 345KV CKT 1	717	789	0.04125	112.7492	GEN629071 1-BURLINGTON GENERATOR FOR UNIT NO 1 E
FDNS	00NR	6	20WP	G15_033	FROM->TO	G14-057T 345.00 - SUNNYSIDE 345KV CKT 1	717	789	0.04125	112.7471	GEN560183 1-REDHIL-WTG1 12.000
FDNS	00NR	6	20WP	G15_033	FROM->TO	G14-057T 345.00 - SUNNYSIDE 345KV CKT 1	717	789	0.04122	112.7448	GLASSES - MADILL INDUSTRIAL TAP 138KV CKT 1
FDNS	00NR	6	20WP	G15_033	FROM->TO	G14-057T 345.00 - SUNNYSIDE 345KV CKT 1	717	789	0.04125	112.7434	GEN629070 2-BEAVER CHANNEL GENERATORFOR UNIT NO 2
FDNS	00NR	6	20WP	G15_033	FROM->TO	G14-057T 345.00 - SUNNYSIDE 345KV CKT 1	717	789	0.04125	112.7392	GEN600047 1-MECCT1
FDNS	00NR	6	20WP	G15_033	FROM->TO	G14-057T 345.00 - SUNNYSIDE 345KV CKT 1	717	789	0.04144	112.7375	G15063_T 345.00 - MATHWSN7 345.00 345KV CKT 1
FDNS	00NR	6	20WP	G15_033	FROM->TO	G14-057T 345.00 - SUNNYSIDE 345KV CKT 1	717	789	0.04126	112.7347	P12:138:WFEC:MSL08
FDNS	00NR	6	20WP	G15_033	FROM->TO	G14-057T 345.00 - SUNNYSIDE 345KV CKT 1	717	789	0.04125	112.7321	GEN562017 1-G11_022_3 0.6900
FDNS	00NR	6	20WP	G15_033	FROM->TO	G14-057T 345.00 - SUNNYSIDE 345KV CKT 1	717	789	0.04146	112.7283	ALTUS JUNCTION - RUSSELL 138KV CKT 1
FDNS	00NR	6	20WP	G15_033	FROM->TO	G14-057T 345.00 - SUNNYSIDE 345KV CKT 1	717	789	0.04146	112.7283	ALTUS JUNCTION - RUSSELL 138KV CKT 1
FDNS	00NR	6	20WP	G15_033	FROM->TO	G14-057T 345.00 - SUNNYSIDE 345KV CKT 1	717	789	0.04125	112.7255	GEN515443 1-MNCOWND1 0.7000
FDNS	00NR	6	20WP	G15_033	FROM->TO	G14-057T 345.00 - SUNNYSIDE 345KV CKT 1	717	789	0.04125	112.7211	BURLINGTON NO1 + NO 2 + NO 3 161/20.0KV TRANSFORMER CKT 1
FDNS	00NR	6	20WP	G15_033	FROM->TO	G14-057T 345.00 - SUNNYSIDE 345KV CKT 1	717	789	0.04125	112.7127	GEN615010 1-STANTON4
FDNS	00NR	6	20WP	G15_033	FROM->TO	G14-057T 345.00 - SUNNYSIDE 345KV CKT 1	717	789	0.0412	112.7101	HUGO (HUGO 1) 345/138/13.8KV TRANSFORMER CKT 1
FDNS	00NR	6	20WP	G15_033	FROM->TO	G14-057T 345.00 - SUNNYSIDE 345KV CKT 1	717	789	0.04125	112.7088	GEN615021 1-GRE-ER 14G 16.000
FDNS	00NR	6	20WP	G15_033	FROM->TO	G14-057T 345.00 - SUNNYSIDE 345KV CKT 1	717	789	0.04061	112.6966	PRAIRIE POINT - RATLIFF 138KV CKT 1
FDNS	00NR	6	20WP	G15_033	FROM->TO	G14-057T 345.00 - SUNNYSIDE 345KV CKT 1	717	789	0.04122	112.6936	CANEY CREEK - JOHNSON COUNTY 138KV CKT 1
FDNS	00NR	6	20WP	G15_033	FROM->TO	G14-057T 345.00 - SUNNYSIDE 345KV CKT 1	717	789	0.04119	112.6909	CARTER - CHICKASAW 138KV CKT 1
FDNS	00NR	6	20WP	G15_033	FROM->TO	G14-057T 345.00 - SUNNYSIDE 345KV CKT 1	717	789	0.04122	112.6872	OVEXFRMCCOVE
FDNS	00NR	6	20WP	G15_033	FROM->TO	G14-057T 345.00 - SUNNYSIDE 345KV CKT 1	717	789	0.04122	112.6863	GLASSES - RUSSETT 138KV CKT 1
FDNS	00NR	6	20WP	G15_033	FROM->TO	G14-057T 345.00 - SUNNYSIDE 345KV CKT 1	717	789	0.04125	112.6738	INDEPENDENCE 500/26.0KV TRANSFORMER CKT 1
FDNS	00NR	6	20WP	G15_033	FROM->TO	G14-057T 345.00 - SUNNYSIDE 345KV CKT 1	717	789	0.04123	112.6674	CANADIAN RIVER - MCALESTER SOUTH 138KV CKT 1
FDNS	00NR	6	20WP	G15_033	FROM->TO	G14-057T 345.00 - SUNNYSIDE 345KV CKT 1	717	789	0.04123	112.6674	CANADIAN RIVER - MCALESTER SOUTH 138KV CKT 1
FDNS	00NR	6	20WP	G15_033	FROM->TO	G14-057T 345.00 - SUNNYSIDE 345KV CKT 1	717	789	0.04123	112.6655	CANADIAN RIVER () 345/138/13.8KV TRANSFORMER CKT 1
FDNS	00NR	6	20WP	G15_033	FROM->TO	G14-057T 345.00 - SUNNYSIDE 345KV CKT 1	717	789	0.04123	112.6655	CANADIAN RIVER () 345/138/13.8KV TRANSFORMER CKT 1
FDNS	00NR	6	20WP	G15_033	FROM->TO	G14-057T 345.00 - SUNNYSIDE 345KV CKT 1	717	789	0.04109	112.6533	ROCKY POINT - SPRINGDALE 138KV CKT 1
FDNS	00NR	6	20WP	G15_033	FROM->TO	G14-057T 345.00 - SUNNYSIDE 345KV CKT 1	717	789	0.04091	112.6498	MINGO - SETAB 345KV CKT 1
FDNS	00NR	6	20WP	G15_033	FROM->TO	G14-057T 345.00 - SUNNYSIDE 345KV CKT 1	717	789	0.04091	112.6498	MINGO - SETAB 345KV CKT 1
FDNS	00NR	6	20WP	G15_033	FROM->TO	G14-057T 345.00 - SUNNYSIDE 345KV CKT 1	717	789	0.04125	112.6468	GEN600067 9-HIGH BRIDGE
FDNS	00NR	6	20WP	G15_033	FROM->TO	G14-057T 345.00 - SUNNYSIDE 345KV CKT 1	717	789	0.04125	112.6425	GEN531447 1-HOLCOMB GENERATOR
FDNS	00NR	6	20WP	G15_033	FROM->TO	G14-057T 345.00 - SUNNYSIDE 345KV CKT 1	717	789	0.04125	112.6392	P12:230:UMZB:# 112 #: NU IN SD. NU-RCDC & DRY CREEK XFMR
FDNS	00NR	6	20WP	G15_033	FROM->TO	G14-057T 345.00 - SUNNYSIDE 345KV CKT 1	717	789	0.04125	112.6389	RCDC EAST 4230.00 - RED CEDAR DC 230KV CKT 1
FDNS	00NR	6	20WP	G15_033	FROM->TO	G14-057T 345.00 - SUNNYSIDE 345KV CKT 1	717	789	0.04125	112.6337	GEN562902 1-G15052_3 0.6900
FDNS	00NR	6	20WP	G15_033	FROM->TO	G14-057T 345.00 - SUNNYSIDE 345KV CKT 1	717	789	0.04184	112.6254	CHISHOLM6 230.00 - SWEETWATER 230KV CKT 1
FDNS	00NR	6	20WP	G15_033	FROM->TO	G14-057T 345.00 - SUNNYSIDE 345KV CKT 1	717	789	0.04125	112.619	GEN560331 1-G10-46 13.800
FDNS	00NR	6	20WP	G15_033	FROM->TO	G14-057T 345.00 - SUNNYSIDE 345KV CKT 1	717	789	0.04093	112.6187	JOLLYVILLE - SULPHR 4 138.00 138KV CKT 1
FDNS	00NR	6	20WP	G15_033	FROM->TO	G14-057T 345.00 - SUNNYSIDE 345KV CKT 1	717	789	0.04125	112.6179	GEN563242 1-G15090_3 0.6900
FDNS	00NR	6	20WP	G15_033	FROM->TO	G14-057T 345.00 - SUNNYSIDE 345KV CKT 1	717	789	0.04122	112.6161	CHAMBER SPRINGS - CLARKSVILLE 345KV CKT 1
FDNS	00NR	6	16WP	G15_033	FROM->TO	G14-057T 345.00 - SUNNYSIDE 345KV CKT 1	717	789	0.04911	112.6118	CHISHOLM7 345.00 - GRACEMONT 345KV CKT 1
FDNS	00NR	6	20WP	G15_033	FROM->TO	G14-057T 345.00 - SUNNYSIDE 345KV CKT 1	717	789	0.04125	112.6112	GEN562802 1-G15039_3 0.3570
FDNS	00NR	6	20WP	G15_033	FROM->TO	G14-057T 345.00 - SUNNYSIDE 345KV CKT 1	717	789	0.04123	112.6076	GRPRAR1-LNX3345.00 - YANKTON 345KV CKT Z
FDNS	00NR	6	20WP	G15_033	FROM->TO	G14-057T 345.00 - SUNNYSIDE 345KV CKT 1	717	789	0.04123	112.6072	GRPRAR1-LNX3345.00 - HOLT.CO3 345.00 345KV CKT 1
FDNS	00NR	6	20WP	G15_033	FROM->TO	G14-057T 345.00 - SUNNYSIDE 345KV CKT 1	717	789	0.04125	112.6012	GEN562078 1-G11_051_3 0.6900
FDNS	00NR	6	20WP	G15_033	FROM->TO	G14-057T 345.00 - SUNNYSIDE 345KV CKT 1	717	789	0.04125	112.5931	GEN562587 1-G14_056_3 0.6900
FDNS	00NR	6	20WP	G15_033	FROM->TO	G14-057T 345.00 - SUNNYSIDE 345KV CKT 1	717	789	0.04125	112.5883	GEN562269 1-G12-020-1 0.6900
FDNS	00NR	6	20WP	G15_033	FROM->TO	G14-057T 345.00 - SUNNYSIDE 345KV CKT 1	717	789	0.04125	112.5854	GEN629072 4-LANSING GENERATOR FOR UNITS NO4 EIA CODE 1
FDNS	00NR	6	20WP	G15_033	FROM->TO	G14-057T 345.00 - SUNNYSIDE 345KV CKT 1	717	789	0.04125	112.5798	GEN514805 1-SOONER UNIT 1
FDNS	00NR	6	20WP	G15_033	FROM->TO	G14-057T 345.00 - SUNNYSIDE 345KV CKT 1	717	789	0.04125	112.577	GEN524285 1-WILDORADO WIND GEN
FDNS	00NR	6	20WP	G15_033	FROM->TO	G14-057T 345.00 - SUNNYSIDE 345KV CKT 1	717	789	0.04125	112.5675	GEN563062 1-G15071_3 0.6900
FDNS	00NR	6	20WP	G15_033	FROM->TO	G14-057T 345.00 - SUNNYSIDE 345KV CKT 1	717	789	0.04125	112.5579	GEN514806 1-SOONER UNIT 2
FDNS	00NR	6	20WP	G15_033	FROM->TO	G14-057T 345.00 - SUNNYSIDE 345KV CKT 1	717	789	0.04093	112.5538	JOLLYVILLE - KERR MCGEE CIMARRON 138KV CKT 1
FDNS	00NR	6	20WP	G15_033	FROM->TO	G14-057T 345.00 - SUNNYSIDE 345KV CKT 1	717	789	0.04125	112.5423	GEN562270 1-G12-020-2 0.6900
FDNS	00NR	6	20WP	G15_033	FROM->TO	G14-057T 345.00 - SUNNYSIDE 345KV CKT 1	717	789	0.04125	112.5358	GEN562812 1-G15040_3 0.3570
FDNS	00NR	6	20WP	G15_033	FROM->TO	G14-057T 345.00 - SUNNYSIDE 345KV CKT 1	717	789	0.04125	112.5287	GEN563132 1-G15078_3 0.3570
FDNS	00NR	6	20WP	G15_033	FROM->TO	G14-057T 345.00 - SUNNYSIDE 345KV CKT 1	717	789	0.04125	112.5276	GEN657749 1-YOUNG 1 GENERATOR
FDNS	00NR	6	20WP	G15_033	FROM->TO	G14-057T 345.00 - SUNNYSIDE 345KV CKT 1	717	789	0.04125	112.5249	GEN563102 1-G15075_3 0.5500
FDNS	00NR	6	20WP	G15_033	FROM->TO	G14-057T 345.00 - SUNNYSIDE 345KV CKT 1	717	789	0.04125	112.5225	GEN524023 1-NICHOLS GEN #3 22 KV
FDNS	00NR	6	20WP	G15_033	FROM->TO	G14-057T 345.00 - SUNNYSIDE 345KV CKT 1	717	789	0.04125	112.5203	GEN562882 1-G15047_3 0.6900
FDNS	00NR	6	20WP	G15_033	FROM->TO	G14-057T 345.00 - SUNNYSIDE 345KV CKT 1	717	789	0.04258	112.5161	P12:138:AEPW:112GORE4:SNYDER-4
FDNS	00NR	6	20WP	G15_033	FROM->TO	G14-057T 345.00 - SUNNYSIDE 345KV CKT 1	717	789	0.04093	112.5055	ARBWIND4 138.00 - KERR MCGEE CIMARRON 138KV CKT 1
FDNS	00NR	6	20WP	G15_033	FROM->TO	G14-057T 345.00 - SUNNYSIDE 345KV CKT 1	717	789	0.04125	112.5025	GEN562974 1-G15060_5 0.6900
FDNS	00NR	6	20WP	G15_033	FROM->TO	G14-057T 345.00 - SUNNYSIDE 345KV CKT 1	717	789	0.0412	112.5022	CROCKETT - TENASKA RUSK COUNTY 345KV CKT 1
FDNS	00NR	6	20WP	G15_033	FROM->TO	G14-057T 345.00 - SUNNYSIDE 345KV CKT 1	717	789	0.0412	112.4976	LEBROCK - TENASKA RUSK COUNTY 345KV CKT 1
FDNS	00NR	6	20WP	G15_033	FROM->TO	G14-057T 345.00 - SUNNYSIDE 345KV CKT 1	717	789	0.04125	112.4928	GEN562973 1-G15060_4 0.6900
FDNS	00NR	6	20WP	G15_033	FROM->TO	G14-057T 345.00 - SUNNYSIDE 345KV CKT 1	717	789	0.04125	112.4696	GEN521112 1-ORME3 13.800
FDNS	00NR	6	20WP	G15_033	FROM->TO	G14-057T 345.00 - SUNNYSIDE 345KV CKT 1	717	789	0.04125	112.4631	GEN524295 1-SPNSPUR_WND10.6900
FDNS	00NR	6	20WP	G15_033	FROM->TO	G14-057T 345.00 - SUNNYSIDE 345KV CKT 1	717	789	0.04125	112.4448	THOMAS HILL 161/22.0KV TRANSFORMER CKT 1
FDNS	00NR	6	20WP	G15_033	FROM->TO	G14-057T 345.00 - SUNNYSIDE 345KV CKT 1	717	789	0.04116	112.443	BROWN - RUSSETT 138KV CKT 1
FDNS	00NR	6	20WP	G15_033	FROM->TO	G14-057T 345.00 - SUNNYSIDE 345KV CKT 1	717	789	0.04097	112.4381	CHICKASAW - TOTAL 138KV CKT 1
FDNS	00NR	6	20WP	G15_033	FROM->TO	G14-057T 345.00 - SUNNYSIDE 345KV CKT 1	717	789	0.04125	112.4248	GEN345671 2-1RUSH G2 18.000
FDNS	00NR	6	20WP	G15_033	FROM->TO	G14-057T 345.00 - SUNNYSIDE 345KV CKT 1	717	789	0.04125	112.4229	GEN345670 1-1RUSH G1 18.000
FDNS	00NR	6	20WP	G15_033	FROM->TO	G14-057T 345.00 - SUNNYSIDE 345KV CKT 1	717	789	0.04125	112.4217	GEN560105 1-G08-22 0.6900
FDNS	00NR	6	20WP	G15_033	FROM->TO	G14-057T 345.00 - SUNNYSIDE 345KV CKT 1	717	789	0.04125	112.4112	GEN511962 2-RKYRDGW2-1 0.7000
FDNS	00NR	6	20WP	G15_033	FROM->TO	G14-057T 345.00 - SUNNYSIDE 345KV CKT 1	717	789	0.04125	112.3921	4SIOUX 1 138.00 138/18.0KV TRANSFORMER CKT 1
FDNS	00NR	6	20WP	G15_033	FROM->TO	G14-057T 345.00 - SUNNYSIDE 345KV CKT 1	717	789	0.04125	112.3876	GEN562550 1-G14_040_3 0.6900
FDNS	00NR	6	20WP	G15_033	FROM->TO	G14-057T 345.00 - SUNNYSIDE 345KV CKT 1	717	789	0.04116	112.3744	RUSSETT - RUSSETT 138KV CKT 1
FDNS	00NR	6	20WP	G15_033	FROM->TO	G14-057T 345.00 - SUNNYSIDE 345KV CKT 1	717	789	0.04125	112.3655	GEN527161 1-MUSTANG GEN #1
FDNS	00NR	6	20WP	G15_033	FROM->TO	G14-057T 345.00 - SUNNYSIDE 345KV CKT 1	717	789	0.04125	112.3655	GEN527162 1-MUSTANG GEN #2

SOLUTION	GROUP	SCENARIO	SEASON	SOURCE	DIRECTION	MONITORED ELEMENT	RATEA (MVA)	RATEB(MVA)	TDF	TC%LOADING (% MVA)	CONTINGENCY
FDNS	00NR	6	20WP	G15_033	FROM->TO	G14-057T 345.00 - SUNNYSIDE 345KV CKT 1	717	789	0.04104	112.3561	ROCKY POINT - SUNNYSIDE 138KV CKT 1
FDNS	00NR	6	20WP	G15_033	FROM->TO	G14-057T 345.00 - SUNNYSIDE 345KV CKT 1	717	789	0.04125	112.355	GEN563192 1-G15084_3 0.5500
FDNS	00NR	6	20WP	G15_033	FROM->TO	G14-057T 345.00 - SUNNYSIDE 345KV CKT 1	717	789	0.04125	112.3489	GEN681522 3-GENOA 3
FDNS	00NR	6	20WP	G15_033	FROM->TO	G14-057T 345.00 - SUNNYSIDE 345KV CKT 1	717	789	0.04127	112.3428	ARKANSAS NUCLEAR ONE - FT SMITH 500KV CKT 1
FDNS	00NR	6	20WP	G15_033	FROM->TO	G14-057T 345.00 - SUNNYSIDE 345KV CKT 1	717	789	0.04127	112.3428	ARKANSAS NUCLEAR ONE - FT SMITH 500KV CKT 1
FDNS	00NR	6	20WP	G15_033	FROM->TO	G14-057T 345.00 - SUNNYSIDE 345KV CKT 1	717	789	0.04125	112.34	EASTDC - ERCOT EQUIVALENCE 345KV CKT 1
FDNS	00NR	6	20WP	G15_033	FROM->TO	G14-057T 345.00 - SUNNYSIDE 345KV CKT 1	717	789	0.04112	112.3326	RUSSETT - SPRINGDALE 138KV CKT 1
FDNS	00NR	6	20WP	G15_033	FROM->TO	G14-057T 345.00 - SUNNYSIDE 345KV CKT 1	717	789	0.04125	112.3262	GEN562892 1-G15048_3 0.6900
FDNS	00NR	6	20WP	G15_033	FROM->TO	G14-057T 345.00 - SUNNYSIDE 345KV CKT 1	717	789	0.04125	112.3188	GEN562512 1-G14_020_3 0.6900
FDNS	00NR	6	20WP	G15_033	FROM->TO	G14-057T 345.00 - SUNNYSIDE 345KV CKT 1	717	789	0.04125	112.3137	GEN527882 1-CUNNINGHAM GEN #2 20 KV
FDNS	00NR	6	20WP	G15_033	FROM->TO	G14-057T 345.00 - SUNNYSIDE 345KV CKT 1	717	789	0.04125	112.3113	GEN525494 1-PLANT X GEN #4 20 KV
FDNS	00NR	6	20WP	G15_033	FROM->TO	G14-057T 345.00 - SUNNYSIDE 345KV CKT 1	717	789	0.04127	112.3051	P12:138:WFEC:MSL16
FDNS	00NR	6	20WP	G15_033	FROM->TO	G14-057T 345.00 - SUNNYSIDE 345KV CKT 1	717	789	0.04125	112.2989	GEN527163 1-MUSTANG GEN #3 22 KV
FDNS	00NR	6	20WP	G15_033	FROM->TO	G14-057T 345.00 - SUNNYSIDE 345KV CKT 1	717	789	0.04122	112.29	P12:138:WFEC-AEPW:GOLDENSW4:CRAIGJT4
FDNS	00NR	6	20WP	G15_033	FROM->TO	G14-057T 345.00 - SUNNYSIDE 345KV CKT 1	717	789	0.04125	112.2819	GEN672321 1-SHAND GENERATOR 1
FDNS	00NR	6	20WP	G15_033	FROM->TO	G14-057T 345.00 - SUNNYSIDE 345KV CKT 1	717	789	0.04081	112.2683	ARDMORE WEST - CARTER 138KV CKT 1
FDNS	00NR	6	20WP	G15_033	FROM->TO	G14-057T 345.00 - SUNNYSIDE 345KV CKT 1	717	789	0.04125	112.2652	GEN344895 2-1LAB G2 20.000
FDNS	00NR	6	20WP	G15_033	FROM->TO	G14-057T 345.00 - SUNNYSIDE 345KV CKT 1	717	789	0.04125	112.2581	GEN672310 1-POPLAR RIVER GENERATOR 1
FDNS	00NR	6	20WP	G15_033	FROM->TO	G14-057T 345.00 - SUNNYSIDE 345KV CKT 1	717	789	0.04125	112.2581	GEN672311 2-POPLAR RIVER GENERATOR 2
FDNS	00NR	6	20WP	G15_033	FROM->TO	G14-057T 345.00 - SUNNYSIDE 345KV CKT 1	717	789	0.04125	112.2561	GEN520811 1-ANADRK4
FDNS	00NR	6	20WP	G15_033	FROM->TO	G14-057T 345.00 - SUNNYSIDE 345KV CKT 1	717	789	0.04149	112.2498	G15085_T 138.00 - RUSSELL 138KV CKT 1
FDNS	00NR	6	20WP	G15_033	FROM->TO	G14-057T 345.00 - SUNNYSIDE 345KV CKT 1	717	789	0.04125	112.2484	GEN672306 6-BOUNDARY DAM GENERATOR 6
FDNS	00NR	6	20WP	G15_033	FROM->TO	G14-057T 345.00 - SUNNYSIDE 345KV CKT 1	717	789	0.04125	112.2395	CLAY BOSWELL 230/20.9KV TRANSFORMER CKT 1
FDNS	00NR	6	20WP	G15_033	FROM->TO	G14-057T 345.00 - SUNNYSIDE 345KV CKT 1	717	789	0.04122	112.2392	P12:138:WFEC:MSL07
FDNS	00NR	6	20WP	G15_033	FROM->TO	G14-057T 345.00 - SUNNYSIDE 345KV CKT 1	717	789	0.04122	112.2392	P12:138:WFEC-AEPW:HUGOPP4:ATOKA--4
FDNS	00NR	6	20WP	G15_033	FROM->TO	G14-057T 345.00 - SUNNYSIDE 345KV CKT 1	717	789	0.04125	112.2385	GEN344896 3-1LAB G3 20.000
FDNS	00NR	6	20WP	G15_033	FROM->TO	G14-057T 345.00 - SUNNYSIDE 345KV CKT 1	717	789	0.04125	112.2373	GEN344897 4-1LAB G4 20.000
FDNS	00NR	6	20WP	G15_033	FROM->TO	G14-057T 345.00 - SUNNYSIDE 345KV CKT 1	717	789	0.04125	112.2337	GEN344894 1-1LAB G1 20.000
FDNS	00NR	6	20WP	G15_033	FROM->TO	G14-057T 345.00 - SUNNYSIDE 345KV CKT 1	717	789	0.04125	112.2217	GEN511853 1-COMANCHE #3
FDNS	00NR	6	20WP	G15_033	FROM->TO	G14-057T 345.00 - SUNNYSIDE 345KV CKT 1	717	789	0.04125	112.2191	GEN521111 1-ORME2 13.800
FDNS	00NR	6	20WP	G15_033	FROM->TO	G14-057T 345.00 - SUNNYSIDE 345KV CKT 1	717	789	0.04125	112.2186	GEN681542 6-JP MADGETT
FDNS	00NR	6	20WP	G15_033	FROM->TO	G14-057T 345.00 - SUNNYSIDE 345KV CKT 1	717	789	0.04124	112.2115	P12:138:AEPW-SWPA:LONEOAK4:TUPELO4
FDNS	00NR	6	20WP	G15_033	FROM->TO	G14-057T 345.00 - SUNNYSIDE 345KV CKT 1	717	789	0.04124	112.2114	P12:138:WFEC:MSL06
FDNS	00NR	6	20WP	G15_033	FROM->TO	G14-057T 345.00 - SUNNYSIDE 345KV CKT 1	717	789	0.04125	112.2067	GEN521110 1-ORME1 13.800
FDNS	00NR	6	20WP	G15_033	FROM->TO	G14-057T 345.00 - SUNNYSIDE 345KV CKT 1	717	789	0.04079	112.1883	SUNNYSIDE (SUNNYSD5) 345/138/13.8KV TRANSFORMER CKT 1
FDNS	00NR	6	20WP	G15_033	FROM->TO	G14-057T 345.00 - SUNNYSIDE 345KV CKT 1	717	789	0.04125	112.1771	GEN523461 1-BLACKHAWK GEN #1
FDNS	00NR	6	20WP	G15_033	FROM->TO	G14-057T 345.00 - SUNNYSIDE 345KV CKT 1	717	789	0.04125	112.177	GEN523462 1-BLACKHAWK GEN #2
FDNS	00NR	6	20WP	G15_033	FROM->TO	G14-057T 345.00 - SUNNYSIDE 345KV CKT 1	717	789	0.04125	112.1635	GEN562699 1-G15_018_3 0.6900
FDNS	00NR	6	20WP	G15_033	FROM->TO	G14-057T 345.00 - SUNNYSIDE 345KV CKT 1	717	789	0.04125	112.1557	ALMA 161 161/24.0KV TRANSFORMER CKT 1
FDNS	00NR	6	20WP	G15_033	FROM->TO	G14-057T 345.00 - SUNNYSIDE 345KV CKT 1	717	789	0.04081	112.1555	ARDMORE WEST - UNIROYAL 138KV CKT 1
FDNS	00NR	6	20WP	G15_033	FROM->TO	G14-057T 345.00 - SUNNYSIDE 345KV CKT 1	717	789	0.04125	112.1521	GEN511852 1-COMANCHE #2
FDNS	00NR	6	20WP	G15_033	FROM->TO	G14-057T 345.00 - SUNNYSIDE 345KV CKT 1	717	789	0.04125	112.1385	GEN563292 1-G15095_3 0.6900
FDNS	00NR	6	20WP	G15_033	FROM->TO	G14-057T 345.00 - SUNNYSIDE 345KV CKT 1	717	789	0.04083	112.1268	CARTRCO4 138.00 - RATLIFF 138KV CKT 1
FDNS	00NR	6	20WP	G15_033	FROM->TO	G14-057T 345.00 - SUNNYSIDE 345KV CKT 1	717	789	0.0411	112.1264	CLARKSVILLE - MUSKOGEE 345KV CKT 1
FDNS	00NR	6	20WP	G15_033	FROM->TO	G14-057T 345.00 - SUNNYSIDE 345KV CKT 1	717	789	0.0411	112.1264	CLARKSVILLE - MUSKOGEE 345KV CKT 1
FDNS	06ALL	6	17SP	G15_033	FROM->TO	G14-057T 345.00 - SUNNYSIDE 345KV CKT 1	717	789	0.20819	112.1208	CIMARRON - MINCO 345KV CKT 1
FDNS	00NR	6	20WP	G15_033	FROM->TO	G14-057T 345.00 - SUNNYSIDE 345KV CKT 1	717	789	0.04125	112.1202	GEN562861 1-G15045_2 0.4800
FDNS	00NR	6	20WP	G15_033	FROM->TO	G14-057T 345.00 - SUNNYSIDE 345KV CKT 1	717	789	0.04125	112.1172	GEN563162 1-G15081_3 0.6900
FDNS	00NR	6	20WP	G15_033	FROM->TO	G14-057T 345.00 - SUNNYSIDE 345KV CKT 1	717	789	0.04103	112.1033	P12:138:OKGE:3TERM40
FDNS	00NR	6	20WP	G15_033	FROM->TO	G14-057T 345.00 - SUNNYSIDE 345KV CKT 1	717	789	0.04258	112.1009	CACHE - SNYDER 138KV CKT 1
FDNS	00NR	6	20WP	G15_033	FROM->TO	G14-057T 345.00 - SUNNYSIDE 345KV CKT 1	717	789	0.04125	112.0793	GEN563122 1-G15077_3 0.3850
FDNS	00NR	6	20WP	G15_033	FROM->TO	G14-057T 345.00 - SUNNYSIDE 345KV CKT 1	717	789	0.04125	112.0471	GEN661015 1-COYOTE
FDNS	00NR	6	20WP	G15_033	FROM->TO	G14-057T 345.00 - SUNNYSIDE 345KV CKT 1	717	789	0.0415	112.0101	P12:138:AEPW:SHAM4WT:CHILD4WT
FDNS	00NR	6	16WP	G15_033	FROM->TO	G14-057T 345.00 - SUNNYSIDE 345KV CKT 1	717	789	0.04304	111.9889	LYDIA - VALLIANT 345KV CKT 1
FDNS	00NR	6	16WP	G15_033	FROM->TO	G14-057T 345.00 - SUNNYSIDE 345KV CKT 1	717	789	0.04304	111.9889	LYDIA - VALLIANT 345KV CKT 1
FDNS	00NR	6	20WP	G15_033	FROM->TO	G14-057T 345.00 - SUNNYSIDE 345KV CKT 1	717	789	0.04122	111.9714	P12:138:WFEC:MSL15
FDNS	00NR	6	20WP	G15_033	FROM->TO	G14-057T 345.00 - SUNNYSIDE 345KV CKT 1	717	789	0.04125	111.9627	GEN527883 1-CUNNINGHAM GEN #3 22 KV
FDNS	00NR	6	20WP	G15_033	FROM->TO	G14-057T 345.00 - SUNNYSIDE 345KV CKT 1	717	789	0.04125	111.9599	GEN527884 1-CUNNINGHAM GEN #4 22 KV
FDNS	00NR	6	20WP	G15_033	FROM->TO	G14-057T 345.00 - SUNNYSIDE 345KV CKT 1	717	789	0.04081	111.9376	SUNNYSIDE - UNIROYAL 138KV CKT 1
FDNS	00NR	6	20WP	G15_033	FROM->TO	G14-057T 345.00 - SUNNYSIDE 345KV CKT 1	717	789	0.04125	111.9313	GEN657748 1-YOUNG 2 GENERATOR
FDNS	00NR	6	20WP	G15_033	FROM->TO	G14-057T 345.00 - SUNNYSIDE 345KV CKT 1	717	789	0.04125	111.9221	GEN562992 1-G15063_3 0.6900
FDNS	00NR	6	20WP	G15_033	FROM->TO	G14-057T 345.00 - SUNNYSIDE 345KV CKT 1	717	789	0.04125	111.9013	GEN562952 1-G15057_3 0.6500
FDNS	00NR	6	20WP	G15_033	FROM->TO	G14-057T 345.00 - SUNNYSIDE 345KV CKT 1	717	789	0.04125	111.8925	GEN526331 1-JONES GEN #1 22 KV
FDNS	00NR	6	20WP	G15_033	FROM->TO	G14-057T 345.00 - SUNNYSIDE 345KV CKT 1	717	789	0.04125	111.8923	GEN526332 1-JONES GEN #2 21 KV
FDNS	00NR	6	20WP	G15_033	FROM->TO	G14-057T 345.00 - SUNNYSIDE 345KV CKT 1	717	789	0.04125	111.8626	GEN562704 1-G15_020_3 0.3550
FDNS	00NR	6	20WP	G15_033	FROM->TO	G14-057T 345.00 - SUNNYSIDE 345KV CKT 1	717	789	0.04125	111.8398	GEN620315 1-BIG STONE GEN
FDNS	00NR	6	20WP	G15_033	FROM->TO	G14-057T 345.00 - SUNNYSIDE 345KV CKT 1	717	789	0.04126	111.7751	CANEY CREEK - TEXOMA JCT 138KV CKT 1
FDNS	00NR	6	20WP	G15_033	FROM->TO	G14-057T 345.00 - SUNNYSIDE 345KV CKT 1	717	789	0.04125	111.7636	GEN600004 2-PRAIRIE ISLAND G2
FDNS	00NR	6	20WP	G15_033	FROM->TO	G14-057T 345.00 - SUNNYSIDE 345KV CKT 1	717	789	0.04125	111.761	GEN600003 1-PRAIRIE ISLAND G1
FDNS	00NR	6	20WP	G15_033	FROM->TO	G14-057T 345.00 - SUNNYSIDE 345KV CKT 1	717	789	0.04125	111.7398	GEN600006 1-AS KING
FDNS	00NR	6	20WP	G15_033	FROM->TO	G14-057T 345.00 - SUNNYSIDE 345KV CKT 1	717	789	0.04125	111.7387	GEN562710 1-G15_022_3 0.5500
FDNS	00NR	6	20WP	G15_033	FROM->TO	G14-057T 345.00 - SUNNYSIDE 345KV CKT 1	717	789	0.04125	111.7316	GEN563173 1-G15082_3 0.6900
FDNS	00NR	6	20WP	G15_033	FROM->TO	G14-057T 345.00 - SUNNYSIDE 345KV CKT 1	717	789	0.04125	111.6871	GEN532751 1-WOLF CREEK GENERATING STATION UNIT 1
FDNS	00NR	6	20WP	G15_033	FROM->TO	G14-057T 345.00 - SUNNYSIDE 345KV CKT 1	717	789	0.04125	111.6621	GEN511851 1-COMANCHE #1
FDNS	00NR	6	20WP	G15_033	FROM->TO	G14-057T 345.00 - SUNNYSIDE 345KV CKT 1	717	789	0.04124	111.6478	P12:138:WFEC:MSL09
FDNS	00NR	6	20WP	G15_033	FROM->TO	G14-057T 345.00 - SUNNYSIDE 345KV CKT 1	717	789	0.04169	111.6377	P12:138:AEPW-OGE:CORNVIL4:CIMARON4
FDNS	00NR	6	20WP	G15_033	FROM->TO	G14-057T 345.00 - SUNNYSIDE 345KV CKT 1	717	789	0.04125	111.5644	GEN629074 1-ARNOLD LOWSIDE OF GSU XFMR
FDNS	00NR	6	20WP	G15_033	FROM->TO	G14-057T 345.00 - SUNNYSIDE 345KV CKT 1	717	789	0.04125	111.5587	GEN635213 3-NEAL UNIT 3
FDNS	00NR	6	20WP	G15_033	FROM->TO	G14-057T 345.00 - SUNNYSIDE 345KV CKT 1	717	789	0.04125	111.5553	GEN615001 1-COAL CREEK

SOLUTION	GROUP	SCENARIO	SEASON	SOURCE	DIRECTION	MONITORED ELEMENT	RATEA (MVA)	RATEB(MVA)	TDF	TC%LOADING (% MVA)	CONTINGENCY
FDNS	00NR	6	20WP	G15_033	FROM->TO	G14-057T 345.00 - SUNNYSIDE 345KV CKT 1	717	789	0.04125	111.5462	BIG STONE 230/24.0KV TRANSFORMER CKT 1
FDNS	00NR	6	20WP	G15_033	FROM->TO	G14-057T 345.00 - SUNNYSIDE 345KV CKT 1	717	789	0.04125	111.5294	GEN615002 2-COAL CREEK
FDNS	06NR	6	20L	G15_033	FROM->TO	G14-057T 345.00 - SUNNYSIDE 345KV CKT 1	717	789	0.04261	111.4917	BASE CASE
FDNS	00NR	6	20WP	G15_033	FROM->TO	G14-057T 345.00 - SUNNYSIDE 345KV CKT 1	717	789	0.04125	111.4703	GEN636641 1-LOUISA UNIT 1
FDNS	00NR	6	20WP	G15_033	FROM->TO	G14-057T 345.00 - SUNNYSIDE 345KV CKT 1	717	789	0.04111	111.4576	NORTHWEST TEXARKANA - VALLIANT 345KV CKT 1
FDNS	00NR	6	20WP	G15_033	FROM->TO	G14-057T 345.00 - SUNNYSIDE 345KV CKT 1	717	789	0.04111	111.4576	NORTHWEST TEXARKANA - VALLIANT 345KV CKT 1
FDNS	00NR	6	20WP	G15_033	FROM->TO	G14-057T 345.00 - SUNNYSIDE 345KV CKT 1	717	789	0.04125	111.4516	GEN562754 1-G15031_5 0.6900
FDNS	00NR	6	20WP	G15_033	FROM->TO	G14-057T 345.00 - SUNNYSIDE 345KV CKT 1	717	789	0.04125	111.434	GEN600005 1-MONTICELLO
FDNS	00NR	6	20WP	G15_033	FROM->TO	G14-057T 345.00 - SUNNYSIDE 345KV CKT 1	717	789	0.04125	111.4256	GEN562556 1-G14_046_3 0.3420
FDNS	00NR	6	20WP	G15_033	FROM->TO	G14-057T 345.00 - SUNNYSIDE 345KV CKT 1	717	789	0.04125	111.3983	GEN562023 1-G11_020_3 0.6900
FDNS	00NR	6	20WP	G15_033	FROM->TO	G14-057T 345.00 - SUNNYSIDE 345KV CKT 1	717	789	0.04125	111.3983	GEN562026 1-G11_019_3 0.6900
FDNS	00NR	6	20WP	G15_033	FROM->TO	G14-057T 345.00 - SUNNYSIDE 345KV CKT 1	717	789	0.04125	111.3868	GEN562756 1-G15031_7 0.6900
FDNS	00NR	6	20WP	G15_033	FROM->TO	G14-057T 345.00 - SUNNYSIDE 345KV CKT 1	717	789	0.04125	111.3534	GEN563142 1-G15079_3 0.5500
FDNS	00NR	6	20WP	G15_033	FROM->TO	G14-057T 345.00 - SUNNYSIDE 345KV CKT 1	717	789	0.04125	111.3534	GEN563151 1-G15080_2 0.5500
FDNS	00NR	6	20WP	G15_033	FROM->TO	G14-057T 345.00 - SUNNYSIDE 345KV CKT 1	717	789	0.04125	111.3059	GEN600000 1-SHERBURNECNTY G1
FDNS	00NR	6	20WP	G15_033	FROM->TO	G14-057T 345.00 - SUNNYSIDE 345KV CKT 1	717	789	0.04125	111.2707	GEN629075 1-OTTUMWA GENERATOR FOR OTTUMWA UNIT NO 1
FDNS	00NR	6	20WP	G15_033	FROM->TO	G14-057T 345.00 - SUNNYSIDE 345KV CKT 1	717	789	0.04125	111.2563	GEN600001 2-SHERBURNE CNTY G2
FDNS	00NR	6	20WP	G15_033	FROM->TO	G14-057T 345.00 - SUNNYSIDE 345KV CKT 1	717	789	0.04125	111.181	GEN511848 1-SOUTHWESTERN STATION #3
FDNS	00NR	6	20WP	G15_033	FROM->TO	G14-057T 345.00 - SUNNYSIDE 345KV CKT 1	717	789	0.04125	111.1372	GEN563042 1-G15068_3 0.6900
FDNS	00NR	6	20WP	G15_033	FROM->TO	G14-057T 345.00 - SUNNYSIDE 345KV CKT 1	717	789	0.04125	111.1329	GEN527901 1-HOBBS PLANT #1 (CT)
FDNS	00NR	6	20WP	G15_033	FROM->TO	G14-057T 345.00 - SUNNYSIDE 345KV CKT 1	717	789	0.04125	111.1329	GEN527902 1-HOBBS PLANT #2 (CT)
FDNS	00NR	6	16WP	G15_033	FROM->TO	G14-057T 345.00 - SUNNYSIDE 345KV CKT 1	717	789	0.04332	111.1177	EASTDC - ERCOT EQUIVALENCE 345KV CKT 1
FDNS	00NR	6	20WP	G15_033	FROM->TO	G14-057T 345.00 - SUNNYSIDE 345KV CKT 1	717	789	0.04125	111.098	GEN523971 1-HARRINGTON GEN #1 24 KV
FDNS	00NR	6	20WP	G15_033	FROM->TO	G14-057T 345.00 - SUNNYSIDE 345KV CKT 1	717	789	0.04125	111.0979	GEN523972 1-HARRINGTON GEN #2 24 KV
FDNS	00NR	6	20WP	G15_033	FROM->TO	G14-057T 345.00 - SUNNYSIDE 345KV CKT 1	717	789	0.04125	111.0979	GEN523973 1-HARRINGTON GEN #3 24 KV
FDNS	00NR	6	16WP	G15_033	FROM->TO	G14-057T 345.00 - SUNNYSIDE 345KV CKT 1	717	789	0.23317	111.0828	G14-074T 345.00 - TUCO INTERCHANGE 345KV CKT 1
FDNS	00NR	6	20WP	G15_033	FROM->TO	G14-057T 345.00 - SUNNYSIDE 345KV CKT 1	717	789	0.04105	111.0527	LYDIA - WELSH 345KV CKT 1
FDNS	00NR	6	20WP	G15_033	FROM->TO	G14-057T 345.00 - SUNNYSIDE 345KV CKT 1	717	789	0.04105	111.0527	LYDIA - WELSH 345KV CKT 1
FDNS	00NR	6	20WP	G15_033	FROM->TO	G14-057T 345.00 - SUNNYSIDE 345KV CKT 1	717	789	0.04097	111.0279	GRAPEVINE 345.00 - POTTER COUNTY INTERCHANGE 345KV CKT 1
FDNS	00NR	6	20WP	G15_033	FROM->TO	G14-057T 345.00 - SUNNYSIDE 345KV CKT 1	717	789	0.04125	111.0272	SHERBURNE CO 345/24.0KV TRANSFORMER CKT 1
FDNS	00NR	6	20WP	G15_033	FROM->TO	G14-057T 345.00 - SUNNYSIDE 345KV CKT 1	717	789	0.04418	111.0263	CHISHOLM7 345.00 - GRAPEVINE 345.00 345KV CKT 1
FDNS	00NR	6	20WP	G15_033	FROM->TO	G14-057T 345.00 - SUNNYSIDE 345KV CKT 1	717	789	0.04125	110.9825	GEN635214 4-NEAL UNIT 4
FDNS	00NR	6	20WP	G15_033	FROM->TO	G14-057T 345.00 - SUNNYSIDE 345KV CKT 1	717	789	0.04125	110.9463	GEN563273 2-G15093_4 0.6900
FDNS	00NR	6	20WP	G15_033	FROM->TO	G14-057T 345.00 - SUNNYSIDE 345KV CKT 1	717	789	0.04125	110.8251	GEN563043 1-G15068_4 0.6900
FDNS	00NR	6	20WP	G15_033	FROM->TO	G14-057T 345.00 - SUNNYSIDE 345KV CKT 1	717	789	0.04125	110.8082	GEN600002 3-SHERBURNE CNTY G3
FDNS	00NR	6	20WP	G15_033	FROM->TO	G14-057T 345.00 - SUNNYSIDE 345KV CKT 1	717	789	0.04125	110.7685	GEN563202 1-G15085_3 0.5500
FDNS	00NR	6	20WP	G15_033	FROM->TO	G14-057T 345.00 - SUNNYSIDE 345KV CKT 1	717	789	0.04125	110.7644	GEN526333 1-JONES GEN #3 21 KV
FDNS	00NR	6	20WP	G15_033	FROM->TO	G14-057T 345.00 - SUNNYSIDE 345KV CKT 1	717	789	0.04125	110.7643	GEN526334 1-JONES_4 116.500
FDNS	00NR	6	20WP	G15_033	FROM->TO	G14-057T 345.00 - SUNNYSIDE 345KV CKT 1	717	789	0.04125	110.7594	GEN525844 1-ELK_1 118.000
FDNS	00NR	6	20WP	G15_033	FROM->TO	G14-057T 345.00 - SUNNYSIDE 345KV CKT 1	717	789	0.04125	110.7524	GEN344225 1-1CAL G1 25.000
FDNS	00NR	6	20WP	G15_033	FROM->TO	G14-057T 345.00 - SUNNYSIDE 345KV CKT 1	717	789	0.04125	110.7481	GEN525845 1-ELK_2 1 18.000
FDNS	00NR	6	20WP	G15_033	FROM->TO	G14-057T 345.00 - SUNNYSIDE 345KV CKT 1	717	789	0.04125	110.5508	GEN527166 1-MUSTANG_6 118.000
FDNS	00NR	6	20WP	G15_033	FROM->TO	G14-057T 345.00 - SUNNYSIDE 345KV CKT 1	717	789	0.04125	110.5174	GEN562590 1-G14_057_3 0.6900
FDNS	00NR	6	20WP	G15_033	FROM->TO	G14-057T 345.00 - SUNNYSIDE 345KV CKT 1	717	789	0.04125	110.504	GEN635023 3-WALTER SCOTT UNIT 3
FDNS	00NR	6	20WP	G15_033	FROM->TO	G14-057T 345.00 - SUNNYSIDE 345KV CKT 1	717	789	0.04125	110.4812	GEN528501 1-G14_012 24.000
FDNS	00NR	6	20WP	G15_033	FROM->TO	G14-057T 345.00 - SUNNYSIDE 345KV CKT 1	717	789	0.04125	110.4415	GEN562685 1-G15_013_3 0.3550
FDNS	00NR	6	20WP	G15_033	FROM->TO	G14-057T 345.00 - SUNNYSIDE 345KV CKT 1	717	789	0.04125	110.4054	GEN562762 1-G15033_3 0.6900
FDNS	00NR	6	20WP	G15_033	FROM->TO	G14-057T 345.00 - SUNNYSIDE 345KV CKT 1	717	789	0.04125	110.3988	GEN562655 1-G14_074_3 0.6900
FDNS	00NR	6	20WP	G15_033	FROM->TO	G14-057T 345.00 - SUNNYSIDE 345KV CKT 1	717	789	0.04125	110.3149	GEN563272 1-G15093_3 0.6900
FDNS	00NR	6	16WP	G15_033	FROM->TO	G14-057T 345.00 - SUNNYSIDE 345KV CKT 1	717	789	0.08699	110.3112	GRACEMONT - LAWTON EASTSIDE 345KV CKT 1
FDNS	00NR	6	16WP	G15_033	FROM->TO	G14-057T 345.00 - SUNNYSIDE 345KV CKT 1	717	789	0.08699	110.3112	GRACEMONT - LAWTON EASTSIDE 345KV CKT 1
FDNS	00NR	6	20WP	G15_033	FROM->TO	G14-057T 345.00 - SUNNYSIDE 345KV CKT 1	717	789	0.04082	110.3075	JOHNSON COUNTY (JOHNCO) 345/138/13.8KV TRANSFORMER CKT 1
FDNS	00NR	6	20WP	G15_033	FROM->TO	G14-057T 345.00 - SUNNYSIDE 345KV CKT 1	717	789	0.04125	110.2198	GEN525562 1-TOLK GEN #2 24 KV
FDNS	00NR	6	20WP	G15_033	FROM->TO	G14-057T 345.00 - SUNNYSIDE 345KV CKT 1	717	789	0.04125	110.1794	GEN527903 1-HOBBS PLANT #3 (ST)
FDNS	00NR	6	20WP	G15_033	FROM->TO	G14-057T 345.00 - SUNNYSIDE 345KV CKT 1	717	789	0.04125	110.1373	GEN525561 1-TOLK GEN #1 24 KV
FDNS	00NR	6	20WP	G15_033	FROM->TO	G14-057T 345.00 - SUNNYSIDE 345KV CKT 1	717	789	0.04125	110.0815	GEN635024 4-WALTER SCOTT UNIT 4
FDNS	00NR	6	16WP	G15_033	FROM->TO	G14-057T 345.00 - SUNNYSIDE 345KV CKT 1	717	789	0.03793	109.9687	JOHNSON COUNTY - PITTSBURG 345KV CKT 1
FDNS	00NR	6	16WP	G15_033	FROM->TO	G14-057T 345.00 - SUNNYSIDE 345KV CKT 1	717	789	0.03793	109.9687	JOHNSON COUNTY - PITTSBURG 345KV CKT 1
FDNS	00NR	6	20WP	G15_033	FROM->TO	G14-057T 345.00 - SUNNYSIDE 345KV CKT 1	717	789	0.04097	109.9389	LYDIA - VALLIANT 345KV CKT 1
FDNS	00NR	6	20WP	G15_033	FROM->TO	G14-057T 345.00 - SUNNYSIDE 345KV CKT 1	717	789	0.04097	109.9389	LYDIA - VALLIANT 345KV CKT 1
FDNS	00NR	6	16WP	G15_033	FROM->TO	G14-057T 345.00 - SUNNYSIDE 345KV CKT 1	717	789	0.04332	109.8963	GEN563263 1-G15092_4 0.6900
FDNS	00NR	6	20WP	G15_033	FROM->TO	G14-057T 345.00 - SUNNYSIDE 345KV CKT 1	717	789	0.04656	109.6996	CHISHOLM7 345.00 - GRACEMONT 345KV CKT 1
FDNS	06NR	6	20L	G15_033	FROM->TO	G14-057T 345.00 - SUNNYSIDE 345KV CKT 1	717	789	0.04069	109.6742	PITTSBURG - SEMINOLE 345KV CKT 1
FDNS	06NR	6	20L	G15_033	FROM->TO	G14-057T 345.00 - SUNNYSIDE 345KV CKT 1	717	789	0.04069	109.6742	PITTSBURG - SEMINOLE 345KV CKT 1
FDNS	00NR	6	16WP	G15_033	FROM->TO	G14-057T 345.00 - SUNNYSIDE 345KV CKT 1	717	789	0.04197	108.925	HUGO - VALLIANT 345KV CKT 1
FDNS	00NR	6	16WP	G15_033	FROM->TO	G14-057T 345.00 - SUNNYSIDE 345KV CKT 1	717	789	0.04197	108.925	HUGO - VALLIANT 345KV CKT 1
FDNS	00NR	6	20WP	G15_033	FROM->TO	G14-057T 345.00 - SUNNYSIDE 345KV CKT 1	717	789	0.0823	108.703	GRACEMONT - LAWTON EASTSIDE 345KV CKT 1
FDNS	00NR	6	20WP	G15_033	FROM->TO	G14-057T 345.00 - SUNNYSIDE 345KV CKT 1	717	789	0.0823	108.703	GRACEMONT - LAWTON EASTSIDE 345KV CKT 1
FDNS	06NR	6	20L	G15_033	FROM->TO	G14-057T 345.00 - SUNNYSIDE 345KV CKT 1	717	789	0.04189	108.6806	CIMARRON - DRAPER LAKE 345KV CKT 1
FDNS	00NR	6	16WP	G15_033	FROM->TO	G14-057T 345.00 - SUNNYSIDE 345KV CKT 1	717	789	0.04332	108.2232	GEN563262 1-G15092_3 0.6900
FDNS	00NR	6	17SP	G15_033	FROM->TO	G14-057T 345.00 - SUNNYSIDE 345KV CKT 1	717	789	0.05433	107.7751	CIMARRON - MINCO 345KV CKT 1
FDNS	00NR	6	20WP	G15_033	FROM->TO	G14-057T 345.00 - SUNNYSIDE 345KV CKT 1	717	789	0.03612	107.7419	JOHNSON COUNTY - PITTSBURG 345KV CKT 1
FDNS	00NR	6	20WP	G15_033	FROM->TO	G14-057T 345.00 - SUNNYSIDE 345KV CKT 1	717	789	0.03612	107.7419	JOHNSON COUNTY - PITTSBURG 345KV CKT 1
FDNS	00NR	6	20WP	G15_033	FROM->TO	G14-057T 345.00 - SUNNYSIDE 345KV CKT 1	717	789	0.23393	107.6315	G14-074T 345.00 - TUCO INTERCHANGE 345KV CKT 1
FDNS	06ALL	6	17SP	G15_033	FROM->TO	G14-057T 345.00 - SUNNYSIDE 345KV CKT 1	717	789	0.20819	107.2663	GRACEMONT - MINCO 345KV CKT 1
FDNS	00NR	6	20WP	G15_033	FROM->TO	G14-057T 345.00 - SUNNYSIDE 345KV CKT 1	717	789	0.03995	107.1951	HUGO - VALLIANT 345KV CKT 1
FDNS	00NR	6	20WP	G15_033	FROM->TO	G14-057T 345.00 - SUNNYSIDE 345KV CKT 1	717	789	0.03995	107.1951	HUGO - VALLIANT 345KV CKT 1
FDNS	00NR	6	20WP	G15_033	FROM->TO	G14-057T 345.00 - SUNNYSIDE 345KV CKT 1	717	789	0.04125	107.0857	GEN563263 1-G15092_4 0.6900
FDNS	06NR	6	20L	G15_033	FROM->TO	G14-057T 345.00 - SUNNYSIDE 345KV CKT 1	717	789	0.04115	106.8054	G14_038T 345.00 - Hitchland Interchange 345KV CKT 1

SOLUTION	GROUP	SCENARIO	SEASON	SOURCE	DIRECTION	MONITORED ELEMENT	RATEA (MVA)	RATEB(MVA)	TDF	TC%LOADING (% MVA)	CONTINGENCY
FDNS	06NR	6	20L	G15_033	FROM->TO	G14-057T 345.00 - SUNNYSIDE 345KV CKT 1	717	789	0.04451	106.5386	P12:138:WFEC:MSL03
FDNS	06NR	6	20L	G15_033	FROM->TO	G14-057T 345.00 - SUNNYSIDE 345KV CKT 1	717	789	0.04115	106.3627	G14_038T 345.00 - POTTER COUNTY INTERCHANGE 345KV CKT 1
FDNS	06NR	6	20L	G15_033	FROM->TO	G14-057T 345.00 - SUNNYSIDE 345KV CKT 1	717	789	0.04013	106.2046	Hitchland Interchange - WALKTAP7 345.00 345KV CKT 1
FDNS	06NR	6	20L	G15_033	FROM->TO	G14-057T 345.00 - SUNNYSIDE 345KV CKT 1	717	789	0.04013	106.2046	Hitchland Interchange - WALKTAP7 345.00 345KV CKT 1
FDNS	06NR	6	20L	G15_033	FROM->TO	G14-057T 345.00 - SUNNYSIDE 345KV CKT 1	717	789	0.04013	106.1059	P12:345:SPS:J07.1.FINN.HITCH
FDNS	06NR	6	20L	G15_033	FROM->TO	G14-057T 345.00 - SUNNYSIDE 345KV CKT 1	717	789	0.04247	105.5976	CLEVELAND - G15066_T 345.00 345KV CKT 1
FDNS	06NR	6	20L	G15_033	FROM->TO	G14-057T 345.00 - SUNNYSIDE 345KV CKT 1	717	789	0.04261	105.4877	GEN501801 1-DOLET HILLS UNIT1
FDNS	00NR	6	20WP	G15_033	FROM->TO	G14-057T 345.00 - SUNNYSIDE 345KV CKT 1	717	789	0.04125	105.4108	GEN563262 1-G15092_3 0.6900
FDNS	06NR	6	20L	G15_033	FROM->TO	G14-057T 345.00 - SUNNYSIDE 345KV CKT 1	717	789	0.04261	105.3859	GEN509416 1-TURK GENERATION
FDNS	06NR	6	20L	G15_033	FROM->TO	G14-057T 345.00 - SUNNYSIDE 345KV CKT 1	717	789	0.04247	105.2962	G15066_T 345.00 - SOONER 345KV CKT 1
FDNS	06NR	6	20L	G15_033	FROM->TO	G14-057T 345.00 - SUNNYSIDE 345KV CKT 1	717	789	0.04261	105.2405	GEN509403 1-PIRKEY GENERATION
FDNS	06ALL	6	20SP	G15_033	FROM->TO	G14-057T 345.00 - SUNNYSIDE 345KV CKT 1	717	789	0.20654	105.106	CIMARRON - MINCO 345KV CKT 1
FDNS	06NR	6	20L	G15_033	FROM->TO	G14-057T 345.00 - SUNNYSIDE 345KV CKT 1	717	789	0.04261	104.7866	GEN336821 1-GRAND GULF UNIT
FDNS	06NR	6	20L	G15_033	FROM->TO	G14-057T 345.00 - SUNNYSIDE 345KV CKT 1	717	789	0.04261	104.6327	GEN336153 1-WATERFORD UNIT#3
FDNS	00NR	6	16WP	G15_033	FROM->TO	G14-057T 345.00 - SUNNYSIDE 345KV CKT 1	717	789	0.03612	104.4568	JOHNSON COUNTY - SUNNYSIDE 345KV CKT 1
FDNS	06NR	6	20L	G15_033	FROM->TO	G14-057T 345.00 - SUNNYSIDE 345KV CKT 1	717	789	0.04255	104.3111	PITTSBURG - VALLIANT 345KV CKT 1
FDNS	06NR	6	20L	G15_033	FROM->TO	G14-057T 345.00 - SUNNYSIDE 345KV CKT 1	717	789	0.04255	104.3111	PITTSBURG - VALLIANT 345KV CKT 1
FDNS	06NR	6	20L	G15_033	FROM->TO	G14-057T 345.00 - SUNNYSIDE 345KV CKT 1	717	789	0.04261	104.275	GEN335831 1-RIVERBEND UNIT#1
FDNS	06NR	6	20L	G15_033	FROM->TO	G14-057T 345.00 - SUNNYSIDE 345KV CKT 1	717	789	0.04237	104.2481	ARCADIA - NORTHWEST 345KV CKT 1
FDNS	06NR	6	20L	G15_033	FROM->TO	G14-057T 345.00 - SUNNYSIDE 345KV CKT 1	717	789	0.04253	104.0478	CLEVELAND - TULSA NORTH 345KV CKT 1
FDNS	06NR	6	20L	G15_033	FROM->TO	G14-057T 345.00 - SUNNYSIDE 345KV CKT 1	717	789	0.04253	104.0478	CLEVELAND - TULSA NORTH 345KV CKT 1
FDNS	06NR	6	20L	G15_033	FROM->TO	G14-057T 345.00 - SUNNYSIDE 345KV CKT 1	717	789	0.0411	103.912	FINNEY SWITCHING STATION - HOLCOMB 345KV CKT 1
FDNS	06NR	6	20L	G15_033	FROM->TO	G14-057T 345.00 - SUNNYSIDE 345KV CKT 1	717	789	0.0411	103.912	FINNEY SWITCHING STATION - HOLCOMB 345KV CKT 1
FDNS	06NR	6	20L	G15_033	FROM->TO	G14-057T 345.00 - SUNNYSIDE 345KV CKT 1	717	789	0.04261	103.8014	GRAND GULF 500/22.0KV TRANSFORMER CKT 1
FDNS	06NR	6	20L	G15_033	FROM->TO	G14-057T 345.00 - SUNNYSIDE 345KV CKT 1	717	789	0.0411	103.6152	FINNEY SWITCHING STATION - WALKTAP7 345.00 345KV CKT 1
FDNS	06NR	6	20L	G15_033	FROM->TO	G14-057T 345.00 - SUNNYSIDE 345KV CKT 1	717	789	0.0411	103.6152	FINNEY SWITCHING STATION - WALKTAP7 345.00 345KV CKT 1
FDNS	06ALL	6	20WP	G15_033	FROM->TO	G14-057T 345.00 - SUNNYSIDE 345KV CKT 1	717	789	0.1538	103.5944	BASE CASE
FDNS	06NR	6	20L	G15_033	FROM->TO	G14-057T 345.00 - SUNNYSIDE 345KV CKT 1	717	789	0.04259	103.5102	LACYGNE - WAVERLY7 345.00 345KV CKT 1
FDNS	06NR	6	20L	G15_033	FROM->TO	G14-057T 345.00 - SUNNYSIDE 345KV CKT 1	717	789	0.04261	103.4855	GEN335206 1-NELSON UNIT 6
FDNS	06NR	6	20L	G15_033	FROM->TO	G14-057T 345.00 - SUNNYSIDE 345KV CKT 1	717	789	0.04292	103.4725	CORN TAP - NAPLESTP 138.00 138KV CKT 1
FDNS	06NR	6	20L	G15_033	FROM->TO	G14-057T 345.00 - SUNNYSIDE 345KV CKT 1	717	789	0.04267	103.4209	REDBUD - RIVERSIDE STATION 345KV CKT 1
FDNS	06NR	6	20L	G15_033	FROM->TO	G14-057T 345.00 - SUNNYSIDE 345KV CKT 1	717	789	0.04267	103.4209	REDBUD - RIVERSIDE STATION 345KV CKT 1
FDNS	06ALL	6	17G	G15_033	FROM->TO	G14-057T 345.00 - SUNNYSIDE 345KV CKT 1	717	789	0.15699	103.4014	BASE CASE
FDNS	06NR	6	20L	G15_033	FROM->TO	G14-057T 345.00 - SUNNYSIDE 345KV CKT 1	717	789	0.04283	103.3975	COMANCHE - LOCO 138KV CKT 1
FDNS	06NR	6	20L	G15_033	FROM->TO	G14-057T 345.00 - SUNNYSIDE 345KV CKT 1	717	789	0.04292	103.3921	NAPLESTP 138.00 - PAYNE 138.00 138KV CKT 1
FDNS	06NR	6	20L	G15_033	FROM->TO	G14-057T 345.00 - SUNNYSIDE 345KV CKT 1	717	789	0.04259	103.3797	WAVERLY7 345.00 - WOLF CREEK 345KV CKT 1
FDNS	06NR	6	20L	G15_033	FROM->TO	G14-057T 345.00 - SUNNYSIDE 345KV CKT 1	717	789	0.04222	103.3702	MINGO - RED WILLOW 345KV CKT 1
FDNS	06NR	6	20L	G15_033	FROM->TO	G14-057T 345.00 - SUNNYSIDE 345KV CKT 1	717	789	0.04222	103.3702	MINGO - RED WILLOW 345KV CKT 1
FDNS	06NR	6	20L	G15_033	FROM->TO	G14-057T 345.00 - SUNNYSIDE 345KV CKT 1	717	789	0.04381	103.3548	P12:138:AEPW:DUNCAN-4:L.E.S.-4
FDNS	06NR	6	20L	G15_033	FROM->TO	G14-057T 345.00 - SUNNYSIDE 345KV CKT 1	717	789	0.04261	103.2906	GEN509406 1-WELSH #3
FDNS	06NR	6	20L	G15_033	FROM->TO	G14-057T 345.00 - SUNNYSIDE 345KV CKT 1	717	789	0.04261	103.2904	GEN509404 1-WELSH #1
FDNS	06NR	6	20L	G15_033	FROM->TO	G14-057T 345.00 - SUNNYSIDE 345KV CKT 1	717	789	0.04381	103.2327	COMANCHE TAP - OMPA-DUNCAN 840 138KV CKT 1
FDNS	06NR	6	20L	G15_033	FROM->TO	G14-057T 345.00 - SUNNYSIDE 345KV CKT 1	717	789	0.04398	103.2156	POTTER COUNTY INTERCHANGE - TOLK STATION 345KV CKT 1
FDNS	06NR	6	20L	G15_033	FROM->TO	G14-057T 345.00 - SUNNYSIDE 345KV CKT 1	717	789	0.04262	103.1349	HEALDTON - LOCO 138KV CKT 1
FDNS	06NR	6	20L	G15_033	FROM->TO	G14-057T 345.00 - SUNNYSIDE 345KV CKT 1	717	789	0.04221	103.0855	ARCADIA - SEMINOLE 345KV CKT 1
FDNS	06NR	6	20L	G15_033	FROM->TO	G14-057T 345.00 - SUNNYSIDE 345KV CKT 1	717	789	0.08524	103.0603	GRACEMONT - LAWTON EASTSIDE 345KV CKT 1
FDNS	06NR	6	20L	G15_033	FROM->TO	G14-057T 345.00 - SUNNYSIDE 345KV CKT 1	717	789	0.08524	103.0603	GRACEMONT - LAWTON EASTSIDE 345KV CKT 1
FDNS	06NR	6	20L	G15_033	FROM->TO	G14-057T 345.00 - SUNNYSIDE 345KV CKT 1	717	789	0.04262	103.045	HEALDTON - RINGLING 138KV CKT 1
FDNS	06NR	6	20L	G15_033	FROM->TO	G14-057T 345.00 - SUNNYSIDE 345KV CKT 1	717	789	0.04297	103.036	ANADARKO - POCASSETT 138KV CKT 1
FDNS	06NR	6	20L	G15_033	FROM->TO	G14-057T 345.00 - SUNNYSIDE 345KV CKT 1	717	789	0.0459	103.0293	P12:345:SPS:J15.1.XRDS.TOLK
FDNS	06NR	6	20L	G15_033	FROM->TO	G14-057T 345.00 - SUNNYSIDE 345KV CKT 1	717	789	0.04262	102.9803	RINGLING - SOUTH WILSON 138KV CKT 1
FDNS	06NR	6	20L	G15_033	FROM->TO	G14-057T 345.00 - SUNNYSIDE 345KV CKT 1	717	789	0.04297	102.9706	POCASSETT - TUTTLE 138KV CKT 1
FDNS	06NR	6	20L	G15_033	FROM->TO	G14-057T 345.00 - SUNNYSIDE 345KV CKT 1	717	789	0.04381	102.9378	DUNCAN - OMPA-DUNCAN 840 138KV CKT 1
FDNS	06NR	6	20L	G15_033	FROM->TO	G14-057T 345.00 - SUNNYSIDE 345KV CKT 1	717	789	0.04381	102.9378	DUNCAN - OMPA-DUNCAN 840 138KV CKT 1
FDNS	06NR	6	20L	G15_033	FROM->TO	G14-057T 345.00 - SUNNYSIDE 345KV CKT 1	717	789	0.04261	102.9069	GEN501813 1-RODEMACHER UNIT 3
FDNS	06NR	6	20L	G15_033	FROM->TO	G14-057T 345.00 - SUNNYSIDE 345KV CKT 1	717	789	0.04464	102.8987	LAWTON EASTSIDE (LES 5) 345/138/13.8KV TRANSFORMER CKT 2
FDNS	06NR	6	20L	G15_033	FROM->TO	G14-057T 345.00 - SUNNYSIDE 345KV CKT 1	717	789	0.04464	102.8987	LAWTON EASTSIDE (LES 5) 345/138/13.8KV TRANSFORMER CKT 2
FDNS	06NR	6	20L	G15_033	FROM->TO	G14-057T 345.00 - SUNNYSIDE 345KV CKT 1	717	789	0.04256	102.8844	WEBRE - WELLS 500KV CKT 1
FDNS	06NR	6	20L	G15_033	FROM->TO	G14-057T 345.00 - SUNNYSIDE 345KV CKT 1	717	789	0.04247	102.8687	THISTLE7 345.00 - WOODWARD DISTRICT EHV 345KV CKT 1
FDNS	06NR	6	20L	G15_033	FROM->TO	G14-057T 345.00 - SUNNYSIDE 345KV CKT 1	717	789	0.04247	102.8687	THISTLE7 345.00 - WOODWARD DISTRICT EHV 345KV CKT 1
FDNS	06NR	6	20L	G15_033	FROM->TO	G14-057T 345.00 - SUNNYSIDE 345KV CKT 1	717	789	0.04247	102.8687	THISTLE7 345.00 - WOODWARD DISTRICT EHV 345KV CKT 2
FDNS	06NR	6	20L	G15_033	FROM->TO	G14-057T 345.00 - SUNNYSIDE 345KV CKT 1	717	789	0.04247	102.8687	THISTLE7 345.00 - WOODWARD DISTRICT EHV 345KV CKT 2
FDNS	06NR	6	20L	G15_033	FROM->TO	G14-057T 345.00 - SUNNYSIDE 345KV CKT 1	717	789	0.04261	102.8663	DOLET HILLS 345/24.0KV TRANSFORMER CKT 1
FDNS	06NR	6	20L	G15_033	FROM->TO	G14-057T 345.00 - SUNNYSIDE 345KV CKT 1	717	789	0.04261	102.8655	GEN501812 1-RODEMACHER UNIT 2
FDNS	06NR	6	20L	G15_033	FROM->TO	G14-057T 345.00 - SUNNYSIDE 345KV CKT 1	717	789	0.04262	102.8641	MARIETTA - SOUTH WILSON 138KV CKT 1
FDNS	06NR	6	20L	G15_033	FROM->TO	G14-057T 345.00 - SUNNYSIDE 345KV CKT 1	717	789	0.04261	102.8451	GEN509408 1-WILKES #2
FDNS	06NR	6	20L	G15_033	FROM->TO	G14-057T 345.00 - SUNNYSIDE 345KV CKT 1	717	789	0.04262	102.8375	P12:138:WFEC:MSL17
FDNS	06NR	6	20L	G15_033	FROM->TO	G14-057T 345.00 - SUNNYSIDE 345KV CKT 1	717	789	0.04297	102.8067	BRIDGECR 138.00 - TUTTLE 138KV CKT 1
FDNS	06NR	6	20L	G15_033	FROM->TO	G14-057T 345.00 - SUNNYSIDE 345KV CKT 1	717	789	0.04261	102.7591	GEN337911 1-ARKANSAS NUCLEAR ONE UNIT #2
FDNS	06NR	6	20L	G15_033	FROM->TO	G14-057T 345.00 - SUNNYSIDE 345KV CKT 1	717	789	0.04261	102.7401	GEN337652 1-WHITE BLUFF UNIT #1
FDNS	06NR	6	20L	G15_033	FROM->TO	G14-057T 345.00 - SUNNYSIDE 345KV CKT 1	717	789	0.04251	102.7296	CANEYRV7 345.00 - NEOSHO 345KV CKT 1
FDNS	06NR	6	20L	G15_033	FROM->TO	G14-057T 345.00 - SUNNYSIDE 345KV CKT 1	717	789	0.04238	102.7252	P12:138:AEPW-OGE:WTH_JCT4:JENSEN4
FDNS	06NR	6	20L	G15_033	FROM->TO	G14-057T 345.00 - SUNNYSIDE 345KV CKT 1	717	789	0.04261	102.7169	GEN337653 1-WHITE BLUFF UNIT #2
FDNS	06NR	6	20L	G15_033	FROM->TO	G14-057T 345.00 - SUNNYSIDE 345KV CKT 1	717	789	0.04297	102.7138	P12:138:WFEC:MSL01
FDNS	06NR	6	20L	G15_033	FROM->TO	G14-057T 345.00 - SUNNYSIDE 345KV CKT 1	717	789	0.04297	102.6972	BRIDGECR 138.00 - SUNSHINE CANYON 138KV CKT 1
FDNS	06NR	6	20L	G15_033	FROM->TO	G14-057T 345.00 - SUNNYSIDE 345KV CKT 1	717	789	0.04253	102.6931	DOLET HILLS - SOUTHWEST SHREVEPORT 345KV CKT 1
FDNS	06NR	6	20L	G15_033	FROM->TO	G14-057T 345.00 - SUNNYSIDE 345KV CKT 1	717	789	0.04253	102.6931	DOLET HILLS - SOUTHWEST SHREVEPORT 345KV CKT 1
FDNS	06NR	6	20L	G15_033	FROM->TO	G14-057T 345.00 - SUNNYSIDE 345KV CKT 1	717	789	0.04225	102.6906	MINGO - SETAB 345KV CKT 1
FDNS	06NR	6	20L	G15_033	FROM->TO	G14-057T 345.00 - SUNNYSIDE 345KV CKT 1	717	789	0.04225	102.6906	MINGO - SETAB 345KV CKT 1

SOLUTION	GROUP	SCENARIO	SEASON	SOURCE	DIRECTION	MONITORED ELEMENT	RATEA (MVA)	RATEB(MVA)	TDF	TC%LOADING (% MVA)	CONTINGENCY
FDNS	06NR	6	20L	G15_033	FROM->TO	G14-057T 345.00 - SUNNYSIDE 345KV CKT 1	717	789	0.04533	102.6632	P12:138:AEPW:S.W.S.-4:L.E.S.-4
FDNS	06NR	6	20L	G15_033	FROM->TO	G14-057T 345.00 - SUNNYSIDE 345KV CKT 1	717	789	0.04241	102.5969	MATHWSN7 345.00 - NORTHWEST 345KV CKT 1
FDNS	06NR	6	20L	G15_033	FROM->TO	G14-057T 345.00 - SUNNYSIDE 345KV CKT 1	717	789	0.04251	102.5768	CANEYRV7 345.00 - LATHAMS7 345.00 345KV CKT 1
FDNS	06NR	6	20L	G15_033	FROM->TO	G14-057T 345.00 - SUNNYSIDE 345KV CKT 1	717	789	0.04271	102.5749	CIVIT - PAOLI 138KV CKT 1
FDNS	06NR	6	20L	G15_033	FROM->TO	G14-057T 345.00 - SUNNYSIDE 345KV CKT 1	717	789	0.04261	102.5368	GEN337910 1-ARKANSAS NUCLEAR ONE UNIT #1
FDNS	06NR	6	20L	G15_033	FROM->TO	G14-057T 345.00 - SUNNYSIDE 345KV CKT 1	717	789	0.04271	102.5257	CIVIT - STRATFORD 138KV CKT 1
FDNS	06NR	6	20L	G15_033	FROM->TO	G14-057T 345.00 - SUNNYSIDE 345KV CKT 1	717	789	0.04261	102.5187	NEW MADRID 345/22.0KV TRANSFORMER CKT 1
FDNS	06NR	6	20L	G15_033	FROM->TO	G14-057T 345.00 - SUNNYSIDE 345KV CKT 1	717	789	0.04261	102.4853	FRONTIER - GRIMES 345KV CKT 1
FDNS	06NR	6	20L	G15_033	FROM->TO	G14-057T 345.00 - SUNNYSIDE 345KV CKT 1	717	789	0.04271	102.4828	OIL CENTER - STRATFORD 138KV CKT 1
FDNS	06NR	6	20L	G15_033	FROM->TO	G14-057T 345.00 - SUNNYSIDE 345KV CKT 1	717	789	0.04288	102.4791	P12:138:AEPW-OGE:CORNVIL4:MAUD 4
FDNS	06NR	6	20L	G15_033	FROM->TO	G14-057T 345.00 - SUNNYSIDE 345KV CKT 1	717	789	0.04239	102.4645	WEATHERFORD JCT. - WEATHERFORD SOUTHEAST 138KV CKT 1
FDNS	06NR	6	20L	G15_033	FROM->TO	G14-057T 345.00 - SUNNYSIDE 345KV CKT 1	717	789	0.04239	102.4645	WEATHERFORD JCT. - WEATHERFORD SOUTHEAST 138KV CKT 1
FDNS	06NR	6	20L	G15_033	FROM->TO	G14-057T 345.00 - SUNNYSIDE 345KV CKT 1	717	789	0.04288	102.453	BLANCHARD - CORNVILLE 138KV CKT 1
FDNS	06NR	6	20L	G15_033	FROM->TO	G14-057T 345.00 - SUNNYSIDE 345KV CKT 1	717	789	0.04239	102.4527	P12:138:AEPW:REDROCKRD4:WTH_JCT4
FDNS	06NR	6	20L	G15_033	FROM->TO	G14-057T 345.00 - SUNNYSIDE 345KV CKT 1	717	789	0.04225	102.4281	CANADIAN - NOBLE 138KV CKT 1
FDNS	06NR	6	20L	G15_033	FROM->TO	G14-057T 345.00 - SUNNYSIDE 345KV CKT 1	717	789	0.0425	102.4265	AXTELL - POST ROCK 345KV CKT 1
FDNS	06NR	6	20L	G15_033	FROM->TO	G14-057T 345.00 - SUNNYSIDE 345KV CKT 1	717	789	0.04227	102.4264	P12:138:OKGE:3TERM27
FDNS	06NR	6	20L	G15_033	FROM->TO	G14-057T 345.00 - SUNNYSIDE 345KV CKT 1	717	789	0.04261	102.4236	GEN506754 1-LEBROCK STEAM 1
FDNS	06NR	6	20L	G15_033	FROM->TO	G14-057T 345.00 - SUNNYSIDE 345KV CKT 1	717	789	0.04288	102.4225	BAILEY4 138.00 - SUNSHINE CANYON 138KV CKT 1
FDNS	06NR	6	20L	G15_033	FROM->TO	G14-057T 345.00 - SUNNYSIDE 345KV CKT 1	717	789	0.04271	102.4162	LATTA JCT - OIL CENTER 138KV CKT 1
FDNS	06NR	6	20L	G15_033	FROM->TO	G14-057T 345.00 - SUNNYSIDE 345KV CKT 1	717	789	0.04239	102.4101	HINTON - WEATHERFORD JCT. 138KV CKT 1
FDNS	06NR	6	20L	G15_033	FROM->TO	G14-057T 345.00 - SUNNYSIDE 345KV CKT 1	717	789	0.04223	102.4081	CHISHOLM6 230.00 - ELK CITY 230KV 230KV CKT 1
FDNS	06NR	6	20L	G15_033	FROM->TO	G14-057T 345.00 - SUNNYSIDE 345KV CKT 1	717	789	0.04223	102.4061	ELK CITY 230KV (ELKCTY-6) 230/138/13.8KV TRANSFORMER CKT 1
FDNS	06NR	6	20L	G15_033	FROM->TO	G14-057T 345.00 - SUNNYSIDE 345KV CKT 1	717	789	0.04223	102.4061	ELK CITY 230KV (ELKCTY-6) 230/138/13.8KV TRANSFORMER CKT 1
FDNS	06NR	6	20L	G15_033	FROM->TO	G14-057T 345.00 - SUNNYSIDE 345KV CKT 1	717	789	0.04257	102.4044	ELDORADO EHV - SHERIDAN EHV 500KV CKT 1
FDNS	06NR	6	20L	G15_033	FROM->TO	G14-057T 345.00 - SUNNYSIDE 345KV CKT 1	717	789	0.04261	102.3947	GEN334440 1-SABINE UNIT 4
FDNS	06NR	6	20L	G15_033	FROM->TO	G14-057T 345.00 - SUNNYSIDE 345KV CKT 1	717	789	0.04225	102.3881	NOBLE - PURCELL4 138.00 138KV CKT 1
FDNS	06NR	6	20L	G15_033	FROM->TO	G14-057T 345.00 - SUNNYSIDE 345KV CKT 1	717	789	0.04239	102.3775	HINTON - REDROCKRD4 138.00 138KV CKT 1
FDNS	06NR	6	20L	G15_033	FROM->TO	G14-057T 345.00 - SUNNYSIDE 345KV CKT 1	717	789	0.04145	102.376	G11-14T 345.00 - WOODWARD DISTRICT EHV 345KV CKT 1
FDNS	06NR	6	20L	G15_033	FROM->TO	G14-057T 345.00 - SUNNYSIDE 345KV CKT 1	717	789	0.04145	102.376	G11-14T 345.00 - WOODWARD DISTRICT EHV 345KV CKT 2
FDNS	06NR	6	20L	G15_033	FROM->TO	G14-057T 345.00 - SUNNYSIDE 345KV CKT 1	717	789	0.04179	102.364	HITCHLAND INTERCHANGE - MOORE COUNTY INTERCHANGE 230KV CKT 1
FDNS	06NR	6	20L	G15_033	FROM->TO	G14-057T 345.00 - SUNNYSIDE 345KV CKT 1	717	789	0.04179	102.364	HITCHLAND INTERCHANGE - MOORE COUNTY INTERCHANGE 230KV CKT 1
FDNS	06NR	6	20L	G15_033	FROM->TO	G14-057T 345.00 - SUNNYSIDE 345KV CKT 1	717	789	0.04288	102.3565	BLANCHARD - MAUD 138KV CKT 1
FDNS	06NR	6	20L	G15_033	FROM->TO	G14-057T 345.00 - SUNNYSIDE 345KV CKT 1	717	789	0.04288	102.3544	BAILEY4 138.00 - WESTMOORE 138KV CKT 1
FDNS	06NR	6	20L	G15_033	FROM->TO	G14-057T 345.00 - SUNNYSIDE 345KV CKT 1	717	789	0.04247	102.3539	G13-010T 345.00 - POST ROCK 345KV CKT 1
FDNS	06NR	6	20L	G15_033	FROM->TO	G14-057T 345.00 - SUNNYSIDE 345KV CKT 1	717	789	0.04282	102.3457	G15063_T 345.00 - WOODRING 345KV CKT 1
FDNS	06NR	6	20L	G15_033	FROM->TO	G14-057T 345.00 - SUNNYSIDE 345KV CKT 1	717	789	0.04261	102.3415	GEN334030 1-FRONTIER UNIT 1
FDNS	06NR	6	20L	G15_033	FROM->TO	G14-057T 345.00 - SUNNYSIDE 345KV CKT 1	717	789	0.04261	102.3378	GEN334031 1-FRONTIER UNIT 2
FDNS	06NR	6	20L	G15_033	FROM->TO	G14-057T 345.00 - SUNNYSIDE 345KV CKT 1	717	789	0.04234	102.337	HOLCOMB - SETAB 345KV CKT 1
FDNS	06NR	6	20L	G15_033	FROM->TO	G14-057T 345.00 - SUNNYSIDE 345KV CKT 1	717	789	0.04234	102.337	HOLCOMB - SETAB 345KV CKT 1
FDNS	06NR	6	20L	G15_033	FROM->TO	G14-057T 345.00 - SUNNYSIDE 345KV CKT 1	717	789	0.04248	102.3274	P12:138:AEPW:WTHWF4:CLINTJC4
FDNS	06NR	6	20L	G15_033	FROM->TO	G14-057T 345.00 - SUNNYSIDE 345KV CKT 1	717	789	0.04251	102.3144	LATHAMS7 345.00 - ROSE HILL 345KV CKT 1
FDNS	06NR	6	20L	G15_033	FROM->TO	G14-057T 345.00 - SUNNYSIDE 345KV CKT 1	717	789	0.04263	102.3085	TUPELO - TUPELO TAP 138KV CKT 1
FDNS	06NR	6	20L	G15_033	FROM->TO	G14-057T 345.00 - SUNNYSIDE 345KV CKT 1	717	789	0.04235	102.3053	PARK LANE - SEMINOLE 138KV CKT 1
FDNS	06NR	6	20L	G15_033	FROM->TO	G14-057T 345.00 - SUNNYSIDE 345KV CKT 1	717	789	0.04247	102.3047	G13-010T 345.00 - SPEARVILLE 345KV CKT 1
FDNS	06NR	6	20L	G15_033	FROM->TO	G14-057T 345.00 - SUNNYSIDE 345KV CKT 1	717	789	0.04288	102.2772	FRANKLIN SW - WESTMOORE 138KV CKT 1
FDNS	06NR	6	20L	G15_033	FROM->TO	G14-057T 345.00 - SUNNYSIDE 345KV CKT 1	717	789	0.04262	102.2713	MARIETTA - MARIETTA4 138.00 138KV CKT 1
FDNS	06NR	6	20L	G15_033	FROM->TO	G14-057T 345.00 - SUNNYSIDE 345KV CKT 1	717	789	0.04251	102.2672	DRAPER LAKE - SEMINOLE 345KV CKT 2
FDNS	06NR	6	20L	G15_033	FROM->TO	G14-057T 345.00 - SUNNYSIDE 345KV CKT 1	717	789	0.04251	102.2671	DRAPER LAKE - SEMINOLE 345KV CKT 1
FDNS	06NR	6	20L	G15_033	FROM->TO	G14-057T 345.00 - SUNNYSIDE 345KV CKT 1	717	789	0.04261	102.2571	GEN335204 1-NELSON UNIT 4
FDNS	06NR	6	20L	G15_033	FROM->TO	G14-057T 345.00 - SUNNYSIDE 345KV CKT 1	717	789	0.04271	102.2483	LASALLE - LATTA JCT 138KV CKT 1
FDNS	06NR	6	20L	G15_033	FROM->TO	G14-057T 345.00 - SUNNYSIDE 345KV CKT 1	717	789	0.04256	102.2387	P12:138:WFEC:MSL02
FDNS	06NR	6	20L	G15_033	FROM->TO	G14-057T 345.00 - SUNNYSIDE 345KV CKT 1	717	789	0.04258	102.2313	ELDORADO EHV - MOUNT OLIVE 500KV CKT 1
FDNS	06NR	6	20L	G15_033	FROM->TO	G14-057T 345.00 - SUNNYSIDE 345KV CKT 1	717	789	0.04261	102.2282	NEW MADRID 161/22.0KV TRANSFORMER CKT 1
FDNS	06NR	6	20L	G15_033	FROM->TO	G14-057T 345.00 - SUNNYSIDE 345KV CKT 1	717	789	0.04327	102.2262	P12:138:AEPW:CORNVIL4:DUNCAN-4
FDNS	06NR	6	20L	G15_033	FROM->TO	G14-057T 345.00 - SUNNYSIDE 345KV CKT 1	717	789	0.04261	102.2249	GEN336170 1-GULF OXY U4
FDNS	06NR	6	20L	G15_033	FROM->TO	G14-057T 345.00 - SUNNYSIDE 345KV CKT 1	717	789	0.04244	102.2169	G1524G1525 345.00 - THISTLE7 345.00 345KV CKT 1
FDNS	06NR	6	20L	G15_033	FROM->TO	G14-057T 345.00 - SUNNYSIDE 345KV CKT 1	717	789	0.04244	102.2169	G1524G1525 345.00 - THISTLE7 345.00 345KV CKT 2
FDNS	06NR	6	20L	G15_033	FROM->TO	G14-057T 345.00 - SUNNYSIDE 345KV CKT 1	717	789	0.04261	102.2101	GEN336252 1-NINEMILE POINT UNIT#5
FDNS	06NR	6	20L	G15_033	FROM->TO	G14-057T 345.00 - SUNNYSIDE 345KV CKT 1	717	789	0.04256	102.2002	PAOLI - PAYNE 138.00 138KV CKT 1
FDNS	06NR	6	20L	G15_033	FROM->TO	G14-057T 345.00 - SUNNYSIDE 345KV CKT 1	717	789	0.04282	102.1933	G15063_T 345.00 - MATHWSN7 345.00 345KV CKT 1
FDNS	06NR	6	20L	G15_033	FROM->TO	G14-057T 345.00 - SUNNYSIDE 345KV CKT 1	717	789	0.04261	102.1818	WHITE BLUFF 500/26.0KV TRANSFORMER CKT 1
FDNS	06NR	6	20L	G15_033	FROM->TO	G14-057T 345.00 - SUNNYSIDE 345KV CKT 1	717	789	0.04271	102.1808	LASALLE - STONEWAL LH138.00 138KV CKT 1
FDNS	06NR	6	20L	G15_033	FROM->TO	G14-057T 345.00 - SUNNYSIDE 345KV CKT 1	717	789	0.04225	102.1732	PURCELL4 138.00 - WALNUT CREEK 138KV CKT 1
FDNS	06NR	6	20L	G15_033	FROM->TO	G14-057T 345.00 - SUNNYSIDE 345KV CKT 1	717	789	0.04271	102.1646	STONEWAL LH138.00 - TUPELO TAP 138KV CKT 1
FDNS	06NR	6	20L	G15_033	FROM->TO	G14-057T 345.00 - SUNNYSIDE 345KV CKT 1	717	789	0.04242	102.1637	MOREWOOD SW - NINE MILE 138KV CKT 1
FDNS	06NR	6	20L	G15_033	FROM->TO	G14-057T 345.00 - SUNNYSIDE 345KV CKT 1	717	789	0.04248	102.1509	P12:138:AEPW:WTHWF4:WTH_SE4
FDNS	06NR	6	20L	G15_033	FROM->TO	G14-057T 345.00 - SUNNYSIDE 345KV CKT 1	717	789	0.04231	102.1435	MATHWSN7 345.00 - TATONGA7 345.00 345KV CKT 1
FDNS	06NR	6	20L	G15_033	FROM->TO	G14-057T 345.00 - SUNNYSIDE 345KV CKT 1	717	789	0.04231	102.1435	MATHWSN7 345.00 - TATONGA7 345.00 345KV CKT 2
FDNS	06NR	6	20L	G15_033	FROM->TO	G14-057T 345.00 - SUNNYSIDE 345KV CKT 1	717	789	0.04261	102.1401	GEN336831 1-BAXTER WILSON SES
FDNS	06NR	6	20L	G15_033	FROM->TO	G14-057T 345.00 - SUNNYSIDE 345KV CKT 1	717	789	0.04259	102.1349	EMPORIA ENERGY CENTER - G14_001T 345.00 345KV CKT 1
FDNS	06NR	6	20L	G15_033	FROM->TO	G14-057T 345.00 - SUNNYSIDE 345KV CKT 1	717	789	0.04268	102.1336	P12:138:AEPW:SHERID4:112GORE4
FDNS	06NR	6	20L	G15_033	FROM->TO	G14-057T 345.00 - SUNNYSIDE 345KV CKT 1	717	789	0.04229	102.1206	MOORE COUNTY INTERCHANGE - POTTER COUNTY INTERCHANGE 230KV CKT 1
FDNS	06NR	6	20L	G15_033	FROM->TO	G14-057T 345.00 - SUNNYSIDE 345KV CKT 1	717	789	0.04229	102.1206	MOORE COUNTY INTERCHANGE - POTTER COUNTY INTERCHANGE 230KV CKT 1
FDNS	06NR	6	20L	G15_033	FROM->TO	G14-057T 345.00 - SUNNYSIDE 345KV CKT 1	717	789	0.04261	102.1118	GEN562783 1-G15036_4 0.6900
FDNS	06NR	6	20L	G15_033	FROM->TO	G14-057T 345.00 - SUNNYSIDE 345KV CKT 1	717	789	0.04261	102.1118	GEN562784 1-G15036_5 0.6900
FDNS	06NR	6	20L	G15_033	FROM->TO	G14-057T 345.00 - SUNNYSIDE 345KV CKT 1	717	789	0.04261	102.1117	GEN338146 1-INDEPENDENCE UNIT #2
FDNS	06NR	6	20L	G15_033	FROM->TO	G14-057T 345.00 - SUNNYSIDE 345KV CKT 1	717	789	0.04266	102.1072	GRACEMONT (BANK 1) 345/138/13.8KV TRANSFORMER CKT 1
FDNS	06NR	6	20L	G15_033	FROM->TO	G14-057T 345.00 - SUNNYSIDE 345KV CKT 1	717	789	0.04259	102.1046	ANADARKO - GEORGIA 138KV CKT 1

SOLUTION	GROUP	SCENARIO	SEASON	SOURCE	DIRECTION	MONITORED ELEMENT	RATEA (MVA)	RATEB(MVA)	TDF	TC%LOADING (% MVA)	CONTINGENCY
FDNS	06NR	6	20L	G15_033	FROM->TO	G14-057T 345.00 - SUNNYSIDE 345KV CKT 1	717	789	0.04262	102.0902	ENVILLE 138.00 - MARIETTA4 138.00 138KV CKT 1
FDNS	06ALL	6	16WP	G15_033	FROM->TO	G14-057T 345.00 - SUNNYSIDE 345KV CKT 1	717	789	0.1601	102.0868	BASE CASE
FDNS	06NR	6	20L	G15_033	FROM->TO	G14-057T 345.00 - SUNNYSIDE 345KV CKT 1	717	789	0.04261	102.0864	GEN506752 1-LEBROCK GAS 1
FDNS	06NR	6	20L	G15_033	FROM->TO	G14-057T 345.00 - SUNNYSIDE 345KV CKT 1	717	789	0.04361	102.0863	LAWTON EASTSIDE (LES 4) 345/138/13.8KV TRANSFORMER CKT 1
FDNS	06NR	6	20L	G15_033	FROM->TO	G14-057T 345.00 - SUNNYSIDE 345KV CKT 1	717	789	0.04361	102.0863	LAWTON EASTSIDE (LES 4) 345/138/13.8KV TRANSFORMER CKT 1
FDNS	06NR	6	20L	G15_033	FROM->TO	G14-057T 345.00 - SUNNYSIDE 345KV CKT 1	717	789	0.04261	102.0856	GEN506753 1-LEBROCK GAS 2
FDNS	06NR	6	20L	G15_033	FROM->TO	G14-057T 345.00 - SUNNYSIDE 345KV CKT 1	717	789	0.04282	102.0815	CIMARRON - NORTHWEST 345KV CKT 1
FDNS	06NR	6	20L	G15_033	FROM->TO	G14-057T 345.00 - SUNNYSIDE 345KV CKT 1	717	789	0.04259	102.0733	FLETCHER - GEORGIA 138KV CKT 1
FDNS	06NR	6	20L	G15_033	FROM->TO	G14-057T 345.00 - SUNNYSIDE 345KV CKT 1	717	789	0.04261	102.0731	NELSON 230/20.0KV TRANSFORMER CKT 1
FDNS	06NR	6	20L	G15_033	FROM->TO	G14-057T 345.00 - SUNNYSIDE 345KV CKT 1	717	789	0.04259	102.0594	G14_001T 345.00 - WICHITA 345KV CKT 1
FDNS	06NR	6	20L	G15_033	FROM->TO	G14-057T 345.00 - SUNNYSIDE 345KV CKT 1	717	789	0.04256	102.0565	EMPIRE - FLETCHER 138KV CKT 1
FDNS	06NR	6	20L	G15_033	FROM->TO	G14-057T 345.00 - SUNNYSIDE 345KV CKT 1	717	789	0.04248	102.0483	WEATHERFORD TAP - WEATHERFORD WIND FARM 138KV CKT 1
FDNS	06NR	6	20L	G15_033	FROM->TO	G14-057T 345.00 - SUNNYSIDE 345KV CKT 1	717	789	0.04249	102.0444	P12:138:OKGE-AEPW:JENSEN4:REDROCKRD4
FDNS	06NR	6	20L	G15_033	FROM->TO	G14-057T 345.00 - SUNNYSIDE 345KV CKT 1	717	789	0.04261	102.0437	GEN515577 1-ARBWND11 0.6900
FDNS	06NR	6	20L	G15_033	FROM->TO	G14-057T 345.00 - SUNNYSIDE 345KV CKT 1	717	789	0.04236	102.0409	CLINTON JUNCTION - ELK CITY 138KV CKT 1
FDNS	06NR	6	20L	G15_033	FROM->TO	G14-057T 345.00 - SUNNYSIDE 345KV CKT 1	717	789	0.04236	102.0409	CLINTON JUNCTION - ELK CITY 138KV CKT 1
FDNS	06NR	6	20L	G15_033	FROM->TO	G14-057T 345.00 - SUNNYSIDE 345KV CKT 1	717	789	0.04262	102.0403	ENVILLE 138.00 - LEBANON 138KV CKT 1
FDNS	06NR	6	20L	G15_033	FROM->TO	G14-057T 345.00 - SUNNYSIDE 345KV CKT 1	717	789	0.04242	102.0381	BEARCAT 138.00 - NINE MILE 138KV CKT 1
FDNS	06NR	6	20L	G15_033	FROM->TO	G14-057T 345.00 - SUNNYSIDE 345KV CKT 1	717	789	0.04256	102.0249	COMANCHE - EMPIRE 138KV CKT 1
FDNS	06NR	6	20L	G15_033	FROM->TO	G14-057T 345.00 - SUNNYSIDE 345KV CKT 1	717	789	0.04244	102.0239	GERALD GENTLEMAN STATION - RED WILLOW 345KV CKT 1
FDNS	06NR	6	20L	G15_033	FROM->TO	G14-057T 345.00 - SUNNYSIDE 345KV CKT 1	717	789	0.04248	102.0091	WEATHERFORD SOUTHEAST - WEATHERFORD TAP 138KV CKT 1
FDNS	06NR	6	20L	G15_033	FROM->TO	G14-057T 345.00 - SUNNYSIDE 345KV CKT 1	717	789	0.04261	102.0058	GEN590011 2-ERCOT EQUIVALENCE
FDNS	06NR	6	20L	G15_033	FROM->TO	G14-057T 345.00 - SUNNYSIDE 345KV CKT 1	717	789	0.05019	102.0041	TUCO INTERCHANGE - TUCO_2 345.00 345KV CKT 1
FDNS	06NR	6	20L	G15_033	FROM->TO	G14-057T 345.00 - SUNNYSIDE 345KV CKT 1	717	789	0.04282	101.9994	DUNCAN (DUNCAN) 138/69/13.8KV TRANSFORMER CKT 1
FDNS	06NR	6	20L	G15_033	FROM->TO	G14-057T 345.00 - SUNNYSIDE 345KV CKT 1	717	789	0.04282	101.9994	DUNCAN (DUNCAN) 138/69/13.8KV TRANSFORMER CKT 1
FDNS	06NR	6	20L	G15_033	FROM->TO	G14-057T 345.00 - SUNNYSIDE 345KV CKT 1	717	789	0.0426	101.997	8DANIEL8 500.00 - MCKNIGHT 500KV CKT 1
FDNS	06NR	6	20L	G15_033	FROM->TO	G14-057T 345.00 - SUNNYSIDE 345KV CKT 1	717	789	0.04212	101.9827	BUCKNER7 345.00 - SPEARVILLE 345KV CKT 1
FDNS	06NR	6	20L	G15_033	FROM->TO	G14-057T 345.00 - SUNNYSIDE 345KV CKT 1	717	789	0.04212	101.9827	BUCKNER7 345.00 - SPEARVILLE 345KV CKT 1
FDNS	06NR	6	20L	G15_033	FROM->TO	G14-057T 345.00 - SUNNYSIDE 345KV CKT 1	717	789	0.04261	101.9765	GEN334441 1-SABINE UNIT 5
FDNS	06NR	6	20L	G15_033	FROM->TO	G14-057T 345.00 - SUNNYSIDE 345KV CKT 1	717	789	0.04261	101.9754	GEN590010 1-ERCOT EQUIVALENCE
FDNS	06NR	6	20L	G15_033	FROM->TO	G14-057T 345.00 - SUNNYSIDE 345KV CKT 1	717	789	0.04271	101.9734	P12:138:WFEC:MSL05
FDNS	06NR	6	20L	G15_033	FROM->TO	G14-057T 345.00 - SUNNYSIDE 345KV CKT 1	717	789	0.04261	101.973	GEN335614 1-WILLOW GLENN UNIT#4
FDNS	06NR	6	20L	G15_033	FROM->TO	G14-057T 345.00 - SUNNYSIDE 345KV CKT 1	717	789	0.04261	101.9689	GEN338143 1-INDEPENDENCE UNIT #1
FDNS	06NR	6	20L	G15_033	FROM->TO	G14-057T 345.00 - SUNNYSIDE 345KV CKT 1	717	789	0.04261	101.9671	GEN300007 1-NEW MADRID UNIT 2
FDNS	06NR	6	20L	G15_033	FROM->TO	G14-057T 345.00 - SUNNYSIDE 345KV CKT 1	717	789	0.04261	101.967	P12:69:AEPW:L.E.S.-2:LAW WC2
FDNS	06NR	6	20L	G15_033	FROM->TO	G14-057T 345.00 - SUNNYSIDE 345KV CKT 1	717	789	0.04242	101.9617	BEARCAT 138.00 - MOORELAND 138KV CKT 1
FDNS	06NR	6	20L	G15_033	FROM->TO	G14-057T 345.00 - SUNNYSIDE 345KV CKT 1	717	789	0.04261	101.9553	GEN334392 1-EXXON MOBIL IPP 1
FDNS	06NR	6	20L	G15_033	FROM->TO	G14-057T 345.00 - SUNNYSIDE 345KV CKT 1	717	789	0.04252	101.9542	CUSTER4 138.00 - RED HILLS WIND 138KV CKT 1
FDNS	06NR	6	20L	G15_033	FROM->TO	G14-057T 345.00 - SUNNYSIDE 345KV CKT 1	717	789	0.04261	101.9537	GEN334393 1-EXXON MOBIL IPP 2
FDNS	06NR	6	20L	G15_033	FROM->TO	G14-057T 345.00 - SUNNYSIDE 345KV CKT 1	717	789	0.04261	101.9537	GEN334394 1-EXXON MOBIL IPP 3
FDNS	06NR	6	20L	G15_033	FROM->TO	G14-057T 345.00 - SUNNYSIDE 345KV CKT 1	717	789	0.04261	101.9518	GEN337041 1-GERALD ANDRUS
FDNS	06NR	6	20L	G15_033	FROM->TO	G14-057T 345.00 - SUNNYSIDE 345KV CKT 1	717	789	0.04261	101.9463	GEN336191 1-LITTLE GYPSY UNIT#3
FDNS	06NR	6	20L	G15_033	FROM->TO	G14-057T 345.00 - SUNNYSIDE 345KV CKT 1	717	789	0.04264	101.9456	ANADARKO - GRACMNT4 138.00 138KV CKT 1
FDNS	06NR	6	20L	G15_033	FROM->TO	G14-057T 345.00 - SUNNYSIDE 345KV CKT 1	717	789	0.04261	101.9418	GEN336464 1-MICHOUD UNIT #3
FDNS	06NR	6	20L	G15_033	FROM->TO	G14-057T 345.00 - SUNNYSIDE 345KV CKT 1	717	789	0.04242	101.9399	P12:138:WFEC:MSL14
FDNS	06NR	6	20L	G15_033	FROM->TO	G14-057T 345.00 - SUNNYSIDE 345KV CKT 1	717	789	0.04266	101.9323	P12:138:AEPW:CORNVIL4:S.W.S.-4
FDNS	06NR	6	20L	G15_033	FROM->TO	G14-057T 345.00 - SUNNYSIDE 345KV CKT 1	717	789	0.04252	101.9301	CUSTER4 138.00 - ELLIS 4 138.00 138KV CKT 1
FDNS	06NR	6	20L	G15_033	FROM->TO	G14-057T 345.00 - SUNNYSIDE 345KV CKT 1	717	789	0.04268	101.929	P12:138:AEPW:112GORE4:L.E.S.-4
FDNS	06NR	6	20L	G15_033	FROM->TO	G14-057T 345.00 - SUNNYSIDE 345KV CKT 1	717	789	0.04259	101.9279	LAYFLD8 500.00 - MOUNT OLIVE 500KV CKT 1
FDNS	06NR	6	20L	G15_033	FROM->TO	G14-057T 345.00 - SUNNYSIDE 345KV CKT 1	717	789	0.04259	101.9279	LAYFLD8 500.00 - MOUNT OLIVE 500KV CKT 1
FDNS	06NR	6	20L	G15_033	FROM->TO	G14-057T 345.00 - SUNNYSIDE 345KV CKT 1	717	789	0.04282	101.9248	P12:69:WFEC-AEPW:COMANCH2:DUNCAN-2
FDNS	06NR	6	20L	G15_033	FROM->TO	G14-057T 345.00 - SUNNYSIDE 345KV CKT 1	717	789	0.04262	101.9228	GRDA1 - GREC TAP5 345.00 345KV CKT 1
FDNS	06NR	6	20L	G15_033	FROM->TO	G14-057T 345.00 - SUNNYSIDE 345KV CKT 1	717	789	0.04248	101.9213	CLINTON JUNCTION - CLINTON NATURAL GAS TAP 138KV CKT 1
FDNS	06NR	6	20L	G15_033	FROM->TO	G14-057T 345.00 - SUNNYSIDE 345KV CKT 1	717	789	0.04261	101.9185	GEN334433 1-SABINE UNIT 3
FDNS	06NR	6	20L	G15_033	FROM->TO	G14-057T 345.00 - SUNNYSIDE 345KV CKT 1	717	789	0.04261	101.9139	P12:161:AEPW:DYESS 5:HYLAND 5
FDNS	06NR	6	20L	G15_033	FROM->TO	G14-057T 345.00 - SUNNYSIDE 345KV CKT 1	717	789	0.04262	101.9125	LEBANON - TEXOMA JCT 138KV CKT 1
FDNS	06NR	6	20L	G15_033	FROM->TO	G14-057T 345.00 - SUNNYSIDE 345KV CKT 1	717	789	0.04261	101.9078	GEN303007 1-1BC2 U2
FDNS	06NR	6	20L	G15_033	FROM->TO	G14-057T 345.00 - SUNNYSIDE 345KV CKT 1	717	789	0.04261	101.8964	GEN336242 1-1NMIL ST1 18.000
FDNS	06NR	6	20L	G15_033	FROM->TO	G14-057T 345.00 - SUNNYSIDE 345KV CKT 1	717	789	0.04225	101.8947	PAOLI - WALNUT CREEK 138KV CKT 1
FDNS	06NR	6	20L	G15_033	FROM->TO	G14-057T 345.00 - SUNNYSIDE 345KV CKT 1	717	789	0.04261	101.8938	GEN303006 1-1BC2 U1
FDNS	06NR	6	20L	G15_033	FROM->TO	G14-057T 345.00 - SUNNYSIDE 345KV CKT 1	717	789	0.04261	101.8931	FRONTIER 345/18.0KV TRANSFORMER CKT 1
FDNS	06NR	6	20L	G15_033	FROM->TO	G14-057T 345.00 - SUNNYSIDE 345KV CKT 1	717	789	0.04261	101.8895	FRONTIER 345/18.0KV TRANSFORMER CKT 1
FDNS	06NR	6	20L	G15_033	FROM->TO	G14-057T 345.00 - SUNNYSIDE 345KV CKT 1	717	789	0.04261	101.8868	P12:161:AEPW:EROGERS5:ECNTRTN5
FDNS	06NR	6	20L	G15_033	FROM->TO	G14-057T 345.00 - SUNNYSIDE 345KV CKT 1	717	789	0.04282	101.8845	DUNCAN - TOSCO 69KV CKT 1
FDNS	06NR	6	20L	G15_033	FROM->TO	G14-057T 345.00 - SUNNYSIDE 345KV CKT 1	717	789	0.04256	101.8818	DRAPER LAKE - SEMINOLE 345KV CKT 3
FDNS	06NR	6	20L	G15_033	FROM->TO	G14-057T 345.00 - SUNNYSIDE 345KV CKT 1	717	789	0.04261	101.8734	GEN336801 1-BAXTER WILSON UNIT #1
FDNS	06NR	6	20L	G15_033	FROM->TO	G14-057T 345.00 - SUNNYSIDE 345KV CKT 1	717	789	0.04282	101.8678	COMANCHE TAP - TOSCO 69KV CKT 1
FDNS	06NR	6	20L	G15_033	FROM->TO	G14-057T 345.00 - SUNNYSIDE 345KV CKT 1	717	789	0.04261	101.8622	GEN336251 1-NINEMILE POINT UNIT#4
FDNS	06NR	6	20L	G15_033	FROM->TO	G14-057T 345.00 - SUNNYSIDE 345KV CKT 1	717	789	0.04327	101.8594	DUNCAN - DUNCHERTP4 138.00 138KV CKT 1
FDNS	06NR	6	20L	G15_033	FROM->TO	G14-057T 345.00 - SUNNYSIDE 345KV CKT 1	717	789	0.04327	101.8594	DUNCAN - DUNCHERTP4 138.00 138KV CKT 1
FDNS	06NR	6	20L	G15_033	FROM->TO	G14-057T 345.00 - SUNNYSIDE 345KV CKT 1	717	789	0.04327	101.8586	DUNCAN EASTSIDE - DUNCHERTP4 138.00 138KV CKT 1
FDNS	06NR	6	20L	G15_033	FROM->TO	G14-057T 345.00 - SUNNYSIDE 345KV CKT 1	717	789	0.04259	101.8479	G15074_T 345.00 - HOYT 345KV CKT 1
FDNS	06NR	6	20L	G15_033	FROM->TO	G14-057T 345.00 - SUNNYSIDE 345KV CKT 1	717	789	0.04261	101.8429	CIMARRON - CZECH HALL 138KV CKT 1
FDNS	06NR	6	20L	G15_033	FROM->TO	G14-057T 345.00 - SUNNYSIDE 345KV CKT 1	717	789	0.04261	101.8415	GEN334070 1-LEWIS CREEK 1
FDNS	06NR	6	20L	G15_033	FROM->TO	G14-057T 345.00 - SUNNYSIDE 345KV CKT 1	717	789	0.04261	101.8415	GEN334071 1-LEWIS CREEK 2
FDNS	06NR	6	20L	G15_033	FROM->TO	G14-057T 345.00 - SUNNYSIDE 345KV CKT 1	717	789	0.04252	101.838	ELLIS 4 138.00 - MOREWOOD SW 138KV CKT 1
FDNS	06NR	6	20L	G15_033	FROM->TO	G14-057T 345.00 - SUNNYSIDE 345KV CKT 1	717	789	0.04259	101.8348	HOT SPRINGS EHV - MAGNET COVE 500KV CKT 1
FDNS	06NR	6	20L	G15_033	FROM->TO	G14-057T 345.00 - SUNNYSIDE 345KV CKT 1	717	789	0.04259	101.8342	MAGNET COVE - SHERIDAN EHV 500KV CKT 1
FDNS	06NR	6	20L	G15_033	FROM->TO	G14-057T 345.00 - SUNNYSIDE 345KV CKT 1	717	789	0.04327	101.8294	DUNCAN EASTSIDE - OMPA-DUNCAN 821 138KV CKT 1

SOLUTION	GROUP	SCENARIO	SEASON	SOURCE	DIRECTION	MONITORED ELEMENT	RATEA (MVA)	RATEB(MVA)	TDF	TC%LOADING (% MVA)	CONTINGENCY
FDNS	06NR	6	20L	G15_033	FROM->TO	G14-057T 345.00 - SUNNYSIDE 345KV CKT 1	717	789	0.04267	101.8271	NORGE ROAD - SOUTHWESTERN STATION 138KV CKT 1
FDNS	06NR	6	20L	G15_033	FROM->TO	G14-057T 345.00 - SUNNYSIDE 345KV CKT 1	717	789	0.04267	101.8271	NORGE ROAD - SOUTHWESTERN STATION 138KV CKT 1
FDNS	06NR	6	20L	G15_033	FROM->TO	G14-057T 345.00 - SUNNYSIDE 345KV CKT 1	717	789	0.04257	101.8247	CIMARRON - SARA 138KV CKT 1
FDNS	06NR	6	20L	G15_033	FROM->TO	G14-057T 345.00 - SUNNYSIDE 345KV CKT 1	717	789	0.04261	101.8158	CZECH HALL - XEROX 138KV CKT 1
FDNS	06NR	6	20L	G15_033	FROM->TO	G14-057T 345.00 - SUNNYSIDE 345KV CKT 1	717	789	0.04261	101.8153	GEN300006 1-NEW MADRID UNIT 1
FDNS	06NR	6	20L	G15_033	FROM->TO	G14-057T 345.00 - SUNNYSIDE 345KV CKT 1	717	789	0.04261	101.8141	MORGAN - XEROX 138KV CKT 1
FDNS	06NR	6	20L	G15_033	FROM->TO	G14-057T 345.00 - SUNNYSIDE 345KV CKT 1	717	789	0.04264	101.8105	ANADARKO - SEQUOYAHJ4 138.00 138KV CKT 1
FDNS	06NR	6	20L	G15_033	FROM->TO	G14-057T 345.00 - SUNNYSIDE 345KV CKT 1	717	789	0.04239	101.8105	SEMINOLE - VANOSTP4 138.00 138KV CKT 1
FDNS	06NR	6	20L	G15_033	FROM->TO	G14-057T 345.00 - SUNNYSIDE 345KV CKT 1	717	789	0.04282	101.8087	COMANCHE - COMANCHE TAP 69KV CKT 1
FDNS	06NR	6	20L	G15_033	FROM->TO	G14-057T 345.00 - SUNNYSIDE 345KV CKT 1	717	789	0.04261	101.8082	GEN336241 1-1NMIL CT2 18.000
FDNS	06NR	6	20L	G15_033	FROM->TO	G14-057T 345.00 - SUNNYSIDE 345KV CKT 1	717	789	0.04261	101.8081	GEN337430 1-PERYVILLE UNIT #3
FDNS	06NR	6	20L	G15_033	FROM->TO	G14-057T 345.00 - SUNNYSIDE 345KV CKT 1	717	789	0.04261	101.808	GEN336240 1-1NMIL CT1 18.000
FDNS	06NR	6	20L	G15_033	FROM->TO	G14-057T 345.00 - SUNNYSIDE 345KV CKT 1	717	789	0.04261	101.8072	GEN337428 1-PERYVILLE UNIT #1
FDNS	06NR	6	20L	G15_033	FROM->TO	G14-057T 345.00 - SUNNYSIDE 345KV CKT 1	717	789	0.04264	101.8069	CORN TAP - SEQUOYAHJ4 138.00 138KV CKT 1
FDNS	06NR	6	20L	G15_033	FROM->TO	G14-057T 345.00 - SUNNYSIDE 345KV CKT 1	717	789	0.04261	101.805	MORGAN - MUSTANG 138KV CKT 1
FDNSLock	06NR	6	20L	G15_033	FROM->TO	G14-057T 345.00 - SUNNYSIDE 345KV CKT 1	717	789	0.04261	101.8	OKLAUNION 345KV SWITCHED SHUNT
FDNS	06NR	6	20L	G15_033	FROM->TO	G14-057T 345.00 - SUNNYSIDE 345KV CKT 1	717	789	0.04261	101.7991	GEN335571 1-CARVILLE UNIT #1
FDNS	06NR	6	20L	G15_033	FROM->TO	G14-057T 345.00 - SUNNYSIDE 345KV CKT 1	717	789	0.04261	101.799	GEN335570 1-CARVILLE CTG
FDNS	06NR	6	20L	G15_033	FROM->TO	G14-057T 345.00 - SUNNYSIDE 345KV CKT 1	717	789	0.04258	101.793	BLACKBERRY - NEOSHO 345KV CKT 1
FDNS	06NR	6	20L	G15_033	FROM->TO	G14-057T 345.00 - SUNNYSIDE 345KV CKT 1	717	789	0.04258	101.793	BLACKBERRY - NEOSHO 345KV CKT 1
FDNS	06NR	6	20L	G15_033	FROM->TO	G14-057T 345.00 - SUNNYSIDE 345KV CKT 1	717	789	0.04249	101.7922	Canadian Pump Station - REDROCKRD4 138.00 138KV CKT 1
FDNS	06NR	6	20L	G15_033	FROM->TO	G14-057T 345.00 - SUNNYSIDE 345KV CKT 1	717	789	0.04259	101.79	G15074_T 345.00 - JEFFREY ENERGY CENTER 345KV CKT 1
FDNS	06NR	6	20L	G15_033	FROM->TO	G14-057T 345.00 - SUNNYSIDE 345KV CKT 1	717	789	0.04261	101.7888	GEN336167 1-GULF OXY U1
FDNS	06NR	6	20L	G15_033	FROM->TO	G14-057T 345.00 - SUNNYSIDE 345KV CKT 1	717	789	0.04261	101.7888	GEN336168 1-GULF OXY U2
FDNS	06NR	6	20L	G15_033	FROM->TO	G14-057T 345.00 - SUNNYSIDE 345KV CKT 1	717	789	0.04261	101.7888	GEN336169 1-GULF OXY U3
FDNS	06NR	6	20L	G15_033	FROM->TO	G14-057T 345.00 - SUNNYSIDE 345KV CKT 1	717	789	0.04266	101.7872	SOUTHWESTERN STATION - VERDEN 138KV CKT 1
FDNS	06NR	6	20L	G15_033	FROM->TO	G14-057T 345.00 - SUNNYSIDE 345KV CKT 1	717	789	0.04307	101.7867	TUTTLE - TUTTLE CONOCO TAP 138KV CKT 1
FDNS	06NR	6	20L	G15_033	FROM->TO	G14-057T 345.00 - SUNNYSIDE 345KV CKT 1	717	789	0.04261	101.7792	GEN303024 1-1G3INTHB 18.000
FDNS	06NR	6	20L	G15_033	FROM->TO	G14-057T 345.00 - SUNNYSIDE 345KV CKT 1	717	789	0.04257	101.7792	SARA - STHLAKE4 138.00 138KV CKT 1
FDNS	06NR	6	20L	G15_033	FROM->TO	G14-057T 345.00 - SUNNYSIDE 345KV CKT 1	717	789	0.04266	101.777	NORTH 29TH CHICKASHA - VERDEN 138KV CKT 1
FDNS	06NR	6	20L	G15_033	FROM->TO	G14-057T 345.00 - SUNNYSIDE 345KV CKT 1	717	789	0.04248	101.7763	CLINTON NATURAL GAS TAP - WEATHERFORD WIND FARM 138KV CKT 1
FDNS	06NR	6	20L	G15_033	FROM->TO	G14-057T 345.00 - SUNNYSIDE 345KV CKT 1	717	789	0.04259	101.7749	HOYT - STRANGER CREEK 345KV CKT 1
FDNS	06NR	6	20L	G15_033	FROM->TO	G14-057T 345.00 - SUNNYSIDE 345KV CKT 1	717	789	0.0426	101.7748	P12:138:AEPW-OGE:SHIDLER4:OSAGE 4
FDNS	06NR	6	20L	G15_033	FROM->TO	G14-057T 345.00 - SUNNYSIDE 345KV CKT 1	717	789	0.04292	101.7667	P12:69:AEPW-OMPA:COMANC-2:OMWALTR2
FDNS	06NR	6	20L	G15_033	FROM->TO	G14-057T 345.00 - SUNNYSIDE 345KV CKT 1	717	789	0.04257	101.7659	MCCLAIN - STHLAKE4 138.00 138KV CKT 1
FDNS	06NR	6	20L	G15_033	FROM->TO	G14-057T 345.00 - SUNNYSIDE 345KV CKT 1	717	789	0.04267	101.7559	CORNVILLE - NORGE ROAD 138KV CKT 1
FDNS	06NR	6	20L	G15_033	FROM->TO	G14-057T 345.00 - SUNNYSIDE 345KV CKT 1	717	789	0.04267	101.7559	CORNVILLE - NORGE ROAD 138KV CKT 1
FDNS	06NR	6	20L	G15_033	FROM->TO	G14-057T 345.00 - SUNNYSIDE 345KV CKT 1	717	789	0.04261	101.7552	OKLAUNION 345KV SWITCHED SHUNT
FDNS	06NR	6	20L	G15_033	FROM->TO	G14-057T 345.00 - SUNNYSIDE 345KV CKT 1	717	789	0.04266	101.7506	CORNVILLE - NORTH 29TH CHICKASHA 138KV CKT 1
FDNS	06NR	6	20L	G15_033	FROM->TO	G14-057T 345.00 - SUNNYSIDE 345KV CKT 1	717	789	0.04261	101.7501	GEN303008 1-1BC2 U3
FDNS	06NR	6	20L	G15_033	FROM->TO	G14-057T 345.00 - SUNNYSIDE 345KV CKT 1	717	789	0.04261	101.7462	GEN337432 1-PERYVILLE UNIT #5
FDNS	06NR	6	20L	G15_033	FROM->TO	G14-057T 345.00 - SUNNYSIDE 345KV CKT 1	717	789	0.04261	101.7442	GEN335644 1-EXXON UNIT5
FDNSLock	06NR	6	20L	G15_033	FROM->TO	G14-057T 345.00 - SUNNYSIDE 345KV CKT 1	717	789	0.04261	101.6	SUNNYSIDE 1 13KV SWITCHED SHUNT
FDNS	06NR	6	20L	G15_033	FROM->TO	G14-057T 345.00 - SUNNYSIDE 345KV CKT 1	717	789	0.04261	101.5544	SUNNYSIDE 1 13KV SWITCHED SHUNT
FDNS	06NR	6	20L	G15_033	FROM->TO	G14-057T 345.00 - SUNNYSIDE 345KV CKT 1	717	789	0.04261	101.3466	OKLAUNION 345/13.2KV TRANSFORMER CKT 1
FDNS	06NR	6	20L	G15_033	FROM->TO	G14-057T 345.00 - SUNNYSIDE 345KV CKT 1	717	789	0.04261	101.3175	803-OKLAUNION
FDNS	00NR	6	20WP	G15_033	FROM->TO	G14-057T 345.00 - SUNNYSIDE 345KV CKT 1	717	789	0.03439	101.3151	JOHNSON COUNTY - SUNNYSIDE 345KV CKT 1
FDNS	06NR	6	20L	G15_033	FROM->TO	G14-057T 345.00 - SUNNYSIDE 345KV CKT 1	717	789	0.04302	101.2909	P12:230:AEPW:ELKCITY6:SWEETWT6
FDNS	06NR	6	20L	G15_033	FROM->TO	G14-057T 345.00 - SUNNYSIDE 345KV CKT 1	717	789	0.04309	101.0752	CHISHOLM7 345.00 () 345/230/13.2KV TRANSFORMER CKT 1
FDNS	06NR	6	20L	G15_033	FROM->TO	G14-057T 345.00 - SUNNYSIDE 345KV CKT 1	717	789	0.04402	101.0414	P12:138:AEPW:112GORE4:SNYDER-4
FDNS	06NR	6	20L	G15_033	FROM->TO	G14-057T 345.00 - SUNNYSIDE 345KV CKT 1	717	789	0.04245	100.9155	ROCKY POINT - SPRINGDALE 138KV CKT 1
FDNS	06NR	6	20L	G15_033	FROM->TO	G14-057T 345.00 - SUNNYSIDE 345KV CKT 1	717	789	0.04261	100.9147	GEN562084 1-G11_050_3 0.6900
FDNS	06NR	6	20L	G15_033	FROM->TO	G14-057T 345.00 - SUNNYSIDE 345KV CKT 1	717	789	0.04261	100.8982	GEN560187 1-WTH WIND 0.5750
FDNS	06NR	6	20L	G15_033	FROM->TO	G14-057T 345.00 - SUNNYSIDE 345KV CKT 1	717	789	0.04261	100.8869	GEN560112 1-G08_037_3 0.6900
FDNS	06NR	6	20L	G15_033	FROM->TO	G14-057T 345.00 - SUNNYSIDE 345KV CKT 1	717	789	0.04316	100.8829	CLINTON AIR FORCE BASE TAP - HOBART JUNCTION 138KV CKT 1
FDNS	06NR	6	20L	G15_033	FROM->TO	G14-057T 345.00 - SUNNYSIDE 345KV CKT 1	717	789	0.04261	100.8827	GEN560186 1-BLUCAN2-WTG10.7000
FDNS	06NR	6	20L	G15_033	FROM->TO	G14-057T 345.00 - SUNNYSIDE 345KV CKT 1	717	789	0.04288	100.8716	P12:138:AEPW:SHAM4WT:CHILD4WT
FDNS	06NR	6	20L	G15_033	FROM->TO	G14-057T 345.00 - SUNNYSIDE 345KV CKT 1	717	789	0.04316	100.8653	CLINTON AIR FORCE BASE TAP - ELK CITY 138KV CKT 1
FDNS	06NR	6	20L	G15_033	FROM->TO	G14-057T 345.00 - SUNNYSIDE 345KV CKT 1	717	789	0.04261	100.8611	GEN515365 1-CENT 21 0.7000
FDNS	06NR	6	20L	G15_033	FROM->TO	G14-057T 345.00 - SUNNYSIDE 345KV CKT 1	717	789	0.04402	100.8607	CACHE - SNYDER 138KV CKT 1
FDNS	06NR	6	20L	G15_033	FROM->TO	G14-057T 345.00 - SUNNYSIDE 345KV CKT 1	717	789	0.04252	100.8496	BROWN - RUSSETT 138KV CKT 1
FDNS	06NR	6	20L	G15_033	FROM->TO	G14-057T 345.00 - SUNNYSIDE 345KV CKT 1	717	789	0.0426	100.8467	P12:138:WFEC:MSL06
FDNS	06NR	6	20L	G15_033	FROM->TO	G14-057T 345.00 - SUNNYSIDE 345KV CKT 1	717	789	0.0426	100.8462	P12:138:AEPW-SWPA:LONEOAK4:TUPELO4
FDNS	06NR	6	20L	G15_033	FROM->TO	G14-057T 345.00 - SUNNYSIDE 345KV CKT 1	717	789	0.04248	100.8345	RUSSETT - SPRINGDALE 138KV CKT 1
FDNS	06NR	6	20L	G15_033	FROM->TO	G14-057T 345.00 - SUNNYSIDE 345KV CKT 1	717	789	0.04261	100.834	GEN659103 1-ANTELOPE VALLEY UNIT1
FDNS	06NR	6	20L	G15_033	FROM->TO	G14-057T 345.00 - SUNNYSIDE 345KV CKT 1	717	789	0.04261	100.834	GEN659107 2-ANTELOPE VALLEY UNIT2
FDNS	06NR	6	20L	G15_033	FROM->TO	G14-057T 345.00 - SUNNYSIDE 345KV CKT 1	717	789	0.042	100.8328	P12:138:OKGE:3TERM39
FDNS	06NR	6	20L	G15_033	FROM->TO	G14-057T 345.00 - SUNNYSIDE 345KV CKT 1	717	789	0.04261	100.8309	BURLINGTON NO1 + NO 2 + NO 3 161/20.0KV TRANSFORMER CKT 1
FDNS	06NR	6	20L	G15_033	FROM->TO	G14-057T 345.00 - SUNNYSIDE 345KV CKT 1	717	789	0.04252	100.8283	RUSSETT - RUSSETT 138KV CKT 1
FDNS	06NR	6	20L	G15_033	FROM->TO	G14-057T 345.00 - SUNNYSIDE 345KV CKT 1	717	789	0.04261	100.8205	GEN645012 2-NEBRASKA CITY 2
FDNS	06NR	6	20L	G15_033	FROM->TO	G14-057T 345.00 - SUNNYSIDE 345KV CKT 1	717	789	0.04259	100.8202	8BHAM STEEL 500.00 - WEST MEMPHIS 500 500KV CKT 1
FDNS	06NR	6	20L	G15_033	FROM->TO	G14-057T 345.00 - SUNNYSIDE 345KV CKT 1	717	789	0.04261	100.8175	GEN530690 1-PRWINDG1 0.6900
FDNS	06NR	6	20L	G15_033	FROM->TO	G14-057T 345.00 - SUNNYSIDE 345KV CKT 1	717	789	0.04261	100.8169	GEN563273 2-G15093_4 0.6900
FDNS	06NR	6	20L	G15_033	FROM->TO	G14-057T 345.00 - SUNNYSIDE 345KV CKT 1	717	789	0.04261	100.8121	GEN511961 1-DEMPSEY-WTG10.7000
FDNS	06NR	6	20L	G15_033	FROM->TO	G14-057T 345.00 - SUNNYSIDE 345KV CKT 1	717	789	0.04261	100.8109	GEN523815 1-LLANO ESTACADO WIND GEN
FDNS	06NR	6	20L	G15_033	FROM->TO	G14-057T 345.00 - SUNNYSIDE 345KV CKT 1	717	789	0.04261	100.8073	GEN562559 1-G14_047_3 0.4800
FDNS	06NR	6	20L	G15_033	FROM->TO	G14-057T 345.00 - SUNNYSIDE 345KV CKT 1	717	789	0.04261	100.798	GEN539807 1-G05-12-1 0.6900
FDNS	06NR	6	20L	G15_033	FROM->TO	G14-057T 345.00 - SUNNYSIDE 345KV CKT 1	717	789	0.04302	100.7951	GRAPEVINE INTERCHANGE - STATELINE INTERCHANGE 230KV CKT 1
FDNS	06NR	6	20L	G15_033	FROM->TO	G14-057T 345.00 - SUNNYSIDE 345KV CKT 1	717	789	0.04302	100.7951	GRAPEVINE INTERCHANGE - STATELINE INTERCHANGE 230KV CKT 1

SOLUTION	GROUP	SCENARIO	SEASON	SOURCE	DIRECTION	MONITORED ELEMENT	RATEA (MVA)	RATEB(MVA)	TDF	TC%LOADING (% MVA)	CONTINGENCY
FDNS	06NR	6	20L	G15_033	FROM->TO	G14-057T 345.00 - SUNNYSIDE 345KV CKT 1	717	789	0.04261	100.7841	GEN515591 1-PALDRW11 0.6900
FDNS	06NR	6	20L	G15_033	FROM->TO	G14-057T 345.00 - SUNNYSIDE 345KV CKT 1	717	789	0.04261	100.778	GEN562023 1-G11_020_3 0.6900
FDNS	06NR	6	20L	G15_033	FROM->TO	G14-057T 345.00 - SUNNYSIDE 345KV CKT 1	717	789	0.04261	100.778	GEN562026 1-G11_019_3 0.6900
FDNS	06NR	6	20L	G15_033	FROM->TO	G14-057T 345.00 - SUNNYSIDE 345KV CKT 1	717	789	0.04261	100.7747	GEN532663 1-LAWRENCE ENERGY CENTER UNIT 5
FDNS	06NR	6	20L	G15_033	FROM->TO	G14-057T 345.00 - SUNNYSIDE 345KV CKT 1	717	789	0.04259	100.7649	P12:138:WFEC-AEPW:GOLDENSW4:CRAIGJT4
FDNS	06NR	6	20L	G15_033	FROM->TO	G14-057T 345.00 - SUNNYSIDE 345KV CKT 1	717	789	0.04261	100.7481	GEN562627 1-ASGI14_002_30.8200
FDNS	06NR	6	20L	G15_033	FROM->TO	G14-057T 345.00 - SUNNYSIDE 345KV CKT 1	717	789	0.04313	100.7473	GRAPEVINE INTERCHANGE - NICHOLS STATION 230KV CKT 1
FDNS	06NR	6	20L	G15_033	FROM->TO	G14-057T 345.00 - SUNNYSIDE 345KV CKT 1	717	789	0.04313	100.7473	GRAPEVINE INTERCHANGE - NICHOLS STATION 230KV CKT 1
FDNS	06NR	6	20L	G15_033	FROM->TO	G14-057T 345.00 - SUNNYSIDE 345KV CKT 1	717	789	0.04257	100.7454	HUGO (HUGO 1) 345/138/13.8KV TRANSFORMER CKT 1
FDNS	06NR	6	20L	G15_033	FROM->TO	G14-057T 345.00 - SUNNYSIDE 345KV CKT 1	717	789	0.04253	100.7438	HOPE - MCNAB REC 115KV CKT 1
FDNS	06NR	6	20L	G15_033	FROM->TO	G14-057T 345.00 - SUNNYSIDE 345KV CKT 1	717	789	0.0424	100.7415	ROCKY POINT - SUNNYSIDE 138KV CKT 1
FDNS	06NR	6	20L	G15_033	FROM->TO	G14-057T 345.00 - SUNNYSIDE 345KV CKT 1	717	789	0.04256	100.7377	WELSH - WILKES 345KV CKT 1
FDNS	06NR	6	20L	G15_033	FROM->TO	G14-057T 345.00 - SUNNYSIDE 345KV CKT 1	717	789	0.04256	100.7377	WELSH - WILKES 345KV CKT 1
FDNS	06NR	6	20L	G15_033	FROM->TO	G14-057T 345.00 - SUNNYSIDE 345KV CKT 1	717	789	0.04253	100.7346	MCNAB REC - Turk 115 115KV CKT 1
FDNS	06NR	6	20L	G15_033	FROM->TO	G14-057T 345.00 - SUNNYSIDE 345KV CKT 1	717	789	0.04253	100.7346	TURK (TURK 1) 138/115/13.2KV TRANSFORMER CKT 1
FDNS	06NR	6	20L	G15_033	FROM->TO	G14-057T 345.00 - SUNNYSIDE 345KV CKT 1	717	789	0.04253	100.7346	TURK (TURK 1) 138/115/13.2KV TRANSFORMER CKT 1
FDNS	06NR	6	20L	G15_033	FROM->TO	G14-057T 345.00 - SUNNYSIDE 345KV CKT 1	717	789	0.04253	100.7229	P12:115:AEPW:TURK3:HOPE3
FDNS	06NR	6	20L	G15_033	FROM->TO	G14-057T 345.00 - SUNNYSIDE 345KV CKT 1	717	789	0.04261	100.7189	GEN528361 1-MADDOX GEN #1
FDNS	06NR	6	20L	G15_033	FROM->TO	G14-057T 345.00 - SUNNYSIDE 345KV CKT 1	717	789	0.04261	100.7184	GEN563202 1-G15085_3 0.5500
FDNS	06NR	6	20L	G15_033	FROM->TO	G14-057T 345.00 - SUNNYSIDE 345KV CKT 1	717	789	0.04261	100.718	GEN515443 1-MNCOWND1 0.7000
FDNS	06NR	6	20L	G15_033	FROM->TO	G14-057T 345.00 - SUNNYSIDE 345KV CKT 1	717	789	0.04261	100.7169	CLAY BOSWELL 230/20.9KV TRANSFORMER CKT 1
FDNS	06NR	6	20L	G15_033	FROM->TO	G14-057T 345.00 - SUNNYSIDE 345KV CKT 1	717	789	0.04253	100.7149	LONGWOOD - WILKES 345KV CKT 1
FDNS	06NR	6	20L	G15_033	FROM->TO	G14-057T 345.00 - SUNNYSIDE 345KV CKT 1	717	789	0.04253	100.7149	LONGWOOD - WILKES 345KV CKT 1
FDNS	06NR	6	20L	G15_033	FROM->TO	G14-057T 345.00 - SUNNYSIDE 345KV CKT 1	717	789	0.04256	100.7092	CARROLL - DOLET HILLS 230KV CKT 1
FDNS	06NR	6	20L	G15_033	FROM->TO	G14-057T 345.00 - SUNNYSIDE 345KV CKT 1	717	789	0.04261	100.6939	GEN562685 1-G15_013_3 0.3550
FDNS	06NR	6	20L	G15_033	FROM->TO	G14-057T 345.00 - SUNNYSIDE 345KV CKT 1	717	789	0.04261	100.693	GEN629072 4-LANSING GENERATOR FOR UNITS NO4 EIA CODE 1
FDNS	06NR	6	20L	G15_033	FROM->TO	G14-057T 345.00 - SUNNYSIDE 345KV CKT 1	717	789	0.04261	100.6872	GEN562432 1-G13-030 0.6900
FDNS	06NR	6	20L	G15_033	FROM->TO	G14-057T 345.00 - SUNNYSIDE 345KV CKT 1	717	789	0.04261	100.6808	GEN563272 1-G15093_3 0.6900
FDNS	06NR	6	20L	G15_033	FROM->TO	G14-057T 345.00 - SUNNYSIDE 345KV CKT 1	717	789	0.04261	100.6713	GEN562074 1-G1149G1504 0.6900
FDNS	06NR	6	20L	G15_033	FROM->TO	G14-057T 345.00 - SUNNYSIDE 345KV CKT 1	717	789	0.04261	100.6659	GEN562017 1-G11_022_3 0.6900
FDNS	06NR	6	20L	G15_033	FROM->TO	G14-057T 345.00 - SUNNYSIDE 345KV CKT 1	717	789	0.04261	100.6604	GEN681542 6-JP MADGETT
FDNS	06NR	6	20L	G15_033	FROM->TO	G14-057T 345.00 - SUNNYSIDE 345KV CKT 1	717	789	0.04239	100.6545	P12:138:OKGE:3TERM40
FDNS	06NR	6	20L	G15_033	FROM->TO	G14-057T 345.00 - SUNNYSIDE 345KV CKT 1	717	789	0.04261	100.6523	GEN515393 1-OGEWND2G
FDNS	06NR	6	20L	G15_033	FROM->TO	G14-057T 345.00 - SUNNYSIDE 345KV CKT 1	717	789	0.04261	100.6519	INDEPENDENCE 500/26.0KV TRANSFORMER CKT 1
FDNS	06NR	6	20L	G15_033	FROM->TO	G14-057T 345.00 - SUNNYSIDE 345KV CKT 1	717	789	0.04261	100.6443	GEN562962 1-G15058_3 0.4180
FDNS	06NR	6	20L	G15_033	FROM->TO	G14-057T 345.00 - SUNNYSIDE 345KV CKT 1	717	789	0.04246	100.638	CLARKSVILLE - MUSKOGEE 345KV CKT 1
FDNS	06NR	6	20L	G15_033	FROM->TO	G14-057T 345.00 - SUNNYSIDE 345KV CKT 1	717	789	0.04246	100.638	CLARKSVILLE - MUSKOGEE 345KV CKT 1
FDNS	06NR	6	20L	G15_033	FROM->TO	G14-057T 345.00 - SUNNYSIDE 345KV CKT 1	717	789	0.04171	100.6284	CANADIAN RIVER - MUSKOGEE 345KV CKT 1
FDNS	06NR	6	20L	G15_033	FROM->TO	G14-057T 345.00 - SUNNYSIDE 345KV CKT 1	717	789	0.04263	100.6249	P12:138:WFEC:MSL16
FDNS	06NR	6	20L	G15_033	FROM->TO	G14-057T 345.00 - SUNNYSIDE 345KV CKT 1	717	789	0.04261	100.6156	GEN344894 1-1LAB G1 20.000
FDNS	06NR	6	20L	G15_033	FROM->TO	G14-057T 345.00 - SUNNYSIDE 345KV CKT 1	717	789	0.04261	100.6052	P12:138:WFEC:MSL09
FDNS	06NR	6	20L	G15_033	FROM->TO	G14-057T 345.00 - SUNNYSIDE 345KV CKT 1	717	789	0.04261	100.5922	ALMA 161 161/24.0KV TRANSFORMER CKT 1
FDNS	06NR	6	20L	G15_033	FROM->TO	G14-057T 345.00 - SUNNYSIDE 345KV CKT 1	717	789	0.04261	100.5677	GEN562587 1-G14_056_3 0.6900
FDNS	06NR	6	20L	G15_033	FROM->TO	G14-057T 345.00 - SUNNYSIDE 345KV CKT 1	717	789	0.04261	100.5594	GEN661015 1-COYOTE
FDNS	06NR	6	20L	G15_033	FROM->TO	G14-057T 345.00 - SUNNYSIDE 345KV CKT 1	717	789	0.04233	100.5592	CHICKASAW - TOTAL 138KV CKT 1
FDNS	06NR	6	20L	G15_033	FROM->TO	G14-057T 345.00 - SUNNYSIDE 345KV CKT 1	717	789	0.04216	100.5553	ARDMORE WEST - CARTER 138KV CKT 1
FDNS	06NR	6	20L	G15_033	FROM->TO	G14-057T 345.00 - SUNNYSIDE 345KV CKT 1	717	789	0.04259	100.549	DELL 500 - INDEPENDENCE 500KV CKT 1
FDNS	06NR	6	20L	G15_033	FROM->TO	G14-057T 345.00 - SUNNYSIDE 345KV CKT 1	717	789	0.04261	100.5473	GEN657748 1-YOUNG 2 GENERATOR
FDNS	06NR	6	20L	G15_033	FROM->TO	G14-057T 345.00 - SUNNYSIDE 345KV CKT 1	717	789	0.04258	100.5373	KEO EHV - WEST MEMPHIS 500 500KV CKT 1
FDNS	06NR	6	20L	G15_033	FROM->TO	G14-057T 345.00 - SUNNYSIDE 345KV CKT 1	717	789	0.04261	100.5305	GEN562802 1-G15039_3 0.3570
FDNS	06NR	6	20L	G15_033	FROM->TO	G14-057T 345.00 - SUNNYSIDE 345KV CKT 1	717	789	0.04261	100.5303	GEN515449 1-CRSRDW11 0.6900
FDNS	06NR	6	20L	G15_033	FROM->TO	G14-057T 345.00 - SUNNYSIDE 345KV CKT 1	717	789	0.04261	100.5262	GEN563062 1-G15071_3 0.6900
FDNS	06NR	6	20L	G15_033	FROM->TO	G14-057T 345.00 - SUNNYSIDE 345KV CKT 1	717	789	0.04216	100.5089	ARDMORE WEST - UNIROYAL 138KV CKT 1
FDNS	06NR	6	20L	G15_033	FROM->TO	G14-057T 345.00 - SUNNYSIDE 345KV CKT 1	717	789	0.04261	100.4856	GEN526678 1-CIRRUS_WND 10.6900
FDNS	06NR	6	20L	G15_033	FROM->TO	G14-057T 345.00 - SUNNYSIDE 345KV CKT 1	717	789	0.04261	100.4829	GEN672306 6-BOUNDARY DAM GENERATOR 6
FDNS	06NR	6	20L	G15_033	FROM->TO	G14-057T 345.00 - SUNNYSIDE 345KV CKT 1	717	789	0.04261	100.4799	GEN562812 1-G15040_3 0.3570
FDNS	06NR	6	20L	G15_033	FROM->TO	G14-057T 345.00 - SUNNYSIDE 345KV CKT 1	717	789	0.04261	100.4779	GEN563132 1-G15078_3 0.3570
FDNS	06NR	6	20L	G15_033	FROM->TO	G14-057T 345.00 - SUNNYSIDE 345KV CKT 1	717	789	0.04261	100.4576	GEN562531 1-G14_033_3 0.3420
FDNS	06NR	6	20L	G15_033	FROM->TO	G14-057T 345.00 - SUNNYSIDE 345KV CKT 1	717	789	0.04261	100.4576	GEN562535 1-G14_034_3 0.3420
FDNS	06NR	6	20L	G15_033	FROM->TO	G14-057T 345.00 - SUNNYSIDE 345KV CKT 1	717	789	0.04327	100.4565	P12:230:AEPW-SPS:SWEETWT6:WHEELER 6
FDNS	06NR	6	20L	G15_033	FROM->TO	G14-057T 345.00 - SUNNYSIDE 345KV CKT 1	717	789	0.04327	100.4554	STLN-DEMARC6 - SWEETWATER 230KV CKT 1
FDNS	06NR	6	20L	G15_033	FROM->TO	G14-057T 345.00 - SUNNYSIDE 345KV CKT 1	717	789	0.04327	100.4546	STATELINE INTERCHANGE - STLN-DEMARC6 230KV CKT 1
FDNS	06NR	6	20L	G15_033	FROM->TO	G14-057T 345.00 - SUNNYSIDE 345KV CKT 1	717	789	0.04261	100.4527	GEN563102 1-G15075_3 0.5500
FDNS	06NR	6	20L	G15_033	FROM->TO	G14-057T 345.00 - SUNNYSIDE 345KV CKT 1	717	789	0.04261	100.4518	4SIOUX 2 138.00 138/18.0KV TRANSFORMER CKT 1
FDNS	06NR	6	20L	G15_033	FROM->TO	G14-057T 345.00 - SUNNYSIDE 345KV CKT 1	717	789	0.04261	100.4277	EASTDC - ERCOT EQUIVALENCE 345KV CKT 1
FDNS	06NR	6	20L	G15_033	FROM->TO	G14-057T 345.00 - SUNNYSIDE 345KV CKT 1	717	789	0.04261	100.4246	GEN672310 1-POPLAR RIVER GENERATOR 1
FDNS	06NR	6	20L	G15_033	FROM->TO	G14-057T 345.00 - SUNNYSIDE 345KV CKT 1	717	789	0.04327	100.409	CHISHOLM6 230.00 - SWEETWATER 230KV CKT 1
FDNS	06NR	6	20L	G15_033	FROM->TO	G14-057T 345.00 - SUNNYSIDE 345KV CKT 1	717	789	0.04216	100.4035	SUNNYSIDE - UNIROYAL 138KV CKT 1
FDNS	06NR	6	20L	G15_033	FROM->TO	G14-057T 345.00 - SUNNYSIDE 345KV CKT 1	717	789	0.04256	100.3846	LEBROCK - TENASKA RUSK COUNTY 345KV CKT 1
FDNS	06NR	6	20L	G15_033	FROM->TO	G14-057T 345.00 - SUNNYSIDE 345KV CKT 1	717	789	0.04256	100.3841	CROCKETT - TENASKA RUSK COUNTY 345KV CKT 1
FDNS	06NR	6	20L	G15_033	FROM->TO	G14-057T 345.00 - SUNNYSIDE 345KV CKT 1	717	789	0.04261	100.3456	GEN524485 1-CAPROCK WIND GEN
FDNS	06NR	6	20L	G15_033	FROM->TO	G14-057T 345.00 - SUNNYSIDE 345KV CKT 1	717	789	0.04261	100.3246	GEN511962 2-RKYRDGW2-1 0.7000
FDNS	06NR	6	20L	G15_033	FROM->TO	G14-057T 345.00 - SUNNYSIDE 345KV CKT 1	717	789	0.04254	100.2892	CROCKETT - GRIMES 345KV CKT 1
FDNS	06NR	6	20L	G15_033	FROM->TO	G14-057T 345.00 - SUNNYSIDE 345KV CKT 1	717	789	0.04254	100.2892	CROCKETT - GRIMES 345KV CKT 1
FDNS	06NR	6	20L	G15_033	FROM->TO	G14-057T 345.00 - SUNNYSIDE 345KV CKT 1	717	789	0.04261	100.2594	GEN532653 1-JEFFREY ENERGY CENTER UNIT 3
FDNS	06NR	6	20L	G15_033	FROM->TO	G14-057T 345.00 - SUNNYSIDE 345KV CKT 1	717	789	0.04261	100.2458	GEN562007 1-G11_025_3 0.6900
FDNS	06NR	6	20L	G15_033	FROM->TO	G14-057T 345.00 - SUNNYSIDE 345KV CKT 1	717	789	0.04261	100.2329	GEN659118 1-LARAMIE RIVER UNIT1
FDNS	06NR	6	20L	G15_033	FROM->TO	G14-057T 345.00 - SUNNYSIDE 345KV CKT 1	717	789	0.04261	100.2212	GEN531447 1-HOLCOMB GENERATOR
FDNS	06ALL	6	20SP	G15_033	FROM->TO	G14-057T 345.00 - SUNNYSIDE 345KV CKT 1	717	789	0.20654	100.2023	GRACEMONT - MINCO 345KV CKT 1

SOLUTION	GROUP	SCENARIO	SEASON	SOURCE	DIRECTION	MONITORED ELEMENT	RATEA (MVA)	RATEB(MVA)	TDF	TC%LOADING (% MVA)	CONTINGENCY
FDNS	06NR	6	17G	G15_033	FROM->TO	G14-057T 345.00 - SUNNYSIDE 345KV CKT 1	717	789	0.04705	100.2021	BORDER 7345.00 - WOODWARD DISTRICT EHV 345KV CKT 1
FDNS	06NR	6	20L	G15_033	FROM->TO	G14-057T 345.00 - SUNNYSIDE 345KV CKT 1	717	789	0.04214	100.1849	SUNNYSIDE (SUNNYSD5) 345/138/13.8KV TRANSFORMER CKT 1
FDNS	06NR	6	20L	G15_033	FROM->TO	G14-057T 345.00 - SUNNYSIDE 345KV CKT 1	717	789	0.04261	100.1563	GEN600006 1-AS KING
FDNS	06NR	6	20L	G15_033	FROM->TO	G14-057T 345.00 - SUNNYSIDE 345KV CKT 1	717	789	0.04261	100.1	GEN620315 1-BIG STONE GEN
FDNS	06NR	6	20L	G15_033	FROM->TO	G14-057T 345.00 - SUNNYSIDE 345KV CKT 1	717	789	0.04247	100.0968	NORTHWEST TEXARKANA - VALLIANT 345KV CKT 1
FDNS	06NR	6	20L	G15_033	FROM->TO	G14-057T 345.00 - SUNNYSIDE 345KV CKT 1	717	789	0.04247	100.0968	NORTHWEST TEXARKANA - VALLIANT 345KV CKT 1
FDNS	06NR	6	20L	G15_033	FROM->TO	G14-057T 345.00 - SUNNYSIDE 345KV CKT 1	717	789	0.04261	100.0832	GEN563263 1-G15092_4 0.6900
FDNS	06NR	6	20L	G15_033	FROM->TO	G14-057T 345.00 - SUNNYSIDE 345KV CKT 1	717	789	0.04261	100.0656	GEN645001 1-FORT CALHOUN 1
FDNS	06NR	6	20L	G15_033	FROM->TO	G14-057T 345.00 - SUNNYSIDE 345KV CKT 1	717	789	0.04261	100.0638	GEN562699 1-G15_018_3 0.6900
FDNS	06NR	6	20L	G15_033	FROM->TO	G14-057T 345.00 - SUNNYSIDE 345KV CKT 1	717	789	0.04261	100.0624	GEN640009 1-COOPER NUCLEAR STATION
FDNS	06NR	6	20L	G15_033	FROM->TO	G14-057T 345.00 - SUNNYSIDE 345KV CKT 1	717	789	0.04261	100.0558	GEN525844 1-ELK_1 118.000
FDNS	06NR	6	17G	G15_033	FROM->TO	G14-057T 345.00 - SUNNYSIDE 345KV CKT 1	717	789	0.0436	100	BASE CASE
FDNS	06NR	6	20L	G15_033	FROM->TO	G14-057T 345.00 - SUNNYSIDE 345KV CKT 1	717	789	0.04261	100	GEN521103 1-BLUE CANYON WIND FARM
FDNS	06NR	6	20L	G15_033	FROM->TO	G14-057T 345.00 - SUNNYSIDE 345KV CKT 1	717	789	0.04261	100	GEN542951 5-HAWTHORN UNIT #5
FDNS	06NR	6	20L	G15_033	FROM->TO	G14-057T 345.00 - SUNNYSIDE 345KV CKT 1	717	789	0.04261	100	GEN562942 1-G15056_3 0.6900
FDNS	06NR	6	20L	G15_033	FROM->TO	G14-057T 345.00 - SUNNYSIDE 345KV CKT 1	717	789	0.04261	100	GEN563122 1-G15077_3 0.3850
FDNS	06NR	6	20L	G15_033	FROM->TO	G14-057T 345.00 - SUNNYSIDE 345KV CKT 1	717	789	0.04261	100	GEN600003 1-PRAIRIE ISLAND G1
FDNS	06NR	6	20L	G15_033	FROM->TO	G14-057T 345.00 - SUNNYSIDE 345KV CKT 1	717	789	0.04261	100	GEN600004 2-PRAIRIE ISLAND G2
FDNS	06NR	6	20L	G15_033	FROM->TO	G14-057T 345.00 - SUNNYSIDE 345KV CKT 1	717	789	0.04259	100	P12:138:WFEC:MSL15
FDNS	06NR	6	20L	G15_033	FROM->TO	G14-057T 345.00 - SUNNYSIDE 345KV CKT 1	717	789	0.04261	99.9	GEN523461 1-BLACKHAWK GEN #1
FDNS	06NR	6	20L	G15_033	FROM->TO	G14-057T 345.00 - SUNNYSIDE 345KV CKT 1	717	789	0.04261	99.9	GEN523462 1-BLACKHAWK GEN #2
FDNS	06NR	6	20L	G15_033	FROM->TO	G14-057T 345.00 - SUNNYSIDE 345KV CKT 1	717	789	0.04261	99.9	GEN524285 1-WILDORADO WIND GEN
FDNS	06NR	6	20L	G15_033	FROM->TO	G14-057T 345.00 - SUNNYSIDE 345KV CKT 1	717	789	0.04261	99.9	GEN629074 1-ARNOLD LOWSIDE OF GSU XFMR
FDNS	06NR	6	20L	G15_033	FROM->TO	G14-057T 345.00 - SUNNYSIDE 345KV CKT 1	717	789	0.04261	99.9	GEN636641 1-LOUISA UNIT 1
FDNS	06NR	6	20L	G15_033	FROM->TO	G14-057T 345.00 - SUNNYSIDE 345KV CKT 1	717	789	0.04253	99.9	DOLET HILLS 345/230KV TRANSFORMER CKT 1
FDNS	06NR	6	20L	G15_033	FROM->TO	G14-057T 345.00 - SUNNYSIDE 345KV CKT 1	717	789	0.04261	99.8	BIG STONE 230/24.0KV TRANSFORMER CKT 1
FDNS	06NR	6	20L	G15_033	FROM->TO	G14-057T 345.00 - SUNNYSIDE 345KV CKT 1	717	789	0.04261	99.8	GEN514805 1-SOONER UNIT 1
FDNS	06NR	6	20L	G15_033	FROM->TO	G14-057T 345.00 - SUNNYSIDE 345KV CKT 1	717	789	0.04261	99.8	GEN514806 1-SOONER UNIT 2
FDNS	06NR	6	20L	G15_033	FROM->TO	G14-057T 345.00 - SUNNYSIDE 345KV CKT 1	717	789	0.04261	99.8	GEN527161 1-MUSTANG GEN #1
FDNS	06NR	6	20L	G15_033	FROM->TO	G14-057T 345.00 - SUNNYSIDE 345KV CKT 1	717	789	0.04261	99.8	GEN527162 1-MUSTANG GEN #2
FDNS	06NR	6	20L	G15_033	FROM->TO	G14-057T 345.00 - SUNNYSIDE 345KV CKT 1	717	789	0.04261	99.8	GEN560183 1-REDHIL-WTG1 12.000
FDNS	06NR	6	20L	G15_033	FROM->TO	G14-057T 345.00 - SUNNYSIDE 345KV CKT 1	717	789	0.04261	99.8	GEN562704 1-G15_020_3 0.3550
FDNS	06NR	6	20L	G15_033	FROM->TO	G14-057T 345.00 - SUNNYSIDE 345KV CKT 1	717	789	0.04261	99.8	GEN600000 1-SHERBURNECNTY G1
FDNS	06NR	6	20L	G15_033	FROM->TO	G14-057T 345.00 - SUNNYSIDE 345KV CKT 1	717	789	0.04261	99.8	GEN635213 3-NEAL UNIT 3
FDNS	06NR	6	20L	G15_033	FROM->TO	G14-057T 345.00 - SUNNYSIDE 345KV CKT 1	717	789	0.04241	99.8	LYDIA - WELSH 345KV CKT 1
FDNS	06NR	6	20L	G15_033	FROM->TO	G14-057T 345.00 - SUNNYSIDE 345KV CKT 1	717	789	0.04241	99.8	LYDIA - WELSH 345KV CKT 1
FDNS	06NR	6	20L	G15_033	FROM->TO	G14-057T 345.00 - SUNNYSIDE 345KV CKT 1	717	789	0.04261	99.7	GEN563262 1-G15092_3 0.6900
FDNS	06NR	6	20L	G15_033	FROM->TO	G14-057T 345.00 - SUNNYSIDE 345KV CKT 1	717	789	0.04261	99.7	GEN600001 2-SHERBURNE CNTY G2
FDNS	06NR	6	20L	G15_033	FROM->TO	G14-057T 345.00 - SUNNYSIDE 345KV CKT 1	717	789	0.04261	99.7	GEN600005 1-MONTICELLO
FDNS	06NR	6	20L	G15_033	FROM->TO	G14-057T 345.00 - SUNNYSIDE 345KV CKT 1	717	789	0.04261	99.7	GEN629075 1-OTTUMWA GENERATOR FOR OTTUMWA UNIT NO 1
FDNS	06NR	6	20L	G15_033	FROM->TO	G14-057T 345.00 - SUNNYSIDE 345KV CKT 1	717	789	0.04217	99.7	JOHNSON COUNTY (JOHNCO) 345/138/13.8KV TRANSFORMER CKT 1
FDNS	06NR	6	20L	G15_033	FROM->TO	G14-057T 345.00 - SUNNYSIDE 345KV CKT 1	717	789	0.04261	99.6	GEN344225 1-1CAL G1 25.000
FDNS	06NR	6	20L	G15_033	FROM->TO	G14-057T 345.00 - SUNNYSIDE 345KV CKT 1	717	789	0.04261	99.6	GEN524295 1-SPNSPUR_WND10.6900
FDNS	06NR	6	20L	G15_033	FROM->TO	G14-057T 345.00 - SUNNYSIDE 345KV CKT 1	717	789	0.04261	99.5	GEN527163 1-MUSTANG GEN #3 22 KV
FDNS	06NR	6	20L	G15_033	FROM->TO	G14-057T 345.00 - SUNNYSIDE 345KV CKT 1	717	789	0.04261	99.5	GEN562710 1-G15_022_3 0.5500
FDNS	06NR	6	20L	G15_033	FROM->TO	G14-057T 345.00 - SUNNYSIDE 345KV CKT 1	717	789	0.04261	99.5	GEN615002 2-COAL CREEK
FDNS	06NR	6	20L	G15_033	FROM->TO	G14-057T 345.00 - SUNNYSIDE 345KV CKT 1	717	789	0.04261	99.5	GEN635214 4-NEAL UNIT 4
FDNS	06NR	6	20L	G15_033	FROM->TO	G14-057T 345.00 - SUNNYSIDE 345KV CKT 1	717	789	0.04159	99.5	CANADIAN RIVER - PITTSBURG 345KV CKT 1
FDNS	06NR	6	20L	G15_033	FROM->TO	G14-057T 345.00 - SUNNYSIDE 345KV CKT 1	717	789	0.04159	99.5	CANADIAN RIVER - PITTSBURG 345KV CKT 1
FDNS	00NR	6	25SP	G15_033	FROM->TO	Hitchland Interchange (SIEM 8743067) 345/230/13.2KV TRANSFORMER CKT 2	560	644	0.05581	100.0805	Hitchland Interchange (H TB80155502) 345/230/13.2KV TRANSFORMER CKT 1
FDNS	00NR	6	25SP	G15_033	FROM->TO	Hitchland Interchange (SIEM 8743067) 345/230/13.2KV TRANSFORMER CKT 2	560	644	0.05581	100.0805	Hitchland Interchange (H TB80155502) 345/230/13.2KV TRANSFORMER CKT 1
FDNS	00NR	6	25SP	G15_033	TO->FROM	JONES STATION - TUCO INTERCHANGE 230KV CKT 1	343.79	343.79	0.14515	129.6325	CARLISLE INTERCHANGE - TUCO INTERCHANGE 230KV CKT 1
FDNS	00NR	6	25SP	G15_033	TO->FROM	JONES STATION - TUCO INTERCHANGE 230KV CKT 1	343.79	343.79	0.14515	129.6325	CARLISLE INTERCHANGE - TUCO INTERCHANGE 230KV CKT 1
FDNS	00NR	6	25SP	G15_033	TO->FROM	JONES STATION - TUCO INTERCHANGE 230KV CKT 1	343.79	343.79	0.1124	112.7855	GEN526333 1-JONES GEN #3 21 KV
FDNS	00NR	6	25SP	G15_033	TO->FROM	JONES STATION - TUCO INTERCHANGE 230KV CKT 1	343.79	343.79	0.1124	112.3951	GEN526334 1-JONES_4 116.500
FDNS	00NR	6	25SP	G15_033	TO->FROM	JONES STATION - TUCO INTERCHANGE 230KV CKT 1	343.79	343.79	0.13566	107.7709	TUCO INTERCHANGE - YOAKUM_345 345.00 345KV CKT 1
FDNS	00NR	6	25SP	G15_033	TO->FROM	JONES STATION - TUCO INTERCHANGE 230KV CKT 1	343.79	343.79	0.13042	103.4125	CARLISLE INTERCHANGE - WOLFFORTH INTERCHANGE 230KV CKT 1
FDNS	00NR	6	25SP	G15_033	TO->FROM	JONES STATION - TUCO INTERCHANGE 230KV CKT 1	343.79	343.79	0.11273	101.2811	PLANT X STATION - SUNDOWN INTERCHANGE 230KV CKT 1
FDNS	00NR	6	25SP	G15_033	TO->FROM	JONES STATION - TUCO INTERCHANGE 230KV CKT 1	343.79	343.79	0.11273	101.2811	PLANT X STATION - SUNDOWN INTERCHANGE 230KV CKT 1
FDNS	00NR	6	25SP	G15_033	TO->FROM	JONES STATION - TUCO INTERCHANGE 230KV CKT 1	343.79	343.79	0.12523	100.5783	P12:345:SPS:J02.1.TOLK.EDDY
FDNS	00NR	6	25SP	G15_033	TO->FROM	JONES STATION - TUCO INTERCHANGE 230KV CKT 1	343.79	343.79	0.1124	100.5273	GEN526332 1-JONES GEN #2 21 KV
FDNS	00NR	6	25SP	G15_033	TO->FROM	JONES STATION - TUCO INTERCHANGE 230KV CKT 1	343.79	343.79	0.1124	100.5254	GEN526331 1-JONES GEN #1 22 KV
FDNS	00NR	6	25SP	G15_033	TO->FROM	JONES STATION - TUCO INTERCHANGE 230KV CKT 1	343.79	343.79	0.11714	100.5163	TUCO INTERCHANGE (ENRCO 136401) 230/115/13.2KV TRANSFORMER CKT 1
FDNS	00NR	6	25SP	G15_033	TO->FROM	JONES STATION - TUCO INTERCHANGE 230KV CKT 1	343.79	343.79	0.11714	100.5163	TUCO INTERCHANGE (ENRCO 136401) 230/115/13.2KV TRANSFORMER CKT 1
FDNS	00NR	6	25SP	G15_033	TO->FROM	JONES STATION - TUCO INTERCHANGE 230KV CKT 1	343.79	343.79	0.11714	100.5163	TUCO INTERCHANGE (ENRCO 136401) 230/115/13.2KV TRANSFORMER CKT 2
FDNS	00NR	6	25SP	G15_033	TO->FROM	JONES STATION - TUCO INTERCHANGE 230KV CKT 1	343.79	343.79	0.11714	100.5163	TUCO INTERCHANGE (ENRCO 136401) 230/115/13.2KV TRANSFORMER CKT 2
FDNS	00NR	6	25SP	G15_033	TO->FROM	JONES STATION - TUCO INTERCHANGE 230KV CKT 1	343.79	343.79	0.1205	99.6	LUBBOCK EAST INTERCHANGE - TUCO INTERCHANGE 115KV CKT 1
FDNS	00NR	6	25SP	G15_033	TO->FROM	JONES STATION - TUCO INTERCHANGE 230KV CKT 1	343.79	343.79	0.1205	99.6	LUBBOCK EAST INTERCHANGE - TUCO INTERCHANGE 115KV CKT 1
FDNS	00NR	6	25SP	G15_033	FROM->TO	LUBBOCK POWER & LIGHT-HOLLY PLANT (SHIH T101039) 230/69/13.5KV TRANSFORMER CKT 1	224	224	0.03592	104.6926	LUBBOCK POWER & LIGHT-SOUTHEAST - LUBBOCK SOUTH INTERCHANGE 230KV CKT 1
FDNS	00NR	6	25SP	G15_033	FROM->TO	LUBBOCK POWER & LIGHT-HOLLY PLANT (SHIH T101039) 230/69/13.5KV TRANSFORMER CKT 1	224	224	0.03592	104.6924	P12:LPL:SPS:K64.1.LP-SE.LUBBS
FDNS	00NR	6	25SP	G15_033	FROM->TO	LUBBOCK POWER & LIGHT-HOLLY PLANT (SHIH T101039) 230/69/13.5KV TRANSFORMER CKT 1	224	224	0.03513	101.9349	LUBBOCK EAST INTERCHANGE - LUBBOCK POWER & LIGHT-WADSWORTH 230KV CKT 1
FDNS	00NR	6	25SP	G15_033	FROM->TO	LUBBOCK POWER & LIGHT-HOLLY PLANT (SHIH T101039) 230/69/13.5KV TRANSFORMER CKT 1	224	224	0.03513	101.9202	LUBBOCK POWER & LIGHT-WADSWORTH (SHIH T101038) 230/69/13.5KV TRANSFORMER CKT 1
FDNS	00NR	6	25SP	G15_033	FROM->TO	LUBBOCK POWER & LIGHT-HOLLY PLANT (SHIH T101039) 230/69/13.5KV TRANSFORMER CKT 1	224	224	0.03513	101.9202	LUBBOCK POWER & LIGHT-WADSWORTH (SHIH T101038) 230/69/13.5KV TRANSFORMER CKT 1
FDNS	00NR	6	25SP	G15_033	FROM->TO	LUBBOCK POWER & LIGHT-HOLLY PLANT (SHIH T101039) 230/69/13.5KV TRANSFORMER CKT 1	224	224	0.03513	101.9202	P12:230:LPL:K57.1.LP-WADS.LUBBE
FDNS	06ALL	6	17G	G15_033	FROM->TO	TUCO INTERCHANGE - TUCO_2 230.00 230KV CKT 1	497	547	0.37823	102.3804	TUCO INTERCHANGE - TUCO_2 345.00 345KV CKT 1
FDNS	00NR	6	25SP	G15_033	FROM->TO	TUCO INTERCHANGE (ENRCO 136401) 230/115/13.2KV TRANSFORMER CKT 1	250	288	0.05091	119.1771	TUCO INTERCHANGE (ENRCO 136401) 230/115/13.2KV TRANSFORMER CKT 2
FDNS	00NR	6	25SP	G15_033	FROM->TO	TUCO INTERCHANGE (ENRCO 136401) 230/115/13.2KV TRANSFORMER CKT 1	250	288	0.05091	119.1771	TUCO INTERCHANGE (ENRCO 136401) 230/115/13.2KV TRANSFORMER CKT 2
FDNS	00NR	6	25SP	G15_033	FROM->TO	TUCO INTERCHANGE (ENRCO 136401) 230/115/13.2KV TRANSFORMER CKT 1	250	288	0.05091	111.7914	TUCO INTERCHANGE (ENRCO 136401) 230/115/13.2KV TRANSFORMER CKT 2
FDNS	00NR	6	25SP	G15_033	FROM->TO	TUCO INTERCHANGE (ENRCO 136401) 230/115/13.2KV TRANSFORMER CKT 1	250	288	0.05091	111.7914	TUCO INTERCHANGE (ENRCO 136401) 230/115/13.2KV TRANSFORMER CKT 2

SOLUTION	GROUP	SCENARIO	SEASON	SOURCE	DIRECTION	MONITORED ELEMENT	RATEA (MVA)	RATEB(MVA)	TDF	TC%LOADING (% MVA)	CONTINGENCY
FDNS	00NR	6	25SP	G15_033	FROM->TO	TUCO INTERCHANGE (ENRCO 136401) 230/115/13.2KV TRANSFORMER CKT 2	250	288	0.05091	119.1771	TUCO INTERCHANGE (ENRCO 136401) 230/115/13.2KV TRANSFORMER CKT 1
FDNS	00NR	6	25SP	G15_033	FROM->TO	TUCO INTERCHANGE (ENRCO 136401) 230/115/13.2KV TRANSFORMER CKT 2	250	288	0.05091	119.1771	TUCO INTERCHANGE (ENRCO 136401) 230/115/13.2KV TRANSFORMER CKT 1
FDNS	00NR	6	25SP	G15_033	FROM->TO	TUCO INTERCHANGE (ENRCO 136401) 230/115/13.2KV TRANSFORMER CKT 2	250	288	0.05091	111.7914	TUCO INTERCHANGE (ENRCO 136401) 230/115/13.2KV TRANSFORMER CKT 1
FDNS	00NR	6	25SP	G15_033	FROM->TO	TUCO INTERCHANGE (ENRCO 136401) 230/115/13.2KV TRANSFORMER CKT 2	250	288	0.05091	111.7914	TUCO INTERCHANGE (ENRCO 136401) 230/115/13.2KV TRANSFORMER CKT 1
FDNS	06ALL	6	17G	G15_033	FROM->TO	TUCO_2 345.00 (TUCO_2 XFMR) 345/230/13.2KV TRANSFORMER CKT 1	560	560	0.27775	107.102	TUCO INTERCHANGE - TUCO_2 345.00 345KV CKT 1
FDNS	06ALL	6	20L	G15_033	FROM->TO	TUCO_2 345.00 (TUCO_2 XFMR) 345/230/13.2KV TRANSFORMER CKT 1	560	560	0.23476	106.4088	TUCO INTERCHANGE - TUCO_2 345.00 345KV CKT 1
FDNS	06ALL	6	17G	G15_033	FROM->TO	TUCO_2 345.00 (TUCO_2 XFMR) 345/230/13.2KV TRANSFORMER CKT 1	560	560	0.27775	105.5988	TUCO INTERCHANGE - TUCO_2 345.00 345KV CKT 1
FDNS	06ALL	6	20L	G15_033	FROM->TO	TUCO_2 345.00 (TUCO_2 XFMR) 345/230/13.2KV TRANSFORMER CKT 1	560	560	0.23476	105.0837	TUCO INTERCHANGE - TUCO_2 345.00 345KV CKT 1
FDNS	06ALL	6	20WP	G15_033	FROM->TO	TUCO_2 345.00 (TUCO_2 XFMR) 345/230/13.2KV TRANSFORMER CKT 1	560	560	0.25214	101.28	TUCO INTERCHANGE - TUCO_2 345.00 345KV CKT 1
FDNS	06ALL	6	20WP	G15_033	FROM->TO	TUCO_2 345.00 (TUCO_2 XFMR) 345/230/13.2KV TRANSFORMER CKT 1	560	560	0.25214	99.8	TUCO INTERCHANGE - TUCO_2 345.00 345KV CKT 1
FDNS	06ALL	7	20SP	G15_033	FROM->TO	CHISHOLM6 230.00 - ELK CITY 230KV 230KV CKT 1	353	353	0.04447	100.158	BASE CASE
FDNS	06ALL	7	20L	G15_033	TO->FROM	CIMARRON - MINCO 345KV CKT 1	956	956	0.24168	121.4947	G14-057T 345.00 - SUNNYSIDE 345KV CKT 1
FDNS	06ALL	7	17G	G15_033	TO->FROM	CIMARRON - MINCO 345KV CKT 1	956	956	0.26802	117.9395	G14-057T 345.00 - SUNNYSIDE 345KV CKT 1
FDNS	06ALL	7	20WP	G15_033	TO->FROM	CIMARRON - MINCO 345KV CKT 1	956	956	0.263	116.4002	G14-057T 345.00 - SUNNYSIDE 345KV CKT 1
FDNS	06ALL	7	20L	G15_033	TO->FROM	CIMARRON - MINCO 345KV CKT 1	956	956	0.24168	116.2758	G14-057T 345.00 - LAWTON EASTSIDE 345KV CKT 1
FDNS	00NR	7	20WP	G15_033	TO->FROM	CIMARRON - MINCO 345KV CKT 1	956	956	0.05893	115.0178	G14-057T 345.00 - SUNNYSIDE 345KV CKT 1
FDNS	00NR	7	16WP	G15_033	TO->FROM	CIMARRON - MINCO 345KV CKT 1	956	956	0.06097	113.7854	G14-057T 345.00 - SUNNYSIDE 345KV CKT 1
FDNS	06ALL	7	17G	G15_033	TO->FROM	CIMARRON - MINCO 345KV CKT 1	956	956	0.26802	112.8925	G14-057T 345.00 - LAWTON EASTSIDE 345KV CKT 1
FDNS	06NR	7	20L	G15_033	TO->FROM	CIMARRON - MINCO 345KV CKT 1	956	956	0.0603	111.1622	G14-057T 345.00 - SUNNYSIDE 345KV CKT 1
FDNS	06ALL	7	16WP	G15_033	TO->FROM	CIMARRON - MINCO 345KV CKT 1	956	956	0.27415	111.0593	G14-057T 345.00 - SUNNYSIDE 345KV CKT 1
FDNS	06ALL	7	20WP	G15_033	TO->FROM	CIMARRON - MINCO 345KV CKT 1	956	956	0.263	111.0342	G14-057T 345.00 - LAWTON EASTSIDE 345KV CKT 1
FDNS	06ALL	7	17SP	G15_033	TO->FROM	CIMARRON - MINCO 345KV CKT 1	956	956	0.27059	111.0288	G14-057T 345.00 - SUNNYSIDE 345KV CKT 1
FDNS	06NR	7	17G	G15_033	TO->FROM	CIMARRON - MINCO 345KV CKT 1	956	956	0.06119	108.6824	G14-057T 345.00 - SUNNYSIDE 345KV CKT 1
FDNS	06ALL	7	20SP	G15_033	TO->FROM	CIMARRON - MINCO 345KV CKT 1	956	956	0.26844	108.4281	G14-057T 345.00 - SUNNYSIDE 345KV CKT 1
FDNS	06ALL	7	17SP	G15_033	TO->FROM	CIMARRON - MINCO 345KV CKT 1	956	956	0.27059	106.172	G14-057T 345.00 - LAWTON EASTSIDE 345KV CKT 1
FDNS	06ALL	7	16WP	G15_033	TO->FROM	CIMARRON - MINCO 345KV CKT 1	956	956	0.27415	105.9627	G14-057T 345.00 - LAWTON EASTSIDE 345KV CKT 1
FDNS	06NR	7	20L	G15_033	TO->FROM	CIMARRON - MINCO 345KV CKT 1	956	956	0.0603	105.4771	G14-057T 345.00 - LAWTON EASTSIDE 345KV CKT 1
FDNS	06ALL	7	20SP	G15_033	TO->FROM	CIMARRON - MINCO 345KV CKT 1	956	956	0.26844	103.5061	G14-057T 345.00 - LAWTON EASTSIDE 345KV CKT 1
FDNS	06NR	7	17G	G15_033	TO->FROM	CIMARRON - MINCO 345KV CKT 1	956	956	0.06119	102.908	G14-057T 345.00 - LAWTON EASTSIDE 345KV CKT 1
FDNS	06NR	7	20L	G15_033	TO->FROM	G14-057T 345.00 - LAWTON EASTSIDE 345KV CKT 1	717	789	0.05413	113.2028	CIMARRON - MINCO 345KV CKT 1
FDNS	06ALL	7	17G	G15_033	TO->FROM	G14-057T 345.00 - LAWTON EASTSIDE 345KV CKT 1	717	789	0.20865	108.083	CIMARRON - MINCO 345KV CKT 1
FDNS	06ALL	7	20WP	G15_033	TO->FROM	G14-057T 345.00 - LAWTON EASTSIDE 345KV CKT 1	717	789	0.20445	107.7368	CIMARRON - MINCO 345KV CKT 1
FDNS	06NR	7	20L	G15_033	TO->FROM	G14-057T 345.00 - LAWTON EASTSIDE 345KV CKT 1	717	789	0.05413	107.6539	GRACEMONT - MINCO 345KV CKT 1
FDNS	06ALL	7	16WP	G15_033	TO->FROM	G14-057T 345.00 - LAWTON EASTSIDE 345KV CKT 1	717	789	0.21301	104.6785	CIMARRON - MINCO 345KV CKT 1
FDNS	06NR	7	17G	G15_033	TO->FROM	G14-057T 345.00 - LAWTON EASTSIDE 345KV CKT 1	717	789	0.05524	103.6613	CIMARRON - MINCO 345KV CKT 1
FDNS	06ALL	7	17G	G15_033	TO->FROM	G14-057T 345.00 - LAWTON EASTSIDE 345KV CKT 1	717	789	0.20865	103.2408	GRACEMONT - MINCO 345KV CKT 1
FDNS	06ALL	7	20WP	G15_033	TO->FROM	G14-057T 345.00 - LAWTON EASTSIDE 345KV CKT 1	717	789	0.20445	102.8618	GRACEMONT - MINCO 345KV CKT 1
FDNS	06ALL	7	20L	G15_033	TO->FROM	G14-057T 345.00 - LAWTON EASTSIDE 345KV CKT 1	717	789	0.13232	100.7791	BASE CASE
FDNS	00NR	7	16WP	G15_033	TO->FROM	G14-057T 345.00 - LAWTON EASTSIDE 345KV CKT 1	717	789	0.05495	99.9	CIMARRON - MINCO 345KV CKT 1
FDNS	06ALL	7	16WP	G15_033	TO->FROM	G14-057T 345.00 - LAWTON EASTSIDE 345KV CKT 1	717	789	0.21301	99.8	GRACEMONT - MINCO 345KV CKT 1
FDNS	00NR	7	16WP	G15_033	FROM->TO	G14-057T 345.00 - SUNNYSIDE 345KV CKT 1	717	789	0.05495	141.3827	CIMARRON - MINCO 345KV CKT 1
FDNS	00NR	7	20WP	G15_033	FROM->TO	G14-057T 345.00 - SUNNYSIDE 345KV CKT 1	717	789	0.05256	139.3377	CIMARRON - MINCO 345KV CKT 1
FDNS	00NR	7	16WP	G15_033	FROM->TO	G14-057T 345.00 - SUNNYSIDE 345KV CKT 1	717	789	0.05495	131.9796	GRACEMONT - MINCO 345KV CKT 1
FDNS	00NR	7	20WP	G15_033	FROM->TO	G14-057T 345.00 - SUNNYSIDE 345KV CKT 1	717	789	0.05256	129.8694	GRACEMONT - MINCO 345KV CKT 1
FDNS	00NR	7	16WP	G15_033	FROM->TO	G14-057T 345.00 - SUNNYSIDE 345KV CKT 1	717	789	0.04135	129.5634	PITTSBURG - SEMINOLE 345KV CKT 1
FDNS	00NR	7	16WP	G15_033	FROM->TO	G14-057T 345.00 - SUNNYSIDE 345KV CKT 1	717	789	0.04135	129.5634	PITTSBURG - SEMINOLE 345KV CKT 1
FDNS	00NR	7	16WP	G15_033	FROM->TO	G14-057T 345.00 - SUNNYSIDE 345KV CKT 1	717	789	0.04332	128.7509	BASE CASE
FDNS	06NR	7	20L	G15_033	FROM->TO	G14-057T 345.00 - SUNNYSIDE 345KV CKT 1	717	789	0.05413	126.6849	CIMARRON - MINCO 345KV CKT 1
FDNS	00NR	7	16WP	G15_033	FROM->TO	G14-057T 345.00 - SUNNYSIDE 345KV CKT 1	717	789	0.04257	126.487	CIMARRON - DRAPER LAKE 345KV CKT 1
FDNS	00NR	7	20WP	G15_033	FROM->TO	G14-057T 345.00 - SUNNYSIDE 345KV CKT 1	717	789	0.03938	125.5667	PITTSBURG - SEMINOLE 345KV CKT 1
FDNS	00NR	7	20WP	G15_033	FROM->TO	G14-057T 345.00 - SUNNYSIDE 345KV CKT 1	717	789	0.03938	125.5667	PITTSBURG - SEMINOLE 345KV CKT 1
FDNS	00NR	7	20WP	G15_033	FROM->TO	G14-057T 345.00 - SUNNYSIDE 345KV CKT 1	717	789	0.04125	125.5547	BASE CASE
FDNS	00NR	7	20WP	G15_033	FROM->TO	G14-057T 345.00 - SUNNYSIDE 345KV CKT 1	717	789	0.04055	123.2315	CIMARRON - DRAPER LAKE 345KV CKT 1
FDNS	00NR	7	16WP	G15_033	FROM->TO	G14-057T 345.00 - SUNNYSIDE 345KV CKT 1	717	789	0.04525	123.1549	P12:138:WFEC:MSL03
FDNS	00NR	7	16WP	G15_033	FROM->TO	G14-057T 345.00 - SUNNYSIDE 345KV CKT 1	717	789	0.04325	122.5832	PITTSBURG - VALLIANT 345KV CKT 1
FDNS	00NR	7	16WP	G15_033	FROM->TO	G14-057T 345.00 - SUNNYSIDE 345KV CKT 1	717	789	0.04325	122.5832	PITTSBURG - VALLIANT 345KV CKT 1
FDNS	00NR	7	16WP	G15_033	FROM->TO	G14-057T 345.00 - SUNNYSIDE 345KV CKT 1	717	789	0.04332	122.2575	GEN509403 1-PIRKEY GENERATION
FDNS	00NR	7	16WP	G15_033	FROM->TO	G14-057T 345.00 - SUNNYSIDE 345KV CKT 1	717	789	0.04332	122.1625	GEN509416 1-TURK GENERATION
FDNS	00NR	7	16WP	G15_033	FROM->TO	G14-057T 345.00 - SUNNYSIDE 345KV CKT 1	717	789	0.04318	121.9265	CLEVELAND - G15066_T 345.00 345KV CKT 1
FDNS	00NR	7	16WP	G15_033	FROM->TO	G14-057T 345.00 - SUNNYSIDE 345KV CKT 1	717	789	0.04318	121.6309	G15066_T 345.00 - SOONER 345KV CKT 1
FDNS	00NR	7	16WP	G15_033	FROM->TO	G14-057T 345.00 - SUNNYSIDE 345KV CKT 1	717	789	0.04332	121.2858	GEN501801 1-DOLET HILLS UNIT1
FDNS	06NR	7	20L	G15_033	FROM->TO	G14-057T 345.00 - SUNNYSIDE 345KV CKT 1	717	789	0.05413	120.9832	GRACEMONT - MINCO 345KV CKT 1
FDNS	00NR	7	16WP	G15_033	FROM->TO	G14-057T 345.00 - SUNNYSIDE 345KV CKT 1	717	789	0.04332	120.8443	GEN509404 1-WELSH #1
FDNS	00NR	7	16WP	G15_033	FROM->TO	G14-057T 345.00 - SUNNYSIDE 345KV CKT 1	717	789	0.04332	120.8443	GEN509406 1-WELSH #3
FDNS	06ALL	7	17G	G15_033	FROM->TO	G14-057T 345.00 - SUNNYSIDE 345KV CKT 1	717	789	0.20865	120.7037	CIMARRON - MINCO 345KV CKT 1
FDNS	06ALL	7	20WP	G15_033	FROM->TO	G14-057T 345.00 - SUNNYSIDE 345KV CKT 1	717	789	0.20445	120.347	CIMARRON - MINCO 345KV CKT 1
FDNS	00NR	7	20WP	G15_033	FROM->TO	G14-057T 345.00 - SUNNYSIDE 345KV CKT 1	717	789	0.0431	120.2455	P12:138:WFEC:MSL03
FDNS	00NR	7	16WP	G15_033	FROM->TO	G14-057T 345.00 - SUNNYSIDE 345KV CKT 1	717	789	0.04363	120.1584	CORN TAP - NAPLESTP 138.00 138KV CKT 1
FDNS	00NR	7	16WP	G15_033	FROM->TO	G14-057T 345.00 - SUNNYSIDE 345KV CKT 1	717	789	0.04363	120.0703	NAPLESTP 138.00 - PAYNE 138.00 138KV CKT 1
FDNS	00NR	7	16WP	G15_033	FROM->TO	G14-057T 345.00 - SUNNYSIDE 345KV CKT 1	717	789	0.04332	119.9944	GEN336821 1-GRAND GULF UNIT
FDNS	00NR	7	16WP	G15_033	FROM->TO	G14-057T 345.00 - SUNNYSIDE 345KV CKT 1	717	789	0.04312	119.9575	7SAREPTA% 345.00 - LONGWOOD 345KV CKT 1
FDNS	00NR	7	16WP	G15_033	FROM->TO	G14-057T 345.00 - SUNNYSIDE 345KV CKT 1	717	789	0.04312	119.9575	7SAREPTA% 345.00 - LONGWOOD 345KV CKT 1
FDNS	00NR	7	16WP	G15_033	FROM->TO	G14-057T 345.00 - SUNNYSIDE 345KV CKT 1	717	789	0.04324	119.919	CLEVELAND - TULSA NORTH 345KV CKT 1
FDNS	00NR	7	16WP	G15_033	FROM->TO	G14-057T 345.00 - SUNNYSIDE 345KV CKT 1	717	789	0.04324	119.919	CLEVELAND - TULSA NORTH 345KV CKT 1
FDNS	00NR	7	16WP	G15_033	FROM->TO	G14-057T 345.00 - SUNNYSIDE 345KV CKT 1	717	789	0.04332	119.886	GEN336153 1-WATERFORD UNIT#3
FDNS	00NR	7	16WP	G15_033	FROM->TO	G14-057T 345.00 - SUNNYSIDE 345KV CKT 1	717	789	0.04324	119.845	DOLET HILLS - SOUTHWEST SHREVEPORT 345KV CKT 1
FDNS	00NR	7	16WP	G15_033	FROM->TO	G14-057T 345.00 - SUNNYSIDE 345KV CKT 1	717	789	0.04324	119.845	DOLET HILLS - SOUTHWEST SHREVEPORT 345KV CKT 1
FDNS	00NR	7	16WP	G15_033	FROM->TO	G14-057T 345.00 - SUNNYSIDE 345KV CKT 1	717	789	0.04354	119.8256	COMANCHE - LOCO 138KV CKT 1
FDNS	00NR	7	16WP	G15_033	FROM->TO	G14-057T 345.00 - SUNNYSIDE 345KV CKT 1	717	789	0.04307	119.7878	ARCADIA - NORTHWEST 345KV CKT 1

SOLUTION	GROUP	SCENARIO	SEASON	SOURCE	DIRECTION	MONITORED ELEMENT	RATEA (MVA)	RATEB(MVA)	TDF	TC%LOADING (% MVA)	CONTINGENCY
FDNS	00NR	7	16WP	G15_033	FROM->TO	G14-057T 345.00 - SUNNYSIDE 345KV CKT 1	717	789	0.04368	119.7157	ANADARKO - POCASSETT 138KV CKT 1
FDNS	00NR	7	16WP	G15_033	FROM->TO	G14-057T 345.00 - SUNNYSIDE 345KV CKT 1	717	789	0.04663	119.6893	BORDER 7345.00 - WOODWARD DISTRICT EHV 345KV CKT 1
FDNS	00NR	7	16WP	G15_033	FROM->TO	G14-057T 345.00 - SUNNYSIDE 345KV CKT 1	717	789	0.04241	119.6118	CANADIAN RIVER - MUSKOGEE 345KV CKT 1
FDNS	00NR	7	16WP	G15_033	FROM->TO	G14-057T 345.00 - SUNNYSIDE 345KV CKT 1	717	789	0.04291	119.5897	ARCADIA - SEMINOLE 345KV CKT 1
FDNS	00NR	7	16WP	G15_033	FROM->TO	G14-057T 345.00 - SUNNYSIDE 345KV CKT 1	717	789	0.04368	119.5799	POCASSETT - TUTTLE 138KV CKT 1
FDNS	00NR	7	16WP	G15_033	FROM->TO	G14-057T 345.00 - SUNNYSIDE 345KV CKT 1	717	789	0.04332	119.5777	GEN335831 1-RIVERBEND UNIT#1
FDNS	00NR	7	16WP	G15_033	FROM->TO	G14-057T 345.00 - SUNNYSIDE 345KV CKT 1	717	789	0.04332	119.5389	GRAND GULF 500/22.0KV TRANSFORMER CKT 1
FDNS	00NR	7	16WP	G15_033	FROM->TO	G14-057T 345.00 - SUNNYSIDE 345KV CKT 1	717	789	0.04332	119.4782	GEN515577 1-ARBWND11 0.6900
FDNS	00NR	7	16WP	G15_033	FROM->TO	G14-057T 345.00 - SUNNYSIDE 345KV CKT 1	717	789	0.04332	119.4427	GEN509409 1-WILKES #3
FDNS	00NR	7	16WP	G15_033	FROM->TO	G14-057T 345.00 - SUNNYSIDE 345KV CKT 1	717	789	0.04333	119.3551	HEALDTON - LOCO 138KV CKT 1
FDNS	00NR	7	16WP	G15_033	FROM->TO	G14-057T 345.00 - SUNNYSIDE 345KV CKT 1	717	789	0.04321	119.3547	7SAREPTA% 345.00 - ELDORADO EHV 345KV CKT 1
FDNS	00NR	7	16WP	G15_033	FROM->TO	G14-057T 345.00 - SUNNYSIDE 345KV CKT 1	717	789	0.04321	119.3545	3TR3AR8EL7EL
FDNS	00NR	7	16WP	G15_033	FROM->TO	G14-057T 345.00 - SUNNYSIDE 345KV CKT 1	717	789	0.04321	119.3442	ELDORADO EHV 500/345KV TRANSFORMER CKT 1
FDNS	00NR	7	16WP	G15_033	FROM->TO	G14-057T 345.00 - SUNNYSIDE 345KV CKT 1	717	789	0.04455	119.3063	P12:138:AEPW:DUNCAN-4:L.E.S.-4
FDNS	00NR	7	20WP	G15_033	FROM->TO	G14-057T 345.00 - SUNNYSIDE 345KV CKT 1	717	789	0.04125	119.2741	GEN509403 1-PIRKEY GENERATION
FDNS	00NR	7	16WP	G15_033	FROM->TO	G14-057T 345.00 - SUNNYSIDE 345KV CKT 1	717	789	0.04368	119.2283	BRIDGECR 138.00 - TUTTLE 138KV CKT 1
FDNS	00NR	7	16WP	G15_033	FROM->TO	G14-057T 345.00 - SUNNYSIDE 345KV CKT 1	717	789	0.04333	119.2104	HEALDTON - RINGLING 138KV CKT 1
FDNS	00NR	7	16WP	G15_033	FROM->TO	G14-057T 345.00 - SUNNYSIDE 345KV CKT 1	717	789	0.04332	119.1942	GEN501813 1-RODEMACHER UNIT 3
FDNS	00NR	7	20WP	G15_033	FROM->TO	G14-057T 345.00 - SUNNYSIDE 345KV CKT 1	717	789	0.04125	119.193	GEN509416 1-TURK GENERATION
FDNS	00NR	7	16WP	G15_033	FROM->TO	G14-057T 345.00 - SUNNYSIDE 345KV CKT 1	717	789	0.04454	119.1728	COMANCHE TAP - OMPA-DUNCAN 840 138KV CKT 1
FDNS	00NR	7	16WP	G15_033	FROM->TO	G14-057T 345.00 - SUNNYSIDE 345KV CKT 1	717	789	0.04332	119.1187	GEN300006 1-NEW MADRID UNIT 1
FDNS	00NR	7	16WP	G15_033	FROM->TO	G14-057T 345.00 - SUNNYSIDE 345KV CKT 1	717	789	0.04332	119.1064	GEN300007 1-NEW MADRID UNIT 2
FDNS	00NR	7	16WP	G15_033	FROM->TO	G14-057T 345.00 - SUNNYSIDE 345KV CKT 1	717	789	0.0433	119.0732	LACYGNE - WAVERLY7 345.00 345KV CKT 1
FDNS	00NR	7	16WP	G15_033	FROM->TO	G14-057T 345.00 - SUNNYSIDE 345KV CKT 1	717	789	0.04332	119.0589	GEN520947 1-HUGO1
FDNS	00NR	7	16WP	G15_033	FROM->TO	G14-057T 345.00 - SUNNYSIDE 345KV CKT 1	717	789	0.04333	119.0455	RINGLING - SOUTH WILSON 138KV CKT 1
FDNS	00NR	7	16WP	G15_033	FROM->TO	G14-057T 345.00 - SUNNYSIDE 345KV CKT 1	717	789	0.04332	118.9857	GEN335206 1-NELSON UNIT 6
FDNS	00NR	7	16WP	G15_033	FROM->TO	G14-057T 345.00 - SUNNYSIDE 345KV CKT 1	717	789	0.04368	118.9819	P12:138:WFEC:MSL01
FDNS	00NR	7	16WP	G15_033	FROM->TO	G14-057T 345.00 - SUNNYSIDE 345KV CKT 1	717	789	0.04368	118.9754	BRIDGECR 138.00 - SUNSHINE CANYON 138KV CKT 1
FDNS	00NR	7	20WP	G15_033	FROM->TO	G14-057T 345.00 - SUNNYSIDE 345KV CKT 1	717	789	0.04118	118.967	PITTSBURG - VALLIANT 345KV CKT 1
FDNS	00NR	7	20WP	G15_033	FROM->TO	G14-057T 345.00 - SUNNYSIDE 345KV CKT 1	717	789	0.04118	118.967	PITTSBURG - VALLIANT 345KV CKT 1
FDNS	00NR	7	16WP	G15_033	FROM->TO	G14-057T 345.00 - SUNNYSIDE 345KV CKT 1	717	789	0.0433	118.9647	WAVERLY7 345.00 - WOLF CREEK 345KV CKT 1
FDNS	00NR	7	20WP	G15_033	FROM->TO	G14-057T 345.00 - SUNNYSIDE 345KV CKT 1	717	789	0.04111	118.9546	CLEVELAND - G15066_T 345.00 345KV CKT 1
FDNS	00NR	7	16WP	G15_033	FROM->TO	G14-057T 345.00 - SUNNYSIDE 345KV CKT 1	717	789	0.04454	118.9021	DUNCAN - OMPA-DUNCAN 840 138KV CKT 1
FDNS	00NR	7	16WP	G15_033	FROM->TO	G14-057T 345.00 - SUNNYSIDE 345KV CKT 1	717	789	0.04454	118.9021	DUNCAN - OMPA-DUNCAN 840 138KV CKT 1
FDNS	00NR	7	16WP	G15_033	FROM->TO	G14-057T 345.00 - SUNNYSIDE 345KV CKT 1	717	789	0.04663	118.8485	BORDER 7345.00 - TUCO_2 345.00 345KV CKT 1
FDNS	00NR	7	16WP	G15_033	FROM->TO	G14-057T 345.00 - SUNNYSIDE 345KV CKT 1	717	789	0.04332	118.8099	DOLET HILLS 345/24.0KV TRANSFORMER CKT 1
FDNS	00NR	7	16WP	G15_033	FROM->TO	G14-057T 345.00 - SUNNYSIDE 345KV CKT 1	717	789	0.04332	118.7917	GEN501812 1-RODEMACHER UNIT 2
FDNS	00NR	7	16WP	G15_033	FROM->TO	G14-057T 345.00 - SUNNYSIDE 345KV CKT 1	717	789	0.04306	118.79	PARK LANE - SEMINOLE 138KV CKT 1
FDNS	00NR	7	16WP	G15_033	FROM->TO	G14-057T 345.00 - SUNNYSIDE 345KV CKT 1	717	789	0.04333	118.7687	MARIETTA - SOUTH WILSON 138KV CKT 1
FDNS	00NR	7	16WP	G15_033	FROM->TO	G14-057T 345.00 - SUNNYSIDE 345KV CKT 1	717	789	0.04332	118.7193	GEN590011 2-ERCOT EQUIVALENCE
FDNS	00NR	7	16WP	G15_033	FROM->TO	G14-057T 345.00 - SUNNYSIDE 345KV CKT 1	717	789	0.04339	118.7163	P12:138:AEPW:SHERID4:112GORE4
FDNS	00NR	7	16WP	G15_033	FROM->TO	G14-057T 345.00 - SUNNYSIDE 345KV CKT 1	717	789	0.04333	118.69	P12:138:WFEC:MSL17
FDNS	00NR	7	16WP	G15_033	FROM->TO	G14-057T 345.00 - SUNNYSIDE 345KV CKT 1	717	789	0.04322	118.6847	CANEYRV7 345.00 - NEOSHO 345KV CKT 1
FDNS	00NR	7	16WP	G15_033	FROM->TO	G14-057T 345.00 - SUNNYSIDE 345KV CKT 1	717	789	0.04332	118.6797	GEN515564 1-ORIGIN11 0.6900
FDNS	00NR	7	16WP	G15_033	FROM->TO	G14-057T 345.00 - SUNNYSIDE 345KV CKT 1	717	789	0.04332	118.6797	GEN515565 1-ORIGIN21 0.6900
FDNS	00NR	7	16WP	G15_033	FROM->TO	G14-057T 345.00 - SUNNYSIDE 345KV CKT 1	717	789	0.04311	118.6696	MATHWSN7 345.00 - NORTHWEST 345KV CKT 1
FDNS	00NR	7	16WP	G15_033	FROM->TO	G14-057T 345.00 - SUNNYSIDE 345KV CKT 1	717	789	0.04338	118.6649	REDBUD - RIVERSIDE STATION 345KV CKT 1
FDNS	00NR	7	16WP	G15_033	FROM->TO	G14-057T 345.00 - SUNNYSIDE 345KV CKT 1	717	789	0.04338	118.6649	REDBUD - RIVERSIDE STATION 345KV CKT 1
FDNS	00NR	7	20WP	G15_033	FROM->TO	G14-057T 345.00 - SUNNYSIDE 345KV CKT 1	717	789	0.04111	118.6635	G15066_T 345.00 - SOONER 345KV CKT 1
FDNS	00NR	7	16WP	G15_033	FROM->TO	G14-057T 345.00 - SUNNYSIDE 345KV CKT 1	717	789	0.04332	118.6531	GEN509408 1-WILKES #2
FDNS	00NR	7	16WP	G15_033	FROM->TO	G14-057T 345.00 - SUNNYSIDE 345KV CKT 1	717	789	0.04332	118.643	GEN590010 1-ERCOT EQUIVALENCE
FDNS	00NR	7	16WP	G15_033	FROM->TO	G14-057T 345.00 - SUNNYSIDE 345KV CKT 1	717	789	0.04343	118.5689	CIVIT - PAOLI 138KV CKT 1
FDNS	00NR	7	16WP	G15_033	FROM->TO	G14-057T 345.00 - SUNNYSIDE 345KV CKT 1	717	789	0.04322	118.535	CANEYRV7 345.00 - LATHAMS7 345.00 345KV CKT 1
FDNS	00NR	7	16WP	G15_033	FROM->TO	G14-057T 345.00 - SUNNYSIDE 345KV CKT 1	717	789	0.04332	118.5076	P12:161:AEPW:DYESS 5:HYLAND 5
FDNS	00NR	7	16WP	G15_033	FROM->TO	G14-057T 345.00 - SUNNYSIDE 345KV CKT 1	717	789	0.04332	118.4966	GEN506754 1-LEBROCK STEAM 1
FDNS	00NR	7	16WP	G15_033	FROM->TO	G14-057T 345.00 - SUNNYSIDE 345KV CKT 1	717	789	0.04332	118.4951	GEN334440 1-SABINE UNIT 4
FDNS	00NR	7	16WP	G15_033	FROM->TO	G14-057T 345.00 - SUNNYSIDE 345KV CKT 1	717	789	0.04329	118.4852	ELDORADO EHV - MOUNT OLIVE 500KV CKT 1
FDNS	00NR	7	16WP	G15_033	FROM->TO	G14-057T 345.00 - SUNNYSIDE 345KV CKT 1	717	789	0.04332	118.4704	P12:69:AEPW:L.E.S.-2:LAW WC2
FDNS	00NR	7	20WP	G15_033	FROM->TO	G14-057T 345.00 - SUNNYSIDE 345KV CKT 1	717	789	0.04125	118.4636	GEN501801 1-DOLET HILLS UNIT1
FDNS	00NR	7	16WP	G15_033	FROM->TO	G14-057T 345.00 - SUNNYSIDE 345KV CKT 1	717	789	0.04327	118.454	PAOLI - PAYNE 138.00 138KV CKT 1
FDNS	00NR	7	16WP	G15_033	FROM->TO	G14-057T 345.00 - SUNNYSIDE 345KV CKT 1	717	789	0.04327	118.4362	P12:138:WFEC:MSL02
FDNS	00NR	7	16WP	G15_033	FROM->TO	G14-057T 345.00 - SUNNYSIDE 345KV CKT 1	717	789	0.04343	118.4269	CIVIT - STRATFORD 138KV CKT 1
FDNS	00NR	7	16WP	G15_033	FROM->TO	G14-057T 345.00 - SUNNYSIDE 345KV CKT 1	717	789	0.04327	118.4237	ELDORADO EHV - SHERIDAN EHV 500KV CKT 1
FDNS	00NR	7	16WP	G15_033	FROM->TO	G14-057T 345.00 - SUNNYSIDE 345KV CKT 1	717	789	0.04334	118.3915	TUPELO - TUPELO TAP 138KV CKT 1
FDNS	00NR	7	16WP	G15_033	FROM->TO	G14-057T 345.00 - SUNNYSIDE 345KV CKT 1	717	789	0.04359	118.388	P12:138:AEPW-OGE:CORNVIL4:MAUD 4
FDNS	00NR	7	16WP	G15_033	FROM->TO	G14-057T 345.00 - SUNNYSIDE 345KV CKT 1	717	789	0.04339	118.3846	P12:138:AEPW:112GORE4:L.E.S.-4
FDNS	00NR	7	16WP	G15_033	FROM->TO	G14-057T 345.00 - SUNNYSIDE 345KV CKT 1	717	789	0.04332	118.3841	NEW MADRID 161/22.0KV TRANSFORMER CKT 1
FDNS	00NR	7	16WP	G15_033	FROM->TO	G14-057T 345.00 - SUNNYSIDE 345KV CKT 1	717	789	0.04332	118.3701	NEW MADRID 345/22.0KV TRANSFORMER CKT 1
FDNS	00NR	7	16WP	G15_033	FROM->TO	G14-057T 345.00 - SUNNYSIDE 345KV CKT 1	717	789	0.04087	118.3683	FINNEY SWITCHING STATION - HOLCOMB 345KV CKT 1
FDNS	00NR	7	16WP	G15_033	FROM->TO	G14-057T 345.00 - SUNNYSIDE 345KV CKT 1	717	789	0.04087	118.3683	FINNEY SWITCHING STATION - HOLCOMB 345KV CKT 1
FDNS	00NR	7	16WP	G15_033	FROM->TO	G14-057T 345.00 - SUNNYSIDE 345KV CKT 1	717	789	0.04332	118.3418	GEN503909 1-FULTONU1 1 16.000
FDNS	00NR	7	16WP	G15_033	FROM->TO	G14-057T 345.00 - SUNNYSIDE 345KV CKT 1	717	789	0.0433	118.3401	ANADARKO - GEORGIA 138KV CKT 1
FDNS	00NR	7	16WP	G15_033	FROM->TO	G14-057T 345.00 - SUNNYSIDE 345KV CKT 1	717	789	0.04332	118.3342	FRONTIER - GRIMES 345KV CKT 1
FDNS	00NR	7	16WP	G15_033	FROM->TO	G14-057T 345.00 - SUNNYSIDE 345KV CKT 1	717	789	0.04359	118.3138	BLANCHARD - CORNVILLE 138KV CKT 1
FDNS	00NR	7	16WP	G15_033	FROM->TO	G14-057T 345.00 - SUNNYSIDE 345KV CKT 1	717	789	0.04322	118.3087	LATHAMS7 345.00 - ROSE HILL 345KV CKT 1
FDNS	00NR	7	16WP	G15_033	FROM->TO	G14-057T 345.00 - SUNNYSIDE 345KV CKT 1	717	789	0.04343	118.3079	OIL CENTER - STRATFORD 138KV CKT 1
FDNS	00NR	7	16WP	G15_033	FROM->TO	G14-057T 345.00 - SUNNYSIDE 345KV CKT 1	717	789	0.04327	118.3073	WEBRE - WELLS 500KV CKT 1
FDNS	00NR	7	16WP	G15_033	FROM->TO	G14-057T 345.00 - SUNNYSIDE 345KV CKT 1	717	789	0.0433	118.2635	FLETCHER - GEORGIA 138KV CKT 1
FDNS	00NR	7	16WP	G15_033	FROM->TO	G14-057T 345.00 - SUNNYSIDE 345KV CKT 1	717	789	0.04327	118.2347	EMPIRE - FLETCHER 138KV CKT 1

SOLUTION	GROUP	SCENARIO	SEASON	SOURCE	DIRECTION	MONITORED ELEMENT	RATEA (MVA)	RATEB(MVA)	TDF	TC%LOADING (% MVA)	CONTINGENCY
FDNS	00NR	7	16WP	G15_033	FROM->TO	G14-057T 345.00 - SUNNYSIDE 345KV CKT 1	717	789	0.04332	118.2167	GEN509393 S1-ARSENAL HILL GENS #4 (STALL)
FDNS	00NR	7	16WP	G15_033	FROM->TO	G14-057T 345.00 - SUNNYSIDE 345KV CKT 1	717	789	0.04301	118.2027	MATHWSN7 345.00 - TATONGA7 345.00 345KV CKT 1
FDNS	00NR	7	16WP	G15_033	FROM->TO	G14-057T 345.00 - SUNNYSIDE 345KV CKT 1	717	789	0.04301	118.2027	MATHWSN7 345.00 - TATONGA7 345.00 345KV CKT 2
FDNS	00NR	7	16WP	G15_033	FROM->TO	G14-057T 345.00 - SUNNYSIDE 345KV CKT 1	717	789	0.04332	118.1954	GEN336252 1-NINEMILE POINT UNIT#5
FDNS	00NR	7	16WP	G15_033	FROM->TO	G14-057T 345.00 - SUNNYSIDE 345KV CKT 1	717	789	0.04332	118.1884	GEN509392 G2-ARSENAL HILL GENS #3 (STALL)
FDNS	00NR	7	16WP	G15_033	FROM->TO	G14-057T 345.00 - SUNNYSIDE 345KV CKT 1	717	789	0.04332	118.1883	GEN509391 G1-ARSENAL HILL GENS #2 (STALL)
FDNS	00NR	7	16WP	G15_033	FROM->TO	G14-057T 345.00 - SUNNYSIDE 345KV CKT 1	717	789	0.04332	118.1703	GEN334071 1-LEWIS CREEK 2
FDNS	00NR	7	16WP	G15_033	FROM->TO	G14-057T 345.00 - SUNNYSIDE 345KV CKT 1	717	789	0.04332	118.1639	DELL 500 - ESSEX UNIT 2 500KV CKT Z1
FDNS	00NR	7	16WP	G15_033	FROM->TO	G14-057T 345.00 - SUNNYSIDE 345KV CKT 1	717	789	0.04332	118.1625	GEN335204 1-NELSON UNIT 4
FDNS	00NR	7	16WP	G15_033	FROM->TO	G14-057T 345.00 - SUNNYSIDE 345KV CKT 1	717	789	0.04332	118.1609	GEN334070 1-LEWIS CREEK 1
FDNS	00NR	7	16WP	G15_033	FROM->TO	G14-057T 345.00 - SUNNYSIDE 345KV CKT 1	717	789	0.04327	118.1601	COMANCHE - EMPIRE 138KV CKT 1
FDNS	00NR	7	16WP	G15_033	FROM->TO	G14-057T 345.00 - SUNNYSIDE 345KV CKT 1	717	789	0.0433	118.1415	G15074_T 345.00 - HOYT 345KV CKT 1
FDNS	00NR	7	16WP	G15_033	FROM->TO	G14-057T 345.00 - SUNNYSIDE 345KV CKT 1	717	789	0.04539	118.1367	LAWTON EASTSIDE (LES 5) 345/138/13.8KV TRANSFORMER CKT 2
FDNS	00NR	7	16WP	G15_033	FROM->TO	G14-057T 345.00 - SUNNYSIDE 345KV CKT 1	717	789	0.04539	118.1367	LAWTON EASTSIDE (LES 5) 345/138/13.8KV TRANSFORMER CKT 2
FDNS	00NR	7	16WP	G15_033	FROM->TO	G14-057T 345.00 - SUNNYSIDE 345KV CKT 1	717	789	0.04343	118.1356	LATTA JCT - OIL CENTER 138KV CKT 1
FDNS	00NR	7	16WP	G15_033	FROM->TO	G14-057T 345.00 - SUNNYSIDE 345KV CKT 1	717	789	0.04359	118.1275	BLANCHARD - MAUD 138KV CKT 1
FDNS	00NR	7	16WP	G15_033	FROM->TO	G14-057T 345.00 - SUNNYSIDE 345KV CKT 1	717	789	0.04332	118.1251	GEN334441 1-SABINE UNIT 5
FDNS	00NR	7	16WP	G15_033	FROM->TO	G14-057T 345.00 - SUNNYSIDE 345KV CKT 1	717	789	0.04353	118.0981	DUNCAN (DUNCAN) 138/69/13.8KV TRANSFORMER CKT 1
FDNS	00NR	7	16WP	G15_033	FROM->TO	G14-057T 345.00 - SUNNYSIDE 345KV CKT 1	717	789	0.04353	118.0981	DUNCAN (DUNCAN) 138/69/13.8KV TRANSFORMER CKT 1
FDNS	00NR	7	16WP	G15_033	FROM->TO	G14-057T 345.00 - SUNNYSIDE 345KV CKT 1	717	789	0.04332	118.0978	GEN337653 1-WHITE BLUFF UNIT #2
FDNS	00NR	7	16WP	G15_033	FROM->TO	G14-057T 345.00 - SUNNYSIDE 345KV CKT 1	717	789	0.04317	118.0839	THISTLE7 345.00 - WOODWARD DISTRICT EHV 345KV CKT 1
FDNS	00NR	7	16WP	G15_033	FROM->TO	G14-057T 345.00 - SUNNYSIDE 345KV CKT 1	717	789	0.04317	118.0839	THISTLE7 345.00 - WOODWARD DISTRICT EHV 345KV CKT 1
FDNS	00NR	7	16WP	G15_033	FROM->TO	G14-057T 345.00 - SUNNYSIDE 345KV CKT 1	717	789	0.04317	118.0839	THISTLE7 345.00 - WOODWARD DISTRICT EHV 345KV CKT 2
FDNS	00NR	7	16WP	G15_033	FROM->TO	G14-057T 345.00 - SUNNYSIDE 345KV CKT 1	717	789	0.04317	118.0839	THISTLE7 345.00 - WOODWARD DISTRICT EHV 345KV CKT 2
FDNS	00NR	7	16WP	G15_033	FROM->TO	G14-057T 345.00 - SUNNYSIDE 345KV CKT 1	717	789	0.04332	118.0824	P12:161:AEPW-SWPA:BEAVER5:EROGERS5
FDNS	00NR	7	16WP	G15_033	FROM->TO	G14-057T 345.00 - SUNNYSIDE 345KV CKT 1	717	789	0.04332	118.0647	GEN334030 1-FRONTIER UNIT 1
FDNS	00NR	7	16WP	G15_033	FROM->TO	G14-057T 345.00 - SUNNYSIDE 345KV CKT 1	717	789	0.04332	118.0629	GEN334031 1-FRONTIER UNIT 2
FDNS	00NR	7	16WP	G15_033	FROM->TO	G14-057T 345.00 - SUNNYSIDE 345KV CKT 1	717	789	0.04332	118.0554	P12:138:AEPW:CATOOSA4:T.S.E.-4
FDNS	00NR	7	16WP	G15_033	FROM->TO	G14-057T 345.00 - SUNNYSIDE 345KV CKT 1	717	789	0.04332	118.04	GEN506752 1-LEBROCK GAS 1
FDNS	00NR	7	16WP	G15_033	FROM->TO	G14-057T 345.00 - SUNNYSIDE 345KV CKT 1	717	789	0.04332	118.0398	GEN506753 1-LEBROCK GAS 2
FDNS	00NR	7	16WP	G15_033	FROM->TO	G14-057T 345.00 - SUNNYSIDE 345KV CKT 1	717	789	0.04332	118.0374	GEN337911 1-ARKANSAS NUCLEAR ONE UNIT #2
FDNS	00NR	7	16WP	G15_033	FROM->TO	G14-057T 345.00 - SUNNYSIDE 345KV CKT 1	717	789	0.04308	118.0357	P12:138:AEPW-OGE:WTH_JCT4:JENSEN4
FDNS	00NR	7	16WP	G15_033	FROM->TO	G14-057T 345.00 - SUNNYSIDE 345KV CKT 1	717	789	0.04331	118.0174	8DANIEL8 500.00 - MCKNIGHT 500KV CKT 1
FDNS	00NR	7	16WP	G15_033	FROM->TO	G14-057T 345.00 - SUNNYSIDE 345KV CKT 1	717	789	0.04277	118.0113	BUCKNER7 345.00 - SPEARVILLE 345KV CKT 1
FDNS	00NR	7	16WP	G15_033	FROM->TO	G14-057T 345.00 - SUNNYSIDE 345KV CKT 1	717	789	0.04277	118.0113	BUCKNER7 345.00 - SPEARVILLE 345KV CKT 1
FDNS	00NR	7	16WP	G15_033	FROM->TO	G14-057T 345.00 - SUNNYSIDE 345KV CKT 1	717	789	0.04332	118.0077	GEN337652 1-WHITE BLUFF UNIT #1
FDNS	00NR	7	16WP	G15_033	FROM->TO	G14-057T 345.00 - SUNNYSIDE 345KV CKT 1	717	789	0.04332	118.0064	P12:161:AEPW:DYESS5:ELMSPRNG:TONTITN5
FDNS	00NR	7	16WP	G15_033	FROM->TO	G14-057T 345.00 - SUNNYSIDE 345KV CKT 1	717	789	0.04332	118.0016	GEN515226 1-MUSKOGEE 6G
FDNS	00NR	7	16WP	G15_033	FROM->TO	G14-057T 345.00 - SUNNYSIDE 345KV CKT 1	717	789	0.04332	118.0009	GEN501811 1-RODEMACHER UNIT 1
FDNS	00NR	7	16WP	G15_033	FROM->TO	G14-057T 345.00 - SUNNYSIDE 345KV CKT 1	717	789	0.04326	118.0001	6LAYFLD 230.00 - CARROLL 230KV CKT 1
FDNS	00NR	7	16WP	G15_033	FROM->TO	G14-057T 345.00 - SUNNYSIDE 345KV CKT 1	717	789	0.04332	117.9983	GEN300003 1-THOMAS HILL UNIT 3
FDNS	00NR	7	16WP	G15_033	FROM->TO	G14-057T 345.00 - SUNNYSIDE 345KV CKT 1	717	789	0.04332	117.9865	GEN336251 1-NINEMILE POINT UNIT#4
FDNS	00NR	7	16WP	G15_033	FROM->TO	G14-057T 345.00 - SUNNYSIDE 345KV CKT 1	717	789	0.04359	117.9849	BAILEY4 138.00 - SUNSHINE CANYON 138KV CKT 1
FDNS	00NR	7	16WP	G15_033	FROM->TO	G14-057T 345.00 - SUNNYSIDE 345KV CKT 1	717	789	0.04332	117.9835	GEN336831 1-BAXTER WILSON SES
FDNS	00NR	7	16WP	G15_033	FROM->TO	G14-057T 345.00 - SUNNYSIDE 345KV CKT 1	717	789	0.04332	117.9785	GEN334433 1-SABINE UNIT 3
FDNS	00NR	7	16WP	G15_033	FROM->TO	G14-057T 345.00 - SUNNYSIDE 345KV CKT 1	717	789	0.04324	117.9765	FULTON 115 - HOPE 115KV CKT 1
FDNS	00NR	7	16WP	G15_033	FROM->TO	G14-057T 345.00 - SUNNYSIDE 345KV CKT 1	717	789	0.04324	117.9765	FULTON 115 - HOPE 115KV CKT 1
FDNS	00NR	7	16WP	G15_033	FROM->TO	G14-057T 345.00 - SUNNYSIDE 345KV CKT 1	717	789	0.05421	117.9683	TUCO INTERCHANGE - TUCO_2 345.00 345KV CKT 1
FDNS	00NR	7	16WP	G15_033	FROM->TO	G14-057T 345.00 - SUNNYSIDE 345KV CKT 1	717	789	0.04332	117.9628	GEN300015 1-1SGPDEL 18.000
FDNS	00NR	7	16WP	G15_033	FROM->TO	G14-057T 345.00 - SUNNYSIDE 345KV CKT 1	717	789	0.04328	117.957	G15088_T 345.00 - MOORE 345KV CKT 1
FDNS	00NR	7	16WP	G15_033	FROM->TO	G14-057T 345.00 - SUNNYSIDE 345KV CKT 1	717	789	0.04338	117.9568	P12:138:AEPW:CORNVIL4:S.W.S.-4
FDNS	00NR	7	16WP	G15_033	FROM->TO	G14-057T 345.00 - SUNNYSIDE 345KV CKT 1	717	789	0.04379	117.9526	TUTTLE - TUTTLE CONOCO TAP 138KV CKT 1
FDNS	00NR	7	16WP	G15_033	FROM->TO	G14-057T 345.00 - SUNNYSIDE 345KV CKT 1	717	789	0.04315	117.9483	G1524G1525 345.00 - THISTLE7 345.00 345KV CKT 1
FDNS	00NR	7	16WP	G15_033	FROM->TO	G14-057T 345.00 - SUNNYSIDE 345KV CKT 1	717	789	0.04315	117.9483	G1524G1525 345.00 - THISTLE7 345.00 345KV CKT 2
FDNS	00NR	7	16WP	G15_033	FROM->TO	G14-057T 345.00 - SUNNYSIDE 345KV CKT 1	717	789	0.04353	117.9305	P12:69:WFEC-AEPW:COMANCH2:DUNCAN-2
FDNS	00NR	7	16WP	G15_033	FROM->TO	G14-057T 345.00 - SUNNYSIDE 345KV CKT 1	717	789	0.04332	117.9286	GEN562783 1-G15036_4 0.6900
FDNS	00NR	7	16WP	G15_033	FROM->TO	G14-057T 345.00 - SUNNYSIDE 345KV CKT 1	717	789	0.04332	117.9286	GEN562784 1-G15036_5 0.6900
FDNS	00NR	7	16WP	G15_033	FROM->TO	G14-057T 345.00 - SUNNYSIDE 345KV CKT 1	717	789	0.04318	117.9209	P12:138:AEPW:WTHWF4:CLINTJC4
FDNS	00NR	7	16WP	G15_033	FROM->TO	G14-057T 345.00 - SUNNYSIDE 345KV CKT 1	717	789	0.04332	117.9205	GEN515040 1-SEMINOLE 1G
FDNS	00NR	7	20WP	G15_033	FROM->TO	G14-057T 345.00 - SUNNYSIDE 345KV CKT 1	717	789	0.04125	117.9025	GEN509406 1-WELSH #3
FDNS	00NR	7	20WP	G15_033	FROM->TO	G14-057T 345.00 - SUNNYSIDE 345KV CKT 1	717	789	0.04125	117.9022	GEN509404 1-WELSH #1
FDNS	00NR	7	16WP	G15_033	FROM->TO	G14-057T 345.00 - SUNNYSIDE 345KV CKT 1	717	789	0.04332	117.9011	P12:161:AEPW:EROGERS5:ECNTRTN5
FDNS	00NR	7	16WP	G15_033	FROM->TO	G14-057T 345.00 - SUNNYSIDE 345KV CKT 1	717	789	0.04332	117.8995	GEN515223 1-MUSKOGEE 4G
FDNS	00NR	7	16WP	G15_033	FROM->TO	G14-057T 345.00 - SUNNYSIDE 345KV CKT 1	717	789	0.04332	117.8995	GEN515225 1-MUSKOGEE 5G
FDNS	00NR	7	16WP	G15_033	FROM->TO	G14-057T 345.00 - SUNNYSIDE 345KV CKT 1	717	789	0.04332	117.8975	RODEMACHER 230/22.0KV TRANSFORMER CKT 1
FDNS	00NR	7	16WP	G15_033	FROM->TO	G14-057T 345.00 - SUNNYSIDE 345KV CKT 1	717	789	0.04332	117.8931	CIMARRON - CZECH HALL 138KV CKT 1
FDNS	00NR	7	16WP	G15_033	FROM->TO	G14-057T 345.00 - SUNNYSIDE 345KV CKT 1	717	789	0.04399	117.8927	P12:138:AEPW:CORNVIL4:DUNCAN-4
FDNS	00NR	7	16WP	G15_033	FROM->TO	G14-057T 345.00 - SUNNYSIDE 345KV CKT 1	717	789	0.0433	117.8907	HOYT - STRANGER CREEK 345KV CKT 1
FDNS	00NR	7	16WP	G15_033	FROM->TO	G14-057T 345.00 - SUNNYSIDE 345KV CKT 1	717	789	0.04328	117.8863	CIMARRON - SARA 138KV CKT 1
FDNS	00NR	7	16WP	G15_033	FROM->TO	G14-057T 345.00 - SUNNYSIDE 345KV CKT 1	717	789	0.0433	117.8861	LAYFLD8 500.00 - MOUNT OLIVE 500KV CKT 1
FDNS	00NR	7	16WP	G15_033	FROM->TO	G14-057T 345.00 - SUNNYSIDE 345KV CKT 1	717	789	0.0433	117.8861	LAYFLD8 500.00 - MOUNT OLIVE 500KV CKT 1
FDNS	00NR	7	16WP	G15_033	FROM->TO	G14-057T 345.00 - SUNNYSIDE 345KV CKT 1	717	789	0.04332	117.8844	WHITE BLUFF 500/26.0KV TRANSFORMER CKT 1
FDNS	00NR	7	16WP	G15_033	FROM->TO	G14-057T 345.00 - SUNNYSIDE 345KV CKT 1	717	789	0.04332	117.8843	GEN303007 1-1BC2 U2
FDNS	00NR	7	16WP	G15_033	FROM->TO	G14-057T 345.00 - SUNNYSIDE 345KV CKT 1	717	789	0.04332	117.8838	GEN505432 1-SIKESTON
FDNS	00NR	7	16WP	G15_033	FROM->TO	G14-057T 345.00 - SUNNYSIDE 345KV CKT 1	717	789	0.0433	117.8835	G15074_T 345.00 - JEFFREY ENERGY CENTER 345KV CKT 1
FDNS	00NR	7	16WP	G15_033	FROM->TO	G14-057T 345.00 - SUNNYSIDE 345KV CKT 1	717	789	0.04332	117.8811	GEN337910 1-ARKANSAS NUCLEAR ONE UNIT #1
FDNS	00NR	7	16WP	G15_033	FROM->TO	G14-057T 345.00 - SUNNYSIDE 345KV CKT 1	717	789	0.04332	117.8797	GEN303006 1-1BC2 U1
FDNS	00NR	7	16WP	G15_033	FROM->TO	G14-057T 345.00 - SUNNYSIDE 345KV CKT 1	717	789	0.04379	117.876	CIMARRON - TUTTLE CONOCO TAP 138KV CKT 1
FDNS	00NR	7	16WP	G15_033	FROM->TO	G14-057T 345.00 - SUNNYSIDE 345KV CKT 1	717	789	0.04353	117.8741	DUNCAN - TOSCO 69KV CKT 1

SOLUTION	GROUP	SCENARIO	SEASON	SOURCE	DIRECTION	MONITORED ELEMENT	RATEA (MVA)	RATEB(MVA)	TDF	TC%LOADING (% MVA)	CONTINGENCY
FDNS	00NR	7	16WP	G15_033	FROM->TO	G14-057T 345.00 - SUNNYSIDE 345KV CKT 1	717	789	0.0433	117.8734	HOT SPRINGS EHV - MAGNET COVE 500KV CKT 1
FDNS	00NR	7	16WP	G15_033	FROM->TO	G14-057T 345.00 - SUNNYSIDE 345KV CKT 1	717	789	0.04299	117.8719	ARBWIND4 138.00 - CARTER 138KV CKT 1
FDNS	00NR	7	16WP	G15_033	FROM->TO	G14-057T 345.00 - SUNNYSIDE 345KV CKT 1	717	789	0.04329	117.8593	MC NIEL 500/115KV TRANSFORMER CKT 1
FDNS	00NR	7	16WP	G15_033	FROM->TO	G14-057T 345.00 - SUNNYSIDE 345KV CKT 1	717	789	0.04343	117.8577	LASALLE - LATTA JCT 138KV CKT 1
FDNS	00NR	7	16WP	G15_033	FROM->TO	G14-057T 345.00 - SUNNYSIDE 345KV CKT 1	717	789	0.04332	117.8568	GEN336191 1-LITTLE GYPSY UNIT#3
FDNS	00NR	7	16WP	G15_033	FROM->TO	G14-057T 345.00 - SUNNYSIDE 345KV CKT 1	717	789	0.04296	117.8501	CANADIAN - NOBLE 138KV CKT 1
FDNS	00NR	7	16WP	G15_033	FROM->TO	G14-057T 345.00 - SUNNYSIDE 345KV CKT 1	717	789	0.04087	117.8497	FINNEY SWITCHING STATION - Hitchland Interchange 345KV CKT 1
FDNS	00NR	7	16WP	G15_033	FROM->TO	G14-057T 345.00 - SUNNYSIDE 345KV CKT 1	717	789	0.04318	117.8493	P12:138:AEPW:WTHWF4:WTH_SE4
FDNS	00NR	7	16WP	G15_033	FROM->TO	G14-057T 345.00 - SUNNYSIDE 345KV CKT 1	717	789	0.04309	117.8465	SEMINOLE - VANOSTP4 138.00 138KV CKT 1
FDNS	00NR	7	16WP	G15_033	FROM->TO	G14-057T 345.00 - SUNNYSIDE 345KV CKT 1	717	789	0.04327	117.8385	BISMARK - HOT SPRINGS WEST BUS 115KV CKT 1
FDNS	00NR	7	16WP	G15_033	FROM->TO	G14-057T 345.00 - SUNNYSIDE 345KV CKT 1	717	789	0.04353	117.835	COMANCHE TAP - TOSCO 69KV CKT 1
FDNS	00NR	7	16WP	G15_033	FROM->TO	G14-057T 345.00 - SUNNYSIDE 345KV CKT 1	717	789	0.04332	117.8339	P12:138:AEPW:N.E.S.-4:CATOOSA4
FDNS	00NR	7	16WP	G15_033	FROM->TO	G14-057T 345.00 - SUNNYSIDE 345KV CKT 1	717	789	0.04332	117.8286	GEN335614 1-WILLOW GLENN UNIT#4
FDNS	00NR	7	16WP	G15_033	FROM->TO	G14-057T 345.00 - SUNNYSIDE 345KV CKT 1	717	789	0.04297	117.8278	P12:138:OKGE:3TERM27
FDNS	00NR	7	16WP	G15_033	FROM->TO	G14-057T 345.00 - SUNNYSIDE 345KV CKT 1	717	789	0.04359	117.8237	BAILEY4 138.00 - WESTMOORE 138KV CKT 1
FDNS	00NR	7	16WP	G15_033	FROM->TO	G14-057T 345.00 - SUNNYSIDE 345KV CKT 1	717	789	0.04332	117.8178	CZECH HALL - XEROX 138KV CKT 1
FDNS	00NR	7	16WP	G15_033	FROM->TO	G14-057T 345.00 - SUNNYSIDE 345KV CKT 1	717	789	0.04332	117.8174	GEN303008 1-1BC2 U3
FDNS	00NR	7	16WP	G15_033	FROM->TO	G14-057T 345.00 - SUNNYSIDE 345KV CKT 1	717	789	0.04332	117.815	NELSON 230/20.0KV TRANSFORMER CKT 1
FDNS	00NR	7	16WP	G15_033	FROM->TO	G14-057T 345.00 - SUNNYSIDE 345KV CKT 1	717	789	0.04332	117.8135	MORGAN - XEROX 138KV CKT 1
FDNS	00NR	7	16WP	G15_033	FROM->TO	G14-057T 345.00 - SUNNYSIDE 345KV CKT 1	717	789	0.04363	117.8088	P12:69:AEPW-OMPA:COMANC-2:OMWALTR2
FDNS	00NR	7	16WP	G15_033	FROM->TO	G14-057T 345.00 - SUNNYSIDE 345KV CKT 1	717	789	0.04332	117.8051	GEN300010 1-ST FRANCIS UNIT 1
FDNS	00NR	7	16WP	G15_033	FROM->TO	G14-057T 345.00 - SUNNYSIDE 345KV CKT 1	717	789	0.04309	117.7928	WEATHERFORD JCT. - WEATHERFORD SOUTHEAST 138KV CKT 1
FDNS	00NR	7	16WP	G15_033	FROM->TO	G14-057T 345.00 - SUNNYSIDE 345KV CKT 1	717	789	0.04309	117.7928	WEATHERFORD JCT. - WEATHERFORD SOUTHEAST 138KV CKT 1
FDNS	00NR	7	16WP	G15_033	FROM->TO	G14-057T 345.00 - SUNNYSIDE 345KV CKT 1	717	789	0.04332	117.791	MORGAN - MUSTANG 138KV CKT 1
FDNS	00NR	7	16WP	G15_033	FROM->TO	G14-057T 345.00 - SUNNYSIDE 345KV CKT 1	717	789	0.04332	117.7898	GEN336170 1-GULF OXY U4
FDNS	00NR	7	16WP	G15_033	FROM->TO	G14-057T 345.00 - SUNNYSIDE 345KV CKT 1	717	789	0.04327	117.7851	ALPINE AECC - BISMARK 115KV CKT 1
FDNS	00NR	7	16WP	G15_033	FROM->TO	G14-057T 345.00 - SUNNYSIDE 345KV CKT 1	717	789	0.04332	117.7836	GEN336464 1-MICHOUD UNIT #3
FDNS	00NR	7	16WP	G15_033	FROM->TO	G14-057T 345.00 - SUNNYSIDE 345KV CKT 1	717	789	0.04769	117.7818	P12:345:SPS:J15.1.XRDS.TOLK
FDNS	00NR	7	16WP	G15_033	FROM->TO	G14-057T 345.00 - SUNNYSIDE 345KV CKT 1	717	789	0.04332	117.7738	CYPRESS - HARTBURG 500KV CKT 1
FDNS	00NR	7	16WP	G15_033	FROM->TO	G14-057T 345.00 - SUNNYSIDE 345KV CKT 1	717	789	0.04353	117.7718	COMANCHE - COMANCHE TAP 69KV CKT 1
FDNS	00NR	7	16WP	G15_033	FROM->TO	G14-057T 345.00 - SUNNYSIDE 345KV CKT 1	717	789	0.04332	117.769	8CAJUN2 500/24.0KV TRANSFORMER CKT 1
FDNS	00NR	7	16WP	G15_033	FROM->TO	G14-057T 345.00 - SUNNYSIDE 345KV CKT 1	717	789	0.04322	117.7587	DRAPER LAKE - SEMINOLE 345KV CKT 1
FDNS	00NR	7	16WP	G15_033	FROM->TO	G14-057T 345.00 - SUNNYSIDE 345KV CKT 1	717	789	0.04322	117.7587	DRAPER LAKE - SEMINOLE 345KV CKT 2
FDNS	00NR	7	16WP	G15_033	FROM->TO	G14-057T 345.00 - SUNNYSIDE 345KV CKT 1	717	789	0.04296	117.7582	NOBLE - PURCELL4 138.00 138KV CKT 1
FDNS	00NR	7	16WP	G15_033	FROM->TO	G14-057T 345.00 - SUNNYSIDE 345KV CKT 1	717	789	0.04309	117.7572	P12:138:AEPW:REDROCKRD4:WTH_JCT4
FDNS	00NR	7	16WP	G15_033	FROM->TO	G14-057T 345.00 - SUNNYSIDE 345KV CKT 1	717	789	0.04332	117.7527	GEN300011 1-ST FRANCIS UNIT 2
FDNS	00NR	7	16WP	G15_033	FROM->TO	G14-057T 345.00 - SUNNYSIDE 345KV CKT 1	717	789	0.04327	117.7405	ALPINE AECC - AMITY SS 115KV CKT 1
FDNS	00NR	7	16WP	G15_033	FROM->TO	G14-057T 345.00 - SUNNYSIDE 345KV CKT 1	717	789	0.04332	117.7381	7JASPER 345.00 - BLACKBERRY 345KV CKT 1
FDNS	00NR	7	16WP	G15_033	FROM->TO	G14-057T 345.00 - SUNNYSIDE 345KV CKT 1	717	789	0.04332	117.7375	GEN501910 1-ACADIA UNIT ST1
FDNS	00NR	7	16WP	G15_033	FROM->TO	G14-057T 345.00 - SUNNYSIDE 345KV CKT 1	717	789	0.04332	117.7331	GEN337041 1-GERALD ANDRUS
FDNS	00NR	7	16WP	G15_033	FROM->TO	G14-057T 345.00 - SUNNYSIDE 345KV CKT 1	717	789	0.04332	117.7281	P12:138:AEPW:R.S.S.-4:S.HUD.-4
FDNS	00NR	7	16WP	G15_033	FROM->TO	G14-057T 345.00 - SUNNYSIDE 345KV CKT 1	717	789	0.04329	117.7256	SWISSVALE - WEST GARDNER 345KV CKT 1
FDNS	00NR	7	16WP	G15_033	FROM->TO	G14-057T 345.00 - SUNNYSIDE 345KV CKT 1	717	789	0.04328	117.7237	BLACKBERRY - NEOSHO 345KV CKT 1
FDNS	00NR	7	16WP	G15_033	FROM->TO	G14-057T 345.00 - SUNNYSIDE 345KV CKT 1	717	789	0.04328	117.7237	BLACKBERRY - NEOSHO 345KV CKT 1
FDNS	00NR	7	16WP	G15_033	FROM->TO	G14-057T 345.00 - SUNNYSIDE 345KV CKT 1	717	789	0.04332	117.7198	GEN300016 1-1G1GPDEL 18.000
FDNS	00NR	7	16WP	G15_033	FROM->TO	G14-057T 345.00 - SUNNYSIDE 345KV CKT 1	717	789	0.04331	117.7174	7LUTESVIL 345.00 - 7ST FRANC 345.00 345KV CKT 1
FDNS	00NR	7	16WP	G15_033	FROM->TO	G14-057T 345.00 - SUNNYSIDE 345KV CKT 1	717	789	0.04335	117.7064	GRACEMONT (BANK 1) 345/138/13.8KV TRANSFORMER CKT 1
FDNS	00NR	7	16WP	G15_033	FROM->TO	G14-057T 345.00 - SUNNYSIDE 345KV CKT 1	717	789	0.04343	117.7014	LASALLE - STONEWAL LH138.00 138KV CKT 1
FDNS	00NR	7	16WP	G15_033	FROM->TO	G14-057T 345.00 - SUNNYSIDE 345KV CKT 1	717	789	0.04328	117.7011	SARA - STHLAKE4 138.00 138KV CKT 1
FDNS	00NR	7	16WP	G15_033	FROM->TO	G14-057T 345.00 - SUNNYSIDE 345KV CKT 1	717	789	0.04331	117.7004	ETTA (DUKE HOTSPRINGS) - MC NIEL 500KV CKT 1
FDNS	00NR	7	16WP	G15_033	FROM->TO	G14-057T 345.00 - SUNNYSIDE 345KV CKT 1	717	789	0.04318	117.6915	BENTON - WICHITA 345KV CKT 1
FDNS	00NR	7	16WP	G15_033	FROM->TO	G14-057T 345.00 - SUNNYSIDE 345KV CKT 1	717	789	0.04332	117.6904	P12:138:AEPW:YARCH-S4:T.S.E.-4
FDNS	00NR	7	16WP	G15_033	FROM->TO	G14-057T 345.00 - SUNNYSIDE 345KV CKT 1	717	789	0.04332	117.6891	GEN336801 1-BAXTER WILSON UNIT #1
FDNS	00NR	7	16WP	G15_033	FROM->TO	G14-057T 345.00 - SUNNYSIDE 345KV CKT 1	717	789	0.04332	117.6889	GEN512688 2-GRDA1 GSU2 22
FDNS	00NR	7	16WP	G15_033	FROM->TO	G14-057T 345.00 - SUNNYSIDE 345KV CKT 1	717	789	0.04332	117.6875	P12:69:AEPW:NROGERS2:ECNTRTN2
FDNS	00NR	7	16WP	G15_033	FROM->TO	G14-057T 345.00 - SUNNYSIDE 345KV CKT 1	717	789	0.04343	117.6869	STONEWAL LH138.00 - TUPELO TAP 138KV CKT 1
FDNS	00NR	7	16WP	G15_033	FROM->TO	G14-057T 345.00 - SUNNYSIDE 345KV CKT 1	717	789	0.04332	117.6848	P12:138:AEPW:BA_71ST4:T.S.E.-4
FDNS	00NR	7	16WP	G15_033	FROM->TO	G14-057T 345.00 - SUNNYSIDE 345KV CKT 1	717	789	0.04309	117.6802	HINTON - WEATHERFORD JCT. 138KV CKT 1
FDNS	00NR	7	16WP	G15_033	FROM->TO	G14-057T 345.00 - SUNNYSIDE 345KV CKT 1	717	789	0.04327	117.6788	CLEO CORNER - CLEOPLT4 138.00 138KV CKT 1
FDNS	00NR	7	16WP	G15_033	FROM->TO	G14-057T 345.00 - SUNNYSIDE 345KV CKT 1	717	789	0.04335	117.6783	ANADARKO - SEQUOYAHJ4 138.00 138KV CKT 1
FDNS	00NR	7	16WP	G15_033	FROM->TO	G14-057T 345.00 - SUNNYSIDE 345KV CKT 1	717	789	0.04332	117.6768	SABINE 230/24.0KV TRANSFORMER CKT 1
FDNS	00NR	7	16WP	G15_033	FROM->TO	G14-057T 345.00 - SUNNYSIDE 345KV CKT 1	717	789	0.04335	117.6747	CORN TAP - SEQUOYAHJ4 138.00 138KV CKT 1
FDNS	00NR	7	16WP	G15_033	FROM->TO	G14-057T 345.00 - SUNNYSIDE 345KV CKT 1	717	789	0.04328	117.6731	MCCLAIN - STHLAKE4 138.00 138KV CKT 1
FDNS	00NR	7	16WP	G15_033	FROM->TO	G14-057T 345.00 - SUNNYSIDE 345KV CKT 1	717	789	0.04359	117.6725	FRANKLIN SW - WESTMOORE 138KV CKT 1
FDNS	00NR	7	16WP	G15_033	FROM->TO	G14-057T 345.00 - SUNNYSIDE 345KV CKT 1	717	789	0.0433	117.6725	8WNEWMADRID 500.00 - DELL 500 500KV CKT 1
FDNS	00NR	7	16WP	G15_033	FROM->TO	G14-057T 345.00 - SUNNYSIDE 345KV CKT 1	717	789	0.04329	117.6721	ENOWILT - LONE OAK 138KV CKT 1
FDNS	00NR	7	16WP	G15_033	FROM->TO	G14-057T 345.00 - SUNNYSIDE 345KV CKT 1	717	789	0.04332	117.669	ESSEX UNIT 2 500/18.0KV TRANSFORMER CKT 1
FDNS	00NR	7	16WP	G15_033	FROM->TO	G14-057T 345.00 - SUNNYSIDE 345KV CKT 1	717	789	0.04319	117.6686	P12:138:OKGE-AEPW:JENSEN4:REDROCKRD4
FDNS	00NR	7	16WP	G15_033	FROM->TO	G14-057T 345.00 - SUNNYSIDE 345KV CKT 1	717	789	0.04332	117.665	FRONTIER 345/18.0KV TRANSFORMER CKT 1
FDNS	00NR	7	16WP	G15_033	FROM->TO	G14-057T 345.00 - SUNNYSIDE 345KV CKT 1	717	789	0.04345	117.6644	WALTERS - WALTERS 69KV CKT 1
FDNS	00NR	7	16WP	G15_033	FROM->TO	G14-057T 345.00 - SUNNYSIDE 345KV CKT 1	717	789	0.04332	117.6632	FRONTIER 345/18.0KV TRANSFORMER CKT 1
FDNS	00NR	7	16WP	G15_033	FROM->TO	G14-057T 345.00 - SUNNYSIDE 345KV CKT 1	717	789	0.04329	117.663	ENOWILT - SARDIS 138KV CKT 1
FDNS	00NR	7	16WP	G15_033	FROM->TO	G14-057T 345.00 - SUNNYSIDE 345KV CKT 1	717	789	0.04329	117.6609	G15095_T 138.00 - ROSE_VALLEY 138.00 138KV CKT 1
FDNS	00NR	7	16WP	G15_033	FROM->TO	G14-057T 345.00 - SUNNYSIDE 345KV CKT 1	717	789	0.04332	117.6588	P12:161:AEPW:CHAMSPR5:FARMING5
FDNS	00NR	7	16WP	G15_033	FROM->TO	G14-057T 345.00 - SUNNYSIDE 345KV CKT 1	717	789	0.04338	117.6586	NORGE ROAD - SOUTHWESTERN STATION 138KV CKT 1
FDNS	00NR	7	16WP	G15_033	FROM->TO	G14-057T 345.00 - SUNNYSIDE 345KV CKT 1	717	789	0.04338	117.6586	NORGE ROAD - SOUTHWESTERN STATION 138KV CKT 1
FDNS	00NR	7	16WP	G15_033	FROM->TO	G14-057T 345.00 - SUNNYSIDE 345KV CKT 1	717	789	0.04333	117.6567	MARIETTA - MARIETTA4 138.00 138KV CKT 1
FDNS	00NR	7	16WP	G15_033	FROM->TO	G14-057T 345.00 - SUNNYSIDE 345KV CKT 1	717	789	0.04209	117.6534	G11-14T 345.00 - WOODWARD DISTRICT EHV 345KV CKT 1
FDNS	00NR	7	16WP	G15_033	FROM->TO	G14-057T 345.00 - SUNNYSIDE 345KV CKT 1	717	789	0.04209	117.6534	G11-14T 345.00 - WOODWARD DISTRICT EHV 345KV CKT 2

SOLUTION	GROUP	SCENARIO	SEASON	SOURCE	DIRECTION	MONITORED ELEMENT	RATEA (MVA)	RATEB(MVA)	TDF	TC%LOADING (% MVA)	CONTINGENCY
FDNS	00NR	7	16WP	G15_033	FROM->TO	G14-057T 345.00 - SUNNYSIDE 345KV CKT 1	717	789	0.04331	117.6518	P12:138:AEPW-OGE:SHIDLER4:OSAGE 4
FDNS	00NR	7	16WP	G15_033	FROM->TO	G14-057T 345.00 - SUNNYSIDE 345KV CKT 1	717	789	0.04228	117.6504	CANADIAN RIVER - PITTSBURG 345KV CKT 1
FDNS	00NR	7	16WP	G15_033	FROM->TO	G14-057T 345.00 - SUNNYSIDE 345KV CKT 1	717	789	0.04228	117.6504	CANADIAN RIVER - PITTSBURG 345KV CKT 1
FDNS	00NR	7	16WP	G15_033	FROM->TO	G14-057T 345.00 - SUNNYSIDE 345KV CKT 1	717	789	0.04327	117.6461	CLEOPLT4 138.00 - MEN TAP 138KV CKT 1
FDNS	00NR	7	16WP	G15_033	FROM->TO	G14-057T 345.00 - SUNNYSIDE 345KV CKT 1	717	789	0.0433	117.6433	EMPORIA ENERGY CENTER - SWISSVALE 345KV CKT 1
FDNS	00NR	7	16WP	G15_033	FROM->TO	G14-057T 345.00 - SUNNYSIDE 345KV CKT 1	717	789	0.0429	117.6382	ARBUCKLE - VANOSTP4 138.00 138KV CKT 1
FDNS	00NR	7	16WP	G15_033	FROM->TO	G14-057T 345.00 - SUNNYSIDE 345KV CKT 1	717	789	0.04327	117.6368	IMO TAP - MEN TAP 138KV CKT 1
FDNS	00NR	7	16WP	G15_033	FROM->TO	G14-057T 345.00 - SUNNYSIDE 345KV CKT 1	717	789	0.04277	117.6314	BUCKNER7 345.00 - HOLCOMB 345KV CKT 1
FDNS	00NR	7	16WP	G15_033	FROM->TO	G14-057T 345.00 - SUNNYSIDE 345KV CKT 1	717	789	0.04277	117.6314	BUCKNER7 345.00 - HOLCOMB 345KV CKT 1
FDNS	00NR	7	16WP	G15_033	FROM->TO	G14-057T 345.00 - SUNNYSIDE 345KV CKT 1	717	789	0.04309	117.6301	HINTON - REDROCKRD4 138.00 138KV CKT 1
FDNS	00NR	7	16WP	G15_033	FROM->TO	G14-057T 345.00 - SUNNYSIDE 345KV CKT 1	717	789	0.04332	117.6277	LEWIS CREEK SWITCHYARD 138/22.0KV TRANSFORMER CKT 1
FDNS	00NR	7	16WP	G15_033	FROM->TO	G14-057T 345.00 - SUNNYSIDE 345KV CKT 1	717	789	0.04329	117.6275	CLAYTON - SARDIS 138KV CKT 1
FDNS	00NR	7	16WP	G15_033	FROM->TO	G14-057T 345.00 - SUNNYSIDE 345KV CKT 1	717	789	0.04332	117.6268	GEN505616 1-BROKEN BOW
FDNS	00NR	7	16WP	G15_033	FROM->TO	G14-057T 345.00 - SUNNYSIDE 345KV CKT 1	717	789	0.04332	117.6227	LEWIS CREEK SWITCHYARD 138/22.0KV TRANSFORMER CKT 1
FDNS	00NR	7	16WP	G15_033	FROM->TO	G14-057T 345.00 - SUNNYSIDE 345KV CKT 1	717	789	0.04363	117.6205	LAWTON RELIFT TAP - OMPA-WALTERS 69KV CKT 1
FDNS	00NR	7	16WP	G15_033	FROM->TO	G14-057T 345.00 - SUNNYSIDE 345KV CKT 1	717	789	0.04338	117.6201	SOUTHWESTERN STATION - VERDEN 138KV CKT 1
FDNS	00NR	7	16WP	G15_033	FROM->TO	G14-057T 345.00 - SUNNYSIDE 345KV CKT 1	717	789	0.04318	117.6119	WEATHERFORD TAP - WEATHERFORD WIND FARM 138KV CKT 1
FDNS	00NR	7	16WP	G15_033	FROM->TO	G14-057T 345.00 - SUNNYSIDE 345KV CKT 1	717	789	0.04394	117.6114	POTTER COUNTY INTERCHANGE - TOLK STATION 345KV CKT 1
FDNS	00NR	7	16WP	G15_033	FROM->TO	G14-057T 345.00 - SUNNYSIDE 345KV CKT 1	717	789	0.04329	117.6076	NOEL_SW 138.00 - ROSE_VALLEY 138.00 138KV CKT 1
FDNS	00NR	7	16WP	G15_033	FROM->TO	G14-057T 345.00 - SUNNYSIDE 345KV CKT 1	717	789	0.04332	117.6061	GEN501970 1-EVANGELINE UNIT 7
FDNS	00NR	7	16WP	G15_033	FROM->TO	G14-057T 345.00 - SUNNYSIDE 345KV CKT 1	717	789	0.04345	117.6043	P12:69:WFEC-AEPW:COMANCH2:WALTRS-2
FDNS	00NR	7	16WP	G15_033	FROM->TO	G14-057T 345.00 - SUNNYSIDE 345KV CKT 1	717	789	0.04338	117.6007	NORTH 29TH CHICKASHA - VERDEN 138KV CKT 1
FDNS	00NR	7	16WP	G15_033	FROM->TO	G14-057T 345.00 - SUNNYSIDE 345KV CKT 1	717	789	0.04329	117.5995	P12:138:AEPW-SWPA:LONEOAK4:BRKNBW4
FDNS	00NR	7	16WP	G15_033	FROM->TO	G14-057T 345.00 - SUNNYSIDE 345KV CKT 1	717	789	0.04324	117.598	HOPE - MCNAB REC 115KV CKT 1
FDNS	00NR	7	16WP	G15_033	FROM->TO	G14-057T 345.00 - SUNNYSIDE 345KV CKT 1	717	789	0.04332	117.5929	GEN334392 1-EXXON MOBIL IPP 1
FDNS	00NR	7	16WP	G15_033	FROM->TO	G14-057T 345.00 - SUNNYSIDE 345KV CKT 1	717	789	0.04324	117.5893	P12:115:AEPW:TURK3:HOPE3
FDNS	00NR	7	16WP	G15_033	FROM->TO	G14-057T 345.00 - SUNNYSIDE 345KV CKT 1	717	789	0.04329	117.5889	CLAYTON - NASHOBA 138KV CKT 1
FDNS	00NR	7	16WP	G15_033	FROM->TO	G14-057T 345.00 - SUNNYSIDE 345KV CKT 1	717	789	0.04333	117.5861	P12:138:OKGE:3TERM12
FDNS	00NR	7	16WP	G15_033	FROM->TO	G14-057T 345.00 - SUNNYSIDE 345KV CKT 1	717	789	0.04332	117.5849	GEN334393 1-EXXON MOBIL IPP 2
FDNS	00NR	7	16WP	G15_033	FROM->TO	G14-057T 345.00 - SUNNYSIDE 345KV CKT 1	717	789	0.04332	117.5849	GEN334394 1-EXXON MOBIL IPP 3
FDNS	00NR	7	16WP	G15_033	FROM->TO	G14-057T 345.00 - SUNNYSIDE 345KV CKT 1	717	789	0.04325	117.5838	CLARKSVILLE - ONETA 345KV CKT 1
FDNS	00NR	7	16WP	G15_033	FROM->TO	G14-057T 345.00 - SUNNYSIDE 345KV CKT 1	717	789	0.04325	117.5838	CLARKSVILLE - ONETA 345KV CKT 1
FDNS	00NR	7	16WP	G15_033	FROM->TO	G14-057T 345.00 - SUNNYSIDE 345KV CKT 1	717	789	0.04328	117.5822	COUCH SES - MC NIEL 115KV CKT 1
FDNS	00NR	7	16WP	G15_033	FROM->TO	G14-057T 345.00 - SUNNYSIDE 345KV CKT 1	717	789	0.0433	117.5812	MORISNT4 138.00 - STILLWATER 138KV CKT 1
FDNS	00NR	7	16WP	G15_033	FROM->TO	G14-057T 345.00 - SUNNYSIDE 345KV CKT 1	717	789	0.04332	117.5802	GEN336222 1-LITTLE GYPSY UNIT#2
FDNS	00NR	7	16WP	G15_033	FROM->TO	G14-057T 345.00 - SUNNYSIDE 345KV CKT 1	717	789	0.04332	117.5782	GEN509394 1-FLINT CREEK
FDNS	00NR	7	16WP	G15_033	FROM->TO	G14-057T 345.00 - SUNNYSIDE 345KV CKT 1	717	789	0.0433	117.5763	EMPORIA ENERGY CENTER - G14_001T 345.00 345KV CKT 1
FDNS	00NR	7	16WP	G15_033	FROM->TO	G14-057T 345.00 - SUNNYSIDE 345KV CKT 1	717	789	0.0433	117.576	P12:138:OKGE:3TERM2
FDNS	00NR	7	16WP	G15_033	FROM->TO	G14-057T 345.00 - SUNNYSIDE 345KV CKT 1	717	789	0.04329	117.5758	BETHEL - NASHOBA 138KV CKT 1
FDNS	00NR	7	16WP	G15_033	FROM->TO	G14-057T 345.00 - SUNNYSIDE 345KV CKT 1	717	789	0.04332	117.573	7JASPER 345.00 - MORGAN 345KV CKT 1
FDNS	00NR	7	16WP	G15_033	FROM->TO	G14-057T 345.00 - SUNNYSIDE 345KV CKT 1	717	789	0.04324	117.5663	MCNAB REC - Turk 115 115KV CKT 1
FDNS	00NR	7	16WP	G15_033	FROM->TO	G14-057T 345.00 - SUNNYSIDE 345KV CKT 1	717	789	0.04324	117.5662	TURK (TURK 1) 138/115/13.2KV TRANSFORMER CKT 1
FDNS	00NR	7	16WP	G15_033	FROM->TO	G14-057T 345.00 - SUNNYSIDE 345KV CKT 1	717	789	0.04324	117.5662	TURK (TURK 1) 138/115/13.2KV TRANSFORMER CKT 1
FDNS	00NR	7	16WP	G15_033	FROM->TO	G14-057T 345.00 - SUNNYSIDE 345KV CKT 1	717	789	0.04434	117.5627	LAWTON EASTSIDE (LES 4) 345/138/13.8KV TRANSFORMER CKT 1
FDNS	00NR	7	16WP	G15_033	FROM->TO	G14-057T 345.00 - SUNNYSIDE 345KV CKT 1	717	789	0.04434	117.5627	LAWTON EASTSIDE (LES 4) 345/138/13.8KV TRANSFORMER CKT 1
FDNS	00NR	7	16WP	G15_033	FROM->TO	G14-057T 345.00 - SUNNYSIDE 345KV CKT 1	717	789	0.04332	117.5594	P12:138:AEPW:R.S.S-4:T.P.S.-4
FDNS	00NR	7	16WP	G15_033	FROM->TO	G14-057T 345.00 - SUNNYSIDE 345KV CKT 1	717	789	0.04363	117.5562	OMPA-WALTERS - WALTERS 69KV CKT 1
FDNS	00NR	7	16WP	G15_033	FROM->TO	G14-057T 345.00 - SUNNYSIDE 345KV CKT 1	717	789	0.04363	117.5562	OMPA-WALTERS - WALTERS 69KV CKT 1
FDNS	00NR	7	16WP	G15_033	FROM->TO	G14-057T 345.00 - SUNNYSIDE 345KV CKT 1	717	789	0.04332	117.5547	GEN334432 1-SABINE UNIT 2
FDNS	00NR	7	16WP	G15_033	FROM->TO	G14-057T 345.00 - SUNNYSIDE 345KV CKT 1	717	789	0.04334	117.5545	FRANKLIN - FRANKLIN SW 138KV CKT 1
FDNS	00NR	7	16WP	G15_033	FROM->TO	G14-057T 345.00 - SUNNYSIDE 345KV CKT 1	717	789	0.04332	117.5545	GEN334431 1-SABINE UNIT 1
FDNS	00NR	7	16WP	G15_033	FROM->TO	G14-057T 345.00 - SUNNYSIDE 345KV CKT 1	717	789	0.04332	117.5498	GEN506749 1-EASTMAN GENERATION A
FDNS	00NR	7	16WP	G15_033	FROM->TO	G14-057T 345.00 - SUNNYSIDE 345KV CKT 1	717	789	0.04332	117.5486	GEN336152 1-WATERFORD UNIT#2
FDNS	00NR	7	16WP	G15_033	FROM->TO	G14-057T 345.00 - SUNNYSIDE 345KV CKT 1	717	789	0.04332	117.5475	GEN336151 1-WATERFORD UNIT#1
FDNS	00NR	7	16WP	G15_033	FROM->TO	G14-057T 345.00 - SUNNYSIDE 345KV CKT 1	717	789	0.04332	117.5471	GEN501971 1-EVANGELINE UNIT 7-1
FDNS	00NR	7	16WP	G15_033	FROM->TO	G14-057T 345.00 - SUNNYSIDE 345KV CKT 1	717	789	0.04332	117.5471	GEN501972 1-EVANGELINE UNIT 7-2
FDNS	00NR	7	16WP	G15_033	FROM->TO	G14-057T 345.00 - SUNNYSIDE 345KV CKT 1	717	789	0.04296	117.5469	PURCELL4 138.00 - WALNUT CREEK 138KV CKT 1
FDNS	00NR	7	16WP	G15_033	FROM->TO	G14-057T 345.00 - SUNNYSIDE 345KV CKT 1	717	789	0.04338	117.5439	CORNVILLE - NORGE ROAD 138KV CKT 1
FDNS	00NR	7	16WP	G15_033	FROM->TO	G14-057T 345.00 - SUNNYSIDE 345KV CKT 1	717	789	0.04338	117.5439	CORNVILLE - NORGE ROAD 138KV CKT 1
FDNS	00NR	7	16WP	G15_033	FROM->TO	G14-057T 345.00 - SUNNYSIDE 345KV CKT 1	717	789	0.04338	117.5384	CORNVILLE - NORTH 29TH CHICKASHA 138KV CKT 1
FDNS	00NR	7	16WP	G15_033	FROM->TO	G14-057T 345.00 - SUNNYSIDE 345KV CKT 1	717	789	0.04332	117.5345	P12:138:AEPW:R.S.S.-4:R:96YALE-4
FDNS	00NR	7	16WP	G15_033	FROM->TO	G14-057T 345.00 - SUNNYSIDE 345KV CKT 1	717	789	0.04318	117.5329	WEATHERFORD SOUTHEAST - WEATHERFORD TAP 138KV CKT 1
FDNS	00NR	7	16WP	G15_033	FROM->TO	G14-057T 345.00 - SUNNYSIDE 345KV CKT 1	717	789	0.04332	117.5326	ST FRANCIS - ST FRANCIS 1 161KV CKT Z1
FDNS	00NR	7	16WP	G15_033	FROM->TO	G14-057T 345.00 - SUNNYSIDE 345KV CKT 1	717	789	0.04332	117.5326	ST FRANCIS 161/16.0KV TRANSFORMER CKT 1
FDNS	00NR	7	16WP	G15_033	FROM->TO	G14-057T 345.00 - SUNNYSIDE 345KV CKT 1	717	789	0.04332	117.5239	P12:138:AEPW:MOHAWK4:T.NO--4
FDNS	00NR	7	16WP	G15_033	FROM->TO	G14-057T 345.00 - SUNNYSIDE 345KV CKT 1	717	789	0.04332	117.5229	GEN501912 1-ACADIA UNIT CT1B
FDNS	00NR	7	16WP	G15_033	FROM->TO	G14-057T 345.00 - SUNNYSIDE 345KV CKT 1	717	789	0.04332	117.5221	GEN501911 1-ACADIA UNIT CT1A
FDNS	00NR	7	16WP	G15_033	FROM->TO	G14-057T 345.00 - SUNNYSIDE 345KV CKT 1	717	789	0.04327	117.5201	P12:138:AEPW:OKMULGE4:R.S.S-4
FDNS	00NR	7	16WP	G15_033	FROM->TO	G14-057T 345.00 - SUNNYSIDE 345KV CKT 1	717	789	0.04329	117.5175	BETHEL - BROKEN BOW 138KV CKT 1
FDNS	00NR	7	16WP	G15_033	FROM->TO	G14-057T 345.00 - SUNNYSIDE 345KV CKT 1	717	789	0.04332	117.5142	GEN659125 1-COVEY
FDNS	00NR	7	16WP	G15_033	FROM->TO	G14-057T 345.00 - SUNNYSIDE 345KV CKT 1	717	789	0.04332	117.5097	HAMMETT TAP - HORSESHOE LAKE 138KV CKT 1
FDNS	00NR	7	16WP	G15_033	FROM->TO	G14-057T 345.00 - SUNNYSIDE 345KV CKT 1	717	789	0.04332	117.5093	SABINE 230/22.0KV TRANSFORMER CKT 1
FDNS	00NR	7	16WP	G15_033	FROM->TO	G14-057T 345.00 - SUNNYSIDE 345KV CKT 1	717	789	0.04353	117.5057	CIMARRON - NORTHWEST 345KV CKT 1
FDNS	00NR	7	16WP	G15_033	FROM->TO	G14-057T 345.00 - SUNNYSIDE 345KV CKT 1	717	789	0.04332	117.5029	ESSEX UNIT 2 500/18.0KV TRANSFORMER CKT 1
FDNS	00NR	7	16WP	G15_033	FROM->TO	G14-057T 345.00 - SUNNYSIDE 345KV CKT 1	717	789	0.0433	117.5028	G14_001T 345.00 - WICHITA 345KV CKT 1
FDNS	00NR	7	16WP	G15_033	FROM->TO	G14-057T 345.00 - SUNNYSIDE 345KV CKT 1	717	789	0.04306	117.5012	ARBUCKLE - MILLCREEK 138KV CKT 1
FDNS	00NR	7	16WP	G15_033	FROM->TO	G14-057T 345.00 - SUNNYSIDE 345KV CKT 1	717	789	0.04332	117.4985	GEN336242 1-1NMIL ST1 18.000
FDNS	00NR	7	16WP	G15_033	FROM->TO	G14-057T 345.00 - SUNNYSIDE 345KV CKT 1	717	789	0.0433	117.4982	GRAND ISLAND - MCCOOL 345KV CKT 1
FDNS	00NR	7	16WP	G15_033	FROM->TO	G14-057T 345.00 - SUNNYSIDE 345KV CKT 1	717	789	0.04318	117.4946	CLINTON JUNCTION - CLINTON NATURAL GAS TAP 138KV CKT 1

SOLUTION	GROUP	SCENARIO	SEASON	SOURCE	DIRECTION	MONITORED ELEMENT	RATEA (MVA)	RATEB(MVA)	TDF	TC%LOADING (% MVA)	CONTINGENCY
FDNS	00NR	7	16WP	G15_033	FROM->TO	G14-057T 345.00 - SUNNYSIDE 345KV CKT 1	717	789	0.04332	117.4919	P12:138:OKGE:3TERM47
FDNS	00NR	7	16WP	G15_033	FROM->TO	G14-057T 345.00 - SUNNYSIDE 345KV CKT 1	717	789	0.04306	117.4913	CLINTON JUNCTION - ELK CITY 138KV CKT 1
FDNS	00NR	7	16WP	G15_033	FROM->TO	G14-057T 345.00 - SUNNYSIDE 345KV CKT 1	717	789	0.04306	117.4913	CLINTON JUNCTION - ELK CITY 138KV CKT 1
FDNS	00NR	7	16WP	G15_033	FROM->TO	G14-057T 345.00 - SUNNYSIDE 345KV CKT 1	717	789	0.04332	117.4899	AS KING - EAU CLAIRE 345KV CKT 1
FDNS	00NR	7	16WP	G15_033	FROM->TO	G14-057T 345.00 - SUNNYSIDE 345KV CKT 1	717	789	0.04329	117.4869	LAYFLD8 500.00 (LAYFLD AUTO) 500/230/13.8KV TRANSFORMER CKT 1
FDNS	00NR	7	16WP	G15_033	FROM->TO	G14-057T 345.00 - SUNNYSIDE 345KV CKT 1	717	789	0.04329	117.4869	LAYFLD8 500.00 (LAYFLD AUTO) 500/230/13.8KV TRANSFORMER CKT 1
FDNS	00NR	7	16WP	G15_033	FROM->TO	G14-057T 345.00 - SUNNYSIDE 345KV CKT 1	717	789	0.04317	117.4864	G11_051T 345.00 - TATONGA7 345.00 345KV CKT 1
FDNS	00NR	7	16WP	G15_033	FROM->TO	G14-057T 345.00 - SUNNYSIDE 345KV CKT 1	717	789	0.04317	117.4864	G11_051T 345.00 - TATONGA7 345.00 345KV CKT 2
FDNS	00NR	7	16WP	G15_033	FROM->TO	G14-057T 345.00 - SUNNYSIDE 345KV CKT 1	717	789	0.04954	117.4835	TOLK STATION - TUCO_2 345.00 345KV CKT 1
FDNS	00NR	7	16WP	G15_033	FROM->TO	G14-057T 345.00 - SUNNYSIDE 345KV CKT 1	717	789	0.04332	117.481	NELSON 230/24.0KV TRANSFORMER CKT 1
FDNS	00NR	7	16WP	G15_033	FROM->TO	G14-057T 345.00 - SUNNYSIDE 345KV CKT 1	717	789	0.04332	117.4805	FLETCHER - MARLOW JCT 69KV CKT 1
FDNS	00NR	7	16WP	G15_033	FROM->TO	G14-057T 345.00 - SUNNYSIDE 345KV CKT 1	717	789	0.04327	117.4744	AMITY SS - MURFREESBORO EAST (AECC) 115KV CKT 1
FDNS	00NR	7	16WP	G15_033	FROM->TO	G14-057T 345.00 - SUNNYSIDE 345KV CKT 1	717	789	0.04332	117.4739	ST FRANCIS 2 161/16.0KV TRANSFORMER CKT 2
FDNS	00NR	7	16WP	G15_033	FROM->TO	G14-057T 345.00 - SUNNYSIDE 345KV CKT 1	717	789	0.04332	117.4739	ST FRANCIS 345/161KV TRANSFORMER CKT 1
FDNS	00NR	7	16WP	G15_033	FROM->TO	G14-057T 345.00 - SUNNYSIDE 345KV CKT 1	717	789	0.04323	117.462	SEMINOLE (SEMINOL2) 345/138/14.4KV TRANSFORMER CKT 1
FDNS	00NR	7	16WP	G15_033	FROM->TO	G14-057T 345.00 - SUNNYSIDE 345KV CKT 1	717	789	0.04327	117.458	LACYGNE - NEOSHO 345KV CKT 1
FDNS	00NR	7	16WP	G15_033	FROM->TO	G14-057T 345.00 - SUNNYSIDE 345KV CKT 1	717	789	0.04318	117.4571	G13-010T 345.00 - POST ROCK 345KV CKT 1
FDNS	00NR	7	16WP	G15_033	FROM->TO	G14-057T 345.00 - SUNNYSIDE 345KV CKT 1	717	789	0.04332	117.4536	GEN599951 1-PSCO LAMAR DC TIE
FDNS	00NR	7	16WP	G15_033	FROM->TO	G14-057T 345.00 - SUNNYSIDE 345KV CKT 1	717	789	0.04332	117.4524	P12:138:WFEC-AEPW:ELKCTY-4:ERICK4
FDNS	00NR	7	16WP	G15_033	FROM->TO	G14-057T 345.00 - SUNNYSIDE 345KV CKT 1	717	789	0.0433	117.4501	MCCOOL - MOORE 345KV CKT 1
FDNS	00NR	7	16WP	G15_033	FROM->TO	G14-057T 345.00 - SUNNYSIDE 345KV CKT 1	717	789	0.04332	117.4386	GEN337766 1-TRACTEBEL UNIT S1
FDNS	00NR	7	16WP	G15_033	FROM->TO	G14-057T 345.00 - SUNNYSIDE 345KV CKT 1	717	789	0.04332	117.4381	GEN338146 1-INDEPENDENCE UNIT #2
FDNS	00NR	7	16WP	G15_033	FROM->TO	G14-057T 345.00 - SUNNYSIDE 345KV CKT 1	717	789	0.04345	117.4358	COMANCHE - WALTERS 69KV CKT 1
FDNS	00NR	7	16WP	G15_033	FROM->TO	G14-057T 345.00 - SUNNYSIDE 345KV CKT 1	717	789	0.04332	117.4349	GEN515042 1-SEMINOLE 3G
FDNS	00NR	7	16WP	G15_033	FROM->TO	G14-057T 345.00 - SUNNYSIDE 345KV CKT 1	717	789	0.04353	117.4348	CRINER - PAYNE 138.00 138KV CKT 1
FDNS	00NR	7	16WP	G15_033	FROM->TO	G14-057T 345.00 - SUNNYSIDE 345KV CKT 1	717	789	0.04331	117.4118	P12:138:OKGE:3TERM20
FDNS	00NR	7	16WP	G15_033	FROM->TO	G14-057T 345.00 - SUNNYSIDE 345KV CKT 1	717	789	0.04332	117.4099	GEN511843 1-RIVERSIDE STATION #2
FDNS	00NR	7	20WP	G15_033	FROM->TO	G14-057T 345.00 - SUNNYSIDE 345KV CKT 1	717	789	0.04155	117.2924	CORN TAP - NAPLESTP 138.00 138KV CKT 1
FDNS	06ALL	7	16WP	G15_033	FROM->TO	G14-057T 345.00 - SUNNYSIDE 345KV CKT 1	717	789	0.21301	117.2565	CIMARRON - MINCO 345KV CKT 1
FDNS	00NR	7	20WP	G15_033	FROM->TO	G14-057T 345.00 - SUNNYSIDE 345KV CKT 1	717	789	0.04155	117.2066	NAPLESTP 138.00 - PAYNE 138.00 138KV CKT 1
FDNS	00NR	7	20WP	G15_033	FROM->TO	G14-057T 345.00 - SUNNYSIDE 345KV CKT 1	717	789	0.04125	117.1962	GEN336821 1-GRAND GULF UNIT
FDNS	00NR	7	20WP	G15_033	FROM->TO	G14-057T 345.00 - SUNNYSIDE 345KV CKT 1	717	789	0.04106	117.17	7SAREPTA% 345.00 - LONGWOOD 345KV CKT 1
FDNS	00NR	7	20WP	G15_033	FROM->TO	G14-057T 345.00 - SUNNYSIDE 345KV CKT 1	717	789	0.04106	117.17	7SAREPTA% 345.00 - LONGWOOD 345KV CKT 1
FDNS	00NR	7	20WP	G15_033	FROM->TO	G14-057T 345.00 - SUNNYSIDE 345KV CKT 1	717	789	0.04349	117.1229	BORDER 7345.00 - WOODWARD DISTRICT EHV 345KV CKT 1
FDNS	00NR	7	20WP	G15_033	FROM->TO	G14-057T 345.00 - SUNNYSIDE 345KV CKT 1	717	789	0.04125	117.0761	GEN336153 1-WATERFORD UNIT#3
FDNS	00NR	7	20WP	G15_033	FROM->TO	G14-057T 345.00 - SUNNYSIDE 345KV CKT 1	717	789	0.04117	116.9623	CLEVELAND - TULSA NORTH 345KV CKT 1
FDNS	00NR	7	20WP	G15_033	FROM->TO	G14-057T 345.00 - SUNNYSIDE 345KV CKT 1	717	789	0.04117	116.9623	CLEVELAND - TULSA NORTH 345KV CKT 1
FDNS	00NR	7	20WP	G15_033	FROM->TO	G14-057T 345.00 - SUNNYSIDE 345KV CKT 1	717	789	0.04146	116.9346	COMANCHE - LOCO 138KV CKT 1
FDNS	00NR	7	20WP	G15_033	FROM->TO	G14-057T 345.00 - SUNNYSIDE 345KV CKT 1	717	789	0.0416	116.8881	ANADARKO - POCASSETT 138KV CKT 1
FDNS	00NR	7	20WP	G15_033	FROM->TO	G14-057T 345.00 - SUNNYSIDE 345KV CKT 1	717	789	0.04101	116.8208	ARCADIA - NORTHWEST 345KV CKT 1
FDNS	00NR	7	20WP	G15_033	FROM->TO	G14-057T 345.00 - SUNNYSIDE 345KV CKT 1	717	789	0.04116	116.7865	DOLET HILLS - SOUTHWEST SHREVEPORT 345KV CKT 1
FDNS	00NR	7	20WP	G15_033	FROM->TO	G14-057T 345.00 - SUNNYSIDE 345KV CKT 1	717	789	0.04116	116.7865	DOLET HILLS - SOUTHWEST SHREVEPORT 345KV CKT 1
FDNS	00NR	7	20WP	G15_033	FROM->TO	G14-057T 345.00 - SUNNYSIDE 345KV CKT 1	717	789	0.04125	116.7643	GEN335831 1-RIVERBEND UNIT#1
FDNS	00NR	7	20WP	G15_033	FROM->TO	G14-057T 345.00 - SUNNYSIDE 345KV CKT 1	717	789	0.0416	116.7423	POCASSETT - TUTTLE 138KV CKT 1
FDNS	00NR	7	16WP	G15_033	FROM->TO	G14-057T 345.00 - SUNNYSIDE 345KV CKT 1	717	789	0.04332	116.7066	OKLAUNION 345/13.2KV TRANSFORMER CKT 1
FDNS	00NR	7	20WP	G15_033	FROM->TO	G14-057T 345.00 - SUNNYSIDE 345KV CKT 1	717	789	0.04125	116.7011	GRAND GULF 500/22.0KV TRANSFORMER CKT 1
FDNS	06NR	7	17G	G15_033	FROM->TO	G14-057T 345.00 - SUNNYSIDE 345KV CKT 1	717	789	0.05524	116.6883	CIMARRON - MINCO 345KV CKT 1
FDNS	00NR	7	16WP	G15_033	FROM->TO	G14-057T 345.00 - SUNNYSIDE 345KV CKT 1	717	789	0.04331	116.6352	JOHNSON COUNTY - RUSSETT 138KV CKT 1
FDNS	00NR	7	16WP	G15_033	FROM->TO	G14-057T 345.00 - SUNNYSIDE 345KV CKT 1	717	789	0.04328	116.6183	HUGO (HUGO 1) 345/138/13.8KV TRANSFORMER CKT 1
FDNS	00NR	7	16WP	G15_033	FROM->TO	G14-057T 345.00 - SUNNYSIDE 345KV CKT 1	717	789	0.04336	116.6163	DRAPER LAKE - MIDWEST TAP 138KV CKT 1
FDNS	00NR	7	16WP	G15_033	FROM->TO	G14-057T 345.00 - SUNNYSIDE 345KV CKT 1	717	789	0.04266	116.6155	MAYSVLT4 138.00 - PRAIRIE POINT 138KV CKT 1
FDNS	00NR	7	16WP	G15_033	FROM->TO	G14-057T 345.00 - SUNNYSIDE 345KV CKT 1	717	789	0.04339	116.5946	P12:138:OKGE:3TERM21
FDNS	00NR	7	16WP	G15_033	FROM->TO	G14-057T 345.00 - SUNNYSIDE 345KV CKT 1	717	789	0.04397	116.5877	CHISHOLM6 230.00 - SWEETWATER 230KV CKT 1
FDNS	00NR	7	16WP	G15_033	FROM->TO	G14-057T 345.00 - SUNNYSIDE 345KV CKT 1	717	789	0.04332	116.5707	GEN520812 1-ANADRK5
FDNS	00NR	7	16WP	G15_033	FROM->TO	G14-057T 345.00 - SUNNYSIDE 345KV CKT 1	717	789	0.04332	116.5706	GEN520813 1-ANADRK6
FDNS	00NR	7	16WP	G15_033	FROM->TO	G14-057T 345.00 - SUNNYSIDE 345KV CKT 1	717	789	0.04332	116.5684	GEN562691 1-G15_015_3 0.6900
FDNS	00NR	7	16WP	G15_033	FROM->TO	G14-057T 345.00 - SUNNYSIDE 345KV CKT 1	717	789	0.0433	116.5652	GLASSES - RUSSETT 138KV CKT 1
FDNS	00NR	7	16WP	G15_033	FROM->TO	G14-057T 345.00 - SUNNYSIDE 345KV CKT 1	717	789	0.04329	116.5652	P12:138:WFEC:MSL11
FDNS	00NR	7	16WP	G15_033	FROM->TO	G14-057T 345.00 - SUNNYSIDE 345KV CKT 1	717	789	0.04329	116.5652	P12:138:WFEC-AEPW:PHAROAH4:LONEOAK4
FDNS	00NR	7	16WP	G15_033	FROM->TO	G14-057T 345.00 - SUNNYSIDE 345KV CKT 1	717	789	0.04304	116.5632	HOLCOMB - SETAB 345KV CKT 1
FDNS	00NR	7	16WP	G15_033	FROM->TO	G14-057T 345.00 - SUNNYSIDE 345KV CKT 1	717	789	0.04304	116.5632	HOLCOMB - SETAB 345KV CKT 1
FDNS	00NR	7	16WP	G15_033	FROM->TO	G14-057T 345.00 - SUNNYSIDE 345KV CKT 1	717	789	0.0433	116.5601	HUGO POWER PLANT - VALLENT 138KV CKT 1
FDNS	00NR	7	20WP	G15_033	FROM->TO	G14-057T 345.00 - SUNNYSIDE 345KV CKT 1	717	789	0.04114	116.5511	7SAREPTA% 345.00 - ELDORADO EHV 345KV CKT 1
FDNS	00NR	7	20WP	G15_033	FROM->TO	G14-057T 345.00 - SUNNYSIDE 345KV CKT 1	717	789	0.04114	116.5508	3TR3AR8EL7EL
FDNS	00NR	7	16WP	G15_033	FROM->TO	G14-057T 345.00 - SUNNYSIDE 345KV CKT 1	717	789	0.04328	116.5493	OVEXFRMCCOVE
FDNS	00NR	7	16WP	G15_033	FROM->TO	G14-057T 345.00 - SUNNYSIDE 345KV CKT 1	717	789	0.04332	116.548	GEN562688 1-G15_014_3 0.6900
FDNS	00NR	7	16WP	G15_033	FROM->TO	G14-057T 345.00 - SUNNYSIDE 345KV CKT 1	717	789	0.04332	116.5463	7CALAWY 1 345.00 345/25.0KV TRANSFORMER CKT 1
FDNS	00NR	7	16WP	G15_033	FROM->TO	G14-057T 345.00 - SUNNYSIDE 345KV CKT 1	717	789	0.04334	116.5459	P12:138:WFEC:MSL08
FDNS	00NR	7	16WP	G15_033	FROM->TO	G14-057T 345.00 - SUNNYSIDE 345KV CKT 1	717	789	0.04299	116.5432	ARBUCKLE - SULPHR 4 138.00 138KV CKT 1
FDNS	00NR	7	16WP	G15_033	FROM->TO	G14-057T 345.00 - SUNNYSIDE 345KV CKT 1	717	789	0.04332	116.5423	GEN515591 1-PALDRW11 0.6900
FDNS	00NR	7	16WP	G15_033	FROM->TO	G14-057T 345.00 - SUNNYSIDE 345KV CKT 1	717	789	0.04332	116.5415	GEN672305 5-BOUNDARY DAM GENERATOR 5
FDNS	00NR	7	16WP	G15_033	FROM->TO	G14-057T 345.00 - SUNNYSIDE 345KV CKT 1	717	789	0.04332	116.5414	GEN600070 9-RIVER SIDE
FDNS	00NR	7	16WP	G15_033	FROM->TO	G14-057T 345.00 - SUNNYSIDE 345KV CKT 1	717	789	0.04332	116.5414	GEN600071 10-RIVER SIDE
FDNS	00NR	7	16WP	G15_033	FROM->TO	G14-057T 345.00 - SUNNYSIDE 345KV CKT 1	717	789	0.04332	116.5414	GEN672303 3-BOUNDARY DAM GENERATOR 3
FDNS	00NR	7	16WP	G15_033	FROM->TO	G14-057T 345.00 - SUNNYSIDE 345KV CKT 1	717	789	0.04332	116.5414	GEN672304 4-BOUNDARY DAM GENERATOR 4
FDNS	00NR	7	20WP	G15_033	FROM->TO	G14-057T 345.00 - SUNNYSIDE 345KV CKT 1	717	789	0.04114	116.5407	ELDORADO EHV 500/345KV TRANSFORMER CKT 1
FDNS	00NR	7	20WP	G15_033	FROM->TO	G14-057T 345.00 - SUNNYSIDE 345KV CKT 1	717	789	0.04125	116.536	GEN515577 1-ARBWND11 0.6900
FDNS	00NR	7	16WP	G15_033	FROM->TO	G14-057T 345.00 - SUNNYSIDE 345KV CKT 1	717	789	0.04332	116.5356	GEN600007 7-RIVERSIDE GEN 7
FDNS	00NR	7	16WP	G15_033	FROM->TO	G14-057T 345.00 - SUNNYSIDE 345KV CKT 1	717	789	0.04332	116.5351	GEN600067 9-HIGH BRIDGE

SOLUTION	GROUP	SCENARIO	SEASON	SOURCE	DIRECTION	MONITORED ELEMENT	RATEA (MVA)	RATEB(MVA)	TDF	TC%LOADING (% MVA)	CONTINGENCY
FDNS	00NR	7	16WP	G15_033	FROM->TO	G14-057T 345.00 - SUNNYSIDE 345KV CKT 1	717	789	0.04332	116.5349	GEN530690 1-PRWINDG1 0.6900
FDNS	00NR	7	16WP	G15_033	FROM->TO	G14-057T 345.00 - SUNNYSIDE 345KV CKT 1	717	789	0.04332	116.5335	P12:069:OKGE:3TERM42
FDNS	00NR	7	16WP	G15_033	FROM->TO	G14-057T 345.00 - SUNNYSIDE 345KV CKT 1	717	789	0.04332	116.5307	GEN615052 1-CAMBRIDGE GENERATING STATION
FDNS	00NR	7	16WP	G15_033	FROM->TO	G14-057T 345.00 - SUNNYSIDE 345KV CKT 1	717	789	0.04332	116.5303	GEN560183 1-REDHIL-WTG1 12.000
FDNS	00NR	7	16WP	G15_033	FROM->TO	G14-057T 345.00 - SUNNYSIDE 345KV CKT 1	717	789	0.04332	116.5303	GEN600011 5-BLACK DOG GEN 1
FDNS	00NR	7	16WP	G15_033	FROM->TO	G14-057T 345.00 - SUNNYSIDE 345KV CKT 1	717	789	0.04332	116.5246	GEN600014 4-BLACK DOG GEN 4
FDNS	00NR	7	16WP	G15_033	FROM->TO	G14-057T 345.00 - SUNNYSIDE 345KV CKT 1	717	789	0.04332	116.5219	GEN629067 1-EMERY GAS TURBINE 1
FDNS	00NR	7	16WP	G15_033	FROM->TO	G14-057T 345.00 - SUNNYSIDE 345KV CKT 1	717	789	0.04266	116.5182	PRAIRIE POINT - RATLIFF 138KV CKT 1
FDNS	00NR	7	16WP	G15_033	FROM->TO	G14-057T 345.00 - SUNNYSIDE 345KV CKT 1	717	789	0.04332	116.5149	GEN615032 2-PLEASANT VALLEY
FDNS	00NR	7	16WP	G15_033	FROM->TO	G14-057T 345.00 - SUNNYSIDE 345KV CKT 1	717	789	0.04332	116.5139	GEN531447 1-HOLCOMB GENERATOR
FDNS	00NR	7	16WP	G15_033	FROM->TO	G14-057T 345.00 - SUNNYSIDE 345KV CKT 1	717	789	0.04332	116.5117	GEN563052 1-G15069_3 0.6900
FDNS	00NR	7	16WP	G15_033	FROM->TO	G14-057T 345.00 - SUNNYSIDE 345KV CKT 1	717	789	0.04327	116.5087	CROCKETT - TENASKA RUSK COUNTY 345KV CKT 1
FDNS	00NR	7	20WP	G15_033	FROM->TO	G14-057T 345.00 - SUNNYSIDE 345KV CKT 1	717	789	0.04241	116.5072	P12:138:AEPW:DUNCAN-4:L.E.S.-4
FDNS	00NR	7	16WP	G15_033	FROM->TO	G14-057T 345.00 - SUNNYSIDE 345KV CKT 1	717	789	0.04327	116.5034	LEBROCK - TENASKA RUSK COUNTY 345KV CKT 1
FDNS	00NR	7	16WP	G15_033	FROM->TO	G14-057T 345.00 - SUNNYSIDE 345KV CKT 1	717	789	0.0433	116.4989	CANEY CREEK - JOHNSON COUNTY 138KV CKT 1
FDNS	00NR	7	16WP	G15_033	FROM->TO	G14-057T 345.00 - SUNNYSIDE 345KV CKT 1	717	789	0.04332	116.4953	GEN562074 1-G1149G1504 0.6900
FDNS	00NR	7	16WP	G15_033	FROM->TO	G14-057T 345.00 - SUNNYSIDE 345KV CKT 1	717	789	0.04332	116.4909	GEN515443 1-MNCOWND1 0.7000
FDNS	00NR	7	16WP	G15_033	FROM->TO	G14-057T 345.00 - SUNNYSIDE 345KV CKT 1	717	789	0.04332	116.4886	GEN600017 C-LS POWER CT
FDNS	00NR	7	16WP	G15_033	FROM->TO	G14-057T 345.00 - SUNNYSIDE 345KV CKT 1	717	789	0.04355	116.4832	ALTUS JUNCTION - RUSSELL 138KV CKT 1
FDNS	00NR	7	16WP	G15_033	FROM->TO	G14-057T 345.00 - SUNNYSIDE 345KV CKT 1	717	789	0.04355	116.4832	ALTUS JUNCTION - RUSSELL 138KV CKT 1
FDNS	00NR	7	16WP	G15_033	FROM->TO	G14-057T 345.00 - SUNNYSIDE 345KV CKT 1	717	789	0.04335	116.4685	ARKANSAS NUCLEAR ONE - FT SMITH 500KV CKT 1
FDNS	00NR	7	16WP	G15_033	FROM->TO	G14-057T 345.00 - SUNNYSIDE 345KV CKT 1	717	789	0.04335	116.4685	ARKANSAS NUCLEAR ONE - FT SMITH 500KV CKT 1
FDNS	00NR	7	16WP	G15_033	FROM->TO	G14-057T 345.00 - SUNNYSIDE 345KV CKT 1	717	789	0.0433	116.466	DELL 500 - INDEPENDENCE 500KV CKT 1
FDNS	00NR	7	16WP	G15_033	FROM->TO	G14-057T 345.00 - SUNNYSIDE 345KV CKT 1	717	789	0.04332	116.4641	GEN672392 1-NBECGT1G 18.000
FDNS	00NR	7	16WP	G15_033	FROM->TO	G14-057T 345.00 - SUNNYSIDE 345KV CKT 1	717	789	0.04332	116.4635	GEN528361 1-MADDOX GEN #1
FDNS	00NR	7	16WP	G15_033	FROM->TO	G14-057T 345.00 - SUNNYSIDE 345KV CKT 1	717	789	0.04327	116.4623	CARTER - CHICKASAW 138KV CKT 1
FDNS	00NR	7	16WP	G15_033	FROM->TO	G14-057T 345.00 - SUNNYSIDE 345KV CKT 1	717	789	0.04332	116.4517	GEN562432 1-G13-030 0.6900
FDNS	00NR	7	16WP	G15_033	FROM->TO	G14-057T 345.00 - SUNNYSIDE 345KV CKT 1	717	789	0.0433	116.4468	CANADIAN RIVER - MCALESTER SOUTH 138KV CKT 1
FDNS	00NR	7	16WP	G15_033	FROM->TO	G14-057T 345.00 - SUNNYSIDE 345KV CKT 1	717	789	0.0433	116.4468	CANADIAN RIVER - MCALESTER SOUTH 138KV CKT 1
FDNS	00NR	7	16WP	G15_033	FROM->TO	G14-057T 345.00 - SUNNYSIDE 345KV CKT 1	717	789	0.0433	116.4453	CANADIAN RIVER () 345/138/13.8KV TRANSFORMER CKT 1
FDNS	00NR	7	16WP	G15_033	FROM->TO	G14-057T 345.00 - SUNNYSIDE 345KV CKT 1	717	789	0.0433	116.4453	CANADIAN RIVER () 345/138/13.8KV TRANSFORMER CKT 1
FDNS	00NR	7	16WP	G15_033	FROM->TO	G14-057T 345.00 - SUNNYSIDE 345KV CKT 1	717	789	0.04332	116.4439	GEN562017 1-G11_022_3 0.6900
FDNS	00NR	7	16WP	G15_033	FROM->TO	G14-057T 345.00 - SUNNYSIDE 345KV CKT 1	717	789	0.04332	116.4399	GEN615010 1-STANTON4
FDNS	00NR	7	16WP	G15_033	FROM->TO	G14-057T 345.00 - SUNNYSIDE 345KV CKT 1	717	789	0.04316	116.4367	ROCKY POINT - SPRINGDALE 138KV CKT 1
FDNS	00NR	7	16WP	G15_033	FROM->TO	G14-057T 345.00 - SUNNYSIDE 345KV CKT 1	717	789	0.04332	116.4366	GEN629070 2-BEAVER CHANNEL GENERATORFOR UNIT NO 2
FDNS	00NR	7	20WP	G15_033	FROM->TO	G14-057T 345.00 - SUNNYSIDE 345KV CKT 1	717	789	0.04086	116.4364	ARCADIA - SEMINOLE 345KV CKT 1
FDNS	00NR	7	16WP	G15_033	FROM->TO	G14-057T 345.00 - SUNNYSIDE 345KV CKT 1	717	789	0.04331	116.425	GRPRAR1-LNX3345.00 - YANKTON 345KV CKT Z
FDNS	00NR	7	16WP	G15_033	FROM->TO	G14-057T 345.00 - SUNNYSIDE 345KV CKT 1	717	789	0.04331	116.4247	GRPRAR1-LNX3345.00 - HOLT.CO3 345.00 345KV CKT 1
FDNS	00NR	7	16WP	G15_033	FROM->TO	G14-057T 345.00 - SUNNYSIDE 345KV CKT 1	717	789	0.04332	116.4208	GEN629071 1-BURLINGTON GENERATOR FOR UNIT NO 1 E
FDNS	00NR	7	20WP	G15_033	FROM->TO	G14-057T 345.00 - SUNNYSIDE 345KV CKT 1	717	789	0.04126	116.4196	HEALDTON - LOCO 138KV CKT 1
FDNS	00NR	7	16WP	G15_033	FROM->TO	G14-057T 345.00 - SUNNYSIDE 345KV CKT 1	717	789	0.04332	116.4192	INDEPENDENCE 500/26.0KV TRANSFORMER CKT 1
FDNS	00NR	7	16WP	G15_033	FROM->TO	G14-057T 345.00 - SUNNYSIDE 345KV CKT 1	717	789	0.04332	116.4189	GEN615021 1-GRE-ER 14G 16.000
FDNS	00NR	7	16WP	G15_033	FROM->TO	G14-057T 345.00 - SUNNYSIDE 345KV CKT 1	717	789	0.04332	116.4119	GEN562902 1-G15052_3 0.6900
FDNS	00NR	7	16WP	G15_033	FROM->TO	G14-057T 345.00 - SUNNYSIDE 345KV CKT 1	717	789	0.04332	116.4085	BURLINGTON NO1 + NO 2 + NO 3 161/20.0KV TRANSFORMER CKT 1
FDNS	00NR	7	16WP	G15_033	FROM->TO	G14-057T 345.00 - SUNNYSIDE 345KV CKT 1	717	789	0.04299	116.3909	JOLLYVILLE - SULPHR 4 138.00 138KV CKT 1
FDNS	00NR	7	20WP	G15_033	FROM->TO	G14-057T 345.00 - SUNNYSIDE 345KV CKT 1	717	789	0.04125	116.3864	GEN509409 1-WILKES #3
FDNS	00NR	7	16WP	G15_033	FROM->TO	G14-057T 345.00 - SUNNYSIDE 345KV CKT 1	717	789	0.04332	116.3819	GEN563062 1-G15071_3 0.6900
FDNS	00NR	7	16WP	G15_033	FROM->TO	G14-057T 345.00 - SUNNYSIDE 345KV CKT 1	717	789	0.04332	116.3813	GEN514805 1-SOONER UNIT 1
FDNS	00NR	7	16WP	G15_033	FROM->TO	G14-057T 345.00 - SUNNYSIDE 345KV CKT 1	717	789	0.04328	116.3795	NORTHWEST TEXARKANA - WELSH 345KV CKT 1
FDNS	00NR	7	16WP	G15_033	FROM->TO	G14-057T 345.00 - SUNNYSIDE 345KV CKT 1	717	789	0.04328	116.3795	NORTHWEST TEXARKANA - WELSH 345KV CKT 1
FDNS	00NR	7	16WP	G15_033	FROM->TO	G14-057T 345.00 - SUNNYSIDE 345KV CKT 1	717	789	0.04332	116.3762	GEN514806 1-SOONER UNIT 2
FDNS	00NR	7	20WP	G15_033	FROM->TO	G14-057T 345.00 - SUNNYSIDE 345KV CKT 1	717	789	0.0416	116.3651	BRIDGECR 138.00 - TUTTLE 138KV CKT 1
FDNS	00NR	7	20WP	G15_033	FROM->TO	G14-057T 345.00 - SUNNYSIDE 345KV CKT 1	717	789	0.0424	116.3647	COMANCHE TAP - OMPA-DUNCAN 840 138KV CKT 1
FDNS	00NR	7	16WP	G15_033	FROM->TO	G14-057T 345.00 - SUNNYSIDE 345KV CKT 1	717	789	0.04332	116.364	GEN563242 1-G15090_3 0.6900
FDNS	00NR	7	16WP	G15_033	FROM->TO	G14-057T 345.00 - SUNNYSIDE 345KV CKT 1	717	789	0.04332	116.363	GEN562587 1-G14_056_3 0.6900
FDNS	00NR	7	16WP	G15_033	FROM->TO	G14-057T 345.00 - SUNNYSIDE 345KV CKT 1	717	789	0.0433	116.3608	CHAMBER SPRINGS - CLARKSVILLE 345KV CKT 1
FDNS	00NR	7	20WP	G15_033	FROM->TO	G14-057T 345.00 - SUNNYSIDE 345KV CKT 1	717	789	0.04125	116.3555	GEN501813 1-RODEMACHER UNIT 3
FDNS	00NR	7	16WP	G15_033	FROM->TO	G14-057T 345.00 - SUNNYSIDE 345KV CKT 1	717	789	0.04332	116.3497	P12:230:UMZB:# 112 #: NU IN SD. NU-RCDC & DRY CREEK XFMR
FDNS	00NR	7	16WP	G15_033	FROM->TO	G14-057T 345.00 - SUNNYSIDE 345KV CKT 1	717	789	0.04332	116.3489	RCDC EAST 4230.00 - RED CEDAR DC 230KV CKT 1
FDNS	00NR	7	16WP	G15_033	FROM->TO	G14-057T 345.00 - SUNNYSIDE 345KV CKT 1	717	789	0.04332	116.3386	GEN562078 1-G11_051_3 0.6900
FDNS	00NR	7	16WP	G15_033	FROM->TO	G14-057T 345.00 - SUNNYSIDE 345KV CKT 1	717	789	0.04332	116.3375	GEN562802 1-G15039_3 0.3570
FDNS	00NR	7	16WP	G15_033	FROM->TO	G14-057T 345.00 - SUNNYSIDE 345KV CKT 1	717	789	0.04332	116.3361	GEN560331 1-G10-46 13.800
FDNS	00NR	7	16WP	G15_033	FROM->TO	G14-057T 345.00 - SUNNYSIDE 345KV CKT 1	717	789	0.04332	116.3319	GEN532653 1-JEFFREY ENERGY CENTER UNIT 3
FDNS	00NR	7	16WP	G15_033	FROM->TO	G14-057T 345.00 - SUNNYSIDE 345KV CKT 1	717	789	0.04332	116.3316	THOMAS HILL 161/22.0KV TRANSFORMER CKT 1
FDNS	00NR	7	16WP	G15_033	FROM->TO	G14-057T 345.00 - SUNNYSIDE 345KV CKT 1	717	789	0.04299	116.3222	JOLLYVILLE - KERR MCGEE CIMARRON 138KV CKT 1
FDNS	00NR	7	16WP	G15_033	FROM->TO	G14-057T 345.00 - SUNNYSIDE 345KV CKT 1	717	789	0.0433	116.3162	KEO EHV - WEST MEMPHIS 500 500KV CKT 1
FDNS	00NR	7	16WP	G15_033	FROM->TO	G14-057T 345.00 - SUNNYSIDE 345KV CKT 1	717	789	0.04332	116.314	GEN562882 1-G15047_3 0.6900
FDNS	00NR	7	16WP	G15_033	FROM->TO	G14-057T 345.00 - SUNNYSIDE 345KV CKT 1	717	789	0.04332	116.3106	GEN524285 1-WILDORADO WIND GEN
FDNS	00NR	7	16WP	G15_033	FROM->TO	G14-057T 345.00 - SUNNYSIDE 345KV CKT 1	717	789	0.04353	116.3099	G15063_T 345.00 - MATHWSN7 345.00 345KV CKT 1
FDNS	00NR	7	16WP	G15_033	FROM->TO	G14-057T 345.00 - SUNNYSIDE 345KV CKT 1	717	789	0.04332	116.3048	GEN562269 1-G12-020-1 0.6900
FDNS	00NR	7	20WP	G15_033	FROM->TO	G14-057T 345.00 - SUNNYSIDE 345KV CKT 1	717	789	0.04038	116.2742	CANADIAN RIVER - MUSKOGEE 345KV CKT 1
FDNS	00NR	7	16WP	G15_033	FROM->TO	G14-057T 345.00 - SUNNYSIDE 345KV CKT 1	717	789	0.04299	116.2716	ARBWIND4 138.00 - KERR MCGEE CIMARRON 138KV CKT 1
FDNS	00NR	7	20WP	G15_033	FROM->TO	G14-057T 345.00 - SUNNYSIDE 345KV CKT 1	717	789	0.04126	116.2686	HEALDTON - RINGLING 138KV CKT 1
FDNS	00NR	7	16WP	G15_033	FROM->TO	G14-057T 345.00 - SUNNYSIDE 345KV CKT 1	717	789	0.04332	116.2684	GEN629072 4-LANSING GENERATOR FOR UNITS NO4 EIA CODE 1
FDNS	00NR	7	16WP	G15_033	FROM->TO	G14-057T 345.00 - SUNNYSIDE 345KV CKT 1	717	789	0.04332	116.2603	GEN562270 1-G12-020-2 0.6900
FDNS	00NR	7	20WP	G15_033	FROM->TO	G14-057T 345.00 - SUNNYSIDE 345KV CKT 1	717	789	0.04349	116.2496	BORDER 7345.00 - TUCO_2 345.00 345KV CKT 1
FDNS	00NR	7	16WP	G15_033	FROM->TO	G14-057T 345.00 - SUNNYSIDE 345KV CKT 1	717	789	0.04332	116.2473	GEN657749 1-YOUNG 1 GENERATOR
FDNS	00NR	7	16WP	G15_033	FROM->TO	G14-057T 345.00 - SUNNYSIDE 345KV CKT 1	717	789	0.04332	116.2454	GEN563102 1-G15075_3 0.5500
FDNS	00NR	7	16WP	G15_033	FROM->TO	G14-057T 345.00 - SUNNYSIDE 345KV CKT 1	717	789	0.04332	116.2449	GEN562812 1-G15040_3 0.3570

SOLUTION	GROUP	SCENARIO	SEASON	SOURCE	DIRECTION	MONITORED ELEMENT	RATEA (MVA)	RATEB(MVA)	TDF	TC%LOADING (% MVA)	CONTINGENCY
FDNS	00NR	7	16WP	G15_033	FROM->TO	G14-057T 345.00 - SUNNYSIDE 345KV CKT 1	717	789	0.04332	116.2348	GEN563132 1-G15078_3 0.3570
FDNS	00NR	7	16WP	G15_033	FROM->TO	G14-057T 345.00 - SUNNYSIDE 345KV CKT 1	717	789	0.04316	116.2343	CLARKSVILLE - MUSKOGEE 345KV CKT 1
FDNS	00NR	7	16WP	G15_033	FROM->TO	G14-057T 345.00 - SUNNYSIDE 345KV CKT 1	717	789	0.04316	116.2343	CLARKSVILLE - MUSKOGEE 345KV CKT 1
FDNS	00NR	7	16WP	G15_033	FROM->TO	G14-057T 345.00 - SUNNYSIDE 345KV CKT 1	717	789	0.04332	116.2229	GEN524295 1-SPNSPUR_WND10.6900
FDNS	00NR	7	20WP	G15_033	FROM->TO	G14-057T 345.00 - SUNNYSIDE 345KV CKT 1	717	789	0.04125	116.2077	GEN300006 1-NEW MADRID UNIT 1
FDNS	00NR	7	16WP	G15_033	FROM->TO	G14-057T 345.00 - SUNNYSIDE 345KV CKT 1	717	789	0.04332	116.2041	GEN511962 2-RKYRDGW2-1 0.7000
FDNS	00NR	7	16WP	G15_033	FROM->TO	G14-057T 345.00 - SUNNYSIDE 345KV CKT 1	717	789	0.04329	116.195	P12:138:WFEC:MSL07
FDNS	00NR	7	16WP	G15_033	FROM->TO	G14-057T 345.00 - SUNNYSIDE 345KV CKT 1	717	789	0.04329	116.195	P12:138:WFEC-AEPW:HUGOPP4:ATOKA--4
FDNS	00NR	7	16WP	G15_033	FROM->TO	G14-057T 345.00 - SUNNYSIDE 345KV CKT 1	717	789	0.04303	116.1944	CHICKASAW - TOTAL 138KV CKT 1
FDNS	00NR	7	20WP	G15_033	FROM->TO	G14-057T 345.00 - SUNNYSIDE 345KV CKT 1	717	789	0.04125	116.1871	GEN300007 1-NEW MADRID UNIT 2
FDNS	00NR	7	16WP	G15_033	FROM->TO	G14-057T 345.00 - SUNNYSIDE 345KV CKT 1	717	789	0.04323	116.1857	BROWN - RUSSETT 138KV CKT 1
FDNS	00NR	7	16WP	G15_033	FROM->TO	G14-057T 345.00 - SUNNYSIDE 345KV CKT 1	717	789	0.04332	116.1796	GEN562974 1-G15060_5 0.6900
FDNS	00NR	7	16WP	G15_033	FROM->TO	G14-057T 345.00 - SUNNYSIDE 345KV CKT 1	717	789	0.04319	116.1768	RUSSETT - SPRINGDALE 138KV CKT 1
FDNS	00NR	7	16WP	G15_033	FROM->TO	G14-057T 345.00 - SUNNYSIDE 345KV CKT 1	717	789	0.04332	116.1748	GEN681522 3-GENOA 3
FDNS	00NR	7	16WP	G15_033	FROM->TO	G14-057T 345.00 - SUNNYSIDE 345KV CKT 1	717	789	0.04332	116.1696	GEN562973 1-G15060_4 0.6900
FDNS	00NR	7	16WP	G15_033	FROM->TO	G14-057T 345.00 - SUNNYSIDE 345KV CKT 1	717	789	0.04332	116.1596	GEN526331 1-JONES GEN #1 22 KV
FDNS	00NR	7	16WP	G15_033	FROM->TO	G14-057T 345.00 - SUNNYSIDE 345KV CKT 1	717	789	0.04332	116.1595	GEN526332 1-JONES GEN #2 21 KV
FDNS	00NR	7	16WP	G15_033	FROM->TO	G14-057T 345.00 - SUNNYSIDE 345KV CKT 1	717	789	0.04332	116.1562	GEN521112 1-ORME3 13.800
FDNS	00NR	7	16WP	G15_033	FROM->TO	G14-057T 345.00 - SUNNYSIDE 345KV CKT 1	717	789	0.04332	116.1465	GEN563192 1-G15084_3 0.5500
FDNS	00NR	7	16WP	G15_033	FROM->TO	G14-057T 345.00 - SUNNYSIDE 345KV CKT 1	717	789	0.0431	116.1443	ROCKY POINT - SUNNYSIDE 138KV CKT 1
FDNS	00NR	7	16WP	G15_033	FROM->TO	G14-057T 345.00 - SUNNYSIDE 345KV CKT 1	717	789	0.04332	116.1435	GEN560105 1-G08-22 0.6900
FDNS	00NR	7	16WP	G15_033	FROM->TO	G14-057T 345.00 - SUNNYSIDE 345KV CKT 1	717	789	0.04297	116.1408	MINGO - SETAB 345KV CKT 1
FDNS	00NR	7	16WP	G15_033	FROM->TO	G14-057T 345.00 - SUNNYSIDE 345KV CKT 1	717	789	0.04297	116.1408	MINGO - SETAB 345KV CKT 1
FDNS	00NR	7	16WP	G15_033	FROM->TO	G14-057T 345.00 - SUNNYSIDE 345KV CKT 1	717	789	0.04334	116.1358	P12:138:WFEC:MSL16
FDNS	00NR	7	20WP	G15_033	FROM->TO	G14-057T 345.00 - SUNNYSIDE 345KV CKT 1	717	789	0.04125	116.1355	GEN335206 1-NELSON UNIT 6
FDNS	00NR	7	16WP	G15_033	FROM->TO	G14-057T 345.00 - SUNNYSIDE 345KV CKT 1	717	789	0.04478	116.1346	P12:138:AEPW:112GORE4:SNYDER-4
FDNS	00NR	7	16WP	G15_033	FROM->TO	G14-057T 345.00 - SUNNYSIDE 345KV CKT 1	717	789	0.04332	116.1234	GEN345671 2-1RUSH G2 18.000
FDNS	00NR	7	16WP	G15_033	FROM->TO	G14-057T 345.00 - SUNNYSIDE 345KV CKT 1	717	789	0.04332	116.1215	GEN345670 1-1RUSH G1 18.000
FDNS	00NR	7	16WP	G15_033	FROM->TO	G14-057T 345.00 - SUNNYSIDE 345KV CKT 1	717	789	0.04332	116.1205	GEN562550 1-G14_040_3 0.6900
FDNS	00NR	7	16WP	G15_033	FROM->TO	G14-057T 345.00 - SUNNYSIDE 345KV CKT 1	717	789	0.04323	116.1174	RUSSETT - RUSSETT 138KV CKT 1
FDNS	00NR	7	20WP	G15_033	FROM->TO	G14-057T 345.00 - SUNNYSIDE 345KV CKT 1	717	789	0.04125	116.1162	GEN520947 1-HUGO1
FDNS	00NR	7	16WP	G15_033	FROM->TO	G14-057T 345.00 - SUNNYSIDE 345KV CKT 1	717	789	0.04332	116.1146	4SIOUX 1 138.00 138/18.0KV TRANSFORMER CKT 1
FDNS	00NR	7	16WP	G15_033	FROM->TO	G14-057T 345.00 - SUNNYSIDE 345KV CKT 1	717	789	0.04332	116.1089	GEN562892 1-G15048_3 0.6900
FDNS	00NR	7	20WP	G15_033	FROM->TO	G14-057T 345.00 - SUNNYSIDE 345KV CKT 1	717	789	0.04123	116.1062	LACYGNE - WAVERLY7 345.00 345KV CKT 1
FDNS	00NR	7	16WP	G15_033	FROM->TO	G14-057T 345.00 - SUNNYSIDE 345KV CKT 1	717	789	0.04332	116.1038	GEN562512 1-G14_020_3 0.6900
FDNS	00NR	7	20WP	G15_033	FROM->TO	G14-057T 345.00 - SUNNYSIDE 345KV CKT 1	717	789	0.0416	116.1011	P12:138:WFEC:MSL01
FDNS	00NR	7	16WP	G15_033	FROM->TO	G14-057T 345.00 - SUNNYSIDE 345KV CKT 1	717	789	0.0425	116.1005	BVRCNTY7 345.00 - GRAPEVINE 345.00 345KV CKT 1
FDNS	00NR	7	20WP	G15_033	FROM->TO	G14-057T 345.00 - SUNNYSIDE 345KV CKT 1	717	789	0.04126	116.0954	RINGLING - SOUTH WILSON 138KV CKT 1
FDNS	00NR	7	20WP	G15_033	FROM->TO	G14-057T 345.00 - SUNNYSIDE 345KV CKT 1	717	789	0.0416	116.0941	BRIDGECR 138.00 - SUNSHINE CANYON 138KV CKT 1
FDNS	00NR	7	16WP	G15_033	FROM->TO	G14-057T 345.00 - SUNNYSIDE 345KV CKT 1	717	789	0.04332	116.0934	GEN527882 1-CUNNINGHAM GEN #2 20 KV
FDNS	00NR	7	16WP	G15_033	FROM->TO	G14-057T 345.00 - SUNNYSIDE 345KV CKT 1	717	789	0.04286	116.0888	ARDMORE WEST - CARTER 138KV CKT 1
FDNS	00NR	7	20WP	G15_033	FROM->TO	G14-057T 345.00 - SUNNYSIDE 345KV CKT 1	717	789	0.0424	116.0865	DUNCAN - OMPA-DUNCAN 840 138KV CKT 1
FDNS	00NR	7	20WP	G15_033	FROM->TO	G14-057T 345.00 - SUNNYSIDE 345KV CKT 1	717	789	0.0424	116.0865	DUNCAN - OMPA-DUNCAN 840 138KV CKT 1
FDNS	00NR	7	16WP	G15_033	FROM->TO	G14-057T 345.00 - SUNNYSIDE 345KV CKT 1	717	789	0.04332	116.0507	CLAY BOSWELL 230/20.9KV TRANSFORMER CKT 1
FDNS	00NR	7	16WP	G15_033	FROM->TO	G14-057T 345.00 - SUNNYSIDE 345KV CKT 1	717	789	0.0433	116.0445	P12:138:WFEC-AEPW:GOLDENSW4:CRAIGJT4
FDNS	00NR	7	16WP	G15_033	FROM->TO	G14-057T 345.00 - SUNNYSIDE 345KV CKT 1	717	789	0.04284	116.0353	SUNNYSIDE (SUNNYSD5) 345/138/13.8KV TRANSFORMER CKT 1
FDNS	00NR	7	16WP	G15_033	FROM->TO	G14-057T 345.00 - SUNNYSIDE 345KV CKT 1	717	789	0.04358	116.0273	G15085_T 138.00 - RUSSELL 138KV CKT 1
FDNS	00NR	7	16WP	G15_033	FROM->TO	G14-057T 345.00 - SUNNYSIDE 345KV CKT 1	717	789	0.04332	116.005	GEN672321 1-SHAND GENERATOR 1
FDNS	00NR	7	16WP	G15_033	FROM->TO	G14-057T 345.00 - SUNNYSIDE 345KV CKT 1	717	789	0.04331	115.9947	P12:138:AEPW-SWPA:LONEOAK4:TUPELO4
FDNS	00NR	7	16WP	G15_033	FROM->TO	G14-057T 345.00 - SUNNYSIDE 345KV CKT 1	717	789	0.04331	115.9946	P12:138:WFEC:MSL06
FDNS	00NR	7	20WP	G15_033	FROM->TO	G14-057T 345.00 - SUNNYSIDE 345KV CKT 1	717	789	0.04123	115.993	WAVERLY7 345.00 - WOLF CREEK 345KV CKT 1
FDNS	00NR	7	16WP	G15_033	FROM->TO	G14-057T 345.00 - SUNNYSIDE 345KV CKT 1	717	789	0.04332	115.9905	GEN521110 1-ORME1 13.800
FDNS	00NR	7	16WP	G15_033	FROM->TO	G14-057T 345.00 - SUNNYSIDE 345KV CKT 1	717	789	0.04332	115.9905	GEN521111 1-ORME2 13.800
FDNS	00NR	7	16WP	G15_033	FROM->TO	G14-057T 345.00 - SUNNYSIDE 345KV CKT 1	717	789	0.04332	115.9876	GEN520811 1-ANADRK4
FDNS	00NR	7	16WP	G15_033	FROM->TO	G14-057T 345.00 - SUNNYSIDE 345KV CKT 1	717	789	0.04332	115.9799	GEN672310 1-POPLAR RIVER GENERATOR 1
FDNS	00NR	7	16WP	G15_033	FROM->TO	G14-057T 345.00 - SUNNYSIDE 345KV CKT 1	717	789	0.04332	115.9799	GEN672311 2-POPLAR RIVER GENERATOR 2
FDNS	00NR	7	16WP	G15_033	FROM->TO	G14-057T 345.00 - SUNNYSIDE 345KV CKT 1	717	789	0.04286	115.9718	ARDMORE WEST - UNIROYAL 138KV CKT 1
FDNS	00NR	7	16WP	G15_033	FROM->TO	G14-057T 345.00 - SUNNYSIDE 345KV CKT 1	717	789	0.04332	115.9715	GEN672306 6-BOUNDARY DAM GENERATOR 6
FDNS	00NR	7	16WP	G15_033	FROM->TO	G14-057T 345.00 - SUNNYSIDE 345KV CKT 1	717	789	0.04288	115.9688	CARTRCO4 138.00 - RATLIFF 138KV CKT 1
FDNS	00NR	7	16WP	G15_033	FROM->TO	G14-057T 345.00 - SUNNYSIDE 345KV CKT 1	717	789	0.04332	115.9652	GEN511853 1-COMANCHE #3
FDNS	00NR	7	16WP	G15_033	FROM->TO	G14-057T 345.00 - SUNNYSIDE 345KV CKT 1	717	789	0.04332	115.9638	GEN344895 2-1LAB G2 20.000
FDNS	00NR	7	16WP	G15_033	FROM->TO	G14-057T 345.00 - SUNNYSIDE 345KV CKT 1	717	789	0.0431	115.9551	P12:138:OKGE:3TERM40
FDNS	00NR	7	20WP	G15_033	FROM->TO	G14-057T 345.00 - SUNNYSIDE 345KV CKT 1	717	789	0.04122	115.946	ELDORADO EHV - MOUNT OLIVE 500KV CKT 1
FDNS	00NR	7	20WP	G15_033	FROM->TO	G14-057T 345.00 - SUNNYSIDE 345KV CKT 1	717	789	0.04125	115.9416	GEN501812 1-RODEMACHER UNIT 2
FDNS	00NR	7	16WP	G15_033	FROM->TO	G14-057T 345.00 - SUNNYSIDE 345KV CKT 1	717	789	0.04332	115.9304	GEN344896 3-1LAB G3 20.000
FDNS	00NR	7	16WP	G15_033	FROM->TO	G14-057T 345.00 - SUNNYSIDE 345KV CKT 1	717	789	0.04332	115.9289	GEN344894 1-1LAB G1 20.000
FDNS	00NR	7	16WP	G15_033	FROM->TO	G14-057T 345.00 - SUNNYSIDE 345KV CKT 1	717	789	0.04332	115.9274	GEN344897 4-1LAB G4 20.000
FDNS	00NR	7	16WP	G15_033	FROM->TO	G14-057T 345.00 - SUNNYSIDE 345KV CKT 1	717	789	0.04332	115.9233	GEN563292 1-G15095_3 0.6900
FDNS	00NR	7	16WP	G15_033	FROM->TO	G14-057T 345.00 - SUNNYSIDE 345KV CKT 1	717	789	0.04332	115.9227	GEN523461 1-BLACKHAWK GEN #1
FDNS	00NR	7	16WP	G15_033	FROM->TO	G14-057T 345.00 - SUNNYSIDE 345KV CKT 1	717	789	0.04332	115.9226	GEN523462 1-BLACKHAWK GEN #2
FDNS	00NR	7	20WP	G15_033	FROM->TO	G14-057T 345.00 - SUNNYSIDE 345KV CKT 1	717	789	0.04125	115.9114	DOLET HILLS 345/24.0KV TRANSFORMER CKT 1
FDNS	00NR	7	16WP	G15_033	FROM->TO	G14-057T 345.00 - SUNNYSIDE 345KV CKT 1	717	789	0.04332	115.9017	GEN562699 1-G15_018_3 0.6900
FDNS	00NR	7	16WP	G15_033	FROM->TO	G14-057T 345.00 - SUNNYSIDE 345KV CKT 1	717	789	0.04332	115.888	GEN511852 1-COMANCHE #2
FDNS	00NR	7	16WP	G15_033	FROM->TO	G14-057T 345.00 - SUNNYSIDE 345KV CKT 1	717	789	0.04332	115.8783	GEN562861 1-G15045_2 0.4800
FDNS	00NR	7	20WP	G15_033	FROM->TO	G14-057T 345.00 - SUNNYSIDE 345KV CKT 1	717	789	0.04099	115.8635	PARK LANE - SEMINOLE 138KV CKT 1
FDNS	00NR	7	20WP	G15_033	FROM->TO	G14-057T 345.00 - SUNNYSIDE 345KV CKT 1	717	789	0.04131	115.8605	P12:138:AEPW:SHERID4:112GORE4
FDNS	00NR	7	16WP	G15_033	FROM->TO	G14-057T 345.00 - SUNNYSIDE 345KV CKT 1	717	789	0.04332	115.86	GEN681542 6-JP MADGETT
FDNS	00NR	7	20WP	G15_033	FROM->TO	G14-057T 345.00 - SUNNYSIDE 345KV CKT 1	717	789	0.0413	115.8456	REDBUD - RIVERSIDE STATION 345KV CKT 1
FDNS	00NR	7	20WP	G15_033	FROM->TO	G14-057T 345.00 - SUNNYSIDE 345KV CKT 1	717	789	0.0413	115.8456	REDBUD - RIVERSIDE STATION 345KV CKT 1

SOLUTION	GROUP	SCENARIO	SEASON	SOURCE	DIRECTION	MONITORED ELEMENT	RATEA (MVA)	RATEB(MVA)	TDF	TC%LOADING (% MVA)	CONTINGENCY
FDNS	00NR	7	16WP	G15_033	FROM->TO	G14-057T 345.00 - SUNNYSIDE 345KV CKT 1	717	789	0.04332	115.8453	GEN563162 1-G15081_3 0.6900
FDNS	00NR	7	16WP	G15_033	FROM->TO	G14-057T 345.00 - SUNNYSIDE 345KV CKT 1	717	789	0.0433	115.8195	P12:138:WFEC:MSL15
FDNS	00NR	7	16WP	G15_033	FROM->TO	G14-057T 345.00 - SUNNYSIDE 345KV CKT 1	717	789	0.04332	115.8081	GEN563122 1-G15077_3 0.3850
FDNS	00NR	7	20WP	G15_033	FROM->TO	G14-057T 345.00 - SUNNYSIDE 345KV CKT 1	717	789	0.04126	115.8052	MARIETTA - SOUTH WILSON 138KV CKT 1
FDNS	00NR	7	16WP	G15_033	FROM->TO	G14-057T 345.00 - SUNNYSIDE 345KV CKT 1	717	789	0.0436	115.7841	P12:138:AEPW:SHAM4WT:CHILD4WT
FDNS	00NR	7	16WP	G15_033	FROM->TO	G14-057T 345.00 - SUNNYSIDE 345KV CKT 1	717	789	0.04332	115.7839	ALMA 161 161/24.0KV TRANSFORMER CKT 1
FDNS	00NR	7	20WP	G15_033	FROM->TO	G14-057T 345.00 - SUNNYSIDE 345KV CKT 1	717	789	0.04125	115.7728	GEN334440 1-SABINE UNIT 4
FDNS	00NR	7	20WP	G15_033	FROM->TO	G14-057T 345.00 - SUNNYSIDE 345KV CKT 1	717	789	0.04125	115.7595	GEN515564 1-ORIGIN11 0.6900
FDNS	00NR	7	20WP	G15_033	FROM->TO	G14-057T 345.00 - SUNNYSIDE 345KV CKT 1	717	789	0.04125	115.7595	GEN515565 1-ORIGIN21 0.6900
FDNS	00NR	7	20WP	G15_033	FROM->TO	G14-057T 345.00 - SUNNYSIDE 345KV CKT 1	717	789	0.04104	115.7515	MATHWSN7 345.00 - NORTHWEST 345KV CKT 1
FDNS	00NR	7	16WP	G15_033	FROM->TO	G14-057T 345.00 - SUNNYSIDE 345KV CKT 1	717	789	0.04286	115.7475	SUNNYSIDE - UNIROYAL 138KV CKT 1
FDNS	00NR	7	16WP	G15_033	FROM->TO	G14-057T 345.00 - SUNNYSIDE 345KV CKT 1	717	789	0.04478	115.7468	CACHE - SNYDER 138KV CKT 1
FDNS	00NR	7	16WP	G15_033	FROM->TO	G14-057T 345.00 - SUNNYSIDE 345KV CKT 1	717	789	0.04332	115.7464	GEN661015 1-COYOTE
FDNS	00NR	7	20WP	G15_033	FROM->TO	G14-057T 345.00 - SUNNYSIDE 345KV CKT 1	717	789	0.0412	115.7446	WEBRE - WELLS 500KV CKT 1
FDNS	00NR	7	16WP	G15_033	FROM->TO	G14-057T 345.00 - SUNNYSIDE 345KV CKT 1	717	789	0.04333	115.7424	CANEY CREEK - TEXOMA JCT 138KV CKT 1
FDNS	06ALL	7	17G	G15_033	FROM->TO	G14-057T 345.00 - SUNNYSIDE 345KV CKT 1	717	789	0.20865	115.7306	GRACEMONT - MINCO 345KV CKT 1
FDNS	00NR	7	20WP	G15_033	FROM->TO	G14-057T 345.00 - SUNNYSIDE 345KV CKT 1	717	789	0.04125	115.7276	DELL 500 - ESSEX UNIT 2 500KV CKT Z1
FDNS	00NR	7	20WP	G15_033	FROM->TO	G14-057T 345.00 - SUNNYSIDE 345KV CKT 1	717	789	0.04125	115.7242	P12:161:AEPW:DYESS 5:HYLAND 5
FDNS	00NR	7	20WP	G15_033	FROM->TO	G14-057T 345.00 - SUNNYSIDE 345KV CKT 1	717	789	0.04115	115.7222	CANEYRV7 345.00 - NEOSHO 345KV CKT 1
FDNS	00NR	7	20WP	G15_033	FROM->TO	G14-057T 345.00 - SUNNYSIDE 345KV CKT 1	717	789	0.04126	115.7216	P12:138:WFEC:MSL17
FDNS	00NR	7	16WP	G15_033	FROM->TO	G14-057T 345.00 - SUNNYSIDE 345KV CKT 1	717	789	0.04332	115.7148	GEN562992 1-G15063_3 0.6900
FDNS	00NR	7	20WP	G15_033	FROM->TO	G14-057T 345.00 - SUNNYSIDE 345KV CKT 1	717	789	0.04125	115.6951	GEN590011 2-ERCOT EQUIVALENCE
FDNS	00NR	7	16WP	G15_033	FROM->TO	G14-057T 345.00 - SUNNYSIDE 345KV CKT 1	717	789	0.04332	115.6938	GEN562952 1-G15057_3 0.6500
FDNS	00NR	7	16WP	G15_033	FROM->TO	G14-057T 345.00 - SUNNYSIDE 345KV CKT 1	717	789	0.04332	115.6251	GEN657748 1-YOUNG 2 GENERATOR
FDNS	00NR	7	20WP	G15_033	FROM->TO	G14-057T 345.00 - SUNNYSIDE 345KV CKT 1	717	789	0.04125	115.6251	GEN590010 1-ERCOT EQUIVALENCE
FDNS	00NR	7	20WP	G15_033	FROM->TO	G14-057T 345.00 - SUNNYSIDE 345KV CKT 1	717	789	0.04125	115.6182	P12:69:AEPW:L.E.S.-2:LAW WC2
FDNS	00NR	7	16WP	G15_033	FROM->TO	G14-057T 345.00 - SUNNYSIDE 345KV CKT 1	717	789	0.04332	115.6082	GEN562704 1-G15_020_3 0.3550
FDNS	00NR	7	20WP	G15_033	FROM->TO	G14-057T 345.00 - SUNNYSIDE 345KV CKT 1	717	789	0.04125	115.5986	GEN509408 1-WILKES #2
FDNS	00NR	7	20WP	G15_033	FROM->TO	G14-057T 345.00 - SUNNYSIDE 345KV CKT 1	717	789	0.04119	115.5958	PAOLI - PAYNE 138.00 138KV CKT 1
FDNS	00NR	7	20WP	G15_033	FROM->TO	G14-057T 345.00 - SUNNYSIDE 345KV CKT 1	717	789	0.0412	115.5942	ELDORADO EHV - SHERIDAN EHV 500KV CKT 1
FDNS	00NR	7	20WP	G15_033	FROM->TO	G14-057T 345.00 - SUNNYSIDE 345KV CKT 1	717	789	0.04115	115.5756	CANEYRV7 345.00 - LATHAMS7 345.00 345KV CKT 1
FDNS	00NR	7	20WP	G15_033	FROM->TO	G14-057T 345.00 - SUNNYSIDE 345KV CKT 1	717	789	0.04135	115.5695	CIVIT - PAOLI 138KV CKT 1
FDNS	00NR	7	20WP	G15_033	FROM->TO	G14-057T 345.00 - SUNNYSIDE 345KV CKT 1	717	789	0.04125	115.558	GEN506754 1-LEBROCK STEAM 1
FDNS	00NR	7	20WP	G15_033	FROM->TO	G14-057T 345.00 - SUNNYSIDE 345KV CKT 1	717	789	0.0412	115.5551	P12:138:WFEC:MSL02
FDNS	00NR	7	16WP	G15_033	FROM->TO	G14-057T 345.00 - SUNNYSIDE 345KV CKT 1	717	789	0.04332	115.5389	P12:138:WFEC:MSL09
FDNS	00NR	7	16WP	G15_033	FROM->TO	G14-057T 345.00 - SUNNYSIDE 345KV CKT 1	717	789	0.04332	115.5124	GEN532751 1-WOLF CREEK GENERATING STATION UNIT 1
FDNS	00NR	7	16WP	G15_033	FROM->TO	G14-057T 345.00 - SUNNYSIDE 345KV CKT 1	717	789	0.04332	115.5029	GEN562710 1-G15_022_3 0.5500
FDNS	00NR	7	20WP	G15_033	FROM->TO	G14-057T 345.00 - SUNNYSIDE 345KV CKT 1	717	789	0.04131	115.5029	P12:138:AEPW:112GORE4:L.E.S.-4
FDNS	00NR	7	20WP	G15_033	FROM->TO	G14-057T 345.00 - SUNNYSIDE 345KV CKT 1	717	789	0.04125	115.4822	GEN336252 1-NINEMILE POINT UNIT#5
FDNS	00NR	7	20WP	G15_033	FROM->TO	G14-057T 345.00 - SUNNYSIDE 345KV CKT 1	717	789	0.04122	115.474	ANADARKO - GEORGIA 138KV CKT 1
FDNS	00NR	7	16WP	G15_033	FROM->TO	G14-057T 345.00 - SUNNYSIDE 345KV CKT 1	717	789	0.04332	115.4502	GEN620315 1-BIG STONE GEN
FDNS	00NR	7	20WP	G15_033	FROM->TO	G14-057T 345.00 - SUNNYSIDE 345KV CKT 1	717	789	0.04151	115.4484	P12:138:AEPW-OGE:CORNVIL4:MAUD 4
FDNS	00NR	7	20WP	G15_033	FROM->TO	G14-057T 345.00 - SUNNYSIDE 345KV CKT 1	717	789	0.03891	115.447	Hitchland Interchange - WALKTAP7 345.00 345KV CKT 1
FDNS	00NR	7	20WP	G15_033	FROM->TO	G14-057T 345.00 - SUNNYSIDE 345KV CKT 1	717	789	0.03891	115.447	Hitchland Interchange - WALKTAP7 345.00 345KV CKT 1
FDNS	00NR	7	20WP	G15_033	FROM->TO	G14-057T 345.00 - SUNNYSIDE 345KV CKT 1	717	789	0.03891	115.4379	P12:345:SPS:J07.1.FINN.HITCH
FDNS	00NR	7	20WP	G15_033	FROM->TO	G14-057T 345.00 - SUNNYSIDE 345KV CKT 1	717	789	0.04127	115.4305	TUPELO - TUPELO TAP 138KV CKT 1
FDNS	00NR	7	20WP	G15_033	FROM->TO	G14-057T 345.00 - SUNNYSIDE 345KV CKT 1	717	789	0.04135	115.4285	CIVIT - STRATFORD 138KV CKT 1
FDNS	00NR	7	20WP	G15_033	FROM->TO	G14-057T 345.00 - SUNNYSIDE 345KV CKT 1	717	789	0.04125	115.4261	FRONTIER - GRIMES 345KV CKT 1
FDNS	00NR	7	20WP	G15_033	FROM->TO	G14-057T 345.00 - SUNNYSIDE 345KV CKT 1	717	789	0.04125	115.4186	GEN335204 1-NELSON UNIT 4
FDNS	00NR	7	20WP	G15_033	FROM->TO	G14-057T 345.00 - SUNNYSIDE 345KV CKT 1	717	789	0.04319	115.4118	LAWTON EASTSIDE (LES 5) 345/138/13.8KV TRANSFORMER CKT 2
FDNS	00NR	7	20WP	G15_033	FROM->TO	G14-057T 345.00 - SUNNYSIDE 345KV CKT 1	717	789	0.04319	115.4118	LAWTON EASTSIDE (LES 5) 345/138/13.8KV TRANSFORMER CKT 2
FDNS	00NR	7	20WP	G15_033	FROM->TO	G14-057T 345.00 - SUNNYSIDE 345KV CKT 1	717	789	0.04125	115.4099	GEN334441 1-SABINE UNIT 5
FDNS	00NR	7	20WP	G15_033	FROM->TO	G14-057T 345.00 - SUNNYSIDE 345KV CKT 1	717	789	0.04125	115.4079	GEN503909 1-FULTONU1 1 16.000
FDNS	00NR	7	16WP	G15_033	FROM->TO	G14-057T 345.00 - SUNNYSIDE 345KV CKT 1	717	789	0.04379	115.4064	P12:138:AEPW-OGE:CORNVIL4:CIMARON4
FDNS	00NR	7	16WP	G15_033	FROM->TO	G14-057T 345.00 - SUNNYSIDE 345KV CKT 1	717	789	0.04332	115.3939	GEN600004 2-PRAIRIE ISLAND G2
FDNS	00NR	7	20WP	G15_033	FROM->TO	G14-057T 345.00 - SUNNYSIDE 345KV CKT 1	717	789	0.04122	115.3927	FLETCHER - GEORGIA 138KV CKT 1
FDNS	00NR	7	16WP	G15_033	FROM->TO	G14-057T 345.00 - SUNNYSIDE 345KV CKT 1	717	789	0.04332	115.3911	GEN600003 1-PRAIRIE ISLAND G1
FDNS	00NR	7	16WP	G15_033	FROM->TO	G14-057T 345.00 - SUNNYSIDE 345KV CKT 1	717	789	0.04332	115.3901	GEN511851 1-COMANCHE #1
FDNS	00NR	7	16WP	G15_033	FROM->TO	G14-057T 345.00 - SUNNYSIDE 345KV CKT 1	717	789	0.04332	115.3803	GEN600006 1-AS KING
FDNS	00NR	7	20WP	G15_033	FROM->TO	G14-057T 345.00 - SUNNYSIDE 345KV CKT 1	717	789	0.04151	115.37	BLANCHARD - CORNVILLE 138KV CKT 1
FDNS	00NR	7	20WP	G15_033	FROM->TO	G14-057T 345.00 - SUNNYSIDE 345KV CKT 1	717	789	0.04115	115.3533	LATHAMS7 345.00 - ROSE HILL 345KV CKT 1
FDNS	00NR	7	20WP	G15_033	FROM->TO	G14-057T 345.00 - SUNNYSIDE 345KV CKT 1	717	789	0.0412	115.3462	EMPIRE - FLETCHER 138KV CKT 1
FDNS	06ALL	7	20WP	G15_033	FROM->TO	G14-057T 345.00 - SUNNYSIDE 345KV CKT 1	717	789	0.20445	115.3359	GRACEMONT - MINCO 345KV CKT 1
FDNS	00NR	7	20WP	G15_033	FROM->TO	G14-057T 345.00 - SUNNYSIDE 345KV CKT 1	717	789	0.04122	115.3286	LAYFLD8 500.00 - MOUNT OLIVE 500KV CKT 1
FDNS	00NR	7	20WP	G15_033	FROM->TO	G14-057T 345.00 - SUNNYSIDE 345KV CKT 1	717	789	0.04122	115.3286	LAYFLD8 500.00 - MOUNT OLIVE 500KV CKT 1
FDNS	00NR	7	20WP	G15_033	FROM->TO	G14-057T 345.00 - SUNNYSIDE 345KV CKT 1	717	789	0.04094	115.3209	MATHWSN7 345.00 - TATONGA7 345.00 345KV CKT 1
FDNS	00NR	7	20WP	G15_033	FROM->TO	G14-057T 345.00 - SUNNYSIDE 345KV CKT 1	717	789	0.04094	115.3209	MATHWSN7 345.00 - TATONGA7 345.00 345KV CKT 2
FDNS	00NR	7	20WP	G15_033	FROM->TO	G14-057T 345.00 - SUNNYSIDE 345KV CKT 1	717	789	0.04125	115.3104	GEN334071 1-LEWIS CREEK 2
FDNS	00NR	7	20WP	G15_033	FROM->TO	G14-057T 345.00 - SUNNYSIDE 345KV CKT 1	717	789	0.04135	115.3103	OIL CENTER - STRATFORD 138KV CKT 1
FDNS	00NR	7	20WP	G15_033	FROM->TO	G14-057T 345.00 - SUNNYSIDE 345KV CKT 1	717	789	0.04125	115.3023	GEN336251 1-NINEMILE POINT UNIT#4
FDNS	00NR	7	20WP	G15_033	FROM->TO	G14-057T 345.00 - SUNNYSIDE 345KV CKT 1	717	789	0.04125	115.3016	GEN334070 1-LEWIS CREEK 1
FDNS	00NR	7	16WP	G15_033	FROM->TO	G14-057T 345.00 - SUNNYSIDE 345KV CKT 1	717	789	0.04332	115.2971	GEN636641 1-LOUISA UNIT 1
FDNS	00NR	7	20WP	G15_033	FROM->TO	G14-057T 345.00 - SUNNYSIDE 345KV CKT 1	717	789	0.04125	115.2898	P12:161:AEPW-SWPA:BEAVER5:EROGERS5
FDNS	00NR	7	16WP	G15_033	FROM->TO	G14-057T 345.00 - SUNNYSIDE 345KV CKT 1	717	789	0.04332	115.2754	GEN563173 1-G15082_3 0.6900
FDNS	00NR	7	20WP	G15_033	FROM->TO	G14-057T 345.00 - SUNNYSIDE 345KV CKT 1	717	789	0.0412	115.2697	COMANCHE - EMPIRE 138KV CKT 1
FDNS	00NR	7	20WP	G15_033	FROM->TO	G14-057T 345.00 - SUNNYSIDE 345KV CKT 1	717	789	0.04125	115.2606	GEN509393 S1-ARSENAL HILL GENS #4 (STALL)
FDNS	00NR	7	20WP	G15_033	FROM->TO	G14-057T 345.00 - SUNNYSIDE 345KV CKT 1	717	789	0.04125	115.2591	GEN509392 G2-ARSENAL HILL GENS #3 (STALL)
FDNS	00NR	7	20WP	G15_033	FROM->TO	G14-057T 345.00 - SUNNYSIDE 345KV CKT 1	717	789	0.04125	115.259	GEN509391 G1-ARSENAL HILL GENS #2 (STALL)
FDNS	00NR	7	20WP	G15_033	FROM->TO	G14-057T 345.00 - SUNNYSIDE 345KV CKT 1	717	789	0.04125	115.2567	GEN337653 1-WHITE BLUFF UNIT #2

SOLUTION	GROUP	SCENARIO	SEASON	SOURCE	DIRECTION	MONITORED ELEMENT	RATEA (MVA)	RATEB(MVA)	TDF	TC%LOADING (% MVA)	CONTINGENCY
FDNS	00NR	7	20WP	G15_033	FROM->TO	G14-057T 345.00 - SUNNYSIDE 345KV CKT 1	717	789	0.04109	115.2476	THISTLE7 345.00 - WOODWARD DISTRICT EHV 345KV CKT 1
FDNS	00NR	7	20WP	G15_033	FROM->TO	G14-057T 345.00 - SUNNYSIDE 345KV CKT 1	717	789	0.04109	115.2476	THISTLE7 345.00 - WOODWARD DISTRICT EHV 345KV CKT 1
FDNS	00NR	7	20WP	G15_033	FROM->TO	G14-057T 345.00 - SUNNYSIDE 345KV CKT 1	717	789	0.04109	115.2476	THISTLE7 345.00 - WOODWARD DISTRICT EHV 345KV CKT 2
FDNS	00NR	7	20WP	G15_033	FROM->TO	G14-057T 345.00 - SUNNYSIDE 345KV CKT 1	717	789	0.04109	115.2476	THISTLE7 345.00 - WOODWARD DISTRICT EHV 345KV CKT 2
FDNS	00NR	7	20WP	G15_033	FROM->TO	G14-057T 345.00 - SUNNYSIDE 345KV CKT 1	717	789	0.04125	115.2449	GEN334433 1-SABINE UNIT 3
FDNS	00NR	7	16WP	G15_033	FROM->TO	G14-057T 345.00 - SUNNYSIDE 345KV CKT 1	717	789	0.04332	115.2424	GEN600005 1-MONTICELLO
FDNS	00NR	7	16WP	G15_033	FROM->TO	G14-057T 345.00 - SUNNYSIDE 345KV CKT 1	717	789	0.04332	115.2376	GEN562754 1-G15031_5 0.6900
FDNS	00NR	7	20WP	G15_033	FROM->TO	G14-057T 345.00 - SUNNYSIDE 345KV CKT 1	717	789	0.04145	115.2343	DUNCAN (DUNCAN) 138/69/13.8KV TRANSFORMER CKT 1
FDNS	00NR	7	20WP	G15_033	FROM->TO	G14-057T 345.00 - SUNNYSIDE 345KV CKT 1	717	789	0.04145	115.2343	DUNCAN (DUNCAN) 138/69/13.8KV TRANSFORMER CKT 1
FDNS	00NR	7	20WP	G15_033	FROM->TO	G14-057T 345.00 - SUNNYSIDE 345KV CKT 1	717	789	0.04125	115.2336	GEN337911 1-ARKANSAS NUCLEAR ONE UNIT #2
FDNS	00NR	7	20WP	G15_033	FROM->TO	G14-057T 345.00 - SUNNYSIDE 345KV CKT 1	717	789	0.04125	115.2295	P12:161:AEPW:DYESS5:ELMSPRNG:TONTITN5
FDNS	00NR	7	20WP	G15_033	FROM->TO	G14-057T 345.00 - SUNNYSIDE 345KV CKT 1	717	789	0.04125	115.2278	GEN336831 1-BAXTER WILSON SES
FDNS	00NR	7	20WP	G15_033	FROM->TO	G14-057T 345.00 - SUNNYSIDE 345KV CKT 1	717	789	0.04125	115.1814	GEN334030 1-FRONTIER UNIT 1
FDNS	00NR	7	20WP	G15_033	FROM->TO	G14-057T 345.00 - SUNNYSIDE 345KV CKT 1	717	789	0.04125	115.179	GEN334031 1-FRONTIER UNIT 2
FDNS	00NR	7	16WP	G15_033	FROM->TO	G14-057T 345.00 - SUNNYSIDE 345KV CKT 1	717	789	0.04332	115.176	GEN562756 1-G15031_7 0.6900
FDNS	00NR	7	20WP	G15_033	FROM->TO	G14-057T 345.00 - SUNNYSIDE 345KV CKT 1	717	789	0.04104	115.174	P12:138:AEPW-OGE:WTH_JCT4:JENSEN4
FDNS	00NR	7	16WP	G15_033	FROM->TO	G14-057T 345.00 - SUNNYSIDE 345KV CKT 1	717	789	0.04332	115.1687	GEN562556 1-G14_046_3 0.3420
FDNS	00NR	7	20WP	G15_033	FROM->TO	G14-057T 345.00 - SUNNYSIDE 345KV CKT 1	717	789	0.04151	115.1676	BLANCHARD - MAUD 138KV CKT 1
FDNS	00NR	7	20WP	G15_033	FROM->TO	G14-057T 345.00 - SUNNYSIDE 345KV CKT 1	717	789	0.04124	115.1603	P12:138:AEPW:CATOOSA4:T.S.E.-4
FDNS	00NR	7	16WP	G15_033	FROM->TO	G14-057T 345.00 - SUNNYSIDE 345KV CKT 1	717	789	0.04332	115.1593	GEN635213 3-NEAL UNIT 3
FDNS	00NR	7	20WP	G15_033	FROM->TO	G14-057T 345.00 - SUNNYSIDE 345KV CKT 1	717	789	0.04125	115.1476	GEN337652 1-WHITE BLUFF UNIT #1
FDNS	00NR	7	20WP	G15_033	FROM->TO	G14-057T 345.00 - SUNNYSIDE 345KV CKT 1	717	789	0.04135	115.1376	LATTA JCT - OIL CENTER 138KV CKT 1
FDNS	00NR	7	20WP	G15_033	FROM->TO	G14-057T 345.00 - SUNNYSIDE 345KV CKT 1	717	789	0.04078	115.1353	BUCKNER7 345.00 - SPEARVILLE 345KV CKT 1
FDNS	00NR	7	20WP	G15_033	FROM->TO	G14-057T 345.00 - SUNNYSIDE 345KV CKT 1	717	789	0.04078	115.1353	BUCKNER7 345.00 - SPEARVILLE 345KV CKT 1
FDNS	00NR	7	16WP	G15_033	FROM->TO	G14-057T 345.00 - SUNNYSIDE 345KV CKT 1	717	789	0.04332	115.1301	GEN629074 1-ARNOLD LOWSIDE OF GSU XFMR
FDNS	00NR	7	20WP	G15_033	FROM->TO	G14-057T 345.00 - SUNNYSIDE 345KV CKT 1	717	789	0.04125	115.1229	GEN501811 1-RODEMACHER UNIT 1
FDNS	00NR	7	20WP	G15_033	FROM->TO	G14-057T 345.00 - SUNNYSIDE 345KV CKT 1	717	789	0.04125	115.1112	GEN506752 1-LEBROCK GAS 1
FDNS	00NR	7	20WP	G15_033	FROM->TO	G14-057T 345.00 - SUNNYSIDE 345KV CKT 1	717	789	0.04125	115.1109	GEN506753 1-LEBROCK GAS 2
FDNS	00NR	7	20WP	G15_033	FROM->TO	G14-057T 345.00 - SUNNYSIDE 345KV CKT 1	717	789	0.04108	115.1107	G1524G1525 345.00 - THISTLE7 345.00 345KV CKT 1
FDNS	00NR	7	20WP	G15_033	FROM->TO	G14-057T 345.00 - SUNNYSIDE 345KV CKT 1	717	789	0.04108	115.1107	G1524G1525 345.00 - THISTLE7 345.00 345KV CKT 2
FDNS	00NR	7	20WP	G15_033	FROM->TO	G14-057T 345.00 - SUNNYSIDE 345KV CKT 1	717	789	0.04125	115.1076	GEN515226 1-MUSKOGEE 6G
FDNS	00NR	7	20WP	G15_033	FROM->TO	G14-057T 345.00 - SUNNYSIDE 345KV CKT 1	717	789	0.04117	115.106	FULTON 115 - HOPE 115KV CKT 1
FDNS	00NR	7	20WP	G15_033	FROM->TO	G14-057T 345.00 - SUNNYSIDE 345KV CKT 1	717	789	0.04117	115.106	FULTON 115 - HOPE 115KV CKT 1
FDNS	00NR	7	16WP	G15_033	FROM->TO	G14-057T 345.00 - SUNNYSIDE 345KV CKT 1	717	789	0.04332	115.1059	BIG STONE 230/24.0KV TRANSFORMER CKT 1
FDNS	00NR	7	20WP	G15_033	FROM->TO	G14-057T 345.00 - SUNNYSIDE 345KV CKT 1	717	789	0.04125	115.0939	GEN336191 1-LITTLE GYPSY UNIT#3
FDNS	00NR	7	16WP	G15_033	FROM->TO	G14-057T 345.00 - SUNNYSIDE 345KV CKT 1	717	789	0.04332	115.0793	GEN563142 1-G15079_3 0.5500
FDNS	00NR	7	16WP	G15_033	FROM->TO	G14-057T 345.00 - SUNNYSIDE 345KV CKT 1	717	789	0.04332	115.0793	GEN563151 1-G15080_2 0.5500
FDNS	00NR	7	20WP	G15_033	FROM->TO	G14-057T 345.00 - SUNNYSIDE 345KV CKT 1	717	789	0.04125	115.0757	GEN300015 1-1SGPDEL 18.000
FDNS	00NR	7	20WP	G15_033	FROM->TO	G14-057T 345.00 - SUNNYSIDE 345KV CKT 1	717	789	0.0413	115.0714	P12:138:AEPW:CORNVIL4:S.W.S.-4
FDNS	00NR	7	20WP	G15_033	FROM->TO	G14-057T 345.00 - SUNNYSIDE 345KV CKT 1	717	789	0.04125	115.0616	GEN335614 1-WILLOW GLENN UNIT#4
FDNS	00NR	7	20WP	G15_033	FROM->TO	G14-057T 345.00 - SUNNYSIDE 345KV CKT 1	717	789	0.04125	115.0616	GEN337910 1-ARKANSAS NUCLEAR ONE UNIT #1
FDNS	00NR	7	20WP	G15_033	FROM->TO	G14-057T 345.00 - SUNNYSIDE 345KV CKT 1	717	789	0.04169	115.0606	TUTTLE - TUTTLE CONOCO TAP 138KV CKT 1
FDNS	00NR	7	20WP	G15_033	FROM->TO	G14-057T 345.00 - SUNNYSIDE 345KV CKT 1	717	789	0.04145	115.056	P12:69:WFEC-AEPW:COMANCH2:DUNCAN-2
FDNS	00NR	7	20WP	G15_033	FROM->TO	G14-057T 345.00 - SUNNYSIDE 345KV CKT 1	717	789	0.04124	115.0508	8DANIEL8 500.00 - MCKNIGHT 500KV CKT 1
FDNS	00NR	7	20WP	G15_033	FROM->TO	G14-057T 345.00 - SUNNYSIDE 345KV CKT 1	717	789	0.04188	115.046	P12:138:AEPW:CORNVIL4:DUNCAN-4
FDNS	00NR	7	20WP	G15_033	FROM->TO	G14-057T 345.00 - SUNNYSIDE 345KV CKT 1	717	789	0.04119	115.0401	6LAYFLD 230.00 - CARROLL 230KV CKT 1
FDNS	00NR	7	20WP	G15_033	FROM->TO	G14-057T 345.00 - SUNNYSIDE 345KV CKT 1	717	789	0.04125	115.0393	P12:161:AEPW:EROGERS5:ECNTRTN5
FDNS	00NR	7	20WP	G15_033	FROM->TO	G14-057T 345.00 - SUNNYSIDE 345KV CKT 1	717	789	0.04151	115.0297	BAILEY4 138.00 - SUNSHINE CANYON 138KV CKT 1
FDNS	00NR	7	20WP	G15_033	FROM->TO	G14-057T 345.00 - SUNNYSIDE 345KV CKT 1	717	789	0.04113	115.0281	P12:138:AEPW:WTHWF4:CLINTJC4
FDNS	00NR	7	20WP	G15_033	FROM->TO	G14-057T 345.00 - SUNNYSIDE 345KV CKT 1	717	789	0.04125	115.0271	GEN300003 1-THOMAS HILL UNIT 3
FDNS	00NR	7	20WP	G15_033	FROM->TO	G14-057T 345.00 - SUNNYSIDE 345KV CKT 1	717	789	0.04125	115.0263	GEN515040 1-SEMINOLE 1G
FDNS	00NR	7	20WP	G15_033	FROM->TO	G14-057T 345.00 - SUNNYSIDE 345KV CKT 1	717	789	0.04125	115.0257	WHITE BLUFF 500/26.0KV TRANSFORMER CKT 1
FDNS	00NR	7	16WP	G15_033	FROM->TO	G14-057T 345.00 - SUNNYSIDE 345KV CKT 1	717	789	0.04332	115.0228	GEN562023 1-G11_020_3 0.6900
FDNS	00NR	7	16WP	G15_033	FROM->TO	G14-057T 345.00 - SUNNYSIDE 345KV CKT 1	717	789	0.04332	115.0228	GEN562026 1-G11_019_3 0.6900
FDNS	00NR	7	20WP	G15_033	FROM->TO	G14-057T 345.00 - SUNNYSIDE 345KV CKT 1	717	789	0.04121	115.0137	G15088_T 345.00 - MOORE 345KV CKT 1
FDNS	00NR	7	20WP	G15_033	FROM->TO	G14-057T 345.00 - SUNNYSIDE 345KV CKT 1	717	789	0.04125	115.0136	GEN303007 1-1BC2 U2
FDNS	00NR	7	20WP	G15_033	FROM->TO	G14-057T 345.00 - SUNNYSIDE 345KV CKT 1	717	789	0.04125	115.0088	GEN336464 1-MICHOUD UNIT #3
FDNS	00NR	7	20WP	G15_033	FROM->TO	G14-057T 345.00 - SUNNYSIDE 345KV CKT 1	717	789	0.04125	115.0079	GEN303006 1-1BC2 U1
FDNS	00NR	7	20WP	G15_033	FROM->TO	G14-057T 345.00 - SUNNYSIDE 345KV CKT 1	717	789	0.04145	115.0069	DUNCAN - TOSCO 69KV CKT 1
FDNS	00NR	7	20WP	G15_033	FROM->TO	G14-057T 345.00 - SUNNYSIDE 345KV CKT 1	717	789	0.04125	115.0058	RODEMACHER 230/22.0KV TRANSFORMER CKT 1
FDNS	00NR	7	20WP	G15_033	FROM->TO	G14-057T 345.00 - SUNNYSIDE 345KV CKT 1	717	789	0.04125	115.0045	GEN515223 1-MUSKOGEE 4G
FDNS	00NR	7	20WP	G15_033	FROM->TO	G14-057T 345.00 - SUNNYSIDE 345KV CKT 1	717	789	0.04125	115.0044	GEN515225 1-MUSKOGEE 5G
FDNS	00NR	7	20WP	G15_033	FROM->TO	G14-057T 345.00 - SUNNYSIDE 345KV CKT 1	717	789	0.04125	115.0037	GEN562783 1-G15036_4 0.6900
FDNS	00NR	7	20WP	G15_033	FROM->TO	G14-057T 345.00 - SUNNYSIDE 345KV CKT 1	717	789	0.04125	115.0037	GEN562784 1-G15036_5 0.6900
FDNS	00NR	7	20WP	G15_033	FROM->TO	G14-057T 345.00 - SUNNYSIDE 345KV CKT 1	717	789	0.0419	115.0021	POTTER COUNTY INTERCHANGE - TOLK STATION 345KV CKT 1
FDNS	00NR	7	20WP	G15_033	FROM->TO	G14-057T 345.00 - SUNNYSIDE 345KV CKT 1	717	789	0.04122	114.9864	MC NIEL 500/115KV TRANSFORMER CKT 1
FDNS	00NR	7	20WP	G15_033	FROM->TO	G14-057T 345.00 - SUNNYSIDE 345KV CKT 1	717	789	0.04169	114.9833	CIMARRON - TUTTLE CONOCO TAP 138KV CKT 1
FDNS	00NR	7	20WP	G15_033	FROM->TO	G14-057T 345.00 - SUNNYSIDE 345KV CKT 1	717	789	0.04119	114.9825	BISMARK - HOT SPRINGS WEST BUS 115KV CKT 1
FDNS	00NR	7	20WP	G15_033	FROM->TO	G14-057T 345.00 - SUNNYSIDE 345KV CKT 1	717	789	0.04123	114.9821	HOT SPRINGS EHV - MAGNET COVE 500KV CKT 1
FDNS	00NR	7	20WP	G15_033	FROM->TO	G14-057T 345.00 - SUNNYSIDE 345KV CKT 1	717	789	0.04402	114.98	P12:345:SPS:J15.1.XRDS.TOLK
FDNS	00NR	7	20WP	G15_033	FROM->TO	G14-057T 345.00 - SUNNYSIDE 345KV CKT 1	717	789	0.04124	114.9766	CIMARRON - CZECH HALL 138KV CKT 1
FDNS	00NR	7	20WP	G15_033	FROM->TO	G14-057T 345.00 - SUNNYSIDE 345KV CKT 1	717	789	0.04122	114.969	G15074_T 345.00 - HOYT 345KV CKT 1
FDNS	00NR	7	20WP	G15_033	FROM->TO	G14-057T 345.00 - SUNNYSIDE 345KV CKT 1	717	789	0.04113	114.9641	P12:138:AEPW:WTHWF4:WTH_SE4
FDNS	00NR	7	20WP	G15_033	FROM->TO	G14-057T 345.00 - SUNNYSIDE 345KV CKT 1	717	789	0.04145	114.9598	COMANCHE TAP - TOSCO 69KV CKT 1
FDNS	00NR	7	20WP	G15_033	FROM->TO	G14-057T 345.00 - SUNNYSIDE 345KV CKT 1	717	789	0.04125	114.9552	GEN337041 1-GERALD ANDRUS
FDNS	00NR	7	20WP	G15_033	FROM->TO	G14-057T 345.00 - SUNNYSIDE 345KV CKT 1	717	789	0.0412	114.9501	CIMARRON - SARA 138KV CKT 1
FDNS	00NR	7	20WP	G15_033	FROM->TO	G14-057T 345.00 - SUNNYSIDE 345KV CKT 1	717	789	0.04125	114.9436	GEN300010 1-ST FRANCIS UNIT 1
FDNS	00NR	7	20WP	G15_033	FROM->TO	G14-057T 345.00 - SUNNYSIDE 345KV CKT 1	717	789	0.04125	114.9432	GEN303008 1-1BC2 U3
FDNS	00NR	7	20WP	G15_033	FROM->TO	G14-057T 345.00 - SUNNYSIDE 345KV CKT 1	717	789	0.04154	114.9369	P12:69:AEPW-OMPA:COMANC-2:OMWALTR2

SOLUTION	GROUP	SCENARIO	SEASON	SOURCE	DIRECTION	MONITORED ELEMENT	RATEA (MVA)	RATEB(MVA)	TDF	TC%LOADING (% MVA)	CONTINGENCY
FDNS	00NR	7	20WP	G15_033	FROM->TO	G14-057T 345.00 - SUNNYSIDE 345KV CKT 1	717	789	0.04125	114.9349	P12:138:AEPW:N.E.S.-4:CATOOSA4
FDNS	00NR	7	20WP	G15_033	FROM->TO	G14-057T 345.00 - SUNNYSIDE 345KV CKT 1	717	789	0.04119	114.9261	ALPINE AECC - BISMARK 115KV CKT 1
FDNS	00NR	7	16WP	G15_033	FROM->TO	G14-057T 345.00 - SUNNYSIDE 345KV CKT 1	717	789	0.04332	114.9259	GEN523971 1-HARRINGTON GEN #1 24 KV
FDNS	00NR	7	16WP	G15_033	FROM->TO	G14-057T 345.00 - SUNNYSIDE 345KV CKT 1	717	789	0.04332	114.9259	GEN523973 1-HARRINGTON GEN #3 24 KV
FDNS	00NR	7	16WP	G15_033	FROM->TO	G14-057T 345.00 - SUNNYSIDE 345KV CKT 1	717	789	0.04332	114.9258	GEN523972 1-HARRINGTON GEN #2 24 KV
FDNS	00NR	7	20WP	G15_033	FROM->TO	G14-057T 345.00 - SUNNYSIDE 345KV CKT 1	717	789	0.04103	114.9209	SEMINOLE - VANOSTP4 138.00 138KV CKT 1
FDNS	00NR	7	16WP	G15_033	FROM->TO	G14-057T 345.00 - SUNNYSIDE 345KV CKT 1	717	789	0.04332	114.9203	GEN511848 1-SOUTHWESTERN STATION #3
FDNS	00NR	7	20WP	G15_033	FROM->TO	G14-057T 345.00 - SUNNYSIDE 345KV CKT 1	717	789	0.04093	114.9198	ARBWIND4 138.00 - CARTER 138KV CKT 1
FDNS	00NR	7	16WP	G15_033	FROM->TO	G14-057T 345.00 - SUNNYSIDE 345KV CKT 1	717	789	0.04332	114.917	GEN600000 1-SHERBURNECNTY G1
FDNS	00NR	7	20WP	G15_033	FROM->TO	G14-057T 345.00 - SUNNYSIDE 345KV CKT 1	717	789	0.04125	114.9151	GEN505432 1-SIKESTON
FDNS	00NR	7	20WP	G15_033	FROM->TO	G14-057T 345.00 - SUNNYSIDE 345KV CKT 1	717	789	0.04125	114.9141	NELSON 230/20.0KV TRANSFORMER CKT 1
FDNS	00NR	7	20WP	G15_033	FROM->TO	G14-057T 345.00 - SUNNYSIDE 345KV CKT 1	717	789	0.04125	114.9134	GEN336170 1-GULF OXY U4
FDNS	00NR	7	20WP	G15_033	FROM->TO	G14-057T 345.00 - SUNNYSIDE 345KV CKT 1	717	789	0.04124	114.9084	CZECH HALL - XEROX 138KV CKT 1
FDNS	00NR	7	20WP	G15_033	FROM->TO	G14-057T 345.00 - SUNNYSIDE 345KV CKT 1	717	789	0.04104	114.9075	WEATHERFORD JCT. - WEATHERFORD SOUTHEAST 138KV CKT 1
FDNS	00NR	7	20WP	G15_033	FROM->TO	G14-057T 345.00 - SUNNYSIDE 345KV CKT 1	717	789	0.04104	114.9075	WEATHERFORD JCT. - WEATHERFORD SOUTHEAST 138KV CKT 1
FDNS	00NR	7	16WP	G15_033	FROM->TO	G14-057T 345.00 - SUNNYSIDE 345KV CKT 1	717	789	0.04332	114.9046	GEN563042 1-G15068_3 0.6900
FDNS	00NR	7	20WP	G15_033	FROM->TO	G14-057T 345.00 - SUNNYSIDE 345KV CKT 1	717	789	0.04124	114.9043	MORGAN - XEROX 138KV CKT 1
FDNS	00NR	7	20WP	G15_033	FROM->TO	G14-057T 345.00 - SUNNYSIDE 345KV CKT 1	717	789	0.04125	114.8947	GEN336801 1-BAXTER WILSON UNIT #1
FDNS	00NR	7	20WP	G15_033	FROM->TO	G14-057T 345.00 - SUNNYSIDE 345KV CKT 1	717	789	0.04145	114.894	COMANCHE - COMANCHE TAP 69KV CKT 1
FDNS	00NR	7	20WP	G15_033	FROM->TO	G14-057T 345.00 - SUNNYSIDE 345KV CKT 1	717	789	0.04104	114.8877	P12:138:AEPW:REDROCKRD4:WTH_JCT4
FDNS	00NR	7	20WP	G15_033	FROM->TO	G14-057T 345.00 - SUNNYSIDE 345KV CKT 1	717	789	0.04125	114.8837	GEN300011 1-ST FRANCIS UNIT 2
FDNS	00NR	7	20WP	G15_033	FROM->TO	G14-057T 345.00 - SUNNYSIDE 345KV CKT 1	717	789	0.04124	114.8827	MORGAN - MUSTANG 138KV CKT 1
FDNS	00NR	7	20WP	G15_033	FROM->TO	G14-057T 345.00 - SUNNYSIDE 345KV CKT 1	717	789	0.04129	114.8822	GRACEMONT (BANK 1) 345/138/13.8KV TRANSFORMER CKT 1
FDNS	00NR	7	20WP	G15_033	FROM->TO	G14-057T 345.00 - SUNNYSIDE 345KV CKT 1	717	789	0.04125	114.8811	8CAJUN2 500/24.0KV TRANSFORMER CKT 1
FDNS	00NR	7	16WP	G15_033	FROM->TO	G14-057T 345.00 - SUNNYSIDE 345KV CKT 1	717	789	0.04318	114.8796	NORTHWEST TEXARKANA - VALLIANT 345KV CKT 1
FDNS	00NR	7	16WP	G15_033	FROM->TO	G14-057T 345.00 - SUNNYSIDE 345KV CKT 1	717	789	0.04318	114.8796	NORTHWEST TEXARKANA - VALLIANT 345KV CKT 1
FDNS	00NR	7	20WP	G15_033	FROM->TO	G14-057T 345.00 - SUNNYSIDE 345KV CKT 1	717	789	0.04119	114.8762	ALPINE AECC - AMITY SS 115KV CKT 1
FDNS	00NR	7	20WP	G15_033	FROM->TO	G14-057T 345.00 - SUNNYSIDE 345KV CKT 1	717	789	0.04125	114.8595	GEN501910 1-ACADIA UNIT ST1
FDNS	00NR	7	20WP	G15_033	FROM->TO	G14-057T 345.00 - SUNNYSIDE 345KV CKT 1	717	789	0.04151	114.8579	BAILEY4 138.00 - WESTMOORE 138KV CKT 1
FDNS	00NR	7	16WP	G15_033	FROM->TO	G14-057T 345.00 - SUNNYSIDE 345KV CKT 1	717	789	0.04332	114.8484	GEN527901 1-HOBBS PLANT #1 (CT)
FDNS	00NR	7	16WP	G15_033	FROM->TO	G14-057T 345.00 - SUNNYSIDE 345KV CKT 1	717	789	0.04332	114.8484	GEN527902 1-HOBBS PLANT #2 (CT)
FDNS	00NR	7	20WP	G15_033	FROM->TO	G14-057T 345.00 - SUNNYSIDE 345KV CKT 1	717	789	0.04135	114.8474	LASALLE - LATTA JCT 138KV CKT 1
FDNS	00NR	7	20WP	G15_033	FROM->TO	G14-057T 345.00 - SUNNYSIDE 345KV CKT 1	717	789	0.0412	114.8428	SARA - STHLAKE4 138.00 138KV CKT 1
FDNS	00NR	7	20WP	G15_033	FROM->TO	G14-057T 345.00 - SUNNYSIDE 345KV CKT 1	717	789	0.04121	114.8378	G15095_T 138.00 - ROSE_VALLEY 138.00 138KV CKT 1
FDNS	00NR	7	20WP	G15_033	FROM->TO	G14-057T 345.00 - SUNNYSIDE 345KV CKT 1	717	789	0.04123	114.8343	ETTA (DUKE HOTSPRINGS) - MC NIEL 500KV CKT 1
FDNS	00NR	7	20WP	G15_033	FROM->TO	G14-057T 345.00 - SUNNYSIDE 345KV CKT 1	717	789	0.04125	114.8339	P12:138:AEPW:R.S.S.-4:S.HUD.-4
FDNS	00NR	7	20WP	G15_033	FROM->TO	G14-057T 345.00 - SUNNYSIDE 345KV CKT 1	717	789	0.04125	114.8325	SABINE 230/24.0KV TRANSFORMER CKT 1
FDNS	00NR	7	16WP	G15_033	FROM->TO	G14-057T 345.00 - SUNNYSIDE 345KV CKT 1	717	789	0.04332	114.8273	GEN600001 2-SHERBURNE CNTY G2
FDNS	00NR	7	20WP	G15_033	FROM->TO	G14-057T 345.00 - SUNNYSIDE 345KV CKT 1	717	789	0.0412	114.8136	MCCLAIN - STHLAKE4 138.00 138KV CKT 1
FDNS	00NR	7	20WP	G15_033	FROM->TO	G14-057T 345.00 - SUNNYSIDE 345KV CKT 1	717	789	0.04125	114.8118	P12:69:AEPW:NROGERS2:ECNTRTN2
FDNS	00NR	7	20WP	G15_033	FROM->TO	G14-057T 345.00 - SUNNYSIDE 345KV CKT 1	717	789	0.04125	114.8051	GEN336222 1-LITTLE GYPSY UNIT#2
FDNS	00NR	7	20WP	G15_033	FROM->TO	G14-057T 345.00 - SUNNYSIDE 345KV CKT 1	717	789	0.04017	114.801	G11-14T 345.00 - WOODWARD DISTRICT EHV 345KV CKT 1
FDNS	00NR	7	20WP	G15_033	FROM->TO	G14-057T 345.00 - SUNNYSIDE 345KV CKT 1	717	789	0.04017	114.801	G11-14T 345.00 - WOODWARD DISTRICT EHV 345KV CKT 2
FDNS	00NR	7	20WP	G15_033	FROM->TO	G14-057T 345.00 - SUNNYSIDE 345KV CKT 1	717	789	0.04125	114.7987	P12:138:AEPW:BA_71ST4:T.S.E.-4
FDNS	00NR	7	20WP	G15_033	FROM->TO	G14-057T 345.00 - SUNNYSIDE 345KV CKT 1	717	789	0.04125	114.7924	GEN300016 1-1G1GPDEL 18.000
FDNS	00NR	7	20WP	G15_033	FROM->TO	G14-057T 345.00 - SUNNYSIDE 345KV CKT 1	717	789	0.04104	114.7923	HINTON - WEATHERFORD JCT. 138KV CKT 1
FDNS	00NR	7	20WP	G15_033	FROM->TO	G14-057T 345.00 - SUNNYSIDE 345KV CKT 1	717	789	0.0409	114.791	CANADIAN - NOBLE 138KV CKT 1
FDNS	00NR	7	20WP	G15_033	FROM->TO	G14-057T 345.00 - SUNNYSIDE 345KV CKT 1	717	789	0.04125	114.7881	P12:138:AEPW:YARCH-S4:T.S.E.-4
FDNS	00NR	7	20WP	G15_033	FROM->TO	G14-057T 345.00 - SUNNYSIDE 345KV CKT 1	717	789	0.0412	114.7807	CLEO CORNER - CLEOPLT4 138.00 138KV CKT 1
FDNS	00NR	7	20WP	G15_033	FROM->TO	G14-057T 345.00 - SUNNYSIDE 345KV CKT 1	717	789	0.04128	114.7801	ANADARKO - SEQUOYAHJ4 138.00 138KV CKT 1
FDNS	00NR	7	20WP	G15_033	FROM->TO	G14-057T 345.00 - SUNNYSIDE 345KV CKT 1	717	789	0.04113	114.7797	P12:138:OKGE-AEPW:JENSEN4:REDROCKRD4
FDNS	00NR	7	20WP	G15_033	FROM->TO	G14-057T 345.00 - SUNNYSIDE 345KV CKT 1	717	789	0.04137	114.7794	WALTERS - WALTERS 69KV CKT 1
FDNS	00NR	7	20WP	G15_033	FROM->TO	G14-057T 345.00 - SUNNYSIDE 345KV CKT 1	717	789	0.04128	114.7761	CORN TAP - SEQUOYAHJ4 138.00 138KV CKT 1
FDNS	00NR	7	20WP	G15_033	FROM->TO	G14-057T 345.00 - SUNNYSIDE 345KV CKT 1	717	789	0.04123	114.7756	P12:138:AEPW-OGE:SHIDLER4:OSAGE 4
FDNS	00NR	7	20WP	G15_033	FROM->TO	G14-057T 345.00 - SUNNYSIDE 345KV CKT 1	717	789	0.0412	114.7706	CLEOPLT4 138.00 - MEN TAP 138KV CKT 1
FDNS	00NR	7	16WP	G15_033	FROM->TO	G14-057T 345.00 - SUNNYSIDE 345KV CKT 1	717	789	0.04332	114.7697	GEN563273 2-G15093_4 0.6900
FDNS	00NR	7	20WP	G15_033	FROM->TO	G14-057T 345.00 - SUNNYSIDE 345KV CKT 1	717	789	0.04125	114.7692	FRONTIER 345/18.0KV TRANSFORMER CKT 1
FDNS	00NR	7	20WP	G15_033	FROM->TO	G14-057T 345.00 - SUNNYSIDE 345KV CKT 1	717	789	0.04125	114.7678	GEN336152 1-WATERFORD UNIT#2
FDNS	00NR	7	20WP	G15_033	FROM->TO	G14-057T 345.00 - SUNNYSIDE 345KV CKT 1	717	789	0.04125	114.7669	GEN336151 1-WATERFORD UNIT#1
FDNS	00NR	7	20WP	G15_033	FROM->TO	G14-057T 345.00 - SUNNYSIDE 345KV CKT 1	717	789	0.04125	114.7668	FRONTIER 345/18.0KV TRANSFORMER CKT 1
FDNS	00NR	7	20WP	G15_033	FROM->TO	G14-057T 345.00 - SUNNYSIDE 345KV CKT 1	717	789	0.04121	114.7664	NOEL_SW 138.00 - ROSE_VALLEY 138.00 138KV CKT 1
FDNS	00NR	7	20WP	G15_033	FROM->TO	G14-057T 345.00 - SUNNYSIDE 345KV CKT 1	717	789	0.0413	114.7661	NORGE ROAD - SOUTHWESTERN STATION 138KV CKT 1
FDNS	00NR	7	20WP	G15_033	FROM->TO	G14-057T 345.00 - SUNNYSIDE 345KV CKT 1	717	789	0.0413	114.7661	NORGE ROAD - SOUTHWESTERN STATION 138KV CKT 1
FDNS	00NR	7	20WP	G15_033	FROM->TO	G14-057T 345.00 - SUNNYSIDE 345KV CKT 1	717	789	0.04078	114.7656	BUCKNER7 345.00 - HOLCOMB 345KV CKT 1
FDNS	00NR	7	20WP	G15_033	FROM->TO	G14-057T 345.00 - SUNNYSIDE 345KV CKT 1	717	789	0.04078	114.7656	BUCKNER7 345.00 - HOLCOMB 345KV CKT 1
FDNS	00NR	7	20WP	G15_033	FROM->TO	G14-057T 345.00 - SUNNYSIDE 345KV CKT 1	717	789	0.04386	114.7653	P12:138:AEPW:S.W.S.-4:L.E.S.-4
FDNS	00NR	7	20WP	G15_033	FROM->TO	G14-057T 345.00 - SUNNYSIDE 345KV CKT 1	717	789	0.04092	114.7652	P12:138:OKGE:3TERM27
FDNS	00NR	7	20WP	G15_033	FROM->TO	G14-057T 345.00 - SUNNYSIDE 345KV CKT 1	717	789	0.0412	114.7613	IMO TAP - MEN TAP 138KV CKT 1
FDNS	00NR	7	20WP	G15_033	FROM->TO	G14-057T 345.00 - SUNNYSIDE 345KV CKT 1	717	789	0.03983	114.7591	FINNEY SWITCHING STATION - HOLCOMB 345KV CKT 1
FDNS	00NR	7	20WP	G15_033	FROM->TO	G14-057T 345.00 - SUNNYSIDE 345KV CKT 1	717	789	0.03983	114.7591	FINNEY SWITCHING STATION - HOLCOMB 345KV CKT 1
FDNS	00NR	7	20WP	G15_033	FROM->TO	G14-057T 345.00 - SUNNYSIDE 345KV CKT 1	717	789	0.04122	114.7574	HOYT - STRANGER CREEK 345KV CKT 1
FDNS	00NR	7	20WP	G15_033	FROM->TO	G14-057T 345.00 - SUNNYSIDE 345KV CKT 1	717	789	0.04121	114.754	BLACKBERRY - NEOSHO 345KV CKT 1
FDNS	00NR	7	20WP	G15_033	FROM->TO	G14-057T 345.00 - SUNNYSIDE 345KV CKT 1	717	789	0.04125	114.7534	7JASPER 345.00 - BLACKBERRY 345KV CKT 1
FDNS	00NR	7	20WP	G15_033	FROM->TO	G14-057T 345.00 - SUNNYSIDE 345KV CKT 1	717	789	0.04122	114.7502	MORISNT4 138.00 - STILLWATER 138KV CKT 1
FDNS	00NR	7	20WP	G15_033	FROM->TO	G14-057T 345.00 - SUNNYSIDE 345KV CKT 1	717	789	0.04221	114.7495	LAWTON EASTSIDE (LES 4) 345/138/13.8KV TRANSFORMER CKT 1
FDNS	00NR	7	20WP	G15_033	FROM->TO	G14-057T 345.00 - SUNNYSIDE 345KV CKT 1	717	789	0.04221	114.7495	LAWTON EASTSIDE (LES 4) 345/138/13.8KV TRANSFORMER CKT 1
FDNS	00NR	7	20WP	G15_033	FROM->TO	G14-057T 345.00 - SUNNYSIDE 345KV CKT 1	717	789	0.04885	114.7459	TUCO INTERCHANGE - TUCO_2 345.00 345KV CKT 1
FDNS	00NR	7	20WP	G15_033	FROM->TO	G14-057T 345.00 - SUNNYSIDE 345KV CKT 1	717	789	0.04122	114.7449	P12:138:OKGE:3TERM2
FDNS	00NR	7	20WP	G15_033	FROM->TO	G14-057T 345.00 - SUNNYSIDE 345KV CKT 1	717	789	0.04124	114.7419	CYPRESS - HARTBURG 500KV CKT 1

SOLUTION	GROUP	SCENARIO	SEASON	SOURCE	DIRECTION	MONITORED ELEMENT	RATEA (MVA)	RATEB(MVA)	TDF	TC%LOADING (% MVA)	CONTINGENCY
FDNS	00NR	7	20WP	G15_033	FROM->TO	G14-057T 345.00 - SUNNYSIDE 345KV CKT 1	717	789	0.04154	114.74	LAWTON RELIFT TAP - OMPA-WALTERS 69KV CKT 1
FDNS	00NR	7	20WP	G15_033	FROM->TO	G14-057T 345.00 - SUNNYSIDE 345KV CKT 1	717	789	0.04125	114.7385	LEWIS CREEK SWITCHYARD 138/22.0KV TRANSFORMER CKT 1
FDNS	00NR	7	20WP	G15_033	FROM->TO	G14-057T 345.00 - SUNNYSIDE 345KV CKT 1	717	789	0.04125	114.734	LEWIS CREEK SWITCHYARD 138/22.0KV TRANSFORMER CKT 1
FDNS	00NR	7	20WP	G15_033	FROM->TO	G14-057T 345.00 - SUNNYSIDE 345KV CKT 1	717	789	0.04125	114.733	GEN300017 1-1G2GPDEL 18.000
FDNS	00NR	7	20WP	G15_033	FROM->TO	G14-057T 345.00 - SUNNYSIDE 345KV CKT 1	717	789	0.04125	114.7285	GEN334432 1-SABINE UNIT 2
FDNS	00NR	7	20WP	G15_033	FROM->TO	G14-057T 345.00 - SUNNYSIDE 345KV CKT 1	717	789	0.04104	114.7285	HINTON - REDROCKRD4 138.00 138KV CKT 1
FDNS	00NR	7	20WP	G15_033	FROM->TO	G14-057T 345.00 - SUNNYSIDE 345KV CKT 1	717	789	0.04125	114.7283	GEN334431 1-SABINE UNIT 1
FDNS	00NR	7	20WP	G15_033	FROM->TO	G14-057T 345.00 - SUNNYSIDE 345KV CKT 1	717	789	0.0412	114.7282	COUCH SES - MC NIEL 115KV CKT 1
FDNS	00NR	7	20WP	G15_033	FROM->TO	G14-057T 345.00 - SUNNYSIDE 345KV CKT 1	717	789	0.04113	114.7282	WEATHERFORD TAP - WEATHERFORD WIND FARM 138KV CKT 1
FDNS	00NR	7	20WP	G15_033	FROM->TO	G14-057T 345.00 - SUNNYSIDE 345KV CKT 1	717	789	0.04117	114.727	HOPE - MCNAB REC 115KV CKT 1
FDNS	00NR	7	20WP	G15_033	FROM->TO	G14-057T 345.00 - SUNNYSIDE 345KV CKT 1	717	789	0.0413	114.7254	SOUTHWESTERN STATION - VERDEN 138KV CKT 1
FDNS	00NR	7	20WP	G15_033	FROM->TO	G14-057T 345.00 - SUNNYSIDE 345KV CKT 1	717	789	0.04125	114.7244	GEN501823 1-TECHE UNIT 3
FDNS	00NR	7	20WP	G15_033	FROM->TO	G14-057T 345.00 - SUNNYSIDE 345KV CKT 1	717	789	0.04122	114.724	G15074_T 345.00 - JEFFREY ENERGY CENTER 345KV CKT 1
FDNS	00NR	7	20WP	G15_033	FROM->TO	G14-057T 345.00 - SUNNYSIDE 345KV CKT 1	717	789	0.04125	114.7218	GEN501970 1-EVANGELINE UNIT 7
FDNS	00NR	7	20WP	G15_033	FROM->TO	G14-057T 345.00 - SUNNYSIDE 345KV CKT 1	717	789	0.04115	114.7212	DRAPER LAKE - SEMINOLE 345KV CKT 1
FDNS	00NR	7	20WP	G15_033	FROM->TO	G14-057T 345.00 - SUNNYSIDE 345KV CKT 1	717	789	0.04115	114.7212	DRAPER LAKE - SEMINOLE 345KV CKT 2
FDNS	00NR	7	20WP	G15_033	FROM->TO	G14-057T 345.00 - SUNNYSIDE 345KV CKT 1	717	789	0.04125	114.7174	P12:161:AEPW:CHAMSPR5:FARMING5
FDNS	00NR	7	20WP	G15_033	FROM->TO	G14-057T 345.00 - SUNNYSIDE 345KV CKT 1	717	789	0.04117	114.7167	P12:115:AEPW:TURK3:HOPE3
FDNS	00NR	7	20WP	G15_033	FROM->TO	G14-057T 345.00 - SUNNYSIDE 345KV CKT 1	717	789	0.04125	114.7103	GEN505616 1-BROKEN BOW
FDNS	00NR	7	20WP	G15_033	FROM->TO	G14-057T 345.00 - SUNNYSIDE 345KV CKT 1	717	789	0.04123	114.7101	7LUTESVIL 345.00 - 7ST FRANC 345.00 345KV CKT 1
FDNS	00NR	7	20WP	G15_033	FROM->TO	G14-057T 345.00 - SUNNYSIDE 345KV CKT 1	717	789	0.04135	114.7066	LASALLE - STONEWAL LH138.00 138KV CKT 1
FDNS	00NR	7	20WP	G15_033	FROM->TO	G14-057T 345.00 - SUNNYSIDE 345KV CKT 1	717	789	0.0413	114.7061	NORTH 29TH CHICKASHA - VERDEN 138KV CKT 1
FDNS	00NR	7	20WP	G15_033	FROM->TO	G14-057T 345.00 - SUNNYSIDE 345KV CKT 1	717	789	0.04085	114.7029	ARBUCKLE - VANOSTP4 138.00 138KV CKT 1
FDNS	00NR	7	20WP	G15_033	FROM->TO	G14-057T 345.00 - SUNNYSIDE 345KV CKT 1	717	789	0.04125	114.6995	GEN334392 1-EXXON MOBIL IPP 1
FDNS	00NR	7	20WP	G15_033	FROM->TO	G14-057T 345.00 - SUNNYSIDE 345KV CKT 1	717	789	0.04122	114.6995	EMPORIA ENERGY CENTER - G14_001T 345.00 345KV CKT 1
FDNS	00NR	7	20WP	G15_033	FROM->TO	G14-057T 345.00 - SUNNYSIDE 345KV CKT 1	717	789	0.0409	114.6972	NOBLE - PURCELL4 138.00 138KV CKT 1
FDNS	00NR	7	16WP	G15_033	FROM->TO	G14-057T 345.00 - SUNNYSIDE 345KV CKT 1	717	789	0.04332	114.6971	GEN629075 1-OTTUMWA GENERATOR FOR OTTUMWA UNIT NO 1
FDNS	00NR	7	20WP	G15_033	FROM->TO	G14-057T 345.00 - SUNNYSIDE 345KV CKT 1	717	789	0.04144	114.697	G15063_T 345.00 - WOODRING 345KV CKT 1
FDNS	00NR	7	20WP	G15_033	FROM->TO	G14-057T 345.00 - SUNNYSIDE 345KV CKT 1	717	789	0.04151	114.6968	FRANKLIN SW - WESTMOORE 138KV CKT 1
FDNS	00NR	7	20WP	G15_033	FROM->TO	G14-057T 345.00 - SUNNYSIDE 345KV CKT 1	717	789	0.04135	114.6921	STONEWAL LH138.00 - TUPELO TAP 138KV CKT 1
FDNS	00NR	7	20WP	G15_033	FROM->TO	G14-057T 345.00 - SUNNYSIDE 345KV CKT 1	717	789	0.04125	114.6919	GEN334393 1-EXXON MOBIL IPP 2
FDNS	00NR	7	20WP	G15_033	FROM->TO	G14-057T 345.00 - SUNNYSIDE 345KV CKT 1	717	789	0.04125	114.6919	GEN334394 1-EXXON MOBIL IPP 3
FDNS	00NR	7	20WP	G15_033	FROM->TO	G14-057T 345.00 - SUNNYSIDE 345KV CKT 1	717	789	0.04117	114.6901	MCNAB REC - Turk 115 115KV CKT 1
FDNS	00NR	7	20WP	G15_033	FROM->TO	G14-057T 345.00 - SUNNYSIDE 345KV CKT 1	717	789	0.04117	114.6901	TURK (TURK 1) 138/115/13.2KV TRANSFORMER CKT 1
FDNS	00NR	7	20WP	G15_033	FROM->TO	G14-057T 345.00 - SUNNYSIDE 345KV CKT 1	717	789	0.04117	114.6901	TURK (TURK 1) 138/115/13.2KV TRANSFORMER CKT 1
FDNS	00NR	7	20WP	G15_033	FROM->TO	G14-057T 345.00 - SUNNYSIDE 345KV CKT 1	717	789	0.04137	114.6831	P12:69:WFEC-AEPW:COMANCH2:WALTRS-2
FDNS	00NR	7	20WP	G15_033	FROM->TO	G14-057T 345.00 - SUNNYSIDE 345KV CKT 1	717	789	0.04125	114.6827	GEN515042 1-SEMINOLE 3G
FDNS	00NR	7	20WP	G15_033	FROM->TO	G14-057T 345.00 - SUNNYSIDE 345KV CKT 1	717	789	0.04121	114.6784	SWISSVALE - WEST GARDNER 345KV CKT 1
FDNS	00NR	7	20WP	G15_033	FROM->TO	G14-057T 345.00 - SUNNYSIDE 345KV CKT 1	717	789	0.04125	114.6771	ST FRANCIS - ST FRANCIS 1 161KV CKT Z1
FDNS	00NR	7	20WP	G15_033	FROM->TO	G14-057T 345.00 - SUNNYSIDE 345KV CKT 1	717	789	0.04154	114.6747	OMPA-WALTERS - WALTERS 69KV CKT 1
FDNS	00NR	7	20WP	G15_033	FROM->TO	G14-057T 345.00 - SUNNYSIDE 345KV CKT 1	717	789	0.04154	114.6747	OMPA-WALTERS - WALTERS 69KV CKT 1
FDNS	00NR	7	20WP	G15_033	FROM->TO	G14-057T 345.00 - SUNNYSIDE 345KV CKT 1	717	789	0.04125	114.6739	SABINE 230/22.0KV TRANSFORMER CKT 1
FDNS	00NR	7	20WP	G15_033	FROM->TO	G14-057T 345.00 - SUNNYSIDE 345KV CKT 1	717	789	0.04121	114.6735	ENOWILT - LONE OAK 138KV CKT 1
FDNS	00NR	7	20WP	G15_033	FROM->TO	G14-057T 345.00 - SUNNYSIDE 345KV CKT 1	717	789	0.04123	114.6727	EMPORIA ENERGY CENTER - SWISSVALE 345KV CKT 1
FDNS	00NR	7	20WP	G15_033	FROM->TO	G14-057T 345.00 - SUNNYSIDE 345KV CKT 1	717	789	0.04126	114.6677	FRANKLIN - FRANKLIN SW 138KV CKT 1
FDNS	00NR	7	20WP	G15_033	FROM->TO	G14-057T 345.00 - SUNNYSIDE 345KV CKT 1	717	789	0.04125	114.6651	P12:138:OKGE:3TERM12
FDNS	00NR	7	20WP	G15_033	FROM->TO	G14-057T 345.00 - SUNNYSIDE 345KV CKT 1	717	789	0.04121	114.6649	ENOWILT - SARDIS 138KV CKT 1
FDNS	00NR	7	20WP	G15_033	FROM->TO	G14-057T 345.00 - SUNNYSIDE 345KV CKT 1	717	789	0.04125	114.6628	P12:138:AEPW:R.S.S-4:T.P.S.-4
FDNS	00NR	7	20WP	G15_033	FROM->TO	G14-057T 345.00 - SUNNYSIDE 345KV CKT 1	717	789	0.04125	114.6608	GEN501972 1-EVANGELINE UNIT 7-2
FDNS	00NR	7	20WP	G15_033	FROM->TO	G14-057T 345.00 - SUNNYSIDE 345KV CKT 1	717	789	0.04125	114.6607	GEN501971 1-EVANGELINE UNIT 7-1
FDNS	00NR	7	20WP	G15_033	FROM->TO	G14-057T 345.00 - SUNNYSIDE 345KV CKT 1	717	789	0.04123	114.6604	LAKEOVER - MCADAMS 500KV CKT 1
FDNS	00NR	7	20WP	G15_033	FROM->TO	G14-057T 345.00 - SUNNYSIDE 345KV CKT 1	717	789	0.04111	114.6562	G13-010T 345.00 - POST ROCK 345KV CKT 1
FDNS	00NR	7	20WP	G15_033	FROM->TO	G14-057T 345.00 - SUNNYSIDE 345KV CKT 1	717	789	0.04113	114.6489	WEATHERFORD SOUTHEAST - WEATHERFORD TAP 138KV CKT 1
FDNS	00NR	7	20WP	G15_033	FROM->TO	G14-057T 345.00 - SUNNYSIDE 345KV CKT 1	717	789	0.0413	114.6457	CORNVILLE - NORGE ROAD 138KV CKT 1
FDNS	00NR	7	20WP	G15_033	FROM->TO	G14-057T 345.00 - SUNNYSIDE 345KV CKT 1	717	789	0.0413	114.6457	CORNVILLE - NORGE ROAD 138KV CKT 1
FDNS	00NR	7	20WP	G15_033	FROM->TO	G14-057T 345.00 - SUNNYSIDE 345KV CKT 1	717	789	0.04112	114.6441	BENTON - WICHITA 345KV CKT 1
FDNS	00NR	7	20WP	G15_033	FROM->TO	G14-057T 345.00 - SUNNYSIDE 345KV CKT 1	717	789	0.0413	114.6413	CORNVILLE - NORTH 29TH CHICKASHA 138KV CKT 1
FDNS	00NR	7	20WP	G15_033	FROM->TO	G14-057T 345.00 - SUNNYSIDE 345KV CKT 1	717	789	0.04125	114.639	P12:138:AEPW:R.S.S.-4:R:96YALE-4
FDNS	00NR	7	20WP	G15_033	FROM->TO	G14-057T 345.00 - SUNNYSIDE 345KV CKT 1	717	789	0.04124	114.6374	FLETCHER - MARLOW JCT 69KV CKT 1
FDNS	00NR	7	20WP	G15_033	FROM->TO	G14-057T 345.00 - SUNNYSIDE 345KV CKT 1	717	789	0.04125	114.637	GEN501912 1-ACADIA UNIT CT1B
FDNS	00NR	7	20WP	G15_033	FROM->TO	G14-057T 345.00 - SUNNYSIDE 345KV CKT 1	717	789	0.04122	114.6362	G14_001T 345.00 - WICHITA 345KV CKT 1
FDNS	00NR	7	20WP	G15_033	FROM->TO	G14-057T 345.00 - SUNNYSIDE 345KV CKT 1	717	789	0.04125	114.6361	GEN501911 1-ACADIA UNIT CT1A
FDNS	00NR	7	20WP	G15_033	FROM->TO	G14-057T 345.00 - SUNNYSIDE 345KV CKT 1	717	789	0.04123	114.6335	8WNEWMADRID 500.00 - DELL 500 500KV CKT 1
FDNS	00NR	7	20WP	G15_033	FROM->TO	G14-057T 345.00 - SUNNYSIDE 345KV CKT 1	717	789	0.04125	114.6314	NELSON 230/24.0KV TRANSFORMER CKT 1
FDNS	00NR	7	20WP	G15_033	FROM->TO	G14-057T 345.00 - SUNNYSIDE 345KV CKT 1	717	789	0.04125	114.6306	GEN506749 1-EASTMAN GENERATION A
FDNS	00NR	7	20WP	G15_033	FROM->TO	G14-057T 345.00 - SUNNYSIDE 345KV CKT 1	717	789	0.04145	114.6295	CIMARRON - NORTHWEST 345KV CKT 1
FDNS	00NR	7	20WP	G15_033	FROM->TO	G14-057T 345.00 - SUNNYSIDE 345KV CKT 1	717	789	0.04121	114.6253	CLAYTON - SARDIS 138KV CKT 1
FDNS	00NR	7	20WP	G15_033	FROM->TO	G14-057T 345.00 - SUNNYSIDE 345KV CKT 1	717	789	0.04125	114.624	GEN509394 1-FLINT CREEK
FDNS	00NR	7	20WP	G15_033	FROM->TO	G14-057T 345.00 - SUNNYSIDE 345KV CKT 1	717	789	0.04126	114.6222	MARIETTA - MARIETTA4 138.00 138KV CKT 1
FDNS	00NR	7	20WP	G15_033	FROM->TO	G14-057T 345.00 - SUNNYSIDE 345KV CKT 1	717	789	0.04121	114.6214	MCADAMS - WOLF CREEK 500KV CKT 1
FDNS	00NR	7	20WP	G15_033	FROM->TO	G14-057T 345.00 - SUNNYSIDE 345KV CKT 1	717	789	0.04123	114.6207	GRAND ISLAND - MCCOOL 345KV CKT 1
FDNS	00NR	7	20WP	G15_033	FROM->TO	G14-057T 345.00 - SUNNYSIDE 345KV CKT 1	717	789	0.04125	114.619	P12:138:AEPW:MOHAWK4:T.NO--4
FDNS	00NR	7	20WP	G15_033	FROM->TO	G14-057T 345.00 - SUNNYSIDE 345KV CKT 1	717	789	0.04101	114.6179	CLINTON JUNCTION - ELK CITY 138KV CKT 1
FDNS	00NR	7	20WP	G15_033	FROM->TO	G14-057T 345.00 - SUNNYSIDE 345KV CKT 1	717	789	0.04101	114.6179	CLINTON JUNCTION - ELK CITY 138KV CKT 1
FDNS	00NR	7	20WP	G15_033	FROM->TO	G14-057T 345.00 - SUNNYSIDE 345KV CKT 1	717	789	0.04125	114.6153	ST FRANCIS 345/161KV TRANSFORMER CKT 1
FDNS	00NR	7	20WP	G15_033	FROM->TO	G14-057T 345.00 - SUNNYSIDE 345KV CKT 1	717	789	0.03974	114.615	G14_038T 345.00 - Hitchland Interchange 345KV CKT 1
FDNS	00NR	7	20WP	G15_033	FROM->TO	G14-057T 345.00 - SUNNYSIDE 345KV CKT 1	717	789	0.04119	114.6131	AMITY SS - MURFREESBORO EAST (AECC) 115KV CKT 1
FDNS	00NR	7	16WP	G15_033	FROM->TO	G14-057T 345.00 - SUNNYSIDE 345KV CKT 1	717	789	0.04332	114.6123	GEN563202 1-G15085_3 0.5500
FDNS	00NR	7	20WP	G15_033	FROM->TO	G14-057T 345.00 - SUNNYSIDE 345KV CKT 1	717	789	0.04125	114.6116	GEN336242 1-1NMIL ST1 18.000

SOLUTION	GROUP	SCENARIO	SEASON	SOURCE	DIRECTION	MONITORED ELEMENT	RATEA (MVA)	RATEB(MVA)	TDF	TC%LOADING (% MVA)	CONTINGENCY
FDNS	00NR	7	20WP	G15_033	FROM->TO	G14-057T 345.00 - SUNNYSIDE 345KV CKT 1	717	789	0.04113	114.6115	CLINTON JUNCTION - CLINTON NATURAL GAS TAP 138KV CKT 1
FDNS	00NR	7	16WP	G15_033	FROM->TO	G14-057T 345.00 - SUNNYSIDE 345KV CKT 1	717	789	0.04332	114.6023	GEN563043 1-G15068_4 0.6900
FDNS	00NR	7	20WP	G15_033	FROM->TO	G14-057T 345.00 - SUNNYSIDE 345KV CKT 1	717	789	0.04121	114.6014	P12:138:AEPW-SWPA:LONEOAK4:BRKNBW4
FDNS	00NR	7	20WP	G15_033	FROM->TO	G14-057T 345.00 - SUNNYSIDE 345KV CKT 1	717	789	0.04111	114.6005	G13-010T 345.00 - SPEARVILLE 345KV CKT 1
FDNS	00NR	7	20WP	G15_033	FROM->TO	G14-057T 345.00 - SUNNYSIDE 345KV CKT 1	717	789	0.04122	114.5989	LAYFLD8 500.00 (LAYFLD AUTO) 500/230/13.8KV TRANSFORMER CKT 1
FDNS	00NR	7	20WP	G15_033	FROM->TO	G14-057T 345.00 - SUNNYSIDE 345KV CKT 1	717	789	0.04122	114.5989	LAYFLD8 500.00 (LAYFLD AUTO) 500/230/13.8KV TRANSFORMER CKT 1
FDNS	00NR	7	20WP	G15_033	FROM->TO	G14-057T 345.00 - SUNNYSIDE 345KV CKT 1	717	789	0.04125	114.5977	SABINE 138/22.0KV TRANSFORMER CKT 1
FDNS	00NR	7	20WP	G15_033	FROM->TO	G14-057T 345.00 - SUNNYSIDE 345KV CKT 1	717	789	0.04124	114.5956	7JASPER 345.00 - MORGAN 345KV CKT 1
FDNS	00NR	7	20WP	G15_033	FROM->TO	G14-057T 345.00 - SUNNYSIDE 345KV CKT 1	717	789	0.04124	114.5953	P12:138:WFEC-AEPW:ELKCTY-4:ERICK4
FDNS	00NR	7	20WP	G15_033	FROM->TO	G14-057T 345.00 - SUNNYSIDE 345KV CKT 1	717	789	0.04121	114.5911	CLAYTON - NASHOBA 138KV CKT 1
FDNS	00NR	7	20WP	G15_033	FROM->TO	G14-057T 345.00 - SUNNYSIDE 345KV CKT 1	717	789	0.0411	114.591	G11_051T 345.00 - TATONGA7 345.00 345KV CKT 1
FDNS	00NR	7	20WP	G15_033	FROM->TO	G14-057T 345.00 - SUNNYSIDE 345KV CKT 1	717	789	0.0411	114.591	G11_051T 345.00 - TATONGA7 345.00 345KV CKT 2
FDNS	00NR	7	20WP	G15_033	FROM->TO	G14-057T 345.00 - SUNNYSIDE 345KV CKT 1	717	789	0.0412	114.5894	LACYGNE - NEOSHO 345KV CKT 1
FDNS	00NR	7	20WP	G15_033	FROM->TO	G14-057T 345.00 - SUNNYSIDE 345KV CKT 1	717	789	0.04125	114.5858	GEN338146 1-INDEPENDENCE UNIT #2
FDNS	00NR	7	20WP	G15_033	FROM->TO	G14-057T 345.00 - SUNNYSIDE 345KV CKT 1	717	789	0.041	114.5811	ARBUCKLE - MILLCREEK 138KV CKT 1
FDNS	00NR	7	20WP	G15_033	FROM->TO	G14-057T 345.00 - SUNNYSIDE 345KV CKT 1	717	789	0.04121	114.578	BETHEL - NASHOBA 138KV CKT 1
FDNS	00NR	7	20WP	G15_033	FROM->TO	G14-057T 345.00 - SUNNYSIDE 345KV CKT 1	717	789	0.04116	114.5744	SEMINOLE (SEMINOL2) 345/138/14.4KV TRANSFORMER CKT 1
FDNS	00NR	7	20WP	G15_033	FROM->TO	G14-057T 345.00 - SUNNYSIDE 345KV CKT 1	717	789	0.04125	114.5717	GEN515041 1-SEMINOLE 2G
FDNS	00NR	7	20WP	G15_033	FROM->TO	G14-057T 345.00 - SUNNYSIDE 345KV CKT 1	717	789	0.04119	114.5647	MURFREESBORO 138/115KV TRANSFORMER CKT 1
FDNS	00NR	7	20WP	G15_033	FROM->TO	G14-057T 345.00 - SUNNYSIDE 345KV CKT 1	717	789	0.04119	114.5646	MURFREESBORO EAST (AECC) - MURFREESBORO SOUTH 115KV CKT 1
FDNS	00NR	7	20WP	G15_033	FROM->TO	G14-057T 345.00 - SUNNYSIDE 345KV CKT 1	717	789	0.04119	114.5637	MURFREESBORO - SOUTH NASHVILLE 138KV CKT 1
FDNS	00NR	7	20WP	G15_033	FROM->TO	G14-057T 345.00 - SUNNYSIDE 345KV CKT 1	717	789	0.04119	114.5637	MURFREESBORO - SOUTH NASHVILLE 138KV CKT 1
FDNS	00NR	7	20WP	G15_033	FROM->TO	G14-057T 345.00 - SUNNYSIDE 345KV CKT 1	717	789	0.0412	114.5581	P12:138:AEPW:OKMULGE4:R.S.S-4
FDNS	00NR	7	16WP	G15_033	FROM->TO	G14-057T 345.00 - SUNNYSIDE 345KV CKT 1	717	789	0.04332	114.553	SHERBURNE CO 345/24.0KV TRANSFORMER CKT 1
FDNS	00NR	7	20WP	G15_033	FROM->TO	G14-057T 345.00 - SUNNYSIDE 345KV CKT 1	717	789	0.04125	114.5528	GEN337766 1-TRACTEBEL UNIT S1
FDNS	00NR	7	20WP	G15_033	FROM->TO	G14-057T 345.00 - SUNNYSIDE 345KV CKT 1	717	789	0.04124	114.5507	HAMMETT TAP - HAMMETT2 138KV CKT 1
FDNS	00NR	7	20WP	G15_033	FROM->TO	G14-057T 345.00 - SUNNYSIDE 345KV CKT 1	717	789	0.04123	114.5479	MCCOOL - MOORE 345KV CKT 1
FDNS	00NR	7	16WP	G15_033	FROM->TO	G14-057T 345.00 - SUNNYSIDE 345KV CKT 1	717	789	0.04332	114.5468	GEN526333 1-JONES GEN #3 21 KV
FDNS	00NR	7	16WP	G15_033	FROM->TO	G14-057T 345.00 - SUNNYSIDE 345KV CKT 1	717	789	0.04332	114.5468	GEN526334 1-JONES_4 116.500
FDNS	00NR	7	20WP	G15_033	FROM->TO	G14-057T 345.00 - SUNNYSIDE 345KV CKT 1	717	789	0.04124	114.5448	P12:138:OKGE:3TERM20
FDNS	00NR	7	20WP	G15_033	FROM->TO	G14-057T 345.00 - SUNNYSIDE 345KV CKT 1	717	789	0.04125	114.543	P12:138:AEPW:81GARN-4:ONETA--4
FDNS	00NR	7	20WP	G15_033	FROM->TO	G14-057T 345.00 - SUNNYSIDE 345KV CKT 1	717	789	0.04145	114.5427	CRINER - PAYNE 138.00 138KV CKT 1
FDNS	00NR	7	20WP	G15_033	FROM->TO	G14-057T 345.00 - SUNNYSIDE 345KV CKT 1	717	789	0.04126	114.5407	GRDA1 - GREC TAP5 345.00 345KV CKT 1
FDNS	00NR	7	20WP	G15_033	FROM->TO	G14-057T 345.00 - SUNNYSIDE 345KV CKT 1	717	789	0.04125	114.5399	8COTNWOOD2! 500.00 - HARTBURG 500KV CKT 1
FDNS	00NR	7	20WP	G15_033	FROM->TO	G14-057T 345.00 - SUNNYSIDE 345KV CKT 1	717	789	0.04188	114.534	DUNCAN - DUNCHERTP4 138.00 138KV CKT 1
FDNS	00NR	7	20WP	G15_033	FROM->TO	G14-057T 345.00 - SUNNYSIDE 345KV CKT 1	717	789	0.04188	114.534	DUNCAN - DUNCHERTP4 138.00 138KV CKT 1
FDNS	00NR	7	20WP	G15_033	FROM->TO	G14-057T 345.00 - SUNNYSIDE 345KV CKT 1	717	789	0.04188	114.5338	DUNCAN EASTSIDE - DUNCHERTP4 138.00 138KV CKT 1
FDNS	00NR	7	20WP	G15_033	FROM->TO	G14-057T 345.00 - SUNNYSIDE 345KV CKT 1	717	789	0.04125	114.5337	GEN336240 1-1NMIL CT1 18.000
FDNS	00NR	7	20WP	G15_033	FROM->TO	G14-057T 345.00 - SUNNYSIDE 345KV CKT 1	717	789	0.04125	114.5337	GEN336241 1-1NMIL CT2 18.000
FDNS	00NR	7	16WP	G15_033	FROM->TO	G14-057T 345.00 - SUNNYSIDE 345KV CKT 1	717	789	0.04332	114.533	GEN635214 4-NEAL UNIT 4
FDNS	00NR	7	20WP	G15_033	FROM->TO	G14-057T 345.00 - SUNNYSIDE 345KV CKT 1	717	789	0.04125	114.5311	GEN303024 1-1G3INTHB 18.000
FDNS	00NR	7	20WP	G15_033	FROM->TO	G14-057T 345.00 - SUNNYSIDE 345KV CKT 1	717	789	0.04125	114.5311	GEN303026 1-1G4INTHB 18.000
FDNS	00NR	7	20WP	G15_033	FROM->TO	G14-057T 345.00 - SUNNYSIDE 345KV CKT 1	717	789	0.04125	114.5311	GEN337430 1-PERYVILLE UNIT #3
FDNS	00NR	7	20WP	G15_033	FROM->TO	G14-057T 345.00 - SUNNYSIDE 345KV CKT 1	717	789	0.04125	114.5301	GEN337428 1-PERYVILLE UNIT #1
FDNS	00NR	7	16WP	G15_033	FROM->TO	G14-057T 345.00 - SUNNYSIDE 345KV CKT 1	717	789	0.04332	114.53	GEN525844 1-ELK_1 118.000
FDNS	00NR	7	20WP	G15_033	FROM->TO	G14-057T 345.00 - SUNNYSIDE 345KV CKT 1	717	789	0.04125	114.5292	GEN335571 1-CARVILLE UNIT #1
FDNS	00NR	7	20WP	G15_033	FROM->TO	G14-057T 345.00 - SUNNYSIDE 345KV CKT 1	717	789	0.04125	114.5291	GEN335570 1-CARVILLE CTG
FDNS	00NR	7	20WP	G15_033	FROM->TO	G14-057T 345.00 - SUNNYSIDE 345KV CKT 1	717	789	0.04126	114.5271	FRANKLIN - PINK SW 138KV CKT 1
FDNS	00NR	7	16WP	G15_033	FROM->TO	G14-057T 345.00 - SUNNYSIDE 345KV CKT 1	717	789	0.04332	114.526	GEN525845 1-ELK_2 1 138.00
FDNS	00NR	7	20WP	G15_033	FROM->TO	G14-057T 345.00 - SUNNYSIDE 345KV CKT 1	717	789	0.04113	114.5211	Canadian Pump Station - REDROCKRD4 138.00 138KV CKT 1
FDNS	00NR	7	20WP	G15_033	FROM->TO	G14-057T 345.00 - SUNNYSIDE 345KV CKT 1	717	789	0.04137	114.5108	COMANCHE - WALTERS 69KV CKT 1
FDNS	00NR	7	20WP	G15_033	FROM->TO	G14-057T 345.00 - SUNNYSIDE 345KV CKT 1	717	789	0.04118	114.4991	SEMINOLE (SEMINOL1) 345/138/14.4KV TRANSFORMER CKT 1
FDNS	00NR	7	16WP	G15_033	FROM->TO	G14-057T 345.00 - SUNNYSIDE 345KV CKT 1	717	789	0.04332	114.3766	GEN600002 3-SHERBURNE CNTY G3
FDNS	00NR	7	16WP	G15_033	FROM->TO	G14-057T 345.00 - SUNNYSIDE 345KV CKT 1	717	789	0.04332	114.3658	GEN344225 1-1CAL G1 25.000
FDNS	00NR	7	16WP	G15_033	FROM->TO	G14-057T 345.00 - SUNNYSIDE 345KV CKT 1	717	789	0.04332	114.3313	GEN525562 1-TOLK GEN #2 24 KV
FDNS	00NR	7	16WP	G15_033	FROM->TO	G14-057T 345.00 - SUNNYSIDE 345KV CKT 1	717	789	0.04287	114.3165	JOHNSON COUNTY (JOHNCO) 345/138/13.8KV TRANSFORMER CKT 1
FDNS	00NR	7	16WP	G15_033	FROM->TO	G14-057T 345.00 - SUNNYSIDE 345KV CKT 1	717	789	0.04332	114.2944	GEN525561 1-TOLK GEN #1 24 KV
FDNS	00NR	7	16WP	G15_033	FROM->TO	G14-057T 345.00 - SUNNYSIDE 345KV CKT 1	717	789	0.04332	114.2926	GEN527166 1-MUSTANG_6 118.000
FDNS	00NR	7	16WP	G15_033	FROM->TO	G14-057T 345.00 - SUNNYSIDE 345KV CKT 1	717	789	0.04332	114.2714	GEN562590 1-G14_057_3 0.6900
FDNS	00NR	7	16WP	G15_033	FROM->TO	G14-057T 345.00 - SUNNYSIDE 345KV CKT 1	717	789	0.04332	114.269	GEN562685 1-G15_013_3 0.3550
FDNS	00NR	7	16WP	G15_033	FROM->TO	G14-057T 345.00 - SUNNYSIDE 345KV CKT 1	717	789	0.04332	114.175	GEN562762 1-G15033_3 0.6900
FDNS	00NR	7	16WP	G15_033	FROM->TO	G14-057T 345.00 - SUNNYSIDE 345KV CKT 1	717	789	0.04332	114.1683	GEN562655 1-G14_074_3 0.6900
FDNS	00NR	7	16WP	G15_033	FROM->TO	G14-057T 345.00 - SUNNYSIDE 345KV CKT 1	717	789	0.04332	114.1608	GEN563272 1-G15093_3 0.6900
FDNS	00NR	7	16WP	G15_033	FROM->TO	G14-057T 345.00 - SUNNYSIDE 345KV CKT 1	717	789	0.04312	114.1168	LYDIA - WELSH 345KV CKT 1
FDNS	00NR	7	16WP	G15_033	FROM->TO	G14-057T 345.00 - SUNNYSIDE 345KV CKT 1	717	789	0.04312	114.1168	LYDIA - WELSH 345KV CKT 1
FDNS	00NR	7	16WP	G15_033	FROM->TO	G14-057T 345.00 - SUNNYSIDE 345KV CKT 1	717	789	0.04332	114.1087	GEN635023 3-WALTER SCOTT UNIT 3
FDNS	06ALL	7	20L	G15_033	FROM->TO	G14-057T 345.00 - SUNNYSIDE 345KV CKT 1	717	789	0.13232	114.0012	BASE CASE
FDNS	00NR	7	16WP	G15_033	FROM->TO	G14-057T 345.00 - SUNNYSIDE 345KV CKT 1	717	789	0.04332	113.8858	GEN527903 1-HOBBS PLANT #3 (ST)
FDNS	00NR	7	20WP	G15_033	FROM->TO	G14-057T 345.00 - SUNNYSIDE 345KV CKT 1	717	789	0.04125	113.8038	OKLAUNION 345/13.2KV TRANSFORMER CKT 1
FDNS	00NR	7	20WP	G15_033	FROM->TO	G14-057T 345.00 - SUNNYSIDE 345KV CKT 1	717	789	0.04061	113.7627	MAYSVILLE - PAOLI 138KV CKT 1
FDNS	00NR	7	16WP	G15_033	FROM->TO	G14-057T 345.00 - SUNNYSIDE 345KV CKT 1	717	789	0.04649	113.7144	CHISHOLM7 345.00 - GRAPEVINE 345.00 345KV CKT 1
FDNS	00NR	7	20WP	G15_033	FROM->TO	G14-057T 345.00 - SUNNYSIDE 345KV CKT 1	717	789	0.04061	113.687	MAYSVILLE - MAYSVLT4 138.00 138KV CKT 1
FDNS	00NR	7	20WP	G15_033	FROM->TO	G14-057T 345.00 - SUNNYSIDE 345KV CKT 1	717	789	0.04122	113.6753	HUGO POWER PLANT - VALLENT 138KV CKT 1
FDNS	00NR	7	20WP	G15_033	FROM->TO	G14-057T 345.00 - SUNNYSIDE 345KV CKT 1	717	789	0.04129	113.6732	DRAPER LAKE - MIDWEST TAP 138KV CKT 1
FDNS	00NR	7	20WP	G15_033	FROM->TO	G14-057T 345.00 - SUNNYSIDE 345KV CKT 1	717	789	0.04123	113.6661	7MCCREDIE 345.00 - 7OVERTON 345.00 345KV CKT 1
FDNS	00NR	7	20WP	G15_033	FROM->TO	G14-057T 345.00 - SUNNYSIDE 345KV CKT 1	717	789	0.04125	113.6642	GEN525493 1-PLANT X GEN #3
FDNS	00NR	7	20WP	G15_033	FROM->TO	G14-057T 345.00 - SUNNYSIDE 345KV CKT 1	717	789	0.04121	113.6609	NORTHWEST TEXARKANA - WELSH 345KV CKT 1
FDNS	00NR	7	20WP	G15_033	FROM->TO	G14-057T 345.00 - SUNNYSIDE 345KV CKT 1	717	789	0.04121	113.6609	NORTHWEST TEXARKANA - WELSH 345KV CKT 1
FDNS	00NR	7	16WP	G15_033	FROM->TO	G14-057T 345.00 - SUNNYSIDE 345KV CKT 1	717	789	0.04332	113.6587	GEN635024 4-WALTER SCOTT UNIT 4

SOLUTION	GROUP	SCENARIO	SEASON	SOURCE	DIRECTION	MONITORED ELEMENT	RATEA (MVA)	RATEB(MVA)	TDF	TC%LOADING (% MVA)	CONTINGENCY
FDNS	00NR	7	20WP	G15_033	FROM->TO	G14-057T 345.00 - SUNNYSIDE 345KV CKT 1	717	789	0.04184	113.6576	CHISHOLM6 230.00 - SWEETWATER 230KV CKT 1
FDNS	00NR	7	20WP	G15_033	FROM->TO	G14-057T 345.00 - SUNNYSIDE 345KV CKT 1	717	789	0.04123	113.6562	DIANA - WELSH 345KV CKT 2
FDNS	00NR	7	20WP	G15_033	FROM->TO	G14-057T 345.00 - SUNNYSIDE 345KV CKT 1	717	789	0.04123	113.6562	DIANA - WELSH 345KV CKT 2
FDNS	00NR	7	20WP	G15_033	FROM->TO	G14-057T 345.00 - SUNNYSIDE 345KV CKT 1	717	789	0.04125	113.6559	GEN520812 1-ANADRK5
FDNS	00NR	7	20WP	G15_033	FROM->TO	G14-057T 345.00 - SUNNYSIDE 345KV CKT 1	717	789	0.04125	113.6559	GEN520813 1-ANADRK6
FDNS	00NR	7	20WP	G15_033	FROM->TO	G14-057T 345.00 - SUNNYSIDE 345KV CKT 1	717	789	0.04125	113.6555	GEN600007 7-RIVERSIDE GEN 7
FDNS	00NR	7	20WP	G15_033	FROM->TO	G14-057T 345.00 - SUNNYSIDE 345KV CKT 1	717	789	0.04122	113.6533	KEO EHV - WEST MEMPHIS 500 500KV CKT 1
FDNS	00NR	7	20WP	G15_033	FROM->TO	G14-057T 345.00 - SUNNYSIDE 345KV CKT 1	717	789	0.04125	113.6523	GEN615052 1-CAMBRIDGE GENERATING STATION
FDNS	00NR	7	20WP	G15_033	FROM->TO	G14-057T 345.00 - SUNNYSIDE 345KV CKT 1	717	789	0.04125	113.6519	GEN600011 5-BLACK DOG GEN 1
FDNS	00NR	7	20WP	G15_033	FROM->TO	G14-057T 345.00 - SUNNYSIDE 345KV CKT 1	717	789	0.04125	113.6485	GEN629068 1-EMERY GAS TURBINE 2
FDNS	00NR	7	20WP	G15_033	FROM->TO	G14-057T 345.00 - SUNNYSIDE 345KV CKT 1	717	789	0.04131	113.6472	P12:138:OKGE:3TERM21
FDNS	00NR	7	20WP	G15_033	FROM->TO	G14-057T 345.00 - SUNNYSIDE 345KV CKT 1	717	789	0.04125	113.6462	GEN600014 4-BLACK DOG GEN 4
FDNS	00NR	7	20WP	G15_033	FROM->TO	G14-057T 345.00 - SUNNYSIDE 345KV CKT 1	717	789	0.04125	113.6455	GEN562688 1-G15_014_3 0.6900
FDNS	00NR	7	20WP	G15_033	FROM->TO	G14-057T 345.00 - SUNNYSIDE 345KV CKT 1	717	789	0.04123	113.6439	DIANA - WELSH 345KV CKT 1
FDNS	00NR	7	20WP	G15_033	FROM->TO	G14-057T 345.00 - SUNNYSIDE 345KV CKT 1	717	789	0.04123	113.6439	DIANA - WELSH 345KV CKT 1
FDNS	00NR	7	20WP	G15_033	FROM->TO	G14-057T 345.00 - SUNNYSIDE 345KV CKT 1	717	789	0.04125	113.6437	GEN629067 1-EMERY GAS TURBINE 1
FDNS	00NR	7	20WP	G15_033	FROM->TO	G14-057T 345.00 - SUNNYSIDE 345KV CKT 1	717	789	0.04125	113.6394	GEN672303 3-BOUNDARY DAM GENERATOR 3
FDNS	00NR	7	20WP	G15_033	FROM->TO	G14-057T 345.00 - SUNNYSIDE 345KV CKT 1	717	789	0.04125	113.6394	GEN672304 4-BOUNDARY DAM GENERATOR 4
FDNS	00NR	7	20WP	G15_033	FROM->TO	G14-057T 345.00 - SUNNYSIDE 345KV CKT 1	717	789	0.04125	113.6394	GEN672305 5-BOUNDARY DAM GENERATOR 5
FDNS	00NR	7	20WP	G15_033	FROM->TO	G14-057T 345.00 - SUNNYSIDE 345KV CKT 1	717	789	0.04125	113.6393	GEN615032 2-PLEASANT VALLEY
FDNS	00NR	7	20WP	G15_033	FROM->TO	G14-057T 345.00 - SUNNYSIDE 345KV CKT 1	717	789	0.04125	113.6382	GEN562772 1-G15034_3 0.6900
FDNS	00NR	7	20WP	G15_033	FROM->TO	G14-057T 345.00 - SUNNYSIDE 345KV CKT 1	717	789	0.04125	113.6358	P12:069:OKGE:3TERM42
FDNS	00NR	7	20WP	G15_033	FROM->TO	G14-057T 345.00 - SUNNYSIDE 345KV CKT 1	717	789	0.04125	113.6327	GEN562691 1-G15_015_3 0.6900
FDNS	00NR	7	20WP	G15_033	FROM->TO	G14-057T 345.00 - SUNNYSIDE 345KV CKT 1	717	789	0.04125	113.6308	GEN515591 1-PALDRW11 0.6900
FDNS	00NR	7	20WP	G15_033	FROM->TO	G14-057T 345.00 - SUNNYSIDE 345KV CKT 1	717	789	0.04116	113.6299	DOLET HILLS 345/230KV TRANSFORMER CKT 1
FDNS	00NR	7	20WP	G15_033	FROM->TO	G14-057T 345.00 - SUNNYSIDE 345KV CKT 1	717	789	0.04144	113.6257	G15063_T 345.00 - MATHWSN7 345.00 345KV CKT 1
FDNS	00NR	7	20WP	G15_033	FROM->TO	G14-057T 345.00 - SUNNYSIDE 345KV CKT 1	717	789	0.04126	113.6251	LEBANON - TEXOMA JCT 138KV CKT 1
FDNS	00NR	7	20WP	G15_033	FROM->TO	G14-057T 345.00 - SUNNYSIDE 345KV CKT 1	717	789	0.04122	113.6209	P12:138:WFEC:MSL11
FDNS	00NR	7	20WP	G15_033	FROM->TO	G14-057T 345.00 - SUNNYSIDE 345KV CKT 1	717	789	0.04122	113.6209	P12:138:WFEC-AEPW:PHAROAH4:LONEOAK4
FDNS	00NR	7	20WP	G15_033	FROM->TO	G14-057T 345.00 - SUNNYSIDE 345KV CKT 1	717	789	0.04061	113.6204	MAYSVLT4 138.00 - PRAIRIE POINT 138KV CKT 1
FDNS	00NR	7	20WP	G15_033	FROM->TO	G14-057T 345.00 - SUNNYSIDE 345KV CKT 1	717	789	0.04119	113.6192	WELSH - WILKES 345KV CKT 1
FDNS	00NR	7	20WP	G15_033	FROM->TO	G14-057T 345.00 - SUNNYSIDE 345KV CKT 1	717	789	0.04119	113.6192	WELSH - WILKES 345KV CKT 1
FDNS	00NR	7	20WP	G15_033	FROM->TO	G14-057T 345.00 - SUNNYSIDE 345KV CKT 1	717	789	0.04125	113.617	GEN560183 1-REDHIL-WTG1 12.000
FDNS	00NR	7	20WP	G15_033	FROM->TO	G14-057T 345.00 - SUNNYSIDE 345KV CKT 1	717	789	0.04125	113.6119	GEN600017 C-LS POWER CT
FDNS	00NR	7	20WP	G15_033	FROM->TO	G14-057T 345.00 - SUNNYSIDE 345KV CKT 1	717	789	0.04122	113.6035	GLASSES - MADILL INDUSTRIAL TAP 138KV CKT 1
FDNS	00NR	7	20WP	G15_033	FROM->TO	G14-057T 345.00 - SUNNYSIDE 345KV CKT 1	717	789	0.04093	113.6002	ARBUCKLE - SULPHR 4 138.00 138KV CKT 1
FDNS	00NR	7	20WP	G15_033	FROM->TO	G14-057T 345.00 - SUNNYSIDE 345KV CKT 1	717	789	0.04126	113.5989	P12:138:WFEC:MSL08
FDNS	00NR	7	20WP	G15_033	FROM->TO	G14-057T 345.00 - SUNNYSIDE 345KV CKT 1	717	789	0.04125	113.5964	GEN672392 1-NBECGT1G 18.000
FDNS	00NR	7	20WP	G15_033	FROM->TO	G14-057T 345.00 - SUNNYSIDE 345KV CKT 1	717	789	0.04125	113.5869	GEN600046 1-MECST
FDNS	00NR	7	20WP	G15_033	FROM->TO	G14-057T 345.00 - SUNNYSIDE 345KV CKT 1	717	789	0.04125	113.5856	GEN629071 1-BURLINGTON GENERATOR FOR UNIT NO 1 E
FDNS	00NR	7	20WP	G15_033	FROM->TO	G14-057T 345.00 - SUNNYSIDE 345KV CKT 1	717	789	0.04125	113.5811	GEN562074 1-G1149G1504 0.6900
FDNS	00NR	7	20WP	G15_033	FROM->TO	G14-057T 345.00 - SUNNYSIDE 345KV CKT 1	717	789	0.04125	113.5797	GEN515443 1-MNCOWND1 0.7000
FDNS	00NR	7	20WP	G15_033	FROM->TO	G14-057T 345.00 - SUNNYSIDE 345KV CKT 1	717	789	0.04125	113.5791	GEN530690 1-PRWINDG1 0.6900
FDNS	00NR	7	20WP	G15_033	FROM->TO	G14-057T 345.00 - SUNNYSIDE 345KV CKT 1	717	789	0.04125	113.5784	GEN629070 2-BEAVER CHANNEL GENERATORFOR UNIT NO 2
FDNS	00NR	7	20WP	G15_033	FROM->TO	G14-057T 345.00 - SUNNYSIDE 345KV CKT 1	717	789	0.04146	113.5738	ALTUS JUNCTION - RUSSELL 138KV CKT 1
FDNS	00NR	7	20WP	G15_033	FROM->TO	G14-057T 345.00 - SUNNYSIDE 345KV CKT 1	717	789	0.04146	113.5738	ALTUS JUNCTION - RUSSELL 138KV CKT 1
FDNS	00NR	7	20WP	G15_033	FROM->TO	G14-057T 345.00 - SUNNYSIDE 345KV CKT 1	717	789	0.04125	113.5728	GEN528361 1-MADDOX GEN #1
FDNS	00NR	7	20WP	G15_033	FROM->TO	G14-057T 345.00 - SUNNYSIDE 345KV CKT 1	717	789	0.04125	113.5726	GEN524022 1-NICHOLS GEN #2
FDNS	00NR	7	20WP	G15_033	FROM->TO	G14-057T 345.00 - SUNNYSIDE 345KV CKT 1	717	789	0.04125	113.5722	GEN600047 1-MECCT1
FDNS	00NR	7	20WP	G15_033	FROM->TO	G14-057T 345.00 - SUNNYSIDE 345KV CKT 1	717	789	0.0412	113.5641	HUGO (HUGO 1) 345/138/13.8KV TRANSFORMER CKT 1
FDNS	00NR	7	20WP	G15_033	FROM->TO	G14-057T 345.00 - SUNNYSIDE 345KV CKT 1	717	789	0.04122	113.5524	CANEY CREEK - JOHNSON COUNTY 138KV CKT 1
FDNS	00NR	7	20WP	G15_033	FROM->TO	G14-057T 345.00 - SUNNYSIDE 345KV CKT 1	717	789	0.04125	113.5499	GEN563052 1-G15069_3 0.6900
FDNS	00NR	7	20WP	G15_033	FROM->TO	G14-057T 345.00 - SUNNYSIDE 345KV CKT 1	717	789	0.04122	113.5451	GLASSES - RUSSETT 138KV CKT 1
FDNS	00NR	7	20WP	G15_033	FROM->TO	G14-057T 345.00 - SUNNYSIDE 345KV CKT 1	717	789	0.04125	113.5444	GEN615010 1-STANTON4
FDNS	00NR	7	20WP	G15_033	FROM->TO	G14-057T 345.00 - SUNNYSIDE 345KV CKT 1	717	789	0.04125	113.5413	GEN615021 1-GRE-ER 14G 16.000
FDNS	00NR	7	20WP	G15_033	FROM->TO	G14-057T 345.00 - SUNNYSIDE 345KV CKT 1	717	789	0.04125	113.5373	GEN562432 1-G13-030 0.6900
FDNS	00NR	7	20WP	G15_033	FROM->TO	G14-057T 345.00 - SUNNYSIDE 345KV CKT 1	717	789	0.04122	113.5337	OVEXFRMCCOVE
FDNS	00NR	7	20WP	G15_033	FROM->TO	G14-057T 345.00 - SUNNYSIDE 345KV CKT 1	717	789	0.04119	113.533	CARTER - CHICKASAW 138KV CKT 1
FDNS	00NR	7	20WP	G15_033	FROM->TO	G14-057T 345.00 - SUNNYSIDE 345KV CKT 1	717	789	0.04125	113.53	GEN562017 1-G11_022_3 0.6900
FDNS	00NR	7	20WP	G15_033	FROM->TO	G14-057T 345.00 - SUNNYSIDE 345KV CKT 1	717	789	0.04061	113.5284	PRAIRIE POINT - RATLIFF 138KV CKT 1
FDNS	00NR	7	20WP	G15_033	FROM->TO	G14-057T 345.00 - SUNNYSIDE 345KV CKT 1	717	789	0.04125	113.5223	INDEPENDENCE 500/26.0KV TRANSFORMER CKT 1
FDNS	00NR	7	20WP	G15_033	FROM->TO	G14-057T 345.00 - SUNNYSIDE 345KV CKT 1	717	789	0.04123	113.5223	CANADIAN RIVER - MCALESTER SOUTH 138KV CKT 1
FDNS	00NR	7	20WP	G15_033	FROM->TO	G14-057T 345.00 - SUNNYSIDE 345KV CKT 1	717	789	0.04123	113.5223	CANADIAN RIVER - MCALESTER SOUTH 138KV CKT 1
FDNS	00NR	7	20WP	G15_033	FROM->TO	G14-057T 345.00 - SUNNYSIDE 345KV CKT 1	717	789	0.04123	113.5203	CANADIAN RIVER () 345/138/13.8KV TRANSFORMER CKT 1
FDNS	00NR	7	20WP	G15_033	FROM->TO	G14-057T 345.00 - SUNNYSIDE 345KV CKT 1	717	789	0.04123	113.5203	CANADIAN RIVER () 345/138/13.8KV TRANSFORMER CKT 1
FDNS	00NR	7	20WP	G15_033	FROM->TO	G14-057T 345.00 - SUNNYSIDE 345KV CKT 1	717	789	0.04109	113.493	ROCKY POINT - SPRINGDALE 138KV CKT 1
FDNS	00NR	7	20WP	G15_033	FROM->TO	G14-057T 345.00 - SUNNYSIDE 345KV CKT 1	717	789	0.04125	113.4821	P12:230:UMZB:# 112 #: NU IN SD. NU-RCDC & DRY CREEK XFMR
FDNS	00NR	7	20WP	G15_033	FROM->TO	G14-057T 345.00 - SUNNYSIDE 345KV CKT 1	717	789	0.04125	113.4817	RCDC EAST 4230.00 - RED CEDAR DC 230KV CKT 1
FDNS	00NR	7	20WP	G15_033	FROM->TO	G14-057T 345.00 - SUNNYSIDE 345KV CKT 1	717	789	0.04125	113.478	GEN600067 9-HIGH BRIDGE
FDNS	00NR	7	20WP	G15_033	FROM->TO	G14-057T 345.00 - SUNNYSIDE 345KV CKT 1	717	789	0.04125	113.4688	GEN563062 1-G15071_3 0.6900
FDNS	00NR	7	20WP	G15_033	FROM->TO	G14-057T 345.00 - SUNNYSIDE 345KV CKT 1	717	789	0.04122	113.4542	CHAMBER SPRINGS - CLARKSVILLE 345KV CKT 1
FDNS	00NR	7	20WP	G15_033	FROM->TO	G14-057T 345.00 - SUNNYSIDE 345KV CKT 1	717	789	0.04093	113.4542	JOLLYVILLE - SULPHR 4 138.00 138KV CKT 1
FDNS	00NR	7	20WP	G15_033	FROM->TO	G14-057T 345.00 - SUNNYSIDE 345KV CKT 1	717	789	0.04125	113.4498	GEN562587 1-G14_056_3 0.6900
FDNS	00NR	7	20WP	G15_033	FROM->TO	G14-057T 345.00 - SUNNYSIDE 345KV CKT 1	717	789	0.04125	113.4486	GEN562902 1-G15052_3 0.6900
FDNS	00NR	7	20WP	G15_033	FROM->TO	G14-057T 345.00 - SUNNYSIDE 345KV CKT 1	717	789	0.04123	113.4414	GRPRAR1-LNX3345.00 - HOLT.CO3 345.00 345KV CKT 1
FDNS	00NR	7	20WP	G15_033	FROM->TO	G14-057T 345.00 - SUNNYSIDE 345KV CKT 1	717	789	0.04123	113.441	GRPRAR1-LNX3345.00 - YANKTON 345KV CKT Z
FDNS	00NR	7	20WP	G15_033	FROM->TO	G14-057T 345.00 - SUNNYSIDE 345KV CKT 1	717	789	0.04125	113.4343	GEN531447 1-HOLCOMB GENERATOR
FDNS	00NR	7	20WP	G15_033	FROM->TO	G14-057T 345.00 - SUNNYSIDE 345KV CKT 1	717	789	0.04125	113.4298	GEN560331 1-G10-46 13.800
FDNS	00NR	7	20WP	G15_033	FROM->TO	G14-057T 345.00 - SUNNYSIDE 345KV CKT 1	717	789	0.04125	113.4297	GEN562802 1-G15039_3 0.3570

SOLUTION	GROUP	SCENARIO	SEASON	SOURCE	DIRECTION	MONITORED ELEMENT	RATEA (MVA)	RATEB(MVA)	TDF	TC%LOADING (% MVA)	CONTINGENCY
FDNS	00NR	7	20WP	G15_033	FROM->TO	G14-057T 345.00 - SUNNYSIDE 345KV CKT 1	717	789	0.04125	113.4181	GEN563242 1-G15090_3 0.6900
FDNS	00NR	7	20WP	G15_033	FROM->TO	G14-057T 345.00 - SUNNYSIDE 345KV CKT 1	717	789	0.04125	113.4162	GEN629072 4-LANSING GENERATOR FOR UNITS NO4 EIA CODE 1
FDNS	00NR	7	20WP	G15_033	FROM->TO	G14-057T 345.00 - SUNNYSIDE 345KV CKT 1	717	789	0.04125	113.4144	GEN514805 1-SOONER UNIT 1
FDNS	00NR	7	20WP	G15_033	FROM->TO	G14-057T 345.00 - SUNNYSIDE 345KV CKT 1	717	789	0.04125	113.4135	GEN562078 1-G11_051_3 0.6900
FDNS	00NR	7	20WP	G15_033	FROM->TO	G14-057T 345.00 - SUNNYSIDE 345KV CKT 1	717	789	0.04125	113.4001	GEN562269 1-G12-020-1 0.6900
FDNS	00NR	7	20WP	G15_033	FROM->TO	G14-057T 345.00 - SUNNYSIDE 345KV CKT 1	717	789	0.04125	113.3998	GEN524285 1-WILDORADO WIND GEN
FDNS	00NR	7	20WP	G15_033	FROM->TO	G14-057T 345.00 - SUNNYSIDE 345KV CKT 1	717	789	0.04125	113.3943	GEN514806 1-SOONER UNIT 2
FDNS	00NR	7	20WP	G15_033	FROM->TO	G14-057T 345.00 - SUNNYSIDE 345KV CKT 1	717	789	0.04091	113.3935	MINGO - SETAB 345KV CKT 1
FDNS	00NR	7	20WP	G15_033	FROM->TO	G14-057T 345.00 - SUNNYSIDE 345KV CKT 1	717	789	0.04091	113.3935	MINGO - SETAB 345KV CKT 1
FDNS	00NR	7	20WP	G15_033	FROM->TO	G14-057T 345.00 - SUNNYSIDE 345KV CKT 1	717	789	0.04093	113.389	JOLLYVILLE - KERR MCGEE CIMARRON 138KV CKT 1
FDNS	00NR	7	20WP	G15_033	FROM->TO	G14-057T 345.00 - SUNNYSIDE 345KV CKT 1	717	789	0.04125	113.3569	GEN562882 1-G15047_3 0.6900
FDNS	00NR	7	20WP	G15_033	FROM->TO	G14-057T 345.00 - SUNNYSIDE 345KV CKT 1	717	789	0.04125	113.3555	GEN562270 1-G12-020-2 0.6900
FDNS	00NR	7	20WP	G15_033	FROM->TO	G14-057T 345.00 - SUNNYSIDE 345KV CKT 1	717	789	0.04125	113.3554	GEN657749 1-YOUNG 1 GENERATOR
FDNS	00NR	7	20WP	G15_033	FROM->TO	G14-057T 345.00 - SUNNYSIDE 345KV CKT 1	717	789	0.04125	113.3515	GEN562812 1-G15040_3 0.3570
FDNS	00NR	7	20WP	G15_033	FROM->TO	G14-057T 345.00 - SUNNYSIDE 345KV CKT 1	717	789	0.0412	113.3504	CROCKETT - TENASKA RUSK COUNTY 345KV CKT 1
FDNS	00NR	7	20WP	G15_033	FROM->TO	G14-057T 345.00 - SUNNYSIDE 345KV CKT 1	717	789	0.04125	113.3477	GEN524023 1-NICHOLS GEN #3 22 KV
FDNS	00NR	7	20WP	G15_033	FROM->TO	G14-057T 345.00 - SUNNYSIDE 345KV CKT 1	717	789	0.04258	113.3468	P12:138:AEPW:112GORE4:SNYDER-4
FDNS	00NR	7	20WP	G15_033	FROM->TO	G14-057T 345.00 - SUNNYSIDE 345KV CKT 1	717	789	0.0412	113.3458	LEBROCK - TENASKA RUSK COUNTY 345KV CKT 1
FDNS	00NR	7	20WP	G15_033	FROM->TO	G14-057T 345.00 - SUNNYSIDE 345KV CKT 1	717	789	0.04125	113.3446	GEN563132 1-G15078_3 0.3570
FDNS	00NR	7	20WP	G15_033	FROM->TO	G14-057T 345.00 - SUNNYSIDE 345KV CKT 1	717	789	0.04054	113.3446	BVRCNTY7 345.00 - GRAPEVINE 345.00 345KV CKT 1
FDNS	00NR	7	20WP	G15_033	FROM->TO	G14-057T 345.00 - SUNNYSIDE 345KV CKT 1	717	789	0.04093	113.3406	ARBWIND4 138.00 - KERR MCGEE CIMARRON 138KV CKT 1
FDNS	00NR	7	20WP	G15_033	FROM->TO	G14-057T 345.00 - SUNNYSIDE 345KV CKT 1	717	789	0.04125	113.3397	GEN563102 1-G15075_3 0.5500
FDNS	00NR	7	20WP	G15_033	FROM->TO	G14-057T 345.00 - SUNNYSIDE 345KV CKT 1	717	789	0.04125	113.3298	GEN521112 1-ORME3 13.800
FDNS	00NR	7	20WP	G15_033	FROM->TO	G14-057T 345.00 - SUNNYSIDE 345KV CKT 1	717	789	0.04125	113.3103	GEN524295 1-SPNSPUR_WND10.6900
FDNS	00NR	7	20WP	G15_033	FROM->TO	G14-057T 345.00 - SUNNYSIDE 345KV CKT 1	717	789	0.04116	113.2957	BROWN - RUSSETT 138KV CKT 1
FDNS	00NR	7	20WP	G15_033	FROM->TO	G14-057T 345.00 - SUNNYSIDE 345KV CKT 1	717	789	0.04097	113.2863	CHICKASAW - TOTAL 138KV CKT 1
FDNS	00NR	7	20WP	G15_033	FROM->TO	G14-057T 345.00 - SUNNYSIDE 345KV CKT 1	717	789	0.04125	113.2823	GEN511962 2-RKYRDGW2-1 0.7000
FDNS	00NR	7	20WP	G15_033	FROM->TO	G14-057T 345.00 - SUNNYSIDE 345KV CKT 1	717	789	0.04125	113.2627	GEN345671 2-1RUSH G2 18.000
FDNS	00NR	7	20WP	G15_033	FROM->TO	G14-057T 345.00 - SUNNYSIDE 345KV CKT 1	717	789	0.04125	113.2607	GEN345670 1-1RUSH G1 18.000
FDNS	00NR	7	20WP	G15_033	FROM->TO	G14-057T 345.00 - SUNNYSIDE 345KV CKT 1	717	789	0.04125	113.2497	GEN562974 1-G15060_5 0.6900
FDNS	00NR	7	20WP	G15_033	FROM->TO	G14-057T 345.00 - SUNNYSIDE 345KV CKT 1	717	789	0.04125	113.2455	GEN560105 1-G08-22 0.6900
FDNS	00NR	7	20WP	G15_033	FROM->TO	G14-057T 345.00 - SUNNYSIDE 345KV CKT 1	717	789	0.04125	113.2394	GEN562973 1-G15060_4 0.6900
FDNS	00NR	7	20WP	G15_033	FROM->TO	G14-057T 345.00 - SUNNYSIDE 345KV CKT 1	717	789	0.04125	113.2378	4SIOUX 1 138.00 138/18.0KV TRANSFORMER CKT 1
FDNS	00NR	7	20WP	G15_033	FROM->TO	G14-057T 345.00 - SUNNYSIDE 345KV CKT 1	717	789	0.04125	113.2307	GEN563192 1-G15084_3 0.5500
FDNS	00NR	7	20WP	G15_033	FROM->TO	G14-057T 345.00 - SUNNYSIDE 345KV CKT 1	717	789	0.04116	113.2266	RUSSETT - RUSSETT 138KV CKT 1
FDNS	00NR	7	20WP	G15_033	FROM->TO	G14-057T 345.00 - SUNNYSIDE 345KV CKT 1	717	789	0.04127	113.215	ARKANSAS NUCLEAR ONE - FT SMITH 500KV CKT 1
FDNS	00NR	7	20WP	G15_033	FROM->TO	G14-057T 345.00 - SUNNYSIDE 345KV CKT 1	717	789	0.04127	113.215	ARKANSAS NUCLEAR ONE - FT SMITH 500KV CKT 1
FDNS	00NR	7	20WP	G15_033	FROM->TO	G14-057T 345.00 - SUNNYSIDE 345KV CKT 1	717	789	0.04125	113.2132	GEN562550 1-G14_040_3 0.6900
FDNS	00NR	7	20WP	G15_033	FROM->TO	G14-057T 345.00 - SUNNYSIDE 345KV CKT 1	717	789	0.04104	113.1938	ROCKY POINT - SUNNYSIDE 138KV CKT 1
FDNS	00NR	7	20WP	G15_033	FROM->TO	G14-057T 345.00 - SUNNYSIDE 345KV CKT 1	717	789	0.04125	113.1884	EASTDC - ERCOT EQUIVALENCE 345KV CKT 1
FDNS	00NR	7	20WP	G15_033	FROM->TO	G14-057T 345.00 - SUNNYSIDE 345KV CKT 1	717	789	0.04125	113.187	GEN527161 1-MUSTANG GEN #1
FDNS	00NR	7	20WP	G15_033	FROM->TO	G14-057T 345.00 - SUNNYSIDE 345KV CKT 1	717	789	0.04125	113.187	GEN527162 1-MUSTANG GEN #2
FDNS	00NR	7	20WP	G15_033	FROM->TO	G14-057T 345.00 - SUNNYSIDE 345KV CKT 1	717	789	0.04112	113.1861	RUSSETT - SPRINGDALE 138KV CKT 1
FDNS	00NR	7	20WP	G15_033	FROM->TO	G14-057T 345.00 - SUNNYSIDE 345KV CKT 1	717	789	0.04125	113.1802	GEN562512 1-G14_020_3 0.6900
FDNS	00NR	7	20WP	G15_033	FROM->TO	G14-057T 345.00 - SUNNYSIDE 345KV CKT 1	717	789	0.04125	113.1753	GEN681522 3-GENOA 3
FDNS	00NR	7	20WP	G15_033	FROM->TO	G14-057T 345.00 - SUNNYSIDE 345KV CKT 1	717	789	0.04127	113.1697	P12:138:WFEC:MSL16
FDNS	00NR	7	20WP	G15_033	FROM->TO	G14-057T 345.00 - SUNNYSIDE 345KV CKT 1	717	789	0.04125	113.1633	GEN562892 1-G15048_3 0.6900
FDNS	00NR	7	20WP	G15_033	FROM->TO	G14-057T 345.00 - SUNNYSIDE 345KV CKT 1	717	789	0.04122	113.1506	P12:138:WFEC-AEPW:GOLDENSW4:CRAIGJT4
FDNS	00NR	7	20WP	G15_033	FROM->TO	G14-057T 345.00 - SUNNYSIDE 345KV CKT 1	717	789	0.04125	113.1386	GEN525494 1-PLANT X GEN #4 20 KV
FDNS	00NR	7	20WP	G15_033	FROM->TO	G14-057T 345.00 - SUNNYSIDE 345KV CKT 1	717	789	0.04125	113.1375	GEN527882 1-CUNNINGHAM GEN #2 20 KV
FDNS	00NR	7	20WP	G15_033	FROM->TO	G14-057T 345.00 - SUNNYSIDE 345KV CKT 1	717	789	0.04125	113.1225	GEN527163 1-MUSTANG GEN #3 22 KV
FDNS	00NR	7	20WP	G15_033	FROM->TO	G14-057T 345.00 - SUNNYSIDE 345KV CKT 1	717	789	0.04149	113.119	G15085_T 138.00 - RUSSELL 138KV CKT 1
FDNS	00NR	7	20WP	G15_033	FROM->TO	G14-057T 345.00 - SUNNYSIDE 345KV CKT 1	717	789	0.04125	113.1168	GEN520811 1-ANADRK4
FDNS	00NR	7	20WP	G15_033	FROM->TO	G14-057T 345.00 - SUNNYSIDE 345KV CKT 1	717	789	0.04125	113.1051	GEN672321 1-SHAND GENERATOR 1
FDNS	00NR	7	20WP	G15_033	FROM->TO	G14-057T 345.00 - SUNNYSIDE 345KV CKT 1	717	789	0.04122	113.1025	P12:138:WFEC:MSL07
FDNS	00NR	7	20WP	G15_033	FROM->TO	G14-057T 345.00 - SUNNYSIDE 345KV CKT 1	717	789	0.04122	113.1025	P12:138:WFEC-AEPW:HUGOPP4:ATOKA--4
FDNS	00NR	7	20WP	G15_033	FROM->TO	G14-057T 345.00 - SUNNYSIDE 345KV CKT 1	717	789	0.04081	113.1008	ARDMORE WEST - CARTER 138KV CKT 1
FDNS	00NR	7	20WP	G15_033	FROM->TO	G14-057T 345.00 - SUNNYSIDE 345KV CKT 1	717	789	0.04125	113.1007	GEN344895 2-1LAB G2 20.000
FDNS	00NR	7	20WP	G15_033	FROM->TO	G14-057T 345.00 - SUNNYSIDE 345KV CKT 1	717	789	0.04125	113.0843	GEN521111 1-ORME2 13.800
FDNS	00NR	7	20WP	G15_033	FROM->TO	G14-057T 345.00 - SUNNYSIDE 345KV CKT 1	717	789	0.04125	113.0808	GEN672310 1-POPLAR RIVER GENERATOR 1
FDNS	00NR	7	20WP	G15_033	FROM->TO	G14-057T 345.00 - SUNNYSIDE 345KV CKT 1	717	789	0.04125	113.0808	GEN672311 2-POPLAR RIVER GENERATOR 2
FDNS	00NR	7	20WP	G15_033	FROM->TO	G14-057T 345.00 - SUNNYSIDE 345KV CKT 1	717	789	0.04125	113.0795	GEN511853 1-COMANCHE #3
FDNS	00NR	7	20WP	G15_033	FROM->TO	G14-057T 345.00 - SUNNYSIDE 345KV CKT 1	717	789	0.04124	113.0789	P12:138:AEPW-SWPA:LONEOAK4:TUPELO4
FDNS	00NR	7	20WP	G15_033	FROM->TO	G14-057T 345.00 - SUNNYSIDE 345KV CKT 1	717	789	0.04124	113.0789	P12:138:WFEC:MSL06
FDNS	00NR	7	20WP	G15_033	FROM->TO	G14-057T 345.00 - SUNNYSIDE 345KV CKT 1	717	789	0.04125	113.0761	CLAY BOSWELL 230/20.9KV TRANSFORMER CKT 1
FDNS	00NR	7	20WP	G15_033	FROM->TO	G14-057T 345.00 - SUNNYSIDE 345KV CKT 1	717	789	0.04125	113.0721	GEN521110 1-ORME1 13.800
FDNS	00NR	7	20WP	G15_033	FROM->TO	G14-057T 345.00 - SUNNYSIDE 345KV CKT 1	717	789	0.04125	113.071	GEN672306 6-BOUNDARY DAM GENERATOR 6
FDNS	00NR	7	20WP	G15_033	FROM->TO	G14-057T 345.00 - SUNNYSIDE 345KV CKT 1	717	789	0.04125	113.0703	GEN344896 3-1LAB G3 20.000
FDNS	00NR	7	20WP	G15_033	FROM->TO	G14-057T 345.00 - SUNNYSIDE 345KV CKT 1	717	789	0.04125	113.0692	GEN344897 4-1LAB G4 20.000
FDNS	00NR	7	20WP	G15_033	FROM->TO	G14-057T 345.00 - SUNNYSIDE 345KV CKT 1	717	789	0.04125	113.0689	GEN344894 1-1LAB G1 20.000
FDNS	00NR	7	20WP	G15_033	FROM->TO	G14-057T 345.00 - SUNNYSIDE 345KV CKT 1	717	789	0.04125	113.0429	GEN681542 6-JP MADGETT
FDNS	00NR	7	20WP	G15_033	FROM->TO	G14-057T 345.00 - SUNNYSIDE 345KV CKT 1	717	789	0.04079	113.0205	SUNNYSIDE (SUNNYSD5) 345/138/13.8KV TRANSFORMER CKT 1
FDNS	00NR	7	20WP	G15_033	FROM->TO	G14-057T 345.00 - SUNNYSIDE 345KV CKT 1	717	789	0.04125	113.0039	GEN511852 1-COMANCHE #2
FDNS	00NR	7	20WP	G15_033	FROM->TO	G14-057T 345.00 - SUNNYSIDE 345KV CKT 1	717	789	0.04125	113.0038	GEN523461 1-BLACKHAWK GEN #1
FDNS	00NR	7	20WP	G15_033	FROM->TO	G14-057T 345.00 - SUNNYSIDE 345KV CKT 1	717	789	0.04125	113.0037	GEN523462 1-BLACKHAWK GEN #2
FDNS	00NR	7	20WP	G15_033	FROM->TO	G14-057T 345.00 - SUNNYSIDE 345KV CKT 1	717	789	0.04125	112.9963	GEN562699 1-G15_018_3 0.6900
FDNS	00NR	7	20WP	G15_033	FROM->TO	G14-057T 345.00 - SUNNYSIDE 345KV CKT 1	717	789	0.04081	112.9876	ARDMORE WEST - UNIROYAL 138KV CKT 1
FDNS	00NR	7	20WP	G15_033	FROM->TO	G14-057T 345.00 - SUNNYSIDE 345KV CKT 1	717	789	0.04083	112.9768	CARTRCO4 138.00 - RATLIFF 138KV CKT 1
FDNS	00NR	7	20WP	G15_033	FROM->TO	G14-057T 345.00 - SUNNYSIDE 345KV CKT 1	717	789	0.04125	112.9734	GEN563292 1-G15095_3 0.6900

SOLUTION	GROUP	SCENARIO	SEASON	SOURCE	DIRECTION	MONITORED ELEMENT	RATEA (MVA)	RATEB(MVA)	TDF	TC%LOADING (% MVA)	CONTINGENCY
FDNS	00NR	7	20WP	G15_033	FROM->TO	G14-057T 345.00 - SUNNYSIDE 345KV CKT 1	717	789	0.04125	112.9713	GEN562861 1-G15045_2 0.4800
FDNS	00NR	7	20WP	G15_033	FROM->TO	G14-057T 345.00 - SUNNYSIDE 345KV CKT 1	717	789	0.0411	112.9647	CLARKSVILLE - MUSKOGEE 345KV CKT 1
FDNS	00NR	7	20WP	G15_033	FROM->TO	G14-057T 345.00 - SUNNYSIDE 345KV CKT 1	717	789	0.0411	112.9647	CLARKSVILLE - MUSKOGEE 345KV CKT 1
FDNS	00NR	7	20WP	G15_033	FROM->TO	G14-057T 345.00 - SUNNYSIDE 345KV CKT 1	717	789	0.04103	112.9542	P12:138:OKGE:3TERM40
FDNS	00NR	7	20WP	G15_033	FROM->TO	G14-057T 345.00 - SUNNYSIDE 345KV CKT 1	717	789	0.04258	112.9343	CACHE - SNYDER 138KV CKT 1
FDNS	00NR	7	20WP	G15_033	FROM->TO	G14-057T 345.00 - SUNNYSIDE 345KV CKT 1	717	789	0.04125	112.9105	GEN563122 1-G15077_3 0.3850
FDNS	00NR	7	20WP	G15_033	FROM->TO	G14-057T 345.00 - SUNNYSIDE 345KV CKT 1	717	789	0.04125	112.9032	GEN563162 1-G15081_3 0.6900
FDNS	00NR	7	16WP	G15_033	FROM->TO	G14-057T 345.00 - SUNNYSIDE 345KV CKT 1	717	789	0.04304	112.8993	LYDIA - VALLIANT 345KV CKT 1
FDNS	00NR	7	16WP	G15_033	FROM->TO	G14-057T 345.00 - SUNNYSIDE 345KV CKT 1	717	789	0.04304	112.8993	LYDIA - VALLIANT 345KV CKT 1
FDNS	00NR	7	20WP	G15_033	FROM->TO	G14-057T 345.00 - SUNNYSIDE 345KV CKT 1	717	789	0.0415	112.8865	P12:138:AEPW:SHAM4WT:CHILD4WT
FDNS	00NR	7	20WP	G15_033	FROM->TO	G14-057T 345.00 - SUNNYSIDE 345KV CKT 1	717	789	0.04125	112.8646	GEN661015 1-COYOTE
FDNS	00NR	7	20WP	G15_033	FROM->TO	G14-057T 345.00 - SUNNYSIDE 345KV CKT 1	717	789	0.04122	112.8604	P12:138:WFEC:MSL15
FDNS	00NR	7	20WP	G15_033	FROM->TO	G14-057T 345.00 - SUNNYSIDE 345KV CKT 1	717	789	0.04125	112.7988	GEN527883 1-CUNNINGHAM GEN #3 22 KV
FDNS	00NR	7	20WP	G15_033	FROM->TO	G14-057T 345.00 - SUNNYSIDE 345KV CKT 1	717	789	0.04125	112.7959	GEN527884 1-CUNNINGHAM GEN #4 22 KV
FDNS	00NR	7	20WP	G15_033	FROM->TO	G14-057T 345.00 - SUNNYSIDE 345KV CKT 1	717	789	0.04125	112.7698	GEN562952 1-G15057_3 0.6500
FDNS	00NR	7	20WP	G15_033	FROM->TO	G14-057T 345.00 - SUNNYSIDE 345KV CKT 1	717	789	0.04081	112.7688	SUNNYSIDE - UNIROYAL 138KV CKT 1
FDNS	00NR	7	20WP	G15_033	FROM->TO	G14-057T 345.00 - SUNNYSIDE 345KV CKT 1	717	789	0.04125	112.7641	GEN562992 1-G15063_3 0.6900
FDNS	00NR	7	20WP	G15_033	FROM->TO	G14-057T 345.00 - SUNNYSIDE 345KV CKT 1	717	789	0.04125	112.7462	GEN657748 1-YOUNG 2 GENERATOR
FDNS	00NR	7	20WP	G15_033	FROM->TO	G14-057T 345.00 - SUNNYSIDE 345KV CKT 1	717	789	0.04125	112.7273	GEN526331 1-JONES GEN #1 22 KV
FDNS	00NR	7	20WP	G15_033	FROM->TO	G14-057T 345.00 - SUNNYSIDE 345KV CKT 1	717	789	0.04125	112.7272	GEN526332 1-JONES GEN #2 21 KV
FDNS	00NR	7	20WP	G15_033	FROM->TO	G14-057T 345.00 - SUNNYSIDE 345KV CKT 1	717	789	0.04125	112.7067	GEN562704 1-G15_020_3 0.3550
FDNS	00NR	7	16WP	G15_033	FROM->TO	G14-057T 345.00 - SUNNYSIDE 345KV CKT 1	717	789	0.04911	112.667	CHISHOLM7 345.00 - GRACEMONT 345KV CKT 1
FDNS	00NR	7	20WP	G15_033	FROM->TO	G14-057T 345.00 - SUNNYSIDE 345KV CKT 1	717	789	0.04125	112.6536	GEN620315 1-BIG STONE GEN
FDNS	00NR	7	20WP	G15_033	FROM->TO	G14-057T 345.00 - SUNNYSIDE 345KV CKT 1	717	789	0.04126	112.6523	CANEY CREEK - TEXOMA JCT 138KV CKT 1
FDNS	00NR	7	20WP	G15_033	FROM->TO	G14-057T 345.00 - SUNNYSIDE 345KV CKT 1	717	789	0.04125	112.5874	GEN562710 1-G15_022_3 0.5500
FDNS	00NR	7	20WP	G15_033	FROM->TO	G14-057T 345.00 - SUNNYSIDE 345KV CKT 1	717	789	0.04125	112.5776	GEN600004 2-PRAIRIE ISLAND G2
FDNS	00NR	7	20WP	G15_033	FROM->TO	G14-057T 345.00 - SUNNYSIDE 345KV CKT 1	717	789	0.04125	112.5748	GEN600003 1-PRAIRIE ISLAND G1
FDNS	00NR	7	20WP	G15_033	FROM->TO	G14-057T 345.00 - SUNNYSIDE 345KV CKT 1	717	789	0.04125	112.5531	GEN600006 1-AS KING
FDNS	00NR	7	20WP	G15_033	FROM->TO	G14-057T 345.00 - SUNNYSIDE 345KV CKT 1	717	789	0.04169	112.5283	P12:138:AEPW-OGE:CORNVIL4:CIMARON4
FDNS	00NR	7	20WP	G15_033	FROM->TO	G14-057T 345.00 - SUNNYSIDE 345KV CKT 1	717	789	0.04124	112.5265	P12:138:WFEC:MSL09
FDNS	00NR	7	20WP	G15_033	FROM->TO	G14-057T 345.00 - SUNNYSIDE 345KV CKT 1	717	789	0.04125	112.5192	GEN511851 1-COMANCHE #1
FDNS	00NR	7	20WP	G15_033	FROM->TO	G14-057T 345.00 - SUNNYSIDE 345KV CKT 1	717	789	0.04125	112.3781	GEN532751 1-WOLF CREEK GENERATING STATION UNIT 1
FDNS	00NR	7	20WP	G15_033	FROM->TO	G14-057T 345.00 - SUNNYSIDE 345KV CKT 1	717	789	0.04125	112.3775	GEN629074 1-ARNOLD LOWSIDE OF GSU XFMR
FDNS	00NR	7	20WP	G15_033	FROM->TO	G14-057T 345.00 - SUNNYSIDE 345KV CKT 1	717	789	0.04125	112.3669	GEN635213 3-NEAL UNIT 3
FDNS	00NR	7	20WP	G15_033	FROM->TO	G14-057T 345.00 - SUNNYSIDE 345KV CKT 1	717	789	0.04125	112.3609	GEN615001 1-COAL CREEK
FDNS	00NR	7	20WP	G15_033	FROM->TO	G14-057T 345.00 - SUNNYSIDE 345KV CKT 1	717	789	0.04125	112.3344	GEN615002 2-COAL CREEK
FDNS	00NR	7	20WP	G15_033	FROM->TO	G14-057T 345.00 - SUNNYSIDE 345KV CKT 1	717	789	0.04125	112.3303	GEN563173 1-G15082_3 0.6900
FDNS	00NR	7	20WP	G15_033	FROM->TO	G14-057T 345.00 - SUNNYSIDE 345KV CKT 1	717	789	0.04125	112.3204	GEN562754 1-G15031_5 0.6900
FDNS	00NR	7	20WP	G15_033	FROM->TO	G14-057T 345.00 - SUNNYSIDE 345KV CKT 1	717	789	0.04111	112.2966	NORTHWEST TEXARKANA - VALLIANT 345KV CKT 1
FDNS	00NR	7	20WP	G15_033	FROM->TO	G14-057T 345.00 - SUNNYSIDE 345KV CKT 1	717	789	0.04111	112.2966	NORTHWEST TEXARKANA - VALLIANT 345KV CKT 1
FDNS	06ALL	7	16WP	G15_033	FROM->TO	G14-057T 345.00 - SUNNYSIDE 345KV CKT 1	717	789	0.21301	112.288	GRACEMONT - MINCO 345KV CKT 1
FDNS	00NR	7	20WP	G15_033	FROM->TO	G14-057T 345.00 - SUNNYSIDE 345KV CKT 1	717	789	0.04125	112.2843	GEN562556 1-G14_046_3 0.3420
FDNS	00NR	7	20WP	G15_033	FROM->TO	G14-057T 345.00 - SUNNYSIDE 345KV CKT 1	717	789	0.04125	112.2838	GEN636641 1-LOUISA UNIT 1
FDNS	00NR	7	20WP	G15_033	FROM->TO	G14-057T 345.00 - SUNNYSIDE 345KV CKT 1	717	789	0.04125	112.2584	GEN562756 1-G15031_7 0.6900
FDNS	00NR	7	20WP	G15_033	FROM->TO	G14-057T 345.00 - SUNNYSIDE 345KV CKT 1	717	789	0.04125	112.2403	GEN600005 1-MONTICELLO
FDNS	00NR	7	20WP	G15_033	FROM->TO	G14-057T 345.00 - SUNNYSIDE 345KV CKT 1	717	789	0.04125	112.2106	GEN563142 1-G15079_3 0.5500
FDNS	00NR	7	20WP	G15_033	FROM->TO	G14-057T 345.00 - SUNNYSIDE 345KV CKT 1	717	789	0.04125	112.2106	GEN563151 1-G15080_2 0.5500
FDNS	00NR	7	20WP	G15_033	FROM->TO	G14-057T 345.00 - SUNNYSIDE 345KV CKT 1	717	789	0.04125	112.1094	GEN600000 1-SHERBURNECNTY G1
FDNS	00NR	7	16WP	G15_033	FROM->TO	G14-057T 345.00 - SUNNYSIDE 345KV CKT 1	717	789	0.23317	112.0802	G14-074T 345.00 - TUCO INTERCHANGE 345KV CKT 1
FDNS	00NR	7	20WP	G15_033	FROM->TO	G14-057T 345.00 - SUNNYSIDE 345KV CKT 1	717	789	0.04125	112.0799	GEN629075 1-OTTUMWA GENERATOR FOR OTTUMWA UNIT NO 1
FDNS	00NR	7	20WP	G15_033	FROM->TO	G14-057T 345.00 - SUNNYSIDE 345KV CKT 1	717	789	0.04125	112.0635	GEN562023 1-G11_020_3 0.6900
FDNS	00NR	7	20WP	G15_033	FROM->TO	G14-057T 345.00 - SUNNYSIDE 345KV CKT 1	717	789	0.04125	112.0635	GEN562026 1-G11_019_3 0.6900
FDNS	00NR	7	20WP	G15_033	FROM->TO	G14-057T 345.00 - SUNNYSIDE 345KV CKT 1	717	789	0.04125	112.0592	GEN600001 2-SHERBURNE CNTY G2
FDNS	00NR	7	20WP	G15_033	FROM->TO	G14-057T 345.00 - SUNNYSIDE 345KV CKT 1	717	789	0.04125	112.0574	GEN511848 1-SOUTHWESTERN STATION #3
FDNS	00NR	7	16WP	G15_033	FROM->TO	G14-057T 345.00 - SUNNYSIDE 345KV CKT 1	717	789	0.04332	112.0253	EASTDC - ERCOT EQUIVALENCE 345KV CKT 1
FDNS	00NR	7	20WP	G15_033	FROM->TO	G14-057T 345.00 - SUNNYSIDE 345KV CKT 1	717	789	0.04125	112.0056	GEN527901 1-HOBBS PLANT #1 (CT)
FDNS	00NR	7	20WP	G15_033	FROM->TO	G14-057T 345.00 - SUNNYSIDE 345KV CKT 1	717	789	0.04125	112.0056	GEN527902 1-HOBBS PLANT #2 (CT)
FDNS	00NR	7	20WP	G15_033	FROM->TO	G14-057T 345.00 - SUNNYSIDE 345KV CKT 1	717	789	0.04125	112.0002	GEN523971 1-HARRINGTON GEN #1 24 KV
FDNS	00NR	7	20WP	G15_033	FROM->TO	G14-057T 345.00 - SUNNYSIDE 345KV CKT 1	717	789	0.04125	112.0002	GEN523973 1-HARRINGTON GEN #3 24 KV
FDNS	00NR	7	20WP	G15_033	FROM->TO	G14-057T 345.00 - SUNNYSIDE 345KV CKT 1	717	789	0.04125	112.0001	GEN523972 1-HARRINGTON GEN #2 24 KV
FDNS	00NR	7	20WP	G15_033	FROM->TO	G14-057T 345.00 - SUNNYSIDE 345KV CKT 1	717	789	0.04125	111.9987	GEN563042 1-G15068_3 0.6900
FDNS	00NR	7	20WP	G15_033	FROM->TO	G14-057T 345.00 - SUNNYSIDE 345KV CKT 1	717	789	0.04105	111.8873	LYDIA - WELSH 345KV CKT 1
FDNS	00NR	7	20WP	G15_033	FROM->TO	G14-057T 345.00 - SUNNYSIDE 345KV CKT 1	717	789	0.04105	111.8873	LYDIA - WELSH 345KV CKT 1
FDNS	00NR	7	20WP	G15_033	FROM->TO	G14-057T 345.00 - SUNNYSIDE 345KV CKT 1	717	789	0.04125	111.84	GEN563273 2-G15093_4 0.6900
FDNS	00NR	7	20WP	G15_033	FROM->TO	G14-057T 345.00 - SUNNYSIDE 345KV CKT 1	717	789	0.04125	111.8377	SHERBURNE CO 345/24.0KV TRANSFORMER CKT 1
FDNS	00NR	7	20WP	G15_033	FROM->TO	G14-057T 345.00 - SUNNYSIDE 345KV CKT 1	717	789	0.04125	111.7766	GEN635214 4-NEAL UNIT 4
FDNS	00NR	7	20WP	G15_033	FROM->TO	G14-057T 345.00 - SUNNYSIDE 345KV CKT 1	717	789	0.04125	111.688	GEN563043 1-G15068_4 0.6900
FDNS	00NR	7	20WP	G15_033	FROM->TO	G14-057T 345.00 - SUNNYSIDE 345KV CKT 1	717	789	0.04125	111.6786	GEN563202 1-G15085_3 0.5500
FDNS	00NR	7	20WP	G15_033	FROM->TO	G14-057T 345.00 - SUNNYSIDE 345KV CKT 1	717	789	0.04125	111.6354	GEN526333 1-JONES GEN #3 21 KV
FDNS	00NR	7	20WP	G15_033	FROM->TO	G14-057T 345.00 - SUNNYSIDE 345KV CKT 1	717	789	0.04125	111.6352	GEN526334 1-JONES_4 116.500
FDNS	00NR	7	20WP	G15_033	FROM->TO	G14-057T 345.00 - SUNNYSIDE 345KV CKT 1	717	789	0.04125	111.6242	GEN525844 1-ELK_1 118.000
FDNS	00NR	7	20WP	G15_033	FROM->TO	G14-057T 345.00 - SUNNYSIDE 345KV CKT 1	717	789	0.04125	111.6132	GEN525845 1-ELK_2 1 18.000
FDNS	00NR	7	20WP	G15_033	FROM->TO	G14-057T 345.00 - SUNNYSIDE 345KV CKT 1	717	789	0.04125	111.6001	GEN600002 3-SHERBURNE CNTY G3
FDNS	00NR	7	20WP	G15_033	FROM->TO	G14-057T 345.00 - SUNNYSIDE 345KV CKT 1	717	789	0.04125	111.5674	GEN344225 1-1CAL G1 25.000
FDNS	00NR	7	20WP	G15_033	FROM->TO	G14-057T 345.00 - SUNNYSIDE 345KV CKT 1	717	789	0.04125	111.4336	GEN527166 1-MUSTANG_6 118.000
FDNS	00NR	7	20WP	G15_033	FROM->TO	G14-057T 345.00 - SUNNYSIDE 345KV CKT 1	717	789	0.04125	111.376	GEN562590 1-G14_057_3 0.6900
FDNS	00NR	7	20WP	G15_033	FROM->TO	G14-057T 345.00 - SUNNYSIDE 345KV CKT 1	717	789	0.04125	111.3674	GEN528501 1-G14_012 24.000
FDNS	00NR	7	20WP	G15_033	FROM->TO	G14-057T 345.00 - SUNNYSIDE 345KV CKT 1	717	789	0.04125	111.3409	GEN562685 1-G15_013_3 0.3550
FDNS	00NR	7	20WP	G15_033	FROM->TO	G14-057T 345.00 - SUNNYSIDE 345KV CKT 1	717	789	0.04125	111.2893	GEN635023 3-WALTER SCOTT UNIT 3

SOLUTION	GROUP	SCENARIO	SEASON	SOURCE	DIRECTION	MONITORED ELEMENT	RATEA (MVA)	RATEB(MVA)	TDF	TC%LOADING (% MVA)	CONTINGENCY
FDNS	00NR	7	20WP	G15_033	FROM->TO	G14-057T 345.00 - SUNNYSIDE 345KV CKT 1	717	789	0.04125	111.27	GEN562762 1-G15033_3 0.6900
FDNS	00NR	7	20WP	G15_033	FROM->TO	G14-057T 345.00 - SUNNYSIDE 345KV CKT 1	717	789	0.04125	111.2635	GEN562655 1-G14_074_3 0.6900
FDNS	00NR	7	20WP	G15_033	FROM->TO	G14-057T 345.00 - SUNNYSIDE 345KV CKT 1	717	789	0.04125	111.2249	GEN563272 1-G15093_3 0.6900
FDNS	00NR	7	20WP	G15_033	FROM->TO	G14-057T 345.00 - SUNNYSIDE 345KV CKT 1	717	789	0.04082	111.1552	JOHNSON COUNTY (JOHNCO) 345/138/13.8KV TRANSFORMER CKT 1
FDNS	00NR	7	20WP	G15_033	FROM->TO	G14-057T 345.00 - SUNNYSIDE 345KV CKT 1	717	789	0.04125	111.1245	GEN525562 1-TOLK GEN #2 24 KV
FDNS	00NR	7	20WP	G15_033	FROM->TO	G14-057T 345.00 - SUNNYSIDE 345KV CKT 1	717	789	0.04125	111.0759	GEN527903 1-HOBBS PLANT #3 (ST)
FDNS	00NR	7	20WP	G15_033	FROM->TO	G14-057T 345.00 - SUNNYSIDE 345KV CKT 1	717	789	0.04125	111.0572	GEN525561 1-TOLK GEN #1 24 KV
FDNS	06NR	7	17G	G15_033	FROM->TO	G14-057T 345.00 - SUNNYSIDE 345KV CKT 1	717	789	0.05524	110.983	GRACEMONT - MINCO 345KV CKT 1
FDNS	00NR	7	16WP	G15_033	FROM->TO	G14-057T 345.00 - SUNNYSIDE 345KV CKT 1	717	789	0.04332	110.8787	GEN563263 1-G15092_4 0.6900
FDNS	00NR	7	20WP	G15_033	FROM->TO	G14-057T 345.00 - SUNNYSIDE 345KV CKT 1	717	789	0.04125	110.8575	GEN635024 4-WALTER SCOTT UNIT 4
FDNS	00NR	7	16WP	G15_033	FROM->TO	G14-057T 345.00 - SUNNYSIDE 345KV CKT 1	717	789	0.08699	110.8457	GRACEMONT - LAWTON EASTSIDE 345KV CKT 1
FDNS	00NR	7	16WP	G15_033	FROM->TO	G14-057T 345.00 - SUNNYSIDE 345KV CKT 1	717	789	0.08699	110.8457	GRACEMONT - LAWTON EASTSIDE 345KV CKT 1
FDNS	00NR	7	16WP	G15_033	FROM->TO	G14-057T 345.00 - SUNNYSIDE 345KV CKT 1	717	789	0.03793	110.7682	JOHNSON COUNTY - PITTSBURG 345KV CKT 1
FDNS	00NR	7	16WP	G15_033	FROM->TO	G14-057T 345.00 - SUNNYSIDE 345KV CKT 1	717	789	0.03793	110.7682	JOHNSON COUNTY - PITTSBURG 345KV CKT 1
FDNS	00NR	7	20WP	G15_033	FROM->TO	G14-057T 345.00 - SUNNYSIDE 345KV CKT 1	717	789	0.04097	110.759	LYDIA - VALLIANT 345KV CKT 1
FDNS	00NR	7	20WP	G15_033	FROM->TO	G14-057T 345.00 - SUNNYSIDE 345KV CKT 1	717	789	0.04097	110.759	LYDIA - VALLIANT 345KV CKT 1
FDNS	00NR	7	20WP	G15_033	FROM->TO	G14-057T 345.00 - SUNNYSIDE 345KV CKT 1	717	789	0.04418	110.6531	CHISHOLM7 345.00 - GRAPEVINE 345.00 345KV CKT 1
FDNS	06NR	7	20L	G15_033	FROM->TO	G14-057T 345.00 - SUNNYSIDE 345KV CKT 1	717	789	0.04261	110.1055	BASE CASE
FDNS	06ALL	7	17SP	G15_033	FROM->TO	G14-057T 345.00 - SUNNYSIDE 345KV CKT 1	717	789	0.2082	109.8311	CIMARRON - MINCO 345KV CKT 1
FDNS	00NR	7	16WP	G15_033	FROM->TO	G14-057T 345.00 - SUNNYSIDE 345KV CKT 1	717	789	0.04197	109.8171	HUGO - VALLIANT 345KV CKT 1
FDNS	00NR	7	16WP	G15_033	FROM->TO	G14-057T 345.00 - SUNNYSIDE 345KV CKT 1	717	789	0.04197	109.8171	HUGO - VALLIANT 345KV CKT 1
FDNS	00NR	7	20WP	G15_033	FROM->TO	G14-057T 345.00 - SUNNYSIDE 345KV CKT 1	717	789	0.04656	109.6766	CHISHOLM7 345.00 - GRACEMONT 345KV CKT 1
FDNS	00NR	7	17SP	G15_033	FROM->TO	G14-057T 345.00 - SUNNYSIDE 345KV CKT 1	717	789	0.05433	109.6553	CIMARRON - MINCO 345KV CKT 1
FDNS	00NR	7	16WP	G15_033	FROM->TO	G14-057T 345.00 - SUNNYSIDE 345KV CKT 1	717	789	0.04332	109.2169	GEN563262 1-G15092_3 0.6900
FDNS	00NR	7	20WP	G15_033	FROM->TO	G14-057T 345.00 - SUNNYSIDE 345KV CKT 1	717	789	0.0823	109.1907	GRACEMONT - LAWTON EASTSIDE 345KV CKT 1
FDNS	00NR	7	20WP	G15_033	FROM->TO	G14-057T 345.00 - SUNNYSIDE 345KV CKT 1	717	789	0.0823	109.1907	GRACEMONT - LAWTON EASTSIDE 345KV CKT 1
FDNS	00NR	7	20WP	G15_033	FROM->TO	G14-057T 345.00 - SUNNYSIDE 345KV CKT 1	717	789	0.23393	108.5228	G14-074T 345.00 - TUCO INTERCHANGE 345KV CKT 1
FDNS	06NR	7	20L	G15_033	FROM->TO	G14-057T 345.00 - SUNNYSIDE 345KV CKT 1	717	789	0.04069	108.5196	PITTSBURG - SEMINOLE 345KV CKT 1
FDNS	06NR	7	20L	G15_033	FROM->TO	G14-057T 345.00 - SUNNYSIDE 345KV CKT 1	717	789	0.04069	108.5196	PITTSBURG - SEMINOLE 345KV CKT 1
FDNS	00NR	7	20WP	G15_033	FROM->TO	G14-057T 345.00 - SUNNYSIDE 345KV CKT 1	717	789	0.03612	108.4577	JOHNSON COUNTY - PITTSBURG 345KV CKT 1
FDNS	00NR	7	20WP	G15_033	FROM->TO	G14-057T 345.00 - SUNNYSIDE 345KV CKT 1	717	789	0.03612	108.4577	JOHNSON COUNTY - PITTSBURG 345KV CKT 1
FDNS	00NR	7	20WP	G15_033	FROM->TO	G14-057T 345.00 - SUNNYSIDE 345KV CKT 1	717	789	0.03995	107.9923	HUGO - VALLIANT 345KV CKT 1
FDNS	00NR	7	20WP	G15_033	FROM->TO	G14-057T 345.00 - SUNNYSIDE 345KV CKT 1	717	789	0.03995	107.9923	HUGO - VALLIANT 345KV CKT 1
FDNS	00NR	7	20WP	G15_033	FROM->TO	G14-057T 345.00 - SUNNYSIDE 345KV CKT 1	717	789	0.04125	107.9647	GEN563263 1-G15092_4 0.6900
FDNS	06NR	7	20L	G15_033	FROM->TO	G14-057T 345.00 - SUNNYSIDE 345KV CKT 1	717	789	0.04189	107.4579	CIMARRON - DRAPER LAKE 345KV CKT 1
FDNS	06NR	7	20L	G15_033	FROM->TO	G14-057T 345.00 - SUNNYSIDE 345KV CKT 1	717	789	0.04554	107.3722	BORDER 7345.00 - WOODWARD DISTRICT EHV 345KV CKT 1
FDNS	06NR	7	20L	G15_033	FROM->TO	G14-057T 345.00 - SUNNYSIDE 345KV CKT 1	717	789	0.04554	106.472	BORDER 7345.00 - TUCO_2 345.00 345KV CKT 1
FDNS	00NR	7	20WP	G15_033	FROM->TO	G14-057T 345.00 - SUNNYSIDE 345KV CKT 1	717	789	0.04125	106.3016	GEN563262 1-G15092_3 0.6900
FDNS	06NR	7	20L	G15_033	FROM->TO	G14-057T 345.00 - SUNNYSIDE 345KV CKT 1	717	789	0.04013	105.2829	Hitchland Interchange - WALKTAP7 345.00 345KV CKT 1
FDNS	06NR	7	20L	G15_033	FROM->TO	G14-057T 345.00 - SUNNYSIDE 345KV CKT 1	717	789	0.04013	105.2829	Hitchland Interchange - WALKTAP7 345.00 345KV CKT 1
FDNS	00NR	7	16WP	G15_033	FROM->TO	G14-057T 345.00 - SUNNYSIDE 345KV CKT 1	717	789	0.03612	105.2151	JOHNSON COUNTY - SUNNYSIDE 345KV CKT 1
FDNS	06NR	7	20L	G15_033	FROM->TO	G14-057T 345.00 - SUNNYSIDE 345KV CKT 1	717	789	0.04013	105.1996	P12:345:SPS:J07.1.FINN.HITCH
FDNS	06NR	7	20L	G15_033	FROM->TO	G14-057T 345.00 - SUNNYSIDE 345KV CKT 1	717	789	0.04451	105.0692	P12:138:WFEC:MSL03
FDNS	06ALL	7	17SP	G15_033	FROM->TO	G14-057T 345.00 - SUNNYSIDE 345KV CKT 1	717	789	0.2082	104.978	GRACEMONT - MINCO 345KV CKT 1
FDNS	06NR	7	20L	G15_033	FROM->TO	G14-057T 345.00 - SUNNYSIDE 345KV CKT 1	717	789	0.04247	104.357	CLEVELAND - G15066_T 345.00 345KV CKT 1
FDNS	06NR	7	20L	G15_033	FROM->TO	G14-057T 345.00 - SUNNYSIDE 345KV CKT 1	717	789	0.04261	104.2955	GEN501801 1-DOLET HILLS UNIT1
FDNS	06NR	7	20L	G15_033	FROM->TO	G14-057T 345.00 - SUNNYSIDE 345KV CKT 1	717	789	0.04261	104.1664	GEN509416 1-TURK GENERATION
FDNS	06NR	7	20L	G15_033	FROM->TO	G14-057T 345.00 - SUNNYSIDE 345KV CKT 1	717	789	0.04247	104.0569	G15066_T 345.00 - SOONER 345KV CKT 1
FDNS	06NR	7	20L	G15_033	FROM->TO	G14-057T 345.00 - SUNNYSIDE 345KV CKT 1	717	789	0.04261	104.0163	GEN509403 1-PIRKEY GENERATION
FDNS	06NR	7	20L	G15_033	FROM->TO	G14-057T 345.00 - SUNNYSIDE 345KV CKT 1	717	789	0.04261	103.5965	GEN336821 1-GRAND GULF UNIT
FDNS	06NR	7	20L	G15_033	FROM->TO	G14-057T 345.00 - SUNNYSIDE 345KV CKT 1	717	789	0.04261	103.436	GEN336153 1-WATERFORD UNIT#3
FDNS	06NR	7	20L	G15_033	FROM->TO	G14-057T 345.00 - SUNNYSIDE 345KV CKT 1	717	789	0.04255	103.1001	PITTSBURG - VALLIANT 345KV CKT 1
FDNS	06NR	7	20L	G15_033	FROM->TO	G14-057T 345.00 - SUNNYSIDE 345KV CKT 1	717	789	0.04255	103.1001	PITTSBURG - VALLIANT 345KV CKT 1
FDNS	06NR	7	20L	G15_033	FROM->TO	G14-057T 345.00 - SUNNYSIDE 345KV CKT 1	717	789	0.04261	103.0715	GEN335831 1-RIVERBEND UNIT#1
FDNS	06NR	7	20L	G15_033	FROM->TO	G14-057T 345.00 - SUNNYSIDE 345KV CKT 1	717	789	0.04237	102.9482	ARCADIA - NORTHWEST 345KV CKT 1
FDNS	06NR	7	20L	G15_033	FROM->TO	G14-057T 345.00 - SUNNYSIDE 345KV CKT 1	717	789	0.0411	102.9315	FINNEY SWITCHING STATION - HOLCOMB 345KV CKT 1
FDNS	06NR	7	20L	G15_033	FROM->TO	G14-057T 345.00 - SUNNYSIDE 345KV CKT 1	717	789	0.0411	102.9315	FINNEY SWITCHING STATION - HOLCOMB 345KV CKT 1
FDNS	06NR	7	20L	G15_033	FROM->TO	G14-057T 345.00 - SUNNYSIDE 345KV CKT 1	717	789	0.04253	102.8037	CLEVELAND - TULSA NORTH 345KV CKT 1
FDNS	06NR	7	20L	G15_033	FROM->TO	G14-057T 345.00 - SUNNYSIDE 345KV CKT 1	717	789	0.04253	102.8037	CLEVELAND - TULSA NORTH 345KV CKT 1
FDNS	06ALL	7	20SP	G15_033	FROM->TO	G14-057T 345.00 - SUNNYSIDE 345KV CKT 1	717	789	0.20655	102.7902	CIMARRON - MINCO 345KV CKT 1
FDNS	06NR	7	20L	G15_033	FROM->TO	G14-057T 345.00 - SUNNYSIDE 345KV CKT 1	717	789	0.0411	102.6036	FINNEY SWITCHING STATION - WALKTAP7 345.00 345KV CKT 1
FDNS	06NR	7	20L	G15_033	FROM->TO	G14-057T 345.00 - SUNNYSIDE 345KV CKT 1	717	789	0.0411	102.6036	FINNEY SWITCHING STATION - WALKTAP7 345.00 345KV CKT 1
FDNS	06NR	7	20L	G15_033	FROM->TO	G14-057T 345.00 - SUNNYSIDE 345KV CKT 1	717	789	0.04261	102.5949	GRAND GULF 500/22.0KV TRANSFORMER CKT 1
FDNS	06ALL	7	20WP	G15_033	FROM->TO	G14-057T 345.00 - SUNNYSIDE 345KV CKT 1	717	789	0.1538	102.5888	BASE CASE
FDNS	06NR	7	20L	G15_033	FROM->TO	G14-057T 345.00 - SUNNYSIDE 345KV CKT 1	717	789	0.04115	102.5376	G14_038T 345.00 - Hitchland Interchange 345KV CKT 1
FDNS	06NR	7	20L	G15_033	FROM->TO	G14-057T 345.00 - SUNNYSIDE 345KV CKT 1	717	789	0.04398	102.3591	POTTER COUNTY INTERCHANGE - TOLK STATION 345KV CKT 1
FDNS	06NR	7	20L	G15_033	FROM->TO	G14-057T 345.00 - SUNNYSIDE 345KV CKT 1	717	789	0.04115	102.3006	G14_038T 345.00 - POTTER COUNTY INTERCHANGE 345KV CKT 1
FDNS	06NR	7	20L	G15_033	FROM->TO	G14-057T 345.00 - SUNNYSIDE 345KV CKT 1	717	789	0.04259	102.2795	LACYGNE - WAVERLY7 345.00 345KV CKT 1
FDNS	06NR	7	20L	G15_033	FROM->TO	G14-057T 345.00 - SUNNYSIDE 345KV CKT 1	717	789	0.04261	102.2632	GEN335206 1-NELSON UNIT 6
FDNS	06NR	7	20L	G15_033	FROM->TO	G14-057T 345.00 - SUNNYSIDE 345KV CKT 1	717	789	0.04222	102.2632	MINGO - RED WILLOW 345KV CKT 1
FDNS	06NR	7	20L	G15_033	FROM->TO	G14-057T 345.00 - SUNNYSIDE 345KV CKT 1	717	789	0.04222	102.2632	MINGO - RED WILLOW 345KV CKT 1
FDNS	06ALL	7	17G	G15_033	FROM->TO	G14-057T 345.00 - SUNNYSIDE 345KV CKT 1	717	789	0.15699	102.2119	BASE CASE
FDNS	06NR	7	20L	G15_033	FROM->TO	G14-057T 345.00 - SUNNYSIDE 345KV CKT 1	717	789	0.04292	102.1777	CORN TAP - NAPLESTP 138.00 138KV CKT 1
FDNS	06NR	7	20L	G15_033	FROM->TO	G14-057T 345.00 - SUNNYSIDE 345KV CKT 1	717	789	0.04283	102.1615	COMANCHE - LOCO 138KV CKT 1
FDNS	06NR	7	20L	G15_033	FROM->TO	G14-057T 345.00 - SUNNYSIDE 345KV CKT 1	717	789	0.04267	102.1578	REDBUD - RIVERSIDE STATION 345KV CKT 1
FDNS	06NR	7	20L	G15_033	FROM->TO	G14-057T 345.00 - SUNNYSIDE 345KV CKT 1	717	789	0.04267	102.1578	REDBUD - RIVERSIDE STATION 345KV CKT 1
FDNS	06NR	7	20L	G15_033	FROM->TO	G14-057T 345.00 - SUNNYSIDE 345KV CKT 1	717	789	0.04259	102.1547	WAVERLY7 345.00 - WOLF CREEK 345KV CKT 1
FDNS	06NR	7	20L	G15_033	FROM->TO	G14-057T 345.00 - SUNNYSIDE 345KV CKT 1	717	789	0.0459	102.1214	P12:345:SPS:J15.1.XRDS.TOLK
FDNS	06NR	7	20L	G15_033	FROM->TO	G14-057T 345.00 - SUNNYSIDE 345KV CKT 1	717	789	0.04292	102.0883	NAPLESTP 138.00 - PAYNE 138.00 138KV CKT 1

SOLUTION	GROUP	SCENARIO	SEASON	SOURCE	DIRECTION	MONITORED ELEMENT	RATEA (MVA)	RATEB(MVA)	TDF	TC%LOADING (% MVA)	CONTINGENCY
FDNS	06NR	7	20L	G15_033	FROM->TO	G14-057T 345.00 - SUNNYSIDE 345KV CKT 1	717	789	0.04381	102.0483	P12:138:AEPW:DUNCAN-4:L.E.S.-4
FDNS	06NR	7	20L	G15_033	FROM->TO	G14-057T 345.00 - SUNNYSIDE 345KV CKT 1	717	789	0.04261	102.0478	GEN509406 1-WELSH #3
FDNS	06NR	7	20L	G15_033	FROM->TO	G14-057T 345.00 - SUNNYSIDE 345KV CKT 1	717	789	0.04261	102.0476	GEN509404 1-WELSH #1
FDNS	00NR	7	20WP	G15_033	FROM->TO	G14-057T 345.00 - SUNNYSIDE 345KV CKT 1	717	789	0.03439	101.9861	JOHNSON COUNTY - SUNNYSIDE 345KV CKT 1
FDNS	06NR	7	20L	G15_033	FROM->TO	G14-057T 345.00 - SUNNYSIDE 345KV CKT 1	717	789	0.04381	101.9316	COMANCHE TAP - OMPA-DUNCAN 840 138KV CKT 1
FDNS	06NR	7	20L	G15_033	FROM->TO	G14-057T 345.00 - SUNNYSIDE 345KV CKT 1	717	789	0.04262	101.8767	HEALDTON - LOCO 138KV CKT 1
FDNS	06NR	7	20L	G15_033	FROM->TO	G14-057T 345.00 - SUNNYSIDE 345KV CKT 1	717	789	0.04221	101.8548	ARCADIA - SEMINOLE 345KV CKT 1
FDNS	06NR	7	20L	G15_033	FROM->TO	G14-057T 345.00 - SUNNYSIDE 345KV CKT 1	717	789	0.04262	101.7868	HEALDTON - RINGLING 138KV CKT 1
FDNS	06NR	7	20L	G15_033	FROM->TO	G14-057T 345.00 - SUNNYSIDE 345KV CKT 1	717	789	0.04262	101.7226	RINGLING - SOUTH WILSON 138KV CKT 1
FDNS	06NR	7	20L	G15_033	FROM->TO	G14-057T 345.00 - SUNNYSIDE 345KV CKT 1	717	789	0.04297	101.7198	ANADARKO - POCASSETT 138KV CKT 1
FDNS	06NR	7	20L	G15_033	FROM->TO	G14-057T 345.00 - SUNNYSIDE 345KV CKT 1	717	789	0.04261	101.6759	GEN501813 1-RODEMACHER UNIT 3
FDNS	06NR	7	20L	G15_033	FROM->TO	G14-057T 345.00 - SUNNYSIDE 345KV CKT 1	717	789	0.04256	101.6641	WEBRE - WELLS 500KV CKT 1
FDNS	06NR	7	20L	G15_033	FROM->TO	G14-057T 345.00 - SUNNYSIDE 345KV CKT 1	717	789	0.04297	101.6563	POCASSETT - TUTTLE 138KV CKT 1
FDNS	06NR	7	20L	G15_033	FROM->TO	G14-057T 345.00 - SUNNYSIDE 345KV CKT 1	717	789	0.04247	101.6492	THISTLE7 345.00 - WOODWARD DISTRICT EHV 345KV CKT 1
FDNS	06NR	7	20L	G15_033	FROM->TO	G14-057T 345.00 - SUNNYSIDE 345KV CKT 1	717	789	0.04247	101.6492	THISTLE7 345.00 - WOODWARD DISTRICT EHV 345KV CKT 1
FDNS	06NR	7	20L	G15_033	FROM->TO	G14-057T 345.00 - SUNNYSIDE 345KV CKT 1	717	789	0.04247	101.6492	THISTLE7 345.00 - WOODWARD DISTRICT EHV 345KV CKT 2
FDNS	06NR	7	20L	G15_033	FROM->TO	G14-057T 345.00 - SUNNYSIDE 345KV CKT 1	717	789	0.04247	101.6492	THISTLE7 345.00 - WOODWARD DISTRICT EHV 345KV CKT 2
FDNS	06NR	7	20L	G15_033	FROM->TO	G14-057T 345.00 - SUNNYSIDE 345KV CKT 1	717	789	0.04381	101.6417	DUNCAN - OMPA-DUNCAN 840 138KV CKT 1
FDNS	06NR	7	20L	G15_033	FROM->TO	G14-057T 345.00 - SUNNYSIDE 345KV CKT 1	717	789	0.04381	101.6417	DUNCAN - OMPA-DUNCAN 840 138KV CKT 1
FDNS	06NR	7	20L	G15_033	FROM->TO	G14-057T 345.00 - SUNNYSIDE 345KV CKT 1	717	789	0.04261	101.6409	DOLET HILLS 345/24.0KV TRANSFORMER CKT 1
FDNS	06NR	7	20L	G15_033	FROM->TO	G14-057T 345.00 - SUNNYSIDE 345KV CKT 1	717	789	0.04261	101.6339	GEN501812 1-RODEMACHER UNIT 2
FDNS	06NR	7	20L	G15_033	FROM->TO	G14-057T 345.00 - SUNNYSIDE 345KV CKT 1	717	789	0.04262	101.6071	MARIETTA - SOUTH WILSON 138KV CKT 1
FDNS	06NR	7	20L	G15_033	FROM->TO	G14-057T 345.00 - SUNNYSIDE 345KV CKT 1	717	789	0.04464	101.6052	LAWTON EASTSIDE (LES 5) 345/138/13.8KV TRANSFORMER CKT 2
FDNS	06NR	7	20L	G15_033	FROM->TO	G14-057T 345.00 - SUNNYSIDE 345KV CKT 1	717	789	0.04464	101.6052	LAWTON EASTSIDE (LES 5) 345/138/13.8KV TRANSFORMER CKT 2
FDNS	06NR	7	20L	G15_033	FROM->TO	G14-057T 345.00 - SUNNYSIDE 345KV CKT 1	717	789	0.04262	101.5818	P12:138:WFEC:MSL17
FDNS	06NR	7	20L	G15_033	FROM->TO	G14-057T 345.00 - SUNNYSIDE 345KV CKT 1	717	789	0.04145	101.577	G11-14T 345.00 - WOODWARD DISTRICT EHV 345KV CKT 1
FDNS	06NR	7	20L	G15_033	FROM->TO	G14-057T 345.00 - SUNNYSIDE 345KV CKT 1	717	789	0.04145	101.577	G11-14T 345.00 - WOODWARD DISTRICT EHV 345KV CKT 2
FDNS	06NR	7	20L	G15_033	FROM->TO	G14-057T 345.00 - SUNNYSIDE 345KV CKT 1	717	789	0.04261	101.5487	GEN337911 1-ARKANSAS NUCLEAR ONE UNIT #2
FDNS	06NR	7	20L	G15_033	FROM->TO	G14-057T 345.00 - SUNNYSIDE 345KV CKT 1	717	789	0.04225	101.5459	MINGO - SETAB 345KV CKT 1
FDNS	06NR	7	20L	G15_033	FROM->TO	G14-057T 345.00 - SUNNYSIDE 345KV CKT 1	717	789	0.04225	101.5459	MINGO - SETAB 345KV CKT 1
FDNS	06NR	7	20L	G15_033	FROM->TO	G14-057T 345.00 - SUNNYSIDE 345KV CKT 1	717	789	0.04261	101.5178	GEN337652 1-WHITE BLUFF UNIT #1
FDNS	06NR	7	20L	G15_033	FROM->TO	G14-057T 345.00 - SUNNYSIDE 345KV CKT 1	717	789	0.08524	101.5168	GRACEMONT - LAWTON EASTSIDE 345KV CKT 1
FDNS	06NR	7	20L	G15_033	FROM->TO	G14-057T 345.00 - SUNNYSIDE 345KV CKT 1	717	789	0.08524	101.5168	GRACEMONT - LAWTON EASTSIDE 345KV CKT 1
FDNS	06NR	7	20L	G15_033	FROM->TO	G14-057T 345.00 - SUNNYSIDE 345KV CKT 1	717	789	0.04251	101.5078	CANEYRV7 345.00 - NEOSHO 345KV CKT 1
FDNS	06NR	7	20L	G15_033	FROM->TO	G14-057T 345.00 - SUNNYSIDE 345KV CKT 1	717	789	0.04261	101.5038	GEN509408 1-WILKES #2
FDNS	06NR	7	20L	G15_033	FROM->TO	G14-057T 345.00 - SUNNYSIDE 345KV CKT 1	717	789	0.04241	101.5007	MATHWSN7 345.00 - NORTHWEST 345KV CKT 1
FDNS	06NR	7	20L	G15_033	FROM->TO	G14-057T 345.00 - SUNNYSIDE 345KV CKT 1	717	789	0.04297	101.4974	BRIDGECR 138.00 - TUTTLE 138KV CKT 1
FDNS	06NR	7	20L	G15_033	FROM->TO	G14-057T 345.00 - SUNNYSIDE 345KV CKT 1	717	789	0.04261	101.4937	GEN337653 1-WHITE BLUFF UNIT #2
FDNS	06NR	7	20L	G15_033	FROM->TO	G14-057T 345.00 - SUNNYSIDE 345KV CKT 1	717	789	0.04253	101.4751	DOLET HILLS - SOUTHWEST SHREVEPORT 345KV CKT 1
FDNS	06NR	7	20L	G15_033	FROM->TO	G14-057T 345.00 - SUNNYSIDE 345KV CKT 1	717	789	0.04253	101.4751	DOLET HILLS - SOUTHWEST SHREVEPORT 345KV CKT 1
FDNS	06NR	7	20L	G15_033	FROM->TO	G14-057T 345.00 - SUNNYSIDE 345KV CKT 1	717	789	0.04297	101.4069	P12:138:WFEC:MSL01
FDNS	06NR	7	20L	G15_033	FROM->TO	G14-057T 345.00 - SUNNYSIDE 345KV CKT 1	717	789	0.04297	101.3912	BRIDGECR 138.00 - SUNSHINE CANYON 138KV CKT 1
FDNS	06NR	7	20L	G15_033	FROM->TO	G14-057T 345.00 - SUNNYSIDE 345KV CKT 1	717	789	0.04238	101.3816	P12:138:AEPW-OGE:WTH_JCT4:JENSEN4
FDNS	06NR	7	20L	G15_033	FROM->TO	G14-057T 345.00 - SUNNYSIDE 345KV CKT 1	717	789	0.04251	101.3643	CANEYRV7 345.00 - LATHAMS7 345.00 345KV CKT 1
FDNS	06NR	7	20L	G15_033	FROM->TO	G14-057T 345.00 - SUNNYSIDE 345KV CKT 1	717	789	0.04261	101.3205	GEN337910 1-ARKANSAS NUCLEAR ONE UNIT #1
FDNS	06NR	7	20L	G15_033	FROM->TO	G14-057T 345.00 - SUNNYSIDE 345KV CKT 1	717	789	0.04271	101.3164	CIVIT - PAOLI 138KV CKT 1
FDNS	06NR	7	20L	G15_033	FROM->TO	G14-057T 345.00 - SUNNYSIDE 345KV CKT 1	717	789	0.04533	101.3109	P12:138:AEPW:S.W.S.-4:L.E.S.-4
FDNS	06NR	7	20L	G15_033	FROM->TO	G14-057T 345.00 - SUNNYSIDE 345KV CKT 1	717	789	0.04261	101.2991	NEW MADRID 345/22.0KV TRANSFORMER CKT 1
FDNS	06NR	7	20L	G15_033	FROM->TO	G14-057T 345.00 - SUNNYSIDE 345KV CKT 1	717	789	0.04271	101.2676	CIVIT - STRATFORD 138KV CKT 1
FDNS	06NR	7	20L	G15_033	FROM->TO	G14-057T 345.00 - SUNNYSIDE 345KV CKT 1	717	789	0.04261	101.2592	FRONTIER - GRIMES 345KV CKT 1
FDNS	06NR	7	20L	G15_033	FROM->TO	G14-057T 345.00 - SUNNYSIDE 345KV CKT 1	717	789	0.04231	101.2351	MATHWSN7 345.00 - TATONGA7 345.00 345KV CKT 1
FDNS	06NR	7	20L	G15_033	FROM->TO	G14-057T 345.00 - SUNNYSIDE 345KV CKT 1	717	789	0.04231	101.2351	MATHWSN7 345.00 - TATONGA7 345.00 345KV CKT 2
FDNS	06NR	7	20L	G15_033	FROM->TO	G14-057T 345.00 - SUNNYSIDE 345KV CKT 1	717	789	0.04271	101.2223	OIL CENTER - STRATFORD 138KV CKT 1
FDNS	06NR	7	20L	G15_033	FROM->TO	G14-057T 345.00 - SUNNYSIDE 345KV CKT 1	717	789	0.0425	101.2201	AXTELL - POST ROCK 345KV CKT 1
FDNS	06NR	7	20L	G15_033	FROM->TO	G14-057T 345.00 - SUNNYSIDE 345KV CKT 1	717	789	0.04288	101.2053	P12:138:AEPW-OGE:CORNVIL4:MAUD 4
FDNS	06NR	7	20L	G15_033	FROM->TO	G14-057T 345.00 - SUNNYSIDE 345KV CKT 1	717	789	0.04225	101.1801	CANADIAN - NOBLE 138KV CKT 1
FDNS	06NR	7	20L	G15_033	FROM->TO	G14-057T 345.00 - SUNNYSIDE 345KV CKT 1	717	789	0.04227	101.1778	P12:138:OKGE:3TERM27
FDNS	06NR	7	20L	G15_033	FROM->TO	G14-057T 345.00 - SUNNYSIDE 345KV CKT 1	717	789	0.04288	101.1739	BLANCHARD - CORNVILLE 138KV CKT 1
FDNS	06NR	7	20L	G15_033	FROM->TO	G14-057T 345.00 - SUNNYSIDE 345KV CKT 1	717	789	0.04261	101.1675	GEN506754 1-LEBROCK STEAM 1
FDNS	06NR	7	20L	G15_033	FROM->TO	G14-057T 345.00 - SUNNYSIDE 345KV CKT 1	717	789	0.04257	101.1674	ELDORADO EHV - SHERIDAN EHV 500KV CKT 1
FDNS	06NR	7	20L	G15_033	FROM->TO	G14-057T 345.00 - SUNNYSIDE 345KV CKT 1	717	789	0.04247	101.1614	G13-010T 345.00 - POST ROCK 345KV CKT 1
FDNS	06ALL	7	16WP	G15_033	FROM->TO	G14-057T 345.00 - SUNNYSIDE 345KV CKT 1	717	789	0.16011	101.1576	BASE CASE
FDNS	06NR	7	20L	G15_033	FROM->TO	G14-057T 345.00 - SUNNYSIDE 345KV CKT 1	717	789	0.04234	101.1565	HOLCOMB - SETAB 345KV CKT 1
FDNS	06NR	7	20L	G15_033	FROM->TO	G14-057T 345.00 - SUNNYSIDE 345KV CKT 1	717	789	0.04234	101.1565	HOLCOMB - SETAB 345KV CKT 1
FDNS	06NR	7	20L	G15_033	FROM->TO	G14-057T 345.00 - SUNNYSIDE 345KV CKT 1	717	789	0.04271	101.156	LATTA JCT - OIL CENTER 138KV CKT 1
FDNS	06NR	7	20L	G15_033	FROM->TO	G14-057T 345.00 - SUNNYSIDE 345KV CKT 1	717	789	0.04261	101.1534	GEN334440 1-SABINE UNIT 4
FDNS	06NR	7	20L	G15_033	FROM->TO	G14-057T 345.00 - SUNNYSIDE 345KV CKT 1	717	789	0.04225	101.1401	NOBLE - PURCELL4 138.00 138KV CKT 1
FDNS	06NR	7	20L	G15_033	FROM->TO	G14-057T 345.00 - SUNNYSIDE 345KV CKT 1	717	789	0.04239	101.1304	WEATHERFORD JCT. - WEATHERFORD SOUTHEAST 138KV CKT 1
FDNS	06NR	7	20L	G15_033	FROM->TO	G14-057T 345.00 - SUNNYSIDE 345KV CKT 1	717	789	0.04239	101.1304	WEATHERFORD JCT. - WEATHERFORD SOUTHEAST 138KV CKT 1
FDNS	06NR	7	20L	G15_033	FROM->TO	G14-057T 345.00 - SUNNYSIDE 345KV CKT 1	717	789	0.04288	101.129	BAILEY4 138.00 - SUNSHINE CANYON 138KV CKT 1
FDNS	06NR	7	20L	G15_033	FROM->TO	G14-057T 345.00 - SUNNYSIDE 345KV CKT 1	717	789	0.04239	101.122	P12:138:AEPW:REDROCKRD4:WTH_JCT4
FDNS	06NR	7	20L	G15_033	FROM->TO	G14-057T 345.00 - SUNNYSIDE 345KV CKT 1	717	789	0.04247	101.1086	G13-010T 345.00 - SPEARVILLE 345KV CKT 1
FDNS	06NR	7	20L	G15_033	FROM->TO	G14-057T 345.00 - SUNNYSIDE 345KV CKT 1	717	789	0.04251	101.0949	LATHAMS7 345.00 - ROSE HILL 345KV CKT 1
FDNS	06NR	7	20L	G15_033	FROM->TO	G14-057T 345.00 - SUNNYSIDE 345KV CKT 1	717	789	0.04261	101.0929	GEN334030 1-FRONTIER UNIT 1
FDNS	06NR	7	20L	G15_033	FROM->TO	G14-057T 345.00 - SUNNYSIDE 345KV CKT 1	717	789	0.04261	101.0892	GEN334031 1-FRONTIER UNIT 2
FDNS	06NR	7	20L	G15_033	FROM->TO	G14-057T 345.00 - SUNNYSIDE 345KV CKT 1	717	789	0.04288	101.0805	BLANCHARD - MAUD 138KV CKT 1
FDNS	06NR	7	20L	G15_033	FROM->TO	G14-057T 345.00 - SUNNYSIDE 345KV CKT 1	717	789	0.04239	101.0795	HINTON - WEATHERFORD JCT. 138KV CKT 1
FDNS	06NR	7	20L	G15_033	FROM->TO	G14-057T 345.00 - SUNNYSIDE 345KV CKT 1	717	789	0.04193	101.075	BVRCNTY7 345.00 - GRAPEVINE 345.00 345KV CKT 1
FDNS	06NR	7	20L	G15_033	FROM->TO	G14-057T 345.00 - SUNNYSIDE 345KV CKT 1	717	789	0.04235	101.0742	PARK LANE - SEMINOLE 138KV CKT 1

SOLUTION	GROUP	SCENARIO	SEASON	SOURCE	DIRECTION	MONITORED ELEMENT	RATEA (MVA)	RATEB(MVA)	TDF	TC%LOADING (% MVA)	CONTINGENCY
FDNS	06NR	7	20L	G15_033	FROM->TO	G14-057T 345.00 - SUNNYSIDE 345KV CKT 1	717	789	0.04084	101.0686	POTTER COUNTY INTERCHANGE (WAUK 90343-A) 345/230/13.2KV TRANSFORMER CKT 1
FDNS	06NR	7	20L	G15_033	FROM->TO	G14-057T 345.00 - SUNNYSIDE 345KV CKT 1	717	789	0.04084	101.0686	POTTER COUNTY INTERCHANGE (WAUK 90343-A) 345/230/13.2KV TRANSFORMER CKT 1
FDNS	06NR	7	20L	G15_033	FROM->TO	G14-057T 345.00 - SUNNYSIDE 345KV CKT 1	717	789	0.04288	101.0628	BAILEY4 138.00 - WESTMOORE 138KV CKT 1
FDNS	06NR	7	20L	G15_033	FROM->TO	G14-057T 345.00 - SUNNYSIDE 345KV CKT 1	717	789	0.04263	101.0617	TUPELO - TUPELO TAP 138KV CKT 1
FDNS	06NR	7	20L	G15_033	FROM->TO	G14-057T 345.00 - SUNNYSIDE 345KV CKT 1	717	789	0.04262	101.0593	MARIETTA - MARIETTA4 138.00 138KV CKT 1
FDNS	06NR	7	20L	G15_033	FROM->TO	G14-057T 345.00 - SUNNYSIDE 345KV CKT 1	717	789	0.04244	101.0543	G1524G1525 345.00 - THISTLE7 345.00 345KV CKT 1
FDNS	06NR	7	20L	G15_033	FROM->TO	G14-057T 345.00 - SUNNYSIDE 345KV CKT 1	717	789	0.04244	101.0543	G1524G1525 345.00 - THISTLE7 345.00 345KV CKT 2
FDNS	06NR	7	20L	G15_033	FROM->TO	G14-057T 345.00 - SUNNYSIDE 345KV CKT 1	717	789	0.04239	101.0498	HINTON - REDROCKRD4 138.00 138KV CKT 1
FDNS	06NR	7	20L	G15_033	FROM->TO	G14-057T 345.00 - SUNNYSIDE 345KV CKT 1	717	789	0.04248	101.0327	P12:138:AEPW:WTHWF4:CLINTJC4
FDNS	06NR	7	20L	G15_033	FROM->TO	G14-057T 345.00 - SUNNYSIDE 345KV CKT 1	717	789	0.04282	101.0326	G15063_T 345.00 - WOODRING 345KV CKT 1
FDNS	06NR	7	20L	G15_033	FROM->TO	G14-057T 345.00 - SUNNYSIDE 345KV CKT 1	717	789	0.04261	101.0133	GEN335204 1-NELSON UNIT 4
FDNS	06NR	7	20L	G15_033	FROM->TO	G14-057T 345.00 - SUNNYSIDE 345KV CKT 1	717	789	0.04251	101.0029	DRAPER LAKE - SEMINOLE 345KV CKT 2
FDNS	06NR	7	20L	G15_033	FROM->TO	G14-057T 345.00 - SUNNYSIDE 345KV CKT 1	717	789	0.04251	101.0028	DRAPER LAKE - SEMINOLE 345KV CKT 1
FDNS	06NR	7	20L	G15_033	FROM->TO	G14-057T 345.00 - SUNNYSIDE 345KV CKT 1	717	789	0.04261	101.0013	NEW MADRID 161/22.0KV TRANSFORMER CKT 1
FDNS	06NR	7	20L	G15_033	FROM->TO	G14-057T 345.00 - SUNNYSIDE 345KV CKT 1	717	789	0.04258	100.9985	ELDORADO EHV - MOUNT OLIVE 500KV CKT 1
FDNS	06NR	7	20L	G15_033	FROM->TO	G14-057T 345.00 - SUNNYSIDE 345KV CKT 1	717	789	0.04271	100.9916	LASALLE - LATTA JCT 138KV CKT 1
FDNS	06NR	7	20L	G15_033	FROM->TO	G14-057T 345.00 - SUNNYSIDE 345KV CKT 1	717	789	0.04288	100.9876	FRANKLIN SW - WESTMOORE 138KV CKT 1
FDNS	06NR	7	20L	G15_033	FROM->TO	G14-057T 345.00 - SUNNYSIDE 345KV CKT 1	717	789	0.04261	100.9809	GEN336170 1-GULF OXY U4
FDNS	06NR	7	20L	G15_033	FROM->TO	G14-057T 345.00 - SUNNYSIDE 345KV CKT 1	717	789	0.04261	100.9657	GEN336252 1-NINEMILE POINT UNIT#5
FDNS	06NR	7	20L	G15_033	FROM->TO	G14-057T 345.00 - SUNNYSIDE 345KV CKT 1	717	789	0.04256	100.9592	P12:138:WFEC:MSL02
FDNS	06NR	7	20L	G15_033	FROM->TO	G14-057T 345.00 - SUNNYSIDE 345KV CKT 1	717	789	0.04261	100.9575	WHITE BLUFF 500/26.0KV TRANSFORMER CKT 1
FDNS	06NR	7	20L	G15_033	FROM->TO	G14-057T 345.00 - SUNNYSIDE 345KV CKT 1	717	789	0.04256	100.9528	PAOLI - PAYNE 138.00 138KV CKT 1
FDNS	06NR	7	20L	G15_033	FROM->TO	G14-057T 345.00 - SUNNYSIDE 345KV CKT 1	717	789	0.04327	100.939	P12:138:AEPW:CORNVIL4:DUNCAN-4
FDNS	06NR	7	20L	G15_033	FROM->TO	G14-057T 345.00 - SUNNYSIDE 345KV CKT 1	717	789	0.04271	100.9244	LASALLE - STONEWAL LH138.00 138KV CKT 1
FDNS	06NR	7	20L	G15_033	FROM->TO	G14-057T 345.00 - SUNNYSIDE 345KV CKT 1	717	789	0.04225	100.9239	PURCELL4 138.00 - WALNUT CREEK 138KV CKT 1
FDNS	06NR	7	20L	G15_033	FROM->TO	G14-057T 345.00 - SUNNYSIDE 345KV CKT 1	717	789	0.04271	100.9084	STONEWAL LH138.00 - TUPELO TAP 138KV CKT 1
FDNS	06NR	7	20L	G15_033	FROM->TO	G14-057T 345.00 - SUNNYSIDE 345KV CKT 1	717	789	0.04259	100.9038	EMPORIA ENERGY CENTER - G14_001T 345.00 345KV CKT 1
FDNS	06NR	7	20L	G15_033	FROM->TO	G14-057T 345.00 - SUNNYSIDE 345KV CKT 1	717	789	0.04261	100.8951	GEN336831 1-BAXTER WILSON SES
FDNS	06NR	7	20L	G15_033	FROM->TO	G14-057T 345.00 - SUNNYSIDE 345KV CKT 1	717	789	0.04262	100.8768	ENVILLE 138.00 - MARIETTA4 138.00 138KV CKT 1
FDNS	06NR	7	20L	G15_033	FROM->TO	G14-057T 345.00 - SUNNYSIDE 345KV CKT 1	717	789	0.04282	100.8767	G15063_T 345.00 - MATHWSN7 345.00 345KV CKT 1
FDNS	06NR	7	20L	G15_033	FROM->TO	G14-057T 345.00 - SUNNYSIDE 345KV CKT 1	717	789	0.04261	100.8765	GEN338146 1-INDEPENDENCE UNIT #2
FDNS	06NR	7	20L	G15_033	FROM->TO	G14-057T 345.00 - SUNNYSIDE 345KV CKT 1	717	789	0.04268	100.8763	P12:138:AEPW:SHERID4:112GORE4
FDNS	06NR	7	20L	G15_033	FROM->TO	G14-057T 345.00 - SUNNYSIDE 345KV CKT 1	717	789	0.04266	100.8679	GRACEMONT (BANK 1) 345/138/13.8KV TRANSFORMER CKT 1
FDNS	06NR	7	20L	G15_033	FROM->TO	G14-057T 345.00 - SUNNYSIDE 345KV CKT 1	717	789	0.04261	100.8629	GEN562783 1-G15036_4 0.6900
FDNS	06NR	7	20L	G15_033	FROM->TO	G14-057T 345.00 - SUNNYSIDE 345KV CKT 1	717	789	0.04261	100.8629	GEN562784 1-G15036_5 0.6900
FDNS	06NR	7	20L	G15_033	FROM->TO	G14-057T 345.00 - SUNNYSIDE 345KV CKT 1	717	789	0.04248	100.85	P12:138:AEPW:WTHWF4:WTH_SE4
FDNS	06NR	7	20L	G15_033	FROM->TO	G14-057T 345.00 - SUNNYSIDE 345KV CKT 1	717	789	0.04212	100.8448	BUCKNER7 345.00 - SPEARVILLE 345KV CKT 1
FDNS	06NR	7	20L	G15_033	FROM->TO	G14-057T 345.00 - SUNNYSIDE 345KV CKT 1	717	789	0.04212	100.8448	BUCKNER7 345.00 - SPEARVILLE 345KV CKT 1
FDNS	06NR	7	20L	G15_033	FROM->TO	G14-057T 345.00 - SUNNYSIDE 345KV CKT 1	717	789	0.04261	100.8442	NELSON 230/20.0KV TRANSFORMER CKT 1
FDNS	06NR	7	20L	G15_033	FROM->TO	G14-057T 345.00 - SUNNYSIDE 345KV CKT 1	717	789	0.04259	100.8424	ANADARKO - GEORGIA 138KV CKT 1
FDNS	06NR	7	20L	G15_033	FROM->TO	G14-057T 345.00 - SUNNYSIDE 345KV CKT 1	717	789	0.04244	100.8278	GERALD GENTLEMAN STATION - RED WILLOW 345KV CKT 1
FDNS	06NR	7	20L	G15_033	FROM->TO	G14-057T 345.00 - SUNNYSIDE 345KV CKT 1	717	789	0.04262	100.827	ENVILLE 138.00 - LEBANON 138KV CKT 1
FDNS	06NR	7	20L	G15_033	FROM->TO	G14-057T 345.00 - SUNNYSIDE 345KV CKT 1	717	789	0.04261	100.8263	GEN506752 1-LEBROCK GAS 1
FDNS	06NR	7	20L	G15_033	FROM->TO	G14-057T 345.00 - SUNNYSIDE 345KV CKT 1	717	789	0.04261	100.8255	GEN506753 1-LEBROCK GAS 2
FDNS	06NR	7	20L	G15_033	FROM->TO	G14-057T 345.00 - SUNNYSIDE 345KV CKT 1	717	789	0.04259	100.8244	G14_001T 345.00 - WICHITA 345KV CKT 1
FDNS	06NR	7	20L	G15_033	FROM->TO	G14-057T 345.00 - SUNNYSIDE 345KV CKT 1	717	789	0.05019	100.8221	TUCO INTERCHANGE - TUCO_2 345.00 345KV CKT 1
FDNS	06NR	7	20L	G15_033	FROM->TO	G14-057T 345.00 - SUNNYSIDE 345KV CKT 1	717	789	0.04361	100.8155	LAWTON EASTSIDE (LES 4) 345/138/13.8KV TRANSFORMER CKT 1
FDNS	06NR	7	20L	G15_033	FROM->TO	G14-057T 345.00 - SUNNYSIDE 345KV CKT 1	717	789	0.04361	100.8155	LAWTON EASTSIDE (LES 4) 345/138/13.8KV TRANSFORMER CKT 1
FDNS	06NR	7	20L	G15_033	FROM->TO	G14-057T 345.00 - SUNNYSIDE 345KV CKT 1	717	789	0.04259	100.8116	FLETCHER - GEORGIA 138KV CKT 1
FDNS	06NR	7	20L	G15_033	FROM->TO	G14-057T 345.00 - SUNNYSIDE 345KV CKT 1	717	789	0.04261	100.7976	GEN515577 1-ARBWND11 0.6900
FDNS	06NR	7	20L	G15_033	FROM->TO	G14-057T 345.00 - SUNNYSIDE 345KV CKT 1	717	789	0.04256	100.7973	EMPIRE - FLETCHER 138KV CKT 1
FDNS	06NR	7	20L	G15_033	FROM->TO	G14-057T 345.00 - SUNNYSIDE 345KV CKT 1	717	789	0.04282	100.78	CIMARRON - NORTHWEST 345KV CKT 1
FDNS	06NR	7	20L	G15_033	FROM->TO	G14-057T 345.00 - SUNNYSIDE 345KV CKT 1	717	789	0.04249	100.7772	P12:138:OKGE-AEPW:JENSEN4:REDROCKRD4
FDNS	06NR	7	20L	G15_033	FROM->TO	G14-057T 345.00 - SUNNYSIDE 345KV CKT 1	717	789	0.04242	100.7689	MOREWOOD SW - NINE MILE 138KV CKT 1
FDNS	06NR	7	20L	G15_033	FROM->TO	G14-057T 345.00 - SUNNYSIDE 345KV CKT 1	717	789	0.04256	100.7663	COMANCHE - EMPIRE 138KV CKT 1
FDNS	06NR	7	20L	G15_033	FROM->TO	G14-057T 345.00 - SUNNYSIDE 345KV CKT 1	717	789	0.0426	100.7579	8DANIEL8 500.00 - MCKNIGHT 500KV CKT 1
FDNS	06NR	7	20L	G15_033	FROM->TO	G14-057T 345.00 - SUNNYSIDE 345KV CKT 1	717	789	0.04248	100.7463	WEATHERFORD TAP - WEATHERFORD WIND FARM 138KV CKT 1
FDNS	06NR	7	20L	G15_033	FROM->TO	G14-057T 345.00 - SUNNYSIDE 345KV CKT 1	717	789	0.04282	100.7422	DUNCAN (DUNCAN) 138/69/13.8KV TRANSFORMER CKT 1
FDNS	06NR	7	20L	G15_033	FROM->TO	G14-057T 345.00 - SUNNYSIDE 345KV CKT 1	717	789	0.04282	100.7422	DUNCAN (DUNCAN) 138/69/13.8KV TRANSFORMER CKT 1
FDNS	06NR	7	20L	G15_033	FROM->TO	G14-057T 345.00 - SUNNYSIDE 345KV CKT 1	717	789	0.04261	100.7308	GEN338143 1-INDEPENDENCE UNIT #1
FDNS	06NR	7	20L	G15_033	FROM->TO	G14-057T 345.00 - SUNNYSIDE 345KV CKT 1	717	789	0.04261	100.7308	GEN590011 2-ERCOT EQUIVALENCE
FDNS	06NR	7	20L	G15_033	FROM->TO	G14-057T 345.00 - SUNNYSIDE 345KV CKT 1	717	789	0.04271	100.7248	P12:138:WFEC:MSL05
FDNS	06NR	7	20L	G15_033	FROM->TO	G14-057T 345.00 - SUNNYSIDE 345KV CKT 1	717	789	0.04261	100.7237	GEN335614 1-WILLOW GLENN UNIT#4
FDNS	06NR	7	20L	G15_033	FROM->TO	G14-057T 345.00 - SUNNYSIDE 345KV CKT 1	717	789	0.04261	100.7213	GEN334441 1-SABINE UNIT 5
FDNS	06NR	7	20L	G15_033	FROM->TO	G14-057T 345.00 - SUNNYSIDE 345KV CKT 1	717	789	0.04248	100.7084	WEATHERFORD SOUTHEAST - WEATHERFORD TAP 138KV CKT 1
FDNS	06NR	7	20L	G15_033	FROM->TO	G14-057T 345.00 - SUNNYSIDE 345KV CKT 1	717	789	0.04261	100.7033	GEN337041 1-GERALD ANDRUS
FDNS	06NR	7	20L	G15_033	FROM->TO	G14-057T 345.00 - SUNNYSIDE 345KV CKT 1	717	789	0.04262	100.7008	LEBANON - TEXOMA JCT 138KV CKT 1
FDNS	06NR	7	20L	G15_033	FROM->TO	G14-057T 345.00 - SUNNYSIDE 345KV CKT 1	717	789	0.04261	100.7008	GEN590010 1-ERCOT EQUIVALENCE
FDNS	06NR	7	20L	G15_033	FROM->TO	G14-057T 345.00 - SUNNYSIDE 345KV CKT 1	717	789	0.04261	100.6998	GEN334392 1-EXXON MOBIL IPP 1
FDNS	06NR	7	20L	G15_033	FROM->TO	G14-057T 345.00 - SUNNYSIDE 345KV CKT 1	717	789	0.04261	100.6981	GEN334393 1-EXXON MOBIL IPP 2
FDNS	06NR	7	20L	G15_033	FROM->TO	G14-057T 345.00 - SUNNYSIDE 345KV CKT 1	717	789	0.04261	100.6981	GEN334394 1-EXXON MOBIL IPP 3
FDNS	06NR	7	20L	G15_033	FROM->TO	G14-057T 345.00 - SUNNYSIDE 345KV CKT 1	717	789	0.04261	100.6959	GEN336191 1-LITTLE GYPSY UNIT#3
FDNS	06NR	7	20L	G15_033	FROM->TO	G14-057T 345.00 - SUNNYSIDE 345KV CKT 1	717	789	0.04261	100.6949	P12:69:AEPW:L.E.S.-2:LAW WC2
FDNS	06NR	7	20L	G15_033	FROM->TO	G14-057T 345.00 - SUNNYSIDE 345KV CKT 1	717	789	0.04261	100.6914	GEN336464 1-MICHOUD UNIT #3
FDNS	06NR	7	20L	G15_033	FROM->TO	G14-057T 345.00 - SUNNYSIDE 345KV CKT 1	717	789	0.04259	100.6901	LAYFLD8 500.00 - MOUNT OLIVE 500KV CKT 1
FDNS	06NR	7	20L	G15_033	FROM->TO	G14-057T 345.00 - SUNNYSIDE 345KV CKT 1	717	789	0.04259	100.6901	LAYFLD8 500.00 - MOUNT OLIVE 500KV CKT 1
FDNS	06NR	7	20L	G15_033	FROM->TO	G14-057T 345.00 - SUNNYSIDE 345KV CKT 1	717	789	0.04261	100.6841	GEN300007 1-NEW MADRID UNIT 2
FDNS	06NR	7	20L	G15_033	FROM->TO	G14-057T 345.00 - SUNNYSIDE 345KV CKT 1	717	789	0.04261	100.6705	P12:161:AEPW:DYESS 5:HYLAND 5
FDNS	06NR	7	20L	G15_033	FROM->TO	G14-057T 345.00 - SUNNYSIDE 345KV CKT 1	717	789	0.04268	100.6698	P12:138:AEPW:112GORE4:L.E.S.-4

SOLUTION	GROUP	SCENARIO	SEASON	SOURCE	DIRECTION	MONITORED ELEMENT	RATEA (MVA)	RATEB(MVA)	TDF	TC%LOADING (% MVA)	CONTINGENCY
FDNS	06NR	7	20L	G15_033	FROM->TO	G14-057T 345.00 - SUNNYSIDE 345KV CKT 1	717	789	0.04282	100.6684	P12:69:WFEC-AEPW:COMANCH2:DUNCAN-2
FDNS	06NR	7	20L	G15_033	FROM->TO	G14-057T 345.00 - SUNNYSIDE 345KV CKT 1	717	789	0.04262	100.6682	GRDA1 - GREC TAP5 345.00 345KV CKT 1
FDNS	06NR	7	20L	G15_033	FROM->TO	G14-057T 345.00 - SUNNYSIDE 345KV CKT 1	717	789	0.04266	100.6671	P12:138:AEPW:CORNVIL4:S.W.S.-4
FDNS	06NR	7	20L	G15_033	FROM->TO	G14-057T 345.00 - SUNNYSIDE 345KV CKT 1	717	789	0.04261	100.6623	GEN334433 1-SABINE UNIT 3
FDNS	00NR	7	17SP	G15_033	FROM->TO	G14-057T 345.00 - SUNNYSIDE 345KV CKT 1	717	789	0.05433	100.6581	GRACEMONT - MINCO 345KV CKT 1
FDNS	06NR	7	20L	G15_033	FROM->TO	G14-057T 345.00 - SUNNYSIDE 345KV CKT 1	717	789	0.04225	100.6574	PAOLI - WALNUT CREEK 138KV CKT 1
FDNS	06NR	7	20L	G15_033	FROM->TO	G14-057T 345.00 - SUNNYSIDE 345KV CKT 1	717	789	0.04261	100.6559	FRONTIER 345/18.0KV TRANSFORMER CKT 1
FDNS	06NR	7	20L	G15_033	FROM->TO	G14-057T 345.00 - SUNNYSIDE 345KV CKT 1	717	789	0.04242	100.6534	BEARCAT 138.00 - NINE MILE 138KV CKT 1
FDNS	06NR	7	20L	G15_033	FROM->TO	G14-057T 345.00 - SUNNYSIDE 345KV CKT 1	717	789	0.04261	100.6522	FRONTIER 345/18.0KV TRANSFORMER CKT 1
FDNS	06NR	7	20L	G15_033	FROM->TO	G14-057T 345.00 - SUNNYSIDE 345KV CKT 1	717	789	0.04261	100.6521	GEN303007 1-1BC2 U2
FDNS	06NR	7	20L	G15_033	FROM->TO	G14-057T 345.00 - SUNNYSIDE 345KV CKT 1	717	789	0.04261	100.6449	GEN336242 1-1NMIL ST1 18.000
FDNS	06NR	7	20L	G15_033	FROM->TO	G14-057T 345.00 - SUNNYSIDE 345KV CKT 1	717	789	0.04261	100.6428	GEN303006 1-1BC2 U1
FDNS	06NR	7	20L	G15_033	FROM->TO	G14-057T 345.00 - SUNNYSIDE 345KV CKT 1	717	789	0.04261	100.6415	P12:161:AEPW:EROGERS5:ECNTRTN5
FDNS	06NR	7	20L	G15_033	FROM->TO	G14-057T 345.00 - SUNNYSIDE 345KV CKT 1	717	789	0.04282	100.6301	DUNCAN - TOSCO 69KV CKT 1
FDNS	06NR	7	20L	G15_033	FROM->TO	G14-057T 345.00 - SUNNYSIDE 345KV CKT 1	717	789	0.04264	100.6298	ANADARKO - GRACMNT4 138.00 138KV CKT 1
FDNS	06NR	7	20L	G15_033	FROM->TO	G14-057T 345.00 - SUNNYSIDE 345KV CKT 1	717	789	0.04261	100.622	GEN336801 1-BAXTER WILSON UNIT #1
FDNS	06NR	7	20L	G15_033	FROM->TO	G14-057T 345.00 - SUNNYSIDE 345KV CKT 1	717	789	0.04248	100.6149	CLINTON JUNCTION - CLINTON NATURAL GAS TAP 138KV CKT 1
FDNS	06NR	7	20L	G15_033	FROM->TO	G14-057T 345.00 - SUNNYSIDE 345KV CKT 1	717	789	0.04259	100.6147	G15074_T 345.00 - HOYT 345KV CKT 1
FDNS	06NR	7	20L	G15_033	FROM->TO	G14-057T 345.00 - SUNNYSIDE 345KV CKT 1	717	789	0.04282	100.6134	COMANCHE TAP - TOSCO 69KV CKT 1
FDNS	06NR	7	20L	G15_033	FROM->TO	G14-057T 345.00 - SUNNYSIDE 345KV CKT 1	717	789	0.04256	100.6091	DRAPER LAKE - SEMINOLE 345KV CKT 3
FDNS	06NR	7	20L	G15_033	FROM->TO	G14-057T 345.00 - SUNNYSIDE 345KV CKT 1	717	789	0.04261	100.6056	GEN336251 1-NINEMILE POINT UNIT#4
FDNS	06NR	7	20L	G15_033	FROM->TO	G14-057T 345.00 - SUNNYSIDE 345KV CKT 1	717	789	0.04252	100.5993	CUSTER4 138.00 - RED HILLS WIND 138KV CKT 1
FDNS	06NR	7	20L	G15_033	FROM->TO	G14-057T 345.00 - SUNNYSIDE 345KV CKT 1	717	789	0.04259	100.5969	MAGNET COVE - SHERIDAN EHV 500KV CKT 1
FDNS	06NR	7	20L	G15_033	FROM->TO	G14-057T 345.00 - SUNNYSIDE 345KV CKT 1	717	789	0.04259	100.5945	HOT SPRINGS EHV - MAGNET COVE 500KV CKT 1
FDNS	06NR	7	20L	G15_033	FROM->TO	G14-057T 345.00 - SUNNYSIDE 345KV CKT 1	717	789	0.04261	100.5913	CIMARRON - CZECH HALL 138KV CKT 1
FDNS	06NR	7	20L	G15_033	FROM->TO	G14-057T 345.00 - SUNNYSIDE 345KV CKT 1	717	789	0.04242	100.5842	BEARCAT 138.00 - MOORELAND 138KV CKT 1
FDNS	06NR	7	20L	G15_033	FROM->TO	G14-057T 345.00 - SUNNYSIDE 345KV CKT 1	717	789	0.04261	100.5835	GEN334070 1-LEWIS CREEK 1
FDNS	06NR	7	20L	G15_033	FROM->TO	G14-057T 345.00 - SUNNYSIDE 345KV CKT 1	717	789	0.04261	100.5835	GEN334071 1-LEWIS CREEK 2
FDNS	06NR	7	20L	G15_033	FROM->TO	G14-057T 345.00 - SUNNYSIDE 345KV CKT 1	717	789	0.04252	100.5788	CUSTER4 138.00 - ELLIS 4 138.00 138KV CKT 1
FDNS	06NR	7	20L	G15_033	FROM->TO	G14-057T 345.00 - SUNNYSIDE 345KV CKT 1	717	789	0.04257	100.5781	CIMARRON - SARA 138KV CKT 1
FDNS	06NR	7	20L	G15_033	FROM->TO	G14-057T 345.00 - SUNNYSIDE 345KV CKT 1	717	789	0.04327	100.5757	DUNCAN - DUNCHERTP4 138.00 138KV CKT 1
FDNS	06NR	7	20L	G15_033	FROM->TO	G14-057T 345.00 - SUNNYSIDE 345KV CKT 1	717	789	0.04327	100.5757	DUNCAN - DUNCHERTP4 138.00 138KV CKT 1
FDNS	06NR	7	20L	G15_033	FROM->TO	G14-057T 345.00 - SUNNYSIDE 345KV CKT 1	717	789	0.04327	100.5749	DUNCAN EASTSIDE - DUNCHERTP4 138.00 138KV CKT 1
FDNS	06NR	7	20L	G15_033	FROM->TO	G14-057T 345.00 - SUNNYSIDE 345KV CKT 1	717	789	0.04267	100.5642	NORGE ROAD - SOUTHWESTERN STATION 138KV CKT 1
FDNS	06NR	7	20L	G15_033	FROM->TO	G14-057T 345.00 - SUNNYSIDE 345KV CKT 1	717	789	0.04267	100.5642	NORGE ROAD - SOUTHWESTERN STATION 138KV CKT 1
FDNS	06NR	7	20L	G15_033	FROM->TO	G14-057T 345.00 - SUNNYSIDE 345KV CKT 1	717	789	0.04261	100.5622	CZECH HALL - XEROX 138KV CKT 1
FDNS	06NR	7	20L	G15_033	FROM->TO	G14-057T 345.00 - SUNNYSIDE 345KV CKT 1	717	789	0.04261	100.5605	MORGAN - XEROX 138KV CKT 1
FDNS	06NR	7	20L	G15_033	FROM->TO	G14-057T 345.00 - SUNNYSIDE 345KV CKT 1	717	789	0.04239	100.5599	SEMINOLE - VANOSTP4 138.00 138KV CKT 1
FDNS	06NR	7	20L	G15_033	FROM->TO	G14-057T 345.00 - SUNNYSIDE 345KV CKT 1	717	789	0.04259	100.5558	G15074_T 345.00 - JEFFREY ENERGY CENTER 345KV CKT 1
FDNS	06NR	7	20L	G15_033	FROM->TO	G14-057T 345.00 - SUNNYSIDE 345KV CKT 1	717	789	0.04282	100.5545	COMANCHE - COMANCHE TAP 69KV CKT 1
FDNS	06NR	7	20L	G15_033	FROM->TO	G14-057T 345.00 - SUNNYSIDE 345KV CKT 1	717	789	0.04261	100.5512	MORGAN - MUSTANG 138KV CKT 1
FDNS	06NR	7	20L	G15_033	FROM->TO	G14-057T 345.00 - SUNNYSIDE 345KV CKT 1	717	789	0.04261	100.5508	GEN337430 1-PERYVILLE UNIT #3
FDNS	06NR	7	20L	G15_033	FROM->TO	G14-057T 345.00 - SUNNYSIDE 345KV CKT 1	717	789	0.04261	100.5503	GEN336241 1-1NMIL CT2 18.000
FDNS	06NR	7	20L	G15_033	FROM->TO	G14-057T 345.00 - SUNNYSIDE 345KV CKT 1	717	789	0.04261	100.5502	GEN336240 1-1NMIL CT1 18.000
FDNS	06NR	7	20L	G15_033	FROM->TO	G14-057T 345.00 - SUNNYSIDE 345KV CKT 1	717	789	0.04261	100.5499	GEN337428 1-PERYVILLE UNIT #1
FDNS	06NR	7	20L	G15_033	FROM->TO	G14-057T 345.00 - SUNNYSIDE 345KV CKT 1	717	789	0.04258	100.548	BLACKBERRY - NEOSHO 345KV CKT 1
FDNS	06NR	7	20L	G15_033	FROM->TO	G14-057T 345.00 - SUNNYSIDE 345KV CKT 1	717	789	0.04258	100.548	BLACKBERRY - NEOSHO 345KV CKT 1
FDNS	06NR	7	20L	G15_033	FROM->TO	G14-057T 345.00 - SUNNYSIDE 345KV CKT 1	717	789	0.04261	100.5411	GEN335571 1-CARVILLE UNIT #1
FDNS	06NR	7	20L	G15_033	FROM->TO	G14-057T 345.00 - SUNNYSIDE 345KV CKT 1	717	789	0.04261	100.541	GEN335570 1-CARVILLE CTG
FDNS	06NR	7	20L	G15_033	FROM->TO	G14-057T 345.00 - SUNNYSIDE 345KV CKT 1	717	789	0.04264	100.5403	CORN TAP - SEQUOYAHJ4 138.00 138KV CKT 1
FDNS	06NR	7	20L	G15_033	FROM->TO	G14-057T 345.00 - SUNNYSIDE 345KV CKT 1	717	789	0.04264	100.5401	ANADARKO - SEQUOYAHJ4 138.00 138KV CKT 1
FDNS	06NR	7	20L	G15_033	FROM->TO	G14-057T 345.00 - SUNNYSIDE 345KV CKT 1	717	789	0.0426	100.5314	P12:138:AEPW-OGE:SHIDLER4:OSAGE 4
FDNS	06NR	7	20L	G15_033	FROM->TO	G14-057T 345.00 - SUNNYSIDE 345KV CKT 1	717	789	0.04257	100.5312	SARA - STHLAKE4 138.00 138KV CKT 1
FDNS	06NR	7	20L	G15_033	FROM->TO	G14-057T 345.00 - SUNNYSIDE 345KV CKT 1	717	789	0.04261	100.5305	GEN336167 1-GULF OXY U1
FDNS	06NR	7	20L	G15_033	FROM->TO	G14-057T 345.00 - SUNNYSIDE 345KV CKT 1	717	789	0.04261	100.5305	GEN336168 1-GULF OXY U2
FDNS	06NR	7	20L	G15_033	FROM->TO	G14-057T 345.00 - SUNNYSIDE 345KV CKT 1	717	789	0.04261	100.5305	GEN336169 1-GULF OXY U3
FDNS	06NR	7	20L	G15_033	FROM->TO	G14-057T 345.00 - SUNNYSIDE 345KV CKT 1	717	789	0.04261	100.5202	GEN303024 1-1G3INTHB 18.000
FDNS	06NR	7	20L	G15_033	FROM->TO	G14-057T 345.00 - SUNNYSIDE 345KV CKT 1	717	789	0.04257	100.5186	MCCLAIN - STHLAKE4 138.00 138KV CKT 1
FDNS	06NR	7	20L	G15_033	FROM->TO	G14-057T 345.00 - SUNNYSIDE 345KV CKT 1	717	789	0.04292	100.5171	P12:69:AEPW-OMPA:COMANC-2:OMWALTR2
FDNS	06NR	7	20L	G15_033	FROM->TO	G14-057T 345.00 - SUNNYSIDE 345KV CKT 1	717	789	0.04266	100.5146	SOUTHWESTERN STATION - VERDEN 138KV CKT 1
FDNS	00NR	7	20SP	G15_033	FROM->TO	G14-057T 345.00 - SUNNYSIDE 345KV CKT 1	717	789	0.05201	100.5073	CIMARRON - MINCO 345KV CKT 1
FDNS	06NR	7	20L	G15_033	FROM->TO	G14-057T 345.00 - SUNNYSIDE 345KV CKT 1	717	789	0.04266	100.504	NORTH 29TH CHICKASHA - VERDEN 138KV CKT 1
FDNS	06NR	7	20L	G15_033	FROM->TO	G14-057T 345.00 - SUNNYSIDE 345KV CKT 1	717	789	0.04267	100.5035	CORNVILLE - NORGE ROAD 138KV CKT 1
FDNS	06NR	7	20L	G15_033	FROM->TO	G14-057T 345.00 - SUNNYSIDE 345KV CKT 1	717	789	0.04267	100.5035	CORNVILLE - NORGE ROAD 138KV CKT 1
FDNS	06NR	7	20L	G15_033	FROM->TO	G14-057T 345.00 - SUNNYSIDE 345KV CKT 1	717	789	0.04307	100.4872	TUTTLE - TUTTLE CONOCO TAP 138KV CKT 1
FDNS	06NR	7	20L	G15_033	FROM->TO	G14-057T 345.00 - SUNNYSIDE 345KV CKT 1	717	789	0.04266	100.4741	CORNVILLE - NORTH 29TH CHICKASHA 138KV CKT 1
FDNSLock	06NR	7	20L	G15_033	FROM->TO	G14-057T 345.00 - SUNNYSIDE 345KV CKT 1	717	789	0.04261	100.3	SUNNYSIDE 1 13KV SWITCHED SHUNT
FDNS	06NR	7	20L	G15_033	FROM->TO	G14-057T 345.00 - SUNNYSIDE 345KV CKT 1	717	789	0.04261	100.2932	SUNNYSIDE 1 13KV SWITCHED SHUNT
FDNS	06NR	7	20L	G15_033	FROM->TO	G14-057T 345.00 - SUNNYSIDE 345KV CKT 1	717	789	0.04261	100.1106	OKLAUNION 345KV SWITCHED SHUNT
FDNSLock	06NR	7	20L	G15_033	FROM->TO	G14-057T 345.00 - SUNNYSIDE 345KV CKT 1	717	789	0.04261	100.1	OKLAUNION 345KV SWITCHED SHUNT
FDNS	06NR	7	20L	G15_033	FROM->TO	G14-057T 345.00 - SUNNYSIDE 345KV CKT 1	717	789	0.04287	99.9	G15085_T 138.00 - RUSSELL 138KV CKT 1
FDNS	06NR	7	20L	G15_033	FROM->TO	G14-057T 345.00 - SUNNYSIDE 345KV CKT 1	717	789	0.04402	99.8	P12:138:AEPW:112GORE4:SNYDER-4
FDNS	06NR	7	20L	G15_033	FROM->TO	G14-057T 345.00 - SUNNYSIDE 345KV CKT 1	717	789	0.04302	99.8	P12:230:AEPW:ELKCITY6:SWEETWT6
FDNS	06NR	7	20L	G15_033	FROM->TO	G14-057T 345.00 - SUNNYSIDE 345KV CKT 1	717	789	0.04316	99.7	P12:138:AEPW:HOB-JCT4:ELKCTY-4
FDNS	06NR	7	20L	G15_033	FROM->TO	G14-057T 345.00 - SUNNYSIDE 345KV CKT 1	717	789	0.04311	99.7	CHILDRESS - LAKE PAULINE 138KV CKT 1
FDNS	06NR	7	20L	G15_033	FROM->TO	G14-057T 345.00 - SUNNYSIDE 345KV CKT 1	717	789	0.04311	99.7	CHILDRESS - LAKE PAULINE 138KV CKT 1
FDNS	06NR	7	20L	G15_033	FROM->TO	G14-057T 345.00 - SUNNYSIDE 345KV CKT 1	717	789	0.04302	99.7	GRAPEVINE INTERCHANGE - STATELINE INTERCHANGE 230KV CKT 1
FDNS	06NR	7	20L	G15_033	FROM->TO	G14-057T 345.00 - SUNNYSIDE 345KV CKT 1	717	789	0.04302	99.7	GRAPEVINE INTERCHANGE - STATELINE INTERCHANGE 230KV CKT 1
FDNS	06NR	7	20L	G15_033	FROM->TO	G14-057T 345.00 - SUNNYSIDE 345KV CKT 1	717	789	0.04288	99.7	KIRBY SWITCHING STATION - MCCLELLAN SUB 115KV CKT 1

SOLUTION	GROUP	SCENARIO	SEASON	SOURCE	DIRECTION	MONITORED ELEMENT	RATEA (MVA)	RATEB(MVA)	TDF	TC%LOADING (% MVA)	CONTINGENCY
FDNS	06NR	7	20L	G15_033	FROM->TO	G14-057T 345.00 - SUNNYSIDE 345KV CKT 1	717	789	0.04288	99.7	MCCLELLAN SUB - MCLEAN RURAL SUB 115KV CKT 1
FDNS	06NR	7	20L	G15_033	FROM->TO	G14-057T 345.00 - SUNNYSIDE 345KV CKT 1	717	789	0.04288	99.7	MCLEAN RURAL SUB - SHAMROCK 115KV CKT 1
FDNS	06NR	7	20L	G15_033	FROM->TO	G14-057T 345.00 - SUNNYSIDE 345KV CKT 1	717	789	0.04288	99.7	MCLEAN RURAL SUB - SHAMROCK 115KV CKT 1
FDNS	06NR	7	20L	G15_033	FROM->TO	G14-057T 345.00 - SUNNYSIDE 345KV CKT 1	717	789	0.04288	99.7	SHAMROCK (SHAMRCK1) 115/69/14.4KV TRANSFORMER CKT 1
FDNS	06NR	7	20L	G15_033	FROM->TO	G14-057T 345.00 - SUNNYSIDE 345KV CKT 1	717	789	0.04288	99.7	SHAMROCK (SHAMRCK1) 115/69/14.4KV TRANSFORMER CKT 1
FDNS	06NR	7	20L	G15_033	FROM->TO	G14-057T 345.00 - SUNNYSIDE 345KV CKT 1	717	789	0.04261	99.7	GEN562084 1-G11_050_3 0.6900
FDNS	06NR	7	20L	G15_033	FROM->TO	G14-057T 345.00 - SUNNYSIDE 345KV CKT 1	717	789	0.04402	99.6	CACHE - SNYDER 138KV CKT 1
FDNS	06NR	7	20L	G15_033	FROM->TO	G14-057T 345.00 - SUNNYSIDE 345KV CKT 1	717	789	0.04316	99.6	CLINTON AIR FORCE BASE TAP - ELK CITY 138KV CKT 1
FDNS	06NR	7	20L	G15_033	FROM->TO	G14-057T 345.00 - SUNNYSIDE 345KV CKT 1	717	789	0.04316	99.6	CLINTON AIR FORCE BASE TAP - HOBART JUNCTION 138KV CKT 1
FDNS	06NR	7	20L	G15_033	FROM->TO	G14-057T 345.00 - SUNNYSIDE 345KV CKT 1	717	789	0.04313	99.6	GRAPEVINE INTERCHANGE - NICHOLS STATION 230KV CKT 1
FDNS	06NR	7	20L	G15_033	FROM->TO	G14-057T 345.00 - SUNNYSIDE 345KV CKT 1	717	789	0.04313	99.6	GRAPEVINE INTERCHANGE - NICHOLS STATION 230KV CKT 1
FDNS	06NR	7	20L	G15_033	FROM->TO	G14-057T 345.00 - SUNNYSIDE 345KV CKT 1	717	789	0.04288	99.6	P12:138:AEPW:SHAM4WT:CHILD4WT
FDNS	06NR	7	20L	G15_033	FROM->TO	G14-057T 345.00 - SUNNYSIDE 345KV CKT 1	717	789	0.04261	99.6	BURLINGTON NO1 + NO 2 + NO 3 161/20.0KV TRANSFORMER CKT 1
FDNS	06NR	7	20L	G15_033	FROM->TO	G14-057T 345.00 - SUNNYSIDE 345KV CKT 1	717	789	0.04261	99.6	GEN515591 1-PALDRW11 0.6900
FDNS	06NR	7	20L	G15_033	FROM->TO	G14-057T 345.00 - SUNNYSIDE 345KV CKT 1	717	789	0.04261	99.6	GEN560112 1-G08_037_3 0.6900
FDNS	06NR	7	20L	G15_033	FROM->TO	G14-057T 345.00 - SUNNYSIDE 345KV CKT 1	717	789	0.04261	99.6	GEN560186 1-BLUCAN2-WTG10.7000
FDNS	06NR	7	20L	G15_033	FROM->TO	G14-057T 345.00 - SUNNYSIDE 345KV CKT 1	717	789	0.04261	99.6	GEN560187 1-WTH WIND 0.5750
FDNS	06NR	7	20L	G15_033	FROM->TO	G14-057T 345.00 - SUNNYSIDE 345KV CKT 1	717	789	0.04261	99.6	GEN563273 2-G15093_4 0.6900
FDNS	06NR	7	20L	G15_033	FROM->TO	G14-057T 345.00 - SUNNYSIDE 345KV CKT 1	717	789	0.04261	99.6	GEN641089 2-ENERGY CENTER 2
FDNS	06NR	7	20L	G15_033	FROM->TO	G14-057T 345.00 - SUNNYSIDE 345KV CKT 1	717	789	0.04261	99.6	GEN645012 2-NEBRASKA CITY 2
FDNS	06NR	7	20L	G15_033	FROM->TO	G14-057T 345.00 - SUNNYSIDE 345KV CKT 1	717	789	0.04261	99.6	GEN659103 1-ANTELOPE VALLEY UNIT1
FDNS	06NR	7	20L	G15_033	FROM->TO	G14-057T 345.00 - SUNNYSIDE 345KV CKT 1	717	789	0.04261	99.6	GEN659107 2-ANTELOPE VALLEY UNIT2
FDNS	06NR	7	20L	G15_033	FROM->TO	G14-057T 345.00 - SUNNYSIDE 345KV CKT 1	717	789	0.0426	99.6	P12:138:AEPW-SWPA:LONEOAK4:TUPELO4
FDNS	06NR	7	20L	G15_033	FROM->TO	G14-057T 345.00 - SUNNYSIDE 345KV CKT 1	717	789	0.0426	99.6	P12:138:WFEC:MSL06
FDNS	06NR	7	20L	G15_033	FROM->TO	G14-057T 345.00 - SUNNYSIDE 345KV CKT 1	717	789	0.04252	99.6	BROWN - RUSSETT 138KV CKT 1
FDNS	06NR	7	20L	G15_033	FROM->TO	G14-057T 345.00 - SUNNYSIDE 345KV CKT 1	717	789	0.04252	99.6	RUSSETT - RUSSETT 138KV CKT 1
FDNS	06NR	7	20L	G15_033	FROM->TO	G14-057T 345.00 - SUNNYSIDE 345KV CKT 1	717	789	0.04248	99.6	RUSSETT - SPRINGDALE 138KV CKT 1
FDNS	06NR	7	20L	G15_033	FROM->TO	G14-057T 345.00 - SUNNYSIDE 345KV CKT 1	717	789	0.042	99.6	P12:138:OKGE:3TERM39
FDNS	06NR	7	20L	G15_033	FROM->TO	G14-057T 345.00 - SUNNYSIDE 345KV CKT 1	717	789	0.04261	99.5	GEN344894 1-1LAB G1 20.000
FDNS	06NR	7	20L	G15_033	FROM->TO	G14-057T 345.00 - SUNNYSIDE 345KV CKT 1	717	789	0.04261	99.5	GEN515443 1-MNCOWND1 0.7000
FDNS	06NR	7	20L	G15_033	FROM->TO	G14-057T 345.00 - SUNNYSIDE 345KV CKT 1	717	789	0.04261	99.5	GEN530690 1-PRWINDG1 0.6900
FDNS	06NR	7	20L	G15_033	FROM->TO	G14-057T 345.00 - SUNNYSIDE 345KV CKT 1	717	789	0.04261	99.5	GEN532663 1-LAWRENCE ENERGY CENTER UNIT 5
FDNS	06NR	7	20L	G15_033	FROM->TO	G14-057T 345.00 - SUNNYSIDE 345KV CKT 1	717	789	0.04261	99.5	GEN539807 1-G05-12-1 0.6900
FDNS	06NR	7	20L	G15_033	FROM->TO	G14-057T 345.00 - SUNNYSIDE 345KV CKT 1	717	789	0.04261	99.5	GEN562017 1-G11_022_3 0.6900
FDNS	06NR	7	20L	G15_033	FROM->TO	G14-057T 345.00 - SUNNYSIDE 345KV CKT 1	717	789	0.04261	99.5	GEN562023 1-G11_020_3 0.6900
FDNS	06NR	7	20L	G15_033	FROM->TO	G14-057T 345.00 - SUNNYSIDE 345KV CKT 1	717	789	0.04261	99.5	GEN562026 1-G11_019_3 0.6900
FDNS	06NR	7	20L	G15_033	FROM->TO	G14-057T 345.00 - SUNNYSIDE 345KV CKT 1	717	789	0.04261	99.5	GEN562074 1-G1149G1504 0.6900
FDNS	06NR	7	20L	G15_033	FROM->TO	G14-057T 345.00 - SUNNYSIDE 345KV CKT 1	717	789	0.04261	99.5	GEN562685 1-G15_013_3 0.3550
FDNS	06NR	7	20L	G15_033	FROM->TO	G14-057T 345.00 - SUNNYSIDE 345KV CKT 1	717	789	0.04261	99.5	GEN563202 1-G15085_3 0.5500
FDNS	06NR	7	20L	G15_033	FROM->TO	G14-057T 345.00 - SUNNYSIDE 345KV CKT 1	717	789	0.04261	99.5	GEN629072 4-LANSING GENERATOR FOR UNITS NO4 EIA CODE 1
FDNS	06NR	7	20L	G15_033	FROM->TO	G14-057T 345.00 - SUNNYSIDE 345KV CKT 1	717	789	0.04259	99.5	8BHAM STEEL 500.00 - WEST MEMPHIS 500 500KV CKT 1
FDNS	06NR	7	20L	G15_033	FROM->TO	G14-057T 345.00 - SUNNYSIDE 345KV CKT 1	717	789	0.04259	99.5	P12:138:WFEC-AEPW:GOLDENSW4:CRAIGJT4
FDNS	06NR	7	20L	G15_033	FROM->TO	G14-057T 345.00 - SUNNYSIDE 345KV CKT 1	717	789	0.04257	99.5	HUGO (HUGO 1) 345/138/13.8KV TRANSFORMER CKT 1
FDNS	06NR	7	20L	G15_033	FROM->TO	G14-057T 345.00 - SUNNYSIDE 345KV CKT 1	717	789	0.04256	99.5	CARROLL - DOLET HILLS 230KV CKT 1
FDNS	06NR	7	20L	G15_033	FROM->TO	G14-057T 345.00 - SUNNYSIDE 345KV CKT 1	717	789	0.04253	99.5	HOPE - MCNAB REC 115KV CKT 1
FDNS	06NR	7	20L	G15_033	FROM->TO	G14-057T 345.00 - SUNNYSIDE 345KV CKT 1	717	789	0.04253	99.5	MCNAB REC - Turk 115 115KV CKT 1
FDNS	06NR	7	20L	G15_033	FROM->TO	G14-057T 345.00 - SUNNYSIDE 345KV CKT 1	717	789	0.04253	99.5	P12:115:AEPW:TURK3:HOPE3
FDNS	06NR	7	20L	G15_033	FROM->TO	G14-057T 345.00 - SUNNYSIDE 345KV CKT 1	717	789	0.04253	99.5	TURK (TURK 1) 138/115/13.2KV TRANSFORMER CKT 1
FDNS	06NR	7	20L	G15_033	FROM->TO	G14-057T 345.00 - SUNNYSIDE 345KV CKT 1	717	789	0.04253	99.5	TURK (TURK 1) 138/115/13.2KV TRANSFORMER CKT 1
FDNS	06NR	7	20L	G15_033	FROM->TO	G14-057T 345.00 - SUNNYSIDE 345KV CKT 1	717	789	0.0424	99.5	ROCKY POINT - SUNNYSIDE 138KV CKT 1
FDNS	00NR	7	25SP	G15_033	TO->FROM	JONES STATION - TUCO INTERCHANGE 230KV CKT 1	343.79	343.79	0.14515	129.1537	CARLISLE INTERCHANGE - TUCO INTERCHANGE 230KV CKT 1
FDNS	00NR	7	25SP	G15_033	TO->FROM	JONES STATION - TUCO INTERCHANGE 230KV CKT 1	343.79	343.79	0.14515	129.1537	CARLISLE INTERCHANGE - TUCO INTERCHANGE 230KV CKT 1
FDNS	00NR	7	25SP	G15_033	TO->FROM	JONES STATION - TUCO INTERCHANGE 230KV CKT 1	343.79	343.79	0.1124	112.419	GEN526333 1-JONES GEN #3 21 KV
FDNS	00NR	7	25SP	G15_033	TO->FROM	JONES STATION - TUCO INTERCHANGE 230KV CKT 1	343.79	343.79	0.1124	112.036	GEN526334 1-JONES_4 116.500
FDNS	00NR	7	25SP	G15_033	TO->FROM	JONES STATION - TUCO INTERCHANGE 230KV CKT 1	343.79	343.79	0.13566	107.2187	TUCO INTERCHANGE - YOAKUM_345 345.00 345KV CKT 1
FDNS	00NR	7	25SP	G15_033	TO->FROM	JONES STATION - TUCO INTERCHANGE 230KV CKT 1	343.79	343.79	0.13042	103.0013	CARLISLE INTERCHANGE - WOLFFORTH INTERCHANGE 230KV CKT 1
FDNS	00NR	7	25SP	G15_033	TO->FROM	JONES STATION - TUCO INTERCHANGE 230KV CKT 1	343.79	343.79	0.11273	101.0414	PLANT X STATION - SUNDOWN INTERCHANGE 230KV CKT 1
FDNS	00NR	7	25SP	G15_033	TO->FROM	JONES STATION - TUCO INTERCHANGE 230KV CKT 1	343.79	343.79	0.11273	101.0414	PLANT X STATION - SUNDOWN INTERCHANGE 230KV CKT 1
FDNS	00NR	7	25SP	G15_033	TO->FROM	JONES STATION - TUCO INTERCHANGE 230KV CKT 1	343.79	343.79	0.12523	100.2536	P12:345:SPS:J02.1.TOLK.EDDY
FDNS	00NR	7	25SP	G15_033	TO->FROM	JONES STATION - TUCO INTERCHANGE 230KV CKT 1	343.79	343.79	0.1124	100.1954	GEN526332 1-JONES GEN #2 21 KV
FDNS	00NR	7	25SP	G15_033	TO->FROM	JONES STATION - TUCO INTERCHANGE 230KV CKT 1	343.79	343.79	0.1124	100.1934	GEN526331 1-JONES GEN #1 22 KV
FDNS	00NR	7	25SP	G15_033	TO->FROM	JONES STATION - TUCO INTERCHANGE 230KV CKT 1	343.79	343.79	0.11714	100.1486	TUCO INTERCHANGE (ENRCO 136401) 230/115/13.2KV TRANSFORMER CKT 1
FDNS	00NR	7	25SP	G15_033	TO->FROM	JONES STATION - TUCO INTERCHANGE 230KV CKT 1	343.79	343.79	0.11714	100.1486	TUCO INTERCHANGE (ENRCO 136401) 230/115/13.2KV TRANSFORMER CKT 1
FDNS	00NR	7	25SP	G15_033	TO->FROM	JONES STATION - TUCO INTERCHANGE 230KV CKT 1	343.79	343.79	0.11714	100.1486	TUCO INTERCHANGE (ENRCO 136401) 230/115/13.2KV TRANSFORMER CKT 2
FDNS	00NR	7	25SP	G15_033	TO->FROM	JONES STATION - TUCO INTERCHANGE 230KV CKT 1	343.79	343.79	0.11714	100.1486	TUCO INTERCHANGE (ENRCO 136401) 230/115/13.2KV TRANSFORMER CKT 2
FDNS	00NR	7	25SP	G15_033	FROM->TO	LUBBOCK POWER & LIGHT-HOLLY PLANT (SHIH T101039) 230/69/13.5KV TRANSFORMER CKT 1	224	224	0.03592	104.7009	LUBBOCK POWER & LIGHT-SOUTHEAST - LUBBOCK SOUTH INTERCHANGE 230KV CKT 1
FDNS	00NR	7	25SP	G15_033	FROM->TO	LUBBOCK POWER & LIGHT-HOLLY PLANT (SHIH T101039) 230/69/13.5KV TRANSFORMER CKT 1	224	224	0.03592	104.6879	P12:LPL:SPS:K64.1.LP-SE.LUBBS
FDNS	00NR	7	25SP	G15_033	FROM->TO	LUBBOCK POWER & LIGHT-HOLLY PLANT (SHIH T101039) 230/69/13.5KV TRANSFORMER CKT 1	224	224	0.03513	101.9255	LUBBOCK EAST INTERCHANGE - LUBBOCK POWER & LIGHT-WADSWORTH 230KV CKT 1
FDNS	00NR	7	25SP	G15_033	FROM->TO	LUBBOCK POWER & LIGHT-HOLLY PLANT (SHIH T101039) 230/69/13.5KV TRANSFORMER CKT 1	224	224	0.03513	101.9108	P12:230:LPL:K57.1.LP-WADS.LUBBE
FDNS	00NR	7	25SP	G15_033	FROM->TO	LUBBOCK POWER & LIGHT-HOLLY PLANT (SHIH T101039) 230/69/13.5KV TRANSFORMER CKT 1	224	224	0.03513	101.9107	LUBBOCK POWER & LIGHT-WADSWORTH (SHIH T101038) 230/69/13.5KV TRANSFORMER CKT 1
FDNS	00NR	7	25SP	G15_033	FROM->TO	LUBBOCK POWER & LIGHT-HOLLY PLANT (SHIH T101039) 230/69/13.5KV TRANSFORMER CKT 1	224	224	0.03513	101.9107	LUBBOCK POWER & LIGHT-WADSWORTH (SHIH T101038) 230/69/13.5KV TRANSFORMER CKT 1
FDNS	00NR	7	25SP	G15_033	FROM->TO	POTTER COUNTY INTERCHANGE (WAUK 90343-A) 345/230/13.2KV TRANSFORMER CKT 1	560	560	0.10969	100.2945	P12:345:SPS:J15.1.XRDS.TOLK
FDNS	00NR	7	25SP	G15_033	FROM->TO	POTTER COUNTY INTERCHANGE (WAUK 90343-A) 345/230/13.2KV TRANSFORMER CKT 1	560	560	0.10969	100.0757	P12:345:SPS:J15.1.XRDS.TOLK
FDNS	06ALL	7	17G	G15_033	FROM->TO	TUCO INTERCHANGE - TUCO_2 230.00 230KV CKT 1	497	547	0.37824	102.9465	TUCO INTERCHANGE - TUCO_2 345.00 345KV CKT 1
FDNS	00NR	7	25SP	G15_033	FROM->TO	TUCO INTERCHANGE (ENRCO 136401) 230/115/13.2KV TRANSFORMER CKT 1	250	288	0.05091	118.7161	TUCO INTERCHANGE (ENRCO 136401) 230/115/13.2KV TRANSFORMER CKT 2
FDNS	00NR	7	25SP	G15_033	FROM->TO	TUCO INTERCHANGE (ENRCO 136401) 230/115/13.2KV TRANSFORMER CKT 1	250	288	0.05091	118.7161	TUCO INTERCHANGE (ENRCO 136401) 230/115/13.2KV TRANSFORMER CKT 2
FDNS	00NR	7	25SP	G15_033	FROM->TO	TUCO INTERCHANGE (ENRCO 136401) 230/115/13.2KV TRANSFORMER CKT 1	250	288	0.05091	111.3663	TUCO INTERCHANGE (ENRCO 136401) 230/115/13.2KV TRANSFORMER CKT 2
FDNS	00NR	7	25SP	G15_033	FROM->TO	TUCO INTERCHANGE (ENRCO 136401) 230/115/13.2KV TRANSFORMER CKT 1	250	288	0.05091	111.3663	TUCO INTERCHANGE (ENRCO 136401) 230/115/13.2KV TRANSFORMER CKT 2
FDNS	00NR	7	25SP	G15_033	FROM->TO	TUCO INTERCHANGE (ENRCO 136401) 230/115/13.2KV TRANSFORMER CKT 2	250	288	0.05091	118.7161	TUCO INTERCHANGE (ENRCO 136401) 230/115/13.2KV TRANSFORMER CKT 1

SOLUTION	GROUP	SCENARIO	SEASON	SOURCE	DIRECTION	MONITORED ELEMENT	RATEA (MVA)	RATEB(MVA)	TDF	TC%LOADING (% MVA)	CONTINGENCY
FDNS	00NR	7	25SP	G15_033	FROM->TO	TUCO INTERCHANGE (ENRCO 136401) 230/115/13.2KV TRANSFORMER CKT 2	250	288	0.05091	118.7161	TUCO INTERCHANGE (ENRCO 136401) 230/115/13.2KV TRANSFORMER CKT 1
FDNS	00NR	7	25SP	G15_033	FROM->TO	TUCO INTERCHANGE (ENRCO 136401) 230/115/13.2KV TRANSFORMER CKT 2	250	288	0.05091	111.3663	TUCO INTERCHANGE (ENRCO 136401) 230/115/13.2KV TRANSFORMER CKT 1
FDNS	00NR	7	25SP	G15_033	FROM->TO	TUCO INTERCHANGE (ENRCO 136401) 230/115/13.2KV TRANSFORMER CKT 2	250	288	0.05091	111.3663	TUCO INTERCHANGE (ENRCO 136401) 230/115/13.2KV TRANSFORMER CKT 1
FDNS	06ALL	7	17G	G15_033	FROM->TO	TUCO_2 345.00 (TUCO_2 XFMR) 345/230/13.2KV TRANSFORMER CKT 1	560	560	0.27776	107.5448	TUCO INTERCHANGE - TUCO_2 345.00 345KV CKT 1
FDNS	06ALL	7	20L	G15_033	FROM->TO	TUCO_2 345.00 (TUCO_2 XFMR) 345/230/13.2KV TRANSFORMER CKT 1	560	560	0.23478	106.6951	TUCO INTERCHANGE - TUCO_2 345.00 345KV CKT 1
FDNS	06ALL	7	17G	G15_033	FROM->TO	TUCO_2 345.00 (TUCO_2 XFMR) 345/230/13.2KV TRANSFORMER CKT 1	560	560	0.27776	106.1214	TUCO INTERCHANGE - TUCO_2 345.00 345KV CKT 1
FDNS	06ALL	7	20L	G15_033	FROM->TO	TUCO_2 345.00 (TUCO_2 XFMR) 345/230/13.2KV TRANSFORMER CKT 1	560	560	0.23478	105.4896	TUCO INTERCHANGE - TUCO_2 345.00 345KV CKT 1
FDNS	06ALL	7	20WP	G15_033	FROM->TO	TUCO_2 345.00 (TUCO_2 XFMR) 345/230/13.2KV TRANSFORMER CKT 1	560	560	0.25214	101.2891	TUCO INTERCHANGE - TUCO_2 345.00 345KV CKT 1
FDNS	06ALL	7	20WP	G15_033	FROM->TO	TUCO_2 345.00 (TUCO_2 XFMR) 345/230/13.2KV TRANSFORMER CKT 1	560	560	0.25214	99.9	TUCO INTERCHANGE - TUCO_2 345.00 345KV CKT 1
FDNS	00NR	8	25SP	G15_033	TO->FROM	JONES STATION - TUCO INTERCHANGE 230KV CKT 1	343.79	343.79	0.14401	128.3131	CARLISLE INTERCHANGE - TUCO INTERCHANGE 230KV CKT 1
FDNS	00NR	8	25SP	G15_033	TO->FROM	JONES STATION - TUCO INTERCHANGE 230KV CKT 1	343.79	343.79	0.14401	128.3131	CARLISLE INTERCHANGE - TUCO INTERCHANGE 230KV CKT 1
FDNS	00NR	8	25SP	G15_033	TO->FROM	JONES STATION - TUCO INTERCHANGE 230KV CKT 1	343.79	343.79	0.11163	111.8492	GEN526333 1-JONES GEN #3 21 KV
FDNS	00NR	8	25SP	G15_033	TO->FROM	JONES STATION - TUCO INTERCHANGE 230KV CKT 1	343.79	343.79	0.11163	111.4668	GEN526334 1-JONES_4 116.500
FDNS	00NR	8	25SP	G15_033	TO->FROM	JONES STATION - TUCO INTERCHANGE 230KV CKT 1	343.79	343.79	0.13365	106.1183	TUCO_2 345.00 - YOAKUM_345 345.00 345KV CKT 1
FDNS	00NR	8	25SP	G15_033	TO->FROM	JONES STATION - TUCO INTERCHANGE 230KV CKT 1	343.79	343.79	0.12941	102.3279	CARLISLE INTERCHANGE - WOLFFORTH INTERCHANGE 230KV CKT 1
FDNS	00NR	8	25SP	G15_033	TO->FROM	JONES STATION - TUCO INTERCHANGE 230KV CKT 1	343.79	343.79	0.11266	100.9491	PLANT X STATION - SUNDOWN INTERCHANGE 230KV CKT 1
FDNS	00NR	8	25SP	G15_033	TO->FROM	JONES STATION - TUCO INTERCHANGE 230KV CKT 1	343.79	343.79	0.11266	100.9491	PLANT X STATION - SUNDOWN INTERCHANGE 230KV CKT 1
FDNS	00NR	8	25SP	G15_033	TO->FROM	JONES STATION - TUCO INTERCHANGE 230KV CKT 1	343.79	343.79	0.12512	99.7	P12:345:SPS:J02.1.TOLK.EDDY
FDNS	00NR	8	25SP	G15_033	TO->FROM	JONES STATION - TUCO INTERCHANGE 230KV CKT 1	343.79	343.79	0.11624	99.5	TUCO INTERCHANGE (ENRCO 136401) 230/115/13.2KV TRANSFORMER CKT 1
FDNS	00NR	8	25SP	G15_033	TO->FROM	JONES STATION - TUCO INTERCHANGE 230KV CKT 1	343.79	343.79	0.11624	99.5	TUCO INTERCHANGE (ENRCO 136401) 230/115/13.2KV TRANSFORMER CKT 1
FDNS	00NR	8	25SP	G15_033	TO->FROM	JONES STATION - TUCO INTERCHANGE 230KV CKT 1	343.79	343.79	0.11624	99.5	TUCO INTERCHANGE (ENRCO 136401) 230/115/13.2KV TRANSFORMER CKT 2
FDNS	00NR	8	25SP	G15_033	TO->FROM	JONES STATION - TUCO INTERCHANGE 230KV CKT 1	343.79	343.79	0.11624	99.5	TUCO INTERCHANGE (ENRCO 136401) 230/115/13.2KV TRANSFORMER CKT 2
FDNS	00NR	8	25SP	G15_033	TO->FROM	JONES STATION - TUCO INTERCHANGE 230KV CKT 1	343.79	343.79	0.11163	99.5	GEN526331 1-JONES GEN #1 22 KV
FDNS	00NR	8	25SP	G15_033	TO->FROM	JONES STATION - TUCO INTERCHANGE 230KV CKT 1	343.79	343.79	0.11163	99.5	GEN526332 1-JONES GEN #2 21 KV
FDNS	00NR	8	25SP	G15_033	FROM->TO	LUBBOCK POWER & LIGHT-HOLLY PLANT (SHIH T101039) 230/69/13.5KV TRANSFORMER CKT 1	224	224	0.03592	104.7109	LUBBOCK POWER & LIGHT-SOUTHEAST - LUBBOCK SOUTH INTERCHANGE 230KV CKT 1
FDNS	00NR	8	25SP	G15_033	FROM->TO	LUBBOCK POWER & LIGHT-HOLLY PLANT (SHIH T101039) 230/69/13.5KV TRANSFORMER CKT 1	224	224	0.03592	104.6979	P12:LPL:SPS:K64.1.LP-SE.LUBBS
FDNS	00NR	8	25SP	G15_033	FROM->TO	LUBBOCK POWER & LIGHT-HOLLY PLANT (SHIH T101039) 230/69/13.5KV TRANSFORMER CKT 1	224	224	0.03512	101.953	LUBBOCK EAST INTERCHANGE - LUBBOCK POWER & LIGHT-WADSWORTH 230KV CKT 1
FDNS	00NR	8	25SP	G15_033	FROM->TO	LUBBOCK POWER & LIGHT-HOLLY PLANT (SHIH T101039) 230/69/13.5KV TRANSFORMER CKT 1	224	224	0.03512	101.9381	P12:230:LPL:K57.1.LP-WADS.LUBBE
FDNS	00NR	8	25SP	G15_033	FROM->TO	LUBBOCK POWER & LIGHT-HOLLY PLANT (SHIH T101039) 230/69/13.5KV TRANSFORMER CKT 1	224	224	0.03512	101.938	LUBBOCK POWER & LIGHT-WADSWORTH (SHIH T101038) 230/69/13.5KV TRANSFORMER CKT 1
FDNS	00NR	8	25SP	G15_033	FROM->TO	LUBBOCK POWER & LIGHT-HOLLY PLANT (SHIH T101039) 230/69/13.5KV TRANSFORMER CKT 1	224	224	0.03512	101.938	LUBBOCK POWER & LIGHT-WADSWORTH (SHIH T101038) 230/69/13.5KV TRANSFORMER CKT 1
FDNS	00NR	8	25SP	G15_033	FROM->TO	TUCO INTERCHANGE (ENRCO 136401) 230/115/13.2KV TRANSFORMER CKT 1	250	288	0.04967	117.845	TUCO INTERCHANGE (ENRCO 136401) 230/115/13.2KV TRANSFORMER CKT 2
FDNS	00NR	8	25SP	G15_033	FROM->TO	TUCO INTERCHANGE (ENRCO 136401) 230/115/13.2KV TRANSFORMER CKT 1	250	288	0.04967	117.845	TUCO INTERCHANGE (ENRCO 136401) 230/115/13.2KV TRANSFORMER CKT 2
FDNS	00NR	8	25SP	G15_033	FROM->TO	TUCO INTERCHANGE (ENRCO 136401) 230/115/13.2KV TRANSFORMER CKT 1	250	288	0.04967	110.4553	TUCO INTERCHANGE (ENRCO 136401) 230/115/13.2KV TRANSFORMER CKT 2
FDNS	00NR	8	25SP	G15_033	FROM->TO	TUCO INTERCHANGE (ENRCO 136401) 230/115/13.2KV TRANSFORMER CKT 1	250	288	0.04967	110.4553	TUCO INTERCHANGE (ENRCO 136401) 230/115/13.2KV TRANSFORMER CKT 2
FDNS	00NR	8	25SP	G15_033	FROM->TO	TUCO INTERCHANGE (ENRCO 136401) 230/115/13.2KV TRANSFORMER CKT 2	250	288	0.04967	117.845	TUCO INTERCHANGE (ENRCO 136401) 230/115/13.2KV TRANSFORMER CKT 1
FDNS	00NR	8	25SP	G15_033	FROM->TO	TUCO INTERCHANGE (ENRCO 136401) 230/115/13.2KV TRANSFORMER CKT 2	250	288	0.04967	117.845	TUCO INTERCHANGE (ENRCO 136401) 230/115/13.2KV TRANSFORMER CKT 1
FDNS	00NR	8	25SP	G15_033	FROM->TO	TUCO INTERCHANGE (ENRCO 136401) 230/115/13.2KV TRANSFORMER CKT 2	250	288	0.04967	110.4553	TUCO INTERCHANGE (ENRCO 136401) 230/115/13.2KV TRANSFORMER CKT 1
FDNS	00NR	8	25SP	G15_033	FROM->TO	TUCO INTERCHANGE (ENRCO 136401) 230/115/13.2KV TRANSFORMER CKT 2	250	288	0.04967	110.4553	TUCO INTERCHANGE (ENRCO 136401) 230/115/13.2KV TRANSFORMER CKT 1
FDNS	00NR	9	25SP	G15_033	FROM->TO	LUBBOCK POWER & LIGHT-HOLLY PLANT (SHIH T101039) 230/69/13.5KV TRANSFORMER CKT 1	224	224	0.0359	104.6637	LUBBOCK POWER & LIGHT-SOUTHEAST - LUBBOCK SOUTH INTERCHANGE 230KV CKT 1
FDNS	00NR	9	25SP	G15_033	FROM->TO	LUBBOCK POWER & LIGHT-HOLLY PLANT (SHIH T101039) 230/69/13.5KV TRANSFORMER CKT 1	224	224	0.0359	104.6507	P12:LPL:SPS:K64.1.LP-SE.LUBBS
FDNS	00NR	9	25SP	G15_033	FROM->TO	LUBBOCK POWER & LIGHT-HOLLY PLANT (SHIH T101039) 230/69/13.5KV TRANSFORMER CKT 1	224	224	0.03513	101.7729	LUBBOCK EAST INTERCHANGE - LUBBOCK POWER & LIGHT-WADSWORTH 230KV CKT 1
FDNS	00NR	9	25SP	G15_033	FROM->TO	LUBBOCK POWER & LIGHT-HOLLY PLANT (SHIH T101039) 230/69/13.5KV TRANSFORMER CKT 1	224	224	0.03513	101.758	P12:230:LPL:K57.1.LP-WADS.LUBBE
FDNS	00NR	9	25SP	G15_033	FROM->TO	LUBBOCK POWER & LIGHT-HOLLY PLANT (SHIH T101039) 230/69/13.5KV TRANSFORMER CKT 1	224	224	0.03513	101.7579	LUBBOCK POWER & LIGHT-WADSWORTH (SHIH T101038) 230/69/13.5KV TRANSFORMER CKT 1
FDNS	00NR	9	25SP	G15_033	FROM->TO	LUBBOCK POWER & LIGHT-HOLLY PLANT (SHIH T101039) 230/69/13.5KV TRANSFORMER CKT 1	224	224	0.03513	101.7579	LUBBOCK POWER & LIGHT-WADSWORTH (SHIH T101038) 230/69/13.5KV TRANSFORMER CKT 1
FDNS	00NR	9	25SP	G15_033	FROM->TO	TUCO INTERCHANGE (ENRCO 136401) 230/115/13.2KV TRANSFORMER CKT 1	250	288	0.03801	119.7997	TUCO INTERCHANGE (ENRCO 136401) 230/115/13.2KV TRANSFORMER CKT 2
FDNS	00NR	9	25SP	G15_033	FROM->TO	TUCO INTERCHANGE (ENRCO 136401) 230/115/13.2KV TRANSFORMER CKT 1	250	288	0.03801	119.7997	TUCO INTERCHANGE (ENRCO 136401) 230/115/13.2KV TRANSFORMER CKT 2
FDNS	00NR	9	25SP	G15_033	FROM->TO	TUCO INTERCHANGE (ENRCO 136401) 230/115/13.2KV TRANSFORMER CKT 1	250	288	0.03801	111.4731	TUCO INTERCHANGE (ENRCO 136401) 230/115/13.2KV TRANSFORMER CKT 2
FDNS	00NR	9	25SP	G15_033	FROM->TO	TUCO INTERCHANGE (ENRCO 136401) 230/115/13.2KV TRANSFORMER CKT 1	250	288	0.03801	111.4731	TUCO INTERCHANGE (ENRCO 136401) 230/115/13.2KV TRANSFORMER CKT 2
FDNS	00NR	9	25SP	G15_033	FROM->TO	TUCO INTERCHANGE (ENRCO 136401) 230/115/13.2KV TRANSFORMER CKT 2	250	288	0.03801	119.7997	TUCO INTERCHANGE (ENRCO 136401) 230/115/13.2KV TRANSFORMER CKT 1
FDNS	00NR	9	25SP	G15_033	FROM->TO	TUCO INTERCHANGE (ENRCO 136401) 230/115/13.2KV TRANSFORMER CKT 2	250	288	0.03801	119.7997	TUCO INTERCHANGE (ENRCO 136401) 230/115/13.2KV TRANSFORMER CKT 1
FDNS	00NR	9	25SP	G15_033	FROM->TO	TUCO INTERCHANGE (ENRCO 136401) 230/115/13.2KV TRANSFORMER CKT 2	250	288	0.03801	111.4731	TUCO INTERCHANGE (ENRCO 136401) 230/115/13.2KV TRANSFORMER CKT 1
FDNS	00NR	9	25SP	G15_033	FROM->TO	TUCO INTERCHANGE (ENRCO 136401) 230/115/13.2KV TRANSFORMER CKT 2	250	288	0.03801	111.4731	TUCO INTERCHANGE (ENRCO 136401) 230/115/13.2KV TRANSFORMER CKT 1
FDNS	00NR	0	16WP	G15_034	FROM->TO	CIMARRON - DRAPER LAKE 345KV CKT 1	717	717	0.11229	134.3506	G14-057T 345.00 - SUNNYSIDE 345KV CKT 1
FDNS	00NR	0	16WP	G15_034	FROM->TO	CIMARRON - DRAPER LAKE 345KV CKT 1	717	717	0.11229	123.7884	G14-057T 345.00 - LAWTON EASTSIDE 345KV CKT 1
FDNS	00NR	0	16WP	G15_034	FROM->TO	CIMARRON - DRAPER LAKE 345KV CKT 1	717	717	0.11403	118.5269	ARCADIA - SEMINOLE 345KV CKT 1
FDNS	00NR	0	16WP	G15_034	FROM->TO	CIMARRON - DRAPER LAKE 345KV CKT 1	717	717	0.12435	117.4511	CLEVELAND - G15066_T 345.00 345KV CKT 1
FDNS	00NR	0	16WP	G15_034	FROM->TO	CIMARRON - DRAPER LAKE 345KV CKT 1	717	717	0.1486	117.2631	ARCADIA - NORTHWEST 345KV CKT 1
FDNS	00NR	0	16WP	G15_034	FROM->TO	CIMARRON - DRAPER LAKE 345KV CKT 1	717	717	0.12435	116.6742	G15066_T 345.00 - SOONER 345KV CKT 1
FDNS	00NR	0	16WP	G15_034	FROM->TO	CIMARRON - DRAPER LAKE 345KV CKT 1	717	717	0.11719	112.0614	CLEVELAND - TULSA NORTH 345KV CKT 1
FDNS	00NR	0	16WP	G15_034	FROM->TO	CIMARRON - DRAPER LAKE 345KV CKT 1	717	717	0.11719	112.0614	CLEVELAND - TULSA NORTH 345KV CKT 1
FDNS	00NR	0	16WP	G15_034	FROM->TO	CIMARRON - DRAPER LAKE 345KV CKT 1	717	717	0.10959	111.8128	MATHWSN7 345.00 - NORTHWEST 345KV CKT 1
FDNS	00NR	0	16WP	G15_034	FROM->TO	CIMARRON - DRAPER LAKE 345KV CKT 1	717	717	0.10818	110.8894	CIMARRON - SARA 138KV CKT 1
FDNS	00NR	0	16WP	G15_034	FROM->TO	CIMARRON - DRAPER LAKE 345KV CKT 1	717	717	0.1077	110.5522	P12:138:WFEC:MSL03
FDNS	00NR	0	16WP	G15_034	FROM->TO	CIMARRON - DRAPER LAKE 345KV CKT 1	717	717	0.10718	109.7061	CIMARRON (CIMARON2) 345/138/13.8KV TRANSFORMER CKT 1
FDNS	00NR	0	16WP	G15_034	FROM->TO	CIMARRON - DRAPER LAKE 345KV CKT 1	717	717	0.10818	109.5963	SARA - STHLAKE4 138.00 138KV CKT 1
FDNS	00NR	0	16WP	G15_034	FROM->TO	CIMARRON - DRAPER LAKE 345KV CKT 1	717	717	0.10712	109.5351	CIMARRON (CIMARON1) 345/138/13.8KV TRANSFORMER CKT 1
FDNS	00NR	0	16WP	G15_034	FROM->TO	CIMARRON - DRAPER LAKE 345KV CKT 1	717	717	0.10818	109.3968	MCCLAIN - STHLAKE4 138.00 138KV CKT 1
FDNS	00NR	0	16WP	G15_034	FROM->TO	CIMARRON - DRAPER LAKE 345KV CKT 1	717	717	0.10688	109.096	CIMARRON - CZECH HALL 138KV CKT 1
FDNS	00NR	0	16WP	G15_034	FROM->TO	CIMARRON - DRAPER LAKE 345KV CKT 1	717	717	0.10688	108.742	CZECH HALL - XEROX 138KV CKT 1
FDNS	00NR	0	16WP	G15_034	FROM->TO	CIMARRON - DRAPER LAKE 345KV CKT 1	717	717	0.10688	108.7224	MORGAN - XEROX 138KV CKT 1
FDNS	00NR	0	16WP	G15_034	FROM->TO	CIMARRON - DRAPER LAKE 345KV CKT 1	717	717	0.10688	108.6051	MORGAN - MUSTANG 138KV CKT 1
FDNS	00NR	0	16WP	G15_034	FROM->TO	CIMARRON - DRAPER LAKE 345KV CKT 1	717	717	0.10619	108.5311	ANADARKO - POCASSETT 138KV CKT 1
FDNS	00NR	0	16WP	G15_034	FROM->TO	CIMARRON - DRAPER LAKE 345KV CKT 1	717	717	0.1056	108.4112	GEN515040 1-SEMINOLE 1G
FDNS	00NR	0	16WP	G15_034	FROM->TO	CIMARRON - DRAPER LAKE 345KV CKT 1	717	717	0.10619	108.3378	POCASSETT - TUTTLE 138KV CKT 1
FDNS	00NR	0	16WP	G15_034	FROM->TO	CIMARRON - DRAPER LAKE 345KV CKT 1	717	717	0.10723	108.2504	LACYGNE - WAVERLY7 345.00 345KV CKT 1
FDNS	00NR	0	16WP	G15_034	FROM->TO	CIMARRON - DRAPER LAKE 345KV CKT 1	717	717	0.1063	108.2269	CORN TAP - NAPLESTP 138.00 138KV CKT 1
FDNS	00NR	0	16WP	G15_034	FROM->TO	CIMARRON - DRAPER LAKE 345KV CKT 1	717	717	0.10726	108.1986	JOHNSON COUNTY - SUNNYSIDE 345KV CKT 1
FDNS	00NR	0	16WP	G15_034	FROM->TO	CIMARRON - DRAPER LAKE 345KV CKT 1	717	717	0.1063	108.1312	NAPLESTP 138.00 - PAYNE 138.00 138KV CKT 1
FDNS	00NR	0	16WP	G15_034	FROM->TO	CIMARRON - DRAPER LAKE 345KV CKT 1	717	717	0.10723	108.0479	WAVERLY7 345.00 - WOLF CREEK 345KV CKT 1

SOLUTION	GROUP	SCENARIO	SEASON	SOURCE	DIRECTION	MONITORED ELEMENT	RATEA (MVA)	RATEB(MVA)	TDF	TC%LOADING (% MVA)	CONTINGENCY
FDNS	00NR	0	16WP	G15_034	FROM->TO	CIMARRON - DRAPER LAKE 345KV CKT 1	717	717	0.1056	108.0171	GEN509403 1-PIRKEY GENERATION
FDNS	00NR	0	16WP	G15_034	FROM->TO	CIMARRON - DRAPER LAKE 345KV CKT 1	717	717	0.1056	107.9678	GEN501801 1-DOLET HILLS UNIT1
FDNS	00NR	0	16WP	G15_034	FROM->TO	CIMARRON - DRAPER LAKE 345KV CKT 1	717	717	0.1056	107.9603	GEN509416 1-TURK GENERATION
FDNS	00NR	0	16WP	G15_034	FROM->TO	CIMARRON - DRAPER LAKE 345KV CKT 1	717	717	0.10939	107.9501	CANEYRV7 345.00 - NEOSHO 345KV CKT 1
FDNS	00NR	0	16WP	G15_034	FROM->TO	CIMARRON - DRAPER LAKE 345KV CKT 1	717	717	0.10619	107.828	BRIDGECR 138.00 - TUTTLE 138KV CKT 1
FDNS	00NR	0	16WP	G15_034	FROM->TO	CIMARRON - DRAPER LAKE 345KV CKT 1	717	717	0.10939	107.6474	CANEYRV7 345.00 - LATHAMS7 345.00 345KV CKT 1
FDNS	00NR	0	16WP	G15_034	FROM->TO	CIMARRON - DRAPER LAKE 345KV CKT 1	717	717	0.1056	107.6452	GEN336821 1-GRAND GULF UNIT
FDNS	00NR	0	16WP	G15_034	FROM->TO	CIMARRON - DRAPER LAKE 345KV CKT 1	717	717	0.1056	107.5478	GEN515042 1-SEMINOLE 3G
FDNS	00NR	0	16WP	G15_034	FROM->TO	CIMARRON - DRAPER LAKE 345KV CKT 1	717	717	0.10619	107.4572	BRIDGECR 138.00 - SUNSHINE CANYON 138KV CKT 1
FDNS	00NR	0	16WP	G15_034	FROM->TO	CIMARRON - DRAPER LAKE 345KV CKT 1	717	717	0.10619	107.4436	P12:138:WFEC:MSL01
FDNS	00NR	0	16WP	G15_034	FROM->TO	CIMARRON - DRAPER LAKE 345KV CKT 1	717	717	0.1056	107.3491	GEN336153 1-WATERFORD UNIT#3
FDNS	00NR	0	16WP	G15_034	FROM->TO	CIMARRON - DRAPER LAKE 345KV CKT 1	717	717	0.1056	107.3142	GEN515041 1-SEMINOLE 2G
FDNS	00NR	0	16WP	G15_034	FROM->TO	CIMARRON - DRAPER LAKE 345KV CKT 1	717	717	0.10939	107.2046	LATHAMS7 345.00 - ROSE HILL 345KV CKT 1
FDNS	00NR	0	16WP	G15_034	FROM->TO	CIMARRON - DRAPER LAKE 345KV CKT 1	717	717	0.1056	107.1162	GEN509406 1-WELSH #3
FDNS	00NR	0	16WP	G15_034	FROM->TO	CIMARRON - DRAPER LAKE 345KV CKT 1	717	717	0.1056	107.1161	GEN509404 1-WELSH #1
FDNS	00NR	0	16WP	G15_034	FROM->TO	CIMARRON - DRAPER LAKE 345KV CKT 1	717	717	0.10317	107.0907	CIMARRON - NORTHWEST 345KV CKT 1
FDNS	00NR	0	16WP	G15_034	FROM->TO	CIMARRON - DRAPER LAKE 345KV CKT 1	717	717	0.1056	107.0506	GEN335831 1-RIVERBEND UNIT#1
FDNS	00NR	0	16WP	G15_034	FROM->TO	CIMARRON - DRAPER LAKE 345KV CKT 1	717	717	0.1056	107.0233	GEN337911 1-ARKANSAS NUCLEAR ONE UNIT #2
FDNS	00NR	0	17SP	G15_034	FROM->TO	CIMARRON - DRAPER LAKE 345KV CKT 1	717	717	0.10153	106.8873	G14-057T 345.00 - SUNNYSIDE 345KV CKT 1
FDNS	00NR	0	16WP	G15_034	FROM->TO	CIMARRON - DRAPER LAKE 345KV CKT 1	717	717	0.10468	106.7664	CANADIAN RIVER - MUSKOGEE 345KV CKT 1
FDNS	00NR	0	16WP	G15_034	FROM->TO	CIMARRON - DRAPER LAKE 345KV CKT 1	717	717	0.10562	106.7529	HUGO - SUNNYSIDE 345KV CKT 1
FDNS	00NR	0	16WP	G15_034	FROM->TO	CIMARRON - DRAPER LAKE 345KV CKT 1	717	717	0.10606	106.6582	P12:138:OKGE:3TERM14
FDNS	00NR	0	16WP	G15_034	FROM->TO	CIMARRON - DRAPER LAKE 345KV CKT 1	717	717	0.10703	106.6521	JOHNSON COUNTY - PITTSBURG 345KV CKT 1
FDNS	00NR	0	16WP	G15_034	FROM->TO	CIMARRON - DRAPER LAKE 345KV CKT 1	717	717	0.10703	106.6521	JOHNSON COUNTY - PITTSBURG 345KV CKT 1
FDNS	00NR	0	16WP	G15_034	FROM->TO	CIMARRON - DRAPER LAKE 345KV CKT 1	717	717	0.1056	106.6508	GRAND GULF 500/22.0KV TRANSFORMER CKT 1
FDNS	00NR	0	16WP	G15_034	FROM->TO	CIMARRON - DRAPER LAKE 345KV CKT 1	717	717	0.1056	106.6478	GEN337910 1-ARKANSAS NUCLEAR ONE UNIT #1
FDNS	00NR	0	16WP	G15_034	FROM->TO	CIMARRON - DRAPER LAKE 345KV CKT 1	717	717	0.1065	106.638	HORSESHOE LAKE - JONES TAP 138KV CKT 1
FDNS	00NR	0	16WP	G15_034	FROM->TO	CIMARRON - DRAPER LAKE 345KV CKT 1	717	717	0.10706	106.6264	MORISNT4 138.00 - STILLWATER 138KV CKT 1
FDNS	00NR	0	16WP	G15_034	FROM->TO	CIMARRON - DRAPER LAKE 345KV CKT 1	717	717	0.10706	106.6217	P12:138:OKGE:3TERM2
FDNS	00NR	0	16WP	G15_034	FROM->TO	CIMARRON - DRAPER LAKE 345KV CKT 1	717	717	0.10388	106.5968	REDBUD - RIVERSIDE STATION 345KV CKT 1
FDNS	00NR	0	16WP	G15_034	FROM->TO	CIMARRON - DRAPER LAKE 345KV CKT 1	717	717	0.10388	106.5968	REDBUD - RIVERSIDE STATION 345KV CKT 1
FDNS	00NR	0	16WP	G15_034	FROM->TO	CIMARRON - DRAPER LAKE 345KV CKT 1	717	717	0.1056	106.4972	GEN501813 1-RODEMACHER UNIT 3
FDNS	00NR	0	16WP	G15_034	FROM->TO	CIMARRON - DRAPER LAKE 345KV CKT 1	717	717	0.1056	106.4895	GEN515226 1-MUSKOGEE 6G
FDNS	00NR	0	16WP	G15_034	FROM->TO	CIMARRON - DRAPER LAKE 345KV CKT 1	717	717	0.10628	106.4055	NORTHWEST (NORTWST2) 345/138/13.8KV TRANSFORMER CKT 1
FDNS	00NR	0	16WP	G15_034	FROM->TO	CIMARRON - DRAPER LAKE 345KV CKT 1	717	717	0.10507	106.3991	ARCADIA - KAMO MEMORIAL 138KV CKT 1
FDNS	00NR	0	16WP	G15_034	FROM->TO	CIMARRON - DRAPER LAKE 345KV CKT 1	717	717	0.10665	106.3954	BAILEY4 138.00 - SUNSHINE CANYON 138KV CKT 1
FDNS	00NR	0	16WP	G15_034	FROM->TO	CIMARRON - DRAPER LAKE 345KV CKT 1	717	717	0.10566	106.372	P12:138:OKGE:3TERM12
FDNS	00NR	0	16WP	G15_034	FROM->TO	CIMARRON - DRAPER LAKE 345KV CKT 1	717	717	0.1058	106.3312	7SAREPTA% 345.00 - LONGWOOD 345KV CKT 1
FDNS	00NR	0	16WP	G15_034	FROM->TO	CIMARRON - DRAPER LAKE 345KV CKT 1	717	717	0.1058	106.3312	7SAREPTA% 345.00 - LONGWOOD 345KV CKT 1
FDNS	00NR	0	16WP	G15_034	FROM->TO	CIMARRON - DRAPER LAKE 345KV CKT 1	717	717	0.1066	106.3119	MEMORIAL - SKYLINE 138KV CKT 1
FDNS	00NR	0	16WP	G15_034	FROM->TO	CIMARRON - DRAPER LAKE 345KV CKT 1	717	717	0.1056	106.3084	GEN335206 1-NELSON UNIT 6
FDNS	00NR	0	16WP	G15_034	FROM->TO	CIMARRON - DRAPER LAKE 345KV CKT 1	717	717	0.10571	106.3062	DOLET HILLS - SOUTHWEST SHREVEPORT 345KV CKT 1
FDNS	00NR	0	16WP	G15_034	FROM->TO	CIMARRON - DRAPER LAKE 345KV CKT 1	717	717	0.10571	106.3062	DOLET HILLS - SOUTHWEST SHREVEPORT 345KV CKT 1
FDNS	00NR	0	16WP	G15_034	FROM->TO	CIMARRON - DRAPER LAKE 345KV CKT 1	717	717	0.1056	106.2932	GEN515225 1-MUSKOGEE 5G
FDNS	00NR	0	16WP	G15_034	FROM->TO	CIMARRON - DRAPER LAKE 345KV CKT 1	717	717	0.1056	106.293	GEN515223 1-MUSKOGEE 4G
FDNS	00NR	0	16WP	G15_034	FROM->TO	CIMARRON - DRAPER LAKE 345KV CKT 1	717	717	0.10629	106.2567	GRACEMONT (BANK 1) 345/138/13.8KV TRANSFORMER CKT 1
FDNS	00NR	0	16WP	G15_034	FROM->TO	CIMARRON - DRAPER LAKE 345KV CKT 1	717	717	0.10579	106.2077	G15074_T 345.00 - HOYT 345KV CKT 1
FDNS	00NR	0	16WP	G15_034	FROM->TO	CIMARRON - DRAPER LAKE 345KV CKT 1	717	717	0.10659	106.2007	QUAIL CREEK - SKYLINE 138KV CKT 1
FDNS	00NR	0	16WP	G15_034	FROM->TO	CIMARRON - DRAPER LAKE 345KV CKT 1	717	717	0.10685	106.1737	P12:138:OKGE:3TERM18
FDNS	00NR	0	16WP	G15_034	FROM->TO	CIMARRON - DRAPER LAKE 345KV CKT 1	717	717	0.1056	106.155	GEN509409 1-WILKES #3
FDNS	00NR	0	16WP	G15_034	FROM->TO	CIMARRON - DRAPER LAKE 345KV CKT 1	717	717	0.1056	106.1438	GEN337653 1-WHITE BLUFF UNIT #2
FDNS	00NR	0	16WP	G15_034	FROM->TO	CIMARRON - DRAPER LAKE 345KV CKT 1	717	717	0.10623	106.141	NORTHWEST (NORTWST4) 345/138/13.8KV TRANSFORMER CKT 1
FDNS	00NR	0	16WP	G15_034	FROM->TO	CIMARRON - DRAPER LAKE 345KV CKT 1	717	717	0.1056	106.1364	GEN501812 1-RODEMACHER UNIT 2
FDNS	00NR	0	16WP	G15_034	FROM->TO	CIMARRON - DRAPER LAKE 345KV CKT 1	717	717	0.10665	106.0956	BAILEY4 138.00 - WESTMOORE 138KV CKT 1
FDNS	00NR	0	16WP	G15_034	FROM->TO	CIMARRON - DRAPER LAKE 345KV CKT 1	717	717	0.1068	106.0919	36 & MERIDIAN - CHEMTRON 138KV CKT 1
FDNS	00NR	0	16WP	G15_034	FROM->TO	CIMARRON - DRAPER LAKE 345KV CKT 1	717	717	0.1056	106.0776	NEW MADRID 161/22.0KV TRANSFORMER CKT 1
FDNS	00NR	0	16WP	G15_034	FROM->TO	CIMARRON - DRAPER LAKE 345KV CKT 1	717	717	0.1056	106.065	NEW MADRID 345/22.0KV TRANSFORMER CKT 1
FDNS	00NR	0	16WP	G15_034	FROM->TO	CIMARRON - DRAPER LAKE 345KV CKT 1	717	717	0.1056	106.0426	GEN520947 1-HUGO1
FDNS	00NR	0	16WP	G15_034	FROM->TO	CIMARRON - DRAPER LAKE 345KV CKT 1	717	717	0.10623	106.0146	NORTHWEST (NORTWST3) 345/138/13.8KV TRANSFORMER CKT 1
FDNS	00NR	0	16WP	G15_034	FROM->TO	CIMARRON - DRAPER LAKE 345KV CKT 1	717	717	0.1056	106.0144	GEN337652 1-WHITE BLUFF UNIT #1
FDNS	00NR	0	16WP	G15_034	FROM->TO	CIMARRON - DRAPER LAKE 345KV CKT 1	717	717	0.1068	106.0049	CHEMTRON - PENNSYLVANIA 138KV CKT 1
FDNS	00NR	0	16WP	G15_034	FROM->TO	CIMARRON - DRAPER LAKE 345KV CKT 1	717	717	0.10482	105.9815	THISTLE7 345.00 - WOODWARD DISTRICT EHV 345KV CKT 1
FDNS	00NR	0	16WP	G15_034	FROM->TO	CIMARRON - DRAPER LAKE 345KV CKT 1	717	717	0.10482	105.9815	THISTLE7 345.00 - WOODWARD DISTRICT EHV 345KV CKT 1
FDNS	00NR	0	16WP	G15_034	FROM->TO	CIMARRON - DRAPER LAKE 345KV CKT 1	717	717	0.10482	105.9815	THISTLE7 345.00 - WOODWARD DISTRICT EHV 345KV CKT 2
FDNS	00NR	0	16WP	G15_034	FROM->TO	CIMARRON - DRAPER LAKE 345KV CKT 1	717	717	0.10482	105.9815	THISTLE7 345.00 - WOODWARD DISTRICT EHV 345KV CKT 2
FDNS	00NR	0	16WP	G15_034	FROM->TO	CIMARRON - DRAPER LAKE 345KV CKT 1	717	717	0.10571	105.9566	7SAREPTA% 345.00 - ELDORADO EHV 345KV CKT 1
FDNS	00NR	0	16WP	G15_034	FROM->TO	CIMARRON - DRAPER LAKE 345KV CKT 1	717	717	0.10571	105.9565	3TR3AR8EL7EL
FDNS	00NR	0	16WP	G15_034	FROM->TO	CIMARRON - DRAPER LAKE 345KV CKT 1	717	717	0.10571	105.9502	ELDORADO EHV 500/345KV TRANSFORMER CKT 1
FDNS	00NR	0	16WP	G15_034	FROM->TO	CIMARRON - DRAPER LAKE 345KV CKT 1	717	717	0.10668	105.9269	BLANCHARD - CORNVILLE 138KV CKT 1
FDNS	00NR	0	16WP	G15_034	FROM->TO	CIMARRON - DRAPER LAKE 345KV CKT 1	717	717	0.10602	105.9039	P12:138:OKGE:3TERM17
FDNS	00NR	0	16WP	G15_034	FROM->TO	CIMARRON - DRAPER LAKE 345KV CKT 1	717	717	0.10584	105.8927	COMANCHE - LOCO 138KV CKT 1
FDNS	00NR	0	16WP	G15_034	FROM->TO	CIMARRON - DRAPER LAKE 345KV CKT 1	717	717	0.11535	105.8801	G15052_T 345.00 - ROSE HILL 345KV CKT 1
FDNS	00NR	0	16WP	G15_034	FROM->TO	CIMARRON - DRAPER LAKE 345KV CKT 1	717	717	0.10649	105.8629	P12:138:OKGE:3TERM11
FDNS	00NR	0	16WP	G15_034	FROM->TO	CIMARRON - DRAPER LAKE 345KV CKT 1	717	717	0.1056	105.8597	GEN515577 1-ARBWND11 0.6900
FDNS	00NR	0	16WP	G15_034	FROM->TO	CIMARRON - DRAPER LAKE 345KV CKT 1	717	717	0.1056	105.8412	GEN334440 1-SABINE UNIT 4
FDNS	00NR	0	16WP	G15_034	FROM->TO	CIMARRON - DRAPER LAKE 345KV CKT 1	717	717	0.10605	105.8407	LONEOAK - NORTHWEST 138KV CKT 1
FDNS	00NR	0	16WP	G15_034	FROM->TO	CIMARRON - DRAPER LAKE 345KV CKT 1	717	717	0.10668	105.836	P12:138:AEPW-OGE:CORNVIL4:MAUD 4
FDNS	00NR	0	16WP	G15_034	FROM->TO	CIMARRON - DRAPER LAKE 345KV CKT 1	717	717	0.10579	105.8344	HOYT - STRANGER CREEK 345KV CKT 1
FDNS	00NR	0	16WP	G15_034	FROM->TO	CIMARRON - DRAPER LAKE 345KV CKT 1	717	717	0.10909	105.8287	CLARKSVILLE - ONETA 345KV CKT 1

SOLUTION	GROUP	SCENARIO	SEASON	SOURCE	DIRECTION	MONITORED ELEMENT	RATEA (MVA)	RATEB(MVA)	TDF	TC%LOADING (% MVA)	CONTINGENCY
FDNS	00NR	0	16WP	G15_034	FROM->TO	CIMARRON - DRAPER LAKE 345KV CKT 1	717	717	0.10909	105.8287	CLARKSVILLE - ONETA 345KV CKT 1
FDNS	00NR	0	16WP	G15_034	FROM->TO	CIMARRON - DRAPER LAKE 345KV CKT 1	717	717	0.10579	105.8278	G15074_T 345.00 - JEFFREY ENERGY CENTER 345KV CKT 1
FDNS	00NR	0	16WP	G15_034	FROM->TO	CIMARRON - DRAPER LAKE 345KV CKT 1	717	717	0.1056	105.8272	DELL 500 - ESSEX UNIT 2 500KV CKT Z1
FDNS	00NR	0	16WP	G15_034	FROM->TO	CIMARRON - DRAPER LAKE 345KV CKT 1	717	717	0.10637	105.8261	KETCH TAP - NORTHWEST 138KV CKT 1
FDNS	00NR	0	16WP	G15_034	FROM->TO	CIMARRON - DRAPER LAKE 345KV CKT 1	717	717	0.10608	105.8169	DIVISION AVE - LAKESIDE 138KV CKT 1
FDNS	00NR	0	16WP	G15_034	FROM->TO	CIMARRON - DRAPER LAKE 345KV CKT 1	717	717	0.10665	105.8143	FRANKLIN SW - WESTMOORE 138KV CKT 1
FDNS	00NR	0	16WP	G15_034	FROM->TO	CIMARRON - DRAPER LAKE 345KV CKT 1	717	717	0.10554	105.8006	HORSESHOE LAKE - KAMO MEMORIAL 138KV CKT 1
FDNS	00NR	0	16WP	G15_034	FROM->TO	CIMARRON - DRAPER LAKE 345KV CKT 1	717	717	0.10605	105.7553	NORTHWEST - PANTHER 138KV CKT 1
FDNS	00NR	0	16WP	G15_034	FROM->TO	CIMARRON - DRAPER LAKE 345KV CKT 1	717	717	0.10648	105.7501	P12:138:OKGE:3TERM20
FDNS	00NR	0	16WP	G15_034	FROM->TO	CIMARRON - DRAPER LAKE 345KV CKT 1	717	717	0.10668	105.7337	BLANCHARD - MAUD 138KV CKT 1
FDNS	00NR	0	16WP	G15_034	FROM->TO	CIMARRON - DRAPER LAKE 345KV CKT 1	717	717	0.10574	105.7247	P12:138:OKGE:3TERM47
FDNS	00NR	0	16WP	G15_034	FROM->TO	CIMARRON - DRAPER LAKE 345KV CKT 1	717	717	0.10584	105.7232	CIMARRON - HAYMAKER 138KV CKT 1
FDNS	00NR	0	16WP	G15_034	FROM->TO	CIMARRON - DRAPER LAKE 345KV CKT 1	717	717	0.10649	105.7124	BLACKBERRY - NEOSHO 345KV CKT 1
FDNS	00NR	0	16WP	G15_034	FROM->TO	CIMARRON - DRAPER LAKE 345KV CKT 1	717	717	0.10649	105.7124	BLACKBERRY - NEOSHO 345KV CKT 1
FDNS	00NR	0	16WP	G15_034	FROM->TO	CIMARRON - DRAPER LAKE 345KV CKT 1	717	717	0.10605	105.7049	PANTHER - SILVER LAKE 138KV CKT 1
FDNS	00NR	0	16WP	G15_034	FROM->TO	CIMARRON - DRAPER LAKE 345KV CKT 1	717	717	0.10615	105.7001	G14-074T 345.00 - OKLAUNION 345KV CKT 1
FDNS	00NR	0	16WP	G15_034	FROM->TO	CIMARRON - DRAPER LAKE 345KV CKT 1	717	717	0.1056	105.6978	DOLET HILLS 345/24.0KV TRANSFORMER CKT 1
FDNS	00NR	0	16WP	G15_034	FROM->TO	CIMARRON - DRAPER LAKE 345KV CKT 1	717	717	0.10608	105.6953	HEFNER - LAKESIDE 138KV CKT 1
FDNS	00NR	0	16WP	G15_034	FROM->TO	CIMARRON - DRAPER LAKE 345KV CKT 1	717	717	0.1056	105.6911	GEN336252 1-NINEMILE POINT UNIT#5
FDNS	00NR	0	16WP	G15_034	FROM->TO	CIMARRON - DRAPER LAKE 345KV CKT 1	717	717	0.10664	105.6582	KETCH - KETCH TAP 138KV CKT 1
FDNS	00NR	0	16WP	G15_034	FROM->TO	CIMARRON - DRAPER LAKE 345KV CKT 1	717	717	0.1056	105.6581	WHITE BLUFF 500/26.0KV TRANSFORMER CKT 1
FDNS	00NR	0	16WP	G15_034	FROM->TO	CIMARRON - DRAPER LAKE 345KV CKT 1	717	717	0.10581	105.6489	SWISSVALE - WEST GARDNER 345KV CKT 1
FDNS	00NR	0	16WP	G15_034	FROM->TO	CIMARRON - DRAPER LAKE 345KV CKT 1	717	717	0.10602	105.6337	DIVISION AVE - MUSTANG 138KV CKT 1
FDNS	00NR	0	16WP	G15_034	FROM->TO	CIMARRON - DRAPER LAKE 345KV CKT 1	717	717	0.10517	105.6281	FINNEY SWITCHING STATION - HOLCOMB 345KV CKT 1
FDNS	00NR	0	16WP	G15_034	FROM->TO	CIMARRON - DRAPER LAKE 345KV CKT 1	717	717	0.10517	105.6281	FINNEY SWITCHING STATION - HOLCOMB 345KV CKT 1
FDNS	00NR	0	16WP	G15_034	FROM->TO	CIMARRON - DRAPER LAKE 345KV CKT 1	717	717	0.10609	105.6273	P12:138:AEPW-OGE:SHIDLER4:OSAGE 4
FDNS	00NR	0	16WP	G15_034	FROM->TO	CIMARRON - DRAPER LAKE 345KV CKT 1	717	717	0.1056	105.6224	GEN509408 1-WILKES #2
FDNS	00NR	0	16WP	G15_034	FROM->TO	CIMARRON - DRAPER LAKE 345KV CKT 1	717	717	0.10584	105.6153	DIVISION AVE - HAYMAKER 138KV CKT 1
FDNS	00NR	0	16WP	G15_034	FROM->TO	CIMARRON - DRAPER LAKE 345KV CKT 1	717	717	0.1056	105.6104	GEN300006 1-NEW MADRID UNIT 1
FDNS	00NR	0	16WP	G15_034	FROM->TO	CIMARRON - DRAPER LAKE 345KV CKT 1	717	717	0.10646	105.606	MCCLAIN - PLEASANT VALLEY 138KV CKT 1
FDNS	00NR	0	16WP	G15_034	FROM->TO	CIMARRON - DRAPER LAKE 345KV CKT 1	717	717	0.1056	105.5979	GEN300007 1-NEW MADRID UNIT 2
FDNS	00NR	0	16WP	G15_034	FROM->TO	CIMARRON - DRAPER LAKE 345KV CKT 1	717	717	0.1061	105.5812	LACYGNE - NEOSHO 345KV CKT 1
FDNS	00NR	0	16WP	G15_034	FROM->TO	CIMARRON - DRAPER LAKE 345KV CKT 1	717	717	0.10573	105.5812	P12:138:WFEC:MSL02
FDNS	00NR	0	16WP	G15_034	FROM->TO	CIMARRON - DRAPER LAKE 345KV CKT 1	717	717	0.10605	105.5746	P12:138:AEPW:OKMULGE4:R.S.S-4
FDNS	00NR	0	16WP	G15_034	FROM->TO	CIMARRON - DRAPER LAKE 345KV CKT 1	717	717	0.1056	105.5699	GEN335204 1-NELSON UNIT 4
FDNS	00NR	0	16WP	G15_034	FROM->TO	CIMARRON - DRAPER LAKE 345KV CKT 1	717	717	0.1056	105.5521	GEN336831 1-BAXTER WILSON SES
FDNS	00NR	0	16WP	G15_034	FROM->TO	CIMARRON - DRAPER LAKE 345KV CKT 1	717	717	0.10564	105.5478	G15088_T 345.00 - MOORE 345KV CKT 1
FDNS	00NR	0	16WP	G15_034	FROM->TO	CIMARRON - DRAPER LAKE 345KV CKT 1	717	717	0.10632	105.5474	CLASSEN - ROBINSON 138KV CKT 1
FDNS	00NR	0	16WP	G15_034	FROM->TO	CIMARRON - DRAPER LAKE 345KV CKT 1	717	717	0.10569	105.5471	ANADARKO - GEORGIA 138KV CKT 1
FDNS	00NR	0	16WP	G15_034	FROM->TO	CIMARRON - DRAPER LAKE 345KV CKT 1	717	717	0.10583	105.5397	EMPORIA ENERGY CENTER - SWISSVALE 345KV CKT 1
FDNS	00NR	0	16WP	G15_034	FROM->TO	CIMARRON - DRAPER LAKE 345KV CKT 1	717	717	0.10385	105.5351	BENTON - WICHITA 345KV CKT 1
FDNS	00NR	0	16WP	G15_034	FROM->TO	CIMARRON - DRAPER LAKE 345KV CKT 1	717	717	0.1056	105.527	GEN506754 1-LEBROCK STEAM 1
FDNS	00NR	0	16WP	G15_034	FROM->TO	CIMARRON - DRAPER LAKE 345KV CKT 1	717	717	0.10619	105.5241	EMPORIA ENERGY CENTER - G14_001T 345.00 345KV CKT 1
FDNS	00NR	0	16WP	G15_034	FROM->TO	CIMARRON - DRAPER LAKE 345KV CKT 1	717	717	0.1056	105.5183	GEN334441 1-SABINE UNIT 5
FDNS	00NR	0	16WP	G15_034	FROM->TO	CIMARRON - DRAPER LAKE 345KV CKT 1	717	717	0.1056	105.5125	GEN334071 1-LEWIS CREEK 2
FDNS	00NR	0	16WP	G15_034	FROM->TO	CIMARRON - DRAPER LAKE 345KV CKT 1	717	717	0.1056	105.5046	GEN334070 1-LEWIS CREEK 1
FDNS	00NR	0	16WP	G15_034	FROM->TO	CIMARRON - DRAPER LAKE 345KV CKT 1	717	717	0.10599	105.4882	CRINER - PAYNE 138.00 138KV CKT 1
FDNS	00NR	0	16WP	G15_034	FROM->TO	CIMARRON - DRAPER LAKE 345KV CKT 1	717	717	0.1056	105.4875	GEN336251 1-NINEMILE POINT UNIT#4
FDNS	00NR	0	16WP	G15_034	FROM->TO	CIMARRON - DRAPER LAKE 345KV CKT 1	717	717	0.10569	105.4831	FLETCHER - GEORGIA 138KV CKT 1
FDNS	00NR	0	16WP	G15_034	FROM->TO	CIMARRON - DRAPER LAKE 345KV CKT 1	717	717	0.1056	105.4603	GEN590011 2-ERCOT EQUIVALENCE
FDNS	00NR	0	16WP	G15_034	FROM->TO	CIMARRON - DRAPER LAKE 345KV CKT 1	717	717	0.10571	105.4593	WEBRE - WELLS 500KV CKT 1
FDNS	00NR	0	16WP	G15_034	FROM->TO	CIMARRON - DRAPER LAKE 345KV CKT 1	717	717	0.10517	105.4403	FINNEY SWITCHING STATION - Hitchland Interchange 345KV CKT 1
FDNS	00NR	0	16WP	G15_034	FROM->TO	CIMARRON - DRAPER LAKE 345KV CKT 1	717	717	0.10671	105.4384	WOODRING (WOODRNG2) 345/138/13.8KV TRANSFORMER CKT 1
FDNS	00NR	0	16WP	G15_034	FROM->TO	CIMARRON - DRAPER LAKE 345KV CKT 1	717	717	0.10605	105.4361	LONEOAK - QUAIL CREEK 138KV CKT 1
FDNS	00NR	0	16WP	G15_034	FROM->TO	CIMARRON - DRAPER LAKE 345KV CKT 1	717	717	0.10571	105.4308	EMPIRE - FLETCHER 138KV CKT 1
FDNS	00NR	0	16WP	G15_034	FROM->TO	CIMARRON - DRAPER LAKE 345KV CKT 1	717	717	0.1056	105.427	GEN501811 1-RODEMACHER UNIT 1
FDNS	00NR	0	16WP	G15_034	FROM->TO	CIMARRON - DRAPER LAKE 345KV CKT 1	717	717	0.10609	105.4212	OSAGE - WEBB CITY TAP 138KV CKT 1
FDNS	00NR	0	16WP	G15_034	FROM->TO	CIMARRON - DRAPER LAKE 345KV CKT 1	717	717	0.1056	105.4196	GEN590010 1-ERCOT EQUIVALENCE
FDNS	00NR	0	16WP	G15_034	FROM->TO	CIMARRON - DRAPER LAKE 345KV CKT 1	717	717	0.1056	105.4129	GEN503909 1-FULTONU1 1 16.000
FDNS	00NR	0	16WP	G15_034	FROM->TO	CIMARRON - DRAPER LAKE 345KV CKT 1	717	717	0.1056	105.4096	GEN338146 1-INDEPENDENCE UNIT #2
FDNS	00NR	0	16WP	G15_034	FROM->TO	CIMARRON - DRAPER LAKE 345KV CKT 1	717	717	0.10526	105.3989	G1524G1525 345.00 - THISTLE7 345.00 345KV CKT 1
FDNS	00NR	0	16WP	G15_034	FROM->TO	CIMARRON - DRAPER LAKE 345KV CKT 1	717	717	0.10526	105.3989	G1524G1525 345.00 - THISTLE7 345.00 345KV CKT 2
FDNS	00NR	0	16WP	G15_034	FROM->TO	CIMARRON - DRAPER LAKE 345KV CKT 1	717	717	0.10625	105.3963	SPVALLY4 138.00 - STILLWATER 138KV CKT 1
FDNS	00NR	0	16WP	G15_034	FROM->TO	CIMARRON - DRAPER LAKE 345KV CKT 1	717	717	0.1056	105.3904	GEN334433 1-SABINE UNIT 3
FDNS	00NR	0	16WP	G15_034	FROM->TO	CIMARRON - DRAPER LAKE 345KV CKT 1	717	717	0.10619	105.3883	G14_001T 345.00 - WICHITA 345KV CKT 1
FDNS	00NR	0	16WP	G15_034	FROM->TO	CIMARRON - DRAPER LAKE 345KV CKT 1	717	717	0.1056	105.3876	P12:069:OKGE:3TERM4
FDNS	00NR	0	16WP	G15_034	FROM->TO	CIMARRON - DRAPER LAKE 345KV CKT 1	717	717	0.1056	105.3874	FRONTIER - GRIMES 345KV CKT 1
FDNS	00NR	0	16WP	G15_034	FROM->TO	CIMARRON - DRAPER LAKE 345KV CKT 1	717	717	0.1056	105.3845	GEN334030 1-FRONTIER UNIT 1
FDNS	00NR	0	16WP	G15_034	FROM->TO	CIMARRON - DRAPER LAKE 345KV CKT 1	717	717	0.1056	105.3833	GEN334031 1-FRONTIER UNIT 2
FDNS	00NR	0	16WP	G15_034	FROM->TO	CIMARRON - DRAPER LAKE 345KV CKT 1	717	717	0.1056	105.3819	GEN303007 1-1BC2 U2
FDNS	00NR	0	16WP	G15_034	FROM->TO	CIMARRON - DRAPER LAKE 345KV CKT 1	717	717	0.1056	105.3771	GEN303006 1-1BC2 U1
FDNS	00NR	0	16WP	G15_034	FROM->TO	CIMARRON - DRAPER LAKE 345KV CKT 1	717	717	0.10571	105.3681	COMANCHE - EMPIRE 138KV CKT 1
FDNS	00NR	0	16WP	G15_034	FROM->TO	CIMARRON - DRAPER LAKE 345KV CKT 1	717	717	0.10625	105.3668	PAYNESB4 138.00 - SPVALLY4 138.00 138KV CKT 1
FDNS	00NR	0	16WP	G15_034	FROM->TO	CIMARRON - DRAPER LAKE 345KV CKT 1	717	717	0.10599	105.3625	COLE - CRINER 138KV CKT 1
FDNS	00NR	0	16WP	G15_034	FROM->TO	CIMARRON - DRAPER LAKE 345KV CKT 1	717	717	0.1056	105.3603	GEN336191 1-LITTLE GYPSY UNIT#3
FDNS	00NR	0	16WP	G15_034	FROM->TO	CIMARRON - DRAPER LAKE 345KV CKT 1	717	717	0.1056	105.3582	GEN337041 1-GERALD ANDRUS
FDNS	00NR	0	16WP	G15_034	FROM->TO	CIMARRON - DRAPER LAKE 345KV CKT 1	717	717	0.1056	105.3531	P12:161:AEPW:DYESS 5:HYLAND 5
FDNS	00NR	0	16WP	G15_034	FROM->TO	CIMARRON - DRAPER LAKE 345KV CKT 1	717	717	0.10625	105.3512	CUSHING - PAYNESB4 138.00 138KV CKT 1
FDNS	00NR	0	16WP	G15_034	FROM->TO	CIMARRON - DRAPER LAKE 345KV CKT 1	717	717	0.10576	105.3504	P12:138:OKGE:3TERM13

SOLUTION	GROUP	SCENARIO	SEASON	SOURCE	DIRECTION	MONITORED ELEMENT	RATEA (MVA)	RATEB(MVA)	TDF	TC%LOADING (% MVA)	CONTINGENCY
FDNS	00NR	0	16WP	G15_034	FROM->TO	CIMARRON - DRAPER LAKE 345KV CKT 1	717	717	0.10563	105.3477	8DANIEL8 500.00 - MCKNIGHT 500KV CKT 1
FDNS	00NR	0	16WP	G15_034	FROM->TO	CIMARRON - DRAPER LAKE 345KV CKT 1	717	717	0.1051	105.3461	CANADIAN RIVER - PITTSBURG 345KV CKT 1
FDNS	00NR	0	16WP	G15_034	FROM->TO	CIMARRON - DRAPER LAKE 345KV CKT 1	717	717	0.1051	105.3461	CANADIAN RIVER - PITTSBURG 345KV CKT 1
FDNS	00NR	0	16WP	G15_034	FROM->TO	CIMARRON - DRAPER LAKE 345KV CKT 1	717	717	0.10656	105.3451	CLEAVELAND - CLEVLND 4 138.00 138KV CKT Z1
FDNS	00NR	0	16WP	G15_034	FROM->TO	CIMARRON - DRAPER LAKE 345KV CKT 1	717	717	0.10656	105.3451	CLEAVELAND - CLEVLND 4 138.00 138KV CKT Z1
FDNS	00NR	0	16WP	G15_034	FROM->TO	CIMARRON - DRAPER LAKE 345KV CKT 1	717	717	0.10656	105.3448	CLEVELAND (CLVAUTO1) 345/138/13.8KV TRANSFORMER CKT 1
FDNS	00NR	0	16WP	G15_034	FROM->TO	CIMARRON - DRAPER LAKE 345KV CKT 1	717	717	0.10656	105.3448	CLEVELAND (CLVAUTO1) 345/138/13.8KV TRANSFORMER CKT 1
FDNS	00NR	0	16WP	G15_034	FROM->TO	CIMARRON - DRAPER LAKE 345KV CKT 1	717	717	0.1056	105.3324	GEN509393 S1-ARSENAL HILL GENS #4 (STALL)
FDNS	00NR	0	16WP	G15_034	FROM->TO	CIMARRON - DRAPER LAKE 345KV CKT 1	717	717	0.10598	105.332	DAYTON - MUSTANG 138KV CKT 1
FDNS	00NR	0	16WP	G15_034	FROM->TO	CIMARRON - DRAPER LAKE 345KV CKT 1	717	717	0.1056	105.3283	GEN335614 1-WILLOW GLENN UNIT#4
FDNS	00NR	0	16WP	G15_034	FROM->TO	CIMARRON - DRAPER LAKE 345KV CKT 1	717	717	0.10598	105.327	DAYTON - HOBBY LOBBY 138KV CKT 1
FDNS	00NR	0	16WP	G15_034	FROM->TO	CIMARRON - DRAPER LAKE 345KV CKT 1	717	717	0.1056	105.3168	GEN303008 1-1BC2 U3
FDNS	00NR	0	16WP	G15_034	FROM->TO	CIMARRON - DRAPER LAKE 345KV CKT 1	717	717	0.1056	105.3135	GEN509392 G2-ARSENAL HILL GENS #3 (STALL)
FDNS	00NR	0	16WP	G15_034	FROM->TO	CIMARRON - DRAPER LAKE 345KV CKT 1	717	717	0.1056	105.3134	GEN509391 G1-ARSENAL HILL GENS #2 (STALL)
FDNS	00NR	0	16WP	G15_034	FROM->TO	CIMARRON - DRAPER LAKE 345KV CKT 1	717	717	0.10593	105.3098	MUSTANG - SW 5TH 138KV CKT 1
FDNS	00NR	0	16WP	G15_034	FROM->TO	CIMARRON - DRAPER LAKE 345KV CKT 1	717	717	0.10572	105.3026	7LUTESVIL 345.00 - 7ST FRANC 345.00 345KV CKT 1
FDNS	00NR	0	16WP	G15_034	FROM->TO	CIMARRON - DRAPER LAKE 345KV CKT 1	717	717	0.1056	105.2951	GEN336170 1-GULF OXY U4
FDNS	00NR	0	16WP	G15_034	FROM->TO	CIMARRON - DRAPER LAKE 345KV CKT 1	717	717	0.1056	105.2924	GEN336464 1-MICHOUD UNIT #3
FDNS	00NR	0	16WP	G15_034	FROM->TO	CIMARRON - DRAPER LAKE 345KV CKT 1	717	717	0.10561	105.2896	ELDORADO EHV - MOUNT OLIVE 500KV CKT 1
FDNS	00NR	0	16WP	G15_034	FROM->TO	CIMARRON - DRAPER LAKE 345KV CKT 1	717	717	0.1056	105.2808	GEN338143 1-INDEPENDENCE UNIT #1
FDNS	00NR	0	16WP	G15_034	FROM->TO	CIMARRON - DRAPER LAKE 345KV CKT 1	717	717	0.10566	105.2695	P12:069:OKGE:3TERM19
FDNS	00NR	0	16WP	G15_034	FROM->TO	CIMARRON - DRAPER LAKE 345KV CKT 1	717	717	0.10602	105.2578	OUMED 4 - STONEWALL 138KV CKT 1
FDNS	00NR	0	16WP	G15_034	FROM->TO	CIMARRON - DRAPER LAKE 345KV CKT 1	717	717	0.1056	105.2571	ESSEX UNIT 2 500/18.0KV TRANSFORMER CKT 1
FDNS	00NR	0	16WP	G15_034	FROM->TO	CIMARRON - DRAPER LAKE 345KV CKT 1	717	717	0.10632	105.2549	LIGHTNING CREEK - ROBINSON 138KV CKT 1
FDNS	00NR	0	16WP	G15_034	FROM->TO	CIMARRON - DRAPER LAKE 345KV CKT 1	717	717	0.10576	105.2531	7JASPER 345.00 - BLACKBERRY 345KV CKT 1
FDNS	00NR	0	16WP	G15_034	FROM->TO	CIMARRON - DRAPER LAKE 345KV CKT 1	717	717	0.1056	105.2474	GEN336801 1-BAXTER WILSON UNIT #1
FDNS	00NR	0	16WP	G15_034	FROM->TO	CIMARRON - DRAPER LAKE 345KV CKT 1	717	717	0.10534	105.2433	ARCADIA - LGARBER4 138.00 138KV CKT 1
FDNS	00NR	0	16WP	G15_034	FROM->TO	CIMARRON - DRAPER LAKE 345KV CKT 1	717	717	0.10609	105.2416	FAIRFAX TAP - SHIDLER 138KV CKT 1
FDNS	00NR	0	16WP	G15_034	FROM->TO	CIMARRON - DRAPER LAKE 345KV CKT 1	717	717	0.10609	105.2415	FAIRFAX TAP - WEBB CITY TAP 138KV CKT 1
FDNS	00NR	0	16WP	G15_034	FROM->TO	CIMARRON - DRAPER LAKE 345KV CKT 1	717	717	0.10575	105.2221	8WNEWMADRID 500.00 - DELL 500 500KV CKT 1
FDNS	00NR	0	16WP	G15_034	FROM->TO	CIMARRON - DRAPER LAKE 345KV CKT 1	717	717	0.10771	105.217	TULSA NORTH - WEKIWA 345KV CKT 1
FDNS	00NR	0	16WP	G15_034	FROM->TO	CIMARRON - DRAPER LAKE 345KV CKT 1	717	717	0.10771	105.217	TULSA NORTH - WEKIWA 345KV CKT 1
FDNS	00NR	0	16WP	G15_034	FROM->TO	CIMARRON - DRAPER LAKE 345KV CKT 1	717	717	0.10649	105.2167	ARKANSAS NUCLEAR ONE - FT SMITH 500KV CKT 1
FDNS	00NR	0	16WP	G15_034	FROM->TO	CIMARRON - DRAPER LAKE 345KV CKT 1	717	717	0.10649	105.2167	ARKANSAS NUCLEAR ONE - FT SMITH 500KV CKT 1
FDNS	00NR	0	16WP	G15_034	FROM->TO	CIMARRON - DRAPER LAKE 345KV CKT 1	717	717	0.10534	105.2134	CHITWOOD - LGARBER4 138.00 138KV CKT 1
FDNS	00NR	0	16WP	G15_034	FROM->TO	CIMARRON - DRAPER LAKE 345KV CKT 1	717	717	0.1056	105.2118	GEN506752 1-LEBROCK GAS 1
FDNS	00NR	0	16WP	G15_034	FROM->TO	CIMARRON - DRAPER LAKE 345KV CKT 1	717	717	0.1056	105.2116	GEN506753 1-LEBROCK GAS 2
FDNS	00NR	0	16WP	G15_034	FROM->TO	CIMARRON - DRAPER LAKE 345KV CKT 1	717	717	0.1056	105.21	GEN501910 1-ACADIA UNIT ST1
FDNS	00NR	0	16WP	G15_034	FROM->TO	CIMARRON - DRAPER LAKE 345KV CKT 1	717	717	0.10534	105.201	CHITWOOD - JONES TAP 138KV CKT 1
FDNS	00NR	0	16WP	G15_034	FROM->TO	CIMARRON - DRAPER LAKE 345KV CKT 1	717	717	0.1056	105.1977	RODEMACHER 230/22.0KV TRANSFORMER CKT 1
FDNS	00NR	0	16WP	G15_034	FROM->TO	CIMARRON - DRAPER LAKE 345KV CKT 1	717	717	0.1056	105.1943	P12:138:AEPW-OGE:WTH_JCT4:JENSEN4
FDNS	00NR	0	16WP	G15_034	FROM->TO	CIMARRON - DRAPER LAKE 345KV CKT 1	717	717	0.10564	105.1937	P12:345:GRDA:CHOUTEAU-SPORTSMANACRES
FDNS	00NR	0	16WP	G15_034	FROM->TO	CIMARRON - DRAPER LAKE 345KV CKT 1	717	717	0.1056	105.1881	ELDORADO EHV - SHERIDAN EHV 500KV CKT 1
FDNS	00NR	0	16WP	G15_034	FROM->TO	CIMARRON - DRAPER LAKE 345KV CKT 1	717	717	0.10571	105.1795	ANADARKO - SEQUOYAHJ4 138.00 138KV CKT 1
FDNS	00NR	0	16WP	G15_034	FROM->TO	CIMARRON - DRAPER LAKE 345KV CKT 1	717	717	0.10571	105.179	CORN TAP - SEQUOYAHJ4 138.00 138KV CKT 1
FDNS	00NR	0	16WP	G15_034	FROM->TO	CIMARRON - DRAPER LAKE 345KV CKT 1	717	717	0.1056	105.1749	GEN511843 1-RIVERSIDE STATION #2
FDNS	00NR	0	16WP	G15_034	FROM->TO	CIMARRON - DRAPER LAKE 345KV CKT 1	717	717	0.1056	105.1727	CHISHOLM6 230.00 - ELK CITY 230KV 230KV CKT 1
FDNS	00NR	0	16WP	G15_034	FROM->TO	CIMARRON - DRAPER LAKE 345KV CKT 1	717	717	0.1056	105.1696	ELK CITY 230KV (ELKCTY-6) 230/138/13.8KV TRANSFORMER CKT 1
FDNS	00NR	0	16WP	G15_034	FROM->TO	CIMARRON - DRAPER LAKE 345KV CKT 1	717	717	0.1056	105.1696	ELK CITY 230KV (ELKCTY-6) 230/138/13.8KV TRANSFORMER CKT 1
FDNS	00NR	0	16WP	G15_034	FROM->TO	CIMARRON - DRAPER LAKE 345KV CKT 1	717	717	0.10568	105.158	6LAYFLD 230.00 - CARROLL 230KV CKT 1
FDNS	00NR	0	16WP	G15_034	FROM->TO	CIMARRON - DRAPER LAKE 345KV CKT 1	717	717	0.10602	105.1566	OUMED 4 - PARK PLACE 138KV CKT 1
FDNS	00NR	0	16WP	G15_034	FROM->TO	CIMARRON - DRAPER LAKE 345KV CKT 1	717	717	0.10569	105.1528	P12:138:AEPW:N.E.S.-4:CATOOSA4
FDNS	00NR	0	16WP	G15_034	FROM->TO	CIMARRON - DRAPER LAKE 345KV CKT 1	717	717	0.10813	105.1452	NORTHEAST STATION - ONETA 345KV CKT 1
FDNS	00NR	0	16WP	G15_034	FROM->TO	CIMARRON - DRAPER LAKE 345KV CKT 1	717	717	0.10813	105.1452	NORTHEAST STATION - ONETA 345KV CKT 1
FDNS	00NR	0	16WP	G15_034	FROM->TO	CIMARRON - DRAPER LAKE 345KV CKT 1	717	717	0.10583	105.1444	P13:138-161:WERE:NSES_TX-4OR5::
FDNS	00NR	0	16WP	G15_034	FROM->TO	CIMARRON - DRAPER LAKE 345KV CKT 1	717	717	0.10606	105.1443	MORISNT4 138.00 - SOONER 138KV CKT 1
FDNS	00NR	0	16WP	G15_034	FROM->TO	CIMARRON - DRAPER LAKE 345KV CKT 1	717	717	0.10584	105.1413	ANADARKO - GRACMNT4 138.00 138KV CKT 1
FDNS	00NR	0	16WP	G15_034	FROM->TO	CIMARRON - DRAPER LAKE 345KV CKT 1	717	717	0.10581	105.1371	7JASPER 345.00 - MORGAN 345KV CKT 1
FDNS	00NR	0	16WP	G15_034	FROM->TO	CIMARRON - DRAPER LAKE 345KV CKT 1	717	717	0.1056	105.1304	8CAJUN2 500/24.0KV TRANSFORMER CKT 1
FDNS	00NR	0	16WP	G15_034	FROM->TO	CIMARRON - DRAPER LAKE 345KV CKT 1	717	717	0.10768	105.1269	GRACEMONT - LAWTON EASTSIDE 345KV CKT 1
FDNS	00NR	0	16WP	G15_034	FROM->TO	CIMARRON - DRAPER LAKE 345KV CKT 1	717	717	0.10768	105.1269	GRACEMONT - LAWTON EASTSIDE 345KV CKT 1
FDNS	00NR	0	16WP	G15_034	FROM->TO	CIMARRON - DRAPER LAKE 345KV CKT 1	717	717	0.10645	105.1243	DALE - HORSESHOE LAKE 138KV CKT 1
FDNS	00NR	0	16WP	G15_034	FROM->TO	CIMARRON - DRAPER LAKE 345KV CKT 1	717	717	0.1056	105.1235	ST FRANCIS - ST FRANCIS 1 161KV CKT Z1
FDNS	00NR	0	16WP	G15_034	FROM->TO	CIMARRON - DRAPER LAKE 345KV CKT 1	717	717	0.1056	105.1235	ST FRANCIS 161/16.0KV TRANSFORMER CKT 1
FDNS	00NR	0	16WP	G15_034	FROM->TO	CIMARRON - DRAPER LAKE 345KV CKT 1	717	717	0.10568	105.1208	FULTON 115 - HOPE 115KV CKT 1
FDNS	00NR	0	16WP	G15_034	FROM->TO	CIMARRON - DRAPER LAKE 345KV CKT 1	717	717	0.10568	105.1208	FULTON 115 - HOPE 115KV CKT 1
FDNS	00NR	0	16WP	G15_034	FROM->TO	CIMARRON - DRAPER LAKE 345KV CKT 1	717	717	0.10632	105.1175	LIGHTNING CREEK - TROSPER 138KV CKT 1
FDNS	00NR	0	16WP	G15_034	FROM->TO	CIMARRON - DRAPER LAKE 345KV CKT 1	717	717	0.1056	105.1151	P12:069:OKGE:3TERM3
FDNS	00NR	0	16WP	G15_034	FROM->TO	CIMARRON - DRAPER LAKE 345KV CKT 1	717	717	0.10599	105.1134	COLE - OUSW4 138KV CKT 1
FDNS	00NR	0	16WP	G15_034	FROM->TO	CIMARRON - DRAPER LAKE 345KV CKT 1	717	717	0.10564	105.112	G13-010T 345.00 - POST ROCK 345KV CKT 1
FDNS	00NR	0	16WP	G15_034	FROM->TO	CIMARRON - DRAPER LAKE 345KV CKT 1	717	717	0.10581	105.1086	P12:138:AEPW:CATOOSA4:T.S.E.-4
FDNS	00NR	0	16WP	G15_034	FROM->TO	CIMARRON - DRAPER LAKE 345KV CKT 1	717	717	0.10598	105.0977	36 & MERIDIAN - HOBBY LOBBY 138KV CKT 1
FDNS	00NR	0	16WP	G15_034	FROM->TO	CIMARRON - DRAPER LAKE 345KV CKT 1	717	717	0.1056	105.0962	GEN337766 1-TRACTEBEL UNIT S1
FDNS	00NR	0	16WP	G15_034	FROM->TO	CIMARRON - DRAPER LAKE 345KV CKT 1	717	717	0.10559	105.0932	HUGO - VALLIANT 345KV CKT 1
FDNS	00NR	0	16WP	G15_034	FROM->TO	CIMARRON - DRAPER LAKE 345KV CKT 1	717	717	0.10559	105.0932	HUGO - VALLIANT 345KV CKT 1
FDNS	00NR	0	16WP	G15_034	FROM->TO	CIMARRON - DRAPER LAKE 345KV CKT 1	717	717	0.1056	105.0928	P12:138:AEPW:SHERID4:112GORE4
FDNS	00NR	0	16WP	G15_034	FROM->TO	CIMARRON - DRAPER LAKE 345KV CKT 1	717	717	0.1056	105.0924	HAMMETT TAP - HAMMETT2 138KV CKT 1
FDNS	00NR	0	16WP	G15_034	FROM->TO	CIMARRON - DRAPER LAKE 345KV CKT 1	717	717	0.1056	105.0914	GEN336222 1-LITTLE GYPSY UNIT#2
FDNS	00NR	0	16WP	G15_034	FROM->TO	CIMARRON - DRAPER LAKE 345KV CKT 1	717	717	0.1056	105.0889	GEN515564 1-ORIGIN11 0.6900

SOLUTION	GROUP	SCENARIO	SEASON	SOURCE	DIRECTION	MONITORED ELEMENT	RATEA (MVA)	RATEB(MVA)	TDF	TC%LOADING (% MVA)	CONTINGENCY
FDNS	00NR	0	16WP	G15_034	FROM->TO	CIMARRON - DRAPER LAKE 345KV CKT 1	717	717	0.1056	105.0889	GEN515565 1-ORIGIN21 0.6900
FDNS	00NR	0	16WP	G15_034	FROM->TO	CIMARRON - DRAPER LAKE 345KV CKT 1	717	717	0.10565	105.0878	P12:138:OKGE:3TERM28
FDNS	00NR	0	16WP	G15_034	FROM->TO	CIMARRON - DRAPER LAKE 345KV CKT 1	717	717	0.1056	105.0868	GEN300015 1-1SGPDEL 18.000
FDNS	00NR	0	16WP	G15_034	FROM->TO	CIMARRON - DRAPER LAKE 345KV CKT 1	717	717	0.10645	105.0827	DALE - SQUIRL CREEK 138KV CKT 1
FDNS	00NR	0	16WP	G15_034	FROM->TO	CIMARRON - DRAPER LAKE 345KV CKT 1	717	717	0.1056	105.0826	NELSON 230/20.0KV TRANSFORMER CKT 1
FDNS	00NR	0	16WP	G15_034	FROM->TO	CIMARRON - DRAPER LAKE 345KV CKT 1	717	717	0.1056	105.0796	GEN501970 1-EVANGELINE UNIT 7
FDNS	00NR	0	16WP	G15_034	FROM->TO	CIMARRON - DRAPER LAKE 345KV CKT 1	717	717	0.10578	105.0794	NW164TH4 138.00 - PIEDMONT 138KV CKT 1
FDNS	00NR	0	16WP	G15_034	FROM->TO	CIMARRON - DRAPER LAKE 345KV CKT 1	717	717	0.10577	105.0782	HEALDTON - LOCO 138KV CKT 1
FDNS	00NR	0	16WP	G15_034	FROM->TO	CIMARRON - DRAPER LAKE 345KV CKT 1	717	717	0.10578	105.0775	NORTHWEST - NW164TH4 138.00 138KV CKT 1
FDNS	00NR	0	16WP	G15_034	FROM->TO	CIMARRON - DRAPER LAKE 345KV CKT 1	717	717	0.10561	105.0744	P12:161:AEPW:EROGERS5:ECNTRTN5
FDNS	00NR	0	16WP	G15_034	FROM->TO	CIMARRON - DRAPER LAKE 345KV CKT 1	717	717	0.10562	105.0733	AS KING - EAU CLAIRE 345KV CKT 1
FDNS	00NR	0	16WP	G15_034	FROM->TO	CIMARRON - DRAPER LAKE 345KV CKT 1	717	717	0.1056	105.0727	ESSEX UNIT 2 500/18.0KV TRANSFORMER CKT 1
FDNS	00NR	0	16WP	G15_034	FROM->TO	CIMARRON - DRAPER LAKE 345KV CKT 1	717	717	0.10559	105.0725	P12:138:OKGE-AEPW:JENSEN4:REDROCKRD4
FDNS	00NR	0	16WP	G15_034	FROM->TO	CIMARRON - DRAPER LAKE 345KV CKT 1	717	717	0.10564	105.0659	FLETCHER - MARLOW JCT 69KV CKT 1
FDNS	00NR	0	16WP	G15_034	FROM->TO	CIMARRON - DRAPER LAKE 345KV CKT 1	717	717	0.10565	105.0653	COMANCHE TAP - OMPA-DUNCAN 840 138KV CKT 1
FDNS	00NR	0	16WP	G15_034	FROM->TO	CIMARRON - DRAPER LAKE 345KV CKT 1	717	717	0.10634	105.0629	MARSHALL - WOODRING 138KV CKT 1
FDNS	00NR	0	16WP	G15_034	FROM->TO	CIMARRON - DRAPER LAKE 345KV CKT 1	717	717	0.10634	105.0619	COTTONWOOD CREEK - MARSHALL 138KV CKT 1
FDNS	00NR	0	16WP	G15_034	FROM->TO	CIMARRON - DRAPER LAKE 345KV CKT 1	717	717	0.1056	105.0617	P12:161:AEPW:DYESS5:ELMSPRNG:TONTITN5
FDNS	00NR	0	16WP	G15_034	FROM->TO	CIMARRON - DRAPER LAKE 345KV CKT 1	717	717	0.10564	105.0606	G13-010T 345.00 - SPEARVILLE 345KV CKT 1
FDNS	00NR	0	16WP	G15_034	FROM->TO	CIMARRON - DRAPER LAKE 345KV CKT 1	717	717	0.1056	105.0599	GEN336152 1-WATERFORD UNIT#2
FDNS	00NR	0	16WP	G15_034	FROM->TO	CIMARRON - DRAPER LAKE 345KV CKT 1	717	717	0.1056	105.0591	ST FRANCIS 345/161KV TRANSFORMER CKT 1
FDNS	00NR	0	16WP	G15_034	FROM->TO	CIMARRON - DRAPER LAKE 345KV CKT 1	717	717	0.1056	105.059	ST FRANCIS 2 161/16.0KV TRANSFORMER CKT 2
FDNS	00NR	0	16WP	G15_034	FROM->TO	CIMARRON - DRAPER LAKE 345KV CKT 1	717	717	0.10565	105.0589	P12:161:AEPW-SWPA:BEAVER5:EROGERS5
FDNS	00NR	0	16WP	G15_034	FROM->TO	CIMARRON - DRAPER LAKE 345KV CKT 1	717	717	0.1056	105.0588	GEN336151 1-WATERFORD UNIT#1
FDNS	00NR	0	16WP	G15_034	FROM->TO	CIMARRON - DRAPER LAKE 345KV CKT 1	717	717	0.10576	105.0488	HEFNER - TULSA 138KV CKT 1
FDNS	00NR	0	16WP	G15_034	FROM->TO	CIMARRON - DRAPER LAKE 345KV CKT 1	717	717	0.10581	105.0485	P12:138:AEPW:MOUNDRD4:SHIDLER4
FDNS	00NR	0	16WP	G15_034	FROM->TO	CIMARRON - DRAPER LAKE 345KV CKT 1	717	717	0.1056	105.0484	GEN334392 1-EXXON MOBIL IPP 1
FDNS	00NR	0	16WP	G15_034	FROM->TO	CIMARRON - DRAPER LAKE 345KV CKT 1	717	717	0.10566	105.046	P12:138:AEPW:CORNVIL4:S.W.S.-4
FDNS	00NR	0	16WP	G15_034	FROM->TO	CIMARRON - DRAPER LAKE 345KV CKT 1	717	717	0.1056	105.0414	GEN334393 1-EXXON MOBIL IPP 2
FDNS	00NR	0	16WP	G15_034	FROM->TO	CIMARRON - DRAPER LAKE 345KV CKT 1	717	717	0.1056	105.0414	GEN334394 1-EXXON MOBIL IPP 3
FDNS	00NR	0	16WP	G15_034	FROM->TO	CIMARRON - DRAPER LAKE 345KV CKT 1	717	717	0.10605	105.0411	BRISTOW - SILVER CITY 138KV CKT 1
FDNS	00NR	0	16WP	G15_034	FROM->TO	CIMARRON - DRAPER LAKE 345KV CKT 1	717	717	0.10972	105.0401	PECAN CREEK - RIVERSIDE STATION 345KV CKT 1
FDNS	00NR	0	16WP	G15_034	FROM->TO	CIMARRON - DRAPER LAKE 345KV CKT 1	717	717	0.10972	105.0401	PECAN CREEK - RIVERSIDE STATION 345KV CKT 1
FDNS	00NR	0	16WP	G15_034	FROM->TO	CIMARRON - DRAPER LAKE 345KV CKT 1	717	717	0.10586	105.0374	EL RENO SW - MUSTANG2 69.000 69KV CKT 1
FDNS	00NR	0	16WP	G15_034	FROM->TO	CIMARRON - DRAPER LAKE 345KV CKT 1	717	717	0.10577	105.0369	HEALDTON - RINGLING 138KV CKT 1
FDNS	00NR	0	16WP	G15_034	FROM->TO	CIMARRON - DRAPER LAKE 345KV CKT 1	717	717	0.10563	105.0351	MC NIEL 500/115KV TRANSFORMER CKT 1
FDNS	00NR	0	16WP	G15_034	FROM->TO	CIMARRON - DRAPER LAKE 345KV CKT 1	717	717	0.10569	105.0326	KELLYAV4 138.00 - MEMORIAL 138KV CKT 1
FDNS	00NR	0	16WP	G15_034	FROM->TO	CIMARRON - DRAPER LAKE 345KV CKT 1	717	717	0.10581	105.0321	SHIDLER - WEST PAWHUSKA 138KV CKT 1
FDNS	00NR	0	16WP	G15_034	FROM->TO	CIMARRON - DRAPER LAKE 345KV CKT 1	717	717	0.10566	105.0275	BISMARK - HOT SPRINGS WEST BUS 115KV CKT 1
FDNS	00NR	0	16WP	G15_034	FROM->TO	CIMARRON - DRAPER LAKE 345KV CKT 1	717	717	0.1056	105.0258	GEN501972 1-EVANGELINE UNIT 7-2
FDNS	00NR	0	16WP	G15_034	FROM->TO	CIMARRON - DRAPER LAKE 345KV CKT 1	717	717	0.1056	105.0257	GEN501971 1-EVANGELINE UNIT 7-1
FDNS	00NR	0	16WP	G15_034	FROM->TO	CIMARRON - DRAPER LAKE 345KV CKT 1	717	717	0.10687	105.0243	BRYANT - MEMORIAL 138KV CKT 1
FDNS	00NR	0	16WP	G15_034	FROM->TO	CIMARRON - DRAPER LAKE 345KV CKT 1	717	717	0.10563	105.0183	ARPIN B4 345.00 - EAU CLAIRE 345KV CKT 1
FDNS	00NR	0	16WP	G15_034	FROM->TO	CIMARRON - DRAPER LAKE 345KV CKT 1	717	717	0.1056	105.0168	GEN334431 1-SABINE UNIT 1
FDNS	00NR	0	16WP	G15_034	FROM->TO	CIMARRON - DRAPER LAKE 345KV CKT 1	717	717	0.1056	105.0167	GEN334432 1-SABINE UNIT 2
FDNS	00NR	0	16WP	G15_034	FROM->TO	CIMARRON - DRAPER LAKE 345KV CKT 1	717	717	0.10602	105.0163	BODLE - PARK PLACE 138KV CKT 1
FDNS	00NR	0	16WP	G15_034	FROM->TO	CIMARRON - DRAPER LAKE 345KV CKT 1	717	717	0.10581	105.0152	PAWHUSKA TAP - WEST PAWHUSKA 138KV CKT 1
FDNS	00NR	0	16WP	G15_034	FROM->TO	CIMARRON - DRAPER LAKE 345KV CKT 1	717	717	0.10573	105.0143	BROOKLINE - MORGAN 345KV CKT 1
FDNS	00NR	0	16WP	G15_034	FROM->TO	CIMARRON - DRAPER LAKE 345KV CKT 1	717	717	0.10573	105.0143	BROOKLINE - MORGAN 345KV CKT 1
FDNS	00NR	0	16WP	G15_034	FROM->TO	CIMARRON - DRAPER LAKE 345KV CKT 1	717	717	0.1056	105.0133	GEN336242 1-1NMIL ST1 18.000
FDNS	00NR	0	16WP	G15_034	FROM->TO	CIMARRON - DRAPER LAKE 345KV CKT 1	717	717	0.1056	105.0124	GEN337765 1-TRACTEBEL UNIT C2
FDNS	00NR	0	16WP	G15_034	FROM->TO	CIMARRON - DRAPER LAKE 345KV CKT 1	717	717	0.1056	105.0123	GEN337764 1-TRACTEBEL UNIT C1
FDNS	00NR	0	16WP	G15_034	FROM->TO	CIMARRON - DRAPER LAKE 345KV CKT 1	717	717	0.1056	105.0112	GEN501912 1-ACADIA UNIT CT1B
FDNS	00NR	0	16WP	G15_034	FROM->TO	CIMARRON - DRAPER LAKE 345KV CKT 1	717	717	0.1056	105.0105	GEN501911 1-ACADIA UNIT CT1A
FDNS	00NR	0	16WP	G15_034	FROM->TO	CIMARRON - DRAPER LAKE 345KV CKT 1	717	717	0.10574	105.0101	COUNCIL - MUSTANG 138KV CKT 1
FDNS	00NR	0	16WP	G15_034	FROM->TO	CIMARRON - DRAPER LAKE 345KV CKT 1	717	717	0.10578	105.0038	PIEDMONT - RICHRDS 138KV CKT 1
FDNS	00NR	0	16WP	G15_034	FROM->TO	CIMARRON - DRAPER LAKE 345KV CKT 1	717	717	0.1056	105.0021	HAMMETT2 - MEEKER 138KV CKT 1
FDNS	00NR	0	16WP	G15_034	FROM->TO	CIMARRON - DRAPER LAKE 345KV CKT 1	717	717	0.10561	105.0018	CYPRESS - HARTBURG 500KV CKT 1
FDNS	00NR	0	16WP	G15_034	FROM->TO	CIMARRON - DRAPER LAKE 345KV CKT 1	717	717	0.10569	105.0011	KELLYAV4 138.00 - REMNGTON PARK 138KV CKT 1
FDNS	00NR	0	16WP	G15_034	FROM->TO	CIMARRON - DRAPER LAKE 345KV CKT 1	717	717	0.10578	105.0002	CIVIT - PAOLI 138KV CKT 1
FDNS	00NR	0	16WP	G15_034	FROM->TO	CIMARRON - DRAPER LAKE 345KV CKT 1	717	717	0.1056	104.997	P12:69:AEPW:L.E.S.-2:LAW WC2
FDNS	00NR	0	16WP	G15_034	FROM->TO	CIMARRON - DRAPER LAKE 345KV CKT 1	717	717	0.10563	104.9966	HAMMETT TAP - HORSESHOE LAKE 138KV CKT 1
FDNS	00NR	0	16WP	G15_034	FROM->TO	CIMARRON - DRAPER LAKE 345KV CKT 1	717	717	0.10577	104.9951	RINGLING - SOUTH WILSON 138KV CKT 1
FDNS	00NR	0	16WP	G15_034	FROM->TO	CIMARRON - DRAPER LAKE 345KV CKT 1	717	717	0.10566	104.9943	ALPINE AECC - BISMARK 115KV CKT 1
FDNS	00NR	0	16WP	G15_034	FROM->TO	CIMARRON - DRAPER LAKE 345KV CKT 1	717	717	0.10561	104.9884	LAYFLD8 500.00 - MOUNT OLIVE 500KV CKT 1
FDNS	00NR	0	16WP	G15_034	FROM->TO	CIMARRON - DRAPER LAKE 345KV CKT 1	717	717	0.10561	104.9884	LAYFLD8 500.00 - MOUNT OLIVE 500KV CKT 1
FDNS	00NR	0	16WP	G15_034	FROM->TO	CIMARRON - DRAPER LAKE 345KV CKT 1	717	717	0.1057	104.9787	CORN TAP - CORNVILLE 138KV CKT 1
FDNS	00NR	0	16WP	G15_034	FROM->TO	CIMARRON - DRAPER LAKE 345KV CKT 1	717	717	0.10574	104.9554	COUNCIL - WESTOAKS 138KV CKT 1
FDNS	00NR	0	16WP	G15_034	FROM->TO	CIMARRON - DRAPER LAKE 345KV CKT 1	717	717	0.10687	104.9463	ACORN 4 138.00 - BRYANT 138KV CKT 1
FDNS	00NR	0	16WP	G15_034	FROM->TO	CIMARRON - DRAPER LAKE 345KV CKT 1	717	717	0.1056	104.5287	BASE CASE
FDNS	00NR	0	16WP	G15_034	FROM->TO	CIMARRON - DRAPER LAKE 345KV CKT 1	717	717	0.10556	104.2117	GRAPEVINE INTERCHANGE - NICHOLS STATION 230KV CKT 1
FDNS	00NR	0	16WP	G15_034	FROM->TO	CIMARRON - DRAPER LAKE 345KV CKT 1	717	717	0.10556	104.2117	GRAPEVINE INTERCHANGE - NICHOLS STATION 230KV CKT 1
FDNS	00NR	0	16WP	G15_034	FROM->TO	CIMARRON - DRAPER LAKE 345KV CKT 1	717	717	0.10622	104.1606	BURGETT4 138.00 - RNDBARN4 138.00 138KV CKT 1
FDNS	00NR	0	16WP	G15_034	FROM->TO	CIMARRON - DRAPER LAKE 345KV CKT 1	717	717	0.10622	104.1583	BURGETT4 138.00 - DANFORTH 138KV CKT 1
FDNS	00NR	0	16WP	G15_034	FROM->TO	CIMARRON - DRAPER LAKE 345KV CKT 1	717	717	0.10622	104.1481	ARCADIA - RNDBARN4 138.00 138KV CKT 1
FDNS	00NR	0	16WP	G15_034	FROM->TO	CIMARRON - DRAPER LAKE 345KV CKT 1	717	717	0.1056	104.1054	GEN515550 1-MNCWND31 0.6900
FDNS	00NR	0	16WP	G15_034	FROM->TO	CIMARRON - DRAPER LAKE 345KV CKT 1	717	717	0.1056	104.0891	GEN562611 1-G14_064_3 0.6900
FDNS	00NR	0	16WP	G15_034	FROM->TO	CIMARRON - DRAPER LAKE 345KV CKT 1	717	717	0.1056	104.0845	GEN659125 1-COVEY
FDNS	00NR	0	16WP	G15_034	FROM->TO	CIMARRON - DRAPER LAKE 345KV CKT 1	717	717	0.10553	104.0804	GRAPEVINE INTERCHANGE - STATELINE INTERCHANGE 230KV CKT 1

SOLUTION	GROUP	SCENARIO	SEASON	SOURCE	DIRECTION	MONITORED ELEMENT	RATEA (MVA)	RATEB(MVA)	TDF	TC%LOADING (% MVA)	CONTINGENCY
FDNS	00NR	0	16WP	G15_034	FROM->TO	CIMARRON - DRAPER LAKE 345KV CKT 1	717	717	0.10553	104.0804	GRAPEVINE INTERCHANGE - STATELINE INTERCHANGE 230KV CKT 1
FDNS	00NR	0	16WP	G15_034	FROM->TO	CIMARRON - DRAPER LAKE 345KV CKT 1	717	717	0.10561	104.0687	P12:138:WFEC:MSL10
FDNS	00NR	0	16WP	G15_034	FROM->TO	CIMARRON - DRAPER LAKE 345KV CKT 1	717	717	0.1056	104.0684	GEN511848 1-SOUTHWESTERN STATION #3
FDNS	00NR	0	16WP	G15_034	FROM->TO	CIMARRON - DRAPER LAKE 345KV CKT 1	717	717	0.1056	104.0611	GEN672303 3-BOUNDARY DAM GENERATOR 3
FDNS	00NR	0	16WP	G15_034	FROM->TO	CIMARRON - DRAPER LAKE 345KV CKT 1	717	717	0.1056	104.0611	GEN672304 4-BOUNDARY DAM GENERATOR 4
FDNS	00NR	0	16WP	G15_034	FROM->TO	CIMARRON - DRAPER LAKE 345KV CKT 1	717	717	0.1056	104.0611	GEN672305 5-BOUNDARY DAM GENERATOR 5
FDNS	00NR	0	16WP	G15_034	FROM->TO	CIMARRON - DRAPER LAKE 345KV CKT 1	717	717	0.1056	104.0606	GEN515601 1-KNGFSR11 0.7000
FDNS	00NR	0	16WP	G15_034	FROM->TO	CIMARRON - DRAPER LAKE 345KV CKT 1	717	717	0.1056	104.0588	GEN600007 7-RIVERSIDE GEN 7
FDNS	00NR	0	16WP	G15_034	FROM->TO	CIMARRON - DRAPER LAKE 345KV CKT 1	717	717	0.1056	104.0583	GEN600067 9-HIGH BRIDGE
FDNS	00NR	0	16WP	G15_034	FROM->TO	CIMARRON - DRAPER LAKE 345KV CKT 1	717	717	0.1056	104.0537	GEN615052 1-CAMBRIDGE GENERATING STATION
FDNS	00NR	0	16WP	G15_034	FROM->TO	CIMARRON - DRAPER LAKE 345KV CKT 1	717	717	0.1056	104.0492	GEN600011 5-BLACK DOG GEN 1
FDNS	00NR	0	16WP	G15_034	FROM->TO	CIMARRON - DRAPER LAKE 345KV CKT 1	717	717	0.1056	104.0471	GEN563062 1-G15071_3 0.6900
FDNS	00NR	0	16WP	G15_034	FROM->TO	CIMARRON - DRAPER LAKE 345KV CKT 1	717	717	0.1056	104.0434	GEN600014 4-BLACK DOG GEN 4
FDNS	00NR	0	16WP	G15_034	FROM->TO	CIMARRON - DRAPER LAKE 345KV CKT 1	717	717	0.1056	104.0429	GEN640020 2-SHELDON STATION UNIT 2
FDNS	00NR	0	16WP	G15_034	FROM->TO	CIMARRON - DRAPER LAKE 345KV CKT 1	717	717	0.1056	104.0357	GEN615032 2-PLEASANT VALLEY
FDNS	00NR	0	16WP	G15_034	FROM->TO	CIMARRON - DRAPER LAKE 345KV CKT 1	717	717	0.10562	104.0338	CHISNEY - CLARKSVILLE 138KV CKT 1
FDNS	00NR	0	16WP	G15_034	FROM->TO	CIMARRON - DRAPER LAKE 345KV CKT 1	717	717	0.1056	104.0335	GEN541151 3-SIBLEY GENERATING UNIT #3
FDNS	00NR	0	16WP	G15_034	FROM->TO	CIMARRON - DRAPER LAKE 345KV CKT 1	717	717	0.10591	104.0303	OVEXFRMCCOVE
FDNS	00NR	0	16WP	G15_034	FROM->TO	CIMARRON - DRAPER LAKE 345KV CKT 1	717	717	0.1056	104.0286	GEN629067 1-EMERY GAS TURBINE 1
FDNS	00NR	0	16WP	G15_034	FROM->TO	CIMARRON - DRAPER LAKE 345KV CKT 1	717	717	0.1056	104.0274	GEN563282 1-G15094_3 0.6900
FDNS	00NR	0	16WP	G15_034	FROM->TO	CIMARRON - DRAPER LAKE 345KV CKT 1	717	717	0.1056	104.0231	GEN562802 1-G15039_3 0.3570
FDNS	00NR	0	16WP	G15_034	FROM->TO	CIMARRON - DRAPER LAKE 345KV CKT 1	717	717	0.1056	104.0218	GEN652353 2-GR PRAIRIEG 0.6900
FDNS	00NR	0	16WP	G15_034	FROM->TO	CIMARRON - DRAPER LAKE 345KV CKT 1	717	717	0.1056	104.0126	GEN515591 1-PALDRW11 0.6900
FDNS	00NR	0	16WP	G15_034	FROM->TO	CIMARRON - DRAPER LAKE 345KV CKT 1	717	717	0.1072	104.0116	FOREST HILL - MAUD 138KV CKT 1
FDNS	00NR	0	16WP	G15_034	FROM->TO	CIMARRON - DRAPER LAKE 345KV CKT 1	717	717	0.1056	104.0099	GEN600017 C-LS POWER CT
FDNS	00NR	0	16WP	G15_034	FROM->TO	CIMARRON - DRAPER LAKE 345KV CKT 1	717	717	0.1056	104.0098	GEN563102 1-G15075_3 0.5500
FDNS	00NR	0	16WP	G15_034	FROM->TO	CIMARRON - DRAPER LAKE 345KV CKT 1	717	717	0.1056	104.0095	GEN562602 1-G15_029_3 0.6900
FDNS	00NR	0	16WP	G15_034	FROM->TO	CIMARRON - DRAPER LAKE 345KV CKT 1	717	717	0.10563	103.9981	MINGO - SETAB 345KV CKT 1
FDNS	00NR	0	16WP	G15_034	FROM->TO	CIMARRON - DRAPER LAKE 345KV CKT 1	717	717	0.10563	103.9981	MINGO - SETAB 345KV CKT 1
FDNS	00NR	0	16WP	G15_034	FROM->TO	CIMARRON - DRAPER LAKE 345KV CKT 1	717	717	0.1056	103.9916	GEN562812 1-G15040_3 0.3570
FDNS	00NR	0	16WP	G15_034	FROM->TO	CIMARRON - DRAPER LAKE 345KV CKT 1	717	717	0.10604	103.9911	SEMINOLE - VANOSTP4 138.00 138KV CKT 1
FDNS	00NR	0	16WP	G15_034	FROM->TO	CIMARRON - DRAPER LAKE 345KV CKT 1	717	717	0.1056	103.9854	GEN563132 1-G15078_3 0.3570
FDNS	00NR	0	16WP	G15_034	FROM->TO	CIMARRON - DRAPER LAKE 345KV CKT 1	717	717	0.1056	103.9813	GEN672392 1-NBECGT1G 18.000
FDNS	00NR	0	16WP	G15_034	FROM->TO	CIMARRON - DRAPER LAKE 345KV CKT 1	717	717	0.1056	103.9764	GEN524285 1-WILDORADO WIND GEN
FDNS	00NR	0	16WP	G15_034	FROM->TO	CIMARRON - DRAPER LAKE 345KV CKT 1	717	717	0.1056	103.9735	GEN562074 1-G1149G1504 0.6900
FDNS	00NR	0	16WP	G15_034	FROM->TO	CIMARRON - DRAPER LAKE 345KV CKT 1	717	717	0.1056	103.9724	GEN629070 2-BEAVER CHANNEL GENERATORFOR UNIT NO 2
FDNS	00NR	0	16WP	G15_034	FROM->TO	CIMARRON - DRAPER LAKE 345KV CKT 1	717	717	0.10609	103.972	P12:138:AEPW:WELETK4:EARLSBORO4
FDNS	00NR	0	16WP	G15_034	FROM->TO	CIMARRON - DRAPER LAKE 345KV CKT 1	717	717	0.10609	103.972	P12:138:OKGE:3TERM36
FDNS	00NR	0	16WP	G15_034	FROM->TO	CIMARRON - DRAPER LAKE 345KV CKT 1	717	717	0.10598	103.9644	EARLSBORO 4138.00 - FIXICO TAP 138KV CKT 1
FDNS	00NR	0	16WP	G15_034	FROM->TO	CIMARRON - DRAPER LAKE 345KV CKT 1	717	717	0.10579	103.958	CANADIAN RIVER - MCALESTER SOUTH 138KV CKT 1
FDNS	00NR	0	16WP	G15_034	FROM->TO	CIMARRON - DRAPER LAKE 345KV CKT 1	717	717	0.10579	103.958	CANADIAN RIVER - MCALESTER SOUTH 138KV CKT 1
FDNS	00NR	0	16WP	G15_034	FROM->TO	CIMARRON - DRAPER LAKE 345KV CKT 1	717	717	0.1056	103.9579	GEN615010 1-STANTON4
FDNS	00NR	0	16WP	G15_034	FROM->TO	CIMARRON - DRAPER LAKE 345KV CKT 1	717	717	0.10579	103.9566	CANADIAN RIVER () 345/138/13.8KV TRANSFORMER CKT 1
FDNS	00NR	0	16WP	G15_034	FROM->TO	CIMARRON - DRAPER LAKE 345KV CKT 1	717	717	0.10579	103.9566	CANADIAN RIVER () 345/138/13.8KV TRANSFORMER CKT 1
FDNS	00NR	0	16WP	G15_034	FROM->TO	CIMARRON - DRAPER LAKE 345KV CKT 1	717	717	0.1056	103.9515	GEN526331 1-JONES GEN #1 22 KV
FDNS	00NR	0	16WP	G15_034	FROM->TO	CIMARRON - DRAPER LAKE 345KV CKT 1	717	717	0.1056	103.9514	GEN526332 1-JONES GEN #2 21 KV
FDNS	00NR	0	16WP	G15_034	FROM->TO	CIMARRON - DRAPER LAKE 345KV CKT 1	717	717	0.1056	103.9475	GEN562596 1-G14_059_3 0.6900
FDNS	00NR	0	16WP	G15_034	FROM->TO	CIMARRON - DRAPER LAKE 345KV CKT 1	717	717	0.1056	103.9433	GEN629071 1-BURLINGTON GENERATOR FOR UNIT NO 1 E
FDNS	00NR	0	16WP	G15_034	FROM->TO	CIMARRON - DRAPER LAKE 345KV CKT 1	717	717	0.1056	103.9421	GEN515365 1-CENT 21 0.7000
FDNS	00NR	0	16WP	G15_034	FROM->TO	CIMARRON - DRAPER LAKE 345KV CKT 1	717	717	0.10562	103.9416	CHISNEY - HIGHLAND 138KV CKT 1
FDNS	00NR	0	16WP	G15_034	FROM->TO	CIMARRON - DRAPER LAKE 345KV CKT 1	717	717	0.10562	103.9408	P12:138:WFEC:MSL07
FDNS	00NR	0	16WP	G15_034	FROM->TO	CIMARRON - DRAPER LAKE 345KV CKT 1	717	717	0.10562	103.9408	P12:138:WFEC-AEPW:HUGOPP4:ATOKA--4
FDNS	00NR	0	16WP	G15_034	FROM->TO	CIMARRON - DRAPER LAKE 345KV CKT 1	717	717	0.1056	103.9376	GEN615021 1-GRE-ER 14G 16.000
FDNS	00NR	0	16WP	G15_034	FROM->TO	CIMARRON - DRAPER LAKE 345KV CKT 1	717	717	0.1056	103.9343	INDEPENDENCE 500/26.0KV TRANSFORMER CKT 1
FDNS	00NR	0	16WP	G15_034	FROM->TO	CIMARRON - DRAPER LAKE 345KV CKT 1	717	717	0.10563	103.9325	GRPRAR1-LNX3345.00 - GRPRAR 345KV CKT Z
FDNS	00NR	0	16WP	G15_034	FROM->TO	CIMARRON - DRAPER LAKE 345KV CKT 1	717	717	0.10562	103.9304	P12:138:AEPW:SHAM4WT:CHILD4WT
FDNS	00NR	0	16WP	G15_034	FROM->TO	CIMARRON - DRAPER LAKE 345KV CKT 1	717	717	0.10563	103.9291	GRPRAR1-LNX3345.00 - HOLT.CO3 345.00 345KV CKT 1
FDNS	00NR	0	16WP	G15_034	FROM->TO	CIMARRON - DRAPER LAKE 345KV CKT 1	717	717	0.1056	103.927	GEN562983 1-G15061_4 0.6900
FDNS	00NR	0	16WP	G15_034	FROM->TO	CIMARRON - DRAPER LAKE 345KV CKT 1	717	717	0.1056	103.927	GEN562984 1-G15061_5 0.6900
FDNS	00NR	0	16WP	G15_034	FROM->TO	CIMARRON - DRAPER LAKE 345KV CKT 1	717	717	0.1056	103.9254	GEN562017 1-G11_022_3 0.6900
FDNS	00NR	0	16WP	G15_034	FROM->TO	CIMARRON - DRAPER LAKE 345KV CKT 1	717	717	0.10561	103.9203	P12:138:AEPW-SWPA:LONEOAK4:TUPELO4
FDNS	00NR	0	16WP	G15_034	FROM->TO	CIMARRON - DRAPER LAKE 345KV CKT 1	717	717	0.10561	103.9202	P12:138:WFEC:MSL06
FDNS	00NR	0	16WP	G15_034	FROM->TO	CIMARRON - DRAPER LAKE 345KV CKT 1	717	717	0.1056	103.9131	GEN562429 1-G13-029 0.6900
FDNS	00NR	0	16WP	G15_034	FROM->TO	CIMARRON - DRAPER LAKE 345KV CKT 1	717	717	0.1056	103.9116	GEN562432 1-G13-030 0.6900
FDNS	00NR	0	16WP	G15_034	FROM->TO	CIMARRON - DRAPER LAKE 345KV CKT 1	717	717	0.1056	103.9092	GEN560105 1-G08-22 0.6900
FDNS	00NR	0	16WP	G15_034	FROM->TO	CIMARRON - DRAPER LAKE 345KV CKT 1	717	717	0.1056	103.9056	GEN300003 1-THOMAS HILL UNIT 3
FDNS	00NR	0	16WP	G15_034	FROM->TO	CIMARRON - DRAPER LAKE 345KV CKT 1	717	717	0.0886	103.9018	G15063_T 345.00 - WOODRING 345KV CKT 1
FDNS	00NR	0	16WP	G15_034	FROM->TO	CIMARRON - DRAPER LAKE 345KV CKT 1	717	717	0.1056	103.8967	BURLINGTON NO1 + NO 2 + NO 3 161/20.0KV TRANSFORMER CKT 1
FDNS	00NR	0	16WP	G15_034	FROM->TO	CIMARRON - DRAPER LAKE 345KV CKT 1	717	717	0.10609	103.8902	P12:138:AEPW-OGE:WELETK4:MAUD 4
FDNS	00NR	0	16WP	G15_034	FROM->TO	CIMARRON - DRAPER LAKE 345KV CKT 1	717	717	0.10565	103.8864	P12:138:WFEC:MSL16
FDNS	00NR	0	16WP	G15_034	FROM->TO	CIMARRON - DRAPER LAKE 345KV CKT 1	717	717	0.1056	103.8824	GEN527882 1-CUNNINGHAM GEN #2 20 KV
FDNS	00NR	0	16WP	G15_034	FROM->TO	CIMARRON - DRAPER LAKE 345KV CKT 1	717	717	0.10598	103.8804	EARLSBORO 4138.00 - MAUD 138KV CKT 1
FDNS	00NR	0	16WP	G15_034	FROM->TO	CIMARRON - DRAPER LAKE 345KV CKT 1	717	717	0.10598	103.8804	EARLSBORO 4138.00 - MAUD 138KV CKT 1
FDNS	00NR	0	16WP	G15_034	FROM->TO	CIMARRON - DRAPER LAKE 345KV CKT 1	717	717	0.10575	103.8782	DELL 500 - INDEPENDENCE 500KV CKT 1
FDNS	00NR	0	16WP	G15_034	FROM->TO	CIMARRON - DRAPER LAKE 345KV CKT 1	717	717	0.1056	103.8745	GEN562550 1-G14_040_3 0.6900
FDNS	00NR	0	16WP	G15_034	FROM->TO	CIMARRON - DRAPER LAKE 345KV CKT 1	717	717	0.10692	103.8731	MAUD - SEMINOLE 138KV CKT 1
FDNS	00NR	0	16WP	G15_034	FROM->TO	CIMARRON - DRAPER LAKE 345KV CKT 1	717	717	0.1056	103.8723	GEN524295 1-SPNSPUR_WND10.6900
FDNS	00NR	0	16WP	G15_034	FROM->TO	CIMARRON - DRAPER LAKE 345KV CKT 1	717	717	0.1056	103.8505	GEN562832 1-G15042_3 0.6900
FDNS	00NR	0	16WP	G15_034	FROM->TO	CIMARRON - DRAPER LAKE 345KV CKT 1	717	717	0.10535	103.8482	P12:230:AEPW:ELKCITY6:SWEETWT6

SOLUTION	GROUP	SCENARIO	SEASON	SOURCE	DIRECTION	MONITORED ELEMENT	RATEA (MVA)	RATEB(MVA)	TDF	TC%LOADING (% MVA)	CONTINGENCY
FDNS	00NR	0	16WP	G15_034	FROM->TO	CIMARRON - DRAPER LAKE 345KV CKT 1	717	717	0.1056	103.8446	P12:230:UMZB:# 112 #: NU IN SD. NU-RCDC & DRY CREEK XFMR
FDNS	00NR	0	16WP	G15_034	FROM->TO	CIMARRON - DRAPER LAKE 345KV CKT 1	717	717	0.1056	103.844	RCDC EAST 4230.00 - RED CEDAR DC 230KV CKT 1
FDNS	00NR	0	16WP	G15_034	FROM->TO	CIMARRON - DRAPER LAKE 345KV CKT 1	717	717	0.1056	103.8352	THOMAS HILL 161/22.0KV TRANSFORMER CKT 1
FDNS	00NR	0	16WP	G15_034	FROM->TO	CIMARRON - DRAPER LAKE 345KV CKT 1	717	717	0.1056	103.8274	GEN515606 1-CANDN11 0.6900
FDNS	00NR	0	16WP	G15_034	FROM->TO	CIMARRON - DRAPER LAKE 345KV CKT 1	717	717	0.1056	103.8274	GEN515607 1-CANDN12 0.6900
FDNS	00NR	0	16WP	G15_034	FROM->TO	CIMARRON - DRAPER LAKE 345KV CKT 1	717	717	0.1056	103.8273	GEN345671 2-1RUSH G2 18.000
FDNS	00NR	0	16WP	G15_034	FROM->TO	CIMARRON - DRAPER LAKE 345KV CKT 1	717	717	0.10547	103.826	STLN-DEMARC6 - SWEETWATER 230KV CKT 1
FDNS	00NR	0	16WP	G15_034	FROM->TO	CIMARRON - DRAPER LAKE 345KV CKT 1	717	717	0.1056	103.8253	GEN345670 1-1RUSH G1 18.000
FDNS	00NR	0	16WP	G15_034	FROM->TO	CIMARRON - DRAPER LAKE 345KV CKT 1	717	717	0.1056	103.8218	GEN531447 1-HOLCOMB GENERATOR
FDNS	00NR	0	16WP	G15_034	FROM->TO	CIMARRON - DRAPER LAKE 345KV CKT 1	717	717	0.10562	103.8152	HIGHLAND - PINK SW 138KV CKT 1
FDNS	00NR	0	16WP	G15_034	FROM->TO	CIMARRON - DRAPER LAKE 345KV CKT 1	717	717	0.10547	103.8149	P12:230:AEPW-SPS:SWEETWT6:WHEELER 6
FDNS	00NR	0	16WP	G15_034	FROM->TO	CIMARRON - DRAPER LAKE 345KV CKT 1	717	717	0.10547	103.8129	STATELINE INTERCHANGE - STLN-DEMARC6 230KV CKT 1
FDNS	00NR	0	16WP	G15_034	FROM->TO	CIMARRON - DRAPER LAKE 345KV CKT 1	717	717	0.1056	103.8022	GEN645011 1-NEBRASKA CITY 1
FDNS	00NR	0	16WP	G15_034	FROM->TO	CIMARRON - DRAPER LAKE 345KV CKT 1	717	717	0.1056	103.7992	GEN515443 1-MNCOWND1 0.7000
FDNS	00NR	0	16WP	G15_034	FROM->TO	CIMARRON - DRAPER LAKE 345KV CKT 1	717	717	0.1056	103.7992	GEN562794 1-G15038_5 0.6900
FDNS	00NR	0	16WP	G15_034	FROM->TO	CIMARRON - DRAPER LAKE 345KV CKT 1	717	717	0.1056	103.7992	GEN562795 1-G15038_6 0.6900
FDNS	00NR	0	16WP	G15_034	FROM->TO	CIMARRON - DRAPER LAKE 345KV CKT 1	717	717	0.1056	103.788	GEN629072 4-LANSING GENERATOR FOR UNITS NO4 EIA CODE 1
FDNS	00NR	0	16WP	G15_034	FROM->TO	CIMARRON - DRAPER LAKE 345KV CKT 1	717	717	0.1056	103.7758	GEN563092 1-G15074_3 0.6900
FDNS	00NR	0	16WP	G15_034	FROM->TO	CIMARRON - DRAPER LAKE 345KV CKT 1	717	717	0.1056	103.7641	GEN542951 5-HAWTHORN UNIT #5
FDNS	00NR	0	16WP	G15_034	FROM->TO	CIMARRON - DRAPER LAKE 345KV CKT 1	717	717	0.1056	103.7579	GEN657749 1-YOUNG 1 GENERATOR
FDNS	00NR	0	16WP	G15_034	FROM->TO	CIMARRON - DRAPER LAKE 345KV CKT 1	717	717	0.1056	103.7568	GEN645012 2-NEBRASKA CITY 2
FDNS	00NR	0	16WP	G15_034	FROM->TO	CIMARRON - DRAPER LAKE 345KV CKT 1	717	717	0.1056	103.7502	GEN562512 1-G14_020_3 0.6900
FDNS	00NR	0	16WP	G15_034	FROM->TO	CIMARRON - DRAPER LAKE 345KV CKT 1	717	717	0.1056	103.7299	GEN562699 1-G15_018_3 0.6900
FDNS	00NR	0	16WP	G15_034	FROM->TO	CIMARRON - DRAPER LAKE 345KV CKT 1	717	717	0.10547	103.713	CHISHOLM6 230.00 - SWEETWATER 230KV CKT 1
FDNS	00NR	0	16WP	G15_034	FROM->TO	CIMARRON - DRAPER LAKE 345KV CKT 1	717	717	0.10582	103.7064	KEO EHV - WEST MEMPHIS 500 500KV CKT 1
FDNS	00NR	0	16WP	G15_034	FROM->TO	CIMARRON - DRAPER LAKE 345KV CKT 1	717	717	0.10608	103.7033	FRISCCO4 138.00 - LULA 138KV CKT 1
FDNS	00NR	0	16WP	G15_034	FROM->TO	CIMARRON - DRAPER LAKE 345KV CKT 1	717	717	0.1056	103.7007	GEN529201 1-OMCDLEC1 13.800
FDNS	00NR	0	16WP	G15_034	FROM->TO	CIMARRON - DRAPER LAKE 345KV CKT 1	717	717	0.10695	103.692	HOLLYWOOD - MIDWEST TAP 138KV CKT 1
FDNS	00NR	0	16WP	G15_034	FROM->TO	CIMARRON - DRAPER LAKE 345KV CKT 1	717	717	0.1056	103.6906	GEN640009 1-COOPER NUCLEAR STATION
FDNS	00NR	0	16WP	G15_034	FROM->TO	CIMARRON - DRAPER LAKE 345KV CKT 1	717	717	0.1056	103.6906	GEN681522 3-GENOA 3
FDNS	00NR	0	16WP	G15_034	FROM->TO	CIMARRON - DRAPER LAKE 345KV CKT 1	717	717	0.1056	103.6891	GEN563122 1-G15077_3 0.3850
FDNS	00NR	0	16WP	G15_034	FROM->TO	CIMARRON - DRAPER LAKE 345KV CKT 1	717	717	0.1056	103.6723	GEN563182 1-G15083_3 0.6900
FDNS	00NR	0	16WP	G15_034	FROM->TO	CIMARRON - DRAPER LAKE 345KV CKT 1	717	717	0.1056	103.6598	GEN562685 1-G15_013_3 0.3550
FDNS	00NR	0	16WP	G15_034	FROM->TO	CIMARRON - DRAPER LAKE 345KV CKT 1	717	717	0.10625	103.6576	FT SMITH - MUSKOGEE 345KV CKT 1
FDNS	00NR	0	16WP	G15_034	FROM->TO	CIMARRON - DRAPER LAKE 345KV CKT 1	717	717	0.1056	103.6431	4SIOUX 1 138.00 138/18.0KV TRANSFORMER CKT 1
FDNS	00NR	0	16WP	G15_034	FROM->TO	CIMARRON - DRAPER LAKE 345KV CKT 1	717	717	0.1059	103.6414	CIMARRON - TUTTLE CONOCO TAP 138KV CKT 1
FDNS	00NR	0	16WP	G15_034	FROM->TO	CIMARRON - DRAPER LAKE 345KV CKT 1	717	717	0.1053	103.6327	CHISHOLM7 345.00 - GRACEMONT 345KV CKT 1
FDNS	00NR	0	16WP	G15_034	FROM->TO	CIMARRON - DRAPER LAKE 345KV CKT 1	717	717	0.1056	103.6323	GEN344895 2-1LAB G2 20.000
FDNS	00NR	0	16WP	G15_034	FROM->TO	CIMARRON - DRAPER LAKE 345KV CKT 1	717	717	0.10583	103.6289	TUPELO - TUPELO TAP 138KV CKT 1
FDNS	00NR	0	16WP	G15_034	FROM->TO	CIMARRON - DRAPER LAKE 345KV CKT 1	717	717	0.1056	103.6171	GEN563222 1-G15088_3 0.6900
FDNS	00NR	0	16WP	G15_034	FROM->TO	CIMARRON - DRAPER LAKE 345KV CKT 1	717	717	0.1056	103.6127	GEN562587 1-G14_056_3 0.6900
FDNS	00NR	0	16WP	G15_034	FROM->TO	CIMARRON - DRAPER LAKE 345KV CKT 1	717	717	0.1056	103.6124	GEN523461 1-BLACKHAWK GEN #1
FDNS	00NR	0	16WP	G15_034	FROM->TO	CIMARRON - DRAPER LAKE 345KV CKT 1	717	717	0.1056	103.6123	GEN523462 1-BLACKHAWK GEN #2
FDNS	00NR	0	16WP	G15_034	FROM->TO	CIMARRON - DRAPER LAKE 345KV CKT 1	717	717	0.10608	103.6082	FRISCCO4 138.00 - HARDEN 4 138.00 138KV CKT 1
FDNS	00NR	0	16WP	G15_034	FROM->TO	CIMARRON - DRAPER LAKE 345KV CKT 1	717	717	0.1056	103.6036	GEN344896 3-1LAB G3 20.000
FDNS	00NR	0	16WP	G15_034	FROM->TO	CIMARRON - DRAPER LAKE 345KV CKT 1	717	717	0.1056	103.6021	GEN344894 1-1LAB G1 20.000
FDNS	00NR	0	16WP	G15_034	FROM->TO	CIMARRON - DRAPER LAKE 345KV CKT 1	717	717	0.1056	103.6009	GEN344897 4-1LAB G4 20.000
FDNS	00NR	0	16WP	G15_034	FROM->TO	CIMARRON - DRAPER LAKE 345KV CKT 1	717	717	0.1056	103.5904	GEN515602 1-KNGFSR12 0.7000
FDNS	00NR	0	16WP	G15_034	FROM->TO	CIMARRON - DRAPER LAKE 345KV CKT 1	717	717	0.1059	103.5701	TUTTLE - TUTTLE CONOCO TAP 138KV CKT 1
FDNS	00NR	0	16WP	G15_034	FROM->TO	CIMARRON - DRAPER LAKE 345KV CKT 1	717	717	0.1056	103.5566	GEN563082 1-G15073_3 0.6900
FDNS	00NR	0	16WP	G15_034	FROM->TO	CIMARRON - DRAPER LAKE 345KV CKT 1	717	717	0.1053	103.5441	CHISHOLM7 345.00 (CHISHOLM) 345/230/13.2KV TRANSFORMER CKT 1
FDNS	00NR	0	16WP	G15_034	FROM->TO	CIMARRON - DRAPER LAKE 345KV CKT 1	717	717	0.1056	103.5224	CLAY BOSWELL 230/20.9KV TRANSFORMER CKT 1
FDNS	00NR	0	16WP	G15_034	FROM->TO	CIMARRON - DRAPER LAKE 345KV CKT 1	717	717	0.1056	103.5204	GEN562704 1-G15_020_3 0.3550
FDNS	00NR	0	16WP	G15_034	FROM->TO	CIMARRON - DRAPER LAKE 345KV CKT 1	717	717	0.1056	103.5105	GEN563202 1-G15085_3 0.5500
FDNS	00NR	0	16WP	G15_034	FROM->TO	CIMARRON - DRAPER LAKE 345KV CKT 1	717	717	0.1056	103.4932	GEN672321 1-SHAND GENERATOR 1
FDNS	00NR	0	16WP	G15_034	FROM->TO	CIMARRON - DRAPER LAKE 345KV CKT 1	717	717	0.1056	103.4917	GEN640010 1-GERALD GENTLEMAN STATION UNIT 1
FDNS	00NR	0	16WP	G15_034	FROM->TO	CIMARRON - DRAPER LAKE 345KV CKT 1	717	717	0.1056	103.4674	GEN672310 1-POPLAR RIVER GENERATOR 1
FDNS	00NR	0	16WP	G15_034	FROM->TO	CIMARRON - DRAPER LAKE 345KV CKT 1	717	717	0.1056	103.4674	GEN672311 2-POPLAR RIVER GENERATOR 2
FDNS	00NR	0	16WP	G15_034	FROM->TO	CIMARRON - DRAPER LAKE 345KV CKT 1	717	717	0.10484	103.4637	SEMINOLE (SEMINOL1) 345/138/14.4KV TRANSFORMER CKT 1
FDNS	00NR	0	16WP	G15_034	FROM->TO	CIMARRON - DRAPER LAKE 345KV CKT 1	717	717	0.1056	103.4579	GEN672306 6-BOUNDARY DAM GENERATOR 6
FDNS	00NR	0	16WP	G15_034	FROM->TO	CIMARRON - DRAPER LAKE 345KV CKT 1	717	717	0.10628	103.4387	LULA - TUPELO TAP 138KV CKT 1
FDNS	00NR	0	16WP	G15_034	FROM->TO	CIMARRON - DRAPER LAKE 345KV CKT 1	717	717	0.1056	103.4317	GEN562710 1-G15_022_3 0.5500
FDNS	00NR	0	16WP	G15_034	FROM->TO	CIMARRON - DRAPER LAKE 345KV CKT 1	717	717	0.1056	103.4227	GEN640011 2-GERALD GENTLEMAN STATION UNIT 2
FDNS	00NR	0	16WP	G15_034	FROM->TO	CIMARRON - DRAPER LAKE 345KV CKT 1	717	717	0.10575	103.4174	NORTHWEST TEXARKANA - VALLIANT 345KV CKT 1
FDNS	00NR	0	16WP	G15_034	FROM->TO	CIMARRON - DRAPER LAKE 345KV CKT 1	717	717	0.10575	103.4174	NORTHWEST TEXARKANA - VALLIANT 345KV CKT 1
FDNS	00NR	0	16WP	G15_034	FROM->TO	CIMARRON - DRAPER LAKE 345KV CKT 1	717	717	0.1056	103.4136	GEN542956 2-LACYGNE UNIT #2
FDNS	00NR	0	16WP	G15_034	FROM->TO	CIMARRON - DRAPER LAKE 345KV CKT 1	717	717	0.1056	103.4059	GEN659118 1-LARAMIE RIVER UNIT1
FDNS	00NR	0	16WP	G15_034	FROM->TO	CIMARRON - DRAPER LAKE 345KV CKT 1	717	717	0.10748	103.3991	OAKCREEK - WILD MARY 138KV CKT 1
FDNS	00NR	0	16WP	G15_034	FROM->TO	CIMARRON - DRAPER LAKE 345KV CKT 1	717	717	0.10608	103.3991	P12:138:OKGE:3TERM22
FDNS	00NR	0	16WP	G15_034	FROM->TO	CIMARRON - DRAPER LAKE 345KV CKT 1	717	717	0.10609	103.3973	DRAPER LAKE - SOONER TAP 138KV CKT 1
FDNS	00NR	0	16WP	G15_034	FROM->TO	CIMARRON - DRAPER LAKE 345KV CKT 1	717	717	0.10608	103.3924	ETNA - HARDEN 4 138.00 138KV CKT 1
FDNS	00NR	0	16WP	G15_034	FROM->TO	CIMARRON - DRAPER LAKE 345KV CKT 1	717	717	0.10562	103.375	P12:138:WFEC:MSL08
FDNS	00NR	0	16WP	G15_034	FROM->TO	CIMARRON - DRAPER LAKE 345KV CKT 1	717	717	0.1056	103.3611	P12:138:WFEC:MSL09
FDNS	00NR	0	16WP	G15_034	FROM->TO	CIMARRON - DRAPER LAKE 345KV CKT 1	717	717	0.1056	103.3604	GEN681542 6-JP MADGETT
FDNS	00NR	0	16WP	G15_034	FROM->TO	CIMARRON - DRAPER LAKE 345KV CKT 1	717	717	0.10562	103.3601	FRANKLIN - PINK SW 138KV CKT 1
FDNS	00NR	0	16WP	G15_034	FROM->TO	CIMARRON - DRAPER LAKE 345KV CKT 1	717	717	0.1056	103.3237	GEN542957 1-IATAN UNIT #1
FDNS	00NR	0	16WP	G15_034	FROM->TO	CIMARRON - DRAPER LAKE 345KV CKT 1	717	717	0.10608	103.3222	ETNA - PARK LANE 138KV CKT 1
FDNS	00NR	0	16WP	G15_034	FROM->TO	CIMARRON - DRAPER LAKE 345KV CKT 1	717	717	0.1056	103.2984	GEN530690 1-PRWINDG1 0.6900
FDNS	00NR	0	16WP	G15_034	FROM->TO	CIMARRON - DRAPER LAKE 345KV CKT 1	717	717	0.1056	103.259	GEN645001 1-FORT CALHOUN 1

SOLUTION	GROUP	SCENARIO	SEASON	SOURCE	DIRECTION	MONITORED ELEMENT	RATEA (MVA)	RATEB(MVA)	TDF	TC%LOADING (% MVA)	CONTINGENCY
FDNS	00NR	0	16WP	G15_034	FROM->TO	CIMARRON - DRAPER LAKE 345KV CKT 1	717	717	0.10469	103.2536	SEMINOLE (SEMINOL2) 345/138/14.4KV TRANSFORMER CKT 1
FDNS	00NR	0	16WP	G15_034	FROM->TO	CIMARRON - DRAPER LAKE 345KV CKT 1	717	717	0.1056	103.2424	ALMA 161 161/24.0KV TRANSFORMER CKT 1
FDNS	00NR	0	16WP	G15_034	FROM->TO	CIMARRON - DRAPER LAKE 345KV CKT 1	717	717	0.1056	103.2409	GEN542955 1-LACYGNE UNIT #1
FDNS	00NR	0	16WP	G15_034	FROM->TO	CIMARRON - DRAPER LAKE 345KV CKT 1	717	717	0.1056	103.2366	GEN661015 1-COYOTE
FDNS	00NR	0	16WP	G15_034	FROM->TO	CIMARRON - DRAPER LAKE 345KV CKT 1	717	717	0.1056	103.2318	GEN562754 1-G15031_5 0.6900
FDNS	00NR	0	16WP	G15_034	FROM->TO	CIMARRON - DRAPER LAKE 345KV CKT 1	717	717	0.1056	103.2195	GEN562556 1-G14_046_3 0.3420
FDNS	00NR	0	16WP	G15_034	FROM->TO	CIMARRON - DRAPER LAKE 345KV CKT 1	717	717	0.10392	103.2152	RENFROW7 345.00 - VIOLA 7 345.00 345KV CKT 1
FDNS	00NR	0	16WP	G15_034	FROM->TO	CIMARRON - DRAPER LAKE 345KV CKT 1	717	717	0.1056	103.1998	GEN532652 1-JEFFREY ENERGY CENTER UNIT 2
FDNS	00NR	0	16WP	G15_034	FROM->TO	CIMARRON - DRAPER LAKE 345KV CKT 1	717	717	0.1056	103.1962	GEN532651 1-JEFFREY ENERGY CENTER UNIT 1
FDNS	00NR	0	16WP	G15_034	FROM->TO	CIMARRON - DRAPER LAKE 345KV CKT 1	717	717	0.1056	103.1877	GEN562756 1-G15031_7 0.6900
FDNS	00NR	0	16WP	G15_034	FROM->TO	CIMARRON - DRAPER LAKE 345KV CKT 1	717	717	0.1056	103.1838	GEN562974 1-G15060_5 0.6900
FDNS	00NR	0	16WP	G15_034	FROM->TO	CIMARRON - DRAPER LAKE 345KV CKT 1	717	717	0.10748	103.1728	AIRDEPT4 138.00 - WILD MARY 138KV CKT 1
FDNS	00NR	0	16WP	G15_034	FROM->TO	CIMARRON - DRAPER LAKE 345KV CKT 1	717	717	0.1056	103.1716	GEN563142 1-G15079_3 0.5500
FDNS	00NR	0	16WP	G15_034	FROM->TO	CIMARRON - DRAPER LAKE 345KV CKT 1	717	717	0.1056	103.1716	GEN563151 1-G15080_2 0.5500
FDNS	00NR	0	16WP	G15_034	FROM->TO	CIMARRON - DRAPER LAKE 345KV CKT 1	717	717	0.1056	103.1676	GEN562973 1-G15060_4 0.6900
FDNS	00NR	0	16WP	G15_034	FROM->TO	CIMARRON - DRAPER LAKE 345KV CKT 1	717	717	0.1056	103.1581	GEN563042 1-G15068_3 0.6900
FDNS	00NR	0	16WP	G15_034	FROM->TO	CIMARRON - DRAPER LAKE 345KV CKT 1	717	717	0.1056	103.1393	GEN562078 1-G11_051_3 0.6900
FDNS	00NR	0	16WP	G15_034	FROM->TO	CIMARRON - DRAPER LAKE 345KV CKT 1	717	717	0.1056	103.1315	GEN562691 1-G15_015_3 0.6900
FDNS	00NR	0	16WP	G15_034	FROM->TO	CIMARRON - DRAPER LAKE 345KV CKT 1	717	717	0.10416	103.128	HUNTERS7 345.00 - RENFROW7 345.00 345KV CKT 1
FDNS	00NR	0	16WP	G15_034	FROM->TO	CIMARRON - DRAPER LAKE 345KV CKT 1	717	717	0.1056	103.1094	GEN657748 1-YOUNG 2 GENERATOR
FDNS	00NR	0	16WP	G15_034	FROM->TO	CIMARRON - DRAPER LAKE 345KV CKT 1	717	717	0.10647	103.0782	PARK LANE - SEMINOLE 138KV CKT 1
FDNS	00NR	0	16WP	G15_034	FROM->TO	CIMARRON - DRAPER LAKE 345KV CKT 1	717	717	0.10562	103.0762	FRANKLIN - FRANKLIN SW 138KV CKT 1
FDNS	00NR	0	16WP	G15_034	FROM->TO	CIMARRON - DRAPER LAKE 345KV CKT 1	717	717	0.1056	103.0759	GEN562655 1-G14_074_3 0.6900
FDNS	00NR	0	16WP	G15_034	FROM->TO	CIMARRON - DRAPER LAKE 345KV CKT 1	717	717	0.1056	103.0754	GEN562762 1-G15033_3 0.6900
FDNS	00NR	0	16WP	G15_034	FROM->TO	CIMARRON - DRAPER LAKE 345KV CKT 1	717	717	0.1056	103.0131	GEN527901 1-HOBBS PLANT #1 (CT)
FDNS	00NR	0	16WP	G15_034	FROM->TO	CIMARRON - DRAPER LAKE 345KV CKT 1	717	717	0.1056	103.0131	GEN527902 1-HOBBS PLANT #2 (CT)
FDNS	00NR	0	16WP	G15_034	FROM->TO	CIMARRON - DRAPER LAKE 345KV CKT 1	717	717	0.1056	103.0015	GEN563273 2-G15093_4 0.6900
FDNS	00NR	0	16WP	G15_034	FROM->TO	CIMARRON - DRAPER LAKE 345KV CKT 1	717	717	0.1056	102.9743	GEN563043 1-G15068_4 0.6900
FDNS	00NR	0	16WP	G15_034	FROM->TO	CIMARRON - DRAPER LAKE 345KV CKT 1	717	717	0.1056	102.9598	GEN563052 1-G15069_3 0.6900
FDNS	00NR	0	16WP	G15_034	FROM->TO	CIMARRON - DRAPER LAKE 345KV CKT 1	717	717	0.10748	102.9434	AIRDEPT4 138.00 - GM 138KV CKT 1
FDNS	00NR	0	16WP	G15_034	FROM->TO	CIMARRON - DRAPER LAKE 345KV CKT 1	717	717	0.1056	102.9328	GEN525845 1-ELK_2 1 138.00
FDNS	00NR	0	16WP	G15_034	FROM->TO	CIMARRON - DRAPER LAKE 345KV CKT 1	717	717	0.1056	102.9294	GEN525844 1-ELK_1 118.000
FDNS	00NR	0	16WP	G15_034	FROM->TO	CIMARRON - DRAPER LAKE 345KV CKT 1	717	717	0.10582	102.9285	LYDIA - WELSH 345KV CKT 1
FDNS	00NR	0	16WP	G15_034	FROM->TO	CIMARRON - DRAPER LAKE 345KV CKT 1	717	717	0.10582	102.9285	LYDIA - WELSH 345KV CKT 1
FDNS	00NR	0	16WP	G15_034	FROM->TO	CIMARRON - DRAPER LAKE 345KV CKT 1	717	717	0.1059	102.9208	P12:138:AEPW-OGE:CORNVIL4:CIMARON4
FDNS	00NR	0	16WP	G15_034	FROM->TO	CIMARRON - DRAPER LAKE 345KV CKT 1	717	717	0.1056	102.9195	GEN620315 1-BIG STONE GEN
FDNS	00NR	0	16WP	G15_034	FROM->TO	CIMARRON - DRAPER LAKE 345KV CKT 1	717	717	0.1056	102.9123	GEN563242 1-G15090_3 0.6900
FDNS	00NR	0	16WP	G15_034	FROM->TO	CIMARRON - DRAPER LAKE 345KV CKT 1	717	717	0.1056	102.8811	GEN526333 1-JONES GEN #3 21 KV
FDNS	00NR	0	16WP	G15_034	FROM->TO	CIMARRON - DRAPER LAKE 345KV CKT 1	717	717	0.1056	102.8811	GEN526334 1-JONES_4 116.500
FDNS	00NR	0	16WP	G15_034	FROM->TO	CIMARRON - DRAPER LAKE 345KV CKT 1	717	717	0.1056	102.874	GEN562772 1-G15034_3 0.6900
FDNS	00NR	0	16WP	G15_034	FROM->TO	CIMARRON - DRAPER LAKE 345KV CKT 1	717	717	0.1056	102.8671	GEN600004 2-PRAIRIE ISLAND G2
FDNS	00NR	0	16WP	G15_034	FROM->TO	CIMARRON - DRAPER LAKE 345KV CKT 1	717	717	0.1056	102.864	GEN600003 1-PRAIRIE ISLAND G1
FDNS	00NR	0	16WP	G15_034	FROM->TO	CIMARRON - DRAPER LAKE 345KV CKT 1	717	717	0.1056	102.8553	GEN600006 1-AS KING
FDNS	00NR	0	16WP	G15_034	FROM->TO	CIMARRON - DRAPER LAKE 345KV CKT 1	717	717	0.1056	102.8474	GEN523971 1-HARRINGTON GEN #1 24 KV
FDNS	00NR	0	16WP	G15_034	FROM->TO	CIMARRON - DRAPER LAKE 345KV CKT 1	717	717	0.1056	102.8473	GEN523972 1-HARRINGTON GEN #2 24 KV
FDNS	00NR	0	16WP	G15_034	FROM->TO	CIMARRON - DRAPER LAKE 345KV CKT 1	717	717	0.1056	102.8473	GEN523973 1-HARRINGTON GEN #3 24 KV
FDNS	00NR	0	16WP	G15_034	FROM->TO	CIMARRON - DRAPER LAKE 345KV CKT 1	717	717	0.1056	102.8213	GEN636641 1-LOUISA UNIT 1
FDNS	00NR	0	16WP	G15_034	FROM->TO	CIMARRON - DRAPER LAKE 345KV CKT 1	717	717	0.1128	102.7681	CLARKSVILLE - MUSKOGEE 345KV CKT 1
FDNS	00NR	0	16WP	G15_034	FROM->TO	CIMARRON - DRAPER LAKE 345KV CKT 1	717	717	0.1128	102.7681	CLARKSVILLE - MUSKOGEE 345KV CKT 1
FDNS	00NR	0	16WP	G15_034	FROM->TO	CIMARRON - DRAPER LAKE 345KV CKT 1	717	717	0.08391	102.7389	RANCHRD7 345.00 - SOONER 345KV CKT 1
FDNS	00NR	0	16WP	G15_034	FROM->TO	CIMARRON - DRAPER LAKE 345KV CKT 1	717	717	0.10748	102.7355	DRAPER LAKE - GM 138KV CKT 1
FDNS	00NR	0	16WP	G15_034	FROM->TO	CIMARRON - DRAPER LAKE 345KV CKT 1	717	717	0.1056	102.7125	GEN600005 1-MONTICELLO
FDNS	00NR	0	16WP	G15_034	FROM->TO	CIMARRON - DRAPER LAKE 345KV CKT 1	717	717	0.1056	102.7111	GEN542962 2-IATAN UNIT #2
FDNS	00NR	0	16WP	G15_034	FROM->TO	CIMARRON - DRAPER LAKE 345KV CKT 1	717	717	0.1056	102.7017	GEN563292 1-G15095_3 0.6900
FDNS	00NR	0	16WP	G15_034	FROM->TO	CIMARRON - DRAPER LAKE 345KV CKT 1	717	717	0.10416	102.6917	HUNTERS7 345.00 - WOODRING 345KV CKT 1
FDNS	00NR	0	16WP	G15_034	FROM->TO	CIMARRON - DRAPER LAKE 345KV CKT 1	717	717	0.1056	102.6463	GEN527166 1-MUSTANG_6 118.000
FDNS	00NR	0	16WP	G15_034	FROM->TO	CIMARRON - DRAPER LAKE 345KV CKT 1	717	717	0.1056	102.6368	GEN525562 1-TOLK GEN #2 24 KV
FDNS	00NR	0	16WP	G15_034	FROM->TO	CIMARRON - DRAPER LAKE 345KV CKT 1	717	717	0.1056	102.6194	GEN629074 1-ARNOLD LOWSIDE OF GSU XFMR
FDNS	00NR	0	16WP	G15_034	FROM->TO	CIMARRON - DRAPER LAKE 345KV CKT 1	717	717	0.10636	102.6103	MUSKOGEE - SEMINOLE 345KV CKT 1
FDNS	00NR	0	16WP	G15_034	FROM->TO	CIMARRON - DRAPER LAKE 345KV CKT 1	717	717	0.1056	102.61	GEN562952 1-G15057_3 0.6500
FDNS	00NR	0	16WP	G15_034	FROM->TO	CIMARRON - DRAPER LAKE 345KV CKT 1	717	717	0.1056	102.6048	GEN563272 1-G15093_3 0.6900
FDNS	00NR	0	16WP	G15_034	FROM->TO	CIMARRON - DRAPER LAKE 345KV CKT 1	717	717	0.09083	102.5846	NORTHWEST - SPRING CREEK 345KV CKT 1
FDNS	00NR	0	16WP	G15_034	FROM->TO	CIMARRON - DRAPER LAKE 345KV CKT 1	717	717	0.1056	102.5625	GEN635213 3-NEAL UNIT 3
FDNS	00NR	0	16WP	G15_034	FROM->TO	CIMARRON - DRAPER LAKE 345KV CKT 1	717	717	0.10609	102.5557	FRANKLIN SW - MIDWEST TAP 138KV CKT 1
FDNS	00NR	0	16WP	G15_034	FROM->TO	CIMARRON - DRAPER LAKE 345KV CKT 1	717	717	0.09083	102.5531	SOONER - SPRING CREEK 345KV CKT 1
FDNS	00NR	0	16WP	G15_034	FROM->TO	CIMARRON - DRAPER LAKE 345KV CKT 1	717	717	0.1056	102.5132	BIG STONE 230/24.0KV TRANSFORMER CKT 1
FDNS	00NR	0	16WP	G15_034	FROM->TO	CIMARRON - DRAPER LAKE 345KV CKT 1	717	717	0.1056	102.507	GEN562892 1-G15048_3 0.6900
FDNS	00NR	0	16WP	G15_034	FROM->TO	CIMARRON - DRAPER LAKE 345KV CKT 1	717	717	0.10691	102.4824	CHAMBER SPRINGS - CLARKSVILLE 345KV CKT 1
FDNS	00NR	0	16WP	G15_034	FROM->TO	CIMARRON - DRAPER LAKE 345KV CKT 1	717	717	0.10042	102.4731	DRAPER LAKE - SEMINOLE 345KV CKT 3
FDNS	00NR	0	16WP	G15_034	FROM->TO	CIMARRON - DRAPER LAKE 345KV CKT 1	717	717	0.1056	102.4615	GEN563173 1-G15082_3 0.6900
FDNS	00NR	0	16WP	G15_034	FROM->TO	CIMARRON - DRAPER LAKE 345KV CKT 1	717	717	0.1056	102.4099	GEN562902 1-G15052_3 0.6900
FDNS	00NR	0	16WP	G15_034	FROM->TO	CIMARRON - DRAPER LAKE 345KV CKT 1	717	717	0.1056	102.4	GEN514805 1-SOONER UNIT 1
FDNS	00NR	0	16WP	G15_034	FROM->TO	CIMARRON - DRAPER LAKE 345KV CKT 1	717	717	0.1056	102.3707	GEN600000 1-SHERBURNECNTY G1
FDNS	00NR	0	16WP	G15_034	FROM->TO	CIMARRON - DRAPER LAKE 345KV CKT 1	717	717	0.1056	102.3666	GEN527903 1-HOBBS PLANT #3 (ST)
FDNS	00NR	0	16WP	G15_034	FROM->TO	CIMARRON - DRAPER LAKE 345KV CKT 1	717	717	0.1056	102.3474	GEN525561 1-TOLK GEN #1 24 KV
FDNS	00NR	0	16WP	G15_034	FROM->TO	CIMARRON - DRAPER LAKE 345KV CKT 1	717	717	0.10634	102.3228	P12:138:OKGE:3TERM23
FDNS	00NR	0	16WP	G15_034	FROM->TO	CIMARRON - DRAPER LAKE 345KV CKT 1	717	717	0.1059	102.3201	LYDIA - VALLIANT 345KV CKT 1
FDNS	00NR	0	16WP	G15_034	FROM->TO	CIMARRON - DRAPER LAKE 345KV CKT 1	717	717	0.1059	102.3201	LYDIA - VALLIANT 345KV CKT 1
FDNS	00NR	0	16WP	G15_034	FROM->TO	CIMARRON - DRAPER LAKE 345KV CKT 1	717	717	0.1056	102.2716	GEN600001 2-SHERBURNE CNTY G2

SOLUTION	GROUP	SCENARIO	SEASON	SOURCE	DIRECTION	MONITORED ELEMENT	RATEA (MVA)	RATEB(MVA)	TDF	TC%LOADING (% MVA)	CONTINGENCY
FDNS	00NR	0	16WP	G15_034	FROM->TO	CIMARRON - DRAPER LAKE 345KV CKT 1	717	717	0.10634	102.2636	BARNES 4 138.00 - DRAPER LAKE 138KV CKT 1
FDNS	00NR	0	16WP	G15_034	FROM->TO	CIMARRON - DRAPER LAKE 345KV CKT 1	717	717	0.1056	102.1932	GEN344225 1-1CAL G1 25.000
FDNS	00NR	0	16WP	G15_034	FROM->TO	CIMARRON - DRAPER LAKE 345KV CKT 1	717	717	0.1056	102.1468	GEN514806 1-SOONER UNIT 2
FDNS	00NR	0	16WP	G15_034	FROM->TO	CIMARRON - DRAPER LAKE 345KV CKT 1	717	717	0.1056	102.1418	GEN629075 1-OTTUMWA GENERATOR FOR OTTUMWA UNIT NO 1
FDNS	00NR	0	16WP	G15_034	FROM->TO	CIMARRON - DRAPER LAKE 345KV CKT 1	717	717	0.1056	102.1124	GEN563162 1-G15081_3 0.6900
FDNS	00NR	0	16WP	G15_034	FROM->TO	CIMARRON - DRAPER LAKE 345KV CKT 1	717	717	0.10713	102.0198	DRAPER LAKE (DRAPER2) 345/138/13.8KV TRANSFORMER CKT 1
FDNS	00NR	0	16WP	G15_034	FROM->TO	CIMARRON - DRAPER LAKE 345KV CKT 1	717	717	0.10712	101.9327	DRAPER LAKE (DRAPER3) 345/138/13.8KV TRANSFORMER CKT 1
FDNS	00NR	0	16WP	G15_034	FROM->TO	CIMARRON - DRAPER LAKE 345KV CKT 1	717	717	0.10712	101.9327	DRAPER LAKE (DRAPER4) 345/138/13.8KV TRANSFORMER CKT 1
FDNS	00NR	0	16WP	G15_034	FROM->TO	CIMARRON - DRAPER LAKE 345KV CKT 1	717	717	0.1056	101.9167	SHERBURNE CO 345/24.0KV TRANSFORMER CKT 1
FDNS	00NR	0	16WP	G15_034	FROM->TO	CIMARRON - DRAPER LAKE 345KV CKT 1	717	717	0.1056	101.9096	GEN532653 1-JEFFREY ENERGY CENTER UNIT 3
FDNS	00NR	0	16WP	G15_034	FROM->TO	CIMARRON - DRAPER LAKE 345KV CKT 1	717	717	0.1056	101.9024	GEN635214 4-NEAL UNIT 4
FDNS	00NR	0	16WP	G15_034	FROM->TO	CIMARRON - DRAPER LAKE 345KV CKT 1	717	717	0.10232	101.8242	CIMARRON - MATHWSN7 345.00 345KV CKT 1
FDNS	00NR	0	16WP	G15_034	FROM->TO	CIMARRON - DRAPER LAKE 345KV CKT 1	717	717	0.10232	101.8242	CIMARRON - MATHWSN7 345.00 345KV CKT 2
FDNS	00NR	0	16WP	G15_034	FROM->TO	CIMARRON - DRAPER LAKE 345KV CKT 1	717	717	0.1056	101.8106	GEN600002 3-SHERBURNE CNTY G3
FDNS	00NR	0	16WP	G15_034	FROM->TO	CIMARRON - DRAPER LAKE 345KV CKT 1	717	717	0.1056	101.7843	GEN562882 1-G15047_3 0.6900
FDNS	00NR	0	16WP	G15_034	FROM->TO	CIMARRON - DRAPER LAKE 345KV CKT 1	717	717	0.1056	101.4209	GEN635023 3-WALTER SCOTT UNIT 3
FDNS	00NR	0	16WP	G15_034	FROM->TO	CIMARRON - DRAPER LAKE 345KV CKT 1	717	717	0.1056	101.2971	GEN562023 1-G11_020_3 0.6900
FDNS	00NR	0	16WP	G15_034	FROM->TO	CIMARRON - DRAPER LAKE 345KV CKT 1	717	717	0.1056	101.2971	GEN562026 1-G11_019_3 0.6900
FDNS	00NR	0	16WP	G15_034	FROM->TO	CIMARRON - DRAPER LAKE 345KV CKT 1	717	717	0.1056	101.2072	EASTDC - ERCOT EQUIVALENCE 345KV CKT 1
FDNS	00NR	0	16WP	G15_034	FROM->TO	CIMARRON - DRAPER LAKE 345KV CKT 1	717	717	0.09591	100.9489	DRAPER LAKE - SEMINOLE 345KV CKT 1
FDNS	00NR	0	16WP	G15_034	FROM->TO	CIMARRON - DRAPER LAKE 345KV CKT 1	717	717	0.09591	100.9487	DRAPER LAKE - SEMINOLE 345KV CKT 2
FDNS	00NR	0	16WP	G15_034	FROM->TO	CIMARRON - DRAPER LAKE 345KV CKT 1	717	717	0.1056	100.9406	GEN635024 4-WALTER SCOTT UNIT 4
FDNS	00NR	0	16WP	G15_034	FROM->TO	CIMARRON - DRAPER LAKE 345KV CKT 1	717	717	0.1056	99.6	GEN562992 1-G15063_3 0.6900
FDNS	08NR	0	20L	G15_034	TO->FROM	CLEAVELAND - CLEVLND 4 138.00 138KV CKT Z1	305	371	0.0663	114.5295	CLEVELAND - TULSA NORTH 345KV CKT 1
FDNS	08NR	0	20L	G15_034	TO->FROM	CLEAVELAND - CLEVLND 4 138.00 138KV CKT Z1	305	371	0.0663	114.5295	CLEVELAND - TULSA NORTH 345KV CKT 1
FDNS	00NR	0	17SP	G15_034	TO->FROM	CLEAVELAND - CLEVLND 4 138.00 138KV CKT Z1	305	371	0.07379	110.9479	CLEVELAND - TULSA NORTH 345KV CKT 1
FDNS	00NR	0	17SP	G15_034	TO->FROM	CLEAVELAND - CLEVLND 4 138.00 138KV CKT Z1	305	371	0.07379	110.9479	CLEVELAND - TULSA NORTH 345KV CKT 1
FDNS	00NR	0	20SP	G15_034	TO->FROM	CLEAVELAND - CLEVLND 4 138.00 138KV CKT Z1	305	371	0.07444	110.0566	CLEVELAND - TULSA NORTH 345KV CKT 1
FDNS	00NR	0	20SP	G15_034	TO->FROM	CLEAVELAND - CLEVLND 4 138.00 138KV CKT Z1	305	371	0.07444	110.0566	CLEVELAND - TULSA NORTH 345KV CKT 1
FDNS	08NR	0	20L	G15_034	FROM->TO	CLEAVELAND - SILVER CITY 138KV CKT 1	174	174	0.02965	116.3987	CLEVELAND - TULSA NORTH 345KV CKT 1
FDNS	08NR	0	20L	G15_034	FROM->TO	CLEAVELAND - SILVER CITY 138KV CKT 1	174	174	0.02965	116.3987	CLEVELAND - TULSA NORTH 345KV CKT 1
FDNS	00NR	0	16WP	G15_034	FROM->TO	G14-057T 345.00 - SUNNYSIDE 345KV CKT 1	717	789	0.03838	124.2897	CIMARRON - DRAPER LAKE 345KV CKT 1
FDNS	00NR	0	16WP	G15_034	FROM->TO	G14-057T 345.00 - SUNNYSIDE 345KV CKT 1	717	789	0.03047	121.5485	P12:138:WFEC:MSL03
FDNS	00NR	0	20WP	G15_034	FROM->TO	G14-057T 345.00 - SUNNYSIDE 345KV CKT 1	717	789	0.03815	121.2133	CIMARRON - DRAPER LAKE 345KV CKT 1
FDNS	00NR	0	16WP	G15_034	FROM->TO	G14-057T 345.00 - SUNNYSIDE 345KV CKT 1	717	789	0.03614	120.1483	CLEVELAND - G15066_T 345.00 345KV CKT 1
FDNS	00NR	0	16WP	G15_034	FROM->TO	G14-057T 345.00 - SUNNYSIDE 345KV CKT 1	717	789	0.03614	119.8485	G15066_T 345.00 - SOONER 345KV CKT 1
FDNS	00NR	0	20WP	G15_034	FROM->TO	G14-057T 345.00 - SUNNYSIDE 345KV CKT 1	717	789	0.03029	118.7744	P12:138:WFEC:MSL03
FDNS	00NR	0	16WP	G15_034	FROM->TO	G14-057T 345.00 - SUNNYSIDE 345KV CKT 1	717	789	0.03342	118.1389	CLEVELAND - TULSA NORTH 345KV CKT 1
FDNS	00NR	0	16WP	G15_034	FROM->TO	G14-057T 345.00 - SUNNYSIDE 345KV CKT 1	717	789	0.03342	118.1389	CLEVELAND - TULSA NORTH 345KV CKT 1
FDNS	00NR	0	16WP	G15_034	FROM->TO	G14-057T 345.00 - SUNNYSIDE 345KV CKT 1	717	789	0.03761	117.8798	ARCADIA - NORTHWEST 345KV CKT 1
FDNS	00NR	0	16WP	G15_034	FROM->TO	G14-057T 345.00 - SUNNYSIDE 345KV CKT 1	717	789	0.03018	117.7594	ARCADIA - SEMINOLE 345KV CKT 1
FDNS	00NR	0	16WP	G15_034	FROM->TO	G14-057T 345.00 - SUNNYSIDE 345KV CKT 1	717	789	0.0296	117.357	LACYGNE - WAVERLY7 345.00 345KV CKT 1
FDNS	00NR	0	20WP	G15_034	FROM->TO	G14-057T 345.00 - SUNNYSIDE 345KV CKT 1	717	789	0.03588	117.3306	CLEVELAND - G15066_T 345.00 345KV CKT 1
FDNS	00NR	0	16WP	G15_034	FROM->TO	G14-057T 345.00 - SUNNYSIDE 345KV CKT 1	717	789	0.0296	117.2406	WAVERLY7 345.00 - WOLF CREEK 345KV CKT 1
FDNS	00NR	0	20WP	G15_034	FROM->TO	G14-057T 345.00 - SUNNYSIDE 345KV CKT 1	717	789	0.03588	117.0379	G15066_T 345.00 - SOONER 345KV CKT 1
FDNS	00NR	0	16WP	G15_034	FROM->TO	G14-057T 345.00 - SUNNYSIDE 345KV CKT 1	717	789	0.03071	117.0036	CANEYRV7 345.00 - NEOSHO 345KV CKT 1
FDNS	00NR	0	16WP	G15_034	FROM->TO	G14-057T 345.00 - SUNNYSIDE 345KV CKT 1	717	789	0.03071	116.8184	CANEYRV7 345.00 - LATHAMS7 345.00 345KV CKT 1
FDNS	00NR	0	16WP	G15_034	FROM->TO	G14-057T 345.00 - SUNNYSIDE 345KV CKT 1	717	789	0.02964	116.6297	P12:138:AEPW-OGE:CORNVIL4:MAUD 4
FDNS	00NR	0	16WP	G15_034	FROM->TO	G14-057T 345.00 - SUNNYSIDE 345KV CKT 1	717	789	0.03071	116.601	LATHAMS7 345.00 - ROSE HILL 345KV CKT 1
FDNS	00NR	0	16WP	G15_034	FROM->TO	G14-057T 345.00 - SUNNYSIDE 345KV CKT 1	717	789	0.02964	116.5579	BLANCHARD - CORNVILLE 138KV CKT 1
FDNS	00NR	0	16WP	G15_034	FROM->TO	G14-057T 345.00 - SUNNYSIDE 345KV CKT 1	717	789	0.02964	116.3614	BLANCHARD - MAUD 138KV CKT 1
FDNS	00NR	0	16WP	G15_034	FROM->TO	G14-057T 345.00 - SUNNYSIDE 345KV CKT 1	717	789	0.02973	116.0221	CANADIAN - NOBLE 138KV CKT 1
FDNS	00NR	0	16WP	G15_034	FROM->TO	G14-057T 345.00 - SUNNYSIDE 345KV CKT 1	717	789	0.02972	116.0005	P12:138:OKGE:3TERM27
FDNS	00NR	0	16WP	G15_034	FROM->TO	G14-057T 345.00 - SUNNYSIDE 345KV CKT 1	717	789	0.03061	115.97	DRAPER LAKE - SEMINOLE 345KV CKT 1
FDNS	00NR	0	16WP	G15_034	FROM->TO	G14-057T 345.00 - SUNNYSIDE 345KV CKT 1	717	789	0.03061	115.97	DRAPER LAKE - SEMINOLE 345KV CKT 2
FDNS	00NR	0	16WP	G15_034	FROM->TO	G14-057T 345.00 - SUNNYSIDE 345KV CKT 1	717	789	0.02973	115.9306	NOBLE - PURCELL4 138.00 138KV CKT 1
FDNS	00NR	0	16WP	G15_034	FROM->TO	G14-057T 345.00 - SUNNYSIDE 345KV CKT 1	717	789	0.03028	115.8372	CLARKSVILLE - ONETA 345KV CKT 1
FDNS	00NR	0	16WP	G15_034	FROM->TO	G14-057T 345.00 - SUNNYSIDE 345KV CKT 1	717	789	0.03028	115.8372	CLARKSVILLE - ONETA 345KV CKT 1
FDNS	00NR	0	16WP	G15_034	FROM->TO	G14-057T 345.00 - SUNNYSIDE 345KV CKT 1	717	789	0.02973	115.7216	PURCELL4 138.00 - WALNUT CREEK 138KV CKT 1
FDNS	00NR	0	20WP	G15_034	FROM->TO	G14-057T 345.00 - SUNNYSIDE 345KV CKT 1	717	789	0.03318	115.36	CLEVELAND - TULSA NORTH 345KV CKT 1
FDNS	00NR	0	20WP	G15_034	FROM->TO	G14-057T 345.00 - SUNNYSIDE 345KV CKT 1	717	789	0.03318	115.36	CLEVELAND - TULSA NORTH 345KV CKT 1
FDNS	00NR	0	20WP	G15_034	FROM->TO	G14-057T 345.00 - SUNNYSIDE 345KV CKT 1	717	789	0.03746	115.0999	ARCADIA - NORTHWEST 345KV CKT 1
FDNS	00NR	0	20WP	G15_034	FROM->TO	G14-057T 345.00 - SUNNYSIDE 345KV CKT 1	717	789	0.03	114.7999	ARCADIA - SEMINOLE 345KV CKT 1
FDNS	00NR	0	16WP	G15_034	FROM->TO	G14-057T 345.00 - SUNNYSIDE 345KV CKT 1	717	789	0.03176	114.5669	CLARKSVILLE - MUSKOGEE 345KV CKT 1
FDNS	00NR	0	16WP	G15_034	FROM->TO	G14-057T 345.00 - SUNNYSIDE 345KV CKT 1	717	789	0.03176	114.5669	CLARKSVILLE - MUSKOGEE 345KV CKT 1
FDNS	00NR	0	20WP	G15_034	FROM->TO	G14-057T 345.00 - SUNNYSIDE 345KV CKT 1	717	789	0.03053	114.215	CANEYRV7 345.00 - NEOSHO 345KV CKT 1
FDNS	00NR	0	20WP	G15_034	FROM->TO	G14-057T 345.00 - SUNNYSIDE 345KV CKT 1	717	789	0.03053	114.0675	CANEYRV7 345.00 - LATHAMS7 345.00 345KV CKT 1
FDNS	00NR	0	20WP	G15_034	FROM->TO	G14-057T 345.00 - SUNNYSIDE 345KV CKT 1	717	789	0.03053	113.8496	LATHAMS7 345.00 - ROSE HILL 345KV CKT 1
FDNS	00NR	0	20WP	G15_034	FROM->TO	G14-057T 345.00 - SUNNYSIDE 345KV CKT 1	717	789	0.02958	113.168	CANADIAN - NOBLE 138KV CKT 1
FDNS	00NR	0	20WP	G15_034	FROM->TO	G14-057T 345.00 - SUNNYSIDE 345KV CKT 1	717	789	0.02958	113.1437	P12:138:OKGE:3TERM27
FDNS	00NR	0	20WP	G15_034	FROM->TO	G14-057T 345.00 - SUNNYSIDE 345KV CKT 1	717	789	0.02958	113.0747	NOBLE - PURCELL4 138.00 138KV CKT 1
FDNS	00NR	0	20WP	G15_034	FROM->TO	G14-057T 345.00 - SUNNYSIDE 345KV CKT 1	717	789	0.03159	111.4993	CLARKSVILLE - MUSKOGEE 345KV CKT 1
FDNS	00NR	0	20WP	G15_034	FROM->TO	G14-057T 345.00 - SUNNYSIDE 345KV CKT 1	717	789	0.03159	111.4993	CLARKSVILLE - MUSKOGEE 345KV CKT 1
FDNS	08NR	0	20L	G15_034	FROM->TO	G15063_T 345.00 - MATHWSN7 345.00 345KV CKT 1	956	956	0.18017	101.6468	SOONER - SPRING CREEK 345KV CKT 1
FDNS	08NR	0	20L	G15_034	FROM->TO	G15063_T 345.00 - MATHWSN7 345.00 345KV CKT 1	956	956	0.18017	101.6199	NORTHWEST - SPRING CREEK 345KV CKT 1
FDNS	00NR	0	20WP	G15_034	TO->FROM	MATHWSN7 345.00 - TATONGA7 345.00 345KV CKT 1	1195	1195	0.03939	111.0527	G14-074T 345.00 - OKLAUNION 345KV CKT 1
FDNS	00NR	0	16WP	G15_034	TO->FROM	MATHWSN7 345.00 - TATONGA7 345.00 345KV CKT 1	1195	1195	0.04022	109.4708	G14-074T 345.00 - OKLAUNION 345KV CKT 1
FDNS	00NR	0	20WP	G15_034	TO->FROM	MATHWSN7 345.00 - TATONGA7 345.00 345KV CKT 1	1195	1195	0.02954	102.7736	THISTLE7 345.00 - WOODWARD DISTRICT EHV 345KV CKT 1
FDNS	00NR	0	20WP	G15_034	TO->FROM	MATHWSN7 345.00 - TATONGA7 345.00 345KV CKT 1	1195	1195	0.02954	102.7736	THISTLE7 345.00 - WOODWARD DISTRICT EHV 345KV CKT 1

SOLUTION	GROUP	SCENARIO	SEASON	SOURCE	DIRECTION	MONITORED ELEMENT	RATEA (MVA)	RATEB(MVA)	TDF	TC%LOADING (% MVA)	CONTINGENCY
FDNS	00NR	0	20WP	G15_034	TO->FROM	MATHWSN7 345.00 - TATONGA7 345.00 345KV CKT 1	1195	1195	0.02954	102.7736	THISTLE7 345.00 - WOODWARD DISTRICT EHV 345KV CKT 2
FDNS	00NR	0	20WP	G15_034	TO->FROM	MATHWSN7 345.00 - TATONGA7 345.00 345KV CKT 1	1195	1195	0.02954	102.7736	THISTLE7 345.00 - WOODWARD DISTRICT EHV 345KV CKT 2
FDNS	00NR	0	20WP	G15_034	TO->FROM	MATHWSN7 345.00 - TATONGA7 345.00 345KV CKT 1	1195	1195	0.03695	102.755	CHISHOLM6 230.00 - SWEETWATER 230KV CKT 1
FDNS	00NR	0	20WP	G15_034	TO->FROM	MATHWSN7 345.00 - TATONGA7 345.00 345KV CKT 1	1195	1195	0.03939	102.648	G14-074T 345.00 - TUCO INTERCHANGE 345KV CKT 1
FDNS	00NR	0	20WP	G15_034	TO->FROM	MATHWSN7 345.00 - TATONGA7 345.00 345KV CKT 1	1195	1195	0.03715	102.5313	P12:230:AEPW:ELKCITY6:SWEETWT6
FDNS	00NR	0	16WP	G15_034	TO->FROM	MATHWSN7 345.00 - TATONGA7 345.00 345KV CKT 1	1195	1195	0.03016	101.6878	THISTLE7 345.00 - WOODWARD DISTRICT EHV 345KV CKT 1
FDNS	00NR	0	16WP	G15_034	TO->FROM	MATHWSN7 345.00 - TATONGA7 345.00 345KV CKT 1	1195	1195	0.03016	101.6878	THISTLE7 345.00 - WOODWARD DISTRICT EHV 345KV CKT 1
FDNS	00NR	0	16WP	G15_034	TO->FROM	MATHWSN7 345.00 - TATONGA7 345.00 345KV CKT 1	1195	1195	0.03016	101.6878	THISTLE7 345.00 - WOODWARD DISTRICT EHV 345KV CKT 2
FDNS	00NR	0	16WP	G15_034	TO->FROM	MATHWSN7 345.00 - TATONGA7 345.00 345KV CKT 1	1195	1195	0.03016	101.6878	THISTLE7 345.00 - WOODWARD DISTRICT EHV 345KV CKT 2
FDNS	00NR	0	16WP	G15_034	TO->FROM	MATHWSN7 345.00 - TATONGA7 345.00 345KV CKT 1	1195	1195	0.04022	101.336	G14-074T 345.00 - TUCO INTERCHANGE 345KV CKT 1
FDNS	00NR	0	16WP	G15_034	TO->FROM	MATHWSN7 345.00 - TATONGA7 345.00 345KV CKT 1	1195	1195	0.03775	101.2796	CHISHOLM6 230.00 - SWEETWATER 230KV CKT 1
FDNS	00NR	0	16WP	G15_034	TO->FROM	MATHWSN7 345.00 - TATONGA7 345.00 345KV CKT 1	1195	1195	0.03796	101.1173	P12:230:AEPW:ELKCITY6:SWEETWT6
FDNS	00NR	0	20WP	G15_034	TO->FROM	MATHWSN7 345.00 - TATONGA7 345.00 345KV CKT 1	1195	1195	0.03377	101.0657	CIMARRON - MINCO 345KV CKT 1
FDNS	00NR	0	20WP	G15_034	TO->FROM	MATHWSN7 345.00 - TATONGA7 345.00 345KV CKT 1	1195	1195	0.03695	100.5522	STLN-DEMARC6 - SWEETWATER 230KV CKT 1
FDNS	00NR	0	20WP	G15_034	TO->FROM	MATHWSN7 345.00 - TATONGA7 345.00 345KV CKT 1	1195	1195	0.03695	100.5393	P12:230:AEPW-SPS:SWEETWT6:WHEELER 6
FDNS	00NR	0	20WP	G15_034	TO->FROM	MATHWSN7 345.00 - TATONGA7 345.00 345KV CKT 1	1195	1195	0.03695	100.5385	STATELINE INTERCHANGE - STLN-DEMARC6 230KV CKT 1
FDNS	00NR	0	20WP	G15_034	TO->FROM	MATHWSN7 345.00 - TATONGA7 345.00 345KV CKT 1	1195	1195	0.03188	100.3672	G1524G1525 345.00 - THISTLE7 345.00 345KV CKT 1
FDNS	00NR	0	20WP	G15_034	TO->FROM	MATHWSN7 345.00 - TATONGA7 345.00 345KV CKT 1	1195	1195	0.03188	100.3672	G1524G1525 345.00 - THISTLE7 345.00 345KV CKT 2
FDNS	00NR	0	16WP	G15_034	TO->FROM	MATHWSN7 345.00 - TATONGA7 345.00 345KV CKT 1	1195	1195	0.0345	100.2834	CIMARRON - MINCO 345KV CKT 1
FDNS	00NR	0	16WP	G15_034	TO->FROM	MATHWSN7 345.00 - TATONGA7 345.00 345KV CKT 1	1195	1195	0.0326	99.5	G1524G1525 345.00 - THISTLE7 345.00 345KV CKT 1
FDNS	00NR	0	16WP	G15_034	TO->FROM	MATHWSN7 345.00 - TATONGA7 345.00 345KV CKT 1	1195	1195	0.0326	99.5	G1524G1525 345.00 - THISTLE7 345.00 345KV CKT 2
FDNS	00NR	2	16WP	G15_034	FROM->TO	CIMARRON - DRAPER LAKE 345KV CKT 1	717	717	0.1123	134.3343	G14-057T 345.00 - SUNNYSIDE 345KV CKT 1
FDNS	00NR	2	16WP	G15_034	FROM->TO	CIMARRON - DRAPER LAKE 345KV CKT 1	717	717	0.1123	123.771	G14-057T 345.00 - LAWTON EASTSIDE 345KV CKT 1
FDNS	00NR	2	16WP	G15_034	FROM->TO	CIMARRON - DRAPER LAKE 345KV CKT 1	717	717	0.11404	118.5113	ARCADIA - SEMINOLE 345KV CKT 1
FDNS	00NR	2	16WP	G15_034	FROM->TO	CIMARRON - DRAPER LAKE 345KV CKT 1	717	717	0.12436	117.4388	CLEVELAND - G15066_T 345.00 345KV CKT 1
FDNS	00NR	2	16WP	G15_034	FROM->TO	CIMARRON - DRAPER LAKE 345KV CKT 1	717	717	0.14861	117.2468	ARCADIA - NORTHWEST 345KV CKT 1
FDNS	00NR	2	16WP	G15_034	FROM->TO	CIMARRON - DRAPER LAKE 345KV CKT 1	717	717	0.12436	116.6621	G15066_T 345.00 - SOONER 345KV CKT 1
FDNS	00NR	2	16WP	G15_034	FROM->TO	CIMARRON - DRAPER LAKE 345KV CKT 1	717	717	0.1172	112.0487	CLEVELAND - TULSA NORTH 345KV CKT 1
FDNS	00NR	2	16WP	G15_034	FROM->TO	CIMARRON - DRAPER LAKE 345KV CKT 1	717	717	0.1172	112.0487	CLEVELAND - TULSA NORTH 345KV CKT 1
FDNS	00NR	2	16WP	G15_034	FROM->TO	CIMARRON - DRAPER LAKE 345KV CKT 1	717	717	0.10959	111.8034	MATHWSN7 345.00 - NORTHWEST 345KV CKT 1
FDNS	00NR	2	16WP	G15_034	FROM->TO	CIMARRON - DRAPER LAKE 345KV CKT 1	717	717	0.10818	110.8771	CIMARRON - SARA 138KV CKT 1
FDNS	00NR	2	16WP	G15_034	FROM->TO	CIMARRON - DRAPER LAKE 345KV CKT 1	717	717	0.1077	110.5381	P12:138:WFEC:MSL03
FDNS	00NR	2	16WP	G15_034	FROM->TO	CIMARRON - DRAPER LAKE 345KV CKT 1	717	717	0.10719	109.6954	CIMARRON (CIMARON2) 345/138/13.8KV TRANSFORMER CKT 1
FDNS	00NR	2	16WP	G15_034	FROM->TO	CIMARRON - DRAPER LAKE 345KV CKT 1	717	717	0.10818	109.5839	SARA - STHLAKE4 138.00 138KV CKT 1
FDNS	00NR	2	16WP	G15_034	FROM->TO	CIMARRON - DRAPER LAKE 345KV CKT 1	717	717	0.10713	109.5243	CIMARRON (CIMARON1) 345/138/13.8KV TRANSFORMER CKT 1
FDNS	00NR	2	16WP	G15_034	FROM->TO	CIMARRON - DRAPER LAKE 345KV CKT 1	717	717	0.10818	109.3844	MCCLAIN - STHLAKE4 138.00 138KV CKT 1
FDNS	00NR	2	16WP	G15_034	FROM->TO	CIMARRON - DRAPER LAKE 345KV CKT 1	717	717	0.10688	109.0835	CIMARRON - CZECH HALL 138KV CKT 1
FDNS	00NR	2	16WP	G15_034	FROM->TO	CIMARRON - DRAPER LAKE 345KV CKT 1	717	717	0.10688	108.7295	CZECH HALL - XEROX 138KV CKT 1
FDNS	00NR	2	16WP	G15_034	FROM->TO	CIMARRON - DRAPER LAKE 345KV CKT 1	717	717	0.10688	108.71	MORGAN - XEROX 138KV CKT 1
FDNS	00NR	2	16WP	G15_034	FROM->TO	CIMARRON - DRAPER LAKE 345KV CKT 1	717	717	0.10688	108.5927	MORGAN - MUSTANG 138KV CKT 1
FDNS	00NR	2	16WP	G15_034	FROM->TO	CIMARRON - DRAPER LAKE 345KV CKT 1	717	717	0.10619	108.5218	ANADARKO - POCASSETT 138KV CKT 1
FDNS	00NR	2	16WP	G15_034	FROM->TO	CIMARRON - DRAPER LAKE 345KV CKT 1	717	717	0.10561	108.4142	GEN515040 1-SEMINOLE 1G
FDNS	00NR	2	16WP	G15_034	FROM->TO	CIMARRON - DRAPER LAKE 345KV CKT 1	717	717	0.10619	108.3238	POCASSETT - TUTTLE 138KV CKT 1
FDNS	00NR	2	16WP	G15_034	FROM->TO	CIMARRON - DRAPER LAKE 345KV CKT 1	717	717	0.10723	108.2369	LACYGNE - WAVERLY7 345.00 345KV CKT 1
FDNS	00NR	2	16WP	G15_034	FROM->TO	CIMARRON - DRAPER LAKE 345KV CKT 1	717	717	0.1063	108.2139	CORN TAP - NAPLESTP 138.00 138KV CKT 1
FDNS	00NR	2	16WP	G15_034	FROM->TO	CIMARRON - DRAPER LAKE 345KV CKT 1	717	717	0.10727	108.1853	JOHNSON COUNTY - SUNNYSIDE 345KV CKT 1
FDNS	00NR	2	16WP	G15_034	FROM->TO	CIMARRON - DRAPER LAKE 345KV CKT 1	717	717	0.1063	108.1177	NAPLESTP 138.00 - PAYNE 138.00 138KV CKT 1
FDNS	00NR	2	16WP	G15_034	FROM->TO	CIMARRON - DRAPER LAKE 345KV CKT 1	717	717	0.10723	108.0345	WAVERLY7 345.00 - WOLF CREEK 345KV CKT 1
FDNS	00NR	2	16WP	G15_034	FROM->TO	CIMARRON - DRAPER LAKE 345KV CKT 1	717	717	0.10561	108.0025	GEN509403 1-PIRKEY GENERATION
FDNS	00NR	2	16WP	G15_034	FROM->TO	CIMARRON - DRAPER LAKE 345KV CKT 1	717	717	0.10561	107.9538	GEN501801 1-DOLET HILLS UNIT1
FDNS	00NR	2	16WP	G15_034	FROM->TO	CIMARRON - DRAPER LAKE 345KV CKT 1	717	717	0.10561	107.9462	GEN509416 1-TURK GENERATION
FDNS	00NR	2	16WP	G15_034	FROM->TO	CIMARRON - DRAPER LAKE 345KV CKT 1	717	717	0.10939	107.9364	CANEYRV7 345.00 - NEOSHO 345KV CKT 1
FDNS	00NR	2	16WP	G15_034	FROM->TO	CIMARRON - DRAPER LAKE 345KV CKT 1	717	717	0.10619	107.8144	BRIDGECR 138.00 - TUTTLE 138KV CKT 1
FDNS	00NR	2	16WP	G15_034	FROM->TO	CIMARRON - DRAPER LAKE 345KV CKT 1	717	717	0.10939	107.6338	CANEYRV7 345.00 - LATHAMS7 345.00 345KV CKT 1
FDNS	00NR	2	16WP	G15_034	FROM->TO	CIMARRON - DRAPER LAKE 345KV CKT 1	717	717	0.10561	107.6312	GEN336821 1-GRAND GULF UNIT
FDNS	00NR	2	16WP	G15_034	FROM->TO	CIMARRON - DRAPER LAKE 345KV CKT 1	717	717	0.10561	107.5364	GEN515042 1-SEMINOLE 3G
FDNS	00NR	2	16WP	G15_034	FROM->TO	CIMARRON - DRAPER LAKE 345KV CKT 1	717	717	0.10619	107.4437	BRIDGECR 138.00 - SUNSHINE CANYON 138KV CKT 1
FDNS	00NR	2	16WP	G15_034	FROM->TO	CIMARRON - DRAPER LAKE 345KV CKT 1	717	717	0.10619	107.4304	P12:138:WFEC:MSL01
FDNS	00NR	2	16WP	G15_034	FROM->TO	CIMARRON - DRAPER LAKE 345KV CKT 1	717	717	0.10561	107.3353	GEN336153 1-WATERFORD UNIT#3
FDNS	00NR	2	16WP	G15_034	FROM->TO	CIMARRON - DRAPER LAKE 345KV CKT 1	717	717	0.10561	107.3028	GEN515041 1-SEMINOLE 2G
FDNS	00NR	2	16WP	G15_034	FROM->TO	CIMARRON - DRAPER LAKE 345KV CKT 1	717	717	0.10939	107.1911	LATHAMS7 345.00 - ROSE HILL 345KV CKT 1
FDNS	00NR	2	16WP	G15_034	FROM->TO	CIMARRON - DRAPER LAKE 345KV CKT 1	717	717	0.10561	107.1021	GEN509406 1-WELSH #3
FDNS	00NR	2	16WP	G15_034	FROM->TO	CIMARRON - DRAPER LAKE 345KV CKT 1	717	717	0.10561	107.1019	GEN509404 1-WELSH #1
FDNS	00NR	2	16WP	G15_034	FROM->TO	CIMARRON - DRAPER LAKE 345KV CKT 1	717	717	0.10317	107.0778	CIMARRON - NORTHWEST 345KV CKT 1
FDNS	00NR	2	16WP	G15_034	FROM->TO	CIMARRON - DRAPER LAKE 345KV CKT 1	717	717	0.10561	107.0366	GEN335831 1-RIVERBEND UNIT#1
FDNS	00NR	2	16WP	G15_034	FROM->TO	CIMARRON - DRAPER LAKE 345KV CKT 1	717	717	0.10561	107.0093	GEN337911 1-ARKANSAS NUCLEAR ONE UNIT #2
FDNS	00NR	2	17SP	G15_034	FROM->TO	CIMARRON - DRAPER LAKE 345KV CKT 1	717	717	0.10153	106.8798	G14-057T 345.00 - SUNNYSIDE 345KV CKT 1
FDNS	00NR	2	16WP	G15_034	FROM->TO	CIMARRON - DRAPER LAKE 345KV CKT 1	717	717	0.10468	106.7532	CANADIAN RIVER - MUSKOGEE 345KV CKT 1
FDNS	00NR	2	16WP	G15_034	FROM->TO	CIMARRON - DRAPER LAKE 345KV CKT 1	717	717	0.10563	106.7407	HUGO - SUNNYSIDE 345KV CKT 1
FDNS	00NR	2	16WP	G15_034	FROM->TO	CIMARRON - DRAPER LAKE 345KV CKT 1	717	717	0.10606	106.6461	P12:138:OKGE:3TERM14
FDNS	00NR	2	16WP	G15_034	FROM->TO	CIMARRON - DRAPER LAKE 345KV CKT 1	717	717	0.10704	106.6391	JOHNSON COUNTY - PITTSBURG 345KV CKT 1
FDNS	00NR	2	16WP	G15_034	FROM->TO	CIMARRON - DRAPER LAKE 345KV CKT 1	717	717	0.10704	106.6391	JOHNSON COUNTY - PITTSBURG 345KV CKT 1
FDNS	00NR	2	16WP	G15_034	FROM->TO	CIMARRON - DRAPER LAKE 345KV CKT 1	717	717	0.10561	106.638	GRAND GULF 500/22.0KV TRANSFORMER CKT 1
FDNS	00NR	2	16WP	G15_034	FROM->TO	CIMARRON - DRAPER LAKE 345KV CKT 1	717	717	0.10561	106.6339	GEN337910 1-ARKANSAS NUCLEAR ONE UNIT #1
FDNS	00NR	2	16WP	G15_034	FROM->TO	CIMARRON - DRAPER LAKE 345KV CKT 1	717	717	0.1065	106.6257	HORSESHOE LAKE - JONES TAP 138KV CKT 1
FDNS	00NR	2	16WP	G15_034	FROM->TO	CIMARRON - DRAPER LAKE 345KV CKT 1	717	717	0.10707	106.6133	MORISNT4 138.00 - STILLWATER 138KV CKT 1
FDNS	00NR	2	16WP	G15_034	FROM->TO	CIMARRON - DRAPER LAKE 345KV CKT 1	717	717	0.10706	106.6087	P12:138:OKGE:3TERM2
FDNS	00NR	2	16WP	G15_034	FROM->TO	CIMARRON - DRAPER LAKE 345KV CKT 1	717	717	0.10389	106.5858	REDBUD - RIVERSIDE STATION 345KV CKT 1
FDNS	00NR	2	16WP	G15_034	FROM->TO	CIMARRON - DRAPER LAKE 345KV CKT 1	717	717	0.10389	106.5858	REDBUD - RIVERSIDE STATION 345KV CKT 1

SOLUTION	GROUP	SCENARIO	SEASON	SOURCE	DIRECTION	MONITORED ELEMENT	RATEA (MVA)	RATEB(MVA)	TDF	TC%LOADING (% MVA)	CONTINGENCY
FDNS	00NR	2	16WP	G15_034	FROM->TO	CIMARRON - DRAPER LAKE 345KV CKT 1	717	717	0.10561	106.4831	GEN501813 1-RODEMACHER UNIT 3
FDNS	00NR	2	16WP	G15_034	FROM->TO	CIMARRON - DRAPER LAKE 345KV CKT 1	717	717	0.10561	106.4757	GEN515226 1-MUSKOGEE 6G
FDNS	00NR	2	16WP	G15_034	FROM->TO	CIMARRON - DRAPER LAKE 345KV CKT 1	717	717	0.10629	106.3936	NORTHWEST (NORTWST2) 345/138/13.8KV TRANSFORMER CKT 1
FDNS	00NR	2	16WP	G15_034	FROM->TO	CIMARRON - DRAPER LAKE 345KV CKT 1	717	717	0.10508	106.3867	ARCADIA - KAMO MEMORIAL 138KV CKT 1
FDNS	00NR	2	16WP	G15_034	FROM->TO	CIMARRON - DRAPER LAKE 345KV CKT 1	717	717	0.10665	106.382	BAILEY4 138.00 - SUNSHINE CANYON 138KV CKT 1
FDNS	00NR	2	16WP	G15_034	FROM->TO	CIMARRON - DRAPER LAKE 345KV CKT 1	717	717	0.10567	106.3599	P12:138:OKGE:3TERM12
FDNS	00NR	2	16WP	G15_034	FROM->TO	CIMARRON - DRAPER LAKE 345KV CKT 1	717	717	0.10581	106.3184	7SAREPTA% 345.00 - LONGWOOD 345KV CKT 1
FDNS	00NR	2	16WP	G15_034	FROM->TO	CIMARRON - DRAPER LAKE 345KV CKT 1	717	717	0.10581	106.3184	7SAREPTA% 345.00 - LONGWOOD 345KV CKT 1
FDNS	00NR	2	16WP	G15_034	FROM->TO	CIMARRON - DRAPER LAKE 345KV CKT 1	717	717	0.10571	106.3044	DOLET HILLS - SOUTHWEST SHREVEPORT 345KV CKT 1
FDNS	00NR	2	16WP	G15_034	FROM->TO	CIMARRON - DRAPER LAKE 345KV CKT 1	717	717	0.10571	106.3044	DOLET HILLS - SOUTHWEST SHREVEPORT 345KV CKT 1
FDNS	00NR	2	16WP	G15_034	FROM->TO	CIMARRON - DRAPER LAKE 345KV CKT 1	717	717	0.1066	106.2996	MEMORIAL - SKYLINE 138KV CKT 1
FDNS	00NR	2	16WP	G15_034	FROM->TO	CIMARRON - DRAPER LAKE 345KV CKT 1	717	717	0.10561	106.2945	GEN335206 1-NELSON UNIT 6
FDNS	00NR	2	16WP	G15_034	FROM->TO	CIMARRON - DRAPER LAKE 345KV CKT 1	717	717	0.10561	106.2794	GEN515225 1-MUSKOGEE 5G
FDNS	00NR	2	16WP	G15_034	FROM->TO	CIMARRON - DRAPER LAKE 345KV CKT 1	717	717	0.10561	106.2793	GEN515223 1-MUSKOGEE 4G
FDNS	00NR	2	16WP	G15_034	FROM->TO	CIMARRON - DRAPER LAKE 345KV CKT 1	717	717	0.10629	106.2422	GRACEMONT (BANK 1) 345/138/13.8KV TRANSFORMER CKT 1
FDNS	00NR	2	16WP	G15_034	FROM->TO	CIMARRON - DRAPER LAKE 345KV CKT 1	717	717	0.1058	106.1951	G15074_T 345.00 - HOYT 345KV CKT 1
FDNS	00NR	2	16WP	G15_034	FROM->TO	CIMARRON - DRAPER LAKE 345KV CKT 1	717	717	0.1066	106.1886	QUAIL CREEK - SKYLINE 138KV CKT 1
FDNS	00NR	2	16WP	G15_034	FROM->TO	CIMARRON - DRAPER LAKE 345KV CKT 1	717	717	0.10685	106.1598	P12:138:OKGE:3TERM18
FDNS	00NR	2	16WP	G15_034	FROM->TO	CIMARRON - DRAPER LAKE 345KV CKT 1	717	717	0.10561	106.1411	GEN509409 1-WILKES #3
FDNS	00NR	2	16WP	G15_034	FROM->TO	CIMARRON - DRAPER LAKE 345KV CKT 1	717	717	0.10561	106.1299	GEN337653 1-WHITE BLUFF UNIT #2
FDNS	00NR	2	16WP	G15_034	FROM->TO	CIMARRON - DRAPER LAKE 345KV CKT 1	717	717	0.10623	106.129	NORTHWEST (NORTWST4) 345/138/13.8KV TRANSFORMER CKT 1
FDNS	00NR	2	16WP	G15_034	FROM->TO	CIMARRON - DRAPER LAKE 345KV CKT 1	717	717	0.10561	106.1234	GEN501812 1-RODEMACHER UNIT 2
FDNS	00NR	2	16WP	G15_034	FROM->TO	CIMARRON - DRAPER LAKE 345KV CKT 1	717	717	0.10665	106.0822	BAILEY4 138.00 - WESTMOORE 138KV CKT 1
FDNS	00NR	2	16WP	G15_034	FROM->TO	CIMARRON - DRAPER LAKE 345KV CKT 1	717	717	0.10681	106.0779	36 & MERIDIAN - CHEMTRON 138KV CKT 1
FDNS	00NR	2	16WP	G15_034	FROM->TO	CIMARRON - DRAPER LAKE 345KV CKT 1	717	717	0.10561	106.0648	NEW MADRID 161/22.0KV TRANSFORMER CKT 1
FDNS	00NR	2	16WP	G15_034	FROM->TO	CIMARRON - DRAPER LAKE 345KV CKT 1	717	717	0.10561	106.0522	NEW MADRID 345/22.0KV TRANSFORMER CKT 1
FDNS	00NR	2	16WP	G15_034	FROM->TO	CIMARRON - DRAPER LAKE 345KV CKT 1	717	717	0.10561	106.0286	GEN520947 1-HUGO1
FDNS	00NR	2	16WP	G15_034	FROM->TO	CIMARRON - DRAPER LAKE 345KV CKT 1	717	717	0.10623	106.0025	NORTHWEST (NORTWST3) 345/138/13.8KV TRANSFORMER CKT 1
FDNS	00NR	2	16WP	G15_034	FROM->TO	CIMARRON - DRAPER LAKE 345KV CKT 1	717	717	0.10561	106.001	GEN337652 1-WHITE BLUFF UNIT #1
FDNS	00NR	2	16WP	G15_034	FROM->TO	CIMARRON - DRAPER LAKE 345KV CKT 1	717	717	0.10681	105.991	CHEMTRON - PENNSYLVANIA 138KV CKT 1
FDNS	00NR	2	16WP	G15_034	FROM->TO	CIMARRON - DRAPER LAKE 345KV CKT 1	717	717	0.10483	105.9645	THISTLE7 345.00 - WOODWARD DISTRICT EHV 345KV CKT 1
FDNS	00NR	2	16WP	G15_034	FROM->TO	CIMARRON - DRAPER LAKE 345KV CKT 1	717	717	0.10483	105.9645	THISTLE7 345.00 - WOODWARD DISTRICT EHV 345KV CKT 1
FDNS	00NR	2	16WP	G15_034	FROM->TO	CIMARRON - DRAPER LAKE 345KV CKT 1	717	717	0.10483	105.9645	THISTLE7 345.00 - WOODWARD DISTRICT EHV 345KV CKT 2
FDNS	00NR	2	16WP	G15_034	FROM->TO	CIMARRON - DRAPER LAKE 345KV CKT 1	717	717	0.10483	105.9645	THISTLE7 345.00 - WOODWARD DISTRICT EHV 345KV CKT 2
FDNS	00NR	2	16WP	G15_034	FROM->TO	CIMARRON - DRAPER LAKE 345KV CKT 1	717	717	0.10572	105.943	7SAREPTA% 345.00 - ELDORADO EHV 345KV CKT 1
FDNS	00NR	2	16WP	G15_034	FROM->TO	CIMARRON - DRAPER LAKE 345KV CKT 1	717	717	0.10572	105.9429	3TR3AR8EL7EL
FDNS	00NR	2	16WP	G15_034	FROM->TO	CIMARRON - DRAPER LAKE 345KV CKT 1	717	717	0.10572	105.9366	ELDORADO EHV 500/345KV TRANSFORMER CKT 1
FDNS	00NR	2	16WP	G15_034	FROM->TO	CIMARRON - DRAPER LAKE 345KV CKT 1	717	717	0.10669	105.9137	BLANCHARD - CORNVILLE 138KV CKT 1
FDNS	00NR	2	16WP	G15_034	FROM->TO	CIMARRON - DRAPER LAKE 345KV CKT 1	717	717	0.10603	105.8917	P12:138:OKGE:3TERM17
FDNS	00NR	2	16WP	G15_034	FROM->TO	CIMARRON - DRAPER LAKE 345KV CKT 1	717	717	0.10585	105.8801	COMANCHE - LOCO 138KV CKT 1
FDNS	00NR	2	16WP	G15_034	FROM->TO	CIMARRON - DRAPER LAKE 345KV CKT 1	717	717	0.11535	105.869	G15052_T 345.00 - ROSE HILL 345KV CKT 1
FDNS	00NR	2	16WP	G15_034	FROM->TO	CIMARRON - DRAPER LAKE 345KV CKT 1	717	717	0.10649	105.8508	P12:138:OKGE:3TERM11
FDNS	00NR	2	16WP	G15_034	FROM->TO	CIMARRON - DRAPER LAKE 345KV CKT 1	717	717	0.10561	105.8458	GEN515577 1-ARBWND11 0.6900
FDNS	00NR	2	16WP	G15_034	FROM->TO	CIMARRON - DRAPER LAKE 345KV CKT 1	717	717	0.10606	105.8285	LONEOAK - NORTHWEST 138KV CKT 1
FDNS	00NR	2	16WP	G15_034	FROM->TO	CIMARRON - DRAPER LAKE 345KV CKT 1	717	717	0.10561	105.8273	GEN334440 1-SABINE UNIT 4
FDNS	00NR	2	16WP	G15_034	FROM->TO	CIMARRON - DRAPER LAKE 345KV CKT 1	717	717	0.10669	105.8228	P12:138:AEPW-OGE:CORNVIL4:MAUD 4
FDNS	00NR	2	16WP	G15_034	FROM->TO	CIMARRON - DRAPER LAKE 345KV CKT 1	717	717	0.1058	105.8211	HOYT - STRANGER CREEK 345KV CKT 1
FDNS	00NR	2	16WP	G15_034	FROM->TO	CIMARRON - DRAPER LAKE 345KV CKT 1	717	717	0.1091	105.8162	CLARKSVILLE - ONETA 345KV CKT 1
FDNS	00NR	2	16WP	G15_034	FROM->TO	CIMARRON - DRAPER LAKE 345KV CKT 1	717	717	0.1091	105.8162	CLARKSVILLE - ONETA 345KV CKT 1
FDNS	00NR	2	16WP	G15_034	FROM->TO	CIMARRON - DRAPER LAKE 345KV CKT 1	717	717	0.1058	105.8145	G15074_T 345.00 - JEFFREY ENERGY CENTER 345KV CKT 1
FDNS	00NR	2	16WP	G15_034	FROM->TO	CIMARRON - DRAPER LAKE 345KV CKT 1	717	717	0.10561	105.8145	DELL 500 - ESSEX UNIT 2 500KV CKT Z1
FDNS	00NR	2	16WP	G15_034	FROM->TO	CIMARRON - DRAPER LAKE 345KV CKT 1	717	717	0.10638	105.8141	KETCH TAP - NORTHWEST 138KV CKT 1
FDNS	00NR	2	16WP	G15_034	FROM->TO	CIMARRON - DRAPER LAKE 345KV CKT 1	717	717	0.10609	105.8047	DIVISION AVE - LAKESIDE 138KV CKT 1
FDNS	00NR	2	16WP	G15_034	FROM->TO	CIMARRON - DRAPER LAKE 345KV CKT 1	717	717	0.10665	105.8009	FRANKLIN SW - WESTMOORE 138KV CKT 1
FDNS	00NR	2	16WP	G15_034	FROM->TO	CIMARRON - DRAPER LAKE 345KV CKT 1	717	717	0.10555	105.7881	HORSESHOE LAKE - KAMO MEMORIAL 138KV CKT 1
FDNS	00NR	2	16WP	G15_034	FROM->TO	CIMARRON - DRAPER LAKE 345KV CKT 1	717	717	0.10606	105.7432	NORTHWEST - PANTHER 138KV CKT 1
FDNS	00NR	2	16WP	G15_034	FROM->TO	CIMARRON - DRAPER LAKE 345KV CKT 1	717	717	0.10649	105.7378	P12:138:OKGE:3TERM20
FDNS	00NR	2	16WP	G15_034	FROM->TO	CIMARRON - DRAPER LAKE 345KV CKT 1	717	717	0.10669	105.7206	BLANCHARD - MAUD 138KV CKT 1
FDNS	00NR	2	16WP	G15_034	FROM->TO	CIMARRON - DRAPER LAKE 345KV CKT 1	717	717	0.10575	105.7122	P12:138:OKGE:3TERM47
FDNS	00NR	2	16WP	G15_034	FROM->TO	CIMARRON - DRAPER LAKE 345KV CKT 1	717	717	0.10585	105.7091	CIMARRON - HAYMAKER 138KV CKT 1
FDNS	00NR	2	16WP	G15_034	FROM->TO	CIMARRON - DRAPER LAKE 345KV CKT 1	717	717	0.10649	105.6998	BLACKBERRY - NEOSHO 345KV CKT 1
FDNS	00NR	2	16WP	G15_034	FROM->TO	CIMARRON - DRAPER LAKE 345KV CKT 1	717	717	0.10649	105.6998	BLACKBERRY - NEOSHO 345KV CKT 1
FDNS	00NR	2	16WP	G15_034	FROM->TO	CIMARRON - DRAPER LAKE 345KV CKT 1	717	717	0.10615	105.6957	G14-074T 345.00 - OKLAUNION 345KV CKT 1
FDNS	00NR	2	16WP	G15_034	FROM->TO	CIMARRON - DRAPER LAKE 345KV CKT 1	717	717	0.10606	105.6927	PANTHER - SILVER LAKE 138KV CKT 1
FDNS	00NR	2	16WP	G15_034	FROM->TO	CIMARRON - DRAPER LAKE 345KV CKT 1	717	717	0.10561	105.685	DOLET HILLS 345/24.0KV TRANSFORMER CKT 1
FDNS	00NR	2	16WP	G15_034	FROM->TO	CIMARRON - DRAPER LAKE 345KV CKT 1	717	717	0.10609	105.6804	HEFNER - LAKESIDE 138KV CKT 1
FDNS	00NR	2	16WP	G15_034	FROM->TO	CIMARRON - DRAPER LAKE 345KV CKT 1	717	717	0.10561	105.6772	GEN336252 1-NINEMILE POINT UNIT#5
FDNS	00NR	2	16WP	G15_034	FROM->TO	CIMARRON - DRAPER LAKE 345KV CKT 1	717	717	0.10665	105.6457	KETCH - KETCH TAP 138KV CKT 1
FDNS	00NR	2	16WP	G15_034	FROM->TO	CIMARRON - DRAPER LAKE 345KV CKT 1	717	717	0.10561	105.6454	WHITE BLUFF 500/26.0KV TRANSFORMER CKT 1
FDNS	00NR	2	16WP	G15_034	FROM->TO	CIMARRON - DRAPER LAKE 345KV CKT 1	717	717	0.10582	105.636	SWISSVALE - WEST GARDNER 345KV CKT 1
FDNS	00NR	2	16WP	G15_034	FROM->TO	CIMARRON - DRAPER LAKE 345KV CKT 1	717	717	0.10603	105.6215	DIVISION AVE - MUSTANG 138KV CKT 1
FDNS	00NR	2	16WP	G15_034	FROM->TO	CIMARRON - DRAPER LAKE 345KV CKT 1	717	717	0.10609	105.6148	P12:138:AEPW-OGE:SHIDLER4:OSAGE 4
FDNS	00NR	2	16WP	G15_034	FROM->TO	CIMARRON - DRAPER LAKE 345KV CKT 1	717	717	0.10517	105.6086	FINNEY SWITCHING STATION - HOLCOMB 345KV CKT 1
FDNS	00NR	2	16WP	G15_034	FROM->TO	CIMARRON - DRAPER LAKE 345KV CKT 1	717	717	0.10517	105.6086	FINNEY SWITCHING STATION - HOLCOMB 345KV CKT 1
FDNS	00NR	2	16WP	G15_034	FROM->TO	CIMARRON - DRAPER LAKE 345KV CKT 1	717	717	0.10561	105.6079	GEN509408 1-WILKES #2
FDNS	00NR	2	16WP	G15_034	FROM->TO	CIMARRON - DRAPER LAKE 345KV CKT 1	717	717	0.10585	105.6013	DIVISION AVE - HAYMAKER 138KV CKT 1
FDNS	00NR	2	16WP	G15_034	FROM->TO	CIMARRON - DRAPER LAKE 345KV CKT 1	717	717	0.10561	105.5965	GEN300006 1-NEW MADRID UNIT 1
FDNS	00NR	2	16WP	G15_034	FROM->TO	CIMARRON - DRAPER LAKE 345KV CKT 1	717	717	0.10647	105.5922	MCCLAIN - PLEASANT VALLEY 138KV CKT 1
FDNS	00NR	2	16WP	G15_034	FROM->TO	CIMARRON - DRAPER LAKE 345KV CKT 1	717	717	0.10561	105.5839	GEN300007 1-NEW MADRID UNIT 2

SOLUTION	GROUP	SCENARIO	SEASON	SOURCE	DIRECTION	MONITORED ELEMENT	RATEA (MVA)	RATEB(MVA)	TDF	TC%LOADING (% MVA)	CONTINGENCY
FDNS	00NR	2	16WP	G15_034	FROM->TO	CIMARRON - DRAPER LAKE 345KV CKT 1	717	717	0.10573	105.5687	P12:138:WFEC:MSL02
FDNS	00NR	2	16WP	G15_034	FROM->TO	CIMARRON - DRAPER LAKE 345KV CKT 1	717	717	0.10611	105.5653	LACYGNE - NEOSHO 345KV CKT 1
FDNS	00NR	2	16WP	G15_034	FROM->TO	CIMARRON - DRAPER LAKE 345KV CKT 1	717	717	0.10606	105.562	P12:138:AEPW:OKMULGE4:R.S.S-4
FDNS	00NR	2	16WP	G15_034	FROM->TO	CIMARRON - DRAPER LAKE 345KV CKT 1	717	717	0.10561	105.556	GEN335204 1-NELSON UNIT 4
FDNS	00NR	2	16WP	G15_034	FROM->TO	CIMARRON - DRAPER LAKE 345KV CKT 1	717	717	0.10561	105.5382	GEN336831 1-BAXTER WILSON SES
FDNS	00NR	2	16WP	G15_034	FROM->TO	CIMARRON - DRAPER LAKE 345KV CKT 1	717	717	0.1057	105.5345	ANADARKO - GEORGIA 138KV CKT 1
FDNS	00NR	2	16WP	G15_034	FROM->TO	CIMARRON - DRAPER LAKE 345KV CKT 1	717	717	0.10564	105.5344	G15088_T 345.00 - MOORE 345KV CKT 1
FDNS	00NR	2	16WP	G15_034	FROM->TO	CIMARRON - DRAPER LAKE 345KV CKT 1	717	717	0.10633	105.5337	CLASSEN - ROBINSON 138KV CKT 1
FDNS	00NR	2	16WP	G15_034	FROM->TO	CIMARRON - DRAPER LAKE 345KV CKT 1	717	717	0.10583	105.5269	EMPORIA ENERGY CENTER - SWISSVALE 345KV CKT 1
FDNS	00NR	2	16WP	G15_034	FROM->TO	CIMARRON - DRAPER LAKE 345KV CKT 1	717	717	0.10385	105.521	BENTON - WICHITA 345KV CKT 1
FDNS	00NR	2	16WP	G15_034	FROM->TO	CIMARRON - DRAPER LAKE 345KV CKT 1	717	717	0.10561	105.5131	GEN506754 1-LEBROCK STEAM 1
FDNS	00NR	2	16WP	G15_034	FROM->TO	CIMARRON - DRAPER LAKE 345KV CKT 1	717	717	0.1062	105.5113	EMPORIA ENERGY CENTER - G14_001T 345.00 345KV CKT 1
FDNS	00NR	2	16WP	G15_034	FROM->TO	CIMARRON - DRAPER LAKE 345KV CKT 1	717	717	0.10561	105.5044	GEN334441 1-SABINE UNIT 5
FDNS	00NR	2	16WP	G15_034	FROM->TO	CIMARRON - DRAPER LAKE 345KV CKT 1	717	717	0.10561	105.4986	GEN334071 1-LEWIS CREEK 2
FDNS	00NR	2	16WP	G15_034	FROM->TO	CIMARRON - DRAPER LAKE 345KV CKT 1	717	717	0.10561	105.4908	GEN334070 1-LEWIS CREEK 1
FDNS	00NR	2	16WP	G15_034	FROM->TO	CIMARRON - DRAPER LAKE 345KV CKT 1	717	717	0.106	105.474	CRINER - PAYNE 138.00 138KV CKT 1
FDNS	00NR	2	16WP	G15_034	FROM->TO	CIMARRON - DRAPER LAKE 345KV CKT 1	717	717	0.10561	105.4738	GEN336251 1-NINEMILE POINT UNIT#4
FDNS	00NR	2	16WP	G15_034	FROM->TO	CIMARRON - DRAPER LAKE 345KV CKT 1	717	717	0.1057	105.4706	FLETCHER - GEORGIA 138KV CKT 1
FDNS	00NR	2	16WP	G15_034	FROM->TO	CIMARRON - DRAPER LAKE 345KV CKT 1	717	717	0.10571	105.4467	WEBRE - WELLS 500KV CKT 1
FDNS	00NR	2	16WP	G15_034	FROM->TO	CIMARRON - DRAPER LAKE 345KV CKT 1	717	717	0.10561	105.4465	GEN590011 2-ERCOT EQUIVALENCE
FDNS	00NR	2	16WP	G15_034	FROM->TO	CIMARRON - DRAPER LAKE 345KV CKT 1	717	717	0.10671	105.4267	WOODRING (WOODRNG2) 345/138/13.8KV TRANSFORMER CKT 1
FDNS	00NR	2	16WP	G15_034	FROM->TO	CIMARRON - DRAPER LAKE 345KV CKT 1	717	717	0.10517	105.4241	FINNEY SWITCHING STATION - Hitchland Interchange 345KV CKT 1
FDNS	00NR	2	16WP	G15_034	FROM->TO	CIMARRON - DRAPER LAKE 345KV CKT 1	717	717	0.10606	105.4224	LONEOAK - QUAIL CREEK 138KV CKT 1
FDNS	00NR	2	16WP	G15_034	FROM->TO	CIMARRON - DRAPER LAKE 345KV CKT 1	717	717	0.10572	105.4183	EMPIRE - FLETCHER 138KV CKT 1
FDNS	00NR	2	16WP	G15_034	FROM->TO	CIMARRON - DRAPER LAKE 345KV CKT 1	717	717	0.10561	105.4132	GEN501811 1-RODEMACHER UNIT 1
FDNS	00NR	2	16WP	G15_034	FROM->TO	CIMARRON - DRAPER LAKE 345KV CKT 1	717	717	0.10609	105.4087	OSAGE - WEBB CITY TAP 138KV CKT 1
FDNS	00NR	2	16WP	G15_034	FROM->TO	CIMARRON - DRAPER LAKE 345KV CKT 1	717	717	0.10561	105.4058	GEN590010 1-ERCOT EQUIVALENCE
FDNS	00NR	2	16WP	G15_034	FROM->TO	CIMARRON - DRAPER LAKE 345KV CKT 1	717	717	0.10561	105.3996	GEN503909 1-FULTONU1 1 16.000
FDNS	00NR	2	16WP	G15_034	FROM->TO	CIMARRON - DRAPER LAKE 345KV CKT 1	717	717	0.10561	105.3959	GEN338146 1-INDEPENDENCE UNIT #2
FDNS	00NR	2	16WP	G15_034	FROM->TO	CIMARRON - DRAPER LAKE 345KV CKT 1	717	717	0.10561	105.3903	FRONTIER - GRIMES 345KV CKT 1
FDNS	00NR	2	16WP	G15_034	FROM->TO	CIMARRON - DRAPER LAKE 345KV CKT 1	717	717	0.10527	105.3841	G1524G1525 345.00 - THISTLE7 345.00 345KV CKT 1
FDNS	00NR	2	16WP	G15_034	FROM->TO	CIMARRON - DRAPER LAKE 345KV CKT 1	717	717	0.10527	105.3841	G1524G1525 345.00 - THISTLE7 345.00 345KV CKT 2
FDNS	00NR	2	16WP	G15_034	FROM->TO	CIMARRON - DRAPER LAKE 345KV CKT 1	717	717	0.10626	105.3824	SPVALLY4 138.00 - STILLWATER 138KV CKT 1
FDNS	00NR	2	16WP	G15_034	FROM->TO	CIMARRON - DRAPER LAKE 345KV CKT 1	717	717	0.10561	105.3766	GEN334433 1-SABINE UNIT 3
FDNS	00NR	2	16WP	G15_034	FROM->TO	CIMARRON - DRAPER LAKE 345KV CKT 1	717	717	0.1062	105.3756	G14_001T 345.00 - WICHITA 345KV CKT 1
FDNS	00NR	2	16WP	G15_034	FROM->TO	CIMARRON - DRAPER LAKE 345KV CKT 1	717	717	0.10561	105.3752	P12:069:OKGE:3TERM4
FDNS	00NR	2	16WP	G15_034	FROM->TO	CIMARRON - DRAPER LAKE 345KV CKT 1	717	717	0.10561	105.3707	GEN334030 1-FRONTIER UNIT 1
FDNS	00NR	2	16WP	G15_034	FROM->TO	CIMARRON - DRAPER LAKE 345KV CKT 1	717	717	0.10561	105.3695	GEN334031 1-FRONTIER UNIT 2
FDNS	00NR	2	16WP	G15_034	FROM->TO	CIMARRON - DRAPER LAKE 345KV CKT 1	717	717	0.10561	105.3681	GEN303007 1-1BC2 U2
FDNS	00NR	2	16WP	G15_034	FROM->TO	CIMARRON - DRAPER LAKE 345KV CKT 1	717	717	0.10561	105.3633	GEN303006 1-1BC2 U1
FDNS	00NR	2	16WP	G15_034	FROM->TO	CIMARRON - DRAPER LAKE 345KV CKT 1	717	717	0.10572	105.3556	COMANCHE - EMPIRE 138KV CKT 1
FDNS	00NR	2	16WP	G15_034	FROM->TO	CIMARRON - DRAPER LAKE 345KV CKT 1	717	717	0.10626	105.353	PAYNESB4 138.00 - SPVALLY4 138.00 138KV CKT 1
FDNS	00NR	2	16WP	G15_034	FROM->TO	CIMARRON - DRAPER LAKE 345KV CKT 1	717	717	0.106	105.3494	COLE - CRINER 138KV CKT 1
FDNS	00NR	2	16WP	G15_034	FROM->TO	CIMARRON - DRAPER LAKE 345KV CKT 1	717	717	0.10561	105.3464	GEN336191 1-LITTLE GYPSY UNIT#3
FDNS	00NR	2	16WP	G15_034	FROM->TO	CIMARRON - DRAPER LAKE 345KV CKT 1	717	717	0.10561	105.3444	GEN337041 1-GERALD ANDRUS
FDNS	00NR	2	16WP	G15_034	FROM->TO	CIMARRON - DRAPER LAKE 345KV CKT 1	717	717	0.10561	105.3407	P12:161:AEPW:DYESS 5:HYLAND 5
FDNS	00NR	2	16WP	G15_034	FROM->TO	CIMARRON - DRAPER LAKE 345KV CKT 1	717	717	0.10576	105.3381	P12:138:OKGE:3TERM13
FDNS	00NR	2	16WP	G15_034	FROM->TO	CIMARRON - DRAPER LAKE 345KV CKT 1	717	717	0.10626	105.3373	CUSHING - PAYNESB4 138.00 138KV CKT 1
FDNS	00NR	2	16WP	G15_034	FROM->TO	CIMARRON - DRAPER LAKE 345KV CKT 1	717	717	0.10564	105.3353	8DANIEL8 500.00 - MCKNIGHT 500KV CKT 1
FDNS	00NR	2	16WP	G15_034	FROM->TO	CIMARRON - DRAPER LAKE 345KV CKT 1	717	717	0.10657	105.3336	CLEAVELAND - CLEVLND 4 138.00 138KV CKT Z1
FDNS	00NR	2	16WP	G15_034	FROM->TO	CIMARRON - DRAPER LAKE 345KV CKT 1	717	717	0.10657	105.3336	CLEAVELAND - CLEVLND 4 138.00 138KV CKT Z1
FDNS	00NR	2	16WP	G15_034	FROM->TO	CIMARRON - DRAPER LAKE 345KV CKT 1	717	717	0.10657	105.3333	CLEVELAND (CLVAUTO1) 345/138/13.8KV TRANSFORMER CKT 1
FDNS	00NR	2	16WP	G15_034	FROM->TO	CIMARRON - DRAPER LAKE 345KV CKT 1	717	717	0.10657	105.3333	CLEVELAND (CLVAUTO1) 345/138/13.8KV TRANSFORMER CKT 1
FDNS	00NR	2	16WP	G15_034	FROM->TO	CIMARRON - DRAPER LAKE 345KV CKT 1	717	717	0.1051	105.3313	CANADIAN RIVER - PITTSBURG 345KV CKT 1
FDNS	00NR	2	16WP	G15_034	FROM->TO	CIMARRON - DRAPER LAKE 345KV CKT 1	717	717	0.1051	105.3313	CANADIAN RIVER - PITTSBURG 345KV CKT 1
FDNS	00NR	2	16WP	G15_034	FROM->TO	CIMARRON - DRAPER LAKE 345KV CKT 1	717	717	0.10561	105.3185	GEN509393 S1-ARSENAL HILL GENS #4 (STALL)
FDNS	00NR	2	16WP	G15_034	FROM->TO	CIMARRON - DRAPER LAKE 345KV CKT 1	717	717	0.10598	105.3182	DAYTON - MUSTANG 138KV CKT 1
FDNS	00NR	2	16WP	G15_034	FROM->TO	CIMARRON - DRAPER LAKE 345KV CKT 1	717	717	0.10561	105.3145	GEN335614 1-WILLOW GLENN UNIT#4
FDNS	00NR	2	16WP	G15_034	FROM->TO	CIMARRON - DRAPER LAKE 345KV CKT 1	717	717	0.10598	105.3132	DAYTON - HOBBY LOBBY 138KV CKT 1
FDNS	00NR	2	16WP	G15_034	FROM->TO	CIMARRON - DRAPER LAKE 345KV CKT 1	717	717	0.10561	105.303	GEN303008 1-1BC2 U3
FDNS	00NR	2	16WP	G15_034	FROM->TO	CIMARRON - DRAPER LAKE 345KV CKT 1	717	717	0.10561	105.2997	GEN509392 G2-ARSENAL HILL GENS #3 (STALL)
FDNS	00NR	2	16WP	G15_034	FROM->TO	CIMARRON - DRAPER LAKE 345KV CKT 1	717	717	0.10561	105.2996	GEN509391 G1-ARSENAL HILL GENS #2 (STALL)
FDNS	00NR	2	16WP	G15_034	FROM->TO	CIMARRON - DRAPER LAKE 345KV CKT 1	717	717	0.10594	105.296	MUSTANG - SW 5TH 138KV CKT 1
FDNS	00NR	2	16WP	G15_034	FROM->TO	CIMARRON - DRAPER LAKE 345KV CKT 1	717	717	0.10572	105.2901	7LUTESVIL 345.00 - 7ST FRANC 345.00 345KV CKT 1
FDNS	00NR	2	16WP	G15_034	FROM->TO	CIMARRON - DRAPER LAKE 345KV CKT 1	717	717	0.10561	105.2812	GEN336170 1-GULF OXY U4
FDNS	00NR	2	16WP	G15_034	FROM->TO	CIMARRON - DRAPER LAKE 345KV CKT 1	717	717	0.10561	105.2786	GEN336464 1-MICHOUD UNIT #3
FDNS	00NR	2	16WP	G15_034	FROM->TO	CIMARRON - DRAPER LAKE 345KV CKT 1	717	717	0.10562	105.2772	ELDORADO EHV - MOUNT OLIVE 500KV CKT 1
FDNS	00NR	2	16WP	G15_034	FROM->TO	CIMARRON - DRAPER LAKE 345KV CKT 1	717	717	0.10561	105.267	GEN338143 1-INDEPENDENCE UNIT #1
FDNS	00NR	2	16WP	G15_034	FROM->TO	CIMARRON - DRAPER LAKE 345KV CKT 1	717	717	0.10566	105.2572	P12:069:OKGE:3TERM19
FDNS	00NR	2	16WP	G15_034	FROM->TO	CIMARRON - DRAPER LAKE 345KV CKT 1	717	717	0.10561	105.2447	ESSEX UNIT 2 500/18.0KV TRANSFORMER CKT 1
FDNS	00NR	2	16WP	G15_034	FROM->TO	CIMARRON - DRAPER LAKE 345KV CKT 1	717	717	0.10602	105.244	OUMED 4 - STONEWALL 138KV CKT 1
FDNS	00NR	2	16WP	G15_034	FROM->TO	CIMARRON - DRAPER LAKE 345KV CKT 1	717	717	0.10633	105.241	LIGHTNING CREEK - ROBINSON 138KV CKT 1
FDNS	00NR	2	16WP	G15_034	FROM->TO	CIMARRON - DRAPER LAKE 345KV CKT 1	717	717	0.10576	105.2408	7JASPER 345.00 - BLACKBERRY 345KV CKT 1
FDNS	00NR	2	16WP	G15_034	FROM->TO	CIMARRON - DRAPER LAKE 345KV CKT 1	717	717	0.10561	105.2336	GEN336801 1-BAXTER WILSON UNIT #1
FDNS	00NR	2	16WP	G15_034	FROM->TO	CIMARRON - DRAPER LAKE 345KV CKT 1	717	717	0.10534	105.2308	ARCADIA - LGARBER4 138.00 138KV CKT 1
FDNS	00NR	2	16WP	G15_034	FROM->TO	CIMARRON - DRAPER LAKE 345KV CKT 1	717	717	0.10609	105.2291	FAIRFAX TAP - SHIDLER 138KV CKT 1
FDNS	00NR	2	16WP	G15_034	FROM->TO	CIMARRON - DRAPER LAKE 345KV CKT 1	717	717	0.10609	105.229	FAIRFAX TAP - WEBB CITY TAP 138KV CKT 1
FDNS	00NR	2	16WP	G15_034	FROM->TO	CIMARRON - DRAPER LAKE 345KV CKT 1	717	717	0.10576	105.2096	8WNEWMADRID 500.00 - DELL 500 500KV CKT 1
FDNS	00NR	2	16WP	G15_034	FROM->TO	CIMARRON - DRAPER LAKE 345KV CKT 1	717	717	0.10772	105.2044	TULSA NORTH - WEKIWA 345KV CKT 1

SOLUTION	GROUP	SCENARIO	SEASON	SOURCE	DIRECTION	MONITORED ELEMENT	RATEA (MVA)	RATEB(MVA)	TDF	TC%LOADING (% MVA)	CONTINGENCY
FDNS	00NR	2	16WP	G15_034	FROM->TO	CIMARRON - DRAPER LAKE 345KV CKT 1	717	717	0.10772	105.2044	TULSA NORTH - WEKIWA 345KV CKT 1
FDNS	00NR	2	16WP	G15_034	FROM->TO	CIMARRON - DRAPER LAKE 345KV CKT 1	717	717	0.10649	105.2039	ARKANSAS NUCLEAR ONE - FT SMITH 500KV CKT 1
FDNS	00NR	2	16WP	G15_034	FROM->TO	CIMARRON - DRAPER LAKE 345KV CKT 1	717	717	0.10649	105.2039	ARKANSAS NUCLEAR ONE - FT SMITH 500KV CKT 1
FDNS	00NR	2	16WP	G15_034	FROM->TO	CIMARRON - DRAPER LAKE 345KV CKT 1	717	717	0.10534	105.2009	CHITWOOD - LGARBER4 138.00 138KV CKT 1
FDNS	00NR	2	16WP	G15_034	FROM->TO	CIMARRON - DRAPER LAKE 345KV CKT 1	717	717	0.10561	105.198	GEN506752 1-LEBROCK GAS 1
FDNS	00NR	2	16WP	G15_034	FROM->TO	CIMARRON - DRAPER LAKE 345KV CKT 1	717	717	0.10561	105.1978	GEN506753 1-LEBROCK GAS 2
FDNS	00NR	2	16WP	G15_034	FROM->TO	CIMARRON - DRAPER LAKE 345KV CKT 1	717	717	0.10561	105.1962	GEN501910 1-ACADIA UNIT ST1
FDNS	00NR	2	16WP	G15_034	FROM->TO	CIMARRON - DRAPER LAKE 345KV CKT 1	717	717	0.10534	105.1885	CHITWOOD - JONES TAP 138KV CKT 1
FDNS	00NR	2	16WP	G15_034	FROM->TO	CIMARRON - DRAPER LAKE 345KV CKT 1	717	717	0.10561	105.1852	RODEMACHER 230/22.0KV TRANSFORMER CKT 1
FDNS	00NR	2	16WP	G15_034	FROM->TO	CIMARRON - DRAPER LAKE 345KV CKT 1	717	717	0.10561	105.1817	P12:138:AEPW-OGE:WTH_JCT4:JENSEN4
FDNS	00NR	2	16WP	G15_034	FROM->TO	CIMARRON - DRAPER LAKE 345KV CKT 1	717	717	0.10564	105.1808	P12:345:GRDA:CHOUTEAU-SPORTSMANACRES
FDNS	00NR	2	16WP	G15_034	FROM->TO	CIMARRON - DRAPER LAKE 345KV CKT 1	717	717	0.10561	105.1757	ELDORADO EHV - SHERIDAN EHV 500KV CKT 1
FDNS	00NR	2	16WP	G15_034	FROM->TO	CIMARRON - DRAPER LAKE 345KV CKT 1	717	717	0.10571	105.1668	ANADARKO - SEQUOYAHJ4 138.00 138KV CKT 1
FDNS	00NR	2	16WP	G15_034	FROM->TO	CIMARRON - DRAPER LAKE 345KV CKT 1	717	717	0.10571	105.1663	CORN TAP - SEQUOYAHJ4 138.00 138KV CKT 1
FDNS	00NR	2	16WP	G15_034	FROM->TO	CIMARRON - DRAPER LAKE 345KV CKT 1	717	717	0.10561	105.1611	GEN511843 1-RIVERSIDE STATION #2
FDNS	00NR	2	16WP	G15_034	FROM->TO	CIMARRON - DRAPER LAKE 345KV CKT 1	717	717	0.1056	105.1602	CHISHOLM6 230.00 - ELK CITY 230KV 230KV CKT 1
FDNS	00NR	2	16WP	G15_034	FROM->TO	CIMARRON - DRAPER LAKE 345KV CKT 1	717	717	0.1056	105.1571	ELK CITY 230KV (ELKCTY-6) 230/138/13.8KV TRANSFORMER CKT 1
FDNS	00NR	2	16WP	G15_034	FROM->TO	CIMARRON - DRAPER LAKE 345KV CKT 1	717	717	0.1056	105.1571	ELK CITY 230KV (ELKCTY-6) 230/138/13.8KV TRANSFORMER CKT 1
FDNS	00NR	2	16WP	G15_034	FROM->TO	CIMARRON - DRAPER LAKE 345KV CKT 1	717	717	0.10568	105.1454	6LAYFLD 230.00 - CARROLL 230KV CKT 1
FDNS	00NR	2	16WP	G15_034	FROM->TO	CIMARRON - DRAPER LAKE 345KV CKT 1	717	717	0.10602	105.1428	OUMED 4 - PARK PLACE 138KV CKT 1
FDNS	00NR	2	16WP	G15_034	FROM->TO	CIMARRON - DRAPER LAKE 345KV CKT 1	717	717	0.1057	105.1404	P12:138:AEPW:N.E.S.-4:CATOOSA4
FDNS	00NR	2	16WP	G15_034	FROM->TO	CIMARRON - DRAPER LAKE 345KV CKT 1	717	717	0.10583	105.132	P13:138-161:WERE:NSES_TX-4OR5::
FDNS	00NR	2	16WP	G15_034	FROM->TO	CIMARRON - DRAPER LAKE 345KV CKT 1	717	717	0.10606	105.1317	MORISNT4 138.00 - SOONER 138KV CKT 1
FDNS	00NR	2	16WP	G15_034	FROM->TO	CIMARRON - DRAPER LAKE 345KV CKT 1	717	717	0.10814	105.131	NORTHEAST STATION - ONETA 345KV CKT 1
FDNS	00NR	2	16WP	G15_034	FROM->TO	CIMARRON - DRAPER LAKE 345KV CKT 1	717	717	0.10814	105.131	NORTHEAST STATION - ONETA 345KV CKT 1
FDNS	00NR	2	16WP	G15_034	FROM->TO	CIMARRON - DRAPER LAKE 345KV CKT 1	717	717	0.10585	105.1287	ANADARKO - GRACMNT4 138.00 138KV CKT 1
FDNS	00NR	2	16WP	G15_034	FROM->TO	CIMARRON - DRAPER LAKE 345KV CKT 1	717	717	0.10581	105.1248	7JASPER 345.00 - MORGAN 345KV CKT 1
FDNS	00NR	2	16WP	G15_034	FROM->TO	CIMARRON - DRAPER LAKE 345KV CKT 1	717	717	0.10561	105.118	8CAJUN2 500/24.0KV TRANSFORMER CKT 1
FDNS	00NR	2	16WP	G15_034	FROM->TO	CIMARRON - DRAPER LAKE 345KV CKT 1	717	717	0.10768	105.1161	GRACEMONT - LAWTON EASTSIDE 345KV CKT 1
FDNS	00NR	2	16WP	G15_034	FROM->TO	CIMARRON - DRAPER LAKE 345KV CKT 1	717	717	0.10768	105.1161	GRACEMONT - LAWTON EASTSIDE 345KV CKT 1
FDNS	00NR	2	16WP	G15_034	FROM->TO	CIMARRON - DRAPER LAKE 345KV CKT 1	717	717	0.10645	105.1116	DALE - HORSESHOE LAKE 138KV CKT 1
FDNS	00NR	2	16WP	G15_034	FROM->TO	CIMARRON - DRAPER LAKE 345KV CKT 1	717	717	0.10561	105.1113	ST FRANCIS - ST FRANCIS 1 161KV CKT Z1
FDNS	00NR	2	16WP	G15_034	FROM->TO	CIMARRON - DRAPER LAKE 345KV CKT 1	717	717	0.10561	105.1113	ST FRANCIS 161/16.0KV TRANSFORMER CKT 1
FDNS	00NR	2	16WP	G15_034	FROM->TO	CIMARRON - DRAPER LAKE 345KV CKT 1	717	717	0.10569	105.1084	FULTON 115 - HOPE 115KV CKT 1
FDNS	00NR	2	16WP	G15_034	FROM->TO	CIMARRON - DRAPER LAKE 345KV CKT 1	717	717	0.10569	105.1084	FULTON 115 - HOPE 115KV CKT 1
FDNS	00NR	2	16WP	G15_034	FROM->TO	CIMARRON - DRAPER LAKE 345KV CKT 1	717	717	0.10633	105.1037	LIGHTNING CREEK - TROSPER 138KV CKT 1
FDNS	00NR	2	16WP	G15_034	FROM->TO	CIMARRON - DRAPER LAKE 345KV CKT 1	717	717	0.10561	105.1027	P12:069:OKGE:3TERM3
FDNS	00NR	2	16WP	G15_034	FROM->TO	CIMARRON - DRAPER LAKE 345KV CKT 1	717	717	0.10564	105.1006	G13-010T 345.00 - POST ROCK 345KV CKT 1
FDNS	00NR	2	16WP	G15_034	FROM->TO	CIMARRON - DRAPER LAKE 345KV CKT 1	717	717	0.106	105.099	COLE - OUSW4 138KV CKT 1
FDNS	00NR	2	16WP	G15_034	FROM->TO	CIMARRON - DRAPER LAKE 345KV CKT 1	717	717	0.10581	105.0962	P12:138:AEPW:CATOOSA4:T.S.E.-4
FDNS	00NR	2	16WP	G15_034	FROM->TO	CIMARRON - DRAPER LAKE 345KV CKT 1	717	717	0.1056	105.0879	HUGO - VALLIANT 345KV CKT 1
FDNS	00NR	2	16WP	G15_034	FROM->TO	CIMARRON - DRAPER LAKE 345KV CKT 1	717	717	0.1056	105.0879	HUGO - VALLIANT 345KV CKT 1
FDNS	00NR	2	16WP	G15_034	FROM->TO	CIMARRON - DRAPER LAKE 345KV CKT 1	717	717	0.10598	105.0838	36 & MERIDIAN - HOBBY LOBBY 138KV CKT 1
FDNS	00NR	2	16WP	G15_034	FROM->TO	CIMARRON - DRAPER LAKE 345KV CKT 1	717	717	0.10561	105.0825	GEN337766 1-TRACTEBEL UNIT S1
FDNS	00NR	2	16WP	G15_034	FROM->TO	CIMARRON - DRAPER LAKE 345KV CKT 1	717	717	0.10561	105.0805	P12:138:AEPW:SHERID4:112GORE4
FDNS	00NR	2	16WP	G15_034	FROM->TO	CIMARRON - DRAPER LAKE 345KV CKT 1	717	717	0.10561	105.0804	HAMMETT TAP - HAMMETT2 138KV CKT 1
FDNS	00NR	2	16WP	G15_034	FROM->TO	CIMARRON - DRAPER LAKE 345KV CKT 1	717	717	0.10561	105.0776	GEN336222 1-LITTLE GYPSY UNIT#2
FDNS	00NR	2	16WP	G15_034	FROM->TO	CIMARRON - DRAPER LAKE 345KV CKT 1	717	717	0.10566	105.0756	P12:138:OKGE:3TERM28
FDNS	00NR	2	16WP	G15_034	FROM->TO	CIMARRON - DRAPER LAKE 345KV CKT 1	717	717	0.10561	105.0751	GEN515564 1-ORIGIN11 0.6900
FDNS	00NR	2	16WP	G15_034	FROM->TO	CIMARRON - DRAPER LAKE 345KV CKT 1	717	717	0.10561	105.0751	GEN515565 1-ORIGIN21 0.6900
FDNS	00NR	2	16WP	G15_034	FROM->TO	CIMARRON - DRAPER LAKE 345KV CKT 1	717	717	0.10561	105.073	GEN300015 1-1SGPDEL 18.000
FDNS	00NR	2	16WP	G15_034	FROM->TO	CIMARRON - DRAPER LAKE 345KV CKT 1	717	717	0.10645	105.0701	DALE - SQUIRL CREEK 138KV CKT 1
FDNS	00NR	2	16WP	G15_034	FROM->TO	CIMARRON - DRAPER LAKE 345KV CKT 1	717	717	0.10561	105.07	NELSON 230/20.0KV TRANSFORMER CKT 1
FDNS	00NR	2	16WP	G15_034	FROM->TO	CIMARRON - DRAPER LAKE 345KV CKT 1	717	717	0.10561	105.0658	GEN501970 1-EVANGELINE UNIT 7
FDNS	00NR	2	16WP	G15_034	FROM->TO	CIMARRON - DRAPER LAKE 345KV CKT 1	717	717	0.10578	105.0657	HEALDTON - LOCO 138KV CKT 1
FDNS	00NR	2	16WP	G15_034	FROM->TO	CIMARRON - DRAPER LAKE 345KV CKT 1	717	717	0.10578	105.0657	NW164TH4 138.00 - PIEDMONT 138KV CKT 1
FDNS	00NR	2	16WP	G15_034	FROM->TO	CIMARRON - DRAPER LAKE 345KV CKT 1	717	717	0.10578	105.0637	NORTHWEST - NW164TH4 138.00 138KV CKT 1
FDNS	00NR	2	16WP	G15_034	FROM->TO	CIMARRON - DRAPER LAKE 345KV CKT 1	717	717	0.10562	105.062	P12:161:AEPW:EROGERS5:ECNTRTN5
FDNS	00NR	2	16WP	G15_034	FROM->TO	CIMARRON - DRAPER LAKE 345KV CKT 1	717	717	0.10562	105.0607	AS KING - EAU CLAIRE 345KV CKT 1
FDNS	00NR	2	16WP	G15_034	FROM->TO	CIMARRON - DRAPER LAKE 345KV CKT 1	717	717	0.10561	105.0604	ESSEX UNIT 2 500/18.0KV TRANSFORMER CKT 1
FDNS	00NR	2	16WP	G15_034	FROM->TO	CIMARRON - DRAPER LAKE 345KV CKT 1	717	717	0.10559	105.0601	P12:138:OKGE-AEPW:JENSEN4:REDROCKRD4
FDNS	00NR	2	16WP	G15_034	FROM->TO	CIMARRON - DRAPER LAKE 345KV CKT 1	717	717	0.10576	105.059	HEFNER - TULSA 138KV CKT 1
FDNS	00NR	2	16WP	G15_034	FROM->TO	CIMARRON - DRAPER LAKE 345KV CKT 1	717	717	0.10564	105.0534	FLETCHER - MARLOW JCT 69KV CKT 1
FDNS	00NR	2	16WP	G15_034	FROM->TO	CIMARRON - DRAPER LAKE 345KV CKT 1	717	717	0.10566	105.0528	COMANCHE TAP - OMPA-DUNCAN 840 138KV CKT 1
FDNS	00NR	2	16WP	G15_034	FROM->TO	CIMARRON - DRAPER LAKE 345KV CKT 1	717	717	0.10561	105.0493	P12:161:AEPW:DYESS5:ELMSPRNG:TONTITN5
FDNS	00NR	2	16WP	G15_034	FROM->TO	CIMARRON - DRAPER LAKE 345KV CKT 1	717	717	0.10634	105.0492	COTTONWOOD CREEK - MARSHALL 138KV CKT 1
FDNS	00NR	2	16WP	G15_034	FROM->TO	CIMARRON - DRAPER LAKE 345KV CKT 1	717	717	0.10634	105.0488	MARSHALL - WOODRING 138KV CKT 1
FDNS	00NR	2	16WP	G15_034	FROM->TO	CIMARRON - DRAPER LAKE 345KV CKT 1	717	717	0.10561	105.0466	ST FRANCIS 2 161/16.0KV TRANSFORMER CKT 2
FDNS	00NR	2	16WP	G15_034	FROM->TO	CIMARRON - DRAPER LAKE 345KV CKT 1	717	717	0.10561	105.0466	ST FRANCIS 345/161KV TRANSFORMER CKT 1
FDNS	00NR	2	16WP	G15_034	FROM->TO	CIMARRON - DRAPER LAKE 345KV CKT 1	717	717	0.10566	105.0465	P12:161:AEPW-SWPA:BEAVER5:EROGERS5
FDNS	00NR	2	16WP	G15_034	FROM->TO	CIMARRON - DRAPER LAKE 345KV CKT 1	717	717	0.10561	105.0461	GEN336152 1-WATERFORD UNIT#2
FDNS	00NR	2	16WP	G15_034	FROM->TO	CIMARRON - DRAPER LAKE 345KV CKT 1	717	717	0.10564	105.0457	G13-010T 345.00 - SPEARVILLE 345KV CKT 1
FDNS	00NR	2	16WP	G15_034	FROM->TO	CIMARRON - DRAPER LAKE 345KV CKT 1	717	717	0.10561	105.045	GEN336151 1-WATERFORD UNIT#1
FDNS	00NR	2	16WP	G15_034	FROM->TO	CIMARRON - DRAPER LAKE 345KV CKT 1	717	717	0.10582	105.0362	P12:138:AEPW:MOUNDRD4:SHIDLER4
FDNS	00NR	2	16WP	G15_034	FROM->TO	CIMARRON - DRAPER LAKE 345KV CKT 1	717	717	0.10561	105.0346	GEN334392 1-EXXON MOBIL IPP 1
FDNS	00NR	2	16WP	G15_034	FROM->TO	CIMARRON - DRAPER LAKE 345KV CKT 1	717	717	0.10567	105.0334	P12:138:AEPW:CORNVIL4:S.W.S.-4
FDNS	00NR	2	16WP	G15_034	FROM->TO	CIMARRON - DRAPER LAKE 345KV CKT 1	717	717	0.10605	105.0287	BRISTOW - SILVER CITY 138KV CKT 1
FDNS	00NR	2	16WP	G15_034	FROM->TO	CIMARRON - DRAPER LAKE 345KV CKT 1	717	717	0.10973	105.0276	PECAN CREEK - RIVERSIDE STATION 345KV CKT 1
FDNS	00NR	2	16WP	G15_034	FROM->TO	CIMARRON - DRAPER LAKE 345KV CKT 1	717	717	0.10973	105.0276	PECAN CREEK - RIVERSIDE STATION 345KV CKT 1

SOLUTION	GROUP	SCENARIO	SEASON	SOURCE	DIRECTION	MONITORED ELEMENT	RATEA (MVA)	RATEB(MVA)	TDF	TC%LOADING (% MVA)	CONTINGENCY
FDNS	00NR	2	16WP	G15_034	FROM->TO	CIMARRON - DRAPER LAKE 345KV CKT 1	717	717	0.10561	105.0276	GEN334393 1-EXXON MOBIL IPP 2
FDNS	00NR	2	16WP	G15_034	FROM->TO	CIMARRON - DRAPER LAKE 345KV CKT 1	717	717	0.10561	105.0276	GEN334394 1-EXXON MOBIL IPP 3
FDNS	00NR	2	16WP	G15_034	FROM->TO	CIMARRON - DRAPER LAKE 345KV CKT 1	717	717	0.10586	105.0249	EL RENO SW - MUSTANG2 69.000 69KV CKT 1
FDNS	00NR	2	16WP	G15_034	FROM->TO	CIMARRON - DRAPER LAKE 345KV CKT 1	717	717	0.10578	105.0245	HEALDTON - RINGLING 138KV CKT 1
FDNS	00NR	2	16WP	G15_034	FROM->TO	CIMARRON - DRAPER LAKE 345KV CKT 1	717	717	0.10564	105.0226	MC NIEL 500/115KV TRANSFORMER CKT 1
FDNS	00NR	2	16WP	G15_034	FROM->TO	CIMARRON - DRAPER LAKE 345KV CKT 1	717	717	0.10582	105.0199	SHIDLER - WEST PAWHUSKA 138KV CKT 1
FDNS	00NR	2	16WP	G15_034	FROM->TO	CIMARRON - DRAPER LAKE 345KV CKT 1	717	717	0.10569	105.0188	KELLYAV4 138.00 - MEMORIAL 138KV CKT 1
FDNS	00NR	2	16WP	G15_034	FROM->TO	CIMARRON - DRAPER LAKE 345KV CKT 1	717	717	0.10566	105.0151	BISMARK - HOT SPRINGS WEST BUS 115KV CKT 1
FDNS	00NR	2	16WP	G15_034	FROM->TO	CIMARRON - DRAPER LAKE 345KV CKT 1	717	717	0.10561	105.012	GEN501972 1-EVANGELINE UNIT 7-2
FDNS	00NR	2	16WP	G15_034	FROM->TO	CIMARRON - DRAPER LAKE 345KV CKT 1	717	717	0.10561	105.0119	GEN501971 1-EVANGELINE UNIT 7-1
FDNS	00NR	2	16WP	G15_034	FROM->TO	CIMARRON - DRAPER LAKE 345KV CKT 1	717	717	0.10688	105.0105	BRYANT - MEMORIAL 138KV CKT 1
FDNS	00NR	2	16WP	G15_034	FROM->TO	CIMARRON - DRAPER LAKE 345KV CKT 1	717	717	0.10564	105.0056	ARPIN B4 345.00 - EAU CLAIRE 345KV CKT 1
FDNS	00NR	2	16WP	G15_034	FROM->TO	CIMARRON - DRAPER LAKE 345KV CKT 1	717	717	0.10561	105.003	GEN334431 1-SABINE UNIT 1
FDNS	00NR	2	16WP	G15_034	FROM->TO	CIMARRON - DRAPER LAKE 345KV CKT 1	717	717	0.10582	105.0029	PAWHUSKA TAP - WEST PAWHUSKA 138KV CKT 1
FDNS	00NR	2	16WP	G15_034	FROM->TO	CIMARRON - DRAPER LAKE 345KV CKT 1	717	717	0.10561	105.0029	GEN334432 1-SABINE UNIT 2
FDNS	00NR	2	16WP	G15_034	FROM->TO	CIMARRON - DRAPER LAKE 345KV CKT 1	717	717	0.10602	105.0025	BODLE - PARK PLACE 138KV CKT 1
FDNS	00NR	2	16WP	G15_034	FROM->TO	CIMARRON - DRAPER LAKE 345KV CKT 1	717	717	0.10574	105.0018	BROOKLINE - MORGAN 345KV CKT 1
FDNS	00NR	2	16WP	G15_034	FROM->TO	CIMARRON - DRAPER LAKE 345KV CKT 1	717	717	0.10574	105.0018	BROOKLINE - MORGAN 345KV CKT 1
FDNS	00NR	2	16WP	G15_034	FROM->TO	CIMARRON - DRAPER LAKE 345KV CKT 1	717	717	0.10561	104.9995	GEN336242 1-1NMIL ST1 18.000
FDNS	00NR	2	16WP	G15_034	FROM->TO	CIMARRON - DRAPER LAKE 345KV CKT 1	717	717	0.10561	104.9986	GEN337764 1-TRACTEBEL UNIT C1
FDNS	00NR	2	16WP	G15_034	FROM->TO	CIMARRON - DRAPER LAKE 345KV CKT 1	717	717	0.10561	104.9986	GEN337765 1-TRACTEBEL UNIT C2
FDNS	00NR	2	16WP	G15_034	FROM->TO	CIMARRON - DRAPER LAKE 345KV CKT 1	717	717	0.10575	104.9978	COUNCIL - MUSTANG 138KV CKT 1
FDNS	00NR	2	16WP	G15_034	FROM->TO	CIMARRON - DRAPER LAKE 345KV CKT 1	717	717	0.10561	104.9974	GEN501912 1-ACADIA UNIT CT1B
FDNS	00NR	2	16WP	G15_034	FROM->TO	CIMARRON - DRAPER LAKE 345KV CKT 1	717	717	0.10561	104.9967	GEN501911 1-ACADIA UNIT CT1A
FDNS	00NR	2	16WP	G15_034	FROM->TO	CIMARRON - DRAPER LAKE 345KV CKT 1	717	717	0.10578	104.99	PIEDMONT - RICHRDS 138KV CKT 1
FDNS	00NR	2	16WP	G15_034	FROM->TO	CIMARRON - DRAPER LAKE 345KV CKT 1	717	717	0.10561	104.99	HAMMETT2 - MEEKER 138KV CKT 1
FDNS	00NR	2	16WP	G15_034	FROM->TO	CIMARRON - DRAPER LAKE 345KV CKT 1	717	717	0.10562	104.9894	CYPRESS - HARTBURG 500KV CKT 1
FDNS	00NR	2	16WP	G15_034	FROM->TO	CIMARRON - DRAPER LAKE 345KV CKT 1	717	717	0.10578	104.9878	CIVIT - PAOLI 138KV CKT 1
FDNS	00NR	2	16WP	G15_034	FROM->TO	CIMARRON - DRAPER LAKE 345KV CKT 1	717	717	0.10569	104.9873	KELLYAV4 138.00 - REMNGTON PARK 138KV CKT 1
FDNS	00NR	2	16WP	G15_034	FROM->TO	CIMARRON - DRAPER LAKE 345KV CKT 1	717	717	0.10561	104.9847	P12:69:AEPW:L.E.S.-2:LAW WC2
FDNS	00NR	2	16WP	G15_034	FROM->TO	CIMARRON - DRAPER LAKE 345KV CKT 1	717	717	0.10563	104.9844	HAMMETT TAP - HORSESHOE LAKE 138KV CKT 1
FDNS	00NR	2	16WP	G15_034	FROM->TO	CIMARRON - DRAPER LAKE 345KV CKT 1	717	717	0.10578	104.9827	RINGLING - SOUTH WILSON 138KV CKT 1
FDNS	00NR	2	16WP	G15_034	FROM->TO	CIMARRON - DRAPER LAKE 345KV CKT 1	717	717	0.10566	104.9818	ALPINE AECC - BISMARK 115KV CKT 1
FDNS	00NR	2	16WP	G15_034	FROM->TO	CIMARRON - DRAPER LAKE 345KV CKT 1	717	717	0.10562	104.9759	LAYFLD8 500.00 - MOUNT OLIVE 500KV CKT 1
FDNS	00NR	2	16WP	G15_034	FROM->TO	CIMARRON - DRAPER LAKE 345KV CKT 1	717	717	0.10562	104.9759	LAYFLD8 500.00 - MOUNT OLIVE 500KV CKT 1
FDNS	00NR	2	16WP	G15_034	FROM->TO	CIMARRON - DRAPER LAKE 345KV CKT 1	717	717	0.10571	104.9664	CORN TAP - CORNVILLE 138KV CKT 1
FDNS	00NR	2	16WP	G15_034	FROM->TO	CIMARRON - DRAPER LAKE 345KV CKT 1	717	717	0.10575	104.9416	COUNCIL - WESTOAKS 138KV CKT 1
FDNS	00NR	2	16WP	G15_034	FROM->TO	CIMARRON - DRAPER LAKE 345KV CKT 1	717	717	0.10688	104.9325	ACORN 4 138.00 - BRYANT 138KV CKT 1
FDNS	00NR	2	16WP	G15_034	FROM->TO	CIMARRON - DRAPER LAKE 345KV CKT 1	717	717	0.10561	104.5149	BASE CASE
FDNS	00NR	2	16WP	G15_034	FROM->TO	CIMARRON - DRAPER LAKE 345KV CKT 1	717	717	0.10556	104.1986	GRAPEVINE INTERCHANGE - NICHOLS STATION 230KV CKT 1
FDNS	00NR	2	16WP	G15_034	FROM->TO	CIMARRON - DRAPER LAKE 345KV CKT 1	717	717	0.10556	104.1986	GRAPEVINE INTERCHANGE - NICHOLS STATION 230KV CKT 1
FDNS	00NR	2	16WP	G15_034	FROM->TO	CIMARRON - DRAPER LAKE 345KV CKT 1	717	717	0.10622	104.148	BURGETT4 138.00 - RNDBARN4 138.00 138KV CKT 1
FDNS	00NR	2	16WP	G15_034	FROM->TO	CIMARRON - DRAPER LAKE 345KV CKT 1	717	717	0.10622	104.1457	BURGETT4 138.00 - DANFORTH 138KV CKT 1
FDNS	00NR	2	16WP	G15_034	FROM->TO	CIMARRON - DRAPER LAKE 345KV CKT 1	717	717	0.10622	104.1354	ARCADIA - RNDBARN4 138.00 138KV CKT 1
FDNS	00NR	2	16WP	G15_034	FROM->TO	CIMARRON - DRAPER LAKE 345KV CKT 1	717	717	0.10561	104.0916	GEN515550 1-MNCWND31 0.6900
FDNS	00NR	2	16WP	G15_034	FROM->TO	CIMARRON - DRAPER LAKE 345KV CKT 1	717	717	0.10554	104.0802	GRAPEVINE INTERCHANGE - STATELINE INTERCHANGE 230KV CKT 1
FDNS	00NR	2	16WP	G15_034	FROM->TO	CIMARRON - DRAPER LAKE 345KV CKT 1	717	717	0.10554	104.0802	GRAPEVINE INTERCHANGE - STATELINE INTERCHANGE 230KV CKT 1
FDNS	00NR	2	16WP	G15_034	FROM->TO	CIMARRON - DRAPER LAKE 345KV CKT 1	717	717	0.10561	104.0753	GEN562611 1-G14_064_3 0.6900
FDNS	00NR	2	16WP	G15_034	FROM->TO	CIMARRON - DRAPER LAKE 345KV CKT 1	717	717	0.10561	104.0709	GEN659125 1-COVEY
FDNS	00NR	2	16WP	G15_034	FROM->TO	CIMARRON - DRAPER LAKE 345KV CKT 1	717	717	0.10561	104.0563	P12:138:WFEC:MSL10
FDNS	00NR	2	16WP	G15_034	FROM->TO	CIMARRON - DRAPER LAKE 345KV CKT 1	717	717	0.10561	104.0543	GEN511848 1-SOUTHWESTERN STATION #3
FDNS	00NR	2	16WP	G15_034	FROM->TO	CIMARRON - DRAPER LAKE 345KV CKT 1	717	717	0.10561	104.0473	GEN672303 3-BOUNDARY DAM GENERATOR 3
FDNS	00NR	2	16WP	G15_034	FROM->TO	CIMARRON - DRAPER LAKE 345KV CKT 1	717	717	0.10561	104.0473	GEN672304 4-BOUNDARY DAM GENERATOR 4
FDNS	00NR	2	16WP	G15_034	FROM->TO	CIMARRON - DRAPER LAKE 345KV CKT 1	717	717	0.10561	104.0473	GEN672305 5-BOUNDARY DAM GENERATOR 5
FDNS	00NR	2	16WP	G15_034	FROM->TO	CIMARRON - DRAPER LAKE 345KV CKT 1	717	717	0.10561	104.0468	GEN515601 1-KNGFSR11 0.7000
FDNS	00NR	2	16WP	G15_034	FROM->TO	CIMARRON - DRAPER LAKE 345KV CKT 1	717	717	0.10561	104.045	GEN600007 7-RIVERSIDE GEN 7
FDNS	00NR	2	16WP	G15_034	FROM->TO	CIMARRON - DRAPER LAKE 345KV CKT 1	717	717	0.10561	104.0445	GEN600067 9-HIGH BRIDGE
FDNS	00NR	2	16WP	G15_034	FROM->TO	CIMARRON - DRAPER LAKE 345KV CKT 1	717	717	0.10561	104.0399	GEN615052 1-CAMBRIDGE GENERATING STATION
FDNS	00NR	2	16WP	G15_034	FROM->TO	CIMARRON - DRAPER LAKE 345KV CKT 1	717	717	0.10561	104.0353	GEN600011 5-BLACK DOG GEN 1
FDNS	00NR	2	16WP	G15_034	FROM->TO	CIMARRON - DRAPER LAKE 345KV CKT 1	717	717	0.10561	104.0334	GEN563062 1-G15071_3 0.6900
FDNS	00NR	2	16WP	G15_034	FROM->TO	CIMARRON - DRAPER LAKE 345KV CKT 1	717	717	0.10561	104.0296	GEN600014 4-BLACK DOG GEN 4
FDNS	00NR	2	16WP	G15_034	FROM->TO	CIMARRON - DRAPER LAKE 345KV CKT 1	717	717	0.10561	104.0293	GEN640020 2-SHELDON STATION UNIT 2
FDNS	00NR	2	16WP	G15_034	FROM->TO	CIMARRON - DRAPER LAKE 345KV CKT 1	717	717	0.10561	104.0218	GEN615032 2-PLEASANT VALLEY
FDNS	00NR	2	16WP	G15_034	FROM->TO	CIMARRON - DRAPER LAKE 345KV CKT 1	717	717	0.10562	104.0198	CHISNEY - CLARKSVILLE 138KV CKT 1
FDNS	00NR	2	16WP	G15_034	FROM->TO	CIMARRON - DRAPER LAKE 345KV CKT 1	717	717	0.10561	104.0197	GEN541151 3-SIBLEY GENERATING UNIT #3
FDNS	00NR	2	16WP	G15_034	FROM->TO	CIMARRON - DRAPER LAKE 345KV CKT 1	717	717	0.10592	104.0178	OVEXFRMCCOVE
FDNS	00NR	2	16WP	G15_034	FROM->TO	CIMARRON - DRAPER LAKE 345KV CKT 1	717	717	0.10561	104.0148	GEN629067 1-EMERY GAS TURBINE 1
FDNS	00NR	2	16WP	G15_034	FROM->TO	CIMARRON - DRAPER LAKE 345KV CKT 1	717	717	0.10561	104.0137	GEN563282 1-G15094_3 0.6900
FDNS	00NR	2	16WP	G15_034	FROM->TO	CIMARRON - DRAPER LAKE 345KV CKT 1	717	717	0.10561	104.0096	GEN562802 1-G15039_3 0.3570
FDNS	00NR	2	16WP	G15_034	FROM->TO	CIMARRON - DRAPER LAKE 345KV CKT 1	717	717	0.10561	104.008	GEN652353 2-GR PRAIRIEG 0.6900
FDNS	00NR	2	16WP	G15_034	FROM->TO	CIMARRON - DRAPER LAKE 345KV CKT 1	717	717	0.10561	103.9989	GEN515591 1-PALDRW11 0.6900
FDNS	00NR	2	16WP	G15_034	FROM->TO	CIMARRON - DRAPER LAKE 345KV CKT 1	717	717	0.10721	103.9985	FOREST HILL - MAUD 138KV CKT 1
FDNS	00NR	2	16WP	G15_034	FROM->TO	CIMARRON - DRAPER LAKE 345KV CKT 1	717	717	0.10561	103.9964	GEN563102 1-G15075_3 0.5500
FDNS	00NR	2	16WP	G15_034	FROM->TO	CIMARRON - DRAPER LAKE 345KV CKT 1	717	717	0.10561	103.9961	GEN562602 1-G15_029_3 0.6900
FDNS	00NR	2	16WP	G15_034	FROM->TO	CIMARRON - DRAPER LAKE 345KV CKT 1	717	717	0.10561	103.996	GEN600017 C-LS POWER CT
FDNS	00NR	2	16WP	G15_034	FROM->TO	CIMARRON - DRAPER LAKE 345KV CKT 1	717	717	0.10563	103.9854	MINGO - SETAB 345KV CKT 1
FDNS	00NR	2	16WP	G15_034	FROM->TO	CIMARRON - DRAPER LAKE 345KV CKT 1	717	717	0.10563	103.9854	MINGO - SETAB 345KV CKT 1
FDNS	00NR	2	16WP	G15_034	FROM->TO	CIMARRON - DRAPER LAKE 345KV CKT 1	717	717	0.10561	103.9781	GEN562812 1-G15040_3 0.3570
FDNS	00NR	2	16WP	G15_034	FROM->TO	CIMARRON - DRAPER LAKE 345KV CKT 1	717	717	0.10604	103.9769	SEMINOLE - VANOSTP4 138.00 138KV CKT 1

SOLUTION	GROUP	SCENARIO	SEASON	SOURCE	DIRECTION	MONITORED ELEMENT	RATEA (MVA)	RATEB(MVA)	TDF	TC%LOADING (% MVA)	CONTINGENCY
FDNS	00NR	2	16WP	G15_034	FROM->TO	CIMARRON - DRAPER LAKE 345KV CKT 1	717	717	0.10561	103.9719	GEN563132 1-G15078_3 0.3570
FDNS	00NR	2	16WP	G15_034	FROM->TO	CIMARRON - DRAPER LAKE 345KV CKT 1	717	717	0.10561	103.9675	GEN672392 1-NBECGT1G 18.000
FDNS	00NR	2	16WP	G15_034	FROM->TO	CIMARRON - DRAPER LAKE 345KV CKT 1	717	717	0.10561	103.9629	GEN524285 1-WILDORADO WIND GEN
FDNS	00NR	2	16WP	G15_034	FROM->TO	CIMARRON - DRAPER LAKE 345KV CKT 1	717	717	0.10561	103.9598	GEN562074 1-G1149G1504 0.6900
FDNS	00NR	2	16WP	G15_034	FROM->TO	CIMARRON - DRAPER LAKE 345KV CKT 1	717	717	0.10561	103.9585	GEN629070 2-BEAVER CHANNEL GENERATORFOR UNIT NO 2
FDNS	00NR	2	16WP	G15_034	FROM->TO	CIMARRON - DRAPER LAKE 345KV CKT 1	717	717	0.10609	103.9577	P12:138:AEPW:WELETK4:EARLSBORO4
FDNS	00NR	2	16WP	G15_034	FROM->TO	CIMARRON - DRAPER LAKE 345KV CKT 1	717	717	0.10609	103.9577	P12:138:OKGE:3TERM36
FDNS	00NR	2	16WP	G15_034	FROM->TO	CIMARRON - DRAPER LAKE 345KV CKT 1	717	717	0.10599	103.9503	EARLSBORO 4138.00 - FIXICO TAP 138KV CKT 1
FDNS	00NR	2	16WP	G15_034	FROM->TO	CIMARRON - DRAPER LAKE 345KV CKT 1	717	717	0.1058	103.9456	CANADIAN RIVER - MCALESTER SOUTH 138KV CKT 1
FDNS	00NR	2	16WP	G15_034	FROM->TO	CIMARRON - DRAPER LAKE 345KV CKT 1	717	717	0.1058	103.9456	CANADIAN RIVER - MCALESTER SOUTH 138KV CKT 1
FDNS	00NR	2	16WP	G15_034	FROM->TO	CIMARRON - DRAPER LAKE 345KV CKT 1	717	717	0.1058	103.9442	CANADIAN RIVER () 345/138/13.8KV TRANSFORMER CKT 1
FDNS	00NR	2	16WP	G15_034	FROM->TO	CIMARRON - DRAPER LAKE 345KV CKT 1	717	717	0.1058	103.9442	CANADIAN RIVER () 345/138/13.8KV TRANSFORMER CKT 1
FDNS	00NR	2	16WP	G15_034	FROM->TO	CIMARRON - DRAPER LAKE 345KV CKT 1	717	717	0.10561	103.9441	GEN615010 1-STANTON4
FDNS	00NR	2	16WP	G15_034	FROM->TO	CIMARRON - DRAPER LAKE 345KV CKT 1	717	717	0.10561	103.938	GEN526331 1-JONES GEN #1 22 KV
FDNS	00NR	2	16WP	G15_034	FROM->TO	CIMARRON - DRAPER LAKE 345KV CKT 1	717	717	0.10561	103.938	GEN526332 1-JONES GEN #2 21 KV
FDNS	00NR	2	16WP	G15_034	FROM->TO	CIMARRON - DRAPER LAKE 345KV CKT 1	717	717	0.10561	103.9338	GEN562596 1-G14_059_3 0.6900
FDNS	00NR	2	16WP	G15_034	FROM->TO	CIMARRON - DRAPER LAKE 345KV CKT 1	717	717	0.10561	103.9295	GEN629071 1-BURLINGTON GENERATOR FOR UNIT NO 1 E
FDNS	00NR	2	16WP	G15_034	FROM->TO	CIMARRON - DRAPER LAKE 345KV CKT 1	717	717	0.10563	103.9285	P12:138:WFEC:MSL07
FDNS	00NR	2	16WP	G15_034	FROM->TO	CIMARRON - DRAPER LAKE 345KV CKT 1	717	717	0.10563	103.9285	P12:138:WFEC-AEPW:HUGOPP4:ATOKA--4
FDNS	00NR	2	16WP	G15_034	FROM->TO	CIMARRON - DRAPER LAKE 345KV CKT 1	717	717	0.10561	103.9283	GEN515365 1-CENT 21 0.7000
FDNS	00NR	2	16WP	G15_034	FROM->TO	CIMARRON - DRAPER LAKE 345KV CKT 1	717	717	0.10562	103.9276	CHISNEY - HIGHLAND 138KV CKT 1
FDNS	00NR	2	16WP	G15_034	FROM->TO	CIMARRON - DRAPER LAKE 345KV CKT 1	717	717	0.10561	103.9238	GEN615021 1-GRE-ER 14G 16.000
FDNS	00NR	2	16WP	G15_034	FROM->TO	CIMARRON - DRAPER LAKE 345KV CKT 1	717	717	0.10561	103.922	INDEPENDENCE 500/26.0KV TRANSFORMER CKT 1
FDNS	00NR	2	16WP	G15_034	FROM->TO	CIMARRON - DRAPER LAKE 345KV CKT 1	717	717	0.10564	103.9203	GRPRAR1-LNX3345.00 - GRPRAR 345KV CKT Z
FDNS	00NR	2	16WP	G15_034	FROM->TO	CIMARRON - DRAPER LAKE 345KV CKT 1	717	717	0.10563	103.9181	P12:138:AEPW:SHAM4WT:CHILD4WT
FDNS	00NR	2	16WP	G15_034	FROM->TO	CIMARRON - DRAPER LAKE 345KV CKT 1	717	717	0.10564	103.917	GRPRAR1-LNX3345.00 - HOLT.CO3 345.00 345KV CKT 1
FDNS	00NR	2	16WP	G15_034	FROM->TO	CIMARRON - DRAPER LAKE 345KV CKT 1	717	717	0.10561	103.9133	GEN562983 1-G15061_4 0.6900
FDNS	00NR	2	16WP	G15_034	FROM->TO	CIMARRON - DRAPER LAKE 345KV CKT 1	717	717	0.10561	103.9133	GEN562984 1-G15061_5 0.6900
FDNS	00NR	2	16WP	G15_034	FROM->TO	CIMARRON - DRAPER LAKE 345KV CKT 1	717	717	0.10561	103.9117	GEN562017 1-G11_022_3 0.6900
FDNS	00NR	2	16WP	G15_034	FROM->TO	CIMARRON - DRAPER LAKE 345KV CKT 1	717	717	0.10561	103.908	P12:138:AEPW-SWPA:LONEOAK4:TUPELO4
FDNS	00NR	2	16WP	G15_034	FROM->TO	CIMARRON - DRAPER LAKE 345KV CKT 1	717	717	0.10561	103.9079	P12:138:WFEC:MSL06
FDNS	00NR	2	16WP	G15_034	FROM->TO	CIMARRON - DRAPER LAKE 345KV CKT 1	717	717	0.10561	103.8993	GEN562429 1-G13-029 0.6900
FDNS	00NR	2	16WP	G15_034	FROM->TO	CIMARRON - DRAPER LAKE 345KV CKT 1	717	717	0.10561	103.8979	GEN562432 1-G13-030 0.6900
FDNS	00NR	2	16WP	G15_034	FROM->TO	CIMARRON - DRAPER LAKE 345KV CKT 1	717	717	0.10561	103.8957	GEN560105 1-G08-22 0.6900
FDNS	00NR	2	16WP	G15_034	FROM->TO	CIMARRON - DRAPER LAKE 345KV CKT 1	717	717	0.08862	103.8945	G15063_T 345.00 - WOODRING 345KV CKT 1
FDNS	00NR	2	16WP	G15_034	FROM->TO	CIMARRON - DRAPER LAKE 345KV CKT 1	717	717	0.10561	103.8919	GEN300003 1-THOMAS HILL UNIT 3
FDNS	00NR	2	16WP	G15_034	FROM->TO	CIMARRON - DRAPER LAKE 345KV CKT 1	717	717	0.10692	103.8852	MAUD - SEMINOLE 138KV CKT 1
FDNS	00NR	2	16WP	G15_034	FROM->TO	CIMARRON - DRAPER LAKE 345KV CKT 1	717	717	0.10561	103.8845	BURLINGTON NO1 + NO 2 + NO 3 161/20.0KV TRANSFORMER CKT 1
FDNS	00NR	2	16WP	G15_034	FROM->TO	CIMARRON - DRAPER LAKE 345KV CKT 1	717	717	0.10609	103.8775	P12:138:AEPW-OGE:WELETK4:MAUD 4
FDNS	00NR	2	16WP	G15_034	FROM->TO	CIMARRON - DRAPER LAKE 345KV CKT 1	717	717	0.10565	103.8742	P12:138:WFEC:MSL16
FDNS	00NR	2	16WP	G15_034	FROM->TO	CIMARRON - DRAPER LAKE 345KV CKT 1	717	717	0.10561	103.8689	GEN527882 1-CUNNINGHAM GEN #2 20 KV
FDNS	00NR	2	16WP	G15_034	FROM->TO	CIMARRON - DRAPER LAKE 345KV CKT 1	717	717	0.10599	103.8663	EARLSBORO 4138.00 - MAUD 138KV CKT 1
FDNS	00NR	2	16WP	G15_034	FROM->TO	CIMARRON - DRAPER LAKE 345KV CKT 1	717	717	0.10599	103.8663	EARLSBORO 4138.00 - MAUD 138KV CKT 1
FDNS	00NR	2	16WP	G15_034	FROM->TO	CIMARRON - DRAPER LAKE 345KV CKT 1	717	717	0.10576	103.866	DELL 500 - INDEPENDENCE 500KV CKT 1
FDNS	00NR	2	16WP	G15_034	FROM->TO	CIMARRON - DRAPER LAKE 345KV CKT 1	717	717	0.10561	103.861	GEN562550 1-G14_040_3 0.6900
FDNS	00NR	2	16WP	G15_034	FROM->TO	CIMARRON - DRAPER LAKE 345KV CKT 1	717	717	0.10561	103.8588	GEN524295 1-SPNSPUR_WND10.6900
FDNS	00NR	2	16WP	G15_034	FROM->TO	CIMARRON - DRAPER LAKE 345KV CKT 1	717	717	0.10561	103.8369	GEN562832 1-G15042_3 0.6900
FDNS	00NR	2	16WP	G15_034	FROM->TO	CIMARRON - DRAPER LAKE 345KV CKT 1	717	717	0.10535	103.8333	P12:230:AEPW:ELKCITY6:SWEETWT6
FDNS	00NR	2	16WP	G15_034	FROM->TO	CIMARRON - DRAPER LAKE 345KV CKT 1	717	717	0.10561	103.8324	P12:230:UMZB:# 112 #: NU IN SD. NU-RCDC & DRY CREEK XFMR
FDNS	00NR	2	16WP	G15_034	FROM->TO	CIMARRON - DRAPER LAKE 345KV CKT 1	717	717	0.10561	103.8318	RCDC EAST 4230.00 - RED CEDAR DC 230KV CKT 1
FDNS	00NR	2	16WP	G15_034	FROM->TO	CIMARRON - DRAPER LAKE 345KV CKT 1	717	717	0.10561	103.823	THOMAS HILL 161/22.0KV TRANSFORMER CKT 1
FDNS	00NR	2	16WP	G15_034	FROM->TO	CIMARRON - DRAPER LAKE 345KV CKT 1	717	717	0.10561	103.8136	GEN515606 1-CANDN11 0.6900
FDNS	00NR	2	16WP	G15_034	FROM->TO	CIMARRON - DRAPER LAKE 345KV CKT 1	717	717	0.10561	103.8136	GEN515607 1-CANDN12 0.6900
FDNS	00NR	2	16WP	G15_034	FROM->TO	CIMARRON - DRAPER LAKE 345KV CKT 1	717	717	0.10561	103.8134	GEN345671 2-1RUSH G2 18.000
FDNS	00NR	2	16WP	G15_034	FROM->TO	CIMARRON - DRAPER LAKE 345KV CKT 1	717	717	0.10548	103.8125	P12:230:AEPW-SPS:SWEETWT6:WHEELER 6
FDNS	00NR	2	16WP	G15_034	FROM->TO	CIMARRON - DRAPER LAKE 345KV CKT 1	717	717	0.10548	103.8121	STLN-DEMARC6 - SWEETWATER 230KV CKT 1
FDNS	00NR	2	16WP	G15_034	FROM->TO	CIMARRON - DRAPER LAKE 345KV CKT 1	717	717	0.10561	103.8115	GEN345670 1-1RUSH G1 18.000
FDNS	00NR	2	16WP	G15_034	FROM->TO	CIMARRON - DRAPER LAKE 345KV CKT 1	717	717	0.10548	103.8105	STATELINE INTERCHANGE - STLN-DEMARC6 230KV CKT 1
FDNS	00NR	2	16WP	G15_034	FROM->TO	CIMARRON - DRAPER LAKE 345KV CKT 1	717	717	0.10561	103.8082	GEN531447 1-HOLCOMB GENERATOR
FDNS	00NR	2	16WP	G15_034	FROM->TO	CIMARRON - DRAPER LAKE 345KV CKT 1	717	717	0.10561	103.7885	GEN645011 1-NEBRASKA CITY 1
FDNS	00NR	2	16WP	G15_034	FROM->TO	CIMARRON - DRAPER LAKE 345KV CKT 1	717	717	0.10561	103.7854	GEN515443 1-MNCOWND1 0.7000
FDNS	00NR	2	16WP	G15_034	FROM->TO	CIMARRON - DRAPER LAKE 345KV CKT 1	717	717	0.10561	103.7854	GEN562794 1-G15038_5 0.6900
FDNS	00NR	2	16WP	G15_034	FROM->TO	CIMARRON - DRAPER LAKE 345KV CKT 1	717	717	0.10561	103.7854	GEN562795 1-G15038_6 0.6900
FDNS	00NR	2	16WP	G15_034	FROM->TO	CIMARRON - DRAPER LAKE 345KV CKT 1	717	717	0.10562	103.7826	HIGHLAND - PINK SW 138KV CKT 1
FDNS	00NR	2	16WP	G15_034	FROM->TO	CIMARRON - DRAPER LAKE 345KV CKT 1	717	717	0.10561	103.7741	GEN629072 4-LANSING GENERATOR FOR UNITS NO4 EIA CODE 1
FDNS	00NR	2	16WP	G15_034	FROM->TO	CIMARRON - DRAPER LAKE 345KV CKT 1	717	717	0.10561	103.7621	GEN563092 1-G15074_3 0.6900
FDNS	00NR	2	16WP	G15_034	FROM->TO	CIMARRON - DRAPER LAKE 345KV CKT 1	717	717	0.10561	103.7504	GEN542951 5-HAWTHORN UNIT #5
FDNS	00NR	2	16WP	G15_034	FROM->TO	CIMARRON - DRAPER LAKE 345KV CKT 1	717	717	0.10561	103.744	GEN657749 1-YOUNG 1 GENERATOR
FDNS	00NR	2	16WP	G15_034	FROM->TO	CIMARRON - DRAPER LAKE 345KV CKT 1	717	717	0.10561	103.7431	GEN645012 2-NEBRASKA CITY 2
FDNS	00NR	2	16WP	G15_034	FROM->TO	CIMARRON - DRAPER LAKE 345KV CKT 1	717	717	0.10561	103.7355	GEN562512 1-G14_020_3 0.6900
FDNS	00NR	2	16WP	G15_034	FROM->TO	CIMARRON - DRAPER LAKE 345KV CKT 1	717	717	0.10561	103.7165	GEN562699 1-G15_018_3 0.6900
FDNS	00NR	2	16WP	G15_034	FROM->TO	CIMARRON - DRAPER LAKE 345KV CKT 1	717	717	0.10548	103.6978	CHISHOLM6 230.00 - SWEETWATER 230KV CKT 1
FDNS	00NR	2	16WP	G15_034	FROM->TO	CIMARRON - DRAPER LAKE 345KV CKT 1	717	717	0.10583	103.6942	KEO EHV - WEST MEMPHIS 500 500KV CKT 1
FDNS	00NR	2	16WP	G15_034	FROM->TO	CIMARRON - DRAPER LAKE 345KV CKT 1	717	717	0.10608	103.6906	FRISCCO4 138.00 - LULA 138KV CKT 1
FDNS	00NR	2	16WP	G15_034	FROM->TO	CIMARRON - DRAPER LAKE 345KV CKT 1	717	717	0.10561	103.6869	GEN529201 1-OMCDLEC1 13.800
FDNS	00NR	2	16WP	G15_034	FROM->TO	CIMARRON - DRAPER LAKE 345KV CKT 1	717	717	0.10696	103.678	HOLLYWOOD - MIDWEST TAP 138KV CKT 1
FDNS	00NR	2	16WP	G15_034	FROM->TO	CIMARRON - DRAPER LAKE 345KV CKT 1	717	717	0.10561	103.6768	GEN640009 1-COOPER NUCLEAR STATION
FDNS	00NR	2	16WP	G15_034	FROM->TO	CIMARRON - DRAPER LAKE 345KV CKT 1	717	717	0.10561	103.6768	GEN681522 3-GENOA 3
FDNS	00NR	2	16WP	G15_034	FROM->TO	CIMARRON - DRAPER LAKE 345KV CKT 1	717	717	0.10561	103.6757	GEN563122 1-G15077_3 0.3850

SOLUTION	GROUP	SCENARIO	SEASON	SOURCE	DIRECTION	MONITORED ELEMENT	RATEA (MVA)	RATEB(MVA)	TDF	TC%LOADING (% MVA)	CONTINGENCY
FDNS	00NR	2	16WP	G15_034	FROM->TO	CIMARRON - DRAPER LAKE 345KV CKT 1	717	717	0.10561	103.6586	GEN563182 1-G15083_3 0.6900
FDNS	00NR	2	16WP	G15_034	FROM->TO	CIMARRON - DRAPER LAKE 345KV CKT 1	717	717	0.10561	103.6462	GEN562685 1-G15_013_3 0.3550
FDNS	00NR	2	16WP	G15_034	FROM->TO	CIMARRON - DRAPER LAKE 345KV CKT 1	717	717	0.10626	103.6451	FT SMITH - MUSKOGEE 345KV CKT 1
FDNS	00NR	2	16WP	G15_034	FROM->TO	CIMARRON - DRAPER LAKE 345KV CKT 1	717	717	0.10561	103.631	4SIOUX 1 138.00 138/18.0KV TRANSFORMER CKT 1
FDNS	00NR	2	16WP	G15_034	FROM->TO	CIMARRON - DRAPER LAKE 345KV CKT 1	717	717	0.1059	103.6291	CIMARRON - TUTTLE CONOCO TAP 138KV CKT 1
FDNS	00NR	2	16WP	G15_034	FROM->TO	CIMARRON - DRAPER LAKE 345KV CKT 1	717	717	0.10531	103.6205	CHISHOLM7 345.00 - GRACEMONT 345KV CKT 1
FDNS	00NR	2	16WP	G15_034	FROM->TO	CIMARRON - DRAPER LAKE 345KV CKT 1	717	717	0.10561	103.6185	GEN344895 2-1LAB G2 20.000
FDNS	00NR	2	16WP	G15_034	FROM->TO	CIMARRON - DRAPER LAKE 345KV CKT 1	717	717	0.10584	103.6162	TUPELO - TUPELO TAP 138KV CKT 1
FDNS	00NR	2	16WP	G15_034	FROM->TO	CIMARRON - DRAPER LAKE 345KV CKT 1	717	717	0.10561	103.6035	GEN563222 1-G15088_3 0.6900
FDNS	00NR	2	16WP	G15_034	FROM->TO	CIMARRON - DRAPER LAKE 345KV CKT 1	717	717	0.10561	103.599	GEN523461 1-BLACKHAWK GEN #1
FDNS	00NR	2	16WP	G15_034	FROM->TO	CIMARRON - DRAPER LAKE 345KV CKT 1	717	717	0.10561	103.5989	GEN523462 1-BLACKHAWK GEN #2
FDNS	00NR	2	16WP	G15_034	FROM->TO	CIMARRON - DRAPER LAKE 345KV CKT 1	717	717	0.10561	103.5989	GEN562587 1-G14_056_3 0.6900
FDNS	00NR	2	16WP	G15_034	FROM->TO	CIMARRON - DRAPER LAKE 345KV CKT 1	717	717	0.10608	103.5954	FRISCCO4 138.00 - HARDEN 4 138.00 138KV CKT 1
FDNS	00NR	2	16WP	G15_034	FROM->TO	CIMARRON - DRAPER LAKE 345KV CKT 1	717	717	0.10561	103.5898	GEN344896 3-1LAB G3 20.000
FDNS	00NR	2	16WP	G15_034	FROM->TO	CIMARRON - DRAPER LAKE 345KV CKT 1	717	717	0.10561	103.5883	GEN344894 1-1LAB G1 20.000
FDNS	00NR	2	16WP	G15_034	FROM->TO	CIMARRON - DRAPER LAKE 345KV CKT 1	717	717	0.10561	103.5872	GEN344897 4-1LAB G4 20.000
FDNS	00NR	2	16WP	G15_034	FROM->TO	CIMARRON - DRAPER LAKE 345KV CKT 1	717	717	0.10561	103.5766	GEN515602 1-KNGFSR12 0.7000
FDNS	00NR	2	16WP	G15_034	FROM->TO	CIMARRON - DRAPER LAKE 345KV CKT 1	717	717	0.1059	103.5578	TUTTLE - TUTTLE CONOCO TAP 138KV CKT 1
FDNS	00NR	2	16WP	G15_034	FROM->TO	CIMARRON - DRAPER LAKE 345KV CKT 1	717	717	0.10561	103.5428	GEN563082 1-G15073_3 0.6900
FDNS	00NR	2	16WP	G15_034	FROM->TO	CIMARRON - DRAPER LAKE 345KV CKT 1	717	717	0.10531	103.5323	CHISHOLM7 345.00 (CHISHOLM) 345/230/13.2KV TRANSFORMER CKT 1
FDNS	00NR	2	16WP	G15_034	FROM->TO	CIMARRON - DRAPER LAKE 345KV CKT 1	717	717	0.10561	103.5102	CLAY BOSWELL 230/20.9KV TRANSFORMER CKT 1
FDNS	00NR	2	16WP	G15_034	FROM->TO	CIMARRON - DRAPER LAKE 345KV CKT 1	717	717	0.10561	103.5071	GEN562704 1-G15_020_3 0.3550
FDNS	00NR	2	16WP	G15_034	FROM->TO	CIMARRON - DRAPER LAKE 345KV CKT 1	717	717	0.10561	103.497	GEN563202 1-G15085_3 0.5500
FDNS	00NR	2	16WP	G15_034	FROM->TO	CIMARRON - DRAPER LAKE 345KV CKT 1	717	717	0.10561	103.4794	GEN672321 1-SHAND GENERATOR 1
FDNS	00NR	2	16WP	G15_034	FROM->TO	CIMARRON - DRAPER LAKE 345KV CKT 1	717	717	0.10561	103.4781	GEN640010 1-GERALD GENTLEMAN STATION UNIT 1
FDNS	00NR	2	16WP	G15_034	FROM->TO	CIMARRON - DRAPER LAKE 345KV CKT 1	717	717	0.10561	103.4536	GEN672310 1-POPLAR RIVER GENERATOR 1
FDNS	00NR	2	16WP	G15_034	FROM->TO	CIMARRON - DRAPER LAKE 345KV CKT 1	717	717	0.10561	103.4536	GEN672311 2-POPLAR RIVER GENERATOR 2
FDNS	00NR	2	16WP	G15_034	FROM->TO	CIMARRON - DRAPER LAKE 345KV CKT 1	717	717	0.10485	103.4531	SEMINOLE (SEMINOL1) 345/138/14.4KV TRANSFORMER CKT 1
FDNS	00NR	2	16WP	G15_034	FROM->TO	CIMARRON - DRAPER LAKE 345KV CKT 1	717	717	0.10561	103.4441	GEN672306 6-BOUNDARY DAM GENERATOR 6
FDNS	00NR	2	16WP	G15_034	FROM->TO	CIMARRON - DRAPER LAKE 345KV CKT 1	717	717	0.10629	103.4258	LULA - TUPELO TAP 138KV CKT 1
FDNS	00NR	2	16WP	G15_034	FROM->TO	CIMARRON - DRAPER LAKE 345KV CKT 1	717	717	0.10561	103.4184	GEN562710 1-G15_022_3 0.5500
FDNS	00NR	2	16WP	G15_034	FROM->TO	CIMARRON - DRAPER LAKE 345KV CKT 1	717	717	0.10561	103.409	GEN640011 2-GERALD GENTLEMAN STATION UNIT 2
FDNS	00NR	2	16WP	G15_034	FROM->TO	CIMARRON - DRAPER LAKE 345KV CKT 1	717	717	0.10576	103.4051	NORTHWEST TEXARKANA - VALLIANT 345KV CKT 1
FDNS	00NR	2	16WP	G15_034	FROM->TO	CIMARRON - DRAPER LAKE 345KV CKT 1	717	717	0.10576	103.4051	NORTHWEST TEXARKANA - VALLIANT 345KV CKT 1
FDNS	00NR	2	16WP	G15_034	FROM->TO	CIMARRON - DRAPER LAKE 345KV CKT 1	717	717	0.10561	103.3998	GEN542956 2-LACYGNE UNIT #2
FDNS	00NR	2	16WP	G15_034	FROM->TO	CIMARRON - DRAPER LAKE 345KV CKT 1	717	717	0.10561	103.3923	GEN659118 1-LARAMIE RIVER UNIT1
FDNS	00NR	2	16WP	G15_034	FROM->TO	CIMARRON - DRAPER LAKE 345KV CKT 1	717	717	0.10609	103.3849	P12:138:OKGE:3TERM22
FDNS	00NR	2	16WP	G15_034	FROM->TO	CIMARRON - DRAPER LAKE 345KV CKT 1	717	717	0.10749	103.3848	OAKCREEK - WILD MARY 138KV CKT 1
FDNS	00NR	2	16WP	G15_034	FROM->TO	CIMARRON - DRAPER LAKE 345KV CKT 1	717	717	0.1061	103.3831	DRAPER LAKE - SOONER TAP 138KV CKT 1
FDNS	00NR	2	16WP	G15_034	FROM->TO	CIMARRON - DRAPER LAKE 345KV CKT 1	717	717	0.10608	103.3797	ETNA - HARDEN 4 138.00 138KV CKT 1
FDNS	00NR	2	16WP	G15_034	FROM->TO	CIMARRON - DRAPER LAKE 345KV CKT 1	717	717	0.10562	103.3625	P12:138:WFEC:MSL08
FDNS	00NR	2	16WP	G15_034	FROM->TO	CIMARRON - DRAPER LAKE 345KV CKT 1	717	717	0.10561	103.3492	P12:138:WFEC:MSL09
FDNS	00NR	2	16WP	G15_034	FROM->TO	CIMARRON - DRAPER LAKE 345KV CKT 1	717	717	0.10562	103.3474	FRANKLIN - PINK SW 138KV CKT 1
FDNS	00NR	2	16WP	G15_034	FROM->TO	CIMARRON - DRAPER LAKE 345KV CKT 1	717	717	0.10561	103.3467	GEN681542 6-JP MADGETT
FDNS	00NR	2	16WP	G15_034	FROM->TO	CIMARRON - DRAPER LAKE 345KV CKT 1	717	717	0.10561	103.31	GEN542957 1-IATAN UNIT #1
FDNS	00NR	2	16WP	G15_034	FROM->TO	CIMARRON - DRAPER LAKE 345KV CKT 1	717	717	0.10608	103.3095	ETNA - PARK LANE 138KV CKT 1
FDNS	00NR	2	16WP	G15_034	FROM->TO	CIMARRON - DRAPER LAKE 345KV CKT 1	717	717	0.10561	103.2846	GEN530690 1-PRWINDG1 0.6900
FDNS	00NR	2	16WP	G15_034	FROM->TO	CIMARRON - DRAPER LAKE 345KV CKT 1	717	717	0.10561	103.2451	GEN645001 1-FORT CALHOUN 1
FDNS	00NR	2	16WP	G15_034	FROM->TO	CIMARRON - DRAPER LAKE 345KV CKT 1	717	717	0.10469	103.2433	SEMINOLE (SEMINOL2) 345/138/14.4KV TRANSFORMER CKT 1
FDNS	00NR	2	16WP	G15_034	FROM->TO	CIMARRON - DRAPER LAKE 345KV CKT 1	717	717	0.10561	103.2302	ALMA 161 161/24.0KV TRANSFORMER CKT 1
FDNS	00NR	2	16WP	G15_034	FROM->TO	CIMARRON - DRAPER LAKE 345KV CKT 1	717	717	0.10561	103.2271	GEN542955 1-LACYGNE UNIT #1
FDNS	00NR	2	16WP	G15_034	FROM->TO	CIMARRON - DRAPER LAKE 345KV CKT 1	717	717	0.10561	103.2228	GEN661015 1-COYOTE
FDNS	00NR	2	16WP	G15_034	FROM->TO	CIMARRON - DRAPER LAKE 345KV CKT 1	717	717	0.10561	103.2191	GEN562754 1-G15031_5 0.6900
FDNS	00NR	2	16WP	G15_034	FROM->TO	CIMARRON - DRAPER LAKE 345KV CKT 1	717	717	0.10561	103.2067	GEN562556 1-G14_046_3 0.3420
FDNS	00NR	2	16WP	G15_034	FROM->TO	CIMARRON - DRAPER LAKE 345KV CKT 1	717	717	0.10393	103.2049	RENFROW7 345.00 - VIOLA 7 345.00 345KV CKT 1
FDNS	00NR	2	16WP	G15_034	FROM->TO	CIMARRON - DRAPER LAKE 345KV CKT 1	717	717	0.10561	103.1865	GEN532652 1-JEFFREY ENERGY CENTER UNIT 2
FDNS	00NR	2	16WP	G15_034	FROM->TO	CIMARRON - DRAPER LAKE 345KV CKT 1	717	717	0.10561	103.1829	GEN532651 1-JEFFREY ENERGY CENTER UNIT 1
FDNS	00NR	2	16WP	G15_034	FROM->TO	CIMARRON - DRAPER LAKE 345KV CKT 1	717	717	0.10561	103.175	GEN562756 1-G15031_7 0.6900
FDNS	00NR	2	16WP	G15_034	FROM->TO	CIMARRON - DRAPER LAKE 345KV CKT 1	717	717	0.10561	103.1705	GEN562974 1-G15060_5 0.6900
FDNS	00NR	2	16WP	G15_034	FROM->TO	CIMARRON - DRAPER LAKE 345KV CKT 1	717	717	0.10561	103.1589	GEN563142 1-G15079_3 0.5500
FDNS	00NR	2	16WP	G15_034	FROM->TO	CIMARRON - DRAPER LAKE 345KV CKT 1	717	717	0.10561	103.1589	GEN563151 1-G15080_2 0.5500
FDNS	00NR	2	16WP	G15_034	FROM->TO	CIMARRON - DRAPER LAKE 345KV CKT 1	717	717	0.10749	103.1584	AIRDEPT4 138.00 - WILD MARY 138KV CKT 1
FDNS	00NR	2	16WP	G15_034	FROM->TO	CIMARRON - DRAPER LAKE 345KV CKT 1	717	717	0.10561	103.1542	GEN562973 1-G15060_4 0.6900
FDNS	00NR	2	16WP	G15_034	FROM->TO	CIMARRON - DRAPER LAKE 345KV CKT 1	717	717	0.10561	103.1455	GEN563042 1-G15068_3 0.6900
FDNS	00NR	2	16WP	G15_034	FROM->TO	CIMARRON - DRAPER LAKE 345KV CKT 1	717	717	0.10561	103.1261	GEN562078 1-G11_051_3 0.6900
FDNS	00NR	2	16WP	G15_034	FROM->TO	CIMARRON - DRAPER LAKE 345KV CKT 1	717	717	0.10561	103.1178	GEN562691 1-G15_015_3 0.6900
FDNS	00NR	2	16WP	G15_034	FROM->TO	CIMARRON - DRAPER LAKE 345KV CKT 1	717	717	0.10417	103.1136	HUNTERS7 345.00 - RENFROW7 345.00 345KV CKT 1
FDNS	00NR	2	16WP	G15_034	FROM->TO	CIMARRON - DRAPER LAKE 345KV CKT 1	717	717	0.10561	103.0957	GEN657748 1-YOUNG 2 GENERATOR
FDNS	00NR	2	16WP	G15_034	FROM->TO	CIMARRON - DRAPER LAKE 345KV CKT 1	717	717	0.10647	103.0651	PARK LANE - SEMINOLE 138KV CKT 1
FDNS	00NR	2	16WP	G15_034	FROM->TO	CIMARRON - DRAPER LAKE 345KV CKT 1	717	717	0.10562	103.0635	FRANKLIN - FRANKLIN SW 138KV CKT 1
FDNS	00NR	2	16WP	G15_034	FROM->TO	CIMARRON - DRAPER LAKE 345KV CKT 1	717	717	0.10561	103.0633	GEN562655 1-G14_074_3 0.6900
FDNS	00NR	2	16WP	G15_034	FROM->TO	CIMARRON - DRAPER LAKE 345KV CKT 1	717	717	0.10561	103.0628	GEN562762 1-G15033_3 0.6900
FDNS	00NR	2	16WP	G15_034	FROM->TO	CIMARRON - DRAPER LAKE 345KV CKT 1	717	717	0.10561	103.0004	GEN527901 1-HOBBS PLANT #1 (CT)
FDNS	00NR	2	16WP	G15_034	FROM->TO	CIMARRON - DRAPER LAKE 345KV CKT 1	717	717	0.10561	103.0004	GEN527902 1-HOBBS PLANT #2 (CT)
FDNS	00NR	2	16WP	G15_034	FROM->TO	CIMARRON - DRAPER LAKE 345KV CKT 1	717	717	0.10561	102.988	GEN563273 2-G15093_4 0.6900
FDNS	00NR	2	16WP	G15_034	FROM->TO	CIMARRON - DRAPER LAKE 345KV CKT 1	717	717	0.10561	102.9617	GEN563043 1-G15068_4 0.6900
FDNS	00NR	2	16WP	G15_034	FROM->TO	CIMARRON - DRAPER LAKE 345KV CKT 1	717	717	0.10561	102.9457	GEN563052 1-G15069_3 0.6900
FDNS	00NR	2	16WP	G15_034	FROM->TO	CIMARRON - DRAPER LAKE 345KV CKT 1	717	717	0.10749	102.929	AIRDEPT4 138.00 - GM 138KV CKT 1
FDNS	00NR	2	16WP	G15_034	FROM->TO	CIMARRON - DRAPER LAKE 345KV CKT 1	717	717	0.10561	102.9202	GEN525845 1-ELK_2 1 138.00

SOLUTION	GROUP	SCENARIO	SEASON	SOURCE	DIRECTION	MONITORED ELEMENT	RATEA (MVA)	RATEB(MVA)	TDF	TC%LOADING (% MVA)	CONTINGENCY
FDNS	00NR	2	16WP	G15_034	FROM->TO	CIMARRON - DRAPER LAKE 345KV CKT 1	717	717	0.10561	102.9168	GEN525844 1-ELK_1 118.000
FDNS	00NR	2	16WP	G15_034	FROM->TO	CIMARRON - DRAPER LAKE 345KV CKT 1	717	717	0.10583	102.9163	LYDIA - WELSH 345KV CKT 1
FDNS	00NR	2	16WP	G15_034	FROM->TO	CIMARRON - DRAPER LAKE 345KV CKT 1	717	717	0.10583	102.9163	LYDIA - WELSH 345KV CKT 1
FDNS	00NR	2	16WP	G15_034	FROM->TO	CIMARRON - DRAPER LAKE 345KV CKT 1	717	717	0.1059	102.9086	P12:138:AEPW-OGE:CORNVIL4:CIMARON4
FDNS	00NR	2	16WP	G15_034	FROM->TO	CIMARRON - DRAPER LAKE 345KV CKT 1	717	717	0.10561	102.9058	GEN620315 1-BIG STONE GEN
FDNS	00NR	2	16WP	G15_034	FROM->TO	CIMARRON - DRAPER LAKE 345KV CKT 1	717	717	0.10561	102.8984	GEN563242 1-G15090_3 0.6900
FDNS	00NR	2	16WP	G15_034	FROM->TO	CIMARRON - DRAPER LAKE 345KV CKT 1	717	717	0.10561	102.8684	GEN526333 1-JONES GEN #3 21 KV
FDNS	00NR	2	16WP	G15_034	FROM->TO	CIMARRON - DRAPER LAKE 345KV CKT 1	717	717	0.10561	102.8684	GEN526334 1-JONES_4 116.500
FDNS	00NR	2	16WP	G15_034	FROM->TO	CIMARRON - DRAPER LAKE 345KV CKT 1	717	717	0.10561	102.8603	GEN562772 1-G15034_3 0.6900
FDNS	00NR	2	16WP	G15_034	FROM->TO	CIMARRON - DRAPER LAKE 345KV CKT 1	717	717	0.10561	102.8532	GEN600004 2-PRAIRIE ISLAND G2
FDNS	00NR	2	16WP	G15_034	FROM->TO	CIMARRON - DRAPER LAKE 345KV CKT 1	717	717	0.10561	102.8503	GEN600003 1-PRAIRIE ISLAND G1
FDNS	00NR	2	16WP	G15_034	FROM->TO	CIMARRON - DRAPER LAKE 345KV CKT 1	717	717	0.10561	102.8417	GEN600006 1-AS KING
FDNS	00NR	2	16WP	G15_034	FROM->TO	CIMARRON - DRAPER LAKE 345KV CKT 1	717	717	0.10561	102.8346	GEN523971 1-HARRINGTON GEN #1 24 KV
FDNS	00NR	2	16WP	G15_034	FROM->TO	CIMARRON - DRAPER LAKE 345KV CKT 1	717	717	0.10561	102.8346	GEN523972 1-HARRINGTON GEN #2 24 KV
FDNS	00NR	2	16WP	G15_034	FROM->TO	CIMARRON - DRAPER LAKE 345KV CKT 1	717	717	0.10561	102.8346	GEN523973 1-HARRINGTON GEN #3 24 KV
FDNS	00NR	2	16WP	G15_034	FROM->TO	CIMARRON - DRAPER LAKE 345KV CKT 1	717	717	0.10561	102.8075	GEN636641 1-LOUISA UNIT 1
FDNS	00NR	2	16WP	G15_034	FROM->TO	CIMARRON - DRAPER LAKE 345KV CKT 1	717	717	0.11281	102.7763	CLARKSVILLE - MUSKOGEE 345KV CKT 1
FDNS	00NR	2	16WP	G15_034	FROM->TO	CIMARRON - DRAPER LAKE 345KV CKT 1	717	717	0.11281	102.7763	CLARKSVILLE - MUSKOGEE 345KV CKT 1
FDNS	00NR	2	16WP	G15_034	FROM->TO	CIMARRON - DRAPER LAKE 345KV CKT 1	717	717	0.08393	102.7277	RANCHRD7 345.00 - SOONER 345KV CKT 1
FDNS	00NR	2	16WP	G15_034	FROM->TO	CIMARRON - DRAPER LAKE 345KV CKT 1	717	717	0.10749	102.721	DRAPER LAKE - GM 138KV CKT 1
FDNS	00NR	2	16WP	G15_034	FROM->TO	CIMARRON - DRAPER LAKE 345KV CKT 1	717	717	0.10561	102.6987	GEN600005 1-MONTICELLO
FDNS	00NR	2	16WP	G15_034	FROM->TO	CIMARRON - DRAPER LAKE 345KV CKT 1	717	717	0.10561	102.6974	GEN542962 2-IATAN UNIT #2
FDNS	00NR	2	16WP	G15_034	FROM->TO	CIMARRON - DRAPER LAKE 345KV CKT 1	717	717	0.10561	102.6882	GEN563292 1-G15095_3 0.6900
FDNS	00NR	2	16WP	G15_034	FROM->TO	CIMARRON - DRAPER LAKE 345KV CKT 1	717	717	0.10417	102.6811	HUNTERS7 345.00 - WOODRING 345KV CKT 1
FDNS	00NR	2	16WP	G15_034	FROM->TO	CIMARRON - DRAPER LAKE 345KV CKT 1	717	717	0.10561	102.6338	GEN527166 1-MUSTANG_6 118.000
FDNS	00NR	2	16WP	G15_034	FROM->TO	CIMARRON - DRAPER LAKE 345KV CKT 1	717	717	0.10561	102.6243	GEN525562 1-TOLK GEN #2 24 KV
FDNS	00NR	2	16WP	G15_034	FROM->TO	CIMARRON - DRAPER LAKE 345KV CKT 1	717	717	0.10561	102.6056	GEN629074 1-ARNOLD LOWSIDE OF GSU XFMR
FDNS	00NR	2	16WP	G15_034	FROM->TO	CIMARRON - DRAPER LAKE 345KV CKT 1	717	717	0.10561	102.5961	GEN562952 1-G15057_3 0.6500
FDNS	00NR	2	16WP	G15_034	FROM->TO	CIMARRON - DRAPER LAKE 345KV CKT 1	717	717	0.10637	102.592	MUSKOGEE - SEMINOLE 345KV CKT 1
FDNS	00NR	2	16WP	G15_034	FROM->TO	CIMARRON - DRAPER LAKE 345KV CKT 1	717	717	0.10561	102.5912	GEN563272 1-G15093_3 0.6900
FDNS	00NR	2	16WP	G15_034	FROM->TO	CIMARRON - DRAPER LAKE 345KV CKT 1	717	717	0.09084	102.5737	NORTHWEST - SPRING CREEK 345KV CKT 1
FDNS	00NR	2	16WP	G15_034	FROM->TO	CIMARRON - DRAPER LAKE 345KV CKT 1	717	717	0.10561	102.5488	GEN635213 3-NEAL UNIT 3
FDNS	00NR	2	16WP	G15_034	FROM->TO	CIMARRON - DRAPER LAKE 345KV CKT 1	717	717	0.10609	102.5423	FRANKLIN SW - MIDWEST TAP 138KV CKT 1
FDNS	00NR	2	16WP	G15_034	FROM->TO	CIMARRON - DRAPER LAKE 345KV CKT 1	717	717	0.09084	102.5415	SOONER - SPRING CREEK 345KV CKT 1
FDNS	00NR	2	16WP	G15_034	FROM->TO	CIMARRON - DRAPER LAKE 345KV CKT 1	717	717	0.10561	102.5016	BIG STONE 230/24.0KV TRANSFORMER CKT 1
FDNS	00NR	2	16WP	G15_034	FROM->TO	CIMARRON - DRAPER LAKE 345KV CKT 1	717	717	0.10561	102.4936	GEN562892 1-G15048_3 0.6900
FDNS	00NR	2	16WP	G15_034	FROM->TO	CIMARRON - DRAPER LAKE 345KV CKT 1	717	717	0.10692	102.4699	CHAMBER SPRINGS - CLARKSVILLE 345KV CKT 1
FDNS	00NR	2	16WP	G15_034	FROM->TO	CIMARRON - DRAPER LAKE 345KV CKT 1	717	717	0.10042	102.4616	DRAPER LAKE - SEMINOLE 345KV CKT 3
FDNS	00NR	2	16WP	G15_034	FROM->TO	CIMARRON - DRAPER LAKE 345KV CKT 1	717	717	0.10561	102.4485	GEN563173 1-G15082_3 0.6900
FDNS	00NR	2	16WP	G15_034	FROM->TO	CIMARRON - DRAPER LAKE 345KV CKT 1	717	717	0.10561	102.3962	GEN562902 1-G15052_3 0.6900
FDNS	00NR	2	16WP	G15_034	FROM->TO	CIMARRON - DRAPER LAKE 345KV CKT 1	717	717	0.10561	102.3855	GEN514805 1-SOONER UNIT 1
FDNS	00NR	2	16WP	G15_034	FROM->TO	CIMARRON - DRAPER LAKE 345KV CKT 1	717	717	0.10561	102.3571	GEN600000 1-SHERBURNECNTY G1
FDNS	00NR	2	16WP	G15_034	FROM->TO	CIMARRON - DRAPER LAKE 345KV CKT 1	717	717	0.10561	102.3543	GEN527903 1-HOBBS PLANT #3 (ST)
FDNS	00NR	2	16WP	G15_034	FROM->TO	CIMARRON - DRAPER LAKE 345KV CKT 1	717	717	0.10561	102.3358	GEN525561 1-TOLK GEN #1 24 KV
FDNS	00NR	2	16WP	G15_034	FROM->TO	CIMARRON - DRAPER LAKE 345KV CKT 1	717	717	0.10591	102.3139	LYDIA - VALLIANT 345KV CKT 1
FDNS	00NR	2	16WP	G15_034	FROM->TO	CIMARRON - DRAPER LAKE 345KV CKT 1	717	717	0.10591	102.3139	LYDIA - VALLIANT 345KV CKT 1
FDNS	00NR	2	16WP	G15_034	FROM->TO	CIMARRON - DRAPER LAKE 345KV CKT 1	717	717	0.10635	102.3097	P12:138:OKGE:3TERM23
FDNS	00NR	2	16WP	G15_034	FROM->TO	CIMARRON - DRAPER LAKE 345KV CKT 1	717	717	0.10561	102.2581	GEN600001 2-SHERBURNE CNTY G2
FDNS	00NR	2	16WP	G15_034	FROM->TO	CIMARRON - DRAPER LAKE 345KV CKT 1	717	717	0.10635	102.2506	BARNES 4 138.00 - DRAPER LAKE 138KV CKT 1
FDNS	00NR	2	16WP	G15_034	FROM->TO	CIMARRON - DRAPER LAKE 345KV CKT 1	717	717	0.10561	102.18	GEN344225 1-1CAL G1 25.000
FDNS	00NR	2	16WP	G15_034	FROM->TO	CIMARRON - DRAPER LAKE 345KV CKT 1	717	717	0.10561	102.1326	GEN514806 1-SOONER UNIT 2
FDNS	00NR	2	16WP	G15_034	FROM->TO	CIMARRON - DRAPER LAKE 345KV CKT 1	717	717	0.10561	102.1283	GEN629075 1-OTTUMWA GENERATOR FOR OTTUMWA UNIT NO 1
FDNS	00NR	2	16WP	G15_034	FROM->TO	CIMARRON - DRAPER LAKE 345KV CKT 1	717	717	0.10561	102.1	GEN563162 1-G15081_3 0.6900
FDNS	00NR	2	16WP	G15_034	FROM->TO	CIMARRON - DRAPER LAKE 345KV CKT 1	717	717	0.10713	102.0066	DRAPER LAKE (DRAPER2) 345/138/13.8KV TRANSFORMER CKT 1
FDNS	00NR	2	16WP	G15_034	FROM->TO	CIMARRON - DRAPER LAKE 345KV CKT 1	717	717	0.10713	101.9188	DRAPER LAKE (DRAPER3) 345/138/13.8KV TRANSFORMER CKT 1
FDNS	00NR	2	16WP	G15_034	FROM->TO	CIMARRON - DRAPER LAKE 345KV CKT 1	717	717	0.10713	101.9188	DRAPER LAKE (DRAPER4) 345/138/13.8KV TRANSFORMER CKT 1
FDNS	00NR	2	16WP	G15_034	FROM->TO	CIMARRON - DRAPER LAKE 345KV CKT 1	717	717	0.10561	101.9056	SHERBURNE CO 345/24.0KV TRANSFORMER CKT 1
FDNS	00NR	2	16WP	G15_034	FROM->TO	CIMARRON - DRAPER LAKE 345KV CKT 1	717	717	0.10561	101.8959	GEN532653 1-JEFFREY ENERGY CENTER UNIT 3
FDNS	00NR	2	16WP	G15_034	FROM->TO	CIMARRON - DRAPER LAKE 345KV CKT 1	717	717	0.10561	101.8892	GEN635214 4-NEAL UNIT 4
FDNS	00NR	2	16WP	G15_034	FROM->TO	CIMARRON - DRAPER LAKE 345KV CKT 1	717	717	0.10233	101.8113	CIMARRON - MATHWSN7 345.00 345KV CKT 1
FDNS	00NR	2	16WP	G15_034	FROM->TO	CIMARRON - DRAPER LAKE 345KV CKT 1	717	717	0.10233	101.8113	CIMARRON - MATHWSN7 345.00 345KV CKT 2
FDNS	00NR	2	16WP	G15_034	FROM->TO	CIMARRON - DRAPER LAKE 345KV CKT 1	717	717	0.10561	101.7972	GEN600002 3-SHERBURNE CNTY G3
FDNS	00NR	2	16WP	G15_034	FROM->TO	CIMARRON - DRAPER LAKE 345KV CKT 1	717	717	0.10561	101.7706	GEN562882 1-G15047_3 0.6900
FDNS	00NR	2	16WP	G15_034	FROM->TO	CIMARRON - DRAPER LAKE 345KV CKT 1	717	717	0.10561	101.4077	GEN635023 3-WALTER SCOTT UNIT 3
FDNS	00NR	2	16WP	G15_034	FROM->TO	CIMARRON - DRAPER LAKE 345KV CKT 1	717	717	0.10561	101.2842	GEN562023 1-G11_020_3 0.6900
FDNS	00NR	2	16WP	G15_034	FROM->TO	CIMARRON - DRAPER LAKE 345KV CKT 1	717	717	0.10561	101.2842	GEN562026 1-G11_019_3 0.6900
FDNS	00NR	2	16WP	G15_034	FROM->TO	CIMARRON - DRAPER LAKE 345KV CKT 1	717	717	0.10561	101.1938	EASTDC - ERCOT EQUIVALENCE 345KV CKT 1
FDNS	00NR	2	16WP	G15_034	FROM->TO	CIMARRON - DRAPER LAKE 345KV CKT 1	717	717	0.09592	100.9388	DRAPER LAKE - SEMINOLE 345KV CKT 1
FDNS	00NR	2	16WP	G15_034	FROM->TO	CIMARRON - DRAPER LAKE 345KV CKT 1	717	717	0.09592	100.9387	DRAPER LAKE - SEMINOLE 345KV CKT 2
FDNS	00NR	2	16WP	G15_034	FROM->TO	CIMARRON - DRAPER LAKE 345KV CKT 1	717	717	0.10561	100.9275	GEN635024 4-WALTER SCOTT UNIT 4
FDNS	00NR	2	16WP	G15_034	FROM->TO	CIMARRON - DRAPER LAKE 345KV CKT 1	717	717	0.10561	99.6	GEN562992 1-G15063_3 0.6900
FDNS	08NR	2	20L	G15_034	TO->FROM	CLEAVELAND - CLEVLND 4 138.00 138KV CKT Z1	305	371	0.0663	114.5277	CLEVELAND - TULSA NORTH 345KV CKT 1
FDNS	08NR	2	20L	G15_034	TO->FROM	CLEAVELAND - CLEVLND 4 138.00 138KV CKT Z1	305	371	0.0663	114.5277	CLEVELAND - TULSA NORTH 345KV CKT 1
FDNS	00NR	2	17SP	G15_034	TO->FROM	CLEAVELAND - CLEVLND 4 138.00 138KV CKT Z1	305	371	0.07379	110.9467	CLEVELAND - TULSA NORTH 345KV CKT 1
FDNS	00NR	2	17SP	G15_034	TO->FROM	CLEAVELAND - CLEVLND 4 138.00 138KV CKT Z1	305	371	0.07379	110.9467	CLEVELAND - TULSA NORTH 345KV CKT 1
FDNS	00NR	2	20SP	G15_034	TO->FROM	CLEAVELAND - CLEVLND 4 138.00 138KV CKT Z1	305	371	0.07444	110.0555	CLEVELAND - TULSA NORTH 345KV CKT 1
FDNS	00NR	2	20SP	G15_034	TO->FROM	CLEAVELAND - CLEVLND 4 138.00 138KV CKT Z1	305	371	0.07444	110.0555	CLEVELAND - TULSA NORTH 345KV CKT 1
FDNS	08NR	2	20L	G15_034	FROM->TO	CLEAVELAND - SILVER CITY 138KV CKT 1	174	174	0.02965	116.395	CLEVELAND - TULSA NORTH 345KV CKT 1
FDNS	08NR	2	20L	G15_034	FROM->TO	CLEAVELAND - SILVER CITY 138KV CKT 1	174	174	0.02965	116.395	CLEVELAND - TULSA NORTH 345KV CKT 1

SOLUTION	GROUP	SCENARIO	SEASON	SOURCE	DIRECTION	MONITORED ELEMENT	RATEA (MVA)	RATEB(MVA)	TDF	TC%LOADING (% MVA)	CONTINGENCY
FDNS	00NR	2	16WP	G15_034	FROM->TO	G14-057T 345.00 - SUNNYSIDE 345KV CKT 1	717	789	0.03838	124.2707	CIMARRON - DRAPER LAKE 345KV CKT 1
FDNS	00NR	2	16WP	G15_034	FROM->TO	G14-057T 345.00 - SUNNYSIDE 345KV CKT 1	717	789	0.03047	121.5267	P12:138:WFEC:MSL03
FDNS	00NR	2	20WP	G15_034	FROM->TO	G14-057T 345.00 - SUNNYSIDE 345KV CKT 1	717	789	0.03815	121.1948	CIMARRON - DRAPER LAKE 345KV CKT 1
FDNS	00NR	2	16WP	G15_034	FROM->TO	G14-057T 345.00 - SUNNYSIDE 345KV CKT 1	717	789	0.03613	120.13	CLEVELAND - G15066_T 345.00 345KV CKT 1
FDNS	00NR	2	16WP	G15_034	FROM->TO	G14-057T 345.00 - SUNNYSIDE 345KV CKT 1	717	789	0.03613	119.8302	G15066_T 345.00 - SOONER 345KV CKT 1
FDNS	00NR	2	20WP	G15_034	FROM->TO	G14-057T 345.00 - SUNNYSIDE 345KV CKT 1	717	789	0.03029	118.7528	P12:138:WFEC:MSL03
FDNS	00NR	2	16WP	G15_034	FROM->TO	G14-057T 345.00 - SUNNYSIDE 345KV CKT 1	717	789	0.03342	118.1204	CLEVELAND - TULSA NORTH 345KV CKT 1
FDNS	00NR	2	16WP	G15_034	FROM->TO	G14-057T 345.00 - SUNNYSIDE 345KV CKT 1	717	789	0.03342	118.1204	CLEVELAND - TULSA NORTH 345KV CKT 1
FDNS	00NR	2	16WP	G15_034	FROM->TO	G14-057T 345.00 - SUNNYSIDE 345KV CKT 1	717	789	0.03761	117.8602	ARCADIA - NORTHWEST 345KV CKT 1
FDNS	00NR	2	16WP	G15_034	FROM->TO	G14-057T 345.00 - SUNNYSIDE 345KV CKT 1	717	789	0.03018	117.7399	ARCADIA - SEMINOLE 345KV CKT 1
FDNS	00NR	2	16WP	G15_034	FROM->TO	G14-057T 345.00 - SUNNYSIDE 345KV CKT 1	717	789	0.0296	117.338	LACYGNE - WAVERLY7 345.00 345KV CKT 1
FDNS	00NR	2	20WP	G15_034	FROM->TO	G14-057T 345.00 - SUNNYSIDE 345KV CKT 1	717	789	0.03588	117.3123	CLEVELAND - G15066_T 345.00 345KV CKT 1
FDNS	00NR	2	16WP	G15_034	FROM->TO	G14-057T 345.00 - SUNNYSIDE 345KV CKT 1	717	789	0.0296	117.2216	WAVERLY7 345.00 - WOLF CREEK 345KV CKT 1
FDNS	00NR	2	20WP	G15_034	FROM->TO	G14-057T 345.00 - SUNNYSIDE 345KV CKT 1	717	789	0.03588	117.0174	G15066_T 345.00 - SOONER 345KV CKT 1
FDNS	00NR	2	16WP	G15_034	FROM->TO	G14-057T 345.00 - SUNNYSIDE 345KV CKT 1	717	789	0.03071	116.9842	CANEYRV7 345.00 - NEOSHO 345KV CKT 1
FDNS	00NR	2	16WP	G15_034	FROM->TO	G14-057T 345.00 - SUNNYSIDE 345KV CKT 1	717	789	0.03071	116.7991	CANEYRV7 345.00 - LATHAMS7 345.00 345KV CKT 1
FDNS	00NR	2	16WP	G15_034	FROM->TO	G14-057T 345.00 - SUNNYSIDE 345KV CKT 1	717	789	0.02964	116.6102	P12:138:AEPW-OGE:CORNVIL4:MAUD 4
FDNS	00NR	2	16WP	G15_034	FROM->TO	G14-057T 345.00 - SUNNYSIDE 345KV CKT 1	717	789	0.03071	116.5818	LATHAMS7 345.00 - ROSE HILL 345KV CKT 1
FDNS	00NR	2	16WP	G15_034	FROM->TO	G14-057T 345.00 - SUNNYSIDE 345KV CKT 1	717	789	0.02964	116.5384	BLANCHARD - CORNVILLE 138KV CKT 1
FDNS	00NR	2	16WP	G15_034	FROM->TO	G14-057T 345.00 - SUNNYSIDE 345KV CKT 1	717	789	0.02964	116.3419	BLANCHARD - MAUD 138KV CKT 1
FDNS	00NR	2	16WP	G15_034	FROM->TO	G14-057T 345.00 - SUNNYSIDE 345KV CKT 1	717	789	0.02973	116.0031	CANADIAN - NOBLE 138KV CKT 1
FDNS	00NR	2	16WP	G15_034	FROM->TO	G14-057T 345.00 - SUNNYSIDE 345KV CKT 1	717	789	0.02972	115.9815	P12:138:OKGE:3TERM27
FDNS	00NR	2	16WP	G15_034	FROM->TO	G14-057T 345.00 - SUNNYSIDE 345KV CKT 1	717	789	0.0306	115.9509	DRAPER LAKE - SEMINOLE 345KV CKT 2
FDNS	00NR	2	16WP	G15_034	FROM->TO	G14-057T 345.00 - SUNNYSIDE 345KV CKT 1	717	789	0.0306	115.9508	DRAPER LAKE - SEMINOLE 345KV CKT 1
FDNS	00NR	2	16WP	G15_034	FROM->TO	G14-057T 345.00 - SUNNYSIDE 345KV CKT 1	717	789	0.02973	115.9116	NOBLE - PURCELL4 138.00 138KV CKT 1
FDNS	00NR	2	16WP	G15_034	FROM->TO	G14-057T 345.00 - SUNNYSIDE 345KV CKT 1	717	789	0.03028	115.8184	CLARKSVILLE - ONETA 345KV CKT 1
FDNS	00NR	2	16WP	G15_034	FROM->TO	G14-057T 345.00 - SUNNYSIDE 345KV CKT 1	717	789	0.03028	115.8184	CLARKSVILLE - ONETA 345KV CKT 1
FDNS	00NR	2	16WP	G15_034	FROM->TO	G14-057T 345.00 - SUNNYSIDE 345KV CKT 1	717	789	0.02973	115.7026	PURCELL4 138.00 - WALNUT CREEK 138KV CKT 1
FDNS	00NR	2	20WP	G15_034	FROM->TO	G14-057T 345.00 - SUNNYSIDE 345KV CKT 1	717	789	0.03318	115.3406	CLEVELAND - TULSA NORTH 345KV CKT 1
FDNS	00NR	2	20WP	G15_034	FROM->TO	G14-057T 345.00 - SUNNYSIDE 345KV CKT 1	717	789	0.03318	115.3406	CLEVELAND - TULSA NORTH 345KV CKT 1
FDNS	00NR	2	20WP	G15_034	FROM->TO	G14-057T 345.00 - SUNNYSIDE 345KV CKT 1	717	789	0.03746	115.1007	ARCADIA - NORTHWEST 345KV CKT 1
FDNS	00NR	2	20WP	G15_034	FROM->TO	G14-057T 345.00 - SUNNYSIDE 345KV CKT 1	717	789	0.02999	114.7797	ARCADIA - SEMINOLE 345KV CKT 1
FDNS	00NR	2	16WP	G15_034	FROM->TO	G14-057T 345.00 - SUNNYSIDE 345KV CKT 1	717	789	0.03176	114.5463	CLARKSVILLE - MUSKOGEE 345KV CKT 1
FDNS	00NR	2	16WP	G15_034	FROM->TO	G14-057T 345.00 - SUNNYSIDE 345KV CKT 1	717	789	0.03176	114.5463	CLARKSVILLE - MUSKOGEE 345KV CKT 1
FDNS	00NR	2	20WP	G15_034	FROM->TO	G14-057T 345.00 - SUNNYSIDE 345KV CKT 1	717	789	0.03052	114.1948	CANEYRV7 345.00 - NEOSHO 345KV CKT 1
FDNS	00NR	2	20WP	G15_034	FROM->TO	G14-057T 345.00 - SUNNYSIDE 345KV CKT 1	717	789	0.03052	114.0474	CANEYRV7 345.00 - LATHAMS7 345.00 345KV CKT 1
FDNS	00NR	2	20WP	G15_034	FROM->TO	G14-057T 345.00 - SUNNYSIDE 345KV CKT 1	717	789	0.03052	113.8302	LATHAMS7 345.00 - ROSE HILL 345KV CKT 1
FDNS	00NR	2	20WP	G15_034	FROM->TO	G14-057T 345.00 - SUNNYSIDE 345KV CKT 1	717	789	0.02958	113.148	CANADIAN - NOBLE 138KV CKT 1
FDNS	00NR	2	20WP	G15_034	FROM->TO	G14-057T 345.00 - SUNNYSIDE 345KV CKT 1	717	789	0.02958	113.1237	P12:138:OKGE:3TERM27
FDNS	00NR	2	20WP	G15_034	FROM->TO	G14-057T 345.00 - SUNNYSIDE 345KV CKT 1	717	789	0.02958	113.0547	NOBLE - PURCELL4 138.00 138KV CKT 1
FDNS	00NR	2	20WP	G15_034	FROM->TO	G14-057T 345.00 - SUNNYSIDE 345KV CKT 1	717	789	0.03159	111.4795	CLARKSVILLE - MUSKOGEE 345KV CKT 1
FDNS	00NR	2	20WP	G15_034	FROM->TO	G14-057T 345.00 - SUNNYSIDE 345KV CKT 1	717	789	0.03159	111.4795	CLARKSVILLE - MUSKOGEE 345KV CKT 1
FDNS	08NR	3	20L	G15_034	TO->FROM	CLEAVELAND - CLEVLND 4 138.00 138KV CKT Z1	305	371	0.0668	115.3548	CLEVELAND - TULSA NORTH 345KV CKT 1
FDNS	08NR	3	20L	G15_034	TO->FROM	CLEAVELAND - CLEVLND 4 138.00 138KV CKT Z1	305	371	0.0668	115.3548	CLEVELAND - TULSA NORTH 345KV CKT 1
FDNS	00NR	3	17SP	G15_034	TO->FROM	CLEAVELAND - CLEVLND 4 138.00 138KV CKT Z1	305	371	0.07438	110.6964	CLEVELAND - TULSA NORTH 345KV CKT 1
FDNS	00NR	3	17SP	G15_034	TO->FROM	CLEAVELAND - CLEVLND 4 138.00 138KV CKT Z1	305	371	0.07438	110.6964	CLEVELAND - TULSA NORTH 345KV CKT 1
FDNS	00NR	3	20SP	G15_034	TO->FROM	CLEAVELAND - CLEVLND 4 138.00 138KV CKT Z1	305	371	0.07501	110.6119	CLEVELAND - TULSA NORTH 345KV CKT 1
FDNS	00NR	3	20SP	G15_034	TO->FROM	CLEAVELAND - CLEVLND 4 138.00 138KV CKT Z1	305	371	0.07501	110.6119	CLEVELAND - TULSA NORTH 345KV CKT 1
FDNS	00NR	3	16WP	G15_034	FROM->TO	G14-057T 345.00 - SUNNYSIDE 345KV CKT 1	717	789	0.03845	124.106	CIMARRON - DRAPER LAKE 345KV CKT 1
FDNS	00NR	3	16WP	G15_034	FROM->TO	G14-057T 345.00 - SUNNYSIDE 345KV CKT 1	717	789	0.03053	121.3957	P12:138:WFEC:MSL03
FDNS	00NR	3	20WP	G15_034	FROM->TO	G14-057T 345.00 - SUNNYSIDE 345KV CKT 1	717	789	0.03814	121.2004	CIMARRON - DRAPER LAKE 345KV CKT 1
FDNS	00NR	3	16WP	G15_034	FROM->TO	G14-057T 345.00 - SUNNYSIDE 345KV CKT 1	717	789	0.03618	119.9589	CLEVELAND - G15066_T 345.00 345KV CKT 1
FDNS	00NR	3	16WP	G15_034	FROM->TO	G14-057T 345.00 - SUNNYSIDE 345KV CKT 1	717	789	0.03618	119.66	G15066_T 345.00 - SOONER 345KV CKT 1
FDNS	00NR	3	20WP	G15_034	FROM->TO	G14-057T 345.00 - SUNNYSIDE 345KV CKT 1	717	789	0.03028	118.7486	P12:138:WFEC:MSL03
FDNS	00NR	3	16WP	G15_034	FROM->TO	G14-057T 345.00 - SUNNYSIDE 345KV CKT 1	717	789	0.03345	117.9553	CLEVELAND - TULSA NORTH 345KV CKT 1
FDNS	00NR	3	16WP	G15_034	FROM->TO	G14-057T 345.00 - SUNNYSIDE 345KV CKT 1	717	789	0.03345	117.9553	CLEVELAND - TULSA NORTH 345KV CKT 1
FDNS	00NR	3	16WP	G15_034	FROM->TO	G14-057T 345.00 - SUNNYSIDE 345KV CKT 1	717	789	0.03767	117.7066	ARCADIA - NORTHWEST 345KV CKT 1
FDNS	00NR	3	16WP	G15_034	FROM->TO	G14-057T 345.00 - SUNNYSIDE 345KV CKT 1	717	789	0.03024	117.6049	ARCADIA - SEMINOLE 345KV CKT 1
FDNS	00NR	3	20WP	G15_034	FROM->TO	G14-057T 345.00 - SUNNYSIDE 345KV CKT 1	717	789	0.03588	117.3099	CLEVELAND - G15066_T 345.00 345KV CKT 1
FDNS	00NR	3	16WP	G15_034	FROM->TO	G14-057T 345.00 - SUNNYSIDE 345KV CKT 1	717	789	0.02966	117.2346	LACYGNE - WAVERLY7 345.00 345KV CKT 1
FDNS	00NR	3	16WP	G15_034	FROM->TO	G14-057T 345.00 - SUNNYSIDE 345KV CKT 1	717	789	0.02966	117.1176	WAVERLY7 345.00 - WOLF CREEK 345KV CKT 1
FDNS	00NR	3	20WP	G15_034	FROM->TO	G14-057T 345.00 - SUNNYSIDE 345KV CKT 1	717	789	0.03588	117.017	G15066_T 345.00 - SOONER 345KV CKT 1
FDNS	00NR	3	16WP	G15_034	FROM->TO	G14-057T 345.00 - SUNNYSIDE 345KV CKT 1	717	789	0.03076	116.8912	CANEYRV7 345.00 - NEOSHO 345KV CKT 1
FDNS	00NR	3	16WP	G15_034	FROM->TO	G14-057T 345.00 - SUNNYSIDE 345KV CKT 1	717	789	0.03076	116.7021	CANEYRV7 345.00 - LATHAMS7 345.00 345KV CKT 1
FDNS	00NR	3	16WP	G15_034	FROM->TO	G14-057T 345.00 - SUNNYSIDE 345KV CKT 1	717	789	0.03076	116.4873	LATHAMS7 345.00 - ROSE HILL 345KV CKT 1
FDNS	00NR	3	16WP	G15_034	FROM->TO	G14-057T 345.00 - SUNNYSIDE 345KV CKT 1	717	789	0.0297	116.4788	P12:138:AEPW-OGE:CORNVIL4:MAUD 4
FDNS	00NR	3	16WP	G15_034	FROM->TO	G14-057T 345.00 - SUNNYSIDE 345KV CKT 1	717	789	0.0297	116.407	BLANCHARD - CORNVILLE 138KV CKT 1
FDNS	00NR	3	16WP	G15_034	FROM->TO	G14-057T 345.00 - SUNNYSIDE 345KV CKT 1	717	789	0.0297	116.2107	BLANCHARD - MAUD 138KV CKT 1
FDNS	00NR	3	16WP	G15_034	FROM->TO	G14-057T 345.00 - SUNNYSIDE 345KV CKT 1	717	789	0.02979	115.8711	CANADIAN - NOBLE 138KV CKT 1
FDNS	00NR	3	16WP	G15_034	FROM->TO	G14-057T 345.00 - SUNNYSIDE 345KV CKT 1	717	789	0.02978	115.8497	P12:138:OKGE:3TERM27
FDNS	00NR	3	16WP	G15_034	FROM->TO	G14-057T 345.00 - SUNNYSIDE 345KV CKT 1	717	789	0.03066	115.8155	DRAPER LAKE - SEMINOLE 345KV CKT 1
FDNS	00NR	3	16WP	G15_034	FROM->TO	G14-057T 345.00 - SUNNYSIDE 345KV CKT 1	717	789	0.03066	115.8155	DRAPER LAKE - SEMINOLE 345KV CKT 2
FDNS	00NR	3	16WP	G15_034	FROM->TO	G14-057T 345.00 - SUNNYSIDE 345KV CKT 1	717	789	0.02979	115.7796	NOBLE - PURCELL4 138.00 138KV CKT 1
FDNS	00NR	3	16WP	G15_034	FROM->TO	G14-057T 345.00 - SUNNYSIDE 345KV CKT 1	717	789	0.03034	115.6915	CLARKSVILLE - ONETA 345KV CKT 1
FDNS	00NR	3	16WP	G15_034	FROM->TO	G14-057T 345.00 - SUNNYSIDE 345KV CKT 1	717	789	0.03034	115.6915	CLARKSVILLE - ONETA 345KV CKT 1
FDNS	00NR	3	16WP	G15_034	FROM->TO	G14-057T 345.00 - SUNNYSIDE 345KV CKT 1	717	789	0.02979	115.5707	PURCELL4 138.00 - WALNUT CREEK 138KV CKT 1
FDNS	00NR	3	20WP	G15_034	FROM->TO	G14-057T 345.00 - SUNNYSIDE 345KV CKT 1	717	789	0.03315	115.3237	CLEVELAND - TULSA NORTH 345KV CKT 1
FDNS	00NR	3	20WP	G15_034	FROM->TO	G14-057T 345.00 - SUNNYSIDE 345KV CKT 1	717	789	0.03315	115.3237	CLEVELAND - TULSA NORTH 345KV CKT 1
FDNS	00NR	3	20WP	G15_034	FROM->TO	G14-057T 345.00 - SUNNYSIDE 345KV CKT 1	717	789	0.03745	115.0957	ARCADIA - NORTHWEST 345KV CKT 1

SOLUTION	GROUP	SCENARIO	SEASON	SOURCE	DIRECTION	MONITORED ELEMENT	RATEA (MVA)	RATEB(MVA)	TDF	TC%LOADING (% MVA)	CONTINGENCY
FDNS	00NR	3	20WP	G15_034	FROM->TO	G14-057T 345.00 - SUNNYSIDE 345KV CKT 1	717	789	0.02999	114.7757	ARCADIA - SEMINOLE 345KV CKT 1
FDNS	00NR	3	16WP	G15_034	FROM->TO	G14-057T 345.00 - SUNNYSIDE 345KV CKT 1	717	789	0.03181	114.4224	CLARKSVILLE - MUSKOGEE 345KV CKT 1
FDNS	00NR	3	16WP	G15_034	FROM->TO	G14-057T 345.00 - SUNNYSIDE 345KV CKT 1	717	789	0.03181	114.4224	CLARKSVILLE - MUSKOGEE 345KV CKT 1
FDNS	00NR	3	20WP	G15_034	FROM->TO	G14-057T 345.00 - SUNNYSIDE 345KV CKT 1	717	789	0.03052	114.1906	CANEYRV7 345.00 - NEOSHO 345KV CKT 1
FDNS	00NR	3	20WP	G15_034	FROM->TO	G14-057T 345.00 - SUNNYSIDE 345KV CKT 1	717	789	0.03052	114.0433	CANEYRV7 345.00 - LATHAMS7 345.00 345KV CKT 1
FDNS	00NR	3	20WP	G15_034	FROM->TO	G14-057T 345.00 - SUNNYSIDE 345KV CKT 1	717	789	0.03052	113.8261	LATHAMS7 345.00 - ROSE HILL 345KV CKT 1
FDNS	00NR	3	20WP	G15_034	FROM->TO	G14-057T 345.00 - SUNNYSIDE 345KV CKT 1	717	789	0.02957	113.1441	CANADIAN - NOBLE 138KV CKT 1
FDNS	00NR	3	20WP	G15_034	FROM->TO	G14-057T 345.00 - SUNNYSIDE 345KV CKT 1	717	789	0.02957	113.1198	P12:138:OKGE:3TERM27
FDNS	00NR	3	20WP	G15_034	FROM->TO	G14-057T 345.00 - SUNNYSIDE 345KV CKT 1	717	789	0.02957	113.0508	NOBLE - PURCELL4 138.00 138KV CKT 1
FDNS	00NR	3	20WP	G15_034	FROM->TO	G14-057T 345.00 - SUNNYSIDE 345KV CKT 1	717	789	0.03158	111.4756	CLARKSVILLE - MUSKOGEE 345KV CKT 1
FDNS	00NR	3	20WP	G15_034	FROM->TO	G14-057T 345.00 - SUNNYSIDE 345KV CKT 1	717	789	0.03158	111.4756	CLARKSVILLE - MUSKOGEE 345KV CKT 1
FDNS	01ALL	0	16WP	G15_038	FROM->TO	CIMARRON - DRAPER LAKE 345KV CKT 1	717	717	0.21328	107.4023	ARCADIA - NORTHWEST 345KV CKT 1
FDNS	01ALL	0	16WP	G15_038	FROM->TO	CIMARRON - DRAPER LAKE 345KV CKT 1	717	717	0.20948	106.5755	GRACEMONT - MINCO 345KV CKT 1
FDNS	01ALL	0	16WP	G15_038	FROM->TO	CIMARRON - DRAPER LAKE 345KV CKT 1	717	717	0.20434	104.4341	CIMARRON - NORTHWEST 345KV CKT 1
FDNS	01ALL	0	16WP	G15_038	FROM->TO	CIMARRON - DRAPER LAKE 345KV CKT 1	717	717	0.19671	103.3766	G15063_T 345.00 - WOODRING 345KV CKT 1
FDNS	01ALL	0	16WP	G15_038	FROM->TO	CIMARRON - DRAPER LAKE 345KV CKT 1	717	717	0.19671	102.4902	G15063_T 345.00 - MATHWSN7 345.00 345KV CKT 1
FDNS	01ALL	2	16WP	G15_038	FROM->TO	CIMARRON - DRAPER LAKE 345KV CKT 1	717	717	0.20674	113.4336	ARCADIA - NORTHWEST 345KV CKT 1
FDNS	01ALL	2	16WP	G15_038	FROM->TO	CIMARRON - DRAPER LAKE 345KV CKT 1	717	717	0.20155	113.3296	GRACEMONT - MINCO 345KV CKT 1
FDNS	01ALL	2	16WP	G15_038	FROM->TO	CIMARRON - DRAPER LAKE 345KV CKT 1	717	717	0.19938	109.3914	CIMARRON - NORTHWEST 345KV CKT 1
FDNS	01ALL	2	17G	G15_038	FROM->TO	CIMARRON - DRAPER LAKE 345KV CKT 1	717	717	0.20458	105.307	GRACEMONT - MINCO 345KV CKT 1
FDNS	01ALL	2	16WP	G15_038	FROM->TO	CIMARRON - DRAPER LAKE 345KV CKT 1	717	717	0.17245	103.9899	BASE CASE
FDNS	01ALL	2	17G	G15_038	FROM->TO	CIMARRON - DRAPER LAKE 345KV CKT 1	717	717	0.21292	101.5795	ARCADIA - NORTHWEST 345KV CKT 1
FDNS	01ALL	2	17G	G15_038	FROM->TO	CIMARRON - DRAPER LAKE 345KV CKT 1	717	717	0.20333	100.6583	CIMARRON - NORTHWEST 345KV CKT 1
FDNS	01ALL	2	17SP	G15_038	FROM->TO	CIMARRON - DRAPER LAKE 345KV CKT 1	717	717	0.19995	99.8	GRACEMONT - MINCO 345KV CKT 1
FDNSLock-Blown up	06ALL	0	16WP	G15_039		Non-Converged Contingency	329.05	360.92	0.61921	-	DEAF SMITH COUNTY INTERCHANGE - G15039_T 230.00 230KV CKT 1
FDNSLock-Blown up	06ALL	0	16WP	G15_039		Non-Converged Contingency	557	557	0.41176	-	BUSHLAND INTERCHANGE - DEAF SMITH COUNTY INTERCHANGE 230KV CKT 1
FDNSLock-Blown up	06ALL	0	16WP	G15_039		Non-Converged Contingency	329.05	360.92	0.35217	-	BUSHLAND INTERCHANGE - POTTER COUNTY INTERCHANGE 230KV CKT 1
FDNSLock-Blown up	06ALL	0	16WP	G15_039		Non-Converged Contingency	987.16	1082.8	0.2154	-	G14_038T 345.00 - Hitchland Interchange 345KV CKT 1
FDNSLock-Blown up	06ALL	0	16WP	G15_039		Non-Converged Contingency	987.16	1082.8	0.2154	-	G14_038T 345.00 - POTTER COUNTY INTERCHANGE 345KV CKT 1
FDNSLock-Blown up	06ALL	0	16WP	G15_039		Non-Converged Contingency	560	560	0.2154	-	POTTER COUNTY INTERCHANGE (WAUK 90343-A) 345/230/13.2KV TRANSFORMER CKT 1
FDNSLock-Blown up	06ALL	0	16WP	G15_039		Non-Converged Contingency	1022	1124	0.16142	-	G14-074T 345.00 - OKLAUNION 345KV CKT 1
FDNSLock-Blown up	06ALL	0	16WP	G15_039		Non-Converged Contingency	1022	1124	0.16142	-	G14-074T 345.00 - TUCO INTERCHANGE 345KV CKT 1
FDNSLock-Blown up	06ALL	0	16WP	G15_039		Non-Converged Contingency	1022	1124	0.16142	-	GEN509403 1-PIRKEY GENERATION
FDNSLock-Blown up	06ALL	0	16WP	G15_039		Non-Converged Contingency	1022	1124	0.16142	-	GEN509404 1-WELSH #1
FDNSLock-Blown up	06ALL	0	16WP	G15_039		Non-Converged Contingency	1022	1124	0.16142	-	GEN509406 1-WELSH #3
FDNSLock-Blown up	06ALL	0	16WP	G15_039		Non-Converged Contingency	1022	1124	0.16142	-	GEN509416 1-TURK GENERATION
FDNSLock-Blown up	06ALL	0	16WP	G15_039		Non-Converged Contingency	1022	1124	0.16142	-	GEN511848 1-SOUTHWESTERN STATION #3
FDNSLock-Blown up	06ALL	0	16WP	G15_039		Non-Converged Contingency	987.16	1082.8	0.15874	-	FINNEY SWITCHING STATION - Hitchland Interchange 345KV CKT 1
FDNSLock-Blown up	06ALL	0	16WP	G15_039		Non-Converged Contingency	956.09	1051.7	0.15874	-	FINNEY SWITCHING STATION - HOLCOMB 345KV CKT 1
FDNSLock-Blown up	06ALL	0	16WP	G15_039		Non-Converged Contingency	956	956	0.15675	-	CIMARRON - MINCO 345KV CKT 1
FDNSLock-Blown up	06ALL	0	16WP	G15_039		Non-Converged Contingency	1195	1195	0.15675	-	GRACEMONT - MINCO 345KV CKT 1
FDNSLock-Blown up	06ALL	0	16WP	G15_039		Non-Converged Contingency	1330	1940	0.15458	-	CHISHOLM7 345.00 - GRACEMONT 345KV CKT 1
FDNSLock-Blown up	06ALL	0	16WP	G15_039		Non-Converged Contingency	552.14	607.52	0.14349	-	TOLK STATION EAST - TUCO INTERCHANGE 230KV CKT 1
FDNSLock-Blown up	06ALL	0	16WP	G15_039		Non-Converged Contingency	560	560	0.1373	-	TUCO INTERCHANGE (GE M1022338) 345/230/13.2KV TRANSFORMER CKT 1
FDNSLock-Blown up	06ALL	0	16WP	G15_039		Non-Converged Contingency	560	560	0.13348	-	TUCO_2 345.00 (TUCO_2 XFMR) 345/230/13.2KV TRANSFORMER CKT 1
FDNSLock-Blown up	06ALL	0	16WP	G15_039		Non-Converged Contingency	616	700	0.11965	-	TUCO INTERCHANGE (SIEM 8743066) 345/230/13.2KV TRANSFORMER CKT 2
FDNSLock-Blown up	06ALL	0	16WP	G15_039		Non-Converged Contingency	1792	1792	0.11726	-	CHISHOLM7 345.00 - WOODWARD DISTRICT EHV 345KV CKT 1
FDNSLock-Blown up	06ALL	0	16WP	G15_039		Non-Converged Contingency	717	789	0.11551	-	G14-057T 345.00 - LAWTON EASTSIDE 345KV CKT 1
FDNSLock-Blown up	06ALL	0	16WP	G15_039		Non-Converged Contingency	717	789	0.11551	-	G14-057T 345.00 - SUNNYSIDE 345KV CKT 1
FDNSLock-Blown up	06ALL	0	16WP	G15_039		Non-Converged Contingency	1792	1792	0.11451	-	BORDER 7345.00 - CHISHOLM7 345.00 345KV CKT 1
FDNSLock-Blown up	06ALL	0	16WP	G15_039		Non-Converged Contingency	1792	1792	0.11451	-	BORDER 7345.00 - CHISHOLM7 345.00 345KV CKT 2
FDNSLock-Blown up	06ALL	0	16WP	G15_039		Non-Converged Contingency	1792	1972	0.11451	-	BORDER 7345.00 - TUCO_2 345.00 345KV CKT 1
FDNSLock-Blown up	06ALL	0	16WP	G15_039		Non-Converged Contingency	1420	1775	0.11451	-	BORDER 7345.00 - TUCO_2 345.00 345KV CKT 2
FDNSLock-Blown up	06ALL	0	16WP	G15_039		Non-Converged Contingency	1420	1775	0.1127	-	G11_051T 345.00 - TATONGA7 345.00 345KV CKT 1
FDNSLock-Blown up	06ALL	0	16WP	G15_039		Non-Converged Contingency	1420	1775	0.1127	-	G11_051T 345.00 - WOODWARD DISTRICT EHV 345KV CKT 1
FDNSLock-Blown up	06ALL	0	16WP	G15_039		Non-Converged Contingency	1195	1195	0.1127	-	MATHWSN7 345.00 - TATONGA7 345.00 345KV CKT 1
FDNSLock-Blown up	06ALL	0	16WP	G15_039		Non-Converged Contingency	1793	1793	0.11085	-	BVRCNTY7 345.00 - G11-14T 345.00 345KV CKT 1
FDNSLock-Blown up	06ALL	0	16WP	G15_039		Non-Converged Contingency	1716	1793	0.11085	-	BVRCNTY7 345.00 - G11-14T 345.00 345KV CKT 2
FDNSLock-Blown up	06ALL	0	16WP	G15_039		Non-Converged Contingency	1792	1792	0.11085	-	BVRCNTY7 345.00 - OPTIMA 345.00 345KV CKT 1
FDNSLock-Blown up	06ALL	0	16WP	G15_039		Non-Converged Contingency	1792	1792	0.11085	-	BVRCNTY7 345.00 - OPTIMA 345.00 345KV CKT 2
FDNSLock-Blown up	06ALL	0	16WP	G15_039		Non-Converged Contingency	1793	1793	0.11085	-	G11-14T 345.00 - WOODWARD DISTRICT EHV 345KV CKT 1
FDNSLock-Blown up	06ALL	0	16WP	G15_039		Non-Converged Contingency	1716	1793	0.11085	-	G11-14T 345.00 - WOODWARD DISTRICT EHV 345KV CKT 2
FDNSLock-Blown up	06ALL	0	16WP	G15_039		Non-Converged Contingency	439	439	0.10575	-	CHISHOLM6 230.00 - SWEETWATER 230KV CKT 1
FDNSLock-Blown up	06ALL	0	16WP	G15_039		Non-Converged Contingency	435.02	457.73	0.10575	-	STATELINE INTERCHANGE - STLN-DEMARC6 230KV CKT 1
FDNSLock-Blown up	06ALL	0	16WP	G15_039		Non-Converged Contingency	439	439	0.10575	-	STLN-DEMARC6 - SWEETWATER 230KV CKT 1
FDNSLock-Blown up	06ALL	0	16WP	G15_039		Non-Converged Contingency	1561	1793	0.09556	-	THISTLE7 345.00 - WOODWARD DISTRICT EHV 345KV CKT 1
FDNSLock-Blown up	06ALL	0	16WP	G15_039		Non-Converged Contingency	1561	1793	0.09556	-	THISTLE7 345.00 - WOODWARD DISTRICT EHV 345KV CKT 2
FDNSLock-Blown up	06ALL	0	16WP	G15_039		Non-Converged Contingency	1792	1972	0.09554	-	TUCO INTERCHANGE - TUCO_2 345.00 345KV CKT 1
FDNSLock-Blown up	06ALL	0	16WP	G15_039		Non-Converged Contingency	556.53	611.5	0.09479	-	NEWHART 230 - PLANT X STATION 230KV CKT 1
FDNSLock-Blown up	06ALL	0	16WP	G15_039		Non-Converged Contingency	556.92	556.92	0.09091	-	HITCHLAND INTERCHANGE - MOORE COUNTY INTERCHANGE 230KV CKT 1
FDNSLock-Blown up	06ALL	0	16WP	G15_039		Non-Converged Contingency	557	557	0.08965	-	GRAPEVINE INTERCHANGE - STATELINE INTERCHANGE 230KV CKT 1
FDNSLock-Blown up	06ALL	0	16WP	G15_039		Non-Converged Contingency	557	557	0.08781	-	GRAPEVINE INTERCHANGE - NICHOLS STATION 230KV CKT 1
FDNSLock-Blown up	06ALL	0	16WP	G15_039		Non-Converged Contingency	1532	1793	0.08103	-	G1524G1525 345.00 - THISTLE7 345.00 345KV CKT 1
FDNSLock-Blown up	06ALL	0	16WP	G15_039		Non-Converged Contingency	1532	1793	0.08103	-	G1524G1525 345.00 - THISTLE7 345.00 345KV CKT 2
FDNSLock-Blown up	06ALL	0	16WP	G15_039		Non-Converged Contingency	1532	1793	0.08103	-	GEN532751 1-WOLF CREEK GENERATING STATION UNIT 1
FDNSLock-Blown up	06ALL	0	16WP	G15_039		Non-Converged Contingency	329.05	360.92	0.0791	-	MOORE COUNTY INTERCHANGE - POTTER COUNTY INTERCHANGE 230KV CKT 1
FDNSLock-Blown up	06ALL	0	16WP	G15_039		Non-Converged Contingency	286	315	0.07413	-	CANYON E_TP3115.00 - CANYON WEST SUB 115KV CKT 1
FDNSLock-Blown up	06ALL	0	16WP	G15_039		Non-Converged Contingency	106	106	0.07413	-	CANYON WEST SUB - DAWN SUB 115KV CKT 1
FDNSLock-Blown up	06ALL	0	16WP	G15_039		Non-Converged Contingency	106	106	0.07413	-	DAWN SUB - Panda Energy Substation Hereford 115KV CKT 1

SOLUTION	GROUP	SCENARIO	SEASON	SOURCE	DIRECTION	MONITORED ELEMENT	RATEA (MVA)	RATEB(MVA)	TDF	TC%LOADING (% MVA)	CONTINGENCY
FDNSLock-Blown up	06ALL	0	16WP	G15_039		Non-Converged Contingency	106	106	0.07413	-	DEAF SMITH COUNTY INTERCHANGE - Panda Energy Substation Hereford 115KV CKT 1
FDNSLock-Blown up	06ALL	0	16WP	G15_039		Non-Converged Contingency	717.1	717.1	0.07262	-	HOLCOMB - SETAB 345KV CKT 1
FDNSLock-Blown up	06ALL	0	16WP	G15_039		Non-Converged Contingency	762.5	762.5	0.07114	-	MINGO - SETAB 345KV CKT 1
FDNSLock-Blown up	06ALL	0	16WP	G15_039		Non-Converged Contingency	785	785	0.0706	-	MINGO - RED WILLOW 345KV CKT 1
FDNSLock-Blown up	06ALL	0	16WP	G15_039		Non-Converged Contingency	726.6	726.6	0.0692	-	BUCKNER7 345.00 - HOLCOMB 345KV CKT 1
FDNSLock-Blown up	06ALL	0	16WP	G15_039		Non-Converged Contingency	1413	1517	0.0692	-	BUCKNER7 345.00 - SPEARVILLE 345KV CKT 1
FDNSLock-Blown up	06ALL	0	16WP	G15_039		Non-Converged Contingency	717	717	0.06417	-	CIMARRON - DRAPER LAKE 345KV CKT 1
FDNSLock-Blown up	06ALL	0	16WP	G15_039		Non-Converged Contingency	439	439	0.06293	-	CHISHOLM6 230.00 - ELK CITY 230KV 230KV CKT 1
FDNSLock-Blown up	06ALL	0	16WP	G15_039		Non-Converged Contingency	450	450	0.06293	-	ELK CITY 230KV (ELKCTY-6) 230/138/13.8KV TRANSFORMER CKT 1
FDNSLock-Blown up	06ALL	0	16WP	G15_039		Non-Converged Contingency	427.05	427.05	0.06123	-	JONES STATION - TUCO INTERCHANGE 230KV CKT 1
FDNSLock-Blown up	06ALL	0	16WP	G15_039		Non-Converged Contingency	1793	1793	0.06007	-	G13-010T 345.00 - POST ROCK 345KV CKT 1
FDNSLock-Blown up	06ALL	0	16WP	G15_039		Non-Converged Contingency	1793	1793	0.06007	-	G13-010T 345.00 - SPEARVILLE 345KV CKT 1
FDNSLock-Blown up	06ALL	0	16WP	G15_039		Non-Converged Contingency	1195	1195	0.05353	-	GEN520947 1-HUGO1
FDNSLock-Blown up	06ALL	0	16WP	G15_039		Non-Converged Contingency	557	557	0.04363	-	NEWHART 230 - POTTER COUNTY INTERCHANGE 230KV CKT 1
FDNSLock-Blown up	06ALL	0	16WP	G15_039		Non-Converged Contingency	552	608	0.03753	-	TUCO INTERCHANGE - TUCO_2 230.00 230KV CKT 1
FDNSLock-Blown up	06ALL	0	16WP	G15_039		Non-Converged Contingency	164.53	177.08	0.0374	-	Hansford County Switch Station - SPEARMAN INTERCHANGE 115KV CKT 1
FDNSLock-Blown up	06ALL	0	16WP	G15_039		Non-Converged Contingency	177.08	177.08	0.0374	-	HITCHLAND INTERCHANGE - Hansford County Switch Station 115KV CKT 1
FDNSLock-Blown up	06ALL	0	16WP	G15_039		Non-Converged Contingency	164.53	177.08	0.03323	-	PRINGLE INTERCHANGE - SPEARMAN INTERCHANGE 115KV CKT 1
FDNSLock-Blown up	06ALL	0	16WP	G15_039		Non-Converged Contingency	176	194	0.02951	-	DWS FRISCO - HITCHLAND INTERCHANGE 115KV CKT 1
FDNSLock-Blown up	06ALL	0	16WP	G15_039		Non-Converged Contingency	176	194	0.02951	-	DWS FRISCO - SHERMAN COUNTY TAP 115KV CKT 1
FDNSLock-Blown up	06NR	0	17G	G15_039		Non-Converged Contingency	318.7	350.57	0.5578	-	DEAF SMITH COUNTY INTERCHANGE - G15039_T 230.00 230KV CKT 1
FDNSLock-Blown up	06NR	0	17G	G15_039		Non-Converged Contingency	478	502	0.34361	-	BUSHLAND INTERCHANGE - DEAF SMITH COUNTY INTERCHANGE 230KV CKT 1
FDNSLock-Blown up	06NR	0	17G	G15_039		Non-Converged Contingency	318.7	350.57	0.28681	-	BUSHLAND INTERCHANGE - POTTER COUNTY INTERCHANGE 230KV CKT 1
FDNSLock-Blown up	06ALL	0	17SP	G15_039		Non-Converged Contingency	956.09	1051.7	0.21481	-	G14_038T 345.00 - Hitchland Interchange 345KV CKT 1
FDNSLock-Blown up	06ALL	0	17SP	G15_039		Non-Converged Contingency	956.09	1051.7	0.21481	-	G14_038T 345.00 - POTTER COUNTY INTERCHANGE 345KV CKT 1
FDNSLock-Blown up	06ALL	0	17SP	G15_039		Non-Converged Contingency	560	560	0.21481	-	POTTER COUNTY INTERCHANGE (WAUK 90343-A) 345/230/13.2KV TRANSFORMER CKT 1
FDNSLock-Blown up	06ALL	0	17SP	G15_039		Non-Converged Contingency	956	1042	0.15976	-	G14-074T 345.00 - OKLAUNION 345KV CKT 1
FDNSLock-Blown up	06ALL	0	17SP	G15_039		Non-Converged Contingency	956	1042	0.15976	-	G14-074T 345.00 - TUCO INTERCHANGE 345KV CKT 1
FDNSLock-Blown up	06ALL	0	17SP	G15_039		Non-Converged Contingency	1792	1972	0.11404	-	BORDER 7345.00 - TUCO_2 345.00 345KV CKT 1
FDNSLock-Blown up	06ALL	0	17SP	G15_039		Non-Converged Contingency	1420	1775	0.11404	-	BORDER 7345.00 - TUCO_2 345.00 345KV CKT 2
FDNSLock-Blown up	06ALL	0	20L	G15_039		Non-Converged Contingency	318.7	350.57	0.60345	-	DEAF SMITH COUNTY INTERCHANGE - G15039_T 230.00 230KV CKT 1
FDNSLock-Blown up	06NR	0	20L	G15_039		Non-Converged Contingency	318.7	350.57	0.56691	-	DEAF SMITH COUNTY INTERCHANGE - G15039_T 230.00 230KV CKT 1
FDNSLock-Blown up	06ALL	0	20L	G15_039		Non-Converged Contingency	478	502	0.38844	-	BUSHLAND INTERCHANGE - DEAF SMITH COUNTY INTERCHANGE 230KV CKT 1
FDNSLock-Blown up	06ALL	0	20L	G15_039		Non-Converged Contingency	478	502	0.38844	-	BUSHLAND INTERCHANGE - DEAF SMITH COUNTY INTERCHANGE 230KV CKT 1
FDNSLock-Blown up	06ALL	0	20L	G15_039		Non-Converged Contingency	478	502	0.38844	-	BUSHLAND INTERCHANGE 230KV SWITCHED SHUNT
FDNSLock-Blown up	06ALL	0	20L	G15_039		Non-Converged Contingency	318.7	350.57	0.33164	-	BUSHLAND INTERCHANGE - POTTER COUNTY INTERCHANGE 230KV CKT 1
FDNSLock-Blown up	06ALL	0	20L	G15_039		Non-Converged Contingency	318.7	350.57	0.33164	-	BUSHLAND INTERCHANGE - POTTER COUNTY INTERCHANGE 230KV CKT 1
FDNSLock-Blown up	06NR	0	20L	G15_039		Non-Converged Contingency	318.7	350.57	0.29129	-	BUSHLAND INTERCHANGE - POTTER COUNTY INTERCHANGE 230KV CKT 1
FDNSLock-Blown up	06NR	0	20L	G15_039		Non-Converged Contingency	318.7	350.57	0.29129	-	BUSHLAND INTERCHANGE - POTTER COUNTY INTERCHANGE 230KV CKT 1
FDNSLock-Blown up	06ALL	0	20L	G15_039		Non-Converged Contingency	0	0	0.25374	-	P12:345:SPS:J07.1.FINN.HITCH
FDNSLock-Blown up	06ALL	0	20L	G15_039		Non-Converged Contingency	0	0	0.23686	-	P12:115:SPS:W40.1.WCANYON.DFSMTH
FDNSLock-Blown up	06ALL	0	20L	G15_039		Non-Converged Contingency	956.09	1051.7	0.17556	-	G14_038T 345.00 - Hitchland Interchange 345KV CKT 1
FDNSLock-Blown up	06ALL	0	20L	G15_039		Non-Converged Contingency	956.09	1051.7	0.17556	-	G14_038T 345.00 - POTTER COUNTY INTERCHANGE 345KV CKT 1
FDNSLock-Blown up	06ALL	0	20L	G15_039		Non-Converged Contingency	560	560	0.17556	-	POTTER COUNTY INTERCHANGE (WAUK 90343-A) 345/230/13.2KV TRANSFORMER CKT 1
FDNSLock-Blown up	06ALL	0	20L	G15_039		Non-Converged Contingency	560	560	0.17556	-	POTTER COUNTY INTERCHANGE (WAUK 90343-A) 345/230/13.2KV TRANSFORMER CKT 1
FDNSLock-Blown up	06ALL	0	20L	G15_039		Non-Converged Contingency	0	0	0.16585	-	P12:230:AEPW-SPS:SWEETWT6:WHEELER 6
FDNSLock-Blown up	06ALL	0	20L	G15_039		Non-Converged Contingency	0	0	0.1579	-	P12:115:SPS:V05.1.OSAGE.WCANYON
FDNSLock-Blown up	06ALL	0	20L	G15_039		Non-Converged Contingency	956.09	1051.7	0.13544	-	Hitchland Interchange - WALKTAP7 345.00 345KV CKT 1
FDNSLock-Blown up	06ALL	0	20L	G15_039		Non-Converged Contingency	956.09	1051.7	0.13544	-	Hitchland Interchange - WALKTAP7 345.00 345KV CKT 1
FDNSLock-Blown up	06ALL	0	20L	G15_039		Non-Converged Contingency	956	956	0.13459	-	CIMARRON - MINCO 345KV CKT 1
FDNSLock-Blown up	06ALL	0	20L	G15_039		Non-Converged Contingency	1195	1195	0.13459	-	GRACEMONT - MINCO 345KV CKT 1
FDNSLock-Blown up	06ALL	0	20L	G15_039		Non-Converged Contingency	0	0	0.13193	-	P12:230:AEPW:ELKCITY6:SWEETWT6
FDNSLock-Blown up	06ALL	0	20L	G15_039		Non-Converged Contingency	1022	1124	0.12727	-	G14-074T 345.00 - OKLAUNION 345KV CKT 1
FDNSLock-Blown up	06ALL	0	20L	G15_039		Non-Converged Contingency	1022	1124	0.12727	-	G14-074T 345.00 - TUCO INTERCHANGE 345KV CKT 1
FDNSLock-Blown up	06ALL	0	20L	G15_039		Non-Converged Contingency	1022	1124	0.12727	-	GEN506754 1-LEBROCK STEAM 1
FDNSLock-Blown up	06ALL	0	20L	G15_039		Non-Converged Contingency	1022	1124	0.12727	-	GEN509394 1-FLINT CREEK
FDNSLock-Blown up	06ALL	0	20L	G15_039		Non-Converged Contingency	1022	1124	0.12727	-	GEN509403 1-PIRKEY GENERATION
FDNSLock-Blown up	06ALL	0	20L	G15_039		Non-Converged Contingency	1022	1124	0.12727	-	GEN509404 1-WELSH #1
FDNSLock-Blown up	06ALL	0	20L	G15_039		Non-Converged Contingency	1022	1124	0.12727	-	GEN509406 1-WELSH #3
FDNSLock-Blown up	06ALL	0	20L	G15_039		Non-Converged Contingency	1022	1124	0.12727	-	GEN509408 1-WILKES #2
FDNSLock-Blown up	06ALL	0	20L	G15_039		Non-Converged Contingency	1022	1124	0.12727	-	GEN509416 1-TURK GENERATION
FDNSLock-Blown up	06ALL	0	20L	G15_039		Non-Converged Contingency	1022	1124	0.12727	-	GEN511840 1-NORTHEASTERN STATION #3
FDNSLock-Blown up	06ALL	0	20L	G15_039		Non-Converged Contingency	1022	1124	0.12727	-	GEN511960 1-ROARK1 0.7000
FDNSLock-Blown up	06ALL	0	20L	G15_039		Non-Converged Contingency	1022	1124	0.12727	-	GEN562590 1-G14_057_3 0.6900
FDNSLock-Blown up	06ALL	0	20L	G15_039		Non-Converged Contingency	1022	1124	0.12727	-	OKLAUNION 345KV SWITCHED SHUNT
FDNSLock-Blown up	06ALL	0	20L	G15_039		Non-Converged Contingency	1584	2098	0.12117	-	CHISHOLM7 345.00 - GRACEMONT 345KV CKT 1
FDNSLock-Blown up	06ALL	0	20L	G15_039		Non-Converged Contingency	1584	2098	0.12117	-	GEN514805 1-SOONER UNIT 1
FDNSLock-Blown up	06ALL	0	20L	G15_039		Non-Converged Contingency	1584	2098	0.12117	-	GEN514806 1-SOONER UNIT 2
FDNSLock-Blown up	06ALL	0	20L	G15_039		Non-Converged Contingency	1584	2098	0.12117	-	GEN515040 1-SEMINOLE 1G
FDNSLock-Blown up	06ALL	0	20L	G15_039		Non-Converged Contingency	1584	2098	0.12117	-	GEN515223 1-MUSKOGEE 4G
FDNSLock-Blown up	06ALL	0	20L	G15_039		Non-Converged Contingency	956.09	1051.7	0.1183	-	FINNEY SWITCHING STATION - HOLCOMB 345KV CKT 1
FDNSLock-Blown up	06ALL	0	20L	G15_039		Non-Converged Contingency	956.09	1051.7	0.1183	-	FINNEY SWITCHING STATION - HOLCOMB 345KV CKT 1
FDNSLock-Blown up	06ALL	0	20L	G15_039		Non-Converged Contingency	956.09	1051.7	0.1183	-	FINNEY SWITCHING STATION - WALKTAP7 345.00 345KV CKT 1
FDNSLock-Blown up	06ALL	0	20L	G15_039		Non-Converged Contingency	956.09	1051.7	0.1183	-	FINNEY SWITCHING STATION - WALKTAP7 345.00 345KV CKT 1
FDNSLock-Blown up	06ALL	0	20L	G15_039		Non-Converged Contingency	478.05	546.96	0.09963	-	TOLK STATION EAST - TUCO INTERCHANGE 230KV CKT 1
FDNSLock-Blown up	06ALL	0	20L	G15_039		Non-Converged Contingency	478.05	546.96	0.09963	-	TOLK STATION EAST - TUCO INTERCHANGE 230KV CKT 1
FDNSLock-Blown up	06ALL	0	20L	G15_039		Non-Converged Contingency	1792	1792	0.09604	-	CHISHOLM7 345.00 - WOODWARD DISTRICT EHV 345KV CKT 1
FDNSLock-Blown up	06ALL	0	20L	G15_039		Non-Converged Contingency	0	0	0.09321	-	P12:115:SPS:V37.1.CASTRO.PLANTX
FDNSLock-Blown up	06ALL	0	20L	G15_039		Non-Converged Contingency	560	560	0.0926	-	TUCO_2 345.00 (TUCO_2 XFMR) 345/230/13.2KV TRANSFORMER CKT 1

SOLUTION	GROUP	SCENARIO	SEASON	SOURCE	DIRECTION	MONITORED ELEMENT	RATEA (MVA)	RATEB(MVA)	TDF	TC%LOADING (% MVA)	CONTINGENCY
FDNSLock-Blown up	06ALL	0	20L	G15_039		Non-Converged Contingency	1792	1792	0.09165	-	BORDER 7345.00 - CHISHOLM7 345.00 345KV CKT 1
FDNSLock-Blown up	06ALL	0	20L	G15_039		Non-Converged Contingency	1792	1792	0.09165	-	BORDER 7345.00 - CHISHOLM7 345.00 345KV CKT 2
FDNSLock-Blown up	06ALL	0	20L	G15_039		Non-Converged Contingency	1792	1972	0.09165	-	BORDER 7345.00 - TUCO_2 345.00 345KV CKT 1
FDNSLock-Blown up	06ALL	0	20L	G15_039		Non-Converged Contingency	1420	1775	0.09165	-	BORDER 7345.00 - TUCO_2 345.00 345KV CKT 2
FDNSLock-Blown up	06ALL	0	20L	G15_039		Non-Converged Contingency	1792	1972	0.09165	-	BORDER 7345.00 345KV SWITCHED SHUNT
FDNSLock-Blown up	06ALL	0	20L	G15_039		Non-Converged Contingency	560	560	0.09159	-	TUCO INTERCHANGE (GE M1022338) 345/230/13.2KV TRANSFORMER CKT 1
FDNSLock-Blown up	06ALL	0	20L	G15_039		Non-Converged Contingency	560	560	0.09159	-	TUCO INTERCHANGE (GE M1022338) 345/230/13.2KV TRANSFORMER CKT 1
FDNSLock-Blown up	06ALL	0	20L	G15_039		Non-Converged Contingency	1420	1775	0.09105	-	G11_051T 345.00 - TATONGA7 345.00 345KV CKT 1
FDNSLock-Blown up	06ALL	0	20L	G15_039		Non-Converged Contingency	1420	1775	0.09105	-	G11_051T 345.00 - WOODWARD DISTRICT EHV 345KV CKT 1
FDNSLock-Blown up	06ALL	0	20L	G15_039		Non-Converged Contingency	1195	1195	0.09105	-	MATHWSN7 345.00 - TATONGA7 345.00 345KV CKT 1
FDNSLock-Blown up	06ALL	0	20L	G15_039		Non-Converged Contingency	1792	1972	0.09069	-	TUCO INTERCHANGE - TUCO_2 345.00 345KV CKT 1
FDNSLock-Blown up	06ALL	0	20L	G15_039		Non-Converged Contingency	478.05	501.95	0.08945	-	PLANT X STATION - SUNDOWN INTERCHANGE 230KV CKT 1
FDNSLock-Blown up	06ALL	0	20L	G15_039		Non-Converged Contingency	478.05	501.95	0.08945	-	PLANT X STATION - SUNDOWN INTERCHANGE 230KV CKT 1
FDNSLock-Blown up	06ALL	0	20L	G15_039		Non-Converged Contingency	717	789	0.08739	-	G14-057T 345.00 - LAWTON EASTSIDE 345KV CKT 1
FDNSLock-Blown up	06ALL	0	20L	G15_039		Non-Converged Contingency	717	789	0.08739	-	G14-057T 345.00 - SUNNYSIDE 345KV CKT 1
FDNSLock-Blown up	06ALL	0	20L	G15_039		Non-Converged Contingency	1793	1793	0.08655	-	BVRCNTY7 345.00 - G11-14T 345.00 345KV CKT 1
FDNSLock-Blown up	06ALL	0	20L	G15_039		Non-Converged Contingency	1716	1793	0.08655	-	BVRCNTY7 345.00 - G11-14T 345.00 345KV CKT 2
FDNSLock-Blown up	06ALL	0	20L	G15_039		Non-Converged Contingency	1792	1792	0.08655	-	BVRCNTY7 345.00 - OPTIMA 345.00 345KV CKT 1
FDNSLock-Blown up	06ALL	0	20L	G15_039		Non-Converged Contingency	1792	1792	0.08655	-	BVRCNTY7 345.00 - OPTIMA 345.00 345KV CKT 2
FDNSLock-Blown up	06ALL	0	20L	G15_039		Non-Converged Contingency	1793	1793	0.08655	-	G11-14T 345.00 - WOODWARD DISTRICT EHV 345KV CKT 1
FDNSLock-Blown up	06ALL	0	20L	G15_039		Non-Converged Contingency	1716	1793	0.08655	-	G11-14T 345.00 - WOODWARD DISTRICT EHV 345KV CKT 2
FDNSLock-Blown up	06ALL	0	20L	G15_039		Non-Converged Contingency	1792	1792	0.08655	-	Hitchland Interchange - OPTIMA 345.00 345KV CKT 1
FDNSLock-Blown up	06ALL	0	20L	G15_039		Non-Converged Contingency	1792	1792	0.08655	-	Hitchland Interchange - OPTIMA 345.00 345KV CKT 2
FDNSLock-Blown up	06ALL	0	20L	G15_039		Non-Converged Contingency	421	439	0.08292	-	CHISHOLM6 230.00 - SWEETWATER 230KV CKT 1
FDNSLock-Blown up	06ALL	0	20L	G15_039		Non-Converged Contingency	348.58	381.24	0.08292	-	STATELINE INTERCHANGE - STLN-DEMARC6 230KV CKT 1
FDNSLock-Blown up	06ALL	0	20L	G15_039		Non-Converged Contingency	353	353	0.08292	-	STLN-DEMARC6 - SWEETWATER 230KV CKT 1
FDNSLock-Blown up	06ALL	0	20L	G15_039		Non-Converged Contingency	560	644	0.07981	-	TUCO INTERCHANGE (SIEM 8743066) 345/230/13.2KV TRANSFORMER CKT 2
FDNSLock-Blown up	06ALL	0	20L	G15_039		Non-Converged Contingency	560	644	0.07981	-	TUCO INTERCHANGE (SIEM 8743066) 345/230/13.2KV TRANSFORMER CKT 2
FDNSLock-Blown up	06ALL	0	20L	G15_039		Non-Converged Contingency	276	304	0.07895	-	CANYON E_TP3115.00 - CANYON WEST SUB 115KV CKT 1
FDNSLock-Blown up	06ALL	0	20L	G15_039		Non-Converged Contingency	160	160	0.07895	-	CANYON E_TP3115.00 - RANDALL COUNTY INTERCHANGE 115KV CKT 1
FDNSLock-Blown up	06ALL	0	20L	G15_039		Non-Converged Contingency	276	304	0.07895	-	CANYON WEST SUB - DAWN SUB 115KV CKT 1
FDNSLock-Blown up	06ALL	0	20L	G15_039		Non-Converged Contingency	276	304	0.07895	-	DAWN SUB - Panda Energy Substation Hereford 115KV CKT 1
FDNSLock-Blown up	06ALL	0	20L	G15_039		Non-Converged Contingency	276	304	0.07895	-	DEAF SMITH COUNTY INTERCHANGE - Panda Energy Substation Hereford 115KV CKT 1
FDNSLock-Blown up	06ALL	0	20L	G15_039		Non-Converged Contingency	1561	1793	0.0771	-	THISTLE7 345.00 - WOODWARD DISTRICT EHV 345KV CKT 1
FDNSLock-Blown up	06ALL	0	20L	G15_039		Non-Converged Contingency	1561	1793	0.0771	-	THISTLE7 345.00 - WOODWARD DISTRICT EHV 345KV CKT 1
FDNSLock-Blown up	06ALL	0	20L	G15_039		Non-Converged Contingency	1561	1793	0.0771	-	THISTLE7 345.00 - WOODWARD DISTRICT EHV 345KV CKT 2
FDNSLock-Blown up	06ALL	0	20L	G15_039		Non-Converged Contingency	1561	1793	0.0771	-	THISTLE7 345.00 - WOODWARD DISTRICT EHV 345KV CKT 2
FDNSLock-Blown up	06ALL	0	20L	G15_039		Non-Converged Contingency	501.95	501.95	0.07382	-	HITCHLAND INTERCHANGE - MOORE COUNTY INTERCHANGE 230KV CKT 1
FDNSLock-Blown up	06ALL	0	20L	G15_039		Non-Converged Contingency	501.95	501.95	0.07382	-	HITCHLAND INTERCHANGE - MOORE COUNTY INTERCHANGE 230KV CKT 1
FDNSLock-Blown up	06ALL	0	20L	G15_039		Non-Converged Contingency	1195	1195	0.07184	-	ARCADIA - NORTHWEST 345KV CKT 1
FDNSLock-Blown up	06ALL	0	20L	G15_039		Non-Converged Contingency	560	644	0.07112	-	Hitchland Interchange (SIEM 8743067) 345/230/13.2KV TRANSFORMER CKT 2
FDNSLock-Blown up	06ALL	0	20L	G15_039		Non-Converged Contingency	560	644	0.07112	-	Hitchland Interchange (SIEM 8743067) 345/230/13.2KV TRANSFORMER CKT 2
FDNSLock-Blown up	06ALL	0	20L	G15_039		Non-Converged Contingency	502	502	0.07025	-	GRAPEVINE INTERCHANGE - STATELINE INTERCHANGE 230KV CKT 1
FDNSLock-Blown up	06ALL	0	20L	G15_039		Non-Converged Contingency	502	502	0.07025	-	GRAPEVINE INTERCHANGE - STATELINE INTERCHANGE 230KV CKT 1
FDNSLock-Blown up	06ALL	0	20L	G15_039		Non-Converged Contingency	0	0	0.06898	-	P12:345:SPS:J14.1.EDDY.XRDS
FDNSLock-Blown up	06ALL	0	20L	G15_039		Non-Converged Contingency	502	502	0.06854	-	GRAPEVINE INTERCHANGE - NICHOLS STATION 230KV CKT 1
FDNSLock-Blown up	06ALL	0	20L	G15_039		Non-Converged Contingency	502	502	0.06854	-	GRAPEVINE INTERCHANGE - NICHOLS STATION 230KV CKT 1
FDNSLock-Blown up	06ALL	0	20L	G15_039		Non-Converged Contingency	1195	1195	0.06764	-	MATHWSN7 345.00 - NORTHWEST 345KV CKT 1
FDNSLock-Blown up	06ALL	0	20L	G15_039		Non-Converged Contingency	478.05	547.36	0.06643	-	NEWHART 230 - PLANT X STATION 230KV CKT 1
FDNSLock-Blown up	06ALL	0	20L	G15_039		Non-Converged Contingency	318.7	350.57	0.06505	-	MOORE COUNTY INTERCHANGE - POTTER COUNTY INTERCHANGE 230KV CKT 1
FDNSLock-Blown up	06ALL	0	20L	G15_039		Non-Converged Contingency	318.7	350.57	0.06505	-	MOORE COUNTY INTERCHANGE - POTTER COUNTY INTERCHANGE 230KV CKT 1
FDNSLock-Blown up	06ALL	0	20L	G15_039		Non-Converged Contingency	1532	1793	0.06379	-	G1524G1525 345.00 - THISTLE7 345.00 345KV CKT 1
FDNSLock-Blown up	06ALL	0	20L	G15_039		Non-Converged Contingency	1532	1793	0.06379	-	G1524G1525 345.00 - THISTLE7 345.00 345KV CKT 2
FDNSLock-Blown up	06ALL	0	20L	G15_039		Non-Converged Contingency	1532	1793	0.06379	-	G1524G1525 345.00 - WICHITA 345KV CKT 1
FDNSLock-Blown up	06ALL	0	20L	G15_039		Non-Converged Contingency	1532	1793	0.06379	-	G1524G1525 345.00 - WICHITA 345KV CKT 2
FDNSLock-Blown up	06ALL	0	20L	G15_039		Non-Converged Contingency	1532	1793	0.06379	-	GEN532653 1-JEFFREY ENERGY CENTER UNIT 3
FDNSLock-Blown up	06ALL	0	20L	G15_039		Non-Converged Contingency	1532	1793	0.06379	-	GEN532663 1-LAWRENCE ENERGY CENTER UNIT 5
FDNSLock-Blown up	06ALL	0	20L	G15_039		Non-Converged Contingency	1532	1793	0.06379	-	GEN532751 1-WOLF CREEK GENERATING STATION UNIT 1
FDNSLock-Blown up	06ALL	0	20L	G15_039		Non-Converged Contingency	560	644	0.06187	-	Hitchland Interchange (H TB80155502) 345/230/13.2KV TRANSFORMER CKT 1
FDNSLock-Blown up	06ALL	0	20L	G15_039		Non-Converged Contingency	560	644	0.06187	-	Hitchland Interchange (H TB80155502) 345/230/13.2KV TRANSFORMER CKT 1
FDNSLock-Blown up	06ALL	0	20L	G15_039		Non-Converged Contingency	956	956	0.06175	-	CIMARRON - NORTHWEST 345KV CKT 1
FDNSLock-Blown up	06ALL	0	20L	G15_039		Non-Converged Contingency	0	0	0.06172	-	P12:115:SPS:V03.1.NICHLS.EPLANT
FDNSLock-Blown up	06ALL	0	20L	G15_039		Non-Converged Contingency	139.23	159.95	0.06111	-	CASTRO COUNTY INTERCHANGE - NEWHART 115KV CKT 1
FDNSLock-Blown up	06ALL	0	20L	G15_039		Non-Converged Contingency	139.23	159.95	0.06111	-	CASTRO COUNTY INTERCHANGE - NEWHART 115KV CKT 1
FDNSLock-Blown up	06ALL	0	20L	G15_039		Non-Converged Contingency	785	785	0.05962	-	GEN640009 1-COOPER NUCLEAR STATION
FDNSLock-Blown up	06ALL	0	20L	G15_039		Non-Converged Contingency	785	785	0.05962	-	MINGO - RED WILLOW 345KV CKT 1
FDNSLock-Blown up	06ALL	0	20L	G15_039		Non-Converged Contingency	785	785	0.05962	-	MINGO - RED WILLOW 345KV CKT 1
FDNSLock-Blown up	06ALL	0	20L	G15_039		Non-Converged Contingency	0	0	0.05931	-	P12:138:AEPW-OGE:WTH_JCT4:JENSEN4
FDNSLock-Blown up	06ALL	0	20L	G15_039		Non-Converged Contingency	762.5	762.5	0.05897	-	MINGO - SETAB 345KV CKT 1
FDNSLock-Blown up	06ALL	0	20L	G15_039		Non-Converged Contingency	762.5	762.5	0.05897	-	MINGO - SETAB 345KV CKT 1
FDNSLock-Blown up	06ALL	0	20L	G15_039		Non-Converged Contingency	717.1	717.1	0.05857	-	HOLCOMB - SETAB 345KV CKT 1
FDNSLock-Blown up	06ALL	0	20L	G15_039		Non-Converged Contingency	717.1	717.1	0.05857	-	HOLCOMB - SETAB 345KV CKT 1
FDNSLock-Blown up	06ALL	0	20L	G15_039		Non-Converged Contingency	159	160	0.0568	-	BUSHLAND INTERCHANGE - HILLSIDE 115KV CKT 1
FDNSLock-Blown up	06ALL	0	20L	G15_039		Non-Converged Contingency	0	0	0.05511	-	P12:138:WFEC-AEPW:WASHITA4:CLINTJC4
FDNSLock-Blown up	06ALL	0	20L	G15_039		Non-Converged Contingency	878	956	0.05208	-	BENTON - WICHITA 345KV CKT 1
FDNSLock-Blown up	06ALL	0	20L	G15_039		Non-Converged Contingency	726.6	726.6	0.05182	-	BUCKNER7 345.00 - HOLCOMB 345KV CKT 1
FDNSLock-Blown up	06ALL	0	20L	G15_039		Non-Converged Contingency	726.6	726.6	0.05182	-	BUCKNER7 345.00 - HOLCOMB 345KV CKT 1
FDNSLock-Blown up	06ALL	0	20L	G15_039		Non-Converged Contingency	1413	1517	0.05182	-	BUCKNER7 345.00 - SPEARVILLE 345KV CKT 1
FDNSLock-Blown up	06ALL	0	20L	G15_039		Non-Converged Contingency	1413	1517	0.05182	-	BUCKNER7 345.00 - SPEARVILLE 345KV CKT 1

SOLUTION	GROUP	SCENARIO	SEASON	SOURCE	DIRECTION	MONITORED ELEMENT	RATEA (MVA)	RATEB(MVA)	TDF	TC%LOADING (% MVA)	CONTINGENCY
FDNSLock-Blown up	06ALL	0	20L	G15_039		Non-Converged Contingency	1039	1195	0.0512	-	NORTHWEST - SPRING CREEK 345KV CKT 1
FDNSLock-Blown up	06ALL	0	20L	G15_039		Non-Converged Contingency	1039	1195	0.0512	-	SOONER - SPRING CREEK 345KV CKT 1
FDNSLock-Blown up	06ALL	0	20L	G15_039		Non-Converged Contingency	956	956	0.05073	-	G15063_T 345.00 - MATHWSN7 345.00 345KV CKT 1
FDNSLock-Blown up	06ALL	0	20L	G15_039		Non-Converged Contingency	956	956	0.05073	-	G15063_T 345.00 - WOODRING 345KV CKT 1
FDNSLock-Blown up	06ALL	0	20L	G15_039		Non-Converged Contingency	1195	1195	0.05045	-	SOONER - WOODRING 345KV CKT 1
FDNSLock-Blown up	06ALL	0	20L	G15_039		Non-Converged Contingency	0	0	0.05002	-	P12:115:SPS:T28.1.LAMTON.PLANTX
FDNSLock-Blown up	06ALL	0	20L	G15_039		Non-Converged Contingency	439	439	0.049	-	CHISHOLM6 230.00 - ELK CITY 230KV 230KV CKT 1
FDNSLock-Blown up	06ALL	0	20L	G15_039		Non-Converged Contingency	450	450	0.049	-	ELK CITY 230KV (ELKCTY-6) 230/138/13.8KV TRANSFORMER CKT 1
FDNSLock-Blown up	06ALL	0	20L	G15_039		Non-Converged Contingency	450	450	0.049	-	ELK CITY 230KV (ELKCTY-6) 230/138/13.8KV TRANSFORMER CKT 1
FDNSLock-Blown up	06ALL	0	20L	G15_039		Non-Converged Contingency	435.82	501.55	0.04899	-	Harrington Station Mid Bus - RANDALL COUNTY INTERCHANGE 230KV CKT 1
FDNSLock-Blown up	06ALL	0	20L	G15_039		Non-Converged Contingency	435.82	501.55	0.04899	-	Harrington Station Mid Bus - RANDALL COUNTY INTERCHANGE 230KV CKT 1
FDNSLock-Blown up	06ALL	0	20L	G15_039		Non-Converged Contingency	1505	1793	0.04882	-	G13-010T 345.00 - POST ROCK 345KV CKT 1
FDNSLock-Blown up	06ALL	0	20L	G15_039		Non-Converged Contingency	1505	1793	0.04882	-	G13-010T 345.00 - SPEARVILLE 345KV CKT 1
FDNSLock-Blown up	06ALL	0	20L	G15_039		Non-Converged Contingency	478	478	0.04812	-	EDDY COUNTY INTERCHANGE - EDDY_NORTH 6230.00 230KV CKT @1
FDNSLock-Blown up	06ALL	0	20L	G15_039		Non-Converged Contingency	1504	1792	0.04791	-	AXTELL - POST ROCK 345KV CKT 1
FDNSLock-Blown up	06ALL	0	20L	G15_039		Non-Converged Contingency	0	0	0.04783	-	P12:115:SPS:W08.1.HITCH.LASLEY
FDNSLock-Blown up	06ALL	0	20L	G15_039		Non-Converged Contingency	318.7	350.57	0.04767	-	G13_027T 230.00 - YOAKUM COUNTY INTERCHANGE 230KV CKT 1
FDNSLock-Blown up	06ALL	0	20L	G15_039		Non-Converged Contingency	0	0	0.0473	-	P12:115:SPS:W29.1.OCLTRE.SPRMN
FDNSLock-Blown up	06ALL	0	20L	G15_039		Non-Converged Contingency	956	956	0.0468	-	GERALD GENTLEMAN STATION - RED WILLOW 345KV CKT 1
FDNSLock-Blown up	06ALL	0	20L	G15_039		Non-Converged Contingency	1792	1792	0.04656	-	TUCO INTERCHANGE - YOAKUM_345 345.00 345KV CKT 1
FDNSLock-Blown up	06ALL	0	20L	G15_039		Non-Converged Contingency	0	0	0.04531	-	P12:138:AEPW:S.W.S.-4:L.E.S.-4
FDNSLock-Blown up	06ALL	0	20L	G15_039		Non-Converged Contingency	1195	1195	0.04482	-	CIMARRON - DRAPER LAKE 345KV CKT 1
FDNSLock-Blown up	06ALL	0	20L	G15_039		Non-Converged Contingency	0	0	0.04454	-	P12:230:SPS:K43.1.PRNGLE.HARR_E
FDNSLock-Blown up	06ALL	0	20L	G15_039		Non-Converged Contingency	1035	1035	0.04103	-	EMPORIA ENERGY CENTER - G14_001T 345.00 345KV CKT 1
FDNSLock-Blown up	06ALL	0	20L	G15_039		Non-Converged Contingency	1035	1035	0.04103	-	G14_001T 345.00 - WICHITA 345KV CKT 1
FDNSLock-Blown up	06ALL	0	20L	G15_039		Non-Converged Contingency	1195	1195	0.03963	-	JOHNSON COUNTY - SUNNYSIDE 345KV CKT 1
FDNSLock-Blown up	06ALL	0	20L	G15_039		Non-Converged Contingency	0	0	0.03913	-	P12:115:SPS:W24.1.MOOREE.LASLEY
FDNSLock-Blown up	06ALL	0	20L	G15_039		Non-Converged Contingency	1141	1195	0.03813	-	GEN542951 5-HAWTHORN UNIT #5
FDNSLock-Blown up	06ALL	0	20L	G15_039		Non-Converged Contingency	1141	1195	0.03813	-	LACYGNE - WAVERLY7 345.00 345KV CKT 1
FDNSLock-Blown up	06ALL	0	20L	G15_039		Non-Converged Contingency	1141	1195	0.03813	-	WAVERLY7 345.00 - WOLF CREEK 345KV CKT 1
FDNSLock-Blown up	06ALL	0	20L	G15_039		Non-Converged Contingency	1151	1195	0.03696	-	JOHNSON COUNTY - PITTSBURG 345KV CKT 1
FDNSLock-Blown up	06ALL	0	20L	G15_039		Non-Converged Contingency	1151	1195	0.03696	-	JOHNSON COUNTY - PITTSBURG 345KV CKT 1
FDNSLock-Blown up	06ALL	0	20L	G15_039		Non-Converged Contingency	0	0	0.03687	-	P12:115:SPS:T53.1.NICHLS.KIRBY
FDNSLock-Blown up	06ALL	0	20L	G15_039		Non-Converged Contingency	1076	1076	0.03683	-	G15074_T 345.00 - HOYT 345KV CKT 1
FDNSLock-Blown up	06ALL	0	20L	G15_039		Non-Converged Contingency	1076	1076	0.03683	-	G15074_T 345.00 - JEFFREY ENERGY CENTER 345KV CKT 1
FDNSLock-Blown up	06ALL	0	20L	G15_039		Non-Converged Contingency	1036	1195	0.0367	-	HOYT - STRANGER CREEK 345KV CKT 1
FDNSLock-Blown up	06ALL	0	20L	G15_039		Non-Converged Contingency	1195	1195	0.03451	-	GEN520811 1-ANADRK4
FDNSLock-Blown up	06ALL	0	20L	G15_039		Non-Converged Contingency	1195	1195	0.03451	-	HUGO - SUNNYSIDE 345KV CKT 1
FDNSLock-Blown up	06ALL	0	20L	G15_039		Non-Converged Contingency	717	926	0.03449	-	CROSSROADS 7345.00 - EDDY COUNTY INTERCHANGE 345KV CKT 1
FDNSLock-Blown up	06ALL	0	20L	G15_039		Non-Converged Contingency	560	560	0.03449	-	EDDY COUNTY INTERCHANGE (ABB AEM30711) 345/230/13.2KV TRANSFORMER CKT 1
FDNSLock-Blown up	06ALL	0	20L	G15_039		Non-Converged Contingency	560	560	0.03449	-	EDDY COUNTY INTERCHANGE (ABB AEM30711) 345/230/13.2KV TRANSFORMER CKT 1
FDNSLock-Blown up	06ALL	0	20L	G15_039		Non-Converged Contingency	675	743	0.03392	-	CHISHOLM7 345.00 () 345/230/13.2KV TRANSFORMER CKT 1
FDNSLock-Blown up	06ALL	0	20L	G15_039		Non-Converged Contingency	1195	1195	0.03322	-	MUSKOGEE - SEMINOLE 345KV CKT 1
FDNSLock-Blown up	06ALL	0	20L	G15_039		Non-Converged Contingency	717	717	0.03301	-	EMPORIA ENERGY CENTER - SWISSVALE 345KV CKT 1
FDNSLock-Blown up	06ALL	0	20L	G15_039		Non-Converged Contingency	0	0	0.03285	-	P12:138:AEPW-OGE:CORNVIL4:CIMARON4
FDNSLock-Blown up	06ALL	0	20L	G15_039		Non-Converged Contingency	0	0	0.03261	-	P12:138:OKGE:3TERM10
FDNSLock-Blown up	06ALL	0	20L	G15_039		Non-Converged Contingency	717	717	0.03194	-	SWISSVALE - WEST GARDNER 345KV CKT 1
FDNSLock-Blown up	06ALL	0	20L	G15_039		Non-Converged Contingency	956	956	0.03189	-	BENTON - ROSE HILL 345KV CKT 1
FDNSLock-Blown up	06ALL	0	20L	G15_039		Non-Converged Contingency	478	502	0.03163	-	NEWHART 230 - POTTER COUNTY INTERCHANGE 230KV CKT 1
FDNSLock-Blown up	06ALL	0	20L	G15_039		Non-Converged Contingency	0	0	0.03093	-	P12:115:SPS:V29.1.NICHLS.KNGSMLL
FDNSLock-Blown up	06ALL	0	20L	G15_039		Non-Converged Contingency	0	0	0.03075	-	P12:115:SPS:T54.1.KIRBY.SHM(520)
FDNSLock-Blown up	06ALL	0	20L	G15_039		Non-Converged Contingency	0	0	0.03075	-	P12:138:AEPW:SHAM4WT:CHILD4WT
FDNSLock-Blown up	06ALL	0	20L	G15_039		Non-Converged Contingency	0	0	0.03026	-	P12:138:OKGE-AEPW:JENSEN4:REDROCKRD4
FDNSLock-Blown up	06ALL	0	20L	G15_039		Non-Converged Contingency	0	0	0.03007	-	P12:69:AEPW:NWMEMPH2:CHLDR2WT
FDNSLock-Blown up	06ALL	0	20L	G15_039		Non-Converged Contingency	478.05	501.55	0.03004	-	AMARILLO SOUTH INTERCHANGE - NICHOLS STATION 230KV CKT 1
FDNSLock-Blown up	06ALL	0	20L	G15_039		Non-Converged Contingency	478.05	501.55	0.03004	-	AMARILLO SOUTH INTERCHANGE - NICHOLS STATION 230KV CKT 1
FDNSLock-Blown up	06ALL	0	20L	G15_039		Non-Converged Contingency	318.7	350.57	0.02954	-	LUBBOCK SOUTH INTERCHANGE - WOLFFORTH INTERCHANGE 230KV CKT 1
FDNSLock-Blown up	06ALL	0	20L	G15_039		Non-Converged Contingency	318.7	350.57	0.02954	-	LUBBOCK SOUTH INTERCHANGE - WOLFFORTH INTERCHANGE 230KV CKT 1
FDNSLock-Blown up	06ALL	0	20L	G15_039		Non-Converged Contingency	318.7	350.57	0.02954	-	LUBBOCK SOUTH INTERCHANGE 230KV SWITCHED SHUNT
FDNSLock-Blown up	06ALL	0	20SP	G15_039		Non-Converged Contingency	956.09	1051.7	0.20982	-	G14_038T 345.00 - Hitchland Interchange 345KV CKT 1
FDNSLock-Blown up	06ALL	0	20SP	G15_039		Non-Converged Contingency	956.09	1051.7	0.20982	-	G14_038T 345.00 - POTTER COUNTY INTERCHANGE 345KV CKT 1
FDNSLock-Blown up	06ALL	0	20SP	G15_039		Non-Converged Contingency	956	1042	0.16206	-	G14-074T 345.00 - OKLAUNION 345KV CKT 1
FDNSLock-Blown up	06ALL	0	20SP	G15_039		Non-Converged Contingency	1792	1972	0.11651	-	BORDER 7345.00 - TUCO_2 345.00 345KV CKT 1
FDNSLock-Blown up	06ALL	0	20SP	G15_039		Non-Converged Contingency	1420	1775	0.11651	-	BORDER 7345.00 - TUCO_2 345.00 345KV CKT 2
FDNSLock-Blown up	06ALL	0	20WP	G15_039		Non-Converged Contingency	329.05	360.92	0.61126	-	DEAF SMITH COUNTY INTERCHANGE - G15039_T 230.00 230KV CKT 1
FDNSLock-Blown up	06ALL	0	20WP	G15_039		Non-Converged Contingency	557	557	0.39686	-	BUSHLAND INTERCHANGE - DEAF SMITH COUNTY INTERCHANGE 230KV CKT 1
FDNSLock-Blown up	06ALL	0	20WP	G15_039		Non-Converged Contingency	557	557	0.39686	-	BUSHLAND INTERCHANGE - DEAF SMITH COUNTY INTERCHANGE 230KV CKT 1
FDNSLock-Blown up	06ALL	0	20WP	G15_039		Non-Converged Contingency	329.05	360.92	0.33977	-	BUSHLAND INTERCHANGE - POTTER COUNTY INTERCHANGE 230KV CKT 1
FDNSLock-Blown up	06ALL	0	20WP	G15_039		Non-Converged Contingency	329.05	360.92	0.33977	-	BUSHLAND INTERCHANGE - POTTER COUNTY INTERCHANGE 230KV CKT 1
FDNSLock-Blown up	06ALL	0	20WP	G15_039		Non-Converged Contingency	0	0	0.29563	-	P12:345:SPS:J07.1.FINN.HITCH
FDNSLock-Blown up	06ALL	0	20WP	G15_039		Non-Converged Contingency	987.16	1082.8	0.20475	-	G14_038T 345.00 - Hitchland Interchange 345KV CKT 1
FDNSLock-Blown up	06ALL	0	20WP	G15_039		Non-Converged Contingency	987.16	1082.8	0.20475	-	G14_038T 345.00 - POTTER COUNTY INTERCHANGE 345KV CKT 1
FDNSLock-Blown up	06ALL	0	20WP	G15_039		Non-Converged Contingency	560	560	0.20475	-	POTTER COUNTY INTERCHANGE (WAUK 90343-A) 345/230/13.2KV TRANSFORMER CKT 1
FDNSLock-Blown up	06ALL	0	20WP	G15_039		Non-Converged Contingency	560	560	0.20475	-	POTTER COUNTY INTERCHANGE (WAUK 90343-A) 345/230/13.2KV TRANSFORMER CKT 1
FDNSLock-Blown up	06ALL	0	20WP	G15_039		Non-Converged Contingency	0	0	0.19682	-	P12:230:AEPW-SPS:SWEETWT6:WHEELER 6
FDNSLock-Blown up	06ALL	0	20WP	G15_039		Non-Converged Contingency	0	0	0.15904	-	P12:230:AEPW:ELKCITY6:SWEETWT6
FDNSLock-Blown up	06ALL	0	20WP	G15_039		Non-Converged Contingency	987.16	1082.8	0.15757	-	Hitchland Interchange - WALKTAP7 345.00 345KV CKT 1
FDNSLock-Blown up	06ALL	0	20WP	G15_039		Non-Converged Contingency	987.16	1082.8	0.15757	-	Hitchland Interchange - WALKTAP7 345.00 345KV CKT 1
FDNSLock-Blown up	06ALL	0	20WP	G15_039		Non-Converged Contingency	1022	1124	0.15721	-	G14-074T 345.00 - OKLAUNION 345KV CKT 1

SOLUTION	GROUP	SCENARIO	SEASON	SOURCE	DIRECTION	MONITORED ELEMENT	RATEA (MVA)	RATEB(MVA)	TDF	TC%LOADING (% MVA)	CONTINGENCY
FDNSLock-Blown up	06ALL	0	20WP	G15_039		Non-Converged Contingency	1022	1124	0.15721	-	G14-074T 345.00 - TUCO INTERCHANGE 345KV CKT 1
FDNSLock-Blown up	06ALL	0	20WP	G15_039		Non-Converged Contingency	1022	1124	0.15721	-	OKLAUNION 345KV SWITCHED SHUNT
FDNSLock-Blown up	06ALL	0	20WP	G15_039		Non-Converged Contingency	956	956	0.15132	-	CIMARRON - MINCO 345KV CKT 1
FDNSLock-Blown up	06ALL	0	20WP	G15_039		Non-Converged Contingency	1195	1195	0.15132	-	GRACEMONT - MINCO 345KV CKT 1
FDNSLock-Blown up	06ALL	0	20WP	G15_039		Non-Converged Contingency	1584	2098	0.14728	-	CHISHOLM7 345.00 - GRACEMONT 345KV CKT 1
FDNSLock-Blown up	06ALL	0	20WP	G15_039		Non-Converged Contingency	956.09	1051.7	0.13806	-	FINNEY SWITCHING STATION - HOLCOMB 345KV CKT 1
FDNSLock-Blown up	06ALL	0	20WP	G15_039		Non-Converged Contingency	956.09	1051.7	0.13806	-	FINNEY SWITCHING STATION - HOLCOMB 345KV CKT 1
FDNSLock-Blown up	06ALL	0	20WP	G15_039		Non-Converged Contingency	987.16	1082.8	0.13806	-	FINNEY SWITCHING STATION - WALKTAP7 345.00 345KV CKT 1
FDNSLock-Blown up	06ALL	0	20WP	G15_039		Non-Converged Contingency	987.16	1082.8	0.13806	-	FINNEY SWITCHING STATION - WALKTAP7 345.00 345KV CKT 1
FDNSLock-Blown up	06ALL	0	20WP	G15_039		Non-Converged Contingency	1792	1972	0.11894	-	TUCO INTERCHANGE - TUCO_2 345.00 345KV CKT 1
FDNSLock-Blown up	06ALL	0	20WP	G15_039		Non-Converged Contingency	1792	1792	0.11617	-	CHISHOLM7 345.00 - WOODWARD DISTRICT EHV 345KV CKT 1
FDNSLock-Blown up	06ALL	0	20WP	G15_039		Non-Converged Contingency	1792	1972	0.11284	-	BORDER 7345.00 - TUCO_2 345.00 345KV CKT 1
FDNSLock-Blown up	06ALL	0	20WP	G15_039		Non-Converged Contingency	1420	1775	0.11284	-	BORDER 7345.00 - TUCO_2 345.00 345KV CKT 2
FDNSLock-Blown up	06ALL	0	20WP	G15_039		Non-Converged Contingency	1792	1972	0.11284	-	BORDER 7345.00 345KV SWITCHED SHUNT
FDNSLock-Blown up	06ALL	0	20WP	G15_039		Non-Converged Contingency	717	789	0.11114	-	G14-057T 345.00 - LAWTON EASTSIDE 345KV CKT 1
FDNSLock-Blown up	06ALL	0	20WP	G15_039		Non-Converged Contingency	717	789	0.11114	-	G14-057T 345.00 - SUNNYSIDE 345KV CKT 1
FDNSLock-Blown up	06ALL	0	20WP	G15_039		Non-Converged Contingency	1420	1775	0.10549	-	G11_051T 345.00 - TATONGA7 345.00 345KV CKT 1
FDNSLock-Blown up	06ALL	0	20WP	G15_039		Non-Converged Contingency	1420	1775	0.10549	-	G11_051T 345.00 - WOODWARD DISTRICT EHV 345KV CKT 1
FDNSLock-Blown up	06ALL	0	20WP	G15_039		Non-Converged Contingency	1195	1195	0.10549	-	MATHWSN7 345.00 - TATONGA7 345.00 345KV CKT 1
FDNSLock-Blown up	06ALL	0	20WP	G15_039		Non-Converged Contingency	1793	1793	0.10197	-	G11-14T 345.00 - WOODWARD DISTRICT EHV 345KV CKT 1
FDNSLock-Blown up	06ALL	0	20WP	G15_039		Non-Converged Contingency	1716	1793	0.10197	-	G11-14T 345.00 - WOODWARD DISTRICT EHV 345KV CKT 2
FDNSLock-Blown up	06ALL	0	20WP	G15_039		Non-Converged Contingency	421	439	0.09841	-	CHISHOLM6 230.00 - SWEETWATER 230KV CKT 1
FDNSLock-Blown up	06ALL	0	20WP	G15_039		Non-Converged Contingency	435.02	457.73	0.09841	-	STATELINE INTERCHANGE - STLN-DEMARC6 230KV CKT 1
FDNSLock-Blown up	06ALL	0	20WP	G15_039		Non-Converged Contingency	439	439	0.09841	-	STLN-DEMARC6 - SWEETWATER 230KV CKT 1
FDNSLock-Blown up	06ALL	0	20WP	G15_039		Non-Converged Contingency	1561	1793	0.09096	-	THISTLE7 345.00 - WOODWARD DISTRICT EHV 345KV CKT 1
FDNSLock-Blown up	06ALL	0	20WP	G15_039		Non-Converged Contingency	1561	1793	0.09096	-	THISTLE7 345.00 - WOODWARD DISTRICT EHV 345KV CKT 1
FDNSLock-Blown up	06ALL	0	20WP	G15_039		Non-Converged Contingency	1561	1793	0.09096	-	THISTLE7 345.00 - WOODWARD DISTRICT EHV 345KV CKT 2
FDNSLock-Blown up	06ALL	0	20WP	G15_039		Non-Converged Contingency	1561	1793	0.09096	-	THISTLE7 345.00 - WOODWARD DISTRICT EHV 345KV CKT 2
FDNSLock-Blown up	06ALL	0	20WP	G15_039		Non-Converged Contingency	556.92	556.92	0.08636	-	HITCHLAND INTERCHANGE - MOORE COUNTY INTERCHANGE 230KV CKT 1
FDNSLock-Blown up	06ALL	0	20WP	G15_039		Non-Converged Contingency	556.92	556.92	0.08636	-	HITCHLAND INTERCHANGE - MOORE COUNTY INTERCHANGE 230KV CKT 1
FDNSLock-Blown up	06ALL	0	20WP	G15_039		Non-Converged Contingency	557	557	0.08344	-	GRAPEVINE INTERCHANGE - STATELINE INTERCHANGE 230KV CKT 1
FDNSLock-Blown up	06ALL	0	20WP	G15_039		Non-Converged Contingency	557	557	0.08344	-	GRAPEVINE INTERCHANGE - STATELINE INTERCHANGE 230KV CKT 1
FDNSLock-Blown up	06ALL	0	20WP	G15_039		Non-Converged Contingency	557	557	0.08189	-	GRAPEVINE INTERCHANGE - NICHOLS STATION 230KV CKT 1
FDNSLock-Blown up	06ALL	0	20WP	G15_039		Non-Converged Contingency	557	557	0.08189	-	GRAPEVINE INTERCHANGE - NICHOLS STATION 230KV CKT 1
FDNSLock-Blown up	06ALL	0	20WP	G15_039		Non-Converged Contingency	1792	1792	0.07693	-	TUCO INTERCHANGE - YOAKUM_345 345.00 345KV CKT 1
FDNSLock-Blown up	06ALL	0	20WP	G15_039		Non-Converged Contingency	329.05	360.92	0.07527	-	MOORE COUNTY INTERCHANGE - POTTER COUNTY INTERCHANGE 230KV CKT 1
FDNSLock-Blown up	06ALL	0	20WP	G15_039		Non-Converged Contingency	329.05	360.92	0.07527	-	MOORE COUNTY INTERCHANGE - POTTER COUNTY INTERCHANGE 230KV CKT 1
FDNSLock-Blown up	06ALL	0	20WP	G15_039		Non-Converged Contingency	557	557	0.03745	-	NEWHART 230 - POTTER COUNTY INTERCHANGE 230KV CKT 1
FDNSLock-Blown up	06ALL	2	16WP	G15_039		Non-Converged Contingency	987.16	1082.8	0.21573	-	G14_038T 345.00 - Hitchland Interchange 345KV CKT 1
FDNSLock-Blown up	06ALL	2	16WP	G15_039		Non-Converged Contingency	987.16	1082.8	0.21573	-	G14_038T 345.00 - POTTER COUNTY INTERCHANGE 345KV CKT 1
FDNSLock-Blown up	06ALL	2	16WP	G15_039		Non-Converged Contingency	560	560	0.21573	-	POTTER COUNTY INTERCHANGE (WAUK 90343-A) 345/230/13.2KV TRANSFORMER CKT 1
FDNSLock-Blown up	06ALL	2	16WP	G15_039		Non-Converged Contingency	1022	1124	0.16176	-	G14-074T 345.00 - OKLAUNION 345KV CKT 1
FDNSLock-Blown up	06ALL	2	16WP	G15_039		Non-Converged Contingency	1022	1124	0.16176	-	G14-074T 345.00 - TUCO INTERCHANGE 345KV CKT 1
FDNSLock-Blown up	06ALL	2	16WP	G15_039		Non-Converged Contingency	1792	1972	0.11479	-	BORDER 7345.00 - TUCO_2 345.00 345KV CKT 1
FDNSLock-Blown up	06ALL	2	16WP	G15_039		Non-Converged Contingency	1420	1775	0.11479	-	BORDER 7345.00 - TUCO_2 345.00 345KV CKT 2
FDNSLock-Blown up	06ALL	2	17G	G15_039		Non-Converged Contingency	956.09	1051.7	0.20651	-	G14_038T 345.00 - Hitchland Interchange 345KV CKT 1
FDNSLock-Blown up	06ALL	2	17G	G15_039		Non-Converged Contingency	956.09	1051.7	0.20651	-	G14_038T 345.00 - POTTER COUNTY INTERCHANGE 345KV CKT 1
FDNSLock-Blown up	06ALL	2	17G	G15_039		Non-Converged Contingency	560	560	0.20651	-	POTTER COUNTY INTERCHANGE (WAUK 90343-A) 345/230/13.2KV TRANSFORMER CKT 1
FDNSLock-Blown up	06ALL	2	17G	G15_039		Non-Converged Contingency	1022	1124	0.15521	-	G14-074T 345.00 - OKLAUNION 345KV CKT 1
FDNSLock-Blown up	06ALL	2	17G	G15_039		Non-Converged Contingency	1022	1124	0.15521	-	G14-074T 345.00 - TUCO INTERCHANGE 345KV CKT 1
FDNSLock-Blown up	06ALL	2	17G	G15_039		Non-Converged Contingency	1792	1972	0.10905	-	BORDER 7345.00 - TUCO_2 345.00 345KV CKT 1
FDNSLock-Blown up	06ALL	2	17G	G15_039		Non-Converged Contingency	1420	1775	0.10905	-	BORDER 7345.00 - TUCO_2 345.00 345KV CKT 2
FDNSLock-Blown up	06ALL	2	17SP	G15_039		Non-Converged Contingency	956	1042	0.15985	-	G14-074T 345.00 - OKLAUNION 345KV CKT 1
FDNSLock-Blown up	06NR	2	20L	G15_039		Non-Converged Contingency	318.7	350.57	0.56691	-	DEAF SMITH COUNTY INTERCHANGE - G15039_T 230.00 230KV CKT 1
FDNSLock-Blown up	06NR	2	20L	G15_039		Non-Converged Contingency	318.7	350.57	0.29129	-	BUSHLAND INTERCHANGE - POTTER COUNTY INTERCHANGE 230KV CKT 1
FDNSLock-Blown up	06NR	2	20L	G15_039		Non-Converged Contingency	318.7	350.57	0.29129	-	BUSHLAND INTERCHANGE - POTTER COUNTY INTERCHANGE 230KV CKT 1
FDNSLock-Blown up	06ALL	2	20L	G15_039		Non-Converged Contingency	0	0	0.25505	-	P12:345:SPS:J07.1.FINN.HITCH
FDNSLock-Blown up	06ALL	2	20L	G15_039		Non-Converged Contingency	956.09	1051.7	0.1762	-	G14_038T 345.00 - Hitchland Interchange 345KV CKT 1
FDNSLock-Blown up	06ALL	2	20L	G15_039		Non-Converged Contingency	956.09	1051.7	0.1762	-	G14_038T 345.00 - POTTER COUNTY INTERCHANGE 345KV CKT 1
FDNSLock-Blown up	06ALL	2	20L	G15_039		Non-Converged Contingency	560	560	0.1762	-	POTTER COUNTY INTERCHANGE (WAUK 90343-A) 345/230/13.2KV TRANSFORMER CKT 1
FDNSLock-Blown up	06ALL	2	20L	G15_039		Non-Converged Contingency	560	560	0.1762	-	POTTER COUNTY INTERCHANGE (WAUK 90343-A) 345/230/13.2KV TRANSFORMER CKT 1
FDNSLock-Blown up	06ALL	2	20L	G15_039		Non-Converged Contingency	956.09	1051.7	0.13613	-	Hitchland Interchange - WALKTAP7 345.00 345KV CKT 1
FDNSLock-Blown up	06ALL	2	20L	G15_039		Non-Converged Contingency	956.09	1051.7	0.13613	-	Hitchland Interchange - WALKTAP7 345.00 345KV CKT 1
FDNSLock-Blown up	06ALL	2	20L	G15_039		Non-Converged Contingency	0	0	0.13229	-	P12:230:AEPW:ELKCITY6:SWEETWT6
FDNSLock-Blown up	06ALL	2	20L	G15_039		Non-Converged Contingency	1022	1124	0.128	-	G14-074T 345.00 - OKLAUNION 345KV CKT 1
FDNSLock-Blown up	06ALL	2	20L	G15_039		Non-Converged Contingency	1022	1124	0.128	-	G14-074T 345.00 - TUCO INTERCHANGE 345KV CKT 1
FDNSLock-Blown up	06ALL	2	20L	G15_039		Non-Converged Contingency	1022	1124	0.128	-	OKLAUNION 345KV SWITCHED SHUNT
FDNSLock-Blown up	06ALL	2	20L	G15_039		Non-Converged Contingency	1584	2098	0.12162	-	CHISHOLM7 345.00 - GRACEMONT 345KV CKT 1
FDNSLock-Blown up	06ALL	2	20L	G15_039		Non-Converged Contingency	1792	1972	0.09232	-	BORDER 7345.00 - TUCO_2 345.00 345KV CKT 1
FDNSLock-Blown up	06ALL	2	20L	G15_039		Non-Converged Contingency	1420	1775	0.09232	-	BORDER 7345.00 - TUCO_2 345.00 345KV CKT 2
FDNSLock-Blown up	06ALL	2	20L	G15_039		Non-Converged Contingency	1195	1195	0.09132	-	MATHWSN7 345.00 - TATONGA7 345.00 345KV CKT 1
FDNSLock-Blown up	06ALL	2	20L	G15_039		Non-Converged Contingency	421	439	0.08309	-	CHISHOLM6 230.00 - SWEETWATER 230KV CKT 1
FDNSLock-Blown up	06ALL	2	20SP	G15_039		Non-Converged Contingency	956	1042	0.16215	-	G14-074T 345.00 - OKLAUNION 345KV CKT 1
FDNSLock-Blown up	06ALL	2	20WP	G15_039		Non-Converged Contingency	987.16	1082.8	0.20496	-	G14_038T 345.00 - Hitchland Interchange 345KV CKT 1
FDNSLock-Blown up	06ALL	2	20WP	G15_039		Non-Converged Contingency	987.16	1082.8	0.20496	-	G14_038T 345.00 - POTTER COUNTY INTERCHANGE 345KV CKT 1
FDNSLock-Blown up	06ALL	2	20WP	G15_039		Non-Converged Contingency	560	560	0.20496	-	POTTER COUNTY INTERCHANGE (WAUK 90343-A) 345/230/13.2KV TRANSFORMER CKT 1
FDNSLock-Blown up	06ALL	2	20WP	G15_039		Non-Converged Contingency	560	560	0.20496	-	POTTER COUNTY INTERCHANGE (WAUK 90343-A) 345/230/13.2KV TRANSFORMER CKT 1
FDNSLock-Blown up	06ALL	2	20WP	G15_039		Non-Converged Contingency	1022	1124	0.15745	-	G14-074T 345.00 - OKLAUNION 345KV CKT 1
FDNSLock-Blown up	06ALL	2	20WP	G15_039		Non-Converged Contingency	1022	1124	0.15745	-	G14-074T 345.00 - TUCO INTERCHANGE 345KV CKT 1

SOLUTION	GROUP	SCENARIO	SEASON	SOURCE	DIRECTION	MONITORED ELEMENT	RATEA (MVA)	RATEB(MVA)	TDF	TC%LOADING (% MVA)	CONTINGENCY
FDNSLock-Blown up	06ALL	2	20WP	G15_039		Non-Converged Contingency	1792	1972	0.11304	-	BORDER 7345.00 - TUCO_2 345.00 345KV CKT 1
FDNSLock-Blown up	06ALL	2	20WP	G15_039		Non-Converged Contingency	1420	1775	0.11304	-	BORDER 7345.00 - TUCO_2 345.00 345KV CKT 2
FDNSLock-Blown up	06ALL	3	16WP	G15_039		Non-Converged Contingency	1022	1124	0.17053	-	G14-074T 345.00 - OKLAUNION 345KV CKT 1
FDNSLock-Blown up	06ALL	3	16WP	G15_039		Non-Converged Contingency	1022	1124	0.17053	-	G14-074T 345.00 - TUCO INTERCHANGE 345KV CKT 1
FDNSLock-Blown up	06ALL	3	17SP	G15_039		Non-Converged Contingency	956	1042	0.16778	-	G14-074T 345.00 - OKLAUNION 345KV CKT 1
FDNSLock-Blown up	06ALL	3	20L	G15_039		Non-Converged Contingency	956.09	1051.7	0.17119	-	G14_038T 345.00 - Hitchland Interchange 345KV CKT 1
FDNSLock-Blown up	06ALL	3	20L	G15_039		Non-Converged Contingency	956.09	1051.7	0.17119	-	G14_038T 345.00 - POTTER COUNTY INTERCHANGE 345KV CKT 1
FDNSLock-Blown up	06ALL	3	20L	G15_039		Non-Converged Contingency	560	560	0.17119	-	POTTER COUNTY INTERCHANGE (WAUK 90343-A) 345/230/13.2KV TRANSFORMER CKT 1
FDNSLock-Blown up	06ALL	3	20L	G15_039		Non-Converged Contingency	956.09	1051.7	0.13421	-	Hitchland Interchange - WALKTAP7 345.00 345KV CKT 1
FDNSLock-Blown up	06ALL	3	20L	G15_039		Non-Converged Contingency	1022	1124	0.13347	-	G14-074T 345.00 - OKLAUNION 345KV CKT 1
FDNSLock-Blown up	06ALL	3	20L	G15_039		Non-Converged Contingency	1022	1124	0.13347	-	G14-074T 345.00 - TUCO INTERCHANGE 345KV CKT 1
FDNSLock-Blown up	06ALL	3	20L	G15_039		Non-Converged Contingency	1584	2098	0.12331	-	CHISHOLM7 345.00 - GRACEMONT 345KV CKT 1
FDNSLock-Blown up	06ALL	3	20L	G15_039		Non-Converged Contingency	1792	1972	0.0986	-	BORDER 7345.00 - TUCO_2 345.00 345KV CKT 1
FDNSLock-Blown up	06ALL	3	20L	G15_039		Non-Converged Contingency	1420	1775	0.0986	-	BORDER 7345.00 - TUCO_2 345.00 345KV CKT 2
FDNSLock-Blown up	06ALL	3	20L	G15_039		Non-Converged Contingency	1195	1195	0.09033	-	MATHWSN7 345.00 - TATONGA7 345.00 345KV CKT 1
FDNSLock-Blown up	06ALL	3	20L	G15_039		Non-Converged Contingency	421	439	0.07883	-	CHISHOLM6 230.00 - SWEETWATER 230KV CKT 1
FDNSLock-Blown up	06ALL	3	20SP	G15_039		Non-Converged Contingency	956	1042	0.16773	-	G14-074T 345.00 - OKLAUNION 345KV CKT 1
FDNSLock-Blown up	06ALL	3	20WP	G15_039		Non-Converged Contingency	987.16	1082.8	0.19862	-	G14_038T 345.00 - Hitchland Interchange 345KV CKT 1
FDNSLock-Blown up	06ALL	3	20WP	G15_039		Non-Converged Contingency	987.16	1082.8	0.19862	-	G14_038T 345.00 - POTTER COUNTY INTERCHANGE 345KV CKT 1
FDNSLock-Blown up	06ALL	3	20WP	G15_039		Non-Converged Contingency	1022	1124	0.16315	-	G14-074T 345.00 - OKLAUNION 345KV CKT 1
FDNSLock-Blown up	06ALL	3	20WP	G15_039		Non-Converged Contingency	1022	1124	0.16315	-	G14-074T 345.00 - TUCO INTERCHANGE 345KV CKT 1
FDNSLock-Blown up	06ALL	3	20WP	G15_039		Non-Converged Contingency	1792	1972	0.11981	-	BORDER 7345.00 - TUCO_2 345.00 345KV CKT 1
FDNSLock-Blown up	06ALL	3	20WP	G15_039		Non-Converged Contingency	1420	1775	0.11981	-	BORDER 7345.00 - TUCO_2 345.00 345KV CKT 2
FDNSLock-Blown up	06ALL	4	16WP	G15_039		Non-Converged Contingency	1022	1124	0.16447	-	G14-074T 345.00 - OKLAUNION 345KV CKT 1
FDNSLock-Blown up	06ALL	4	17G	G15_039		Non-Converged Contingency	956.09	1051.7	0.21269	-	G14_038T 345.00 - Hitchland Interchange 345KV CKT 1
FDNSLock-Blown up	06ALL	4	17G	G15_039		Non-Converged Contingency	956.09	1051.7	0.21269	-	G14_038T 345.00 - POTTER COUNTY INTERCHANGE 345KV CKT 1
FDNSLock-Blown up	06ALL	4	17G	G15_039		Non-Converged Contingency	1022	1124	0.15795	-	G14-074T 345.00 - OKLAUNION 345KV CKT 1
FDNSLock-Blown up	06ALL	4	17G	G15_039		Non-Converged Contingency	1022	1124	0.15795	-	G14-074T 345.00 - TUCO INTERCHANGE 345KV CKT 1
FDNSLock-Blown up	06ALL	4	20L	G15_039		Non-Converged Contingency	0	0	0.25767	-	P12:345:SPS:J07.1.FINN.HITCH
FDNSLock-Blown up	06ALL	4	20L	G15_039		Non-Converged Contingency	956.09	1051.7	0.183	-	G14_038T 345.00 - Hitchland Interchange 345KV CKT 1
FDNSLock-Blown up	06ALL	4	20L	G15_039		Non-Converged Contingency	956.09	1051.7	0.183	-	G14_038T 345.00 - POTTER COUNTY INTERCHANGE 345KV CKT 1
FDNSLock-Blown up	06ALL	4	20L	G15_039		Non-Converged Contingency	956.09	1051.7	0.13753	-	Hitchland Interchange - WALKTAP7 345.00 345KV CKT 1
FDNSLock-Blown up	06ALL	4	20L	G15_039		Non-Converged Contingency	956.09	1051.7	0.13753	-	Hitchland Interchange - WALKTAP7 345.00 345KV CKT 1
FDNSLock-Blown up	06ALL	4	20L	G15_039		Non-Converged Contingency	0	0	0.13063	-	P12:230:AEPW:ELKCITY6:SWEETWT6
FDNSLock-Blown up	06ALL	4	20L	G15_039		Non-Converged Contingency	1022	1124	0.12979	-	G14-074T 345.00 - OKLAUNION 345KV CKT 1
FDNSLock-Blown up	06ALL	4	20L	G15_039		Non-Converged Contingency	1022	1124	0.12979	-	G14-074T 345.00 - TUCO INTERCHANGE 345KV CKT 1
FDNSLock-Blown up	06ALL	4	20L	G15_039		Non-Converged Contingency	1584	2098	0.1228	-	CHISHOLM7 345.00 - GRACEMONT 345KV CKT 1
FDNSLock-Blown up	06ALL	4	20L	G15_039		Non-Converged Contingency	1792	1972	0.0945	-	BORDER 7345.00 - TUCO_2 345.00 345KV CKT 1
FDNSLock-Blown up	06ALL	4	20L	G15_039		Non-Converged Contingency	1420	1775	0.0945	-	BORDER 7345.00 - TUCO_2 345.00 345KV CKT 2
FDNSLock-Blown up	06ALL	4	20WP	G15_039		Non-Converged Contingency	987.16	1082.8	0.21351	-	G14_038T 345.00 - Hitchland Interchange 345KV CKT 1
FDNSLock-Blown up	06ALL	4	20WP	G15_039		Non-Converged Contingency	1022	1124	0.15772	-	G14-074T 345.00 - OKLAUNION 345KV CKT 1
FDNSLock-Blown up	06ALL	4	20WP	G15_039		Non-Converged Contingency	1022	1124	0.15772	-	G14-074T 345.00 - TUCO INTERCHANGE 345KV CKT 1
FDNSLock-Blown up	06ALL	5	16WP	G15_039		Non-Converged Contingency	1022	1124	0.15476	-	G14-074T 345.00 - OKLAUNION 345KV CKT 1
FDNSLock-Blown up	06ALL	5	17G	G15_039		Non-Converged Contingency	1022	1124	0.14873	-	G14-074T 345.00 - OKLAUNION 345KV CKT 1
FDNSLock-Blown up	06ALL	5	20L	G15_039		Non-Converged Contingency	1022	1124	0.12289	-	G14-074T 345.00 - OKLAUNION 345KV CKT 1
FDNSLock-Blown up	06ALL	5	20WP	G15_039		Non-Converged Contingency	1022	1124	0.14801	-	G14-074T 345.00 - OKLAUNION 345KV CKT 1
FDNSLock-Blown up	06ALL	6	17G	G15_039		Non-Converged Contingency	1022	1124	0.14155	-	G14-074T 345.00 - OKLAUNION 345KV CKT 1
FDNSLock-Blown up	06ALL	6	20L	G15_039		Non-Converged Contingency	1022	1124	0.11665	-	G14-074T 345.00 - OKLAUNION 345KV CKT 1
FDNSLock-Blown up	06ALL	6	20WP	G15_039		Non-Converged Contingency	1022	1124	0.14094	-	G14-074T 345.00 - OKLAUNION 345KV CKT 1
FDNS	06ALL	0	17SP	G15_039	FROM->TO	BUSHLAND INTERCHANGE - HILLSIDE 115KV CKT 1	159	160	0.20887	104.4345	BUSHLAND INTERCHANGE - POTTER COUNTY INTERCHANGE 230KV CKT 1
FDNS	06ALL	0	17SP	G15_039	FROM->TO	BUSHLAND INTERCHANGE - HILLSIDE 115KV CKT 1	159	160	0.20887	104.4345	BUSHLAND INTERCHANGE - POTTER COUNTY INTERCHANGE 230KV CKT 1
FDNS	06ALL	0	16WP	G15_039	FROM->TO	BUSHLAND INTERCHANGE - POTTER COUNTY INTERCHANGE 230KV CKT 1	329.05	360.92	0.39807	110.3031	BUSHLAND INTERCHANGE - HILLSIDE 115KV CKT 1
FDNS	06ALL	0	16WP	G15_039	FROM->TO	BUSHLAND INTERCHANGE - POTTER COUNTY INTERCHANGE 230KV CKT 1	329.05	360.92	0.39807	109.9451	BUSHLAND INTERCHANGE (WH 7001795) 230/115/13.2KV TRANSFORMER CKT 1
FDNS	06ALL	0	16WP	G15_039	FROM->TO	BUSHLAND INTERCHANGE - POTTER COUNTY INTERCHANGE 230KV CKT 1	329.05	360.92	0.39807	109.9451	BUSHLAND INTERCHANGE (WH 7001795) 230/115/13.2KV TRANSFORMER CKT 1
FDNS	06ALL	0	16WP	G15_039	FROM->TO	BUSHLAND INTERCHANGE - POTTER COUNTY INTERCHANGE 230KV CKT 1	329.05	360.92	0.39807	109.2884	P12:115:SPS:V52.1.COLTR.BSHLND
FDNS	06ALL	0	16WP	G15_039	FROM->TO	BUSHLAND INTERCHANGE - POTTER COUNTY INTERCHANGE 230KV CKT 1	329.05	360.92	0.39807	107.9936	COULTER INTERCHANGE - HILLSIDE 115KV CKT 1
FDNS	06ALL	0	16WP	G15_039	FROM->TO	BUSHLAND INTERCHANGE - POTTER COUNTY INTERCHANGE 230KV CKT 1	329.05	360.92	0.35217	103.4995	BASE CASE
FDNS	06ALL	0	16WP	G15_039	FROM->TO	BUSHLAND INTERCHANGE - POTTER COUNTY INTERCHANGE 230KV CKT 1	329.05	360.92	0.37893	102.1422	P12:115:SPS:V05.1.OSAGE.WCANYON
FDNS	06ALL	0	16WP	G15_039	FROM->TO	BUSHLAND INTERCHANGE - POTTER COUNTY INTERCHANGE 230KV CKT 1	329.05	360.92	0.37893	101.9943	CANYON E_TP3115.00 - RANDALL COUNTY INTERCHANGE 115KV CKT 1
FDNS	06ALL	0	16WP	G15_039	FROM->TO	BUSHLAND INTERCHANGE - POTTER COUNTY INTERCHANGE 230KV CKT 1	329.05	360.92	0.36412	101.3067	CASTRO COUNTY INTERCHANGE - NEWHART 115KV CKT 1
FDNS	06ALL	0	16WP	G15_039	FROM->TO	BUSHLAND INTERCHANGE - POTTER COUNTY INTERCHANGE 230KV CKT 1	329.05	360.92	0.36412	101.3067	CASTRO COUNTY INTERCHANGE - NEWHART 115KV CKT 1
FDNS	06NR	0	17G	G15_039	FROM->TO	BUSHLAND INTERCHANGE - POTTER COUNTY INTERCHANGE 230KV CKT 1	318.7	350.57	0.33065	101.2444	BUSHLAND INTERCHANGE - HILLSIDE 115KV CKT 1
FDNS	06NR	0	17G	G15_039	FROM->TO	BUSHLAND INTERCHANGE - POTTER COUNTY INTERCHANGE 230KV CKT 1	318.7	350.57	0.33065	101.1735	BUSHLAND INTERCHANGE (WH 7001795) 230/115/13.2KV TRANSFORMER CKT 1
FDNS	06NR	0	17G	G15_039	FROM->TO	BUSHLAND INTERCHANGE - POTTER COUNTY INTERCHANGE 230KV CKT 1	318.7	350.57	0.33065	101.1735	BUSHLAND INTERCHANGE (WH 7001795) 230/115/13.2KV TRANSFORMER CKT 1
FDNS	06NR	0	17G	G15_039	FROM->TO	BUSHLAND INTERCHANGE - POTTER COUNTY INTERCHANGE 230KV CKT 1	318.7	350.57	0.33065	100.4335	P12:115:SPS:V52.1.COLTR.BSHLND
FDNS	06ALL	0	20L	G15_039	FROM->TO	BUSHLAND INTERCHANGE - POTTER COUNTY INTERCHANGE 230KV CKT 1	318.7	350.57	0.37508	100.3604	BUSHLAND INTERCHANGE (WH 7001795) 230/115/13.2KV TRANSFORMER CKT 1
FDNS	06ALL	0	20L	G15_039	FROM->TO	BUSHLAND INTERCHANGE - POTTER COUNTY INTERCHANGE 230KV CKT 1	318.7	350.57	0.37508	100.3604	BUSHLAND INTERCHANGE (WH 7001795) 230/115/13.2KV TRANSFORMER CKT 1
FDNS	06ALL	0	20WP	G15_039	FROM->TO	BUSHLAND INTERCHANGE - POTTER COUNTY INTERCHANGE 230KV CKT 1	329.05	360.92	0.38342	100.2645	BUSHLAND INTERCHANGE (WH 7001795) 230/115/13.2KV TRANSFORMER CKT 1
FDNS	06ALL	0	20WP	G15_039	FROM->TO	BUSHLAND INTERCHANGE - POTTER COUNTY INTERCHANGE 230KV CKT 1	329.05	360.92	0.38342	100.2645	BUSHLAND INTERCHANGE (WH 7001795) 230/115/13.2KV TRANSFORMER CKT 1
FDNS	06ALL	0	20WP	G15_039	FROM->TO	BUSHLAND INTERCHANGE - POTTER COUNTY INTERCHANGE 230KV CKT 1	329.05	360.92	0.38342	100.2413	BUSHLAND INTERCHANGE - HILLSIDE 115KV CKT 1
FDNS	06ALL	0	20L	G15_039	FROM->TO	BUSHLAND INTERCHANGE - POTTER COUNTY INTERCHANGE 230KV CKT 1	318.7	350.57	0.37508	100	P12:115:SPS:V52.1.COLTR.BSHLND
FDNS	06ALL	0	16WP	G15_039	FROM->TO	BUSHLAND INTERCHANGE - POTTER COUNTY INTERCHANGE 230KV CKT 1	329.05	360.92	0.34855	99.9	CHERRY1 - POTTER COUNTY INTERCHANGE 230KV CKT 1
FDNS	06ALL	0	16WP	G15_039	FROM->TO	BUSHLAND INTERCHANGE - POTTER COUNTY INTERCHANGE 230KV CKT 1	329.05	360.92	0.34855	99.9	CHERRY1 - POTTER COUNTY INTERCHANGE 230KV CKT 1
FDNS	06ALL	0	20WP	G15_039	FROM->TO	BUSHLAND INTERCHANGE - POTTER COUNTY INTERCHANGE 230KV CKT 1	329.05	360.92	0.38342	99.6	P12:115:SPS:V52.1.COLTR.BSHLND
FDNS	06ALL	0	17SP	G15_039	FROM->TO	BUSHLAND INTERCHANGE (WH 7001795) 230/115/13.2KV TRANSFORMER CKT 1	168	168	0.20887	105.1032	BUSHLAND INTERCHANGE - POTTER COUNTY INTERCHANGE 230KV CKT 1
FDNS	06ALL	0	17SP	G15_039	FROM->TO	BUSHLAND INTERCHANGE (WH 7001795) 230/115/13.2KV TRANSFORMER CKT 1	168	168	0.20887	105.1032	BUSHLAND INTERCHANGE - POTTER COUNTY INTERCHANGE 230KV CKT 1
FDNS	06ALL	0	17SP	G15_039	FROM->TO	BUSHLAND INTERCHANGE (WH 7001795) 230/115/13.2KV TRANSFORMER CKT 1	168	168	0.20887	101.5276	BUSHLAND INTERCHANGE - POTTER COUNTY INTERCHANGE 230KV CKT 1
FDNS	06ALL	0	17SP	G15_039	FROM->TO	BUSHLAND INTERCHANGE (WH 7001795) 230/115/13.2KV TRANSFORMER CKT 1	168	168	0.20887	101.5276	BUSHLAND INTERCHANGE - POTTER COUNTY INTERCHANGE 230KV CKT 1
FDNS	06ALL	0	20SP	G15_039	FROM->TO	CHISHOLM6 230.00 - ELK CITY 230KV 230KV CKT 1	353	353	0.06233	106.4803	BASE CASE

SOLUTION	GROUP	SCENARIO	SEASON	SOURCE	DIRECTION	MONITORED ELEMENT	RATEA (MVA)	RATEB(MVA)	TDF	TC%LOADING (% MVA)	CONTINGENCY
FDNS	06ALL	0	17SP	G15_039	FROM->TO	CHISHOLM6 230.00 - ELK CITY 230KV 230KV CKT 1	353	353	0.06248	104.7427	BASE CASE
FDNS	06ALL	0	17SP	G15_039	TO->FROM	CIMARRON - MINCO 345KV CKT 1	956	956	0.21088	123.2446	G14-057T 345.00 - SUNNYSIDE 345KV CKT 1
FDNS	06ALL	0	20SP	G15_039	TO->FROM	CIMARRON - MINCO 345KV CKT 1	956	956	0.2118	120.5642	G14-057T 345.00 - SUNNYSIDE 345KV CKT 1
FDNS	06ALL	0	17SP	G15_039	TO->FROM	CIMARRON - MINCO 345KV CKT 1	956	956	0.21088	117.8925	G14-057T 345.00 - LAWTON EASTSIDE 345KV CKT 1
FDNS	06ALL	0	20SP	G15_039	TO->FROM	CIMARRON - MINCO 345KV CKT 1	956	956	0.2118	115.1699	G14-057T 345.00 - LAWTON EASTSIDE 345KV CKT 1
FDNS	06ALL	0	20SP	G15_039	TO->FROM	CIMARRON - MINCO 345KV CKT 1	956	956	0.20075	102.9387	CHISHOLM7 345.00 - WOODWARD DISTRICT EHV 345KV CKT 1
FDNS	06ALL	0	17SP	G15_039	TO->FROM	CIMARRON - MINCO 345KV CKT 1	956	956	0.19922	102.0892	CHISHOLM7 345.00 - WOODWARD DISTRICT EHV 345KV CKT 1
FDNS	06ALL	0	20SP	G15_039	TO->FROM	DEAF SMITH COUNTY INTERCHANGE - G15039_T 230.00 230KV CKT 1	318.7	350.57	0.627	121.4644	G14-074T 345.00 - TUCO INTERCHANGE 345KV CKT 1
FDNS	06ALL	0	17SP	G15_039	TO->FROM	DEAF SMITH COUNTY INTERCHANGE - G15039_T 230.00 230KV CKT 1	318.7	350.57	0.64092	121.2492	NEWHART 230 - PLANT X STATION 230KV CKT 1
FDNS	06ALL	0	20SP	G15_039	TO->FROM	DEAF SMITH COUNTY INTERCHANGE - G15039_T 230.00 230KV CKT 1	318.7	350.57	0.63159	120.5533	NEWHART 230 - PLANT X STATION 230KV CKT 1
FDNS	06ALL	0	20SP	G15_039	TO->FROM	DEAF SMITH COUNTY INTERCHANGE - G15039_T 230.00 230KV CKT 1	318.7	350.57	0.61991	116.1866	NEWHART 230 - POTTER COUNTY INTERCHANGE 230KV CKT 1
FDNS	06ALL	0	17SP	G15_039	TO->FROM	DEAF SMITH COUNTY INTERCHANGE - G15039_T 230.00 230KV CKT 1	318.7	350.57	0.6259	114.9422	NEWHART 230 - POTTER COUNTY INTERCHANGE 230KV CKT 1
FDNS	06ALL	0	20SP	G15_039	TO->FROM	DEAF SMITH COUNTY INTERCHANGE - G15039_T 230.00 230KV CKT 1	318.7	350.57	0.61454	114.5348	AMARILLO SOUTH INTERCHANGE - G15031_T 230.00 230KV CKT 1
FDNS	06ALL	0	17SP	G15_039	TO->FROM	DEAF SMITH COUNTY INTERCHANGE - G15039_T 230.00 230KV CKT 1	318.7	350.57	0.63669	113.9566	TOLK STATION EAST - TUCO INTERCHANGE 230KV CKT 1
FDNS	06ALL	0	17SP	G15_039	TO->FROM	DEAF SMITH COUNTY INTERCHANGE - G15039_T 230.00 230KV CKT 1	318.7	350.57	0.63669	113.9566	TOLK STATION EAST - TUCO INTERCHANGE 230KV CKT 1
FDNS	06ALL	0	20SP	G15_039	TO->FROM	DEAF SMITH COUNTY INTERCHANGE - G15039_T 230.00 230KV CKT 1	318.7	350.57	0.57265	113.6915	P12:115:SPS:T04.1.DFSMTH.CASTRO
FDNS	06ALL	0	17SP	G15_039	TO->FROM	DEAF SMITH COUNTY INTERCHANGE - G15039_T 230.00 230KV CKT 1	318.7	350.57	0.61987	112.863	AMARILLO SOUTH INTERCHANGE - G15031_T 230.00 230KV CKT 1
FDNS	06ALL	0	17SP	G15_039	TO->FROM	DEAF SMITH COUNTY INTERCHANGE - G15039_T 230.00 230KV CKT 1	318.7	350.57	0.57658	112.3632	P12:115:SPS:T04.1.DFSMTH.CASTRO
FDNS	06ALL	0	20SP	G15_039	TO->FROM	DEAF SMITH COUNTY INTERCHANGE - G15039_T 230.00 230KV CKT 1	318.7	350.57	0.59362	112.1275	CURRY COUNTY INTERCHANGE - DEAF SMITH REC-#20 115KV CKT 1
FDNS	06ALL	0	17SP	G15_039	TO->FROM	DEAF SMITH COUNTY INTERCHANGE - G15039_T 230.00 230KV CKT 1	318.7	350.57	0.59882	110.8712	CURRY COUNTY INTERCHANGE - DEAF SMITH REC-#20 115KV CKT 1
FDNS	06ALL	0	20SP	G15_039	TO->FROM	DEAF SMITH COUNTY INTERCHANGE - G15039_T 230.00 230KV CKT 1	318.7	350.57	0.62589	110.6571	TOLK STATION EAST - TUCO INTERCHANGE 230KV CKT 1
FDNS	06ALL	0	20SP	G15_039	TO->FROM	DEAF SMITH COUNTY INTERCHANGE - G15039_T 230.00 230KV CKT 1	318.7	350.57	0.62589	110.6571	TOLK STATION EAST - TUCO INTERCHANGE 230KV CKT 1
FDNS	06ALL	0	20SP	G15_039	TO->FROM	DEAF SMITH COUNTY INTERCHANGE - G15039_T 230.00 230KV CKT 1	318.7	350.57	0.61523	110.3482	TUCO INTERCHANGE - TUCO_2 345.00 345KV CKT 1
FDNS	06ALL	0	20SP	G15_039	TO->FROM	DEAF SMITH COUNTY INTERCHANGE - G15039_T 230.00 230KV CKT 1	318.7	350.57	0.61251	110.3343	BASE CASE
FDNS	06NR	0	17G	G15_039	TO->FROM	DEAF SMITH COUNTY INTERCHANGE - G15039_T 230.00 230KV CKT 1	318.7	350.57	0.56095	110.3216	NEWHART 230 - PLANT X STATION 230KV CKT 1
FDNS	06ALL	0	20SP	G15_039	TO->FROM	DEAF SMITH COUNTY INTERCHANGE - G15039_T 230.00 230KV CKT 1	318.7	350.57	0.59362	110.0741	DEAF SMITH REC-#20 - PARMER COUNTY SUB 115KV CKT 1
FDNS	06ALL	0	20SP	G15_039	TO->FROM	DEAF SMITH COUNTY INTERCHANGE - G15039_T 230.00 230KV CKT 1	318.7	350.57	0.59362	109.5447	DEAF SMITH REC-#24 - PARMER COUNTY SUB 115KV CKT 1
FDNS	06ALL	0	20SP	G15_039	TO->FROM	DEAF SMITH COUNTY INTERCHANGE - G15039_T 230.00 230KV CKT 1	318.7	350.57	0.61759	109.0204	CHISHOLM7 345.00 - WOODWARD DISTRICT EHV 345KV CKT 1
FDNS	06ALL	0	17SP	G15_039	TO->FROM	DEAF SMITH COUNTY INTERCHANGE - G15039_T 230.00 230KV CKT 1	318.7	350.57	0.59882	108.8615	DEAF SMITH REC-#20 - PARMER COUNTY SUB 115KV CKT 1
FDNS	06ALL	0	17SP	G15_039	TO->FROM	DEAF SMITH COUNTY INTERCHANGE - G15039_T 230.00 230KV CKT 1	318.7	350.57	0.61753	108.4885	BASE CASE
FDNS	06ALL	0	17SP	G15_039	TO->FROM	DEAF SMITH COUNTY INTERCHANGE - G15039_T 230.00 230KV CKT 1	318.7	350.57	0.59882	108.2876	DEAF SMITH REC-#24 - PARMER COUNTY SUB 115KV CKT 1
FDNS	06ALL	0	20SP	G15_039	TO->FROM	DEAF SMITH COUNTY INTERCHANGE - G15039_T 230.00 230KV CKT 1	318.7	350.57	0.59362	107.7737	CARGILL SUB - DEAF SMITH REC-#24 115KV CKT 1
FDNS	06ALL	0	20SP	G15_039	TO->FROM	DEAF SMITH COUNTY INTERCHANGE - G15039_T 230.00 230KV CKT 1	318.7	350.57	0.59362	107.6827	P12:115:SPS:T59.1.CARGIL.CURRY
FDNS	06ALL	0	17SP	G15_039	TO->FROM	DEAF SMITH COUNTY INTERCHANGE - G15039_T 230.00 230KV CKT 1	318.7	350.57	0.61912	107.0286	TUCO INTERCHANGE - TUCO_2 345.00 345KV CKT 1
FDNS	06ALL	0	17SP	G15_039	TO->FROM	DEAF SMITH COUNTY INTERCHANGE - G15039_T 230.00 230KV CKT 1	318.7	350.57	0.62226	106.847	CHISHOLM7 345.00 - WOODWARD DISTRICT EHV 345KV CKT 1
FDNS	06ALL	0	17SP	G15_039	TO->FROM	DEAF SMITH COUNTY INTERCHANGE - G15039_T 230.00 230KV CKT 1	318.7	350.57	0.59882	106.6926	CARGILL SUB - DEAF SMITH REC-#24 115KV CKT 1
FDNS	06ALL	0	20SP	G15_039	TO->FROM	DEAF SMITH COUNTY INTERCHANGE - G15039_T 230.00 230KV CKT 1	318.7	350.57	0.62148	106.5141	PLANT X STATION - SUNDOWN INTERCHANGE 230KV CKT 1
FDNS	06ALL	0	20SP	G15_039	TO->FROM	DEAF SMITH COUNTY INTERCHANGE - G15039_T 230.00 230KV CKT 1	318.7	350.57	0.62148	106.5141	PLANT X STATION - SUNDOWN INTERCHANGE 230KV CKT 1
FDNS	06ALL	0	17SP	G15_039	TO->FROM	DEAF SMITH COUNTY INTERCHANGE - G15039_T 230.00 230KV CKT 1	318.7	350.57	0.59882	106.5018	P12:115:SPS:T59.1.CARGIL.CURRY
FDNS	06ALL	0	20SP	G15_039	TO->FROM	DEAF SMITH COUNTY INTERCHANGE - G15039_T 230.00 230KV CKT 1	318.7	350.57	0.61251	106.1894	GEN523972 1-HARRINGTON GEN #2 24 KV
FDNS	06ALL	0	20SP	G15_039	TO->FROM	DEAF SMITH COUNTY INTERCHANGE - G15039_T 230.00 230KV CKT 1	318.7	350.57	0.61251	106.1849	GEN523973 1-HARRINGTON GEN #3 24 KV
FDNS	06ALL	0	20SP	G15_039	TO->FROM	DEAF SMITH COUNTY INTERCHANGE - G15039_T 230.00 230KV CKT 1	318.7	350.57	0.61251	106.1848	GEN523971 1-HARRINGTON GEN #1 24 KV
FDNS	06ALL	0	20SP	G15_039	TO->FROM	DEAF SMITH COUNTY INTERCHANGE - G15039_T 230.00 230KV CKT 1	318.7	350.57	0.61877	106.1295	TUCO INTERCHANGE - YOAKUM_345 345.00 345KV CKT 1
FDNS	06ALL	0	20SP	G15_039	TO->FROM	DEAF SMITH COUNTY INTERCHANGE - G15039_T 230.00 230KV CKT 1	318.7	350.57	0.59362	105.9703	CARGILL SUB - FRIONA SUB 115KV CKT 1
FDNS	06ALL	0	20SP	G15_039	TO->FROM	DEAF SMITH COUNTY INTERCHANGE - G15039_T 230.00 230KV CKT 1	318.7	350.57	0.61559	105.8225	PLANT X STATION (WH ALM20171) 230/115/13.2KV TRANSFORMER CKT 1
FDNS	06ALL	0	20SP	G15_039	TO->FROM	DEAF SMITH COUNTY INTERCHANGE - G15039_T 230.00 230KV CKT 1	318.7	350.57	0.61559	105.8225	PLANT X STATION (WH ALM20171) 230/115/13.2KV TRANSFORMER CKT 1
FDNS	06ALL	0	17SP	G15_039	TO->FROM	DEAF SMITH COUNTY INTERCHANGE - G15039_T 230.00 230KV CKT 1	318.7	350.57	0.62743	105.4804	SUNDOWN INTERCHANGE - WOLFFORTH INTERCHANGE 230KV CKT 1
FDNS	06ALL	0	17SP	G15_039	TO->FROM	DEAF SMITH COUNTY INTERCHANGE - G15039_T 230.00 230KV CKT 1	318.7	350.57	0.62743	105.4804	SUNDOWN INTERCHANGE - WOLFFORTH INTERCHANGE 230KV CKT 1
FDNS	06ALL	0	20SP	G15_039	TO->FROM	DEAF SMITH COUNTY INTERCHANGE - G15039_T 230.00 230KV CKT 1	318.7	350.57	0.61251	105.3803	P12:230:SPS:CL.1.BSHLND.WLDRDO
FDNS	06ALL	0	20SP	G15_039	TO->FROM	DEAF SMITH COUNTY INTERCHANGE - G15039_T 230.00 230KV CKT 1	318.7	350.57	0.61353	105.0442	CHISHOLM7 345.00 - GRACEMONT 345KV CKT 1
FDNS	06ALL	0	17SP	G15_039	TO->FROM	DEAF SMITH COUNTY INTERCHANGE - G15039_T 230.00 230KV CKT 1	318.7	350.57	0.59882	104.6317	CARGILL SUB - FRIONA SUB 115KV CKT 1
FDNS	06ALL	0	20SP	G15_039	TO->FROM	DEAF SMITH COUNTY INTERCHANGE - G15039_T 230.00 230KV CKT 1	318.7	350.57	0.59362	104.3347	DEAF SMITH REC-#6 - FRIONA SUB 115KV CKT 1
FDNS	06ALL	0	20SP	G15_039	TO->FROM	DEAF SMITH COUNTY INTERCHANGE - G15039_T 230.00 230KV CKT 1	318.7	350.57	0.61285	104.3331	KRESS INTERCHANGE - TULIA TAP 115KV CKT 1
FDNS	06ALL	0	17SP	G15_039	TO->FROM	DEAF SMITH COUNTY INTERCHANGE - G15039_T 230.00 230KV CKT 1	318.7	350.57	0.61753	104.2872	GEN523972 1-HARRINGTON GEN #2 24 KV
FDNS	06ALL	0	17SP	G15_039	TO->FROM	DEAF SMITH COUNTY INTERCHANGE - G15039_T 230.00 230KV CKT 1	318.7	350.57	0.61753	104.2824	GEN523973 1-HARRINGTON GEN #3 24 KV
FDNS	06ALL	0	17SP	G15_039	TO->FROM	DEAF SMITH COUNTY INTERCHANGE - G15039_T 230.00 230KV CKT 1	318.7	350.57	0.61753	104.2823	GEN523971 1-HARRINGTON GEN #1 24 KV
FDNS	06ALL	0	17SP	G15_039	TO->FROM	DEAF SMITH COUNTY INTERCHANGE - G15039_T 230.00 230KV CKT 1	318.7	350.57	0.62117	104.2164	PLANT X STATION (WH ALM20171) 230/115/13.2KV TRANSFORMER CKT 1
FDNS	06ALL	0	17SP	G15_039	TO->FROM	DEAF SMITH COUNTY INTERCHANGE - G15039_T 230.00 230KV CKT 1	318.7	350.57	0.62117	104.2164	PLANT X STATION (WH ALM20171) 230/115/13.2KV TRANSFORMER CKT 1
FDNS	06ALL	0	20SP	G15_039	TO->FROM	DEAF SMITH COUNTY INTERCHANGE - G15039_T 230.00 230KV CKT 1	318.7	350.57	0.61471	104.215	CIMARRON - MINCO 345KV CKT 1
FDNS	06ALL	0	17SP	G15_039	TO->FROM	DEAF SMITH COUNTY INTERCHANGE - G15039_T 230.00 230KV CKT 1	318.7	350.57	0.6185	104.1702	CHISHOLM7 345.00 - GRACEMONT 345KV CKT 1
FDNS	06ALL	0	20SP	G15_039	TO->FROM	DEAF SMITH COUNTY INTERCHANGE - G15039_T 230.00 230KV CKT 1	318.7	350.57	0.61285	104.1044	HAPPY INTERCHANGE - TULIA TAP 115KV CKT 1
FDNS	06ALL	0	20SP	G15_039	TO->FROM	DEAF SMITH COUNTY INTERCHANGE - G15039_T 230.00 230KV CKT 1	318.7	350.57	0.61285	103.9902	P12:115:SPS:T67.1.HAPPY.KRESS
FDNS	06ALL	0	17SP	G15_039	TO->FROM	DEAF SMITH COUNTY INTERCHANGE - G15039_T 230.00 230KV CKT 1	318.7	350.57	0.61753	103.8232	P12:230:SPS:CL.1.BSHLND.WLDRDO
FDNS	06ALL	0	17SP	G15_039	TO->FROM	DEAF SMITH COUNTY INTERCHANGE - G15039_T 230.00 230KV CKT 1	318.7	350.57	0.62546	103.791	PLANT X STATION - SUNDOWN INTERCHANGE 230KV CKT 1
FDNS	06ALL	0	17SP	G15_039	TO->FROM	DEAF SMITH COUNTY INTERCHANGE - G15039_T 230.00 230KV CKT 1	318.7	350.57	0.62546	103.791	PLANT X STATION - SUNDOWN INTERCHANGE 230KV CKT 1
FDNS	06ALL	0	20SP	G15_039	TO->FROM	DEAF SMITH COUNTY INTERCHANGE - G15039_T 230.00 230KV CKT 1	318.7	350.57	0.61471	103.7905	GRACEMONT - MINCO 345KV CKT 1
FDNS	06ALL	0	20SP	G15_039	TO->FROM	DEAF SMITH COUNTY INTERCHANGE - G15039_T 230.00 230KV CKT 1	318.7	350.57	0.61396	103.5596	BORDER 7345.00 - CHISHOLM7 345.00 345KV CKT 2
FDNS	06ALL	0	20SP	G15_039	TO->FROM	DEAF SMITH COUNTY INTERCHANGE - G15039_T 230.00 230KV CKT 1	318.7	350.57	0.61396	103.5594	BORDER 7345.00 - CHISHOLM7 345.00 345KV CKT 1
FDNS	06ALL	0	20SP	G15_039	TO->FROM	DEAF SMITH COUNTY INTERCHANGE - G15039_T 230.00 230KV CKT 1	318.7	350.57	0.59362	103.3092	DEAF SMITH REC-#6 - HEREFORD INTERCHANGE 115KV CKT 1
FDNS	06ALL	0	20SP	G15_039	TO->FROM	DEAF SMITH COUNTY INTERCHANGE - G15039_T 230.00 230KV CKT 1	318.7	350.57	0.61412	103.2342	G14-057T 345.00 - SUNNYSIDE 345KV CKT 1
FDNS	06ALL	0	20SP	G15_039	TO->FROM	DEAF SMITH COUNTY INTERCHANGE - G15039_T 230.00 230KV CKT 1	318.7	350.57	0.61764	103.2189	SUNDOWN INTERCHANGE - WOLFFORTH INTERCHANGE 230KV CKT 1
FDNS	06ALL	0	20SP	G15_039	TO->FROM	DEAF SMITH COUNTY INTERCHANGE - G15039_T 230.00 230KV CKT 1	318.7	350.57	0.61764	103.2189	SUNDOWN INTERCHANGE - WOLFFORTH INTERCHANGE 230KV CKT 1
FDNS	06ALL	0	20SP	G15_039	TO->FROM	DEAF SMITH COUNTY INTERCHANGE - G15039_T 230.00 230KV CKT 1	318.7	350.57	0.59362	103.2166	P12:115:SPS:T58.1.HERFRD.CARGIL
FDNS	06ALL	0	20WP	G15_039	TO->FROM	DEAF SMITH COUNTY INTERCHANGE - G15039_T 230.00 230KV CKT 1	329.05	360.92	0.62993	103.2124	NEWHART 230 - PLANT X STATION 230KV CKT 1
FDNS	06NR	0	17G	G15_039	TO->FROM	DEAF SMITH COUNTY INTERCHANGE - G15039_T 230.00 230KV CKT 1	318.7	350.57	0.5145	103.1436	P12:115:SPS:T04.1.DFSMTH.CASTRO
FDNS	06ALL	0	17SP	G15_039	TO->FROM	DEAF SMITH COUNTY INTERCHANGE - G15039_T 230.00 230KV CKT 1	318.7	350.57	0.59882	103.0918	DEAF SMITH REC-#6 - FRIONA SUB 115KV CKT 1
FDNS	06ALL	0	20SP	G15_039	TO->FROM	DEAF SMITH COUNTY INTERCHANGE - G15039_T 230.00 230KV CKT 1	318.7	350.57	0.61272	103.0807	LAMB COUNTY INTERCHANGE - TOLK STATION WEST 230KV CKT 1
FDNS	06ALL	0	20SP	G15_039	TO->FROM	DEAF SMITH COUNTY INTERCHANGE - G15039_T 230.00 230KV CKT 1	318.7	350.57	0.61272	103.0691	P12:230:SPS:K37.1.TOLK.LAMB
FDNS	06ALL	0	20SP	G15_039	TO->FROM	DEAF SMITH COUNTY INTERCHANGE - G15039_T 230.00 230KV CKT 1	318.7	350.57	0.61272	103.066	LAMB COUNTY INTERCHANGE (WH ALM20172) 230/115/13.2KV TRANSFORMER CKT 1

SOLUTION	GROUP	SCENARIO	SEASON	SOURCE	DIRECTION	MONITORED ELEMENT	RATEA (MVA)	RATEB(MVA)	TDF	TC%LOADING (% MVA)	CONTINGENCY
FDNS	06ALL	0	20SP	G15_039	TO->FROM	DEAF SMITH COUNTY INTERCHANGE - G15039_T 230.00 230KV CKT 1	318.7	350.57	0.61272	103.066	LAMB COUNTY INTERCHANGE (WH ALM20172) 230/115/13.2KV TRANSFORMER CKT 1
FDNS	06ALL	0	20SP	G15_039	TO->FROM	DEAF SMITH COUNTY INTERCHANGE - G15039_T 230.00 230KV CKT 1	318.7	350.57	0.61412	103.0302	G14-057T 345.00 - LAWTON EASTSIDE 345KV CKT 1
FDNS	06ALL	0	20SP	G15_039	TO->FROM	DEAF SMITH COUNTY INTERCHANGE - G15039_T 230.00 230KV CKT 1	318.7	350.57	0.6139	103.0203	EDDY COUNTY INTERCHANGE (ABB AEM30711) 345/230/13.2KV TRANSFORMER CKT 1
FDNS	06ALL	0	20SP	G15_039	TO->FROM	DEAF SMITH COUNTY INTERCHANGE - G15039_T 230.00 230KV CKT 1	318.7	350.57	0.6139	103.0203	EDDY COUNTY INTERCHANGE (ABB AEM30711) 345/230/13.2KV TRANSFORMER CKT 1
FDNS	06ALL	0	20SP	G15_039	TO->FROM	DEAF SMITH COUNTY INTERCHANGE - G15039_T 230.00 230KV CKT 1	318.7	350.57	0.6139	103.0197	CROSSROADS 7345.00 - EDDY COUNTY INTERCHANGE 345KV CKT 1
FDNS	06ALL	0	20SP	G15_039	TO->FROM	DEAF SMITH COUNTY INTERCHANGE - G15039_T 230.00 230KV CKT 1	318.7	350.57	0.6139	103.0176	P12:345:SPS:J14.1.EDDY.XRDS
FDNS	06ALL	0	20SP	G15_039	TO->FROM	DEAF SMITH COUNTY INTERCHANGE - G15039_T 230.00 230KV CKT 1	318.7	350.57	0.61404	103.0019	P12:345:SPS:J02.1.TOLK.EDDY
FDNS	06ALL	0	20SP	G15_039	TO->FROM	DEAF SMITH COUNTY INTERCHANGE - G15039_T 230.00 230KV CKT 1	318.7	350.57	0.61251	102.83	GEN524023 1-NICHOLS GEN #3 22 KV
FDNS	06ALL	0	17SP	G15_039	TO->FROM	DEAF SMITH COUNTY INTERCHANGE - G15039_T 230.00 230KV CKT 1	318.7	350.57	0.61804	102.8182	KRESS INTERCHANGE - TULIA TAP 115KV CKT 1
FDNS	06ALL	0	20SP	G15_039	TO->FROM	DEAF SMITH COUNTY INTERCHANGE - G15039_T 230.00 230KV CKT 1	318.7	350.57	0.61375	102.5742	PLANT X STATION - SPGLAKE_TP3 115.00 115KV CKT 1
FDNS	06ALL	0	17SP	G15_039	TO->FROM	DEAF SMITH COUNTY INTERCHANGE - G15039_T 230.00 230KV CKT 1	318.7	350.57	0.6196	102.4756	CIMARRON - MINCO 345KV CKT 1
FDNS	06ALL	0	17SP	G15_039	TO->FROM	DEAF SMITH COUNTY INTERCHANGE - G15039_T 230.00 230KV CKT 1	318.7	350.57	0.61804	102.4397	HAPPY INTERCHANGE - TULIA TAP 115KV CKT 1
FDNS	06ALL	0	20SP	G15_039	TO->FROM	DEAF SMITH COUNTY INTERCHANGE - G15039_T 230.00 230KV CKT 1	318.7	350.57	0.61057	102.4356	CHISHOLM7 345.00 () 345/230/13.2KV TRANSFORMER CKT 1
FDNS	06ALL	0	20SP	G15_039	TO->FROM	DEAF SMITH COUNTY INTERCHANGE - G15039_T 230.00 230KV CKT 1	318.7	350.57	0.61285	102.3736	HAPPY INTERCHANGE - PALO DURO SUB 115KV CKT 1
FDNS	06ALL	0	20SP	G15_039	TO->FROM	DEAF SMITH COUNTY INTERCHANGE - G15039_T 230.00 230KV CKT 1	318.7	350.57	0.61483	102.2618	G13_027T 230.00 - YOAKUM COUNTY INTERCHANGE 230KV CKT 1
FDNS	06ALL	0	20SP	G15_039	TO->FROM	DEAF SMITH COUNTY INTERCHANGE - G15039_T 230.00 230KV CKT 1	318.7	350.57	0.61375	102.1471	LAMB COUNTY REC-SOUTH OLTON - SPGLAKE_TP3 115.00 115KV CKT 1
FDNS	06ALL	0	17SP	G15_039	TO->FROM	DEAF SMITH COUNTY INTERCHANGE - G15039_T 230.00 230KV CKT 1	318.7	350.57	0.59882	102.1122	DEAF SMITH REC-#6 - HEREFORD INTERCHANGE 115KV CKT 1
FDNS	06ALL	0	17SP	G15_039	TO->FROM	DEAF SMITH COUNTY INTERCHANGE - G15039_T 230.00 230KV CKT 1	318.7	350.57	0.6196	102.1111	GRACEMONT - MINCO 345KV CKT 1
FDNS	06ALL	0	20SP	G15_039	TO->FROM	DEAF SMITH COUNTY INTERCHANGE - G15039_T 230.00 230KV CKT 1	318.7	350.57	0.61285	102.106	PALO DURO SUB - RANDALL COUNTY INTERCHANGE 115KV CKT 1
FDNS	06ALL	0	17SP	G15_039	TO->FROM	DEAF SMITH COUNTY INTERCHANGE - G15039_T 230.00 230KV CKT 1	318.7	350.57	0.61804	102.0904	P12:115:SPS:T67.1.HAPPY.KRESS
FDNS	06ALL	0	20SP	G15_039	TO->FROM	DEAF SMITH COUNTY INTERCHANGE - G15039_T 230.00 230KV CKT 1	318.7	350.57	0.61251	102.0894	GEN532751 1-WOLF CREEK GENERATING STATION UNIT 1
FDNS	06ALL	0	17SP	G15_039	TO->FROM	DEAF SMITH COUNTY INTERCHANGE - G15039_T 230.00 230KV CKT 1	318.7	350.57	0.59882	102.0648	P12:115:SPS:T58.1.HERFRD.CARGIL
FDNS	06ALL	0	20SP	G15_039	TO->FROM	DEAF SMITH COUNTY INTERCHANGE - G15039_T 230.00 230KV CKT 1	318.7	350.57	0.61251	102.0184	GEN524022 1-NICHOLS GEN #2
FDNS	06ALL	0	20SP	G15_039	TO->FROM	DEAF SMITH COUNTY INTERCHANGE - G15039_T 230.00 230KV CKT 1	318.7	350.57	0.61251	101.9531	GEN523462 1-BLACKHAWK GEN #2
FDNS	06ALL	0	20SP	G15_039	TO->FROM	DEAF SMITH COUNTY INTERCHANGE - G15039_T 230.00 230KV CKT 1	318.7	350.57	0.61251	101.9529	GEN523461 1-BLACKHAWK GEN #1
FDNS	06ALL	0	20SP	G15_039	TO->FROM	DEAF SMITH COUNTY INTERCHANGE - G15039_T 230.00 230KV CKT 1	318.7	350.57	0.61285	101.9374	P12:115:SPS:T66.1.RNDALL.HAPPY
FDNS	06ALL	0	20SP	G15_039	TO->FROM	DEAF SMITH COUNTY INTERCHANGE - G15039_T 230.00 230KV CKT 1	318.7	350.57	0.61313	101.8612	TUCO INTERCHANGE - TUCO_2 230.00 230KV CKT 1
FDNS	06ALL	0	17SP	G15_039	TO->FROM	DEAF SMITH COUNTY INTERCHANGE - G15039_T 230.00 230KV CKT 1	318.7	350.57	0.61888	101.8464	BORDER 7345.00 - CHISHOLM7 345.00 345KV CKT 2
FDNS	06ALL	0	17SP	G15_039	TO->FROM	DEAF SMITH COUNTY INTERCHANGE - G15039_T 230.00 230KV CKT 1	318.7	350.57	0.61888	101.8462	BORDER 7345.00 - CHISHOLM7 345.00 345KV CKT 1
FDNS	06ALL	0	20SP	G15_039	TO->FROM	DEAF SMITH COUNTY INTERCHANGE - G15039_T 230.00 230KV CKT 1	318.7	350.57	0.61251	101.8061	GEN562550 1-G14_040_3 0.6900
FDNS	06ALL	0	20SP	G15_039	TO->FROM	DEAF SMITH COUNTY INTERCHANGE - G15039_T 230.00 230KV CKT 1	318.7	350.57	0.61262	101.7965	CHISHOLM6 230.00 - ELK CITY 230KV 230KV CKT 1
FDNS	06ALL	0	20SP	G15_039	TO->FROM	DEAF SMITH COUNTY INTERCHANGE - G15039_T 230.00 230KV CKT 1	318.7	350.57	0.61262	101.781	ELK CITY 230KV (ELKCTY-6) 230/138/13.8KV TRANSFORMER CKT 1
FDNS	06ALL	0	20SP	G15_039	TO->FROM	DEAF SMITH COUNTY INTERCHANGE - G15039_T 230.00 230KV CKT 1	318.7	350.57	0.61262	101.781	ELK CITY 230KV (ELKCTY-6) 230/138/13.8KV TRANSFORMER CKT 1
FDNS	06ALL	0	20SP	G15_039	TO->FROM	DEAF SMITH COUNTY INTERCHANGE - G15039_T 230.00 230KV CKT 1	318.7	350.57	0.61251	101.7728	GEN640011 2-GERALD GENTLEMAN STATION UNIT 2
FDNS	06ALL	0	20SP	G15_039	TO->FROM	DEAF SMITH COUNTY INTERCHANGE - G15039_T 230.00 230KV CKT 1	318.7	350.57	0.61251	101.761	GEN524285 1-WILDORADO WIND GEN
FDNS	06ALL	0	20SP	G15_039	TO->FROM	DEAF SMITH COUNTY INTERCHANGE - G15039_T 230.00 230KV CKT 1	318.7	350.57	0.61251	101.686	GEN542962 2-IATAN UNIT #2
FDNS	06ALL	0	20SP	G15_039	TO->FROM	DEAF SMITH COUNTY INTERCHANGE - G15039_T 230.00 230KV CKT 1	318.7	350.57	0.61251	101.6674	GEN640010 1-GERALD GENTLEMAN STATION UNIT 1
FDNS	06ALL	0	20SP	G15_039	TO->FROM	DEAF SMITH COUNTY INTERCHANGE - G15039_T 230.00 230KV CKT 1	318.7	350.57	0.61251	101.6402	GEN659118 1-LARAMIE RIVER UNIT1
FDNS	06ALL	0	20SP	G15_039	TO->FROM	DEAF SMITH COUNTY INTERCHANGE - G15039_T 230.00 230KV CKT 1	318.7	350.57	0.61251	101.6143	GEN531447 1-HOLCOMB GENERATOR
FDNS	06ALL	0	20SP	G15_039	TO->FROM	DEAF SMITH COUNTY INTERCHANGE - G15039_T 230.00 230KV CKT 1	318.7	350.57	0.61251	101.6012	GEN524021 1-NICHOLS GEN #1
FDNS	06ALL	0	20SP	G15_039	TO->FROM	DEAF SMITH COUNTY INTERCHANGE - G15039_T 230.00 230KV CKT 1	318.7	350.57	0.61251	101.5798	GEN300003 1-THOMAS HILL UNIT 3
FDNS	06ALL	0	20SP	G15_039	TO->FROM	DEAF SMITH COUNTY INTERCHANGE - G15039_T 230.00 230KV CKT 1	318.7	350.57	0.61251	101.527	GEN532651 1-JEFFREY ENERGY CENTER UNIT 1
FDNS	06ALL	0	20SP	G15_039	TO->FROM	DEAF SMITH COUNTY INTERCHANGE - G15039_T 230.00 230KV CKT 1	318.7	350.57	0.61251	101.5251	GEN532652 1-JEFFREY ENERGY CENTER UNIT 2
FDNS	06ALL	0	20SP	G15_039	TO->FROM	DEAF SMITH COUNTY INTERCHANGE - G15039_T 230.00 230KV CKT 1	318.7	350.57	0.61251	101.525	GEN532653 1-JEFFREY ENERGY CENTER UNIT 3
FDNS	06ALL	0	20SP	G15_039	TO->FROM	DEAF SMITH COUNTY INTERCHANGE - G15039_T 230.00 230KV CKT 1	318.7	350.57	0.61307	101.5207	EDDY COUNTY INTERCHANGE - EDDY_NORTH 6230.00 230KV CKT @1
FDNS	06ALL	0	17SP	G15_039	TO->FROM	DEAF SMITH COUNTY INTERCHANGE - G15039_T 230.00 230KV CKT 1	318.7	350.57	0.61905	101.5155	G14-057T 345.00 - SUNNYSIDE 345KV CKT 1
FDNS	06ALL	0	20SP	G15_039	TO->FROM	DEAF SMITH COUNTY INTERCHANGE - G15039_T 230.00 230KV CKT 1	318.7	350.57	0.61375	101.5058	P12:115:SPS:T28.1.LAMTON.PLANTX
FDNS	06ALL	0	20SP	G15_039	TO->FROM	DEAF SMITH COUNTY INTERCHANGE - G15039_T 230.00 230KV CKT 1	318.7	350.57	0.61251	101.5043	GEN640009 1-COOPER NUCLEAR STATION
FDNS	06ALL	0	20SP	G15_039	TO->FROM	DEAF SMITH COUNTY INTERCHANGE - G15039_T 230.00 230KV CKT 1	318.7	350.57	0.61251	101.501	GEN645001 1-FORT CALHOUN 1
FDNS	06ALL	0	20SP	G15_039	TO->FROM	DEAF SMITH COUNTY INTERCHANGE - G15039_T 230.00 230KV CKT 1	318.7	350.57	0.61251	101.458	GEN542957 1-IATAN UNIT #1
FDNS	06ALL	0	20SP	G15_039	TO->FROM	DEAF SMITH COUNTY INTERCHANGE - G15039_T 230.00 230KV CKT 1	318.7	350.57	0.61251	101.457	GEN645012 2-NEBRASKA CITY 2
FDNS	06ALL	0	20SP	G15_039	TO->FROM	DEAF SMITH COUNTY INTERCHANGE - G15039_T 230.00 230KV CKT 1	318.7	350.57	0.61251	101.4271	GEN542955 1-LACYGNE UNIT #1
FDNS	06ALL	0	17SP	G15_039	TO->FROM	DEAF SMITH COUNTY INTERCHANGE - G15039_T 230.00 230KV CKT 1	318.7	350.57	0.61905	101.4002	G14-057T 345.00 - LAWTON EASTSIDE 345KV CKT 1
FDNS	06ALL	0	20SP	G15_039	TO->FROM	DEAF SMITH COUNTY INTERCHANGE - G15039_T 230.00 230KV CKT 1	318.7	350.57	0.61251	101.3929	GEN645011 1-NEBRASKA CITY 1
FDNS	06ALL	0	20SP	G15_039	TO->FROM	DEAF SMITH COUNTY INTERCHANGE - G15039_T 230.00 230KV CKT 1	318.7	350.57	0.61359	101.3644	HALE CO INTERCHANGE - PLANT X STATION 115KV CKT 1
FDNS	06ALL	0	20SP	G15_039	TO->FROM	DEAF SMITH COUNTY INTERCHANGE - G15039_T 230.00 230KV CKT 1	318.7	350.57	0.61359	101.3644	HALE CO INTERCHANGE - PLANT X STATION 115KV CKT 1
FDNS	06ALL	0	17SP	G15_039	TO->FROM	DEAF SMITH COUNTY INTERCHANGE - G15039_T 230.00 230KV CKT 1	318.7	350.57	0.61753	101.1879	GEN532751 1-WOLF CREEK GENERATING STATION UNIT 1
FDNS	06ALL	0	17SP	G15_039	TO->FROM	DEAF SMITH COUNTY INTERCHANGE - G15039_T 230.00 230KV CKT 1	318.7	350.57	0.61907	101.1659	PLANT X STATION - SPGLAKE_TP3 115.00 115KV CKT 1
FDNS	06ALL	0	17SP	G15_039	TO->FROM	DEAF SMITH COUNTY INTERCHANGE - G15039_T 230.00 230KV CKT 1	318.7	350.57	0.61784	101.1169	LAMB COUNTY INTERCHANGE - TOLK STATION WEST 230KV CKT 1
FDNS	06ALL	0	17SP	G15_039	TO->FROM	DEAF SMITH COUNTY INTERCHANGE - G15039_T 230.00 230KV CKT 1	318.7	350.57	0.61753	101.1168	GEN524023 1-NICHOLS GEN #3 22 KV
FDNS	06ALL	0	17SP	G15_039	TO->FROM	DEAF SMITH COUNTY INTERCHANGE - G15039_T 230.00 230KV CKT 1	318.7	350.57	0.61784	101.1107	P12:230:SPS:K37.1.TOLK.LAMB
FDNS	06ALL	0	17SP	G15_039	TO->FROM	DEAF SMITH COUNTY INTERCHANGE - G15039_T 230.00 230KV CKT 1	318.7	350.57	0.61784	101.1106	LAMB COUNTY INTERCHANGE (WH ALM20172) 230/115/13.2KV TRANSFORMER CKT 1
FDNS	06ALL	0	17SP	G15_039	TO->FROM	DEAF SMITH COUNTY INTERCHANGE - G15039_T 230.00 230KV CKT 1	318.7	350.57	0.61784	101.1106	LAMB COUNTY INTERCHANGE (WH ALM20172) 230/115/13.2KV TRANSFORMER CKT 1
FDNS	06NR	0	17G	G15_039	TO->FROM	DEAF SMITH COUNTY INTERCHANGE - G15039_T 230.00 230KV CKT 1	318.7	350.57	0.53257	101.0528	CURRY COUNTY INTERCHANGE - DEAF SMITH REC-#20 115KV CKT 1
FDNS	06ALL	0	17SP	G15_039	TO->FROM	DEAF SMITH COUNTY INTERCHANGE - G15039_T 230.00 230KV CKT 1	318.7	350.57	0.61907	100.7574	LAMB COUNTY REC-SOUTH OLTON - SPGLAKE_TP3 115.00 115KV CKT 1
FDNS	06ALL	0	17SP	G15_039	TO->FROM	DEAF SMITH COUNTY INTERCHANGE - G15039_T 230.00 230KV CKT 1	318.7	350.57	0.61804	100.748	HAPPY INTERCHANGE - PALO DURO SUB 115KV CKT 1
FDNS	06ALL	0	17SP	G15_039	TO->FROM	DEAF SMITH COUNTY INTERCHANGE - G15039_T 230.00 230KV CKT 1	318.7	350.57	0.61853	100.6672	TUCO INTERCHANGE - TUCO_2 230.00 230KV CKT 1
FDNS	06ALL	0	17SP	G15_039	TO->FROM	DEAF SMITH COUNTY INTERCHANGE - G15039_T 230.00 230KV CKT 1	318.7	350.57	0.61753	100.5251	GEN542962 2-IATAN UNIT #2
FDNS	06ALL	0	17SP	G15_039	TO->FROM	DEAF SMITH COUNTY INTERCHANGE - G15039_T 230.00 230KV CKT 1	318.7	350.57	0.61804	100.5086	PALO DURO SUB - RANDALL COUNTY INTERCHANGE 115KV CKT 1
FDNS	06ALL	0	17SP	G15_039	TO->FROM	DEAF SMITH COUNTY INTERCHANGE - G15039_T 230.00 230KV CKT 1	318.7	350.57	0.61753	100.5057	GEN640011 2-GERALD GENTLEMAN STATION UNIT 2
FDNS	06NR	0	17G	G15_039	TO->FROM	DEAF SMITH COUNTY INTERCHANGE - G15039_T 230.00 230KV CKT 1	318.7	350.57	0.56261	100.4761	TOLK STATION EAST - TUCO INTERCHANGE 230KV CKT 1
FDNS	06NR	0	17G	G15_039	TO->FROM	DEAF SMITH COUNTY INTERCHANGE - G15039_T 230.00 230KV CKT 1	318.7	350.57	0.56261	100.4761	TOLK STATION EAST - TUCO INTERCHANGE 230KV CKT 1
FDNS	06ALL	0	17SP	G15_039	TO->FROM	DEAF SMITH COUNTY INTERCHANGE - G15039_T 230.00 230KV CKT 1	318.7	350.57	0.61753	100.4653	GEN300003 1-THOMAS HILL UNIT 3
FDNS	06ALL	0	17SP	G15_039	TO->FROM	DEAF SMITH COUNTY INTERCHANGE - G15039_T 230.00 230KV CKT 1	318.7	350.57	0.61753	100.3681	GEN640010 1-GERALD GENTLEMAN STATION UNIT 1
FDNS	06ALL	0	17SP	G15_039	TO->FROM	DEAF SMITH COUNTY INTERCHANGE - G15039_T 230.00 230KV CKT 1	318.7	350.57	0.61804	100.3618	P12:115:SPS:T66.1.RNDALL.HAPPY
FDNS	06ALL	0	17SP	G15_039	TO->FROM	DEAF SMITH COUNTY INTERCHANGE - G15039_T 230.00 230KV CKT 1	318.7	350.57	0.61559	100.3539	CHISHOLM7 345.00 (CHISHOLM) 345/230/13.2KV TRANSFORMER CKT 1
FDNS	06ALL	0	17SP	G15_039	TO->FROM	DEAF SMITH COUNTY INTERCHANGE - G15039_T 230.00 230KV CKT 1	318.7	350.57	0.61753	100.3367	GEN659118 1-LARAMIE RIVER UNIT1
FDNS	06ALL	0	17SP	G15_039	TO->FROM	DEAF SMITH COUNTY INTERCHANGE - G15039_T 230.00 230KV CKT 1	318.7	350.57	0.61767	100.3357	AMOCO SWITCHING STATION - YOAKUM COUNTY INTERCHANGE 230KV CKT 1
FDNS	06ALL	0	17SP	G15_039	TO->FROM	DEAF SMITH COUNTY INTERCHANGE - G15039_T 230.00 230KV CKT 1	318.7	350.57	0.61767	100.3357	AMOCO SWITCHING STATION - YOAKUM COUNTY INTERCHANGE 230KV CKT 1

SOLUTION	GROUP	SCENARIO	SEASON	SOURCE	DIRECTION	MONITORED ELEMENT	RATEA (MVA)	RATEB(MVA)	TDF	TC%LOADING (% MVA)	CONTINGENCY
FDNS	06ALL	0	17SP	G15_039	TO->FROM	DEAF SMITH COUNTY INTERCHANGE - G15039_T 230.00 230KV CKT 1	318.7	350.57	0.61753	100.3129	GEN532651 1-JEFFREY ENERGY CENTER UNIT 1
FDNS	06ALL	0	17SP	G15_039	TO->FROM	DEAF SMITH COUNTY INTERCHANGE - G15039_T 230.00 230KV CKT 1	318.7	350.57	0.61753	100.3112	GEN532652 1-JEFFREY ENERGY CENTER UNIT 2
FDNS	06ALL	0	17SP	G15_039	TO->FROM	DEAF SMITH COUNTY INTERCHANGE - G15039_T 230.00 230KV CKT 1	318.7	350.57	0.61753	100.3112	GEN532653 1-JEFFREY ENERGY CENTER UNIT 3
FDNS	06ALL	0	20SP	G15_039	TO->FROM	DEAF SMITH COUNTY INTERCHANGE - G15039_T 230.00 230KV CKT 1	318.7	350.57	0.61251	100.3039	803-OKLAUNION
FDNS	06ALL	0	17SP	G15_039	TO->FROM	DEAF SMITH COUNTY INTERCHANGE - G15039_T 230.00 230KV CKT 1	318.7	350.57	0.61753	100.2725	GEN640009 1-COOPER NUCLEAR STATION
FDNS	06ALL	0	17SP	G15_039	TO->FROM	DEAF SMITH COUNTY INTERCHANGE - G15039_T 230.00 230KV CKT 1	318.7	350.57	0.61764	100.2693	ELK CITY 230KV (ELKCTY-6) 230/138/13.8KV TRANSFORMER CKT 1
FDNS	06ALL	0	17SP	G15_039	TO->FROM	DEAF SMITH COUNTY INTERCHANGE - G15039_T 230.00 230KV CKT 1	318.7	350.57	0.61764	100.2693	ELK CITY 230KV (ELKCTY-6) 230/138/13.8KV TRANSFORMER CKT 1
FDNS	06ALL	0	17SP	G15_039	TO->FROM	DEAF SMITH COUNTY INTERCHANGE - G15039_T 230.00 230KV CKT 1	318.7	350.57	0.61764	100.2658	CHISHOLM6 230.00 - ELK CITY 230KV 230KV CKT 1
FDNS	06ALL	0	17SP	G15_039	TO->FROM	DEAF SMITH COUNTY INTERCHANGE - G15039_T 230.00 230KV CKT 1	318.7	350.57	0.61753	100.2603	GEN523462 1-BLACKHAWK GEN #2
FDNS	06ALL	0	17SP	G15_039	TO->FROM	DEAF SMITH COUNTY INTERCHANGE - G15039_T 230.00 230KV CKT 1	318.7	350.57	0.61753	100.2601	GEN523461 1-BLACKHAWK GEN #1
FDNS	06ALL	0	17SP	G15_039	TO->FROM	DEAF SMITH COUNTY INTERCHANGE - G15039_T 230.00 230KV CKT 1	318.7	350.57	0.61967	100.2548	TUCO INTERCHANGE (GE M1022338) 345/230/13.2KV TRANSFORMER CKT 1
FDNS	06ALL	0	17SP	G15_039	TO->FROM	DEAF SMITH COUNTY INTERCHANGE - G15039_T 230.00 230KV CKT 1	318.7	350.57	0.61967	100.2548	TUCO INTERCHANGE (GE M1022338) 345/230/13.2KV TRANSFORMER CKT 1
FDNS	06ALL	0	17SP	G15_039	TO->FROM	DEAF SMITH COUNTY INTERCHANGE - G15039_T 230.00 230KV CKT 1	318.7	350.57	0.61753	100.2092	GEN645012 2-NEBRASKA CITY 2
FDNS	06ALL	0	17SP	G15_039	TO->FROM	DEAF SMITH COUNTY INTERCHANGE - G15039_T 230.00 230KV CKT 1	318.7	350.57	0.61753	100.2089	GEN542957 1-IATAN UNIT #1
FDNS	06ALL	0	17SP	G15_039	TO->FROM	DEAF SMITH COUNTY INTERCHANGE - G15039_T 230.00 230KV CKT 1	318.7	350.57	0.61937	100.2048	LUBBOCK SOUTH INTERCHANGE - WOLFFORTH INTERCHANGE 230KV CKT 1
FDNS	06ALL	0	17SP	G15_039	TO->FROM	DEAF SMITH COUNTY INTERCHANGE - G15039_T 230.00 230KV CKT 1	318.7	350.57	0.61937	100.2048	LUBBOCK SOUTH INTERCHANGE - WOLFFORTH INTERCHANGE 230KV CKT 1
FDNS	06ALL	0	17SP	G15_039	TO->FROM	DEAF SMITH COUNTY INTERCHANGE - G15039_T 230.00 230KV CKT 1	318.7	350.57	0.61753	100.2005	GEN542955 1-LACYGNE UNIT #1
FDNS	06ALL	0	17SP	G15_039	TO->FROM	DEAF SMITH COUNTY INTERCHANGE - G15039_T 230.00 230KV CKT 1	318.7	350.57	0.61753	100.1579	GEN524022 1-NICHOLS GEN #2
FDNS	06ALL	0	17SP	G15_039	TO->FROM	DEAF SMITH COUNTY INTERCHANGE - G15039_T 230.00 230KV CKT 1	318.7	350.57	0.6184	100.1387	P12:345:SPS:J02.1.TOLK.EDDY
FDNS	06ALL	0	17SP	G15_039	TO->FROM	DEAF SMITH COUNTY INTERCHANGE - G15039_T 230.00 230KV CKT 1	318.7	350.57	0.618	100.128	EDDY COUNTY INTERCHANGE (ABB AEM30711) 345/230/13.2KV TRANSFORMER CKT 1
FDNS	06ALL	0	17SP	G15_039	TO->FROM	DEAF SMITH COUNTY INTERCHANGE - G15039_T 230.00 230KV CKT 1	318.7	350.57	0.618	100.128	EDDY COUNTY INTERCHANGE (ABB AEM30711) 345/230/13.2KV TRANSFORMER CKT 1
FDNS	06ALL	0	17SP	G15_039	TO->FROM	DEAF SMITH COUNTY INTERCHANGE - G15039_T 230.00 230KV CKT 1	318.7	350.57	0.61753	100.1206	GEN645011 1-NEBRASKA CITY 1
FDNS	06ALL	0	17SP	G15_039	TO->FROM	DEAF SMITH COUNTY INTERCHANGE - G15039_T 230.00 230KV CKT 1	318.7	350.57	0.618	100.1202	CROSSROADS 7345.00 - EDDY COUNTY INTERCHANGE 345KV CKT 1
FDNS	06ALL	0	17SP	G15_039	TO->FROM	DEAF SMITH COUNTY INTERCHANGE - G15039_T 230.00 230KV CKT 1	318.7	350.57	0.618	100.1185	P12:345:SPS:J14.1.EDDY.XRDS
FDNS	06ALL	0	17SP	G15_039	TO->FROM	DEAF SMITH COUNTY INTERCHANGE - G15039_T 230.00 230KV CKT 1	318.7	350.57	0.61753	100.0804	GEN524285 1-WILDORADO WIND GEN
FDNS	06ALL	0	17SP	G15_039	TO->FROM	DEAF SMITH COUNTY INTERCHANGE - G15039_T 230.00 230KV CKT 1	318.7	350.57	0.61927	100	TUCO INTERCHANGE (SIEM 8743066) 345/230/13.2KV TRANSFORMER CKT 2
FDNS	06ALL	0	17SP	G15_039	TO->FROM	DEAF SMITH COUNTY INTERCHANGE - G15039_T 230.00 230KV CKT 1	318.7	350.57	0.61927	100	TUCO INTERCHANGE (SIEM 8743066) 345/230/13.2KV TRANSFORMER CKT 2
FDNS	06ALL	0	17SP	G15_039	TO->FROM	DEAF SMITH COUNTY INTERCHANGE - G15039_T 230.00 230KV CKT 1	318.7	350.57	0.61907	100	P12:115:SPS:T28.1.LAMTON.PLANTX
FDNS	06ALL	0	17SP	G15_039	TO->FROM	DEAF SMITH COUNTY INTERCHANGE - G15039_T 230.00 230KV CKT 1	318.7	350.57	0.61753	100	GEN300006 1-NEW MADRID UNIT 1
FDNS	06ALL	0	17SP	G15_039	TO->FROM	DEAF SMITH COUNTY INTERCHANGE - G15039_T 230.00 230KV CKT 1	318.7	350.57	0.61753	100	GEN300007 1-NEW MADRID UNIT 2
FDNS	06ALL	0	17SP	G15_039	TO->FROM	DEAF SMITH COUNTY INTERCHANGE - G15039_T 230.00 230KV CKT 1	318.7	350.57	0.61753	100	GEN531447 1-HOLCOMB GENERATOR
FDNS	06ALL	0	17SP	G15_039	TO->FROM	DEAF SMITH COUNTY INTERCHANGE - G15039_T 230.00 230KV CKT 1	318.7	350.57	0.61753	100	GEN542956 2-LACYGNE UNIT #2
FDNS	06ALL	0	17SP	G15_039	TO->FROM	DEAF SMITH COUNTY INTERCHANGE - G15039_T 230.00 230KV CKT 1	318.7	350.57	0.61753	100	GEN645001 1-FORT CALHOUN 1
FDNS	06NR	0	17G	G15_039	TO->FROM	DEAF SMITH COUNTY INTERCHANGE - G15039_T 230.00 230KV CKT 1	318.7	350.57	0.5578	99.9	P12:230:SPS:CL.1.BSHLND.WLDRDO
FDNS	06ALL	0	17SP	G15_039	TO->FROM	DEAF SMITH COUNTY INTERCHANGE - G15039_T 230.00 230KV CKT 1	318.7	350.57	0.6191	99.9	TUCO_2 345.00 (TUCO_2 XFMR) 345/230/13.2KV TRANSFORMER CKT 1
FDNS	06ALL	0	17SP	G15_039	TO->FROM	DEAF SMITH COUNTY INTERCHANGE - G15039_T 230.00 230KV CKT 1	318.7	350.57	0.61887	99.9	HALE CO INTERCHANGE - PLANT X STATION 115KV CKT 1
FDNS	06ALL	0	17SP	G15_039	TO->FROM	DEAF SMITH COUNTY INTERCHANGE - G15039_T 230.00 230KV CKT 1	318.7	350.57	0.61887	99.9	HALE CO INTERCHANGE - PLANT X STATION 115KV CKT 1
FDNS	06ALL	0	17SP	G15_039	TO->FROM	DEAF SMITH COUNTY INTERCHANGE - G15039_T 230.00 230KV CKT 1	318.7	350.57	0.61753	99.9	GEN524021 1-NICHOLS GEN #1
FDNS	06ALL	0	17SP	G15_039	TO->FROM	DEAF SMITH COUNTY INTERCHANGE - G15039_T 230.00 230KV CKT 1	318.7	350.57	0.61753	99.9	GEN542951 5-HAWTHORN UNIT #5
FDNS	06ALL	0	17SP	G15_039	TO->FROM	DEAF SMITH COUNTY INTERCHANGE - G15039_T 230.00 230KV CKT 1	318.7	350.57	0.61753	99.9	GEN562550 1-G14_040_3 0.6900
FDNS	06ALL	0	17SP	G15_039	TO->FROM	DEAF SMITH COUNTY INTERCHANGE - G15039_T 230.00 230KV CKT 1	318.7	350.57	0.61753	99.8	GEN509403 1-PIRKEY GENERATION
FDNS	06ALL	0	17SP	G15_039	TO->FROM	DEAF SMITH COUNTY INTERCHANGE - G15039_T 230.00 230KV CKT 1	318.7	350.57	0.61753	99.8	GEN659103 1-ANTELOPE VALLEY UNIT1
FDNS	06ALL	0	17SP	G15_039	TO->FROM	DEAF SMITH COUNTY INTERCHANGE - G15039_T 230.00 230KV CKT 1	318.7	350.57	0.61753	99.8	GEN659107 2-ANTELOPE VALLEY UNIT2
FDNS	06ALL	0	17SP	G15_039	TO->FROM	DEAF SMITH COUNTY INTERCHANGE - G15039_T 230.00 230KV CKT 1	318.7	350.57	0.61863	99.7	TERRY COUNTY INTERCHANGE - WOLFFORTH INTERCHANGE 115KV CKT 1
FDNS	06ALL	0	17SP	G15_039	TO->FROM	DEAF SMITH COUNTY INTERCHANGE - G15039_T 230.00 230KV CKT 1	318.7	350.57	0.61863	99.7	TERRY COUNTY INTERCHANGE - WOLFFORTH INTERCHANGE 115KV CKT 1
FDNS	06ALL	0	17SP	G15_039	TO->FROM	DEAF SMITH COUNTY INTERCHANGE - G15039_T 230.00 230KV CKT 1	318.7	350.57	0.61753	99.7	GEN509416 1-TURK GENERATION
FDNS	06ALL	0	20WP	G15_039	TO->FROM	DEAF SMITH COUNTY INTERCHANGE - G15039_T 230.00 230KV CKT 1	329.05	360.92	0.57134	99.7	P12:115:SPS:T04.1.DFSMTH.CASTRO
FDNS	06ALL	0	17G	G15_039	TO->FROM	DEAF SMITH COUNTY INTERCHANGE - G15039_T 230.00 230KV CKT 1	318.7	350.57	0.63779	99.6	TOLK STATION EAST - TUCO INTERCHANGE 230KV CKT 1
FDNS	06ALL	0	17G	G15_039	TO->FROM	DEAF SMITH COUNTY INTERCHANGE - G15039_T 230.00 230KV CKT 1	318.7	350.57	0.63779	99.6	TOLK STATION EAST - TUCO INTERCHANGE 230KV CKT 1
FDNS	06NR	0	17G	G15_039	TO->FROM	DEAF SMITH COUNTY INTERCHANGE - G15039_T 230.00 230KV CKT 1	318.7	350.57	0.53257	99.6	DEAF SMITH REC-#20 - PARMER COUNTY SUB 115KV CKT 1
FDNS	06ALL	0	17G	G15_039	TO->FROM	DEAF SMITH COUNTY INTERCHANGE - G15039_T 230.00 230KV CKT 1	318.7	350.57	0.5761	99.5	P12:115:SPS:T04.1.DFSMTH.CASTRO
FDNSLock	06ALL	0	20WP	G15_039		ELK CITY 230KV (ELKCTY-6) 230/138/13.8KV TRANSFORMER CKT 1	450	450	0.06063	87.66341	BASE CASE
FDNSLock	06ALL	0	20WP	G15_039		ELK CITY 230KV (ELKCTY-6) 230/138/13.8KV TRANSFORMER CKT 1	450	450	0.06063	87.66341	BASE CASE
FDNS	06ALL	0	20L	G15_039	TO->FROM	G14-057T 345.00 - LAWTON EASTSIDE 345KV CKT 1	717	789	0.08739	108.0268	BASE CASE
FDNS	06ALL	0	20L	G15_039	FROM->TO	G14-057T 345.00 - SUNNYSIDE 345KV CKT 1	717	789	0.08739	120.8788	BASE CASE
FDNS	06ALL	0	20WP	G15_039	FROM->TO	G14-057T 345.00 - SUNNYSIDE 345KV CKT 1	717	789	0.11114	107.5634	BASE CASE
FDNS	06ALL	0	17G	G15_039	FROM->TO	G14-057T 345.00 - SUNNYSIDE 345KV CKT 1	717	789	0.11222	106.9763	BASE CASE
FDNS	06ALL	0	16WP	G15_039	FROM->TO	G14-057T 345.00 - SUNNYSIDE 345KV CKT 1	717	789	0.11551	105.0999	BASE CASE
FDNS	00NR	0	25SP	G15_039	TO->FROM	JONES STATION - TUCO INTERCHANGE 230KV CKT 1	343.79	343.79	0.08334	139.3518	CARLISLE INTERCHANGE - TUCO INTERCHANGE 230KV CKT 1
FDNS	00NR	0	25SP	G15_039	TO->FROM	JONES STATION - TUCO INTERCHANGE 230KV CKT 1	343.79	343.79	0.08334	139.3518	CARLISLE INTERCHANGE - TUCO INTERCHANGE 230KV CKT 1
FDNS	00NR	0	25SP	G15_039	TO->FROM	JONES STATION - TUCO INTERCHANGE 230KV CKT 1	343.79	343.79	0.08273	123.0773	TUCO INTERCHANGE - YOAKUM_345 345.00 345KV CKT 1
FDNS	00NR	0	25SP	G15_039	TO->FROM	JONES STATION - TUCO INTERCHANGE 230KV CKT 1	343.79	343.79	0.06907	119.4572	GEN526333 1-JONES GEN #3 21 KV
FDNS	00NR	0	25SP	G15_039	TO->FROM	JONES STATION - TUCO INTERCHANGE 230KV CKT 1	343.79	343.79	0.06907	119.0504	GEN526334 1-JONES_4 116.500
FDNS	00NR	0	25SP	G15_039	TO->FROM	JONES STATION - TUCO INTERCHANGE 230KV CKT 1	343.79	343.79	0.07571	111.1942	CARLISLE INTERCHANGE - WOLFFORTH INTERCHANGE 230KV CKT 1
FDNS	00NR	0	25SP	G15_039	TO->FROM	JONES STATION - TUCO INTERCHANGE 230KV CKT 1	343.79	343.79	0.0689	107.2791	TUCO INTERCHANGE (ENRCO 136401) 230/115/13.2KV TRANSFORMER CKT 1
FDNS	00NR	0	25SP	G15_039	TO->FROM	JONES STATION - TUCO INTERCHANGE 230KV CKT 1	343.79	343.79	0.0689	107.2791	TUCO INTERCHANGE (ENRCO 136401) 230/115/13.2KV TRANSFORMER CKT 1
FDNS	00NR	0	25SP	G15_039	TO->FROM	JONES STATION - TUCO INTERCHANGE 230KV CKT 1	343.79	343.79	0.0689	107.2791	TUCO INTERCHANGE (ENRCO 136401) 230/115/13.2KV TRANSFORMER CKT 2
FDNS	00NR	0	25SP	G15_039	TO->FROM	JONES STATION - TUCO INTERCHANGE 230KV CKT 1	343.79	343.79	0.0689	107.2791	TUCO INTERCHANGE (ENRCO 136401) 230/115/13.2KV TRANSFORMER CKT 2
FDNS	00NR	0	25SP	G15_039	TO->FROM	JONES STATION - TUCO INTERCHANGE 230KV CKT 1	343.79	343.79	0.06907	106.7618	GEN526332 1-JONES GEN #2 21 KV
FDNS	00NR	0	25SP	G15_039	TO->FROM	JONES STATION - TUCO INTERCHANGE 230KV CKT 1	343.79	343.79	0.06907	106.7593	GEN526331 1-JONES GEN #1 22 KV
FDNS	00NR	0	25SP	G15_039	TO->FROM	JONES STATION - TUCO INTERCHANGE 230KV CKT 1	343.79	343.79	0.08482	105.7876	PLANT X STATION - SUNDOWN INTERCHANGE 230KV CKT 1
FDNS	00NR	0	25SP	G15_039	TO->FROM	JONES STATION - TUCO INTERCHANGE 230KV CKT 1	343.79	343.79	0.08482	105.7876	PLANT X STATION - SUNDOWN INTERCHANGE 230KV CKT 1
FDNS	00NR	0	25SP	G15_039	TO->FROM	JONES STATION - TUCO INTERCHANGE 230KV CKT 1	343.79	343.79	0.0762	105.7418	LUBBOCK EAST INTERCHANGE - TUCO INTERCHANGE 115KV CKT 1
FDNS	00NR	0	25SP	G15_039	TO->FROM	JONES STATION - TUCO INTERCHANGE 230KV CKT 1	343.79	343.79	0.0762	105.7418	LUBBOCK EAST INTERCHANGE - TUCO INTERCHANGE 115KV CKT 1
FDNS	00NR	0	25SP	G15_039	TO->FROM	JONES STATION - TUCO INTERCHANGE 230KV CKT 1	343.79	343.79	0.07174	102.5912	STANTON SUB - TUCO INTERCHANGE 115KV CKT 1
FDNS	00NR	0	25SP	G15_039	TO->FROM	JONES STATION - TUCO INTERCHANGE 230KV CKT 1	343.79	343.79	0.07113	102.3658	P12:230:LPL:K39.1.CRLSLE.LP-MLWK
FDNS	00NR	0	25SP	G15_039	TO->FROM	JONES STATION - TUCO INTERCHANGE 230KV CKT 1	343.79	343.79	0.07113	102.3646	CARLISLE INTERCHANGE - LUBBOCK POWER & LIGHT-MILWAUKEE 230KV CKT 1
FDNS	00NR	0	25SP	G15_039	TO->FROM	JONES STATION - TUCO INTERCHANGE 230KV CKT 1	343.79	343.79	0.07113	102.363	LUBBOCK POWER & LIGHT-MILWAUKEE (M-E C0681251) 230/69/13.5KV TRANSFORMER CKT 1
FDNS	00NR	0	25SP	G15_039	TO->FROM	JONES STATION - TUCO INTERCHANGE 230KV CKT 1	343.79	343.79	0.07113	102.363	LUBBOCK POWER & LIGHT-MILWAUKEE (M-E C0681251) 230/69/13.5KV TRANSFORMER CKT 1

SOLUTION	GROUP	SCENARIO	SEASON	SOURCE	DIRECTION	MONITORED ELEMENT	RATEA (MVA)	RATEB(MVA)	TDF	TC%LOADING (% MVA)	CONTINGENCY
FDNS	00NR	0	25SP	G15_039	TO->FROM	JONES STATION - TUCO INTERCHANGE 230KV CKT 1	343.79	343.79	0.06418	102.0923	TOLK STATION EAST - TUCO INTERCHANGE 230KV CKT 1
FDNS	00NR	0	25SP	G15_039	TO->FROM	JONES STATION - TUCO INTERCHANGE 230KV CKT 1	343.79	343.79	0.06418	102.0923	TOLK STATION EAST - TUCO INTERCHANGE 230KV CKT 1
FDNS	00NR	0	25SP	G15_039	TO->FROM	JONES STATION - TUCO INTERCHANGE 230KV CKT 1	343.79	343.79	0.07174	101.6363	P12:115:SPS:V15.1.TUCO.INDANA
FDNS	00NR	0	25SP	G15_039	TO->FROM	JONES STATION - TUCO INTERCHANGE 230KV CKT 1	343.79	343.79	0.07174	101.6061	INDIANA SUB - STANTON SUB 115KV CKT 1
FDNS	00NR	0	25SP	G15_039	TO->FROM	JONES STATION - TUCO INTERCHANGE 230KV CKT 1	343.79	343.79	0.06907	101.0841	GEN527903 1-HOBBS PLANT #3 (ST)
FDNS	00NR	0	25SP	G15_039	TO->FROM	JONES STATION - TUCO INTERCHANGE 230KV CKT 1	343.79	343.79	0.06907	101.0701	GEN527166 1-MUSTANG_6 118.000
FDNS	00NR	0	25SP	G15_039	TO->FROM	JONES STATION - TUCO INTERCHANGE 230KV CKT 1	343.79	343.79	0.06907	100.6214	GEN528501 1-G14_012 24.000
FDNS	00NR	0	25SP	G15_039	TO->FROM	JONES STATION - TUCO INTERCHANGE 230KV CKT 1	343.79	343.79	0.06884	100.6076	KRESS INTERCHANGE - SWISHER COUNTY INTERCHANGE 115KV CKT 1
FDNS	00NR	0	25SP	G15_039	TO->FROM	JONES STATION - TUCO INTERCHANGE 230KV CKT 1	343.79	343.79	0.06884	100.6076	KRESS INTERCHANGE - SWISHER COUNTY INTERCHANGE 115KV CKT 1
FDNS	00NR	0	25SP	G15_039	TO->FROM	JONES STATION - TUCO INTERCHANGE 230KV CKT 1	343.79	343.79	0.07083	100.4516	CARLISLE INTERCHANGE - MURPHY SUB 115KV CKT 1
FDNS	00NR	0	25SP	G15_039	TO->FROM	JONES STATION - TUCO INTERCHANGE 230KV CKT 1	343.79	343.79	0.07083	100.4516	CARLISLE INTERCHANGE - MURPHY SUB 115KV CKT 1
FDNS	00NR	0	25SP	G15_039	TO->FROM	JONES STATION - TUCO INTERCHANGE 230KV CKT 1	343.79	343.79	0.07119	100.2532	YOAKUM_345 345.00 (UPDATE DATA) 345/230/13.2KV TRANSFORMER CKT 1
FDNS	00NR	0	25SP	G15_039	TO->FROM	JONES STATION - TUCO INTERCHANGE 230KV CKT 1	343.79	343.79	0.06907	100	GEN563122 1-G15077_3 0.3850
FDNS	00NR	0	25SP	G15_039	TO->FROM	JONES STATION - TUCO INTERCHANGE 230KV CKT 1	343.79	343.79	0.06839	100	POTTER COUNTY INTERCHANGE (WAUK 90343-A) 345/230/13.2KV TRANSFORMER CKT 1
FDNS	00NR	0	25SP	G15_039	TO->FROM	JONES STATION - TUCO INTERCHANGE 230KV CKT 1	343.79	343.79	0.06839	100	POTTER COUNTY INTERCHANGE (WAUK 90343-A) 345/230/13.2KV TRANSFORMER CKT 1
FDNS	00NR	0	25SP	G15_039	TO->FROM	JONES STATION - TUCO INTERCHANGE 230KV CKT 1	343.79	343.79	0.07174	99.9	INDIANA SUB - SOUTH PLAINS REC-ERSKINE 115KV CKT 1
FDNS	00NR	0	25SP	G15_039	TO->FROM	JONES STATION - TUCO INTERCHANGE 230KV CKT 1	343.79	343.79	0.06907	99.9	GEN527901 1-HOBBS PLANT #1 (CT)
FDNS	00NR	0	25SP	G15_039	TO->FROM	JONES STATION - TUCO INTERCHANGE 230KV CKT 1	343.79	343.79	0.06907	99.9	GEN527902 1-HOBBS PLANT #2 (CT)
FDNS	00NR	0	25SP	G15_039	TO->FROM	JONES STATION - TUCO INTERCHANGE 230KV CKT 1	343.79	343.79	0.06907	99.9	GEN563102 1-G15075_3 0.5500
FDNS	00NR	0	25SP	G15_039	TO->FROM	JONES STATION - TUCO INTERCHANGE 230KV CKT 1	343.79	343.79	0.07036	99.7	HOBBS - YOAKUM_345 345.00 345KV CKT 1
FDNS	00NR	0	25SP	G15_039	TO->FROM	JONES STATION - TUCO INTERCHANGE 230KV CKT 1	343.79	343.79	0.06842	99.7	FLOYD COUNTY INTERCHANGE - TUCO INTERCHANGE 115KV CKT 1
FDNS	00NR	0	25SP	G15_039	TO->FROM	JONES STATION - TUCO INTERCHANGE 230KV CKT 1	343.79	343.79	0.06842	99.7	FLOYD COUNTY INTERCHANGE - TUCO INTERCHANGE 115KV CKT 1
FDNS	00NR	0	25SP	G15_039	TO->FROM	JONES STATION - TUCO INTERCHANGE 230KV CKT 1	343.79	343.79	0.07021	99.6	P12:345:SPS:J02.1.TOLK.EDDY
FDNS	00NR	0	25SP	G15_039	TO->FROM	JONES STATION - TUCO INTERCHANGE 230KV CKT 1	343.79	343.79	0.06907	99.6	GEN563142 1-G15079_3 0.5500
FDNS	00NR	0	25SP	G15_039	TO->FROM	JONES STATION - TUCO INTERCHANGE 230KV CKT 1	343.79	343.79	0.06907	99.6	GEN563151 1-G15080_2 0.5500
FDNS	00NR	0	25SP	G15_039	TO->FROM	JONES STATION - TUCO INTERCHANGE 230KV CKT 1	343.79	343.79	0.06839	99.6	G14_038T 345.00 - POTTER COUNTY INTERCHANGE 345KV CKT 1
FDNS	00NR	0	25SP	G15_039	TO->FROM	JONES STATION - TUCO INTERCHANGE 230KV CKT 1	343.79	343.79	0.05752	99.6	BUSHLAND INTERCHANGE - DEAF SMITH COUNTY INTERCHANGE 230KV CKT 1
FDNS	00NR	0	25SP	G15_039	TO->FROM	JONES STATION - TUCO INTERCHANGE 230KV CKT 1	343.79	343.79	0.05752	99.6	BUSHLAND INTERCHANGE - DEAF SMITH COUNTY INTERCHANGE 230KV CKT 1
FDNS	00NR	0	25SP	G15_039	FROM->TO	LUBBOCK POWER & LIGHT-HOLLY PLANT (SHIH T101039) 230/69/13.5KV TRANSFORMER CKT 1	224	224	0.0358	104.8294	LUBBOCK POWER & LIGHT-SOUTHEAST - LUBBOCK SOUTH INTERCHANGE 230KV CKT 1
FDNS	00NR	0	25SP	G15_039	FROM->TO	LUBBOCK POWER & LIGHT-HOLLY PLANT (SHIH T101039) 230/69/13.5KV TRANSFORMER CKT 1	224	224	0.0358	104.8165	P12:LPL:SPS:K64.1.LP-SE.LUBBS
FDNS	00NR	0	25SP	G15_039	FROM->TO	LUBBOCK POWER & LIGHT-HOLLY PLANT (SHIH T101039) 230/69/13.5KV TRANSFORMER CKT 1	224	224	0.03458	101.9053	LUBBOCK EAST INTERCHANGE - LUBBOCK POWER & LIGHT-WADSWORTH 230KV CKT 1
FDNS	00NR	0	25SP	G15_039	FROM->TO	LUBBOCK POWER & LIGHT-HOLLY PLANT (SHIH T101039) 230/69/13.5KV TRANSFORMER CKT 1	224	224	0.03458	101.8957	P12:230:LPL:K57.1.LP-WADS.LUBBE
FDNS	00NR	0	25SP	G15_039	FROM->TO	LUBBOCK POWER & LIGHT-HOLLY PLANT (SHIH T101039) 230/69/13.5KV TRANSFORMER CKT 1	224	224	0.03458	101.8956	LUBBOCK POWER & LIGHT-WADSWORTH (SHIH T101038) 230/69/13.5KV TRANSFORMER CKT 1
FDNS	00NR	0	25SP	G15_039	FROM->TO	LUBBOCK POWER & LIGHT-HOLLY PLANT (SHIH T101039) 230/69/13.5KV TRANSFORMER CKT 1	224	224	0.03458	101.8956	LUBBOCK POWER & LIGHT-WADSWORTH (SHIH T101038) 230/69/13.5KV TRANSFORMER CKT 1
FDNSLock	06ALL	0	20WP	G15_039		Non-Converged Contingency	1792	1792	0.11284	-	BORDER 7345.00 - CHISHOLM7 345.00 345KV CKT 1
FDNSLock	06ALL	0	20WP	G15_039		Non-Converged Contingency	1792	1792	0.11284	-	BORDER 7345.00 - CHISHOLM7 345.00 345KV CKT 2
FDNSLock	06ALL	0	20WP	G15_039		Non-Converged Contingency	439	439	0.06063	-	CHISHOLM6 230.00 - ELK CITY 230KV 230KV CKT 1
FDNS	06ALL	0	20WP	G15_039	FROM->TO	POTTER COUNTY INTERCHANGE (WAUK 90343-A) 345/230/13.2KV TRANSFORMER CKT 1	560	560	0.21219	107.9054	HITCHLAND INTERCHANGE - Hansford County Switch Station 115KV CKT 1
FDNS	06ALL	0	20WP	G15_039	FROM->TO	POTTER COUNTY INTERCHANGE (WAUK 90343-A) 345/230/13.2KV TRANSFORMER CKT 1	560	560	0.21219	107.9054	HITCHLAND INTERCHANGE - Hansford County Switch Station 115KV CKT 1
FDNS	06ALL	0	20WP	G15_039	FROM->TO	POTTER COUNTY INTERCHANGE (WAUK 90343-A) 345/230/13.2KV TRANSFORMER CKT 1	560	560	0.20475	107.6403	GEN524295 1-SPNSPUR_WND10.6900
FDNS	06ALL	0	20WP	G15_039	FROM->TO	POTTER COUNTY INTERCHANGE (WAUK 90343-A) 345/230/13.2KV TRANSFORMER CKT 1	560	560	0.20827	107.4609	CHAN/TASCOS6230.00 - POTTER COUNTY INTERCHANGE 230KV CKT 1
FDNS	06ALL	0	20WP	G15_039	FROM->TO	POTTER COUNTY INTERCHANGE (WAUK 90343-A) 345/230/13.2KV TRANSFORMER CKT 1	560	560	0.21219	107.0599	Hansford County Switch Station - SPEARMAN INTERCHANGE 115KV CKT 1
FDNS	06ALL	0	20WP	G15_039	FROM->TO	POTTER COUNTY INTERCHANGE (WAUK 90343-A) 345/230/13.2KV TRANSFORMER CKT 1	560	560	0.21219	107.0599	Hansford County Switch Station - SPEARMAN INTERCHANGE 115KV CKT 1
FDNS	06ALL	0	20WP	G15_039	FROM->TO	POTTER COUNTY INTERCHANGE (WAUK 90343-A) 345/230/13.2KV TRANSFORMER CKT 1	560	560	0.20827	106.7076	DALLAM COUNTY INTERCHANGE - XIT_INTG 3115.00 115KV CKT 1
FDNS	06ALL	0	20WP	G15_039	FROM->TO	POTTER COUNTY INTERCHANGE (WAUK 90343-A) 345/230/13.2KV TRANSFORMER CKT 1	560	560	0.20827	106.5645	XIT_INTG 6230.00 (PRE_XFR_DATA) 230/115/13.2KV TRANSFORMER CKT 1
FDNS	06ALL	0	20WP	G15_039	FROM->TO	POTTER COUNTY INTERCHANGE (WAUK 90343-A) 345/230/13.2KV TRANSFORMER CKT 1	560	560	0.20827	106.5645	XIT_INTG 6230.00 (PRE_XFR_DATA) 230/115/13.2KV TRANSFORMER CKT 1
FDNS	06ALL	0	20WP	G15_039	FROM->TO	POTTER COUNTY INTERCHANGE (WAUK 90343-A) 345/230/13.2KV TRANSFORMER CKT 1	560	560	0.20475	106.5331	GEN524295 1-SPNSPUR_WND10.6900
FDNS	06ALL	0	20WP	G15_039	FROM->TO	POTTER COUNTY INTERCHANGE (WAUK 90343-A) 345/230/13.2KV TRANSFORMER CKT 1	560	560	0.20827	106.467	CHAN/TASCOS6230.00 - XIT_INTG 6230.00 230KV CKT 1
FDNS	06ALL	0	20WP	G15_039	FROM->TO	POTTER COUNTY INTERCHANGE (WAUK 90343-A) 345/230/13.2KV TRANSFORMER CKT 1	560	560	0.21219	106.4657	HITCHLAND INTERCHANGE - Hansford County Switch Station 115KV CKT 1
FDNS	06ALL	0	20WP	G15_039	FROM->TO	POTTER COUNTY INTERCHANGE (WAUK 90343-A) 345/230/13.2KV TRANSFORMER CKT 1	560	560	0.21219	106.4657	HITCHLAND INTERCHANGE - Hansford County Switch Station 115KV CKT 1
FDNS	06ALL	0	20WP	G15_039	FROM->TO	POTTER COUNTY INTERCHANGE (WAUK 90343-A) 345/230/13.2KV TRANSFORMER CKT 1	560	560	0.20883	106.37	Harrington Station East Bus - PRINGLE INTERCHANGE 230KV CKT 1
FDNS	06ALL	0	20WP	G15_039	FROM->TO	POTTER COUNTY INTERCHANGE (WAUK 90343-A) 345/230/13.2KV TRANSFORMER CKT 1	560	560	0.20883	106.3662	P12:230:SPS:K43.1.PRNGLE.HARR_E
FDNS	06ALL	0	20WP	G15_039	FROM->TO	POTTER COUNTY INTERCHANGE (WAUK 90343-A) 345/230/13.2KV TRANSFORMER CKT 1	560	560	0.20883	106.3435	PRINGLE INTERCHANGE (ENRCO13617-1) 230/115/13.2KV TRANSFORMER CKT 1
FDNS	06ALL	0	20WP	G15_039	FROM->TO	POTTER COUNTY INTERCHANGE (WAUK 90343-A) 345/230/13.2KV TRANSFORMER CKT 1	560	560	0.20883	106.3435	PRINGLE INTERCHANGE (ENRCO13617-1) 230/115/13.2KV TRANSFORMER CKT 1
FDNS	06ALL	0	20WP	G15_039	FROM->TO	POTTER COUNTY INTERCHANGE (WAUK 90343-A) 345/230/13.2KV TRANSFORMER CKT 1	560	560	0.20869	106.1986	PRINGLE INTERCHANGE - SPEARMAN INTERCHANGE 115KV CKT 1
FDNS	06ALL	0	20WP	G15_039	FROM->TO	POTTER COUNTY INTERCHANGE (WAUK 90343-A) 345/230/13.2KV TRANSFORMER CKT 1	560	560	0.20869	106.1986	PRINGLE INTERCHANGE - SPEARMAN INTERCHANGE 115KV CKT 1
FDNS	06ALL	0	20WP	G15_039	FROM->TO	POTTER COUNTY INTERCHANGE (WAUK 90343-A) 345/230/13.2KV TRANSFORMER CKT 1	560	560	0.20827	105.9594	CHAN/TASCOS6230.00 - POTTER COUNTY INTERCHANGE 230KV CKT 1
FDNS	06ALL	0	20WP	G15_039	FROM->TO	POTTER COUNTY INTERCHANGE (WAUK 90343-A) 345/230/13.2KV TRANSFORMER CKT 1	560	560	0.21185	105.9255	P12:115:SPS:W08.1.HITCH.LASLEY
FDNS	06ALL	0	20WP	G15_039	FROM->TO	POTTER COUNTY INTERCHANGE (WAUK 90343-A) 345/230/13.2KV TRANSFORMER CKT 1	560	560	0.21185	105.7999	DWS FRISCO - HITCHLAND INTERCHANGE 115KV CKT 1
FDNS	06ALL	0	20WP	G15_039	FROM->TO	POTTER COUNTY INTERCHANGE (WAUK 90343-A) 345/230/13.2KV TRANSFORMER CKT 1	560	560	0.21219	105.7314	Hansford County Switch Station - SPEARMAN INTERCHANGE 115KV CKT 1
FDNS	06ALL	0	20WP	G15_039	FROM->TO	POTTER COUNTY INTERCHANGE (WAUK 90343-A) 345/230/13.2KV TRANSFORMER CKT 1	560	560	0.21219	105.7314	Hansford County Switch Station - SPEARMAN INTERCHANGE 115KV CKT 1
FDNS	06ALL	0	20WP	G15_039	FROM->TO	POTTER COUNTY INTERCHANGE (WAUK 90343-A) 345/230/13.2KV TRANSFORMER CKT 1	560	560	0.20771	105.6717	CHILDRESS - LAKE PAULINE 138KV CKT 1
FDNS	06ALL	0	20WP	G15_039	FROM->TO	POTTER COUNTY INTERCHANGE (WAUK 90343-A) 345/230/13.2KV TRANSFORMER CKT 1	560	560	0.20771	105.6717	CHILDRESS - LAKE PAULINE 138KV CKT 1
FDNS	06ALL	0	20WP	G15_039	FROM->TO	POTTER COUNTY INTERCHANGE (WAUK 90343-A) 345/230/13.2KV TRANSFORMER CKT 1	560	560	0.20475	105.6072	GEN532751 1-WOLF CREEK GENERATING STATION UNIT 1
FDNS	06ALL	0	20WP	G15_039	FROM->TO	POTTER COUNTY INTERCHANGE (WAUK 90343-A) 345/230/13.2KV TRANSFORMER CKT 1	560	560	0.21185	105.5768	DWS FRISCO - SHERMAN COUNTY TAP 115KV CKT 1
FDNS	06NR	0	20L	G15_039	FROM->TO	POTTER COUNTY INTERCHANGE (WAUK 90343-A) 345/230/13.2KV TRANSFORMER CKT 1	560	560	0.0339	105.4866	MOORE COUNTY INTERCHANGE - POTTER COUNTY INTERCHANGE 230KV CKT 1
FDNS	06NR	0	20L	G15_039	FROM->TO	POTTER COUNTY INTERCHANGE (WAUK 90343-A) 345/230/13.2KV TRANSFORMER CKT 1	560	560	0.0339	105.4866	MOORE COUNTY INTERCHANGE - POTTER COUNTY INTERCHANGE 230KV CKT 1
FDNS	06ALL	0	20WP	G15_039	FROM->TO	POTTER COUNTY INTERCHANGE (WAUK 90343-A) 345/230/13.2KV TRANSFORMER CKT 1	560	560	0.20801	105.4029	SPEARMAN INTERCHANGE - SPEARMAN SUB 115KV CKT 1
FDNS	06ALL	0	20WP	G15_039	FROM->TO	POTTER COUNTY INTERCHANGE (WAUK 90343-A) 345/230/13.2KV TRANSFORMER CKT 1	560	560	0.20827	105.2661	DALLAM COUNTY INTERCHANGE - XIT_INTG 3115.00 115KV CKT 1
FDNS	06ALL	0	20WP	G15_039	FROM->TO	POTTER COUNTY INTERCHANGE (WAUK 90343-A) 345/230/13.2KV TRANSFORMER CKT 1	560	560	0.20684	105.2656	CONWAY SUB - NICHOLS STATION 115KV CKT 1
FDNS	06ALL	0	20WP	G15_039	FROM->TO	POTTER COUNTY INTERCHANGE (WAUK 90343-A) 345/230/13.2KV TRANSFORMER CKT 1	560	560	0.20827	105.1395	XIT_INTG 6230.00 (PRE_XFR_DATA) 230/115/13.2KV TRANSFORMER CKT 1
FDNS	06ALL	0	20WP	G15_039	FROM->TO	POTTER COUNTY INTERCHANGE (WAUK 90343-A) 345/230/13.2KV TRANSFORMER CKT 1	560	560	0.20827	105.1395	XIT_INTG 6230.00 (PRE_XFR_DATA) 230/115/13.2KV TRANSFORMER CKT 1
FDNS	06ALL	0	20WP	G15_039	FROM->TO	POTTER COUNTY INTERCHANGE (WAUK 90343-A) 345/230/13.2KV TRANSFORMER CKT 1	560	560	0.20827	105.0639	CHAN/TASCOS6230.00 - XIT_INTG 6230.00 230KV CKT 1
FDNS	06ALL	0	20WP	G15_039	FROM->TO	POTTER COUNTY INTERCHANGE (WAUK 90343-A) 345/230/13.2KV TRANSFORMER CKT 1	560	560	0.20801	105.0639	SPEARMAN SUB - TEXAS FARMS SUB 115KV CKT 1
FDNS	06ALL	0	20WP	G15_039	FROM->TO	POTTER COUNTY INTERCHANGE (WAUK 90343-A) 345/230/13.2KV TRANSFORMER CKT 1	560	560	0.20883	105.0388	Harrington Station East Bus - PRINGLE INTERCHANGE 230KV CKT 1
FDNS	06ALL	0	20WP	G15_039	FROM->TO	POTTER COUNTY INTERCHANGE (WAUK 90343-A) 345/230/13.2KV TRANSFORMER CKT 1	560	560	0.20883	105.0354	P12:230:SPS:K43.1.PRNGLE.HARR_E
FDNS	06ALL	0	20WP	G15_039	FROM->TO	POTTER COUNTY INTERCHANGE (WAUK 90343-A) 345/230/13.2KV TRANSFORMER CKT 1	560	560	0.20883	105.01	PRINGLE INTERCHANGE (ENRCO13617-1) 230/115/13.2KV TRANSFORMER CKT 1
FDNS	06ALL	0	20WP	G15_039	FROM->TO	POTTER COUNTY INTERCHANGE (WAUK 90343-A) 345/230/13.2KV TRANSFORMER CKT 1	560	560	0.20883	105.01	PRINGLE INTERCHANGE (ENRCO13617-1) 230/115/13.2KV TRANSFORMER CKT 1
FDNS	06ALL	0	20WP	G15_039	FROM->TO	POTTER COUNTY INTERCHANGE (WAUK 90343-A) 345/230/13.2KV TRANSFORMER CKT 1	560	560	0.20801	104.8879	OCHILTREE - TEXAS FARMS SUB 115KV CKT 1

SOLUTION	GROUP	SCENARIO	SEASON	SOURCE	DIRECTION	MONITORED ELEMENT	RATEA (MVA)	RATEB(MVA)	TDF	TC%LOADING (% MVA)	CONTINGENCY
FDNS	06ALL	0	20WP	G15_039	FROM->TO	POTTER COUNTY INTERCHANGE (WAUK 90343-A) 345/230/13.2KV TRANSFORMER CKT 1	560	560	0.20869	104.8559	PRINGLE INTERCHANGE - SPEARMAN INTERCHANGE 115KV CKT 1
FDNS	06ALL	0	20WP	G15_039	FROM->TO	POTTER COUNTY INTERCHANGE (WAUK 90343-A) 345/230/13.2KV TRANSFORMER CKT 1	560	560	0.20869	104.8559	PRINGLE INTERCHANGE - SPEARMAN INTERCHANGE 115KV CKT 1
FDNS	06ALL	0	20WP	G15_039	FROM->TO	POTTER COUNTY INTERCHANGE (WAUK 90343-A) 345/230/13.2KV TRANSFORMER CKT 1	560	560	0.21217	104.8346	Hitchland Interchange (SIEM 8743067) 345/230/13.2KV TRANSFORMER CKT 2
FDNS	06ALL	0	20WP	G15_039	FROM->TO	POTTER COUNTY INTERCHANGE (WAUK 90343-A) 345/230/13.2KV TRANSFORMER CKT 1	560	560	0.21217	104.8346	Hitchland Interchange (SIEM 8743067) 345/230/13.2KV TRANSFORMER CKT 2
FDNS	06ALL	0	20WP	G15_039	FROM->TO	POTTER COUNTY INTERCHANGE (WAUK 90343-A) 345/230/13.2KV TRANSFORMER CKT 1	560	560	0.20684	104.8052	CONWAY SUB - KIRBY SWITCHING STATION 115KV CKT 1
FDNS	06ALL	0	20WP	G15_039	FROM->TO	POTTER COUNTY INTERCHANGE (WAUK 90343-A) 345/230/13.2KV TRANSFORMER CKT 1	560	560	0.20684	104.7767	P12:115:SPS:T53.1.NICHLS.KIRBY
FDNS	06ALL	0	20WP	G15_039	FROM->TO	POTTER COUNTY INTERCHANGE (WAUK 90343-A) 345/230/13.2KV TRANSFORMER CKT 1	560	560	0.21185	104.6053	P12:115:SPS:W08.1.HITCH.LASLEY
FDNS	06ALL	0	20WP	G15_039	FROM->TO	POTTER COUNTY INTERCHANGE (WAUK 90343-A) 345/230/13.2KV TRANSFORMER CKT 1	560	560	0.20801	104.5662	P12:115:SPS:W29.1.OCLTRE.SPRMN
FDNS	06ALL	0	20WP	G15_039	FROM->TO	POTTER COUNTY INTERCHANGE (WAUK 90343-A) 345/230/13.2KV TRANSFORMER CKT 1	560	560	0.20637	104.5647	KIRBY SWITCHING STATION - MCCLELLAN SUB 115KV CKT 1
FDNS	06ALL	0	20WP	G15_039	FROM->TO	POTTER COUNTY INTERCHANGE (WAUK 90343-A) 345/230/13.2KV TRANSFORMER CKT 1	560	560	0.2071	104.5501	PRINGLE INTERCHANGE - SPEARMAN INTERCHANGE 115KV CKT 2
FDNS	06ALL	0	20WP	G15_039	FROM->TO	POTTER COUNTY INTERCHANGE (WAUK 90343-A) 345/230/13.2KV TRANSFORMER CKT 1	560	560	0.2071	104.5501	PRINGLE INTERCHANGE - SPEARMAN INTERCHANGE 115KV CKT 2
FDNS	06ALL	0	20WP	G15_039	FROM->TO	POTTER COUNTY INTERCHANGE (WAUK 90343-A) 345/230/13.2KV TRANSFORMER CKT 1	560	560	0.21185	104.4911	DWS FRISCO - HITCHLAND INTERCHANGE 115KV CKT 1
FDNS	06ALL	0	20WP	G15_039	FROM->TO	POTTER COUNTY INTERCHANGE (WAUK 90343-A) 345/230/13.2KV TRANSFORMER CKT 1	560	560	0.20637	104.4514	MCCLELLAN SUB - MCLEAN RURAL SUB 115KV CKT 1
FDNS	06NR	0	20L	G15_039	FROM->TO	POTTER COUNTY INTERCHANGE (WAUK 90343-A) 345/230/13.2KV TRANSFORMER CKT 1	560	560	0.0339	104.417	MOORE COUNTY INTERCHANGE - POTTER COUNTY INTERCHANGE 230KV CKT 1
FDNS	06NR	0	20L	G15_039	FROM->TO	POTTER COUNTY INTERCHANGE (WAUK 90343-A) 345/230/13.2KV TRANSFORMER CKT 1	560	560	0.0339	104.417	MOORE COUNTY INTERCHANGE - POTTER COUNTY INTERCHANGE 230KV CKT 1
FDNS	06ALL	0	20WP	G15_039	FROM->TO	POTTER COUNTY INTERCHANGE (WAUK 90343-A) 345/230/13.2KV TRANSFORMER CKT 1	560	560	0.20475	104.3296	GEN300003 1-THOMAS HILL UNIT 3
FDNS	06ALL	0	20WP	G15_039	FROM->TO	POTTER COUNTY INTERCHANGE (WAUK 90343-A) 345/230/13.2KV TRANSFORMER CKT 1	560	560	0.21185	104.2862	DWS FRISCO - SHERMAN COUNTY TAP 115KV CKT 1
FDNS	06ALL	0	20WP	G15_039	FROM->TO	POTTER COUNTY INTERCHANGE (WAUK 90343-A) 345/230/13.2KV TRANSFORMER CKT 1	560	560	0.20678	104.2135	HUTCHINSON COUNTY INTERCHANGE - NICHOLS STATION 230KV CKT 1
FDNS	06ALL	0	20WP	G15_039	FROM->TO	POTTER COUNTY INTERCHANGE (WAUK 90343-A) 345/230/13.2KV TRANSFORMER CKT 1	560	560	0.20678	104.2135	HUTCHINSON COUNTY INTERCHANGE - NICHOLS STATION 230KV CKT 1
FDNS	06ALL	0	20WP	G15_039	FROM->TO	POTTER COUNTY INTERCHANGE (WAUK 90343-A) 345/230/13.2KV TRANSFORMER CKT 1	560	560	0.20475	104.1907	GEN645012 2-NEBRASKA CITY 2
FDNS	06ALL	0	20WP	G15_039	FROM->TO	POTTER COUNTY INTERCHANGE (WAUK 90343-A) 345/230/13.2KV TRANSFORMER CKT 1	560	560	0.21049	104.1846	Hitchland Interchange (H TB80155502) 345/230/13.2KV TRANSFORMER CKT 1
FDNS	06ALL	0	20WP	G15_039	FROM->TO	POTTER COUNTY INTERCHANGE (WAUK 90343-A) 345/230/13.2KV TRANSFORMER CKT 1	560	560	0.21049	104.1846	Hitchland Interchange (H TB80155502) 345/230/13.2KV TRANSFORMER CKT 1
FDNS	06ALL	0	20WP	G15_039	FROM->TO	POTTER COUNTY INTERCHANGE (WAUK 90343-A) 345/230/13.2KV TRANSFORMER CKT 1	560	560	0.20771	104.1808	CHILDRESS - LAKE PAULINE 138KV CKT 1
FDNS	06ALL	0	20WP	G15_039	FROM->TO	POTTER COUNTY INTERCHANGE (WAUK 90343-A) 345/230/13.2KV TRANSFORMER CKT 1	560	560	0.20771	104.1808	CHILDRESS - LAKE PAULINE 138KV CKT 1
FDNS	06ALL	0	20WP	G15_039	FROM->TO	POTTER COUNTY INTERCHANGE (WAUK 90343-A) 345/230/13.2KV TRANSFORMER CKT 1	560	560	0.20637	104.1671	SHAMROCK (SHAMRCK1) 115/69/14.4KV TRANSFORMER CKT 1
FDNS	06ALL	0	20WP	G15_039	FROM->TO	POTTER COUNTY INTERCHANGE (WAUK 90343-A) 345/230/13.2KV TRANSFORMER CKT 1	560	560	0.20637	104.1671	SHAMROCK (SHAMRCK1) 115/69/14.4KV TRANSFORMER CKT 1
FDNS	06ALL	0	20WP	G15_039	FROM->TO	POTTER COUNTY INTERCHANGE (WAUK 90343-A) 345/230/13.2KV TRANSFORMER CKT 1	560	560	0.20475	104.154	TUCO INTERCHANGE 230/13.0KV TRANSFORMER CKT 1
FDNS	06ALL	0	20WP	G15_039	FROM->TO	POTTER COUNTY INTERCHANGE (WAUK 90343-A) 345/230/13.2KV TRANSFORMER CKT 1	560	560	0.20801	104.1427	SPEARMAN INTERCHANGE - SPEARMAN SUB 115KV CKT 1
FDNS	06ALL	0	20WP	G15_039	FROM->TO	POTTER COUNTY INTERCHANGE (WAUK 90343-A) 345/230/13.2KV TRANSFORMER CKT 1	560	560	0.20475	104.1279	GEN542962 2-IATAN UNIT #2
FDNS	06ALL	0	20WP	G15_039	FROM->TO	POTTER COUNTY INTERCHANGE (WAUK 90343-A) 345/230/13.2KV TRANSFORMER CKT 1	560	560	0.20637	104.1237	MCLEAN RURAL SUB - SHAMROCK 115KV CKT 1
FDNS	06ALL	0	20WP	G15_039	FROM->TO	POTTER COUNTY INTERCHANGE (WAUK 90343-A) 345/230/13.2KV TRANSFORMER CKT 1	560	560	0.20637	104.1237	MCLEAN RURAL SUB - SHAMROCK 115KV CKT 1
FDNS	06ALL	0	20WP	G15_039	FROM->TO	POTTER COUNTY INTERCHANGE (WAUK 90343-A) 345/230/13.2KV TRANSFORMER CKT 1	560	560	0.21098	104.1227	TOLK STATION EAST - TUCO INTERCHANGE 230KV CKT 1
FDNS	06ALL	0	20WP	G15_039	FROM->TO	POTTER COUNTY INTERCHANGE (WAUK 90343-A) 345/230/13.2KV TRANSFORMER CKT 1	560	560	0.21098	104.1227	TOLK STATION EAST - TUCO INTERCHANGE 230KV CKT 1
FDNS	06ALL	0	20WP	G15_039	FROM->TO	POTTER COUNTY INTERCHANGE (WAUK 90343-A) 345/230/13.2KV TRANSFORMER CKT 1	560	560	0.20637	104.118	P12:115:SPS:T54.1.KIRBY.SHM(520)
FDNS	06ALL	0	20WP	G15_039	FROM->TO	POTTER COUNTY INTERCHANGE (WAUK 90343-A) 345/230/13.2KV TRANSFORMER CKT 1	560	560	0.20637	104.118	P12:115:SPS-AEPW:KIRBY3:SHAM3WT
FDNS	06ALL	0	20WP	G15_039	FROM->TO	POTTER COUNTY INTERCHANGE (WAUK 90343-A) 345/230/13.2KV TRANSFORMER CKT 1	560	560	0.2072	104.1109	TUCO_2 345.00 (TUCO_2 XFMR) 345/230/13.2KV TRANSFORMER CKT 1
FDNS	06ALL	0	20WP	G15_039	FROM->TO	POTTER COUNTY INTERCHANGE (WAUK 90343-A) 345/230/13.2KV TRANSFORMER CKT 1	560	560	0.20605	104.0727	G15085_T 138.00 - RUSSELL 138KV CKT 1
FDNS	06ALL	0	20WP	G15_039	FROM->TO	POTTER COUNTY INTERCHANGE (WAUK 90343-A) 345/230/13.2KV TRANSFORMER CKT 1	560	560	0.20475	104.0677	GEN532751 1-WOLF CREEK GENERATING STATION UNIT 1
FDNS	06ALL	0	20WP	G15_039	FROM->TO	POTTER COUNTY INTERCHANGE (WAUK 90343-A) 345/230/13.2KV TRANSFORMER CKT 1	560	560	0.20475	104.0207	GEN645001 1-FORT CALHOUN 1
FDNS	06ALL	0	20WP	G15_039	FROM->TO	POTTER COUNTY INTERCHANGE (WAUK 90343-A) 345/230/13.2KV TRANSFORMER CKT 1	560	560	0.20475	103.9595	GEN640009 1-COOPER NUCLEAR STATION
FDNS	06ALL	0	20WP	G15_039	FROM->TO	POTTER COUNTY INTERCHANGE (WAUK 90343-A) 345/230/13.2KV TRANSFORMER CKT 1	560	560	0.20637	103.956	P12:138:AEPW:SHAM4WT:CHILD4WT
FDNS	06ALL	0	20WP	G15_039	FROM->TO	POTTER COUNTY INTERCHANGE (WAUK 90343-A) 345/230/13.2KV TRANSFORMER CKT 1	560	560	0.20667	103.9437	TUCO INTERCHANGE (GE M1022338) 345/230/13.2KV TRANSFORMER CKT 1
FDNS	06ALL	0	20WP	G15_039	FROM->TO	POTTER COUNTY INTERCHANGE (WAUK 90343-A) 345/230/13.2KV TRANSFORMER CKT 1	560	560	0.20667	103.9437	TUCO INTERCHANGE (GE M1022338) 345/230/13.2KV TRANSFORMER CKT 1
FDNS	06ALL	0	20WP	G15_039	FROM->TO	POTTER COUNTY INTERCHANGE (WAUK 90343-A) 345/230/13.2KV TRANSFORMER CKT 1	560	560	0.20637	103.9253	CHILDRESS - HOLLIS TAP 138KV CKT 1
FDNS	06ALL	0	20WP	G15_039	FROM->TO	POTTER COUNTY INTERCHANGE (WAUK 90343-A) 345/230/13.2KV TRANSFORMER CKT 1	560	560	0.20475	103.9105	GEN659118 1-LARAMIE RIVER UNIT1
FDNS	06ALL	0	20WP	G15_039	FROM->TO	POTTER COUNTY INTERCHANGE (WAUK 90343-A) 345/230/13.2KV TRANSFORMER CKT 1	560	560	0.20684	103.8699	CONWAY SUB - NICHOLS STATION 115KV CKT 1
FDNS	06ALL	0	20WP	G15_039	FROM->TO	POTTER COUNTY INTERCHANGE (WAUK 90343-A) 345/230/13.2KV TRANSFORMER CKT 1	560	560	0.20801	103.8371	SPEARMAN SUB - TEXAS FARMS SUB 115KV CKT 1
FDNS	06ALL	0	20WP	G15_039	FROM->TO	POTTER COUNTY INTERCHANGE (WAUK 90343-A) 345/230/13.2KV TRANSFORMER CKT 1	560	560	0.20475	103.8044	GEN640010 1-GERALD GENTLEMAN STATION UNIT 1
FDNS	06ALL	0	20WP	G15_039	FROM->TO	POTTER COUNTY INTERCHANGE (WAUK 90343-A) 345/230/13.2KV TRANSFORMER CKT 1	560	560	0.20637	103.8011	SHAMROCK - WELLINGTON 138KV CKT 1
FDNS	06ALL	0	20WP	G15_039	FROM->TO	POTTER COUNTY INTERCHANGE (WAUK 90343-A) 345/230/13.2KV TRANSFORMER CKT 1	560	560	0.20475	103.7978	GEN300006 1-NEW MADRID UNIT 1
FDNS	06ALL	0	20WP	G15_039	FROM->TO	POTTER COUNTY INTERCHANGE (WAUK 90343-A) 345/230/13.2KV TRANSFORMER CKT 1	560	560	0.20475	103.7864	GEN300007 1-NEW MADRID UNIT 2
FDNS	06ALL	0	20WP	G15_039	FROM->TO	POTTER COUNTY INTERCHANGE (WAUK 90343-A) 345/230/13.2KV TRANSFORMER CKT 1	560	560	0.20637	103.7725	SHAMROCK (SHAMRCK2) 138/69/14.4KV TRANSFORMER CKT 1
FDNS	06ALL	0	20WP	G15_039	FROM->TO	POTTER COUNTY INTERCHANGE (WAUK 90343-A) 345/230/13.2KV TRANSFORMER CKT 1	560	560	0.20637	103.7725	SHAMROCK (SHAMRCK2) 138/69/14.4KV TRANSFORMER CKT 1
FDNS	06ALL	0	20WP	G15_039	FROM->TO	POTTER COUNTY INTERCHANGE (WAUK 90343-A) 345/230/13.2KV TRANSFORMER CKT 1	560	560	0.20588	103.7616	FAIN SUB - NICHOLS STATION 115KV CKT 1
FDNS	06ALL	0	20WP	G15_039	FROM->TO	POTTER COUNTY INTERCHANGE (WAUK 90343-A) 345/230/13.2KV TRANSFORMER CKT 1	560	560	0.20475	103.758	GEN542957 1-IATAN UNIT #1
FDNS	06ALL	0	20WP	G15_039	FROM->TO	POTTER COUNTY INTERCHANGE (WAUK 90343-A) 345/230/13.2KV TRANSFORMER CKT 1	560	560	0.21217	103.755	Hitchland Interchange (SIEM 8743067) 345/230/13.2KV TRANSFORMER CKT 2
FDNS	06ALL	0	20WP	G15_039	FROM->TO	POTTER COUNTY INTERCHANGE (WAUK 90343-A) 345/230/13.2KV TRANSFORMER CKT 1	560	560	0.21217	103.755	Hitchland Interchange (SIEM 8743067) 345/230/13.2KV TRANSFORMER CKT 2
FDNS	06ALL	0	20WP	G15_039	FROM->TO	POTTER COUNTY INTERCHANGE (WAUK 90343-A) 345/230/13.2KV TRANSFORMER CKT 1	560	560	0.20475	103.7373	GEN542955 1-LACYGNE UNIT #1
FDNS	06ALL	0	20WP	G15_039	FROM->TO	POTTER COUNTY INTERCHANGE (WAUK 90343-A) 345/230/13.2KV TRANSFORMER CKT 1	560	560	0.20475	103.7092	GEN531447 1-HOLCOMB GENERATOR
FDNS	06ALL	0	20WP	G15_039	FROM->TO	POTTER COUNTY INTERCHANGE (WAUK 90343-A) 345/230/13.2KV TRANSFORMER CKT 1	560	560	0.20801	103.6896	OCHILTREE - TEXAS FARMS SUB 115KV CKT 1
FDNS	06ALL	0	20WP	G15_039	FROM->TO	POTTER COUNTY INTERCHANGE (WAUK 90343-A) 345/230/13.2KV TRANSFORMER CKT 1	560	560	0.20475	103.6882	GEN640011 2-GERALD GENTLEMAN STATION UNIT 2
FDNS	06ALL	0	20WP	G15_039	FROM->TO	POTTER COUNTY INTERCHANGE (WAUK 90343-A) 345/230/13.2KV TRANSFORMER CKT 1	560	560	0.20588	103.6513	EXELL TAP - FAIN SUB 115KV CKT 1
FDNS	06ALL	0	20WP	G15_039	FROM->TO	POTTER COUNTY INTERCHANGE (WAUK 90343-A) 345/230/13.2KV TRANSFORMER CKT 1	560	560	0.20631	103.6492	TUCO INTERCHANGE (SIEM 8743066) 345/230/13.2KV TRANSFORMER CKT 2
FDNS	06ALL	0	20WP	G15_039	FROM->TO	POTTER COUNTY INTERCHANGE (WAUK 90343-A) 345/230/13.2KV TRANSFORMER CKT 1	560	560	0.20631	103.6492	TUCO INTERCHANGE (SIEM 8743066) 345/230/13.2KV TRANSFORMER CKT 2
FDNS	06ALL	0	20WP	G15_039	FROM->TO	POTTER COUNTY INTERCHANGE (WAUK 90343-A) 345/230/13.2KV TRANSFORMER CKT 1	560	560	0.21336	103.6226	SWISHER COUNTY INTERCHANGE - TUCO_2 230.00 230KV CKT 1
FDNS	06ALL	0	20WP	G15_039	FROM->TO	POTTER COUNTY INTERCHANGE (WAUK 90343-A) 345/230/13.2KV TRANSFORMER CKT 1	560	560	0.20475	103.6121	GEN532651 1-JEFFREY ENERGY CENTER UNIT 1
FDNS	06ALL	0	20WP	G15_039	FROM->TO	POTTER COUNTY INTERCHANGE (WAUK 90343-A) 345/230/13.2KV TRANSFORMER CKT 1	560	560	0.20475	103.6108	GEN532652 1-JEFFREY ENERGY CENTER UNIT 2
FDNS	06ALL	0	20WP	G15_039	FROM->TO	POTTER COUNTY INTERCHANGE (WAUK 90343-A) 345/230/13.2KV TRANSFORMER CKT 1	560	560	0.20475	103.6108	GEN532653 1-JEFFREY ENERGY CENTER UNIT 3
FDNS	06ALL	0	20WP	G15_039	FROM->TO	POTTER COUNTY INTERCHANGE (WAUK 90343-A) 345/230/13.2KV TRANSFORMER CKT 1	560	560	0.20475	103.5162	GEN542956 2-LACYGNE UNIT #2
FDNS	06ALL	0	20WP	G15_039	FROM->TO	POTTER COUNTY INTERCHANGE (WAUK 90343-A) 345/230/13.2KV TRANSFORMER CKT 1	560	560	0.2067	103.4659	MOORE COUNTY INTERCHANGE EAST BUS - RB-SPURLOCK3115.00 115KV CKT 1
FDNS	06ALL	0	20WP	G15_039	FROM->TO	POTTER COUNTY INTERCHANGE (WAUK 90343-A) 345/230/13.2KV TRANSFORMER CKT 1	560	560	0.20684	103.4623	CONWAY SUB - KIRBY SWITCHING STATION 115KV CKT 1
FDNS	06ALL	0	20WP	G15_039	FROM->TO	POTTER COUNTY INTERCHANGE (WAUK 90343-A) 345/230/13.2KV TRANSFORMER CKT 1	560	560	0.20684	103.4412	P12:115:SPS:T53.1.NICHLS.KIRBY
FDNS	06ALL	0	20WP	G15_039	FROM->TO	POTTER COUNTY INTERCHANGE (WAUK 90343-A) 345/230/13.2KV TRANSFORMER CKT 1	560	560	0.20588	103.4285	P12:115:SPS:T27.1.NICHLS.DUMAS19
FDNS	06ALL	0	20WP	G15_039	FROM->TO	POTTER COUNTY INTERCHANGE (WAUK 90343-A) 345/230/13.2KV TRANSFORMER CKT 1	560	560	0.20475	103.4137	GEN509403 1-PIRKEY GENERATION
FDNS	06ALL	0	20WP	G15_039	FROM->TO	POTTER COUNTY INTERCHANGE (WAUK 90343-A) 345/230/13.2KV TRANSFORMER CKT 1	560	560	0.20475	103.4111	GEN509416 1-TURK GENERATION
FDNS	06ALL	0	20WP	G15_039	FROM->TO	POTTER COUNTY INTERCHANGE (WAUK 90343-A) 345/230/13.2KV TRANSFORMER CKT 1	560	560	0.20565	103.4047	CLINTON JUNCTION - ELK CITY 138KV CKT 1
FDNS	06ALL	0	20WP	G15_039	FROM->TO	POTTER COUNTY INTERCHANGE (WAUK 90343-A) 345/230/13.2KV TRANSFORMER CKT 1	560	560	0.20565	103.4047	CLINTON JUNCTION - ELK CITY 138KV CKT 1
FDNS	06ALL	0	20WP	G15_039	FROM->TO	POTTER COUNTY INTERCHANGE (WAUK 90343-A) 345/230/13.2KV TRANSFORMER CKT 1	560	560	0.20801	103.392	P12:115:SPS:W29.1.OCLTRE.SPRMN
FDNS	06ALL	0	20WP	G15_039	FROM->TO	POTTER COUNTY INTERCHANGE (WAUK 90343-A) 345/230/13.2KV TRANSFORMER CKT 1	560	560	0.20637	103.3574	HOLLIS TAP - WELLINGTON 138KV CKT 1

SOLUTION	GROUP	SCENARIO	SEASON	SOURCE	DIRECTION	MONITORED ELEMENT	RATEA (MVA)	RATEB(MVA)	TDF	TC%LOADING (% MVA)	CONTINGENCY
FDNS	06ALL	0	20WP	G15_039	FROM->TO	POTTER COUNTY INTERCHANGE (WAUK 90343-A) 345/230/13.2KV TRANSFORMER CKT 1	560	560	0.20475	103.3513	GEN542951 5-HAWTHORN UNIT #5
FDNS	06ALL	0	20WP	G15_039	FROM->TO	POTTER COUNTY INTERCHANGE (WAUK 90343-A) 345/230/13.2KV TRANSFORMER CKT 1	560	560	0.20529	103.3462	P12:115:SPS:V29.1.NICHLS.KNGSMLL
FDNS	06ALL	0	20WP	G15_039	FROM->TO	POTTER COUNTY INTERCHANGE (WAUK 90343-A) 345/230/13.2KV TRANSFORMER CKT 1	560	560	0.20588	103.3419	DUMAS SUB - EXELL TAP 115KV CKT 1
FDNS	06ALL	0	20WP	G15_039	FROM->TO	POTTER COUNTY INTERCHANGE (WAUK 90343-A) 345/230/13.2KV TRANSFORMER CKT 1	560	560	0.20545	103.3301	BLACKHAWK STATION S. - QUENCH-RYTON TAP 115KV CKT 1
FDNS	06ALL	0	20WP	G15_039	FROM->TO	POTTER COUNTY INTERCHANGE (WAUK 90343-A) 345/230/13.2KV TRANSFORMER CKT 1	560	560	0.2071	103.3192	PRINGLE INTERCHANGE - SPEARMAN INTERCHANGE 115KV CKT 2
FDNS	06ALL	0	20WP	G15_039	FROM->TO	POTTER COUNTY INTERCHANGE (WAUK 90343-A) 345/230/13.2KV TRANSFORMER CKT 1	560	560	0.2071	103.3192	PRINGLE INTERCHANGE - SPEARMAN INTERCHANGE 115KV CKT 2
FDNSLock	06ALL	0	20WP	G15_039	FROM->TO	POTTER COUNTY INTERCHANGE (WAUK 90343-A) 345/230/13.2KV TRANSFORMER CKT 1	560	560	0.20527	103.3182	JERICHO - KIRBY SWITCHING STATION 115KV CKT 1
FDNSLock	06ALL	0	20WP	G15_039	FROM->TO	POTTER COUNTY INTERCHANGE (WAUK 90343-A) 345/230/13.2KV TRANSFORMER CKT 1	560	560	0.20527	103.3182	JERICHO - KIRBY SWITCHING STATION 115KV CKT 1
FDNS	06ALL	0	20WP	G15_039	FROM->TO	POTTER COUNTY INTERCHANGE (WAUK 90343-A) 345/230/13.2KV TRANSFORMER CKT 1	560	560	0.20527	103.3012	HWRDWCK2 69.000 - JERICHO 69KV CKT 1
FDNSLock	06ALL	0	20WP	G15_039	FROM->TO	POTTER COUNTY INTERCHANGE (WAUK 90343-A) 345/230/13.2KV TRANSFORMER CKT 1	560	560	0.20527	103.2939	P12:69:AEPW:CLARDON2:JERIC2WT
FDNSLock	06ALL	0	20WP	G15_039	FROM->TO	POTTER COUNTY INTERCHANGE (WAUK 90343-A) 345/230/13.2KV TRANSFORMER CKT 1	560	560	0.20527	103.2841	JERICHO (JERIC2WT) 115/69/14.4KV TRANSFORMER CKT 1
FDNSLock	06ALL	0	20WP	G15_039	FROM->TO	POTTER COUNTY INTERCHANGE (WAUK 90343-A) 345/230/13.2KV TRANSFORMER CKT 1	560	560	0.20527	103.2841	JERICHO (JERIC2WT) 115/69/14.4KV TRANSFORMER CKT 1
FDNS	06ALL	0	20WP	G15_039	FROM->TO	POTTER COUNTY INTERCHANGE (WAUK 90343-A) 345/230/13.2KV TRANSFORMER CKT 1	560	560	0.2067	103.2729	RB-ELKS 3115.00 - RB-SPURLOCK3115.00 115KV CKT 1
FDNS	06ALL	0	17G	G15_039	FROM->TO	POTTER COUNTY INTERCHANGE (WAUK 90343-A) 345/230/13.2KV TRANSFORMER CKT 1	560	560	0.20978	103.2533	XIT_INTG 6230.00 (PRE_XFR_DATA) 230/115/13.2KV TRANSFORMER CKT 1
FDNS	06ALL	0	17G	G15_039	FROM->TO	POTTER COUNTY INTERCHANGE (WAUK 90343-A) 345/230/13.2KV TRANSFORMER CKT 1	560	560	0.20978	103.2533	XIT_INTG 6230.00 (PRE_XFR_DATA) 230/115/13.2KV TRANSFORMER CKT 1
FDNS	06ALL	0	20WP	G15_039	FROM->TO	POTTER COUNTY INTERCHANGE (WAUK 90343-A) 345/230/13.2KV TRANSFORMER CKT 1	560	560	0.20475	103.2514	GEN659103 1-ANTELOPE VALLEY UNIT1
FDNS	06ALL	0	20WP	G15_039	FROM->TO	POTTER COUNTY INTERCHANGE (WAUK 90343-A) 345/230/13.2KV TRANSFORMER CKT 1	560	560	0.20475	103.2514	GEN659107 2-ANTELOPE VALLEY UNIT2
FDNSLock	06ALL	0	20WP	G15_039	FROM->TO	POTTER COUNTY INTERCHANGE (WAUK 90343-A) 345/230/13.2KV TRANSFORMER CKT 1	560	560	0.20527	103.2465	CLARENDON - HWRDWCK2 69.000 69KV CKT 1
FDNS	06ALL	0	20WP	G15_039	FROM->TO	POTTER COUNTY INTERCHANGE (WAUK 90343-A) 345/230/13.2KV TRANSFORMER CKT 1	560	560	0.20668	103.2384	DALLAM COUNTY INTERCHANGE - SHERMAN COUNTY SUB 115KV CKT 1
FDNS	06ALL	0	20WP	G15_039	FROM->TO	POTTER COUNTY INTERCHANGE (WAUK 90343-A) 345/230/13.2KV TRANSFORMER CKT 1	560	560	0.20605	103.2284	G15085_T 138.00 - LAKE PAULINE 138KV CKT 1
FDNS	06ALL	0	20WP	G15_039	FROM->TO	POTTER COUNTY INTERCHANGE (WAUK 90343-A) 345/230/13.2KV TRANSFORMER CKT 1	560	560	0.20637	103.2218	KIRBY SWITCHING STATION - MCCLELLAN SUB 115KV CKT 1
FDNS	06ALL	0	20WP	G15_039	FROM->TO	POTTER COUNTY INTERCHANGE (WAUK 90343-A) 345/230/13.2KV TRANSFORMER CKT 1	560	560	0.2067	103.1961	RB-ELKS 3115.00 - SHERMAN COUNTY TAP 115KV CKT 1
FDNS	06ALL	0	20WP	G15_039	FROM->TO	POTTER COUNTY INTERCHANGE (WAUK 90343-A) 345/230/13.2KV TRANSFORMER CKT 1	560	560	0.20475	103.1953	TUCO INTERCHANGE 230KV SWITCHED SHUNT
FDNS	06ALL	0	20WP	G15_039	FROM->TO	POTTER COUNTY INTERCHANGE (WAUK 90343-A) 345/230/13.2KV TRANSFORMER CKT 1	560	560	0.20527	103.1907	P12:69:AEPW:NWMEMPH2:CHLDR2WT
FDNS	06ALL	0	20WP	G15_039	FROM->TO	POTTER COUNTY INTERCHANGE (WAUK 90343-A) 345/230/13.2KV TRANSFORMER CKT 1	560	560	0.20545	103.1717	PRINGLE INTERCHANGE - QUENCH-RYTON TAP 115KV CKT 1
FDNS	06ALL	0	20WP	G15_039	FROM->TO	POTTER COUNTY INTERCHANGE (WAUK 90343-A) 345/230/13.2KV TRANSFORMER CKT 1	560	560	0.20475	103.1521	GEN659111 2-LELAND OLDS UNIT2
FDNS	06ALL	0	20WP	G15_039	FROM->TO	POTTER COUNTY INTERCHANGE (WAUK 90343-A) 345/230/13.2KV TRANSFORMER CKT 1	560	560	0.20475	103.1498	GEN509404 1-WELSH #1
FDNS	06ALL	0	20WP	G15_039	FROM->TO	POTTER COUNTY INTERCHANGE (WAUK 90343-A) 345/230/13.2KV TRANSFORMER CKT 1	560	560	0.20475	103.1498	GEN509406 1-WELSH #3
FDNS	06ALL	0	20WP	G15_039	FROM->TO	POTTER COUNTY INTERCHANGE (WAUK 90343-A) 345/230/13.2KV TRANSFORMER CKT 1	560	560	0.20637	103.1236	MCCLELLAN SUB - MCLEAN RURAL SUB 115KV CKT 1
FDNS	06ALL	0	20WP	G15_039	FROM->TO	POTTER COUNTY INTERCHANGE (WAUK 90343-A) 345/230/13.2KV TRANSFORMER CKT 1	560	560	0.20475	103.1151	GEN590011 2-ERCOT EQUIVALENCE
FDNS	06ALL	0	20WP	G15_039	FROM->TO	POTTER COUNTY INTERCHANGE (WAUK 90343-A) 345/230/13.2KV TRANSFORMER CKT 1	560	560	0.21049	103.1149	Hitchland Interchange (H TB80155502) 345/230/13.2KV TRANSFORMER CKT 1
FDNS	06ALL	0	20WP	G15_039	FROM->TO	POTTER COUNTY INTERCHANGE (WAUK 90343-A) 345/230/13.2KV TRANSFORMER CKT 1	560	560	0.21049	103.1149	Hitchland Interchange (H TB80155502) 345/230/13.2KV TRANSFORMER CKT 1
FDNS	06ALL	0	20WP	G15_039	FROM->TO	POTTER COUNTY INTERCHANGE (WAUK 90343-A) 345/230/13.2KV TRANSFORMER CKT 1	560	560	0.20527	103.0989	CLARENDON - CLARENDON REC 69KV CKT 1
FDNS	06ALL	0	20WP	G15_039	FROM->TO	POTTER COUNTY INTERCHANGE (WAUK 90343-A) 345/230/13.2KV TRANSFORMER CKT 1	560	560	0.20545	103.0973	P12:115:SPS:T49.1.PRNGLE.BLKHK
FDNS	06ALL	0	20WP	G15_039	FROM->TO	POTTER COUNTY INTERCHANGE (WAUK 90343-A) 345/230/13.2KV TRANSFORMER CKT 1	560	560	0.20529	103.0942	KINGSMILL INTERCHANGE - LLANO ESTACADO WIND GEN 115KV CKT 1
FDNS	06ALL	0	20WP	G15_039	FROM->TO	POTTER COUNTY INTERCHANGE (WAUK 90343-A) 345/230/13.2KV TRANSFORMER CKT 1	560	560	0.20475	103.0715	GEN590010 1-ERCOT EQUIVALENCE
FDNS	06ALL	0	17G	G15_039	FROM->TO	POTTER COUNTY INTERCHANGE (WAUK 90343-A) 345/230/13.2KV TRANSFORMER CKT 1	560	560	0.21337	103.0702	DWS FRISCO - HITCHLAND INTERCHANGE 115KV CKT 1
FDNS	06ALL	0	20WP	G15_039	FROM->TO	POTTER COUNTY INTERCHANGE (WAUK 90343-A) 345/230/13.2KV TRANSFORMER CKT 1	560	560	0.20475	103.0686	GEN562544 1-G14_038_3 0.6900
FDNS	06ALL	0	20WP	G15_039	FROM->TO	POTTER COUNTY INTERCHANGE (WAUK 90343-A) 345/230/13.2KV TRANSFORMER CKT 1	560	560	0.20546	103.0681	P12:138:WFEC:MSL03
FDNS	06ALL	0	20WP	G15_039	FROM->TO	POTTER COUNTY INTERCHANGE (WAUK 90343-A) 345/230/13.2KV TRANSFORMER CKT 1	560	560	0.20513	103.0578	JONES STATION - TUCO INTERCHANGE 230KV CKT 1
FDNS	06ALL	0	20WP	G15_039	FROM->TO	POTTER COUNTY INTERCHANGE (WAUK 90343-A) 345/230/13.2KV TRANSFORMER CKT 1	560	560	0.20513	103.0578	JONES STATION - TUCO INTERCHANGE 230KV CKT 1
FDNS	06ALL	0	20WP	G15_039	FROM->TO	POTTER COUNTY INTERCHANGE (WAUK 90343-A) 345/230/13.2KV TRANSFORMER CKT 1	560	560	0.20521	103.0531	HERRING TAP - RIVERVIEW INTERCHANGE 115KV CKT 1
FDNS	06ALL	0	20WP	G15_039	FROM->TO	POTTER COUNTY INTERCHANGE (WAUK 90343-A) 345/230/13.2KV TRANSFORMER CKT 1	560	560	0.20475	103.0326	GEN509394 1-FLINT CREEK
FDNS	06ALL	0	20WP	G15_039	FROM->TO	POTTER COUNTY INTERCHANGE (WAUK 90343-A) 345/230/13.2KV TRANSFORMER CKT 1	560	560	0.2067	103.0275	P12:115:SPS:W24.1.MOOREE.LASLEY
FDNS	06ALL	0	20WP	G15_039	FROM->TO	POTTER COUNTY INTERCHANGE (WAUK 90343-A) 345/230/13.2KV TRANSFORMER CKT 1	560	560	0.20678	103.0261	HUTCHINSON COUNTY INTERCHANGE - NICHOLS STATION 230KV CKT 1
FDNS	06ALL	0	20WP	G15_039	FROM->TO	POTTER COUNTY INTERCHANGE (WAUK 90343-A) 345/230/13.2KV TRANSFORMER CKT 1	560	560	0.20678	103.0261	HUTCHINSON COUNTY INTERCHANGE - NICHOLS STATION 230KV CKT 1
FDNSLock	06ALL	0	20WP	G15_039	FROM->TO	POTTER COUNTY INTERCHANGE (WAUK 90343-A) 345/230/13.2KV TRANSFORMER CKT 1	560	560	0.20475	103.0241	TUCO INTERCHANGE 230KV SWITCHED SHUNT
FDNS	06ALL	0	20WP	G15_039	FROM->TO	POTTER COUNTY INTERCHANGE (WAUK 90343-A) 345/230/13.2KV TRANSFORMER CKT 1	560	560	0.20583	103.0158	BOWERS INTERCHANGE - Graves Sub 115KV CKT 1
FDNS	06ALL	0	20WP	G15_039	FROM->TO	POTTER COUNTY INTERCHANGE (WAUK 90343-A) 345/230/13.2KV TRANSFORMER CKT 1	560	560	0.20475	103.0155	GEN520947 1-HUGO1
FDNS	06ALL	0	20WP	G15_039	FROM->TO	POTTER COUNTY INTERCHANGE (WAUK 90343-A) 345/230/13.2KV TRANSFORMER CKT 1	560	560	0.20475	103.0148	GEN525820 1-TUCO Interchange SVC Bus
FDNS	06ALL	0	20WP	G15_039	FROM->TO	POTTER COUNTY INTERCHANGE (WAUK 90343-A) 345/230/13.2KV TRANSFORMER CKT 1	560	560	0.20475	103.0148	GEN525820 1-TUCO Interchange SVC Bus
FDNS	06ALL	0	20WP	G15_039	FROM->TO	POTTER COUNTY INTERCHANGE (WAUK 90343-A) 345/230/13.2KV TRANSFORMER CKT 1	560	560	0.20628	102.9934	PRINGLE INTERCHANGE - RIVERVIEW INTERCHANGE 115KV CKT 1
FDNS	06ALL	0	20WP	G15_039	FROM->TO	POTTER COUNTY INTERCHANGE (WAUK 90343-A) 345/230/13.2KV TRANSFORMER CKT 1	560	560	0.20628	102.9934	PRINGLE INTERCHANGE - RIVERVIEW INTERCHANGE 115KV CKT 1
FDNS	06ALL	0	20WP	G15_039	FROM->TO	POTTER COUNTY INTERCHANGE (WAUK 90343-A) 345/230/13.2KV TRANSFORMER CKT 1	560	560	0.20475	102.9928	GEN300003 1-THOMAS HILL UNIT 3
FDNS	06ALL	0	20WP	G15_039	FROM->TO	POTTER COUNTY INTERCHANGE (WAUK 90343-A) 345/230/13.2KV TRANSFORMER CKT 1	560	560	0.20824	102.9908	PLANT X STATION - SUNDOWN INTERCHANGE 230KV CKT 1
FDNS	06ALL	0	20WP	G15_039	FROM->TO	POTTER COUNTY INTERCHANGE (WAUK 90343-A) 345/230/13.2KV TRANSFORMER CKT 1	560	560	0.20824	102.9908	PLANT X STATION - SUNDOWN INTERCHANGE 230KV CKT 1
FDNSLock	06ALL	0	20WP	G15_039	FROM->TO	POTTER COUNTY INTERCHANGE (WAUK 90343-A) 345/230/13.2KV TRANSFORMER CKT 1	560	560	0.20527	102.9906	P12:69:AEPW:NWMEMPH2:CLARDON2
FDNS	06ALL	0	20WP	G15_039	FROM->TO	POTTER COUNTY INTERCHANGE (WAUK 90343-A) 345/230/13.2KV TRANSFORMER CKT 1	560	560	0.20521	102.9875	HERRING TAP - RITA BLANCA REC-SNEED 115KV CKT 1
FDNS	06ALL	0	20WP	G15_039	FROM->TO	POTTER COUNTY INTERCHANGE (WAUK 90343-A) 345/230/13.2KV TRANSFORMER CKT 1	560	560	0.20565	102.9849	ALTUS JUNCTION - RUSSELL 138KV CKT 1
FDNS	06ALL	0	20WP	G15_039	FROM->TO	POTTER COUNTY INTERCHANGE (WAUK 90343-A) 345/230/13.2KV TRANSFORMER CKT 1	560	560	0.20565	102.9849	ALTUS JUNCTION - RUSSELL 138KV CKT 1
FDNS	06ALL	0	20WP	G15_039	FROM->TO	POTTER COUNTY INTERCHANGE (WAUK 90343-A) 345/230/13.2KV TRANSFORMER CKT 1	560	560	0.21098	102.9678	TOLK STATION EAST - TUCO INTERCHANGE 230KV CKT 1
FDNS	06ALL	0	20WP	G15_039	FROM->TO	POTTER COUNTY INTERCHANGE (WAUK 90343-A) 345/230/13.2KV TRANSFORMER CKT 1	560	560	0.21098	102.9678	TOLK STATION EAST - TUCO INTERCHANGE 230KV CKT 1
FDNS	06ALL	0	20WP	G15_039	FROM->TO	POTTER COUNTY INTERCHANGE (WAUK 90343-A) 345/230/13.2KV TRANSFORMER CKT 1	560	560	0.20475	102.9604	GEN514806 1-SOONER UNIT 2
FDNS	06ALL	0	17G	G15_039	FROM->TO	POTTER COUNTY INTERCHANGE (WAUK 90343-A) 345/230/13.2KV TRANSFORMER CKT 1	560	560	0.20978	102.9406	CHAN/TASCOS6230.00 - XIT_INTG 6230.00 230KV CKT 1
FDNS	06ALL	0	20WP	G15_039	FROM->TO	POTTER COUNTY INTERCHANGE (WAUK 90343-A) 345/230/13.2KV TRANSFORMER CKT 1	560	560	0.20528	102.9371	GRACEMONT - LAWTON EASTSIDE 345KV CKT 1
FDNS	06ALL	0	20WP	G15_039	FROM->TO	POTTER COUNTY INTERCHANGE (WAUK 90343-A) 345/230/13.2KV TRANSFORMER CKT 1	560	560	0.20528	102.9371	GRACEMONT - LAWTON EASTSIDE 345KV CKT 1
FDNS	06ALL	0	20WP	G15_039	FROM->TO	POTTER COUNTY INTERCHANGE (WAUK 90343-A) 345/230/13.2KV TRANSFORMER CKT 1	560	560	0.20527	102.9371	MEMPHIS - NW MEMPHIS 69KV CKT 1
FDNS	06ALL	0	20WP	G15_039	FROM->TO	POTTER COUNTY INTERCHANGE (WAUK 90343-A) 345/230/13.2KV TRANSFORMER CKT 1	560	560	0.20475	102.927	GEN514805 1-SOONER UNIT 1
FDNS	06ALL	0	20WP	G15_039	FROM->TO	POTTER COUNTY INTERCHANGE (WAUK 90343-A) 345/230/13.2KV TRANSFORMER CKT 1	560	560	0.20475	102.9128	GEN515226 1-MUSKOGEE 6G
FDNS	06ALL	0	20WP	G15_039	FROM->TO	POTTER COUNTY INTERCHANGE (WAUK 90343-A) 345/230/13.2KV TRANSFORMER CKT 1	560	560	0.20475	102.8887	GEN645012 2-NEBRASKA CITY 2
FDNS	06ALL	0	20WP	G15_039	FROM->TO	POTTER COUNTY INTERCHANGE (WAUK 90343-A) 345/230/13.2KV TRANSFORMER CKT 1	560	560	0.20521	102.8874	MOORE COUNTY INTERCHANGE W. - RITA BLANCA REC-SNEED 115KV CKT 1
FDNSLock	06ALL	0	20WP	G15_039	FROM->TO	POTTER COUNTY INTERCHANGE (WAUK 90343-A) 345/230/13.2KV TRANSFORMER CKT 1	560	560	0.20527	102.8752	CLARENDON REC - HEDLEY 69KV CKT 1
FDNS	06ALL	0	20WP	G15_039	FROM->TO	POTTER COUNTY INTERCHANGE (WAUK 90343-A) 345/230/13.2KV TRANSFORMER CKT 1	560	560	0.20529	102.8739	P12:138:AEPW:S.W.S.-4:L.E.S.-4
FDNS	06ALL	0	20WP	G15_039	FROM->TO	POTTER COUNTY INTERCHANGE (WAUK 90343-A) 345/230/13.2KV TRANSFORMER CKT 1	560	560	0.2072	102.8719	TUCO_2 345.00 (TUCO_2 XFMR) 345/230/13.2KV TRANSFORMER CKT 1
FDNS	06ALL	0	20WP	G15_039	FROM->TO	POTTER COUNTY INTERCHANGE (WAUK 90343-A) 345/230/13.2KV TRANSFORMER CKT 1	560	560	0.20556	102.8712	KINGSMILL INTERCHANGE - MCCULLOUGH SUB 69KV CKT 1
FDNS	06ALL	0	20WP	G15_039	FROM->TO	POTTER COUNTY INTERCHANGE (WAUK 90343-A) 345/230/13.2KV TRANSFORMER CKT 1	560	560	0.20475	102.8699	GEN541151 3-SIBLEY GENERATING UNIT #3
FDNS	06ALL	0	20WP	G15_039	FROM->TO	POTTER COUNTY INTERCHANGE (WAUK 90343-A) 345/230/13.2KV TRANSFORMER CKT 1	560	560	0.20637	102.8695	SHAMROCK (SHAMRCK1) 115/69/14.4KV TRANSFORMER CKT 1
FDNS	06ALL	0	20WP	G15_039	FROM->TO	POTTER COUNTY INTERCHANGE (WAUK 90343-A) 345/230/13.2KV TRANSFORMER CKT 1	560	560	0.20637	102.8695	SHAMROCK (SHAMRCK1) 115/69/14.4KV TRANSFORMER CKT 1
FDNS	06ALL	0	20WP	G15_039	FROM->TO	POTTER COUNTY INTERCHANGE (WAUK 90343-A) 345/230/13.2KV TRANSFORMER CKT 1	560	560	0.20475	102.8672	GEN511840 1-NORTHEASTERN STATION #3

SOLUTION	GROUP	SCENARIO	SEASON	SOURCE	DIRECTION	MONITORED ELEMENT	RATEA (MVA)	RATEB(MVA)	TDF	TC%LOADING (% MVA)	CONTINGENCY
FDNS	06ALL	0	20WP	G15_039	FROM->TO	POTTER COUNTY INTERCHANGE (WAUK 90343-A) 345/230/13.2KV TRANSFORMER CKT 1	560	560	0.20529	102.8545	LLANO ESTACADO WIND GEN - MIDSTREAM ENERGY TAP 115KV CKT 1
FDNS	06ALL	0	20WP	G15_039	FROM->TO	POTTER COUNTY INTERCHANGE (WAUK 90343-A) 345/230/13.2KV TRANSFORMER CKT 1	560	560	0.20475	102.8512	TUCO INTERCHANGE 230/13.0KV TRANSFORMER CKT 1
FDNS	06ALL	0	20WP	G15_039	FROM->TO	POTTER COUNTY INTERCHANGE (WAUK 90343-A) 345/230/13.2KV TRANSFORMER CKT 1	560	560	0.20637	102.8349	MCLEAN RURAL SUB - SHAMROCK 115KV CKT 1
FDNS	06ALL	0	20WP	G15_039	FROM->TO	POTTER COUNTY INTERCHANGE (WAUK 90343-A) 345/230/13.2KV TRANSFORMER CKT 1	560	560	0.20637	102.8349	MCLEAN RURAL SUB - SHAMROCK 115KV CKT 1
FDNS	06ALL	0	20WP	G15_039	FROM->TO	POTTER COUNTY INTERCHANGE (WAUK 90343-A) 345/230/13.2KV TRANSFORMER CKT 1	560	560	0.20475	102.8336	GEN513601 1-GRECCTG_1 20.000
FDNSLock	06ALL	0	20WP	G15_039	FROM->TO	POTTER COUNTY INTERCHANGE (WAUK 90343-A) 345/230/13.2KV TRANSFORMER CKT 1	560	560	0.20527	102.8262	HEDLEY - NORTH MEMPHIS REC 69KV CKT 1
FDNS	06ALL	0	20WP	G15_039	FROM->TO	POTTER COUNTY INTERCHANGE (WAUK 90343-A) 345/230/13.2KV TRANSFORMER CKT 1	560	560	0.20637	102.825	P12:115:SPS:T54.1.KIRBY.SHM(520)
FDNS	06ALL	0	20WP	G15_039	FROM->TO	POTTER COUNTY INTERCHANGE (WAUK 90343-A) 345/230/13.2KV TRANSFORMER CKT 1	560	560	0.20637	102.825	P12:115:SPS-AEPW:KIRBY3:SHAM3WT
FDNS	06ALL	0	20WP	G15_039	FROM->TO	POTTER COUNTY INTERCHANGE (WAUK 90343-A) 345/230/13.2KV TRANSFORMER CKT 1	560	560	0.20475	102.8228	GEN511839 1-NORTHEASTERN STATION #2
FDNS	06ALL	0	20WP	G15_039	FROM->TO	POTTER COUNTY INTERCHANGE (WAUK 90343-A) 345/230/13.2KV TRANSFORMER CKT 1	560	560	0.20529	102.8213	MIDSTREAM ENERGY TAP - NICHOLS STATION 115KV CKT 1
FDNS	06ALL	0	20WP	G15_039	FROM->TO	POTTER COUNTY INTERCHANGE (WAUK 90343-A) 345/230/13.2KV TRANSFORMER CKT 1	560	560	0.20475	102.8185	GEN542962 2-IATAN UNIT #2
FDNS	06ALL	0	20WP	G15_039	FROM->TO	POTTER COUNTY INTERCHANGE (WAUK 90343-A) 345/230/13.2KV TRANSFORMER CKT 1	560	560	0.20475	102.8113	GEN511843 1-RIVERSIDE STATION #2
FDNS	06ALL	0	20WP	G15_039	FROM->TO	POTTER COUNTY INTERCHANGE (WAUK 90343-A) 345/230/13.2KV TRANSFORMER CKT 1	560	560	0.20475	102.8099	GEN515223 1-MUSKOGEE 4G
FDNS	06ALL	0	20WP	G15_039	FROM->TO	POTTER COUNTY INTERCHANGE (WAUK 90343-A) 345/230/13.2KV TRANSFORMER CKT 1	560	560	0.20475	102.8098	GEN515225 1-MUSKOGEE 5G
FDNS	06ALL	0	20WP	G15_039	FROM->TO	POTTER COUNTY INTERCHANGE (WAUK 90343-A) 345/230/13.2KV TRANSFORMER CKT 1	560	560	0.20475	102.8028	GEN300002 1-THOMAS HILL UNIT 2
FDNS	06ALL	0	20WP	G15_039	FROM->TO	POTTER COUNTY INTERCHANGE (WAUK 90343-A) 345/230/13.2KV TRANSFORMER CKT 1	560	560	0.20475	102.7978	GEN562017 1-G11_022_3 0.6900
FDNSLock	06ALL	0	20WP	G15_039	FROM->TO	POTTER COUNTY INTERCHANGE (WAUK 90343-A) 345/230/13.2KV TRANSFORMER CKT 1	560	560	0.20527	102.7872	NORTH MEMPHIS REC - NW MEMPHIS 69KV CKT 1
FDNS	06ALL	0	20WP	G15_039	FROM->TO	POTTER COUNTY INTERCHANGE (WAUK 90343-A) 345/230/13.2KV TRANSFORMER CKT 1	560	560	0.20605	102.7791	G15085_T 138.00 - RUSSELL 138KV CKT 1
FDNS	06ALL	0	20WP	G15_039	FROM->TO	POTTER COUNTY INTERCHANGE (WAUK 90343-A) 345/230/13.2KV TRANSFORMER CKT 1	560	560	0.20521	102.7702	P12:115:SPS:V01.1.MOOREW.RVRVIEW
FDNS	06ALL	0	20WP	G15_039	FROM->TO	POTTER COUNTY INTERCHANGE (WAUK 90343-A) 345/230/13.2KV TRANSFORMER CKT 1	560	560	0.20475	102.7699	GEN512688 2-GRDA1 GSU2 22
FDNS	06ALL	0	20WP	G15_039	FROM->TO	POTTER COUNTY INTERCHANGE (WAUK 90343-A) 345/230/13.2KV TRANSFORMER CKT 1	560	560	0.20668	102.7661	SHERMAN COUNTY SUB - SHERMAN COUNTY TAP 115KV CKT 1
FDNS	06ALL	0	20WP	G15_039	FROM->TO	POTTER COUNTY INTERCHANGE (WAUK 90343-A) 345/230/13.2KV TRANSFORMER CKT 1	560	560	0.20547	102.7532	HUGO - SUNNYSIDE 345KV CKT 1
FDNS	06ALL	0	20WP	G15_039	FROM->TO	POTTER COUNTY INTERCHANGE (WAUK 90343-A) 345/230/13.2KV TRANSFORMER CKT 1	560	560	0.20588	102.7498	DUMAS SUB - RB-S&S 3115.00 115KV CKT 1
FDNS	06ALL	0	20WP	G15_039	FROM->TO	POTTER COUNTY INTERCHANGE (WAUK 90343-A) 345/230/13.2KV TRANSFORMER CKT 1	560	560	0.20475	102.7416	GEN509409 1-WILKES #3
FDNS	06ALL	0	20WP	G15_039	FROM->TO	POTTER COUNTY INTERCHANGE (WAUK 90343-A) 345/230/13.2KV TRANSFORMER CKT 1	560	560	0.20475	102.7404	GEN645001 1-FORT CALHOUN 1
FDNS	06ALL	0	20WP	G15_039	FROM->TO	POTTER COUNTY INTERCHANGE (WAUK 90343-A) 345/230/13.2KV TRANSFORMER CKT 1	560	560	0.20475	102.7232	GEN532663 1-LAWRENCE ENERGY CENTER UNIT 5
FDNS	06ALL	0	20WP	G15_039	FROM->TO	POTTER COUNTY INTERCHANGE (WAUK 90343-A) 345/230/13.2KV TRANSFORMER CKT 1	560	560	0.20667	102.7171	TUCO INTERCHANGE (GE M1022338) 345/230/13.2KV TRANSFORMER CKT 1
FDNS	06ALL	0	20WP	G15_039	FROM->TO	POTTER COUNTY INTERCHANGE (WAUK 90343-A) 345/230/13.2KV TRANSFORMER CKT 1	560	560	0.20667	102.7171	TUCO INTERCHANGE (GE M1022338) 345/230/13.2KV TRANSFORMER CKT 1
FDNS	06ALL	0	20WP	G15_039	FROM->TO	POTTER COUNTY INTERCHANGE (WAUK 90343-A) 345/230/13.2KV TRANSFORMER CKT 1	560	560	0.20532	102.7063	JOHNSON COUNTY - SUNNYSIDE 345KV CKT 1
FDNS	06ALL	0	20WP	G15_039	FROM->TO	POTTER COUNTY INTERCHANGE (WAUK 90343-A) 345/230/13.2KV TRANSFORMER CKT 1	560	560	0.20527	102.7	P12:69:AEPW:CHLDR2WT:MEMPHIS2
FDNS	06ALL	0	20WP	G15_039	FROM->TO	POTTER COUNTY INTERCHANGE (WAUK 90343-A) 345/230/13.2KV TRANSFORMER CKT 1	560	560	0.20475	102.6917	GEN300015 1-1SGPDEL 18.000
FDNS	06ALL	0	20WP	G15_039	FROM->TO	POTTER COUNTY INTERCHANGE (WAUK 90343-A) 345/230/13.2KV TRANSFORMER CKT 1	560	560	0.20475	102.6912	GEN505432 1-SIKESTON
FDNS	06ALL	0	20WP	G15_039	FROM->TO	POTTER COUNTY INTERCHANGE (WAUK 90343-A) 345/230/13.2KV TRANSFORMER CKT 1	560	560	0.20475	102.6896	GEN300011 1-ST FRANCIS UNIT 2
FDNS	06ALL	0	20WP	G15_039	FROM->TO	POTTER COUNTY INTERCHANGE (WAUK 90343-A) 345/230/13.2KV TRANSFORMER CKT 1	560	560	0.20668	102.6889	P12:115:SPS:W05.1.DALLAM.LASLEY
FDNS	06ALL	0	20WP	G15_039	FROM->TO	POTTER COUNTY INTERCHANGE (WAUK 90343-A) 345/230/13.2KV TRANSFORMER CKT 1	560	560	0.20475	102.688	GEN300010 1-ST FRANCIS UNIT 1
FDNS	06ALL	0	20WP	G15_039	FROM->TO	POTTER COUNTY INTERCHANGE (WAUK 90343-A) 345/230/13.2KV TRANSFORMER CKT 1	560	560	0.20475	102.6841	GEN640009 1-COOPER NUCLEAR STATION
FDNS	06ALL	0	20WP	G15_039	FROM->TO	POTTER COUNTY INTERCHANGE (WAUK 90343-A) 345/230/13.2KV TRANSFORMER CKT 1	560	560	0.20637	102.6803	P12:138:AEPW:SHAM4WT:CHILD4WT
FDNS	06ALL	0	20WP	G15_039	FROM->TO	POTTER COUNTY INTERCHANGE (WAUK 90343-A) 345/230/13.2KV TRANSFORMER CKT 1	560	560	0.20476	102.6771	GRACEMONT (BANK 1) 345/138/13.8KV TRANSFORMER CKT 1
FDNS	06ALL	0	20WP	G15_039	FROM->TO	POTTER COUNTY INTERCHANGE (WAUK 90343-A) 345/230/13.2KV TRANSFORMER CKT 1	560	560	0.20534	102.6731	JOHNSON COUNTY - PITTSBURG 345KV CKT 1
FDNS	06ALL	0	20WP	G15_039	FROM->TO	POTTER COUNTY INTERCHANGE (WAUK 90343-A) 345/230/13.2KV TRANSFORMER CKT 1	560	560	0.20534	102.6731	JOHNSON COUNTY - PITTSBURG 345KV CKT 1
FDNS	06ALL	0	20WP	G15_039	FROM->TO	POTTER COUNTY INTERCHANGE (WAUK 90343-A) 345/230/13.2KV TRANSFORMER CKT 1	560	560	0.20475	102.6725	GEN659118 1-LARAMIE RIVER UNIT1
FDNS	06ALL	0	20WP	G15_039	FROM->TO	POTTER COUNTY INTERCHANGE (WAUK 90343-A) 345/230/13.2KV TRANSFORMER CKT 1	560	560	0.20569	102.6611	MOREWOOD SW - NINE MILE 138KV CKT 1
FDNS	06ALL	0	20WP	G15_039	FROM->TO	POTTER COUNTY INTERCHANGE (WAUK 90343-A) 345/230/13.2KV TRANSFORMER CKT 1	560	560	0.20637	102.658	CHILDRESS - HOLLIS TAP 138KV CKT 1
FDNS	06ALL	0	20WP	G15_039	FROM->TO	POTTER COUNTY INTERCHANGE (WAUK 90343-A) 345/230/13.2KV TRANSFORMER CKT 1	560	560	0.20463	102.6435	TUCO INTERCHANGE - TUCO_2 230.00 230KV CKT 1
FDNS	06ALL	0	20WP	G15_039	FROM->TO	POTTER COUNTY INTERCHANGE (WAUK 90343-A) 345/230/13.2KV TRANSFORMER CKT 1	560	560	0.20475	102.6427	GEN562432 1-G13-030 0.6900
FDNS	06ALL	0	20WP	G15_039	FROM->TO	POTTER COUNTY INTERCHANGE (WAUK 90343-A) 345/230/13.2KV TRANSFORMER CKT 1	560	560	0.20588	102.6307	FAIN SUB - NICHOLS STATION 115KV CKT 1
FDNS	06ALL	0	20WP	G15_039	FROM->TO	POTTER COUNTY INTERCHANGE (WAUK 90343-A) 345/230/13.2KV TRANSFORMER CKT 1	560	560	0.20475	102.6294	GEN511842 1-RIVERSIDE STATION #1
FDNS	06ALL	0	20WP	G15_039	FROM->TO	POTTER COUNTY INTERCHANGE (WAUK 90343-A) 345/230/13.2KV TRANSFORMER CKT 1	560	560	0.20483	102.6264	OCHILTREE - TRI COUNTY REC-COLE 115KV CKT 1
FDNS	06ALL	0	20WP	G15_039	FROM->TO	POTTER COUNTY INTERCHANGE (WAUK 90343-A) 345/230/13.2KV TRANSFORMER CKT 1	560	560	0.20483	102.6264	OCHILTREE - TRI COUNTY REC-COLE 115KV CKT 1
FDNS	06ALL	0	20WP	G15_039	FROM->TO	POTTER COUNTY INTERCHANGE (WAUK 90343-A) 345/230/13.2KV TRANSFORMER CKT 1	560	560	0.20588	102.6061	P12:115:SPS:T25.1.MOOREW.DUMAS19
FDNS	06ALL	0	20WP	G15_039	FROM->TO	POTTER COUNTY INTERCHANGE (WAUK 90343-A) 345/230/13.2KV TRANSFORMER CKT 1	560	560	0.20475	102.6042	GEN539670 4-JUDSON LARGE GENERATOR
FDNS	06ALL	0	20WP	G15_039	FROM->TO	POTTER COUNTY INTERCHANGE (WAUK 90343-A) 345/230/13.2KV TRANSFORMER CKT 1	560	560	0.20588	102.6004	MOORE COUNTY INTERCHANGE W. - RB-S&S 3115.00 115KV CKT 1
FDNS	06ALL	0	20WP	G15_039	FROM->TO	POTTER COUNTY INTERCHANGE (WAUK 90343-A) 345/230/13.2KV TRANSFORMER CKT 1	560	560	0.20535	102.5882	WEATHERFORD JCT. - WEATHERFORD SOUTHEAST 138KV CKT 1
FDNS	06ALL	0	20WP	G15_039	FROM->TO	POTTER COUNTY INTERCHANGE (WAUK 90343-A) 345/230/13.2KV TRANSFORMER CKT 1	560	560	0.20535	102.5882	WEATHERFORD JCT. - WEATHERFORD SOUTHEAST 138KV CKT 1
FDNS	06ALL	0	20WP	G15_039	FROM->TO	POTTER COUNTY INTERCHANGE (WAUK 90343-A) 345/230/13.2KV TRANSFORMER CKT 1	560	560	0.20475	102.5842	GEN659110 1-LELAND OLDS UNIT1
FDNS	06ALL	0	20WP	G15_039	FROM->TO	POTTER COUNTY INTERCHANGE (WAUK 90343-A) 345/230/13.2KV TRANSFORMER CKT 1	560	560	0.20475	102.5805	GEN549893 2-SOUTHWEST 2
FDNS	06ALL	0	20WP	G15_039	FROM->TO	POTTER COUNTY INTERCHANGE (WAUK 90343-A) 345/230/13.2KV TRANSFORMER CKT 1	560	560	0.20475	102.58	GEN640010 1-GERALD GENTLEMAN STATION UNIT 1
FDNS	06ALL	0	20WP	G15_039	FROM->TO	POTTER COUNTY INTERCHANGE (WAUK 90343-A) 345/230/13.2KV TRANSFORMER CKT 1	560	560	0.20475	102.5776	GEN546702 1-NM GEN N1
FDNS	06ALL	0	20WP	G15_039	FROM->TO	POTTER COUNTY INTERCHANGE (WAUK 90343-A) 345/230/13.2KV TRANSFORMER CKT 1	560	560	0.20528	102.5735	CRMWA#4 - NICHOLS STATION 115KV CKT 1
FDNS	06ALL	0	20WP	G15_039	FROM->TO	POTTER COUNTY INTERCHANGE (WAUK 90343-A) 345/230/13.2KV TRANSFORMER CKT 1	560	560	0.20475	102.5733	GEN645011 1-NEBRASKA CITY 1
FDNS	06ALL	0	20WP	G15_039	FROM->TO	POTTER COUNTY INTERCHANGE (WAUK 90343-A) 345/230/13.2KV TRANSFORMER CKT 1	560	560	0.20527	102.5687	AMOCO TAP - CHILDRESS 69KV CKT 1
FDNS	06ALL	0	20WP	G15_039	FROM->TO	POTTER COUNTY INTERCHANGE (WAUK 90343-A) 345/230/13.2KV TRANSFORMER CKT 1	560	560	0.20475	102.5578	GEN641089 2-ENERGY CENTER 2
FDNS	06ALL	0	20WP	G15_039	FROM->TO	POTTER COUNTY INTERCHANGE (WAUK 90343-A) 345/230/13.2KV TRANSFORMER CKT 1	560	560	0.20495	102.5577	P12:138:AEPW:HOB-JCT4:ELKCTY-4
FDNS	06ALL	0	20WP	G15_039	FROM->TO	POTTER COUNTY INTERCHANGE (WAUK 90343-A) 345/230/13.2KV TRANSFORMER CKT 1	560	560	0.20475	102.5508	GEN531447 1-HOLCOMB GENERATOR
FDNS	06ALL	0	20WP	G15_039	FROM->TO	POTTER COUNTY INTERCHANGE (WAUK 90343-A) 345/230/13.2KV TRANSFORMER CKT 1	560	560	0.20593	102.5498	G13_027T 230.00 - YOAKUM COUNTY INTERCHANGE 230KV CKT 1
FDNS	06ALL	0	20WP	G15_039	FROM->TO	POTTER COUNTY INTERCHANGE (WAUK 90343-A) 345/230/13.2KV TRANSFORMER CKT 1	560	560	0.20528	102.549	CRMWA#4 - MEREDITH 115KV CKT 1
FDNS	06ALL	0	20WP	G15_039	FROM->TO	POTTER COUNTY INTERCHANGE (WAUK 90343-A) 345/230/13.2KV TRANSFORMER CKT 1	560	560	0.20637	102.5458	SHAMROCK - WELLINGTON 138KV CKT 1
FDNS	06ALL	0	20WP	G15_039	FROM->TO	POTTER COUNTY INTERCHANGE (WAUK 90343-A) 345/230/13.2KV TRANSFORMER CKT 1	560	560	0.20532	102.5446	P12:138:AEPW-OGE:WTH_JCT4:JENSEN4
FDNS	06ALL	0	20WP	G15_039	FROM->TO	POTTER COUNTY INTERCHANGE (WAUK 90343-A) 345/230/13.2KV TRANSFORMER CKT 1	560	560	0.20535	102.5411	P12:138:AEPW:REDROCKRD4:WTH_JCT4
FDNS	06ALL	0	20WP	G15_039	FROM->TO	POTTER COUNTY INTERCHANGE (WAUK 90343-A) 345/230/13.2KV TRANSFORMER CKT 1	560	560	0.20475	102.5396	G15095_T 138.00 - ROSE_VALLEY 138.00 138KV CKT 1
FDNS	06ALL	0	20WP	G15_039	FROM->TO	POTTER COUNTY INTERCHANGE (WAUK 90343-A) 345/230/13.2KV TRANSFORMER CKT 1	560	560	0.20535	102.539	HINTON - WEATHERFORD JCT. 138KV CKT 1
FDNS	06ALL	0	20WP	G15_039	FROM->TO	POTTER COUNTY INTERCHANGE (WAUK 90343-A) 345/230/13.2KV TRANSFORMER CKT 1	560	560	0.20536	102.532	P12:345:SPS:J14.1.EDDY.XRDS
FDNS	06ALL	0	20WP	G15_039	FROM->TO	POTTER COUNTY INTERCHANGE (WAUK 90343-A) 345/230/13.2KV TRANSFORMER CKT 1	560	560	0.20475	102.5318	GEN300001 1-THOMAS HILL UNIT 1
FDNS	06ALL	0	20WP	G15_039	FROM->TO	POTTER COUNTY INTERCHANGE (WAUK 90343-A) 345/230/13.2KV TRANSFORMER CKT 1	560	560	0.20536	102.5304	CROSSROADS 7345.00 - EDDY COUNTY INTERCHANGE 345KV CKT 1
FDNS	06ALL	0	20WP	G15_039	FROM->TO	POTTER COUNTY INTERCHANGE (WAUK 90343-A) 345/230/13.2KV TRANSFORMER CKT 1	560	560	0.20475	102.5298	GEN515591 1-PALDRW11 0.6900
FDNS	06ALL	0	20WP	G15_039	FROM->TO	POTTER COUNTY INTERCHANGE (WAUK 90343-A) 345/230/13.2KV TRANSFORMER CKT 1	560	560	0.20588	102.529	EXELL TAP - FAIN SUB 115KV CKT 1
FDNS	06ALL	0	20WP	G15_039	FROM->TO	POTTER COUNTY INTERCHANGE (WAUK 90343-A) 345/230/13.2KV TRANSFORMER CKT 1	560	560	0.20475	102.5221	GEN300006 1-NEW MADRID UNIT 1
FDNS	06ALL	0	20WP	G15_039	FROM->TO	POTTER COUNTY INTERCHANGE (WAUK 90343-A) 345/230/13.2KV TRANSFORMER CKT 1	560	560	0.20637	102.5191	SHAMROCK (SHAMRCK2) 138/69/14.4KV TRANSFORMER CKT 1
FDNS	06ALL	0	20WP	G15_039	FROM->TO	POTTER COUNTY INTERCHANGE (WAUK 90343-A) 345/230/13.2KV TRANSFORMER CKT 1	560	560	0.20637	102.5191	SHAMROCK (SHAMRCK2) 138/69/14.4KV TRANSFORMER CKT 1

SOLUTION	GROUP	SCENARIO	SEASON	SOURCE	DIRECTION	MONITORED ELEMENT	RATEA (MVA)	RATEB(MVA)	TDF	TC%LOADING (% MVA)	CONTINGENCY
FDNS	06ALL	0	20WP	G15_039	FROM->TO	POTTER COUNTY INTERCHANGE (WAUK 90343-A) 345/230/13.2KV TRANSFORMER CKT 1	560	560	0.20475	102.5129	GEN300007 1-NEW MADRID UNIT 2
FDNS	06ALL	0	20WP	G15_039	FROM->TO	POTTER COUNTY INTERCHANGE (WAUK 90343-A) 345/230/13.2KV TRANSFORMER CKT 1	560	560	0.20475	102.4969	GEN542957 1-IATAN UNIT #1
FDNS	06ALL	0	20WP	G15_039	FROM->TO	POTTER COUNTY INTERCHANGE (WAUK 90343-A) 345/230/13.2KV TRANSFORMER CKT 1	560	560	0.20475	102.4752	GEN640011 2-GERALD GENTLEMAN STATION UNIT 2
FDNS	06ALL	0	20WP	G15_039	FROM->TO	POTTER COUNTY INTERCHANGE (WAUK 90343-A) 345/230/13.2KV TRANSFORMER CKT 1	560	560	0.21336	102.4716	SWISHER COUNTY INTERCHANGE - TUCO_2 230.00 230KV CKT 1
FDNS	06ALL	0	20WP	G15_039	FROM->TO	POTTER COUNTY INTERCHANGE (WAUK 90343-A) 345/230/13.2KV TRANSFORMER CKT 1	560	560	0.20475	102.4716	GEN542955 1-LACYGNE UNIT #1
FDNS	06ALL	0	20WP	G15_039	FROM->TO	POTTER COUNTY INTERCHANGE (WAUK 90343-A) 345/230/13.2KV TRANSFORMER CKT 1	560	560	0.20631	102.4466	TUCO INTERCHANGE (SIEM 8743066) 345/230/13.2KV TRANSFORMER CKT 2
FDNS	06ALL	0	20WP	G15_039	FROM->TO	POTTER COUNTY INTERCHANGE (WAUK 90343-A) 345/230/13.2KV TRANSFORMER CKT 1	560	560	0.20631	102.4466	TUCO INTERCHANGE (SIEM 8743066) 345/230/13.2KV TRANSFORMER CKT 2
FDNS	06ALL	0	20WP	G15_039	FROM->TO	POTTER COUNTY INTERCHANGE (WAUK 90343-A) 345/230/13.2KV TRANSFORMER CKT 1	560	560	0.20475	102.3676	GEN532651 1-JEFFREY ENERGY CENTER UNIT 1
FDNS	06ALL	0	20WP	G15_039	FROM->TO	POTTER COUNTY INTERCHANGE (WAUK 90343-A) 345/230/13.2KV TRANSFORMER CKT 1	560	560	0.20475	102.3658	GEN532652 1-JEFFREY ENERGY CENTER UNIT 2
FDNS	06ALL	0	20WP	G15_039	FROM->TO	POTTER COUNTY INTERCHANGE (WAUK 90343-A) 345/230/13.2KV TRANSFORMER CKT 1	560	560	0.20475	102.3658	GEN532653 1-JEFFREY ENERGY CENTER UNIT 3
FDNS	06ALL	0	20WP	G15_039	FROM->TO	POTTER COUNTY INTERCHANGE (WAUK 90343-A) 345/230/13.2KV TRANSFORMER CKT 1	560	560	0.20588	102.3179	P12:115:SPS:T27.1.NICHLS.DUMAS19
FDNS	06ALL	0	20WP	G15_039	FROM->TO	POTTER COUNTY INTERCHANGE (WAUK 90343-A) 345/230/13.2KV TRANSFORMER CKT 1	560	560	0.2067	102.3154	MOORE COUNTY INTERCHANGE EAST BUS - RB-SPURLOCK3115.00 115KV CKT 1
FDNS	06ALL	0	17G	G15_039	FROM->TO	POTTER COUNTY INTERCHANGE (WAUK 90343-A) 345/230/13.2KV TRANSFORMER CKT 1	560	560	0.21337	102.3056	DWS FRISCO - SHERMAN COUNTY TAP 115KV CKT 1
FDNS	06ALL	0	20WP	G15_039	FROM->TO	POTTER COUNTY INTERCHANGE (WAUK 90343-A) 345/230/13.2KV TRANSFORMER CKT 1	560	560	0.20475	102.2798	GEN542956 2-LACYGNE UNIT #2
FDNS	06ALL	0	20WP	G15_039	FROM->TO	POTTER COUNTY INTERCHANGE (WAUK 90343-A) 345/230/13.2KV TRANSFORMER CKT 1	560	560	0.20588	102.2449	DUMAS SUB - EXELL TAP 115KV CKT 1
FDNS	06ALL	0	20WP	G15_039	FROM->TO	POTTER COUNTY INTERCHANGE (WAUK 90343-A) 345/230/13.2KV TRANSFORMER CKT 1	560	560	0.20545	102.1938	BLACKHAWK STATION S. - QUENCH-RYTON TAP 115KV CKT 1
FDNS	06ALL	0	20WP	G15_039	FROM->TO	POTTER COUNTY INTERCHANGE (WAUK 90343-A) 345/230/13.2KV TRANSFORMER CKT 1	560	560	0.20529	102.1771	P12:115:SPS:V29.1.NICHLS.KNGSMLL
FDNS	06ALL	0	20WP	G15_039	FROM->TO	POTTER COUNTY INTERCHANGE (WAUK 90343-A) 345/230/13.2KV TRANSFORMER CKT 1	560	560	0.20475	102.1745	GEN509403 1-PIRKEY GENERATION
FDNS	06ALL	0	20WP	G15_039	FROM->TO	POTTER COUNTY INTERCHANGE (WAUK 90343-A) 345/230/13.2KV TRANSFORMER CKT 1	560	560	0.20565	102.1723	CLINTON JUNCTION - ELK CITY 138KV CKT 1
FDNS	06ALL	0	20WP	G15_039	FROM->TO	POTTER COUNTY INTERCHANGE (WAUK 90343-A) 345/230/13.2KV TRANSFORMER CKT 1	560	560	0.20565	102.1723	CLINTON JUNCTION - ELK CITY 138KV CKT 1
FDNS	06ALL	0	20WP	G15_039	FROM->TO	POTTER COUNTY INTERCHANGE (WAUK 90343-A) 345/230/13.2KV TRANSFORMER CKT 1	560	560	0.20475	102.1708	GEN509416 1-TURK GENERATION
FDNS	06ALL	0	20WP	G15_039	FROM->TO	POTTER COUNTY INTERCHANGE (WAUK 90343-A) 345/230/13.2KV TRANSFORMER CKT 1	560	560	0.20637	102.1579	HOLLIS TAP - WELLINGTON 138KV CKT 1
FDNS	06ALL	0	20WP	G15_039	FROM->TO	POTTER COUNTY INTERCHANGE (WAUK 90343-A) 345/230/13.2KV TRANSFORMER CKT 1	560	560	0.2067	102.1399	RB-ELKS 3115.00 - RB-SPURLOCK3115.00 115KV CKT 1
FDNS	06ALL	0	20WP	G15_039	FROM->TO	POTTER COUNTY INTERCHANGE (WAUK 90343-A) 345/230/13.2KV TRANSFORMER CKT 1	560	560	0.20475	102.1399	GEN542951 5-HAWTHORN UNIT #5
FDNSLock	06ALL	0	20WP	G15_039	FROM->TO	POTTER COUNTY INTERCHANGE (WAUK 90343-A) 345/230/13.2KV TRANSFORMER CKT 1	560	560	0.20527	102.1215	JERICHO - KIRBY SWITCHING STATION 115KV CKT 1
FDNSLock	06ALL	0	20WP	G15_039	FROM->TO	POTTER COUNTY INTERCHANGE (WAUK 90343-A) 345/230/13.2KV TRANSFORMER CKT 1	560	560	0.20527	102.1215	JERICHO - KIRBY SWITCHING STATION 115KV CKT 1
FDNS	06ALL	0	20WP	G15_039	FROM->TO	POTTER COUNTY INTERCHANGE (WAUK 90343-A) 345/230/13.2KV TRANSFORMER CKT 1	560	560	0.20527	102.1062	HWRDWCK2 69.000 - JERICHO 69KV CKT 1
FDNSLock	06ALL	0	20WP	G15_039	FROM->TO	POTTER COUNTY INTERCHANGE (WAUK 90343-A) 345/230/13.2KV TRANSFORMER CKT 1	560	560	0.20527	102.0989	P12:69:AEPW:CLARDON2:JERIC2WT
FDNSLock	06ALL	0	20WP	G15_039	FROM->TO	POTTER COUNTY INTERCHANGE (WAUK 90343-A) 345/230/13.2KV TRANSFORMER CKT 1	560	560	0.20527	102.0905	JERICHO (JERIC2WT) 115/69/14.4KV TRANSFORMER CKT 1
FDNSLock	06ALL	0	20WP	G15_039	FROM->TO	POTTER COUNTY INTERCHANGE (WAUK 90343-A) 345/230/13.2KV TRANSFORMER CKT 1	560	560	0.20527	102.0905	JERICHO (JERIC2WT) 115/69/14.4KV TRANSFORMER CKT 1
FDNS	06ALL	0	20WP	G15_039	FROM->TO	POTTER COUNTY INTERCHANGE (WAUK 90343-A) 345/230/13.2KV TRANSFORMER CKT 1	560	560	0.20668	102.0871	DALLAM COUNTY INTERCHANGE - SHERMAN COUNTY SUB 115KV CKT 1
FDNS	06ALL	0	20WP	G15_039	FROM->TO	POTTER COUNTY INTERCHANGE (WAUK 90343-A) 345/230/13.2KV TRANSFORMER CKT 1	560	560	0.2067	102.0684	RB-ELKS 3115.00 - SHERMAN COUNTY TAP 115KV CKT 1
FDNS	06ALL	0	20WP	G15_039	FROM->TO	POTTER COUNTY INTERCHANGE (WAUK 90343-A) 345/230/13.2KV TRANSFORMER CKT 1	560	560	0.20475	102.065	GEN659103 1-ANTELOPE VALLEY UNIT1
FDNS	06ALL	0	20WP	G15_039	FROM->TO	POTTER COUNTY INTERCHANGE (WAUK 90343-A) 345/230/13.2KV TRANSFORMER CKT 1	560	560	0.20475	102.065	GEN659107 2-ANTELOPE VALLEY UNIT2
FDNSLock	06ALL	0	20WP	G15_039	FROM->TO	POTTER COUNTY INTERCHANGE (WAUK 90343-A) 345/230/13.2KV TRANSFORMER CKT 1	560	560	0.20527	102.0572	CLARENDON - HWRDWCK2 69.000 69KV CKT 1
FDNS	06ALL	0	20WP	G15_039	FROM->TO	POTTER COUNTY INTERCHANGE (WAUK 90343-A) 345/230/13.2KV TRANSFORMER CKT 1	560	560	0.20545	102.0551	PRINGLE INTERCHANGE - QUENCH-RYTON TAP 115KV CKT 1
FDNS	06ALL	0	20WP	G15_039	FROM->TO	POTTER COUNTY INTERCHANGE (WAUK 90343-A) 345/230/13.2KV TRANSFORMER CKT 1	560	560	0.20605	102.0398	G15085_T 138.00 - LAKE PAULINE 138KV CKT 1
FDNS	06ALL	0	20WP	G15_039	FROM->TO	POTTER COUNTY INTERCHANGE (WAUK 90343-A) 345/230/13.2KV TRANSFORMER CKT 1	560	560	0.20527	102.0105	P12:69:AEPW:NWMEMPH2:CHLDR2WT
FDNS	06ALL	0	20WP	G15_039	FROM->TO	POTTER COUNTY INTERCHANGE (WAUK 90343-A) 345/230/13.2KV TRANSFORMER CKT 1	560	560	0.20475	102.009	TUCO INTERCHANGE 230KV SWITCHED SHUNT
FDNS	06ALL	0	20WP	G15_039	FROM->TO	POTTER COUNTY INTERCHANGE (WAUK 90343-A) 345/230/13.2KV TRANSFORMER CKT 1	560	560	0.20475	101.9937	2115-TUCO INTERCHANGE
FDNS	06ALL	0	20WP	G15_039	FROM->TO	POTTER COUNTY INTERCHANGE (WAUK 90343-A) 345/230/13.2KV TRANSFORMER CKT 1	560	560	0.20475	101.9937	BASE CASE
FDNS	06ALL	0	20WP	G15_039	FROM->TO	POTTER COUNTY INTERCHANGE (WAUK 90343-A) 345/230/13.2KV TRANSFORMER CKT 1	560	560	0.20545	101.9842	P12:115:SPS:T49.1.PRNGLE.BLKHK
FDNS	06ALL	0	20WP	G15_039	FROM->TO	POTTER COUNTY INTERCHANGE (WAUK 90343-A) 345/230/13.2KV TRANSFORMER CKT 1	560	560	0.20475	101.9765	GEN659111 2-LELAND OLDS UNIT2
FDNS	06ALL	0	20WP	G15_039	FROM->TO	POTTER COUNTY INTERCHANGE (WAUK 90343-A) 345/230/13.2KV TRANSFORMER CKT 1	560	560	0.20475	101.9666	GEN562544 1-G14_038_3 0.6900
FDNS	06ALL	0	17G	G15_039	FROM->TO	POTTER COUNTY INTERCHANGE (WAUK 90343-A) 345/230/13.2KV TRANSFORMER CKT 1	560	560	0.21368	101.9629	Hitchland Interchange (SIEM 8743067) 345/230/13.2KV TRANSFORMER CKT 2
FDNS	06ALL	0	17G	G15_039	FROM->TO	POTTER COUNTY INTERCHANGE (WAUK 90343-A) 345/230/13.2KV TRANSFORMER CKT 1	560	560	0.21368	101.9629	Hitchland Interchange (SIEM 8743067) 345/230/13.2KV TRANSFORMER CKT 2
FDNS	06ALL	0	20WP	G15_039	FROM->TO	POTTER COUNTY INTERCHANGE (WAUK 90343-A) 345/230/13.2KV TRANSFORMER CKT 1	560	560	0.20529	101.9566	KINGSMILL INTERCHANGE - LLANO ESTACADO WIND GEN 115KV CKT 1
FDNS	06ALL	0	20WP	G15_039	FROM->TO	POTTER COUNTY INTERCHANGE (WAUK 90343-A) 345/230/13.2KV TRANSFORMER CKT 1	560	560	0.20521	101.9491	HERRING TAP - RIVERVIEW INTERCHANGE 115KV CKT 1
FDNS	06ALL	0	20WP	G15_039	FROM->TO	POTTER COUNTY INTERCHANGE (WAUK 90343-A) 345/230/13.2KV TRANSFORMER CKT 1	560	560	0.20475	101.9457	GEN509406 1-WELSH #3
FDNS	06ALL	0	20WP	G15_039	FROM->TO	POTTER COUNTY INTERCHANGE (WAUK 90343-A) 345/230/13.2KV TRANSFORMER CKT 1	560	560	0.20475	101.9456	GEN509404 1-WELSH #1
FDNS	06ALL	0	20WP	G15_039	FROM->TO	POTTER COUNTY INTERCHANGE (WAUK 90343-A) 345/230/13.2KV TRANSFORMER CKT 1	560	560	0.20475	101.9291	GEN590011 2-ERCOT EQUIVALENCE
FDNS	06ALL	0	20WP	G15_039	FROM->TO	POTTER COUNTY INTERCHANGE (WAUK 90343-A) 345/230/13.2KV TRANSFORMER CKT 1	560	560	0.20527	101.9271	CLARENDON - CLARENDON REC 69KV CKT 1
FDNS	06ALL	0	20WP	G15_039	FROM->TO	POTTER COUNTY INTERCHANGE (WAUK 90343-A) 345/230/13.2KV TRANSFORMER CKT 1	560	560	0.2067	101.9065	P12:115:SPS:W24.1.MOOREE.LASLEY
FDNS	06ALL	0	20WP	G15_039	FROM->TO	POTTER COUNTY INTERCHANGE (WAUK 90343-A) 345/230/13.2KV TRANSFORMER CKT 1	560	560	0.20824	101.8944	PLANT X STATION - SUNDOWN INTERCHANGE 230KV CKT 1
FDNS	06ALL	0	20WP	G15_039	FROM->TO	POTTER COUNTY INTERCHANGE (WAUK 90343-A) 345/230/13.2KV TRANSFORMER CKT 1	560	560	0.20824	101.8944	PLANT X STATION - SUNDOWN INTERCHANGE 230KV CKT 1
FDNS	06ALL	0	20WP	G15_039	FROM->TO	POTTER COUNTY INTERCHANGE (WAUK 90343-A) 345/230/13.2KV TRANSFORMER CKT 1	560	560	0.20628	101.8938	PRINGLE INTERCHANGE - RIVERVIEW INTERCHANGE 115KV CKT 1
FDNS	06ALL	0	20WP	G15_039	FROM->TO	POTTER COUNTY INTERCHANGE (WAUK 90343-A) 345/230/13.2KV TRANSFORMER CKT 1	560	560	0.20628	101.8938	PRINGLE INTERCHANGE - RIVERVIEW INTERCHANGE 115KV CKT 1
FDNS	06ALL	0	20WP	G15_039	FROM->TO	POTTER COUNTY INTERCHANGE (WAUK 90343-A) 345/230/13.2KV TRANSFORMER CKT 1	560	560	0.20521	101.8931	HERRING TAP - RITA BLANCA REC-SNEED 115KV CKT 1
FDNS	06ALL	0	20WP	G15_039	FROM->TO	POTTER COUNTY INTERCHANGE (WAUK 90343-A) 345/230/13.2KV TRANSFORMER CKT 1	560	560	0.20513	101.8923	JONES STATION - TUCO INTERCHANGE 230KV CKT 1
FDNS	06ALL	0	20WP	G15_039	FROM->TO	POTTER COUNTY INTERCHANGE (WAUK 90343-A) 345/230/13.2KV TRANSFORMER CKT 1	560	560	0.20513	101.8923	JONES STATION - TUCO INTERCHANGE 230KV CKT 1
FDNS	06ALL	0	20WP	G15_039	FROM->TO	POTTER COUNTY INTERCHANGE (WAUK 90343-A) 345/230/13.2KV TRANSFORMER CKT 1	560	560	0.20475	101.8913	GEN590010 1-ERCOT EQUIVALENCE
FDNS	06ALL	0	20WP	G15_039	FROM->TO	POTTER COUNTY INTERCHANGE (WAUK 90343-A) 345/230/13.2KV TRANSFORMER CKT 1	560	560	0.20546	101.884	P12:138:WFEC:MSL03
FDNS	06ALL	0	20WP	G15_039	FROM->TO	POTTER COUNTY INTERCHANGE (WAUK 90343-A) 345/230/13.2KV TRANSFORMER CKT 1	560	560	0.20583	101.8741	BOWERS INTERCHANGE - Graves Sub 115KV CKT 1
FDNSLock	06ALL	0	20WP	G15_039	FROM->TO	POTTER COUNTY INTERCHANGE (WAUK 90343-A) 345/230/13.2KV TRANSFORMER CKT 1	560	560	0.20475	101.8577	TUCO INTERCHANGE 230KV SWITCHED SHUNT
FDNS	06ALL	0	20WP	G15_039	FROM->TO	POTTER COUNTY INTERCHANGE (WAUK 90343-A) 345/230/13.2KV TRANSFORMER CKT 1	560	560	0.20475	101.8495	GEN509394 1-FLINT CREEK
FDNS	06ALL	0	20WP	G15_039	FROM->TO	POTTER COUNTY INTERCHANGE (WAUK 90343-A) 345/230/13.2KV TRANSFORMER CKT 1	560	560	0.20475	101.8479	GEN525820 1-TUCO Interchange SVC Bus
FDNS	06ALL	0	20WP	G15_039	FROM->TO	POTTER COUNTY INTERCHANGE (WAUK 90343-A) 345/230/13.2KV TRANSFORMER CKT 1	560	560	0.20475	101.8479	GEN525820 1-TUCO Interchange SVC Bus
FDNSLock	06ALL	0	20WP	G15_039	FROM->TO	POTTER COUNTY INTERCHANGE (WAUK 90343-A) 345/230/13.2KV TRANSFORMER CKT 1	560	560	0.20527	101.8344	P12:69:AEPW:NWMEMPH2:CLARDON2
FDNS	06ALL	0	20WP	G15_039	FROM->TO	POTTER COUNTY INTERCHANGE (WAUK 90343-A) 345/230/13.2KV TRANSFORMER CKT 1	560	560	0.20565	101.8276	ALTUS JUNCTION - RUSSELL 138KV CKT 1
FDNS	06ALL	0	20WP	G15_039	FROM->TO	POTTER COUNTY INTERCHANGE (WAUK 90343-A) 345/230/13.2KV TRANSFORMER CKT 1	560	560	0.20565	101.8276	ALTUS JUNCTION - RUSSELL 138KV CKT 1
FDNS	06ALL	0	20WP	G15_039	FROM->TO	POTTER COUNTY INTERCHANGE (WAUK 90343-A) 345/230/13.2KV TRANSFORMER CKT 1	560	560	0.20475	101.826	GEN520947 1-HUGO1
FDNS	06ALL	0	20WP	G15_039	FROM->TO	POTTER COUNTY INTERCHANGE (WAUK 90343-A) 345/230/13.2KV TRANSFORMER CKT 1	560	560	0.20528	101.8061	GRACEMONT - LAWTON EASTSIDE 345KV CKT 1
FDNS	06ALL	0	20WP	G15_039	FROM->TO	POTTER COUNTY INTERCHANGE (WAUK 90343-A) 345/230/13.2KV TRANSFORMER CKT 1	560	560	0.20528	101.8061	GRACEMONT - LAWTON EASTSIDE 345KV CKT 1
FDNS	06ALL	0	20WP	G15_039	FROM->TO	POTTER COUNTY INTERCHANGE (WAUK 90343-A) 345/230/13.2KV TRANSFORMER CKT 1	560	560	0.20521	101.7994	MOORE COUNTY INTERCHANGE W. - RITA BLANCA REC-SNEED 115KV CKT 1
FDNS	06ALL	0	17G	G15_039	FROM->TO	POTTER COUNTY INTERCHANGE (WAUK 90343-A) 345/230/13.2KV TRANSFORMER CKT 1	560	560	0.20978	101.7906	XIT_INTG 6230.00 (PRE_XFR_DATA) 230/115/13.2KV TRANSFORMER CKT 1
FDNS	06ALL	0	17G	G15_039	FROM->TO	POTTER COUNTY INTERCHANGE (WAUK 90343-A) 345/230/13.2KV TRANSFORMER CKT 1	560	560	0.20978	101.7906	XIT_INTG 6230.00 (PRE_XFR_DATA) 230/115/13.2KV TRANSFORMER CKT 1
FDNS	06ALL	0	20WP	G15_039	FROM->TO	POTTER COUNTY INTERCHANGE (WAUK 90343-A) 345/230/13.2KV TRANSFORMER CKT 1	560	560	0.20527	101.7873	MEMPHIS - NW MEMPHIS 69KV CKT 1
FDNS	06ALL	0	20WP	G15_039	FROM->TO	POTTER COUNTY INTERCHANGE (WAUK 90343-A) 345/230/13.2KV TRANSFORMER CKT 1	560	560	0.20475	101.7793	GEN514806 1-SOONER UNIT 2
FDNS	06ALL	0	20WP	G15_039	FROM->TO	POTTER COUNTY INTERCHANGE (WAUK 90343-A) 345/230/13.2KV TRANSFORMER CKT 1	560	560	0.20475	101.756	GEN514805 1-SOONER UNIT 1

SOLUTION	GROUP	SCENARIO	SEASON	SOURCE	DIRECTION	MONITORED ELEMENT	RATEA (MVA)	RATEB(MVA)	TDF	TC%LOADING (% MVA)	CONTINGENCY
FDNS	06ALL	0	20WP	G15_039	FROM->TO	POTTER COUNTY INTERCHANGE (WAUK 90343-A) 345/230/13.2KV TRANSFORMER CKT 1	560	560	0.20475	101.7407	GEN515226 1-MUSKOGEE 6G
FDNS	06ALL	0	20WP	G15_039	FROM->TO	POTTER COUNTY INTERCHANGE (WAUK 90343-A) 345/230/13.2KV TRANSFORMER CKT 1	560	560	0.20529	101.7327	LLANO ESTACADO WIND GEN - MIDSTREAM ENERGY TAP 115KV CKT 1
FDNSLock	06ALL	0	20WP	G15_039	FROM->TO	POTTER COUNTY INTERCHANGE (WAUK 90343-A) 345/230/13.2KV TRANSFORMER CKT 1	560	560	0.20527	101.7324	CLARENDON REC - HEDLEY 69KV CKT 1
FDNS	06ALL	0	20WP	G15_039	FROM->TO	POTTER COUNTY INTERCHANGE (WAUK 90343-A) 345/230/13.2KV TRANSFORMER CKT 1	560	560	0.20556	101.7286	KINGSMILL INTERCHANGE - MCCULLOUGH SUB 69KV CKT 1
FDNS	06ALL	0	20WP	G15_039	FROM->TO	POTTER COUNTY INTERCHANGE (WAUK 90343-A) 345/230/13.2KV TRANSFORMER CKT 1	560	560	0.20475	101.7236	GEN562017 1-G11_022_3 0.6900
FDNS	06ALL	0	20WP	G15_039	FROM->TO	POTTER COUNTY INTERCHANGE (WAUK 90343-A) 345/230/13.2KV TRANSFORMER CKT 1	560	560	0.20475	101.716	GEN541151 3-SIBLEY GENERATING UNIT #3
FDNS	06ALL	0	20WP	G15_039	FROM->TO	POTTER COUNTY INTERCHANGE (WAUK 90343-A) 345/230/13.2KV TRANSFORMER CKT 1	560	560	0.20529	101.7147	P12:138:AEPW:S.W.S.-4:L.E.S.-4
FDNS	06ALL	0	20WP	G15_039	FROM->TO	POTTER COUNTY INTERCHANGE (WAUK 90343-A) 345/230/13.2KV TRANSFORMER CKT 1	560	560	0.20529	101.7075	MIDSTREAM ENERGY TAP - NICHOLS STATION 115KV CKT 1
FDNS	06ALL	0	20WP	G15_039	FROM->TO	POTTER COUNTY INTERCHANGE (WAUK 90343-A) 345/230/13.2KV TRANSFORMER CKT 1	560	560	0.20475	101.7046	GEN511840 1-NORTHEASTERN STATION #3
FDNS	06ALL	0	17G	G15_039	FROM->TO	POTTER COUNTY INTERCHANGE (WAUK 90343-A) 345/230/13.2KV TRANSFORMER CKT 1	560	560	0.20947	101.6933	P12:115:SPS:W29.1.OCLTRE.SPRMN
FDNS	06ALL	0	20WP	G15_039	FROM->TO	POTTER COUNTY INTERCHANGE (WAUK 90343-A) 345/230/13.2KV TRANSFORMER CKT 1	560	560	0.20588	101.6917	DUMAS SUB - RB-S&S 3115.00 115KV CKT 1
FDNSLock	06ALL	0	20WP	G15_039	FROM->TO	POTTER COUNTY INTERCHANGE (WAUK 90343-A) 345/230/13.2KV TRANSFORMER CKT 1	560	560	0.20527	101.6903	HEDLEY - NORTH MEMPHIS REC 69KV CKT 1
FDNS	06ALL	0	20WP	G15_039	FROM->TO	POTTER COUNTY INTERCHANGE (WAUK 90343-A) 345/230/13.2KV TRANSFORMER CKT 1	560	560	0.20521	101.6879	P12:115:SPS:V01.1.MOOREW.RVRVIEW
FDNS	06ALL	0	20WP	G15_039	FROM->TO	POTTER COUNTY INTERCHANGE (WAUK 90343-A) 345/230/13.2KV TRANSFORMER CKT 1	560	560	0.20475	101.6753	GEN513601 1-GRECCTG_1 20.000
FDNS	06ALL	0	20WP	G15_039	FROM->TO	POTTER COUNTY INTERCHANGE (WAUK 90343-A) 345/230/13.2KV TRANSFORMER CKT 1	560	560	0.20668	101.6678	SHERMAN COUNTY SUB - SHERMAN COUNTY TAP 115KV CKT 1
FDNS	06ALL	0	20WP	G15_039	FROM->TO	POTTER COUNTY INTERCHANGE (WAUK 90343-A) 345/230/13.2KV TRANSFORMER CKT 1	560	560	0.20475	101.6649	GEN511839 1-NORTHEASTERN STATION #2
FDNS	06ALL	0	20WP	G15_039	FROM->TO	POTTER COUNTY INTERCHANGE (WAUK 90343-A) 345/230/13.2KV TRANSFORMER CKT 1	560	560	0.20475	101.6576	GEN300002 1-THOMAS HILL UNIT 2
FDNS	06ALL	0	17G	G15_039	FROM->TO	POTTER COUNTY INTERCHANGE (WAUK 90343-A) 345/230/13.2KV TRANSFORMER CKT 1	560	560	0.20947	101.6558	OCHILTREE - TEXAS FARMS SUB 115KV CKT 1
FDNSLock	06ALL	0	20WP	G15_039	FROM->TO	POTTER COUNTY INTERCHANGE (WAUK 90343-A) 345/230/13.2KV TRANSFORMER CKT 1	560	560	0.20527	101.6556	NORTH MEMPHIS REC - NW MEMPHIS 69KV CKT 1
FDNS	06ALL	0	20WP	G15_039	FROM->TO	POTTER COUNTY INTERCHANGE (WAUK 90343-A) 345/230/13.2KV TRANSFORMER CKT 1	560	560	0.20475	101.654	GEN511843 1-RIVERSIDE STATION #2
FDNS	06ALL	0	20WP	G15_039	FROM->TO	POTTER COUNTY INTERCHANGE (WAUK 90343-A) 345/230/13.2KV TRANSFORMER CKT 1	560	560	0.20475	101.6518	GEN515223 1-MUSKOGEE 4G
FDNS	06ALL	0	20WP	G15_039	FROM->TO	POTTER COUNTY INTERCHANGE (WAUK 90343-A) 345/230/13.2KV TRANSFORMER CKT 1	560	560	0.20475	101.6518	GEN515225 1-MUSKOGEE 5G
FDNS	06ALL	0	17G	G15_039	FROM->TO	POTTER COUNTY INTERCHANGE (WAUK 90343-A) 345/230/13.2KV TRANSFORMER CKT 1	560	560	0.21337	101.6396	DWS FRISCO - HITCHLAND INTERCHANGE 115KV CKT 1
FDNS	06ALL	0	20WP	G15_039	FROM->TO	POTTER COUNTY INTERCHANGE (WAUK 90343-A) 345/230/13.2KV TRANSFORMER CKT 1	560	560	0.20475	101.6195	GEN512688 2-GRDA1 GSU2 22
FDNS	06ALL	0	20WP	G15_039	FROM->TO	POTTER COUNTY INTERCHANGE (WAUK 90343-A) 345/230/13.2KV TRANSFORMER CKT 1	560	560	0.20547	101.6085	HUGO - SUNNYSIDE 345KV CKT 1
FDNS	06ALL	0	20WP	G15_039	FROM->TO	POTTER COUNTY INTERCHANGE (WAUK 90343-A) 345/230/13.2KV TRANSFORMER CKT 1	560	560	0.20527	101.6	P12:69:AEPW:CHLDR2WT:MEMPHIS2
FDNS	06ALL	0	20WP	G15_039	FROM->TO	POTTER COUNTY INTERCHANGE (WAUK 90343-A) 345/230/13.2KV TRANSFORMER CKT 1	560	560	0.20475	101.5923	GEN509409 1-WILKES #3
FDNS	06ALL	0	20WP	G15_039	FROM->TO	POTTER COUNTY INTERCHANGE (WAUK 90343-A) 345/230/13.2KV TRANSFORMER CKT 1	560	560	0.20668	101.5895	P12:115:SPS:W05.1.DALLAM.LASLEY
FDNS	06ALL	0	20WP	G15_039	FROM->TO	POTTER COUNTY INTERCHANGE (WAUK 90343-A) 345/230/13.2KV TRANSFORMER CKT 1	560	560	0.20475	101.5827	GEN532663 1-LAWRENCE ENERGY CENTER UNIT 5
FDNS	06ALL	0	20WP	G15_039	FROM->TO	POTTER COUNTY INTERCHANGE (WAUK 90343-A) 345/230/13.2KV TRANSFORMER CKT 1	560	560	0.20475	101.5698	GEN562432 1-G13-030 0.6900
FDNS	06ALL	0	20WP	G15_039	FROM->TO	POTTER COUNTY INTERCHANGE (WAUK 90343-A) 345/230/13.2KV TRANSFORMER CKT 1	560	560	0.20532	101.5655	JOHNSON COUNTY - SUNNYSIDE 345KV CKT 1
FDNS	06ALL	0	17G	G15_039	FROM->TO	POTTER COUNTY INTERCHANGE (WAUK 90343-A) 345/230/13.2KV TRANSFORMER CKT 1	560	560	0.20947	101.5577	SPEARMAN SUB - TEXAS FARMS SUB 115KV CKT 1
FDNS	06ALL	0	20WP	G15_039	FROM->TO	POTTER COUNTY INTERCHANGE (WAUK 90343-A) 345/230/13.2KV TRANSFORMER CKT 1	560	560	0.20475	101.5565	GEN505432 1-SIKESTON
FDNS	06ALL	0	20WP	G15_039	FROM->TO	POTTER COUNTY INTERCHANGE (WAUK 90343-A) 345/230/13.2KV TRANSFORMER CKT 1	560	560	0.20475	101.556	GEN300015 1-1SGPDEL 18.000
FDNS	06ALL	0	20WP	G15_039	FROM->TO	POTTER COUNTY INTERCHANGE (WAUK 90343-A) 345/230/13.2KV TRANSFORMER CKT 1	560	560	0.20588	101.5559	P12:115:SPS:T25.1.MOOREW.DUMAS19
FDNS	06ALL	0	20WP	G15_039	FROM->TO	POTTER COUNTY INTERCHANGE (WAUK 90343-A) 345/230/13.2KV TRANSFORMER CKT 1	560	560	0.20475	101.555	GEN300011 1-ST FRANCIS UNIT 2
FDNS	06ALL	0	20WP	G15_039	FROM->TO	POTTER COUNTY INTERCHANGE (WAUK 90343-A) 345/230/13.2KV TRANSFORMER CKT 1	560	560	0.20588	101.554	MOORE COUNTY INTERCHANGE W. - RB-S&S 3115.00 115KV CKT 1
FDNS	06ALL	0	20WP	G15_039	FROM->TO	POTTER COUNTY INTERCHANGE (WAUK 90343-A) 345/230/13.2KV TRANSFORMER CKT 1	560	560	0.20475	101.5528	GEN300010 1-ST FRANCIS UNIT 1
FDNS	06ALL	0	20WP	G15_039	FROM->TO	POTTER COUNTY INTERCHANGE (WAUK 90343-A) 345/230/13.2KV TRANSFORMER CKT 1	560	560	0.20569	101.5482	MOREWOOD SW - NINE MILE 138KV CKT 1
FDNS	06ALL	0	20WP	G15_039	FROM->TO	POTTER COUNTY INTERCHANGE (WAUK 90343-A) 345/230/13.2KV TRANSFORMER CKT 1	560	560	0.20534	101.5381	JOHNSON COUNTY - PITTSBURG 345KV CKT 1
FDNS	06ALL	0	20WP	G15_039	FROM->TO	POTTER COUNTY INTERCHANGE (WAUK 90343-A) 345/230/13.2KV TRANSFORMER CKT 1	560	560	0.20534	101.5381	JOHNSON COUNTY - PITTSBURG 345KV CKT 1
FDNS	06ALL	0	20WP	G15_039	FROM->TO	POTTER COUNTY INTERCHANGE (WAUK 90343-A) 345/230/13.2KV TRANSFORMER CKT 1	560	560	0.20476	101.5293	GRACEMONT (BANK 1) 345/138/13.8KV TRANSFORMER CKT 1
FDNS	06ALL	0	20WP	G15_039	FROM->TO	POTTER COUNTY INTERCHANGE (WAUK 90343-A) 345/230/13.2KV TRANSFORMER CKT 1	560	560	0.20475	101.5288	GEN539670 4-JUDSON LARGE GENERATOR
FDNS	06ALL	0	17G	G15_039	FROM->TO	POTTER COUNTY INTERCHANGE (WAUK 90343-A) 345/230/13.2KV TRANSFORMER CKT 1	560	560	0.20978	101.5286	CHAN/TASCOS6230.00 - XIT_INTG 6230.00 230KV CKT 1
FDNS	06ALL	0	20WP	G15_039	FROM->TO	POTTER COUNTY INTERCHANGE (WAUK 90343-A) 345/230/13.2KV TRANSFORMER CKT 1	560	560	0.20463	101.5188	TUCO INTERCHANGE - TUCO_2 230.00 230KV CKT 1
FDNS	06ALL	0	20WP	G15_039	FROM->TO	POTTER COUNTY INTERCHANGE (WAUK 90343-A) 345/230/13.2KV TRANSFORMER CKT 1	560	560	0.20528	101.5	CRMWA#4 - NICHOLS STATION 115KV CKT 1
FDNS	06ALL	0	20WP	G15_039	FROM->TO	POTTER COUNTY INTERCHANGE (WAUK 90343-A) 345/230/13.2KV TRANSFORMER CKT 1	560	560	0.20475	101.4953	GEN511842 1-RIVERSIDE STATION #1
FDNS	06ALL	0	20WP	G15_039	FROM->TO	POTTER COUNTY INTERCHANGE (WAUK 90343-A) 345/230/13.2KV TRANSFORMER CKT 1	560	560	0.20475	101.4569	GEN562755 1-G15031_6 0.6900
FDNS	06ALL	0	20WP	G15_039	FROM->TO	POTTER COUNTY INTERCHANGE (WAUK 90343-A) 345/230/13.2KV TRANSFORMER CKT 1	560	560	0.20268	101.4557	HOLCOMB - SETAB 345KV CKT 1
FDNS	06ALL	0	20WP	G15_039	FROM->TO	POTTER COUNTY INTERCHANGE (WAUK 90343-A) 345/230/13.2KV TRANSFORMER CKT 1	560	560	0.20268	101.4557	HOLCOMB - SETAB 345KV CKT 1
FDNS	06ALL	0	20WP	G15_039	FROM->TO	POTTER COUNTY INTERCHANGE (WAUK 90343-A) 345/230/13.2KV TRANSFORMER CKT 1	560	560	0.2017	101.3696	MINGO - RED WILLOW 345KV CKT 1
FDNS	06ALL	0	20WP	G15_039	FROM->TO	POTTER COUNTY INTERCHANGE (WAUK 90343-A) 345/230/13.2KV TRANSFORMER CKT 1	560	560	0.2017	101.3696	MINGO - RED WILLOW 345KV CKT 1
FDNS	06ALL	0	20WP	G15_039	FROM->TO	POTTER COUNTY INTERCHANGE (WAUK 90343-A) 345/230/13.2KV TRANSFORMER CKT 1	560	560	0.20475	101.3662	GEN560759 1-ASGI13_02_3 0.6900
FDNS	06ALL	0	20WP	G15_039	FROM->TO	POTTER COUNTY INTERCHANGE (WAUK 90343-A) 345/230/13.2KV TRANSFORMER CKT 1	560	560	0.20475	101.3655	GEN560367 1-ASGI-10-21 0.6900
FDNS	06ALL	0	17G	G15_039	FROM->TO	POTTER COUNTY INTERCHANGE (WAUK 90343-A) 345/230/13.2KV TRANSFORMER CKT 1	560	560	0.21199	101.3486	Hitchland Interchange (H TB80155502) 345/230/13.2KV TRANSFORMER CKT 1
FDNS	06ALL	0	17G	G15_039	FROM->TO	POTTER COUNTY INTERCHANGE (WAUK 90343-A) 345/230/13.2KV TRANSFORMER CKT 1	560	560	0.21199	101.3486	Hitchland Interchange (H TB80155502) 345/230/13.2KV TRANSFORMER CKT 1
FDNS	06ALL	0	20WP	G15_039	FROM->TO	POTTER COUNTY INTERCHANGE (WAUK 90343-A) 345/230/13.2KV TRANSFORMER CKT 1	560	560	0.20475	101.3446	GEN560762 1-ASGI13_03_3 0.6900
FDNS	06ALL	0	20WP	G15_039	FROM->TO	POTTER COUNTY INTERCHANGE (WAUK 90343-A) 345/230/13.2KV TRANSFORMER CKT 1	560	560	0.20475	101.3241	GEN562325 1-ASGI_12_02_30.6900
FDNS	06ALL	0	20WP	G15_039	FROM->TO	POTTER COUNTY INTERCHANGE (WAUK 90343-A) 345/230/13.2KV TRANSFORMER CKT 1	560	560	0.20475	101.2941	GEN562753 1-G15031_4 0.6900
FDNS	06ALL	0	20WP	G15_039	FROM->TO	POTTER COUNTY INTERCHANGE (WAUK 90343-A) 345/230/13.2KV TRANSFORMER CKT 1	560	560	0.20475	101.2565	GEN524904 1-SNJN-WTG14 10.6000
FDNS	06ALL	0	20WP	G15_039	FROM->TO	POTTER COUNTY INTERCHANGE (WAUK 90343-A) 345/230/13.2KV TRANSFORMER CKT 1	560	560	0.20475	101.2309	GEN523941 1-MAJSTC-WTG110.6900
FDNS	06ALL	0	20WP	G15_039	FROM->TO	POTTER COUNTY INTERCHANGE (WAUK 90343-A) 345/230/13.2KV TRANSFORMER CKT 1	560	560	0.20475	101.2299	GEN523942 1-MAJSTC-WTG210.6900
FDNS	06ALL	0	20WP	G15_039	FROM->TO	POTTER COUNTY INTERCHANGE (WAUK 90343-A) 345/230/13.2KV TRANSFORMER CKT 1	560	560	0.20475	101.1975	GEN525910 1-PLSNTHLLWND10.6900
FDNS	06ALL	0	20WP	G15_039	FROM->TO	POTTER COUNTY INTERCHANGE (WAUK 90343-A) 345/230/13.2KV TRANSFORMER CKT 1	560	560	0.20475	101.1512	GEN524892 1-SNJN-WTG13 10.6000
FDNS	06ALL	0	20WP	G15_039	FROM->TO	POTTER COUNTY INTERCHANGE (WAUK 90343-A) 345/230/13.2KV TRANSFORMER CKT 1	560	560	0.20475	101.1471	GEN524890 1-SNJN-WTGA1 10.6000
FDNS	06ALL	0	17G	G15_039	FROM->TO	POTTER COUNTY INTERCHANGE (WAUK 90343-A) 345/230/13.2KV TRANSFORMER CKT 1	560	560	0.21652	101.129	TOLK STATION EAST - TUCO INTERCHANGE 230KV CKT 1
FDNS	06ALL	0	17G	G15_039	FROM->TO	POTTER COUNTY INTERCHANGE (WAUK 90343-A) 345/230/13.2KV TRANSFORMER CKT 1	560	560	0.21652	101.129	TOLK STATION EAST - TUCO INTERCHANGE 230KV CKT 1
FDNS	06ALL	0	20WP	G15_039	FROM->TO	POTTER COUNTY INTERCHANGE (WAUK 90343-A) 345/230/13.2KV TRANSFORMER CKT 1	560	560	0.20475	101.1206	GEN524894 1-SNJN-WTG15 10.6000
FDNS	06ALL	0	20WP	G15_039	FROM->TO	POTTER COUNTY INTERCHANGE (WAUK 90343-A) 345/230/13.2KV TRANSFORMER CKT 1	560	560	0.20475	101.1138	GEN524898 1-SNJN-WTG22 10.6000
FDNS	06ALL	0	20WP	G15_039	FROM->TO	POTTER COUNTY INTERCHANGE (WAUK 90343-A) 345/230/13.2KV TRANSFORMER CKT 1	560	560	0.20475	101.1081	GEN524287 1-GS-PHWD_GEN10.6900
FDNS	06ALL	0	20WP	G15_039	FROM->TO	POTTER COUNTY INTERCHANGE (WAUK 90343-A) 345/230/13.2KV TRANSFORMER CKT 1	560	560	0.20475	101.1079	GEN524896 1-SNJN-WTG21 10.6000
FDNS	06ALL	0	20WP	G15_039	FROM->TO	POTTER COUNTY INTERCHANGE (WAUK 90343-A) 345/230/13.2KV TRANSFORMER CKT 1	560	560	0.20475	101.1005	GEN562414 1-G13_022 0.4800
FDNS	06ALL	0	20WP	G15_039	FROM->TO	POTTER COUNTY INTERCHANGE (WAUK 90343-A) 345/230/13.2KV TRANSFORMER CKT 1	560	560	0.20475	101.0806	GEN524902 1-SNJN-WTG12 10.6000
FDNS	06ALL	0	20WP	G15_039	FROM->TO	POTTER COUNTY INTERCHANGE (WAUK 90343-A) 345/230/13.2KV TRANSFORMER CKT 1	560	560	0.20836	101.0762	CHISHOLM7 345.00 () 345/230/13.2KV TRANSFORMER CKT 1
FDNS	06ALL	0	20WP	G15_039	FROM->TO	POTTER COUNTY INTERCHANGE (WAUK 90343-A) 345/230/13.2KV TRANSFORMER CKT 1	560	560	0.20202	101.0607	MINGO - SETAB 345KV CKT 1
FDNS	06ALL	0	20WP	G15_039	FROM->TO	POTTER COUNTY INTERCHANGE (WAUK 90343-A) 345/230/13.2KV TRANSFORMER CKT 1	560	560	0.20202	101.0607	MINGO - SETAB 345KV CKT 1
FDNS	06ALL	0	20WP	G15_039	FROM->TO	POTTER COUNTY INTERCHANGE (WAUK 90343-A) 345/230/13.2KV TRANSFORMER CKT 1	560	560	0.20475	101.0227	GEN523815 1-LLANO ESTACADO WIND GEN
FDNS	06ALL	0	17G	G15_039	FROM->TO	POTTER COUNTY INTERCHANGE (WAUK 90343-A) 345/230/13.2KV TRANSFORMER CKT 1	560	560	0.21337	100.9914	DWS FRISCO - SHERMAN COUNTY TAP 115KV CKT 1
FDNS	06ALL	0	20WP	G15_039	FROM->TO	POTTER COUNTY INTERCHANGE (WAUK 90343-A) 345/230/13.2KV TRANSFORMER CKT 1	560	560	0.20215	100.9777	BVRCNTY7 345.00 - G11-14T 345.00 345KV CKT 1

SOLUTION	GROUP	SCENARIO	SEASON	SOURCE	DIRECTION	MONITORED ELEMENT	RATEA (MVA)	RATEB(MVA)	TDF	TC%LOADING (% MVA)	CONTINGENCY
FDNS	06ALL	0	20WP	G15_039	FROM->TO	POTTER COUNTY INTERCHANGE (WAUK 90343-A) 345/230/13.2KV TRANSFORMER CKT 1	560	560	0.20215	100.9777	BVRCNTY7 345.00 - G11-14T 345.00 345KV CKT 2
FDNS	06ALL	0	20WP	G15_039	FROM->TO	POTTER COUNTY INTERCHANGE (WAUK 90343-A) 345/230/13.2KV TRANSFORMER CKT 1	560	560	0.20475	100.9471	2115-TUCO INTERCHANGE
FDNS	06ALL	0	20WP	G15_039	FROM->TO	POTTER COUNTY INTERCHANGE (WAUK 90343-A) 345/230/13.2KV TRANSFORMER CKT 1	560	560	0.20475	100.9471	BASE CASE
FDNS	06ALL	0	20WP	G15_039	FROM->TO	POTTER COUNTY INTERCHANGE (WAUK 90343-A) 345/230/13.2KV TRANSFORMER CKT 1	560	560	0.20172	100.9412	BVRCNTY7 345.00 - OPTIMA 345.00 345KV CKT 1
FDNS	06ALL	0	20WP	G15_039	FROM->TO	POTTER COUNTY INTERCHANGE (WAUK 90343-A) 345/230/13.2KV TRANSFORMER CKT 1	560	560	0.20172	100.9412	BVRCNTY7 345.00 - OPTIMA 345.00 345KV CKT 2
FDNS	06ALL	0	17G	G15_039	FROM->TO	POTTER COUNTY INTERCHANGE (WAUK 90343-A) 345/230/13.2KV TRANSFORMER CKT 1	560	560	0.20827	100.932	HUTCHINSON COUNTY INTERCHANGE - NICHOLS STATION 230KV CKT 1
FDNS	06ALL	0	17G	G15_039	FROM->TO	POTTER COUNTY INTERCHANGE (WAUK 90343-A) 345/230/13.2KV TRANSFORMER CKT 1	560	560	0.20827	100.932	HUTCHINSON COUNTY INTERCHANGE - NICHOLS STATION 230KV CKT 1
FDNS	06ALL	0	20WP	G15_039	FROM->TO	POTTER COUNTY INTERCHANGE (WAUK 90343-A) 345/230/13.2KV TRANSFORMER CKT 1	560	560	0.20475	100.91	GEN522866 1-LUBBOCK POWER & LIGHT-HOLLY GEN
FDNS	06ALL	0	20WP	G15_039	FROM->TO	POTTER COUNTY INTERCHANGE (WAUK 90343-A) 345/230/13.2KV TRANSFORMER CKT 1	560	560	0.20475	100.9078	GEN528332 1-WILDCAT_WND134.500
FDNS	06ALL	0	20WP	G15_039	FROM->TO	POTTER COUNTY INTERCHANGE (WAUK 90343-A) 345/230/13.2KV TRANSFORMER CKT 1	560	560	0.20475	100.8986	GEN562538 1-G14_035_3 0.3420
FDNS	06ALL	0	20WP	G15_039	FROM->TO	POTTER COUNTY INTERCHANGE (WAUK 90343-A) 345/230/13.2KV TRANSFORMER CKT 1	560	560	0.20475	100.8606	GEN560363 1-ASGI-10-20 0.6900
FDNS	06ALL	0	17G	G15_039	FROM->TO	POTTER COUNTY INTERCHANGE (WAUK 90343-A) 345/230/13.2KV TRANSFORMER CKT 1	560	560	0.20732	100.7698	EXELL TAP - FAIN SUB 115KV CKT 1
FDNS	06ALL	0	17G	G15_039	FROM->TO	POTTER COUNTY INTERCHANGE (WAUK 90343-A) 345/230/13.2KV TRANSFORMER CKT 1	560	560	0.21368	100.7649	Hitchland Interchange (SIEM 8743067) 345/230/13.2KV TRANSFORMER CKT 2
FDNS	06ALL	0	17G	G15_039	FROM->TO	POTTER COUNTY INTERCHANGE (WAUK 90343-A) 345/230/13.2KV TRANSFORMER CKT 1	560	560	0.21368	100.7649	Hitchland Interchange (SIEM 8743067) 345/230/13.2KV TRANSFORMER CKT 2
FDNS	06ALL	0	20WP	G15_039	FROM->TO	POTTER COUNTY INTERCHANGE (WAUK 90343-A) 345/230/13.2KV TRANSFORMER CKT 1	560	560	0.20475	100.6489	GEN525844 1-ELK_1 118.000
FDNS	06ALL	0	17G	G15_039	FROM->TO	POTTER COUNTY INTERCHANGE (WAUK 90343-A) 345/230/13.2KV TRANSFORMER CKT 1	560	560	0.20732	100.5742	FAIN SUB - NICHOLS STATION 115KV CKT 1
FDNS	06ALL	0	17G	G15_039	FROM->TO	POTTER COUNTY INTERCHANGE (WAUK 90343-A) 345/230/13.2KV TRANSFORMER CKT 1	560	560	0.20817	100.541	MOORE COUNTY INTERCHANGE EAST BUS - RB-SPURLOCK3115.00 115KV CKT 1
FDNS	06ALL	0	20WP	G15_039	FROM->TO	POTTER COUNTY INTERCHANGE (WAUK 90343-A) 345/230/13.2KV TRANSFORMER CKT 1	560	560	0.20475	100.5193	GEN562559 1-G14_047_3 0.4800
FDNS	06ALL	0	17G	G15_039	FROM->TO	POTTER COUNTY INTERCHANGE (WAUK 90343-A) 345/230/13.2KV TRANSFORMER CKT 1	560	560	0.20788	100.4992	HOLLIS TAP - WELLINGTON 138KV CKT 1
FDNS	06ALL	0	17G	G15_039	FROM->TO	POTTER COUNTY INTERCHANGE (WAUK 90343-A) 345/230/13.2KV TRANSFORMER CKT 1	560	560	0.20947	100.4541	P12:115:SPS:W29.1.OCLTRE.SPRMN
FDNS	06ALL	0	17G	G15_039	FROM->TO	POTTER COUNTY INTERCHANGE (WAUK 90343-A) 345/230/13.2KV TRANSFORMER CKT 1	560	560	0.20788	100.4444	SHAMROCK - WELLINGTON 138KV CKT 1
FDNS	06ALL	0	17G	G15_039	FROM->TO	POTTER COUNTY INTERCHANGE (WAUK 90343-A) 345/230/13.2KV TRANSFORMER CKT 1	560	560	0.20947	100.4347	OCHILTREE - TEXAS FARMS SUB 115KV CKT 1
FDNS	06ALL	0	20WP	G15_039	FROM->TO	POTTER COUNTY INTERCHANGE (WAUK 90343-A) 345/230/13.2KV TRANSFORMER CKT 1	560	560	0.20475	100.3894	GEN560367 1-ASGI-10-21 0.6900
FDNS	06ALL	0	20WP	G15_039	FROM->TO	POTTER COUNTY INTERCHANGE (WAUK 90343-A) 345/230/13.2KV TRANSFORMER CKT 1	560	560	0.20475	100.3871	GEN560759 1-ASGI13_02_3 0.6900
FDNS	06ALL	0	20WP	G15_039	FROM->TO	POTTER COUNTY INTERCHANGE (WAUK 90343-A) 345/230/13.2KV TRANSFORMER CKT 1	560	560	0.20475	100.3677	GEN560762 1-ASGI13_03_3 0.6900
FDNS	06ALL	0	17G	G15_039	FROM->TO	POTTER COUNTY INTERCHANGE (WAUK 90343-A) 345/230/13.2KV TRANSFORMER CKT 1	560	560	0.20689	100.3572	PRINGLE INTERCHANGE - QUENCH-RYTON TAP 115KV CKT 1
FDNS	06ALL	0	17G	G15_039	FROM->TO	POTTER COUNTY INTERCHANGE (WAUK 90343-A) 345/230/13.2KV TRANSFORMER CKT 1	560	560	0.20947	100.3518	SPEARMAN SUB - TEXAS FARMS SUB 115KV CKT 1
FDNS	06ALL	0	17G	G15_039	FROM->TO	POTTER COUNTY INTERCHANGE (WAUK 90343-A) 345/230/13.2KV TRANSFORMER CKT 1	560	560	0.20732	100.351	DUMAS SUB - EXELL TAP 115KV CKT 1
FDNS	06ALL	0	20WP	G15_039	FROM->TO	POTTER COUNTY INTERCHANGE (WAUK 90343-A) 345/230/13.2KV TRANSFORMER CKT 1	560	560	0.20475	100.3494	GEN562325 1-ASGI_12_02_30.6900
FDNS	06ALL	0	20WP	G15_039	FROM->TO	POTTER COUNTY INTERCHANGE (WAUK 90343-A) 345/230/13.2KV TRANSFORMER CKT 1	560	560	0.20475	100.3468	GEN562627 1-ASGI14_002_30.8200
FDNS	06ALL	0	17G	G15_039	FROM->TO	POTTER COUNTY INTERCHANGE (WAUK 90343-A) 345/230/13.2KV TRANSFORMER CKT 1	560	560	0.20817	100.3431	RB-ELKS 3115.00 - RB-SPURLOCK3115.00 115KV CKT 1
FDNS	06ALL	0	17G	G15_039	FROM->TO	POTTER COUNTY INTERCHANGE (WAUK 90343-A) 345/230/13.2KV TRANSFORMER CKT 1	560	560	0.21722	100.3247	SWISHER COUNTY INTERCHANGE - TUCO_2 230.00 230KV CKT 1
FDNS	06ALL	0	20WP	G15_039	FROM->TO	POTTER COUNTY INTERCHANGE (WAUK 90343-A) 345/230/13.2KV TRANSFORMER CKT 1	560	560	0.20475	100.3221	GEN562753 1-G15031_4 0.6900
FDNS	06ALL	0	17G	G15_039	FROM->TO	POTTER COUNTY INTERCHANGE (WAUK 90343-A) 345/230/13.2KV TRANSFORMER CKT 1	560	560	0.20674	100.3	P12:69:AEPW:NWMEMPH2:CHLDR2WT
FDNS	06ALL	0	17G	G15_039	FROM->TO	POTTER COUNTY INTERCHANGE (WAUK 90343-A) 345/230/13.2KV TRANSFORMER CKT 1	560	560	0.20774	100.2988	PRINGLE INTERCHANGE - RIVERVIEW INTERCHANGE 115KV CKT 1
FDNS	06ALL	0	17G	G15_039	FROM->TO	POTTER COUNTY INTERCHANGE (WAUK 90343-A) 345/230/13.2KV TRANSFORMER CKT 1	560	560	0.20774	100.2988	PRINGLE INTERCHANGE - RIVERVIEW INTERCHANGE 115KV CKT 1
FDNS	06ALL	0	17G	G15_039	FROM->TO	POTTER COUNTY INTERCHANGE (WAUK 90343-A) 345/230/13.2KV TRANSFORMER CKT 1	560	560	0.20788	100.298	CHILDRESS - HOLLIS TAP 138KV CKT 1
FDNS	06ALL	0	20WP	G15_039	FROM->TO	POTTER COUNTY INTERCHANGE (WAUK 90343-A) 345/230/13.2KV TRANSFORMER CKT 1	560	560	0.20475	100.2895	GEN524904 1-SNJN-WTG14 10.6000
FDNS	06ALL	0	17G	G15_039	FROM->TO	POTTER COUNTY INTERCHANGE (WAUK 90343-A) 345/230/13.2KV TRANSFORMER CKT 1	560	560	0.20689	100.2813	BLACKHAWK STATION S. - QUENCH-RYTON TAP 115KV CKT 1
FDNS	06ALL	0	20WP	G15_039	FROM->TO	POTTER COUNTY INTERCHANGE (WAUK 90343-A) 345/230/13.2KV TRANSFORMER CKT 1	560	560	0.20475	100.2706	GEN523941 1-MAJSTC-WTG110.6900
FDNS	06ALL	0	20WP	G15_039	FROM->TO	POTTER COUNTY INTERCHANGE (WAUK 90343-A) 345/230/13.2KV TRANSFORMER CKT 1	560	560	0.20475	100.2696	GEN523942 1-MAJSTC-WTG210.6900
FDNS	06ALL	0	20WP	G15_039	FROM->TO	POTTER COUNTY INTERCHANGE (WAUK 90343-A) 345/230/13.2KV TRANSFORMER CKT 1	560	560	0.20268	100.2546	HOLCOMB - SETAB 345KV CKT 1
FDNS	06ALL	0	20WP	G15_039	FROM->TO	POTTER COUNTY INTERCHANGE (WAUK 90343-A) 345/230/13.2KV TRANSFORMER CKT 1	560	560	0.20268	100.2546	HOLCOMB - SETAB 345KV CKT 1
FDNS	06ALL	0	20WP	G15_039	FROM->TO	POTTER COUNTY INTERCHANGE (WAUK 90343-A) 345/230/13.2KV TRANSFORMER CKT 1	560	560	0.20475	100.2388	GEN525910 1-PLSNTHLLWND10.6900
FDNS	06ALL	0	17G	G15_039	FROM->TO	POTTER COUNTY INTERCHANGE (WAUK 90343-A) 345/230/13.2KV TRANSFORMER CKT 1	560	560	0.20676	100.233	KINGSMILL INTERCHANGE - LLANO ESTACADO WIND GEN 115KV CKT 1
FDNS	06ALL	0	17G	G15_039	FROM->TO	POTTER COUNTY INTERCHANGE (WAUK 90343-A) 345/230/13.2KV TRANSFORMER CKT 1	560	560	0.20732	100.2105	P12:115:SPS:T27.1.NICHLS.DUMAS19
FDNS	06ALL	0	20WP	G15_039	FROM->TO	POTTER COUNTY INTERCHANGE (WAUK 90343-A) 345/230/13.2KV TRANSFORMER CKT 1	560	560	0.2017	100.1988	MINGO - RED WILLOW 345KV CKT 1
FDNS	06ALL	0	20WP	G15_039	FROM->TO	POTTER COUNTY INTERCHANGE (WAUK 90343-A) 345/230/13.2KV TRANSFORMER CKT 1	560	560	0.2017	100.1988	MINGO - RED WILLOW 345KV CKT 1
FDNS	06ALL	0	20WP	G15_039	FROM->TO	POTTER COUNTY INTERCHANGE (WAUK 90343-A) 345/230/13.2KV TRANSFORMER CKT 1	560	560	0.20475	100.1946	GEN524892 1-SNJN-WTG13 10.6000
FDNS	06ALL	0	20WP	G15_039	FROM->TO	POTTER COUNTY INTERCHANGE (WAUK 90343-A) 345/230/13.2KV TRANSFORMER CKT 1	560	560	0.20475	100.1909	GEN524890 1-SNJN-WTGA1 10.6000
FDNS	06ALL	0	17G	G15_039	FROM->TO	POTTER COUNTY INTERCHANGE (WAUK 90343-A) 345/230/13.2KV TRANSFORMER CKT 1	560	560	0.20705	100.1885	KINGSMILL INTERCHANGE - MCCULLOUGH SUB 69KV CKT 1
FDNS	06ALL	0	20WP	G15_039	FROM->TO	POTTER COUNTY INTERCHANGE (WAUK 90343-A) 345/230/13.2KV TRANSFORMER CKT 1	560	560	0.20475	100.1675	GEN524894 1-SNJN-WTG15 10.6000
FDNS	06ALL	0	20WP	G15_039	FROM->TO	POTTER COUNTY INTERCHANGE (WAUK 90343-A) 345/230/13.2KV TRANSFORMER CKT 1	560	560	0.20475	100.1616	GEN524898 1-SNJN-WTG22 10.6000
FDNS	06ALL	0	17G	G15_039	FROM->TO	POTTER COUNTY INTERCHANGE (WAUK 90343-A) 345/230/13.2KV TRANSFORMER CKT 1	560	560	0.21199	100.1606	Hitchland Interchange (H TB80155502) 345/230/13.2KV TRANSFORMER CKT 1
FDNS	06ALL	0	17G	G15_039	FROM->TO	POTTER COUNTY INTERCHANGE (WAUK 90343-A) 345/230/13.2KV TRANSFORMER CKT 1	560	560	0.21199	100.1606	Hitchland Interchange (H TB80155502) 345/230/13.2KV TRANSFORMER CKT 1
FDNS	06ALL	0	20WP	G15_039	FROM->TO	POTTER COUNTY INTERCHANGE (WAUK 90343-A) 345/230/13.2KV TRANSFORMER CKT 1	560	560	0.20475	100.1565	GEN524287 1-GS-PHWD_GEN10.6900
FDNS	06ALL	0	20WP	G15_039	FROM->TO	POTTER COUNTY INTERCHANGE (WAUK 90343-A) 345/230/13.2KV TRANSFORMER CKT 1	560	560	0.20475	100.1558	GEN524896 1-SNJN-WTG21 10.6000
FDNS	06ALL	0	20WP	G15_039	FROM->TO	POTTER COUNTY INTERCHANGE (WAUK 90343-A) 345/230/13.2KV TRANSFORMER CKT 1	560	560	0.20475	100.1483	GEN562414 1-G13_022 0.4800
FDNS	06ALL	0	20WP	G15_039	FROM->TO	POTTER COUNTY INTERCHANGE (WAUK 90343-A) 345/230/13.2KV TRANSFORMER CKT 1	560	560	0.20475	100.1456	GEN562962 1-G15058_3 0.4180
FDNS	06ALL	0	20WP	G15_039	FROM->TO	POTTER COUNTY INTERCHANGE (WAUK 90343-A) 345/230/13.2KV TRANSFORMER CKT 1	560	560	0.20475	100.1318	GEN524902 1-SNJN-WTG12 10.6000
FDNS	06ALL	0	17G	G15_039	FROM->TO	POTTER COUNTY INTERCHANGE (WAUK 90343-A) 345/230/13.2KV TRANSFORMER CKT 1	560	560	0.20816	100.1254	DALLAM COUNTY INTERCHANGE - SHERMAN COUNTY SUB 115KV CKT 1
FDNS	06ALL	0	20WP	G15_039	FROM->TO	POTTER COUNTY INTERCHANGE (WAUK 90343-A) 345/230/13.2KV TRANSFORMER CKT 1	560	560	0.20836	100.1224	CHISHOLM7 345.00 () 345/230/13.2KV TRANSFORMER CKT 1
FDNS	06ALL	0	17G	G15_039	FROM->TO	POTTER COUNTY INTERCHANGE (WAUK 90343-A) 345/230/13.2KV TRANSFORMER CKT 1	560	560	0.20665	100.1188	HERRING TAP - RIVERVIEW INTERCHANGE 115KV CKT 1
FDNS	06ALL	0	17G	G15_039	FROM->TO	POTTER COUNTY INTERCHANGE (WAUK 90343-A) 345/230/13.2KV TRANSFORMER CKT 1	560	560	0.20689	100.1131	P12:115:SPS:T49.1.PRNGLE.BLKHK
FDNS	06ALL	0	17G	G15_039	FROM->TO	POTTER COUNTY INTERCHANGE (WAUK 90343-A) 345/230/13.2KV TRANSFORMER CKT 1	560	560	0.20703	100.1007	MOREWOOD SW - NINE MILE 138KV CKT 1
FDNS	06ALL	0	20WP	G15_039	FROM->TO	POTTER COUNTY INTERCHANGE (WAUK 90343-A) 345/230/13.2KV TRANSFORMER CKT 1	560	560	0.20475	100.0973	GEN562812 1-G15040_3 0.3570
FDNS	06ALL	0	20WP	G15_039	FROM->TO	POTTER COUNTY INTERCHANGE (WAUK 90343-A) 345/230/13.2KV TRANSFORMER CKT 1	560	560	0.20475	100.0909	GEN563132 1-G15078_3 0.3570
FDNS	06ALL	0	20WP	G15_039	FROM->TO	POTTER COUNTY INTERCHANGE (WAUK 90343-A) 345/230/13.2KV TRANSFORMER CKT 1	560	560	0.20475	100.0834	GEN523815 1-LLANO ESTACADO WIND GEN
FDNS	06ALL	0	20WP	G15_039	FROM->TO	POTTER COUNTY INTERCHANGE (WAUK 90343-A) 345/230/13.2KV TRANSFORMER CKT 1	560	560	0.20475	100.0655	GEN563102 1-G15075_3 0.5500
FDNS	06ALL	0	17G	G15_039	FROM->TO	POTTER COUNTY INTERCHANGE (WAUK 90343-A) 345/230/13.2KV TRANSFORMER CKT 1	560	560	0.20674	100.0625	P12:69:AEPW:CHLDR2WT:MEMPHIS2
FDNS	06ALL	0	17G	G15_039	FROM->TO	POTTER COUNTY INTERCHANGE (WAUK 90343-A) 345/230/13.2KV TRANSFORMER CKT 1	560	560	0.20817	100.0531	RB-ELKS 3115.00 - SHERMAN COUNTY TAP 115KV CKT 1
FDNS	06ALL	0	17G	G15_039	FROM->TO	POTTER COUNTY INTERCHANGE (WAUK 90343-A) 345/230/13.2KV TRANSFORMER CKT 1	560	560	0.20676	100.0528	JOHNSON COUNTY - SUNNYSIDE 345KV CKT 1
FDNS	06ALL	0	17G	G15_039	FROM->TO	POTTER COUNTY INTERCHANGE (WAUK 90343-A) 345/230/13.2KV TRANSFORMER CKT 1	560	560	0.20817	100	P12:115:SPS:W24.1.MOOREE.LASLEY
FDNS	06ALL	0	17G	G15_039	FROM->TO	POTTER COUNTY INTERCHANGE (WAUK 90343-A) 345/230/13.2KV TRANSFORMER CKT 1	560	560	0.20733	100	BOWERS INTERCHANGE - Graves Sub 115KV CKT 1
FDNS	06ALL	0	17G	G15_039	FROM->TO	POTTER COUNTY INTERCHANGE (WAUK 90343-A) 345/230/13.2KV TRANSFORMER CKT 1	560	560	0.20661	100	CUSTER4 138.00 - RED HILLS WIND 138KV CKT 1
FDNS	06ALL	0	20WP	G15_039	FROM->TO	POTTER COUNTY INTERCHANGE (WAUK 90343-A) 345/230/13.2KV TRANSFORMER CKT 1	560	560	0.20475	100	GEN522866 1-LUBBOCK POWER & LIGHT-HOLLY GEN
FDNS	06ALL	0	20WP	G15_039	FROM->TO	POTTER COUNTY INTERCHANGE (WAUK 90343-A) 345/230/13.2KV TRANSFORMER CKT 1	560	560	0.20475	100	GEN528332 1-WILDCAT_WND134.500
FDNS	06ALL	0	20WP	G15_039	FROM->TO	POTTER COUNTY INTERCHANGE (WAUK 90343-A) 345/230/13.2KV TRANSFORMER CKT 1	560	560	0.20475	100	GEN562538 1-G14_035_3 0.3420
FDNS	06ALL	0	20WP	G15_039	FROM->TO	POTTER COUNTY INTERCHANGE (WAUK 90343-A) 345/230/13.2KV TRANSFORMER CKT 1	560	560	0.20202	100	MINGO - SETAB 345KV CKT 1

SOLUTION	GROUP	SCENARIO	SEASON	SOURCE	DIRECTION	MONITORED ELEMENT	RATEA (MVA)	RATEB(MVA)	TDF	TC%LOADING (% MVA)	CONTINGENCY
FDNS	06ALL	0	20WP	G15_039	FROM->TO	POTTER COUNTY INTERCHANGE (WAUK 90343-A) 345/230/13.2KV TRANSFORMER CKT 1	560	560	0.20202	100	MINGO - SETAB 345KV CKT 1
FDNS	06ALL	0	17G	G15_039	FROM->TO	POTTER COUNTY INTERCHANGE (WAUK 90343-A) 345/230/13.2KV TRANSFORMER CKT 1	560	560	0.21652	99.9	TOLK STATION EAST - TUCO INTERCHANGE 230KV CKT 1
FDNS	06ALL	0	17G	G15_039	FROM->TO	POTTER COUNTY INTERCHANGE (WAUK 90343-A) 345/230/13.2KV TRANSFORMER CKT 1	560	560	0.21652	99.9	TOLK STATION EAST - TUCO INTERCHANGE 230KV CKT 1
FDNS	06ALL	0	17G	G15_039	FROM->TO	POTTER COUNTY INTERCHANGE (WAUK 90343-A) 345/230/13.2KV TRANSFORMER CKT 1	560	560	0.20732	99.9	DUMAS SUB - RB-S&S 3115.00 115KV CKT 1
FDNS	06ALL	0	17G	G15_039	FROM->TO	POTTER COUNTY INTERCHANGE (WAUK 90343-A) 345/230/13.2KV TRANSFORMER CKT 1	560	560	0.20705	99.9	BOWERS INTERCHANGE - MCCULLOUGH SUB 69KV CKT 1
FDNS	06ALL	0	17G	G15_039	FROM->TO	POTTER COUNTY INTERCHANGE (WAUK 90343-A) 345/230/13.2KV TRANSFORMER CKT 1	560	560	0.20703	99.9	BEARCAT 138.00 - NINE MILE 138KV CKT 1
FDNS	06ALL	0	17G	G15_039	FROM->TO	POTTER COUNTY INTERCHANGE (WAUK 90343-A) 345/230/13.2KV TRANSFORMER CKT 1	560	560	0.20665	99.9	HERRING TAP - RITA BLANCA REC-SNEED 115KV CKT 1
FDNS	06ALL	0	17G	G15_039	FROM->TO	POTTER COUNTY INTERCHANGE (WAUK 90343-A) 345/230/13.2KV TRANSFORMER CKT 1	560	560	0.20661	99.9	CUSTER4 138.00 - ELLIS 4 138.00 138KV CKT 1
FDNS	06ALL	0	17SP	G15_039	FROM->TO	POTTER COUNTY INTERCHANGE (WAUK 90343-A) 345/230/13.2KV TRANSFORMER CKT 1	560	560	0.24146	99.9	CHISHOLM6 230.00 - SWEETWATER 230KV CKT 1
FDNS	06ALL	0	20WP	G15_039	FROM->TO	POTTER COUNTY INTERCHANGE (WAUK 90343-A) 345/230/13.2KV TRANSFORMER CKT 1	560	560	0.20475	99.9	GEN560363 1-ASGI-10-20 0.6900
FDNS	06ALL	0	20WP	G15_039	FROM->TO	POTTER COUNTY INTERCHANGE (WAUK 90343-A) 345/230/13.2KV TRANSFORMER CKT 1	560	560	0.20116	99.9	BUCKNER7 345.00 - HOLCOMB 345KV CKT 1
FDNS	06ALL	0	20WP	G15_039	FROM->TO	POTTER COUNTY INTERCHANGE (WAUK 90343-A) 345/230/13.2KV TRANSFORMER CKT 1	560	560	0.20116	99.9	BUCKNER7 345.00 - HOLCOMB 345KV CKT 1
FDNS	06ALL	0	17G	G15_039	FROM->TO	POTTER COUNTY INTERCHANGE (WAUK 90343-A) 345/230/13.2KV TRANSFORMER CKT 1	560	560	0.20816	99.8	SHERMAN COUNTY SUB - SHERMAN COUNTY TAP 115KV CKT 1
FDNS	06ALL	0	17G	G15_039	FROM->TO	POTTER COUNTY INTERCHANGE (WAUK 90343-A) 345/230/13.2KV TRANSFORMER CKT 1	560	560	0.20681	99.8	WEATHERFORD JCT. - WEATHERFORD SOUTHEAST 138KV CKT 1
FDNS	06ALL	0	17G	G15_039	FROM->TO	POTTER COUNTY INTERCHANGE (WAUK 90343-A) 345/230/13.2KV TRANSFORMER CKT 1	560	560	0.20681	99.8	WEATHERFORD JCT. - WEATHERFORD SOUTHEAST 138KV CKT 1
FDNS	06ALL	0	17G	G15_039	FROM->TO	POTTER COUNTY INTERCHANGE (WAUK 90343-A) 345/230/13.2KV TRANSFORMER CKT 1	560	560	0.20676	99.8	MIDSTREAM ENERGY TAP - NICHOLS STATION 115KV CKT 1
FDNS	06ALL	0	20WP	G15_039	FROM->TO	POTTER COUNTY INTERCHANGE (WAUK 90343-A) 345/230/13.2KV TRANSFORMER CKT 1	560	560	0.20475	99.8	GEN525844 1-ELK_1 118.000
FDNS	06ALL	0	20WP	G15_039	FROM->TO	POTTER COUNTY INTERCHANGE (WAUK 90343-A) 345/230/13.2KV TRANSFORMER CKT 1	560	560	0.20215	99.8	BVRCNTY7 345.00 - G11-14T 345.00 345KV CKT 1
FDNS	06ALL	0	20WP	G15_039	FROM->TO	POTTER COUNTY INTERCHANGE (WAUK 90343-A) 345/230/13.2KV TRANSFORMER CKT 1	560	560	0.20215	99.8	BVRCNTY7 345.00 - G11-14T 345.00 345KV CKT 2
FDNS	06ALL	0	17G	G15_039	FROM->TO	POTTER COUNTY INTERCHANGE (WAUK 90343-A) 345/230/13.2KV TRANSFORMER CKT 1	560	560	0.20901	99.7	LUBBOCK SOUTH INTERCHANGE - WOLFFORTH INTERCHANGE 230KV CKT 1
FDNS	06ALL	0	17G	G15_039	FROM->TO	POTTER COUNTY INTERCHANGE (WAUK 90343-A) 345/230/13.2KV TRANSFORMER CKT 1	560	560	0.20901	99.7	LUBBOCK SOUTH INTERCHANGE - WOLFFORTH INTERCHANGE 230KV CKT 1
FDNS	06ALL	0	17G	G15_039	FROM->TO	POTTER COUNTY INTERCHANGE (WAUK 90343-A) 345/230/13.2KV TRANSFORMER CKT 1	560	560	0.20827	99.7	HUTCHINSON COUNTY INTERCHANGE - NICHOLS STATION 230KV CKT 1
FDNS	06ALL	0	17G	G15_039	FROM->TO	POTTER COUNTY INTERCHANGE (WAUK 90343-A) 345/230/13.2KV TRANSFORMER CKT 1	560	560	0.20827	99.7	HUTCHINSON COUNTY INTERCHANGE - NICHOLS STATION 230KV CKT 1
FDNS	06ALL	0	17G	G15_039	FROM->TO	POTTER COUNTY INTERCHANGE (WAUK 90343-A) 345/230/13.2KV TRANSFORMER CKT 1	560	560	0.20816	99.7	P12:115:SPS:W05.1.DALLAM.LASLEY
FDNS	06ALL	0	17G	G15_039	FROM->TO	POTTER COUNTY INTERCHANGE (WAUK 90343-A) 345/230/13.2KV TRANSFORMER CKT 1	560	560	0.20703	99.7	BEARCAT 138.00 - MOORELAND 138KV CKT 1
FDNS	06ALL	0	17G	G15_039	FROM->TO	POTTER COUNTY INTERCHANGE (WAUK 90343-A) 345/230/13.2KV TRANSFORMER CKT 1	560	560	0.20681	99.7	HINTON - WEATHERFORD JCT. 138KV CKT 1
FDNS	06ALL	0	17G	G15_039	FROM->TO	POTTER COUNTY INTERCHANGE (WAUK 90343-A) 345/230/13.2KV TRANSFORMER CKT 1	560	560	0.20681	99.7	P12:138:AEPW:REDROCKRD4:WTH_JCT4
FDNS	06ALL	0	17G	G15_039	FROM->TO	POTTER COUNTY INTERCHANGE (WAUK 90343-A) 345/230/13.2KV TRANSFORMER CKT 1	560	560	0.20678	99.7	JOHNSON COUNTY - PITTSBURG 345KV CKT 1
FDNS	06ALL	0	17G	G15_039	FROM->TO	POTTER COUNTY INTERCHANGE (WAUK 90343-A) 345/230/13.2KV TRANSFORMER CKT 1	560	560	0.20678	99.7	JOHNSON COUNTY - PITTSBURG 345KV CKT 1
FDNS	06ALL	0	17G	G15_039	FROM->TO	POTTER COUNTY INTERCHANGE (WAUK 90343-A) 345/230/13.2KV TRANSFORMER CKT 1	560	560	0.20676	99.7	LLANO ESTACADO WIND GEN - MIDSTREAM ENERGY TAP 115KV CKT 1
FDNS	06ALL	0	17G	G15_039	FROM->TO	POTTER COUNTY INTERCHANGE (WAUK 90343-A) 345/230/13.2KV TRANSFORMER CKT 1	560	560	0.20661	99.7	ELLIS 4 138.00 - MOREWOOD SW 138KV CKT 1
FDNS	06ALL	0	20WP	G15_039	FROM->TO	POTTER COUNTY INTERCHANGE (WAUK 90343-A) 345/230/13.2KV TRANSFORMER CKT 1	560	560	0.20652	99.7	CHERRY1 - HARRINGTON STATION 230KV CKT 1
FDNS	06ALL	0	20WP	G15_039	FROM->TO	POTTER COUNTY INTERCHANGE (WAUK 90343-A) 345/230/13.2KV TRANSFORMER CKT 1	560	560	0.20652	99.7	CHERRY1 - HARRINGTON STATION 230KV CKT 1
FDNS	06ALL	0	20WP	G15_039	FROM->TO	POTTER COUNTY INTERCHANGE (WAUK 90343-A) 345/230/13.2KV TRANSFORMER CKT 1	560	560	0.20475	99.7	GEN526678 1-CIRRUS_WND 10.6900
FDNS	06ALL	0	20WP	G15_039	FROM->TO	POTTER COUNTY INTERCHANGE (WAUK 90343-A) 345/230/13.2KV TRANSFORMER CKT 1	560	560	0.20475	99.7	GEN562802 1-G15039_3 0.3570
FDNS	06ALL	0	20WP	G15_039	FROM->TO	POTTER COUNTY INTERCHANGE (WAUK 90343-A) 345/230/13.2KV TRANSFORMER CKT 1	560	560	0.20172	99.7	BVRCNTY7 345.00 - OPTIMA 345.00 345KV CKT 1
FDNS	06ALL	0	20WP	G15_039	FROM->TO	POTTER COUNTY INTERCHANGE (WAUK 90343-A) 345/230/13.2KV TRANSFORMER CKT 1	560	560	0.20172	99.7	BVRCNTY7 345.00 - OPTIMA 345.00 345KV CKT 2
FDNS	06ALL	0	17G	G15_039	FROM->TO	POTTER COUNTY INTERCHANGE (WAUK 90343-A) 345/230/13.2KV TRANSFORMER CKT 1	560	560	0.20991	99.6	SUNDOWN INTERCHANGE - WOLFFORTH INTERCHANGE 230KV CKT 1
FDNS	06ALL	0	17G	G15_039	FROM->TO	POTTER COUNTY INTERCHANGE (WAUK 90343-A) 345/230/13.2KV TRANSFORMER CKT 1	560	560	0.20991	99.6	SUNDOWN INTERCHANGE - WOLFFORTH INTERCHANGE 230KV CKT 1
FDNS	06ALL	0	17G	G15_039	FROM->TO	POTTER COUNTY INTERCHANGE (WAUK 90343-A) 345/230/13.2KV TRANSFORMER CKT 1	560	560	0.20732	99.6	MOORE COUNTY INTERCHANGE W. - RB-S&S 3115.00 115KV CKT 1
FDNS	06ALL	0	17G	G15_039	FROM->TO	POTTER COUNTY INTERCHANGE (WAUK 90343-A) 345/230/13.2KV TRANSFORMER CKT 1	560	560	0.20732	99.6	P12:115:SPS:T25.1.MOOREW.DUMAS19
FDNS	06ALL	0	17G	G15_039	FROM->TO	POTTER COUNTY INTERCHANGE (WAUK 90343-A) 345/230/13.2KV TRANSFORMER CKT 1	560	560	0.20677	99.6	P12:138:AEPW-OGE:WTH_JCT4:JENSEN4
FDNS	06ALL	0	17G	G15_039	FROM->TO	POTTER COUNTY INTERCHANGE (WAUK 90343-A) 345/230/13.2KV TRANSFORMER CKT 1	560	560	0.20675	99.6	G15063_T 345.00 - MATHWSN7 345.00 345KV CKT 1
FDNS	06ALL	0	17G	G15_039	FROM->TO	POTTER COUNTY INTERCHANGE (WAUK 90343-A) 345/230/13.2KV TRANSFORMER CKT 1	560	560	0.20665	99.6	MOORE COUNTY INTERCHANGE W. - RITA BLANCA REC-SNEED 115KV CKT 1
FDNS	06ALL	0	17G	G15_039	FROM->TO	POTTER COUNTY INTERCHANGE (WAUK 90343-A) 345/230/13.2KV TRANSFORMER CKT 1	560	560	0.20656	99.6	P12:138:AEPW:WTHWF4:WTH_SE4
FDNS	06ALL	0	17G	G15_039	FROM->TO	POTTER COUNTY INTERCHANGE (WAUK 90343-A) 345/230/13.2KV TRANSFORMER CKT 1	560	560	0.20656	99.6	WEATHERFORD TAP - WEATHERFORD WIND FARM 138KV CKT 1
FDNS	06ALL	0	20WP	G15_039	FROM->TO	POTTER COUNTY INTERCHANGE (WAUK 90343-A) 345/230/13.2KV TRANSFORMER CKT 1	560	560	0.20475	99.6	GEN562531 1-G14_033_3 0.3420
FDNS	06ALL	0	20WP	G15_039	FROM->TO	POTTER COUNTY INTERCHANGE (WAUK 90343-A) 345/230/13.2KV TRANSFORMER CKT 1	560	560	0.20475	99.6	GEN562535 1-G14_034_3 0.3420
FDNS	06ALL	0	20WP	G15_039	FROM->TO	POTTER COUNTY INTERCHANGE (WAUK 90343-A) 345/230/13.2KV TRANSFORMER CKT 1	560	560	0.20475	99.6	GEN562559 1-G14_047_3 0.4800
FDNS	06ALL	0	17G	G15_039	FROM->TO	POTTER COUNTY INTERCHANGE (WAUK 90343-A) 345/230/13.2KV TRANSFORMER CKT 1	560	560	0.20732	99.5	EXELL TAP - FAIN SUB 115KV CKT 1
FDNS	06ALL	0	17G	G15_039	FROM->TO	POTTER COUNTY INTERCHANGE (WAUK 90343-A) 345/230/13.2KV TRANSFORMER CKT 1	560	560	0.20691	99.5	HUGO - SUNNYSIDE 345KV CKT 1
FDNS	06ALL	0	17G	G15_039	FROM->TO	POTTER COUNTY INTERCHANGE (WAUK 90343-A) 345/230/13.2KV TRANSFORMER CKT 1	560	560	0.20675	99.5	G15063_T 345.00 - WOODRING 345KV CKT 1
FDNS	06ALL	0	17G	G15_039	FROM->TO	POTTER COUNTY INTERCHANGE (WAUK 90343-A) 345/230/13.2KV TRANSFORMER CKT 1	560	560	0.20674	99.5	CRMWA#4 - NICHOLS STATION 115KV CKT 1
FDNS	06ALL	0	17G	G15_039	FROM->TO	POTTER COUNTY INTERCHANGE (WAUK 90343-A) 345/230/13.2KV TRANSFORMER CKT 1	560	560	0.20665	99.5	P12:115:SPS:V01.1.MOOREW.RVRVIEW
FDNS	06ALL	0	17G	G15_039	FROM->TO	POTTER COUNTY INTERCHANGE (WAUK 90343-A) 345/230/13.2KV TRANSFORMER CKT 1	560	560	0.20656	99.5	P12:138:AEPW:WTHWF4:CLINTJC4
FDNS	06ALL	0	17G	G15_039	FROM->TO	POTTER COUNTY INTERCHANGE (WAUK 90343-A) 345/230/13.2KV TRANSFORMER CKT 1	560	560	0.20655	99.5	CARNEGIE - HOBART JUNCTION 138KV CKT 1
FDNS	06ALL	0	17G	G15_039	FROM->TO	POTTER COUNTY INTERCHANGE (WAUK 90343-A) 345/230/13.2KV TRANSFORMER CKT 1	560	560	0.20655	99.5	P12:138:AEPW:S.W.S.-4:HOB-JCT4
FDNS	06ALL	0	17G	G15_039	FROM->TO	POTTER COUNTY INTERCHANGE (WAUK 90343-A) 345/230/13.2KV TRANSFORMER CKT 1	560	560	0.20638	99.5	CLINTON AIR FORCE BASE TAP - ELK CITY 138KV CKT 1
FDNS	06ALL	0	17G	G15_039	FROM->TO	POTTER COUNTY INTERCHANGE (WAUK 90343-A) 345/230/13.2KV TRANSFORMER CKT 1	560	560	0.20628	99.5	OCHILTREE - TRI COUNTY REC-COLE 115KV CKT 1
FDNS	06ALL	0	17G	G15_039	FROM->TO	POTTER COUNTY INTERCHANGE (WAUK 90343-A) 345/230/13.2KV TRANSFORMER CKT 1	560	560	0.20628	99.5	OCHILTREE - TRI COUNTY REC-COLE 115KV CKT 1
FDNS	06ALL	0	17G	G15_039	FROM->TO	POTTER COUNTY INTERCHANGE (WAUK 90343-A) 345/230/13.2KV TRANSFORMER CKT 1	560	560	0.20622	99.5	ARCADIA - NORTHWEST 345KV CKT 1
FDNS	06ALL	0	17G	G15_039	FROM->TO	POTTER COUNTY INTERCHANGE (WAUK 90343-A) 345/230/13.2KV TRANSFORMER CKT 1	560	560	0.20622	99.5	LAWTON EASTSIDE (LES 5) 345/138/13.8KV TRANSFORMER CKT 2
FDNS	06ALL	0	17G	G15_039	FROM->TO	POTTER COUNTY INTERCHANGE (WAUK 90343-A) 345/230/13.2KV TRANSFORMER CKT 1	560	560	0.20622	99.5	LAWTON EASTSIDE (LES 5) 345/138/13.8KV TRANSFORMER CKT 2
FDNS	06ALL	0	17G	G15_039	FROM->TO	POTTER COUNTY INTERCHANGE (WAUK 90343-A) 345/230/13.2KV TRANSFORMER CKT 1	560	560	0.20621	99.5	COMANCHE - LAWTON EASTSIDE 69KV CKT 1
FDNS	06ALL	0	17G	G15_039	FROM->TO	POTTER COUNTY INTERCHANGE (WAUK 90343-A) 345/230/13.2KV TRANSFORMER CKT 1	560	560	0.20621	99.5	COMANCHE - LAWTON EASTSIDE 69KV CKT 1
FDNS	06ALL	0	17G	G15_039	FROM->TO	POTTER COUNTY INTERCHANGE (WAUK 90343-A) 345/230/13.2KV TRANSFORMER CKT 1	560	560	0.2062	99.5	2084-Graves Sub
FDNS	06ALL	0	17G	G15_039	FROM->TO	POTTER COUNTY INTERCHANGE (WAUK 90343-A) 345/230/13.2KV TRANSFORMER CKT 1	560	560	0.2062	99.5	DEMPSEY6 230.00 (DEMPSEYWF) 230/34.5/9.95KV TRANSFORMER CKT 1
FDNS	06ALL	0	17G	G15_039	FROM->TO	POTTER COUNTY INTERCHANGE (WAUK 90343-A) 345/230/13.2KV TRANSFORMER CKT 1	560	560	0.20598	99.5	CLEARLAKE - SPEERMORE 69KV CKT 1
FDNS	06ALL	0	17G	G15_039	FROM->TO	POTTER COUNTY INTERCHANGE (WAUK 90343-A) 345/230/13.2KV TRANSFORMER CKT 1	560	560	0.20598	99.5	CLEARLAKE - TRI COUNTY REC-TEXAS COUNTY INTERCHANGE 69KV CKT 1
FDNS	06ALL	0	20WP	G15_039	FROM->TO	POTTER COUNTY INTERCHANGE (WAUK 90343-A) 345/230/13.2KV TRANSFORMER CKT 1	560	560	0.20475	99.5	GEN562627 1-ASGI14_002_30.8200
FDNS	06ALL	0	20SP	G15_039	FROM->TO	TUCO_2 345.00 (TUCO_2 XFMR) 345/230/13.2KV TRANSFORMER CKT 1	560	560	0.21227	168.9327	TUCO INTERCHANGE - TUCO_2 345.00 345KV CKT 1
FDNS	06ALL	0	17SP	G15_039	FROM->TO	TUCO_2 345.00 (TUCO_2 XFMR) 345/230/13.2KV TRANSFORMER CKT 1	560	560	0.21222	168.0719	TUCO INTERCHANGE - TUCO_2 345.00 345KV CKT 1
FDNS	06ALL	0	20SP	G15_039	FROM->TO	TUCO_2 345.00 (TUCO_2 XFMR) 345/230/13.2KV TRANSFORMER CKT 1	560	560	0.21227	162.4281	TUCO INTERCHANGE - TUCO_2 345.00 345KV CKT 1
FDNS	06ALL	0	17SP	G15_039	FROM->TO	TUCO_2 345.00 (TUCO_2 XFMR) 345/230/13.2KV TRANSFORMER CKT 1	560	560	0.21222	161.5424	TUCO INTERCHANGE - TUCO_2 345.00 345KV CKT 1
FDNS	06NR	2	17G	G15_039	FROM->TO	BUSHLAND INTERCHANGE - HILLSIDE 115KV CKT 1	159	160	0.18005	118.1849	BUSHLAND INTERCHANGE - POTTER COUNTY INTERCHANGE 230KV CKT 1
FDNS	06NR	2	17G	G15_039	FROM->TO	BUSHLAND INTERCHANGE - HILLSIDE 115KV CKT 1	159	160	0.18005	118.1849	BUSHLAND INTERCHANGE - POTTER COUNTY INTERCHANGE 230KV CKT 1
FDNS	06ALL	2	16WP	G15_039	FROM->TO	BUSHLAND INTERCHANGE - HILLSIDE 115KV CKT 1	165	177	0.21006	116.434	BUSHLAND INTERCHANGE - POTTER COUNTY INTERCHANGE 230KV CKT 1
FDNS	06ALL	2	16WP	G15_039	FROM->TO	BUSHLAND INTERCHANGE - HILLSIDE 115KV CKT 1	165	177	0.21006	116.434	BUSHLAND INTERCHANGE - POTTER COUNTY INTERCHANGE 230KV CKT 1
FDNS	06ALL	2	17G	G15_039	FROM->TO	BUSHLAND INTERCHANGE - HILLSIDE 115KV CKT 1	159	160	0.20907	111.5289	BUSHLAND INTERCHANGE - POTTER COUNTY INTERCHANGE 230KV CKT 1

SOLUTION	GROUP	SCENARIO	SEASON	SOURCE	DIRECTION	MONITORED ELEMENT	RATEA (MVA)	RATEB(MVA)	TDF	TC%LOADING (% MVA)	CONTINGENCY
FDNS	06ALL	2	17G	G15_039	FROM->TO	BUSHLAND INTERCHANGE - HILLSIDE 115KV CKT 1	159	160	0.20907	111.5289	BUSHLAND INTERCHANGE - POTTER COUNTY INTERCHANGE 230KV CKT 1
FDNS	06ALL	2	20L	G15_039	FROM->TO	BUSHLAND INTERCHANGE - HILLSIDE 115KV CKT 1	159	160	0.19668	107.794	BUSHLAND INTERCHANGE - POTTER COUNTY INTERCHANGE 230KV CKT 1
FDNS	06ALL	2	20L	G15_039	FROM->TO	BUSHLAND INTERCHANGE - HILLSIDE 115KV CKT 1	159	160	0.19668	107.794	BUSHLAND INTERCHANGE - POTTER COUNTY INTERCHANGE 230KV CKT 1
FDNS	06ALL	2	20WP	G15_039	FROM->TO	BUSHLAND INTERCHANGE - HILLSIDE 115KV CKT 1	165	177	0.20004	104.777	BUSHLAND INTERCHANGE - POTTER COUNTY INTERCHANGE 230KV CKT 1
FDNS	06ALL	2	20WP	G15_039	FROM->TO	BUSHLAND INTERCHANGE - HILLSIDE 115KV CKT 1	165	177	0.20004	104.777	BUSHLAND INTERCHANGE - POTTER COUNTY INTERCHANGE 230KV CKT 1
FDNS	06ALL	2	16WP	G15_039	FROM->TO	BUSHLAND INTERCHANGE - POTTER COUNTY INTERCHANGE 230KV CKT 1	329.05	360.92	0.36431	109.093	NEWHART 230 - POTTER COUNTY INTERCHANGE 230KV CKT 1
FDNS	06NR	2	17G	G15_039	FROM->TO	BUSHLAND INTERCHANGE - POTTER COUNTY INTERCHANGE 230KV CKT 1	318.7	350.57	0.2857	103.6906	NEWHART 230 - POTTER COUNTY INTERCHANGE 230KV CKT 1
FDNS	06ALL	2	16WP	G15_039	FROM->TO	BUSHLAND INTERCHANGE - POTTER COUNTY INTERCHANGE 230KV CKT 1	329.05	360.92	0.36962	103.1948	TOLK STATION EAST - TUCO INTERCHANGE 230KV CKT 1
FDNS	06ALL	2	16WP	G15_039	FROM->TO	BUSHLAND INTERCHANGE - POTTER COUNTY INTERCHANGE 230KV CKT 1	329.05	360.92	0.36962	103.1948	TOLK STATION EAST - TUCO INTERCHANGE 230KV CKT 1
FDNS	06ALL	2	16WP	G15_039	FROM->TO	BUSHLAND INTERCHANGE - POTTER COUNTY INTERCHANGE 230KV CKT 1	329.05	360.92	0.3984	102.2816	BUSHLAND INTERCHANGE - HILLSIDE 115KV CKT 1
FDNS	06ALL	2	16WP	G15_039	FROM->TO	BUSHLAND INTERCHANGE - POTTER COUNTY INTERCHANGE 230KV CKT 1	329.05	360.92	0.3984	102.2688	BUSHLAND INTERCHANGE (WH 7001795) 230/115/13.2KV TRANSFORMER CKT 1
FDNS	06ALL	2	16WP	G15_039	FROM->TO	BUSHLAND INTERCHANGE - POTTER COUNTY INTERCHANGE 230KV CKT 1	329.05	360.92	0.3984	102.2688	BUSHLAND INTERCHANGE (WH 7001795) 230/115/13.2KV TRANSFORMER CKT 1
FDNS	06ALL	2	16WP	G15_039	FROM->TO	BUSHLAND INTERCHANGE - POTTER COUNTY INTERCHANGE 230KV CKT 1	329.05	360.92	0.3984	101.6511	P12:115:SPS:V52.1.COLTR.BSHLND
FDNS	06ALL	2	16WP	G15_039	FROM->TO	BUSHLAND INTERCHANGE - POTTER COUNTY INTERCHANGE 230KV CKT 1	329.05	360.92	0.3682	100.4397	NEWHART 230 - PLANT X STATION 230KV CKT 1
FDNS	06ALL	2	20WP	G15_039	FROM->TO	BUSHLAND INTERCHANGE - POTTER COUNTY INTERCHANGE 230KV CKT 1	329.05	360.92	0.34991	100.355	NEWHART 230 - POTTER COUNTY INTERCHANGE 230KV CKT 1
FDNS	06ALL	2	20L	G15_039	FROM->TO	BUSHLAND INTERCHANGE - POTTER COUNTY INTERCHANGE 230KV CKT 1	318.7	350.57	0.34097	100.2389	NEWHART 230 - POTTER COUNTY INTERCHANGE 230KV CKT 1
FDNS	06ALL	2	16WP	G15_039	FROM->TO	BUSHLAND INTERCHANGE - POTTER COUNTY INTERCHANGE 230KV CKT 1	329.05	360.92	0.3984	100.2272	COULTER INTERCHANGE - HILLSIDE 115KV CKT 1
FDNS	06ALL	2	16WP	G15_039	FROM->TO	BUSHLAND INTERCHANGE (WH 7001795) 230/115/13.2KV TRANSFORMER CKT 1	168	168	0.21006	132.1613	BUSHLAND INTERCHANGE - POTTER COUNTY INTERCHANGE 230KV CKT 1
FDNS	06ALL	2	16WP	G15_039	FROM->TO	BUSHLAND INTERCHANGE (WH 7001795) 230/115/13.2KV TRANSFORMER CKT 1	168	168	0.21006	132.1613	BUSHLAND INTERCHANGE - POTTER COUNTY INTERCHANGE 230KV CKT 1
FDNS	06ALL	2	16WP	G15_039	FROM->TO	BUSHLAND INTERCHANGE (WH 7001795) 230/115/13.2KV TRANSFORMER CKT 1	168	168	0.21006	126.7491	BUSHLAND INTERCHANGE - POTTER COUNTY INTERCHANGE 230KV CKT 1
FDNS	06ALL	2	16WP	G15_039	FROM->TO	BUSHLAND INTERCHANGE (WH 7001795) 230/115/13.2KV TRANSFORMER CKT 1	168	168	0.21006	126.7491	BUSHLAND INTERCHANGE - POTTER COUNTY INTERCHANGE 230KV CKT 1
FDNS	06ALL	2	20WP	G15_039	FROM->TO	BUSHLAND INTERCHANGE (WH 7001795) 230/115/13.2KV TRANSFORMER CKT 1	168	168	0.20004	118.1249	BUSHLAND INTERCHANGE - POTTER COUNTY INTERCHANGE 230KV CKT 1
FDNS	06ALL	2	20WP	G15_039	FROM->TO	BUSHLAND INTERCHANGE (WH 7001795) 230/115/13.2KV TRANSFORMER CKT 1	168	168	0.20004	118.1249	BUSHLAND INTERCHANGE - POTTER COUNTY INTERCHANGE 230KV CKT 1
FDNS	06NR	2	17G	G15_039	FROM->TO	BUSHLAND INTERCHANGE (WH 7001795) 230/115/13.2KV TRANSFORMER CKT 1	168	168	0.18005	116.5462	BUSHLAND INTERCHANGE - POTTER COUNTY INTERCHANGE 230KV CKT 1
FDNS	06NR	2	17G	G15_039	FROM->TO	BUSHLAND INTERCHANGE (WH 7001795) 230/115/13.2KV TRANSFORMER CKT 1	168	168	0.18005	116.5462	BUSHLAND INTERCHANGE - POTTER COUNTY INTERCHANGE 230KV CKT 1
FDNS	06ALL	2	20WP	G15_039	FROM->TO	BUSHLAND INTERCHANGE (WH 7001795) 230/115/13.2KV TRANSFORMER CKT 1	168	168	0.20004	114.4975	BUSHLAND INTERCHANGE - POTTER COUNTY INTERCHANGE 230KV CKT 1
FDNS	06ALL	2	20WP	G15_039	FROM->TO	BUSHLAND INTERCHANGE (WH 7001795) 230/115/13.2KV TRANSFORMER CKT 1	168	168	0.20004	114.4975	BUSHLAND INTERCHANGE - POTTER COUNTY INTERCHANGE 230KV CKT 1
FDNS	06NR	2	17G	G15_039	FROM->TO	BUSHLAND INTERCHANGE (WH 7001795) 230/115/13.2KV TRANSFORMER CKT 1	168	168	0.18005	114.0422	BUSHLAND INTERCHANGE - POTTER COUNTY INTERCHANGE 230KV CKT 1
FDNS	06NR	2	17G	G15_039	FROM->TO	BUSHLAND INTERCHANGE (WH 7001795) 230/115/13.2KV TRANSFORMER CKT 1	168	168	0.18005	114.0422	BUSHLAND INTERCHANGE - POTTER COUNTY INTERCHANGE 230KV CKT 1
FDNS	06ALL	2	17G	G15_039	FROM->TO	BUSHLAND INTERCHANGE (WH 7001795) 230/115/13.2KV TRANSFORMER CKT 1	168	168	0.20907	112.6126	BUSHLAND INTERCHANGE - POTTER COUNTY INTERCHANGE 230KV CKT 1
FDNS	06ALL	2	17G	G15_039	FROM->TO	BUSHLAND INTERCHANGE (WH 7001795) 230/115/13.2KV TRANSFORMER CKT 1	168	168	0.20907	112.6126	BUSHLAND INTERCHANGE - POTTER COUNTY INTERCHANGE 230KV CKT 1
FDNS	06ALL	2	17G	G15_039	FROM->TO	BUSHLAND INTERCHANGE (WH 7001795) 230/115/13.2KV TRANSFORMER CKT 1	168	168	0.20907	109.4587	BUSHLAND INTERCHANGE - POTTER COUNTY INTERCHANGE 230KV CKT 1
FDNS	06ALL	2	17G	G15_039	FROM->TO	BUSHLAND INTERCHANGE (WH 7001795) 230/115/13.2KV TRANSFORMER CKT 1	168	168	0.20907	109.4587	BUSHLAND INTERCHANGE - POTTER COUNTY INTERCHANGE 230KV CKT 1
FDNS	06ALL	2	20L	G15_039	FROM->TO	BUSHLAND INTERCHANGE (WH 7001795) 230/115/13.2KV TRANSFORMER CKT 1	168	168	0.19668	107.218	BUSHLAND INTERCHANGE - POTTER COUNTY INTERCHANGE 230KV CKT 1
FDNS	06ALL	2	20L	G15_039	FROM->TO	BUSHLAND INTERCHANGE (WH 7001795) 230/115/13.2KV TRANSFORMER CKT 1	168	168	0.19668	107.218	BUSHLAND INTERCHANGE - POTTER COUNTY INTERCHANGE 230KV CKT 1
FDNS	06ALL	2	20L	G15_039	FROM->TO	BUSHLAND INTERCHANGE (WH 7001795) 230/115/13.2KV TRANSFORMER CKT 1	168	168	0.19668	104.9485	BUSHLAND INTERCHANGE - POTTER COUNTY INTERCHANGE 230KV CKT 1
FDNS	06ALL	2	20L	G15_039	FROM->TO	BUSHLAND INTERCHANGE (WH 7001795) 230/115/13.2KV TRANSFORMER CKT 1	168	168	0.19668	104.9485	BUSHLAND INTERCHANGE - POTTER COUNTY INTERCHANGE 230KV CKT 1
FDNS	06ALL	2	17SP	G15_039	FROM->TO	BUSHLAND INTERCHANGE (WH 7001795) 230/115/13.2KV TRANSFORMER CKT 1	168	168	0.20892	100.4484	BUSHLAND INTERCHANGE - POTTER COUNTY INTERCHANGE 230KV CKT 1
FDNS	06ALL	2	17SP	G15_039	FROM->TO	BUSHLAND INTERCHANGE (WH 7001795) 230/115/13.2KV TRANSFORMER CKT 1	168	168	0.20892	100.4484	BUSHLAND INTERCHANGE - POTTER COUNTY INTERCHANGE 230KV CKT 1
FDNS	06NR	2	17G	G15_039	FROM->TO	CANYON E_TP3115.00 - RANDALL COUNTY INTERCHANGE 115KV CKT 1	96	96	0.13153	100.8119	BUSHLAND INTERCHANGE - DEAF SMITH COUNTY INTERCHANGE 230KV CKT 1
FDNS	06NR	2	17G	G15_039	FROM->TO	CANYON E_TP3115.00 - RANDALL COUNTY INTERCHANGE 115KV CKT 1	96	96	0.13153	100.8119	BUSHLAND INTERCHANGE - DEAF SMITH COUNTY INTERCHANGE 230KV CKT 1
FDNS	06NR	2	17G	G15_039	TO->FROM	CANYON WEST SUB - DAWN SUB 115KV CKT 1	96	96	0.13153	127.5172	BUSHLAND INTERCHANGE - DEAF SMITH COUNTY INTERCHANGE 230KV CKT 1
FDNS	06NR	2	17G	G15_039	TO->FROM	CANYON WEST SUB - DAWN SUB 115KV CKT 1	96	96	0.13153	127.5172	BUSHLAND INTERCHANGE - DEAF SMITH COUNTY INTERCHANGE 230KV CKT 1
FDNS	06NR	2	17G	G15_039	FROM->TO	CASTRO COUNTY INTERCHANGE - DEAF SMITH REC-#21 115KV CKT 1	159	174	0.04014	106.0645	DEAF SMITH COUNTY INTERCHANGE - G15039_T 230.00 230KV CKT 1
FDNS	06ALL	2	20SP	G15_039	FROM->TO	CHISHOLM6 230.00 - ELK CITY 230KV 230KV CKT 1	353	353	0.06236	103.9805	BASE CASE
FDNS	06ALL	2	17SP	G15_039	FROM->TO	CHISHOLM6 230.00 - ELK CITY 230KV 230KV CKT 1	353	353	0.06251	101.7938	BASE CASE
FDNS	06ALL	2	17G	G15_039	TO->FROM	CIMARRON - MINCO 345KV CKT 1	956	956	0.20695	131.7687	G14-057T 345.00 - SUNNYSIDE 345KV CKT 1
FDNS	06ALL	2	20WP	G15_039	TO->FROM	CIMARRON - MINCO 345KV CKT 1	956	956	0.20573	130.9595	G14-057T 345.00 - SUNNYSIDE 345KV CKT 1
FDNS	06ALL	2	17G	G15_039	TO->FROM	CIMARRON - MINCO 345KV CKT 1	956	956	0.20695	126.2954	G14-057T 345.00 - LAWTON EASTSIDE 345KV CKT 1
FDNS	06ALL	2	20WP	G15_039	TO->FROM	CIMARRON - MINCO 345KV CKT 1	956	956	0.20573	125.3296	G14-057T 345.00 - LAWTON EASTSIDE 345KV CKT 1
FDNS	06ALL	2	16WP	G15_039	TO->FROM	CIMARRON - MINCO 345KV CKT 1	956	956	0.21351	123.9324	G14-057T 345.00 - SUNNYSIDE 345KV CKT 1
FDNS	06ALL	2	17SP	G15_039	TO->FROM	CIMARRON - MINCO 345KV CKT 1	956	956	0.211	123.0412	G14-057T 345.00 - SUNNYSIDE 345KV CKT 1
FDNS	06ALL	2	20SP	G15_039	TO->FROM	CIMARRON - MINCO 345KV CKT 1	956	956	0.21192	120.4683	G14-057T 345.00 - SUNNYSIDE 345KV CKT 1
FDNS	06ALL	2	16WP	G15_039	TO->FROM	CIMARRON - MINCO 345KV CKT 1	956	956	0.21351	118.3934	G14-057T 345.00 - LAWTON EASTSIDE 345KV CKT 1
FDNS	06ALL	2	17SP	G15_039	TO->FROM	CIMARRON - MINCO 345KV CKT 1	956	956	0.211	117.7499	G14-057T 345.00 - LAWTON EASTSIDE 345KV CKT 1
FDNS	06ALL	2	20SP	G15_039	TO->FROM	CIMARRON - MINCO 345KV CKT 1	956	956	0.21192	115.0256	G14-057T 345.00 - LAWTON EASTSIDE 345KV CKT 1
FDNS	06ALL	2	20SP	G15_039	TO->FROM	CIMARRON - MINCO 345KV CKT 1	956	956	0.20088	102.1101	CHISHOLM7 345.00 - WOODWARD DISTRICT EHV 345KV CKT 1
FDNS	06ALL	2	17SP	G15_039	TO->FROM	CIMARRON - MINCO 345KV CKT 1	956	956	0.19936	100.969	CHISHOLM7 345.00 - WOODWARD DISTRICT EHV 345KV CKT 1
FDNS	06ALL	2	16WP	G15_039	TO->FROM	COULTER INTERCHANGE - HILLSIDE 115KV CKT 1	159	159	0.21006	123.8723	BUSHLAND INTERCHANGE - POTTER COUNTY INTERCHANGE 230KV CKT 1
FDNS	06ALL	2	16WP	G15_039	TO->FROM	COULTER INTERCHANGE - HILLSIDE 115KV CKT 1	159	159	0.21006	123.8723	BUSHLAND INTERCHANGE - POTTER COUNTY INTERCHANGE 230KV CKT 1
FDNS	06NR	2	17G	G15_039	TO->FROM	COULTER INTERCHANGE - HILLSIDE 115KV CKT 1	159	159	0.18005	113.2181	BUSHLAND INTERCHANGE - POTTER COUNTY INTERCHANGE 230KV CKT 1
FDNS	06NR	2	17G	G15_039	TO->FROM	COULTER INTERCHANGE - HILLSIDE 115KV CKT 1	159	159	0.18005	113.2181	BUSHLAND INTERCHANGE - POTTER COUNTY INTERCHANGE 230KV CKT 1
FDNS	06ALL	2	20WP	G15_039	TO->FROM	COULTER INTERCHANGE - HILLSIDE 115KV CKT 1	159	159	0.20004	110.1411	BUSHLAND INTERCHANGE - POTTER COUNTY INTERCHANGE 230KV CKT 1
FDNS	06ALL	2	20WP	G15_039	TO->FROM	COULTER INTERCHANGE - HILLSIDE 115KV CKT 1	159	159	0.20004	110.1411	BUSHLAND INTERCHANGE - POTTER COUNTY INTERCHANGE 230KV CKT 1
FDNS	06ALL	2	17G	G15_039	TO->FROM	COULTER INTERCHANGE - HILLSIDE 115KV CKT 1	159	159	0.20907	106.5038	BUSHLAND INTERCHANGE - POTTER COUNTY INTERCHANGE 230KV CKT 1
FDNS	06ALL	2	17G	G15_039	TO->FROM	COULTER INTERCHANGE - HILLSIDE 115KV CKT 1	159	159	0.20907	106.5038	BUSHLAND INTERCHANGE - POTTER COUNTY INTERCHANGE 230KV CKT 1
FDNS	06ALL	2	20L	G15_039	TO->FROM	COULTER INTERCHANGE - HILLSIDE 115KV CKT 1	159	159	0.19668	105.1962	BUSHLAND INTERCHANGE - POTTER COUNTY INTERCHANGE 230KV CKT 1
FDNS	06ALL	2	20L	G15_039	TO->FROM	COULTER INTERCHANGE - HILLSIDE 115KV CKT 1	159	159	0.19668	105.1962	BUSHLAND INTERCHANGE - POTTER COUNTY INTERCHANGE 230KV CKT 1
FDNS	06NR	2	17G	G15_039	TO->FROM	DAWN SUB - Panda Energy Substation Hereford 115KV CKT 1	96	96	0.13153	130.9313	BUSHLAND INTERCHANGE - DEAF SMITH COUNTY INTERCHANGE 230KV CKT 1
FDNS	06NR	2	17G	G15_039	TO->FROM	DAWN SUB - Panda Energy Substation Hereford 115KV CKT 1	96	96	0.13153	130.9313	BUSHLAND INTERCHANGE - DEAF SMITH COUNTY INTERCHANGE 230KV CKT 1
FDNS	06NR	2	17G	G15_039	TO->FROM	DAWN SUB - Panda Energy Substation Hereford 115KV CKT 1	96	96	0.09143	102.1469	BUSHLAND INTERCHANGE - POTTER COUNTY INTERCHANGE 230KV CKT 1
FDNS	06NR	2	17G	G15_039	TO->FROM	DAWN SUB - Panda Energy Substation Hereford 115KV CKT 1	96	96	0.09143	102.1469	BUSHLAND INTERCHANGE - POTTER COUNTY INTERCHANGE 230KV CKT 1
FDNS	06NR	2	17G	G15_039	TO->FROM	DEAF SMITH COUNTY INTERCHANGE - DEAF SMITH REC-#21 115KV CKT 1	159	174	0.04014	100.9586	DEAF SMITH COUNTY INTERCHANGE - G15039_T 230.00 230KV CKT 1
FDNS	06ALL	2	17SP	G15_039	TO->FROM	DEAF SMITH COUNTY INTERCHANGE - G15039_T 230.00 230KV CKT 1	318.7	350.57	0.64104	115.5525	NEWHART 230 - PLANT X STATION 230KV CKT 1
FDNS	06ALL	2	20SP	G15_039	TO->FROM	DEAF SMITH COUNTY INTERCHANGE - G15039_T 230.00 230KV CKT 1	318.7	350.57	0.63169	115.2881	NEWHART 230 - PLANT X STATION 230KV CKT 1
FDNS	06ALL	2	20SP	G15_039	TO->FROM	DEAF SMITH COUNTY INTERCHANGE - G15039_T 230.00 230KV CKT 1	318.7	350.57	0.62122	114.0737	BORDER 7345.00 - TUCO_2 345.00 345KV CKT 1
FDNS	06ALL	2	20SP	G15_039	TO->FROM	DEAF SMITH COUNTY INTERCHANGE - G15039_T 230.00 230KV CKT 1	318.7	350.57	0.62122	114.0736	BORDER 7345.00 - TUCO_2 345.00 345KV CKT 2
FDNS	06ALL	2	20SP	G15_039	TO->FROM	DEAF SMITH COUNTY INTERCHANGE - G15039_T 230.00 230KV CKT 1	318.7	350.57	0.62708	113.0267	G14-074T 345.00 - TUCO INTERCHANGE 345KV CKT 1
FDNS	06ALL	2	17SP	G15_039	TO->FROM	DEAF SMITH COUNTY INTERCHANGE - G15039_T 230.00 230KV CKT 1	318.7	350.57	0.6256	111.3781	BORDER 7345.00 - TUCO_2 345.00 345KV CKT 1

SOLUTION	GROUP	SCENARIO	SEASON	SOURCE	DIRECTION	MONITORED ELEMENT	RATEA (MVA)	RATEB(MVA)	TDF	TC%LOADING (% MVA)	CONTINGENCY
FDNS	06ALL	2	17SP	G15_039	TO->FROM	DEAF SMITH COUNTY INTERCHANGE - G15039_T 230.00 230KV CKT 1	318.7	350.57	0.6256	111.378	BORDER 7345.00 - TUCO_2 345.00 345KV CKT 2
FDNS	06ALL	2	17SP	G15_039	TO->FROM	DEAF SMITH COUNTY INTERCHANGE - G15039_T 230.00 230KV CKT 1	318.7	350.57	0.6311	110.6883	G14-074T 345.00 - TUCO INTERCHANGE 345KV CKT 1
FDNS	06ALL	2	17SP	G15_039	TO->FROM	DEAF SMITH COUNTY INTERCHANGE - G15039_T 230.00 230KV CKT 1	318.7	350.57	0.6368	110.5283	TOLK STATION EAST - TUCO INTERCHANGE 230KV CKT 1
FDNS	06ALL	2	17SP	G15_039	TO->FROM	DEAF SMITH COUNTY INTERCHANGE - G15039_T 230.00 230KV CKT 1	318.7	350.57	0.6368	110.5283	TOLK STATION EAST - TUCO INTERCHANGE 230KV CKT 1
FDNS	06ALL	2	20SP	G15_039	TO->FROM	DEAF SMITH COUNTY INTERCHANGE - G15039_T 230.00 230KV CKT 1	318.7	350.57	0.62	110.1923	NEWHART 230 - POTTER COUNTY INTERCHANGE 230KV CKT 1
FDNS	06ALL	2	20SP	G15_039	TO->FROM	DEAF SMITH COUNTY INTERCHANGE - G15039_T 230.00 230KV CKT 1	318.7	350.57	0.57273	109.3534	P12:115:SPS:T04.1.DFSMTH.CASTRO
FDNS	06ALL	2	20SP	G15_039	TO->FROM	DEAF SMITH COUNTY INTERCHANGE - G15039_T 230.00 230KV CKT 1	318.7	350.57	0.61462	108.5206	AMARILLO SOUTH INTERCHANGE - G15031_T 230.00 230KV CKT 1
FDNS	06ALL	2	17SP	G15_039	TO->FROM	DEAF SMITH COUNTY INTERCHANGE - G15039_T 230.00 230KV CKT 1	318.7	350.57	0.626	108.2398	NEWHART 230 - POTTER COUNTY INTERCHANGE 230KV CKT 1
FDNS	06ALL	2	17SP	G15_039	TO->FROM	DEAF SMITH COUNTY INTERCHANGE - G15039_T 230.00 230KV CKT 1	318.7	350.57	0.57667	107.8131	P12:115:SPS:T04.1.DFSMTH.CASTRO
FDNS	06ALL	2	20SP	G15_039	TO->FROM	DEAF SMITH COUNTY INTERCHANGE - G15039_T 230.00 230KV CKT 1	318.7	350.57	0.5937	107.7883	CURRY COUNTY INTERCHANGE - DEAF SMITH REC-#20 115KV CKT 1
FDNS	06ALL	2	20SP	G15_039	TO->FROM	DEAF SMITH COUNTY INTERCHANGE - G15039_T 230.00 230KV CKT 1	318.7	350.57	0.62598	107.1653	TOLK STATION EAST - TUCO INTERCHANGE 230KV CKT 1
FDNS	06ALL	2	20SP	G15_039	TO->FROM	DEAF SMITH COUNTY INTERCHANGE - G15039_T 230.00 230KV CKT 1	318.7	350.57	0.62598	107.1653	TOLK STATION EAST - TUCO INTERCHANGE 230KV CKT 1
FDNS	06ALL	2	17SP	G15_039	TO->FROM	DEAF SMITH COUNTY INTERCHANGE - G15039_T 230.00 230KV CKT 1	318.7	350.57	0.59892	106.3179	CURRY COUNTY INTERCHANGE - DEAF SMITH REC-#20 115KV CKT 1
FDNS	06ALL	2	20SP	G15_039	TO->FROM	DEAF SMITH COUNTY INTERCHANGE - G15039_T 230.00 230KV CKT 1	318.7	350.57	0.61259	106.1518	BASE CASE
FDNS	06ALL	2	17SP	G15_039	TO->FROM	DEAF SMITH COUNTY INTERCHANGE - G15039_T 230.00 230KV CKT 1	318.7	350.57	0.61997	106.0153	AMARILLO SOUTH INTERCHANGE - G15031_T 230.00 230KV CKT 1
FDNS	06ALL	2	20SP	G15_039	TO->FROM	DEAF SMITH COUNTY INTERCHANGE - G15039_T 230.00 230KV CKT 1	318.7	350.57	0.5937	105.817	DEAF SMITH REC-#20 - PARMER COUNTY SUB 115KV CKT 1
FDNS	06ALL	2	20SP	G15_039	TO->FROM	DEAF SMITH COUNTY INTERCHANGE - G15039_T 230.00 230KV CKT 1	318.7	350.57	0.5937	105.2581	DEAF SMITH REC-#24 - PARMER COUNTY SUB 115KV CKT 1
FDNS	06ALL	2	17SP	G15_039	TO->FROM	DEAF SMITH COUNTY INTERCHANGE - G15039_T 230.00 230KV CKT 1	318.7	350.57	0.59892	104.4684	DEAF SMITH REC-#20 - PARMER COUNTY SUB 115KV CKT 1
FDNS	06NR	2	17G	G15_039	TO->FROM	DEAF SMITH COUNTY INTERCHANGE - G15039_T 230.00 230KV CKT 1	318.7	350.57	0.56095	104.2484	NEWHART 230 - PLANT X STATION 230KV CKT 1
FDNS	06ALL	2	17SP	G15_039	TO->FROM	DEAF SMITH COUNTY INTERCHANGE - G15039_T 230.00 230KV CKT 1	318.7	350.57	0.61762	104.2255	BASE CASE
FDNS	06ALL	2	20SP	G15_039	TO->FROM	DEAF SMITH COUNTY INTERCHANGE - G15039_T 230.00 230KV CKT 1	318.7	350.57	0.61531	104.0273	TUCO INTERCHANGE - TUCO_2 345.00 345KV CKT 1
FDNS	06NR	2	17G	G15_039	TO->FROM	DEAF SMITH COUNTY INTERCHANGE - G15039_T 230.00 230KV CKT 1	318.7	350.57	0.55699	103.9799	NEWHART 230 - POTTER COUNTY INTERCHANGE 230KV CKT 1
FDNS	06ALL	2	17SP	G15_039	TO->FROM	DEAF SMITH COUNTY INTERCHANGE - G15039_T 230.00 230KV CKT 1	318.7	350.57	0.59892	103.9506	DEAF SMITH REC-#24 - PARMER COUNTY SUB 115KV CKT 1
FDNS	06ALL	2	16WP	G15_039	TO->FROM	DEAF SMITH COUNTY INTERCHANGE - G15039_T 230.00 230KV CKT 1	329.05	360.92	0.64417	103.6371	NEWHART 230 - PLANT X STATION 230KV CKT 1
FDNS	06ALL	2	20SP	G15_039	TO->FROM	DEAF SMITH COUNTY INTERCHANGE - G15039_T 230.00 230KV CKT 1	318.7	350.57	0.61259	103.5492	GEN523972 1-HARRINGTON GEN #2 24 KV
FDNS	06ALL	2	20SP	G15_039	TO->FROM	DEAF SMITH COUNTY INTERCHANGE - G15039_T 230.00 230KV CKT 1	318.7	350.57	0.61259	103.5456	GEN523971 1-HARRINGTON GEN #1 24 KV
FDNS	06ALL	2	20SP	G15_039	TO->FROM	DEAF SMITH COUNTY INTERCHANGE - G15039_T 230.00 230KV CKT 1	318.7	350.57	0.61259	103.5456	GEN523973 1-HARRINGTON GEN #3 24 KV
FDNS	06ALL	2	20SP	G15_039	TO->FROM	DEAF SMITH COUNTY INTERCHANGE - G15039_T 230.00 230KV CKT 1	318.7	350.57	0.5937	103.5399	CARGILL SUB - DEAF SMITH REC-#24 115KV CKT 1
FDNS	06ALL	2	20SP	G15_039	TO->FROM	DEAF SMITH COUNTY INTERCHANGE - G15039_T 230.00 230KV CKT 1	318.7	350.57	0.5937	103.4746	P12:115:SPS:T59.1.CARGIL.CURRY
FDNS	06ALL	2	16WP	G15_039	TO->FROM	DEAF SMITH COUNTY INTERCHANGE - G15039_T 230.00 230KV CKT 1	329.05	360.92	0.64068	103.0717	TOLK STATION EAST - TUCO INTERCHANGE 230KV CKT 1
FDNS	06ALL	2	16WP	G15_039	TO->FROM	DEAF SMITH COUNTY INTERCHANGE - G15039_T 230.00 230KV CKT 1	329.05	360.92	0.64068	103.0717	TOLK STATION EAST - TUCO INTERCHANGE 230KV CKT 1
FDNS	06ALL	2	20SP	G15_039	TO->FROM	DEAF SMITH COUNTY INTERCHANGE - G15039_T 230.00 230KV CKT 1	318.7	350.57	0.62156	102.8049	PLANT X STATION - SUNDOWN INTERCHANGE 230KV CKT 1
FDNS	06ALL	2	20SP	G15_039	TO->FROM	DEAF SMITH COUNTY INTERCHANGE - G15039_T 230.00 230KV CKT 1	318.7	350.57	0.62156	102.8049	PLANT X STATION - SUNDOWN INTERCHANGE 230KV CKT 1
FDNS	06NR	2	17G	G15_039	TO->FROM	DEAF SMITH COUNTY INTERCHANGE - G15039_T 230.00 230KV CKT 1	318.7	350.57	0.55689	102.5424	AMARILLO SOUTH INTERCHANGE - G15031_T 230.00 230KV CKT 1
FDNS	06ALL	2	17SP	G15_039	TO->FROM	DEAF SMITH COUNTY INTERCHANGE - G15039_T 230.00 230KV CKT 1	318.7	350.57	0.59892	102.2668	CARGILL SUB - DEAF SMITH REC-#24 115KV CKT 1
FDNS	06ALL	2	20SP	G15_039	TO->FROM	DEAF SMITH COUNTY INTERCHANGE - G15039_T 230.00 230KV CKT 1	318.7	350.57	0.61767	102.2249	CHISHOLM7 345.00 - WOODWARD DISTRICT EHV 345KV CKT 1
FDNS	06ALL	2	17SP	G15_039	TO->FROM	DEAF SMITH COUNTY INTERCHANGE - G15039_T 230.00 230KV CKT 1	318.7	350.57	0.59892	102.1677	P12:115:SPS:T59.1.CARGIL.CURRY
FDNS	06ALL	2	20SP	G15_039	TO->FROM	DEAF SMITH COUNTY INTERCHANGE - G15039_T 230.00 230KV CKT 1	318.7	350.57	0.61886	102.1458	TUCO INTERCHANGE - YOAKUM_345 345.00 345KV CKT 1
FDNS	06ALL	2	20SP	G15_039	TO->FROM	DEAF SMITH COUNTY INTERCHANGE - G15039_T 230.00 230KV CKT 1	318.7	350.57	0.61567	101.8972	PLANT X STATION (WH ALM20171) 230/115/13.2KV TRANSFORMER CKT 1
FDNS	06ALL	2	20SP	G15_039	TO->FROM	DEAF SMITH COUNTY INTERCHANGE - G15039_T 230.00 230KV CKT 1	318.7	350.57	0.61567	101.8972	PLANT X STATION (WH ALM20171) 230/115/13.2KV TRANSFORMER CKT 1
FDNS	06ALL	2	20SP	G15_039	TO->FROM	DEAF SMITH COUNTY INTERCHANGE - G15039_T 230.00 230KV CKT 1	318.7	350.57	0.5937	101.8349	CARGILL SUB - FRIONA SUB 115KV CKT 1
FDNS	06ALL	2	17SP	G15_039	TO->FROM	DEAF SMITH COUNTY INTERCHANGE - G15039_T 230.00 230KV CKT 1	318.7	350.57	0.62752	101.7257	SUNDOWN INTERCHANGE - WOLFFORTH INTERCHANGE 230KV CKT 1
FDNS	06ALL	2	17SP	G15_039	TO->FROM	DEAF SMITH COUNTY INTERCHANGE - G15039_T 230.00 230KV CKT 1	318.7	350.57	0.62752	101.7257	SUNDOWN INTERCHANGE - WOLFFORTH INTERCHANGE 230KV CKT 1
FDNS	06ALL	2	17SP	G15_039	TO->FROM	DEAF SMITH COUNTY INTERCHANGE - G15039_T 230.00 230KV CKT 1	318.7	350.57	0.61762	101.3007	GEN523972 1-HARRINGTON GEN #2 24 KV
FDNS	06ALL	2	17SP	G15_039	TO->FROM	DEAF SMITH COUNTY INTERCHANGE - G15039_T 230.00 230KV CKT 1	318.7	350.57	0.61762	101.2974	GEN523973 1-HARRINGTON GEN #3 24 KV
FDNS	06ALL	2	17SP	G15_039	TO->FROM	DEAF SMITH COUNTY INTERCHANGE - G15039_T 230.00 230KV CKT 1	318.7	350.57	0.61762	101.2973	GEN523971 1-HARRINGTON GEN #1 24 KV
FDNS	06ALL	2	20SP	G15_039	TO->FROM	DEAF SMITH COUNTY INTERCHANGE - G15039_T 230.00 230KV CKT 1	318.7	350.57	0.61259	101.2972	P12:230:SPS:CL.1.BSHLND.WLDRDO
FDNS	06ALL	2	17SP	G15_039	TO->FROM	DEAF SMITH COUNTY INTERCHANGE - G15039_T 230.00 230KV CKT 1	318.7	350.57	0.59892	100.3617	CARGILL SUB - FRIONA SUB 115KV CKT 1
FDNS	06ALL	2	20SP	G15_039	TO->FROM	DEAF SMITH COUNTY INTERCHANGE - G15039_T 230.00 230KV CKT 1	318.7	350.57	0.5937	100.2545	DEAF SMITH REC-#6 - FRIONA SUB 115KV CKT 1
FDNS	06ALL	2	20SP	G15_039	TO->FROM	DEAF SMITH COUNTY INTERCHANGE - G15039_T 230.00 230KV CKT 1	318.7	350.57	0.61479	100.238	CIMARRON - MINCO 345KV CKT 1
FDNS	06ALL	2	17SP	G15_039	TO->FROM	DEAF SMITH COUNTY INTERCHANGE - G15039_T 230.00 230KV CKT 1	318.7	350.57	0.62126	100.1762	PLANT X STATION (WH ALM20171) 230/115/13.2KV TRANSFORMER CKT 1
FDNS	06ALL	2	17SP	G15_039	TO->FROM	DEAF SMITH COUNTY INTERCHANGE - G15039_T 230.00 230KV CKT 1	318.7	350.57	0.62126	100.1762	PLANT X STATION (WH ALM20171) 230/115/13.2KV TRANSFORMER CKT 1
FDNS	06ALL	2	20SP	G15_039	TO->FROM	DEAF SMITH COUNTY INTERCHANGE - G15039_T 230.00 230KV CKT 1	318.7	350.57	0.61293	100.085	KRESS INTERCHANGE - TULIA TAP 115KV CKT 1
FDNS	06ALL	2	17SP	G15_039	TO->FROM	DEAF SMITH COUNTY INTERCHANGE - G15039_T 230.00 230KV CKT 1	318.7	350.57	0.62555	100	PLANT X STATION - SUNDOWN INTERCHANGE 230KV CKT 1
FDNS	06ALL	2	17SP	G15_039	TO->FROM	DEAF SMITH COUNTY INTERCHANGE - G15039_T 230.00 230KV CKT 1	318.7	350.57	0.62555	100	PLANT X STATION - SUNDOWN INTERCHANGE 230KV CKT 1
FDNS	06ALL	2	17SP	G15_039	TO->FROM	DEAF SMITH COUNTY INTERCHANGE - G15039_T 230.00 230KV CKT 1	318.7	350.57	0.61921	100	TUCO INTERCHANGE - TUCO_2 345.00 345KV CKT 1
FDNS	06ALL	2	20SP	G15_039	TO->FROM	DEAF SMITH COUNTY INTERCHANGE - G15039_T 230.00 230KV CKT 1	318.7	350.57	0.61293	99.9	HAPPY INTERCHANGE - TULIA TAP 115KV CKT 1
FDNS	06ALL	2	20SP	G15_039	TO->FROM	DEAF SMITH COUNTY INTERCHANGE - G15039_T 230.00 230KV CKT 1	318.7	350.57	0.61293	99.8	P12:115:SPS:T67.1.HAPPY.KRESS
FDNS	06ALL	2	16WP	G15_039	TO->FROM	DEAF SMITH COUNTY INTERCHANGE - G15039_T 230.00 230KV CKT 1	329.05	360.92	0.6281	99.7	NEWHART 230 - POTTER COUNTY INTERCHANGE 230KV CKT 1
FDNS	06ALL	2	17SP	G15_039	TO->FROM	DEAF SMITH COUNTY INTERCHANGE - G15039_T 230.00 230KV CKT 1	318.7	350.57	0.62235	99.7	CHISHOLM7 345.00 - WOODWARD DISTRICT EHV 345KV CKT 1
FDNS	06ALL	2	17SP	G15_039	TO->FROM	DEAF SMITH COUNTY INTERCHANGE - G15039_T 230.00 230KV CKT 1	318.7	350.57	0.61762	99.6	P12:230:SPS:CL.1.BSHLND.WLDRDO
FDNS	06ALL	2	20SP	G15_039	TO->FROM	DEAF SMITH COUNTY INTERCHANGE - G15039_T 230.00 230KV CKT 1	318.7	350.57	0.61773	99.6	SUNDOWN INTERCHANGE - WOLFFORTH INTERCHANGE 230KV CKT 1
FDNS	06ALL	2	20SP	G15_039	TO->FROM	DEAF SMITH COUNTY INTERCHANGE - G15039_T 230.00 230KV CKT 1	318.7	350.57	0.61773	99.6	SUNDOWN INTERCHANGE - WOLFFORTH INTERCHANGE 230KV CKT 1
FDNS	06ALL	2	20SP	G15_039	TO->FROM	DEAF SMITH COUNTY INTERCHANGE - G15039_T 230.00 230KV CKT 1	318.7	350.57	0.61479	99.6	GRACEMONT - MINCO 345KV CKT 1
FDNS	06ALL	2	20SP	G15_039	TO->FROM	DEAF SMITH COUNTY INTERCHANGE - G15039_T 230.00 230KV CKT 1	318.7	350.57	0.6142	99.5	G14-057T 345.00 - SUNNYSIDE 345KV CKT 1
FDNS	06ALL	2	20SP	G15_039	TO->FROM	DEAF SMITH COUNTY INTERCHANGE - G15039_T 230.00 230KV CKT 1	318.7	350.57	0.61412	99.5	P12:345:SPS:J02.1.TOLK.EDDY
FDNS	06NR	2	17G	G15_039	FROM->TO	DEAF SMITH COUNTY INTERCHANGE - Panda Energy Substation Hereford 115KV CKT 1	96	96	0.13153	136.0663	BUSHLAND INTERCHANGE - DEAF SMITH COUNTY INTERCHANGE 230KV CKT 1
FDNS	06NR	2	17G	G15_039	FROM->TO	DEAF SMITH COUNTY INTERCHANGE - Panda Energy Substation Hereford 115KV CKT 1	96	96	0.13153	136.0663	BUSHLAND INTERCHANGE - DEAF SMITH COUNTY INTERCHANGE 230KV CKT 1
FDNS	06NR	2	17G	G15_039	FROM->TO	DEAF SMITH COUNTY INTERCHANGE - Panda Energy Substation Hereford 115KV CKT 1	96	96	0.09143	107.2414	BUSHLAND INTERCHANGE - POTTER COUNTY INTERCHANGE 230KV CKT 1
FDNS	06NR	2	17G	G15_039	FROM->TO	DEAF SMITH COUNTY INTERCHANGE - Panda Energy Substation Hereford 115KV CKT 1	96	96	0.09143	107.2414	BUSHLAND INTERCHANGE - POTTER COUNTY INTERCHANGE 230KV CKT 1
FDNS	06ALL	2	20L	G15_039	TO->FROM	G14-057T 345.00 - LAWTON EASTSIDE 345KV CKT 1	717	789	0.08767	105.4406	BASE CASE
FDNS	06ALL	2	20L	G15_039	FROM->TO	G14-057T 345.00 - SUNNYSIDE 345KV CKT 1	717	789	0.08767	118.6576	BASE CASE
FDNS	06ALL	2	20WP	G15_039	FROM->TO	G14-057T 345.00 - SUNNYSIDE 345KV CKT 1	717	789	0.11127	106.4822	BASE CASE
FDNS	06ALL	2	17G	G15_039	FROM->TO	G14-057T 345.00 - SUNNYSIDE 345KV CKT 1	717	789	0.1124	105.8626	BASE CASE
FDNS	06ALL	2	16WP	G15_039	FROM->TO	G14-057T 345.00 - SUNNYSIDE 345KV CKT 1	717	789	0.11569	104.4384	BASE CASE
FDNS	00NR	2	25SP	G15_039	TO->FROM	JONES STATION - TUCO INTERCHANGE 230KV CKT 1	343.79	343.79	0.08334	139.1643	CARLISLE INTERCHANGE - TUCO INTERCHANGE 230KV CKT 1
FDNS	00NR	2	25SP	G15_039	TO->FROM	JONES STATION - TUCO INTERCHANGE 230KV CKT 1	343.79	343.79	0.08334	139.1643	CARLISLE INTERCHANGE - TUCO INTERCHANGE 230KV CKT 1
FDNS	00NR	2	25SP	G15_039	TO->FROM	JONES STATION - TUCO INTERCHANGE 230KV CKT 1	343.79	343.79	0.08273	122.6847	TUCO INTERCHANGE - YOAKUM_345 345.00 345KV CKT 1
FDNS	00NR	2	25SP	G15_039	TO->FROM	JONES STATION - TUCO INTERCHANGE 230KV CKT 1	343.79	343.79	0.06907	119.1138	GEN526333 1-JONES GEN #3 21 KV

SOLUTION	GROUP	SCENARIO	SEASON	SOURCE	DIRECTION	MONITORED ELEMENT	RATEA (MVA)	RATEB(MVA)	TDF	TC%LOADING (% MVA)	CONTINGENCY
FDNS	00NR	2	25SP	G15_039	TO->FROM	JONES STATION - TUCO INTERCHANGE 230KV CKT 1	343.79	343.79	0.06907	118.7159	GEN526334 1-JONES_4 116.500
FDNS	00NR	2	25SP	G15_039	TO->FROM	JONES STATION - TUCO INTERCHANGE 230KV CKT 1	343.79	343.79	0.07571	111.2162	CARLISLE INTERCHANGE - WOLFFORTH INTERCHANGE 230KV CKT 1
FDNS	00NR	2	25SP	G15_039	TO->FROM	JONES STATION - TUCO INTERCHANGE 230KV CKT 1	343.79	343.79	0.0689	106.9963	TUCO INTERCHANGE (ENRCO 136401) 230/115/13.2KV TRANSFORMER CKT 1
FDNS	00NR	2	25SP	G15_039	TO->FROM	JONES STATION - TUCO INTERCHANGE 230KV CKT 1	343.79	343.79	0.0689	106.9963	TUCO INTERCHANGE (ENRCO 136401) 230/115/13.2KV TRANSFORMER CKT 1
FDNS	00NR	2	25SP	G15_039	TO->FROM	JONES STATION - TUCO INTERCHANGE 230KV CKT 1	343.79	343.79	0.0689	106.9963	TUCO INTERCHANGE (ENRCO 136401) 230/115/13.2KV TRANSFORMER CKT 2
FDNS	00NR	2	25SP	G15_039	TO->FROM	JONES STATION - TUCO INTERCHANGE 230KV CKT 1	343.79	343.79	0.0689	106.9963	TUCO INTERCHANGE (ENRCO 136401) 230/115/13.2KV TRANSFORMER CKT 2
FDNS	00NR	2	25SP	G15_039	TO->FROM	JONES STATION - TUCO INTERCHANGE 230KV CKT 1	343.79	343.79	0.06907	106.4847	GEN526332 1-JONES GEN #2 21 KV
FDNS	00NR	2	25SP	G15_039	TO->FROM	JONES STATION - TUCO INTERCHANGE 230KV CKT 1	343.79	343.79	0.06907	106.4826	GEN526331 1-JONES GEN #1 22 KV
FDNS	00NR	2	25SP	G15_039	TO->FROM	JONES STATION - TUCO INTERCHANGE 230KV CKT 1	343.79	343.79	0.0762	105.6092	LUBBOCK EAST INTERCHANGE - TUCO INTERCHANGE 115KV CKT 1
FDNS	00NR	2	25SP	G15_039	TO->FROM	JONES STATION - TUCO INTERCHANGE 230KV CKT 1	343.79	343.79	0.0762	105.6092	LUBBOCK EAST INTERCHANGE - TUCO INTERCHANGE 115KV CKT 1
FDNS	00NR	2	25SP	G15_039	TO->FROM	JONES STATION - TUCO INTERCHANGE 230KV CKT 1	343.79	343.79	0.08482	105.4194	PLANT X STATION - SUNDOWN INTERCHANGE 230KV CKT 1
FDNS	00NR	2	25SP	G15_039	TO->FROM	JONES STATION - TUCO INTERCHANGE 230KV CKT 1	343.79	343.79	0.08482	105.4194	PLANT X STATION - SUNDOWN INTERCHANGE 230KV CKT 1
FDNS	00NR	2	25SP	G15_039	TO->FROM	JONES STATION - TUCO INTERCHANGE 230KV CKT 1	343.79	343.79	0.07174	102.5525	STANTON SUB - TUCO INTERCHANGE 115KV CKT 1
FDNS	00NR	2	25SP	G15_039	TO->FROM	JONES STATION - TUCO INTERCHANGE 230KV CKT 1	343.79	343.79	0.07113	102.3349	P12:230:LPL:K39.1.CRLSLE.LP-MLWK
FDNS	00NR	2	25SP	G15_039	TO->FROM	JONES STATION - TUCO INTERCHANGE 230KV CKT 1	343.79	343.79	0.07113	102.3335	LUBBOCK POWER & LIGHT-MILWAUKEE (M-E C0681251) 230/69/13.5KV TRANSFORMER CKT 1
FDNS	00NR	2	25SP	G15_039	TO->FROM	JONES STATION - TUCO INTERCHANGE 230KV CKT 1	343.79	343.79	0.07113	102.3335	LUBBOCK POWER & LIGHT-MILWAUKEE (M-E C0681251) 230/69/13.5KV TRANSFORMER CKT 1
FDNS	00NR	2	25SP	G15_039	TO->FROM	JONES STATION - TUCO INTERCHANGE 230KV CKT 1	343.79	343.79	0.07113	102.3328	CARLISLE INTERCHANGE - LUBBOCK POWER & LIGHT-MILWAUKEE 230KV CKT 1
FDNS	00NR	2	25SP	G15_039	TO->FROM	JONES STATION - TUCO INTERCHANGE 230KV CKT 1	343.79	343.79	0.06418	101.8206	TOLK STATION EAST - TUCO INTERCHANGE 230KV CKT 1
FDNS	00NR	2	25SP	G15_039	TO->FROM	JONES STATION - TUCO INTERCHANGE 230KV CKT 1	343.79	343.79	0.06418	101.8206	TOLK STATION EAST - TUCO INTERCHANGE 230KV CKT 1
FDNS	00NR	2	25SP	G15_039	TO->FROM	JONES STATION - TUCO INTERCHANGE 230KV CKT 1	343.79	343.79	0.07174	101.6251	P12:115:SPS:V15.1.TUCO.INDANA
FDNS	00NR	2	25SP	G15_039	TO->FROM	JONES STATION - TUCO INTERCHANGE 230KV CKT 1	343.79	343.79	0.07174	101.5793	INDIANA SUB - STANTON SUB 115KV CKT 1
FDNS	00NR	2	25SP	G15_039	TO->FROM	JONES STATION - TUCO INTERCHANGE 230KV CKT 1	343.79	343.79	0.06907	100.7469	GEN527166 1-MUSTANG_6 118.000
FDNS	00NR	2	25SP	G15_039	TO->FROM	JONES STATION - TUCO INTERCHANGE 230KV CKT 1	343.79	343.79	0.06907	100.7466	GEN527903 1-HOBBS PLANT #3 (ST)
FDNS	00NR	2	25SP	G15_039	TO->FROM	JONES STATION - TUCO INTERCHANGE 230KV CKT 1	343.79	343.79	0.07083	100.3452	CARLISLE INTERCHANGE - MURPHY SUB 115KV CKT 1
FDNS	00NR	2	25SP	G15_039	TO->FROM	JONES STATION - TUCO INTERCHANGE 230KV CKT 1	343.79	343.79	0.07083	100.3452	CARLISLE INTERCHANGE - MURPHY SUB 115KV CKT 1
FDNS	00NR	2	25SP	G15_039	TO->FROM	JONES STATION - TUCO INTERCHANGE 230KV CKT 1	343.79	343.79	0.06884	100.3228	KRESS INTERCHANGE - SWISHER COUNTY INTERCHANGE 115KV CKT 1
FDNS	00NR	2	25SP	G15_039	TO->FROM	JONES STATION - TUCO INTERCHANGE 230KV CKT 1	343.79	343.79	0.06884	100.3228	KRESS INTERCHANGE - SWISHER COUNTY INTERCHANGE 115KV CKT 1
FDNS	00NR	2	25SP	G15_039	TO->FROM	JONES STATION - TUCO INTERCHANGE 230KV CKT 1	343.79	343.79	0.06907	100.2967	GEN528501 1-G14_012 24.000
FDNS	00NR	2	25SP	G15_039	TO->FROM	JONES STATION - TUCO INTERCHANGE 230KV CKT 1	343.79	343.79	0.07119	100.1964	YOAKUM_345 345.00 (UPDATE DATA) 345/230/13.2KV TRANSFORMER CKT 1
FDNS	00NR	2	25SP	G15_039	TO->FROM	JONES STATION - TUCO INTERCHANGE 230KV CKT 1	343.79	343.79	0.07174	99.9	INDIANA SUB - SOUTH PLAINS REC-ERSKINE 115KV CKT 1
FDNS	00NR	2	25SP	G15_039	TO->FROM	JONES STATION - TUCO INTERCHANGE 230KV CKT 1	343.79	343.79	0.06842	99.8	FLOYD COUNTY INTERCHANGE - TUCO INTERCHANGE 115KV CKT 1
FDNS	00NR	2	25SP	G15_039	TO->FROM	JONES STATION - TUCO INTERCHANGE 230KV CKT 1	343.79	343.79	0.06842	99.8	FLOYD COUNTY INTERCHANGE - TUCO INTERCHANGE 115KV CKT 1
FDNS	00NR	2	25SP	G15_039	TO->FROM	JONES STATION - TUCO INTERCHANGE 230KV CKT 1	343.79	343.79	0.06907	99.7	GEN563122 1-G15077_3 0.3850
FDNS	00NR	2	25SP	G15_039	TO->FROM	JONES STATION - TUCO INTERCHANGE 230KV CKT 1	343.79	343.79	0.06839	99.7	POTTER COUNTY INTERCHANGE (WAUK 90343-A) 345/230/13.2KV TRANSFORMER CKT 1
FDNS	00NR	2	25SP	G15_039	TO->FROM	JONES STATION - TUCO INTERCHANGE 230KV CKT 1	343.79	343.79	0.06839	99.7	POTTER COUNTY INTERCHANGE (WAUK 90343-A) 345/230/13.2KV TRANSFORMER CKT 1
FDNS	00NR	2	25SP	G15_039	TO->FROM	JONES STATION - TUCO INTERCHANGE 230KV CKT 1	343.79	343.79	0.06907	99.6	GEN527901 1-HOBBS PLANT #1 (CT)
FDNS	00NR	2	25SP	G15_039	TO->FROM	JONES STATION - TUCO INTERCHANGE 230KV CKT 1	343.79	343.79	0.06907	99.6	GEN527902 1-HOBBS PLANT #2 (CT)
FDNS	00NR	2	25SP	G15_039	TO->FROM	JONES STATION - TUCO INTERCHANGE 230KV CKT 1	343.79	343.79	0.06907	99.6	GEN563102 1-G15075_3 0.5500
FDNS	00NR	2	25SP	G15_039	FROM->TO	LUBBOCK POWER & LIGHT-HOLLY PLANT (SHIH T101039) 230/69/13.5KV TRANSFORMER CKT 1	224	224	0.0358	104.7613	LUBBOCK POWER & LIGHT-SOUTHEAST - LUBBOCK SOUTH INTERCHANGE 230KV CKT 1
FDNS	00NR	2	25SP	G15_039	FROM->TO	LUBBOCK POWER & LIGHT-HOLLY PLANT (SHIH T101039) 230/69/13.5KV TRANSFORMER CKT 1	224	224	0.0358	104.7484	P12:LPL:SPS:K64.1.LP-SE.LUBBS
FDNS	00NR	2	25SP	G15_039	FROM->TO	LUBBOCK POWER & LIGHT-HOLLY PLANT (SHIH T101039) 230/69/13.5KV TRANSFORMER CKT 1	224	224	0.03458	102.133	P12:230:LPL:K57.1.LP-WADS.LUBBE
FDNS	00NR	2	25SP	G15_039	FROM->TO	LUBBOCK POWER & LIGHT-HOLLY PLANT (SHIH T101039) 230/69/13.5KV TRANSFORMER CKT 1	224	224	0.03458	102.1329	LUBBOCK POWER & LIGHT-WADSWORTH (SHIH T101038) 230/69/13.5KV TRANSFORMER CKT 1
FDNS	00NR	2	25SP	G15_039	FROM->TO	LUBBOCK POWER & LIGHT-HOLLY PLANT (SHIH T101039) 230/69/13.5KV TRANSFORMER CKT 1	224	224	0.03458	102.1329	LUBBOCK POWER & LIGHT-WADSWORTH (SHIH T101038) 230/69/13.5KV TRANSFORMER CKT 1
FDNS	00NR	2	25SP	G15_039	FROM->TO	LUBBOCK POWER & LIGHT-HOLLY PLANT (SHIH T101039) 230/69/13.5KV TRANSFORMER CKT 1	224	224	0.03458	101.829	LUBBOCK EAST INTERCHANGE - LUBBOCK POWER & LIGHT-WADSWORTH 230KV CKT 1
FDNSLock	06ALL	2	20WP	G15_039		P12:230:AEPW:ELKCITY6:SWEETWT6	0	0	0.15919	9999	BASE CASE
FDNS	06ALL	2	20WP	G15_039	FROM->TO	POTTER COUNTY INTERCHANGE (WAUK 90343-A) 345/230/13.2KV TRANSFORMER CKT 1	560	560	0.22982	118.0007	CHISHOLM6 230.00 - SWEETWATER 230KV CKT 1
FDNS	06ALL	2	17G	G15_039	FROM->TO	POTTER COUNTY INTERCHANGE (WAUK 90343-A) 345/230/13.2KV TRANSFORMER CKT 1	560	560	0.23259	116.6736	CHISHOLM6 230.00 - SWEETWATER 230KV CKT 1
FDNS	06ALL	2	20WP	G15_039	FROM->TO	POTTER COUNTY INTERCHANGE (WAUK 90343-A) 345/230/13.2KV TRANSFORMER CKT 1	560	560	0.22982	115.2061	CHISHOLM6 230.00 - SWEETWATER 230KV CKT 1
FDNS	06ALL	2	20WP	G15_039	FROM->TO	POTTER COUNTY INTERCHANGE (WAUK 90343-A) 345/230/13.2KV TRANSFORMER CKT 1	560	560	0.23855	113.9333	HITCHLAND INTERCHANGE - MOORE COUNTY INTERCHANGE 230KV CKT 1
FDNS	06ALL	2	20WP	G15_039	FROM->TO	POTTER COUNTY INTERCHANGE (WAUK 90343-A) 345/230/13.2KV TRANSFORMER CKT 1	560	560	0.23855	113.9333	HITCHLAND INTERCHANGE - MOORE COUNTY INTERCHANGE 230KV CKT 1
FDNS	06ALL	2	17G	G15_039	FROM->TO	POTTER COUNTY INTERCHANGE (WAUK 90343-A) 345/230/13.2KV TRANSFORMER CKT 1	560	560	0.23259	113.1991	CHISHOLM6 230.00 - SWEETWATER 230KV CKT 1
FDNS	06ALL	2	20WP	G15_039	FROM->TO	POTTER COUNTY INTERCHANGE (WAUK 90343-A) 345/230/13.2KV TRANSFORMER CKT 1	560	560	0.22694	112.6437	MOORE COUNTY INTERCHANGE - POTTER COUNTY INTERCHANGE 230KV CKT 1
FDNS	06ALL	2	20WP	G15_039	FROM->TO	POTTER COUNTY INTERCHANGE (WAUK 90343-A) 345/230/13.2KV TRANSFORMER CKT 1	560	560	0.22694	112.6437	MOORE COUNTY INTERCHANGE - POTTER COUNTY INTERCHANGE 230KV CKT 1
FDNS	06ALL	2	20WP	G15_039	FROM->TO	POTTER COUNTY INTERCHANGE (WAUK 90343-A) 345/230/13.2KV TRANSFORMER CKT 1	560	560	0.23855	112.5017	HITCHLAND INTERCHANGE - MOORE COUNTY INTERCHANGE 230KV CKT 1
FDNS	06ALL	2	20WP	G15_039	FROM->TO	POTTER COUNTY INTERCHANGE (WAUK 90343-A) 345/230/13.2KV TRANSFORMER CKT 1	560	560	0.23855	112.5017	HITCHLAND INTERCHANGE - MOORE COUNTY INTERCHANGE 230KV CKT 1
FDNS	06ALL	2	20WP	G15_039	FROM->TO	POTTER COUNTY INTERCHANGE (WAUK 90343-A) 345/230/13.2KV TRANSFORMER CKT 1	560	560	0.22982	112.2902	STLN-DEMARC6 - SWEETWATER 230KV CKT 1
FDNS	06ALL	2	20WP	G15_039	FROM->TO	POTTER COUNTY INTERCHANGE (WAUK 90343-A) 345/230/13.2KV TRANSFORMER CKT 1	560	560	0.22982	112.2286	P12:230:AEPW-SPS:SWEETWT6:WHEELER 6
FDNS	06ALL	2	20WP	G15_039	FROM->TO	POTTER COUNTY INTERCHANGE (WAUK 90343-A) 345/230/13.2KV TRANSFORMER CKT 1	560	560	0.22982	112.2225	STATELINE INTERCHANGE - STLN-DEMARC6 230KV CKT 1
FDNS	06ALL	2	20L	G15_039	FROM->TO	POTTER COUNTY INTERCHANGE (WAUK 90343-A) 345/230/13.2KV TRANSFORMER CKT 1	560	560	0.20498	111.6965	HITCHLAND INTERCHANGE - MOORE COUNTY INTERCHANGE 230KV CKT 1
FDNS	06ALL	2	20L	G15_039	FROM->TO	POTTER COUNTY INTERCHANGE (WAUK 90343-A) 345/230/13.2KV TRANSFORMER CKT 1	560	560	0.20498	111.6965	HITCHLAND INTERCHANGE - MOORE COUNTY INTERCHANGE 230KV CKT 1
FDNS	06ALL	2	17G	G15_039	FROM->TO	POTTER COUNTY INTERCHANGE (WAUK 90343-A) 345/230/13.2KV TRANSFORMER CKT 1	560	560	0.24051	111.3301	HITCHLAND INTERCHANGE - MOORE COUNTY INTERCHANGE 230KV CKT 1
FDNS	06ALL	2	20WP	G15_039	FROM->TO	POTTER COUNTY INTERCHANGE (WAUK 90343-A) 345/230/13.2KV TRANSFORMER CKT 1	560	560	0.22694	111.2241	MOORE COUNTY INTERCHANGE - POTTER COUNTY INTERCHANGE 230KV CKT 1
FDNS	06ALL	2	20WP	G15_039	FROM->TO	POTTER COUNTY INTERCHANGE (WAUK 90343-A) 345/230/13.2KV TRANSFORMER CKT 1	560	560	0.22694	111.2241	MOORE COUNTY INTERCHANGE - POTTER COUNTY INTERCHANGE 230KV CKT 1
FDNS	06ALL	2	20WP	G15_039	FROM->TO	POTTER COUNTY INTERCHANGE (WAUK 90343-A) 345/230/13.2KV TRANSFORMER CKT 1	560	560	0.22026	110.9145	GRAPEVINE INTERCHANGE - NICHOLS STATION 230KV CKT 1
FDNS	06ALL	2	20WP	G15_039	FROM->TO	POTTER COUNTY INTERCHANGE (WAUK 90343-A) 345/230/13.2KV TRANSFORMER CKT 1	560	560	0.22026	110.9145	GRAPEVINE INTERCHANGE - NICHOLS STATION 230KV CKT 1
FDNS	06ALL	2	20WP	G15_039	FROM->TO	POTTER COUNTY INTERCHANGE (WAUK 90343-A) 345/230/13.2KV TRANSFORMER CKT 1	560	560	0.22982	110.3881	STLN-DEMARC6 - SWEETWATER 230KV CKT 1
FDNS	06ALL	2	20WP	G15_039	FROM->TO	POTTER COUNTY INTERCHANGE (WAUK 90343-A) 345/230/13.2KV TRANSFORMER CKT 1	560	560	0.22982	110.3353	P12:230:AEPW-SPS:SWEETWT6:WHEELER 6
FDNS	06ALL	2	20WP	G15_039	FROM->TO	POTTER COUNTY INTERCHANGE (WAUK 90343-A) 345/230/13.2KV TRANSFORMER CKT 1	560	560	0.22982	110.3307	STATELINE INTERCHANGE - STLN-DEMARC6 230KV CKT 1
FDNS	06ALL	2	20L	G15_039	FROM->TO	POTTER COUNTY INTERCHANGE (WAUK 90343-A) 345/230/13.2KV TRANSFORMER CKT 1	560	560	0.19717	110.2573	STLN-DEMARC6 - SWEETWATER 230KV CKT 1
FDNS	06ALL	2	20L	G15_039	FROM->TO	POTTER COUNTY INTERCHANGE (WAUK 90343-A) 345/230/13.2KV TRANSFORMER CKT 1	560	560	0.19717	110.2282	P12:230:AEPW-SPS:SWEETWT6:WHEELER 6
FDNS	06ALL	2	20L	G15_039	FROM->TO	POTTER COUNTY INTERCHANGE (WAUK 90343-A) 345/230/13.2KV TRANSFORMER CKT 1	560	560	0.19717	110.1277	STATELINE INTERCHANGE - STLN-DEMARC6 230KV CKT 1
FDNS	06ALL	2	17G	G15_039	FROM->TO	POTTER COUNTY INTERCHANGE (WAUK 90343-A) 345/230/13.2KV TRANSFORMER CKT 1	560	560	0.23259	110.0362	STLN-DEMARC6 - SWEETWATER 230KV CKT 1
FDNS	06ALL	2	17G	G15_039	FROM->TO	POTTER COUNTY INTERCHANGE (WAUK 90343-A) 345/230/13.2KV TRANSFORMER CKT 1	560	560	0.23259	110.0305	P12:230:AEPW-SPS:SWEETWT6:WHEELER 6
FDNS	06ALL	2	17G	G15_039	FROM->TO	POTTER COUNTY INTERCHANGE (WAUK 90343-A) 345/230/13.2KV TRANSFORMER CKT 1	560	560	0.23259	110.0227	STATELINE INTERCHANGE - STLN-DEMARC6 230KV CKT 1
FDNS	06ALL	2	20L	G15_039	FROM->TO	POTTER COUNTY INTERCHANGE (WAUK 90343-A) 345/230/13.2KV TRANSFORMER CKT 1	560	560	0.20498	110.0145	HITCHLAND INTERCHANGE - MOORE COUNTY INTERCHANGE 230KV CKT 1
FDNS	06ALL	2	20L	G15_039	FROM->TO	POTTER COUNTY INTERCHANGE (WAUK 90343-A) 345/230/13.2KV TRANSFORMER CKT 1	560	560	0.20498	110.0145	HITCHLAND INTERCHANGE - MOORE COUNTY INTERCHANGE 230KV CKT 1
FDNS	06ALL	2	17G	G15_039	FROM->TO	POTTER COUNTY INTERCHANGE (WAUK 90343-A) 345/230/13.2KV TRANSFORMER CKT 1	560	560	0.24051	109.9541	HITCHLAND INTERCHANGE - MOORE COUNTY INTERCHANGE 230KV CKT 1
FDNS	06ALL	2	20WP	G15_039	FROM->TO	POTTER COUNTY INTERCHANGE (WAUK 90343-A) 345/230/13.2KV TRANSFORMER CKT 1	560	560	0.22026	109.1891	GRAPEVINE INTERCHANGE - NICHOLS STATION 230KV CKT 1
FDNS	06ALL	2	20WP	G15_039	FROM->TO	POTTER COUNTY INTERCHANGE (WAUK 90343-A) 345/230/13.2KV TRANSFORMER CKT 1	560	560	0.22026	109.1891	GRAPEVINE INTERCHANGE - NICHOLS STATION 230KV CKT 1

SOLUTION	GROUP	SCENARIO	SEASON	SOURCE	DIRECTION	MONITORED ELEMENT	RATEA (MVA)	RATEB(MVA)	TDF	TC%LOADING (% MVA)	CONTINGENCY
FDNS	06ALL	2	17G	G15_039	FROM->TO	POTTER COUNTY INTERCHANGE (WAUK 90343-A) 345/230/13.2KV TRANSFORMER CKT 1	560	560	0.22884	108.9863	MOORE COUNTY INTERCHANGE - POTTER COUNTY INTERCHANGE 230KV CKT 1
FDNS	06ALL	2	17G	G15_039	FROM->TO	POTTER COUNTY INTERCHANGE (WAUK 90343-A) 345/230/13.2KV TRANSFORMER CKT 1	560	560	0.22884	108.9863	MOORE COUNTY INTERCHANGE - POTTER COUNTY INTERCHANGE 230KV CKT 1
FDNS	06ALL	2	20WP	G15_039	FROM->TO	POTTER COUNTY INTERCHANGE (WAUK 90343-A) 345/230/13.2KV TRANSFORMER CKT 1	560	560	0.22341	108.4047	CHISHOLM7 345.00 - WOODWARD DISTRICT EHV 345KV CKT 1
FDNS	06ALL	2	20L	G15_039	FROM->TO	POTTER COUNTY INTERCHANGE (WAUK 90343-A) 345/230/13.2KV TRANSFORMER CKT 1	560	560	0.19524	108.0097	MOORE COUNTY INTERCHANGE - POTTER COUNTY INTERCHANGE 230KV CKT 1
FDNS	06ALL	2	20L	G15_039	FROM->TO	POTTER COUNTY INTERCHANGE (WAUK 90343-A) 345/230/13.2KV TRANSFORMER CKT 1	560	560	0.19524	108.0097	MOORE COUNTY INTERCHANGE - POTTER COUNTY INTERCHANGE 230KV CKT 1
FDNS	06ALL	2	17G	G15_039	FROM->TO	POTTER COUNTY INTERCHANGE (WAUK 90343-A) 345/230/13.2KV TRANSFORMER CKT 1	560	560	0.23259	107.8708	STLN-DEMARC6 - SWEETWATER 230KV CKT 1
FDNS	06ALL	2	17G	G15_039	FROM->TO	POTTER COUNTY INTERCHANGE (WAUK 90343-A) 345/230/13.2KV TRANSFORMER CKT 1	560	560	0.23259	107.8659	P12:230:AEPW-SPS:SWEETWT6:WHEELER 6
FDNS	06ALL	2	17G	G15_039	FROM->TO	POTTER COUNTY INTERCHANGE (WAUK 90343-A) 345/230/13.2KV TRANSFORMER CKT 1	560	560	0.23259	107.8605	STATELINE INTERCHANGE - STLN-DEMARC6 230KV CKT 1
FDNS	06ALL	2	20L	G15_039	FROM->TO	POTTER COUNTY INTERCHANGE (WAUK 90343-A) 345/230/13.2KV TRANSFORMER CKT 1	560	560	0.19717	107.8259	STLN-DEMARC6 - SWEETWATER 230KV CKT 1
FDNS	06ALL	2	20L	G15_039	FROM->TO	POTTER COUNTY INTERCHANGE (WAUK 90343-A) 345/230/13.2KV TRANSFORMER CKT 1	560	560	0.19717	107.8069	P12:230:AEPW-SPS:SWEETWT6:WHEELER 6
FDNS	06ALL	2	20WP	G15_039	FROM->TO	POTTER COUNTY INTERCHANGE (WAUK 90343-A) 345/230/13.2KV TRANSFORMER CKT 1	560	560	0.22012	107.7705	GRAPEVINE INTERCHANGE - STATELINE INTERCHANGE 230KV CKT 1
FDNS	06ALL	2	20WP	G15_039	FROM->TO	POTTER COUNTY INTERCHANGE (WAUK 90343-A) 345/230/13.2KV TRANSFORMER CKT 1	560	560	0.22012	107.7705	GRAPEVINE INTERCHANGE - STATELINE INTERCHANGE 230KV CKT 1
FDNS	06ALL	2	17G	G15_039	FROM->TO	POTTER COUNTY INTERCHANGE (WAUK 90343-A) 345/230/13.2KV TRANSFORMER CKT 1	560	560	0.22251	107.7283	GRAPEVINE INTERCHANGE - NICHOLS STATION 230KV CKT 1
FDNS	06ALL	2	17G	G15_039	FROM->TO	POTTER COUNTY INTERCHANGE (WAUK 90343-A) 345/230/13.2KV TRANSFORMER CKT 1	560	560	0.22251	107.7283	GRAPEVINE INTERCHANGE - NICHOLS STATION 230KV CKT 1
FDNS	06ALL	2	20L	G15_039	FROM->TO	POTTER COUNTY INTERCHANGE (WAUK 90343-A) 345/230/13.2KV TRANSFORMER CKT 1	560	560	0.19717	107.7205	STATELINE INTERCHANGE - STLN-DEMARC6 230KV CKT 1
FDNS	06ALL	2	17G	G15_039	FROM->TO	POTTER COUNTY INTERCHANGE (WAUK 90343-A) 345/230/13.2KV TRANSFORMER CKT 1	560	560	0.22884	107.6376	MOORE COUNTY INTERCHANGE - POTTER COUNTY INTERCHANGE 230KV CKT 1
FDNS	06ALL	2	17G	G15_039	FROM->TO	POTTER COUNTY INTERCHANGE (WAUK 90343-A) 345/230/13.2KV TRANSFORMER CKT 1	560	560	0.22884	107.6376	MOORE COUNTY INTERCHANGE - POTTER COUNTY INTERCHANGE 230KV CKT 1
FDNS	06ALL	2	20WP	G15_039	FROM->TO	POTTER COUNTY INTERCHANGE (WAUK 90343-A) 345/230/13.2KV TRANSFORMER CKT 1	560	560	0.22341	107.092	CHISHOLM7 345.00 - WOODWARD DISTRICT EHV 345KV CKT 1
FDNS	06ALL	2	16WP	G15_039	FROM->TO	POTTER COUNTY INTERCHANGE (WAUK 90343-A) 345/230/13.2KV TRANSFORMER CKT 1	560	560	0.24366	106.7175	P12:230:AEPW:ELKCITY6:SWEETWT6
FDNS	06ALL	2	20L	G15_039	FROM->TO	POTTER COUNTY INTERCHANGE (WAUK 90343-A) 345/230/13.2KV TRANSFORMER CKT 1	560	560	0.19524	106.6311	MOORE COUNTY INTERCHANGE - POTTER COUNTY INTERCHANGE 230KV CKT 1
FDNS	06ALL	2	20L	G15_039	FROM->TO	POTTER COUNTY INTERCHANGE (WAUK 90343-A) 345/230/13.2KV TRANSFORMER CKT 1	560	560	0.19524	106.6311	MOORE COUNTY INTERCHANGE - POTTER COUNTY INTERCHANGE 230KV CKT 1
FDNS	06ALL	2	20WP	G15_039	FROM->TO	POTTER COUNTY INTERCHANGE (WAUK 90343-A) 345/230/13.2KV TRANSFORMER CKT 1	560	560	0.22012	106.372	GRAPEVINE INTERCHANGE - STATELINE INTERCHANGE 230KV CKT 1
FDNS	06ALL	2	20WP	G15_039	FROM->TO	POTTER COUNTY INTERCHANGE (WAUK 90343-A) 345/230/13.2KV TRANSFORMER CKT 1	560	560	0.22012	106.372	GRAPEVINE INTERCHANGE - STATELINE INTERCHANGE 230KV CKT 1
FDNS	06ALL	2	16WP	G15_039	FROM->TO	POTTER COUNTY INTERCHANGE (WAUK 90343-A) 345/230/13.2KV TRANSFORMER CKT 1	560	560	0.2429	106.2613	CHISHOLM6 230.00 - SWEETWATER 230KV CKT 1
FDNS	06ALL	2	17G	G15_039	FROM->TO	POTTER COUNTY INTERCHANGE (WAUK 90343-A) 345/230/13.2KV TRANSFORMER CKT 1	560	560	0.22368	106.135	CHISHOLM7 345.00 - WOODWARD DISTRICT EHV 345KV CKT 1
FDNS	06ALL	2	17G	G15_039	FROM->TO	POTTER COUNTY INTERCHANGE (WAUK 90343-A) 345/230/13.2KV TRANSFORMER CKT 1	560	560	0.22251	105.8921	GRAPEVINE INTERCHANGE - NICHOLS STATION 230KV CKT 1
FDNS	06ALL	2	17G	G15_039	FROM->TO	POTTER COUNTY INTERCHANGE (WAUK 90343-A) 345/230/13.2KV TRANSFORMER CKT 1	560	560	0.22251	105.8921	GRAPEVINE INTERCHANGE - NICHOLS STATION 230KV CKT 1
FDNS	06NR	2	20L	G15_039	FROM->TO	POTTER COUNTY INTERCHANGE (WAUK 90343-A) 345/230/13.2KV TRANSFORMER CKT 1	560	560	0.0339	105.4866	MOORE COUNTY INTERCHANGE - POTTER COUNTY INTERCHANGE 230KV CKT 1
FDNS	06NR	2	20L	G15_039	FROM->TO	POTTER COUNTY INTERCHANGE (WAUK 90343-A) 345/230/13.2KV TRANSFORMER CKT 1	560	560	0.0339	105.4866	MOORE COUNTY INTERCHANGE - POTTER COUNTY INTERCHANGE 230KV CKT 1
FDNS	06ALL	2	16WP	G15_039	FROM->TO	POTTER COUNTY INTERCHANGE (WAUK 90343-A) 345/230/13.2KV TRANSFORMER CKT 1	560	560	0.24366	105.3389	P12:230:AEPW:ELKCITY6:SWEETWT6
FDNS	06ALL	2	16WP	G15_039	FROM->TO	POTTER COUNTY INTERCHANGE (WAUK 90343-A) 345/230/13.2KV TRANSFORMER CKT 1	560	560	0.2429	105.0083	CHISHOLM6 230.00 - SWEETWATER 230KV CKT 1
FDNS	06NR	2	17G	G15_039	FROM->TO	POTTER COUNTY INTERCHANGE (WAUK 90343-A) 345/230/13.2KV TRANSFORMER CKT 1	560	560	0.03042	105.0048	HITCHLAND INTERCHANGE - MOORE COUNTY INTERCHANGE 230KV CKT 1
FDNS	06NR	2	17G	G15_039	FROM->TO	POTTER COUNTY INTERCHANGE (WAUK 90343-A) 345/230/13.2KV TRANSFORMER CKT 1	560	560	0.03042	105.0048	HITCHLAND INTERCHANGE - MOORE COUNTY INTERCHANGE 230KV CKT 1
FDNS	06ALL	2	17G	G15_039	FROM->TO	POTTER COUNTY INTERCHANGE (WAUK 90343-A) 345/230/13.2KV TRANSFORMER CKT 1	560	560	0.22239	105.0042	GRAPEVINE INTERCHANGE - STATELINE INTERCHANGE 230KV CKT 1
FDNS	06ALL	2	17G	G15_039	FROM->TO	POTTER COUNTY INTERCHANGE (WAUK 90343-A) 345/230/13.2KV TRANSFORMER CKT 1	560	560	0.22239	105.0042	GRAPEVINE INTERCHANGE - STATELINE INTERCHANGE 230KV CKT 1
FDNS	06ALL	2	17G	G15_039	FROM->TO	POTTER COUNTY INTERCHANGE (WAUK 90343-A) 345/230/13.2KV TRANSFORMER CKT 1	560	560	0.22368	104.6763	CHISHOLM7 345.00 - WOODWARD DISTRICT EHV 345KV CKT 1
FDNS	06NR	2	20L	G15_039	FROM->TO	POTTER COUNTY INTERCHANGE (WAUK 90343-A) 345/230/13.2KV TRANSFORMER CKT 1	560	560	0.0339	104.417	MOORE COUNTY INTERCHANGE - POTTER COUNTY INTERCHANGE 230KV CKT 1
FDNS	06NR	2	20L	G15_039	FROM->TO	POTTER COUNTY INTERCHANGE (WAUK 90343-A) 345/230/13.2KV TRANSFORMER CKT 1	560	560	0.0339	104.417	MOORE COUNTY INTERCHANGE - POTTER COUNTY INTERCHANGE 230KV CKT 1
FDNS	06NR	2	17G	G15_039	FROM->TO	POTTER COUNTY INTERCHANGE (WAUK 90343-A) 345/230/13.2KV TRANSFORMER CKT 1	560	560	0.03042	104.2382	HITCHLAND INTERCHANGE - MOORE COUNTY INTERCHANGE 230KV CKT 1
FDNS	06NR	2	17G	G15_039	FROM->TO	POTTER COUNTY INTERCHANGE (WAUK 90343-A) 345/230/13.2KV TRANSFORMER CKT 1	560	560	0.03042	104.2382	HITCHLAND INTERCHANGE - MOORE COUNTY INTERCHANGE 230KV CKT 1
FDNSLock	06ALL	2	20WP	G15_039	FROM->TO	POTTER COUNTY INTERCHANGE (WAUK 90343-A) 345/230/13.2KV TRANSFORMER CKT 1	560	560	0.20496	104.0132	OKLAUNION 345KV SWITCHED SHUNT
FDNS	06ALL	2	17G	G15_039	FROM->TO	POTTER COUNTY INTERCHANGE (WAUK 90343-A) 345/230/13.2KV TRANSFORMER CKT 1	560	560	0.20651	103.6905	GEN524295 1-SPNSPUR_WND10.6900
FDNS	06ALL	2	17G	G15_039	FROM->TO	POTTER COUNTY INTERCHANGE (WAUK 90343-A) 345/230/13.2KV TRANSFORMER CKT 1	560	560	0.22239	103.488	GRAPEVINE INTERCHANGE - STATELINE INTERCHANGE 230KV CKT 1
FDNS	06ALL	2	20WP	G15_039	FROM->TO	POTTER COUNTY INTERCHANGE (WAUK 90343-A) 345/230/13.2KV TRANSFORMER CKT 1	560	560	0.20496	103.4743	GEN524295 1-SPNSPUR_WND10.6900
FDNS	06ALL	2	20WP	G15_039	FROM->TO	POTTER COUNTY INTERCHANGE (WAUK 90343-A) 345/230/13.2KV TRANSFORMER CKT 1	560	560	0.21161	103.362	CIMARRON - MINCO 345KV CKT 1
FDNS	06ALL	2	20WP	G15_039	FROM->TO	POTTER COUNTY INTERCHANGE (WAUK 90343-A) 345/230/13.2KV TRANSFORMER CKT 1	560	560	0.21078	103.2521	CHISHOLM7 345.00 - GRACEMONT 345KV CKT 1
FDNS	06ALL	2	20WP	G15_039	FROM->TO	POTTER COUNTY INTERCHANGE (WAUK 90343-A) 345/230/13.2KV TRANSFORMER CKT 1	560	560	0.20496	103.1191	OKLAUNION 345KV SWITCHED SHUNT
FDNS	06ALL	2	20WP	G15_039	FROM->TO	POTTER COUNTY INTERCHANGE (WAUK 90343-A) 345/230/13.2KV TRANSFORMER CKT 1	560	560	0.20496	103.1	803-OKLAUNION
FDNS	06ALL	2	17G	G15_039	FROM->TO	POTTER COUNTY INTERCHANGE (WAUK 90343-A) 345/230/13.2KV TRANSFORMER CKT 1	560	560	0.20651	103.0069	GEN524295 1-SPNSPUR_WND10.6900
FDNS	06NR	2	17G	G15_039	FROM->TO	POTTER COUNTY INTERCHANGE (WAUK 90343-A) 345/230/13.2KV TRANSFORMER CKT 1	560	560	0.03168	102.9398	MOORE COUNTY INTERCHANGE - POTTER COUNTY INTERCHANGE 230KV CKT 1
FDNS	06NR	2	17G	G15_039	FROM->TO	POTTER COUNTY INTERCHANGE (WAUK 90343-A) 345/230/13.2KV TRANSFORMER CKT 1	560	560	0.03168	102.9398	MOORE COUNTY INTERCHANGE - POTTER COUNTY INTERCHANGE 230KV CKT 1
FDNSLock	06ALL	2	20WP	G15_039	FROM->TO	POTTER COUNTY INTERCHANGE (WAUK 90343-A) 345/230/13.2KV TRANSFORMER CKT 1	560	560	0.20496	102.7603	OKLAUNION 345KV SWITCHED SHUNT
FDNS	06ALL	2	20WP	G15_039	FROM->TO	POTTER COUNTY INTERCHANGE (WAUK 90343-A) 345/230/13.2KV TRANSFORMER CKT 1	560	560	0.20496	102.6869	GEN524295 1-SPNSPUR_WND10.6900
FDNS	06ALL	2	20WP	G15_039	FROM->TO	POTTER COUNTY INTERCHANGE (WAUK 90343-A) 345/230/13.2KV TRANSFORMER CKT 1	560	560	0.21161	102.5339	GRACEMONT - MINCO 345KV CKT 1
FDNS	06ALL	2	20WP	G15_039	FROM->TO	POTTER COUNTY INTERCHANGE (WAUK 90343-A) 345/230/13.2KV TRANSFORMER CKT 1	560	560	0.20911	102.5131	G14-057T 345.00 - SUNNYSIDE 345KV CKT 1
FDNS	06ALL	2	20WP	G15_039	FROM->TO	POTTER COUNTY INTERCHANGE (WAUK 90343-A) 345/230/13.2KV TRANSFORMER CKT 1	560	560	0.21242	102.223	HITCHLAND INTERCHANGE - Hansford County Switch Station 115KV CKT 1
FDNS	06ALL	2	20WP	G15_039	FROM->TO	POTTER COUNTY INTERCHANGE (WAUK 90343-A) 345/230/13.2KV TRANSFORMER CKT 1	560	560	0.21242	102.223	HITCHLAND INTERCHANGE - Hansford County Switch Station 115KV CKT 1
FDNS	06NR	2	17G	G15_039	FROM->TO	POTTER COUNTY INTERCHANGE (WAUK 90343-A) 345/230/13.2KV TRANSFORMER CKT 1	560	560	0.03168	102.1537	MOORE COUNTY INTERCHANGE - POTTER COUNTY INTERCHANGE 230KV CKT 1
FDNS	06NR	2	17G	G15_039	FROM->TO	POTTER COUNTY INTERCHANGE (WAUK 90343-A) 345/230/13.2KV TRANSFORMER CKT 1	560	560	0.03168	102.1537	MOORE COUNTY INTERCHANGE - POTTER COUNTY INTERCHANGE 230KV CKT 1
FDNS	06ALL	2	20WP	G15_039	FROM->TO	POTTER COUNTY INTERCHANGE (WAUK 90343-A) 345/230/13.2KV TRANSFORMER CKT 1	560	560	0.21161	102.1523	CIMARRON - MINCO 345KV CKT 1
FDNS	06ALL	2	16WP	G15_039	FROM->TO	POTTER COUNTY INTERCHANGE (WAUK 90343-A) 345/230/13.2KV TRANSFORMER CKT 1	560	560	0.25132	102.0618	HITCHLAND INTERCHANGE - MOORE COUNTY INTERCHANGE 230KV CKT 1
FDNS	06ALL	2	16WP	G15_039	FROM->TO	POTTER COUNTY INTERCHANGE (WAUK 90343-A) 345/230/13.2KV TRANSFORMER CKT 1	560	560	0.25132	102.0618	HITCHLAND INTERCHANGE - MOORE COUNTY INTERCHANGE 230KV CKT 1
FDNS	06ALL	2	20WP	G15_039	FROM->TO	POTTER COUNTY INTERCHANGE (WAUK 90343-A) 345/230/13.2KV TRANSFORMER CKT 1	560	560	0.20496	102	803-OKLAUNION
FDNS	06ALL	2	20WP	G15_039	FROM->TO	POTTER COUNTY INTERCHANGE (WAUK 90343-A) 345/230/13.2KV TRANSFORMER CKT 1	560	560	0.20496	101.9905	OKLAUNION 345KV SWITCHED SHUNT
FDNS	06ALL	2	20WP	G15_039	FROM->TO	POTTER COUNTY INTERCHANGE (WAUK 90343-A) 345/230/13.2KV TRANSFORMER CKT 1	560	560	0.20849	101.9473	CHAN/TASCOS6230.00 - POTTER COUNTY INTERCHANGE 230KV CKT 1
FDNS	06ALL	2	20WP	G15_039	FROM->TO	POTTER COUNTY INTERCHANGE (WAUK 90343-A) 345/230/13.2KV TRANSFORMER CKT 1	560	560	0.20911	101.9197	G14-057T 345.00 - LAWTON EASTSIDE 345KV CKT 1
FDNS	06ALL	2	20WP	G15_039	FROM->TO	POTTER COUNTY INTERCHANGE (WAUK 90343-A) 345/230/13.2KV TRANSFORMER CKT 1	560	560	0.21078	101.773	CHISHOLM7 345.00 - GRACEMONT 345KV CKT 1
FDNS	06ALL	2	16WP	G15_039	FROM->TO	POTTER COUNTY INTERCHANGE (WAUK 90343-A) 345/230/13.2KV TRANSFORMER CKT 1	560	560	0.25132	101.6956	HITCHLAND INTERCHANGE - MOORE COUNTY INTERCHANGE 230KV CKT 1
FDNS	06ALL	2	16WP	G15_039	FROM->TO	POTTER COUNTY INTERCHANGE (WAUK 90343-A) 345/230/13.2KV TRANSFORMER CKT 1	560	560	0.25132	101.6956	HITCHLAND INTERCHANGE - MOORE COUNTY INTERCHANGE 230KV CKT 1
FDNS	06ALL	2	20WP	G15_039	FROM->TO	POTTER COUNTY INTERCHANGE (WAUK 90343-A) 345/230/13.2KV TRANSFORMER CKT 1	560	560	0.21242	101.6135	Hansford County Switch Station - SPEARMAN INTERCHANGE 115KV CKT 1
FDNS	06ALL	2	20WP	G15_039	FROM->TO	POTTER COUNTY INTERCHANGE (WAUK 90343-A) 345/230/13.2KV TRANSFORMER CKT 1	560	560	0.21242	101.6135	Hansford County Switch Station - SPEARMAN INTERCHANGE 115KV CKT 1
FDNS	06ALL	2	20WP	G15_039	FROM->TO	POTTER COUNTY INTERCHANGE (WAUK 90343-A) 345/230/13.2KV TRANSFORMER CKT 1	560	560	0.21161	101.4457	GRACEMONT - MINCO 345KV CKT 1
FDNS	06ALL	2	20WP	G15_039	FROM->TO	POTTER COUNTY INTERCHANGE (WAUK 90343-A) 345/230/13.2KV TRANSFORMER CKT 1	560	560	0.21242	101.429	HITCHLAND INTERCHANGE - Hansford County Switch Station 115KV CKT 1
FDNS	06ALL	2	20WP	G15_039	FROM->TO	POTTER COUNTY INTERCHANGE (WAUK 90343-A) 345/230/13.2KV TRANSFORMER CKT 1	560	560	0.21242	101.429	HITCHLAND INTERCHANGE - Hansford County Switch Station 115KV CKT 1
FDNS	06ALL	2	20WP	G15_039	FROM->TO	POTTER COUNTY INTERCHANGE (WAUK 90343-A) 345/230/13.2KV TRANSFORMER CKT 1	560	560	0.20911	101.4081	G14-057T 345.00 - SUNNYSIDE 345KV CKT 1
FDNS	06ALL	2	20WP	G15_039	FROM->TO	POTTER COUNTY INTERCHANGE (WAUK 90343-A) 345/230/13.2KV TRANSFORMER CKT 1	560	560	0.20832	101.3948	CHISHOLM6 230.00 - ELK CITY 230KV 230KV CKT 1
FDNS	06ALL	2	20WP	G15_039	FROM->TO	POTTER COUNTY INTERCHANGE (WAUK 90343-A) 345/230/13.2KV TRANSFORMER CKT 1	560	560	0.20832	101.3707	ELK CITY 230KV (ELKCTY-6) 230/138/13.8KV TRANSFORMER CKT 1
FDNS	06ALL	2	20WP	G15_039	FROM->TO	POTTER COUNTY INTERCHANGE (WAUK 90343-A) 345/230/13.2KV TRANSFORMER CKT 1	560	560	0.20832	101.3707	ELK CITY 230KV (ELKCTY-6) 230/138/13.8KV TRANSFORMER CKT 1
FDNS	06ALL	2	20WP	G15_039	FROM->TO	POTTER COUNTY INTERCHANGE (WAUK 90343-A) 345/230/13.2KV TRANSFORMER CKT 1	560	560	0.20849	101.2533	DALLAM COUNTY INTERCHANGE - XIT_INTG 3115.00 115KV CKT 1

SOLUTION	GROUP	SCENARIO	SEASON	SOURCE	DIRECTION	MONITORED ELEMENT	RATEA (MVA)	RATEB(MVA)	TDF	TC%LOADING (% MVA)	CONTINGENCY
FDNS	06ALL	2	20WP	G15_039	FROM->TO	POTTER COUNTY INTERCHANGE (WAUK 90343-A) 345/230/13.2KV TRANSFORMER CKT 1	560	560	0.20849	101.2482	XIT_INTG 6230.00 (PRE_XFR_DATA) 230/115/13.2KV TRANSFORMER CKT 1
FDNS	06ALL	2	20WP	G15_039	FROM->TO	POTTER COUNTY INTERCHANGE (WAUK 90343-A) 345/230/13.2KV TRANSFORMER CKT 1	560	560	0.20849	101.2482	XIT_INTG 6230.00 (PRE_XFR_DATA) 230/115/13.2KV TRANSFORMER CKT 1
FDNS	06ALL	2	20WP	G15_039	FROM->TO	POTTER COUNTY INTERCHANGE (WAUK 90343-A) 345/230/13.2KV TRANSFORMER CKT 1	560	560	0.20849	101.2016	CHAN/TASCOS6230.00 - XIT_INTG 6230.00 230KV CKT 1
FDNS	06ALL	2	16WP	G15_039	FROM->TO	POTTER COUNTY INTERCHANGE (WAUK 90343-A) 345/230/13.2KV TRANSFORMER CKT 1	560	560	0.23896	101.1885	MOORE COUNTY INTERCHANGE - POTTER COUNTY INTERCHANGE 230KV CKT 1
FDNS	06ALL	2	16WP	G15_039	FROM->TO	POTTER COUNTY INTERCHANGE (WAUK 90343-A) 345/230/13.2KV TRANSFORMER CKT 1	560	560	0.23896	101.1885	MOORE COUNTY INTERCHANGE - POTTER COUNTY INTERCHANGE 230KV CKT 1
FDNS	06ALL	2	20WP	G15_039	FROM->TO	POTTER COUNTY INTERCHANGE (WAUK 90343-A) 345/230/13.2KV TRANSFORMER CKT 1	560	560	0.20752	101.139	TUCO INTERCHANGE - TUCO_2 345.00 345KV CKT 1
FDNS	06ALL	2	20WP	G15_039	FROM->TO	POTTER COUNTY INTERCHANGE (WAUK 90343-A) 345/230/13.2KV TRANSFORMER CKT 1	560	560	0.20849	101.1018	CHAN/TASCOS6230.00 - POTTER COUNTY INTERCHANGE 230KV CKT 1
FDNS	06ALL	2	20WP	G15_039	FROM->TO	POTTER COUNTY INTERCHANGE (WAUK 90343-A) 345/230/13.2KV TRANSFORMER CKT 1	560	560	0.20911	100.8899	G14-057T 345.00 - LAWTON EASTSIDE 345KV CKT 1
FDNS	06ALL	2	16WP	G15_039	FROM->TO	POTTER COUNTY INTERCHANGE (WAUK 90343-A) 345/230/13.2KV TRANSFORMER CKT 1	560	560	0.2429	100.866	STLN-DEMARC6 - SWEETWATER 230KV CKT 1
FDNS	06ALL	2	16WP	G15_039	FROM->TO	POTTER COUNTY INTERCHANGE (WAUK 90343-A) 345/230/13.2KV TRANSFORMER CKT 1	560	560	0.2429	100.8556	STATELINE INTERCHANGE - STLN-DEMARC6 230KV CKT 1
FDNS	06ALL	2	20WP	G15_039	FROM->TO	POTTER COUNTY INTERCHANGE (WAUK 90343-A) 345/230/13.2KV TRANSFORMER CKT 1	560	560	0.21242	100.8545	Hansford County Switch Station - SPEARMAN INTERCHANGE 115KV CKT 1
FDNS	06ALL	2	20WP	G15_039	FROM->TO	POTTER COUNTY INTERCHANGE (WAUK 90343-A) 345/230/13.2KV TRANSFORMER CKT 1	560	560	0.21242	100.8545	Hansford County Switch Station - SPEARMAN INTERCHANGE 115KV CKT 1
FDNS	06ALL	2	20WP	G15_039	FROM->TO	POTTER COUNTY INTERCHANGE (WAUK 90343-A) 345/230/13.2KV TRANSFORMER CKT 1	560	560	0.20905	100.8481	Harrington Station East Bus - PRINGLE INTERCHANGE 230KV CKT 1
FDNS	06ALL	2	20WP	G15_039	FROM->TO	POTTER COUNTY INTERCHANGE (WAUK 90343-A) 345/230/13.2KV TRANSFORMER CKT 1	560	560	0.20905	100.8436	PRINGLE INTERCHANGE (ENRCO13617-1) 230/115/13.2KV TRANSFORMER CKT 1
FDNS	06ALL	2	20WP	G15_039	FROM->TO	POTTER COUNTY INTERCHANGE (WAUK 90343-A) 345/230/13.2KV TRANSFORMER CKT 1	560	560	0.20905	100.8436	PRINGLE INTERCHANGE (ENRCO13617-1) 230/115/13.2KV TRANSFORMER CKT 1
FDNS	06ALL	2	16WP	G15_039	FROM->TO	POTTER COUNTY INTERCHANGE (WAUK 90343-A) 345/230/13.2KV TRANSFORMER CKT 1	560	560	0.2429	100.8266	P12:230:AEPW-SPS:SWEETWT6:WHEELER 6
FDNS	06ALL	2	20WP	G15_039	FROM->TO	POTTER COUNTY INTERCHANGE (WAUK 90343-A) 345/230/13.2KV TRANSFORMER CKT 1	560	560	0.20905	100.825	P12:230:SPS:K43.1.PRNGLE.HARR_E
FDNS	06ALL	2	16WP	G15_039	FROM->TO	POTTER COUNTY INTERCHANGE (WAUK 90343-A) 345/230/13.2KV TRANSFORMER CKT 1	560	560	0.23896	100.8228	MOORE COUNTY INTERCHANGE - POTTER COUNTY INTERCHANGE 230KV CKT 1
FDNS	06ALL	2	16WP	G15_039	FROM->TO	POTTER COUNTY INTERCHANGE (WAUK 90343-A) 345/230/13.2KV TRANSFORMER CKT 1	560	560	0.23896	100.8228	MOORE COUNTY INTERCHANGE - POTTER COUNTY INTERCHANGE 230KV CKT 1
FDNS	06ALL	2	20WP	G15_039	FROM->TO	POTTER COUNTY INTERCHANGE (WAUK 90343-A) 345/230/13.2KV TRANSFORMER CKT 1	560	560	0.20891	100.6917	PRINGLE INTERCHANGE - SPEARMAN INTERCHANGE 115KV CKT 1
FDNS	06ALL	2	20WP	G15_039	FROM->TO	POTTER COUNTY INTERCHANGE (WAUK 90343-A) 345/230/13.2KV TRANSFORMER CKT 1	560	560	0.20891	100.6917	PRINGLE INTERCHANGE - SPEARMAN INTERCHANGE 115KV CKT 1
FDNS	06ALL	2	20WP	G15_039	FROM->TO	POTTER COUNTY INTERCHANGE (WAUK 90343-A) 345/230/13.2KV TRANSFORMER CKT 1	560	560	0.21207	100.6113	DWS FRISCO - HITCHLAND INTERCHANGE 115KV CKT 1
FDNS	06ALL	2	20WP	G15_039	FROM->TO	POTTER COUNTY INTERCHANGE (WAUK 90343-A) 345/230/13.2KV TRANSFORMER CKT 1	560	560	0.21207	100.5931	P12:115:SPS:W08.1.HITCH.LASLEY
FDNS	06ALL	2	20WP	G15_039	FROM->TO	POTTER COUNTY INTERCHANGE (WAUK 90343-A) 345/230/13.2KV TRANSFORMER CKT 1	560	560	0.20832	100.4386	CHISHOLM6 230.00 - ELK CITY 230KV 230KV CKT 1
FDNS	06ALL	2	20WP	G15_039	FROM->TO	POTTER COUNTY INTERCHANGE (WAUK 90343-A) 345/230/13.2KV TRANSFORMER CKT 1	560	560	0.20849	100.4263	DALLAM COUNTY INTERCHANGE - XIT_INTG 3115.00 115KV CKT 1
FDNS	06ALL	2	20WP	G15_039	FROM->TO	POTTER COUNTY INTERCHANGE (WAUK 90343-A) 345/230/13.2KV TRANSFORMER CKT 1	560	560	0.20849	100.4215	XIT_INTG 6230.00 (PRE_XFR_DATA) 230/115/13.2KV TRANSFORMER CKT 1
FDNS	06ALL	2	20WP	G15_039	FROM->TO	POTTER COUNTY INTERCHANGE (WAUK 90343-A) 345/230/13.2KV TRANSFORMER CKT 1	560	560	0.20849	100.4215	XIT_INTG 6230.00 (PRE_XFR_DATA) 230/115/13.2KV TRANSFORMER CKT 1
FDNS	06ALL	2	20WP	G15_039	FROM->TO	POTTER COUNTY INTERCHANGE (WAUK 90343-A) 345/230/13.2KV TRANSFORMER CKT 1	560	560	0.20832	100.4163	ELK CITY 230KV (ELKCTY-6) 230/138/13.8KV TRANSFORMER CKT 1
FDNS	06ALL	2	20WP	G15_039	FROM->TO	POTTER COUNTY INTERCHANGE (WAUK 90343-A) 345/230/13.2KV TRANSFORMER CKT 1	560	560	0.20832	100.4163	ELK CITY 230KV (ELKCTY-6) 230/138/13.8KV TRANSFORMER CKT 1
FDNS	06ALL	2	20WP	G15_039	FROM->TO	POTTER COUNTY INTERCHANGE (WAUK 90343-A) 345/230/13.2KV TRANSFORMER CKT 1	560	560	0.21207	100.4054	DWS FRISCO - SHERMAN COUNTY TAP 115KV CKT 1
FDNS	06ALL	2	20WP	G15_039	FROM->TO	POTTER COUNTY INTERCHANGE (WAUK 90343-A) 345/230/13.2KV TRANSFORMER CKT 1	560	560	0.20849	100.3926	CHAN/TASCOS6230.00 - XIT_INTG 6230.00 230KV CKT 1
FDNS	06ALL	2	20WP	G15_039	FROM->TO	POTTER COUNTY INTERCHANGE (WAUK 90343-A) 345/230/13.2KV TRANSFORMER CKT 1	560	560	0.20752	100.3763	TUCO INTERCHANGE - TUCO_2 345.00 345KV CKT 1
FDNS	06ALL	2	20WP	G15_039	FROM->TO	POTTER COUNTY INTERCHANGE (WAUK 90343-A) 345/230/13.2KV TRANSFORMER CKT 1	560	560	0.20496	100.3531	GEN532751 1-WOLF CREEK GENERATING STATION UNIT 1
FDNS	06ALL	2	20WP	G15_039	FROM->TO	POTTER COUNTY INTERCHANGE (WAUK 90343-A) 345/230/13.2KV TRANSFORMER CKT 1	560	560	0.21121	100.3094	TOLK STATION EAST - TUCO INTERCHANGE 230KV CKT 1
FDNS	06ALL	2	20WP	G15_039	FROM->TO	POTTER COUNTY INTERCHANGE (WAUK 90343-A) 345/230/13.2KV TRANSFORMER CKT 1	560	560	0.21121	100.3094	TOLK STATION EAST - TUCO INTERCHANGE 230KV CKT 1
FDNS	06ALL	2	20WP	G15_039	FROM->TO	POTTER COUNTY INTERCHANGE (WAUK 90343-A) 345/230/13.2KV TRANSFORMER CKT 1	560	560	0.20823	100.2018	SPEARMAN INTERCHANGE - SPEARMAN SUB 115KV CKT 1
FDNS	06ALL	2	16WP	G15_039	FROM->TO	POTTER COUNTY INTERCHANGE (WAUK 90343-A) 345/230/13.2KV TRANSFORMER CKT 1	560	560	0.2429	100.1775	STLN-DEMARC6 - SWEETWATER 230KV CKT 1
FDNS	06ALL	2	16WP	G15_039	FROM->TO	POTTER COUNTY INTERCHANGE (WAUK 90343-A) 345/230/13.2KV TRANSFORMER CKT 1	560	560	0.2429	100.1653	STATELINE INTERCHANGE - STLN-DEMARC6 230KV CKT 1
FDNS	06ALL	2	16WP	G15_039	FROM->TO	POTTER COUNTY INTERCHANGE (WAUK 90343-A) 345/230/13.2KV TRANSFORMER CKT 1	560	560	0.2429	100.1388	P12:230:AEPW-SPS:SWEETWT6:WHEELER 6
FDNS	06ALL	2	20WP	G15_039	FROM->TO	POTTER COUNTY INTERCHANGE (WAUK 90343-A) 345/230/13.2KV TRANSFORMER CKT 1	560	560	0.20905	100.1181	Harrington Station East Bus - PRINGLE INTERCHANGE 230KV CKT 1
FDNS	06ALL	2	20WP	G15_039	FROM->TO	POTTER COUNTY INTERCHANGE (WAUK 90343-A) 345/230/13.2KV TRANSFORMER CKT 1	560	560	0.20905	100.1016	PRINGLE INTERCHANGE (ENRCO13617-1) 230/115/13.2KV TRANSFORMER CKT 1
FDNS	06ALL	2	20WP	G15_039	FROM->TO	POTTER COUNTY INTERCHANGE (WAUK 90343-A) 345/230/13.2KV TRANSFORMER CKT 1	560	560	0.20905	100.1016	PRINGLE INTERCHANGE (ENRCO13617-1) 230/115/13.2KV TRANSFORMER CKT 1
FDNS	06ALL	2	20WP	G15_039	FROM->TO	POTTER COUNTY INTERCHANGE (WAUK 90343-A) 345/230/13.2KV TRANSFORMER CKT 1	560	560	0.20905	100.0957	P12:230:SPS:K43.1.PRNGLE.HARR_E
FDNS	06ALL	2	20WP	G15_039	FROM->TO	POTTER COUNTY INTERCHANGE (WAUK 90343-A) 345/230/13.2KV TRANSFORMER CKT 1	560	560	0.21358	100.0866	SWISHER COUNTY INTERCHANGE - TUCO_2 230.00 230KV CKT 1
FDNS	06ALL	2	16WP	G15_039	FROM->TO	POTTER COUNTY INTERCHANGE (WAUK 90343-A) 345/230/13.2KV TRANSFORMER CKT 1	560	560	0.23237	100	GRAPEVINE INTERCHANGE - NICHOLS STATION 230KV CKT 1
FDNS	06ALL	2	16WP	G15_039	FROM->TO	POTTER COUNTY INTERCHANGE (WAUK 90343-A) 345/230/13.2KV TRANSFORMER CKT 1	560	560	0.23237	100	GRAPEVINE INTERCHANGE - NICHOLS STATION 230KV CKT 1
FDNS	06ALL	2	20WP	G15_039	FROM->TO	POTTER COUNTY INTERCHANGE (WAUK 90343-A) 345/230/13.2KV TRANSFORMER CKT 1	560	560	0.20891	100	PRINGLE INTERCHANGE - SPEARMAN INTERCHANGE 115KV CKT 1
FDNS	06ALL	2	20WP	G15_039	FROM->TO	POTTER COUNTY INTERCHANGE (WAUK 90343-A) 345/230/13.2KV TRANSFORMER CKT 1	560	560	0.20891	100	PRINGLE INTERCHANGE - SPEARMAN INTERCHANGE 115KV CKT 1
FDNS	06ALL	2	20WP	G15_039	FROM->TO	POTTER COUNTY INTERCHANGE (WAUK 90343-A) 345/230/13.2KV TRANSFORMER CKT 1	560	560	0.20823	100	SPEARMAN SUB - TEXAS FARMS SUB 115KV CKT 1
FDNS	06ALL	2	17G	G15_039	FROM->TO	POTTER COUNTY INTERCHANGE (WAUK 90343-A) 345/230/13.2KV TRANSFORMER CKT 1	560	560	0.21238	99.9	CHISHOLM7 345.00 - GRACEMONT 345KV CKT 1
FDNS	06ALL	2	20WP	G15_039	FROM->TO	POTTER COUNTY INTERCHANGE (WAUK 90343-A) 345/230/13.2KV TRANSFORMER CKT 1	560	560	0.21239	99.9	Hitchland Interchange (SIEM 8743067) 345/230/13.2KV TRANSFORMER CKT 2
FDNS	06ALL	2	20WP	G15_039	FROM->TO	POTTER COUNTY INTERCHANGE (WAUK 90343-A) 345/230/13.2KV TRANSFORMER CKT 1	560	560	0.21239	99.9	Hitchland Interchange (SIEM 8743067) 345/230/13.2KV TRANSFORMER CKT 2
FDNS	06ALL	2	20WP	G15_039	FROM->TO	POTTER COUNTY INTERCHANGE (WAUK 90343-A) 345/230/13.2KV TRANSFORMER CKT 1	560	560	0.20823	99.9	OCHILTREE - TEXAS FARMS SUB 115KV CKT 1
FDNS	06ALL	2	17G	G15_039	FROM->TO	POTTER COUNTY INTERCHANGE (WAUK 90343-A) 345/230/13.2KV TRANSFORMER CKT 1	560	560	0.21306	99.8	CIMARRON - MINCO 345KV CKT 1
FDNS	06ALL	2	20WP	G15_039	FROM->TO	POTTER COUNTY INTERCHANGE (WAUK 90343-A) 345/230/13.2KV TRANSFORMER CKT 1	560	560	0.21207	99.8	DWS FRISCO - HITCHLAND INTERCHANGE 115KV CKT 1
FDNS	06ALL	2	20WP	G15_039	FROM->TO	POTTER COUNTY INTERCHANGE (WAUK 90343-A) 345/230/13.2KV TRANSFORMER CKT 1	560	560	0.21207	99.8	P12:115:SPS:W08.1.HITCH.LASLEY
FDNS	06ALL	2	20WP	G15_039	FROM->TO	POTTER COUNTY INTERCHANGE (WAUK 90343-A) 345/230/13.2KV TRANSFORMER CKT 1	560	560	0.21207	99.7	DWS FRISCO - SHERMAN COUNTY TAP 115KV CKT 1
FDNS	06ALL	2	20WP	G15_039	FROM->TO	POTTER COUNTY INTERCHANGE (WAUK 90343-A) 345/230/13.2KV TRANSFORMER CKT 1	560	560	0.20823	99.7	P12:115:SPS:W29.1.OCLTRE.SPRMN
FDNS	06ALL	2	20WP	G15_039	FROM->TO	POTTER COUNTY INTERCHANGE (WAUK 90343-A) 345/230/13.2KV TRANSFORMER CKT 1	560	560	0.20793	99.7	CHILDRESS - LAKE PAULINE 138KV CKT 1
FDNS	06ALL	2	20WP	G15_039	FROM->TO	POTTER COUNTY INTERCHANGE (WAUK 90343-A) 345/230/13.2KV TRANSFORMER CKT 1	560	560	0.20793	99.7	CHILDRESS - LAKE PAULINE 138KV CKT 1
FDNS	06ALL	2	20WP	G15_039	FROM->TO	POTTER COUNTY INTERCHANGE (WAUK 90343-A) 345/230/13.2KV TRANSFORMER CKT 1	560	560	0.21121	99.6	TOLK STATION EAST - TUCO INTERCHANGE 230KV CKT 1
FDNS	06ALL	2	20WP	G15_039	FROM->TO	POTTER COUNTY INTERCHANGE (WAUK 90343-A) 345/230/13.2KV TRANSFORMER CKT 1	560	560	0.21121	99.6	TOLK STATION EAST - TUCO INTERCHANGE 230KV CKT 1
FDNS	06ALL	2	20WP	G15_039	FROM->TO	POTTER COUNTY INTERCHANGE (WAUK 90343-A) 345/230/13.2KV TRANSFORMER CKT 1	560	560	0.20706	99.6	CONWAY SUB - NICHOLS STATION 115KV CKT 1
FDNS	06ALL	2	20WP	G15_039	FROM->TO	POTTER COUNTY INTERCHANGE (WAUK 90343-A) 345/230/13.2KV TRANSFORMER CKT 1	560	560	0.20496	99.6	BORDER 7345.00 345KV SWITCHED SHUNT
FDNS	06ALL	2	20WP	G15_039	FROM->TO	POTTER COUNTY INTERCHANGE (WAUK 90343-A) 345/230/13.2KV TRANSFORMER CKT 1	560	560	0.20496	99.6	GEN531447 1-HOLCOMB GENERATOR
FDNSLock	06ALL	2	20WP	G15_039	FROM->TO	POTTER COUNTY INTERCHANGE (WAUK 90343-A) 345/230/13.2KV TRANSFORMER CKT 1	560	560	0.20496	99.6	BORDER 7345.00 345KV SWITCHED SHUNT
FDNS	06ALL	2	20WP	G15_039	FROM->TO	POTTER COUNTY INTERCHANGE (WAUK 90343-A) 345/230/13.2KV TRANSFORMER CKT 1	560	560	0.20878	99.5	TUCO INTERCHANGE - YOAKUM_345 345.00 345KV CKT 1
FDNS	06ALL	2	20WP	G15_039	FROM->TO	POTTER COUNTY INTERCHANGE (WAUK 90343-A) 345/230/13.2KV TRANSFORMER CKT 1	560	560	0.20823	99.5	SPEARMAN INTERCHANGE - SPEARMAN SUB 115KV CKT 1
FDNS	06ALL	2	20WP	G15_039	FROM->TO	POTTER COUNTY INTERCHANGE (WAUK 90343-A) 345/230/13.2KV TRANSFORMER CKT 1	560	560	0.20732	99.5	PRINGLE INTERCHANGE - SPEARMAN INTERCHANGE 115KV CKT 2
FDNS	06ALL	2	20WP	G15_039	FROM->TO	POTTER COUNTY INTERCHANGE (WAUK 90343-A) 345/230/13.2KV TRANSFORMER CKT 1	560	560	0.20732	99.5	PRINGLE INTERCHANGE - SPEARMAN INTERCHANGE 115KV CKT 2
FDNS	06ALL	2	20WP	G15_039	FROM->TO	POTTER COUNTY INTERCHANGE (WAUK 90343-A) 345/230/13.2KV TRANSFORMER CKT 1	560	560	0.20706	99.5	P12:115:SPS:T53.1.NICHLS.KIRBY
FDNS	06ALL	2	20WP	G15_039	FROM->TO	POTTER COUNTY INTERCHANGE (WAUK 90343-A) 345/230/13.2KV TRANSFORMER CKT 1	560	560	0.20496	99.5	GEN532751 1-WOLF CREEK GENERATING STATION UNIT 1
FDNS	06ALL	2	16WP	G15_039	FROM->TO	TUCO INTERCHANGE (GE M1022338) 345/230/13.2KV TRANSFORMER CKT 1	560	560	0.20172	120.5418	TUCO INTERCHANGE (SIEM 8743066) 345/230/13.2KV TRANSFORMER CKT 2
FDNS	06ALL	2	16WP	G15_039	FROM->TO	TUCO INTERCHANGE (GE M1022338) 345/230/13.2KV TRANSFORMER CKT 1	560	560	0.20172	120.5418	TUCO INTERCHANGE (SIEM 8743066) 345/230/13.2KV TRANSFORMER CKT 2
FDNS	06ALL	2	16WP	G15_039	FROM->TO	TUCO INTERCHANGE (GE M1022338) 345/230/13.2KV TRANSFORMER CKT 1	560	560	0.20384	120.3223	TUCO_2 345.00 (TUCO_2 XFMR) 345/230/13.2KV TRANSFORMER CKT 1
FDNS	06ALL	2	16WP	G15_039	FROM->TO	TUCO INTERCHANGE (GE M1022338) 345/230/13.2KV TRANSFORMER CKT 1	560	560	0.20384	118.6764	TUCO_2 345.00 (TUCO_2 XFMR) 345/230/13.2KV TRANSFORMER CKT 1
FDNS	06ALL	2	16WP	G15_039	FROM->TO	TUCO INTERCHANGE (GE M1022338) 345/230/13.2KV TRANSFORMER CKT 1	560	560	0.20172	118.6764	TUCO INTERCHANGE (SIEM 8743066) 345/230/13.2KV TRANSFORMER CKT 2
FDNS	06ALL	2	16WP	G15_039	FROM->TO	TUCO INTERCHANGE (GE M1022338) 345/230/13.2KV TRANSFORMER CKT 1	560	560	0.20172	118.6764	TUCO INTERCHANGE (SIEM 8743066) 345/230/13.2KV TRANSFORMER CKT 2
FDNS	06ALL	2	20WP	G15_039	FROM->TO	TUCO_2 345.00 (TUCO_2 XFMR) 345/230/13.2KV TRANSFORMER CKT 1	560	560	0.20609	189.4604	TUCO INTERCHANGE - TUCO_2 345.00 345KV CKT 1

SOLUTION	GROUP	SCENARIO	SEASON	SOURCE	DIRECTION	MONITORED ELEMENT	RATEA (MVA)	RATEB(MVA)	TDF	TC%LOADING (% MVA)	CONTINGENCY
FDNS	06ALL	2	17G	G15_039	FROM->TO	TUCO_2 345.00 (TUCO_2 XFMR) 345/230/13.2KV TRANSFORMER CKT 1	560	560	0.20322	187.4581	TUCO INTERCHANGE - TUCO_2 345.00 345KV CKT 1
FDNS	06ALL	2	20WP	G15_039	FROM->TO	TUCO_2 345.00 (TUCO_2 XFMR) 345/230/13.2KV TRANSFORMER CKT 1	560	560	0.20609	184.0471	TUCO INTERCHANGE - TUCO_2 345.00 345KV CKT 1
FDNS	06ALL	2	17G	G15_039	FROM->TO	TUCO_2 345.00 (TUCO_2 XFMR) 345/230/13.2KV TRANSFORMER CKT 1	560	560	0.20322	182.4703	TUCO INTERCHANGE - TUCO_2 345.00 345KV CKT 1
FDNS	06ALL	2	16WP	G15_039	FROM->TO	TUCO_2 345.00 (TUCO_2 XFMR) 345/230/13.2KV TRANSFORMER CKT 1	560	560	0.21376	175.5009	TUCO INTERCHANGE - TUCO_2 345.00 345KV CKT 1
FDNS	06ALL	2	16WP	G15_039	FROM->TO	TUCO_2 345.00 (TUCO_2 XFMR) 345/230/13.2KV TRANSFORMER CKT 1	560	560	0.21376	172.6087	TUCO INTERCHANGE - TUCO_2 345.00 345KV CKT 1
FDNS	06ALL	2	20SP	G15_039	FROM->TO	TUCO_2 345.00 (TUCO_2 XFMR) 345/230/13.2KV TRANSFORMER CKT 1	560	560	0.2124	166.4217	TUCO INTERCHANGE - TUCO_2 345.00 345KV CKT 1
FDNS	06ALL	2	17SP	G15_039	FROM->TO	TUCO_2 345.00 (TUCO_2 XFMR) 345/230/13.2KV TRANSFORMER CKT 1	560	560	0.21237	164.6979	TUCO INTERCHANGE - TUCO_2 345.00 345KV CKT 1
FDNS	06ALL	2	20SP	G15_039	FROM->TO	TUCO_2 345.00 (TUCO_2 XFMR) 345/230/13.2KV TRANSFORMER CKT 1	560	560	0.2124	163.5805	TUCO INTERCHANGE - TUCO_2 345.00 345KV CKT 1
FDNS	06ALL	2	17SP	G15_039	FROM->TO	TUCO_2 345.00 (TUCO_2 XFMR) 345/230/13.2KV TRANSFORMER CKT 1	560	560	0.21237	162.1713	TUCO INTERCHANGE - TUCO_2 345.00 345KV CKT 1
FDNS	06NR	3	20L	G15_039	FROM->TO	BUSHLAND INTERCHANGE - HILLSIDE 115KV CKT 1	159	160	0.17776	108.1399	BUSHLAND INTERCHANGE - POTTER COUNTY INTERCHANGE 230KV CKT 1
FDNS	06NR	3	20L	G15_039	FROM->TO	BUSHLAND INTERCHANGE - HILLSIDE 115KV CKT 1	159	160	0.17776	108.1399	BUSHLAND INTERCHANGE - POTTER COUNTY INTERCHANGE 230KV CKT 1
FDNS	06NR	3	17G	G15_039	FROM->TO	BUSHLAND INTERCHANGE - HILLSIDE 115KV CKT 1	159	160	0.17817	105.508	BUSHLAND INTERCHANGE - POTTER COUNTY INTERCHANGE 230KV CKT 1
FDNS	06NR	3	17G	G15_039	FROM->TO	BUSHLAND INTERCHANGE - HILLSIDE 115KV CKT 1	159	160	0.17817	105.508	BUSHLAND INTERCHANGE - POTTER COUNTY INTERCHANGE 230KV CKT 1
FDNS	06NR	3	20L	G15_039	FROM->TO	BUSHLAND INTERCHANGE - POTTER COUNTY INTERCHANGE 230KV CKT 1	318.7	350.57	0.2895	102.6252	NEWHART 230 - POTTER COUNTY INTERCHANGE 230KV CKT 1
FDNS	06ALL	3	16WP	G15_039	FROM->TO	BUSHLAND INTERCHANGE (WH 7001795) 230/115/13.2KV TRANSFORMER CKT 1	168	168	0.19974	112.1919	BUSHLAND INTERCHANGE - POTTER COUNTY INTERCHANGE 230KV CKT 1
FDNS	06ALL	3	16WP	G15_039	FROM->TO	BUSHLAND INTERCHANGE (WH 7001795) 230/115/13.2KV TRANSFORMER CKT 1	168	168	0.19974	112.1919	BUSHLAND INTERCHANGE - POTTER COUNTY INTERCHANGE 230KV CKT 1
FDNS	06ALL	3	16WP	G15_039	FROM->TO	BUSHLAND INTERCHANGE (WH 7001795) 230/115/13.2KV TRANSFORMER CKT 1	168	168	0.19974	107.7619	BUSHLAND INTERCHANGE - POTTER COUNTY INTERCHANGE 230KV CKT 1
FDNS	06ALL	3	16WP	G15_039	FROM->TO	BUSHLAND INTERCHANGE (WH 7001795) 230/115/13.2KV TRANSFORMER CKT 1	168	168	0.19974	107.7619	BUSHLAND INTERCHANGE - POTTER COUNTY INTERCHANGE 230KV CKT 1
FDNS	06NR	3	20L	G15_039	FROM->TO	BUSHLAND INTERCHANGE (WH 7001795) 230/115/13.2KV TRANSFORMER CKT 1	168	168	0.17776	106.6189	BUSHLAND INTERCHANGE - POTTER COUNTY INTERCHANGE 230KV CKT 1
FDNS	06NR	3	20L	G15_039	FROM->TO	BUSHLAND INTERCHANGE (WH 7001795) 230/115/13.2KV TRANSFORMER CKT 1	168	168	0.17776	106.6189	BUSHLAND INTERCHANGE - POTTER COUNTY INTERCHANGE 230KV CKT 1
FDNS	06NR	3	17G	G15_039	FROM->TO	BUSHLAND INTERCHANGE (WH 7001795) 230/115/13.2KV TRANSFORMER CKT 1	168	168	0.17817	104.9286	BUSHLAND INTERCHANGE - POTTER COUNTY INTERCHANGE 230KV CKT 1
FDNS	06NR	3	17G	G15_039	FROM->TO	BUSHLAND INTERCHANGE (WH 7001795) 230/115/13.2KV TRANSFORMER CKT 1	168	168	0.17817	104.9286	BUSHLAND INTERCHANGE - POTTER COUNTY INTERCHANGE 230KV CKT 1
FDNS	06NR	3	20L	G15_039	FROM->TO	BUSHLAND INTERCHANGE (WH 7001795) 230/115/13.2KV TRANSFORMER CKT 1	168	168	0.17776	104.4653	BUSHLAND INTERCHANGE - POTTER COUNTY INTERCHANGE 230KV CKT 1
FDNS	06NR	3	20L	G15_039	FROM->TO	BUSHLAND INTERCHANGE (WH 7001795) 230/115/13.2KV TRANSFORMER CKT 1	168	168	0.17776	104.4653	BUSHLAND INTERCHANGE - POTTER COUNTY INTERCHANGE 230KV CKT 1
FDNS	06NR	3	17G	G15_039	FROM->TO	BUSHLAND INTERCHANGE (WH 7001795) 230/115/13.2KV TRANSFORMER CKT 1	168	168	0.17817	102.648	BUSHLAND INTERCHANGE - POTTER COUNTY INTERCHANGE 230KV CKT 1
FDNS	06NR	3	17G	G15_039	FROM->TO	BUSHLAND INTERCHANGE (WH 7001795) 230/115/13.2KV TRANSFORMER CKT 1	168	168	0.17817	102.648	BUSHLAND INTERCHANGE - POTTER COUNTY INTERCHANGE 230KV CKT 1
FDNS	06NR	3	17G	G15_039	TO->FROM	CANYON WEST SUB - DAWN SUB 115KV CKT 1	96	96	0.1288	109.382	BUSHLAND INTERCHANGE - DEAF SMITH COUNTY INTERCHANGE 230KV CKT 1
FDNS	06NR	3	17G	G15_039	TO->FROM	CANYON WEST SUB - DAWN SUB 115KV CKT 1	96	96	0.1288	109.382	BUSHLAND INTERCHANGE - DEAF SMITH COUNTY INTERCHANGE 230KV CKT 1
FDNS	06NR	3	20L	G15_039	FROM->TO	CASTRO COUNTY INTERCHANGE - DEAF SMITH REC-#21 115KV CKT 1	159	174	0.04054	101.2841	DEAF SMITH COUNTY INTERCHANGE - G15039_T 230.00 230KV CKT 1
FDNS	06NR	3	17G	G15_039	FROM->TO	CASTRO COUNTY INTERCHANGE - DEAF SMITH REC-#21 115KV CKT 1	159	174	0.03813	100.2799	DEAF SMITH COUNTY INTERCHANGE - G15039_T 230.00 230KV CKT 1
FDNS	06ALL	3	20SP	G15_039	FROM->TO	CHISHOLM6 230.00 - ELK CITY 230KV 230KV CKT 1	353	353	0.06259	104.1963	BASE CASE
FDNS	06ALL	3	17SP	G15_039	FROM->TO	CHISHOLM6 230.00 - ELK CITY 230KV 230KV CKT 1	353	353	0.06282	101.9728	BASE CASE
FDNS	06ALL	3	17G	G15_039	TO->FROM	CIMARRON - MINCO 345KV CKT 1	956	956	0.21301	132.797	G14-057T 345.00 - SUNNYSIDE 345KV CKT 1
FDNS	06ALL	3	20WP	G15_039	TO->FROM	CIMARRON - MINCO 345KV CKT 1	956	956	0.20997	131.9094	G14-057T 345.00 - SUNNYSIDE 345KV CKT 1
FDNS	06ALL	3	17G	G15_039	TO->FROM	CIMARRON - MINCO 345KV CKT 1	956	956	0.21301	127.3481	G14-057T 345.00 - LAWTON EASTSIDE 345KV CKT 1
FDNS	06ALL	3	20WP	G15_039	TO->FROM	CIMARRON - MINCO 345KV CKT 1	956	956	0.20997	126.3057	G14-057T 345.00 - LAWTON EASTSIDE 345KV CKT 1
FDNS	06ALL	3	16WP	G15_039	TO->FROM	CIMARRON - MINCO 345KV CKT 1	956	956	0.21992	125.3645	G14-057T 345.00 - SUNNYSIDE 345KV CKT 1
FDNS	06ALL	3	17SP	G15_039	TO->FROM	CIMARRON - MINCO 345KV CKT 1	956	956	0.21667	124.3731	G14-057T 345.00 - SUNNYSIDE 345KV CKT 1
FDNS	06ALL	3	20SP	G15_039	TO->FROM	CIMARRON - MINCO 345KV CKT 1	956	956	0.21597	121.3286	G14-057T 345.00 - SUNNYSIDE 345KV CKT 1
FDNS	06ALL	3	16WP	G15_039	TO->FROM	CIMARRON - MINCO 345KV CKT 1	956	956	0.21992	119.9255	G14-057T 345.00 - LAWTON EASTSIDE 345KV CKT 1
FDNS	06ALL	3	17SP	G15_039	TO->FROM	CIMARRON - MINCO 345KV CKT 1	956	956	0.21667	118.8978	G14-057T 345.00 - LAWTON EASTSIDE 345KV CKT 1
FDNS	06ALL	3	20SP	G15_039	TO->FROM	CIMARRON - MINCO 345KV CKT 1	956	956	0.21597	116.0894	G14-057T 345.00 - LAWTON EASTSIDE 345KV CKT 1
FDNS	06ALL	3	17G	G15_039	TO->FROM	CIMARRON - MINCO 345KV CKT 1	956	956	0.19991	109.1031	CHISHOLM7 345.00 - WOODWARD DISTRICT EHV 345KV CKT 1
FDNS	06ALL	3	20WP	G15_039	TO->FROM	CIMARRON - MINCO 345KV CKT 1	956	956	0.19946	105.2058	CHISHOLM7 345.00 - WOODWARD DISTRICT EHV 345KV CKT 1
FDNS	06ALL	3	20SP	G15_039	TO->FROM	CIMARRON - MINCO 345KV CKT 1	956	956	0.20624	103.3967	CHISHOLM7 345.00 - WOODWARD DISTRICT EHV 345KV CKT 1
FDNS	06ALL	3	17SP	G15_039	TO->FROM	CIMARRON - MINCO 345KV CKT 1	956	956	0.20681	102.6701	CHISHOLM7 345.00 - WOODWARD DISTRICT EHV 345KV CKT 1
FDNS	06NR	3	20L	G15_039	TO->FROM	COULTER INTERCHANGE - HILLSIDE 115KV CKT 1	159	159	0.17776	105.531	BUSHLAND INTERCHANGE - POTTER COUNTY INTERCHANGE 230KV CKT 1
FDNS	06NR	3	20L	G15_039	TO->FROM	COULTER INTERCHANGE - HILLSIDE 115KV CKT 1	159	159	0.17776	105.531	BUSHLAND INTERCHANGE - POTTER COUNTY INTERCHANGE 230KV CKT 1
FDNS	06ALL	3	16WP	G15_039	TO->FROM	COULTER INTERCHANGE - HILLSIDE 115KV CKT 1	159	159	0.19974	103.5222	BUSHLAND INTERCHANGE - POTTER COUNTY INTERCHANGE 230KV CKT 1
FDNS	06ALL	3	16WP	G15_039	TO->FROM	COULTER INTERCHANGE - HILLSIDE 115KV CKT 1	159	159	0.19974	103.5222	BUSHLAND INTERCHANGE - POTTER COUNTY INTERCHANGE 230KV CKT 1
FDNS	06NR	3	17G	G15_039	TO->FROM	COULTER INTERCHANGE - HILLSIDE 115KV CKT 1	159	159	0.17817	100.454	BUSHLAND INTERCHANGE - POTTER COUNTY INTERCHANGE 230KV CKT 1
FDNS	06NR	3	17G	G15_039	TO->FROM	COULTER INTERCHANGE - HILLSIDE 115KV CKT 1	159	159	0.17817	100.454	BUSHLAND INTERCHANGE - POTTER COUNTY INTERCHANGE 230KV CKT 1
FDNS	06NR	3	17G	G15_039	TO->FROM	DAWN SUB - Panda Energy Substation Hereford 115KV CKT 1	96	96	0.1288	112.7612	BUSHLAND INTERCHANGE - DEAF SMITH COUNTY INTERCHANGE 230KV CKT 1
FDNS	06NR	3	17G	G15_039	TO->FROM	DAWN SUB - Panda Energy Substation Hereford 115KV CKT 1	96	96	0.1288	112.7612	BUSHLAND INTERCHANGE - DEAF SMITH COUNTY INTERCHANGE 230KV CKT 1
FDNS	06ALL	3	20SP	G15_039	TO->FROM	DEAF SMITH COUNTY INTERCHANGE - G15039_T 230.00 230KV CKT 1	318.7	350.57	0.61105	104.3475	BORDER 7345.00 - TUCO_2 345.00 345KV CKT 1
FDNS	06ALL	3	20SP	G15_039	TO->FROM	DEAF SMITH COUNTY INTERCHANGE - G15039_T 230.00 230KV CKT 1	318.7	350.57	0.61105	104.3475	BORDER 7345.00 - TUCO_2 345.00 345KV CKT 2
FDNS	06ALL	3	20SP	G15_039	TO->FROM	DEAF SMITH COUNTY INTERCHANGE - G15039_T 230.00 230KV CKT 1	318.7	350.57	0.61727	103.558	G14-074T 345.00 - TUCO INTERCHANGE 345KV CKT 1
FDNS	06NR	3	17G	G15_039	FROM->TO	DEAF SMITH COUNTY INTERCHANGE - Panda Energy Substation Hereford 115KV CKT 1	96	96	0.1288	117.8354	BUSHLAND INTERCHANGE - DEAF SMITH COUNTY INTERCHANGE 230KV CKT 1
FDNS	06NR	3	17G	G15_039	FROM->TO	DEAF SMITH COUNTY INTERCHANGE - Panda Energy Substation Hereford 115KV CKT 1	96	96	0.1288	117.8354	BUSHLAND INTERCHANGE - DEAF SMITH COUNTY INTERCHANGE 230KV CKT 1
FDNS	06ALL	3	20L	G15_039	TO->FROM	G14-057T 345.00 - LAWTON EASTSIDE 345KV CKT 1	717	789	0.08973	106.0801	BASE CASE
FDNS	06ALL	3	20L	G15_039	FROM->TO	G14-057T 345.00 - SUNNYSIDE 345KV CKT 1	717	789	0.08973	119.3111	BASE CASE
FDNS	06ALL	3	20WP	G15_039	FROM->TO	G14-057T 345.00 - SUNNYSIDE 345KV CKT 1	717	789	0.11325	107.198	BASE CASE
FDNS	06ALL	3	17G	G15_039	FROM->TO	G14-057T 345.00 - SUNNYSIDE 345KV CKT 1	717	789	0.11524	106.7167	BASE CASE
FDNS	06ALL	3	16WP	G15_039	FROM->TO	G14-057T 345.00 - SUNNYSIDE 345KV CKT 1	717	789	0.11871	105.3992	BASE CASE
FDNS	06NR	3	20L	G15_039	FROM->TO	G14-074T 345.00 - OKLAUNION 345KV CKT 1	1022	1124	0.04346	101.9316	DEAF SMITH COUNTY INTERCHANGE - G15039_T 230.00 230KV CKT 1
FDNS	00NR	3	25SP	G15_039	TO->FROM	JONES STATION - TUCO INTERCHANGE 230KV CKT 1	343.79	343.79	0.0859	130.1614	CARLISLE INTERCHANGE - TUCO INTERCHANGE 230KV CKT 1
FDNS	00NR	3	25SP	G15_039	TO->FROM	JONES STATION - TUCO INTERCHANGE 230KV CKT 1	343.79	343.79	0.0859	130.1614	CARLISLE INTERCHANGE - TUCO INTERCHANGE 230KV CKT 1
FDNS	00NR	3	25SP	G15_039	TO->FROM	JONES STATION - TUCO INTERCHANGE 230KV CKT 1	343.79	343.79	0.07109	113.3309	GEN526333 1-JONES GEN #3 21 KV
FDNS	00NR	3	25SP	G15_039	TO->FROM	JONES STATION - TUCO INTERCHANGE 230KV CKT 1	343.79	343.79	0.07109	112.9359	GEN526334 1-JONES_4 116.500
FDNS	00NR	3	25SP	G15_039	TO->FROM	JONES STATION - TUCO INTERCHANGE 230KV CKT 1	343.79	343.79	0.08241	108.5941	TUCO INTERCHANGE - YOAKUM_345 345.00 345KV CKT 1
FDNS	00NR	3	25SP	G15_039	TO->FROM	JONES STATION - TUCO INTERCHANGE 230KV CKT 1	343.79	343.79	0.07813	103.864	CARLISLE INTERCHANGE - WOLFFORTH INTERCHANGE 230KV CKT 1
FDNS	00NR	3	25SP	G15_039	TO->FROM	JONES STATION - TUCO INTERCHANGE 230KV CKT 1	343.79	343.79	0.08737	101.6819	PLANT X STATION - SUNDOWN INTERCHANGE 230KV CKT 1
FDNS	00NR	3	25SP	G15_039	TO->FROM	JONES STATION - TUCO INTERCHANGE 230KV CKT 1	343.79	343.79	0.08737	101.6819	PLANT X STATION - SUNDOWN INTERCHANGE 230KV CKT 1
FDNS	00NR	3	25SP	G15_039	TO->FROM	JONES STATION - TUCO INTERCHANGE 230KV CKT 1	343.79	343.79	0.07109	100.8779	GEN526332 1-JONES GEN #2 21 KV
FDNS	00NR	3	25SP	G15_039	TO->FROM	JONES STATION - TUCO INTERCHANGE 230KV CKT 1	343.79	343.79	0.07109	100.876	GEN526331 1-JONES GEN #1 22 KV
FDNS	00NR	3	25SP	G15_039	TO->FROM	JONES STATION - TUCO INTERCHANGE 230KV CKT 1	343.79	343.79	0.07108	100.7208	TUCO INTERCHANGE (ENRCO 136401) 230/115/13.2KV TRANSFORMER CKT 1
FDNS	00NR	3	25SP	G15_039	TO->FROM	JONES STATION - TUCO INTERCHANGE 230KV CKT 1	343.79	343.79	0.07108	100.7208	TUCO INTERCHANGE (ENRCO 136401) 230/115/13.2KV TRANSFORMER CKT 1
FDNS	00NR	3	25SP	G15_039	TO->FROM	JONES STATION - TUCO INTERCHANGE 230KV CKT 1	343.79	343.79	0.07108	100.7208	TUCO INTERCHANGE (ENRCO 136401) 230/115/13.2KV TRANSFORMER CKT 2
FDNS	00NR	3	25SP	G15_039	TO->FROM	JONES STATION - TUCO INTERCHANGE 230KV CKT 1	343.79	343.79	0.07108	100.7208	TUCO INTERCHANGE (ENRCO 136401) 230/115/13.2KV TRANSFORMER CKT 2

SOLUTION	GROUP	SCENARIO	SEASON	SOURCE	DIRECTION	MONITORED ELEMENT	RATEA (MVA)	RATEB(MVA)	TDF	TC%LOADING (% MVA)	CONTINGENCY
FDNS	00NR	3	25SP	G15_039	TO->FROM	JONES STATION - TUCO INTERCHANGE 230KV CKT 1	343.79	343.79	0.07828	99.8	LUBBOCK EAST INTERCHANGE - TUCO INTERCHANGE 115KV CKT 1
FDNS	00NR	3	25SP	G15_039	TO->FROM	JONES STATION - TUCO INTERCHANGE 230KV CKT 1	343.79	343.79	0.07828	99.8	LUBBOCK EAST INTERCHANGE - TUCO INTERCHANGE 115KV CKT 1
FDNS	00NR	3	25SP	G15_039	FROM->TO	LUBBOCK POWER & LIGHT-HOLLY PLANT (SHIH T101039) 230/69/13.5KV TRANSFORMER CKT 1	224	224	0.0358	104.7002	LUBBOCK POWER & LIGHT-SOUTHEAST - LUBBOCK SOUTH INTERCHANGE 230KV CKT 1
FDNS	00NR	3	25SP	G15_039	FROM->TO	LUBBOCK POWER & LIGHT-HOLLY PLANT (SHIH T101039) 230/69/13.5KV TRANSFORMER CKT 1	224	224	0.0358	104.6872	P12:LPL:SPS:K64.1.LP-SE.LUBBS
FDNS	00NR	3	25SP	G15_039	FROM->TO	LUBBOCK POWER & LIGHT-HOLLY PLANT (SHIH T101039) 230/69/13.5KV TRANSFORMER CKT 1	224	224	0.03461	101.9683	LUBBOCK EAST INTERCHANGE - LUBBOCK POWER & LIGHT-WADSWORTH 230KV CKT 1
FDNS	00NR	3	25SP	G15_039	FROM->TO	LUBBOCK POWER & LIGHT-HOLLY PLANT (SHIH T101039) 230/69/13.5KV TRANSFORMER CKT 1	224	224	0.03461	101.9535	P12:230:LPL:K57.1.LP-WADS.LUBBE
FDNS	00NR	3	25SP	G15_039	FROM->TO	LUBBOCK POWER & LIGHT-HOLLY PLANT (SHIH T101039) 230/69/13.5KV TRANSFORMER CKT 1	224	224	0.03461	101.9534	LUBBOCK POWER & LIGHT-WADSWORTH (SHIH T101038) 230/69/13.5KV TRANSFORMER CKT 1
FDNS	00NR	3	25SP	G15_039	FROM->TO	LUBBOCK POWER & LIGHT-HOLLY PLANT (SHIH T101039) 230/69/13.5KV TRANSFORMER CKT 1	224	224	0.03461	101.9534	LUBBOCK POWER & LIGHT-WADSWORTH (SHIH T101038) 230/69/13.5KV TRANSFORMER CKT 1
FDNS	06ALL	3	20WP	G15_039	FROM->TO	POTTER COUNTY INTERCHANGE (WAUK 90343-A) 345/230/13.2KV TRANSFORMER CKT 1	560	560	0.22249	113.6922	P12:230:AEPW:ELKCITY6:SWEETWT6
FDNS	06ALL	3	20WP	G15_039	FROM->TO	POTTER COUNTY INTERCHANGE (WAUK 90343-A) 345/230/13.2KV TRANSFORMER CKT 1	560	560	0.22163	112.4685	CHISHOLM6 230.00 - SWEETWATER 230KV CKT 1
FDNS	06ALL	3	20WP	G15_039	FROM->TO	POTTER COUNTY INTERCHANGE (WAUK 90343-A) 345/230/13.2KV TRANSFORMER CKT 1	560	560	0.22249	111.2858	P12:230:AEPW:ELKCITY6:SWEETWT6
FDNS	06ALL	3	20WP	G15_039	FROM->TO	POTTER COUNTY INTERCHANGE (WAUK 90343-A) 345/230/13.2KV TRANSFORMER CKT 1	560	560	0.22163	110.3491	CHISHOLM6 230.00 - SWEETWATER 230KV CKT 1
FDNS	06ALL	3	17G	G15_039	FROM->TO	POTTER COUNTY INTERCHANGE (WAUK 90343-A) 345/230/13.2KV TRANSFORMER CKT 1	560	560	0.22048	109.1858	CHISHOLM6 230.00 - SWEETWATER 230KV CKT 1
FDNS	06ALL	3	20WP	G15_039	FROM->TO	POTTER COUNTY INTERCHANGE (WAUK 90343-A) 345/230/13.2KV TRANSFORMER CKT 1	560	560	0.23096	109.0577	HITCHLAND INTERCHANGE - MOORE COUNTY INTERCHANGE 230KV CKT 1
FDNS	06ALL	3	20WP	G15_039	FROM->TO	POTTER COUNTY INTERCHANGE (WAUK 90343-A) 345/230/13.2KV TRANSFORMER CKT 1	560	560	0.23096	109.0577	HITCHLAND INTERCHANGE - MOORE COUNTY INTERCHANGE 230KV CKT 1
FDNS	06ALL	3	20WP	G15_039	FROM->TO	POTTER COUNTY INTERCHANGE (WAUK 90343-A) 345/230/13.2KV TRANSFORMER CKT 1	560	560	0.21977	108.0277	MOORE COUNTY INTERCHANGE - POTTER COUNTY INTERCHANGE 230KV CKT 1
FDNS	06ALL	3	20WP	G15_039	FROM->TO	POTTER COUNTY INTERCHANGE (WAUK 90343-A) 345/230/13.2KV TRANSFORMER CKT 1	560	560	0.21977	108.0277	MOORE COUNTY INTERCHANGE - POTTER COUNTY INTERCHANGE 230KV CKT 1
FDNS	06ALL	3	20WP	G15_039	FROM->TO	POTTER COUNTY INTERCHANGE (WAUK 90343-A) 345/230/13.2KV TRANSFORMER CKT 1	560	560	0.23096	107.8874	HITCHLAND INTERCHANGE - MOORE COUNTY INTERCHANGE 230KV CKT 1
FDNS	06ALL	3	20WP	G15_039	FROM->TO	POTTER COUNTY INTERCHANGE (WAUK 90343-A) 345/230/13.2KV TRANSFORMER CKT 1	560	560	0.23096	107.8874	HITCHLAND INTERCHANGE - MOORE COUNTY INTERCHANGE 230KV CKT 1
FDNS	06ALL	3	20L	G15_039	FROM->TO	POTTER COUNTY INTERCHANGE (WAUK 90343-A) 345/230/13.2KV TRANSFORMER CKT 1	560	560	0.19897	107.2324	HITCHLAND INTERCHANGE - MOORE COUNTY INTERCHANGE 230KV CKT 1
FDNS	06ALL	3	20L	G15_039	FROM->TO	POTTER COUNTY INTERCHANGE (WAUK 90343-A) 345/230/13.2KV TRANSFORMER CKT 1	560	560	0.19897	107.2324	HITCHLAND INTERCHANGE - MOORE COUNTY INTERCHANGE 230KV CKT 1
FDNS	06ALL	3	20WP	G15_039	FROM->TO	POTTER COUNTY INTERCHANGE (WAUK 90343-A) 345/230/13.2KV TRANSFORMER CKT 1	560	560	0.22163	107.0531	STLN-DEMARC6 - SWEETWATER 230KV CKT 1
FDNS	06ALL	3	20WP	G15_039	FROM->TO	POTTER COUNTY INTERCHANGE (WAUK 90343-A) 345/230/13.2KV TRANSFORMER CKT 1	560	560	0.22163	107.0383	P12:230:AEPW-SPS:SWEETWT6:WHEELER 6
FDNS	06ALL	3	20WP	G15_039	FROM->TO	POTTER COUNTY INTERCHANGE (WAUK 90343-A) 345/230/13.2KV TRANSFORMER CKT 1	560	560	0.22163	107.0324	STATELINE INTERCHANGE - STLN-DEMARC6 230KV CKT 1
FDNS	06ALL	3	17G	G15_039	FROM->TO	POTTER COUNTY INTERCHANGE (WAUK 90343-A) 345/230/13.2KV TRANSFORMER CKT 1	560	560	0.22048	106.8923	CHISHOLM6 230.00 - SWEETWATER 230KV CKT 1
FDNS	06ALL	3	20WP	G15_039	FROM->TO	POTTER COUNTY INTERCHANGE (WAUK 90343-A) 345/230/13.2KV TRANSFORMER CKT 1	560	560	0.21977	106.8592	MOORE COUNTY INTERCHANGE - POTTER COUNTY INTERCHANGE 230KV CKT 1
FDNS	06ALL	3	20WP	G15_039	FROM->TO	POTTER COUNTY INTERCHANGE (WAUK 90343-A) 345/230/13.2KV TRANSFORMER CKT 1	560	560	0.21977	106.8592	MOORE COUNTY INTERCHANGE - POTTER COUNTY INTERCHANGE 230KV CKT 1
FDNS	06NR	3	20L	G15_039	FROM->TO	POTTER COUNTY INTERCHANGE (WAUK 90343-A) 345/230/13.2KV TRANSFORMER CKT 1	560	560	0.03099	106.6	HITCHLAND INTERCHANGE - MOORE COUNTY INTERCHANGE 230KV CKT 1
FDNS	06NR	3	20L	G15_039	FROM->TO	POTTER COUNTY INTERCHANGE (WAUK 90343-A) 345/230/13.2KV TRANSFORMER CKT 1	560	560	0.03099	106.6	HITCHLAND INTERCHANGE - MOORE COUNTY INTERCHANGE 230KV CKT 1
FDNS	06ALL	3	20WP	G15_039	FROM->TO	POTTER COUNTY INTERCHANGE (WAUK 90343-A) 345/230/13.2KV TRANSFORMER CKT 1	560	560	0.21286	106.0739	GRAPEVINE INTERCHANGE - NICHOLS STATION 230KV CKT 1
FDNS	06ALL	3	20WP	G15_039	FROM->TO	POTTER COUNTY INTERCHANGE (WAUK 90343-A) 345/230/13.2KV TRANSFORMER CKT 1	560	560	0.21286	106.0739	GRAPEVINE INTERCHANGE - NICHOLS STATION 230KV CKT 1
FDNS	06ALL	3	20L	G15_039	FROM->TO	POTTER COUNTY INTERCHANGE (WAUK 90343-A) 345/230/13.2KV TRANSFORMER CKT 1	560	560	0.19897	105.8902	HITCHLAND INTERCHANGE - MOORE COUNTY INTERCHANGE 230KV CKT 1
FDNS	06ALL	3	20L	G15_039	FROM->TO	POTTER COUNTY INTERCHANGE (WAUK 90343-A) 345/230/13.2KV TRANSFORMER CKT 1	560	560	0.19897	105.8902	HITCHLAND INTERCHANGE - MOORE COUNTY INTERCHANGE 230KV CKT 1
FDNS	06ALL	3	20WP	G15_039	FROM->TO	POTTER COUNTY INTERCHANGE (WAUK 90343-A) 345/230/13.2KV TRANSFORMER CKT 1	560	560	0.22163	105.6262	STLN-DEMARC6 - SWEETWATER 230KV CKT 1
FDNS	06ALL	3	20WP	G15_039	FROM->TO	POTTER COUNTY INTERCHANGE (WAUK 90343-A) 345/230/13.2KV TRANSFORMER CKT 1	560	560	0.22163	105.6147	P12:230:AEPW-SPS:SWEETWT6:WHEELER 6
FDNS	06ALL	3	20WP	G15_039	FROM->TO	POTTER COUNTY INTERCHANGE (WAUK 90343-A) 345/230/13.2KV TRANSFORMER CKT 1	560	560	0.22163	105.61	STATELINE INTERCHANGE - STLN-DEMARC6 230KV CKT 1
FDNS	06ALL	3	17G	G15_039	FROM->TO	POTTER COUNTY INTERCHANGE (WAUK 90343-A) 345/230/13.2KV TRANSFORMER CKT 1	560	560	0.2293	105.5093	HITCHLAND INTERCHANGE - MOORE COUNTY INTERCHANGE 230KV CKT 1
FDNS	06ALL	3	17G	G15_039	FROM->TO	POTTER COUNTY INTERCHANGE (WAUK 90343-A) 345/230/13.2KV TRANSFORMER CKT 1	560	560	0.2293	105.5093	HITCHLAND INTERCHANGE - MOORE COUNTY INTERCHANGE 230KV CKT 1
FDNS	06ALL	3	20WP	G15_039	FROM->TO	POTTER COUNTY INTERCHANGE (WAUK 90343-A) 345/230/13.2KV TRANSFORMER CKT 1	560	560	0.21834	105.3556	CHISHOLM7 345.00 - WOODWARD DISTRICT EHV 345KV CKT 1
FDNS	06NR	3	20L	G15_039	FROM->TO	POTTER COUNTY INTERCHANGE (WAUK 90343-A) 345/230/13.2KV TRANSFORMER CKT 1	560	560	0.03099	105.2635	HITCHLAND INTERCHANGE - MOORE COUNTY INTERCHANGE 230KV CKT 1
FDNS	06NR	3	20L	G15_039	FROM->TO	POTTER COUNTY INTERCHANGE (WAUK 90343-A) 345/230/13.2KV TRANSFORMER CKT 1	560	560	0.03099	105.2635	HITCHLAND INTERCHANGE - MOORE COUNTY INTERCHANGE 230KV CKT 1
FDNS	06ALL	3	20WP	G15_039	FROM->TO	POTTER COUNTY INTERCHANGE (WAUK 90343-A) 345/230/13.2KV TRANSFORMER CKT 1	560	560	0.21286	104.7645	GRAPEVINE INTERCHANGE - NICHOLS STATION 230KV CKT 1
FDNS	06ALL	3	20WP	G15_039	FROM->TO	POTTER COUNTY INTERCHANGE (WAUK 90343-A) 345/230/13.2KV TRANSFORMER CKT 1	560	560	0.21286	104.7645	GRAPEVINE INTERCHANGE - NICHOLS STATION 230KV CKT 1
FDNS	06ALL	3	17G	G15_039	FROM->TO	POTTER COUNTY INTERCHANGE (WAUK 90343-A) 345/230/13.2KV TRANSFORMER CKT 1	560	560	0.2293	104.5149	HITCHLAND INTERCHANGE - MOORE COUNTY INTERCHANGE 230KV CKT 1
FDNS	06ALL	3	17G	G15_039	FROM->TO	POTTER COUNTY INTERCHANGE (WAUK 90343-A) 345/230/13.2KV TRANSFORMER CKT 1	560	560	0.2293	104.5149	HITCHLAND INTERCHANGE - MOORE COUNTY INTERCHANGE 230KV CKT 1
FDNS	06ALL	3	20WP	G15_039	FROM->TO	POTTER COUNTY INTERCHANGE (WAUK 90343-A) 345/230/13.2KV TRANSFORMER CKT 1	560	560	0.21834	104.2423	CHISHOLM7 345.00 - WOODWARD DISTRICT EHV 345KV CKT 1
FDNS	06ALL	3	17G	G15_039	FROM->TO	POTTER COUNTY INTERCHANGE (WAUK 90343-A) 345/230/13.2KV TRANSFORMER CKT 1	560	560	0.21826	103.5147	MOORE COUNTY INTERCHANGE - POTTER COUNTY INTERCHANGE 230KV CKT 1
FDNS	06ALL	3	17G	G15_039	FROM->TO	POTTER COUNTY INTERCHANGE (WAUK 90343-A) 345/230/13.2KV TRANSFORMER CKT 1	560	560	0.21826	103.5147	MOORE COUNTY INTERCHANGE - POTTER COUNTY INTERCHANGE 230KV CKT 1
FDNS	06ALL	3	17G	G15_039	FROM->TO	POTTER COUNTY INTERCHANGE (WAUK 90343-A) 345/230/13.2KV TRANSFORMER CKT 1	560	560	0.22048	103.4344	STLN-DEMARC6 - SWEETWATER 230KV CKT 1
FDNS	06ALL	3	20WP	G15_039	FROM->TO	POTTER COUNTY INTERCHANGE (WAUK 90343-A) 345/230/13.2KV TRANSFORMER CKT 1	560	560	0.21268	103.0344	GRAPEVINE INTERCHANGE - STATELINE INTERCHANGE 230KV CKT 1
FDNS	06ALL	3	20WP	G15_039	FROM->TO	POTTER COUNTY INTERCHANGE (WAUK 90343-A) 345/230/13.2KV TRANSFORMER CKT 1	560	560	0.21268	103.0344	GRAPEVINE INTERCHANGE - STATELINE INTERCHANGE 230KV CKT 1
FDNS	06NR	3	20L	G15_039	FROM->TO	POTTER COUNTY INTERCHANGE (WAUK 90343-A) 345/230/13.2KV TRANSFORMER CKT 1	560	560	0.03241	102.6147	MOORE COUNTY INTERCHANGE - POTTER COUNTY INTERCHANGE 230KV CKT 1
FDNS	06NR	3	20L	G15_039	FROM->TO	POTTER COUNTY INTERCHANGE (WAUK 90343-A) 345/230/13.2KV TRANSFORMER CKT 1	560	560	0.03241	102.6147	MOORE COUNTY INTERCHANGE - POTTER COUNTY INTERCHANGE 230KV CKT 1
FDNS	06ALL	3	17G	G15_039	FROM->TO	POTTER COUNTY INTERCHANGE (WAUK 90343-A) 345/230/13.2KV TRANSFORMER CKT 1	560	560	0.21613	102.5758	CHISHOLM7 345.00 - WOODWARD DISTRICT EHV 345KV CKT 1
FDNS	06ALL	3	17G	G15_039	FROM->TO	POTTER COUNTY INTERCHANGE (WAUK 90343-A) 345/230/13.2KV TRANSFORMER CKT 1	560	560	0.21826	102.5028	MOORE COUNTY INTERCHANGE - POTTER COUNTY INTERCHANGE 230KV CKT 1
FDNS	06ALL	3	17G	G15_039	FROM->TO	POTTER COUNTY INTERCHANGE (WAUK 90343-A) 345/230/13.2KV TRANSFORMER CKT 1	560	560	0.21826	102.5028	MOORE COUNTY INTERCHANGE - POTTER COUNTY INTERCHANGE 230KV CKT 1
FDNS	06ALL	3	17G	G15_039	FROM->TO	POTTER COUNTY INTERCHANGE (WAUK 90343-A) 345/230/13.2KV TRANSFORMER CKT 1	560	560	0.22048	102.0101	STLN-DEMARC6 - SWEETWATER 230KV CKT 1
FDNS	06ALL	3	20WP	G15_039	FROM->TO	POTTER COUNTY INTERCHANGE (WAUK 90343-A) 345/230/13.2KV TRANSFORMER CKT 1	560	560	0.21268	101.9729	GRAPEVINE INTERCHANGE - STATELINE INTERCHANGE 230KV CKT 1
FDNS	06ALL	3	20WP	G15_039	FROM->TO	POTTER COUNTY INTERCHANGE (WAUK 90343-A) 345/230/13.2KV TRANSFORMER CKT 1	560	560	0.21268	101.9729	GRAPEVINE INTERCHANGE - STATELINE INTERCHANGE 230KV CKT 1
FDNS	06ALL	3	17G	G15_039	FROM->TO	POTTER COUNTY INTERCHANGE (WAUK 90343-A) 345/230/13.2KV TRANSFORMER CKT 1	560	560	0.21156	101.7398	GRAPEVINE INTERCHANGE - NICHOLS STATION 230KV CKT 1
FDNS	06ALL	3	17G	G15_039	FROM->TO	POTTER COUNTY INTERCHANGE (WAUK 90343-A) 345/230/13.2KV TRANSFORMER CKT 1	560	560	0.21156	101.7398	GRAPEVINE INTERCHANGE - NICHOLS STATION 230KV CKT 1
FDNS	06NR	3	20L	G15_039	FROM->TO	POTTER COUNTY INTERCHANGE (WAUK 90343-A) 345/230/13.2KV TRANSFORMER CKT 1	560	560	0.03241	101.6011	MOORE COUNTY INTERCHANGE - POTTER COUNTY INTERCHANGE 230KV CKT 1
FDNS	06NR	3	20L	G15_039	FROM->TO	POTTER COUNTY INTERCHANGE (WAUK 90343-A) 345/230/13.2KV TRANSFORMER CKT 1	560	560	0.03241	101.6011	MOORE COUNTY INTERCHANGE - POTTER COUNTY INTERCHANGE 230KV CKT 1
FDNS	06ALL	3	17G	G15_039	FROM->TO	POTTER COUNTY INTERCHANGE (WAUK 90343-A) 345/230/13.2KV TRANSFORMER CKT 1	560	560	0.21613	101.4359	CHISHOLM7 345.00 - WOODWARD DISTRICT EHV 345KV CKT 1
FDNS	06NR	3	17G	G15_039	FROM->TO	POTTER COUNTY INTERCHANGE (WAUK 90343-A) 345/230/13.2KV TRANSFORMER CKT 1	560	560	0.02978	101.1982	HITCHLAND INTERCHANGE - MOORE COUNTY INTERCHANGE 230KV CKT 1
FDNS	06NR	3	17G	G15_039	FROM->TO	POTTER COUNTY INTERCHANGE (WAUK 90343-A) 345/230/13.2KV TRANSFORMER CKT 1	560	560	0.02978	101.1982	HITCHLAND INTERCHANGE - MOORE COUNTY INTERCHANGE 230KV CKT 1
FDNS	06NR	3	17G	G15_039	FROM->TO	POTTER COUNTY INTERCHANGE (WAUK 90343-A) 345/230/13.2KV TRANSFORMER CKT 1	560	560	0.02978	100.6221	HITCHLAND INTERCHANGE - MOORE COUNTY INTERCHANGE 230KV CKT 1
FDNS	06NR	3	17G	G15_039	FROM->TO	POTTER COUNTY INTERCHANGE (WAUK 90343-A) 345/230/13.2KV TRANSFORMER CKT 1	560	560	0.02978	100.6221	HITCHLAND INTERCHANGE - MOORE COUNTY INTERCHANGE 230KV CKT 1
FDNS	06ALL	3	17G	G15_039	FROM->TO	POTTER COUNTY INTERCHANGE (WAUK 90343-A) 345/230/13.2KV TRANSFORMER CKT 1	560	560	0.21156	100.5146	GRAPEVINE INTERCHANGE - NICHOLS STATION 230KV CKT 1
FDNS	06ALL	3	17G	G15_039	FROM->TO	POTTER COUNTY INTERCHANGE (WAUK 90343-A) 345/230/13.2KV TRANSFORMER CKT 1	560	560	0.21156	100.5146	GRAPEVINE INTERCHANGE - NICHOLS STATION 230KV CKT 1
FDNS	06ALL	3	20WP	G15_039	FROM->TO	POTTER COUNTY INTERCHANGE (WAUK 90343-A) 345/230/13.2KV TRANSFORMER CKT 1	560	560	0.20552	99.7	CIMARRON - MINCO 345KV CKT 1
FDNS	06ALL	3	20WP	G15_039	FROM->TO	POTTER COUNTY INTERCHANGE (WAUK 90343-A) 345/230/13.2KV TRANSFORMER CKT 1	560	560	0.20455	99.7	CHISHOLM7 345.00 - GRACEMONT 345KV CKT 1
FDNS	06ALL	3	20WP	G15_039	FROM->TO	POTTER COUNTY INTERCHANGE (WAUK 90343-A) 345/230/13.2KV TRANSFORMER CKT 1	560	560	0.19862	99.5	GEN524295 1-SPNSPUR_WND10.6900
FDNS	06ALL	4	20SP	G15_039	FROM->TO	CHISHOLM6 230.00 - ELK CITY 230KV 230KV CKT 1	353	353	0.06213	103.152	BASE CASE
FDNS	06ALL	4	17SP	G15_039	FROM->TO	CHISHOLM6 230.00 - ELK CITY 230KV 230KV CKT 1	353	353	0.06231	100.7007	BASE CASE
FDNS	06ALL	4	17G	G15_039	TO->FROM	CIMARRON - MINCO 345KV CKT 1	956	956	0.20845	129.7974	G14-057T 345.00 - SUNNYSIDE 345KV CKT 1
FDNS	06ALL	4	20WP	G15_039	TO->FROM	CIMARRON - MINCO 345KV CKT 1	956	956	0.20553	128.511	G14-057T 345.00 - SUNNYSIDE 345KV CKT 1
FDNS	06ALL	4	17G	G15_039	TO->FROM	CIMARRON - MINCO 345KV CKT 1	956	956	0.20845	124.286	G14-057T 345.00 - LAWTON EASTSIDE 345KV CKT 1
FDNS	06ALL	4	20WP	G15_039	TO->FROM	CIMARRON - MINCO 345KV CKT 1	956	956	0.20553	123.0537	G14-057T 345.00 - LAWTON EASTSIDE 345KV CKT 1

SOLUTION	GROUP	SCENARIO	SEASON	SOURCE	DIRECTION	MONITORED ELEMENT	RATEA (MVA)	RATEB(MVA)	TDF	TC%LOADING (% MVA)	CONTINGENCY
FDNS	06ALL	4	16WP	G15_039	TO->FROM	CIMARRON - MINCO 345KV CKT 1	956	956	0.21502	122.1275	G14-057T 345.00 - SUNNYSIDE 345KV CKT 1
FDNS	06ALL	4	17SP	G15_039	TO->FROM	CIMARRON - MINCO 345KV CKT 1	956	956	0.21165	121.005	G14-057T 345.00 - SUNNYSIDE 345KV CKT 1
FDNS	06ALL	4	20SP	G15_039	TO->FROM	CIMARRON - MINCO 345KV CKT 1	956	956	0.21128	117.7968	G14-057T 345.00 - SUNNYSIDE 345KV CKT 1
FDNS	06ALL	4	16WP	G15_039	TO->FROM	CIMARRON - MINCO 345KV CKT 1	956	956	0.21502	116.5578	G14-057T 345.00 - LAWTON EASTSIDE 345KV CKT 1
FDNS	06ALL	4	17SP	G15_039	TO->FROM	CIMARRON - MINCO 345KV CKT 1	956	956	0.21165	115.6625	G14-057T 345.00 - LAWTON EASTSIDE 345KV CKT 1
FDNS	06ALL	4	20SP	G15_039	TO->FROM	CIMARRON - MINCO 345KV CKT 1	956	956	0.21128	112.5931	G14-057T 345.00 - LAWTON EASTSIDE 345KV CKT 1
FDNSLock	06ALL	4	16WP	G15_039		G14_001T 345.00 - WICHITA 345KV CKT 1	1035	1035	0.05427	25.24282	BASE CASE
FDNS	06ALL	4	20L	G15_039	TO->FROM	G14-057T 345.00 - LAWTON EASTSIDE 345KV CKT 1	717	789	0.08855	104.3251	BASE CASE
FDNS	06ALL	4	20L	G15_039	FROM->TO	G14-057T 345.00 - SUNNYSIDE 345KV CKT 1	717	789	0.08855	117.5276	BASE CASE
FDNS	06ALL	4	20WP	G15_039	FROM->TO	G14-057T 345.00 - SUNNYSIDE 345KV CKT 1	717	789	0.11144	105.3579	BASE CASE
FDNS	06ALL	4	17G	G15_039	FROM->TO	G14-057T 345.00 - SUNNYSIDE 345KV CKT 1	717	789	0.11338	105.0325	BASE CASE
FDNS	06ALL	4	16WP	G15_039	FROM->TO	G14-057T 345.00 - SUNNYSIDE 345KV CKT 1	717	789	0.11671	103.6585	BASE CASE
FDNS	00NR	4	25SP	G15_039	TO->FROM	JONES STATION - TUCO INTERCHANGE 230KV CKT 1	343.79	343.79	0.0857	129.809	CARLISLE INTERCHANGE - TUCO INTERCHANGE 230KV CKT 1
FDNS	00NR	4	25SP	G15_039	TO->FROM	JONES STATION - TUCO INTERCHANGE 230KV CKT 1	343.79	343.79	0.0857	129.809	CARLISLE INTERCHANGE - TUCO INTERCHANGE 230KV CKT 1
FDNS	00NR	4	25SP	G15_039	TO->FROM	JONES STATION - TUCO INTERCHANGE 230KV CKT 1	343.79	343.79	0.071	113.028	GEN526333 1-JONES GEN #3 21 KV
FDNS	00NR	4	25SP	G15_039	TO->FROM	JONES STATION - TUCO INTERCHANGE 230KV CKT 1	343.79	343.79	0.071	112.6359	GEN526334 1-JONES_4 116.500
FDNS	00NR	4	25SP	G15_039	TO->FROM	JONES STATION - TUCO INTERCHANGE 230KV CKT 1	343.79	343.79	0.08208	108.0461	TUCO INTERCHANGE - YOAKUM_345 345.00 345KV CKT 1
FDNS	00NR	4	25SP	G15_039	TO->FROM	JONES STATION - TUCO INTERCHANGE 230KV CKT 1	343.79	343.79	0.07794	103.563	CARLISLE INTERCHANGE - WOLFFORTH INTERCHANGE 230KV CKT 1
FDNS	00NR	4	25SP	G15_039	TO->FROM	JONES STATION - TUCO INTERCHANGE 230KV CKT 1	343.79	343.79	0.08717	101.3715	PLANT X STATION - SUNDOWN INTERCHANGE 230KV CKT 1
FDNS	00NR	4	25SP	G15_039	TO->FROM	JONES STATION - TUCO INTERCHANGE 230KV CKT 1	343.79	343.79	0.08717	101.3715	PLANT X STATION - SUNDOWN INTERCHANGE 230KV CKT 1
FDNS	00NR	4	25SP	G15_039	TO->FROM	JONES STATION - TUCO INTERCHANGE 230KV CKT 1	343.79	343.79	0.07245	100.6898	P12:345:SPS:J02.1.TOLK.EDDY
FDNS	00NR	4	25SP	G15_039	TO->FROM	JONES STATION - TUCO INTERCHANGE 230KV CKT 1	343.79	343.79	0.071	100.6764	GEN526332 1-JONES GEN #2 21 KV
FDNS	00NR	4	25SP	G15_039	TO->FROM	JONES STATION - TUCO INTERCHANGE 230KV CKT 1	343.79	343.79	0.071	100.6745	GEN526331 1-JONES GEN #1 22 KV
FDNS	00NR	4	25SP	G15_039	TO->FROM	JONES STATION - TUCO INTERCHANGE 230KV CKT 1	343.79	343.79	0.07111	100.6429	TUCO INTERCHANGE (ENRCO 136401) 230/115/13.2KV TRANSFORMER CKT 1
FDNS	00NR	4	25SP	G15_039	TO->FROM	JONES STATION - TUCO INTERCHANGE 230KV CKT 1	343.79	343.79	0.07111	100.6429	TUCO INTERCHANGE (ENRCO 136401) 230/115/13.2KV TRANSFORMER CKT 1
FDNS	00NR	4	25SP	G15_039	TO->FROM	JONES STATION - TUCO INTERCHANGE 230KV CKT 1	343.79	343.79	0.07111	100.6429	TUCO INTERCHANGE (ENRCO 136401) 230/115/13.2KV TRANSFORMER CKT 2
FDNS	00NR	4	25SP	G15_039	TO->FROM	JONES STATION - TUCO INTERCHANGE 230KV CKT 1	343.79	343.79	0.07111	100.6429	TUCO INTERCHANGE (ENRCO 136401) 230/115/13.2KV TRANSFORMER CKT 2
FDNS	00NR	4	25SP	G15_039	TO->FROM	JONES STATION - TUCO INTERCHANGE 230KV CKT 1	343.79	343.79	0.07811	99.8	LUBBOCK EAST INTERCHANGE - TUCO INTERCHANGE 115KV CKT 1
FDNS	00NR	4	25SP	G15_039	TO->FROM	JONES STATION - TUCO INTERCHANGE 230KV CKT 1	343.79	343.79	0.07811	99.8	LUBBOCK EAST INTERCHANGE - TUCO INTERCHANGE 115KV CKT 1
FDNS	00NR	4	25SP	G15_039	FROM->TO	LUBBOCK POWER & LIGHT-HOLLY PLANT (SHIH T101039) 230/69/13.5KV TRANSFORMER CKT 1	224	224	0.0358	104.6928	LUBBOCK POWER & LIGHT-SOUTHEAST - LUBBOCK SOUTH INTERCHANGE 230KV CKT 1
FDNS	00NR	4	25SP	G15_039	FROM->TO	LUBBOCK POWER & LIGHT-HOLLY PLANT (SHIH T101039) 230/69/13.5KV TRANSFORMER CKT 1	224	224	0.0358	104.6926	P12:LPL:SPS:K64.1.LP-SE.LUBBS
FDNS	00NR	4	25SP	G15_039	FROM->TO	LUBBOCK POWER & LIGHT-HOLLY PLANT (SHIH T101039) 230/69/13.5KV TRANSFORMER CKT 1	224	224	0.0346	101.9377	LUBBOCK EAST INTERCHANGE - LUBBOCK POWER & LIGHT-WADSWORTH 230KV CKT 1
FDNS	00NR	4	25SP	G15_039	FROM->TO	LUBBOCK POWER & LIGHT-HOLLY PLANT (SHIH T101039) 230/69/13.5KV TRANSFORMER CKT 1	224	224	0.0346	101.923	P12:230:LPL:K57.1.LP-WADS.LUBBE
FDNS	00NR	4	25SP	G15_039	FROM->TO	LUBBOCK POWER & LIGHT-HOLLY PLANT (SHIH T101039) 230/69/13.5KV TRANSFORMER CKT 1	224	224	0.0346	101.9229	LUBBOCK POWER & LIGHT-WADSWORTH (SHIH T101038) 230/69/13.5KV TRANSFORMER CKT 1
FDNS	00NR	4	25SP	G15_039	FROM->TO	LUBBOCK POWER & LIGHT-HOLLY PLANT (SHIH T101039) 230/69/13.5KV TRANSFORMER CKT 1	224	224	0.0346	101.9229	LUBBOCK POWER & LIGHT-WADSWORTH (SHIH T101038) 230/69/13.5KV TRANSFORMER CKT 1
FDNSLock	06ALL	4	20L	G15_039		OKLAUNION 345KV SWITCHED SHUNT	1022	1124	0.12979	86.37846	BASE CASE
FDNS	06ALL	5	20SP	G15_039	FROM->TO	CHISHOLM6 230.00 - ELK CITY 230KV 230KV CKT 1	353	353	0.06801	107.7212	BASE CASE
FDNS	06ALL	5	17SP	G15_039	FROM->TO	CHISHOLM6 230.00 - ELK CITY 230KV 230KV CKT 1	353	353	0.06829	105.7594	BASE CASE
FDNS	06ALL	5	17G	G15_039	TO->FROM	CIMARRON - MINCO 345KV CKT 1	956	956	0.2191	132.5137	G14-057T 345.00 - SUNNYSIDE 345KV CKT 1
FDNS	06ALL	5	20WP	G15_039	TO->FROM	CIMARRON - MINCO 345KV CKT 1	956	956	0.21521	131.4126	G14-057T 345.00 - SUNNYSIDE 345KV CKT 1
FDNS	06ALL	5	17G	G15_039	TO->FROM	CIMARRON - MINCO 345KV CKT 1	956	956	0.2191	127.0859	G14-057T 345.00 - LAWTON EASTSIDE 345KV CKT 1
FDNS	06ALL	5	20WP	G15_039	TO->FROM	CIMARRON - MINCO 345KV CKT 1	956	956	0.21521	126.0182	G14-057T 345.00 - LAWTON EASTSIDE 345KV CKT 1
FDNS	06ALL	5	16WP	G15_039	TO->FROM	CIMARRON - MINCO 345KV CKT 1	956	956	0.22586	125.0103	G14-057T 345.00 - SUNNYSIDE 345KV CKT 1
FDNS	06ALL	5	17SP	G15_039	TO->FROM	CIMARRON - MINCO 345KV CKT 1	956	956	0.22208	123.5221	G14-057T 345.00 - SUNNYSIDE 345KV CKT 1
FDNS	06ALL	5	20SP	G15_039	TO->FROM	CIMARRON - MINCO 345KV CKT 1	956	956	0.2214	120.476	G14-057T 345.00 - SUNNYSIDE 345KV CKT 1
FDNS	06ALL	5	16WP	G15_039	TO->FROM	CIMARRON - MINCO 345KV CKT 1	956	956	0.22586	119.6144	G14-057T 345.00 - LAWTON EASTSIDE 345KV CKT 1
FDNS	06ALL	5	17SP	G15_039	TO->FROM	CIMARRON - MINCO 345KV CKT 1	956	956	0.22208	118.2604	G14-057T 345.00 - LAWTON EASTSIDE 345KV CKT 1
FDNS	06ALL	5	20SP	G15_039	TO->FROM	CIMARRON - MINCO 345KV CKT 1	956	956	0.2214	115.0864	G14-057T 345.00 - LAWTON EASTSIDE 345KV CKT 1
FDNS	06ALL	5	17G	G15_039	TO->FROM	CIMARRON - MINCO 345KV CKT 1	956	956	0.21055	110.4087	CHISHOLM7 345.00 - WOODWARD DISTRICT EHV 345KV CKT 1
FDNS	06ALL	5	20WP	G15_039	TO->FROM	CIMARRON - MINCO 345KV CKT 1	956	956	0.20882	106.6912	CHISHOLM7 345.00 - WOODWARD DISTRICT EHV 345KV CKT 1
FDNS	06ALL	5	16WP	G15_039	TO->FROM	CIMARRON - MINCO 345KV CKT 1	956	956	0.19887	106.1194	MATHWSN7 345.00 - TATONGA7 345.00 345KV CKT 1
FDNS	06ALL	5	17SP	G15_039	TO->FROM	CIMARRON - MINCO 345KV CKT 1	956	956	0.19647	106.0588	MATHWSN7 345.00 - TATONGA7 345.00 345KV CKT 1
FDNS	06ALL	5	20SP	G15_039	TO->FROM	CIMARRON - MINCO 345KV CKT 1	956	956	0.19582	105.1459	MATHWSN7 345.00 - TATONGA7 345.00 345KV CKT 1
FDNS	06ALL	5	20SP	G15_039	TO->FROM	CIMARRON - MINCO 345KV CKT 1	956	956	0.21586	102.6282	CHISHOLM7 345.00 - WOODWARD DISTRICT EHV 345KV CKT 1
FDNS	06ALL	5	17SP	G15_039	TO->FROM	CIMARRON - MINCO 345KV CKT 1	956	956	0.21646	102.3712	CHISHOLM7 345.00 - WOODWARD DISTRICT EHV 345KV CKT 1
FDNS	06ALL	5	17SP	G15_039	TO->FROM	CIMARRON - MINCO 345KV CKT 1	956	956	0.19647	100.8538	G11_051T 345.00 - TATONGA7 345.00 345KV CKT 1
FDNS	06ALL	5	16WP	G15_039	TO->FROM	CIMARRON - MINCO 345KV CKT 1	956	956	0.19887	100.7286	G11_051T 345.00 - TATONGA7 345.00 345KV CKT 1
FDNS	06ALL	5	20SP	G15_039	TO->FROM	CIMARRON - MINCO 345KV CKT 1	956	956	0.19582	100	G11_051T 345.00 - TATONGA7 345.00 345KV CKT 1
FDNS	06ALL	5	16WP	G15_039	TO->FROM	CIMARRON - MINCO 345KV CKT 1	956	956	0.21871	99.9	CHISHOLM7 345.00 - WOODWARD DISTRICT EHV 345KV CKT 1
FDNS	06ALL	5	20L	G15_039	TO->FROM	G14-057T 345.00 - LAWTON EASTSIDE 345KV CKT 1	717	789	0.09057	104.5834	BASE CASE
FDNS	06ALL	5	20L	G15_039	FROM->TO	G14-057T 345.00 - SUNNYSIDE 345KV CKT 1	717	789	0.09057	117.7866	BASE CASE
FDNS	06ALL	5	20WP	G15_039	FROM->TO	G14-057T 345.00 - SUNNYSIDE 345KV CKT 1	717	789	0.11254	105.6059	BASE CASE
FDNS	06ALL	5	17G	G15_039	FROM->TO	G14-057T 345.00 - SUNNYSIDE 345KV CKT 1	717	789	0.11491	105.2883	BASE CASE
FDNS	06ALL	5	16WP	G15_039	FROM->TO	G14-057T 345.00 - SUNNYSIDE 345KV CKT 1	717	789	0.11817	103.9305	BASE CASE
FDNS	00NR	5	25SP	G15_039	TO->FROM	JONES STATION - TUCO INTERCHANGE 230KV CKT 1	343.79	343.79	0.08587	129.641	CARLISLE INTERCHANGE - TUCO INTERCHANGE 230KV CKT 1
FDNS	00NR	5	25SP	G15_039	TO->FROM	JONES STATION - TUCO INTERCHANGE 230KV CKT 1	343.79	343.79	0.08587	129.641	CARLISLE INTERCHANGE - TUCO INTERCHANGE 230KV CKT 1
FDNS	00NR	5	25SP	G15_039	TO->FROM	JONES STATION - TUCO INTERCHANGE 230KV CKT 1	343.79	343.79	0.07112	112.7964	GEN526333 1-JONES GEN #3 21 KV
FDNS	00NR	5	25SP	G15_039	TO->FROM	JONES STATION - TUCO INTERCHANGE 230KV CKT 1	343.79	343.79	0.07112	112.4061	GEN526334 1-JONES_4 116.500
FDNS	00NR	5	25SP	G15_039	TO->FROM	JONES STATION - TUCO INTERCHANGE 230KV CKT 1	343.79	343.79	0.08221	107.7831	TUCO INTERCHANGE - YOAKUM_345 345.00 345KV CKT 1
FDNS	00NR	5	25SP	G15_039	TO->FROM	JONES STATION - TUCO INTERCHANGE 230KV CKT 1	343.79	343.79	0.07809	103.4197	CARLISLE INTERCHANGE - WOLFFORTH INTERCHANGE 230KV CKT 1
FDNS	00NR	5	25SP	G15_039	TO->FROM	JONES STATION - TUCO INTERCHANGE 230KV CKT 1	343.79	343.79	0.08727	101.2834	PLANT X STATION - SUNDOWN INTERCHANGE 230KV CKT 1
FDNS	00NR	5	25SP	G15_039	TO->FROM	JONES STATION - TUCO INTERCHANGE 230KV CKT 1	343.79	343.79	0.08727	101.2834	PLANT X STATION - SUNDOWN INTERCHANGE 230KV CKT 1
FDNS	00NR	5	25SP	G15_039	TO->FROM	JONES STATION - TUCO INTERCHANGE 230KV CKT 1	343.79	343.79	0.07252	100.5886	P12:345:SPS:J02.1.TOLK.EDDY
FDNS	00NR	5	25SP	G15_039	TO->FROM	JONES STATION - TUCO INTERCHANGE 230KV CKT 1	343.79	343.79	0.07112	100.5344	GEN526332 1-JONES GEN #2 21 KV
FDNS	00NR	5	25SP	G15_039	TO->FROM	JONES STATION - TUCO INTERCHANGE 230KV CKT 1	343.79	343.79	0.07112	100.5324	GEN526331 1-JONES GEN #1 22 KV
FDNS	00NR	5	25SP	G15_039	TO->FROM	JONES STATION - TUCO INTERCHANGE 230KV CKT 1	343.79	343.79	0.07124	100.5232	TUCO INTERCHANGE (ENRCO 136401) 230/115/13.2KV TRANSFORMER CKT 1
FDNS	00NR	5	25SP	G15_039	TO->FROM	JONES STATION - TUCO INTERCHANGE 230KV CKT 1	343.79	343.79	0.07124	100.5232	TUCO INTERCHANGE (ENRCO 136401) 230/115/13.2KV TRANSFORMER CKT 1
FDNS	00NR	5	25SP	G15_039	TO->FROM	JONES STATION - TUCO INTERCHANGE 230KV CKT 1	343.79	343.79	0.07124	100.5232	TUCO INTERCHANGE (ENRCO 136401) 230/115/13.2KV TRANSFORMER CKT 2
FDNS	00NR	5	25SP	G15_039	TO->FROM	JONES STATION - TUCO INTERCHANGE 230KV CKT 1	343.79	343.79	0.07124	100.5232	TUCO INTERCHANGE (ENRCO 136401) 230/115/13.2KV TRANSFORMER CKT 2

SOLUTION	GROUP	SCENARIO	SEASON	SOURCE	DIRECTION	MONITORED ELEMENT	RATEA (MVA)	RATEB(MVA)	TDF	TC%LOADING (% MVA)	CONTINGENCY
FDNS	00NR	5	25SP	G15_039	TO->FROM	JONES STATION - TUCO INTERCHANGE 230KV CKT 1	343.79	343.79	0.07823	99.6	LUBBOCK EAST INTERCHANGE - TUCO INTERCHANGE 115KV CKT 1
FDNS	00NR	5	25SP	G15_039	TO->FROM	JONES STATION - TUCO INTERCHANGE 230KV CKT 1	343.79	343.79	0.07823	99.6	LUBBOCK EAST INTERCHANGE - TUCO INTERCHANGE 115KV CKT 1
FDNS	00NR	5	25SP	G15_039	FROM->TO	LUBBOCK POWER & LIGHT-HOLLY PLANT (SHIH T101039) 230/69/13.5KV TRANSFORMER CKT 1	224	224	0.03581	104.6927	LUBBOCK POWER & LIGHT-SOUTHEAST - LUBBOCK SOUTH INTERCHANGE 230KV CKT 1
FDNS	00NR	5	25SP	G15_039	FROM->TO	LUBBOCK POWER & LIGHT-HOLLY PLANT (SHIH T101039) 230/69/13.5KV TRANSFORMER CKT 1	224	224	0.03581	104.6925	P12:LPL:SPS:K64.1.LP-SE.LUBBS
FDNS	00NR	5	25SP	G15_039	FROM->TO	LUBBOCK POWER & LIGHT-HOLLY PLANT (SHIH T101039) 230/69/13.5KV TRANSFORMER CKT 1	224	224	0.0346	101.9351	LUBBOCK EAST INTERCHANGE - LUBBOCK POWER & LIGHT-WADSWORTH 230KV CKT 1
FDNS	00NR	5	25SP	G15_039	FROM->TO	LUBBOCK POWER & LIGHT-HOLLY PLANT (SHIH T101039) 230/69/13.5KV TRANSFORMER CKT 1	224	224	0.0346	101.9204	P12:230:LPL:K57.1.LP-WADS.LUBBE
FDNS	00NR	5	25SP	G15_039	FROM->TO	LUBBOCK POWER & LIGHT-HOLLY PLANT (SHIH T101039) 230/69/13.5KV TRANSFORMER CKT 1	224	224	0.0346	101.9203	LUBBOCK POWER & LIGHT-WADSWORTH (SHIH T101038) 230/69/13.5KV TRANSFORMER CKT 1
FDNS	00NR	5	25SP	G15_039	FROM->TO	LUBBOCK POWER & LIGHT-HOLLY PLANT (SHIH T101039) 230/69/13.5KV TRANSFORMER CKT 1	224	224	0.0346	101.9203	LUBBOCK POWER & LIGHT-WADSWORTH (SHIH T101038) 230/69/13.5KV TRANSFORMER CKT 1
FDNS	06NR	5	20L	G15_039	FROM->TO	POTTER COUNTY INTERCHANGE (WAUK 90343-A) 345/230/13.2KV TRANSFORMER CKT 1	560	560	0.04029	138.3857	P12:345:SPS:J15.1.XRDS.TOLK
FDNS	06NR	5	20L	G15_039	FROM->TO	POTTER COUNTY INTERCHANGE (WAUK 90343-A) 345/230/13.2KV TRANSFORMER CKT 1	560	560	0.04029	136.8571	P12:345:SPS:J15.1.XRDS.TOLK
FDNS	06NR	5	20L	G15_039	FROM->TO	POTTER COUNTY INTERCHANGE (WAUK 90343-A) 345/230/13.2KV TRANSFORMER CKT 1	560	560	0.0367	136.5121	POTTER COUNTY INTERCHANGE - TOLK STATION 345KV CKT 1
FDNS	06NR	5	17G	G15_039	FROM->TO	POTTER COUNTY INTERCHANGE (WAUK 90343-A) 345/230/13.2KV TRANSFORMER CKT 1	560	560	0.0371	136.1804	P12:345:SPS:J15.1.XRDS.TOLK
FDNS	06NR	5	17G	G15_039	FROM->TO	POTTER COUNTY INTERCHANGE (WAUK 90343-A) 345/230/13.2KV TRANSFORMER CKT 1	560	560	0.0371	135.6583	P12:345:SPS:J15.1.XRDS.TOLK
FDNS	06NR	5	20L	G15_039	FROM->TO	POTTER COUNTY INTERCHANGE (WAUK 90343-A) 345/230/13.2KV TRANSFORMER CKT 1	560	560	0.0367	135.0142	POTTER COUNTY INTERCHANGE - TOLK STATION 345KV CKT 1
FDNS	06ALL	5	20WP	G15_039	FROM->TO	POTTER COUNTY INTERCHANGE (WAUK 90343-A) 345/230/13.2KV TRANSFORMER CKT 1	560	560	0.2718	134.3002	P12:345:SPS:J15.1.XRDS.TOLK
FDNS	06ALL	5	20WP	G15_039	FROM->TO	POTTER COUNTY INTERCHANGE (WAUK 90343-A) 345/230/13.2KV TRANSFORMER CKT 1	560	560	0.2718	134.2067	P12:345:SPS:J15.1.XRDS.TOLK
FDNS	06NR	5	17G	G15_039	FROM->TO	POTTER COUNTY INTERCHANGE (WAUK 90343-A) 345/230/13.2KV TRANSFORMER CKT 1	560	560	0.03561	133.1553	POTTER COUNTY INTERCHANGE - TOLK STATION 345KV CKT 1
FDNS	06NR	5	17G	G15_039	FROM->TO	POTTER COUNTY INTERCHANGE (WAUK 90343-A) 345/230/13.2KV TRANSFORMER CKT 1	560	560	0.03561	132.6583	POTTER COUNTY INTERCHANGE - TOLK STATION 345KV CKT 1
FDNS	06ALL	5	17G	G15_039	FROM->TO	POTTER COUNTY INTERCHANGE (WAUK 90343-A) 345/230/13.2KV TRANSFORMER CKT 1	560	560	0.27649	131.4477	P12:345:SPS:J15.1.XRDS.TOLK
FDNS	06ALL	5	17G	G15_039	FROM->TO	POTTER COUNTY INTERCHANGE (WAUK 90343-A) 345/230/13.2KV TRANSFORMER CKT 1	560	560	0.27649	130.9697	P12:345:SPS:J15.1.XRDS.TOLK
FDNS	06ALL	5	20L	G15_039	FROM->TO	POTTER COUNTY INTERCHANGE (WAUK 90343-A) 345/230/13.2KV TRANSFORMER CKT 1	560	560	0.23685	129.9636	P12:345:SPS:J15.1.XRDS.TOLK
FDNS	06ALL	5	20L	G15_039	FROM->TO	POTTER COUNTY INTERCHANGE (WAUK 90343-A) 345/230/13.2KV TRANSFORMER CKT 1	560	560	0.23685	129.8782	P12:345:SPS:J15.1.XRDS.TOLK
FDNS	06ALL	5	20WP	G15_039	FROM->TO	POTTER COUNTY INTERCHANGE (WAUK 90343-A) 345/230/13.2KV TRANSFORMER CKT 1	560	560	0.26044	129.0373	POTTER COUNTY INTERCHANGE - TOLK STATION 345KV CKT 1
FDNS	06ALL	5	20WP	G15_039	FROM->TO	POTTER COUNTY INTERCHANGE (WAUK 90343-A) 345/230/13.2KV TRANSFORMER CKT 1	560	560	0.26044	128.967	POTTER COUNTY INTERCHANGE - TOLK STATION 345KV CKT 1
FDNS	06ALL	5	20L	G15_039	FROM->TO	POTTER COUNTY INTERCHANGE (WAUK 90343-A) 345/230/13.2KV TRANSFORMER CKT 1	560	560	0.22641	126.0722	POTTER COUNTY INTERCHANGE - TOLK STATION 345KV CKT 1
FDNS	06ALL	5	20L	G15_039	FROM->TO	POTTER COUNTY INTERCHANGE (WAUK 90343-A) 345/230/13.2KV TRANSFORMER CKT 1	560	560	0.22641	125.9146	POTTER COUNTY INTERCHANGE - TOLK STATION 345KV CKT 1
FDNS	06ALL	5	17G	G15_039	FROM->TO	POTTER COUNTY INTERCHANGE (WAUK 90343-A) 345/230/13.2KV TRANSFORMER CKT 1	560	560	0.26072	124.9996	POTTER COUNTY INTERCHANGE - TOLK STATION 345KV CKT 1
FDNS	06ALL	5	17G	G15_039	FROM->TO	POTTER COUNTY INTERCHANGE (WAUK 90343-A) 345/230/13.2KV TRANSFORMER CKT 1	560	560	0.26072	124.6782	POTTER COUNTY INTERCHANGE - TOLK STATION 345KV CKT 1
FDNS	06ALL	5	16WP	G15_039	FROM->TO	POTTER COUNTY INTERCHANGE (WAUK 90343-A) 345/230/13.2KV TRANSFORMER CKT 1	560	560	0.28774	123.3278	P12:345:SPS:J15.1.XRDS.TOLK
FDNS	06ALL	5	16WP	G15_039	FROM->TO	POTTER COUNTY INTERCHANGE (WAUK 90343-A) 345/230/13.2KV TRANSFORMER CKT 1	560	560	0.28774	122.0001	P12:345:SPS:J15.1.XRDS.TOLK
FDNS	06NR	5	20L	G15_039	FROM->TO	POTTER COUNTY INTERCHANGE (WAUK 90343-A) 345/230/13.2KV TRANSFORMER CKT 1	560	560	0.05276	119.3762	CHISHOLM6 230.00 - SWEETWATER 230KV CKT 1
FDNS	06ALL	5	20WP	G15_039	FROM->TO	POTTER COUNTY INTERCHANGE (WAUK 90343-A) 345/230/13.2KV TRANSFORMER CKT 1	560	560	0.26082	115.8937	P12:345:SPS:J02.1.TOLK.EDDY
FDNS	06ALL	5	20WP	G15_039	FROM->TO	POTTER COUNTY INTERCHANGE (WAUK 90343-A) 345/230/13.2KV TRANSFORMER CKT 1	560	560	0.26082	115.4156	P12:345:SPS:J02.1.TOLK.EDDY
FDNS	06ALL	5	16WP	G15_039	FROM->TO	POTTER COUNTY INTERCHANGE (WAUK 90343-A) 345/230/13.2KV TRANSFORMER CKT 1	560	560	0.27162	115.1938	POTTER COUNTY INTERCHANGE - TOLK STATION 345KV CKT 1
FDNS	06NR	5	20L	G15_039	FROM->TO	POTTER COUNTY INTERCHANGE (WAUK 90343-A) 345/230/13.2KV TRANSFORMER CKT 1	560	560	0.05245	114.9824	P12:230:AEPW:ELKCITY6:SWEETWT6
FDNS	06NR	5	20L	G15_039	FROM->TO	POTTER COUNTY INTERCHANGE (WAUK 90343-A) 345/230/13.2KV TRANSFORMER CKT 1	560	560	0.05276	114.7146	CHISHOLM6 230.00 - SWEETWATER 230KV CKT 1
FDNS	06ALL	5	16WP	G15_039	FROM->TO	POTTER COUNTY INTERCHANGE (WAUK 90343-A) 345/230/13.2KV TRANSFORMER CKT 1	560	560	0.27162	114.0847	POTTER COUNTY INTERCHANGE - TOLK STATION 345KV CKT 1
FDNS	06NR	5	17G	G15_039	FROM->TO	POTTER COUNTY INTERCHANGE (WAUK 90343-A) 345/230/13.2KV TRANSFORMER CKT 1	560	560	0.05546	112.4647	CHISHOLM6 230.00 - SWEETWATER 230KV CKT 1
FDNS	06NR	5	20L	G15_039	FROM->TO	POTTER COUNTY INTERCHANGE (WAUK 90343-A) 345/230/13.2KV TRANSFORMER CKT 1	560	560	0.05276	111.9828	STATELINE INTERCHANGE - STLN-DEMARC6 230KV CKT 1
FDNS	06NR	5	20L	G15_039	FROM->TO	POTTER COUNTY INTERCHANGE (WAUK 90343-A) 345/230/13.2KV TRANSFORMER CKT 1	560	560	0.05276	111.9801	STLN-DEMARC6 - SWEETWATER 230KV CKT 1
FDNS	06NR	5	20L	G15_039	FROM->TO	POTTER COUNTY INTERCHANGE (WAUK 90343-A) 345/230/13.2KV TRANSFORMER CKT 1	560	560	0.05276	111.9782	P12:230:AEPW-SPS:SWEETWT6:WHEELER 6
FDNS	06ALL	5	17G	G15_039	FROM->TO	POTTER COUNTY INTERCHANGE (WAUK 90343-A) 345/230/13.2KV TRANSFORMER CKT 1	560	560	0.26866	111.2395	P12:345:SPS:J02.1.TOLK.EDDY
FDNS	06ALL	5	17G	G15_039	FROM->TO	POTTER COUNTY INTERCHANGE (WAUK 90343-A) 345/230/13.2KV TRANSFORMER CKT 1	560	560	0.26866	111.0607	P12:345:SPS:J02.1.TOLK.EDDY
FDNS	06ALL	5	20L	G15_039	FROM->TO	POTTER COUNTY INTERCHANGE (WAUK 90343-A) 345/230/13.2KV TRANSFORMER CKT 1	560	560	0.22921	110.9578	P12:345:SPS:J02.1.TOLK.EDDY
FDNS	06NR	5	20L	G15_039	FROM->TO	POTTER COUNTY INTERCHANGE (WAUK 90343-A) 345/230/13.2KV TRANSFORMER CKT 1	560	560	0.05946	110.7217	P12:345:SPS:J02.1.TOLK.EDDY
FDNS	06NR	5	20L	G15_039	FROM->TO	POTTER COUNTY INTERCHANGE (WAUK 90343-A) 345/230/13.2KV TRANSFORMER CKT 1	560	560	0.05245	110.3644	P12:230:AEPW:ELKCITY6:SWEETWT6
FDNS	06ALL	5	20L	G15_039	FROM->TO	POTTER COUNTY INTERCHANGE (WAUK 90343-A) 345/230/13.2KV TRANSFORMER CKT 1	560	560	0.22921	110.2852	P12:345:SPS:J02.1.TOLK.EDDY
FDNS	06ALL	5	17SP	G15_039	FROM->TO	POTTER COUNTY INTERCHANGE (WAUK 90343-A) 345/230/13.2KV TRANSFORMER CKT 1	560	560	0.28456	108.8592	P12:345:SPS:J15.1.XRDS.TOLK
FDNS	06NR	5	17G	G15_039	FROM->TO	POTTER COUNTY INTERCHANGE (WAUK 90343-A) 345/230/13.2KV TRANSFORMER CKT 1	560	560	0.05546	108.7706	CHISHOLM6 230.00 - SWEETWATER 230KV CKT 1
FDNS	06NR	5	20L	G15_039	FROM->TO	POTTER COUNTY INTERCHANGE (WAUK 90343-A) 345/230/13.2KV TRANSFORMER CKT 1	560	560	0.05276	108.6884	STATELINE INTERCHANGE - STLN-DEMARC6 230KV CKT 1
FDNS	06NR	5	20L	G15_039	FROM->TO	POTTER COUNTY INTERCHANGE (WAUK 90343-A) 345/230/13.2KV TRANSFORMER CKT 1	560	560	0.05276	108.6802	P12:230:AEPW-SPS:SWEETWT6:WHEELER 6
FDNS	06NR	5	20L	G15_039	FROM->TO	POTTER COUNTY INTERCHANGE (WAUK 90343-A) 345/230/13.2KV TRANSFORMER CKT 1	560	560	0.05276	108.6732	STLN-DEMARC6 - SWEETWATER 230KV CKT 1
FDNS	06NR	5	20L	G15_039	FROM->TO	POTTER COUNTY INTERCHANGE (WAUK 90343-A) 345/230/13.2KV TRANSFORMER CKT 1	560	560	0.05946	108.5959	P12:345:SPS:J02.1.TOLK.EDDY
FDNS	06ALL	5	20L	G15_039	FROM->TO	POTTER COUNTY INTERCHANGE (WAUK 90343-A) 345/230/13.2KV TRANSFORMER CKT 1	560	560	0.21833	107.9038	CHISHOLM6 230.00 - SWEETWATER 230KV CKT 1
FDNS	06ALL	5	20WP	G15_039	FROM->TO	POTTER COUNTY INTERCHANGE (WAUK 90343-A) 345/230/13.2KV TRANSFORMER CKT 1	560	560	0.2499	107.5602	CHISHOLM6 230.00 - SWEETWATER 230KV CKT 1
FDNS	06NR	5	17G	G15_039	FROM->TO	POTTER COUNTY INTERCHANGE (WAUK 90343-A) 345/230/13.2KV TRANSFORMER CKT 1	560	560	0.05519	107.5475	P12:230:AEPW:ELKCITY6:SWEETWT6
FDNS	06ALL	5	17SP	G15_039	FROM->TO	POTTER COUNTY INTERCHANGE (WAUK 90343-A) 345/230/13.2KV TRANSFORMER CKT 1	560	560	0.28456	107.3735	P12:345:SPS:J15.1.XRDS.TOLK
FDNS	06NR	5	17G	G15_039	FROM->TO	POTTER COUNTY INTERCHANGE (WAUK 90343-A) 345/230/13.2KV TRANSFORMER CKT 1	560	560	0.05446	107.0356	P12:345:SPS:J02.1.TOLK.EDDY
FDNS	06ALL	5	20L	G15_039	FROM->TO	POTTER COUNTY INTERCHANGE (WAUK 90343-A) 345/230/13.2KV TRANSFORMER CKT 1	560	560	0.21833	105.7287	CHISHOLM6 230.00 - SWEETWATER 230KV CKT 1
FDNS	06ALL	5	20L	G15_039	FROM->TO	POTTER COUNTY INTERCHANGE (WAUK 90343-A) 345/230/13.2KV TRANSFORMER CKT 1	560	560	0.21651	105.68	P12:230:AEPW:ELKCITY6:SWEETWT6
FDNS	06NR	5	20L	G15_039	FROM->TO	POTTER COUNTY INTERCHANGE (WAUK 90343-A) 345/230/13.2KV TRANSFORMER CKT 1	560	560	0.05293	105.6586	GRAPEVINE INTERCHANGE - NICHOLS STATION 230KV CKT 1
FDNS	06NR	5	20L	G15_039	FROM->TO	POTTER COUNTY INTERCHANGE (WAUK 90343-A) 345/230/13.2KV TRANSFORMER CKT 1	560	560	0.05293	105.6586	GRAPEVINE INTERCHANGE - NICHOLS STATION 230KV CKT 1
FDNS	06NR	5	17G	G15_039	FROM->TO	POTTER COUNTY INTERCHANGE (WAUK 90343-A) 345/230/13.2KV TRANSFORMER CKT 1	560	560	0.05446	105.6413	P12:345:SPS:J02.1.TOLK.EDDY
FDNS	06ALL	5	20WP	G15_039	FROM->TO	POTTER COUNTY INTERCHANGE (WAUK 90343-A) 345/230/13.2KV TRANSFORMER CKT 1	560	560	0.2499	105.6378	CHISHOLM6 230.00 - SWEETWATER 230KV CKT 1
FDNS	06NR	5	17G	G15_039	FROM->TO	POTTER COUNTY INTERCHANGE (WAUK 90343-A) 345/230/13.2KV TRANSFORMER CKT 1	560	560	0.05546	105.182	STATELINE INTERCHANGE - STLN-DEMARC6 230KV CKT 1
FDNS	06NR	5	17G	G15_039	FROM->TO	POTTER COUNTY INTERCHANGE (WAUK 90343-A) 345/230/13.2KV TRANSFORMER CKT 1	560	560	0.05546	105.1782	P12:230:AEPW-SPS:SWEETWT6:WHEELER 6
FDNS	06NR	5	17G	G15_039	FROM->TO	POTTER COUNTY INTERCHANGE (WAUK 90343-A) 345/230/13.2KV TRANSFORMER CKT 1	560	560	0.05546	105.1735	STLN-DEMARC6 - SWEETWATER 230KV CKT 1
FDNS	06ALL	5	17G	G15_039	FROM->TO	POTTER COUNTY INTERCHANGE (WAUK 90343-A) 345/230/13.2KV TRANSFORMER CKT 1	560	560	0.24843	104.919	CHISHOLM6 230.00 - SWEETWATER 230KV CKT 1
FDNS	06ALL	5	20WP	G15_039	FROM->TO	POTTER COUNTY INTERCHANGE (WAUK 90343-A) 345/230/13.2KV TRANSFORMER CKT 1	560	560	0.24768	104.8114	P12:230:AEPW:ELKCITY6:SWEETWT6
FDNS	06ALL	5	16WP	G15_039	FROM->TO	POTTER COUNTY INTERCHANGE (WAUK 90343-A) 345/230/13.2KV TRANSFORMER CKT 1	560	560	0.27861	104.3006	P12:345:SPS:J02.1.TOLK.EDDY
FDNS	06NR	5	17G	G15_039	FROM->TO	POTTER COUNTY INTERCHANGE (WAUK 90343-A) 345/230/13.2KV TRANSFORMER CKT 1	560	560	0.05519	104.0817	P12:230:AEPW:ELKCITY6:SWEETWT6
FDNS	06ALL	5	16WP	G15_039	FROM->TO	POTTER COUNTY INTERCHANGE (WAUK 90343-A) 345/230/13.2KV TRANSFORMER CKT 1	560	560	0.27861	103.7897	P12:345:SPS:J02.1.TOLK.EDDY
FDNS	06NR	5	20L	G15_039	FROM->TO	POTTER COUNTY INTERCHANGE (WAUK 90343-A) 345/230/13.2KV TRANSFORMER CKT 1	560	560	0.05281	103.5688	GRAPEVINE INTERCHANGE - STATELINE INTERCHANGE 230KV CKT 1
FDNS	06NR	5	20L	G15_039	FROM->TO	POTTER COUNTY INTERCHANGE (WAUK 90343-A) 345/230/13.2KV TRANSFORMER CKT 1	560	560	0.05281	103.5688	GRAPEVINE INTERCHANGE - STATELINE INTERCHANGE 230KV CKT 1
FDNS	06ALL	5	20L	G15_039	FROM->TO	POTTER COUNTY INTERCHANGE (WAUK 90343-A) 345/230/13.2KV TRANSFORMER CKT 1	560	560	0.21651	103.3522	P12:230:AEPW:ELKCITY6:SWEETWT6
FDNS	06ALL	5	17G	G15_039	FROM->TO	POTTER COUNTY INTERCHANGE (WAUK 90343-A) 345/230/13.2KV TRANSFORMER CKT 1	560	560	0.24843	103.2944	CHISHOLM6 230.00 - SWEETWATER 230KV CKT 1
FDNS	06ALL	5	20WP	G15_039	FROM->TO	POTTER COUNTY INTERCHANGE (WAUK 90343-A) 345/230/13.2KV TRANSFORMER CKT 1	560	560	0.24768	102.8847	P12:230:AEPW:ELKCITY6:SWEETWT6
FDNS	06NR	5	20L	G15_039	FROM->TO	POTTER COUNTY INTERCHANGE (WAUK 90343-A) 345/230/13.2KV TRANSFORMER CKT 1	560	560	0.05293	102.7256	GRAPEVINE INTERCHANGE - NICHOLS STATION 230KV CKT 1
FDNS	06NR	5	20L	G15_039	FROM->TO	POTTER COUNTY INTERCHANGE (WAUK 90343-A) 345/230/13.2KV TRANSFORMER CKT 1	560	560	0.05293	102.7256	GRAPEVINE INTERCHANGE - NICHOLS STATION 230KV CKT 1

SOLUTION	GROUP	SCENARIO	SEASON	SOURCE	DIRECTION	MONITORED ELEMENT	RATEA (MVA)	RATEB(MVA)	TDF	TC%LOADING (% MVA)	CONTINGENCY
FDNS	06NR	5	17G	G15_039	FROM->TO	POTTER COUNTY INTERCHANGE (WAUK 90343-A) 345/230/13.2KV TRANSFORMER CKT 1	560	560	0.05546	102.7019	STATELINE INTERCHANGE - STLN-DEMARC6 230KV CKT 1
FDNS	06NR	5	17G	G15_039	FROM->TO	POTTER COUNTY INTERCHANGE (WAUK 90343-A) 345/230/13.2KV TRANSFORMER CKT 1	560	560	0.05546	102.6952	P12:230:AEPW-SPS:SWEETWT6:WHEELER 6
FDNS	06NR	5	17G	G15_039	FROM->TO	POTTER COUNTY INTERCHANGE (WAUK 90343-A) 345/230/13.2KV TRANSFORMER CKT 1	560	560	0.05546	102.6866	STLN-DEMARC6 - SWEETWATER 230KV CKT 1
FDNS	06ALL	5	17G	G15_039	FROM->TO	POTTER COUNTY INTERCHANGE (WAUK 90343-A) 345/230/13.2KV TRANSFORMER CKT 1	560	560	0.2462	102.502	P12:230:AEPW:ELKCITY6:SWEETWT6
FDNS	06ALL	5	20SP	G15_039	FROM->TO	POTTER COUNTY INTERCHANGE (WAUK 90343-A) 345/230/13.2KV TRANSFORMER CKT 1	560	560	0.27813	102.363	P12:345:SPS:J15.1.XRDS.TOLK
FDNS	06ALL	5	17SP	G15_039	FROM->TO	POTTER COUNTY INTERCHANGE (WAUK 90343-A) 345/230/13.2KV TRANSFORMER CKT 1	560	560	0.26943	102.3103	POTTER COUNTY INTERCHANGE - TOLK STATION 345KV CKT 1
FDNS	06NR	5	20L	G15_039	FROM->TO	POTTER COUNTY INTERCHANGE (WAUK 90343-A) 345/230/13.2KV TRANSFORMER CKT 1	560	560	0.05634	101.778	HITCHLAND INTERCHANGE - MOORE COUNTY INTERCHANGE 230KV CKT 1
FDNS	06NR	5	20L	G15_039	FROM->TO	POTTER COUNTY INTERCHANGE (WAUK 90343-A) 345/230/13.2KV TRANSFORMER CKT 1	560	560	0.05634	101.778	HITCHLAND INTERCHANGE - MOORE COUNTY INTERCHANGE 230KV CKT 1
FDNS	06ALL	5	20L	G15_039	FROM->TO	POTTER COUNTY INTERCHANGE (WAUK 90343-A) 345/230/13.2KV TRANSFORMER CKT 1	560	560	0.21833	101.1737	P12:230:AEPW-SPS:SWEETWT6:WHEELER 6
FDNS	06ALL	5	20L	G15_039	FROM->TO	POTTER COUNTY INTERCHANGE (WAUK 90343-A) 345/230/13.2KV TRANSFORMER CKT 1	560	560	0.21833	101.1736	STATELINE INTERCHANGE - STLN-DEMARC6 230KV CKT 1
FDNS	06ALL	5	20L	G15_039	FROM->TO	POTTER COUNTY INTERCHANGE (WAUK 90343-A) 345/230/13.2KV TRANSFORMER CKT 1	560	560	0.21833	101.1644	STLN-DEMARC6 - SWEETWATER 230KV CKT 1
FDNS	06ALL	5	20SP	G15_039	FROM->TO	POTTER COUNTY INTERCHANGE (WAUK 90343-A) 345/230/13.2KV TRANSFORMER CKT 1	560	560	0.27813	101.0624	P12:345:SPS:J15.1.XRDS.TOLK
FDNS	06ALL	5	17SP	G15_039	FROM->TO	POTTER COUNTY INTERCHANGE (WAUK 90343-A) 345/230/13.2KV TRANSFORMER CKT 1	560	560	0.26943	101.0142	POTTER COUNTY INTERCHANGE - TOLK STATION 345KV CKT 1
FDNS	06NR	5	17G	G15_039	FROM->TO	POTTER COUNTY INTERCHANGE (WAUK 90343-A) 345/230/13.2KV TRANSFORMER CKT 1	560	560	0.05576	100.971	GRAPEVINE INTERCHANGE - NICHOLS STATION 230KV CKT 1
FDNS	06NR	5	17G	G15_039	FROM->TO	POTTER COUNTY INTERCHANGE (WAUK 90343-A) 345/230/13.2KV TRANSFORMER CKT 1	560	560	0.05576	100.971	GRAPEVINE INTERCHANGE - NICHOLS STATION 230KV CKT 1
FDNS	06ALL	5	20WP	G15_039	FROM->TO	POTTER COUNTY INTERCHANGE (WAUK 90343-A) 345/230/13.2KV TRANSFORMER CKT 1	560	560	0.2499	100.8474	STATELINE INTERCHANGE - STLN-DEMARC6 230KV CKT 1
FDNS	06ALL	5	20WP	G15_039	FROM->TO	POTTER COUNTY INTERCHANGE (WAUK 90343-A) 345/230/13.2KV TRANSFORMER CKT 1	560	560	0.2499	100.8471	P12:230:AEPW-SPS:SWEETWT6:WHEELER 6
FDNS	06ALL	5	20WP	G15_039	FROM->TO	POTTER COUNTY INTERCHANGE (WAUK 90343-A) 345/230/13.2KV TRANSFORMER CKT 1	560	560	0.2499	100.8335	STLN-DEMARC6 - SWEETWATER 230KV CKT 1
FDNS	06ALL	5	17G	G15_039	FROM->TO	POTTER COUNTY INTERCHANGE (WAUK 90343-A) 345/230/13.2KV TRANSFORMER CKT 1	560	560	0.2462	100.8109	P12:230:AEPW:ELKCITY6:SWEETWT6
FDNS	06NR	5	20L	G15_039	FROM->TO	POTTER COUNTY INTERCHANGE (WAUK 90343-A) 345/230/13.2KV TRANSFORMER CKT 1	560	560	0.05281	100.7928	GRAPEVINE INTERCHANGE - STATELINE INTERCHANGE 230KV CKT 1
FDNS	06NR	5	20L	G15_039	FROM->TO	POTTER COUNTY INTERCHANGE (WAUK 90343-A) 345/230/13.2KV TRANSFORMER CKT 1	560	560	0.05281	100.7928	GRAPEVINE INTERCHANGE - STATELINE INTERCHANGE 230KV CKT 1
FDNS	06ALL	5	20WP	G15_039	FROM->TO	POTTER COUNTY INTERCHANGE (WAUK 90343-A) 345/230/13.2KV TRANSFORMER CKT 1	560	560	0.23761	100.2787	GRAPEVINE INTERCHANGE - NICHOLS STATION 230KV CKT 1
FDNS	06ALL	5	20WP	G15_039	FROM->TO	POTTER COUNTY INTERCHANGE (WAUK 90343-A) 345/230/13.2KV TRANSFORMER CKT 1	560	560	0.23761	100.2787	GRAPEVINE INTERCHANGE - NICHOLS STATION 230KV CKT 1
FDNS	06ALL	5	20L	G15_039	FROM->TO	POTTER COUNTY INTERCHANGE (WAUK 90343-A) 345/230/13.2KV TRANSFORMER CKT 1	560	560	0.21833	99.6	P12:230:AEPW-SPS:SWEETWT6:WHEELER 6
FDNS	06ALL	5	20L	G15_039	FROM->TO	POTTER COUNTY INTERCHANGE (WAUK 90343-A) 345/230/13.2KV TRANSFORMER CKT 1	560	560	0.21833	99.6	STATELINE INTERCHANGE - STLN-DEMARC6 230KV CKT 1
FDNS	06ALL	5	20L	G15_039	FROM->TO	POTTER COUNTY INTERCHANGE (WAUK 90343-A) 345/230/13.2KV TRANSFORMER CKT 1	560	560	0.21833	99.6	STLN-DEMARC6 - SWEETWATER 230KV CKT 1
FDNS	06ALL	5	20WP	G15_039	FROM->TO	POTTER COUNTY INTERCHANGE (WAUK 90343-A) 345/230/13.2KV TRANSFORMER CKT 1	560	560	0.2499	99.5	P12:230:AEPW-SPS:SWEETWT6:WHEELER 6
FDNS	06ALL	5	20WP	G15_039	FROM->TO	POTTER COUNTY INTERCHANGE (WAUK 90343-A) 345/230/13.2KV TRANSFORMER CKT 1	560	560	0.2499	99.5	STATELINE INTERCHANGE - STLN-DEMARC6 230KV CKT 1
FDNS	06ALL	5	16WP	G15_039	FROM->TO	TOLK STATION (ABBXNL844501) 345/230/13.2KV TRANSFORMER CKT 1	560	560	0.19831	113.0248	CROSSROADS 7345.00 - TOLK STATION 345KV CKT 1
FDNS	06ALL	5	16WP	G15_039	FROM->TO	TOLK STATION (ABBXNL844501) 345/230/13.2KV TRANSFORMER CKT 1	560	560	0.19831	110.571	CROSSROADS 7345.00 - TOLK STATION 345KV CKT 1
FDNS	06ALL	5	20WP	G15_039	FROM->TO	TOLK STATION (ABBXNL844501) 345/230/13.2KV TRANSFORMER CKT 1	560	560	0.22726	100.9733	POTTER COUNTY INTERCHANGE (WAUK 90343-A) 345/230/13.2KV TRANSFORMER CKT 1
FDNS	06ALL	5	20WP	G15_039	FROM->TO	TOLK STATION (ABBXNL844501) 345/230/13.2KV TRANSFORMER CKT 1	560	560	0.22726	100.9733	POTTER COUNTY INTERCHANGE (WAUK 90343-A) 345/230/13.2KV TRANSFORMER CKT 1
FDNS	06ALL	6	20SP	G15_039	FROM->TO	CHISHOLM6 230.00 - ELK CITY 230KV 230KV CKT 1	353	353	0.06107	102.8848	BASE CASE
FDNS	06ALL	6	17SP	G15_039	FROM->TO	CHISHOLM6 230.00 - ELK CITY 230KV 230KV CKT 1	353	353	0.06128	100.6562	BASE CASE
FDNS	06ALL	6	16WP	G15_039	TO->FROM	CIMARRON - MINCO 345KV CKT 1	956	956	0.19826	114.352	G14-057T 345.00 - SUNNYSIDE 345KV CKT 1
FDNS	06ALL	6	16WP	G15_039	TO->FROM	CIMARRON - MINCO 345KV CKT 1	956	956	0.19826	108.975	G14-057T 345.00 - LAWTON EASTSIDE 345KV CKT 1
FDNS	06ALL	6	20SP	G15_039	TO->FROM	DEAF SMITH COUNTY INTERCHANGE - G15039_T 230.00 230KV CKT 1	318.7	350.57	0.62361	99.6	P12:345:SPS:J15.1.XRDS.TOLK
FDNS	06ALL	6	20L	G15_039	TO->FROM	G14-057T 345.00 - LAWTON EASTSIDE 345KV CKT 1	717	789	0.08587	102.0743	BASE CASE
FDNS	06ALL	6	20L	G15_039	FROM->TO	G14-057T 345.00 - SUNNYSIDE 345KV CKT 1	717	789	0.08587	115.279	BASE CASE
FDNS	06ALL	6	20WP	G15_039	FROM->TO	G14-057T 345.00 - SUNNYSIDE 345KV CKT 1	717	789	0.10737	103.5944	BASE CASE
FDNS	06ALL	6	17G	G15_039	FROM->TO	G14-057T 345.00 - SUNNYSIDE 345KV CKT 1	717	789	0.10969	103.4014	BASE CASE
FDNS	06ALL	6	16WP	G15_039	FROM->TO	G14-057T 345.00 - SUNNYSIDE 345KV CKT 1	717	789	0.1128	102.0868	BASE CASE
FDNS	00NR	6	25SP	G15_039	TO->FROM	JONES STATION - TUCO INTERCHANGE 230KV CKT 1	343.79	343.79	0.0859	129.6325	CARLISLE INTERCHANGE - TUCO INTERCHANGE 230KV CKT 1
FDNS	00NR	6	25SP	G15_039	TO->FROM	JONES STATION - TUCO INTERCHANGE 230KV CKT 1	343.79	343.79	0.0859	129.6325	CARLISLE INTERCHANGE - TUCO INTERCHANGE 230KV CKT 1
FDNS	00NR	6	25SP	G15_039	TO->FROM	JONES STATION - TUCO INTERCHANGE 230KV CKT 1	343.79	343.79	0.07114	112.7855	GEN526333 1-JONES GEN #3 21 KV
FDNS	00NR	6	25SP	G15_039	TO->FROM	JONES STATION - TUCO INTERCHANGE 230KV CKT 1	343.79	343.79	0.07114	112.3951	GEN526334 1-JONES_4 116.500
FDNS	00NR	6	25SP	G15_039	TO->FROM	JONES STATION - TUCO INTERCHANGE 230KV CKT 1	343.79	343.79	0.08224	107.7709	TUCO INTERCHANGE - YOAKUM_345 345.00 345KV CKT 1
FDNS	00NR	6	25SP	G15_039	TO->FROM	JONES STATION - TUCO INTERCHANGE 230KV CKT 1	343.79	343.79	0.07812	103.4125	CARLISLE INTERCHANGE - WOLFFORTH INTERCHANGE 230KV CKT 1
FDNS	00NR	6	25SP	G15_039	TO->FROM	JONES STATION - TUCO INTERCHANGE 230KV CKT 1	343.79	343.79	0.08728	101.2811	PLANT X STATION - SUNDOWN INTERCHANGE 230KV CKT 1
FDNS	00NR	6	25SP	G15_039	TO->FROM	JONES STATION - TUCO INTERCHANGE 230KV CKT 1	343.79	343.79	0.08728	101.2811	PLANT X STATION - SUNDOWN INTERCHANGE 230KV CKT 1
FDNS	00NR	6	25SP	G15_039	TO->FROM	JONES STATION - TUCO INTERCHANGE 230KV CKT 1	343.79	343.79	0.07253	100.5783	P12:345:SPS:J02.1.TOLK.EDDY
FDNS	00NR	6	25SP	G15_039	TO->FROM	JONES STATION - TUCO INTERCHANGE 230KV CKT 1	343.79	343.79	0.07114	100.5273	GEN526332 1-JONES GEN #2 21 KV
FDNS	00NR	6	25SP	G15_039	TO->FROM	JONES STATION - TUCO INTERCHANGE 230KV CKT 1	343.79	343.79	0.07114	100.5254	GEN526331 1-JONES GEN #1 22 KV
FDNS	00NR	6	25SP	G15_039	TO->FROM	JONES STATION - TUCO INTERCHANGE 230KV CKT 1	343.79	343.79	0.07126	100.5163	TUCO INTERCHANGE (ENRCO 136401) 230/115/13.2KV TRANSFORMER CKT 1
FDNS	00NR	6	25SP	G15_039	TO->FROM	JONES STATION - TUCO INTERCHANGE 230KV CKT 1	343.79	343.79	0.07126	100.5163	TUCO INTERCHANGE (ENRCO 136401) 230/115/13.2KV TRANSFORMER CKT 1
FDNS	00NR	6	25SP	G15_039	TO->FROM	JONES STATION - TUCO INTERCHANGE 230KV CKT 1	343.79	343.79	0.07126	100.5163	TUCO INTERCHANGE (ENRCO 136401) 230/115/13.2KV TRANSFORMER CKT 2
FDNS	00NR	6	25SP	G15_039	TO->FROM	JONES STATION - TUCO INTERCHANGE 230KV CKT 1	343.79	343.79	0.07126	100.5163	TUCO INTERCHANGE (ENRCO 136401) 230/115/13.2KV TRANSFORMER CKT 2
FDNS	00NR	6	25SP	G15_039	TO->FROM	JONES STATION - TUCO INTERCHANGE 230KV CKT 1	343.79	343.79	0.07825	99.6	LUBBOCK EAST INTERCHANGE - TUCO INTERCHANGE 115KV CKT 1
FDNS	00NR	6	25SP	G15_039	TO->FROM	JONES STATION - TUCO INTERCHANGE 230KV CKT 1	343.79	343.79	0.07825	99.6	LUBBOCK EAST INTERCHANGE - TUCO INTERCHANGE 115KV CKT 1
FDNS	00NR	6	25SP	G15_039	FROM->TO	LUBBOCK POWER & LIGHT-HOLLY PLANT (SHIH T101039) 230/69/13.5KV TRANSFORMER CKT 1	224	224	0.03581	104.6926	LUBBOCK POWER & LIGHT-SOUTHEAST - LUBBOCK SOUTH INTERCHANGE 230KV CKT 1
FDNS	00NR	6	25SP	G15_039	FROM->TO	LUBBOCK POWER & LIGHT-HOLLY PLANT (SHIH T101039) 230/69/13.5KV TRANSFORMER CKT 1	224	224	0.03581	104.6924	P12:LPL:SPS:K64.1.LP-SE.LUBBS
FDNS	00NR	6	25SP	G15_039	FROM->TO	LUBBOCK POWER & LIGHT-HOLLY PLANT (SHIH T101039) 230/69/13.5KV TRANSFORMER CKT 1	224	224	0.0346	101.9349	LUBBOCK EAST INTERCHANGE - LUBBOCK POWER & LIGHT-WADSWORTH 230KV CKT 1
FDNS	00NR	6	25SP	G15_039	FROM->TO	LUBBOCK POWER & LIGHT-HOLLY PLANT (SHIH T101039) 230/69/13.5KV TRANSFORMER CKT 1	224	224	0.0346	101.9202	LUBBOCK POWER & LIGHT-WADSWORTH (SHIH T101038) 230/69/13.5KV TRANSFORMER CKT 1
FDNS	00NR	6	25SP	G15_039	FROM->TO	LUBBOCK POWER & LIGHT-HOLLY PLANT (SHIH T101039) 230/69/13.5KV TRANSFORMER CKT 1	224	224	0.0346	101.9202	LUBBOCK POWER & LIGHT-WADSWORTH (SHIH T101038) 230/69/13.5KV TRANSFORMER CKT 1
FDNS	00NR	6	25SP	G15_039	FROM->TO	LUBBOCK POWER & LIGHT-HOLLY PLANT (SHIH T101039) 230/69/13.5KV TRANSFORMER CKT 1	224	224	0.0346	101.9202	P12:230:LPL:K57.1.LP-WADS.LUBBE
FDNS	06NR	6	20L	G15_039	FROM->TO	POTTER COUNTY INTERCHANGE (WAUK 90343-A) 345/230/13.2KV TRANSFORMER CKT 1	560	560	0.0422	138.2557	P12:345:SPS:J15.1.XRDS.TOLK
FDNS	06NR	6	20L	G15_039	FROM->TO	POTTER COUNTY INTERCHANGE (WAUK 90343-A) 345/230/13.2KV TRANSFORMER CKT 1	560	560	0.0422	137.1212	P12:345:SPS:J15.1.XRDS.TOLK
FDNS	06NR	6	20L	G15_039	FROM->TO	POTTER COUNTY INTERCHANGE (WAUK 90343-A) 345/230/13.2KV TRANSFORMER CKT 1	560	560	0.03845	136.3996	POTTER COUNTY INTERCHANGE - TOLK STATION 345KV CKT 1
FDNS	06NR	6	17G	G15_039	FROM->TO	POTTER COUNTY INTERCHANGE (WAUK 90343-A) 345/230/13.2KV TRANSFORMER CKT 1	560	560	0.03879	136.1293	P12:345:SPS:J15.1.XRDS.TOLK
FDNS	06NR	6	17G	G15_039	FROM->TO	POTTER COUNTY INTERCHANGE (WAUK 90343-A) 345/230/13.2KV TRANSFORMER CKT 1	560	560	0.03879	135.8984	P12:345:SPS:J15.1.XRDS.TOLK
FDNS	06ALL	6	20WP	G15_039	FROM->TO	POTTER COUNTY INTERCHANGE (WAUK 90343-A) 345/230/13.2KV TRANSFORMER CKT 1	560	560	0.28568	135.6418	P12:345:SPS:J15.1.XRDS.TOLK
FDNS	06ALL	6	20WP	G15_039	FROM->TO	POTTER COUNTY INTERCHANGE (WAUK 90343-A) 345/230/13.2KV TRANSFORMER CKT 1	560	560	0.28568	135.4792	P12:345:SPS:J15.1.XRDS.TOLK
FDNS	06NR	6	20L	G15_039	FROM->TO	POTTER COUNTY INTERCHANGE (WAUK 90343-A) 345/230/13.2KV TRANSFORMER CKT 1	560	560	0.03845	135.2815	POTTER COUNTY INTERCHANGE - TOLK STATION 345KV CKT 1
FDNS	06NR	6	17G	G15_039	FROM->TO	POTTER COUNTY INTERCHANGE (WAUK 90343-A) 345/230/13.2KV TRANSFORMER CKT 1	560	560	0.03723	133.1268	POTTER COUNTY INTERCHANGE - TOLK STATION 345KV CKT 1
FDNS	06NR	6	17G	G15_039	FROM->TO	POTTER COUNTY INTERCHANGE (WAUK 90343-A) 345/230/13.2KV TRANSFORMER CKT 1	560	560	0.03723	132.9021	POTTER COUNTY INTERCHANGE - TOLK STATION 345KV CKT 1
FDNS	06ALL	6	20L	G15_039	FROM->TO	POTTER COUNTY INTERCHANGE (WAUK 90343-A) 345/230/13.2KV TRANSFORMER CKT 1	560	560	0.24883	131.3504	P12:345:SPS:J15.1.XRDS.TOLK
FDNS	06ALL	6	20L	G15_039	FROM->TO	POTTER COUNTY INTERCHANGE (WAUK 90343-A) 345/230/13.2KV TRANSFORMER CKT 1	560	560	0.24883	131.3347	P12:345:SPS:J15.1.XRDS.TOLK
FDNS	06ALL	6	20WP	G15_039	FROM->TO	POTTER COUNTY INTERCHANGE (WAUK 90343-A) 345/230/13.2KV TRANSFORMER CKT 1	560	560	0.27434	130.4565	POTTER COUNTY INTERCHANGE - TOLK STATION 345KV CKT 1
FDNS	06ALL	6	20WP	G15_039	FROM->TO	POTTER COUNTY INTERCHANGE (WAUK 90343-A) 345/230/13.2KV TRANSFORMER CKT 1	560	560	0.27434	130.3259	POTTER COUNTY INTERCHANGE - TOLK STATION 345KV CKT 1

SOLUTION	GROUP	SCENARIO	SEASON	SOURCE	DIRECTION	MONITORED ELEMENT	RATEA (MVA)	RATEB(MVA)	TDF	TC%LOADING (% MVA)	CONTINGENCY
FDNS	06ALL	6	20L	G15_039	FROM->TO	POTTER COUNTY INTERCHANGE (WAUK 90343-A) 345/230/13.2KV TRANSFORMER CKT 1	560	560	0.23839	127.4784	POTTER COUNTY INTERCHANGE - TOLK STATION 345KV CKT 1
FDNS	06ALL	6	20L	G15_039	FROM->TO	POTTER COUNTY INTERCHANGE (WAUK 90343-A) 345/230/13.2KV TRANSFORMER CKT 1	560	560	0.23839	127.4227	POTTER COUNTY INTERCHANGE - TOLK STATION 345KV CKT 1
FDNS	06ALL	6	17G	G15_039	FROM->TO	POTTER COUNTY INTERCHANGE (WAUK 90343-A) 345/230/13.2KV TRANSFORMER CKT 1	560	560	0.2745	126.2728	POTTER COUNTY INTERCHANGE - TOLK STATION 345KV CKT 1
FDNS	06ALL	6	17G	G15_039	FROM->TO	POTTER COUNTY INTERCHANGE (WAUK 90343-A) 345/230/13.2KV TRANSFORMER CKT 1	560	560	0.2745	125.8889	POTTER COUNTY INTERCHANGE - TOLK STATION 345KV CKT 1
FDNS	06ALL	6	16WP	G15_039	FROM->TO	POTTER COUNTY INTERCHANGE (WAUK 90343-A) 345/230/13.2KV TRANSFORMER CKT 1	560	560	0.30218	124.5835	P12:345:SPS:J15.1.XRDS.TOLK
FDNS	06ALL	6	16WP	G15_039	FROM->TO	POTTER COUNTY INTERCHANGE (WAUK 90343-A) 345/230/13.2KV TRANSFORMER CKT 1	560	560	0.30218	123.2053	P12:345:SPS:J15.1.XRDS.TOLK
FDNS	06NR	6	20L	G15_039	FROM->TO	POTTER COUNTY INTERCHANGE (WAUK 90343-A) 345/230/13.2KV TRANSFORMER CKT 1	560	560	0.0539	117.6632	CHISHOLM6 230.00 - SWEETWATER 230KV CKT 1
FDNS	06ALL	6	20WP	G15_039	FROM->TO	POTTER COUNTY INTERCHANGE (WAUK 90343-A) 345/230/13.2KV TRANSFORMER CKT 1	560	560	0.27305	116.5549	P12:345:SPS:J02.1.TOLK.EDDY
FDNS	06ALL	6	16WP	G15_039	FROM->TO	POTTER COUNTY INTERCHANGE (WAUK 90343-A) 345/230/13.2KV TRANSFORMER CKT 1	560	560	0.28609	116.5159	POTTER COUNTY INTERCHANGE - TOLK STATION 345KV CKT 1
FDNS	06ALL	6	20WP	G15_039	FROM->TO	POTTER COUNTY INTERCHANGE (WAUK 90343-A) 345/230/13.2KV TRANSFORMER CKT 1	560	560	0.27305	116.109	P12:345:SPS:J02.1.TOLK.EDDY
FDNS	06ALL	6	16WP	G15_039	FROM->TO	POTTER COUNTY INTERCHANGE (WAUK 90343-A) 345/230/13.2KV TRANSFORMER CKT 1	560	560	0.28609	115.3558	POTTER COUNTY INTERCHANGE - TOLK STATION 345KV CKT 1
FDNS	06NR	6	20L	G15_039	FROM->TO	POTTER COUNTY INTERCHANGE (WAUK 90343-A) 345/230/13.2KV TRANSFORMER CKT 1	560	560	0.0539	113.5798	CHISHOLM6 230.00 - SWEETWATER 230KV CKT 1
FDNS	06NR	6	20L	G15_039	FROM->TO	POTTER COUNTY INTERCHANGE (WAUK 90343-A) 345/230/13.2KV TRANSFORMER CKT 1	560	560	0.05375	113.4585	P12:230:AEPW:ELKCITY6:SWEETWT6
FDNS	06ALL	6	20L	G15_039	FROM->TO	POTTER COUNTY INTERCHANGE (WAUK 90343-A) 345/230/13.2KV TRANSFORMER CKT 1	560	560	0.23968	111.6368	P12:345:SPS:J02.1.TOLK.EDDY
FDNS	06NR	6	17G	G15_039	FROM->TO	POTTER COUNTY INTERCHANGE (WAUK 90343-A) 345/230/13.2KV TRANSFORMER CKT 1	560	560	0.05639	111.1123	CHISHOLM6 230.00 - SWEETWATER 230KV CKT 1
FDNS	06ALL	6	20L	G15_039	FROM->TO	POTTER COUNTY INTERCHANGE (WAUK 90343-A) 345/230/13.2KV TRANSFORMER CKT 1	560	560	0.23968	111.0135	P12:345:SPS:J02.1.TOLK.EDDY
FDNS	06NR	6	20L	G15_039	FROM->TO	POTTER COUNTY INTERCHANGE (WAUK 90343-A) 345/230/13.2KV TRANSFORMER CKT 1	560	560	0.06049	110.3785	P12:345:SPS:J02.1.TOLK.EDDY
FDNS	06NR	6	20L	G15_039	FROM->TO	POTTER COUNTY INTERCHANGE (WAUK 90343-A) 345/230/13.2KV TRANSFORMER CKT 1	560	560	0.0539	110.2701	STLN-DEMARC6 - SWEETWATER 230KV CKT 1
FDNS	06NR	6	20L	G15_039	FROM->TO	POTTER COUNTY INTERCHANGE (WAUK 90343-A) 345/230/13.2KV TRANSFORMER CKT 1	560	560	0.0539	110.2543	STATELINE INTERCHANGE - STLN-DEMARC6 230KV CKT 1
FDNS	06NR	6	20L	G15_039	FROM->TO	POTTER COUNTY INTERCHANGE (WAUK 90343-A) 345/230/13.2KV TRANSFORMER CKT 1	560	560	0.0539	110.2508	P12:230:AEPW-SPS:SWEETWT6:WHEELER 6
FDNS	06ALL	6	17SP	G15_039	FROM->TO	POTTER COUNTY INTERCHANGE (WAUK 90343-A) 345/230/13.2KV TRANSFORMER CKT 1	560	560	0.29899	109.9868	P12:345:SPS:J15.1.XRDS.TOLK
FDNS	06NR	6	20L	G15_039	FROM->TO	POTTER COUNTY INTERCHANGE (WAUK 90343-A) 345/230/13.2KV TRANSFORMER CKT 1	560	560	0.05375	109.4448	P12:230:AEPW:ELKCITY6:SWEETWT6
FDNS	06NR	6	20L	G15_039	FROM->TO	POTTER COUNTY INTERCHANGE (WAUK 90343-A) 345/230/13.2KV TRANSFORMER CKT 1	560	560	0.06049	108.5148	P12:345:SPS:J02.1.TOLK.EDDY
FDNS	06ALL	6	17SP	G15_039	FROM->TO	POTTER COUNTY INTERCHANGE (WAUK 90343-A) 345/230/13.2KV TRANSFORMER CKT 1	560	560	0.29899	108.4833	P12:345:SPS:J15.1.XRDS.TOLK
FDNS	06ALL	6	20L	G15_039	FROM->TO	POTTER COUNTY INTERCHANGE (WAUK 90343-A) 345/230/13.2KV TRANSFORMER CKT 1	560	560	0.22859	108.2575	CHISHOLM6 230.00 - SWEETWATER 230KV CKT 1
FDNS	06ALL	6	20WP	G15_039	FROM->TO	POTTER COUNTY INTERCHANGE (WAUK 90343-A) 345/230/13.2KV TRANSFORMER CKT 1	560	560	0.26198	107.975	CHISHOLM6 230.00 - SWEETWATER 230KV CKT 1
FDNS	06NR	6	17G	G15_039	FROM->TO	POTTER COUNTY INTERCHANGE (WAUK 90343-A) 345/230/13.2KV TRANSFORMER CKT 1	560	560	0.05639	107.8532	CHISHOLM6 230.00 - SWEETWATER 230KV CKT 1
FDNS	06NR	6	20L	G15_039	FROM->TO	POTTER COUNTY INTERCHANGE (WAUK 90343-A) 345/230/13.2KV TRANSFORMER CKT 1	560	560	0.0539	107.3808	STLN-DEMARC6 - SWEETWATER 230KV CKT 1
FDNS	06NR	6	20L	G15_039	FROM->TO	POTTER COUNTY INTERCHANGE (WAUK 90343-A) 345/230/13.2KV TRANSFORMER CKT 1	560	560	0.0539	107.3752	STATELINE INTERCHANGE - STLN-DEMARC6 230KV CKT 1
FDNS	06NR	6	20L	G15_039	FROM->TO	POTTER COUNTY INTERCHANGE (WAUK 90343-A) 345/230/13.2KV TRANSFORMER CKT 1	560	560	0.0539	107.3689	P12:230:AEPW-SPS:SWEETWT6:WHEELER 6
FDNS	06NR	6	17G	G15_039	FROM->TO	POTTER COUNTY INTERCHANGE (WAUK 90343-A) 345/230/13.2KV TRANSFORMER CKT 1	560	560	0.05535	106.8335	P12:345:SPS:J02.1.TOLK.EDDY
FDNS	06ALL	6	20L	G15_039	FROM->TO	POTTER COUNTY INTERCHANGE (WAUK 90343-A) 345/230/13.2KV TRANSFORMER CKT 1	560	560	0.22859	106.231	CHISHOLM6 230.00 - SWEETWATER 230KV CKT 1
FDNS	06NR	6	17G	G15_039	FROM->TO	POTTER COUNTY INTERCHANGE (WAUK 90343-A) 345/230/13.2KV TRANSFORMER CKT 1	560	560	0.05626	106.2115	P12:230:AEPW:ELKCITY6:SWEETWT6
FDNS	06ALL	6	20L	G15_039	FROM->TO	POTTER COUNTY INTERCHANGE (WAUK 90343-A) 345/230/13.2KV TRANSFORMER CKT 1	560	560	0.2276	106.1194	P12:230:AEPW:ELKCITY6:SWEETWT6
FDNS	06ALL	6	20WP	G15_039	FROM->TO	POTTER COUNTY INTERCHANGE (WAUK 90343-A) 345/230/13.2KV TRANSFORMER CKT 1	560	560	0.26198	106.1183	CHISHOLM6 230.00 - SWEETWATER 230KV CKT 1
FDNS	06NR	6	17G	G15_039	FROM->TO	POTTER COUNTY INTERCHANGE (WAUK 90343-A) 345/230/13.2KV TRANSFORMER CKT 1	560	560	0.05535	105.6332	P12:345:SPS:J02.1.TOLK.EDDY
FDNS	06ALL	6	20WP	G15_039	FROM->TO	POTTER COUNTY INTERCHANGE (WAUK 90343-A) 345/230/13.2KV TRANSFORMER CKT 1	560	560	0.26076	105.4175	P12:230:AEPW:ELKCITY6:SWEETWT6
FDNS	06ALL	6	17G	G15_039	FROM->TO	POTTER COUNTY INTERCHANGE (WAUK 90343-A) 345/230/13.2KV TRANSFORMER CKT 1	560	560	0.26034	105.3722	CHISHOLM6 230.00 - SWEETWATER 230KV CKT 1
FDNS	06ALL	6	16WP	G15_039	FROM->TO	POTTER COUNTY INTERCHANGE (WAUK 90343-A) 345/230/13.2KV TRANSFORMER CKT 1	560	560	0.29129	104.8403	P12:345:SPS:J02.1.TOLK.EDDY
FDNS	06NR	6	20L	G15_039	FROM->TO	POTTER COUNTY INTERCHANGE (WAUK 90343-A) 345/230/13.2KV TRANSFORMER CKT 1	560	560	0.05399	104.5291	GRAPEVINE INTERCHANGE - NICHOLS STATION 230KV CKT 1
FDNS	06NR	6	20L	G15_039	FROM->TO	POTTER COUNTY INTERCHANGE (WAUK 90343-A) 345/230/13.2KV TRANSFORMER CKT 1	560	560	0.05399	104.5291	GRAPEVINE INTERCHANGE - NICHOLS STATION 230KV CKT 1
FDNS	06ALL	6	16WP	G15_039	FROM->TO	POTTER COUNTY INTERCHANGE (WAUK 90343-A) 345/230/13.2KV TRANSFORMER CKT 1	560	560	0.29129	104.3479	P12:345:SPS:J02.1.TOLK.EDDY
FDNS	06ALL	6	20L	G15_039	FROM->TO	POTTER COUNTY INTERCHANGE (WAUK 90343-A) 345/230/13.2KV TRANSFORMER CKT 1	560	560	0.2276	104.0524	P12:230:AEPW:ELKCITY6:SWEETWT6
FDNS	06ALL	6	17G	G15_039	FROM->TO	POTTER COUNTY INTERCHANGE (WAUK 90343-A) 345/230/13.2KV TRANSFORMER CKT 1	560	560	0.26034	103.8192	CHISHOLM6 230.00 - SWEETWATER 230KV CKT 1
FDNS	06NR	6	17G	G15_039	FROM->TO	POTTER COUNTY INTERCHANGE (WAUK 90343-A) 345/230/13.2KV TRANSFORMER CKT 1	560	560	0.05639	103.8186	STLN-DEMARC6 - SWEETWATER 230KV CKT 1
FDNS	06NR	6	17G	G15_039	FROM->TO	POTTER COUNTY INTERCHANGE (WAUK 90343-A) 345/230/13.2KV TRANSFORMER CKT 1	560	560	0.05639	103.7679	STATELINE INTERCHANGE - STLN-DEMARC6 230KV CKT 1
FDNS	06NR	6	17G	G15_039	FROM->TO	POTTER COUNTY INTERCHANGE (WAUK 90343-A) 345/230/13.2KV TRANSFORMER CKT 1	560	560	0.05639	103.7648	P12:230:AEPW-SPS:SWEETWT6:WHEELER 6
FDNS	06ALL	6	20WP	G15_039	FROM->TO	POTTER COUNTY INTERCHANGE (WAUK 90343-A) 345/230/13.2KV TRANSFORMER CKT 1	560	560	0.26076	103.6014	P12:230:AEPW:ELKCITY6:SWEETWT6
FDNS	06ALL	6	20SP	G15_039	FROM->TO	POTTER COUNTY INTERCHANGE (WAUK 90343-A) 345/230/13.2KV TRANSFORMER CKT 1	560	560	0.29243	103.5013	P12:345:SPS:J15.1.XRDS.TOLK
FDNS	06ALL	6	17SP	G15_039	FROM->TO	POTTER COUNTY INTERCHANGE (WAUK 90343-A) 345/230/13.2KV TRANSFORMER CKT 1	560	560	0.28388	103.4959	POTTER COUNTY INTERCHANGE - TOLK STATION 345KV CKT 1
FDNS	06NR	6	17G	G15_039	FROM->TO	POTTER COUNTY INTERCHANGE (WAUK 90343-A) 345/230/13.2KV TRANSFORMER CKT 1	560	560	0.05626	103.1861	P12:230:AEPW:ELKCITY6:SWEETWT6
FDNS	06NR	6	20L	G15_039	FROM->TO	POTTER COUNTY INTERCHANGE (WAUK 90343-A) 345/230/13.2KV TRANSFORMER CKT 1	560	560	0.05389	102.4853	GRAPEVINE INTERCHANGE - STATELINE INTERCHANGE 230KV CKT 1
FDNS	06NR	6	20L	G15_039	FROM->TO	POTTER COUNTY INTERCHANGE (WAUK 90343-A) 345/230/13.2KV TRANSFORMER CKT 1	560	560	0.05389	102.4853	GRAPEVINE INTERCHANGE - STATELINE INTERCHANGE 230KV CKT 1
FDNS	06NR	6	20L	G15_039	FROM->TO	POTTER COUNTY INTERCHANGE (WAUK 90343-A) 345/230/13.2KV TRANSFORMER CKT 1	560	560	0.05729	102.2549	HITCHLAND INTERCHANGE - MOORE COUNTY INTERCHANGE 230KV CKT 1
FDNS	06NR	6	20L	G15_039	FROM->TO	POTTER COUNTY INTERCHANGE (WAUK 90343-A) 345/230/13.2KV TRANSFORMER CKT 1	560	560	0.05729	102.2549	HITCHLAND INTERCHANGE - MOORE COUNTY INTERCHANGE 230KV CKT 1
FDNS	06ALL	6	20SP	G15_039	FROM->TO	POTTER COUNTY INTERCHANGE (WAUK 90343-A) 345/230/13.2KV TRANSFORMER CKT 1	560	560	0.29243	102.1921	P12:345:SPS:J15.1.XRDS.TOLK
FDNS	06ALL	6	17SP	G15_039	FROM->TO	POTTER COUNTY INTERCHANGE (WAUK 90343-A) 345/230/13.2KV TRANSFORMER CKT 1	560	560	0.28388	102.1846	POTTER COUNTY INTERCHANGE - TOLK STATION 345KV CKT 1
FDNS	06NR	6	20L	G15_039	FROM->TO	POTTER COUNTY INTERCHANGE (WAUK 90343-A) 345/230/13.2KV TRANSFORMER CKT 1	560	560	0.05399	101.9536	GRAPEVINE INTERCHANGE - NICHOLS STATION 230KV CKT 1
FDNS	06NR	6	20L	G15_039	FROM->TO	POTTER COUNTY INTERCHANGE (WAUK 90343-A) 345/230/13.2KV TRANSFORMER CKT 1	560	560	0.05399	101.9536	GRAPEVINE INTERCHANGE - NICHOLS STATION 230KV CKT 1
FDNS	06NR	6	17G	G15_039	FROM->TO	POTTER COUNTY INTERCHANGE (WAUK 90343-A) 345/230/13.2KV TRANSFORMER CKT 1	560	560	0.05639	101.6291	STLN-DEMARC6 - SWEETWATER 230KV CKT 1
FDNS	06ALL	6	20L	G15_039	FROM->TO	POTTER COUNTY INTERCHANGE (WAUK 90343-A) 345/230/13.2KV TRANSFORMER CKT 1	560	560	0.22859	101.6285	STATELINE INTERCHANGE - STLN-DEMARC6 230KV CKT 1
FDNS	06ALL	6	20L	G15_039	FROM->TO	POTTER COUNTY INTERCHANGE (WAUK 90343-A) 345/230/13.2KV TRANSFORMER CKT 1	560	560	0.22859	101.6284	P12:230:AEPW-SPS:SWEETWT6:WHEELER 6
FDNS	06ALL	6	20L	G15_039	FROM->TO	POTTER COUNTY INTERCHANGE (WAUK 90343-A) 345/230/13.2KV TRANSFORMER CKT 1	560	560	0.22859	101.623	STLN-DEMARC6 - SWEETWATER 230KV CKT 1
FDNS	06NR	6	17G	G15_039	FROM->TO	POTTER COUNTY INTERCHANGE (WAUK 90343-A) 345/230/13.2KV TRANSFORMER CKT 1	560	560	0.05639	101.5718	STATELINE INTERCHANGE - STLN-DEMARC6 230KV CKT 1
FDNS	06NR	6	17G	G15_039	FROM->TO	POTTER COUNTY INTERCHANGE (WAUK 90343-A) 345/230/13.2KV TRANSFORMER CKT 1	560	560	0.05639	101.5658	P12:230:AEPW-SPS:SWEETWT6:WHEELER 6
FDNS	06ALL	6	20WP	G15_039	FROM->TO	POTTER COUNTY INTERCHANGE (WAUK 90343-A) 345/230/13.2KV TRANSFORMER CKT 1	560	560	0.26198	101.2389	STLN-DEMARC6 - SWEETWATER 230KV CKT 1
FDNS	06ALL	6	20WP	G15_039	FROM->TO	POTTER COUNTY INTERCHANGE (WAUK 90343-A) 345/230/13.2KV TRANSFORMER CKT 1	560	560	0.26198	101.206	STATELINE INTERCHANGE - STLN-DEMARC6 230KV CKT 1
FDNS	06ALL	6	20WP	G15_039	FROM->TO	POTTER COUNTY INTERCHANGE (WAUK 90343-A) 345/230/13.2KV TRANSFORMER CKT 1	560	560	0.26198	101.2051	P12:230:AEPW-SPS:SWEETWT6:WHEELER 6
FDNS	06ALL	6	20WP	G15_039	FROM->TO	POTTER COUNTY INTERCHANGE (WAUK 90343-A) 345/230/13.2KV TRANSFORMER CKT 1	560	560	0.24968	100.8002	GRAPEVINE INTERCHANGE - NICHOLS STATION 230KV CKT 1
FDNS	06ALL	6	20WP	G15_039	FROM->TO	POTTER COUNTY INTERCHANGE (WAUK 90343-A) 345/230/13.2KV TRANSFORMER CKT 1	560	560	0.24968	100.8002	GRAPEVINE INTERCHANGE - NICHOLS STATION 230KV CKT 1
FDNS	06ALL	6	20L	G15_039	FROM->TO	POTTER COUNTY INTERCHANGE (WAUK 90343-A) 345/230/13.2KV TRANSFORMER CKT 1	560	560	0.22859	100.138	STATELINE INTERCHANGE - STLN-DEMARC6 230KV CKT 1
FDNS	06ALL	6	20L	G15_039	FROM->TO	POTTER COUNTY INTERCHANGE (WAUK 90343-A) 345/230/13.2KV TRANSFORMER CKT 1	560	560	0.22859	100.1364	P12:230:AEPW-SPS:SWEETWT6:WHEELER 6
FDNS	06ALL	6	20L	G15_039	FROM->TO	POTTER COUNTY INTERCHANGE (WAUK 90343-A) 345/230/13.2KV TRANSFORMER CKT 1	560	560	0.22859	100.1246	STLN-DEMARC6 - SWEETWATER 230KV CKT 1
FDNS	06NR	6	17G	G15_039	FROM->TO	POTTER COUNTY INTERCHANGE (WAUK 90343-A) 345/230/13.2KV TRANSFORMER CKT 1	560	560	0.05662	100	GRAPEVINE INTERCHANGE - NICHOLS STATION 230KV CKT 1
FDNS	06NR	6	17G	G15_039	FROM->TO	POTTER COUNTY INTERCHANGE (WAUK 90343-A) 345/230/13.2KV TRANSFORMER CKT 1	560	560	0.05662	100	GRAPEVINE INTERCHANGE - NICHOLS STATION 230KV CKT 1
FDNS	06NR	6	20L	G15_039	FROM->TO	POTTER COUNTY INTERCHANGE (WAUK 90343-A) 345/230/13.2KV TRANSFORMER CKT 1	560	560	0.05389	100	GRAPEVINE INTERCHANGE - STATELINE INTERCHANGE 230KV CKT 1
FDNS	06NR	6	20L	G15_039	FROM->TO	POTTER COUNTY INTERCHANGE (WAUK 90343-A) 345/230/13.2KV TRANSFORMER CKT 1	560	560	0.05389	100	GRAPEVINE INTERCHANGE - STATELINE INTERCHANGE 230KV CKT 1
FDNS	06ALL	6	20WP	G15_039	FROM->TO	POTTER COUNTY INTERCHANGE (WAUK 90343-A) 345/230/13.2KV TRANSFORMER CKT 1	560	560	0.26198	99.9	STLN-DEMARC6 - SWEETWATER 230KV CKT 1
FDNS	06ALL	6	20L	G15_039	FROM->TO	POTTER COUNTY INTERCHANGE (WAUK 90343-A) 345/230/13.2KV TRANSFORMER CKT 1	560	560	0.22865	99.8	HITCHLAND INTERCHANGE - MOORE COUNTY INTERCHANGE 230KV CKT 1

SOLUTION	GROUP	SCENARIO	SEASON	SOURCE	DIRECTION	MONITORED ELEMENT	RATEA (MVA)	RATEB(MVA)	TDF	TC%LOADING (% MVA)	CONTINGENCY
FDNS	06ALL	6	20L	G15_039	FROM->TO	POTTER COUNTY INTERCHANGE (WAUK 90343-A) 345/230/13.2KV TRANSFORMER CKT 1	560	560	0.22865	99.8	HITCHLAND INTERCHANGE - MOORE COUNTY INTERCHANGE 230KV CKT 1
FDNS	06NR	6	20L	G15_039	FROM->TO	POTTER COUNTY INTERCHANGE (WAUK 90343-A) 345/230/13.2KV TRANSFORMER CKT 1	560	560	0.05729	99.8	HITCHLAND INTERCHANGE - MOORE COUNTY INTERCHANGE 230KV CKT 1
FDNS	06NR	6	20L	G15_039	FROM->TO	POTTER COUNTY INTERCHANGE (WAUK 90343-A) 345/230/13.2KV TRANSFORMER CKT 1	560	560	0.05729	99.8	HITCHLAND INTERCHANGE - MOORE COUNTY INTERCHANGE 230KV CKT 1
FDNS	06ALL	6	20WP	G15_039	FROM->TO	POTTER COUNTY INTERCHANGE (WAUK 90343-A) 345/230/13.2KV TRANSFORMER CKT 1	560	560	0.26198	99.8	P12:230:AEPW-SPS:SWEETWT6:WHEELER 6
FDNS	06ALL	6	20WP	G15_039	FROM->TO	POTTER COUNTY INTERCHANGE (WAUK 90343-A) 345/230/13.2KV TRANSFORMER CKT 1	560	560	0.26198	99.8	STATELINE INTERCHANGE - STLN-DEMARC6 230KV CKT 1
FDNS	06ALL	6	20SP	G15_039	FROM->TO	POTTER COUNTY INTERCHANGE (WAUK 90343-A) 345/230/13.2KV TRANSFORMER CKT 1	560	560	0.28087	99.5	POTTER COUNTY INTERCHANGE - TOLK STATION 345KV CKT 1
FDNS	06ALL	6	20WP	G15_039	FROM->TO	POTTER COUNTY INTERCHANGE (WAUK 90343-A) 345/230/13.2KV TRANSFORMER CKT 1	560	560	0.2612	99.5	HITCHLAND INTERCHANGE - MOORE COUNTY INTERCHANGE 230KV CKT 1
FDNS	06ALL	6	20WP	G15_039	FROM->TO	POTTER COUNTY INTERCHANGE (WAUK 90343-A) 345/230/13.2KV TRANSFORMER CKT 1	560	560	0.2612	99.5	HITCHLAND INTERCHANGE - MOORE COUNTY INTERCHANGE 230KV CKT 1
FDNS	06ALL	6	16WP	G15_039	FROM->TO	TOLK STATION (ABBXNL844501) 345/230/13.2KV TRANSFORMER CKT 1	560	560	0.19989	112.8509	CROSSROADS 7345.00 - TOLK STATION 345KV CKT 1
FDNS	06ALL	6	16WP	G15_039	FROM->TO	TOLK STATION (ABBXNL844501) 345/230/13.2KV TRANSFORMER CKT 1	560	560	0.19989	110.425	CROSSROADS 7345.00 - TOLK STATION 345KV CKT 1
FDNS	06ALL	6	20WP	G15_039	FROM->TO	TOLK STATION (ABBXNL844501) 345/230/13.2KV TRANSFORMER CKT 1	560	560	0.23009	101.0022	POTTER COUNTY INTERCHANGE (WAUK 90343-A) 345/230/13.2KV TRANSFORMER CKT 1
FDNS	06ALL	6	20WP	G15_039	FROM->TO	TOLK STATION (ABBXNL844501) 345/230/13.2KV TRANSFORMER CKT 1	560	560	0.23009	101.0022	POTTER COUNTY INTERCHANGE (WAUK 90343-A) 345/230/13.2KV TRANSFORMER CKT 1
FDNS	06ALL	7	20SP	G15_039	FROM->TO	CHISHOLM6 230.00 - ELK CITY 230KV 230KV CKT 1	353	353	0.06107	100.158	BASE CASE
FDNS	06ALL	7	16WP	G15_039	TO->FROM	CIMARRON - MINCO 345KV CKT 1	956	956	0.19828	111.0593	G14-057T 345.00 - SUNNYSIDE 345KV CKT 1
FDNS	06ALL	7	16WP	G15_039	TO->FROM	CIMARRON - MINCO 345KV CKT 1	956	956	0.19828	105.9627	G14-057T 345.00 - LAWTON EASTSIDE 345KV CKT 1
FDNS	06ALL	7	20SP	G15_039	TO->FROM	DEAF SMITH COUNTY INTERCHANGE - G15039_T 230.00 230KV CKT 1	318.7	350.57	0.62361	99.6	P12:345:SPS:J15.1.XRDS.TOLK
FDNS	06ALL	7	20L	G15_039	TO->FROM	G14-057T 345.00 - LAWTON EASTSIDE 345KV CKT 1	717	789	0.08589	100.7791	BASE CASE
FDNS	06ALL	7	20L	G15_039	FROM->TO	G14-057T 345.00 - SUNNYSIDE 345KV CKT 1	717	789	0.08589	114.0012	BASE CASE
FDNS	06ALL	7	20WP	G15_039	FROM->TO	G14-057T 345.00 - SUNNYSIDE 345KV CKT 1	717	789	0.10736	102.5888	BASE CASE
FDNS	06ALL	7	17G	G15_039	FROM->TO	G14-057T 345.00 - SUNNYSIDE 345KV CKT 1	717	789	0.1097	102.2119	BASE CASE
FDNS	06ALL	7	16WP	G15_039	FROM->TO	G14-057T 345.00 - SUNNYSIDE 345KV CKT 1	717	789	0.11281	101.1576	BASE CASE
FDNS	00NR	7	25SP	G15_039	TO->FROM	JONES STATION - TUCO INTERCHANGE 230KV CKT 1	343.79	343.79	0.0859	129.1537	CARLISLE INTERCHANGE - TUCO INTERCHANGE 230KV CKT 1
FDNS	00NR	7	25SP	G15_039	TO->FROM	JONES STATION - TUCO INTERCHANGE 230KV CKT 1	343.79	343.79	0.0859	129.1537	CARLISLE INTERCHANGE - TUCO INTERCHANGE 230KV CKT 1
FDNS	00NR	7	25SP	G15_039	TO->FROM	JONES STATION - TUCO INTERCHANGE 230KV CKT 1	343.79	343.79	0.07114	112.419	GEN526333 1-JONES GEN #3 21 KV
FDNS	00NR	7	25SP	G15_039	TO->FROM	JONES STATION - TUCO INTERCHANGE 230KV CKT 1	343.79	343.79	0.07114	112.036	GEN526334 1-JONES_4 116.500
FDNS	00NR	7	25SP	G15_039	TO->FROM	JONES STATION - TUCO INTERCHANGE 230KV CKT 1	343.79	343.79	0.08224	107.2187	TUCO INTERCHANGE - YOAKUM_345 345.00 345KV CKT 1
FDNS	00NR	7	25SP	G15_039	TO->FROM	JONES STATION - TUCO INTERCHANGE 230KV CKT 1	343.79	343.79	0.07812	103.0013	CARLISLE INTERCHANGE - WOLFFORTH INTERCHANGE 230KV CKT 1
FDNS	00NR	7	25SP	G15_039	TO->FROM	JONES STATION - TUCO INTERCHANGE 230KV CKT 1	343.79	343.79	0.08728	101.0414	PLANT X STATION - SUNDOWN INTERCHANGE 230KV CKT 1
FDNS	00NR	7	25SP	G15_039	TO->FROM	JONES STATION - TUCO INTERCHANGE 230KV CKT 1	343.79	343.79	0.08728	101.0414	PLANT X STATION - SUNDOWN INTERCHANGE 230KV CKT 1
FDNS	00NR	7	25SP	G15_039	TO->FROM	JONES STATION - TUCO INTERCHANGE 230KV CKT 1	343.79	343.79	0.07253	100.2536	P12:345:SPS:J02.1.TOLK.EDDY
FDNS	00NR	7	25SP	G15_039	TO->FROM	JONES STATION - TUCO INTERCHANGE 230KV CKT 1	343.79	343.79	0.07114	100.1954	GEN526332 1-JONES GEN #2 21 KV
FDNS	00NR	7	25SP	G15_039	TO->FROM	JONES STATION - TUCO INTERCHANGE 230KV CKT 1	343.79	343.79	0.07114	100.1934	GEN526331 1-JONES GEN #1 22 KV
FDNS	00NR	7	25SP	G15_039	TO->FROM	JONES STATION - TUCO INTERCHANGE 230KV CKT 1	343.79	343.79	0.07126	100.1486	TUCO INTERCHANGE (ENRCO 136401) 230/115/13.2KV TRANSFORMER CKT 1
FDNS	00NR	7	25SP	G15_039	TO->FROM	JONES STATION - TUCO INTERCHANGE 230KV CKT 1	343.79	343.79	0.07126	100.1486	TUCO INTERCHANGE (ENRCO 136401) 230/115/13.2KV TRANSFORMER CKT 1
FDNS	00NR	7	25SP	G15_039	TO->FROM	JONES STATION - TUCO INTERCHANGE 230KV CKT 1	343.79	343.79	0.07126	100.1486	TUCO INTERCHANGE (ENRCO 136401) 230/115/13.2KV TRANSFORMER CKT 2
FDNS	00NR	7	25SP	G15_039	TO->FROM	JONES STATION - TUCO INTERCHANGE 230KV CKT 1	343.79	343.79	0.07126	100.1486	TUCO INTERCHANGE (ENRCO 136401) 230/115/13.2KV TRANSFORMER CKT 2
FDNS	00NR	7	25SP	G15_039	FROM->TO	LUBBOCK POWER & LIGHT-HOLLY PLANT (SHIH T101039) 230/69/13.5KV TRANSFORMER CKT 1	224	224	0.03581	104.7009	LUBBOCK POWER & LIGHT-SOUTHEAST - LUBBOCK SOUTH INTERCHANGE 230KV CKT 1
FDNS	00NR	7	25SP	G15_039	FROM->TO	LUBBOCK POWER & LIGHT-HOLLY PLANT (SHIH T101039) 230/69/13.5KV TRANSFORMER CKT 1	224	224	0.03581	104.6879	P12:LPL:SPS:K64.1.LP-SE.LUBBS
FDNS	00NR	7	25SP	G15_039	FROM->TO	LUBBOCK POWER & LIGHT-HOLLY PLANT (SHIH T101039) 230/69/13.5KV TRANSFORMER CKT 1	224	224	0.0346	101.9255	LUBBOCK EAST INTERCHANGE - LUBBOCK POWER & LIGHT-WADSWORTH 230KV CKT 1
FDNS	00NR	7	25SP	G15_039	FROM->TO	LUBBOCK POWER & LIGHT-HOLLY PLANT (SHIH T101039) 230/69/13.5KV TRANSFORMER CKT 1	224	224	0.0346	101.9108	P12:230:LPL:K57.1.LP-WADS.LUBBE
FDNS	00NR	7	25SP	G15_039	FROM->TO	LUBBOCK POWER & LIGHT-HOLLY PLANT (SHIH T101039) 230/69/13.5KV TRANSFORMER CKT 1	224	224	0.0346	101.9107	LUBBOCK POWER & LIGHT-WADSWORTH (SHIH T101038) 230/69/13.5KV TRANSFORMER CKT 1
FDNS	00NR	7	25SP	G15_039	FROM->TO	LUBBOCK POWER & LIGHT-HOLLY PLANT (SHIH T101039) 230/69/13.5KV TRANSFORMER CKT 1	224	224	0.0346	101.9107	LUBBOCK POWER & LIGHT-WADSWORTH (SHIH T101038) 230/69/13.5KV TRANSFORMER CKT 1
FDNS	06NR	7	20L	G15_039	FROM->TO	POTTER COUNTY INTERCHANGE (WAUK 90343-A) 345/230/13.2KV TRANSFORMER CKT 1	560	560	0.0422	147.5976	P12:345:SPS:J15.1.XRDS.TOLK
FDNS	06NR	7	17G	G15_039	FROM->TO	POTTER COUNTY INTERCHANGE (WAUK 90343-A) 345/230/13.2KV TRANSFORMER CKT 1	560	560	0.03879	147.1186	P12:345:SPS:J15.1.XRDS.TOLK
FDNS	06NR	7	20L	G15_039	FROM->TO	POTTER COUNTY INTERCHANGE (WAUK 90343-A) 345/230/13.2KV TRANSFORMER CKT 1	560	560	0.0422	145.6843	P12:345:SPS:J15.1.XRDS.TOLK
FDNS	06NR	7	20L	G15_039	FROM->TO	POTTER COUNTY INTERCHANGE (WAUK 90343-A) 345/230/13.2KV TRANSFORMER CKT 1	560	560	0.03845	145.3364	POTTER COUNTY INTERCHANGE - TOLK STATION 345KV CKT 1
FDNS	06ALL	7	20WP	G15_039	FROM->TO	POTTER COUNTY INTERCHANGE (WAUK 90343-A) 345/230/13.2KV TRANSFORMER CKT 1	560	560	0.28568	145.2357	P12:345:SPS:J15.1.XRDS.TOLK
FDNS	06NR	7	17G	G15_039	FROM->TO	POTTER COUNTY INTERCHANGE (WAUK 90343-A) 345/230/13.2KV TRANSFORMER CKT 1	560	560	0.03879	144.2651	P12:345:SPS:J15.1.XRDS.TOLK
FDNS	06NR	7	20L	G15_039	FROM->TO	POTTER COUNTY INTERCHANGE (WAUK 90343-A) 345/230/13.2KV TRANSFORMER CKT 1	560	560	0.03845	143.6207	POTTER COUNTY INTERCHANGE - TOLK STATION 345KV CKT 1
FDNS	06NR	7	17G	G15_039	FROM->TO	POTTER COUNTY INTERCHANGE (WAUK 90343-A) 345/230/13.2KV TRANSFORMER CKT 1	560	560	0.03723	143.371	POTTER COUNTY INTERCHANGE - TOLK STATION 345KV CKT 1
FDNS	06ALL	7	20WP	G15_039	FROM->TO	POTTER COUNTY INTERCHANGE (WAUK 90343-A) 345/230/13.2KV TRANSFORMER CKT 1	560	560	0.28568	143.2694	P12:345:SPS:J15.1.XRDS.TOLK
FDNS	06ALL	7	20L	G15_039	FROM->TO	POTTER COUNTY INTERCHANGE (WAUK 90343-A) 345/230/13.2KV TRANSFORMER CKT 1	560	560	0.2489	140.9722	P12:345:SPS:J15.1.XRDS.TOLK
FDNS	06NR	7	17G	G15_039	FROM->TO	POTTER COUNTY INTERCHANGE (WAUK 90343-A) 345/230/13.2KV TRANSFORMER CKT 1	560	560	0.03723	140.8106	POTTER COUNTY INTERCHANGE - TOLK STATION 345KV CKT 1
FDNS	06ALL	7	20WP	G15_039	FROM->TO	POTTER COUNTY INTERCHANGE (WAUK 90343-A) 345/230/13.2KV TRANSFORMER CKT 1	560	560	0.27433	139.6579	POTTER COUNTY INTERCHANGE - TOLK STATION 345KV CKT 1
FDNS	06ALL	7	20L	G15_039	FROM->TO	POTTER COUNTY INTERCHANGE (WAUK 90343-A) 345/230/13.2KV TRANSFORMER CKT 1	560	560	0.2489	139.1603	P12:345:SPS:J15.1.XRDS.TOLK
FDNS	06ALL	7	20WP	G15_039	FROM->TO	POTTER COUNTY INTERCHANGE (WAUK 90343-A) 345/230/13.2KV TRANSFORMER CKT 1	560	560	0.27433	137.9216	POTTER COUNTY INTERCHANGE - TOLK STATION 345KV CKT 1
FDNS	06ALL	7	20L	G15_039	FROM->TO	POTTER COUNTY INTERCHANGE (WAUK 90343-A) 345/230/13.2KV TRANSFORMER CKT 1	560	560	0.23845	136.7701	POTTER COUNTY INTERCHANGE - TOLK STATION 345KV CKT 1
FDNS	06ALL	7	17G	G15_039	FROM->TO	POTTER COUNTY INTERCHANGE (WAUK 90343-A) 345/230/13.2KV TRANSFORMER CKT 1	560	560	0.27452	135.7702	POTTER COUNTY INTERCHANGE - TOLK STATION 345KV CKT 1
FDNS	06ALL	7	20L	G15_039	FROM->TO	POTTER COUNTY INTERCHANGE (WAUK 90343-A) 345/230/13.2KV TRANSFORMER CKT 1	560	560	0.23845	135.1875	POTTER COUNTY INTERCHANGE - TOLK STATION 345KV CKT 1
FDNS	06ALL	7	16WP	G15_039	FROM->TO	POTTER COUNTY INTERCHANGE (WAUK 90343-A) 345/230/13.2KV TRANSFORMER CKT 1	560	560	0.3022	133.795	P12:345:SPS:J15.1.XRDS.TOLK
FDNS	06ALL	7	17G	G15_039	FROM->TO	POTTER COUNTY INTERCHANGE (WAUK 90343-A) 345/230/13.2KV TRANSFORMER CKT 1	560	560	0.27452	133.7386	POTTER COUNTY INTERCHANGE - TOLK STATION 345KV CKT 1
FDNS	06ALL	7	16WP	G15_039	FROM->TO	POTTER COUNTY INTERCHANGE (WAUK 90343-A) 345/230/13.2KV TRANSFORMER CKT 1	560	560	0.3022	130.8152	P12:345:SPS:J15.1.XRDS.TOLK
FDNS	06ALL	7	16WP	G15_039	FROM->TO	POTTER COUNTY INTERCHANGE (WAUK 90343-A) 345/230/13.2KV TRANSFORMER CKT 1	560	560	0.28611	125.2874	POTTER COUNTY INTERCHANGE - TOLK STATION 345KV CKT 1
FDNS	06ALL	7	20WP	G15_039	FROM->TO	POTTER COUNTY INTERCHANGE (WAUK 90343-A) 345/230/13.2KV TRANSFORMER CKT 1	560	560	0.27305	124.8912	P12:345:SPS:J02.1.TOLK.EDDY
FDNS	06ALL	7	20WP	G15_039	FROM->TO	POTTER COUNTY INTERCHANGE (WAUK 90343-A) 345/230/13.2KV TRANSFORMER CKT 1	560	560	0.27305	123.9005	P12:345:SPS:J02.1.TOLK.EDDY
FDNS	06NR	7	20L	G15_039	FROM->TO	POTTER COUNTY INTERCHANGE (WAUK 90343-A) 345/230/13.2KV TRANSFORMER CKT 1	560	560	0.0539	122.9304	CHISHOLM6 230.00 - SWEETWATER 230KV CKT 1
FDNS	06ALL	7	16WP	G15_039	FROM->TO	POTTER COUNTY INTERCHANGE (WAUK 90343-A) 345/230/13.2KV TRANSFORMER CKT 1	560	560	0.28611	122.7478	POTTER COUNTY INTERCHANGE - TOLK STATION 345KV CKT 1
FDNS	06NR	7	20L	G15_039	FROM->TO	POTTER COUNTY INTERCHANGE (WAUK 90343-A) 345/230/13.2KV TRANSFORMER CKT 1	560	560	0.0539	122.3859	CHISHOLM6 230.00 - SWEETWATER 230KV CKT 1
FDNS	06NR	7	20L	G15_039	FROM->TO	POTTER COUNTY INTERCHANGE (WAUK 90343-A) 345/230/13.2KV TRANSFORMER CKT 1	560	560	0.05375	120.5035	P12:230:AEPW:ELKCITY6:SWEETWT6
FDNS	06ALL	7	20L	G15_039	FROM->TO	POTTER COUNTY INTERCHANGE (WAUK 90343-A) 345/230/13.2KV TRANSFORMER CKT 1	560	560	0.23973	120.1818	P12:345:SPS:J02.1.TOLK.EDDY
FDNS	06NR	7	20L	G15_039	FROM->TO	POTTER COUNTY INTERCHANGE (WAUK 90343-A) 345/230/13.2KV TRANSFORMER CKT 1	560	560	0.05375	120.0139	P12:230:AEPW:ELKCITY6:SWEETWT6
FDNS	06ALL	7	20L	G15_039	FROM->TO	POTTER COUNTY INTERCHANGE (WAUK 90343-A) 345/230/13.2KV TRANSFORMER CKT 1	560	560	0.23973	119.3629	P12:345:SPS:J02.1.TOLK.EDDY
FDNS	06ALL	7	17SP	G15_039	FROM->TO	POTTER COUNTY INTERCHANGE (WAUK 90343-A) 345/230/13.2KV TRANSFORMER CKT 1	560	560	0.29901	118.7065	P12:345:SPS:J15.1.XRDS.TOLK
FDNS	06NR	7	20L	G15_039	FROM->TO	POTTER COUNTY INTERCHANGE (WAUK 90343-A) 345/230/13.2KV TRANSFORMER CKT 1	560	560	0.06049	117.4069	P12:345:SPS:J02.1.TOLK.EDDY
FDNS	06NR	7	17G	G15_039	FROM->TO	POTTER COUNTY INTERCHANGE (WAUK 90343-A) 345/230/13.2KV TRANSFORMER CKT 1	560	560	0.05639	117.2637	CHISHOLM6 230.00 - SWEETWATER 230KV CKT 1
FDNS	06NR	7	17G	G15_039	FROM->TO	POTTER COUNTY INTERCHANGE (WAUK 90343-A) 345/230/13.2KV TRANSFORMER CKT 1	560	560	0.05639	117.2172	CHISHOLM6 230.00 - SWEETWATER 230KV CKT 1
FDNS	06NR	7	20L	G15_039	FROM->TO	POTTER COUNTY INTERCHANGE (WAUK 90343-A) 345/230/13.2KV TRANSFORMER CKT 1	560	560	0.06049	116.9323	P12:345:SPS:J02.1.TOLK.EDDY
FDNS	06ALL	7	17SP	G15_039	FROM->TO	POTTER COUNTY INTERCHANGE (WAUK 90343-A) 345/230/13.2KV TRANSFORMER CKT 1	560	560	0.29901	115.9022	P12:345:SPS:J15.1.XRDS.TOLK
FDNS	06NR	7	20L	G15_039	FROM->TO	POTTER COUNTY INTERCHANGE (WAUK 90343-A) 345/230/13.2KV TRANSFORMER CKT 1	560	560	0.0539	115.5124	STATELINE INTERCHANGE - STLN-DEMARC6 230KV CKT 1

SOLUTION	GROUP	SCENARIO	SEASON	SOURCE	DIRECTION	MONITORED ELEMENT	RATEA (MVA)	RATEB(MVA)	TDF	TC%LOADING (% MVA)	CONTINGENCY
FDNS	06NR	7	20L	G15_039	FROM->TO	POTTER COUNTY INTERCHANGE (WAUK 90343-A) 345/230/13.2KV TRANSFORMER CKT 1	560	560	0.0539	115.5105	P12:230:AEPW-SPS:SWEETWT6:WHEELER 6
FDNS	06NR	7	20L	G15_039	FROM->TO	POTTER COUNTY INTERCHANGE (WAUK 90343-A) 345/230/13.2KV TRANSFORMER CKT 1	560	560	0.0539	115.4989	STLN-DEMARC6 - SWEETWATER 230KV CKT 1
FDNS	06ALL	7	20L	G15_039	FROM->TO	POTTER COUNTY INTERCHANGE (WAUK 90343-A) 345/230/13.2KV TRANSFORMER CKT 1	560	560	0.2286	115.2026	CHISHOLM6 230.00 - SWEETWATER 230KV CKT 1
FDNS	06NR	7	20L	G15_039	FROM->TO	POTTER COUNTY INTERCHANGE (WAUK 90343-A) 345/230/13.2KV TRANSFORMER CKT 1	560	560	0.0539	115.1465	STATELINE INTERCHANGE - STLN-DEMARC6 230KV CKT 1
FDNS	06NR	7	20L	G15_039	FROM->TO	POTTER COUNTY INTERCHANGE (WAUK 90343-A) 345/230/13.2KV TRANSFORMER CKT 1	560	560	0.0539	115.1445	P12:230:AEPW-SPS:SWEETWT6:WHEELER 6
FDNS	06NR	7	20L	G15_039	FROM->TO	POTTER COUNTY INTERCHANGE (WAUK 90343-A) 345/230/13.2KV TRANSFORMER CKT 1	560	560	0.0539	115.1236	STLN-DEMARC6 - SWEETWATER 230KV CKT 1
FDNS	06ALL	7	20WP	G15_039	FROM->TO	POTTER COUNTY INTERCHANGE (WAUK 90343-A) 345/230/13.2KV TRANSFORMER CKT 1	560	560	0.26198	114.9482	CHISHOLM6 230.00 - SWEETWATER 230KV CKT 1
FDNS	06ALL	7	20L	G15_039	FROM->TO	POTTER COUNTY INTERCHANGE (WAUK 90343-A) 345/230/13.2KV TRANSFORMER CKT 1	560	560	0.2286	114.9062	CHISHOLM6 230.00 - SWEETWATER 230KV CKT 1
FDNS	06NR	7	17G	G15_039	FROM->TO	POTTER COUNTY INTERCHANGE (WAUK 90343-A) 345/230/13.2KV TRANSFORMER CKT 1	560	560	0.05535	114.849	P12:345:SPS:J02.1.TOLK.EDDY
FDNS	06ALL	7	20WP	G15_039	FROM->TO	POTTER COUNTY INTERCHANGE (WAUK 90343-A) 345/230/13.2KV TRANSFORMER CKT 1	560	560	0.26198	114.7145	CHISHOLM6 230.00 - SWEETWATER 230KV CKT 1
FDNS	06NR	7	17G	G15_039	FROM->TO	POTTER COUNTY INTERCHANGE (WAUK 90343-A) 345/230/13.2KV TRANSFORMER CKT 1	560	560	0.05626	114.389	P12:230:AEPW:ELKCITY6:SWEETWT6
FDNS	06NR	7	17G	G15_039	FROM->TO	POTTER COUNTY INTERCHANGE (WAUK 90343-A) 345/230/13.2KV TRANSFORMER CKT 1	560	560	0.05626	114.2974	P12:230:AEPW:ELKCITY6:SWEETWT6
FDNS	06ALL	7	20L	G15_039	FROM->TO	POTTER COUNTY INTERCHANGE (WAUK 90343-A) 345/230/13.2KV TRANSFORMER CKT 1	560	560	0.22761	114.0332	P12:230:AEPW:ELKCITY6:SWEETWT6
FDNS	06ALL	7	20L	G15_039	FROM->TO	POTTER COUNTY INTERCHANGE (WAUK 90343-A) 345/230/13.2KV TRANSFORMER CKT 1	560	560	0.22761	113.7339	P12:230:AEPW:ELKCITY6:SWEETWT6
FDNS	06NR	7	17G	G15_039	FROM->TO	POTTER COUNTY INTERCHANGE (WAUK 90343-A) 345/230/13.2KV TRANSFORMER CKT 1	560	560	0.05535	113.7132	P12:345:SPS:J02.1.TOLK.EDDY
FDNS	06ALL	7	20WP	G15_039	FROM->TO	POTTER COUNTY INTERCHANGE (WAUK 90343-A) 345/230/13.2KV TRANSFORMER CKT 1	560	560	0.26076	113.3767	P12:230:AEPW:ELKCITY6:SWEETWT6
FDNS	06ALL	7	16WP	G15_039	FROM->TO	POTTER COUNTY INTERCHANGE (WAUK 90343-A) 345/230/13.2KV TRANSFORMER CKT 1	560	560	0.29131	113.2535	P12:345:SPS:J02.1.TOLK.EDDY
FDNS	06ALL	7	20WP	G15_039	FROM->TO	POTTER COUNTY INTERCHANGE (WAUK 90343-A) 345/230/13.2KV TRANSFORMER CKT 1	560	560	0.26076	113.142	P12:230:AEPW:ELKCITY6:SWEETWT6
FDNS	06ALL	7	17G	G15_039	FROM->TO	POTTER COUNTY INTERCHANGE (WAUK 90343-A) 345/230/13.2KV TRANSFORMER CKT 1	560	560	0.26035	112.9017	CHISHOLM6 230.00 - SWEETWATER 230KV CKT 1
FDNS	06ALL	7	17G	G15_039	FROM->TO	POTTER COUNTY INTERCHANGE (WAUK 90343-A) 345/230/13.2KV TRANSFORMER CKT 1	560	560	0.26035	112.7906	CHISHOLM6 230.00 - SWEETWATER 230KV CKT 1
FDNS	06ALL	7	17SP	G15_039	FROM->TO	POTTER COUNTY INTERCHANGE (WAUK 90343-A) 345/230/13.2KV TRANSFORMER CKT 1	560	560	0.2839	112.021	POTTER COUNTY INTERCHANGE - TOLK STATION 345KV CKT 1
FDNS	06ALL	7	20SP	G15_039	FROM->TO	POTTER COUNTY INTERCHANGE (WAUK 90343-A) 345/230/13.2KV TRANSFORMER CKT 1	560	560	0.29244	111.9416	P12:345:SPS:J15.1.XRDS.TOLK
FDNS	06ALL	7	16WP	G15_039	FROM->TO	POTTER COUNTY INTERCHANGE (WAUK 90343-A) 345/230/13.2KV TRANSFORMER CKT 1	560	560	0.29131	111.4742	P12:345:SPS:J02.1.TOLK.EDDY
FDNS	06NR	7	20L	G15_039	FROM->TO	POTTER COUNTY INTERCHANGE (WAUK 90343-A) 345/230/13.2KV TRANSFORMER CKT 1	560	560	0.05399	110.3295	GRAPEVINE INTERCHANGE - NICHOLS STATION 230KV CKT 1
FDNS	06NR	7	20L	G15_039	FROM->TO	POTTER COUNTY INTERCHANGE (WAUK 90343-A) 345/230/13.2KV TRANSFORMER CKT 1	560	560	0.05399	110.3295	GRAPEVINE INTERCHANGE - NICHOLS STATION 230KV CKT 1
FDNS	06NR	7	20L	G15_039	FROM->TO	POTTER COUNTY INTERCHANGE (WAUK 90343-A) 345/230/13.2KV TRANSFORMER CKT 1	560	560	0.05399	110.0835	GRAPEVINE INTERCHANGE - NICHOLS STATION 230KV CKT 1
FDNS	06NR	7	20L	G15_039	FROM->TO	POTTER COUNTY INTERCHANGE (WAUK 90343-A) 345/230/13.2KV TRANSFORMER CKT 1	560	560	0.05399	110.0835	GRAPEVINE INTERCHANGE - NICHOLS STATION 230KV CKT 1
FDNS	06NR	7	17G	G15_039	FROM->TO	POTTER COUNTY INTERCHANGE (WAUK 90343-A) 345/230/13.2KV TRANSFORMER CKT 1	560	560	0.05639	109.9796	STATELINE INTERCHANGE - STLN-DEMARC6 230KV CKT 1
FDNS	06NR	7	17G	G15_039	FROM->TO	POTTER COUNTY INTERCHANGE (WAUK 90343-A) 345/230/13.2KV TRANSFORMER CKT 1	560	560	0.05639	109.9773	P12:230:AEPW-SPS:SWEETWT6:WHEELER 6
FDNS	06NR	7	17G	G15_039	FROM->TO	POTTER COUNTY INTERCHANGE (WAUK 90343-A) 345/230/13.2KV TRANSFORMER CKT 1	560	560	0.05639	109.9374	STLN-DEMARC6 - SWEETWATER 230KV CKT 1
FDNS	06NR	7	17G	G15_039	FROM->TO	POTTER COUNTY INTERCHANGE (WAUK 90343-A) 345/230/13.2KV TRANSFORMER CKT 1	560	560	0.05639	109.7876	STATELINE INTERCHANGE - STLN-DEMARC6 230KV CKT 1
FDNS	06NR	7	17G	G15_039	FROM->TO	POTTER COUNTY INTERCHANGE (WAUK 90343-A) 345/230/13.2KV TRANSFORMER CKT 1	560	560	0.05639	109.7852	P12:230:AEPW-SPS:SWEETWT6:WHEELER 6
FDNS	06NR	7	17G	G15_039	FROM->TO	POTTER COUNTY INTERCHANGE (WAUK 90343-A) 345/230/13.2KV TRANSFORMER CKT 1	560	560	0.05639	109.7526	STLN-DEMARC6 - SWEETWATER 230KV CKT 1
FDNS	06ALL	7	17SP	G15_039	FROM->TO	POTTER COUNTY INTERCHANGE (WAUK 90343-A) 345/230/13.2KV TRANSFORMER CKT 1	560	560	0.2839	109.5353	POTTER COUNTY INTERCHANGE - TOLK STATION 345KV CKT 1
FDNS	06ALL	7	20SP	G15_039	FROM->TO	POTTER COUNTY INTERCHANGE (WAUK 90343-A) 345/230/13.2KV TRANSFORMER CKT 1	560	560	0.29244	109.4721	P12:345:SPS:J15.1.XRDS.TOLK
FDNS	06NR	7	20L	G15_039	FROM->TO	POTTER COUNTY INTERCHANGE (WAUK 90343-A) 345/230/13.2KV TRANSFORMER CKT 1	560	560	0.05206	109.0045	BORDER 7345.00 - WOODWARD DISTRICT EHV 345KV CKT 1
FDNS	06ALL	7	20L	G15_039	FROM->TO	POTTER COUNTY INTERCHANGE (WAUK 90343-A) 345/230/13.2KV TRANSFORMER CKT 1	560	560	0.2286	108.6444	STLN-DEMARC6 - SWEETWATER 230KV CKT 1
FDNS	06ALL	7	20L	G15_039	FROM->TO	POTTER COUNTY INTERCHANGE (WAUK 90343-A) 345/230/13.2KV TRANSFORMER CKT 1	560	560	0.2286	108.5909	STATELINE INTERCHANGE - STLN-DEMARC6 230KV CKT 1
FDNS	06ALL	7	20L	G15_039	FROM->TO	POTTER COUNTY INTERCHANGE (WAUK 90343-A) 345/230/13.2KV TRANSFORMER CKT 1	560	560	0.2286	108.5908	P12:230:AEPW-SPS:SWEETWT6:WHEELER 6
FDNS	06NR	7	17G	G15_039	FROM->TO	POTTER COUNTY INTERCHANGE (WAUK 90343-A) 345/230/13.2KV TRANSFORMER CKT 1	560	560	0.05475	108.5827	G14-074T 345.00 - OKLAUNION 345KV CKT 1
FDNS	06ALL	7	20L	G15_039	FROM->TO	POTTER COUNTY INTERCHANGE (WAUK 90343-A) 345/230/13.2KV TRANSFORMER CKT 1	560	560	0.2286	108.4467	STLN-DEMARC6 - SWEETWATER 230KV CKT 1
FDNS	06ALL	7	20L	G15_039	FROM->TO	POTTER COUNTY INTERCHANGE (WAUK 90343-A) 345/230/13.2KV TRANSFORMER CKT 1	560	560	0.2286	108.3997	STATELINE INTERCHANGE - STLN-DEMARC6 230KV CKT 1
FDNS	06ALL	7	20L	G15_039	FROM->TO	POTTER COUNTY INTERCHANGE (WAUK 90343-A) 345/230/13.2KV TRANSFORMER CKT 1	560	560	0.2286	108.3995	P12:230:AEPW-SPS:SWEETWT6:WHEELER 6
FDNS	06ALL	7	20WP	G15_039	FROM->TO	POTTER COUNTY INTERCHANGE (WAUK 90343-A) 345/230/13.2KV TRANSFORMER CKT 1	560	560	0.26198	108.2091	STLN-DEMARC6 - SWEETWATER 230KV CKT 1
FDNS	06ALL	7	20WP	G15_039	FROM->TO	POTTER COUNTY INTERCHANGE (WAUK 90343-A) 345/230/13.2KV TRANSFORMER CKT 1	560	560	0.26198	108.2049	STATELINE INTERCHANGE - STLN-DEMARC6 230KV CKT 1
FDNS	06ALL	7	20WP	G15_039	FROM->TO	POTTER COUNTY INTERCHANGE (WAUK 90343-A) 345/230/13.2KV TRANSFORMER CKT 1	560	560	0.26198	108.2045	P12:230:AEPW-SPS:SWEETWT6:WHEELER 6
FDNS	06NR	7	20L	G15_039	FROM->TO	POTTER COUNTY INTERCHANGE (WAUK 90343-A) 345/230/13.2KV TRANSFORMER CKT 1	560	560	0.05389	108.1978	GRAPEVINE INTERCHANGE - STATELINE INTERCHANGE 230KV CKT 1
FDNS	06NR	7	20L	G15_039	FROM->TO	POTTER COUNTY INTERCHANGE (WAUK 90343-A) 345/230/13.2KV TRANSFORMER CKT 1	560	560	0.05389	108.1978	GRAPEVINE INTERCHANGE - STATELINE INTERCHANGE 230KV CKT 1
FDNS	06ALL	7	20WP	G15_039	FROM->TO	POTTER COUNTY INTERCHANGE (WAUK 90343-A) 345/230/13.2KV TRANSFORMER CKT 1	560	560	0.26198	108.0584	STATELINE INTERCHANGE - STLN-DEMARC6 230KV CKT 1
FDNS	06ALL	7	20WP	G15_039	FROM->TO	POTTER COUNTY INTERCHANGE (WAUK 90343-A) 345/230/13.2KV TRANSFORMER CKT 1	560	560	0.26198	108.0581	P12:230:AEPW-SPS:SWEETWT6:WHEELER 6
FDNS	06ALL	7	20WP	G15_039	FROM->TO	POTTER COUNTY INTERCHANGE (WAUK 90343-A) 345/230/13.2KV TRANSFORMER CKT 1	560	560	0.26198	108.0528	STLN-DEMARC6 - SWEETWATER 230KV CKT 1
FDNS	06NR	7	20L	G15_039	FROM->TO	POTTER COUNTY INTERCHANGE (WAUK 90343-A) 345/230/13.2KV TRANSFORMER CKT 1	560	560	0.05389	107.9525	GRAPEVINE INTERCHANGE - STATELINE INTERCHANGE 230KV CKT 1
FDNS	06NR	7	20L	G15_039	FROM->TO	POTTER COUNTY INTERCHANGE (WAUK 90343-A) 345/230/13.2KV TRANSFORMER CKT 1	560	560	0.05389	107.9525	GRAPEVINE INTERCHANGE - STATELINE INTERCHANGE 230KV CKT 1
FDNS	06ALL	7	20WP	G15_039	FROM->TO	POTTER COUNTY INTERCHANGE (WAUK 90343-A) 345/230/13.2KV TRANSFORMER CKT 1	560	560	0.24968	107.9264	GRAPEVINE INTERCHANGE - NICHOLS STATION 230KV CKT 1
FDNS	06ALL	7	20WP	G15_039	FROM->TO	POTTER COUNTY INTERCHANGE (WAUK 90343-A) 345/230/13.2KV TRANSFORMER CKT 1	560	560	0.24968	107.9264	GRAPEVINE INTERCHANGE - NICHOLS STATION 230KV CKT 1
FDNS	06ALL	7	20WP	G15_039	FROM->TO	POTTER COUNTY INTERCHANGE (WAUK 90343-A) 345/230/13.2KV TRANSFORMER CKT 1	560	560	0.24968	107.8549	GRAPEVINE INTERCHANGE - NICHOLS STATION 230KV CKT 1
FDNS	06ALL	7	20WP	G15_039	FROM->TO	POTTER COUNTY INTERCHANGE (WAUK 90343-A) 345/230/13.2KV TRANSFORMER CKT 1	560	560	0.24968	107.8549	GRAPEVINE INTERCHANGE - NICHOLS STATION 230KV CKT 1
FDNS	06NR	7	20L	G15_039	FROM->TO	POTTER COUNTY INTERCHANGE (WAUK 90343-A) 345/230/13.2KV TRANSFORMER CKT 1	560	560	0.05206	107.7575	BORDER 7345.00 - WOODWARD DISTRICT EHV 345KV CKT 1
FDNS	06ALL	7	20SP	G15_039	FROM->TO	POTTER COUNTY INTERCHANGE (WAUK 90343-A) 345/230/13.2KV TRANSFORMER CKT 1	560	560	0.28088	107.7296	POTTER COUNTY INTERCHANGE - TOLK STATION 345KV CKT 1
FDNS	06NR	7	20L	G15_039	FROM->TO	POTTER COUNTY INTERCHANGE (WAUK 90343-A) 345/230/13.2KV TRANSFORMER CKT 1	560	560	0.05729	107.3899	HITCHLAND INTERCHANGE - MOORE COUNTY INTERCHANGE 230KV CKT 1
FDNS	06NR	7	20L	G15_039	FROM->TO	POTTER COUNTY INTERCHANGE (WAUK 90343-A) 345/230/13.2KV TRANSFORMER CKT 1	560	560	0.05729	107.3899	HITCHLAND INTERCHANGE - MOORE COUNTY INTERCHANGE 230KV CKT 1
FDNS	06ALL	7	20L	G15_039	FROM->TO	POTTER COUNTY INTERCHANGE (WAUK 90343-A) 345/230/13.2KV TRANSFORMER CKT 1	560	560	0.2116	107.1514	G14-074T 345.00 - OKLAUNION 345KV CKT 1
FDNS	06NR	7	20L	G15_039	FROM->TO	POTTER COUNTY INTERCHANGE (WAUK 90343-A) 345/230/13.2KV TRANSFORMER CKT 1	560	560	0.05729	107.0361	HITCHLAND INTERCHANGE - MOORE COUNTY INTERCHANGE 230KV CKT 1
FDNS	06NR	7	20L	G15_039	FROM->TO	POTTER COUNTY INTERCHANGE (WAUK 90343-A) 345/230/13.2KV TRANSFORMER CKT 1	560	560	0.05729	107.0361	HITCHLAND INTERCHANGE - MOORE COUNTY INTERCHANGE 230KV CKT 1
FDNS	06NR	7	20L	G15_039	FROM->TO	POTTER COUNTY INTERCHANGE (WAUK 90343-A) 345/230/13.2KV TRANSFORMER CKT 1	560	560	0.05206	106.9221	BORDER 7345.00 - TUCO_2 345.00 345KV CKT 1
FDNS	06ALL	7	20WP	G15_039	FROM->TO	POTTER COUNTY INTERCHANGE (WAUK 90343-A) 345/230/13.2KV TRANSFORMER CKT 1	560	560	0.26642	106.7295	TOLK STATION (ABBXNL844501) 345/230/13.2KV TRANSFORMER CKT 1
FDNS	06ALL	7	20WP	G15_039	FROM->TO	POTTER COUNTY INTERCHANGE (WAUK 90343-A) 345/230/13.2KV TRANSFORMER CKT 1	560	560	0.26642	106.7295	TOLK STATION (ABBXNL844501) 345/230/13.2KV TRANSFORMER CKT 1
FDNS	06NR	7	17G	G15_039	FROM->TO	POTTER COUNTY INTERCHANGE (WAUK 90343-A) 345/230/13.2KV TRANSFORMER CKT 1	560	560	0.05662	106.7011	GRAPEVINE INTERCHANGE - NICHOLS STATION 230KV CKT 1
FDNS	06NR	7	17G	G15_039	FROM->TO	POTTER COUNTY INTERCHANGE (WAUK 90343-A) 345/230/13.2KV TRANSFORMER CKT 1	560	560	0.05662	106.7011	GRAPEVINE INTERCHANGE - NICHOLS STATION 230KV CKT 1
FDNS	06ALL	7	20WP	G15_039	FROM->TO	POTTER COUNTY INTERCHANGE (WAUK 90343-A) 345/230/13.2KV TRANSFORMER CKT 1	560	560	0.24208	106.6242	G14-074T 345.00 - OKLAUNION 345KV CKT 1
FDNS	06NR	7	17G	G15_039	FROM->TO	POTTER COUNTY INTERCHANGE (WAUK 90343-A) 345/230/13.2KV TRANSFORMER CKT 1	560	560	0.05662	106.448	GRAPEVINE INTERCHANGE - NICHOLS STATION 230KV CKT 1
FDNS	06NR	7	17G	G15_039	FROM->TO	POTTER COUNTY INTERCHANGE (WAUK 90343-A) 345/230/13.2KV TRANSFORMER CKT 1	560	560	0.05662	106.448	GRAPEVINE INTERCHANGE - NICHOLS STATION 230KV CKT 1
FDNS	06ALL	7	20WP	G15_039	FROM->TO	POTTER COUNTY INTERCHANGE (WAUK 90343-A) 345/230/13.2KV TRANSFORMER CKT 1	560	560	0.26642	106.4379	TOLK STATION (ABBXNL844501) 345/230/13.2KV TRANSFORMER CKT 1
FDNS	06ALL	7	20WP	G15_039	FROM->TO	POTTER COUNTY INTERCHANGE (WAUK 90343-A) 345/230/13.2KV TRANSFORMER CKT 1	560	560	0.26642	106.4379	TOLK STATION (ABBXNL844501) 345/230/13.2KV TRANSFORMER CKT 1
FDNS	06ALL	7	17G	G15_039	FROM->TO	POTTER COUNTY INTERCHANGE (WAUK 90343-A) 345/230/13.2KV TRANSFORMER CKT 1	560	560	0.26035	106.3525	STATELINE INTERCHANGE - STLN-DEMARC6 230KV CKT 1
FDNS	06ALL	7	17G	G15_039	FROM->TO	POTTER COUNTY INTERCHANGE (WAUK 90343-A) 345/230/13.2KV TRANSFORMER CKT 1	560	560	0.26035	106.3244	STLN-DEMARC6 - SWEETWATER 230KV CKT 1
FDNS	06NR	7	17G	G15_039	FROM->TO	POTTER COUNTY INTERCHANGE (WAUK 90343-A) 345/230/13.2KV TRANSFORMER CKT 1	560	560	0.05475	106.2004	G14-074T 345.00 - OKLAUNION 345KV CKT 1
FDNS	06ALL	7	17G	G15_039	FROM->TO	POTTER COUNTY INTERCHANGE (WAUK 90343-A) 345/230/13.2KV TRANSFORMER CKT 1	560	560	0.26035	106.171	STATELINE INTERCHANGE - STLN-DEMARC6 230KV CKT 1
FDNS	06ALL	7	17G	G15_039	FROM->TO	POTTER COUNTY INTERCHANGE (WAUK 90343-A) 345/230/13.2KV TRANSFORMER CKT 1	560	560	0.26035	106.1508	STLN-DEMARC6 - SWEETWATER 230KV CKT 1

SOLUTION	GROUP	SCENARIO	SEASON	SOURCE	DIRECTION	MONITORED ELEMENT	RATEA (MVA)	RATEB(MVA)	TDF	TC%LOADING (% MVA)	CONTINGENCY
FDNS	06NR	7	20L	G15_039	FROM->TO	POTTER COUNTY INTERCHANGE (WAUK 90343-A) 345/230/13.2KV TRANSFORMER CKT 1	560	560	0.05206	106.0474	BORDER 7345.00 - TUCO_2 345.00 345KV CKT 1
FDNS	06ALL	7	20WP	G15_039	FROM->TO	POTTER COUNTY INTERCHANGE (WAUK 90343-A) 345/230/13.2KV TRANSFORMER CKT 1	560	560	0.25085	105.788	MOORE COUNTY INTERCHANGE - POTTER COUNTY INTERCHANGE 230KV CKT 1
FDNS	06ALL	7	20WP	G15_039	FROM->TO	POTTER COUNTY INTERCHANGE (WAUK 90343-A) 345/230/13.2KV TRANSFORMER CKT 1	560	560	0.25085	105.788	MOORE COUNTY INTERCHANGE - POTTER COUNTY INTERCHANGE 230KV CKT 1
FDNS	06ALL	7	20L	G15_039	FROM->TO	POTTER COUNTY INTERCHANGE (WAUK 90343-A) 345/230/13.2KV TRANSFORMER CKT 1	560	560	0.22866	105.7334	HITCHLAND INTERCHANGE - MOORE COUNTY INTERCHANGE 230KV CKT 1
FDNS	06ALL	7	20L	G15_039	FROM->TO	POTTER COUNTY INTERCHANGE (WAUK 90343-A) 345/230/13.2KV TRANSFORMER CKT 1	560	560	0.22866	105.7334	HITCHLAND INTERCHANGE - MOORE COUNTY INTERCHANGE 230KV CKT 1
FDNS	06ALL	7	20L	G15_039	FROM->TO	POTTER COUNTY INTERCHANGE (WAUK 90343-A) 345/230/13.2KV TRANSFORMER CKT 1	560	560	0.21808	105.6216	GRAPEVINE INTERCHANGE - NICHOLS STATION 230KV CKT 1
FDNS	06ALL	7	20L	G15_039	FROM->TO	POTTER COUNTY INTERCHANGE (WAUK 90343-A) 345/230/13.2KV TRANSFORMER CKT 1	560	560	0.21808	105.6216	GRAPEVINE INTERCHANGE - NICHOLS STATION 230KV CKT 1
FDNS	06ALL	7	20WP	G15_039	FROM->TO	POTTER COUNTY INTERCHANGE (WAUK 90343-A) 345/230/13.2KV TRANSFORMER CKT 1	560	560	0.25085	105.5516	MOORE COUNTY INTERCHANGE - POTTER COUNTY INTERCHANGE 230KV CKT 1
FDNS	06ALL	7	20WP	G15_039	FROM->TO	POTTER COUNTY INTERCHANGE (WAUK 90343-A) 345/230/13.2KV TRANSFORMER CKT 1	560	560	0.25085	105.5516	MOORE COUNTY INTERCHANGE - POTTER COUNTY INTERCHANGE 230KV CKT 1
FDNS	06ALL	7	20L	G15_039	FROM->TO	POTTER COUNTY INTERCHANGE (WAUK 90343-A) 345/230/13.2KV TRANSFORMER CKT 1	560	560	0.21808	105.54	GRAPEVINE INTERCHANGE - NICHOLS STATION 230KV CKT 1
FDNS	06ALL	7	20L	G15_039	FROM->TO	POTTER COUNTY INTERCHANGE (WAUK 90343-A) 345/230/13.2KV TRANSFORMER CKT 1	560	560	0.21808	105.54	GRAPEVINE INTERCHANGE - NICHOLS STATION 230KV CKT 1
FDNS	06ALL	7	20SP	G15_039	FROM->TO	POTTER COUNTY INTERCHANGE (WAUK 90343-A) 345/230/13.2KV TRANSFORMER CKT 1	560	560	0.28088	105.4506	POTTER COUNTY INTERCHANGE - TOLK STATION 345KV CKT 1
FDNS	06ALL	7	20WP	G15_039	FROM->TO	POTTER COUNTY INTERCHANGE (WAUK 90343-A) 345/230/13.2KV TRANSFORMER CKT 1	560	560	0.2612	105.4502	HITCHLAND INTERCHANGE - MOORE COUNTY INTERCHANGE 230KV CKT 1
FDNS	06ALL	7	20WP	G15_039	FROM->TO	POTTER COUNTY INTERCHANGE (WAUK 90343-A) 345/230/13.2KV TRANSFORMER CKT 1	560	560	0.2612	105.4502	HITCHLAND INTERCHANGE - MOORE COUNTY INTERCHANGE 230KV CKT 1
FDNS	06ALL	7	20L	G15_039	FROM->TO	POTTER COUNTY INTERCHANGE (WAUK 90343-A) 345/230/13.2KV TRANSFORMER CKT 1	560	560	0.22866	105.4442	HITCHLAND INTERCHANGE - MOORE COUNTY INTERCHANGE 230KV CKT 1
FDNS	06ALL	7	20L	G15_039	FROM->TO	POTTER COUNTY INTERCHANGE (WAUK 90343-A) 345/230/13.2KV TRANSFORMER CKT 1	560	560	0.22866	105.4442	HITCHLAND INTERCHANGE - MOORE COUNTY INTERCHANGE 230KV CKT 1
FDNS	06ALL	7	20WP	G15_039	FROM->TO	POTTER COUNTY INTERCHANGE (WAUK 90343-A) 345/230/13.2KV TRANSFORMER CKT 1	560	560	0.2612	105.2772	HITCHLAND INTERCHANGE - MOORE COUNTY INTERCHANGE 230KV CKT 1
FDNS	06ALL	7	20WP	G15_039	FROM->TO	POTTER COUNTY INTERCHANGE (WAUK 90343-A) 345/230/13.2KV TRANSFORMER CKT 1	560	560	0.2612	105.2772	HITCHLAND INTERCHANGE - MOORE COUNTY INTERCHANGE 230KV CKT 1
FDNS	06ALL	7	20WP	G15_039	FROM->TO	POTTER COUNTY INTERCHANGE (WAUK 90343-A) 345/230/13.2KV TRANSFORMER CKT 1	560	560	0.24208	105.2313	G14-074T 345.00 - OKLAUNION 345KV CKT 1
FDNS	06NR	7	20L	G15_039	FROM->TO	POTTER COUNTY INTERCHANGE (WAUK 90343-A) 345/230/13.2KV TRANSFORMER CKT 1	560	560	0.05912	105.1831	MOORE COUNTY INTERCHANGE - POTTER COUNTY INTERCHANGE 230KV CKT 1
FDNS	06NR	7	20L	G15_039	FROM->TO	POTTER COUNTY INTERCHANGE (WAUK 90343-A) 345/230/13.2KV TRANSFORMER CKT 1	560	560	0.05912	105.1831	MOORE COUNTY INTERCHANGE - POTTER COUNTY INTERCHANGE 230KV CKT 1
FDNS	06NR	7	20L	G15_039	FROM->TO	POTTER COUNTY INTERCHANGE (WAUK 90343-A) 345/230/13.2KV TRANSFORMER CKT 1	560	560	0.05912	105.0234	MOORE COUNTY INTERCHANGE - POTTER COUNTY INTERCHANGE 230KV CKT 1
FDNS	06NR	7	20L	G15_039	FROM->TO	POTTER COUNTY INTERCHANGE (WAUK 90343-A) 345/230/13.2KV TRANSFORMER CKT 1	560	560	0.05912	105.0234	MOORE COUNTY INTERCHANGE - POTTER COUNTY INTERCHANGE 230KV CKT 1
FDNS	06ALL	7	17G	G15_039	FROM->TO	POTTER COUNTY INTERCHANGE (WAUK 90343-A) 345/230/13.2KV TRANSFORMER CKT 1	560	560	0.24794	105.0086	GRAPEVINE INTERCHANGE - NICHOLS STATION 230KV CKT 1
FDNS	06NR	7	20L	G15_039	FROM->TO	POTTER COUNTY INTERCHANGE (WAUK 90343-A) 345/230/13.2KV TRANSFORMER CKT 1	560	560	0.05202	104.8793	G14-074T 345.00 - TUCO INTERCHANGE 345KV CKT 1
FDNS	06ALL	7	20L	G15_039	FROM->TO	POTTER COUNTY INTERCHANGE (WAUK 90343-A) 345/230/13.2KV TRANSFORMER CKT 1	560	560	0.2116	104.7979	G14-074T 345.00 - OKLAUNION 345KV CKT 1
FDNS	06ALL	7	17G	G15_039	FROM->TO	POTTER COUNTY INTERCHANGE (WAUK 90343-A) 345/230/13.2KV TRANSFORMER CKT 1	560	560	0.24794	104.7674	GRAPEVINE INTERCHANGE - NICHOLS STATION 230KV CKT 1
FDNS	06NR	7	17G	G15_039	FROM->TO	POTTER COUNTY INTERCHANGE (WAUK 90343-A) 345/230/13.2KV TRANSFORMER CKT 1	560	560	0.05474	104.4109	BORDER 7345.00 - WOODWARD DISTRICT EHV 345KV CKT 1
FDNS	06ALL	7	20WP	G15_039	FROM->TO	POTTER COUNTY INTERCHANGE (WAUK 90343-A) 345/230/13.2KV TRANSFORMER CKT 1	560	560	0.24968	104.0764	GRAPEVINE INTERCHANGE - STATELINE INTERCHANGE 230KV CKT 1
FDNS	06ALL	7	20WP	G15_039	FROM->TO	POTTER COUNTY INTERCHANGE (WAUK 90343-A) 345/230/13.2KV TRANSFORMER CKT 1	560	560	0.24968	104.0764	GRAPEVINE INTERCHANGE - STATELINE INTERCHANGE 230KV CKT 1
FDNS	06ALL	7	20WP	G15_039	FROM->TO	POTTER COUNTY INTERCHANGE (WAUK 90343-A) 345/230/13.2KV TRANSFORMER CKT 1	560	560	0.24968	104.0137	GRAPEVINE INTERCHANGE - STATELINE INTERCHANGE 230KV CKT 1
FDNS	06ALL	7	20WP	G15_039	FROM->TO	POTTER COUNTY INTERCHANGE (WAUK 90343-A) 345/230/13.2KV TRANSFORMER CKT 1	560	560	0.24968	104.0137	GRAPEVINE INTERCHANGE - STATELINE INTERCHANGE 230KV CKT 1
FDNS	06NR	7	20L	G15_039	FROM->TO	POTTER COUNTY INTERCHANGE (WAUK 90343-A) 345/230/13.2KV TRANSFORMER CKT 1	560	560	0.05202	104.0053	G14-074T 345.00 - TUCO INTERCHANGE 345KV CKT 1
FDNS	06ALL	7	17G	G15_039	FROM->TO	POTTER COUNTY INTERCHANGE (WAUK 90343-A) 345/230/13.2KV TRANSFORMER CKT 1	560	560	0.24	103.894	G14-074T 345.00 - OKLAUNION 345KV CKT 1
FDNS	06NR	7	17G	G15_039	FROM->TO	POTTER COUNTY INTERCHANGE (WAUK 90343-A) 345/230/13.2KV TRANSFORMER CKT 1	560	560	0.05474	103.6541	BORDER 7345.00 - WOODWARD DISTRICT EHV 345KV CKT 1
FDNS	06ALL	7	20L	G15_039	FROM->TO	POTTER COUNTY INTERCHANGE (WAUK 90343-A) 345/230/13.2KV TRANSFORMER CKT 1	560	560	0.21993	103.5631	MOORE COUNTY INTERCHANGE - POTTER COUNTY INTERCHANGE 230KV CKT 1
FDNS	06ALL	7	20L	G15_039	FROM->TO	POTTER COUNTY INTERCHANGE (WAUK 90343-A) 345/230/13.2KV TRANSFORMER CKT 1	560	560	0.21993	103.5631	MOORE COUNTY INTERCHANGE - POTTER COUNTY INTERCHANGE 230KV CKT 1
FDNS	06NR	7	17G	G15_039	FROM->TO	POTTER COUNTY INTERCHANGE (WAUK 90343-A) 345/230/13.2KV TRANSFORMER CKT 1	560	560	0.05643	103.5127	GRAPEVINE INTERCHANGE - STATELINE INTERCHANGE 230KV CKT 1
FDNS	06NR	7	17G	G15_039	FROM->TO	POTTER COUNTY INTERCHANGE (WAUK 90343-A) 345/230/13.2KV TRANSFORMER CKT 1	560	560	0.05643	103.5127	GRAPEVINE INTERCHANGE - STATELINE INTERCHANGE 230KV CKT 1
FDNS	06ALL	7	20L	G15_039	FROM->TO	POTTER COUNTY INTERCHANGE (WAUK 90343-A) 345/230/13.2KV TRANSFORMER CKT 1	560	560	0.2182	103.5057	GRAPEVINE INTERCHANGE - STATELINE INTERCHANGE 230KV CKT 1
FDNS	06ALL	7	20L	G15_039	FROM->TO	POTTER COUNTY INTERCHANGE (WAUK 90343-A) 345/230/13.2KV TRANSFORMER CKT 1	560	560	0.2182	103.5057	GRAPEVINE INTERCHANGE - STATELINE INTERCHANGE 230KV CKT 1
FDNS	06ALL	7	17G	G15_039	FROM->TO	POTTER COUNTY INTERCHANGE (WAUK 90343-A) 345/230/13.2KV TRANSFORMER CKT 1	560	560	0.2591	103.4347	HITCHLAND INTERCHANGE - MOORE COUNTY INTERCHANGE 230KV CKT 1
FDNS	06ALL	7	20L	G15_039	FROM->TO	POTTER COUNTY INTERCHANGE (WAUK 90343-A) 345/230/13.2KV TRANSFORMER CKT 1	560	560	0.21993	103.3956	MOORE COUNTY INTERCHANGE - POTTER COUNTY INTERCHANGE 230KV CKT 1
FDNS	06ALL	7	20L	G15_039	FROM->TO	POTTER COUNTY INTERCHANGE (WAUK 90343-A) 345/230/13.2KV TRANSFORMER CKT 1	560	560	0.21993	103.3956	MOORE COUNTY INTERCHANGE - POTTER COUNTY INTERCHANGE 230KV CKT 1
FDNS	06ALL	7	20L	G15_039	FROM->TO	POTTER COUNTY INTERCHANGE (WAUK 90343-A) 345/230/13.2KV TRANSFORMER CKT 1	560	560	0.2182	103.3782	GRAPEVINE INTERCHANGE - STATELINE INTERCHANGE 230KV CKT 1
FDNS	06ALL	7	20L	G15_039	FROM->TO	POTTER COUNTY INTERCHANGE (WAUK 90343-A) 345/230/13.2KV TRANSFORMER CKT 1	560	560	0.2182	103.3782	GRAPEVINE INTERCHANGE - STATELINE INTERCHANGE 230KV CKT 1
FDNS	06ALL	7	17G	G15_039	FROM->TO	POTTER COUNTY INTERCHANGE (WAUK 90343-A) 345/230/13.2KV TRANSFORMER CKT 1	560	560	0.2591	103.2583	HITCHLAND INTERCHANGE - MOORE COUNTY INTERCHANGE 230KV CKT 1
FDNS	06NR	7	17G	G15_039	FROM->TO	POTTER COUNTY INTERCHANGE (WAUK 90343-A) 345/230/13.2KV TRANSFORMER CKT 1	560	560	0.05643	103.247	GRAPEVINE INTERCHANGE - STATELINE INTERCHANGE 230KV CKT 1
FDNS	06NR	7	17G	G15_039	FROM->TO	POTTER COUNTY INTERCHANGE (WAUK 90343-A) 345/230/13.2KV TRANSFORMER CKT 1	560	560	0.05643	103.247	GRAPEVINE INTERCHANGE - STATELINE INTERCHANGE 230KV CKT 1
FDNS	06ALL	7	17G	G15_039	FROM->TO	POTTER COUNTY INTERCHANGE (WAUK 90343-A) 345/230/13.2KV TRANSFORMER CKT 1	560	560	0.2489	102.6929	MOORE COUNTY INTERCHANGE - POTTER COUNTY INTERCHANGE 230KV CKT 1
FDNS	06ALL	7	17G	G15_039	FROM->TO	POTTER COUNTY INTERCHANGE (WAUK 90343-A) 345/230/13.2KV TRANSFORMER CKT 1	560	560	0.2489	102.6376	MOORE COUNTY INTERCHANGE - POTTER COUNTY INTERCHANGE 230KV CKT 1
FDNS	06ALL	7	17G	G15_039	FROM->TO	POTTER COUNTY INTERCHANGE (WAUK 90343-A) 345/230/13.2KV TRANSFORMER CKT 1	560	560	0.24	102.6293	G14-074T 345.00 - OKLAUNION 345KV CKT 1
FDNS	06NR	7	17G	G15_039	FROM->TO	POTTER COUNTY INTERCHANGE (WAUK 90343-A) 345/230/13.2KV TRANSFORMER CKT 1	560	560	0.05474	102.5924	BORDER 7345.00 - TUCO_2 345.00 345KV CKT 1
FDNS	06NR	7	20L	G15_039	FROM->TO	POTTER COUNTY INTERCHANGE (WAUK 90343-A) 345/230/13.2KV TRANSFORMER CKT 1	560	560	0.0688	102.419	TOLK STATION (ABBXNL844501) 345/230/13.2KV TRANSFORMER CKT 1
FDNS	06NR	7	20L	G15_039	FROM->TO	POTTER COUNTY INTERCHANGE (WAUK 90343-A) 345/230/13.2KV TRANSFORMER CKT 1	560	560	0.0688	102.419	TOLK STATION (ABBXNL844501) 345/230/13.2KV TRANSFORMER CKT 1
FDNS	06NR	7	20L	G15_039	FROM->TO	POTTER COUNTY INTERCHANGE (WAUK 90343-A) 345/230/13.2KV TRANSFORMER CKT 1	560	560	0.0688	102.4115	TOLK STATION (ABBXNL844501) 345/230/13.2KV TRANSFORMER CKT 1
FDNS	06NR	7	20L	G15_039	FROM->TO	POTTER COUNTY INTERCHANGE (WAUK 90343-A) 345/230/13.2KV TRANSFORMER CKT 1	560	560	0.0688	102.4115	TOLK STATION (ABBXNL844501) 345/230/13.2KV TRANSFORMER CKT 1
FDNS	06NR	7	17G	G15_039	FROM->TO	POTTER COUNTY INTERCHANGE (WAUK 90343-A) 345/230/13.2KV TRANSFORMER CKT 1	560	560	0.05474	102.1599	BORDER 7345.00 - TUCO_2 345.00 345KV CKT 1
FDNS	06NR	7	17G	G15_039	FROM->TO	POTTER COUNTY INTERCHANGE (WAUK 90343-A) 345/230/13.2KV TRANSFORMER CKT 1	560	560	0.05979	102.0342	HITCHLAND INTERCHANGE - MOORE COUNTY INTERCHANGE 230KV CKT 1
FDNS	06NR	7	17G	G15_039	FROM->TO	POTTER COUNTY INTERCHANGE (WAUK 90343-A) 345/230/13.2KV TRANSFORMER CKT 1	560	560	0.05979	102.0342	HITCHLAND INTERCHANGE - MOORE COUNTY INTERCHANGE 230KV CKT 1
FDNS	06ALL	7	17G	G15_039	FROM->TO	POTTER COUNTY INTERCHANGE (WAUK 90343-A) 345/230/13.2KV TRANSFORMER CKT 1	560	560	0.24793	101.8723	GRAPEVINE INTERCHANGE - STATELINE INTERCHANGE 230KV CKT 1
FDNS	06NR	7	17G	G15_039	FROM->TO	POTTER COUNTY INTERCHANGE (WAUK 90343-A) 345/230/13.2KV TRANSFORMER CKT 1	560	560	0.05979	101.7403	HITCHLAND INTERCHANGE - MOORE COUNTY INTERCHANGE 230KV CKT 1
FDNS	06NR	7	17G	G15_039	FROM->TO	POTTER COUNTY INTERCHANGE (WAUK 90343-A) 345/230/13.2KV TRANSFORMER CKT 1	560	560	0.05979	101.7403	HITCHLAND INTERCHANGE - MOORE COUNTY INTERCHANGE 230KV CKT 1
FDNS	06ALL	7	17G	G15_039	FROM->TO	POTTER COUNTY INTERCHANGE (WAUK 90343-A) 345/230/13.2KV TRANSFORMER CKT 1	560	560	0.24793	101.6451	GRAPEVINE INTERCHANGE - STATELINE INTERCHANGE 230KV CKT 1
FDNS	06NR	7	17G	G15_039	FROM->TO	POTTER COUNTY INTERCHANGE (WAUK 90343-A) 345/230/13.2KV TRANSFORMER CKT 1	560	560	0.06143	101.4948	MOORE COUNTY INTERCHANGE - POTTER COUNTY INTERCHANGE 230KV CKT 1
FDNS	06NR	7	17G	G15_039	FROM->TO	POTTER COUNTY INTERCHANGE (WAUK 90343-A) 345/230/13.2KV TRANSFORMER CKT 1	560	560	0.06143	101.4948	MOORE COUNTY INTERCHANGE - POTTER COUNTY INTERCHANGE 230KV CKT 1
FDNS	06NR	7	17G	G15_039	FROM->TO	POTTER COUNTY INTERCHANGE (WAUK 90343-A) 345/230/13.2KV TRANSFORMER CKT 1	560	560	0.06143	101.3229	MOORE COUNTY INTERCHANGE - POTTER COUNTY INTERCHANGE 230KV CKT 1
FDNS	06NR	7	17G	G15_039	FROM->TO	POTTER COUNTY INTERCHANGE (WAUK 90343-A) 345/230/13.2KV TRANSFORMER CKT 1	560	560	0.06143	101.3229	MOORE COUNTY INTERCHANGE - POTTER COUNTY INTERCHANGE 230KV CKT 1
FDNS	06ALL	7	20L	G15_039	FROM->TO	POTTER COUNTY INTERCHANGE (WAUK 90343-A) 345/230/13.2KV TRANSFORMER CKT 1	560	560	0.23539	101.0634	TOLK STATION (ABBXNL844501) 345/230/13.2KV TRANSFORMER CKT 1
FDNS	06ALL	7	20L	G15_039	FROM->TO	POTTER COUNTY INTERCHANGE (WAUK 90343-A) 345/230/13.2KV TRANSFORMER CKT 1	560	560	0.23539	101.0634	TOLK STATION (ABBXNL844501) 345/230/13.2KV TRANSFORMER CKT 1
FDNS	06ALL	7	20L	G15_039	FROM->TO	POTTER COUNTY INTERCHANGE (WAUK 90343-A) 345/230/13.2KV TRANSFORMER CKT 1	560	560	0.23539	101.0087	TOLK STATION (ABBXNL844501) 345/230/13.2KV TRANSFORMER CKT 1
FDNS	06ALL	7	20L	G15_039	FROM->TO	POTTER COUNTY INTERCHANGE (WAUK 90343-A) 345/230/13.2KV TRANSFORMER CKT 1	560	560	0.23539	101.0087	TOLK STATION (ABBXNL844501) 345/230/13.2KV TRANSFORMER CKT 1
FDNS	06ALL	7	20WP	G15_039	FROM->TO	POTTER COUNTY INTERCHANGE (WAUK 90343-A) 345/230/13.2KV TRANSFORMER CKT 1	560	560	0.23755	100.1059	BORDER 7345.00 - TUCO_2 345.00 345KV CKT 1
FDNS	06ALL	7	20WP	G15_039	FROM->TO	POTTER COUNTY INTERCHANGE (WAUK 90343-A) 345/230/13.2KV TRANSFORMER CKT 1	560	560	0.23755	100.1058	BORDER 7345.00 - TUCO_2 345.00 345KV CKT 2
FDNS	06ALL	7	20WP	G15_039	FROM->TO	POTTER COUNTY INTERCHANGE (WAUK 90343-A) 345/230/13.2KV TRANSFORMER CKT 1	560	560	0.23755	99.8	BORDER 7345.00 - TUCO_2 345.00 345KV CKT 1
FDNS	06ALL	7	20WP	G15_039	FROM->TO	POTTER COUNTY INTERCHANGE (WAUK 90343-A) 345/230/13.2KV TRANSFORMER CKT 1	560	560	0.23755	99.8	BORDER 7345.00 - TUCO_2 345.00 345KV CKT 2
FDNS	06NR	7	17G	G15_039	FROM->TO	POTTER COUNTY INTERCHANGE (WAUK 90343-A) 345/230/13.2KV TRANSFORMER CKT 1	560	560	0.05475	99.7	G14-074T 345.00 - TUCO INTERCHANGE 345KV CKT 1
FDNS	06ALL	7	16WP	G15_039	FROM->TO	TOLK STATION (ABBXNL844501) 345/230/13.2KV TRANSFORMER CKT 1	560	560	0.19992	112.9883	CROSSROADS 7345.00 - TOLK STATION 345KV CKT 1
FDNS	06ALL	7	16WP	G15_039	FROM->TO	TOLK STATION (ABBXNL844501) 345/230/13.2KV TRANSFORMER CKT 1	560	560	0.19992	110.8952	CROSSROADS 7345.00 - TOLK STATION 345KV CKT 1

SOLUTION	GROUP	SCENARIO	SEASON	SOURCE	DIRECTION	MONITORED ELEMENT	RATEA (MVA)	RATEB(MVA)	TDF	TC%LOADING (% MVA)	CONTINGENCY
FDNS	06ALL	7	20WP	G15_039	FROM->TO	TOLK STATION (ABBXNL844501) 345/230/13.2KV TRANSFORMER CKT 1	560	560	0.23009	102.5293	POTTER COUNTY INTERCHANGE (WAUK 90343-A) 345/230/13.2KV TRANSFORMER CKT 1
FDNS	06ALL	7	20WP	G15_039	FROM->TO	TOLK STATION (ABBXNL844501) 345/230/13.2KV TRANSFORMER CKT 1	560	560	0.23009	102.5293	POTTER COUNTY INTERCHANGE (WAUK 90343-A) 345/230/13.2KV TRANSFORMER CKT 1
FDNS	06ALL	7	20WP	G15_039	FROM->TO	TOLK STATION (ABBXNL844501) 345/230/13.2KV TRANSFORMER CKT 1	560	560	0.23009	99.7	POTTER COUNTY INTERCHANGE (WAUK 90343-A) 345/230/13.2KV TRANSFORMER CKT 1
FDNS	06ALL	7	20WP	G15_039	FROM->TO	TOLK STATION (ABBXNL844501) 345/230/13.2KV TRANSFORMER CKT 1	560	560	0.23009	99.7	POTTER COUNTY INTERCHANGE (WAUK 90343-A) 345/230/13.2KV TRANSFORMER CKT 1
FDNS	00NR	8	25SP	G15_039	TO->FROM	JONES STATION - TUCO INTERCHANGE 230KV CKT 1	343.79	343.79	0.08664	128.3131	CARLISLE INTERCHANGE - TUCO INTERCHANGE 230KV CKT 1
FDNS	00NR	8	25SP	G15_039	TO->FROM	JONES STATION - TUCO INTERCHANGE 230KV CKT 1	343.79	343.79	0.08664	128.3131	CARLISLE INTERCHANGE - TUCO INTERCHANGE 230KV CKT 1
FDNS	00NR	8	25SP	G15_039	TO->FROM	JONES STATION - TUCO INTERCHANGE 230KV CKT 1	343.79	343.79	0.07169	111.8492	GEN526333 1-JONES GEN #3 21 KV
FDNS	00NR	8	25SP	G15_039	TO->FROM	JONES STATION - TUCO INTERCHANGE 230KV CKT 1	343.79	343.79	0.07169	111.4668	GEN526334 1-JONES_4 116.500
FDNS	00NR	8	25SP	G15_039	TO->FROM	JONES STATION - TUCO INTERCHANGE 230KV CKT 1	343.79	343.79	0.08267	106.1183	TUCO_2 345.00 - YOAKUM_345 345.00 345KV CKT 1
FDNS	00NR	8	25SP	G15_039	TO->FROM	JONES STATION - TUCO INTERCHANGE 230KV CKT 1	343.79	343.79	0.07879	102.3279	CARLISLE INTERCHANGE - WOLFFORTH INTERCHANGE 230KV CKT 1
FDNS	00NR	8	25SP	G15_039	TO->FROM	JONES STATION - TUCO INTERCHANGE 230KV CKT 1	343.79	343.79	0.08765	100.9491	PLANT X STATION - SUNDOWN INTERCHANGE 230KV CKT 1
FDNS	00NR	8	25SP	G15_039	TO->FROM	JONES STATION - TUCO INTERCHANGE 230KV CKT 1	343.79	343.79	0.08765	100.9491	PLANT X STATION - SUNDOWN INTERCHANGE 230KV CKT 1
FDNS	00NR	8	25SP	G15_039	TO->FROM	JONES STATION - TUCO INTERCHANGE 230KV CKT 1	343.79	343.79	0.07277	99.7	P12:345:SPS:J02.1.TOLK.EDDY
FDNS	00NR	8	25SP	G15_039	TO->FROM	JONES STATION - TUCO INTERCHANGE 230KV CKT 1	343.79	343.79	0.07189	99.5	TUCO INTERCHANGE (ENRCO 136401) 230/115/13.2KV TRANSFORMER CKT 1
FDNS	00NR	8	25SP	G15_039	TO->FROM	JONES STATION - TUCO INTERCHANGE 230KV CKT 1	343.79	343.79	0.07189	99.5	TUCO INTERCHANGE (ENRCO 136401) 230/115/13.2KV TRANSFORMER CKT 1
FDNS	00NR	8	25SP	G15_039	TO->FROM	JONES STATION - TUCO INTERCHANGE 230KV CKT 1	343.79	343.79	0.07189	99.5	TUCO INTERCHANGE (ENRCO 136401) 230/115/13.2KV TRANSFORMER CKT 2
FDNS	00NR	8	25SP	G15_039	TO->FROM	JONES STATION - TUCO INTERCHANGE 230KV CKT 1	343.79	343.79	0.07189	99.5	TUCO INTERCHANGE (ENRCO 136401) 230/115/13.2KV TRANSFORMER CKT 2
FDNS	00NR	8	25SP	G15_039	TO->FROM	JONES STATION - TUCO INTERCHANGE 230KV CKT 1	343.79	343.79	0.07169	99.5	GEN526331 1-JONES GEN #1 22 KV
FDNS	00NR	8	25SP	G15_039	TO->FROM	JONES STATION - TUCO INTERCHANGE 230KV CKT 1	343.79	343.79	0.07169	99.5	GEN526332 1-JONES GEN #2 21 KV
FDNS	00NR	8	25SP	G15_039	FROM->TO	LUBBOCK POWER & LIGHT-HOLLY PLANT (SHIH T101039) 230/69/13.5KV TRANSFORMER CKT 1	224	224	0.03581	104.7109	LUBBOCK POWER & LIGHT-SOUTHEAST - LUBBOCK SOUTH INTERCHANGE 230KV CKT 1
FDNS	00NR	8	25SP	G15_039	FROM->TO	LUBBOCK POWER & LIGHT-HOLLY PLANT (SHIH T101039) 230/69/13.5KV TRANSFORMER CKT 1	224	224	0.03581	104.6979	P12:LPL:SPS:K64.1.LP-SE.LUBBS
FDNS	00NR	8	25SP	G15_039	FROM->TO	LUBBOCK POWER & LIGHT-HOLLY PLANT (SHIH T101039) 230/69/13.5KV TRANSFORMER CKT 1	224	224	0.03461	101.953	LUBBOCK EAST INTERCHANGE - LUBBOCK POWER & LIGHT-WADSWORTH 230KV CKT 1
FDNS	00NR	8	25SP	G15_039	FROM->TO	LUBBOCK POWER & LIGHT-HOLLY PLANT (SHIH T101039) 230/69/13.5KV TRANSFORMER CKT 1	224	224	0.03461	101.9381	P12:230:LPL:K57.1.LP-WADS.LUBBE
FDNS	00NR	8	25SP	G15_039	FROM->TO	LUBBOCK POWER & LIGHT-HOLLY PLANT (SHIH T101039) 230/69/13.5KV TRANSFORMER CKT 1	224	224	0.03461	101.938	LUBBOCK POWER & LIGHT-WADSWORTH (SHIH T101038) 230/69/13.5KV TRANSFORMER CKT 1
FDNS	00NR	8	25SP	G15_039	FROM->TO	LUBBOCK POWER & LIGHT-HOLLY PLANT (SHIH T101039) 230/69/13.5KV TRANSFORMER CKT 1	224	224	0.03461	101.938	LUBBOCK POWER & LIGHT-WADSWORTH (SHIH T101038) 230/69/13.5KV TRANSFORMER CKT 1
FDNS	00NR	9	25SP	G15_039	FROM->TO	LUBBOCK POWER & LIGHT-HOLLY PLANT (SHIH T101039) 230/69/13.5KV TRANSFORMER CKT 1	224	224	0.03581	104.6637	LUBBOCK POWER & LIGHT-SOUTHEAST - LUBBOCK SOUTH INTERCHANGE 230KV CKT 1
FDNS	00NR	9	25SP	G15_039	FROM->TO	LUBBOCK POWER & LIGHT-HOLLY PLANT (SHIH T101039) 230/69/13.5KV TRANSFORMER CKT 1	224	224	0.03581	104.6507	P12:LPL:SPS:K64.1.LP-SE.LUBBS
FDNS	00NR	9	25SP	G15_039	FROM->TO	LUBBOCK POWER & LIGHT-HOLLY PLANT (SHIH T101039) 230/69/13.5KV TRANSFORMER CKT 1	224	224	0.0346	101.7729	LUBBOCK EAST INTERCHANGE - LUBBOCK POWER & LIGHT-WADSWORTH 230KV CKT 1
FDNS	00NR	9	25SP	G15_039	FROM->TO	LUBBOCK POWER & LIGHT-HOLLY PLANT (SHIH T101039) 230/69/13.5KV TRANSFORMER CKT 1	224	224	0.0346	101.758	P12:230:LPL:K57.1.LP-WADS.LUBBE
FDNS	00NR	9	25SP	G15_039	FROM->TO	LUBBOCK POWER & LIGHT-HOLLY PLANT (SHIH T101039) 230/69/13.5KV TRANSFORMER CKT 1	224	224	0.0346	101.7579	LUBBOCK POWER & LIGHT-WADSWORTH (SHIH T101038) 230/69/13.5KV TRANSFORMER CKT 1
FDNS	00NR	9	25SP	G15_039	FROM->TO	LUBBOCK POWER & LIGHT-HOLLY PLANT (SHIH T101039) 230/69/13.5KV TRANSFORMER CKT 1	224	224	0.0346	101.7579	LUBBOCK POWER & LIGHT-WADSWORTH (SHIH T101038) 230/69/13.5KV TRANSFORMER CKT 1
FDNSLock-Blown up	06ALL	0	16WP	G15_040		Non-Converged Contingency	483	483	0.33807	-	AMOCO SWITCHING STATION - YOAKUM COUNTY INTERCHANGE 230KV CKT 1
FDNSLock-Blown up	06ALL	0	16WP	G15_040		Non-Converged Contingency	1022	1124	0.20324	-	G14-074T 345.00 - OKLAUNION 345KV CKT 1
FDNSLock-Blown up	06ALL	0	16WP	G15_040		Non-Converged Contingency	1022	1124	0.20324	-	G14-074T 345.00 - TUCO INTERCHANGE 345KV CKT 1
FDNSLock-Blown up	06ALL	0	16WP	G15_040		Non-Converged Contingency	1022	1124	0.20324	-	GEN509403 1-PIRKEY GENERATION
FDNSLock-Blown up	06ALL	0	16WP	G15_040		Non-Converged Contingency	1022	1124	0.20324	-	GEN509404 1-WELSH #1
FDNSLock-Blown up	06ALL	0	16WP	G15_040		Non-Converged Contingency	1022	1124	0.20324	-	GEN509406 1-WELSH #3
FDNSLock-Blown up	06ALL	0	16WP	G15_040		Non-Converged Contingency	1022	1124	0.20324	-	GEN509416 1-TURK GENERATION
FDNSLock-Blown up	06ALL	0	16WP	G15_040		Non-Converged Contingency	1022	1124	0.20324	-	GEN511848 1-SOUTHWESTERN STATION #3
FDNSLock-Blown up	06ALL	0	16WP	G15_040		Non-Converged Contingency	560	560	0.19214	-	TUCO INTERCHANGE (GE M1022338) 345/230/13.2KV TRANSFORMER CKT 1
FDNSLock-Blown up	06ALL	0	16WP	G15_040		Non-Converged Contingency	956	956	0.17871	-	CIMARRON - MINCO 345KV CKT 1
FDNSLock-Blown up	06ALL	0	16WP	G15_040		Non-Converged Contingency	1195	1195	0.17871	-	GRACEMONT - MINCO 345KV CKT 1
FDNSLock-Blown up	06ALL	0	16WP	G15_040		Non-Converged Contingency	427.05	427.05	0.17807	-	JONES STATION - TUCO INTERCHANGE 230KV CKT 1
FDNSLock-Blown up	06ALL	0	16WP	G15_040		Non-Converged Contingency	616	700	0.16744	-	TUCO INTERCHANGE (SIEM 8743066) 345/230/13.2KV TRANSFORMER CKT 2
FDNSLock-Blown up	06ALL	0	16WP	G15_040		Non-Converged Contingency	556.53	611.5	0.1673	-	NEWHART 230 - PLANT X STATION 230KV CKT 1
FDNSLock-Blown up	06ALL	0	16WP	G15_040		Non-Converged Contingency	987.16	1082.8	0.1648	-	G14_038T 345.00 - Hitchland Interchange 345KV CKT 1
FDNSLock-Blown up	06ALL	0	16WP	G15_040		Non-Converged Contingency	987.16	1082.8	0.1648	-	G14_038T 345.00 - POTTER COUNTY INTERCHANGE 345KV CKT 1
FDNSLock-Blown up	06ALL	0	16WP	G15_040		Non-Converged Contingency	560	560	0.1648	-	POTTER COUNTY INTERCHANGE (WAUK 90343-A) 345/230/13.2KV TRANSFORMER CKT 1
FDNSLock-Blown up	06ALL	0	16WP	G15_040		Non-Converged Contingency	552.14	607.52	0.16377	-	TOLK STATION EAST - TUCO INTERCHANGE 230KV CKT 1
FDNSLock-Blown up	06ALL	0	16WP	G15_040		Non-Converged Contingency	560	560	0.16298	-	TUCO_2 345.00 (TUCO_2 XFMR) 345/230/13.2KV TRANSFORMER CKT 1
FDNSLock-Blown up	06ALL	0	16WP	G15_040		Non-Converged Contingency	1792	1792	0.16264	-	CHISHOLM7 345.00 - WOODWARD DISTRICT EHV 345KV CKT 1
FDNSLock-Blown up	06ALL	0	16WP	G15_040		Non-Converged Contingency	1330	1940	0.16102	-	CHISHOLM7 345.00 - GRACEMONT 345KV CKT 1
FDNSLock-Blown up	06ALL	0	16WP	G15_040		Non-Converged Contingency	1792	1792	0.15966	-	BORDER 7345.00 - CHISHOLM7 345.00 345KV CKT 1
FDNSLock-Blown up	06ALL	0	16WP	G15_040		Non-Converged Contingency	1792	1792	0.15966	-	BORDER 7345.00 - CHISHOLM7 345.00 345KV CKT 2
FDNSLock-Blown up	06ALL	0	16WP	G15_040		Non-Converged Contingency	1792	1972	0.15966	-	BORDER 7345.00 - TUCO_2 345.00 345KV CKT 1
FDNSLock-Blown up	06ALL	0	16WP	G15_040		Non-Converged Contingency	1420	1775	0.15966	-	BORDER 7345.00 - TUCO_2 345.00 345KV CKT 2
FDNSLock-Blown up	06ALL	0	16WP	G15_040		Non-Converged Contingency	552	608	0.15746	-	TUCO INTERCHANGE - TUCO_2 230.00 230KV CKT 1
FDNSLock-Blown up	06ALL	0	16WP	G15_040		Non-Converged Contingency	1792	1972	0.15634	-	TUCO INTERCHANGE - TUCO_2 345.00 345KV CKT 1
FDNSLock-Blown up	06ALL	0	16WP	G15_040		Non-Converged Contingency	557	557	0.15266	-	BUSHLAND INTERCHANGE - DEAF SMITH COUNTY INTERCHANGE 230KV CKT 1
FDNSLock-Blown up	06ALL	0	16WP	G15_040		Non-Converged Contingency	329.05	360.92	0.13947	-	DEAF SMITH COUNTY INTERCHANGE - G15039_T 230.00 230KV CKT 1
FDNSLock-Blown up	06ALL	0	16WP	G15_040		Non-Converged Contingency	329.05	360.92	0.13947	-	G15039_T 230.00 - PLANT X STATION 230KV CKT 1
FDNSLock-Blown up	06ALL	0	16WP	G15_040		Non-Converged Contingency	987.16	1082.8	0.13709	-	FINNEY SWITCHING STATION - Hitchland Interchange 345KV CKT 1
FDNSLock-Blown up	06ALL	0	16WP	G15_040		Non-Converged Contingency	956.09	1051.7	0.13709	-	FINNEY SWITCHING STATION - HOLCOMB 345KV CKT 1
FDNSLock-Blown up	06ALL	0	16WP	G15_040		Non-Converged Contingency	329.05	360.92	0.13502	-	BUSHLAND INTERCHANGE - POTTER COUNTY INTERCHANGE 230KV CKT 1
FDNSLock-Blown up	06ALL	0	16WP	G15_040		Non-Converged Contingency	717	789	0.12862	-	G14-057T 345.00 - LAWTON EASTSIDE 345KV CKT 1
FDNSLock-Blown up	06ALL	0	16WP	G15_040		Non-Converged Contingency	717	789	0.12862	-	G14-057T 345.00 - SUNNYSIDE 345KV CKT 1
FDNSLock-Blown up	06ALL	0	16WP	G15_040		Non-Converged Contingency	143.02	173.09	0.11757	-	WOLFFORTH INTERCHANGE - YUMA INTERCHANGE 115KV CKT 1
FDNSLock-Blown up	06ALL	0	16WP	G15_040		Non-Converged Contingency	557	557	0.11532	-	NEWHART 230 - POTTER COUNTY INTERCHANGE 230KV CKT 1
FDNSLock-Blown up	06ALL	0	16WP	G15_040		Non-Converged Contingency	1420	1775	0.09949	-	G11_051T 345.00 - TATONGA7 345.00 345KV CKT 1
FDNSLock-Blown up	06ALL	0	16WP	G15_040		Non-Converged Contingency	1420	1775	0.09949	-	G11_051T 345.00 - WOODWARD DISTRICT EHV 345KV CKT 1
FDNSLock-Blown up	06ALL	0	16WP	G15_040		Non-Converged Contingency	1195	1195	0.09949	-	MATHWSN7 345.00 - TATONGA7 345.00 345KV CKT 1
FDNSLock-Blown up	06ALL	0	16WP	G15_040		Non-Converged Contingency	442	752	0.09779	-	PLANT X STATION - TOLK STATION WEST 230KV CKT 1
FDNSLock-Blown up	06ALL	0	16WP	G15_040		Non-Converged Contingency	442	752	0.09569	-	PLANT X STATION - TOLK STATION EAST 230KV CKT 2
FDNSLock-Blown up	06ALL	0	16WP	G15_040		Non-Converged Contingency	1561	1793	0.09411	-	THISTLE7 345.00 - WOODWARD DISTRICT EHV 345KV CKT 1
FDNSLock-Blown up	06ALL	0	16WP	G15_040		Non-Converged Contingency	1561	1793	0.09411	-	THISTLE7 345.00 - WOODWARD DISTRICT EHV 345KV CKT 2
FDNSLock-Blown up	06ALL	0	16WP	G15_040		Non-Converged Contingency	329.05	360.92	0.08753	-	AMARILLO SOUTH INTERCHANGE - G15031_T 230.00 230KV CKT 1
FDNSLock-Blown up	06ALL	0	16WP	G15_040		Non-Converged Contingency	1793	1793	0.07815	-	BVRCNTY7 345.00 - G11-14T 345.00 345KV CKT 1
FDNSLock-Blown up	06ALL	0	16WP	G15_040		Non-Converged Contingency	1716	1793	0.07815	-	BVRCNTY7 345.00 - G11-14T 345.00 345KV CKT 2
FDNSLock-Blown up	06ALL	0	16WP	G15_040		Non-Converged Contingency	1792	1792	0.07815	-	BVRCNTY7 345.00 - OPTIMA 345.00 345KV CKT 1

SOLUTION	GROUP	SCENARIO	SEASON	SOURCE	DIRECTION	MONITORED ELEMENT	RATEA (MVA)	RATEB(MVA)	TDF	TC%LOADING (% MVA)	CONTINGENCY
FDNSLock-Blown up	06ALL	0	16WP	G15_040		Non-Converged Contingency	1792	1792	0.07815	-	BVRCNTY7 345.00 - OPTIMA 345.00 345KV CKT 2
FDNSLock-Blown up	06ALL	0	16WP	G15_040		Non-Converged Contingency	1793	1793	0.07815	-	G11-14T 345.00 - WOODWARD DISTRICT EHV 345KV CKT 1
FDNSLock-Blown up	06ALL	0	16WP	G15_040		Non-Converged Contingency	1716	1793	0.07815	-	G11-14T 345.00 - WOODWARD DISTRICT EHV 345KV CKT 2
FDNSLock-Blown up	06ALL	0	16WP	G15_040		Non-Converged Contingency	1532	1793	0.07533	-	G1524G1525 345.00 - THISTLE7 345.00 345KV CKT 1
FDNSLock-Blown up	06ALL	0	16WP	G15_040		Non-Converged Contingency	1532	1793	0.07533	-	G1524G1525 345.00 - THISTLE7 345.00 345KV CKT 2
FDNSLock-Blown up	06ALL	0	16WP	G15_040		Non-Converged Contingency	1532	1793	0.07533	-	GEN532751 1-WOLF CREEK GENERATING STATION UNIT 1
FDNSLock-Blown up	06ALL	0	16WP	G15_040		Non-Converged Contingency	556.92	556.92	0.06997	-	HITCHLAND INTERCHANGE - MOORE COUNTY INTERCHANGE 230KV CKT 1
FDNSLock-Blown up	06ALL	0	16WP	G15_040		Non-Converged Contingency	439	439	0.06819	-	CHISHOLM6 230.00 - SWEETWATER 230KV CKT 1
FDNSLock-Blown up	06ALL	0	16WP	G15_040		Non-Converged Contingency	435.02	457.73	0.06819	-	STATELINE INTERCHANGE - STLN-DEMARC6 230KV CKT 1
FDNSLock-Blown up	06ALL	0	16WP	G15_040		Non-Converged Contingency	439	439	0.06819	-	STLN-DEMARC6 - SWEETWATER 230KV CKT 1
FDNSLock-Blown up	06ALL	0	16WP	G15_040		Non-Converged Contingency	717.1	717.1	0.06624	-	HOLCOMB - SETAB 345KV CKT 1
FDNSLock-Blown up	06ALL	0	16WP	G15_040		Non-Converged Contingency	785	785	0.06528	-	MINGO - RED WILLOW 345KV CKT 1
FDNSLock-Blown up	06ALL	0	16WP	G15_040		Non-Converged Contingency	762.5	762.5	0.06515	-	MINGO - SETAB 345KV CKT 1
FDNSLock-Blown up	06ALL	0	16WP	G15_040		Non-Converged Contingency	439	439	0.06385	-	CHISHOLM6 230.00 - ELK CITY 230KV 230KV CKT 1
FDNSLock-Blown up	06ALL	0	16WP	G15_040		Non-Converged Contingency	450	450	0.06385	-	ELK CITY 230KV (ELKCTY-6) 230/138/13.8KV TRANSFORMER CKT 1
FDNSLock-Blown up	06ALL	0	16WP	G15_040		Non-Converged Contingency	717	717	0.06347	-	CIMARRON - DRAPER LAKE 345KV CKT 1
FDNSLock-Blown up	06ALL	0	16WP	G15_040		Non-Converged Contingency	329.05	360.92	0.05963	-	MOORE COUNTY INTERCHANGE - POTTER COUNTY INTERCHANGE 230KV CKT 1
FDNSLock-Blown up	06ALL	0	16WP	G15_040		Non-Converged Contingency	557	557	0.05797	-	GRAPEVINE INTERCHANGE - STATELINE INTERCHANGE 230KV CKT 1
FDNSLock-Blown up	06ALL	0	16WP	G15_040		Non-Converged Contingency	557	557	0.05796	-	GRAPEVINE INTERCHANGE - NICHOLS STATION 230KV CKT 1
FDNSLock-Blown up	06ALL	0	16WP	G15_040		Non-Converged Contingency	1195	1195	0.05755	-	GEN520947 1-HUGO1
FDNSLock-Blown up	06ALL	0	16WP	G15_040		Non-Converged Contingency	1793	1793	0.0565	-	G13-010T 345.00 - POST ROCK 345KV CKT 1
FDNSLock-Blown up	06ALL	0	16WP	G15_040		Non-Converged Contingency	1793	1793	0.0565	-	G13-010T 345.00 - SPEARVILLE 345KV CKT 1
FDNSLock-Blown up	06ALL	0	16WP	G15_040		Non-Converged Contingency	726.6	726.6	0.05529	-	BUCKNER7 345.00 - HOLCOMB 345KV CKT 1
FDNSLock-Blown up	06ALL	0	16WP	G15_040		Non-Converged Contingency	1413	1517	0.05529	-	BUCKNER7 345.00 - SPEARVILLE 345KV CKT 1
FDNSLock-Blown up	06ALL	0	16WP	G15_040		Non-Converged Contingency	717	789	0.04334	-	GRACEMONT - LAWTON EASTSIDE 345KV CKT 1
FDNSLock-Blown up	06ALL	0	16WP	G15_040		Non-Converged Contingency	286	315	0.03165	-	CANYON E_TP3115.00 - CANYON WEST SUB 115KV CKT 1
FDNSLock-Blown up	06ALL	0	16WP	G15_040		Non-Converged Contingency	106	106	0.03165	-	CANYON WEST SUB - DAWN SUB 115KV CKT 1
FDNSLock-Blown up	06ALL	0	16WP	G15_040		Non-Converged Contingency	106	106	0.03165	-	DAWN SUB - Panda Energy Substation Hereford 115KV CKT 1
FDNSLock-Blown up	06ALL	0	16WP	G15_040		Non-Converged Contingency	106	106	0.03165	-	DEAF SMITH COUNTY INTERCHANGE - Panda Energy Substation Hereford 115KV CKT 1
FDNSLock-Blown up	06ALL	0	16WP	G15_040		Non-Converged Contingency	164.53	177.08	0.02976	-	Hansford County Switch Station - SPEARMAN INTERCHANGE 115KV CKT 1
FDNSLock-Blown up	06ALL	0	16WP	G15_040		Non-Converged Contingency	177.08	177.08	0.02976	-	HITCHLAND INTERCHANGE - Hansford County Switch Station 115KV CKT 1
FDNSLock-Blown up	06ALL	0	17SP	G15_040		Non-Converged Contingency	956	1042	0.20303	-	G14-074T 345.00 - OKLAUNION 345KV CKT 1
FDNSLock-Blown up	06ALL	0	17SP	G15_040		Non-Converged Contingency	956	1042	0.20303	-	G14-074T 345.00 - TUCO INTERCHANGE 345KV CKT 1
FDNSLock-Blown up	06ALL	0	17SP	G15_040		Non-Converged Contingency	956.09	1051.7	0.16247	-	G14_038T 345.00 - Hitchland Interchange 345KV CKT 1
FDNSLock-Blown up	06ALL	0	17SP	G15_040		Non-Converged Contingency	956.09	1051.7	0.16247	-	G14_038T 345.00 - POTTER COUNTY INTERCHANGE 345KV CKT 1
FDNSLock-Blown up	06ALL	0	17SP	G15_040		Non-Converged Contingency	560	560	0.16247	-	POTTER COUNTY INTERCHANGE (WAUK 90343-A) 345/230/13.2KV TRANSFORMER CKT 1
FDNSLock-Blown up	06ALL	0	17SP	G15_040		Non-Converged Contingency	1792	1972	0.16069	-	BORDER 7345.00 - TUCO_2 345.00 345KV CKT 1
FDNSLock-Blown up	06ALL	0	17SP	G15_040		Non-Converged Contingency	1420	1775	0.16069	-	BORDER 7345.00 - TUCO_2 345.00 345KV CKT 2
FDNSLock-Blown up	06ALL	0	20L	G15_040		Non-Converged Contingency	1792	1792	0.30821	-	TUCO INTERCHANGE - YOAKUM_345 345.00 345KV CKT 1
FDNSLock-Blown up	06ALL	0	20L	G15_040		Non-Converged Contingency	1792	1972	0.24723	-	TUCO INTERCHANGE - TUCO_2 345.00 345KV CKT 1
FDNSLock-Blown up	06ALL	0	20L	G15_040		Non-Converged Contingency	414	414	0.20379	-	AMOCO SWITCHING STATION - YOAKUM COUNTY INTERCHANGE 230KV CKT 1
FDNSLock-Blown up	06ALL	0	20L	G15_040		Non-Converged Contingency	414	414	0.20379	-	AMOCO SWITCHING STATION - YOAKUM COUNTY INTERCHANGE 230KV CKT 1
FDNSLock-Blown up	06ALL	0	20L	G15_040		Non-Converged Contingency	0	0	0.19951	-	P12:345:SPS:J07.1.FINN.HITCH
FDNSLock-Blown up	06ALL	0	20L	G15_040		Non-Converged Contingency	1022	1124	0.18182	-	G14-074T 345.00 - OKLAUNION 345KV CKT 1
FDNSLock-Blown up	06ALL	0	20L	G15_040		Non-Converged Contingency	1022	1124	0.18182	-	G14-074T 345.00 - TUCO INTERCHANGE 345KV CKT 1
FDNSLock-Blown up	06ALL	0	20L	G15_040		Non-Converged Contingency	1022	1124	0.18182	-	GEN506754 1-LEBROCK STEAM 1
FDNSLock-Blown up	06ALL	0	20L	G15_040		Non-Converged Contingency	1022	1124	0.18182	-	GEN509394 1-FLINT CREEK
FDNSLock-Blown up	06ALL	0	20L	G15_040		Non-Converged Contingency	1022	1124	0.18182	-	GEN509403 1-PIRKEY GENERATION
FDNSLock-Blown up	06ALL	0	20L	G15_040		Non-Converged Contingency	1022	1124	0.18182	-	GEN509404 1-WELSH #1
FDNSLock-Blown up	06ALL	0	20L	G15_040		Non-Converged Contingency	1022	1124	0.18182	-	GEN509406 1-WELSH #3
FDNSLock-Blown up	06ALL	0	20L	G15_040		Non-Converged Contingency	1022	1124	0.18182	-	GEN509408 1-WILKES #2
FDNSLock-Blown up	06ALL	0	20L	G15_040		Non-Converged Contingency	1022	1124	0.18182	-	GEN509416 1-TURK GENERATION
FDNSLock-Blown up	06ALL	0	20L	G15_040		Non-Converged Contingency	1022	1124	0.18182	-	GEN511840 1-NORTHEASTERN STATION #3
FDNSLock-Blown up	06ALL	0	20L	G15_040		Non-Converged Contingency	1022	1124	0.18182	-	GEN511960 1-ROARK1 0.7000
FDNSLock-Blown up	06ALL	0	20L	G15_040		Non-Converged Contingency	1022	1124	0.18182	-	GEN562590 1-G14_057_3 0.6900
FDNSLock-Blown up	06ALL	0	20L	G15_040		Non-Converged Contingency	1022	1124	0.18182	-	OKLAUNION 345KV SWITCHED SHUNT
FDNSLock-Blown up	06ALL	0	20L	G15_040		Non-Converged Contingency	956	956	0.16307	-	CIMARRON - MINCO 345KV CKT 1
FDNSLock-Blown up	06ALL	0	20L	G15_040		Non-Converged Contingency	1195	1195	0.16307	-	GRACEMONT - MINCO 345KV CKT 1
FDNSLock-Blown up	06ALL	0	20L	G15_040		Non-Converged Contingency	1792	1792	0.15434	-	CHISHOLM7 345.00 - WOODWARD DISTRICT EHV 345KV CKT 1
FDNSLock-Blown up	06ALL	0	20L	G15_040		Non-Converged Contingency	1792	1792	0.14992	-	BORDER 7345.00 - CHISHOLM7 345.00 345KV CKT 1
FDNSLock-Blown up	06ALL	0	20L	G15_040		Non-Converged Contingency	1792	1792	0.14992	-	BORDER 7345.00 - CHISHOLM7 345.00 345KV CKT 2
FDNSLock-Blown up	06ALL	0	20L	G15_040		Non-Converged Contingency	1792	1972	0.14992	-	BORDER 7345.00 - TUCO_2 345.00 345KV CKT 1
FDNSLock-Blown up	06ALL	0	20L	G15_040		Non-Converged Contingency	1420	1775	0.14992	-	BORDER 7345.00 - TUCO_2 345.00 345KV CKT 2
FDNSLock-Blown up	06ALL	0	20L	G15_040		Non-Converged Contingency	1792	1972	0.14992	-	BORDER 7345.00 345KV SWITCHED SHUNT
FDNSLock-Blown up	06ALL	0	20L	G15_040		Non-Converged Contingency	0	0	0.14379	-	P12:115:SPS:T71.1.CRLSLE.YUMA
FDNSLock-Blown up	06ALL	0	20L	G15_040		Non-Converged Contingency	1584	2098	0.12946	-	CHISHOLM7 345.00 - GRACEMONT 345KV CKT 1
FDNSLock-Blown up	06ALL	0	20L	G15_040		Non-Converged Contingency	1584	2098	0.12946	-	GEN514805 1-SOONER UNIT 1
FDNSLock-Blown up	06ALL	0	20L	G15_040		Non-Converged Contingency	1584	2098	0.12946	-	GEN514806 1-SOONER UNIT 2
FDNSLock-Blown up	06ALL	0	20L	G15_040		Non-Converged Contingency	1584	2098	0.12946	-	GEN515040 1-SEMINOLE 1G
FDNSLock-Blown up	06ALL	0	20L	G15_040		Non-Converged Contingency	1584	2098	0.12946	-	GEN515223 1-MUSKOGEE 4G
FDNSLock-Blown up	06ALL	0	20L	G15_040		Non-Converged Contingency	956.09	1051.7	0.11055	-	G14_038T 345.00 - Hitchland Interchange 345KV CKT 1
FDNSLock-Blown up	06ALL	0	20L	G15_040		Non-Converged Contingency	956.09	1051.7	0.11055	-	G14_038T 345.00 - POTTER COUNTY INTERCHANGE 345KV CKT 1
FDNSLock-Blown up	06ALL	0	20L	G15_040		Non-Converged Contingency	560	560	0.11055	-	POTTER COUNTY INTERCHANGE (WAUK 90343-A) 345/230/13.2KV TRANSFORMER CKT 1
FDNSLock-Blown up	06ALL	0	20L	G15_040		Non-Converged Contingency	560	560	0.11055	-	POTTER COUNTY INTERCHANGE (WAUK 90343-A) 345/230/13.2KV TRANSFORMER CKT 1
FDNSLock-Blown up	06ALL	0	20L	G15_040		Non-Converged Contingency	478	502	0.10938	-	BUSHLAND INTERCHANGE - DEAF SMITH COUNTY INTERCHANGE 230KV CKT 1
FDNSLock-Blown up	06ALL	0	20L	G15_040		Non-Converged Contingency	478	502	0.10938	-	BUSHLAND INTERCHANGE - DEAF SMITH COUNTY INTERCHANGE 230KV CKT 1
FDNSLock-Blown up	06ALL	0	20L	G15_040		Non-Converged Contingency	478	502	0.10938	-	BUSHLAND INTERCHANGE 230KV SWITCHED SHUNT
FDNSLock-Blown up	06ALL	0	20L	G15_040		Non-Converged Contingency	956.09	1051.7	0.10654	-	Hitchland Interchange - WALKTAP7 345.00 345KV CKT 1
FDNSLock-Blown up	06ALL	0	20L	G15_040		Non-Converged Contingency	956.09	1051.7	0.10654	-	Hitchland Interchange - WALKTAP7 345.00 345KV CKT 1

SOLUTION	GROUP	SCENARIO	SEASON	SOURCE	DIRECTION	MONITORED ELEMENT	RATEA (MVA)	RATEB(MVA)	TDF	TC%LOADING (% MVA)	CONTINGENCY
FDNSLock-Blown up	06ALL	0	20L	G15_040		Non-Converged Contingency	497	547	0.10578	-	TUCO INTERCHANGE - TUCO_2 230.00 230KV CKT 1
FDNSLock-Blown up	06ALL	0	20L	G15_040		Non-Converged Contingency	717	789	0.1045	-	G14-057T 345.00 - LAWTON EASTSIDE 345KV CKT 1
FDNSLock-Blown up	06ALL	0	20L	G15_040		Non-Converged Contingency	717	789	0.1045	-	G14-057T 345.00 - SUNNYSIDE 345KV CKT 1
FDNSLock-Blown up	06ALL	0	20L	G15_040		Non-Converged Contingency	478.05	547.36	0.09958	-	NEWHART 230 - PLANT X STATION 230KV CKT 1
FDNSLock-Blown up	06ALL	0	20L	G15_040		Non-Converged Contingency	318.7	350.57	0.09925	-	DEAF SMITH COUNTY INTERCHANGE - G15039_T 230.00 230KV CKT 1
FDNSLock-Blown up	06ALL	0	20L	G15_040		Non-Converged Contingency	318.7	350.57	0.09925	-	G15039_T 230.00 - PLANT X STATION 230KV CKT 1
FDNSLock-Blown up	06ALL	0	20L	G15_040		Non-Converged Contingency	318.7	350.57	0.09717	-	BUSHLAND INTERCHANGE - POTTER COUNTY INTERCHANGE 230KV CKT 1
FDNSLock-Blown up	06ALL	0	20L	G15_040		Non-Converged Contingency	318.7	350.57	0.09717	-	BUSHLAND INTERCHANGE - POTTER COUNTY INTERCHANGE 230KV CKT 1
FDNSLock-Blown up	06ALL	0	20L	G15_040		Non-Converged Contingency	478	502	0.09424	-	NEWHART 230 - POTTER COUNTY INTERCHANGE 230KV CKT 1
FDNSLock-Blown up	06ALL	0	20L	G15_040		Non-Converged Contingency	956.09	1051.7	0.09298	-	FINNEY SWITCHING STATION - HOLCOMB 345KV CKT 1
FDNSLock-Blown up	06ALL	0	20L	G15_040		Non-Converged Contingency	956.09	1051.7	0.09298	-	FINNEY SWITCHING STATION - HOLCOMB 345KV CKT 1
FDNSLock-Blown up	06ALL	0	20L	G15_040		Non-Converged Contingency	956.09	1051.7	0.09298	-	FINNEY SWITCHING STATION - WALKTAP7 345.00 345KV CKT 1
FDNSLock-Blown up	06ALL	0	20L	G15_040		Non-Converged Contingency	956.09	1051.7	0.09298	-	FINNEY SWITCHING STATION - WALKTAP7 345.00 345KV CKT 1
FDNSLock-Blown up	06ALL	0	20L	G15_040		Non-Converged Contingency	318.7	350.57	0.08749	-	LUBBOCK SOUTH INTERCHANGE - WOLFFORTH INTERCHANGE 230KV CKT 1
FDNSLock-Blown up	06ALL	0	20L	G15_040		Non-Converged Contingency	318.7	350.57	0.08749	-	LUBBOCK SOUTH INTERCHANGE - WOLFFORTH INTERCHANGE 230KV CKT 1
FDNSLock-Blown up	06ALL	0	20L	G15_040		Non-Converged Contingency	318.7	350.57	0.08749	-	LUBBOCK SOUTH INTERCHANGE 230KV SWITCHED SHUNT
FDNSLock-Blown up	06ALL	0	20L	G15_040		Non-Converged Contingency	478	502	0.08477	-	AMARILLO SOUTH INTERCHANGE - G15031_T 230.00 230KV CKT 1
FDNSLock-Blown up	06ALL	0	20L	G15_040		Non-Converged Contingency	0	0	0.0841	-	P12:230:AEPW:ELKCITY6:SWEETWT6
FDNSLock-Blown up	06ALL	0	20L	G15_040		Non-Converged Contingency	478	502	0.08379	-	CARLISLE INTERCHANGE - TUCO INTERCHANGE 230KV CKT 1
FDNSLock-Blown up	06ALL	0	20L	G15_040		Non-Converged Contingency	478	502	0.08379	-	CARLISLE INTERCHANGE - TUCO INTERCHANGE 230KV CKT 1
FDNSLock-Blown up	06ALL	0	20L	G15_040		Non-Converged Contingency	0	0	0.0809	-	P12:115:SPS:T59.1.CARGIL.CURRY
FDNSLock-Blown up	06ALL	0	20L	G15_040		Non-Converged Contingency	0	0	0.07724	-	P12:115:SPS:W40.1.WCANYON.DFSMTH
FDNSLock-Blown up	06ALL	0	20L	G15_040		Non-Converged Contingency	1561	1793	0.07536	-	THISTLE7 345.00 - WOODWARD DISTRICT EHV 345KV CKT 1
FDNSLock-Blown up	06ALL	0	20L	G15_040		Non-Converged Contingency	1561	1793	0.07536	-	THISTLE7 345.00 - WOODWARD DISTRICT EHV 345KV CKT 1
FDNSLock-Blown up	06ALL	0	20L	G15_040		Non-Converged Contingency	1561	1793	0.07536	-	THISTLE7 345.00 - WOODWARD DISTRICT EHV 345KV CKT 2
FDNSLock-Blown up	06ALL	0	20L	G15_040		Non-Converged Contingency	1561	1793	0.07536	-	THISTLE7 345.00 - WOODWARD DISTRICT EHV 345KV CKT 2
FDNSLock-Blown up	06ALL	0	20L	G15_040		Non-Converged Contingency	1420	1775	0.07421	-	G11_051T 345.00 - TATONGA7 345.00 345KV CKT 1
FDNSLock-Blown up	06ALL	0	20L	G15_040		Non-Converged Contingency	1420	1775	0.07421	-	G11_051T 345.00 - WOODWARD DISTRICT EHV 345KV CKT 1
FDNSLock-Blown up	06ALL	0	20L	G15_040		Non-Converged Contingency	1195	1195	0.07421	-	MATHWSN7 345.00 - TATONGA7 345.00 345KV CKT 1
FDNSLock-Blown up	06ALL	0	20L	G15_040		Non-Converged Contingency	478	478	0.07372	-	CARLISLE INTERCHANGE - WOLFFORTH INTERCHANGE 230KV CKT 1
FDNSLock-Blown up	06ALL	0	20L	G15_040		Non-Converged Contingency	1195	1195	0.07186	-	ARCADIA - NORTHWEST 345KV CKT 1
FDNSLock-Blown up	06ALL	0	20L	G15_040		Non-Converged Contingency	956	956	0.06996	-	CIMARRON - NORTHWEST 345KV CKT 1
FDNSLock-Blown up	06ALL	0	20L	G15_040		Non-Converged Contingency	717	926	0.06855	-	CROSSROADS 7345.00 - TOLK STATION 345KV CKT 1
FDNSLock-Blown up	06ALL	0	20L	G15_040		Non-Converged Contingency	560	560	0.06855	-	TOLK STATION (ABBXNL844501) 345/230/13.2KV TRANSFORMER CKT 1
FDNSLock-Blown up	06ALL	0	20L	G15_040		Non-Converged Contingency	560	560	0.06855	-	TOLK STATION (ABBXNL844501) 345/230/13.2KV TRANSFORMER CKT 1
FDNSLock-Blown up	06ALL	0	20L	G15_040		Non-Converged Contingency	0	0	0.06806	-	P12:230:AEPW-SPS:SWEETWT6:WHEELER 6
FDNSLock-Blown up	06ALL	0	20L	G15_040		Non-Converged Contingency	560	560	0.06457	-	TUCO INTERCHANGE (GE M1022338) 345/230/13.2KV TRANSFORMER CKT 1
FDNSLock-Blown up	06ALL	0	20L	G15_040		Non-Converged Contingency	560	560	0.06457	-	TUCO INTERCHANGE (GE M1022338) 345/230/13.2KV TRANSFORMER CKT 1
FDNSLock-Blown up	06ALL	0	20L	G15_040		Non-Converged Contingency	1195	1195	0.06372	-	MATHWSN7 345.00 - NORTHWEST 345KV CKT 1
FDNSLock-Blown up	06ALL	0	20L	G15_040		Non-Converged Contingency	343.79	343.79	0.0627	-	JONES STATION - TUCO INTERCHANGE 230KV CKT 1
FDNSLock-Blown up	06ALL	0	20L	G15_040		Non-Converged Contingency	343.79	343.79	0.0627	-	JONES STATION - TUCO INTERCHANGE 230KV CKT 1
FDNSLock-Blown up	06ALL	0	20L	G15_040		Non-Converged Contingency	442	752	0.06084	-	PLANT X STATION - TOLK STATION WEST 230KV CKT 1
FDNSLock-Blown up	06ALL	0	20L	G15_040		Non-Converged Contingency	442	752	0.06084	-	PLANT X STATION - TOLK STATION WEST 230KV CKT 1
FDNSLock-Blown up	06ALL	0	20L	G15_040		Non-Converged Contingency	0	0	0.06067	-	P12:115:SPS:T58.1.HERFRD.CARGIL
FDNSLock-Blown up	06ALL	0	20L	G15_040		Non-Converged Contingency	0	0	0.06	-	P12:138:AEPW-OGE:WTH_JCT4:JENSEN4
FDNSLock-Blown up	06ALL	0	20L	G15_040		Non-Converged Contingency	442	752	0.05949	-	PLANT X STATION - TOLK STATION EAST 230KV CKT 2
FDNSLock-Blown up	06ALL	0	20L	G15_040		Non-Converged Contingency	442	752	0.05949	-	PLANT X STATION - TOLK STATION EAST 230KV CKT 2
FDNSLock-Blown up	06ALL	0	20L	G15_040		Non-Converged Contingency	956	956	0.05893	-	G15063_T 345.00 - MATHWSN7 345.00 345KV CKT 1
FDNSLock-Blown up	06ALL	0	20L	G15_040		Non-Converged Contingency	956	956	0.05893	-	G15063_T 345.00 - WOODRING 345KV CKT 1
FDNSLock-Blown up	06ALL	0	20L	G15_040		Non-Converged Contingency	1039	1195	0.05676	-	NORTHWEST - SPRING CREEK 345KV CKT 1
FDNSLock-Blown up	06ALL	0	20L	G15_040		Non-Converged Contingency	1039	1195	0.05676	-	SOONER - SPRING CREEK 345KV CKT 1
FDNSLock-Blown up	06ALL	0	20L	G15_040		Non-Converged Contingency	1532	1793	0.05651	-	G1524G1525 345.00 - THISTLE7 345.00 345KV CKT 1
FDNSLock-Blown up	06ALL	0	20L	G15_040		Non-Converged Contingency	1532	1793	0.05651	-	G1524G1525 345.00 - THISTLE7 345.00 345KV CKT 2
FDNSLock-Blown up	06ALL	0	20L	G15_040		Non-Converged Contingency	1532	1793	0.05651	-	G1524G1525 345.00 - WICHITA 345KV CKT 1
FDNSLock-Blown up	06ALL	0	20L	G15_040		Non-Converged Contingency	1532	1793	0.05651	-	G1524G1525 345.00 - WICHITA 345KV CKT 2
FDNSLock-Blown up	06ALL	0	20L	G15_040		Non-Converged Contingency	1532	1793	0.05651	-	GEN532653 1-JEFFREY ENERGY CENTER UNIT 3
FDNSLock-Blown up	06ALL	0	20L	G15_040		Non-Converged Contingency	1532	1793	0.05651	-	GEN532663 1-LAWRENCE ENERGY CENTER UNIT 5
FDNSLock-Blown up	06ALL	0	20L	G15_040		Non-Converged Contingency	1532	1793	0.05651	-	GEN532751 1-WOLF CREEK GENERATING STATION UNIT 1
FDNSLock-Blown up	06ALL	0	20L	G15_040		Non-Converged Contingency	435.82	501.55	0.05635	-	Harrington Station Mid Bus - RANDALL COUNTY INTERCHANGE 230KV CKT 1
FDNSLock-Blown up	06ALL	0	20L	G15_040		Non-Converged Contingency	435.82	501.55	0.05635	-	Harrington Station Mid Bus - RANDALL COUNTY INTERCHANGE 230KV CKT 1
FDNSLock-Blown up	06ALL	0	20L	G15_040		Non-Converged Contingency	560	644	0.05627	-	TUCO INTERCHANGE (SIEM 8743066) 345/230/13.2KV TRANSFORMER CKT 2
FDNSLock-Blown up	06ALL	0	20L	G15_040		Non-Converged Contingency	560	644	0.05627	-	TUCO INTERCHANGE (SIEM 8743066) 345/230/13.2KV TRANSFORMER CKT 2
FDNSLock-Blown up	06ALL	0	20L	G15_040		Non-Converged Contingency	560	560	0.05261	-	TUCO_2 345.00 (TUCO_2 XFMR) 345/230/13.2KV TRANSFORMER CKT 1
FDNSLock-Blown up	06ALL	0	20L	G15_040		Non-Converged Contingency	0	0	0.0526	-	P12:115:SPS:V15.1.TUCO.INDANA
FDNSLock-Blown up	06ALL	0	20L	G15_040		Non-Converged Contingency	0	0	0.05256	-	P12:138:AEPW:S.W.S.-4:L.E.S.-4
FDNSLock-Blown up	06ALL	0	20L	G15_040		Non-Converged Contingency	785	785	0.05242	-	GEN640009 1-COOPER NUCLEAR STATION
FDNSLock-Blown up	06ALL	0	20L	G15_040		Non-Converged Contingency	785	785	0.05242	-	MINGO - RED WILLOW 345KV CKT 1
FDNSLock-Blown up	06ALL	0	20L	G15_040		Non-Converged Contingency	785	785	0.05242	-	MINGO - RED WILLOW 345KV CKT 1
FDNSLock-Blown up	06ALL	0	20L	G15_040		Non-Converged Contingency	0	0	0.05149	-	P12:115:SPS:V05.1.OSAGE.WCANYON
FDNSLock-Blown up	06ALL	0	20L	G15_040		Non-Converged Contingency	0	0	0.0511	-	P12:115:SPS:T66.1.RNDALL.HAPPY
FDNSLock-Blown up	06ALL	0	20L	G15_040		Non-Converged Contingency	0	0	0.0511	-	P12:115:SPS:T67.1.HAPPY.KRESS
FDNSLock-Blown up	06ALL	0	20L	G15_040		Non-Converged Contingency	762.5	762.5	0.05099	-	MINGO - SETAB 345KV CKT 1
FDNSLock-Blown up	06ALL	0	20L	G15_040		Non-Converged Contingency	762.5	762.5	0.05099	-	MINGO - SETAB 345KV CKT 1
FDNSLock-Blown up	06ALL	0	20L	G15_040		Non-Converged Contingency	478.05	546.96	0.05088	-	TOLK STATION EAST - TUCO INTERCHANGE 230KV CKT 1
FDNSLock-Blown up	06ALL	0	20L	G15_040		Non-Converged Contingency	478.05	546.96	0.05088	-	TOLK STATION EAST - TUCO INTERCHANGE 230KV CKT 1
FDNSLock-Blown up	06ALL	0	20L	G15_040		Non-Converged Contingency	717	789	0.05082	-	GRACEMONT - LAWTON EASTSIDE 345KV CKT 1
FDNSLock-Blown up	06ALL	0	20L	G15_040		Non-Converged Contingency	717	789	0.05082	-	GRACEMONT - LAWTON EASTSIDE 345KV CKT 1
FDNSLock-Blown up	06ALL	0	20L	G15_040		Non-Converged Contingency	1195	1195	0.05055	-	SOONER - WOODRING 345KV CKT 1
FDNSLock-Blown up	06ALL	0	20L	G15_040		Non-Converged Contingency	717.1	717.1	0.0505	-	HOLCOMB - SETAB 345KV CKT 1

SOLUTION	GROUP	SCENARIO	SEASON	SOURCE	DIRECTION	MONITORED ELEMENT	RATEA (MVA)	RATEB(MVA)	TDF	TC%LOADING (% MVA)	CONTINGENCY
FDNSLock-Blown up	06ALL	0	20L	G15_040		Non-Converged Contingency	717.1	717.1	0.0505	-	HOLCOMB - SETAB 345KV CKT 1
FDNSLock-Blown up	06ALL	0	20L	G15_040		Non-Converged Contingency	439	439	0.05007	-	CHISHOLM6 230.00 - ELK CITY 230KV 230KV CKT 1
FDNSLock-Blown up	06ALL	0	20L	G15_040		Non-Converged Contingency	450	450	0.05007	-	ELK CITY 230KV (ELKCTY-6) 230/138/13.8KV TRANSFORMER CKT 1
FDNSLock-Blown up	06ALL	0	20L	G15_040		Non-Converged Contingency	450	450	0.05007	-	ELK CITY 230KV (ELKCTY-6) 230/138/13.8KV TRANSFORMER CKT 1
FDNSLock-Blown up	06ALL	0	20L	G15_040		Non-Converged Contingency	0	0	0.04819	-	P12:115:SPS:T28.1.LAMTON.PLANTX
FDNSLock-Blown up	06ALL	0	20L	G15_040		Non-Converged Contingency	1195	1195	0.04798	-	JOHNSON COUNTY - SUNNYSIDE 345KV CKT 1
FDNSLock-Blown up	06ALL	0	20L	G15_040		Non-Converged Contingency	478.05	501.55	0.04769	-	AMARILLO SOUTH INTERCHANGE - NICHOLS STATION 230KV CKT 1
FDNSLock-Blown up	06ALL	0	20L	G15_040		Non-Converged Contingency	478.05	501.55	0.04769	-	AMARILLO SOUTH INTERCHANGE - NICHOLS STATION 230KV CKT 1
FDNSLock-Blown up	06ALL	0	20L	G15_040		Non-Converged Contingency	501.95	501.95	0.04681	-	HITCHLAND INTERCHANGE - MOORE COUNTY INTERCHANGE 230KV CKT 1
FDNSLock-Blown up	06ALL	0	20L	G15_040		Non-Converged Contingency	501.95	501.95	0.04681	-	HITCHLAND INTERCHANGE - MOORE COUNTY INTERCHANGE 230KV CKT 1
FDNSLock-Blown up	06ALL	0	20L	G15_040		Non-Converged Contingency	560	644	0.04573	-	Hitchland Interchange (SIEM 8743067) 345/230/13.2KV TRANSFORMER CKT 2
FDNSLock-Blown up	06ALL	0	20L	G15_040		Non-Converged Contingency	560	644	0.04573	-	Hitchland Interchange (SIEM 8743067) 345/230/13.2KV TRANSFORMER CKT 2
FDNSLock-Blown up	06ALL	0	20L	G15_040		Non-Converged Contingency	1504	1792	0.04507	-	AXTELL - POST ROCK 345KV CKT 1
FDNSLock-Blown up	06ALL	0	20L	G15_040		Non-Converged Contingency	0	0	0.04478	-	P12:138:WFEC-AEPW:WASHITA4:CLINTJC4
FDNSLock-Blown up	06ALL	0	20L	G15_040		Non-Converged Contingency	1793	1793	0.04477	-	BVRCNTY7 345.00 - G11-14T 345.00 345KV CKT 1
FDNSLock-Blown up	06ALL	0	20L	G15_040		Non-Converged Contingency	1716	1793	0.04477	-	BVRCNTY7 345.00 - G11-14T 345.00 345KV CKT 2
FDNSLock-Blown up	06ALL	0	20L	G15_040		Non-Converged Contingency	1792	1792	0.04477	-	BVRCNTY7 345.00 - OPTIMA 345.00 345KV CKT 1
FDNSLock-Blown up	06ALL	0	20L	G15_040		Non-Converged Contingency	1792	1792	0.04477	-	BVRCNTY7 345.00 - OPTIMA 345.00 345KV CKT 2
FDNSLock-Blown up	06ALL	0	20L	G15_040		Non-Converged Contingency	1793	1793	0.04477	-	G11-14T 345.00 - WOODWARD DISTRICT EHV 345KV CKT 1
FDNSLock-Blown up	06ALL	0	20L	G15_040		Non-Converged Contingency	1716	1793	0.04477	-	G11-14T 345.00 - WOODWARD DISTRICT EHV 345KV CKT 2
FDNSLock-Blown up	06ALL	0	20L	G15_040		Non-Converged Contingency	1792	1792	0.04477	-	Hitchland Interchange - OPTIMA 345.00 345KV CKT 1
FDNSLock-Blown up	06ALL	0	20L	G15_040		Non-Converged Contingency	1792	1792	0.04477	-	Hitchland Interchange - OPTIMA 345.00 345KV CKT 2
FDNSLock-Blown up	06ALL	0	20L	G15_040		Non-Converged Contingency	878	956	0.04442	-	BENTON - WICHITA 345KV CKT 1
FDNSLock-Blown up	06ALL	0	20L	G15_040		Non-Converged Contingency	1151	1195	0.04416	-	JOHNSON COUNTY - PITTSBURG 345KV CKT 1
FDNSLock-Blown up	06ALL	0	20L	G15_040		Non-Converged Contingency	1151	1195	0.04416	-	JOHNSON COUNTY - PITTSBURG 345KV CKT 1
FDNSLock-Blown up	06ALL	0	20L	G15_040		Non-Converged Contingency	1505	1793	0.04411	-	G13-010T 345.00 - POST ROCK 345KV CKT 1
FDNSLock-Blown up	06ALL	0	20L	G15_040		Non-Converged Contingency	1505	1793	0.04411	-	G13-010T 345.00 - SPEARVILLE 345KV CKT 1
FDNSLock-Blown up	06ALL	0	20L	G15_040		Non-Converged Contingency	0	0	0.04408	-	P12:115:SPS:T89.1.DC_N.HIGG
FDNSLock-Blown up	06ALL	0	20L	G15_040		Non-Converged Contingency	1195	1195	0.04399	-	CIMARRON - DRAPER LAKE 345KV CKT 1
FDNSLock-Blown up	06ALL	0	20L	G15_040		Non-Converged Contingency	0	0	0.04151	-	P12:230:SPS:K51.1.OASIS.RSVLT
FDNSLock-Blown up	06ALL	0	20L	G15_040		Non-Converged Contingency	956	956	0.04109	-	GERALD GENTLEMAN STATION - RED WILLOW 345KV CKT 1
FDNSLock-Blown up	06ALL	0	20L	G15_040		Non-Converged Contingency	0	0	0.04061	-	P12:138:AEPW-OGE:CORNVIL4:CIMARON4
FDNSLock-Blown up	06ALL	0	20L	G15_040		Non-Converged Contingency	1035	1035	0.04051	-	EMPORIA ENERGY CENTER - G14_001T 345.00 345KV CKT 1
FDNSLock-Blown up	06ALL	0	20L	G15_040		Non-Converged Contingency	1035	1035	0.04051	-	G14_001T 345.00 - WICHITA 345KV CKT 1
FDNSLock-Blown up	06ALL	0	20L	G15_040		Non-Converged Contingency	0	0	0.04035	-	P12:115:SPS:V80.1.DC_STH.LE-WAIT
FDNSLock-Blown up	06ALL	0	20L	G15_040		Non-Converged Contingency	0	0	0.04033	-	P12:115:SPS:V03.1.NICHLS.EPLANT
FDNSLock-Blown up	06ALL	0	20L	G15_040		Non-Converged Contingency	318.7	350.57	0.04028	-	MOORE COUNTY INTERCHANGE - POTTER COUNTY INTERCHANGE 230KV CKT 1
FDNSLock-Blown up	06ALL	0	20L	G15_040		Non-Converged Contingency	318.7	350.57	0.04028	-	MOORE COUNTY INTERCHANGE - POTTER COUNTY INTERCHANGE 230KV CKT 1
FDNSLock-Blown up	06ALL	0	20L	G15_040		Non-Converged Contingency	560	644	0.03978	-	Hitchland Interchange (H TB80155502) 345/230/13.2KV TRANSFORMER CKT 1
FDNSLock-Blown up	06ALL	0	20L	G15_040		Non-Converged Contingency	560	644	0.03978	-	Hitchland Interchange (H TB80155502) 345/230/13.2KV TRANSFORMER CKT 1
FDNSLock-Blown up	06ALL	0	20L	G15_040		Non-Converged Contingency	1195	1195	0.03976	-	GEN520811 1-ANADRK4
FDNSLock-Blown up	06ALL	0	20L	G15_040		Non-Converged Contingency	1195	1195	0.03976	-	HUGO - SUNNYSIDE 345KV CKT 1
FDNSLock-Blown up	06ALL	0	20L	G15_040		Non-Converged Contingency	1141	1195	0.03783	-	GEN542951 5-HAWTHORN UNIT #5
FDNSLock-Blown up	06ALL	0	20L	G15_040		Non-Converged Contingency	1141	1195	0.03783	-	LACYGNE - WAVERLY7 345.00 345KV CKT 1
FDNSLock-Blown up	06ALL	0	20L	G15_040		Non-Converged Contingency	1141	1195	0.03783	-	WAVERLY7 345.00 - WOLF CREEK 345KV CKT 1
FDNSLock-Blown up	06ALL	0	20L	G15_040		Non-Converged Contingency	1195	1195	0.03604	-	MUSKOGEE - SEMINOLE 345KV CKT 1
FDNSLock-Blown up	06ALL	0	20L	G15_040		Non-Converged Contingency	1076	1076	0.03535	-	G15074_T 345.00 - HOYT 345KV CKT 1
FDNSLock-Blown up	06ALL	0	20L	G15_040		Non-Converged Contingency	1076	1076	0.03535	-	G15074_T 345.00 - JEFFREY ENERGY CENTER 345KV CKT 1
FDNSLock-Blown up	06ALL	0	20L	G15_040		Non-Converged Contingency	1036	1195	0.03517	-	HOYT - STRANGER CREEK 345KV CKT 1
FDNSLock-Blown up	06ALL	0	20L	G15_040		Non-Converged Contingency	497.17	546.96	0.03436	-	AMARILLO SOUTH INTERCHANGE - RANDALL COUNTY INTERCHANGE 230KV CKT 1
FDNSLock-Blown up	06ALL	0	20L	G15_040		Non-Converged Contingency	497.17	546.96	0.03436	-	AMARILLO SOUTH INTERCHANGE - RANDALL COUNTY INTERCHANGE 230KV CKT 1
FDNSLock-Blown up	06ALL	0	20L	G15_040		Non-Converged Contingency	726.6	726.6	0.03435	-	BUCKNER7 345.00 - HOLCOMB 345KV CKT 1
FDNSLock-Blown up	06ALL	0	20L	G15_040		Non-Converged Contingency	726.6	726.6	0.03435	-	BUCKNER7 345.00 - HOLCOMB 345KV CKT 1
FDNSLock-Blown up	06ALL	0	20L	G15_040		Non-Converged Contingency	1413	1517	0.03435	-	BUCKNER7 345.00 - SPEARVILLE 345KV CKT 1
FDNSLock-Blown up	06ALL	0	20L	G15_040		Non-Converged Contingency	1413	1517	0.03435	-	BUCKNER7 345.00 - SPEARVILLE 345KV CKT 1
FDNSLock-Blown up	06ALL	0	20L	G15_040		Non-Converged Contingency	421	439	0.03403	-	CHISHOLM6 230.00 - SWEETWATER 230KV CKT 1
FDNSLock-Blown up	06ALL	0	20L	G15_040		Non-Converged Contingency	348.58	381.24	0.03403	-	STATELINE INTERCHANGE - STLN-DEMARC6 230KV CKT 1
FDNSLock-Blown up	06ALL	0	20L	G15_040		Non-Converged Contingency	353	353	0.03403	-	STLN-DEMARC6 - SWEETWATER 230KV CKT 1
FDNSLock-Blown up	06ALL	0	20L	G15_040		Non-Converged Contingency	0	0	0.03249	-	P12:138:OKGE:3TERM10
FDNSLock-Blown up	06ALL	0	20L	G15_040		Non-Converged Contingency	159	160	0.03204	-	COCHRAN INTERCHANGE - G15-014T 115.00 115KV CKT 1
FDNSLock-Blown up	06ALL	0	20L	G15_040		Non-Converged Contingency	159	160	0.03204	-	COCHRAN INTERCHANGE - PACIFIC SUB 115KV CKT 1
FDNSLock-Blown up	06ALL	0	20L	G15_040		Non-Converged Contingency	159	160	0.03204	-	PACIFIC SUB - SUNDOWN INTERCHANGE 115KV CKT 1
FDNSLock-Blown up	06ALL	0	20L	G15_040		Non-Converged Contingency	159	160	0.03204	-	SUNDOWN INTERCHANGE 115KV SWITCHED SHUNT
FDNSLock-Blown up	06ALL	0	20L	G15_040		Non-Converged Contingency	717	717	0.03169	-	EMPORIA ENERGY CENTER - SWISSVALE 345KV CKT 1
FDNSLock-Blown up	06ALL	0	20L	G15_040		Non-Converged Contingency	0	0	0.03131	-	P12:115:SPS:T04.1.DFSMTH.CASTRO
FDNSLock-Blown up	06ALL	0	20L	G15_040		Non-Converged Contingency	0	0	0.03088	-	P12:115:SPS:W29.1.OCLTRE.SPRMN
FDNSLock-Blown up	06ALL	0	20L	G15_040		Non-Converged Contingency	0	0	0.03051	-	P12:138:AEPW:REDROCKRD4:WTH_JCT4
FDNSLock-Blown up	06ALL	0	20L	G15_040		Non-Converged Contingency	0	0	0.03043	-	P12:115:SPS:W08.1.HITCH.LASLEY
FDNSLock-Blown up	06ALL	0	20L	G15_040		Non-Converged Contingency	0	0	0.0299	-	P12:138:AEPW:DUNCAN-4:L.E.S.-4
FDNSLock-Blown up	06ALL	0	20L	G15_040		Non-Converged Contingency	717	717	0.02967	-	SWISSVALE - WEST GARDNER 345KV CKT 1
FDNSLock-Blown up	06ALL	0	20L	G15_040		Non-Converged Contingency	502	502	0.02965	-	GRAPEVINE INTERCHANGE - NICHOLS STATION 230KV CKT 1
FDNSLock-Blown up	06ALL	0	20L	G15_040		Non-Converged Contingency	502	502	0.02965	-	GRAPEVINE INTERCHANGE - NICHOLS STATION 230KV CKT 1
FDNSLock-Blown up	06ALL	0	20SP	G15_040		Non-Converged Contingency	956	1042	0.21661	-	G14-074T 345.00 - OKLAUNION 345KV CKT 1
FDNSLock-Blown up	06ALL	0	20SP	G15_040		Non-Converged Contingency	1792	1972	0.17478	-	BORDER 7345.00 - TUCO_2 345.00 345KV CKT 1
FDNSLock-Blown up	06ALL	0	20SP	G15_040		Non-Converged Contingency	1420	1775	0.17478	-	BORDER 7345.00 - TUCO_2 345.00 345KV CKT 2
FDNSLock-Blown up	06ALL	0	20SP	G15_040		Non-Converged Contingency	956.09	1051.7	0.14482	-	G14_038T 345.00 - Hitchland Interchange 345KV CKT 1
FDNSLock-Blown up	06ALL	0	20SP	G15_040		Non-Converged Contingency	956.09	1051.7	0.14482	-	G14_038T 345.00 - POTTER COUNTY INTERCHANGE 345KV CKT 1
FDNSLock-Blown up	06ALL	0	20WP	G15_040		Non-Converged Contingency	1792	1792	0.33857	-	TUCO INTERCHANGE - YOAKUM_345 345.00 345KV CKT 1
FDNSLock-Blown up	06ALL	0	20WP	G15_040		Non-Converged Contingency	1792	1972	0.27548	-	TUCO INTERCHANGE - TUCO_2 345.00 345KV CKT 1

SOLUTION	GROUP	SCENARIO	SEASON	SOURCE	DIRECTION	MONITORED ELEMENT	RATEA (MVA)	RATEB(MVA)	TDF	TC%LOADING (% MVA)	CONTINGENCY
FDNSLock-Blown up	06ALL	0	20WP	G15_040		Non-Converged Contingency	0	0	0.2414	-	P12:345:SPS:J07.1.FINN.HITCH
FDNSLock-Blown up	06ALL	0	20WP	G15_040		Non-Converged Contingency	1022	1124	0.21176	-	G14-074T 345.00 - OKLAUNION 345KV CKT 1
FDNSLock-Blown up	06ALL	0	20WP	G15_040		Non-Converged Contingency	1022	1124	0.21176	-	G14-074T 345.00 - TUCO INTERCHANGE 345KV CKT 1
FDNSLock-Blown up	06ALL	0	20WP	G15_040		Non-Converged Contingency	1022	1124	0.21176	-	OKLAUNION 345KV SWITCHED SHUNT
FDNSLock-Blown up	06ALL	0	20WP	G15_040		Non-Converged Contingency	956	956	0.1798	-	CIMARRON - MINCO 345KV CKT 1
FDNSLock-Blown up	06ALL	0	20WP	G15_040		Non-Converged Contingency	1195	1195	0.1798	-	GRACEMONT - MINCO 345KV CKT 1
FDNSLock-Blown up	06ALL	0	20WP	G15_040		Non-Converged Contingency	1792	1792	0.17446	-	CHISHOLM7 345.00 - WOODWARD DISTRICT EHV 345KV CKT 1
FDNSLock-Blown up	06ALL	0	20WP	G15_040		Non-Converged Contingency	1792	1972	0.17111	-	BORDER 7345.00 - TUCO_2 345.00 345KV CKT 1
FDNSLock-Blown up	06ALL	0	20WP	G15_040		Non-Converged Contingency	1420	1775	0.17111	-	BORDER 7345.00 - TUCO_2 345.00 345KV CKT 2
FDNSLock-Blown up	06ALL	0	20WP	G15_040		Non-Converged Contingency	1792	1972	0.17111	-	BORDER 7345.00 345KV SWITCHED SHUNT
FDNSLock-Blown up	06ALL	0	20WP	G15_040		Non-Converged Contingency	1584	2098	0.15558	-	CHISHOLM7 345.00 - GRACEMONT 345KV CKT 1
FDNSLock-Blown up	06ALL	0	20WP	G15_040		Non-Converged Contingency	987.16	1082.8	0.13975	-	G14_038T 345.00 - Hitchland Interchange 345KV CKT 1
FDNSLock-Blown up	06ALL	0	20WP	G15_040		Non-Converged Contingency	987.16	1082.8	0.13975	-	G14_038T 345.00 - POTTER COUNTY INTERCHANGE 345KV CKT 1
FDNSLock-Blown up	06ALL	0	20WP	G15_040		Non-Converged Contingency	560	560	0.13975	-	POTTER COUNTY INTERCHANGE (WAUK 90343-A) 345/230/13.2KV TRANSFORMER CKT 1
FDNSLock-Blown up	06ALL	0	20WP	G15_040		Non-Converged Contingency	560	560	0.13975	-	POTTER COUNTY INTERCHANGE (WAUK 90343-A) 345/230/13.2KV TRANSFORMER CKT 1
FDNSLock-Blown up	06ALL	0	20WP	G15_040		Non-Converged Contingency	987.16	1082.8	0.12866	-	Hitchland Interchange - WALKTAP7 345.00 345KV CKT 1
FDNSLock-Blown up	06ALL	0	20WP	G15_040		Non-Converged Contingency	987.16	1082.8	0.12866	-	Hitchland Interchange - WALKTAP7 345.00 345KV CKT 1
FDNSLock-Blown up	06ALL	0	20WP	G15_040		Non-Converged Contingency	717	789	0.12825	-	G14-057T 345.00 - LAWTON EASTSIDE 345KV CKT 1
FDNSLock-Blown up	06ALL	0	20WP	G15_040		Non-Converged Contingency	717	789	0.12825	-	G14-057T 345.00 - SUNNYSIDE 345KV CKT 1
FDNSLock-Blown up	06ALL	0	20WP	G15_040		Non-Converged Contingency	557	557	0.11781	-	BUSHLAND INTERCHANGE - DEAF SMITH COUNTY INTERCHANGE 230KV CKT 1
FDNSLock-Blown up	06ALL	0	20WP	G15_040		Non-Converged Contingency	557	557	0.11781	-	BUSHLAND INTERCHANGE - DEAF SMITH COUNTY INTERCHANGE 230KV CKT 1
FDNSLock-Blown up	06ALL	0	20WP	G15_040		Non-Converged Contingency	956.09	1051.7	0.11274	-	FINNEY SWITCHING STATION - HOLCOMB 345KV CKT 1
FDNSLock-Blown up	06ALL	0	20WP	G15_040		Non-Converged Contingency	956.09	1051.7	0.11274	-	FINNEY SWITCHING STATION - HOLCOMB 345KV CKT 1
FDNSLock-Blown up	06ALL	0	20WP	G15_040		Non-Converged Contingency	987.16	1082.8	0.11274	-	FINNEY SWITCHING STATION - WALKTAP7 345.00 345KV CKT 1
FDNSLock-Blown up	06ALL	0	20WP	G15_040		Non-Converged Contingency	987.16	1082.8	0.11274	-	FINNEY SWITCHING STATION - WALKTAP7 345.00 345KV CKT 1
FDNSLock-Blown up	06ALL	0	20WP	G15_040		Non-Converged Contingency	0	0	0.11121	-	P12:230:AEPW:ELKCITY6:SWEETWT6
FDNSLock-Blown up	06ALL	0	20WP	G15_040		Non-Converged Contingency	329.05	360.92	0.10702	-	DEAF SMITH COUNTY INTERCHANGE - G15039_T 230.00 230KV CKT 1
FDNSLock-Blown up	06ALL	0	20WP	G15_040		Non-Converged Contingency	329.05	360.92	0.10702	-	G15039_T 230.00 - PLANT X STATION 230KV CKT 1
FDNSLock-Blown up	06ALL	0	20WP	G15_040		Non-Converged Contingency	329.05	360.92	0.10531	-	BUSHLAND INTERCHANGE - POTTER COUNTY INTERCHANGE 230KV CKT 1
FDNSLock-Blown up	06ALL	0	20WP	G15_040		Non-Converged Contingency	329.05	360.92	0.10531	-	BUSHLAND INTERCHANGE - POTTER COUNTY INTERCHANGE 230KV CKT 1
FDNSLock-Blown up	06ALL	0	20WP	G15_040		Non-Converged Contingency	557	557	0.10006	-	NEWHART 230 - POTTER COUNTY INTERCHANGE 230KV CKT 1
FDNSLock-Blown up	06ALL	0	20WP	G15_040		Non-Converged Contingency	0	0	0.09903	-	P12:230:AEPW-SPS:SWEETWT6:WHEELER 6
FDNSLock-Blown up	06ALL	0	20WP	G15_040		Non-Converged Contingency	1561	1793	0.08922	-	THISTLE7 345.00 - WOODWARD DISTRICT EHV 345KV CKT 1
FDNSLock-Blown up	06ALL	0	20WP	G15_040		Non-Converged Contingency	1561	1793	0.08922	-	THISTLE7 345.00 - WOODWARD DISTRICT EHV 345KV CKT 1
FDNSLock-Blown up	06ALL	0	20WP	G15_040		Non-Converged Contingency	1561	1793	0.08922	-	THISTLE7 345.00 - WOODWARD DISTRICT EHV 345KV CKT 2
FDNSLock-Blown up	06ALL	0	20WP	G15_040		Non-Converged Contingency	1561	1793	0.08922	-	THISTLE7 345.00 - WOODWARD DISTRICT EHV 345KV CKT 2
FDNSLock-Blown up	06ALL	0	20WP	G15_040		Non-Converged Contingency	1420	1775	0.08865	-	G11_051T 345.00 - TATONGA7 345.00 345KV CKT 1
FDNSLock-Blown up	06ALL	0	20WP	G15_040		Non-Converged Contingency	1420	1775	0.08865	-	G11_051T 345.00 - WOODWARD DISTRICT EHV 345KV CKT 1
FDNSLock-Blown up	06ALL	0	20WP	G15_040		Non-Converged Contingency	1195	1195	0.08865	-	MATHWSN7 345.00 - TATONGA7 345.00 345KV CKT 1
FDNSLock-Blown up	06ALL	0	20WP	G15_040		Non-Converged Contingency	478	502	0.08661	-	AMARILLO SOUTH INTERCHANGE - G15031_T 230.00 230KV CKT 1
FDNSLock-Blown up	06ALL	0	20WP	G15_040		Non-Converged Contingency	1793	1793	0.06019	-	G11-14T 345.00 - WOODWARD DISTRICT EHV 345KV CKT 1
FDNSLock-Blown up	06ALL	0	20WP	G15_040		Non-Converged Contingency	1716	1793	0.06019	-	G11-14T 345.00 - WOODWARD DISTRICT EHV 345KV CKT 2
FDNSLock-Blown up	06ALL	0	20WP	G15_040		Non-Converged Contingency	556.92	556.92	0.05936	-	HITCHLAND INTERCHANGE - MOORE COUNTY INTERCHANGE 230KV CKT 1
FDNSLock-Blown up	06ALL	0	20WP	G15_040		Non-Converged Contingency	556.92	556.92	0.05936	-	HITCHLAND INTERCHANGE - MOORE COUNTY INTERCHANGE 230KV CKT 1
FDNSLock-Blown up	06ALL	0	20WP	G15_040		Non-Converged Contingency	329.05	360.92	0.0505	-	MOORE COUNTY INTERCHANGE - POTTER COUNTY INTERCHANGE 230KV CKT 1
FDNSLock-Blown up	06ALL	0	20WP	G15_040		Non-Converged Contingency	329.05	360.92	0.0505	-	MOORE COUNTY INTERCHANGE - POTTER COUNTY INTERCHANGE 230KV CKT 1
FDNSLock-Blown up	06ALL	0	20WP	G15_040		Non-Converged Contingency	421	439	0.04951	-	CHISHOLM6 230.00 - SWEETWATER 230KV CKT 1
FDNSLock-Blown up	06ALL	0	20WP	G15_040		Non-Converged Contingency	435.02	457.73	0.04951	-	STATELINE INTERCHANGE - STLN-DEMARC6 230KV CKT 1
FDNSLock-Blown up	06ALL	0	20WP	G15_040		Non-Converged Contingency	439	439	0.04951	-	STLN-DEMARC6 - SWEETWATER 230KV CKT 1
FDNSLock-Blown up	06ALL	0	20WP	G15_040		Non-Converged Contingency	557	557	0.04301	-	GRAPEVINE INTERCHANGE - NICHOLS STATION 230KV CKT 1
FDNSLock-Blown up	06ALL	0	20WP	G15_040		Non-Converged Contingency	557	557	0.04301	-	GRAPEVINE INTERCHANGE - NICHOLS STATION 230KV CKT 1
FDNSLock-Blown up	06ALL	0	20WP	G15_040		Non-Converged Contingency	557	557	0.04221	-	GRAPEVINE INTERCHANGE - STATELINE INTERCHANGE 230KV CKT 1
FDNSLock-Blown up	06ALL	0	20WP	G15_040		Non-Converged Contingency	557	557	0.04221	-	GRAPEVINE INTERCHANGE - STATELINE INTERCHANGE 230KV CKT 1
FDNSLock-Blown up	06ALL	2	16WP	G15_040		Non-Converged Contingency	1022	1124	0.20358	-	G14-074T 345.00 - OKLAUNION 345KV CKT 1
FDNSLock-Blown up	06ALL	2	16WP	G15_040		Non-Converged Contingency	1022	1124	0.20358	-	G14-074T 345.00 - TUCO INTERCHANGE 345KV CKT 1
FDNSLock-Blown up	06ALL	2	16WP	G15_040		Non-Converged Contingency	987.16	1082.8	0.16513	-	G14_038T 345.00 - Hitchland Interchange 345KV CKT 1
FDNSLock-Blown up	06ALL	2	16WP	G15_040		Non-Converged Contingency	987.16	1082.8	0.16513	-	G14_038T 345.00 - POTTER COUNTY INTERCHANGE 345KV CKT 1
FDNSLock-Blown up	06ALL	2	16WP	G15_040		Non-Converged Contingency	560	560	0.16513	-	POTTER COUNTY INTERCHANGE (WAUK 90343-A) 345/230/13.2KV TRANSFORMER CKT 1
FDNSLock-Blown up	06ALL	2	16WP	G15_040		Non-Converged Contingency	1792	1972	0.15994	-	BORDER 7345.00 - TUCO_2 345.00 345KV CKT 1
FDNSLock-Blown up	06ALL	2	16WP	G15_040		Non-Converged Contingency	1420	1775	0.15994	-	BORDER 7345.00 - TUCO_2 345.00 345KV CKT 2
FDNSLock-Blown up	06ALL	2	17G	G15_040		Non-Converged Contingency	1022	1124	0.19704	-	G14-074T 345.00 - OKLAUNION 345KV CKT 1
FDNSLock-Blown up	06ALL	2	17G	G15_040		Non-Converged Contingency	1022	1124	0.19704	-	G14-074T 345.00 - TUCO INTERCHANGE 345KV CKT 1
FDNSLock-Blown up	06ALL	2	17G	G15_040		Non-Converged Contingency	956.09	1051.7	0.1559	-	G14_038T 345.00 - Hitchland Interchange 345KV CKT 1
FDNSLock-Blown up	06ALL	2	17G	G15_040		Non-Converged Contingency	956.09	1051.7	0.1559	-	G14_038T 345.00 - POTTER COUNTY INTERCHANGE 345KV CKT 1
FDNSLock-Blown up	06ALL	2	17G	G15_040		Non-Converged Contingency	560	560	0.1559	-	POTTER COUNTY INTERCHANGE (WAUK 90343-A) 345/230/13.2KV TRANSFORMER CKT 1
FDNSLock-Blown up	06ALL	2	17G	G15_040		Non-Converged Contingency	1792	1972	0.15421	-	BORDER 7345.00 - TUCO_2 345.00 345KV CKT 1
FDNSLock-Blown up	06ALL	2	17G	G15_040		Non-Converged Contingency	1420	1775	0.15421	-	BORDER 7345.00 - TUCO_2 345.00 345KV CKT 2
FDNSLock-Blown up	06ALL	2	17SP	G15_040		Non-Converged Contingency	956	1042	0.20312	-	G14-074T 345.00 - OKLAUNION 345KV CKT 1
FDNSLock-Blown up	06ALL	2	20L	G15_040		Non-Converged Contingency	0	0	0.20082	-	P12:345:SPS:J07.1.FINN.HITCH
FDNSLock-Blown up	06ALL	2	20L	G15_040		Non-Converged Contingency	1022	1124	0.18255	-	G14-074T 345.00 - OKLAUNION 345KV CKT 1
FDNSLock-Blown up	06ALL	2	20L	G15_040		Non-Converged Contingency	1022	1124	0.18255	-	G14-074T 345.00 - TUCO INTERCHANGE 345KV CKT 1
FDNSLock-Blown up	06ALL	2	20L	G15_040		Non-Converged Contingency	1022	1124	0.18255	-	OKLAUNION 345KV SWITCHED SHUNT
FDNSLock-Blown up	06ALL	2	20L	G15_040		Non-Converged Contingency	1792	1972	0.15059	-	BORDER 7345.00 - TUCO_2 345.00 345KV CKT 1
FDNSLock-Blown up	06ALL	2	20L	G15_040		Non-Converged Contingency	1420	1775	0.15059	-	BORDER 7345.00 - TUCO_2 345.00 345KV CKT 2
FDNSLock-Blown up	06ALL	2	20L	G15_040		Non-Converged Contingency	1584	2098	0.12991	-	CHISHOLM7 345.00 - GRACEMONT 345KV CKT 1
FDNSLock-Blown up	06ALL	2	20L	G15_040		Non-Converged Contingency	956.09	1051.7	0.1112	-	G14_038T 345.00 - Hitchland Interchange 345KV CKT 1
FDNSLock-Blown up	06ALL	2	20L	G15_040		Non-Converged Contingency	956.09	1051.7	0.1112	-	G14_038T 345.00 - POTTER COUNTY INTERCHANGE 345KV CKT 1
FDNSLock-Blown up	06ALL	2	20L	G15_040		Non-Converged Contingency	560	560	0.1112	-	POTTER COUNTY INTERCHANGE (WAUK 90343-A) 345/230/13.2KV TRANSFORMER CKT 1
FDNSLock-Blown up	06ALL	2	20L	G15_040		Non-Converged Contingency	560	560	0.1112	-	POTTER COUNTY INTERCHANGE (WAUK 90343-A) 345/230/13.2KV TRANSFORMER CKT 1

SOLUTION	GROUP	SCENARIO	SEASON	SOURCE	DIRECTION	MONITORED ELEMENT	RATEA (MVA)	RATEB(MVA)	TDF	TC%LOADING (% MVA)	CONTINGENCY
FDNSLock-Blown up	06ALL	2	20L	G15_040		Non-Converged Contingency	956.09	1051.7	0.10722	-	Hitchland Interchange - WALKTAP7 345.00 345KV CKT 1
FDNSLock-Blown up	06ALL	2	20L	G15_040		Non-Converged Contingency	956.09	1051.7	0.10722	-	Hitchland Interchange - WALKTAP7 345.00 345KV CKT 1
FDNSLock-Blown up	06ALL	2	20L	G15_040		Non-Converged Contingency	0	0	0.08446	-	P12:230:AEPW:ELKCITY6:SWEETWT6
FDNSLock-Blown up	06ALL	2	20L	G15_040		Non-Converged Contingency	1195	1195	0.07448	-	MATHWSN7 345.00 - TATONGA7 345.00 345KV CKT 1
FDNSLock-Blown up	06ALL	2	20L	G15_040		Non-Converged Contingency	421	439	0.0342	-	CHISHOLM6 230.00 - SWEETWATER 230KV CKT 1
FDNSLock-Blown up	06ALL	2	20SP	G15_040		Non-Converged Contingency	956	1042	0.21671	-	G14-074T 345.00 - OKLAUNION 345KV CKT 1
FDNSLock-Blown up	06ALL	2	20WP	G15_040		Non-Converged Contingency	1022	1124	0.212	-	G14-074T 345.00 - OKLAUNION 345KV CKT 1
FDNSLock-Blown up	06ALL	2	20WP	G15_040		Non-Converged Contingency	1022	1124	0.212	-	G14-074T 345.00 - TUCO INTERCHANGE 345KV CKT 1
FDNSLock-Blown up	06ALL	2	20WP	G15_040		Non-Converged Contingency	1792	1972	0.17132	-	BORDER 7345.00 - TUCO_2 345.00 345KV CKT 1
FDNSLock-Blown up	06ALL	2	20WP	G15_040		Non-Converged Contingency	1420	1775	0.17132	-	BORDER 7345.00 - TUCO_2 345.00 345KV CKT 2
FDNSLock-Blown up	06ALL	2	20WP	G15_040		Non-Converged Contingency	987.16	1082.8	0.13996	-	G14_038T 345.00 - Hitchland Interchange 345KV CKT 1
FDNSLock-Blown up	06ALL	2	20WP	G15_040		Non-Converged Contingency	987.16	1082.8	0.13996	-	G14_038T 345.00 - POTTER COUNTY INTERCHANGE 345KV CKT 1
FDNSLock-Blown up	06ALL	2	20WP	G15_040		Non-Converged Contingency	560	560	0.13996	-	POTTER COUNTY INTERCHANGE (WAUK 90343-A) 345/230/13.2KV TRANSFORMER CKT 1
FDNSLock-Blown up	06ALL	2	20WP	G15_040		Non-Converged Contingency	560	560	0.13996	-	POTTER COUNTY INTERCHANGE (WAUK 90343-A) 345/230/13.2KV TRANSFORMER CKT 1
FDNSLock-Blown up	06ALL	3	16WP	G15_040		Non-Converged Contingency	1022	1124	0.21555	-	G14-074T 345.00 - OKLAUNION 345KV CKT 1
FDNSLock-Blown up	06ALL	3	16WP	G15_040		Non-Converged Contingency	1022	1124	0.21555	-	G14-074T 345.00 - TUCO INTERCHANGE 345KV CKT 1
FDNSLock-Blown up	06ALL	3	17SP	G15_040		Non-Converged Contingency	956	1042	0.21371	-	G14-074T 345.00 - OKLAUNION 345KV CKT 1
FDNSLock-Blown up	06ALL	3	20L	G15_040		Non-Converged Contingency	1022	1124	0.18702	-	G14-074T 345.00 - OKLAUNION 345KV CKT 1
FDNSLock-Blown up	06ALL	3	20L	G15_040		Non-Converged Contingency	1022	1124	0.18702	-	G14-074T 345.00 - TUCO INTERCHANGE 345KV CKT 1
FDNSLock-Blown up	06ALL	3	20L	G15_040		Non-Converged Contingency	1792	1972	0.15564	-	BORDER 7345.00 - TUCO_2 345.00 345KV CKT 1
FDNSLock-Blown up	06ALL	3	20L	G15_040		Non-Converged Contingency	1420	1775	0.15564	-	BORDER 7345.00 - TUCO_2 345.00 345KV CKT 2
FDNSLock-Blown up	06ALL	3	20L	G15_040		Non-Converged Contingency	1584	2098	0.13139	-	CHISHOLM7 345.00 - GRACEMONT 345KV CKT 1
FDNSLock-Blown up	06ALL	3	20L	G15_040		Non-Converged Contingency	956.09	1051.7	0.10747	-	G14_038T 345.00 - Hitchland Interchange 345KV CKT 1
FDNSLock-Blown up	06ALL	3	20L	G15_040		Non-Converged Contingency	956.09	1051.7	0.10747	-	G14_038T 345.00 - POTTER COUNTY INTERCHANGE 345KV CKT 1
FDNSLock-Blown up	06ALL	3	20L	G15_040		Non-Converged Contingency	560	560	0.10747	-	POTTER COUNTY INTERCHANGE (WAUK 90343-A) 345/230/13.2KV TRANSFORMER CKT 1
FDNSLock-Blown up	06ALL	3	20L	G15_040		Non-Converged Contingency	956.09	1051.7	0.10588	-	Hitchland Interchange - WALKTAP7 345.00 345KV CKT 1
FDNSLock-Blown up	06ALL	3	20L	G15_040		Non-Converged Contingency	1195	1195	0.07381	-	MATHWSN7 345.00 - TATONGA7 345.00 345KV CKT 1
FDNSLock-Blown up	06ALL	3	20L	G15_040		Non-Converged Contingency	421	439	0.03095	-	CHISHOLM6 230.00 - SWEETWATER 230KV CKT 1
FDNSLock-Blown up	06ALL	3	20SP	G15_040		Non-Converged Contingency	956	1042	0.22128	-	G14-074T 345.00 - OKLAUNION 345KV CKT 1
FDNSLock-Blown up	06ALL	3	20WP	G15_040		Non-Converged Contingency	1022	1124	0.21669	-	G14-074T 345.00 - OKLAUNION 345KV CKT 1
FDNSLock-Blown up	06ALL	3	20WP	G15_040		Non-Converged Contingency	1022	1124	0.21669	-	G14-074T 345.00 - TUCO INTERCHANGE 345KV CKT 1
FDNSLock-Blown up	06ALL	3	20WP	G15_040		Non-Converged Contingency	1792	1972	0.17685	-	BORDER 7345.00 - TUCO_2 345.00 345KV CKT 1
FDNSLock-Blown up	06ALL	3	20WP	G15_040		Non-Converged Contingency	1420	1775	0.17685	-	BORDER 7345.00 - TUCO_2 345.00 345KV CKT 2
FDNSLock-Blown up	06ALL	3	20WP	G15_040		Non-Converged Contingency	987.16	1082.8	0.13491	-	G14_038T 345.00 - Hitchland Interchange 345KV CKT 1
FDNSLock-Blown up	06ALL	3	20WP	G15_040		Non-Converged Contingency	987.16	1082.8	0.13491	-	G14_038T 345.00 - POTTER COUNTY INTERCHANGE 345KV CKT 1
FDNSLock-Blown up	06ALL	4	16WP	G15_040		Non-Converged Contingency	1022	1124	0.19481	-	G14-074T 345.00 - OKLAUNION 345KV CKT 1
FDNSLock-Blown up	06ALL	4	17G	G15_040		Non-Converged Contingency	956.09	1051.7	0.19613	-	G14_038T 345.00 - Hitchland Interchange 345KV CKT 1
FDNSLock-Blown up	06ALL	4	17G	G15_040		Non-Converged Contingency	956.09	1051.7	0.19613	-	G14_038T 345.00 - POTTER COUNTY INTERCHANGE 345KV CKT 1
FDNSLock-Blown up	06ALL	4	17G	G15_040		Non-Converged Contingency	1022	1124	0.1883	-	G14-074T 345.00 - OKLAUNION 345KV CKT 1
FDNSLock-Blown up	06ALL	4	17G	G15_040		Non-Converged Contingency	1022	1124	0.1883	-	G14-074T 345.00 - TUCO INTERCHANGE 345KV CKT 1
FDNSLock-Blown up	06ALL	4	20L	G15_040		Non-Converged Contingency	0	0	0.22121	-	P12:345:SPS:J07.1.FINN.HITCH
FDNSLock-Blown up	06ALL	4	20L	G15_040		Non-Converged Contingency	1022	1124	0.1695	-	G14-074T 345.00 - OKLAUNION 345KV CKT 1
FDNSLock-Blown up	06ALL	4	20L	G15_040		Non-Converged Contingency	1022	1124	0.1695	-	G14-074T 345.00 - TUCO INTERCHANGE 345KV CKT 1
FDNSLock-Blown up	06ALL	4	20L	G15_040		Non-Converged Contingency	956.09	1051.7	0.15492	-	G14_038T 345.00 - Hitchland Interchange 345KV CKT 1
FDNSLock-Blown up	06ALL	4	20L	G15_040		Non-Converged Contingency	956.09	1051.7	0.15492	-	G14_038T 345.00 - POTTER COUNTY INTERCHANGE 345KV CKT 1
FDNSLock-Blown up	06ALL	4	20L	G15_040		Non-Converged Contingency	1792	1972	0.13675	-	BORDER 7345.00 - TUCO_2 345.00 345KV CKT 1
FDNSLock-Blown up	06ALL	4	20L	G15_040		Non-Converged Contingency	1420	1775	0.13675	-	BORDER 7345.00 - TUCO_2 345.00 345KV CKT 2
FDNSLock-Blown up	06ALL	4	20L	G15_040		Non-Converged Contingency	1584	2098	0.1277	-	CHISHOLM7 345.00 - GRACEMONT 345KV CKT 1
FDNSLock-Blown up	06ALL	4	20L	G15_040		Non-Converged Contingency	956.09	1051.7	0.1181	-	Hitchland Interchange - WALKTAP7 345.00 345KV CKT 1
FDNSLock-Blown up	06ALL	4	20L	G15_040		Non-Converged Contingency	956.09	1051.7	0.1181	-	Hitchland Interchange - WALKTAP7 345.00 345KV CKT 1
FDNSLock-Blown up	06ALL	4	20L	G15_040		Non-Converged Contingency	0	0	0.08951	-	P12:230:AEPW:ELKCITY6:SWEETWT6
FDNSLock-Blown up	06ALL	4	20WP	G15_040		Non-Converged Contingency	1022	1124	0.19743	-	G14-074T 345.00 - OKLAUNION 345KV CKT 1
FDNSLock-Blown up	06ALL	4	20WP	G15_040		Non-Converged Contingency	1022	1124	0.19743	-	G14-074T 345.00 - TUCO INTERCHANGE 345KV CKT 1
FDNSLock-Blown up	06ALL	4	20WP	G15_040		Non-Converged Contingency	987.16	1082.8	0.18544	-	G14_038T 345.00 - Hitchland Interchange 345KV CKT 1
FDNSLock-Blown up	06ALL	5	16WP	G15_040		Non-Converged Contingency	1022	1124	0.18735	-	G14-074T 345.00 - OKLAUNION 345KV CKT 1
FDNSLock-Blown up	06ALL	5	17G	G15_040		Non-Converged Contingency	1022	1124	0.18132	-	G14-074T 345.00 - OKLAUNION 345KV CKT 1
FDNSLock-Blown up	06ALL	5	20L	G15_040		Non-Converged Contingency	1022	1124	0.16584	-	G14-074T 345.00 - OKLAUNION 345KV CKT 1
FDNSLock-Blown up	06ALL	5	20WP	G15_040		Non-Converged Contingency	1022	1124	0.19095	-	G14-074T 345.00 - OKLAUNION 345KV CKT 1
FDNSLock-Blown up	06ALL	6	17G	G15_040		Non-Converged Contingency	1022	1124	0.17428	-	G14-074T 345.00 - OKLAUNION 345KV CKT 1
FDNSLock-Blown up	06ALL	6	20L	G15_040		Non-Converged Contingency	1022	1124	0.15986	-	G14-074T 345.00 - OKLAUNION 345KV CKT 1
FDNSLock-Blown up	06ALL	6	20WP	G15_040		Non-Converged Contingency	1022	1124	0.18415	-	G14-074T 345.00 - OKLAUNION 345KV CKT 1
FDNS	06ALL	0	16WP	G15_040	FROM->TO	BUSHLAND INTERCHANGE - POTTER COUNTY INTERCHANGE 230KV CKT 1	329.05	360.92	0.13502	103.4995	BASE CASE
FDNS	06ALL	0	20SP	G15_040	FROM->TO	CHISHOLM6 230.00 - ELK CITY 230KV 230KV CKT 1	353	353	0.0634	106.4803	BASE CASE
FDNS	06ALL	0	17SP	G15_040	FROM->TO	CHISHOLM6 230.00 - ELK CITY 230KV 230KV CKT 1	353	353	0.06343	104.7427	BASE CASE
FDNS	06ALL	0	17SP	G15_040	TO->FROM	CIMARRON - MINCO 345KV CKT 1	956	956	0.24028	123.2446	G14-057T 345.00 - SUNNYSIDE 345KV CKT 1
FDNS	06ALL	0	20SP	G15_040	TO->FROM	CIMARRON - MINCO 345KV CKT 1	956	956	0.2486	120.5642	G14-057T 345.00 - SUNNYSIDE 345KV CKT 1
FDNS	06ALL	0	17SP	G15_040	TO->FROM	CIMARRON - MINCO 345KV CKT 1	956	956	0.24028	117.8925	G14-057T 345.00 - LAWTON EASTSIDE 345KV CKT 1
FDNS	06ALL	0	20SP	G15_040	TO->FROM	CIMARRON - MINCO 345KV CKT 1	956	956	0.2486	115.1699	G14-057T 345.00 - LAWTON EASTSIDE 345KV CKT 1
FDNS	06ALL	0	17SP	G15_040	TO->FROM	CIMARRON - MINCO 345KV CKT 1	956	956	0.20528	105.5731	MATHWSN7 345.00 - TATONGA7 345.00 345KV CKT 1
FDNS	06ALL	0	20SP	G15_040	TO->FROM	CIMARRON - MINCO 345KV CKT 1	956	956	0.21057	104.5241	MATHWSN7 345.00 - TATONGA7 345.00 345KV CKT 1
FDNS	06ALL	0	20SP	G15_040	TO->FROM	CIMARRON - MINCO 345KV CKT 1	956	956	0.25043	102.9387	CHISHOLM7 345.00 - WOODWARD DISTRICT EHV 345KV CKT 1
FDNS	06ALL	0	17SP	G15_040	TO->FROM	CIMARRON - MINCO 345KV CKT 1	956	956	0.23908	102.0892	CHISHOLM7 345.00 - WOODWARD DISTRICT EHV 345KV CKT 1
FDNS	06ALL	0	17SP	G15_040	TO->FROM	CIMARRON - MINCO 345KV CKT 1	956	956	0.20528	100.3376	G11_051T 345.00 - TATONGA7 345.00 345KV CKT 1
FDNS	06ALL	0	20SP	G15_040	TO->FROM	DEAF SMITH COUNTY INTERCHANGE - G15039_T 230.00 230KV CKT 1	318.7	350.57	0.10831	110.3343	BASE CASE
FDNS	06ALL	0	17SP	G15_040	TO->FROM	DEAF SMITH COUNTY INTERCHANGE - G15039_T 230.00 230KV CKT 1	318.7	350.57	0.13474	108.4885	BASE CASE
FDNSLock	06ALL	0	20WP	G15_040		ELK CITY 230KV (ELKCTY-6) 230/138/13.8KV TRANSFORMER CKT 1	450	450	0.0617	87.66341	BASE CASE
FDNSLock	06ALL	0	20WP	G15_040		ELK CITY 230KV (ELKCTY-6) 230/138/13.8KV TRANSFORMER CKT 1	450	450	0.0617	87.66341	BASE CASE
FDNS	06ALL	0	20L	G15_040	TO->FROM	G14-057T 345.00 - LAWTON EASTSIDE 345KV CKT 1	717	789	0.1045	108.0268	BASE CASE
FDNS	06ALL	0	20L	G15_040	FROM->TO	G14-057T 345.00 - SUNNYSIDE 345KV CKT 1	717	789	0.1045	120.8788	BASE CASE

SOLUTION	GROUP	SCENARIO	SEASON	SOURCE	DIRECTION	MONITORED ELEMENT	RATEA (MVA)	RATEB(MVA)	TDF	TC%LOADING (% MVA)	CONTINGENCY
FDNS	06ALL	0	20WP	G15_040	FROM->TO	G14-057T 345.00 - SUNNYSIDE 345KV CKT 1	717	789	0.12825	107.5634	BASE CASE
FDNS	06ALL	0	17G	G15_040	FROM->TO	G14-057T 345.00 - SUNNYSIDE 345KV CKT 1	717	789	0.12534	106.9763	BASE CASE
FDNS	06ALL	0	16WP	G15_040	FROM->TO	G14-057T 345.00 - SUNNYSIDE 345KV CKT 1	717	789	0.12862	105.0999	BASE CASE
FDNSLock	06ALL	0	20WP	G15_040		Non-Converged Contingency	1792	1792	0.17111	-	BORDER 7345.00 - CHISHOLM7 345.00 345KV CKT 1
FDNSLock	06ALL	0	20WP	G15_040		Non-Converged Contingency	1792	1792	0.17111	-	BORDER 7345.00 - CHISHOLM7 345.00 345KV CKT 2
FDNSLock	06ALL	0	20WP	G15_040		Non-Converged Contingency	439	439	0.0617	-	CHISHOLM6 230.00 - ELK CITY 230KV 230KV CKT 1
FDNS	06ALL	0	20WP	G15_040	FROM->TO	POTTER COUNTY INTERCHANGE (WAUK 90343-A) 345/230/13.2KV TRANSFORMER CKT 1	560	560	0.13975	101.9937	BASE CASE
FDNS	06ALL	0	20WP	G15_040	FROM->TO	POTTER COUNTY INTERCHANGE (WAUK 90343-A) 345/230/13.2KV TRANSFORMER CKT 1	560	560	0.13975	100.9471	BASE CASE
FDNS	06ALL	0	17SP	G15_040	FROM->TO	SUNDOWN INTERCHANGE - WOLFFORTH INTERCHANGE 230KV CKT 1	318.7	350.57	0.31317	100	TOLK STATION EAST - TUCO INTERCHANGE 230KV CKT 1
FDNS	06ALL	0	17SP	G15_040	FROM->TO	SUNDOWN INTERCHANGE - WOLFFORTH INTERCHANGE 230KV CKT 1	318.7	350.57	0.31317	100	TOLK STATION EAST - TUCO INTERCHANGE 230KV CKT 1
FDNS	06ALL	0	20SP	G15_040	FROM->TO	TUCO INTERCHANGE - TUCO_2 230.00 230KV CKT 1	497	547	0.34676	176.1131	TUCO INTERCHANGE - TUCO_2 345.00 345KV CKT 1
FDNS	06ALL	0	17SP	G15_040	FROM->TO	TUCO INTERCHANGE - TUCO_2 230.00 230KV CKT 1	497	547	0.2993	172.1789	TUCO INTERCHANGE - TUCO_2 345.00 345KV CKT 1
FDNS	06ALL	0	25SP	G15_040	FROM->TO	TUCO INTERCHANGE - TUCO_2 230.00 230KV CKT 1	497	547	0.35732	101.2227615	TUCO INTERCHANGE - TUCO_2 345.00 345KV CKT 1
FDNS	06ALL	0	20SP	G15_040	FROM->TO	TUCO_2 345.00 (TUCO_2 XFMR) 345/230/13.2KV TRANSFORMER CKT 1	560	560	0.30256	168.9327	TUCO INTERCHANGE - TUCO_2 345.00 345KV CKT 1
FDNS	06ALL	0	17SP	G15_040	FROM->TO	TUCO_2 345.00 (TUCO_2 XFMR) 345/230/13.2KV TRANSFORMER CKT 1	560	560	0.29506	168.0719	TUCO INTERCHANGE - TUCO_2 345.00 345KV CKT 1
FDNS	06ALL	0	20SP	G15_040	FROM->TO	TUCO_2 345.00 (TUCO_2 XFMR) 345/230/13.2KV TRANSFORMER CKT 1	560	560	0.30256	162.4281	TUCO INTERCHANGE - TUCO_2 345.00 345KV CKT 1
FDNS	06ALL	0	17SP	G15_040	FROM->TO	TUCO_2 345.00 (TUCO_2 XFMR) 345/230/13.2KV TRANSFORMER CKT 1	560	560	0.29506	161.5424	TUCO INTERCHANGE - TUCO_2 345.00 345KV CKT 1
FDNS	06ALL	0	17G	G15_040	FROM->TO	WOLFFORTH INTERCHANGE - YUMA INTERCHANGE 115KV CKT 1	119.51	153.97	0.21764	103.043	LUBBOCK SOUTH INTERCHANGE - WOLFFORTH INTERCHANGE 230KV CKT 1
FDNS	06ALL	0	17G	G15_040	FROM->TO	WOLFFORTH INTERCHANGE - YUMA INTERCHANGE 115KV CKT 1	119.51	153.97	0.21764	103.043	LUBBOCK SOUTH INTERCHANGE - WOLFFORTH INTERCHANGE 230KV CKT 1
FDNS	06ALL	2	20SP	G15_040	FROM->TO	CHISHOLM6 230.00 - ELK CITY 230KV 230KV CKT 1	353	353	0.06342	103.9805	BASE CASE
FDNS	06ALL	2	17SP	G15_040	FROM->TO	CHISHOLM6 230.00 - ELK CITY 230KV 230KV CKT 1	353	353	0.06346	101.7938	BASE CASE
FDNS	06ALL	2	20L	G15_040	TO->FROM	CIMARRON - MINCO 345KV CKT 1	956	956	0.21506	140.1322	G14-057T 345.00 - SUNNYSIDE 345KV CKT 1
FDNS	06ALL	2	20L	G15_040	TO->FROM	CIMARRON - MINCO 345KV CKT 1	956	956	0.21506	133.5433	G14-057T 345.00 - LAWTON EASTSIDE 345KV CKT 1
FDNS	06ALL	2	17G	G15_040	TO->FROM	CIMARRON - MINCO 345KV CKT 1	956	956	0.2353	131.7687	G14-057T 345.00 - SUNNYSIDE 345KV CKT 1
FDNS	06ALL	2	20WP	G15_040	TO->FROM	CIMARRON - MINCO 345KV CKT 1	956	956	0.24253	130.9595	G14-057T 345.00 - SUNNYSIDE 345KV CKT 1
FDNS	06ALL	2	17G	G15_040	TO->FROM	CIMARRON - MINCO 345KV CKT 1	956	956	0.2353	126.2954	G14-057T 345.00 - LAWTON EASTSIDE 345KV CKT 1
FDNS	06ALL	2	20WP	G15_040	TO->FROM	CIMARRON - MINCO 345KV CKT 1	956	956	0.24253	125.3296	G14-057T 345.00 - LAWTON EASTSIDE 345KV CKT 1
FDNS	06ALL	2	16WP	G15_040	TO->FROM	CIMARRON - MINCO 345KV CKT 1	956	956	0.24185	123.9324	G14-057T 345.00 - SUNNYSIDE 345KV CKT 1
FDNS	06ALL	2	17SP	G15_040	TO->FROM	CIMARRON - MINCO 345KV CKT 1	956	956	0.24041	123.0412	G14-057T 345.00 - SUNNYSIDE 345KV CKT 1
FDNS	06ALL	2	20SP	G15_040	TO->FROM	CIMARRON - MINCO 345KV CKT 1	956	956	0.24872	120.4683	G14-057T 345.00 - SUNNYSIDE 345KV CKT 1
FDNS	06ALL	2	16WP	G15_040	TO->FROM	CIMARRON - MINCO 345KV CKT 1	956	956	0.24185	118.3934	G14-057T 345.00 - LAWTON EASTSIDE 345KV CKT 1
FDNS	06ALL	2	17SP	G15_040	TO->FROM	CIMARRON - MINCO 345KV CKT 1	956	956	0.24041	117.7499	G14-057T 345.00 - LAWTON EASTSIDE 345KV CKT 1
FDNS	06ALL	2	20SP	G15_040	TO->FROM	CIMARRON - MINCO 345KV CKT 1	956	956	0.24872	115.0256	G14-057T 345.00 - LAWTON EASTSIDE 345KV CKT 1
FDNS	06ALL	2	17G	G15_040	TO->FROM	CIMARRON - MINCO 345KV CKT 1	956	956	0.20103	111.0722	MATHWSN7 345.00 - TATONGA7 345.00 345KV CKT 1
FDNS	06ALL	2	20WP	G15_040	TO->FROM	CIMARRON - MINCO 345KV CKT 1	956	956	0.20396	110.8109	MATHWSN7 345.00 - TATONGA7 345.00 345KV CKT 1
FDNS	06ALL	2	20L	G15_040	TO->FROM	CIMARRON - MINCO 345KV CKT 1	956	956	0.22054	107.6011	CHISHOLM7 345.00 - WOODWARD DISTRICT EHV 345KV CKT 1
FDNS	06ALL	2	17G	G15_040	TO->FROM	CIMARRON - MINCO 345KV CKT 1	956	956	0.23052	107.4004	CHISHOLM7 345.00 - WOODWARD DISTRICT EHV 345KV CKT 1
FDNS	06ALL	2	20WP	G15_040	TO->FROM	CIMARRON - MINCO 345KV CKT 1	956	956	0.20396	105.5266	G11_051T 345.00 - TATONGA7 345.00 345KV CKT 1
FDNSLock	06ALL	2	17G	G15_040	TO->FROM	CIMARRON - MINCO 345KV CKT 1	956	956	0.20103	105.1772	G11_051T 345.00 - TATONGA7 345.00 345KV CKT 1
FDNS	06ALL	2	17SP	G15_040	TO->FROM	CIMARRON - MINCO 345KV CKT 1	956	956	0.2054	104.7953	MATHWSN7 345.00 - TATONGA7 345.00 345KV CKT 1
FDNS	06ALL	2	20SP	G15_040	TO->FROM	CIMARRON - MINCO 345KV CKT 1	956	956	0.21069	104.2231	MATHWSN7 345.00 - TATONGA7 345.00 345KV CKT 1
FDNS	06ALL	2	16WP	G15_040	TO->FROM	CIMARRON - MINCO 345KV CKT 1	956	956	0.20602	104.0692	MATHWSN7 345.00 - TATONGA7 345.00 345KV CKT 1
FDNS	06ALL	2	20WP	G15_040	TO->FROM	CIMARRON - MINCO 345KV CKT 1	956	956	0.20396	103.9402	G11_051T 345.00 - WOODWARD DISTRICT EHV 345KV CKT 1
FDNS	06ALL	2	20WP	G15_040	TO->FROM	CIMARRON - MINCO 345KV CKT 1	956	956	0.24362	103.712	CHISHOLM7 345.00 - WOODWARD DISTRICT EHV 345KV CKT 1
FDNSLock	06ALL	2	17G	G15_040	TO->FROM	CIMARRON - MINCO 345KV CKT 1	956	956	0.20103	103.655	G11_051T 345.00 - WOODWARD DISTRICT EHV 345KV CKT 1
FDNS	06ALL	2	20SP	G15_040	TO->FROM	CIMARRON - MINCO 345KV CKT 1	956	956	0.25056	102.1101	CHISHOLM7 345.00 - WOODWARD DISTRICT EHV 345KV CKT 1
FDNS	06ALL	2	17SP	G15_040	TO->FROM	CIMARRON - MINCO 345KV CKT 1	956	956	0.23922	100.969	CHISHOLM7 345.00 - WOODWARD DISTRICT EHV 345KV CKT 1
FDNS	06ALL	2	17SP	G15_040	TO->FROM	CIMARRON - MINCO 345KV CKT 1	956	956	0.2054	99.6	G11_051T 345.00 - TATONGA7 345.00 345KV CKT 1
FDNS	06ALL	2	20SP	G15_040	TO->FROM	DEAF SMITH COUNTY INTERCHANGE - G15039_T 230.00 230KV CKT 1	318.7	350.57	0.10838	106.1518	BASE CASE
FDNS	06ALL	2	17SP	G15_040	TO->FROM	DEAF SMITH COUNTY INTERCHANGE - G15039_T 230.00 230KV CKT 1	318.7	350.57	0.13483	104.2255	BASE CASE
FDNS	06ALL	2	20L	G15_040	TO->FROM	G14-057T 345.00 - LAWTON EASTSIDE 345KV CKT 1	717	789	0.10478	105.4406	BASE CASE
FDNS	06ALL	2	20L	G15_040	FROM->TO	G14-057T 345.00 - SUNNYSIDE 345KV CKT 1	717	789	0.10478	118.6576	BASE CASE
FDNS	06ALL	2	20WP	G15_040	FROM->TO	G14-057T 345.00 - SUNNYSIDE 345KV CKT 1	717	789	0.12838	106.4822	BASE CASE
FDNS	06ALL	2	17G	G15_040	FROM->TO	G14-057T 345.00 - SUNNYSIDE 345KV CKT 1	717	789	0.12552	105.8626	BASE CASE
FDNS	06ALL	2	16WP	G15_040	FROM->TO	G14-057T 345.00 - SUNNYSIDE 345KV CKT 1	717	789	0.12881	104.4384	BASE CASE
FDNS	06ALL	2	20L	G15_040	FROM->TO	GRACEMONT - MINCO 345KV CKT 1	1195	1195	0.21506	101.0673	G14-057T 345.00 - SUNNYSIDE 345KV CKT 1
FDNSLock	06ALL	2	20WP	G15_040		P12:230:AEPW:ELKCITY6:SWEETWT6	0	0	0.11136	9999	BASE CASE
FDNS	06ALL	2	17SP	G15_040	FROM->TO	SUNDOWN INTERCHANGE - WOLFFORTH INTERCHANGE 230KV CKT 1	318.7	350.57	0.31329	101.6908	TOLK STATION EAST - TUCO INTERCHANGE 230KV CKT 1
FDNS	06ALL	2	17SP	G15_040	FROM->TO	SUNDOWN INTERCHANGE - WOLFFORTH INTERCHANGE 230KV CKT 1	318.7	350.57	0.31329	101.6908	TOLK STATION EAST - TUCO INTERCHANGE 230KV CKT 1
FDNS	06ALL	2	20L	G15_040	FROM->TO	TUCO INTERCHANGE - TUCO_2 230.00 230KV CKT 1	497	547	0.3097	181.2199	TUCO INTERCHANGE - TUCO_2 345.00 345KV CKT 1
FDNS	06ALL	2	17G	G15_040	FROM->TO	TUCO INTERCHANGE - TUCO_2 230.00 230KV CKT 1	497	547	0.27853	176.0864	TUCO INTERCHANGE - TUCO_2 345.00 345KV CKT 1
FDNS	06ALL	2	20SP	G15_040	FROM->TO	TUCO INTERCHANGE - TUCO_2 230.00 230KV CKT 1	497	547	0.34689	166.2483	TUCO INTERCHANGE - TUCO_2 345.00 345KV CKT 1
FDNS	06ALL	2	17SP	G15_040	FROM->TO	TUCO INTERCHANGE - TUCO_2 230.00 230KV CKT 1	497	547	0.29943	159.9768	TUCO INTERCHANGE - TUCO_2 345.00 345KV CKT 1
FDNS	06ALL	2	20WP	G15_040	FROM->TO	TUCO INTERCHANGE - TUCO_2 230.00 230KV CKT 1	552	608	0.34141	155.2742	TUCO INTERCHANGE - TUCO_2 345.00 345KV CKT 1
FDNS	06ALL	2	16WP	G15_040	FROM->TO	TUCO INTERCHANGE - TUCO_2 230.00 230KV CKT 1	552	608	0.28816	142.7524	TUCO INTERCHANGE - TUCO_2 345.00 345KV CKT 1
FDNS	06ALL	2	25SP	G15_040	FROM->TO	TUCO INTERCHANGE - TUCO_2 230.00 230KV CKT 1	497	547	0.35733	102.0482993	TUCO INTERCHANGE - TUCO_2 345.00 345KV CKT 1
FDNS	06ALL	2	16WP	G15_040	FROM->TO	TUCO INTERCHANGE (GE M1022338) 345/230/13.2KV TRANSFORMER CKT 1	560	560	0.2821	120.5418	TUCO INTERCHANGE (SIEM 8743066) 345/230/13.2KV TRANSFORMER CKT 2
FDNS	06ALL	2	16WP	G15_040	FROM->TO	TUCO INTERCHANGE (GE M1022338) 345/230/13.2KV TRANSFORMER CKT 1	560	560	0.2821	120.5418	TUCO INTERCHANGE (SIEM 8743066) 345/230/13.2KV TRANSFORMER CKT 2
FDNS	06ALL	2	16WP	G15_040	FROM->TO	TUCO INTERCHANGE (GE M1022338) 345/230/13.2KV TRANSFORMER CKT 1	560	560	0.27328	120.3223	TUCO_2 345.00 (TUCO_2 XFMR) 345/230/13.2KV TRANSFORMER CKT 1
FDNS	06ALL	2	16WP	G15_040	FROM->TO	TUCO INTERCHANGE (GE M1022338) 345/230/13.2KV TRANSFORMER CKT 1	560	560	0.2821	118.6764	TUCO INTERCHANGE (SIEM 8743066) 345/230/13.2KV TRANSFORMER CKT 2
FDNS	06ALL	2	16WP	G15_040	FROM->TO	TUCO INTERCHANGE (GE M1022338) 345/230/13.2KV TRANSFORMER CKT 1	560	560	0.2821	118.6764	TUCO INTERCHANGE (SIEM 8743066) 345/230/13.2KV TRANSFORMER CKT 2
FDNS	06ALL	2	16WP	G15_040	FROM->TO	TUCO INTERCHANGE (GE M1022338) 345/230/13.2KV TRANSFORMER CKT 1	560	560	0.27328	118.6764	TUCO_2 345.00 (TUCO_2 XFMR) 345/230/13.2KV TRANSFORMER CKT 1
FDNS	06ALL	2	17G	G15_040	FROM->TO	TUCO INTERCHANGE (GE M1022338) 345/230/13.2KV TRANSFORMER CKT 1	560	560	0.27247	114.4569	TUCO INTERCHANGE (SIEM 8743066) 345/230/13.2KV TRANSFORMER CKT 2
FDNS	06ALL	2	17G	G15_040	FROM->TO	TUCO INTERCHANGE (GE M1022338) 345/230/13.2KV TRANSFORMER CKT 1	560	560	0.26387	114.4414	TUCO_2 345.00 (TUCO_2 XFMR) 345/230/13.2KV TRANSFORMER CKT 1
FDNS	06ALL	2	17G	G15_040	FROM->TO	TUCO INTERCHANGE (GE M1022338) 345/230/13.2KV TRANSFORMER CKT 1	560	560	0.26387	112.333	TUCO_2 345.00 (TUCO_2 XFMR) 345/230/13.2KV TRANSFORMER CKT 1
FDNS	06ALL	2	17G	G15_040	FROM->TO	TUCO INTERCHANGE (GE M1022338) 345/230/13.2KV TRANSFORMER CKT 1	560	560	0.27247	112.1874	TUCO INTERCHANGE (SIEM 8743066) 345/230/13.2KV TRANSFORMER CKT 2
FDNS	06ALL	2	16WP	G15_040	FROM->TO	TUCO INTERCHANGE (GE M1022338) 345/230/13.2KV TRANSFORMER CKT 1	560	560	0.26273	103.9349	TUCO INTERCHANGE - TUCO_2 230.00 230KV CKT 1
FDNS	06ALL	2	16WP	G15_040	FROM->TO	TUCO INTERCHANGE (GE M1022338) 345/230/13.2KV TRANSFORMER CKT 1	560	560	0.26273	102.2603	TUCO INTERCHANGE - TUCO_2 230.00 230KV CKT 1
FDNS	06ALL	2	17G	G15_040	FROM->TO	TUCO INTERCHANGE (GE M1022338) 345/230/13.2KV TRANSFORMER CKT 1	560	560	0.25401	100.6861	TUCO INTERCHANGE - TUCO_2 230.00 230KV CKT 1

SOLUTION	GROUP	SCENARIO	SEASON	SOURCE	DIRECTION	MONITORED ELEMENT	RATEA (MVA)	RATEB(MVA)	TDF	TC%LOADING (% MVA)	CONTINGENCY
FDNS	06ALL	2	20L	G15_040	FROM->TO	TUCO_2 345.00 (TUCO_2 XFMR) 345/230/13.2KV TRANSFORMER CKT 1	560	560	0.25957	190.1451	TUCO INTERCHANGE - TUCO_2 345.00 345KV CKT 1
FDNS	06ALL	2	20WP	G15_040	FROM->TO	TUCO_2 345.00 (TUCO_2 XFMR) 345/230/13.2KV TRANSFORMER CKT 1	560	560	0.29638	189.4604	TUCO INTERCHANGE - TUCO_2 345.00 345KV CKT 1
FDNS	06ALL	2	17G	G15_040	FROM->TO	TUCO_2 345.00 (TUCO_2 XFMR) 345/230/13.2KV TRANSFORMER CKT 1	560	560	0.2835	187.4581	TUCO INTERCHANGE - TUCO_2 345.00 345KV CKT 1
FDNS	06ALL	2	20WP	G15_040	FROM->TO	TUCO_2 345.00 (TUCO_2 XFMR) 345/230/13.2KV TRANSFORMER CKT 1	560	560	0.29638	184.0471	TUCO INTERCHANGE - TUCO_2 345.00 345KV CKT 1
FDNS	06ALL	2	20L	G15_040	FROM->TO	TUCO_2 345.00 (TUCO_2 XFMR) 345/230/13.2KV TRANSFORMER CKT 1	560	560	0.25957	184.0031	TUCO INTERCHANGE - TUCO_2 345.00 345KV CKT 1
FDNS	06ALL	2	17G	G15_040	FROM->TO	TUCO_2 345.00 (TUCO_2 XFMR) 345/230/13.2KV TRANSFORMER CKT 1	560	560	0.2835	182.4703	TUCO INTERCHANGE - TUCO_2 345.00 345KV CKT 1
FDNS	06ALL	2	16WP	G15_040	FROM->TO	TUCO_2 345.00 (TUCO_2 XFMR) 345/230/13.2KV TRANSFORMER CKT 1	560	560	0.29402	175.5009	TUCO INTERCHANGE - TUCO_2 345.00 345KV CKT 1
FDNS	06ALL	2	16WP	G15_040	FROM->TO	TUCO_2 345.00 (TUCO_2 XFMR) 345/230/13.2KV TRANSFORMER CKT 1	560	560	0.29402	172.6087	TUCO INTERCHANGE - TUCO_2 345.00 345KV CKT 1
FDNS	06ALL	2	20SP	G15_040	FROM->TO	TUCO_2 345.00 (TUCO_2 XFMR) 345/230/13.2KV TRANSFORMER CKT 1	560	560	0.3027	166.4217	TUCO INTERCHANGE - TUCO_2 345.00 345KV CKT 1
FDNS	06ALL	2	17SP	G15_040	FROM->TO	TUCO_2 345.00 (TUCO_2 XFMR) 345/230/13.2KV TRANSFORMER CKT 1	560	560	0.29521	164.6979	TUCO INTERCHANGE - TUCO_2 345.00 345KV CKT 1
FDNS	06ALL	2	20SP	G15_040	FROM->TO	TUCO_2 345.00 (TUCO_2 XFMR) 345/230/13.2KV TRANSFORMER CKT 1	560	560	0.3027	163.5805	TUCO INTERCHANGE - TUCO_2 345.00 345KV CKT 1
FDNS	06ALL	2	17SP	G15_040	FROM->TO	TUCO_2 345.00 (TUCO_2 XFMR) 345/230/13.2KV TRANSFORMER CKT 1	560	560	0.29521	162.1713	TUCO INTERCHANGE - TUCO_2 345.00 345KV CKT 1
FDNS	06ALL	2	16WP	G15_040	FROM->TO	TUCO_2 345.00 (TUCO_2 XFMR) 345/230/13.2KV TRANSFORMER CKT 1	560	560	0.248	112.6263	TUCO INTERCHANGE (GE M1022338) 345/230/13.2KV TRANSFORMER CKT 1
FDNS	06ALL	2	16WP	G15_040	FROM->TO	TUCO_2 345.00 (TUCO_2 XFMR) 345/230/13.2KV TRANSFORMER CKT 1	560	560	0.248	112.6263	TUCO INTERCHANGE (GE M1022338) 345/230/13.2KV TRANSFORMER CKT 1
FDNS	06ALL	2	16WP	G15_040	FROM->TO	TUCO_2 345.00 (TUCO_2 XFMR) 345/230/13.2KV TRANSFORMER CKT 1	560	560	0.248	111.4972	TUCO INTERCHANGE (GE M1022338) 345/230/13.2KV TRANSFORMER CKT 1
FDNS	06ALL	2	16WP	G15_040	FROM->TO	TUCO_2 345.00 (TUCO_2 XFMR) 345/230/13.2KV TRANSFORMER CKT 1	560	560	0.248	111.4972	TUCO INTERCHANGE (GE M1022338) 345/230/13.2KV TRANSFORMER CKT 1
FDNS	06ALL	2	17G	G15_040	FROM->TO	TUCO_2 345.00 (TUCO_2 XFMR) 345/230/13.2KV TRANSFORMER CKT 1	560	560	0.23938	107.1719	TUCO INTERCHANGE (GE M1022338) 345/230/13.2KV TRANSFORMER CKT 1
FDNS	06ALL	2	16WP	G15_040	FROM->TO	TUCO_2 345.00 (TUCO_2 XFMR) 345/230/13.2KV TRANSFORMER CKT 1	560	560	0.23204	105.8242	TUCO INTERCHANGE (SIEM 8743066) 345/230/13.2KV TRANSFORMER CKT 2
FDNS	06ALL	2	16WP	G15_040	FROM->TO	TUCO_2 345.00 (TUCO_2 XFMR) 345/230/13.2KV TRANSFORMER CKT 1	560	560	0.23204	105.8242	TUCO INTERCHANGE (SIEM 8743066) 345/230/13.2KV TRANSFORMER CKT 2
FDNS	06ALL	2	17G	G15_040	FROM->TO	TUCO_2 345.00 (TUCO_2 XFMR) 345/230/13.2KV TRANSFORMER CKT 1	560	560	0.23938	105.6097	TUCO INTERCHANGE (GE M1022338) 345/230/13.2KV TRANSFORMER CKT 1
FDNS	06ALL	2	16WP	G15_040	FROM->TO	TUCO_2 345.00 (TUCO_2 XFMR) 345/230/13.2KV TRANSFORMER CKT 1	560	560	0.23204	104.8168	TUCO INTERCHANGE (SIEM 8743066) 345/230/13.2KV TRANSFORMER CKT 2
FDNS	06ALL	2	16WP	G15_040	FROM->TO	TUCO_2 345.00 (TUCO_2 XFMR) 345/230/13.2KV TRANSFORMER CKT 1	560	560	0.23204	104.8168	TUCO INTERCHANGE (SIEM 8743066) 345/230/13.2KV TRANSFORMER CKT 2
FDNS	06ALL	2	17G	G15_040	FROM->TO	TUCO_2 345.00 (TUCO_2 XFMR) 345/230/13.2KV TRANSFORMER CKT 1	560	560	0.22397	100.7205	TUCO INTERCHANGE (SIEM 8743066) 345/230/13.2KV TRANSFORMER CKT 2
FDNS	06ALL	2	17G	G15_040	FROM->TO	WOLFFORTH INTERCHANGE - YUMA INTERCHANGE 115KV CKT 1	119.51	153.97	0.21781	103.3037	LUBBOCK SOUTH INTERCHANGE - WOLFFORTH INTERCHANGE 230KV CKT 1
FDNS	06ALL	2	17G	G15_040	FROM->TO	WOLFFORTH INTERCHANGE - YUMA INTERCHANGE 115KV CKT 1	119.51	153.97	0.21781	103.3037	LUBBOCK SOUTH INTERCHANGE - WOLFFORTH INTERCHANGE 230KV CKT 1
FDNS	06ALL	3	20SP	G15_040	FROM->TO	CHISHOLM6 230.00 - ELK CITY 230KV 230KV CKT 1	353	353	0.06363	104.1963	BASE CASE
FDNS	06ALL	3	17SP	G15_040	FROM->TO	CHISHOLM6 230.00 - ELK CITY 230KV 230KV CKT 1	353	353	0.06383	101.9728	BASE CASE
FDNS	06ALL	3	20L	G15_040	TO->FROM	CIMARRON - MINCO 345KV CKT 1	956	956	0.21873	140.6921	G14-057T 345.00 - SUNNYSIDE 345KV CKT 1
FDNS	06ALL	3	20L	G15_040	TO->FROM	CIMARRON - MINCO 345KV CKT 1	956	956	0.21873	134.2883	G14-057T 345.00 - LAWTON EASTSIDE 345KV CKT 1
FDNS	06ALL	3	17G	G15_040	TO->FROM	CIMARRON - MINCO 345KV CKT 1	956	956	0.24359	132.797	G14-057T 345.00 - SUNNYSIDE 345KV CKT 1
FDNS	06ALL	3	20WP	G15_040	TO->FROM	CIMARRON - MINCO 345KV CKT 1	956	956	0.24604	131.9094	G14-057T 345.00 - SUNNYSIDE 345KV CKT 1
FDNS	06ALL	3	17G	G15_040	TO->FROM	CIMARRON - MINCO 345KV CKT 1	956	956	0.24359	127.3481	G14-057T 345.00 - LAWTON EASTSIDE 345KV CKT 1
FDNS	06ALL	3	20WP	G15_040	TO->FROM	CIMARRON - MINCO 345KV CKT 1	956	956	0.24604	126.3057	G14-057T 345.00 - LAWTON EASTSIDE 345KV CKT 1
FDNS	06ALL	3	16WP	G15_040	TO->FROM	CIMARRON - MINCO 345KV CKT 1	956	956	0.2505	125.3645	G14-057T 345.00 - SUNNYSIDE 345KV CKT 1
FDNS	06ALL	3	17SP	G15_040	TO->FROM	CIMARRON - MINCO 345KV CKT 1	956	956	0.24794	124.3731	G14-057T 345.00 - SUNNYSIDE 345KV CKT 1
FDNS	06ALL	3	20SP	G15_040	TO->FROM	CIMARRON - MINCO 345KV CKT 1	956	956	0.25205	121.3286	G14-057T 345.00 - SUNNYSIDE 345KV CKT 1
FDNS	06ALL	3	16WP	G15_040	TO->FROM	CIMARRON - MINCO 345KV CKT 1	956	956	0.2505	119.9255	G14-057T 345.00 - LAWTON EASTSIDE 345KV CKT 1
FDNS	06ALL	3	17SP	G15_040	TO->FROM	CIMARRON - MINCO 345KV CKT 1	956	956	0.24794	118.8978	G14-057T 345.00 - LAWTON EASTSIDE 345KV CKT 1
FDNS	06ALL	3	20SP	G15_040	TO->FROM	CIMARRON - MINCO 345KV CKT 1	956	956	0.25205	116.0894	G14-057T 345.00 - LAWTON EASTSIDE 345KV CKT 1
FDNS	06ALL	3	20WP	G15_040	TO->FROM	CIMARRON - MINCO 345KV CKT 1	956	956	0.20643	111.5734	MATHWSN7 345.00 - TATONGA7 345.00 345KV CKT 1
FDNS	06ALL	3	20L	G15_040	TO->FROM	CIMARRON - MINCO 345KV CKT 1	956	956	0.22494	109.488	CHISHOLM7 345.00 - WOODWARD DISTRICT EHV 345KV CKT 1
FDNS	06ALL	3	17G	G15_040	TO->FROM	CIMARRON - MINCO 345KV CKT 1	956	956	0.24139	109.1031	CHISHOLM7 345.00 - WOODWARD DISTRICT EHV 345KV CKT 1
FDNS	06ALL	3	20WP	G15_040	TO->FROM	CIMARRON - MINCO 345KV CKT 1	956	956	0.20643	106.2571	G11_051T 345.00 - TATONGA7 345.00 345KV CKT 1
FDNS	06ALL	3	17G	G15_040	TO->FROM	CIMARRON - MINCO 345KV CKT 1	956	956	0.20664	106.016	G11_051T 345.00 - TATONGA7 345.00 345KV CKT 1
FDNS	06ALL	3	17SP	G15_040	TO->FROM	CIMARRON - MINCO 345KV CKT 1	956	956	0.21049	105.6361	MATHWSN7 345.00 - TATONGA7 345.00 345KV CKT 1
FDNS	06ALL	3	20WP	G15_040	TO->FROM	CIMARRON - MINCO 345KV CKT 1	956	956	0.24804	105.2058	CHISHOLM7 345.00 - WOODWARD DISTRICT EHV 345KV CKT 1
FDNS	06ALL	3	16WP	G15_040	TO->FROM	CIMARRON - MINCO 345KV CKT 1	956	956	0.21191	105.1594	MATHWSN7 345.00 - TATONGA7 345.00 345KV CKT 1
FDNS	06ALL	3	20SP	G15_040	TO->FROM	CIMARRON - MINCO 345KV CKT 1	956	956	0.21298	104.8651	MATHWSN7 345.00 - TATONGA7 345.00 345KV CKT 1
FDNS	06ALL	3	20WP	G15_040	TO->FROM	CIMARRON - MINCO 345KV CKT 1	956	956	0.20643	104.6601	G11_051T 345.00 - WOODWARD DISTRICT EHV 345KV CKT 1
FDNS	06ALL	3	17G	G15_040	TO->FROM	CIMARRON - MINCO 345KV CKT 1	956	956	0.20664	104.4511	G11_051T 345.00 - WOODWARD DISTRICT EHV 345KV CKT 1
FDNS	06ALL	3	20SP	G15_040	TO->FROM	CIMARRON - MINCO 345KV CKT 1	956	956	0.25482	103.3967	CHISHOLM7 345.00 - WOODWARD DISTRICT EHV 345KV CKT 1
FDNS	06ALL	3	17SP	G15_040	TO->FROM	CIMARRON - MINCO 345KV CKT 1	956	956	0.24914	102.6701	CHISHOLM7 345.00 - WOODWARD DISTRICT EHV 345KV CKT 1
FDNS	06ALL	3	17SP	G15_040	TO->FROM	CIMARRON - MINCO 345KV CKT 1	956	956	0.21049	100.4546	G11_051T 345.00 - TATONGA7 345.00 345KV CKT 1
FDNS	06ALL	3	20WP	G15_040	TO->FROM	CIMARRON - MINCO 345KV CKT 1	956	956	0.19801	100.2954	P12:138:WFEC:MSL03
FDNS	06ALL	3	16WP	G15_040	TO->FROM	CIMARRON - MINCO 345KV CKT 1	956	956	0.21191	99.8	G11_051T 345.00 - TATONGA7 345.00 345KV CKT 1
FDNS	06ALL	3	20SP	G15_040	TO->FROM	CIMARRON - MINCO 345KV CKT 1	956	956	0.21298	99.7	G11_051T 345.00 - TATONGA7 345.00 345KV CKT 1
FDNS	06ALL	3	17SP	G15_040	TO->FROM	CIMARRON - MINCO 345KV CKT 1	956	956	0.20069	99.6	P12:138:WFEC:MSL03
FDNS	06ALL	3	20SP	G15_040	TO->FROM	CIMARRON - MINCO 345KV CKT 1	956	956	0.20421	99.6	P12:138:WFEC:MSL03
FDNS	06ALL	3	20L	G15_040	TO->FROM	G14-057T 345.00 - LAWTON EASTSIDE 345KV CKT 1	717	789	0.10651	106.0801	BASE CASE
FDNS	06ALL	3	20L	G15_040	FROM->TO	G14-057T 345.00 - SUNNYSIDE 345KV CKT 1	717	789	0.10651	119.3111	BASE CASE
FDNS	06ALL	3	20WP	G15_040	FROM->TO	G14-057T 345.00 - SUNNYSIDE 345KV CKT 1	717	789	0.13004	107.198	BASE CASE
FDNS	06ALL	3	17G	G15_040	FROM->TO	G14-057T 345.00 - SUNNYSIDE 345KV CKT 1	717	789	0.12938	106.7167	BASE CASE
FDNS	06ALL	3	16WP	G15_040	FROM->TO	G14-057T 345.00 - SUNNYSIDE 345KV CKT 1	717	789	0.13285	105.3992	BASE CASE
FDNS	06ALL	3	20L	G15_040	FROM->TO	GRACEMONT - MINCO 345KV CKT 1	1195	1195	0.21873	101.53	G14-057T 345.00 - SUNNYSIDE 345KV CKT 1
FDNS	06ALL	3	20L	G15_040	FROM->TO	TUCO INTERCHANGE - TUCO_2 230.00 230KV CKT 1	497	547	0.22477	105.0803	TUCO INTERCHANGE - TUCO_2 345.00 345KV CKT 1
FDNS	06ALL	3	20SP	G15_040	FROM->TO	TUCO INTERCHANGE - TUCO_2 230.00 230KV CKT 1	497	547	0.24402	99.5	TUCO INTERCHANGE - TUCO_2 345.00 345KV CKT 1
FDNS	06ALL	4	20SP	G15_040	FROM->TO	CHISHOLM6 230.00 - ELK CITY 230KV 230KV CKT 1	353	353	0.06194	103.152	BASE CASE
FDNS	06ALL	4	17SP	G15_040	FROM->TO	CHISHOLM6 230.00 - ELK CITY 230KV 230KV CKT 1	353	353	0.06203	100.7007	BASE CASE
FDNS	06ALL	4	20L	G15_040	TO->FROM	CIMARRON - MINCO 345KV CKT 1	956	956	0.20517	136.9659	G14-057T 345.00 - SUNNYSIDE 345KV CKT 1
FDNS	06ALL	4	20L	G15_040	TO->FROM	CIMARRON - MINCO 345KV CKT 1	956	956	0.20517	130.9905	G14-057T 345.00 - LAWTON EASTSIDE 345KV CKT 1
FDNS	06ALL	4	17G	G15_040	TO->FROM	CIMARRON - MINCO 345KV CKT 1	956	956	0.22767	129.7974	G14-057T 345.00 - SUNNYSIDE 345KV CKT 1
FDNS	06ALL	4	20WP	G15_040	TO->FROM	CIMARRON - MINCO 345KV CKT 1	956	956	0.23088	128.511	G14-057T 345.00 - SUNNYSIDE 345KV CKT 1
FDNS	06ALL	4	17G	G15_040	TO->FROM	CIMARRON - MINCO 345KV CKT 1	956	956	0.22767	124.286	G14-057T 345.00 - LAWTON EASTSIDE 345KV CKT 1
FDNS	06ALL	4	20WP	G15_040	TO->FROM	CIMARRON - MINCO 345KV CKT 1	956	956	0.23088	123.0537	G14-057T 345.00 - LAWTON EASTSIDE 345KV CKT 1
FDNS	06ALL	4	16WP	G15_040	TO->FROM	CIMARRON - MINCO 345KV CKT 1	956	956	0.23424	122.1275	G14-057T 345.00 - SUNNYSIDE 345KV CKT 1
FDNS	06ALL	4	17SP	G15_040	TO->FROM	CIMARRON - MINCO 345KV CKT 1	956	956	0.23156	121.005	G14-057T 345.00 - SUNNYSIDE 345KV CKT 1
FDNS	06ALL	4	20SP	G15_040	TO->FROM	CIMARRON - MINCO 345KV CKT 1	956	956	0.23662	117.7968	G14-057T 345.00 - SUNNYSIDE 345KV CKT 1
FDNS	06ALL	4	16WP	G15_040	TO->FROM	CIMARRON - MINCO 345KV CKT 1	956	956	0.23424	116.5578	G14-057T 345.00 - LAWTON EASTSIDE 345KV CKT 1
FDNS	06ALL	4	17SP	G15_040	TO->FROM	CIMARRON - MINCO 345KV CKT 1	956	956	0.23156	115.6625	G14-057T 345.00 - LAWTON EASTSIDE 345KV CKT 1

SOLUTION	GROUP	SCENARIO	SEASON	SOURCE	DIRECTION	MONITORED ELEMENT	RATEA (MVA)	RATEB(MVA)	TDF	TC%LOADING (% MVA)	CONTINGENCY
FDNS	06ALL	4	20SP	G15_040	TO->FROM	CIMARRON - MINCO 345KV CKT 1	956	956	0.23662	112.5931	G14-057T 345.00 - LAWTON EASTSIDE 345KV CKT 1
FDNSLock	06ALL	4	17G	G15_040	TO->FROM	CIMARRON - MINCO 345KV CKT 1	956	956	0.19675	110.3749	MATHWSN7 345.00 - TATONGA7 345.00 345KV CKT 1
FDNS	06ALL	4	20WP	G15_040	TO->FROM	CIMARRON - MINCO 345KV CKT 1	956	956	0.19697	109.8635	MATHWSN7 345.00 - TATONGA7 345.00 345KV CKT 1
FDNS	06ALL	4	20WP	G15_040	TO->FROM	CIMARRON - MINCO 345KV CKT 1	956	956	0.19697	104.457	G11_051T 345.00 - TATONGA7 345.00 345KV CKT 1
FDNS	06ALL	4	17G	G15_040	TO->FROM	CIMARRON - MINCO 345KV CKT 1	956	956	0.21746	104.4362	CHISHOLM7 345.00 - WOODWARD DISTRICT EHV 345KV CKT 1
FDNS	06ALL	4	17G	G15_040	TO->FROM	CIMARRON - MINCO 345KV CKT 1	956	956	0.19675	104.3067	G11_051T 345.00 - TATONGA7 345.00 345KV CKT 1
FDNS	06ALL	4	20L	G15_040	TO->FROM	CIMARRON - MINCO 345KV CKT 1	956	956	0.2042	103.7687	CHISHOLM7 345.00 - WOODWARD DISTRICT EHV 345KV CKT 1
FDNS	06ALL	4	17SP	G15_040	TO->FROM	CIMARRON - MINCO 345KV CKT 1	956	956	0.20022	103.6969	MATHWSN7 345.00 - TATONGA7 345.00 345KV CKT 1
FDNS	06ALL	4	16WP	G15_040	TO->FROM	CIMARRON - MINCO 345KV CKT 1	956	956	0.2018	103.3746	MATHWSN7 345.00 - TATONGA7 345.00 345KV CKT 1
FDNS	06ALL	4	20WP	G15_040	TO->FROM	CIMARRON - MINCO 345KV CKT 1	956	956	0.19697	102.8471	G11_051T 345.00 - WOODWARD DISTRICT EHV 345KV CKT 1
FDNS	06ALL	4	20SP	G15_040	TO->FROM	CIMARRON - MINCO 345KV CKT 1	956	956	0.20333	102.8303	MATHWSN7 345.00 - TATONGA7 345.00 345KV CKT 1
FDNS	06ALL	4	17G	G15_040	TO->FROM	CIMARRON - MINCO 345KV CKT 1	956	956	0.19675	102.7262	G11_051T 345.00 - WOODWARD DISTRICT EHV 345KV CKT 1
FDNS	06ALL	4	20WP	G15_040	TO->FROM	CIMARRON - MINCO 345KV CKT 1	956	956	0.22506	100.3052	CHISHOLM7 345.00 - WOODWARD DISTRICT EHV 345KV CKT 1
FDNSLock	06ALL	4	16WP	G15_040		G14_001T 345.00 - WICHITA 345KV CKT 1	1035	1035	0.05397	25.24282	BASE CASE
FDNS	06ALL	4	20L	G15_040	TO->FROM	G14-057T 345.00 - LAWTON EASTSIDE 345KV CKT 1	717	789	0.10058	104.3251	BASE CASE
FDNS	06ALL	4	20L	G15_040	FROM->TO	G14-057T 345.00 - SUNNYSIDE 345KV CKT 1	717	789	0.10058	117.5276	BASE CASE
FDNS	06ALL	4	20WP	G15_040	FROM->TO	G14-057T 345.00 - SUNNYSIDE 345KV CKT 1	717	789	0.12347	105.3579	BASE CASE
FDNS	06ALL	4	17G	G15_040	FROM->TO	G14-057T 345.00 - SUNNYSIDE 345KV CKT 1	717	789	0.12248	105.0325	BASE CASE
FDNS	06ALL	4	16WP	G15_040	FROM->TO	G14-057T 345.00 - SUNNYSIDE 345KV CKT 1	717	789	0.12581	103.6585	BASE CASE
FDNSLock	06ALL	4	20L	G15_040		OKLAUNION 345KV SWITCHED SHUNT	1022	1124	0.1695	86.37846	BASE CASE
FDNS	06ALL	4	16WP	G15_040	FROM->TO	TOLK STATION (ABBXNL844501) 345/230/13.2KV TRANSFORMER CKT 1	560	560	0.26623	113.0515	CROSSROADS 7345.00 - TOLK STATION 345KV CKT 1
FDNS	06ALL	4	16WP	G15_040	FROM->TO	TOLK STATION (ABBXNL844501) 345/230/13.2KV TRANSFORMER CKT 1	560	560	0.26623	110.3257	CROSSROADS 7345.00 - TOLK STATION 345KV CKT 1
FDNS	06ALL	4	20L	G15_040	FROM->TO	TUCO INTERCHANGE - TUCO_2 230.00 230KV CKT 1	497	547	0.22529	103.1103	TUCO INTERCHANGE - TUCO_2 345.00 345KV CKT 1
FDNS	06ALL	4	20WP	G15_040	FROM->TO	TUCO_2 345.00 (TUCO_2 XFMR) 345/230/13.2KV TRANSFORMER CKT 1	560	560	0.19698	111.7671	TUCO INTERCHANGE - TUCO_2 345.00 345KV CKT 1
FDNS	06ALL	4	20WP	G15_040	FROM->TO	TUCO_2 345.00 (TUCO_2 XFMR) 345/230/13.2KV TRANSFORMER CKT 1	560	560	0.19698	109.2949	TUCO INTERCHANGE - TUCO_2 345.00 345KV CKT 1
FDNS	06ALL	5	20SP	G15_040	FROM->TO	CHISHOLM6 230.00 - ELK CITY 230KV 230KV CKT 1	353	353	0.06593	107.7212	BASE CASE
FDNS	06ALL	5	17SP	G15_040	FROM->TO	CHISHOLM6 230.00 - ELK CITY 230KV 230KV CKT 1	353	353	0.06662	105.7594	BASE CASE
FDNS	06ALL	5	20L	G15_040	TO->FROM	CIMARRON - MINCO 345KV CKT 1	956	956	0.21216	139.1694	G14-057T 345.00 - SUNNYSIDE 345KV CKT 1
FDNS	06ALL	5	20L	G15_040	TO->FROM	CIMARRON - MINCO 345KV CKT 1	956	956	0.21216	133.4583	G14-057T 345.00 - LAWTON EASTSIDE 345KV CKT 1
FDNS	06ALL	5	17G	G15_040	TO->FROM	CIMARRON - MINCO 345KV CKT 1	956	956	0.23603	132.5137	G14-057T 345.00 - SUNNYSIDE 345KV CKT 1
FDNS	06ALL	5	20WP	G15_040	TO->FROM	CIMARRON - MINCO 345KV CKT 1	956	956	0.23731	131.4126	G14-057T 345.00 - SUNNYSIDE 345KV CKT 1
FDNS	06ALL	5	17G	G15_040	TO->FROM	CIMARRON - MINCO 345KV CKT 1	956	956	0.23603	127.0859	G14-057T 345.00 - LAWTON EASTSIDE 345KV CKT 1
FDNS	06ALL	5	20WP	G15_040	TO->FROM	CIMARRON - MINCO 345KV CKT 1	956	956	0.23731	126.0182	G14-057T 345.00 - LAWTON EASTSIDE 345KV CKT 1
FDNS	06ALL	5	16WP	G15_040	TO->FROM	CIMARRON - MINCO 345KV CKT 1	956	956	0.24278	125.0103	G14-057T 345.00 - SUNNYSIDE 345KV CKT 1
FDNS	06ALL	5	17SP	G15_040	TO->FROM	CIMARRON - MINCO 345KV CKT 1	956	956	0.23959	123.5221	G14-057T 345.00 - SUNNYSIDE 345KV CKT 1
FDNS	06ALL	5	20SP	G15_040	TO->FROM	CIMARRON - MINCO 345KV CKT 1	956	956	0.24351	120.476	G14-057T 345.00 - SUNNYSIDE 345KV CKT 1
FDNS	06ALL	5	16WP	G15_040	TO->FROM	CIMARRON - MINCO 345KV CKT 1	956	956	0.24278	119.6144	G14-057T 345.00 - LAWTON EASTSIDE 345KV CKT 1
FDNS	06ALL	5	17SP	G15_040	TO->FROM	CIMARRON - MINCO 345KV CKT 1	956	956	0.23959	118.2604	G14-057T 345.00 - LAWTON EASTSIDE 345KV CKT 1
FDNS	06ALL	5	20SP	G15_040	TO->FROM	CIMARRON - MINCO 345KV CKT 1	956	956	0.24351	115.0864	G14-057T 345.00 - LAWTON EASTSIDE 345KV CKT 1
FDNS	06ALL	5	17G	G15_040	TO->FROM	CIMARRON - MINCO 345KV CKT 1	956	956	0.20409	113.1247	MATHWSN7 345.00 - TATONGA7 345.00 345KV CKT 1
FDNS	06ALL	5	20WP	G15_040	TO->FROM	CIMARRON - MINCO 345KV CKT 1	956	956	0.20267	112.7231	MATHWSN7 345.00 - TATONGA7 345.00 345KV CKT 1
FDNS	06ALL	5	20L	G15_040	TO->FROM	CIMARRON - MINCO 345KV CKT 1	956	956	0.21198	110.4804	CHISHOLM7 345.00 - WOODWARD DISTRICT EHV 345KV CKT 1
FDNS	06ALL	5	17G	G15_040	TO->FROM	CIMARRON - MINCO 345KV CKT 1	956	956	0.22956	110.4087	CHISHOLM7 345.00 - WOODWARD DISTRICT EHV 345KV CKT 1
FDNS	06ALL	5	20WP	G15_040	TO->FROM	CIMARRON - MINCO 345KV CKT 1	956	956	0.20267	107.3503	G11_051T 345.00 - TATONGA7 345.00 345KV CKT 1
FDNS	06ALL	5	17G	G15_040	TO->FROM	CIMARRON - MINCO 345KV CKT 1	956	956	0.20409	107.1655	G11_051T 345.00 - TATONGA7 345.00 345KV CKT 1
FDNS	06ALL	5	20WP	G15_040	TO->FROM	CIMARRON - MINCO 345KV CKT 1	956	956	0.23336	106.6912	CHISHOLM7 345.00 - WOODWARD DISTRICT EHV 345KV CKT 1
FDNS	06ALL	5	16WP	G15_040	TO->FROM	CIMARRON - MINCO 345KV CKT 1	956	956	0.2093	106.1194	MATHWSN7 345.00 - TATONGA7 345.00 345KV CKT 1
FDNS	06ALL	5	17SP	G15_040	TO->FROM	CIMARRON - MINCO 345KV CKT 1	956	956	0.2073	106.0588	MATHWSN7 345.00 - TATONGA7 345.00 345KV CKT 1
FDNS	06ALL	5	20WP	G15_040	TO->FROM	CIMARRON - MINCO 345KV CKT 1	956	956	0.20267	105.6974	G11_051T 345.00 - WOODWARD DISTRICT EHV 345KV CKT 1
FDNS	06ALL	5	17G	G15_040	TO->FROM	CIMARRON - MINCO 345KV CKT 1	956	956	0.20409	105.5499	G11_051T 345.00 - WOODWARD DISTRICT EHV 345KV CKT 1
FDNS	06ALL	5	20SP	G15_040	TO->FROM	CIMARRON - MINCO 345KV CKT 1	956	956	0.20944	105.1459	MATHWSN7 345.00 - TATONGA7 345.00 345KV CKT 1
FDNS	06ALL	5	20SP	G15_040	TO->FROM	CIMARRON - MINCO 345KV CKT 1	956	956	0.24041	102.6282	CHISHOLM7 345.00 - WOODWARD DISTRICT EHV 345KV CKT 1
FDNS	06ALL	5	17SP	G15_040	TO->FROM	CIMARRON - MINCO 345KV CKT 1	956	956	0.2361	102.3712	CHISHOLM7 345.00 - WOODWARD DISTRICT EHV 345KV CKT 1
FDNS	06ALL	5	17SP	G15_040	TO->FROM	CIMARRON - MINCO 345KV CKT 1	956	956	0.2073	100.8538	G11_051T 345.00 - TATONGA7 345.00 345KV CKT 1
FDNS	06ALL	5	16WP	G15_040	TO->FROM	CIMARRON - MINCO 345KV CKT 1	956	956	0.2093	100.7286	G11_051T 345.00 - TATONGA7 345.00 345KV CKT 1
FDNS	06ALL	5	20SP	G15_040	TO->FROM	CIMARRON - MINCO 345KV CKT 1	956	956	0.20944	100	G11_051T 345.00 - TATONGA7 345.00 345KV CKT 1
FDNS	06ALL	5	16WP	G15_040	TO->FROM	CIMARRON - MINCO 345KV CKT 1	956	956	0.23772	99.9	CHISHOLM7 345.00 - WOODWARD DISTRICT EHV 345KV CKT 1
FDNS	06ALL	5	17SP	G15_040	TO->FROM	CIMARRON - MINCO 345KV CKT 1	956	956	0.19512	99.5	P12:138:WFEC:MSL03
FDNS	06ALL	5	20L	G15_040	TO->FROM	G14-057T 345.00 - LAWTON EASTSIDE 345KV CKT 1	717	789	0.10225	104.5834	BASE CASE
FDNS	06ALL	5	20L	G15_040	FROM->TO	G14-057T 345.00 - SUNNYSIDE 345KV CKT 1	717	789	0.10225	117.7866	BASE CASE
FDNS	06ALL	5	20WP	G15_040	FROM->TO	G14-057T 345.00 - SUNNYSIDE 345KV CKT 1	717	789	0.12422	105.6059	BASE CASE
FDNS	06ALL	5	17G	G15_040	FROM->TO	G14-057T 345.00 - SUNNYSIDE 345KV CKT 1	717	789	0.12376	105.2883	BASE CASE
FDNS	06ALL	5	16WP	G15_040	FROM->TO	G14-057T 345.00 - SUNNYSIDE 345KV CKT 1	717	789	0.12702	103.9305	BASE CASE
FDNS	06ALL	5	20L	G15_040	FROM->TO	GRACEMONT - MINCO 345KV CKT 1	1195	1195	0.21216	100.3039	G14-057T 345.00 - SUNNYSIDE 345KV CKT 1
FDNS	06ALL	5	17G	G15_040	FROM->TO	POTTER COUNTY INTERCHANGE (WAUK 90343-A) 345/230/13.2KV TRANSFORMER CKT 1	560	560	0.19519	131.4477	P12:345:SPS:J15.1.XRDS.TOLK
FDNS	06ALL	5	17G	G15_040	FROM->TO	POTTER COUNTY INTERCHANGE (WAUK 90343-A) 345/230/13.2KV TRANSFORMER CKT 1	560	560	0.19519	130.9697	P12:345:SPS:J15.1.XRDS.TOLK
FDNS	06ALL	5	16WP	G15_040	FROM->TO	POTTER COUNTY INTERCHANGE (WAUK 90343-A) 345/230/13.2KV TRANSFORMER CKT 1	560	560	0.20645	123.3278	P12:345:SPS:J15.1.XRDS.TOLK
FDNS	06ALL	5	16WP	G15_040	FROM->TO	POTTER COUNTY INTERCHANGE (WAUK 90343-A) 345/230/13.2KV TRANSFORMER CKT 1	560	560	0.20645	122.0001	P12:345:SPS:J15.1.XRDS.TOLK
FDNS	06ALL	5	17SP	G15_040	FROM->TO	POTTER COUNTY INTERCHANGE (WAUK 90343-A) 345/230/13.2KV TRANSFORMER CKT 1	560	560	0.20026	108.8592	P12:345:SPS:J15.1.XRDS.TOLK
FDNS	06ALL	5	17SP	G15_040	FROM->TO	POTTER COUNTY INTERCHANGE (WAUK 90343-A) 345/230/13.2KV TRANSFORMER CKT 1	560	560	0.20026	107.3735	P12:345:SPS:J15.1.XRDS.TOLK
FDNS	06ALL	5	16WP	G15_040	FROM->TO	TOLK STATION (ABBXNL844501) 345/230/13.2KV TRANSFORMER CKT 1	560	560	0.27138	113.0248	CROSSROADS 7345.00 - TOLK STATION 345KV CKT 1
FDNS	06ALL	5	16WP	G15_040	FROM->TO	TOLK STATION (ABBXNL844501) 345/230/13.2KV TRANSFORMER CKT 1	560	560	0.27138	110.571	CROSSROADS 7345.00 - TOLK STATION 345KV CKT 1
FDNS	06ALL	6	20SP	G15_040	FROM->TO	CHISHOLM6 230.00 - ELK CITY 230KV 230KV CKT 1	353	353	0.05911	102.8848	BASE CASE
FDNS	06ALL	6	17SP	G15_040	FROM->TO	CHISHOLM6 230.00 - ELK CITY 230KV 230KV CKT 1	353	353	0.05964	100.6562	BASE CASE
FDNS	06ALL	6	17G	G15_040	TO->FROM	CIMARRON - MINCO 345KV CKT 1	956	956	0.20954	121.6178	G14-057T 345.00 - SUNNYSIDE 345KV CKT 1
FDNS	06ALL	6	20WP	G15_040	TO->FROM	CIMARRON - MINCO 345KV CKT 1	956	956	0.21194	119.7395	G14-057T 345.00 - SUNNYSIDE 345KV CKT 1
FDNS	06ALL	6	17G	G15_040	TO->FROM	CIMARRON - MINCO 345KV CKT 1	956	956	0.20954	116.437	G14-057T 345.00 - LAWTON EASTSIDE 345KV CKT 1
FDNS	06ALL	6	20WP	G15_040	TO->FROM	CIMARRON - MINCO 345KV CKT 1	956	956	0.21194	114.5016	G14-057T 345.00 - LAWTON EASTSIDE 345KV CKT 1
FDNS	06ALL	6	17SP	G15_040	TO->FROM	CIMARRON - MINCO 345KV CKT 1	956	956	0.21283	114.4047	G14-057T 345.00 - SUNNYSIDE 345KV CKT 1

SOLUTION	GROUP	SCENARIO	SEASON	SOURCE	DIRECTION	MONITORED ELEMENT	RATEA (MVA)	RATEB(MVA)	TDF	TC%LOADING (% MVA)	CONTINGENCY
FDNS	06ALL	6	16WP	G15_040	TO->FROM	CIMARRON - MINCO 345KV CKT 1	956	956	0.21568	114.352	G14-057T 345.00 - SUNNYSIDE 345KV CKT 1
FDNS	06ALL	6	20SP	G15_040	TO->FROM	CIMARRON - MINCO 345KV CKT 1	956	956	0.21736	111.5632	G14-057T 345.00 - SUNNYSIDE 345KV CKT 1
FDNS	06ALL	6	17SP	G15_040	TO->FROM	CIMARRON - MINCO 345KV CKT 1	956	956	0.21283	109.1774	G14-057T 345.00 - LAWTON EASTSIDE 345KV CKT 1
FDNS	06ALL	6	16WP	G15_040	TO->FROM	CIMARRON - MINCO 345KV CKT 1	956	956	0.21568	108.975	G14-057T 345.00 - LAWTON EASTSIDE 345KV CKT 1
FDNS	06ALL	6	20SP	G15_040	TO->FROM	CIMARRON - MINCO 345KV CKT 1	956	956	0.21736	106.5254	G14-057T 345.00 - LAWTON EASTSIDE 345KV CKT 1
FDNS	06ALL	6	17G	G15_040	TO->FROM	CIMARRON - MINCO 345KV CKT 1	956	956	0.19885	105.9404	CHISHOLM7 345.00 - WOODWARD DISTRICT EHV 345KV CKT 1
FDNS	06ALL	6	20WP	G15_040	TO->FROM	CIMARRON - MINCO 345KV CKT 1	956	956	0.20297	101.5954	CHISHOLM7 345.00 - WOODWARD DISTRICT EHV 345KV CKT 1
FDNS	06ALL	6	20L	G15_040	TO->FROM	G14-057T 345.00 - LAWTON EASTSIDE 345KV CKT 1	717	789	0.09763	102.0743	BASE CASE
FDNS	06ALL	6	20L	G15_040	FROM->TO	G14-057T 345.00 - SUNNYSIDE 345KV CKT 1	717	789	0.09763	115.279	BASE CASE
FDNS	06ALL	6	20WP	G15_040	FROM->TO	G14-057T 345.00 - SUNNYSIDE 345KV CKT 1	717	789	0.11913	103.5944	BASE CASE
FDNS	06ALL	6	17G	G15_040	FROM->TO	G14-057T 345.00 - SUNNYSIDE 345KV CKT 1	717	789	0.11856	103.4014	BASE CASE
FDNS	06ALL	6	16WP	G15_040	FROM->TO	G14-057T 345.00 - SUNNYSIDE 345KV CKT 1	717	789	0.12167	102.0868	BASE CASE
FDNS	06ALL	6	16WP	G15_040	FROM->TO	POTTER COUNTY INTERCHANGE (WAUK 90343-A) 345/230/13.2KV TRANSFORMER CKT 1	560	560	0.22061	124.5835	P12:345:SPS:J15.1.XRDS.TOLK
FDNS	06ALL	6	16WP	G15_040	FROM->TO	POTTER COUNTY INTERCHANGE (WAUK 90343-A) 345/230/13.2KV TRANSFORMER CKT 1	560	560	0.22061	123.2053	P12:345:SPS:J15.1.XRDS.TOLK
FDNS	06ALL	6	16WP	G15_040	FROM->TO	POTTER COUNTY INTERCHANGE (WAUK 90343-A) 345/230/13.2KV TRANSFORMER CKT 1	560	560	0.19742	116.5159	POTTER COUNTY INTERCHANGE - TOLK STATION 345KV CKT 1
FDNS	06ALL	6	16WP	G15_040	FROM->TO	POTTER COUNTY INTERCHANGE (WAUK 90343-A) 345/230/13.2KV TRANSFORMER CKT 1	560	560	0.19742	115.3558	POTTER COUNTY INTERCHANGE - TOLK STATION 345KV CKT 1
FDNS	06ALL	6	17SP	G15_040	FROM->TO	POTTER COUNTY INTERCHANGE (WAUK 90343-A) 345/230/13.2KV TRANSFORMER CKT 1	560	560	0.21438	109.9868	P12:345:SPS:J15.1.XRDS.TOLK
FDNS	06ALL	6	17SP	G15_040	FROM->TO	POTTER COUNTY INTERCHANGE (WAUK 90343-A) 345/230/13.2KV TRANSFORMER CKT 1	560	560	0.21438	108.4833	P12:345:SPS:J15.1.XRDS.TOLK
FDNS	06ALL	6	16WP	G15_040	FROM->TO	TOLK STATION (ABBXNL844501) 345/230/13.2KV TRANSFORMER CKT 1	560	560	0.27303	112.8509	CROSSROADS 7345.00 - TOLK STATION 345KV CKT 1
FDNS	06ALL	6	16WP	G15_040	FROM->TO	TOLK STATION (ABBXNL844501) 345/230/13.2KV TRANSFORMER CKT 1	560	560	0.27303	110.425	CROSSROADS 7345.00 - TOLK STATION 345KV CKT 1
FDNS	06ALL	7	20SP	G15_040	FROM->TO	CHISHOLM6 230.00 - ELK CITY 230KV 230KV CKT 1	353	353	0.05911	100.158	BASE CASE
FDNS	06ALL	7	17G	G15_040	TO->FROM	CIMARRON - MINCO 345KV CKT 1	956	956	0.20956	117.9395	G14-057T 345.00 - SUNNYSIDE 345KV CKT 1
FDNS	06ALL	7	20WP	G15_040	TO->FROM	CIMARRON - MINCO 345KV CKT 1	956	956	0.21193	116.4002	G14-057T 345.00 - SUNNYSIDE 345KV CKT 1
FDNS	06ALL	7	17G	G15_040	TO->FROM	CIMARRON - MINCO 345KV CKT 1	956	956	0.20956	112.8925	G14-057T 345.00 - LAWTON EASTSIDE 345KV CKT 1
FDNS	06ALL	7	16WP	G15_040	TO->FROM	CIMARRON - MINCO 345KV CKT 1	956	956	0.2157	111.0593	G14-057T 345.00 - SUNNYSIDE 345KV CKT 1
FDNS	06ALL	7	20WP	G15_040	TO->FROM	CIMARRON - MINCO 345KV CKT 1	956	956	0.21193	111.0342	G14-057T 345.00 - LAWTON EASTSIDE 345KV CKT 1
FDNS	06ALL	7	17SP	G15_040	TO->FROM	CIMARRON - MINCO 345KV CKT 1	956	956	0.21285	111.0288	G14-057T 345.00 - SUNNYSIDE 345KV CKT 1
FDNS	06ALL	7	20SP	G15_040	TO->FROM	CIMARRON - MINCO 345KV CKT 1	956	956	0.21737	108.4281	G14-057T 345.00 - SUNNYSIDE 345KV CKT 1
FDNS	06ALL	7	17SP	G15_040	TO->FROM	CIMARRON - MINCO 345KV CKT 1	956	956	0.21285	106.172	G14-057T 345.00 - LAWTON EASTSIDE 345KV CKT 1
FDNS	06ALL	7	16WP	G15_040	TO->FROM	CIMARRON - MINCO 345KV CKT 1	956	956	0.2157	105.9627	G14-057T 345.00 - LAWTON EASTSIDE 345KV CKT 1
FDNS	06ALL	7	20SP	G15_040	TO->FROM	CIMARRON - MINCO 345KV CKT 1	956	956	0.21737	103.5061	G14-057T 345.00 - LAWTON EASTSIDE 345KV CKT 1
FDNS	06ALL	7	20L	G15_040	TO->FROM	G14-057T 345.00 - LAWTON EASTSIDE 345KV CKT 1	717	789	0.09765	100.7791	BASE CASE
FDNS	06ALL	7	20L	G15_040	FROM->TO	G14-057T 345.00 - SUNNYSIDE 345KV CKT 1	717	789	0.09765	114.0012	BASE CASE
FDNS	06ALL	7	20WP	G15_040	FROM->TO	G14-057T 345.00 - SUNNYSIDE 345KV CKT 1	717	789	0.11912	102.5888	BASE CASE
FDNS	06ALL	7	17G	G15_040	FROM->TO	G14-057T 345.00 - SUNNYSIDE 345KV CKT 1	717	789	0.11856	102.2119	BASE CASE
FDNS	06ALL	7	16WP	G15_040	FROM->TO	G14-057T 345.00 - SUNNYSIDE 345KV CKT 1	717	789	0.12168	101.1576	BASE CASE
FDNS	06ALL	7	16WP	G15_040	FROM->TO	POTTER COUNTY INTERCHANGE (WAUK 90343-A) 345/230/13.2KV TRANSFORMER CKT 1	560	560	0.22063	133.795	P12:345:SPS:J15.1.XRDS.TOLK
FDNS	06ALL	7	16WP	G15_040	FROM->TO	POTTER COUNTY INTERCHANGE (WAUK 90343-A) 345/230/13.2KV TRANSFORMER CKT 1	560	560	0.22063	130.8152	P12:345:SPS:J15.1.XRDS.TOLK
FDNS	06ALL	7	16WP	G15_040	FROM->TO	POTTER COUNTY INTERCHANGE (WAUK 90343-A) 345/230/13.2KV TRANSFORMER CKT 1	560	560	0.19744	125.2874	POTTER COUNTY INTERCHANGE - TOLK STATION 345KV CKT 1
FDNS	06ALL	7	16WP	G15_040	FROM->TO	POTTER COUNTY INTERCHANGE (WAUK 90343-A) 345/230/13.2KV TRANSFORMER CKT 1	560	560	0.19744	122.7478	POTTER COUNTY INTERCHANGE - TOLK STATION 345KV CKT 1
FDNS	06ALL	7	17SP	G15_040	FROM->TO	POTTER COUNTY INTERCHANGE (WAUK 90343-A) 345/230/13.2KV TRANSFORMER CKT 1	560	560	0.2144	118.7065	P12:345:SPS:J15.1.XRDS.TOLK
FDNS	06ALL	7	17SP	G15_040	FROM->TO	POTTER COUNTY INTERCHANGE (WAUK 90343-A) 345/230/13.2KV TRANSFORMER CKT 1	560	560	0.2144	115.9022	P12:345:SPS:J15.1.XRDS.TOLK
FDNS	06ALL	7	16WP	G15_040	FROM->TO	TOLK STATION (ABBXNL844501) 345/230/13.2KV TRANSFORMER CKT 1	560	560	0.27306	112.9883	CROSSROADS 7345.00 - TOLK STATION 345KV CKT 1
FDNS	06ALL	7	16WP	G15_040	FROM->TO	TOLK STATION (ABBXNL844501) 345/230/13.2KV TRANSFORMER CKT 1	560	560	0.27306	110.8952	CROSSROADS 7345.00 - TOLK STATION 345KV CKT 1
FDNSLock-Blown up	06NR	0	17G	G15_041		Non-Converged Contingency	1022	1124	0.10191	-	G14-074T 345.00 - OKLAUNION 345KV CKT 1
FDNSLock-Blown up	06NR	0	17G	G15_041		Non-Converged Contingency	1022	1124	0.10191	-	G14-074T 345.00 - TUCO INTERCHANGE 345KV CKT 1
FDNSLock-Blown up	06NR	0	17G	G15_041		Non-Converged Contingency	1792	1972	0.0962	-	BORDER 7345.00 - TUCO_2 345.00 345KV CKT 1
FDNSLock-Blown up	06NR	0	17G	G15_041		Non-Converged Contingency	1792	1792	0.0962	-	BORDER 7345.00 - WOODWARD DISTRICT EHV 345KV CKT 1
FDNSLock-Blown up	06NR	0	17G	G15_041		Non-Converged Contingency	318.7	350.57	0.08077	-	AMARILLO SOUTH INTERCHANGE - G15031_T 230.00 230KV CKT 1
FDNSLock-Blown up	06NR	0	17G	G15_041		Non-Converged Contingency	478	502	0.04338	-	NEWHART 230 - POTTER COUNTY INTERCHANGE 230KV CKT 1
FDNSLock-Blown up	06NR	0	20L	G15_041		Non-Converged Contingency	1022	1124	0.09073	-	G14-074T 345.00 - OKLAUNION 345KV CKT 1
FDNSLock-Blown up	06NR	0	20L	G15_041		Non-Converged Contingency	1022	1124	0.09073	-	G14-074T 345.00 - TUCO INTERCHANGE 345KV CKT 1
FDNSLock-Blown up	06NR	0	20L	G15_041		Non-Converged Contingency	1022	1124	0.09073	-	OKLAUNION 345KV SWITCHED SHUNT
FDNSLock-Blown up	06NR	0	20L	G15_041		Non-Converged Contingency	1792	1972	0.0858	-	BORDER 7345.00 - TUCO_2 345.00 345KV CKT 1
FDNSLock-Blown up	06NR	0	20L	G15_041		Non-Converged Contingency	1792	1792	0.0858	-	BORDER 7345.00 - WOODWARD DISTRICT EHV 345KV CKT 1
FDNSLock-Blown up	06NR	0	20L	G15_041		Non-Converged Contingency	1792	1972	0.0858	-	BORDER 7345.00 345KV SWITCHED SHUNT
FDNSLock-Blown up	06NR	0	20L	G15_041		Non-Converged Contingency	478	502	0.08365	-	AMARILLO SOUTH INTERCHANGE - G15031_T 230.00 230KV CKT 1
FDNSLock-Blown up	06NR	0	20L	G15_041		Non-Converged Contingency	478	502	0.05447	-	NEWHART 230 - POTTER COUNTY INTERCHANGE 230KV CKT 1
FDNSLock-Blown up	06NR	2	17G	G15_041		Non-Converged Contingency	1022	1124	0.10191	-	G14-074T 345.00 - OKLAUNION 345KV CKT 1
FDNSLock-Blown up	06NR	2	17G	G15_041		Non-Converged Contingency	1022	1124	0.10191	-	G14-074T 345.00 - TUCO INTERCHANGE 345KV CKT 1
FDNSLock-Blown up	06NR	2	17G	G15_041		Non-Converged Contingency	1792	1972	0.0962	-	BORDER 7345.00 - TUCO_2 345.00 345KV CKT 1
FDNSLock-Blown up	06NR	2	17G	G15_041		Non-Converged Contingency	1792	1792	0.0962	-	BORDER 7345.00 - WOODWARD DISTRICT EHV 345KV CKT 1
FDNSLock-Blown up	06NR	2	20L	G15_041		Non-Converged Contingency	1022	1124	0.09073	-	G14-074T 345.00 - OKLAUNION 345KV CKT 1
FDNSLock-Blown up	06NR	2	20L	G15_041		Non-Converged Contingency	1022	1124	0.09073	-	G14-074T 345.00 - TUCO INTERCHANGE 345KV CKT 1
FDNSLock-Blown up	06NR	2	20L	G15_041		Non-Converged Contingency	1022	1124	0.09073	-	OKLAUNION 345KV SWITCHED SHUNT
FDNSLock-Blown up	06NR	2	20L	G15_041		Non-Converged Contingency	1792	1972	0.0858	-	BORDER 7345.00 - TUCO_2 345.00 345KV CKT 1
FDNSLock-Blown up	06NR	2	20L	G15_041		Non-Converged Contingency	1792	1792	0.0858	-	BORDER 7345.00 - WOODWARD DISTRICT EHV 345KV CKT 1
FDNSLock-Blown up	06NR	2	20L	G15_041		Non-Converged Contingency	1792	1972	0.0858	-	BORDER 7345.00 345KV SWITCHED SHUNT
FDNSLock-Blown up	06NR	2	20L	G15_041		Non-Converged Contingency	478	502	0.08365	-	AMARILLO SOUTH INTERCHANGE - G15031_T 230.00 230KV CKT 1
FDNSLock-Blown up	06NR	2	20L	G15_041		Non-Converged Contingency	478	502	0.05447	-	NEWHART 230 - POTTER COUNTY INTERCHANGE 230KV CKT 1
FDNSLock-Blown up	06NR	3	17G	G15_041		Non-Converged Contingency	1022	1124	0.08358	-	G14-074T 345.00 - OKLAUNION 345KV CKT 1
FDNSLock-Blown up	06NR	3	17G	G15_041		Non-Converged Contingency	1022	1124	0.08358	-	G14-074T 345.00 - TUCO INTERCHANGE 345KV CKT 1
FDNSLock-Blown up	06NR	3	17G	G15_041		Non-Converged Contingency	1792	1972	0.07737	-	BORDER 7345.00 - TUCO_2 345.00 345KV CKT 1
FDNSLock-Blown up	06NR	3	17G	G15_041		Non-Converged Contingency	1792	1792	0.07737	-	BORDER 7345.00 - WOODWARD DISTRICT EHV 345KV CKT 1
FDNSLock-Blown up	06NR	3	20L	G15_041		Non-Converged Contingency	1022	1124	0.07987	-	G14-074T 345.00 - OKLAUNION 345KV CKT 1
FDNSLock-Blown up	06NR	3	20L	G15_041		Non-Converged Contingency	1022	1124	0.07987	-	G14-074T 345.00 - TUCO INTERCHANGE 345KV CKT 1
FDNSLock-Blown up	06NR	3	20L	G15_041		Non-Converged Contingency	1022	1124	0.07987	-	OKLAUNION 345KV SWITCHED SHUNT
FDNSLock-Blown up	06NR	3	20L	G15_041		Non-Converged Contingency	1792	1972	0.07438	-	BORDER 7345.00 - TUCO_2 345.00 345KV CKT 1
FDNSLock-Blown up	06NR	3	20L	G15_041		Non-Converged Contingency	1792	1792	0.07438	-	BORDER 7345.00 - WOODWARD DISTRICT EHV 345KV CKT 1

SOLUTION	GROUP	SCENARIO	SEASON	SOURCE	DIRECTION	MONITORED ELEMENT	RATEA (MVA)	RATEB(MVA)	TDF	TC%LOADING (% MVA)	CONTINGENCY
FDNSLock-Blown up	06NR	3	20L	G15_041		Non-Converged Contingency	1792	1972	0.07438	-	BORDER 7345.00 345KV SWITCHED SHUNT
FDNSLock-Blown up	06NR	4	17G	G15_041		Non-Converged Contingency	1022	1124	0.0729	-	G14-074T 345.00 - OKLAUNION 345KV CKT 1
FDNSLock-Blown up	06NR	4	17G	G15_041		Non-Converged Contingency	1022	1124	0.0729	-	G14-074T 345.00 - TUCO INTERCHANGE 345KV CKT 1
FDNSLock-Blown up	06NR	4	17G	G15_041		Non-Converged Contingency	1792	1972	0.06629	-	BORDER 7345.00 - TUCO_2 345.00 345KV CKT 1
FDNSLock-Blown up	06NR	4	17G	G15_041		Non-Converged Contingency	1792	1792	0.06629	-	BORDER 7345.00 - WOODWARD DISTRICT EHV 345KV CKT 1
FDNSLock-Blown up	06NR	4	20L	G15_041		Non-Converged Contingency	1022	1124	0.06743	-	G14-074T 345.00 - OKLAUNION 345KV CKT 1
FDNSLock-Blown up	06NR	4	20L	G15_041		Non-Converged Contingency	1022	1124	0.06743	-	G14-074T 345.00 - TUCO INTERCHANGE 345KV CKT 1
FDNSLock-Blown up	06NR	4	20L	G15_041		Non-Converged Contingency	1022	1124	0.06743	-	OKLAUNION 345KV SWITCHED SHUNT
FDNSLock-Blown up	06NR	4	20L	G15_041		Non-Converged Contingency	1792	1972	0.0615	-	BORDER 7345.00 - TUCO_2 345.00 345KV CKT 1
FDNSLock-Blown up	06NR	4	20L	G15_041		Non-Converged Contingency	1792	1792	0.0615	-	BORDER 7345.00 - WOODWARD DISTRICT EHV 345KV CKT 1
FDNSLock-Blown up	06NR	5	17G	G15_041		Non-Converged Contingency	1022	1124	0.07754	-	G14-074T 345.00 - OKLAUNION 345KV CKT 1
FDNSLock-Blown up	06NR	5	17G	G15_041		Non-Converged Contingency	1792	1792	0.06804	-	BORDER 7345.00 - WOODWARD DISTRICT EHV 345KV CKT 1
FDNSLock-Blown up	06NR	5	20L	G15_041		Non-Converged Contingency	1022	1124	0.07129	-	G14-074T 345.00 - OKLAUNION 345KV CKT 1
FDNSLock-Blown up	06NR	5	20L	G15_041		Non-Converged Contingency	1022	1124	0.07129	-	G14-074T 345.00 - TUCO INTERCHANGE 345KV CKT 1
FDNSLock-Blown up	06NR	5	20L	G15_041		Non-Converged Contingency	1792	1972	0.06298	-	BORDER 7345.00 - TUCO_2 345.00 345KV CKT 1
FDNSLock-Blown up	06NR	5	20L	G15_041		Non-Converged Contingency	1792	1792	0.06298	-	BORDER 7345.00 - WOODWARD DISTRICT EHV 345KV CKT 1
FDNSLock-Blown up	06NR	6	17G	G15_041		Non-Converged Contingency	1022	1124	0.07782	-	G14-074T 345.00 - OKLAUNION 345KV CKT 1
FDNSLock-Blown up	06NR	6	20L	G15_041		Non-Converged Contingency	1022	1124	0.07153	-	G14-074T 345.00 - OKLAUNION 345KV CKT 1
FDNSLock-Blown up	06NR	6	20L	G15_041		Non-Converged Contingency	1792	1972	0.06353	-	BORDER 7345.00 - TUCO_2 345.00 345KV CKT 1
FDNSLock-Blown up	06NR	6	20L	G15_041		Non-Converged Contingency	1792	1792	0.06353	-	BORDER 7345.00 - WOODWARD DISTRICT EHV 345KV CKT 1
FDNSLock-Blown up	06NR	7	20L	G15_041		Non-Converged Contingency	1022	1124	0.07153	-	G14-074T 345.00 - OKLAUNION 345KV CKT 1
FDNS	00NR	0	25SP	G15_041	FROM->TO	CARLISLE INTERCHANGE - LP-DOUD_TP 3115.00 115KV CKT 1	159	160	0.03328	110.1627	WOLFFORTH INTERCHANGE (WH 7001668) 230/115/13.2KV TRANSFORMER CKT 1
FDNS	00NR	0	25SP	G15_041	FROM->TO	CARLISLE INTERCHANGE - LP-DOUD_TP 3115.00 115KV CKT 1	159	160	0.03328	110.1627	WOLFFORTH INTERCHANGE (WH 7001668) 230/115/13.2KV TRANSFORMER CKT 1
FDNS	00NR	0	25SP	G15_041	FROM->TO	CARLISLE INTERCHANGE - LP-DOUD_TP 3115.00 115KV CKT 1	159	160	0.04998	99.9	TUCO INTERCHANGE - YOAKUM_345 345.00 345KV CKT 1
FDNS	06NR	0	17G	G15_041	TO->FROM	CIMARRON - MINCO 345KV CKT 1	956	956	0.02972	103.8817	G14-057T 345.00 - SUNNYSIDE 345KV CKT 1
FDNS	00NR	0	16WP	G15_041	FROM->TO	G14-057T 345.00 - SUNNYSIDE 345KV CKT 1	717	789	0.03414	118.5917	BORDER 7345.00 - WOODWARD DISTRICT EHV 345KV CKT 1
FDNS	00NR	0	16WP	G15_041	FROM->TO	G14-057T 345.00 - SUNNYSIDE 345KV CKT 1	717	789	0.03414	117.6629	BORDER 7345.00 - TUCO_2 345.00 345KV CKT 1
FDNS	00NR	0	16WP	G15_041	FROM->TO	G14-057T 345.00 - SUNNYSIDE 345KV CKT 1	717	789	0.04365	115.7778	GRACEMONT - LAWTON EASTSIDE 345KV CKT 1
FDNS	00NR	0	16WP	G15_041	FROM->TO	G14-057T 345.00 - SUNNYSIDE 345KV CKT 1	717	789	0.04365	115.7778	GRACEMONT - LAWTON EASTSIDE 345KV CKT 1
FDNS	00NR	0	20WP	G15_041	FROM->TO	G14-057T 345.00 - SUNNYSIDE 345KV CKT 1	717	789	0.0355	114.9223	GRACEMONT - LAWTON EASTSIDE 345KV CKT 1
FDNS	00NR	0	20WP	G15_041	FROM->TO	G14-057T 345.00 - SUNNYSIDE 345KV CKT 1	717	789	0.0355	114.9223	GRACEMONT - LAWTON EASTSIDE 345KV CKT 1
FDNS	06NR	0	20L	G15_041	FROM->TO	G14-057T 345.00 - SUNNYSIDE 345KV CKT 1	717	789	0.0397	110.7164	GRACEMONT - LAWTON EASTSIDE 345KV CKT 1
FDNS	06NR	0	20L	G15_041	FROM->TO	G14-057T 345.00 - SUNNYSIDE 345KV CKT 1	717	789	0.0397	110.7164	GRACEMONT - LAWTON EASTSIDE 345KV CKT 1
FDNS	06NR	0	17G	G15_041	FROM->TO	G14-057T 345.00 - SUNNYSIDE 345KV CKT 1	717	789	0.04456	101.3715	GRACEMONT - LAWTON EASTSIDE 345KV CKT 1
FDNS	06NR	0	17G	G15_041	FROM->TO	G14-057T 345.00 - SUNNYSIDE 345KV CKT 1	717	789	0.04456	101.3715	GRACEMONT - LAWTON EASTSIDE 345KV CKT 1
FDNS	06NR	0	20L	G15_041	FROM->TO	G14-074T 345.00 - OKLAUNION 345KV CKT 1	1022	1124	0.09073	106.9322	BASE CASE
FDNS	06NR	0	17G	G15_041	FROM->TO	G14-074T 345.00 - OKLAUNION 345KV CKT 1	1022	1124	0.10191	102.2735	BASE CASE
FDNS	06NR	0	20L	G15_041	FROM->TO	G14-074T 345.00 - OKLAUNION 345KV CKT 1	1022	1124	0.08659	102.2532	CHISHOLM7 345.00 - GRACEMONT 345KV CKT 1
FDNS	06NR	0	20L	G15_041	FROM->TO	G14-074T 345.00 - OKLAUNION 345KV CKT 1	1022	1124	0.08659	101.8896	CHISHOLM7 345.00 () 345/230/13.2KV TRANSFORMER CKT 1
FDNS	06NR	0	20L	G15_041	FROM->TO	G14-074T 345.00 - OKLAUNION 345KV CKT 1	1022	1124	0.11123	101.4902	TUCO INTERCHANGE - TUCO_2 345.00 345KV CKT 1
FDNS	06NR	0	20L	G15_041	FROM->TO	G14-074T 345.00 - OKLAUNION 345KV CKT 1	1022	1124	0.09475	101.2851	BUSHLAND INTERCHANGE - DEAF SMITH COUNTY INTERCHANGE 230KV CKT 1
FDNS	06NR	0	20L	G15_041	FROM->TO	G14-074T 345.00 - OKLAUNION 345KV CKT 1	1022	1124	0.09475	101.2851	BUSHLAND INTERCHANGE - DEAF SMITH COUNTY INTERCHANGE 230KV CKT 1
FDNS	06NR	0	20L	G15_041	FROM->TO	G14-074T 345.00 - OKLAUNION 345KV CKT 1	1022	1124	0.08996	101.2671	MOORE COUNTY INTERCHANGE - POTTER COUNTY INTERCHANGE 230KV CKT 1
FDNS	06NR	0	20L	G15_041	FROM->TO	G14-074T 345.00 - OKLAUNION 345KV CKT 1	1022	1124	0.08996	101.2671	MOORE COUNTY INTERCHANGE - POTTER COUNTY INTERCHANGE 230KV CKT 1
FDNS	06NR	0	20L	G15_041	FROM->TO	G14-074T 345.00 - OKLAUNION 345KV CKT 1	1022	1124	0.08922	101.2654	G11-14T 345.00 - WOODWARD DISTRICT EHV 345KV CKT 1
FDNS	06NR	0	20L	G15_041	FROM->TO	G14-074T 345.00 - OKLAUNION 345KV CKT 1	1022	1124	0.08922	101.2654	G11-14T 345.00 - WOODWARD DISTRICT EHV 345KV CKT 2
FDNS	00NR	0	25SP	G15_041	FROM->TO	Hitchland Interchange (H TB80155502) 345/230/13.2KV TRANSFORMER CKT 1	560	644	0.04979	100	Hitchland Interchange (SIEM 8743067) 345/230/13.2KV TRANSFORMER CKT 2
FDNS	00NR	0	25SP	G15_041	FROM->TO	Hitchland Interchange (H TB80155502) 345/230/13.2KV TRANSFORMER CKT 1	560	644	0.04979	100	Hitchland Interchange (SIEM 8743067) 345/230/13.2KV TRANSFORMER CKT 2
FDNS	00NR	0	25SP	G15_041	FROM->TO	Hitchland Interchange (SIEM 8743067) 345/230/13.2KV TRANSFORMER CKT 2	560	644	0.05082	102.3531	Hitchland Interchange (H TB80155502) 345/230/13.2KV TRANSFORMER CKT 1
FDNS	00NR	0	25SP	G15_041	FROM->TO	Hitchland Interchange (SIEM 8743067) 345/230/13.2KV TRANSFORMER CKT 2	560	644	0.05082	102.3531	Hitchland Interchange (H TB80155502) 345/230/13.2KV TRANSFORMER CKT 1
FDNS	00NR	0	25SP	G15_041	FROM->TO	Hitchland Interchange (SIEM 8743067) 345/230/13.2KV TRANSFORMER CKT 2	560	644	0.05082	100.5303	Hitchland Interchange (H TB80155502) 345/230/13.2KV TRANSFORMER CKT 1
FDNS	00NR	0	25SP	G15_041	FROM->TO	Hitchland Interchange (SIEM 8743067) 345/230/13.2KV TRANSFORMER CKT 2	560	644	0.05082	100.5303	Hitchland Interchange (H TB80155502) 345/230/13.2KV TRANSFORMER CKT 1
FDNS	00NR	0	25SP	G15_041	TO->FROM	JONES STATION - TUCO INTERCHANGE 230KV CKT 1	343.79	343.79	0.17401	139.3518	CARLISLE INTERCHANGE - TUCO INTERCHANGE 230KV CKT 1
FDNS	00NR	0	25SP	G15_041	TO->FROM	JONES STATION - TUCO INTERCHANGE 230KV CKT 1	343.79	343.79	0.17401	139.3518	CARLISLE INTERCHANGE - TUCO INTERCHANGE 230KV CKT 1
FDNS	00NR	0	25SP	G15_041	TO->FROM	JONES STATION - TUCO INTERCHANGE 230KV CKT 1	343.79	343.79	0.17131	123.0773	TUCO INTERCHANGE - YOAKUM_345 345.00 345KV CKT 1
FDNS	00NR	0	25SP	G15_041	TO->FROM	JONES STATION - TUCO INTERCHANGE 230KV CKT 1	343.79	343.79	0.1316	119.4572	GEN526333 1-JONES GEN #3 21 KV
FDNS	00NR	0	25SP	G15_041	TO->FROM	JONES STATION - TUCO INTERCHANGE 230KV CKT 1	343.79	343.79	0.1316	119.0504	GEN526334 1-JONES_4 116.500
FDNS	00NR	0	25SP	G15_041	TO->FROM	JONES STATION - TUCO INTERCHANGE 230KV CKT 1	343.79	343.79	0.15547	111.1942	CARLISLE INTERCHANGE - WOLFFORTH INTERCHANGE 230KV CKT 1
FDNS	00NR	0	25SP	G15_041	TO->FROM	JONES STATION - TUCO INTERCHANGE 230KV CKT 1	343.79	343.79	0.13838	107.2791	TUCO INTERCHANGE (ENRCO 136401) 230/115/13.2KV TRANSFORMER CKT 1
FDNS	00NR	0	25SP	G15_041	TO->FROM	JONES STATION - TUCO INTERCHANGE 230KV CKT 1	343.79	343.79	0.13838	107.2791	TUCO INTERCHANGE (ENRCO 136401) 230/115/13.2KV TRANSFORMER CKT 1
FDNS	00NR	0	25SP	G15_041	TO->FROM	JONES STATION - TUCO INTERCHANGE 230KV CKT 1	343.79	343.79	0.13838	107.2791	TUCO INTERCHANGE (ENRCO 136401) 230/115/13.2KV TRANSFORMER CKT 2
FDNS	00NR	0	25SP	G15_041	TO->FROM	JONES STATION - TUCO INTERCHANGE 230KV CKT 1	343.79	343.79	0.13838	107.2791	TUCO INTERCHANGE (ENRCO 136401) 230/115/13.2KV TRANSFORMER CKT 2
FDNS	00NR	0	25SP	G15_041	TO->FROM	JONES STATION - TUCO INTERCHANGE 230KV CKT 1	343.79	343.79	0.1316	106.7618	GEN526332 1-JONES GEN #2 21 KV
FDNS	00NR	0	25SP	G15_041	TO->FROM	JONES STATION - TUCO INTERCHANGE 230KV CKT 1	343.79	343.79	0.1316	106.7593	GEN526331 1-JONES GEN #1 22 KV
FDNS	00NR	0	25SP	G15_041	TO->FROM	JONES STATION - TUCO INTERCHANGE 230KV CKT 1	343.79	343.79	0.12697	105.7876	PLANT X STATION - SUNDOWN INTERCHANGE 230KV CKT 1
FDNS	00NR	0	25SP	G15_041	TO->FROM	JONES STATION - TUCO INTERCHANGE 230KV CKT 1	343.79	343.79	0.12697	105.7876	PLANT X STATION - SUNDOWN INTERCHANGE 230KV CKT 1
FDNS	00NR	0	25SP	G15_041	TO->FROM	JONES STATION - TUCO INTERCHANGE 230KV CKT 1	343.79	343.79	0.14042	105.7418	LUBBOCK EAST INTERCHANGE - TUCO INTERCHANGE 115KV CKT 1
FDNS	00NR	0	25SP	G15_041	TO->FROM	JONES STATION - TUCO INTERCHANGE 230KV CKT 1	343.79	343.79	0.14042	105.7418	LUBBOCK EAST INTERCHANGE - TUCO INTERCHANGE 115KV CKT 1
FDNS	00NR	0	25SP	G15_041	TO->FROM	JONES STATION - TUCO INTERCHANGE 230KV CKT 1	343.79	343.79	0.13554	102.5912	STANTON SUB - TUCO INTERCHANGE 115KV CKT 1
FDNS	00NR	0	25SP	G15_041	TO->FROM	JONES STATION - TUCO INTERCHANGE 230KV CKT 1	343.79	343.79	0.13369	102.3658	P12:230:LPL:K39.1.CRLSLE.LP-MLWK
FDNS	00NR	0	25SP	G15_041	TO->FROM	JONES STATION - TUCO INTERCHANGE 230KV CKT 1	343.79	343.79	0.13369	102.3646	CARLISLE INTERCHANGE - LUBBOCK POWER & LIGHT-MILWAUKEE 230KV CKT 1
FDNS	00NR	0	25SP	G15_041	TO->FROM	JONES STATION - TUCO INTERCHANGE 230KV CKT 1	343.79	343.79	0.13369	102.363	LUBBOCK POWER & LIGHT-MILWAUKEE (M-E C0681251) 230/69/13.5KV TRANSFORMER CKT 1
FDNS	00NR	0	25SP	G15_041	TO->FROM	JONES STATION - TUCO INTERCHANGE 230KV CKT 1	343.79	343.79	0.13369	102.363	LUBBOCK POWER & LIGHT-MILWAUKEE (M-E C0681251) 230/69/13.5KV TRANSFORMER CKT 1
FDNS	00NR	0	25SP	G15_041	TO->FROM	JONES STATION - TUCO INTERCHANGE 230KV CKT 1	343.79	343.79	0.14988	102.0923	TOLK STATION EAST - TUCO INTERCHANGE 230KV CKT 1
FDNS	00NR	0	25SP	G15_041	TO->FROM	JONES STATION - TUCO INTERCHANGE 230KV CKT 1	343.79	343.79	0.14988	102.0923	TOLK STATION EAST - TUCO INTERCHANGE 230KV CKT 1
FDNS	00NR	0	25SP	G15_041	TO->FROM	JONES STATION - TUCO INTERCHANGE 230KV CKT 1	343.79	343.79	0.13554	101.6363	P12:115:SPS:V15.1.TUCO.INDANA
FDNS	00NR	0	25SP	G15_041	TO->FROM	JONES STATION - TUCO INTERCHANGE 230KV CKT 1	343.79	343.79	0.13554	101.6061	INDIANA SUB - STANTON SUB 115KV CKT 1
FDNS	00NR	0	25SP	G15_041	TO->FROM	JONES STATION - TUCO INTERCHANGE 230KV CKT 1	343.79	343.79	0.1316	101.0841	GEN527903 1-HOBBS PLANT #3 (ST)
FDNS	00NR	0	25SP	G15_041	TO->FROM	JONES STATION - TUCO INTERCHANGE 230KV CKT 1	343.79	343.79	0.1316	101.0701	GEN527166 1-MUSTANG_6 118.000

SOLUTION	GROUP	SCENARIO	SEASON	SOURCE	DIRECTION	MONITORED ELEMENT	RATEA (MVA)	RATEB(MVA)	TDF	TC%LOADING (% MVA)	CONTINGENCY
FDNS	00NR	0	25SP	G15_041	TO->FROM	JONES STATION - TUCO INTERCHANGE 230KV CKT 1	343.79	343.79	0.1316	100.6214	GEN528501 1-G14_012 24.000
FDNS	00NR	0	25SP	G15_041	TO->FROM	JONES STATION - TUCO INTERCHANGE 230KV CKT 1	343.79	343.79	0.132	100.6076	KRESS INTERCHANGE - SWISHER COUNTY INTERCHANGE 115KV CKT 1
FDNS	00NR	0	25SP	G15_041	TO->FROM	JONES STATION - TUCO INTERCHANGE 230KV CKT 1	343.79	343.79	0.132	100.6076	KRESS INTERCHANGE - SWISHER COUNTY INTERCHANGE 115KV CKT 1
FDNS	00NR	0	25SP	G15_041	TO->FROM	JONES STATION - TUCO INTERCHANGE 230KV CKT 1	343.79	343.79	0.13257	100.4516	CARLISLE INTERCHANGE - MURPHY SUB 115KV CKT 1
FDNS	00NR	0	25SP	G15_041	TO->FROM	JONES STATION - TUCO INTERCHANGE 230KV CKT 1	343.79	343.79	0.13257	100.4516	CARLISLE INTERCHANGE - MURPHY SUB 115KV CKT 1
FDNS	00NR	0	25SP	G15_041	TO->FROM	JONES STATION - TUCO INTERCHANGE 230KV CKT 1	343.79	343.79	0.141	100.2532	YOAKUM_345 345.00 (UPDATE DATA) 345/230/13.2KV TRANSFORMER CKT 1
FDNS	00NR	0	25SP	G15_041	TO->FROM	JONES STATION - TUCO INTERCHANGE 230KV CKT 1	343.79	343.79	0.13256	100	POTTER COUNTY INTERCHANGE (WAUK 90343-A) 345/230/13.2KV TRANSFORMER CKT 1
FDNS	00NR	0	25SP	G15_041	TO->FROM	JONES STATION - TUCO INTERCHANGE 230KV CKT 1	343.79	343.79	0.13256	100	POTTER COUNTY INTERCHANGE (WAUK 90343-A) 345/230/13.2KV TRANSFORMER CKT 1
FDNS	00NR	0	25SP	G15_041	TO->FROM	JONES STATION - TUCO INTERCHANGE 230KV CKT 1	343.79	343.79	0.1316	100	GEN563122 1-G15077_3 0.3850
FDNS	00NR	0	25SP	G15_041	TO->FROM	JONES STATION - TUCO INTERCHANGE 230KV CKT 1	343.79	343.79	0.13554	99.9	INDIANA SUB - SOUTH PLAINS REC-ERSKINE 115KV CKT 1
FDNS	00NR	0	25SP	G15_041	TO->FROM	JONES STATION - TUCO INTERCHANGE 230KV CKT 1	343.79	343.79	0.1316	99.9	GEN527901 1-HOBBS PLANT #1 (CT)
FDNS	00NR	0	25SP	G15_041	TO->FROM	JONES STATION - TUCO INTERCHANGE 230KV CKT 1	343.79	343.79	0.1316	99.9	GEN527902 1-HOBBS PLANT #2 (CT)
FDNS	00NR	0	25SP	G15_041	TO->FROM	JONES STATION - TUCO INTERCHANGE 230KV CKT 1	343.79	343.79	0.1316	99.9	GEN563102 1-G15075_3 0.5500
FDNS	00NR	0	25SP	G15_041	TO->FROM	JONES STATION - TUCO INTERCHANGE 230KV CKT 1	343.79	343.79	0.13437	99.7	HOBBS - YOAKUM_345 345.00 345KV CKT 1
FDNS	00NR	0	25SP	G15_041	TO->FROM	JONES STATION - TUCO INTERCHANGE 230KV CKT 1	343.79	343.79	0.13324	99.7	FLOYD COUNTY INTERCHANGE - TUCO INTERCHANGE 115KV CKT 1
FDNS	00NR	0	25SP	G15_041	TO->FROM	JONES STATION - TUCO INTERCHANGE 230KV CKT 1	343.79	343.79	0.13324	99.7	FLOYD COUNTY INTERCHANGE - TUCO INTERCHANGE 115KV CKT 1
FDNS	00NR	0	25SP	G15_041	TO->FROM	JONES STATION - TUCO INTERCHANGE 230KV CKT 1	343.79	343.79	0.13306	99.6	P12:345:SPS:J02.1.TOLK.EDDY
FDNS	00NR	0	25SP	G15_041	TO->FROM	JONES STATION - TUCO INTERCHANGE 230KV CKT 1	343.79	343.79	0.13256	99.6	G14_038T 345.00 - POTTER COUNTY INTERCHANGE 345KV CKT 1
FDNS	00NR	0	25SP	G15_041	TO->FROM	JONES STATION - TUCO INTERCHANGE 230KV CKT 1	343.79	343.79	0.1316	99.6	GEN563142 1-G15079_3 0.5500
FDNS	00NR	0	25SP	G15_041	TO->FROM	JONES STATION - TUCO INTERCHANGE 230KV CKT 1	343.79	343.79	0.1316	99.6	GEN563151 1-G15080_2 0.5500
FDNS	00NR	0	25SP	G15_041	TO->FROM	JONES STATION - TUCO INTERCHANGE 230KV CKT 1	343.79	343.79	0.13122	99.6	BUSHLAND INTERCHANGE - DEAF SMITH COUNTY INTERCHANGE 230KV CKT 1
FDNS	00NR	0	25SP	G15_041	TO->FROM	JONES STATION - TUCO INTERCHANGE 230KV CKT 1	343.79	343.79	0.13122	99.6	BUSHLAND INTERCHANGE - DEAF SMITH COUNTY INTERCHANGE 230KV CKT 1
FDNS	00NR	0	25SP	G15_041	TO->FROM	KRESS INTERCHANGE - SWISHER COUNTY INTERCHANGE 115KV CKT 1	218	239	0.03074	118.9572	NEWHART 230 - SWISHER COUNTY INTERCHANGE 230KV CKT 1
FDNS	00NR	0	17SP	G15_041	TO->FROM	KRESS INTERCHANGE - SWISHER COUNTY INTERCHANGE 115KV CKT 1	218	239	0.0454	103.7156	NEWHART 230 - SWISHER COUNTY INTERCHANGE 230KV CKT 1
FDNS	00NR	0	20SP	G15_041	TO->FROM	KRESS INTERCHANGE - SWISHER COUNTY INTERCHANGE 115KV CKT 1	218	239	0.03144	101.9578	NEWHART 230 - SWISHER COUNTY INTERCHANGE 230KV CKT 1
FDNS	00NR	0	25SP	G15_041	FROM->TO	LUBBOCK POWER & LIGHT-HOLLY PLANT (SHIH T101039) 230/69/13.5KV TRANSFORMER CKT 1	224	224	0.03597	104.8294	LUBBOCK POWER & LIGHT-SOUTHEAST - LUBBOCK SOUTH INTERCHANGE 230KV CKT 1
FDNS	00NR	0	25SP	G15_041	FROM->TO	LUBBOCK POWER & LIGHT-HOLLY PLANT (SHIH T101039) 230/69/13.5KV TRANSFORMER CKT 1	224	224	0.03597	104.8165	P12:LPL:SPS:K64.1.LP-SE.LUBBS
FDNS	00NR	0	25SP	G15_041	FROM->TO	LUBBOCK POWER & LIGHT-HOLLY PLANT (SHIH T101039) 230/69/13.5KV TRANSFORMER CKT 1	224	224	0.0354	101.9053	LUBBOCK EAST INTERCHANGE - LUBBOCK POWER & LIGHT-WADSWORTH 230KV CKT 1
FDNS	00NR	0	25SP	G15_041	FROM->TO	LUBBOCK POWER & LIGHT-HOLLY PLANT (SHIH T101039) 230/69/13.5KV TRANSFORMER CKT 1	224	224	0.0354	101.8957	P12:230:LPL:K57.1.LP-WADS.LUBBE
FDNS	00NR	0	25SP	G15_041	FROM->TO	LUBBOCK POWER & LIGHT-HOLLY PLANT (SHIH T101039) 230/69/13.5KV TRANSFORMER CKT 1	224	224	0.0354	101.8956	LUBBOCK POWER & LIGHT-WADSWORTH (SHIH T101038) 230/69/13.5KV TRANSFORMER CKT 1
FDNS	00NR	0	25SP	G15_041	FROM->TO	LUBBOCK POWER & LIGHT-HOLLY PLANT (SHIH T101039) 230/69/13.5KV TRANSFORMER CKT 1	224	224	0.0354	101.8956	LUBBOCK POWER & LIGHT-WADSWORTH (SHIH T101038) 230/69/13.5KV TRANSFORMER CKT 1
FDNS	00NR	0	25SP	G15_041	FROM->TO	POTTER COUNTY INTERCHANGE (WAUK 90343-A) 345/230/13.2KV TRANSFORMER CKT 1	560	560	0.03495	106.174	G14-074T 345.00 - TUCO INTERCHANGE 345KV CKT 1
FDNS	00NR	0	25SP	G15_041	FROM->TO	POTTER COUNTY INTERCHANGE (WAUK 90343-A) 345/230/13.2KV TRANSFORMER CKT 1	560	560	0.05966	105.4342	HITCHLAND INTERCHANGE - MOORE COUNTY INTERCHANGE 230KV CKT 1
FDNS	00NR	0	25SP	G15_041	FROM->TO	POTTER COUNTY INTERCHANGE (WAUK 90343-A) 345/230/13.2KV TRANSFORMER CKT 1	560	560	0.05966	105.4342	HITCHLAND INTERCHANGE - MOORE COUNTY INTERCHANGE 230KV CKT 1
FDNS	00NR	0	25SP	G15_041	FROM->TO	POTTER COUNTY INTERCHANGE (WAUK 90343-A) 345/230/13.2KV TRANSFORMER CKT 1	560	560	0.03495	104.1075	G14-074T 345.00 - TUCO INTERCHANGE 345KV CKT 1
FDNS	00NR	0	25SP	G15_041	FROM->TO	POTTER COUNTY INTERCHANGE (WAUK 90343-A) 345/230/13.2KV TRANSFORMER CKT 1	560	560	0.05966	103.6189	HITCHLAND INTERCHANGE - MOORE COUNTY INTERCHANGE 230KV CKT 1
FDNS	00NR	0	25SP	G15_041	FROM->TO	POTTER COUNTY INTERCHANGE (WAUK 90343-A) 345/230/13.2KV TRANSFORMER CKT 1	560	560	0.05966	103.6189	HITCHLAND INTERCHANGE - MOORE COUNTY INTERCHANGE 230KV CKT 1
FDNS	00NR	0	25SP	G15_041	FROM->TO	POTTER COUNTY INTERCHANGE (WAUK 90343-A) 345/230/13.2KV TRANSFORMER CKT 1	560	560	0.03172	103.6147	BORDER 7345.00 - TUCO_2 345.00 345KV CKT 1
FDNS	00NR	0	25SP	G15_041	FROM->TO	POTTER COUNTY INTERCHANGE (WAUK 90343-A) 345/230/13.2KV TRANSFORMER CKT 1	560	560	0.03172	101.7534	BORDER 7345.00 - TUCO_2 345.00 345KV CKT 1
FDNS	00NR	0	25SP	G15_041	FROM->TO	POTTER COUNTY INTERCHANGE (WAUK 90343-A) 345/230/13.2KV TRANSFORMER CKT 1	560	560	0.03172	100.8317	BORDER 7345.00 - WOODWARD DISTRICT EHV 345KV CKT 1
FDNS	06NR	0	17G	G15_041	FROM->TO	TUCO INTERCHANGE - TUCO_2 230.00 230KV CKT 1	497	547	0.24046	120.0923	TUCO INTERCHANGE - TUCO_2 345.00 345KV CKT 1
FDNS	06NR	0	20L	G15_041	FROM->TO	TUCO INTERCHANGE - TUCO_2 230.00 230KV CKT 1	497	547	0.20622	110.6573	TUCO INTERCHANGE - TUCO_2 345.00 345KV CKT 1
FDNS	00NR	0	25SP	G15_041	FROM->TO	TUCO INTERCHANGE (ENRCO 136401) 230/115/13.2KV TRANSFORMER CKT 1	250	288	0.07112	123.8204	TUCO INTERCHANGE (ENRCO 136401) 230/115/13.2KV TRANSFORMER CKT 2
FDNS	00NR	0	25SP	G15_041	FROM->TO	TUCO INTERCHANGE (ENRCO 136401) 230/115/13.2KV TRANSFORMER CKT 1	250	288	0.07112	123.8204	TUCO INTERCHANGE (ENRCO 136401) 230/115/13.2KV TRANSFORMER CKT 2
FDNS	00NR	0	25SP	G15_041	FROM->TO	TUCO INTERCHANGE (ENRCO 136401) 230/115/13.2KV TRANSFORMER CKT 1	250	288	0.07112	115.7916	TUCO INTERCHANGE (ENRCO 136401) 230/115/13.2KV TRANSFORMER CKT 2
FDNS	00NR	0	25SP	G15_041	FROM->TO	TUCO INTERCHANGE (ENRCO 136401) 230/115/13.2KV TRANSFORMER CKT 1	250	288	0.07112	115.7916	TUCO INTERCHANGE (ENRCO 136401) 230/115/13.2KV TRANSFORMER CKT 2
FDNS	00NR	0	25SP	G15_041	FROM->TO	TUCO INTERCHANGE (ENRCO 136401) 230/115/13.2KV TRANSFORMER CKT 2	250	288	0.07112	123.8204	TUCO INTERCHANGE (ENRCO 136401) 230/115/13.2KV TRANSFORMER CKT 1
FDNS	00NR	0	25SP	G15_041	FROM->TO	TUCO INTERCHANGE (ENRCO 136401) 230/115/13.2KV TRANSFORMER CKT 2	250	288	0.07112	123.8204	TUCO INTERCHANGE (ENRCO 136401) 230/115/13.2KV TRANSFORMER CKT 1
FDNS	00NR	0	25SP	G15_041	FROM->TO	TUCO INTERCHANGE (ENRCO 136401) 230/115/13.2KV TRANSFORMER CKT 2	250	288	0.07112	115.7916	TUCO INTERCHANGE (ENRCO 136401) 230/115/13.2KV TRANSFORMER CKT 1
FDNS	00NR	0	25SP	G15_041	FROM->TO	TUCO INTERCHANGE (ENRCO 136401) 230/115/13.2KV TRANSFORMER CKT 2	250	288	0.07112	115.7916	TUCO INTERCHANGE (ENRCO 136401) 230/115/13.2KV TRANSFORMER CKT 1
FDNS	00NR	0	17SP	G15_041	FROM->TO	TUCO INTERCHANGE (GE M102345) 230/115/13.2KV TRANSFORMER CKT 1	242	252	0.09683	103.022	TUCO INTERCHANGE (ENRCO 136401) 230/115/13.2KV TRANSFORMER CKT 2
FDNS	00NR	0	17SP	G15_041	FROM->TO	TUCO INTERCHANGE (GE M102345) 230/115/13.2KV TRANSFORMER CKT 1	242	252	0.09683	103.022	TUCO INTERCHANGE (ENRCO 136401) 230/115/13.2KV TRANSFORMER CKT 2
FDNS	00NR	0	17SP	G15_041	FROM->TO	TUCO INTERCHANGE (GE M102345) 230/115/13.2KV TRANSFORMER CKT 1	242	252	0.09683	102.376	TUCO INTERCHANGE (ENRCO 136401) 230/115/13.2KV TRANSFORMER CKT 2
FDNS	00NR	0	17SP	G15_041	FROM->TO	TUCO INTERCHANGE (GE M102345) 230/115/13.2KV TRANSFORMER CKT 1	242	252	0.09683	102.376	TUCO INTERCHANGE (ENRCO 136401) 230/115/13.2KV TRANSFORMER CKT 2
FDNS	06NR	0	17G	G15_041	FROM->TO	TUCO_2 345.00 (TUCO_2 XFMR) 345/230/13.2KV TRANSFORMER CKT 1	560	560	0.06028	114.7643	TUCO INTERCHANGE - TUCO_2 345.00 345KV CKT 1
FDNS	06NR	0	17G	G15_041	FROM->TO	TUCO_2 345.00 (TUCO_2 XFMR) 345/230/13.2KV TRANSFORMER CKT 1	560	560	0.06028	111.8684	TUCO INTERCHANGE - TUCO_2 345.00 345KV CKT 1
FDNS	06NR	0	20L	G15_041	FROM->TO	TUCO_2 345.00 (TUCO_2 XFMR) 345/230/13.2KV TRANSFORMER CKT 1	560	560	0.05749	110.8936	TUCO INTERCHANGE - TUCO_2 345.00 345KV CKT 1
FDNS	06NR	0	20L	G15_041	FROM->TO	TUCO_2 345.00 (TUCO_2 XFMR) 345/230/13.2KV TRANSFORMER CKT 1	560	560	0.05749	108.3383	TUCO INTERCHANGE - TUCO_2 345.00 345KV CKT 1
FDNS	06NR	2	17G	G15_041	TO->FROM	AMARILLO SOUTH INTERCHANGE - G15031_T 230.00 230KV CKT 1	318.7	350.57	0.09525	103.4449	NEWHART 230 - POTTER COUNTY INTERCHANGE 230KV CKT 1
FDNS	00NR	2	25SP	G15_041	FROM->TO	CARLISLE INTERCHANGE - LP-DOUD_TP 3115.00 115KV CKT 1	159	160	0.03328	110.2252	WOLFFORTH INTERCHANGE (WH 7001668) 230/115/13.2KV TRANSFORMER CKT 1
FDNS	00NR	2	25SP	G15_041	FROM->TO	CARLISLE INTERCHANGE - LP-DOUD_TP 3115.00 115KV CKT 1	159	160	0.03328	110.2252	WOLFFORTH INTERCHANGE (WH 7001668) 230/115/13.2KV TRANSFORMER CKT 1
FDNS	00NR	2	25SP	G15_041	FROM->TO	CARLISLE INTERCHANGE - LP-DOUD_TP 3115.00 115KV CKT 1	159	160	0.04998	100	TUCO INTERCHANGE - YOAKUM_345 345.00 345KV CKT 1
FDNS	06NR	2	17G	G15_041	TO->FROM	CIMARRON - MINCO 345KV CKT 1	956	956	0.02972	104.6584	G14-057T 345.00 - SUNNYSIDE 345KV CKT 1
FDNS	00NR	2	16WP	G15_041	FROM->TO	G14-057T 345.00 - SUNNYSIDE 345KV CKT 1	717	789	0.03414	118.7202	BORDER 7345.00 - WOODWARD DISTRICT EHV 345KV CKT 1
FDNS	00NR	2	16WP	G15_041	FROM->TO	G14-057T 345.00 - SUNNYSIDE 345KV CKT 1	717	789	0.03414	117.7383	BORDER 7345.00 - TUCO_2 345.00 345KV CKT 1
FDNS	00NR	2	16WP	G15_041	FROM->TO	G14-057T 345.00 - SUNNYSIDE 345KV CKT 1	717	789	0.04365	115.4668	GRACEMONT - LAWTON EASTSIDE 345KV CKT 1
FDNS	00NR	2	16WP	G15_041	FROM->TO	G14-057T 345.00 - SUNNYSIDE 345KV CKT 1	717	789	0.04365	115.4668	GRACEMONT - LAWTON EASTSIDE 345KV CKT 1
FDNS	00NR	2	20WP	G15_041	FROM->TO	G14-057T 345.00 - SUNNYSIDE 345KV CKT 1	717	789	0.0355	114.2225	GRACEMONT - LAWTON EASTSIDE 345KV CKT 1
FDNS	00NR	2	20WP	G15_041	FROM->TO	G14-057T 345.00 - SUNNYSIDE 345KV CKT 1	717	789	0.0355	114.2225	GRACEMONT - LAWTON EASTSIDE 345KV CKT 1
FDNS	06NR	2	20L	G15_041	FROM->TO	G14-057T 345.00 - SUNNYSIDE 345KV CKT 1	717	789	0.0397	110.7164	GRACEMONT - LAWTON EASTSIDE 345KV CKT 1
FDNS	06NR	2	20L	G15_041	FROM->TO	G14-057T 345.00 - SUNNYSIDE 345KV CKT 1	717	789	0.0397	110.7164	GRACEMONT - LAWTON EASTSIDE 345KV CKT 1
FDNS	06NR	2	17G	G15_041	FROM->TO	G14-057T 345.00 - SUNNYSIDE 345KV CKT 1	717	789	0.04456	101.117	GRACEMONT - LAWTON EASTSIDE 345KV CKT 1
FDNS	06NR	2	17G	G15_041	FROM->TO	G14-057T 345.00 - SUNNYSIDE 345KV CKT 1	717	789	0.04456	101.117	GRACEMONT - LAWTON EASTSIDE 345KV CKT 1
FDNS	06NR	2	20L	G15_041	FROM->TO	G14-074T 345.00 - OKLAUNION 345KV CKT 1	1022	1124	0.09073	106.9322	BASE CASE
FDNS	06NR	2	17G	G15_041	FROM->TO	G14-074T 345.00 - OKLAUNION 345KV CKT 1	1022	1124	0.10191	102.9455	BASE CASE
FDNS	06NR	2	20L	G15_041	FROM->TO	G14-074T 345.00 - OKLAUNION 345KV CKT 1	1022	1124	0.08659	102.2532	CHISHOLM7 345.00 - GRACEMONT 345KV CKT 1
FDNS	06NR	2	20L	G15_041	FROM->TO	G14-074T 345.00 - OKLAUNION 345KV CKT 1	1022	1124	0.08659	101.8896	CHISHOLM7 345.00 () 345/230/13.2KV TRANSFORMER CKT 1
FDNS	06NR	2	20L	G15_041	FROM->TO	G14-074T 345.00 - OKLAUNION 345KV CKT 1	1022	1124	0.11123	101.4902	TUCO INTERCHANGE - TUCO_2 345.00 345KV CKT 1
FDNS	06NR	2	20L	G15_041	FROM->TO	G14-074T 345.00 - OKLAUNION 345KV CKT 1	1022	1124	0.09475	101.2851	BUSHLAND INTERCHANGE - DEAF SMITH COUNTY INTERCHANGE 230KV CKT 1

SOLUTION	GROUP	SCENARIO	SEASON	SOURCE	DIRECTION	MONITORED ELEMENT	RATEA (MVA)	RATEB(MVA)	TDF	TC%LOADING (% MVA)	CONTINGENCY
FDNS	06NR	2	20L	G15_041	FROM->TO	G14-074T 345.00 - OKLAUNION 345KV CKT 1	1022	1124	0.09475	101.2851	BUSHLAND INTERCHANGE - DEAF SMITH COUNTY INTERCHANGE 230KV CKT 1
FDNS	06NR	2	20L	G15_041	FROM->TO	G14-074T 345.00 - OKLAUNION 345KV CKT 1	1022	1124	0.08996	101.2671	MOORE COUNTY INTERCHANGE - POTTER COUNTY INTERCHANGE 230KV CKT 1
FDNS	06NR	2	20L	G15_041	FROM->TO	G14-074T 345.00 - OKLAUNION 345KV CKT 1	1022	1124	0.08996	101.2671	MOORE COUNTY INTERCHANGE - POTTER COUNTY INTERCHANGE 230KV CKT 1
FDNS	06NR	2	20L	G15_041	FROM->TO	G14-074T 345.00 - OKLAUNION 345KV CKT 1	1022	1124	0.08922	101.2654	G11-14T 345.00 - WOODWARD DISTRICT EHV 345KV CKT 1
FDNS	06NR	2	20L	G15_041	FROM->TO	G14-074T 345.00 - OKLAUNION 345KV CKT 1	1022	1124	0.08922	101.2654	G11-14T 345.00 - WOODWARD DISTRICT EHV 345KV CKT 2
FDNS	00NR	2	25SP	G15_041	FROM->TO	Hitchland Interchange (H TB80155502) 345/230/13.2KV TRANSFORMER CKT 1	560	644	0.04979	99.7	Hitchland Interchange (SIEM 8743067) 345/230/13.2KV TRANSFORMER CKT 2
FDNS	00NR	2	25SP	G15_041	FROM->TO	Hitchland Interchange (H TB80155502) 345/230/13.2KV TRANSFORMER CKT 1	560	644	0.04979	99.7	Hitchland Interchange (SIEM 8743067) 345/230/13.2KV TRANSFORMER CKT 2
FDNS	00NR	2	25SP	G15_041	FROM->TO	Hitchland Interchange (SIEM 8743067) 345/230/13.2KV TRANSFORMER CKT 2	560	644	0.05082	101.9783	Hitchland Interchange (H TB80155502) 345/230/13.2KV TRANSFORMER CKT 1
FDNS	00NR	2	25SP	G15_041	FROM->TO	Hitchland Interchange (SIEM 8743067) 345/230/13.2KV TRANSFORMER CKT 2	560	644	0.05082	101.9783	Hitchland Interchange (H TB80155502) 345/230/13.2KV TRANSFORMER CKT 1
FDNS	00NR	2	25SP	G15_041	FROM->TO	Hitchland Interchange (SIEM 8743067) 345/230/13.2KV TRANSFORMER CKT 2	560	644	0.05082	100.1637	Hitchland Interchange (H TB80155502) 345/230/13.2KV TRANSFORMER CKT 1
FDNS	00NR	2	25SP	G15_041	FROM->TO	Hitchland Interchange (SIEM 8743067) 345/230/13.2KV TRANSFORMER CKT 2	560	644	0.05082	100.1637	Hitchland Interchange (H TB80155502) 345/230/13.2KV TRANSFORMER CKT 1
FDNS	00NR	2	25SP	G15_041	TO->FROM	JONES STATION - TUCO INTERCHANGE 230KV CKT 1	343.79	343.79	0.17401	139.1643	CARLISLE INTERCHANGE - TUCO INTERCHANGE 230KV CKT 1
FDNS	00NR	2	25SP	G15_041	TO->FROM	JONES STATION - TUCO INTERCHANGE 230KV CKT 1	343.79	343.79	0.17401	139.1643	CARLISLE INTERCHANGE - TUCO INTERCHANGE 230KV CKT 1
FDNS	00NR	2	25SP	G15_041	TO->FROM	JONES STATION - TUCO INTERCHANGE 230KV CKT 1	343.79	343.79	0.17131	122.6847	TUCO INTERCHANGE - YOAKUM_345 345.00 345KV CKT 1
FDNS	00NR	2	25SP	G15_041	TO->FROM	JONES STATION - TUCO INTERCHANGE 230KV CKT 1	343.79	343.79	0.1316	119.1138	GEN526333 1-JONES GEN #3 21 KV
FDNS	00NR	2	25SP	G15_041	TO->FROM	JONES STATION - TUCO INTERCHANGE 230KV CKT 1	343.79	343.79	0.1316	118.7159	GEN526334 1-JONES_4 116.500
FDNS	00NR	2	25SP	G15_041	TO->FROM	JONES STATION - TUCO INTERCHANGE 230KV CKT 1	343.79	343.79	0.15547	111.2162	CARLISLE INTERCHANGE - WOLFFORTH INTERCHANGE 230KV CKT 1
FDNS	00NR	2	25SP	G15_041	TO->FROM	JONES STATION - TUCO INTERCHANGE 230KV CKT 1	343.79	343.79	0.13838	106.9963	TUCO INTERCHANGE (ENRCO 136401) 230/115/13.2KV TRANSFORMER CKT 1
FDNS	00NR	2	25SP	G15_041	TO->FROM	JONES STATION - TUCO INTERCHANGE 230KV CKT 1	343.79	343.79	0.13838	106.9963	TUCO INTERCHANGE (ENRCO 136401) 230/115/13.2KV TRANSFORMER CKT 1
FDNS	00NR	2	25SP	G15_041	TO->FROM	JONES STATION - TUCO INTERCHANGE 230KV CKT 1	343.79	343.79	0.13838	106.9963	TUCO INTERCHANGE (ENRCO 136401) 230/115/13.2KV TRANSFORMER CKT 2
FDNS	00NR	2	25SP	G15_041	TO->FROM	JONES STATION - TUCO INTERCHANGE 230KV CKT 1	343.79	343.79	0.13838	106.9963	TUCO INTERCHANGE (ENRCO 136401) 230/115/13.2KV TRANSFORMER CKT 2
FDNS	00NR	2	25SP	G15_041	TO->FROM	JONES STATION - TUCO INTERCHANGE 230KV CKT 1	343.79	343.79	0.1316	106.4847	GEN526332 1-JONES GEN #2 21 KV
FDNS	00NR	2	25SP	G15_041	TO->FROM	JONES STATION - TUCO INTERCHANGE 230KV CKT 1	343.79	343.79	0.1316	106.4826	GEN526331 1-JONES GEN #1 22 KV
FDNS	00NR	2	25SP	G15_041	TO->FROM	JONES STATION - TUCO INTERCHANGE 230KV CKT 1	343.79	343.79	0.14042	105.6092	LUBBOCK EAST INTERCHANGE - TUCO INTERCHANGE 115KV CKT 1
FDNS	00NR	2	25SP	G15_041	TO->FROM	JONES STATION - TUCO INTERCHANGE 230KV CKT 1	343.79	343.79	0.14042	105.6092	LUBBOCK EAST INTERCHANGE - TUCO INTERCHANGE 115KV CKT 1
FDNS	00NR	2	25SP	G15_041	TO->FROM	JONES STATION - TUCO INTERCHANGE 230KV CKT 1	343.79	343.79	0.12697	105.4194	PLANT X STATION - SUNDOWN INTERCHANGE 230KV CKT 1
FDNS	00NR	2	25SP	G15_041	TO->FROM	JONES STATION - TUCO INTERCHANGE 230KV CKT 1	343.79	343.79	0.12697	105.4194	PLANT X STATION - SUNDOWN INTERCHANGE 230KV CKT 1
FDNS	00NR	2	25SP	G15_041	TO->FROM	JONES STATION - TUCO INTERCHANGE 230KV CKT 1	343.79	343.79	0.13554	102.5525	STANTON SUB - TUCO INTERCHANGE 115KV CKT 1
FDNS	00NR	2	25SP	G15_041	TO->FROM	JONES STATION - TUCO INTERCHANGE 230KV CKT 1	343.79	343.79	0.13369	102.3349	P12:230:LPL:K39.1.CRLSLE.LP-MLWK
FDNS	00NR	2	25SP	G15_041	TO->FROM	JONES STATION - TUCO INTERCHANGE 230KV CKT 1	343.79	343.79	0.13369	102.3335	LUBBOCK POWER & LIGHT-MILWAUKEE (M-E C0681251) 230/69/13.5KV TRANSFORMER CKT 1
FDNS	00NR	2	25SP	G15_041	TO->FROM	JONES STATION - TUCO INTERCHANGE 230KV CKT 1	343.79	343.79	0.13369	102.3335	LUBBOCK POWER & LIGHT-MILWAUKEE (M-E C0681251) 230/69/13.5KV TRANSFORMER CKT 1
FDNS	00NR	2	25SP	G15_041	TO->FROM	JONES STATION - TUCO INTERCHANGE 230KV CKT 1	343.79	343.79	0.13369	102.3328	CARLISLE INTERCHANGE - LUBBOCK POWER & LIGHT-MILWAUKEE 230KV CKT 1
FDNS	00NR	2	25SP	G15_041	TO->FROM	JONES STATION - TUCO INTERCHANGE 230KV CKT 1	343.79	343.79	0.14988	101.8206	TOLK STATION EAST - TUCO INTERCHANGE 230KV CKT 1
FDNS	00NR	2	25SP	G15_041	TO->FROM	JONES STATION - TUCO INTERCHANGE 230KV CKT 1	343.79	343.79	0.14988	101.8206	TOLK STATION EAST - TUCO INTERCHANGE 230KV CKT 1
FDNS	00NR	2	25SP	G15_041	TO->FROM	JONES STATION - TUCO INTERCHANGE 230KV CKT 1	343.79	343.79	0.13554	101.6251	P12:115:SPS:V15.1.TUCO.INDANA
FDNS	00NR	2	25SP	G15_041	TO->FROM	JONES STATION - TUCO INTERCHANGE 230KV CKT 1	343.79	343.79	0.13554	101.5793	INDIANA SUB - STANTON SUB 115KV CKT 1
FDNS	00NR	2	25SP	G15_041	TO->FROM	JONES STATION - TUCO INTERCHANGE 230KV CKT 1	343.79	343.79	0.1316	100.7469	GEN527166 1-MUSTANG_6 118.000
FDNS	00NR	2	25SP	G15_041	TO->FROM	JONES STATION - TUCO INTERCHANGE 230KV CKT 1	343.79	343.79	0.1316	100.7466	GEN527903 1-HOBBS PLANT #3 (ST)
FDNS	00NR	2	25SP	G15_041	TO->FROM	JONES STATION - TUCO INTERCHANGE 230KV CKT 1	343.79	343.79	0.13257	100.3452	CARLISLE INTERCHANGE - MURPHY SUB 115KV CKT 1
FDNS	00NR	2	25SP	G15_041	TO->FROM	JONES STATION - TUCO INTERCHANGE 230KV CKT 1	343.79	343.79	0.13257	100.3452	CARLISLE INTERCHANGE - MURPHY SUB 115KV CKT 1
FDNS	00NR	2	25SP	G15_041	TO->FROM	JONES STATION - TUCO INTERCHANGE 230KV CKT 1	343.79	343.79	0.132	100.3228	KRESS INTERCHANGE - SWISHER COUNTY INTERCHANGE 115KV CKT 1
FDNS	00NR	2	25SP	G15_041	TO->FROM	JONES STATION - TUCO INTERCHANGE 230KV CKT 1	343.79	343.79	0.132	100.3228	KRESS INTERCHANGE - SWISHER COUNTY INTERCHANGE 115KV CKT 1
FDNS	00NR	2	25SP	G15_041	TO->FROM	JONES STATION - TUCO INTERCHANGE 230KV CKT 1	343.79	343.79	0.1316	100.2967	GEN528501 1-G14_012 24.000
FDNS	00NR	2	25SP	G15_041	TO->FROM	JONES STATION - TUCO INTERCHANGE 230KV CKT 1	343.79	343.79	0.141	100.1964	YOAKUM_345 345.00 (UPDATE DATA) 345/230/13.2KV TRANSFORMER CKT 1
FDNS	00NR	2	25SP	G15_041	TO->FROM	JONES STATION - TUCO INTERCHANGE 230KV CKT 1	343.79	343.79	0.13554	99.9	INDIANA SUB - SOUTH PLAINS REC-ERSKINE 115KV CKT 1
FDNS	00NR	2	25SP	G15_041	TO->FROM	JONES STATION - TUCO INTERCHANGE 230KV CKT 1	343.79	343.79	0.13324	99.8	FLOYD COUNTY INTERCHANGE - TUCO INTERCHANGE 115KV CKT 1
FDNS	00NR	2	25SP	G15_041	TO->FROM	JONES STATION - TUCO INTERCHANGE 230KV CKT 1	343.79	343.79	0.13324	99.8	FLOYD COUNTY INTERCHANGE - TUCO INTERCHANGE 115KV CKT 1
FDNS	00NR	2	25SP	G15_041	TO->FROM	JONES STATION - TUCO INTERCHANGE 230KV CKT 1	343.79	343.79	0.13256	99.7	POTTER COUNTY INTERCHANGE (WAUK 90343-A) 345/230/13.2KV TRANSFORMER CKT 1
FDNS	00NR	2	25SP	G15_041	TO->FROM	JONES STATION - TUCO INTERCHANGE 230KV CKT 1	343.79	343.79	0.13256	99.7	POTTER COUNTY INTERCHANGE (WAUK 90343-A) 345/230/13.2KV TRANSFORMER CKT 1
FDNS	00NR	2	25SP	G15_041	TO->FROM	JONES STATION - TUCO INTERCHANGE 230KV CKT 1	343.79	343.79	0.1316	99.7	GEN563122 1-G15077_3 0.3850
FDNS	00NR	2	25SP	G15_041	TO->FROM	JONES STATION - TUCO INTERCHANGE 230KV CKT 1	343.79	343.79	0.1316	99.6	GEN527901 1-HOBBS PLANT #1 (CT)
FDNS	00NR	2	25SP	G15_041	TO->FROM	JONES STATION - TUCO INTERCHANGE 230KV CKT 1	343.79	343.79	0.1316	99.6	GEN527902 1-HOBBS PLANT #2 (CT)
FDNS	00NR	2	25SP	G15_041	TO->FROM	JONES STATION - TUCO INTERCHANGE 230KV CKT 1	343.79	343.79	0.1316	99.6	GEN563102 1-G15075_3 0.5500
FDNS	00NR	2	25SP	G15_041	TO->FROM	KRESS INTERCHANGE - SWISHER COUNTY INTERCHANGE 115KV CKT 1	218	239	0.03074	118.9382	NEWHART 230 - SWISHER COUNTY INTERCHANGE 230KV CKT 1
FDNS	00NR	2	17SP	G15_041	TO->FROM	KRESS INTERCHANGE - SWISHER COUNTY INTERCHANGE 115KV CKT 1	218	239	0.0454	103.6501	NEWHART 230 - SWISHER COUNTY INTERCHANGE 230KV CKT 1
FDNS	00NR	2	20SP	G15_041	TO->FROM	KRESS INTERCHANGE - SWISHER COUNTY INTERCHANGE 115KV CKT 1	218	239	0.03144	101.6807	NEWHART 230 - SWISHER COUNTY INTERCHANGE 230KV CKT 1
FDNS	00NR	2	25SP	G15_041	FROM->TO	LUBBOCK POWER & LIGHT-HOLLY PLANT (SHIH T101039) 230/69/13.5KV TRANSFORMER CKT 1	224	224	0.03597	104.7613	LUBBOCK POWER & LIGHT-SOUTHEAST - LUBBOCK SOUTH INTERCHANGE 230KV CKT 1
FDNS	00NR	2	25SP	G15_041	FROM->TO	LUBBOCK POWER & LIGHT-HOLLY PLANT (SHIH T101039) 230/69/13.5KV TRANSFORMER CKT 1	224	224	0.03597	104.7484	P12:LPL:SPS:K64.1.LP-SE.LUBBS
FDNS	00NR	2	25SP	G15_041	FROM->TO	LUBBOCK POWER & LIGHT-HOLLY PLANT (SHIH T101039) 230/69/13.5KV TRANSFORMER CKT 1	224	224	0.0354	102.133	P12:230:LPL:K57.1.LP-WADS.LUBBE
FDNS	00NR	2	25SP	G15_041	FROM->TO	LUBBOCK POWER & LIGHT-HOLLY PLANT (SHIH T101039) 230/69/13.5KV TRANSFORMER CKT 1	224	224	0.0354	102.1329	LUBBOCK POWER & LIGHT-WADSWORTH (SHIH T101038) 230/69/13.5KV TRANSFORMER CKT 1
FDNS	00NR	2	25SP	G15_041	FROM->TO	LUBBOCK POWER & LIGHT-HOLLY PLANT (SHIH T101039) 230/69/13.5KV TRANSFORMER CKT 1	224	224	0.0354	102.1329	LUBBOCK POWER & LIGHT-WADSWORTH (SHIH T101038) 230/69/13.5KV TRANSFORMER CKT 1
FDNS	00NR	2	25SP	G15_041	FROM->TO	LUBBOCK POWER & LIGHT-HOLLY PLANT (SHIH T101039) 230/69/13.5KV TRANSFORMER CKT 1	224	224	0.0354	101.829	LUBBOCK EAST INTERCHANGE - LUBBOCK POWER & LIGHT-WADSWORTH 230KV CKT 1
FDNS	00NR	2	25SP	G15_041	FROM->TO	POTTER COUNTY INTERCHANGE (WAUK 90343-A) 345/230/13.2KV TRANSFORMER CKT 1	560	560	0.05966	104.4906	HITCHLAND INTERCHANGE - MOORE COUNTY INTERCHANGE 230KV CKT 1
FDNS	00NR	2	25SP	G15_041	FROM->TO	POTTER COUNTY INTERCHANGE (WAUK 90343-A) 345/230/13.2KV TRANSFORMER CKT 1	560	560	0.05966	104.4906	HITCHLAND INTERCHANGE - MOORE COUNTY INTERCHANGE 230KV CKT 1
FDNS	00NR	2	25SP	G15_041	FROM->TO	POTTER COUNTY INTERCHANGE (WAUK 90343-A) 345/230/13.2KV TRANSFORMER CKT 1	560	560	0.03495	104.4508	G14-074T 345.00 - TUCO INTERCHANGE 345KV CKT 1
FDNS	00NR	2	25SP	G15_041	FROM->TO	POTTER COUNTY INTERCHANGE (WAUK 90343-A) 345/230/13.2KV TRANSFORMER CKT 1	560	560	0.03172	103.5835	BORDER 7345.00 - TUCO_2 345.00 345KV CKT 1
FDNS	00NR	2	25SP	G15_041	FROM->TO	POTTER COUNTY INTERCHANGE (WAUK 90343-A) 345/230/13.2KV TRANSFORMER CKT 1	560	560	0.05966	102.7887	HITCHLAND INTERCHANGE - MOORE COUNTY INTERCHANGE 230KV CKT 1
FDNS	00NR	2	25SP	G15_041	FROM->TO	POTTER COUNTY INTERCHANGE (WAUK 90343-A) 345/230/13.2KV TRANSFORMER CKT 1	560	560	0.05966	102.7887	HITCHLAND INTERCHANGE - MOORE COUNTY INTERCHANGE 230KV CKT 1
FDNS	00NR	2	25SP	G15_041	FROM->TO	POTTER COUNTY INTERCHANGE (WAUK 90343-A) 345/230/13.2KV TRANSFORMER CKT 1	560	560	0.03495	102.5774	G14-074T 345.00 - TUCO INTERCHANGE 345KV CKT 1
FDNS	00NR	2	25SP	G15_041	FROM->TO	POTTER COUNTY INTERCHANGE (WAUK 90343-A) 345/230/13.2KV TRANSFORMER CKT 1	560	560	0.03172	101.7573	BORDER 7345.00 - TUCO_2 345.00 345KV CKT 1
FDNS	00NR	2	25SP	G15_041	FROM->TO	POTTER COUNTY INTERCHANGE (WAUK 90343-A) 345/230/13.2KV TRANSFORMER CKT 1	560	560	0.03172	100.8717	BORDER 7345.00 - WOODWARD DISTRICT EHV 345KV CKT 1
FDNS	06NR	2	20L	G15_041	FROM->TO	TUCO INTERCHANGE - TUCO_2 230.00 230KV CKT 1	497	547	0.20622	110.6574	TUCO INTERCHANGE - TUCO_2 345.00 345KV CKT 1
FDNS	06NR	2	17G	G15_041	FROM->TO	TUCO INTERCHANGE - TUCO_2 230.00 230KV CKT 1	497	547	0.24046	106.5066	TUCO INTERCHANGE - TUCO_2 345.00 345KV CKT 1
FDNS	00NR	2	25SP	G15_041	FROM->TO	TUCO INTERCHANGE (ENRCO 136401) 230/115/13.2KV TRANSFORMER CKT 1	250	288	0.07112	123.4792	TUCO INTERCHANGE (ENRCO 136401) 230/115/13.2KV TRANSFORMER CKT 2
FDNS	00NR	2	25SP	G15_041	FROM->TO	TUCO INTERCHANGE (ENRCO 136401) 230/115/13.2KV TRANSFORMER CKT 1	250	288	0.07112	123.4792	TUCO INTERCHANGE (ENRCO 136401) 230/115/13.2KV TRANSFORMER CKT 2
FDNS	00NR	2	25SP	G15_041	FROM->TO	TUCO INTERCHANGE (ENRCO 136401) 230/115/13.2KV TRANSFORMER CKT 1	250	288	0.07112	115.8221	TUCO INTERCHANGE (ENRCO 136401) 230/115/13.2KV TRANSFORMER CKT 2
FDNS	00NR	2	25SP	G15_041	FROM->TO	TUCO INTERCHANGE (ENRCO 136401) 230/115/13.2KV TRANSFORMER CKT 1	250	288	0.07112	115.8221	TUCO INTERCHANGE (ENRCO 136401) 230/115/13.2KV TRANSFORMER CKT 2
FDNS	00NR	2	25SP	G15_041	FROM->TO	TUCO INTERCHANGE (ENRCO 136401) 230/115/13.2KV TRANSFORMER CKT 2	250	288	0.07112	123.4792	TUCO INTERCHANGE (ENRCO 136401) 230/115/13.2KV TRANSFORMER CKT 1
FDNS	00NR	2	25SP	G15_041	FROM->TO	TUCO INTERCHANGE (ENRCO 136401) 230/115/13.2KV TRANSFORMER CKT 2	250	288	0.07112	123.4792	TUCO INTERCHANGE (ENRCO 136401) 230/115/13.2KV TRANSFORMER CKT 1

SOLUTION	GROUP	SCENARIO	SEASON	SOURCE	DIRECTION	MONITORED ELEMENT	RATEA (MVA)	RATEB(MVA)	TDF	TC%LOADING (% MVA)	CONTINGENCY
FDNS	00NR	2	25SP	G15_041	FROM->TO	TUCO INTERCHANGE (ENRCO 136401) 230/115/13.2KV TRANSFORMER CKT 2	250	288	0.07112	115.8221	TUCO INTERCHANGE (ENRCO 136401) 230/115/13.2KV TRANSFORMER CKT 1
FDNS	00NR	2	25SP	G15_041	FROM->TO	TUCO INTERCHANGE (ENRCO 136401) 230/115/13.2KV TRANSFORMER CKT 2	250	288	0.07112	115.8221	TUCO INTERCHANGE (ENRCO 136401) 230/115/13.2KV TRANSFORMER CKT 1
FDNS	00NR	2	17SP	G15_041	FROM->TO	TUCO INTERCHANGE (GE M102345) 230/115/13.2KV TRANSFORMER CKT 1	242	252	0.09683	102.8207	TUCO INTERCHANGE (ENRCO 136401) 230/115/13.2KV TRANSFORMER CKT 2
FDNS	00NR	2	17SP	G15_041	FROM->TO	TUCO INTERCHANGE (GE M102345) 230/115/13.2KV TRANSFORMER CKT 1	242	252	0.09683	102.8207	TUCO INTERCHANGE (ENRCO 136401) 230/115/13.2KV TRANSFORMER CKT 2
FDNS	00NR	2	17SP	G15_041	FROM->TO	TUCO INTERCHANGE (GE M102345) 230/115/13.2KV TRANSFORMER CKT 1	242	252	0.09683	102.1676	TUCO INTERCHANGE (ENRCO 136401) 230/115/13.2KV TRANSFORMER CKT 2
FDNS	00NR	2	17SP	G15_041	FROM->TO	TUCO INTERCHANGE (GE M102345) 230/115/13.2KV TRANSFORMER CKT 1	242	252	0.09683	102.1676	TUCO INTERCHANGE (ENRCO 136401) 230/115/13.2KV TRANSFORMER CKT 2
FDNS	06NR	2	20L	G15_041	FROM->TO	TUCO_2 345.00 (TUCO_2 XFMR) 345/230/13.2KV TRANSFORMER CKT 1	560	560	0.05749	110.8937	TUCO INTERCHANGE - TUCO_2 345.00 345KV CKT 1
FDNS	06NR	2	20L	G15_041	FROM->TO	TUCO_2 345.00 (TUCO_2 XFMR) 345/230/13.2KV TRANSFORMER CKT 1	560	560	0.05749	108.3383	TUCO INTERCHANGE - TUCO_2 345.00 345KV CKT 1
FDNS	06NR	2	17G	G15_041	FROM->TO	TUCO_2 345.00 (TUCO_2 XFMR) 345/230/13.2KV TRANSFORMER CKT 1	560	560	0.06028	107.0023	TUCO INTERCHANGE - TUCO_2 345.00 345KV CKT 1
FDNS	06NR	2	17G	G15_041	FROM->TO	TUCO_2 345.00 (TUCO_2 XFMR) 345/230/13.2KV TRANSFORMER CKT 1	560	560	0.06028	104.728	TUCO INTERCHANGE - TUCO_2 345.00 345KV CKT 1
FDNS	06NR	3	17G	G15_041	TO->FROM	AMARILLO SOUTH INTERCHANGE - G15031_T 230.00 230KV CKT 1	318.7	350.57	0.09533	103.2239	NEWHART 230 - POTTER COUNTY INTERCHANGE 230KV CKT 1
FDNS	06NR	3	20L	G15_041	FROM->TO	BUSHLAND INTERCHANGE - POTTER COUNTY INTERCHANGE 230KV CKT 1	318.7	350.57	0.05651	102.6252	NEWHART 230 - POTTER COUNTY INTERCHANGE 230KV CKT 1
FDNS	00NR	3	16WP	G15_041	FROM->TO	G14-057T 345.00 - SUNNYSIDE 345KV CKT 1	717	789	0.0352	115.1889	GRACEMONT - LAWTON EASTSIDE 345KV CKT 1
FDNS	00NR	3	16WP	G15_041	FROM->TO	G14-057T 345.00 - SUNNYSIDE 345KV CKT 1	717	789	0.0352	115.1889	GRACEMONT - LAWTON EASTSIDE 345KV CKT 1
FDNS	00NR	3	20WP	G15_041	FROM->TO	G14-057T 345.00 - SUNNYSIDE 345KV CKT 1	717	789	0.03052	114.2681	GRACEMONT - LAWTON EASTSIDE 345KV CKT 1
FDNS	00NR	3	20WP	G15_041	FROM->TO	G14-057T 345.00 - SUNNYSIDE 345KV CKT 1	717	789	0.03052	114.2681	GRACEMONT - LAWTON EASTSIDE 345KV CKT 1
FDNS	06NR	3	20L	G15_041	FROM->TO	G14-057T 345.00 - SUNNYSIDE 345KV CKT 1	717	789	0.03491	111.5658	GRACEMONT - LAWTON EASTSIDE 345KV CKT 1
FDNS	06NR	3	20L	G15_041	FROM->TO	G14-057T 345.00 - SUNNYSIDE 345KV CKT 1	717	789	0.03491	111.5658	GRACEMONT - LAWTON EASTSIDE 345KV CKT 1
FDNS	06NR	3	17G	G15_041	FROM->TO	G14-057T 345.00 - SUNNYSIDE 345KV CKT 1	717	789	0.03647	102.1075	GRACEMONT - LAWTON EASTSIDE 345KV CKT 1
FDNS	06NR	3	17G	G15_041	FROM->TO	G14-057T 345.00 - SUNNYSIDE 345KV CKT 1	717	789	0.03647	102.1075	GRACEMONT - LAWTON EASTSIDE 345KV CKT 1
FDNS	06NR	3	20L	G15_041	FROM->TO	G14-074T 345.00 - OKLAUNION 345KV CKT 1	1022	1124	0.07987	108.2612	BASE CASE
FDNS	06NR	3	17G	G15_041	FROM->TO	G14-074T 345.00 - OKLAUNION 345KV CKT 1	1022	1124	0.08243	106.9843	G11_051T 345.00 - WOODWARD DISTRICT EHV 345KV CKT 1
FDNS	06NR	3	17G	G15_041	FROM->TO	G14-074T 345.00 - OKLAUNION 345KV CKT 1	1022	1124	0.08358	105.0698	BASE CASE
FDNS	06NR	3	20L	G15_041	FROM->TO	G14-074T 345.00 - OKLAUNION 345KV CKT 1	1022	1124	0.07616	103.3966	CHISHOLM7 345.00 - GRACEMONT 345KV CKT 1
FDNS	06NR	3	20L	G15_041	FROM->TO	G14-074T 345.00 - OKLAUNION 345KV CKT 1	1022	1124	0.07616	102.9036	CHISHOLM7 345.00 () 345/230/13.2KV TRANSFORMER CKT 1
FDNS	06NR	3	20L	G15_041	FROM->TO	G14-074T 345.00 - OKLAUNION 345KV CKT 1	1022	1124	0.09073	102.6829	AMARILLO SOUTH INTERCHANGE - G15031_T 230.00 230KV CKT 1
FDNS	06NR	3	20L	G15_041	FROM->TO	G14-074T 345.00 - OKLAUNION 345KV CKT 1	1022	1124	0.0875	102.2907	NEWHART 230 - POTTER COUNTY INTERCHANGE 230KV CKT 1
FDNS	06NR	3	20L	G15_041	FROM->TO	G14-074T 345.00 - OKLAUNION 345KV CKT 1	1022	1124	0.08433	101.9316	DEAF SMITH COUNTY INTERCHANGE - G15039_T 230.00 230KV CKT 1
FDNS	06NR	3	20L	G15_041	FROM->TO	G14-074T 345.00 - OKLAUNION 345KV CKT 1	1022	1124	0.08433	100.8261	G15039_T 230.00 - PLANT X STATION 230KV CKT 1
FDNS	06NR	3	20L	G15_041	FROM->TO	G14-074T 345.00 - OKLAUNION 345KV CKT 1	1022	1124	0.0796	100.637	MINGO - RED WILLOW 345KV CKT 1
FDNS	06NR	3	20L	G15_041	FROM->TO	G14-074T 345.00 - OKLAUNION 345KV CKT 1	1022	1124	0.0796	100.637	MINGO - RED WILLOW 345KV CKT 1
FDNS	06NR	3	20L	G15_041	FROM->TO	G14-074T 345.00 - OKLAUNION 345KV CKT 1	1022	1124	0.07879	100.065	CHILDRESS - LAKE PAULINE 138KV CKT 1
FDNS	06NR	3	20L	G15_041	FROM->TO	G14-074T 345.00 - OKLAUNION 345KV CKT 1	1022	1124	0.07879	100.065	CHILDRESS - LAKE PAULINE 138KV CKT 1
FDNS	06NR	3	20L	G15_041	FROM->TO	G14-074T 345.00 - OKLAUNION 345KV CKT 1	1022	1124	0.07919	100	CONWAY SUB - NICHOLS STATION 115KV CKT 1
FDNS	06NR	3	20L	G15_041	FROM->TO	G14-074T 345.00 - OKLAUNION 345KV CKT 1	1022	1124	0.07919	99.9	CONWAY SUB - KIRBY SWITCHING STATION 115KV CKT 1
FDNS	06NR	3	17G	G15_041	FROM->TO	G14-074T 345.00 - OKLAUNION 345KV CKT 1	1022	1124	0.09397	99.8	AMARILLO SOUTH INTERCHANGE - G15031_T 230.00 230KV CKT 1
FDNS	06NR	3	20L	G15_041	FROM->TO	G14-074T 345.00 - OKLAUNION 345KV CKT 1	1022	1124	0.07919	99.8	P12:115:SPS:T53.1.NICHLS.KIRBY
FDNS	06NR	3	20L	G15_041	FROM->TO	G14-074T 345.00 - OKLAUNION 345KV CKT 1	1022	1124	0.07982	99.7	IODINE - WOODWARD EHV 138KV CKT 1
FDNS	06NR	3	20L	G15_041	FROM->TO	G14-074T 345.00 - OKLAUNION 345KV CKT 1	1022	1124	0.07982	99.6	DEWEY - IODINE 138KV CKT 1
FDNS	06NR	3	20L	G15_041	FROM->TO	G14-074T 345.00 - OKLAUNION 345KV CKT 1	1022	1124	0.07982	99.6	WOODWARD - WWPAR4 138.00 138KV CKT 1
FDNS	06NR	3	20L	G15_041	FROM->TO	G14-074T 345.00 - OKLAUNION 345KV CKT 1	1022	1124	0.07982	99.6	WOODWARD EHV - WWPAR4 138.00 138KV CKT 1
FDNS	06NR	3	17G	G15_041	FROM->TO	G14-074T 345.00 - OKLAUNION 345KV CKT 1	1022	1124	0.07964	99.5	CHISHOLM7 345.00 - GRACEMONT 345KV CKT 1
FDNS	06NR	3	20L	G15_041	FROM->TO	G14-074T 345.00 - OKLAUNION 345KV CKT 1	1022	1124	0.07928	99.5	KIRBY SWITCHING STATION - MCCLELLAN SUB 115KV CKT 1
FDNS	06NR	3	20L	G15_041	FROM->TO	G14-074T 345.00 - OKLAUNION 345KV CKT 1	1022	1124	0.07928	99.5	MCCLELLAN SUB - MCLEAN RURAL SUB 115KV CKT 1
FDNS	00NR	3	25SP	G15_041	FROM->TO	Hitchland Interchange (SIEM 8743067) 345/230/13.2KV TRANSFORMER CKT 2	560	644	0.04397	100.776	Hitchland Interchange (H TB80155502) 345/230/13.2KV TRANSFORMER CKT 1
FDNS	00NR	3	25SP	G15_041	FROM->TO	Hitchland Interchange (SIEM 8743067) 345/230/13.2KV TRANSFORMER CKT 2	560	644	0.04397	100.776	Hitchland Interchange (H TB80155502) 345/230/13.2KV TRANSFORMER CKT 1
FDNS	00NR	3	25SP	G15_041	TO->FROM	JONES STATION - TUCO INTERCHANGE 230KV CKT 1	343.79	343.79	0.15033	130.1614	CARLISLE INTERCHANGE - TUCO INTERCHANGE 230KV CKT 1
FDNS	00NR	3	25SP	G15_041	TO->FROM	JONES STATION - TUCO INTERCHANGE 230KV CKT 1	343.79	343.79	0.15033	130.1614	CARLISLE INTERCHANGE - TUCO INTERCHANGE 230KV CKT 1
FDNS	00NR	3	25SP	G15_041	TO->FROM	JONES STATION - TUCO INTERCHANGE 230KV CKT 1	343.79	343.79	0.11608	113.3309	GEN526333 1-JONES GEN #3 21 KV
FDNS	00NR	3	25SP	G15_041	TO->FROM	JONES STATION - TUCO INTERCHANGE 230KV CKT 1	343.79	343.79	0.11608	112.9359	GEN526334 1-JONES_4 116.500
FDNS	00NR	3	25SP	G15_041	TO->FROM	JONES STATION - TUCO INTERCHANGE 230KV CKT 1	343.79	343.79	0.14047	108.5941	TUCO INTERCHANGE - YOAKUM_345 345.00 345KV CKT 1
FDNS	00NR	3	25SP	G15_041	TO->FROM	JONES STATION - TUCO INTERCHANGE 230KV CKT 1	343.79	343.79	0.13495	103.864	CARLISLE INTERCHANGE - WOLFFORTH INTERCHANGE 230KV CKT 1
FDNS	00NR	3	25SP	G15_041	TO->FROM	JONES STATION - TUCO INTERCHANGE 230KV CKT 1	343.79	343.79	0.11513	101.6819	PLANT X STATION - SUNDOWN INTERCHANGE 230KV CKT 1
FDNS	00NR	3	25SP	G15_041	TO->FROM	JONES STATION - TUCO INTERCHANGE 230KV CKT 1	343.79	343.79	0.11513	101.6819	PLANT X STATION - SUNDOWN INTERCHANGE 230KV CKT 1
FDNS	00NR	3	25SP	G15_041	TO->FROM	JONES STATION - TUCO INTERCHANGE 230KV CKT 1	343.79	343.79	0.11608	100.8779	GEN526332 1-JONES GEN #2 21 KV
FDNS	00NR	3	25SP	G15_041	TO->FROM	JONES STATION - TUCO INTERCHANGE 230KV CKT 1	343.79	343.79	0.11608	100.876	GEN526331 1-JONES GEN #1 22 KV
FDNS	00NR	3	25SP	G15_041	TO->FROM	JONES STATION - TUCO INTERCHANGE 230KV CKT 1	343.79	343.79	0.12142	100.7208	TUCO INTERCHANGE (ENRCO 136401) 230/115/13.2KV TRANSFORMER CKT 1
FDNS	00NR	3	25SP	G15_041	TO->FROM	JONES STATION - TUCO INTERCHANGE 230KV CKT 1	343.79	343.79	0.12142	100.7208	TUCO INTERCHANGE (ENRCO 136401) 230/115/13.2KV TRANSFORMER CKT 1
FDNS	00NR	3	25SP	G15_041	TO->FROM	JONES STATION - TUCO INTERCHANGE 230KV CKT 1	343.79	343.79	0.12142	100.7208	TUCO INTERCHANGE (ENRCO 136401) 230/115/13.2KV TRANSFORMER CKT 2
FDNS	00NR	3	25SP	G15_041	TO->FROM	JONES STATION - TUCO INTERCHANGE 230KV CKT 1	343.79	343.79	0.12142	100.7208	TUCO INTERCHANGE (ENRCO 136401) 230/115/13.2KV TRANSFORMER CKT 2
FDNS	00NR	3	25SP	G15_041	TO->FROM	JONES STATION - TUCO INTERCHANGE 230KV CKT 1	343.79	343.79	0.12413	99.8	LUBBOCK EAST INTERCHANGE - TUCO INTERCHANGE 115KV CKT 1
FDNS	00NR	3	25SP	G15_041	TO->FROM	JONES STATION - TUCO INTERCHANGE 230KV CKT 1	343.79	343.79	0.12413	99.8	LUBBOCK EAST INTERCHANGE - TUCO INTERCHANGE 115KV CKT 1
FDNS	00NR	3	25SP	G15_041	FROM->TO	LUBBOCK POWER & LIGHT-HOLLY PLANT (SHIH T101039) 230/69/13.5KV TRANSFORMER CKT 1	224	224	0.03593	104.7002	LUBBOCK POWER & LIGHT-SOUTHEAST - LUBBOCK SOUTH INTERCHANGE 230KV CKT 1
FDNS	00NR	3	25SP	G15_041	FROM->TO	LUBBOCK POWER & LIGHT-HOLLY PLANT (SHIH T101039) 230/69/13.5KV TRANSFORMER CKT 1	224	224	0.03593	104.6872	P12:LPL:SPS:K64.1.LP-SE.LUBBS
FDNS	00NR	3	25SP	G15_041	FROM->TO	LUBBOCK POWER & LIGHT-HOLLY PLANT (SHIH T101039) 230/69/13.5KV TRANSFORMER CKT 1	224	224	0.03516	101.9683	LUBBOCK EAST INTERCHANGE - LUBBOCK POWER & LIGHT-WADSWORTH 230KV CKT 1
FDNS	00NR	3	25SP	G15_041	FROM->TO	LUBBOCK POWER & LIGHT-HOLLY PLANT (SHIH T101039) 230/69/13.5KV TRANSFORMER CKT 1	224	224	0.03516	101.9535	P12:230:LPL:K57.1.LP-WADS.LUBBE
FDNS	00NR	3	25SP	G15_041	FROM->TO	LUBBOCK POWER & LIGHT-HOLLY PLANT (SHIH T101039) 230/69/13.5KV TRANSFORMER CKT 1	224	224	0.03516	101.9534	LUBBOCK POWER & LIGHT-WADSWORTH (SHIH T101038) 230/69/13.5KV TRANSFORMER CKT 1
FDNS	00NR	3	25SP	G15_041	FROM->TO	LUBBOCK POWER & LIGHT-HOLLY PLANT (SHIH T101039) 230/69/13.5KV TRANSFORMER CKT 1	224	224	0.03516	101.9534	LUBBOCK POWER & LIGHT-WADSWORTH (SHIH T101038) 230/69/13.5KV TRANSFORMER CKT 1
FDNS	00NR	3	25SP	G15_041	FROM->TO	POTTER COUNTY INTERCHANGE (WAUK 90343-A) 345/230/13.2KV TRANSFORMER CKT 1	560	560	0.04899	102.244	HITCHLAND INTERCHANGE - MOORE COUNTY INTERCHANGE 230KV CKT 1
FDNS	00NR	3	25SP	G15_041	FROM->TO	POTTER COUNTY INTERCHANGE (WAUK 90343-A) 345/230/13.2KV TRANSFORMER CKT 1	560	560	0.04899	102.244	HITCHLAND INTERCHANGE - MOORE COUNTY INTERCHANGE 230KV CKT 1
FDNS	00NR	3	25SP	G15_041	FROM->TO	POTTER COUNTY INTERCHANGE (WAUK 90343-A) 345/230/13.2KV TRANSFORMER CKT 1	560	560	0.04899	100.6701	HITCHLAND INTERCHANGE - MOORE COUNTY INTERCHANGE 230KV CKT 1
FDNS	00NR	3	25SP	G15_041	FROM->TO	POTTER COUNTY INTERCHANGE (WAUK 90343-A) 345/230/13.2KV TRANSFORMER CKT 1	560	560	0.04899	100.6701	HITCHLAND INTERCHANGE - MOORE COUNTY INTERCHANGE 230KV CKT 1
FDNS	00NR	3	25SP	G15_041	FROM->TO	TUCO INTERCHANGE (ENRCO 136401) 230/115/13.2KV TRANSFORMER CKT 1	250	288	0.05739	118.111	TUCO INTERCHANGE (ENRCO 136401) 230/115/13.2KV TRANSFORMER CKT 2
FDNS	00NR	3	25SP	G15_041	FROM->TO	TUCO INTERCHANGE (ENRCO 136401) 230/115/13.2KV TRANSFORMER CKT 1	250	288	0.05739	118.111	TUCO INTERCHANGE (ENRCO 136401) 230/115/13.2KV TRANSFORMER CKT 2
FDNS	00NR	3	25SP	G15_041	FROM->TO	TUCO INTERCHANGE (ENRCO 136401) 230/115/13.2KV TRANSFORMER CKT 1	250	288	0.05739	110.7214	TUCO INTERCHANGE (ENRCO 136401) 230/115/13.2KV TRANSFORMER CKT 2
FDNS	00NR	3	25SP	G15_041	FROM->TO	TUCO INTERCHANGE (ENRCO 136401) 230/115/13.2KV TRANSFORMER CKT 1	250	288	0.05739	110.7214	TUCO INTERCHANGE (ENRCO 136401) 230/115/13.2KV TRANSFORMER CKT 2
FDNS	00NR	3	25SP	G15_041	FROM->TO	TUCO INTERCHANGE (ENRCO 136401) 230/115/13.2KV TRANSFORMER CKT 2	250	288	0.05739	118.111	TUCO INTERCHANGE (ENRCO 136401) 230/115/13.2KV TRANSFORMER CKT 1
FDNS	00NR	3	25SP	G15_041	FROM->TO	TUCO INTERCHANGE (ENRCO 136401) 230/115/13.2KV TRANSFORMER CKT 2	250	288	0.05739	118.111	TUCO INTERCHANGE (ENRCO 136401) 230/115/13.2KV TRANSFORMER CKT 1
FDNS	00NR	3	25SP	G15_041	FROM->TO	TUCO INTERCHANGE (ENRCO 136401) 230/115/13.2KV TRANSFORMER CKT 2	250	288	0.05739	110.7214	TUCO INTERCHANGE (ENRCO 136401) 230/115/13.2KV TRANSFORMER CKT 1

SOLUTION	GROUP	SCENARIO	SEASON	SOURCE	DIRECTION	MONITORED ELEMENT	RATEA (MVA)	RATEB(MVA)	TDF	TC%LOADING (% MVA)	CONTINGENCY
FDNS	00NR	3	25SP	G15_041	FROM->TO	TUCO INTERCHANGE (ENRCO 136401) 230/115/13.2KV TRANSFORMER CKT 2	250	288	0.05739	110.7214	TUCO INTERCHANGE (ENRCO 136401) 230/115/13.2KV TRANSFORMER CKT 1
FDNS	00NR	4	16WP	G15_041	FROM->TO	G14-057T 345.00 - SUNNYSIDE 345KV CKT 1	717	789	0.03062	114.6085	GRACEMONT - LAWTON EASTSIDE 345KV CKT 1
FDNS	00NR	4	16WP	G15_041	FROM->TO	G14-057T 345.00 - SUNNYSIDE 345KV CKT 1	717	789	0.03062	114.6085	GRACEMONT - LAWTON EASTSIDE 345KV CKT 1
FDNS	06NR	4	17G	G15_041	FROM->TO	G14-074T 345.00 - OKLAUNION 345KV CKT 1	1022	1124	0.06237	105.4861	STATELINE INTERCHANGE - STLN-DEMARC6 230KV CKT 1
FDNS	06NR	4	17G	G15_041	FROM->TO	G14-074T 345.00 - OKLAUNION 345KV CKT 1	1022	1124	0.06237	105.4832	P12:230:AEPW-SPS:SWEETWT6:WHEELER 6
FDNS	06NR	4	17G	G15_041	FROM->TO	G14-074T 345.00 - OKLAUNION 345KV CKT 1	1022	1124	0.06237	105.0392	STLN-DEMARC6 - SWEETWATER 230KV CKT 1
FDNS	06NR	4	20L	G15_041	FROM->TO	G14-074T 345.00 - OKLAUNION 345KV CKT 1	1022	1124	0.06185	103.8229	GRAPEVINE INTERCHANGE - STATELINE INTERCHANGE 230KV CKT 1
FDNS	06NR	4	20L	G15_041	FROM->TO	G14-074T 345.00 - OKLAUNION 345KV CKT 1	1022	1124	0.06185	103.8229	GRAPEVINE INTERCHANGE - STATELINE INTERCHANGE 230KV CKT 1
FDNS	06NR	4	17G	G15_041	FROM->TO	G14-074T 345.00 - OKLAUNION 345KV CKT 1	1022	1124	0.07201	102.9967	MATHWSN7 345.00 - TATONGA7 345.00 345KV CKT 1
FDNS	06NR	4	20L	G15_041	FROM->TO	G14-074T 345.00 - OKLAUNION 345KV CKT 1	1022	1124	0.06743	101.1904	BASE CASE
FDNS	06NR	4	17G	G15_041	FROM->TO	G14-074T 345.00 - OKLAUNION 345KV CKT 1	1022	1124	0.06735	101.0862	GRAPEVINE INTERCHANGE - NICHOLS STATION 230KV CKT 1
FDNS	06NR	4	17G	G15_041	FROM->TO	G14-074T 345.00 - OKLAUNION 345KV CKT 1	1022	1124	0.06735	101.0862	GRAPEVINE INTERCHANGE - NICHOLS STATION 230KV CKT 1
FDNS	06NR	4	17G	G15_041	FROM->TO	G14-074T 345.00 - OKLAUNION 345KV CKT 1	1022	1124	0.07201	99.8	G11_051T 345.00 - TATONGA7 345.00 345KV CKT 1
FDNS	00NR	4	25SP	G15_041	FROM->TO	Hitchland Interchange (SIEM 8743067) 345/230/13.2KV TRANSFORMER CKT 2	560	644	0.04452	100.255	Hitchland Interchange (H TB80155502) 345/230/13.2KV TRANSFORMER CKT 1
FDNS	00NR	4	25SP	G15_041	FROM->TO	Hitchland Interchange (SIEM 8743067) 345/230/13.2KV TRANSFORMER CKT 2	560	644	0.04452	100.255	Hitchland Interchange (H TB80155502) 345/230/13.2KV TRANSFORMER CKT 1
FDNS	00NR	4	25SP	G15_041	TO->FROM	JONES STATION - TUCO INTERCHANGE 230KV CKT 1	343.79	343.79	0.15052	129.809	CARLISLE INTERCHANGE - TUCO INTERCHANGE 230KV CKT 1
FDNS	00NR	4	25SP	G15_041	TO->FROM	JONES STATION - TUCO INTERCHANGE 230KV CKT 1	343.79	343.79	0.15052	129.809	CARLISLE INTERCHANGE - TUCO INTERCHANGE 230KV CKT 1
FDNS	00NR	4	25SP	G15_041	TO->FROM	JONES STATION - TUCO INTERCHANGE 230KV CKT 1	343.79	343.79	0.11616	113.028	GEN526333 1-JONES GEN #3 21 KV
FDNS	00NR	4	25SP	G15_041	TO->FROM	JONES STATION - TUCO INTERCHANGE 230KV CKT 1	343.79	343.79	0.11616	112.6359	GEN526334 1-JONES_4 116.500
FDNS	00NR	4	25SP	G15_041	TO->FROM	JONES STATION - TUCO INTERCHANGE 230KV CKT 1	343.79	343.79	0.14075	108.0461	TUCO INTERCHANGE - YOAKUM_345 345.00 345KV CKT 1
FDNS	00NR	4	25SP	G15_041	TO->FROM	JONES STATION - TUCO INTERCHANGE 230KV CKT 1	343.79	343.79	0.13513	103.563	CARLISLE INTERCHANGE - WOLFFORTH INTERCHANGE 230KV CKT 1
FDNS	00NR	4	25SP	G15_041	TO->FROM	JONES STATION - TUCO INTERCHANGE 230KV CKT 1	343.79	343.79	0.11532	101.3715	PLANT X STATION - SUNDOWN INTERCHANGE 230KV CKT 1
FDNS	00NR	4	25SP	G15_041	TO->FROM	JONES STATION - TUCO INTERCHANGE 230KV CKT 1	343.79	343.79	0.11532	101.3715	PLANT X STATION - SUNDOWN INTERCHANGE 230KV CKT 1
FDNS	00NR	4	25SP	G15_041	TO->FROM	JONES STATION - TUCO INTERCHANGE 230KV CKT 1	343.79	343.79	0.12861	100.6898	P12:345:SPS:J02.1.TOLK.EDDY
FDNS	00NR	4	25SP	G15_041	TO->FROM	JONES STATION - TUCO INTERCHANGE 230KV CKT 1	343.79	343.79	0.11616	100.6764	GEN526332 1-JONES GEN #2 21 KV
FDNS	00NR	4	25SP	G15_041	TO->FROM	JONES STATION - TUCO INTERCHANGE 230KV CKT 1	343.79	343.79	0.11616	100.6745	GEN526331 1-JONES GEN #1 22 KV
FDNS	00NR	4	25SP	G15_041	TO->FROM	JONES STATION - TUCO INTERCHANGE 230KV CKT 1	343.79	343.79	0.12139	100.6429	TUCO INTERCHANGE (ENRCO 136401) 230/115/13.2KV TRANSFORMER CKT 1
FDNS	00NR	4	25SP	G15_041	TO->FROM	JONES STATION - TUCO INTERCHANGE 230KV CKT 1	343.79	343.79	0.12139	100.6429	TUCO INTERCHANGE (ENRCO 136401) 230/115/13.2KV TRANSFORMER CKT 1
FDNS	00NR	4	25SP	G15_041	TO->FROM	JONES STATION - TUCO INTERCHANGE 230KV CKT 1	343.79	343.79	0.12139	100.6429	TUCO INTERCHANGE (ENRCO 136401) 230/115/13.2KV TRANSFORMER CKT 2
FDNS	00NR	4	25SP	G15_041	TO->FROM	JONES STATION - TUCO INTERCHANGE 230KV CKT 1	343.79	343.79	0.12139	100.6429	TUCO INTERCHANGE (ENRCO 136401) 230/115/13.2KV TRANSFORMER CKT 2
FDNS	00NR	4	25SP	G15_041	TO->FROM	JONES STATION - TUCO INTERCHANGE 230KV CKT 1	343.79	343.79	0.12431	99.8	LUBBOCK EAST INTERCHANGE - TUCO INTERCHANGE 115KV CKT 1
FDNS	00NR	4	25SP	G15_041	TO->FROM	JONES STATION - TUCO INTERCHANGE 230KV CKT 1	343.79	343.79	0.12431	99.8	LUBBOCK EAST INTERCHANGE - TUCO INTERCHANGE 115KV CKT 1
FDNS	00NR	4	25SP	G15_041	FROM->TO	LUBBOCK POWER & LIGHT-HOLLY PLANT (SHIH T101039) 230/69/13.5KV TRANSFORMER CKT 1	224	224	0.03593	104.6928	LUBBOCK POWER & LIGHT-SOUTHEAST - LUBBOCK SOUTH INTERCHANGE 230KV CKT 1
FDNS	00NR	4	25SP	G15_041	FROM->TO	LUBBOCK POWER & LIGHT-HOLLY PLANT (SHIH T101039) 230/69/13.5KV TRANSFORMER CKT 1	224	224	0.03593	104.6926	P12:LPL:SPS:K64.1.LP-SE.LUBBS
FDNS	00NR	4	25SP	G15_041	FROM->TO	LUBBOCK POWER & LIGHT-HOLLY PLANT (SHIH T101039) 230/69/13.5KV TRANSFORMER CKT 1	224	224	0.03517	101.9377	LUBBOCK EAST INTERCHANGE - LUBBOCK POWER & LIGHT-WADSWORTH 230KV CKT 1
FDNS	00NR	4	25SP	G15_041	FROM->TO	LUBBOCK POWER & LIGHT-HOLLY PLANT (SHIH T101039) 230/69/13.5KV TRANSFORMER CKT 1	224	224	0.03517	101.923	P12:230:LPL:K57.1.LP-WADS.LUBBE
FDNS	00NR	4	25SP	G15_041	FROM->TO	LUBBOCK POWER & LIGHT-HOLLY PLANT (SHIH T101039) 230/69/13.5KV TRANSFORMER CKT 1	224	224	0.03517	101.9229	LUBBOCK POWER & LIGHT-WADSWORTH (SHIH T101038) 230/69/13.5KV TRANSFORMER CKT 1
FDNS	00NR	4	25SP	G15_041	FROM->TO	LUBBOCK POWER & LIGHT-HOLLY PLANT (SHIH T101039) 230/69/13.5KV TRANSFORMER CKT 1	224	224	0.03517	101.9229	LUBBOCK POWER & LIGHT-WADSWORTH (SHIH T101038) 230/69/13.5KV TRANSFORMER CKT 1
FDNS	00NR	4	25SP	G15_041	FROM->TO	TUCO INTERCHANGE (ENRCO 136401) 230/115/13.2KV TRANSFORMER CKT 1	250	288	0.0562	119.2845	TUCO INTERCHANGE (ENRCO 136401) 230/115/13.2KV TRANSFORMER CKT 2
FDNS	00NR	4	25SP	G15_041	FROM->TO	TUCO INTERCHANGE (ENRCO 136401) 230/115/13.2KV TRANSFORMER CKT 1	250	288	0.0562	119.2845	TUCO INTERCHANGE (ENRCO 136401) 230/115/13.2KV TRANSFORMER CKT 2
FDNS	00NR	4	25SP	G15_041	FROM->TO	TUCO INTERCHANGE (ENRCO 136401) 230/115/13.2KV TRANSFORMER CKT 1	250	288	0.0562	111.9148	TUCO INTERCHANGE (ENRCO 136401) 230/115/13.2KV TRANSFORMER CKT 2
FDNS	00NR	4	25SP	G15_041	FROM->TO	TUCO INTERCHANGE (ENRCO 136401) 230/115/13.2KV TRANSFORMER CKT 1	250	288	0.0562	111.9148	TUCO INTERCHANGE (ENRCO 136401) 230/115/13.2KV TRANSFORMER CKT 2
FDNS	00NR	4	25SP	G15_041	FROM->TO	TUCO INTERCHANGE (ENRCO 136401) 230/115/13.2KV TRANSFORMER CKT 2	250	288	0.0562	119.2845	TUCO INTERCHANGE (ENRCO 136401) 230/115/13.2KV TRANSFORMER CKT 1
FDNS	00NR	4	25SP	G15_041	FROM->TO	TUCO INTERCHANGE (ENRCO 136401) 230/115/13.2KV TRANSFORMER CKT 2	250	288	0.0562	119.2845	TUCO INTERCHANGE (ENRCO 136401) 230/115/13.2KV TRANSFORMER CKT 1
FDNS	00NR	4	25SP	G15_041	FROM->TO	TUCO INTERCHANGE (ENRCO 136401) 230/115/13.2KV TRANSFORMER CKT 2	250	288	0.0562	111.9148	TUCO INTERCHANGE (ENRCO 136401) 230/115/13.2KV TRANSFORMER CKT 1
FDNS	00NR	4	25SP	G15_041	FROM->TO	TUCO INTERCHANGE (ENRCO 136401) 230/115/13.2KV TRANSFORMER CKT 2	250	288	0.0562	111.9148	TUCO INTERCHANGE (ENRCO 136401) 230/115/13.2KV TRANSFORMER CKT 1
FDNS	00NR	5	16WP	G15_041	FROM->TO	G14-057T 345.00 - SUNNYSIDE 345KV CKT 1	717	789	0.03137	113.0867	GRACEMONT - LAWTON EASTSIDE 345KV CKT 1
FDNS	00NR	5	16WP	G15_041	FROM->TO	G14-057T 345.00 - SUNNYSIDE 345KV CKT 1	717	789	0.03137	113.0867	GRACEMONT - LAWTON EASTSIDE 345KV CKT 1
FDNS	00NR	5	25SP	G15_041	FROM->TO	Hitchland Interchange (SIEM 8743067) 345/230/13.2KV TRANSFORMER CKT 2	560	644	0.04311	99.8	Hitchland Interchange (H TB80155502) 345/230/13.2KV TRANSFORMER CKT 1
FDNS	00NR	5	25SP	G15_041	FROM->TO	Hitchland Interchange (SIEM 8743067) 345/230/13.2KV TRANSFORMER CKT 2	560	644	0.04311	99.8	Hitchland Interchange (H TB80155502) 345/230/13.2KV TRANSFORMER CKT 1
FDNS	00NR	5	25SP	G15_041	TO->FROM	JONES STATION - TUCO INTERCHANGE 230KV CKT 1	343.79	343.79	0.15025	129.641	CARLISLE INTERCHANGE - TUCO INTERCHANGE 230KV CKT 1
FDNS	00NR	5	25SP	G15_041	TO->FROM	JONES STATION - TUCO INTERCHANGE 230KV CKT 1	343.79	343.79	0.15025	129.641	CARLISLE INTERCHANGE - TUCO INTERCHANGE 230KV CKT 1
FDNS	00NR	5	25SP	G15_041	TO->FROM	JONES STATION - TUCO INTERCHANGE 230KV CKT 1	343.79	343.79	0.11598	112.7964	GEN526333 1-JONES GEN #3 21 KV
FDNS	00NR	5	25SP	G15_041	TO->FROM	JONES STATION - TUCO INTERCHANGE 230KV CKT 1	343.79	343.79	0.11598	112.4061	GEN526334 1-JONES_4 116.500
FDNS	00NR	5	25SP	G15_041	TO->FROM	JONES STATION - TUCO INTERCHANGE 230KV CKT 1	343.79	343.79	0.14043	107.7831	TUCO INTERCHANGE - YOAKUM_345 345.00 345KV CKT 1
FDNS	00NR	5	25SP	G15_041	TO->FROM	JONES STATION - TUCO INTERCHANGE 230KV CKT 1	343.79	343.79	0.1349	103.4197	CARLISLE INTERCHANGE - WOLFFORTH INTERCHANGE 230KV CKT 1
FDNS	00NR	5	25SP	G15_041	TO->FROM	JONES STATION - TUCO INTERCHANGE 230KV CKT 1	343.79	343.79	0.11519	101.2834	PLANT X STATION - SUNDOWN INTERCHANGE 230KV CKT 1
FDNS	00NR	5	25SP	G15_041	TO->FROM	JONES STATION - TUCO INTERCHANGE 230KV CKT 1	343.79	343.79	0.11519	101.2834	PLANT X STATION - SUNDOWN INTERCHANGE 230KV CKT 1
FDNS	00NR	5	25SP	G15_041	TO->FROM	JONES STATION - TUCO INTERCHANGE 230KV CKT 1	343.79	343.79	0.12854	100.5886	P12:345:SPS:J02.1.TOLK.EDDY
FDNS	00NR	5	25SP	G15_041	TO->FROM	JONES STATION - TUCO INTERCHANGE 230KV CKT 1	343.79	343.79	0.11598	100.5344	GEN526332 1-JONES GEN #2 21 KV
FDNS	00NR	5	25SP	G15_041	TO->FROM	JONES STATION - TUCO INTERCHANGE 230KV CKT 1	343.79	343.79	0.11598	100.5324	GEN526331 1-JONES GEN #1 22 KV
FDNS	00NR	5	25SP	G15_041	TO->FROM	JONES STATION - TUCO INTERCHANGE 230KV CKT 1	343.79	343.79	0.12119	100.5232	TUCO INTERCHANGE (ENRCO 136401) 230/115/13.2KV TRANSFORMER CKT 1
FDNS	00NR	5	25SP	G15_041	TO->FROM	JONES STATION - TUCO INTERCHANGE 230KV CKT 1	343.79	343.79	0.12119	100.5232	TUCO INTERCHANGE (ENRCO 136401) 230/115/13.2KV TRANSFORMER CKT 1
FDNS	00NR	5	25SP	G15_041	TO->FROM	JONES STATION - TUCO INTERCHANGE 230KV CKT 1	343.79	343.79	0.12119	100.5232	TUCO INTERCHANGE (ENRCO 136401) 230/115/13.2KV TRANSFORMER CKT 2
FDNS	00NR	5	25SP	G15_041	TO->FROM	JONES STATION - TUCO INTERCHANGE 230KV CKT 1	343.79	343.79	0.12119	100.5232	TUCO INTERCHANGE (ENRCO 136401) 230/115/13.2KV TRANSFORMER CKT 2
FDNS	00NR	5	25SP	G15_041	TO->FROM	JONES STATION - TUCO INTERCHANGE 230KV CKT 1	343.79	343.79	0.12412	99.6	LUBBOCK EAST INTERCHANGE - TUCO INTERCHANGE 115KV CKT 1
FDNS	00NR	5	25SP	G15_041	TO->FROM	JONES STATION - TUCO INTERCHANGE 230KV CKT 1	343.79	343.79	0.12412	99.6	LUBBOCK EAST INTERCHANGE - TUCO INTERCHANGE 115KV CKT 1
FDNS	00NR	5	25SP	G15_041	FROM->TO	LUBBOCK POWER & LIGHT-HOLLY PLANT (SHIH T101039) 230/69/13.5KV TRANSFORMER CKT 1	224	224	0.03593	104.6927	LUBBOCK POWER & LIGHT-SOUTHEAST - LUBBOCK SOUTH INTERCHANGE 230KV CKT 1
FDNS	00NR	5	25SP	G15_041	FROM->TO	LUBBOCK POWER & LIGHT-HOLLY PLANT (SHIH T101039) 230/69/13.5KV TRANSFORMER CKT 1	224	224	0.03593	104.6925	P12:LPL:SPS:K64.1.LP-SE.LUBBS
FDNS	00NR	5	25SP	G15_041	FROM->TO	LUBBOCK POWER & LIGHT-HOLLY PLANT (SHIH T101039) 230/69/13.5KV TRANSFORMER CKT 1	224	224	0.03517	101.9351	LUBBOCK EAST INTERCHANGE - LUBBOCK POWER & LIGHT-WADSWORTH 230KV CKT 1
FDNS	00NR	5	25SP	G15_041	FROM->TO	LUBBOCK POWER & LIGHT-HOLLY PLANT (SHIH T101039) 230/69/13.5KV TRANSFORMER CKT 1	224	224	0.03517	101.9204	P12:230:LPL:K57.1.LP-WADS.LUBBE
FDNS	00NR	5	25SP	G15_041	FROM->TO	LUBBOCK POWER & LIGHT-HOLLY PLANT (SHIH T101039) 230/69/13.5KV TRANSFORMER CKT 1	224	224	0.03517	101.9203	LUBBOCK POWER & LIGHT-WADSWORTH (SHIH T101038) 230/69/13.5KV TRANSFORMER CKT 1
FDNS	00NR	5	25SP	G15_041	FROM->TO	LUBBOCK POWER & LIGHT-HOLLY PLANT (SHIH T101039) 230/69/13.5KV TRANSFORMER CKT 1	224	224	0.03517	101.9203	LUBBOCK POWER & LIGHT-WADSWORTH (SHIH T101038) 230/69/13.5KV TRANSFORMER CKT 1
FDNS	00NR	5	25SP	G15_041	FROM->TO	TUCO INTERCHANGE (ENRCO 136401) 230/115/13.2KV TRANSFORMER CKT 1	250	288	0.05599	119.1885	TUCO INTERCHANGE (ENRCO 136401) 230/115/13.2KV TRANSFORMER CKT 2
FDNS	00NR	5	25SP	G15_041	FROM->TO	TUCO INTERCHANGE (ENRCO 136401) 230/115/13.2KV TRANSFORMER CKT 1	250	288	0.05599	119.1885	TUCO INTERCHANGE (ENRCO 136401) 230/115/13.2KV TRANSFORMER CKT 2
FDNS	00NR	5	25SP	G15_041	FROM->TO	TUCO INTERCHANGE (ENRCO 136401) 230/115/13.2KV TRANSFORMER CKT 1	250	288	0.05599	111.8019	TUCO INTERCHANGE (ENRCO 136401) 230/115/13.2KV TRANSFORMER CKT 2
FDNS	00NR	5	25SP	G15_041	FROM->TO	TUCO INTERCHANGE (ENRCO 136401) 230/115/13.2KV TRANSFORMER CKT 1	250	288	0.05599	111.8019	TUCO INTERCHANGE (ENRCO 136401) 230/115/13.2KV TRANSFORMER CKT 2
FDNS	00NR	5	25SP	G15_041	FROM->TO	TUCO INTERCHANGE (ENRCO 136401) 230/115/13.2KV TRANSFORMER CKT 2	250	288	0.05599	119.1885	TUCO INTERCHANGE (ENRCO 136401) 230/115/13.2KV TRANSFORMER CKT 1
FDNS	00NR	5	25SP	G15_041	FROM->TO	TUCO INTERCHANGE (ENRCO 136401) 230/115/13.2KV TRANSFORMER CKT 2	250	288	0.05599	119.1885	TUCO INTERCHANGE (ENRCO 136401) 230/115/13.2KV TRANSFORMER CKT 1

SOLUTION	GROUP	SCENARIO	SEASON	SOURCE	DIRECTION	MONITORED ELEMENT	RATEA (MVA)	RATEB(MVA)	TDF	TC%LOADING (% MVA)	CONTINGENCY
FDNS	00NR	5	25SP	G15_041	FROM->TO	TUCO INTERCHANGE (ENRCO 136401) 230/115/13.2KV TRANSFORMER CKT 2	250	288	0.05599	111.8019	TUCO INTERCHANGE (ENRCO 136401) 230/115/13.2KV TRANSFORMER CKT 1
FDNS	00NR	5	25SP	G15_041	FROM->TO	TUCO INTERCHANGE (ENRCO 136401) 230/115/13.2KV TRANSFORMER CKT 2	250	288	0.05599	111.8019	TUCO INTERCHANGE (ENRCO 136401) 230/115/13.2KV TRANSFORMER CKT 1
FDNS	00NR	6	16WP	G15_041	FROM->TO	G14-057T 345.00 - SUNNYSIDE 345KV CKT 1	717	789	0.03189	110.3112	GRACEMONT - LAWTON EASTSIDE 345KV CKT 1
FDNS	00NR	6	16WP	G15_041	FROM->TO	G14-057T 345.00 - SUNNYSIDE 345KV CKT 1	717	789	0.03189	110.3112	GRACEMONT - LAWTON EASTSIDE 345KV CKT 1
FDNS	06NR	6	20L	G15_041	FROM->TO	G14-057T 345.00 - SUNNYSIDE 345KV CKT 1	717	789	0.02989	103.0603	GRACEMONT - LAWTON EASTSIDE 345KV CKT 1
FDNS	06NR	6	20L	G15_041	FROM->TO	G14-057T 345.00 - SUNNYSIDE 345KV CKT 1	717	789	0.02989	103.0603	GRACEMONT - LAWTON EASTSIDE 345KV CKT 1
FDNS	00NR	6	25SP	G15_041	FROM->TO	Hitchland Interchange (SIEM 8743067) 345/230/13.2KV TRANSFORMER CKT 2	560	644	0.04139	100.0805	Hitchland Interchange (H TB80155502) 345/230/13.2KV TRANSFORMER CKT 1
FDNS	00NR	6	25SP	G15_041	FROM->TO	Hitchland Interchange (SIEM 8743067) 345/230/13.2KV TRANSFORMER CKT 2	560	644	0.04139	100.0805	Hitchland Interchange (H TB80155502) 345/230/13.2KV TRANSFORMER CKT 1
FDNS	00NR	6	25SP	G15_041	TO->FROM	JONES STATION - TUCO INTERCHANGE 230KV CKT 1	343.79	343.79	0.1502	129.6325	CARLISLE INTERCHANGE - TUCO INTERCHANGE 230KV CKT 1
FDNS	00NR	6	25SP	G15_041	TO->FROM	JONES STATION - TUCO INTERCHANGE 230KV CKT 1	343.79	343.79	0.1502	129.6325	CARLISLE INTERCHANGE - TUCO INTERCHANGE 230KV CKT 1
FDNS	00NR	6	25SP	G15_041	TO->FROM	JONES STATION - TUCO INTERCHANGE 230KV CKT 1	343.79	343.79	0.11595	112.7855	GEN526333 1-JONES GEN #3 21 KV
FDNS	00NR	6	25SP	G15_041	TO->FROM	JONES STATION - TUCO INTERCHANGE 230KV CKT 1	343.79	343.79	0.11595	112.3951	GEN526334 1-JONES_4 116.500
FDNS	00NR	6	25SP	G15_041	TO->FROM	JONES STATION - TUCO INTERCHANGE 230KV CKT 1	343.79	343.79	0.14039	107.7709	TUCO INTERCHANGE - YOAKUM_345 345.00 345KV CKT 1
FDNS	00NR	6	25SP	G15_041	TO->FROM	JONES STATION - TUCO INTERCHANGE 230KV CKT 1	343.79	343.79	0.13486	103.4125	CARLISLE INTERCHANGE - WOLFFORTH INTERCHANGE 230KV CKT 1
FDNS	00NR	6	25SP	G15_041	TO->FROM	JONES STATION - TUCO INTERCHANGE 230KV CKT 1	343.79	343.79	0.11517	101.2811	PLANT X STATION - SUNDOWN INTERCHANGE 230KV CKT 1
FDNS	00NR	6	25SP	G15_041	TO->FROM	JONES STATION - TUCO INTERCHANGE 230KV CKT 1	343.79	343.79	0.11517	101.2811	PLANT X STATION - SUNDOWN INTERCHANGE 230KV CKT 1
FDNS	00NR	6	25SP	G15_041	TO->FROM	JONES STATION - TUCO INTERCHANGE 230KV CKT 1	343.79	343.79	0.12853	100.5783	P12:345:SPS:J02.1.TOLK.EDDY
FDNS	00NR	6	25SP	G15_041	TO->FROM	JONES STATION - TUCO INTERCHANGE 230KV CKT 1	343.79	343.79	0.11595	100.5273	GEN526332 1-JONES GEN #2 21 KV
FDNS	00NR	6	25SP	G15_041	TO->FROM	JONES STATION - TUCO INTERCHANGE 230KV CKT 1	343.79	343.79	0.11595	100.5254	GEN526331 1-JONES GEN #1 22 KV
FDNS	00NR	6	25SP	G15_041	TO->FROM	JONES STATION - TUCO INTERCHANGE 230KV CKT 1	343.79	343.79	0.12116	100.5163	TUCO INTERCHANGE (ENRCO 136401) 230/115/13.2KV TRANSFORMER CKT 1
FDNS	00NR	6	25SP	G15_041	TO->FROM	JONES STATION - TUCO INTERCHANGE 230KV CKT 1	343.79	343.79	0.12116	100.5163	TUCO INTERCHANGE (ENRCO 136401) 230/115/13.2KV TRANSFORMER CKT 1
FDNS	00NR	6	25SP	G15_041	TO->FROM	JONES STATION - TUCO INTERCHANGE 230KV CKT 1	343.79	343.79	0.12116	100.5163	TUCO INTERCHANGE (ENRCO 136401) 230/115/13.2KV TRANSFORMER CKT 2
FDNS	00NR	6	25SP	G15_041	TO->FROM	JONES STATION - TUCO INTERCHANGE 230KV CKT 1	343.79	343.79	0.12116	100.5163	TUCO INTERCHANGE (ENRCO 136401) 230/115/13.2KV TRANSFORMER CKT 2
FDNS	00NR	6	25SP	G15_041	TO->FROM	JONES STATION - TUCO INTERCHANGE 230KV CKT 1	343.79	343.79	0.12409	99.6	LUBBOCK EAST INTERCHANGE - TUCO INTERCHANGE 115KV CKT 1
FDNS	00NR	6	25SP	G15_041	TO->FROM	JONES STATION - TUCO INTERCHANGE 230KV CKT 1	343.79	343.79	0.12409	99.6	LUBBOCK EAST INTERCHANGE - TUCO INTERCHANGE 115KV CKT 1
FDNS	00NR	6	25SP	G15_041	FROM->TO	LUBBOCK POWER & LIGHT-HOLLY PLANT (SHIH T101039) 230/69/13.5KV TRANSFORMER CKT 1	224	224	0.03593	104.6926	LUBBOCK POWER & LIGHT-SOUTHEAST - LUBBOCK SOUTH INTERCHANGE 230KV CKT 1
FDNS	00NR	6	25SP	G15_041	FROM->TO	LUBBOCK POWER & LIGHT-HOLLY PLANT (SHIH T101039) 230/69/13.5KV TRANSFORMER CKT 1	224	224	0.03593	104.6924	P12:LPL:SPS:K64.1.LP-SE.LUBBS
FDNS	00NR	6	25SP	G15_041	FROM->TO	LUBBOCK POWER & LIGHT-HOLLY PLANT (SHIH T101039) 230/69/13.5KV TRANSFORMER CKT 1	224	224	0.03517	101.9349	LUBBOCK EAST INTERCHANGE - LUBBOCK POWER & LIGHT-WADSWORTH 230KV CKT 1
FDNS	00NR	6	25SP	G15_041	FROM->TO	LUBBOCK POWER & LIGHT-HOLLY PLANT (SHIH T101039) 230/69/13.5KV TRANSFORMER CKT 1	224	224	0.03517	101.9202	LUBBOCK POWER & LIGHT-WADSWORTH (SHIH T101038) 230/69/13.5KV TRANSFORMER CKT 1
FDNS	00NR	6	25SP	G15_041	FROM->TO	LUBBOCK POWER & LIGHT-HOLLY PLANT (SHIH T101039) 230/69/13.5KV TRANSFORMER CKT 1	224	224	0.03517	101.9202	LUBBOCK POWER & LIGHT-WADSWORTH (SHIH T101038) 230/69/13.5KV TRANSFORMER CKT 1
FDNS	00NR	6	25SP	G15_041	FROM->TO	LUBBOCK POWER & LIGHT-HOLLY PLANT (SHIH T101039) 230/69/13.5KV TRANSFORMER CKT 1	224	224	0.03517	101.9202	P12:230:LPL:K57.1.LP-WADS.LUBBE
FDNS	00NR	6	25SP	G15_041	FROM->TO	TUCO INTERCHANGE (ENRCO 136401) 230/115/13.2KV TRANSFORMER CKT 1	250	288	0.05596	119.1771	TUCO INTERCHANGE (ENRCO 136401) 230/115/13.2KV TRANSFORMER CKT 2
FDNS	00NR	6	25SP	G15_041	FROM->TO	TUCO INTERCHANGE (ENRCO 136401) 230/115/13.2KV TRANSFORMER CKT 1	250	288	0.05596	119.1771	TUCO INTERCHANGE (ENRCO 136401) 230/115/13.2KV TRANSFORMER CKT 2
FDNS	00NR	6	25SP	G15_041	FROM->TO	TUCO INTERCHANGE (ENRCO 136401) 230/115/13.2KV TRANSFORMER CKT 1	250	288	0.05596	111.7914	TUCO INTERCHANGE (ENRCO 136401) 230/115/13.2KV TRANSFORMER CKT 2
FDNS	00NR	6	25SP	G15_041	FROM->TO	TUCO INTERCHANGE (ENRCO 136401) 230/115/13.2KV TRANSFORMER CKT 1	250	288	0.05596	111.7914	TUCO INTERCHANGE (ENRCO 136401) 230/115/13.2KV TRANSFORMER CKT 2
FDNS	00NR	6	25SP	G15_041	FROM->TO	TUCO INTERCHANGE (ENRCO 136401) 230/115/13.2KV TRANSFORMER CKT 2	250	288	0.05596	119.1771	TUCO INTERCHANGE (ENRCO 136401) 230/115/13.2KV TRANSFORMER CKT 1
FDNS	00NR	6	25SP	G15_041	FROM->TO	TUCO INTERCHANGE (ENRCO 136401) 230/115/13.2KV TRANSFORMER CKT 2	250	288	0.05596	119.1771	TUCO INTERCHANGE (ENRCO 136401) 230/115/13.2KV TRANSFORMER CKT 1
FDNS	00NR	6	25SP	G15_041	FROM->TO	TUCO INTERCHANGE (ENRCO 136401) 230/115/13.2KV TRANSFORMER CKT 2	250	288	0.05596	111.7914	TUCO INTERCHANGE (ENRCO 136401) 230/115/13.2KV TRANSFORMER CKT 1
FDNS	00NR	6	25SP	G15_041	FROM->TO	TUCO INTERCHANGE (ENRCO 136401) 230/115/13.2KV TRANSFORMER CKT 2	250	288	0.05596	111.7914	TUCO INTERCHANGE (ENRCO 136401) 230/115/13.2KV TRANSFORMER CKT 1
FDNS	00NR	7	16WP	G15_041	FROM->TO	G14-057T 345.00 - SUNNYSIDE 345KV CKT 1	717	789	0.03189	110.8457	GRACEMONT - LAWTON EASTSIDE 345KV CKT 1
FDNS	00NR	7	16WP	G15_041	FROM->TO	G14-057T 345.00 - SUNNYSIDE 345KV CKT 1	717	789	0.03189	110.8457	GRACEMONT - LAWTON EASTSIDE 345KV CKT 1
FDNS	06NR	7	20L	G15_041	FROM->TO	G14-057T 345.00 - SUNNYSIDE 345KV CKT 1	717	789	0.02989	101.5168	GRACEMONT - LAWTON EASTSIDE 345KV CKT 1
FDNS	06NR	7	20L	G15_041	FROM->TO	G14-057T 345.00 - SUNNYSIDE 345KV CKT 1	717	789	0.02989	101.5168	GRACEMONT - LAWTON EASTSIDE 345KV CKT 1
FDNS	00NR	7	25SP	G15_041	TO->FROM	JONES STATION - TUCO INTERCHANGE 230KV CKT 1	343.79	343.79	0.1502	129.1537	CARLISLE INTERCHANGE - TUCO INTERCHANGE 230KV CKT 1
FDNS	00NR	7	25SP	G15_041	TO->FROM	JONES STATION - TUCO INTERCHANGE 230KV CKT 1	343.79	343.79	0.1502	129.1537	CARLISLE INTERCHANGE - TUCO INTERCHANGE 230KV CKT 1
FDNS	00NR	7	25SP	G15_041	TO->FROM	JONES STATION - TUCO INTERCHANGE 230KV CKT 1	343.79	343.79	0.11595	112.419	GEN526333 1-JONES GEN #3 21 KV
FDNS	00NR	7	25SP	G15_041	TO->FROM	JONES STATION - TUCO INTERCHANGE 230KV CKT 1	343.79	343.79	0.11595	112.036	GEN526334 1-JONES_4 116.500
FDNS	00NR	7	25SP	G15_041	TO->FROM	JONES STATION - TUCO INTERCHANGE 230KV CKT 1	343.79	343.79	0.14039	107.2187	TUCO INTERCHANGE - YOAKUM_345 345.00 345KV CKT 1
FDNS	00NR	7	25SP	G15_041	TO->FROM	JONES STATION - TUCO INTERCHANGE 230KV CKT 1	343.79	343.79	0.13486	103.0013	CARLISLE INTERCHANGE - WOLFFORTH INTERCHANGE 230KV CKT 1
FDNS	00NR	7	25SP	G15_041	TO->FROM	JONES STATION - TUCO INTERCHANGE 230KV CKT 1	343.79	343.79	0.11517	101.0414	PLANT X STATION - SUNDOWN INTERCHANGE 230KV CKT 1
FDNS	00NR	7	25SP	G15_041	TO->FROM	JONES STATION - TUCO INTERCHANGE 230KV CKT 1	343.79	343.79	0.11517	101.0414	PLANT X STATION - SUNDOWN INTERCHANGE 230KV CKT 1
FDNS	00NR	7	25SP	G15_041	TO->FROM	JONES STATION - TUCO INTERCHANGE 230KV CKT 1	343.79	343.79	0.12853	100.2536	P12:345:SPS:J02.1.TOLK.EDDY
FDNS	00NR	7	25SP	G15_041	TO->FROM	JONES STATION - TUCO INTERCHANGE 230KV CKT 1	343.79	343.79	0.11595	100.1954	GEN526332 1-JONES GEN #2 21 KV
FDNS	00NR	7	25SP	G15_041	TO->FROM	JONES STATION - TUCO INTERCHANGE 230KV CKT 1	343.79	343.79	0.11595	100.1934	GEN526331 1-JONES GEN #1 22 KV
FDNS	00NR	7	25SP	G15_041	TO->FROM	JONES STATION - TUCO INTERCHANGE 230KV CKT 1	343.79	343.79	0.12116	100.1486	TUCO INTERCHANGE (ENRCO 136401) 230/115/13.2KV TRANSFORMER CKT 1
FDNS	00NR	7	25SP	G15_041	TO->FROM	JONES STATION - TUCO INTERCHANGE 230KV CKT 1	343.79	343.79	0.12116	100.1486	TUCO INTERCHANGE (ENRCO 136401) 230/115/13.2KV TRANSFORMER CKT 1
FDNS	00NR	7	25SP	G15_041	TO->FROM	JONES STATION - TUCO INTERCHANGE 230KV CKT 1	343.79	343.79	0.12116	100.1486	TUCO INTERCHANGE (ENRCO 136401) 230/115/13.2KV TRANSFORMER CKT 2
FDNS	00NR	7	25SP	G15_041	TO->FROM	JONES STATION - TUCO INTERCHANGE 230KV CKT 1	343.79	343.79	0.12116	100.1486	TUCO INTERCHANGE (ENRCO 136401) 230/115/13.2KV TRANSFORMER CKT 2
FDNS	00NR	7	25SP	G15_041	FROM->TO	LUBBOCK POWER & LIGHT-HOLLY PLANT (SHIH T101039) 230/69/13.5KV TRANSFORMER CKT 1	224	224	0.03593	104.7009	LUBBOCK POWER & LIGHT-SOUTHEAST - LUBBOCK SOUTH INTERCHANGE 230KV CKT 1
FDNS	00NR	7	25SP	G15_041	FROM->TO	LUBBOCK POWER & LIGHT-HOLLY PLANT (SHIH T101039) 230/69/13.5KV TRANSFORMER CKT 1	224	224	0.03593	104.6879	P12:LPL:SPS:K64.1.LP-SE.LUBBS
FDNS	00NR	7	25SP	G15_041	FROM->TO	LUBBOCK POWER & LIGHT-HOLLY PLANT (SHIH T101039) 230/69/13.5KV TRANSFORMER CKT 1	224	224	0.03517	101.9255	LUBBOCK EAST INTERCHANGE - LUBBOCK POWER & LIGHT-WADSWORTH 230KV CKT 1
FDNS	00NR	7	25SP	G15_041	FROM->TO	LUBBOCK POWER & LIGHT-HOLLY PLANT (SHIH T101039) 230/69/13.5KV TRANSFORMER CKT 1	224	224	0.03517	101.9108	P12:230:LPL:K57.1.LP-WADS.LUBBE
FDNS	00NR	7	25SP	G15_041	FROM->TO	LUBBOCK POWER & LIGHT-HOLLY PLANT (SHIH T101039) 230/69/13.5KV TRANSFORMER CKT 1	224	224	0.03517	101.9107	LUBBOCK POWER & LIGHT-WADSWORTH (SHIH T101038) 230/69/13.5KV TRANSFORMER CKT 1
FDNS	00NR	7	25SP	G15_041	FROM->TO	LUBBOCK POWER & LIGHT-HOLLY PLANT (SHIH T101039) 230/69/13.5KV TRANSFORMER CKT 1	224	224	0.03517	101.9107	LUBBOCK POWER & LIGHT-WADSWORTH (SHIH T101038) 230/69/13.5KV TRANSFORMER CKT 1
FDNS	00NR	7	25SP	G15_041	FROM->TO	POTTER COUNTY INTERCHANGE (WAUK 90343-A) 345/230/13.2KV TRANSFORMER CKT 1	560	560	0.07313	100.2945	P12:345:SPS:J15.1.XRDS.TOLK
FDNS	00NR	7	25SP	G15_041	FROM->TO	POTTER COUNTY INTERCHANGE (WAUK 90343-A) 345/230/13.2KV TRANSFORMER CKT 1	560	560	0.07313	100.0757	P12:345:SPS:J15.1.XRDS.TOLK
FDNS	00NR	7	25SP	G15_041	FROM->TO	TUCO INTERCHANGE (ENRCO 136401) 230/115/13.2KV TRANSFORMER CKT 1	250	288	0.05596	118.7161	TUCO INTERCHANGE (ENRCO 136401) 230/115/13.2KV TRANSFORMER CKT 2
FDNS	00NR	7	25SP	G15_041	FROM->TO	TUCO INTERCHANGE (ENRCO 136401) 230/115/13.2KV TRANSFORMER CKT 1	250	288	0.05596	118.7161	TUCO INTERCHANGE (ENRCO 136401) 230/115/13.2KV TRANSFORMER CKT 2
FDNS	00NR	7	25SP	G15_041	FROM->TO	TUCO INTERCHANGE (ENRCO 136401) 230/115/13.2KV TRANSFORMER CKT 1	250	288	0.05596	111.3663	TUCO INTERCHANGE (ENRCO 136401) 230/115/13.2KV TRANSFORMER CKT 2
FDNS	00NR	7	25SP	G15_041	FROM->TO	TUCO INTERCHANGE (ENRCO 136401) 230/115/13.2KV TRANSFORMER CKT 1	250	288	0.05596	111.3663	TUCO INTERCHANGE (ENRCO 136401) 230/115/13.2KV TRANSFORMER CKT 2
FDNS	00NR	7	25SP	G15_041	FROM->TO	TUCO INTERCHANGE (ENRCO 136401) 230/115/13.2KV TRANSFORMER CKT 2	250	288	0.05596	118.7161	TUCO INTERCHANGE (ENRCO 136401) 230/115/13.2KV TRANSFORMER CKT 1
FDNS	00NR	7	25SP	G15_041	FROM->TO	TUCO INTERCHANGE (ENRCO 136401) 230/115/13.2KV TRANSFORMER CKT 2	250	288	0.05596	118.7161	TUCO INTERCHANGE (ENRCO 136401) 230/115/13.2KV TRANSFORMER CKT 1
FDNS	00NR	7	25SP	G15_041	FROM->TO	TUCO INTERCHANGE (ENRCO 136401) 230/115/13.2KV TRANSFORMER CKT 2	250	288	0.05596	111.3663	TUCO INTERCHANGE (ENRCO 136401) 230/115/13.2KV TRANSFORMER CKT 1
FDNS	00NR	7	25SP	G15_041	FROM->TO	TUCO INTERCHANGE (ENRCO 136401) 230/115/13.2KV TRANSFORMER CKT 2	250	288	0.05596	111.3663	TUCO INTERCHANGE (ENRCO 136401) 230/115/13.2KV TRANSFORMER CKT 1
FDNS	00NR	8	25SP	G15_041	TO->FROM	JONES STATION - TUCO INTERCHANGE 230KV CKT 1	343.79	343.79	0.14927	128.3131	CARLISLE INTERCHANGE - TUCO INTERCHANGE 230KV CKT 1
FDNS	00NR	8	25SP	G15_041	TO->FROM	JONES STATION - TUCO INTERCHANGE 230KV CKT 1	343.79	343.79	0.14927	128.3131	CARLISLE INTERCHANGE - TUCO INTERCHANGE 230KV CKT 1
FDNS	00NR	8	25SP	G15_041	TO->FROM	JONES STATION - TUCO INTERCHANGE 230KV CKT 1	343.79	343.79	0.11532	111.8492	GEN526333 1-JONES GEN #3 21 KV
FDNS	00NR	8	25SP	G15_041	TO->FROM	JONES STATION - TUCO INTERCHANGE 230KV CKT 1	343.79	343.79	0.11532	111.4668	GEN526334 1-JONES_4 116.500
FDNS	00NR	8	25SP	G15_041	TO->FROM	JONES STATION - TUCO INTERCHANGE 230KV CKT 1	343.79	343.79	0.13842	106.1183	TUCO_2 345.00 - YOAKUM_345 345.00 345KV CKT 1

SOLUTION	GROUP	SCENARIO	SEASON	SOURCE	DIRECTION	MONITORED ELEMENT	RATEA (MVA)	RATEB(MVA)	TDF	TC%LOADING (% MVA)	CONTINGENCY
FDNS	00NR	8	25SP	G15_041	TO->FROM	JONES STATION - TUCO INTERCHANGE 230KV CKT 1	343.79	343.79	0.13403	102.3279	CARLISLE INTERCHANGE - WOLFFORTH INTERCHANGE 230KV CKT 1
FDNS	00NR	8	25SP	G15_041	TO->FROM	JONES STATION - TUCO INTERCHANGE 230KV CKT 1	343.79	343.79	0.11523	100.9491	PLANT X STATION - SUNDOWN INTERCHANGE 230KV CKT 1
FDNS	00NR	8	25SP	G15_041	TO->FROM	JONES STATION - TUCO INTERCHANGE 230KV CKT 1	343.79	343.79	0.11523	100.9491	PLANT X STATION - SUNDOWN INTERCHANGE 230KV CKT 1
FDNS	00NR	8	25SP	G15_041	TO->FROM	JONES STATION - TUCO INTERCHANGE 230KV CKT 1	343.79	343.79	0.12863	99.7	P12:345:SPS:J02.1.TOLK.EDDY
FDNS	00NR	8	25SP	G15_041	TO->FROM	JONES STATION - TUCO INTERCHANGE 230KV CKT 1	343.79	343.79	0.12042	99.5	TUCO INTERCHANGE (ENRCO 136401) 230/115/13.2KV TRANSFORMER CKT 1
FDNS	00NR	8	25SP	G15_041	TO->FROM	JONES STATION - TUCO INTERCHANGE 230KV CKT 1	343.79	343.79	0.12042	99.5	TUCO INTERCHANGE (ENRCO 136401) 230/115/13.2KV TRANSFORMER CKT 1
FDNS	00NR	8	25SP	G15_041	TO->FROM	JONES STATION - TUCO INTERCHANGE 230KV CKT 1	343.79	343.79	0.12042	99.5	TUCO INTERCHANGE (ENRCO 136401) 230/115/13.2KV TRANSFORMER CKT 2
FDNS	00NR	8	25SP	G15_041	TO->FROM	JONES STATION - TUCO INTERCHANGE 230KV CKT 1	343.79	343.79	0.12042	99.5	TUCO INTERCHANGE (ENRCO 136401) 230/115/13.2KV TRANSFORMER CKT 2
FDNS	00NR	8	25SP	G15_041	TO->FROM	JONES STATION - TUCO INTERCHANGE 230KV CKT 1	343.79	343.79	0.11532	99.5	GEN526331 1-JONES GEN #1 22 KV
FDNS	00NR	8	25SP	G15_041	TO->FROM	JONES STATION - TUCO INTERCHANGE 230KV CKT 1	343.79	343.79	0.11532	99.5	GEN526332 1-JONES GEN #2 21 KV
FDNS	00NR	8	25SP	G15_041	FROM->TO	LUBBOCK POWER & LIGHT-HOLLY PLANT (SHIH T101039) 230/69/13.5KV TRANSFORMER CKT 1	224	224	0.03593	104.7109	LUBBOCK POWER & LIGHT-SOUTHEAST - LUBBOCK SOUTH INTERCHANGE 230KV CKT 1
FDNS	00NR	8	25SP	G15_041	FROM->TO	LUBBOCK POWER & LIGHT-HOLLY PLANT (SHIH T101039) 230/69/13.5KV TRANSFORMER CKT 1	224	224	0.03593	104.6979	P12:LPL:SPS:K64.1.LP-SE.LUBBS
FDNS	00NR	8	25SP	G15_041	FROM->TO	LUBBOCK POWER & LIGHT-HOLLY PLANT (SHIH T101039) 230/69/13.5KV TRANSFORMER CKT 1	224	224	0.03516	101.953	LUBBOCK EAST INTERCHANGE - LUBBOCK POWER & LIGHT-WADSWORTH 230KV CKT 1
FDNS	00NR	8	25SP	G15_041	FROM->TO	LUBBOCK POWER & LIGHT-HOLLY PLANT (SHIH T101039) 230/69/13.5KV TRANSFORMER CKT 1	224	224	0.03516	101.9381	P12:230:LPL:K57.1.LP-WADS.LUBBE
FDNS	00NR	8	25SP	G15_041	FROM->TO	LUBBOCK POWER & LIGHT-HOLLY PLANT (SHIH T101039) 230/69/13.5KV TRANSFORMER CKT 1	224	224	0.03516	101.938	LUBBOCK POWER & LIGHT-WADSWORTH (SHIH T101038) 230/69/13.5KV TRANSFORMER CKT 1
FDNS	00NR	8	25SP	G15_041	FROM->TO	LUBBOCK POWER & LIGHT-HOLLY PLANT (SHIH T101039) 230/69/13.5KV TRANSFORMER CKT 1	224	224	0.03516	101.938	LUBBOCK POWER & LIGHT-WADSWORTH (SHIH T101038) 230/69/13.5KV TRANSFORMER CKT 1
FDNS	00NR	8	25SP	G15_041	FROM->TO	TUCO INTERCHANGE (ENRCO 136401) 230/115/13.2KV TRANSFORMER CKT 1	250	288	0.05484	117.845	TUCO INTERCHANGE (ENRCO 136401) 230/115/13.2KV TRANSFORMER CKT 2
FDNS	00NR	8	25SP	G15_041	FROM->TO	TUCO INTERCHANGE (ENRCO 136401) 230/115/13.2KV TRANSFORMER CKT 1	250	288	0.05484	117.845	TUCO INTERCHANGE (ENRCO 136401) 230/115/13.2KV TRANSFORMER CKT 2
FDNS	00NR	8	25SP	G15_041	FROM->TO	TUCO INTERCHANGE (ENRCO 136401) 230/115/13.2KV TRANSFORMER CKT 1	250	288	0.05484	110.4553	TUCO INTERCHANGE (ENRCO 136401) 230/115/13.2KV TRANSFORMER CKT 2
FDNS	00NR	8	25SP	G15_041	FROM->TO	TUCO INTERCHANGE (ENRCO 136401) 230/115/13.2KV TRANSFORMER CKT 1	250	288	0.05484	110.4553	TUCO INTERCHANGE (ENRCO 136401) 230/115/13.2KV TRANSFORMER CKT 2
FDNS	00NR	8	25SP	G15_041	FROM->TO	TUCO INTERCHANGE (ENRCO 136401) 230/115/13.2KV TRANSFORMER CKT 2	250	288	0.05484	117.845	TUCO INTERCHANGE (ENRCO 136401) 230/115/13.2KV TRANSFORMER CKT 1
FDNS	00NR	8	25SP	G15_041	FROM->TO	TUCO INTERCHANGE (ENRCO 136401) 230/115/13.2KV TRANSFORMER CKT 2	250	288	0.05484	117.845	TUCO INTERCHANGE (ENRCO 136401) 230/115/13.2KV TRANSFORMER CKT 1
FDNS	00NR	8	25SP	G15_041	FROM->TO	TUCO INTERCHANGE (ENRCO 136401) 230/115/13.2KV TRANSFORMER CKT 2	250	288	0.05484	110.4553	TUCO INTERCHANGE (ENRCO 136401) 230/115/13.2KV TRANSFORMER CKT 1
FDNS	00NR	8	25SP	G15_041	FROM->TO	TUCO INTERCHANGE (ENRCO 136401) 230/115/13.2KV TRANSFORMER CKT 2	250	288	0.05484	110.4553	TUCO INTERCHANGE (ENRCO 136401) 230/115/13.2KV TRANSFORMER CKT 1
FDNS	00NR	9	25SP	G15_041	FROM->TO	LUBBOCK POWER & LIGHT-HOLLY PLANT (SHIH T101039) 230/69/13.5KV TRANSFORMER CKT 1	224	224	0.03591	104.6637	LUBBOCK POWER & LIGHT-SOUTHEAST - LUBBOCK SOUTH INTERCHANGE 230KV CKT 1
FDNS	00NR	9	25SP	G15_041	FROM->TO	LUBBOCK POWER & LIGHT-HOLLY PLANT (SHIH T101039) 230/69/13.5KV TRANSFORMER CKT 1	224	224	0.03591	104.6507	P12:LPL:SPS:K64.1.LP-SE.LUBBS
FDNS	00NR	9	25SP	G15_041	FROM->TO	LUBBOCK POWER & LIGHT-HOLLY PLANT (SHIH T101039) 230/69/13.5KV TRANSFORMER CKT 1	224	224	0.03517	101.7729	LUBBOCK EAST INTERCHANGE - LUBBOCK POWER & LIGHT-WADSWORTH 230KV CKT 1
FDNS	00NR	9	25SP	G15_041	FROM->TO	LUBBOCK POWER & LIGHT-HOLLY PLANT (SHIH T101039) 230/69/13.5KV TRANSFORMER CKT 1	224	224	0.03517	101.758	P12:230:LPL:K57.1.LP-WADS.LUBBE
FDNS	00NR	9	25SP	G15_041	FROM->TO	LUBBOCK POWER & LIGHT-HOLLY PLANT (SHIH T101039) 230/69/13.5KV TRANSFORMER CKT 1	224	224	0.03517	101.7579	LUBBOCK POWER & LIGHT-WADSWORTH (SHIH T101038) 230/69/13.5KV TRANSFORMER CKT 1
FDNS	00NR	9	25SP	G15_041	FROM->TO	LUBBOCK POWER & LIGHT-HOLLY PLANT (SHIH T101039) 230/69/13.5KV TRANSFORMER CKT 1	224	224	0.03517	101.7579	LUBBOCK POWER & LIGHT-WADSWORTH (SHIH T101038) 230/69/13.5KV TRANSFORMER CKT 1
FDNS	00NR	9	25SP	G15_041	FROM->TO	TUCO INTERCHANGE (ENRCO 136401) 230/115/13.2KV TRANSFORMER CKT 1	250	288	0.04154	119.7997	TUCO INTERCHANGE (ENRCO 136401) 230/115/13.2KV TRANSFORMER CKT 2
FDNS	00NR	9	25SP	G15_041	FROM->TO	TUCO INTERCHANGE (ENRCO 136401) 230/115/13.2KV TRANSFORMER CKT 1	250	288	0.04154	119.7997	TUCO INTERCHANGE (ENRCO 136401) 230/115/13.2KV TRANSFORMER CKT 2
FDNS	00NR	9	25SP	G15_041	FROM->TO	TUCO INTERCHANGE (ENRCO 136401) 230/115/13.2KV TRANSFORMER CKT 1	250	288	0.04154	111.4731	TUCO INTERCHANGE (ENRCO 136401) 230/115/13.2KV TRANSFORMER CKT 2
FDNS	00NR	9	25SP	G15_041	FROM->TO	TUCO INTERCHANGE (ENRCO 136401) 230/115/13.2KV TRANSFORMER CKT 1	250	288	0.04154	111.4731	TUCO INTERCHANGE (ENRCO 136401) 230/115/13.2KV TRANSFORMER CKT 2
FDNS	00NR	9	25SP	G15_041	FROM->TO	TUCO INTERCHANGE (ENRCO 136401) 230/115/13.2KV TRANSFORMER CKT 2	250	288	0.04154	119.7997	TUCO INTERCHANGE (ENRCO 136401) 230/115/13.2KV TRANSFORMER CKT 1
FDNS	00NR	9	25SP	G15_041	FROM->TO	TUCO INTERCHANGE (ENRCO 136401) 230/115/13.2KV TRANSFORMER CKT 2	250	288	0.04154	119.7997	TUCO INTERCHANGE (ENRCO 136401) 230/115/13.2KV TRANSFORMER CKT 1
FDNS	00NR	9	25SP	G15_041	FROM->TO	TUCO INTERCHANGE (ENRCO 136401) 230/115/13.2KV TRANSFORMER CKT 2	250	288	0.04154	111.4731	TUCO INTERCHANGE (ENRCO 136401) 230/115/13.2KV TRANSFORMER CKT 1
FDNS	00NR	9	25SP	G15_041	FROM->TO	TUCO INTERCHANGE (ENRCO 136401) 230/115/13.2KV TRANSFORMER CKT 2	250	288	0.04154	111.4731	TUCO INTERCHANGE (ENRCO 136401) 230/115/13.2KV TRANSFORMER CKT 1
FDNSLock-Blown up	00NR	0	16WP	G15_042		Non-Converged Contingency	720	720	0.06322	-	GR ISLD-LNX3345.00 - GRAND ISLAND 345KV CKT Z
FDNSLock-Blown up	00NR	0	16WP	G15_042		Non-Converged Contingency	720	720	0.06322	-	GR ISLD-LNX3345.00 - HOLT.CO3 345.00 345KV CKT 1
FDNSLock-Blown up	09NR	0	17G	G15_042		Non-Converged Contingency	720	720	0.06299	-	GR ISLD-LNX3345.00 - GRAND ISLAND 345KV CKT Z
FDNSLock-Blown up	09NR	0	17G	G15_042		Non-Converged Contingency	720	720	0.06299	-	GR ISLD-LNX3345.00 - HOLT.CO3 345.00 345KV CKT 1
FDNSLock-Blown up	00NR	0	17SP	G15_042		Non-Converged Contingency	720	720	0.06466	-	GR ISLD-LNX3345.00 - GRAND ISLAND 345KV CKT Z
FDNSLock-Blown up	00NR	0	17SP	G15_042		Non-Converged Contingency	720	720	0.06466	-	GR ISLD-LNX3345.00 - HOLT.CO3 345.00 345KV CKT 1
FDNSLock-Blown up	00NR	2	17SP	G15_042		Non-Converged Contingency	720	720	0.09181	-	GRPRAR1-LNX3345.00 - GRPRAR 345KV CKT Z
FDNSLock-Blown up	00NR	2	17SP	G15_042		Non-Converged Contingency	720	720	0.09181	-	GRPRAR1-LNX3345.00 - HOLT.CO3 345.00 345KV CKT 1
FDNS	00NR	0	20SP	G15_042	FROM->TO	BELDEN - HOSKINS 115KV CKT 1	115	115	0.06412	106.5641	DIXONCO 230.00 - HOSKINS 230KV CKT 1
FDNS	00NR	0	25SP	G15_042	FROM->TO	BELDEN - HOSKINS 115KV CKT 1	115	115	0.06417	104.1678	DIXONCO 230.00 - HOSKINS 230KV CKT 1
FDNS	00NR	0	17SP	G15_042	FROM->TO	BELDEN - HOSKINS 115KV CKT 1	115	115	0.06467	101.0384	DIXONCO 230.00 - HOSKINS 230KV CKT 1
FDNS	00NR	0	16WP	G15_042	FROM->TO	BELDEN - HOSKINS 115KV CKT 1	115	115	0.06466	100.2775	DIXONCO 230.00 - HOSKINS 230KV CKT 1
FDNS	09ALL	0	20L	G15_042	FROM->TO	DIXONCO 230.00 - HOSKINS 230KV CKT 1	320	320	1	207.8772	DIXONCO 230.00 - TWIN CHURCH 230KV CKT 1
FDNS	09ALL	0	17G	G15_042	FROM->TO	DIXONCO 230.00 - HOSKINS 230KV CKT 1	320	320	1	206.5148	DIXONCO 230.00 - TWIN CHURCH 230KV CKT 1
FDNS	09ALL	0	17SP	G15_042	FROM->TO	DIXONCO 230.00 - HOSKINS 230KV CKT 1	320	320	1	204.5471	DIXONCO 230.00 - TWIN CHURCH 230KV CKT 1
FDNS	09ALL	0	20WP	G15_042	FROM->TO	DIXONCO 230.00 - HOSKINS 230KV CKT 1	320	320	1	204.3891	DIXONCO 230.00 - TWIN CHURCH 230KV CKT 1
FDNS	09ALL	0	16WP	G15_042	FROM->TO	DIXONCO 230.00 - HOSKINS 230KV CKT 1	320	320	1	204.3444	DIXONCO 230.00 - TWIN CHURCH 230KV CKT 1
FDNS	09ALL	0	25SP	G15_042	FROM->TO	DIXONCO 230.00 - HOSKINS 230KV CKT 1	320	320	1	204.3078	DIXONCO 230.00 - TWIN CHURCH 230KV CKT 1
FDNS	09ALL	0	20SP	G15_042	FROM->TO	DIXONCO 230.00 - HOSKINS 230KV CKT 1	320	320	1	203.7632	DIXONCO 230.00 - TWIN CHURCH 230KV CKT 1
FDNS	09NR	0	20L	G15_042	FROM->TO	DIXONCO 230.00 - HOSKINS 230KV CKT 1	320	320	1	191.2576	DIXONCO 230.00 - TWIN CHURCH 230KV CKT 1
FDNS	09NR	0	17G	G15_042	FROM->TO	DIXONCO 230.00 - HOSKINS 230KV CKT 1	320	320	1	190.7545	DIXONCO 230.00 - TWIN CHURCH 230KV CKT 1
FDNS	00NR	0	17SP	G15_042	FROM->TO	DIXONCO 230.00 - HOSKINS 230KV CKT 1	320	320	1	151.1261	DIXONCO 230.00 - TWIN CHURCH 230KV CKT 1
FDNS	00NR	0	25SP	G15_042	FROM->TO	DIXONCO 230.00 - HOSKINS 230KV CKT 1	320	320	1	150.5412	DIXONCO 230.00 - TWIN CHURCH 230KV CKT 1
FDNS	00NR	0	16WP	G15_042	FROM->TO	DIXONCO 230.00 - HOSKINS 230KV CKT 1	320	320	1	150.2649	DIXONCO 230.00 - TWIN CHURCH 230KV CKT 1
FDNS	00NR	0	20SP	G15_042	FROM->TO	DIXONCO 230.00 - HOSKINS 230KV CKT 1	320	320	1	150.2585	DIXONCO 230.00 - TWIN CHURCH 230KV CKT 1
FDNS	00NR	0	20WP	G15_042	FROM->TO	DIXONCO 230.00 - HOSKINS 230KV CKT 1	320	320	1	150.2172	DIXONCO 230.00 - TWIN CHURCH 230KV CKT 1
FDNS	09ALL	0	20L	G15_042	FROM->TO	DIXONCO 230.00 - HOSKINS 230KV CKT 1	320	320	0.78109	150.1176	SIOUX CITY - TWIN CHURCH 230KV CKT 1
FDNS	09ALL	0	17G	G15_042	FROM->TO	DIXONCO 230.00 - HOSKINS 230KV CKT 1	320	320	0.78241	141.9525	SIOUX CITY - TWIN CHURCH 230KV CKT 1
FDNS	09NR	0	20L	G15_042	FROM->TO	DIXONCO 230.00 - HOSKINS 230KV CKT 1	320	320	0.78297	139.9353	SIOUX CITY - TWIN CHURCH 230KV CKT 1
FDNS	09ALL	0	20SP	G15_042	FROM->TO	DIXONCO 230.00 - HOSKINS 230KV CKT 1	320	320	0.78158	137.7169	SIOUX CITY - TWIN CHURCH 230KV CKT 1
FDNS	09ALL	0	25SP	G15_042	FROM->TO	DIXONCO 230.00 - HOSKINS 230KV CKT 1	320	320	0.78161	137.2095	SIOUX CITY - TWIN CHURCH 230KV CKT 1
FDNS	09ALL	0	20WP	G15_042	FROM->TO	DIXONCO 230.00 - HOSKINS 230KV CKT 1	320	320	0.78151	137.2039	SIOUX CITY - TWIN CHURCH 230KV CKT 1
FDNS	09ALL	0	17SP	G15_042	FROM->TO	DIXONCO 230.00 - HOSKINS 230KV CKT 1	320	320	0.7825	136.6597	SIOUX CITY - TWIN CHURCH 230KV CKT 1
FDNS	09ALL	0	16WP	G15_042	FROM->TO	DIXONCO 230.00 - HOSKINS 230KV CKT 1	320	320	0.7823	136.4947	SIOUX CITY - TWIN CHURCH 230KV CKT 1
FDNS	09NR	0	17G	G15_042	FROM->TO	DIXONCO 230.00 - HOSKINS 230KV CKT 1	320	320	0.78402	131.6304	SIOUX CITY - TWIN CHURCH 230KV CKT 1
FDNS	00NR	0	20WP	G15_042	FROM->TO	DIXONCO 230.00 - HOSKINS 230KV CKT 1	320	320	0.7833	101.2165	SIOUX CITY - TWIN CHURCH 230KV CKT 1
FDNS	00NR	0	20SP	G15_042	FROM->TO	DIXONCO 230.00 - HOSKINS 230KV CKT 1	320	320	0.78335	100.8881	SIOUX CITY - TWIN CHURCH 230KV CKT 1
FDNS	00NR	0	16WP	G15_042	FROM->TO	DIXONCO 230.00 - HOSKINS 230KV CKT 1	320	320	0.78407	100.3746	SIOUX CITY - TWIN CHURCH 230KV CKT 1
FDNS	00NR	0	25SP	G15_042	FROM->TO	DIXONCO 230.00 - HOSKINS 230KV CKT 1	320	320	0.78338	100.2558	SIOUX CITY - TWIN CHURCH 230KV CKT 1
FDNS	00NR	0	17SP	G15_042	FROM->TO	DIXONCO 230.00 - HOSKINS 230KV CKT 1	320	320	0.78412	99.7	SIOUX CITY - TWIN CHURCH 230KV CKT 1
FDNS	09ALL	0	25SP	G15_042	FROM->TO	DIXONCO 230.00 - HOSKINS 230KV CKT 1	320	320	0.51889	99.6	KELLY - MEADOWGROVE4230.00 230KV CKT 1

SOLUTION	GROUP	SCENARIO	SEASON	SOURCE	DIRECTION	MONITORED ELEMENT	RATEA (MVA)	RATEB(MVA)	TDF	TC%LOADING (% MVA)	CONTINGENCY
FDNS	09ALL	0	25SP	G15_042	FROM->TO	DIXONCO 230.00 - TWIN CHURCH 230KV CKT 1	320	320	1	203.7593	DIXONCO 230.00 - HOSKINS 230KV CKT 1
FDNS	09ALL	0	20SP	G15_042	FROM->TO	DIXONCO 230.00 - TWIN CHURCH 230KV CKT 1	320	320	1	203.6742	DIXONCO 230.00 - HOSKINS 230KV CKT 1
FDNS	09ALL	0	17SP	G15_042	FROM->TO	DIXONCO 230.00 - TWIN CHURCH 230KV CKT 1	320	320	1	203.6251	DIXONCO 230.00 - HOSKINS 230KV CKT 1
FDNS	09ALL	0	20L	G15_042	FROM->TO	DIXONCO 230.00 - TWIN CHURCH 230KV CKT 1	320	320	1	203.1299	DIXONCO 230.00 - HOSKINS 230KV CKT 1
FDNS	09ALL	0	16WP	G15_042	FROM->TO	DIXONCO 230.00 - TWIN CHURCH 230KV CKT 1	320	320	1	202.7486	DIXONCO 230.00 - HOSKINS 230KV CKT 1
FDNS	09ALL	0	20WP	G15_042	FROM->TO	DIXONCO 230.00 - TWIN CHURCH 230KV CKT 1	320	320	1	202.7326	DIXONCO 230.00 - HOSKINS 230KV CKT 1
FDNS	09ALL	0	17G	G15_042	FROM->TO	DIXONCO 230.00 - TWIN CHURCH 230KV CKT 1	320	320	1	202.675	DIXONCO 230.00 - HOSKINS 230KV CKT 1
FDNS	09NR	0	20L	G15_042	FROM->TO	DIXONCO 230.00 - TWIN CHURCH 230KV CKT 1	320	320	1	189.0804	DIXONCO 230.00 - HOSKINS 230KV CKT 1
FDNS	09NR	0	17G	G15_042	FROM->TO	DIXONCO 230.00 - TWIN CHURCH 230KV CKT 1	320	320	1	188.6374	DIXONCO 230.00 - HOSKINS 230KV CKT 1
FDNS	00NR	0	17SP	G15_042	FROM->TO	DIXONCO 230.00 - TWIN CHURCH 230KV CKT 1	320	320	1	150.6763	DIXONCO 230.00 - HOSKINS 230KV CKT 1
FDNS	00NR	0	25SP	G15_042	FROM->TO	DIXONCO 230.00 - TWIN CHURCH 230KV CKT 1	320	320	1	150.4297	DIXONCO 230.00 - HOSKINS 230KV CKT 1
FDNS	00NR	0	20SP	G15_042	FROM->TO	DIXONCO 230.00 - TWIN CHURCH 230KV CKT 1	320	320	1	150.3448	DIXONCO 230.00 - HOSKINS 230KV CKT 1
FDNS	00NR	0	16WP	G15_042	FROM->TO	DIXONCO 230.00 - TWIN CHURCH 230KV CKT 1	320	320	1	149.5759	DIXONCO 230.00 - HOSKINS 230KV CKT 1
FDNS	00NR	0	20WP	G15_042	FROM->TO	DIXONCO 230.00 - TWIN CHURCH 230KV CKT 1	320	320	1	149.5063	DIXONCO 230.00 - HOSKINS 230KV CKT 1
FDNS	09ALL	0	20L	G15_042	FROM->TO	DIXONCO 230.00 - TWIN CHURCH 230KV CKT 1	320	320	0.4817	143.3182	P13:230-345:NPPD:NUCOR-1
FDNS	09ALL	0	20L	G15_042	FROM->TO	DIXONCO 230.00 - TWIN CHURCH 230KV CKT 1	320	320	0.52146	142.8799	HOSKINS - RAUN 345KV CKT 1
FDNS	09ALL	0	17G	G15_042	FROM->TO	DIXONCO 230.00 - TWIN CHURCH 230KV CKT 1	320	320	0.48061	141.7149	P13:230-345:NPPD:NUCOR-1
FDNS	09ALL	0	17G	G15_042	FROM->TO	DIXONCO 230.00 - TWIN CHURCH 230KV CKT 1	320	320	0.52115	141.6078	HOSKINS - RAUN 345KV CKT 1
FDNS	09ALL	0	16WP	G15_042	FROM->TO	DIXONCO 230.00 - TWIN CHURCH 230KV CKT 1	320	320	0.48102	140.8595	P13:230-345:NPPD:NUCOR-1
FDNS	09ALL	0	20WP	G15_042	FROM->TO	DIXONCO 230.00 - TWIN CHURCH 230KV CKT 1	320	320	0.48151	140.487	P13:230-345:NPPD:NUCOR-1
FDNS	09ALL	0	16WP	G15_042	FROM->TO	DIXONCO 230.00 - TWIN CHURCH 230KV CKT 1	320	320	0.52145	136.9722	HOSKINS - RAUN 345KV CKT 1
FDNS	09ALL	0	16WP	G15_042	FROM->TO	DIXONCO 230.00 - TWIN CHURCH 230KV CKT 1	320	320	0.52145	136.9722	HOSKINS - RAUN 345KV CKT 1
FDNS	09ALL	0	20WP	G15_042	FROM->TO	DIXONCO 230.00 - TWIN CHURCH 230KV CKT 1	320	320	0.522	135.8331	HOSKINS - RAUN 345KV CKT 1
FDNS	09ALL	0	20WP	G15_042	FROM->TO	DIXONCO 230.00 - TWIN CHURCH 230KV CKT 1	320	320	0.522	135.8331	HOSKINS - RAUN 345KV CKT 1
FDNS	09ALL	0	20L	G15_042	FROM->TO	DIXONCO 230.00 - TWIN CHURCH 230KV CKT 1	320	320	0.62484	134.6065	HOSKINS (HOSKINS T2) 345/230/13.8KV TRANSFORMER CKT 1
FDNS	09ALL	0	20L	G15_042	FROM->TO	DIXONCO 230.00 - TWIN CHURCH 230KV CKT 1	320	320	0.62484	134.6065	HOSKINS (HOSKINS T2) 345/230/13.8KV TRANSFORMER CKT 1
FDNS	09ALL	0	20SP	G15_042	FROM->TO	DIXONCO 230.00 - TWIN CHURCH 230KV CKT 1	320	320	0.48086	133.2807	P13:230-345:NPPD:NUCOR-1
FDNS	09ALL	0	17SP	G15_042	FROM->TO	DIXONCO 230.00 - TWIN CHURCH 230KV CKT 1	320	320	0.48022	133.1573	P13:230-345:NPPD:NUCOR-1
FDNS	09ALL	0	17G	G15_042	FROM->TO	DIXONCO 230.00 - TWIN CHURCH 230KV CKT 1	320	320	0.62442	133.0336	HOSKINS (HOSKINS T2) 345/230/13.8KV TRANSFORMER CKT 1
FDNS	09ALL	0	17G	G15_042	FROM->TO	DIXONCO 230.00 - TWIN CHURCH 230KV CKT 1	320	320	0.62442	133.0336	HOSKINS (HOSKINS T2) 345/230/13.8KV TRANSFORMER CKT 1
FDNS	09ALL	0	25SP	G15_042	FROM->TO	DIXONCO 230.00 - TWIN CHURCH 230KV CKT 1	320	320	0.48075	132.5108	P13:230-345:NPPD:NUCOR-1
FDNS	09NR	0	20L	G15_042	FROM->TO	DIXONCO 230.00 - TWIN CHURCH 230KV CKT 1	320	320	0.47153	132.2426	P13:230-345:NPPD:NUCOR-1
FDNS	09NR	0	17G	G15_042	FROM->TO	DIXONCO 230.00 - TWIN CHURCH 230KV CKT 1	320	320	0.47053	131.612	P13:230-345:NPPD:NUCOR-1
FDNS	09NR	0	17G	G15_042	FROM->TO	DIXONCO 230.00 - TWIN CHURCH 230KV CKT 1	320	320	0.50251	129.9787	HOSKINS - RAUN 345KV CKT 1
FDNS	09ALL	0	16WP	G15_042	FROM->TO	DIXONCO 230.00 - TWIN CHURCH 230KV CKT 1	320	320	0.48102	129.2031	P13:115-230:NPPD:NUCOR-3
FDNS	09NR	0	20L	G15_042	FROM->TO	DIXONCO 230.00 - TWIN CHURCH 230KV CKT 1	320	320	0.5043	128.8605	HOSKINS - RAUN 345KV CKT 1
FDNS	09NR	0	20L	G15_042	FROM->TO	DIXONCO 230.00 - TWIN CHURCH 230KV CKT 1	320	320	0.5043	128.8605	HOSKINS - RAUN 345KV CKT 1
FDNS	09ALL	0	20WP	G15_042	FROM->TO	DIXONCO 230.00 - TWIN CHURCH 230KV CKT 1	320	320	0.48151	128.7409	P13:115-230:NPPD:NUCOR-3
FDNS	09ALL	0	20L	G15_042	FROM->TO	DIXONCO 230.00 - TWIN CHURCH 230KV CKT 1	320	320	0.4817	127.3432	P13:115-230:NPPD:NUCOR-3
FDNS	09ALL	0	17G	G15_042	FROM->TO	DIXONCO 230.00 - TWIN CHURCH 230KV CKT 1	320	320	0.48061	127.0484	P13:115-230:NPPD:NUCOR-3
FDNS	09ALL	0	16WP	G15_042	FROM->TO	DIXONCO 230.00 - TWIN CHURCH 230KV CKT 1	320	320	0.62461	126.4687	HOSKINS (HOSKINS T2) 345/230/13.8KV TRANSFORMER CKT 1
FDNS	09ALL	0	16WP	G15_042	FROM->TO	DIXONCO 230.00 - TWIN CHURCH 230KV CKT 1	320	320	0.62461	126.4687	HOSKINS (HOSKINS T2) 345/230/13.8KV TRANSFORMER CKT 1
FDNS	09ALL	0	20L	G15_042	FROM->TO	DIXONCO 230.00 - TWIN CHURCH 230KV CKT 1	320	320	0.5124	126.463	HOSKINS - SHELL CREEK 345KV CKT 1
FDNS	09ALL	0	20WP	G15_042	FROM->TO	DIXONCO 230.00 - TWIN CHURCH 230KV CKT 1	320	320	0.62489	126.0912	HOSKINS (HOSKINS T2) 345/230/13.8KV TRANSFORMER CKT 1
FDNS	09ALL	0	20WP	G15_042	FROM->TO	DIXONCO 230.00 - TWIN CHURCH 230KV CKT 1	320	320	0.62489	126.0912	HOSKINS (HOSKINS T2) 345/230/13.8KV TRANSFORMER CKT 1
FDNS	09ALL	0	17G	G15_042	FROM->TO	DIXONCO 230.00 - TWIN CHURCH 230KV CKT 1	320	320	0.51202	126.0716	HOSKINS - SHELL CREEK 345KV CKT 1
FDNS	09ALL	0	17G	G15_042	FROM->TO	DIXONCO 230.00 - TWIN CHURCH 230KV CKT 1	320	320	0.49379	125.2223	COLUMEAST - NW68TH & HOLDREGE 345KV CKT 1
FDNS	09ALL	0	17G	G15_042	FROM->TO	DIXONCO 230.00 - TWIN CHURCH 230KV CKT 1	320	320	0.49379	125.2223	COLUMEAST - NW68TH & HOLDREGE 345KV CKT 1
FDNS	09ALL	0	20L	G15_042	FROM->TO	DIXONCO 230.00 - TWIN CHURCH 230KV CKT 1	320	320	0.49385	124.8819	COLUMEAST - NW68TH & HOLDREGE 345KV CKT 1
FDNS	09ALL	0	20L	G15_042	FROM->TO	DIXONCO 230.00 - TWIN CHURCH 230KV CKT 1	320	320	0.49385	124.8819	COLUMEAST - NW68TH & HOLDREGE 345KV CKT 1
FDNS	09ALL	0	20L	G15_042	FROM->TO	DIXONCO 230.00 - TWIN CHURCH 230KV CKT 1	320	320	0.47155	124.4488	BELDEN - TWIN CHURCH 115KV CKT 1
FDNS	09ALL	0	20L	G15_042	FROM->TO	DIXONCO 230.00 - TWIN CHURCH 230KV CKT 1	320	320	0.49324	124.3749	COLUMEAST - SHELL CREEK 345KV CKT 1
FDNS	09ALL	0	17G	G15_042	FROM->TO	DIXONCO 230.00 - TWIN CHURCH 230KV CKT 1	320	320	0.49274	124.3264	COLUMEAST - SHELL CREEK 345KV CKT 1
FDNS	09ALL	0	17G	G15_042	FROM->TO	DIXONCO 230.00 - TWIN CHURCH 230KV CKT 1	320	320	0.47084	124.2487	BELDEN - TWIN CHURCH 115KV CKT 1
FDNS	09ALL	0	20L	G15_042	FROM->TO	DIXONCO 230.00 - TWIN CHURCH 230KV CKT 1	320	320	0.47417	124.034	RAUN - SIOUX CITY 345KV CKT 1
FDNS	09ALL	0	16WP	G15_042	FROM->TO	DIXONCO 230.00 - TWIN CHURCH 230KV CKT 1	320	320	0.48102	123.6335	P13:115-345:NPPD:NUCOR-2
FDNS	09NR	0	20L	G15_042	FROM->TO	DIXONCO 230.00 - TWIN CHURCH 230KV CKT 1	320	320	0.61761	123.6321	HOSKINS (HOSKINS T2) 345/230/13.8KV TRANSFORMER CKT 1
FDNS	09NR	0	20L	G15_042	FROM->TO	DIXONCO 230.00 - TWIN CHURCH 230KV CKT 1	320	320	0.61761	123.6321	HOSKINS (HOSKINS T2) 345/230/13.8KV TRANSFORMER CKT 1
FDNS	09ALL	0	20L	G15_042	FROM->TO	DIXONCO 230.00 - TWIN CHURCH 230KV CKT 1	320	320	0.4817	123.2656	P13:115-345:NPPD:NUCOR-2
FDNS	09ALL	0	20WP	G15_042	FROM->TO	DIXONCO 230.00 - TWIN CHURCH 230KV CKT 1	320	320	0.48151	123.1445	P13:115-345:NPPD:NUCOR-2
FDNS	09NR	0	17G	G15_042	FROM->TO	DIXONCO 230.00 - TWIN CHURCH 230KV CKT 1	320	320	0.61703	123.0432	HOSKINS (HOSKINS T2) 345/230/13.8KV TRANSFORMER CKT 1
FDNS	09NR	0	17G	G15_042	FROM->TO	DIXONCO 230.00 - TWIN CHURCH 230KV CKT 1	320	320	0.61703	123.0432	HOSKINS (HOSKINS T2) 345/230/13.8KV TRANSFORMER CKT 1
FDNS	09ALL	0	16WP	G15_042	FROM->TO	DIXONCO 230.00 - TWIN CHURCH 230KV CKT 1	320	320	0.4712	122.7487	BELDEN - TWIN CHURCH 115KV CKT 1
FDNS	09ALL	0	20L	G15_042	FROM->TO	DIXONCO 230.00 - TWIN CHURCH 230KV CKT 1	320	320	0.48266	122.7094	BLOOMFIELD - GAVINS POINT 115KV CKT 1
FDNS	09ALL	0	17G	G15_042	FROM->TO	DIXONCO 230.00 - TWIN CHURCH 230KV CKT 1	320	320	0.48061	122.6077	P13:115-345:NPPD:NUCOR-2
FDNS	09ALL	0	16WP	G15_042	FROM->TO	DIXONCO 230.00 - TWIN CHURCH 230KV CKT 1	320	320	0.47278	122.475	RAUN - SIOUX CITY 345KV CKT 1
FDNS	09ALL	0	16WP	G15_042	FROM->TO	DIXONCO 230.00 - TWIN CHURCH 230KV CKT 1	320	320	0.47278	122.475	RAUN - SIOUX CITY 345KV CKT 1
FDNS	09ALL	0	20L	G15_042	FROM->TO	DIXONCO 230.00 - TWIN CHURCH 230KV CKT 1	320	320	0.50701	122.3761	HOSKINS (HOSKINS T1) 230/115/13.8KV TRANSFORMER CKT 1
FDNS	09ALL	0	20L	G15_042	FROM->TO	DIXONCO 230.00 - TWIN CHURCH 230KV CKT 1	320	320	0.50701	122.3761	HOSKINS (HOSKINS T1) 230/115/13.8KV TRANSFORMER CKT 1
FDNS	09ALL	0	16WP	G15_042	FROM->TO	DIXONCO 230.00 - TWIN CHURCH 230KV CKT 1	320	320	0.51237	122.365	HOSKINS - SHELL CREEK 345KV CKT 1
FDNS	09ALL	0	20L	G15_042	FROM->TO	DIXONCO 230.00 - TWIN CHURCH 230KV CKT 1	320	320	0.48118	122.2773	FTTHOM2-LNX3345.00 - GRPRAR2-LNX3345.00 345KV CKT 1
FDNS	09ALL	0	20L	G15_042	FROM->TO	DIXONCO 230.00 - TWIN CHURCH 230KV CKT 1	320	320	0.48118	122.2762	FT THOMPSON - FTTHOM2-LNX3345.00 345KV CKT Z
FDNS	09ALL	0	20L	G15_042	FROM->TO	DIXONCO 230.00 - TWIN CHURCH 230KV CKT 1	320	320	0.48118	122.2646	GRPRAR2-LNX3345.00 - YANKTON 345KV CKT Z
FDNS	09ALL	0	17G	G15_042	FROM->TO	DIXONCO 230.00 - TWIN CHURCH 230KV CKT 1	320	320	0.50581	122.0833	HOSKINS (HOSKINS T1) 230/115/13.8KV TRANSFORMER CKT 1
FDNS	09ALL	0	17G	G15_042	FROM->TO	DIXONCO 230.00 - TWIN CHURCH 230KV CKT 1	320	320	0.50581	122.0833	HOSKINS (HOSKINS T1) 230/115/13.8KV TRANSFORMER CKT 1
FDNS	09ALL	0	20WP	G15_042	FROM->TO	DIXONCO 230.00 - TWIN CHURCH 230KV CKT 1	320	320	0.47171	122.0707	BELDEN - TWIN CHURCH 115KV CKT 1
FDNS	09ALL	0	20WP	G15_042	FROM->TO	DIXONCO 230.00 - TWIN CHURCH 230KV CKT 1	320	320	0.5123	121.8253	HOSKINS - SHELL CREEK 345KV CKT 1
FDNS	09ALL	0	20WP	G15_042	FROM->TO	DIXONCO 230.00 - TWIN CHURCH 230KV CKT 1	320	320	0.47355	121.7534	RAUN - SIOUX CITY 345KV CKT 1
FDNS	09ALL	0	20WP	G15_042	FROM->TO	DIXONCO 230.00 - TWIN CHURCH 230KV CKT 1	320	320	0.47355	121.7534	RAUN - SIOUX CITY 345KV CKT 1

SOLUTION	GROUP	SCENARIO	SEASON	SOURCE	DIRECTION	MONITORED ELEMENT	RATEA (MVA)	RATEB(MVA)	TDF	TC%LOADING (% MVA)	CONTINGENCY
FDNS	09ALL	0	17G	G15_042	FROM->TO	DIXONCO 230.00 - TWIN CHURCH 230KV CKT 1	320	320	0.48134	121.6191	BLOOMFIELD - GAVINS POINT 115KV CKT 1
FDNS	09ALL	0	16WP	G15_042	FROM->TO	DIXONCO 230.00 - TWIN CHURCH 230KV CKT 1	320	320	0.49305	121.5839	COLUMEAST - SHELL CREEK 345KV CKT 1
FDNS	09ALL	0	16WP	G15_042	FROM->TO	DIXONCO 230.00 - TWIN CHURCH 230KV CKT 1	320	320	0.49406	121.5506	COLUMEAST - NW68TH & HOLDREGE 345KV CKT 1
FDNS	09ALL	0	16WP	G15_042	FROM->TO	DIXONCO 230.00 - TWIN CHURCH 230KV CKT 1	320	320	0.49406	121.5506	COLUMEAST - NW68TH & HOLDREGE 345KV CKT 1
FDNS	09ALL	0	17G	G15_042	FROM->TO	DIXONCO 230.00 - TWIN CHURCH 230KV CKT 1	320	320	0.47213	121.4833	RAUN - SIOUX CITY 345KV CKT 1
FDNS	09ALL	0	20L	G15_042	FROM->TO	DIXONCO 230.00 - TWIN CHURCH 230KV CKT 1	320	320	0.48266	121.3879	FT RANDAL - MEADOWGROVE4230.00 230KV CKT 1
FDNS	09ALL	0	20L	G15_042	FROM->TO	DIXONCO 230.00 - TWIN CHURCH 230KV CKT 1	320	320	0.48441	121.2364	HOSKINS - STANTON NORTH 115KV CKT 1
FDNS	09ALL	0	17G	G15_042	FROM->TO	DIXONCO 230.00 - TWIN CHURCH 230KV CKT 1	320	320	0.4799	121.1919	FTTHOM2-LNX3345.00 - GRPRAR2-LNX3345.00 345KV CKT 1
FDNS	09ALL	0	17G	G15_042	FROM->TO	DIXONCO 230.00 - TWIN CHURCH 230KV CKT 1	320	320	0.4799	121.1609	GRPRAR2-LNX3345.00 - YANKTON 345KV CKT Z
FDNS	09ALL	0	17G	G15_042	FROM->TO	DIXONCO 230.00 - TWIN CHURCH 230KV CKT 1	320	320	0.4799	121.125	FT THOMPSON - FTTHOM2-LNX3345.00 345KV CKT Z
FDNS	09ALL	0	17G	G15_042	FROM->TO	DIXONCO 230.00 - TWIN CHURCH 230KV CKT 1	320	320	0.48334	121.0974	HOSKINS - STANTON NORTH 115KV CKT 1
FDNS	09ALL	0	20L	G15_042	FROM->TO	DIXONCO 230.00 - TWIN CHURCH 230KV CKT 1	320	320	0.4817	121.0713	SHERBURNE CO 345/24.0KV TRANSFORMER CKT 1
FDNS	09ALL	0	20L	G15_042	FROM->TO	DIXONCO 230.00 - TWIN CHURCH 230KV CKT 1	320	320	0.4817	121.0699	GEN600002 3-SHERBURNE CNTY G3
FDNS	09ALL	0	20WP	G15_042	FROM->TO	DIXONCO 230.00 - TWIN CHURCH 230KV CKT 1	320	320	0.49329	121.0096	COLUMEAST - SHELL CREEK 345KV CKT 1
FDNS	09ALL	0	20L	G15_042	FROM->TO	DIXONCO 230.00 - TWIN CHURCH 230KV CKT 1	320	320	0.48441	120.9827	STANTON - STANTON NORTH 115KV CKT 1
FDNS	09ALL	0	20L	G15_042	FROM->TO	DIXONCO 230.00 - TWIN CHURCH 230KV CKT 1	320	320	0.48441	120.9476	P12:115:NPPD:1166:STNTN.N7:BEEMER 7:BTB
FDNS	09ALL	0	16WP	G15_042	FROM->TO	DIXONCO 230.00 - TWIN CHURCH 230KV CKT 1	320	320	0.50621	120.9206	HOSKINS (HOSKINS T1) 230/115/13.8KV TRANSFORMER CKT 1
FDNS	09ALL	0	16WP	G15_042	FROM->TO	DIXONCO 230.00 - TWIN CHURCH 230KV CKT 1	320	320	0.50621	120.9206	HOSKINS (HOSKINS T1) 230/115/13.8KV TRANSFORMER CKT 1
FDNS	09ALL	0	20L	G15_042	FROM->TO	DIXONCO 230.00 - TWIN CHURCH 230KV CKT 1	320	320	0.48441	120.9001	BEEMER - STANTON 115KV CKT 1
FDNS	09ALL	0	20WP	G15_042	FROM->TO	DIXONCO 230.00 - TWIN CHURCH 230KV CKT 1	320	320	0.49409	120.8988	COLUMEAST - NW68TH & HOLDREGE 345KV CKT 1
FDNS	09ALL	0	20WP	G15_042	FROM->TO	DIXONCO 230.00 - TWIN CHURCH 230KV CKT 1	320	320	0.49409	120.8988	COLUMEAST - NW68TH & HOLDREGE 345KV CKT 1
FDNS	09ALL	0	20L	G15_042	FROM->TO	DIXONCO 230.00 - TWIN CHURCH 230KV CKT 1	320	320	0.4817	120.8517	BIG STONE 230/24.0KV TRANSFORMER CKT 1
FDNS	09ALL	0	17G	G15_042	FROM->TO	DIXONCO 230.00 - TWIN CHURCH 230KV CKT 1	320	320	0.48334	120.8076	STANTON - STANTON NORTH 115KV CKT 1
FDNS	09ALL	0	17G	G15_042	FROM->TO	DIXONCO 230.00 - TWIN CHURCH 230KV CKT 1	320	320	0.47882	120.806	FT RANDAL - SIOUX CITY 230KV CKT 1
FDNS	09ALL	0	20L	G15_042	FROM->TO	DIXONCO 230.00 - TWIN CHURCH 230KV CKT 1	320	320	0.4817	120.798	GEN600001 2-SHERBURNE CNTY G2
FDNS	09ALL	0	20L	G15_042	FROM->TO	DIXONCO 230.00 - TWIN CHURCH 230KV CKT 1	320	320	0.4817	120.7773	GEN600005 1-MONTICELLO
FDNS	09ALL	0	17G	G15_042	FROM->TO	DIXONCO 230.00 - TWIN CHURCH 230KV CKT 1	320	320	0.48334	120.7664	P12:115:NPPD:1166:STNTN.N7:BEEMER 7:BTB
FDNS	09ALL	0	20L	G15_042	FROM->TO	DIXONCO 230.00 - TWIN CHURCH 230KV CKT 1	320	320	0.4817	120.7214	GEN615002 2-COAL CREEK
FDNS	09ALL	0	17G	G15_042	FROM->TO	DIXONCO 230.00 - TWIN CHURCH 230KV CKT 1	320	320	0.48061	120.7	GEN600002 3-SHERBURNE CNTY G3
FDNS	09ALL	0	17G	G15_042	FROM->TO	DIXONCO 230.00 - TWIN CHURCH 230KV CKT 1	320	320	0.48334	120.6988	BEEMER - STANTON 115KV CKT 1
FDNS	09ALL	0	20L	G15_042	FROM->TO	DIXONCO 230.00 - TWIN CHURCH 230KV CKT 1	320	320	0.48441	120.6804	BEEMER - WEST POINT 115KV CKT 1
FDNS	09ALL	0	20L	G15_042	FROM->TO	DIXONCO 230.00 - TWIN CHURCH 230KV CKT 1	320	320	0.4817	120.6682	GEN600000 1-SHERBURNECNTY G1
FDNS	09ALL	0	20L	G15_042	FROM->TO	DIXONCO 230.00 - TWIN CHURCH 230KV CKT 1	320	320	0.4817	120.6569	GEN620315 1-BIG STONE GEN
FDNS	09ALL	0	17SP	G15_042	FROM->TO	DIXONCO 230.00 - TWIN CHURCH 230KV CKT 1	320	320	0.48022	120.6469	P13:115-230:NPPD:NUCOR-3
FDNS	09ALL	0	20L	G15_042	FROM->TO	DIXONCO 230.00 - TWIN CHURCH 230KV CKT 1	320	320	0.47941	120.6459	FT RANDAL - SIOUX CITY 230KV CKT 1
FDNS	09ALL	0	17G	G15_042	FROM->TO	DIXONCO 230.00 - TWIN CHURCH 230KV CKT 1	320	320	0.48061	120.5457	SHERBURNE CO 345/24.0KV TRANSFORMER CKT 1
FDNS	09ALL	0	20L	G15_042	FROM->TO	DIXONCO 230.00 - TWIN CHURCH 230KV CKT 1	320	320	0.48438	120.5189	P12:115:NPPD:1161:OAKLAND7:BEEMER 7:BTB
FDNS	09ALL	0	20L	G15_042	FROM->TO	DIXONCO 230.00 - TWIN CHURCH 230KV CKT 1	320	320	0.48273	120.5105	COOPER - MOORE 345KV CKT 1
FDNS	09ALL	0	20L	G15_042	FROM->TO	DIXONCO 230.00 - TWIN CHURCH 230KV CKT 1	320	320	0.48261	120.4727	GAVINS POINT - YANKON JCT 115KV CKT 1
FDNS	09ALL	0	20L	G15_042	FROM->TO	DIXONCO 230.00 - TWIN CHURCH 230KV CKT 1	320	320	0.48261	120.4727	GAVINS POINT - YANKON JCT 115KV CKT 1
FDNS	09ALL	0	20WP	G15_042	FROM->TO	DIXONCO 230.00 - TWIN CHURCH 230KV CKT 1	320	320	0.50674	120.4442	HOSKINS (HOSKINS T1) 230/115/13.8KV TRANSFORMER CKT 1
FDNS	09ALL	0	20WP	G15_042	FROM->TO	DIXONCO 230.00 - TWIN CHURCH 230KV CKT 1	320	320	0.50674	120.4442	HOSKINS (HOSKINS T1) 230/115/13.8KV TRANSFORMER CKT 1
FDNS	09ALL	0	20SP	G15_042	FROM->TO	DIXONCO 230.00 - TWIN CHURCH 230KV CKT 1	320	320	0.48086	120.4325	P13:115-230:NPPD:NUCOR-3
FDNS	09ALL	0	20L	G15_042	FROM->TO	DIXONCO 230.00 - TWIN CHURCH 230KV CKT 1	320	320	0.4817	120.3912	GEN600003 1-PRAIRIE ISLAND G1
FDNS	09ALL	0	20L	G15_042	FROM->TO	DIXONCO 230.00 - TWIN CHURCH 230KV CKT 1	320	320	0.4817	120.3892	GEN600004 2-PRAIRIE ISLAND G2
FDNS	09ALL	0	20L	G15_042	FROM->TO	DIXONCO 230.00 - TWIN CHURCH 230KV CKT 1	320	320	0.48248	120.3249	P12:115:NPPD:1168B:ALBION 7:PETERSBRG.N7:BTB
FDNS	09ALL	0	20L	G15_042	FROM->TO	DIXONCO 230.00 - TWIN CHURCH 230KV CKT 1	320	320	0.48248	120.3187	PETERSBRG.N7115.00 - PETERSBURG 115KV CKT Z1
FDNS	09ALL	0	20L	G15_042	FROM->TO	DIXONCO 230.00 - TWIN CHURCH 230KV CKT 1	320	320	0.48248	120.3083	ALBION - PETERSBURG 115KV CKT 1
FDNS	09ALL	0	17G	G15_042	FROM->TO	DIXONCO 230.00 - TWIN CHURCH 230KV CKT 1	320	320	0.48334	120.2907	BEEMER - WEST POINT 115KV CKT 1
FDNS	09ALL	0	20L	G15_042	FROM->TO	DIXONCO 230.00 - TWIN CHURCH 230KV CKT 1	320	320	0.48438	120.2771	OAKLAND - WEST POINT 115KV CKT 1
FDNS	09ALL	0	16WP	G15_042	FROM->TO	DIXONCO 230.00 - TWIN CHURCH 230KV CKT 1	320	320	0.48179	120.2611	BLOOMFIELD - GAVINS POINT 115KV CKT 1
FDNS	09ALL	0	17SP	G15_042	FROM->TO	DIXONCO 230.00 - TWIN CHURCH 230KV CKT 1	320	320	0.52057	120.2566	HOSKINS - RAUN 345KV CKT 1
FDNS	09ALL	0	17SP	G15_042	FROM->TO	DIXONCO 230.00 - TWIN CHURCH 230KV CKT 1	320	320	0.52057	120.2566	HOSKINS - RAUN 345KV CKT 1
FDNS	09ALL	0	20SP	G15_042	FROM->TO	DIXONCO 230.00 - TWIN CHURCH 230KV CKT 1	320	320	0.52112	120.2506	HOSKINS - RAUN 345KV CKT 1
FDNSLock	09ALL	0	17G	G15_042	FROM->TO	DIXONCO 230.00 - TWIN CHURCH 230KV CKT 1	320	320	0.48061	120.2016	GEN600000 1-SHERBURNECNTY G1
FDNS	09ALL	0	20L	G15_042	FROM->TO	DIXONCO 230.00 - TWIN CHURCH 230KV CKT 1	320	320	0.4817	120.1879	GEN659103 1-ANTELOPE VALLEY UNIT1
FDNS	09ALL	0	20L	G15_042	FROM->TO	DIXONCO 230.00 - TWIN CHURCH 230KV CKT 1	320	320	0.4817	120.1879	GEN659107 2-ANTELOPE VALLEY UNIT2
FDNSLock	09ALL	0	17G	G15_042	FROM->TO	DIXONCO 230.00 - TWIN CHURCH 230KV CKT 1	320	320	0.48061	120.1515	GEN600001 2-SHERBURNE CNTY G2
FDNS	09ALL	0	20L	G15_042	FROM->TO	DIXONCO 230.00 - TWIN CHURCH 230KV CKT 1	320	320	0.4817	120.1247	GEN600006 1-AS KING
FDNS	09ALL	0	20L	G15_042	FROM->TO	DIXONCO 230.00 - TWIN CHURCH 230KV CKT 1	320	320	0.48181	120.1129	FALLOW 3 345.00 - GRIMES 345KV CKT 1
FDNS	09ALL	0	20L	G15_042	FROM->TO	DIXONCO 230.00 - TWIN CHURCH 230KV CKT 1	320	320	0.48076	120.1019	FT RANDAL - UTICA JCT 230KV CKT 1
FDNS	09ALL	0	17G	G15_042	FROM->TO	DIXONCO 230.00 - TWIN CHURCH 230KV CKT 1	320	320	0.48331	120.0985	P12:115:NPPD:1161:OAKLAND7:BEEMER 7:BTB
FDNS	09ALL	0	16WP	G15_042	FROM->TO	DIXONCO 230.00 - TWIN CHURCH 230KV CKT 1	320	320	0.48374	120.0316	HOSKINS - STANTON NORTH 115KV CKT 1
FDNS	09ALL	0	20L	G15_042	FROM->TO	DIXONCO 230.00 - TWIN CHURCH 230KV CKT 1	320	320	0.48228	120.0271	103RD & ROKEBY - SUB 3458 NEB CTY 345KV CKT 1
FDNS	09ALL	0	20L	G15_042	FROM->TO	DIXONCO 230.00 - TWIN CHURCH 230KV CKT 1	320	320	0.48228	120.0271	103RD & ROKEBY - SUB 3458 NEB CTY 345KV CKT 1
FDNS	09ALL	0	20L	G15_042	FROM->TO	DIXONCO 230.00 - TWIN CHURCH 230KV CKT 1	320	320	0.47963	120.0182	RASMUSN - UTICA JCT 230KV CKT 1
FDNS	09ALL	0	20L	G15_042	FROM->TO	DIXONCO 230.00 - TWIN CHURCH 230KV CKT 1	320	320	0.4823	119.9883	HIGHLND 3 345.00 - OBRIEN 3 345.00 345KV CKT 1
FDNS	09ALL	0	20L	G15_042	FROM->TO	DIXONCO 230.00 - TWIN CHURCH 230KV CKT 1	320	320	0.48333	119.9869	CLEARWATER - NELIGH 115KV CKT 1
FDNS	09ALL	0	17G	G15_042	FROM->TO	DIXONCO 230.00 - TWIN CHURCH 230KV CKT 1	320	320	0.48061	119.9837	GEN659103 1-ANTELOPE VALLEY UNIT1
FDNS	09ALL	0	17G	G15_042	FROM->TO	DIXONCO 230.00 - TWIN CHURCH 230KV CKT 1	320	320	0.48061	119.9837	GEN659107 2-ANTELOPE VALLEY UNIT2
FDNS	09ALL	0	20L	G15_042	FROM->TO	DIXONCO 230.00 - TWIN CHURCH 230KV CKT 1	320	320	0.48123	119.9825	ATCHSNT3 345.00 - BOONEVILLE 345KV CKT 1
FDNS	09ALL	0	17G	G15_042	FROM->TO	DIXONCO 230.00 - TWIN CHURCH 230KV CKT 1	320	320	0.47892	119.9649	RASMUSN - UTICA JCT 230KV CKT 1
FDNS	09ALL	0	17G	G15_042	FROM->TO	DIXONCO 230.00 - TWIN CHURCH 230KV CKT 1	320	320	0.48061	119.9225	GEN600005 1-MONTICELLO
FDNS	09ALL	0	25SP	G15_042	FROM->TO	DIXONCO 230.00 - TWIN CHURCH 230KV CKT 1	320	320	0.48075	119.9151	P13:115-230:NPPD:NUCOR-3
FDNS	09ALL	0	17G	G15_042	FROM->TO	DIXONCO 230.00 - TWIN CHURCH 230KV CKT 1	320	320	0.48061	119.8632	GEN615001 1-COAL CREEK
FDNS	09ALL	0	17G	G15_042	FROM->TO	DIXONCO 230.00 - TWIN CHURCH 230KV CKT 1	320	320	0.48136	119.8424	P12:115:NPPD:1168B:ALBION 7:PETERSBRG.N7:BTB
FDNS	09ALL	0	17G	G15_042	FROM->TO	DIXONCO 230.00 - TWIN CHURCH 230KV CKT 1	320	320	0.48061	119.8406	GEN659111 2-LELAND OLDS UNIT2
FDNS	09ALL	0	17G	G15_042	FROM->TO	DIXONCO 230.00 - TWIN CHURCH 230KV CKT 1	320	320	0.48136	119.832	PETERSBRG.N7115.00 - PETERSBURG 115KV CKT Z1
FDNS	09ALL	0	17G	G15_042	FROM->TO	DIXONCO 230.00 - TWIN CHURCH 230KV CKT 1	320	320	0.47993	119.8303	FT RANDAL - UTICA JCT 230KV CKT 1

SOLUTION	GROUP	SCENARIO	SEASON	SOURCE	DIRECTION	MONITORED ELEMENT	RATEA (MVA)	RATEB(MVA)	TDF	TC%LOADING (% MVA)	CONTINGENCY
FDNS	09ALL	0	17G	G15_042	FROM->TO	DIXONCO 230.00 - TWIN CHURCH 230KV CKT 1	320	320	0.48331	119.8133	OAKLAND - WEST POINT 115KV CKT 1
FDNS	09ALL	0	17G	G15_042	FROM->TO	DIXONCO 230.00 - TWIN CHURCH 230KV CKT 1	320	320	0.48136	119.8109	ALBION - PETERSBURG 115KV CKT 1
FDNS	09ALL	0	16WP	G15_042	FROM->TO	DIXONCO 230.00 - TWIN CHURCH 230KV CKT 1	320	320	0.48053	119.7987	GRPRAR2-LNX3345.00 - YANKTON 345KV CKT Z
FDNS	09ALL	0	16WP	G15_042	FROM->TO	DIXONCO 230.00 - TWIN CHURCH 230KV CKT 1	320	320	0.48053	119.7792	FTTHOM2-LNX3345.00 - GRPRAR2-LNX3345.00 345KV CKT 1
FDNS	09ALL	0	16WP	G15_042	FROM->TO	DIXONCO 230.00 - TWIN CHURCH 230KV CKT 1	320	320	0.48053	119.7725	FT THOMPSON - FTTHOM2-LNX3345.00 345KV CKT Z
FDNSLock	09ALL	0	17G	G15_042	FROM->TO	DIXONCO 230.00 - TWIN CHURCH 230KV CKT 1	320	320	0.48061	119.7474	GEN620315 1-BIG STONE GEN
FDNS	09ALL	0	20WP	G15_042	FROM->TO	DIXONCO 230.00 - TWIN CHURCH 230KV CKT 1	320	320	0.48228	119.7345	BLOOMFIELD - GAVINS POINT 115KV CKT 1
FDNS	09ALL	0	16WP	G15_042	FROM->TO	DIXONCO 230.00 - TWIN CHURCH 230KV CKT 1	320	320	0.47912	119.7303	FT RANDAL - SIOUX CITY 230KV CKT 1
FDNS	09ALL	0	17G	G15_042	FROM->TO	DIXONCO 230.00 - TWIN CHURCH 230KV CKT 1	320	320	0.48061	119.725	GEN600003 1-PRAIRIE ISLAND G1
FDNS	09ALL	0	17G	G15_042	FROM->TO	DIXONCO 230.00 - TWIN CHURCH 230KV CKT 1	320	320	0.48061	119.7227	GEN600004 2-PRAIRIE ISLAND G2
FDNS	09ALL	0	17G	G15_042	FROM->TO	DIXONCO 230.00 - TWIN CHURCH 230KV CKT 1	320	320	0.48061	119.7137	GEN600006 1-AS KING
FDNS	09ALL	0	17G	G15_042	FROM->TO	DIXONCO 230.00 - TWIN CHURCH 230KV CKT 1	320	320	0.48029	119.6976	SUB 3454 - WAGENER 345KV CKT 1
FDNS	09ALL	0	17G	G15_042	FROM->TO	DIXONCO 230.00 - TWIN CHURCH 230KV CKT 1	320	320	0.48029	119.6976	SUB 3454 - WAGENER 345KV CKT 1
FDNS	09ALL	0	16WP	G15_042	FROM->TO	DIXONCO 230.00 - TWIN CHURCH 230KV CKT 1	320	320	0.48102	119.6798	GEN600002 3-SHERBURNE CNTY G3
FDNS	09ALL	0	17G	G15_042	FROM->TO	DIXONCO 230.00 - TWIN CHURCH 230KV CKT 1	320	320	0.48097	119.6779	FT RANDAL - MEADOWGROVE4230.00 230KV CKT 1
FDNS	09ALL	0	17G	G15_042	FROM->TO	DIXONCO 230.00 - TWIN CHURCH 230KV CKT 1	320	320	0.47892	119.67	RASMUSN - SIOUX CITY 230KV CKT 1
FDNS	09ALL	0	17G	G15_042	FROM->TO	DIXONCO 230.00 - TWIN CHURCH 230KV CKT 1	320	320	0.48172	119.6249	COOPER - MOORE 345KV CKT 1
FDNS	09ALL	0	17G	G15_042	FROM->TO	DIXONCO 230.00 - TWIN CHURCH 230KV CKT 1	320	320	0.48155	119.6204	GAVINS POINT - YANKON JCT 115KV CKT 1
FDNS	09ALL	0	17G	G15_042	FROM->TO	DIXONCO 230.00 - TWIN CHURCH 230KV CKT 1	320	320	0.48155	119.6204	GAVINS POINT - YANKON JCT 115KV CKT 1
FDNS	09ALL	0	16WP	G15_042	FROM->TO	DIXONCO 230.00 - TWIN CHURCH 230KV CKT 1	320	320	0.48374	119.619	STANTON - STANTON NORTH 115KV CKT 1
FDNS	09ALL	0	17G	G15_042	FROM->TO	DIXONCO 230.00 - TWIN CHURCH 230KV CKT 1	320	320	0.48124	119.5968	MINGO - RED WILLOW 345KV CKT 1
FDNS	09ALL	0	17G	G15_042	FROM->TO	DIXONCO 230.00 - TWIN CHURCH 230KV CKT 1	320	320	0.48124	119.5968	MINGO - RED WILLOW 345KV CKT 1
FDNS	09ALL	0	17G	G15_042	FROM->TO	DIXONCO 230.00 - TWIN CHURCH 230KV CKT 1	320	320	0.48032	119.5935	COLUMBUS - SCHUYLER 115KV CKT 1
FDNS	09ALL	0	16WP	G15_042	FROM->TO	DIXONCO 230.00 - TWIN CHURCH 230KV CKT 1	320	320	0.48374	119.5292	P12:115:NPPD:1166:STNTN.N7:BEEMER 7:BTB
FDNS	09ALL	0	17G	G15_042	FROM->TO	DIXONCO 230.00 - TWIN CHURCH 230KV CKT 1	320	320	0.48162	119.5068	AXTELL - POST ROCK 345KV CKT 1
FDNS	09ALL	0	16WP	G15_042	FROM->TO	DIXONCO 230.00 - TWIN CHURCH 230KV CKT 1	320	320	0.48102	119.4735	SHERBURNE CO 345/24.0KV TRANSFORMER CKT 1
FDNS	09ALL	0	17G	G15_042	FROM->TO	DIXONCO 230.00 - TWIN CHURCH 230KV CKT 1	320	320	0.48061	119.3965	GEN635214 4-NEAL UNIT 4
FDNS	09ALL	0	17G	G15_042	FROM->TO	DIXONCO 230.00 - TWIN CHURCH 230KV CKT 1	320	320	0.48061	119.3892	GEN657748 1-YOUNG 2 GENERATOR
FDNS	09ALL	0	16WP	G15_042	FROM->TO	DIXONCO 230.00 - TWIN CHURCH 230KV CKT 1	320	320	0.48374	119.3751	BEEMER - STANTON 115KV CKT 1
FDNS	09ALL	0	20WP	G15_042	FROM->TO	DIXONCO 230.00 - TWIN CHURCH 230KV CKT 1	320	320	0.4843	119.3596	HOSKINS - STANTON NORTH 115KV CKT 1
FDNS	09ALL	0	17G	G15_042	FROM->TO	DIXONCO 230.00 - TWIN CHURCH 230KV CKT 1	320	320	0.48061	119.3022	GEN661015 1-COYOTE
FDNS	09ALL	0	17G	G15_042	FROM->TO	DIXONCO 230.00 - TWIN CHURCH 230KV CKT 1	320	320	0.48007	119.2522	ATCHSNT3 345.00 - BOONEVILLE 345KV CKT 1
FDNS	09ALL	0	20WP	G15_042	FROM->TO	DIXONCO 230.00 - TWIN CHURCH 230KV CKT 1	320	320	0.48093	119.1766	FTTHOM2-LNX3345.00 - GRPRAR2-LNX3345.00 345KV CKT 1
FDNS	09ALL	0	20WP	G15_042	FROM->TO	DIXONCO 230.00 - TWIN CHURCH 230KV CKT 1	320	320	0.48093	119.1765	FT THOMPSON - FTTHOM2-LNX3345.00 345KV CKT Z
FDNS	09ALL	0	20WP	G15_042	FROM->TO	DIXONCO 230.00 - TWIN CHURCH 230KV CKT 1	320	320	0.48093	119.1719	GRPRAR2-LNX3345.00 - YANKTON 345KV CKT Z
FDNS	09ALL	0	16WP	G15_042	FROM->TO	DIXONCO 230.00 - TWIN CHURCH 230KV CKT 1	320	320	0.48102	119.1369	GEN600000 1-SHERBURNECNTY G1
FDNS	09ALL	0	16WP	G15_042	FROM->TO	DIXONCO 230.00 - TWIN CHURCH 230KV CKT 1	320	320	0.48102	119.0527	GEN600001 2-SHERBURNE CNTY G2
FDNS	09ALL	0	20WP	G15_042	FROM->TO	DIXONCO 230.00 - TWIN CHURCH 230KV CKT 1	320	320	0.47961	119.0186	FT RANDAL - SIOUX CITY 230KV CKT 1
FDNS	09ALL	0	20L	G15_042	FROM->TO	DIXONCO 230.00 - TWIN CHURCH 230KV CKT 1	320	320	0.4817	118.9903	BASE CASE
FDNS	09ALL	0	20WP	G15_042	FROM->TO	DIXONCO 230.00 - TWIN CHURCH 230KV CKT 1	320	320	0.4843	118.9796	STANTON - STANTON NORTH 115KV CKT 1
FDNS	09ALL	0	16WP	G15_042	FROM->TO	DIXONCO 230.00 - TWIN CHURCH 230KV CKT 1	320	320	0.48102	118.9174	BIG STONE 230/24.0KV TRANSFORMER CKT 1
FDNS	09ALL	0	20WP	G15_042	FROM->TO	DIXONCO 230.00 - TWIN CHURCH 230KV CKT 1	320	320	0.4843	118.8913	P12:115:NPPD:1166:STNTN.N7:BEEMER 7:BTB
FDNS	09ALL	0	20SP	G15_042	FROM->TO	DIXONCO 230.00 - TWIN CHURCH 230KV CKT 1	320	320	0.62444	118.8697	HOSKINS (HOSKINS T2) 345/230/13.8KV TRANSFORMER CKT 1
FDNS	09ALL	0	20SP	G15_042	FROM->TO	DIXONCO 230.00 - TWIN CHURCH 230KV CKT 1	320	320	0.62444	118.8697	HOSKINS (HOSKINS T2) 345/230/13.8KV TRANSFORMER CKT 1
FDNS	09ALL	0	16WP	G15_042	FROM->TO	DIXONCO 230.00 - TWIN CHURCH 230KV CKT 1	320	320	0.4803	118.8138	FT RANDAL - UTICA JCT 230KV CKT 1
FDNS	09ALL	0	20WP	G15_042	FROM->TO	DIXONCO 230.00 - TWIN CHURCH 230KV CKT 1	320	320	0.48151	118.7846	GEN600002 3-SHERBURNE CNTY G3
FDNS	09ALL	0	16WP	G15_042	FROM->TO	DIXONCO 230.00 - TWIN CHURCH 230KV CKT 1	320	320	0.48102	118.7692	GEN659103 1-ANTELOPE VALLEY UNIT1
FDNS	09ALL	0	16WP	G15_042	FROM->TO	DIXONCO 230.00 - TWIN CHURCH 230KV CKT 1	320	320	0.48102	118.7692	GEN659107 2-ANTELOPE VALLEY UNIT2
FDNS	09ALL	0	16WP	G15_042	FROM->TO	DIXONCO 230.00 - TWIN CHURCH 230KV CKT 1	320	320	0.48102	118.7499	GEN600005 1-MONTICELLO
FDNS	09ALL	0	20WP	G15_042	FROM->TO	DIXONCO 230.00 - TWIN CHURCH 230KV CKT 1	320	320	0.4843	118.7386	BEEMER - STANTON 115KV CKT 1
FDNS	09ALL	0	16WP	G15_042	FROM->TO	DIXONCO 230.00 - TWIN CHURCH 230KV CKT 1	320	320	0.48102	118.7376	GEN615002 2-COAL CREEK
FDNS	09ALL	0	16WP	G15_042	FROM->TO	DIXONCO 230.00 - TWIN CHURCH 230KV CKT 1	320	320	0.48102	118.7104	GEN615001 1-COAL CREEK
FDNS	09ALL	0	16WP	G15_042	FROM->TO	DIXONCO 230.00 - TWIN CHURCH 230KV CKT 1	320	320	0.48374	118.7075	BEEMER - WEST POINT 115KV CKT 1
FDNS	09ALL	0	17SP	G15_042	FROM->TO	DIXONCO 230.00 - TWIN CHURCH 230KV CKT 1	320	320	0.62411	118.6874	HOSKINS (HOSKINS T2) 345/230/13.8KV TRANSFORMER CKT 1
FDNS	09ALL	0	17SP	G15_042	FROM->TO	DIXONCO 230.00 - TWIN CHURCH 230KV CKT 1	320	320	0.62411	118.6874	HOSKINS (HOSKINS T2) 345/230/13.8KV TRANSFORMER CKT 1
FDNS	09ALL	0	20WP	G15_042	FROM->TO	DIXONCO 230.00 - TWIN CHURCH 230KV CKT 1	320	320	0.48151	118.6498	SHERBURNE CO 345/24.0KV TRANSFORMER CKT 1
FDNS	09ALL	0	16WP	G15_042	FROM->TO	DIXONCO 230.00 - TWIN CHURCH 230KV CKT 1	320	320	0.48102	118.6205	GEN659111 2-LELAND OLDS UNIT2
FDNS	09ALL	0	16WP	G15_042	FROM->TO	DIXONCO 230.00 - TWIN CHURCH 230KV CKT 1	320	320	0.47923	118.6058	RASMUSN - UTICA JCT 230KV CKT 1
FDNSLock	09ALL	0	16WP	G15_042	FROM->TO	DIXONCO 230.00 - TWIN CHURCH 230KV CKT 1	320	320	0.48073	118.605	COLUMBUS - SCHUYLER 115KV CKT 1
FDNS	09ALL	0	16WP	G15_042	FROM->TO	DIXONCO 230.00 - TWIN CHURCH 230KV CKT 1	320	320	0.48102	118.6039	GEN620315 1-BIG STONE GEN
FDNS	09ALL	0	16WP	G15_042	FROM->TO	DIXONCO 230.00 - TWIN CHURCH 230KV CKT 1	320	320	0.46247	118.5764	P13:345:UMZW:# 260 #: SC2 IN IA. LOSS OF TRANSFORMER (KU1A
FDNS	09ALL	0	16WP	G15_042	FROM->TO	DIXONCO 230.00 - TWIN CHURCH 230KV CKT 1	320	320	0.48102	118.5563	GEN600006 1-AS KING
FDNS	09ALL	0	16WP	G15_042	FROM->TO	DIXONCO 230.00 - TWIN CHURCH 230KV CKT 1	320	320	0.48176	118.5447	P12:115:NPPD:1168B:ALBION 7:PETERSBRG.N7:BTB
FDNS	09ALL	0	16WP	G15_042	FROM->TO	DIXONCO 230.00 - TWIN CHURCH 230KV CKT 1	320	320	0.48102	118.5436	GEN600003 1-PRAIRIE ISLAND G1
FDNS	09ALL	0	16WP	G15_042	FROM->TO	DIXONCO 230.00 - TWIN CHURCH 230KV CKT 1	320	320	0.48102	118.5411	GEN600004 2-PRAIRIE ISLAND G2
FDNS	09ALL	0	16WP	G15_042	FROM->TO	DIXONCO 230.00 - TWIN CHURCH 230KV CKT 1	320	320	0.48176	118.5301	PETERSBRG.N7115.00 - PETERSBURG 115KV CKT Z1
FDNS	09ALL	0	16WP	G15_042	FROM->TO	DIXONCO 230.00 - TWIN CHURCH 230KV CKT 1	320	320	0.48176	118.5041	ALBION - PETERSBURG 115KV CKT 1
FDNS	09ALL	0	16WP	G15_042	FROM->TO	DIXONCO 230.00 - TWIN CHURCH 230KV CKT 1	320	320	0.4807	118.4714	SUB 3454 - WAGENER 345KV CKT 1
FDNS	09ALL	0	16WP	G15_042	FROM->TO	DIXONCO 230.00 - TWIN CHURCH 230KV CKT 1	320	320	0.4807	118.4714	SUB 3454 - WAGENER 345KV CKT 1
FDNS	09ALL	0	16WP	G15_042	FROM->TO	DIXONCO 230.00 - TWIN CHURCH 230KV CKT 1	320	320	0.48371	118.445	P12:115:NPPD:1161:OAKLAND7:BEEMER 7:BTB
FDNS	09ALL	0	20WP	G15_042	FROM->TO	DIXONCO 230.00 - TWIN CHURCH 230KV CKT 1	320	320	0.48151	118.411	BIG STONE 230/24.0KV TRANSFORMER CKT 1
FDNS	09ALL	0	16WP	G15_042	FROM->TO	DIXONCO 230.00 - TWIN CHURCH 230KV CKT 1	320	320	0.482	118.408	GAVINS POINT - YANKON JCT 115KV CKT 1
FDNS	09ALL	0	16WP	G15_042	FROM->TO	DIXONCO 230.00 - TWIN CHURCH 230KV CKT 1	320	320	0.482	118.408	GAVINS POINT - YANKON JCT 115KV CKT 1
FDNS	09NR	0	17G	G15_042	FROM->TO	DIXONCO 230.00 - TWIN CHURCH 230KV CKT 1	320	320	0.47053	118.372	P13:115-230:NPPD:NUCOR-3
FDNS	09ALL	0	16WP	G15_042	FROM->TO	DIXONCO 230.00 - TWIN CHURCH 230KV CKT 1	320	320	0.48049	118.3399	ATCHSNT3 345.00 - BOONEVILLE 345KV CKT 1
FDNS	09ALL	0	20WP	G15_042	FROM->TO	DIXONCO 230.00 - TWIN CHURCH 230KV CKT 1	320	320	0.46286	118.3396	P13:345:UMZW:# 260 #: SC2 IN IA. LOSS OF TRANSFORMER (KU1A
FDNS	09ALL	0	16WP	G15_042	FROM->TO	DIXONCO 230.00 - TWIN CHURCH 230KV CKT 1	320	320	0.48102	118.3229	GEN657748 1-YOUNG 2 GENERATOR
FDNS	09ALL	0	20WP	G15_042	FROM->TO	DIXONCO 230.00 - TWIN CHURCH 230KV CKT 1	320	320	0.48151	118.3119	GEN600000 1-SHERBURNECNTY G1
FDNS	09ALL	0	16WP	G15_042	FROM->TO	DIXONCO 230.00 - TWIN CHURCH 230KV CKT 1	320	320	0.47923	118.2917	RASMUSN - SIOUX CITY 230KV CKT 1

SOLUTION	GROUP	SCENARIO	SEASON	SOURCE	DIRECTION	MONITORED ELEMENT	RATEA (MVA)	RATEB(MVA)	TDF	TC%LOADING (% MVA)	CONTINGENCY
FDNS	09ALL	0	16WP	G15_042	FROM->TO	DIXONCO 230.00 - TWIN CHURCH 230KV CKT 1	320	320	0.48152	118.2602	FT RANDAL - MEADOWGROVE4230.00 230KV CKT 1
FDNS	09ALL	0	17G	G15_042	FROM->TO	DIXONCO 230.00 - TWIN CHURCH 230KV CKT 1	320	320	0.48061	118.2459	BASE CASE
FDNS	09ALL	0	20WP	G15_042	FROM->TO	DIXONCO 230.00 - TWIN CHURCH 230KV CKT 1	320	320	0.48151	118.2269	GEN600001 2-SHERBURNE CNTY G2
FDNS	09ALL	0	20WP	G15_042	FROM->TO	DIXONCO 230.00 - TWIN CHURCH 230KV CKT 1	320	320	0.4808	118.2236	FT RANDAL - UTICA JCT 230KV CKT 1
FDNS	09ALL	0	20WP	G15_042	FROM->TO	DIXONCO 230.00 - TWIN CHURCH 230KV CKT 1	320	320	0.48151	118.205	GEN659103 1-ANTELOPE VALLEY UNIT1
FDNS	09ALL	0	20WP	G15_042	FROM->TO	DIXONCO 230.00 - TWIN CHURCH 230KV CKT 1	320	320	0.48151	118.205	GEN659107 2-ANTELOPE VALLEY UNIT2
FDNS	09ALL	0	16WP	G15_042	FROM->TO	DIXONCO 230.00 - TWIN CHURCH 230KV CKT 1	320	320	0.48102	118.1993	GEN661015 1-COYOTE
FDNS	09ALL	0	20WP	G15_042	FROM->TO	DIXONCO 230.00 - TWIN CHURCH 230KV CKT 1	320	320	0.48151	118.1971	GEN600005 1-MONTICELLO
FDNS	09ALL	0	16WP	G15_042	FROM->TO	DIXONCO 230.00 - TWIN CHURCH 230KV CKT 1	320	320	0.48102	118.1315	ALMA 161 161/24.0KV TRANSFORMER CKT 1
FDNS	09ALL	0	16WP	G15_042	FROM->TO	DIXONCO 230.00 - TWIN CHURCH 230KV CKT 1	320	320	0.48049	118.1154	ATCHSNT3 345.00 - COOPER 345KV CKT 1
FDNS	09ALL	0	16WP	G15_042	FROM->TO	DIXONCO 230.00 - TWIN CHURCH 230KV CKT 1	320	320	0.48049	118.1154	ATCHSNT3 345.00 - COOPER 345KV CKT 1
FDNS	09ALL	0	20WP	G15_042	FROM->TO	DIXONCO 230.00 - TWIN CHURCH 230KV CKT 1	320	320	0.48151	118.1099	GEN620315 1-BIG STONE GEN
FDNS	09ALL	0	20WP	G15_042	FROM->TO	DIXONCO 230.00 - TWIN CHURCH 230KV CKT 1	320	320	0.48151	118.0968	GEN615002 2-COAL CREEK
FDNS	09ALL	0	20WP	G15_042	FROM->TO	DIXONCO 230.00 - TWIN CHURCH 230KV CKT 1	320	320	0.4843	118.0933	BEEMER - WEST POINT 115KV CKT 1
FDNS	09ALL	0	20WP	G15_042	FROM->TO	DIXONCO 230.00 - TWIN CHURCH 230KV CKT 1	320	320	0.48151	118.0708	GEN615001 1-COAL CREEK
FDNS	09ALL	0	16WP	G15_042	FROM->TO	DIXONCO 230.00 - TWIN CHURCH 230KV CKT 1	320	320	0.48371	118.0673	OAKLAND - WEST POINT 115KV CKT 1
FDNS	09ALL	0	20WP	G15_042	FROM->TO	DIXONCO 230.00 - TWIN CHURCH 230KV CKT 1	320	320	0.48151	118.0594	GEN659111 2-LELAND OLDS UNIT2
FDNS	09ALL	0	25SP	G15_042	FROM->TO	DIXONCO 230.00 - TWIN CHURCH 230KV CKT 1	320	320	0.62437	118.0351	HOSKINS (HOSKINS T2) 345/230/13.8KV TRANSFORMER CKT 1
FDNS	09ALL	0	25SP	G15_042	FROM->TO	DIXONCO 230.00 - TWIN CHURCH 230KV CKT 1	320	320	0.62437	118.0351	HOSKINS (HOSKINS T2) 345/230/13.8KV TRANSFORMER CKT 1
FDNS	09ALL	0	20L	G15_042	FROM->TO	DIXONCO 230.00 - TWIN CHURCH 230KV CKT 1	320	320	0.4809	118.0283	GRIMES - LEHIGH 345KV CKT 1
FDNS	09ALL	0	16WP	G15_042	FROM->TO	DIXONCO 230.00 - TWIN CHURCH 230KV CKT 1	320	320	0.48102	118.0235	GEN635214 4-NEAL UNIT 4
FDNS	09ALL	0	16WP	G15_042	FROM->TO	DIXONCO 230.00 - TWIN CHURCH 230KV CKT 1	320	320	0.48071	118.0209	P12:230:UMZB:# 116 #: ST IN SD. WSG-ST-VH
FDNS	09ALL	0	20L	G15_042	FROM->TO	DIXONCO 230.00 - TWIN CHURCH 230KV CKT 1	320	320	0.48245	118.0077	BATTLE CREEK - COUNTY LINE 115KV CKT 1
FDNS	09ALL	0	20L	G15_042	FROM->TO	DIXONCO 230.00 - TWIN CHURCH 230KV CKT 1	320	320	0.48245	117.9969	ANTELOPE 7115.00 - COUNTY LINE 115KV CKT 1
FDNS	09ALL	0	16WP	G15_042	FROM->TO	DIXONCO 230.00 - TWIN CHURCH 230KV CKT 1	320	320	0.48102	117.995	GEN672306 6-BOUNDARY DAM GENERATOR 6
FDNS	09ALL	0	16WP	G15_042	FROM->TO	DIXONCO 230.00 - TWIN CHURCH 230KV CKT 1	320	320	0.48102	117.9846	GEN672310 1-POPLAR RIVER GENERATOR 1
FDNS	09ALL	0	16WP	G15_042	FROM->TO	DIXONCO 230.00 - TWIN CHURCH 230KV CKT 1	320	320	0.48102	117.9846	GEN672311 2-POPLAR RIVER GENERATOR 2
FDNS	09ALL	0	16WP	G15_042	FROM->TO	DIXONCO 230.00 - TWIN CHURCH 230KV CKT 1	320	320	0.48162	117.9821	HIGHLND 3 345.00 - OBRIEN 3 345.00 345KV CKT 1
FDNS	09ALL	0	16WP	G15_042	FROM->TO	DIXONCO 230.00 - TWIN CHURCH 230KV CKT 1	320	320	0.48071	117.9774	HANLON - STORLA 230KV CKT 1
FDNS	09ALL	0	16WP	G15_042	FROM->TO	DIXONCO 230.00 - TWIN CHURCH 230KV CKT 1	320	320	0.47923	117.9716	PAHOJA - SIOUX FALLS 230KV CKT 1
FDNS	09ALL	0	16WP	G15_042	FROM->TO	DIXONCO 230.00 - TWIN CHURCH 230KV CKT 1	320	320	0.4821	117.9707	COOPER - MOORE 345KV CKT 1
FDNS	09ALL	0	20L	G15_042	FROM->TO	DIXONCO 230.00 - TWIN CHURCH 230KV CKT 1	320	320	0.4817	117.9696	GEN335831 1-RIVERBEND UNIT#1
FDNS	09ALL	0	16WP	G15_042	FROM->TO	DIXONCO 230.00 - TWIN CHURCH 230KV CKT 1	320	320	0.48102	117.9616	GEN672321 1-SHAND GENERATOR 1
FDNS	09ALL	0	20WP	G15_042	FROM->TO	DIXONCO 230.00 - TWIN CHURCH 230KV CKT 1	320	320	0.4797	117.9602	RASMUSN - UTICA JCT 230KV CKT 1
FDNS	09ALL	0	16WP	G15_042	FROM->TO	DIXONCO 230.00 - TWIN CHURCH 230KV CKT 1	320	320	0.48111	117.95	FALLOW 3 345.00 - GRIMES 345KV CKT 1
FDNS	09ALL	0	20L	G15_042	FROM->TO	DIXONCO 230.00 - TWIN CHURCH 230KV CKT 1	320	320	0.4817	117.9349	GEN337910 1-ARKANSAS NUCLEAR ONE UNIT #1
FDNS	09ALL	0	16WP	G15_042	FROM->TO	DIXONCO 230.00 - TWIN CHURCH 230KV CKT 1	320	320	0.48102	117.9252	CLAY BOSWELL 230/20.9KV TRANSFORMER CKT 1
FDNS	09ALL	0	20L	G15_042	FROM->TO	DIXONCO 230.00 - TWIN CHURCH 230KV CKT 1	320	320	0.47983	117.9241	SIOUX CITY - SIOUXCY-LNX3345.00 345KV CKT Z
FDNS	09ALL	0	16WP	G15_042	FROM->TO	DIXONCO 230.00 - TWIN CHURCH 230KV CKT 1	320	320	0.48163	117.9233	LAKEFIELD 3 - OBRIEN 3 345.00 345KV CKT 1
FDNS	09ALL	0	20L	G15_042	FROM->TO	DIXONCO 230.00 - TWIN CHURCH 230KV CKT 1	320	320	0.47983	117.9153	P12:345:UMZW:# 907 #: SC2-SR IN IA. SC2-SR 345 KV LINE
FDNS	09ALL	0	20L	G15_042	FROM->TO	DIXONCO 230.00 - TWIN CHURCH 230KV CKT 1	320	320	0.48027	117.911	SIOUX CITY (SC KV1A) 230/161/13.8KV TRANSFORMER CKT 1
FDNS	09ALL	0	20L	G15_042	FROM->TO	DIXONCO 230.00 - TWIN CHURCH 230KV CKT 1	320	320	0.48026	117.9034	SIOUX CITY (SC KV5A) 230/161/13.8KV TRANSFORMER CKT 1
FDNS	09ALL	0	20WP	G15_042	FROM->TO	DIXONCO 230.00 - TWIN CHURCH 230KV CKT 1	320	320	0.48123	117.8971	SUB 3454 - WAGENER 345KV CKT 1
FDNS	09ALL	0	20WP	G15_042	FROM->TO	DIXONCO 230.00 - TWIN CHURCH 230KV CKT 1	320	320	0.48123	117.8971	SUB 3454 - WAGENER 345KV CKT 1
FDNS	09ALL	0	20WP	G15_042	FROM->TO	DIXONCO 230.00 - TWIN CHURCH 230KV CKT 1	320	320	0.48208	117.8962	FT RANDAL - MEADOWGROVE4230.00 230KV CKT 1
FDNS	09ALL	0	20L	G15_042	FROM->TO	DIXONCO 230.00 - TWIN CHURCH 230KV CKT 1	320	320	0.4817	117.8847	GEN563222 1-G15088_3 0.6900
FDNS	09ALL	0	20L	G15_042	FROM->TO	DIXONCO 230.00 - TWIN CHURCH 230KV CKT 1	320	320	0.4817	117.8802	GEN344225 1-1CAL G1 25.000
FDNS	09ALL	0	20WP	G15_042	FROM->TO	DIXONCO 230.00 - TWIN CHURCH 230KV CKT 1	320	320	0.4825	117.8708	GAVINS POINT - YANKON JCT 115KV CKT 1
FDNS	09ALL	0	20WP	G15_042	FROM->TO	DIXONCO 230.00 - TWIN CHURCH 230KV CKT 1	320	320	0.4825	117.8708	GAVINS POINT - YANKON JCT 115KV CKT 1
FDNS	09ALL	0	20WP	G15_042	FROM->TO	DIXONCO 230.00 - TWIN CHURCH 230KV CKT 1	320	320	0.48231	117.8678	P12:115:NPPD:1168B:ALBION 7:PETERSBRG.N7:BTB
FDNS	09ALL	0	20WP	G15_042	FROM->TO	DIXONCO 230.00 - TWIN CHURCH 230KV CKT 1	320	320	0.48106	117.8667	ATCHSNT3 345.00 - BOONEVILLE 345KV CKT 1
FDNS	09ALL	0	20WP	G15_042	FROM->TO	DIXONCO 230.00 - TWIN CHURCH 230KV CKT 1	320	320	0.48231	117.8545	PETERSBRG.N7115.00 - PETERSBURG 115KV CKT Z1
FDNS	09ALL	0	20WP	G15_042	FROM->TO	DIXONCO 230.00 - TWIN CHURCH 230KV CKT 1	320	320	0.48151	117.8543	GEN600006 1-AS KING
FDNS	09ALL	0	20WP	G15_042	FROM->TO	DIXONCO 230.00 - TWIN CHURCH 230KV CKT 1	320	320	0.48143	117.8543	COLUMBUS - SCHUYLER 115KV CKT 1
FDNS	09ALL	0	20WP	G15_042	FROM->TO	DIXONCO 230.00 - TWIN CHURCH 230KV CKT 1	320	320	0.48427	117.8421	P12:115:NPPD:1161:OAKLAND7:BEEMER 7:BTB
FDNS	09ALL	0	20L	G15_042	FROM->TO	DIXONCO 230.00 - TWIN CHURCH 230KV CKT 1	320	320	0.4817	117.8403	GEN336153 1-WATERFORD UNIT#3
FDNS	09ALL	0	20WP	G15_042	FROM->TO	DIXONCO 230.00 - TWIN CHURCH 230KV CKT 1	320	320	0.48231	117.8293	ALBION - PETERSBURG 115KV CKT 1
FDNS	09ALL	0	20WP	G15_042	FROM->TO	DIXONCO 230.00 - TWIN CHURCH 230KV CKT 1	320	320	0.48151	117.8237	GEN600003 1-PRAIRIE ISLAND G1
FDNS	09ALL	0	20WP	G15_042	FROM->TO	DIXONCO 230.00 - TWIN CHURCH 230KV CKT 1	320	320	0.48151	117.8217	GEN600004 2-PRAIRIE ISLAND G2
FDNS	09ALL	0	20L	G15_042	FROM->TO	DIXONCO 230.00 - TWIN CHURCH 230KV CKT 1	320	320	0.48051	117.8193	ANITA TAP POINT TO CRESTON AND DENISON - EXIRA 161KV CKT 1
FDNS	09ALL	0	20L	G15_042	FROM->TO	DIXONCO 230.00 - TWIN CHURCH 230KV CKT 1	320	320	0.4817	117.8164	GEN562912 1-G15053_3 0.6900
FDNS	09ALL	0	20L	G15_042	FROM->TO	DIXONCO 230.00 - TWIN CHURCH 230KV CKT 1	320	320	0.48051	117.7923	DENISON - EXIRA 161KV CKT 1
FDNS	09ALL	0	20L	G15_042	FROM->TO	DIXONCO 230.00 - TWIN CHURCH 230KV CKT 1	320	320	0.48051	117.792	DENISON (DN KV1A) 230/161/13.8KV TRANSFORMER CKT 1
FDNS	09ALL	0	20L	G15_042	FROM->TO	DIXONCO 230.00 - TWIN CHURCH 230KV CKT 1	320	320	0.47983	117.7911	SIOUXCY-LNX3345.00 - SPLIT ROCK 345KV CKT 1
FDNS	09ALL	0	20L	G15_042	FROM->TO	DIXONCO 230.00 - TWIN CHURCH 230KV CKT 1	320	320	0.47983	117.7911	SIOUXCY-LNX3345.00 - SPLIT ROCK 345KV CKT 1
FDNS	09ALL	0	20L	G15_042	FROM->TO	DIXONCO 230.00 - TWIN CHURCH 230KV CKT 1	320	320	0.4817	117.7468	GEN337911 1-ARKANSAS NUCLEAR ONE UNIT #2
FDNS	09ALL	0	20WP	G15_042	FROM->TO	DIXONCO 230.00 - TWIN CHURCH 230KV CKT 1	320	320	0.48151	117.7167	GEN657748 1-YOUNG 2 GENERATOR
FDNS	09ALL	0	20L	G15_042	FROM->TO	DIXONCO 230.00 - TWIN CHURCH 230KV CKT 1	320	320	0.48118	117.7098	GRPRAR1-LNX3345.00 - GRPRAR 345KV CKT Z
FDNS	09ALL	0	20L	G15_042	FROM->TO	DIXONCO 230.00 - TWIN CHURCH 230KV CKT 1	320	320	0.48118	117.7074	GRPRAR1-LNX3345.00 - HOLT.CO3 345.00 345KV CKT 1
FDNS	09ALL	0	20WP	G15_042	FROM->TO	DIXONCO 230.00 - TWIN CHURCH 230KV CKT 1	320	320	0.4797	117.6583	RASMUSN - SIOUX CITY 230KV CKT 1
FDNS	09ALL	0	20WP	G15_042	FROM->TO	DIXONCO 230.00 - TWIN CHURCH 230KV CKT 1	320	320	0.48106	117.643	ATCHSNT3 345.00 - COOPER 345KV CKT 1
FDNS	09ALL	0	20WP	G15_042	FROM->TO	DIXONCO 230.00 - TWIN CHURCH 230KV CKT 1	320	320	0.48106	117.643	ATCHSNT3 345.00 - COOPER 345KV CKT 1
FDNS	09ALL	0	20L	G15_042	FROM->TO	DIXONCO 230.00 - TWIN CHURCH 230KV CKT 1	320	320	0.4817	117.616	GEN336821 1-GRAND GULF UNIT
FDNS	09ALL	0	20L	G15_042	FROM->TO	DIXONCO 230.00 - TWIN CHURCH 230KV CKT 1	320	320	0.4817	117.6058	GEN640431 1-LAREDO.GEN1W0.6900
FDNS	09ALL	0	20WP	G15_042	FROM->TO	DIXONCO 230.00 - TWIN CHURCH 230KV CKT 1	320	320	0.48151	117.6044	GEN661015 1-COYOTE
FDNS	09ALL	0	20L	G15_042	FROM->TO	DIXONCO 230.00 - TWIN CHURCH 230KV CKT 1	320	320	0.4817	117.5795	GEN635023 3-WALTER SCOTT UNIT 3
FDNS	09ALL	0	20WP	G15_042	FROM->TO	DIXONCO 230.00 - TWIN CHURCH 230KV CKT 1	320	320	0.48162	117.4891	FALLOW 3 345.00 - GRIMES 345KV CKT 1
FDNS	09ALL	0	20WP	G15_042	FROM->TO	DIXONCO 230.00 - TWIN CHURCH 230KV CKT 1	320	320	0.48151	117.4728	CLAY BOSWELL 230/20.9KV TRANSFORMER CKT 1
FDNS	09ALL	0	20WP	G15_042	FROM->TO	DIXONCO 230.00 - TWIN CHURCH 230KV CKT 1	320	320	0.48427	117.4694	OAKLAND - WEST POINT 115KV CKT 1

SOLUTION	GROUP	SCENARIO	SEASON	SOURCE	DIRECTION	MONITORED ELEMENT	RATEA (MVA)	RATEB(MVA)	TDF	TC%LOADING (% MVA)	CONTINGENCY
FDNS	09ALL	0	25SP	G15_042	FROM->TO	DIXONCO 230.00 - TWIN CHURCH 230KV CKT 1	320	320	0.52099	117.4566	HOSKINS - RAUN 345KV CKT 1
FDNS	09ALL	0	25SP	G15_042	FROM->TO	DIXONCO 230.00 - TWIN CHURCH 230KV CKT 1	320	320	0.52099	117.4566	HOSKINS - RAUN 345KV CKT 1
FDNS	09ALL	0	20WP	G15_042	FROM->TO	DIXONCO 230.00 - TWIN CHURCH 230KV CKT 1	320	320	0.48151	117.4263	GEN672306 6-BOUNDARY DAM GENERATOR 6
FDNS	09NR	0	20L	G15_042	FROM->TO	DIXONCO 230.00 - TWIN CHURCH 230KV CKT 1	320	320	0.47153	117.4109	P13:115-230:NPPD:NUCOR-3
FDNS	09ALL	0	20L	G15_042	FROM->TO	DIXONCO 230.00 - TWIN CHURCH 230KV CKT 1	320	320	0.4817	117.3593	GEN635024 4-WALTER SCOTT UNIT 4
FDNS	09ALL	0	17G	G15_042	FROM->TO	DIXONCO 230.00 - TWIN CHURCH 230KV CKT 1	320	320	0.48061	117.3228	GEN501801 1-DOLET HILLS UNIT1
FDNS	09ALL	0	17G	G15_042	FROM->TO	DIXONCO 230.00 - TWIN CHURCH 230KV CKT 1	320	320	0.48061	117.322	GEN337652 1-WHITE BLUFF UNIT #1
FDNS	09ALL	0	17G	G15_042	FROM->TO	DIXONCO 230.00 - TWIN CHURCH 230KV CKT 1	320	320	0.47895	117.2875	SIOUXCY-LNX3345.00 - SPLIT ROCK 345KV CKT 1
FDNS	09ALL	0	17G	G15_042	FROM->TO	DIXONCO 230.00 - TWIN CHURCH 230KV CKT 1	320	320	0.47895	117.2875	SIOUXCY-LNX3345.00 - SPLIT ROCK 345KV CKT 1
FDNS	09ALL	0	17G	G15_042	FROM->TO	DIXONCO 230.00 - TWIN CHURCH 230KV CKT 1	320	320	0.48061	117.2732	GEN337653 1-WHITE BLUFF UNIT #2
FDNS	09ALL	0	20L	G15_042	FROM->TO	DIXONCO 230.00 - TWIN CHURCH 230KV CKT 1	320	320	0.46999	117.2583	BANCROFT - OAKLAND 115KV CKT 1
FDNS	09ALL	0	20L	G15_042	FROM->TO	DIXONCO 230.00 - TWIN CHURCH 230KV CKT 1	320	320	0.4817	117.2543	GEN562921 1-G15054_2 0.6900
FDNS	09ALL	0	17G	G15_042	FROM->TO	DIXONCO 230.00 - TWIN CHURCH 230KV CKT 1	320	320	0.48133	117.2422	BATTLE CREEK - NORTH NORFOLK 115KV CKT 1
FDNS	09ALL	0	17G	G15_042	FROM->TO	DIXONCO 230.00 - TWIN CHURCH 230KV CKT 1	320	320	0.48061	117.2249	GEN563222 1-G15088_3 0.6900
FDNS	09ALL	0	20L	G15_042	FROM->TO	DIXONCO 230.00 - TWIN CHURCH 230KV CKT 1	320	320	0.4795	117.1718	EAGLE 4 230.00 - SIOUX CITY 230KV CKT 1
FDNS	09ALL	0	17G	G15_042	FROM->TO	DIXONCO 230.00 - TWIN CHURCH 230KV CKT 1	320	320	0.48133	117.1707	BATTLE CREEK - COUNTY LINE 115KV CKT 1
FDNS	09ALL	0	17G	G15_042	FROM->TO	DIXONCO 230.00 - TWIN CHURCH 230KV CKT 1	320	320	0.48133	117.157	ANTELOPE 7115.00 - COUNTY LINE 115KV CKT 1
FDNS	09ALL	0	17G	G15_042	FROM->TO	DIXONCO 230.00 - TWIN CHURCH 230KV CKT 1	320	320	0.47903	117.127	SIOUX CITY (SC KV1A) 230/161/13.8KV TRANSFORMER CKT 1
FDNS	09ALL	0	17G	G15_042	FROM->TO	DIXONCO 230.00 - TWIN CHURCH 230KV CKT 1	320	320	0.47902	117.1192	SIOUX CITY (SC KV5A) 230/161/13.8KV TRANSFORMER CKT 1
FDNS	09ALL	0	17G	G15_042	FROM->TO	DIXONCO 230.00 - TWIN CHURCH 230KV CKT 1	320	320	0.48061	117.0689	GEN562912 1-G15053_3 0.6900
FDNS	09ALL	0	17G	G15_042	FROM->TO	DIXONCO 230.00 - TWIN CHURCH 230KV CKT 1	320	320	0.47965	117.0532	GRIMES - LEHIGH 345KV CKT 1
FDNS	09ALL	0	17G	G15_042	FROM->TO	DIXONCO 230.00 - TWIN CHURCH 230KV CKT 1	320	320	0.48061	117.0337	GEN335831 1-RIVERBEND UNIT#1
FDNS	09ALL	0	17G	G15_042	FROM->TO	DIXONCO 230.00 - TWIN CHURCH 230KV CKT 1	320	320	0.48061	117.0335	GEN337910 1-ARKANSAS NUCLEAR ONE UNIT #1
FDNS	09ALL	0	17G	G15_042	FROM->TO	DIXONCO 230.00 - TWIN CHURCH 230KV CKT 1	320	320	0.47931	117.0234	ANITA TAP POINT TO CRESTON AND DENISON - EXIRA 161KV CKT 1
FDNS	09ALL	0	17G	G15_042	FROM->TO	DIXONCO 230.00 - TWIN CHURCH 230KV CKT 1	320	320	0.47931	116.9987	DENISON (DN KV1A) 230/161/13.8KV TRANSFORMER CKT 1
FDNS	09ALL	0	17G	G15_042	FROM->TO	DIXONCO 230.00 - TWIN CHURCH 230KV CKT 1	320	320	0.47931	116.9957	DENISON - EXIRA 161KV CKT 1
FDNS	09ALL	0	16WP	G15_042	FROM->TO	DIXONCO 230.00 - TWIN CHURCH 230KV CKT 1	320	320	0.48102	116.9772	BASE CASE
FDNS	09ALL	0	17G	G15_042	FROM->TO	DIXONCO 230.00 - TWIN CHURCH 230KV CKT 1	320	320	0.48061	116.9639	GEN635023 3-WALTER SCOTT UNIT 3
FDNS	09ALL	0	17G	G15_042	FROM->TO	DIXONCO 230.00 - TWIN CHURCH 230KV CKT 1	320	320	0.4828	116.9573	KELLY - SHELL CREEK 230KV CKT 1
FDNS	09ALL	0	17G	G15_042	FROM->TO	DIXONCO 230.00 - TWIN CHURCH 230KV CKT 1	320	320	0.4828	116.9514	SHELL CREEK (SHELLCREEKT1) 345/230/13.8KV TRANSFORMER CKT 1
FDNS	09ALL	0	17G	G15_042	FROM->TO	DIXONCO 230.00 - TWIN CHURCH 230KV CKT 1	320	320	0.4828	116.9514	SHELL CREEK (SHELLCREEKT1) 345/230/13.8KV TRANSFORMER CKT 1
FDNS	09ALL	0	20L	G15_042	FROM->TO	DIXONCO 230.00 - TWIN CHURCH 230KV CKT 1	320	320	0.47815	116.9078	PLYMOUTH - SIOUX CITY 161KV CKT 1
FDNS	09ALL	0	17G	G15_042	FROM->TO	DIXONCO 230.00 - TWIN CHURCH 230KV CKT 1	320	320	0.47659	116.9057	TWIN CHURCH (TWNCHURCH T4) 230/115/13.8KV TRANSFORMER CKT 1
FDNS	09ALL	0	17G	G15_042	FROM->TO	DIXONCO 230.00 - TWIN CHURCH 230KV CKT 1	320	320	0.47659	116.9057	TWIN CHURCH (TWNCHURCH T4) 230/115/13.8KV TRANSFORMER CKT 1
FDNS	09ALL	0	17G	G15_042	FROM->TO	DIXONCO 230.00 - TWIN CHURCH 230KV CKT 1	320	320	0.48061	116.88	GEN336153 1-WATERFORD UNIT#3
FDNS	09ALL	0	20L	G15_042	FROM->TO	DIXONCO 230.00 - TWIN CHURCH 230KV CKT 1	320	320	0.46999	116.85	P12:115:NPPD:1193:OAKLAND7:EMERSON7:BTB
FDNS	09ALL	0	17G	G15_042	FROM->TO	DIXONCO 230.00 - TWIN CHURCH 230KV CKT 1	320	320	0.48061	116.8364	GEN640431 1-LAREDO.GEN1W0.6900
FDNS	09ALL	0	20L	G15_042	FROM->TO	DIXONCO 230.00 - TWIN CHURCH 230KV CKT 1	320	320	0.46999	116.8295	BANCROFT - EMERSON 115KV CKT 1
FDNS	09ALL	0	17G	G15_042	FROM->TO	DIXONCO 230.00 - TWIN CHURCH 230KV CKT 1	320	320	0.48061	116.8189	GEN337911 1-ARKANSAS NUCLEAR ONE UNIT #2
FDNS	09ALL	0	20L	G15_042	FROM->TO	DIXONCO 230.00 - TWIN CHURCH 230KV CKT 1	320	320	0.48181	116.8111	GR ISLD-LNX3345.00 - HOLT.CO3 345.00 345KV CKT 1
FDNS	09ALL	0	17G	G15_042	FROM->TO	DIXONCO 230.00 - TWIN CHURCH 230KV CKT 1	320	320	0.48061	116.7582	GEN635024 4-WALTER SCOTT UNIT 4
FDNS	09ALL	0	20L	G15_042	FROM->TO	DIXONCO 230.00 - TWIN CHURCH 230KV CKT 1	320	320	0.48181	116.7532	GR ISLD-LNX3345.00 - GRAND ISLAND 345KV CKT Z
FDNS	09ALL	0	17G	G15_042	FROM->TO	DIXONCO 230.00 - TWIN CHURCH 230KV CKT 1	320	320	0.47856	116.6749	EAGLE 4 230.00 - SIOUX CITY 230KV CKT 1
FDNS	09ALL	0	17G	G15_042	FROM->TO	DIXONCO 230.00 - TWIN CHURCH 230KV CKT 1	320	320	0.48061	116.6121	GEN336821 1-GRAND GULF UNIT
FDNS	09ALL	0	17G	G15_042	FROM->TO	DIXONCO 230.00 - TWIN CHURCH 230KV CKT 1	320	320	0.48061	116.5086	GEN562921 1-G15054_2 0.6900
FDNS	09ALL	0	20WP	G15_042	FROM->TO	DIXONCO 230.00 - TWIN CHURCH 230KV CKT 1	320	320	0.48151	116.4755	BASE CASE
FDNS	09ALL	0	17G	G15_042	FROM->TO	DIXONCO 230.00 - TWIN CHURCH 230KV CKT 1	320	320	0.47743	116.4273	RAUN - SUB 3451 FT CAL 345KV CKT 1
FDNS	09ALL	0	17G	G15_042	FROM->TO	DIXONCO 230.00 - TWIN CHURCH 230KV CKT 1	320	320	0.47743	116.4273	RAUN - SUB 3451 FT CAL 345KV CKT 1
FDNS	09ALL	0	20L	G15_042	FROM->TO	DIXONCO 230.00 - TWIN CHURCH 230KV CKT 1	320	320	0.47927	116.2409	DENISON - SIOUX CITY 230KV CKT 1
FDNS	09ALL	0	17G	G15_042	FROM->TO	DIXONCO 230.00 - TWIN CHURCH 230KV CKT 1	320	320	0.4799	116.129	GRPRAR1-LNX3345.00 - GRPRAR 345KV CKT Z
FDNS	09ALL	0	17G	G15_042	FROM->TO	DIXONCO 230.00 - TWIN CHURCH 230KV CKT 1	320	320	0.4799	116.1289	GRPRAR1-LNX3345.00 - HOLT.CO3 345.00 345KV CKT 1
FDNS	09ALL	0	16WP	G15_042	FROM->TO	DIXONCO 230.00 - TWIN CHURCH 230KV CKT 1	320	320	0.48102	116.0251	GEN337652 1-WHITE BLUFF UNIT #1
FDNS	09ALL	0	16WP	G15_042	FROM->TO	DIXONCO 230.00 - TWIN CHURCH 230KV CKT 1	320	320	0.47974	116.0146	DENISON (DN KV1A) 230/161/13.8KV TRANSFORMER CKT 1
FDNS	09ALL	0	16WP	G15_042	FROM->TO	DIXONCO 230.00 - TWIN CHURCH 230KV CKT 1	320	320	0.47974	116.014	DENISON - EXIRA 161KV CKT 1
FDNS	09ALL	0	17G	G15_042	FROM->TO	DIXONCO 230.00 - TWIN CHURCH 230KV CKT 1	320	320	0.47665	116.0026	PLYMOUTH - SIOUX CITY 161KV CKT 1
FDNS	09ALL	0	16WP	G15_042	FROM->TO	DIXONCO 230.00 - TWIN CHURCH 230KV CKT 1	320	320	0.48102	115.9897	GEN501801 1-DOLET HILLS UNIT1
FDNS	09ALL	0	16WP	G15_042	FROM->TO	DIXONCO 230.00 - TWIN CHURCH 230KV CKT 1	320	320	0.48009	115.9765	GRIMES - LEHIGH 345KV CKT 1
FDNS	09ALL	0	16WP	G15_042	FROM->TO	DIXONCO 230.00 - TWIN CHURCH 230KV CKT 1	320	320	0.47926	115.9666	SIOUXCY-LNX3345.00 - SPLIT ROCK 345KV CKT 1
FDNS	09ALL	0	16WP	G15_042	FROM->TO	DIXONCO 230.00 - TWIN CHURCH 230KV CKT 1	320	320	0.47926	115.9666	SIOUXCY-LNX3345.00 - SPLIT ROCK 345KV CKT 1
FDNS	09ALL	0	16WP	G15_042	FROM->TO	DIXONCO 230.00 - TWIN CHURCH 230KV CKT 1	320	320	0.48102	115.9456	GEN337653 1-WHITE BLUFF UNIT #2
FDNS	09NR	0	17G	G15_042	FROM->TO	DIXONCO 230.00 - TWIN CHURCH 230KV CKT 1	320	320	0.5074	115.9264	HOSKINS - SHELL CREEK 345KV CKT 1
FDNS	09ALL	0	16WP	G15_042	FROM->TO	DIXONCO 230.00 - TWIN CHURCH 230KV CKT 1	320	320	0.48102	115.9204	GEN563222 1-G15088_3 0.6900
FDNS	09ALL	0	17G	G15_042	FROM->TO	DIXONCO 230.00 - TWIN CHURCH 230KV CKT 1	320	320	0.46875	115.9144	BANCROFT - OAKLAND 115KV CKT 1
FDNS	09ALL	0	16WP	G15_042	FROM->TO	DIXONCO 230.00 - TWIN CHURCH 230KV CKT 1	320	320	0.48174	115.8818	BATTLE CREEK - COUNTY LINE 115KV CKT 1
FDNS	09ALL	0	16WP	G15_042	FROM->TO	DIXONCO 230.00 - TWIN CHURCH 230KV CKT 1	320	320	0.48174	115.8664	ANTELOPE 7115.00 - COUNTY LINE 115KV CKT 1
FDNS	09ALL	0	16WP	G15_042	FROM->TO	DIXONCO 230.00 - TWIN CHURCH 230KV CKT 1	320	320	0.47793	115.8385	RAUN - SUB 3451 FT CAL 345KV CKT 1
FDNS	09ALL	0	16WP	G15_042	FROM->TO	DIXONCO 230.00 - TWIN CHURCH 230KV CKT 1	320	320	0.47793	115.8385	RAUN - SUB 3451 FT CAL 345KV CKT 1
FDNS	09ALL	0	16WP	G15_042	FROM->TO	DIXONCO 230.00 - TWIN CHURCH 230KV CKT 1	320	320	0.48102	115.8207	GEN562912 1-G15053_3 0.6900
FDNS	09ALL	0	16WP	G15_042	FROM->TO	DIXONCO 230.00 - TWIN CHURCH 230KV CKT 1	320	320	0.48325	115.818	KELLY - SHELL CREEK 230KV CKT 1
FDNS	09ALL	0	16WP	G15_042	FROM->TO	DIXONCO 230.00 - TWIN CHURCH 230KV CKT 1	320	320	0.47953	115.8148	SIOUX CITY (SC KV1A) 230/161/13.8KV TRANSFORMER CKT 1
FDNS	09ALL	0	16WP	G15_042	FROM->TO	DIXONCO 230.00 - TWIN CHURCH 230KV CKT 1	320	320	0.48325	115.8102	SHELL CREEK (SHELLCREEKT1) 345/230/13.8KV TRANSFORMER CKT 1
FDNS	09ALL	0	16WP	G15_042	FROM->TO	DIXONCO 230.00 - TWIN CHURCH 230KV CKT 1	320	320	0.48325	115.8102	SHELL CREEK (SHELLCREEKT1) 345/230/13.8KV TRANSFORMER CKT 1
FDNS	09ALL	0	16WP	G15_042	FROM->TO	DIXONCO 230.00 - TWIN CHURCH 230KV CKT 1	320	320	0.47952	115.8066	SIOUX CITY (SC KV5A) 230/161/13.8KV TRANSFORMER CKT 1
FDNS	09ALL	0	16WP	G15_042	FROM->TO	DIXONCO 230.00 - TWIN CHURCH 230KV CKT 1	320	320	0.48102	115.7021	GEN335831 1-RIVERBEND UNIT#1
FDNS	09ALL	0	16WP	G15_042	FROM->TO	DIXONCO 230.00 - TWIN CHURCH 230KV CKT 1	320	320	0.48102	115.7016	GEN337910 1-ARKANSAS NUCLEAR ONE UNIT #1
FDNS	09NR	0	20L	G15_042	FROM->TO	DIXONCO 230.00 - TWIN CHURCH 230KV CKT 1	320	320	0.50767	115.6839	HOSKINS - SHELL CREEK 345KV CKT 1
FDNS	09ALL	0	20L	G15_042	FROM->TO	DIXONCO 230.00 - TWIN CHURCH 230KV CKT 1	320	320	0.48305	115.6158	ANTELOPE 3345.00 - HOSKINS 345KV CKT 1
FDNS	09ALL	0	16WP	G15_042	FROM->TO	DIXONCO 230.00 - TWIN CHURCH 230KV CKT 1	320	320	0.47974	115.5794	ANITA TAP POINT TO CRESTON AND DENISON - EXIRA 161KV CKT 1
FDNS	09ALL	0	16WP	G15_042	FROM->TO	DIXONCO 230.00 - TWIN CHURCH 230KV CKT 1	320	320	0.48102	115.578	GEN640431 1-LAREDO.GEN1W0.6900

SOLUTION	GROUP	SCENARIO	SEASON	SOURCE	DIRECTION	MONITORED ELEMENT	RATEA (MVA)	RATEB(MVA)	TDF	TC%LOADING (% MVA)	CONTINGENCY
FDNS	09ALL	0	20WP	G15_042	FROM->TO	DIXONCO 230.00 - TWIN CHURCH 230KV CKT 1	320	320	0.48151	115.5569	GEN337652 1-WHITE BLUFF UNIT #1
FDNS	09NR	0	17G	G15_042	FROM->TO	DIXONCO 230.00 - TWIN CHURCH 230KV CKT 1	320	320	0.48402	115.5532	COLUMEAST - NW68TH & HOLDREGE 345KV CKT 1
FDNS	09NR	0	17G	G15_042	FROM->TO	DIXONCO 230.00 - TWIN CHURCH 230KV CKT 1	320	320	0.48402	115.5532	COLUMEAST - NW68TH & HOLDREGE 345KV CKT 1
FDNS	09NR	0	17G	G15_042	FROM->TO	DIXONCO 230.00 - TWIN CHURCH 230KV CKT 1	320	320	0.46052	115.541	BELDEN - TWIN CHURCH 115KV CKT 1
FDNS	09ALL	0	16WP	G15_042	FROM->TO	DIXONCO 230.00 - TWIN CHURCH 230KV CKT 1	320	320	0.48102	115.5409	GEN336153 1-WATERFORD UNIT#3
FDNS	09ALL	0	20WP	G15_042	FROM->TO	DIXONCO 230.00 - TWIN CHURCH 230KV CKT 1	320	320	0.48069	115.5039	GRIMES - LEHIGH 345KV CKT 1
FDNS	09ALL	0	16WP	G15_042	FROM->TO	DIXONCO 230.00 - TWIN CHURCH 230KV CKT 1	320	320	0.48102	115.4812	GEN635023 3-WALTER SCOTT UNIT 3
FDNS	09ALL	0	20WP	G15_042	FROM->TO	DIXONCO 230.00 - TWIN CHURCH 230KV CKT 1	320	320	0.48151	115.4805	GEN501801 1-DOLET HILLS UNIT1
FDNS	09ALL	0	16WP	G15_042	FROM->TO	DIXONCO 230.00 - TWIN CHURCH 230KV CKT 1	320	320	0.48102	115.4776	GEN344225 1-1CAL G1 25.000
FDNS	09ALL	0	16WP	G15_042	FROM->TO	DIXONCO 230.00 - TWIN CHURCH 230KV CKT 1	320	320	0.48102	115.477	GEN337911 1-ARKANSAS NUCLEAR ONE UNIT #2
FDNS	09ALL	0	20WP	G15_042	FROM->TO	DIXONCO 230.00 - TWIN CHURCH 230KV CKT 1	320	320	0.48151	115.4596	GEN337653 1-WHITE BLUFF UNIT #2
FDNS	09ALL	0	20WP	G15_042	FROM->TO	DIXONCO 230.00 - TWIN CHURCH 230KV CKT 1	320	320	0.47869	115.4517	RAUN - SUB 3451 FT CAL 345KV CKT 1
FDNS	09ALL	0	20WP	G15_042	FROM->TO	DIXONCO 230.00 - TWIN CHURCH 230KV CKT 1	320	320	0.47869	115.4517	RAUN - SUB 3451 FT CAL 345KV CKT 1
FDNS	09ALL	0	20WP	G15_042	FROM->TO	DIXONCO 230.00 - TWIN CHURCH 230KV CKT 1	320	320	0.47963	115.4414	SIOUXCY-LNX3345.00 - SPLIT ROCK 345KV CKT 1
FDNS	09ALL	0	20WP	G15_042	FROM->TO	DIXONCO 230.00 - TWIN CHURCH 230KV CKT 1	320	320	0.47963	115.4414	SIOUXCY-LNX3345.00 - SPLIT ROCK 345KV CKT 1
FDNS	09ALL	0	20WP	G15_042	FROM->TO	DIXONCO 230.00 - TWIN CHURCH 230KV CKT 1	320	320	0.48225	115.4049	BATTLE CREEK - COUNTY LINE 115KV CKT 1
FDNS	09ALL	0	20WP	G15_042	FROM->TO	DIXONCO 230.00 - TWIN CHURCH 230KV CKT 1	320	320	0.48225	115.3996	ANTELOPE 7115.00 - COUNTY LINE 115KV CKT 1
FDNS	09ALL	0	20WP	G15_042	FROM->TO	DIXONCO 230.00 - TWIN CHURCH 230KV CKT 1	320	320	0.48151	115.3877	GEN563222 1-G15088_3 0.6900
FDNS	09ALL	0	16WP	G15_042	FROM->TO	DIXONCO 230.00 - TWIN CHURCH 230KV CKT 1	320	320	0.4692	115.379	BANCROFT - OAKLAND 115KV CKT 1
FDNS	09ALL	0	20WP	G15_042	FROM->TO	DIXONCO 230.00 - TWIN CHURCH 230KV CKT 1	320	320	0.48004	115.3542	SIOUX CITY (SC KV1A) 230/161/13.8KV TRANSFORMER CKT 1
FDNS	09ALL	0	20WP	G15_042	FROM->TO	DIXONCO 230.00 - TWIN CHURCH 230KV CKT 1	320	320	0.48003	115.3463	SIOUX CITY (SC KV5A) 230/161/13.8KV TRANSFORMER CKT 1
FDNS	09ALL	0	20WP	G15_042	FROM->TO	DIXONCO 230.00 - TWIN CHURCH 230KV CKT 1	320	320	0.48374	115.3405	KELLY - SHELL CREEK 230KV CKT 1
FDNS	09ALL	0	20WP	G15_042	FROM->TO	DIXONCO 230.00 - TWIN CHURCH 230KV CKT 1	320	320	0.48374	115.3379	SHELL CREEK (SHELLCREEKT1) 345/230/13.8KV TRANSFORMER CKT 1
FDNS	09ALL	0	20WP	G15_042	FROM->TO	DIXONCO 230.00 - TWIN CHURCH 230KV CKT 1	320	320	0.48374	115.3379	SHELL CREEK (SHELLCREEKT1) 345/230/13.8KV TRANSFORMER CKT 1
FDNS	09ALL	0	20WP	G15_042	FROM->TO	DIXONCO 230.00 - TWIN CHURCH 230KV CKT 1	320	320	0.48151	115.3225	GEN562912 1-G15053_3 0.6900
FDNS	09ALL	0	20L	G15_042	FROM->TO	DIXONCO 230.00 - TWIN CHURCH 230KV CKT 1	320	320	0.48305	115.2788	ANTELOPE 3345.00 (ANTELOPE T1) 345/115/13.8KV TRANSFORMER CKT 1
FDNS	09ALL	0	16WP	G15_042	FROM->TO	DIXONCO 230.00 - TWIN CHURCH 230KV CKT 1	320	320	0.48102	115.2683	GEN562921 1-G15054_2 0.6900
FDNS	09ALL	0	16WP	G15_042	FROM->TO	DIXONCO 230.00 - TWIN CHURCH 230KV CKT 1	320	320	0.48102	115.2588	GEN635024 4-WALTER SCOTT UNIT 4
FDNS	09ALL	0	17G	G15_042	FROM->TO	DIXONCO 230.00 - TWIN CHURCH 230KV CKT 1	320	320	0.46875	115.2528	P12:115:NPPD:1193:OAKLAND7:EMERSON7:BTB
FDNS	09ALL	0	16WP	G15_042	FROM->TO	DIXONCO 230.00 - TWIN CHURCH 230KV CKT 1	320	320	0.48102	115.2447	GEN336821 1-GRAND GULF UNIT
FDNS	09ALL	0	20WP	G15_042	FROM->TO	DIXONCO 230.00 - TWIN CHURCH 230KV CKT 1	320	320	0.48151	115.222	GEN335831 1-RIVERBEND UNIT#1
FDNS	09ALL	0	20WP	G15_042	FROM->TO	DIXONCO 230.00 - TWIN CHURCH 230KV CKT 1	320	320	0.48151	115.2172	GEN337910 1-ARKANSAS NUCLEAR ONE UNIT #1
FDNS	09ALL	0	17G	G15_042	FROM->TO	DIXONCO 230.00 - TWIN CHURCH 230KV CKT 1	320	320	0.46875	115.217	BANCROFT - EMERSON 115KV CKT 1
FDNS	09ALL	0	16WP	G15_042	FROM->TO	DIXONCO 230.00 - TWIN CHURCH 230KV CKT 1	320	320	0.47888	115.2049	EAGLE 4 230.00 - SIOUX CITY 230KV CKT 1
FDNS	09ALL	0	16WP	G15_042	FROM->TO	DIXONCO 230.00 - TWIN CHURCH 230KV CKT 1	320	320	0.477	115.1901	TWIN CHURCH (TWNCHURCH T4) 230/115/13.8KV TRANSFORMER CKT 1
FDNS	09ALL	0	16WP	G15_042	FROM->TO	DIXONCO 230.00 - TWIN CHURCH 230KV CKT 1	320	320	0.477	115.1901	TWIN CHURCH (TWNCHURCH T4) 230/115/13.8KV TRANSFORMER CKT 1
FDNS	09ALL	0	20L	G15_042	FROM->TO	DIXONCO 230.00 - TWIN CHURCH 230KV CKT 1	320	320	0.46999	115.1893	EMERSON - TWIN CHURCH 115KV CKT 1
FDNS	09ALL	0	17G	G15_042	FROM->TO	DIXONCO 230.00 - TWIN CHURCH 230KV CKT 1	320	320	0.47798	115.1737	DENISON - SIOUX CITY 230KV CKT 1
FDNS	09ALL	0	20WP	G15_042	FROM->TO	DIXONCO 230.00 - TWIN CHURCH 230KV CKT 1	320	320	0.48151	115.1099	GEN640431 1-LAREDO.GEN1W0.6900
FDNS	09ALL	0	20WP	G15_042	FROM->TO	DIXONCO 230.00 - TWIN CHURCH 230KV CKT 1	320	320	0.48151	115.0636	GEN336153 1-WATERFORD UNIT#3
FDNS	09ALL	0	20WP	G15_042	FROM->TO	DIXONCO 230.00 - TWIN CHURCH 230KV CKT 1	320	320	0.46967	115.0363	BANCROFT - OAKLAND 115KV CKT 1
FDNS	09ALL	0	20WP	G15_042	FROM->TO	DIXONCO 230.00 - TWIN CHURCH 230KV CKT 1	320	320	0.48151	115.0154	GEN344225 1-1CAL G1 25.000
FDNS	09ALL	0	20WP	G15_042	FROM->TO	DIXONCO 230.00 - TWIN CHURCH 230KV CKT 1	320	320	0.48151	114.9934	GEN337911 1-ARKANSAS NUCLEAR ONE UNIT #2
FDNS	09NR	0	17G	G15_042	FROM->TO	DIXONCO 230.00 - TWIN CHURCH 230KV CKT 1	320	320	0.48413	114.9073	COLUMEAST - SHELL CREEK 345KV CKT 1
FDNS	09ALL	0	16WP	G15_042	FROM->TO	DIXONCO 230.00 - TWIN CHURCH 230KV CKT 1	320	320	0.48053	114.855	GRPRAR1-LNX3345.00 - GRPRAR 345KV CKT Z
FDNS	09ALL	0	16WP	G15_042	FROM->TO	DIXONCO 230.00 - TWIN CHURCH 230KV CKT 1	320	320	0.48053	114.8527	GRPRAR1-LNX3345.00 - HOLT.CO3 345.00 345KV CKT 1
FDNS	09ALL	0	20WP	G15_042	FROM->TO	DIXONCO 230.00 - TWIN CHURCH 230KV CKT 1	320	320	0.48028	114.8484	ANITA TAP POINT TO CRESTON AND DENISON - EXIRA 161KV CKT 1
FDNS	09ALL	0	20WP	G15_042	FROM->TO	DIXONCO 230.00 - TWIN CHURCH 230KV CKT 1	320	320	0.48151	114.839	GEN635023 3-WALTER SCOTT UNIT 3
FDNS	09ALL	0	20WP	G15_042	FROM->TO	DIXONCO 230.00 - TWIN CHURCH 230KV CKT 1	320	320	0.48151	114.7741	GEN562921 1-G15054_2 0.6900
FDNS	09ALL	0	20WP	G15_042	FROM->TO	DIXONCO 230.00 - TWIN CHURCH 230KV CKT 1	320	320	0.48151	114.7715	GEN336821 1-GRAND GULF UNIT
FDNS	09ALL	0	20WP	G15_042	FROM->TO	DIXONCO 230.00 - TWIN CHURCH 230KV CKT 1	320	320	0.47748	114.7638	TWIN CHURCH (TWNCHURCH T4) 230/115/13.8KV TRANSFORMER CKT 1
FDNS	09ALL	0	20WP	G15_042	FROM->TO	DIXONCO 230.00 - TWIN CHURCH 230KV CKT 1	320	320	0.47748	114.7638	TWIN CHURCH (TWNCHURCH T4) 230/115/13.8KV TRANSFORMER CKT 1
FDNS	09ALL	0	20L	G15_042	FROM->TO	DIXONCO 230.00 - TWIN CHURCH 230KV CKT 1	320	320	0.48251	114.7577	BELDEN - HOSKINS 115KV CKT 1
FDNS	09ALL	0	16WP	G15_042	FROM->TO	DIXONCO 230.00 - TWIN CHURCH 230KV CKT 1	320	320	0.47729	114.739	PLYMOUTH - SIOUX CITY 161KV CKT 1
FDNS	09ALL	0	16WP	G15_042	FROM->TO	DIXONCO 230.00 - TWIN CHURCH 230KV CKT 1	320	320	0.47729	114.739	PLYMOUTH - SIOUX CITY 161KV CKT 1
FDNS	09ALL	0	16WP	G15_042	FROM->TO	DIXONCO 230.00 - TWIN CHURCH 230KV CKT 1	320	320	0.4692	114.6712	P12:115:NPPD:1193:OAKLAND7:EMERSON7:BTB
FDNS	09ALL	0	17G	G15_042	FROM->TO	DIXONCO 230.00 - TWIN CHURCH 230KV CKT 1	320	320	0.48174	114.6543	ANTELOPE 3345.00 - HOSKINS 345KV CKT 1
FDNS	09ALL	0	20WP	G15_042	FROM->TO	DIXONCO 230.00 - TWIN CHURCH 230KV CKT 1	320	320	0.48093	114.6525	GRPRAR1-LNX3345.00 - HOLT.CO3 345.00 345KV CKT 1
FDNS	09ALL	0	20WP	G15_042	FROM->TO	DIXONCO 230.00 - TWIN CHURCH 230KV CKT 1	320	320	0.48093	114.6506	GRPRAR1-LNX3345.00 - GRPRAR 345KV CKT Z
FDNS	09ALL	0	20L	G15_042	FROM->TO	DIXONCO 230.00 - TWIN CHURCH 230KV CKT 1	320	320	0.4817	114.6417	GEN562673 1-G15_007_3 0.6900
FDNS	09ALL	0	16WP	G15_042	FROM->TO	DIXONCO 230.00 - TWIN CHURCH 230KV CKT 1	320	320	0.4692	114.6232	BANCROFT - EMERSON 115KV CKT 1
FDNS	09ALL	0	20WP	G15_042	FROM->TO	DIXONCO 230.00 - TWIN CHURCH 230KV CKT 1	320	320	0.48151	114.5947	GEN635024 4-WALTER SCOTT UNIT 4
FDNS	09ALL	0	20WP	G15_042	FROM->TO	DIXONCO 230.00 - TWIN CHURCH 230KV CKT 1	320	320	0.47933	114.5908	EAGLE 4 230.00 - SIOUX CITY 230KV CKT 1
FDNS	09NR	0	20L	G15_042	FROM->TO	DIXONCO 230.00 - TWIN CHURCH 230KV CKT 1	320	320	0.4616	114.3537	BELDEN - TWIN CHURCH 115KV CKT 1
FDNS	09ALL	0	20WP	G15_042	FROM->TO	DIXONCO 230.00 - TWIN CHURCH 230KV CKT 1	320	320	0.46967	114.3429	P12:115:NPPD:1193:OAKLAND7:EMERSON7:BTB
FDNS	09ALL	0	17G	G15_042	FROM->TO	DIXONCO 230.00 - TWIN CHURCH 230KV CKT 1	320	320	0.48174	114.3162	ANTELOPE 3345.00 (ANTELOPE T1) 345/115/13.8KV TRANSFORMER CKT 1
FDNS	09ALL	0	20WP	G15_042	FROM->TO	DIXONCO 230.00 - TWIN CHURCH 230KV CKT 1	320	320	0.46967	114.3013	BANCROFT - EMERSON 115KV CKT 1
FDNS	09NR	0	20L	G15_042	FROM->TO	DIXONCO 230.00 - TWIN CHURCH 230KV CKT 1	320	320	0.46136	114.2723	RAUN - SIOUX CITY 345KV CKT 1
FDNS	09NR	0	20L	G15_042	FROM->TO	DIXONCO 230.00 - TWIN CHURCH 230KV CKT 1	320	320	0.46136	114.2723	RAUN - SIOUX CITY 345KV CKT 1
FDNS	09ALL	0	20WP	G15_042	FROM->TO	DIXONCO 230.00 - TWIN CHURCH 230KV CKT 1	320	320	0.47782	114.2117	PLYMOUTH - SIOUX CITY 161KV CKT 1
FDNS	09ALL	0	20WP	G15_042	FROM->TO	DIXONCO 230.00 - TWIN CHURCH 230KV CKT 1	320	320	0.47782	114.2117	PLYMOUTH - SIOUX CITY 161KV CKT 1
FDNS	09NR	0	20L	G15_042	FROM->TO	DIXONCO 230.00 - TWIN CHURCH 230KV CKT 1	320	320	0.48464	114.1827	COLUMEAST - NW68TH & HOLDREGE 345KV CKT 1
FDNS	09NR	0	20L	G15_042	FROM->TO	DIXONCO 230.00 - TWIN CHURCH 230KV CKT 1	320	320	0.48464	114.1827	COLUMEAST - NW68TH & HOLDREGE 345KV CKT 1
FDNS	09ALL	0	20L	G15_042	FROM->TO	DIXONCO 230.00 - TWIN CHURCH 230KV CKT 1	320	320	0.4817	114.1668	GEN562438 1-G13-032 0.6900
FDNS	09ALL	0	20L	G15_042	FROM->TO	DIXONCO 230.00 - TWIN CHURCH 230KV CKT 1	320	320	0.48266	114.039	KELLY - MEADOWGROVE4230.00 230KV CKT 1
FDNS	09ALL	0	17SP	G15_042	FROM->TO	DIXONCO 230.00 - TWIN CHURCH 230KV CKT 1	320	320	0.48022	114.0231	P13:115-345:NPPD:NUCOR-2
FDNS	09ALL	0	20SP	G15_042	FROM->TO	DIXONCO 230.00 - TWIN CHURCH 230KV CKT 1	320	320	0.48086	114.0118	P13:115-345:NPPD:NUCOR-2
FDNS	09NR	0	17G	G15_042	FROM->TO	DIXONCO 230.00 - TWIN CHURCH 230KV CKT 1	320	320	0.47053	114.0009	P13:115-345:NPPD:NUCOR-2
FDNS	09ALL	0	17G	G15_042	FROM->TO	DIXONCO 230.00 - TWIN CHURCH 230KV CKT 1	320	320	0.48061	113.9724	GEN562673 1-G15_007_3 0.6900

SOLUTION	GROUP	SCENARIO	SEASON	SOURCE	DIRECTION	MONITORED ELEMENT	RATEA (MVA)	RATEB(MVA)	TDF	TC%LOADING (% MVA)	CONTINGENCY
FDNS	09ALL	0	16WP	G15_042	FROM->TO	DIXONCO 230.00 - TWIN CHURCH 230KV CKT 1	320	320	0.47842	113.9458	DENISON - SIOUX CITY 230KV CKT 1
FDNS	09NR	0	20L	G15_042	FROM->TO	DIXONCO 230.00 - TWIN CHURCH 230KV CKT 1	320	320	0.48507	113.9208	COLUMEAST - SHELL CREEK 345KV CKT 1
FDNS	09ALL	0	16WP	G15_042	FROM->TO	DIXONCO 230.00 - TWIN CHURCH 230KV CKT 1	320	320	0.48219	113.7664	ANTELOPE 3345.00 - HOSKINS 345KV CKT 1
FDNS	09ALL	0	20SP	G15_042	FROM->TO	DIXONCO 230.00 - TWIN CHURCH 230KV CKT 1	320	320	0.51194	113.7067	HOSKINS - SHELL CREEK 345KV CKT 1
FDNS	09ALL	0	17G	G15_042	FROM->TO	DIXONCO 230.00 - TWIN CHURCH 230KV CKT 1	320	320	0.48091	113.7033	BELDEN - HOSKINS 115KV CKT 1
FDNS	09ALL	0	17G	G15_042	FROM->TO	DIXONCO 230.00 - TWIN CHURCH 230KV CKT 1	320	320	0.46875	113.6596	EMERSON - TWIN CHURCH 115KV CKT 1
FDNS	09ALL	0	17SP	G15_042	FROM->TO	DIXONCO 230.00 - TWIN CHURCH 230KV CKT 1	320	320	0.5118	113.6263	HOSKINS - SHELL CREEK 345KV CKT 1
FDNS	09ALL	0	20WP	G15_042	FROM->TO	DIXONCO 230.00 - TWIN CHURCH 230KV CKT 1	320	320	0.48158	113.6102	GR ISLD-LNX3345.00 - HOLT.CO3 345.00 345KV CKT 1
FDNS	09ALL	0	20WP	G15_042	FROM->TO	DIXONCO 230.00 - TWIN CHURCH 230KV CKT 1	320	320	0.48158	113.5419	GR ISLD-LNX3345.00 - GRAND ISLAND 345KV CKT Z
FDNS	09ALL	0	20WP	G15_042	FROM->TO	DIXONCO 230.00 - TWIN CHURCH 230KV CKT 1	320	320	0.47899	113.5052	DENISON - SIOUX CITY 230KV CKT 1
FDNS	09NR	0	17G	G15_042	FROM->TO	DIXONCO 230.00 - TWIN CHURCH 230KV CKT 1	320	320	0.49626	113.4676	HOSKINS (HOSKINS T1) 230/115/13.8KV TRANSFORMER CKT 1
FDNS	09NR	0	17G	G15_042	FROM->TO	DIXONCO 230.00 - TWIN CHURCH 230KV CKT 1	320	320	0.49626	113.4676	HOSKINS (HOSKINS T1) 230/115/13.8KV TRANSFORMER CKT 1
FDNS	09ALL	0	16WP	G15_042	FROM->TO	DIXONCO 230.00 - TWIN CHURCH 230KV CKT 1	320	320	0.48219	113.463	ANTELOPE 3345.00 (ANTELOPE T1) 345/115/13.8KV TRANSFORMER CKT 1
FDNS	09ALL	0	25SP	G15_042	FROM->TO	DIXONCO 230.00 - TWIN CHURCH 230KV CKT 1	320	320	0.51187	113.4301	HOSKINS - SHELL CREEK 345KV CKT 1
FDNS	09ALL	0	17G	G15_042	FROM->TO	DIXONCO 230.00 - TWIN CHURCH 230KV CKT 1	320	320	0.48061	113.4256	GEN562438 1-G13-032 0.6900
FDNS	09NR	0	17G	G15_042	FROM->TO	DIXONCO 230.00 - TWIN CHURCH 230KV CKT 1	320	320	0.46059	113.3837	RAUN - SIOUX CITY 345KV CKT 1
FDNS	09NR	0	20L	G15_042	FROM->TO	DIXONCO 230.00 - TWIN CHURCH 230KV CKT 1	320	320	0.47153	113.3558	P13:115-345:NPPD:NUCOR-2
FDNS	09ALL	0	20WP	G15_042	FROM->TO	DIXONCO 230.00 - TWIN CHURCH 230KV CKT 1	320	320	0.48275	113.344	ANTELOPE 3345.00 - HOSKINS 345KV CKT 1
FDNS	09ALL	0	25SP	G15_042	FROM->TO	DIXONCO 230.00 - TWIN CHURCH 230KV CKT 1	320	320	0.48075	113.2298	P13:115-345:NPPD:NUCOR-2
FDNS	09ALL	0	20WP	G15_042	FROM->TO	DIXONCO 230.00 - TWIN CHURCH 230KV CKT 1	320	320	0.48275	113.0456	ANTELOPE 3345.00 (ANTELOPE T1) 345/115/13.8KV TRANSFORMER CKT 1
FDNS	09ALL	0	16WP	G15_042	FROM->TO	DIXONCO 230.00 - TWIN CHURCH 230KV CKT 1	320	320	0.48141	112.8769	BELDEN - HOSKINS 115KV CKT 1
FDNS	09NR	0	17G	G15_042	FROM->TO	DIXONCO 230.00 - TWIN CHURCH 230KV CKT 1	320	320	0.46801	112.7714	FTTHOM2-LNX3345.00 - GRPRAR2-LNX3345.00 345KV CKT 1
FDNS	09NR	0	17G	G15_042	FROM->TO	DIXONCO 230.00 - TWIN CHURCH 230KV CKT 1	320	320	0.46801	112.74	GRPRAR2-LNX3345.00 - YANKTON 345KV CKT Z
FDNS	09NR	0	17G	G15_042	FROM->TO	DIXONCO 230.00 - TWIN CHURCH 230KV CKT 1	320	320	0.46801	112.7195	FT THOMPSON - FTTHOM2-LNX3345.00 345KV CKT Z
FDNS	09ALL	0	16WP	G15_042	FROM->TO	DIXONCO 230.00 - TWIN CHURCH 230KV CKT 1	320	320	0.48102	112.5816	GEN562673 1-G15_007_3 0.6900
FDNS	09ALL	0	17SP	G15_042	FROM->TO	DIXONCO 230.00 - TWIN CHURCH 230KV CKT 1	320	320	0.49239	112.556	COLUMEAST - SHELL CREEK 345KV CKT 1
FDNS	09ALL	0	20SP	G15_042	FROM->TO	DIXONCO 230.00 - TWIN CHURCH 230KV CKT 1	320	320	0.47108	112.5445	BELDEN - TWIN CHURCH 115KV CKT 1
FDNS	09NR	0	20L	G15_042	FROM->TO	DIXONCO 230.00 - TWIN CHURCH 230KV CKT 1	320	320	0.49727	112.4963	HOSKINS (HOSKINS T1) 230/115/13.8KV TRANSFORMER CKT 1
FDNS	09NR	0	20L	G15_042	FROM->TO	DIXONCO 230.00 - TWIN CHURCH 230KV CKT 1	320	320	0.49727	112.4963	HOSKINS (HOSKINS T1) 230/115/13.8KV TRANSFORMER CKT 1
FDNS	09NR	0	17G	G15_042	FROM->TO	DIXONCO 230.00 - TWIN CHURCH 230KV CKT 1	320	320	0.47316	112.4305	HOSKINS - STANTON NORTH 115KV CKT 1
FDNS	09NR	0	20L	G15_042	FROM->TO	DIXONCO 230.00 - TWIN CHURCH 230KV CKT 1	320	320	0.46884	112.4273	FT THOMPSON - FTTHOM2-LNX3345.00 345KV CKT Z
FDNS	09NR	0	20L	G15_042	FROM->TO	DIXONCO 230.00 - TWIN CHURCH 230KV CKT 1	320	320	0.46884	112.4268	FTTHOM2-LNX3345.00 - GRPRAR2-LNX3345.00 345KV CKT 1
FDNS	09NR	0	20L	G15_042	FROM->TO	DIXONCO 230.00 - TWIN CHURCH 230KV CKT 1	320	320	0.46884	112.4209	GRPRAR2-LNX3345.00 - YANKTON 345KV CKT Z
FDNS	09ALL	0	20WP	G15_042	FROM->TO	DIXONCO 230.00 - TWIN CHURCH 230KV CKT 1	320	320	0.48195	112.4097	BELDEN - HOSKINS 115KV CKT 1
FDNS	09NR	0	17G	G15_042	FROM->TO	DIXONCO 230.00 - TWIN CHURCH 230KV CKT 1	320	320	0.46873	112.3496	FT RANDAL - SIOUX CITY 230KV CKT 1
FDNS	09ALL	0	17SP	G15_042	FROM->TO	DIXONCO 230.00 - TWIN CHURCH 230KV CKT 1	320	320	0.49344	112.3446	COLUMEAST - NW68TH & HOLDREGE 345KV CKT 1
FDNS	09ALL	0	17SP	G15_042	FROM->TO	DIXONCO 230.00 - TWIN CHURCH 230KV CKT 1	320	320	0.49344	112.3446	COLUMEAST - NW68TH & HOLDREGE 345KV CKT 1
FDNS	09ALL	0	17SP	G15_042	FROM->TO	DIXONCO 230.00 - TWIN CHURCH 230KV CKT 1	320	320	0.50541	112.3215	HOSKINS (HOSKINS T1) 230/115/13.8KV TRANSFORMER CKT 1
FDNS	09ALL	0	17SP	G15_042	FROM->TO	DIXONCO 230.00 - TWIN CHURCH 230KV CKT 1	320	320	0.50541	112.3215	HOSKINS (HOSKINS T1) 230/115/13.8KV TRANSFORMER CKT 1
FDNS	09ALL	0	17G	G15_042	FROM->TO	DIXONCO 230.00 - TWIN CHURCH 230KV CKT 1	320	320	0.48097	112.3184	KELLY - MEADOWGROVE4230.00 230KV CKT 1
FDNS	09NR	0	17G	G15_042	FROM->TO	DIXONCO 230.00 - TWIN CHURCH 230KV CKT 1	320	320	0.47076	112.3161	BLOOMFIELD - GAVINS POINT 115KV CKT 1
FDNS	09NR	0	17G	G15_042	FROM->TO	DIXONCO 230.00 - TWIN CHURCH 230KV CKT 1	320	320	0.47053	112.3103	GEN600002 3-SHERBURNE CNTY G3
FDNS	09ALL	0	20SP	G15_042	FROM->TO	DIXONCO 230.00 - TWIN CHURCH 230KV CKT 1	320	320	0.49279	112.2814	COLUMEAST - SHELL CREEK 345KV CKT 1
FDNS	09ALL	0	16WP	G15_042	FROM->TO	DIXONCO 230.00 - TWIN CHURCH 230KV CKT 1	320	320	0.48102	112.2374	GEN562438 1-G13-032 0.6900
FDNS	09ALL	0	20SP	G15_042	FROM->TO	DIXONCO 230.00 - TWIN CHURCH 230KV CKT 1	320	320	0.5061	112.174	HOSKINS (HOSKINS T1) 230/115/13.8KV TRANSFORMER CKT 1
FDNS	09ALL	0	20SP	G15_042	FROM->TO	DIXONCO 230.00 - TWIN CHURCH 230KV CKT 1	320	320	0.5061	112.174	HOSKINS (HOSKINS T1) 230/115/13.8KV TRANSFORMER CKT 1
FDNS	09NR	0	17G	G15_042	FROM->TO	DIXONCO 230.00 - TWIN CHURCH 230KV CKT 1	320	320	0.47316	112.1245	STANTON - STANTON NORTH 115KV CKT 1
FDNS	09NR	0	20L	G15_042	FROM->TO	DIXONCO 230.00 - TWIN CHURCH 230KV CKT 1	320	320	0.47178	112.0982	BLOOMFIELD - GAVINS POINT 115KV CKT 1
FDNS	09NR	0	17G	G15_042	FROM->TO	DIXONCO 230.00 - TWIN CHURCH 230KV CKT 1	320	320	0.47316	112.0781	P12:115:NPPD:1166:STNTN.N7:BEEMER 7:BTB
FDNS	09ALL	0	20WP	G15_042	FROM->TO	DIXONCO 230.00 - TWIN CHURCH 230KV CKT 1	320	320	0.48151	112.0697	GEN562673 1-G15_007_3 0.6900
FDNS	09NR	0	17G	G15_042	FROM->TO	DIXONCO 230.00 - TWIN CHURCH 230KV CKT 1	320	320	0.47316	112.0117	BEEMER - STANTON 115KV CKT 1
FDNS	09ALL	0	17SP	G15_042	FROM->TO	DIXONCO 230.00 - TWIN CHURCH 230KV CKT 1	320	320	0.47047	111.983	BELDEN - TWIN CHURCH 115KV CKT 1
FDNS	09ALL	0	20SP	G15_042	FROM->TO	DIXONCO 230.00 - TWIN CHURCH 230KV CKT 1	320	320	0.49364	111.8537	COLUMEAST - NW68TH & HOLDREGE 345KV CKT 1
FDNS	09ALL	0	20SP	G15_042	FROM->TO	DIXONCO 230.00 - TWIN CHURCH 230KV CKT 1	320	320	0.49364	111.8537	COLUMEAST - NW68TH & HOLDREGE 345KV CKT 1
FDNS	09ALL	0	16WP	G15_042	FROM->TO	DIXONCO 230.00 - TWIN CHURCH 230KV CKT 1	320	320	0.4692	111.8015	EMERSON - TWIN CHURCH 115KV CKT 1
FDNSLock	09NR	0	17G	G15_042	FROM->TO	DIXONCO 230.00 - TWIN CHURCH 230KV CKT 1	320	320	0.47053	111.7835	GEN600000 1-SHERBURNECNTY G1
FDNS	09ALL	0	20WP	G15_042	FROM->TO	DIXONCO 230.00 - TWIN CHURCH 230KV CKT 1	320	320	0.48151	111.7434	GEN562438 1-G13-032 0.6900
FDNS	09NR	0	17G	G15_042	FROM->TO	DIXONCO 230.00 - TWIN CHURCH 230KV CKT 1	320	320	0.47053	111.7	GEN600001 2-SHERBURNE CNTY G2
FDNS	09ALL	0	25SP	G15_042	FROM->TO	DIXONCO 230.00 - TWIN CHURCH 230KV CKT 1	320	320	0.4927	111.6825	COLUMEAST - SHELL CREEK 345KV CKT 1
FDNS	09NR	0	17G	G15_042	FROM->TO	DIXONCO 230.00 - TWIN CHURCH 230KV CKT 1	320	320	0.47316	111.6026	BEEMER - WEST POINT 115KV CKT 1
FDNS	09ALL	0	25SP	G15_042	FROM->TO	DIXONCO 230.00 - TWIN CHURCH 230KV CKT 1	320	320	0.50599	111.5978	HOSKINS (HOSKINS T1) 230/115/13.8KV TRANSFORMER CKT 1
FDNS	09ALL	0	25SP	G15_042	FROM->TO	DIXONCO 230.00 - TWIN CHURCH 230KV CKT 1	320	320	0.50599	111.5978	HOSKINS (HOSKINS T1) 230/115/13.8KV TRANSFORMER CKT 1
FDNS	09ALL	0	20WP	G15_042	FROM->TO	DIXONCO 230.00 - TWIN CHURCH 230KV CKT 1	320	320	0.46967	111.5379	EMERSON - TWIN CHURCH 115KV CKT 1
FDNS	09ALL	0	25SP	G15_042	FROM->TO	DIXONCO 230.00 - TWIN CHURCH 230KV CKT 1	320	320	0.47099	111.5379	BELDEN - TWIN CHURCH 115KV CKT 1
FDNS	09NR	0	17G	G15_042	FROM->TO	DIXONCO 230.00 - TWIN CHURCH 230KV CKT 1	320	320	0.47053	111.5027	GEN659103 1-ANTELOPE VALLEY UNIT1
FDNS	09NR	0	17G	G15_042	FROM->TO	DIXONCO 230.00 - TWIN CHURCH 230KV CKT 1	320	320	0.47053	111.5027	GEN659107 2-ANTELOPE VALLEY UNIT2
FDNS	09NR	0	17G	G15_042	FROM->TO	DIXONCO 230.00 - TWIN CHURCH 230KV CKT 1	320	320	0.47053	111.4995	GEN600005 1-MONTICELLO
FDNS	09NR	0	17G	G15_042	FROM->TO	DIXONCO 230.00 - TWIN CHURCH 230KV CKT 1	320	320	0.47053	111.4623	GEN615001 1-COAL CREEK
FDNS	09NR	0	17G	G15_042	FROM->TO	DIXONCO 230.00 - TWIN CHURCH 230KV CKT 1	320	320	0.46892	111.4277	RASMUSN - UTICA JCT 230KV CKT 1
FDNS	09NR	0	17G	G15_042	FROM->TO	DIXONCO 230.00 - TWIN CHURCH 230KV CKT 1	320	320	0.46978	111.4125	FT RANDAL - UTICA JCT 230KV CKT 1
FDNS	09NR	0	17G	G15_042	FROM->TO	DIXONCO 230.00 - TWIN CHURCH 230KV CKT 1	320	320	0.47292	111.4071	P12:115:NPPD:1161:OAKLAND7:BEEMER 7:BTB
FDNS	09NR	0	17G	G15_042	FROM->TO	DIXONCO 230.00 - TWIN CHURCH 230KV CKT 1	320	320	0.47053	111.3604	GEN659111 2-LELAND OLDS UNIT2
FDNS	09NR	0	17G	G15_042	FROM->TO	DIXONCO 230.00 - TWIN CHURCH 230KV CKT 1	320	320	0.46905	111.3512	SUB 3454 - WAGENER 345KV CKT 1
FDNS	09NR	0	17G	G15_042	FROM->TO	DIXONCO 230.00 - TWIN CHURCH 230KV CKT 1	320	320	0.46905	111.3512	SUB 3454 - WAGENER 345KV CKT 1
FDNSLock	09NR	0	17G	G15_042	FROM->TO	DIXONCO 230.00 - TWIN CHURCH 230KV CKT 1	320	320	0.47053	111.3246	GEN620315 1-BIG STONE GEN
FDNS	09NR	0	17G	G15_042	FROM->TO	DIXONCO 230.00 - TWIN CHURCH 230KV CKT 1	320	320	0.47053	111.2968	GEN600003 1-PRAIRIE ISLAND G1
FDNS	09NR	0	17G	G15_042	FROM->TO	DIXONCO 230.00 - TWIN CHURCH 230KV CKT 1	320	320	0.47053	111.2946	GEN600004 2-PRAIRIE ISLAND G2
FDNS	09NR	0	17G	G15_042	FROM->TO	DIXONCO 230.00 - TWIN CHURCH 230KV CKT 1	320	320	0.47053	111.2869	GEN600006 1-AS KING
FDNS	09NR	0	20L	G15_042	FROM->TO	DIXONCO 230.00 - TWIN CHURCH 230KV CKT 1	320	320	0.47153	111.2838	SHERBURNE CO 345/24.0KV TRANSFORMER CKT 1

SOLUTION	GROUP	SCENARIO	SEASON	SOURCE	DIRECTION	MONITORED ELEMENT	RATEA (MVA)	RATEB(MVA)	TDF	TC%LOADING (% MVA)	CONTINGENCY
FDNS	09NR	0	20L	G15_042	FROM->TO	DIXONCO 230.00 - TWIN CHURCH 230KV CKT 1	320	320	0.47153	111.2765	GEN600002 3-SHERBURNE CNTY G3
FDNS	09NR	0	17G	G15_042	FROM->TO	DIXONCO 230.00 - TWIN CHURCH 230KV CKT 1	320	320	0.4713	111.2487	COOPER - MOORE 345KV CKT 1
FDNS	09NR	0	20L	G15_042	FROM->TO	DIXONCO 230.00 - TWIN CHURCH 230KV CKT 1	320	320	0.47432	111.2182	HOSKINS - STANTON NORTH 115KV CKT 1
FDNS	09NR	0	17G	G15_042	FROM->TO	DIXONCO 230.00 - TWIN CHURCH 230KV CKT 1	320	320	0.46892	111.1757	RASMUSN - SIOUX CITY 230KV CKT 1
FDNS	09ALL	0	25SP	G15_042	FROM->TO	DIXONCO 230.00 - TWIN CHURCH 230KV CKT 1	320	320	0.49356	111.1327	COLUMEAST - NW68TH & HOLDREGE 345KV CKT 1
FDNS	09ALL	0	25SP	G15_042	FROM->TO	DIXONCO 230.00 - TWIN CHURCH 230KV CKT 1	320	320	0.49356	111.1327	COLUMEAST - NW68TH & HOLDREGE 345KV CKT 1
FDNS	09NR	0	17G	G15_042	FROM->TO	DIXONCO 230.00 - TWIN CHURCH 230KV CKT 1	320	320	0.47292	111.1272	OAKLAND - WEST POINT 115KV CKT 1
FDNS	09NR	0	17G	G15_042	FROM->TO	DIXONCO 230.00 - TWIN CHURCH 230KV CKT 1	320	320	0.46987	111.1005	COLUMBUS - SCHUYLER 115KV CKT 1
FDNS	09NR	0	20L	G15_042	FROM->TO	DIXONCO 230.00 - TWIN CHURCH 230KV CKT 1	320	320	0.47079	111.0941	FT RANDAL - MEADOWGROVE4230.00 230KV CKT 1
FDNS	09NR	0	20L	G15_042	FROM->TO	DIXONCO 230.00 - TWIN CHURCH 230KV CKT 1	320	320	0.47153	111.0694	BIG STONE 230/24.0KV TRANSFORMER CKT 1
FDNS	09NR	0	17G	G15_042	FROM->TO	DIXONCO 230.00 - TWIN CHURCH 230KV CKT 1	320	320	0.47161	111.0617	P12:115:NPPD:1168B:ALBION 7:PETERSBRG.N7:BTB
FDNS	09NR	0	17G	G15_042	FROM->TO	DIXONCO 230.00 - TWIN CHURCH 230KV CKT 1	320	320	0.47161	111.0497	PETERSBRG.N7115.00 - PETERSBURG 115KV CKT Z1
FDNS	09NR	0	17G	G15_042	FROM->TO	DIXONCO 230.00 - TWIN CHURCH 230KV CKT 1	320	320	0.47161	111.0377	ALBION - PETERSBURG 115KV CKT 1
FDNS	09NR	0	20L	G15_042	FROM->TO	DIXONCO 230.00 - TWIN CHURCH 230KV CKT 1	320	320	0.47153	111.0056	GEN600001 2-SHERBURNE CNTY G2
FDNS	09ALL	0	16WP	G15_042	FROM->TO	DIXONCO 230.00 - TWIN CHURCH 230KV CKT 1	320	320	0.48152	110.9895	KELLY - MEADOWGROVE4230.00 230KV CKT 1
FDNS	09NR	0	20L	G15_042	FROM->TO	DIXONCO 230.00 - TWIN CHURCH 230KV CKT 1	320	320	0.47153	110.9891	GEN600005 1-MONTICELLO
FDNS	09NR	0	17G	G15_042	FROM->TO	DIXONCO 230.00 - TWIN CHURCH 230KV CKT 1	320	320	0.47053	110.9699	GEN657748 1-YOUNG 2 GENERATOR
FDNS	09NR	0	20L	G15_042	FROM->TO	DIXONCO 230.00 - TWIN CHURCH 230KV CKT 1	320	320	0.47432	110.9627	STANTON - STANTON NORTH 115KV CKT 1
FDNS	09NR	0	17G	G15_042	FROM->TO	DIXONCO 230.00 - TWIN CHURCH 230KV CKT 1	320	320	0.47053	110.9571	GEN635214 4-NEAL UNIT 4
FDNS	09NR	0	20L	G15_042	FROM->TO	DIXONCO 230.00 - TWIN CHURCH 230KV CKT 1	320	320	0.47432	110.9296	P12:115:NPPD:1166:STNTN.N7:BEEMER 7:BTB
FDNS	09NR	0	20L	G15_042	FROM->TO	DIXONCO 230.00 - TWIN CHURCH 230KV CKT 1	320	320	0.47153	110.9274	GEN615002 2-COAL CREEK
FDNS	09NR	0	20L	G15_042	FROM->TO	DIXONCO 230.00 - TWIN CHURCH 230KV CKT 1	320	320	0.47432	110.8822	BEEMER - STANTON 115KV CKT 1
FDNS	09NR	0	17G	G15_042	FROM->TO	DIXONCO 230.00 - TWIN CHURCH 230KV CKT 1	320	320	0.47053	110.8801	GEN661015 1-COYOTE
FDNS	09NR	0	20L	G15_042	FROM->TO	DIXONCO 230.00 - TWIN CHURCH 230KV CKT 1	320	320	0.47153	110.8758	GEN600000 1-SHERBURNECNTY G1
FDNS	09NR	0	20L	G15_042	FROM->TO	DIXONCO 230.00 - TWIN CHURCH 230KV CKT 1	320	320	0.47153	110.8661	GEN620315 1-BIG STONE GEN
FDNS	09NR	0	17G	G15_042	FROM->TO	DIXONCO 230.00 - TWIN CHURCH 230KV CKT 1	320	320	0.4694	110.8148	ATCHSNT3 345.00 - BOONEVILLE 345KV CKT 1
FDNS	09NR	0	17G	G15_042	FROM->TO	DIXONCO 230.00 - TWIN CHURCH 230KV CKT 1	320	320	0.47027	110.797	AXTELL - POST ROCK 345KV CKT 1
FDNS	09NR	0	20L	G15_042	FROM->TO	DIXONCO 230.00 - TWIN CHURCH 230KV CKT 1	320	320	0.46978	110.7643	FT RANDAL - SIOUX CITY 230KV CKT 1
FDNS	09ALL	0	17SP	G15_042	FROM->TO	DIXONCO 230.00 - TWIN CHURCH 230KV CKT 1	320	320	0.48295	110.6865	HOSKINS - STANTON NORTH 115KV CKT 1
FDNS	09NR	0	20L	G15_042	FROM->TO	DIXONCO 230.00 - TWIN CHURCH 230KV CKT 1	320	320	0.47432	110.6608	BEEMER - WEST POINT 115KV CKT 1
FDNS	09ALL	0	20SP	G15_042	FROM->TO	DIXONCO 230.00 - TWIN CHURCH 230KV CKT 1	320	320	0.48366	110.6563	HOSKINS - STANTON NORTH 115KV CKT 1
FDNS	09NR	0	20L	G15_042	FROM->TO	DIXONCO 230.00 - TWIN CHURCH 230KV CKT 1	320	320	0.47292	110.6469	COOPER - MOORE 345KV CKT 1
FDNS	09NR	0	20L	G15_042	FROM->TO	DIXONCO 230.00 - TWIN CHURCH 230KV CKT 1	320	320	0.45296	110.6394	P13:345:UMZW:# 260 #: SC2 IN IA. LOSS OF TRANSFORMER (KU1A
FDNS	09ALL	0	20WP	G15_042	FROM->TO	DIXONCO 230.00 - TWIN CHURCH 230KV CKT 1	320	320	0.48208	110.6169	KELLY - MEADOWGROVE4230.00 230KV CKT 1
FDNS	09ALL	0	17SP	G15_042	FROM->TO	DIXONCO 230.00 - TWIN CHURCH 230KV CKT 1	320	320	0.47843	110.6072	FT RANDAL - SIOUX CITY 230KV CKT 1
FDNS	09NR	0	20L	G15_042	FROM->TO	DIXONCO 230.00 - TWIN CHURCH 230KV CKT 1	320	320	0.47153	110.5927	GEN600003 1-PRAIRIE ISLAND G1
FDNS	09NR	0	20L	G15_042	FROM->TO	DIXONCO 230.00 - TWIN CHURCH 230KV CKT 1	320	320	0.47153	110.5906	GEN600004 2-PRAIRIE ISLAND G2
FDNS	09NR	0	20L	G15_042	FROM->TO	DIXONCO 230.00 - TWIN CHURCH 230KV CKT 1	320	320	0.47398	110.4827	P12:115:NPPD:1161:OAKLAND7:BEEMER 7:BTB
FDNS	09NR	0	20L	G15_042	FROM->TO	DIXONCO 230.00 - TWIN CHURCH 230KV CKT 1	320	320	0.47242	110.3822	GAVINS POINT - YANKON JCT 115KV CKT 1
FDNS	09NR	0	20L	G15_042	FROM->TO	DIXONCO 230.00 - TWIN CHURCH 230KV CKT 1	320	320	0.47242	110.3822	GAVINS POINT - YANKON JCT 115KV CKT 1
FDNS	09NR	0	20L	G15_042	FROM->TO	DIXONCO 230.00 - TWIN CHURCH 230KV CKT 1	320	320	0.47153	110.3713	GEN659103 1-ANTELOPE VALLEY UNIT1
FDNS	09NR	0	20L	G15_042	FROM->TO	DIXONCO 230.00 - TWIN CHURCH 230KV CKT 1	320	320	0.47153	110.3713	GEN659107 2-ANTELOPE VALLEY UNIT2
FDNS	09NR	0	20L	G15_042	FROM->TO	DIXONCO 230.00 - TWIN CHURCH 230KV CKT 1	320	320	0.47153	110.3242	GEN600006 1-AS KING
FDNS	09ALL	0	20SP	G15_042	FROM->TO	DIXONCO 230.00 - TWIN CHURCH 230KV CKT 1	320	320	0.47906	110.2767	FT RANDAL - SIOUX CITY 230KV CKT 1
FDNS	09NR	0	20L	G15_042	FROM->TO	DIXONCO 230.00 - TWIN CHURCH 230KV CKT 1	320	320	0.47142	110.2715	FALLOW 3 345.00 - GRIMES 345KV CKT 1
FDNS	09NR	0	20L	G15_042	FROM->TO	DIXONCO 230.00 - TWIN CHURCH 230KV CKT 1	320	320	0.47082	110.2698	FT RANDAL - UTICA JCT 230KV CKT 1
FDNS	09NR	0	20L	G15_042	FROM->TO	DIXONCO 230.00 - TWIN CHURCH 230KV CKT 1	320	320	0.47263	110.2546	P12:115:NPPD:1168B:ALBION 7:PETERSBRG.N7:BTB
FDNS	09NR	0	20L	G15_042	FROM->TO	DIXONCO 230.00 - TWIN CHURCH 230KV CKT 1	320	320	0.47263	110.249	PETERSBRG.N7115.00 - PETERSBURG 115KV CKT Z1
FDNS	09NR	0	20L	G15_042	FROM->TO	DIXONCO 230.00 - TWIN CHURCH 230KV CKT 1	320	320	0.47263	110.2387	ALBION - PETERSBURG 115KV CKT 1
FDNS	09NR	0	20L	G15_042	FROM->TO	DIXONCO 230.00 - TWIN CHURCH 230KV CKT 1	320	320	0.47398	110.2185	OAKLAND - WEST POINT 115KV CKT 1
FDNS	09NR	0	20L	G15_042	FROM->TO	DIXONCO 230.00 - TWIN CHURCH 230KV CKT 1	320	320	0.47192	110.1839	HIGHLND 3 345.00 - OBRIEN 3 345.00 345KV CKT 1
FDNS	09ALL	0	20SP	G15_042	FROM->TO	DIXONCO 230.00 - TWIN CHURCH 230KV CKT 1	320	320	0.46208	110.071	P13:345:UMZW:# 260 #: SC2 IN IA. LOSS OF TRANSFORMER (KU1A
FDNS	09ALL	0	20SP	G15_042	FROM->TO	DIXONCO 230.00 - TWIN CHURCH 230KV CKT 1	320	320	0.48366	110.0663	STANTON - STANTON NORTH 115KV CKT 1
FDNS	09ALL	0	17SP	G15_042	FROM->TO	DIXONCO 230.00 - TWIN CHURCH 230KV CKT 1	320	320	0.48295	110.0203	STANTON - STANTON NORTH 115KV CKT 1
FDNS	09ALL	0	17SP	G15_042	FROM->TO	DIXONCO 230.00 - TWIN CHURCH 230KV CKT 1	320	320	0.4615	109.8649	P13:345:UMZW:# 260 #: SC2 IN IA. LOSS OF TRANSFORMER (KU1A
FDNS	09ALL	0	20SP	G15_042	FROM->TO	DIXONCO 230.00 - TWIN CHURCH 230KV CKT 1	320	320	0.48366	109.8419	P12:115:NPPD:1166:STNTN.N7:BEEMER 7:BTB
FDNS	09ALL	0	25SP	G15_042	FROM->TO	DIXONCO 230.00 - TWIN CHURCH 230KV CKT 1	320	320	0.46195	109.8224	P13:345:UMZW:# 260 #: SC2 IN IA. LOSS OF TRANSFORMER (KU1A
FDNS	09ALL	0	17SP	G15_042	FROM->TO	DIXONCO 230.00 - TWIN CHURCH 230KV CKT 1	320	320	0.48022	109.8105	SHERBURNE CO 345/24.0KV TRANSFORMER CKT 1
FDNS	09ALL	0	17SP	G15_042	FROM->TO	DIXONCO 230.00 - TWIN CHURCH 230KV CKT 1	320	320	0.48295	109.7923	P12:115:NPPD:1166:STNTN.N7:BEEMER 7:BTB
FDNS	09NR	0	17G	G15_042	FROM->TO	DIXONCO 230.00 - TWIN CHURCH 230KV CKT 1	320	320	0.47053	109.7857	BASE CASE
FDNS	09ALL	0	25SP	G15_042	FROM->TO	DIXONCO 230.00 - TWIN CHURCH 230KV CKT 1	320	320	0.48356	109.7317	HOSKINS - STANTON NORTH 115KV CKT 1
FDNS	09ALL	0	20SP	G15_042	FROM->TO	DIXONCO 230.00 - TWIN CHURCH 230KV CKT 1	320	320	0.47251	109.7244	RAUN - SIOUX CITY 345KV CKT 1
FDNS	09ALL	0	17SP	G15_042	FROM->TO	DIXONCO 230.00 - TWIN CHURCH 230KV CKT 1	320	320	0.48022	109.6158	GEN600002 3-SHERBURNE CNTY G3
FDNS	09ALL	0	20SP	G15_042	FROM->TO	DIXONCO 230.00 - TWIN CHURCH 230KV CKT 1	320	320	0.48086	109.6076	SHERBURNE CO 345/24.0KV TRANSFORMER CKT 1
FDNS	09ALL	0	20SP	G15_042	FROM->TO	DIXONCO 230.00 - TWIN CHURCH 230KV CKT 1	320	320	0.48366	109.4975	BEEMER - STANTON 115KV CKT 1
FDNS	09ALL	0	17SP	G15_042	FROM->TO	DIXONCO 230.00 - TWIN CHURCH 230KV CKT 1	320	320	0.47852	109.4874	RASMUSN - UTICA JCT 230KV CKT 1
FDNS	09ALL	0	17SP	G15_042	FROM->TO	DIXONCO 230.00 - TWIN CHURCH 230KV CKT 1	320	320	0.48295	109.4465	BEEMER - STANTON 115KV CKT 1
FDNS	09ALL	0	17SP	G15_042	FROM->TO	DIXONCO 230.00 - TWIN CHURCH 230KV CKT 1	320	320	0.47145	109.4352	RAUN - SIOUX CITY 345KV CKT 1
FDNS	09ALL	0	17SP	G15_042	FROM->TO	DIXONCO 230.00 - TWIN CHURCH 230KV CKT 1	320	320	0.47145	109.4352	RAUN - SIOUX CITY 345KV CKT 1
FDNS	09ALL	0	25SP	G15_042	FROM->TO	DIXONCO 230.00 - TWIN CHURCH 230KV CKT 1	320	320	0.47897	109.418	FT RANDAL - SIOUX CITY 230KV CKT 1
FDNS	09ALL	0	17SP	G15_042	FROM->TO	DIXONCO 230.00 - TWIN CHURCH 230KV CKT 1	320	320	0.47954	109.4003	FT RANDAL - UTICA JCT 230KV CKT 1
FDNS	09ALL	0	17SP	G15_042	FROM->TO	DIXONCO 230.00 - TWIN CHURCH 230KV CKT 1	320	320	0.48097	109.3839	P12:115:NPPD:1168B:ALBION 7:PETERSBRG.N7:BTB
FDNS	09ALL	0	20SP	G15_042	FROM->TO	DIXONCO 230.00 - TWIN CHURCH 230KV CKT 1	320	320	0.48086	109.3733	GEN600002 3-SHERBURNE CNTY G3
FDNS	09ALL	0	17SP	G15_042	FROM->TO	DIXONCO 230.00 - TWIN CHURCH 230KV CKT 1	320	320	0.48097	109.3573	PETERSBRG.N7115.00 - PETERSBURG 115KV CKT Z1
FDNS	09ALL	0	25SP	G15_042	FROM->TO	DIXONCO 230.00 - TWIN CHURCH 230KV CKT 1	320	320	0.47232	109.352	RAUN - SIOUX CITY 345KV CKT 1
FDNS	09ALL	0	25SP	G15_042	FROM->TO	DIXONCO 230.00 - TWIN CHURCH 230KV CKT 1	320	320	0.47232	109.352	RAUN - SIOUX CITY 345KV CKT 1
FDNS	09ALL	0	20SP	G15_042	FROM->TO	DIXONCO 230.00 - TWIN CHURCH 230KV CKT 1	320	320	0.47913	109.3256	RASMUSN - UTICA JCT 230KV CKT 1
FDNS	09ALL	0	17SP	G15_042	FROM->TO	DIXONCO 230.00 - TWIN CHURCH 230KV CKT 1	320	320	0.48097	109.2671	ALBION - PETERSBURG 115KV CKT 1
FDNS	09ALL	0	17SP	G15_042	FROM->TO	DIXONCO 230.00 - TWIN CHURCH 230KV CKT 1	320	320	0.48022	109.2399	BIG STONE 230/24.0KV TRANSFORMER CKT 1

SOLUTION	GROUP	SCENARIO	SEASON	SOURCE	DIRECTION	MONITORED ELEMENT	RATEA (MVA)	RATEB(MVA)	TDF	TC%LOADING (% MVA)	CONTINGENCY
FDNS	09ALL	0	17SP	G15_042	FROM->TO	DIXONCO 230.00 - TWIN CHURCH 230KV CKT 1	320	320	0.48022	109.2175	GEN659103 1-ANTELOPE VALLEY UNIT1
FDNS	09ALL	0	17SP	G15_042	FROM->TO	DIXONCO 230.00 - TWIN CHURCH 230KV CKT 1	320	320	0.48022	109.2175	GEN659107 2-ANTELOPE VALLEY UNIT2
FDNS	09ALL	0	20SP	G15_042	FROM->TO	DIXONCO 230.00 - TWIN CHURCH 230KV CKT 1	320	320	0.48086	109.2118	GEN659103 1-ANTELOPE VALLEY UNIT1
FDNS	09ALL	0	20SP	G15_042	FROM->TO	DIXONCO 230.00 - TWIN CHURCH 230KV CKT 1	320	320	0.48086	109.2118	GEN659107 2-ANTELOPE VALLEY UNIT2
FDNS	09ALL	0	17SP	G15_042	FROM->TO	DIXONCO 230.00 - TWIN CHURCH 230KV CKT 1	320	320	0.4809	109.2104	BLOOMFIELD - GAVINS POINT 115KV CKT 1
FDNS	09ALL	0	20SP	G15_042	FROM->TO	DIXONCO 230.00 - TWIN CHURCH 230KV CKT 1	320	320	0.48167	109.1922	P12:115:NPPD:1168B:ALBION 7:PETERSBRG.N7:BTB
FDNS	09NR	0	20L	G15_042	FROM->TO	DIXONCO 230.00 - TWIN CHURCH 230KV CKT 1	320	320	0.47153	109.1828	BASE CASE
FDNS	09ALL	0	20SP	G15_042	FROM->TO	DIXONCO 230.00 - TWIN CHURCH 230KV CKT 1	320	320	0.48167	109.1676	PETERSBRG.N7115.00 - PETERSBURG 115KV CKT Z1
FDNS	09ALL	0	20SP	G15_042	FROM->TO	DIXONCO 230.00 - TWIN CHURCH 230KV CKT 1	320	320	0.48021	109.1621	FT RANDAL - UTICA JCT 230KV CKT 1
FDNS	09ALL	0	17SP	G15_042	FROM->TO	DIXONCO 230.00 - TWIN CHURCH 230KV CKT 1	320	320	0.47852	109.1587	RASMUSN - SIOUX CITY 230KV CKT 1
FDNS	09ALL	0	17SP	G15_042	FROM->TO	DIXONCO 230.00 - TWIN CHURCH 230KV CKT 1	320	320	0.48022	109.1559	GEN600000 1-SHERBURNECNTY G1
FDNS	09ALL	0	25SP	G15_042	FROM->TO	DIXONCO 230.00 - TWIN CHURCH 230KV CKT 1	320	320	0.48356	109.1481	STANTON - STANTON NORTH 115KV CKT 1
FDNS	09ALL	0	17SP	G15_042	FROM->TO	DIXONCO 230.00 - TWIN CHURCH 230KV CKT 1	320	320	0.4785	109.1421	PAHOJA - SIOUX FALLS 230KV CKT 1
FDNS	09ALL	0	17SP	G15_042	FROM->TO	DIXONCO 230.00 - TWIN CHURCH 230KV CKT 1	320	320	0.48022	109.1015	GEN600001 2-SHERBURNE CNTY G2
FDNS	09ALL	0	20SP	G15_042	FROM->TO	DIXONCO 230.00 - TWIN CHURCH 230KV CKT 1	320	320	0.48167	109.0772	ALBION - PETERSBURG 115KV CKT 1
FDNS	09ALL	0	17SP	G15_042	FROM->TO	DIXONCO 230.00 - TWIN CHURCH 230KV CKT 1	320	320	0.48022	109.0685	GEN659111 2-LELAND OLDS UNIT2
FDNS	09ALL	0	20SP	G15_042	FROM->TO	DIXONCO 230.00 - TWIN CHURCH 230KV CKT 1	320	320	0.48086	109.063	GEN659111 2-LELAND OLDS UNIT2
FDNS	09ALL	0	20SP	G15_042	FROM->TO	DIXONCO 230.00 - TWIN CHURCH 230KV CKT 1	320	320	0.47907	109.0076	PAHOJA - SIOUX FALLS 230KV CKT 1
FDNS	09ALL	0	20SP	G15_042	FROM->TO	DIXONCO 230.00 - TWIN CHURCH 230KV CKT 1	320	320	0.47913	108.9971	RASMUSN - SIOUX CITY 230KV CKT 1
FDNS	09ALL	0	20SP	G15_042	FROM->TO	DIXONCO 230.00 - TWIN CHURCH 230KV CKT 1	320	320	0.48086	108.966	GEN600000 1-SHERBURNECNTY G1
FDNS	09ALL	0	20SP	G15_042	FROM->TO	DIXONCO 230.00 - TWIN CHURCH 230KV CKT 1	320	320	0.48086	108.9119	GEN600001 2-SHERBURNE CNTY G2
FDNS	09ALL	0	25SP	G15_042	FROM->TO	DIXONCO 230.00 - TWIN CHURCH 230KV CKT 1	320	320	0.48356	108.9115	P12:115:NPPD:1166:STNTN.N7:BEEMER 7:BTB
FDNS	09ALL	0	17SP	G15_042	FROM->TO	DIXONCO 230.00 - TWIN CHURCH 230KV CKT 1	320	320	0.48022	108.8803	GEN600005 1-MONTICELLO
FDNS	09ALL	0	20SP	G15_042	FROM->TO	DIXONCO 230.00 - TWIN CHURCH 230KV CKT 1	320	320	0.48366	108.8675	BEEMER - WEST POINT 115KV CKT 1
FDNS	09ALL	0	20SP	G15_042	FROM->TO	DIXONCO 230.00 - TWIN CHURCH 230KV CKT 1	320	320	0.48086	108.8649	GEN600005 1-MONTICELLO
FDNS	09NR	0	17G	G15_042	FROM->TO	DIXONCO 230.00 - TWIN CHURCH 230KV CKT 1	320	320	0.47053	108.8492	GEN337652 1-WHITE BLUFF UNIT #1
FDNS	09NR	0	17G	G15_042	FROM->TO	DIXONCO 230.00 - TWIN CHURCH 230KV CKT 1	320	320	0.47128	108.8466	BATTLE CREEK - COUNTY LINE 115KV CKT 1
FDNS	09NR	0	17G	G15_042	FROM->TO	DIXONCO 230.00 - TWIN CHURCH 230KV CKT 1	320	320	0.47053	108.8347	GEN501801 1-DOLET HILLS UNIT1
FDNS	09NR	0	17G	G15_042	FROM->TO	DIXONCO 230.00 - TWIN CHURCH 230KV CKT 1	320	320	0.47128	108.8331	ANTELOPE 7115.00 - COUNTY LINE 115KV CKT 1
FDNS	09NR	0	17G	G15_042	FROM->TO	DIXONCO 230.00 - TWIN CHURCH 230KV CKT 1	320	320	0.46929	108.8195	SIOUXCY-LNX3345.00 - SPLIT ROCK 345KV CKT 1
FDNS	09ALL	0	20SP	G15_042	FROM->TO	DIXONCO 230.00 - TWIN CHURCH 230KV CKT 1	320	320	0.48182	108.8158	GAVINS POINT - YANKON JCT 115KV CKT 1
FDNS	09ALL	0	20SP	G15_042	FROM->TO	DIXONCO 230.00 - TWIN CHURCH 230KV CKT 1	320	320	0.48182	108.8158	GAVINS POINT - YANKON JCT 115KV CKT 1
FDNS	09ALL	0	20SP	G15_042	FROM->TO	DIXONCO 230.00 - TWIN CHURCH 230KV CKT 1	320	320	0.48086	108.8018	GEN620315 1-BIG STONE GEN
FDNS	09ALL	0	17SP	G15_042	FROM->TO	DIXONCO 230.00 - TWIN CHURCH 230KV CKT 1	320	320	0.48295	108.7986	BEEMER - WEST POINT 115KV CKT 1
FDNS	09NR	0	17G	G15_042	FROM->TO	DIXONCO 230.00 - TWIN CHURCH 230KV CKT 1	320	320	0.47053	108.7943	GEN337653 1-WHITE BLUFF UNIT #2
FDNS	09ALL	0	25SP	G15_042	FROM->TO	DIXONCO 230.00 - TWIN CHURCH 230KV CKT 1	320	320	0.48075	108.788	SHERBURNE CO 345/24.0KV TRANSFORMER CKT 1
FDNS	09ALL	0	20SP	G15_042	FROM->TO	DIXONCO 230.00 - TWIN CHURCH 230KV CKT 1	320	320	0.48158	108.7825	BLOOMFIELD - GAVINS POINT 115KV CKT 1
FDNS	09ALL	0	17SP	G15_042	FROM->TO	DIXONCO 230.00 - TWIN CHURCH 230KV CKT 1	320	320	0.48022	108.7736	GEN615002 2-COAL CREEK
FDNS	09ALL	0	17SP	G15_042	FROM->TO	DIXONCO 230.00 - TWIN CHURCH 230KV CKT 1	320	320	0.48022	108.753	GEN615001 1-COAL CREEK
FDNS	09ALL	0	17SP	G15_042	FROM->TO	DIXONCO 230.00 - TWIN CHURCH 230KV CKT 1	320	320	0.48022	108.7454	GEN620315 1-BIG STONE GEN
FDNS	09NR	0	17G	G15_042	FROM->TO	DIXONCO 230.00 - TWIN CHURCH 230KV CKT 1	320	320	0.47053	108.7199	GEN563222 1-G15088_3 0.6900
FDNSLock	09ALL	0	17SP	G15_042	FROM->TO	DIXONCO 230.00 - TWIN CHURCH 230KV CKT 1	320	320	0.47993	108.7141	COLUMBUS - SCHUYLER 115KV CKT 1
FDNS	09ALL	0	17SP	G15_042	FROM->TO	DIXONCO 230.00 - TWIN CHURCH 230KV CKT 1	320	320	0.48022	108.7057	GEN600006 1-AS KING
FDNSLock	09ALL	0	20SP	G15_042	FROM->TO	DIXONCO 230.00 - TWIN CHURCH 230KV CKT 1	320	320	0.48078	108.7048	COLUMBUS - SCHUYLER 115KV CKT 1
FDNS	09NR	0	17G	G15_042	FROM->TO	DIXONCO 230.00 - TWIN CHURCH 230KV CKT 1	320	320	0.46898	108.7026	SIOUX CITY (SC KV1A) 230/161/13.8KV TRANSFORMER CKT 1
FDNS	09NR	0	17G	G15_042	FROM->TO	DIXONCO 230.00 - TWIN CHURCH 230KV CKT 1	320	320	0.46897	108.6951	SIOUX CITY (SC KV5A) 230/161/13.8KV TRANSFORMER CKT 1
FDNS	09ALL	0	17SP	G15_042	FROM->TO	DIXONCO 230.00 - TWIN CHURCH 230KV CKT 1	320	320	0.48022	108.6866	GEN600003 1-PRAIRIE ISLAND G1
FDNS	09ALL	0	17SP	G15_042	FROM->TO	DIXONCO 230.00 - TWIN CHURCH 230KV CKT 1	320	320	0.48022	108.6842	GEN600004 2-PRAIRIE ISLAND G2
FDNS	09NR	0	17G	G15_042	FROM->TO	DIXONCO 230.00 - TWIN CHURCH 230KV CKT 1	320	320	0.47053	108.6645	GEN640431 1-LAREDO.GEN1W0.6900
FDNS	09ALL	0	20SP	G15_042	FROM->TO	DIXONCO 230.00 - TWIN CHURCH 230KV CKT 1	320	320	0.48086	108.6491	GEN615002 2-COAL CREEK
FDNS	09NR	0	17G	G15_042	FROM->TO	DIXONCO 230.00 - TWIN CHURCH 230KV CKT 1	320	320	0.46958	108.6403	GRIMES - LEHIGH 345KV CKT 1
FDNS	09ALL	0	20SP	G15_042	FROM->TO	DIXONCO 230.00 - TWIN CHURCH 230KV CKT 1	320	320	0.48086	108.6303	GEN615001 1-COAL CREEK
FDNS	09ALL	0	25SP	G15_042	FROM->TO	DIXONCO 230.00 - TWIN CHURCH 230KV CKT 1	320	320	0.48075	108.6266	GEN600002 3-SHERBURNE CNTY G3
FDNS	09NR	0	17G	G15_042	FROM->TO	DIXONCO 230.00 - TWIN CHURCH 230KV CKT 1	320	320	0.47053	108.6218	GEN562912 1-G15053_3 0.6900
FDNS	09NR	0	17G	G15_042	FROM->TO	DIXONCO 230.00 - TWIN CHURCH 230KV CKT 1	320	320	0.46938	108.6095	ANITA TAP POINT TO CRESTON AND DENISON - EXIRA 161KV CKT 1
FDNS	09ALL	0	17SP	G15_042	FROM->TO	DIXONCO 230.00 - TWIN CHURCH 230KV CKT 1	320	320	0.47992	108.5841	P12:230:UMZB:# 116 #: ST IN SD. WSG-ST-VH
FDNS	09NR	0	17G	G15_042	FROM->TO	DIXONCO 230.00 - TWIN CHURCH 230KV CKT 1	320	320	0.46938	108.5821	DENISON - EXIRA 161KV CKT 1
FDNS	09NR	0	17G	G15_042	FROM->TO	DIXONCO 230.00 - TWIN CHURCH 230KV CKT 1	320	320	0.46938	108.5812	DENISON (DN KV1A) 230/161/13.8KV TRANSFORMER CKT 1
FDNS	09ALL	0	17SP	G15_042	FROM->TO	DIXONCO 230.00 - TWIN CHURCH 230KV CKT 1	320	320	0.4785	108.5799	EAGLE 4 230.00 - PAHOJA 230KV CKT 1
FDNS	09ALL	0	17SP	G15_042	FROM->TO	DIXONCO 230.00 - TWIN CHURCH 230KV CKT 1	320	320	0.4808	108.5595	MINGO - RED WILLOW 345KV CKT 1
FDNS	09ALL	0	17SP	G15_042	FROM->TO	DIXONCO 230.00 - TWIN CHURCH 230KV CKT 1	320	320	0.4808	108.5595	MINGO - RED WILLOW 345KV CKT 1
FDNS	09ALL	0	25SP	G15_042	FROM->TO	DIXONCO 230.00 - TWIN CHURCH 230KV CKT 1	320	320	0.48356	108.5583	BEEMER - STANTON 115KV CKT 1
FDNS	09ALL	0	20SP	G15_042	FROM->TO	DIXONCO 230.00 - TWIN CHURCH 230KV CKT 1	320	320	0.48086	108.558	GEN600006 1-AS KING
FDNS	09NR	0	17G	G15_042	FROM->TO	DIXONCO 230.00 - TWIN CHURCH 230KV CKT 1	320	320	0.47053	108.5564	GEN337910 1-ARKANSAS NUCLEAR ONE UNIT #1
FDNS	09NR	0	17G	G15_042	FROM->TO	DIXONCO 230.00 - TWIN CHURCH 230KV CKT 1	320	320	0.47053	108.5527	GEN335831 1-RIVERBEND UNIT#1
FDNS	09ALL	0	17SP	G15_042	FROM->TO	DIXONCO 230.00 - TWIN CHURCH 230KV CKT 1	320	320	0.48022	108.5496	ALMA 161 161/24.0KV TRANSFORMER CKT 1
FDNS	09ALL	0	20SP	G15_042	FROM->TO	DIXONCO 230.00 - TWIN CHURCH 230KV CKT 1	320	320	0.48004	108.5434	FTTHOM2-LNX3345.00 - GRPRAR2-LNX3345.00 345KV CKT 1
FDNS	09NR	0	17G	G15_042	FROM->TO	DIXONCO 230.00 - TWIN CHURCH 230KV CKT 1	320	320	0.47347	108.5415	KELLY - SHELL CREEK 230KV CKT 1
FDNS	09ALL	0	17SP	G15_042	FROM->TO	DIXONCO 230.00 - TWIN CHURCH 230KV CKT 1	320	320	0.47992	108.5394	HANLON - STORLA 230KV CKT 1
FDNS	09NR	0	17G	G15_042	FROM->TO	DIXONCO 230.00 - TWIN CHURCH 230KV CKT 1	320	320	0.47347	108.5389	SHELL CREEK (SHELLCREEKT1) 345/230/13.8KV TRANSFORMER CKT 1
FDNS	09NR	0	17G	G15_042	FROM->TO	DIXONCO 230.00 - TWIN CHURCH 230KV CKT 1	320	320	0.47347	108.5389	SHELL CREEK (SHELLCREEKT1) 345/230/13.8KV TRANSFORMER CKT 1
FDNS	09ALL	0	20SP	G15_042	FROM->TO	DIXONCO 230.00 - TWIN CHURCH 230KV CKT 1	320	320	0.48004	108.5273	FT THOMPSON - FTTHOM2-LNX3345.00 345KV CKT Z
FDNS	09ALL	0	20SP	G15_042	FROM->TO	DIXONCO 230.00 - TWIN CHURCH 230KV CKT 1	320	320	0.48004	108.5267	GRPRAR2-LNX3345.00 - YANKTON 345KV CKT Z
FDNS	09ALL	0	20SP	G15_042	FROM->TO	DIXONCO 230.00 - TWIN CHURCH 230KV CKT 1	320	320	0.48086	108.5216	GEN600003 1-PRAIRIE ISLAND G1
FDNS	09ALL	0	20SP	G15_042	FROM->TO	DIXONCO 230.00 - TWIN CHURCH 230KV CKT 1	320	320	0.48086	108.5197	GEN600004 2-PRAIRIE ISLAND G2
FDNS	09ALL	0	17SP	G15_042	FROM->TO	DIXONCO 230.00 - TWIN CHURCH 230KV CKT 1	320	320	0.4795	108.4843	FTTHOM2-LNX3345.00 - GRPRAR2-LNX3345.00 345KV CKT 1
FDNS	09ALL	0	20SP	G15_042	FROM->TO	DIXONCO 230.00 - TWIN CHURCH 230KV CKT 1	320	320	0.48056	108.483	SUB 3454 - WAGENER 345KV CKT 1
FDNS	09ALL	0	20SP	G15_042	FROM->TO	DIXONCO 230.00 - TWIN CHURCH 230KV CKT 1	320	320	0.48056	108.483	SUB 3454 - WAGENER 345KV CKT 1
FDNS	09ALL	0	20SP	G15_042	FROM->TO	DIXONCO 230.00 - TWIN CHURCH 230KV CKT 1	320	320	0.48364	108.4757	P12:115:NPPD:1161:OAKLAND7:BEEMER 7:BTB

SOLUTION	GROUP	SCENARIO	SEASON	SOURCE	DIRECTION	MONITORED ELEMENT	RATEA (MVA)	RATEB(MVA)	TDF	TC%LOADING (% MVA)	CONTINGENCY
FDNS	09ALL	0	25SP	G15_042	FROM->TO	DIXONCO 230.00 - TWIN CHURCH 230KV CKT 1	320	320	0.48075	108.4704	BIG STONE 230/24.0KV TRANSFORMER CKT 1
FDNS	09NR	0	17G	G15_042	FROM->TO	DIXONCO 230.00 - TWIN CHURCH 230KV CKT 1	320	320	0.46635	108.4671	TWIN CHURCH (TWNCHURCH T4) 230/115/13.8KV TRANSFORMER CKT 1
FDNS	09NR	0	17G	G15_042	FROM->TO	DIXONCO 230.00 - TWIN CHURCH 230KV CKT 1	320	320	0.46635	108.4671	TWIN CHURCH (TWNCHURCH T4) 230/115/13.8KV TRANSFORMER CKT 1
FDNS	09ALL	0	17SP	G15_042	FROM->TO	DIXONCO 230.00 - TWIN CHURCH 230KV CKT 1	320	320	0.4795	108.4607	GRPRAR2-LNX3345.00 - YANKTON 345KV CKT Z
FDNS	09ALL	0	20SP	G15_042	FROM->TO	DIXONCO 230.00 - TWIN CHURCH 230KV CKT 1	320	320	0.47907	108.4551	EAGLE 4 230.00 - PAHOJA 230KV CKT 1
FDNS	09NR	0	17G	G15_042	FROM->TO	DIXONCO 230.00 - TWIN CHURCH 230KV CKT 1	320	320	0.47053	108.4481	GEN635023 3-WALTER SCOTT UNIT 3
FDNS	09ALL	0	20SP	G15_042	FROM->TO	DIXONCO 230.00 - TWIN CHURCH 230KV CKT 1	320	320	0.48057	108.4392	P12:230:UMZB:# 116 #: ST IN SD. WSG-ST-VH
FDNS	09ALL	0	17SP	G15_042	FROM->TO	DIXONCO 230.00 - TWIN CHURCH 230KV CKT 1	320	320	0.48119	108.4349	AXTELL - POST ROCK 345KV CKT 1
FDNS	09ALL	0	17SP	G15_042	FROM->TO	DIXONCO 230.00 - TWIN CHURCH 230KV CKT 1	320	320	0.4795	108.429	FT THOMPSON - FTTHOM2-LNX3345.00 345KV CKT Z
FDNS	09ALL	0	25SP	G15_042	FROM->TO	DIXONCO 230.00 - TWIN CHURCH 230KV CKT 1	320	320	0.48156	108.4252	P12:115:NPPD:1168B:ALBION 7:PETERSBRG.N7:BTB
FDNS	09ALL	0	17SP	G15_042	FROM->TO	DIXONCO 230.00 - TWIN CHURCH 230KV CKT 1	320	320	0.47995	108.4156	FT THOMPSON - LETCHER 230KV CKT 1
FDNS	09ALL	0	17SP	G15_042	FROM->TO	DIXONCO 230.00 - TWIN CHURCH 230KV CKT 1	320	320	0.47995	108.4156	FT THOMPSON - LETCHER 230KV CKT 1
FDNS	09ALL	0	25SP	G15_042	FROM->TO	DIXONCO 230.00 - TWIN CHURCH 230KV CKT 1	320	320	0.47904	108.4146	RASMUSN - UTICA JCT 230KV CKT 1
FDNS	09ALL	0	20SP	G15_042	FROM->TO	DIXONCO 230.00 - TWIN CHURCH 230KV CKT 1	320	320	0.48183	108.4026	AXTELL - POST ROCK 345KV CKT 1
FDNS	09ALL	0	17SP	G15_042	FROM->TO	DIXONCO 230.00 - TWIN CHURCH 230KV CKT 1	320	320	0.48293	108.4005	P12:115:NPPD:1161:OAKLAND7:BEEMER 7:BTB
FDNS	09ALL	0	25SP	G15_042	FROM->TO	DIXONCO 230.00 - TWIN CHURCH 230KV CKT 1	320	320	0.48156	108.3967	PETERSBRG.N7115.00 - PETERSBURG 115KV CKT Z1
FDNS	09NR	0	17G	G15_042	FROM->TO	DIXONCO 230.00 - TWIN CHURCH 230KV CKT 1	320	320	0.47053	108.396	GEN336153 1-WATERFORD UNIT#3
FDNS	09ALL	0	25SP	G15_042	FROM->TO	DIXONCO 230.00 - TWIN CHURCH 230KV CKT 1	320	320	0.4801	108.396	FT RANDAL - UTICA JCT 230KV CKT 1
FDNS	09ALL	0	20SP	G15_042	FROM->TO	DIXONCO 230.00 - TWIN CHURCH 230KV CKT 1	320	320	0.48058	108.3895	HANLON - STORLA 230KV CKT 1
FDNS	09ALL	0	25SP	G15_042	FROM->TO	DIXONCO 230.00 - TWIN CHURCH 230KV CKT 1	320	320	0.48075	108.379	GEN659103 1-ANTELOPE VALLEY UNIT1
FDNS	09ALL	0	25SP	G15_042	FROM->TO	DIXONCO 230.00 - TWIN CHURCH 230KV CKT 1	320	320	0.48075	108.379	GEN659107 2-ANTELOPE VALLEY UNIT2
FDNS	09ALL	0	17SP	G15_042	FROM->TO	DIXONCO 230.00 - TWIN CHURCH 230KV CKT 1	320	320	0.47989	108.3699	SUB 3454 - WAGENER 345KV CKT 1
FDNS	09ALL	0	17SP	G15_042	FROM->TO	DIXONCO 230.00 - TWIN CHURCH 230KV CKT 1	320	320	0.47989	108.3699	SUB 3454 - WAGENER 345KV CKT 1
FDNS	09NR	0	17G	G15_042	FROM->TO	DIXONCO 230.00 - TWIN CHURCH 230KV CKT 1	320	320	0.47053	108.3372	GEN337911 1-ARKANSAS NUCLEAR ONE UNIT #2
FDNS	09NR	0	20L	G15_042	FROM->TO	DIXONCO 230.00 - TWIN CHURCH 230KV CKT 1	320	320	0.47153	108.3059	GEN337652 1-WHITE BLUFF UNIT #1
FDNS	09ALL	0	25SP	G15_042	FROM->TO	DIXONCO 230.00 - TWIN CHURCH 230KV CKT 1	320	320	0.48156	108.3032	ALBION - PETERSBURG 115KV CKT 1
FDNS	09ALL	0	25SP	G15_042	FROM->TO	DIXONCO 230.00 - TWIN CHURCH 230KV CKT 1	320	320	0.47898	108.2476	PAHOJA - SIOUX FALLS 230KV CKT 1
FDNS	09NR	0	17G	G15_042	FROM->TO	DIXONCO 230.00 - TWIN CHURCH 230KV CKT 1	320	320	0.47053	108.239	GEN635024 4-WALTER SCOTT UNIT 4
FDNS	09NR	0	17G	G15_042	FROM->TO	DIXONCO 230.00 - TWIN CHURCH 230KV CKT 1	320	320	0.46872	108.237	EAGLE 4 230.00 - SIOUX CITY 230KV CKT 1
FDNS	09NR	0	20L	G15_042	FROM->TO	DIXONCO 230.00 - TWIN CHURCH 230KV CKT 1	320	320	0.47057	108.2347	GRIMES - LEHIGH 345KV CKT 1
FDNS	09ALL	0	25SP	G15_042	FROM->TO	DIXONCO 230.00 - TWIN CHURCH 230KV CKT 1	320	320	0.48075	108.2331	GEN659111 2-LELAND OLDS UNIT2
FDNS	09ALL	0	25SP	G15_042	FROM->TO	DIXONCO 230.00 - TWIN CHURCH 230KV CKT 1	320	320	0.48075	108.2072	GEN600000 1-SHERBURNECNTY G1
FDNS	09NR	0	17G	G15_042	FROM->TO	DIXONCO 230.00 - TWIN CHURCH 230KV CKT 1	320	320	0.46685	108.1552	RAUN - SUB 3451 FT CAL 345KV CKT 1
FDNS	09NR	0	17G	G15_042	FROM->TO	DIXONCO 230.00 - TWIN CHURCH 230KV CKT 1	320	320	0.46685	108.1552	RAUN - SUB 3451 FT CAL 345KV CKT 1
FDNS	09ALL	0	25SP	G15_042	FROM->TO	DIXONCO 230.00 - TWIN CHURCH 230KV CKT 1	320	320	0.48075	108.1504	GEN600001 2-SHERBURNE CNTY G2
FDNS	09NR	0	20L	G15_042	FROM->TO	DIXONCO 230.00 - TWIN CHURCH 230KV CKT 1	320	320	0.47004	108.1414	SIOUX CITY (SC KV1A) 230/161/13.8KV TRANSFORMER CKT 1
FDNS	09NR	0	20L	G15_042	FROM->TO	DIXONCO 230.00 - TWIN CHURCH 230KV CKT 1	320	320	0.47021	108.1397	SIOUXCY-LNX3345.00 - SPLIT ROCK 345KV CKT 1
FDNS	09NR	0	20L	G15_042	FROM->TO	DIXONCO 230.00 - TWIN CHURCH 230KV CKT 1	320	320	0.47021	108.1397	SIOUXCY-LNX3345.00 - SPLIT ROCK 345KV CKT 1
FDNS	09NR	0	20L	G15_042	FROM->TO	DIXONCO 230.00 - TWIN CHURCH 230KV CKT 1	320	320	0.47153	108.1379	GEN335831 1-RIVERBEND UNIT#1
FDNS	09NR	0	20L	G15_042	FROM->TO	DIXONCO 230.00 - TWIN CHURCH 230KV CKT 1	320	320	0.47003	108.1341	SIOUX CITY (SC KV5A) 230/161/13.8KV TRANSFORMER CKT 1
FDNS	09ALL	0	25SP	G15_042	FROM->TO	DIXONCO 230.00 - TWIN CHURCH 230KV CKT 1	320	320	0.47904	108.1133	RASMUSN - SIOUX CITY 230KV CKT 1
FDNS	09NR	0	17G	G15_042	FROM->TO	DIXONCO 230.00 - TWIN CHURCH 230KV CKT 1	320	320	0.47053	108.1098	GEN336821 1-GRAND GULF UNIT
FDNS	09NR	0	20L	G15_042	FROM->TO	DIXONCO 230.00 - TWIN CHURCH 230KV CKT 1	320	320	0.47153	108.1035	GEN337910 1-ARKANSAS NUCLEAR ONE UNIT #1
FDNS	09ALL	0	25SP	G15_042	FROM->TO	DIXONCO 230.00 - TWIN CHURCH 230KV CKT 1	320	320	0.48075	108.1011	GEN600005 1-MONTICELLO
FDNS	09NR	0	20L	G15_042	FROM->TO	DIXONCO 230.00 - TWIN CHURCH 230KV CKT 1	320	320	0.47153	108.087	GEN640431 1-LAREDO.GEN1W0.6900
FDNS	09NR	0	20L	G15_042	FROM->TO	DIXONCO 230.00 - TWIN CHURCH 230KV CKT 1	320	320	0.47153	108.0791	GEN563222 1-G15088_3 0.6900
FDNS	09NR	0	17G	G15_042	FROM->TO	DIXONCO 230.00 - TWIN CHURCH 230KV CKT 1	320	320	0.47053	108.0673	GEN562921 1-G15054_2 0.6900
FDNS	09NR	0	20L	G15_042	FROM->TO	DIXONCO 230.00 - TWIN CHURCH 230KV CKT 1	320	320	0.47153	108.0498	GEN344225 1-1CAL G1 25.000
FDNS	09NR	0	20L	G15_042	FROM->TO	DIXONCO 230.00 - TWIN CHURCH 230KV CKT 1	320	320	0.47037	108.048	ANITA TAP POINT TO CRESTON AND DENISON - EXIRA 161KV CKT 1
FDNS	09NR	0	20L	G15_042	FROM->TO	DIXONCO 230.00 - TWIN CHURCH 230KV CKT 1	320	320	0.47153	108.0223	GEN562912 1-G15053_3 0.6900
FDNS	09NR	0	20L	G15_042	FROM->TO	DIXONCO 230.00 - TWIN CHURCH 230KV CKT 1	320	320	0.47037	108.0218	DENISON - EXIRA 161KV CKT 1
FDNS	09NR	0	20L	G15_042	FROM->TO	DIXONCO 230.00 - TWIN CHURCH 230KV CKT 1	320	320	0.47037	108.0216	DENISON (DN KV1A) 230/161/13.8KV TRANSFORMER CKT 1
FDNS	09ALL	0	25SP	G15_042	FROM->TO	DIXONCO 230.00 - TWIN CHURCH 230KV CKT 1	320	320	0.48075	108.0167	GEN620315 1-BIG STONE GEN
FDNS	09NR	0	20L	G15_042	FROM->TO	DIXONCO 230.00 - TWIN CHURCH 230KV CKT 1	320	320	0.47153	108.0077	GEN336153 1-WATERFORD UNIT#3
FDNS	09ALL	0	25SP	G15_042	FROM->TO	DIXONCO 230.00 - TWIN CHURCH 230KV CKT 1	320	320	0.48131	107.9622	MINGO - RED WILLOW 345KV CKT 1
FDNS	09ALL	0	25SP	G15_042	FROM->TO	DIXONCO 230.00 - TWIN CHURCH 230KV CKT 1	320	320	0.48131	107.9622	MINGO - RED WILLOW 345KV CKT 1
FDNS	09ALL	0	25SP	G15_042	FROM->TO	DIXONCO 230.00 - TWIN CHURCH 230KV CKT 1	320	320	0.4817	107.9488	GAVINS POINT - YANKON JCT 115KV CKT 1
FDNS	09ALL	0	25SP	G15_042	FROM->TO	DIXONCO 230.00 - TWIN CHURCH 230KV CKT 1	320	320	0.4817	107.9488	GAVINS POINT - YANKON JCT 115KV CKT 1
FDNS	09ALL	0	25SP	G15_042	FROM->TO	DIXONCO 230.00 - TWIN CHURCH 230KV CKT 1	320	320	0.48356	107.9294	BEEMER - WEST POINT 115KV CKT 1
FDNS	09NR	0	20L	G15_042	FROM->TO	DIXONCO 230.00 - TWIN CHURCH 230KV CKT 1	320	320	0.47153	107.9139	GEN337911 1-ARKANSAS NUCLEAR ONE UNIT #2
FDNS	09ALL	0	25SP	G15_042	FROM->TO	DIXONCO 230.00 - TWIN CHURCH 230KV CKT 1	320	320	0.48145	107.9126	BLOOMFIELD - GAVINS POINT 115KV CKT 1
FDNS	09ALL	0	25SP	G15_042	FROM->TO	DIXONCO 230.00 - TWIN CHURCH 230KV CKT 1	320	320	0.48172	107.9053	AXTELL - POST ROCK 345KV CKT 1
FDNS	09ALL	0	25SP	G15_042	FROM->TO	DIXONCO 230.00 - TWIN CHURCH 230KV CKT 1	320	320	0.48075	107.8587	GEN615002 2-COAL CREEK
FDNS	09NR	0	20L	G15_042	FROM->TO	DIXONCO 230.00 - TWIN CHURCH 230KV CKT 1	320	320	0.46884	107.858	GRPRAR1-LNX3345.00 - GRPRAR 345KV CKT Z
FDNS	09NR	0	20L	G15_042	FROM->TO	DIXONCO 230.00 - TWIN CHURCH 230KV CKT 1	320	320	0.46884	107.8562	GRPRAR1-LNX3345.00 - HOLT.CO3 345.00 345KV CKT 1
FDNS	09ALL	0	25SP	G15_042	FROM->TO	DIXONCO 230.00 - TWIN CHURCH 230KV CKT 1	320	320	0.48075	107.8397	GEN615001 1-COAL CREEK
FDNS	09ALL	0	25SP	G15_042	FROM->TO	DIXONCO 230.00 - TWIN CHURCH 230KV CKT 1	320	320	0.48075	107.7873	GEN600006 1-AS KING
FDNS	09NR	0	20L	G15_042	FROM->TO	DIXONCO 230.00 - TWIN CHURCH 230KV CKT 1	320	320	0.47153	107.7817	GEN336821 1-GRAND GULF UNIT
FDNS	09ALL	0	25SP	G15_042	FROM->TO	DIXONCO 230.00 - TWIN CHURCH 230KV CKT 1	320	320	0.48067	107.7651	COLUMBUS - SCHUYLER 115KV CKT 1
FDNS	09NR	0	17G	G15_042	FROM->TO	DIXONCO 230.00 - TWIN CHURCH 230KV CKT 1	320	320	0.46801	107.7484	GRPRAR1-LNX3345.00 - HOLT.CO3 345.00 345KV CKT 1
FDNS	09ALL	0	25SP	G15_042	FROM->TO	DIXONCO 230.00 - TWIN CHURCH 230KV CKT 1	320	320	0.48075	107.7477	GEN600003 1-PRAIRIE ISLAND G1
FDNS	09NR	0	17G	G15_042	FROM->TO	DIXONCO 230.00 - TWIN CHURCH 230KV CKT 1	320	320	0.46801	107.7476	GRPRAR1-LNX3345.00 - GRPRAR 345KV CKT Z
FDNS	09ALL	0	25SP	G15_042	FROM->TO	DIXONCO 230.00 - TWIN CHURCH 230KV CKT 1	320	320	0.48075	107.7457	GEN600004 2-PRAIRIE ISLAND G2
FDNS	09ALL	0	25SP	G15_042	FROM->TO	DIXONCO 230.00 - TWIN CHURCH 230KV CKT 1	320	320	0.48075	107.7429	CLAY BOSWELL 230/20.9KV TRANSFORMER CKT 1
FDNS	09NR	0	20L	G15_042	FROM->TO	DIXONCO 230.00 - TWIN CHURCH 230KV CKT 1	320	320	0.47153	107.7364	GEN635023 3-WALTER SCOTT UNIT 3
FDNS	09NR	0	17G	G15_042	FROM->TO	DIXONCO 230.00 - TWIN CHURCH 230KV CKT 1	320	320	0.45805	107.7032	BANCROFT - OAKLAND 115KV CKT 1
FDNS	09ALL	0	25SP	G15_042	FROM->TO	DIXONCO 230.00 - TWIN CHURCH 230KV CKT 1	320	320	0.48046	107.6502	P12:230:UMZB:# 116 #: ST IN SD. WSG-ST-VH
FDNS	09NR	0	17G	G15_042	FROM->TO	DIXONCO 230.00 - TWIN CHURCH 230KV CKT 1	320	320	0.46645	107.6458	PLYMOUTH - SIOUX CITY 161KV CKT 1
FDNS	09ALL	0	25SP	G15_042	FROM->TO	DIXONCO 230.00 - TWIN CHURCH 230KV CKT 1	320	320	0.47987	107.6215	FT THOMPSON - FTTHOM2-LNX3345.00 345KV CKT Z

SOLUTION	GROUP	SCENARIO	SEASON	SOURCE	DIRECTION	MONITORED ELEMENT	RATEA (MVA)	RATEB(MVA)	TDF	TC%LOADING (% MVA)	CONTINGENCY
FDNS	09ALL	0	25SP	G15_042	FROM->TO	DIXONCO 230.00 - TWIN CHURCH 230KV CKT 1	320	320	0.48135	107.6176	HIGHLND 3 345.00 - OBRIEN 3 345.00 345KV CKT 1
FDNS	09ALL	0	25SP	G15_042	FROM->TO	DIXONCO 230.00 - TWIN CHURCH 230KV CKT 1	320	320	0.47987	107.6148	GRPRAR2-LNX3345.00 - YANKTON 345KV CKT Z
FDNS	09ALL	0	25SP	G15_042	FROM->TO	DIXONCO 230.00 - TWIN CHURCH 230KV CKT 1	320	320	0.47987	107.614	FTTHOM2-LNX3345.00 - GRPRAR2-LNX3345.00 345KV CKT 1
FDNS	09ALL	0	25SP	G15_042	FROM->TO	DIXONCO 230.00 - TWIN CHURCH 230KV CKT 1	320	320	0.47898	107.6098	EAGLE 4 230.00 - PAHOJA 230KV CKT 1
FDNS	09NR	0	20L	G15_042	FROM->TO	DIXONCO 230.00 - TWIN CHURCH 230KV CKT 1	320	320	0.45892	107.6066	BANCROFT - OAKLAND 115KV CKT 1
FDNS	09ALL	0	25SP	G15_042	FROM->TO	DIXONCO 230.00 - TWIN CHURCH 230KV CKT 1	320	320	0.48047	107.5981	HANLON - STORLA 230KV CKT 1
FDNS	09ALL	0	25SP	G15_042	FROM->TO	DIXONCO 230.00 - TWIN CHURCH 230KV CKT 1	320	320	0.48075	107.5557	ALMA 161 161/24.0KV TRANSFORMER CKT 1
FDNS	09ALL	0	25SP	G15_042	FROM->TO	DIXONCO 230.00 - TWIN CHURCH 230KV CKT 1	320	320	0.48075	107.5279	GEN657748 1-YOUNG 2 GENERATOR
FDNS	09ALL	0	25SP	G15_042	FROM->TO	DIXONCO 230.00 - TWIN CHURCH 230KV CKT 1	320	320	0.48354	107.5257	P12:115:NPPD:1161:OAKLAND7:BEEMER 7:BTB
FDNS	09NR	0	20L	G15_042	FROM->TO	DIXONCO 230.00 - TWIN CHURCH 230KV CKT 1	320	320	0.47153	107.521	GEN635024 4-WALTER SCOTT UNIT 4
FDNS	09NR	0	20L	G15_042	FROM->TO	DIXONCO 230.00 - TWIN CHURCH 230KV CKT 1	320	320	0.47153	107.47	GEN562921 1-G15054_2 0.6900
FDNS	09NR	0	20L	G15_042	FROM->TO	DIXONCO 230.00 - TWIN CHURCH 230KV CKT 1	320	320	0.46968	107.4622	EAGLE 4 230.00 - SIOUX CITY 230KV CKT 1
FDNS	09ALL	0	20SP	G15_042	FROM->TO	DIXONCO 230.00 - TWIN CHURCH 230KV CKT 1	320	320	0.48086	107.3901	BASE CASE
FDNS	09ALL	0	17SP	G15_042	FROM->TO	DIXONCO 230.00 - TWIN CHURCH 230KV CKT 1	320	320	0.48022	107.3838	BASE CASE
FDNS	09NR	0	20L	G15_042	FROM->TO	DIXONCO 230.00 - TWIN CHURCH 230KV CKT 1	320	320	0.45892	107.1979	P12:115:NPPD:1193:OAKLAND7:EMERSON7:BTB
FDNS	09NR	0	20L	G15_042	FROM->TO	DIXONCO 230.00 - TWIN CHURCH 230KV CKT 1	320	320	0.45892	107.1761	BANCROFT - EMERSON 115KV CKT 1
FDNS	09NR	0	20L	G15_042	FROM->TO	DIXONCO 230.00 - TWIN CHURCH 230KV CKT 1	320	320	0.46759	107.1722	PLYMOUTH - SIOUX CITY 161KV CKT 1
FDNS	09NR	0	20L	G15_042	FROM->TO	DIXONCO 230.00 - TWIN CHURCH 230KV CKT 1	320	320	0.46759	107.1722	PLYMOUTH - SIOUX CITY 161KV CKT 1
FDNS	09NR	0	17G	G15_042	FROM->TO	DIXONCO 230.00 - TWIN CHURCH 230KV CKT 1	320	320	0.45805	107.0402	P12:115:NPPD:1193:OAKLAND7:EMERSON7:BTB
FDNS	09NR	0	17G	G15_042	FROM->TO	DIXONCO 230.00 - TWIN CHURCH 230KV CKT 1	320	320	0.45805	107.0053	BANCROFT - EMERSON 115KV CKT 1
FDNS	09NR	0	20L	G15_042	FROM->TO	DIXONCO 230.00 - TWIN CHURCH 230KV CKT 1	320	320	0.47132	106.9499	GR ISLD-LNX3345.00 - HOLT.CO3 345.00 345KV CKT 1
FDNS	09NR	0	20L	G15_042	FROM->TO	DIXONCO 230.00 - TWIN CHURCH 230KV CKT 1	320	320	0.47132	106.8967	GR ISLD-LNX3345.00 - GRAND ISLAND 345KV CKT Z
FDNS	09NR	0	17G	G15_042	FROM->TO	DIXONCO 230.00 - TWIN CHURCH 230KV CKT 1	320	320	0.46805	106.7979	DENISON - SIOUX CITY 230KV CKT 1
FDNS	09NR	0	17G	G15_042	FROM->TO	DIXONCO 230.00 - TWIN CHURCH 230KV CKT 1	320	320	0.47183	106.7337	ANTELOPE 3345.00 - HOSKINS 345KV CKT 1
FDNS	09ALL	0	25SP	G15_042	FROM->TO	DIXONCO 230.00 - TWIN CHURCH 230KV CKT 1	320	320	0.48075	106.5843	BASE CASE
FDNS	09ALL	0	20SP	G15_042	FROM->TO	DIXONCO 230.00 - TWIN CHURCH 230KV CKT 1	320	320	0.48086	106.5135	GEN344896 3-1LAB G3 20.000
FDNS	09ALL	0	20SP	G15_042	FROM->TO	DIXONCO 230.00 - TWIN CHURCH 230KV CKT 1	320	320	0.48086	106.5134	GEN344894 1-1LAB G1 20.000
FDNS	09ALL	0	20SP	G15_042	FROM->TO	DIXONCO 230.00 - TWIN CHURCH 230KV CKT 1	320	320	0.48086	106.5134	GEN344895 2-1LAB G2 20.000
FDNS	09ALL	0	20SP	G15_042	FROM->TO	DIXONCO 230.00 - TWIN CHURCH 230KV CKT 1	320	320	0.48086	106.5125	GEN344897 4-1LAB G4 20.000
FDNS	09ALL	0	17SP	G15_042	FROM->TO	DIXONCO 230.00 - TWIN CHURCH 230KV CKT 1	320	320	0.48093	106.5	BATTLE CREEK - COUNTY LINE 115KV CKT 1
FDNS	09NR	0	20L	G15_042	FROM->TO	DIXONCO 230.00 - TWIN CHURCH 230KV CKT 1	320	320	0.46901	106.4977	DENISON - SIOUX CITY 230KV CKT 1
FDNS	09ALL	0	17SP	G15_042	FROM->TO	DIXONCO 230.00 - TWIN CHURCH 230KV CKT 1	320	320	0.48022	106.4734	GEN344896 3-1LAB G3 20.000
FDNS	09ALL	0	17SP	G15_042	FROM->TO	DIXONCO 230.00 - TWIN CHURCH 230KV CKT 1	320	320	0.48022	106.4733	GEN344894 1-1LAB G1 20.000
FDNS	09ALL	0	17SP	G15_042	FROM->TO	DIXONCO 230.00 - TWIN CHURCH 230KV CKT 1	320	320	0.48022	106.4716	GEN344897 4-1LAB G4 20.000
FDNS	09ALL	0	20SP	G15_042	FROM->TO	DIXONCO 230.00 - TWIN CHURCH 230KV CKT 1	320	320	0.48086	106.4714	GEN335206 1-NELSON UNIT 6
FDNS	09ALL	0	17SP	G15_042	FROM->TO	DIXONCO 230.00 - TWIN CHURCH 230KV CKT 1	320	320	0.48022	106.4627	GEN335206 1-NELSON UNIT 6
FDNS	09ALL	0	17SP	G15_042	FROM->TO	DIXONCO 230.00 - TWIN CHURCH 230KV CKT 1	320	320	0.48022	106.443	GEN337041 1-GERALD ANDRUS
FDNS	09ALL	0	20SP	G15_042	FROM->TO	DIXONCO 230.00 - TWIN CHURCH 230KV CKT 1	320	320	0.48159	106.431	ANTELOPE 7115.00 - COUNTY LINE 115KV CKT 1
FDNS	09NR	0	17G	G15_042	FROM->TO	DIXONCO 230.00 - TWIN CHURCH 230KV CKT 1	320	320	0.47183	106.4212	ANTELOPE 3345.00 (ANTELOPE T1) 345/115/13.8KV TRANSFORMER CKT 1
FDNS	09ALL	0	20SP	G15_042	FROM->TO	DIXONCO 230.00 - TWIN CHURCH 230KV CKT 1	320	320	0.47889	106.4193	TWIN CHURCH (TWNCHURCH T6) 230/115/13.8KV TRANSFORMER CKT 2
FDNS	09ALL	0	20SP	G15_042	FROM->TO	DIXONCO 230.00 - TWIN CHURCH 230KV CKT 1	320	320	0.47889	106.4193	TWIN CHURCH (TWNCHURCH T6) 230/115/13.8KV TRANSFORMER CKT 2
FDNS	09ALL	0	17SP	G15_042	FROM->TO	DIXONCO 230.00 - TWIN CHURCH 230KV CKT 1	320	320	0.48022	106.4045	GEN336251 1-NINEMILE POINT UNIT#4
FDNS	09ALL	0	17SP	G15_042	FROM->TO	DIXONCO 230.00 - TWIN CHURCH 230KV CKT 1	320	320	0.48022	106.3974	GEN336831 1-BAXTER WILSON SES
FDNS	09ALL	0	17SP	G15_042	FROM->TO	DIXONCO 230.00 - TWIN CHURCH 230KV CKT 1	320	320	0.48093	106.3956	ANTELOPE 7115.00 - COUNTY LINE 115KV CKT 1
FDNS	09NR	0	20L	G15_042	FROM->TO	DIXONCO 230.00 - TWIN CHURCH 230KV CKT 1	320	320	0.47282	106.378	ANTELOPE 3345.00 - HOSKINS 345KV CKT 1
FDNS	09ALL	0	20SP	G15_042	FROM->TO	DIXONCO 230.00 - TWIN CHURCH 230KV CKT 1	320	320	0.48086	106.3697	GEN501813 1-RODEMACHER UNIT 3
FDNS	09ALL	0	17SP	G15_042	FROM->TO	DIXONCO 230.00 - TWIN CHURCH 230KV CKT 1	320	320	0.48022	106.3594	GEN501813 1-RODEMACHER UNIT 3
FDNS	09ALL	0	17SP	G15_042	FROM->TO	DIXONCO 230.00 - TWIN CHURCH 230KV CKT 1	320	320	0.47826	106.3543	TWIN CHURCH (TWNCHURCH T6) 230/115/13.8KV TRANSFORMER CKT 2
FDNS	09ALL	0	17SP	G15_042	FROM->TO	DIXONCO 230.00 - TWIN CHURCH 230KV CKT 1	320	320	0.47826	106.3543	TWIN CHURCH (TWNCHURCH T6) 230/115/13.8KV TRANSFORMER CKT 2
FDNS	09ALL	0	20SP	G15_042	FROM->TO	DIXONCO 230.00 - TWIN CHURCH 230KV CKT 1	320	320	0.48086	106.3477	GEN337041 1-GERALD ANDRUS
FDNS	09NR	0	17G	G15_042	FROM->TO	DIXONCO 230.00 - TWIN CHURCH 230KV CKT 1	320	320	0.47053	106.3467	GEN562673 1-G15_007_3 0.6900
FDNS	09ALL	0	20SP	G15_042	FROM->TO	DIXONCO 230.00 - TWIN CHURCH 230KV CKT 1	320	320	0.48086	106.329	GEN563222 1-G15088_3 0.6900
FDNS	09ALL	0	20SP	G15_042	FROM->TO	DIXONCO 230.00 - TWIN CHURCH 230KV CKT 1	320	320	0.48307	106.3277	SHELL CREEK (SHELLCREEKT1) 345/230/13.8KV TRANSFORMER CKT 1
FDNS	09ALL	0	20SP	G15_042	FROM->TO	DIXONCO 230.00 - TWIN CHURCH 230KV CKT 1	320	320	0.48307	106.3277	SHELL CREEK (SHELLCREEKT1) 345/230/13.8KV TRANSFORMER CKT 1
FDNS	09ALL	0	17SP	G15_042	FROM->TO	DIXONCO 230.00 - TWIN CHURCH 230KV CKT 1	320	320	0.48022	106.3268	GEN336252 1-NINEMILE POINT UNIT#5
FDNS	09ALL	0	17SP	G15_042	FROM->TO	DIXONCO 230.00 - TWIN CHURCH 230KV CKT 1	320	320	0.48022	106.3186	GEN563222 1-G15088_3 0.6900
FDNS	09ALL	0	20SP	G15_042	FROM->TO	DIXONCO 230.00 - TWIN CHURCH 230KV CKT 1	320	320	0.48307	106.3175	KELLY - SHELL CREEK 230KV CKT 1
FDNS	09ALL	0	20SP	G15_042	FROM->TO	DIXONCO 230.00 - TWIN CHURCH 230KV CKT 1	320	320	0.48086	106.3144	GEN336831 1-BAXTER WILSON SES
FDNS	09ALL	0	17SP	G15_042	FROM->TO	DIXONCO 230.00 - TWIN CHURCH 230KV CKT 1	320	320	0.47892	106.307	DENISON (DN KV1A) 230/161/13.8KV TRANSFORMER CKT 1
FDNS	09ALL	0	17SP	G15_042	FROM->TO	DIXONCO 230.00 - TWIN CHURCH 230KV CKT 1	320	320	0.47892	106.3039	DENISON - EXIRA 161KV CKT 1
FDNS	09ALL	0	20SP	G15_042	FROM->TO	DIXONCO 230.00 - TWIN CHURCH 230KV CKT 1	320	320	0.48086	106.3038	GEN336251 1-NINEMILE POINT UNIT#4
FDNS	09ALL	0	20SP	G15_042	FROM->TO	DIXONCO 230.00 - TWIN CHURCH 230KV CKT 1	320	320	0.48086	106.2551	GEN336252 1-NINEMILE POINT UNIT#5
FDNS	09ALL	0	20SP	G15_042	FROM->TO	DIXONCO 230.00 - TWIN CHURCH 230KV CKT 1	320	320	0.48048	106.2523	LAKEFIELD 3 - NOBLES 345KV CKT 1
FDNS	09ALL	0	20SP	G15_042	FROM->TO	DIXONCO 230.00 - TWIN CHURCH 230KV CKT 1	320	320	0.48086	106.2464	GEN562912 1-G15053_3 0.6900
FDNS	09ALL	0	17SP	G15_042	FROM->TO	DIXONCO 230.00 - TWIN CHURCH 230KV CKT 1	320	320	0.47815	106.2351	EAGLE 4 230.00 - SIOUX CITY 230KV CKT 1
FDNS	09ALL	0	17SP	G15_042	FROM->TO	DIXONCO 230.00 - TWIN CHURCH 230KV CKT 1	320	320	0.48022	106.2275	GEN562912 1-G15053_3 0.6900
FDNS	09ALL	0	20SP	G15_042	FROM->TO	DIXONCO 230.00 - TWIN CHURCH 230KV CKT 1	320	320	0.48086	106.1687	GEN501801 1-DOLET HILLS UNIT1
FDNS	09ALL	0	20SP	G15_042	FROM->TO	DIXONCO 230.00 - TWIN CHURCH 230KV CKT 1	320	320	0.48086	106.1659	GEN338143 1-INDEPENDENCE UNIT #1
FDNS	09ALL	0	17SP	G15_042	FROM->TO	DIXONCO 230.00 - TWIN CHURCH 230KV CKT 1	320	320	0.48022	106.1658	GEN501801 1-DOLET HILLS UNIT1
FDNS	09ALL	0	20SP	G15_042	FROM->TO	DIXONCO 230.00 - TWIN CHURCH 230KV CKT 1	320	320	0.48128	106.1649	ONEILL - SPENCER 115KV CKT 1
FDNS	09ALL	0	20SP	G15_042	FROM->TO	DIXONCO 230.00 - TWIN CHURCH 230KV CKT 1	320	320	0.48086	106.1628	GEN338146 1-INDEPENDENCE UNIT #2
FDNS	09ALL	0	17SP	G15_042	FROM->TO	DIXONCO 230.00 - TWIN CHURCH 230KV CKT 1	320	320	0.48243	106.1442	KELLY - SHELL CREEK 230KV CKT 1
FDNS	09ALL	0	17SP	G15_042	FROM->TO	DIXONCO 230.00 - TWIN CHURCH 230KV CKT 1	320	320	0.48243	106.1417	SHELL CREEK (SHELLCREEKT1) 345/230/13.8KV TRANSFORMER CKT 1
FDNS	09ALL	0	17SP	G15_042	FROM->TO	DIXONCO 230.00 - TWIN CHURCH 230KV CKT 1	320	320	0.48243	106.1417	SHELL CREEK (SHELLCREEKT1) 345/230/13.8KV TRANSFORMER CKT 1
FDNS	09ALL	0	17SP	G15_042	FROM->TO	DIXONCO 230.00 - TWIN CHURCH 230KV CKT 1	320	320	0.4807	106.1358	ONEILL - SPENCER 115KV CKT 1
FDNS	09ALL	0	17SP	G15_042	FROM->TO	DIXONCO 230.00 - TWIN CHURCH 230KV CKT 1	320	320	0.48022	106.1329	GEN338143 1-INDEPENDENCE UNIT #1
FDNS	09ALL	0	20SP	G15_042	FROM->TO	DIXONCO 230.00 - TWIN CHURCH 230KV CKT 1	320	320	0.47873	106.1305	EAGLE 4 230.00 - SIOUX CITY 230KV CKT 1
FDNS	09ALL	0	17SP	G15_042	FROM->TO	DIXONCO 230.00 - TWIN CHURCH 230KV CKT 1	320	320	0.48022	106.1268	GEN338146 1-INDEPENDENCE UNIT #2
FDNS	09ALL	0	20SP	G15_042	FROM->TO	DIXONCO 230.00 - TWIN CHURCH 230KV CKT 1	320	320	0.48086	106.1235	GEN337652 1-WHITE BLUFF UNIT #1

SOLUTION	GROUP	SCENARIO	SEASON	SOURCE	DIRECTION	MONITORED ELEMENT	RATEA (MVA)	RATEB(MVA)	TDF	TC%LOADING (% MVA)	CONTINGENCY
FDNS	09ALL	0	20SP	G15_042	FROM->TO	DIXONCO 230.00 - TWIN CHURCH 230KV CKT 1	320	320	0.48128	106.1117	P12:115:NPPD:WAPA6:FTRANDL7:ONEILL 7:BTB
FDNS	09ALL	0	20SP	G15_042	FROM->TO	DIXONCO 230.00 - TWIN CHURCH 230KV CKT 1	320	320	0.48128	106.1117	P12:115:UMZB:# 115 #: SE IN NE. FR-SE-ON
FDNS	09ALL	0	17SP	G15_042	FROM->TO	DIXONCO 230.00 - TWIN CHURCH 230KV CKT 1	320	320	0.48022	106.0937	GEN337652 1-WHITE BLUFF UNIT #1
FDNS	09ALL	0	20SP	G15_042	FROM->TO	DIXONCO 230.00 - TWIN CHURCH 230KV CKT 1	320	320	0.48086	106.0903	GEN337653 1-WHITE BLUFF UNIT #2
FDNS	09ALL	0	17SP	G15_042	FROM->TO	DIXONCO 230.00 - TWIN CHURCH 230KV CKT 1	320	320	0.48022	106.0843	GEN337653 1-WHITE BLUFF UNIT #2
FDNS	09ALL	0	17SP	G15_042	FROM->TO	DIXONCO 230.00 - TWIN CHURCH 230KV CKT 1	320	320	0.4807	106.0829	P12:115:NPPD:WAPA6:FTRANDL7:ONEILL 7:BTB
FDNS	09ALL	0	17SP	G15_042	FROM->TO	DIXONCO 230.00 - TWIN CHURCH 230KV CKT 1	320	320	0.4807	106.0829	P12:115:UMZB:# 115 #: SE IN NE. FR-SE-ON
FDNS	09NR	0	20L	G15_042	FROM->TO	DIXONCO 230.00 - TWIN CHURCH 230KV CKT 1	320	320	0.47282	106.0743	ANTELOPE 3345.00 (ANTELOPE T1) 345/115/13.8KV TRANSFORMER CKT 1
FDNS	09ALL	0	17SP	G15_042	FROM->TO	DIXONCO 230.00 - TWIN CHURCH 230KV CKT 1	320	320	0.47892	106.0454	ANITA TAP POINT TO CRESTON AND DENISON - EXIRA 161KV CKT 1
FDNS	09ALL	0	20SP	G15_042	FROM->TO	DIXONCO 230.00 - TWIN CHURCH 230KV CKT 1	320	320	0.48086	106.0431	GEN640010 1-GERALD GENTLEMAN STATION UNIT 1
FDNS	09ALL	0	20SP	G15_042	FROM->TO	DIXONCO 230.00 - TWIN CHURCH 230KV CKT 1	320	320	0.47936	106.0346	SIOUX CITY (SC KV1A) 230/161/13.8KV TRANSFORMER CKT 1
FDNS	09ALL	0	20SP	G15_042	FROM->TO	DIXONCO 230.00 - TWIN CHURCH 230KV CKT 1	320	320	0.48128	106.0344	FT RANDAL - SPENCER 115KV CKT 1
FDNS	09ALL	0	17SP	G15_042	FROM->TO	DIXONCO 230.00 - TWIN CHURCH 230KV CKT 1	320	320	0.4807	106.0298	FT RANDAL - SPENCER 115KV CKT 1
FDNS	09ALL	0	20SP	G15_042	FROM->TO	DIXONCO 230.00 - TWIN CHURCH 230KV CKT 1	320	320	0.47935	106.025	SIOUX CITY (SC KV5A) 230/161/13.8KV TRANSFORMER CKT 1
FDNS	09ALL	0	20SP	G15_042	FROM->TO	DIXONCO 230.00 - TWIN CHURCH 230KV CKT 1	320	320	0.48086	106.0101	GEN640431 1-LAREDO.GEN1W0.6900
FDNS	09ALL	0	20SP	G15_042	FROM->TO	DIXONCO 230.00 - TWIN CHURCH 230KV CKT 1	320	320	0.48086	106.0081	GEN640011 2-GERALD GENTLEMAN STATION UNIT 2
FDNS	09ALL	0	17SP	G15_042	FROM->TO	DIXONCO 230.00 - TWIN CHURCH 230KV CKT 1	320	320	0.4787	105.9977	SIOUX CITY (SC KV1A) 230/161/13.8KV TRANSFORMER CKT 1
FDNS	09ALL	0	17SP	G15_042	FROM->TO	DIXONCO 230.00 - TWIN CHURCH 230KV CKT 1	320	320	0.47869	105.988	SIOUX CITY (SC KV5A) 230/161/13.8KV TRANSFORMER CKT 1
FDNS	09ALL	0	17SP	G15_042	FROM->TO	DIXONCO 230.00 - TWIN CHURCH 230KV CKT 1	320	320	0.48022	105.9651	GEN640431 1-LAREDO.GEN1W0.6900
FDNS	09NR	0	17G	G15_042	FROM->TO	DIXONCO 230.00 - TWIN CHURCH 230KV CKT 1	320	320	0.47053	105.9471	GEN562438 1-G13-032 0.6900
FDNS	09ALL	0	17SP	G15_042	FROM->TO	DIXONCO 230.00 - TWIN CHURCH 230KV CKT 1	320	320	0.48022	105.9394	GEN640011 2-GERALD GENTLEMAN STATION UNIT 2
FDNS	09ALL	0	20SP	G15_042	FROM->TO	DIXONCO 230.00 - TWIN CHURCH 230KV CKT 1	320	320	0.47794	105.8887	RAUN - SUB 3451 FT CAL 345KV CKT 1
FDNS	09ALL	0	20SP	G15_042	FROM->TO	DIXONCO 230.00 - TWIN CHURCH 230KV CKT 1	320	320	0.47794	105.8887	RAUN - SUB 3451 FT CAL 345KV CKT 1
FDNS	09ALL	0	20SP	G15_042	FROM->TO	DIXONCO 230.00 - TWIN CHURCH 230KV CKT 1	320	320	0.4796	105.8243	ANITA TAP POINT TO CRESTON AND DENISON - EXIRA 161KV CKT 1
FDNS	09ALL	0	20SP	G15_042	FROM->TO	DIXONCO 230.00 - TWIN CHURCH 230KV CKT 1	320	320	0.48086	105.7893	GEN337910 1-ARKANSAS NUCLEAR ONE UNIT #1
FDNS	09ALL	0	17SP	G15_042	FROM->TO	DIXONCO 230.00 - TWIN CHURCH 230KV CKT 1	320	320	0.48022	105.7839	GEN337910 1-ARKANSAS NUCLEAR ONE UNIT #1
FDNS	09ALL	0	20SP	G15_042	FROM->TO	DIXONCO 230.00 - TWIN CHURCH 230KV CKT 1	320	320	0.48086	105.7528	GEN335831 1-RIVERBEND UNIT#1
FDNS	09ALL	0	17SP	G15_042	FROM->TO	DIXONCO 230.00 - TWIN CHURCH 230KV CKT 1	320	320	0.47702	105.7465	RAUN - SUB 3451 FT CAL 345KV CKT 1
FDNS	09ALL	0	17SP	G15_042	FROM->TO	DIXONCO 230.00 - TWIN CHURCH 230KV CKT 1	320	320	0.47702	105.7465	RAUN - SUB 3451 FT CAL 345KV CKT 1
FDNS	09ALL	0	17SP	G15_042	FROM->TO	DIXONCO 230.00 - TWIN CHURCH 230KV CKT 1	320	320	0.48022	105.7357	GEN335831 1-RIVERBEND UNIT#1
FDNS	09ALL	0	17SP	G15_042	FROM->TO	DIXONCO 230.00 - TWIN CHURCH 230KV CKT 1	320	320	0.48022	105.7282	GEN640010 1-GERALD GENTLEMAN STATION UNIT 1
FDNS	09NR	0	20L	G15_042	FROM->TO	DIXONCO 230.00 - TWIN CHURCH 230KV CKT 1	320	320	0.47153	105.7183	GEN562673 1-G15_007_3 0.6900
FDNS	09ALL	0	20SP	G15_042	FROM->TO	DIXONCO 230.00 - TWIN CHURCH 230KV CKT 1	320	320	0.48086	105.7005	GEN562921 1-G15054_2 0.6900
FDNS	09ALL	0	17SP	G15_042	FROM->TO	DIXONCO 230.00 - TWIN CHURCH 230KV CKT 1	320	320	0.48022	105.677	GEN562921 1-G15054_2 0.6900
FDNS	09ALL	0	17SP	G15_042	FROM->TO	DIXONCO 230.00 - TWIN CHURCH 230KV CKT 1	320	320	0.4809	105.6748	BLOOMFIELD - CREIGHTON 115KV CKT 1
FDNS	09ALL	0	25SP	G15_042	FROM->TO	DIXONCO 230.00 - TWIN CHURCH 230KV CKT 1	320	320	0.48148	105.6546	ANTELOPE 7115.00 - COUNTY LINE 115KV CKT 1
FDNS	09ALL	0	17SP	G15_042	FROM->TO	DIXONCO 230.00 - TWIN CHURCH 230KV CKT 1	320	320	0.48022	105.6477	GEN635023 3-WALTER SCOTT UNIT 3
FDNS	09ALL	0	25SP	G15_042	FROM->TO	DIXONCO 230.00 - TWIN CHURCH 230KV CKT 1	320	320	0.48075	105.6115	GEN501813 1-RODEMACHER UNIT 3
FDNS	09ALL	0	25SP	G15_042	FROM->TO	DIXONCO 230.00 - TWIN CHURCH 230KV CKT 1	320	320	0.48075	105.5934	GEN337041 1-GERALD ANDRUS
FDNS	09ALL	0	25SP	G15_042	FROM->TO	DIXONCO 230.00 - TWIN CHURCH 230KV CKT 1	320	320	0.48075	105.5571	GEN336831 1-BAXTER WILSON SES
FDNS	09ALL	0	20SP	G15_042	FROM->TO	DIXONCO 230.00 - TWIN CHURCH 230KV CKT 1	320	320	0.48086	105.5465	GEN336153 1-WATERFORD UNIT#3
FDNS	09NR	0	20L	G15_042	FROM->TO	DIXONCO 230.00 - TWIN CHURCH 230KV CKT 1	320	320	0.45892	105.5368	EMERSON - TWIN CHURCH 115KV CKT 1
FDNS	09ALL	0	25SP	G15_042	FROM->TO	DIXONCO 230.00 - TWIN CHURCH 230KV CKT 1	320	320	0.48075	105.5356	GEN336251 1-NINEMILE POINT UNIT#4
FDNS	09ALL	0	17SP	G15_042	FROM->TO	DIXONCO 230.00 - TWIN CHURCH 230KV CKT 1	320	320	0.48022	105.5276	GEN336153 1-WATERFORD UNIT#3
FDNS	09ALL	0	25SP	G15_042	FROM->TO	DIXONCO 230.00 - TWIN CHURCH 230KV CKT 1	320	320	0.47878	105.5166	TWIN CHURCH (TWNCHURCH T6) 230/115/13.8KV TRANSFORMER CKT 2
FDNS	09ALL	0	25SP	G15_042	FROM->TO	DIXONCO 230.00 - TWIN CHURCH 230KV CKT 1	320	320	0.47878	105.5166	TWIN CHURCH (TWNCHURCH T6) 230/115/13.8KV TRANSFORMER CKT 2
FDNS	09ALL	0	25SP	G15_042	FROM->TO	DIXONCO 230.00 - TWIN CHURCH 230KV CKT 1	320	320	0.48075	105.5145	GEN563222 1-G15088_3 0.6900
FDNS	09ALL	0	20SP	G15_042	FROM->TO	DIXONCO 230.00 - TWIN CHURCH 230KV CKT 1	320	320	0.48086	105.5057	GEN344225 1-1CAL G1 25.000
FDNS	09ALL	0	20SP	G15_042	FROM->TO	DIXONCO 230.00 - TWIN CHURCH 230KV CKT 1	320	320	0.48086	105.5048	GEN337911 1-ARKANSAS NUCLEAR ONE UNIT #2
FDNS	09ALL	0	17SP	G15_042	FROM->TO	DIXONCO 230.00 - TWIN CHURCH 230KV CKT 1	320	320	0.48022	105.5019	GEN337911 1-ARKANSAS NUCLEAR ONE UNIT #2
FDNS	09ALL	0	25SP	G15_042	FROM->TO	DIXONCO 230.00 - TWIN CHURCH 230KV CKT 1	320	320	0.48075	105.4896	GEN336252 1-NINEMILE POINT UNIT#5
FDNS	09ALL	0	20SP	G15_042	FROM->TO	DIXONCO 230.00 - TWIN CHURCH 230KV CKT 1	320	320	0.48086	105.4877	GEN635023 3-WALTER SCOTT UNIT 3
FDNS	09ALL	0	20SP	G15_042	FROM->TO	DIXONCO 230.00 - TWIN CHURCH 230KV CKT 1	320	320	0.48208	105.4759	ANTELOPE 3345.00 - HOSKINS 345KV CKT 1
FDNS	09NR	0	17G	G15_042	FROM->TO	DIXONCO 230.00 - TWIN CHURCH 230KV CKT 1	320	320	0.45805	105.4558	EMERSON - TWIN CHURCH 115KV CKT 1
FDNS	09ALL	0	25SP	G15_042	FROM->TO	DIXONCO 230.00 - TWIN CHURCH 230KV CKT 1	320	320	0.48075	105.4348	GEN562912 1-G15053_3 0.6900
FDNS	09ALL	0	25SP	G15_042	FROM->TO	DIXONCO 230.00 - TWIN CHURCH 230KV CKT 1	320	320	0.48037	105.429	LAKEFIELD 3 - NOBLES 345KV CKT 1
FDNS	09ALL	0	25SP	G15_042	FROM->TO	DIXONCO 230.00 - TWIN CHURCH 230KV CKT 1	320	320	0.48075	105.4129	GEN501801 1-DOLET HILLS UNIT1
FDNS	09ALL	0	17SP	G15_042	FROM->TO	DIXONCO 230.00 - TWIN CHURCH 230KV CKT 1	320	320	0.48022	105.397	GEN344225 1-1CAL G1 25.000
FDNS	09ALL	0	17SP	G15_042	FROM->TO	DIXONCO 230.00 - TWIN CHURCH 230KV CKT 1	320	320	0.46829	105.3807	BANCROFT - OAKLAND 115KV CKT 1
FDNS	09ALL	0	17SP	G15_042	FROM->TO	DIXONCO 230.00 - TWIN CHURCH 230KV CKT 1	320	320	0.48022	105.3759	GEN635024 4-WALTER SCOTT UNIT 4
FDNS	09ALL	0	20SP	G15_042	FROM->TO	DIXONCO 230.00 - TWIN CHURCH 230KV CKT 1	320	320	0.47681	105.3583	TWIN CHURCH (TWNCHURCH T4) 230/115/13.8KV TRANSFORMER CKT 1
FDNS	09ALL	0	20SP	G15_042	FROM->TO	DIXONCO 230.00 - TWIN CHURCH 230KV CKT 1	320	320	0.47681	105.3583	TWIN CHURCH (TWNCHURCH T4) 230/115/13.8KV TRANSFORMER CKT 1
FDNS	09ALL	0	17SP	G15_042	FROM->TO	DIXONCO 230.00 - TWIN CHURCH 230KV CKT 1	320	320	0.48135	105.3544	ANTELOPE 3345.00 - HOSKINS 345KV CKT 1
FDNS	09NR	0	20L	G15_042	FROM->TO	DIXONCO 230.00 - TWIN CHURCH 230KV CKT 1	320	320	0.47153	105.3499	GEN562438 1-G13-032 0.6900
FDNS	09ALL	0	25SP	G15_042	FROM->TO	DIXONCO 230.00 - TWIN CHURCH 230KV CKT 1	320	320	0.48075	105.3432	GEN337653 1-WHITE BLUFF UNIT #2
FDNS	09ALL	0	25SP	G15_042	FROM->TO	DIXONCO 230.00 - TWIN CHURCH 230KV CKT 1	320	320	0.48075	105.3389	GEN338143 1-INDEPENDENCE UNIT #1
FDNS	09ALL	0	25SP	G15_042	FROM->TO	DIXONCO 230.00 - TWIN CHURCH 230KV CKT 1	320	320	0.48075	105.3381	GEN338146 1-INDEPENDENCE UNIT #2
FDNS	09ALL	0	20SP	G15_042	FROM->TO	DIXONCO 230.00 - TWIN CHURCH 230KV CKT 1	320	320	0.48158	105.3202	BLOOMFIELD - CREIGHTON 115KV CKT 1
FDNS	09NR	0	17G	G15_042	FROM->TO	DIXONCO 230.00 - TWIN CHURCH 230KV CKT 1	320	320	0.46972	105.3016	BELDEN - HOSKINS 115KV CKT 1
FDNS	09ALL	0	25SP	G15_042	FROM->TO	DIXONCO 230.00 - TWIN CHURCH 230KV CKT 1	320	320	0.48075	105.2953	GEN337652 1-WHITE BLUFF UNIT #1
FDNS	09ALL	0	25SP	G15_042	FROM->TO	DIXONCO 230.00 - TWIN CHURCH 230KV CKT 1	320	320	0.48116	105.2736	ONEILL - SPENCER 115KV CKT 1
FDNS	09ALL	0	20SP	G15_042	FROM->TO	DIXONCO 230.00 - TWIN CHURCH 230KV CKT 1	320	320	0.46892	105.2679	BANCROFT - OAKLAND 115KV CKT 1
FDNS	09ALL	0	17SP	G15_042	FROM->TO	DIXONCO 230.00 - TWIN CHURCH 230KV CKT 1	320	320	0.47619	105.239	TWIN CHURCH (TWNCHURCH T4) 230/115/13.8KV TRANSFORMER CKT 1
FDNS	09ALL	0	17SP	G15_042	FROM->TO	DIXONCO 230.00 - TWIN CHURCH 230KV CKT 1	320	320	0.47619	105.239	TWIN CHURCH (TWNCHURCH T4) 230/115/13.8KV TRANSFORMER CKT 1
FDNS	09ALL	0	25SP	G15_042	FROM->TO	DIXONCO 230.00 - TWIN CHURCH 230KV CKT 1	320	320	0.47925	105.2298	SIOUX CITY (SC KV1A) 230/161/13.8KV TRANSFORMER CKT 1
FDNS	09ALL	0	25SP	G15_042	FROM->TO	DIXONCO 230.00 - TWIN CHURCH 230KV CKT 1	320	320	0.47924	105.2203	SIOUX CITY (SC KV5A) 230/161/13.8KV TRANSFORMER CKT 1
FDNS	09ALL	0	25SP	G15_042	FROM->TO	DIXONCO 230.00 - TWIN CHURCH 230KV CKT 1	320	320	0.48116	105.2198	P12:115:NPPD:WAPA6:FTRANDL7:ONEILL 7:BTB
FDNS	09ALL	0	25SP	G15_042	FROM->TO	DIXONCO 230.00 - TWIN CHURCH 230KV CKT 1	320	320	0.48116	105.2198	P12:115:UMZB:# 115 #: SE IN NE. FR-SE-ON
FDNS	09ALL	0	25SP	G15_042	FROM->TO	DIXONCO 230.00 - TWIN CHURCH 230KV CKT 1	320	320	0.47863	105.2148	EAGLE 4 230.00 - SIOUX CITY 230KV CKT 1

SOLUTION	GROUP	SCENARIO	SEASON	SOURCE	DIRECTION	MONITORED ELEMENT	RATEA (MVA)	RATEB(MVA)	TDF	TC%LOADING (% MVA)	CONTINGENCY
FDNS	09ALL	0	25SP	G15_042	FROM->TO	DIXONCO 230.00 - TWIN CHURCH 230KV CKT 1	320	320	0.48075	105.2022	GEN640431 1-LAREDO.GEN1W0.6900
FDNS	09ALL	0	20SP	G15_042	FROM->TO	DIXONCO 230.00 - TWIN CHURCH 230KV CKT 1	320	320	0.48086	105.1988	GEN635024 4-WALTER SCOTT UNIT 4
FDNS	09ALL	0	20SP	G15_042	FROM->TO	DIXONCO 230.00 - TWIN CHURCH 230KV CKT 1	320	320	0.48208	105.1832	ANTELOPE 3345.00 (ANTELOPE T1) 345/115/13.8KV TRANSFORMER CKT 1
FDNS	09ALL	0	25SP	G15_042	FROM->TO	DIXONCO 230.00 - TWIN CHURCH 230KV CKT 1	320	320	0.48116	105.1763	FT RANDAL - SPENCER 115KV CKT 1
FDNS	09ALL	0	20SP	G15_042	FROM->TO	DIXONCO 230.00 - TWIN CHURCH 230KV CKT 1	320	320	0.48086	105.1532	GEN336821 1-GRAND GULF UNIT
FDNS	09ALL	0	17SP	G15_042	FROM->TO	DIXONCO 230.00 - TWIN CHURCH 230KV CKT 1	320	320	0.48022	105.1327	GEN336821 1-GRAND GULF UNIT
FDNS	09ALL	0	25SP	G15_042	FROM->TO	DIXONCO 230.00 - TWIN CHURCH 230KV CKT 1	320	320	0.48075	105.0772	GEN337910 1-ARKANSAS NUCLEAR ONE UNIT #1
FDNS	09ALL	0	17SP	G15_042	FROM->TO	DIXONCO 230.00 - TWIN CHURCH 230KV CKT 1	320	320	0.48135	105.0729	ANTELOPE 3345.00 (ANTELOPE T1) 345/115/13.8KV TRANSFORMER CKT 1
FDNS	09ALL	0	25SP	G15_042	FROM->TO	DIXONCO 230.00 - TWIN CHURCH 230KV CKT 1	320	320	0.48075	105.0534	GEN335831 1-RIVERBEND UNIT#1
FDNS	09ALL	0	25SP	G15_042	FROM->TO	DIXONCO 230.00 - TWIN CHURCH 230KV CKT 1	320	320	0.47781	105.0242	RAUN - SUB 3451 FT CAL 345KV CKT 1
FDNS	09ALL	0	25SP	G15_042	FROM->TO	DIXONCO 230.00 - TWIN CHURCH 230KV CKT 1	320	320	0.47781	105.0242	RAUN - SUB 3451 FT CAL 345KV CKT 1
FDNS	09ALL	0	25SP	G15_042	FROM->TO	DIXONCO 230.00 - TWIN CHURCH 230KV CKT 1	320	320	0.48075	104.9	GEN640011 2-GERALD GENTLEMAN STATION UNIT 2
FDNS	09NR	0	20L	G15_042	FROM->TO	DIXONCO 230.00 - TWIN CHURCH 230KV CKT 1	320	320	0.47076	104.8954	BELDEN - HOSKINS 115KV CKT 1
FDNS	09ALL	0	25SP	G15_042	FROM->TO	DIXONCO 230.00 - TWIN CHURCH 230KV CKT 1	320	320	0.48075	104.8858	GEN562921 1-G15054_2 0.6900
FDNS	09ALL	0	25SP	G15_042	FROM->TO	DIXONCO 230.00 - TWIN CHURCH 230KV CKT 1	320	320	0.47948	104.8756	ANITA TAP POINT TO CRESTON AND DENISON - EXIRA 161KV CKT 1
FDNS	09ALL	0	25SP	G15_042	FROM->TO	DIXONCO 230.00 - TWIN CHURCH 230KV CKT 1	320	320	0.48075	104.8568	GEN336153 1-WATERFORD UNIT#3
FDNS	09ALL	0	25SP	G15_042	FROM->TO	DIXONCO 230.00 - TWIN CHURCH 230KV CKT 1	320	320	0.48075	104.8142	GEN344225 1-1CAL G1 25.000
FDNS	09ALL	0	25SP	G15_042	FROM->TO	DIXONCO 230.00 - TWIN CHURCH 230KV CKT 1	320	320	0.48075	104.8055	GEN640010 1-GERALD GENTLEMAN STATION UNIT 1
FDNS	09ALL	0	25SP	G15_042	FROM->TO	DIXONCO 230.00 - TWIN CHURCH 230KV CKT 1	320	320	0.48075	104.8045	GEN337911 1-ARKANSAS NUCLEAR ONE UNIT #2
FDNS	09ALL	0	25SP	G15_042	FROM->TO	DIXONCO 230.00 - TWIN CHURCH 230KV CKT 1	320	320	0.48196	104.7606	ANTELOPE 3345.00 - HOSKINS 345KV CKT 1
FDNS	09ALL	0	25SP	G15_042	FROM->TO	DIXONCO 230.00 - TWIN CHURCH 230KV CKT 1	320	320	0.48075	104.7193	GEN635023 3-WALTER SCOTT UNIT 3
FDNS	09NR	0	20L	G15_042	FROM->TO	DIXONCO 230.00 - TWIN CHURCH 230KV CKT 1	320	320	0.47079	104.6362	KELLY - MEADOWGROVE4230.00 230KV CKT 1
FDNS	09ALL	0	25SP	G15_042	FROM->TO	DIXONCO 230.00 - TWIN CHURCH 230KV CKT 1	320	320	0.46879	104.6032	BANCROFT - OAKLAND 115KV CKT 1
FDNS	09ALL	0	17SP	G15_042	FROM->TO	DIXONCO 230.00 - TWIN CHURCH 230KV CKT 1	320	320	0.46829	104.5499	P12:115:NPPD:1193:OAKLAND7:EMERSON7:BTB
FDNS	09ALL	0	17SP	G15_042	FROM->TO	DIXONCO 230.00 - TWIN CHURCH 230KV CKT 1	320	320	0.46829	104.5026	BANCROFT - EMERSON 115KV CKT 1
FDNS	09ALL	0	25SP	G15_042	FROM->TO	DIXONCO 230.00 - TWIN CHURCH 230KV CKT 1	320	320	0.48075	104.487	GEN336821 1-GRAND GULF UNIT
FDNS	09ALL	0	25SP	G15_042	FROM->TO	DIXONCO 230.00 - TWIN CHURCH 230KV CKT 1	320	320	0.48196	104.4793	ANTELOPE 3345.00 (ANTELOPE T1) 345/115/13.8KV TRANSFORMER CKT 1
FDNS	09ALL	0	25SP	G15_042	FROM->TO	DIXONCO 230.00 - TWIN CHURCH 230KV CKT 1	320	320	0.48145	104.4727	BLOOMFIELD - CREIGHTON 115KV CKT 1
FDNS	09ALL	0	20SP	G15_042	FROM->TO	DIXONCO 230.00 - TWIN CHURCH 230KV CKT 1	320	320	0.46892	104.4432	P12:115:NPPD:1193:OAKLAND7:EMERSON7:BTB
FDNS	09ALL	0	25SP	G15_042	FROM->TO	DIXONCO 230.00 - TWIN CHURCH 230KV CKT 1	320	320	0.48075	104.4385	GEN635024 4-WALTER SCOTT UNIT 4
FDNS	09ALL	0	20SP	G15_042	FROM->TO	DIXONCO 230.00 - TWIN CHURCH 230KV CKT 1	320	320	0.46892	104.3983	BANCROFT - EMERSON 115KV CKT 1
FDNS	09ALL	0	25SP	G15_042	FROM->TO	DIXONCO 230.00 - TWIN CHURCH 230KV CKT 1	320	320	0.4767	104.393	TWIN CHURCH (TWNCHURCH T4) 230/115/13.8KV TRANSFORMER CKT 1
FDNS	09ALL	0	25SP	G15_042	FROM->TO	DIXONCO 230.00 - TWIN CHURCH 230KV CKT 1	320	320	0.4767	104.393	TWIN CHURCH (TWNCHURCH T4) 230/115/13.8KV TRANSFORMER CKT 1
FDNS	09ALL	0	17SP	G15_042	FROM->TO	DIXONCO 230.00 - TWIN CHURCH 230KV CKT 1	320	320	0.47639	104.3382	PLYMOUTH - SIOUX CITY 161KV CKT 1
FDNS	09ALL	0	17SP	G15_042	FROM->TO	DIXONCO 230.00 - TWIN CHURCH 230KV CKT 1	320	320	0.47639	104.3382	PLYMOUTH - SIOUX CITY 161KV CKT 1
FDNS	09ALL	0	20SP	G15_042	FROM->TO	DIXONCO 230.00 - TWIN CHURCH 230KV CKT 1	320	320	0.47709	104.3301	PLYMOUTH - SIOUX CITY 161KV CKT 1
FDNS	09NR	0	17G	G15_042	FROM->TO	DIXONCO 230.00 - TWIN CHURCH 230KV CKT 1	320	320	0.4697	104.3023	KELLY - MEADOWGROVE4230.00 230KV CKT 1
FDNS	09ALL	0	20SP	G15_042	FROM->TO	DIXONCO 230.00 - TWIN CHURCH 230KV CKT 1	320	320	0.47829	104.3019	DENISON - SIOUX CITY 230KV CKT 1
FDNS	09ALL	0	17SP	G15_042	FROM->TO	DIXONCO 230.00 - TWIN CHURCH 230KV CKT 1	320	320	0.47757	104.1721	DENISON - SIOUX CITY 230KV CKT 1
FDNS	09ALL	0	20SP	G15_042	FROM->TO	DIXONCO 230.00 - TWIN CHURCH 230KV CKT 1	320	320	0.48004	104.1202	GRPRAR1-LNX3345.00 - GRPRAR 345KV CKT Z
FDNS	09ALL	0	20SP	G15_042	FROM->TO	DIXONCO 230.00 - TWIN CHURCH 230KV CKT 1	320	320	0.48004	104.1162	GRPRAR1-LNX3345.00 - HOLT.CO3 345.00 345KV CKT 1
FDNS	09ALL	0	20SP	G15_042	FROM->TO	DIXONCO 230.00 - TWIN CHURCH 230KV CKT 1	320	320	0.48085	103.9385	GR ISLD-LNX3345.00 - HOLT.CO3 345.00 345KV CKT 1
FDNS	09ALL	0	20SP	G15_042	FROM->TO	DIXONCO 230.00 - TWIN CHURCH 230KV CKT 1	320	320	0.48085	103.8928	GR ISLD-LNX3345.00 - GRAND ISLAND 345KV CKT Z
FDNS	09ALL	0	25SP	G15_042	FROM->TO	DIXONCO 230.00 - TWIN CHURCH 230KV CKT 1	320	320	0.46879	103.7806	P12:115:NPPD:1193:OAKLAND7:EMERSON7:BTB
FDNS	09ALL	0	25SP	G15_042	FROM->TO	DIXONCO 230.00 - TWIN CHURCH 230KV CKT 1	320	320	0.46879	103.733	BANCROFT - EMERSON 115KV CKT 1
FDNS	09ALL	0	17SP	G15_042	FROM->TO	DIXONCO 230.00 - TWIN CHURCH 230KV CKT 1	320	320	0.4795	103.6505	GRPRAR1-LNX3345.00 - HOLT.CO3 345.00 345KV CKT 1
FDNS	09ALL	0	17SP	G15_042	FROM->TO	DIXONCO 230.00 - TWIN CHURCH 230KV CKT 1	320	320	0.4795	103.6458	GRPRAR1-LNX3345.00 - GRPRAR 345KV CKT Z
FDNS	09ALL	0	25SP	G15_042	FROM->TO	DIXONCO 230.00 - TWIN CHURCH 230KV CKT 1	320	320	0.47817	103.6302	DENISON - SIOUX CITY 230KV CKT 1
FDNS	09ALL	0	25SP	G15_042	FROM->TO	DIXONCO 230.00 - TWIN CHURCH 230KV CKT 1	320	320	0.47697	103.522	PLYMOUTH - SIOUX CITY 161KV CKT 1
FDNS	09ALL	0	25SP	G15_042	FROM->TO	DIXONCO 230.00 - TWIN CHURCH 230KV CKT 1	320	320	0.47697	103.522	PLYMOUTH - SIOUX CITY 161KV CKT 1
FDNS	09ALL	0	25SP	G15_042	FROM->TO	DIXONCO 230.00 - TWIN CHURCH 230KV CKT 1	320	320	0.47987	103.2524	GRPRAR1-LNX3345.00 - GRPRAR 345KV CKT Z
FDNS	09ALL	0	25SP	G15_042	FROM->TO	DIXONCO 230.00 - TWIN CHURCH 230KV CKT 1	320	320	0.47987	103.248	GRPRAR1-LNX3345.00 - HOLT.CO3 345.00 345KV CKT 1
FDNS	09ALL	0	17SP	G15_042	FROM->TO	DIXONCO 230.00 - TWIN CHURCH 230KV CKT 1	320	320	0.48043	103.1887	BELDEN - HOSKINS 115KV CKT 1
FDNS	09ALL	0	25SP	G15_042	FROM->TO	DIXONCO 230.00 - TWIN CHURCH 230KV CKT 1	320	320	0.48073	103.0788	GR ISLD-LNX3345.00 - HOLT.CO3 345.00 345KV CKT 1
FDNS	09ALL	0	25SP	G15_042	FROM->TO	DIXONCO 230.00 - TWIN CHURCH 230KV CKT 1	320	320	0.48073	103.0018	GR ISLD-LNX3345.00 - GRAND ISLAND 345KV CKT Z
FDNS	09ALL	0	17SP	G15_042	FROM->TO	DIXONCO 230.00 - TWIN CHURCH 230KV CKT 1	320	320	0.48022	103.0006	GEN562673 1-G15_007_3 0.6900
FDNS	09ALL	0	20SP	G15_042	FROM->TO	DIXONCO 230.00 - TWIN CHURCH 230KV CKT 1	320	320	0.48086	102.9713	GEN562673 1-G15_007_3 0.6900
FDNS	09ALL	0	20SP	G15_042	FROM->TO	DIXONCO 230.00 - TWIN CHURCH 230KV CKT 1	320	320	0.48086	102.7108	GEN562438 1-G13-032 0.6900
FDNS	09ALL	0	17SP	G15_042	FROM->TO	DIXONCO 230.00 - TWIN CHURCH 230KV CKT 1	320	320	0.48022	102.6615	GEN562438 1-G13-032 0.6900
FDNS	09ALL	0	20SP	G15_042	FROM->TO	DIXONCO 230.00 - TWIN CHURCH 230KV CKT 1	320	320	0.48119	102.6402	BELDEN - HOSKINS 115KV CKT 1
FDNS	09ALL	0	25SP	G15_042	FROM->TO	DIXONCO 230.00 - TWIN CHURCH 230KV CKT 1	320	320	0.48075	102.2039	GEN562673 1-G15_007_3 0.6900
FDNS	09ALL	0	17SP	G15_042	FROM->TO	DIXONCO 230.00 - TWIN CHURCH 230KV CKT 1	320	320	0.46829	101.9766	EMERSON - TWIN CHURCH 115KV CKT 1
FDNS	09ALL	0	20SP	G15_042	FROM->TO	DIXONCO 230.00 - TWIN CHURCH 230KV CKT 1	320	320	0.46892	101.9288	EMERSON - TWIN CHURCH 115KV CKT 1
FDNS	09ALL	0	25SP	G15_042	FROM->TO	DIXONCO 230.00 - TWIN CHURCH 230KV CKT 1	320	320	0.48075	101.8884	GEN562438 1-G13-032 0.6900
FDNS	09ALL	0	25SP	G15_042	FROM->TO	DIXONCO 230.00 - TWIN CHURCH 230KV CKT 1	320	320	0.48105	101.837	BELDEN - HOSKINS 115KV CKT 1
FDNS	09ALL	0	25SP	G15_042	FROM->TO	DIXONCO 230.00 - TWIN CHURCH 230KV CKT 1	320	320	0.46879	101.1514	EMERSON - TWIN CHURCH 115KV CKT 1
FDNS	09ALL	0	20L	G15_042	FROM->TO	DIXONCO 230.00 - TWIN CHURCH 230KV CKT 1	320	320	0.4817	100.7009	GEN562003 1-G11_027_3 0.6900
FDNS	09ALL	0	20SP	G15_042	FROM->TO	DIXONCO 230.00 - TWIN CHURCH 230KV CKT 1	320	320	0.48125	100.6146	KELLY - MEADOWGROVE4230.00 230KV CKT 1
FDNS	09ALL	0	17SP	G15_042	FROM->TO	DIXONCO 230.00 - TWIN CHURCH 230KV CKT 1	320	320	0.48053	100.4008	KELLY - MEADOWGROVE4230.00 230KV CKT 1
FDNS	09ALL	0	17G	G15_042	FROM->TO	DIXONCO 230.00 - TWIN CHURCH 230KV CKT 1	320	320	0.48061	100	GEN562003 1-G11_027_3 0.6900
FDNS	09ALL	0	25SP	G15_042	FROM->TO	DIXONCO 230.00 - TWIN CHURCH 230KV CKT 1	320	320	0.48111	99.8	KELLY - MEADOWGROVE4230.00 230KV CKT 1
FDNS	00NR	0	17SP	G15_042	FROM->TO	G14-059T 230.00 - OGALLALA 230KV CKT 1	320	320	0.03313	169.5112	SIDNEY - SIDNEY1-LNX3345.00 345KV CKT Z
FDNS	00NR	0	17SP	G15_042	FROM->TO	G14-059T 230.00 - OGALLALA 230KV CKT 1	320	320	0.03313	169.4494	KEYSTONE - SIDNEY1-LNX3345.00 345KV CKT 1
FDNS	09NR	0	17G	G15_042	FROM->TO	G14-059T 230.00 - OGALLALA 230KV CKT 1	320	320	0.03263	148.0014	KEYSTONE - SIDNEY1-LNX3345.00 345KV CKT 1
FDNS	09NR	0	17G	G15_042	FROM->TO	G14-059T 230.00 - OGALLALA 230KV CKT 1	320	320	0.03263	147.9713	SIDNEY - SIDNEY1-LNX3345.00 345KV CKT Z
FDNSLock	00NR	0	16WP	G15_042	FROM->TO	G14-059T 230.00 - OGALLALA 230KV CKT 1	320	320	0.03221	141.3538	KEYSTONE - SIDNEY1-LNX3345.00 345KV CKT 1
FDNSLock	00NR	0	16WP	G15_042	FROM->TO	G14-059T 230.00 - OGALLALA 230KV CKT 1	320	320	0.03221	141.3219	SIDNEY - SIDNEY1-LNX3345.00 345KV CKT Z
FDNS	00NR	0	17SP	G15_042	TO->FROM	G14-059T 230.00 - SIDNEY 230KV CKT 1	320	320	0.03313	118.5049	SIDNEY - SIDNEY1-LNX3345.00 345KV CKT Z
FDNS	00NR	0	17SP	G15_042	TO->FROM	G14-059T 230.00 - SIDNEY 230KV CKT 1	320	320	0.03313	118.4199	KEYSTONE - SIDNEY1-LNX3345.00 345KV CKT 1

SOLUTION	GROUP	SCENARIO	SEASON	SOURCE	DIRECTION	MONITORED ELEMENT	RATEA (MVA)	RATEB(MVA)	TDF	TC%LOADING (% MVA)	CONTINGENCY
FDNS	09NR	0	20L	G15_042	FROM->TO	GAVINS POINT - YANKON JCT 115KV CKT 1	120	120	0.06009	101.7605	SIOUX CITY - TWIN CHURCH 230KV CKT 1
FDNS	09NR	0	17G	G15_042	TO->FROM	GERALD GENTLEMAN STATION - OGALLALA 230KV CKT 1	320	320	0.04601	119.5022	GERALD GENTLEMAN STATION - KEYSTONE 345KV CKT 1
FDNSLock	00NR	0	16WP	G15_042	TO->FROM	GERALD GENTLEMAN STATION - OGALLALA 230KV CKT 1	320	320	0.04511	113.6765	GERALD GENTLEMAN STATION - KEYSTONE 345KV CKT 1
FDNS	00NR	0	17SP	G15_042	TO->FROM	GERALD GENTLEMAN STATION - OGALLALA 230KV CKT 1	320	320	0.03569	112.452	GERALD GENTLEMAN STATION - KEYSTONE 345KV CKT 1
FDNS	00NR	0	20WP	G15_042	TO->FROM	GERALD GENTLEMAN STATION - OGALLALA 230KV CKT 1	320	320	0.03974	107.125	GERALD GENTLEMAN STATION - KEYSTONE 345KV CKT 1
FDNS	00NR	0	20SP	G15_042	TO->FROM	GERALD GENTLEMAN STATION - OGALLALA 230KV CKT 1	320	320	0.02964	101.6888	GERALD GENTLEMAN STATION - KEYSTONE 345KV CKT 1
FDNS	00NR	0	17SP	G15_042	FROM->TO	GR ISLD-LNX3345.00 - GRAND ISLAND 345KV CKT Z	720	720	0.06428	139.3799	G09_001IST 345.00 - WATERTOWN 345KV CKT 1
FDNS	00NR	0	17SP	G15_042	FROM->TO	GR ISLD-LNX3345.00 - GRAND ISLAND 345KV CKT Z	720	720	0.06645	139.0637	KELLY - MEADOWGROVE4230.00 230KV CKT 1
FDNS	00NR	0	17SP	G15_042	FROM->TO	GR ISLD-LNX3345.00 - GRAND ISLAND 345KV CKT Z	720	720	0.06242	138.6319	P12:230:UMZB:# 116 #: ST IN SD. WSG-ST-VH
FDNS	00NR	0	17SP	G15_042	FROM->TO	GR ISLD-LNX3345.00 - GRAND ISLAND 345KV CKT Z	720	720	0.06348	137.8128	WATERTN-LNX3345.00 - WATERTOWN 345KV CKT Z
FDNS	00NR	0	17SP	G15_042	FROM->TO	GR ISLD-LNX3345.00 - GRAND ISLAND 345KV CKT Z	720	720	0.06348	137.7489	P12:345:UMZW:# 1747 #: WT2 IN SD. WT2-WHT LINE FAULT
FDNS	00NR	0	17SP	G15_042	FROM->TO	GR ISLD-LNX3345.00 - GRAND ISLAND 345KV CKT Z	720	720	0.06276	137.7133	STORLA - WESSINGTON 230KV CKT 1
FDNS	00NR	0	17SP	G15_042	FROM->TO	GR ISLD-LNX3345.00 - GRAND ISLAND 345KV CKT Z	720	720	0.06348	137.6553	WATERTN-LNX3345.00 - WHITE 345KV CKT 1
FDNS	00NR	0	17SP	G15_042	FROM->TO	GR ISLD-LNX3345.00 - GRAND ISLAND 345KV CKT Z	720	720	0.06282	136.3519	HANLON - STORLA 230KV CKT 1
FDNS	00NR	0	17SP	G15_042	FROM->TO	GR ISLD-LNX3345.00 - GRAND ISLAND 345KV CKT Z	720	720	0.06237	136.0759	FT THOMPSON - LETCHER 230KV CKT 1
FDNS	00NR	0	17SP	G15_042	FROM->TO	GR ISLD-LNX3345.00 - GRAND ISLAND 345KV CKT Z	720	720	0.06237	136.0759	FT THOMPSON - LETCHER 230KV CKT 1
FDNS	00NR	0	17SP	G15_042	FROM->TO	GR ISLD-LNX3345.00 - GRAND ISLAND 345KV CKT Z	720	720	0.06213	134.743	FT RANDAL - FT THOMPSON 230KV CKT 1
FDNS	00NR	0	17SP	G15_042	FROM->TO	GR ISLD-LNX3345.00 - GRAND ISLAND 345KV CKT Z	720	720	0.06213	134.743	FT RANDAL - FT THOMPSON 230KV CKT 1
FDNS	00NR	0	17SP	G15_042	FROM->TO	GR ISLD-LNX3345.00 - GRAND ISLAND 345KV CKT Z	720	720	0.06219	134.7138	FT RANDAL - G12_009IST 230.00 230KV CKT 1
FDNS	00NR	0	17SP	G15_042	FROM->TO	GR ISLD-LNX3345.00 - GRAND ISLAND 345KV CKT Z	720	720	0.06219	134.6259	FT THOMPSON - LAKE PLATT 230KV CKT 1
FDNS	00NR	0	17SP	G15_042	FROM->TO	GR ISLD-LNX3345.00 - GRAND ISLAND 345KV CKT Z	720	720	0.06219	134.6259	FT THOMPSON - LAKE PLATT 230KV CKT 1
FDNS	00NR	0	17SP	G15_042	FROM->TO	GR ISLD-LNX3345.00 - GRAND ISLAND 345KV CKT Z	720	720	0.06642	134.543	KEYSTONE - SIDNEY1-LNX3345.00 345KV CKT 1
FDNS	00NR	0	17SP	G15_042	FROM->TO	GR ISLD-LNX3345.00 - GRAND ISLAND 345KV CKT Z	720	720	0.06642	134.5216	SIDNEY - SIDNEY1-LNX3345.00 345KV CKT Z
FDNS	00NR	0	17SP	G15_042	FROM->TO	GR ISLD-LNX3345.00 - GRAND ISLAND 345KV CKT Z	720	720	0.07339	134.4768	NUNDRWD - WAYSIDE 230KV CKT 1
FDNS	00NR	0	17SP	G15_042	FROM->TO	GR ISLD-LNX3345.00 - GRAND ISLAND 345KV CKT Z	720	720	0.06428	134.3905	G09_001IST 345.00 - GROTON 345KV CKT 1
FDNS	00NR	0	17SP	G15_042	FROM->TO	GR ISLD-LNX3345.00 - GRAND ISLAND 345KV CKT Z	720	720	0.06219	134.2326	G12_009IST 230.00 - LAKE PLATT 230KV CKT 1
FDNS	00NR	0	17SP	G15_042	FROM->TO	GR ISLD-LNX3345.00 - GRAND ISLAND 345KV CKT Z	720	720	0.06459	134.2197	CHISAGO COUNTY - FORBES 500KV CKT 1
FDNS	00NR	0	17SP	G15_042	FROM->TO	GR ISLD-LNX3345.00 - GRAND ISLAND 345KV CKT Z	720	720	0.06466	134.1473	GEN336821 1-GRAND GULF UNIT
FDNS	00NR	0	17SP	G15_042	FROM->TO	GR ISLD-LNX3345.00 - GRAND ISLAND 345KV CKT Z	720	720	0.06645	134.0228	FT RANDAL - MEADOWGROVE4230.00 230KV CKT 1
FDNS	00NR	0	17SP	G15_042	FROM->TO	GR ISLD-LNX3345.00 - GRAND ISLAND 345KV CKT Z	720	720	0.07389	133.952	RAUN - SUB 3451 FT CAL 345KV CKT 1
FDNS	00NR	0	17SP	G15_042	FROM->TO	GR ISLD-LNX3345.00 - GRAND ISLAND 345KV CKT Z	720	720	0.07389	133.952	RAUN - SUB 3451 FT CAL 345KV CKT 1
FDNS	00NR	0	17SP	G15_042	FROM->TO	GR ISLD-LNX3345.00 - GRAND ISLAND 345KV CKT Z	720	720	0.06457	133.8744	CENTER - JAMESTOWN 345KV CKT 1
FDNS	00NR	0	17SP	G15_042	FROM->TO	GR ISLD-LNX3345.00 - GRAND ISLAND 345KV CKT Z	720	720	0.06321	133.7167	LETCHER - SIOUX FALLS 230KV CKT 1
FDNS	00NR	0	17SP	G15_042	FROM->TO	GR ISLD-LNX3345.00 - GRAND ISLAND 345KV CKT Z	720	720	0.06466	133.6199	GEN344225 1-1CAL G1 25.000
FDNS	00NR	0	17SP	G15_042	FROM->TO	GR ISLD-LNX3345.00 - GRAND ISLAND 345KV CKT Z	720	720	0.06466	133.5098	GEN635024 4-WALTER SCOTT UNIT 4
FDNS	00NR	0	17SP	G15_042	FROM->TO	GR ISLD-LNX3345.00 - GRAND ISLAND 345KV CKT Z	720	720	0.06466	133.4039	GEN337911 1-ARKANSAS NUCLEAR ONE UNIT #2
FDNS	00NR	0	17SP	G15_042	FROM->TO	GR ISLD-LNX3345.00 - GRAND ISLAND 345KV CKT Z	720	720	0.05086	133.3888	GRAND ISLAND - SWEETWATER 345KV CKT 1
FDNS	00NR	0	17SP	G15_042	FROM->TO	GR ISLD-LNX3345.00 - GRAND ISLAND 345KV CKT Z	720	720	0.06466	133.3552	GEN336153 1-WATERFORD UNIT#3
FDNS	00NR	0	17SP	G15_042	FROM->TO	GR ISLD-LNX3345.00 - GRAND ISLAND 345KV CKT Z	720	720	0.0646	133.3286	BISON 3 345.00 - BUFFALO 345KV CKT 1
FDNS	00NR	0	17SP	G15_042	FROM->TO	GR ISLD-LNX3345.00 - GRAND ISLAND 345KV CKT Z	720	720	0.06466	132.9715	GEN635023 3-WALTER SCOTT UNIT 3
FDNS	00NR	0	17SP	G15_042	FROM->TO	GR ISLD-LNX3345.00 - GRAND ISLAND 345KV CKT Z	720	720	0.06466	132.9227	GEN335831 1-RIVERBEND UNIT#1
FDNS	00NR	0	17SP	G15_042	FROM->TO	GR ISLD-LNX3345.00 - GRAND ISLAND 345KV CKT Z	720	720	0.06333	132.9171	SPLIT ROCK - WHITE 345KV CKT 1
FDNS	00NR	0	17SP	G15_042	FROM->TO	GR ISLD-LNX3345.00 - GRAND ISLAND 345KV CKT Z	720	720	0.06333	132.9171	SPLIT ROCK - WHITE 345KV CKT 1
FDNS	00NR	0	17SP	G15_042	FROM->TO	GR ISLD-LNX3345.00 - GRAND ISLAND 345KV CKT Z	720	720	0.06466	132.8237	GEN337910 1-ARKANSAS NUCLEAR ONE UNIT #1
FDNS	00NR	0	17SP	G15_042	FROM->TO	GR ISLD-LNX3345.00 - GRAND ISLAND 345KV CKT Z	720	720	0.06491	132.7285	ARROWHEAD - ARROWHEAD 230 230KV CKT 1
FDNS	00NR	0	17SP	G15_042	FROM->TO	GR ISLD-LNX3345.00 - GRAND ISLAND 345KV CKT Z	720	720	0.06261	132.6142	FT RANDAL - SIOUX CITY 230KV CKT 1
FDNS	00NR	0	17SP	G15_042	FROM->TO	GR ISLD-LNX3345.00 - GRAND ISLAND 345KV CKT Z	720	720	0.06435	132.6078	GROTON-LNX3 345.00 - LELAND1-LNX3345.00 345KV CKT 1
FDNS	00NR	0	17SP	G15_042	FROM->TO	GR ISLD-LNX3345.00 - GRAND ISLAND 345KV CKT Z	720	720	0.06435	132.5676	GROTON - GROTON-LNX3 345.00 345KV CKT Z
FDNS	00NR	0	17SP	G15_042	FROM->TO	GR ISLD-LNX3345.00 - GRAND ISLAND 345KV CKT Z	720	720	0.06435	132.5669	P12:345:UMZB:# 109 #: LOS GRT IN ND. LOS GRT
FDNS	00NR	0	17SP	G15_042	FROM->TO	GR ISLD-LNX3345.00 - GRAND ISLAND 345KV CKT Z	720	720	0.06435	132.551	LELAND OLDS - LELAND1-LNX3345.00 345KV CKT Z
FDNS	00NR	0	17SP	G15_042	FROM->TO	GR ISLD-LNX3345.00 - GRAND ISLAND 345KV CKT Z	720	720	0.06466	132.5069	GEN640010 1-GERALD GENTLEMAN STATION UNIT 1
FDNS	00NR	0	17SP	G15_042	FROM->TO	GR ISLD-LNX3345.00 - GRAND ISLAND 345KV CKT Z	720	720	0.0637	132.4993	HANLON - SIOUX FALLS 230KV CKT 1
FDNSLock	00NR	0	17SP	G15_042	FROM->TO	GR ISLD-LNX3345.00 - GRAND ISLAND 345KV CKT Z	720	720	0.06485	132.4756	P12:115:NPPD:1091:VALENTN7:MISSION7:BTB
FDNS	00NR	0	17SP	G15_042	FROM->TO	GR ISLD-LNX3345.00 - GRAND ISLAND 345KV CKT Z	720	720	0.06541	132.4608	HAZLETON - MITCHLCO3 345.00 345KV CKT 1
FDNS	00NR	0	17SP	G15_042	FROM->TO	GR ISLD-LNX3345.00 - GRAND ISLAND 345KV CKT Z	720	720	0.06549	132.4529	GERALD GENTLEMAN STATION - KEYSTONE 345KV CKT 1
FDNS	00NR	0	17SP	G15_042	FROM->TO	GR ISLD-LNX3345.00 - GRAND ISLAND 345KV CKT Z	720	720	0.06461	132.3179	ALEXMRES3 345.00 - BISON 3 345.00 345KV CKT 1
FDNS	00NR	0	17SP	G15_042	FROM->TO	GR ISLD-LNX3345.00 - GRAND ISLAND 345KV CKT Z	720	720	0.06466	132.2633	GEN337653 1-WHITE BLUFF UNIT #2
FDNS	00NR	0	17SP	G15_042	FROM->TO	GR ISLD-LNX3345.00 - GRAND ISLAND 345KV CKT Z	720	720	0.06466	132.2476	GEN337652 1-WHITE BLUFF UNIT #1
FDNS	00NR	0	17SP	G15_042	FROM->TO	GR ISLD-LNX3345.00 - GRAND ISLAND 345KV CKT Z	720	720	0.06466	132.1956	GEN640011 2-GERALD GENTLEMAN STATION UNIT 2
FDNS	00NR	0	17SP	G15_042	FROM->TO	GR ISLD-LNX3345.00 - GRAND ISLAND 345KV CKT Z	720	720	0.06485	132.1757	MISSION - ST FRANCIS 115KV CKT 1
FDNS	00NR	0	17SP	G15_042	FROM->TO	GR ISLD-LNX3345.00 - GRAND ISLAND 345KV CKT Z	720	720	0.06466	132.1606	GEN338146 1-INDEPENDENCE UNIT #2
FDNS	00NR	0	17SP	G15_042	FROM->TO	GR ISLD-LNX3345.00 - GRAND ISLAND 345KV CKT Z	720	720	0.06466	132.159	GEN338143 1-INDEPENDENCE UNIT #1
FDNS	00NR	0	17SP	G15_042	FROM->TO	GR ISLD-LNX3345.00 - GRAND ISLAND 345KV CKT Z	720	720	0.06189	132.159	SIOUXCY-LNX3345.00 - SPLIT ROCK 345KV CKT 1
FDNS	00NR	0	17SP	G15_042	FROM->TO	GR ISLD-LNX3345.00 - GRAND ISLAND 345KV CKT Z	720	720	0.06189	132.159	SIOUXCY-LNX3345.00 - SPLIT ROCK 345KV CKT 1
FDNS	00NR	0	17SP	G15_042	FROM->TO	GR ISLD-LNX3345.00 - GRAND ISLAND 345KV CKT Z	720	720	0.06463	132.1475	ELLENDALE - OAKES 230KV CKT 1
FDNS	00NR	0	17SP	G15_042	FROM->TO	GR ISLD-LNX3345.00 - GRAND ISLAND 345KV CKT Z	720	720	0.06463	132.1475	ELLENDALE - OAKES 230KV CKT 1
FDNS	00NR	0	17SP	G15_042	FROM->TO	GR ISLD-LNX3345.00 - GRAND ISLAND 345KV CKT Z	720	720	0.06498	132.1414	AS KING - EAU CLAIRE 345KV CKT 1
FDNS	00NR	0	17SP	G15_042	FROM->TO	GR ISLD-LNX3345.00 - GRAND ISLAND 345KV CKT Z	720	720	0.06466	132.1185	GEN501801 1-DOLET HILLS UNIT1
FDNS	00NR	0	17SP	G15_042	FROM->TO	GR ISLD-LNX3345.00 - GRAND ISLAND 345KV CKT Z	720	720	0.06189	132.104	P12:345:UMZW:# 907 #: SC2-SR IN IA. SC2-SR 345 KV LINE
FDNS	00NR	0	17SP	G15_042	FROM->TO	GR ISLD-LNX3345.00 - GRAND ISLAND 345KV CKT Z	720	720	0.06189	132.065	SIOUX CITY - SIOUXCY-LNX3345.00 345KV CKT Z
FDNS	00NR	0	17SP	G15_042	FROM->TO	GR ISLD-LNX3345.00 - GRAND ISLAND 345KV CKT Z	720	720	0.06463	132.0539	FORMAN - OAKES 230KV CKT 1
FDNSLock	00NR	0	17SP	G15_042	FROM->TO	GR ISLD-LNX3345.00 - GRAND ISLAND 345KV CKT Z	720	720	0.06485	132.0406	HARMONY - VALENTINE 115KV CKT 1
FDNS	00NR	0	17SP	G15_042	FROM->TO	GR ISLD-LNX3345.00 - GRAND ISLAND 345KV CKT Z	720	720	0.06617	132.0395	SIDNEY - STEGALL 345KV CKT 1
FDNS	00NR	0	17SP	G15_042	FROM->TO	GR ISLD-LNX3345.00 - GRAND ISLAND 345KV CKT Z	720	720	0.06485	132.0391	HARMONY - ST FRANCIS 115KV CKT 1
FDNS	00NR	0	17SP	G15_042	FROM->TO	GR ISLD-LNX3345.00 - GRAND ISLAND 345KV CKT Z	720	720	0.06342	132.0318	FT RANDAL - UTICA JCT 230KV CKT 1
FDNS	00NR	0	17SP	G15_042	FROM->TO	GR ISLD-LNX3345.00 - GRAND ISLAND 345KV CKT Z	720	720	0.06431	132.0241	CARPENTER - HURON 230KV CKT 1
FDNS	00NR	0	17SP	G15_042	FROM->TO	GR ISLD-LNX3345.00 - GRAND ISLAND 345KV CKT Z	720	720	0.06431	131.9553	HURON - WATERTOWN 230KV CKT 2
FDNS	00NR	0	17SP	G15_042	FROM->TO	GR ISLD-LNX3345.00 - GRAND ISLAND 345KV CKT Z	720	720	0.06431	131.9553	HURON - WATERTOWN 230KV CKT 2
FDNS	00NR	0	17SP	G15_042	FROM->TO	GR ISLD-LNX3345.00 - GRAND ISLAND 345KV CKT Z	720	720	0.06512	131.95	ARPIN B4 345.00 - EAU CLAIRE 345KV CKT 1

SOLUTION	GROUP	SCENARIO	SEASON	SOURCE	DIRECTION	MONITORED ELEMENT	RATEA (MVA)	RATEB(MVA)	TDF	TC%LOADING (% MVA)	CONTINGENCY
FDNS	00NR	0	17SP	G15_042	FROM->TO	GR ISLD-LNX3345.00 - GRAND ISLAND 345KV CKT Z	720	720	0.06431	131.8923	CARPENTER - WATERTOWN 230KV CKT 1
FDNS	00NR	0	17SP	G15_042	FROM->TO	GR ISLD-LNX3345.00 - GRAND ISLAND 345KV CKT Z	720	720	0.06431	131.8923	CARPENTER - WATERTOWN 230KV CKT 1
FDNS	00NR	0	17SP	G15_042	FROM->TO	GR ISLD-LNX3345.00 - GRAND ISLAND 345KV CKT Z	720	720	0.06276	131.8395	FT THOMPSON - WESSINGTON 230KV CKT 1
FDNS	00NR	0	17SP	G15_042	FROM->TO	GR ISLD-LNX3345.00 - GRAND ISLAND 345KV CKT Z	720	720	0.06276	131.8395	FT THOMPSON - WESSINGTON 230KV CKT 1
FDNS	00NR	0	17SP	G15_042	FROM->TO	GR ISLD-LNX3345.00 - GRAND ISLAND 345KV CKT Z	720	720	0.06466	131.7723	GEN336252 1-NINEMILE POINT UNIT#5
FDNS	00NR	0	17SP	G15_042	FROM->TO	GR ISLD-LNX3345.00 - GRAND ISLAND 345KV CKT Z	720	720	0.0629	131.7334	PAHOJA - SIOUX FALLS 230KV CKT 1
FDNS	00NR	0	17SP	G15_042	FROM->TO	GR ISLD-LNX3345.00 - GRAND ISLAND 345KV CKT Z	720	720	0.06466	131.7305	GEN501813 1-RODEMACHER UNIT 3
FDNS	00NR	0	17SP	G15_042	FROM->TO	GR ISLD-LNX3345.00 - GRAND ISLAND 345KV CKT Z	720	720	0.06469	131.7068	P12:115:NPPD:WAPA6:FTRANDL7:ONEILL 7:BTB
FDNS	00NR	0	17SP	G15_042	FROM->TO	GR ISLD-LNX3345.00 - GRAND ISLAND 345KV CKT Z	720	720	0.06469	131.7068	P12:115:UMZB:# 115 #: SE IN NE. FR-SE-ON
FDNS	00NR	0	17SP	G15_042	FROM->TO	GR ISLD-LNX3345.00 - GRAND ISLAND 345KV CKT Z	720	720	0.06079	131.7007	GERALD GENTLEMAN STATION - SWEETWATER 345KV CKT 1
FDNS	00NR	0	17SP	G15_042	FROM->TO	GR ISLD-LNX3345.00 - GRAND ISLAND 345KV CKT Z	720	720	0.06541	131.6728	ADAMS - MITCHLCO3 345.00 345KV CKT 1
FDNS	00NR	0	17SP	G15_042	FROM->TO	GR ISLD-LNX3345.00 - GRAND ISLAND 345KV CKT Z	720	720	0.06469	131.6656	FT RANDAL - SPENCER 115KV CKT 1
FDNS	00NR	0	17SP	G15_042	FROM->TO	GR ISLD-LNX3345.00 - GRAND ISLAND 345KV CKT Z	720	720	0.06466	131.6347	GEN336831 1-BAXTER WILSON SES
FDNS	00NR	0	17SP	G15_042	FROM->TO	GR ISLD-LNX3345.00 - GRAND ISLAND 345KV CKT Z	720	720	0.06466	131.622	GEN336251 1-NINEMILE POINT UNIT#4
FDNSLock	00NR	0	17SP	G15_042	FROM->TO	GR ISLD-LNX3345.00 - GRAND ISLAND 345KV CKT Z	720	720	0.06485	131.6073	AINSWORTH - VALENTINE 115KV CKT 1
FDNS	00NR	0	17SP	G15_042	FROM->TO	GR ISLD-LNX3345.00 - GRAND ISLAND 345KV CKT Z	720	720	0.06469	131.5743	ONEILL - SPENCER 115KV CKT 1
FDNS	00NR	0	17SP	G15_042	FROM->TO	GR ISLD-LNX3345.00 - GRAND ISLAND 345KV CKT Z	720	720	0.06464	131.5582	CNTSHNT3 345.00 - PRAIRIE3 345.00 345KV CKT 1
FDNS	00NR	0	17SP	G15_042	FROM->TO	GR ISLD-LNX3345.00 - GRAND ISLAND 345KV CKT Z	720	720	0.06466	131.5472	GEN337041 1-GERALD ANDRUS
FDNS	00NR	0	17SP	G15_042	FROM->TO	GR ISLD-LNX3345.00 - GRAND ISLAND 345KV CKT Z	720	720	0.06466	131.5304	GEN335206 1-NELSON UNIT 6
FDNS	00NR	0	17SP	G15_042	FROM->TO	GR ISLD-LNX3345.00 - GRAND ISLAND 345KV CKT Z	720	720	0.08324	131.5123	HOSKINS - SHELL CREEK 345KV CKT 1
FDNS	00NR	0	17SP	G15_042	FROM->TO	GR ISLD-LNX3345.00 - GRAND ISLAND 345KV CKT Z	720	720	0.06466	131.5063	GEN344897 4-1LAB G4 20.000
FDNS	00NR	0	17SP	G15_042	FROM->TO	GR ISLD-LNX3345.00 - GRAND ISLAND 345KV CKT Z	720	720	0.06466	131.503	GEN344894 1-1LAB G1 20.000
FDNS	00NR	0	17SP	G15_042	FROM->TO	GR ISLD-LNX3345.00 - GRAND ISLAND 345KV CKT Z	720	720	0.06466	131.5029	GEN344896 3-1LAB G3 20.000
FDNS	00NR	0	17SP	G15_042	FROM->TO	GR ISLD-LNX3345.00 - GRAND ISLAND 345KV CKT Z	720	720	0.06495	131.4564	G15094_T 345.00 - SIDNEY2-LNX3345.00 345KV CKT 1
FDNS	00NR	0	17SP	G15_042	FROM->TO	GR ISLD-LNX3345.00 - GRAND ISLAND 345KV CKT Z	720	720	0.06495	131.4525	SIDNEY - SIDNEY2-LNX3345.00 345KV CKT Z
FDNS	00NR	0	17SP	G15_042	FROM->TO	GR ISLD-LNX3345.00 - GRAND ISLAND 345KV CKT Z	720	720	0.06464	131.4521	FORMAN - HANKINSON 230KV CKT 1
FDNS	00NR	0	17SP	G15_042	FROM->TO	GR ISLD-LNX3345.00 - GRAND ISLAND 345KV CKT Z	720	720	0.06466	131.4478	GEN344895 2-1LAB G2 20.000
FDNS	00NR	0	17SP	G15_042	FROM->TO	GR ISLD-LNX3345.00 - GRAND ISLAND 345KV CKT Z	720	720	0.06515	131.4449	ADAMS - PLEASANT VALLEY 345KV CKT 1
FDNS	00NR	0	17SP	G15_042	FROM->TO	GR ISLD-LNX3345.00 - GRAND ISLAND 345KV CKT Z	720	720	0.06466	131.4361	GEN345670 1-1RUSH G1 18.000
FDNS	00NR	0	17SP	G15_042	FROM->TO	GR ISLD-LNX3345.00 - GRAND ISLAND 345KV CKT Z	720	720	0.06466	131.4357	GEN345671 2-1RUSH G2 18.000
FDNS	00NR	0	17SP	G15_042	FROM->TO	GR ISLD-LNX3345.00 - GRAND ISLAND 345KV CKT Z	720	720	0.06314	131.409	RASMUSN - UTICA JCT 230KV CKT 1
FDNS	00NR	0	17SP	G15_042	FROM->TO	GR ISLD-LNX3345.00 - GRAND ISLAND 345KV CKT Z	720	720	0.06705	131.3849	GRIMES - LEHIGH 345KV CKT 1
FDNS	00NR	0	17SP	G15_042	FROM->TO	GR ISLD-LNX3345.00 - GRAND ISLAND 345KV CKT Z	720	720	0.06466	131.3743	GEN501812 1-RODEMACHER UNIT 2
FDNS	00NR	0	17SP	G15_042	FROM->TO	GR ISLD-LNX3345.00 - GRAND ISLAND 345KV CKT Z	720	720	0.0629	131.3737	EAGLE 4 230.00 - PAHOJA 230KV CKT 1
FDNS	00NR	0	17SP	G15_042	FROM->TO	GR ISLD-LNX3345.00 - GRAND ISLAND 345KV CKT Z	720	720	0.06466	131.3518	GEN334440 1-SABINE UNIT 4
FDNS	00NR	0	17SP	G15_042	FROM->TO	GR ISLD-LNX3345.00 - GRAND ISLAND 345KV CKT Z	720	720	0.06466	131.3209	GEN563222 1-G15088_3 0.6900
FDNS	00NR	0	17SP	G15_042	FROM->TO	GR ISLD-LNX3345.00 - GRAND ISLAND 345KV CKT Z	720	720	0.06314	131.2572	RASMUSN - SIOUX CITY 230KV CKT 1
FDNS	00NR	0	17SP	G15_042	FROM->TO	GR ISLD-LNX3345.00 - GRAND ISLAND 345KV CKT Z	720	720	0.06466	131.1949	GEN336191 1-LITTLE GYPSY UNIT#3
FDNS	00NR	0	17SP	G15_042	FROM->TO	GR ISLD-LNX3345.00 - GRAND ISLAND 345KV CKT Z	720	720	0.06522	131.1823	LAKEFIELD 3 - NOBLES 345KV CKT 1
FDNS	00NR	0	17SP	G15_042	FROM->TO	GR ISLD-LNX3345.00 - GRAND ISLAND 345KV CKT Z	720	720	0.0817	131.1645	DIXONCO 230.00 - HOSKINS 230KV CKT 1
FDNS	00NR	0	17SP	G15_042	FROM->TO	GR ISLD-LNX3345.00 - GRAND ISLAND 345KV CKT Z	720	720	0.06179	131.1533	GERALD GENTLEMAN STATION - SWEETWATER 345KV CKT 2
FDNS	00NR	0	17SP	G15_042	FROM->TO	GR ISLD-LNX3345.00 - GRAND ISLAND 345KV CKT Z	720	720	0.06875	131.1447	RAUN - SIOUX CITY 345KV CKT 1
FDNS	00NR	0	17SP	G15_042	FROM->TO	GR ISLD-LNX3345.00 - GRAND ISLAND 345KV CKT Z	720	720	0.06875	131.1447	RAUN - SIOUX CITY 345KV CKT 1
FDNS	00NR	0	17SP	G15_042	FROM->TO	GR ISLD-LNX3345.00 - GRAND ISLAND 345KV CKT Z	720	720	0.06466	131.1356	GEN641089 2-ENERGY CENTER 2
FDNS	00NR	0	17SP	G15_042	FROM->TO	GR ISLD-LNX3345.00 - GRAND ISLAND 345KV CKT Z	720	720	0.06466	131.1315	GEN338388 1-1PLUM PT U1 23.000
FDNS	00NR	0	17SP	G15_042	FROM->TO	GR ISLD-LNX3345.00 - GRAND ISLAND 345KV CKT Z	720	720	0.06466	131.115	GEN336801 1-BAXTER WILSON UNIT #1
FDNS	00NR	0	17SP	G15_042	FROM->TO	GR ISLD-LNX3345.00 - GRAND ISLAND 345KV CKT Z	720	720	0.06466	131.089	GEN335614 1-WILLOW GLENN UNIT#4
FDNS	00NR	0	17SP	G15_042	FROM->TO	GR ISLD-LNX3345.00 - GRAND ISLAND 345KV CKT Z	720	720	0.06466	131.0813	GEN334441 1-SABINE UNIT 5
FDNS	00NR	0	17SP	G15_042	FROM->TO	GR ISLD-LNX3345.00 - GRAND ISLAND 345KV CKT Z	720	720	0.06466	131.0738	GEN336464 1-MICHOUD UNIT #3
FDNS	00NR	0	17SP	G15_042	FROM->TO	GR ISLD-LNX3345.00 - GRAND ISLAND 345KV CKT Z	720	720	0.06534	131.068	KOSSUTH 3 345.00 - OBRIEN 3 345.00 345KV CKT 1
FDNS	00NR	0	17SP	G15_042	FROM->TO	GR ISLD-LNX3345.00 - GRAND ISLAND 345KV CKT Z	720	720	0.06464	131.0671	ALEXMRES3 345.00 - WAITE PARK 345KV CKT 1
FDNS	00NR	0	17SP	G15_042	FROM->TO	GR ISLD-LNX3345.00 - GRAND ISLAND 345KV CKT Z	720	720	0.06466	131.0606	GEN335204 1-NELSON UNIT 4
FDNS	00NR	0	17SP	G15_042	FROM->TO	GR ISLD-LNX3345.00 - GRAND ISLAND 345KV CKT Z	720	720	0.07132	131.0579	COLUMEAST - SHELL CREEK 345KV CKT 1
FDNS	00NR	0	17SP	G15_042	FROM->TO	GR ISLD-LNX3345.00 - GRAND ISLAND 345KV CKT Z	720	720	0.06496	131.0518	BROOKING COUNTY - LYON COUNTY 345KV CKT 1
FDNS	00NR	0	17SP	G15_042	FROM->TO	GR ISLD-LNX3345.00 - GRAND ISLAND 345KV CKT Z	720	720	0.06534	131.0399	KOSSUTH 3 345.00 - WEBSTER 345KV CKT 1
FDNS	00NR	0	17SP	G15_042	FROM->TO	GR ISLD-LNX3345.00 - GRAND ISLAND 345KV CKT Z	720	720	0.06464	131.0392	GLENBORO SOUTH - RUGBY 230KV CKT 1
FDNS	00NR	0	17SP	G15_042	FROM->TO	GR ISLD-LNX3345.00 - GRAND ISLAND 345KV CKT Z	720	720	0.06464	131.0135	CENTER - COYOTE 345KV CKT 1
FDNS	00NR	0	17SP	G15_042	FROM->TO	GR ISLD-LNX3345.00 - GRAND ISLAND 345KV CKT Z	720	720	0.06466	131.0096	BLAIR - GRANITE FALLS 230KV CKT 1
FDNS	00NR	0	17SP	G15_042	FROM->TO	GR ISLD-LNX3345.00 - GRAND ISLAND 345KV CKT Z	720	720	0.06466	131.0096	BLAIR - GRANITE FALLS 230KV CKT 1
FDNS	00NR	0	17SP	G15_042	FROM->TO	GR ISLD-LNX3345.00 - GRAND ISLAND 345KV CKT Z	720	720	0.07081	130.9663	COLUMEAST - NW68TH & HOLDREGE 345KV CKT 1
FDNS	00NR	0	17SP	G15_042	FROM->TO	GR ISLD-LNX3345.00 - GRAND ISLAND 345KV CKT Z	720	720	0.07081	130.9663	COLUMEAST - NW68TH & HOLDREGE 345KV CKT 1
FDNS	00NR	0	17SP	G15_042	FROM->TO	GR ISLD-LNX3345.00 - GRAND ISLAND 345KV CKT Z	720	720	0.06769	130.9429	STEGALL - STEGALL TRANSFORMER 230KV CKT 1
FDNS	00NR	0	17SP	G15_042	FROM->TO	GR ISLD-LNX3345.00 - GRAND ISLAND 345KV CKT Z	720	720	0.06769	130.9211	P13:230-345:NPPD:STEGALL3:KV3A
FDNS	00NR	0	17SP	G15_042	FROM->TO	GR ISLD-LNX3345.00 - GRAND ISLAND 345KV CKT Z	720	720	0.06769	130.9098	STEGALL (SGQ KV3A) 345/230/13.8KV TRANSFORMER CKT 1
FDNS	00NR	0	17SP	G15_042	FROM->TO	GR ISLD-LNX3345.00 - GRAND ISLAND 345KV CKT Z	720	720	0.06466	130.9025	GEN334433 1-SABINE UNIT 3
FDNS	00NR	0	17SP	G15_042	FROM->TO	GR ISLD-LNX3345.00 - GRAND ISLAND 345KV CKT Z	720	720	0.06499	130.9021	BYRON - NORTH ROCHESTER 345KV CKT 1
FDNS	00NR	0	17SP	G15_042	FROM->TO	GR ISLD-LNX3345.00 - GRAND ISLAND 345KV CKT Z	720	720	0.06499	130.8661	G14-059T 230.00 - OGALLALA 230KV CKT 1
FDNS	00NR	0	17SP	G15_042	FROM->TO	GR ISLD-LNX3345.00 - GRAND ISLAND 345KV CKT Z	720	720	0.06966	130.8533	STEGALL-LNX3230.00 - WAYSIDE 230KV CKT 1
FDNS	00NR	0	17SP	G15_042	FROM->TO	GR ISLD-LNX3345.00 - GRAND ISLAND 345KV CKT Z	720	720	0.06431	130.8524	MENNO JCT - TRIPP JCT 115KV CKT 1
FDNS	00NR	0	17SP	G15_042	FROM->TO	GR ISLD-LNX3345.00 - GRAND ISLAND 345KV CKT Z	720	720	0.06466	130.8515	GEN629075 1-OTTUMWA GENERATOR FOR OTTUMWA UNIT NO 1
FDNS	00NR	0	17SP	G15_042	FROM->TO	GR ISLD-LNX3345.00 - GRAND ISLAND 345KV CKT Z	720	720	0.06466	130.847	GEN336222 1-LITTLE GYPSY UNIT#2
FDNS	00NR	0	17SP	G15_042	FROM->TO	GR ISLD-LNX3345.00 - GRAND ISLAND 345KV CKT Z	720	720	0.06466	130.8418	P13:230-345:NPPD:NUCOR-1
FDNS	00NR	0	17SP	G15_042	FROM->TO	GR ISLD-LNX3345.00 - GRAND ISLAND 345KV CKT Z	720	720	0.06966	130.8411	STEGALL - STEGALL-LNX3230.00 230KV CKT Z
FDNS	00NR	0	17SP	G15_042	FROM->TO	GR ISLD-LNX3345.00 - GRAND ISLAND 345KV CKT Z	720	720	0.06466	130.841	P12:115:UMZW:# 162 #: NEL IN ND. FAULT ON ML-NEL-MX-GA 115 KV
FDNS	00NR	0	17SP	G15_042	FROM->TO	GR ISLD-LNX3345.00 - GRAND ISLAND 345KV CKT Z	720	720	0.06466	130.8288	GEN303007 1-1BC2 U2
FDNS	00NR	0	17SP	G15_042	FROM->TO	GR ISLD-LNX3345.00 - GRAND ISLAND 345KV CKT Z	720	720	0.06466	130.8224	GEN303006 1-1BC2 U1
FDNS	00NR	0	17SP	G15_042	FROM->TO	GR ISLD-LNX3345.00 - GRAND ISLAND 345KV CKT Z	720	720	0.06412	130.7801	FT THOMPSON - HURON 230KV CKT 1
FDNS	00NR	0	17SP	G15_042	FROM->TO	GR ISLD-LNX3345.00 - GRAND ISLAND 345KV CKT Z	720	720	0.06412	130.7801	FT THOMPSON - HURON 230KV CKT 1
FDNS	00NR	0	17SP	G15_042	FROM->TO	GR ISLD-LNX3345.00 - GRAND ISLAND 345KV CKT Z	720	720	0.06412	130.7801	FT THOMPSON - HURON 230KV CKT 2

SOLUTION	GROUP	SCENARIO	SEASON	SOURCE	DIRECTION	MONITORED ELEMENT	RATEA (MVA)	RATEB(MVA)	TDF	TC%LOADING (% MVA)	CONTINGENCY
FDNS	00NR	0	17SP	G15_042	FROM->TO	GR ISLD-LNX3345.00 - GRAND ISLAND 345KV CKT Z	720	720	0.06412	130.7801	FT THOMPSON - HURON 230KV CKT 2
FDNS	00NR	0	17SP	G15_042	FROM->TO	GR ISLD-LNX3345.00 - GRAND ISLAND 345KV CKT Z	720	720	0.06466	130.7598	GEN336152 1-WATERFORD UNIT#2
FDNS	00NR	0	17SP	G15_042	FROM->TO	GR ISLD-LNX3345.00 - GRAND ISLAND 345KV CKT Z	720	720	0.06466	130.7593	GEN336151 1-WATERFORD UNIT#1
FDNS	00NR	0	17SP	G15_042	FROM->TO	GR ISLD-LNX3345.00 - GRAND ISLAND 345KV CKT Z	720	720	0.06466	130.7462	GEN303008 1-1BC2 U3
FDNS	00NR	0	17SP	G15_042	FROM->TO	GR ISLD-LNX3345.00 - GRAND ISLAND 345KV CKT Z	720	720	0.06464	130.7358	GARRISON - JAMES TOWN 230KV CKT 1
FDNS	00NR	0	17SP	G15_042	FROM->TO	GR ISLD-LNX3345.00 - GRAND ISLAND 345KV CKT Z	720	720	0.06466	130.7309	GEN336170 1-GULF OXY U4
FDNS	00NR	0	17SP	G15_042	FROM->TO	GR ISLD-LNX3345.00 - GRAND ISLAND 345KV CKT Z	720	720	0.06431	130.7232	MENNO JCT - UTICA 115KV CKT 1
FDNS	00NR	0	17SP	G15_042	FROM->TO	GR ISLD-LNX3345.00 - GRAND ISLAND 345KV CKT Z	720	720	0.0647	130.7184	HANKINSON - WAHPETON 230KV CKT 1
FDNS	00NR	0	17SP	G15_042	FROM->TO	GR ISLD-LNX3345.00 - GRAND ISLAND 345KV CKT Z	720	720	0.06636	130.6984	PETERSBRG.N7115.00 - PETERSBURG 115KV CKT Z1
FDNS	00NR	0	17SP	G15_042	FROM->TO	GR ISLD-LNX3345.00 - GRAND ISLAND 345KV CKT Z	720	720	0.06478	130.6981	NORTH ROCHESTER - PRAIRIE ISLAND 345KV CKT 1
FDNS	00NR	0	17SP	G15_042	FROM->TO	GR ISLD-LNX3345.00 - GRAND ISLAND 345KV CKT Z	720	720	0.06469	130.6902	APPLEDORN 4 230.00 - WATERTOWN 230KV CKT 1
FDNS	00NR	0	17SP	G15_042	FROM->TO	GR ISLD-LNX3345.00 - GRAND ISLAND 345KV CKT Z	720	720	0.06469	130.6902	APPLEDORN 4 230.00 - WATERTOWN 230KV CKT 1
FDNS	00NR	0	17SP	G15_042	FROM->TO	GR ISLD-LNX3345.00 - GRAND ISLAND 345KV CKT Z	720	720	0.06431	130.6816	P12:115:UMZZ:# 237 #: MEN IN SD. MENNO JUNCTION IS A TAP (UJ-MEN-TP).
FDNS	00NR	0	17SP	G15_042	FROM->TO	GR ISLD-LNX3345.00 - GRAND ISLAND 345KV CKT Z	720	720	0.06636	130.6743	P12:115:NPPD:1168B:ALBION 7:PETERSBRG.N7:BTB
FDNS	00NR	0	17SP	G15_042	FROM->TO	GR ISLD-LNX3345.00 - GRAND ISLAND 345KV CKT Z	720	720	0.06468	130.6654	FERGSFL4 230.00 - WAHPETON 230KV CKT 1
FDNS	00NR	0	17SP	G15_042	FROM->TO	GR ISLD-LNX3345.00 - GRAND ISLAND 345KV CKT Z	720	720	0.06151	130.6641	FT THOMPSON (FT2 KU1B) 345/230/13.8KV TRANSFORMER CKT 1
FDNS	00NR	0	17SP	G15_042	FROM->TO	GR ISLD-LNX3345.00 - GRAND ISLAND 345KV CKT Z	720	720	0.06152	130.6623	FT THOMPSON (FT2 KU1A) 345/230/13.8KV TRANSFORMER CKT 1
FDNS	00NR	0	17SP	G15_042	FROM->TO	GR ISLD-LNX3345.00 - GRAND ISLAND 345KV CKT Z	720	720	0.06464	130.6495	FARGO - JAMES TOWN 230KV CKT 1
FDNS	00NR	0	17SP	G15_042	FROM->TO	GR ISLD-LNX3345.00 - GRAND ISLAND 345KV CKT Z	720	720	0.06466	130.6446	GEN501811 1-RODEMACHER UNIT 1
FDNS	00NR	0	17SP	G15_042	FROM->TO	GR ISLD-LNX3345.00 - GRAND ISLAND 345KV CKT Z	720	720	0.06495	130.6428	G15094_T 345.00 - LARAMIE RIVER 345KV CKT 1
FDNS	00NR	0	17SP	G15_042	FROM->TO	GR ISLD-LNX3345.00 - GRAND ISLAND 345KV CKT Z	720	720	0.06482	130.6372	ARKANSAS NUCLEAR ONE - FT SMITH 500KV CKT 1
FDNS	00NR	0	17SP	G15_042	FROM->TO	GR ISLD-LNX3345.00 - GRAND ISLAND 345KV CKT Z	720	720	0.06482	130.6372	ARKANSAS NUCLEAR ONE - FT SMITH 500KV CKT 1
FDNS	00NR	0	17SP	G15_042	FROM->TO	GR ISLD-LNX3345.00 - GRAND ISLAND 345KV CKT Z	720	720	0.06469	130.634	APPLEDORN 4 230.00 - GRANITE FALLS 230KV CKT 1
FDNS	00NR	0	17SP	G15_042	FROM->TO	GR ISLD-LNX3345.00 - GRAND ISLAND 345KV CKT Z	720	720	0.06469	130.634	APPLEDORN 4 230.00 - GRANITE FALLS 230KV CKT 1
FDNS	00NR	0	17SP	G15_042	FROM->TO	GR ISLD-LNX3345.00 - GRAND ISLAND 345KV CKT Z	720	720	0.065	130.6325	BYRON - PLEASANT VALLEY 345KV CKT 1
FDNS	00NR	0	17SP	G15_042	FROM->TO	GR ISLD-LNX3345.00 - GRAND ISLAND 345KV CKT Z	720	720	0.06636	130.6282	ALBION - PETERSBURG 115KV CKT 1
FDNS	00NR	0	17SP	G15_042	FROM->TO	GR ISLD-LNX3345.00 - GRAND ISLAND 345KV CKT Z	720	720	0.06466	130.6122	P13:115-230:NPPD:NUCOR-3
FDNS	00NR	0	17SP	G15_042	FROM->TO	GR ISLD-LNX3345.00 - GRAND ISLAND 345KV CKT Z	720	720	0.06464	130.6056	FARGO - JAMES TOWN 230KV CKT 2
FDNS	00NR	0	17SP	G15_042	FROM->TO	GR ISLD-LNX3345.00 - GRAND ISLAND 345KV CKT Z	720	720	0.06587	130.6004	DENISON - SIOUX CITY 230KV CKT 1
FDNS	00NR	0	17SP	G15_042	FROM->TO	GR ISLD-LNX3345.00 - GRAND ISLAND 345KV CKT Z	720	720	0.06466	130.5697	P13:230:UMZW:# 2218 #: FP IN MT. LOSS OF TRANSFORMER (AT2).
FDNS	00NR	0	17SP	G15_042	FROM->TO	GR ISLD-LNX3345.00 - GRAND ISLAND 345KV CKT Z	720	720	0.06493	130.5585	ARPIN B3 345.00 - ROCKY RN B8 345.00 345KV CKT 1
FDNS	00NR	0	17SP	G15_042	FROM->TO	GR ISLD-LNX3345.00 - GRAND ISLAND 345KV CKT Z	720	720	0.06351	130.5401	P12:115:NPPD:1164:ONEILL 7:JEFFREY9:BTB
FDNS	00NR	0	17SP	G15_042	FROM->TO	GR ISLD-LNX3345.00 - GRAND ISLAND 345KV CKT Z	720	720	0.06464	130.5333	BISMARK - WEBER 230KV CKT 1
FDNS	00NR	0	17SP	G15_042	FROM->TO	GR ISLD-LNX3345.00 - GRAND ISLAND 345KV CKT Z	720	720	0.06394	130.528	LAKEFIELD 3 - LKFLDXL3 345KV CKT 1
FDNS	00NR	0	17SP	G15_042	FROM->TO	GR ISLD-LNX3345.00 - GRAND ISLAND 345KV CKT Z	720	720	0.06464	130.5229	BISMARK - JAMES TOWN 230KV CKT 1
FDNS	00NR	0	17SP	G15_042	FROM->TO	GR ISLD-LNX3345.00 - GRAND ISLAND 345KV CKT Z	720	720	0.06466	130.5208	GEN334071 1-LEWIS CREEK 2
FDNS	00NR	0	17SP	G15_042	FROM->TO	GR ISLD-LNX3345.00 - GRAND ISLAND 345KV CKT Z	720	720	0.06466	130.5152	GEN334070 1-LEWIS CREEK 1
FDNS	00NR	0	17SP	G15_042	FROM->TO	GR ISLD-LNX3345.00 - GRAND ISLAND 345KV CKT Z	720	720	0.06466	130.5119	GEN337766 1-TRACTEBEL UNIT S1
FDNS	00NR	0	17SP	G15_042	FROM->TO	GR ISLD-LNX3345.00 - GRAND ISLAND 345KV CKT Z	720	720	0.06464	130.4965	JAMES TOWN - WEBER 230KV CKT 1
FDNS	00NR	0	17SP	G15_042	FROM->TO	GR ISLD-LNX3345.00 - GRAND ISLAND 345KV CKT Z	720	720	0.06466	130.4889	P13:115-345:NPPD:NUCOR-2
FDNS	00NR	0	17SP	G15_042	FROM->TO	GR ISLD-LNX3345.00 - GRAND ISLAND 345KV CKT Z	720	720	0.06466	130.488	AUDUBON - SHEYNNE 230KV CKT 1
FDNS	00NR	0	17SP	G15_042	FROM->TO	GR ISLD-LNX3345.00 - GRAND ISLAND 345KV CKT Z	720	720	0.06516	130.4834	7PALM TAP 345.00 - SUB T 345KV CKT 1
FDNS	00NR	0	17SP	G15_042	FROM->TO	GR ISLD-LNX3345.00 - GRAND ISLAND 345KV CKT Z	720	720	0.06516	130.4831	PALXFRASBTHI
FDNS	00NR	0	17SP	G15_042	FROM->TO	GR ISLD-LNX3345.00 - GRAND ISLAND 345KV CKT Z	720	720	0.06351	130.476	CLEARWATER - ONEILL 115KV CKT 1
FDNS	00NR	0	17SP	G15_042	FROM->TO	GR ISLD-LNX3345.00 - GRAND ISLAND 345KV CKT Z	720	720	0.06466	130.4719	BALTA - RAMSEY 230KV CKT 1
FDNS	00NR	0	17SP	G15_042	FROM->TO	GR ISLD-LNX3345.00 - GRAND ISLAND 345KV CKT Z	720	720	0.06468	130.4695	FERGSFL4 230.00 - GRE-SILVRLK4230.00 230KV CKT 1
FDNS	00NR	0	17SP	G15_042	FROM->TO	GR ISLD-LNX3345.00 - GRAND ISLAND 345KV CKT Z	720	720	0.06466	130.4666	GEN501910 1-ACADIA UNIT ST1
FDNS	00NR	0	17SP	G15_042	FROM->TO	GR ISLD-LNX3345.00 - GRAND ISLAND 345KV CKT Z	720	720	0.06518	130.458	NOBLES - SPLIT ROCK 345KV CKT 1
FDNS	00NR	0	17SP	G15_042	FROM->TO	GR ISLD-LNX3345.00 - GRAND ISLAND 345KV CKT Z	720	720	0.06465	130.4485	ELM CREEK - MONTICELLO 345KV CKT 1
FDNS	00NR	0	17SP	G15_042	FROM->TO	GR ISLD-LNX3345.00 - GRAND ISLAND 345KV CKT Z	720	720	0.06523	130.4452	P12:115:NPPD:WAPA1:CHADRON7:BOXBUTE7:BTB
FDNS	00NR	0	17SP	G15_042	FROM->TO	GR ISLD-LNX3345.00 - GRAND ISLAND 345KV CKT Z	720	720	0.06466	130.4429	PRAIRIE ISLAND 345/20.0KV TRANSFORMER CKT 1
FDNS	00NR	0	17SP	G15_042	FROM->TO	GR ISLD-LNX3345.00 - GRAND ISLAND 345KV CKT Z	720	720	0.06451	130.4422	MT VERN - STORLA 115KV CKT 1
FDNS	00NR	0	17SP	G15_042	FROM->TO	GR ISLD-LNX3345.00 - GRAND ISLAND 345KV CKT Z	720	720	0.06466	130.4383	PRAIRIE ISLAND 345/20.0KV TRANSFORMER CKT 2
FDNS	00NR	0	17SP	G15_042	FROM->TO	GR ISLD-LNX3345.00 - GRAND ISLAND 345KV CKT Z	720	720	0.06466	130.4343	GEN562596 1-G14_059_3 0.6900
FDNS	00NR	0	17SP	G15_042	FROM->TO	GR ISLD-LNX3345.00 - GRAND ISLAND 345KV CKT Z	720	720	0.06466	130.4332	GEN345765 H-1SIOUX 2 18.000
FDNS	00NR	0	17SP	G15_042	FROM->TO	GR ISLD-LNX3345.00 - GRAND ISLAND 345KV CKT Z	720	720	0.06318	130.4255	GAVINS POINT - YANKON JCT 115KV CKT 1
FDNS	00NR	0	17SP	G15_042	FROM->TO	GR ISLD-LNX3345.00 - GRAND ISLAND 345KV CKT Z	720	720	0.06318	130.4255	GAVINS POINT - YANKON JCT 115KV CKT 1
FDNS	00NR	0	17SP	G15_042	FROM->TO	GR ISLD-LNX3345.00 - GRAND ISLAND 345KV CKT Z	720	720	0.065	130.4241	P13:230-345:NPPD:SIDNEY 3:KV2A
FDNS	00NR	0	17SP	G15_042	FROM->TO	GR ISLD-LNX3345.00 - GRAND ISLAND 345KV CKT Z	720	720	0.065	130.424	SIDNEY (SDQ KV2A) 345/230/13.8KV TRANSFORMER CKT 1
FDNS	00NR	0	17SP	G15_042	FROM->TO	GR ISLD-LNX3345.00 - GRAND ISLAND 345KV CKT Z	720	720	0.06468	130.424	GRE-SILVRLK4230.00 - HENNING 230KV CKT 1
FDNS	00NR	0	17SP	G15_042	FROM->TO	GR ISLD-LNX3345.00 - GRAND ISLAND 345KV CKT Z	720	720	0.065	130.4236	SIDNEY - SIDNEY TRANSFORMER 230KV CKT 1
FDNS	00NR	0	17SP	G15_042	FROM->TO	GR ISLD-LNX3345.00 - GRAND ISLAND 345KV CKT Z	720	720	0.06495	130.4099	CHADRON - WAYSIDE 115KV CKT 1
FDNS	00NR	0	17SP	G15_042	FROM->TO	GR ISLD-LNX3345.00 - GRAND ISLAND 345KV CKT Z	720	720	0.06495	130.4099	P13:115-230:NPPD:WAYSIDE4:T1
FDNS	00NR	0	17SP	G15_042	FROM->TO	GR ISLD-LNX3345.00 - GRAND ISLAND 345KV CKT Z	720	720	0.06456	130.4085	DKSN_CO5 161.00 - TRIBOJI NO1 + NO2 161KV CKT 1
FDNS	00NR	0	17SP	G15_042	FROM->TO	GR ISLD-LNX3345.00 - GRAND ISLAND 345KV CKT Z	720	720	0.06495	130.4072	WAYSIDE (WAYSIDE T1) 230/115/13.8KV TRANSFORMER CKT 1
FDNS	00NR	0	17SP	G15_042	FROM->TO	GR ISLD-LNX3345.00 - GRAND ISLAND 345KV CKT Z	720	720	0.06502	130.407	P13:115-230:TSGT:SIDNEY-KV1A
FDNS	00NR	0	17SP	G15_042	FROM->TO	GR ISLD-LNX3345.00 - GRAND ISLAND 345KV CKT Z	720	720	0.06636	130.4021	NELIGH - PETERSBRG.N7115.00 115KV CKT 1
FDNS	00NR	0	17SP	G15_042	FROM->TO	GR ISLD-LNX3345.00 - GRAND ISLAND 345KV CKT Z	720	720	0.06466	130.3993	GEN345756 H-1SIOUX 1 18.000
FDNS	00NR	0	17SP	G15_042	FROM->TO	GR ISLD-LNX3345.00 - GRAND ISLAND 345KV CKT Z	720	720	0.06466	130.399	GEN337764 1-TRACTEBEL UNIT C1
FDNS	00NR	0	17SP	G15_042	FROM->TO	GR ISLD-LNX3345.00 - GRAND ISLAND 345KV CKT Z	720	720	0.06466	130.399	GEN337765 1-TRACTEBEL UNIT C2
FDNS	00NR	0	17SP	G15_042	FROM->TO	GR ISLD-LNX3345.00 - GRAND ISLAND 345KV CKT Z	720	720	0.06464	130.3913	LELAND OLDS - STANTON 230KV CKT 1
FDNS	00NR	0	17SP	G15_042	FROM->TO	GR ISLD-LNX3345.00 - GRAND ISLAND 345KV CKT Z	720	720	0.06464	130.3913	LELAND OLDS - STANTON 230KV CKT 1
FDNS	00NR	0	17SP	G15_042	FROM->TO	GR ISLD-LNX3345.00 - GRAND ISLAND 345KV CKT Z	720	720	0.06466	130.386	GRAND GULF 500/22.0KV TRANSFORMER CKT 1
FDNS	00NR	0	17SP	G15_042	FROM->TO	GR ISLD-LNX3345.00 - GRAND ISLAND 345KV CKT Z	720	720	0.06465	130.3716	PRAIRIE - WINGER 230KV CKT 1
FDNS	00NR	0	17SP	G15_042	FROM->TO	GR ISLD-LNX3345.00 - GRAND ISLAND 345KV CKT Z	720	720	0.0648	130.3698	FRANKS - HUBEN 345KV CKT 1
FDNS	00NR	0	17SP	G15_042	FROM->TO	GR ISLD-LNX3345.00 - GRAND ISLAND 345KV CKT Z	720	720	0.06468	130.3677	HENNING - INMANN 230KV CKT 1
FDNS	00NR	0	17SP	G15_042	FROM->TO	GR ISLD-LNX3345.00 - GRAND ISLAND 345KV CKT Z	720	720	0.06466	130.3564	GEN336221 1-LITTLE GYPSY UNIT#1
FDNS	00NR	0	17SP	G15_042	FROM->TO	GR ISLD-LNX3345.00 - GRAND ISLAND 345KV CKT Z	720	720	0.06508	130.3552	EAGLE - PHILIP 115KV CKT 1
FDNS	00NR	0	17SP	G15_042	FROM->TO	GR ISLD-LNX3345.00 - GRAND ISLAND 345KV CKT Z	720	720	0.06466	130.3524	BIG STONE (230/115) 230/115/13.8KV TRANSFORMER CKT 1

SOLUTION	GROUP	SCENARIO	SEASON	SOURCE	DIRECTION	MONITORED ELEMENT	RATEA (MVA)	RATEB(MVA)	TDF	TC%LOADING (% MVA)	CONTINGENCY
FDNS	00NR	0	17SP	G15_042	FROM->TO	GR ISLD-LNX3345.00 - GRAND ISLAND 345KV CKT Z	720	720	0.06476	130.3512	GENOA 161 - SENECA 161 161KV CKT 1
FDNS	00NR	0	17SP	G15_042	FROM->TO	GR ISLD-LNX3345.00 - GRAND ISLAND 345KV CKT Z	720	720	0.06523	130.3498	CHADRON - DUNLAP 115KV CKT 1
FDNS	00NR	0	17SP	G15_042	FROM->TO	GR ISLD-LNX3345.00 - GRAND ISLAND 345KV CKT Z	720	720	0.06463	130.3485	GROTON (GROTON KU2A) 345/115/13.8KV TRANSFORMER CKT 1
FDNS	00NR	0	17SP	G15_042	FROM->TO	GR ISLD-LNX3345.00 - GRAND ISLAND 345KV CKT Z	720	720	0.06466	130.3483	GEN337757 1-DUKE HOTSPRINGS STG1
FDNS	00NR	0	17SP	G15_042	FROM->TO	GR ISLD-LNX3345.00 - GRAND ISLAND 345KV CKT Z	720	720	0.06466	130.3481	GEN336242 1-1NMIL ST1 18.000
FDNS	00NR	0	17SP	G15_042	FROM->TO	GR ISLD-LNX3345.00 - GRAND ISLAND 345KV CKT Z	720	720	0.06466	130.3436	GEN334431 1-SABINE UNIT 1
FDNS	00NR	0	17SP	G15_042	FROM->TO	GR ISLD-LNX3345.00 - GRAND ISLAND 345KV CKT Z	720	720	0.06466	130.3436	GEN334432 1-SABINE UNIT 2
FDNS	00NR	0	17SP	G15_042	FROM->TO	GR ISLD-LNX3345.00 - GRAND ISLAND 345KV CKT Z	720	720	0.06466	130.3223	GEN334030 1-FRONTIER UNIT 1
FDNS	00NR	0	17SP	G15_042	FROM->TO	GR ISLD-LNX3345.00 - GRAND ISLAND 345KV CKT Z	720	720	0.06466	130.3218	GEN334031 1-FRONTIER UNIT 2
FDNS	00NR	0	17SP	G15_042	FROM->TO	GR ISLD-LNX3345.00 - GRAND ISLAND 345KV CKT Z	720	720	0.06473	130.3196	NORTH LA CROSSE - NORTH ROCHESTER 345KV CKT 1
FDNS	00NR	0	17SP	G15_042	FROM->TO	GR ISLD-LNX3345.00 - GRAND ISLAND 345KV CKT Z	720	720	0.06466	130.318	GEN336446 1-MICHOUD UNIT #2
FDNS	00NR	0	17SP	G15_042	FROM->TO	GR ISLD-LNX3345.00 - GRAND ISLAND 345KV CKT Z	720	720	0.06467	130.313	KARLSTAD - WINGER 230KV CKT 1
FDNS	00NR	0	17SP	G15_042	FROM->TO	GR ISLD-LNX3345.00 - GRAND ISLAND 345KV CKT Z	720	720	0.06466	130.3064	GEN345832 1-1TS G1 13.800
FDNS	00NR	0	17SP	G15_042	FROM->TO	GR ISLD-LNX3345.00 - GRAND ISLAND 345KV CKT Z	720	720	0.06466	130.3061	GEN345841 2-1TS G2 13.800
FDNS	00NR	0	17SP	G15_042	FROM->TO	GR ISLD-LNX3345.00 - GRAND ISLAND 345KV CKT Z	720	720	0.06481	130.3053	HAMPTON CORNER - NORTH ROCHESTER 345KV CKT 1
FDNS	00NR	0	17SP	G15_042	FROM->TO	GR ISLD-LNX3345.00 - GRAND ISLAND 345KV CKT Z	720	720	0.06467	130.3047	AUDUBON - HUBBARD 230KV CKT 1
FDNS	00NR	0	17SP	G15_042	FROM->TO	GR ISLD-LNX3345.00 - GRAND ISLAND 345KV CKT Z	720	720	0.06466	130.3033	GEN501970 1-EVANGELINE UNIT 7
FDNS	00NR	0	17SP	G15_042	FROM->TO	GR ISLD-LNX3345.00 - GRAND ISLAND 345KV CKT Z	720	720	0.06508	130.2956	EAGLE - MARTIN 115KV CKT 1
FDNS	00NR	0	17SP	G15_042	FROM->TO	GR ISLD-LNX3345.00 - GRAND ISLAND 345KV CKT Z	720	720	0.06456	130.2955	BLOOMFIELD - CREIGHTON 115KV CKT 1
FDNS	00NR	0	17SP	G15_042	FROM->TO	GR ISLD-LNX3345.00 - GRAND ISLAND 345KV CKT Z	720	720	0.06474	130.2935	P13:230:UMZW:# 253 #: FR IN SD. LOSS OF TRANSFORMER (E
FDNS	00NR	0	17SP	G15_042	FROM->TO	GR ISLD-LNX3345.00 - GRAND ISLAND 345KV CKT Z	720	720	0.06457	130.2911	GRANT - MITCHELL 115KV CKT 1
FDNS	00NR	0	17SP	G15_042	FROM->TO	GR ISLD-LNX3345.00 - GRAND ISLAND 345KV CKT Z	720	720	0.06457	130.2911	GRANT - MITCHELL 115KV CKT 1
FDNS	00NR	0	17SP	G15_042	FROM->TO	GR ISLD-LNX3345.00 - GRAND ISLAND 345KV CKT Z	720	720	0.06408	130.2902	NAPA JCT7 115.00 - UTICA 115KV CKT 1
FDNS	00NR	0	17SP	G15_042	FROM->TO	GR ISLD-LNX3345.00 - GRAND ISLAND 345KV CKT Z	720	720	0.06408	130.2902	NAPA JCT7 115.00 - UTICA 115KV CKT 1
FDNS	00NR	0	17SP	G15_042	FROM->TO	GR ISLD-LNX3345.00 - GRAND ISLAND 345KV CKT Z	720	720	0.06408	130.2893	P12:115:UMZW:# 1910 #: YJ IN SD. YJ-UJ LINE FAULT
FDNS	00NR	0	17SP	G15_042	FROM->TO	GR ISLD-LNX3345.00 - GRAND ISLAND 345KV CKT Z	720	720	0.06408	130.2868	NAPA JCT7 115.00 - YANKON JCT 115KV CKT 1
FDNS	00NR	0	17SP	G15_042	FROM->TO	GR ISLD-LNX3345.00 - GRAND ISLAND 345KV CKT Z	720	720	0.06408	130.2868	NAPA JCT7 115.00 - YANKON JCT 115KV CKT 1
FDNS	00NR	0	17SP	G15_042	FROM->TO	GR ISLD-LNX3345.00 - GRAND ISLAND 345KV CKT Z	720	720	0.06466	130.2841	P12:345:GRDA:CHOUTEAU-SPORTSMANACRES
FDNS	00NR	0	17SP	G15_042	FROM->TO	GR ISLD-LNX3345.00 - GRAND ISLAND 345KV CKT Z	720	720	0.06466	130.2838	GEN337430 1-PERYVILLE UNIT #3
FDNS	00NR	0	17SP	G15_042	FROM->TO	GR ISLD-LNX3345.00 - GRAND ISLAND 345KV CKT Z	720	720	0.06466	130.2835	GEN337428 1-PERYVILLE UNIT #1
FDNS	00NR	0	17SP	G15_042	FROM->TO	GR ISLD-LNX3345.00 - GRAND ISLAND 345KV CKT Z	720	720	0.06466	130.281	GEN531447 1-HOLCOMB GENERATOR
FDNS	00NR	0	17SP	G15_042	FROM->TO	GR ISLD-LNX3345.00 - GRAND ISLAND 345KV CKT Z	720	720	0.06466	130.2564	GEN336240 1-1NMIL CT1 18.000
FDNS	00NR	0	17SP	G15_042	FROM->TO	GR ISLD-LNX3345.00 - GRAND ISLAND 345KV CKT Z	720	720	0.06466	130.2564	GEN336241 1-1NMIL CT2 18.000
FDNS	00NR	0	17SP	G15_042	FROM->TO	GR ISLD-LNX3345.00 - GRAND ISLAND 345KV CKT Z	720	720	0.06466	130.2562	GEN501912 1-ACADIA UNIT CT1B
FDNS	00NR	0	17SP	G15_042	FROM->TO	GR ISLD-LNX3345.00 - GRAND ISLAND 345KV CKT Z	720	720	0.06466	130.256	GEN501911 1-ACADIA UNIT CT1A
FDNS	00NR	0	17SP	G15_042	FROM->TO	GR ISLD-LNX3345.00 - GRAND ISLAND 345KV CKT Z	720	720	0.06523	130.2556	BOXBUTE7 115.00 - DUNLAP 115KV CKT 1
FDNS	00NR	0	17SP	G15_042	FROM->TO	GR ISLD-LNX3345.00 - GRAND ISLAND 345KV CKT Z	720	720	0.06466	130.249	WHITE BLUFF 500/26.0KV TRANSFORMER CKT 1
FDNS	00NR	0	17SP	G15_042	FROM->TO	GR ISLD-LNX3345.00 - GRAND ISLAND 345KV CKT Z	720	720	0.06466	130.2482	GEN501971 1-EVANGELINE UNIT 7-1
FDNS	00NR	0	17SP	G15_042	FROM->TO	GR ISLD-LNX3345.00 - GRAND ISLAND 345KV CKT Z	720	720	0.06466	130.2482	GEN501972 1-EVANGELINE UNIT 7-2
FDNS	00NR	0	17SP	G15_042	FROM->TO	GR ISLD-LNX3345.00 - GRAND ISLAND 345KV CKT Z	720	720	0.06466	130.2442	FINNEY SWITCHING STATION - PSCO LAMAR DC TIE 345KV CKT 1
FDNS	00NR	0	17SP	G15_042	FROM->TO	GR ISLD-LNX3345.00 - GRAND ISLAND 345KV CKT Z	720	720	0.06466	130.2442	FINNEY SWITCHING STATION - PSCO LAMAR DC TIE 345KV CKT 1
FDNS	00NR	0	17SP	G15_042	FROM->TO	GR ISLD-LNX3345.00 - GRAND ISLAND 345KV CKT Z	720	720	0.06503	130.2048	MAURINE - NUNDRWD-LNX3230.00 230KV CKT 1
FDNS	00NR	0	17SP	G15_042	FROM->TO	GR ISLD-LNX3345.00 - GRAND ISLAND 345KV CKT Z	720	720	0.06555	130.2037	MARTIN - SHANNON 115KV CKT 1
FDNS	00NR	0	17SP	G15_042	FROM->TO	GR ISLD-LNX3345.00 - GRAND ISLAND 345KV CKT Z	720	720	0.06466	130.1693	GEN562983 1-G15061_4 0.6900
FDNS	00NR	0	17SP	G15_042	FROM->TO	GR ISLD-LNX3345.00 - GRAND ISLAND 345KV CKT Z	720	720	0.06466	130.1693	GEN562984 1-G15061_5 0.6900
FDNS	00NR	0	17SP	G15_042	FROM->TO	GR ISLD-LNX3345.00 - GRAND ISLAND 345KV CKT Z	720	720	0.06466	130.0907	GEN659118 1-LARAMIE RIVER UNIT1
FDNS	00NR	0	17SP	G15_042	FROM->TO	GR ISLD-LNX3345.00 - GRAND ISLAND 345KV CKT Z	720	720	0.06466	129.9632	GEN563282 1-G15094_3 0.6900
FDNS	00NR	0	17SP	G15_042	FROM->TO	GR ISLD-LNX3345.00 - GRAND ISLAND 345KV CKT Z	720	720	0.06625	129.8288	KELLY - SHELL CREEK 230KV CKT 1
FDNS	00NR	0	17SP	G15_042	FROM->TO	GR ISLD-LNX3345.00 - GRAND ISLAND 345KV CKT Z	720	720	0.06447	129.8279	103RD & ROKEBY - SUB 3458 NEB CTY 345KV CKT 1
FDNS	00NR	0	17SP	G15_042	FROM->TO	GR ISLD-LNX3345.00 - GRAND ISLAND 345KV CKT Z	720	720	0.06447	129.8279	103RD & ROKEBY - SUB 3458 NEB CTY 345KV CKT 1
FDNS	00NR	0	17SP	G15_042	FROM->TO	GR ISLD-LNX3345.00 - GRAND ISLAND 345KV CKT Z	720	720	0.06625	129.8127	SHELL CREEK (SHELLCREEKT1) 345/230/13.8KV TRANSFORMER CKT 1
FDNS	00NR	0	17SP	G15_042	FROM->TO	GR ISLD-LNX3345.00 - GRAND ISLAND 345KV CKT Z	720	720	0.06625	129.8127	SHELL CREEK (SHELLCREEKT1) 345/230/13.8KV TRANSFORMER CKT 1
FDNS	00NR	0	17SP	G15_042	FROM->TO	GR ISLD-LNX3345.00 - GRAND ISLAND 345KV CKT Z	720	720	0.06466	129.748	BASE CASE
FDNS	00NR	0	17SP	G15_042	FROM->TO	GR ISLD-LNX3345.00 - GRAND ISLAND 345KV CKT Z	720	720	0.07669	129.7147	COLUMWEST - KELLY 230KV CKT 1
FDNS	00NR	0	17SP	G15_042	FROM->TO	GR ISLD-LNX3345.00 - GRAND ISLAND 345KV CKT Z	720	720	0.06241	129.6918	GRAND ISLAND - RIVERDALE 230KV CKT 1
FDNS	00NR	0	17SP	G15_042	FROM->TO	GR ISLD-LNX3345.00 - GRAND ISLAND 345KV CKT Z	720	720	0.06486	129.6347	BUCKNER7 345.00 - SPEARVILLE 345KV CKT 1
FDNS	00NR	0	17SP	G15_042	FROM->TO	GR ISLD-LNX3345.00 - GRAND ISLAND 345KV CKT Z	720	720	0.06486	129.6347	BUCKNER7 345.00 - SPEARVILLE 345KV CKT 1
FDNS	00NR	0	17SP	G15_042	FROM->TO	GR ISLD-LNX3345.00 - GRAND ISLAND 345KV CKT Z	720	720	0.06482	129.5842	MINGO (MINGO) 345/115/13.8KV TRANSFORMER CKT 1
FDNS	00NR	0	17SP	G15_042	FROM->TO	GR ISLD-LNX3345.00 - GRAND ISLAND 345KV CKT Z	720	720	0.06482	129.5842	MINGO (MINGO) 345/115/13.8KV TRANSFORMER CKT 1
FDNS	00NR	0	17SP	G15_042	FROM->TO	GR ISLD-LNX3345.00 - GRAND ISLAND 345KV CKT Z	720	720	0.06466	129.5465	GEN645001 1-FORT CALHOUN 1
FDNS	00NR	0	17SP	G15_042	FROM->TO	GR ISLD-LNX3345.00 - GRAND ISLAND 345KV CKT Z	720	720	0.06605	129.4815	HOLCOMB - SETAB 345KV CKT 1
FDNS	00NR	0	17SP	G15_042	FROM->TO	GR ISLD-LNX3345.00 - GRAND ISLAND 345KV CKT Z	720	720	0.06605	129.4815	HOLCOMB - SETAB 345KV CKT 1
FDNS	00NR	0	17SP	G15_042	FROM->TO	GR ISLD-LNX3345.00 - GRAND ISLAND 345KV CKT Z	720	720	0.06472	129.4092	G15074_T 345.00 - HOYT 345KV CKT 1
FDNS	00NR	0	17SP	G15_042	FROM->TO	GR ISLD-LNX3345.00 - GRAND ISLAND 345KV CKT Z	720	720	0.06626	129.3905	AXTELL - PAULINE 345KV CKT 1
FDNS	00NR	0	17SP	G15_042	FROM->TO	GR ISLD-LNX3345.00 - GRAND ISLAND 345KV CKT Z	720	720	0.06507	129.3553	AURORA - GRAND ISLAND 115KV CKT 1
FDNS	00NR	0	17SP	G15_042	FROM->TO	GR ISLD-LNX3345.00 - GRAND ISLAND 345KV CKT Z	720	720	0.06723	129.3454	MOORE - NW68TH & HOLDREGE 345KV CKT 1
FDNS	00NR	0	17SP	G15_042	FROM->TO	GR ISLD-LNX3345.00 - GRAND ISLAND 345KV CKT Z	720	720	0.06723	129.3454	MOORE - NW68TH & HOLDREGE 345KV CKT 1
FDNS	00NR	0	17SP	G15_042	FROM->TO	GR ISLD-LNX3345.00 - GRAND ISLAND 345KV CKT Z	720	720	0.06445	129.3302	GRAND ISLAND (GRAND.ISD T5) 230/115/13.8KV TRANSFORMER CKT 2
FDNS	00NR	0	17SP	G15_042	FROM->TO	GR ISLD-LNX3345.00 - GRAND ISLAND 345KV CKT Z	720	720	0.06445	129.3302	GRAND ISLAND (GRAND.ISD T5) 230/115/13.8KV TRANSFORMER CKT 2
FDNS	00NR	0	17SP	G15_042	FROM->TO	GR ISLD-LNX3345.00 - GRAND ISLAND 345KV CKT Z	720	720	0.06445	129.3278	GRAND ISLAND (GRAND.ISD T2) 230/115/13.8KV TRANSFORMER CKT 1
FDNS	00NR	0	17SP	G15_042	FROM->TO	GR ISLD-LNX3345.00 - GRAND ISLAND 345KV CKT Z	720	720	0.06445	129.3278	GRAND ISLAND (GRAND.ISD T2) 230/115/13.8KV TRANSFORMER CKT 1
FDNS	00NR	0	17SP	G15_042	FROM->TO	GR ISLD-LNX3345.00 - GRAND ISLAND 345KV CKT Z	720	720	0.06494	129.3116	MISSION - WITTEN 115KV CKT 1
FDNS	00NR	0	17SP	G15_042	FROM->TO	GR ISLD-LNX3345.00 - GRAND ISLAND 345KV CKT Z	720	720	0.06494	129.3003	P12:115:UMZW:# 173 #: WI-WE-MS IN SD. WITTEN IS A TAP
FDNS	00NR	0	17SP	G15_042	FROM->TO	GR ISLD-LNX3345.00 - GRAND ISLAND 345KV CKT Z	720	720	0.06472	129.2893	G14-074T 345.00 - OKLAUNION 345KV CKT 1
FDNS	00NR	0	17SP	G15_042	FROM->TO	GR ISLD-LNX3345.00 - GRAND ISLAND 345KV CKT Z	720	720	0.06471	129.2879	G15066_T 345.00 - SOONER 345KV CKT 1
FDNS	00NR	0	17SP	G15_042	FROM->TO	GR ISLD-LNX3345.00 - GRAND ISLAND 345KV CKT Z	720	720	0.06577	129.2729	MAXWELL - NORTH PLATTE 115KV CKT 1
FDNS	00NR	0	17SP	G15_042	FROM->TO	GR ISLD-LNX3345.00 - GRAND ISLAND 345KV CKT Z	720	720	0.06471	129.2555	CLEVELAND - G15066_T 345.00 345KV CKT 1
FDNS	00NR	0	17SP	G15_042	FROM->TO	GR ISLD-LNX3345.00 - GRAND ISLAND 345KV CKT Z	720	720	0.06464	129.2453	GRAND ISLAND (GI KU1B) 345/230/13.8KV TRANSFORMER CKT 2
FDNS	00NR	0	17SP	G15_042	FROM->TO	GR ISLD-LNX3345.00 - GRAND ISLAND 345KV CKT Z	720	720	0.06464	129.2453	GRAND ISLAND (GI KU1B) 345/230/13.8KV TRANSFORMER CKT 2

SOLUTION	GROUP	SCENARIO	SEASON	SOURCE	DIRECTION	MONITORED ELEMENT	RATEA (MVA)	RATEB(MVA)	TDF	TC%LOADING (% MVA)	CONTINGENCY
FDNS	00NR	0	17SP	G15_042	FROM->TO	GR ISLD-LNX3345.00 - GRAND ISLAND 345KV CKT Z	720	720	0.06464	129.2443	GRAND ISLAND (GI KU1A) 345/230/13.8KV TRANSFORMER CKT 1
FDNS	00NR	0	17SP	G15_042	FROM->TO	GR ISLD-LNX3345.00 - GRAND ISLAND 345KV CKT Z	720	720	0.06464	129.2443	GRAND ISLAND (GI KU1A) 345/230/13.8KV TRANSFORMER CKT 1
FDNS	00NR	0	17SP	G15_042	FROM->TO	GR ISLD-LNX3345.00 - GRAND ISLAND 345KV CKT Z	720	720	0.06492	129.2437	SMOKYHL6 230.00 - SUMMIT 230KV CKT 1
FDNS	00NR	0	17SP	G15_042	FROM->TO	GR ISLD-LNX3345.00 - GRAND ISLAND 345KV CKT Z	720	720	0.06466	129.2296	GEN562003 1-G11_027_3 0.6900
FDNS	00NR	0	17SP	G15_042	FROM->TO	GR ISLD-LNX3345.00 - GRAND ISLAND 345KV CKT Z	720	720	0.06473	129.2276	ANTELOP-LNX3345.00 - BRDLAND-LNX3345.00 345KV CKT 1
FDNS	00NR	0	17SP	G15_042	FROM->TO	GR ISLD-LNX3345.00 - GRAND ISLAND 345KV CKT Z	720	720	0.06471	129.224	G14-057T 345.00 - SUNNYSIDE 345KV CKT 1
FDNS	00NR	0	17SP	G15_042	FROM->TO	GR ISLD-LNX3345.00 - GRAND ISLAND 345KV CKT Z	720	720	0.06729	129.2202	SUB 3454 - WAGENER 345KV CKT 1
FDNS	00NR	0	17SP	G15_042	FROM->TO	GR ISLD-LNX3345.00 - GRAND ISLAND 345KV CKT Z	720	720	0.06729	129.2202	SUB 3454 - WAGENER 345KV CKT 1
FDNS	00NR	0	17SP	G15_042	FROM->TO	GR ISLD-LNX3345.00 - GRAND ISLAND 345KV CKT Z	720	720	0.06708	129.2154	MAXWELL - STAPLETON 115KV CKT 1
FDNS	00NR	0	17SP	G15_042	FROM->TO	GR ISLD-LNX3345.00 - GRAND ISLAND 345KV CKT Z	720	720	0.06466	129.2072	GEN652546 1-FT RANDAL
FDNS	00NR	0	17SP	G15_042	FROM->TO	GR ISLD-LNX3345.00 - GRAND ISLAND 345KV CKT Z	720	720	0.06466	129.2036	GEN600125 2-FEP ST G 13.800
FDNS	00NR	0	17SP	G15_042	FROM->TO	GR ISLD-LNX3345.00 - GRAND ISLAND 345KV CKT Z	720	720	0.06466	129.1924	GEN615031 1-PLEASANT VALLEY
FDNS	00NR	0	17SP	G15_042	FROM->TO	GR ISLD-LNX3345.00 - GRAND ISLAND 345KV CKT Z	720	720	0.06466	129.1874	GEN615032 2-PLEASANT VALLEY
FDNS	00NR	0	17SP	G15_042	FROM->TO	GR ISLD-LNX3345.00 - GRAND ISLAND 345KV CKT Z	720	720	0.06466	129.1856	GEN659158 2-PIONEER G213.800
FDNS	00NR	0	17SP	G15_042	FROM->TO	GR ISLD-LNX3345.00 - GRAND ISLAND 345KV CKT Z	720	720	0.06466	129.1856	GEN659159 3-PIONEER G313.800
FDNS	00NR	0	17SP	G15_042	FROM->TO	GR ISLD-LNX3345.00 - GRAND ISLAND 345KV CKT Z	720	720	0.06495	129.1851	LARAMIE RIVER - STEGALL 345KV CKT 1
FDNS	00NR	0	17SP	G15_042	FROM->TO	GR ISLD-LNX3345.00 - GRAND ISLAND 345KV CKT Z	720	720	0.06466	129.1782	GEN659156 2-LONESMCRK 2G13.800
FDNS	00NR	0	17SP	G15_042	FROM->TO	GR ISLD-LNX3345.00 - GRAND ISLAND 345KV CKT Z	720	720	0.06466	129.1782	GEN659157 3-LONESMCRK 3G13.800
FDNS	00NR	0	17SP	G15_042	FROM->TO	GR ISLD-LNX3345.00 - GRAND ISLAND 345KV CKT Z	720	720	0.06466	129.1728	GEN600018 S-LS POWER STEAM
FDNS	00NR	0	17SP	G15_042	FROM->TO	GR ISLD-LNX3345.00 - GRAND ISLAND 345KV CKT Z	720	720	0.06466	129.1726	MITCHLCO3 345.00 345/34.5KV TRANSFORMER CKT 1
FDNS	00NR	0	17SP	G15_042	FROM->TO	GR ISLD-LNX3345.00 - GRAND ISLAND 345KV CKT Z	720	720	0.06466	129.1672	GEN672367 1-MERIDIAN GENERATOR 1 GT1
FDNS	00NR	0	17SP	G15_042	FROM->TO	GR ISLD-LNX3345.00 - GRAND ISLAND 345KV CKT Z	720	720	0.06466	129.1672	GEN672368 2-MERIDIAN GENERATOR 2 GT2
FDNS	00NR	0	17SP	G15_042	FROM->TO	GR ISLD-LNX3345.00 - GRAND ISLAND 345KV CKT Z	720	720	0.06466	129.1607	GEN657964 1-ASH2GEN9 0.5750
FDNS	00NR	0	17SP	G15_042	FROM->TO	GR ISLD-LNX3345.00 - GRAND ISLAND 345KV CKT Z	720	720	0.06661	129.1599	GERALD GENTLEMAN STATION - RED WILLOW 345KV CKT 1
FDNS	00NR	0	17SP	G15_042	FROM->TO	GR ISLD-LNX3345.00 - GRAND ISLAND 345KV CKT Z	720	720	0.06466	129.1561	GEN652548 5-FT RANDAL
FDNS	00NR	0	17SP	G15_042	FROM->TO	GR ISLD-LNX3345.00 - GRAND ISLAND 345KV CKT Z	720	720	0.06466	129.1561	GEN652549 7-FT RANDAL
FDNS	00NR	0	17SP	G15_042	FROM->TO	GR ISLD-LNX3345.00 - GRAND ISLAND 345KV CKT Z	720	720	0.06466	129.1535	GEN672350 1-NIPAWIN GENERATOR 1
FDNS	00NR	0	17SP	G15_042	FROM->TO	GR ISLD-LNX3345.00 - GRAND ISLAND 345KV CKT Z	720	720	0.06466	129.1535	GEN672351 2-NIPAWIN GENERATOR 2
FDNS	00NR	0	17SP	G15_042	FROM->TO	GR ISLD-LNX3345.00 - GRAND ISLAND 345KV CKT Z	720	720	0.06466	129.1534	GEN672352 3-NIPAWIN GENERATOR 3
FDNS	00NR	0	17SP	G15_042	FROM->TO	GR ISLD-LNX3345.00 - GRAND ISLAND 345KV CKT Z	720	720	0.06466	129.1517	GEN620324 3-HOOT LAKE 3 GEN
FDNS	00NR	0	17SP	G15_042	FROM->TO	GR ISLD-LNX3345.00 - GRAND ISLAND 345KV CKT Z	720	720	0.06446	129.1512	BISMARK - L3 HAWDON 230KV CKT 1
FDNS	00NR	0	17SP	G15_042	FROM->TO	GR ISLD-LNX3345.00 - GRAND ISLAND 345KV CKT Z	720	720	0.06494	129.1479	P12:115:UMZW:# 172 #: WI IN SD.
FDNS	00NR	0	17SP	G15_042	FROM->TO	GR ISLD-LNX3345.00 - GRAND ISLAND 345KV CKT Z	720	720	0.06853	129.1465	MINGO - RED WILLOW 345KV CKT 1
FDNS	00NR	0	17SP	G15_042	FROM->TO	GR ISLD-LNX3345.00 - GRAND ISLAND 345KV CKT Z	720	720	0.06853	129.1465	MINGO - RED WILLOW 345KV CKT 1
FDNS	00NR	0	17SP	G15_042	FROM->TO	GR ISLD-LNX3345.00 - GRAND ISLAND 345KV CKT Z	720	720	0.06466	129.1434	GEN652547 3-FT RANDAL
FDNS	00NR	0	17SP	G15_042	FROM->TO	GR ISLD-LNX3345.00 - GRAND ISLAND 345KV CKT Z	720	720	0.06466	129.1383	GEN672349 3-CORY COGEN GENERATOR 3 ST
FDNS	00NR	0	17SP	G15_042	FROM->TO	GR ISLD-LNX3345.00 - GRAND ISLAND 345KV CKT Z	720	720	0.06466	129.1345	GEN660003 3-HURON WEST PARK
FDNS	00NR	0	17SP	G15_042	FROM->TO	GR ISLD-LNX3345.00 - GRAND ISLAND 345KV CKT Z	720	720	0.06484	129.129	G11_051T 345.00 - WOODWARD DISTRICT EHV 345KV CKT 1
FDNS	00NR	0	17SP	G15_042	FROM->TO	GR ISLD-LNX3345.00 - GRAND ISLAND 345KV CKT Z	720	720	0.06466	129.1057	GEN600020 2-ANGUS ANSON1
FDNS	00NR	0	17SP	G15_042	FROM->TO	GR ISLD-LNX3345.00 - GRAND ISLAND 345KV CKT Z	720	720	0.06672	129.1049	LOUP CITY - NORTH LOUP 115KV CKT 1
FDNS	00NR	0	17SP	G15_042	FROM->TO	GR ISLD-LNX3345.00 - GRAND ISLAND 345KV CKT Z	720	720	0.06466	129.0989	GEN600021 3-ANGUS ANSON2
FDNS	00NR	0	17SP	G15_042	FROM->TO	GR ISLD-LNX3345.00 - GRAND ISLAND 345KV CKT Z	720	720	0.06466	129.0698	GEN600012 2-BLACK DOG GEN 2
FDNS	00NR	0	17SP	G15_042	FROM->TO	GR ISLD-LNX3345.00 - GRAND ISLAND 345KV CKT Z	720	720	0.06466	129.0667	GEN590010 1-ERCOT EQUIVALENCE
FDNS	00NR	0	17SP	G15_042	FROM->TO	GR ISLD-LNX3345.00 - GRAND ISLAND 345KV CKT Z	720	720	0.0669	129.0563	MINGO - SETAB 345KV CKT 1
FDNS	00NR	0	17SP	G15_042	FROM->TO	GR ISLD-LNX3345.00 - GRAND ISLAND 345KV CKT Z	720	720	0.0669	129.0563	MINGO - SETAB 345KV CKT 1
FDNS	00NR	0	17SP	G15_042	FROM->TO	GR ISLD-LNX3345.00 - GRAND ISLAND 345KV CKT Z	720	720	0.06466	129.0557	GEN672339 16-QE 16G 13.800
FDNS	00NR	0	17SP	G15_042	FROM->TO	GR ISLD-LNX3345.00 - GRAND ISLAND 345KV CKT Z	720	720	0.06466	129.0557	GEN672342 3-QUEEN ELIZABETH GENERATOR 3
FDNS	00NR	0	17SP	G15_042	FROM->TO	GR ISLD-LNX3345.00 - GRAND ISLAND 345KV CKT Z	720	720	0.06466	129.0517	GEN652410 3-FT PECK
FDNS	00NR	0	17SP	G15_042	FROM->TO	GR ISLD-LNX3345.00 - GRAND ISLAND 345KV CKT Z	720	720	0.06466	129.0503	GEN659290 1-EDGECOL
FDNS	00NR	0	17SP	G15_042	FROM->TO	GR ISLD-LNX3345.00 - GRAND ISLAND 345KV CKT Z	720	720	0.06466	129.0414	GEN672393 2-NBECST2G 13.800
FDNS	00NR	0	17SP	G15_042	FROM->TO	GR ISLD-LNX3345.00 - GRAND ISLAND 345KV CKT Z	720	720	0.06466	129.0367	GEN300003 1-THOMAS HILL UNIT 3
FDNS	00NR	0	17SP	G15_042	FROM->TO	GR ISLD-LNX3345.00 - GRAND ISLAND 345KV CKT Z	720	720	0.06466	129.0351	EASTDC - ERCOT EQUIVALENCE 345KV CKT 1
FDNS	00NR	0	17SP	G15_042	FROM->TO	GR ISLD-LNX3345.00 - GRAND ISLAND 345KV CKT Z	720	720	0.06466	129.0346	GEN590011 2-ERCOT EQUIVALENCE
FDNS	00NR	0	17SP	G15_042	FROM->TO	GR ISLD-LNX3345.00 - GRAND ISLAND 345KV CKT Z	720	720	0.06466	129.034	GEN629072 4-LANSING GENERATOR FOR UNITS NO4 EIA CODE 1
FDNS	00NR	0	17SP	G15_042	FROM->TO	GR ISLD-LNX3345.00 - GRAND ISLAND 345KV CKT Z	720	720	0.06463	129.0019	GRAND ISLAND (GI KU3A) 345/230/13.8KV TRANSFORMER CKT 3
FDNS	00NR	0	17SP	G15_042	FROM->TO	GR ISLD-LNX3345.00 - GRAND ISLAND 345KV CKT Z	720	720	0.06463	129.0019	GRAND ISLAND (GI KU3A) 345/230/13.8KV TRANSFORMER CKT 3
FDNS	00NR	0	17SP	G15_042	FROM->TO	GR ISLD-LNX3345.00 - GRAND ISLAND 345KV CKT Z	720	720	0.06466	128.9842	GEN652414 4-FT PECK
FDNS	00NR	0	17SP	G15_042	FROM->TO	GR ISLD-LNX3345.00 - GRAND ISLAND 345KV CKT Z	720	720	0.06466	128.9842	GEN652415 5-FT PECK
FDNS	00NR	0	17SP	G15_042	FROM->TO	GR ISLD-LNX3345.00 - GRAND ISLAND 345KV CKT Z	720	720	0.06466	128.9829	LADISH 115/13.2KV TRANSFORMER CKT 1
FDNS	00NR	0	17SP	G15_042	FROM->TO	GR ISLD-LNX3345.00 - GRAND ISLAND 345KV CKT Z	720	720	0.06466	128.9733	GEN660001 2-ABERDEEN SIEBRECHT
FDNS	00NR	0	17SP	G15_042	FROM->TO	GR ISLD-LNX3345.00 - GRAND ISLAND 345KV CKT Z	720	720	0.04957	128.9595	DIXONCO 230.00 - TWIN CHURCH 230KV CKT 1
FDNSLock	00NR	0	17SP	G15_042	FROM->TO	GR ISLD-LNX3345.00 - GRAND ISLAND 345KV CKT Z	720	720	0.06667	128.9476	CENTRAL CITY - GRAND ISLAND 115KV CKT 1
FDNS	00NR	0	17SP	G15_042	FROM->TO	GR ISLD-LNX3345.00 - GRAND ISLAND 345KV CKT Z	720	720	0.06466	128.9469	EMERY 161/18.0KV TRANSFORMER CKT 1
FDNS	00NR	0	17SP	G15_042	FROM->TO	GR ISLD-LNX3345.00 - GRAND ISLAND 345KV CKT Z	720	720	0.06466	128.9278	GEN600050 1-FEP
FDNS	00NR	0	17SP	G15_042	FROM->TO	GR ISLD-LNX3345.00 - GRAND ISLAND 345KV CKT Z	720	720	0.06466	128.9271	GEN652345 W-G07_023IS_2 0.6900
FDNS	00NR	0	17SP	G15_042	FROM->TO	GR ISLD-LNX3345.00 - GRAND ISLAND 345KV CKT Z	720	720	0.06879	128.9218	G15088_T 345.00 - PAULINE 345KV CKT 1
FDNS	00NR	0	17SP	G15_042	FROM->TO	GR ISLD-LNX3345.00 - GRAND ISLAND 345KV CKT Z	720	720	0.06466	128.9081	GEN 11104 1-J262_GEN 0.6000
FDNS	00NR	0	17SP	G15_042	FROM->TO	GR ISLD-LNX3345.00 - GRAND ISLAND 345KV CKT Z	720	720	0.06466	128.9081	GEN 11108 1-J263_GEN 0.6000
FDNS	00NR	0	17SP	G15_042	FROM->TO	GR ISLD-LNX3345.00 - GRAND ISLAND 345KV CKT Z	720	720	0.06466	128.8843	GEN600046 1-MECST
FDNS	00NR	0	17SP	G15_042	FROM->TO	GR ISLD-LNX3345.00 - GRAND ISLAND 345KV CKT Z	720	720	0.06466	128.8832	GEN300007 1-NEW MADRID UNIT 2
FDNS	00NR	0	17SP	G15_042	FROM->TO	GR ISLD-LNX3345.00 - GRAND ISLAND 345KV CKT Z	720	720	0.06466	128.8827	G830_SUB 115.00 - GRE-MCHENRY7115.00 115KV CKT 1
FDNS	00NR	0	17SP	G15_042	FROM->TO	GR ISLD-LNX3345.00 - GRAND ISLAND 345KV CKT Z	720	720	0.06466	128.8809	G830_SUB 115.00 115/34.5KV TRANSFORMER CKT 1
FDNS	00NR	0	17SP	G15_042	FROM->TO	GR ISLD-LNX3345.00 - GRAND ISLAND 345KV CKT Z	720	720	0.06466	128.8766	GEN300006 1-NEW MADRID UNIT 1
FDNS	00NR	0	17SP	G15_042	FROM->TO	GR ISLD-LNX3345.00 - GRAND ISLAND 345KV CKT Z	720	720	0.06473	128.8681	P12:345:UMZB:# 102 #: AVS BD IN ND. AVS BRD LR
FDNS	00NR	0	17SP	G15_042	FROM->TO	GR ISLD-LNX3345.00 - GRAND ISLAND 345KV CKT Z	720	720	0.06473	128.8667	BRDLAND-LNX3345.00 - HURON 345KV CKT Z
FDNS	00NR	0	17SP	G15_042	FROM->TO	GR ISLD-LNX3345.00 - GRAND ISLAND 345KV CKT Z	720	720	0.06473	128.8664	P12:345:UMZB:# 103 #: BD IN SD. LOSS OF LINE
FDNS	00NR	0	17SP	G15_042	FROM->TO	GR ISLD-LNX3345.00 - GRAND ISLAND 345KV CKT Z	720	720	0.06473	128.8652	BROADLAND - HURON 230KV CKT 1
FDNS	00NR	0	17SP	G15_042	FROM->TO	GR ISLD-LNX3345.00 - GRAND ISLAND 345KV CKT Z	720	720	0.06473	128.8651	HURON (BD KU2A) 345/230/13.8KV TRANSFORMER CKT 1
FDNS	00NR	0	17SP	G15_042	FROM->TO	GR ISLD-LNX3345.00 - GRAND ISLAND 345KV CKT Z	720	720	0.06473	128.8651	HURON (BD KU2A) 345/230/13.8KV TRANSFORMER CKT 1

SOLUTION	GROUP	SCENARIO	SEASON	SOURCE	DIRECTION	MONITORED ELEMENT	RATEA (MVA)	RATEB(MVA)	TDF	TC%LOADING (% MVA)	CONTINGENCY
FDNS	00NR	0	17SP	G15_042	FROM->TO	GR ISLD-LNX3345.00 - GRAND ISLAND 345KV CKT Z	720	720	0.06499	128.8644	POST ROCK (POSTROCK T1) 345/230/13.8KV TRANSFORMER CKT 1
FDNS	00NR	0	17SP	G15_042	FROM->TO	GR ISLD-LNX3345.00 - GRAND ISLAND 345KV CKT Z	720	720	0.06466	128.863	DRAYTON - LETELLIER 230KV CKT 1
FDNS	00NR	0	17SP	G15_042	FROM->TO	GR ISLD-LNX3345.00 - GRAND ISLAND 345KV CKT Z	720	720	0.06466	128.8584	GEN600047 1-MECCT1
FDNS	00NR	0	17SP	G15_042	FROM->TO	GR ISLD-LNX3345.00 - GRAND ISLAND 345KV CKT Z	720	720	0.06466	128.8437	GEN600063 1-COLVILLE GEN 1
FDNS	00NR	0	17SP	G15_042	FROM->TO	GR ISLD-LNX3345.00 - GRAND ISLAND 345KV CKT Z	720	720	0.06466	128.8437	GEN600064 2-COLVILLE GEN 2
FDNS	00NR	0	17SP	G15_042	FROM->TO	GR ISLD-LNX3345.00 - GRAND ISLAND 345KV CKT Z	720	720	0.06466	128.8401	GEN600043 7-BLUE LAKE5
FDNS	00NR	0	17SP	G15_042	FROM->TO	GR ISLD-LNX3345.00 - GRAND ISLAND 345KV CKT Z	720	720	0.06466	128.8401	GEN600044 8-BLUE LAKE6
FDNS	00NR	0	17SP	G15_042	FROM->TO	GR ISLD-LNX3345.00 - GRAND ISLAND 345KV CKT Z	720	720	0.06315	128.8215	COOPER - MOORE 345KV CKT 1
FDNS	00NR	0	17SP	G15_042	FROM->TO	GR ISLD-LNX3345.00 - GRAND ISLAND 345KV CKT Z	720	720	0.06466	128.8013	GEN600065 7-HIGH BRIDGE
FDNS	00NR	0	17SP	G15_042	FROM->TO	GR ISLD-LNX3345.00 - GRAND ISLAND 345KV CKT Z	720	720	0.06466	128.8013	GEN600066 8-HIGH BRIDGE
FDNS	00NR	0	17SP	G15_042	FROM->TO	GR ISLD-LNX3345.00 - GRAND ISLAND 345KV CKT Z	720	720	0.06466	128.7991	GEN600014 4-BLACK DOG GEN 4
FDNS	00NR	0	17SP	G15_042	FROM->TO	GR ISLD-LNX3345.00 - GRAND ISLAND 345KV CKT Z	720	720	0.06466	128.7947	GEN600011 5-BLACK DOG GEN 1
FDNS	00NR	0	17SP	G15_042	FROM->TO	GR ISLD-LNX3345.00 - GRAND ISLAND 345KV CKT Z	720	720	0.06466	128.7871	GEN600071 10-RIVER SIDE
FDNS	00NR	0	17SP	G15_042	FROM->TO	GR ISLD-LNX3345.00 - GRAND ISLAND 345KV CKT Z	720	720	0.06466	128.787	GEN600070 9-RIVER SIDE
FDNS	00NR	0	17SP	G15_042	FROM->TO	GR ISLD-LNX3345.00 - GRAND ISLAND 345KV CKT Z	720	720	0.06677	128.783	103RD & ROKEBY - MOORE 345KV CKT 1
FDNS	00NR	0	17SP	G15_042	FROM->TO	GR ISLD-LNX3345.00 - GRAND ISLAND 345KV CKT Z	720	720	0.06677	128.783	103RD & ROKEBY - MOORE 345KV CKT 1
FDNS	00NR	0	17SP	G15_042	FROM->TO	GR ISLD-LNX3345.00 - GRAND ISLAND 345KV CKT Z	720	720	0.06466	128.7773	GEN659273 2-GROTON SYNC COND
FDNS	00NR	0	17SP	G15_042	FROM->TO	GR ISLD-LNX3345.00 - GRAND ISLAND 345KV CKT Z	720	720	0.06466	128.7773	GEN659294 1-WILTONCOL9
FDNS	00NR	0	17SP	G15_042	FROM->TO	GR ISLD-LNX3345.00 - GRAND ISLAND 345KV CKT Z	720	720	0.07669	128.775	COLUMWEST - GRAND ISLAND 230KV CKT 1
FDNS	00NR	0	17SP	G15_042	FROM->TO	GR ISLD-LNX3345.00 - GRAND ISLAND 345KV CKT Z	720	720	0.06466	128.7731	GEN600007 7-RIVERSIDE GEN 7
FDNS	00NR	0	17SP	G15_042	FROM->TO	GR ISLD-LNX3345.00 - GRAND ISLAND 345KV CKT Z	720	720	0.06466	128.7645	GEN600045 4-ANSON
FDNS	00NR	0	17SP	G15_042	FROM->TO	GR ISLD-LNX3345.00 - GRAND ISLAND 345KV CKT Z	720	720	0.06466	128.744	GEN600017 C-LS POWER CT
FDNS	00NR	0	17SP	G15_042	FROM->TO	GR ISLD-LNX3345.00 - GRAND ISLAND 345KV CKT Z	720	720	0.06466	128.7425	GEN659192 6-LYNN
FDNS	00NR	0	17SP	G15_042	FROM->TO	GR ISLD-LNX3345.00 - GRAND ISLAND 345KV CKT Z	720	720	0.06466	128.7422	LANSING WEST 161/22.0KV TRANSFORMER CKT 1
FDNS	00NR	0	17SP	G15_042	FROM->TO	GR ISLD-LNX3345.00 - GRAND ISLAND 345KV CKT Z	720	720	0.06466	128.7417	GEN659162 4-RED WLCK
FDNS	00NR	0	17SP	G15_042	FROM->TO	GR ISLD-LNX3345.00 - GRAND ISLAND 345KV CKT Z	720	720	0.06466	128.7417	GEN659163 5-BLACK WDCK
FDNS	00NR	0	17SP	G15_042	FROM->TO	GR ISLD-LNX3345.00 - GRAND ISLAND 345KV CKT Z	720	720	0.06484	128.7337	G11_051T 345.00 - TATONGA7 345.00 345KV CKT 1
FDNS	00NR	0	17SP	G15_042	FROM->TO	GR ISLD-LNX3345.00 - GRAND ISLAND 345KV CKT Z	720	720	0.06466	128.7217	GEN 10648 1-G830_GEN 0.6900
FDNS	00NR	0	17SP	G15_042	FROM->TO	GR ISLD-LNX3345.00 - GRAND ISLAND 345KV CKT Z	720	720	0.06466	128.715	CENTER 230/22.0KV TRANSFORMER CKT 1
FDNS	00NR	0	17SP	G15_042	FROM->TO	GR ISLD-LNX3345.00 - GRAND ISLAND 345KV CKT Z	720	720	0.06466	128.6917	GEN615021 1-GRE-ER 14G 16.000
FDNS	00NR	0	17SP	G15_042	FROM->TO	GR ISLD-LNX3345.00 - GRAND ISLAND 345KV CKT Z	720	720	0.06446	128.6902	OAHE - SULLEY BUTTE 230KV CKT 1
FDNS	00NR	0	17SP	G15_042	FROM->TO	GR ISLD-LNX3345.00 - GRAND ISLAND 345KV CKT Z	720	720	0.06466	128.6878	GEN659031 1-G12_014IS_4 0.6900
FDNS	00NR	0	17SP	G15_042	FROM->TO	GR ISLD-LNX3345.00 - GRAND ISLAND 345KV CKT Z	720	720	0.06466	128.6746	GEN615052 1-CAMBRIDGE GENERATING STATION
FDNS	00NR	0	17SP	G15_042	FROM->TO	GR ISLD-LNX3345.00 - GRAND ISLAND 345KV CKT Z	720	720	0.06466	128.6403	GEN615015 1-GRE-SPRITWDG13.200
FDNS	00NR	0	17SP	G15_042	FROM->TO	GR ISLD-LNX3345.00 - GRAND ISLAND 345KV CKT Z	720	720	0.06466	128.6366	GEN681522 3-GENOA 3
FDNS	00NR	0	17SP	G15_042	FROM->TO	GR ISLD-LNX3345.00 - GRAND ISLAND 345KV CKT Z	720	720	0.06622	128.5948	AXTELL - POST ROCK 345KV CKT 1
FDNS	00NR	0	17SP	G15_042	FROM->TO	GR ISLD-LNX3345.00 - GRAND ISLAND 345KV CKT Z	720	720	0.06473	128.5499	ANTELOP-LNX3345.00 - ANTELOPE VALLEY 345KV CKT Z
FDNS	00NR	0	17SP	G15_042	FROM->TO	GR ISLD-LNX3345.00 - GRAND ISLAND 345KV CKT Z	720	720	0.06446	128.5499	SULLYBT-LNX3230.00 - WHITLOK 230KV CKT 1
FDNS	00NR	0	17SP	G15_042	FROM->TO	GR ISLD-LNX3345.00 - GRAND ISLAND 345KV CKT Z	720	720	0.06446	128.5447	SULLEY BUTTE - SULLYBT-LNX3230.00 230KV CKT Z
FDNS	00NR	0	17SP	G15_042	FROM->TO	GR ISLD-LNX3345.00 - GRAND ISLAND 345KV CKT Z	720	720	0.06466	128.5334	GEN660016 1-B_H WIND 0.7000
FDNS	00NR	0	17SP	G15_042	FROM->TO	GR ISLD-LNX3345.00 - GRAND ISLAND 345KV CKT Z	720	720	0.06466	128.5203	GEN659353 1-DEERCREK CTG18.000
FDNS	00NR	0	17SP	G15_042	FROM->TO	GR ISLD-LNX3345.00 - GRAND ISLAND 345KV CKT Z	720	720	0.06466	128.5161	GEN659354 1-DEERCREK STG18.000
FDNS	00NR	0	17SP	G15_042	FROM->TO	GR ISLD-LNX3345.00 - GRAND ISLAND 345KV CKT Z	720	720	0.06484	128.4847	MATHWSN7 345.00 - TATONGA7 345.00 345KV CKT 1
FDNS	00NR	0	17SP	G15_042	FROM->TO	GR ISLD-LNX3345.00 - GRAND ISLAND 345KV CKT Z	720	720	0.06446	128.484	P12:230:UMZB:# 114 #: SB IN SD. SB-WK-GH
FDNS	00NR	0	17SP	G15_042	FROM->TO	GR ISLD-LNX3345.00 - GRAND ISLAND 345KV CKT Z	720	720	0.06446	128.484	P12:230:UMZB:# 117 #: WK IN SD. SB-WK-GH
FDNS	00NR	0	17SP	G15_042	FROM->TO	GR ISLD-LNX3345.00 - GRAND ISLAND 345KV CKT Z	720	720	0.06466	128.4601	GEN672303 3-BOUNDARY DAM GENERATOR 3
FDNS	00NR	0	17SP	G15_042	FROM->TO	GR ISLD-LNX3345.00 - GRAND ISLAND 345KV CKT Z	720	720	0.06466	128.46	GEN672305 5-BOUNDARY DAM GENERATOR 5
FDNS	00NR	0	17SP	G15_042	FROM->TO	GR ISLD-LNX3345.00 - GRAND ISLAND 345KV CKT Z	720	720	0.06446	128.4518	GLENHAM - WHITLOK 230KV CKT 1
FDNS	00NR	0	17SP	G15_042	FROM->TO	GR ISLD-LNX3345.00 - GRAND ISLAND 345KV CKT Z	720	720	0.06466	128.4513	GEN652906 1-G09_006IS_3 0.6900
FDNS	00NR	0	17SP	G15_042	FROM->TO	GR ISLD-LNX3345.00 - GRAND ISLAND 345KV CKT Z	720	720	0.06466	128.4355	GEN672392 1-NBECGT1G 18.000
FDNS	00NR	0	17SP	G15_042	FROM->TO	GR ISLD-LNX3345.00 - GRAND ISLAND 345KV CKT Z	720	720	0.06466	128.4103	GEN600067 9-HIGH BRIDGE
FDNS	00NR	0	17SP	G15_042	FROM->TO	GR ISLD-LNX3345.00 - GRAND ISLAND 345KV CKT Z	720	720	0.06466	128.4061	GEN562832 1-G15042_3 0.6900
FDNS	00NR	0	17SP	G15_042	FROM->TO	GR ISLD-LNX3345.00 - GRAND ISLAND 345KV CKT Z	720	720	0.06466	128.3967	BISONMP4 230.00 - SQUARE BUTTE 230KV CKT 1
FDNS	00NR	0	17SP	G15_042	FROM->TO	GR ISLD-LNX3345.00 - GRAND ISLAND 345KV CKT Z	720	720	0.06466	128.3626	GEN910006 1-G12_012IS_3 0.6900
FDNS	00NR	0	17SP	G15_042	FROM->TO	GR ISLD-LNX3345.00 - GRAND ISLAND 345KV CKT Z	720	720	0.06466	128.3497	GEN662101 1-WESSINGTON190.5750
FDNS	00NR	0	17SP	G15_042	FROM->TO	GR ISLD-LNX3345.00 - GRAND ISLAND 345KV CKT Z	720	720	0.06466	128.3177	COYOTE 345/24.0KV TRANSFORMER CKT 1
FDNS	00NR	0	17SP	G15_042	FROM->TO	GR ISLD-LNX3345.00 - GRAND ISLAND 345KV CKT Z	720	720	0.06466	128.3029	GEN652907 1-G09_007IS_3 0.6900
FDNS	00NR	0	17SP	G15_042	FROM->TO	GR ISLD-LNX3345.00 - GRAND ISLAND 345KV CKT Z	720	720	0.06466	128.1346	GEN652543 3-BIG BEND
FDNS	00NR	0	17SP	G15_042	FROM->TO	GR ISLD-LNX3345.00 - GRAND ISLAND 345KV CKT Z	720	720	0.06466	128.1149	SQUARE BUTTE - YNG2 4 230.00 230KV CKT 1
FDNS	00NR	0	17SP	G15_042	FROM->TO	GR ISLD-LNX3345.00 - GRAND ISLAND 345KV CKT Z	720	720	0.06466	128.1139	YNG2 4 230.00 230/20.0KV TRANSFORMER CKT 1
FDNS	00NR	0	17SP	G15_042	FROM->TO	GR ISLD-LNX3345.00 - GRAND ISLAND 345KV CKT Z	720	720	0.06466	128.0003	GEN659018 1-G14_003IS_3 0.6900
FDNS	00NR	0	17SP	G15_042	FROM->TO	GR ISLD-LNX3345.00 - GRAND ISLAND 345KV CKT Z	720	720	0.06466	127.9985	GEN659289 1-DAYCNTYWND W0.6900
FDNS	00NR	0	17SP	G15_042	FROM->TO	GR ISLD-LNX3345.00 - GRAND ISLAND 345KV CKT Z	720	720	0.06466	127.9636	GEN681542 6-JP MADGETT
FDNS	00NR	0	17SP	G15_042	FROM->TO	GR ISLD-LNX3345.00 - GRAND ISLAND 345KV CKT Z	720	720	0.06466	127.9625	GEN563312 1-G15097_3 0.6900
FDNS	00NR	0	17SP	G15_042	FROM->TO	GR ISLD-LNX3345.00 - GRAND ISLAND 345KV CKT Z	720	720	0.06446	127.9036	GLENHAM - L3 HAWDON 230KV CKT 1
FDNS	00NR	0	17SP	G15_042	FROM->TO	GR ISLD-LNX3345.00 - GRAND ISLAND 345KV CKT Z	720	720	0.06466	127.8236	GEN659194 1-NDPRAIRWND1W0.6900
FDNS	00NR	0	17SP	G15_042	FROM->TO	GR ISLD-LNX3345.00 - GRAND ISLAND 345KV CKT Z	720	720	0.06466	127.8095	GEN659010 4-G07_027IS_2 0.6900
FDNS	00NR	0	17SP	G15_042	FROM->TO	GR ISLD-LNX3345.00 - GRAND ISLAND 345KV CKT Z	720	720	0.06466	127.7982	GEN652460 4-GARRISON
FDNS	00NR	0	17SP	G15_042	FROM->TO	GR ISLD-LNX3345.00 - GRAND ISLAND 345KV CKT Z	720	720	0.06466	127.7982	GEN652461 5-GARRISON
FDNS	00NR	0	17SP	G15_042	FROM->TO	GR ISLD-LNX3345.00 - GRAND ISLAND 345KV CKT Z	720	720	0.06466	127.7958	GEN652542 1-BIG BEND
FDNS	00NR	0	17SP	G15_042	FROM->TO	GR ISLD-LNX3345.00 - GRAND ISLAND 345KV CKT Z	720	720	0.06466	127.7569	GEN563342 1-G15098_3 0.6900
FDNS	00NR	0	17SP	G15_042	FROM->TO	GR ISLD-LNX3345.00 - GRAND ISLAND 345KV CKT Z	720	720	0.06466	127.7395	GEN652458 2-GARRISON
FDNS	00NR	0	17SP	G15_042	FROM->TO	GR ISLD-LNX3345.00 - GRAND ISLAND 345KV CKT Z	720	720	0.06466	127.7395	GEN652459 3-GARRISON
FDNS	00NR	0	17SP	G15_042	FROM->TO	GR ISLD-LNX3345.00 - GRAND ISLAND 345KV CKT Z	720	720	0.06466	127.7394	GEN652457 1-GARRISON
FDNS	00NR	0	17SP	G15_042	FROM->TO	GR ISLD-LNX3345.00 - GRAND ISLAND 345KV CKT Z	720	720	0.06466	127.6794	GEN659403 1-NDSUNFLWR W0.6900
FDNS	00NR	0	17SP	G15_042	FROM->TO	GR ISLD-LNX3345.00 - GRAND ISLAND 345KV CKT Z	720	720	0.06845	127.6104	AXTELL - SWEETWATER 345KV CKT 1
FDNS	00NR	0	17SP	G15_042	FROM->TO	GR ISLD-LNX3345.00 - GRAND ISLAND 345KV CKT Z	720	720	0.06466	127.5812	STANTON 230/18.0KV TRANSFORMER CKT 1
FDNS	00NR	0	17SP	G15_042	FROM->TO	GR ISLD-LNX3345.00 - GRAND ISLAND 345KV CKT Z	720	720	0.06466	127.5081	GR ISLD-LNX3345.00 345KV SWITCHED SHUNT
FDNS	00NR	0	17SP	G15_042	FROM->TO	GR ISLD-LNX3345.00 - GRAND ISLAND 345KV CKT Z	720	720	0.06466	127.4175	CLAY BOSWELL 230/20.9KV TRANSFORMER CKT 1

SOLUTION	GROUP	SCENARIO	SEASON	SOURCE	DIRECTION	MONITORED ELEMENT	RATEA (MVA)	RATEB(MVA)	TDF	TC%LOADING (% MVA)	CONTINGENCY
FDNS	00NR	0	17SP	G15_042	FROM->TO	GR ISLD-LNX3345.00 - GRAND ISLAND 345KV CKT Z	720	720	0.06466	127.3162	GEN659411 1-CAMPBLCNTY W0.6900
FDNS	00NR	0	17SP	G15_042	FROM->TO	GR ISLD-LNX3345.00 - GRAND ISLAND 345KV CKT Z	720	720	0.06466	127.1606	GEN652559 1-OAHE
FDNS	00NR	0	17SP	G15_042	FROM->TO	GR ISLD-LNX3345.00 - GRAND ISLAND 345KV CKT Z	720	720	0.06466	127.1593	ALMA 161 161/24.0KV TRANSFORMER CKT 1
FDNS	00NR	0	17SP	G15_042	FROM->TO	GR ISLD-LNX3345.00 - GRAND ISLAND 345KV CKT Z	720	720	0.06466	127.112	GEN659296 2-SDPRAIRWND1W0.6900
FDNS	00NR	0	17SP	G15_042	FROM->TO	GR ISLD-LNX3345.00 - GRAND ISLAND 345KV CKT Z	720	720	0.06466	126.9705	RCDC EAST 4230.00 - RED CEDAR DC 230KV CKT 1
FDNS	00NR	0	17SP	G15_042	FROM->TO	GR ISLD-LNX3345.00 - GRAND ISLAND 345KV CKT Z	720	720	0.06879	126.9658	G15088_T 345.00 - MOORE 345KV CKT 1
FDNS	00NR	0	17SP	G15_042	FROM->TO	GR ISLD-LNX3345.00 - GRAND ISLAND 345KV CKT Z	720	720	0.06466	126.9519	GEN672321 1-SHAND GENERATOR 1
FDNS	00NR	0	17SP	G15_042	FROM->TO	GR ISLD-LNX3345.00 - GRAND ISLAND 345KV CKT Z	720	720	0.06467	126.9491	P12:230:UMZB:# 112 #: NU IN SD. NU-RCDC & DRY CREEK XFMR
FDNS	00NR	0	17SP	G15_042	FROM->TO	GR ISLD-LNX3345.00 - GRAND ISLAND 345KV CKT Z	720	720	0.06466	126.9338	GEN615010 1-STANTON4
FDNS	00NR	0	17SP	G15_042	FROM->TO	GR ISLD-LNX3345.00 - GRAND ISLAND 345KV CKT Z	720	720	0.06466	126.9296	GEN672310 1-POPLAR RIVER GENERATOR 1
FDNS	00NR	0	17SP	G15_042	FROM->TO	GR ISLD-LNX3345.00 - GRAND ISLAND 345KV CKT Z	720	720	0.06466	126.9296	GEN672311 2-POPLAR RIVER GENERATOR 2
FDNS	00NR	0	17SP	G15_042	FROM->TO	GR ISLD-LNX3345.00 - GRAND ISLAND 345KV CKT Z	720	720	0.06466	126.8554	GEN672306 6-BOUNDARY DAM GENERATOR 6
FDNS	00NR	0	17SP	G15_042	FROM->TO	GR ISLD-LNX3345.00 - GRAND ISLAND 345KV CKT Z	720	720	0.06466	126.8183	GEN659453 1-GI1414GEN W0.6900
FDNS	00NR	0	17SP	G15_042	FROM->TO	GR ISLD-LNX3345.00 - GRAND ISLAND 345KV CKT Z	720	720	0.06466	126.8171	GEN563302 1-G15096_3 0.6900
FDNS	00NR	0	17SP	G15_042	FROM->TO	GR ISLD-LNX3345.00 - GRAND ISLAND 345KV CKT Z	720	720	0.06466	126.7913	GEN652556 2-OAHE
FDNS	00NR	0	17SP	G15_042	FROM->TO	GR ISLD-LNX3345.00 - GRAND ISLAND 345KV CKT Z	720	720	0.06466	126.7913	GEN652557 4-OAHE
FDNS	00NR	0	17SP	G15_042	FROM->TO	GR ISLD-LNX3345.00 - GRAND ISLAND 345KV CKT Z	720	720	0.06466	126.7913	GEN652558 6-OAHE
FDNS	00NR	0	17SP	G15_042	FROM->TO	GR ISLD-LNX3345.00 - GRAND ISLAND 345KV CKT Z	720	720	0.06466	126.7785	GEN600004 2-PRAIRIE ISLAND G2
FDNS	00NR	0	17SP	G15_042	FROM->TO	GR ISLD-LNX3345.00 - GRAND ISLAND 345KV CKT Z	720	720	0.06466	126.774	GEN600003 1-PRAIRIE ISLAND G1
FDNS	00NR	0	17SP	G15_042	FROM->TO	GR ISLD-LNX3345.00 - GRAND ISLAND 345KV CKT Z	720	720	0.06466	126.7102	GEN659141 1-K10215A
FDNS	00NR	0	17SP	G15_042	FROM->TO	GR ISLD-LNX3345.00 - GRAND ISLAND 345KV CKT Z	720	720	0.06466	126.6583	GEN659110 1-LELAND OLDS UNIT1
FDNS	00NR	0	17SP	G15_042	FROM->TO	GR ISLD-LNX3345.00 - GRAND ISLAND 345KV CKT Z	720	720	0.06466	126.6517	GEN657749 1-YOUNG 1 GENERATOR
FDNS	00NR	0	17SP	G15_042	FROM->TO	GR ISLD-LNX3345.00 - GRAND ISLAND 345KV CKT Z	720	720	0.06466	126.4545	GEN652173 1-G09_001IS_2 0.6900
FDNS	00NR	0	17SP	G15_042	FROM->TO	GR ISLD-LNX3345.00 - GRAND ISLAND 345KV CKT Z	720	720	0.06466	126.4491	GEN600006 1-AS KING
FDNS	00NR	0	17SP	G15_042	FROM->TO	GR ISLD-LNX3345.00 - GRAND ISLAND 345KV CKT Z	720	720	0.06466	126.1483	GEN659407 1-ANTELPHILLSW0.6900
FDNS	00NR	0	17SP	G15_042	FROM->TO	GR ISLD-LNX3345.00 - GRAND ISLAND 345KV CKT Z	720	720	0.06466	125.8488	GEN600005 1-MONTICELLO
FDNS	00NR	0	17SP	G15_042	FROM->TO	GR ISLD-LNX3345.00 - GRAND ISLAND 345KV CKT Z	720	720	0.06466	125.1533	GEN600000 1-SHERBURNECNTY G1
FDNS	00NR	0	17SP	G15_042	FROM->TO	GR ISLD-LNX3345.00 - GRAND ISLAND 345KV CKT Z	720	720	0.06466	124.7391	GEN600001 2-SHERBURNE CNTY G2
FDNS	00NR	0	17SP	G15_042	FROM->TO	GR ISLD-LNX3345.00 - GRAND ISLAND 345KV CKT Z	720	720	0.06466	124.5328	GEN620315 1-BIG STONE GEN
FDNS	00NR	0	17SP	G15_042	FROM->TO	GR ISLD-LNX3345.00 - GRAND ISLAND 345KV CKT Z	720	720	0.06466	124.4986	GEN661015 1-COYOTE
FDNS	00NR	0	17SP	G15_042	FROM->TO	GR ISLD-LNX3345.00 - GRAND ISLAND 345KV CKT Z	720	720	0.06466	124.0797	GEN657748 1-YOUNG 2 GENERATOR
FDNS	00NR	0	17SP	G15_042	FROM->TO	GR ISLD-LNX3345.00 - GRAND ISLAND 345KV CKT Z	720	720	0.06466	123.9345	GEN600002 3-SHERBURNE CNTY G3
FDNS	00NR	0	17SP	G15_042	FROM->TO	GR ISLD-LNX3345.00 - GRAND ISLAND 345KV CKT Z	720	720	0.06466	123.6949	GEN562872 1-G15046_3 0.6900
FDNS	00NR	0	17SP	G15_042	FROM->TO	GR ISLD-LNX3345.00 - GRAND ISLAND 345KV CKT Z	720	720	0.07479	123.5972	MCCOOL - MOORE 345KV CKT 1
FDNS	00NR	0	17SP	G15_042	FROM->TO	GR ISLD-LNX3345.00 - GRAND ISLAND 345KV CKT Z	720	720	0.06466	123.3944	GEN659111 2-LELAND OLDS UNIT2
FDNS	00NR	0	17SP	G15_042	FROM->TO	GR ISLD-LNX3345.00 - GRAND ISLAND 345KV CKT Z	720	720	0.06466	122.9194	GEN659103 1-ANTELOPE VALLEY UNIT1
FDNS	00NR	0	17SP	G15_042	FROM->TO	GR ISLD-LNX3345.00 - GRAND ISLAND 345KV CKT Z	720	720	0.06466	122.9194	GEN659107 2-ANTELOPE VALLEY UNIT2
FDNS	00NR	0	17SP	G15_042	FROM->TO	GR ISLD-LNX3345.00 - GRAND ISLAND 345KV CKT Z	720	720	0.06466	121.9558	GEN659125 1-COVEY
FDNS	00NR	0	17SP	G15_042	FROM->TO	GR ISLD-LNX3345.00 - GRAND ISLAND 345KV CKT Z	720	720	0.0637	121.922	FTTHOM1-LNX3345.00 - LELAND2-LNX3345.00 345KV CKT 1
FDNS	00NR	0	20SP	G15_042	FROM->TO	GR ISLD-LNX3345.00 - GRAND ISLAND 345KV CKT Z	720	720	0.06096	121.6983	HOLT.CO3 345.00 - THEDFRD3 345.00 345KV CKT 1
FDNS	00NR	0	17SP	G15_042	FROM->TO	GR ISLD-LNX3345.00 - GRAND ISLAND 345KV CKT Z	720	720	0.0637	121.67	P12:345:UMZB:# 108 #: LOS FT IN ND. LOS FT
FDNS	00NR	0	17SP	G15_042	FROM->TO	GR ISLD-LNX3345.00 - GRAND ISLAND 345KV CKT Z	720	720	0.0637	121.6593	FT THOMPSON - FTTHOM1-LNX3345.00 345KV CKT Z
FDNS	00NR	0	25SP	G15_042	FROM->TO	GR ISLD-LNX3345.00 - GRAND ISLAND 345KV CKT Z	720	720	0.06185	121.5104	HOLT.CO3 345.00 - THEDFRD3 345.00 345KV CKT 1
FDNS	00NR	0	17SP	G15_042	FROM->TO	GR ISLD-LNX3345.00 - GRAND ISLAND 345KV CKT Z	720	720	0.0637	121.4254	LELAND OLDS - LELAND2-LNX3345.00 345KV CKT Z
FDNS	00NR	0	17SP	G15_042	FROM->TO	GR ISLD-LNX3345.00 - GRAND ISLAND 345KV CKT Z	720	720	0.06466	121.232	GEN615001 1-COAL CREEK
FDNS	00NR	0	17SP	G15_042	FROM->TO	GR ISLD-LNX3345.00 - GRAND ISLAND 345KV CKT Z	720	720	0.06466	121.1067	GEN615002 2-COAL CREEK
FDNS	00NR	0	17SP	G15_042	FROM->TO	GR ISLD-LNX3345.00 - GRAND ISLAND 345KV CKT Z	720	720	0.07552	120.1904	GRAND ISLAND - MCCOOL 345KV CKT 1
FDNS	00NR	0	17SP	G15_042	FROM->TO	GR ISLD-LNX3345.00 - GRAND ISLAND 345KV CKT Z	720	720	0.06466	114.2696	GEN562714 1-G15_023_4 0.6900
FDNS	00NR	0	17SP	G15_042	FROM->TO	GR ISLD-LNX3345.00 - GRAND ISLAND 345KV CKT Z	720	720	0.06466	114.2696	GEN562715 1-G15_023_5 0.6900
FDNS	00NR	0	20SP	G15_042	FROM->TO	GR ISLD-LNX3345.00 - GRAND ISLAND 345KV CKT Z	720	720	0.05506	111.9689	GERALD GENTLEMAN STATION - THEDFRD3 345.00 345KV CKT 1
FDNS	00NR	0	25SP	G15_042	FROM->TO	GR ISLD-LNX3345.00 - GRAND ISLAND 345KV CKT Z	720	720	0.05621	111.3329	GERALD GENTLEMAN STATION - THEDFRD3 345.00 345KV CKT 1
FDNS	00NR	0	17SP	G15_042	FROM->TO	GR ISLD-LNX3345.00 - GRAND ISLAND 345KV CKT Z	720	720	0.06466	108.1649	GEN652353 2-GR PRAIRIEG 0.6900
FDNS	00NR	0	16WP	G15_042	FROM->TO	GR ISLD-LNX3345.00 - GRAND ISLAND 345KV CKT Z	720	720	0.065	102.4932	KELLY - MEADOWGROVE4230.00 230KV CKT 1
FDNS	00NR	0	16WP	G15_042	FROM->TO	GR ISLD-LNX3345.00 - GRAND ISLAND 345KV CKT Z	720	720	0.06102	101.8942	P12:230:UMZB:# 116 #: ST IN SD. WSG-ST-VH
FDNS	00NR	0	16WP	G15_042	FROM->TO	GR ISLD-LNX3345.00 - GRAND ISLAND 345KV CKT Z	720	720	0.06135	101.2943	STORLA - WESSINGTON 230KV CKT 1
FDNS	00NR	0	16WP	G15_042	FROM->TO	GR ISLD-LNX3345.00 - GRAND ISLAND 345KV CKT Z	720	720	0.06321	100.8674	ROSEAU - ROSEAUM 2 500.00 500KV CKT 1
FDNS	00NR	0	16WP	G15_042	FROM->TO	GR ISLD-LNX3345.00 - GRAND ISLAND 345KV CKT Z	720	720	0.06141	100.313	HANLON - STORLA 230KV CKT 1
FDNS	00NR	0	16WP	G15_042	FROM->TO	GR ISLD-LNX3345.00 - GRAND ISLAND 345KV CKT Z	720	720	0.04925	100	GRAND ISLAND - SWEETWATER 345KV CKT 1
FDNS	00NR	0	16WP	G15_042	FROM->TO	GR ISLD-LNX3345.00 - GRAND ISLAND 345KV CKT Z	720	720	0.06207	99.9	P12:345:UMZW:# 1747 #: WT2 IN SD. WT2-WHT LINE FAULT
FDNS	00NR	0	16WP	G15_042	FROM->TO	GR ISLD-LNX3345.00 - GRAND ISLAND 345KV CKT Z	720	720	0.06207	99.9	WATERTN-LNX3345.00 - WATERTOWN 345KV CKT Z
FDNS	00NR	0	16WP	G15_042	FROM->TO	GR ISLD-LNX3345.00 - GRAND ISLAND 345KV CKT Z	720	720	0.06207	99.9	WATERTN-LNX3345.00 - WHITE 345KV CKT 1
FDNS	00NR	0	16WP	G15_042	FROM->TO	GR ISLD-LNX3345.00 - GRAND ISLAND 345KV CKT Z	720	720	0.06097	99.8	FT THOMPSON - LETCHER 230KV CKT 1
FDNS	00NR	0	16WP	G15_042	FROM->TO	GR ISLD-LNX3345.00 - GRAND ISLAND 345KV CKT Z	720	720	0.06097	99.8	FT THOMPSON - LETCHER 230KV CKT 1
FDNSLock	00NR	0	16WP	G15_042	FROM->TO	GR ISLD-LNX3345.00 - GRAND ISLAND 345KV CKT Z	720	720	0.06491	99.5	KEYSTONE - SIDNEY1-LNX3345.00 345KV CKT 1
FDNSLock	00NR	0	16WP	G15_042	FROM->TO	GR ISLD-LNX3345.00 - GRAND ISLAND 345KV CKT Z	720	720	0.06491	99.5	SIDNEY - SIDNEY1-LNX3345.00 345KV CKT Z
FDNS	00NR	0	17SP	G15_042	TO->FROM	GR ISLD-LNX3345.00 - HOLT.CO3 345.00 345KV CKT 1	720	720	0.06428	138.4828	G09_001IST 345.00 - WATERTOWN 345KV CKT 1
FDNS	00NR	0	17SP	G15_042	TO->FROM	GR ISLD-LNX3345.00 - HOLT.CO3 345.00 345KV CKT 1	720	720	0.06645	138.0694	KELLY - MEADOWGROVE4230.00 230KV CKT 1
FDNS	00NR	0	17SP	G15_042	TO->FROM	GR ISLD-LNX3345.00 - HOLT.CO3 345.00 345KV CKT 1	720	720	0.06242	137.65	P12:230:UMZB:# 116 #: ST IN SD. WSG-ST-VH
FDNS	00NR	0	17SP	G15_042	TO->FROM	GR ISLD-LNX3345.00 - HOLT.CO3 345.00 345KV CKT 1	720	720	0.06348	136.8472	WATERTN-LNX3345.00 - WATERTOWN 345KV CKT Z
FDNS	00NR	0	17SP	G15_042	TO->FROM	GR ISLD-LNX3345.00 - HOLT.CO3 345.00 345KV CKT 1	720	720	0.06348	136.7798	P12:345:UMZW:# 1747 #: WT2 IN SD. WT2-WHT LINE FAULT
FDNS	00NR	0	17SP	G15_042	TO->FROM	GR ISLD-LNX3345.00 - HOLT.CO3 345.00 345KV CKT 1	720	720	0.06276	136.7283	STORLA - WESSINGTON 230KV CKT 1
FDNS	00NR	0	17SP	G15_042	TO->FROM	GR ISLD-LNX3345.00 - HOLT.CO3 345.00 345KV CKT 1	720	720	0.06348	136.676	WATERTN-LNX3345.00 - WHITE 345KV CKT 1
FDNS	00NR	0	17SP	G15_042	TO->FROM	GR ISLD-LNX3345.00 - HOLT.CO3 345.00 345KV CKT 1	720	720	0.06282	135.3597	HANLON - STORLA 230KV CKT 1
FDNS	00NR	0	17SP	G15_042	TO->FROM	GR ISLD-LNX3345.00 - HOLT.CO3 345.00 345KV CKT 1	720	720	0.06237	135.0789	FT THOMPSON - LETCHER 230KV CKT 1
FDNS	00NR	0	17SP	G15_042	TO->FROM	GR ISLD-LNX3345.00 - HOLT.CO3 345.00 345KV CKT 1	720	720	0.06237	135.0789	FT THOMPSON - LETCHER 230KV CKT 1
FDNS	00NR	0	17SP	G15_042	TO->FROM	GR ISLD-LNX3345.00 - HOLT.CO3 345.00 345KV CKT 1	720	720	0.06213	133.7629	FT RANDAL - FT THOMPSON 230KV CKT 1
FDNS	00NR	0	17SP	G15_042	TO->FROM	GR ISLD-LNX3345.00 - HOLT.CO3 345.00 345KV CKT 1	720	720	0.06213	133.7629	FT RANDAL - FT THOMPSON 230KV CKT 1
FDNS	00NR	0	17SP	G15_042	TO->FROM	GR ISLD-LNX3345.00 - HOLT.CO3 345.00 345KV CKT 1	720	720	0.06219	133.7265	FT RANDAL - G12_009IST 230.00 230KV CKT 1
FDNS	00NR	0	17SP	G15_042	TO->FROM	GR ISLD-LNX3345.00 - HOLT.CO3 345.00 345KV CKT 1	720	720	0.06219	133.6464	FT THOMPSON - LAKE PLATT 230KV CKT 1

SOLUTION	GROUP	SCENARIO	SEASON	SOURCE	DIRECTION	MONITORED ELEMENT	RATEA (MVA)	RATEB(MVA)	TDF	TC%LOADING (% MVA)	CONTINGENCY
FDNS	00NR	0	17SP	G15_042	TO->FROM	GR ISLD-LNX3345.00 - HOLT.CO3 345.00 345KV CKT 1	720	720	0.06219	133.6464	FT THOMPSON - LAKE PLATT 230KV CKT 1
FDNS	00NR	0	17SP	G15_042	TO->FROM	GR ISLD-LNX3345.00 - HOLT.CO3 345.00 345KV CKT 1	720	720	0.06642	133.5696	KEYSTONE - SIDNEY1-LNX3345.00 345KV CKT 1
FDNS	00NR	0	17SP	G15_042	TO->FROM	GR ISLD-LNX3345.00 - HOLT.CO3 345.00 345KV CKT 1	720	720	0.06642	133.5488	SIDNEY - SIDNEY1-LNX3345.00 345KV CKT Z
FDNS	00NR	0	17SP	G15_042	TO->FROM	GR ISLD-LNX3345.00 - HOLT.CO3 345.00 345KV CKT 1	720	720	0.07339	133.5085	NUNDRWD - WAYSIDE 230KV CKT 1
FDNS	00NR	0	17SP	G15_042	TO->FROM	GR ISLD-LNX3345.00 - HOLT.CO3 345.00 345KV CKT 1	720	720	0.06428	133.4449	G09_001IST 345.00 - GROTON 345KV CKT 1
FDNS	00NR	0	17SP	G15_042	TO->FROM	GR ISLD-LNX3345.00 - HOLT.CO3 345.00 345KV CKT 1	720	720	0.06459	133.2589	CHISAGO COUNTY - FORBES 500KV CKT 1
FDNS	00NR	0	17SP	G15_042	TO->FROM	GR ISLD-LNX3345.00 - HOLT.CO3 345.00 345KV CKT 1	720	720	0.06219	133.2456	G12_009IST 230.00 - LAKE PLATT 230KV CKT 1
FDNS	00NR	0	17SP	G15_042	TO->FROM	GR ISLD-LNX3345.00 - HOLT.CO3 345.00 345KV CKT 1	720	720	0.06466	133.1666	GEN336821 1-GRAND GULF UNIT
FDNS	00NR	0	17SP	G15_042	TO->FROM	GR ISLD-LNX3345.00 - HOLT.CO3 345.00 345KV CKT 1	720	720	0.06645	133.0352	FT RANDAL - MEADOWGROVE4230.00 230KV CKT 1
FDNS	00NR	0	17SP	G15_042	TO->FROM	GR ISLD-LNX3345.00 - HOLT.CO3 345.00 345KV CKT 1	720	720	0.07389	132.9558	RAUN - SUB 3451 FT CAL 345KV CKT 1
FDNS	00NR	0	17SP	G15_042	TO->FROM	GR ISLD-LNX3345.00 - HOLT.CO3 345.00 345KV CKT 1	720	720	0.07389	132.9558	RAUN - SUB 3451 FT CAL 345KV CKT 1
FDNS	00NR	0	17SP	G15_042	TO->FROM	GR ISLD-LNX3345.00 - HOLT.CO3 345.00 345KV CKT 1	720	720	0.06457	132.9142	CENTER - JAMESTOWN 345KV CKT 1
FDNS	00NR	0	17SP	G15_042	TO->FROM	GR ISLD-LNX3345.00 - HOLT.CO3 345.00 345KV CKT 1	720	720	0.06321	132.7255	LETCHER - SIOUX FALLS 230KV CKT 1
FDNS	00NR	0	17SP	G15_042	TO->FROM	GR ISLD-LNX3345.00 - HOLT.CO3 345.00 345KV CKT 1	720	720	0.06466	132.6387	GEN344225 1-1CAL G1 25.000
FDNS	00NR	0	17SP	G15_042	TO->FROM	GR ISLD-LNX3345.00 - HOLT.CO3 345.00 345KV CKT 1	720	720	0.06466	132.5268	GEN635024 4-WALTER SCOTT UNIT 4
FDNS	00NR	0	17SP	G15_042	TO->FROM	GR ISLD-LNX3345.00 - HOLT.CO3 345.00 345KV CKT 1	720	720	0.06466	132.4226	GEN337911 1-ARKANSAS NUCLEAR ONE UNIT #2
FDNS	00NR	0	17SP	G15_042	TO->FROM	GR ISLD-LNX3345.00 - HOLT.CO3 345.00 345KV CKT 1	720	720	0.06466	132.3742	GEN336153 1-WATERFORD UNIT#3
FDNS	00NR	0	17SP	G15_042	TO->FROM	GR ISLD-LNX3345.00 - HOLT.CO3 345.00 345KV CKT 1	720	720	0.0646	132.3654	BISON 3 345.00 - BUFFALO 345KV CKT 1
FDNS	00NR	0	17SP	G15_042	TO->FROM	GR ISLD-LNX3345.00 - HOLT.CO3 345.00 345KV CKT 1	720	720	0.05086	132.3519	GRAND ISLAND - SWEETWATER 345KV CKT 1
FDNS	00NR	0	17SP	G15_042	TO->FROM	GR ISLD-LNX3345.00 - HOLT.CO3 345.00 345KV CKT 1	720	720	0.06466	131.9888	GEN635023 3-WALTER SCOTT UNIT 3
FDNS	00NR	0	17SP	G15_042	TO->FROM	GR ISLD-LNX3345.00 - HOLT.CO3 345.00 345KV CKT 1	720	720	0.06333	131.9463	SPLIT ROCK - WHITE 345KV CKT 1
FDNS	00NR	0	17SP	G15_042	TO->FROM	GR ISLD-LNX3345.00 - HOLT.CO3 345.00 345KV CKT 1	720	720	0.06333	131.9463	SPLIT ROCK - WHITE 345KV CKT 1
FDNS	00NR	0	17SP	G15_042	TO->FROM	GR ISLD-LNX3345.00 - HOLT.CO3 345.00 345KV CKT 1	720	720	0.06466	131.9415	GEN335831 1-RIVERBEND UNIT#1
FDNS	00NR	0	17SP	G15_042	TO->FROM	GR ISLD-LNX3345.00 - HOLT.CO3 345.00 345KV CKT 1	720	720	0.06466	131.8426	GEN337910 1-ARKANSAS NUCLEAR ONE UNIT #1
FDNS	00NR	0	17SP	G15_042	TO->FROM	GR ISLD-LNX3345.00 - HOLT.CO3 345.00 345KV CKT 1	720	720	0.06491	131.7508	ARROWHEAD - ARROWHEAD 230 230KV CKT 1
FDNS	00NR	0	17SP	G15_042	TO->FROM	GR ISLD-LNX3345.00 - HOLT.CO3 345.00 345KV CKT 1	720	720	0.06435	131.6562	GROTON-LNX3 345.00 - LELAND1-LNX3345.00 345KV CKT 1
FDNS	00NR	0	17SP	G15_042	TO->FROM	GR ISLD-LNX3345.00 - HOLT.CO3 345.00 345KV CKT 1	720	720	0.06261	131.6275	FT RANDAL - SIOUX CITY 230KV CKT 1
FDNS	00NR	0	17SP	G15_042	TO->FROM	GR ISLD-LNX3345.00 - HOLT.CO3 345.00 345KV CKT 1	720	720	0.06435	131.6129	GROTON - GROTON-LNX3 345.00 345KV CKT Z
FDNS	00NR	0	17SP	G15_042	TO->FROM	GR ISLD-LNX3345.00 - HOLT.CO3 345.00 345KV CKT 1	720	720	0.06435	131.612	P12:345:UMZB:# 109 #: LOS GRT IN ND. LOS GRT
FDNS	00NR	0	17SP	G15_042	TO->FROM	GR ISLD-LNX3345.00 - HOLT.CO3 345.00 345KV CKT 1	720	720	0.06435	131.5963	LELAND OLDS - LELAND1-LNX3345.00 345KV CKT Z
FDNS	00NR	0	17SP	G15_042	TO->FROM	GR ISLD-LNX3345.00 - HOLT.CO3 345.00 345KV CKT 1	720	720	0.06466	131.5476	GEN640010 1-GERALD GENTLEMAN STATION UNIT 1
FDNS	00NR	0	17SP	G15_042	TO->FROM	GR ISLD-LNX3345.00 - HOLT.CO3 345.00 345KV CKT 1	720	720	0.0637	131.5162	HANLON - SIOUX FALLS 230KV CKT 1
FDNSLock	00NR	0	17SP	G15_042	TO->FROM	GR ISLD-LNX3345.00 - HOLT.CO3 345.00 345KV CKT 1	720	720	0.06485	131.5045	P12:115:NPPD:1091:VALENTN7:MISSION7:BTB
FDNS	00NR	0	17SP	G15_042	TO->FROM	GR ISLD-LNX3345.00 - HOLT.CO3 345.00 345KV CKT 1	720	720	0.06549	131.4818	GERALD GENTLEMAN STATION - KEYSTONE 345KV CKT 1
FDNS	00NR	0	17SP	G15_042	TO->FROM	GR ISLD-LNX3345.00 - HOLT.CO3 345.00 345KV CKT 1	720	720	0.06541	131.4797	HAZLETON - MITCHLCO3 345.00 345KV CKT 1
FDNS	00NR	0	17SP	G15_042	TO->FROM	GR ISLD-LNX3345.00 - HOLT.CO3 345.00 345KV CKT 1	720	720	0.06461	131.3441	ALEXMRES3 345.00 - BISON 3 345.00 345KV CKT 1
FDNS	00NR	0	17SP	G15_042	TO->FROM	GR ISLD-LNX3345.00 - HOLT.CO3 345.00 345KV CKT 1	720	720	0.06466	131.2848	GEN337653 1-WHITE BLUFF UNIT #2
FDNS	00NR	0	17SP	G15_042	TO->FROM	GR ISLD-LNX3345.00 - HOLT.CO3 345.00 345KV CKT 1	720	720	0.06466	131.2692	GEN337652 1-WHITE BLUFF UNIT #1
FDNS	00NR	0	17SP	G15_042	TO->FROM	GR ISLD-LNX3345.00 - HOLT.CO3 345.00 345KV CKT 1	720	720	0.06466	131.2327	GEN640011 2-GERALD GENTLEMAN STATION UNIT 2
FDNS	00NR	0	17SP	G15_042	TO->FROM	GR ISLD-LNX3345.00 - HOLT.CO3 345.00 345KV CKT 1	720	720	0.06485	131.2016	MISSION - ST FRANCIS 115KV CKT 1
FDNS	00NR	0	17SP	G15_042	TO->FROM	GR ISLD-LNX3345.00 - HOLT.CO3 345.00 345KV CKT 1	720	720	0.06466	131.1837	GEN338146 1-INDEPENDENCE UNIT #2
FDNS	00NR	0	17SP	G15_042	TO->FROM	GR ISLD-LNX3345.00 - HOLT.CO3 345.00 345KV CKT 1	720	720	0.06466	131.181	GEN338143 1-INDEPENDENCE UNIT #1
FDNS	00NR	0	17SP	G15_042	TO->FROM	GR ISLD-LNX3345.00 - HOLT.CO3 345.00 345KV CKT 1	720	720	0.06463	131.1786	ELLENDALE - OAKES 230KV CKT 1
FDNS	00NR	0	17SP	G15_042	TO->FROM	GR ISLD-LNX3345.00 - HOLT.CO3 345.00 345KV CKT 1	720	720	0.06463	131.1786	ELLENDALE - OAKES 230KV CKT 1
FDNS	00NR	0	17SP	G15_042	TO->FROM	GR ISLD-LNX3345.00 - HOLT.CO3 345.00 345KV CKT 1	720	720	0.06189	131.1785	SIOUXCY-LNX3345.00 - SPLIT ROCK 345KV CKT 1
FDNS	00NR	0	17SP	G15_042	TO->FROM	GR ISLD-LNX3345.00 - HOLT.CO3 345.00 345KV CKT 1	720	720	0.06189	131.1785	SIOUXCY-LNX3345.00 - SPLIT ROCK 345KV CKT 1
FDNS	00NR	0	17SP	G15_042	TO->FROM	GR ISLD-LNX3345.00 - HOLT.CO3 345.00 345KV CKT 1	720	720	0.06498	131.1626	AS KING - EAU CLAIRE 345KV CKT 1
FDNS	00NR	0	17SP	G15_042	TO->FROM	GR ISLD-LNX3345.00 - HOLT.CO3 345.00 345KV CKT 1	720	720	0.06466	131.1409	GEN501801 1-DOLET HILLS UNIT1
FDNS	00NR	0	17SP	G15_042	TO->FROM	GR ISLD-LNX3345.00 - HOLT.CO3 345.00 345KV CKT 1	720	720	0.06189	131.1238	P12:345:UMZW:# 907 #: SC2-SR IN IA. SC2-SR 345 KV LINE
FDNS	00NR	0	17SP	G15_042	TO->FROM	GR ISLD-LNX3345.00 - HOLT.CO3 345.00 345KV CKT 1	720	720	0.06463	131.087	FORMAN - OAKES 230KV CKT 1
FDNS	00NR	0	17SP	G15_042	TO->FROM	GR ISLD-LNX3345.00 - HOLT.CO3 345.00 345KV CKT 1	720	720	0.06189	131.0841	SIOUX CITY - SIOUXCY-LNX3345.00 345KV CKT Z
FDNSLock	00NR	0	17SP	G15_042	TO->FROM	GR ISLD-LNX3345.00 - HOLT.CO3 345.00 345KV CKT 1	720	720	0.06485	131.0689	HARMONY - VALENTINE 115KV CKT 1
FDNS	00NR	0	17SP	G15_042	TO->FROM	GR ISLD-LNX3345.00 - HOLT.CO3 345.00 345KV CKT 1	720	720	0.06617	131.0686	SIDNEY - STEGALL 345KV CKT 1
FDNS	00NR	0	17SP	G15_042	TO->FROM	GR ISLD-LNX3345.00 - HOLT.CO3 345.00 345KV CKT 1	720	720	0.06485	131.0664	HARMONY - ST FRANCIS 115KV CKT 1
FDNS	00NR	0	17SP	G15_042	TO->FROM	GR ISLD-LNX3345.00 - HOLT.CO3 345.00 345KV CKT 1	720	720	0.06342	131.0516	FT RANDAL - UTICA JCT 230KV CKT 1
FDNS	00NR	0	17SP	G15_042	TO->FROM	GR ISLD-LNX3345.00 - HOLT.CO3 345.00 345KV CKT 1	720	720	0.06431	131.0475	CARPENTER - HURON 230KV CKT 1
FDNS	00NR	0	17SP	G15_042	TO->FROM	GR ISLD-LNX3345.00 - HOLT.CO3 345.00 345KV CKT 1	720	720	0.06431	130.9793	HURON - WATERTOWN 230KV CKT 2
FDNS	00NR	0	17SP	G15_042	TO->FROM	GR ISLD-LNX3345.00 - HOLT.CO3 345.00 345KV CKT 1	720	720	0.06431	130.9793	HURON - WATERTOWN 230KV CKT 2
FDNS	00NR	0	17SP	G15_042	TO->FROM	GR ISLD-LNX3345.00 - HOLT.CO3 345.00 345KV CKT 1	720	720	0.06512	130.9716	ARPIN B4 345.00 - EAU CLAIRE 345KV CKT 1
FDNS	00NR	0	17SP	G15_042	TO->FROM	GR ISLD-LNX3345.00 - HOLT.CO3 345.00 345KV CKT 1	720	720	0.06431	130.9164	CARPENTER - WATERTOWN 230KV CKT 1
FDNS	00NR	0	17SP	G15_042	TO->FROM	GR ISLD-LNX3345.00 - HOLT.CO3 345.00 345KV CKT 1	720	720	0.06431	130.9164	CARPENTER - WATERTOWN 230KV CKT 1
FDNS	00NR	0	17SP	G15_042	TO->FROM	GR ISLD-LNX3345.00 - HOLT.CO3 345.00 345KV CKT 1	720	720	0.06276	130.86	FT THOMPSON - WESSINGTON 230KV CKT 1
FDNS	00NR	0	17SP	G15_042	TO->FROM	GR ISLD-LNX3345.00 - HOLT.CO3 345.00 345KV CKT 1	720	720	0.06276	130.86	FT THOMPSON - WESSINGTON 230KV CKT 1
FDNS	00NR	0	17SP	G15_042	TO->FROM	GR ISLD-LNX3345.00 - HOLT.CO3 345.00 345KV CKT 1	720	720	0.06466	130.7962	GEN336252 1-NINEMILE POINT UNIT#5
FDNS	00NR	0	17SP	G15_042	TO->FROM	GR ISLD-LNX3345.00 - HOLT.CO3 345.00 345KV CKT 1	720	720	0.06466	130.7546	GEN501813 1-RODEMACHER UNIT 3
FDNS	00NR	0	17SP	G15_042	TO->FROM	GR ISLD-LNX3345.00 - HOLT.CO3 345.00 345KV CKT 1	720	720	0.0629	130.7522	PAHOJA - SIOUX FALLS 230KV CKT 1
FDNS	00NR	0	17SP	G15_042	TO->FROM	GR ISLD-LNX3345.00 - HOLT.CO3 345.00 345KV CKT 1	720	720	0.06469	130.7281	P12:115:NPPD:WAPA6:FTRANDL7:ONEILL 7:BTB
FDNS	00NR	0	17SP	G15_042	TO->FROM	GR ISLD-LNX3345.00 - HOLT.CO3 345.00 345KV CKT 1	720	720	0.06469	130.7281	P12:115:UMZB:# 115 #: SE IN NE. FR-SE-ON
FDNS	00NR	0	17SP	G15_042	TO->FROM	GR ISLD-LNX3345.00 - HOLT.CO3 345.00 345KV CKT 1	720	720	0.06079	130.7061	GERALD GENTLEMAN STATION - SWEETWATER 345KV CKT 1
FDNS	00NR	0	17SP	G15_042	TO->FROM	GR ISLD-LNX3345.00 - HOLT.CO3 345.00 345KV CKT 1	720	720	0.06541	130.696	ADAMS - MITCHLCO3 345.00 345KV CKT 1
FDNS	00NR	0	17SP	G15_042	TO->FROM	GR ISLD-LNX3345.00 - HOLT.CO3 345.00 345KV CKT 1	720	720	0.06469	130.6873	FT RANDAL - SPENCER 115KV CKT 1
FDNS	00NR	0	17SP	G15_042	TO->FROM	GR ISLD-LNX3345.00 - HOLT.CO3 345.00 345KV CKT 1	720	720	0.06466	130.6593	GEN336831 1-BAXTER WILSON SES
FDNS	00NR	0	17SP	G15_042	TO->FROM	GR ISLD-LNX3345.00 - HOLT.CO3 345.00 345KV CKT 1	720	720	0.06466	130.6466	GEN336251 1-NINEMILE POINT UNIT#4
FDNSLock	00NR	0	17SP	G15_042	TO->FROM	GR ISLD-LNX3345.00 - HOLT.CO3 345.00 345KV CKT 1	720	720	0.06485	130.6365	AINSWORTH - VALENTINE 115KV CKT 1
FDNS	00NR	0	17SP	G15_042	TO->FROM	GR ISLD-LNX3345.00 - HOLT.CO3 345.00 345KV CKT 1	720	720	0.06469	130.5966	ONEILL - SPENCER 115KV CKT 1
FDNS	00NR	0	17SP	G15_042	TO->FROM	GR ISLD-LNX3345.00 - HOLT.CO3 345.00 345KV CKT 1	720	720	0.06464	130.5874	CNTSHNT3 345.00 - PRAIRIE3 345.00 345KV CKT 1
FDNS	00NR	0	17SP	G15_042	TO->FROM	GR ISLD-LNX3345.00 - HOLT.CO3 345.00 345KV CKT 1	720	720	0.06466	130.5722	GEN337041 1-GERALD ANDRUS
FDNS	00NR	0	17SP	G15_042	TO->FROM	GR ISLD-LNX3345.00 - HOLT.CO3 345.00 345KV CKT 1	720	720	0.06466	130.5555	GEN335206 1-NELSON UNIT 6
FDNS	00NR	0	17SP	G15_042	TO->FROM	GR ISLD-LNX3345.00 - HOLT.CO3 345.00 345KV CKT 1	720	720	0.06466	130.5309	GEN344897 4-1LAB G4 20.000

SOLUTION	GROUP	SCENARIO	SEASON	SOURCE	DIRECTION	MONITORED ELEMENT	RATEA (MVA)	RATEB(MVA)	TDF	TC%LOADING (% MVA)	CONTINGENCY
FDNS	00NR	0	17SP	G15_042	TO->FROM	GR ISLD-LNX3345.00 - HOLT.CO3 345.00 345KV CKT 1	720	720	0.06466	130.5275	GEN344894 1-1LAB G1 20.000
FDNS	00NR	0	17SP	G15_042	TO->FROM	GR ISLD-LNX3345.00 - HOLT.CO3 345.00 345KV CKT 1	720	720	0.06466	130.5274	GEN344896 3-1LAB G3 20.000
FDNS	00NR	0	17SP	G15_042	TO->FROM	GR ISLD-LNX3345.00 - HOLT.CO3 345.00 345KV CKT 1	720	720	0.08324	130.5252	HOSKINS - SHELL CREEK 345KV CKT 1
FDNS	00NR	0	17SP	G15_042	TO->FROM	GR ISLD-LNX3345.00 - HOLT.CO3 345.00 345KV CKT 1	720	720	0.06495	130.4853	SIDNEY - SIDNEY2-LNX3345.00 345KV CKT Z
FDNS	00NR	0	17SP	G15_042	TO->FROM	GR ISLD-LNX3345.00 - HOLT.CO3 345.00 345KV CKT 1	720	720	0.06495	130.4839	G15094_T 345.00 - SIDNEY2-LNX3345.00 345KV CKT 1
FDNS	00NR	0	17SP	G15_042	TO->FROM	GR ISLD-LNX3345.00 - HOLT.CO3 345.00 345KV CKT 1	720	720	0.06464	130.4809	FORMAN - HANKINSON 230KV CKT 1
FDNS	00NR	0	17SP	G15_042	TO->FROM	GR ISLD-LNX3345.00 - HOLT.CO3 345.00 345KV CKT 1	720	720	0.06515	130.4733	ADAMS - PLEASANT VALLEY 345KV CKT 1
FDNS	00NR	0	17SP	G15_042	TO->FROM	GR ISLD-LNX3345.00 - HOLT.CO3 345.00 345KV CKT 1	720	720	0.06466	130.4727	GEN344895 2-1LAB G2 20.000
FDNS	00NR	0	17SP	G15_042	TO->FROM	GR ISLD-LNX3345.00 - HOLT.CO3 345.00 345KV CKT 1	720	720	0.06466	130.461	GEN345670 1-1RUSH G1 18.000
FDNS	00NR	0	17SP	G15_042	TO->FROM	GR ISLD-LNX3345.00 - HOLT.CO3 345.00 345KV CKT 1	720	720	0.06466	130.4607	GEN345671 2-1RUSH G2 18.000
FDNS	00NR	0	17SP	G15_042	TO->FROM	GR ISLD-LNX3345.00 - HOLT.CO3 345.00 345KV CKT 1	720	720	0.06314	130.431	RASMUSN - UTICA JCT 230KV CKT 1
FDNS	00NR	0	17SP	G15_042	TO->FROM	GR ISLD-LNX3345.00 - HOLT.CO3 345.00 345KV CKT 1	720	720	0.06705	130.4055	GRIMES - LEHIGH 345KV CKT 1
FDNS	00NR	0	17SP	G15_042	TO->FROM	GR ISLD-LNX3345.00 - HOLT.CO3 345.00 345KV CKT 1	720	720	0.06466	130.4001	GEN501812 1-RODEMACHER UNIT 2
FDNS	00NR	0	17SP	G15_042	TO->FROM	GR ISLD-LNX3345.00 - HOLT.CO3 345.00 345KV CKT 1	720	720	0.0629	130.3955	EAGLE 4 230.00 - PAHOJA 230KV CKT 1
FDNS	00NR	0	17SP	G15_042	TO->FROM	GR ISLD-LNX3345.00 - HOLT.CO3 345.00 345KV CKT 1	720	720	0.06466	130.3774	GEN334440 1-SABINE UNIT 4
FDNS	00NR	0	17SP	G15_042	TO->FROM	GR ISLD-LNX3345.00 - HOLT.CO3 345.00 345KV CKT 1	720	720	0.06466	130.3431	GEN563222 1-G15088_3 0.6900
FDNS	00NR	0	17SP	G15_042	TO->FROM	GR ISLD-LNX3345.00 - HOLT.CO3 345.00 345KV CKT 1	720	720	0.06314	130.2798	RASMUSN - SIOUX CITY 230KV CKT 1
FDNS	00NR	0	17SP	G15_042	TO->FROM	GR ISLD-LNX3345.00 - HOLT.CO3 345.00 345KV CKT 1	720	720	0.06466	130.2216	GEN336191 1-LITTLE GYPSY UNIT#3
FDNS	00NR	0	17SP	G15_042	TO->FROM	GR ISLD-LNX3345.00 - HOLT.CO3 345.00 345KV CKT 1	720	720	0.06522	130.2052	LAKEFIELD 3 - NOBLES 345KV CKT 1
FDNS	00NR	0	17SP	G15_042	TO->FROM	GR ISLD-LNX3345.00 - HOLT.CO3 345.00 345KV CKT 1	720	720	0.0817	130.1874	DIXONCO 230.00 - HOSKINS 230KV CKT 1
FDNS	00NR	0	17SP	G15_042	TO->FROM	GR ISLD-LNX3345.00 - HOLT.CO3 345.00 345KV CKT 1	720	720	0.06875	130.1689	RAUN - SIOUX CITY 345KV CKT 1
FDNS	00NR	0	17SP	G15_042	TO->FROM	GR ISLD-LNX3345.00 - HOLT.CO3 345.00 345KV CKT 1	720	720	0.06875	130.1689	RAUN - SIOUX CITY 345KV CKT 1
FDNS	00NR	0	17SP	G15_042	TO->FROM	GR ISLD-LNX3345.00 - HOLT.CO3 345.00 345KV CKT 1	720	720	0.06179	130.1686	GERALD GENTLEMAN STATION - SWEETWATER 345KV CKT 2
FDNS	00NR	0	17SP	G15_042	TO->FROM	GR ISLD-LNX3345.00 - HOLT.CO3 345.00 345KV CKT 1	720	720	0.06466	130.1584	GEN641089 2-ENERGY CENTER 2
FDNS	00NR	0	17SP	G15_042	TO->FROM	GR ISLD-LNX3345.00 - HOLT.CO3 345.00 345KV CKT 1	720	720	0.06466	130.1576	GEN338388 1-1PLUM PT U1 23.000
FDNS	00NR	0	17SP	G15_042	TO->FROM	GR ISLD-LNX3345.00 - HOLT.CO3 345.00 345KV CKT 1	720	720	0.06466	130.1417	GEN336801 1-BAXTER WILSON UNIT #1
FDNS	00NR	0	17SP	G15_042	TO->FROM	GR ISLD-LNX3345.00 - HOLT.CO3 345.00 345KV CKT 1	720	720	0.06466	130.1167	GEN335614 1-WILLOW GLENN UNIT#4
FDNS	00NR	0	17SP	G15_042	TO->FROM	GR ISLD-LNX3345.00 - HOLT.CO3 345.00 345KV CKT 1	720	720	0.06466	130.109	GEN334441 1-SABINE UNIT 5
FDNS	00NR	0	17SP	G15_042	TO->FROM	GR ISLD-LNX3345.00 - HOLT.CO3 345.00 345KV CKT 1	720	720	0.06466	130.1016	GEN336464 1-MICHOUD UNIT #3
FDNS	00NR	0	17SP	G15_042	TO->FROM	GR ISLD-LNX3345.00 - HOLT.CO3 345.00 345KV CKT 1	720	720	0.06464	130.0948	ALEXMRES3 345.00 - WAITE PARK 345KV CKT 1
FDNS	00NR	0	17SP	G15_042	TO->FROM	GR ISLD-LNX3345.00 - HOLT.CO3 345.00 345KV CKT 1	720	720	0.06534	130.0928	KOSSUTH 3 345.00 - OBRIEN 3 345.00 345KV CKT 1
FDNS	00NR	0	17SP	G15_042	TO->FROM	GR ISLD-LNX3345.00 - HOLT.CO3 345.00 345KV CKT 1	720	720	0.06466	130.0884	GEN335204 1-NELSON UNIT 4
FDNS	00NR	0	17SP	G15_042	TO->FROM	GR ISLD-LNX3345.00 - HOLT.CO3 345.00 345KV CKT 1	720	720	0.07132	130.0811	COLUMEAST - SHELL CREEK 345KV CKT 1
FDNS	00NR	0	17SP	G15_042	TO->FROM	GR ISLD-LNX3345.00 - HOLT.CO3 345.00 345KV CKT 1	720	720	0.06496	130.0756	BROOKING COUNTY - LYON COUNTY 345KV CKT 1
FDNS	00NR	0	17SP	G15_042	TO->FROM	GR ISLD-LNX3345.00 - HOLT.CO3 345.00 345KV CKT 1	720	720	0.06464	130.0688	GLENBORO SOUTH - RUGBY 230KV CKT 1
FDNS	00NR	0	17SP	G15_042	TO->FROM	GR ISLD-LNX3345.00 - HOLT.CO3 345.00 345KV CKT 1	720	720	0.06534	130.0591	KOSSUTH 3 345.00 - WEBSTER 345KV CKT 1
FDNS	00NR	0	17SP	G15_042	TO->FROM	GR ISLD-LNX3345.00 - HOLT.CO3 345.00 345KV CKT 1	720	720	0.06464	130.0431	CENTER - COYOTE 345KV CKT 1
FDNS	00NR	0	17SP	G15_042	TO->FROM	GR ISLD-LNX3345.00 - HOLT.CO3 345.00 345KV CKT 1	720	720	0.06466	130.0358	BLAIR - GRANITE FALLS 230KV CKT 1
FDNS	00NR	0	17SP	G15_042	TO->FROM	GR ISLD-LNX3345.00 - HOLT.CO3 345.00 345KV CKT 1	720	720	0.06466	130.0358	BLAIR - GRANITE FALLS 230KV CKT 1
FDNS	00NR	0	17SP	G15_042	TO->FROM	GR ISLD-LNX3345.00 - HOLT.CO3 345.00 345KV CKT 1	720	720	0.07081	129.9869	COLUMEAST - NW68TH & HOLDREGE 345KV CKT 1
FDNS	00NR	0	17SP	G15_042	TO->FROM	GR ISLD-LNX3345.00 - HOLT.CO3 345.00 345KV CKT 1	720	720	0.07081	129.9869	COLUMEAST - NW68TH & HOLDREGE 345KV CKT 1
FDNS	00NR	0	17SP	G15_042	TO->FROM	GR ISLD-LNX3345.00 - HOLT.CO3 345.00 345KV CKT 1	720	720	0.06769	129.9757	STEGALL - STEGALL TRANSFORMER 230KV CKT 1
FDNS	00NR	0	17SP	G15_042	TO->FROM	GR ISLD-LNX3345.00 - HOLT.CO3 345.00 345KV CKT 1	720	720	0.06769	129.954	P13:230-345:NPPD:STEGALL3:KV3A
FDNS	00NR	0	17SP	G15_042	TO->FROM	GR ISLD-LNX3345.00 - HOLT.CO3 345.00 345KV CKT 1	720	720	0.06769	129.9444	STEGALL (SGQ KV3A) 345/230/13.8KV TRANSFORMER CKT 1
FDNS	00NR	0	17SP	G15_042	TO->FROM	GR ISLD-LNX3345.00 - HOLT.CO3 345.00 345KV CKT 1	720	720	0.06466	129.932	GEN334433 1-SABINE UNIT 3
FDNS	00NR	0	17SP	G15_042	TO->FROM	GR ISLD-LNX3345.00 - HOLT.CO3 345.00 345KV CKT 1	720	720	0.06499	129.9294	BYRON - NORTH ROCHESTER 345KV CKT 1
FDNS	00NR	0	17SP	G15_042	TO->FROM	GR ISLD-LNX3345.00 - HOLT.CO3 345.00 345KV CKT 1	720	720	0.06499	129.8959	G14-059T 230.00 - OGALLALA 230KV CKT 1
FDNS	00NR	0	17SP	G15_042	TO->FROM	GR ISLD-LNX3345.00 - HOLT.CO3 345.00 345KV CKT 1	720	720	0.06966	129.8863	STEGALL-LNX3230.00 - WAYSIDE 230KV CKT 1
FDNS	00NR	0	17SP	G15_042	TO->FROM	GR ISLD-LNX3345.00 - HOLT.CO3 345.00 345KV CKT 1	720	720	0.06431	129.8852	MENNO JCT - TRIPP JCT 115KV CKT 1
FDNS	00NR	0	17SP	G15_042	TO->FROM	GR ISLD-LNX3345.00 - HOLT.CO3 345.00 345KV CKT 1	720	720	0.06466	129.879	GEN629075 1-OTTUMWA GENERATOR FOR OTTUMWA UNIT NO 1
FDNS	00NR	0	17SP	G15_042	TO->FROM	GR ISLD-LNX3345.00 - HOLT.CO3 345.00 345KV CKT 1	720	720	0.06466	129.8763	GEN336222 1-LITTLE GYPSY UNIT#2
FDNS	00NR	0	17SP	G15_042	TO->FROM	GR ISLD-LNX3345.00 - HOLT.CO3 345.00 345KV CKT 1	720	720	0.06966	129.8744	STEGALL - STEGALL-LNX3230.00 230KV CKT Z
FDNS	00NR	0	17SP	G15_042	TO->FROM	GR ISLD-LNX3345.00 - HOLT.CO3 345.00 345KV CKT 1	720	720	0.06466	129.8681	P13:230-345:NPPD:NUCOR-1
FDNS	00NR	0	17SP	G15_042	TO->FROM	GR ISLD-LNX3345.00 - HOLT.CO3 345.00 345KV CKT 1	720	720	0.06466	129.8656	P12:115:UMZW:# 162 #: NEL IN ND. FAULT ON ML-NEL-MX-GA 115 KV
FDNS	00NR	0	17SP	G15_042	TO->FROM	GR ISLD-LNX3345.00 - HOLT.CO3 345.00 345KV CKT 1	720	720	0.06466	129.8586	GEN303007 1-1BC2 U2
FDNS	00NR	0	17SP	G15_042	TO->FROM	GR ISLD-LNX3345.00 - HOLT.CO3 345.00 345KV CKT 1	720	720	0.06466	129.8521	GEN303006 1-1BC2 U1
FDNS	00NR	0	17SP	G15_042	TO->FROM	GR ISLD-LNX3345.00 - HOLT.CO3 345.00 345KV CKT 1	720	720	0.06412	129.8079	FT THOMPSON - HURON 230KV CKT 1
FDNS	00NR	0	17SP	G15_042	TO->FROM	GR ISLD-LNX3345.00 - HOLT.CO3 345.00 345KV CKT 1	720	720	0.06412	129.8079	FT THOMPSON - HURON 230KV CKT 1
FDNS	00NR	0	17SP	G15_042	TO->FROM	GR ISLD-LNX3345.00 - HOLT.CO3 345.00 345KV CKT 1	720	720	0.06412	129.8079	FT THOMPSON - HURON 230KV CKT 2
FDNS	00NR	0	17SP	G15_042	TO->FROM	GR ISLD-LNX3345.00 - HOLT.CO3 345.00 345KV CKT 1	720	720	0.06412	129.8079	FT THOMPSON - HURON 230KV CKT 2
FDNS	00NR	0	17SP	G15_042	TO->FROM	GR ISLD-LNX3345.00 - HOLT.CO3 345.00 345KV CKT 1	720	720	0.06466	129.7903	GEN336152 1-WATERFORD UNIT#2
FDNS	00NR	0	17SP	G15_042	TO->FROM	GR ISLD-LNX3345.00 - HOLT.CO3 345.00 345KV CKT 1	720	720	0.06466	129.7898	GEN336151 1-WATERFORD UNIT#1
FDNS	00NR	0	17SP	G15_042	TO->FROM	GR ISLD-LNX3345.00 - HOLT.CO3 345.00 345KV CKT 1	720	720	0.06466	129.7763	GEN303008 1-1BC2 U3
FDNS	00NR	0	17SP	G15_042	TO->FROM	GR ISLD-LNX3345.00 - HOLT.CO3 345.00 345KV CKT 1	720	720	0.06464	129.768	GARRISON - JAMES TOWN 230KV CKT 1
FDNS	00NR	0	17SP	G15_042	TO->FROM	GR ISLD-LNX3345.00 - HOLT.CO3 345.00 345KV CKT 1	720	720	0.06466	129.7616	GEN336170 1-GULF OXY U4
FDNS	00NR	0	17SP	G15_042	TO->FROM	GR ISLD-LNX3345.00 - HOLT.CO3 345.00 345KV CKT 1	720	720	0.06431	129.7547	MENNO JCT - UTICA 115KV CKT 1
FDNS	00NR	0	17SP	G15_042	TO->FROM	GR ISLD-LNX3345.00 - HOLT.CO3 345.00 345KV CKT 1	720	720	0.0647	129.7464	HANKINSON - WAHPETON 230KV CKT 1
FDNS	00NR	0	17SP	G15_042	TO->FROM	GR ISLD-LNX3345.00 - HOLT.CO3 345.00 345KV CKT 1	720	720	0.06478	129.7276	NORTH ROCHESTER - PRAIRIE ISLAND 345KV CKT 1
FDNS	00NR	0	17SP	G15_042	TO->FROM	GR ISLD-LNX3345.00 - HOLT.CO3 345.00 345KV CKT 1	720	720	0.06636	129.7224	PETERSBRG.N7115.00 - PETERSBURG 115KV CKT Z1
FDNS	00NR	0	17SP	G15_042	TO->FROM	GR ISLD-LNX3345.00 - HOLT.CO3 345.00 345KV CKT 1	720	720	0.06469	129.7193	APPLEDORN 4 230.00 - WATERTOWN 230KV CKT 1
FDNS	00NR	0	17SP	G15_042	TO->FROM	GR ISLD-LNX3345.00 - HOLT.CO3 345.00 345KV CKT 1	720	720	0.06469	129.7193	APPLEDORN 4 230.00 - WATERTOWN 230KV CKT 1
FDNS	00NR	0	17SP	G15_042	TO->FROM	GR ISLD-LNX3345.00 - HOLT.CO3 345.00 345KV CKT 1	720	720	0.06431	129.713	P12:115:UMZZ:# 237 #: MEN IN SD. MENNO JUNCTION IS A TAP (UJ-MEN-TP).
FDNS	00NR	0	17SP	G15_042	TO->FROM	GR ISLD-LNX3345.00 - HOLT.CO3 345.00 345KV CKT 1	720	720	0.06636	129.6992	P12:115:NPPD:1168B:ALBION 7:PETERSBRG.N7:BTB
FDNS	00NR	0	17SP	G15_042	TO->FROM	GR ISLD-LNX3345.00 - HOLT.CO3 345.00 345KV CKT 1	720	720	0.06468	129.6955	FERGSFL4 230.00 - WAHPETON 230KV CKT 1
FDNS	00NR	0	17SP	G15_042	TO->FROM	GR ISLD-LNX3345.00 - HOLT.CO3 345.00 345KV CKT 1	720	720	0.06464	129.681	FARGO - JAMES TOWN 230KV CKT 1
FDNS	00NR	0	17SP	G15_042	TO->FROM	GR ISLD-LNX3345.00 - HOLT.CO3 345.00 345KV CKT 1	720	720	0.06495	129.6758	G15094_T 345.00 - LARAMIE RIVER 345KV CKT 1
FDNS	00NR	0	17SP	G15_042	TO->FROM	GR ISLD-LNX3345.00 - HOLT.CO3 345.00 345KV CKT 1	720	720	0.06466	129.6756	GEN501811 1-RODEMACHER UNIT 1
FDNS	00NR	0	17SP	G15_042	TO->FROM	GR ISLD-LNX3345.00 - HOLT.CO3 345.00 345KV CKT 1	720	720	0.06482	129.6691	ARKANSAS NUCLEAR ONE - FT SMITH 500KV CKT 1
FDNS	00NR	0	17SP	G15_042	TO->FROM	GR ISLD-LNX3345.00 - HOLT.CO3 345.00 345KV CKT 1	720	720	0.06482	129.6691	ARKANSAS NUCLEAR ONE - FT SMITH 500KV CKT 1

SOLUTION	GROUP	SCENARIO	SEASON	SOURCE	DIRECTION	MONITORED ELEMENT	RATEA (MVA)	RATEB(MVA)	TDF	TC%LOADING (% MVA)	CONTINGENCY
FDNS	00NR	0	17SP	G15_042	TO->FROM	GR ISLD-LNX3345.00 - HOLT.CO3 345.00 345KV CKT 1	720	720	0.06469	129.6632	APPLEDORN 4 230.00 - GRANITE FALLS 230KV CKT 1
FDNS	00NR	0	17SP	G15_042	TO->FROM	GR ISLD-LNX3345.00 - HOLT.CO3 345.00 345KV CKT 1	720	720	0.06469	129.6632	APPLEDORN 4 230.00 - GRANITE FALLS 230KV CKT 1
FDNS	00NR	0	17SP	G15_042	TO->FROM	GR ISLD-LNX3345.00 - HOLT.CO3 345.00 345KV CKT 1	720	720	0.065	129.6631	BYRON - PLEASANT VALLEY 345KV CKT 1
FDNS	00NR	0	17SP	G15_042	TO->FROM	GR ISLD-LNX3345.00 - HOLT.CO3 345.00 345KV CKT 1	720	720	0.06636	129.653	ALBION - PETERSBURG 115KV CKT 1
FDNS	00NR	0	17SP	G15_042	TO->FROM	GR ISLD-LNX3345.00 - HOLT.CO3 345.00 345KV CKT 1	720	720	0.06466	129.6381	P13:115-230:NPPD:NUCOR-3
FDNS	00NR	0	17SP	G15_042	TO->FROM	GR ISLD-LNX3345.00 - HOLT.CO3 345.00 345KV CKT 1	720	720	0.06464	129.6381	FARGO - JAMES TOWN 230KV CKT 2
FDNS	00NR	0	17SP	G15_042	TO->FROM	GR ISLD-LNX3345.00 - HOLT.CO3 345.00 345KV CKT 1	720	720	0.06587	129.6266	DENISON - SIOUX CITY 230KV CKT 1
FDNS	00NR	0	17SP	G15_042	TO->FROM	GR ISLD-LNX3345.00 - HOLT.CO3 345.00 345KV CKT 1	720	720	0.06466	129.5995	P13:230:UMZW:# 2218 #: FP IN MT. LOSS OF TRANSFORMER (AT2).
FDNS	00NR	0	17SP	G15_042	TO->FROM	GR ISLD-LNX3345.00 - HOLT.CO3 345.00 345KV CKT 1	720	720	0.06493	129.5894	ARPIN B3 345.00 - ROCKY RN B8 345.00 345KV CKT 1
FDNS	00NR	0	17SP	G15_042	TO->FROM	GR ISLD-LNX3345.00 - HOLT.CO3 345.00 345KV CKT 1	720	720	0.06351	129.5716	P12:115:NPPD:1164:ONEILL 7:JEFFREY9:BTB
FDNS	00NR	0	17SP	G15_042	TO->FROM	GR ISLD-LNX3345.00 - HOLT.CO3 345.00 345KV CKT 1	720	720	0.06466	129.5522	GEN334071 1-LEWIS CREEK 2
FDNS	00NR	0	17SP	G15_042	TO->FROM	GR ISLD-LNX3345.00 - HOLT.CO3 345.00 345KV CKT 1	720	720	0.06466	129.5466	GEN334070 1-LEWIS CREEK 1
FDNS	00NR	0	17SP	G15_042	TO->FROM	GR ISLD-LNX3345.00 - HOLT.CO3 345.00 345KV CKT 1	720	720	0.06466	129.5428	GEN337766 1-TRACTEBEL UNIT S1
FDNS	00NR	0	17SP	G15_042	TO->FROM	GR ISLD-LNX3345.00 - HOLT.CO3 345.00 345KV CKT 1	720	720	0.06466	129.5165	P13:115-345:NPPD:NUCOR-2
FDNS	00NR	0	17SP	G15_042	TO->FROM	GR ISLD-LNX3345.00 - HOLT.CO3 345.00 345KV CKT 1	720	720	0.06516	129.5142	PALXFRASBTHI
FDNS	00NR	0	17SP	G15_042	TO->FROM	GR ISLD-LNX3345.00 - HOLT.CO3 345.00 345KV CKT 1	720	720	0.06516	129.514	7PALM TAP 345.00 - SUB T 345KV CKT 1
FDNS	00NR	0	17SP	G15_042	TO->FROM	GR ISLD-LNX3345.00 - HOLT.CO3 345.00 345KV CKT 1	720	720	0.06351	129.5074	CLEARWATER - ONEILL 115KV CKT 1
FDNS	00NR	0	17SP	G15_042	TO->FROM	GR ISLD-LNX3345.00 - HOLT.CO3 345.00 345KV CKT 1	720	720	0.06466	129.4982	GEN501910 1-ACADIA UNIT ST1
FDNS	00NR	0	17SP	G15_042	TO->FROM	GR ISLD-LNX3345.00 - HOLT.CO3 345.00 345KV CKT 1	720	720	0.06518	129.4883	NOBLES - SPLIT ROCK 345KV CKT 1
FDNS	00NR	0	17SP	G15_042	TO->FROM	GR ISLD-LNX3345.00 - HOLT.CO3 345.00 345KV CKT 1	720	720	0.06523	129.4778	P12:115:NPPD:WAPA1:CHADRON7:BOXBUTE7:BTB
FDNS	00NR	0	17SP	G15_042	TO->FROM	GR ISLD-LNX3345.00 - HOLT.CO3 345.00 345KV CKT 1	720	720	0.06466	129.4766	GEN562596 1-G14_059_3 0.6900
FDNS	00NR	0	17SP	G15_042	TO->FROM	GR ISLD-LNX3345.00 - HOLT.CO3 345.00 345KV CKT 1	720	720	0.06451	129.476	MT VERN - STORLA 115KV CKT 1
FDNS	00NR	0	17SP	G15_042	TO->FROM	GR ISLD-LNX3345.00 - HOLT.CO3 345.00 345KV CKT 1	720	720	0.06466	129.465	GEN345765 H-1SIOUX 2 18.000
FDNS	00NR	0	17SP	G15_042	TO->FROM	GR ISLD-LNX3345.00 - HOLT.CO3 345.00 345KV CKT 1	720	720	0.06495	129.4437	CHADRON - WAYSIDE 115KV CKT 1
FDNS	00NR	0	17SP	G15_042	TO->FROM	GR ISLD-LNX3345.00 - HOLT.CO3 345.00 345KV CKT 1	720	720	0.06495	129.4437	P13:115-230:NPPD:WAYSIDE4:T1
FDNS	00NR	0	17SP	G15_042	TO->FROM	GR ISLD-LNX3345.00 - HOLT.CO3 345.00 345KV CKT 1	720	720	0.06495	129.4411	WAYSIDE (WAYSIDE T1) 230/115/13.8KV TRANSFORMER CKT 1
FDNS	00NR	0	17SP	G15_042	TO->FROM	GR ISLD-LNX3345.00 - HOLT.CO3 345.00 345KV CKT 1	720	720	0.06636	129.4326	NELIGH - PETERSBRG.N7115.00 115KV CKT 1
FDNS	00NR	0	17SP	G15_042	TO->FROM	GR ISLD-LNX3345.00 - HOLT.CO3 345.00 345KV CKT 1	720	720	0.06466	129.4305	GEN337764 1-TRACTEBEL UNIT C1
FDNS	00NR	0	17SP	G15_042	TO->FROM	GR ISLD-LNX3345.00 - HOLT.CO3 345.00 345KV CKT 1	720	720	0.06466	129.4305	GEN337765 1-TRACTEBEL UNIT C2
FDNS	00NR	0	17SP	G15_042	TO->FROM	GR ISLD-LNX3345.00 - HOLT.CO3 345.00 345KV CKT 1	720	720	0.06466	129.4182	GRAND GULF 500/22.0KV TRANSFORMER CKT 1
FDNS	00NR	0	17SP	G15_042	TO->FROM	GR ISLD-LNX3345.00 - HOLT.CO3 345.00 345KV CKT 1	720	720	0.0648	129.4022	FRANKS - HUBEN 345KV CKT 1
FDNS	00NR	0	17SP	G15_042	TO->FROM	GR ISLD-LNX3345.00 - HOLT.CO3 345.00 345KV CKT 1	720	720	0.06523	129.3835	CHADRON - DUNLAP 115KV CKT 1
FDNS	00NR	0	17SP	G15_042	TO->FROM	GR ISLD-LNX3345.00 - HOLT.CO3 345.00 345KV CKT 1	720	720	0.06466	129.1445	GEN659118 1-LARAMIE RIVER UNIT1
FDNS	00NR	0	17SP	G15_042	TO->FROM	GR ISLD-LNX3345.00 - HOLT.CO3 345.00 345KV CKT 1	720	720	0.06466	129.0069	GEN563282 1-G15094_3 0.6900
FDNS	00NR	0	17SP	G15_042	TO->FROM	GR ISLD-LNX3345.00 - HOLT.CO3 345.00 345KV CKT 1	720	720	0.06466	128.7833	BASE CASE
FDNS	00NR	0	17SP	G15_042	TO->FROM	GR ISLD-LNX3345.00 - HOLT.CO3 345.00 345KV CKT 1	720	720	0.07669	128.7328	COLUMWEST - KELLY 230KV CKT 1
FDNS	00NR	0	17SP	G15_042	TO->FROM	GR ISLD-LNX3345.00 - HOLT.CO3 345.00 345KV CKT 1	720	720	0.06466	128.6085	GR ISLD-LNX3345.00 345KV SWITCHED SHUNT
FDNS	00NR	0	17SP	G15_042	TO->FROM	GR ISLD-LNX3345.00 - HOLT.CO3 345.00 345KV CKT 1	720	720	0.06466	128.5741	GEN645001 1-FORT CALHOUN 1
FDNS	00NR	0	17SP	G15_042	TO->FROM	GR ISLD-LNX3345.00 - HOLT.CO3 345.00 345KV CKT 1	720	720	0.06482	128.523	FT THOMPSON - OAHE 230KV CKT 1
FDNS	00NR	0	17SP	G15_042	TO->FROM	GR ISLD-LNX3345.00 - HOLT.CO3 345.00 345KV CKT 1	720	720	0.06482	128.523	FT THOMPSON - OAHE 230KV CKT 1
FDNS	00NR	0	17SP	G15_042	TO->FROM	GR ISLD-LNX3345.00 - HOLT.CO3 345.00 345KV CKT 1	720	720	0.06482	128.523	FT THOMPSON - OAHE 230KV CKT 2
FDNS	00NR	0	17SP	G15_042	TO->FROM	GR ISLD-LNX3345.00 - HOLT.CO3 345.00 345KV CKT 1	720	720	0.06482	128.523	FT THOMPSON - OAHE 230KV CKT 2
FDNS	00NR	0	17SP	G15_042	TO->FROM	GR ISLD-LNX3345.00 - HOLT.CO3 345.00 345KV CKT 1	720	720	0.06483	128.4833	FT THOMPSON - OAHE 230KV CKT 3
FDNS	00NR	0	17SP	G15_042	TO->FROM	GR ISLD-LNX3345.00 - HOLT.CO3 345.00 345KV CKT 1	720	720	0.06483	128.4833	FT THOMPSON - OAHE 230KV CKT 3
FDNS	00NR	0	17SP	G15_042	TO->FROM	GR ISLD-LNX3345.00 - HOLT.CO3 345.00 345KV CKT 1	720	720	0.06483	128.4833	FT THOMPSON - OAHE 230KV CKT 4
FDNS	00NR	0	17SP	G15_042	TO->FROM	GR ISLD-LNX3345.00 - HOLT.CO3 345.00 345KV CKT 1	720	720	0.06483	128.4833	FT THOMPSON - OAHE 230KV CKT 4
FDNS	00NR	0	17SP	G15_042	TO->FROM	GR ISLD-LNX3345.00 - HOLT.CO3 345.00 345KV CKT 1	720	720	0.06466	128.4448	FTTHOM2-LNX3345.00 345KV SWITCHED SHUNT
FDNS	00NR	0	17SP	G15_042	TO->FROM	GR ISLD-LNX3345.00 - HOLT.CO3 345.00 345KV CKT 1	720	720	0.06626	128.4156	AXTELL - PAULINE 345KV CKT 1
FDNS	00NR	0	17SP	G15_042	TO->FROM	GR ISLD-LNX3345.00 - HOLT.CO3 345.00 345KV CKT 1	720	720	0.06445	128.3602	GRAND ISLAND (GRAND.ISD T5) 230/115/13.8KV TRANSFORMER CKT 2
FDNS	00NR	0	17SP	G15_042	TO->FROM	GR ISLD-LNX3345.00 - HOLT.CO3 345.00 345KV CKT 1	720	720	0.06445	128.3602	GRAND ISLAND (GRAND.ISD T5) 230/115/13.8KV TRANSFORMER CKT 2
FDNS	00NR	0	17SP	G15_042	TO->FROM	GR ISLD-LNX3345.00 - HOLT.CO3 345.00 345KV CKT 1	720	720	0.06445	128.3578	GRAND ISLAND (GRAND.ISD T2) 230/115/13.8KV TRANSFORMER CKT 1
FDNS	00NR	0	17SP	G15_042	TO->FROM	GR ISLD-LNX3345.00 - HOLT.CO3 345.00 345KV CKT 1	720	720	0.06445	128.3578	GRAND ISLAND (GRAND.ISD T2) 230/115/13.8KV TRANSFORMER CKT 1
FDNS	00NR	0	17SP	G15_042	TO->FROM	GR ISLD-LNX3345.00 - HOLT.CO3 345.00 345KV CKT 1	720	720	0.06577	128.3033	MAXWELL - NORTH PLATTE 115KV CKT 1
FDNS	00NR	0	17SP	G15_042	TO->FROM	GR ISLD-LNX3345.00 - HOLT.CO3 345.00 345KV CKT 1	720	720	0.06473	128.2897	ANTELOP-LNX3345.00 - BRDLAND-LNX3345.00 345KV CKT 1
FDNS	00NR	0	17SP	G15_042	TO->FROM	GR ISLD-LNX3345.00 - HOLT.CO3 345.00 345KV CKT 1	720	720	0.06464	128.28	GRAND ISLAND (GI KU1B) 345/230/13.8KV TRANSFORMER CKT 2
FDNS	00NR	0	17SP	G15_042	TO->FROM	GR ISLD-LNX3345.00 - HOLT.CO3 345.00 345KV CKT 1	720	720	0.06464	128.28	GRAND ISLAND (GI KU1B) 345/230/13.8KV TRANSFORMER CKT 2
FDNS	00NR	0	17SP	G15_042	TO->FROM	GR ISLD-LNX3345.00 - HOLT.CO3 345.00 345KV CKT 1	720	720	0.06464	128.279	GRAND ISLAND (GI KU1A) 345/230/13.8KV TRANSFORMER CKT 1
FDNS	00NR	0	17SP	G15_042	TO->FROM	GR ISLD-LNX3345.00 - HOLT.CO3 345.00 345KV CKT 1	720	720	0.06464	128.279	GRAND ISLAND (GI KU1A) 345/230/13.8KV TRANSFORMER CKT 1
FDNS	00NR	0	17SP	G15_042	TO->FROM	GR ISLD-LNX3345.00 - HOLT.CO3 345.00 345KV CKT 1	720	720	0.06729	128.2493	SUB 3454 - WAGENER 345KV CKT 1
FDNS	00NR	0	17SP	G15_042	TO->FROM	GR ISLD-LNX3345.00 - HOLT.CO3 345.00 345KV CKT 1	720	720	0.06729	128.2493	SUB 3454 - WAGENER 345KV CKT 1
FDNS	00NR	0	17SP	G15_042	TO->FROM	GR ISLD-LNX3345.00 - HOLT.CO3 345.00 345KV CKT 1	720	720	0.06466	128.1978	GEN652548 5-FT RANDAL
FDNS	00NR	0	17SP	G15_042	TO->FROM	GR ISLD-LNX3345.00 - HOLT.CO3 345.00 345KV CKT 1	720	720	0.06466	128.1978	GEN652549 7-FT RANDAL
FDNS	00NR	0	17SP	G15_042	TO->FROM	GR ISLD-LNX3345.00 - HOLT.CO3 345.00 345KV CKT 1	720	720	0.06466	128.1853	GEN652547 3-FT RANDAL
FDNS	00NR	0	17SP	G15_042	TO->FROM	GR ISLD-LNX3345.00 - HOLT.CO3 345.00 345KV CKT 1	720	720	0.06494	128.1852	P12:115:UMZW:# 172 #: WI IN SD.
FDNS	00NR	0	17SP	G15_042	TO->FROM	GR ISLD-LNX3345.00 - HOLT.CO3 345.00 345KV CKT 1	720	720	0.06661	128.1808	GERALD GENTLEMAN STATION - RED WILLOW 345KV CKT 1
FDNS	00NR	0	17SP	G15_042	TO->FROM	GR ISLD-LNX3345.00 - HOLT.CO3 345.00 345KV CKT 1	720	720	0.06466	128.1766	GEN660003 3-HURON WEST PARK
FDNS	00NR	0	17SP	G15_042	TO->FROM	GR ISLD-LNX3345.00 - HOLT.CO3 345.00 345KV CKT 1	720	720	0.06853	128.1703	MINGO - RED WILLOW 345KV CKT 1
FDNS	00NR	0	17SP	G15_042	TO->FROM	GR ISLD-LNX3345.00 - HOLT.CO3 345.00 345KV CKT 1	720	720	0.06853	128.1703	MINGO - RED WILLOW 345KV CKT 1
FDNS	00NR	0	17SP	G15_042	TO->FROM	GR ISLD-LNX3345.00 - HOLT.CO3 345.00 345KV CKT 1	720	720	0.06484	128.1617	G11_051T 345.00 - WOODWARD DISTRICT EHV 345KV CKT 1
FDNS	00NR	0	17SP	G15_042	TO->FROM	GR ISLD-LNX3345.00 - HOLT.CO3 345.00 345KV CKT 1	720	720	0.06466	128.1458	GEN600020 2-ANGUS ANSON1
FDNS	00NR	0	17SP	G15_042	TO->FROM	GR ISLD-LNX3345.00 - HOLT.CO3 345.00 345KV CKT 1	720	720	0.06672	128.1417	LOUP CITY - NORTH LOUP 115KV CKT 1
FDNS	00NR	0	17SP	G15_042	TO->FROM	GR ISLD-LNX3345.00 - HOLT.CO3 345.00 345KV CKT 1	720	720	0.06466	128.1392	GEN600021 3-ANGUS ANSON2
FDNS	00NR	0	17SP	G15_042	TO->FROM	GR ISLD-LNX3345.00 - HOLT.CO3 345.00 345KV CKT 1	720	720	0.06466	128.1088	GEN600012 2-BLACK DOG GEN 2
FDNS	00NR	0	17SP	G15_042	TO->FROM	GR ISLD-LNX3345.00 - HOLT.CO3 345.00 345KV CKT 1	720	720	0.06466	128.1041	GEN590010 1-ERCOT EQUIVALENCE
FDNS	00NR	0	17SP	G15_042	TO->FROM	GR ISLD-LNX3345.00 - HOLT.CO3 345.00 345KV CKT 1	720	720	0.06466	128.0882	GEN659290 1-EDGECOL
FDNS	00NR	0	17SP	G15_042	TO->FROM	GR ISLD-LNX3345.00 - HOLT.CO3 345.00 345KV CKT 1	720	720	0.0669	128.0814	MINGO - SETAB 345KV CKT 1
FDNS	00NR	0	17SP	G15_042	TO->FROM	GR ISLD-LNX3345.00 - HOLT.CO3 345.00 345KV CKT 1	720	720	0.0669	128.0814	MINGO - SETAB 345KV CKT 1
FDNS	00NR	0	17SP	G15_042	TO->FROM	GR ISLD-LNX3345.00 - HOLT.CO3 345.00 345KV CKT 1	720	720	0.06466	128.0735	EASTDC - ERCOT EQUIVALENCE 345KV CKT 1
FDNS	00NR	0	17SP	G15_042	TO->FROM	GR ISLD-LNX3345.00 - HOLT.CO3 345.00 345KV CKT 1	720	720	0.06466	128.0735	GEN629072 4-LANSING GENERATOR FOR UNITS NO4 EIA CODE 1

SOLUTION	GROUP	SCENARIO	SEASON	SOURCE	DIRECTION	MONITORED ELEMENT	RATEA (MVA)	RATEB(MVA)	TDF	TC%LOADING (% MVA)	CONTINGENCY
FDNS	00NR	0	17SP	G15_042	TO->FROM	GR ISLD-LNX3345.00 - HOLT.CO3 345.00 345KV CKT 1	720	720	0.06466	128.0722	GEN590011 2-ERCOT EQUIVALENCE
FDNS	00NR	0	17SP	G15_042	TO->FROM	GR ISLD-LNX3345.00 - HOLT.CO3 345.00 345KV CKT 1	720	720	0.06466	128.0699	GEN300003 1-THOMAS HILL UNIT 3
FDNS	00NR	0	17SP	G15_042	TO->FROM	GR ISLD-LNX3345.00 - HOLT.CO3 345.00 345KV CKT 1	720	720	0.06463	128.0352	GRAND ISLAND (GI KU3A) 345/230/13.8KV TRANSFORMER CKT 3
FDNS	00NR	0	17SP	G15_042	TO->FROM	GR ISLD-LNX3345.00 - HOLT.CO3 345.00 345KV CKT 1	720	720	0.06463	128.0352	GRAND ISLAND (GI KU3A) 345/230/13.8KV TRANSFORMER CKT 3
FDNS	00NR	0	17SP	G15_042	TO->FROM	GR ISLD-LNX3345.00 - HOLT.CO3 345.00 345KV CKT 1	720	720	0.06466	128.0217	GEN652414 4-FT PECK
FDNS	00NR	0	17SP	G15_042	TO->FROM	GR ISLD-LNX3345.00 - HOLT.CO3 345.00 345KV CKT 1	720	720	0.06466	128.0217	GEN652415 5-FT PECK
FDNS	00NR	0	17SP	G15_042	TO->FROM	GR ISLD-LNX3345.00 - HOLT.CO3 345.00 345KV CKT 1	720	720	0.06466	128.0199	LADISH 115/13.2KV TRANSFORMER CKT 1
FDNS	00NR	0	17SP	G15_042	TO->FROM	GR ISLD-LNX3345.00 - HOLT.CO3 345.00 345KV CKT 1	720	720	0.06466	128.0124	GEN660001 2-ABERDEEN SIEBRECHT
FDNS	00NR	0	17SP	G15_042	TO->FROM	GR ISLD-LNX3345.00 - HOLT.CO3 345.00 345KV CKT 1	720	720	0.04957	127.9985	DIXONCO 230.00 - TWIN CHURCH 230KV CKT 1
FDNSLock	00NR	0	17SP	G15_042	TO->FROM	GR ISLD-LNX3345.00 - HOLT.CO3 345.00 345KV CKT 1	720	720	0.06667	127.9874	CENTRAL CITY - GRAND ISLAND 115KV CKT 1
FDNS	00NR	0	17SP	G15_042	TO->FROM	GR ISLD-LNX3345.00 - HOLT.CO3 345.00 345KV CKT 1	720	720	0.06466	127.9869	EMERY 161/18.0KV TRANSFORMER CKT 1
FDNS	00NR	0	17SP	G15_042	TO->FROM	GR ISLD-LNX3345.00 - HOLT.CO3 345.00 345KV CKT 1	720	720	0.06466	127.9678	GEN600050 1-FEP
FDNS	00NR	0	17SP	G15_042	TO->FROM	GR ISLD-LNX3345.00 - HOLT.CO3 345.00 345KV CKT 1	720	720	0.06466	127.9662	GEN652345 W-G07_023IS_2 0.6900
FDNS	00NR	0	17SP	G15_042	TO->FROM	GR ISLD-LNX3345.00 - HOLT.CO3 345.00 345KV CKT 1	720	720	0.06879	127.9535	G15088_T 345.00 - PAULINE 345KV CKT 1
FDNS	00NR	0	17SP	G15_042	TO->FROM	GR ISLD-LNX3345.00 - HOLT.CO3 345.00 345KV CKT 1	720	720	0.06466	127.9461	GEN 11104 1-J262_GEN 0.6000
FDNS	00NR	0	17SP	G15_042	TO->FROM	GR ISLD-LNX3345.00 - HOLT.CO3 345.00 345KV CKT 1	720	720	0.06466	127.9461	GEN 11108 1-J263_GEN 0.6000
FDNS	00NR	0	17SP	G15_042	TO->FROM	GR ISLD-LNX3345.00 - HOLT.CO3 345.00 345KV CKT 1	720	720	0.06466	127.925	GEN600046 1-MECST
FDNS	00NR	0	17SP	G15_042	TO->FROM	GR ISLD-LNX3345.00 - HOLT.CO3 345.00 345KV CKT 1	720	720	0.06473	127.9234	P12:345:UMZB:# 102 #: AVS BD IN ND. AVS BRD LR
FDNS	00NR	0	17SP	G15_042	TO->FROM	GR ISLD-LNX3345.00 - HOLT.CO3 345.00 345KV CKT 1	720	720	0.06473	127.9218	P12:345:UMZB:# 103 #: BD IN SD. LOSS OF LINE
FDNS	00NR	0	17SP	G15_042	TO->FROM	GR ISLD-LNX3345.00 - HOLT.CO3 345.00 345KV CKT 1	720	720	0.06473	127.9214	BRDLAND-LNX3345.00 - HURON 345KV CKT Z
FDNS	00NR	0	17SP	G15_042	TO->FROM	GR ISLD-LNX3345.00 - HOLT.CO3 345.00 345KV CKT 1	720	720	0.06466	127.9202	GEN300007 1-NEW MADRID UNIT 2
FDNS	00NR	0	17SP	G15_042	TO->FROM	GR ISLD-LNX3345.00 - HOLT.CO3 345.00 345KV CKT 1	720	720	0.06473	127.9198	BROADLAND - HURON 230KV CKT 1
FDNS	00NR	0	17SP	G15_042	TO->FROM	GR ISLD-LNX3345.00 - HOLT.CO3 345.00 345KV CKT 1	720	720	0.06473	127.9197	HURON (BD KU2A) 345/230/13.8KV TRANSFORMER CKT 1
FDNS	00NR	0	17SP	G15_042	TO->FROM	GR ISLD-LNX3345.00 - HOLT.CO3 345.00 345KV CKT 1	720	720	0.06473	127.9197	HURON (BD KU2A) 345/230/13.8KV TRANSFORMER CKT 1
FDNS	00NR	0	17SP	G15_042	TO->FROM	GR ISLD-LNX3345.00 - HOLT.CO3 345.00 345KV CKT 1	720	720	0.06466	127.9196	G830_SUB 115.00 - GRE-MCHENRY7115.00 115KV CKT 1
FDNS	00NR	0	17SP	G15_042	TO->FROM	GR ISLD-LNX3345.00 - HOLT.CO3 345.00 345KV CKT 1	720	720	0.06466	127.9178	G830_SUB 115.00 115/34.5KV TRANSFORMER CKT 1
FDNS	00NR	0	17SP	G15_042	TO->FROM	GR ISLD-LNX3345.00 - HOLT.CO3 345.00 345KV CKT 1	720	720	0.06466	127.9136	GEN300006 1-NEW MADRID UNIT 1
FDNS	00NR	0	17SP	G15_042	TO->FROM	GR ISLD-LNX3345.00 - HOLT.CO3 345.00 345KV CKT 1	720	720	0.06499	127.9045	POST ROCK (POSTROCK T1) 345/230/13.8KV TRANSFORMER CKT 1
FDNS	00NR	0	17SP	G15_042	TO->FROM	GR ISLD-LNX3345.00 - HOLT.CO3 345.00 345KV CKT 1	720	720	0.06466	127.8995	DRAYTON - LETELLIER 230KV CKT 1
FDNS	00NR	0	17SP	G15_042	TO->FROM	GR ISLD-LNX3345.00 - HOLT.CO3 345.00 345KV CKT 1	720	720	0.06466	127.8994	GEN600047 1-MECCT1
FDNS	00NR	0	17SP	G15_042	TO->FROM	GR ISLD-LNX3345.00 - HOLT.CO3 345.00 345KV CKT 1	720	720	0.06466	127.8839	GEN600063 1-COLVILLE GEN 1
FDNS	00NR	0	17SP	G15_042	TO->FROM	GR ISLD-LNX3345.00 - HOLT.CO3 345.00 345KV CKT 1	720	720	0.06466	127.8839	GEN600064 2-COLVILLE GEN 2
FDNS	00NR	0	17SP	G15_042	TO->FROM	GR ISLD-LNX3345.00 - HOLT.CO3 345.00 345KV CKT 1	720	720	0.06466	127.8805	GEN600043 7-BLUE LAKE5
FDNS	00NR	0	17SP	G15_042	TO->FROM	GR ISLD-LNX3345.00 - HOLT.CO3 345.00 345KV CKT 1	720	720	0.06466	127.8805	GEN600044 8-BLUE LAKE6
FDNS	00NR	0	17SP	G15_042	TO->FROM	GR ISLD-LNX3345.00 - HOLT.CO3 345.00 345KV CKT 1	720	720	0.06315	127.8493	COOPER - MOORE 345KV CKT 1
FDNS	00NR	0	17SP	G15_042	TO->FROM	GR ISLD-LNX3345.00 - HOLT.CO3 345.00 345KV CKT 1	720	720	0.06466	127.8416	GEN600065 7-HIGH BRIDGE
FDNS	00NR	0	17SP	G15_042	TO->FROM	GR ISLD-LNX3345.00 - HOLT.CO3 345.00 345KV CKT 1	720	720	0.06466	127.8416	GEN600066 8-HIGH BRIDGE
FDNS	00NR	0	17SP	G15_042	TO->FROM	GR ISLD-LNX3345.00 - HOLT.CO3 345.00 345KV CKT 1	720	720	0.06466	127.8396	GEN600014 4-BLACK DOG GEN 4
FDNS	00NR	0	17SP	G15_042	TO->FROM	GR ISLD-LNX3345.00 - HOLT.CO3 345.00 345KV CKT 1	720	720	0.06466	127.8352	GEN600011 5-BLACK DOG GEN 1
FDNS	00NR	0	17SP	G15_042	TO->FROM	GR ISLD-LNX3345.00 - HOLT.CO3 345.00 345KV CKT 1	720	720	0.06466	127.8275	GEN600071 10-RIVER SIDE
FDNS	00NR	0	17SP	G15_042	TO->FROM	GR ISLD-LNX3345.00 - HOLT.CO3 345.00 345KV CKT 1	720	720	0.06466	127.8274	GEN600070 9-RIVER SIDE
FDNS	00NR	0	17SP	G15_042	TO->FROM	GR ISLD-LNX3345.00 - HOLT.CO3 345.00 345KV CKT 1	720	720	0.06466	127.8156	GEN659273 2-GROTON SYNC COND
FDNS	00NR	0	17SP	G15_042	TO->FROM	GR ISLD-LNX3345.00 - HOLT.CO3 345.00 345KV CKT 1	720	720	0.06466	127.8156	GEN659294 1-WILTONCOL9
FDNS	00NR	0	17SP	G15_042	TO->FROM	GR ISLD-LNX3345.00 - HOLT.CO3 345.00 345KV CKT 1	720	720	0.06466	127.8136	GEN600007 7-RIVERSIDE GEN 7
FDNS	00NR	0	17SP	G15_042	TO->FROM	GR ISLD-LNX3345.00 - HOLT.CO3 345.00 345KV CKT 1	720	720	0.06677	127.8127	103RD & ROKEBY - MOORE 345KV CKT 1
FDNS	00NR	0	17SP	G15_042	TO->FROM	GR ISLD-LNX3345.00 - HOLT.CO3 345.00 345KV CKT 1	720	720	0.06677	127.8127	103RD & ROKEBY - MOORE 345KV CKT 1
FDNS	00NR	0	17SP	G15_042	TO->FROM	GR ISLD-LNX3345.00 - HOLT.CO3 345.00 345KV CKT 1	720	720	0.06466	127.8082	GEN600045 4-ANSON
FDNS	00NR	0	17SP	G15_042	TO->FROM	GR ISLD-LNX3345.00 - HOLT.CO3 345.00 345KV CKT 1	720	720	0.07669	127.8005	COLUMWEST - GRAND ISLAND 230KV CKT 1
FDNS	00NR	0	17SP	G15_042	TO->FROM	GR ISLD-LNX3345.00 - HOLT.CO3 345.00 345KV CKT 1	720	720	0.06466	127.7847	GEN600017 C-LS POWER CT
FDNS	00NR	0	17SP	G15_042	TO->FROM	GR ISLD-LNX3345.00 - HOLT.CO3 345.00 345KV CKT 1	720	720	0.06466	127.783	LANSING WEST 161/22.0KV TRANSFORMER CKT 1
FDNS	00NR	0	17SP	G15_042	TO->FROM	GR ISLD-LNX3345.00 - HOLT.CO3 345.00 345KV CKT 1	720	720	0.06466	127.7806	GEN659192 6-LYNN
FDNS	00NR	0	17SP	G15_042	TO->FROM	GR ISLD-LNX3345.00 - HOLT.CO3 345.00 345KV CKT 1	720	720	0.06466	127.7798	GEN659162 4-RED WLCK
FDNS	00NR	0	17SP	G15_042	TO->FROM	GR ISLD-LNX3345.00 - HOLT.CO3 345.00 345KV CKT 1	720	720	0.06466	127.7798	GEN659163 5-BLACK WDCK
FDNS	00NR	0	17SP	G15_042	TO->FROM	GR ISLD-LNX3345.00 - HOLT.CO3 345.00 345KV CKT 1	720	720	0.06484	127.7672	G11_051T 345.00 - TATONGA7 345.00 345KV CKT 1
FDNS	00NR	0	17SP	G15_042	TO->FROM	GR ISLD-LNX3345.00 - HOLT.CO3 345.00 345KV CKT 1	720	720	0.06466	127.7597	GEN 10648 1-G830_GEN 0.6900
FDNS	00NR	0	17SP	G15_042	TO->FROM	GR ISLD-LNX3345.00 - HOLT.CO3 345.00 345KV CKT 1	720	720	0.06466	127.7506	CENTER 230/22.0KV TRANSFORMER CKT 1
FDNS	00NR	0	17SP	G15_042	TO->FROM	GR ISLD-LNX3345.00 - HOLT.CO3 345.00 345KV CKT 1	720	720	0.06466	127.7325	GEN615021 1-GRE-ER 14G 16.000
FDNS	00NR	0	17SP	G15_042	TO->FROM	GR ISLD-LNX3345.00 - HOLT.CO3 345.00 345KV CKT 1	720	720	0.06446	127.7317	OAHE - SULLEY BUTTE 230KV CKT 1
FDNS	00NR	0	17SP	G15_042	TO->FROM	GR ISLD-LNX3345.00 - HOLT.CO3 345.00 345KV CKT 1	720	720	0.06466	127.7276	GEN659031 1-G12_014IS_4 0.6900
FDNS	00NR	0	17SP	G15_042	TO->FROM	GR ISLD-LNX3345.00 - HOLT.CO3 345.00 345KV CKT 1	720	720	0.06466	127.7153	GEN615052 1-CAMBRIDGE GENERATING STATION
FDNS	00NR	0	17SP	G15_042	TO->FROM	GR ISLD-LNX3345.00 - HOLT.CO3 345.00 345KV CKT 1	720	720	0.06466	127.6794	GEN615015 1-GRE-SPRITWDG13.200
FDNS	00NR	0	17SP	G15_042	TO->FROM	GR ISLD-LNX3345.00 - HOLT.CO3 345.00 345KV CKT 1	720	720	0.06466	127.6783	GEN681522 3-GENOA 3
FDNS	00NR	0	17SP	G15_042	TO->FROM	GR ISLD-LNX3345.00 - HOLT.CO3 345.00 345KV CKT 1	720	720	0.06622	127.6289	AXTELL - POST ROCK 345KV CKT 1
FDNS	00NR	0	17SP	G15_042	TO->FROM	GR ISLD-LNX3345.00 - HOLT.CO3 345.00 345KV CKT 1	720	720	0.06473	127.6025	ANTELOP-LNX3345.00 - ANTELOPE VALLEY 345KV CKT Z
FDNS	00NR	0	17SP	G15_042	TO->FROM	GR ISLD-LNX3345.00 - HOLT.CO3 345.00 345KV CKT 1	720	720	0.06446	127.592	SULLYBT-LNX3230.00 - WHITLOK 230KV CKT 1
FDNS	00NR	0	17SP	G15_042	TO->FROM	GR ISLD-LNX3345.00 - HOLT.CO3 345.00 345KV CKT 1	720	720	0.06446	127.5874	SULLEY BUTTE - SULLYBT-LNX3230.00 230KV CKT Z
FDNS	00NR	0	17SP	G15_042	TO->FROM	GR ISLD-LNX3345.00 - HOLT.CO3 345.00 345KV CKT 1	720	720	0.06466	127.5764	GEN660016 1-B_H WIND 0.7000
FDNS	00NR	0	17SP	G15_042	TO->FROM	GR ISLD-LNX3345.00 - HOLT.CO3 345.00 345KV CKT 1	720	720	0.06466	127.5654	GEN659353 1-DEERCREK CTG18.000
FDNS	00NR	0	17SP	G15_042	TO->FROM	GR ISLD-LNX3345.00 - HOLT.CO3 345.00 345KV CKT 1	720	720	0.06466	127.5612	GEN659354 1-DEERCREK STG18.000
FDNS	00NR	0	17SP	G15_042	TO->FROM	GR ISLD-LNX3345.00 - HOLT.CO3 345.00 345KV CKT 1	720	720	0.06446	127.5282	P12:230:UMZB:# 114 #: SB IN SD. SB-WK-GH
FDNS	00NR	0	17SP	G15_042	TO->FROM	GR ISLD-LNX3345.00 - HOLT.CO3 345.00 345KV CKT 1	720	720	0.06446	127.5282	P12:230:UMZB:# 117 #: WK IN SD. SB-WK-GH
FDNS	00NR	0	17SP	G15_042	TO->FROM	GR ISLD-LNX3345.00 - HOLT.CO3 345.00 345KV CKT 1	720	720	0.06484	127.5177	MATHWSN7 345.00 - TATONGA7 345.00 345KV CKT 1
FDNS	00NR	0	17SP	G15_042	TO->FROM	GR ISLD-LNX3345.00 - HOLT.CO3 345.00 345KV CKT 1	720	720	0.06466	127.5002	GEN672303 3-BOUNDARY DAM GENERATOR 3
FDNS	00NR	0	17SP	G15_042	TO->FROM	GR ISLD-LNX3345.00 - HOLT.CO3 345.00 345KV CKT 1	720	720	0.06466	127.5002	GEN672305 5-BOUNDARY DAM GENERATOR 5
FDNS	00NR	0	17SP	G15_042	TO->FROM	GR ISLD-LNX3345.00 - HOLT.CO3 345.00 345KV CKT 1	720	720	0.06446	127.4951	GLENHAM - WHITLOK 230KV CKT 1
FDNS	00NR	0	17SP	G15_042	TO->FROM	GR ISLD-LNX3345.00 - HOLT.CO3 345.00 345KV CKT 1	720	720	0.06466	127.4941	GEN652906 1-G09_006IS_3 0.6900
FDNS	00NR	0	17SP	G15_042	TO->FROM	GR ISLD-LNX3345.00 - HOLT.CO3 345.00 345KV CKT 1	720	720	0.06466	127.4759	GEN672392 1-NBECGT1G 18.000
FDNS	00NR	0	17SP	G15_042	TO->FROM	GR ISLD-LNX3345.00 - HOLT.CO3 345.00 345KV CKT 1	720	720	0.06466	127.4527	GEN600067 9-HIGH BRIDGE
FDNS	00NR	0	17SP	G15_042	TO->FROM	GR ISLD-LNX3345.00 - HOLT.CO3 345.00 345KV CKT 1	720	720	0.06466	127.4505	GEN562832 1-G15042_3 0.6900

SOLUTION	GROUP	SCENARIO	SEASON	SOURCE	DIRECTION	MONITORED ELEMENT	RATEA (MVA)	RATEB(MVA)	TDF	TC%LOADING (% MVA)	CONTINGENCY
FDNS	00NR	0	17SP	G15_042	TO->FROM	GR ISLD-LNX3345.00 - HOLT.CO3 345.00 345KV CKT 1	720	720	0.06466	127.435	BISONMP4 230.00 - SQUARE BUTTE 230KV CKT 1
FDNS	00NR	0	17SP	G15_042	TO->FROM	GR ISLD-LNX3345.00 - HOLT.CO3 345.00 345KV CKT 1	720	720	0.06466	127.402	GEN910006 1-G12_012IS_3 0.6900
FDNS	00NR	0	17SP	G15_042	TO->FROM	GR ISLD-LNX3345.00 - HOLT.CO3 345.00 345KV CKT 1	720	720	0.06466	127.3922	GEN662101 1-WESSINGTON190.5750
FDNS	00NR	0	17SP	G15_042	TO->FROM	GR ISLD-LNX3345.00 - HOLT.CO3 345.00 345KV CKT 1	720	720	0.06466	127.3534	COYOTE 345/24.0KV TRANSFORMER CKT 1
FDNS	00NR	0	17SP	G15_042	TO->FROM	GR ISLD-LNX3345.00 - HOLT.CO3 345.00 345KV CKT 1	720	720	0.06466	127.3465	GEN652907 1-G09_007IS_3 0.6900
FDNS	00NR	0	17SP	G15_042	TO->FROM	GR ISLD-LNX3345.00 - HOLT.CO3 345.00 345KV CKT 1	720	720	0.06466	127.1817	GEN652543 3-BIG BEND
FDNS	00NR	0	17SP	G15_042	TO->FROM	GR ISLD-LNX3345.00 - HOLT.CO3 345.00 345KV CKT 1	720	720	0.06466	127.1499	SQUARE BUTTE - YNG2 4 230.00 230KV CKT 1
FDNS	00NR	0	17SP	G15_042	TO->FROM	GR ISLD-LNX3345.00 - HOLT.CO3 345.00 345KV CKT 1	720	720	0.06466	127.149	YNG2 4 230.00 230/20.0KV TRANSFORMER CKT 1
FDNS	00NR	0	17SP	G15_042	TO->FROM	GR ISLD-LNX3345.00 - HOLT.CO3 345.00 345KV CKT 1	720	720	0.06466	127.041	GEN659289 1-DAYCNTYWND W0.6900
FDNS	00NR	0	17SP	G15_042	TO->FROM	GR ISLD-LNX3345.00 - HOLT.CO3 345.00 345KV CKT 1	720	720	0.06466	127.0406	GEN659018 1-G14_003IS_3 0.6900
FDNS	00NR	0	17SP	G15_042	TO->FROM	GR ISLD-LNX3345.00 - HOLT.CO3 345.00 345KV CKT 1	720	720	0.06466	127.0088	GEN681542 6-JP MADGETT
FDNS	00NR	0	17SP	G15_042	TO->FROM	GR ISLD-LNX3345.00 - HOLT.CO3 345.00 345KV CKT 1	720	720	0.06466	127.0055	GEN563312 1-G15097_3 0.6900
FDNS	00NR	0	17SP	G15_042	TO->FROM	GR ISLD-LNX3345.00 - HOLT.CO3 345.00 345KV CKT 1	720	720	0.06446	126.9505	GLENHAM - L3 HAWDON 230KV CKT 1
FDNS	00NR	0	17SP	G15_042	TO->FROM	GR ISLD-LNX3345.00 - HOLT.CO3 345.00 345KV CKT 1	720	720	0.06466	126.8646	GEN659194 1-NDPRAIRWND1W0.6900
FDNS	00NR	0	17SP	G15_042	TO->FROM	GR ISLD-LNX3345.00 - HOLT.CO3 345.00 345KV CKT 1	720	720	0.06466	126.8507	GEN659010 4-G07_027IS_2 0.6900
FDNS	00NR	0	17SP	G15_042	TO->FROM	GR ISLD-LNX3345.00 - HOLT.CO3 345.00 345KV CKT 1	720	720	0.06466	126.8433	GEN652542 1-BIG BEND
FDNS	00NR	0	17SP	G15_042	TO->FROM	GR ISLD-LNX3345.00 - HOLT.CO3 345.00 345KV CKT 1	720	720	0.06466	126.8393	GEN652461 5-GARRISON
FDNS	00NR	0	17SP	G15_042	TO->FROM	GR ISLD-LNX3345.00 - HOLT.CO3 345.00 345KV CKT 1	720	720	0.06466	126.8392	GEN652460 4-GARRISON
FDNS	00NR	0	17SP	G15_042	TO->FROM	GR ISLD-LNX3345.00 - HOLT.CO3 345.00 345KV CKT 1	720	720	0.06466	126.7982	GEN563342 1-G15098_3 0.6900
FDNS	00NR	0	17SP	G15_042	TO->FROM	GR ISLD-LNX3345.00 - HOLT.CO3 345.00 345KV CKT 1	720	720	0.06466	126.7806	GEN652457 1-GARRISON
FDNS	00NR	0	17SP	G15_042	TO->FROM	GR ISLD-LNX3345.00 - HOLT.CO3 345.00 345KV CKT 1	720	720	0.06466	126.7806	GEN652458 2-GARRISON
FDNS	00NR	0	17SP	G15_042	TO->FROM	GR ISLD-LNX3345.00 - HOLT.CO3 345.00 345KV CKT 1	720	720	0.06466	126.7806	GEN652459 3-GARRISON
FDNS	00NR	0	17SP	G15_042	TO->FROM	GR ISLD-LNX3345.00 - HOLT.CO3 345.00 345KV CKT 1	720	720	0.06466	126.721	GEN659403 1-NDSUNFLWR W0.6900
FDNS	00NR	0	17SP	G15_042	TO->FROM	GR ISLD-LNX3345.00 - HOLT.CO3 345.00 345KV CKT 1	720	720	0.06466	126.6214	STANTON 230/18.0KV TRANSFORMER CKT 1
FDNS	00NR	0	17SP	G15_042	TO->FROM	GR ISLD-LNX3345.00 - HOLT.CO3 345.00 345KV CKT 1	720	720	0.06845	126.6156	AXTELL - SWEETWATER 345KV CKT 1
FDNS	00NR	0	17SP	G15_042	TO->FROM	GR ISLD-LNX3345.00 - HOLT.CO3 345.00 345KV CKT 1	720	720	0.06466	126.4632	CLAY BOSWELL 230/20.9KV TRANSFORMER CKT 1
FDNS	00NR	0	17SP	G15_042	TO->FROM	GR ISLD-LNX3345.00 - HOLT.CO3 345.00 345KV CKT 1	720	720	0.06466	126.3605	GEN659411 1-CAMPBLCNTY W0.6900
FDNS	00NR	0	17SP	G15_042	TO->FROM	GR ISLD-LNX3345.00 - HOLT.CO3 345.00 345KV CKT 1	720	720	0.06466	126.2074	ALMA 161 161/24.0KV TRANSFORMER CKT 1
FDNS	00NR	0	17SP	G15_042	TO->FROM	GR ISLD-LNX3345.00 - HOLT.CO3 345.00 345KV CKT 1	720	720	0.06466	126.2066	GEN652559 1-OAHE
FDNS	00NR	0	17SP	G15_042	TO->FROM	GR ISLD-LNX3345.00 - HOLT.CO3 345.00 345KV CKT 1	720	720	0.06466	126.1625	GEN659296 2-SDPRAIRWND1W0.6900
FDNS	00NR	0	17SP	G15_042	TO->FROM	GR ISLD-LNX3345.00 - HOLT.CO3 345.00 345KV CKT 1	720	720	0.06466	126.0189	RCDC EAST 4230.00 - RED CEDAR DC 230KV CKT 1
FDNS	00NR	0	17SP	G15_042	TO->FROM	GR ISLD-LNX3345.00 - HOLT.CO3 345.00 345KV CKT 1	720	720	0.06467	125.9988	P12:230:UMZB:# 112 #: NU IN SD. NU-RCDC & DRY CREEK XFMR
FDNS	00NR	0	17SP	G15_042	TO->FROM	GR ISLD-LNX3345.00 - HOLT.CO3 345.00 345KV CKT 1	720	720	0.06466	125.9981	GEN672321 1-SHAND GENERATOR 1
FDNS	00NR	0	17SP	G15_042	TO->FROM	GR ISLD-LNX3345.00 - HOLT.CO3 345.00 345KV CKT 1	720	720	0.06879	125.9869	G15088_T 345.00 - MOORE 345KV CKT 1
FDNS	00NR	0	17SP	G15_042	TO->FROM	GR ISLD-LNX3345.00 - HOLT.CO3 345.00 345KV CKT 1	720	720	0.06466	125.9773	GEN615010 1-STANTON4
FDNS	00NR	0	17SP	G15_042	TO->FROM	GR ISLD-LNX3345.00 - HOLT.CO3 345.00 345KV CKT 1	720	720	0.06466	125.9758	GEN672310 1-POPLAR RIVER GENERATOR 1
FDNS	00NR	0	17SP	G15_042	TO->FROM	GR ISLD-LNX3345.00 - HOLT.CO3 345.00 345KV CKT 1	720	720	0.06466	125.9758	GEN672311 2-POPLAR RIVER GENERATOR 2
FDNS	00NR	0	17SP	G15_042	TO->FROM	GR ISLD-LNX3345.00 - HOLT.CO3 345.00 345KV CKT 1	720	720	0.06466	125.902	GEN672306 6-BOUNDARY DAM GENERATOR 6
FDNS	00NR	0	17SP	G15_042	TO->FROM	GR ISLD-LNX3345.00 - HOLT.CO3 345.00 345KV CKT 1	720	720	0.06466	125.8623	GEN659453 1-GI1414GEN W0.6900
FDNS	00NR	0	17SP	G15_042	TO->FROM	GR ISLD-LNX3345.00 - HOLT.CO3 345.00 345KV CKT 1	720	720	0.06466	125.8611	GEN563302 1-G15096_3 0.6900
FDNS	00NR	0	17SP	G15_042	TO->FROM	GR ISLD-LNX3345.00 - HOLT.CO3 345.00 345KV CKT 1	720	720	0.06466	125.8387	GEN652557 4-OAHE
FDNS	00NR	0	17SP	G15_042	TO->FROM	GR ISLD-LNX3345.00 - HOLT.CO3 345.00 345KV CKT 1	720	720	0.06466	125.8386	GEN652556 2-OAHE
FDNS	00NR	0	17SP	G15_042	TO->FROM	GR ISLD-LNX3345.00 - HOLT.CO3 345.00 345KV CKT 1	720	720	0.06466	125.8386	GEN652558 6-OAHE
FDNS	00NR	0	17SP	G15_042	TO->FROM	GR ISLD-LNX3345.00 - HOLT.CO3 345.00 345KV CKT 1	720	720	0.06466	125.8302	GEN600004 2-PRAIRIE ISLAND G2
FDNS	00NR	0	17SP	G15_042	TO->FROM	GR ISLD-LNX3345.00 - HOLT.CO3 345.00 345KV CKT 1	720	720	0.06466	125.8258	GEN600003 1-PRAIRIE ISLAND G1
FDNS	00NR	0	17SP	G15_042	TO->FROM	GR ISLD-LNX3345.00 - HOLT.CO3 345.00 345KV CKT 1	720	720	0.06466	125.7543	GEN659141 1-K10215A
FDNS	00NR	0	17SP	G15_042	TO->FROM	GR ISLD-LNX3345.00 - HOLT.CO3 345.00 345KV CKT 1	720	720	0.06466	125.7028	GEN659110 1-LELAND OLDS UNIT1
FDNS	00NR	0	17SP	G15_042	TO->FROM	GR ISLD-LNX3345.00 - HOLT.CO3 345.00 345KV CKT 1	720	720	0.06466	125.6962	GEN657749 1-YOUNG 1 GENERATOR
FDNS	00NR	0	17SP	G15_042	TO->FROM	GR ISLD-LNX3345.00 - HOLT.CO3 345.00 345KV CKT 1	720	720	0.06466	125.5053	GEN652173 1-G09_001IS_2 0.6900
FDNS	00NR	0	17SP	G15_042	TO->FROM	GR ISLD-LNX3345.00 - HOLT.CO3 345.00 345KV CKT 1	720	720	0.06466	125.5016	GEN600006 1-AS KING
FDNS	00NR	0	17SP	G15_042	TO->FROM	GR ISLD-LNX3345.00 - HOLT.CO3 345.00 345KV CKT 1	720	720	0.06466	125.1933	GEN659407 1-ANTELPHILLSW0.6900
FDNS	00NR	0	17SP	G15_042	TO->FROM	GR ISLD-LNX3345.00 - HOLT.CO3 345.00 345KV CKT 1	720	720	0.06466	124.9041	GEN600005 1-MONTICELLO
FDNS	00NR	0	17SP	G15_042	TO->FROM	GR ISLD-LNX3345.00 - HOLT.CO3 345.00 345KV CKT 1	720	720	0.06466	124.2121	GEN600000 1-SHERBURNECNTY G1
FDNS	00NR	0	17SP	G15_042	TO->FROM	GR ISLD-LNX3345.00 - HOLT.CO3 345.00 345KV CKT 1	720	720	0.06466	123.8	GEN600001 2-SHERBURNE CNTY G2
FDNS	00NR	0	17SP	G15_042	TO->FROM	GR ISLD-LNX3345.00 - HOLT.CO3 345.00 345KV CKT 1	720	720	0.06466	123.5969	GEN620315 1-BIG STONE GEN
FDNS	00NR	0	17SP	G15_042	TO->FROM	GR ISLD-LNX3345.00 - HOLT.CO3 345.00 345KV CKT 1	720	720	0.06466	123.5494	GEN661015 1-COYOTE
FDNS	00NR	0	17SP	G15_042	TO->FROM	GR ISLD-LNX3345.00 - HOLT.CO3 345.00 345KV CKT 1	720	720	0.06466	123.1323	GEN657748 1-YOUNG 2 GENERATOR
FDNS	00NR	0	17SP	G15_042	TO->FROM	GR ISLD-LNX3345.00 - HOLT.CO3 345.00 345KV CKT 1	720	720	0.06466	122.9992	GEN600002 3-SHERBURNE CNTY G3
FDNS	00NR	0	17SP	G15_042	TO->FROM	GR ISLD-LNX3345.00 - HOLT.CO3 345.00 345KV CKT 1	720	720	0.06466	122.7475	GEN562872 1-G15046_3 0.6900
FDNS	00NR	0	17SP	G15_042	TO->FROM	GR ISLD-LNX3345.00 - HOLT.CO3 345.00 345KV CKT 1	720	720	0.07479	122.5669	MCCOOL - MOORE 345KV CKT 1
FDNS	00NR	0	17SP	G15_042	TO->FROM	GR ISLD-LNX3345.00 - HOLT.CO3 345.00 345KV CKT 1	720	720	0.06466	122.4481	GEN659111 2-LELAND OLDS UNIT2
FDNS	00NR	0	17SP	G15_042	TO->FROM	GR ISLD-LNX3345.00 - HOLT.CO3 345.00 345KV CKT 1	720	720	0.06466	121.9741	GEN659103 1-ANTELOPE VALLEY UNIT1
FDNS	00NR	0	17SP	G15_042	TO->FROM	GR ISLD-LNX3345.00 - HOLT.CO3 345.00 345KV CKT 1	720	720	0.06466	121.9741	GEN659107 2-ANTELOPE VALLEY UNIT2
FDNS	00NR	0	17SP	G15_042	TO->FROM	GR ISLD-LNX3345.00 - HOLT.CO3 345.00 345KV CKT 1	720	720	0.06466	121.0129	GEN659125 1-COVEY
FDNS	00NR	0	17SP	G15_042	TO->FROM	GR ISLD-LNX3345.00 - HOLT.CO3 345.00 345KV CKT 1	720	720	0.0637	121.0104	FTTHOM1-LNX3345.00 - LELAND2-LNX3345.00 345KV CKT 1
FDNS	00NR	0	20SP	G15_042	TO->FROM	GR ISLD-LNX3345.00 - HOLT.CO3 345.00 345KV CKT 1	720	720	0.06096	120.7555	HOLT.CO3 345.00 - THEDFRD3 345.00 345KV CKT 1
FDNS	00NR	0	17SP	G15_042	TO->FROM	GR ISLD-LNX3345.00 - HOLT.CO3 345.00 345KV CKT 1	720	720	0.0637	120.734	P12:345:UMZB:# 108 #: LOS FT IN ND. LOS FT
FDNS	00NR	0	17SP	G15_042	TO->FROM	GR ISLD-LNX3345.00 - HOLT.CO3 345.00 345KV CKT 1	720	720	0.0637	120.7228	FT THOMPSON - FTTHOM1-LNX3345.00 345KV CKT Z
FDNS	00NR	0	25SP	G15_042	TO->FROM	GR ISLD-LNX3345.00 - HOLT.CO3 345.00 345KV CKT 1	720	720	0.06185	120.5692	HOLT.CO3 345.00 - THEDFRD3 345.00 345KV CKT 1
FDNS	00NR	0	17SP	G15_042	TO->FROM	GR ISLD-LNX3345.00 - HOLT.CO3 345.00 345KV CKT 1	720	720	0.0637	120.4702	LELAND OLDS - LELAND2-LNX3345.00 345KV CKT Z
FDNS	00NR	0	17SP	G15_042	TO->FROM	GR ISLD-LNX3345.00 - HOLT.CO3 345.00 345KV CKT 1	720	720	0.06466	120.2926	GEN615001 1-COAL CREEK
FDNS	00NR	0	17SP	G15_042	TO->FROM	GR ISLD-LNX3345.00 - HOLT.CO3 345.00 345KV CKT 1	720	720	0.06466	120.1676	GEN615002 2-COAL CREEK
FDNS	00NR	0	17SP	G15_042	TO->FROM	GR ISLD-LNX3345.00 - HOLT.CO3 345.00 345KV CKT 1	720	720	0.07552	119.171	GRAND ISLAND - MCCOOL 345KV CKT 1
FDNS	00NR	0	17SP	G15_042	TO->FROM	GR ISLD-LNX3345.00 - HOLT.CO3 345.00 345KV CKT 1	720	720	0.06466	113.5207	GEN562714 1-G15_023_4 0.6900
FDNS	00NR	0	17SP	G15_042	TO->FROM	GR ISLD-LNX3345.00 - HOLT.CO3 345.00 345KV CKT 1	720	720	0.06466	113.5207	GEN562715 1-G15_023_5 0.6900
FDNS	00NR	0	20SP	G15_042	TO->FROM	GR ISLD-LNX3345.00 - HOLT.CO3 345.00 345KV CKT 1	720	720	0.05506	111.0854	GERALD GENTLEMAN STATION - THEDFRD3 345.00 345KV CKT 1
FDNS	00NR	0	25SP	G15_042	TO->FROM	GR ISLD-LNX3345.00 - HOLT.CO3 345.00 345KV CKT 1	720	720	0.05621	110.4541	GERALD GENTLEMAN STATION - THEDFRD3 345.00 345KV CKT 1
FDNS	00NR	0	17SP	G15_042	TO->FROM	GR ISLD-LNX3345.00 - HOLT.CO3 345.00 345KV CKT 1	720	720	0.06466	107.2839	GEN652353 2-GR PRAIRIEG 0.6900
FDNS	00NR	0	16WP	G15_042	TO->FROM	GR ISLD-LNX3345.00 - HOLT.CO3 345.00 345KV CKT 1	720	720	0.065	101.7905	KELLY - MEADOWGROVE4230.00 230KV CKT 1

SOLUTION	GROUP	SCENARIO	SEASON	SOURCE	DIRECTION	MONITORED ELEMENT	RATEA (MVA)	RATEB(MVA)	TDF	TC%LOADING (% MVA)	CONTINGENCY
FDNS	00NR	0	16WP	G15_042	TO->FROM	GR ISLD-LNX3345.00 - HOLT.CO3 345.00 345KV CKT 1	720	720	0.06102	101.2023	P12:230:UMZB:# 116 #: ST IN SD. WSG-ST-VH
FDNS	00NR	0	16WP	G15_042	TO->FROM	GR ISLD-LNX3345.00 - HOLT.CO3 345.00 345KV CKT 1	720	720	0.06135	100.6073	STORLA - WESSINGTON 230KV CKT 1
FDNS	00NR	0	16WP	G15_042	TO->FROM	GR ISLD-LNX3345.00 - HOLT.CO3 345.00 345KV CKT 1	720	720	0.06321	100.1903	ROSEAU - ROSEAUM 2 500.00 500KV CKT 1
FDNS	00NR	0	16WP	G15_042	TO->FROM	GR ISLD-LNX3345.00 - HOLT.CO3 345.00 345KV CKT 1	720	720	0.06141	99.6	HANLON - STORLA 230KV CKT 1
FDNS	00NR	0	17SP	G15_042	FROM->TO	HOSKINS (HOSKINS T1) 230/115/13.8KV TRANSFORMER CKT 1	187	187	0.13488	109.1151	P13:230-345:NPPD:NUCOR-1
FDNS	00NR	0	25SP	G15_042	FROM->TO	HOSKINS (HOSKINS T1) 230/115/13.8KV TRANSFORMER CKT 1	187	187	0.13511	108.9552	P13:230-345:NPPD:NUCOR-1
FDNS	00NR	0	20SP	G15_042	FROM->TO	HOSKINS (HOSKINS T1) 230/115/13.8KV TRANSFORMER CKT 1	187	187	0.13507	108.5918	P13:230-345:NPPD:NUCOR-1
FDNS	00NR	0	17SP	G15_042	FROM->TO	HOSKINS (HOSKINS T1) 230/115/13.8KV TRANSFORMER CKT 1	187	187	0.13488	108.4429	P13:230-345:NPPD:NUCOR-1
FDNS	00NR	0	25SP	G15_042	FROM->TO	HOSKINS (HOSKINS T1) 230/115/13.8KV TRANSFORMER CKT 1	187	187	0.13511	108.2074	P13:230-345:NPPD:NUCOR-1
FDNS	00NR	0	20SP	G15_042	FROM->TO	HOSKINS (HOSKINS T1) 230/115/13.8KV TRANSFORMER CKT 1	187	187	0.13507	107.6939	P13:230-345:NPPD:NUCOR-1
FDNS	09ALL	0	20L	G15_042	FROM->TO	HOSKINS (HOSKINS T2) 345/230/13.8KV TRANSFORMER CKT 1	336	336	0.72974	122.9573	DIXONCO 230.00 - TWIN CHURCH 230KV CKT 1
FDNS	09ALL	0	17G	G15_042	FROM->TO	HOSKINS (HOSKINS T2) 345/230/13.8KV TRANSFORMER CKT 1	336	336	0.73072	120.0996	DIXONCO 230.00 - TWIN CHURCH 230KV CKT 1
FDNS	09ALL	0	20L	G15_042	FROM->TO	HOSKINS (HOSKINS T2) 345/230/13.8KV TRANSFORMER CKT 1	336	336	0.72974	118.3574	DIXONCO 230.00 - TWIN CHURCH 230KV CKT 1
FDNS	09ALL	0	17G	G15_042	FROM->TO	HOSKINS (HOSKINS T2) 345/230/13.8KV TRANSFORMER CKT 1	336	336	0.73072	115.9126	DIXONCO 230.00 - TWIN CHURCH 230KV CKT 1
FDNS	09NR	0	20L	G15_042	FROM->TO	HOSKINS (HOSKINS T2) 345/230/13.8KV TRANSFORMER CKT 1	336	336	0.73042	113.1446	DIXONCO 230.00 - TWIN CHURCH 230KV CKT 1
FDNS	09NR	0	17G	G15_042	FROM->TO	HOSKINS (HOSKINS T2) 345/230/13.8KV TRANSFORMER CKT 1	336	336	0.73078	110.8905	DIXONCO 230.00 - TWIN CHURCH 230KV CKT 1
FDNS	09NR	0	20L	G15_042	FROM->TO	HOSKINS (HOSKINS T2) 345/230/13.8KV TRANSFORMER CKT 1	336	336	0.73042	109.5802	DIXONCO 230.00 - TWIN CHURCH 230KV CKT 1
FDNS	09NR	0	17G	G15_042	FROM->TO	HOSKINS (HOSKINS T2) 345/230/13.8KV TRANSFORMER CKT 1	336	336	0.73078	107.4867	DIXONCO 230.00 - TWIN CHURCH 230KV CKT 1
FDNS	09ALL	0	16WP	G15_042	FROM->TO	HOSKINS (HOSKINS T2) 345/230/13.8KV TRANSFORMER CKT 1	336	336	0.73054	107.1773	DIXONCO 230.00 - TWIN CHURCH 230KV CKT 1
FDNS	09ALL	0	20WP	G15_042	FROM->TO	HOSKINS (HOSKINS T2) 345/230/13.8KV TRANSFORMER CKT 1	336	336	0.73025	107.115	DIXONCO 230.00 - TWIN CHURCH 230KV CKT 1
FDNS	09ALL	0	20SP	G15_042	FROM->TO	HOSKINS (HOSKINS T2) 345/230/13.8KV TRANSFORMER CKT 1	336	336	0.73034	106.4167	DIXONCO 230.00 - TWIN CHURCH 230KV CKT 1
FDNS	09ALL	0	25SP	G15_042	FROM->TO	HOSKINS (HOSKINS T2) 345/230/13.8KV TRANSFORMER CKT 1	336	336	0.73037	105.3555	DIXONCO 230.00 - TWIN CHURCH 230KV CKT 1
FDNS	09ALL	0	17SP	G15_042	FROM->TO	HOSKINS (HOSKINS T2) 345/230/13.8KV TRANSFORMER CKT 1	336	336	0.73076	105.0778	DIXONCO 230.00 - TWIN CHURCH 230KV CKT 1
FDNS	09ALL	0	16WP	G15_042	FROM->TO	HOSKINS (HOSKINS T2) 345/230/13.8KV TRANSFORMER CKT 1	336	336	0.73054	103.3792	DIXONCO 230.00 - TWIN CHURCH 230KV CKT 1
FDNS	09ALL	0	20WP	G15_042	FROM->TO	HOSKINS (HOSKINS T2) 345/230/13.8KV TRANSFORMER CKT 1	336	336	0.73025	103.3371	DIXONCO 230.00 - TWIN CHURCH 230KV CKT 1
FDNS	09ALL	0	20SP	G15_042	FROM->TO	HOSKINS (HOSKINS T2) 345/230/13.8KV TRANSFORMER CKT 1	336	336	0.73034	102.5527	DIXONCO 230.00 - TWIN CHURCH 230KV CKT 1
FDNS	09ALL	0	25SP	G15_042	FROM->TO	HOSKINS (HOSKINS T2) 345/230/13.8KV TRANSFORMER CKT 1	336	336	0.73037	101.5615	DIXONCO 230.00 - TWIN CHURCH 230KV CKT 1
FDNS	09ALL	0	17SP	G15_042	FROM->TO	HOSKINS (HOSKINS T2) 345/230/13.8KV TRANSFORMER CKT 1	336	336	0.73076	101.3667	DIXONCO 230.00 - TWIN CHURCH 230KV CKT 1
FDNS	00NR	0	17SP	G15_042	TO->FROM	SIDNEY - SIDNEY TRANSFORMER 230KV CKT 1	400	400	0.03768	120.8827	KEYSTONE - SIDNEY1-LNX3345.00 345KV CKT 1
FDNS	00NR	0	17SP	G15_042	TO->FROM	SIDNEY - SIDNEY TRANSFORMER 230KV CKT 1	400	400	0.03768	120.2355	SIDNEY - SIDNEY1-LNX3345.00 345KV CKT Z
FDNSLock	00NR	0	20SP	G15_042	TO->FROM	SIDNEY - SIDNEY TRANSFORMER 230KV CKT 1	400	400	0.0325	111.0053	KEYSTONE - SIDNEY1-LNX3345.00 345KV CKT 1
FDNS	00NR	0	20SP	G15_042	TO->FROM	SIDNEY - SIDNEY TRANSFORMER 230KV CKT 1	400	400	0.0325	109.8896	SIDNEY - SIDNEY1-LNX3345.00 345KV CKT Z
FDNS	00NR	0	25SP	G15_042	TO->FROM	SIDNEY - SIDNEY TRANSFORMER 230KV CKT 1	400	400	0.03228	109.6285	KEYSTONE - SIDNEY1-LNX3345.00 345KV CKT 1
FDNS	00NR	0	25SP	G15_042	TO->FROM	SIDNEY - SIDNEY TRANSFORMER 230KV CKT 1	400	400	0.03228	109.1934	SIDNEY - SIDNEY1-LNX3345.00 345KV CKT Z
FDNS	00NR	0	17SP	G15_042	FROM->TO	SIDNEY (SDQ KV2A) 345/230/13.8KV TRANSFORMER CKT 1	400	480	0.03768	102.6537	KEYSTONE - SIDNEY1-LNX3345.00 345KV CKT 1
FDNS	00NR	0	17SP	G15_042	FROM->TO	SIDNEY (SDQ KV2A) 345/230/13.8KV TRANSFORMER CKT 1	400	480	0.03768	102.2384	SIDNEY - SIDNEY1-LNX3345.00 345KV CKT Z
FDNS	00NR	0	17SP	G15_042	FROM->TO	SIDNEY (SDQ KV2A) 345/230/13.8KV TRANSFORMER CKT 1	400	480	0.03768	102.023	KEYSTONE - SIDNEY1-LNX3345.00 345KV CKT 1
FDNS	00NR	0	17SP	G15_042	FROM->TO	SIDNEY (SDQ KV2A) 345/230/13.8KV TRANSFORMER CKT 1	400	480	0.03768	101.9841	SIDNEY - SIDNEY1-LNX3345.00 345KV CKT Z
FDNS	09ALL	0	20L	G15_042	TO->FROM	SIOUX CITY - TWIN CHURCH 230KV CKT 1	320	320	0.80805	171.7946	DIXONCO 230.00 - HOSKINS 230KV CKT 1
FDNS	09NR	0	20L	G15_042	TO->FROM	SIOUX CITY - TWIN CHURCH 230KV CKT 1	320	320	0.80311	158.4999	DIXONCO 230.00 - HOSKINS 230KV CKT 1
FDNS	09ALL	0	17G	G15_042	TO->FROM	SIOUX CITY - TWIN CHURCH 230KV CKT 1	320	320	0.80866	158.1352	DIXONCO 230.00 - HOSKINS 230KV CKT 1
FDNS	09ALL	0	20WP	G15_042	TO->FROM	SIOUX CITY - TWIN CHURCH 230KV CKT 1	320	320	0.80857	151.3342	DIXONCO 230.00 - HOSKINS 230KV CKT 1
FDNS	09ALL	0	16WP	G15_042	TO->FROM	SIOUX CITY - TWIN CHURCH 230KV CKT 1	320	320	0.80866	150.6998	DIXONCO 230.00 - HOSKINS 230KV CKT 1
FDNS	09ALL	0	20SP	G15_042	TO->FROM	SIOUX CITY - TWIN CHURCH 230KV CKT 1	320	320	0.80817	146.1796	DIXONCO 230.00 - HOSKINS 230KV CKT 1
FDNS	09NR	0	17G	G15_042	TO->FROM	SIOUX CITY - TWIN CHURCH 230KV CKT 1	320	320	0.8034	145.8761	DIXONCO 230.00 - HOSKINS 230KV CKT 1
FDNS	09ALL	0	25SP	G15_042	TO->FROM	SIOUX CITY - TWIN CHURCH 230KV CKT 1	320	320	0.80813	144.592	DIXONCO 230.00 - HOSKINS 230KV CKT 1
FDNS	09ALL	0	17SP	G15_042	TO->FROM	SIOUX CITY - TWIN CHURCH 230KV CKT 1	320	320	0.80835	144.0882	DIXONCO 230.00 - HOSKINS 230KV CKT 1
FDNS	09ALL	0	20L	G15_042	TO->FROM	SIOUX CITY - TWIN CHURCH 230KV CKT 1	320	320	0.45147	133.6835	HOSKINS - RAUN 345KV CKT 1
FDNS	09ALL	0	20L	G15_042	TO->FROM	SIOUX CITY - TWIN CHURCH 230KV CKT 1	320	320	0.40644	127.924	P13:230-345:NPPD:NUCOR-1
FDNS	09ALL	0	20L	G15_042	TO->FROM	SIOUX CITY - TWIN CHURCH 230KV CKT 1	320	320	0.52905	120.276	HOSKINS (HOSKINS T2) 345/230/13.8KV TRANSFORMER CKT 1
FDNS	09ALL	0	20L	G15_042	TO->FROM	SIOUX CITY - TWIN CHURCH 230KV CKT 1	320	320	0.52905	120.276	HOSKINS (HOSKINS T2) 345/230/13.8KV TRANSFORMER CKT 1
FDNS	09ALL	0	17G	G15_042	TO->FROM	SIOUX CITY - TWIN CHURCH 230KV CKT 1	320	320	0.45238	119.2562	HOSKINS - RAUN 345KV CKT 1
FDNS	09NR	0	20L	G15_042	TO->FROM	SIOUX CITY - TWIN CHURCH 230KV CKT 1	320	320	0.43074	118.8338	HOSKINS - RAUN 345KV CKT 1
FDNS	09NR	0	20L	G15_042	TO->FROM	SIOUX CITY - TWIN CHURCH 230KV CKT 1	320	320	0.43074	118.8338	HOSKINS - RAUN 345KV CKT 1
FDNS	09NR	0	20L	G15_042	TO->FROM	SIOUX CITY - TWIN CHURCH 230KV CKT 1	320	320	0.39363	116.7538	P13:230-345:NPPD:NUCOR-1
FDNS	09ALL	0	20L	G15_042	TO->FROM	SIOUX CITY - TWIN CHURCH 230KV CKT 1	320	320	0.43144	115.0244	EMERSON - TWIN CHURCH 115KV CKT 1
FDNS	09ALL	0	20L	G15_042	TO->FROM	SIOUX CITY - TWIN CHURCH 230KV CKT 1	320	320	0.41146	114.5367	GAVINS POINT - YANKON JCT 115KV CKT 1
FDNS	09ALL	0	20L	G15_042	TO->FROM	SIOUX CITY - TWIN CHURCH 230KV CKT 1	320	320	0.41146	114.5367	GAVINS POINT - YANKON JCT 115KV CKT 1
FDNS	09ALL	0	20L	G15_042	TO->FROM	SIOUX CITY - TWIN CHURCH 230KV CKT 1	320	320	0.39568	113.964	RAUN - SIOUX CITY 345KV CKT 1
FDNS	09ALL	0	20L	G15_042	TO->FROM	SIOUX CITY - TWIN CHURCH 230KV CKT 1	320	320	0.43497	113.7965	HOSKINS - SHELL CREEK 345KV CKT 1
FDNS	09ALL	0	17G	G15_042	TO->FROM	SIOUX CITY - TWIN CHURCH 230KV CKT 1	320	320	0.4062	113.3368	P13:230-345:NPPD:NUCOR-1
FDNS	09ALL	0	20L	G15_042	TO->FROM	SIOUX CITY - TWIN CHURCH 230KV CKT 1	320	320	0.41918	113.0749	COLUMEAST - NW68TH & HOLDREGE 345KV CKT 1
FDNS	09ALL	0	20L	G15_042	TO->FROM	SIOUX CITY - TWIN CHURCH 230KV CKT 1	320	320	0.41918	113.0749	COLUMEAST - NW68TH & HOLDREGE 345KV CKT 1
FDNS	09ALL	0	20L	G15_042	TO->FROM	SIOUX CITY - TWIN CHURCH 230KV CKT 1	320	320	0.40644	112.9679	P13:115-230:NPPD:NUCOR-3
FDNS	09ALL	0	20L	G15_042	TO->FROM	SIOUX CITY - TWIN CHURCH 230KV CKT 1	320	320	0.41729	111.9272	COLUMEAST - SHELL CREEK 345KV CKT 1
FDNS	09ALL	0	20L	G15_042	TO->FROM	SIOUX CITY - TWIN CHURCH 230KV CKT 1	320	320	0.43144	111.6016	P12:115:NPPD:1193:OAKLAND7:EMERSON7:BTB
FDNS	09ALL	0	20L	G15_042	TO->FROM	SIOUX CITY - TWIN CHURCH 230KV CKT 1	320	320	0.43144	111.5722	BANCROFT - EMERSON 115KV CKT 1
FDNS	09ALL	0	20L	G15_042	TO->FROM	SIOUX CITY - TWIN CHURCH 230KV CKT 1	320	320	0.40889	111.1189	NAPA JCT7 115.00 - YANKON JCT 115KV CKT 1
FDNS	09ALL	0	20L	G15_042	TO->FROM	SIOUX CITY - TWIN CHURCH 230KV CKT 1	320	320	0.40889	111.1189	NAPA JCT7 115.00 - YANKON JCT 115KV CKT 1
FDNS	09ALL	0	20L	G15_042	TO->FROM	SIOUX CITY - TWIN CHURCH 230KV CKT 1	320	320	0.40889	111.1163	NAPA JCT7 115.00 - UTICA 115KV CKT 1
FDNS	09ALL	0	20L	G15_042	TO->FROM	SIOUX CITY - TWIN CHURCH 230KV CKT 1	320	320	0.40889	111.1163	NAPA JCT7 115.00 - UTICA 115KV CKT 1
FDNS	09ALL	0	20L	G15_042	TO->FROM	SIOUX CITY - TWIN CHURCH 230KV CKT 1	320	320	0.40889	111.1163	P12:115:UMZW:# 1910 #: YJ IN SD. YJ-UJ LINE FAULT
FDNS	09ALL	0	20L	G15_042	TO->FROM	SIOUX CITY - TWIN CHURCH 230KV CKT 1	320	320	0.40578	111.0554	FT THOMPSON - FTTHOM2-LNX3345.00 345KV CKT Z
FDNS	09ALL	0	20L	G15_042	TO->FROM	SIOUX CITY - TWIN CHURCH 230KV CKT 1	320	320	0.40578	111.0456	FTTHOM2-LNX3345.00 - GRPRAR2-LNX3345.00 345KV CKT 1
FDNS	09ALL	0	20L	G15_042	TO->FROM	SIOUX CITY - TWIN CHURCH 230KV CKT 1	320	320	0.40578	111.0417	GRPRAR2-LNX3345.00 - YANKTON 345KV CKT Z
FDNS	09ALL	0	20L	G15_042	TO->FROM	SIOUX CITY - TWIN CHURCH 230KV CKT 1	320	320	0.41815	110.8974	BELDEN - HARTINGTON 115KV CKT 1
FDNS	09ALL	0	20L	G15_042	TO->FROM	SIOUX CITY - TWIN CHURCH 230KV CKT 1	320	320	0.40644	110.8927	P13:115-345:NPPD:NUCOR-2
FDNS	09ALL	0	20L	G15_042	TO->FROM	SIOUX CITY - TWIN CHURCH 230KV CKT 1	320	320	0.43144	110.6561	BANCROFT - OAKLAND 115KV CKT 1
FDNS	09ALL	0	20L	G15_042	TO->FROM	SIOUX CITY - TWIN CHURCH 230KV CKT 1	320	320	0.41678	110.2309	TEKAMAH (TEKAMAH T1) 161/115/13.8KV TRANSFORMER CKT 1

SOLUTION	GROUP	SCENARIO	SEASON	SOURCE	DIRECTION	MONITORED ELEMENT	RATEA (MVA)	RATEB(MVA)	TDF	TC%LOADING (% MVA)	CONTINGENCY
FDNS	09ALL	0	20L	G15_042	TO->FROM	SIOUX CITY - TWIN CHURCH 230KV CKT 1	320	320	0.41678	110.2309	TEKAMAH (TEKAMAH T1) 161/115/13.8KV TRANSFORMER CKT 1
FDNS	09ALL	0	20L	G15_042	TO->FROM	SIOUX CITY - TWIN CHURCH 230KV CKT 1	320	320	0.40588	109.9424	BELDEN - HOSKINS 115KV CKT 1
FDNS	09ALL	0	20L	G15_042	TO->FROM	SIOUX CITY - TWIN CHURCH 230KV CKT 1	320	320	0.40644	109.9346	SHERBURNE CO 345/24.0KV TRANSFORMER CKT 1
FDNS	09ALL	0	20L	G15_042	TO->FROM	SIOUX CITY - TWIN CHURCH 230KV CKT 1	320	320	0.40644	109.9247	GEN600002 3-SHERBURNE CNTY G3
FDNS	09ALL	0	20L	G15_042	TO->FROM	SIOUX CITY - TWIN CHURCH 230KV CKT 1	320	320	0.41678	109.7769	OAKLAND - TEKAMAH 115KV CKT 1
FDNS	09ALL	0	20L	G15_042	TO->FROM	SIOUX CITY - TWIN CHURCH 230KV CKT 1	320	320	0.40757	109.669	FT RANDAL - MEADOWGROVE4230.00 230KV CKT 1
FDNS	09ALL	0	20L	G15_042	TO->FROM	SIOUX CITY - TWIN CHURCH 230KV CKT 1	320	320	0.40267	109.633	FT RANDAL - SIOUX CITY 230KV CKT 1
FDNS	09ALL	0	20L	G15_042	TO->FROM	SIOUX CITY - TWIN CHURCH 230KV CKT 1	320	320	0.40644	109.5676	BIG STONE 230/24.0KV TRANSFORMER CKT 1
FDNS	09ALL	0	20L	G15_042	TO->FROM	SIOUX CITY - TWIN CHURCH 230KV CKT 1	320	320	0.40644	109.5299	GEN600001 2-SHERBURNE CNTY G2
FDNS	09ALL	0	20L	G15_042	TO->FROM	SIOUX CITY - TWIN CHURCH 230KV CKT 1	320	320	0.40644	109.4992	GEN600005 1-MONTICELLO
FDNS	09ALL	0	20L	G15_042	TO->FROM	SIOUX CITY - TWIN CHURCH 230KV CKT 1	320	320	0.40723	109.4453	GAVINS POINT - SPIRIT MOUND 115KV CKT 1
FDNS	09ALL	0	20L	G15_042	TO->FROM	SIOUX CITY - TWIN CHURCH 230KV CKT 1	320	320	0.40644	109.3645	GEN635214 4-NEAL UNIT 4
FDNS	09ALL	0	20L	G15_042	TO->FROM	SIOUX CITY - TWIN CHURCH 230KV CKT 1	320	320	0.40644	109.341	GEN600000 1-SHERBURNECNTY G1
FDNS	09ALL	0	20L	G15_042	TO->FROM	SIOUX CITY - TWIN CHURCH 230KV CKT 1	320	320	0.40644	109.2835	GEN615002 2-COAL CREEK
FDNS	09ALL	0	20L	G15_042	TO->FROM	SIOUX CITY - TWIN CHURCH 230KV CKT 1	320	320	0.40746	109.2788	UTICA JCT (UJ KV3A) 230/115/13.2KV TRANSFORMER CKT 1
FDNS	09ALL	0	20L	G15_042	TO->FROM	SIOUX CITY - TWIN CHURCH 230KV CKT 1	320	320	0.40644	109.2678	GEN620315 1-BIG STONE GEN
FDNS	09NR	0	20L	G15_042	TO->FROM	SIOUX CITY - TWIN CHURCH 230KV CKT 1	320	320	0.51875	109.1989	HOSKINS (HOSKINS T2) 345/230/13.8KV TRANSFORMER CKT 1
FDNS	09NR	0	20L	G15_042	TO->FROM	SIOUX CITY - TWIN CHURCH 230KV CKT 1	320	320	0.51875	109.1989	HOSKINS (HOSKINS T2) 345/230/13.8KV TRANSFORMER CKT 1
FDNS	09ALL	0	20L	G15_042	TO->FROM	SIOUX CITY - TWIN CHURCH 230KV CKT 1	320	320	0.40666	109.0511	FALLOW 3 345.00 - GRIMES 345KV CKT 1
FDNS	09ALL	0	20L	G15_042	TO->FROM	SIOUX CITY - TWIN CHURCH 230KV CKT 1	320	320	0.40644	108.9571	GEN600003 1-PRAIRIE ISLAND G1
FDNS	09ALL	0	20L	G15_042	TO->FROM	SIOUX CITY - TWIN CHURCH 230KV CKT 1	320	320	0.40644	108.9543	GEN600004 2-PRAIRIE ISLAND G2
FDNS	09ALL	0	20L	G15_042	TO->FROM	SIOUX CITY - TWIN CHURCH 230KV CKT 1	320	320	0.40251	108.8739	RASMUSN - UTICA JCT 230KV CKT 1
FDNS	09ALL	0	20L	G15_042	TO->FROM	SIOUX CITY - TWIN CHURCH 230KV CKT 1	320	320	0.41815	108.8585	GAVINS POINT - HARTINGTON 115KV CKT 1
FDNS	09ALL	0	20L	G15_042	TO->FROM	SIOUX CITY - TWIN CHURCH 230KV CKT 1	320	320	0.40723	108.8536	MANNING - SPIRIT MOUND 115KV CKT 1
FDNS	09ALL	0	20L	G15_042	TO->FROM	SIOUX CITY - TWIN CHURCH 230KV CKT 1	320	320	0.4209	108.7873	HOSKINS (HOSKINS T1) 230/115/13.8KV TRANSFORMER CKT 1
FDNS	09ALL	0	20L	G15_042	TO->FROM	SIOUX CITY - TWIN CHURCH 230KV CKT 1	320	320	0.4209	108.7873	HOSKINS (HOSKINS T1) 230/115/13.8KV TRANSFORMER CKT 1
FDNS	09ALL	0	20L	G15_042	TO->FROM	SIOUX CITY - TWIN CHURCH 230KV CKT 1	320	320	0.40644	108.7802	GEN635213 3-NEAL UNIT 3
FDNS	09ALL	0	20L	G15_042	TO->FROM	SIOUX CITY - TWIN CHURCH 230KV CKT 1	320	320	0.40666	108.7412	MADISON COUNTY - RLHILLS3 345.00 345KV CKT 1
FDNS	09ALL	0	20L	G15_042	TO->FROM	SIOUX CITY - TWIN CHURCH 230KV CKT 1	320	320	0.40766	108.6531	COOPER - MOORE 345KV CKT 1
FDNS	09ALL	0	20L	G15_042	TO->FROM	SIOUX CITY - TWIN CHURCH 230KV CKT 1	320	320	0.40723	108.5639	BERSFORD - MANNING 115KV CKT 1
FDNS	09ALL	0	20L	G15_042	TO->FROM	SIOUX CITY - TWIN CHURCH 230KV CKT 1	320	320	0.40644	108.5608	GEN659103 1-ANTELOPE VALLEY UNIT1
FDNS	09ALL	0	20L	G15_042	TO->FROM	SIOUX CITY - TWIN CHURCH 230KV CKT 1	320	320	0.40644	108.5608	GEN659107 2-ANTELOPE VALLEY UNIT2
FDNS	09ALL	0	20L	G15_042	TO->FROM	SIOUX CITY - TWIN CHURCH 230KV CKT 1	320	320	0.40644	108.5552	GEN600006 1-AS KING
FDNS	09ALL	0	20L	G15_042	TO->FROM	SIOUX CITY - TWIN CHURCH 230KV CKT 1	320	320	0.40666	108.5296	FALLOW 3 345.00 - POTTCO 3 345.00 345KV CKT 1
FDNS	09ALL	0	20L	G15_042	TO->FROM	SIOUX CITY - TWIN CHURCH 230KV CKT 1	320	320	0.40251	108.456	RASMUSN - SIOUX CITY 230KV CKT 1
FDNS	09ALL	0	20L	G15_042	TO->FROM	SIOUX CITY - TWIN CHURCH 230KV CKT 1	320	320	0.40732	108.3963	P12:115:NPPD:1168B:ALBION 7:PETERSBRG.N7:BTB
FDNS	09ALL	0	20L	G15_042	TO->FROM	SIOUX CITY - TWIN CHURCH 230KV CKT 1	320	320	0.40732	108.3887	PETERSBRG.N7115.00 - PETERSBURG 115KV CKT Z1
FDNS	09ALL	0	20L	G15_042	TO->FROM	SIOUX CITY - TWIN CHURCH 230KV CKT 1	320	320	0.40732	108.3771	ALBION - PETERSBURG 115KV CKT 1
FDNS	09ALL	0	20L	G15_042	TO->FROM	SIOUX CITY - TWIN CHURCH 230KV CKT 1	320	320	0.41409	108.352	TWIN CHURCH (TWNCHURCH T4) 230/115/13.8KV TRANSFORMER CKT 1
FDNS	09ALL	0	20L	G15_042	TO->FROM	SIOUX CITY - TWIN CHURCH 230KV CKT 1	320	320	0.41409	108.352	TWIN CHURCH (TWNCHURCH T4) 230/115/13.8KV TRANSFORMER CKT 1
FDNS	09ALL	0	20L	G15_042	TO->FROM	SIOUX CITY - TWIN CHURCH 230KV CKT 1	320	320	0.40577	108.3173	ATCHSNT3 345.00 - BOONEVILLE 345KV CKT 1
FDNS	09ALL	0	20L	G15_042	TO->FROM	SIOUX CITY - TWIN CHURCH 230KV CKT 1	320	320	0.40644	108.1343	GEN672310 1-POPLAR RIVER GENERATOR 1
FDNS	09ALL	0	20L	G15_042	TO->FROM	SIOUX CITY - TWIN CHURCH 230KV CKT 1	320	320	0.40581	108.1336	NEAL NORTH - SALIX 161KV CKT 1
FDNS	09ALL	0	20L	G15_042	TO->FROM	SIOUX CITY - TWIN CHURCH 230KV CKT 1	320	320	0.40666	108.0685	PONY CREEK - RLHILLS3 345.00 345KV CKT 1
FDNS	09ALL	0	20L	G15_042	TO->FROM	SIOUX CITY - TWIN CHURCH 230KV CKT 1	320	320	0.40671	108.0586	BLOOMFIELD - GAVINS POINT 115KV CKT 1
FDNS	09ALL	0	20L	G15_042	TO->FROM	SIOUX CITY - TWIN CHURCH 230KV CKT 1	320	320	0.40644	108.053	GEN672306 6-BOUNDARY DAM GENERATOR 6
FDNS	09ALL	0	20L	G15_042	TO->FROM	SIOUX CITY - TWIN CHURCH 230KV CKT 1	320	320	0.40834	108.0489	CLEARWATER - NELIGH 115KV CKT 1
FDNS	09ALL	0	20L	G15_042	TO->FROM	SIOUX CITY - TWIN CHURCH 230KV CKT 1	320	320	0.40834	108.0381	P12:115:NPPD:1164:ONEILL 7:JEFFREY9:BTB
FDNS	09ALL	0	20L	G15_042	TO->FROM	SIOUX CITY - TWIN CHURCH 230KV CKT 1	320	320	0.40708	108.0279	103RD & ROKEBY - SUB 3458 NEB CTY 345KV CKT 1
FDNS	09ALL	0	20L	G15_042	TO->FROM	SIOUX CITY - TWIN CHURCH 230KV CKT 1	320	320	0.40708	108.0279	103RD & ROKEBY - SUB 3458 NEB CTY 345KV CKT 1
FDNS	09ALL	0	20L	G15_042	TO->FROM	SIOUX CITY - TWIN CHURCH 230KV CKT 1	320	320	0.40834	108.0086	CLEARWATER - ONEILL 115KV CKT 1
FDNS	09ALL	0	20L	G15_042	TO->FROM	SIOUX CITY - TWIN CHURCH 230KV CKT 1	320	320	0.40577	108.0019	ATCHSNT3 345.00 - COOPER 345KV CKT 1
FDNS	09ALL	0	20L	G15_042	TO->FROM	SIOUX CITY - TWIN CHURCH 230KV CKT 1	320	320	0.40596	107.9902	LIBERTY5 161.00 - RAUN 161KV CKT 1
FDNS	09ALL	0	20L	G15_042	TO->FROM	SIOUX CITY - TWIN CHURCH 230KV CKT 1	320	320	0.40723	107.9774	BERSFORD - SIOUX FALLS 115KV CKT 1
FDNS	09ALL	0	20L	G15_042	TO->FROM	SIOUX CITY - TWIN CHURCH 230KV CKT 1	320	320	0.40644	107.9754	GEN659111 2-LELAND OLDS UNIT2
FDNS	09ALL	0	20L	G15_042	TO->FROM	SIOUX CITY - TWIN CHURCH 230KV CKT 1	320	320	0.40699	107.9266	G15-005T 345.00 - SIBLEY 345KV CKT 1
FDNS	09ALL	0	20L	G15_042	TO->FROM	SIOUX CITY - TWIN CHURCH 230KV CKT 1	320	320	0.40554	107.9109	FT RANDAL - UTICA JCT 230KV CKT 1
FDNS	09ALL	0	20L	G15_042	TO->FROM	SIOUX CITY - TWIN CHURCH 230KV CKT 1	320	320	0.40758	107.9102	AXTELL - POST ROCK 345KV CKT 1
FDNS	09ALL	0	20L	G15_042	TO->FROM	SIOUX CITY - TWIN CHURCH 230KV CKT 1	320	320	0.40849	107.8426	P12:69:OPPD:S976-FREM D-FREM E
FDNS	09ALL	0	20L	G15_042	TO->FROM	SIOUX CITY - TWIN CHURCH 230KV CKT 1	320	320	0.40849	107.8424	FREMONT SUB D - SUB 976 69KV CKT 1
FDNS	09NR	0	17G	G15_042	TO->FROM	SIOUX CITY - TWIN CHURCH 230KV CKT 1	320	320	0.42955	107.634	HOSKINS - RAUN 345KV CKT 1
FDNS	09ALL	0	16WP	G15_042	TO->FROM	SIOUX CITY - TWIN CHURCH 230KV CKT 1	320	320	0.45273	106.9479	HOSKINS - RAUN 345KV CKT 1
FDNS	09ALL	0	16WP	G15_042	TO->FROM	SIOUX CITY - TWIN CHURCH 230KV CKT 1	320	320	0.45273	106.9479	HOSKINS - RAUN 345KV CKT 1
FDNS	09ALL	0	20L	G15_042	TO->FROM	SIOUX CITY - TWIN CHURCH 230KV CKT 1	320	320	0.40644	106.9	BASE CASE
FDNS	09ALL	0	20WP	G15_042	TO->FROM	SIOUX CITY - TWIN CHURCH 230KV CKT 1	320	320	0.45268	106.423	HOSKINS - RAUN 345KV CKT 1
FDNS	09ALL	0	20WP	G15_042	TO->FROM	SIOUX CITY - TWIN CHURCH 230KV CKT 1	320	320	0.45268	106.423	HOSKINS - RAUN 345KV CKT 1
FDNS	09ALL	0	20L	G15_042	TO->FROM	SIOUX CITY - TWIN CHURCH 230KV CKT 1	320	320	0.40603	105.8864	LAKEFIELD 3 - NOBLES 345KV CKT 1
FDNS	09ALL	0	20L	G15_042	TO->FROM	SIOUX CITY - TWIN CHURCH 230KV CKT 1	320	320	0.40644	105.8723	GEN640009 1-COOPER NUCLEAR STATION
FDNS	09ALL	0	20L	G15_042	TO->FROM	SIOUX CITY - TWIN CHURCH 230KV CKT 1	320	320	0.40594	105.7884	POCAHONTAS COUNTY - POMEROY 161KV CKT 1
FDNS	09ALL	0	20L	G15_042	TO->FROM	SIOUX CITY - TWIN CHURCH 230KV CKT 1	320	320	0.40644	105.7493	GEN338143 1-INDEPENDENCE UNIT #1
FDNS	09ALL	0	20L	G15_042	TO->FROM	SIOUX CITY - TWIN CHURCH 230KV CKT 1	320	320	0.40644	105.7444	GEN338146 1-INDEPENDENCE UNIT #2
FDNS	09ALL	0	20L	G15_042	TO->FROM	SIOUX CITY - TWIN CHURCH 230KV CKT 1	320	320	0.40644	105.7118	GEN501801 1-DOLET HILLS UNIT1
FDNS	09ALL	0	20L	G15_042	TO->FROM	SIOUX CITY - TWIN CHURCH 230KV CKT 1	320	320	0.40597	105.7097	HAYES - POMEROY 161KV CKT 1
FDNS	09ALL	0	20WP	G15_042	TO->FROM	SIOUX CITY - TWIN CHURCH 230KV CKT 1	320	320	0.40682	105.6965	P13:230-345:NPPD:NUCOR-1
FDNS	09ALL	0	20L	G15_042	TO->FROM	SIOUX CITY - TWIN CHURCH 230KV CKT 1	320	320	0.40644	105.6923	GEN337653 1-WHITE BLUFF UNIT #2
FDNS	09ALL	0	17G	G15_042	TO->FROM	SIOUX CITY - TWIN CHURCH 230KV CKT 1	320	320	0.5295	105.6641	HOSKINS (HOSKINS T2) 345/230/13.8KV TRANSFORMER CKT 1
FDNS	09ALL	0	17G	G15_042	TO->FROM	SIOUX CITY - TWIN CHURCH 230KV CKT 1	320	320	0.5295	105.6641	HOSKINS (HOSKINS T2) 345/230/13.8KV TRANSFORMER CKT 1
FDNS	09ALL	0	20L	G15_042	TO->FROM	SIOUX CITY - TWIN CHURCH 230KV CKT 1	320	320	0.40644	105.6631	GEN337652 1-WHITE BLUFF UNIT #1
FDNS	09ALL	0	20L	G15_042	TO->FROM	SIOUX CITY - TWIN CHURCH 230KV CKT 1	320	320	0.40776	105.6524	P12:115:NPPD:1163B:NELIGH 7:NORFK.N7:BTB

SOLUTION	GROUP	SCENARIO	SEASON	SOURCE	DIRECTION	MONITORED ELEMENT	RATEA (MVA)	RATEB(MVA)	TDF	TC%LOADING (% MVA)	CONTINGENCY
FDNS	09ALL	0	20L	G15_042	TO->FROM	SIOUX CITY - TWIN CHURCH 230KV CKT 1	320	320	0.40695	105.5606	ANTELOPE 3345.00 - HOSKINS 345KV CKT 1
FDNS	09ALL	0	20L	G15_042	TO->FROM	SIOUX CITY - TWIN CHURCH 230KV CKT 1	320	320	0.40644	105.517	GEN562912 1-G15053_3 0.6900
FDNS	09ALL	0	20L	G15_042	TO->FROM	SIOUX CITY - TWIN CHURCH 230KV CKT 1	320	320	0.4076	105.5003	BATTLE CREEK - NORTH NORFOLK 115KV CKT 1
FDNS	09ALL	0	20L	G15_042	TO->FROM	SIOUX CITY - TWIN CHURCH 230KV CKT 1	320	320	0.40644	105.4732	GEN563222 1-G15088_3 0.6900
FDNS	09ALL	0	20L	G15_042	TO->FROM	SIOUX CITY - TWIN CHURCH 230KV CKT 1	320	320	0.4076	105.4392	BATTLE CREEK - COUNTY LINE 115KV CKT 1
FDNS	09ALL	0	20L	G15_042	TO->FROM	SIOUX CITY - TWIN CHURCH 230KV CKT 1	320	320	0.4076	105.4262	ANTELOPE 7115.00 - COUNTY LINE 115KV CKT 1
FDNS	09ALL	0	20L	G15_042	TO->FROM	SIOUX CITY - TWIN CHURCH 230KV CKT 1	320	320	0.40644	105.4227	GEN335831 1-RIVERBEND UNIT#1
FDNS	09ALL	0	20L	G15_042	TO->FROM	SIOUX CITY - TWIN CHURCH 230KV CKT 1	320	320	0.40644	105.3739	GEN337910 1-ARKANSAS NUCLEAR ONE UNIT #1
FDNS	09ALL	0	20L	G15_042	TO->FROM	SIOUX CITY - TWIN CHURCH 230KV CKT 1	320	320	0.40578	105.2703	GRPRAR1-LNX3345.00 - GRPRAR 345KV CKT Z
FDNS	09ALL	0	20L	G15_042	TO->FROM	SIOUX CITY - TWIN CHURCH 230KV CKT 1	320	320	0.40578	105.2658	GRPRAR1-LNX3345.00 - HOLT.CO3 345.00 345KV CKT 1
FDNS	09ALL	0	20L	G15_042	TO->FROM	SIOUX CITY - TWIN CHURCH 230KV CKT 1	320	320	0.40644	105.2474	GEN640431 1-LAREDO.GEN1W0.6900
FDNS	09ALL	0	20L	G15_042	TO->FROM	SIOUX CITY - TWIN CHURCH 230KV CKT 1	320	320	0.40644	105.2444	GEN344225 1-1CAL G1 25.000
FDNS	09ALL	0	20L	G15_042	TO->FROM	SIOUX CITY - TWIN CHURCH 230KV CKT 1	320	320	0.40644	105.2354	GEN336153 1-WATERFORD UNIT#3
FDNS	09ALL	0	16WP	G15_042	TO->FROM	SIOUX CITY - TWIN CHURCH 230KV CKT 1	320	320	0.40669	105.234	P13:230-345:NPPD:NUCOR-1
FDNS	09ALL	0	20L	G15_042	TO->FROM	SIOUX CITY - TWIN CHURCH 230KV CKT 1	320	320	0.40427	105.2171	SIOUX CITY (SC KV1A) 230/161/13.8KV TRANSFORMER CKT 1
FDNS	09ALL	0	20L	G15_042	TO->FROM	SIOUX CITY - TWIN CHURCH 230KV CKT 1	320	320	0.40695	105.2091	ANTELOPE 3345.00 (ANTELOPE T1) 345/115/13.8KV TRANSFORMER CKT 1
FDNS	09ALL	0	20L	G15_042	TO->FROM	SIOUX CITY - TWIN CHURCH 230KV CKT 1	320	320	0.40425	105.2053	SIOUX CITY (SC KV5A) 230/161/13.8KV TRANSFORMER CKT 1
FDNS	09ALL	0	20L	G15_042	TO->FROM	SIOUX CITY - TWIN CHURCH 230KV CKT 1	320	320	0.40644	105.1213	GEN640418 1-ELKHORN RIDGE WIND
FDNS	09ALL	0	20L	G15_042	TO->FROM	SIOUX CITY - TWIN CHURCH 230KV CKT 1	320	320	0.40498	105.1029	GRIMES - LEHIGH 345KV CKT 1
FDNS	09ALL	0	20L	G15_042	TO->FROM	SIOUX CITY - TWIN CHURCH 230KV CKT 1	320	320	0.40644	105.1017	GEN337911 1-ARKANSAS NUCLEAR ONE UNIT #2
FDNS	09ALL	0	20L	G15_042	TO->FROM	SIOUX CITY - TWIN CHURCH 230KV CKT 1	320	320	0.40461	105.1011	ANITA TAP POINT TO CRESTON AND DENISON - EXIRA 161KV CKT 1
FDNS	09ALL	0	20L	G15_042	TO->FROM	SIOUX CITY - TWIN CHURCH 230KV CKT 1	320	320	0.40461	105.0466	DENISON - EXIRA 161KV CKT 1
FDNS	09ALL	0	20L	G15_042	TO->FROM	SIOUX CITY - TWIN CHURCH 230KV CKT 1	320	320	0.40461	105.0461	DENISON (DN KV1A) 230/161/13.8KV TRANSFORMER CKT 1
FDNS	09ALL	0	20L	G15_042	TO->FROM	SIOUX CITY - TWIN CHURCH 230KV CKT 1	320	320	0.39988	104.9776	RAUN - SUB 3451 FT CAL 345KV CKT 1
FDNS	09ALL	0	20L	G15_042	TO->FROM	SIOUX CITY - TWIN CHURCH 230KV CKT 1	320	320	0.39988	104.9776	RAUN - SUB 3451 FT CAL 345KV CKT 1
FDNS	09ALL	0	20L	G15_042	TO->FROM	SIOUX CITY - TWIN CHURCH 230KV CKT 1	320	320	0.40644	104.909	GEN336821 1-GRAND GULF UNIT
FDNS	09ALL	0	20L	G15_042	TO->FROM	SIOUX CITY - TWIN CHURCH 230KV CKT 1	320	320	0.40296	104.893	SIOUX CITY - SIOUXCY-LNX3345.00 345KV CKT Z
FDNS	09ALL	0	20L	G15_042	TO->FROM	SIOUX CITY - TWIN CHURCH 230KV CKT 1	320	320	0.40296	104.8743	P12:345:UMZW:# 907 #: SC2-SR IN IA. SC2-SR 345 KV LINE
FDNS	09ALL	0	20L	G15_042	TO->FROM	SIOUX CITY - TWIN CHURCH 230KV CKT 1	320	320	0.40644	104.8535	GEN562921 1-G15054_2 0.6900
FDNS	09ALL	0	20L	G15_042	TO->FROM	SIOUX CITY - TWIN CHURCH 230KV CKT 1	320	320	0.40296	104.6054	SIOUXCY-LNX3345.00 - SPLIT ROCK 345KV CKT 1
FDNS	09ALL	0	20L	G15_042	TO->FROM	SIOUX CITY - TWIN CHURCH 230KV CKT 1	320	320	0.40296	104.6054	SIOUXCY-LNX3345.00 - SPLIT ROCK 345KV CKT 1
FDNS	09NR	0	20L	G15_042	TO->FROM	SIOUX CITY - TWIN CHURCH 230KV CKT 1	320	320	0.42055	104.5829	EMERSON - TWIN CHURCH 115KV CKT 1
FDNS	09ALL	0	20L	G15_042	TO->FROM	SIOUX CITY - TWIN CHURCH 230KV CKT 1	320	320	0.40658	104.1001	GR ISLD-LNX3345.00 - HOLT.CO3 345.00 345KV CKT 1
FDNS	09ALL	0	20L	G15_042	TO->FROM	SIOUX CITY - TWIN CHURCH 230KV CKT 1	320	320	0.40644	104.0842	GEN635023 3-WALTER SCOTT UNIT 3
FDNS	09ALL	0	20L	G15_042	TO->FROM	SIOUX CITY - TWIN CHURCH 230KV CKT 1	320	320	0.40658	104.0455	GR ISLD-LNX3345.00 - GRAND ISLAND 345KV CKT Z
FDNS	09NR	0	20L	G15_042	TO->FROM	SIOUX CITY - TWIN CHURCH 230KV CKT 1	320	320	0.37908	103.9487	RAUN - SIOUX CITY 345KV CKT 1
FDNS	09NR	0	20L	G15_042	TO->FROM	SIOUX CITY - TWIN CHURCH 230KV CKT 1	320	320	0.37908	103.9487	RAUN - SIOUX CITY 345KV CKT 1
FDNS	09NR	0	17G	G15_042	TO->FROM	SIOUX CITY - TWIN CHURCH 230KV CKT 1	320	320	0.39312	103.8597	P13:230-345:NPPD:NUCOR-1
FDNS	09ALL	0	20L	G15_042	TO->FROM	SIOUX CITY - TWIN CHURCH 230KV CKT 1	320	320	0.40283	103.7922	EAGLE 4 230.00 - SIOUX CITY 230KV CKT 1
FDNS	09ALL	0	20L	G15_042	TO->FROM	SIOUX CITY - TWIN CHURCH 230KV CKT 1	320	320	0.40644	103.6471	GEN635024 4-WALTER SCOTT UNIT 4
FDNS	09ALL	0	20L	G15_042	TO->FROM	SIOUX CITY - TWIN CHURCH 230KV CKT 1	320	320	0.40103	103.6379	PLYMOUTH - SIOUX CITY 161KV CKT 1
FDNS	09NR	0	20L	G15_042	TO->FROM	SIOUX CITY - TWIN CHURCH 230KV CKT 1	320	320	0.39855	103.2762	GAVINS POINT - YANKON JCT 115KV CKT 1
FDNS	09NR	0	20L	G15_042	TO->FROM	SIOUX CITY - TWIN CHURCH 230KV CKT 1	320	320	0.39855	103.2762	GAVINS POINT - YANKON JCT 115KV CKT 1
FDNS	09ALL	0	17G	G15_042	TO->FROM	SIOUX CITY - TWIN CHURCH 230KV CKT 1	320	320	0.4313	102.9266	EMERSON - TWIN CHURCH 115KV CKT 1
FDNS	09NR	0	20L	G15_042	TO->FROM	SIOUX CITY - TWIN CHURCH 230KV CKT 1	320	320	0.4272	102.8531	HOSKINS - SHELL CREEK 345KV CKT 1
FDNS	09NR	0	20L	G15_042	TO->FROM	SIOUX CITY - TWIN CHURCH 230KV CKT 1	320	320	0.39363	102.8276	P13:115-230:NPPD:NUCOR-3
FDNS	09ALL	0	20L	G15_042	TO->FROM	SIOUX CITY - TWIN CHURCH 230KV CKT 1	320	320	0.40268	102.5734	DENISON - SIOUX CITY 230KV CKT 1
FDNS	09ALL	0	20L	G15_042	TO->FROM	SIOUX CITY - TWIN CHURCH 230KV CKT 1	320	320	0.40644	102.4396	GEN562673 1-G15_007_3 0.6900
FDNS	09NR	0	20L	G15_042	TO->FROM	SIOUX CITY - TWIN CHURCH 230KV CKT 1	320	320	0.40737	102.0204	COLUMEAST - NW68TH & HOLDREGE 345KV CKT 1
FDNS	09NR	0	20L	G15_042	TO->FROM	SIOUX CITY - TWIN CHURCH 230KV CKT 1	320	320	0.40737	102.0204	COLUMEAST - NW68TH & HOLDREGE 345KV CKT 1
FDNS	09ALL	0	20L	G15_042	TO->FROM	SIOUX CITY - TWIN CHURCH 230KV CKT 1	320	320	0.40644	101.3716	GEN563113 1-G15076_4 0.6500
FDNS	09ALL	0	20L	G15_042	TO->FROM	SIOUX CITY - TWIN CHURCH 230KV CKT 1	320	320	0.40644	101.3716	GEN563114 1-G15076_5 0.6500
FDNS	09NR	0	20L	G15_042	TO->FROM	SIOUX CITY - TWIN CHURCH 230KV CKT 1	320	320	0.40637	101.2752	COLUMEAST - SHELL CREEK 345KV CKT 1
FDNS	09ALL	0	20L	G15_042	TO->FROM	SIOUX CITY - TWIN CHURCH 230KV CKT 1	320	320	0.40644	101.2116	GEN562438 1-G13-032 0.6900
FDNS	09NR	0	20L	G15_042	TO->FROM	SIOUX CITY - TWIN CHURCH 230KV CKT 1	320	320	0.42055	101.1718	P12:115:NPPD:1193:OAKLAND7:EMERSON7:BTB
FDNS	09NR	0	20L	G15_042	TO->FROM	SIOUX CITY - TWIN CHURCH 230KV CKT 1	320	320	0.42055	101.1409	BANCROFT - EMERSON 115KV CKT 1
FDNS	09NR	0	20L	G15_042	TO->FROM	SIOUX CITY - TWIN CHURCH 230KV CKT 1	320	320	0.40298	101.055	BELDEN - HARTINGTON 115KV CKT 1
FDNS	09ALL	0	20L	G15_042	TO->FROM	SIOUX CITY - TWIN CHURCH 230KV CKT 1	320	320	0.40757	101.0355	KELLY - MEADOWGROVE4230.00 230KV CKT 1
FDNS	09NR	0	20L	G15_042	TO->FROM	SIOUX CITY - TWIN CHURCH 230KV CKT 1	320	320	0.3902	100.9543	FT THOMPSON - FTTHOM2-LNX3345.00 345KV CKT Z
FDNS	09NR	0	20L	G15_042	TO->FROM	SIOUX CITY - TWIN CHURCH 230KV CKT 1	320	320	0.3902	100.9451	GRPRAR2-LNX3345.00 - YANKTON 345KV CKT Z
FDNS	09NR	0	20L	G15_042	TO->FROM	SIOUX CITY - TWIN CHURCH 230KV CKT 1	320	320	0.3902	100.9421	FTTHOM2-LNX3345.00 - GRPRAR2-LNX3345.00 345KV CKT 1
FDNS	09NR	0	20L	G15_042	TO->FROM	SIOUX CITY - TWIN CHURCH 230KV CKT 1	320	320	0.39363	100.655	P13:115-345:NPPD:NUCOR-2
FDNS	09ALL	0	17G	G15_042	TO->FROM	SIOUX CITY - TWIN CHURCH 230KV CKT 1	320	320	0.42024	100.4236	COLUMEAST - NW68TH & HOLDREGE 345KV CKT 1
FDNS	09ALL	0	17G	G15_042	TO->FROM	SIOUX CITY - TWIN CHURCH 230KV CKT 1	320	320	0.42024	100.4236	COLUMEAST - NW68TH & HOLDREGE 345KV CKT 1
FDNS	09NR	0	20L	G15_042	TO->FROM	SIOUX CITY - TWIN CHURCH 230KV CKT 1	320	320	0.39608	100.3978	NAPA JCT7 115.00 - YANKON JCT 115KV CKT 1
FDNS	09NR	0	20L	G15_042	TO->FROM	SIOUX CITY - TWIN CHURCH 230KV CKT 1	320	320	0.39608	100.3978	NAPA JCT7 115.00 - YANKON JCT 115KV CKT 1
FDNS	09NR	0	20L	G15_042	TO->FROM	SIOUX CITY - TWIN CHURCH 230KV CKT 1	320	320	0.39608	100.3953	P12:115:UMZW:# 1910 #: YJ IN SD. YJ-UJ LINE FAULT
FDNS	09NR	0	20L	G15_042	TO->FROM	SIOUX CITY - TWIN CHURCH 230KV CKT 1	320	320	0.39608	100.3952	NAPA JCT7 115.00 - UTICA 115KV CKT 1
FDNS	09NR	0	20L	G15_042	TO->FROM	SIOUX CITY - TWIN CHURCH 230KV CKT 1	320	320	0.39608	100.3952	NAPA JCT7 115.00 - UTICA 115KV CKT 1
FDNS	09ALL	0	17G	G15_042	TO->FROM	SIOUX CITY - TWIN CHURCH 230KV CKT 1	320	320	0.43524	100.2833	HOSKINS - SHELL CREEK 345KV CKT 1
FDNS	09NR	0	20L	G15_042	TO->FROM	SIOUX CITY - TWIN CHURCH 230KV CKT 1	320	320	0.42055	100.2298	BANCROFT - OAKLAND 115KV CKT 1
FDNS	09NR	0	20L	G15_042	TO->FROM	SIOUX CITY - TWIN CHURCH 230KV CKT 1	320	320	0.39363	99.9	SHERBURNE CO 345/24.0KV TRANSFORMER CKT 1
FDNS	09ALL	0	17G	G15_042	TO->FROM	SIOUX CITY - TWIN CHURCH 230KV CKT 1	320	320	0.41136	99.8	GAVINS POINT - YANKON JCT 115KV CKT 1
FDNS	09ALL	0	17G	G15_042	TO->FROM	SIOUX CITY - TWIN CHURCH 230KV CKT 1	320	320	0.41136	99.8	GAVINS POINT - YANKON JCT 115KV CKT 1
FDNS	09NR	0	20L	G15_042	TO->FROM	SIOUX CITY - TWIN CHURCH 230KV CKT 1	320	320	0.39415	99.8	BELDEN - HOSKINS 115KV CKT 1
FDNS	09NR	0	20L	G15_042	TO->FROM	SIOUX CITY - TWIN CHURCH 230KV CKT 1	320	320	0.39363	99.8	GEN600002 3-SHERBURNE CNTY G3
FDNS	09ALL	0	17G	G15_042	TO->FROM	SIOUX CITY - TWIN CHURCH 230KV CKT 1	320	320	0.4313	99.5	P12:115:NPPD:1193:OAKLAND7:EMERSON7:BTB
FDNS	09NR	0	20L	G15_042	TO->FROM	SIOUX CITY - TWIN CHURCH 230KV CKT 1	320	320	0.39363	99.5	BIG STONE 230/24.0KV TRANSFORMER CKT 1
FDNS	00NR	2	17SP	G15_042	FROM->TO	BELDEN - HOSKINS 115KV CKT 1	115	115	0.13597	123.538	DIXONCO 230.00 - HOSKINS 230KV CKT 1

SOLUTION	GROUP	SCENARIO	SEASON	SOURCE	DIRECTION	MONITORED ELEMENT	RATEA (MVA)	RATEB(MVA)	TDF	TC%LOADING (% MVA)	CONTINGENCY
FDNS	09ALL	2	25SP	G15_042	FROM->TO	DIXONCO 230.00 - HOSKINS 230KV CKT 1	320	320	0.56764	123.9673	DIXONCO 230.00 - TWIN CHURCH 230KV CKT 1
FDNS	09ALL	2	20SP	G15_042	FROM->TO	DIXONCO 230.00 - HOSKINS 230KV CKT 1	320	320	0.56747	123.6685	DIXONCO 230.00 - TWIN CHURCH 230KV CKT 1
FDNS	09ALL	2	17SP	G15_042	FROM->TO	DIXONCO 230.00 - HOSKINS 230KV CKT 1	320	320	0.56797	122.9036	DIXONCO 230.00 - TWIN CHURCH 230KV CKT 1
FDNS	09ALL	2	17G	G15_042	FROM->TO	DIXONCO 230.00 - HOSKINS 230KV CKT 1	320	320	0.56761	116.5225	DIXONCO 230.00 - TWIN CHURCH 230KV CKT 1
FDNS	09ALL	2	16WP	G15_042	FROM->TO	DIXONCO 230.00 - HOSKINS 230KV CKT 1	320	320	0.56694	116.3473	DIXONCO 230.00 - TWIN CHURCH 230KV CKT 1
FDNS	09ALL	2	20WP	G15_042	FROM->TO	DIXONCO 230.00 - HOSKINS 230KV CKT 1	320	320	0.56669	116.0792	DIXONCO 230.00 - TWIN CHURCH 230KV CKT 1
FDNS	00NR	2	17SP	G15_042	FROM->TO	DIXONCO 230.00 - HOSKINS 230KV CKT 1	320	320	0.57571	114.79	DIXONCO 230.00 - TWIN CHURCH 230KV CKT 1
FDNS	09ALL	2	20L	G15_042	FROM->TO	DIXONCO 230.00 - HOSKINS 230KV CKT 1	320	320	0.56521	113.5444	DIXONCO 230.00 - TWIN CHURCH 230KV CKT 1
FDNS	09ALL	2	20SP	G15_042	FROM->TO	DIXONCO 230.00 - HOSKINS 230KV CKT 1	320	320	0.52146	99.7	SIOUX CITY - TWIN CHURCH 230KV CKT 1
FDNS	09ALL	2	25SP	G15_042	FROM->TO	DIXONCO 230.00 - HOSKINS 230KV CKT 1	320	320	0.52162	99.6	SIOUX CITY - TWIN CHURCH 230KV CKT 1
FDNS	09ALL	2	17G	G15_042	FROM->TO	DIXONCO 230.00 - TWIN CHURCH 230KV CKT 1	320	320	0.55004	133.7254	DIXONCO 230.00 - HOSKINS 230KV CKT 1
FDNS	09ALL	2	16WP	G15_042	FROM->TO	DIXONCO 230.00 - TWIN CHURCH 230KV CKT 1	320	320	0.54973	133.06	DIXONCO 230.00 - HOSKINS 230KV CKT 1
FDNS	09ALL	2	20WP	G15_042	FROM->TO	DIXONCO 230.00 - TWIN CHURCH 230KV CKT 1	320	320	0.54987	132.2703	DIXONCO 230.00 - HOSKINS 230KV CKT 1
FDNS	09ALL	2	20SP	G15_042	FROM->TO	DIXONCO 230.00 - TWIN CHURCH 230KV CKT 1	320	320	0.55005	131.6666	DIXONCO 230.00 - HOSKINS 230KV CKT 1
FDNS	09ALL	2	25SP	G15_042	FROM->TO	DIXONCO 230.00 - TWIN CHURCH 230KV CKT 1	320	320	0.55012	130.9551	DIXONCO 230.00 - HOSKINS 230KV CKT 1
FDNS	09ALL	2	20L	G15_042	FROM->TO	DIXONCO 230.00 - TWIN CHURCH 230KV CKT 1	320	320	0.54853	130.9336	DIXONCO 230.00 - HOSKINS 230KV CKT 1
FDNS	09ALL	2	17SP	G15_042	FROM->TO	DIXONCO 230.00 - TWIN CHURCH 230KV CKT 1	320	320	0.55003	130.6713	DIXONCO 230.00 - HOSKINS 230KV CKT 1
FDNS	09ALL	2	20L	G15_042	FROM->TO	DIXONCO 230.00 - TWIN CHURCH 230KV CKT 1	320	320	0.48065	117.8924	BELDEN 4 230.00 - DIXONCO 230.00 230KV CKT 1
FDNS	09ALL	2	17G	G15_042	FROM->TO	DIXONCO 230.00 - TWIN CHURCH 230KV CKT 1	320	320	0.47965	117.2922	BELDEN 4 230.00 - DIXONCO 230.00 230KV CKT 1
FDNS	09ALL	2	16WP	G15_042	FROM->TO	DIXONCO 230.00 - TWIN CHURCH 230KV CKT 1	320	320	0.48004	116.1353	BELDEN 4 230.00 - DIXONCO 230.00 230KV CKT 1
FDNS	09ALL	2	17G	G15_042	FROM->TO	DIXONCO 230.00 - TWIN CHURCH 230KV CKT 1	320	320	0.36861	115.9815	HOSKINS - RAUN 345KV CKT 1
FDNS	09ALL	2	20WP	G15_042	FROM->TO	DIXONCO 230.00 - TWIN CHURCH 230KV CKT 1	320	320	0.48045	115.6128	BELDEN 4 230.00 - DIXONCO 230.00 230KV CKT 1
FDNS	09ALL	2	20L	G15_042	FROM->TO	DIXONCO 230.00 - TWIN CHURCH 230KV CKT 1	320	320	0.36775	114.6463	HOSKINS - RAUN 345KV CKT 1
FDNS	09ALL	2	20L	G15_042	FROM->TO	DIXONCO 230.00 - TWIN CHURCH 230KV CKT 1	320	320	0.36775	114.6463	HOSKINS - RAUN 345KV CKT 1
FDNS	09ALL	2	20L	G15_042	FROM->TO	DIXONCO 230.00 - TWIN CHURCH 230KV CKT 1	320	320	0.39521	114.6142	BELDEN 4 230.00 - RASMUSN 230KV CKT 1
FDNS	09ALL	2	17G	G15_042	FROM->TO	DIXONCO 230.00 - TWIN CHURCH 230KV CKT 1	320	320	0.39516	114.1601	BELDEN 4 230.00 - RASMUSN 230KV CKT 1
FDNS	09ALL	2	16WP	G15_042	FROM->TO	DIXONCO 230.00 - TWIN CHURCH 230KV CKT 1	320	320	0.36859	112.4301	HOSKINS - RAUN 345KV CKT 1
FDNS	09ALL	2	16WP	G15_042	FROM->TO	DIXONCO 230.00 - TWIN CHURCH 230KV CKT 1	320	320	0.39543	111.9923	BELDEN 4 230.00 - RASMUSN 230KV CKT 1
FDNS	09ALL	2	17G	G15_042	FROM->TO	DIXONCO 230.00 - TWIN CHURCH 230KV CKT 1	320	320	0.34244	111.9764	P13:230-345:NPPD:NUCOR-1
FDNS	09ALL	2	17G	G15_042	FROM->TO	DIXONCO 230.00 - TWIN CHURCH 230KV CKT 1	320	320	0.36232	111.7576	RASMUSN - SIOUX CITY 230KV CKT 1
FDNS	09ALL	2	20WP	G15_042	FROM->TO	DIXONCO 230.00 - TWIN CHURCH 230KV CKT 1	320	320	0.39583	111.3001	BELDEN 4 230.00 - RASMUSN 230KV CKT 1
FDNS	09ALL	2	16WP	G15_042	FROM->TO	DIXONCO 230.00 - TWIN CHURCH 230KV CKT 1	320	320	0.3425	111.2734	P13:230-345:NPPD:NUCOR-1
FDNS	09ALL	2	20WP	G15_042	FROM->TO	DIXONCO 230.00 - TWIN CHURCH 230KV CKT 1	320	320	0.36913	111.0571	HOSKINS - RAUN 345KV CKT 1
FDNS	09ALL	2	20WP	G15_042	FROM->TO	DIXONCO 230.00 - TWIN CHURCH 230KV CKT 1	320	320	0.36913	111.0571	HOSKINS - RAUN 345KV CKT 1
FDNS	09ALL	2	20L	G15_042	FROM->TO	DIXONCO 230.00 - TWIN CHURCH 230KV CKT 1	320	320	0.34213	110.5932	P13:230-345:NPPD:NUCOR-1
FDNS	09ALL	2	20WP	G15_042	FROM->TO	DIXONCO 230.00 - TWIN CHURCH 230KV CKT 1	320	320	0.34289	110.4383	P13:230-345:NPPD:NUCOR-1
FDNS	09ALL	2	16WP	G15_042	FROM->TO	DIXONCO 230.00 - TWIN CHURCH 230KV CKT 1	320	320	0.36211	109.7773	RASMUSN - SIOUX CITY 230KV CKT 1
FDNS	09ALL	2	20L	G15_042	FROM->TO	DIXONCO 230.00 - TWIN CHURCH 230KV CKT 1	320	320	0.36087	108.8316	RASMUSN - SIOUX CITY 230KV CKT 1
FDNS	09ALL	2	20WP	G15_042	FROM->TO	DIXONCO 230.00 - TWIN CHURCH 230KV CKT 1	320	320	0.36252	108.4053	RASMUSN - SIOUX CITY 230KV CKT 1
FDNS	09ALL	2	17G	G15_042	FROM->TO	DIXONCO 230.00 - TWIN CHURCH 230KV CKT 1	320	320	0.34627	107.416	BELDEN - TWIN CHURCH 115KV CKT 1
FDNS	09ALL	2	17SP	G15_042	FROM->TO	DIXONCO 230.00 - TWIN CHURCH 230KV CKT 1	320	320	0.47926	106.9444	BELDEN 4 230.00 - DIXONCO 230.00 230KV CKT 1
FDNS	09ALL	2	20SP	G15_042	FROM->TO	DIXONCO 230.00 - TWIN CHURCH 230KV CKT 1	320	320	0.47981	106.733	BELDEN 4 230.00 - DIXONCO 230.00 230KV CKT 1
FDNS	09ALL	2	16WP	G15_042	FROM->TO	DIXONCO 230.00 - TWIN CHURCH 230KV CKT 1	320	320	0.34628	106.2848	BELDEN - TWIN CHURCH 115KV CKT 1
FDNS	09ALL	2	17G	G15_042	FROM->TO	DIXONCO 230.00 - TWIN CHURCH 230KV CKT 1	320	320	0.41865	106.0909	HOSKINS (HOSKINS T2) 345/230/13.8KV TRANSFORMER CKT 1
FDNS	09ALL	2	17G	G15_042	FROM->TO	DIXONCO 230.00 - TWIN CHURCH 230KV CKT 1	320	320	0.41865	106.0909	HOSKINS (HOSKINS T2) 345/230/13.8KV TRANSFORMER CKT 1
FDNS	09ALL	2	16WP	G15_042	FROM->TO	DIXONCO 230.00 - TWIN CHURCH 230KV CKT 1	320	320	0.3425	106.0026	P13:115-230:NPPD:NUCOR-3
FDNS	09ALL	2	25SP	G15_042	FROM->TO	DIXONCO 230.00 - TWIN CHURCH 230KV CKT 1	320	320	0.4797	105.9625	BELDEN 4 230.00 - DIXONCO 230.00 230KV CKT 1
FDNS	09ALL	2	20SP	G15_042	FROM->TO	DIXONCO 230.00 - TWIN CHURCH 230KV CKT 1	320	320	0.34257	105.4574	P13:230-345:NPPD:NUCOR-1
FDNS	09ALL	2	20WP	G15_042	FROM->TO	DIXONCO 230.00 - TWIN CHURCH 230KV CKT 1	320	320	0.34671	105.2538	BELDEN - TWIN CHURCH 115KV CKT 1
FDNS	09ALL	2	20WP	G15_042	FROM->TO	DIXONCO 230.00 - TWIN CHURCH 230KV CKT 1	320	320	0.34289	105.1357	P13:115-230:NPPD:NUCOR-3
FDNS	09ALL	2	20L	G15_042	FROM->TO	DIXONCO 230.00 - TWIN CHURCH 230KV CKT 1	320	320	0.34566	104.9084	BELDEN - TWIN CHURCH 115KV CKT 1
FDNS	09ALL	2	17G	G15_042	FROM->TO	DIXONCO 230.00 - TWIN CHURCH 230KV CKT 1	320	320	0.36401	104.8619	HOSKINS - SHELL CREEK 345KV CKT 1
FDNS	09ALL	2	17G	G15_042	FROM->TO	DIXONCO 230.00 - TWIN CHURCH 230KV CKT 1	320	320	0.35241	104.8025	COLUMEAST - NW68TH & HOLDREGE 345KV CKT 1
FDNS	09ALL	2	17G	G15_042	FROM->TO	DIXONCO 230.00 - TWIN CHURCH 230KV CKT 1	320	320	0.35241	104.8025	COLUMEAST - NW68TH & HOLDREGE 345KV CKT 1
FDNS	09ALL	2	17G	G15_042	FROM->TO	DIXONCO 230.00 - TWIN CHURCH 230KV CKT 1	320	320	0.34244	104.7837	P13:115-230:NPPD:NUCOR-3
FDNS	09ALL	2	17SP	G15_042	FROM->TO	DIXONCO 230.00 - TWIN CHURCH 230KV CKT 1	320	320	0.34219	104.7633	P13:230-345:NPPD:NUCOR-1
FDNS	09ALL	2	20L	G15_042	FROM->TO	DIXONCO 230.00 - TWIN CHURCH 230KV CKT 1	320	320	0.41774	104.7068	HOSKINS (HOSKINS T2) 345/230/13.8KV TRANSFORMER CKT 1
FDNS	09ALL	2	20L	G15_042	FROM->TO	DIXONCO 230.00 - TWIN CHURCH 230KV CKT 1	320	320	0.41774	104.7068	HOSKINS (HOSKINS T2) 345/230/13.8KV TRANSFORMER CKT 1
FDNS	09ALL	2	25SP	G15_042	FROM->TO	DIXONCO 230.00 - TWIN CHURCH 230KV CKT 1	320	320	0.34254	104.4163	P13:230-345:NPPD:NUCOR-1
FDNS	09ALL	2	17G	G15_042	FROM->TO	DIXONCO 230.00 - TWIN CHURCH 230KV CKT 1	320	320	0.35126	104.0125	COLUMEAST - SHELL CREEK 345KV CKT 1
FDNS	09ALL	2	20L	G15_042	FROM->TO	DIXONCO 230.00 - TWIN CHURCH 230KV CKT 1	320	320	0.3632	102.9687	HOSKINS - SHELL CREEK 345KV CKT 1
FDNS	09ALL	2	20L	G15_042	FROM->TO	DIXONCO 230.00 - TWIN CHURCH 230KV CKT 1	320	320	0.34213	102.942	P13:115-230:NPPD:NUCOR-3
FDNS	09ALL	2	16WP	G15_042	FROM->TO	DIXONCO 230.00 - TWIN CHURCH 230KV CKT 1	320	320	0.3425	102.7384	P13:115-345:NPPD:NUCOR-2
FDNS	09ALL	2	17G	G15_042	FROM->TO	DIXONCO 230.00 - TWIN CHURCH 230KV CKT 1	320	320	0.34051	102.5393	FT RANDAL - SIOUX CITY 230KV CKT 1
FDNS	09ALL	2	20L	G15_042	FROM->TO	DIXONCO 230.00 - TWIN CHURCH 230KV CKT 1	320	320	0.35132	102.3706	COLUMEAST - NW68TH & HOLDREGE 345KV CKT 1
FDNS	09ALL	2	20L	G15_042	FROM->TO	DIXONCO 230.00 - TWIN CHURCH 230KV CKT 1	320	320	0.35132	102.3706	COLUMEAST - NW68TH & HOLDREGE 345KV CKT 1
FDNS	09ALL	2	17G	G15_042	FROM->TO	DIXONCO 230.00 - TWIN CHURCH 230KV CKT 1	320	320	0.34244	102.341	P13:115-345:NPPD:NUCOR-2
FDNS	09ALL	2	16WP	G15_042	FROM->TO	DIXONCO 230.00 - TWIN CHURCH 230KV CKT 1	320	320	0.33372	102.2786	RAUN - SIOUX CITY 345KV CKT 1
FDNS	09ALL	2	20SP	G15_042	FROM->TO	DIXONCO 230.00 - TWIN CHURCH 230KV CKT 1	320	320	0.36241	102.261	RASMUSN - SIOUX CITY 230KV CKT 1
FDNS	00NR	2	17SP	G15_042	FROM->TO	DIXONCO 230.00 - TWIN CHURCH 230KV CKT 1	320	320	0.5483	102.1304	DIXONCO 230.00 - HOSKINS 230KV CKT 1
FDNS	09ALL	2	17G	G15_042	FROM->TO	DIXONCO 230.00 - TWIN CHURCH 230KV CKT 1	320	320	0.34498	102.0542	HOSKINS - STANTON NORTH 115KV CKT 1
FDNS	09ALL	2	20SP	G15_042	FROM->TO	DIXONCO 230.00 - TWIN CHURCH 230KV CKT 1	320	320	0.39528	102.0318	BELDEN 4 230.00 - RASMUSN 230KV CKT 1
FDNS	09ALL	2	17SP	G15_042	FROM->TO	DIXONCO 230.00 - TWIN CHURCH 230KV CKT 1	320	320	0.36206	101.9649	RASMUSN - SIOUX CITY 230KV CKT 1
FDNS	09ALL	2	20L	G15_042	FROM->TO	DIXONCO 230.00 - TWIN CHURCH 230KV CKT 1	320	320	0.35051	101.8843	COLUMEAST - SHELL CREEK 345KV CKT 1
FDNS	09ALL	2	20WP	G15_042	FROM->TO	DIXONCO 230.00 - TWIN CHURCH 230KV CKT 1	320	320	0.34289	101.8793	P13:115-345:NPPD:NUCOR-2
FDNS	09ALL	2	17G	G15_042	FROM->TO	DIXONCO 230.00 - TWIN CHURCH 230KV CKT 1	320	320	0.3453	101.859	GAVINS POINT - YANKON JCT 115KV CKT 1
FDNS	09ALL	2	17G	G15_042	FROM->TO	DIXONCO 230.00 - TWIN CHURCH 230KV CKT 1	320	320	0.3453	101.859	GAVINS POINT - YANKON JCT 115KV CKT 1
FDNS	09ALL	2	16WP	G15_042	FROM->TO	DIXONCO 230.00 - TWIN CHURCH 230KV CKT 1	320	320	0.36399	101.8323	HOSKINS - SHELL CREEK 345KV CKT 1
FDNS	09ALL	2	17G	G15_042	FROM->TO	DIXONCO 230.00 - TWIN CHURCH 230KV CKT 1	320	320	0.34498	101.7489	STANTON - STANTON NORTH 115KV CKT 1

SOLUTION	GROUP	SCENARIO	SEASON	SOURCE	DIRECTION	MONITORED ELEMENT	RATEA (MVA)	RATEB(MVA)	TDF	TC%LOADING (% MVA)	CONTINGENCY
FDNS	09ALL	2	17G	G15_042	FROM->TO	DIXONCO 230.00 - TWIN CHURCH 230KV CKT 1	320	320	0.34498	101.7021	P12:115:NPPD:1166:STNTN.N7:BEEMER 7:BTB
FDNS	09ALL	2	16WP	G15_042	FROM->TO	DIXONCO 230.00 - TWIN CHURCH 230KV CKT 1	320	320	0.35234	101.6995	COLUMEAST - NW68TH & HOLDREGE 345KV CKT 1
FDNS	09ALL	2	16WP	G15_042	FROM->TO	DIXONCO 230.00 - TWIN CHURCH 230KV CKT 1	320	320	0.35234	101.6995	COLUMEAST - NW68TH & HOLDREGE 345KV CKT 1
FDNS	09ALL	2	16WP	G15_042	FROM->TO	DIXONCO 230.00 - TWIN CHURCH 230KV CKT 1	320	320	0.35124	101.6674	COLUMEAST - SHELL CREEK 345KV CKT 1
FDNS	09ALL	2	17G	G15_042	FROM->TO	DIXONCO 230.00 - TWIN CHURCH 230KV CKT 1	320	320	0.34498	101.6408	BEEMER - STANTON 115KV CKT 1
FDNS	09ALL	2	17G	G15_042	FROM->TO	DIXONCO 230.00 - TWIN CHURCH 230KV CKT 1	320	320	0.33355	101.6281	RAUN - SIOUX CITY 345KV CKT 1
FDNS	09ALL	2	16WP	G15_042	FROM->TO	DIXONCO 230.00 - TWIN CHURCH 230KV CKT 1	320	320	0.34044	101.5826	FT RANDAL - SIOUX CITY 230KV CKT 1
FDNS	09ALL	2	20L	G15_042	FROM->TO	DIXONCO 230.00 - TWIN CHURCH 230KV CKT 1	320	320	0.3339	101.528	RAUN - SIOUX CITY 345KV CKT 1
FDNS	09ALL	2	20L	G15_042	FROM->TO	DIXONCO 230.00 - TWIN CHURCH 230KV CKT 1	320	320	0.3339	101.528	RAUN - SIOUX CITY 345KV CKT 1
FDNS	09ALL	2	16WP	G15_042	FROM->TO	DIXONCO 230.00 - TWIN CHURCH 230KV CKT 1	320	320	0.41853	101.4024	HOSKINS (HOSKINS T2) 345/230/13.8KV TRANSFORMER CKT 1
FDNS	09ALL	2	16WP	G15_042	FROM->TO	DIXONCO 230.00 - TWIN CHURCH 230KV CKT 1	320	320	0.41853	101.4024	HOSKINS (HOSKINS T2) 345/230/13.8KV TRANSFORMER CKT 1
FDNS	09ALL	2	20WP	G15_042	FROM->TO	DIXONCO 230.00 - TWIN CHURCH 230KV CKT 1	320	320	0.3343	101.2877	RAUN - SIOUX CITY 345KV CKT 1
FDNS	09ALL	2	20WP	G15_042	FROM->TO	DIXONCO 230.00 - TWIN CHURCH 230KV CKT 1	320	320	0.3343	101.2877	RAUN - SIOUX CITY 345KV CKT 1
FDNS	09ALL	2	17G	G15_042	FROM->TO	DIXONCO 230.00 - TWIN CHURCH 230KV CKT 1	320	320	0.34332	101.2776	GAVINS POINT - SPIRIT MOUND 115KV CKT 1
FDNS	09ALL	2	17G	G15_042	FROM->TO	DIXONCO 230.00 - TWIN CHURCH 230KV CKT 1	320	320	0.35231	101.2584	HOSKINS (HOSKINS T1) 230/115/13.8KV TRANSFORMER CKT 1
FDNS	09ALL	2	17G	G15_042	FROM->TO	DIXONCO 230.00 - TWIN CHURCH 230KV CKT 1	320	320	0.35231	101.2584	HOSKINS (HOSKINS T1) 230/115/13.8KV TRANSFORMER CKT 1
FDNS	09ALL	2	17G	G15_042	FROM->TO	DIXONCO 230.00 - TWIN CHURCH 230KV CKT 1	320	320	0.34498	101.2355	BEEMER - WEST POINT 115KV CKT 1
FDNS	09ALL	2	17G	G15_042	FROM->TO	DIXONCO 230.00 - TWIN CHURCH 230KV CKT 1	320	320	0.34376	101.2263	UTICA JCT - VFODNES 230KV CKT 1
FDNS	09ALL	2	16WP	G15_042	FROM->TO	DIXONCO 230.00 - TWIN CHURCH 230KV CKT 1	320	320	0.34502	101.0553	HOSKINS - STANTON NORTH 115KV CKT 1
FDNS	09ALL	2	17G	G15_042	FROM->TO	DIXONCO 230.00 - TWIN CHURCH 230KV CKT 1	320	320	0.34495	101.03	P12:115:NPPD:1161:OAKLAND7:BEEMER 7:BTB
FDNS	09ALL	2	17G	G15_042	FROM->TO	DIXONCO 230.00 - TWIN CHURCH 230KV CKT 1	320	320	0.34244	100.9564	GEN635214 4-NEAL UNIT 4
FDNS	09ALL	2	17G	G15_042	FROM->TO	DIXONCO 230.00 - TWIN CHURCH 230KV CKT 1	320	320	0.34244	100.9	GEN600002 3-SHERBURNE CNTY G3
FDNS	09ALL	2	20WP	G15_042	FROM->TO	DIXONCO 230.00 - TWIN CHURCH 230KV CKT 1	320	320	0.36404	100.896	HOSKINS - SHELL CREEK 345KV CKT 1
FDNS	09ALL	2	17G	G15_042	FROM->TO	DIXONCO 230.00 - TWIN CHURCH 230KV CKT 1	320	320	0.34179	100.8754	FT THOMPSON - FTTHOM2-LNX3345.00 345KV CKT Z
FDNS	09ALL	2	17G	G15_042	FROM->TO	DIXONCO 230.00 - TWIN CHURCH 230KV CKT 1	320	320	0.34244	100.8704	SHERBURNE CO 345/24.0KV TRANSFORMER CKT 1
FDNS	09ALL	2	17G	G15_042	FROM->TO	DIXONCO 230.00 - TWIN CHURCH 230KV CKT 1	320	320	0.34179	100.8673	GRPRAR2-LNX3345.00 - YANKTON 345KV CKT Z
FDNS	09ALL	2	17G	G15_042	FROM->TO	DIXONCO 230.00 - TWIN CHURCH 230KV CKT 1	320	320	0.34179	100.8641	FTTHOM2-LNX3345.00 - GRPRAR2-LNX3345.00 345KV CKT 1
FDNS	09ALL	2	16WP	G15_042	FROM->TO	DIXONCO 230.00 - TWIN CHURCH 230KV CKT 1	320	320	0.34545	100.8493	GAVINS POINT - YANKON JCT 115KV CKT 1
FDNS	09ALL	2	16WP	G15_042	FROM->TO	DIXONCO 230.00 - TWIN CHURCH 230KV CKT 1	320	320	0.34545	100.8493	GAVINS POINT - YANKON JCT 115KV CKT 1
FDNS	09ALL	2	20L	G15_042	FROM->TO	DIXONCO 230.00 - TWIN CHURCH 230KV CKT 1	320	320	0.34213	100.8451	P13:115-345:NPPD:NUCOR-2
FDNS	09ALL	2	17G	G15_042	FROM->TO	DIXONCO 230.00 - TWIN CHURCH 230KV CKT 1	320	320	0.34373	100.7966	NAPA JCT7 115.00 - UTICA 115KV CKT 1
FDNS	09ALL	2	17G	G15_042	FROM->TO	DIXONCO 230.00 - TWIN CHURCH 230KV CKT 1	320	320	0.34373	100.7966	NAPA JCT7 115.00 - UTICA 115KV CKT 1
FDNS	09ALL	2	17G	G15_042	FROM->TO	DIXONCO 230.00 - TWIN CHURCH 230KV CKT 1	320	320	0.34373	100.7966	P12:115:UMZW:# 1910 #: YJ IN SD. YJ-UJ LINE FAULT
FDNS	09ALL	2	17G	G15_042	FROM->TO	DIXONCO 230.00 - TWIN CHURCH 230KV CKT 1	320	320	0.34373	100.7954	NAPA JCT7 115.00 - YANKON JCT 115KV CKT 1
FDNS	09ALL	2	17G	G15_042	FROM->TO	DIXONCO 230.00 - TWIN CHURCH 230KV CKT 1	320	320	0.34373	100.7954	NAPA JCT7 115.00 - YANKON JCT 115KV CKT 1
FDNS	09ALL	2	17G	G15_042	FROM->TO	DIXONCO 230.00 - TWIN CHURCH 230KV CKT 1	320	320	0.34315	100.7918	P12:115:NPPD:1168B:ALBION 7:PETERSBRG.N7:BTB
FDNS	09ALL	2	17G	G15_042	FROM->TO	DIXONCO 230.00 - TWIN CHURCH 230KV CKT 1	320	320	0.34315	100.7838	PETERSBRG.N7115.00 - PETERSBURG 115KV CKT Z1
FDNS	09ALL	2	17G	G15_042	FROM->TO	DIXONCO 230.00 - TWIN CHURCH 230KV CKT 1	320	320	0.34315	100.77	ALBION - PETERSBURG 115KV CKT 1
FDNS	09ALL	2	17G	G15_042	FROM->TO	DIXONCO 230.00 - TWIN CHURCH 230KV CKT 1	320	320	0.34495	100.7594	OAKLAND - WEST POINT 115KV CKT 1
FDNS	09ALL	2	25SP	G15_042	FROM->TO	DIXONCO 230.00 - TWIN CHURCH 230KV CKT 1	320	320	0.39522	100.7447	BELDEN 4 230.00 - RASMUSN 230KV CKT 1
FDNS	09ALL	2	25SP	G15_042	FROM->TO	DIXONCO 230.00 - TWIN CHURCH 230KV CKT 1	320	320	0.36243	100.7347	RASMUSN - SIOUX CITY 230KV CKT 1
FDNS	09ALL	2	17SP	G15_042	FROM->TO	DIXONCO 230.00 - TWIN CHURCH 230KV CKT 1	320	320	0.39489	100.7275	BELDEN 4 230.00 - RASMUSN 230KV CKT 1
FDNS	09ALL	2	20WP	G15_042	FROM->TO	DIXONCO 230.00 - TWIN CHURCH 230KV CKT 1	320	320	0.35147	100.7188	COLUMEAST - SHELL CREEK 345KV CKT 1
FDNS	09ALL	2	17G	G15_042	FROM->TO	DIXONCO 230.00 - TWIN CHURCH 230KV CKT 1	320	320	0.34216	100.7134	COLUMBUS - SCHUYLER 115KV CKT 1
FDNS	09ALL	2	17G	G15_042	FROM->TO	DIXONCO 230.00 - TWIN CHURCH 230KV CKT 1	320	320	0.34332	100.7004	MANNING - SPIRIT MOUND 115KV CKT 1
FDNS	09ALL	2	20WP	G15_042	FROM->TO	DIXONCO 230.00 - TWIN CHURCH 230KV CKT 1	320	320	0.35243	100.6769	COLUMEAST - NW68TH & HOLDREGE 345KV CKT 1
FDNS	09ALL	2	20WP	G15_042	FROM->TO	DIXONCO 230.00 - TWIN CHURCH 230KV CKT 1	320	320	0.35243	100.6769	COLUMEAST - NW68TH & HOLDREGE 345KV CKT 1
FDNS	09ALL	2	17G	G15_042	FROM->TO	DIXONCO 230.00 - TWIN CHURCH 230KV CKT 1	320	320	0.34209	100.657	SUB 3454 - WAGENER 345KV CKT 1
FDNS	09ALL	2	17G	G15_042	FROM->TO	DIXONCO 230.00 - TWIN CHURCH 230KV CKT 1	320	320	0.34209	100.657	SUB 3454 - WAGENER 345KV CKT 1
FDNS	09ALL	2	16WP	G15_042	FROM->TO	DIXONCO 230.00 - TWIN CHURCH 230KV CKT 1	320	320	0.34502	100.6423	STANTON - STANTON NORTH 115KV CKT 1
FDNS	09ALL	2	17G	G15_042	FROM->TO	DIXONCO 230.00 - TWIN CHURCH 230KV CKT 1	320	320	0.34309	100.6303	MINGO - RED WILLOW 345KV CKT 1
FDNS	09ALL	2	17G	G15_042	FROM->TO	DIXONCO 230.00 - TWIN CHURCH 230KV CKT 1	320	320	0.34309	100.6303	MINGO - RED WILLOW 345KV CKT 1
FDNS	09ALL	2	17G	G15_042	FROM->TO	DIXONCO 230.00 - TWIN CHURCH 230KV CKT 1	320	320	0.34244	100.6	GEN600000 1-SHERBURNECNTY G1
FDNS	09ALL	2	20WP	G15_042	FROM->TO	DIXONCO 230.00 - TWIN CHURCH 230KV CKT 1	320	320	0.41879	100.591	HOSKINS (HOSKINS T2) 345/230/13.8KV TRANSFORMER CKT 1
FDNS	09ALL	2	20WP	G15_042	FROM->TO	DIXONCO 230.00 - TWIN CHURCH 230KV CKT 1	320	320	0.41879	100.591	HOSKINS (HOSKINS T2) 345/230/13.8KV TRANSFORMER CKT 1
FDNSLock	09ALL	2	17G	G15_042	FROM->TO	DIXONCO 230.00 - TWIN CHURCH 230KV CKT 1	320	320	0.34244	100.5686	GEN600001 2-SHERBURNE CNTY G2
FDNS	09ALL	2	17G	G15_042	FROM->TO	DIXONCO 230.00 - TWIN CHURCH 230KV CKT 1	320	320	0.34337	100.5606	COOPER - MOORE 345KV CKT 1
FDNS	09ALL	2	20L	G15_042	FROM->TO	DIXONCO 230.00 - TWIN CHURCH 230KV CKT 1	320	320	0.34493	100.5601	GAVINS POINT - YANKON JCT 115KV CKT 1
FDNS	09ALL	2	20L	G15_042	FROM->TO	DIXONCO 230.00 - TWIN CHURCH 230KV CKT 1	320	320	0.34493	100.5601	GAVINS POINT - YANKON JCT 115KV CKT 1
FDNS	09ALL	2	17G	G15_042	FROM->TO	DIXONCO 230.00 - TWIN CHURCH 230KV CKT 1	320	320	0.34244	100.5486	GEN635213 3-NEAL UNIT 3
FDNS	09ALL	2	16WP	G15_042	FROM->TO	DIXONCO 230.00 - TWIN CHURCH 230KV CKT 1	320	320	0.34502	100.5461	P12:115:NPPD:1166:STNTN.N7:BEEMER 7:BTB
FDNS	09ALL	2	17G	G15_042	FROM->TO	DIXONCO 230.00 - TWIN CHURCH 230KV CKT 1	320	320	0.34335	100.5015	AXTELL - POST ROCK 345KV CKT 1
FDNS	09ALL	2	20WP	G15_042	FROM->TO	DIXONCO 230.00 - TWIN CHURCH 230KV CKT 1	320	320	0.34086	100.4938	FT RANDAL - SIOUX CITY 230KV CKT 1
FDNS	09ALL	2	17G	G15_042	FROM->TO	DIXONCO 230.00 - TWIN CHURCH 230KV CKT 1	320	320	0.34332	100.486	BERSFORD - MANNING 115KV CKT 1
FDNS	09ALL	2	17G	G15_042	FROM->TO	DIXONCO 230.00 - TWIN CHURCH 230KV CKT 1	320	320	0.34058	100.4653	PAHOJA - SIOUX FALLS 230KV CKT 1
FDNS	09ALL	2	17G	G15_042	FROM->TO	DIXONCO 230.00 - TWIN CHURCH 230KV CKT 1	320	320	0.34328	100.4356	SIOUX FALLS - VFODNES 230KV CKT 1
FDNS	09ALL	2	17G	G15_042	FROM->TO	DIXONCO 230.00 - TWIN CHURCH 230KV CKT 1	320	320	0.34244	100.4233	GEN600005 1-MONTICELLO
FDNS	09ALL	2	16WP	G15_042	FROM->TO	DIXONCO 230.00 - TWIN CHURCH 230KV CKT 1	320	320	0.34502	100.4151	BEEMER - STANTON 115KV CKT 1
FDNS	09ALL	2	17G	G15_042	FROM->TO	DIXONCO 230.00 - TWIN CHURCH 230KV CKT 1	320	320	0.34244	100.3658	BIG STONE 230/24.0KV TRANSFORMER CKT 1
FDNS	09ALL	2	17G	G15_042	FROM->TO	DIXONCO 230.00 - TWIN CHURCH 230KV CKT 1	320	320	0.34244	100.3566	GEN600003 1-PRAIRIE ISLAND G1
FDNS	09ALL	2	17G	G15_042	FROM->TO	DIXONCO 230.00 - TWIN CHURCH 230KV CKT 1	320	320	0.34244	100.355	GEN600004 2-PRAIRIE ISLAND G2
FDNS	09ALL	2	16WP	G15_042	FROM->TO	DIXONCO 230.00 - TWIN CHURCH 230KV CKT 1	320	320	0.35236	100.0912	HOSKINS (HOSKINS T1) 230/115/13.8KV TRANSFORMER CKT 1
FDNS	09ALL	2	16WP	G15_042	FROM->TO	DIXONCO 230.00 - TWIN CHURCH 230KV CKT 1	320	320	0.35236	100.0912	HOSKINS (HOSKINS T1) 230/115/13.8KV TRANSFORMER CKT 1
FDNS	09ALL	2	20WP	G15_042	FROM->TO	DIXONCO 230.00 - TWIN CHURCH 230KV CKT 1	320	320	0.34584	100.0713	GAVINS POINT - YANKON JCT 115KV CKT 1
FDNS	09ALL	2	20WP	G15_042	FROM->TO	DIXONCO 230.00 - TWIN CHURCH 230KV CKT 1	320	320	0.34584	100.0713	GAVINS POINT - YANKON JCT 115KV CKT 1
FDNS	09ALL	2	16WP	G15_042	FROM->TO	DIXONCO 230.00 - TWIN CHURCH 230KV CKT 1	320	320	0.34384	100.0496	UTICA JCT - VFODNES 230KV CKT 1
FDNS	09ALL	2	16WP	G15_042	FROM->TO	DIXONCO 230.00 - TWIN CHURCH 230KV CKT 1	320	320	0.3434	100	GAVINS POINT - SPIRIT MOUND 115KV CKT 1
FDNS	09ALL	2	20WP	G15_042	FROM->TO	DIXONCO 230.00 - TWIN CHURCH 230KV CKT 1	320	320	0.34548	100	HOSKINS - STANTON NORTH 115KV CKT 1
FDNS	09ALL	2	20L	G15_042	FROM->TO	DIXONCO 230.00 - TWIN CHURCH 230KV CKT 1	320	320	0.34465	99.9	HOSKINS - STANTON NORTH 115KV CKT 1

SOLUTION	GROUP	SCENARIO	SEASON	SOURCE	DIRECTION	MONITORED ELEMENT	RATEA (MVA)	RATEB(MVA)	TDF	TC%LOADING (% MVA)	CONTINGENCY
FDNS	09ALL	2	20L	G15_042	FROM->TO	DIXONCO 230.00 - TWIN CHURCH 230KV CKT 1	320	320	0.33963	99.9	FT RANDAL - SIOUX CITY 230KV CKT 1
FDNS	09ALL	2	16WP	G15_042	FROM->TO	DIXONCO 230.00 - TWIN CHURCH 230KV CKT 1	320	320	0.34502	99.8	BEEMER - WEST POINT 115KV CKT 1
FDNS	09ALL	2	16WP	G15_042	FROM->TO	DIXONCO 230.00 - TWIN CHURCH 230KV CKT 1	320	320	0.3425	99.8	GEN600002 3-SHERBURNE CNTY G3
FDNSLock	09ALL	2	16WP	G15_042	FROM->TO	DIXONCO 230.00 - TWIN CHURCH 230KV CKT 1	320	320	0.34221	99.8	COLUMBUS - SCHUYLER 115KV CKT 1
FDNS	09ALL	2	16WP	G15_042	FROM->TO	DIXONCO 230.00 - TWIN CHURCH 230KV CKT 1	320	320	0.3425	99.7	GEN635214 4-NEAL UNIT 4
FDNS	09ALL	2	20L	G15_042	FROM->TO	DIXONCO 230.00 - TWIN CHURCH 230KV CKT 1	320	320	0.3417	99.7	FTTHOM2-LNX3345.00 - GRPRAR2-LNX3345.00 345KV CKT 1
FDNS	09ALL	2	16WP	G15_042	FROM->TO	DIXONCO 230.00 - TWIN CHURCH 230KV CKT 1	320	320	0.3432	99.6	ALBION - PETERSBURG 115KV CKT 1
FDNS	09ALL	2	16WP	G15_042	FROM->TO	DIXONCO 230.00 - TWIN CHURCH 230KV CKT 1	320	320	0.3432	99.6	P12:115:NPPD:1168B:ALBION 7:PETERSBRG.N7:BTB
FDNS	09ALL	2	16WP	G15_042	FROM->TO	DIXONCO 230.00 - TWIN CHURCH 230KV CKT 1	320	320	0.3432	99.6	PETERSBRG.N7115.00 - PETERSBURG 115KV CKT Z1
FDNS	09ALL	2	16WP	G15_042	FROM->TO	DIXONCO 230.00 - TWIN CHURCH 230KV CKT 1	320	320	0.34197	99.6	FT THOMPSON - FTTHOM2-LNX3345.00 345KV CKT Z
FDNS	09ALL	2	16WP	G15_042	FROM->TO	DIXONCO 230.00 - TWIN CHURCH 230KV CKT 1	320	320	0.34197	99.6	FTTHOM2-LNX3345.00 - GRPRAR2-LNX3345.00 345KV CKT 1
FDNS	09ALL	2	16WP	G15_042	FROM->TO	DIXONCO 230.00 - TWIN CHURCH 230KV CKT 1	320	320	0.34197	99.6	GRPRAR2-LNX3345.00 - YANKTON 345KV CKT Z
FDNS	09ALL	2	20L	G15_042	FROM->TO	DIXONCO 230.00 - TWIN CHURCH 230KV CKT 1	320	320	0.34465	99.6	BEEMER - STANTON 115KV CKT 1
FDNS	09ALL	2	20L	G15_042	FROM->TO	DIXONCO 230.00 - TWIN CHURCH 230KV CKT 1	320	320	0.34465	99.6	P12:115:NPPD:1166:STNTN.N7:BEEMER 7:BTB
FDNS	09ALL	2	20L	G15_042	FROM->TO	DIXONCO 230.00 - TWIN CHURCH 230KV CKT 1	320	320	0.34465	99.6	STANTON - STANTON NORTH 115KV CKT 1
FDNS	09ALL	2	20L	G15_042	FROM->TO	DIXONCO 230.00 - TWIN CHURCH 230KV CKT 1	320	320	0.3417	99.6	FT THOMPSON - FTTHOM2-LNX3345.00 345KV CKT Z
FDNS	09ALL	2	20L	G15_042	FROM->TO	DIXONCO 230.00 - TWIN CHURCH 230KV CKT 1	320	320	0.3417	99.6	GRPRAR2-LNX3345.00 - YANKTON 345KV CKT Z
FDNS	09ALL	2	20WP	G15_042	FROM->TO	DIXONCO 230.00 - TWIN CHURCH 230KV CKT 1	320	320	0.34548	99.6	STANTON - STANTON NORTH 115KV CKT 1
FDNS	09ALL	2	16WP	G15_042	FROM->TO	DIXONCO 230.00 - TWIN CHURCH 230KV CKT 1	320	320	0.34499	99.5	P12:115:NPPD:1161:OAKLAND7:BEEMER 7:BTB
FDNS	09ALL	2	16WP	G15_042	FROM->TO	DIXONCO 230.00 - TWIN CHURCH 230KV CKT 1	320	320	0.3434	99.5	MANNING - SPIRIT MOUND 115KV CKT 1
FDNS	09ALL	2	16WP	G15_042	FROM->TO	DIXONCO 230.00 - TWIN CHURCH 230KV CKT 1	320	320	0.3425	99.5	GEN600000 1-SHERBURNECNTY G1
FDNS	09ALL	2	16WP	G15_042	FROM->TO	DIXONCO 230.00 - TWIN CHURCH 230KV CKT 1	320	320	0.34216	99.5	SUB 3454 - WAGENER 345KV CKT 1
FDNS	09ALL	2	16WP	G15_042	FROM->TO	DIXONCO 230.00 - TWIN CHURCH 230KV CKT 1	320	320	0.34216	99.5	SUB 3454 - WAGENER 345KV CKT 1
FDNS	09ALL	2	16WP	G15_042	FROM->TO	DIXONCO 230.00 - TWIN CHURCH 230KV CKT 1	320	320	0.34049	99.5	PAHOJA - SIOUX FALLS 230KV CKT 1
FDNS	09ALL	2	20L	G15_042	FROM->TO	DIXONCO 230.00 - TWIN CHURCH 230KV CKT 1	320	320	0.34331	99.5	UTICA JCT - VFODNES 230KV CKT 1
FDNS	09ALL	2	20SP	G15_042	FROM->TO	DIXONCO 230.00 - TWIN CHURCH 230KV CKT 1	320	320	0.36865	99.5	HOSKINS - RAUN 345KV CKT 1
FDNS	09ALL	2	20WP	G15_042	FROM->TO	DIXONCO 230.00 - TWIN CHURCH 230KV CKT 1	320	320	0.34548	99.5	P12:115:NPPD:1166:STNTN.N7:BEEMER 7:BTB
FDNS	00NR	2	17SP	G15_042	FROM->TO	G14-059T 230.00 - OGALLALA 230KV CKT 1	320	320	0.02973	167.2434	SIDNEY - SIDNEY1-LNX3345.00 345KV CKT Z
FDNS	00NR	2	17SP	G15_042	FROM->TO	G14-059T 230.00 - OGALLALA 230KV CKT 1	320	320	0.02973	167.0441	KEYSTONE - SIDNEY1-LNX3345.00 345KV CKT 1
FDNS	00NR	2	17SP	G15_042	TO->FROM	G14-059T 230.00 - SIDNEY 230KV CKT 1	320	320	0.02973	116.2551	SIDNEY - SIDNEY1-LNX3345.00 345KV CKT Z
FDNS	00NR	2	17SP	G15_042	TO->FROM	G14-059T 230.00 - SIDNEY 230KV CKT 1	320	320	0.02973	116.042	KEYSTONE - SIDNEY1-LNX3345.00 345KV CKT 1
FDNS	00NR	2	17SP	G15_042	TO->FROM	GERALD GENTLEMAN STATION - OGALLALA 230KV CKT 1	320	320	0.03069	109.9012	GERALD GENTLEMAN STATION - KEYSTONE 345KV CKT 1
FDNS	00NR	2	17SP	G15_042	FROM->TO	GR ISLD-LNX3345.00 - GRAND ISLAND 345KV CKT Z	720	720	0.06923	130.1603	CHERRYC3 345.00 - HOLT.CO3 345.00 345KV CKT 1
FDNS	00NR	2	17SP	G15_042	FROM->TO	GR ISLD-LNX3345.00 - GRAND ISLAND 345KV CKT Z	720	720	0.06261	120.1656	CHERRYC3 345.00 - GERALD GENTLEMAN STATION 345KV CKT 1
FDNS	00NR	2	17SP	G15_042	FROM->TO	GR ISLD-LNX3345.00 - GRAND ISLAND 345KV CKT Z	720	720	0.02958	115.8314	HOSKINS - SHELL CREEK 345KV CKT 1
FDNS	00NR	2	17SP	G15_042	TO->FROM	GR ISLD-LNX3345.00 - HOLT.CO3 345.00 345KV CKT 1	720	720	0.06923	129.1944	CHERRYC3 345.00 - HOLT.CO3 345.00 345KV CKT 1
FDNS	00NR	2	17SP	G15_042	TO->FROM	GR ISLD-LNX3345.00 - HOLT.CO3 345.00 345KV CKT 1	720	720	0.06261	119.2756	CHERRYC3 345.00 - GERALD GENTLEMAN STATION 345KV CKT 1
FDNS	00NR	2	17SP	G15_042	TO->FROM	GR ISLD-LNX3345.00 - HOLT.CO3 345.00 345KV CKT 1	720	720	0.02958	114.8933	HOSKINS - SHELL CREEK 345KV CKT 1
FDNS	00NR	2	17SP	G15_042	TO->FROM	SIDNEY - SIDNEY TRANSFORMER 230KV CKT 1	400	400	0.03373	118.7101	KEYSTONE - SIDNEY1-LNX3345.00 345KV CKT 1
FDNS	00NR	2	17SP	G15_042	TO->FROM	SIDNEY - SIDNEY TRANSFORMER 230KV CKT 1	400	400	0.03373	118.2146	SIDNEY - SIDNEY1-LNX3345.00 345KV CKT Z
FDNS	00NR	2	17SP	G15_042	FROM->TO	SIDNEY (SDQ KV2A) 345/230/13.8KV TRANSFORMER CKT 1	400	480	0.03373	100.8156	KEYSTONE - SIDNEY1-LNX3345.00 345KV CKT 1
FDNS	00NR	2	17SP	G15_042	FROM->TO	SIDNEY (SDQ KV2A) 345/230/13.8KV TRANSFORMER CKT 1	400	480	0.03373	100.5215	SIDNEY - SIDNEY1-LNX3345.00 345KV CKT Z
FDNS	00NR	2	17SP	G15_042	FROM->TO	SIDNEY (SDQ KV2A) 345/230/13.8KV TRANSFORMER CKT 1	400	480	0.03373	100.2736	SIDNEY - SIDNEY1-LNX3345.00 345KV CKT Z
FDNS	00NR	2	17SP	G15_042	FROM->TO	SIDNEY (SDQ KV2A) 345/230/13.8KV TRANSFORMER CKT 1	400	480	0.03373	100.213	KEYSTONE - SIDNEY1-LNX3345.00 345KV CKT 1
FDNS	09ALL	2	20L	G15_042	TO->FROM	SIOUX CITY - TWIN CHURCH 230KV CKT 1	320	320	0.4855	112.5767	DIXONCO 230.00 - HOSKINS 230KV CKT 1
FDNS	09ALL	2	20L	G15_042	TO->FROM	SIOUX CITY - TWIN CHURCH 230KV CKT 1	320	320	0.37461	105.0652	BELDEN 4 230.00 - RASMUSN 230KV CKT 1
FDNS	09ALL	2	20L	G15_042	TO->FROM	SIOUX CITY - TWIN CHURCH 230KV CKT 1	320	320	0.33893	103.4616	HOSKINS - RAUN 345KV CKT 1
FDNS	09ALL	2	20L	G15_042	TO->FROM	SIOUX CITY - TWIN CHURCH 230KV CKT 1	320	320	0.33893	103.4616	HOSKINS - RAUN 345KV CKT 1
FDNS	09ALL	2	17G	G15_042	TO->FROM	SIOUX CITY - TWIN CHURCH 230KV CKT 1	320	320	0.48712	102.5424	DIXONCO 230.00 - HOSKINS 230KV CKT 1
FDNS	00NR	3	17SP	G15_042	FROM->TO	COLUMEAST (COL.EAST T3) 230/115/13.8KV TRANSFORMER CKT 1	187	187	0.04015	109.6271	COLUMEAST - SHELL CREEK 345KV CKT 1
FDNS	00NR	3	17SP	G15_042	FROM->TO	COLUMEAST (COL.EAST T3) 230/115/13.8KV TRANSFORMER CKT 1	187	187	0.04015	108.958	COLUMEAST - SHELL CREEK 345KV CKT 1
FDNS	00NR	3	20SP	G15_042	FROM->TO	COLUMEAST (COL.EAST T3) 230/115/13.8KV TRANSFORMER CKT 1	187	187	0.04055	106.2219	COLUMEAST - SHELL CREEK 345KV CKT 1
FDNS	00NR	3	20SP	G15_042	FROM->TO	COLUMEAST (COL.EAST T3) 230/115/13.8KV TRANSFORMER CKT 1	187	187	0.04055	105.4771	COLUMEAST - SHELL CREEK 345KV CKT 1
FDNS	00NR	3	25SP	G15_042	FROM->TO	COLUMEAST (COL.EAST T3) 230/115/13.8KV TRANSFORMER CKT 1	187	187	0.04013	102.789	COLUMEAST - SHELL CREEK 345KV CKT 1
FDNS	00NR	3	16WP	G15_042	FROM->TO	COLUMEAST (COL.EAST T3) 230/115/13.8KV TRANSFORMER CKT 1	187	187	0.04114	102.2317	COLUMEAST - SHELL CREEK 345KV CKT 1
FDNS	00NR	3	25SP	G15_042	FROM->TO	COLUMEAST (COL.EAST T3) 230/115/13.8KV TRANSFORMER CKT 1	187	187	0.04013	102.1579	COLUMEAST - SHELL CREEK 345KV CKT 1
FDNS	00NR	3	16WP	G15_042	FROM->TO	COLUMEAST (COL.EAST T3) 230/115/13.8KV TRANSFORMER CKT 1	187	187	0.04114	100.6408	COLUMEAST - SHELL CREEK 345KV CKT 1
FDNS	09ALL	3	25SP	G15_042	FROM->TO	DIXONCO 230.00 - HOSKINS 230KV CKT 1	320	320	0.57862	114.4603	DIXONCO 230.00 - TWIN CHURCH 230KV CKT 1
FDNS	09ALL	3	20SP	G15_042	FROM->TO	DIXONCO 230.00 - HOSKINS 230KV CKT 1	320	320	0.57842	114.0922	DIXONCO 230.00 - TWIN CHURCH 230KV CKT 1
FDNS	09ALL	3	17SP	G15_042	FROM->TO	DIXONCO 230.00 - HOSKINS 230KV CKT 1	320	320	0.57912	112.8474	DIXONCO 230.00 - TWIN CHURCH 230KV CKT 1
FDNS	09ALL	3	17G	G15_042	FROM->TO	DIXONCO 230.00 - HOSKINS 230KV CKT 1	320	320	0.57855	109.0048	DIXONCO 230.00 - TWIN CHURCH 230KV CKT 1
FDNS	09ALL	3	20L	G15_042	FROM->TO	DIXONCO 230.00 - HOSKINS 230KV CKT 1	320	320	0.57613	107.9291	DIXONCO 230.00 - TWIN CHURCH 230KV CKT 1
FDNS	09ALL	3	16WP	G15_042	FROM->TO	DIXONCO 230.00 - HOSKINS 230KV CKT 1	320	320	0.57803	107.224	DIXONCO 230.00 - TWIN CHURCH 230KV CKT 1
FDNS	09ALL	3	20WP	G15_042	FROM->TO	DIXONCO 230.00 - HOSKINS 230KV CKT 1	320	320	0.5776	106.9936	DIXONCO 230.00 - TWIN CHURCH 230KV CKT 1
FDNS	00NR	3	20SP	G15_042	FROM->TO	DIXONCO 230.00 - HOSKINS 230KV CKT 1	320	320	0.58953	103.6842	DIXONCO 230.00 - TWIN CHURCH 230KV CKT 1
FDNS	00NR	3	25SP	G15_042	FROM->TO	DIXONCO 230.00 - HOSKINS 230KV CKT 1	320	320	0.58963	103.2887	DIXONCO 230.00 - TWIN CHURCH 230KV CKT 1
FDNS	00NR	3	17SP	G15_042	FROM->TO	DIXONCO 230.00 - HOSKINS 230KV CKT 1	320	320	0.58984	103.0438	DIXONCO 230.00 - TWIN CHURCH 230KV CKT 1
FDNS	09NR	3	17G	G15_042	FROM->TO	DIXONCO 230.00 - HOSKINS 230KV CKT 1	320	320	0.58939	101.9865	DIXONCO 230.00 - TWIN CHURCH 230KV CKT 1
FDNS	09NR	3	20L	G15_042	FROM->TO	DIXONCO 230.00 - HOSKINS 230KV CKT 1	320	320	0.58809	101.9723	DIXONCO 230.00 - TWIN CHURCH 230KV CKT 1
FDNS	09ALL	3	17G	G15_042	FROM->TO	DIXONCO 230.00 - TWIN CHURCH 230KV CKT 1	320	320	0.5488	131.4393	DIXONCO 230.00 - HOSKINS 230KV CKT 1
FDNS	09ALL	3	16WP	G15_042	FROM->TO	DIXONCO 230.00 - TWIN CHURCH 230KV CKT 1	320	320	0.54848	131.0941	DIXONCO 230.00 - HOSKINS 230KV CKT 1
FDNS	09ALL	3	20WP	G15_042	FROM->TO	DIXONCO 230.00 - TWIN CHURCH 230KV CKT 1	320	320	0.54865	130.3484	DIXONCO 230.00 - HOSKINS 230KV CKT 1
FDNS	09ALL	3	20SP	G15_042	FROM->TO	DIXONCO 230.00 - TWIN CHURCH 230KV CKT 1	320	320	0.54882	129.6495	DIXONCO 230.00 - HOSKINS 230KV CKT 1
FDNS	09ALL	3	25SP	G15_042	FROM->TO	DIXONCO 230.00 - TWIN CHURCH 230KV CKT 1	320	320	0.54888	128.9014	DIXONCO 230.00 - HOSKINS 230KV CKT 1
FDNS	09ALL	3	17SP	G15_042	FROM->TO	DIXONCO 230.00 - TWIN CHURCH 230KV CKT 1	320	320	0.54875	128.8414	DIXONCO 230.00 - HOSKINS 230KV CKT 1
FDNS	09ALL	3	20L	G15_042	FROM->TO	DIXONCO 230.00 - TWIN CHURCH 230KV CKT 1	320	320	0.5473	128.2726	DIXONCO 230.00 - HOSKINS 230KV CKT 1
FDNS	09NR	3	17G	G15_042	FROM->TO	DIXONCO 230.00 - TWIN CHURCH 230KV CKT 1	320	320	0.54667	124.0291	DIXONCO 230.00 - HOSKINS 230KV CKT 1
FDNS	09ALL	3	16WP	G15_042	FROM->TO	DIXONCO 230.00 - TWIN CHURCH 230KV CKT 1	320	320	0.46723	120.8496	BELDEN 4 230.00 - DIXONCO 230.00 230KV CKT 1
FDNS	09NR	3	20L	G15_042	FROM->TO	DIXONCO 230.00 - TWIN CHURCH 230KV CKT 1	320	320	0.54753	120.4141	DIXONCO 230.00 - HOSKINS 230KV CKT 1

SOLUTION	GROUP	SCENARIO	SEASON	SOURCE	DIRECTION	MONITORED ELEMENT	RATEA (MVA)	RATEB(MVA)	TDF	TC%LOADING (% MVA)	CONTINGENCY
FDNS	09ALL	3	20WP	G15_042	FROM->TO	DIXONCO 230.00 - TWIN CHURCH 230KV CKT 1	320	320	0.46787	120.2906	BELDEN 4 230.00 - DIXONCO 230.00 230KV CKT 1
FDNS	09ALL	3	17G	G15_042	FROM->TO	DIXONCO 230.00 - TWIN CHURCH 230KV CKT 1	320	320	0.46701	119.8032	BELDEN 4 230.00 - DIXONCO 230.00 230KV CKT 1
FDNS	09ALL	3	17G	G15_042	FROM->TO	DIXONCO 230.00 - TWIN CHURCH 230KV CKT 1	320	320	0.34805	118.5448	HOSKINS - RAUN 345KV CKT 1
FDNS	09ALL	3	16WP	G15_042	FROM->TO	DIXONCO 230.00 - TWIN CHURCH 230KV CKT 1	320	320	0.34788	118.3371	HOSKINS - RAUN 345KV CKT 1
FDNS	09ALL	3	20L	G15_042	FROM->TO	DIXONCO 230.00 - TWIN CHURCH 230KV CKT 1	320	320	0.46804	117.7589	BELDEN 4 230.00 - DIXONCO 230.00 230KV CKT 1
FDNS	09ALL	3	16WP	G15_042	FROM->TO	DIXONCO 230.00 - TWIN CHURCH 230KV CKT 1	320	320	0.38267	117.0776	BELDEN 4 230.00 - RASMUSN 230KV CKT 1
FDNS	09ALL	3	17G	G15_042	FROM->TO	DIXONCO 230.00 - TWIN CHURCH 230KV CKT 1	320	320	0.38255	116.9773	BELDEN 4 230.00 - RASMUSN 230KV CKT 1
FDNS	09ALL	3	20WP	G15_042	FROM->TO	DIXONCO 230.00 - TWIN CHURCH 230KV CKT 1	320	320	0.34873	116.9367	HOSKINS - RAUN 345KV CKT 1
FDNS	09ALL	3	20WP	G15_042	FROM->TO	DIXONCO 230.00 - TWIN CHURCH 230KV CKT 1	320	320	0.34873	116.9367	HOSKINS - RAUN 345KV CKT 1
FDNS	09ALL	3	20WP	G15_042	FROM->TO	DIXONCO 230.00 - TWIN CHURCH 230KV CKT 1	320	320	0.38329	116.3347	BELDEN 4 230.00 - RASMUSN 230KV CKT 1
FDNS	09ALL	3	20L	G15_042	FROM->TO	DIXONCO 230.00 - TWIN CHURCH 230KV CKT 1	320	320	0.38265	114.9386	BELDEN 4 230.00 - RASMUSN 230KV CKT 1
FDNS	09ALL	3	17G	G15_042	FROM->TO	DIXONCO 230.00 - TWIN CHURCH 230KV CKT 1	320	320	0.35248	114.23	RASMUSN - SIOUX CITY 230KV CKT 1
FDNS	09ALL	3	16WP	G15_042	FROM->TO	DIXONCO 230.00 - TWIN CHURCH 230KV CKT 1	320	320	0.35217	114.1172	RASMUSN - SIOUX CITY 230KV CKT 1
FDNS	09ALL	3	20L	G15_042	FROM->TO	DIXONCO 230.00 - TWIN CHURCH 230KV CKT 1	320	320	0.34743	113.7458	HOSKINS - RAUN 345KV CKT 1
FDNS	09ALL	3	20L	G15_042	FROM->TO	DIXONCO 230.00 - TWIN CHURCH 230KV CKT 1	320	320	0.34743	113.7458	HOSKINS - RAUN 345KV CKT 1
FDNS	09NR	3	17G	G15_042	FROM->TO	DIXONCO 230.00 - TWIN CHURCH 230KV CKT 1	320	320	0.45327	113.1281	BELDEN 4 230.00 - DIXONCO 230.00 230KV CKT 1
FDNS	09ALL	3	16WP	G15_042	FROM->TO	DIXONCO 230.00 - TWIN CHURCH 230KV CKT 1	320	320	0.33305	112.8874	P13:230-345:NPPD:NUCOR-1
FDNS	09ALL	3	17SP	G15_042	FROM->TO	DIXONCO 230.00 - TWIN CHURCH 230KV CKT 1	320	320	0.46636	112.8771	BELDEN 4 230.00 - DIXONCO 230.00 230KV CKT 1
FDNS	09ALL	3	20WP	G15_042	FROM->TO	DIXONCO 230.00 - TWIN CHURCH 230KV CKT 1	320	320	0.35276	112.7175	RASMUSN - SIOUX CITY 230KV CKT 1
FDNS	09ALL	3	17G	G15_042	FROM->TO	DIXONCO 230.00 - TWIN CHURCH 230KV CKT 1	320	320	0.33311	112.3627	P13:230-345:NPPD:NUCOR-1
FDNS	09NR	3	17G	G15_042	FROM->TO	DIXONCO 230.00 - TWIN CHURCH 230KV CKT 1	320	320	0.32926	112.169	HOSKINS - RAUN 345KV CKT 1
FDNS	09ALL	3	20SP	G15_042	FROM->TO	DIXONCO 230.00 - TWIN CHURCH 230KV CKT 1	320	320	0.46717	112.1029	BELDEN 4 230.00 - DIXONCO 230.00 230KV CKT 1
FDNS	09ALL	3	20WP	G15_042	FROM->TO	DIXONCO 230.00 - TWIN CHURCH 230KV CKT 1	320	320	0.33361	112.0641	P13:230-345:NPPD:NUCOR-1
FDNS	09ALL	3	25SP	G15_042	FROM->TO	DIXONCO 230.00 - TWIN CHURCH 230KV CKT 1	320	320	0.46702	111.1527	BELDEN 4 230.00 - DIXONCO 230.00 230KV CKT 1
FDNS	09NR	3	17G	G15_042	FROM->TO	DIXONCO 230.00 - TWIN CHURCH 230KV CKT 1	320	320	0.36915	110.7771	BELDEN 4 230.00 - RASMUSN 230KV CKT 1
FDNS	09ALL	3	16WP	G15_042	FROM->TO	DIXONCO 230.00 - TWIN CHURCH 230KV CKT 1	320	320	0.33626	110.6796	BELDEN - TWIN CHURCH 115KV CKT 1
FDNS	09ALL	3	17G	G15_042	FROM->TO	DIXONCO 230.00 - TWIN CHURCH 230KV CKT 1	320	320	0.33637	109.9209	BELDEN - TWIN CHURCH 115KV CKT 1
FDNS	09ALL	3	16WP	G15_042	FROM->TO	DIXONCO 230.00 - TWIN CHURCH 230KV CKT 1	320	320	0.33305	109.8013	P13:115-230:NPPD:NUCOR-3
FDNS	09ALL	3	20L	G15_042	FROM->TO	DIXONCO 230.00 - TWIN CHURCH 230KV CKT 1	320	320	0.33283	109.5813	P13:230-345:NPPD:NUCOR-1
FDNS	09ALL	3	20WP	G15_042	FROM->TO	DIXONCO 230.00 - TWIN CHURCH 230KV CKT 1	320	320	0.33688	109.5556	BELDEN - TWIN CHURCH 115KV CKT 1
FDNS	09NR	3	20L	G15_042	FROM->TO	DIXONCO 230.00 - TWIN CHURCH 230KV CKT 1	320	320	0.45554	109.5223	BELDEN 4 230.00 - DIXONCO 230.00 230KV CKT 1
FDNS	09ALL	3	20L	G15_042	FROM->TO	DIXONCO 230.00 - TWIN CHURCH 230KV CKT 1	320	320	0.3511	109.3166	RASMUSN - SIOUX CITY 230KV CKT 1
FDNS	09ALL	3	20WP	G15_042	FROM->TO	DIXONCO 230.00 - TWIN CHURCH 230KV CKT 1	320	320	0.33361	108.937	P13:115-230:NPPD:NUCOR-3
FDNS	09NR	3	17G	G15_042	FROM->TO	DIXONCO 230.00 - TWIN CHURCH 230KV CKT 1	320	320	0.34073	108.3686	RASMUSN - SIOUX CITY 230KV CKT 1
FDNS	09ALL	3	20SP	G15_042	FROM->TO	DIXONCO 230.00 - TWIN CHURCH 230KV CKT 1	320	320	0.3827	107.6651	BELDEN 4 230.00 - RASMUSN 230KV CKT 1
FDNS	09ALL	3	17SP	G15_042	FROM->TO	DIXONCO 230.00 - TWIN CHURCH 230KV CKT 1	320	320	0.34732	107.5332	HOSKINS - RAUN 345KV CKT 1
FDNS	09ALL	3	17G	G15_042	FROM->TO	DIXONCO 230.00 - TWIN CHURCH 230KV CKT 1	320	320	0.34425	107.4287	HOSKINS - SHELL CREEK 345KV CKT 1
FDNS	00NR	3	16WP	G15_042	FROM->TO	DIXONCO 230.00 - TWIN CHURCH 230KV CKT 1	320	320	0.54647	107.3794	DIXONCO 230.00 - HOSKINS 230KV CKT 1
FDNS	09ALL	3	20SP	G15_042	FROM->TO	DIXONCO 230.00 - TWIN CHURCH 230KV CKT 1	320	320	0.33324	107.3136	P13:230-345:NPPD:NUCOR-1
FDNS	09ALL	3	17SP	G15_042	FROM->TO	DIXONCO 230.00 - TWIN CHURCH 230KV CKT 1	320	320	0.35201	107.2655	RASMUSN - SIOUX CITY 230KV CKT 1
FDNS	09ALL	3	16WP	G15_042	FROM->TO	DIXONCO 230.00 - TWIN CHURCH 230KV CKT 1	320	320	0.34408	107.2106	HOSKINS - SHELL CREEK 345KV CKT 1
FDNS	09ALL	3	20SP	G15_042	FROM->TO	DIXONCO 230.00 - TWIN CHURCH 230KV CKT 1	320	320	0.3482	107.1011	HOSKINS - RAUN 345KV CKT 1
FDNS	09NR	3	20L	G15_042	FROM->TO	DIXONCO 230.00 - TWIN CHURCH 230KV CKT 1	320	320	0.37156	107.0534	BELDEN 4 230.00 - RASMUSN 230KV CKT 1
FDNS	09ALL	3	17SP	G15_042	FROM->TO	DIXONCO 230.00 - TWIN CHURCH 230KV CKT 1	320	320	0.38203	107.0303	BELDEN 4 230.00 - RASMUSN 230KV CKT 1
FDNS	09ALL	3	17G	G15_042	FROM->TO	DIXONCO 230.00 - TWIN CHURCH 230KV CKT 1	320	320	0.33311	107.0136	P13:115-230:NPPD:NUCOR-3
FDNS	09ALL	3	20SP	G15_042	FROM->TO	DIXONCO 230.00 - TWIN CHURCH 230KV CKT 1	320	320	0.3526	106.9919	RASMUSN - SIOUX CITY 230KV CKT 1
FDNS	09ALL	3	17SP	G15_042	FROM->TO	DIXONCO 230.00 - TWIN CHURCH 230KV CKT 1	320	320	0.33264	106.9722	P13:230-345:NPPD:NUCOR-1
FDNS	09ALL	3	16WP	G15_042	FROM->TO	DIXONCO 230.00 - TWIN CHURCH 230KV CKT 1	320	320	0.32383	106.8416	RAUN - SIOUX CITY 345KV CKT 1
FDNS	09ALL	3	17G	G15_042	FROM->TO	DIXONCO 230.00 - TWIN CHURCH 230KV CKT 1	320	320	0.33942	106.7472	COLUMEAST - NW68TH & HOLDREGE 345KV CKT 1
FDNS	09ALL	3	17G	G15_042	FROM->TO	DIXONCO 230.00 - TWIN CHURCH 230KV CKT 1	320	320	0.33942	106.7472	COLUMEAST - NW68TH & HOLDREGE 345KV CKT 1
FDNS	09ALL	3	17G	G15_042	FROM->TO	DIXONCO 230.00 - TWIN CHURCH 230KV CKT 1	320	320	0.41356	106.611	HOSKINS (HOSKINS T2) 345/230/13.8KV TRANSFORMER CKT 1
FDNS	09ALL	3	17G	G15_042	FROM->TO	DIXONCO 230.00 - TWIN CHURCH 230KV CKT 1	320	320	0.41356	106.611	HOSKINS (HOSKINS T2) 345/230/13.8KV TRANSFORMER CKT 1
FDNS	09ALL	3	16WP	G15_042	FROM->TO	DIXONCO 230.00 - TWIN CHURCH 230KV CKT 1	320	320	0.33305	106.3198	P13:115-345:NPPD:NUCOR-2
FDNS	09ALL	3	20WP	G15_042	FROM->TO	DIXONCO 230.00 - TWIN CHURCH 230KV CKT 1	320	320	0.34451	106.2607	HOSKINS - SHELL CREEK 345KV CKT 1
FDNS	09ALL	3	25SP	G15_042	FROM->TO	DIXONCO 230.00 - TWIN CHURCH 230KV CKT 1	320	320	0.38259	106.2593	BELDEN 4 230.00 - RASMUSN 230KV CKT 1
FDNS	09NR	3	17G	G15_042	FROM->TO	DIXONCO 230.00 - TWIN CHURCH 230KV CKT 1	320	320	0.32224	106.1555	P13:230-345:NPPD:NUCOR-1
FDNS	09ALL	3	25SP	G15_042	FROM->TO	DIXONCO 230.00 - TWIN CHURCH 230KV CKT 1	320	320	0.33318	106.1437	P13:230-345:NPPD:NUCOR-1
FDNS	00NR	3	20WP	G15_042	FROM->TO	DIXONCO 230.00 - TWIN CHURCH 230KV CKT 1	320	320	0.54659	106.1193	DIXONCO 230.00 - HOSKINS 230KV CKT 1
FDNS	09ALL	3	17G	G15_042	FROM->TO	DIXONCO 230.00 - TWIN CHURCH 230KV CKT 1	320	320	0.33845	106.0782	COLUMEAST - SHELL CREEK 345KV CKT 1
FDNS	09ALL	3	16WP	G15_042	FROM->TO	DIXONCO 230.00 - TWIN CHURCH 230KV CKT 1	320	320	0.33925	106.0091	COLUMEAST - NW68TH & HOLDREGE 345KV CKT 1
FDNS	09ALL	3	16WP	G15_042	FROM->TO	DIXONCO 230.00 - TWIN CHURCH 230KV CKT 1	320	320	0.33925	106.0091	COLUMEAST - NW68TH & HOLDREGE 345KV CKT 1
FDNS	09ALL	3	16WP	G15_042	FROM->TO	DIXONCO 230.00 - TWIN CHURCH 230KV CKT 1	320	320	0.33831	105.939	COLUMEAST - SHELL CREEK 345KV CKT 1
FDNS	09ALL	3	20WP	G15_042	FROM->TO	DIXONCO 230.00 - TWIN CHURCH 230KV CKT 1	320	320	0.32461	105.9051	RAUN - SIOUX CITY 345KV CKT 1
FDNS	09ALL	3	20WP	G15_042	FROM->TO	DIXONCO 230.00 - TWIN CHURCH 230KV CKT 1	320	320	0.32461	105.9051	RAUN - SIOUX CITY 345KV CKT 1
FDNS	09ALL	3	16WP	G15_042	FROM->TO	DIXONCO 230.00 - TWIN CHURCH 230KV CKT 1	320	320	0.3312	105.7454	FT RANDAL - SIOUX CITY 230KV CKT 1
FDNS	09ALL	3	20WP	G15_042	FROM->TO	DIXONCO 230.00 - TWIN CHURCH 230KV CKT 1	320	320	0.33361	105.4547	P13:115-345:NPPD:NUCOR-2
FDNS	09ALL	3	16WP	G15_042	FROM->TO	DIXONCO 230.00 - TWIN CHURCH 230KV CKT 1	320	320	0.33486	105.4525	HOSKINS - STANTON NORTH 115KV CKT 1
FDNS	09ALL	3	25SP	G15_042	FROM->TO	DIXONCO 230.00 - TWIN CHURCH 230KV CKT 1	320	320	0.35258	105.3254	RASMUSN - SIOUX CITY 230KV CKT 1
FDNS	09ALL	3	20L	G15_042	FROM->TO	DIXONCO 230.00 - TWIN CHURCH 230KV CKT 1	320	320	0.3358	105.3239	BELDEN - TWIN CHURCH 115KV CKT 1
FDNS	09NR	3	20L	G15_042	FROM->TO	DIXONCO 230.00 - TWIN CHURCH 230KV CKT 1	320	320	0.33307	105.1297	HOSKINS - RAUN 345KV CKT 1
FDNS	09NR	3	20L	G15_042	FROM->TO	DIXONCO 230.00 - TWIN CHURCH 230KV CKT 1	320	320	0.33307	105.1297	HOSKINS - RAUN 345KV CKT 1
FDNS	09ALL	3	16WP	G15_042	FROM->TO	DIXONCO 230.00 - TWIN CHURCH 230KV CKT 1	320	320	0.33486	105.0519	STANTON - STANTON NORTH 115KV CKT 1
FDNS	09ALL	3	16WP	G15_042	FROM->TO	DIXONCO 230.00 - TWIN CHURCH 230KV CKT 1	320	320	0.33518	105.009	GAVINS POINT - YANKON JCT 115KV CKT 1
FDNS	09ALL	3	16WP	G15_042	FROM->TO	DIXONCO 230.00 - TWIN CHURCH 230KV CKT 1	320	320	0.33518	105.009	GAVINS POINT - YANKON JCT 115KV CKT 1
FDNS	09ALL	3	17G	G15_042	FROM->TO	DIXONCO 230.00 - TWIN CHURCH 230KV CKT 1	320	320	0.33138	105.0086	FT RANDAL - SIOUX CITY 230KV CKT 1
FDNS	09ALL	3	20WP	G15_042	FROM->TO	DIXONCO 230.00 - TWIN CHURCH 230KV CKT 1	320	320	0.33965	104.9924	COLUMEAST - NW68TH & HOLDREGE 345KV CKT 1
FDNS	09ALL	3	20WP	G15_042	FROM->TO	DIXONCO 230.00 - TWIN CHURCH 230KV CKT 1	320	320	0.33965	104.9924	COLUMEAST - NW68TH & HOLDREGE 345KV CKT 1
FDNS	09ALL	3	20WP	G15_042	FROM->TO	DIXONCO 230.00 - TWIN CHURCH 230KV CKT 1	320	320	0.33879	104.9848	COLUMEAST - SHELL CREEK 345KV CKT 1
FDNS	09ALL	3	16WP	G15_042	FROM->TO	DIXONCO 230.00 - TWIN CHURCH 230KV CKT 1	320	320	0.33486	104.9473	P12:115:NPPD:1166:STNTN.N7:BEEMER 7:BTB

SOLUTION	GROUP	SCENARIO	SEASON	SOURCE	DIRECTION	MONITORED ELEMENT	RATEA (MVA)	RATEB(MVA)	TDF	TC%LOADING (% MVA)	CONTINGENCY
FDNS	09ALL	3	16WP	G15_042	FROM->TO	DIXONCO 230.00 - TWIN CHURCH 230KV CKT 1	320	320	0.33507	104.9094	GR ISLD-LNX3345.00 - HOLT.CO3 345.00 345KV CKT 1
FDNS	09ALL	3	16WP	G15_042	FROM->TO	DIXONCO 230.00 - TWIN CHURCH 230KV CKT 1	320	320	0.33305	104.8677	GEN635214 4-NEAL UNIT 4
FDNS	09ALL	3	16WP	G15_042	FROM->TO	DIXONCO 230.00 - TWIN CHURCH 230KV CKT 1	320	320	0.33507	104.8666	GR ISLD-LNX3345.00 - GRAND ISLAND 345KV CKT Z
FDNS	09ALL	3	16WP	G15_042	FROM->TO	DIXONCO 230.00 - TWIN CHURCH 230KV CKT 1	320	320	0.33486	104.8558	BEEMER - STANTON 115KV CKT 1
FDNS	09ALL	3	17G	G15_042	FROM->TO	DIXONCO 230.00 - TWIN CHURCH 230KV CKT 1	320	320	0.33494	104.6584	HOSKINS - STANTON NORTH 115KV CKT 1
FDNS	09ALL	3	20WP	G15_042	FROM->TO	DIXONCO 230.00 - TWIN CHURCH 230KV CKT 1	320	320	0.33178	104.6468	FT RANDAL - SIOUX CITY 230KV CKT 1
FDNS	09ALL	3	17G	G15_042	FROM->TO	DIXONCO 230.00 - TWIN CHURCH 230KV CKT 1	320	320	0.33522	104.6311	GR ISLD-LNX3345.00 - HOLT.CO3 345.00 345KV CKT 1
FDNS	09ALL	3	17G	G15_042	FROM->TO	DIXONCO 230.00 - TWIN CHURCH 230KV CKT 1	320	320	0.33522	104.5661	GR ISLD-LNX3345.00 - GRAND ISLAND 345KV CKT Z
FDNS	09ALL	3	25SP	G15_042	FROM->TO	DIXONCO 230.00 - TWIN CHURCH 230KV CKT 1	320	320	0.3481	104.5384	HOSKINS - RAUN 345KV CKT 1
FDNS	09ALL	3	25SP	G15_042	FROM->TO	DIXONCO 230.00 - TWIN CHURCH 230KV CKT 1	320	320	0.3481	104.5384	HOSKINS - RAUN 345KV CKT 1
FDNS	09ALL	3	17G	G15_042	FROM->TO	DIXONCO 230.00 - TWIN CHURCH 230KV CKT 1	320	320	0.32384	104.4656	RAUN - SIOUX CITY 345KV CKT 1
FDNS	09ALL	3	16WP	G15_042	FROM->TO	DIXONCO 230.00 - TWIN CHURCH 230KV CKT 1	320	320	0.33409	104.419	FTTHOM2-LNX3345.00 - GRPRAR2-LNX3345.00 345KV CKT 1
FDNS	09ALL	3	20WP	G15_042	FROM->TO	DIXONCO 230.00 - TWIN CHURCH 230KV CKT 1	320	320	0.33549	104.4165	HOSKINS - STANTON NORTH 115KV CKT 1
FDNS	09ALL	3	16WP	G15_042	FROM->TO	DIXONCO 230.00 - TWIN CHURCH 230KV CKT 1	320	320	0.33409	104.3963	FT THOMPSON - FTTHOM2-LNX3345.00 345KV CKT Z
FDNS	09ALL	3	16WP	G15_042	FROM->TO	DIXONCO 230.00 - TWIN CHURCH 230KV CKT 1	320	320	0.33409	104.3851	GRPRAR2-LNX3345.00 - YANKTON 345KV CKT Z
FDNS	09NR	3	17G	G15_042	FROM->TO	DIXONCO 230.00 - TWIN CHURCH 230KV CKT 1	320	320	0.32506	104.3736	BELDEN - TWIN CHURCH 115KV CKT 1
FDNS	09ALL	3	17G	G15_042	FROM->TO	DIXONCO 230.00 - TWIN CHURCH 230KV CKT 1	320	320	0.33311	104.3615	GEN635214 4-NEAL UNIT 4
FDNS	09ALL	3	17G	G15_042	FROM->TO	DIXONCO 230.00 - TWIN CHURCH 230KV CKT 1	320	320	0.33494	104.3596	STANTON - STANTON NORTH 115KV CKT 1
FDNS	09ALL	3	17G	G15_042	FROM->TO	DIXONCO 230.00 - TWIN CHURCH 230KV CKT 1	320	320	0.33382	104.3146	FTTHOM2-LNX3345.00 - GRPRAR2-LNX3345.00 345KV CKT 1
FDNS	09ALL	3	17G	G15_042	FROM->TO	DIXONCO 230.00 - TWIN CHURCH 230KV CKT 1	320	320	0.33494	104.3099	P12:115:NPPD:1166:STNTN.N7:BEEMER 7:BTB
FDNS	09ALL	3	17G	G15_042	FROM->TO	DIXONCO 230.00 - TWIN CHURCH 230KV CKT 1	320	320	0.33311	104.3098	P13:115-345:NPPD:NUCOR-2
FDNS	09ALL	3	17G	G15_042	FROM->TO	DIXONCO 230.00 - TWIN CHURCH 230KV CKT 1	320	320	0.33382	104.2852	FT THOMPSON - FTTHOM2-LNX3345.00 345KV CKT Z
FDNS	09ALL	3	17G	G15_042	FROM->TO	DIXONCO 230.00 - TWIN CHURCH 230KV CKT 1	320	320	0.33382	104.2668	GRPRAR2-LNX3345.00 - YANKTON 345KV CKT Z
FDNS	09ALL	3	17G	G15_042	FROM->TO	DIXONCO 230.00 - TWIN CHURCH 230KV CKT 1	320	320	0.33494	104.2578	BEEMER - STANTON 115KV CKT 1
FDNS	09ALL	3	16WP	G15_042	FROM->TO	DIXONCO 230.00 - TWIN CHURCH 230KV CKT 1	320	320	0.33486	104.2511	BEEMER - WEST POINT 115KV CKT 1
FDNS	09ALL	3	16WP	G15_042	FROM->TO	DIXONCO 230.00 - TWIN CHURCH 230KV CKT 1	320	320	0.33305	104.2433	GEN635213 3-NEAL UNIT 3
FDNS	09ALL	3	17G	G15_042	FROM->TO	DIXONCO 230.00 - TWIN CHURCH 230KV CKT 1	320	320	0.33517	104.2258	GAVINS POINT - YANKON JCT 115KV CKT 1
FDNS	09ALL	3	17G	G15_042	FROM->TO	DIXONCO 230.00 - TWIN CHURCH 230KV CKT 1	320	320	0.33517	104.2258	GAVINS POINT - YANKON JCT 115KV CKT 1
FDNS	09ALL	3	16WP	G15_042	FROM->TO	DIXONCO 230.00 - TWIN CHURCH 230KV CKT 1	320	320	0.34309	104.1998	HOSKINS (HOSKINS T1) 230/115/13.8KV TRANSFORMER CKT 1
FDNS	09ALL	3	16WP	G15_042	FROM->TO	DIXONCO 230.00 - TWIN CHURCH 230KV CKT 1	320	320	0.34309	104.1998	HOSKINS (HOSKINS T1) 230/115/13.8KV TRANSFORMER CKT 1
FDNS	09ALL	3	16WP	G15_042	FROM->TO	DIXONCO 230.00 - TWIN CHURCH 230KV CKT 1	320	320	0.33422	104.1931	UTICA JCT - VFODNES 230KV CKT 1
FDNS	09ALL	3	20WP	G15_042	FROM->TO	DIXONCO 230.00 - TWIN CHURCH 230KV CKT 1	320	320	0.33576	104.1931	GAVINS POINT - YANKON JCT 115KV CKT 1
FDNS	09ALL	3	20WP	G15_042	FROM->TO	DIXONCO 230.00 - TWIN CHURCH 230KV CKT 1	320	320	0.33576	104.1931	GAVINS POINT - YANKON JCT 115KV CKT 1
FDNS	09ALL	3	16WP	G15_042	FROM->TO	DIXONCO 230.00 - TWIN CHURCH 230KV CKT 1	320	320	0.33305	104.1757	GEN600002 3-SHERBURNE CNTY G3
FDNS	09ALL	3	16WP	G15_042	FROM->TO	DIXONCO 230.00 - TWIN CHURCH 230KV CKT 1	320	320	0.33377	104.1301	GAVINS POINT - SPIRIT MOUND 115KV CKT 1
FDNS	09ALL	3	16WP	G15_042	FROM->TO	DIXONCO 230.00 - TWIN CHURCH 230KV CKT 1	320	320	0.33348	104.1036	GRAND ISLAND - MCCOOL 345KV CKT 1
FDNS	09ALL	3	20WP	G15_042	FROM->TO	DIXONCO 230.00 - TWIN CHURCH 230KV CKT 1	320	320	0.33549	104.0474	STANTON - STANTON NORTH 115KV CKT 1
FDNSLock	09ALL	3	16WP	G15_042	FROM->TO	DIXONCO 230.00 - TWIN CHURCH 230KV CKT 1	320	320	0.33275	104.0433	COLUMBUS - SCHUYLER 115KV CKT 1
FDNS	09ALL	3	17G	G15_042	FROM->TO	DIXONCO 230.00 - TWIN CHURCH 230KV CKT 1	320	320	0.33454	104.037	MINGO - RED WILLOW 345KV CKT 1
FDNS	09ALL	3	17G	G15_042	FROM->TO	DIXONCO 230.00 - TWIN CHURCH 230KV CKT 1	320	320	0.33454	104.037	MINGO - RED WILLOW 345KV CKT 1
FDNS	09ALL	3	16WP	G15_042	FROM->TO	DIXONCO 230.00 - TWIN CHURCH 230KV CKT 1	320	320	0.33438	104.0167	MINGO - RED WILLOW 345KV CKT 1
FDNS	09ALL	3	16WP	G15_042	FROM->TO	DIXONCO 230.00 - TWIN CHURCH 230KV CKT 1	320	320	0.33438	104.0167	MINGO - RED WILLOW 345KV CKT 1
FDNS	09ALL	3	20WP	G15_042	FROM->TO	DIXONCO 230.00 - TWIN CHURCH 230KV CKT 1	320	320	0.33559	103.9811	GR ISLD-LNX3345.00 - HOLT.CO3 345.00 345KV CKT 1
FDNS	09ALL	3	16WP	G15_042	FROM->TO	DIXONCO 230.00 - TWIN CHURCH 230KV CKT 1	320	320	0.33483	103.9588	P12:115:NPPD:1161:OAKLAND7:BEEMER 7:BTB
FDNS	09ALL	3	20WP	G15_042	FROM->TO	DIXONCO 230.00 - TWIN CHURCH 230KV CKT 1	320	320	0.33549	103.948	P12:115:NPPD:1166:STNTN.N7:BEEMER 7:BTB
FDNS	09ALL	3	20WP	G15_042	FROM->TO	DIXONCO 230.00 - TWIN CHURCH 230KV CKT 1	320	320	0.33559	103.9412	GR ISLD-LNX3345.00 - GRAND ISLAND 345KV CKT Z
FDNS	09ALL	3	16WP	G15_042	FROM->TO	DIXONCO 230.00 - TWIN CHURCH 230KV CKT 1	320	320	0.33345	103.8906	MCCOOL - MOORE 345KV CKT 1
FDNS	09ALL	3	17G	G15_042	FROM->TO	DIXONCO 230.00 - TWIN CHURCH 230KV CKT 1	320	320	0.33494	103.8678	BEEMER - WEST POINT 115KV CKT 1
FDNS	09ALL	3	20WP	G15_042	FROM->TO	DIXONCO 230.00 - TWIN CHURCH 230KV CKT 1	320	320	0.33549	103.8592	BEEMER - STANTON 115KV CKT 1
FDNS	09ALL	3	20L	G15_042	FROM->TO	DIXONCO 230.00 - TWIN CHURCH 230KV CKT 1	320	320	0.41267	103.8589	HOSKINS (HOSKINS T2) 345/230/13.8KV TRANSFORMER CKT 1
FDNS	09ALL	3	20L	G15_042	FROM->TO	DIXONCO 230.00 - TWIN CHURCH 230KV CKT 1	320	320	0.41267	103.8589	HOSKINS (HOSKINS T2) 345/230/13.8KV TRANSFORMER CKT 1
FDNS	09ALL	3	16WP	G15_042	FROM->TO	DIXONCO 230.00 - TWIN CHURCH 230KV CKT 1	320	320	0.33305	103.8139	GEN600000 1-SHERBURNECNTY G1
FDNS	09ALL	3	20WP	G15_042	FROM->TO	DIXONCO 230.00 - TWIN CHURCH 230KV CKT 1	320	320	0.3347	103.8063	FTTHOM2-LNX3345.00 - GRPRAR2-LNX3345.00 345KV CKT 1
FDNS	09ALL	3	20WP	G15_042	FROM->TO	DIXONCO 230.00 - TWIN CHURCH 230KV CKT 1	320	320	0.33361	103.8041	GEN635214 4-NEAL UNIT 4
FDNS	09ALL	3	20WP	G15_042	FROM->TO	DIXONCO 230.00 - TWIN CHURCH 230KV CKT 1	320	320	0.3347	103.7859	FT THOMPSON - FTTHOM2-LNX3345.00 345KV CKT Z
FDNS	09ALL	3	20WP	G15_042	FROM->TO	DIXONCO 230.00 - TWIN CHURCH 230KV CKT 1	320	320	0.3347	103.7753	GRPRAR2-LNX3345.00 - YANKTON 345KV CKT Z
FDNS	09ALL	3	16WP	G15_042	FROM->TO	DIXONCO 230.00 - TWIN CHURCH 230KV CKT 1	320	320	0.33284	103.7615	SUB 3454 - WAGENER 345KV CKT 1
FDNS	09ALL	3	16WP	G15_042	FROM->TO	DIXONCO 230.00 - TWIN CHURCH 230KV CKT 1	320	320	0.33284	103.7615	SUB 3454 - WAGENER 345KV CKT 1
FDNS	09ALL	3	16WP	G15_042	FROM->TO	DIXONCO 230.00 - TWIN CHURCH 230KV CKT 1	320	320	0.33305	103.7578	GEN600001 2-SHERBURNE CNTY G2
FDNS	09ALL	3	17G	G15_042	FROM->TO	DIXONCO 230.00 - TWIN CHURCH 230KV CKT 1	320	320	0.33356	103.7261	GRAND ISLAND - MCCOOL 345KV CKT 1
FDNS	09ALL	3	17G	G15_042	FROM->TO	DIXONCO 230.00 - TWIN CHURCH 230KV CKT 1	320	320	0.33311	103.7201	GEN635213 3-NEAL UNIT 3
FDNS	09ALL	3	16WP	G15_042	FROM->TO	DIXONCO 230.00 - TWIN CHURCH 230KV CKT 1	320	320	0.33256	103.713	ATCHSNT3 345.00 - BOONEVILLE 345KV CKT 1
FDNS	09ALL	3	17G	G15_042	FROM->TO	DIXONCO 230.00 - TWIN CHURCH 230KV CKT 1	320	320	0.34316	103.7095	HOSKINS (HOSKINS T1) 230/115/13.8KV TRANSFORMER CKT 1
FDNS	09ALL	3	17G	G15_042	FROM->TO	DIXONCO 230.00 - TWIN CHURCH 230KV CKT 1	320	320	0.34316	103.7095	HOSKINS (HOSKINS T1) 230/115/13.8KV TRANSFORMER CKT 1
FDNS	09ALL	3	17G	G15_042	FROM->TO	DIXONCO 230.00 - TWIN CHURCH 230KV CKT 1	320	320	0.33491	103.6493	P12:115:NPPD:1161:OAKLAND7:BEEMER 7:BTB
FDNS	09ALL	3	16WP	G15_042	FROM->TO	DIXONCO 230.00 - TWIN CHURCH 230KV CKT 1	320	320	0.33377	103.6424	MANNING - SPIRIT MOUND 115KV CKT 1
FDNS	09ALL	3	17G	G15_042	FROM->TO	DIXONCO 230.00 - TWIN CHURCH 230KV CKT 1	320	320	0.33426	103.636	UTICA JCT - VFODNES 230KV CKT 1
FDNS	09ALL	3	16WP	G15_042	FROM->TO	DIXONCO 230.00 - TWIN CHURCH 230KV CKT 1	320	320	0.33483	103.6288	OAKLAND - WEST POINT 115KV CKT 1
FDNS	09ALL	3	17G	G15_042	FROM->TO	DIXONCO 230.00 - TWIN CHURCH 230KV CKT 1	320	320	0.33381	103.628	GAVINS POINT - SPIRIT MOUND 115KV CKT 1
FDNS	09ALL	3	16WP	G15_042	FROM->TO	DIXONCO 230.00 - TWIN CHURCH 230KV CKT 1	320	320	0.33305	103.5931	GEN600005 1-MONTICELLO
FDNS	09ALL	3	16WP	G15_042	FROM->TO	DIXONCO 230.00 - TWIN CHURCH 230KV CKT 1	320	320	0.33118	103.5871	PAHOJA - SIOUX FALLS 230KV CKT 1
FDNS	09ALL	3	16WP	G15_042	FROM->TO	DIXONCO 230.00 - TWIN CHURCH 230KV CKT 1	320	320	0.33399	103.5726	NAPA JCT7 115.00 - UTICA 115KV CKT 1
FDNS	09ALL	3	16WP	G15_042	FROM->TO	DIXONCO 230.00 - TWIN CHURCH 230KV CKT 1	320	320	0.33399	103.5726	NAPA JCT7 115.00 - UTICA 115KV CKT 1
FDNS	09ALL	3	16WP	G15_042	FROM->TO	DIXONCO 230.00 - TWIN CHURCH 230KV CKT 1	320	320	0.33399	103.5726	P12:115:UMZW:# 1910 #: YJ IN SD. YJ-UJ LINE FAULT
FDNS	09ALL	3	16WP	G15_042	FROM->TO	DIXONCO 230.00 - TWIN CHURCH 230KV CKT 1	320	320	0.33399	103.5722	NAPA JCT7 115.00 - YANKON JCT 115KV CKT 1
FDNS	09ALL	3	16WP	G15_042	FROM->TO	DIXONCO 230.00 - TWIN CHURCH 230KV CKT 1	320	320	0.33399	103.5722	NAPA JCT7 115.00 - YANKON JCT 115KV CKT 1
FDNS	09ALL	3	17G	G15_042	FROM->TO	DIXONCO 230.00 - TWIN CHURCH 230KV CKT 1	320	320	0.33311	103.5715	GEN600002 3-SHERBURNE CNTY G3
FDNS	09ALL	3	17G	G15_042	FROM->TO	DIXONCO 230.00 - TWIN CHURCH 230KV CKT 1	320	320	0.33352	103.5574	MCCOOL - MOORE 345KV CKT 1
FDNS	09ALL	3	16WP	G15_042	FROM->TO	DIXONCO 230.00 - TWIN CHURCH 230KV CKT 1	320	320	0.33305	103.5511	GEN600003 1-PRAIRIE ISLAND G1

SOLUTION	GROUP	SCENARIO	SEASON	SOURCE	DIRECTION	MONITORED ELEMENT	RATEA (MVA)	RATEB(MVA)	TDF	TC%LOADING (% MVA)	CONTINGENCY
FDNS	09ALL	3	16WP	G15_042	FROM->TO	DIXONCO 230.00 - TWIN CHURCH 230KV CKT 1	320	320	0.33305	103.5493	GEN600004 2-PRAIRIE ISLAND G2
FDNS	09ALL	3	17G	G15_042	FROM->TO	DIXONCO 230.00 - TWIN CHURCH 230KV CKT 1	320	320	0.33311	103.5322	SHERBURNE CO 345/24.0KV TRANSFORMER CKT 1
FDNS	09ALL	3	16WP	G15_042	FROM->TO	DIXONCO 230.00 - TWIN CHURCH 230KV CKT 1	320	320	0.33256	103.5047	ATCHSNT3 345.00 - COOPER 345KV CKT 1
FDNS	09ALL	3	16WP	G15_042	FROM->TO	DIXONCO 230.00 - TWIN CHURCH 230KV CKT 1	320	320	0.33305	103.5029	GEN645001 1-FORT CALHOUN 1
FDNS	09ALL	3	16WP	G15_042	FROM->TO	DIXONCO 230.00 - TWIN CHURCH 230KV CKT 1	320	320	0.33305	103.5015	GEN600006 1-AS KING
FDNS	09ALL	3	16WP	G15_042	FROM->TO	DIXONCO 230.00 - TWIN CHURCH 230KV CKT 1	320	320	0.33289	103.4879	G15088_T 345.00 - MOORE 345KV CKT 1
FDNS	09ALL	3	16WP	G15_042	FROM->TO	DIXONCO 230.00 - TWIN CHURCH 230KV CKT 1	320	320	0.33276	103.4845	P12:230:UMZB:# 116 #: ST IN SD. WSG-ST-VH
FDNS	09ALL	3	16WP	G15_042	FROM->TO	DIXONCO 230.00 - TWIN CHURCH 230KV CKT 1	320	320	0.33388	103.4455	G15061_T 345.00 - SETAB 345KV CKT 1
FDNS	09ALL	3	16WP	G15_042	FROM->TO	DIXONCO 230.00 - TWIN CHURCH 230KV CKT 1	320	320	0.33438	103.4386	AXTELL - POST ROCK 345KV CKT 1
FDNS	09ALL	3	16WP	G15_042	FROM->TO	DIXONCO 230.00 - TWIN CHURCH 230KV CKT 1	320	320	0.33377	103.4351	BERSFORD - MANNING 115KV CKT 1
FDNS	09ALL	3	16WP	G15_042	FROM->TO	DIXONCO 230.00 - TWIN CHURCH 230KV CKT 1	320	320	0.33382	103.428	SIOUX FALLS - VFODNES 230KV CKT 1
FDNS	09ALL	3	17G	G15_042	FROM->TO	DIXONCO 230.00 - TWIN CHURCH 230KV CKT 1	320	320	0.33452	103.4168	AXTELL - POST ROCK 345KV CKT 1
FDNS	09ALL	3	16WP	G15_042	FROM->TO	DIXONCO 230.00 - TWIN CHURCH 230KV CKT 1	320	320	0.33277	103.4017	HANLON - STORLA 230KV CKT 1
FDNS	09ALL	3	17G	G15_042	FROM->TO	DIXONCO 230.00 - TWIN CHURCH 230KV CKT 1	320	320	0.33491	103.4005	OAKLAND - WEST POINT 115KV CKT 1
FDNS	09ALL	3	16WP	G15_042	FROM->TO	DIXONCO 230.00 - TWIN CHURCH 230KV CKT 1	320	320	0.33367	103.3459	GERALD GENTLEMAN STATION - RED WILLOW 345KV CKT 1
FDNS	09ALL	3	20WP	G15_042	FROM->TO	DIXONCO 230.00 - TWIN CHURCH 230KV CKT 1	320	320	0.34366	103.3371	HOSKINS (HOSKINS T1) 230/115/13.8KV TRANSFORMER CKT 1
FDNS	09ALL	3	20WP	G15_042	FROM->TO	DIXONCO 230.00 - TWIN CHURCH 230KV CKT 1	320	320	0.34366	103.3371	HOSKINS (HOSKINS T1) 230/115/13.8KV TRANSFORMER CKT 1
FDNS	09ALL	3	20WP	G15_042	FROM->TO	DIXONCO 230.00 - TWIN CHURCH 230KV CKT 1	320	320	0.3348	103.3298	UTICA JCT - VFODNES 230KV CKT 1
FDNS	09ALL	3	17SP	G15_042	FROM->TO	DIXONCO 230.00 - TWIN CHURCH 230KV CKT 1	320	320	0.33264	103.2898	P13:115-230:NPPD:NUCOR-3
FDNS	09ALL	3	20WP	G15_042	FROM->TO	DIXONCO 230.00 - TWIN CHURCH 230KV CKT 1	320	320	0.33549	103.2733	BEEMER - WEST POINT 115KV CKT 1
FDNS	09ALL	3	20SP	G15_042	FROM->TO	DIXONCO 230.00 - TWIN CHURCH 230KV CKT 1	320	320	0.33654	103.2692	BELDEN - TWIN CHURCH 115KV CKT 1
FDNS	09ALL	3	20SP	G15_042	FROM->TO	DIXONCO 230.00 - TWIN CHURCH 230KV CKT 1	320	320	0.33324	103.2681	P13:115-230:NPPD:NUCOR-3
FDNS	09ALL	3	20L	G15_042	FROM->TO	DIXONCO 230.00 - TWIN CHURCH 230KV CKT 1	320	320	0.33283	103.2478	P13:115-230:NPPD:NUCOR-3
FDNS	09ALL	3	20WP	G15_042	FROM->TO	DIXONCO 230.00 - TWIN CHURCH 230KV CKT 1	320	320	0.33361	103.2388	GEN635213 3-NEAL UNIT 3
FDNS	09ALL	3	20WP	G15_042	FROM->TO	DIXONCO 230.00 - TWIN CHURCH 230KV CKT 1	320	320	0.33434	103.2383	GAVINS POINT - SPIRIT MOUND 115KV CKT 1
FDNS	09ALL	3	17G	G15_042	FROM->TO	DIXONCO 230.00 - TWIN CHURCH 230KV CKT 1	320	320	0.33402	103.232	P12:115:UMZW:# 1910 #: YJ IN SD. YJ-UJ LINE FAULT
FDNS	09ALL	3	17G	G15_042	FROM->TO	DIXONCO 230.00 - TWIN CHURCH 230KV CKT 1	320	320	0.33402	103.2319	NAPA JCT7 115.00 - UTICA 115KV CKT 1
FDNS	09ALL	3	17G	G15_042	FROM->TO	DIXONCO 230.00 - TWIN CHURCH 230KV CKT 1	320	320	0.33402	103.2319	NAPA JCT7 115.00 - UTICA 115KV CKT 1
FDNS	09ALL	3	17G	G15_042	FROM->TO	DIXONCO 230.00 - TWIN CHURCH 230KV CKT 1	320	320	0.33402	103.2312	NAPA JCT7 115.00 - YANKON JCT 115KV CKT 1
FDNS	09ALL	3	17G	G15_042	FROM->TO	DIXONCO 230.00 - TWIN CHURCH 230KV CKT 1	320	320	0.33402	103.2312	NAPA JCT7 115.00 - YANKON JCT 115KV CKT 1
FDNS	09ALL	3	17G	G15_042	FROM->TO	DIXONCO 230.00 - TWIN CHURCH 230KV CKT 1	320	320	0.33311	103.213	GEN600000 1-SHERBURNECNTY G1
FDNS	09ALL	3	20WP	G15_042	FROM->TO	DIXONCO 230.00 - TWIN CHURCH 230KV CKT 1	320	320	0.33403	103.2096	GRAND ISLAND - MCCOOL 345KV CKT 1
FDNS	09ALL	3	17G	G15_042	FROM->TO	DIXONCO 230.00 - TWIN CHURCH 230KV CKT 1	320	320	0.33281	103.2076	COLUMBUS - SCHUYLER 115KV CKT 1
FDNS	09ALL	3	17G	G15_042	FROM->TO	DIXONCO 230.00 - TWIN CHURCH 230KV CKT 1	320	320	0.33289	103.1813	SUB 3454 - WAGENER 345KV CKT 1
FDNS	09ALL	3	17G	G15_042	FROM->TO	DIXONCO 230.00 - TWIN CHURCH 230KV CKT 1	320	320	0.33289	103.1813	SUB 3454 - WAGENER 345KV CKT 1
FDNS	09ALL	3	17G	G15_042	FROM->TO	DIXONCO 230.00 - TWIN CHURCH 230KV CKT 1	320	320	0.33311	103.1789	GEN600001 2-SHERBURNE CNTY G2
FDNS	09ALL	3	17G	G15_042	FROM->TO	DIXONCO 230.00 - TWIN CHURCH 230KV CKT 1	320	320	0.33399	103.1464	G15061_T 345.00 - SETAB 345KV CKT 1
FDNS	09ALL	3	17G	G15_042	FROM->TO	DIXONCO 230.00 - TWIN CHURCH 230KV CKT 1	320	320	0.33421	103.1375	COOPER - MOORE 345KV CKT 1
FDNS	09ALL	3	20WP	G15_042	FROM->TO	DIXONCO 230.00 - TWIN CHURCH 230KV CKT 1	320	320	0.33361	103.1043	SHERBURNE CO 345/24.0KV TRANSFORMER CKT 1
FDNS	09ALL	3	17G	G15_042	FROM->TO	DIXONCO 230.00 - TWIN CHURCH 230KV CKT 1	320	320	0.33381	103.0997	MANNING - SPIRIT MOUND 115KV CKT 1
FDNS	09ALL	3	20WP	G15_042	FROM->TO	DIXONCO 230.00 - TWIN CHURCH 230KV CKT 1	320	320	0.33361	103.0855	GEN600002 3-SHERBURNE CNTY G3
FDNS	09ALL	3	17G	G15_042	FROM->TO	DIXONCO 230.00 - TWIN CHURCH 230KV CKT 1	320	320	0.33377	103.0418	GERALD GENTLEMAN STATION - RED WILLOW 345KV CKT 1
FDNS	09ALL	3	17G	G15_042	FROM->TO	DIXONCO 230.00 - TWIN CHURCH 230KV CKT 1	320	320	0.33311	103.016	GEN600005 1-MONTICELLO
FDNS	09ALL	3	17G	G15_042	FROM->TO	DIXONCO 230.00 - TWIN CHURCH 230KV CKT 1	320	320	0.33294	103.0056	G15088_T 345.00 - MOORE 345KV CKT 1
FDNS	09ALL	3	20WP	G15_042	FROM->TO	DIXONCO 230.00 - TWIN CHURCH 230KV CKT 1	320	320	0.33547	102.9898	P12:115:NPPD:1161:OAKLAND7:BEEMER 7:BTB
FDNS	09ALL	3	17SP	G15_042	FROM->TO	DIXONCO 230.00 - TWIN CHURCH 230KV CKT 1	320	320	0.33591	102.9818	BELDEN - TWIN CHURCH 115KV CKT 1
FDNS	09ALL	3	17G	G15_042	FROM->TO	DIXONCO 230.00 - TWIN CHURCH 230KV CKT 1	320	320	0.33311	102.9773	GEN600003 1-PRAIRIE ISLAND G1
FDNS	09ALL	3	17G	G15_042	FROM->TO	DIXONCO 230.00 - TWIN CHURCH 230KV CKT 1	320	320	0.33311	102.9754	GEN600004 2-PRAIRIE ISLAND G2
FDNS	09ALL	3	17G	G15_042	FROM->TO	DIXONCO 230.00 - TWIN CHURCH 230KV CKT 1	320	320	0.33399	102.9732	G15061_T 345.00 - MINGO 345KV CKT 1
FDNS	09ALL	3	17G	G15_042	FROM->TO	DIXONCO 230.00 - TWIN CHURCH 230KV CKT 1	320	320	0.33311	102.9512	GEN645001 1-FORT CALHOUN 1
FDNS	09ALL	3	20WP	G15_042	FROM->TO	DIXONCO 230.00 - TWIN CHURCH 230KV CKT 1	320	320	0.334	102.9241	MCCOOL - MOORE 345KV CKT 1
FDNS	09ALL	3	17G	G15_042	FROM->TO	DIXONCO 230.00 - TWIN CHURCH 230KV CKT 1	320	320	0.33311	102.9064	GEN600006 1-AS KING
FDNS	09ALL	3	20WP	G15_042	FROM->TO	DIXONCO 230.00 - TWIN CHURCH 230KV CKT 1	320	320	0.3335	102.9053	COLUMBUS - SCHUYLER 115KV CKT 1
FDNS	09ALL	3	17G	G15_042	FROM->TO	DIXONCO 230.00 - TWIN CHURCH 230KV CKT 1	320	320	0.33381	102.8988	BERSFORD - MANNING 115KV CKT 1
FDNS	00NR	3	20SP	G15_042	FROM->TO	DIXONCO 230.00 - TWIN CHURCH 230KV CKT 1	320	320	0.54647	102.8986	DIXONCO 230.00 - HOSKINS 230KV CKT 1
FDNS	09ALL	3	20L	G15_042	FROM->TO	DIXONCO 230.00 - TWIN CHURCH 230KV CKT 1	320	320	0.34367	102.8883	HOSKINS - SHELL CREEK 345KV CKT 1
FDNS	09ALL	3	17G	G15_042	FROM->TO	DIXONCO 230.00 - TWIN CHURCH 230KV CKT 1	320	320	0.33387	102.8834	SIOUX FALLS - VFODNES 230KV CKT 1
FDNS	09ALL	3	17G	G15_042	FROM->TO	DIXONCO 230.00 - TWIN CHURCH 230KV CKT 1	320	320	0.33311	102.8734	BIG STONE 230/24.0KV TRANSFORMER CKT 1
FDNS	09ALL	3	17G	G15_042	FROM->TO	DIXONCO 230.00 - TWIN CHURCH 230KV CKT 1	320	320	0.33139	102.8697	PAHOJA - SIOUX FALLS 230KV CKT 1
FDNS	09ALL	3	20WP	G15_042	FROM->TO	DIXONCO 230.00 - TWIN CHURCH 230KV CKT 1	320	320	0.33494	102.8683	MINGO - RED WILLOW 345KV CKT 1
FDNS	09ALL	3	20WP	G15_042	FROM->TO	DIXONCO 230.00 - TWIN CHURCH 230KV CKT 1	320	320	0.33494	102.8683	MINGO - RED WILLOW 345KV CKT 1
FDNS	09ALL	3	20WP	G15_042	FROM->TO	DIXONCO 230.00 - TWIN CHURCH 230KV CKT 1	320	320	0.3332	102.8638	ATCHSNT3 345.00 - BOONEVILLE 345KV CKT 1
FDNS	09ALL	3	17G	G15_042	FROM->TO	DIXONCO 230.00 - TWIN CHURCH 230KV CKT 1	320	320	0.33349	102.8505	AXTELL - SWEETWATER 345KV CKT 1
FDNS	09ALL	3	20WP	G15_042	FROM->TO	DIXONCO 230.00 - TWIN CHURCH 230KV CKT 1	320	320	0.33342	102.8319	SUB 3454 - WAGENER 345KV CKT 1
FDNS	09ALL	3	20WP	G15_042	FROM->TO	DIXONCO 230.00 - TWIN CHURCH 230KV CKT 1	320	320	0.33342	102.8319	SUB 3454 - WAGENER 345KV CKT 1
FDNS	09ALL	3	17G	G15_042	FROM->TO	DIXONCO 230.00 - TWIN CHURCH 230KV CKT 1	320	320	0.33261	102.8212	ATCHSNT3 345.00 - BOONEVILLE 345KV CKT 1
FDNS	09ALL	3	20WP	G15_042	FROM->TO	DIXONCO 230.00 - TWIN CHURCH 230KV CKT 1	320	320	0.33361	102.7687	GEN600000 1-SHERBURNECNTY G1
FDNS	09ALL	3	20WP	G15_042	FROM->TO	DIXONCO 230.00 - TWIN CHURCH 230KV CKT 1	320	320	0.33361	102.7198	GEN645001 1-FORT CALHOUN 1
FDNS	09ALL	3	20WP	G15_042	FROM->TO	DIXONCO 230.00 - TWIN CHURCH 230KV CKT 1	320	320	0.33361	102.7128	GEN600001 2-SHERBURNE CNTY G2
FDNS	09ALL	3	20WP	G15_042	FROM->TO	DIXONCO 230.00 - TWIN CHURCH 230KV CKT 1	320	320	0.33456	102.7121	NAPA JCT7 115.00 - UTICA 115KV CKT 1
FDNS	09ALL	3	20WP	G15_042	FROM->TO	DIXONCO 230.00 - TWIN CHURCH 230KV CKT 1	320	320	0.33456	102.7121	NAPA JCT7 115.00 - UTICA 115KV CKT 1
FDNS	09ALL	3	20WP	G15_042	FROM->TO	DIXONCO 230.00 - TWIN CHURCH 230KV CKT 1	320	320	0.33456	102.7121	P12:115:UMZW:# 1910 #: YJ IN SD. YJ-UJ LINE FAULT
FDNS	09ALL	3	20WP	G15_042	FROM->TO	DIXONCO 230.00 - TWIN CHURCH 230KV CKT 1	320	320	0.33456	102.7117	NAPA JCT7 115.00 - YANKON JCT 115KV CKT 1
FDNS	09ALL	3	20WP	G15_042	FROM->TO	DIXONCO 230.00 - TWIN CHURCH 230KV CKT 1	320	320	0.33456	102.7117	NAPA JCT7 115.00 - YANKON JCT 115KV CKT 1
FDNS	09ALL	3	20WP	G15_042	FROM->TO	DIXONCO 230.00 - TWIN CHURCH 230KV CKT 1	320	320	0.33434	102.7089	MANNING - SPIRIT MOUND 115KV CKT 1
FDNS	09ALL	3	20WP	G15_042	FROM->TO	DIXONCO 230.00 - TWIN CHURCH 230KV CKT 1	320	320	0.33361	102.7077	BIG STONE 230/24.0KV TRANSFORMER CKT 1
FDNS	09ALL	3	20WP	G15_042	FROM->TO	DIXONCO 230.00 - TWIN CHURCH 230KV CKT 1	320	320	0.33361	102.6883	GEN600005 1-MONTICELLO
FDNS	09ALL	3	20WP	G15_042	FROM->TO	DIXONCO 230.00 - TWIN CHURCH 230KV CKT 1	320	320	0.33547	102.6667	OAKLAND - WEST POINT 115KV CKT 1
FDNS	09ALL	3	20WP	G15_042	FROM->TO	DIXONCO 230.00 - TWIN CHURCH 230KV CKT 1	320	320	0.3332	102.6486	ATCHSNT3 345.00 - COOPER 345KV CKT 1

SOLUTION	GROUP	SCENARIO	SEASON	SOURCE	DIRECTION	MONITORED ELEMENT	RATEA (MVA)	RATEB(MVA)	TDF	TC%LOADING (% MVA)	CONTINGENCY
FDNS	09ALL	3	20WP	G15_042	FROM->TO	DIXONCO 230.00 - TWIN CHURCH 230KV CKT 1	320	320	0.3332	102.6486	ATCHSNT3 345.00 - COOPER 345KV CKT 1
FDNS	09ALL	3	20WP	G15_042	FROM->TO	DIXONCO 230.00 - TWIN CHURCH 230KV CKT 1	320	320	0.31503	102.6347	P13:345:UMZW:# 260 #: SC2 IN IA. LOSS OF TRANSFORMER (KU1A
FDNS	09ALL	3	20WP	G15_042	FROM->TO	DIXONCO 230.00 - TWIN CHURCH 230KV CKT 1	320	320	0.33171	102.6167	PAHOJA - SIOUX FALLS 230KV CKT 1
FDNS	09ALL	3	20WP	G15_042	FROM->TO	DIXONCO 230.00 - TWIN CHURCH 230KV CKT 1	320	320	0.33346	102.6086	G15088_T 345.00 - MOORE 345KV CKT 1
FDNS	09ALL	3	20WP	G15_042	FROM->TO	DIXONCO 230.00 - TWIN CHURCH 230KV CKT 1	320	320	0.33361	102.5876	GEN300003 1-THOMAS HILL UNIT 3
FDNS	09ALL	3	20WP	G15_042	FROM->TO	DIXONCO 230.00 - TWIN CHURCH 230KV CKT 1	320	320	0.33334	102.5764	P12:230:UMZB:# 116 #: ST IN SD. WSG-ST-VH
FDNS	09ALL	3	20WP	G15_042	FROM->TO	DIXONCO 230.00 - TWIN CHURCH 230KV CKT 1	320	320	0.33361	102.5307	GEN600003 1-PRAIRIE ISLAND G1
FDNS	09ALL	3	20WP	G15_042	FROM->TO	DIXONCO 230.00 - TWIN CHURCH 230KV CKT 1	320	320	0.33361	102.5292	GEN600004 2-PRAIRIE ISLAND G2
FDNS	09ALL	3	20WP	G15_042	FROM->TO	DIXONCO 230.00 - TWIN CHURCH 230KV CKT 1	320	320	0.33434	102.5075	BERSFORD - MANNING 115KV CKT 1
FDNS	09ALL	3	20WP	G15_042	FROM->TO	DIXONCO 230.00 - TWIN CHURCH 230KV CKT 1	320	320	0.33361	102.4964	GEN600006 1-AS KING
FDNS	09ALL	3	20WP	G15_042	FROM->TO	DIXONCO 230.00 - TWIN CHURCH 230KV CKT 1	320	320	0.33334	102.4906	HANLON - STORLA 230KV CKT 1
FDNS	09ALL	3	16WP	G15_042	FROM->TO	DIXONCO 230.00 - TWIN CHURCH 230KV CKT 1	320	320	0.33305	102.408	BASE CASE
FDNS	09NR	3	20L	G15_042	FROM->TO	DIXONCO 230.00 - TWIN CHURCH 230KV CKT 1	320	320	0.32438	102.3299	P13:230-345:NPPD:NUCOR-1
FDNS	09ALL	3	20L	G15_042	FROM->TO	DIXONCO 230.00 - TWIN CHURCH 230KV CKT 1	320	320	0.32418	102.2878	RAUN - SIOUX CITY 345KV CKT 1
FDNS	09ALL	3	20L	G15_042	FROM->TO	DIXONCO 230.00 - TWIN CHURCH 230KV CKT 1	320	320	0.32418	102.2878	RAUN - SIOUX CITY 345KV CKT 1
FDNS	09ALL	3	25SP	G15_042	FROM->TO	DIXONCO 230.00 - TWIN CHURCH 230KV CKT 1	320	320	0.33318	102.2599	P13:115-230:NPPD:NUCOR-3
FDNS	09ALL	3	20L	G15_042	FROM->TO	DIXONCO 230.00 - TWIN CHURCH 230KV CKT 1	320	320	0.33401	102.2571	FTTHOM2-LNX3345.00 - GRPRAR2-LNX3345.00 345KV CKT 1
FDNS	09ALL	3	20L	G15_042	FROM->TO	DIXONCO 230.00 - TWIN CHURCH 230KV CKT 1	320	320	0.33859	102.2348	COLUMEAST - NW68TH & HOLDREGE 345KV CKT 1
FDNS	09ALL	3	20L	G15_042	FROM->TO	DIXONCO 230.00 - TWIN CHURCH 230KV CKT 1	320	320	0.33859	102.2348	COLUMEAST - NW68TH & HOLDREGE 345KV CKT 1
FDNS	09ALL	3	20L	G15_042	FROM->TO	DIXONCO 230.00 - TWIN CHURCH 230KV CKT 1	320	320	0.33401	102.2266	FT THOMPSON - FTTHOM2-LNX3345.00 345KV CKT Z
FDNS	00NR	3	17SP	G15_042	FROM->TO	DIXONCO 230.00 - TWIN CHURCH 230KV CKT 1	320	320	0.54636	102.2135	DIXONCO 230.00 - HOSKINS 230KV CKT 1
FDNS	09ALL	3	20L	G15_042	FROM->TO	DIXONCO 230.00 - TWIN CHURCH 230KV CKT 1	320	320	0.33401	102.2066	GRPRAR2-LNX3345.00 - YANKTON 345KV CKT Z
FDNS	09ALL	3	25SP	G15_042	FROM->TO	DIXONCO 230.00 - TWIN CHURCH 230KV CKT 1	320	320	0.33649	101.9693	BELDEN - TWIN CHURCH 115KV CKT 1
FDNS	00NR	3	25SP	G15_042	FROM->TO	DIXONCO 230.00 - TWIN CHURCH 230KV CKT 1	320	320	0.54643	101.8894	DIXONCO 230.00 - HOSKINS 230KV CKT 1
FDNS	09ALL	3	17G	G15_042	FROM->TO	DIXONCO 230.00 - TWIN CHURCH 230KV CKT 1	320	320	0.33311	101.8514	BASE CASE
FDNS	09NR	3	20L	G15_042	FROM->TO	DIXONCO 230.00 - TWIN CHURCH 230KV CKT 1	320	320	0.34333	101.8276	RASMUSN - SIOUX CITY 230KV CKT 1
FDNS	09ALL	3	20L	G15_042	FROM->TO	DIXONCO 230.00 - TWIN CHURCH 230KV CKT 1	320	320	0.33786	101.8079	COLUMEAST - SHELL CREEK 345KV CKT 1
FDNS	09NR	3	17G	G15_042	FROM->TO	DIXONCO 230.00 - TWIN CHURCH 230KV CKT 1	320	320	0.32224	101.647	P13:115-230:NPPD:NUCOR-3
FDNS	09NR	3	17G	G15_042	FROM->TO	DIXONCO 230.00 - TWIN CHURCH 230KV CKT 1	320	320	0.33494	101.5943	HOSKINS - SHELL CREEK 345KV CKT 1
FDNS	09ALL	3	20WP	G15_042	FROM->TO	DIXONCO 230.00 - TWIN CHURCH 230KV CKT 1	320	320	0.33361	101.541	BASE CASE
FDNS	09ALL	3	16WP	G15_042	FROM->TO	DIXONCO 230.00 - TWIN CHURCH 230KV CKT 1	320	320	0.33305	101.4183	GEN640418 1-ELKHORN RIDGE WIND
FDNS	09ALL	3	16WP	G15_042	FROM->TO	DIXONCO 230.00 - TWIN CHURCH 230KV CKT 1	320	320	0.33305	101.4177	GEN562921 1-G15054_2 0.6900
FDNS	09ALL	3	16WP	G15_042	FROM->TO	DIXONCO 230.00 - TWIN CHURCH 230KV CKT 1	320	320	0.33184	101.4079	DENISON (DN KV1A) 230/161/13.8KV TRANSFORMER CKT 1
FDNS	09ALL	3	16WP	G15_042	FROM->TO	DIXONCO 230.00 - TWIN CHURCH 230KV CKT 1	320	320	0.33184	101.4033	DENISON - EXIRA 161KV CKT 1
FDNS	09ALL	3	16WP	G15_042	FROM->TO	DIXONCO 230.00 - TWIN CHURCH 230KV CKT 1	320	320	0.33677	101.376	HOSKINS (HOSKN T4) 345/115/13.8KV TRANSFORMER CKT 1
FDNS	09ALL	3	16WP	G15_042	FROM->TO	DIXONCO 230.00 - TWIN CHURCH 230KV CKT 1	320	320	0.33677	101.376	HOSKINS (HOSKN T4) 345/115/13.8KV TRANSFORMER CKT 1
FDNS	09ALL	3	16WP	G15_042	FROM->TO	DIXONCO 230.00 - TWIN CHURCH 230KV CKT 1	320	320	0.33305	101.3201	GEN335831 1-RIVERBEND UNIT#1
FDNS	09ALL	3	16WP	G15_042	FROM->TO	DIXONCO 230.00 - TWIN CHURCH 230KV CKT 1	320	320	0.33416	101.305	P12:115:NPPD:1163B:NELIGH 7:NORFK.N7:BTB
FDNS	09ALL	3	16WP	G15_042	FROM->TO	DIXONCO 230.00 - TWIN CHURCH 230KV CKT 1	320	320	0.33305	101.3016	GEN337910 1-ARKANSAS NUCLEAR ONE UNIT #1
FDNS	09ALL	3	16WP	G15_042	FROM->TO	DIXONCO 230.00 - TWIN CHURCH 230KV CKT 1	320	320	0.33158	101.2966	SIOUX CITY (SC KV1A) 230/161/13.8KV TRANSFORMER CKT 1
FDNS	09ALL	3	16WP	G15_042	FROM->TO	DIXONCO 230.00 - TWIN CHURCH 230KV CKT 1	320	320	0.33157	101.2888	SIOUX CITY (SC KV5A) 230/161/13.8KV TRANSFORMER CKT 1
FDNS	09ALL	3	16WP	G15_042	FROM->TO	DIXONCO 230.00 - TWIN CHURCH 230KV CKT 1	320	320	0.33305	101.2772	GEN344225 1-1CAL G1 25.000
FDNS	09ALL	3	16WP	G15_042	FROM->TO	DIXONCO 230.00 - TWIN CHURCH 230KV CKT 1	320	320	0.3321	101.2553	GRIMES - LEHIGH 345KV CKT 1
FDNS	09ALL	3	16WP	G15_042	FROM->TO	DIXONCO 230.00 - TWIN CHURCH 230KV CKT 1	320	320	0.33305	101.1816	GEN336153 1-WATERFORD UNIT#3
FDNS	09ALL	3	16WP	G15_042	FROM->TO	DIXONCO 230.00 - TWIN CHURCH 230KV CKT 1	320	320	0.33177	101.1504	TWIN CHURCH (TWNCHURCH T6) 230/115/13.8KV TRANSFORMER CKT 2
FDNS	09ALL	3	16WP	G15_042	FROM->TO	DIXONCO 230.00 - TWIN CHURCH 230KV CKT 1	320	320	0.33177	101.1504	TWIN CHURCH (TWNCHURCH T6) 230/115/13.8KV TRANSFORMER CKT 2
FDNS	09ALL	3	17SP	G15_042	FROM->TO	DIXONCO 230.00 - TWIN CHURCH 230KV CKT 1	320	320	0.34379	101.1404	HOSKINS - SHELL CREEK 345KV CKT 1
FDNS	09ALL	3	16WP	G15_042	FROM->TO	DIXONCO 230.00 - TWIN CHURCH 230KV CKT 1	320	320	0.33413	101.1146	BATTLE CREEK - NORTH NORFOLK 115KV CKT 1
FDNS	09ALL	3	16WP	G15_042	FROM->TO	DIXONCO 230.00 - TWIN CHURCH 230KV CKT 1	320	320	0.33305	101.1045	GEN337911 1-ARKANSAS NUCLEAR ONE UNIT #2
FDNS	09ALL	3	16WP	G15_042	FROM->TO	DIXONCO 230.00 - TWIN CHURCH 230KV CKT 1	320	320	0.33305	101.0083	GEN562714 1-G15_023_4 0.6900
FDNS	09ALL	3	16WP	G15_042	FROM->TO	DIXONCO 230.00 - TWIN CHURCH 230KV CKT 1	320	320	0.33305	101.0083	GEN562715 1-G15_023_5 0.6900
FDNS	09ALL	3	16WP	G15_042	FROM->TO	DIXONCO 230.00 - TWIN CHURCH 230KV CKT 1	320	320	0.33184	100.9857	ANITA TAP POINT TO CRESTON AND DENISON - EXIRA 161KV CKT 1
FDNS	09ALL	3	20L	G15_042	FROM->TO	DIXONCO 230.00 - TWIN CHURCH 230KV CKT 1	320	320	0.33283	100.9814	P13:115-345:NPPD:NUCOR-2
FDNS	09ALL	3	16WP	G15_042	FROM->TO	DIXONCO 230.00 - TWIN CHURCH 230KV CKT 1	320	320	0.33305	100.9317	GEN336821 1-GRAND GULF UNIT
FDNS	09ALL	3	17G	G15_042	FROM->TO	DIXONCO 230.00 - TWIN CHURCH 230KV CKT 1	320	320	0.3314	100.9125	SUB 1226 - TEKAMAH 161KV CKT 1
FDNS	09ALL	3	17G	G15_042	FROM->TO	DIXONCO 230.00 - TWIN CHURCH 230KV CKT 1	320	320	0.3314	100.9125	SUB 1226 - TEKAMAH 161KV CKT 1
FDNS	09ALL	3	17G	G15_042	FROM->TO	DIXONCO 230.00 - TWIN CHURCH 230KV CKT 1	320	320	0.33183	100.8802	TWIN CHURCH (TWNCHURCH T6) 230/115/13.8KV TRANSFORMER CKT 2
FDNS	09ALL	3	17G	G15_042	FROM->TO	DIXONCO 230.00 - TWIN CHURCH 230KV CKT 1	320	320	0.33183	100.8802	TWIN CHURCH (TWNCHURCH T6) 230/115/13.8KV TRANSFORMER CKT 2
FDNS	09ALL	3	20SP	G15_042	FROM->TO	DIXONCO 230.00 - TWIN CHURCH 230KV CKT 1	320	320	0.34429	100.8801	HOSKINS - SHELL CREEK 345KV CKT 1
FDNS	09ALL	3	16WP	G15_042	FROM->TO	DIXONCO 230.00 - TWIN CHURCH 230KV CKT 1	320	320	0.33413	100.8773	BATTLE CREEK - COUNTY LINE 115KV CKT 1
FDNS	09ALL	3	16WP	G15_042	FROM->TO	DIXONCO 230.00 - TWIN CHURCH 230KV CKT 1	320	320	0.33305	100.8706	GEN640011 2-GERALD GENTLEMAN STATION UNIT 2
FDNS	09ALL	3	16WP	G15_042	FROM->TO	DIXONCO 230.00 - TWIN CHURCH 230KV CKT 1	320	320	0.32154	100.8705	BANCROFT - OAKLAND 115KV CKT 1
FDNS	09ALL	3	16WP	G15_042	FROM->TO	DIXONCO 230.00 - TWIN CHURCH 230KV CKT 1	320	320	0.33413	100.8676	ANTELOPE 7115.00 - COUNTY LINE 115KV CKT 1
FDNS	09ALL	3	16WP	G15_042	FROM->TO	DIXONCO 230.00 - TWIN CHURCH 230KV CKT 1	320	320	0.33305	100.8625	GEN640010 1-GERALD GENTLEMAN STATION UNIT 1
FDNS	09NR	3	17G	G15_042	FROM->TO	DIXONCO 230.00 - TWIN CHURCH 230KV CKT 1	320	320	0.32818	100.857	COLUMEAST - NW68TH & HOLDREGE 345KV CKT 1
FDNS	09NR	3	17G	G15_042	FROM->TO	DIXONCO 230.00 - TWIN CHURCH 230KV CKT 1	320	320	0.32818	100.857	COLUMEAST - NW68TH & HOLDREGE 345KV CKT 1
FDNS	09ALL	3	20L	G15_042	FROM->TO	DIXONCO 230.00 - TWIN CHURCH 230KV CKT 1	320	320	0.33484	100.8563	GAVINS POINT - YANKON JCT 115KV CKT 1
FDNS	09ALL	3	20L	G15_042	FROM->TO	DIXONCO 230.00 - TWIN CHURCH 230KV CKT 1	320	320	0.33484	100.8563	GAVINS POINT - YANKON JCT 115KV CKT 1
FDNS	09ALL	3	17G	G15_042	FROM->TO	DIXONCO 230.00 - TWIN CHURCH 230KV CKT 1	320	320	0.33311	100.849	GEN640418 1-ELKHORN RIDGE WIND
FDNS	09ALL	3	17G	G15_042	FROM->TO	DIXONCO 230.00 - TWIN CHURCH 230KV CKT 1	320	320	0.33311	100.8373	GEN562921 1-G15054_2 0.6900
FDNS	09ALL	3	17G	G15_042	FROM->TO	DIXONCO 230.00 - TWIN CHURCH 230KV CKT 1	320	320	0.33311	100.8267	GEN335831 1-RIVERBEND UNIT#1
FDNS	09ALL	3	17G	G15_042	FROM->TO	DIXONCO 230.00 - TWIN CHURCH 230KV CKT 1	320	320	0.33311	100.804	GEN337910 1-ARKANSAS NUCLEAR ONE UNIT #1
FDNS	09ALL	3	16WP	G15_042	FROM->TO	DIXONCO 230.00 - TWIN CHURCH 230KV CKT 1	320	320	0.3298	100.7923	RAUN - SUB 3451 FT CAL 345KV CKT 1
FDNS	09ALL	3	16WP	G15_042	FROM->TO	DIXONCO 230.00 - TWIN CHURCH 230KV CKT 1	320	320	0.3298	100.7923	RAUN - SUB 3451 FT CAL 345KV CKT 1
FDNS	09ALL	3	17G	G15_042	FROM->TO	DIXONCO 230.00 - TWIN CHURCH 230KV CKT 1	320	320	0.33155	100.7735	SIOUX CITY (SC KV1A) 230/161/13.8KV TRANSFORMER CKT 1
FDNS	09ALL	3	17G	G15_042	FROM->TO	DIXONCO 230.00 - TWIN CHURCH 230KV CKT 1	320	320	0.33154	100.766	SIOUX CITY (SC KV5A) 230/161/13.8KV TRANSFORMER CKT 1
FDNS	09ALL	3	16WP	G15_042	FROM->TO	DIXONCO 230.00 - TWIN CHURCH 230KV CKT 1	320	320	0.33079	100.7009	P12:345:UMZW:# 907 #: SC2-SR IN IA. SC2-SR 345 KV LINE
FDNS	09ALL	3	17G	G15_042	FROM->TO	DIXONCO 230.00 - TWIN CHURCH 230KV CKT 1	320	320	0.33311	100.6964	GEN336153 1-WATERFORD UNIT#3
FDNS	09ALL	3	16WP	G15_042	FROM->TO	DIXONCO 230.00 - TWIN CHURCH 230KV CKT 1	320	320	0.33079	100.6943	SIOUX CITY - SIOUXCY-LNX3345.00 345KV CKT Z

SOLUTION	GROUP	SCENARIO	SEASON	SOURCE	DIRECTION	MONITORED ELEMENT	RATEA (MVA)	RATEB(MVA)	TDF	TC%LOADING (% MVA)	CONTINGENCY
FDNS	09ALL	3	16WP	G15_042	FROM->TO	DIXONCO 230.00 - TWIN CHURCH 230KV CKT 1	320	320	0.33305	100.6891	GEN652353 2-GR PRAIRIEG 0.6900
FDNS	09ALL	3	16WP	G15_042	FROM->TO	DIXONCO 230.00 - TWIN CHURCH 230KV CKT 1	320	320	0.33305	100.665	GEN659118 1-LARAMIE RIVER UNIT1
FDNS	09ALL	3	20L	G15_042	FROM->TO	DIXONCO 230.00 - TWIN CHURCH 230KV CKT 1	320	320	0.33475	100.6612	GR ISLD-LNX3345.00 - HOLT.CO3 345.00 345KV CKT 1
FDNS	09ALL	3	20WP	G15_042	FROM->TO	DIXONCO 230.00 - TWIN CHURCH 230KV CKT 1	320	320	0.33361	100.6393	GEN501801 1-DOLET HILLS UNIT1
FDNS	09ALL	3	17G	G15_042	FROM->TO	DIXONCO 230.00 - TWIN CHURCH 230KV CKT 1	320	320	0.33311	100.617	GEN337911 1-ARKANSAS NUCLEAR ONE UNIT #2
FDNS	09ALL	3	20L	G15_042	FROM->TO	DIXONCO 230.00 - TWIN CHURCH 230KV CKT 1	320	320	0.33283	100.6164	GEN635214 4-NEAL UNIT 4
FDNS	09ALL	3	16WP	G15_042	FROM->TO	DIXONCO 230.00 - TWIN CHURCH 230KV CKT 1	320	320	0.33079	100.6035	SIOUXCY-LNX3345.00 - SPLIT ROCK 345KV CKT 1
FDNS	09ALL	3	20L	G15_042	FROM->TO	DIXONCO 230.00 - TWIN CHURCH 230KV CKT 1	320	320	0.33475	100.597	GR ISLD-LNX3345.00 - GRAND ISLAND 345KV CKT Z
FDNS	09ALL	3	17G	G15_042	FROM->TO	DIXONCO 230.00 - TWIN CHURCH 230KV CKT 1	320	320	0.33188	100.5905	ANITA TAP POINT TO CRESTON AND DENISON - EXIRA 161KV CKT 1
FDNS	09ALL	3	17G	G15_042	FROM->TO	DIXONCO 230.00 - TWIN CHURCH 230KV CKT 1	320	320	0.33421	100.5727	P12:115:NPPD:1163B:NELIGH 7:NORFK.N7:BTB
FDNS	09ALL	3	17G	G15_042	FROM->TO	DIXONCO 230.00 - TWIN CHURCH 230KV CKT 1	320	320	0.33311	100.5659	GEN640011 2-GERALD GENTLEMAN STATION UNIT 2
FDNS	09ALL	3	17G	G15_042	FROM->TO	DIXONCO 230.00 - TWIN CHURCH 230KV CKT 1	320	320	0.33188	100.5649	DENISON - EXIRA 161KV CKT 1
FDNS	09ALL	3	17G	G15_042	FROM->TO	DIXONCO 230.00 - TWIN CHURCH 230KV CKT 1	320	320	0.33188	100.5628	DENISON (DN KV1A) 230/161/13.8KV TRANSFORMER CKT 1
FDNS	09ALL	3	20WP	G15_042	FROM->TO	DIXONCO 230.00 - TWIN CHURCH 230KV CKT 1	320	320	0.33361	100.5464	GEN562921 1-G15054_2 0.6900
FDNS	09ALL	3	20WP	G15_042	FROM->TO	DIXONCO 230.00 - TWIN CHURCH 230KV CKT 1	320	320	0.33361	100.5453	GEN640418 1-ELKHORN RIDGE WIND
FDNS	09ALL	3	20WP	G15_042	FROM->TO	DIXONCO 230.00 - TWIN CHURCH 230KV CKT 1	320	320	0.33731	100.5162	HOSKINS (HOSKN T4) 345/115/13.8KV TRANSFORMER CKT 1
FDNS	09ALL	3	20WP	G15_042	FROM->TO	DIXONCO 230.00 - TWIN CHURCH 230KV CKT 1	320	320	0.33731	100.5162	HOSKINS (HOSKN T4) 345/115/13.8KV TRANSFORMER CKT 1
FDNS	09ALL	3	17G	G15_042	FROM->TO	DIXONCO 230.00 - TWIN CHURCH 230KV CKT 1	320	320	0.33214	100.5094	GRIMES - LEHIGH 345KV CKT 1
FDNS	09ALL	3	17G	G15_042	FROM->TO	DIXONCO 230.00 - TWIN CHURCH 230KV CKT 1	320	320	0.33311	100.4968	GEN640010 1-GERALD GENTLEMAN STATION UNIT 1
FDNS	09ALL	3	20WP	G15_042	FROM->TO	DIXONCO 230.00 - TWIN CHURCH 230KV CKT 1	320	320	0.3328	100.4866	GRIMES - LEHIGH 345KV CKT 1
FDNS	09ALL	3	17G	G15_042	FROM->TO	DIXONCO 230.00 - TWIN CHURCH 230KV CKT 1	320	320	0.33419	100.4806	BATTLE CREEK - NORTH NORFOLK 115KV CKT 1
FDNS	09ALL	3	20WP	G15_042	FROM->TO	DIXONCO 230.00 - TWIN CHURCH 230KV CKT 1	320	320	0.33472	100.4745	P12:115:NPPD:1163B:NELIGH 7:NORFK.N7:BTB
FDNS	09ALL	3	17G	G15_042	FROM->TO	DIXONCO 230.00 - TWIN CHURCH 230KV CKT 1	320	320	0.33311	100.4719	GEN336821 1-GRAND GULF UNIT
FDNS	09ALL	3	20L	G15_042	FROM->TO	DIXONCO 230.00 - TWIN CHURCH 230KV CKT 1	320	320	0.33051	100.4703	FT RANDAL - SIOUX CITY 230KV CKT 1
FDNS	09ALL	3	20WP	G15_042	FROM->TO	DIXONCO 230.00 - TWIN CHURCH 230KV CKT 1	320	320	0.33215	100.4656	SIOUX CITY (SC KV1A) 230/161/13.8KV TRANSFORMER CKT 1
FDNS	09ALL	3	20WP	G15_042	FROM->TO	DIXONCO 230.00 - TWIN CHURCH 230KV CKT 1	320	320	0.33214	100.4581	SIOUX CITY (SC KV5A) 230/161/13.8KV TRANSFORMER CKT 1
FDNS	09ALL	3	20WP	G15_042	FROM->TO	DIXONCO 230.00 - TWIN CHURCH 230KV CKT 1	320	320	0.33361	100.4553	GEN335831 1-RIVERBEND UNIT#1
FDNS	09NR	3	17G	G15_042	FROM->TO	DIXONCO 230.00 - TWIN CHURCH 230KV CKT 1	320	320	0.40596	100.4443	HOSKINS (HOSKINS T2) 345/230/13.8KV TRANSFORMER CKT 1
FDNS	09NR	3	17G	G15_042	FROM->TO	DIXONCO 230.00 - TWIN CHURCH 230KV CKT 1	320	320	0.40596	100.4443	HOSKINS (HOSKINS T2) 345/230/13.8KV TRANSFORMER CKT 1
FDNS	09ALL	3	20L	G15_042	FROM->TO	DIXONCO 230.00 - TWIN CHURCH 230KV CKT 1	320	320	0.33464	100.4408	HOSKINS - STANTON NORTH 115KV CKT 1
FDNS	09ALL	3	17G	G15_042	FROM->TO	DIXONCO 230.00 - TWIN CHURCH 230KV CKT 1	320	320	0.33311	100.4402	GEN562714 1-G15_023_4 0.6900
FDNS	09ALL	3	17G	G15_042	FROM->TO	DIXONCO 230.00 - TWIN CHURCH 230KV CKT 1	320	320	0.33311	100.4402	GEN562715 1-G15_023_5 0.6900
FDNS	09ALL	3	20WP	G15_042	FROM->TO	DIXONCO 230.00 - TWIN CHURCH 230KV CKT 1	320	320	0.33361	100.4306	GEN344225 1-1CAL G1 25.000
FDNS	09ALL	3	20WP	G15_042	FROM->TO	DIXONCO 230.00 - TWIN CHURCH 230KV CKT 1	320	320	0.33361	100.4289	GEN337910 1-ARKANSAS NUCLEAR ONE UNIT #1
FDNS	09ALL	3	17G	G15_042	FROM->TO	DIXONCO 230.00 - TWIN CHURCH 230KV CKT 1	320	320	0.33104	100.3884	SIOUX CITY - SIOUXCY-LNX3345.00 345KV CKT Z
FDNS	09ALL	3	17G	G15_042	FROM->TO	DIXONCO 230.00 - TWIN CHURCH 230KV CKT 1	320	320	0.33419	100.3881	BATTLE CREEK - COUNTY LINE 115KV CKT 1
FDNS	09ALL	3	17G	G15_042	FROM->TO	DIXONCO 230.00 - TWIN CHURCH 230KV CKT 1	320	320	0.33104	100.3876	P12:345:UMZW:# 907 #: SC2-SR IN IA. SC2-SR 345 KV LINE
FDNS	09ALL	3	17G	G15_042	FROM->TO	DIXONCO 230.00 - TWIN CHURCH 230KV CKT 1	320	320	0.33419	100.3764	ANTELOPE 7115.00 - COUNTY LINE 115KV CKT 1
FDNS	09NR	3	17G	G15_042	FROM->TO	DIXONCO 230.00 - TWIN CHURCH 230KV CKT 1	320	320	0.32794	100.3584	COLUMEAST - SHELL CREEK 345KV CKT 1
FDNS	09ALL	3	20WP	G15_042	FROM->TO	DIXONCO 230.00 - TWIN CHURCH 230KV CKT 1	320	320	0.33361	100.3187	GEN336153 1-WATERFORD UNIT#3
FDNS	09ALL	3	20WP	G15_042	FROM->TO	DIXONCO 230.00 - TWIN CHURCH 230KV CKT 1	320	320	0.33232	100.3187	TWIN CHURCH (TWNCHURCH T6) 230/115/13.8KV TRANSFORMER CKT 2
FDNS	09ALL	3	20WP	G15_042	FROM->TO	DIXONCO 230.00 - TWIN CHURCH 230KV CKT 1	320	320	0.33232	100.3187	TWIN CHURCH (TWNCHURCH T6) 230/115/13.8KV TRANSFORMER CKT 2
FDNS	09ALL	3	16WP	G15_042	FROM->TO	DIXONCO 230.00 - TWIN CHURCH 230KV CKT 1	320	320	0.3293	100.3062	PLYMOUTH - SIOUX CITY 161KV CKT 1
FDNS	09ALL	3	20WP	G15_042	FROM->TO	DIXONCO 230.00 - TWIN CHURCH 230KV CKT 1	320	320	0.3347	100.2871	BATTLE CREEK - NORTH NORFOLK 115KV CKT 1
FDNS	09ALL	3	17G	G15_042	FROM->TO	DIXONCO 230.00 - TWIN CHURCH 230KV CKT 1	320	320	0.33104	100.2786	SIOUXCY-LNX3345.00 - SPLIT ROCK 345KV CKT 1
FDNS	09ALL	3	17G	G15_042	FROM->TO	DIXONCO 230.00 - TWIN CHURCH 230KV CKT 1	320	320	0.33104	100.2786	SIOUXCY-LNX3345.00 - SPLIT ROCK 345KV CKT 1
FDNS	09ALL	3	20WP	G15_042	FROM->TO	DIXONCO 230.00 - TWIN CHURCH 230KV CKT 1	320	320	0.33361	100.2301	GEN337911 1-ARKANSAS NUCLEAR ONE UNIT #2
FDNS	09ALL	3	20L	G15_042	FROM->TO	DIXONCO 230.00 - TWIN CHURCH 230KV CKT 1	320	320	0.33464	100.1918	STANTON - STANTON NORTH 115KV CKT 1
FDNS	09ALL	3	20L	G15_042	FROM->TO	DIXONCO 230.00 - TWIN CHURCH 230KV CKT 1	320	320	0.33464	100.1516	P12:115:NPPD:1166:STNTN.N7:BEEMER 7:BTB
FDNS	09ALL	3	20WP	G15_042	FROM->TO	DIXONCO 230.00 - TWIN CHURCH 230KV CKT 1	320	320	0.32206	100.1476	BANCROFT - OAKLAND 115KV CKT 1
FDNS	09ALL	3	20WP	G15_042	FROM->TO	DIXONCO 230.00 - TWIN CHURCH 230KV CKT 1	320	320	0.33361	100.1283	GEN562714 1-G15_023_4 0.6900
FDNS	09ALL	3	20WP	G15_042	FROM->TO	DIXONCO 230.00 - TWIN CHURCH 230KV CKT 1	320	320	0.33361	100.1283	GEN562715 1-G15_023_5 0.6900
FDNS	09ALL	3	17G	G15_042	FROM->TO	DIXONCO 230.00 - TWIN CHURCH 230KV CKT 1	320	320	0.33311	100.113	GEN659118 1-LARAMIE RIVER UNIT1
FDNS	09ALL	3	20L	G15_042	FROM->TO	DIXONCO 230.00 - TWIN CHURCH 230KV CKT 1	320	320	0.33464	100.1117	BEEMER - STANTON 115KV CKT 1
FDNS	09ALL	3	17G	G15_042	FROM->TO	DIXONCO 230.00 - TWIN CHURCH 230KV CKT 1	320	320	0.33311	100.1084	GEN652353 2-GR PRAIRIEG 0.6900
FDNS	09ALL	3	20WP	G15_042	FROM->TO	DIXONCO 230.00 - TWIN CHURCH 230KV CKT 1	320	320	0.33062	100.0849	RAUN - SUB 3451 FT CAL 345KV CKT 1
FDNS	09ALL	3	20WP	G15_042	FROM->TO	DIXONCO 230.00 - TWIN CHURCH 230KV CKT 1	320	320	0.33062	100.0849	RAUN - SUB 3451 FT CAL 345KV CKT 1
FDNS	09ALL	3	16WP	G15_042	FROM->TO	DIXONCO 230.00 - TWIN CHURCH 230KV CKT 1	320	320	0.32154	100.0788	P12:115:NPPD:1193:OAKLAND7:EMERSON7:BTB
FDNS	09ALL	3	20WP	G15_042	FROM->TO	DIXONCO 230.00 - TWIN CHURCH 230KV CKT 1	320	320	0.33361	100.0705	GEN336821 1-GRAND GULF UNIT
FDNS	09ALL	3	20L	G15_042	FROM->TO	DIXONCO 230.00 - TWIN CHURCH 230KV CKT 1	320	320	0.33283	100.0704	GEN635213 3-NEAL UNIT 3
FDNS	09ALL	3	20WP	G15_042	FROM->TO	DIXONCO 230.00 - TWIN CHURCH 230KV CKT 1	320	320	0.3347	100.0589	BATTLE CREEK - COUNTY LINE 115KV CKT 1
FDNS	09ALL	3	16WP	G15_042	FROM->TO	DIXONCO 230.00 - TWIN CHURCH 230KV CKT 1	320	320	0.32154	100.0571	BANCROFT - EMERSON 115KV CKT 1
FDNS	09ALL	3	20WP	G15_042	FROM->TO	DIXONCO 230.00 - TWIN CHURCH 230KV CKT 1	320	320	0.3347	100.0493	ANTELOPE 7115.00 - COUNTY LINE 115KV CKT 1
FDNS	09ALL	3	16WP	G15_042	FROM->TO	DIXONCO 230.00 - TWIN CHURCH 230KV CKT 1	320	320	0.36725	100.0491	BELDEN 4 230.00 (BELDEN T1) 230/115/13.8KV TRANSFORMER CKT 1
FDNS	09ALL	3	16WP	G15_042	FROM->TO	DIXONCO 230.00 - TWIN CHURCH 230KV CKT 1	320	320	0.33086	100	EAGLE 4 230.00 - SIOUX CITY 230KV CKT 1
FDNS	09ALL	3	20L	G15_042	FROM->TO	DIXONCO 230.00 - TWIN CHURCH 230KV CKT 1	320	320	0.34288	100	HOSKINS (HOSKINS T1) 230/115/13.8KV TRANSFORMER CKT 1
FDNS	09ALL	3	20L	G15_042	FROM->TO	DIXONCO 230.00 - TWIN CHURCH 230KV CKT 1	320	320	0.34288	100	HOSKINS (HOSKINS T1) 230/115/13.8KV TRANSFORMER CKT 1
FDNS	09ALL	3	20L	G15_042	FROM->TO	DIXONCO 230.00 - TWIN CHURCH 230KV CKT 1	320	320	0.33386	100	UTICA JCT - VFODNES 230KV CKT 1
FDNS	09ALL	3	20WP	G15_042	FROM->TO	DIXONCO 230.00 - TWIN CHURCH 230KV CKT 1	320	320	0.33361	100	GEN640011 2-GERALD GENTLEMAN STATION UNIT 2
FDNS	09ALL	3	25SP	G15_042	FROM->TO	DIXONCO 230.00 - TWIN CHURCH 230KV CKT 1	320	320	0.34423	100	HOSKINS - SHELL CREEK 345KV CKT 1
FDNS	09ALL	3	17G	G15_042	FROM->TO	DIXONCO 230.00 - TWIN CHURCH 230KV CKT 1	320	320	0.3305	99.9	TWIN CHURCH (TWNCHURCH T4) 230/115/13.8KV TRANSFORMER CKT 1
FDNS	09ALL	3	17G	G15_042	FROM->TO	DIXONCO 230.00 - TWIN CHURCH 230KV CKT 1	320	320	0.3305	99.9	TWIN CHURCH (TWNCHURCH T4) 230/115/13.8KV TRANSFORMER CKT 1
FDNS	09ALL	3	20L	G15_042	FROM->TO	DIXONCO 230.00 - TWIN CHURCH 230KV CKT 1	320	320	0.33464	99.9	BEEMER - WEST POINT 115KV CKT 1
FDNS	09ALL	3	20WP	G15_042	FROM->TO	DIXONCO 230.00 - TWIN CHURCH 230KV CKT 1	320	320	0.33361	99.9	GEN640010 1-GERALD GENTLEMAN STATION UNIT 1
FDNS	09ALL	3	20WP	G15_042	FROM->TO	DIXONCO 230.00 - TWIN CHURCH 230KV CKT 1	320	320	0.33244	99.9	ANITA TAP POINT TO CRESTON AND DENISON - EXIRA 161KV CKT 1
FDNS	09ALL	3	20WP	G15_042	FROM->TO	DIXONCO 230.00 - TWIN CHURCH 230KV CKT 1	320	320	0.33125	99.9	P12:345:UMZW:# 907 #: SC2-SR IN IA. SC2-SR 345 KV LINE
FDNS	09ALL	3	20WP	G15_042	FROM->TO	DIXONCO 230.00 - TWIN CHURCH 230KV CKT 1	320	320	0.33125	99.9	SIOUX CITY - SIOUXCY-LNX3345.00 345KV CKT Z
FDNS	09ALL	3	16WP	G15_042	FROM->TO	DIXONCO 230.00 - TWIN CHURCH 230KV CKT 1	320	320	0.33305	99.8	GEN563113 1-G15076_4 0.6500
FDNS	09ALL	3	16WP	G15_042	FROM->TO	DIXONCO 230.00 - TWIN CHURCH 230KV CKT 1	320	320	0.33305	99.8	GEN563114 1-G15076_5 0.6500

SOLUTION	GROUP	SCENARIO	SEASON	SOURCE	DIRECTION	MONITORED ELEMENT	RATEA (MVA)	RATEB(MVA)	TDF	TC%LOADING (% MVA)	CONTINGENCY
FDNS	09ALL	3	16WP	G15_042	FROM->TO	DIXONCO 230.00 - TWIN CHURCH 230KV CKT 1	320	320	0.33045	99.8	TWIN CHURCH (TWNCHURCH T4) 230/115/13.8KV TRANSFORMER CKT 1
FDNS	09ALL	3	16WP	G15_042	FROM->TO	DIXONCO 230.00 - TWIN CHURCH 230KV CKT 1	320	320	0.33045	99.8	TWIN CHURCH (TWNCHURCH T4) 230/115/13.8KV TRANSFORMER CKT 1
FDNS	09ALL	3	17G	G15_042	FROM->TO	DIXONCO 230.00 - TWIN CHURCH 230KV CKT 1	320	320	0.33102	99.8	EAGLE 4 230.00 - SIOUX CITY 230KV CKT 1
FDNS	09ALL	3	20L	G15_042	FROM->TO	DIXONCO 230.00 - TWIN CHURCH 230KV CKT 1	320	320	0.33385	99.8	COOPER - MOORE 345KV CKT 1
FDNS	09ALL	3	20L	G15_042	FROM->TO	DIXONCO 230.00 - TWIN CHURCH 230KV CKT 1	320	320	0.33347	99.8	GAVINS POINT - SPIRIT MOUND 115KV CKT 1
FDNS	09ALL	3	20L	G15_042	FROM->TO	DIXONCO 230.00 - TWIN CHURCH 230KV CKT 1	320	320	0.33283	99.8	SHERBURNE CO 345/24.0KV TRANSFORMER CKT 1
FDNS	09ALL	3	20WP	G15_042	FROM->TO	DIXONCO 230.00 - TWIN CHURCH 230KV CKT 1	320	320	0.33361	99.8	GEN652353 2-GR PRAIRIEG 0.6900
FDNS	09ALL	3	20WP	G15_042	FROM->TO	DIXONCO 230.00 - TWIN CHURCH 230KV CKT 1	320	320	0.33361	99.8	GEN659118 1-LARAMIE RIVER UNIT1
FDNS	09ALL	3	20WP	G15_042	FROM->TO	DIXONCO 230.00 - TWIN CHURCH 230KV CKT 1	320	320	0.33125	99.8	SIOUXCY-LNX3345.00 - SPLIT ROCK 345KV CKT 1
FDNS	09ALL	3	20WP	G15_042	FROM->TO	DIXONCO 230.00 - TWIN CHURCH 230KV CKT 1	320	320	0.33125	99.8	SIOUXCY-LNX3345.00 - SPLIT ROCK 345KV CKT 1
FDNS	09ALL	3	16WP	G15_042	FROM->TO	DIXONCO 230.00 - TWIN CHURCH 230KV CKT 1	320	320	0.33305	99.7	GEN562438 1-G13-032 0.6900
FDNS	09ALL	3	16WP	G15_042	FROM->TO	DIXONCO 230.00 - TWIN CHURCH 230KV CKT 1	320	320	0.33305	99.7	GEN562673 1-G15_007_3 0.6900
FDNS	09ALL	3	17G	G15_042	FROM->TO	DIXONCO 230.00 - TWIN CHURCH 230KV CKT 1	320	320	0.32914	99.7	PLYMOUTH - SIOUX CITY 161KV CKT 1
FDNS	09NR	3	17G	G15_042	FROM->TO	DIXONCO 230.00 - TWIN CHURCH 230KV CKT 1	320	320	0.32053	99.7	FT RANDAL - SIOUX CITY 230KV CKT 1
FDNS	09ALL	3	20L	G15_042	FROM->TO	DIXONCO 230.00 - TWIN CHURCH 230KV CKT 1	320	320	0.33461	99.7	P12:115:NPPD:1161:OAKLAND7:BEEMER 7:BTB
FDNS	09ALL	3	20L	G15_042	FROM->TO	DIXONCO 230.00 - TWIN CHURCH 230KV CKT 1	320	320	0.33317	99.7	GRAND ISLAND - MCCOOL 345KV CKT 1
FDNS	09ALL	3	20L	G15_042	FROM->TO	DIXONCO 230.00 - TWIN CHURCH 230KV CKT 1	320	320	0.33283	99.7	GEN600002 3-SHERBURNE CNTY G3
FDNS	09ALL	3	17G	G15_042	FROM->TO	DIXONCO 230.00 - TWIN CHURCH 230KV CKT 1	320	320	0.32156	99.6	BANCROFT - OAKLAND 115KV CKT 1
FDNS	09ALL	3	20L	G15_042	FROM->TO	DIXONCO 230.00 - TWIN CHURCH 230KV CKT 1	320	320	0.33367	99.6	NAPA JCT7 115.00 - UTICA 115KV CKT 1
FDNS	09ALL	3	20L	G15_042	FROM->TO	DIXONCO 230.00 - TWIN CHURCH 230KV CKT 1	320	320	0.33367	99.6	NAPA JCT7 115.00 - UTICA 115KV CKT 1
FDNS	09ALL	3	20L	G15_042	FROM->TO	DIXONCO 230.00 - TWIN CHURCH 230KV CKT 1	320	320	0.33367	99.6	NAPA JCT7 115.00 - YANKON JCT 115KV CKT 1
FDNS	09ALL	3	20L	G15_042	FROM->TO	DIXONCO 230.00 - TWIN CHURCH 230KV CKT 1	320	320	0.33367	99.6	NAPA JCT7 115.00 - YANKON JCT 115KV CKT 1
FDNS	09ALL	3	20L	G15_042	FROM->TO	DIXONCO 230.00 - TWIN CHURCH 230KV CKT 1	320	320	0.33367	99.6	P12:115:UMZW:# 1910 #: YJ IN SD. YJ-UJ LINE FAULT
FDNS	09ALL	3	20L	G15_042	FROM->TO	DIXONCO 230.00 - TWIN CHURCH 230KV CKT 1	320	320	0.33314	99.6	MCCOOL - MOORE 345KV CKT 1
FDNS	09ALL	3	17G	G15_042	FROM->TO	DIXONCO 230.00 - TWIN CHURCH 230KV CKT 1	320	320	0.32978	99.5	RAUN - SUB 3451 FT CAL 345KV CKT 1
FDNS	09ALL	3	17G	G15_042	FROM->TO	DIXONCO 230.00 - TWIN CHURCH 230KV CKT 1	320	320	0.32978	99.5	RAUN - SUB 3451 FT CAL 345KV CKT 1
FDNS	09NR	3	17G	G15_042	FROM->TO	DIXONCO 230.00 - TWIN CHURCH 230KV CKT 1	320	320	0.31179	99.5	RAUN - SIOUX CITY 345KV CKT 1
FDNS	09ALL	3	20L	G15_042	FROM->TO	DIXONCO 230.00 - TWIN CHURCH 230KV CKT 1	320	320	0.33461	99.5	OAKLAND - WEST POINT 115KV CKT 1
FDNS	09ALL	3	20L	G15_042	FROM->TO	DIXONCO 230.00 - TWIN CHURCH 230KV CKT 1	320	320	0.33412	99.5	MINGO - RED WILLOW 345KV CKT 1
FDNS	09ALL	3	20L	G15_042	FROM->TO	DIXONCO 230.00 - TWIN CHURCH 230KV CKT 1	320	320	0.33412	99.5	MINGO - RED WILLOW 345KV CKT 1
FDNS	09ALL	3	20L	G15_042	FROM->TO	DIXONCO 230.00 - TWIN CHURCH 230KV CKT 1	320	320	0.33287	99.5	FT RANDAL - MEADOWGROVE4230.00 230KV CKT 1
FDNS	09ALL	3	20L	G15_042	FROM->TO	DIXONCO 230.00 - TWIN CHURCH 230KV CKT 1	320	320	0.33283	99.5	BIG STONE 230/24.0KV TRANSFORMER CKT 1
FDNS	09ALL	3	20L	G15_042	FROM->TO	DIXONCO 230.00 - TWIN CHURCH 230KV CKT 1	320	320	0.33283	99.5	GEN600001 2-SHERBURNE CNTY G2
FDNS	09ALL	3	20L	G15_042	FROM->TO	DIXONCO 230.00 - TWIN CHURCH 230KV CKT 1	320	320	0.33283	99.5	GEN600005 1-MONTICELLO
FDNS	09ALL	3	20L	G15_042	FROM->TO	DIXONCO 230.00 - TWIN CHURCH 230KV CKT 1	320	320	0.33283	99.5	GEN645001 1-FORT CALHOUN 1
FDNS	09NR	3	17G	G15_042	TO->FROM	GERALD GENTLEMAN STATION - OGALLALA 230KV CKT 1	320	320	0.03931	124.6748	GERALD GENTLEMAN STATION - KEYSTONE 345KV CKT 1
FDNS	00NR	3	16WP	G15_042	TO->FROM	GERALD GENTLEMAN STATION - OGALLALA 230KV CKT 1	320	320	0.03858	119.0451	GERALD GENTLEMAN STATION - KEYSTONE 345KV CKT 1
FDNS	00NR	3	20WP	G15_042	TO->FROM	GERALD GENTLEMAN STATION - OGALLALA 230KV CKT 1	320	320	0.03943	113.4992	GERALD GENTLEMAN STATION - KEYSTONE 345KV CKT 1
FDNS	00NR	3	17SP	G15_042	TO->FROM	GRPRAR1-LNX3345.00 - GRPRAR 345KV CKT Z	720	720	0.03092	120.4019	P12:230:UMZB:# 116 #: ST IN SD. WSG-ST-VH
FDNS	00NR	3	17SP	G15_042	TO->FROM	GRPRAR1-LNX3345.00 - GRPRAR 345KV CKT Z	720	720	0.03699	120.1824	KELLY - MEADOWGROVE4230.00 230KV CKT 1
FDNS	00NR	3	17SP	G15_042	TO->FROM	GRPRAR1-LNX3345.00 - GRPRAR 345KV CKT Z	720	720	0.03212	119.5799	WATERTN-LNX3345.00 - WATERTOWN 345KV CKT Z
FDNS	00NR	3	17SP	G15_042	TO->FROM	GRPRAR1-LNX3345.00 - GRPRAR 345KV CKT Z	720	720	0.03212	119.5469	P12:345:UMZW:# 1747 #: WT2 IN SD. WT2-WHT LINE FAULT
FDNS	00NR	3	17SP	G15_042	TO->FROM	GRPRAR1-LNX3345.00 - GRPRAR 345KV CKT Z	720	720	0.03212	119.5349	WATERTN-LNX3345.00 - WHITE 345KV CKT 1
FDNS	00NR	3	17SP	G15_042	TO->FROM	GRPRAR1-LNX3345.00 - GRPRAR 345KV CKT Z	720	720	0.03129	119.4581	STORLA - WESSINGTON 230KV CKT 1
FDNS	00NR	3	17SP	G15_042	TO->FROM	GRPRAR1-LNX3345.00 - GRPRAR 345KV CKT Z	720	720	0.0328	118.7839	G09_001IST 345.00 - WATERTOWN 345KV CKT 1
FDNS	00NR	3	17SP	G15_042	TO->FROM	GRPRAR1-LNX3345.00 - GRPRAR 345KV CKT Z	720	720	0.03125	118.3592	HANLON - STORLA 230KV CKT 1
FDNS	00NR	3	17SP	G15_042	TO->FROM	GRPRAR1-LNX3345.00 - GRPRAR 345KV CKT Z	720	720	0.03081	117.7272	FT THOMPSON - LETCHER 230KV CKT 1
FDNS	00NR	3	17SP	G15_042	TO->FROM	GRPRAR1-LNX3345.00 - GRPRAR 345KV CKT Z	720	720	0.03081	117.7272	FT THOMPSON - LETCHER 230KV CKT 1
FDNS	00NR	3	17SP	G15_042	TO->FROM	GRPRAR1-LNX3345.00 - GRPRAR 345KV CKT Z	720	720	0.03311	117.3359	BUFFALO - JAMESTOWN 345KV CKT 1
FDNS	00NR	3	17SP	G15_042	TO->FROM	GRPRAR1-LNX3345.00 - GRPRAR 345KV CKT Z	720	720	0.03056	116.3154	FT RANDAL - G12_009IST 230.00 230KV CKT 1
FDNS	00NR	3	17SP	G15_042	TO->FROM	GRPRAR1-LNX3345.00 - GRPRAR 345KV CKT Z	720	720	0.03049	116.281	FT RANDAL - FT THOMPSON 230KV CKT 1
FDNS	00NR	3	17SP	G15_042	TO->FROM	GRPRAR1-LNX3345.00 - GRPRAR 345KV CKT Z	720	720	0.03049	116.281	FT RANDAL - FT THOMPSON 230KV CKT 1
FDNS	00NR	3	17SP	G15_042	TO->FROM	GRPRAR1-LNX3345.00 - GRPRAR 345KV CKT Z	720	720	0.03311	116.2451	CHISAGO COUNTY - FORBES 500KV CKT 1
FDNS	00NR	3	17SP	G15_042	TO->FROM	GRPRAR1-LNX3345.00 - GRPRAR 345KV CKT Z	720	720	0.03056	116.2018	FT THOMPSON - LAKE PLATT 230KV CKT 1
FDNS	00NR	3	17SP	G15_042	TO->FROM	GRPRAR1-LNX3345.00 - GRPRAR 345KV CKT Z	720	720	0.03056	116.2018	FT THOMPSON - LAKE PLATT 230KV CKT 1
FDNS	00NR	3	17SP	G15_042	TO->FROM	GRPRAR1-LNX3345.00 - GRPRAR 345KV CKT Z	720	720	0.0328	116.1752	G09_001IST 345.00 - GROTON 345KV CKT 1
FDNS	00NR	3	17SP	G15_042	TO->FROM	GRPRAR1-LNX3345.00 - GRPRAR 345KV CKT Z	720	720	0.04126	116.1304	NUNDRWD - WAYSIDE 230KV CKT 1
FDNS	00NR	3	17SP	G15_042	TO->FROM	GRPRAR1-LNX3345.00 - GRPRAR 345KV CKT Z	720	720	0.03056	115.8251	G12_009IST 230.00 - LAKE PLATT 230KV CKT 1
FDNS	00NR	3	17SP	G15_042	TO->FROM	GRPRAR1-LNX3345.00 - GRPRAR 345KV CKT Z	720	720	0.03311	115.7673	CENTER - JAMESTOWN 345KV CKT 1
FDNS	00NR	3	17SP	G15_042	TO->FROM	GRPRAR1-LNX3345.00 - GRPRAR 345KV CKT Z	720	720	0.03699	115.6425	FT RANDAL - MEADOWGROVE4230.00 230KV CKT 1
FDNS	00NR	3	17SP	G15_042	TO->FROM	GRPRAR1-LNX3345.00 - GRPRAR 345KV CKT Z	720	720	0.03179	115.5115	LETCHER - SIOUX FALLS 230KV CKT 1
FDNS	00NR	3	17SP	G15_042	TO->FROM	GRPRAR1-LNX3345.00 - GRPRAR 345KV CKT Z	720	720	0.03313	115.2817	GEN336821 1-GRAND GULF UNIT
FDNS	00NR	3	17SP	G15_042	TO->FROM	GRPRAR1-LNX3345.00 - GRPRAR 345KV CKT Z	720	720	0.03312	115.2469	BISON 3 345.00 - BUFFALO 345KV CKT 1
FDNS	00NR	3	17SP	G15_042	TO->FROM	GRPRAR1-LNX3345.00 - GRPRAR 345KV CKT Z	720	720	0.03313	115.1516	GEN635024 4-WALTER SCOTT UNIT 4
FDNS	00NR	3	17SP	G15_042	TO->FROM	GRPRAR1-LNX3345.00 - GRPRAR 345KV CKT Z	720	720	0.03152	115.0878	SPLIT ROCK - WHITE 345KV CKT 1
FDNS	00NR	3	17SP	G15_042	TO->FROM	GRPRAR1-LNX3345.00 - GRPRAR 345KV CKT Z	720	720	0.03152	115.0878	SPLIT ROCK - WHITE 345KV CKT 1
FDNS	00NR	3	17SP	G15_042	TO->FROM	GRPRAR1-LNX3345.00 - GRPRAR 345KV CKT Z	720	720	0.03313	114.8938	GEN344225 1-1CAL G1 25.000
FDNS	00NR	3	17SP	G15_042	TO->FROM	GRPRAR1-LNX3345.00 - GRPRAR 345KV CKT Z	720	720	0.03408	114.8176	KEYSTONE - SIDNEY1-LNX3345.00 345KV CKT 1
FDNS	00NR	3	17SP	G15_042	TO->FROM	GRPRAR1-LNX3345.00 - GRPRAR 345KV CKT Z	720	720	0.03408	114.8025	SIDNEY - SIDNEY1-LNX3345.00 345KV CKT Z
FDNS	00NR	3	17SP	G15_042	TO->FROM	GRPRAR1-LNX3345.00 - GRPRAR 345KV CKT Z	720	720	0.03313	114.7121	GEN562714 1-G15_023_4 0.6900
FDNS	00NR	3	17SP	G15_042	TO->FROM	GRPRAR1-LNX3345.00 - GRPRAR 345KV CKT Z	720	720	0.03313	114.7121	GEN562715 1-G15_023_5 0.6900
FDNS	00NR	3	17SP	G15_042	TO->FROM	GRPRAR1-LNX3345.00 - GRPRAR 345KV CKT Z	720	720	0.03313	114.6777	GEN635023 3-WALTER SCOTT UNIT 3
FDNS	00NR	3	17SP	G15_042	TO->FROM	GRPRAR1-LNX3345.00 - GRPRAR 345KV CKT Z	720	720	0.03313	114.646	GEN337911 1-ARKANSAS NUCLEAR ONE UNIT #2
FDNS	00NR	3	17SP	G15_042	TO->FROM	GRPRAR1-LNX3345.00 - GRPRAR 345KV CKT Z	720	720	0.03313	114.6162	GEN336153 1-WATERFORD UNIT#3
FDNS	00NR	3	17SP	G15_042	TO->FROM	GRPRAR1-LNX3345.00 - GRPRAR 345KV CKT Z	720	720	0.03114	114.6052	FT RANDAL - SIOUX CITY 230KV CKT 1
FDNS	00NR	3	17SP	G15_042	TO->FROM	GRPRAR1-LNX3345.00 - GRPRAR 345KV CKT Z	720	720	0.03284	114.5303	GROTON-LNX3 345.00 - LELAND1-LNX3345.00 345KV CKT 1
FDNS	00NR	3	17SP	G15_042	TO->FROM	GRPRAR1-LNX3345.00 - GRPRAR 345KV CKT Z	720	720	0.03284	114.4254	P12:345:UMZB:# 109 #: LOS GRT IN ND. LOS GRT
FDNS	00NR	3	17SP	G15_042	TO->FROM	GRPRAR1-LNX3345.00 - GRPRAR 345KV CKT Z	720	720	0.03284	114.4252	LELAND OLDS - LELAND1-LNX3345.00 345KV CKT Z
FDNS	00NR	3	17SP	G15_042	TO->FROM	GRPRAR1-LNX3345.00 - GRPRAR 345KV CKT Z	720	720	0.03284	114.4024	GROTON - GROTON-LNX3 345.00 345KV CKT Z

SOLUTION	GROUP	SCENARIO	SEASON	SOURCE	DIRECTION	MONITORED ELEMENT	RATEA (MVA)	RATEB(MVA)	TDF	TC%LOADING (% MVA)	CONTINGENCY
FDNS	00NR	3	17SP	G15_042	TO->FROM	GRPRAR1-LNX3345.00 - GRPRAR 345KV CKT Z	720	720	0.03342	114.3622	ARROWHEAD - ARROWHEAD 230 230KV CKT 1
FDNS	00NR	3	17SP	G15_042	TO->FROM	GRPRAR1-LNX3345.00 - GRPRAR 345KV CKT Z	720	720	0.03229	114.3417	HANLON - SIOUX FALLS 230KV CKT 1
FDNS	00NR	3	17SP	G15_042	TO->FROM	GRPRAR1-LNX3345.00 - GRPRAR 345KV CKT Z	720	720	0.0337	114.2948	MISSION - ST FRANCIS 115KV CKT 1
FDNS	00NR	3	17SP	G15_042	TO->FROM	GRPRAR1-LNX3345.00 - GRPRAR 345KV CKT Z	720	720	0.0337	114.2842	P12:115:NPPD:1091:VALENTN7:MISSION7:BTB
FDNS	00NR	3	17SP	G15_042	TO->FROM	GRPRAR1-LNX3345.00 - GRPRAR 345KV CKT Z	720	720	0.03313	114.2812	GEN640010 1-GERALD GENTLEMAN STATION UNIT 1
FDNS	00NR	3	17SP	G15_042	TO->FROM	GRPRAR1-LNX3345.00 - GRPRAR 345KV CKT Z	720	720	0.03313	114.2698	GEN335831 1-RIVERBEND UNIT#1
FDNS	00NR	3	17SP	G15_042	TO->FROM	GRPRAR1-LNX3345.00 - GRPRAR 345KV CKT Z	720	720	0.03313	114.1789	GEN337910 1-ARKANSAS NUCLEAR ONE UNIT #1
FDNS	00NR	3	17SP	G15_042	TO->FROM	GRPRAR1-LNX3345.00 - GRPRAR 345KV CKT Z	720	720	0.03028	114.1675	FT RANDAL - UTICA JCT 230KV CKT 1
FDNS	00NR	3	17SP	G15_042	TO->FROM	GRPRAR1-LNX3345.00 - GRPRAR 345KV CKT Z	720	720	0.0337	114.1321	HARMONY - ST FRANCIS 115KV CKT 1
FDNS	00NR	3	17SP	G15_042	TO->FROM	GRPRAR1-LNX3345.00 - GRPRAR 345KV CKT Z	720	720	0.03317	114.1027	ALEXMRES3 345.00 - BISON 3 345.00 345KV CKT 1
FDNS	00NR	3	17SP	G15_042	TO->FROM	GRPRAR1-LNX3345.00 - GRPRAR 345KV CKT Z	720	720	0.03395	114.083	HAZLETON - MITCHLCO3 345.00 345KV CKT 1
FDNS	00NR	3	17SP	G15_042	TO->FROM	GRPRAR1-LNX3345.00 - GRPRAR 345KV CKT Z	720	720	0.03043	114.0389	SIOUXCY-LNX3345.00 - SPLIT ROCK 345KV CKT 1
FDNS	00NR	3	17SP	G15_042	TO->FROM	GRPRAR1-LNX3345.00 - GRPRAR 345KV CKT Z	720	720	0.03043	114.0389	SIOUXCY-LNX3345.00 - SPLIT ROCK 345KV CKT 1
FDNS	00NR	3	17SP	G15_042	TO->FROM	GRPRAR1-LNX3345.00 - GRPRAR 345KV CKT Z	720	720	0.03312	114.0237	ELLENDALE - OAKES 230KV CKT 1
FDNS	00NR	3	17SP	G15_042	TO->FROM	GRPRAR1-LNX3345.00 - GRPRAR 345KV CKT Z	720	720	0.03312	114.0237	ELLENDALE - OAKES 230KV CKT 1
FDNS	00NR	3	17SP	G15_042	TO->FROM	GRPRAR1-LNX3345.00 - GRPRAR 345KV CKT Z	720	720	0.03043	114.0208	P12:345:UMZW:# 907 #: SC2-SR IN IA. SC2-SR 345 KV LINE
FDNS	00NR	3	17SP	G15_042	TO->FROM	GRPRAR1-LNX3345.00 - GRPRAR 345KV CKT Z	720	720	0.03313	113.989	GEN640011 2-GERALD GENTLEMAN STATION UNIT 2
FDNS	00NR	3	17SP	G15_042	TO->FROM	GRPRAR1-LNX3345.00 - GRPRAR 345KV CKT Z	720	720	0.03043	113.9704	SIOUX CITY - SIOUXCY-LNX3345.00 345KV CKT Z
FDNS	00NR	3	17SP	G15_042	TO->FROM	GRPRAR1-LNX3345.00 - GRPRAR 345KV CKT Z	720	720	0.03782	113.9615	RAUN - SUB 3451 FT CAL 345KV CKT 1
FDNS	00NR	3	17SP	G15_042	TO->FROM	GRPRAR1-LNX3345.00 - GRPRAR 345KV CKT Z	720	720	0.03782	113.9615	RAUN - SUB 3451 FT CAL 345KV CKT 1
FDNS	00NR	3	17SP	G15_042	TO->FROM	GRPRAR1-LNX3345.00 - GRPRAR 345KV CKT Z	720	720	0.03463	113.9549	FT RANDAL - SPENCER 115KV CKT 1
FDNS	00NR	3	17SP	G15_042	TO->FROM	GRPRAR1-LNX3345.00 - GRPRAR 345KV CKT Z	720	720	0.0337	113.9459	HARMONY - VALENTINE 115KV CKT 1
FDNS	00NR	3	17SP	G15_042	TO->FROM	GRPRAR1-LNX3345.00 - GRPRAR 345KV CKT Z	720	720	0.03312	113.934	FORMAN - OAKES 230KV CKT 1
FDNS	00NR	3	17SP	G15_042	TO->FROM	GRPRAR1-LNX3345.00 - GRPRAR 345KV CKT Z	720	720	0.03342	113.9305	GERALD GENTLEMAN STATION - KEYSTONE 345KV CKT 1
FDNS	00NR	3	17SP	G15_042	TO->FROM	GRPRAR1-LNX3345.00 - GRPRAR 345KV CKT Z	720	720	0.03463	113.9285	P12:115:NPPD:WAPA6:FTRANDL7:ONEILL 7:BTB
FDNS	00NR	3	17SP	G15_042	TO->FROM	GRPRAR1-LNX3345.00 - GRPRAR 345KV CKT Z	720	720	0.03463	113.9285	P12:115:UMZB:# 115 #: SE IN NE. FR-SE-ON
FDNS	00NR	3	17SP	G15_042	TO->FROM	GRPRAR1-LNX3345.00 - GRPRAR 345KV CKT Z	720	720	0.03452	113.9119	SIDNEY - STEGALL 345KV CKT 1
FDNS	00NR	3	17SP	G15_042	TO->FROM	GRPRAR1-LNX3345.00 - GRPRAR 345KV CKT Z	720	720	0.065	113.8221	DIXONCO 230.00 - HOSKINS 230KV CKT 1
FDNS	00NR	3	17SP	G15_042	TO->FROM	GRPRAR1-LNX3345.00 - GRPRAR 345KV CKT Z	720	720	0.03463	113.8071	ONEILL - SPENCER 115KV CKT 1
FDNS	00NR	3	17SP	G15_042	TO->FROM	GRPRAR1-LNX3345.00 - GRPRAR 345KV CKT Z	720	720	0.03346	113.7864	AS KING - EAU CLAIRE 345KV CKT 1
FDNS	00NR	3	17SP	G15_042	TO->FROM	GRPRAR1-LNX3345.00 - GRPRAR 345KV CKT Z	720	720	0.03301	113.7674	CARPENTER - HURON 230KV CKT 1
FDNS	00NR	3	17SP	G15_042	TO->FROM	GRPRAR1-LNX3345.00 - GRPRAR 345KV CKT Z	720	720	0.03141	113.7632	PAHOJA - SIOUX FALLS 230KV CKT 1
FDNS	00NR	3	17SP	G15_042	TO->FROM	GRPRAR1-LNX3345.00 - GRPRAR 345KV CKT Z	720	720	0.03313	113.6932	GEN337653 1-WHITE BLUFF UNIT #2
FDNS	00NR	3	17SP	G15_042	TO->FROM	GRPRAR1-LNX3345.00 - GRPRAR 345KV CKT Z	720	720	0.03313	113.6798	GEN337652 1-WHITE BLUFF UNIT #1
FDNS	00NR	3	17SP	G15_042	TO->FROM	GRPRAR1-LNX3345.00 - GRPRAR 345KV CKT Z	720	720	0.03301	113.6747	HURON - WATERTOWN 230KV CKT 2
FDNS	00NR	3	17SP	G15_042	TO->FROM	GRPRAR1-LNX3345.00 - GRPRAR 345KV CKT Z	720	720	0.03301	113.6747	HURON - WATERTOWN 230KV CKT 2
FDNS	00NR	3	17SP	G15_042	TO->FROM	GRPRAR1-LNX3345.00 - GRPRAR 345KV CKT Z	720	720	0.03313	113.6273	GEN338146 1-INDEPENDENCE UNIT #2
FDNS	00NR	3	17SP	G15_042	TO->FROM	GRPRAR1-LNX3345.00 - GRPRAR 345KV CKT Z	720	720	0.03313	113.6209	GEN338143 1-INDEPENDENCE UNIT #1
FDNS	00NR	3	17SP	G15_042	TO->FROM	GRPRAR1-LNX3345.00 - GRPRAR 345KV CKT Z	720	720	0.03301	113.6141	CARPENTER - WATERTOWN 230KV CKT 1
FDNS	00NR	3	17SP	G15_042	TO->FROM	GRPRAR1-LNX3345.00 - GRPRAR 345KV CKT Z	720	720	0.03301	113.6141	CARPENTER - WATERTOWN 230KV CKT 1
FDNS	00NR	3	17SP	G15_042	TO->FROM	GRPRAR1-LNX3345.00 - GRPRAR 345KV CKT Z	720	720	0.03359	113.5763	ARPIN B4 345.00 - EAU CLAIRE 345KV CKT 1
FDNS	00NR	3	17SP	G15_042	TO->FROM	GRPRAR1-LNX3345.00 - GRPRAR 345KV CKT Z	720	720	0.03313	113.5596	GEN501801 1-DOLET HILLS UNIT1
FDNS	00NR	3	17SP	G15_042	TO->FROM	GRPRAR1-LNX3345.00 - GRPRAR 345KV CKT Z	720	720	0.03314	113.5189	FORMAN - HANKINSON 230KV CKT 1
FDNS	00NR	3	17SP	G15_042	TO->FROM	GRPRAR1-LNX3345.00 - GRPRAR 345KV CKT Z	720	720	0.0337	113.4231	AINSWORTH - VALENTINE 115KV CKT 1
FDNS	00NR	3	17SP	G15_042	TO->FROM	GRPRAR1-LNX3345.00 - GRPRAR 345KV CKT Z	720	720	0.03129	113.3735	FT THOMPSON - WESSINGTON 230KV CKT 1
FDNS	00NR	3	17SP	G15_042	TO->FROM	GRPRAR1-LNX3345.00 - GRPRAR 345KV CKT Z	720	720	0.03129	113.3735	FT THOMPSON - WESSINGTON 230KV CKT 1
FDNS	00NR	3	17SP	G15_042	TO->FROM	GRPRAR1-LNX3345.00 - GRPRAR 345KV CKT Z	720	720	0.03141	113.3415	EAGLE 4 230.00 - PAHOJA 230KV CKT 1
FDNS	00NR	3	17SP	G15_042	TO->FROM	GRPRAR1-LNX3345.00 - GRPRAR 345KV CKT Z	720	720	0.0334	113.3331	G15094_T 345.00 - SIDNEY2-LNX3345.00 345KV CKT 1
FDNS	00NR	3	17SP	G15_042	TO->FROM	GRPRAR1-LNX3345.00 - GRPRAR 345KV CKT Z	720	720	0.03314	113.3301	CNTSHNT3 345.00 - PRAIRIE3 345.00 345KV CKT 1
FDNS	00NR	3	17SP	G15_042	TO->FROM	GRPRAR1-LNX3345.00 - GRPRAR 345KV CKT Z	720	720	0.03395	113.3217	ADAMS - MITCHLCO3 345.00 345KV CKT 1
FDNS	00NR	3	17SP	G15_042	TO->FROM	GRPRAR1-LNX3345.00 - GRPRAR 345KV CKT Z	720	720	0.0334	113.3086	SIDNEY - SIDNEY2-LNX3345.00 345KV CKT Z
FDNS	00NR	3	17SP	G15_042	TO->FROM	GRPRAR1-LNX3345.00 - GRPRAR 345KV CKT Z	720	720	0.03313	113.2754	GEN336252 1-NINEMILE POINT UNIT#5
FDNS	00NR	3	17SP	G15_042	TO->FROM	GRPRAR1-LNX3345.00 - GRPRAR 345KV CKT Z	720	720	0.03313	113.2354	GEN501813 1-RODEMACHER UNIT 3
FDNS	00NR	3	17SP	G15_042	TO->FROM	GRPRAR1-LNX3345.00 - GRPRAR 345KV CKT Z	720	720	0.03313	113.158	GEN336831 1-BAXTER WILSON SES
FDNS	00NR	3	17SP	G15_042	TO->FROM	GRPRAR1-LNX3345.00 - GRPRAR 345KV CKT Z	720	720	0.0337	113.1539	ADAMS - PLEASANT VALLEY 345KV CKT 1
FDNS	00NR	3	17SP	G15_042	TO->FROM	GRPRAR1-LNX3345.00 - GRPRAR 345KV CKT Z	720	720	0.03313	113.1467	GEN336251 1-NINEMILE POINT UNIT#4
FDNS	00NR	3	17SP	G15_042	TO->FROM	GRPRAR1-LNX3345.00 - GRPRAR 345KV CKT Z	720	720	0.03313	113.0842	GEN337041 1-GERALD ANDRUS
FDNS	00NR	3	17SP	G15_042	TO->FROM	GRPRAR1-LNX3345.00 - GRPRAR 345KV CKT Z	720	720	0.03313	113.0724	GEN344897 4-1LAB G4 20.000
FDNS	00NR	3	17SP	G15_042	TO->FROM	GRPRAR1-LNX3345.00 - GRPRAR 345KV CKT Z	720	720	0.03313	113.0695	GEN344894 1-1LAB G1 20.000
FDNS	00NR	3	17SP	G15_042	TO->FROM	GRPRAR1-LNX3345.00 - GRPRAR 345KV CKT Z	720	720	0.03313	113.0692	GEN344896 3-1LAB G3 20.000
FDNS	00NR	3	17SP	G15_042	TO->FROM	GRPRAR1-LNX3345.00 - GRPRAR 345KV CKT Z	720	720	0.03313	113.0637	GEN335206 1-NELSON UNIT 6
FDNS	00NR	3	17SP	G15_042	TO->FROM	GRPRAR1-LNX3345.00 - GRPRAR 345KV CKT Z	720	720	0.03313	113.0214	GEN344895 2-1LAB G2 20.000
FDNS	00NR	3	17SP	G15_042	TO->FROM	GRPRAR1-LNX3345.00 - GRPRAR 345KV CKT Z	720	720	0.03313	113.0093	GEN345670 1-1RUSH G1 18.000
FDNS	00NR	3	17SP	G15_042	TO->FROM	GRPRAR1-LNX3345.00 - GRPRAR 345KV CKT Z	720	720	0.03313	113.0089	GEN345671 2-1RUSH G2 18.000
FDNS	00NR	3	17SP	G15_042	TO->FROM	GRPRAR1-LNX3345.00 - GRPRAR 345KV CKT Z	720	720	0.03399	112.9343	LAKEFIELD 3 - NOBLES 345KV CKT 1
FDNS	00NR	3	17SP	G15_042	TO->FROM	GRPRAR1-LNX3345.00 - GRPRAR 345KV CKT Z	720	720	0.03313	112.9339	GEN501812 1-RODEMACHER UNIT 2
FDNS	00NR	3	17SP	G15_042	TO->FROM	GRPRAR1-LNX3345.00 - GRPRAR 345KV CKT Z	720	720	0.03313	112.9147	GEN334440 1-SABINE UNIT 4
FDNS	00NR	3	17SP	G15_042	TO->FROM	GRPRAR1-LNX3345.00 - GRPRAR 345KV CKT Z	720	720	0.0332	112.9105	ALEXMRES3 345.00 - WAITE PARK 345KV CKT 1
FDNS	00NR	3	17SP	G15_042	TO->FROM	GRPRAR1-LNX3345.00 - GRPRAR 345KV CKT Z	720	720	0.03317	112.9021	BLAIR - GRANITE FALLS 230KV CKT 1
FDNS	00NR	3	17SP	G15_042	TO->FROM	GRPRAR1-LNX3345.00 - GRPRAR 345KV CKT Z	720	720	0.03317	112.9021	BLAIR - GRANITE FALLS 230KV CKT 1
FDNS	00NR	3	17SP	G15_042	TO->FROM	GRPRAR1-LNX3345.00 - GRPRAR 345KV CKT Z	720	720	0.03313	112.8812	GEN635214 4-NEAL UNIT 4
FDNS	00NR	3	17SP	G15_042	TO->FROM	GRPRAR1-LNX3345.00 - GRPRAR 345KV CKT Z	720	720	0.03312	112.8561	CENTER - COYOTE 345KV CKT 1
FDNS	00NR	3	17SP	G15_042	TO->FROM	GRPRAR1-LNX3345.00 - GRPRAR 345KV CKT Z	720	720	0.03347	112.8263	BROOKING COUNTY - LYON COUNTY 345KV CKT 1
FDNS	00NR	3	17SP	G15_042	TO->FROM	GRPRAR1-LNX3345.00 - GRPRAR 345KV CKT Z	720	720	0.0359	112.8037	STEGALL - STEGALL TRANSFORMER 230KV CKT 1
FDNS	00NR	3	17SP	G15_042	TO->FROM	GRPRAR1-LNX3345.00 - GRPRAR 345KV CKT Z	720	720	0.03244	112.7961	MENNO JCT - TRIPP JCT 115KV CKT 1
FDNS	00NR	3	17SP	G15_042	TO->FROM	GRPRAR1-LNX3345.00 - GRPRAR 345KV CKT Z	720	720	0.03317	112.7889	GLENBORO SOUTH - RUGBY 230KV CKT 1
FDNS	00NR	3	17SP	G15_042	TO->FROM	GRPRAR1-LNX3345.00 - GRPRAR 345KV CKT Z	720	720	0.0359	112.7888	P13:230-345:NPPD:STEGALL3:KV3A
FDNS	00NR	3	17SP	G15_042	TO->FROM	GRPRAR1-LNX3345.00 - GRPRAR 345KV CKT Z	720	720	0.03313	112.7874	GEN629075 1-OTTUMWA GENERATOR FOR OTTUMWA UNIT NO 1
FDNS	00NR	3	17SP	G15_042	TO->FROM	GRPRAR1-LNX3345.00 - GRPRAR 345KV CKT Z	720	720	0.03313	112.787	GEN336191 1-LITTLE GYPSY UNIT#3

SOLUTION	GROUP	SCENARIO	SEASON	SOURCE	DIRECTION	MONITORED ELEMENT	RATEA (MVA)	RATEB(MVA)	TDF	TC%LOADING (% MVA)	CONTINGENCY
FDNS	00NR	3	17SP	G15_042	TO->FROM	GRPRAR1-LNX3345.00 - GRPRAR 345KV CKT Z	720	720	0.0359	112.781	STEGALL (SGQ KV3A) 345/230/13.8KV TRANSFORMER CKT 1
FDNS	00NR	3	17SP	G15_042	TO->FROM	GRPRAR1-LNX3345.00 - GRPRAR 345KV CKT Z	720	720	0.03319	112.7418	HANKINSON - WAHPETON 230KV CKT 1
FDNS	00NR	3	17SP	G15_042	TO->FROM	GRPRAR1-LNX3345.00 - GRPRAR 345KV CKT Z	720	720	0.03313	112.7369	GEN338388 1-1PLUM PT U1 23.000
FDNS	00NR	3	17SP	G15_042	TO->FROM	GRPRAR1-LNX3345.00 - GRPRAR 345KV CKT Z	720	720	0.03313	112.7133	P12:115:UMZW:# 162 #: NEL IN ND. FAULT ON ML-NEL-MX-GA 115 KV
FDNS	00NR	3	17SP	G15_042	TO->FROM	GRPRAR1-LNX3345.00 - GRPRAR 345KV CKT Z	720	720	0.03313	112.7108	GEN336801 1-BAXTER WILSON UNIT #1
FDNS	00NR	3	17SP	G15_042	TO->FROM	GRPRAR1-LNX3345.00 - GRPRAR 345KV CKT Z	720	720	0.03772	112.6987	STEGALL-LNX3230.00 - WAYSIDE 230KV CKT 1
FDNS	00NR	3	17SP	G15_042	TO->FROM	GRPRAR1-LNX3345.00 - GRPRAR 345KV CKT Z	720	720	0.03313	112.6967	GEN335614 1-WILLOW GLENN UNIT#4
FDNS	00NR	3	17SP	G15_042	TO->FROM	GRPRAR1-LNX3345.00 - GRPRAR 345KV CKT Z	720	720	0.03376	112.6915	KOSSUTH 3 345.00 - OBRIEN 3 345.00 345KV CKT 1
FDNS	00NR	3	17SP	G15_042	TO->FROM	GRPRAR1-LNX3345.00 - GRPRAR 345KV CKT Z	720	720	0.03772	112.6907	STEGALL - STEGALL-LNX3230.00 230KV CKT Z
FDNS	00NR	3	17SP	G15_042	TO->FROM	GRPRAR1-LNX3345.00 - GRPRAR 345KV CKT Z	720	720	0.03313	112.6866	GEN334441 1-SABINE UNIT 5
FDNS	00NR	3	17SP	G15_042	TO->FROM	GRPRAR1-LNX3345.00 - GRPRAR 345KV CKT Z	720	720	0.03313	112.6839	GEN336464 1-MICHOUD UNIT #3
FDNS	00NR	3	17SP	G15_042	TO->FROM	GRPRAR1-LNX3345.00 - GRPRAR 345KV CKT Z	720	720	0.03244	112.6802	MENNO JCT - UTICA 115KV CKT 1
FDNS	00NR	3	17SP	G15_042	TO->FROM	GRPRAR1-LNX3345.00 - GRPRAR 345KV CKT Z	720	720	0.03313	112.676	GEN563222 1-G15088_3 0.6900
FDNS	00NR	3	17SP	G15_042	TO->FROM	GRPRAR1-LNX3345.00 - GRPRAR 345KV CKT Z	720	720	0.03376	112.6699	KOSSUTH 3 345.00 - WEBSTER 345KV CKT 1
FDNS	00NR	3	17SP	G15_042	TO->FROM	GRPRAR1-LNX3345.00 - GRPRAR 345KV CKT Z	720	720	0.03313	112.6698	GEN335204 1-NELSON UNIT 4
FDNS	00NR	3	17SP	G15_042	TO->FROM	GRPRAR1-LNX3345.00 - GRPRAR 345KV CKT Z	720	720	0.03952	112.6692	RAUN - SIOUX CITY 345KV CKT 1
FDNS	00NR	3	17SP	G15_042	TO->FROM	GRPRAR1-LNX3345.00 - GRPRAR 345KV CKT Z	720	720	0.03952	112.6692	RAUN - SIOUX CITY 345KV CKT 1
FDNS	00NR	3	17SP	G15_042	TO->FROM	GRPRAR1-LNX3345.00 - GRPRAR 345KV CKT Z	720	720	0.03313	112.656	GARRISON - JAMES TOWN 230KV CKT 1
FDNS	00NR	3	17SP	G15_042	TO->FROM	GRPRAR1-LNX3345.00 - GRPRAR 345KV CKT Z	720	720	0.03354	112.635	BYRON - NORTH ROCHESTER 345KV CKT 1
FDNS	00NR	3	17SP	G15_042	TO->FROM	GRPRAR1-LNX3345.00 - GRPRAR 345KV CKT Z	720	720	0.0346	112.6227	GRIMES - LEHIGH 345KV CKT 1
FDNS	00NR	3	17SP	G15_042	TO->FROM	GRPRAR1-LNX3345.00 - GRPRAR 345KV CKT Z	720	720	0.03244	112.6105	P12:115:UMZZ:# 237 #: MEN IN SD. MENNO JUNCTION IS A TAP (UJ-MEN-TP).
FDNS	00NR	3	17SP	G15_042	TO->FROM	GRPRAR1-LNX3345.00 - GRPRAR 345KV CKT Z	720	720	0.03313	112.5461	GEN334433 1-SABINE UNIT 3
FDNS	00NR	3	17SP	G15_042	TO->FROM	GRPRAR1-LNX3345.00 - GRPRAR 345KV CKT Z	720	720	0.03313	112.5455	GEN635213 3-NEAL UNIT 3
FDNS	00NR	3	17SP	G15_042	TO->FROM	GRPRAR1-LNX3345.00 - GRPRAR 345KV CKT Z	720	720	0.03322	112.5156	APPLEDORN 4 230.00 - WATERTOWN 230KV CKT 1
FDNS	00NR	3	17SP	G15_042	TO->FROM	GRPRAR1-LNX3345.00 - GRPRAR 345KV CKT Z	720	720	0.03322	112.5156	APPLEDORN 4 230.00 - WATERTOWN 230KV CKT 1
FDNS	00NR	3	17SP	G15_042	TO->FROM	GRPRAR1-LNX3345.00 - GRPRAR 345KV CKT Z	720	720	0.03313	112.491	GEN336222 1-LITTLE GYPSY UNIT#2
FDNS	00NR	3	17SP	G15_042	TO->FROM	GRPRAR1-LNX3345.00 - GRPRAR 345KV CKT Z	720	720	0.03313	112.4807	GEN303007 1-1BC2 U2
FDNS	00NR	3	17SP	G15_042	TO->FROM	GRPRAR1-LNX3345.00 - GRPRAR 345KV CKT Z	720	720	0.03313	112.4751	GEN303006 1-1BC2 U1
FDNS	00NR	3	17SP	G15_042	TO->FROM	GRPRAR1-LNX3345.00 - GRPRAR 345KV CKT Z	720	720	0.03313	112.465	FARGO - JAMES TOWN 230KV CKT 1
FDNS	00NR	3	17SP	G15_042	TO->FROM	GRPRAR1-LNX3345.00 - GRPRAR 345KV CKT Z	720	720	0.03313	112.453	GEN640009 1-COOPER NUCLEAR STATION
FDNS	00NR	3	17SP	G15_042	TO->FROM	GRPRAR1-LNX3345.00 - GRPRAR 345KV CKT Z	720	720	0.03328	112.4503	NORTH ROCHESTER - PRAIRIE ISLAND 345KV CKT 1
FDNS	00NR	3	17SP	G15_042	TO->FROM	GRPRAR1-LNX3345.00 - GRPRAR 345KV CKT Z	720	720	0.0334	112.4448	G15094_T 345.00 - LARAMIE RIVER 345KV CKT 1
FDNS	00NR	3	17SP	G15_042	TO->FROM	GRPRAR1-LNX3345.00 - GRPRAR 345KV CKT Z	720	720	0.03313	112.4425	P13:230:UMZW:# 2218 #: FP IN MT. LOSS OF TRANSFORMER (AT2).
FDNS	00NR	3	17SP	G15_042	TO->FROM	GRPRAR1-LNX3345.00 - GRPRAR 345KV CKT Z	720	720	0.03313	112.4408	FARGO - JAMES TOWN 230KV CKT 2
FDNS	00NR	3	17SP	G15_042	TO->FROM	GRPRAR1-LNX3345.00 - GRPRAR 345KV CKT Z	720	720	0.03322	112.4379	APPLEDORN 4 230.00 - GRANITE FALLS 230KV CKT 1
FDNS	00NR	3	17SP	G15_042	TO->FROM	GRPRAR1-LNX3345.00 - GRPRAR 345KV CKT Z	720	720	0.03322	112.4379	APPLEDORN 4 230.00 - GRANITE FALLS 230KV CKT 1
FDNS	00NR	3	17SP	G15_042	TO->FROM	GRPRAR1-LNX3345.00 - GRPRAR 345KV CKT Z	720	720	0.03313	112.4296	GEN336152 1-WATERFORD UNIT#2
FDNS	00NR	3	17SP	G15_042	TO->FROM	GRPRAR1-LNX3345.00 - GRPRAR 345KV CKT Z	720	720	0.03313	112.4293	GEN336151 1-WATERFORD UNIT#1
FDNS	00NR	3	17SP	G15_042	TO->FROM	GRPRAR1-LNX3345.00 - GRPRAR 345KV CKT Z	720	720	0.03317	112.4152	FERGSFL4 230.00 - WAHPETON 230KV CKT 1
FDNS	00NR	3	17SP	G15_042	TO->FROM	GRPRAR1-LNX3345.00 - GRPRAR 345KV CKT Z	720	720	0.03313	112.4095	GEN303008 1-1BC2 U3
FDNS	00NR	3	17SP	G15_042	TO->FROM	GRPRAR1-LNX3345.00 - GRPRAR 345KV CKT Z	720	720	0.03313	112.4049	GEN336170 1-GULF OXY U4
FDNS	00NR	3	17SP	G15_042	TO->FROM	GRPRAR1-LNX3345.00 - GRPRAR 345KV CKT Z	720	720	0.03354	112.3877	BYRON - PLEASANT VALLEY 345KV CKT 1
FDNS	00NR	3	17SP	G15_042	TO->FROM	GRPRAR1-LNX3345.00 - GRPRAR 345KV CKT Z	720	720	0.03312	112.3838	BISMARK - JAMES TOWN 230KV CKT 1
FDNS	00NR	3	17SP	G15_042	TO->FROM	GRPRAR1-LNX3345.00 - GRPRAR 345KV CKT Z	720	720	0.03313	112.3816	GEN641089 2-ENERGY CENTER 2
FDNS	00NR	3	17SP	G15_042	TO->FROM	GRPRAR1-LNX3345.00 - GRPRAR 345KV CKT Z	720	720	0.03543	112.3792	BLOOMFIELD - CREIGHTON 115KV CKT 1
FDNS	00NR	3	17SP	G15_042	TO->FROM	GRPRAR1-LNX3345.00 - GRPRAR 345KV CKT Z	720	720	0.0336	112.3791	P13:230-345:NPPD:SIDNEY 3:KV2A
FDNS	00NR	3	17SP	G15_042	TO->FROM	GRPRAR1-LNX3345.00 - GRPRAR 345KV CKT Z	720	720	0.0336	112.379	SIDNEY (SDQ KV2A) 345/230/13.8KV TRANSFORMER CKT 1
FDNS	00NR	3	17SP	G15_042	TO->FROM	GRPRAR1-LNX3345.00 - GRPRAR 345KV CKT Z	720	720	0.03362	112.3785	P13:115-230:TSGT:SIDNEY-KV1A
FDNS	00NR	3	17SP	G15_042	TO->FROM	GRPRAR1-LNX3345.00 - GRPRAR 345KV CKT Z	720	720	0.0336	112.3768	SIDNEY - SIDNEY TRANSFORMER 230KV CKT 1
FDNS	00NR	3	17SP	G15_042	TO->FROM	GRPRAR1-LNX3345.00 - GRPRAR 345KV CKT Z	720	720	0.03312	112.3733	BISMARK - WEBER 230KV CKT 1
FDNS	00NR	3	17SP	G15_042	TO->FROM	GRPRAR1-LNX3345.00 - GRPRAR 345KV CKT Z	720	720	0.03228	112.366	LAKEFIELD 3 - LKFLDXL3 345KV CKT 1
FDNS	00NR	3	17SP	G15_042	TO->FROM	GRPRAR1-LNX3345.00 - GRPRAR 345KV CKT Z	720	720	0.03312	112.3586	JAMES TOWN - WEBER 230KV CKT 1
FDNS	00NR	3	17SP	G15_042	TO->FROM	GRPRAR1-LNX3345.00 - GRPRAR 345KV CKT Z	720	720	0.03312	112.3248	ELM CREEK - MONTICELLO 345KV CKT 1
FDNS	00NR	3	17SP	G15_042	TO->FROM	GRPRAR1-LNX3345.00 - GRPRAR 345KV CKT Z	720	720	0.03313	112.3222	GEN562596 1-G14_059_3 0.6900
FDNS	00NR	3	17SP	G15_042	TO->FROM	GRPRAR1-LNX3345.00 - GRPRAR 345KV CKT Z	720	720	0.03543	112.2986	BLOOMFIELD - GAVINS POINT 115KV CKT 1
FDNS	00NR	3	17SP	G15_042	TO->FROM	GRPRAR1-LNX3345.00 - GRPRAR 345KV CKT Z	720	720	0.03313	112.2966	GEN501811 1-RODEMACHER UNIT 1
FDNS	00NR	3	17SP	G15_042	TO->FROM	GRPRAR1-LNX3345.00 - GRPRAR 345KV CKT Z	720	720	0.03325	112.2952	ARKANSAS NUCLEAR ONE - FT SMITH 500KV CKT 1
FDNS	00NR	3	17SP	G15_042	TO->FROM	GRPRAR1-LNX3345.00 - GRPRAR 345KV CKT Z	720	720	0.03325	112.2952	ARKANSAS NUCLEAR ONE - FT SMITH 500KV CKT 1
FDNS	00NR	3	17SP	G15_042	TO->FROM	GRPRAR1-LNX3345.00 - GRPRAR 345KV CKT Z	720	720	0.03297	112.2893	MT VERN - STORLA 115KV CKT 1
FDNS	00NR	3	17SP	G15_042	TO->FROM	GRPRAR1-LNX3345.00 - GRPRAR 345KV CKT Z	720	720	0.03315	112.2818	AUDUBON - SHEYNNE 230KV CKT 1
FDNS	00NR	3	17SP	G15_042	TO->FROM	GRPRAR1-LNX3345.00 - GRPRAR 345KV CKT Z	720	720	0.03316	112.2707	FERGSFL4 230.00 - GRE-SILVRLK4230.00 230KV CKT 1
FDNS	00NR	3	17SP	G15_042	TO->FROM	GRPRAR1-LNX3345.00 - GRPRAR 345KV CKT Z	720	720	0.03313	112.2673	PRAIRIE ISLAND 345/20.0KV TRANSFORMER CKT 1
FDNS	00NR	3	17SP	G15_042	TO->FROM	GRPRAR1-LNX3345.00 - GRPRAR 345KV CKT Z	720	720	0.03289	112.2656	FT THOMPSON - HURON 230KV CKT 1
FDNS	00NR	3	17SP	G15_042	TO->FROM	GRPRAR1-LNX3345.00 - GRPRAR 345KV CKT Z	720	720	0.03289	112.2656	FT THOMPSON - HURON 230KV CKT 1
FDNS	00NR	3	17SP	G15_042	TO->FROM	GRPRAR1-LNX3345.00 - GRPRAR 345KV CKT Z	720	720	0.03289	112.2656	FT THOMPSON - HURON 230KV CKT 2
FDNS	00NR	3	17SP	G15_042	TO->FROM	GRPRAR1-LNX3345.00 - GRPRAR 345KV CKT Z	720	720	0.03289	112.2656	FT THOMPSON - HURON 230KV CKT 2
FDNS	00NR	3	17SP	G15_042	TO->FROM	GRPRAR1-LNX3345.00 - GRPRAR 345KV CKT Z	720	720	0.03313	112.2649	PRAIRIE ISLAND 345/20.0KV TRANSFORMER CKT 2
FDNS	00NR	3	17SP	G15_042	TO->FROM	GRPRAR1-LNX3345.00 - GRPRAR 345KV CKT Z	720	720	0.03313	112.2641	BALTA - RAMSEY 230KV CKT 1
FDNS	00NR	3	17SP	G15_042	TO->FROM	GRPRAR1-LNX3345.00 - GRPRAR 345KV CKT Z	720	720	0.03303	112.257	DKSN_CO5 161.00 - TRIBOJI NO1 + NO2 161KV CKT 1
FDNS	00NR	3	17SP	G15_042	TO->FROM	GRPRAR1-LNX3345.00 - GRPRAR 345KV CKT Z	720	720	0.03313	112.2528	GEN532751 1-WOLF CREEK GENERATING STATION UNIT 1
FDNS	00NR	3	17SP	G15_042	TO->FROM	GRPRAR1-LNX3345.00 - GRPRAR 345KV CKT Z	720	720	0.03364	112.2467	P12:115:NPPD:WAPA1:CHADRON7:BOXBUTE7:BTB
FDNS	00NR	3	17SP	G15_042	TO->FROM	GRPRAR1-LNX3345.00 - GRPRAR 345KV CKT Z	720	720	0.03313	112.2339	GEN562921 1-G15054_2 0.6900
FDNS	00NR	3	17SP	G15_042	TO->FROM	GRPRAR1-LNX3345.00 - GRPRAR 345KV CKT Z	720	720	0.03343	112.2288	CHADRON - WAYSIDE 115KV CKT 1
FDNS	00NR	3	17SP	G15_042	TO->FROM	GRPRAR1-LNX3345.00 - GRPRAR 345KV CKT Z	720	720	0.03343	112.2288	P13:115-230:NPPD:WAYSIDE4:T1
FDNS	00NR	3	17SP	G15_042	TO->FROM	GRPRAR1-LNX3345.00 - GRPRAR 345KV CKT Z	720	720	0.03343	112.2279	WAYSIDE (WAYSIDE T1) 230/115/13.8KV TRANSFORMER CKT 1
FDNS	00NR	3	17SP	G15_042	TO->FROM	GRPRAR1-LNX3345.00 - GRPRAR 345KV CKT Z	720	720	0.03316	112.2269	GRE-SILVRLK4230.00 - HENNING 230KV CKT 1
FDNS	00NR	3	17SP	G15_042	TO->FROM	GRPRAR1-LNX3345.00 - GRPRAR 345KV CKT Z	720	720	0.03313	112.219	GEN334071 1-LEWIS CREEK 2
FDNS	00NR	3	17SP	G15_042	TO->FROM	GRPRAR1-LNX3345.00 - GRPRAR 345KV CKT Z	720	720	0.03314	112.2181	BIG STONE (230/115) 230/115/13.8KV TRANSFORMER CKT 1
FDNS	00NR	3	17SP	G15_042	TO->FROM	GRPRAR1-LNX3345.00 - GRPRAR 345KV CKT Z	720	720	0.03313	112.2141	GEN334070 1-LEWIS CREEK 1

SOLUTION	GROUP	SCENARIO	SEASON	SOURCE	DIRECTION	MONITORED ELEMENT	RATEA (MVA)	RATEB(MVA)	TDF	TC%LOADING (% MVA)	CONTINGENCY
FDNS	00NR	3	17SP	G15_042	TO->FROM	GRPRAR1-LNX3345.00 - GRPRAR 345KV CKT Z	720	720	0.03313	112.2137	GEN337766 1-TRACTEBEL UNIT S1
FDNS	00NR	3	17SP	G15_042	TO->FROM	GRPRAR1-LNX3345.00 - GRPRAR 345KV CKT Z	720	720	0.03382	112.2033	NOBLES - SPLIT ROCK 345KV CKT 1
FDNS	00NR	3	17SP	G15_042	TO->FROM	GRPRAR1-LNX3345.00 - GRPRAR 345KV CKT Z	720	720	0.03313	112.2001	GEN659118 1-LARAMIE RIVER UNIT1
FDNS	00NR	3	17SP	G15_042	TO->FROM	GRPRAR1-LNX3345.00 - GRPRAR 345KV CKT Z	720	720	0.03364	112.1949	CHADRON - DUNLAP 115KV CKT 1
FDNS	00NR	3	17SP	G15_042	TO->FROM	GRPRAR1-LNX3345.00 - GRPRAR 345KV CKT Z	720	720	0.03313	112.1896	PRAIRIE - WINGER 230KV CKT 1
FDNS	00NR	3	17SP	G15_042	TO->FROM	GRPRAR1-LNX3345.00 - GRPRAR 345KV CKT Z	720	720	0.03364	112.176	P12:115:NPPD:WAPA2:HEMINGF7:SNAKECK7:BTB
FDNS	00NR	3	17SP	G15_042	TO->FROM	GRPRAR1-LNX3345.00 - GRPRAR 345KV CKT Z	720	720	0.03313	112.1741	GEN501910 1-ACADIA UNIT ST1
FDNS	00NR	3	17SP	G15_042	TO->FROM	GRPRAR1-LNX3345.00 - GRPRAR 345KV CKT Z	720	720	0.03287	112.1705	HURON WEST PARK - MITCHELL NW 115KV CKT 1
FDNS	00NR	3	17SP	G15_042	TO->FROM	GRPRAR1-LNX3345.00 - GRPRAR 345KV CKT Z	720	720	0.03287	112.1705	HURON WEST PARK - MITCHELL NW 115KV CKT 1
FDNS	00NR	3	17SP	G15_042	TO->FROM	GRPRAR1-LNX3345.00 - GRPRAR 345KV CKT Z	720	720	0.03316	112.1676	HENNING - INMANN 230KV CKT 1
FDNS	00NR	3	17SP	G15_042	TO->FROM	GRPRAR1-LNX3345.00 - GRPRAR 345KV CKT Z	720	720	0.03316	112.166	LELAND OLDS - STANTON 230KV CKT 1
FDNS	00NR	3	17SP	G15_042	TO->FROM	GRPRAR1-LNX3345.00 - GRPRAR 345KV CKT Z	720	720	0.03316	112.166	LELAND OLDS - STANTON 230KV CKT 1
FDNS	00NR	3	17SP	G15_042	TO->FROM	GRPRAR1-LNX3345.00 - GRPRAR 345KV CKT Z	720	720	0.03351	112.156	PALXFRASBTHI
FDNS	00NR	3	17SP	G15_042	TO->FROM	GRPRAR1-LNX3345.00 - GRPRAR 345KV CKT Z	720	720	0.03372	112.1486	EAGLE - PHILIP 115KV CKT 1
FDNS	00NR	3	17SP	G15_042	TO->FROM	GRPRAR1-LNX3345.00 - GRPRAR 345KV CKT Z	720	720	0.0324	112.1445	FT RANDAL - WHITE SWAN 115KV CKT 1
FDNS	00NR	3	17SP	G15_042	TO->FROM	GRPRAR1-LNX3345.00 - GRPRAR 345KV CKT Z	720	720	0.03262	112.1399	CLEARWATER - ONEILL 115KV CKT 1
FDNS	00NR	3	17SP	G15_042	TO->FROM	GRPRAR1-LNX3345.00 - GRPRAR 345KV CKT Z	720	720	0.03352	112.1383	7PALM TAP 345.00 - SUB T 345KV CKT 1
FDNS	00NR	3	17SP	G15_042	TO->FROM	GRPRAR1-LNX3345.00 - GRPRAR 345KV CKT Z	720	720	0.03313	112.1341	GEN345765 H-1SIOUX 2 18.000
FDNS	00NR	3	17SP	G15_042	TO->FROM	GRPRAR1-LNX3345.00 - GRPRAR 345KV CKT Z	720	720	0.03311	112.1339	GROTON (GROTON KU2A) 345/115/13.8KV TRANSFORMER CKT 1
FDNS	00NR	3	17SP	G15_042	TO->FROM	GRPRAR1-LNX3345.00 - GRPRAR 345KV CKT Z	720	720	0.03312	112.1302	GRANT - MITCHELL 115KV CKT 1
FDNS	00NR	3	17SP	G15_042	TO->FROM	GRPRAR1-LNX3345.00 - GRPRAR 345KV CKT Z	720	720	0.03312	112.1302	GRANT - MITCHELL 115KV CKT 1
FDNS	00NR	3	17SP	G15_042	TO->FROM	GRPRAR1-LNX3345.00 - GRPRAR 345KV CKT Z	720	720	0.03313	112.1166	GEN337764 1-TRACTEBEL UNIT C1
FDNS	00NR	3	17SP	G15_042	TO->FROM	GRPRAR1-LNX3345.00 - GRPRAR 345KV CKT Z	720	720	0.03313	112.1166	GEN337765 1-TRACTEBEL UNIT C2
FDNS	00NR	3	17SP	G15_042	TO->FROM	GRPRAR1-LNX3345.00 - GRPRAR 345KV CKT Z	720	720	0.0324	112.1146	TYNDALL - WHITE SWAN 115KV CKT 1
FDNS	00NR	3	17SP	G15_042	TO->FROM	GRPRAR1-LNX3345.00 - GRPRAR 345KV CKT Z	720	720	0.03315	112.1138	AUDUBON - HUBBARD 230KV CKT 1
FDNS	00NR	3	17SP	G15_042	TO->FROM	GRPRAR1-LNX3345.00 - GRPRAR 345KV CKT Z	720	720	0.03322	112.1075	GENOA 161 - SENECA 161 161KV CKT 1
FDNS	00NR	3	17SP	G15_042	TO->FROM	GRPRAR1-LNX3345.00 - GRPRAR 345KV CKT Z	720	720	0.03316	112.1073	KARLSTAD - WINGER 230KV CKT 1
FDNS	00NR	3	17SP	G15_042	TO->FROM	GRPRAR1-LNX3345.00 - GRPRAR 345KV CKT Z	720	720	0.03313	112.1068	GEN345756 H-1SIOUX 1 18.000
FDNS	00NR	3	17SP	G15_042	TO->FROM	GRPRAR1-LNX3345.00 - GRPRAR 345KV CKT Z	720	720	0.03654	112.0968	BELDEN - HOSKINS 115KV CKT 1
FDNS	00NR	3	17SP	G15_042	TO->FROM	GRPRAR1-LNX3345.00 - GRPRAR 345KV CKT Z	720	720	0.03303	112.0953	DKSN_CO5 161.00 - LAKEFIELD 5 NO1 + NO 2 161KV CKT 1
FDNS	00NR	3	17SP	G15_042	TO->FROM	GRPRAR1-LNX3345.00 - GRPRAR 345KV CKT Z	720	720	0.0332	112.0835	NORTH LA CROSSE - NORTH ROCHESTER 345KV CKT 1
FDNS	00NR	3	17SP	G15_042	TO->FROM	GRPRAR1-LNX3345.00 - GRPRAR 345KV CKT Z	720	720	0.03313	112.0806	GEN336221 1-LITTLE GYPSY UNIT#1
FDNS	00NR	3	17SP	G15_042	TO->FROM	GRPRAR1-LNX3345.00 - GRPRAR 345KV CKT Z	720	720	0.03329	112.0805	HAMPTON CORNER - NORTH ROCHESTER 345KV CKT 1
FDNS	00NR	3	17SP	G15_042	TO->FROM	GRPRAR1-LNX3345.00 - GRPRAR 345KV CKT Z	720	720	0.03313	112.0795	GRAND GULF 500/22.0KV TRANSFORMER CKT 1
FDNS	00NR	3	17SP	G15_042	TO->FROM	GRPRAR1-LNX3345.00 - GRPRAR 345KV CKT Z	720	720	0.03227	112.0773	P12:115:UMZW:# 1910 #: YJ IN SD. YJ-UJ LINE FAULT
FDNS	00NR	3	17SP	G15_042	TO->FROM	GRPRAR1-LNX3345.00 - GRPRAR 345KV CKT Z	720	720	0.03227	112.0772	NAPA JCT7 115.00 - UTICA 115KV CKT 1
FDNS	00NR	3	17SP	G15_042	TO->FROM	GRPRAR1-LNX3345.00 - GRPRAR 345KV CKT Z	720	720	0.03227	112.0772	NAPA JCT7 115.00 - UTICA 115KV CKT 1
FDNS	00NR	3	17SP	G15_042	TO->FROM	GRPRAR1-LNX3345.00 - GRPRAR 345KV CKT Z	720	720	0.03313	112.0757	GEN636641 1-LOUISA UNIT 1
FDNS	00NR	3	17SP	G15_042	TO->FROM	GRPRAR1-LNX3345.00 - GRPRAR 345KV CKT Z	720	720	0.03372	112.0748	EAGLE - MARTIN 115KV CKT 1
FDNS	00NR	3	17SP	G15_042	TO->FROM	GRPRAR1-LNX3345.00 - GRPRAR 345KV CKT Z	720	720	0.03227	112.0741	NAPA JCT7 115.00 - YANKON JCT 115KV CKT 1
FDNS	00NR	3	17SP	G15_042	TO->FROM	GRPRAR1-LNX3345.00 - GRPRAR 345KV CKT Z	720	720	0.03227	112.0741	NAPA JCT7 115.00 - YANKON JCT 115KV CKT 1
FDNS	00NR	3	17SP	G15_042	TO->FROM	GRPRAR1-LNX3345.00 - GRPRAR 345KV CKT Z	720	720	0.03313	112.0729	GEN337757 1-DUKE HOTSPRINGS STG1
FDNS	00NR	3	17SP	G15_042	TO->FROM	GRPRAR1-LNX3345.00 - GRPRAR 345KV CKT Z	720	720	0.03313	112.0728	GEN336242 1-1NMIL ST1 18.000
FDNS	00NR	3	17SP	G15_042	TO->FROM	GRPRAR1-LNX3345.00 - GRPRAR 345KV CKT Z	720	720	0.03313	112.0679	GEN334432 1-SABINE UNIT 2
FDNS	00NR	3	17SP	G15_042	TO->FROM	GRPRAR1-LNX3345.00 - GRPRAR 345KV CKT Z	720	720	0.03313	112.0678	GEN334431 1-SABINE UNIT 1
FDNS	00NR	3	17SP	G15_042	TO->FROM	GRPRAR1-LNX3345.00 - GRPRAR 345KV CKT Z	720	720	0.03324	112.0629	FRANKS - HUBEN 345KV CKT 1
FDNS	00NR	3	17SP	G15_042	TO->FROM	GRPRAR1-LNX3345.00 - GRPRAR 345KV CKT Z	720	720	0.03364	112.0601	BOXBUTE7 115.00 - DUNLAP 115KV CKT 1
FDNS	00NR	3	17SP	G15_042	TO->FROM	GRPRAR1-LNX3345.00 - GRPRAR 345KV CKT Z	720	720	0.03393	112.0583	DENISON - SIOUX CITY 230KV CKT 1
FDNS	00NR	3	17SP	G15_042	TO->FROM	GRPRAR1-LNX3345.00 - GRPRAR 345KV CKT Z	720	720	0.03262	112.0544	P12:115:NPPD:1164:ONEILL 7:JEFFREY9:BTB
FDNS	00NR	3	17SP	G15_042	TO->FROM	GRPRAR1-LNX3345.00 - GRPRAR 345KV CKT Z	720	720	0.03313	112.048	GEN334030 1-FRONTIER UNIT 1
FDNS	00NR	3	17SP	G15_042	TO->FROM	GRPRAR1-LNX3345.00 - GRPRAR 345KV CKT Z	720	720	0.03313	112.0477	GEN334031 1-FRONTIER UNIT 2
FDNS	00NR	3	17SP	G15_042	TO->FROM	GRPRAR1-LNX3345.00 - GRPRAR 345KV CKT Z	720	720	0.03313	112.047	GEN336446 1-MICHOUD UNIT #2
FDNS	00NR	3	17SP	G15_042	TO->FROM	GRPRAR1-LNX3345.00 - GRPRAR 345KV CKT Z	720	720	0.03313	112.0469	GEN345832 1-1TS G1 13.800
FDNS	00NR	3	17SP	G15_042	TO->FROM	GRPRAR1-LNX3345.00 - GRPRAR 345KV CKT Z	720	720	0.03313	112.0465	GEN345841 2-1TS G2 13.800
FDNS	00NR	3	17SP	G15_042	TO->FROM	GRPRAR1-LNX3345.00 - GRPRAR 345KV CKT Z	720	720	0.03313	112.0336	GEN501970 1-EVANGELINE UNIT 7
FDNS	00NR	3	17SP	G15_042	TO->FROM	GRPRAR1-LNX3345.00 - GRPRAR 345KV CKT Z	720	720	0.03313	112.0251	GEN531447 1-HOLCOMB GENERATOR
FDNS	00NR	3	17SP	G15_042	TO->FROM	GRPRAR1-LNX3345.00 - GRPRAR 345KV CKT Z	720	720	0.03313	112.0148	GEN562912 1-G15053_3 0.6900
FDNS	00NR	3	17SP	G15_042	TO->FROM	GRPRAR1-LNX3345.00 - GRPRAR 345KV CKT Z	720	720	0.03313	111.9176	GEN563282 1-G15094_3 0.6900
FDNS	00NR	3	20SP	G15_042	TO->FROM	GRPRAR1-LNX3345.00 - GRPRAR 345KV CKT Z	720	720	0.03529	111.9165	KELLY - MEADOWGROVE4230.00 230KV CKT 1
FDNS	00NR	3	17SP	G15_042	TO->FROM	GRPRAR1-LNX3345.00 - GRPRAR 345KV CKT Z	720	720	0.03313	111.5569	BASE CASE
FDNS	00NR	3	17SP	G15_042	TO->FROM	GRPRAR1-LNX3345.00 - GRPRAR 345KV CKT Z	720	720	0.03271	111.191	NELIGH - PETERSBRG.N7115.00 115KV CKT 1
FDNS	00NR	3	17SP	G15_042	TO->FROM	GRPRAR1-LNX3345.00 - GRPRAR 345KV CKT Z	720	720	0.03271	111.1392	ALBION - PETERSBURG 115KV CKT 1
FDNS	00NR	3	17SP	G15_042	TO->FROM	GRPRAR1-LNX3345.00 - GRPRAR 345KV CKT Z	720	720	0.03271	111.1197	PETERSBRG.N7115.00 - PETERSBURG 115KV CKT Z1
FDNS	00NR	3	17SP	G15_042	TO->FROM	GRPRAR1-LNX3345.00 - GRPRAR 345KV CKT Z	720	720	0.03403	111.1145	103RD & ROKEBY - MOORE 345KV CKT 1
FDNS	00NR	3	17SP	G15_042	TO->FROM	GRPRAR1-LNX3345.00 - GRPRAR 345KV CKT Z	720	720	0.03403	111.1145	103RD & ROKEBY - MOORE 345KV CKT 1
FDNS	00NR	3	17SP	G15_042	TO->FROM	GRPRAR1-LNX3345.00 - GRPRAR 345KV CKT Z	720	720	0.0344	111.1106	BATTLE CREEK - COUNTY LINE 115KV CKT 1
FDNS	00NR	3	17SP	G15_042	TO->FROM	GRPRAR1-LNX3345.00 - GRPRAR 345KV CKT Z	720	720	0.03331	111.1061	FT THOMPSON - OAHE 230KV CKT 1
FDNS	00NR	3	17SP	G15_042	TO->FROM	GRPRAR1-LNX3345.00 - GRPRAR 345KV CKT Z	720	720	0.03331	111.1061	FT THOMPSON - OAHE 230KV CKT 1
FDNS	00NR	3	17SP	G15_042	TO->FROM	GRPRAR1-LNX3345.00 - GRPRAR 345KV CKT Z	720	720	0.03331	111.1061	FT THOMPSON - OAHE 230KV CKT 2
FDNS	00NR	3	17SP	G15_042	TO->FROM	GRPRAR1-LNX3345.00 - GRPRAR 345KV CKT Z	720	720	0.03331	111.1061	FT THOMPSON - OAHE 230KV CKT 2
FDNS	00NR	3	17SP	G15_042	TO->FROM	GRPRAR1-LNX3345.00 - GRPRAR 345KV CKT Z	720	720	0.03271	111.0807	P12:115:NPPD:1168B:ALBION 7:PETERSBRG.N7:BTB
FDNS	00NR	3	17SP	G15_042	TO->FROM	GRPRAR1-LNX3345.00 - GRPRAR 345KV CKT Z	720	720	0.03313	111.0804	GEN652546 1-FT RANDAL
FDNS	00NR	3	17SP	G15_042	TO->FROM	GRPRAR1-LNX3345.00 - GRPRAR 345KV CKT Z	720	720	0.0344	111.06	ANTELOPE 7115.00 - COUNTY LINE 115KV CKT 1
FDNS	00NR	3	17SP	G15_042	TO->FROM	GRPRAR1-LNX3345.00 - GRPRAR 345KV CKT Z	720	720	0.03487	111.0546	NUNDRWD - PHILIP TAP 230KV CKT 1
FDNS	00NR	3	17SP	G15_042	TO->FROM	GRPRAR1-LNX3345.00 - GRPRAR 345KV CKT Z	720	720	0.03332	111.0486	FT THOMPSON - OAHE 230KV CKT 3
FDNS	00NR	3	17SP	G15_042	TO->FROM	GRPRAR1-LNX3345.00 - GRPRAR 345KV CKT Z	720	720	0.03332	111.0486	FT THOMPSON - OAHE 230KV CKT 3
FDNS	00NR	3	17SP	G15_042	TO->FROM	GRPRAR1-LNX3345.00 - GRPRAR 345KV CKT Z	720	720	0.03332	111.0486	FT THOMPSON - OAHE 230KV CKT 4
FDNS	00NR	3	17SP	G15_042	TO->FROM	GRPRAR1-LNX3345.00 - GRPRAR 345KV CKT Z	720	720	0.03332	111.0486	FT THOMPSON - OAHE 230KV CKT 4
FDNS	00NR	3	17SP	G15_042	TO->FROM	GRPRAR1-LNX3345.00 - GRPRAR 345KV CKT Z	720	720	0.03313	111.0472	MITCHLCO3 345.00 345/34.5KV TRANSFORMER CKT 1

SOLUTION	GROUP	SCENARIO	SEASON	SOURCE	DIRECTION	MONITORED ELEMENT	RATEA (MVA)	RATEB(MVA)	TDF	TC%LOADING (% MVA)	CONTINGENCY
FDNS	00NR	3	25SP	G15_042	TO->FROM	GRPRAR1-LNX3345.00 - GRPRAR 345KV CKT Z	720	720	0.03565	111.0411	KELLY - MEADOWGROVE4230.00 230KV CKT 1
FDNS	00NR	3	17SP	G15_042	TO->FROM	GRPRAR1-LNX3345.00 - GRPRAR 345KV CKT Z	720	720	0.03313	111.0405	GEN672348 2-CORY COGEN GENERATOR 2 GT2
FDNS	00NR	3	17SP	G15_042	TO->FROM	GRPRAR1-LNX3345.00 - GRPRAR 345KV CKT Z	720	720	0.03313	111.0404	GEN672347 1-CORY COGEN GENERATOR 1 GT1
FDNS	00NR	3	17SP	G15_042	TO->FROM	GRPRAR1-LNX3345.00 - GRPRAR 345KV CKT Z	720	720	0.03313	111.0319	GEN600018 S-LS POWER STEAM
FDNS	00NR	3	17SP	G15_042	TO->FROM	GRPRAR1-LNX3345.00 - GRPRAR 345KV CKT Z	720	720	0.03328	111.0255	POST ROCK (POSTROCK T1) 345/230/13.8KV TRANSFORMER CKT 1
FDNS	00NR	3	17SP	G15_042	TO->FROM	GRPRAR1-LNX3345.00 - GRPRAR 345KV CKT Z	720	720	0.03324	111.0225	G11_051T 345.00 - WOODWARD DISTRICT EHV 345KV CKT 1
FDNS	00NR	3	17SP	G15_042	TO->FROM	GRPRAR1-LNX3345.00 - GRPRAR 345KV CKT Z	720	720	0.03313	111.0217	GEN659158 2-PIONEER G213.800
FDNS	00NR	3	17SP	G15_042	TO->FROM	GRPRAR1-LNX3345.00 - GRPRAR 345KV CKT Z	720	720	0.03313	111.0217	GEN659159 3-PIONEER G313.800
FDNS	00NR	3	17SP	G15_042	TO->FROM	GRPRAR1-LNX3345.00 - GRPRAR 345KV CKT Z	720	720	0.03313	111.0205	GEN300003 1-THOMAS HILL UNIT 3
FDNS	00NR	3	17SP	G15_042	TO->FROM	GRPRAR1-LNX3345.00 - GRPRAR 345KV CKT Z	720	720	0.03313	111.0141	GEN659156 2-LONESMCRK 2G13.800
FDNS	00NR	3	17SP	G15_042	TO->FROM	GRPRAR1-LNX3345.00 - GRPRAR 345KV CKT Z	720	720	0.03313	111.0141	GEN659157 3-LONESMCRK 3G13.800
FDNS	00NR	3	17SP	G15_042	TO->FROM	GRPRAR1-LNX3345.00 - GRPRAR 345KV CKT Z	720	720	0.03308	111.0092	G14-021T 345.00 - MULLNCR7 345.00 345KV CKT 1
FDNS	00NR	3	17SP	G15_042	TO->FROM	GRPRAR1-LNX3345.00 - GRPRAR 345KV CKT Z	720	720	0.03308	111.0092	G15-005T 345.00 - MULLNCR7 345.00 345KV CKT 1
FDNS	00NR	3	17SP	G15_042	TO->FROM	GRPRAR1-LNX3345.00 - GRPRAR 345KV CKT Z	720	720	0.03313	111.0047	GEN652548 5-FT RANDAL
FDNS	00NR	3	17SP	G15_042	TO->FROM	GRPRAR1-LNX3345.00 - GRPRAR 345KV CKT Z	720	720	0.03313	111.0047	GEN652549 7-FT RANDAL
FDNS	00NR	3	17SP	G15_042	TO->FROM	GRPRAR1-LNX3345.00 - GRPRAR 345KV CKT Z	720	720	0.03347	111.003	P12:115:UMZW:# 172 #: WI IN SD.
FDNS	00NR	3	17SP	G15_042	TO->FROM	GRPRAR1-LNX3345.00 - GRPRAR 345KV CKT Z	720	720	0.03313	110.9998	GEN590010 1-ERCOT EQUIVALENCE
FDNS	00NR	3	17SP	G15_042	TO->FROM	GRPRAR1-LNX3345.00 - GRPRAR 345KV CKT Z	720	720	0.03313	110.9992	GEN672367 1-MERIDIAN GENERATOR 1 GT1
FDNS	00NR	3	17SP	G15_042	TO->FROM	GRPRAR1-LNX3345.00 - GRPRAR 345KV CKT Z	720	720	0.03313	110.9992	GEN672368 2-MERIDIAN GENERATOR 2 GT2
FDNS	00NR	3	17SP	G15_042	TO->FROM	GRPRAR1-LNX3345.00 - GRPRAR 345KV CKT Z	720	720	0.03315	110.9957	P12:115:UMZZ:# 232 #: AB IN SD. ABERDEEN A TAP BETWEEN ELLENDALE AND ABERDEEN-SIEBRECHT.
FDNS	00NR	3	17SP	G15_042	TO->FROM	GRPRAR1-LNX3345.00 - GRPRAR 345KV CKT Z	720	720	0.0334	110.994	LARAMIE RIVER - STEGALL 345KV CKT 1
FDNS	00NR	3	17SP	G15_042	TO->FROM	GRPRAR1-LNX3345.00 - GRPRAR 345KV CKT Z	720	720	0.03313	110.9934	GEN652547 3-FT RANDAL
FDNS	00NR	3	17SP	G15_042	TO->FROM	GRPRAR1-LNX3345.00 - GRPRAR 345KV CKT Z	720	720	0.03313	110.9923	GEN600021 3-ANGUS ANSON2
FDNS	00NR	3	17SP	G15_042	TO->FROM	GRPRAR1-LNX3345.00 - GRPRAR 345KV CKT Z	720	720	0.03313	110.9894	GEN600020 2-ANGUS ANSON1
FDNS	00NR	3	17SP	G15_042	TO->FROM	GRPRAR1-LNX3345.00 - GRPRAR 345KV CKT Z	720	720	0.03313	110.9878	GEN657964 1-ASH2GEN9 0.5750
FDNS	00NR	3	17SP	G15_042	TO->FROM	GRPRAR1-LNX3345.00 - GRPRAR 345KV CKT Z	720	720	0.03313	110.9864	GEN672352 3-NIPAWIN GENERATOR 3
FDNS	00NR	3	17SP	G15_042	TO->FROM	GRPRAR1-LNX3345.00 - GRPRAR 345KV CKT Z	720	720	0.03313	110.9862	GEN672350 1-NIPAWIN GENERATOR 1
FDNS	00NR	3	17SP	G15_042	TO->FROM	GRPRAR1-LNX3345.00 - GRPRAR 345KV CKT Z	720	720	0.03313	110.9862	GEN672351 2-NIPAWIN GENERATOR 2
FDNS	00NR	3	17SP	G15_042	TO->FROM	GRPRAR1-LNX3345.00 - GRPRAR 345KV CKT Z	720	720	0.03313	110.9742	GEN590011 2-ERCOT EQUIVALENCE
FDNS	00NR	3	17SP	G15_042	TO->FROM	GRPRAR1-LNX3345.00 - GRPRAR 345KV CKT Z	720	720	0.03313	110.9728	GEN672349 3-CORY COGEN GENERATOR 3 ST
FDNS	00NR	3	17SP	G15_042	TO->FROM	GRPRAR1-LNX3345.00 - GRPRAR 345KV CKT Z	720	720	0.03313	110.9681	GEN620324 3-HOOT LAKE 3 GEN
FDNS	00NR	3	17SP	G15_042	TO->FROM	GRPRAR1-LNX3345.00 - GRPRAR 345KV CKT Z	720	720	0.03313	110.9636	EASTDC - ERCOT EQUIVALENCE 345KV CKT 1
FDNS	00NR	3	17SP	G15_042	TO->FROM	GRPRAR1-LNX3345.00 - GRPRAR 345KV CKT Z	720	720	0.03308	110.9628	G15-005T 345.00 - SIBLEY 345KV CKT 1
FDNS	00NR	3	17SP	G15_042	TO->FROM	GRPRAR1-LNX3345.00 - GRPRAR 345KV CKT Z	720	720	0.03321	110.9482	ANTELOP-LNX3345.00 - BRDLAND-LNX3345.00 345KV CKT 1
FDNS	00NR	3	17SP	G15_042	TO->FROM	GRPRAR1-LNX3345.00 - GRPRAR 345KV CKT Z	720	720	0.03313	110.9445	GEN629072 4-LANSING GENERATOR FOR UNITS NO4 EIA CODE 1
FDNS	00NR	3	17SP	G15_042	TO->FROM	GRPRAR1-LNX3345.00 - GRPRAR 345KV CKT Z	720	720	0.03313	110.9413	GEN660003 3-HURON WEST PARK
FDNS	00NR	3	17SP	G15_042	TO->FROM	GRPRAR1-LNX3345.00 - GRPRAR 345KV CKT Z	720	720	0.03313	110.936	GEN600012 2-BLACK DOG GEN 2
FDNS	00NR	3	17SP	G15_042	TO->FROM	GRPRAR1-LNX3345.00 - GRPRAR 345KV CKT Z	720	720	0.03383	110.9323	AXTELL - POST ROCK 345KV CKT 1
FDNS	00NR	3	17SP	G15_042	TO->FROM	GRPRAR1-LNX3345.00 - GRPRAR 345KV CKT Z	720	720	0.03113	110.9189	COLUMEAST - NW68TH & HOLDREGE 345KV CKT 1
FDNS	00NR	3	17SP	G15_042	TO->FROM	GRPRAR1-LNX3345.00 - GRPRAR 345KV CKT Z	720	720	0.03113	110.9189	COLUMEAST - NW68TH & HOLDREGE 345KV CKT 1
FDNS	00NR	3	17SP	G15_042	TO->FROM	GRPRAR1-LNX3345.00 - GRPRAR 345KV CKT Z	720	720	0.03193	110.9069	COOPER - MOORE 345KV CKT 1
FDNS	00NR	3	17SP	G15_042	TO->FROM	GRPRAR1-LNX3345.00 - GRPRAR 345KV CKT Z	720	720	0.03313	110.9009	GEN659290 1-EDGECOL
FDNS	00NR	3	17SP	G15_042	TO->FROM	GRPRAR1-LNX3345.00 - GRPRAR 345KV CKT Z	720	720	0.03313	110.8992	EMERY 161/18.0KV TRANSFORMER CKT 1
FDNS	00NR	3	17SP	G15_042	TO->FROM	GRPRAR1-LNX3345.00 - GRPRAR 345KV CKT Z	720	720	0.03313	110.8949	GEN652410 3-FT PECK
FDNS	00NR	3	17SP	G15_042	TO->FROM	GRPRAR1-LNX3345.00 - GRPRAR 345KV CKT Z	720	720	0.03313	110.8936	GEN672339 16-QE 16G 13.800
FDNS	00NR	3	17SP	G15_042	TO->FROM	GRPRAR1-LNX3345.00 - GRPRAR 345KV CKT Z	720	720	0.03313	110.8936	GEN672342 3-QUEEN ELIZABETH GENERATOR 3
FDNS	00NR	3	17SP	G15_042	TO->FROM	GRPRAR1-LNX3345.00 - GRPRAR 345KV CKT Z	720	720	0.03591	110.8829	MINGO - RED WILLOW 345KV CKT 1
FDNS	00NR	3	17SP	G15_042	TO->FROM	GRPRAR1-LNX3345.00 - GRPRAR 345KV CKT Z	720	720	0.03591	110.8829	MINGO - RED WILLOW 345KV CKT 1
FDNS	00NR	3	17SP	G15_042	TO->FROM	GRPRAR1-LNX3345.00 - GRPRAR 345KV CKT Z	720	720	0.03313	110.8809	GEN672393 2-NBECST2G 13.800
FDNS	00NR	3	17SP	G15_042	TO->FROM	GRPRAR1-LNX3345.00 - GRPRAR 345KV CKT Z	720	720	0.03429	110.8751	P12:115:NPPD:1163B:NELIGH 7:NORFK.N7:BTB
FDNS	00NR	3	17SP	G15_042	TO->FROM	GRPRAR1-LNX3345.00 - GRPRAR 345KV CKT Z	720	720	0.03313	110.864	GEN600046 1-MECST
FDNS	00NR	3	17SP	G15_042	TO->FROM	GRPRAR1-LNX3345.00 - GRPRAR 345KV CKT Z	720	720	0.03313	110.8527	GEN300007 1-NEW MADRID UNIT 2
FDNS	00NR	3	17SP	G15_042	TO->FROM	GRPRAR1-LNX3345.00 - GRPRAR 345KV CKT Z	720	720	0.03313	110.847	GEN300006 1-NEW MADRID UNIT 1
FDNS	00NR	3	17SP	G15_042	TO->FROM	GRPRAR1-LNX3345.00 - GRPRAR 345KV CKT Z	720	720	0.03106	110.8458	COLUMEAST - SHELL CREEK 345KV CKT 1
FDNS	00NR	3	17SP	G15_042	TO->FROM	GRPRAR1-LNX3345.00 - GRPRAR 345KV CKT Z	720	720	0.03313	110.8394	GEN600047 1-MECCT1
FDNS	00NR	3	17SP	G15_042	TO->FROM	GRPRAR1-LNX3345.00 - GRPRAR 345KV CKT Z	720	720	0.03313	110.8309	GEN652414 4-FT PECK
FDNS	00NR	3	17SP	G15_042	TO->FROM	GRPRAR1-LNX3345.00 - GRPRAR 345KV CKT Z	720	720	0.03313	110.8309	GEN652415 5-FT PECK
FDNS	00NR	3	17SP	G15_042	TO->FROM	GRPRAR1-LNX3345.00 - GRPRAR 345KV CKT Z	720	720	0.03313	110.8254	GEN600050 1-FEP
FDNS	00NR	3	17SP	G15_042	TO->FROM	GRPRAR1-LNX3345.00 - GRPRAR 345KV CKT Z	720	720	0.03313	110.8141	GEN660001 2-ABERDEEN SIEBRECHT
FDNS	00NR	3	17SP	G15_042	TO->FROM	GRPRAR1-LNX3345.00 - GRPRAR 345KV CKT Z	720	720	0.03313	110.8019	LADISH 115/13.2KV TRANSFORMER CKT 1
FDNS	00NR	3	17SP	G15_042	TO->FROM	GRPRAR1-LNX3345.00 - GRPRAR 345KV CKT Z	720	720	0.03313	110.7811	GEN652345 W-G07_023IS_2 0.6900
FDNS	00NR	3	17SP	G15_042	TO->FROM	GRPRAR1-LNX3345.00 - GRPRAR 345KV CKT Z	720	720	0.03474	110.7558	G15061_T 345.00 - SETAB 345KV CKT 1
FDNS	00NR	3	17SP	G15_042	TO->FROM	GRPRAR1-LNX3345.00 - GRPRAR 345KV CKT Z	720	720	0.03309	110.7464	BISMARK - L3 HAWDON 230KV CKT 1
FDNS	00NR	3	17SP	G15_042	TO->FROM	GRPRAR1-LNX3345.00 - GRPRAR 345KV CKT Z	720	720	0.03313	110.743	GEN 11104 1-J262_GEN 0.6000
FDNS	00NR	3	17SP	G15_042	TO->FROM	GRPRAR1-LNX3345.00 - GRPRAR 345KV CKT Z	720	720	0.03313	110.743	GEN 11108 1-J263_GEN 0.6000
FDNS	00NR	3	17SP	G15_042	TO->FROM	GRPRAR1-LNX3345.00 - GRPRAR 345KV CKT Z	720	720	0.03313	110.7356	GEN600063 1-COLVILLE GEN 1
FDNS	00NR	3	17SP	G15_042	TO->FROM	GRPRAR1-LNX3345.00 - GRPRAR 345KV CKT Z	720	720	0.03313	110.7356	GEN600064 2-COLVILLE GEN 2
FDNS	00NR	3	17SP	G15_042	TO->FROM	GRPRAR1-LNX3345.00 - GRPRAR 345KV CKT Z	720	720	0.03461	110.7246	GERALD GENTLEMAN STATION - RED WILLOW 345KV CKT 1
FDNS	00NR	3	17SP	G15_042	TO->FROM	GRPRAR1-LNX3345.00 - GRPRAR 345KV CKT Z	720	720	0.03313	110.7232	GEN600043 7-BLUE LAKE5
FDNS	00NR	3	17SP	G15_042	TO->FROM	GRPRAR1-LNX3345.00 - GRPRAR 345KV CKT Z	720	720	0.03313	110.7232	GEN600044 8-BLUE LAKE6
FDNS	00NR	3	17SP	G15_042	TO->FROM	GRPRAR1-LNX3345.00 - GRPRAR 345KV CKT Z	720	720	0.03313	110.7226	GEN600045 4-ANSON
FDNS	00NR	3	17SP	G15_042	TO->FROM	GRPRAR1-LNX3345.00 - GRPRAR 345KV CKT Z	720	720	0.03313	110.7124	G830_SUB 115.00 - GRE-MCHENRY7115.00 115KV CKT 1
FDNS	00NR	3	17SP	G15_042	TO->FROM	GRPRAR1-LNX3345.00 - GRPRAR 345KV CKT Z	720	720	0.03317	110.7042	DRAYTON - LETELLIER 230KV CKT 1
FDNS	00NR	3	17SP	G15_042	TO->FROM	GRPRAR1-LNX3345.00 - GRPRAR 345KV CKT Z	720	720	0.03313	110.7017	G830_SUB 115.00 115/34.5KV TRANSFORMER CKT 1
FDNS	00NR	3	17SP	G15_042	TO->FROM	GRPRAR1-LNX3345.00 - GRPRAR 345KV CKT Z	720	720	0.03313	110.691	GEN600014 4-BLACK DOG GEN 4
FDNS	00NR	3	17SP	G15_042	TO->FROM	GRPRAR1-LNX3345.00 - GRPRAR 345KV CKT Z	720	720	0.03324	110.6904	G11_051T 345.00 - TATONGA7 345.00 345KV CKT 1
FDNS	00NR	3	17SP	G15_042	TO->FROM	GRPRAR1-LNX3345.00 - GRPRAR 345KV CKT Z	720	720	0.03313	110.6891	GEN600065 7-HIGH BRIDGE
FDNS	00NR	3	17SP	G15_042	TO->FROM	GRPRAR1-LNX3345.00 - GRPRAR 345KV CKT Z	720	720	0.03313	110.6891	GEN600066 8-HIGH BRIDGE
FDNS	00NR	3	17SP	G15_042	TO->FROM	GRPRAR1-LNX3345.00 - GRPRAR 345KV CKT Z	720	720	0.03313	110.6844	GEN600011 5-BLACK DOG GEN 1

SOLUTION	GROUP	SCENARIO	SEASON	SOURCE	DIRECTION	MONITORED ELEMENT	RATEA (MVA)	RATEB(MVA)	TDF	TC%LOADING (% MVA)	CONTINGENCY
FDNS	00NR	3	17SP	G15_042	TO->FROM	GRPRAR1-LNX3345.00 - GRPRAR 345KV CKT Z	720	720	0.03313	110.6729	GEN600071 10-RIVER SIDE
FDNS	00NR	3	17SP	G15_042	TO->FROM	GRPRAR1-LNX3345.00 - GRPRAR 345KV CKT Z	720	720	0.03313	110.6728	GEN600070 9-RIVER SIDE
FDNS	00NR	3	17SP	G15_042	TO->FROM	GRPRAR1-LNX3345.00 - GRPRAR 345KV CKT Z	720	720	0.03313	110.66	GEN600007 7-RIVERSIDE GEN 7
FDNS	00NR	3	17SP	G15_042	TO->FROM	GRPRAR1-LNX3345.00 - GRPRAR 345KV CKT Z	720	720	0.03086	110.6568	FT THOMPSON (FT2 KU1A) 345/230/13.8KV TRANSFORMER CKT 1
FDNS	00NR	3	17SP	G15_042	TO->FROM	GRPRAR1-LNX3345.00 - GRPRAR 345KV CKT Z	720	720	0.03085	110.6536	FT THOMPSON (FT2 KU1B) 345/230/13.8KV TRANSFORMER CKT 1
FDNS	00NR	3	17SP	G15_042	TO->FROM	GRPRAR1-LNX3345.00 - GRPRAR 345KV CKT Z	720	720	0.03313	110.644	GEN652906 1-G09_006IS_3 0.6900
FDNS	00NR	3	17SP	G15_042	TO->FROM	GRPRAR1-LNX3345.00 - GRPRAR 345KV CKT Z	720	720	0.03313	110.64	GEN600017 C-LS POWER CT
FDNS	00NR	3	17SP	G15_042	TO->FROM	GRPRAR1-LNX3345.00 - GRPRAR 345KV CKT Z	720	720	0.03313	110.6351	GEN659273 2-GROTON SYNC COND
FDNS	00NR	3	17SP	G15_042	TO->FROM	GRPRAR1-LNX3345.00 - GRPRAR 345KV CKT Z	720	720	0.03313	110.6351	GEN659294 1-WILTONCOL9
FDNS	00NR	3	17SP	G15_042	TO->FROM	GRPRAR1-LNX3345.00 - GRPRAR 345KV CKT Z	720	720	0.03313	110.6154	LANSING WEST 161/22.0KV TRANSFORMER CKT 1
FDNS	00NR	3	17SP	G15_042	TO->FROM	GRPRAR1-LNX3345.00 - GRPRAR 345KV CKT Z	720	720	0.03313	110.6	GEN659192 6-LYNN
FDNS	00NR	3	17SP	G15_042	TO->FROM	GRPRAR1-LNX3345.00 - GRPRAR 345KV CKT Z	720	720	0.03313	110.599	GEN659162 4-RED WLCK
FDNS	00NR	3	17SP	G15_042	TO->FROM	GRPRAR1-LNX3345.00 - GRPRAR 345KV CKT Z	720	720	0.03313	110.599	GEN659163 5-BLACK WDCK
FDNS	00NR	3	17SP	G15_042	TO->FROM	GRPRAR1-LNX3345.00 - GRPRAR 345KV CKT Z	720	720	0.03313	110.5835	GEN681522 3-GENOA 3
FDNS	00NR	3	17SP	G15_042	TO->FROM	GRPRAR1-LNX3345.00 - GRPRAR 345KV CKT Z	720	720	0.03313	110.5775	GEN615021 1-GRE-ER 14G 16.000
FDNS	00NR	3	25SP	G15_042	TO->FROM	GRPRAR1-LNX3345.00 - GRPRAR 345KV CKT Z	720	720	0.02968	110.5692	P12:230:UMZB:# 116 #: ST IN SD. WSG-ST-VH
FDNS	00NR	3	17SP	G15_042	TO->FROM	GRPRAR1-LNX3345.00 - GRPRAR 345KV CKT Z	720	720	0.03313	110.5642	GEN615052 1-CAMBRIDGE GENERATING STATION
FDNS	00NR	3	17SP	G15_042	TO->FROM	GRPRAR1-LNX3345.00 - GRPRAR 345KV CKT Z	720	720	0.03321	110.5631	BRDLAND-LNX3345.00 - HURON 345KV CKT Z
FDNS	00NR	3	17SP	G15_042	TO->FROM	GRPRAR1-LNX3345.00 - GRPRAR 345KV CKT Z	720	720	0.03321	110.5627	HURON (BD KU2A) 345/230/13.8KV TRANSFORMER CKT 1
FDNS	00NR	3	17SP	G15_042	TO->FROM	GRPRAR1-LNX3345.00 - GRPRAR 345KV CKT Z	720	720	0.03321	110.5627	HURON (BD KU2A) 345/230/13.8KV TRANSFORMER CKT 1
FDNS	00NR	3	17SP	G15_042	TO->FROM	GRPRAR1-LNX3345.00 - GRPRAR 345KV CKT Z	720	720	0.03321	110.5624	BROADLAND - HURON 230KV CKT 1
FDNS	00NR	3	17SP	G15_042	TO->FROM	GRPRAR1-LNX3345.00 - GRPRAR 345KV CKT Z	720	720	0.03313	110.561	CENTER 230/22.0KV TRANSFORMER CKT 1
FDNS	00NR	3	17SP	G15_042	TO->FROM	GRPRAR1-LNX3345.00 - GRPRAR 345KV CKT Z	720	720	0.03313	110.5598	GEN659031 1-G12_014IS_4 0.6900
FDNS	00NR	3	17SP	G15_042	TO->FROM	GRPRAR1-LNX3345.00 - GRPRAR 345KV CKT Z	720	720	0.03321	110.5568	P12:345:UMZB:# 103 #: BD IN SD. LOSS OF LINE
FDNS	00NR	3	17SP	G15_042	TO->FROM	GRPRAR1-LNX3345.00 - GRPRAR 345KV CKT Z	720	720	0.03321	110.5557	P12:345:UMZB:# 102 #: AVS BD IN ND. AVS BRD LR
FDNS	00NR	3	17SP	G15_042	TO->FROM	GRPRAR1-LNX3345.00 - GRPRAR 345KV CKT Z	720	720	0.03313	110.5548	GEN 10648 1-G830_GEN 0.6900
FDNS	00NR	3	20SP	G15_042	TO->FROM	GRPRAR1-LNX3345.00 - GRPRAR 345KV CKT Z	720	720	0.02972	110.5501	STORLA - WESSINGTON 230KV CKT 1
FDNS	00NR	3	17SP	G15_042	TO->FROM	GRPRAR1-LNX3345.00 - GRPRAR 345KV CKT Z	720	720	0.03313	110.5488	GEN652907 1-G09_007IS_3 0.6900
FDNS	00NR	3	17SP	G15_042	TO->FROM	GRPRAR1-LNX3345.00 - GRPRAR 345KV CKT Z	720	720	0.03313	110.5395	GEN660016 1-B_H WIND 0.7000
FDNS	00NR	3	17SP	G15_042	TO->FROM	GRPRAR1-LNX3345.00 - GRPRAR 345KV CKT Z	720	720	0.03313	110.4842	GEN615015 1-GRE-SPRITWDG13.200
FDNS	00NR	3	17SP	G15_042	TO->FROM	GRPRAR1-LNX3345.00 - GRPRAR 345KV CKT Z	720	720	0.03324	110.4708	MATHWSN7 345.00 - TATONGA7 345.00 345KV CKT 1
FDNS	00NR	3	17SP	G15_042	TO->FROM	GRPRAR1-LNX3345.00 - GRPRAR 345KV CKT Z	720	720	0.03313	110.4173	GEN659353 1-DEERCREK CTG18.000
FDNS	00NR	3	17SP	G15_042	TO->FROM	GRPRAR1-LNX3345.00 - GRPRAR 345KV CKT Z	720	720	0.03313	110.4156	GEN659354 1-DEERCREK STG18.000
FDNS	00NR	3	17SP	G15_042	TO->FROM	GRPRAR1-LNX3345.00 - GRPRAR 345KV CKT Z	720	720	0.03321	110.4038	ANTELOP-LNX3345.00 - ANTELOPE VALLEY 345KV CKT Z
FDNS	00NR	3	17SP	G15_042	TO->FROM	GRPRAR1-LNX3345.00 - GRPRAR 345KV CKT Z	720	720	0.03313	110.3285	GEN600067 9-HIGH BRIDGE
FDNS	00NR	3	17SP	G15_042	TO->FROM	GRPRAR1-LNX3345.00 - GRPRAR 345KV CKT Z	720	720	0.03313	110.3278	GEN672303 3-BOUNDARY DAM GENERATOR 3
FDNS	00NR	3	17SP	G15_042	TO->FROM	GRPRAR1-LNX3345.00 - GRPRAR 345KV CKT Z	720	720	0.03313	110.3278	GEN672305 5-BOUNDARY DAM GENERATOR 5
FDNS	00NR	3	17SP	G15_042	TO->FROM	GRPRAR1-LNX3345.00 - GRPRAR 345KV CKT Z	720	720	0.03603	110.3176	ANTELOPE 3345.00 (ANTELOPE T1) 345/115/13.8KV TRANSFORMER CKT 1
FDNS	00NR	3	17SP	G15_042	TO->FROM	GRPRAR1-LNX3345.00 - GRPRAR 345KV CKT Z	720	720	0.03313	110.3034	GEN672392 1-NBECGT1G 18.000
FDNS	00NR	3	17SP	G15_042	TO->FROM	GRPRAR1-LNX3345.00 - GRPRAR 345KV CKT Z	720	720	0.03309	110.2716	OAHE - SULLEY BUTTE 230KV CKT 1
FDNS	00NR	3	17SP	G15_042	TO->FROM	GRPRAR1-LNX3345.00 - GRPRAR 345KV CKT Z	720	720	0.03313	110.2403	GEN910006 1-G12_012IS_3 0.6900
FDNS	00NR	3	17SP	G15_042	TO->FROM	GRPRAR1-LNX3345.00 - GRPRAR 345KV CKT Z	720	720	0.03313	110.2319	BISONMP4 230.00 - SQUARE BUTTE 230KV CKT 1
FDNS	00NR	3	17SP	G15_042	TO->FROM	GRPRAR1-LNX3345.00 - GRPRAR 345KV CKT Z	720	720	0.03313	110.187	GEN662101 1-WESSINGTON190.5750
FDNS	00NR	3	17SP	G15_042	TO->FROM	GRPRAR1-LNX3345.00 - GRPRAR 345KV CKT Z	720	720	0.0347	110.1346	AXTELL - SWEETWATER 345KV CKT 1
FDNS	00NR	3	17SP	G15_042	TO->FROM	GRPRAR1-LNX3345.00 - GRPRAR 345KV CKT Z	720	720	0.03309	110.1161	SULLEY BUTTE - SULLYBT-LNX3230.00 230KV CKT Z
FDNS	00NR	3	17SP	G15_042	TO->FROM	GRPRAR1-LNX3345.00 - GRPRAR 345KV CKT Z	720	720	0.03309	110.1159	SULLYBT-LNX3230.00 - WHITLOK 230KV CKT 1
FDNS	00NR	3	17SP	G15_042	TO->FROM	GRPRAR1-LNX3345.00 - GRPRAR 345KV CKT Z	720	720	0.03475	110.1006	G15088_T 345.00 - MOORE 345KV CKT 1
FDNS	00NR	3	17SP	G15_042	TO->FROM	GRPRAR1-LNX3345.00 - GRPRAR 345KV CKT Z	720	720	0.03309	110.07	P12:230:UMZB:# 114 #: SB IN SD. SB-WK-GH
FDNS	00NR	3	17SP	G15_042	TO->FROM	GRPRAR1-LNX3345.00 - GRPRAR 345KV CKT Z	720	720	0.03309	110.07	P12:230:UMZB:# 117 #: WK IN SD. SB-WK-GH
FDNS	00NR	3	17SP	G15_042	TO->FROM	GRPRAR1-LNX3345.00 - GRPRAR 345KV CKT Z	720	720	0.03313	110.0453	SQUARE BUTTE - YNG2 4 230.00 230KV CKT 1
FDNS	00NR	3	17SP	G15_042	TO->FROM	GRPRAR1-LNX3345.00 - GRPRAR 345KV CKT Z	720	720	0.03309	110.0173	GLENHAM - WHITLOK 230KV CKT 1
FDNS	00NR	3	17SP	G15_042	TO->FROM	GRPRAR1-LNX3345.00 - GRPRAR 345KV CKT Z	720	720	0.03313	109.9578	GEN681542 6-JP MADGETT
FDNS	00NR	3	17SP	G15_042	TO->FROM	GRPRAR1-LNX3345.00 - GRPRAR 345KV CKT Z	720	720	0.03313	109.9119	GEN659289 1-DAYCNTYWND W0.6900
FDNS	00NR	3	17SP	G15_042	TO->FROM	GRPRAR1-LNX3345.00 - GRPRAR 345KV CKT Z	720	720	0.03313	109.8951	GEN659018 1-G14_003IS_3 0.6900
FDNS	00NR	3	17SP	G15_042	TO->FROM	GRPRAR1-LNX3345.00 - GRPRAR 345KV CKT Z	720	720	0.03313	109.8752	GEN652543 3-BIG BEND
FDNS	00NR	3	17SP	G15_042	TO->FROM	GRPRAR1-LNX3345.00 - GRPRAR 345KV CKT Z	720	720	0.03313	109.8737	GEN563312 1-G15097_3 0.6900
FDNS	00NR	3	25SP	G15_042	TO->FROM	GRPRAR1-LNX3345.00 - GRPRAR 345KV CKT Z	720	720	0.03004	109.8057	STORLA - WESSINGTON 230KV CKT 1
FDNS	00NR	3	17SP	G15_042	TO->FROM	GRPRAR1-LNX3345.00 - GRPRAR 345KV CKT Z	720	720	0.03313	109.73	GEN659194 1-NDPRAIRWND1W0.6900
FDNS	00NR	3	17SP	G15_042	TO->FROM	GRPRAR1-LNX3345.00 - GRPRAR 345KV CKT Z	720	720	0.03313	109.7134	GEN659010 4-G07_027IS_2 0.6900
FDNS	00NR	3	17SP	G15_042	TO->FROM	GRPRAR1-LNX3345.00 - GRPRAR 345KV CKT Z	720	720	0.03313	109.7062	GEN652460 4-GARRISON
FDNS	00NR	3	17SP	G15_042	TO->FROM	GRPRAR1-LNX3345.00 - GRPRAR 345KV CKT Z	720	720	0.03313	109.7062	GEN652461 5-GARRISON
FDNS	00NR	3	17SP	G15_042	TO->FROM	GRPRAR1-LNX3345.00 - GRPRAR 345KV CKT Z	720	720	0.03313	109.6839	GEN563342 1-G15098_3 0.6900
FDNS	00NR	3	17SP	G15_042	TO->FROM	GRPRAR1-LNX3345.00 - GRPRAR 345KV CKT Z	720	720	0.03313	109.6472	GEN652457 1-GARRISON
FDNS	00NR	3	17SP	G15_042	TO->FROM	GRPRAR1-LNX3345.00 - GRPRAR 345KV CKT Z	720	720	0.03313	109.6472	GEN652458 2-GARRISON
FDNS	00NR	3	17SP	G15_042	TO->FROM	GRPRAR1-LNX3345.00 - GRPRAR 345KV CKT Z	720	720	0.03313	109.6472	GEN652459 3-GARRISON
FDNS	00NR	3	17SP	G15_042	TO->FROM	GRPRAR1-LNX3345.00 - GRPRAR 345KV CKT Z	720	720	0.03313	109.594	GEN659403 1-NDSUNFLWR W0.6900
FDNS	00NR	3	20SP	G15_042	TO->FROM	GRPRAR1-LNX3345.00 - GRPRAR 345KV CKT Z	720	720	0.02969	109.5791	HANLON - STORLA 230KV CKT 1
FDNS	00NR	3	17SP	G15_042	TO->FROM	GRPRAR1-LNX3345.00 - GRPRAR 345KV CKT Z	720	720	0.03313	109.5465	GEN652542 1-BIG BEND
FDNS	00NR	3	17SP	G15_042	TO->FROM	GRPRAR1-LNX3345.00 - GRPRAR 345KV CKT Z	720	720	0.03538	109.49	MCCOOL - MOORE 345KV CKT 1
FDNS	00NR	3	17SP	G15_042	TO->FROM	GRPRAR1-LNX3345.00 - GRPRAR 345KV CKT Z	720	720	0.03313	109.4321	GEN652559 1-OAHE
FDNS	00NR	3	17SP	G15_042	TO->FROM	GRPRAR1-LNX3345.00 - GRPRAR 345KV CKT Z	720	720	0.03313	109.4316	STANTON 230/18.0KV TRANSFORMER CKT 1
FDNS	00NR	3	17SP	G15_042	TO->FROM	GRPRAR1-LNX3345.00 - GRPRAR 345KV CKT Z	720	720	0.03313	109.4276	CLAY BOSWELL 230/20.9KV TRANSFORMER CKT 1
FDNS	00NR	3	17SP	G15_042	TO->FROM	GRPRAR1-LNX3345.00 - GRPRAR 345KV CKT Z	720	720	0.03309	109.4061	GLENHAM - L3 HAWDON 230KV CKT 1
FDNS	00NR	3	17SP	G15_042	TO->FROM	GRPRAR1-LNX3345.00 - GRPRAR 345KV CKT Z	720	720	0.03313	109.1778	GEN659411 1-CAMPBLCNTY W0.6900
FDNS	00NR	3	20SP	G15_042	TO->FROM	GRPRAR1-LNX3345.00 - GRPRAR 345KV CKT Z	720	720	0.03147	108.9991	BUFFALO - JAMESTOWN 345KV CKT 1
FDNS	00NR	3	20SP	G15_042	TO->FROM	GRPRAR1-LNX3345.00 - GRPRAR 345KV CKT Z	720	720	0.03124	108.9501	G09_001IST 345.00 - WATERTOWN 345KV CKT 1
FDNS	00NR	3	17SP	G15_042	TO->FROM	GRPRAR1-LNX3345.00 - GRPRAR 345KV CKT Z	720	720	0.03313	108.9498	GEN659296 2-SDPRAIRWND1W0.6900
FDNS	00NR	3	17SP	G15_042	TO->FROM	GRPRAR1-LNX3345.00 - GRPRAR 345KV CKT Z	720	720	0.03313	108.9347	GEN672321 1-SHAND GENERATOR 1
FDNS	00NR	3	17SP	G15_042	TO->FROM	GRPRAR1-LNX3345.00 - GRPRAR 345KV CKT Z	720	720	0.03313	108.9246	GEN672310 1-POPLAR RIVER GENERATOR 1

SOLUTION	GROUP	SCENARIO	SEASON	SOURCE	DIRECTION	MONITORED ELEMENT	RATEA (MVA)	RATEB(MVA)	TDF	TC%LOADING (% MVA)	CONTINGENCY
FDNS	00NR	3	17SP	G15_042	TO->FROM	GRPRAR1-LNX3345.00 - GRPRAR 345KV CKT Z	720	720	0.03313	108.9245	GEN672311 2-POPLAR RIVER GENERATOR 2
FDNS	00NR	3	17SP	G15_042	TO->FROM	GRPRAR1-LNX3345.00 - GRPRAR 345KV CKT Z	720	720	0.03314	108.8787	P12:230:UMZB:# 112 #: NU IN SD. NU-RCDC & DRY CREEK XFMR
FDNS	00NR	3	17SP	G15_042	TO->FROM	GRPRAR1-LNX3345.00 - GRPRAR 345KV CKT Z	720	720	0.03313	108.8726	RCDC EAST 4230.00 - RED CEDAR DC 230KV CKT 1
FDNS	00NR	3	17SP	G15_042	TO->FROM	GRPRAR1-LNX3345.00 - GRPRAR 345KV CKT Z	720	720	0.03313	108.8524	GEN600004 2-PRAIRIE ISLAND G2
FDNS	00NR	3	17SP	G15_042	TO->FROM	GRPRAR1-LNX3345.00 - GRPRAR 345KV CKT Z	720	720	0.03313	108.8482	GEN600003 1-PRAIRIE ISLAND G1
FDNS	00NR	3	17SP	G15_042	TO->FROM	GRPRAR1-LNX3345.00 - GRPRAR 345KV CKT Z	720	720	0.03313	108.8255	GEN672306 6-BOUNDARY DAM GENERATOR 6
FDNS	00NR	3	25SP	G15_042	TO->FROM	GRPRAR1-LNX3345.00 - GRPRAR 345KV CKT Z	720	720	0.03001	108.8019	HANLON - STORLA 230KV CKT 1
FDNS	00NR	3	17SP	G15_042	TO->FROM	GRPRAR1-LNX3345.00 - GRPRAR 345KV CKT Z	720	720	0.03313	108.7996	GEN615010 1-STANTON4
FDNS	00NR	3	17SP	G15_042	TO->FROM	GRPRAR1-LNX3345.00 - GRPRAR 345KV CKT Z	720	720	0.03313	108.7876	GEN659453 1-GI1414GEN W0.6900
FDNS	00NR	3	17SP	G15_042	TO->FROM	GRPRAR1-LNX3345.00 - GRPRAR 345KV CKT Z	720	720	0.03313	108.7859	GEN563302 1-G15096_3 0.6900
FDNS	00NR	3	17SP	G15_042	TO->FROM	GRPRAR1-LNX3345.00 - GRPRAR 345KV CKT Z	720	720	0.03313	108.6806	GEN659141 1-K10215A
FDNS	00NR	3	17SP	G15_042	TO->FROM	GRPRAR1-LNX3345.00 - GRPRAR 345KV CKT Z	720	720	0.03313	108.5993	GEN652556 2-OAHE
FDNS	00NR	3	17SP	G15_042	TO->FROM	GRPRAR1-LNX3345.00 - GRPRAR 345KV CKT Z	720	720	0.03313	108.5993	GEN652557 4-OAHE
FDNS	00NR	3	17SP	G15_042	TO->FROM	GRPRAR1-LNX3345.00 - GRPRAR 345KV CKT Z	720	720	0.03313	108.5993	GEN652558 6-OAHE
FDNS	00NR	3	17SP	G15_042	TO->FROM	GRPRAR1-LNX3345.00 - GRPRAR 345KV CKT Z	720	720	0.03313	108.5969	GEN659110 1-LELAND OLDS UNIT1
FDNS	00NR	3	25SP	G15_042	TO->FROM	GRPRAR1-LNX3345.00 - GRPRAR 345KV CKT Z	720	720	0.03179	108.5322	BUFFALO - JAMESTOWN 345KV CKT 1
FDNS	00NR	3	17SP	G15_042	TO->FROM	GRPRAR1-LNX3345.00 - GRPRAR 345KV CKT Z	720	720	0.03313	108.5302	GEN657749 1-YOUNG 1 GENERATOR
FDNS	00NR	3	17SP	G15_042	TO->FROM	GRPRAR1-LNX3345.00 - GRPRAR 345KV CKT Z	720	720	0.03313	108.5102	GEN600006 1-AS KING
FDNS	00NR	3	17SP	G15_042	TO->FROM	GRPRAR1-LNX3345.00 - GRPRAR 345KV CKT Z	720	720	0.03313	108.4342	GEN652173 1-G09_001IS_2 0.6900
FDNS	00NR	3	17SP	G15_042	TO->FROM	GRPRAR1-LNX3345.00 - GRPRAR 345KV CKT Z	720	720	0.03523	108.352	GRAND ISLAND - MCCOOL 345KV CKT 1
FDNS	00NR	3	25SP	G15_042	TO->FROM	GRPRAR1-LNX3345.00 - GRPRAR 345KV CKT Z	720	720	0.02958	108.1573	FT THOMPSON - LETCHER 230KV CKT 1
FDNS	00NR	3	25SP	G15_042	TO->FROM	GRPRAR1-LNX3345.00 - GRPRAR 345KV CKT Z	720	720	0.02958	108.1573	FT THOMPSON - LETCHER 230KV CKT 1
FDNS	00NR	3	17SP	G15_042	TO->FROM	GRPRAR1-LNX3345.00 - GRPRAR 345KV CKT Z	720	720	0.03313	108.1468	GEN659407 1-ANTELPHILLSW0.6900
FDNS	00NR	3	25SP	G15_042	TO->FROM	GRPRAR1-LNX3345.00 - GRPRAR 345KV CKT Z	720	720	0.03157	108.1206	G09_001IST 345.00 - WATERTOWN 345KV CKT 1
FDNS	00NR	3	17SP	G15_042	TO->FROM	GRPRAR1-LNX3345.00 - GRPRAR 345KV CKT Z	720	720	0.03313	107.9563	GEN600005 1-MONTICELLO
FDNS	00NR	3	20SP	G15_042	TO->FROM	GRPRAR1-LNX3345.00 - GRPRAR 345KV CKT Z	720	720	0.03091	107.8283	WATERTN-LNX3345.00 - WHITE 345KV CKT 1
FDNS	00NR	3	20SP	G15_042	TO->FROM	GRPRAR1-LNX3345.00 - GRPRAR 345KV CKT Z	720	720	0.03091	107.7298	WATERTN-LNX3345.00 - WATERTOWN 345KV CKT Z
FDNS	00NR	3	20SP	G15_042	TO->FROM	GRPRAR1-LNX3345.00 - GRPRAR 345KV CKT Z	720	720	0.03091	107.7187	P12:345:UMZW:# 1747 #: WT2 IN SD. WT2-WHT LINE FAULT
FDNS	00NR	3	20SP	G15_042	TO->FROM	GRPRAR1-LNX3345.00 - GRPRAR 345KV CKT Z	720	720	0.03148	107.6029	GEN336821 1-GRAND GULF UNIT
FDNS	00NR	3	20SP	G15_042	TO->FROM	GRPRAR1-LNX3345.00 - GRPRAR 345KV CKT Z	720	720	0.03148	107.5901	GEN635024 4-WALTER SCOTT UNIT 4
FDNS	00NR	3	20SP	G15_042	TO->FROM	GRPRAR1-LNX3345.00 - GRPRAR 345KV CKT Z	720	720	0.03529	107.5652	FT RANDAL - MEADOWGROVE4230.00 230KV CKT 1
FDNS	00NR	3	20SP	G15_042	TO->FROM	GRPRAR1-LNX3345.00 - GRPRAR 345KV CKT Z	720	720	0.03146	107.5291	CENTER - JAMESTOWN 345KV CKT 1
FDNS	00NR	3	20SP	G15_042	TO->FROM	GRPRAR1-LNX3345.00 - GRPRAR 345KV CKT Z	720	720	0.02977	107.4473	SPLIT ROCK - WHITE 345KV CKT 1
FDNS	00NR	3	20SP	G15_042	TO->FROM	GRPRAR1-LNX3345.00 - GRPRAR 345KV CKT Z	720	720	0.02977	107.4473	SPLIT ROCK - WHITE 345KV CKT 1
FDNS	00NR	3	17SP	G15_042	TO->FROM	GRPRAR1-LNX3345.00 - GRPRAR 345KV CKT Z	720	720	0.03313	107.2973	GEN600000 1-SHERBURNECNTY G1
FDNS	00NR	3	20SP	G15_042	TO->FROM	GRPRAR1-LNX3345.00 - GRPRAR 345KV CKT Z	720	720	0.03149	107.2685	CHISAGO COUNTY - CHISAGO COUNTY 500KV CKT 1
FDNS	00NR	3	20SP	G15_042	TO->FROM	GRPRAR1-LNX3345.00 - GRPRAR 345KV CKT Z	720	720	0.03149	107.2448	CHISAGO COUNTY - FORBES 500KV CKT 1
FDNS	00NR	3	20SP	G15_042	TO->FROM	GRPRAR1-LNX3345.00 - GRPRAR 345KV CKT Z	720	720	0.03147	107.1332	BISON 3 345.00 - BUFFALO 345KV CKT 1
FDNS	00NR	3	20SP	G15_042	TO->FROM	GRPRAR1-LNX3345.00 - GRPRAR 345KV CKT Z	720	720	0.03148	107.1005	GEN635023 3-WALTER SCOTT UNIT 3
FDNS	00NR	3	20SP	G15_042	TO->FROM	GRPRAR1-LNX3345.00 - GRPRAR 345KV CKT Z	720	720	0.03021	107.0996	LETCHER - SIOUX FALLS 230KV CKT 1
FDNS	00NR	3	20SP	G15_042	TO->FROM	GRPRAR1-LNX3345.00 - GRPRAR 345KV CKT Z	720	720	0.03148	107.0769	GEN562714 1-G15_023_4 0.6900
FDNS	00NR	3	20SP	G15_042	TO->FROM	GRPRAR1-LNX3345.00 - GRPRAR 345KV CKT Z	720	720	0.03148	107.0769	GEN562715 1-G15_023_5 0.6900
FDNS	00NR	3	20SP	G15_042	TO->FROM	GRPRAR1-LNX3345.00 - GRPRAR 345KV CKT Z	720	720	0.03148	107.0433	GEN344225 1-1CAL G1 25.000
FDNS	00NR	3	20SP	G15_042	TO->FROM	GRPRAR1-LNX3345.00 - GRPRAR 345KV CKT Z	720	720	0.03148	106.961	GEN337911 1-ARKANSAS NUCLEAR ONE UNIT #2
FDNS	00NR	3	17SP	G15_042	TO->FROM	GRPRAR1-LNX3345.00 - GRPRAR 345KV CKT Z	720	720	0.03313	106.9464	GEN600001 2-SHERBURNE CNTY G2
FDNS	00NR	3	20SP	G15_042	TO->FROM	GRPRAR1-LNX3345.00 - GRPRAR 345KV CKT Z	720	720	0.03148	106.9313	GEN336153 1-WATERFORD UNIT#3
FDNS	00NR	3	25SP	G15_042	TO->FROM	GRPRAR1-LNX3345.00 - GRPRAR 345KV CKT Z	720	720	0.03123	106.9293	WATERTN-LNX3345.00 - WHITE 345KV CKT 1
FDNS	00NR	3	25SP	G15_042	TO->FROM	GRPRAR1-LNX3345.00 - GRPRAR 345KV CKT Z	720	720	0.03178	106.9072	CENTER - JAMESTOWN 345KV CKT 1
FDNS	00NR	3	20SP	G15_042	TO->FROM	GRPRAR1-LNX3345.00 - GRPRAR 345KV CKT Z	720	720	0.03247	106.8926	MISSION - ST FRANCIS 115KV CKT 1
FDNS	00NR	3	20SP	G15_042	TO->FROM	GRPRAR1-LNX3345.00 - GRPRAR 345KV CKT Z	720	720	0.03247	106.8699	P12:115:NPPD:1091:VALENTN7:MISSION7:BTB
FDNS	00NR	3	20SP	G15_042	TO->FROM	GRPRAR1-LNX3345.00 - GRPRAR 345KV CKT Z	720	720	0.03246	106.8533	SIDNEY - SIDNEY1-LNX3345.00 345KV CKT Z
FDNS	00NR	3	20SP	G15_042	TO->FROM	GRPRAR1-LNX3345.00 - GRPRAR 345KV CKT Z	720	720	0.03246	106.833	KEYSTONE - SIDNEY1-LNX3345.00 345KV CKT 1
FDNS	00NR	3	25SP	G15_042	TO->FROM	GRPRAR1-LNX3345.00 - GRPRAR 345KV CKT Z	720	720	0.03123	106.8275	WATERTN-LNX3345.00 - WATERTOWN 345KV CKT Z
FDNS	00NR	3	25SP	G15_042	TO->FROM	GRPRAR1-LNX3345.00 - GRPRAR 345KV CKT Z	720	720	0.03123	106.819	P12:345:UMZW:# 1747 #: WT2 IN SD. WT2-WHT LINE FAULT
FDNS	00NR	3	20SP	G15_042	TO->FROM	GRPRAR1-LNX3345.00 - GRPRAR 345KV CKT Z	720	720	0.03924	106.7396	NUNDRWD - WAYSIDE 230KV CKT 1
FDNS	00NR	3	20SP	G15_042	TO->FROM	GRPRAR1-LNX3345.00 - GRPRAR 345KV CKT Z	720	720	0.03247	106.7207	HARMONY - ST FRANCIS 115KV CKT 1
FDNS	00NR	3	20SP	G15_042	TO->FROM	GRPRAR1-LNX3345.00 - GRPRAR 345KV CKT Z	720	720	0.03124	106.7041	G09_001IST 345.00 - GROTON 345KV CKT 1
FDNS	00NR	3	25SP	G15_042	TO->FROM	GRPRAR1-LNX3345.00 - GRPRAR 345KV CKT Z	720	720	0.03565	106.6899	FT RANDAL - MEADOWGROVE4230.00 230KV CKT 1
FDNS	00NR	3	25SP	G15_042	TO->FROM	GRPRAR1-LNX3345.00 - GRPRAR 345KV CKT Z	720	720	0.0318	106.6294	GEN635024 4-WALTER SCOTT UNIT 4
FDNS	00NR	3	20SP	G15_042	TO->FROM	GRPRAR1-LNX3345.00 - GRPRAR 345KV CKT Z	720	720	0.03148	106.6061	GEN640010 1-GERALD GENTLEMAN STATION UNIT 1
FDNS	00NR	3	20SP	G15_042	TO->FROM	GRPRAR1-LNX3345.00 - GRPRAR 345KV CKT Z	720	720	0.03148	106.585	GEN335831 1-RIVERBEND UNIT#1
FDNS	00NR	3	25SP	G15_042	TO->FROM	GRPRAR1-LNX3345.00 - GRPRAR 345KV CKT Z	720	720	0.0318	106.5624	GEN336821 1-GRAND GULF UNIT
FDNS	00NR	3	25SP	G15_042	TO->FROM	GRPRAR1-LNX3345.00 - GRPRAR 345KV CKT Z	720	720	0.03179	106.5371	BISON 3 345.00 - BUFFALO 345KV CKT 1
FDNS	00NR	3	25SP	G15_042	TO->FROM	GRPRAR1-LNX3345.00 - GRPRAR 345KV CKT Z	720	720	0.03181	106.5263	CHISAGO COUNTY - CHISAGO COUNTY 500KV CKT 1
FDNS	00NR	3	20SP	G15_042	TO->FROM	GRPRAR1-LNX3345.00 - GRPRAR 345KV CKT Z	720	720	0.03148	106.5198	GEN640011 2-GERALD GENTLEMAN STATION UNIT 2
FDNS	00NR	3	25SP	G15_042	TO->FROM	GRPRAR1-LNX3345.00 - GRPRAR 345KV CKT Z	720	720	0.0318	106.5154	GEN640010 1-GERALD GENTLEMAN STATION UNIT 1
FDNS	00NR	3	20SP	G15_042	TO->FROM	GRPRAR1-LNX3345.00 - GRPRAR 345KV CKT Z	720	720	0.03148	106.4909	GEN337910 1-ARKANSAS NUCLEAR ONE UNIT #1
FDNS	00NR	3	17SP	G15_042	TO->FROM	GRPRAR1-LNX3345.00 - GRPRAR 345KV CKT Z	720	720	0.03313	106.4753	GEN620315 1-BIG STONE GEN
FDNS	00NR	3	25SP	G15_042	TO->FROM	GRPRAR1-LNX3345.00 - GRPRAR 345KV CKT Z	720	720	0.03181	106.4747	CHISAGO COUNTY - FORBES 500KV CKT 1
FDNS	00NR	3	20SP	G15_042	TO->FROM	GRPRAR1-LNX3345.00 - GRPRAR 345KV CKT Z	720	720	0.03247	106.4627	HARMONY - VALENTINE 115KV CKT 1
FDNS	00NR	3	25SP	G15_042	TO->FROM	GRPRAR1-LNX3345.00 - GRPRAR 345KV CKT Z	720	720	0.03009	106.4622	SPLIT ROCK - WHITE 345KV CKT 1
FDNS	00NR	3	25SP	G15_042	TO->FROM	GRPRAR1-LNX3345.00 - GRPRAR 345KV CKT Z	720	720	0.03009	106.4622	SPLIT ROCK - WHITE 345KV CKT 1
FDNS	00NR	3	17SP	G15_042	TO->FROM	GRPRAR1-LNX3345.00 - GRPRAR 345KV CKT Z	720	720	0.03313	106.4576	GEN661015 1-COYOTE
FDNS	00NR	3	25SP	G15_042	TO->FROM	GRPRAR1-LNX3345.00 - GRPRAR 345KV CKT Z	720	720	0.0318	106.3274	GEN562714 1-G15_023_4 0.6900
FDNS	00NR	3	25SP	G15_042	TO->FROM	GRPRAR1-LNX3345.00 - GRPRAR 345KV CKT Z	720	720	0.0318	106.3274	GEN562715 1-G15_023_5 0.6900
FDNS	00NR	3	20SP	G15_042	TO->FROM	GRPRAR1-LNX3345.00 - GRPRAR 345KV CKT Z	720	720	0.03295	106.3216	FT RANDAL - SPENCER 115KV CKT 1
FDNS	00NR	3	20SP	G15_042	TO->FROM	GRPRAR1-LNX3345.00 - GRPRAR 345KV CKT Z	720	720	0.03295	106.3013	P12:115:NPPD:WAPA6:FTRANDL7:ONEILL 7:BTB
FDNS	00NR	3	20SP	G15_042	TO->FROM	GRPRAR1-LNX3345.00 - GRPRAR 345KV CKT Z	720	720	0.03295	106.3013	P12:115:UMZB:# 115 #: SE IN NE. FR-SE-ON
FDNS	00NR	3	25SP	G15_042	TO->FROM	GRPRAR1-LNX3345.00 - GRPRAR 345KV CKT Z	720	720	0.03053	106.287	LETCHER - SIOUX FALLS 230KV CKT 1

SOLUTION	GROUP	SCENARIO	SEASON	SOURCE	DIRECTION	MONITORED ELEMENT	RATEA (MVA)	RATEB(MVA)	TDF	TC%LOADING (% MVA)	CONTINGENCY
FDNS	00NR	3	17SP	G15_042	TO->FROM	GRPRAR1-LNX3345.00 - GRPRAR 345KV CKT Z	720	720	0.03313	106.254	GEN600002 3-SHERBURNE CNTY G3
FDNS	00NR	3	25SP	G15_042	TO->FROM	GRPRAR1-LNX3345.00 - GRPRAR 345KV CKT Z	720	720	0.0318	106.2148	GEN640011 2-GERALD GENTLEMAN STATION UNIT 2
FDNS	00NR	3	25SP	G15_042	TO->FROM	GRPRAR1-LNX3345.00 - GRPRAR 345KV CKT Z	720	720	0.03279	106.1907	MISSION - ST FRANCIS 115KV CKT 1
FDNS	00NR	3	20SP	G15_042	TO->FROM	GRPRAR1-LNX3345.00 - GRPRAR 345KV CKT Z	720	720	0.03295	106.1784	ONEILL - SPENCER 115KV CKT 1
FDNS	00NR	3	20SP	G15_042	TO->FROM	GRPRAR1-LNX3345.00 - GRPRAR 345KV CKT Z	720	720	0.03123	106.1748	GROTON-LNX3 345.00 - LELAND1-LNX3345.00 345KV CKT 1
FDNS	00NR	3	25SP	G15_042	TO->FROM	GRPRAR1-LNX3345.00 - GRPRAR 345KV CKT Z	720	720	0.0318	106.1647	GEN635023 3-WALTER SCOTT UNIT 3
FDNS	00NR	3	20SP	G15_042	TO->FROM	GRPRAR1-LNX3345.00 - GRPRAR 345KV CKT Z	720	720	0.06318	106.1556	DIXONCO 230.00 - HOSKINS 230KV CKT 1
FDNS	00NR	3	20SP	G15_042	TO->FROM	GRPRAR1-LNX3345.00 - GRPRAR 345KV CKT Z	720	720	0.03069	106.123	HANLON - SIOUX FALLS 230KV CKT 1
FDNS	00NR	3	20SP	G15_042	TO->FROM	GRPRAR1-LNX3345.00 - GRPRAR 345KV CKT Z	720	720	0.03123	106.1223	GROTON - GROTON-LNX3 345.00 345KV CKT Z
FDNS	00NR	3	20SP	G15_042	TO->FROM	GRPRAR1-LNX3345.00 - GRPRAR 345KV CKT Z	720	720	0.03123	106.1203	P12:345:UMZB:# 109 #: LOS GRT IN ND. LOS GRT
FDNS	00NR	3	20SP	G15_042	TO->FROM	GRPRAR1-LNX3345.00 - GRPRAR 345KV CKT Z	720	720	0.03123	106.1141	LELAND OLDS - LELAND1-LNX3345.00 345KV CKT Z
FDNS	00NR	3	25SP	G15_042	TO->FROM	GRPRAR1-LNX3345.00 - GRPRAR 345KV CKT Z	720	720	0.03278	106.1084	KEYSTONE - SIDNEY1-LNX3345.00 345KV CKT 1
FDNS	00NR	3	25SP	G15_042	TO->FROM	GRPRAR1-LNX3345.00 - GRPRAR 345KV CKT Z	720	720	0.03278	106.1049	SIDNEY - SIDNEY1-LNX3345.00 345KV CKT Z
FDNS	00NR	3	25SP	G15_042	TO->FROM	GRPRAR1-LNX3345.00 - GRPRAR 345KV CKT Z	720	720	0.0318	106.1	GEN337911 1-ARKANSAS NUCLEAR ONE UNIT #2
FDNS	00NR	3	25SP	G15_042	TO->FROM	GRPRAR1-LNX3345.00 - GRPRAR 345KV CKT Z	720	720	0.0318	106.027	GEN344225 1-1CAL G1 25.000
FDNS	00NR	3	20SP	G15_042	TO->FROM	GRPRAR1-LNX3345.00 - GRPRAR 345KV CKT Z	720	720	0.03246	106.0216	LAKEFIELD 3 - NOBLES 345KV CKT 1
FDNS	00NR	3	20SP	G15_042	TO->FROM	GRPRAR1-LNX3345.00 - GRPRAR 345KV CKT Z	720	720	0.03177	106.0204	GERALD GENTLEMAN STATION - KEYSTONE 345KV CKT 1
FDNS	00NR	3	17SP	G15_042	TO->FROM	GRPRAR1-LNX3345.00 - GRPRAR 345KV CKT Z	720	720	0.03313	106.0089	GEN657748 1-YOUNG 2 GENERATOR
FDNS	00NR	3	25SP	G15_042	TO->FROM	GRPRAR1-LNX3345.00 - GRPRAR 345KV CKT Z	720	720	0.03279	106.0031	HARMONY - ST FRANCIS 115KV CKT 1
FDNS	00NR	3	20SP	G15_042	TO->FROM	GRPRAR1-LNX3345.00 - GRPRAR 345KV CKT Z	720	720	0.03148	105.9995	GEN337653 1-WHITE BLUFF UNIT #2
FDNS	00NR	3	20SP	G15_042	TO->FROM	GRPRAR1-LNX3345.00 - GRPRAR 345KV CKT Z	720	720	0.02973	105.9691	PAHOJA - SIOUX FALLS 230KV CKT 1
FDNS	00NR	3	25SP	G15_042	TO->FROM	GRPRAR1-LNX3345.00 - GRPRAR 345KV CKT Z	720	720	0.03157	105.9611	G09_001IST 345.00 - GROTON 345KV CKT 1
FDNS	00NR	3	20SP	G15_042	TO->FROM	GRPRAR1-LNX3345.00 - GRPRAR 345KV CKT Z	720	720	0.03576	105.9562	RAUN - SUB 3451 FT CAL 345KV CKT 1
FDNS	00NR	3	20SP	G15_042	TO->FROM	GRPRAR1-LNX3345.00 - GRPRAR 345KV CKT Z	720	720	0.03576	105.9562	RAUN - SUB 3451 FT CAL 345KV CKT 1
FDNS	00NR	3	20SP	G15_042	TO->FROM	GRPRAR1-LNX3345.00 - GRPRAR 345KV CKT Z	720	720	0.03148	105.9465	GEN337652 1-WHITE BLUFF UNIT #1
FDNS	00NR	3	25SP	G15_042	TO->FROM	GRPRAR1-LNX3345.00 - GRPRAR 345KV CKT Z	720	720	0.0318	105.9373	GEN336153 1-WATERFORD UNIT#3
FDNS	00NR	3	20SP	G15_042	TO->FROM	GRPRAR1-LNX3345.00 - GRPRAR 345KV CKT Z	720	720	0.0329	105.921	SIDNEY - STEGALL 345KV CKT 1
FDNS	00NR	3	20SP	G15_042	TO->FROM	GRPRAR1-LNX3345.00 - GRPRAR 345KV CKT Z	720	720	0.03171	105.9137	ARROWHEAD - ARROWHEAD 230 230KV CKT 1
FDNS	00NR	3	20SP	G15_042	TO->FROM	GRPRAR1-LNX3345.00 - GRPRAR 345KV CKT Z	720	720	0.03247	105.9054	AINSWORTH - VALENTINE 115KV CKT 1
FDNS	00NR	3	25SP	G15_042	TO->FROM	GRPRAR1-LNX3345.00 - GRPRAR 345KV CKT Z	720	720	0.03953	105.8999	NUNDRWD - WAYSIDE 230KV CKT 1
FDNS	00NR	3	20SP	G15_042	TO->FROM	GRPRAR1-LNX3345.00 - GRPRAR 345KV CKT Z	720	720	0.03148	105.8912	GEN338146 1-INDEPENDENCE UNIT #2
FDNS	00NR	3	20SP	G15_042	TO->FROM	GRPRAR1-LNX3345.00 - GRPRAR 345KV CKT Z	720	720	0.03148	105.888	GEN338143 1-INDEPENDENCE UNIT #1
FDNS	00NR	3	20SP	G15_042	TO->FROM	GRPRAR1-LNX3345.00 - GRPRAR 345KV CKT Z	720	720	0.03148	105.8659	GEN501801 1-DOLET HILLS UNIT1
FDNS	00NR	3	20SP	G15_042	TO->FROM	GRPRAR1-LNX3345.00 - GRPRAR 345KV CKT Z	720	720	0.03184	105.8365	BROOKING COUNTY - LYON COUNTY 345KV CKT 1
FDNS	00NR	3	20SP	G15_042	TO->FROM	GRPRAR1-LNX3345.00 - GRPRAR 345KV CKT Z	720	720	0.03153	105.8142	ALEXMRES3 345.00 - BISON 3 345.00 345KV CKT 1
FDNS	00NR	3	25SP	G15_042	TO->FROM	GRPRAR1-LNX3345.00 - GRPRAR 345KV CKT Z	720	720	0.02979	105.7828	FT RANDAL - SIOUX CITY 230KV CKT 1
FDNS	00NR	3	17SP	G15_042	TO->FROM	GRPRAR1-LNX3345.00 - GRPRAR 345KV CKT Z	720	720	0.03313	105.7583	GEN562872 1-G15046_3 0.6900
FDNS	00NR	3	20SP	G15_042	TO->FROM	GRPRAR1-LNX3345.00 - GRPRAR 345KV CKT Z	720	720	0.03175	105.7451	AS KING - EAU CLAIRE 345KV CKT 1
FDNS	00NR	3	20SP	G15_042	TO->FROM	GRPRAR1-LNX3345.00 - GRPRAR 345KV CKT Z	720	720	0.03148	105.7262	GEN336252 1-NINEMILE POINT UNIT#5
FDNS	00NR	3	25SP	G15_042	TO->FROM	GRPRAR1-LNX3345.00 - GRPRAR 345KV CKT Z	720	720	0.03279	105.7249	HARMONY - VALENTINE 115KV CKT 1
FDNS	00NR	3	20SP	G15_042	TO->FROM	GRPRAR1-LNX3345.00 - GRPRAR 345KV CKT Z	720	720	0.03138	105.7087	CARPENTER - HURON 230KV CKT 1
FDNS	00NR	3	20SP	G15_042	TO->FROM	GRPRAR1-LNX3345.00 - GRPRAR 345KV CKT Z	720	720	0.03148	105.6456	GEN336251 1-NINEMILE POINT UNIT#4
FDNS	00NR	3	25SP	G15_042	TO->FROM	GRPRAR1-LNX3345.00 - GRPRAR 345KV CKT Z	720	720	0.03327	105.6402	FT RANDAL - SPENCER 115KV CKT 1
FDNS	00NR	3	20SP	G15_042	TO->FROM	GRPRAR1-LNX3345.00 - GRPRAR 345KV CKT Z	720	720	0.03148	105.6272	GEN336831 1-BAXTER WILSON SES
FDNS	00NR	3	25SP	G15_042	TO->FROM	GRPRAR1-LNX3345.00 - GRPRAR 345KV CKT Z	720	720	0.0318	105.6166	GEN335831 1-RIVERBEND UNIT#1
FDNS	00NR	3	25SP	G15_042	TO->FROM	GRPRAR1-LNX3345.00 - GRPRAR 345KV CKT Z	720	720	0.03327	105.6087	P12:115:NPPD:WAPA6:FTRANDL7:ONEILL 7:BTB
FDNS	00NR	3	25SP	G15_042	TO->FROM	GRPRAR1-LNX3345.00 - GRPRAR 345KV CKT Z	720	720	0.03327	105.6087	P12:115:UMZB:# 115 #: SE IN NE. FR-SE-ON
FDNS	00NR	3	20SP	G15_042	TO->FROM	GRPRAR1-LNX3345.00 - GRPRAR 345KV CKT Z	720	720	0.03138	105.6039	HURON - WATERTOWN 230KV CKT 2
FDNS	00NR	3	20SP	G15_042	TO->FROM	GRPRAR1-LNX3345.00 - GRPRAR 345KV CKT Z	720	720	0.03138	105.6039	HURON - WATERTOWN 230KV CKT 2
FDNS	00NR	3	20SP	G15_042	TO->FROM	GRPRAR1-LNX3345.00 - GRPRAR 345KV CKT Z	720	720	0.03148	105.5746	GEN337041 1-GERALD ANDRUS
FDNS	00NR	3	20SP	G15_042	TO->FROM	GRPRAR1-LNX3345.00 - GRPRAR 345KV CKT Z	720	720	0.03138	105.5647	CARPENTER - WATERTOWN 230KV CKT 1
FDNS	00NR	3	20SP	G15_042	TO->FROM	GRPRAR1-LNX3345.00 - GRPRAR 345KV CKT Z	720	720	0.03138	105.5647	CARPENTER - WATERTOWN 230KV CKT 1
FDNS	00NR	3	25SP	G15_042	TO->FROM	GRPRAR1-LNX3345.00 - GRPRAR 345KV CKT Z	720	720	0.0318	105.5553	GEN337910 1-ARKANSAS NUCLEAR ONE UNIT #1
FDNS	00NR	3	20SP	G15_042	TO->FROM	GRPRAR1-LNX3345.00 - GRPRAR 345KV CKT Z	720	720	0.03148	105.5416	GEN501813 1-RODEMACHER UNIT 3
FDNS	00NR	3	20SP	G15_042	TO->FROM	GRPRAR1-LNX3345.00 - GRPRAR 345KV CKT Z	720	720	0.03205	105.5399	HAZLETON - MITCHLCO3 345.00 345KV CKT 1
FDNS	00NR	3	20SP	G15_042	TO->FROM	GRPRAR1-LNX3345.00 - GRPRAR 345KV CKT Z	720	720	0.02973	105.525	EAGLE 4 230.00 - PAHOJA 230KV CKT 1
FDNS	00NR	3	25SP	G15_042	TO->FROM	GRPRAR1-LNX3345.00 - GRPRAR 345KV CKT Z	720	720	0.03327	105.4947	ONEILL - SPENCER 115KV CKT 1
FDNS	00NR	3	20SP	G15_042	TO->FROM	GRPRAR1-LNX3345.00 - GRPRAR 345KV CKT Z	720	720	0.03175	105.4739	G15094_T 345.00 - SIDNEY2-LNX3345.00 345KV CKT 1
FDNS	00NR	3	20SP	G15_042	TO->FROM	GRPRAR1-LNX3345.00 - GRPRAR 345KV CKT Z	720	720	0.03175	105.4662	SIDNEY - SIDNEY2-LNX3345.00 345KV CKT Z
FDNS	00NR	3	20SP	G15_042	TO->FROM	GRPRAR1-LNX3345.00 - GRPRAR 345KV CKT Z	720	720	0.03149	105.4662	CNTSHNT3 345.00 - PRAIRIE3 345.00 345KV CKT 1
FDNS	00NR	3	17SP	G15_042	TO->FROM	GRPRAR1-LNX3345.00 - GRPRAR 345KV CKT Z	720	720	0.03313	105.458	GEN659111 2-LELAND OLDS UNIT2
FDNS	00NR	3	25SP	G15_042	TO->FROM	GRPRAR1-LNX3345.00 - GRPRAR 345KV CKT Z	720	720	0.03155	105.4543	GROTON-LNX3 345.00 - LELAND1-LNX3345.00 345KV CKT 1
FDNS	00NR	3	25SP	G15_042	TO->FROM	GRPRAR1-LNX3345.00 - GRPRAR 345KV CKT Z	720	720	0.03155	105.4123	GROTON - GROTON-LNX3 345.00 345KV CKT Z
FDNS	00NR	3	25SP	G15_042	TO->FROM	GRPRAR1-LNX3345.00 - GRPRAR 345KV CKT Z	720	720	0.03155	105.4088	P12:345:UMZB:# 109 #: LOS GRT IN ND. LOS GRT
FDNS	00NR	3	25SP	G15_042	TO->FROM	GRPRAR1-LNX3345.00 - GRPRAR 345KV CKT Z	720	720	0.03155	105.4042	LELAND OLDS - LELAND1-LNX3345.00 345KV CKT Z
FDNS	00NR	3	25SP	G15_042	TO->FROM	GRPRAR1-LNX3345.00 - GRPRAR 345KV CKT Z	720	720	0.0635	105.3876	DIXONCO 230.00 - HOSKINS 230KV CKT 1
FDNS	00NR	3	20SP	G15_042	TO->FROM	GRPRAR1-LNX3345.00 - GRPRAR 345KV CKT Z	720	720	0.03148	105.3729	GEN335206 1-NELSON UNIT 6
FDNS	00NR	3	20SP	G15_042	TO->FROM	GRPRAR1-LNX3345.00 - GRPRAR 345KV CKT Z	720	720	0.03148	105.3361	GEN344897 4-1LAB G4 20.000
FDNS	00NR	3	20SP	G15_042	TO->FROM	GRPRAR1-LNX3345.00 - GRPRAR 345KV CKT Z	720	720	0.03148	105.3345	GEN344894 1-1LAB G1 20.000
FDNS	00NR	3	20SP	G15_042	TO->FROM	GRPRAR1-LNX3345.00 - GRPRAR 345KV CKT Z	720	720	0.03148	105.3345	GEN344895 2-1LAB G2 20.000
FDNS	00NR	3	20SP	G15_042	TO->FROM	GRPRAR1-LNX3345.00 - GRPRAR 345KV CKT Z	720	720	0.03148	105.3344	GEN344896 3-1LAB G3 20.000
FDNS	00NR	3	20SP	G15_042	TO->FROM	GRPRAR1-LNX3345.00 - GRPRAR 345KV CKT Z	720	720	0.03148	105.331	GEN635214 4-NEAL UNIT 4
FDNS	00NR	3	20SP	G15_042	TO->FROM	GRPRAR1-LNX3345.00 - GRPRAR 345KV CKT Z	720	720	0.03148	105.3292	GEN334440 1-SABINE UNIT 4
FDNS	00NR	3	20SP	G15_042	TO->FROM	GRPRAR1-LNX3345.00 - GRPRAR 345KV CKT Z	720	720	0.03179	105.3041	ARPIN B4 345.00 - EAU CLAIRE 345KV CKT 1
FDNS	00NR	3	20SP	G15_042	TO->FROM	GRPRAR1-LNX3345.00 - GRPRAR 345KV CKT Z	720	720	0.03148	105.282	GEN345671 2-1RUSH G2 18.000
FDNS	00NR	3	25SP	G15_042	TO->FROM	GRPRAR1-LNX3345.00 - GRPRAR 345KV CKT Z	720	720	0.03278	105.2797	LAKEFIELD 3 - NOBLES 345KV CKT 1
FDNS	00NR	3	20SP	G15_042	TO->FROM	GRPRAR1-LNX3345.00 - GRPRAR 345KV CKT Z	720	720	0.03148	105.2774	GEN345670 1-1RUSH G1 18.000
FDNS	00NR	3	25SP	G15_042	TO->FROM	GRPRAR1-LNX3345.00 - GRPRAR 345KV CKT Z	720	720	0.03101	105.2752	HANLON - SIOUX FALLS 230KV CKT 1
FDNS	00NR	3	25SP	G15_042	TO->FROM	GRPRAR1-LNX3345.00 - GRPRAR 345KV CKT Z	720	720	0.0321	105.2451	GERALD GENTLEMAN STATION - KEYSTONE 345KV CKT 1

SOLUTION	GROUP	SCENARIO	SEASON	SOURCE	DIRECTION	MONITORED ELEMENT	RATEA (MVA)	RATEB(MVA)	TDF	TC%LOADING (% MVA)	CONTINGENCY
FDNS	00NR	3	20SP	G15_042	TO->FROM	GRPRAR1-LNX3345.00 - GRPRAR 345KV CKT Z	720	720	0.03148	105.2381	GEN501812 1-RODEMACHER UNIT 2
FDNS	00NR	3	20SP	G15_042	TO->FROM	GRPRAR1-LNX3345.00 - GRPRAR 345KV CKT Z	720	720	0.03148	105.205	GEN336191 1-LITTLE GYPSY UNIT#3
FDNS	00NR	3	25SP	G15_042	TO->FROM	GRPRAR1-LNX3345.00 - GRPRAR 345KV CKT Z	720	720	0.0318	105.2	GEN338143 1-INDEPENDENCE UNIT #1
FDNS	00NR	3	25SP	G15_042	TO->FROM	GRPRAR1-LNX3345.00 - GRPRAR 345KV CKT Z	720	720	0.0318	105.2	GEN338146 1-INDEPENDENCE UNIT #2
FDNS	00NR	3	20SP	G15_042	TO->FROM	GRPRAR1-LNX3345.00 - GRPRAR 345KV CKT Z	720	720	0.02972	105.1872	FT THOMPSON - WESSINGTON 230KV CKT 1
FDNS	00NR	3	20SP	G15_042	TO->FROM	GRPRAR1-LNX3345.00 - GRPRAR 345KV CKT Z	720	720	0.02972	105.1872	FT THOMPSON - WESSINGTON 230KV CKT 1
FDNS	00NR	3	20SP	G15_042	TO->FROM	GRPRAR1-LNX3345.00 - GRPRAR 345KV CKT Z	720	720	0.03148	105.1819	GEN338388 1-1PLUM PT U1 23.000
FDNS	00NR	3	20SP	G15_042	TO->FROM	GRPRAR1-LNX3345.00 - GRPRAR 345KV CKT Z	720	720	0.03148	105.1768	GEN629075 1-OTTUMWA GENERATOR FOR OTTUMWA UNIT NO 1
FDNS	00NR	3	25SP	G15_042	TO->FROM	GRPRAR1-LNX3345.00 - GRPRAR 345KV CKT Z	720	720	0.03606	105.1685	RAUN - SUB 3451 FT CAL 345KV CKT 1
FDNS	00NR	3	25SP	G15_042	TO->FROM	GRPRAR1-LNX3345.00 - GRPRAR 345KV CKT Z	720	720	0.03606	105.1685	RAUN - SUB 3451 FT CAL 345KV CKT 1
FDNS	00NR	3	25SP	G15_042	TO->FROM	GRPRAR1-LNX3345.00 - GRPRAR 345KV CKT Z	720	720	0.03005	105.1548	PAHOJA - SIOUX FALLS 230KV CKT 1
FDNS	00NR	3	25SP	G15_042	TO->FROM	GRPRAR1-LNX3345.00 - GRPRAR 345KV CKT Z	720	720	0.03216	105.1406	BROOKING COUNTY - LYON COUNTY 345KV CKT 1
FDNS	00NR	3	20SP	G15_042	TO->FROM	GRPRAR1-LNX3345.00 - GRPRAR 345KV CKT Z	720	720	0.03148	105.1388	GEN335614 1-WILLOW GLENN UNIT#4
FDNS	00NR	3	25SP	G15_042	TO->FROM	GRPRAR1-LNX3345.00 - GRPRAR 345KV CKT Z	720	720	0.03322	105.138	SIDNEY - STEGALL 345KV CKT 1
FDNS	00NR	3	25SP	G15_042	TO->FROM	GRPRAR1-LNX3345.00 - GRPRAR 345KV CKT Z	720	720	0.03279	105.1323	AINSWORTH - VALENTINE 115KV CKT 1
FDNS	00NR	3	20SP	G15_042	TO->FROM	GRPRAR1-LNX3345.00 - GRPRAR 345KV CKT Z	720	720	0.03148	105.1267	GEN336801 1-BAXTER WILSON UNIT #1
FDNS	00NR	3	20SP	G15_042	TO->FROM	GRPRAR1-LNX3345.00 - GRPRAR 345KV CKT Z	720	720	0.03148	105.1236	GEN336464 1-MICHOUD UNIT #3
FDNS	00NR	3	20SP	G15_042	TO->FROM	GRPRAR1-LNX3345.00 - GRPRAR 345KV CKT Z	720	720	0.03148	105.1127	GEN335204 1-NELSON UNIT 4
FDNS	00NR	3	20SP	G15_042	TO->FROM	GRPRAR1-LNX3345.00 - GRPRAR 345KV CKT Z	720	720	0.03148	105.103	GEN334441 1-SABINE UNIT 5
FDNS	00NR	3	20SP	G15_042	TO->FROM	GRPRAR1-LNX3345.00 - GRPRAR 345KV CKT Z	720	720	0.03302	105.093	GRIMES - LEHIGH 345KV CKT 1
FDNS	00NR	3	25SP	G15_042	TO->FROM	GRPRAR1-LNX3345.00 - GRPRAR 345KV CKT Z	720	720	0.0318	105.0833	GEN337653 1-WHITE BLUFF UNIT #2
FDNS	00NR	3	20SP	G15_042	TO->FROM	GRPRAR1-LNX3345.00 - GRPRAR 345KV CKT Z	720	720	0.0317	105.0778	NORTH LA CROSSE - NORTH ROCHESTER 345KV CKT 1
FDNS	00NR	3	25SP	G15_042	TO->FROM	GRPRAR1-LNX3345.00 - GRPRAR 345KV CKT Z	720	720	0.03185	105.0727	ALEXMRES3 345.00 - BISON 3 345.00 345KV CKT 1
FDNS	00NR	3	25SP	G15_042	TO->FROM	GRPRAR1-LNX3345.00 - GRPRAR 345KV CKT Z	720	720	0.03203	105.0338	ARROWHEAD - ARROWHEAD 230 230KV CKT 1
FDNS	00NR	3	20SP	G15_042	TO->FROM	GRPRAR1-LNX3345.00 - GRPRAR 345KV CKT Z	720	720	0.03203	105.0225	KOSSUTH 3 345.00 - WEBSTER 345KV CKT 1
FDNS	00NR	3	17SP	G15_042	TO->FROM	GRPRAR1-LNX3345.00 - GRPRAR 345KV CKT Z	720	720	0.03313	105.0043	GEN659103 1-ANTELOPE VALLEY UNIT1
FDNS	00NR	3	17SP	G15_042	TO->FROM	GRPRAR1-LNX3345.00 - GRPRAR 345KV CKT Z	720	720	0.03313	105.0043	GEN659107 2-ANTELOPE VALLEY UNIT2
FDNS	00NR	3	20SP	G15_042	TO->FROM	GRPRAR1-LNX3345.00 - GRPRAR 345KV CKT Z	720	720	0.03148	104.9845	GEN563222 1-G15088_3 0.6900
FDNS	00NR	3	20SP	G15_042	TO->FROM	GRPRAR1-LNX3345.00 - GRPRAR 345KV CKT Z	720	720	0.03148	104.9831	P12:115:UMZW:# 162 #: NEL IN ND. FAULT ON ML-NEL-MX-GA 115 KV
FDNS	00NR	3	25SP	G15_042	TO->FROM	GRPRAR1-LNX3345.00 - GRPRAR 345KV CKT Z	720	720	0.0318	104.98	GEN501801 1-DOLET HILLS UNIT1
FDNS	00NR	3	17SP	G15_042	TO->FROM	GRPRAR1-LNX3345.00 - GRPRAR 345KV CKT Z	720	720	0.03313	104.9737	BIG STONE 230/24.0KV TRANSFORMER CKT 1
FDNS	00NR	3	20SP	G15_042	TO->FROM	GRPRAR1-LNX3345.00 - GRPRAR 345KV CKT Z	720	720	0.03148	104.9684	GEN334433 1-SABINE UNIT 3
FDNS	00NR	3	20SP	G15_042	TO->FROM	GRPRAR1-LNX3345.00 - GRPRAR 345KV CKT Z	720	720	0.03129	104.9558	BROOKING COUNTY - BSSOUTH3 345.00 345KV CKT 1
FDNS	00NR	3	20SP	G15_042	TO->FROM	GRPRAR1-LNX3345.00 - GRPRAR 345KV CKT Z	720	720	0.03148	104.9533	GEN635213 3-NEAL UNIT 3
FDNS	00NR	3	25SP	G15_042	TO->FROM	GRPRAR1-LNX3345.00 - GRPRAR 345KV CKT Z	720	720	0.0317	104.952	CARPENTER - HURON 230KV CKT 1
FDNS	00NR	3	20SP	G15_042	TO->FROM	GRPRAR1-LNX3345.00 - GRPRAR 345KV CKT Z	720	720	0.03179	104.916	NMA B3 345 345.00 - NORTH LA CROSSE 345KV CKT 1
FDNS	00NR	3	20SP	G15_042	TO->FROM	GRPRAR1-LNX3345.00 - GRPRAR 345KV CKT Z	720	720	0.03138	104.9116	HESKETT - WISHEK 230KV CKT 1
FDNS	00NR	3	20SP	G15_042	TO->FROM	GRPRAR1-LNX3345.00 - GRPRAR 345KV CKT Z	720	720	0.03081	104.9109	MENNO JCT - TRIPP JCT 115KV CKT 1
FDNS	00NR	3	20SP	G15_042	TO->FROM	GRPRAR1-LNX3345.00 - GRPRAR 345KV CKT Z	720	720	0.03205	104.9097	ADAMS - MITCHLCO3 345.00 345KV CKT 1
FDNS	00NR	3	25SP	G15_042	TO->FROM	GRPRAR1-LNX3345.00 - GRPRAR 345KV CKT Z	720	720	0.03207	104.9045	AS KING - EAU CLAIRE 345KV CKT 1
FDNS	00NR	3	20SP	G15_042	TO->FROM	GRPRAR1-LNX3345.00 - GRPRAR 345KV CKT Z	720	720	0.03784	104.9009	RAUN - SIOUX CITY 345KV CKT 1
FDNS	00NR	3	20SP	G15_042	TO->FROM	GRPRAR1-LNX3345.00 - GRPRAR 345KV CKT Z	720	720	0.03784	104.9009	RAUN - SIOUX CITY 345KV CKT 1
FDNS	00NR	3	20SP	G15_042	TO->FROM	GRPRAR1-LNX3345.00 - GRPRAR 345KV CKT Z	720	720	0.03147	104.8986	CENTER - COYOTE 345KV CKT 1
FDNS	00NR	3	20SP	G15_042	TO->FROM	GRPRAR1-LNX3345.00 - GRPRAR 345KV CKT Z	720	720	0.03148	104.8976	GEN336222 1-LITTLE GYPSY UNIT#2
FDNS	00NR	3	20SP	G15_042	TO->FROM	GRPRAR1-LNX3345.00 - GRPRAR 345KV CKT Z	720	720	0.03377	104.8961	BLOOMFIELD - CREIGHTON 115KV CKT 1
FDNS	00NR	3	20SP	G15_042	TO->FROM	GRPRAR1-LNX3345.00 - GRPRAR 345KV CKT Z	720	720	0.03152	104.8672	GLENBORO SOUTH - RUGBY 230KV CKT 1
FDNS	00NR	3	25SP	G15_042	TO->FROM	GRPRAR1-LNX3345.00 - GRPRAR 345KV CKT Z	720	720	0.03181	104.859	CNTSHNT3 345.00 - PRAIRIE3 345.00 345KV CKT 1
FDNS	00NR	3	20SP	G15_042	TO->FROM	GRPRAR1-LNX3345.00 - GRPRAR 345KV CKT Z	720	720	0.03147	104.8587	GARRISON - JAMES TOWN 230KV CKT 1
FDNS	00NR	3	25SP	G15_042	TO->FROM	GRPRAR1-LNX3345.00 - GRPRAR 345KV CKT Z	720	720	0.03236	104.8576	HAZLETON - MITCHLCO3 345.00 345KV CKT 1
FDNS	00NR	3	20SP	G15_042	TO->FROM	GRPRAR1-LNX3345.00 - GRPRAR 345KV CKT Z	720	720	0.03148	104.8484	GEN336152 1-WATERFORD UNIT#2
FDNS	00NR	3	20SP	G15_042	TO->FROM	GRPRAR1-LNX3345.00 - GRPRAR 345KV CKT Z	720	720	0.03148	104.8481	GEN336151 1-WATERFORD UNIT#1
FDNS	00NR	3	20SP	G15_042	TO->FROM	GRPRAR1-LNX3345.00 - GRPRAR 345KV CKT Z	720	720	0.03138	104.8465	MERRCRT4 230.00 - WISHEK 230KV CKT 1
FDNS	00NR	3	25SP	G15_042	TO->FROM	GRPRAR1-LNX3345.00 - GRPRAR 345KV CKT Z	720	720	0.0317	104.8454	HURON - WATERTOWN 230KV CKT 2
FDNS	00NR	3	25SP	G15_042	TO->FROM	GRPRAR1-LNX3345.00 - GRPRAR 345KV CKT Z	720	720	0.0317	104.8454	HURON - WATERTOWN 230KV CKT 2
FDNS	00NR	3	20SP	G15_042	TO->FROM	GRPRAR1-LNX3345.00 - GRPRAR 345KV CKT Z	720	720	0.03148	104.8228	GEN531447 1-HOLCOMB GENERATOR
FDNS	00NR	3	20SP	G15_042	TO->FROM	GRPRAR1-LNX3345.00 - GRPRAR 345KV CKT Z	720	720	0.03148	104.8129	GEN640009 1-COOPER NUCLEAR STATION
FDNS	00NR	3	20SP	G15_042	TO->FROM	GRPRAR1-LNX3345.00 - GRPRAR 345KV CKT Z	720	720	0.03377	104.8074	BLOOMFIELD - GAVINS POINT 115KV CKT 1
FDNS	00NR	3	20SP	G15_042	TO->FROM	GRPRAR1-LNX3345.00 - GRPRAR 345KV CKT Z	720	720	0.03185	104.8043	ADAMS - PLEASANT VALLEY 345KV CKT 1
FDNS	00NR	3	25SP	G15_042	TO->FROM	GRPRAR1-LNX3345.00 - GRPRAR 345KV CKT Z	720	720	0.0317	104.8034	CARPENTER - WATERTOWN 230KV CKT 1
FDNS	00NR	3	25SP	G15_042	TO->FROM	GRPRAR1-LNX3345.00 - GRPRAR 345KV CKT Z	720	720	0.0317	104.8034	CARPENTER - WATERTOWN 230KV CKT 1
FDNS	00NR	3	20SP	G15_042	TO->FROM	GRPRAR1-LNX3345.00 - GRPRAR 345KV CKT Z	720	720	0.03156	104.7926	APPLEDORN 4 230.00 - WATERTOWN 230KV CKT 1
FDNS	00NR	3	20SP	G15_042	TO->FROM	GRPRAR1-LNX3345.00 - GRPRAR 345KV CKT Z	720	720	0.03156	104.7926	APPLEDORN 4 230.00 - WATERTOWN 230KV CKT 1
FDNS	00NR	3	20SP	G15_042	TO->FROM	GRPRAR1-LNX3345.00 - GRPRAR 345KV CKT Z	720	720	0.03081	104.7887	MENNO JCT - UTICA 115KV CKT 1
FDNS	00NR	3	20SP	G15_042	TO->FROM	GRPRAR1-LNX3345.00 - GRPRAR 345KV CKT Z	720	720	0.03148	104.7817	GEN303007 1-1BC2 U2
FDNS	00NR	3	20SP	G15_042	TO->FROM	GRPRAR1-LNX3345.00 - GRPRAR 345KV CKT Z	720	720	0.03148	104.7756	GEN303006 1-1BC2 U1
FDNS	00NR	3	20SP	G15_042	TO->FROM	GRPRAR1-LNX3345.00 - GRPRAR 345KV CKT Z	720	720	0.03139	104.7717	BSSOUTH3 345.00 - ELLENDLMVP3 345.00 345KV CKT 1
FDNS	00NR	3	20SP	G15_042	TO->FROM	GRPRAR1-LNX3345.00 - GRPRAR 345KV CKT Z	720	720	0.03139	104.7717	BSSOUTH3 345.00 - ELLENDLMVP3 345.00 345KV CKT 1
FDNS	00NR	3	25SP	G15_042	TO->FROM	GRPRAR1-LNX3345.00 - GRPRAR 345KV CKT Z	720	720	0.0318	104.7708	GEN336251 1-NINEMILE POINT UNIT#4
FDNS	00NR	3	20SP	G15_042	TO->FROM	GRPRAR1-LNX3345.00 - GRPRAR 345KV CKT Z	720	720	0.0316	104.7589	ARKANSAS NUCLEAR ONE - FT SMITH 500KV CKT 1
FDNS	00NR	3	20SP	G15_042	TO->FROM	GRPRAR1-LNX3345.00 - GRPRAR 345KV CKT Z	720	720	0.0316	104.7589	ARKANSAS NUCLEAR ONE - FT SMITH 500KV CKT 1
FDNS	00NR	3	20SP	G15_042	TO->FROM	GRPRAR1-LNX3345.00 - GRPRAR 345KV CKT Z	720	720	0.03139	104.7508	ELLENDLMVP3 345.00 (1) 345/230/34.5KV TRANSFORMER CKT 1
FDNS	00NR	3	20SP	G15_042	TO->FROM	GRPRAR1-LNX3345.00 - GRPRAR 345KV CKT Z	720	720	0.03157	104.7478	ALEXMRES3 345.00 - WAITE PARK 345KV CKT 1
FDNS	00NR	3	20SP	G15_042	TO->FROM	GRPRAR1-LNX3345.00 - GRPRAR 345KV CKT Z	720	720	0.03081	104.7415	P12:115:UMZZ:# 237 #: MEN IN SD. MENNO JUNCTION IS A TAP (UJ-MEN-TP).
FDNS	00NR	3	25SP	G15_042	TO->FROM	GRPRAR1-LNX3345.00 - GRPRAR 345KV CKT Z	720	720	0.03207	104.7361	G15094_T 345.00 - SIDNEY2-LNX3345.00 345KV CKT 1
FDNS	00NR	3	25SP	G15_042	TO->FROM	GRPRAR1-LNX3345.00 - GRPRAR 345KV CKT Z	720	720	0.0318	104.7356	GEN336831 1-BAXTER WILSON SES
FDNS	00NR	3	25SP	G15_042	TO->FROM	GRPRAR1-LNX3345.00 - GRPRAR 345KV CKT Z	720	720	0.03207	104.7352	SIDNEY - SIDNEY2-LNX3345.00 345KV CKT Z
FDNS	00NR	3	20SP	G15_042	TO->FROM	GRPRAR1-LNX3345.00 - GRPRAR 345KV CKT Z	720	720	0.03156	104.7318	APPLEDORN 4 230.00 - GRANITE FALLS 230KV CKT 1
FDNS	00NR	3	20SP	G15_042	TO->FROM	GRPRAR1-LNX3345.00 - GRPRAR 345KV CKT Z	720	720	0.03156	104.7318	APPLEDORN 4 230.00 - GRANITE FALLS 230KV CKT 1
FDNS	00NR	3	20SP	G15_042	TO->FROM	GRPRAR1-LNX3345.00 - GRPRAR 345KV CKT Z	720	720	0.03154	104.7193	BLAIR - GRANITE FALLS 230KV CKT 1

SOLUTION	GROUP	SCENARIO	SEASON	SOURCE	DIRECTION	MONITORED ELEMENT	RATEA (MVA)	RATEB(MVA)	TDF	TC%LOADING (% MVA)	CONTINGENCY
FDNS	00NR	3	20SP	G15_042	TO->FROM	GRPRAR1-LNX3345.00 - GRPRAR 345KV CKT Z	720	720	0.03154	104.7193	BLAIR - GRANITE FALLS 230KV CKT 1
FDNS	00NR	3	20SP	G15_042	TO->FROM	GRPRAR1-LNX3345.00 - GRPRAR 345KV CKT Z	720	720	0.03101	104.7189	WINNER - WITTEN 115KV CKT 1
FDNS	00NR	3	20SP	G15_042	TO->FROM	GRPRAR1-LNX3345.00 - GRPRAR 345KV CKT Z	720	720	0.03164	104.7169	NORTH ROCHESTER - PRAIRIE ISLAND 345KV CKT 1
FDNS	00NR	3	20SP	G15_042	TO->FROM	GRPRAR1-LNX3345.00 - GRPRAR 345KV CKT Z	720	720	0.03148	104.7096	GEN303008 1-1BC2 U3
FDNS	00NR	3	20SP	G15_042	TO->FROM	GRPRAR1-LNX3345.00 - GRPRAR 345KV CKT Z	720	720	0.03148	104.7044	GEN336170 1-GULF OXY U4
FDNS	00NR	3	20SP	G15_042	TO->FROM	GRPRAR1-LNX3345.00 - GRPRAR 345KV CKT Z	720	720	0.03148	104.6918	GEN641089 2-ENERGY CENTER 2
FDNS	00NR	3	25SP	G15_042	TO->FROM	GRPRAR1-LNX3345.00 - GRPRAR 345KV CKT Z	720	720	0.03005	104.6889	EAGLE 4 230.00 - PAHOJA 230KV CKT 1
FDNS	00NR	3	25SP	G15_042	TO->FROM	GRPRAR1-LNX3345.00 - GRPRAR 345KV CKT Z	720	720	0.0318	104.6774	GEN337041 1-GERALD ANDRUS
FDNS	00NR	3	20SP	G15_042	TO->FROM	GRPRAR1-LNX3345.00 - GRPRAR 345KV CKT Z	720	720	0.0343	104.6611	STEGALL - STEGALL TRANSFORMER 230KV CKT 1
FDNS	00NR	3	20SP	G15_042	TO->FROM	GRPRAR1-LNX3345.00 - GRPRAR 345KV CKT Z	720	720	0.03175	104.6587	G15094_T 345.00 - LARAMIE RIVER 345KV CKT 1
FDNS	00NR	3	25SP	G15_042	TO->FROM	GRPRAR1-LNX3345.00 - GRPRAR 345KV CKT Z	720	720	0.0318	104.6572	GEN501813 1-RODEMACHER UNIT 3
FDNS	00NR	3	20SP	G15_042	TO->FROM	GRPRAR1-LNX3345.00 - GRPRAR 345KV CKT Z	720	720	0.0343	104.6539	P13:230-345:NPPD:STEGALL3:KV3A
FDNS	00NR	3	20SP	G15_042	TO->FROM	GRPRAR1-LNX3345.00 - GRPRAR 345KV CKT Z	720	720	0.03191	104.6463	HUNTLEY3 345.00 - LEDYARD3 345.00 345KV CKT 1
FDNS	00NR	3	20SP	G15_042	TO->FROM	GRPRAR1-LNX3345.00 - GRPRAR 345KV CKT Z	720	720	0.03148	104.6446	FARGO - JAMES TOWN 230KV CKT 1
FDNSLock	00NR	3	20SP	G15_042	TO->FROM	GRPRAR1-LNX3345.00 - GRPRAR 345KV CKT Z	720	720	0.0343	104.632	STEGALL (SGQ KV3A) 345/230/13.8KV TRANSFORMER CKT 1
FDNS	00NR	3	20SP	G15_042	TO->FROM	GRPRAR1-LNX3345.00 - GRPRAR 345KV CKT Z	720	720	0.03148	104.6247	GEN501811 1-RODEMACHER UNIT 1
FDNS	00NR	3	20SP	G15_042	TO->FROM	GRPRAR1-LNX3345.00 - GRPRAR 345KV CKT Z	720	720	0.03148	104.6235	FARGO - JAMES TOWN 230KV CKT 2
FDNS	00NR	3	20SP	G15_042	TO->FROM	GRPRAR1-LNX3345.00 - GRPRAR 345KV CKT Z	720	720	0.03148	104.6142	GEN562596 1-G14_059_3 0.6900
FDNS	00NR	3	20SP	G15_042	TO->FROM	GRPRAR1-LNX3345.00 - GRPRAR 345KV CKT Z	720	720	0.03148	104.6088	P13:230:UMZW:# 2218 #: FP IN MT. LOSS OF TRANSFORMER (AT2).
FDNS	00NR	3	20SP	G15_042	TO->FROM	GRPRAR1-LNX3345.00 - GRPRAR 345KV CKT Z	720	720	0.03196	104.6033	P13:230-345:NPPD:SIDNEY 3:KV2A
FDNS	00NR	3	20SP	G15_042	TO->FROM	GRPRAR1-LNX3345.00 - GRPRAR 345KV CKT Z	720	720	0.03196	104.6032	SIDNEY (SDQ KV2A) 345/230/13.8KV TRANSFORMER CKT 1
FDNS	00NR	3	20SP	G15_042	TO->FROM	GRPRAR1-LNX3345.00 - GRPRAR 345KV CKT Z	720	720	0.03196	104.6031	SIDNEY - SIDNEY TRANSFORMER 230KV CKT 1
FDNS	00NR	3	20SP	G15_042	TO->FROM	GRPRAR1-LNX3345.00 - GRPRAR 345KV CKT Z	720	720	0.03147	104.5968	BISMARK - JAMES TOWN 230KV CKT 1
FDNS	00NR	3	20SP	G15_042	TO->FROM	GRPRAR1-LNX3345.00 - GRPRAR 345KV CKT Z	720	720	0.03147	104.5881	BISMARK - WEBER 230KV CKT 1
FDNS	00NR	3	20SP	G15_042	TO->FROM	GRPRAR1-LNX3345.00 - GRPRAR 345KV CKT Z	720	720	0.03198	104.58	P13:115-230:TSGT:SIDNEY-KV1A
FDNS	00NR	3	20SP	G15_042	TO->FROM	GRPRAR1-LNX3345.00 - GRPRAR 345KV CKT Z	720	720	0.03226	104.577	NOBLES - SPLIT ROCK 345KV CKT 1
FDNS	00NR	3	20SP	G15_042	TO->FROM	GRPRAR1-LNX3345.00 - GRPRAR 345KV CKT Z	720	720	0.03148	104.5732	GEN334071 1-LEWIS CREEK 2
FDNS	00NR	3	20SP	G15_042	TO->FROM	GRPRAR1-LNX3345.00 - GRPRAR 345KV CKT Z	720	720	0.03147	104.5727	JAMES TOWN - WEBER 230KV CKT 1
FDNS	00NR	3	20SP	G15_042	TO->FROM	GRPRAR1-LNX3345.00 - GRPRAR 345KV CKT Z	720	720	0.03183	104.5718	HUNTLEY3 345.00 - LAKEFIELD 3 345KV CKT 1
FDNS	00NR	3	20SP	G15_042	TO->FROM	GRPRAR1-LNX3345.00 - GRPRAR 345KV CKT Z	720	720	0.0322	104.5707	P12:230:UMZW:# 733 #: FT IN SD. FT-BG2 LINE FAULT
FDNS	00NR	3	20SP	G15_042	TO->FROM	GRPRAR1-LNX3345.00 - GRPRAR 345KV CKT Z	720	720	0.03148	104.5699	GEN334070 1-LEWIS CREEK 1
FDNS	00NR	3	20SP	G15_042	TO->FROM	GRPRAR1-LNX3345.00 - GRPRAR 345KV CKT Z	720	720	0.03148	104.5605	GEN532751 1-WOLF CREEK GENERATING STATION UNIT 1
FDNS	00NR	3	20SP	G15_042	TO->FROM	GRPRAR1-LNX3345.00 - GRPRAR 345KV CKT Z	720	720	0.03123	104.5599	FT THOMPSON - HURON 230KV CKT 1
FDNS	00NR	3	20SP	G15_042	TO->FROM	GRPRAR1-LNX3345.00 - GRPRAR 345KV CKT Z	720	720	0.03123	104.5599	FT THOMPSON - HURON 230KV CKT 1
FDNS	00NR	3	20SP	G15_042	TO->FROM	GRPRAR1-LNX3345.00 - GRPRAR 345KV CKT Z	720	720	0.03123	104.5599	FT THOMPSON - HURON 230KV CKT 2
FDNS	00NR	3	20SP	G15_042	TO->FROM	GRPRAR1-LNX3345.00 - GRPRAR 345KV CKT Z	720	720	0.03123	104.5599	FT THOMPSON - HURON 230KV CKT 2
FDNS	00NR	3	20SP	G15_042	TO->FROM	GRPRAR1-LNX3345.00 - GRPRAR 345KV CKT Z	720	720	0.03148	104.5468	GEN562921 1-G15054_2 0.6900
FDNS	00NR	3	20SP	G15_042	TO->FROM	GRPRAR1-LNX3345.00 - GRPRAR 345KV CKT Z	720	720	0.03148	104.5379	GEN337766 1-TRACTEBEL UNIT S1
FDNS	00NR	3	20SP	G15_042	TO->FROM	GRPRAR1-LNX3345.00 - GRPRAR 345KV CKT Z	720	720	0.03148	104.5339	GEN636641 1-LOUISA UNIT 1
FDNS	00NR	3	20SP	G15_042	TO->FROM	GRPRAR1-LNX3345.00 - GRPRAR 345KV CKT Z	720	720	0.03148	104.5322	BALTA - RAMSEY 230KV CKT 1
FDNS	00NR	3	20SP	G15_042	TO->FROM	GRPRAR1-LNX3345.00 - GRPRAR 345KV CKT Z	720	720	0.03148	104.5322	PRAIRIE ISLAND 345/20.0KV TRANSFORMER CKT 1
FDNS	00NR	3	20SP	G15_042	TO->FROM	GRPRAR1-LNX3345.00 - GRPRAR 345KV CKT Z	720	720	0.03101	104.5315	GREGORY - WINNER 115KV CKT 1
FDNS	00NR	3	20SP	G15_042	TO->FROM	GRPRAR1-LNX3345.00 - GRPRAR 345KV CKT Z	720	720	0.03148	104.5309	PRAIRIE ISLAND 345/20.0KV TRANSFORMER CKT 2
FDNS	00NR	3	20SP	G15_042	TO->FROM	GRPRAR1-LNX3345.00 - GRPRAR 345KV CKT Z	720	720	0.0322	104.5297	LOWERBRULE 4230.00 - RELIANCE 4 230.00 230KV CKT 1
FDNS	00NR	3	20SP	G15_042	TO->FROM	GRPRAR1-LNX3345.00 - GRPRAR 345KV CKT Z	720	720	0.03101	104.5226	P12:115:UMZW:# 172 #: WI IN SD.
FDNS	00NR	3	20SP	G15_042	TO->FROM	GRPRAR1-LNX3345.00 - GRPRAR 345KV CKT Z	720	720	0.03148	104.5217	GEN659118 1-LARAMIE RIVER UNIT1
FDNS	00NR	3	20SP	G15_042	TO->FROM	GRPRAR1-LNX3345.00 - GRPRAR 345KV CKT Z	720	720	0.0315	104.5073	FORMAN - HANKINSON 230KV CKT 1
FDNS	00NR	3	20SP	G15_042	TO->FROM	GRPRAR1-LNX3345.00 - GRPRAR 345KV CKT Z	720	720	0.03148	104.5025	GEN501910 1-ACADIA UNIT ST1
FDNS	00NR	3	25SP	G15_042	TO->FROM	GRPRAR1-LNX3345.00 - GRPRAR 345KV CKT Z	720	720	0.0318	104.4985	GEN335206 1-NELSON UNIT 6
FDNS	00NR	3	25SP	G15_042	TO->FROM	GRPRAR1-LNX3345.00 - GRPRAR 345KV CKT Z	720	720	0.03211	104.4907	ARPIN B4 345.00 - EAU CLAIRE 345KV CKT 1
FDNS	00NR	3	20SP	G15_042	TO->FROM	GRPRAR1-LNX3345.00 - GRPRAR 345KV CKT Z	720	720	0.03147	104.4882	ELM CREEK - MONTICELLO 345KV CKT 1
FDNS	00NR	3	25SP	G15_042	TO->FROM	GRPRAR1-LNX3345.00 - GRPRAR 345KV CKT Z	720	720	0.0318	104.4755	GEN334440 1-SABINE UNIT 4
FDNS	00NR	3	20SP	G15_042	TO->FROM	GRPRAR1-LNX3345.00 - GRPRAR 345KV CKT Z	720	720	0.03148	104.4724	GEN336221 1-LITTLE GYPSY UNIT#1
FDNS	00NR	3	20SP	G15_042	TO->FROM	GRPRAR1-LNX3345.00 - GRPRAR 345KV CKT Z	720	720	0.03148	104.4709	GEN337757 1-DUKE HOTSPRINGS STG1
FDNS	00NR	3	20SP	G15_042	TO->FROM	GRPRAR1-LNX3345.00 - GRPRAR 345KV CKT Z	720	720	0.03148	104.4506	GEN345765 H-1SIOUX 2 18.000
FDNS	00NR	3	20SP	G15_042	TO->FROM	GRPRAR1-LNX3345.00 - GRPRAR 345KV CKT Z	720	720	0.0315	104.4505	AUDUBON - SHEYNNE 230KV CKT 1
FDNS	00NR	3	25SP	G15_042	TO->FROM	GRPRAR1-LNX3345.00 - GRPRAR 345KV CKT Z	720	720	0.0318	104.4428	GEN344897 4-1LAB G4 20.000
FDNS	00NR	3	25SP	G15_042	TO->FROM	GRPRAR1-LNX3345.00 - GRPRAR 345KV CKT Z	720	720	0.0318	104.4414	GEN344894 1-1LAB G1 20.000
FDNS	00NR	3	25SP	G15_042	TO->FROM	GRPRAR1-LNX3345.00 - GRPRAR 345KV CKT Z	720	720	0.0318	104.4414	GEN344895 2-1LAB G2 20.000
FDNS	00NR	3	25SP	G15_042	TO->FROM	GRPRAR1-LNX3345.00 - GRPRAR 345KV CKT Z	720	720	0.0318	104.4413	GEN344896 3-1LAB G3 20.000
FDNS	00NR	3	20SP	G15_042	TO->FROM	GRPRAR1-LNX3345.00 - GRPRAR 345KV CKT Z	720	720	0.03203	104.4397	P12:115:NPPD:WAPA1:CHADRON7:BOXBUTE7:BTB
FDNS	00NR	3	20SP	G15_042	TO->FROM	GRPRAR1-LNX3345.00 - GRPRAR 345KV CKT Z	720	720	0.03148	104.4365	GEN337764 1-TRACTEBEL UNIT C1
FDNS	00NR	3	20SP	G15_042	TO->FROM	GRPRAR1-LNX3345.00 - GRPRAR 345KV CKT Z	720	720	0.03148	104.4365	GEN337765 1-TRACTEBEL UNIT C2
FDNS	00NR	3	20SP	G15_042	TO->FROM	GRPRAR1-LNX3345.00 - GRPRAR 345KV CKT Z	720	720	0.0316	104.4355	FRANKS - HUBEN 345KV CKT 1
FDNS	00NR	3	20SP	G15_042	TO->FROM	GRPRAR1-LNX3345.00 - GRPRAR 345KV CKT Z	720	720	0.03487	104.435	BELDEN - HOSKINS 115KV CKT 1
FDNS	00NR	3	20SP	G15_042	TO->FROM	GRPRAR1-LNX3345.00 - GRPRAR 345KV CKT Z	720	720	0.03148	104.4335	GEN334431 1-SABINE UNIT 1
FDNS	00NR	3	20SP	G15_042	TO->FROM	GRPRAR1-LNX3345.00 - GRPRAR 345KV CKT Z	720	720	0.03148	104.4334	GEN334432 1-SABINE UNIT 2
FDNS	00NR	3	20SP	G15_042	TO->FROM	GRPRAR1-LNX3345.00 - GRPRAR 345KV CKT Z	720	720	0.03132	104.4308	MT VERN - STORLA 115KV CKT 1
FDNS	00NR	3	20SP	G15_042	TO->FROM	GRPRAR1-LNX3345.00 - GRPRAR 345KV CKT Z	720	720	0.03148	104.4293	GEN336446 1-MICHOUD UNIT #2
FDNS	00NR	3	20SP	G15_042	TO->FROM	GRPRAR1-LNX3345.00 - GRPRAR 345KV CKT Z	720	720	0.0315	104.4229	LELAND OLDS - STANTON 230KV CKT 1
FDNS	00NR	3	20SP	G15_042	TO->FROM	GRPRAR1-LNX3345.00 - GRPRAR 345KV CKT Z	720	720	0.0315	104.4229	LELAND OLDS - STANTON 230KV CKT 1
FDNS	00NR	3	20SP	G15_042	TO->FROM	GRPRAR1-LNX3345.00 - GRPRAR 345KV CKT Z	720	720	0.0317	104.4211	OVEXFRMCCOVE
FDNS	00NR	3	25SP	G15_042	TO->FROM	GRPRAR1-LNX3345.00 - GRPRAR 345KV CKT Z	720	720	0.0318	104.4194	GEN635214 4-NEAL UNIT 4
FDNS	00NR	3	25SP	G15_042	TO->FROM	GRPRAR1-LNX3345.00 - GRPRAR 345KV CKT Z	720	720	0.03004	104.4155	FT THOMPSON - WESSINGTON 230KV CKT 1
FDNS	00NR	3	25SP	G15_042	TO->FROM	GRPRAR1-LNX3345.00 - GRPRAR 345KV CKT Z	720	720	0.03004	104.4155	FT THOMPSON - WESSINGTON 230KV CKT 1
FDNS	00NR	3	25SP	G15_042	TO->FROM	GRPRAR1-LNX3345.00 - GRPRAR 345KV CKT Z	720	720	0.03184	104.4073	GLENBORO SOUTH - RUGBY 230KV CKT 1
FDNS	00NR	3	20SP	G15_042	TO->FROM	GRPRAR1-LNX3345.00 - GRPRAR 345KV CKT Z	720	720	0.03148	104.4054	GRAND GULF 500/22.0KV TRANSFORMER CKT 1
FDNS	00NR	3	20SP	G15_042	TO->FROM	GRPRAR1-LNX3345.00 - GRPRAR 345KV CKT Z	720	720	0.03152	104.3976	FERGSFL4 230.00 - WAHPETON 230KV CKT 1
FDNS	00NR	3	20SP	G15_042	TO->FROM	GRPRAR1-LNX3345.00 - GRPRAR 345KV CKT Z	720	720	0.03148	104.3975	GEN336242 1-1NMIL ST1 18.000

SOLUTION	GROUP	SCENARIO	SEASON	SOURCE	DIRECTION	MONITORED ELEMENT	RATEA (MVA)	RATEB(MVA)	TDF	TC%LOADING (% MVA)	CONTINGENCY
FDNS	00NR	3	20SP	G15_042	TO->FROM	GRPRAR1-LNX3345.00 - GRPRAR 345KV CKT Z	720	720	0.03148	104.3962	GEN501823 1-TECHE UNIT 3
FDNS	00NR	3	25SP	G15_042	TO->FROM	GRPRAR1-LNX3345.00 - GRPRAR 345KV CKT Z	720	720	0.0318	104.3942	GEN338388 1-1PLUM PT U1 23.000
FDNS	00NR	3	25SP	G15_042	TO->FROM	GRPRAR1-LNX3345.00 - GRPRAR 345KV CKT Z	720	720	0.0318	104.3896	GEN345671 2-1RUSH G2 18.000
FDNS	00NR	3	20SP	G15_042	TO->FROM	GRPRAR1-LNX3345.00 - GRPRAR 345KV CKT Z	720	720	0.03149	104.3882	ELLENDLMVP4 230.00 - OAKES 230KV CKT 1
FDNS	00NR	3	20SP	G15_042	TO->FROM	GRPRAR1-LNX3345.00 - GRPRAR 345KV CKT Z	720	720	0.03149	104.3882	ELLENDLMVP4 230.00 - OAKES 230KV CKT 1
FDNS	00NR	3	20SP	G15_042	TO->FROM	GRPRAR1-LNX3345.00 - GRPRAR 345KV CKT Z	720	720	0.03149	104.3869	FORMAN - OAKES 230KV CKT 1
FDNS	00NR	3	25SP	G15_042	TO->FROM	GRPRAR1-LNX3345.00 - GRPRAR 345KV CKT Z	720	720	0.0318	104.3857	GEN345670 1-1RUSH G1 18.000
FDNS	00NR	3	20SP	G15_042	TO->FROM	GRPRAR1-LNX3345.00 - GRPRAR 345KV CKT Z	720	720	0.03148	104.3791	PRAIRIE - WINGER 230KV CKT 1
FDNS	00NR	3	20SP	G15_042	TO->FROM	GRPRAR1-LNX3345.00 - GRPRAR 345KV CKT Z	720	720	0.03148	104.3788	GEN345756 H-1SIOUX 1 18.000
FDNS	00NR	3	20SP	G15_042	TO->FROM	GRPRAR1-LNX3345.00 - GRPRAR 345KV CKT Z	720	720	0.03203	104.3764	CHADRON - DUNLAP 115KV CKT 1
FDNS	00NR	3	25SP	G15_042	TO->FROM	GRPRAR1-LNX3345.00 - GRPRAR 345KV CKT Z	720	720	0.0318	104.3737	GEN501812 1-RODEMACHER UNIT 2
FDNS	00NR	3	20SP	G15_042	TO->FROM	GRPRAR1-LNX3345.00 - GRPRAR 345KV CKT Z	720	720	0.0322	104.3727	RELIANCE 4 230.00 - WITTEN 4 230.00 230KV CKT 1
FDNS	00NR	3	20SP	G15_042	TO->FROM	GRPRAR1-LNX3345.00 - GRPRAR 345KV CKT Z	720	720	0.03153	104.3702	HANKINSON - WAHPETON 230KV CKT 1
FDNS	00NR	3	20SP	G15_042	TO->FROM	GRPRAR1-LNX3345.00 - GRPRAR 345KV CKT Z	720	720	0.03165	104.3694	HAMPTON CORNER - NORTH ROCHESTER 345KV CKT 1
FDNS	00NR	3	20SP	G15_042	TO->FROM	GRPRAR1-LNX3345.00 - GRPRAR 345KV CKT Z	720	720	0.03152	104.3636	FERGSFL4 230.00 - GRE-SILVRLK4230.00 230KV CKT 1
FDNS	00NR	3	20SP	G15_042	TO->FROM	GRPRAR1-LNX3345.00 - GRPRAR 345KV CKT Z	720	720	0.03148	104.3629	P13:230-345:NPPD:NUCOR-1
FDNS	00NR	3	20SP	G15_042	TO->FROM	GRPRAR1-LNX3345.00 - GRPRAR 345KV CKT Z	720	720	0.03148	104.3623	GEN345832 1-1TS G1 13.800
FDNS	00NR	3	20SP	G15_042	TO->FROM	GRPRAR1-LNX3345.00 - GRPRAR 345KV CKT Z	720	720	0.03148	104.362	GEN345841 2-1TS G2 13.800
FDNS	00NR	3	20SP	G15_042	TO->FROM	GRPRAR1-LNX3345.00 - GRPRAR 345KV CKT Z	720	720	0.03148	104.3606	GEN334031 1-FRONTIER UNIT 2
FDNS	00NR	3	20SP	G15_042	TO->FROM	GRPRAR1-LNX3345.00 - GRPRAR 345KV CKT Z	720	720	0.03148	104.36	GEN334030 1-FRONTIER UNIT 1
FDNS	00NR	3	20SP	G15_042	TO->FROM	GRPRAR1-LNX3345.00 - GRPRAR 345KV CKT Z	720	720	0.03148	104.3557	GEN336944 1-REX BROWN
FDNS	00NR	3	20SP	G15_042	TO->FROM	GRPRAR1-LNX3345.00 - GRPRAR 345KV CKT Z	720	720	0.03148	104.353	GEN501970 1-EVANGELINE UNIT 7
FDNS	00NR	3	20SP	G15_042	TO->FROM	GRPRAR1-LNX3345.00 - GRPRAR 345KV CKT Z	720	720	0.03224	104.3525	DENISON - SIOUX CITY 230KV CKT 1
FDNS	00NR	3	25SP	G15_042	TO->FROM	GRPRAR1-LNX3345.00 - GRPRAR 345KV CKT Z	720	720	0.0318	104.3515	GEN336191 1-LITTLE GYPSY UNIT#3
FDNS	00NR	3	25SP	G15_042	TO->FROM	GRPRAR1-LNX3345.00 - GRPRAR 345KV CKT Z	720	720	0.03334	104.347	GRIMES - LEHIGH 345KV CKT 1
FDNS	00NR	3	20SP	G15_042	TO->FROM	GRPRAR1-LNX3345.00 - GRPRAR 345KV CKT Z	720	720	0.03148	104.345	GEN335612 1-WILLOW GLENN UNIT#2
FDNS	00NR	3	20SP	G15_042	TO->FROM	GRPRAR1-LNX3345.00 - GRPRAR 345KV CKT Z	720	720	0.03247	104.3429	MARTIN - SHANNON 115KV CKT 1
FDNS	00NR	3	20SP	G15_042	TO->FROM	GRPRAR1-LNX3345.00 - GRPRAR 345KV CKT Z	720	720	0.03148	104.3425	GEN635693 3-GREATER DES MOINES ENERGY CENTER ST
FDNS	00NR	3	20SP	G15_042	TO->FROM	GRPRAR1-LNX3345.00 - GRPRAR 345KV CKT Z	720	720	0.03173	104.3408	BYRON - NORTH ROCHESTER 345KV CKT 1
FDNS	00NR	3	20SP	G15_042	TO->FROM	GRPRAR1-LNX3345.00 - GRPRAR 345KV CKT Z	720	720	0.0316	104.3391	GRE-CEDARMT3345.00 - HELENA 345KV CKT 1
FDNS	00NR	3	20SP	G15_042	TO->FROM	GRPRAR1-LNX3345.00 - GRPRAR 345KV CKT Z	720	720	0.0316	104.3391	GRE-CEDARMT3345.00 - HELENA 345KV CKT 2
FDNS	00NR	3	20SP	G15_042	TO->FROM	GRPRAR1-LNX3345.00 - GRPRAR 345KV CKT Z	720	720	0.03263	104.3376	PLYMOUTH - SIOUX CITY 161KV CKT 1
FDNS	00NR	3	20SP	G15_042	TO->FROM	GRPRAR1-LNX3345.00 - GRPRAR 345KV CKT Z	720	720	0.03263	104.3376	PLYMOUTH - SIOUX CITY 161KV CKT 1
FDNS	00NR	3	20SP	G15_042	TO->FROM	GRPRAR1-LNX3345.00 - GRPRAR 345KV CKT Z	720	720	0.03148	104.3351	GEN337430 1-PERYVILLE UNIT #3
FDNS	00NR	3	20SP	G15_042	TO->FROM	GRPRAR1-LNX3345.00 - GRPRAR 345KV CKT Z	720	720	0.03148	104.3349	GEN337428 1-PERYVILLE UNIT #1
FDNS	00NR	3	25SP	G15_042	TO->FROM	GRPRAR1-LNX3345.00 - GRPRAR 345KV CKT Z	720	720	0.03235	104.3255	KOSSUTH 3 345.00 - WEBSTER 345KV CKT 1
FDNS	00NR	3	20SP	G15_042	TO->FROM	GRPRAR1-LNX3345.00 - GRPRAR 345KV CKT Z	720	720	0.03148	104.3215	GEN562912 1-G15053_3 0.6900
FDNS	00NR	3	20SP	G15_042	TO->FROM	GRPRAR1-LNX3345.00 - GRPRAR 345KV CKT Z	720	720	0.0322	104.3213	WITTEN 4 230.00 () 230/115/13.8KV TRANSFORMER CKT 1
FDNS	00NR	3	20SP	G15_042	TO->FROM	GRPRAR1-LNX3345.00 - GRPRAR 345KV CKT Z	720	720	0.03068	104.3209	FT RANDAL - WHITE SWAN 115KV CKT 1
FDNS	00NR	3	20SP	G15_042	TO->FROM	GRPRAR1-LNX3345.00 - GRPRAR 345KV CKT Z	720	720	0.03148	104.3166	GEN338443 1-PANDA S1
FDNS	00NR	3	20SP	G15_042	TO->FROM	GRPRAR1-LNX3345.00 - GRPRAR 345KV CKT Z	720	720	0.03148	104.3144	GEN336240 1-1NMIL CT1 18.000
FDNS	00NR	3	20SP	G15_042	TO->FROM	GRPRAR1-LNX3345.00 - GRPRAR 345KV CKT Z	720	720	0.03148	104.3144	GEN336241 1-1NMIL CT2 18.000
FDNS	00NR	3	20SP	G15_042	TO->FROM	GRPRAR1-LNX3345.00 - GRPRAR 345KV CKT Z	720	720	0.03148	104.3122	GEN501912 1-ACADIA UNIT CT1B
FDNS	00NR	3	20SP	G15_042	TO->FROM	GRPRAR1-LNX3345.00 - GRPRAR 345KV CKT Z	720	720	0.03148	104.312	GEN501911 1-ACADIA UNIT CT1A
FDNS	00NR	3	20SP	G15_042	TO->FROM	GRPRAR1-LNX3345.00 - GRPRAR 345KV CKT Z	720	720	0.03148	104.3118	P12:345:GRDA:CHOUTEAU-SPORTSMANACRES
FDNS	00NR	3	25SP	G15_042	TO->FROM	GRPRAR1-LNX3345.00 - GRPRAR 345KV CKT Z	720	720	0.0318	104.301	P12:115:UMZW:# 162 #: NEL IN ND. FAULT ON ML-NEL-MX-GA 115 KV
FDNS	00NR	3	25SP	G15_042	TO->FROM	GRPRAR1-LNX3345.00 - GRPRAR 345KV CKT Z	720	720	0.0318	104.3	GEN629075 1-OTTUMWA GENERATOR FOR OTTUMWA UNIT NO 1
FDNS	00NR	3	25SP	G15_042	TO->FROM	GRPRAR1-LNX3345.00 - GRPRAR 345KV CKT Z	720	720	0.0318	104.278	GEN335614 1-WILLOW GLENN UNIT#4
FDNS	00NR	3	25SP	G15_042	TO->FROM	GRPRAR1-LNX3345.00 - GRPRAR 345KV CKT Z	720	720	0.0318	104.2731	GEN336801 1-BAXTER WILSON UNIT #1
FDNS	00NR	3	25SP	G15_042	TO->FROM	GRPRAR1-LNX3345.00 - GRPRAR 345KV CKT Z	720	720	0.0318	104.2681	GEN334441 1-SABINE UNIT 5
FDNS	00NR	3	25SP	G15_042	TO->FROM	GRPRAR1-LNX3345.00 - GRPRAR 345KV CKT Z	720	720	0.0318	104.2628	GEN336464 1-MICHOUD UNIT #3
FDNS	00NR	3	25SP	G15_042	TO->FROM	GRPRAR1-LNX3345.00 - GRPRAR 345KV CKT Z	720	720	0.0318	104.2598	GEN563222 1-G15088_3 0.6900
FDNS	00NR	3	25SP	G15_042	TO->FROM	GRPRAR1-LNX3345.00 - GRPRAR 345KV CKT Z	720	720	0.0318	104.2525	GEN335204 1-NELSON UNIT 4
FDNS	00NR	3	25SP	G15_042	TO->FROM	GRPRAR1-LNX3345.00 - GRPRAR 345KV CKT Z	720	720	0.03201	104.2413	NORTH LA CROSSE - NORTH ROCHESTER 345KV CKT 1
FDNS	00NR	3	25SP	G15_042	TO->FROM	GRPRAR1-LNX3345.00 - GRPRAR 345KV CKT Z	720	720	0.0317	104.2334	HESKETT - WISHEK 230KV CKT 1
FDNS	00NR	3	25SP	G15_042	TO->FROM	GRPRAR1-LNX3345.00 - GRPRAR 345KV CKT Z	720	720	0.03236	104.2219	ADAMS - MITCHLCO3 345.00 345KV CKT 1
FDNS	00NR	3	20SP	G15_042	TO->FROM	GRPRAR1-LNX3345.00 - GRPRAR 345KV CKT Z	720	720	0.03148	104.2029	GEN563282 1-G15094_3 0.6900
FDNS	00NR	3	25SP	G15_042	TO->FROM	GRPRAR1-LNX3345.00 - GRPRAR 345KV CKT Z	720	720	0.0318	104.171	GEN640009 1-COOPER NUCLEAR STATION
FDNS	00NR	3	25SP	G15_042	TO->FROM	GRPRAR1-LNX3345.00 - GRPRAR 345KV CKT Z	720	720	0.03179	104.1609	CENTER - COYOTE 345KV CKT 1
FDNS	00NR	3	25SP	G15_042	TO->FROM	GRPRAR1-LNX3345.00 - GRPRAR 345KV CKT Z	720	720	0.0317	104.1588	MERRCRT4 230.00 - WISHEK 230KV CKT 1
FDNS	00NR	3	25SP	G15_042	TO->FROM	GRPRAR1-LNX3345.00 - GRPRAR 345KV CKT Z	720	720	0.03409	104.1334	BLOOMFIELD - CREIGHTON 115KV CKT 1
FDNS	00NR	3	25SP	G15_042	TO->FROM	GRPRAR1-LNX3345.00 - GRPRAR 345KV CKT Z	720	720	0.0318	104.1331	GEN334433 1-SABINE UNIT 3
FDNS	00NR	3	25SP	G15_042	TO->FROM	GRPRAR1-LNX3345.00 - GRPRAR 345KV CKT Z	720	720	0.03114	104.1291	MENNO JCT - TRIPP JCT 115KV CKT 1
FDNS	00NR	3	25SP	G15_042	TO->FROM	GRPRAR1-LNX3345.00 - GRPRAR 345KV CKT Z	720	720	0.0318	104.1234	GARRISON - JAMES TOWN 230KV CKT 1
FDNS	00NR	3	25SP	G15_042	TO->FROM	GRPRAR1-LNX3345.00 - GRPRAR 345KV CKT Z	720	720	0.03162	104.1227	BROOKING COUNTY - BSSOUTH3 345.00 345KV CKT 1
FDNS	00NR	3	25SP	G15_042	TO->FROM	GRPRAR1-LNX3345.00 - GRPRAR 345KV CKT Z	720	720	0.0318	104.0991	GEN531447 1-HOLCOMB GENERATOR
FDNS	00NR	3	25SP	G15_042	TO->FROM	GRPRAR1-LNX3345.00 - GRPRAR 345KV CKT Z	720	720	0.03409	104.0946	BLOOMFIELD - GAVINS POINT 115KV CKT 1
FDNS	00NR	3	25SP	G15_042	TO->FROM	GRPRAR1-LNX3345.00 - GRPRAR 345KV CKT Z	720	720	0.0318	104.078	GEN635213 3-NEAL UNIT 3
FDNS	00NR	3	25SP	G15_042	TO->FROM	GRPRAR1-LNX3345.00 - GRPRAR 345KV CKT Z	720	720	0.0318	104.0699	GEN336222 1-LITTLE GYPSY UNIT#2
FDNS	00NR	3	17SP	G15_042	TO->FROM	GRPRAR1-LNX3345.00 - GRPRAR 345KV CKT Z	720	720	0.03313	104.0691	GEN659125 1-COVEY
FDNS	00NR	3	25SP	G15_042	TO->FROM	GRPRAR1-LNX3345.00 - GRPRAR 345KV CKT Z	720	720	0.03188	104.0445	APPLEDORN 4 230.00 - WATERTOWN 230KV CKT 1
FDNS	00NR	3	25SP	G15_042	TO->FROM	GRPRAR1-LNX3345.00 - GRPRAR 345KV CKT Z	720	720	0.03188	104.0445	APPLEDORN 4 230.00 - WATERTOWN 230KV CKT 1
FDNS	00NR	3	25SP	G15_042	TO->FROM	GRPRAR1-LNX3345.00 - GRPRAR 345KV CKT Z	720	720	0.03193	104.0303	ARKANSAS NUCLEAR ONE - FT SMITH 500KV CKT 1
FDNS	00NR	3	25SP	G15_042	TO->FROM	GRPRAR1-LNX3345.00 - GRPRAR 345KV CKT Z	720	720	0.03193	104.0303	ARKANSAS NUCLEAR ONE - FT SMITH 500KV CKT 1
FDNS	00NR	3	25SP	G15_042	TO->FROM	GRPRAR1-LNX3345.00 - GRPRAR 345KV CKT Z	720	720	0.0318	104.0169	GEN336151 1-WATERFORD UNIT#1
FDNS	00NR	3	25SP	G15_042	TO->FROM	GRPRAR1-LNX3345.00 - GRPRAR 345KV CKT Z	720	720	0.0318	104.0169	GEN336152 1-WATERFORD UNIT#2
FDNS	00NR	3	25SP	G15_042	TO->FROM	GRPRAR1-LNX3345.00 - GRPRAR 345KV CKT Z	720	720	0.03172	104.0075	BSSOUTH3 345.00 - ELLENDLMVP3 345.00 345KV CKT 1
FDNS	00NR	3	25SP	G15_042	TO->FROM	GRPRAR1-LNX3345.00 - GRPRAR 345KV CKT Z	720	720	0.03172	104.0075	BSSOUTH3 345.00 - ELLENDLMVP3 345.00 345KV CKT 1
FDNS	00NR	3	25SP	G15_042	TO->FROM	GRPRAR1-LNX3345.00 - GRPRAR 345KV CKT Z	720	720	0.03217	104	ADAMS - PLEASANT VALLEY 345KV CKT 1

SOLUTION	GROUP	SCENARIO	SEASON	SOURCE	DIRECTION	MONITORED ELEMENT	RATEA (MVA)	RATEB(MVA)	TDF	TC%LOADING (% MVA)	CONTINGENCY
FDNS	00NR	3	25SP	G15_042	TO->FROM	GRPRAR1-LNX3345.00 - GRPRAR 345KV CKT Z	720	720	0.03114	103.9992	MENNO JCT - UTICA 115KV CKT 1
FDNS	00NR	3	25SP	G15_042	TO->FROM	GRPRAR1-LNX3345.00 - GRPRAR 345KV CKT Z	720	720	0.03172	103.9866	ELLENDLMVP3 345.00 (1) 345/230/34.5KV TRANSFORMER CKT 1
FDNS	00NR	3	25SP	G15_042	TO->FROM	GRPRAR1-LNX3345.00 - GRPRAR 345KV CKT Z	720	720	0.03188	103.9802	APPLEDORN 4 230.00 - GRANITE FALLS 230KV CKT 1
FDNS	00NR	3	25SP	G15_042	TO->FROM	GRPRAR1-LNX3345.00 - GRPRAR 345KV CKT Z	720	720	0.03188	103.9802	APPLEDORN 4 230.00 - GRANITE FALLS 230KV CKT 1
FDNS	00NR	3	25SP	G15_042	TO->FROM	GRPRAR1-LNX3345.00 - GRPRAR 345KV CKT Z	720	720	0.03189	103.9791	ALEXMRES3 345.00 - WAITE PARK 345KV CKT 1
FDNS	00NR	3	25SP	G15_042	TO->FROM	GRPRAR1-LNX3345.00 - GRPRAR 345KV CKT Z	720	720	0.03186	103.9744	BLAIR - GRANITE FALLS 230KV CKT 1
FDNS	00NR	3	25SP	G15_042	TO->FROM	GRPRAR1-LNX3345.00 - GRPRAR 345KV CKT Z	720	720	0.03186	103.9744	BLAIR - GRANITE FALLS 230KV CKT 1
FDNS	00NR	3	25SP	G15_042	TO->FROM	GRPRAR1-LNX3345.00 - GRPRAR 345KV CKT Z	720	720	0.03209	103.9619	NMA B3 345 345.00 - NORTH LA CROSSE 345KV CKT 1
FDNS	00NR	3	25SP	G15_042	TO->FROM	GRPRAR1-LNX3345.00 - GRPRAR 345KV CKT Z	720	720	0.0318	103.959	GEN641089 2-ENERGY CENTER 2
FDNS	00NR	3	25SP	G15_042	TO->FROM	GRPRAR1-LNX3345.00 - GRPRAR 345KV CKT Z	720	720	0.0318	103.9458	GEN303007 1-1BC2 U2
FDNS	00NR	3	25SP	G15_042	TO->FROM	GRPRAR1-LNX3345.00 - GRPRAR 345KV CKT Z	720	720	0.03133	103.9444	WINNER - WITTEN 115KV CKT 1
FDNS	00NR	3	25SP	G15_042	TO->FROM	GRPRAR1-LNX3345.00 - GRPRAR 345KV CKT Z	720	720	0.0318	103.9403	GEN303006 1-1BC2 U1
FDNS	00NR	3	25SP	G15_042	TO->FROM	GRPRAR1-LNX3345.00 - GRPRAR 345KV CKT Z	720	720	0.03114	103.9317	P12:115:UMZZ:# 237 #: MEN IN SD. MENNO JUNCTION IS A TAP (UJ-MEN-TP).
FDNS	00NR	3	25SP	G15_042	TO->FROM	GRPRAR1-LNX3345.00 - GRPRAR 345KV CKT Z	720	720	0.0318	103.9235	P13:230:UMZW:# 2218 #: FP IN MT. LOSS OF TRANSFORMER (AT2).
FDNS	00NR	3	25SP	G15_042	TO->FROM	GRPRAR1-LNX3345.00 - GRPRAR 345KV CKT Z	720	720	0.0318	103.9136	GEN532751 1-WOLF CREEK GENERATING STATION UNIT 1
FDNS	00NR	3	25SP	G15_042	TO->FROM	GRPRAR1-LNX3345.00 - GRPRAR 345KV CKT Z	720	720	0.0318	103.9093	FARGO - JAMES TOWN 230KV CKT 1
FDNS	00NR	3	25SP	G15_042	TO->FROM	GRPRAR1-LNX3345.00 - GRPRAR 345KV CKT Z	720	720	0.03196	103.9029	NORTH ROCHESTER - PRAIRIE ISLAND 345KV CKT 1
FDNS	00NR	3	25SP	G15_042	TO->FROM	GRPRAR1-LNX3345.00 - GRPRAR 345KV CKT Z	720	720	0.03815	103.8999	RAUN - SIOUX CITY 345KV CKT 1
FDNS	00NR	3	25SP	G15_042	TO->FROM	GRPRAR1-LNX3345.00 - GRPRAR 345KV CKT Z	720	720	0.03815	103.8999	RAUN - SIOUX CITY 345KV CKT 1
FDNS	00NR	3	25SP	G15_042	TO->FROM	GRPRAR1-LNX3345.00 - GRPRAR 345KV CKT Z	720	720	0.03207	103.8987	G15094_T 345.00 - LARAMIE RIVER 345KV CKT 1
FDNS	00NR	3	25SP	G15_042	TO->FROM	GRPRAR1-LNX3345.00 - GRPRAR 345KV CKT Z	720	720	0.0318	103.8874	FARGO - JAMES TOWN 230KV CKT 2
FDNS	00NR	3	25SP	G15_042	TO->FROM	GRPRAR1-LNX3345.00 - GRPRAR 345KV CKT Z	720	720	0.0318	103.879	GEN303008 1-1BC2 U3
FDNS	00NR	3	25SP	G15_042	TO->FROM	GRPRAR1-LNX3345.00 - GRPRAR 345KV CKT Z	720	720	0.03223	103.8782	HUNTLEY3 345.00 - LEDYARD3 345.00 345KV CKT 1
FDNS	00NR	3	25SP	G15_042	TO->FROM	GRPRAR1-LNX3345.00 - GRPRAR 345KV CKT Z	720	720	0.0318	103.8736	GEN336170 1-GULF OXY U4
FDNS	00NR	3	25SP	G15_042	TO->FROM	GRPRAR1-LNX3345.00 - GRPRAR 345KV CKT Z	720	720	0.03179	103.8665	BISMARK - JAMES TOWN 230KV CKT 1
FDNS	00NR	3	25SP	G15_042	TO->FROM	GRPRAR1-LNX3345.00 - GRPRAR 345KV CKT Z	720	720	0.0318	103.8571	GEN562596 1-G14_059_3 0.6900
FDNS	00NR	3	25SP	G15_042	TO->FROM	GRPRAR1-LNX3345.00 - GRPRAR 345KV CKT Z	720	720	0.03179	103.8569	BISMARK - WEBER 230KV CKT 1
FDNS	00NR	3	20SP	G15_042	TO->FROM	GRPRAR1-LNX3345.00 - GRPRAR 345KV CKT Z	720	720	0.03148	103.8498	BASE CASE
FDNS	00NR	3	25SP	G15_042	TO->FROM	GRPRAR1-LNX3345.00 - GRPRAR 345KV CKT Z	720	720	0.03179	103.8412	JAMES TOWN - WEBER 230KV CKT 1
FDNS	00NR	3	25SP	G15_042	TO->FROM	GRPRAR1-LNX3345.00 - GRPRAR 345KV CKT Z	720	720	0.03461	103.8381	P13:230-345:NPPD:STEGALL3:KV3A
FDNS	00NR	3	25SP	G15_042	TO->FROM	GRPRAR1-LNX3345.00 - GRPRAR 345KV CKT Z	720	720	0.03461	103.8362	STEGALL (SGQ KV3A) 345/230/13.8KV TRANSFORMER CKT 1
FDNS	00NR	3	25SP	G15_042	TO->FROM	GRPRAR1-LNX3345.00 - GRPRAR 345KV CKT Z	720	720	0.03215	103.8324	HUNTLEY3 345.00 - LAKEFIELD 3 345KV CKT 1
FDNS	00NR	3	25SP	G15_042	TO->FROM	GRPRAR1-LNX3345.00 - GRPRAR 345KV CKT Z	720	720	0.03227	103.8318	P13:230-345:NPPD:SIDNEY 3:KV2A
FDNS	00NR	3	25SP	G15_042	TO->FROM	GRPRAR1-LNX3345.00 - GRPRAR 345KV CKT Z	720	720	0.03227	103.8317	SIDNEY (SDQ KV2A) 345/230/13.8KV TRANSFORMER CKT 1
FDNS	00NR	3	25SP	G15_042	TO->FROM	GRPRAR1-LNX3345.00 - GRPRAR 345KV CKT Z	720	720	0.03227	103.8316	SIDNEY - SIDNEY TRANSFORMER 230KV CKT 1
FDNS	00NR	3	25SP	G15_042	TO->FROM	GRPRAR1-LNX3345.00 - GRPRAR 345KV CKT Z	720	720	0.03155	103.8302	FT THOMPSON - HURON 230KV CKT 1
FDNS	00NR	3	25SP	G15_042	TO->FROM	GRPRAR1-LNX3345.00 - GRPRAR 345KV CKT Z	720	720	0.03155	103.8302	FT THOMPSON - HURON 230KV CKT 1
FDNS	00NR	3	25SP	G15_042	TO->FROM	GRPRAR1-LNX3345.00 - GRPRAR 345KV CKT Z	720	720	0.03155	103.8302	FT THOMPSON - HURON 230KV CKT 2
FDNS	00NR	3	25SP	G15_042	TO->FROM	GRPRAR1-LNX3345.00 - GRPRAR 345KV CKT Z	720	720	0.03155	103.8302	FT THOMPSON - HURON 230KV CKT 2
FDNS	00NR	3	25SP	G15_042	TO->FROM	GRPRAR1-LNX3345.00 - GRPRAR 345KV CKT Z	720	720	0.03461	103.8258	STEGALL - STEGALL TRANSFORMER 230KV CKT 1
FDNS	00NR	3	25SP	G15_042	TO->FROM	GRPRAR1-LNX3345.00 - GRPRAR 345KV CKT Z	720	720	0.0318	103.8214	BALTA - RAMSEY 230KV CKT 1
FDNS	00NR	3	25SP	G15_042	TO->FROM	GRPRAR1-LNX3345.00 - GRPRAR 345KV CKT Z	720	720	0.03251	103.8188	P12:230:UMZW:# 733 #: FT IN SD. FT-BG2 LINE FAULT
FDNS	00NR	3	25SP	G15_042	TO->FROM	GRPRAR1-LNX3345.00 - GRPRAR 345KV CKT Z	720	720	0.03251	103.8184	FT THOMPSON - LOWERBRULE 4230.00 230KV CKT 1
FDNS	00NR	3	25SP	G15_042	TO->FROM	GRPRAR1-LNX3345.00 - GRPRAR 345KV CKT Z	720	720	0.03251	103.8184	FT THOMPSON - LOWERBRULE 4230.00 230KV CKT 1
FDNS	00NR	3	25SP	G15_042	TO->FROM	GRPRAR1-LNX3345.00 - GRPRAR 345KV CKT Z	720	720	0.03251	103.8148	LOWERBRULE 4230.00 - RELIANCE 4 230.00 230KV CKT 1
FDNS	00NR	3	25SP	G15_042	TO->FROM	GRPRAR1-LNX3345.00 - GRPRAR 345KV CKT Z	720	720	0.0323	103.8051	P13:115-230:TSGT:SIDNEY-KV1A
FDNS	00NR	3	25SP	G15_042	TO->FROM	GRPRAR1-LNX3345.00 - GRPRAR 345KV CKT Z	720	720	0.0318	103.8043	GEN501811 1-RODEMACHER UNIT 1
FDNS	00NR	3	25SP	G15_042	TO->FROM	GRPRAR1-LNX3345.00 - GRPRAR 345KV CKT Z	720	720	0.0318	103.7844	GEN562921 1-G15054_2 0.6900
FDNS	00NR	3	25SP	G15_042	TO->FROM	GRPRAR1-LNX3345.00 - GRPRAR 345KV CKT Z	720	720	0.03182	103.7713	FORMAN - HANKINSON 230KV CKT 1
FDNS	00NR	3	25SP	G15_042	TO->FROM	GRPRAR1-LNX3345.00 - GRPRAR 345KV CKT Z	720	720	0.0318	103.7651	GEN659118 1-LARAMIE RIVER UNIT1
FDNS	00NR	3	25SP	G15_042	TO->FROM	GRPRAR1-LNX3345.00 - GRPRAR 345KV CKT Z	720	720	0.0318	103.7592	GEN334070 1-LEWIS CREEK 1
FDNS	00NR	3	25SP	G15_042	TO->FROM	GRPRAR1-LNX3345.00 - GRPRAR 345KV CKT Z	720	720	0.0318	103.7591	GEN334071 1-LEWIS CREEK 2
FDNS	00NR	3	25SP	G15_042	TO->FROM	GRPRAR1-LNX3345.00 - GRPRAR 345KV CKT Z	720	720	0.03133	103.7562	GREGORY - WINNER 115KV CKT 1
FDNS	00NR	3	25SP	G15_042	TO->FROM	GRPRAR1-LNX3345.00 - GRPRAR 345KV CKT Z	720	720	0.0318	103.7554	PRAIRIE ISLAND 345/20.0KV TRANSFORMER CKT 1
FDNS	00NR	3	25SP	G15_042	TO->FROM	GRPRAR1-LNX3345.00 - GRPRAR 345KV CKT Z	720	720	0.0318	103.7542	PRAIRIE ISLAND 345/20.0KV TRANSFORMER CKT 2
FDNS	00NR	3	25SP	G15_042	TO->FROM	GRPRAR1-LNX3345.00 - GRPRAR 345KV CKT Z	720	720	0.03133	103.7291	P12:115:UMZW:# 172 #: WI IN SD.
FDNS	00NR	3	25SP	G15_042	TO->FROM	GRPRAR1-LNX3345.00 - GRPRAR 345KV CKT Z	720	720	0.0318	103.7229	GEN337766 1-TRACTEBEL UNIT S1
FDNS	00NR	3	25SP	G15_042	TO->FROM	GRPRAR1-LNX3345.00 - GRPRAR 345KV CKT Z	720	720	0.0318	103.7169	GEN645012 2-NEBRASKA CITY 2
FDNS	00NR	3	25SP	G15_042	TO->FROM	GRPRAR1-LNX3345.00 - GRPRAR 345KV CKT Z	720	720	0.0318	103.7099	GEN337757 1-DUKE HOTSPRINGS STG1
FDNS	00NR	3	25SP	G15_042	TO->FROM	GRPRAR1-LNX3345.00 - GRPRAR 345KV CKT Z	720	720	0.0318	103.6973	ELM CREEK - MONTICELLO 345KV CKT 1
FDNS	00NR	3	25SP	G15_042	TO->FROM	GRPRAR1-LNX3345.00 - GRPRAR 345KV CKT Z	720	720	0.0318	103.6881	GEN501910 1-ACADIA UNIT ST1
FDNS	00NR	3	25SP	G15_042	TO->FROM	GRPRAR1-LNX3345.00 - GRPRAR 345KV CKT Z	720	720	0.03185	103.6855	HANKINSON - WAHPETON 230KV CKT 1
FDNS	00NR	3	25SP	G15_042	TO->FROM	GRPRAR1-LNX3345.00 - GRPRAR 345KV CKT Z	720	720	0.03182	103.6821	AUDUBON - SHEYNNE 230KV CKT 1
FDNS	00NR	3	25SP	G15_042	TO->FROM	GRPRAR1-LNX3345.00 - GRPRAR 345KV CKT Z	720	720	0.0318	103.6811	GEN645011 1-NEBRASKA CITY 1
FDNS	00NR	3	25SP	G15_042	TO->FROM	GRPRAR1-LNX3345.00 - GRPRAR 345KV CKT Z	720	720	0.03164	103.6756	MT VERN - STORLA 115KV CKT 1
FDNS	00NR	3	25SP	G15_042	TO->FROM	GRPRAR1-LNX3345.00 - GRPRAR 345KV CKT Z	720	720	0.03235	103.6752	P12:115:NPPD:WAPA1:CHADRON7:BOXBUTE7:BTB
FDNS	00NR	3	25SP	G15_042	TO->FROM	GRPRAR1-LNX3345.00 - GRPRAR 345KV CKT Z	720	720	0.03202	103.674	OVEXFRMCCOVE
FDNS	00NR	3	25SP	G15_042	TO->FROM	GRPRAR1-LNX3345.00 - GRPRAR 345KV CKT Z	720	720	0.03181	103.6694	ELLENDLMVP4 230.00 - OAKES 230KV CKT 1
FDNS	00NR	3	25SP	G15_042	TO->FROM	GRPRAR1-LNX3345.00 - GRPRAR 345KV CKT Z	720	720	0.03181	103.6694	ELLENDLMVP4 230.00 - OAKES 230KV CKT 1
FDNS	00NR	3	25SP	G15_042	TO->FROM	GRPRAR1-LNX3345.00 - GRPRAR 345KV CKT Z	720	720	0.03181	103.6671	FORMAN - OAKES 230KV CKT 1
FDNS	00NR	3	25SP	G15_042	TO->FROM	GRPRAR1-LNX3345.00 - GRPRAR 345KV CKT Z	720	720	0.0318	103.6651	GEN336221 1-LITTLE GYPSY UNIT#1
FDNS	00NR	3	25SP	G15_042	TO->FROM	GRPRAR1-LNX3345.00 - GRPRAR 345KV CKT Z	720	720	0.0352	103.6598	BELDEN - HOSKINS 115KV CKT 1
FDNS	00NR	3	25SP	G15_042	TO->FROM	GRPRAR1-LNX3345.00 - GRPRAR 345KV CKT Z	720	720	0.03251	103.6518	RELIANCE 4 230.00 - WITTEN 4 230.00 230KV CKT 1
FDNS	00NR	3	25SP	G15_042	TO->FROM	GRPRAR1-LNX3345.00 - GRPRAR 345KV CKT Z	720	720	0.03184	103.6518	FERGSFL4 230.00 - WAHPETON 230KV CKT 1
FDNS	00NR	3	25SP	G15_042	TO->FROM	GRPRAR1-LNX3345.00 - GRPRAR 345KV CKT Z	720	720	0.03192	103.649	FRANKS - HUBEN 345KV CKT 1
FDNS	00NR	3	25SP	G15_042	TO->FROM	GRPRAR1-LNX3345.00 - GRPRAR 345KV CKT Z	720	720	0.0318	103.6484	GEN532651 1-JEFFREY ENERGY CENTER UNIT 1
FDNS	00NR	3	25SP	G15_042	TO->FROM	GRPRAR1-LNX3345.00 - GRPRAR 345KV CKT Z	720	720	0.0318	103.6472	PRAIRIE - WINGER 230KV CKT 1
FDNS	00NR	3	25SP	G15_042	TO->FROM	GRPRAR1-LNX3345.00 - GRPRAR 345KV CKT Z	720	720	0.0318	103.643	GEN532652 1-JEFFREY ENERGY CENTER UNIT 2
FDNS	00NR	3	25SP	G15_042	TO->FROM	GRPRAR1-LNX3345.00 - GRPRAR 345KV CKT Z	720	720	0.0318	103.6429	GEN532653 1-JEFFREY ENERGY CENTER UNIT 3

SOLUTION	GROUP	SCENARIO	SEASON	SOURCE	DIRECTION	MONITORED ELEMENT	RATEA (MVA)	RATEB(MVA)	TDF	TC%LOADING (% MVA)	CONTINGENCY
FDNS	00NR	3	25SP	G15_042	TO->FROM	GRPRAR1-LNX3345.00 - GRPRAR 345KV CKT Z	720	720	0.03258	103.6391	NOBLES - SPLIT ROCK 345KV CKT 1
FDNS	00NR	3	25SP	G15_042	TO->FROM	GRPRAR1-LNX3345.00 - GRPRAR 345KV CKT Z	720	720	0.0318	103.6369	GRAND GULF 500/22.0KV TRANSFORMER CKT 1
FDNS	00NR	3	25SP	G15_042	TO->FROM	GRPRAR1-LNX3345.00 - GRPRAR 345KV CKT Z	720	720	0.0318	103.6319	GEN334431 1-SABINE UNIT 1
FDNS	00NR	3	25SP	G15_042	TO->FROM	GRPRAR1-LNX3345.00 - GRPRAR 345KV CKT Z	720	720	0.0318	103.6319	GEN334432 1-SABINE UNIT 2
FDNS	00NR	3	25SP	G15_042	TO->FROM	GRPRAR1-LNX3345.00 - GRPRAR 345KV CKT Z	720	720	0.0318	103.6281	GEN345765 H-1SIOUX 2 18.000
FDNS	00NR	3	25SP	G15_042	TO->FROM	GRPRAR1-LNX3345.00 - GRPRAR 345KV CKT Z	720	720	0.0318	103.6278	GEN337764 1-TRACTEBEL UNIT C1
FDNS	00NR	3	25SP	G15_042	TO->FROM	GRPRAR1-LNX3345.00 - GRPRAR 345KV CKT Z	720	720	0.0318	103.6278	GEN337765 1-TRACTEBEL UNIT C2
FDNS	00NR	3	25SP	G15_042	TO->FROM	GRPRAR1-LNX3345.00 - GRPRAR 345KV CKT Z	720	720	0.0318	103.6275	GEN336446 1-MICHOUD UNIT #2
FDNS	00NR	3	25SP	G15_042	TO->FROM	GRPRAR1-LNX3345.00 - GRPRAR 345KV CKT Z	720	720	0.03235	103.6258	CHADRON - DUNLAP 115KV CKT 1
FDNS	00NR	3	25SP	G15_042	TO->FROM	GRPRAR1-LNX3345.00 - GRPRAR 345KV CKT Z	720	720	0.03251	103.6184	WITTEN 4 230.00 () 230/115/13.8KV TRANSFORMER CKT 1
FDNS	00NR	3	25SP	G15_042	TO->FROM	GRPRAR1-LNX3345.00 - GRPRAR 345KV CKT Z	720	720	0.03184	103.6004	FERGSFL4 230.00 - GRE-SILVRLK4230.00 230KV CKT 1
FDNS	00NR	3	25SP	G15_042	TO->FROM	GRPRAR1-LNX3345.00 - GRPRAR 345KV CKT Z	720	720	0.03181	103.5991	BALTA - MCHENRY 230KV CKT 1
FDNS	00NR	3	25SP	G15_042	TO->FROM	GRPRAR1-LNX3345.00 - GRPRAR 345KV CKT Z	720	720	0.03279	103.5943	MARTIN - SHANNON 115KV CKT 1
FDNS	00NR	3	25SP	G15_042	TO->FROM	GRPRAR1-LNX3345.00 - GRPRAR 345KV CKT Z	720	720	0.0318	103.5894	GEN501823 1-TECHE UNIT 3
FDNS	00NR	3	25SP	G15_042	TO->FROM	GRPRAR1-LNX3345.00 - GRPRAR 345KV CKT Z	720	720	0.03192	103.5892	GRE-CEDARMT3345.00 - HELENA 345KV CKT 1
FDNS	00NR	3	25SP	G15_042	TO->FROM	GRPRAR1-LNX3345.00 - GRPRAR 345KV CKT Z	720	720	0.03192	103.5892	GRE-CEDARMT3345.00 - HELENA 345KV CKT 2
FDNS	00NR	3	25SP	G15_042	TO->FROM	GRPRAR1-LNX3345.00 - GRPRAR 345KV CKT Z	720	720	0.0318	103.5886	GEN336242 1-1NMIL ST1 18.000
FDNS	00NR	3	25SP	G15_042	TO->FROM	GRPRAR1-LNX3345.00 - GRPRAR 345KV CKT Z	720	720	0.0318	103.5802	GEN636641 1-LOUISA UNIT 1
FDNS	00NR	3	25SP	G15_042	TO->FROM	GRPRAR1-LNX3345.00 - GRPRAR 345KV CKT Z	720	720	0.03197	103.578	HAMPTON CORNER - NORTH ROCHESTER 345KV CKT 1
FDNS	00NR	3	25SP	G15_042	TO->FROM	GRPRAR1-LNX3345.00 - GRPRAR 345KV CKT Z	720	720	0.0318	103.5772	P13:230-345:NPPD:NUCOR-1
FDNS	00NR	3	25SP	G15_042	TO->FROM	GRPRAR1-LNX3345.00 - GRPRAR 345KV CKT Z	720	720	0.03417	103.5731	OAHE - PHILIP TAP 230KV CKT 1
FDNS	00NR	3	25SP	G15_042	TO->FROM	GRPRAR1-LNX3345.00 - GRPRAR 345KV CKT Z	720	720	0.03256	103.5722	DENISON - SIOUX CITY 230KV CKT 1
FDNS	00NR	3	25SP	G15_042	TO->FROM	GRPRAR1-LNX3345.00 - GRPRAR 345KV CKT Z	720	720	0.03296	103.5616	PLYMOUTH - SIOUX CITY 161KV CKT 1
FDNS	00NR	3	25SP	G15_042	TO->FROM	GRPRAR1-LNX3345.00 - GRPRAR 345KV CKT Z	720	720	0.03296	103.5616	PLYMOUTH - SIOUX CITY 161KV CKT 1
FDNS	00NR	3	25SP	G15_042	TO->FROM	GRPRAR1-LNX3345.00 - GRPRAR 345KV CKT Z	720	720	0.0318	103.5616	GEN334030 1-FRONTIER UNIT 1
FDNS	00NR	3	25SP	G15_042	TO->FROM	GRPRAR1-LNX3345.00 - GRPRAR 345KV CKT Z	720	720	0.0318	103.5613	GEN334031 1-FRONTIER UNIT 2
FDNS	00NR	3	25SP	G15_042	TO->FROM	GRPRAR1-LNX3345.00 - GRPRAR 345KV CKT Z	720	720	0.0318	103.5595	GEN345756 H-1SIOUX 1 18.000
FDNS	00NR	3	25SP	G15_042	TO->FROM	GRPRAR1-LNX3345.00 - GRPRAR 345KV CKT Z	720	720	0.03189	103.5581	GRE-CEDARMT3345.00 - LYON COUNTY 345KV CKT 2
FDNS	00NR	3	25SP	G15_042	TO->FROM	GRPRAR1-LNX3345.00 - GRPRAR 345KV CKT Z	720	720	0.0318	103.557	GEN562912 1-G15053_3 0.6900
FDNS	00NR	3	25SP	G15_042	TO->FROM	GRPRAR1-LNX3345.00 - GRPRAR 345KV CKT Z	720	720	0.0318	103.5557	GEN338443 1-PANDA S1
FDNS	00NR	3	25SP	G15_042	TO->FROM	GRPRAR1-LNX3345.00 - GRPRAR 345KV CKT Z	720	720	0.03189	103.5555	GRE-CEDARMT3345.00 - LYON COUNTY 345KV CKT 1
FDNS	00NR	3	25SP	G15_042	TO->FROM	GRPRAR1-LNX3345.00 - GRPRAR 345KV CKT Z	720	720	0.03203	103.5546	WAYSIDE (WAYSIDE T1) 230/115/13.8KV TRANSFORMER CKT 1
FDNS	00NR	3	25SP	G15_042	TO->FROM	GRPRAR1-LNX3345.00 - GRPRAR 345KV CKT Z	720	720	0.03203	103.5543	CHADRON - WAYSIDE 115KV CKT 1
FDNS	00NR	3	25SP	G15_042	TO->FROM	GRPRAR1-LNX3345.00 - GRPRAR 345KV CKT Z	720	720	0.03203	103.5543	P13:115-230:NPPD:WAYSIDE4:T1
FDNS	00NR	3	25SP	G15_042	TO->FROM	GRPRAR1-LNX3345.00 - GRPRAR 345KV CKT Z	720	720	0.0318	103.551	GEN336944 1-REX BROWN
FDNS	00NR	3	25SP	G15_042	TO->FROM	GRPRAR1-LNX3345.00 - GRPRAR 345KV CKT Z	720	720	0.0318	103.5493	GEN345832 1-1TS G1 13.800
FDNS	00NR	3	25SP	G15_042	TO->FROM	GRPRAR1-LNX3345.00 - GRPRAR 345KV CKT Z	720	720	0.0318	103.549	P12:345:GRDA:CHOUTEAU-SPORTSMANACRES
FDNS	00NR	3	25SP	G15_042	TO->FROM	GRPRAR1-LNX3345.00 - GRPRAR 345KV CKT Z	720	720	0.0318	103.5489	GEN345841 2-1TS G2 13.800
FDNS	00NR	3	25SP	G15_042	TO->FROM	GRPRAR1-LNX3345.00 - GRPRAR 345KV CKT Z	720	720	0.0318	103.5487	GEN501970 1-EVANGELINE UNIT 7
FDNS	00NR	3	25SP	G15_042	TO->FROM	GRPRAR1-LNX3345.00 - GRPRAR 345KV CKT Z	720	720	0.031	103.5483	FT RANDAL - WHITE SWAN 115KV CKT 1
FDNS	00NR	3	25SP	G15_042	TO->FROM	GRPRAR1-LNX3345.00 - GRPRAR 345KV CKT Z	720	720	0.0318	103.5414	GEN335612 1-WILLOW GLENN UNIT#2
FDNS	00NR	3	20SP	G15_042	TO->FROM	GRPRAR1-LNX3345.00 - GRPRAR 345KV CKT Z	720	720	0.03104	103.5229	NELIGH - PETERSBRG.N7115.00 115KV CKT 1
FDNS	00NR	3	20SP	G15_042	TO->FROM	GRPRAR1-LNX3345.00 - GRPRAR 345KV CKT Z	720	720	0.03104	103.4689	PETERSBRG.N7115.00 - PETERSBURG 115KV CKT Z1
FDNS	00NR	3	20SP	G15_042	TO->FROM	GRPRAR1-LNX3345.00 - GRPRAR 345KV CKT Z	720	720	0.03104	103.4667	P12:115:NPPD:1168B:ALBION 7:PETERSBRG.N7:BTB
FDNS	00NR	3	20SP	G15_042	TO->FROM	GRPRAR1-LNX3345.00 - GRPRAR 345KV CKT Z	720	720	0.03167	103.4657	BUCKNER7 345.00 - SPEARVILLE 345KV CKT 1
FDNS	00NR	3	20SP	G15_042	TO->FROM	GRPRAR1-LNX3345.00 - GRPRAR 345KV CKT Z	720	720	0.03167	103.4657	BUCKNER7 345.00 - SPEARVILLE 345KV CKT 1
FDNS	00NR	3	25SP	G15_042	TO->FROM	GRPRAR1-LNX3345.00 - GRPRAR 345KV CKT Z	720	720	0.0318	103.4398	GEN563282 1-G15094_3 0.6900
FDNS	00NR	3	20SP	G15_042	TO->FROM	GRPRAR1-LNX3345.00 - GRPRAR 345KV CKT Z	720	720	0.0343	103.4196	MINGO - RED WILLOW 345KV CKT 1
FDNS	00NR	3	20SP	G15_042	TO->FROM	GRPRAR1-LNX3345.00 - GRPRAR 345KV CKT Z	720	720	0.0343	103.4196	MINGO - RED WILLOW 345KV CKT 1
FDNS	00NR	3	20SP	G15_042	TO->FROM	GRPRAR1-LNX3345.00 - GRPRAR 345KV CKT Z	720	720	0.03234	103.4178	103RD & ROKEBY - MOORE 345KV CKT 1
FDNS	00NR	3	20SP	G15_042	TO->FROM	GRPRAR1-LNX3345.00 - GRPRAR 345KV CKT Z	720	720	0.03234	103.4178	103RD & ROKEBY - MOORE 345KV CKT 1
FDNS	00NR	3	20SP	G15_042	TO->FROM	GRPRAR1-LNX3345.00 - GRPRAR 345KV CKT Z	720	720	0.03425	103.402	AINSWORTH - AINSWORTH 115KV CKT 1
FDNS	00NR	3	20SP	G15_042	TO->FROM	GRPRAR1-LNX3345.00 - GRPRAR 345KV CKT Z	720	720	0.03164	103.4005	FT THOMPSON - OAHE 230KV CKT 1
FDNS	00NR	3	20SP	G15_042	TO->FROM	GRPRAR1-LNX3345.00 - GRPRAR 345KV CKT Z	720	720	0.03164	103.4005	FT THOMPSON - OAHE 230KV CKT 1
FDNS	00NR	3	20SP	G15_042	TO->FROM	GRPRAR1-LNX3345.00 - GRPRAR 345KV CKT Z	720	720	0.03164	103.4005	FT THOMPSON - OAHE 230KV CKT 2
FDNS	00NR	3	20SP	G15_042	TO->FROM	GRPRAR1-LNX3345.00 - GRPRAR 345KV CKT Z	720	720	0.03164	103.4005	FT THOMPSON - OAHE 230KV CKT 2
FDNS	00NR	3	20SP	G15_042	TO->FROM	GRPRAR1-LNX3345.00 - GRPRAR 345KV CKT Z	720	720	0.03272	103.3872	ANTELOPE 7115.00 - COUNTY LINE 115KV CKT 1
FDNS	00NR	3	20SP	G15_042	TO->FROM	GRPRAR1-LNX3345.00 - GRPRAR 345KV CKT Z	720	720	0.03165	103.3737	FT THOMPSON - OAHE 230KV CKT 3
FDNS	00NR	3	20SP	G15_042	TO->FROM	GRPRAR1-LNX3345.00 - GRPRAR 345KV CKT Z	720	720	0.03165	103.3737	FT THOMPSON - OAHE 230KV CKT 3
FDNS	00NR	3	20SP	G15_042	TO->FROM	GRPRAR1-LNX3345.00 - GRPRAR 345KV CKT Z	720	720	0.03165	103.3737	FT THOMPSON - OAHE 230KV CKT 4
FDNS	00NR	3	20SP	G15_042	TO->FROM	GRPRAR1-LNX3345.00 - GRPRAR 345KV CKT Z	720	720	0.03165	103.3737	FT THOMPSON - OAHE 230KV CKT 4
FDNS	00NR	3	20SP	G15_042	TO->FROM	GRPRAR1-LNX3345.00 - GRPRAR 345KV CKT Z	720	720	0.03218	103.3519	AXTELL - POST ROCK 345KV CKT 1
FDNS	00NR	3	20SP	G15_042	TO->FROM	GRPRAR1-LNX3345.00 - GRPRAR 345KV CKT Z	720	720	0.03141	103.3485	BISMARK - L3 HAWDON 230KV CKT 1
FDNS	00NR	3	20SP	G15_042	TO->FROM	GRPRAR1-LNX3345.00 - GRPRAR 345KV CKT Z	720	720	0.03173	103.3449	FALLOW 3 345.00 - GRIMES 345KV CKT 1
FDNS	00NR	3	20SP	G15_042	TO->FROM	GRPRAR1-LNX3345.00 - GRPRAR 345KV CKT Z	720	720	0.03159	103.3448	G11_051T 345.00 - WOODWARD DISTRICT EHV 345KV CKT 1
FDNS	00NR	3	20SP	G15_042	TO->FROM	GRPRAR1-LNX3345.00 - GRPRAR 345KV CKT Z	720	720	0.03148	103.3344	GEN659147 1-PIONEER 1G13.800
FDNS	00NR	3	20SP	G15_042	TO->FROM	GRPRAR1-LNX3345.00 - GRPRAR 345KV CKT Z	720	720	0.03148	103.3344	GEN659158 2-PIONEER G213.800
FDNS	00NR	3	20SP	G15_042	TO->FROM	GRPRAR1-LNX3345.00 - GRPRAR 345KV CKT Z	720	720	0.03148	103.3344	GEN659159 3-PIONEER G313.800
FDNS	00NR	3	20SP	G15_042	TO->FROM	GRPRAR1-LNX3345.00 - GRPRAR 345KV CKT Z	720	720	0.03148	103.3339	GEN659148 1-LONESMCRK 1G13.800
FDNS	00NR	3	20SP	G15_042	TO->FROM	GRPRAR1-LNX3345.00 - GRPRAR 345KV CKT Z	720	720	0.03148	103.3339	GEN659156 2-LONESMCRK 2G13.800
FDNS	00NR	3	20SP	G15_042	TO->FROM	GRPRAR1-LNX3345.00 - GRPRAR 345KV CKT Z	720	720	0.03148	103.3339	GEN659157 3-LONESMCRK 3G13.800
FDNS	00NR	3	20SP	G15_042	TO->FROM	GRPRAR1-LNX3345.00 - GRPRAR 345KV CKT Z	720	720	0.03148	103.3274	GEN657964 1-ASH2GEN9 0.5750
FDNS	00NR	3	20SP	G15_042	TO->FROM	GRPRAR1-LNX3345.00 - GRPRAR 345KV CKT Z	720	720	0.03148	103.3266	GEN672367 1-MERIDIAN GENERATOR 1 GT1
FDNS	00NR	3	20SP	G15_042	TO->FROM	GRPRAR1-LNX3345.00 - GRPRAR 345KV CKT Z	720	720	0.03148	103.3265	GEN672368 2-MERIDIAN GENERATOR 2 GT2
FDNS	00NR	3	20SP	G15_042	TO->FROM	GRPRAR1-LNX3345.00 - GRPRAR 345KV CKT Z	720	720	0.03148	103.3256	GEN672358 1-CHAPLN1W 0.6900
FDNS	00NR	3	20SP	G15_042	TO->FROM	GRPRAR1-LNX3345.00 - GRPRAR 345KV CKT Z	720	720	0.03144	103.3063	G14-021T 345.00 - MULLNCR7 345.00 345KV CKT 1
FDNS	00NR	3	20SP	G15_042	TO->FROM	GRPRAR1-LNX3345.00 - GRPRAR 345KV CKT Z	720	720	0.03144	103.3037	G15-005T 345.00 - MULLNCR7 345.00 345KV CKT 1
FDNS	00NR	3	20SP	G15_042	TO->FROM	GRPRAR1-LNX3345.00 - GRPRAR 345KV CKT Z	720	720	0.03148	103.303	GEN672349 3-CORY COGEN GENERATOR 3 ST
FDNS	00NR	3	20SP	G15_042	TO->FROM	GRPRAR1-LNX3345.00 - GRPRAR 345KV CKT Z	720	720	0.03148	103.3007	GEN672350 1-NIPAWIN GENERATOR 1

SOLUTION	GROUP	SCENARIO	SEASON	SOURCE	DIRECTION	MONITORED ELEMENT	RATEA (MVA)	RATEB(MVA)	TDF	TC%LOADING (% MVA)	CONTINGENCY
FDNS	00NR	3	20SP	G15_042	TO->FROM	GRPRAR1-LNX3345.00 - GRPRAR 345KV CKT Z	720	720	0.03148	103.3007	GEN672351 2-NIPAWIN GENERATOR 2
FDNS	00NR	3	20SP	G15_042	TO->FROM	GRPRAR1-LNX3345.00 - GRPRAR 345KV CKT Z	720	720	0.03148	103.3007	GEN672352 3-NIPAWIN GENERATOR 3
FDNSLock	00NR	3	20SP	G15_042	TO->FROM	GRPRAR1-LNX3345.00 - GRPRAR 345KV CKT Z	720	720	0.03131	103.2962	WATERTOWN (WT2 KU1A) 345/230/13.8KV TRANSFORMER CKT 1
FDNS	00NR	3	20SP	G15_042	TO->FROM	GRPRAR1-LNX3345.00 - GRPRAR 345KV CKT Z	720	720	0.03163	103.2949	POST ROCK (POSTROCK T1) 345/230/13.8KV TRANSFORMER CKT 1
FDNS	00NR	3	20SP	G15_042	TO->FROM	GRPRAR1-LNX3345.00 - GRPRAR 345KV CKT Z	720	720	0.03148	103.2934	GEN600012 2-BLACK DOG GEN 2
FDNS	00NR	3	20SP	G15_042	TO->FROM	GRPRAR1-LNX3345.00 - GRPRAR 345KV CKT Z	720	720	0.03304	103.2839	G15061_T 345.00 - SETAB 345KV CKT 1
FDNS	00NR	3	20SP	G15_042	TO->FROM	GRPRAR1-LNX3345.00 - GRPRAR 345KV CKT Z	720	720	0.03023	103.2807	COOPER - MOORE 345KV CKT 1
FDNS	00NR	3	20SP	G15_042	TO->FROM	GRPRAR1-LNX3345.00 - GRPRAR 345KV CKT Z	720	720	0.03148	103.2748	GEN590010 1-ERCOT EQUIVALENCE
FDNS	00NR	3	20SP	G15_042	TO->FROM	GRPRAR1-LNX3345.00 - GRPRAR 345KV CKT Z	720	720	0.03148	103.2613	GEN652548 5-FT RANDAL
FDNS	00NR	3	20SP	G15_042	TO->FROM	GRPRAR1-LNX3345.00 - GRPRAR 345KV CKT Z	720	720	0.03148	103.2613	GEN652549 7-FT RANDAL
FDNS	00NR	3	20SP	G15_042	TO->FROM	GRPRAR1-LNX3345.00 - GRPRAR 345KV CKT Z	720	720	0.03148	103.2612	GEN652546 1-FT RANDAL
FDNS	00NR	3	20SP	G15_042	TO->FROM	GRPRAR1-LNX3345.00 - GRPRAR 345KV CKT Z	720	720	0.03148	103.2586	EMERY 161/18.0KV TRANSFORMER CKT 1
FDNS	00NR	3	20SP	G15_042	TO->FROM	GRPRAR1-LNX3345.00 - GRPRAR 345KV CKT Z	720	720	0.03144	103.2569	G15-005T 345.00 - SIBLEY 345KV CKT 1
FDNS	00NR	3	20SP	G15_042	TO->FROM	GRPRAR1-LNX3345.00 - GRPRAR 345KV CKT Z	720	720	0.03148	103.2567	GEN652547 3-FT RANDAL
FDNS	00NR	3	20SP	G15_042	TO->FROM	GRPRAR1-LNX3345.00 - GRPRAR 345KV CKT Z	720	720	0.03148	103.2481	GEN590011 2-ERCOT EQUIVALENCE
FDNS	00NR	3	20SP	G15_042	TO->FROM	GRPRAR1-LNX3345.00 - GRPRAR 345KV CKT Z	720	720	0.03175	103.2386	LARAMIE RIVER - STEGALL 345KV CKT 1
FDNS	00NR	3	20SP	G15_042	TO->FROM	GRPRAR1-LNX3345.00 - GRPRAR 345KV CKT Z	720	720	0.03148	103.2384	GEN300003 1-THOMAS HILL UNIT 3
FDNS	00NR	3	20SP	G15_042	TO->FROM	GRPRAR1-LNX3345.00 - GRPRAR 345KV CKT Z	720	720	0.03148	103.2296	GEN672339 16-QE 16G 13.800
FDNS	00NR	3	20SP	G15_042	TO->FROM	GRPRAR1-LNX3345.00 - GRPRAR 345KV CKT Z	720	720	0.03148	103.2295	GEN659290 1-EDGECOL
FDNS	00NR	3	20SP	G15_042	TO->FROM	GRPRAR1-LNX3345.00 - GRPRAR 345KV CKT Z	720	720	0.03148	103.227	GEN600046 1-MECST
FDNS	00NR	3	20SP	G15_042	TO->FROM	GRPRAR1-LNX3345.00 - GRPRAR 345KV CKT Z	720	720	0.03152	103.2162	DRAYTON - LETELLIER 230KV CKT 1
FDNS	00NR	3	20SP	G15_042	TO->FROM	GRPRAR1-LNX3345.00 - GRPRAR 345KV CKT Z	720	720	0.03148	103.2157	GEN672393 2-NBECST2G 13.800
FDNS	00NR	3	20SP	G15_042	TO->FROM	GRPRAR1-LNX3345.00 - GRPRAR 345KV CKT Z	720	720	0.03148	103.2105	GEN600050 1-FEP
FDNS	00NR	3	20SP	G15_042	TO->FROM	GRPRAR1-LNX3345.00 - GRPRAR 345KV CKT Z	720	720	0.03148	103.2001	GEN620324 3-HOOT LAKE 3 GEN
FDNS	00NR	3	20SP	G15_042	TO->FROM	GRPRAR1-LNX3345.00 - GRPRAR 345KV CKT Z	720	720	0.0326	103.1946	P12:115:NPPD:1163B:NELIGH 7:NORFK.N7:BTB
FDNS	00NR	3	20SP	G15_042	TO->FROM	GRPRAR1-LNX3345.00 - GRPRAR 345KV CKT Z	720	720	0.03148	103.1944	GEN672342 3-QUEEN ELIZABETH GENERATOR 3
FDNS	00NR	3	20SP	G15_042	TO->FROM	GRPRAR1-LNX3345.00 - GRPRAR 345KV CKT Z	720	720	0.03155	103.1937	ANTELOP-LNX3345.00 - BRDLAND-LNX3345.00 345KV CKT 1
FDNS	00NR	3	20SP	G15_042	TO->FROM	GRPRAR1-LNX3345.00 - GRPRAR 345KV CKT Z	720	720	0.03148	103.1871	GEN652410 3-FT PECK
FDNS	00NR	3	20SP	G15_042	TO->FROM	GRPRAR1-LNX3345.00 - GRPRAR 345KV CKT Z	720	720	0.03148	103.1835	LADISH 115/13.2KV TRANSFORMER CKT 1
FDNS	00NR	3	20SP	G15_042	TO->FROM	GRPRAR1-LNX3345.00 - GRPRAR 345KV CKT Z	720	720	0.03201	103.1811	THEDFRD3 345.00 (THEDFORDT2) 345/115/13.8KV TRANSFORMER CKT 1
FDNS	00NR	3	20SP	G15_042	TO->FROM	GRPRAR1-LNX3345.00 - GRPRAR 345KV CKT Z	720	720	0.03148	103.1741	GEN600047 1-MECCT1
FDNS	00NR	3	20SP	G15_042	TO->FROM	GRPRAR1-LNX3345.00 - GRPRAR 345KV CKT Z	720	720	0.03148	103.1616	GEN660003 3-HURON WEST PARK
FDNS	00NR	3	20SP	G15_042	TO->FROM	GRPRAR1-LNX3345.00 - GRPRAR 345KV CKT Z	720	720	0.03148	103.1506	GEN660001 2-ABERDEEN SIEBRECHT
FDNS	00NR	3	20SP	G15_042	TO->FROM	GRPRAR1-LNX3345.00 - GRPRAR 345KV CKT Z	720	720	0.03148	103.1267	GEN600063 1-COLVILLE GEN 1
FDNS	00NR	3	20SP	G15_042	TO->FROM	GRPRAR1-LNX3345.00 - GRPRAR 345KV CKT Z	720	720	0.03148	103.1267	GEN600064 2-COLVILLE GEN 2
FDNS	00NR	3	20SP	G15_042	TO->FROM	GRPRAR1-LNX3345.00 - GRPRAR 345KV CKT Z	720	720	0.03148	103.1243	GEN652414 4-FT PECK
FDNS	00NR	3	20SP	G15_042	TO->FROM	GRPRAR1-LNX3345.00 - GRPRAR 345KV CKT Z	720	720	0.03148	103.1243	GEN652415 5-FT PECK
FDNS	00NR	3	20SP	G15_042	TO->FROM	GRPRAR1-LNX3345.00 - GRPRAR 345KV CKT Z	720	720	0.033	103.1221	GERALD GENTLEMAN STATION - RED WILLOW 345KV CKT 1
FDNS	00NR	3	20SP	G15_042	TO->FROM	GRPRAR1-LNX3345.00 - GRPRAR 345KV CKT Z	720	720	0.03148	103.1131	GEN681522 3-GENOA 3
FDNS	00NR	3	20SP	G15_042	TO->FROM	GRPRAR1-LNX3345.00 - GRPRAR 345KV CKT Z	720	720	0.03148	103.1129	GEN652345 W-G07_023IS_2 0.6900
FDNS	00NR	3	20SP	G15_042	TO->FROM	GRPRAR1-LNX3345.00 - GRPRAR 345KV CKT Z	720	720	0.03148	103.1121	GEN300007 1-NEW MADRID UNIT 2
FDNS	00NR	3	20SP	G15_042	TO->FROM	GRPRAR1-LNX3345.00 - GRPRAR 345KV CKT Z	720	720	0.03148	103.108	GEN 11104 1-J262_GEN 0.6000
FDNS	00NR	3	20SP	G15_042	TO->FROM	GRPRAR1-LNX3345.00 - GRPRAR 345KV CKT Z	720	720	0.03148	103.108	GEN 11108 1-J263_GEN 0.6000
FDNS	00NR	3	20SP	G15_042	TO->FROM	GRPRAR1-LNX3345.00 - GRPRAR 345KV CKT Z	720	720	0.03148	103.107	GEN300006 1-NEW MADRID UNIT 1
FDNS	00NR	3	17SP	G15_042	TO->FROM	GRPRAR1-LNX3345.00 - GRPRAR 345KV CKT Z	720	720	0.03313	103.1052	GEN615001 1-COAL CREEK
FDNS	00NR	3	20SP	G15_042	TO->FROM	GRPRAR1-LNX3345.00 - GRPRAR 345KV CKT Z	720	720	0.03148	103.1001	GEN600043 7-BLUE LAKE5
FDNS	00NR	3	20SP	G15_042	TO->FROM	GRPRAR1-LNX3345.00 - GRPRAR 345KV CKT Z	720	720	0.03148	103.1001	GEN600044 8-BLUE LAKE6
FDNS	00NR	3	20SP	G15_042	TO->FROM	GRPRAR1-LNX3345.00 - GRPRAR 345KV CKT Z	720	720	0.03148	103.0859	G830_SUB 115.00 - GRE-MCHENRY7115.00 115KV CKT 1
FDNS	00NR	3	25SP	G15_042	TO->FROM	GRPRAR1-LNX3345.00 - GRPRAR 345KV CKT Z	720	720	0.0318	103.0801	BASE CASE
FDNS	00NR	3	20SP	G15_042	TO->FROM	GRPRAR1-LNX3345.00 - GRPRAR 345KV CKT Z	720	720	0.03148	103.0751	G830_SUB 115.00 115/34.5KV TRANSFORMER CKT 1
FDNS	00NR	3	20SP	G15_042	TO->FROM	GRPRAR1-LNX3345.00 - GRPRAR 345KV CKT Z	720	720	0.03148	103.0749	GEN600014 4-BLACK DOG GEN 4
FDNS	00NR	3	20SP	G15_042	TO->FROM	GRPRAR1-LNX3345.00 - GRPRAR 345KV CKT Z	720	720	0.03148	103.0713	GEN600065 7-HIGH BRIDGE
FDNS	00NR	3	20SP	G15_042	TO->FROM	GRPRAR1-LNX3345.00 - GRPRAR 345KV CKT Z	720	720	0.03148	103.0713	GEN600066 8-HIGH BRIDGE
FDNS	00NR	3	20SP	G15_042	TO->FROM	GRPRAR1-LNX3345.00 - GRPRAR 345KV CKT Z	720	720	0.03148	103.0683	GEN600011 5-BLACK DOG GEN 1
FDNS	00NR	3	20SP	G15_042	TO->FROM	GRPRAR1-LNX3345.00 - GRPRAR 345KV CKT Z	720	720	0.03148	103.058	GEN600071 10-RIVER SIDE
FDNS	00NR	3	20SP	G15_042	TO->FROM	GRPRAR1-LNX3345.00 - GRPRAR 345KV CKT Z	720	720	0.03148	103.0578	GEN600070 9-RIVER SIDE
FDNS	00NR	3	20SP	G15_042	TO->FROM	GRPRAR1-LNX3345.00 - GRPRAR 345KV CKT Z	720	720	0.03148	103.0556	LANSING WEST 161/22.0KV TRANSFORMER CKT 1
FDNS	00NR	3	20SP	G15_042	TO->FROM	GRPRAR1-LNX3345.00 - GRPRAR 345KV CKT Z	720	720	0.03148	103.0467	GEN600007 7-RIVERSIDE GEN 7
FDNS	00NR	3	20SP	G15_042	TO->FROM	GRPRAR1-LNX3345.00 - GRPRAR 345KV CKT Z	720	720	0.03148	103.0328	GEN600017 C-LS POWER CT
FDNS	00NR	3	20SP	G15_042	TO->FROM	GRPRAR1-LNX3345.00 - GRPRAR 345KV CKT Z	720	720	0.03148	103.0228	GEN600045 4-ANSON
FDNS	00NR	3	20SP	G15_042	TO->FROM	GRPRAR1-LNX3345.00 - GRPRAR 345KV CKT Z	720	720	0.03159	103.009	G11_051T 345.00 - TATONGA7 345.00 345KV CKT 1
FDNS	00NR	3	17SP	G15_042	TO->FROM	GRPRAR1-LNX3345.00 - GRPRAR 345KV CKT Z	720	720	0.03313	102.9742	GEN615002 2-COAL CREEK
FDNS	00NR	3	20SP	G15_042	TO->FROM	GRPRAR1-LNX3345.00 - GRPRAR 345KV CKT Z	720	720	0.03155	102.9732	BRDLAND-LNX3345.00 - HURON 345KV CKT Z
FDNS	00NR	3	20SP	G15_042	TO->FROM	GRPRAR1-LNX3345.00 - GRPRAR 345KV CKT Z	720	720	0.03155	102.9726	BROADLAND - HURON 230KV CKT 1
FDNS	00NR	3	20SP	G15_042	TO->FROM	GRPRAR1-LNX3345.00 - GRPRAR 345KV CKT Z	720	720	0.03155	102.9726	HURON (BD KU2A) 345/230/13.8KV TRANSFORMER CKT 1
FDNS	00NR	3	20SP	G15_042	TO->FROM	GRPRAR1-LNX3345.00 - GRPRAR 345KV CKT Z	720	720	0.03155	102.9726	HURON (BD KU2A) 345/230/13.8KV TRANSFORMER CKT 1
FDNS	00NR	3	20SP	G15_042	TO->FROM	GRPRAR1-LNX3345.00 - GRPRAR 345KV CKT Z	720	720	0.03148	102.9722	GEN659294 1-WILTONCOL9
FDNS	00NR	3	20SP	G15_042	TO->FROM	GRPRAR1-LNX3345.00 - GRPRAR 345KV CKT Z	720	720	0.03148	102.9721	GEN659273 2-GROTON SYNC COND
FDNS	00NR	3	20SP	G15_042	TO->FROM	GRPRAR1-LNX3345.00 - GRPRAR 345KV CKT Z	720	720	0.03155	102.9675	P12:345:UMZB:# 103 #: BD IN SD. LOSS OF LINE
FDNS	00NR	3	20SP	G15_042	TO->FROM	GRPRAR1-LNX3345.00 - GRPRAR 345KV CKT Z	720	720	0.03155	102.966	P12:345:UMZB:# 102 #: AVS BD IN ND. AVS BRD LR
FDNS	00NR	3	20SP	G15_042	TO->FROM	GRPRAR1-LNX3345.00 - GRPRAR 345KV CKT Z	720	720	0.03148	102.9651	GEN615052 1-CAMBRIDGE GENERATING STATION
FDNS	00NR	3	20SP	G15_042	TO->FROM	GRPRAR1-LNX3345.00 - GRPRAR 345KV CKT Z	720	720	0.03148	102.9501	GEN615021 1-GRE-ER 14G 16.000
FDNS	00NR	3	20SP	G15_042	TO->FROM	GRPRAR1-LNX3345.00 - GRPRAR 345KV CKT Z	720	720	0.03155	102.927	ANTELOP-LNX3345.00 - ANTELOPE VALLEY 345KV CKT Z
FDNS	00NR	3	20SP	G15_042	TO->FROM	GRPRAR1-LNX3345.00 - GRPRAR 345KV CKT Z	720	720	0.03141	102.918	OAHE - SULLEY BUTTE 230KV CKT 1
FDNS	00NR	3	20SP	G15_042	TO->FROM	GRPRAR1-LNX3345.00 - GRPRAR 345KV CKT Z	720	720	0.03148	102.9135	GEN 10648 1-G830_GEN 0.6900
FDNS	00NR	3	20SP	G15_042	TO->FROM	GRPRAR1-LNX3345.00 - GRPRAR 345KV CKT Z	720	720	0.03148	102.9116	GEN659192 6-LYNN
FDNS	00NR	3	20SP	G15_042	TO->FROM	GRPRAR1-LNX3345.00 - GRPRAR 345KV CKT Z	720	720	0.03148	102.9104	GEN659162 4-RED WLCK
FDNS	00NR	3	20SP	G15_042	TO->FROM	GRPRAR1-LNX3345.00 - GRPRAR 345KV CKT Z	720	720	0.03148	102.9104	GEN659163 5-BLACK WDCK
FDNS	00NR	3	20SP	G15_042	TO->FROM	GRPRAR1-LNX3345.00 - GRPRAR 345KV CKT Z	720	720	0.03148	102.906	GEN659031 1-G12_014IS_4 0.6900

SOLUTION	GROUP	SCENARIO	SEASON	SOURCE	DIRECTION	MONITORED ELEMENT	RATEA (MVA)	RATEB(MVA)	TDF	TC%LOADING (% MVA)	CONTINGENCY
FDNS	00NR	3	20SP	G15_042	TO->FROM	GRPRAR1-LNX3345.00 - GRPRAR 345KV CKT Z	720	720	0.03009	102.8776	HIGHLND 3 345.00 - OBRIEN 3 345.00 345KV CKT 1
FDNS	00NR	3	20SP	G15_042	TO->FROM	GRPRAR1-LNX3345.00 - GRPRAR 345KV CKT Z	720	720	0.03148	102.8744	GEN615015 1-GRE-SPRITWDG13.200
FDNS	00NR	3	20SP	G15_042	TO->FROM	GRPRAR1-LNX3345.00 - GRPRAR 345KV CKT Z	720	720	0.03148	102.8685	GEN660016 1-B_H WIND 0.7000
FDNS	00NR	3	20SP	G15_042	TO->FROM	GRPRAR1-LNX3345.00 - GRPRAR 345KV CKT Z	720	720	0.03148	102.7857	BISONMP4 230.00 - SQUARE BUTTE 230KV CKT 1
FDNS	00NR	3	20SP	G15_042	TO->FROM	GRPRAR1-LNX3345.00 - GRPRAR 345KV CKT Z	720	720	0.03159	102.7809	MATHWSN7 345.00 - TATONGA7 345.00 345KV CKT 1
FDNS	00NR	3	25SP	G15_042	TO->FROM	GRPRAR1-LNX3345.00 - GRPRAR 345KV CKT Z	720	720	0.03136	102.7802	NELIGH - PETERSBRG.N7115.00 115KV CKT 1
FDNS	00NR	3	20SP	G15_042	TO->FROM	GRPRAR1-LNX3345.00 - GRPRAR 345KV CKT Z	720	720	0.03141	102.7569	SULLEY BUTTE - SULLYBT-LNX3230.00 230KV CKT Z
FDNS	00NR	3	20SP	G15_042	TO->FROM	GRPRAR1-LNX3345.00 - GRPRAR 345KV CKT Z	720	720	0.03141	102.7564	SULLYBT-LNX3230.00 - WHITLOK 230KV CKT 1
FDNS	00NR	3	20SP	G15_042	TO->FROM	GRPRAR1-LNX3345.00 - GRPRAR 345KV CKT Z	720	720	0.03148	102.7517	GEN600067 9-HIGH BRIDGE
FDNS	00NR	3	20SP	G15_042	TO->FROM	GRPRAR1-LNX3345.00 - GRPRAR 345KV CKT Z	720	720	0.03148	102.732	GEN672304 4-BOUNDARY DAM GENERATOR 4
FDNS	00NR	3	20SP	G15_042	TO->FROM	GRPRAR1-LNX3345.00 - GRPRAR 345KV CKT Z	720	720	0.03148	102.732	GEN672305 5-BOUNDARY DAM GENERATOR 5
FDNS	00NR	3	20SP	G15_042	TO->FROM	GRPRAR1-LNX3345.00 - GRPRAR 345KV CKT Z	720	720	0.03148	102.7319	GEN672303 3-BOUNDARY DAM GENERATOR 3
FDNS	00NR	3	20SP	G15_042	TO->FROM	GRPRAR1-LNX3345.00 - GRPRAR 345KV CKT Z	720	720	0.03141	102.7075	P12:230:UMZB:# 114 #: SB IN SD. SB-WK-GH
FDNS	00NR	3	20SP	G15_042	TO->FROM	GRPRAR1-LNX3345.00 - GRPRAR 345KV CKT Z	720	720	0.03141	102.7075	P12:230:UMZB:# 117 #: WK IN SD. SB-WK-GH
FDNS	00NR	3	20SP	G15_042	TO->FROM	GRPRAR1-LNX3345.00 - GRPRAR 345KV CKT Z	720	720	0.03148	102.705	GEN659353 1-DEERCREK CTG18.000
FDNS	00NR	3	20SP	G15_042	TO->FROM	GRPRAR1-LNX3345.00 - GRPRAR 345KV CKT Z	720	720	0.03148	102.7042	GEN659354 1-DEERCREK STG18.000
FDNS	00NR	3	25SP	G15_042	TO->FROM	GRPRAR1-LNX3345.00 - GRPRAR 345KV CKT Z	720	720	0.03136	102.7002	PETERSBRG.N7115.00 - PETERSBURG 115KV CKT Z1
FDNS	00NR	3	25SP	G15_042	TO->FROM	GRPRAR1-LNX3345.00 - GRPRAR 345KV CKT Z	720	720	0.03136	102.6865	P12:115:NPPD:1168B:ALBION 7:PETERSBRG.N7:BTB
FDNS	00NR	3	20SP	G15_042	TO->FROM	GRPRAR1-LNX3345.00 - GRPRAR 345KV CKT Z	720	720	0.03148	102.6802	GEN672392 1-NBECGT1G 18.000
FDNS	00NR	3	25SP	G15_042	TO->FROM	GRPRAR1-LNX3345.00 - GRPRAR 345KV CKT Z	720	720	0.03061	102.6647	COOPER - MOORE 345KV CKT 1
FDNS	00NR	3	20SP	G15_042	TO->FROM	GRPRAR1-LNX3345.00 - GRPRAR 345KV CKT Z	720	720	0.03141	102.6547	GLENHAM - WHITLOK 230KV CKT 1
FDNS	00NR	3	25SP	G15_042	TO->FROM	GRPRAR1-LNX3345.00 - GRPRAR 345KV CKT Z	720	720	0.03196	102.6453	FT THOMPSON - OAHE 230KV CKT 1
FDNS	00NR	3	25SP	G15_042	TO->FROM	GRPRAR1-LNX3345.00 - GRPRAR 345KV CKT Z	720	720	0.03196	102.6453	FT THOMPSON - OAHE 230KV CKT 1
FDNS	00NR	3	25SP	G15_042	TO->FROM	GRPRAR1-LNX3345.00 - GRPRAR 345KV CKT Z	720	720	0.03196	102.6453	FT THOMPSON - OAHE 230KV CKT 2
FDNS	00NR	3	25SP	G15_042	TO->FROM	GRPRAR1-LNX3345.00 - GRPRAR 345KV CKT Z	720	720	0.03196	102.6453	FT THOMPSON - OAHE 230KV CKT 2
FDNS	00NR	3	25SP	G15_042	TO->FROM	GRPRAR1-LNX3345.00 - GRPRAR 345KV CKT Z	720	720	0.03305	102.6254	ANTELOPE 7115.00 - COUNTY LINE 115KV CKT 1
FDNS	00NR	3	25SP	G15_042	TO->FROM	GRPRAR1-LNX3345.00 - GRPRAR 345KV CKT Z	720	720	0.03197	102.6182	FT THOMPSON - OAHE 230KV CKT 3
FDNS	00NR	3	25SP	G15_042	TO->FROM	GRPRAR1-LNX3345.00 - GRPRAR 345KV CKT Z	720	720	0.03197	102.6182	FT THOMPSON - OAHE 230KV CKT 3
FDNS	00NR	3	25SP	G15_042	TO->FROM	GRPRAR1-LNX3345.00 - GRPRAR 345KV CKT Z	720	720	0.03197	102.6182	FT THOMPSON - OAHE 230KV CKT 4
FDNS	00NR	3	25SP	G15_042	TO->FROM	GRPRAR1-LNX3345.00 - GRPRAR 345KV CKT Z	720	720	0.03197	102.6182	FT THOMPSON - OAHE 230KV CKT 4
FDNS	00NR	3	25SP	G15_042	TO->FROM	GRPRAR1-LNX3345.00 - GRPRAR 345KV CKT Z	720	720	0.03205	102.5915	7MAYWOOD 345.00 - 7SPENCER 345.00 345KV CKT 1
FDNS	00NR	3	25SP	G15_042	TO->FROM	GRPRAR1-LNX3345.00 - GRPRAR 345KV CKT Z	720	720	0.03181	102.5876	P12:115:UMZZ:# 232 #: AB IN SD. ABERDEEN A TAP BETWEEN ELLENDALE AND ABERDEEN-SIEBRECHT.
FDNS	00NR	3	25SP	G15_042	TO->FROM	GRPRAR1-LNX3345.00 - GRPRAR 345KV CKT Z	720	720	0.0318	102.5746	GEN672347 1-CORY COGEN GENERATOR 1 GT1
FDNS	00NR	3	25SP	G15_042	TO->FROM	GRPRAR1-LNX3345.00 - GRPRAR 345KV CKT Z	720	720	0.0318	102.5746	GEN672348 2-CORY COGEN GENERATOR 2 GT2
FDNS	00NR	3	25SP	G15_042	TO->FROM	GRPRAR1-LNX3345.00 - GRPRAR 345KV CKT Z	720	720	0.03176	102.5736	G14-021T 345.00 - MULLNCR7 345.00 345KV CKT 1
FDNS	00NR	3	25SP	G15_042	TO->FROM	GRPRAR1-LNX3345.00 - GRPRAR 345KV CKT Z	720	720	0.03173	102.5727	BISMARK - L3 HAWDON 230KV CKT 1
FDNS	00NR	3	25SP	G15_042	TO->FROM	GRPRAR1-LNX3345.00 - GRPRAR 345KV CKT Z	720	720	0.03176	102.5711	G15-005T 345.00 - MULLNCR7 345.00 345KV CKT 1
FDNS	00NR	3	25SP	G15_042	TO->FROM	GRPRAR1-LNX3345.00 - GRPRAR 345KV CKT Z	720	720	0.0318	102.5709	GEN629072 4-LANSING GENERATOR FOR UNITS NO4 EIA CODE 1
FDNS	00NR	3	25SP	G15_042	TO->FROM	GRPRAR1-LNX3345.00 - GRPRAR 345KV CKT Z	720	720	0.0318	102.5676	GEN300003 1-THOMAS HILL UNIT 3
FDNS	00NR	3	20SP	G15_042	TO->FROM	GRPRAR1-LNX3345.00 - GRPRAR 345KV CKT Z	720	720	0.03148	102.5662	GEN681542 6-JP MADGETT
FDNS	00NR	3	25SP	G15_042	TO->FROM	GRPRAR1-LNX3345.00 - GRPRAR 345KV CKT Z	720	720	0.03455	102.5642	AINSWORTH - AINSWORTH 115KV CKT 1
FDNS	00NR	3	25SP	G15_042	TO->FROM	GRPRAR1-LNX3345.00 - GRPRAR 345KV CKT Z	720	720	0.03358	102.5585	ATCHSNT3 345.00 - BOONEVILLE 345KV CKT 1
FDNS	00NR	3	25SP	G15_042	TO->FROM	GRPRAR1-LNX3345.00 - GRPRAR 345KV CKT Z	720	720	0.0318	102.5578	GEN659147 1-PIONEER 1G13.800
FDNS	00NR	3	25SP	G15_042	TO->FROM	GRPRAR1-LNX3345.00 - GRPRAR 345KV CKT Z	720	720	0.0318	102.5578	GEN659158 2-PIONEER G213.800
FDNS	00NR	3	25SP	G15_042	TO->FROM	GRPRAR1-LNX3345.00 - GRPRAR 345KV CKT Z	720	720	0.0318	102.5578	GEN659159 3-PIONEER G313.800
FDNS	00NR	3	25SP	G15_042	TO->FROM	GRPRAR1-LNX3345.00 - GRPRAR 345KV CKT Z	720	720	0.0318	102.5562	GEN672358 1-CHAPLN1W 0.6900
FDNS	00NR	3	25SP	G15_042	TO->FROM	GRPRAR1-LNX3345.00 - GRPRAR 345KV CKT Z	720	720	0.0318	102.5557	GEN659148 1-LONESMCRK 1G13.800
FDNS	00NR	3	25SP	G15_042	TO->FROM	GRPRAR1-LNX3345.00 - GRPRAR 345KV CKT Z	720	720	0.0318	102.5557	GEN659156 2-LONESMCRK 2G13.800
FDNS	00NR	3	25SP	G15_042	TO->FROM	GRPRAR1-LNX3345.00 - GRPRAR 345KV CKT Z	720	720	0.0318	102.5557	GEN659157 3-LONESMCRK 3G13.800
FDNS	00NR	3	20SP	G15_042	TO->FROM	GRPRAR1-LNX3345.00 - GRPRAR 345KV CKT Z	720	720	0.03148	102.5533	GEN662101 1-WESSINGTON190.5750
FDNS	00NR	3	25SP	G15_042	TO->FROM	GRPRAR1-LNX3345.00 - GRPRAR 345KV CKT Z	720	720	0.0318	102.553	GEN659417 1X-BEPCPKFT 1GX13.800
FDNS	00NR	3	25SP	G15_042	TO->FROM	GRPRAR1-LNX3345.00 - GRPRAR 345KV CKT Z	720	720	0.0318	102.553	GEN659418 2X-BEPCPKFT 2GX13.800
FDNS	00NR	3	25SP	G15_042	TO->FROM	GRPRAR1-LNX3345.00 - GRPRAR 345KV CKT Z	720	720	0.0318	102.553	GEN659419 3X-BEPCPKFT 3GX13.800
FDNS	00NR	3	25SP	G15_042	TO->FROM	GRPRAR1-LNX3345.00 - GRPRAR 345KV CKT Z	720	720	0.03205	102.5463	FALLOW 3 345.00 - GRIMES 345KV CKT 1
FDNS	00NR	3	25SP	G15_042	TO->FROM	GRPRAR1-LNX3345.00 - GRPRAR 345KV CKT Z	720	720	0.0318	102.5463	GEN657964 1-ASH2GEN9 0.5750
FDNS	00NR	3	20SP	G15_042	TO->FROM	GRPRAR1-LNX3345.00 - GRPRAR 345KV CKT Z	720	720	0.03148	102.5461	CENTER 230/22.0KV TRANSFORMER CKT 1
FDNS	00NR	3	25SP	G15_042	TO->FROM	GRPRAR1-LNX3345.00 - GRPRAR 345KV CKT Z	720	720	0.0298	102.5417	COLUMEAST - NW68TH & HOLDREGE 345KV CKT 1
FDNS	00NR	3	25SP	G15_042	TO->FROM	GRPRAR1-LNX3345.00 - GRPRAR 345KV CKT Z	720	720	0.0298	102.5417	COLUMEAST - NW68TH & HOLDREGE 345KV CKT 1
FDNS	00NR	3	20SP	G15_042	TO->FROM	GRPRAR1-LNX3345.00 - GRPRAR 345KV CKT Z	720	720	0.03292	102.5308	MISSION - WITTEN 115KV CKT 1
FDNS	00NR	3	25SP	G15_042	TO->FROM	GRPRAR1-LNX3345.00 - GRPRAR 345KV CKT Z	720	720	0.0318	102.5286	GEN672367 1-MERIDIAN GENERATOR 1 GT1
FDNS	00NR	3	25SP	G15_042	TO->FROM	GRPRAR1-LNX3345.00 - GRPRAR 345KV CKT Z	720	720	0.0318	102.5286	GEN672368 2-MERIDIAN GENERATOR 2 GT2
FDNS	00NR	3	25SP	G15_042	TO->FROM	GRPRAR1-LNX3345.00 - GRPRAR 345KV CKT Z	720	720	0.03176	102.5235	G15-005T 345.00 - SIBLEY 345KV CKT 1
FDNS	00NR	3	25SP	G15_042	TO->FROM	GRPRAR1-LNX3345.00 - GRPRAR 345KV CKT Z	720	720	0.03187	102.5189	ANTELOP-LNX3345.00 - BRDLAND-LNX3345.00 345KV CKT 1
FDNS	00NR	3	25SP	G15_042	TO->FROM	GRPRAR1-LNX3345.00 - GRPRAR 345KV CKT Z	720	720	0.0318	102.5159	GEN672350 1-NIPAWIN GENERATOR 1
FDNS	00NR	3	25SP	G15_042	TO->FROM	GRPRAR1-LNX3345.00 - GRPRAR 345KV CKT Z	720	720	0.0318	102.5159	GEN672351 2-NIPAWIN GENERATOR 2
FDNS	00NR	3	25SP	G15_042	TO->FROM	GRPRAR1-LNX3345.00 - GRPRAR 345KV CKT Z	720	720	0.0318	102.5159	GEN672352 3-NIPAWIN GENERATOR 3
FDNS	00NR	3	20SP	G15_042	TO->FROM	GRPRAR1-LNX3345.00 - GRPRAR 345KV CKT Z	720	720	0.03148	102.5147	GEN910006 1-G12_012IS_3 0.6900
FDNS	00NR	3	25SP	G15_042	TO->FROM	GRPRAR1-LNX3345.00 - GRPRAR 345KV CKT Z	720	720	0.03281	102.5102	HOLCOMB - SETAB 345KV CKT 1
FDNS	00NR	3	25SP	G15_042	TO->FROM	GRPRAR1-LNX3345.00 - GRPRAR 345KV CKT Z	720	720	0.03281	102.5102	HOLCOMB - SETAB 345KV CKT 1
FDNS	00NR	3	25SP	G15_042	TO->FROM	GRPRAR1-LNX3345.00 - GRPRAR 345KV CKT Z	720	720	0.0318	102.5084	GEN672349 3-CORY COGEN GENERATOR 3 ST
FDNS	00NR	3	25SP	G15_042	TO->FROM	GRPRAR1-LNX3345.00 - GRPRAR 345KV CKT Z	720	720	0.0318	102.5013	GEN600012 2-BLACK DOG GEN 2
FDNS	00NR	3	25SP	G15_042	TO->FROM	GRPRAR1-LNX3345.00 - GRPRAR 345KV CKT Z	720	720	0.0318	102.4967	GEN652546 1-FT RANDAL
FDNS	00NR	3	25SP	G15_042	TO->FROM	GRPRAR1-LNX3345.00 - GRPRAR 345KV CKT Z	720	720	0.0318	102.4962	GEN652548 5-FT RANDAL
FDNS	00NR	3	25SP	G15_042	TO->FROM	GRPRAR1-LNX3345.00 - GRPRAR 345KV CKT Z	720	720	0.0318	102.4962	GEN652549 7-FT RANDAL
FDNS	00NR	3	25SP	G15_042	TO->FROM	GRPRAR1-LNX3345.00 - GRPRAR 345KV CKT Z	720	720	0.0318	102.4917	GEN652547 3-FT RANDAL
FDNS	00NR	3	20SP	G15_042	TO->FROM	GRPRAR1-LNX3345.00 - GRPRAR 345KV CKT Z	720	720	0.03428	102.4887	ANTELOPE 3345.00 (ANTELOPE T1) 345/115/13.8KV TRANSFORMER CKT 1
FDNS	00NR	3	25SP	G15_042	TO->FROM	GRPRAR1-LNX3345.00 - GRPRAR 345KV CKT Z	720	720	0.0318	102.4884	EMERY 161/18.0KV TRANSFORMER CKT 1
FDNSLock	00NR	3	25SP	G15_042	TO->FROM	GRPRAR1-LNX3345.00 - GRPRAR 345KV CKT Z	720	720	0.03164	102.4708	WATERTOWN (WT2 KU1A) 345/230/13.8KV TRANSFORMER CKT 1
FDNS	00NR	3	25SP	G15_042	TO->FROM	GRPRAR1-LNX3345.00 - GRPRAR 345KV CKT Z	720	720	0.0318	102.4648	GEN659290 1-EDGECOL

SOLUTION	GROUP	SCENARIO	SEASON	SOURCE	DIRECTION	MONITORED ELEMENT	RATEA (MVA)	RATEB(MVA)	TDF	TC%LOADING (% MVA)	CONTINGENCY
FDNS	00NR	3	25SP	G15_042	TO->FROM	GRPRAR1-LNX3345.00 - GRPRAR 345KV CKT Z	720	720	0.03211	102.4449	FINNEY SWITCHING STATION - WALKTAP7 345.00 345KV CKT 1
FDNS	00NR	3	25SP	G15_042	TO->FROM	GRPRAR1-LNX3345.00 - GRPRAR 345KV CKT Z	720	720	0.03211	102.4449	FINNEY SWITCHING STATION - WALKTAP7 345.00 345KV CKT 1
FDNS	00NR	3	25SP	G15_042	TO->FROM	GRPRAR1-LNX3345.00 - GRPRAR 345KV CKT Z	720	720	0.03207	102.4414	LARAMIE RIVER - STEGALL 345KV CKT 1
FDNS	00NR	3	25SP	G15_042	TO->FROM	GRPRAR1-LNX3345.00 - GRPRAR 345KV CKT Z	720	720	0.03293	102.4315	P12:115:NPPD:1163B:NELIGH 7:NORFK.N7:BTB
FDNS	00NR	3	25SP	G15_042	TO->FROM	GRPRAR1-LNX3345.00 - GRPRAR 345KV CKT Z	720	720	0.02962	102.4299	FT THOMPSON (FT2 KU1A) 345/230/13.8KV TRANSFORMER CKT 1
FDNS	00NR	3	20SP	G15_042	TO->FROM	GRPRAR1-LNX3345.00 - GRPRAR 345KV CKT Z	720	720	0.03313	102.4292	AXTELL - SWEETWATER 345KV CKT 1
FDNS	00NR	3	25SP	G15_042	TO->FROM	GRPRAR1-LNX3345.00 - GRPRAR 345KV CKT Z	720	720	0.02968	102.4281	COLUMEAST - SHELL CREEK 345KV CKT 1
FDNS	00NR	3	25SP	G15_042	TO->FROM	GRPRAR1-LNX3345.00 - GRPRAR 345KV CKT Z	720	720	0.02961	102.4274	FT THOMPSON (FT2 KU1B) 345/230/13.8KV TRANSFORMER CKT 1
FDNS	00NR	3	25SP	G15_042	TO->FROM	GRPRAR1-LNX3345.00 - GRPRAR 345KV CKT Z	720	720	0.0318	102.4256	GEN300007 1-NEW MADRID UNIT 2
FDNS	00NR	3	25SP	G15_042	TO->FROM	GRPRAR1-LNX3345.00 - GRPRAR 345KV CKT Z	720	720	0.0318	102.4256	GEN672357 2-FUT-WL2X 13.800
FDNS	00NR	3	25SP	G15_042	TO->FROM	GRPRAR1-LNX3345.00 - GRPRAR 345KV CKT Z	720	720	0.0318	102.4208	GEN300006 1-NEW MADRID UNIT 1
FDNS	00NR	3	25SP	G15_042	TO->FROM	GRPRAR1-LNX3345.00 - GRPRAR 345KV CKT Z	720	720	0.0318	102.4154	GEN672393 2-NBECST2G 13.800
FDNS	00NR	3	25SP	G15_042	TO->FROM	GRPRAR1-LNX3345.00 - GRPRAR 345KV CKT Z	720	720	0.0318	102.4115	GEN652410 3-FT PECK
FDNS	00NR	3	25SP	G15_042	TO->FROM	GRPRAR1-LNX3345.00 - GRPRAR 345KV CKT Z	720	720	0.0318	102.4113	GEN672390 2-FUT-SW2X 13.800
FDNS	00NR	3	25SP	G15_042	TO->FROM	GRPRAR1-LNX3345.00 - GRPRAR 345KV CKT Z	720	720	0.0318	102.4095	GEN620324 3-HOOT LAKE 3 GEN
FDNS	00NR	3	25SP	G15_042	TO->FROM	GRPRAR1-LNX3345.00 - GRPRAR 345KV CKT Z	720	720	0.0318	102.4069	GEN600050 1-FEP
FDNS	00NR	3	25SP	G15_042	TO->FROM	GRPRAR1-LNX3345.00 - GRPRAR 345KV CKT Z	720	720	0.03129	102.4045	HELENA - SHEAS LK3 345.00 345KV CKT 1
FDNS	00NR	3	20SP	G15_042	TO->FROM	GRPRAR1-LNX3345.00 - GRPRAR 345KV CKT Z	720	720	0.03148	102.4041	CLAY BOSWELL 230/20.9KV TRANSFORMER CKT 1
FDNS	00NR	3	25SP	G15_042	TO->FROM	GRPRAR1-LNX3345.00 - GRPRAR 345KV CKT Z	720	720	0.0318	102.3981	GEN660003 3-HURON WEST PARK
FDNS	00NR	3	25SP	G15_042	TO->FROM	GRPRAR1-LNX3345.00 - GRPRAR 345KV CKT Z	720	720	0.0318	102.3955	GEN600046 1-MECST
FDNS	00NR	3	20SP	G15_042	TO->FROM	GRPRAR1-LNX3345.00 - GRPRAR 345KV CKT Z	720	720	0.03296	102.3893	G15088_T 345.00 - MOORE 345KV CKT 1
FDNS	00NR	3	25SP	G15_042	TO->FROM	GRPRAR1-LNX3345.00 - GRPRAR 345KV CKT Z	720	720	0.0318	102.3834	LADISH 115/13.2KV TRANSFORMER CKT 1
FDNS	00NR	3	25SP	G15_042	TO->FROM	GRPRAR1-LNX3345.00 - GRPRAR 345KV CKT Z	720	720	0.03227	102.382	Hitchland Interchange - WALKTAP7 345.00 345KV CKT 1
FDNS	00NR	3	25SP	G15_042	TO->FROM	GRPRAR1-LNX3345.00 - GRPRAR 345KV CKT Z	720	720	0.03227	102.382	Hitchland Interchange - WALKTAP7 345.00 345KV CKT 1
FDNS	00NR	3	25SP	G15_042	TO->FROM	GRPRAR1-LNX3345.00 - GRPRAR 345KV CKT Z	720	720	0.03227	102.3738	P12:345:SPS:J07.1.FINN.HITCH
FDNS	00NR	3	25SP	G15_042	TO->FROM	GRPRAR1-LNX3345.00 - GRPRAR 345KV CKT Z	720	720	0.0318	102.3699	GEN660001 2-ABERDEEN SIEBRECHT
FDNS	00NR	3	25SP	G15_042	TO->FROM	GRPRAR1-LNX3345.00 - GRPRAR 345KV CKT Z	720	720	0.0318	102.3648	GEN600047 1-MECCT1
FDNS	00NR	3	25SP	G15_042	TO->FROM	GRPRAR1-LNX3345.00 - GRPRAR 345KV CKT Z	720	720	0.0318	102.3497	GEN652345 W-G07_023IS_2 0.6900
FDNS	00NR	3	25SP	G15_042	TO->FROM	GRPRAR1-LNX3345.00 - GRPRAR 345KV CKT Z	720	720	0.0318	102.3477	GEN652414 4-FT PECK
FDNS	00NR	3	25SP	G15_042	TO->FROM	GRPRAR1-LNX3345.00 - GRPRAR 345KV CKT Z	720	720	0.0318	102.3477	GEN652415 5-FT PECK
FDNS	00NR	3	25SP	G15_042	TO->FROM	GRPRAR1-LNX3345.00 - GRPRAR 345KV CKT Z	720	720	0.03232	102.3442	THEDFRD3 345.00 (THEDFORDT2) 345/115/13.8KV TRANSFORMER CKT 1
FDNS	00NR	3	25SP	G15_042	TO->FROM	GRPRAR1-LNX3345.00 - GRPRAR 345KV CKT Z	720	720	0.03134	102.3347	SHEAS LK3 345.00 - WILMARTH 345KV CKT 1
FDNS	00NR	3	25SP	G15_042	TO->FROM	GRPRAR1-LNX3345.00 - GRPRAR 345KV CKT Z	720	720	0.0318	102.3216	GEN600063 1-COLVILLE GEN 1
FDNS	00NR	3	25SP	G15_042	TO->FROM	GRPRAR1-LNX3345.00 - GRPRAR 345KV CKT Z	720	720	0.0318	102.3216	GEN600064 2-COLVILLE GEN 2
FDNS	00NR	3	25SP	G15_042	TO->FROM	GRPRAR1-LNX3345.00 - GRPRAR 345KV CKT Z	720	720	0.0318	102.3205	GEN590010 1-ERCOT EQUIVALENCE
FDNS	00NR	3	25SP	G15_042	TO->FROM	GRPRAR1-LNX3345.00 - GRPRAR 345KV CKT Z	720	720	0.0318	102.3204	GEN 11104 1-J262_GEN 0.6000
FDNS	00NR	3	25SP	G15_042	TO->FROM	GRPRAR1-LNX3345.00 - GRPRAR 345KV CKT Z	720	720	0.0318	102.3204	GEN 11108 1-J263_GEN 0.6000
FDNS	00NR	3	25SP	G15_042	TO->FROM	GRPRAR1-LNX3345.00 - GRPRAR 345KV CKT Z	720	720	0.03118	102.3148	FIELD NORTH - LKFLDXL3 345KV CKT 1
FDNS	00NR	3	25SP	G15_042	TO->FROM	GRPRAR1-LNX3345.00 - GRPRAR 345KV CKT Z	720	720	0.03118	102.314	FIELD SOUTH - WILMARTH 345KV CKT 1
FDNS	00NR	3	25SP	G15_042	TO->FROM	GRPRAR1-LNX3345.00 - GRPRAR 345KV CKT Z	720	720	0.03118	102.3068	FIELD NORTH - FIELD SOUTH 345KV CKT 1
FDNS	00NR	3	25SP	G15_042	TO->FROM	GRPRAR1-LNX3345.00 - GRPRAR 345KV CKT Z	720	720	0.0318	102.3007	GEN600043 7-BLUE LAKE5
FDNS	00NR	3	25SP	G15_042	TO->FROM	GRPRAR1-LNX3345.00 - GRPRAR 345KV CKT Z	720	720	0.0318	102.3007	GEN600044 8-BLUE LAKE6
FDNS	00NR	3	25SP	G15_042	TO->FROM	GRPRAR1-LNX3345.00 - GRPRAR 345KV CKT Z	720	720	0.0318	102.3004	G830_SUB 115.00 - GRE-MCHENRY7115.00 115KV CKT 1
FDNS	00NR	3	25SP	G15_042	TO->FROM	GRPRAR1-LNX3345.00 - GRPRAR 345KV CKT Z	720	720	0.0318	102.2998	G830_SUB 115.00 115/34.5KV TRANSFORMER CKT 1
FDNS	00NR	3	25SP	G15_042	TO->FROM	GRPRAR1-LNX3345.00 - GRPRAR 345KV CKT Z	720	720	0.0318	102.2979	GEN590011 2-ERCOT EQUIVALENCE
FDNS	00NR	3	20SP	G15_042	TO->FROM	GRPRAR1-LNX3345.00 - GRPRAR 345KV CKT Z	720	720	0.03148	102.2933	GEN659289 1-DAYCNTYWND W0.6900
FDNS	00NR	3	25SP	G15_042	TO->FROM	GRPRAR1-LNX3345.00 - GRPRAR 345KV CKT Z	720	720	0.03187	102.292	BRDLAND-LNX3345.00 - HURON 345KV CKT Z
FDNS	00NR	3	25SP	G15_042	TO->FROM	GRPRAR1-LNX3345.00 - GRPRAR 345KV CKT Z	720	720	0.0318	102.2916	LANSING WEST 161/22.0KV TRANSFORMER CKT 1
FDNS	00NR	3	25SP	G15_042	TO->FROM	GRPRAR1-LNX3345.00 - GRPRAR 345KV CKT Z	720	720	0.03187	102.2915	BROADLAND - HURON 230KV CKT 1
FDNS	00NR	3	25SP	G15_042	TO->FROM	GRPRAR1-LNX3345.00 - GRPRAR 345KV CKT Z	720	720	0.03187	102.2896	HURON (BD KU2A) 345/230/13.8KV TRANSFORMER CKT 1
FDNS	00NR	3	25SP	G15_042	TO->FROM	GRPRAR1-LNX3345.00 - GRPRAR 345KV CKT Z	720	720	0.03187	102.2896	HURON (BD KU2A) 345/230/13.8KV TRANSFORMER CKT 1
FDNS	00NR	3	25SP	G15_042	TO->FROM	GRPRAR1-LNX3345.00 - GRPRAR 345KV CKT Z	720	720	0.03187	102.2887	P12:345:UMZB:# 102 #: AVS BD IN ND. AVS BRD LR
FDNS	00NR	3	25SP	G15_042	TO->FROM	GRPRAR1-LNX3345.00 - GRPRAR 345KV CKT Z	720	720	0.03187	102.2862	P12:345:UMZB:# 103 #: BD IN SD. LOSS OF LINE
FDNS	00NR	3	25SP	G15_042	TO->FROM	GRPRAR1-LNX3345.00 - GRPRAR 345KV CKT Z	720	720	0.0318	102.2778	GEN681522 3-GENOA 3
FDNS	00NR	3	25SP	G15_042	TO->FROM	GRPRAR1-LNX3345.00 - GRPRAR 345KV CKT Z	720	720	0.0318	102.2721	GEN600014 4-BLACK DOG GEN 4
FDNS	00NR	3	25SP	G15_042	TO->FROM	GRPRAR1-LNX3345.00 - GRPRAR 345KV CKT Z	720	720	0.0318	102.2696	GEN600065 7-HIGH BRIDGE
FDNS	00NR	3	25SP	G15_042	TO->FROM	GRPRAR1-LNX3345.00 - GRPRAR 345KV CKT Z	720	720	0.0318	102.2696	GEN600066 8-HIGH BRIDGE
FDNS	00NR	3	25SP	G15_042	TO->FROM	GRPRAR1-LNX3345.00 - GRPRAR 345KV CKT Z	720	720	0.0318	102.2665	GEN600011 5-BLACK DOG GEN 1
FDNS	00NR	3	25SP	G15_042	TO->FROM	GRPRAR1-LNX3345.00 - GRPRAR 345KV CKT Z	720	720	0.0318	102.2569	GEN600071 10-RIVER SIDE
FDNS	00NR	3	25SP	G15_042	TO->FROM	GRPRAR1-LNX3345.00 - GRPRAR 345KV CKT Z	720	720	0.0318	102.2567	GEN600070 9-RIVER SIDE
FDNS	00NR	3	20SP	G15_042	TO->FROM	GRPRAR1-LNX3345.00 - GRPRAR 345KV CKT Z	720	720	0.03148	102.2559	GEN563312 1-G15097_3 0.6900
FDNS	00NR	3	25SP	G15_042	TO->FROM	GRPRAR1-LNX3345.00 - GRPRAR 345KV CKT Z	720	720	0.0318	102.245	GEN600007 7-RIVERSIDE GEN 7
FDNS	00NR	3	25SP	G15_042	TO->FROM	GRPRAR1-LNX3345.00 - GRPRAR 345KV CKT Z	720	720	0.0318	102.2276	GEN600017 C-LS POWER CT
FDNS	00NR	3	20SP	G15_042	TO->FROM	GRPRAR1-LNX3345.00 - GRPRAR 345KV CKT Z	720	720	0.03148	102.2252	GEN659018 1-G14_003IS_3 0.6900
FDNS	00NR	3	25SP	G15_042	TO->FROM	GRPRAR1-LNX3345.00 - GRPRAR 345KV CKT Z	720	720	0.0318	102.2234	GEN600045 4-ANSON
FDNS	00NR	3	20SP	G15_042	TO->FROM	GRPRAR1-LNX3345.00 - GRPRAR 345KV CKT Z	720	720	0.03148	102.2014	GEN652906 1-G09_006IS_3 0.6900
FDNS	00NR	3	25SP	G15_042	TO->FROM	GRPRAR1-LNX3345.00 - GRPRAR 345KV CKT Z	720	720	0.0318	102.2013	GEN659273 2-GROTON SYNC COND
FDNS	00NR	3	25SP	G15_042	TO->FROM	GRPRAR1-LNX3345.00 - GRPRAR 345KV CKT Z	720	720	0.0318	102.2013	GEN659294 1-WILTONCOL9
FDNS	00NR	3	25SP	G15_042	TO->FROM	GRPRAR1-LNX3345.00 - GRPRAR 345KV CKT Z	720	720	0.03173	102.1888	OAHE - SULLEY BUTTE 230KV CKT 1
FDNS	00NR	3	25SP	G15_042	TO->FROM	GRPRAR1-LNX3345.00 - GRPRAR 345KV CKT Z	720	720	0.03255	102.1708	AXTELL - POST ROCK 345KV CKT 1
FDNS	00NR	3	20SP	G15_042	TO->FROM	GRPRAR1-LNX3345.00 - GRPRAR 345KV CKT Z	720	720	0.03148	102.1634	GEN652543 3-BIG BEND
FDNS	00NR	3	25SP	G15_042	TO->FROM	GRPRAR1-LNX3345.00 - GRPRAR 345KV CKT Z	720	720	0.0318	102.1568	GEN615052 1-CAMBRIDGE GENERATING STATION
FDNS	00NR	3	25SP	G15_042	TO->FROM	GRPRAR1-LNX3345.00 - GRPRAR 345KV CKT Z	720	720	0.03187	102.1541	ANTELOP-LNX3345.00 - ANTELOPE VALLEY 345KV CKT Z
FDNS	00NR	3	25SP	G15_042	TO->FROM	GRPRAR1-LNX3345.00 - GRPRAR 345KV CKT Z	720	720	0.0318	102.1393	GEN659031 1-G12_014IS_4 0.6900
FDNS	00NR	3	25SP	G15_042	TO->FROM	GRPRAR1-LNX3345.00 - GRPRAR 345KV CKT Z	720	720	0.0318	102.1251	GEN 10648 1-G830_GEN 0.6900
FDNS	00NR	3	20SP	G15_042	TO->FROM	GRPRAR1-LNX3345.00 - GRPRAR 345KV CKT Z	720	720	0.03148	102.1227	COYOTE 345/24.0KV TRANSFORMER CKT 1
FDNS	00NR	3	25SP	G15_042	TO->FROM	GRPRAR1-LNX3345.00 - GRPRAR 345KV CKT Z	720	720	0.0318	102.1207	GEN659192 6-LYNN
FDNS	00NR	3	25SP	G15_042	TO->FROM	GRPRAR1-LNX3345.00 - GRPRAR 345KV CKT Z	720	720	0.0318	102.1191	GEN659162 4-RED WLCK
FDNS	00NR	3	25SP	G15_042	TO->FROM	GRPRAR1-LNX3345.00 - GRPRAR 345KV CKT Z	720	720	0.0318	102.1191	GEN659163 5-BLACK WDCK

SOLUTION	GROUP	SCENARIO	SEASON	SOURCE	DIRECTION	MONITORED ELEMENT	RATEA (MVA)	RATEB(MVA)	TDF	TC%LOADING (% MVA)	CONTINGENCY
FDNS	00NR	3	25SP	G15_042	TO->FROM	GRPRAR1-LNX3345.00 - GRPRAR 345KV CKT Z	720	720	0.0318	102.1082	GEN660016 1-B_H WIND 0.7000
FDNS	00NR	3	20SP	G15_042	TO->FROM	GRPRAR1-LNX3345.00 - GRPRAR 345KV CKT Z	720	720	0.03148	102.0965	GEN659194 1-NDPRAIRWND1W0.6900
FDNS	00NR	3	20SP	G15_042	TO->FROM	GRPRAR1-LNX3345.00 - GRPRAR 345KV CKT Z	720	720	0.03148	102.0936	GEN659010 4-G07_027IS_2 0.6900
FDNS	00NR	3	25SP	G15_042	TO->FROM	GRPRAR1-LNX3345.00 - GRPRAR 345KV CKT Z	720	720	0.0318	102.089	GEN615021 1-GRE-ER 14G 16.000
FDNS	00NR	3	20SP	G15_042	TO->FROM	GRPRAR1-LNX3345.00 - GRPRAR 345KV CKT Z	720	720	0.03148	102.0801	GEN652460 4-GARRISON
FDNS	00NR	3	20SP	G15_042	TO->FROM	GRPRAR1-LNX3345.00 - GRPRAR 345KV CKT Z	720	720	0.03148	102.0801	GEN652461 5-GARRISON
FDNS	00NR	3	25SP	G15_042	TO->FROM	GRPRAR1-LNX3345.00 - GRPRAR 345KV CKT Z	720	720	0.0318	102.0582	GEN615015 1-GRE-SPRITWDG13.200
FDNS	00NR	3	20SP	G15_042	TO->FROM	GRPRAR1-LNX3345.00 - GRPRAR 345KV CKT Z	720	720	0.03148	102.0362	GEN652559 1-OAHE
FDNS	00NR	3	20SP	G15_042	TO->FROM	GRPRAR1-LNX3345.00 - GRPRAR 345KV CKT Z	720	720	0.03141	102.0329	GLENHAM - L3 HAWDON 230KV CKT 1
FDNS	00NR	3	25SP	G15_042	TO->FROM	GRPRAR1-LNX3345.00 - GRPRAR 345KV CKT Z	720	720	0.0318	102.0284	GEN657705 X-DRAYTON
FDNS	00NR	3	20SP	G15_042	TO->FROM	GRPRAR1-LNX3345.00 - GRPRAR 345KV CKT Z	720	720	0.03148	102.023	GEN652459 3-GARRISON
FDNS	00NR	3	20SP	G15_042	TO->FROM	GRPRAR1-LNX3345.00 - GRPRAR 345KV CKT Z	720	720	0.03148	102.0229	GEN652457 1-GARRISON
FDNS	00NR	3	20SP	G15_042	TO->FROM	GRPRAR1-LNX3345.00 - GRPRAR 345KV CKT Z	720	720	0.03148	102.0229	GEN652458 2-GARRISON
FDNS	00NR	3	25SP	G15_042	TO->FROM	GRPRAR1-LNX3345.00 - GRPRAR 345KV CKT Z	720	720	0.03173	102.0206	SULLEY BUTTE - SULLYBT-LNX3230.00 230KV CKT Z
FDNS	00NR	3	25SP	G15_042	TO->FROM	GRPRAR1-LNX3345.00 - GRPRAR 345KV CKT Z	720	720	0.03173	102.0205	SULLYBT-LNX3230.00 - WHITLOK 230KV CKT 1
FDNS	00NR	3	20SP	G15_042	TO->FROM	GRPRAR1-LNX3345.00 - GRPRAR 345KV CKT Z	720	720	0.03148	102.0128	GEN652907 1-G09_007IS_3 0.6900
FDNS	00NR	3	20SP	G15_042	TO->FROM	GRPRAR1-LNX3345.00 - GRPRAR 345KV CKT Z	720	720	0.03148	101.9957	GEN563342 1-G15098_3 0.6900
FDNS	00NR	3	25SP	G15_042	TO->FROM	GRPRAR1-LNX3345.00 - GRPRAR 345KV CKT Z	720	720	0.0318	101.9911	BISONMP4 230.00 - SQUARE BUTTE 230KV CKT 1
FDNS	00NR	3	20SP	G15_042	TO->FROM	GRPRAR1-LNX3345.00 - GRPRAR 345KV CKT Z	720	720	0.03148	101.9667	GEN659403 1-NDSUNFLWR W0.6900
FDNS	00NR	3	25SP	G15_042	TO->FROM	GRPRAR1-LNX3345.00 - GRPRAR 345KV CKT Z	720	720	0.03173	101.9646	P12:230:UMZB:# 114 #: SB IN SD. SB-WK-GH
FDNS	00NR	3	25SP	G15_042	TO->FROM	GRPRAR1-LNX3345.00 - GRPRAR 345KV CKT Z	720	720	0.03173	101.9646	P12:230:UMZB:# 117 #: WK IN SD. SB-WK-GH
FDNS	00NR	3	20SP	G15_042	TO->FROM	GRPRAR1-LNX3345.00 - GRPRAR 345KV CKT Z	720	720	0.03148	101.9441	GEN652542 1-BIG BEND
FDNS	00NR	3	25SP	G15_042	TO->FROM	GRPRAR1-LNX3345.00 - GRPRAR 345KV CKT Z	720	720	0.0318	101.9345	GEN600067 9-HIGH BRIDGE
FDNS	00NR	3	25SP	G15_042	TO->FROM	GRPRAR1-LNX3345.00 - GRPRAR 345KV CKT Z	720	720	0.0318	101.934	GEN659353 1-DEERCREK CTG18.000
FDNS	00NR	3	25SP	G15_042	TO->FROM	GRPRAR1-LNX3345.00 - GRPRAR 345KV CKT Z	720	720	0.0318	101.9329	GEN659354 1-DEERCREK STG18.000
FDNS	00NR	3	25SP	G15_042	TO->FROM	GRPRAR1-LNX3345.00 - GRPRAR 345KV CKT Z	720	720	0.03337	101.9185	G15061_T 345.00 - SETAB 345KV CKT 1
FDNS	00NR	3	20SP	G15_042	TO->FROM	GRPRAR1-LNX3345.00 - GRPRAR 345KV CKT Z	720	720	0.0336	101.9181	MCCOOL - MOORE 345KV CKT 1
FDNS	00NR	3	25SP	G15_042	TO->FROM	GRPRAR1-LNX3345.00 - GRPRAR 345KV CKT Z	720	720	0.03331	101.918	GERALD GENTLEMAN STATION - RED WILLOW 345KV CKT 1
FDNS	00NR	3	25SP	G15_042	TO->FROM	GRPRAR1-LNX3345.00 - GRPRAR 345KV CKT Z	720	720	0.0318	101.9179	GEN672303 3-BOUNDARY DAM GENERATOR 3
FDNS	00NR	3	25SP	G15_042	TO->FROM	GRPRAR1-LNX3345.00 - GRPRAR 345KV CKT Z	720	720	0.0318	101.9179	GEN672304 4-BOUNDARY DAM GENERATOR 4
FDNS	00NR	3	25SP	G15_042	TO->FROM	GRPRAR1-LNX3345.00 - GRPRAR 345KV CKT Z	720	720	0.0318	101.9178	GEN672305 5-BOUNDARY DAM GENERATOR 5
FDNS	00NR	3	25SP	G15_042	TO->FROM	GRPRAR1-LNX3345.00 - GRPRAR 345KV CKT Z	720	720	0.03173	101.9128	GLENHAM - WHITLOK 230KV CKT 1
FDNS	00NR	3	25SP	G15_042	TO->FROM	GRPRAR1-LNX3345.00 - GRPRAR 345KV CKT Z	720	720	0.0318	101.887	GEN672356 1-FUT-WL1X 18.000
FDNS	00NR	3	20SP	G15_042	TO->FROM	GRPRAR1-LNX3345.00 - GRPRAR 345KV CKT Z	720	720	0.03148	101.8758	STANTON 230/18.0KV TRANSFORMER CKT 1
FDNS	00NR	3	25SP	G15_042	TO->FROM	GRPRAR1-LNX3345.00 - GRPRAR 345KV CKT Z	720	720	0.0318	101.8561	GEN672389 1-FUT-SW1X 18.000
FDNS	00NR	3	25SP	G15_042	TO->FROM	GRPRAR1-LNX3345.00 - GRPRAR 345KV CKT Z	720	720	0.0318	101.8473	GEN672392 1-NBECGT1G 18.000
FDNS	00NR	3	17SP	G15_042	TO->FROM	GRPRAR1-LNX3345.00 - GRPRAR 345KV CKT Z	720	720	0.03311	101.8428	FTTHOM1-LNX3345.00 - LELAND2-LNX3345.00 345KV CKT 1
FDNS	00NR	3	25SP	G15_042	TO->FROM	GRPRAR1-LNX3345.00 - GRPRAR 345KV CKT Z	720	720	0.03322	101.8341	MISSION - WITTEN 115KV CKT 1
FDNS	00NR	3	20SP	G15_042	TO->FROM	GRPRAR1-LNX3345.00 - GRPRAR 345KV CKT Z	720	720	0.03148	101.8227	SQUARE BUTTE - YNG2 4 230.00 230KV CKT 1
FDNS	00NR	3	20SP	G15_042	TO->FROM	GRPRAR1-LNX3345.00 - GRPRAR 345KV CKT Z	720	720	0.03148	101.8222	YNG2 4 230.00 230/20.0KV TRANSFORMER CKT 1
FDNS	00NR	3	25SP	G15_042	TO->FROM	GRPRAR1-LNX3345.00 - GRPRAR 345KV CKT Z	720	720	0.03462	101.8204	MINGO - RED WILLOW 345KV CKT 1
FDNS	00NR	3	25SP	G15_042	TO->FROM	GRPRAR1-LNX3345.00 - GRPRAR 345KV CKT Z	720	720	0.03462	101.8204	MINGO - RED WILLOW 345KV CKT 1
FDNS	00NR	3	25SP	G15_042	TO->FROM	GRPRAR1-LNX3345.00 - GRPRAR 345KV CKT Z	720	720	0.03331	101.8165	G15088_T 345.00 - MOORE 345KV CKT 1
FDNS	00NR	3	25SP	G15_042	TO->FROM	GRPRAR1-LNX3345.00 - GRPRAR 345KV CKT Z	720	720	0.0318	101.783	GEN662101 1-WESSINGTON190.5750
FDNS	00NR	3	25SP	G15_042	TO->FROM	GRPRAR1-LNX3345.00 - GRPRAR 345KV CKT Z	720	720	0.0318	101.7437	GEN681542 6-JP MADGETT
FDNS	00NR	3	25SP	G15_042	TO->FROM	GRPRAR1-LNX3345.00 - GRPRAR 345KV CKT Z	720	720	0.0318	101.7275	GEN910006 1-G12_012IS_3 0.6900
FDNS	00NR	3	25SP	G15_042	TO->FROM	GRPRAR1-LNX3345.00 - GRPRAR 345KV CKT Z	720	720	0.0318	101.7081	CENTER 230/22.0KV TRANSFORMER CKT 1
FDNS	00NR	3	17SP	G15_042	TO->FROM	GRPRAR1-LNX3345.00 - GRPRAR 345KV CKT Z	720	720	0.03311	101.6789	P12:345:UMZB:# 108 #: LOS FT IN ND. LOS FT
FDNS	00NR	3	17SP	G15_042	TO->FROM	GRPRAR1-LNX3345.00 - GRPRAR 345KV CKT Z	720	720	0.03311	101.6699	FT THOMPSON - FTTHOM1-LNX3345.00 345KV CKT Z
FDNS	00NR	3	20SP	G15_042	TO->FROM	GRPRAR1-LNX3345.00 - GRPRAR 345KV CKT Z	720	720	0.03148	101.5847	GEN659411 1-CAMPBLCNTY W0.6900
FDNS	00NR	3	17SP	G15_042	TO->FROM	GRPRAR1-LNX3345.00 - GRPRAR 345KV CKT Z	720	720	0.03311	101.5841	LELAND OLDS - LELAND2-LNX3345.00 345KV CKT Z
FDNS	00NR	3	25SP	G15_042	TO->FROM	GRPRAR1-LNX3345.00 - GRPRAR 345KV CKT Z	720	720	0.0346	101.5839	ANTELOPE 3345.00 (ANTELOPE T1) 345/115/13.8KV TRANSFORMER CKT 1
FDNS	00NR	3	25SP	G15_042	TO->FROM	GRPRAR1-LNX3345.00 - GRPRAR 345KV CKT Z	720	720	0.03341	101.5374	AXTELL - SWEETWATER 345KV CKT 1
FDNS	00NR	3	25SP	G15_042	TO->FROM	GRPRAR1-LNX3345.00 - GRPRAR 345KV CKT Z	720	720	0.0318	101.5249	GEN659289 1-DAYCNTYWND W0.6900
FDNS	00NR	3	20SP	G15_042	TO->FROM	GRPRAR1-LNX3345.00 - GRPRAR 345KV CKT Z	720	720	0.03148	101.5017	GEN600004 2-PRAIRIE ISLAND G2
FDNS	00NR	3	20SP	G15_042	TO->FROM	GRPRAR1-LNX3345.00 - GRPRAR 345KV CKT Z	720	720	0.03148	101.4978	GEN600003 1-PRAIRIE ISLAND G1
FDNS	00NR	3	25SP	G15_042	TO->FROM	GRPRAR1-LNX3345.00 - GRPRAR 345KV CKT Z	720	720	0.0341	101.4929	MCCOOL - MOORE 345KV CKT 1
FDNS	00NR	3	25SP	G15_042	TO->FROM	GRPRAR1-LNX3345.00 - GRPRAR 345KV CKT Z	720	720	0.0318	101.4882	GEN563312 1-G15097_3 0.6900
FDNS	00NR	3	20SP	G15_042	TO->FROM	GRPRAR1-LNX3345.00 - GRPRAR 345KV CKT Z	720	720	0.03148	101.4524	GEN672321 1-SHAND GENERATOR 1
FDNS	00NR	3	25SP	G15_042	TO->FROM	GRPRAR1-LNX3345.00 - GRPRAR 345KV CKT Z	720	720	0.0318	101.4411	GEN659018 1-G14_003IS_3 0.6900
FDNS	00NR	3	25SP	G15_042	TO->FROM	GRPRAR1-LNX3345.00 - GRPRAR 345KV CKT Z	720	720	0.0318	101.4241	GEN652906 1-G09_006IS_3 0.6900
FDNS	00NR	3	20SP	G15_042	TO->FROM	GRPRAR1-LNX3345.00 - GRPRAR 345KV CKT Z	720	720	0.03148	101.3919	GEN672310 1-POPLAR RIVER GENERATOR 1
FDNS	00NR	3	20SP	G15_042	TO->FROM	GRPRAR1-LNX3345.00 - GRPRAR 345KV CKT Z	720	720	0.03148	101.3919	GEN672311 2-POPLAR RIVER GENERATOR 2
FDNS	00NR	3	20SP	G15_042	TO->FROM	GRPRAR1-LNX3345.00 - GRPRAR 345KV CKT Z	720	720	0.03148	101.374	GEN672306 6-BOUNDARY DAM GENERATOR 6
FDNS	00NR	3	20SP	G15_042	TO->FROM	GRPRAR1-LNX3345.00 - GRPRAR 345KV CKT Z	720	720	0.03148	101.3486	GEN659296 2-SDPRAIRWND1W0.6900
FDNS	00NR	3	20SP	G15_042	TO->FROM	GRPRAR1-LNX3345.00 - GRPRAR 345KV CKT Z	720	720	0.03148	101.3346	RCDC EAST 4230.00 - RED CEDAR DC 230KV CKT 1
FDNS	00NR	3	20SP	G15_042	TO->FROM	GRPRAR1-LNX3345.00 - GRPRAR 345KV CKT Z	720	720	0.03148	101.3266	P12:230:UMZB:# 112 #: NU IN SD. NU-RCDC & DRY CREEK XFMR
FDNS	00NR	3	25SP	G15_042	TO->FROM	GRPRAR1-LNX3345.00 - GRPRAR 345KV CKT Z	720	720	0.0318	101.318	GEN659010 4-G07_027IS_2 0.6900
FDNS	00NR	3	25SP	G15_042	TO->FROM	GRPRAR1-LNX3345.00 - GRPRAR 345KV CKT Z	720	720	0.0318	101.313	GEN659194 1-NDPRAIRWND1W0.6900
FDNS	00NR	3	25SP	G15_042	TO->FROM	GRPRAR1-LNX3345.00 - GRPRAR 345KV CKT Z	720	720	0.0318	101.3014	GEN652460 4-GARRISON
FDNS	00NR	3	25SP	G15_042	TO->FROM	GRPRAR1-LNX3345.00 - GRPRAR 345KV CKT Z	720	720	0.0318	101.3011	GEN652461 5-GARRISON
FDNS	00NR	3	25SP	G15_042	TO->FROM	GRPRAR1-LNX3345.00 - GRPRAR 345KV CKT Z	720	720	0.03173	101.2623	GLENHAM - L3 HAWDON 230KV CKT 1
FDNS	00NR	3	20SP	G15_042	TO->FROM	GRPRAR1-LNX3345.00 - GRPRAR 345KV CKT Z	720	720	0.03148	101.2471	GEN615010 1-STANTON4
FDNS	00NR	3	25SP	G15_042	TO->FROM	GRPRAR1-LNX3345.00 - GRPRAR 345KV CKT Z	720	720	0.0318	101.2449	GEN652457 1-GARRISON
FDNS	00NR	3	25SP	G15_042	TO->FROM	GRPRAR1-LNX3345.00 - GRPRAR 345KV CKT Z	720	720	0.0318	101.2449	GEN652458 2-GARRISON
FDNS	00NR	3	25SP	G15_042	TO->FROM	GRPRAR1-LNX3345.00 - GRPRAR 345KV CKT Z	720	720	0.0318	101.2449	GEN652459 3-GARRISON
FDNS	00NR	3	25SP	G15_042	TO->FROM	GRPRAR1-LNX3345.00 - GRPRAR 345KV CKT Z	720	720	0.0318	101.236	GEN652907 1-G09_007IS_3 0.6900
FDNS	00NR	3	25SP	G15_042	TO->FROM	GRPRAR1-LNX3345.00 - GRPRAR 345KV CKT Z	720	720	0.03042	101.2198	HIGHLND 3 345.00 - OBRIEN 3 345.00 345KV CKT 1
FDNS	00NR	3	25SP	G15_042	TO->FROM	GRPRAR1-LNX3345.00 - GRPRAR 345KV CKT Z	720	720	0.0318	101.2043	GEN563342 1-G15098_3 0.6900

SOLUTION	GROUP	SCENARIO	SEASON	SOURCE	DIRECTION	MONITORED ELEMENT	RATEA (MVA)	RATEB(MVA)	TDF	TC%LOADING (% MVA)	CONTINGENCY
FDNS	00NR	3	25SP	G15_042	TO->FROM	GRPRAR1-LNX3345.00 - GRPRAR 345KV CKT Z	720	720	0.0318	101.1869	GEN659403 1-NDSUNFLWR W0.6900
FDNS	00NR	3	25SP	G15_042	TO->FROM	GRPRAR1-LNX3345.00 - GRPRAR 345KV CKT Z	720	720	0.0318	101.1801	GEN652543 3-BIG BEND
FDNS	00NR	3	25SP	G15_042	TO->FROM	GRPRAR1-LNX3345.00 - GRPRAR 345KV CKT Z	720	720	0.0318	101.1738	GEN652542 1-BIG BEND
FDNS	00NR	3	20SP	G15_042	TO->FROM	GRPRAR1-LNX3345.00 - GRPRAR 345KV CKT Z	720	720	0.03148	101.1527	GEN600006 1-AS KING
FDNS	00NR	3	20SP	G15_042	TO->FROM	GRPRAR1-LNX3345.00 - GRPRAR 345KV CKT Z	720	720	0.03148	101.1495	GEN659453 1-GI1414GEN W0.6900
FDNS	00NR	3	20SP	G15_042	TO->FROM	GRPRAR1-LNX3345.00 - GRPRAR 345KV CKT Z	720	720	0.03148	101.148	GEN563302 1-G15096_3 0.6900
FDNS	00NR	3	25SP	G15_042	TO->FROM	GRPRAR1-LNX3345.00 - GRPRAR 345KV CKT Z	720	720	0.0318	101.0461	STANTON 230/18.0KV TRANSFORMER CKT 1
FDNS	00NR	3	20SP	G15_042	TO->FROM	GRPRAR1-LNX3345.00 - GRPRAR 345KV CKT Z	720	720	0.03148	101.0432	GEN659141 1-K10215A
FDNS	00NR	3	20SP	G15_042	TO->FROM	GRPRAR1-LNX3345.00 - GRPRAR 345KV CKT Z	720	720	0.03148	101.0421	GEN652556 2-OAHE
FDNS	00NR	3	20SP	G15_042	TO->FROM	GRPRAR1-LNX3345.00 - GRPRAR 345KV CKT Z	720	720	0.03148	101.0421	GEN652557 4-OAHE
FDNS	00NR	3	20SP	G15_042	TO->FROM	GRPRAR1-LNX3345.00 - GRPRAR 345KV CKT Z	720	720	0.03148	101.0421	GEN652558 6-OAHE
FDNS	00NR	3	20SP	G15_042	TO->FROM	GRPRAR1-LNX3345.00 - GRPRAR 345KV CKT Z	720	720	0.03148	101.0146	GEN659110 1-LELAND OLDS UNIT1
FDNS	00NR	3	25SP	G15_042	TO->FROM	GRPRAR1-LNX3345.00 - GRPRAR 345KV CKT Z	720	720	0.0318	100.8673	GEN652559 1-OAHE
FDNS	00NR	3	20SP	G15_042	TO->FROM	GRPRAR1-LNX3345.00 - GRPRAR 345KV CKT Z	720	720	0.03148	100.8527	GEN652173 1-G09_001IS_2 0.6900
FDNS	00NR	3	25SP	G15_042	TO->FROM	GRPRAR1-LNX3345.00 - GRPRAR 345KV CKT Z	720	720	0.0318	100.8105	GEN659411 1-CAMPBLCNTY W0.6900
FDNS	00NR	3	25SP	G15_042	TO->FROM	GRPRAR1-LNX3345.00 - GRPRAR 345KV CKT Z	720	720	0.0318	100.6656	SQUARE BUTTE - YNG2 4 230.00 230KV CKT 1
FDNS	00NR	3	20SP	G15_042	TO->FROM	GRPRAR1-LNX3345.00 - GRPRAR 345KV CKT Z	720	720	0.03148	100.6412	GEN657749 1-YOUNG 1 GENERATOR
FDNS	00NR	3	20SP	G15_042	TO->FROM	GRPRAR1-LNX3345.00 - GRPRAR 345KV CKT Z	720	720	0.03354	100.6335	GRAND ISLAND - MCCOOL 345KV CKT 1
FDNS	00NR	3	25SP	G15_042	TO->FROM	GRPRAR1-LNX3345.00 - GRPRAR 345KV CKT Z	720	720	0.0318	100.6064	GEN600004 2-PRAIRIE ISLAND G2
FDNS	00NR	3	25SP	G15_042	TO->FROM	GRPRAR1-LNX3345.00 - GRPRAR 345KV CKT Z	720	720	0.0318	100.6022	GEN600003 1-PRAIRIE ISLAND G1
FDNS	00NR	3	25SP	G15_042	TO->FROM	GRPRAR1-LNX3345.00 - GRPRAR 345KV CKT Z	720	720	0.0318	100.5929	GEN672310 1-POPLAR RIVER GENERATOR 1
FDNS	00NR	3	25SP	G15_042	TO->FROM	GRPRAR1-LNX3345.00 - GRPRAR 345KV CKT Z	720	720	0.0318	100.5928	GEN672311 2-POPLAR RIVER GENERATOR 2
FDNS	00NR	3	25SP	G15_042	TO->FROM	GRPRAR1-LNX3345.00 - GRPRAR 345KV CKT Z	720	720	0.0318	100.5818	GEN659296 2-SDPRAIRWND1W0.6900
FDNS	00NR	3	25SP	G15_042	TO->FROM	GRPRAR1-LNX3345.00 - GRPRAR 345KV CKT Z	720	720	0.0318	100.5804	GEN672321 1-SHAND GENERATOR 1
FDNS	00NR	3	20SP	G15_042	TO->FROM	GRPRAR1-LNX3345.00 - GRPRAR 345KV CKT Z	720	720	0.03148	100.5434	GEN659407 1-ANTELPHILLSW0.6900
FDNS	00NR	3	25SP	G15_042	TO->FROM	GRPRAR1-LNX3345.00 - GRPRAR 345KV CKT Z	720	720	0.0318	100.5327	P12:230:UMZB:# 112 #: NU IN SD. NU-RCDC & DRY CREEK XFMR
FDNS	00NR	3	25SP	G15_042	TO->FROM	GRPRAR1-LNX3345.00 - GRPRAR 345KV CKT Z	720	720	0.0318	100.524	RCDC EAST 4230.00 - RED CEDAR DC 230KV CKT 1
FDNS	00NR	3	25SP	G15_042	TO->FROM	GRPRAR1-LNX3345.00 - GRPRAR 345KV CKT Z	720	720	0.0318	100.4985	GEN672306 6-BOUNDARY DAM GENERATOR 6
FDNS	00NR	3	25SP	G15_042	TO->FROM	GRPRAR1-LNX3345.00 - GRPRAR 345KV CKT Z	720	720	0.0318	100.3879	GEN615010 1-STANTON4
FDNS	00NR	3	25SP	G15_042	TO->FROM	GRPRAR1-LNX3345.00 - GRPRAR 345KV CKT Z	720	720	0.0318	100.3611	GEN659453 1-GI1414GEN W0.6900
FDNS	00NR	3	25SP	G15_042	TO->FROM	GRPRAR1-LNX3345.00 - GRPRAR 345KV CKT Z	720	720	0.0318	100.3591	GEN563302 1-G15096_3 0.6900
FDNS	00NR	3	25SP	G15_042	TO->FROM	GRPRAR1-LNX3345.00 - GRPRAR 345KV CKT Z	720	720	0.0318	100.2695	GEN652557 4-OAHE
FDNS	00NR	3	25SP	G15_042	TO->FROM	GRPRAR1-LNX3345.00 - GRPRAR 345KV CKT Z	720	720	0.0318	100.2695	GEN652558 6-OAHE
FDNS	00NR	3	25SP	G15_042	TO->FROM	GRPRAR1-LNX3345.00 - GRPRAR 345KV CKT Z	720	720	0.0318	100.2694	GEN652556 2-OAHE
FDNS	00NR	3	25SP	G15_042	TO->FROM	GRPRAR1-LNX3345.00 - GRPRAR 345KV CKT Z	720	720	0.0318	100.2557	GEN600006 1-AS KING
FDNS	00NR	3	25SP	G15_042	TO->FROM	GRPRAR1-LNX3345.00 - GRPRAR 345KV CKT Z	720	720	0.0318	100.2432	GEN659141 1-K10215A
FDNS	00NR	3	20SP	G15_042	TO->FROM	GRPRAR1-LNX3345.00 - GRPRAR 345KV CKT Z	720	720	0.03148	100.2235	GEN600005 1-MONTICELLO
FDNS	00NR	3	25SP	G15_042	TO->FROM	GRPRAR1-LNX3345.00 - GRPRAR 345KV CKT Z	720	720	0.0318	100.197	GEN659110 1-LELAND OLDS UNIT1
FDNS	00NR	3	25SP	G15_042	TO->FROM	GRPRAR1-LNX3345.00 - GRPRAR 345KV CKT Z	720	720	0.03402	100.181	GRAND ISLAND - MCCOOL 345KV CKT 1
FDNS	00NR	3	20SP	G15_042	TO->FROM	GRPRAR1-LNX3345.00 - GRPRAR 345KV CKT Z	720	720	0.03148	100.1	GEN600000 1-SHERBURNECNTY G1
FDNS	00NR	3	25SP	G15_042	TO->FROM	GRPRAR1-LNX3345.00 - GRPRAR 345KV CKT Z	720	720	0.0318	100.0899	GEN652173 1-G09_001IS_2 0.6900
FDNS	00NR	3	20SP	G15_042	TO->FROM	GRPRAR1-LNX3345.00 - GRPRAR 345KV CKT Z	720	720	0.03148	99.8	GEN600001 2-SHERBURNE CNTY G2
FDNS	00NR	3	25SP	G15_042	TO->FROM	GRPRAR1-LNX3345.00 - GRPRAR 345KV CKT Z	720	720	0.0318	99.8	CLAY BOSWELL 230/20.9KV TRANSFORMER CKT 1
FDNS	00NR	3	25SP	G15_042	TO->FROM	GRPRAR1-LNX3345.00 - GRPRAR 345KV CKT Z	720	720	0.0318	99.8	GEN657749 1-YOUNG 1 GENERATOR
FDNS	00NR	3	25SP	G15_042	TO->FROM	GRPRAR1-LNX3345.00 - GRPRAR 345KV CKT Z	720	720	0.0318	99.8	GEN659407 1-ANTELPHILLSW0.6900
FDNS	00NR	3	20SP	G15_042	TO->FROM	GRPRAR1-LNX3345.00 - GRPRAR 345KV CKT Z	720	720	0.03148	99.7	GEN661015 1-COYOTE
FDNS	00NR	3	20SP	G15_042	TO->FROM	GRPRAR1-LNX3345.00 - GRPRAR 345KV CKT Z	720	720	0.03148	99.5	GEN620315 1-BIG STONE GEN
FDNS	00NR	3	17SP	G15_042	FROM->TO	GRPRAR1-LNX3345.00 - HOLT.CO3 345.00 345KV CKT 1	720	720	0.03092	120.402	P12:230:UMZB:# 116 #: ST IN SD. WSG-ST-VH
FDNS	00NR	3	17SP	G15_042	FROM->TO	GRPRAR1-LNX3345.00 - HOLT.CO3 345.00 345KV CKT 1	720	720	0.03699	120.18	KELLY - MEADOWGROVE4230.00 230KV CKT 1
FDNS	00NR	3	17SP	G15_042	FROM->TO	GRPRAR1-LNX3345.00 - HOLT.CO3 345.00 345KV CKT 1	720	720	0.03212	119.5799	WATERTN-LNX3345.00 - WATERTOWN 345KV CKT Z
FDNS	00NR	3	17SP	G15_042	FROM->TO	GRPRAR1-LNX3345.00 - HOLT.CO3 345.00 345KV CKT 1	720	720	0.03212	119.5469	P12:345:UMZW:# 1747 #: WT2 IN SD. WT2-WHT LINE FAULT
FDNS	00NR	3	17SP	G15_042	FROM->TO	GRPRAR1-LNX3345.00 - HOLT.CO3 345.00 345KV CKT 1	720	720	0.03212	119.5349	WATERTN-LNX3345.00 - WHITE 345KV CKT 1
FDNS	00NR	3	17SP	G15_042	FROM->TO	GRPRAR1-LNX3345.00 - HOLT.CO3 345.00 345KV CKT 1	720	720	0.03129	119.4581	STORLA - WESSINGTON 230KV CKT 1
FDNS	00NR	3	17SP	G15_042	FROM->TO	GRPRAR1-LNX3345.00 - HOLT.CO3 345.00 345KV CKT 1	720	720	0.0328	118.7842	G09_001IST 345.00 - WATERTOWN 345KV CKT 1
FDNS	00NR	3	17SP	G15_042	FROM->TO	GRPRAR1-LNX3345.00 - HOLT.CO3 345.00 345KV CKT 1	720	720	0.03125	118.3592	HANLON - STORLA 230KV CKT 1
FDNS	00NR	3	17SP	G15_042	FROM->TO	GRPRAR1-LNX3345.00 - HOLT.CO3 345.00 345KV CKT 1	720	720	0.03081	117.7273	FT THOMPSON - LETCHER 230KV CKT 1
FDNS	00NR	3	17SP	G15_042	FROM->TO	GRPRAR1-LNX3345.00 - HOLT.CO3 345.00 345KV CKT 1	720	720	0.03081	117.7273	FT THOMPSON - LETCHER 230KV CKT 1
FDNS	00NR	3	17SP	G15_042	FROM->TO	GRPRAR1-LNX3345.00 - HOLT.CO3 345.00 345KV CKT 1	720	720	0.03311	117.336	BUFFALO - JAMESTOWN 345KV CKT 1
FDNS	00NR	3	17SP	G15_042	FROM->TO	GRPRAR1-LNX3345.00 - HOLT.CO3 345.00 345KV CKT 1	720	720	0.03056	116.3154	FT RANDAL - G12_009IST 230.00 230KV CKT 1
FDNS	00NR	3	17SP	G15_042	FROM->TO	GRPRAR1-LNX3345.00 - HOLT.CO3 345.00 345KV CKT 1	720	720	0.03049	116.281	FT RANDAL - FT THOMPSON 230KV CKT 1
FDNS	00NR	3	17SP	G15_042	FROM->TO	GRPRAR1-LNX3345.00 - HOLT.CO3 345.00 345KV CKT 1	720	720	0.03049	116.281	FT RANDAL - FT THOMPSON 230KV CKT 1
FDNS	00NR	3	17SP	G15_042	FROM->TO	GRPRAR1-LNX3345.00 - HOLT.CO3 345.00 345KV CKT 1	720	720	0.03311	116.2451	CHISAGO COUNTY - FORBES 500KV CKT 1
FDNS	00NR	3	17SP	G15_042	FROM->TO	GRPRAR1-LNX3345.00 - HOLT.CO3 345.00 345KV CKT 1	720	720	0.03056	116.2018	FT THOMPSON - LAKE PLATT 230KV CKT 1
FDNS	00NR	3	17SP	G15_042	FROM->TO	GRPRAR1-LNX3345.00 - HOLT.CO3 345.00 345KV CKT 1	720	720	0.03056	116.2018	FT THOMPSON - LAKE PLATT 230KV CKT 1
FDNS	00NR	3	17SP	G15_042	FROM->TO	GRPRAR1-LNX3345.00 - HOLT.CO3 345.00 345KV CKT 1	720	720	0.0328	116.1752	G09_001IST 345.00 - GROTON 345KV CKT 1
FDNS	00NR	3	17SP	G15_042	FROM->TO	GRPRAR1-LNX3345.00 - HOLT.CO3 345.00 345KV CKT 1	720	720	0.04126	116.1304	NUNDRWD - WAYSIDE 230KV CKT 1
FDNS	00NR	3	17SP	G15_042	FROM->TO	GRPRAR1-LNX3345.00 - HOLT.CO3 345.00 345KV CKT 1	720	720	0.03056	115.8251	G12_009IST 230.00 - LAKE PLATT 230KV CKT 1
FDNS	00NR	3	17SP	G15_042	FROM->TO	GRPRAR1-LNX3345.00 - HOLT.CO3 345.00 345KV CKT 1	720	720	0.03311	115.7675	CENTER - JAMESTOWN 345KV CKT 1
FDNS	00NR	3	17SP	G15_042	FROM->TO	GRPRAR1-LNX3345.00 - HOLT.CO3 345.00 345KV CKT 1	720	720	0.03699	115.6425	FT RANDAL - MEADOWGROVE4230.00 230KV CKT 1
FDNS	00NR	3	17SP	G15_042	FROM->TO	GRPRAR1-LNX3345.00 - HOLT.CO3 345.00 345KV CKT 1	720	720	0.03179	115.5114	LETCHER - SIOUX FALLS 230KV CKT 1
FDNS	00NR	3	17SP	G15_042	FROM->TO	GRPRAR1-LNX3345.00 - HOLT.CO3 345.00 345KV CKT 1	720	720	0.03313	115.2817	GEN336821 1-GRAND GULF UNIT
FDNS	00NR	3	17SP	G15_042	FROM->TO	GRPRAR1-LNX3345.00 - HOLT.CO3 345.00 345KV CKT 1	720	720	0.03312	115.2469	BISON 3 345.00 - BUFFALO 345KV CKT 1
FDNS	00NR	3	17SP	G15_042	FROM->TO	GRPRAR1-LNX3345.00 - HOLT.CO3 345.00 345KV CKT 1	720	720	0.03313	115.1516	GEN635024 4-WALTER SCOTT UNIT 4
FDNS	00NR	3	17SP	G15_042	FROM->TO	GRPRAR1-LNX3345.00 - HOLT.CO3 345.00 345KV CKT 1	720	720	0.03152	115.0879	SPLIT ROCK - WHITE 345KV CKT 1
FDNS	00NR	3	17SP	G15_042	FROM->TO	GRPRAR1-LNX3345.00 - HOLT.CO3 345.00 345KV CKT 1	720	720	0.03152	115.0879	SPLIT ROCK - WHITE 345KV CKT 1
FDNS	00NR	3	17SP	G15_042	FROM->TO	GRPRAR1-LNX3345.00 - HOLT.CO3 345.00 345KV CKT 1	720	720	0.03313	114.8938	GEN344225 1-1CAL G1 25.000
FDNS	00NR	3	17SP	G15_042	FROM->TO	GRPRAR1-LNX3345.00 - HOLT.CO3 345.00 345KV CKT 1	720	720	0.03408	114.8176	KEYSTONE - SIDNEY1-LNX3345.00 345KV CKT 1
FDNS	00NR	3	17SP	G15_042	FROM->TO	GRPRAR1-LNX3345.00 - HOLT.CO3 345.00 345KV CKT 1	720	720	0.03408	114.8025	SIDNEY - SIDNEY1-LNX3345.00 345KV CKT Z
FDNS	00NR	3	17SP	G15_042	FROM->TO	GRPRAR1-LNX3345.00 - HOLT.CO3 345.00 345KV CKT 1	720	720	0.03313	114.7121	GEN562714 1-G15_023_4 0.6900

SOLUTION	GROUP	SCENARIO	SEASON	SOURCE	DIRECTION	MONITORED ELEMENT	RATEA (MVA)	RATEB(MVA)	TDF	TC%LOADING (% MVA)	CONTINGENCY
FDNS	00NR	3	17SP	G15_042	FROM->TO	GRPRAR1-LNX3345.00 - HOLT.CO3 345.00 345KV CKT 1	720	720	0.03313	114.7121	GEN562715 1-G15_023_5 0.6900
FDNS	00NR	3	17SP	G15_042	FROM->TO	GRPRAR1-LNX3345.00 - HOLT.CO3 345.00 345KV CKT 1	720	720	0.03313	114.6777	GEN635023 3-WALTER SCOTT UNIT 3
FDNS	00NR	3	17SP	G15_042	FROM->TO	GRPRAR1-LNX3345.00 - HOLT.CO3 345.00 345KV CKT 1	720	720	0.03313	114.646	GEN337911 1-ARKANSAS NUCLEAR ONE UNIT #2
FDNS	00NR	3	17SP	G15_042	FROM->TO	GRPRAR1-LNX3345.00 - HOLT.CO3 345.00 345KV CKT 1	720	720	0.03313	114.6162	GEN336153 1-WATERFORD UNIT#3
FDNS	00NR	3	17SP	G15_042	FROM->TO	GRPRAR1-LNX3345.00 - HOLT.CO3 345.00 345KV CKT 1	720	720	0.03114	114.6052	FT RANDAL - SIOUX CITY 230KV CKT 1
FDNS	00NR	3	17SP	G15_042	FROM->TO	GRPRAR1-LNX3345.00 - HOLT.CO3 345.00 345KV CKT 1	720	720	0.03284	114.5305	GROTON-LNX3 345.00 - LELAND1-LNX3345.00 345KV CKT 1
FDNS	00NR	3	17SP	G15_042	FROM->TO	GRPRAR1-LNX3345.00 - HOLT.CO3 345.00 345KV CKT 1	720	720	0.03284	114.4255	P12:345:UMZB:# 109 #: LOS GRT IN ND. LOS GRT
FDNS	00NR	3	17SP	G15_042	FROM->TO	GRPRAR1-LNX3345.00 - HOLT.CO3 345.00 345KV CKT 1	720	720	0.03284	114.4253	LELAND OLDS - LELAND1-LNX3345.00 345KV CKT Z
FDNS	00NR	3	17SP	G15_042	FROM->TO	GRPRAR1-LNX3345.00 - HOLT.CO3 345.00 345KV CKT 1	720	720	0.03284	114.4024	GROTON - GROTON-LNX3 345.00 345KV CKT Z
FDNS	00NR	3	17SP	G15_042	FROM->TO	GRPRAR1-LNX3345.00 - HOLT.CO3 345.00 345KV CKT 1	720	720	0.03342	114.3623	ARROWHEAD - ARROWHEAD 230 230KV CKT 1
FDNS	00NR	3	17SP	G15_042	FROM->TO	GRPRAR1-LNX3345.00 - HOLT.CO3 345.00 345KV CKT 1	720	720	0.03229	114.3416	HANLON - SIOUX FALLS 230KV CKT 1
FDNS	00NR	3	17SP	G15_042	FROM->TO	GRPRAR1-LNX3345.00 - HOLT.CO3 345.00 345KV CKT 1	720	720	0.0337	114.2948	MISSION - ST FRANCIS 115KV CKT 1
FDNS	00NR	3	17SP	G15_042	FROM->TO	GRPRAR1-LNX3345.00 - HOLT.CO3 345.00 345KV CKT 1	720	720	0.0337	114.2842	P12:115:NPPD:1091:VALENTN7:MISSION7:BTB
FDNS	00NR	3	17SP	G15_042	FROM->TO	GRPRAR1-LNX3345.00 - HOLT.CO3 345.00 345KV CKT 1	720	720	0.03313	114.2812	GEN640010 1-GERALD GENTLEMAN STATION UNIT 1
FDNS	00NR	3	17SP	G15_042	FROM->TO	GRPRAR1-LNX3345.00 - HOLT.CO3 345.00 345KV CKT 1	720	720	0.03313	114.2698	GEN335831 1-RIVERBEND UNIT#1
FDNS	00NR	3	17SP	G15_042	FROM->TO	GRPRAR1-LNX3345.00 - HOLT.CO3 345.00 345KV CKT 1	720	720	0.03313	114.1789	GEN337910 1-ARKANSAS NUCLEAR ONE UNIT #1
FDNS	00NR	3	17SP	G15_042	FROM->TO	GRPRAR1-LNX3345.00 - HOLT.CO3 345.00 345KV CKT 1	720	720	0.03028	114.1675	FT RANDAL - UTICA JCT 230KV CKT 1
FDNS	00NR	3	17SP	G15_042	FROM->TO	GRPRAR1-LNX3345.00 - HOLT.CO3 345.00 345KV CKT 1	720	720	0.0337	114.1321	HARMONY - ST FRANCIS 115KV CKT 1
FDNS	00NR	3	17SP	G15_042	FROM->TO	GRPRAR1-LNX3345.00 - HOLT.CO3 345.00 345KV CKT 1	720	720	0.03317	114.1027	ALEXMRES3 345.00 - BISON 3 345.00 345KV CKT 1
FDNS	00NR	3	17SP	G15_042	FROM->TO	GRPRAR1-LNX3345.00 - HOLT.CO3 345.00 345KV CKT 1	720	720	0.03395	114.083	HAZLETON - MITCHLCO3 345.00 345KV CKT 1
FDNS	00NR	3	17SP	G15_042	FROM->TO	GRPRAR1-LNX3345.00 - HOLT.CO3 345.00 345KV CKT 1	720	720	0.03043	114.0389	SIOUXCY-LNX3345.00 - SPLIT ROCK 345KV CKT 1
FDNS	00NR	3	17SP	G15_042	FROM->TO	GRPRAR1-LNX3345.00 - HOLT.CO3 345.00 345KV CKT 1	720	720	0.03043	114.0389	SIOUXCY-LNX3345.00 - SPLIT ROCK 345KV CKT 1
FDNS	00NR	3	17SP	G15_042	FROM->TO	GRPRAR1-LNX3345.00 - HOLT.CO3 345.00 345KV CKT 1	720	720	0.03312	114.0237	ELLENDALE - OAKES 230KV CKT 1
FDNS	00NR	3	17SP	G15_042	FROM->TO	GRPRAR1-LNX3345.00 - HOLT.CO3 345.00 345KV CKT 1	720	720	0.03312	114.0237	ELLENDALE - OAKES 230KV CKT 1
FDNS	00NR	3	17SP	G15_042	FROM->TO	GRPRAR1-LNX3345.00 - HOLT.CO3 345.00 345KV CKT 1	720	720	0.03043	114.0208	P12:345:UMZW:# 907 #: SC2-SR IN IA. SC2-SR 345 KV LINE
FDNS	00NR	3	17SP	G15_042	FROM->TO	GRPRAR1-LNX3345.00 - HOLT.CO3 345.00 345KV CKT 1	720	720	0.03313	113.989	GEN640011 2-GERALD GENTLEMAN STATION UNIT 2
FDNS	00NR	3	17SP	G15_042	FROM->TO	GRPRAR1-LNX3345.00 - HOLT.CO3 345.00 345KV CKT 1	720	720	0.03043	113.9705	SIOUX CITY - SIOUXCY-LNX3345.00 345KV CKT Z
FDNS	00NR	3	17SP	G15_042	FROM->TO	GRPRAR1-LNX3345.00 - HOLT.CO3 345.00 345KV CKT 1	720	720	0.03782	113.9615	RAUN - SUB 3451 FT CAL 345KV CKT 1
FDNS	00NR	3	17SP	G15_042	FROM->TO	GRPRAR1-LNX3345.00 - HOLT.CO3 345.00 345KV CKT 1	720	720	0.03782	113.9615	RAUN - SUB 3451 FT CAL 345KV CKT 1
FDNS	00NR	3	17SP	G15_042	FROM->TO	GRPRAR1-LNX3345.00 - HOLT.CO3 345.00 345KV CKT 1	720	720	0.03463	113.9549	FT RANDAL - SPENCER 115KV CKT 1
FDNS	00NR	3	17SP	G15_042	FROM->TO	GRPRAR1-LNX3345.00 - HOLT.CO3 345.00 345KV CKT 1	720	720	0.0337	113.9459	HARMONY - VALENTINE 115KV CKT 1
FDNS	00NR	3	17SP	G15_042	FROM->TO	GRPRAR1-LNX3345.00 - HOLT.CO3 345.00 345KV CKT 1	720	720	0.03312	113.934	FORMAN - OAKES 230KV CKT 1
FDNS	00NR	3	17SP	G15_042	FROM->TO	GRPRAR1-LNX3345.00 - HOLT.CO3 345.00 345KV CKT 1	720	720	0.03342	113.9305	GERALD GENTLEMAN STATION - KEYSTONE 345KV CKT 1
FDNS	00NR	3	17SP	G15_042	FROM->TO	GRPRAR1-LNX3345.00 - HOLT.CO3 345.00 345KV CKT 1	720	720	0.03463	113.9284	P12:115:NPPD:WAPA6:FTRANDL7:ONEILL 7:BTB
FDNS	00NR	3	17SP	G15_042	FROM->TO	GRPRAR1-LNX3345.00 - HOLT.CO3 345.00 345KV CKT 1	720	720	0.03463	113.9284	P12:115:UMZB:# 115 #: SE IN NE. FR-SE-ON
FDNS	00NR	3	17SP	G15_042	FROM->TO	GRPRAR1-LNX3345.00 - HOLT.CO3 345.00 345KV CKT 1	720	720	0.03452	113.9119	SIDNEY - STEGALL 345KV CKT 1
FDNS	00NR	3	17SP	G15_042	FROM->TO	GRPRAR1-LNX3345.00 - HOLT.CO3 345.00 345KV CKT 1	720	720	0.065	113.8221	DIXONCO 230.00 - HOSKINS 230KV CKT 1
FDNS	00NR	3	17SP	G15_042	FROM->TO	GRPRAR1-LNX3345.00 - HOLT.CO3 345.00 345KV CKT 1	720	720	0.03463	113.8071	ONEILL - SPENCER 115KV CKT 1
FDNS	00NR	3	17SP	G15_042	FROM->TO	GRPRAR1-LNX3345.00 - HOLT.CO3 345.00 345KV CKT 1	720	720	0.03346	113.7864	AS KING - EAU CLAIRE 345KV CKT 1
FDNS	00NR	3	17SP	G15_042	FROM->TO	GRPRAR1-LNX3345.00 - HOLT.CO3 345.00 345KV CKT 1	720	720	0.03301	113.7674	CARPENTER - HURON 230KV CKT 1
FDNS	00NR	3	17SP	G15_042	FROM->TO	GRPRAR1-LNX3345.00 - HOLT.CO3 345.00 345KV CKT 1	720	720	0.03141	113.7632	PAHOJA - SIOUX FALLS 230KV CKT 1
FDNS	00NR	3	17SP	G15_042	FROM->TO	GRPRAR1-LNX3345.00 - HOLT.CO3 345.00 345KV CKT 1	720	720	0.03313	113.6932	GEN337653 1-WHITE BLUFF UNIT #2
FDNS	00NR	3	17SP	G15_042	FROM->TO	GRPRAR1-LNX3345.00 - HOLT.CO3 345.00 345KV CKT 1	720	720	0.03313	113.6798	GEN337652 1-WHITE BLUFF UNIT #1
FDNS	00NR	3	17SP	G15_042	FROM->TO	GRPRAR1-LNX3345.00 - HOLT.CO3 345.00 345KV CKT 1	720	720	0.03301	113.6747	HURON - WATERTOWN 230KV CKT 2
FDNS	00NR	3	17SP	G15_042	FROM->TO	GRPRAR1-LNX3345.00 - HOLT.CO3 345.00 345KV CKT 1	720	720	0.03301	113.6747	HURON - WATERTOWN 230KV CKT 2
FDNS	00NR	3	17SP	G15_042	FROM->TO	GRPRAR1-LNX3345.00 - HOLT.CO3 345.00 345KV CKT 1	720	720	0.03313	113.6273	GEN338146 1-INDEPENDENCE UNIT #2
FDNS	00NR	3	17SP	G15_042	FROM->TO	GRPRAR1-LNX3345.00 - HOLT.CO3 345.00 345KV CKT 1	720	720	0.03313	113.6209	GEN338143 1-INDEPENDENCE UNIT #1
FDNS	00NR	3	17SP	G15_042	FROM->TO	GRPRAR1-LNX3345.00 - HOLT.CO3 345.00 345KV CKT 1	720	720	0.03301	113.6141	CARPENTER - WATERTOWN 230KV CKT 1
FDNS	00NR	3	17SP	G15_042	FROM->TO	GRPRAR1-LNX3345.00 - HOLT.CO3 345.00 345KV CKT 1	720	720	0.03301	113.6141	CARPENTER - WATERTOWN 230KV CKT 1
FDNS	00NR	3	17SP	G15_042	FROM->TO	GRPRAR1-LNX3345.00 - HOLT.CO3 345.00 345KV CKT 1	720	720	0.03359	113.5763	ARPIN B4 345.00 - EAU CLAIRE 345KV CKT 1
FDNS	00NR	3	17SP	G15_042	FROM->TO	GRPRAR1-LNX3345.00 - HOLT.CO3 345.00 345KV CKT 1	720	720	0.03313	113.5596	GEN501801 1-DOLET HILLS UNIT1
FDNS	00NR	3	17SP	G15_042	FROM->TO	GRPRAR1-LNX3345.00 - HOLT.CO3 345.00 345KV CKT 1	720	720	0.03314	113.519	FORMAN - HANKINSON 230KV CKT 1
FDNS	00NR	3	17SP	G15_042	FROM->TO	GRPRAR1-LNX3345.00 - HOLT.CO3 345.00 345KV CKT 1	720	720	0.0337	113.4231	AINSWORTH - VALENTINE 115KV CKT 1
FDNS	00NR	3	17SP	G15_042	FROM->TO	GRPRAR1-LNX3345.00 - HOLT.CO3 345.00 345KV CKT 1	720	720	0.03129	113.3735	FT THOMPSON - WESSINGTON 230KV CKT 1
FDNS	00NR	3	17SP	G15_042	FROM->TO	GRPRAR1-LNX3345.00 - HOLT.CO3 345.00 345KV CKT 1	720	720	0.03129	113.3735	FT THOMPSON - WESSINGTON 230KV CKT 1
FDNS	00NR	3	17SP	G15_042	FROM->TO	GRPRAR1-LNX3345.00 - HOLT.CO3 345.00 345KV CKT 1	720	720	0.03141	113.3415	EAGLE 4 230.00 - PAHOJA 230KV CKT 1
FDNS	00NR	3	17SP	G15_042	FROM->TO	GRPRAR1-LNX3345.00 - HOLT.CO3 345.00 345KV CKT 1	720	720	0.0334	113.333	G15094_T 345.00 - SIDNEY2-LNX3345.00 345KV CKT 1
FDNS	00NR	3	17SP	G15_042	FROM->TO	GRPRAR1-LNX3345.00 - HOLT.CO3 345.00 345KV CKT 1	720	720	0.03314	113.3301	CNTSHNT3 345.00 - PRAIRIE3 345.00 345KV CKT 1
FDNS	00NR	3	17SP	G15_042	FROM->TO	GRPRAR1-LNX3345.00 - HOLT.CO3 345.00 345KV CKT 1	720	720	0.03395	113.3217	ADAMS - MITCHLCO3 345.00 345KV CKT 1
FDNS	00NR	3	17SP	G15_042	FROM->TO	GRPRAR1-LNX3345.00 - HOLT.CO3 345.00 345KV CKT 1	720	720	0.0334	113.3086	SIDNEY - SIDNEY2-LNX3345.00 345KV CKT Z
FDNS	00NR	3	17SP	G15_042	FROM->TO	GRPRAR1-LNX3345.00 - HOLT.CO3 345.00 345KV CKT 1	720	720	0.03313	113.2754	GEN336252 1-NINEMILE POINT UNIT#5
FDNS	00NR	3	17SP	G15_042	FROM->TO	GRPRAR1-LNX3345.00 - HOLT.CO3 345.00 345KV CKT 1	720	720	0.03313	113.2354	GEN501813 1-RODEMACHER UNIT 3
FDNS	00NR	3	17SP	G15_042	FROM->TO	GRPRAR1-LNX3345.00 - HOLT.CO3 345.00 345KV CKT 1	720	720	0.03313	113.158	GEN336831 1-BAXTER WILSON SES
FDNS	00NR	3	17SP	G15_042	FROM->TO	GRPRAR1-LNX3345.00 - HOLT.CO3 345.00 345KV CKT 1	720	720	0.0337	113.1539	ADAMS - PLEASANT VALLEY 345KV CKT 1
FDNS	00NR	3	17SP	G15_042	FROM->TO	GRPRAR1-LNX3345.00 - HOLT.CO3 345.00 345KV CKT 1	720	720	0.03313	113.1468	GEN336251 1-NINEMILE POINT UNIT#4
FDNS	00NR	3	17SP	G15_042	FROM->TO	GRPRAR1-LNX3345.00 - HOLT.CO3 345.00 345KV CKT 1	720	720	0.03313	113.0842	GEN337041 1-GERALD ANDRUS
FDNS	00NR	3	17SP	G15_042	FROM->TO	GRPRAR1-LNX3345.00 - HOLT.CO3 345.00 345KV CKT 1	720	720	0.03313	113.0724	GEN344897 4-1LAB G4 20.000
FDNS	00NR	3	17SP	G15_042	FROM->TO	GRPRAR1-LNX3345.00 - HOLT.CO3 345.00 345KV CKT 1	720	720	0.03313	113.0695	GEN344894 1-1LAB G1 20.000
FDNS	00NR	3	17SP	G15_042	FROM->TO	GRPRAR1-LNX3345.00 - HOLT.CO3 345.00 345KV CKT 1	720	720	0.03313	113.0692	GEN344896 3-1LAB G3 20.000
FDNS	00NR	3	17SP	G15_042	FROM->TO	GRPRAR1-LNX3345.00 - HOLT.CO3 345.00 345KV CKT 1	720	720	0.03313	113.0637	GEN335206 1-NELSON UNIT 6
FDNS	00NR	3	17SP	G15_042	FROM->TO	GRPRAR1-LNX3345.00 - HOLT.CO3 345.00 345KV CKT 1	720	720	0.03313	113.0214	GEN344895 2-1LAB G2 20.000
FDNS	00NR	3	17SP	G15_042	FROM->TO	GRPRAR1-LNX3345.00 - HOLT.CO3 345.00 345KV CKT 1	720	720	0.03313	113.0093	GEN345670 1-1RUSH G1 18.000
FDNS	00NR	3	17SP	G15_042	FROM->TO	GRPRAR1-LNX3345.00 - HOLT.CO3 345.00 345KV CKT 1	720	720	0.03313	113.009	GEN345671 2-1RUSH G2 18.000
FDNS	00NR	3	17SP	G15_042	FROM->TO	GRPRAR1-LNX3345.00 - HOLT.CO3 345.00 345KV CKT 1	720	720	0.03399	112.9343	LAKEFIELD 3 - NOBLES 345KV CKT 1
FDNS	00NR	3	17SP	G15_042	FROM->TO	GRPRAR1-LNX3345.00 - HOLT.CO3 345.00 345KV CKT 1	720	720	0.03313	112.9339	GEN501812 1-RODEMACHER UNIT 2
FDNS	00NR	3	17SP	G15_042	FROM->TO	GRPRAR1-LNX3345.00 - HOLT.CO3 345.00 345KV CKT 1	720	720	0.03313	112.9147	GEN334440 1-SABINE UNIT 4
FDNS	00NR	3	17SP	G15_042	FROM->TO	GRPRAR1-LNX3345.00 - HOLT.CO3 345.00 345KV CKT 1	720	720	0.0332	112.9105	ALEXMRES3 345.00 - WAITE PARK 345KV CKT 1
FDNS	00NR	3	17SP	G15_042	FROM->TO	GRPRAR1-LNX3345.00 - HOLT.CO3 345.00 345KV CKT 1	720	720	0.03317	112.9021	BLAIR - GRANITE FALLS 230KV CKT 1
FDNS	00NR	3	17SP	G15_042	FROM->TO	GRPRAR1-LNX3345.00 - HOLT.CO3 345.00 345KV CKT 1	720	720	0.03317	112.9021	BLAIR - GRANITE FALLS 230KV CKT 1

SOLUTION	GROUP	SCENARIO	SEASON	SOURCE	DIRECTION	MONITORED ELEMENT	RATEA (MVA)	RATEB(MVA)	TDF	TC%LOADING (% MVA)	CONTINGENCY
FDNS	00NR	3	17SP	G15_042	FROM->TO	GRPRAR1-LNX3345.00 - HOLT.CO3 345.00 345KV CKT 1	720	720	0.03313	112.8812	GEN635214 4-NEAL UNIT 4
FDNS	00NR	3	17SP	G15_042	FROM->TO	GRPRAR1-LNX3345.00 - HOLT.CO3 345.00 345KV CKT 1	720	720	0.03312	112.8561	CENTER - COYOTE 345KV CKT 1
FDNS	00NR	3	17SP	G15_042	FROM->TO	GRPRAR1-LNX3345.00 - HOLT.CO3 345.00 345KV CKT 1	720	720	0.03347	112.8263	BROOKING COUNTY - LYON COUNTY 345KV CKT 1
FDNS	00NR	3	17SP	G15_042	FROM->TO	GRPRAR1-LNX3345.00 - HOLT.CO3 345.00 345KV CKT 1	720	720	0.0359	112.8037	STEGALL - STEGALL TRANSFORMER 230KV CKT 1
FDNS	00NR	3	17SP	G15_042	FROM->TO	GRPRAR1-LNX3345.00 - HOLT.CO3 345.00 345KV CKT 1	720	720	0.03244	112.7961	MENNO JCT - TRIPP JCT 115KV CKT 1
FDNS	00NR	3	17SP	G15_042	FROM->TO	GRPRAR1-LNX3345.00 - HOLT.CO3 345.00 345KV CKT 1	720	720	0.03317	112.7889	GLENBORO SOUTH - RUGBY 230KV CKT 1
FDNS	00NR	3	17SP	G15_042	FROM->TO	GRPRAR1-LNX3345.00 - HOLT.CO3 345.00 345KV CKT 1	720	720	0.0359	112.7887	P13:230-345:NPPD:STEGALL3:KV3A
FDNS	00NR	3	17SP	G15_042	FROM->TO	GRPRAR1-LNX3345.00 - HOLT.CO3 345.00 345KV CKT 1	720	720	0.03313	112.7874	GEN629075 1-OTTUMWA GENERATOR FOR OTTUMWA UNIT NO 1
FDNS	00NR	3	17SP	G15_042	FROM->TO	GRPRAR1-LNX3345.00 - HOLT.CO3 345.00 345KV CKT 1	720	720	0.03313	112.787	GEN336191 1-LITTLE GYPSY UNIT#3
FDNS	00NR	3	17SP	G15_042	FROM->TO	GRPRAR1-LNX3345.00 - HOLT.CO3 345.00 345KV CKT 1	720	720	0.0359	112.781	STEGALL (SGQ KV3A) 345/230/13.8KV TRANSFORMER CKT 1
FDNS	00NR	3	17SP	G15_042	FROM->TO	GRPRAR1-LNX3345.00 - HOLT.CO3 345.00 345KV CKT 1	720	720	0.03319	112.7418	HANKINSON - WAHPETON 230KV CKT 1
FDNS	00NR	3	17SP	G15_042	FROM->TO	GRPRAR1-LNX3345.00 - HOLT.CO3 345.00 345KV CKT 1	720	720	0.03313	112.7369	GEN338388 1-1PLUM PT U1 23.000
FDNS	00NR	3	17SP	G15_042	FROM->TO	GRPRAR1-LNX3345.00 - HOLT.CO3 345.00 345KV CKT 1	720	720	0.03313	112.7134	P12:115:UMZW:# 162 #: NEL IN ND. FAULT ON ML-NEL-MX-GA 115 KV
FDNS	00NR	3	17SP	G15_042	FROM->TO	GRPRAR1-LNX3345.00 - HOLT.CO3 345.00 345KV CKT 1	720	720	0.03313	112.7108	GEN336801 1-BAXTER WILSON UNIT #1
FDNS	00NR	3	17SP	G15_042	FROM->TO	GRPRAR1-LNX3345.00 - HOLT.CO3 345.00 345KV CKT 1	720	720	0.03772	112.6987	STEGALL-LNX3230.00 - WAYSIDE 230KV CKT 1
FDNS	00NR	3	17SP	G15_042	FROM->TO	GRPRAR1-LNX3345.00 - HOLT.CO3 345.00 345KV CKT 1	720	720	0.03313	112.6967	GEN335614 1-WILLOW GLENN UNIT#4
FDNS	00NR	3	17SP	G15_042	FROM->TO	GRPRAR1-LNX3345.00 - HOLT.CO3 345.00 345KV CKT 1	720	720	0.03376	112.6915	KOSSUTH 3 345.00 - OBRIEN 3 345.00 345KV CKT 1
FDNS	00NR	3	17SP	G15_042	FROM->TO	GRPRAR1-LNX3345.00 - HOLT.CO3 345.00 345KV CKT 1	720	720	0.03772	112.6907	STEGALL - STEGALL-LNX3230.00 230KV CKT Z
FDNS	00NR	3	17SP	G15_042	FROM->TO	GRPRAR1-LNX3345.00 - HOLT.CO3 345.00 345KV CKT 1	720	720	0.03313	112.6866	GEN334441 1-SABINE UNIT 5
FDNS	00NR	3	17SP	G15_042	FROM->TO	GRPRAR1-LNX3345.00 - HOLT.CO3 345.00 345KV CKT 1	720	720	0.03313	112.6839	GEN336464 1-MICHOUD UNIT #3
FDNS	00NR	3	17SP	G15_042	FROM->TO	GRPRAR1-LNX3345.00 - HOLT.CO3 345.00 345KV CKT 1	720	720	0.03244	112.6802	MENNO JCT - UTICA 115KV CKT 1
FDNS	00NR	3	17SP	G15_042	FROM->TO	GRPRAR1-LNX3345.00 - HOLT.CO3 345.00 345KV CKT 1	720	720	0.03313	112.6759	GEN563222 1-G15088_3 0.6900
FDNS	00NR	3	17SP	G15_042	FROM->TO	GRPRAR1-LNX3345.00 - HOLT.CO3 345.00 345KV CKT 1	720	720	0.03376	112.67	KOSSUTH 3 345.00 - WEBSTER 345KV CKT 1
FDNS	00NR	3	17SP	G15_042	FROM->TO	GRPRAR1-LNX3345.00 - HOLT.CO3 345.00 345KV CKT 1	720	720	0.03313	112.6698	GEN335204 1-NELSON UNIT 4
FDNS	00NR	3	17SP	G15_042	FROM->TO	GRPRAR1-LNX3345.00 - HOLT.CO3 345.00 345KV CKT 1	720	720	0.03952	112.6692	RAUN - SIOUX CITY 345KV CKT 1
FDNS	00NR	3	17SP	G15_042	FROM->TO	GRPRAR1-LNX3345.00 - HOLT.CO3 345.00 345KV CKT 1	720	720	0.03952	112.6692	RAUN - SIOUX CITY 345KV CKT 1
FDNS	00NR	3	17SP	G15_042	FROM->TO	GRPRAR1-LNX3345.00 - HOLT.CO3 345.00 345KV CKT 1	720	720	0.03313	112.656	GARRISON - JAMES TOWN 230KV CKT 1
FDNS	00NR	3	17SP	G15_042	FROM->TO	GRPRAR1-LNX3345.00 - HOLT.CO3 345.00 345KV CKT 1	720	720	0.03354	112.635	BYRON - NORTH ROCHESTER 345KV CKT 1
FDNS	00NR	3	17SP	G15_042	FROM->TO	GRPRAR1-LNX3345.00 - HOLT.CO3 345.00 345KV CKT 1	720	720	0.0346	112.6227	GRIMES - LEHIGH 345KV CKT 1
FDNS	00NR	3	17SP	G15_042	FROM->TO	GRPRAR1-LNX3345.00 - HOLT.CO3 345.00 345KV CKT 1	720	720	0.03244	112.6106	P12:115:UMZZ:# 237 #: MEN IN SD. MENNO JUNCTION IS A TAP (UJ-MEN-TP).
FDNS	00NR	3	17SP	G15_042	FROM->TO	GRPRAR1-LNX3345.00 - HOLT.CO3 345.00 345KV CKT 1	720	720	0.03313	112.5462	GEN334433 1-SABINE UNIT 3
FDNS	00NR	3	17SP	G15_042	FROM->TO	GRPRAR1-LNX3345.00 - HOLT.CO3 345.00 345KV CKT 1	720	720	0.03313	112.5455	GEN635213 3-NEAL UNIT 3
FDNS	00NR	3	17SP	G15_042	FROM->TO	GRPRAR1-LNX3345.00 - HOLT.CO3 345.00 345KV CKT 1	720	720	0.03322	112.5156	APPLEDORN 4 230.00 - WATERTOWN 230KV CKT 1
FDNS	00NR	3	17SP	G15_042	FROM->TO	GRPRAR1-LNX3345.00 - HOLT.CO3 345.00 345KV CKT 1	720	720	0.03322	112.5156	APPLEDORN 4 230.00 - WATERTOWN 230KV CKT 1
FDNS	00NR	3	17SP	G15_042	FROM->TO	GRPRAR1-LNX3345.00 - HOLT.CO3 345.00 345KV CKT 1	720	720	0.03313	112.491	GEN336222 1-LITTLE GYPSY UNIT#2
FDNS	00NR	3	17SP	G15_042	FROM->TO	GRPRAR1-LNX3345.00 - HOLT.CO3 345.00 345KV CKT 1	720	720	0.03313	112.4807	GEN303007 1-1BC2 U2
FDNS	00NR	3	17SP	G15_042	FROM->TO	GRPRAR1-LNX3345.00 - HOLT.CO3 345.00 345KV CKT 1	720	720	0.03313	112.4751	GEN303006 1-1BC2 U1
FDNS	00NR	3	17SP	G15_042	FROM->TO	GRPRAR1-LNX3345.00 - HOLT.CO3 345.00 345KV CKT 1	720	720	0.03313	112.465	FARGO - JAMES TOWN 230KV CKT 1
FDNS	00NR	3	17SP	G15_042	FROM->TO	GRPRAR1-LNX3345.00 - HOLT.CO3 345.00 345KV CKT 1	720	720	0.03313	112.453	GEN640009 1-COOPER NUCLEAR STATION
FDNS	00NR	3	17SP	G15_042	FROM->TO	GRPRAR1-LNX3345.00 - HOLT.CO3 345.00 345KV CKT 1	720	720	0.03328	112.4503	NORTH ROCHESTER - PRAIRIE ISLAND 345KV CKT 1
FDNS	00NR	3	17SP	G15_042	FROM->TO	GRPRAR1-LNX3345.00 - HOLT.CO3 345.00 345KV CKT 1	720	720	0.0334	112.4448	G15094_T 345.00 - LARAMIE RIVER 345KV CKT 1
FDNS	00NR	3	17SP	G15_042	FROM->TO	GRPRAR1-LNX3345.00 - HOLT.CO3 345.00 345KV CKT 1	720	720	0.03313	112.4425	P13:230:UMZW:# 2218 #: FP IN MT. LOSS OF TRANSFORMER (AT2).
FDNS	00NR	3	17SP	G15_042	FROM->TO	GRPRAR1-LNX3345.00 - HOLT.CO3 345.00 345KV CKT 1	720	720	0.03313	112.4408	FARGO - JAMES TOWN 230KV CKT 2
FDNS	00NR	3	17SP	G15_042	FROM->TO	GRPRAR1-LNX3345.00 - HOLT.CO3 345.00 345KV CKT 1	720	720	0.03322	112.4379	APPLEDORN 4 230.00 - GRANITE FALLS 230KV CKT 1
FDNS	00NR	3	17SP	G15_042	FROM->TO	GRPRAR1-LNX3345.00 - HOLT.CO3 345.00 345KV CKT 1	720	720	0.03322	112.4379	APPLEDORN 4 230.00 - GRANITE FALLS 230KV CKT 1
FDNS	00NR	3	17SP	G15_042	FROM->TO	GRPRAR1-LNX3345.00 - HOLT.CO3 345.00 345KV CKT 1	720	720	0.03313	112.4296	GEN336152 1-WATERFORD UNIT#2
FDNS	00NR	3	17SP	G15_042	FROM->TO	GRPRAR1-LNX3345.00 - HOLT.CO3 345.00 345KV CKT 1	720	720	0.03313	112.4294	GEN336151 1-WATERFORD UNIT#1
FDNS	00NR	3	17SP	G15_042	FROM->TO	GRPRAR1-LNX3345.00 - HOLT.CO3 345.00 345KV CKT 1	720	720	0.03317	112.4152	FERGSFL4 230.00 - WAHPETON 230KV CKT 1
FDNS	00NR	3	17SP	G15_042	FROM->TO	GRPRAR1-LNX3345.00 - HOLT.CO3 345.00 345KV CKT 1	720	720	0.03313	112.4095	GEN303008 1-1BC2 U3
FDNS	00NR	3	17SP	G15_042	FROM->TO	GRPRAR1-LNX3345.00 - HOLT.CO3 345.00 345KV CKT 1	720	720	0.03313	112.4049	GEN336170 1-GULF OXY U4
FDNS	00NR	3	17SP	G15_042	FROM->TO	GRPRAR1-LNX3345.00 - HOLT.CO3 345.00 345KV CKT 1	720	720	0.03354	112.3877	BYRON - PLEASANT VALLEY 345KV CKT 1
FDNS	00NR	3	17SP	G15_042	FROM->TO	GRPRAR1-LNX3345.00 - HOLT.CO3 345.00 345KV CKT 1	720	720	0.03312	112.3838	BISMARK - JAMES TOWN 230KV CKT 1
FDNS	00NR	3	17SP	G15_042	FROM->TO	GRPRAR1-LNX3345.00 - HOLT.CO3 345.00 345KV CKT 1	720	720	0.03313	112.3816	GEN641089 2-ENERGY CENTER 2
FDNS	00NR	3	17SP	G15_042	FROM->TO	GRPRAR1-LNX3345.00 - HOLT.CO3 345.00 345KV CKT 1	720	720	0.03543	112.3791	BLOOMFIELD - CREIGHTON 115KV CKT 1
FDNS	00NR	3	17SP	G15_042	FROM->TO	GRPRAR1-LNX3345.00 - HOLT.CO3 345.00 345KV CKT 1	720	720	0.0336	112.3791	P13:230-345:NPPD:SIDNEY 3:KV2A
FDNS	00NR	3	17SP	G15_042	FROM->TO	GRPRAR1-LNX3345.00 - HOLT.CO3 345.00 345KV CKT 1	720	720	0.0336	112.379	SIDNEY (SDQ KV2A) 345/230/13.8KV TRANSFORMER CKT 1
FDNS	00NR	3	17SP	G15_042	FROM->TO	GRPRAR1-LNX3345.00 - HOLT.CO3 345.00 345KV CKT 1	720	720	0.03362	112.3785	P13:115-230:TSGT:SIDNEY-KV1A
FDNS	00NR	3	17SP	G15_042	FROM->TO	GRPRAR1-LNX3345.00 - HOLT.CO3 345.00 345KV CKT 1	720	720	0.0336	112.3768	SIDNEY - SIDNEY TRANSFORMER 230KV CKT 1
FDNS	00NR	3	17SP	G15_042	FROM->TO	GRPRAR1-LNX3345.00 - HOLT.CO3 345.00 345KV CKT 1	720	720	0.03312	112.3733	BISMARK - WEBER 230KV CKT 1
FDNS	00NR	3	17SP	G15_042	FROM->TO	GRPRAR1-LNX3345.00 - HOLT.CO3 345.00 345KV CKT 1	720	720	0.03228	112.366	LAKEFIELD 3 - LKFLDXL3 345KV CKT 1
FDNS	00NR	3	17SP	G15_042	FROM->TO	GRPRAR1-LNX3345.00 - HOLT.CO3 345.00 345KV CKT 1	720	720	0.03312	112.3586	JAMES TOWN - WEBER 230KV CKT 1
FDNS	00NR	3	20SP	G15_042	FROM->TO	GRPRAR1-LNX3345.00 - HOLT.CO3 345.00 345KV CKT 1	720	720	0.03529	112.3504	KELLY - MEADOWGROVE4230.00 230KV CKT 1
FDNS	00NR	3	17SP	G15_042	FROM->TO	GRPRAR1-LNX3345.00 - HOLT.CO3 345.00 345KV CKT 1	720	720	0.03312	112.3248	ELM CREEK - MONTICELLO 345KV CKT 1
FDNS	00NR	3	17SP	G15_042	FROM->TO	GRPRAR1-LNX3345.00 - HOLT.CO3 345.00 345KV CKT 1	720	720	0.03313	112.3222	GEN562596 1-G14_059_3 0.6900
FDNS	00NR	3	17SP	G15_042	FROM->TO	GRPRAR1-LNX3345.00 - HOLT.CO3 345.00 345KV CKT 1	720	720	0.03543	112.2982	BLOOMFIELD - GAVINS POINT 115KV CKT 1
FDNS	00NR	3	17SP	G15_042	FROM->TO	GRPRAR1-LNX3345.00 - HOLT.CO3 345.00 345KV CKT 1	720	720	0.03313	112.2966	GEN501811 1-RODEMACHER UNIT 1
FDNS	00NR	3	17SP	G15_042	FROM->TO	GRPRAR1-LNX3345.00 - HOLT.CO3 345.00 345KV CKT 1	720	720	0.03325	112.2952	ARKANSAS NUCLEAR ONE - FT SMITH 500KV CKT 1
FDNS	00NR	3	17SP	G15_042	FROM->TO	GRPRAR1-LNX3345.00 - HOLT.CO3 345.00 345KV CKT 1	720	720	0.03325	112.2952	ARKANSAS NUCLEAR ONE - FT SMITH 500KV CKT 1
FDNS	00NR	3	17SP	G15_042	FROM->TO	GRPRAR1-LNX3345.00 - HOLT.CO3 345.00 345KV CKT 1	720	720	0.03297	112.2894	MT VERN - STORLA 115KV CKT 1
FDNS	00NR	3	17SP	G15_042	FROM->TO	GRPRAR1-LNX3345.00 - HOLT.CO3 345.00 345KV CKT 1	720	720	0.03315	112.2818	AUDUBON - SHEYNNE 230KV CKT 1
FDNS	00NR	3	17SP	G15_042	FROM->TO	GRPRAR1-LNX3345.00 - HOLT.CO3 345.00 345KV CKT 1	720	720	0.03316	112.2708	FERGSFL4 230.00 - GRE-SILVRLK4230.00 230KV CKT 1
FDNS	00NR	3	17SP	G15_042	FROM->TO	GRPRAR1-LNX3345.00 - HOLT.CO3 345.00 345KV CKT 1	720	720	0.03313	112.2673	PRAIRIE ISLAND 345/20.0KV TRANSFORMER CKT 1
FDNS	00NR	3	17SP	G15_042	FROM->TO	GRPRAR1-LNX3345.00 - HOLT.CO3 345.00 345KV CKT 1	720	720	0.03289	112.2656	FT THOMPSON - HURON 230KV CKT 1
FDNS	00NR	3	17SP	G15_042	FROM->TO	GRPRAR1-LNX3345.00 - HOLT.CO3 345.00 345KV CKT 1	720	720	0.03289	112.2656	FT THOMPSON - HURON 230KV CKT 1
FDNS	00NR	3	17SP	G15_042	FROM->TO	GRPRAR1-LNX3345.00 - HOLT.CO3 345.00 345KV CKT 1	720	720	0.03289	112.2656	FT THOMPSON - HURON 230KV CKT 2
FDNS	00NR	3	17SP	G15_042	FROM->TO	GRPRAR1-LNX3345.00 - HOLT.CO3 345.00 345KV CKT 1	720	720	0.03289	112.2656	FT THOMPSON - HURON 230KV CKT 2
FDNS	00NR	3	17SP	G15_042	FROM->TO	GRPRAR1-LNX3345.00 - HOLT.CO3 345.00 345KV CKT 1	720	720	0.03313	112.2649	PRAIRIE ISLAND 345/20.0KV TRANSFORMER CKT 2
FDNS	00NR	3	17SP	G15_042	FROM->TO	GRPRAR1-LNX3345.00 - HOLT.CO3 345.00 345KV CKT 1	720	720	0.03313	112.2641	BALTA - RAMSEY 230KV CKT 1
FDNS	00NR	3	17SP	G15_042	FROM->TO	GRPRAR1-LNX3345.00 - HOLT.CO3 345.00 345KV CKT 1	720	720	0.03303	112.257	DKSN_CO5 161.00 - TRIBOJI NO1 + NO2 161KV CKT 1

SOLUTION	GROUP	SCENARIO	SEASON	SOURCE	DIRECTION	MONITORED ELEMENT	RATEA (MVA)	RATEB(MVA)	TDF	TC%LOADING (% MVA)	CONTINGENCY
FDNS	00NR	3	17SP	G15_042	FROM->TO	GRPRAR1-LNX3345.00 - HOLT.CO3 345.00 345KV CKT 1	720	720	0.03313	112.2528	GEN532751 1-WOLF CREEK GENERATING STATION UNIT 1
FDNS	00NR	3	17SP	G15_042	FROM->TO	GRPRAR1-LNX3345.00 - HOLT.CO3 345.00 345KV CKT 1	720	720	0.03364	112.2467	P12:115:NPPD:WAPA1:CHADRON7:BOXBUTE7:BTB
FDNS	00NR	3	17SP	G15_042	FROM->TO	GRPRAR1-LNX3345.00 - HOLT.CO3 345.00 345KV CKT 1	720	720	0.03313	112.2339	GEN562921 1-G15054_2 0.6900
FDNS	00NR	3	17SP	G15_042	FROM->TO	GRPRAR1-LNX3345.00 - HOLT.CO3 345.00 345KV CKT 1	720	720	0.03343	112.2288	CHADRON - WAYSIDE 115KV CKT 1
FDNS	00NR	3	17SP	G15_042	FROM->TO	GRPRAR1-LNX3345.00 - HOLT.CO3 345.00 345KV CKT 1	720	720	0.03343	112.2288	P13:115-230:NPPD:WAYSIDE4:T1
FDNS	00NR	3	17SP	G15_042	FROM->TO	GRPRAR1-LNX3345.00 - HOLT.CO3 345.00 345KV CKT 1	720	720	0.03343	112.2279	WAYSIDE (WAYSIDE T1) 230/115/13.8KV TRANSFORMER CKT 1
FDNS	00NR	3	17SP	G15_042	FROM->TO	GRPRAR1-LNX3345.00 - HOLT.CO3 345.00 345KV CKT 1	720	720	0.03316	112.227	GRE-SILVRLK4230.00 - HENNING 230KV CKT 1
FDNS	00NR	3	17SP	G15_042	FROM->TO	GRPRAR1-LNX3345.00 - HOLT.CO3 345.00 345KV CKT 1	720	720	0.03313	112.219	GEN334071 1-LEWIS CREEK 2
FDNS	00NR	3	17SP	G15_042	FROM->TO	GRPRAR1-LNX3345.00 - HOLT.CO3 345.00 345KV CKT 1	720	720	0.03314	112.2181	BIG STONE (230/115) 230/115/13.8KV TRANSFORMER CKT 1
FDNS	00NR	3	17SP	G15_042	FROM->TO	GRPRAR1-LNX3345.00 - HOLT.CO3 345.00 345KV CKT 1	720	720	0.03313	112.2142	GEN334070 1-LEWIS CREEK 1
FDNS	00NR	3	17SP	G15_042	FROM->TO	GRPRAR1-LNX3345.00 - HOLT.CO3 345.00 345KV CKT 1	720	720	0.03313	112.2137	GEN337766 1-TRACTEBEL UNIT S1
FDNS	00NR	3	17SP	G15_042	FROM->TO	GRPRAR1-LNX3345.00 - HOLT.CO3 345.00 345KV CKT 1	720	720	0.03382	112.2033	NOBLES - SPLIT ROCK 345KV CKT 1
FDNS	00NR	3	17SP	G15_042	FROM->TO	GRPRAR1-LNX3345.00 - HOLT.CO3 345.00 345KV CKT 1	720	720	0.03313	112.2001	GEN659118 1-LARAMIE RIVER UNIT1
FDNS	00NR	3	17SP	G15_042	FROM->TO	GRPRAR1-LNX3345.00 - HOLT.CO3 345.00 345KV CKT 1	720	720	0.03364	112.1949	CHADRON - DUNLAP 115KV CKT 1
FDNS	00NR	3	17SP	G15_042	FROM->TO	GRPRAR1-LNX3345.00 - HOLT.CO3 345.00 345KV CKT 1	720	720	0.03313	112.1896	PRAIRIE - WINGER 230KV CKT 1
FDNS	00NR	3	17SP	G15_042	FROM->TO	GRPRAR1-LNX3345.00 - HOLT.CO3 345.00 345KV CKT 1	720	720	0.03364	112.176	P12:115:NPPD:WAPA2:HEMINGF7:SNAKECK7:BTB
FDNS	00NR	3	17SP	G15_042	FROM->TO	GRPRAR1-LNX3345.00 - HOLT.CO3 345.00 345KV CKT 1	720	720	0.03313	112.1741	GEN501910 1-ACADIA UNIT ST1
FDNS	00NR	3	17SP	G15_042	FROM->TO	GRPRAR1-LNX3345.00 - HOLT.CO3 345.00 345KV CKT 1	720	720	0.03287	112.1705	HURON WEST PARK - MITCHELL NW 115KV CKT 1
FDNS	00NR	3	17SP	G15_042	FROM->TO	GRPRAR1-LNX3345.00 - HOLT.CO3 345.00 345KV CKT 1	720	720	0.03287	112.1705	HURON WEST PARK - MITCHELL NW 115KV CKT 1
FDNS	00NR	3	17SP	G15_042	FROM->TO	GRPRAR1-LNX3345.00 - HOLT.CO3 345.00 345KV CKT 1	720	720	0.03316	112.1676	HENNING - INMANN 230KV CKT 1
FDNS	00NR	3	17SP	G15_042	FROM->TO	GRPRAR1-LNX3345.00 - HOLT.CO3 345.00 345KV CKT 1	720	720	0.03316	112.166	LELAND OLDS - STANTON 230KV CKT 1
FDNS	00NR	3	17SP	G15_042	FROM->TO	GRPRAR1-LNX3345.00 - HOLT.CO3 345.00 345KV CKT 1	720	720	0.03316	112.166	LELAND OLDS - STANTON 230KV CKT 1
FDNS	00NR	3	17SP	G15_042	FROM->TO	GRPRAR1-LNX3345.00 - HOLT.CO3 345.00 345KV CKT 1	720	720	0.03351	112.156	PALXFRASBTHI
FDNS	00NR	3	17SP	G15_042	FROM->TO	GRPRAR1-LNX3345.00 - HOLT.CO3 345.00 345KV CKT 1	720	720	0.03372	112.1486	EAGLE - PHILIP 115KV CKT 1
FDNS	00NR	3	17SP	G15_042	FROM->TO	GRPRAR1-LNX3345.00 - HOLT.CO3 345.00 345KV CKT 1	720	720	0.0324	112.1446	FT RANDAL - WHITE SWAN 115KV CKT 1
FDNS	00NR	3	17SP	G15_042	FROM->TO	GRPRAR1-LNX3345.00 - HOLT.CO3 345.00 345KV CKT 1	720	720	0.03262	112.14	CLEARWATER - ONEILL 115KV CKT 1
FDNS	00NR	3	17SP	G15_042	FROM->TO	GRPRAR1-LNX3345.00 - HOLT.CO3 345.00 345KV CKT 1	720	720	0.03352	112.1383	7PALM TAP 345.00 - SUB T 345KV CKT 1
FDNS	00NR	3	17SP	G15_042	FROM->TO	GRPRAR1-LNX3345.00 - HOLT.CO3 345.00 345KV CKT 1	720	720	0.03313	112.1341	GEN345765 H-1SIOUX 2 18.000
FDNS	00NR	3	17SP	G15_042	FROM->TO	GRPRAR1-LNX3345.00 - HOLT.CO3 345.00 345KV CKT 1	720	720	0.03311	112.134	GROTON (GROTON KU2A) 345/115/13.8KV TRANSFORMER CKT 1
FDNS	00NR	3	17SP	G15_042	FROM->TO	GRPRAR1-LNX3345.00 - HOLT.CO3 345.00 345KV CKT 1	720	720	0.03312	112.1302	GRANT - MITCHELL 115KV CKT 1
FDNS	00NR	3	17SP	G15_042	FROM->TO	GRPRAR1-LNX3345.00 - HOLT.CO3 345.00 345KV CKT 1	720	720	0.03312	112.1302	GRANT - MITCHELL 115KV CKT 1
FDNS	00NR	3	17SP	G15_042	FROM->TO	GRPRAR1-LNX3345.00 - HOLT.CO3 345.00 345KV CKT 1	720	720	0.03313	112.1166	GEN337764 1-TRACTEBEL UNIT C1
FDNS	00NR	3	17SP	G15_042	FROM->TO	GRPRAR1-LNX3345.00 - HOLT.CO3 345.00 345KV CKT 1	720	720	0.03313	112.1166	GEN337765 1-TRACTEBEL UNIT C2
FDNS	00NR	3	17SP	G15_042	FROM->TO	GRPRAR1-LNX3345.00 - HOLT.CO3 345.00 345KV CKT 1	720	720	0.0324	112.1146	TYNDALL - WHITE SWAN 115KV CKT 1
FDNS	00NR	3	17SP	G15_042	FROM->TO	GRPRAR1-LNX3345.00 - HOLT.CO3 345.00 345KV CKT 1	720	720	0.03315	112.1138	AUDUBON - HUBBARD 230KV CKT 1
FDNS	00NR	3	17SP	G15_042	FROM->TO	GRPRAR1-LNX3345.00 - HOLT.CO3 345.00 345KV CKT 1	720	720	0.03322	112.1075	GENOA 161 - SENECA 161 161KV CKT 1
FDNS	00NR	3	17SP	G15_042	FROM->TO	GRPRAR1-LNX3345.00 - HOLT.CO3 345.00 345KV CKT 1	720	720	0.03316	112.1073	KARLSTAD - WINGER 230KV CKT 1
FDNS	00NR	3	17SP	G15_042	FROM->TO	GRPRAR1-LNX3345.00 - HOLT.CO3 345.00 345KV CKT 1	720	720	0.03313	112.1068	GEN345756 H-1SIOUX 1 18.000
FDNS	00NR	3	17SP	G15_042	FROM->TO	GRPRAR1-LNX3345.00 - HOLT.CO3 345.00 345KV CKT 1	720	720	0.03654	112.0968	BELDEN - HOSKINS 115KV CKT 1
FDNS	00NR	3	17SP	G15_042	FROM->TO	GRPRAR1-LNX3345.00 - HOLT.CO3 345.00 345KV CKT 1	720	720	0.03303	112.0953	DKSN_CO5 161.00 - LAKEFIELD 5 NO1 + NO 2 161KV CKT 1
FDNS	00NR	3	17SP	G15_042	FROM->TO	GRPRAR1-LNX3345.00 - HOLT.CO3 345.00 345KV CKT 1	720	720	0.0332	112.0835	NORTH LA CROSSE - NORTH ROCHESTER 345KV CKT 1
FDNS	00NR	3	17SP	G15_042	FROM->TO	GRPRAR1-LNX3345.00 - HOLT.CO3 345.00 345KV CKT 1	720	720	0.03313	112.0806	GEN336221 1-LITTLE GYPSY UNIT#1
FDNS	00NR	3	17SP	G15_042	FROM->TO	GRPRAR1-LNX3345.00 - HOLT.CO3 345.00 345KV CKT 1	720	720	0.03329	112.0805	HAMPTON CORNER - NORTH ROCHESTER 345KV CKT 1
FDNS	00NR	3	17SP	G15_042	FROM->TO	GRPRAR1-LNX3345.00 - HOLT.CO3 345.00 345KV CKT 1	720	720	0.03313	112.0795	GRAND GULF 500/22.0KV TRANSFORMER CKT 1
FDNS	00NR	3	17SP	G15_042	FROM->TO	GRPRAR1-LNX3345.00 - HOLT.CO3 345.00 345KV CKT 1	720	720	0.03227	112.0773	NAPA JCT7 115.00 - UTICA 115KV CKT 1
FDNS	00NR	3	17SP	G15_042	FROM->TO	GRPRAR1-LNX3345.00 - HOLT.CO3 345.00 345KV CKT 1	720	720	0.03227	112.0773	NAPA JCT7 115.00 - UTICA 115KV CKT 1
FDNS	00NR	3	17SP	G15_042	FROM->TO	GRPRAR1-LNX3345.00 - HOLT.CO3 345.00 345KV CKT 1	720	720	0.03227	112.0773	P12:115:UMZW:# 1910 #: YJ IN SD. YJ-UJ LINE FAULT
FDNS	00NR	3	17SP	G15_042	FROM->TO	GRPRAR1-LNX3345.00 - HOLT.CO3 345.00 345KV CKT 1	720	720	0.03313	112.0757	GEN636641 1-LOUISA UNIT 1
FDNS	00NR	3	17SP	G15_042	FROM->TO	GRPRAR1-LNX3345.00 - HOLT.CO3 345.00 345KV CKT 1	720	720	0.03372	112.0748	EAGLE - MARTIN 115KV CKT 1
FDNS	00NR	3	17SP	G15_042	FROM->TO	GRPRAR1-LNX3345.00 - HOLT.CO3 345.00 345KV CKT 1	720	720	0.03227	112.0741	NAPA JCT7 115.00 - YANKON JCT 115KV CKT 1
FDNS	00NR	3	17SP	G15_042	FROM->TO	GRPRAR1-LNX3345.00 - HOLT.CO3 345.00 345KV CKT 1	720	720	0.03227	112.0741	NAPA JCT7 115.00 - YANKON JCT 115KV CKT 1
FDNS	00NR	3	17SP	G15_042	FROM->TO	GRPRAR1-LNX3345.00 - HOLT.CO3 345.00 345KV CKT 1	720	720	0.03313	112.0729	GEN337757 1-DUKE HOTSPRINGS STG1
FDNS	00NR	3	17SP	G15_042	FROM->TO	GRPRAR1-LNX3345.00 - HOLT.CO3 345.00 345KV CKT 1	720	720	0.03313	112.0728	GEN336242 1-1NMIL ST1 18.000
FDNS	00NR	3	17SP	G15_042	FROM->TO	GRPRAR1-LNX3345.00 - HOLT.CO3 345.00 345KV CKT 1	720	720	0.03313	112.0679	GEN334432 1-SABINE UNIT 2
FDNS	00NR	3	17SP	G15_042	FROM->TO	GRPRAR1-LNX3345.00 - HOLT.CO3 345.00 345KV CKT 1	720	720	0.03313	112.0678	GEN334431 1-SABINE UNIT 1
FDNS	00NR	3	17SP	G15_042	FROM->TO	GRPRAR1-LNX3345.00 - HOLT.CO3 345.00 345KV CKT 1	720	720	0.03324	112.0629	FRANKS - HUBEN 345KV CKT 1
FDNS	00NR	3	17SP	G15_042	FROM->TO	GRPRAR1-LNX3345.00 - HOLT.CO3 345.00 345KV CKT 1	720	720	0.03364	112.0599	BOXBUTE7 115.00 - DUNLAP 115KV CKT 1
FDNS	00NR	3	17SP	G15_042	FROM->TO	GRPRAR1-LNX3345.00 - HOLT.CO3 345.00 345KV CKT 1	720	720	0.03393	112.0583	DENISON - SIOUX CITY 230KV CKT 1
FDNS	00NR	3	17SP	G15_042	FROM->TO	GRPRAR1-LNX3345.00 - HOLT.CO3 345.00 345KV CKT 1	720	720	0.03262	112.0544	P12:115:NPPD:1164:ONEILL 7:JEFFREY9:BTB
FDNS	00NR	3	17SP	G15_042	FROM->TO	GRPRAR1-LNX3345.00 - HOLT.CO3 345.00 345KV CKT 1	720	720	0.03313	112.0479	GEN334030 1-FRONTIER UNIT 1
FDNS	00NR	3	17SP	G15_042	FROM->TO	GRPRAR1-LNX3345.00 - HOLT.CO3 345.00 345KV CKT 1	720	720	0.03313	112.0477	GEN334031 1-FRONTIER UNIT 2
FDNS	00NR	3	17SP	G15_042	FROM->TO	GRPRAR1-LNX3345.00 - HOLT.CO3 345.00 345KV CKT 1	720	720	0.03313	112.047	GEN336446 1-MICHOUD UNIT #2
FDNS	00NR	3	17SP	G15_042	FROM->TO	GRPRAR1-LNX3345.00 - HOLT.CO3 345.00 345KV CKT 1	720	720	0.03313	112.0469	GEN345832 1-1TS G1 13.800
FDNS	00NR	3	17SP	G15_042	FROM->TO	GRPRAR1-LNX3345.00 - HOLT.CO3 345.00 345KV CKT 1	720	720	0.03313	112.0465	GEN345841 2-1TS G2 13.800
FDNS	00NR	3	17SP	G15_042	FROM->TO	GRPRAR1-LNX3345.00 - HOLT.CO3 345.00 345KV CKT 1	720	720	0.03313	112.0336	GEN501970 1-EVANGELINE UNIT 7
FDNS	00NR	3	17SP	G15_042	FROM->TO	GRPRAR1-LNX3345.00 - HOLT.CO3 345.00 345KV CKT 1	720	720	0.03313	112.025	GEN531447 1-HOLCOMB GENERATOR
FDNS	00NR	3	17SP	G15_042	FROM->TO	GRPRAR1-LNX3345.00 - HOLT.CO3 345.00 345KV CKT 1	720	720	0.03313	112.0148	GEN562912 1-G15053_3 0.6900
FDNS	00NR	3	17SP	G15_042	FROM->TO	GRPRAR1-LNX3345.00 - HOLT.CO3 345.00 345KV CKT 1	720	720	0.03313	111.9176	GEN563282 1-G15094_3 0.6900
FDNS	00NR	3	17SP	G15_042	FROM->TO	GRPRAR1-LNX3345.00 - HOLT.CO3 345.00 345KV CKT 1	720	720	0.03313	111.5569	BASE CASE
FDNS	00NR	3	25SP	G15_042	FROM->TO	GRPRAR1-LNX3345.00 - HOLT.CO3 345.00 345KV CKT 1	720	720	0.03565	111.4615	KELLY - MEADOWGROVE4230.00 230KV CKT 1
FDNS	00NR	3	17SP	G15_042	FROM->TO	GRPRAR1-LNX3345.00 - HOLT.CO3 345.00 345KV CKT 1	720	720	0.03271	111.191	NELIGH - PETERSBRG.N7115.00 115KV CKT 1
FDNS	00NR	3	17SP	G15_042	FROM->TO	GRPRAR1-LNX3345.00 - HOLT.CO3 345.00 345KV CKT 1	720	720	0.03271	111.1389	ALBION - PETERSBURG 115KV CKT 1
FDNS	00NR	3	17SP	G15_042	FROM->TO	GRPRAR1-LNX3345.00 - HOLT.CO3 345.00 345KV CKT 1	720	720	0.03271	111.1194	PETERSBRG.N7115.00 - PETERSBURG 115KV CKT Z1
FDNS	00NR	3	17SP	G15_042	FROM->TO	GRPRAR1-LNX3345.00 - HOLT.CO3 345.00 345KV CKT 1	720	720	0.03403	111.1145	103RD & ROKEBY - MOORE 345KV CKT 1
FDNS	00NR	3	17SP	G15_042	FROM->TO	GRPRAR1-LNX3345.00 - HOLT.CO3 345.00 345KV CKT 1	720	720	0.03403	111.1145	103RD & ROKEBY - MOORE 345KV CKT 1
FDNS	00NR	3	17SP	G15_042	FROM->TO	GRPRAR1-LNX3345.00 - HOLT.CO3 345.00 345KV CKT 1	720	720	0.0344	111.1106	BATTLE CREEK - COUNTY LINE 115KV CKT 1
FDNS	00NR	3	17SP	G15_042	FROM->TO	GRPRAR1-LNX3345.00 - HOLT.CO3 345.00 345KV CKT 1	720	720	0.03331	111.1061	FT THOMPSON - OAHE 230KV CKT 1
FDNS	00NR	3	17SP	G15_042	FROM->TO	GRPRAR1-LNX3345.00 - HOLT.CO3 345.00 345KV CKT 1	720	720	0.03331	111.1061	FT THOMPSON - OAHE 230KV CKT 1
FDNS	00NR	3	17SP	G15_042	FROM->TO	GRPRAR1-LNX3345.00 - HOLT.CO3 345.00 345KV CKT 1	720	720	0.03331	111.1061	FT THOMPSON - OAHE 230KV CKT 2

SOLUTION	GROUP	SCENARIO	SEASON	SOURCE	DIRECTION	MONITORED ELEMENT	RATEA (MVA)	RATEB(MVA)	TDF	TC%LOADING (% MVA)	CONTINGENCY
FDNS	00NR	3	17SP	G15_042	FROM->TO	GRPRAR1-LNX3345.00 - HOLT.CO3 345.00 345KV CKT 1	720	720	0.03331	111.1061	FT THOMPSON - OAHE 230KV CKT 2
FDNS	00NR	3	17SP	G15_042	FROM->TO	GRPRAR1-LNX3345.00 - HOLT.CO3 345.00 345KV CKT 1	720	720	0.03271	111.0805	P12:115:NPPD:1168B:ALBION 7:PETERSBRG.N7:BTB
FDNS	00NR	3	17SP	G15_042	FROM->TO	GRPRAR1-LNX3345.00 - HOLT.CO3 345.00 345KV CKT 1	720	720	0.03313	111.0804	GEN652546 1-FT RANDAL
FDNS	00NR	3	17SP	G15_042	FROM->TO	GRPRAR1-LNX3345.00 - HOLT.CO3 345.00 345KV CKT 1	720	720	0.0344	111.06	ANTELOPE 7115.00 - COUNTY LINE 115KV CKT 1
FDNS	00NR	3	17SP	G15_042	FROM->TO	GRPRAR1-LNX3345.00 - HOLT.CO3 345.00 345KV CKT 1	720	720	0.03487	111.0546	NUNDRWD - PHILIP TAP 230KV CKT 1
FDNS	00NR	3	17SP	G15_042	FROM->TO	GRPRAR1-LNX3345.00 - HOLT.CO3 345.00 345KV CKT 1	720	720	0.03332	111.0486	FT THOMPSON - OAHE 230KV CKT 3
FDNS	00NR	3	17SP	G15_042	FROM->TO	GRPRAR1-LNX3345.00 - HOLT.CO3 345.00 345KV CKT 1	720	720	0.03332	111.0486	FT THOMPSON - OAHE 230KV CKT 3
FDNS	00NR	3	17SP	G15_042	FROM->TO	GRPRAR1-LNX3345.00 - HOLT.CO3 345.00 345KV CKT 1	720	720	0.03332	111.0486	FT THOMPSON - OAHE 230KV CKT 4
FDNS	00NR	3	17SP	G15_042	FROM->TO	GRPRAR1-LNX3345.00 - HOLT.CO3 345.00 345KV CKT 1	720	720	0.03332	111.0486	FT THOMPSON - OAHE 230KV CKT 4
FDNS	00NR	3	17SP	G15_042	FROM->TO	GRPRAR1-LNX3345.00 - HOLT.CO3 345.00 345KV CKT 1	720	720	0.03313	111.0472	MITCHLCO3 345.00 345/34.5KV TRANSFORMER CKT 1
FDNS	00NR	3	17SP	G15_042	FROM->TO	GRPRAR1-LNX3345.00 - HOLT.CO3 345.00 345KV CKT 1	720	720	0.03313	111.0405	GEN672348 2-CORY COGEN GENERATOR 2 GT2
FDNS	00NR	3	17SP	G15_042	FROM->TO	GRPRAR1-LNX3345.00 - HOLT.CO3 345.00 345KV CKT 1	720	720	0.03313	111.0404	GEN672347 1-CORY COGEN GENERATOR 1 GT1
FDNS	00NR	3	17SP	G15_042	FROM->TO	GRPRAR1-LNX3345.00 - HOLT.CO3 345.00 345KV CKT 1	720	720	0.03313	111.0319	GEN600018 S-LS POWER STEAM
FDNS	00NR	3	17SP	G15_042	FROM->TO	GRPRAR1-LNX3345.00 - HOLT.CO3 345.00 345KV CKT 1	720	720	0.03328	111.0255	POST ROCK (POSTROCK T1) 345/230/13.8KV TRANSFORMER CKT 1
FDNS	00NR	3	17SP	G15_042	FROM->TO	GRPRAR1-LNX3345.00 - HOLT.CO3 345.00 345KV CKT 1	720	720	0.03324	111.0225	G11_051T 345.00 - WOODWARD DISTRICT EHV 345KV CKT 1
FDNS	00NR	3	17SP	G15_042	FROM->TO	GRPRAR1-LNX3345.00 - HOLT.CO3 345.00 345KV CKT 1	720	720	0.03313	111.0217	GEN659158 2-PIONEER G213.800
FDNS	00NR	3	17SP	G15_042	FROM->TO	GRPRAR1-LNX3345.00 - HOLT.CO3 345.00 345KV CKT 1	720	720	0.03313	111.0217	GEN659159 3-PIONEER G313.800
FDNS	00NR	3	17SP	G15_042	FROM->TO	GRPRAR1-LNX3345.00 - HOLT.CO3 345.00 345KV CKT 1	720	720	0.03313	111.0205	GEN300003 1-THOMAS HILL UNIT 3
FDNS	00NR	3	25SP	G15_042	FROM->TO	GRPRAR1-LNX3345.00 - HOLT.CO3 345.00 345KV CKT 1	720	720	0.02968	111.0171	P12:230:UMZB:# 116 #: ST IN SD. WSG-ST-VH
FDNS	00NR	3	17SP	G15_042	FROM->TO	GRPRAR1-LNX3345.00 - HOLT.CO3 345.00 345KV CKT 1	720	720	0.03313	111.0141	GEN659156 2-LONESMCRK 2G13.800
FDNS	00NR	3	17SP	G15_042	FROM->TO	GRPRAR1-LNX3345.00 - HOLT.CO3 345.00 345KV CKT 1	720	720	0.03313	111.0141	GEN659157 3-LONESMCRK 3G13.800
FDNS	00NR	3	20SP	G15_042	FROM->TO	GRPRAR1-LNX3345.00 - HOLT.CO3 345.00 345KV CKT 1	720	720	0.02972	111.0113	STORLA - WESSINGTON 230KV CKT 1
FDNS	00NR	3	17SP	G15_042	FROM->TO	GRPRAR1-LNX3345.00 - HOLT.CO3 345.00 345KV CKT 1	720	720	0.03308	111.0093	G15-005T 345.00 - MULLNCR7 345.00 345KV CKT 1
FDNS	00NR	3	17SP	G15_042	FROM->TO	GRPRAR1-LNX3345.00 - HOLT.CO3 345.00 345KV CKT 1	720	720	0.03308	111.0092	G14-021T 345.00 - MULLNCR7 345.00 345KV CKT 1
FDNS	00NR	3	17SP	G15_042	FROM->TO	GRPRAR1-LNX3345.00 - HOLT.CO3 345.00 345KV CKT 1	720	720	0.03313	111.0049	GEN652548 5-FT RANDAL
FDNS	00NR	3	17SP	G15_042	FROM->TO	GRPRAR1-LNX3345.00 - HOLT.CO3 345.00 345KV CKT 1	720	720	0.03313	111.0049	GEN652549 7-FT RANDAL
FDNS	00NR	3	17SP	G15_042	FROM->TO	GRPRAR1-LNX3345.00 - HOLT.CO3 345.00 345KV CKT 1	720	720	0.03347	111.0031	P12:115:UMZW:# 172 #: WI IN SD.
FDNS	00NR	3	17SP	G15_042	FROM->TO	GRPRAR1-LNX3345.00 - HOLT.CO3 345.00 345KV CKT 1	720	720	0.03313	110.9998	GEN590010 1-ERCOT EQUIVALENCE
FDNS	00NR	3	17SP	G15_042	FROM->TO	GRPRAR1-LNX3345.00 - HOLT.CO3 345.00 345KV CKT 1	720	720	0.03313	110.9992	GEN672367 1-MERIDIAN GENERATOR 1 GT1
FDNS	00NR	3	17SP	G15_042	FROM->TO	GRPRAR1-LNX3345.00 - HOLT.CO3 345.00 345KV CKT 1	720	720	0.03313	110.9992	GEN672368 2-MERIDIAN GENERATOR 2 GT2
FDNS	00NR	3	17SP	G15_042	FROM->TO	GRPRAR1-LNX3345.00 - HOLT.CO3 345.00 345KV CKT 1	720	720	0.03315	110.9957	P12:115:UMZZ:# 232 #: AB IN SD. ABERDEEN A TAP BETWEEN ELLENDALE AND ABERDEEN-SIEBRECHT.
FDNS	00NR	3	17SP	G15_042	FROM->TO	GRPRAR1-LNX3345.00 - HOLT.CO3 345.00 345KV CKT 1	720	720	0.0334	110.994	LARAMIE RIVER - STEGALL 345KV CKT 1
FDNS	00NR	3	17SP	G15_042	FROM->TO	GRPRAR1-LNX3345.00 - HOLT.CO3 345.00 345KV CKT 1	720	720	0.03313	110.9934	GEN652547 3-FT RANDAL
FDNS	00NR	3	17SP	G15_042	FROM->TO	GRPRAR1-LNX3345.00 - HOLT.CO3 345.00 345KV CKT 1	720	720	0.03313	110.9923	GEN600021 3-ANGUS ANSON2
FDNS	00NR	3	17SP	G15_042	FROM->TO	GRPRAR1-LNX3345.00 - HOLT.CO3 345.00 345KV CKT 1	720	720	0.03313	110.9894	GEN600020 2-ANGUS ANSON1
FDNS	00NR	3	17SP	G15_042	FROM->TO	GRPRAR1-LNX3345.00 - HOLT.CO3 345.00 345KV CKT 1	720	720	0.03313	110.9878	GEN657964 1-ASH2GEN9 0.5750
FDNS	00NR	3	17SP	G15_042	FROM->TO	GRPRAR1-LNX3345.00 - HOLT.CO3 345.00 345KV CKT 1	720	720	0.03313	110.9864	GEN672352 3-NIPAWIN GENERATOR 3
FDNS	00NR	3	17SP	G15_042	FROM->TO	GRPRAR1-LNX3345.00 - HOLT.CO3 345.00 345KV CKT 1	720	720	0.03313	110.9862	GEN672350 1-NIPAWIN GENERATOR 1
FDNS	00NR	3	17SP	G15_042	FROM->TO	GRPRAR1-LNX3345.00 - HOLT.CO3 345.00 345KV CKT 1	720	720	0.03313	110.9862	GEN672351 2-NIPAWIN GENERATOR 2
FDNS	00NR	3	17SP	G15_042	FROM->TO	GRPRAR1-LNX3345.00 - HOLT.CO3 345.00 345KV CKT 1	720	720	0.03313	110.9742	GEN590011 2-ERCOT EQUIVALENCE
FDNS	00NR	3	17SP	G15_042	FROM->TO	GRPRAR1-LNX3345.00 - HOLT.CO3 345.00 345KV CKT 1	720	720	0.03313	110.9728	GEN672349 3-CORY COGEN GENERATOR 3 ST
FDNS	00NR	3	17SP	G15_042	FROM->TO	GRPRAR1-LNX3345.00 - HOLT.CO3 345.00 345KV CKT 1	720	720	0.03313	110.9681	GEN620324 3-HOOT LAKE 3 GEN
FDNS	00NR	3	17SP	G15_042	FROM->TO	GRPRAR1-LNX3345.00 - HOLT.CO3 345.00 345KV CKT 1	720	720	0.03313	110.9636	EASTDC - ERCOT EQUIVALENCE 345KV CKT 1
FDNS	00NR	3	17SP	G15_042	FROM->TO	GRPRAR1-LNX3345.00 - HOLT.CO3 345.00 345KV CKT 1	720	720	0.03308	110.9628	G15-005T 345.00 - SIBLEY 345KV CKT 1
FDNS	00NR	3	17SP	G15_042	FROM->TO	GRPRAR1-LNX3345.00 - HOLT.CO3 345.00 345KV CKT 1	720	720	0.03321	110.9482	ANTELOP-LNX3345.00 - BRDLAND-LNX3345.00 345KV CKT 1
FDNS	00NR	3	17SP	G15_042	FROM->TO	GRPRAR1-LNX3345.00 - HOLT.CO3 345.00 345KV CKT 1	720	720	0.03313	110.9445	GEN629072 4-LANSING GENERATOR FOR UNITS NO4 EIA CODE 1
FDNS	00NR	3	17SP	G15_042	FROM->TO	GRPRAR1-LNX3345.00 - HOLT.CO3 345.00 345KV CKT 1	720	720	0.03313	110.9414	GEN660003 3-HURON WEST PARK
FDNS	00NR	3	17SP	G15_042	FROM->TO	GRPRAR1-LNX3345.00 - HOLT.CO3 345.00 345KV CKT 1	720	720	0.03313	110.936	GEN600012 2-BLACK DOG GEN 2
FDNS	00NR	3	17SP	G15_042	FROM->TO	GRPRAR1-LNX3345.00 - HOLT.CO3 345.00 345KV CKT 1	720	720	0.03383	110.9323	AXTELL - POST ROCK 345KV CKT 1
FDNS	00NR	3	17SP	G15_042	FROM->TO	GRPRAR1-LNX3345.00 - HOLT.CO3 345.00 345KV CKT 1	720	720	0.03113	110.9189	COLUMEAST - NW68TH & HOLDREGE 345KV CKT 1
FDNS	00NR	3	17SP	G15_042	FROM->TO	GRPRAR1-LNX3345.00 - HOLT.CO3 345.00 345KV CKT 1	720	720	0.03113	110.9189	COLUMEAST - NW68TH & HOLDREGE 345KV CKT 1
FDNS	00NR	3	17SP	G15_042	FROM->TO	GRPRAR1-LNX3345.00 - HOLT.CO3 345.00 345KV CKT 1	720	720	0.03193	110.9069	COOPER - MOORE 345KV CKT 1
FDNS	00NR	3	17SP	G15_042	FROM->TO	GRPRAR1-LNX3345.00 - HOLT.CO3 345.00 345KV CKT 1	720	720	0.03313	110.9009	GEN659290 1-EDGECOL
FDNS	00NR	3	17SP	G15_042	FROM->TO	GRPRAR1-LNX3345.00 - HOLT.CO3 345.00 345KV CKT 1	720	720	0.03313	110.8992	EMERY 161/18.0KV TRANSFORMER CKT 1
FDNS	00NR	3	17SP	G15_042	FROM->TO	GRPRAR1-LNX3345.00 - HOLT.CO3 345.00 345KV CKT 1	720	720	0.03313	110.8949	GEN652410 3-FT PECK
FDNS	00NR	3	17SP	G15_042	FROM->TO	GRPRAR1-LNX3345.00 - HOLT.CO3 345.00 345KV CKT 1	720	720	0.03313	110.8937	GEN672339 16-QE 16G 13.800
FDNS	00NR	3	17SP	G15_042	FROM->TO	GRPRAR1-LNX3345.00 - HOLT.CO3 345.00 345KV CKT 1	720	720	0.03313	110.8937	GEN672342 3-QUEEN ELIZABETH GENERATOR 3
FDNS	00NR	3	17SP	G15_042	FROM->TO	GRPRAR1-LNX3345.00 - HOLT.CO3 345.00 345KV CKT 1	720	720	0.03591	110.8829	MINGO - RED WILLOW 345KV CKT 1
FDNS	00NR	3	17SP	G15_042	FROM->TO	GRPRAR1-LNX3345.00 - HOLT.CO3 345.00 345KV CKT 1	720	720	0.03591	110.8829	MINGO - RED WILLOW 345KV CKT 1
FDNS	00NR	3	17SP	G15_042	FROM->TO	GRPRAR1-LNX3345.00 - HOLT.CO3 345.00 345KV CKT 1	720	720	0.03313	110.8809	GEN672393 2-NBECST2G 13.800
FDNS	00NR	3	17SP	G15_042	FROM->TO	GRPRAR1-LNX3345.00 - HOLT.CO3 345.00 345KV CKT 1	720	720	0.03429	110.8751	P12:115:NPPD:1163B:NELIGH 7:NORFK.N7:BTB
FDNS	00NR	3	17SP	G15_042	FROM->TO	GRPRAR1-LNX3345.00 - HOLT.CO3 345.00 345KV CKT 1	720	720	0.03313	110.8641	GEN600046 1-MECST
FDNS	00NR	3	17SP	G15_042	FROM->TO	GRPRAR1-LNX3345.00 - HOLT.CO3 345.00 345KV CKT 1	720	720	0.03313	110.8527	GEN300007 1-NEW MADRID UNIT 2
FDNS	00NR	3	17SP	G15_042	FROM->TO	GRPRAR1-LNX3345.00 - HOLT.CO3 345.00 345KV CKT 1	720	720	0.03313	110.847	GEN300006 1-NEW MADRID UNIT 1
FDNS	00NR	3	17SP	G15_042	FROM->TO	GRPRAR1-LNX3345.00 - HOLT.CO3 345.00 345KV CKT 1	720	720	0.03106	110.8458	COLUMEAST - SHELL CREEK 345KV CKT 1
FDNS	00NR	3	17SP	G15_042	FROM->TO	GRPRAR1-LNX3345.00 - HOLT.CO3 345.00 345KV CKT 1	720	720	0.03313	110.8394	GEN600047 1-MECCT1
FDNS	00NR	3	17SP	G15_042	FROM->TO	GRPRAR1-LNX3345.00 - HOLT.CO3 345.00 345KV CKT 1	720	720	0.03313	110.8309	GEN652414 4-FT PECK
FDNS	00NR	3	17SP	G15_042	FROM->TO	GRPRAR1-LNX3345.00 - HOLT.CO3 345.00 345KV CKT 1	720	720	0.03313	110.8309	GEN652415 5-FT PECK
FDNS	00NR	3	17SP	G15_042	FROM->TO	GRPRAR1-LNX3345.00 - HOLT.CO3 345.00 345KV CKT 1	720	720	0.03313	110.8254	GEN600050 1-FEP
FDNS	00NR	3	17SP	G15_042	FROM->TO	GRPRAR1-LNX3345.00 - HOLT.CO3 345.00 345KV CKT 1	720	720	0.03313	110.8141	GEN660001 2-ABERDEEN SIEBRECHT
FDNS	00NR	3	17SP	G15_042	FROM->TO	GRPRAR1-LNX3345.00 - HOLT.CO3 345.00 345KV CKT 1	720	720	0.03313	110.8019	LADISH 115/13.2KV TRANSFORMER CKT 1
FDNS	00NR	3	17SP	G15_042	FROM->TO	GRPRAR1-LNX3345.00 - HOLT.CO3 345.00 345KV CKT 1	720	720	0.03313	110.7811	GEN652345 W-G07_023IS_2 0.6900
FDNS	00NR	3	17SP	G15_042	FROM->TO	GRPRAR1-LNX3345.00 - HOLT.CO3 345.00 345KV CKT 1	720	720	0.03474	110.7558	G15061_T 345.00 - SETAB 345KV CKT 1
FDNS	00NR	3	17SP	G15_042	FROM->TO	GRPRAR1-LNX3345.00 - HOLT.CO3 345.00 345KV CKT 1	720	720	0.03309	110.7464	BISMARK - L3 HAWDON 230KV CKT 1
FDNS	00NR	3	17SP	G15_042	FROM->TO	GRPRAR1-LNX3345.00 - HOLT.CO3 345.00 345KV CKT 1	720	720	0.03313	110.743	GEN 11104 1-J262_GEN 0.6000
FDNS	00NR	3	17SP	G15_042	FROM->TO	GRPRAR1-LNX3345.00 - HOLT.CO3 345.00 345KV CKT 1	720	720	0.03313	110.743	GEN 11108 1-J263_GEN 0.6000
FDNS	00NR	3	17SP	G15_042	FROM->TO	GRPRAR1-LNX3345.00 - HOLT.CO3 345.00 345KV CKT 1	720	720	0.03313	110.7356	GEN600063 1-COLVILLE GEN 1
FDNS	00NR	3	17SP	G15_042	FROM->TO	GRPRAR1-LNX3345.00 - HOLT.CO3 345.00 345KV CKT 1	720	720	0.03313	110.7356	GEN600064 2-COLVILLE GEN 2
FDNS	00NR	3	17SP	G15_042	FROM->TO	GRPRAR1-LNX3345.00 - HOLT.CO3 345.00 345KV CKT 1	720	720	0.03461	110.7246	GERALD GENTLEMAN STATION - RED WILLOW 345KV CKT 1

SOLUTION	GROUP	SCENARIO	SEASON	SOURCE	DIRECTION	MONITORED ELEMENT	RATEA (MVA)	RATEB(MVA)	TDF	TC%LOADING (% MVA)	CONTINGENCY
FDNS	00NR	3	17SP	G15_042	FROM->TO	GRPRAR1-LNX3345.00 - HOLT.CO3 345.00 345KV CKT 1	720	720	0.03313	110.7232	GEN600043 7-BLUE LAKE5
FDNS	00NR	3	17SP	G15_042	FROM->TO	GRPRAR1-LNX3345.00 - HOLT.CO3 345.00 345KV CKT 1	720	720	0.03313	110.7232	GEN600044 8-BLUE LAKE6
FDNS	00NR	3	17SP	G15_042	FROM->TO	GRPRAR1-LNX3345.00 - HOLT.CO3 345.00 345KV CKT 1	720	720	0.03313	110.7226	GEN600045 4-ANSON
FDNS	00NR	3	17SP	G15_042	FROM->TO	GRPRAR1-LNX3345.00 - HOLT.CO3 345.00 345KV CKT 1	720	720	0.03313	110.7124	G830_SUB 115.00 - GRE-MCHENRY7115.00 115KV CKT 1
FDNS	00NR	3	17SP	G15_042	FROM->TO	GRPRAR1-LNX3345.00 - HOLT.CO3 345.00 345KV CKT 1	720	720	0.03317	110.7042	DRAYTON - LETELLIER 230KV CKT 1
FDNS	00NR	3	17SP	G15_042	FROM->TO	GRPRAR1-LNX3345.00 - HOLT.CO3 345.00 345KV CKT 1	720	720	0.03313	110.7017	G830_SUB 115.00 115/34.5KV TRANSFORMER CKT 1
FDNS	00NR	3	17SP	G15_042	FROM->TO	GRPRAR1-LNX3345.00 - HOLT.CO3 345.00 345KV CKT 1	720	720	0.03313	110.691	GEN600014 4-BLACK DOG GEN 4
FDNS	00NR	3	17SP	G15_042	FROM->TO	GRPRAR1-LNX3345.00 - HOLT.CO3 345.00 345KV CKT 1	720	720	0.03324	110.6904	G11_051T 345.00 - TATONGA7 345.00 345KV CKT 1
FDNS	00NR	3	17SP	G15_042	FROM->TO	GRPRAR1-LNX3345.00 - HOLT.CO3 345.00 345KV CKT 1	720	720	0.03313	110.6891	GEN600065 7-HIGH BRIDGE
FDNS	00NR	3	17SP	G15_042	FROM->TO	GRPRAR1-LNX3345.00 - HOLT.CO3 345.00 345KV CKT 1	720	720	0.03313	110.6891	GEN600066 8-HIGH BRIDGE
FDNS	00NR	3	17SP	G15_042	FROM->TO	GRPRAR1-LNX3345.00 - HOLT.CO3 345.00 345KV CKT 1	720	720	0.03313	110.6844	GEN600011 5-BLACK DOG GEN 1
FDNS	00NR	3	17SP	G15_042	FROM->TO	GRPRAR1-LNX3345.00 - HOLT.CO3 345.00 345KV CKT 1	720	720	0.03313	110.6729	GEN600071 10-RIVER SIDE
FDNS	00NR	3	17SP	G15_042	FROM->TO	GRPRAR1-LNX3345.00 - HOLT.CO3 345.00 345KV CKT 1	720	720	0.03313	110.6728	GEN600070 9-RIVER SIDE
FDNS	00NR	3	17SP	G15_042	FROM->TO	GRPRAR1-LNX3345.00 - HOLT.CO3 345.00 345KV CKT 1	720	720	0.03313	110.6601	GEN600007 7-RIVERSIDE GEN 7
FDNS	00NR	3	17SP	G15_042	FROM->TO	GRPRAR1-LNX3345.00 - HOLT.CO3 345.00 345KV CKT 1	720	720	0.03086	110.6569	FT THOMPSON (FT2 KU1A) 345/230/13.8KV TRANSFORMER CKT 1
FDNS	00NR	3	17SP	G15_042	FROM->TO	GRPRAR1-LNX3345.00 - HOLT.CO3 345.00 345KV CKT 1	720	720	0.03085	110.6537	FT THOMPSON (FT2 KU1B) 345/230/13.8KV TRANSFORMER CKT 1
FDNS	00NR	3	17SP	G15_042	FROM->TO	GRPRAR1-LNX3345.00 - HOLT.CO3 345.00 345KV CKT 1	720	720	0.03313	110.644	GEN652906 1-G09_006IS_3 0.6900
FDNS	00NR	3	17SP	G15_042	FROM->TO	GRPRAR1-LNX3345.00 - HOLT.CO3 345.00 345KV CKT 1	720	720	0.03313	110.64	GEN600017 C-LS POWER CT
FDNS	00NR	3	17SP	G15_042	FROM->TO	GRPRAR1-LNX3345.00 - HOLT.CO3 345.00 345KV CKT 1	720	720	0.03313	110.6351	GEN659273 2-GROTON SYNC COND
FDNS	00NR	3	17SP	G15_042	FROM->TO	GRPRAR1-LNX3345.00 - HOLT.CO3 345.00 345KV CKT 1	720	720	0.03313	110.6351	GEN659294 1-WILTONCOL9
FDNS	00NR	3	17SP	G15_042	FROM->TO	GRPRAR1-LNX3345.00 - HOLT.CO3 345.00 345KV CKT 1	720	720	0.03313	110.6154	LANSING WEST 161/22.0KV TRANSFORMER CKT 1
FDNS	00NR	3	17SP	G15_042	FROM->TO	GRPRAR1-LNX3345.00 - HOLT.CO3 345.00 345KV CKT 1	720	720	0.03313	110.6	GEN659192 6-LYNN
FDNS	00NR	3	17SP	G15_042	FROM->TO	GRPRAR1-LNX3345.00 - HOLT.CO3 345.00 345KV CKT 1	720	720	0.03313	110.599	GEN659162 4-RED WLCK
FDNS	00NR	3	17SP	G15_042	FROM->TO	GRPRAR1-LNX3345.00 - HOLT.CO3 345.00 345KV CKT 1	720	720	0.03313	110.599	GEN659163 5-BLACK WDCK
FDNS	00NR	3	17SP	G15_042	FROM->TO	GRPRAR1-LNX3345.00 - HOLT.CO3 345.00 345KV CKT 1	720	720	0.03313	110.5835	GEN681522 3-GENOA 3
FDNS	00NR	3	17SP	G15_042	FROM->TO	GRPRAR1-LNX3345.00 - HOLT.CO3 345.00 345KV CKT 1	720	720	0.03313	110.5775	GEN615021 1-GRE-ER 14G 16.000
FDNS	00NR	3	17SP	G15_042	FROM->TO	GRPRAR1-LNX3345.00 - HOLT.CO3 345.00 345KV CKT 1	720	720	0.03313	110.5642	GEN615052 1-CAMBRIDGE GENERATING STATION
FDNS	00NR	3	17SP	G15_042	FROM->TO	GRPRAR1-LNX3345.00 - HOLT.CO3 345.00 345KV CKT 1	720	720	0.03321	110.5631	BRDLAND-LNX3345.00 - HURON 345KV CKT Z
FDNS	00NR	3	17SP	G15_042	FROM->TO	GRPRAR1-LNX3345.00 - HOLT.CO3 345.00 345KV CKT 1	720	720	0.03321	110.5627	HURON (BD KU2A) 345/230/13.8KV TRANSFORMER CKT 1
FDNS	00NR	3	17SP	G15_042	FROM->TO	GRPRAR1-LNX3345.00 - HOLT.CO3 345.00 345KV CKT 1	720	720	0.03321	110.5627	HURON (BD KU2A) 345/230/13.8KV TRANSFORMER CKT 1
FDNS	00NR	3	17SP	G15_042	FROM->TO	GRPRAR1-LNX3345.00 - HOLT.CO3 345.00 345KV CKT 1	720	720	0.03321	110.5624	BROADLAND - HURON 230KV CKT 1
FDNS	00NR	3	17SP	G15_042	FROM->TO	GRPRAR1-LNX3345.00 - HOLT.CO3 345.00 345KV CKT 1	720	720	0.03313	110.561	CENTER 230/22.0KV TRANSFORMER CKT 1
FDNS	00NR	3	17SP	G15_042	FROM->TO	GRPRAR1-LNX3345.00 - HOLT.CO3 345.00 345KV CKT 1	720	720	0.03313	110.5599	GEN659031 1-G12_014IS_4 0.6900
FDNS	00NR	3	17SP	G15_042	FROM->TO	GRPRAR1-LNX3345.00 - HOLT.CO3 345.00 345KV CKT 1	720	720	0.03321	110.5568	P12:345:UMZB:# 103 #: BD IN SD. LOSS OF LINE
FDNS	00NR	3	17SP	G15_042	FROM->TO	GRPRAR1-LNX3345.00 - HOLT.CO3 345.00 345KV CKT 1	720	720	0.03321	110.5557	P12:345:UMZB:# 102 #: AVS BD IN ND. AVS BRD LR
FDNS	00NR	3	17SP	G15_042	FROM->TO	GRPRAR1-LNX3345.00 - HOLT.CO3 345.00 345KV CKT 1	720	720	0.03313	110.5548	GEN 10648 1-G830_GEN 0.6900
FDNS	00NR	3	17SP	G15_042	FROM->TO	GRPRAR1-LNX3345.00 - HOLT.CO3 345.00 345KV CKT 1	720	720	0.03313	110.5488	GEN652907 1-G09_007IS_3 0.6900
FDNS	00NR	3	17SP	G15_042	FROM->TO	GRPRAR1-LNX3345.00 - HOLT.CO3 345.00 345KV CKT 1	720	720	0.03313	110.5395	GEN660016 1-B_H WIND 0.7000
FDNS	00NR	3	17SP	G15_042	FROM->TO	GRPRAR1-LNX3345.00 - HOLT.CO3 345.00 345KV CKT 1	720	720	0.03313	110.4842	GEN615015 1-GRE-SPRITWDG13.200
FDNS	00NR	3	17SP	G15_042	FROM->TO	GRPRAR1-LNX3345.00 - HOLT.CO3 345.00 345KV CKT 1	720	720	0.03324	110.4708	MATHWSN7 345.00 - TATONGA7 345.00 345KV CKT 1
FDNS	00NR	3	17SP	G15_042	FROM->TO	GRPRAR1-LNX3345.00 - HOLT.CO3 345.00 345KV CKT 1	720	720	0.03313	110.4172	GEN659353 1-DEERCREK CTG18.000
FDNS	00NR	3	17SP	G15_042	FROM->TO	GRPRAR1-LNX3345.00 - HOLT.CO3 345.00 345KV CKT 1	720	720	0.03313	110.4154	GEN659354 1-DEERCREK STG18.000
FDNS	00NR	3	17SP	G15_042	FROM->TO	GRPRAR1-LNX3345.00 - HOLT.CO3 345.00 345KV CKT 1	720	720	0.03321	110.4038	ANTELOP-LNX3345.00 - ANTELOPE VALLEY 345KV CKT Z
FDNS	00NR	3	17SP	G15_042	FROM->TO	GRPRAR1-LNX3345.00 - HOLT.CO3 345.00 345KV CKT 1	720	720	0.03313	110.3285	GEN600067 9-HIGH BRIDGE
FDNS	00NR	3	17SP	G15_042	FROM->TO	GRPRAR1-LNX3345.00 - HOLT.CO3 345.00 345KV CKT 1	720	720	0.03313	110.3278	GEN672303 3-BOUNDARY DAM GENERATOR 3
FDNS	00NR	3	17SP	G15_042	FROM->TO	GRPRAR1-LNX3345.00 - HOLT.CO3 345.00 345KV CKT 1	720	720	0.03313	110.3278	GEN672305 5-BOUNDARY DAM GENERATOR 5
FDNS	00NR	3	17SP	G15_042	FROM->TO	GRPRAR1-LNX3345.00 - HOLT.CO3 345.00 345KV CKT 1	720	720	0.03603	110.3178	ANTELOPE 3345.00 (ANTELOPE T1) 345/115/13.8KV TRANSFORMER CKT 1
FDNS	00NR	3	17SP	G15_042	FROM->TO	GRPRAR1-LNX3345.00 - HOLT.CO3 345.00 345KV CKT 1	720	720	0.03313	110.3034	GEN672392 1-NBECGT1G 18.000
FDNS	00NR	3	17SP	G15_042	FROM->TO	GRPRAR1-LNX3345.00 - HOLT.CO3 345.00 345KV CKT 1	720	720	0.03309	110.2716	OAHE - SULLEY BUTTE 230KV CKT 1
FDNS	00NR	3	25SP	G15_042	FROM->TO	GRPRAR1-LNX3345.00 - HOLT.CO3 345.00 345KV CKT 1	720	720	0.03004	110.2541	STORLA - WESSINGTON 230KV CKT 1
FDNS	00NR	3	17SP	G15_042	FROM->TO	GRPRAR1-LNX3345.00 - HOLT.CO3 345.00 345KV CKT 1	720	720	0.03313	110.2403	GEN910006 1-G12_012IS_3 0.6900
FDNS	00NR	3	17SP	G15_042	FROM->TO	GRPRAR1-LNX3345.00 - HOLT.CO3 345.00 345KV CKT 1	720	720	0.03313	110.2319	BISONMP4 230.00 - SQUARE BUTTE 230KV CKT 1
FDNS	00NR	3	17SP	G15_042	FROM->TO	GRPRAR1-LNX3345.00 - HOLT.CO3 345.00 345KV CKT 1	720	720	0.03313	110.1871	GEN662101 1-WESSINGTON190.5750
FDNS	00NR	3	17SP	G15_042	FROM->TO	GRPRAR1-LNX3345.00 - HOLT.CO3 345.00 345KV CKT 1	720	720	0.0347	110.1346	AXTELL - SWEETWATER 345KV CKT 1
FDNS	00NR	3	17SP	G15_042	FROM->TO	GRPRAR1-LNX3345.00 - HOLT.CO3 345.00 345KV CKT 1	720	720	0.03309	110.1161	SULLEY BUTTE - SULLYBT-LNX3230.00 230KV CKT Z
FDNS	00NR	3	17SP	G15_042	FROM->TO	GRPRAR1-LNX3345.00 - HOLT.CO3 345.00 345KV CKT 1	720	720	0.03309	110.1159	SULLYBT-LNX3230.00 - WHITLOK 230KV CKT 1
FDNS	00NR	3	17SP	G15_042	FROM->TO	GRPRAR1-LNX3345.00 - HOLT.CO3 345.00 345KV CKT 1	720	720	0.03475	110.1006	G15088_T 345.00 - MOORE 345KV CKT 1
FDNS	00NR	3	17SP	G15_042	FROM->TO	GRPRAR1-LNX3345.00 - HOLT.CO3 345.00 345KV CKT 1	720	720	0.03309	110.07	P12:230:UMZB:# 114 #: SB IN SD. SB-WK-GH
FDNS	00NR	3	17SP	G15_042	FROM->TO	GRPRAR1-LNX3345.00 - HOLT.CO3 345.00 345KV CKT 1	720	720	0.03309	110.07	P12:230:UMZB:# 117 #: WK IN SD. SB-WK-GH
FDNS	00NR	3	17SP	G15_042	FROM->TO	GRPRAR1-LNX3345.00 - HOLT.CO3 345.00 345KV CKT 1	720	720	0.03313	110.0454	SQUARE BUTTE - YNG2 4 230.00 230KV CKT 1
FDNS	00NR	3	20SP	G15_042	FROM->TO	GRPRAR1-LNX3345.00 - HOLT.CO3 345.00 345KV CKT 1	720	720	0.02969	110.031	HANLON - STORLA 230KV CKT 1
FDNS	00NR	3	17SP	G15_042	FROM->TO	GRPRAR1-LNX3345.00 - HOLT.CO3 345.00 345KV CKT 1	720	720	0.03309	110.0173	GLENHAM - WHITLOK 230KV CKT 1
FDNS	00NR	3	17SP	G15_042	FROM->TO	GRPRAR1-LNX3345.00 - HOLT.CO3 345.00 345KV CKT 1	720	720	0.03313	109.9578	GEN681542 6-JP MADGETT
FDNS	00NR	3	17SP	G15_042	FROM->TO	GRPRAR1-LNX3345.00 - HOLT.CO3 345.00 345KV CKT 1	720	720	0.03313	109.9119	GEN659289 1-DAYCNTYWND W0.6900
FDNS	00NR	3	17SP	G15_042	FROM->TO	GRPRAR1-LNX3345.00 - HOLT.CO3 345.00 345KV CKT 1	720	720	0.03313	109.8951	GEN659018 1-G14_003IS_3 0.6900
FDNS	00NR	3	17SP	G15_042	FROM->TO	GRPRAR1-LNX3345.00 - HOLT.CO3 345.00 345KV CKT 1	720	720	0.03313	109.8752	GEN652543 3-BIG BEND
FDNS	00NR	3	17SP	G15_042	FROM->TO	GRPRAR1-LNX3345.00 - HOLT.CO3 345.00 345KV CKT 1	720	720	0.03313	109.8737	GEN563312 1-G15097_3 0.6900
FDNS	00NR	3	17SP	G15_042	FROM->TO	GRPRAR1-LNX3345.00 - HOLT.CO3 345.00 345KV CKT 1	720	720	0.03313	109.73	GEN659194 1-NDPRAIRWND1W0.6900
FDNS	00NR	3	17SP	G15_042	FROM->TO	GRPRAR1-LNX3345.00 - HOLT.CO3 345.00 345KV CKT 1	720	720	0.03313	109.7134	GEN659010 4-G07_027IS_2 0.6900
FDNS	00NR	3	17SP	G15_042	FROM->TO	GRPRAR1-LNX3345.00 - HOLT.CO3 345.00 345KV CKT 1	720	720	0.03313	109.7062	GEN652460 4-GARRISON
FDNS	00NR	3	17SP	G15_042	FROM->TO	GRPRAR1-LNX3345.00 - HOLT.CO3 345.00 345KV CKT 1	720	720	0.03313	109.7062	GEN652461 5-GARRISON
FDNS	00NR	3	17SP	G15_042	FROM->TO	GRPRAR1-LNX3345.00 - HOLT.CO3 345.00 345KV CKT 1	720	720	0.03313	109.6839	GEN563342 1-G15098_3 0.6900
FDNS	00NR	3	17SP	G15_042	FROM->TO	GRPRAR1-LNX3345.00 - HOLT.CO3 345.00 345KV CKT 1	720	720	0.03313	109.6472	GEN652457 1-GARRISON
FDNS	00NR	3	17SP	G15_042	FROM->TO	GRPRAR1-LNX3345.00 - HOLT.CO3 345.00 345KV CKT 1	720	720	0.03313	109.6472	GEN652458 2-GARRISON
FDNS	00NR	3	17SP	G15_042	FROM->TO	GRPRAR1-LNX3345.00 - HOLT.CO3 345.00 345KV CKT 1	720	720	0.03313	109.6472	GEN652459 3-GARRISON
FDNS	00NR	3	17SP	G15_042	FROM->TO	GRPRAR1-LNX3345.00 - HOLT.CO3 345.00 345KV CKT 1	720	720	0.03313	109.594	GEN659403 1-NDSUNFLWR W0.6900
FDNS	00NR	3	17SP	G15_042	FROM->TO	GRPRAR1-LNX3345.00 - HOLT.CO3 345.00 345KV CKT 1	720	720	0.03313	109.5465	GEN652542 1-BIG BEND
FDNS	00NR	3	17SP	G15_042	FROM->TO	GRPRAR1-LNX3345.00 - HOLT.CO3 345.00 345KV CKT 1	720	720	0.03538	109.49	MCCOOL - MOORE 345KV CKT 1
FDNS	00NR	3	20SP	G15_042	FROM->TO	GRPRAR1-LNX3345.00 - HOLT.CO3 345.00 345KV CKT 1	720	720	0.03147	109.4837	BUFFALO - JAMESTOWN 345KV CKT 1

SOLUTION	GROUP	SCENARIO	SEASON	SOURCE	DIRECTION	MONITORED ELEMENT	RATEA (MVA)	RATEB(MVA)	TDF	TC%LOADING (% MVA)	CONTINGENCY
FDNS	00NR	3	20SP	G15_042	FROM->TO	GRPRAR1-LNX3345.00 - HOLT.CO3 345.00 345KV CKT 1	720	720	0.03124	109.4491	G09_001IST 345.00 - WATERTOWN 345KV CKT 1
FDNS	00NR	3	17SP	G15_042	FROM->TO	GRPRAR1-LNX3345.00 - HOLT.CO3 345.00 345KV CKT 1	720	720	0.03313	109.4321	GEN652559 1-OAHE
FDNS	00NR	3	17SP	G15_042	FROM->TO	GRPRAR1-LNX3345.00 - HOLT.CO3 345.00 345KV CKT 1	720	720	0.03313	109.4316	STANTON 230/18.0KV TRANSFORMER CKT 1
FDNS	00NR	3	17SP	G15_042	FROM->TO	GRPRAR1-LNX3345.00 - HOLT.CO3 345.00 345KV CKT 1	720	720	0.03313	109.4276	CLAY BOSWELL 230/20.9KV TRANSFORMER CKT 1
FDNS	00NR	3	17SP	G15_042	FROM->TO	GRPRAR1-LNX3345.00 - HOLT.CO3 345.00 345KV CKT 1	720	720	0.03309	109.4061	GLENHAM - L3 HAWDON 230KV CKT 1
FDNS	00NR	3	25SP	G15_042	FROM->TO	GRPRAR1-LNX3345.00 - HOLT.CO3 345.00 345KV CKT 1	720	720	0.03001	109.2408	HANLON - STORLA 230KV CKT 1
FDNS	00NR	3	17SP	G15_042	FROM->TO	GRPRAR1-LNX3345.00 - HOLT.CO3 345.00 345KV CKT 1	720	720	0.03313	109.1778	GEN659411 1-CAMPBLCNTY W0.6900
FDNS	00NR	3	25SP	G15_042	FROM->TO	GRPRAR1-LNX3345.00 - HOLT.CO3 345.00 345KV CKT 1	720	720	0.03179	109.0052	BUFFALO - JAMESTOWN 345KV CKT 1
FDNS	00NR	3	17SP	G15_042	FROM->TO	GRPRAR1-LNX3345.00 - HOLT.CO3 345.00 345KV CKT 1	720	720	0.03313	108.9498	GEN659296 2-SDPRAIRWND1W0.6900
FDNS	00NR	3	17SP	G15_042	FROM->TO	GRPRAR1-LNX3345.00 - HOLT.CO3 345.00 345KV CKT 1	720	720	0.03313	108.9347	GEN672321 1-SHAND GENERATOR 1
FDNS	00NR	3	17SP	G15_042	FROM->TO	GRPRAR1-LNX3345.00 - HOLT.CO3 345.00 345KV CKT 1	720	720	0.03313	108.9246	GEN672310 1-POPLAR RIVER GENERATOR 1
FDNS	00NR	3	17SP	G15_042	FROM->TO	GRPRAR1-LNX3345.00 - HOLT.CO3 345.00 345KV CKT 1	720	720	0.03313	108.9245	GEN672311 2-POPLAR RIVER GENERATOR 2
FDNS	00NR	3	17SP	G15_042	FROM->TO	GRPRAR1-LNX3345.00 - HOLT.CO3 345.00 345KV CKT 1	720	720	0.03314	108.8786	P12:230:UMZB:# 112 #: NU IN SD. NU-RCDC & DRY CREEK XFMR
FDNS	00NR	3	17SP	G15_042	FROM->TO	GRPRAR1-LNX3345.00 - HOLT.CO3 345.00 345KV CKT 1	720	720	0.03313	108.8727	RCDC EAST 4230.00 - RED CEDAR DC 230KV CKT 1
FDNS	00NR	3	17SP	G15_042	FROM->TO	GRPRAR1-LNX3345.00 - HOLT.CO3 345.00 345KV CKT 1	720	720	0.03313	108.8524	GEN600004 2-PRAIRIE ISLAND G2
FDNS	00NR	3	17SP	G15_042	FROM->TO	GRPRAR1-LNX3345.00 - HOLT.CO3 345.00 345KV CKT 1	720	720	0.03313	108.8482	GEN600003 1-PRAIRIE ISLAND G1
FDNS	00NR	3	17SP	G15_042	FROM->TO	GRPRAR1-LNX3345.00 - HOLT.CO3 345.00 345KV CKT 1	720	720	0.03313	108.8255	GEN672306 6-BOUNDARY DAM GENERATOR 6
FDNS	00NR	3	17SP	G15_042	FROM->TO	GRPRAR1-LNX3345.00 - HOLT.CO3 345.00 345KV CKT 1	720	720	0.03313	108.7995	GEN615010 1-STANTON4
FDNS	00NR	3	17SP	G15_042	FROM->TO	GRPRAR1-LNX3345.00 - HOLT.CO3 345.00 345KV CKT 1	720	720	0.03313	108.7876	GEN659453 1-GI1414GEN W0.6900
FDNS	00NR	3	17SP	G15_042	FROM->TO	GRPRAR1-LNX3345.00 - HOLT.CO3 345.00 345KV CKT 1	720	720	0.03313	108.7859	GEN563302 1-G15096_3 0.6900
FDNS	00NR	3	17SP	G15_042	FROM->TO	GRPRAR1-LNX3345.00 - HOLT.CO3 345.00 345KV CKT 1	720	720	0.03313	108.6806	GEN659141 1-K10215A
FDNS	00NR	3	25SP	G15_042	FROM->TO	GRPRAR1-LNX3345.00 - HOLT.CO3 345.00 345KV CKT 1	720	720	0.03157	108.605	G09_001IST 345.00 - WATERTOWN 345KV CKT 1
FDNS	00NR	3	17SP	G15_042	FROM->TO	GRPRAR1-LNX3345.00 - HOLT.CO3 345.00 345KV CKT 1	720	720	0.03313	108.5993	GEN652556 2-OAHE
FDNS	00NR	3	17SP	G15_042	FROM->TO	GRPRAR1-LNX3345.00 - HOLT.CO3 345.00 345KV CKT 1	720	720	0.03313	108.5993	GEN652557 4-OAHE
FDNS	00NR	3	17SP	G15_042	FROM->TO	GRPRAR1-LNX3345.00 - HOLT.CO3 345.00 345KV CKT 1	720	720	0.03313	108.5993	GEN652558 6-OAHE
FDNS	00NR	3	17SP	G15_042	FROM->TO	GRPRAR1-LNX3345.00 - HOLT.CO3 345.00 345KV CKT 1	720	720	0.03313	108.5969	GEN659110 1-LELAND OLDS UNIT1
FDNS	00NR	3	25SP	G15_042	FROM->TO	GRPRAR1-LNX3345.00 - HOLT.CO3 345.00 345KV CKT 1	720	720	0.02958	108.5884	FT THOMPSON - LETCHER 230KV CKT 1
FDNS	00NR	3	25SP	G15_042	FROM->TO	GRPRAR1-LNX3345.00 - HOLT.CO3 345.00 345KV CKT 1	720	720	0.02958	108.5884	FT THOMPSON - LETCHER 230KV CKT 1
FDNS	00NR	3	17SP	G15_042	FROM->TO	GRPRAR1-LNX3345.00 - HOLT.CO3 345.00 345KV CKT 1	720	720	0.03313	108.5302	GEN657749 1-YOUNG 1 GENERATOR
FDNS	00NR	3	17SP	G15_042	FROM->TO	GRPRAR1-LNX3345.00 - HOLT.CO3 345.00 345KV CKT 1	720	720	0.03313	108.5102	GEN600006 1-AS KING
FDNS	00NR	3	17SP	G15_042	FROM->TO	GRPRAR1-LNX3345.00 - HOLT.CO3 345.00 345KV CKT 1	720	720	0.03313	108.4342	GEN652173 1-G09_001IS_2 0.6900
FDNS	00NR	3	17SP	G15_042	FROM->TO	GRPRAR1-LNX3345.00 - HOLT.CO3 345.00 345KV CKT 1	720	720	0.03523	108.352	GRAND ISLAND - MCCOOL 345KV CKT 1
FDNS	00NR	3	20SP	G15_042	FROM->TO	GRPRAR1-LNX3345.00 - HOLT.CO3 345.00 345KV CKT 1	720	720	0.03091	108.2912	WATERTN-LNX3345.00 - WHITE 345KV CKT 1
FDNS	00NR	3	20SP	G15_042	FROM->TO	GRPRAR1-LNX3345.00 - HOLT.CO3 345.00 345KV CKT 1	720	720	0.03091	108.1903	WATERTN-LNX3345.00 - WATERTOWN 345KV CKT Z
FDNS	00NR	3	20SP	G15_042	FROM->TO	GRPRAR1-LNX3345.00 - HOLT.CO3 345.00 345KV CKT 1	720	720	0.03091	108.1791	P12:345:UMZW:# 1747 #: WT2 IN SD. WT2-WHT LINE FAULT
FDNS	00NR	3	17SP	G15_042	FROM->TO	GRPRAR1-LNX3345.00 - HOLT.CO3 345.00 345KV CKT 1	720	720	0.03313	108.1468	GEN659407 1-ANTELPHILLSW0.6900
FDNS	00NR	3	20SP	G15_042	FROM->TO	GRPRAR1-LNX3345.00 - HOLT.CO3 345.00 345KV CKT 1	720	720	0.03148	108.06	GEN336821 1-GRAND GULF UNIT
FDNS	00NR	3	20SP	G15_042	FROM->TO	GRPRAR1-LNX3345.00 - HOLT.CO3 345.00 345KV CKT 1	720	720	0.03148	108.0372	GEN635024 4-WALTER SCOTT UNIT 4
FDNS	00NR	3	20SP	G15_042	FROM->TO	GRPRAR1-LNX3345.00 - HOLT.CO3 345.00 345KV CKT 1	720	720	0.03529	108.0157	FT RANDAL - MEADOWGROVE4230.00 230KV CKT 1
FDNS	00NR	3	20SP	G15_042	FROM->TO	GRPRAR1-LNX3345.00 - HOLT.CO3 345.00 345KV CKT 1	720	720	0.03146	108.0056	CENTER - JAMESTOWN 345KV CKT 1
FDNS	00NR	3	17SP	G15_042	FROM->TO	GRPRAR1-LNX3345.00 - HOLT.CO3 345.00 345KV CKT 1	720	720	0.03313	107.9563	GEN600005 1-MONTICELLO
FDNS	00NR	3	20SP	G15_042	FROM->TO	GRPRAR1-LNX3345.00 - HOLT.CO3 345.00 345KV CKT 1	720	720	0.02977	107.9182	SPLIT ROCK - WHITE 345KV CKT 1
FDNS	00NR	3	20SP	G15_042	FROM->TO	GRPRAR1-LNX3345.00 - HOLT.CO3 345.00 345KV CKT 1	720	720	0.02977	107.9182	SPLIT ROCK - WHITE 345KV CKT 1
FDNS	00NR	3	20SP	G15_042	FROM->TO	GRPRAR1-LNX3345.00 - HOLT.CO3 345.00 345KV CKT 1	720	720	0.03149	107.7409	CHISAGO COUNTY - CHISAGO COUNTY 500KV CKT 1
FDNS	00NR	3	20SP	G15_042	FROM->TO	GRPRAR1-LNX3345.00 - HOLT.CO3 345.00 345KV CKT 1	720	720	0.03149	107.717	CHISAGO COUNTY - FORBES 500KV CKT 1
FDNS	00NR	3	20SP	G15_042	FROM->TO	GRPRAR1-LNX3345.00 - HOLT.CO3 345.00 345KV CKT 1	720	720	0.03147	107.6068	BISON 3 345.00 - BUFFALO 345KV CKT 1
FDNS	00NR	3	20SP	G15_042	FROM->TO	GRPRAR1-LNX3345.00 - HOLT.CO3 345.00 345KV CKT 1	720	720	0.03148	107.5488	GEN635023 3-WALTER SCOTT UNIT 3
FDNS	00NR	3	20SP	G15_042	FROM->TO	GRPRAR1-LNX3345.00 - HOLT.CO3 345.00 345KV CKT 1	720	720	0.03148	107.546	GEN562714 1-G15_023_4 0.6900
FDNS	00NR	3	20SP	G15_042	FROM->TO	GRPRAR1-LNX3345.00 - HOLT.CO3 345.00 345KV CKT 1	720	720	0.03148	107.546	GEN562715 1-G15_023_5 0.6900
FDNS	00NR	3	20SP	G15_042	FROM->TO	GRPRAR1-LNX3345.00 - HOLT.CO3 345.00 345KV CKT 1	720	720	0.03021	107.5454	LETCHER - SIOUX FALLS 230KV CKT 1
FDNS	00NR	3	20SP	G15_042	FROM->TO	GRPRAR1-LNX3345.00 - HOLT.CO3 345.00 345KV CKT 1	720	720	0.03148	107.4984	GEN344225 1-1CAL G1 25.000
FDNS	00NR	3	20SP	G15_042	FROM->TO	GRPRAR1-LNX3345.00 - HOLT.CO3 345.00 345KV CKT 1	720	720	0.03148	107.4173	GEN337911 1-ARKANSAS NUCLEAR ONE UNIT #2
FDNS	00NR	3	20SP	G15_042	FROM->TO	GRPRAR1-LNX3345.00 - HOLT.CO3 345.00 345KV CKT 1	720	720	0.03148	107.3881	GEN336153 1-WATERFORD UNIT#3
FDNS	00NR	3	25SP	G15_042	FROM->TO	GRPRAR1-LNX3345.00 - HOLT.CO3 345.00 345KV CKT 1	720	720	0.03123	107.379	WATERTN-LNX3345.00 - WHITE 345KV CKT 1
FDNS	00NR	3	25SP	G15_042	FROM->TO	GRPRAR1-LNX3345.00 - HOLT.CO3 345.00 345KV CKT 1	720	720	0.03178	107.3707	CENTER - JAMESTOWN 345KV CKT 1
FDNS	00NR	3	20SP	G15_042	FROM->TO	GRPRAR1-LNX3345.00 - HOLT.CO3 345.00 345KV CKT 1	720	720	0.03247	107.3623	MISSION - ST FRANCIS 115KV CKT 1
FDNS	00NR	3	20SP	G15_042	FROM->TO	GRPRAR1-LNX3345.00 - HOLT.CO3 345.00 345KV CKT 1	720	720	0.03247	107.3395	P12:115:NPPD:1091:VALENTN7:MISSION7:BTB
FDNS	00NR	3	20SP	G15_042	FROM->TO	GRPRAR1-LNX3345.00 - HOLT.CO3 345.00 345KV CKT 1	720	720	0.03246	107.3201	SIDNEY - SIDNEY1-LNX3345.00 345KV CKT Z
FDNS	00NR	3	17SP	G15_042	FROM->TO	GRPRAR1-LNX3345.00 - HOLT.CO3 345.00 345KV CKT 1	720	720	0.03313	107.2973	GEN600000 1-SHERBURNECNTY G1
FDNS	00NR	3	20SP	G15_042	FROM->TO	GRPRAR1-LNX3345.00 - HOLT.CO3 345.00 345KV CKT 1	720	720	0.03246	107.2968	KEYSTONE - SIDNEY1-LNX3345.00 345KV CKT 1
FDNS	00NR	3	25SP	G15_042	FROM->TO	GRPRAR1-LNX3345.00 - HOLT.CO3 345.00 345KV CKT 1	720	720	0.03123	107.2748	WATERTN-LNX3345.00 - WATERTOWN 345KV CKT Z
FDNS	00NR	3	25SP	G15_042	FROM->TO	GRPRAR1-LNX3345.00 - HOLT.CO3 345.00 345KV CKT 1	720	720	0.03123	107.2663	P12:345:UMZW:# 1747 #: WT2 IN SD. WT2-WHT LINE FAULT
FDNS	00NR	3	20SP	G15_042	FROM->TO	GRPRAR1-LNX3345.00 - HOLT.CO3 345.00 345KV CKT 1	720	720	0.03924	107.2071	NUNDRWD - WAYSIDE 230KV CKT 1
FDNS	00NR	3	20SP	G15_042	FROM->TO	GRPRAR1-LNX3345.00 - HOLT.CO3 345.00 345KV CKT 1	720	720	0.03247	107.1904	HARMONY - ST FRANCIS 115KV CKT 1
FDNS	00NR	3	20SP	G15_042	FROM->TO	GRPRAR1-LNX3345.00 - HOLT.CO3 345.00 345KV CKT 1	720	720	0.03124	107.1798	G09_001IST 345.00 - GROTON 345KV CKT 1
FDNS	00NR	3	25SP	G15_042	FROM->TO	GRPRAR1-LNX3345.00 - HOLT.CO3 345.00 345KV CKT 1	720	720	0.03565	107.1267	FT RANDAL - MEADOWGROVE4230.00 230KV CKT 1
FDNS	00NR	3	20SP	G15_042	FROM->TO	GRPRAR1-LNX3345.00 - HOLT.CO3 345.00 345KV CKT 1	720	720	0.03148	107.0863	GEN640010 1-GERALD GENTLEMAN STATION UNIT 1
FDNS	00NR	3	25SP	G15_042	FROM->TO	GRPRAR1-LNX3345.00 - HOLT.CO3 345.00 345KV CKT 1	720	720	0.0318	107.0638	GEN635024 4-WALTER SCOTT UNIT 4
FDNS	00NR	3	20SP	G15_042	FROM->TO	GRPRAR1-LNX3345.00 - HOLT.CO3 345.00 345KV CKT 1	720	720	0.03148	107.0416	GEN335831 1-RIVERBEND UNIT#1
FDNS	00NR	3	25SP	G15_042	FROM->TO	GRPRAR1-LNX3345.00 - HOLT.CO3 345.00 345KV CKT 1	720	720	0.0318	107.0048	GEN336821 1-GRAND GULF UNIT
FDNS	00NR	3	25SP	G15_042	FROM->TO	GRPRAR1-LNX3345.00 - HOLT.CO3 345.00 345KV CKT 1	720	720	0.03179	106.9982	BISON 3 345.00 - BUFFALO 345KV CKT 1
FDNS	00NR	3	20SP	G15_042	FROM->TO	GRPRAR1-LNX3345.00 - HOLT.CO3 345.00 345KV CKT 1	720	720	0.03148	106.9953	GEN640011 2-GERALD GENTLEMAN STATION UNIT 2
FDNS	00NR	3	25SP	G15_042	FROM->TO	GRPRAR1-LNX3345.00 - HOLT.CO3 345.00 345KV CKT 1	720	720	0.03181	106.9854	CHISAGO COUNTY - CHISAGO COUNTY 500KV CKT 1
FDNS	00NR	3	25SP	G15_042	FROM->TO	GRPRAR1-LNX3345.00 - HOLT.CO3 345.00 345KV CKT 1	720	720	0.0318	106.9847	GEN640010 1-GERALD GENTLEMAN STATION UNIT 1
FDNS	00NR	3	20SP	G15_042	FROM->TO	GRPRAR1-LNX3345.00 - HOLT.CO3 345.00 345KV CKT 1	720	720	0.03148	106.9472	GEN337910 1-ARKANSAS NUCLEAR ONE UNIT #1
FDNS	00NR	3	17SP	G15_042	FROM->TO	GRPRAR1-LNX3345.00 - HOLT.CO3 345.00 345KV CKT 1	720	720	0.03313	106.9464	GEN600001 2-SHERBURNE CNTY G2
FDNS	00NR	3	25SP	G15_042	FROM->TO	GRPRAR1-LNX3345.00 - HOLT.CO3 345.00 345KV CKT 1	720	720	0.03181	106.9335	CHISAGO COUNTY - FORBES 500KV CKT 1
FDNS	00NR	3	20SP	G15_042	FROM->TO	GRPRAR1-LNX3345.00 - HOLT.CO3 345.00 345KV CKT 1	720	720	0.03247	106.9323	HARMONY - VALENTINE 115KV CKT 1
FDNS	00NR	3	25SP	G15_042	FROM->TO	GRPRAR1-LNX3345.00 - HOLT.CO3 345.00 345KV CKT 1	720	720	0.03009	106.9194	SPLIT ROCK - WHITE 345KV CKT 1

SOLUTION	GROUP	SCENARIO	SEASON	SOURCE	DIRECTION	MONITORED ELEMENT	RATEA (MVA)	RATEB(MVA)	TDF	TC%LOADING (% MVA)	CONTINGENCY
FDNS	00NR	3	25SP	G15_042	FROM->TO	GRPRAR1-LNX3345.00 - HOLT.CO3 345.00 345KV CKT 1	720	720	0.03009	106.9194	SPLIT ROCK - WHITE 345KV CKT 1
FDNS	00NR	3	25SP	G15_042	FROM->TO	GRPRAR1-LNX3345.00 - HOLT.CO3 345.00 345KV CKT 1	720	720	0.0318	106.7795	GEN562714 1-G15_023_4 0.6900
FDNS	00NR	3	25SP	G15_042	FROM->TO	GRPRAR1-LNX3345.00 - HOLT.CO3 345.00 345KV CKT 1	720	720	0.0318	106.7795	GEN562715 1-G15_023_5 0.6900
FDNS	00NR	3	20SP	G15_042	FROM->TO	GRPRAR1-LNX3345.00 - HOLT.CO3 345.00 345KV CKT 1	720	720	0.03295	106.7766	FT RANDAL - SPENCER 115KV CKT 1
FDNS	00NR	3	20SP	G15_042	FROM->TO	GRPRAR1-LNX3345.00 - HOLT.CO3 345.00 345KV CKT 1	720	720	0.03295	106.7571	P12:115:NPPD:WAPA6:FTRANDL7:ONEILL 7:BTB
FDNS	00NR	3	20SP	G15_042	FROM->TO	GRPRAR1-LNX3345.00 - HOLT.CO3 345.00 345KV CKT 1	720	720	0.03295	106.7571	P12:115:UMZB:# 115 #: SE IN NE. FR-SE-ON
FDNS	00NR	3	25SP	G15_042	FROM->TO	GRPRAR1-LNX3345.00 - HOLT.CO3 345.00 345KV CKT 1	720	720	0.03053	106.7198	LETCHER - SIOUX FALLS 230KV CKT 1
FDNS	00NR	3	25SP	G15_042	FROM->TO	GRPRAR1-LNX3345.00 - HOLT.CO3 345.00 345KV CKT 1	720	720	0.0318	106.6751	GEN640011 2-GERALD GENTLEMAN STATION UNIT 2
FDNS	00NR	3	20SP	G15_042	FROM->TO	GRPRAR1-LNX3345.00 - HOLT.CO3 345.00 345KV CKT 1	720	720	0.03123	106.6616	GROTON-LNX3 345.00 - LELAND1-LNX3345.00 345KV CKT 1
FDNS	00NR	3	25SP	G15_042	FROM->TO	GRPRAR1-LNX3345.00 - HOLT.CO3 345.00 345KV CKT 1	720	720	0.03279	106.645	MISSION - ST FRANCIS 115KV CKT 1
FDNS	00NR	3	20SP	G15_042	FROM->TO	GRPRAR1-LNX3345.00 - HOLT.CO3 345.00 345KV CKT 1	720	720	0.03295	106.6346	ONEILL - SPENCER 115KV CKT 1
FDNS	00NR	3	20SP	G15_042	FROM->TO	GRPRAR1-LNX3345.00 - HOLT.CO3 345.00 345KV CKT 1	720	720	0.03123	106.6051	GROTON - GROTON-LNX3 345.00 345KV CKT Z
FDNS	00NR	3	20SP	G15_042	FROM->TO	GRPRAR1-LNX3345.00 - HOLT.CO3 345.00 345KV CKT 1	720	720	0.03123	106.6034	P12:345:UMZB:# 109 #: LOS GRT IN ND. LOS GRT
FDNS	00NR	3	25SP	G15_042	FROM->TO	GRPRAR1-LNX3345.00 - HOLT.CO3 345.00 345KV CKT 1	720	720	0.0318	106.6008	GEN635023 3-WALTER SCOTT UNIT 3
FDNS	00NR	3	25SP	G15_042	FROM->TO	GRPRAR1-LNX3345.00 - HOLT.CO3 345.00 345KV CKT 1	720	720	0.0318	106.6	GEN337911 1-ARKANSAS NUCLEAR ONE UNIT #2
FDNS	00NR	3	20SP	G15_042	FROM->TO	GRPRAR1-LNX3345.00 - HOLT.CO3 345.00 345KV CKT 1	720	720	0.03123	106.5971	LELAND OLDS - LELAND1-LNX3345.00 345KV CKT Z
FDNS	00NR	3	20SP	G15_042	FROM->TO	GRPRAR1-LNX3345.00 - HOLT.CO3 345.00 345KV CKT 1	720	720	0.06318	106.5772	DIXONCO 230.00 - HOSKINS 230KV CKT 1
FDNS	00NR	3	20SP	G15_042	FROM->TO	GRPRAR1-LNX3345.00 - HOLT.CO3 345.00 345KV CKT 1	720	720	0.03069	106.576	HANLON - SIOUX FALLS 230KV CKT 1
FDNS	00NR	3	25SP	G15_042	FROM->TO	GRPRAR1-LNX3345.00 - HOLT.CO3 345.00 345KV CKT 1	720	720	0.03278	106.5582	KEYSTONE - SIDNEY1-LNX3345.00 345KV CKT 1
FDNS	00NR	3	25SP	G15_042	FROM->TO	GRPRAR1-LNX3345.00 - HOLT.CO3 345.00 345KV CKT 1	720	720	0.03278	106.558	SIDNEY - SIDNEY1-LNX3345.00 345KV CKT Z
FDNS	00NR	3	20SP	G15_042	FROM->TO	GRPRAR1-LNX3345.00 - HOLT.CO3 345.00 345KV CKT 1	720	720	0.03177	106.4866	GERALD GENTLEMAN STATION - KEYSTONE 345KV CKT 1
FDNS	00NR	3	17SP	G15_042	FROM->TO	GRPRAR1-LNX3345.00 - HOLT.CO3 345.00 345KV CKT 1	720	720	0.03313	106.4753	GEN620315 1-BIG STONE GEN
FDNS	00NR	3	20SP	G15_042	FROM->TO	GRPRAR1-LNX3345.00 - HOLT.CO3 345.00 345KV CKT 1	720	720	0.03246	106.4689	LAKEFIELD 3 - NOBLES 345KV CKT 1
FDNS	00NR	3	25SP	G15_042	FROM->TO	GRPRAR1-LNX3345.00 - HOLT.CO3 345.00 345KV CKT 1	720	720	0.0318	106.4684	GEN344225 1-1CAL G1 25.000
FDNS	00NR	3	17SP	G15_042	FROM->TO	GRPRAR1-LNX3345.00 - HOLT.CO3 345.00 345KV CKT 1	720	720	0.03313	106.4576	GEN661015 1-COYOTE
FDNS	00NR	3	25SP	G15_042	FROM->TO	GRPRAR1-LNX3345.00 - HOLT.CO3 345.00 345KV CKT 1	720	720	0.03279	106.4572	HARMONY - ST FRANCIS 115KV CKT 1
FDNS	00NR	3	20SP	G15_042	FROM->TO	GRPRAR1-LNX3345.00 - HOLT.CO3 345.00 345KV CKT 1	720	720	0.03148	106.4558	GEN337653 1-WHITE BLUFF UNIT #2
FDNS	00NR	3	25SP	G15_042	FROM->TO	GRPRAR1-LNX3345.00 - HOLT.CO3 345.00 345KV CKT 1	720	720	0.03157	106.423	G09_001IST 345.00 - GROTON 345KV CKT 1
FDNS	00NR	3	20SP	G15_042	FROM->TO	GRPRAR1-LNX3345.00 - HOLT.CO3 345.00 345KV CKT 1	720	720	0.02973	106.4187	PAHOJA - SIOUX FALLS 230KV CKT 1
FDNS	00NR	3	20SP	G15_042	FROM->TO	GRPRAR1-LNX3345.00 - HOLT.CO3 345.00 345KV CKT 1	720	720	0.03148	106.4028	GEN337652 1-WHITE BLUFF UNIT #1
FDNS	00NR	3	20SP	G15_042	FROM->TO	GRPRAR1-LNX3345.00 - HOLT.CO3 345.00 345KV CKT 1	720	720	0.03576	106.3892	RAUN - SUB 3451 FT CAL 345KV CKT 1
FDNS	00NR	3	20SP	G15_042	FROM->TO	GRPRAR1-LNX3345.00 - HOLT.CO3 345.00 345KV CKT 1	720	720	0.03576	106.3892	RAUN - SUB 3451 FT CAL 345KV CKT 1
FDNS	00NR	3	20SP	G15_042	FROM->TO	GRPRAR1-LNX3345.00 - HOLT.CO3 345.00 345KV CKT 1	720	720	0.0329	106.3831	SIDNEY - STEGALL 345KV CKT 1
FDNS	00NR	3	25SP	G15_042	FROM->TO	GRPRAR1-LNX3345.00 - HOLT.CO3 345.00 345KV CKT 1	720	720	0.0318	106.3797	GEN336153 1-WATERFORD UNIT#3
FDNS	00NR	3	20SP	G15_042	FROM->TO	GRPRAR1-LNX3345.00 - HOLT.CO3 345.00 345KV CKT 1	720	720	0.03171	106.3719	ARROWHEAD - ARROWHEAD 230 230KV CKT 1
FDNS	00NR	3	20SP	G15_042	FROM->TO	GRPRAR1-LNX3345.00 - HOLT.CO3 345.00 345KV CKT 1	720	720	0.03247	106.3715	AINSWORTH - VALENTINE 115KV CKT 1
FDNS	00NR	3	25SP	G15_042	FROM->TO	GRPRAR1-LNX3345.00 - HOLT.CO3 345.00 345KV CKT 1	720	720	0.03953	106.3526	NUNDRWD - WAYSIDE 230KV CKT 1
FDNS	00NR	3	20SP	G15_042	FROM->TO	GRPRAR1-LNX3345.00 - HOLT.CO3 345.00 345KV CKT 1	720	720	0.03148	106.3474	GEN338146 1-INDEPENDENCE UNIT #2
FDNS	00NR	3	20SP	G15_042	FROM->TO	GRPRAR1-LNX3345.00 - HOLT.CO3 345.00 345KV CKT 1	720	720	0.03148	106.3442	GEN338143 1-INDEPENDENCE UNIT #1
FDNS	00NR	3	20SP	G15_042	FROM->TO	GRPRAR1-LNX3345.00 - HOLT.CO3 345.00 345KV CKT 1	720	720	0.03148	106.3222	GEN501801 1-DOLET HILLS UNIT1
FDNS	00NR	3	20SP	G15_042	FROM->TO	GRPRAR1-LNX3345.00 - HOLT.CO3 345.00 345KV CKT 1	720	720	0.03184	106.2895	BROOKING COUNTY - LYON COUNTY 345KV CKT 1
FDNS	00NR	3	20SP	G15_042	FROM->TO	GRPRAR1-LNX3345.00 - HOLT.CO3 345.00 345KV CKT 1	720	720	0.03153	106.2787	ALEXMRES3 345.00 - BISON 3 345.00 345KV CKT 1
FDNS	00NR	3	17SP	G15_042	FROM->TO	GRPRAR1-LNX3345.00 - HOLT.CO3 345.00 345KV CKT 1	720	720	0.03313	106.254	GEN600002 3-SHERBURNE CNTY G3
FDNS	00NR	3	25SP	G15_042	FROM->TO	GRPRAR1-LNX3345.00 - HOLT.CO3 345.00 345KV CKT 1	720	720	0.02979	106.2155	FT RANDAL - SIOUX CITY 230KV CKT 1
FDNS	00NR	3	20SP	G15_042	FROM->TO	GRPRAR1-LNX3345.00 - HOLT.CO3 345.00 345KV CKT 1	720	720	0.03175	106.2007	AS KING - EAU CLAIRE 345KV CKT 1
FDNS	00NR	3	20SP	G15_042	FROM->TO	GRPRAR1-LNX3345.00 - HOLT.CO3 345.00 345KV CKT 1	720	720	0.03148	106.1826	GEN336252 1-NINEMILE POINT UNIT#5
FDNS	00NR	3	25SP	G15_042	FROM->TO	GRPRAR1-LNX3345.00 - HOLT.CO3 345.00 345KV CKT 1	720	720	0.03279	106.1803	HARMONY - VALENTINE 115KV CKT 1
FDNS	00NR	3	20SP	G15_042	FROM->TO	GRPRAR1-LNX3345.00 - HOLT.CO3 345.00 345KV CKT 1	720	720	0.03138	106.1642	CARPENTER - HURON 230KV CKT 1
FDNS	00NR	3	20SP	G15_042	FROM->TO	GRPRAR1-LNX3345.00 - HOLT.CO3 345.00 345KV CKT 1	720	720	0.03148	106.1019	GEN336251 1-NINEMILE POINT UNIT#4
FDNS	00NR	3	20SP	G15_042	FROM->TO	GRPRAR1-LNX3345.00 - HOLT.CO3 345.00 345KV CKT 1	720	720	0.03148	106.0835	GEN336831 1-BAXTER WILSON SES
FDNS	00NR	3	25SP	G15_042	FROM->TO	GRPRAR1-LNX3345.00 - HOLT.CO3 345.00 345KV CKT 1	720	720	0.03327	106.0794	FT RANDAL - SPENCER 115KV CKT 1
FDNS	00NR	3	20SP	G15_042	FROM->TO	GRPRAR1-LNX3345.00 - HOLT.CO3 345.00 345KV CKT 1	720	720	0.03138	106.0605	HURON - WATERTOWN 230KV CKT 2
FDNS	00NR	3	20SP	G15_042	FROM->TO	GRPRAR1-LNX3345.00 - HOLT.CO3 345.00 345KV CKT 1	720	720	0.03138	106.0605	HURON - WATERTOWN 230KV CKT 2
FDNS	00NR	3	25SP	G15_042	FROM->TO	GRPRAR1-LNX3345.00 - HOLT.CO3 345.00 345KV CKT 1	720	720	0.0318	106.0591	GEN335831 1-RIVERBEND UNIT#1
FDNS	00NR	3	25SP	G15_042	FROM->TO	GRPRAR1-LNX3345.00 - HOLT.CO3 345.00 345KV CKT 1	720	720	0.03327	106.049	P12:115:NPPD:WAPA6:FTRANDL7:ONEILL 7:BTB
FDNS	00NR	3	25SP	G15_042	FROM->TO	GRPRAR1-LNX3345.00 - HOLT.CO3 345.00 345KV CKT 1	720	720	0.03327	106.049	P12:115:UMZB:# 115 #: SE IN NE. FR-SE-ON
FDNS	00NR	3	20SP	G15_042	FROM->TO	GRPRAR1-LNX3345.00 - HOLT.CO3 345.00 345KV CKT 1	720	720	0.03148	106.0309	GEN337041 1-GERALD ANDRUS
FDNS	00NR	3	20SP	G15_042	FROM->TO	GRPRAR1-LNX3345.00 - HOLT.CO3 345.00 345KV CKT 1	720	720	0.03138	106.0207	CARPENTER - WATERTOWN 230KV CKT 1
FDNS	00NR	3	20SP	G15_042	FROM->TO	GRPRAR1-LNX3345.00 - HOLT.CO3 345.00 345KV CKT 1	720	720	0.03138	106.0207	CARPENTER - WATERTOWN 230KV CKT 1
FDNS	00NR	3	17SP	G15_042	FROM->TO	GRPRAR1-LNX3345.00 - HOLT.CO3 345.00 345KV CKT 1	720	720	0.03313	106.0089	GEN657748 1-YOUNG 2 GENERATOR
FDNS	00NR	3	20SP	G15_042	FROM->TO	GRPRAR1-LNX3345.00 - HOLT.CO3 345.00 345KV CKT 1	720	720	0.03148	105.9979	GEN501813 1-RODEMACHER UNIT 3
FDNS	00NR	3	25SP	G15_042	FROM->TO	GRPRAR1-LNX3345.00 - HOLT.CO3 345.00 345KV CKT 1	720	720	0.0318	105.9973	GEN337910 1-ARKANSAS NUCLEAR ONE UNIT #1
FDNS	00NR	3	20SP	G15_042	FROM->TO	GRPRAR1-LNX3345.00 - HOLT.CO3 345.00 345KV CKT 1	720	720	0.03205	105.9948	HAZLETON - MITCHLCO3 345.00 345KV CKT 1
FDNS	00NR	3	20SP	G15_042	FROM->TO	GRPRAR1-LNX3345.00 - HOLT.CO3 345.00 345KV CKT 1	720	720	0.02973	105.9761	EAGLE 4 230.00 - PAHOJA 230KV CKT 1
FDNS	00NR	3	25SP	G15_042	FROM->TO	GRPRAR1-LNX3345.00 - HOLT.CO3 345.00 345KV CKT 1	720	720	0.03327	105.9354	ONEILL - SPENCER 115KV CKT 1
FDNS	00NR	3	20SP	G15_042	FROM->TO	GRPRAR1-LNX3345.00 - HOLT.CO3 345.00 345KV CKT 1	720	720	0.03175	105.9339	G15094_T 345.00 - SIDNEY2-LNX3345.00 345KV CKT 1
FDNS	00NR	3	20SP	G15_042	FROM->TO	GRPRAR1-LNX3345.00 - HOLT.CO3 345.00 345KV CKT 1	720	720	0.03149	105.9298	CNTSHNT3 345.00 - PRAIRIE3 345.00 345KV CKT 1
FDNS	00NR	3	25SP	G15_042	FROM->TO	GRPRAR1-LNX3345.00 - HOLT.CO3 345.00 345KV CKT 1	720	720	0.03155	105.9277	GROTON-LNX3 345.00 - LELAND1-LNX3345.00 345KV CKT 1
FDNS	00NR	3	20SP	G15_042	FROM->TO	GRPRAR1-LNX3345.00 - HOLT.CO3 345.00 345KV CKT 1	720	720	0.03175	105.9267	SIDNEY - SIDNEY2-LNX3345.00 345KV CKT Z
FDNS	00NR	3	25SP	G15_042	FROM->TO	GRPRAR1-LNX3345.00 - HOLT.CO3 345.00 345KV CKT 1	720	720	0.03155	105.8818	GROTON - GROTON-LNX3 345.00 345KV CKT Z
FDNS	00NR	3	25SP	G15_042	FROM->TO	GRPRAR1-LNX3345.00 - HOLT.CO3 345.00 345KV CKT 1	720	720	0.03155	105.8785	P12:345:UMZB:# 109 #: LOS GRT IN ND. LOS GRT
FDNS	00NR	3	25SP	G15_042	FROM->TO	GRPRAR1-LNX3345.00 - HOLT.CO3 345.00 345KV CKT 1	720	720	0.03155	105.8738	LELAND OLDS - LELAND1-LNX3345.00 345KV CKT Z
FDNS	00NR	3	20SP	G15_042	FROM->TO	GRPRAR1-LNX3345.00 - HOLT.CO3 345.00 345KV CKT 1	720	720	0.03148	105.8292	GEN335206 1-NELSON UNIT 6
FDNS	00NR	3	20SP	G15_042	FROM->TO	GRPRAR1-LNX3345.00 - HOLT.CO3 345.00 345KV CKT 1	720	720	0.03148	105.7943	GEN635214 4-NEAL UNIT 4
FDNS	00NR	3	25SP	G15_042	FROM->TO	GRPRAR1-LNX3345.00 - HOLT.CO3 345.00 345KV CKT 1	720	720	0.0635	105.7933	DIXONCO 230.00 - HOSKINS 230KV CKT 1
FDNS	00NR	3	20SP	G15_042	FROM->TO	GRPRAR1-LNX3345.00 - HOLT.CO3 345.00 345KV CKT 1	720	720	0.03148	105.7917	GEN344897 4-1LAB G4 20.000
FDNS	00NR	3	20SP	G15_042	FROM->TO	GRPRAR1-LNX3345.00 - HOLT.CO3 345.00 345KV CKT 1	720	720	0.03148	105.7901	GEN344894 1-1LAB G1 20.000
FDNS	00NR	3	20SP	G15_042	FROM->TO	GRPRAR1-LNX3345.00 - HOLT.CO3 345.00 345KV CKT 1	720	720	0.03148	105.7901	GEN344895 2-1LAB G2 20.000
FDNS	00NR	3	20SP	G15_042	FROM->TO	GRPRAR1-LNX3345.00 - HOLT.CO3 345.00 345KV CKT 1	720	720	0.03148	105.79	GEN344896 3-1LAB G3 20.000

SOLUTION	GROUP	SCENARIO	SEASON	SOURCE	DIRECTION	MONITORED ELEMENT	RATEA (MVA)	RATEB(MVA)	TDF	TC%LOADING (% MVA)	CONTINGENCY
FDNS	00NR	3	20SP	G15_042	FROM->TO	GRPRAR1-LNX3345.00 - HOLT.CO3 345.00 345KV CKT 1	720	720	0.03148	105.7855	GEN334440 1-SABINE UNIT 4
FDNS	00NR	3	20SP	G15_042	FROM->TO	GRPRAR1-LNX3345.00 - HOLT.CO3 345.00 345KV CKT 1	720	720	0.03179	105.7592	ARPIN B4 345.00 - EAU CLAIRE 345KV CKT 1
FDNS	00NR	3	17SP	G15_042	FROM->TO	GRPRAR1-LNX3345.00 - HOLT.CO3 345.00 345KV CKT 1	720	720	0.03313	105.7583	GEN562872 1-G15046_3 0.6900
FDNS	00NR	3	20SP	G15_042	FROM->TO	GRPRAR1-LNX3345.00 - HOLT.CO3 345.00 345KV CKT 1	720	720	0.03148	105.7378	GEN345671 2-1RUSH G2 18.000
FDNS	00NR	3	20SP	G15_042	FROM->TO	GRPRAR1-LNX3345.00 - HOLT.CO3 345.00 345KV CKT 1	720	720	0.03148	105.7332	GEN345670 1-1RUSH G1 18.000
FDNS	00NR	3	25SP	G15_042	FROM->TO	GRPRAR1-LNX3345.00 - HOLT.CO3 345.00 345KV CKT 1	720	720	0.03101	105.7156	HANLON - SIOUX FALLS 230KV CKT 1
FDNS	00NR	3	25SP	G15_042	FROM->TO	GRPRAR1-LNX3345.00 - HOLT.CO3 345.00 345KV CKT 1	720	720	0.03278	105.714	LAKEFIELD 3 - NOBLES 345KV CKT 1
FDNS	00NR	3	25SP	G15_042	FROM->TO	GRPRAR1-LNX3345.00 - HOLT.CO3 345.00 345KV CKT 1	720	720	0.0318	105.7	GEN338143 1-INDEPENDENCE UNIT #1
FDNS	00NR	3	25SP	G15_042	FROM->TO	GRPRAR1-LNX3345.00 - HOLT.CO3 345.00 345KV CKT 1	720	720	0.0318	105.7	GEN338146 1-INDEPENDENCE UNIT #2
FDNS	00NR	3	25SP	G15_042	FROM->TO	GRPRAR1-LNX3345.00 - HOLT.CO3 345.00 345KV CKT 1	720	720	0.0321	105.6973	GERALD GENTLEMAN STATION - KEYSTONE 345KV CKT 1
FDNS	00NR	3	20SP	G15_042	FROM->TO	GRPRAR1-LNX3345.00 - HOLT.CO3 345.00 345KV CKT 1	720	720	0.03148	105.6943	GEN501812 1-RODEMACHER UNIT 2
FDNS	00NR	3	20SP	G15_042	FROM->TO	GRPRAR1-LNX3345.00 - HOLT.CO3 345.00 345KV CKT 1	720	720	0.03148	105.6612	GEN336191 1-LITTLE GYPSY UNIT#3
FDNS	00NR	3	20SP	G15_042	FROM->TO	GRPRAR1-LNX3345.00 - HOLT.CO3 345.00 345KV CKT 1	720	720	0.02972	105.6414	FT THOMPSON - WESSINGTON 230KV CKT 1
FDNS	00NR	3	20SP	G15_042	FROM->TO	GRPRAR1-LNX3345.00 - HOLT.CO3 345.00 345KV CKT 1	720	720	0.02972	105.6414	FT THOMPSON - WESSINGTON 230KV CKT 1
FDNS	00NR	3	20SP	G15_042	FROM->TO	GRPRAR1-LNX3345.00 - HOLT.CO3 345.00 345KV CKT 1	720	720	0.03148	105.6381	GEN338388 1-1PLUM PT U1 23.000
FDNS	00NR	3	20SP	G15_042	FROM->TO	GRPRAR1-LNX3345.00 - HOLT.CO3 345.00 345KV CKT 1	720	720	0.03148	105.6332	GEN629075 1-OTTUMWA GENERATOR FOR OTTUMWA UNIT NO 1
FDNS	00NR	3	20SP	G15_042	FROM->TO	GRPRAR1-LNX3345.00 - HOLT.CO3 345.00 345KV CKT 1	720	720	0.03148	105.595	GEN335614 1-WILLOW GLENN UNIT#4
FDNS	00NR	3	25SP	G15_042	FROM->TO	GRPRAR1-LNX3345.00 - HOLT.CO3 345.00 345KV CKT 1	720	720	0.03005	105.5913	PAHOJA - SIOUX FALLS 230KV CKT 1
FDNS	00NR	3	25SP	G15_042	FROM->TO	GRPRAR1-LNX3345.00 - HOLT.CO3 345.00 345KV CKT 1	720	720	0.03606	105.5872	RAUN - SUB 3451 FT CAL 345KV CKT 1
FDNS	00NR	3	25SP	G15_042	FROM->TO	GRPRAR1-LNX3345.00 - HOLT.CO3 345.00 345KV CKT 1	720	720	0.03606	105.5872	RAUN - SUB 3451 FT CAL 345KV CKT 1
FDNS	00NR	3	25SP	G15_042	FROM->TO	GRPRAR1-LNX3345.00 - HOLT.CO3 345.00 345KV CKT 1	720	720	0.03322	105.5865	SIDNEY - STEGALL 345KV CKT 1
FDNS	00NR	3	25SP	G15_042	FROM->TO	GRPRAR1-LNX3345.00 - HOLT.CO3 345.00 345KV CKT 1	720	720	0.03279	105.5835	AINSWORTH - VALENTINE 115KV CKT 1
FDNS	00NR	3	20SP	G15_042	FROM->TO	GRPRAR1-LNX3345.00 - HOLT.CO3 345.00 345KV CKT 1	720	720	0.03148	105.5829	GEN336801 1-BAXTER WILSON UNIT #1
FDNS	00NR	3	25SP	G15_042	FROM->TO	GRPRAR1-LNX3345.00 - HOLT.CO3 345.00 345KV CKT 1	720	720	0.03216	105.5802	BROOKING COUNTY - LYON COUNTY 345KV CKT 1
FDNS	00NR	3	20SP	G15_042	FROM->TO	GRPRAR1-LNX3345.00 - HOLT.CO3 345.00 345KV CKT 1	720	720	0.03148	105.5798	GEN336464 1-MICHOUD UNIT #3
FDNS	00NR	3	20SP	G15_042	FROM->TO	GRPRAR1-LNX3345.00 - HOLT.CO3 345.00 345KV CKT 1	720	720	0.03148	105.5689	GEN335204 1-NELSON UNIT 4
FDNS	00NR	3	20SP	G15_042	FROM->TO	GRPRAR1-LNX3345.00 - HOLT.CO3 345.00 345KV CKT 1	720	720	0.03148	105.5592	GEN334441 1-SABINE UNIT 5
FDNS	00NR	3	20SP	G15_042	FROM->TO	GRPRAR1-LNX3345.00 - HOLT.CO3 345.00 345KV CKT 1	720	720	0.03302	105.5413	GRIMES - LEHIGH 345KV CKT 1
FDNS	00NR	3	20SP	G15_042	FROM->TO	GRPRAR1-LNX3345.00 - HOLT.CO3 345.00 345KV CKT 1	720	720	0.0317	105.5322	NORTH LA CROSSE - NORTH ROCHESTER 345KV CKT 1
FDNS	00NR	3	25SP	G15_042	FROM->TO	GRPRAR1-LNX3345.00 - HOLT.CO3 345.00 345KV CKT 1	720	720	0.0318	105.5255	GEN337653 1-WHITE BLUFF UNIT #2
FDNS	00NR	3	25SP	G15_042	FROM->TO	GRPRAR1-LNX3345.00 - HOLT.CO3 345.00 345KV CKT 1	720	720	0.03185	105.5241	ALEXMRES3 345.00 - BISON 3 345.00 345KV CKT 1
FDNS	00NR	3	25SP	G15_042	FROM->TO	GRPRAR1-LNX3345.00 - HOLT.CO3 345.00 345KV CKT 1	720	720	0.03203	105.4785	ARROWHEAD - ARROWHEAD 230 230KV CKT 1
FDNS	00NR	3	20SP	G15_042	FROM->TO	GRPRAR1-LNX3345.00 - HOLT.CO3 345.00 345KV CKT 1	720	720	0.03203	105.4762	KOSSUTH 3 345.00 - WEBSTER 345KV CKT 1
FDNS	00NR	3	17SP	G15_042	FROM->TO	GRPRAR1-LNX3345.00 - HOLT.CO3 345.00 345KV CKT 1	720	720	0.03313	105.458	GEN659111 2-LELAND OLDS UNIT2
FDNS	00NR	3	20SP	G15_042	FROM->TO	GRPRAR1-LNX3345.00 - HOLT.CO3 345.00 345KV CKT 1	720	720	0.03148	105.4365	GEN563222 1-G15088_3 0.6900
FDNS	00NR	3	20SP	G15_042	FROM->TO	GRPRAR1-LNX3345.00 - HOLT.CO3 345.00 345KV CKT 1	720	720	0.03148	105.436	P12:115:UMZW:# 162 #: NEL IN ND. FAULT ON ML-NEL-MX-GA 115 KV
FDNS	00NR	3	20SP	G15_042	FROM->TO	GRPRAR1-LNX3345.00 - HOLT.CO3 345.00 345KV CKT 1	720	720	0.03148	105.4246	GEN334433 1-SABINE UNIT 3
FDNS	00NR	3	25SP	G15_042	FROM->TO	GRPRAR1-LNX3345.00 - HOLT.CO3 345.00 345KV CKT 1	720	720	0.0318	105.4222	GEN501801 1-DOLET HILLS UNIT1
FDNS	00NR	3	20SP	G15_042	FROM->TO	GRPRAR1-LNX3345.00 - HOLT.CO3 345.00 345KV CKT 1	720	720	0.03129	105.4183	BROOKING COUNTY - BSSOUTH3 345.00 345KV CKT 1
FDNS	00NR	3	20SP	G15_042	FROM->TO	GRPRAR1-LNX3345.00 - HOLT.CO3 345.00 345KV CKT 1	720	720	0.03148	105.4147	GEN635213 3-NEAL UNIT 3
FDNS	00NR	3	25SP	G15_042	FROM->TO	GRPRAR1-LNX3345.00 - HOLT.CO3 345.00 345KV CKT 1	720	720	0.0317	105.3943	CARPENTER - HURON 230KV CKT 1
FDNS	00NR	3	20SP	G15_042	FROM->TO	GRPRAR1-LNX3345.00 - HOLT.CO3 345.00 345KV CKT 1	720	720	0.03138	105.376	HESKETT - WISHEK 230KV CKT 1
FDNS	00NR	3	20SP	G15_042	FROM->TO	GRPRAR1-LNX3345.00 - HOLT.CO3 345.00 345KV CKT 1	720	720	0.03179	105.3707	NMA B3 345 345.00 - NORTH LA CROSSE 345KV CKT 1
FDNS	00NR	3	20SP	G15_042	FROM->TO	GRPRAR1-LNX3345.00 - HOLT.CO3 345.00 345KV CKT 1	720	720	0.03081	105.3702	MENNO JCT - TRIPP JCT 115KV CKT 1
FDNS	00NR	3	20SP	G15_042	FROM->TO	GRPRAR1-LNX3345.00 - HOLT.CO3 345.00 345KV CKT 1	720	720	0.03205	105.3648	ADAMS - MITCHLCO3 345.00 345KV CKT 1
FDNS	00NR	3	20SP	G15_042	FROM->TO	GRPRAR1-LNX3345.00 - HOLT.CO3 345.00 345KV CKT 1	720	720	0.03147	105.3602	CENTER - COYOTE 345KV CKT 1
FDNS	00NR	3	20SP	G15_042	FROM->TO	GRPRAR1-LNX3345.00 - HOLT.CO3 345.00 345KV CKT 1	720	720	0.03148	105.3538	GEN336222 1-LITTLE GYPSY UNIT#2
FDNS	00NR	3	20SP	G15_042	FROM->TO	GRPRAR1-LNX3345.00 - HOLT.CO3 345.00 345KV CKT 1	720	720	0.03784	105.3531	RAUN - SIOUX CITY 345KV CKT 1
FDNS	00NR	3	20SP	G15_042	FROM->TO	GRPRAR1-LNX3345.00 - HOLT.CO3 345.00 345KV CKT 1	720	720	0.03784	105.3531	RAUN - SIOUX CITY 345KV CKT 1
FDNS	00NR	3	20SP	G15_042	FROM->TO	GRPRAR1-LNX3345.00 - HOLT.CO3 345.00 345KV CKT 1	720	720	0.03377	105.3531	BLOOMFIELD - CREIGHTON 115KV CKT 1
FDNS	00NR	3	25SP	G15_042	FROM->TO	GRPRAR1-LNX3345.00 - HOLT.CO3 345.00 345KV CKT 1	720	720	0.03207	105.3468	AS KING - EAU CLAIRE 345KV CKT 1
FDNS	00NR	3	20SP	G15_042	FROM->TO	GRPRAR1-LNX3345.00 - HOLT.CO3 345.00 345KV CKT 1	720	720	0.03152	105.328	GLENBORO SOUTH - RUGBY 230KV CKT 1
FDNS	00NR	3	20SP	G15_042	FROM->TO	GRPRAR1-LNX3345.00 - HOLT.CO3 345.00 345KV CKT 1	720	720	0.03147	105.3225	GARRISON - JAMES TOWN 230KV CKT 1
FDNS	00NR	3	20SP	G15_042	FROM->TO	GRPRAR1-LNX3345.00 - HOLT.CO3 345.00 345KV CKT 1	720	720	0.03138	105.3103	MERRCRT4 230.00 - WISHEK 230KV CKT 1
FDNS	00NR	3	25SP	G15_042	FROM->TO	GRPRAR1-LNX3345.00 - HOLT.CO3 345.00 345KV CKT 1	720	720	0.03181	105.3099	CNTSHNT3 345.00 - PRAIRIE3 345.00 345KV CKT 1
FDNS	00NR	3	20SP	G15_042	FROM->TO	GRPRAR1-LNX3345.00 - HOLT.CO3 345.00 345KV CKT 1	720	720	0.03148	105.3045	GEN336152 1-WATERFORD UNIT#2
FDNS	00NR	3	20SP	G15_042	FROM->TO	GRPRAR1-LNX3345.00 - HOLT.CO3 345.00 345KV CKT 1	720	720	0.03148	105.3042	GEN336151 1-WATERFORD UNIT#1
FDNS	00NR	3	25SP	G15_042	FROM->TO	GRPRAR1-LNX3345.00 - HOLT.CO3 345.00 345KV CKT 1	720	720	0.03236	105.2989	HAZLETON - MITCHLCO3 345.00 345KV CKT 1
FDNS	00NR	3	25SP	G15_042	FROM->TO	GRPRAR1-LNX3345.00 - HOLT.CO3 345.00 345KV CKT 1	720	720	0.0317	105.2887	HURON - WATERTOWN 230KV CKT 2
FDNS	00NR	3	25SP	G15_042	FROM->TO	GRPRAR1-LNX3345.00 - HOLT.CO3 345.00 345KV CKT 1	720	720	0.0317	105.2887	HURON - WATERTOWN 230KV CKT 2
FDNS	00NR	3	20SP	G15_042	FROM->TO	GRPRAR1-LNX3345.00 - HOLT.CO3 345.00 345KV CKT 1	720	720	0.03148	105.2847	GEN531447 1-HOLCOMB GENERATOR
FDNS	00NR	3	20SP	G15_042	FROM->TO	GRPRAR1-LNX3345.00 - HOLT.CO3 345.00 345KV CKT 1	720	720	0.03377	105.2667	BLOOMFIELD - GAVINS POINT 115KV CKT 1
FDNS	00NR	3	20SP	G15_042	FROM->TO	GRPRAR1-LNX3345.00 - HOLT.CO3 345.00 345KV CKT 1	720	720	0.03185	105.26	ADAMS - PLEASANT VALLEY 345KV CKT 1
FDNS	00NR	3	20SP	G15_042	FROM->TO	GRPRAR1-LNX3345.00 - HOLT.CO3 345.00 345KV CKT 1	720	720	0.03148	105.251	GEN640009 1-COOPER NUCLEAR STATION
FDNS	00NR	3	20SP	G15_042	FROM->TO	GRPRAR1-LNX3345.00 - HOLT.CO3 345.00 345KV CKT 1	720	720	0.03081	105.2474	MENNO JCT - UTICA 115KV CKT 1
FDNS	00NR	3	20SP	G15_042	FROM->TO	GRPRAR1-LNX3345.00 - HOLT.CO3 345.00 345KV CKT 1	720	720	0.03156	105.247	APPLEDORN 4 230.00 - WATERTOWN 230KV CKT 1
FDNS	00NR	3	20SP	G15_042	FROM->TO	GRPRAR1-LNX3345.00 - HOLT.CO3 345.00 345KV CKT 1	720	720	0.03156	105.247	APPLEDORN 4 230.00 - WATERTOWN 230KV CKT 1
FDNS	00NR	3	25SP	G15_042	FROM->TO	GRPRAR1-LNX3345.00 - HOLT.CO3 345.00 345KV CKT 1	720	720	0.0317	105.2461	CARPENTER - WATERTOWN 230KV CKT 1
FDNS	00NR	3	25SP	G15_042	FROM->TO	GRPRAR1-LNX3345.00 - HOLT.CO3 345.00 345KV CKT 1	720	720	0.0317	105.2461	CARPENTER - WATERTOWN 230KV CKT 1
FDNS	00NR	3	20SP	G15_042	FROM->TO	GRPRAR1-LNX3345.00 - HOLT.CO3 345.00 345KV CKT 1	720	720	0.03148	105.2378	GEN303007 1-1BC2 U2
FDNS	00NR	3	20SP	G15_042	FROM->TO	GRPRAR1-LNX3345.00 - HOLT.CO3 345.00 345KV CKT 1	720	720	0.03139	105.234	BSSOUTH3 345.00 - ELLENDLMVP3 345.00 345KV CKT 1
FDNS	00NR	3	20SP	G15_042	FROM->TO	GRPRAR1-LNX3345.00 - HOLT.CO3 345.00 345KV CKT 1	720	720	0.03139	105.234	BSSOUTH3 345.00 - ELLENDLMVP3 345.00 345KV CKT 1
FDNS	00NR	3	20SP	G15_042	FROM->TO	GRPRAR1-LNX3345.00 - HOLT.CO3 345.00 345KV CKT 1	720	720	0.03148	105.2317	GEN303006 1-1BC2 U1
FDNS	00NR	3	20SP	G15_042	FROM->TO	GRPRAR1-LNX3345.00 - HOLT.CO3 345.00 345KV CKT 1	720	720	0.0316	105.2147	ARKANSAS NUCLEAR ONE - FT SMITH 500KV CKT 1
FDNS	00NR	3	20SP	G15_042	FROM->TO	GRPRAR1-LNX3345.00 - HOLT.CO3 345.00 345KV CKT 1	720	720	0.0316	105.2147	ARKANSAS NUCLEAR ONE - FT SMITH 500KV CKT 1
FDNS	00NR	3	25SP	G15_042	FROM->TO	GRPRAR1-LNX3345.00 - HOLT.CO3 345.00 345KV CKT 1	720	720	0.0318	105.2133	GEN336251 1-NINEMILE POINT UNIT#4
FDNS	00NR	3	20SP	G15_042	FROM->TO	GRPRAR1-LNX3345.00 - HOLT.CO3 345.00 345KV CKT 1	720	720	0.03139	105.2128	ELLENDLMVP3 345.00 (1) 345/230/34.5KV TRANSFORMER CKT 1
FDNS	00NR	3	20SP	G15_042	FROM->TO	GRPRAR1-LNX3345.00 - HOLT.CO3 345.00 345KV CKT 1	720	720	0.03157	105.2071	ALEXMRES3 345.00 - WAITE PARK 345KV CKT 1
FDNS	00NR	3	20SP	G15_042	FROM->TO	GRPRAR1-LNX3345.00 - HOLT.CO3 345.00 345KV CKT 1	720	720	0.03081	105.2001	P12:115:UMZZ:# 237 #: MEN IN SD. MENNO JUNCTION IS A TAP (UJ-MEN-TP).

SOLUTION	GROUP	SCENARIO	SEASON	SOURCE	DIRECTION	MONITORED ELEMENT	RATEA (MVA)	RATEB(MVA)	TDF	TC%LOADING (% MVA)	CONTINGENCY
FDNS	00NR	3	20SP	G15_042	FROM->TO	GRPRAR1-LNX3345.00 - HOLT.CO3 345.00 345KV CKT 1	720	720	0.03156	105.1857	APPLEDORN 4 230.00 - GRANITE FALLS 230KV CKT 1
FDNS	00NR	3	20SP	G15_042	FROM->TO	GRPRAR1-LNX3345.00 - HOLT.CO3 345.00 345KV CKT 1	720	720	0.03156	105.1857	APPLEDORN 4 230.00 - GRANITE FALLS 230KV CKT 1
FDNS	00NR	3	25SP	G15_042	FROM->TO	GRPRAR1-LNX3345.00 - HOLT.CO3 345.00 345KV CKT 1	720	720	0.03207	105.1824	G15094_T 345.00 - SIDNEY2-LNX3345.00 345KV CKT 1
FDNS	00NR	3	25SP	G15_042	FROM->TO	GRPRAR1-LNX3345.00 - HOLT.CO3 345.00 345KV CKT 1	720	720	0.03207	105.1819	SIDNEY - SIDNEY2-LNX3345.00 345KV CKT Z
FDNS	00NR	3	20SP	G15_042	FROM->TO	GRPRAR1-LNX3345.00 - HOLT.CO3 345.00 345KV CKT 1	720	720	0.03101	105.1784	WINNER - WITTEN 115KV CKT 1
FDNS	00NR	3	25SP	G15_042	FROM->TO	GRPRAR1-LNX3345.00 - HOLT.CO3 345.00 345KV CKT 1	720	720	0.0318	105.178	GEN336831 1-BAXTER WILSON SES
FDNS	00NR	3	20SP	G15_042	FROM->TO	GRPRAR1-LNX3345.00 - HOLT.CO3 345.00 345KV CKT 1	720	720	0.03154	105.1746	BLAIR - GRANITE FALLS 230KV CKT 1
FDNS	00NR	3	20SP	G15_042	FROM->TO	GRPRAR1-LNX3345.00 - HOLT.CO3 345.00 345KV CKT 1	720	720	0.03154	105.1746	BLAIR - GRANITE FALLS 230KV CKT 1
FDNS	00NR	3	20SP	G15_042	FROM->TO	GRPRAR1-LNX3345.00 - HOLT.CO3 345.00 345KV CKT 1	720	720	0.03164	105.1729	NORTH ROCHESTER - PRAIRIE ISLAND 345KV CKT 1
FDNS	00NR	3	20SP	G15_042	FROM->TO	GRPRAR1-LNX3345.00 - HOLT.CO3 345.00 345KV CKT 1	720	720	0.03148	105.1657	GEN303008 1-1BC2 U3
FDNS	00NR	3	20SP	G15_042	FROM->TO	GRPRAR1-LNX3345.00 - HOLT.CO3 345.00 345KV CKT 1	720	720	0.03148	105.1604	GEN336170 1-GULF OXY U4
FDNS	00NR	3	20SP	G15_042	FROM->TO	GRPRAR1-LNX3345.00 - HOLT.CO3 345.00 345KV CKT 1	720	720	0.03148	105.1451	GEN641089 2-ENERGY CENTER 2
FDNS	00NR	3	25SP	G15_042	FROM->TO	GRPRAR1-LNX3345.00 - HOLT.CO3 345.00 345KV CKT 1	720	720	0.03005	105.1272	EAGLE 4 230.00 - PAHOJA 230KV CKT 1
FDNS	00NR	3	20SP	G15_042	FROM->TO	GRPRAR1-LNX3345.00 - HOLT.CO3 345.00 345KV CKT 1	720	720	0.0343	105.1201	STEGALL - STEGALL TRANSFORMER 230KV CKT 1
FDNS	00NR	3	25SP	G15_042	FROM->TO	GRPRAR1-LNX3345.00 - HOLT.CO3 345.00 345KV CKT 1	720	720	0.0318	105.1198	GEN337041 1-GERALD ANDRUS
FDNS	00NR	3	20SP	G15_042	FROM->TO	GRPRAR1-LNX3345.00 - HOLT.CO3 345.00 345KV CKT 1	720	720	0.03175	105.1167	G15094_T 345.00 - LARAMIE RIVER 345KV CKT 1
FDNS	00NR	3	20SP	G15_042	FROM->TO	GRPRAR1-LNX3345.00 - HOLT.CO3 345.00 345KV CKT 1	720	720	0.0343	105.113	P13:230-345:NPPD:STEGALL3:KV3A
FDNS	00NR	3	20SP	G15_042	FROM->TO	GRPRAR1-LNX3345.00 - HOLT.CO3 345.00 345KV CKT 1	720	720	0.03148	105.1047	FARGO - JAMES TOWN 230KV CKT 1
FDNS	00NR	3	20SP	G15_042	FROM->TO	GRPRAR1-LNX3345.00 - HOLT.CO3 345.00 345KV CKT 1	720	720	0.03191	105.1004	HUNTLEY3 345.00 - LEDYARD3 345.00 345KV CKT 1
FDNS	00NR	3	25SP	G15_042	FROM->TO	GRPRAR1-LNX3345.00 - HOLT.CO3 345.00 345KV CKT 1	720	720	0.0318	105.0995	GEN501813 1-RODEMACHER UNIT 3
FDNSLock	00NR	3	20SP	G15_042	FROM->TO	GRPRAR1-LNX3345.00 - HOLT.CO3 345.00 345KV CKT 1	720	720	0.0343	105.0912	STEGALL (SGQ KV3A) 345/230/13.8KV TRANSFORMER CKT 1
FDNS	00NR	3	20SP	G15_042	FROM->TO	GRPRAR1-LNX3345.00 - HOLT.CO3 345.00 345KV CKT 1	720	720	0.03148	105.0866	GEN562596 1-G14_059_3 0.6900
FDNS	00NR	3	20SP	G15_042	FROM->TO	GRPRAR1-LNX3345.00 - HOLT.CO3 345.00 345KV CKT 1	720	720	0.03148	105.0835	FARGO - JAMES TOWN 230KV CKT 2
FDNS	00NR	3	20SP	G15_042	FROM->TO	GRPRAR1-LNX3345.00 - HOLT.CO3 345.00 345KV CKT 1	720	720	0.03148	105.0808	GEN501811 1-RODEMACHER UNIT 1
FDNS	00NR	3	20SP	G15_042	FROM->TO	GRPRAR1-LNX3345.00 - HOLT.CO3 345.00 345KV CKT 1	720	720	0.03148	105.0617	P13:230:UMZW:# 2218 #: FP IN MT. LOSS OF TRANSFORMER (AT2).
FDNS	00NR	3	20SP	G15_042	FROM->TO	GRPRAR1-LNX3345.00 - HOLT.CO3 345.00 345KV CKT 1	720	720	0.03196	105.0577	P13:230-345:NPPD:SIDNEY 3:KV2A
FDNS	00NR	3	20SP	G15_042	FROM->TO	GRPRAR1-LNX3345.00 - HOLT.CO3 345.00 345KV CKT 1	720	720	0.03196	105.0577	SIDNEY (SDQ KV2A) 345/230/13.8KV TRANSFORMER CKT 1
FDNS	00NR	3	20SP	G15_042	FROM->TO	GRPRAR1-LNX3345.00 - HOLT.CO3 345.00 345KV CKT 1	720	720	0.03196	105.0576	SIDNEY - SIDNEY TRANSFORMER 230KV CKT 1
FDNS	00NR	3	20SP	G15_042	FROM->TO	GRPRAR1-LNX3345.00 - HOLT.CO3 345.00 345KV CKT 1	720	720	0.03147	105.0566	BISMARK - JAMES TOWN 230KV CKT 1
FDNS	00NR	3	20SP	G15_042	FROM->TO	GRPRAR1-LNX3345.00 - HOLT.CO3 345.00 345KV CKT 1	720	720	0.03147	105.0477	BISMARK - WEBER 230KV CKT 1
FDNS	00NR	3	20SP	G15_042	FROM->TO	GRPRAR1-LNX3345.00 - HOLT.CO3 345.00 345KV CKT 1	720	720	0.0322	105.0472	P12:230:UMZW:# 733 #: FT IN SD. FT-BG2 LINE FAULT
FDNS	00NR	3	20SP	G15_042	FROM->TO	GRPRAR1-LNX3345.00 - HOLT.CO3 345.00 345KV CKT 1	720	720	0.03198	105.0342	P13:115-230:TSGT:SIDNEY-KV1A
FDNS	00NR	3	20SP	G15_042	FROM->TO	GRPRAR1-LNX3345.00 - HOLT.CO3 345.00 345KV CKT 1	720	720	0.03147	105.0323	JAMES TOWN - WEBER 230KV CKT 1
FDNS	00NR	3	20SP	G15_042	FROM->TO	GRPRAR1-LNX3345.00 - HOLT.CO3 345.00 345KV CKT 1	720	720	0.03226	105.0295	NOBLES - SPLIT ROCK 345KV CKT 1
FDNS	00NR	3	20SP	G15_042	FROM->TO	GRPRAR1-LNX3345.00 - HOLT.CO3 345.00 345KV CKT 1	720	720	0.03148	105.0292	GEN334071 1-LEWIS CREEK 2
FDNS	00NR	3	20SP	G15_042	FROM->TO	GRPRAR1-LNX3345.00 - HOLT.CO3 345.00 345KV CKT 1	720	720	0.03148	105.0259	GEN334070 1-LEWIS CREEK 1
FDNS	00NR	3	20SP	G15_042	FROM->TO	GRPRAR1-LNX3345.00 - HOLT.CO3 345.00 345KV CKT 1	720	720	0.03183	105.0255	HUNTLEY3 345.00 - LAKEFIELD 3 345KV CKT 1
FDNS	00NR	3	20SP	G15_042	FROM->TO	GRPRAR1-LNX3345.00 - HOLT.CO3 345.00 345KV CKT 1	720	720	0.03123	105.0164	FT THOMPSON - HURON 230KV CKT 1
FDNS	00NR	3	20SP	G15_042	FROM->TO	GRPRAR1-LNX3345.00 - HOLT.CO3 345.00 345KV CKT 1	720	720	0.03123	105.0164	FT THOMPSON - HURON 230KV CKT 1
FDNS	00NR	3	20SP	G15_042	FROM->TO	GRPRAR1-LNX3345.00 - HOLT.CO3 345.00 345KV CKT 1	720	720	0.03123	105.0164	FT THOMPSON - HURON 230KV CKT 2
FDNS	00NR	3	20SP	G15_042	FROM->TO	GRPRAR1-LNX3345.00 - HOLT.CO3 345.00 345KV CKT 1	720	720	0.03123	105.0164	FT THOMPSON - HURON 230KV CKT 2
FDNS	00NR	3	20SP	G15_042	FROM->TO	GRPRAR1-LNX3345.00 - HOLT.CO3 345.00 345KV CKT 1	720	720	0.03148	105.0128	GEN532751 1-WOLF CREEK GENERATING STATION UNIT 1
FDNS	00NR	3	20SP	G15_042	FROM->TO	GRPRAR1-LNX3345.00 - HOLT.CO3 345.00 345KV CKT 1	720	720	0.03148	105.0127	GEN659118 1-LARAMIE RIVER UNIT1
FDNS	00NR	3	20SP	G15_042	FROM->TO	GRPRAR1-LNX3345.00 - HOLT.CO3 345.00 345KV CKT 1	720	720	0.03148	105.008	GEN562921 1-G15054_2 0.6900
FDNS	00NR	3	17SP	G15_042	FROM->TO	GRPRAR1-LNX3345.00 - HOLT.CO3 345.00 345KV CKT 1	720	720	0.03313	105.0043	GEN659103 1-ANTELOPE VALLEY UNIT1
FDNS	00NR	3	17SP	G15_042	FROM->TO	GRPRAR1-LNX3345.00 - HOLT.CO3 345.00 345KV CKT 1	720	720	0.03313	105.0043	GEN659107 2-ANTELOPE VALLEY UNIT2
FDNS	00NR	3	20SP	G15_042	FROM->TO	GRPRAR1-LNX3345.00 - HOLT.CO3 345.00 345KV CKT 1	720	720	0.03148	104.9939	GEN337766 1-TRACTEBEL UNIT S1
FDNS	00NR	3	20SP	G15_042	FROM->TO	GRPRAR1-LNX3345.00 - HOLT.CO3 345.00 345KV CKT 1	720	720	0.03148	104.9924	PRAIRIE ISLAND 345/20.0KV TRANSFORMER CKT 1
FDNS	00NR	3	20SP	G15_042	FROM->TO	GRPRAR1-LNX3345.00 - HOLT.CO3 345.00 345KV CKT 1	720	720	0.03148	104.9915	GEN636641 1-LOUISA UNIT 1
FDNS	00NR	3	20SP	G15_042	FROM->TO	GRPRAR1-LNX3345.00 - HOLT.CO3 345.00 345KV CKT 1	720	720	0.03148	104.9913	BALTA - RAMSEY 230KV CKT 1
FDNS	00NR	3	20SP	G15_042	FROM->TO	GRPRAR1-LNX3345.00 - HOLT.CO3 345.00 345KV CKT 1	720	720	0.03148	104.9911	PRAIRIE ISLAND 345/20.0KV TRANSFORMER CKT 2
FDNS	00NR	3	20SP	G15_042	FROM->TO	GRPRAR1-LNX3345.00 - HOLT.CO3 345.00 345KV CKT 1	720	720	0.0322	104.9907	LOWERBRULE 4230.00 - RELIANCE 4 230.00 230KV CKT 1
FDNS	00NR	3	20SP	G15_042	FROM->TO	GRPRAR1-LNX3345.00 - HOLT.CO3 345.00 345KV CKT 1	720	720	0.03101	104.99	GREGORY - WINNER 115KV CKT 1
FDNS	00NR	3	20SP	G15_042	FROM->TO	GRPRAR1-LNX3345.00 - HOLT.CO3 345.00 345KV CKT 1	720	720	0.03101	104.9806	P12:115:UMZW:# 172 #: WI IN SD.
FDNS	00NR	3	17SP	G15_042	FROM->TO	GRPRAR1-LNX3345.00 - HOLT.CO3 345.00 345KV CKT 1	720	720	0.03313	104.9737	BIG STONE 230/24.0KV TRANSFORMER CKT 1
FDNS	00NR	3	20SP	G15_042	FROM->TO	GRPRAR1-LNX3345.00 - HOLT.CO3 345.00 345KV CKT 1	720	720	0.0315	104.9651	FORMAN - HANKINSON 230KV CKT 1
FDNS	00NR	3	20SP	G15_042	FROM->TO	GRPRAR1-LNX3345.00 - HOLT.CO3 345.00 345KV CKT 1	720	720	0.03148	104.9585	GEN501910 1-ACADIA UNIT ST1
FDNS	00NR	3	20SP	G15_042	FROM->TO	GRPRAR1-LNX3345.00 - HOLT.CO3 345.00 345KV CKT 1	720	720	0.03147	104.9466	ELM CREEK - MONTICELLO 345KV CKT 1
FDNS	00NR	3	25SP	G15_042	FROM->TO	GRPRAR1-LNX3345.00 - HOLT.CO3 345.00 345KV CKT 1	720	720	0.0318	104.9408	GEN335206 1-NELSON UNIT 6
FDNS	00NR	3	25SP	G15_042	FROM->TO	GRPRAR1-LNX3345.00 - HOLT.CO3 345.00 345KV CKT 1	720	720	0.03211	104.9324	ARPIN B4 345.00 - EAU CLAIRE 345KV CKT 1
FDNS	00NR	3	20SP	G15_042	FROM->TO	GRPRAR1-LNX3345.00 - HOLT.CO3 345.00 345KV CKT 1	720	720	0.03148	104.9284	GEN336221 1-LITTLE GYPSY UNIT#1
FDNS	00NR	3	20SP	G15_042	FROM->TO	GRPRAR1-LNX3345.00 - HOLT.CO3 345.00 345KV CKT 1	720	720	0.03148	104.9268	GEN337757 1-DUKE HOTSPRINGS STG1
FDNS	00NR	3	25SP	G15_042	FROM->TO	GRPRAR1-LNX3345.00 - HOLT.CO3 345.00 345KV CKT 1	720	720	0.0318	104.9179	GEN334440 1-SABINE UNIT 4
FDNS	00NR	3	20SP	G15_042	FROM->TO	GRPRAR1-LNX3345.00 - HOLT.CO3 345.00 345KV CKT 1	720	720	0.0315	104.9084	AUDUBON - SHEYNNE 230KV CKT 1
FDNS	00NR	3	20SP	G15_042	FROM->TO	GRPRAR1-LNX3345.00 - HOLT.CO3 345.00 345KV CKT 1	720	720	0.03148	104.9063	GEN345765 H-1SIOUX 2 18.000
FDNS	00NR	3	20SP	G15_042	FROM->TO	GRPRAR1-LNX3345.00 - HOLT.CO3 345.00 345KV CKT 1	720	720	0.03203	104.8961	P12:115:NPPD:WAPA1:CHADRON7:BOXBUTE7:BTB
FDNS	00NR	3	20SP	G15_042	FROM->TO	GRPRAR1-LNX3345.00 - HOLT.CO3 345.00 345KV CKT 1	720	720	0.03487	104.8936	BELDEN - HOSKINS 115KV CKT 1
FDNS	00NR	3	20SP	G15_042	FROM->TO	GRPRAR1-LNX3345.00 - HOLT.CO3 345.00 345KV CKT 1	720	720	0.03148	104.8925	GEN337764 1-TRACTEBEL UNIT C1
FDNS	00NR	3	20SP	G15_042	FROM->TO	GRPRAR1-LNX3345.00 - HOLT.CO3 345.00 345KV CKT 1	720	720	0.03148	104.8924	GEN337765 1-TRACTEBEL UNIT C2
FDNS	00NR	3	20SP	G15_042	FROM->TO	GRPRAR1-LNX3345.00 - HOLT.CO3 345.00 345KV CKT 1	720	720	0.0316	104.8911	FRANKS - HUBEN 345KV CKT 1
FDNS	00NR	3	20SP	G15_042	FROM->TO	GRPRAR1-LNX3345.00 - HOLT.CO3 345.00 345KV CKT 1	720	720	0.03148	104.8894	GEN334431 1-SABINE UNIT 1
FDNS	00NR	3	20SP	G15_042	FROM->TO	GRPRAR1-LNX3345.00 - HOLT.CO3 345.00 345KV CKT 1	720	720	0.03148	104.8894	GEN334432 1-SABINE UNIT 2
FDNS	00NR	3	20SP	G15_042	FROM->TO	GRPRAR1-LNX3345.00 - HOLT.CO3 345.00 345KV CKT 1	720	720	0.03132	104.8892	MT VERN - STORLA 115KV CKT 1
FDNS	00NR	3	20SP	G15_042	FROM->TO	GRPRAR1-LNX3345.00 - HOLT.CO3 345.00 345KV CKT 1	720	720	0.03148	104.8853	GEN336446 1-MICHOUD UNIT #2
FDNS	00NR	3	25SP	G15_042	FROM->TO	GRPRAR1-LNX3345.00 - HOLT.CO3 345.00 345KV CKT 1	720	720	0.0318	104.8849	GEN344897 4-1LAB G4 20.000
FDNS	00NR	3	25SP	G15_042	FROM->TO	GRPRAR1-LNX3345.00 - HOLT.CO3 345.00 345KV CKT 1	720	720	0.0318	104.8836	GEN344894 1-1LAB G1 20.000
FDNS	00NR	3	25SP	G15_042	FROM->TO	GRPRAR1-LNX3345.00 - HOLT.CO3 345.00 345KV CKT 1	720	720	0.0318	104.8836	GEN344895 2-1LAB G2 20.000
FDNS	00NR	3	25SP	G15_042	FROM->TO	GRPRAR1-LNX3345.00 - HOLT.CO3 345.00 345KV CKT 1	720	720	0.0318	104.8835	GEN344896 3-1LAB G3 20.000
FDNS	00NR	3	20SP	G15_042	FROM->TO	GRPRAR1-LNX3345.00 - HOLT.CO3 345.00 345KV CKT 1	720	720	0.0315	104.8833	LELAND OLDS - STANTON 230KV CKT 1

SOLUTION	GROUP	SCENARIO	SEASON	SOURCE	DIRECTION	MONITORED ELEMENT	RATEA (MVA)	RATEB(MVA)	TDF	TC%LOADING (% MVA)	CONTINGENCY
FDNS	00NR	3	20SP	G15_042	FROM->TO	GRPRAR1-LNX3345.00 - HOLT.CO3 345.00 345KV CKT 1	720	720	0.0315	104.8833	LELAND OLDS - STANTON 230KV CKT 1
FDNS	00NR	3	20SP	G15_042	FROM->TO	GRPRAR1-LNX3345.00 - HOLT.CO3 345.00 345KV CKT 1	720	720	0.0317	104.875	OVEXFRMCCOVE
FDNS	00NR	3	25SP	G15_042	FROM->TO	GRPRAR1-LNX3345.00 - HOLT.CO3 345.00 345KV CKT 1	720	720	0.0318	104.8695	GEN635214 4-NEAL UNIT 4
FDNS	00NR	3	20SP	G15_042	FROM->TO	GRPRAR1-LNX3345.00 - HOLT.CO3 345.00 345KV CKT 1	720	720	0.03148	104.8613	GRAND GULF 500/22.0KV TRANSFORMER CKT 1
FDNS	00NR	3	25SP	G15_042	FROM->TO	GRPRAR1-LNX3345.00 - HOLT.CO3 345.00 345KV CKT 1	720	720	0.03004	104.8565	FT THOMPSON - WESSINGTON 230KV CKT 1
FDNS	00NR	3	25SP	G15_042	FROM->TO	GRPRAR1-LNX3345.00 - HOLT.CO3 345.00 345KV CKT 1	720	720	0.03004	104.8565	FT THOMPSON - WESSINGTON 230KV CKT 1
FDNS	00NR	3	25SP	G15_042	FROM->TO	GRPRAR1-LNX3345.00 - HOLT.CO3 345.00 345KV CKT 1	720	720	0.03184	104.8563	GLENBORO SOUTH - RUGBY 230KV CKT 1
FDNS	00NR	3	20SP	G15_042	FROM->TO	GRPRAR1-LNX3345.00 - HOLT.CO3 345.00 345KV CKT 1	720	720	0.03152	104.8543	FERGSFL4 230.00 - WAHPETON 230KV CKT 1
FDNS	00NR	3	20SP	G15_042	FROM->TO	GRPRAR1-LNX3345.00 - HOLT.CO3 345.00 345KV CKT 1	720	720	0.03148	104.8535	GEN336242 1-1NMIL ST1 18.000
FDNS	00NR	3	20SP	G15_042	FROM->TO	GRPRAR1-LNX3345.00 - HOLT.CO3 345.00 345KV CKT 1	720	720	0.03148	104.8522	GEN501823 1-TECHE UNIT 3
FDNS	00NR	3	20SP	G15_042	FROM->TO	GRPRAR1-LNX3345.00 - HOLT.CO3 345.00 345KV CKT 1	720	720	0.03149	104.8452	ELLENDLMVP4 230.00 - OAKES 230KV CKT 1
FDNS	00NR	3	20SP	G15_042	FROM->TO	GRPRAR1-LNX3345.00 - HOLT.CO3 345.00 345KV CKT 1	720	720	0.03149	104.8452	ELLENDLMVP4 230.00 - OAKES 230KV CKT 1
FDNS	00NR	3	20SP	G15_042	FROM->TO	GRPRAR1-LNX3345.00 - HOLT.CO3 345.00 345KV CKT 1	720	720	0.03149	104.8442	FORMAN - OAKES 230KV CKT 1
FDNS	00NR	3	20SP	G15_042	FROM->TO	GRPRAR1-LNX3345.00 - HOLT.CO3 345.00 345KV CKT 1	720	720	0.03148	104.8378	PRAIRIE - WINGER 230KV CKT 1
FDNS	00NR	3	25SP	G15_042	FROM->TO	GRPRAR1-LNX3345.00 - HOLT.CO3 345.00 345KV CKT 1	720	720	0.0318	104.8367	GEN338388 1-1PLUM PT U1 23.000
FDNS	00NR	3	20SP	G15_042	FROM->TO	GRPRAR1-LNX3345.00 - HOLT.CO3 345.00 345KV CKT 1	720	720	0.03203	104.8349	CHADRON - DUNLAP 115KV CKT 1
FDNS	00NR	3	20SP	G15_042	FROM->TO	GRPRAR1-LNX3345.00 - HOLT.CO3 345.00 345KV CKT 1	720	720	0.03148	104.8345	GEN345756 H-1SIOUX 1 18.000
FDNS	00NR	3	20SP	G15_042	FROM->TO	GRPRAR1-LNX3345.00 - HOLT.CO3 345.00 345KV CKT 1	720	720	0.0322	104.8319	RELIANCE 4 230.00 - WITTEN 4 230.00 230KV CKT 1
FDNS	00NR	3	25SP	G15_042	FROM->TO	GRPRAR1-LNX3345.00 - HOLT.CO3 345.00 345KV CKT 1	720	720	0.0318	104.8319	GEN345671 2-1RUSH G2 18.000
FDNS	00NR	3	25SP	G15_042	FROM->TO	GRPRAR1-LNX3345.00 - HOLT.CO3 345.00 345KV CKT 1	720	720	0.0318	104.828	GEN345670 1-1RUSH G1 18.000
FDNS	00NR	3	20SP	G15_042	FROM->TO	GRPRAR1-LNX3345.00 - HOLT.CO3 345.00 345KV CKT 1	720	720	0.03165	104.8248	HAMPTON CORNER - NORTH ROCHESTER 345KV CKT 1
FDNS	00NR	3	20SP	G15_042	FROM->TO	GRPRAR1-LNX3345.00 - HOLT.CO3 345.00 345KV CKT 1	720	720	0.03153	104.824	HANKINSON - WAHPETON 230KV CKT 1
FDNS	00NR	3	20SP	G15_042	FROM->TO	GRPRAR1-LNX3345.00 - HOLT.CO3 345.00 345KV CKT 1	720	720	0.03152	104.8202	FERGSFL4 230.00 - GRE-SILVRLK4230.00 230KV CKT 1
FDNS	00NR	3	20SP	G15_042	FROM->TO	GRPRAR1-LNX3345.00 - HOLT.CO3 345.00 345KV CKT 1	720	720	0.03148	104.8181	GEN345832 1-1TS G1 13.800
FDNS	00NR	3	20SP	G15_042	FROM->TO	GRPRAR1-LNX3345.00 - HOLT.CO3 345.00 345KV CKT 1	720	720	0.03148	104.8178	GEN345841 2-1TS G2 13.800
FDNS	00NR	3	20SP	G15_042	FROM->TO	GRPRAR1-LNX3345.00 - HOLT.CO3 345.00 345KV CKT 1	720	720	0.03148	104.8173	P13:230-345:NPPD:NUCOR-1
FDNS	00NR	3	20SP	G15_042	FROM->TO	GRPRAR1-LNX3345.00 - HOLT.CO3 345.00 345KV CKT 1	720	720	0.03148	104.8166	GEN334031 1-FRONTIER UNIT 2
FDNS	00NR	3	25SP	G15_042	FROM->TO	GRPRAR1-LNX3345.00 - HOLT.CO3 345.00 345KV CKT 1	720	720	0.0318	104.8161	GEN501812 1-RODEMACHER UNIT 2
FDNS	00NR	3	20SP	G15_042	FROM->TO	GRPRAR1-LNX3345.00 - HOLT.CO3 345.00 345KV CKT 1	720	720	0.03148	104.8159	GEN334030 1-FRONTIER UNIT 1
FDNS	00NR	3	20SP	G15_042	FROM->TO	GRPRAR1-LNX3345.00 - HOLT.CO3 345.00 345KV CKT 1	720	720	0.03148	104.8117	GEN336944 1-REX BROWN
FDNS	00NR	3	20SP	G15_042	FROM->TO	GRPRAR1-LNX3345.00 - HOLT.CO3 345.00 345KV CKT 1	720	720	0.03148	104.8089	GEN501970 1-EVANGELINE UNIT 7
FDNS	00NR	3	20SP	G15_042	FROM->TO	GRPRAR1-LNX3345.00 - HOLT.CO3 345.00 345KV CKT 1	720	720	0.03224	104.802	DENISON - SIOUX CITY 230KV CKT 1
FDNS	00NR	3	20SP	G15_042	FROM->TO	GRPRAR1-LNX3345.00 - HOLT.CO3 345.00 345KV CKT 1	720	720	0.03148	104.801	GEN335612 1-WILLOW GLENN UNIT#2
FDNS	00NR	3	20SP	G15_042	FROM->TO	GRPRAR1-LNX3345.00 - HOLT.CO3 345.00 345KV CKT 1	720	720	0.03247	104.8001	MARTIN - SHANNON 115KV CKT 1
FDNS	00NR	3	25SP	G15_042	FROM->TO	GRPRAR1-LNX3345.00 - HOLT.CO3 345.00 345KV CKT 1	720	720	0.0318	104.8	GEN629075 1-OTTUMWA GENERATOR FOR OTTUMWA UNIT NO 1
FDNS	00NR	3	20SP	G15_042	FROM->TO	GRPRAR1-LNX3345.00 - HOLT.CO3 345.00 345KV CKT 1	720	720	0.03148	104.7981	GEN635693 3-GREATER DES MOINES ENERGY CENTER ST
FDNS	00NR	3	20SP	G15_042	FROM->TO	GRPRAR1-LNX3345.00 - HOLT.CO3 345.00 345KV CKT 1	720	720	0.03173	104.7967	BYRON - NORTH ROCHESTER 345KV CKT 1
FDNS	00NR	3	25SP	G15_042	FROM->TO	GRPRAR1-LNX3345.00 - HOLT.CO3 345.00 345KV CKT 1	720	720	0.0318	104.794	GEN336191 1-LITTLE GYPSY UNIT#3
FDNS	00NR	3	20SP	G15_042	FROM->TO	GRPRAR1-LNX3345.00 - HOLT.CO3 345.00 345KV CKT 1	720	720	0.0316	104.7939	GRE-CEDARMT3345.00 - HELENA 345KV CKT 1
FDNS	00NR	3	20SP	G15_042	FROM->TO	GRPRAR1-LNX3345.00 - HOLT.CO3 345.00 345KV CKT 1	720	720	0.0316	104.7939	GRE-CEDARMT3345.00 - HELENA 345KV CKT 2
FDNS	00NR	3	20SP	G15_042	FROM->TO	GRPRAR1-LNX3345.00 - HOLT.CO3 345.00 345KV CKT 1	720	720	0.03148	104.791	GEN337430 1-PERYVILLE UNIT #3
FDNS	00NR	3	20SP	G15_042	FROM->TO	GRPRAR1-LNX3345.00 - HOLT.CO3 345.00 345KV CKT 1	720	720	0.03148	104.7908	GEN337428 1-PERYVILLE UNIT #1
FDNS	00NR	3	20SP	G15_042	FROM->TO	GRPRAR1-LNX3345.00 - HOLT.CO3 345.00 345KV CKT 1	720	720	0.03263	104.7898	PLYMOUTH - SIOUX CITY 161KV CKT 1
FDNS	00NR	3	20SP	G15_042	FROM->TO	GRPRAR1-LNX3345.00 - HOLT.CO3 345.00 345KV CKT 1	720	720	0.03263	104.7898	PLYMOUTH - SIOUX CITY 161KV CKT 1
FDNS	00NR	3	25SP	G15_042	FROM->TO	GRPRAR1-LNX3345.00 - HOLT.CO3 345.00 345KV CKT 1	720	720	0.03334	104.782	GRIMES - LEHIGH 345KV CKT 1
FDNS	00NR	3	20SP	G15_042	FROM->TO	GRPRAR1-LNX3345.00 - HOLT.CO3 345.00 345KV CKT 1	720	720	0.03148	104.781	GEN562912 1-G15053_3 0.6900
FDNS	00NR	3	20SP	G15_042	FROM->TO	GRPRAR1-LNX3345.00 - HOLT.CO3 345.00 345KV CKT 1	720	720	0.03068	104.7758	FT RANDAL - WHITE SWAN 115KV CKT 1
FDNS	00NR	3	20SP	G15_042	FROM->TO	GRPRAR1-LNX3345.00 - HOLT.CO3 345.00 345KV CKT 1	720	720	0.0322	104.7754	WITTEN 4 230.00 () 230/115/13.8KV TRANSFORMER CKT 1
FDNS	00NR	3	20SP	G15_042	FROM->TO	GRPRAR1-LNX3345.00 - HOLT.CO3 345.00 345KV CKT 1	720	720	0.03148	104.7726	GEN338443 1-PANDA S1
FDNS	00NR	3	20SP	G15_042	FROM->TO	GRPRAR1-LNX3345.00 - HOLT.CO3 345.00 345KV CKT 1	720	720	0.03148	104.7704	GEN336240 1-1NMIL CT1 18.000
FDNS	00NR	3	20SP	G15_042	FROM->TO	GRPRAR1-LNX3345.00 - HOLT.CO3 345.00 345KV CKT 1	720	720	0.03148	104.7703	GEN336241 1-1NMIL CT2 18.000
FDNS	00NR	3	20SP	G15_042	FROM->TO	GRPRAR1-LNX3345.00 - HOLT.CO3 345.00 345KV CKT 1	720	720	0.03148	104.7684	P12:345:GRDA:CHOUTEAU-SPORTSMANACRES
FDNS	00NR	3	20SP	G15_042	FROM->TO	GRPRAR1-LNX3345.00 - HOLT.CO3 345.00 345KV CKT 1	720	720	0.03148	104.7681	GEN501912 1-ACADIA UNIT CT1B
FDNS	00NR	3	20SP	G15_042	FROM->TO	GRPRAR1-LNX3345.00 - HOLT.CO3 345.00 345KV CKT 1	720	720	0.03148	104.768	GEN501911 1-ACADIA UNIT CT1A
FDNS	00NR	3	25SP	G15_042	FROM->TO	GRPRAR1-LNX3345.00 - HOLT.CO3 345.00 345KV CKT 1	720	720	0.03235	104.7659	KOSSUTH 3 345.00 - WEBSTER 345KV CKT 1
FDNS	00NR	3	25SP	G15_042	FROM->TO	GRPRAR1-LNX3345.00 - HOLT.CO3 345.00 345KV CKT 1	720	720	0.0318	104.7414	P12:115:UMZW:# 162 #: NEL IN ND. FAULT ON ML-NEL-MX-GA 115 KV
FDNS	00NR	3	25SP	G15_042	FROM->TO	GRPRAR1-LNX3345.00 - HOLT.CO3 345.00 345KV CKT 1	720	720	0.0318	104.7204	GEN335614 1-WILLOW GLENN UNIT#4
FDNS	00NR	3	25SP	G15_042	FROM->TO	GRPRAR1-LNX3345.00 - HOLT.CO3 345.00 345KV CKT 1	720	720	0.0318	104.7155	GEN336801 1-BAXTER WILSON UNIT #1
FDNS	00NR	3	25SP	G15_042	FROM->TO	GRPRAR1-LNX3345.00 - HOLT.CO3 345.00 345KV CKT 1	720	720	0.0318	104.7104	GEN334441 1-SABINE UNIT 5
FDNS	00NR	3	25SP	G15_042	FROM->TO	GRPRAR1-LNX3345.00 - HOLT.CO3 345.00 345KV CKT 1	720	720	0.0318	104.7052	GEN336464 1-MICHOUD UNIT #3
FDNS	00NR	3	25SP	G15_042	FROM->TO	GRPRAR1-LNX3345.00 - HOLT.CO3 345.00 345KV CKT 1	720	720	0.0318	104.6993	GEN563222 1-G15088_3 0.6900
FDNS	00NR	3	25SP	G15_042	FROM->TO	GRPRAR1-LNX3345.00 - HOLT.CO3 345.00 345KV CKT 1	720	720	0.0318	104.6949	GEN335204 1-NELSON UNIT 4
FDNS	00NR	3	25SP	G15_042	FROM->TO	GRPRAR1-LNX3345.00 - HOLT.CO3 345.00 345KV CKT 1	720	720	0.0317	104.6851	HESKETT - WISHEK 230KV CKT 1
FDNS	00NR	3	25SP	G15_042	FROM->TO	GRPRAR1-LNX3345.00 - HOLT.CO3 345.00 345KV CKT 1	720	720	0.03201	104.6824	NORTH LA CROSSE - NORTH ROCHESTER 345KV CKT 1
FDNS	00NR	3	20SP	G15_042	FROM->TO	GRPRAR1-LNX3345.00 - HOLT.CO3 345.00 345KV CKT 1	720	720	0.03148	104.6745	GEN563282 1-G15094_3 0.6900
FDNS	00NR	3	25SP	G15_042	FROM->TO	GRPRAR1-LNX3345.00 - HOLT.CO3 345.00 345KV CKT 1	720	720	0.03236	104.6636	ADAMS - MITCHLCO3 345.00 345KV CKT 1
FDNS	00NR	3	25SP	G15_042	FROM->TO	GRPRAR1-LNX3345.00 - HOLT.CO3 345.00 345KV CKT 1	720	720	0.0317	104.6098	MERRCRT4 230.00 - WISHEK 230KV CKT 1
FDNS	00NR	3	25SP	G15_042	FROM->TO	GRPRAR1-LNX3345.00 - HOLT.CO3 345.00 345KV CKT 1	720	720	0.03179	104.6093	CENTER - COYOTE 345KV CKT 1
FDNS	00NR	3	25SP	G15_042	FROM->TO	GRPRAR1-LNX3345.00 - HOLT.CO3 345.00 345KV CKT 1	720	720	0.0318	104.5982	GEN640009 1-COOPER NUCLEAR STATION
FDNS	00NR	3	25SP	G15_042	FROM->TO	GRPRAR1-LNX3345.00 - HOLT.CO3 345.00 345KV CKT 1	720	720	0.03409	104.5757	BLOOMFIELD - CREIGHTON 115KV CKT 1
FDNS	00NR	3	25SP	G15_042	FROM->TO	GRPRAR1-LNX3345.00 - HOLT.CO3 345.00 345KV CKT 1	720	720	0.0318	104.5755	GEN334433 1-SABINE UNIT 3
FDNS	00NR	3	25SP	G15_042	FROM->TO	GRPRAR1-LNX3345.00 - HOLT.CO3 345.00 345KV CKT 1	720	720	0.03114	104.575	MENNO JCT - TRIPP JCT 115KV CKT 1
FDNS	00NR	3	25SP	G15_042	FROM->TO	GRPRAR1-LNX3345.00 - HOLT.CO3 345.00 345KV CKT 1	720	720	0.0318	104.5739	GARRISON - JAMES TOWN 230KV CKT 1
FDNS	00NR	3	25SP	G15_042	FROM->TO	GRPRAR1-LNX3345.00 - HOLT.CO3 345.00 345KV CKT 1	720	720	0.03162	104.5713	BROOKING COUNTY - BSSOUTH3 345.00 345KV CKT 1
FDNS	00NR	3	25SP	G15_042	FROM->TO	GRPRAR1-LNX3345.00 - HOLT.CO3 345.00 345KV CKT 1	720	720	0.0318	104.5452	GEN531447 1-HOLCOMB GENERATOR
FDNS	00NR	3	25SP	G15_042	FROM->TO	GRPRAR1-LNX3345.00 - HOLT.CO3 345.00 345KV CKT 1	720	720	0.03409	104.5419	BLOOMFIELD - GAVINS POINT 115KV CKT 1
FDNS	00NR	3	25SP	G15_042	FROM->TO	GRPRAR1-LNX3345.00 - HOLT.CO3 345.00 345KV CKT 1	720	720	0.0318	104.5258	GEN635213 3-NEAL UNIT 3
FDNS	00NR	3	25SP	G15_042	FROM->TO	GRPRAR1-LNX3345.00 - HOLT.CO3 345.00 345KV CKT 1	720	720	0.0318	104.5123	GEN336222 1-LITTLE GYPSY UNIT#2
FDNS	00NR	3	25SP	G15_042	FROM->TO	GRPRAR1-LNX3345.00 - HOLT.CO3 345.00 345KV CKT 1	720	720	0.03217	104.5	ADAMS - PLEASANT VALLEY 345KV CKT 1

SOLUTION	GROUP	SCENARIO	SEASON	SOURCE	DIRECTION	MONITORED ELEMENT	RATEA (MVA)	RATEB(MVA)	TDF	TC%LOADING (% MVA)	CONTINGENCY
FDNS	00NR	3	25SP	G15_042	FROM->TO	GRPRAR1-LNX3345.00 - HOLT.CO3 345.00 345KV CKT 1	720	720	0.03188	104.4855	APPLEDORN 4 230.00 - WATERTOWN 230KV CKT 1
FDNS	00NR	3	25SP	G15_042	FROM->TO	GRPRAR1-LNX3345.00 - HOLT.CO3 345.00 345KV CKT 1	720	720	0.03188	104.4855	APPLEDORN 4 230.00 - WATERTOWN 230KV CKT 1
FDNS	00NR	3	25SP	G15_042	FROM->TO	GRPRAR1-LNX3345.00 - HOLT.CO3 345.00 345KV CKT 1	720	720	0.03193	104.472	ARKANSAS NUCLEAR ONE - FT SMITH 500KV CKT 1
FDNS	00NR	3	25SP	G15_042	FROM->TO	GRPRAR1-LNX3345.00 - HOLT.CO3 345.00 345KV CKT 1	720	720	0.03193	104.472	ARKANSAS NUCLEAR ONE - FT SMITH 500KV CKT 1
FDNS	00NR	3	25SP	G15_042	FROM->TO	GRPRAR1-LNX3345.00 - HOLT.CO3 345.00 345KV CKT 1	720	720	0.0318	104.4594	GEN336151 1-WATERFORD UNIT#1
FDNS	00NR	3	25SP	G15_042	FROM->TO	GRPRAR1-LNX3345.00 - HOLT.CO3 345.00 345KV CKT 1	720	720	0.0318	104.4594	GEN336152 1-WATERFORD UNIT#2
FDNS	00NR	3	25SP	G15_042	FROM->TO	GRPRAR1-LNX3345.00 - HOLT.CO3 345.00 345KV CKT 1	720	720	0.03172	104.4563	BSSOUTH3 345.00 - ELLENDLMVP3 345.00 345KV CKT 1
FDNS	00NR	3	25SP	G15_042	FROM->TO	GRPRAR1-LNX3345.00 - HOLT.CO3 345.00 345KV CKT 1	720	720	0.03172	104.4563	BSSOUTH3 345.00 - ELLENDLMVP3 345.00 345KV CKT 1
FDNS	00NR	3	25SP	G15_042	FROM->TO	GRPRAR1-LNX3345.00 - HOLT.CO3 345.00 345KV CKT 1	720	720	0.03114	104.4444	MENNO JCT - UTICA 115KV CKT 1
FDNS	00NR	3	25SP	G15_042	FROM->TO	GRPRAR1-LNX3345.00 - HOLT.CO3 345.00 345KV CKT 1	720	720	0.03172	104.4352	ELLENDLMVP3 345.00 (1) 345/230/34.5KV TRANSFORMER CKT 1
FDNS	00NR	3	25SP	G15_042	FROM->TO	GRPRAR1-LNX3345.00 - HOLT.CO3 345.00 345KV CKT 1	720	720	0.03189	104.4249	ALEXMRES3 345.00 - WAITE PARK 345KV CKT 1
FDNS	00NR	3	25SP	G15_042	FROM->TO	GRPRAR1-LNX3345.00 - HOLT.CO3 345.00 345KV CKT 1	720	720	0.03188	104.4206	APPLEDORN 4 230.00 - GRANITE FALLS 230KV CKT 1
FDNS	00NR	3	25SP	G15_042	FROM->TO	GRPRAR1-LNX3345.00 - HOLT.CO3 345.00 345KV CKT 1	720	720	0.03188	104.4206	APPLEDORN 4 230.00 - GRANITE FALLS 230KV CKT 1
FDNS	00NR	3	25SP	G15_042	FROM->TO	GRPRAR1-LNX3345.00 - HOLT.CO3 345.00 345KV CKT 1	720	720	0.03186	104.4164	BLAIR - GRANITE FALLS 230KV CKT 1
FDNS	00NR	3	25SP	G15_042	FROM->TO	GRPRAR1-LNX3345.00 - HOLT.CO3 345.00 345KV CKT 1	720	720	0.03186	104.4164	BLAIR - GRANITE FALLS 230KV CKT 1
FDNS	00NR	3	25SP	G15_042	FROM->TO	GRPRAR1-LNX3345.00 - HOLT.CO3 345.00 345KV CKT 1	720	720	0.03209	104.4034	NMA B3 345 345.00 - NORTH LA CROSSE 345KV CKT 1
FDNS	00NR	3	25SP	G15_042	FROM->TO	GRPRAR1-LNX3345.00 - HOLT.CO3 345.00 345KV CKT 1	720	720	0.0318	104.3981	GEN641089 2-ENERGY CENTER 2
FDNS	00NR	3	25SP	G15_042	FROM->TO	GRPRAR1-LNX3345.00 - HOLT.CO3 345.00 345KV CKT 1	720	720	0.03133	104.3905	WINNER - WITTEN 115KV CKT 1
FDNS	00NR	3	25SP	G15_042	FROM->TO	GRPRAR1-LNX3345.00 - HOLT.CO3 345.00 345KV CKT 1	720	720	0.0318	104.3882	GEN303007 1-1BC2 U2
FDNS	00NR	3	25SP	G15_042	FROM->TO	GRPRAR1-LNX3345.00 - HOLT.CO3 345.00 345KV CKT 1	720	720	0.0318	104.3827	GEN303006 1-1BC2 U1
FDNS	00NR	3	25SP	G15_042	FROM->TO	GRPRAR1-LNX3345.00 - HOLT.CO3 345.00 345KV CKT 1	720	720	0.03114	104.3767	P12:115:UMZZ:# 237 #: MEN IN SD. MENNO JUNCTION IS A TAP (UJ-MEN-TP).
FDNS	00NR	3	25SP	G15_042	FROM->TO	GRPRAR1-LNX3345.00 - HOLT.CO3 345.00 345KV CKT 1	720	720	0.0318	104.3635	P13:230:UMZW:# 2218 #: FP IN MT. LOSS OF TRANSFORMER (AT2).
FDNS	00NR	3	25SP	G15_042	FROM->TO	GRPRAR1-LNX3345.00 - HOLT.CO3 345.00 345KV CKT 1	720	720	0.0318	104.3562	FARGO - JAMES TOWN 230KV CKT 1
FDNS	00NR	3	25SP	G15_042	FROM->TO	GRPRAR1-LNX3345.00 - HOLT.CO3 345.00 345KV CKT 1	720	720	0.0318	104.3534	GEN532751 1-WOLF CREEK GENERATING STATION UNIT 1
FDNS	00NR	3	25SP	G15_042	FROM->TO	GRPRAR1-LNX3345.00 - HOLT.CO3 345.00 345KV CKT 1	720	720	0.03196	104.3455	NORTH ROCHESTER - PRAIRIE ISLAND 345KV CKT 1
FDNS	00NR	3	25SP	G15_042	FROM->TO	GRPRAR1-LNX3345.00 - HOLT.CO3 345.00 345KV CKT 1	720	720	0.03207	104.3433	G15094_T 345.00 - LARAMIE RIVER 345KV CKT 1
FDNS	00NR	3	25SP	G15_042	FROM->TO	GRPRAR1-LNX3345.00 - HOLT.CO3 345.00 345KV CKT 1	720	720	0.03815	104.3401	RAUN - SIOUX CITY 345KV CKT 1
FDNS	00NR	3	25SP	G15_042	FROM->TO	GRPRAR1-LNX3345.00 - HOLT.CO3 345.00 345KV CKT 1	720	720	0.03815	104.3401	RAUN - SIOUX CITY 345KV CKT 1
FDNS	00NR	3	25SP	G15_042	FROM->TO	GRPRAR1-LNX3345.00 - HOLT.CO3 345.00 345KV CKT 1	720	720	0.0318	104.3342	FARGO - JAMES TOWN 230KV CKT 2
FDNS	00NR	3	25SP	G15_042	FROM->TO	GRPRAR1-LNX3345.00 - HOLT.CO3 345.00 345KV CKT 1	720	720	0.0318	104.3214	GEN303008 1-1BC2 U3
FDNS	00NR	3	25SP	G15_042	FROM->TO	GRPRAR1-LNX3345.00 - HOLT.CO3 345.00 345KV CKT 1	720	720	0.03223	104.319	HUNTLEY3 345.00 - LEDYARD3 345.00 345KV CKT 1
FDNS	00NR	3	25SP	G15_042	FROM->TO	GRPRAR1-LNX3345.00 - HOLT.CO3 345.00 345KV CKT 1	720	720	0.0318	104.316	GEN336170 1-GULF OXY U4
FDNS	00NR	3	25SP	G15_042	FROM->TO	GRPRAR1-LNX3345.00 - HOLT.CO3 345.00 345KV CKT 1	720	720	0.03179	104.3131	BISMARK - JAMES TOWN 230KV CKT 1
FDNS	00NR	3	25SP	G15_042	FROM->TO	GRPRAR1-LNX3345.00 - HOLT.CO3 345.00 345KV CKT 1	720	720	0.0318	104.3118	GEN562596 1-G14_059_3 0.6900
FDNS	00NR	3	20SP	G15_042	FROM->TO	GRPRAR1-LNX3345.00 - HOLT.CO3 345.00 345KV CKT 1	720	720	0.03148	104.3055	BASE CASE
FDNS	00NR	3	25SP	G15_042	FROM->TO	GRPRAR1-LNX3345.00 - HOLT.CO3 345.00 345KV CKT 1	720	720	0.03179	104.3034	BISMARK - WEBER 230KV CKT 1
FDNS	00NR	3	25SP	G15_042	FROM->TO	GRPRAR1-LNX3345.00 - HOLT.CO3 345.00 345KV CKT 1	720	720	0.03179	104.2877	JAMES TOWN - WEBER 230KV CKT 1
FDNS	00NR	3	25SP	G15_042	FROM->TO	GRPRAR1-LNX3345.00 - HOLT.CO3 345.00 345KV CKT 1	720	720	0.03461	104.2836	P13:230-345:NPPD:STEGALL3:KV3A
FDNS	00NR	3	25SP	G15_042	FROM->TO	GRPRAR1-LNX3345.00 - HOLT.CO3 345.00 345KV CKT 1	720	720	0.03461	104.2816	STEGALL (SGQ KV3A) 345/230/13.8KV TRANSFORMER CKT 1
FDNS	00NR	3	25SP	G15_042	FROM->TO	GRPRAR1-LNX3345.00 - HOLT.CO3 345.00 345KV CKT 1	720	720	0.03155	104.2736	FT THOMPSON - HURON 230KV CKT 1
FDNS	00NR	3	25SP	G15_042	FROM->TO	GRPRAR1-LNX3345.00 - HOLT.CO3 345.00 345KV CKT 1	720	720	0.03155	104.2736	FT THOMPSON - HURON 230KV CKT 1
FDNS	00NR	3	25SP	G15_042	FROM->TO	GRPRAR1-LNX3345.00 - HOLT.CO3 345.00 345KV CKT 1	720	720	0.03155	104.2736	FT THOMPSON - HURON 230KV CKT 2
FDNS	00NR	3	25SP	G15_042	FROM->TO	GRPRAR1-LNX3345.00 - HOLT.CO3 345.00 345KV CKT 1	720	720	0.03155	104.2736	FT THOMPSON - HURON 230KV CKT 2
FDNS	00NR	3	25SP	G15_042	FROM->TO	GRPRAR1-LNX3345.00 - HOLT.CO3 345.00 345KV CKT 1	720	720	0.03227	104.2727	P13:230-345:NPPD:SIDNEY 3:KV2A
FDNS	00NR	3	25SP	G15_042	FROM->TO	GRPRAR1-LNX3345.00 - HOLT.CO3 345.00 345KV CKT 1	720	720	0.03227	104.2726	SIDNEY - SIDNEY TRANSFORMER 230KV CKT 1
FDNS	00NR	3	25SP	G15_042	FROM->TO	GRPRAR1-LNX3345.00 - HOLT.CO3 345.00 345KV CKT 1	720	720	0.03227	104.2726	SIDNEY (SDQ KV2A) 345/230/13.8KV TRANSFORMER CKT 1
FDNS	00NR	3	25SP	G15_042	FROM->TO	GRPRAR1-LNX3345.00 - HOLT.CO3 345.00 345KV CKT 1	720	720	0.03215	104.2726	HUNTLEY3 345.00 - LAKEFIELD 3 345KV CKT 1
FDNS	00NR	3	25SP	G15_042	FROM->TO	GRPRAR1-LNX3345.00 - HOLT.CO3 345.00 345KV CKT 1	720	720	0.03461	104.2711	STEGALL - STEGALL TRANSFORMER 230KV CKT 1
FDNS	00NR	3	25SP	G15_042	FROM->TO	GRPRAR1-LNX3345.00 - HOLT.CO3 345.00 345KV CKT 1	720	720	0.03251	104.2687	P12:230:UMZW:# 733 #: FT IN SD. FT-BG2 LINE FAULT
FDNS	00NR	3	25SP	G15_042	FROM->TO	GRPRAR1-LNX3345.00 - HOLT.CO3 345.00 345KV CKT 1	720	720	0.03251	104.2683	FT THOMPSON - LOWERBRULE 4230.00 230KV CKT 1
FDNS	00NR	3	25SP	G15_042	FROM->TO	GRPRAR1-LNX3345.00 - HOLT.CO3 345.00 345KV CKT 1	720	720	0.03251	104.2683	FT THOMPSON - LOWERBRULE 4230.00 230KV CKT 1
FDNS	00NR	3	25SP	G15_042	FROM->TO	GRPRAR1-LNX3345.00 - HOLT.CO3 345.00 345KV CKT 1	720	720	0.0318	104.2676	BALTA - RAMSEY 230KV CKT 1
FDNS	00NR	3	25SP	G15_042	FROM->TO	GRPRAR1-LNX3345.00 - HOLT.CO3 345.00 345KV CKT 1	720	720	0.03251	104.2634	LOWERBRULE 4230.00 - RELIANCE 4 230.00 230KV CKT 1
FDNS	00NR	3	25SP	G15_042	FROM->TO	GRPRAR1-LNX3345.00 - HOLT.CO3 345.00 345KV CKT 1	720	720	0.0318	104.2467	GEN501811 1-RODEMACHER UNIT 1
FDNS	00NR	3	25SP	G15_042	FROM->TO	GRPRAR1-LNX3345.00 - HOLT.CO3 345.00 345KV CKT 1	720	720	0.0323	104.2454	P13:115-230:TSGT:SIDNEY-KV1A
FDNS	00NR	3	25SP	G15_042	FROM->TO	GRPRAR1-LNX3345.00 - HOLT.CO3 345.00 345KV CKT 1	720	720	0.0318	104.2411	GEN659118 1-LARAMIE RIVER UNIT1
FDNS	00NR	3	25SP	G15_042	FROM->TO	GRPRAR1-LNX3345.00 - HOLT.CO3 345.00 345KV CKT 1	720	720	0.0318	104.2324	GEN562921 1-G15054_2 0.6900
FDNS	00NR	3	25SP	G15_042	FROM->TO	GRPRAR1-LNX3345.00 - HOLT.CO3 345.00 345KV CKT 1	720	720	0.03182	104.2159	FORMAN - HANKINSON 230KV CKT 1
FDNS	00NR	3	25SP	G15_042	FROM->TO	GRPRAR1-LNX3345.00 - HOLT.CO3 345.00 345KV CKT 1	720	720	0.0318	104.2015	GEN334070 1-LEWIS CREEK 1
FDNS	00NR	3	25SP	G15_042	FROM->TO	GRPRAR1-LNX3345.00 - HOLT.CO3 345.00 345KV CKT 1	720	720	0.0318	104.2015	GEN334071 1-LEWIS CREEK 2
FDNS	00NR	3	25SP	G15_042	FROM->TO	GRPRAR1-LNX3345.00 - HOLT.CO3 345.00 345KV CKT 1	720	720	0.03133	104.2014	GREGORY - WINNER 115KV CKT 1
FDNS	00NR	3	25SP	G15_042	FROM->TO	GRPRAR1-LNX3345.00 - HOLT.CO3 345.00 345KV CKT 1	720	720	0.0318	104.1998	PRAIRIE ISLAND 345/20.0KV TRANSFORMER CKT 1
FDNS	00NR	3	25SP	G15_042	FROM->TO	GRPRAR1-LNX3345.00 - HOLT.CO3 345.00 345KV CKT 1	720	720	0.0318	104.1986	PRAIRIE ISLAND 345/20.0KV TRANSFORMER CKT 2
FDNS	00NR	3	25SP	G15_042	FROM->TO	GRPRAR1-LNX3345.00 - HOLT.CO3 345.00 345KV CKT 1	720	720	0.03133	104.1737	P12:115:UMZW:# 172 #: WI IN SD.
FDNS	00NR	3	25SP	G15_042	FROM->TO	GRPRAR1-LNX3345.00 - HOLT.CO3 345.00 345KV CKT 1	720	720	0.0318	104.1652	GEN337766 1-TRACTEBEL UNIT S1
FDNS	00NR	3	25SP	G15_042	FROM->TO	GRPRAR1-LNX3345.00 - HOLT.CO3 345.00 345KV CKT 1	720	720	0.0318	104.1523	GEN337757 1-DUKE HOTSPRINGS STG1
FDNS	00NR	3	25SP	G15_042	FROM->TO	GRPRAR1-LNX3345.00 - HOLT.CO3 345.00 345KV CKT 1	720	720	0.0318	104.1512	GEN645012 2-NEBRASKA CITY 2
FDNS	00NR	3	25SP	G15_042	FROM->TO	GRPRAR1-LNX3345.00 - HOLT.CO3 345.00 345KV CKT 1	720	720	0.0318	104.1422	ELM CREEK - MONTICELLO 345KV CKT 1
FDNS	00NR	3	25SP	G15_042	FROM->TO	GRPRAR1-LNX3345.00 - HOLT.CO3 345.00 345KV CKT 1	720	720	0.0318	104.1305	GEN501910 1-ACADIA UNIT ST1
FDNS	00NR	3	25SP	G15_042	FROM->TO	GRPRAR1-LNX3345.00 - HOLT.CO3 345.00 345KV CKT 1	720	720	0.03182	104.1267	AUDUBON - SHEYNNE 230KV CKT 1
FDNS	00NR	3	25SP	G15_042	FROM->TO	GRPRAR1-LNX3345.00 - HOLT.CO3 345.00 345KV CKT 1	720	720	0.03185	104.1261	HANKINSON - WAHPETON 230KV CKT 1
FDNS	00NR	3	25SP	G15_042	FROM->TO	GRPRAR1-LNX3345.00 - HOLT.CO3 345.00 345KV CKT 1	720	720	0.03164	104.1206	MT VERN - STORLA 115KV CKT 1
FDNS	00NR	3	25SP	G15_042	FROM->TO	GRPRAR1-LNX3345.00 - HOLT.CO3 345.00 345KV CKT 1	720	720	0.03235	104.1184	P12:115:NPPD:WAPA1:CHADRON7:BOXBUTE7:BTB
FDNS	00NR	3	25SP	G15_042	FROM->TO	GRPRAR1-LNX3345.00 - HOLT.CO3 345.00 345KV CKT 1	720	720	0.03202	104.1146	OVEXFRMCCOVE
FDNS	00NR	3	25SP	G15_042	FROM->TO	GRPRAR1-LNX3345.00 - HOLT.CO3 345.00 345KV CKT 1	720	720	0.03181	104.1133	ELLENDLMVP4 230.00 - OAKES 230KV CKT 1
FDNS	00NR	3	25SP	G15_042	FROM->TO	GRPRAR1-LNX3345.00 - HOLT.CO3 345.00 345KV CKT 1	720	720	0.03181	104.1133	ELLENDLMVP4 230.00 - OAKES 230KV CKT 1
FDNS	00NR	3	25SP	G15_042	FROM->TO	GRPRAR1-LNX3345.00 - HOLT.CO3 345.00 345KV CKT 1	720	720	0.03181	104.1113	FORMAN - OAKES 230KV CKT 1
FDNS	00NR	3	25SP	G15_042	FROM->TO	GRPRAR1-LNX3345.00 - HOLT.CO3 345.00 345KV CKT 1	720	720	0.0318	104.1075	GEN336221 1-LITTLE GYPSY UNIT#1
FDNS	00NR	3	25SP	G15_042	FROM->TO	GRPRAR1-LNX3345.00 - HOLT.CO3 345.00 345KV CKT 1	720	720	0.0352	104.1056	BELDEN - HOSKINS 115KV CKT 1

SOLUTION	GROUP	SCENARIO	SEASON	SOURCE	DIRECTION	MONITORED ELEMENT	RATEA (MVA)	RATEB(MVA)	TDF	TC%LOADING (% MVA)	CONTINGENCY
FDNS	00NR	3	25SP	G15_042	FROM->TO	GRPRAR1-LNX3345.00 - HOLT.CO3 345.00 345KV CKT 1	720	720	0.03251	104.0986	RELIANCE 4 230.00 - WITTEN 4 230.00 230KV CKT 1
FDNS	00NR	3	25SP	G15_042	FROM->TO	GRPRAR1-LNX3345.00 - HOLT.CO3 345.00 345KV CKT 1	720	720	0.03184	104.0952	FERGSFL4 230.00 - WAHPETON 230KV CKT 1
FDNS	00NR	3	25SP	G15_042	FROM->TO	GRPRAR1-LNX3345.00 - HOLT.CO3 345.00 345KV CKT 1	720	720	0.0318	104.0925	PRAIRIE - WINGER 230KV CKT 1
FDNS	00NR	3	25SP	G15_042	FROM->TO	GRPRAR1-LNX3345.00 - HOLT.CO3 345.00 345KV CKT 1	720	720	0.03192	104.0908	FRANKS - HUBEN 345KV CKT 1
FDNS	00NR	3	25SP	G15_042	FROM->TO	GRPRAR1-LNX3345.00 - HOLT.CO3 345.00 345KV CKT 1	720	720	0.0318	104.0884	GEN532651 1-JEFFREY ENERGY CENTER UNIT 1
FDNS	00NR	3	25SP	G15_042	FROM->TO	GRPRAR1-LNX3345.00 - HOLT.CO3 345.00 345KV CKT 1	720	720	0.0318	104.083	GEN532652 1-JEFFREY ENERGY CENTER UNIT 2
FDNS	00NR	3	25SP	G15_042	FROM->TO	GRPRAR1-LNX3345.00 - HOLT.CO3 345.00 345KV CKT 1	720	720	0.0318	104.0829	GEN532653 1-JEFFREY ENERGY CENTER UNIT 3
FDNS	00NR	3	25SP	G15_042	FROM->TO	GRPRAR1-LNX3345.00 - HOLT.CO3 345.00 345KV CKT 1	720	720	0.03258	104.0795	NOBLES - SPLIT ROCK 345KV CKT 1
FDNS	00NR	3	25SP	G15_042	FROM->TO	GRPRAR1-LNX3345.00 - HOLT.CO3 345.00 345KV CKT 1	720	720	0.0318	104.0789	GRAND GULF 500/22.0KV TRANSFORMER CKT 1
FDNS	00NR	3	25SP	G15_042	FROM->TO	GRPRAR1-LNX3345.00 - HOLT.CO3 345.00 345KV CKT 1	720	720	0.0318	104.0743	GEN334431 1-SABINE UNIT 1
FDNS	00NR	3	25SP	G15_042	FROM->TO	GRPRAR1-LNX3345.00 - HOLT.CO3 345.00 345KV CKT 1	720	720	0.0318	104.0743	GEN334432 1-SABINE UNIT 2
FDNS	00NR	3	25SP	G15_042	FROM->TO	GRPRAR1-LNX3345.00 - HOLT.CO3 345.00 345KV CKT 1	720	720	0.03235	104.0704	CHADRON - DUNLAP 115KV CKT 1
FDNS	00NR	3	25SP	G15_042	FROM->TO	GRPRAR1-LNX3345.00 - HOLT.CO3 345.00 345KV CKT 1	720	720	0.0318	104.0704	GEN345765 H-1SIOUX 2 18.000
FDNS	00NR	3	25SP	G15_042	FROM->TO	GRPRAR1-LNX3345.00 - HOLT.CO3 345.00 345KV CKT 1	720	720	0.0318	104.0702	GEN337764 1-TRACTEBEL UNIT C1
FDNS	00NR	3	25SP	G15_042	FROM->TO	GRPRAR1-LNX3345.00 - HOLT.CO3 345.00 345KV CKT 1	720	720	0.0318	104.0702	GEN337765 1-TRACTEBEL UNIT C2
FDNS	00NR	3	25SP	G15_042	FROM->TO	GRPRAR1-LNX3345.00 - HOLT.CO3 345.00 345KV CKT 1	720	720	0.0318	104.0699	GEN336446 1-MICHOUD UNIT #2
FDNS	00NR	3	17SP	G15_042	FROM->TO	GRPRAR1-LNX3345.00 - HOLT.CO3 345.00 345KV CKT 1	720	720	0.03313	104.0691	GEN659125 1-COVEY
FDNS	00NR	3	25SP	G15_042	FROM->TO	GRPRAR1-LNX3345.00 - HOLT.CO3 345.00 345KV CKT 1	720	720	0.03251	104.06	WITTEN 4 230.00 () 230/115/13.8KV TRANSFORMER CKT 1
FDNS	00NR	3	25SP	G15_042	FROM->TO	GRPRAR1-LNX3345.00 - HOLT.CO3 345.00 345KV CKT 1	720	720	0.03181	104.0439	BALTA - MCHENRY 230KV CKT 1
FDNS	00NR	3	25SP	G15_042	FROM->TO	GRPRAR1-LNX3345.00 - HOLT.CO3 345.00 345KV CKT 1	720	720	0.03184	104.0436	FERGSFL4 230.00 - GRE-SILVRLK4230.00 230KV CKT 1
FDNS	00NR	3	25SP	G15_042	FROM->TO	GRPRAR1-LNX3345.00 - HOLT.CO3 345.00 345KV CKT 1	720	720	0.03279	104.0381	MARTIN - SHANNON 115KV CKT 1
FDNS	00NR	3	25SP	G15_042	FROM->TO	GRPRAR1-LNX3345.00 - HOLT.CO3 345.00 345KV CKT 1	720	720	0.0318	104.0318	GEN501823 1-TECHE UNIT 3
FDNS	00NR	3	25SP	G15_042	FROM->TO	GRPRAR1-LNX3345.00 - HOLT.CO3 345.00 345KV CKT 1	720	720	0.0318	104.031	GEN336242 1-1NMIL ST1 18.000
FDNS	00NR	3	25SP	G15_042	FROM->TO	GRPRAR1-LNX3345.00 - HOLT.CO3 345.00 345KV CKT 1	720	720	0.03192	104.0307	GRE-CEDARMT3345.00 - HELENA 345KV CKT 1
FDNS	00NR	3	25SP	G15_042	FROM->TO	GRPRAR1-LNX3345.00 - HOLT.CO3 345.00 345KV CKT 1	720	720	0.03192	104.0307	GRE-CEDARMT3345.00 - HELENA 345KV CKT 2
FDNS	00NR	3	25SP	G15_042	FROM->TO	GRPRAR1-LNX3345.00 - HOLT.CO3 345.00 345KV CKT 1	720	720	0.0318	104.0248	GEN636641 1-LOUISA UNIT 1
FDNS	00NR	3	25SP	G15_042	FROM->TO	GRPRAR1-LNX3345.00 - HOLT.CO3 345.00 345KV CKT 1	720	720	0.03197	104.0201	HAMPTON CORNER - NORTH ROCHESTER 345KV CKT 1
FDNS	00NR	3	25SP	G15_042	FROM->TO	GRPRAR1-LNX3345.00 - HOLT.CO3 345.00 345KV CKT 1	720	720	0.0318	104.0188	P13:230-345:NPPD:NUCOR-1
FDNS	00NR	3	25SP	G15_042	FROM->TO	GRPRAR1-LNX3345.00 - HOLT.CO3 345.00 345KV CKT 1	720	720	0.03156	104.0185	HURON WEST PARK - MITCHELL NW 115KV CKT 1
FDNS	00NR	3	25SP	G15_042	FROM->TO	GRPRAR1-LNX3345.00 - HOLT.CO3 345.00 345KV CKT 1	720	720	0.03156	104.0185	HURON WEST PARK - MITCHELL NW 115KV CKT 1
FDNS	00NR	3	25SP	G15_042	FROM->TO	GRPRAR1-LNX3345.00 - HOLT.CO3 345.00 345KV CKT 1	720	720	0.03417	104.0169	OAHE - PHILIP TAP 230KV CKT 1
FDNS	00NR	3	25SP	G15_042	FROM->TO	GRPRAR1-LNX3345.00 - HOLT.CO3 345.00 345KV CKT 1	720	720	0.0318	104.0039	GEN334030 1-FRONTIER UNIT 1
FDNS	00NR	3	25SP	G15_042	FROM->TO	GRPRAR1-LNX3345.00 - HOLT.CO3 345.00 345KV CKT 1	720	720	0.0318	104.0036	GEN334031 1-FRONTIER UNIT 2
FDNS	00NR	3	25SP	G15_042	FROM->TO	GRPRAR1-LNX3345.00 - HOLT.CO3 345.00 345KV CKT 1	720	720	0.0318	104.0034	GEN562912 1-G15053_3 0.6900
FDNS	00NR	3	25SP	G15_042	FROM->TO	GRPRAR1-LNX3345.00 - HOLT.CO3 345.00 345KV CKT 1	720	720	0.0318	104.0018	GEN345756 H-1SIOUX 1 18.000
FDNS	00NR	3	25SP	G15_042	FROM->TO	GRPRAR1-LNX3345.00 - HOLT.CO3 345.00 345KV CKT 1	720	720	0.03189	103.9998	GRE-CEDARMT3345.00 - LYON COUNTY 345KV CKT 2
FDNS	00NR	3	25SP	G15_042	FROM->TO	GRPRAR1-LNX3345.00 - HOLT.CO3 345.00 345KV CKT 1	720	720	0.03203	103.9994	WAYSIDE (WAYSIDE T1) 230/115/13.8KV TRANSFORMER CKT 1
FDNS	00NR	3	25SP	G15_042	FROM->TO	GRPRAR1-LNX3345.00 - HOLT.CO3 345.00 345KV CKT 1	720	720	0.03203	103.9991	CHADRON - WAYSIDE 115KV CKT 1
FDNS	00NR	3	25SP	G15_042	FROM->TO	GRPRAR1-LNX3345.00 - HOLT.CO3 345.00 345KV CKT 1	720	720	0.03203	103.9991	P13:115-230:NPPD:WAYSIDE4:T1
FDNS	00NR	3	25SP	G15_042	FROM->TO	GRPRAR1-LNX3345.00 - HOLT.CO3 345.00 345KV CKT 1	720	720	0.0318	103.9981	GEN338443 1-PANDA S1
FDNS	00NR	3	25SP	G15_042	FROM->TO	GRPRAR1-LNX3345.00 - HOLT.CO3 345.00 345KV CKT 1	720	720	0.0318	103.9935	GEN336944 1-REX BROWN
FDNS	00NR	3	25SP	G15_042	FROM->TO	GRPRAR1-LNX3345.00 - HOLT.CO3 345.00 345KV CKT 1	720	720	0.0318	103.9916	GEN345832 1-1TS G1 13.800
FDNS	00NR	3	25SP	G15_042	FROM->TO	GRPRAR1-LNX3345.00 - HOLT.CO3 345.00 345KV CKT 1	720	720	0.0318	103.9915	P12:345:GRDA:CHOUTEAU-SPORTSMANACRES
FDNS	00NR	3	25SP	G15_042	FROM->TO	GRPRAR1-LNX3345.00 - HOLT.CO3 345.00 345KV CKT 1	720	720	0.0318	103.9913	GEN345841 2-1TS G2 13.800
FDNS	00NR	3	25SP	G15_042	FROM->TO	GRPRAR1-LNX3345.00 - HOLT.CO3 345.00 345KV CKT 1	720	720	0.0318	103.9911	GEN501970 1-EVANGELINE UNIT 7
FDNS	00NR	3	25SP	G15_042	FROM->TO	GRPRAR1-LNX3345.00 - HOLT.CO3 345.00 345KV CKT 1	720	720	0.031	103.99	FT RANDAL - WHITE SWAN 115KV CKT 1
FDNS	00NR	3	25SP	G15_042	FROM->TO	GRPRAR1-LNX3345.00 - HOLT.CO3 345.00 345KV CKT 1	720	720	0.0318	103.9838	GEN335612 1-WILLOW GLENN UNIT#2
FDNS	00NR	3	20SP	G15_042	FROM->TO	GRPRAR1-LNX3345.00 - HOLT.CO3 345.00 345KV CKT 1	720	720	0.03104	103.9525	NELIGH - PETERSBRG.N7115.00 115KV CKT 1
FDNS	00NR	3	25SP	G15_042	FROM->TO	GRPRAR1-LNX3345.00 - HOLT.CO3 345.00 345KV CKT 1	720	720	0.0318	103.9347	GEN562438 1-G13-032 0.6900
FDNS	00NR	3	20SP	G15_042	FROM->TO	GRPRAR1-LNX3345.00 - HOLT.CO3 345.00 345KV CKT 1	720	720	0.03104	103.9124	PETERSBRG.N7115.00 - PETERSBURG 115KV CKT Z1
FDNS	00NR	3	20SP	G15_042	FROM->TO	GRPRAR1-LNX3345.00 - HOLT.CO3 345.00 345KV CKT 1	720	720	0.03104	103.9109	P12:115:NPPD:1168B:ALBION 7:PETERSBRG.N7:BTB
FDNS	00NR	3	20SP	G15_042	FROM->TO	GRPRAR1-LNX3345.00 - HOLT.CO3 345.00 345KV CKT 1	720	720	0.03167	103.9103	BUCKNER7 345.00 - SPEARVILLE 345KV CKT 1
FDNS	00NR	3	20SP	G15_042	FROM->TO	GRPRAR1-LNX3345.00 - HOLT.CO3 345.00 345KV CKT 1	720	720	0.03167	103.9103	BUCKNER7 345.00 - SPEARVILLE 345KV CKT 1
FDNS	00NR	3	25SP	G15_042	FROM->TO	GRPRAR1-LNX3345.00 - HOLT.CO3 345.00 345KV CKT 1	720	720	0.0318	103.8936	GEN563282 1-G15094_3 0.6900
FDNS	00NR	3	20SP	G15_042	FROM->TO	GRPRAR1-LNX3345.00 - HOLT.CO3 345.00 345KV CKT 1	720	720	0.03164	103.8719	FT THOMPSON - OAHE 230KV CKT 1
FDNS	00NR	3	20SP	G15_042	FROM->TO	GRPRAR1-LNX3345.00 - HOLT.CO3 345.00 345KV CKT 1	720	720	0.03164	103.8719	FT THOMPSON - OAHE 230KV CKT 1
FDNS	00NR	3	20SP	G15_042	FROM->TO	GRPRAR1-LNX3345.00 - HOLT.CO3 345.00 345KV CKT 1	720	720	0.03164	103.8719	FT THOMPSON - OAHE 230KV CKT 2
FDNS	00NR	3	20SP	G15_042	FROM->TO	GRPRAR1-LNX3345.00 - HOLT.CO3 345.00 345KV CKT 1	720	720	0.03164	103.8719	FT THOMPSON - OAHE 230KV CKT 2
FDNS	00NR	3	20SP	G15_042	FROM->TO	GRPRAR1-LNX3345.00 - HOLT.CO3 345.00 345KV CKT 1	720	720	0.03234	103.8698	103RD & ROKEBY - MOORE 345KV CKT 1
FDNS	00NR	3	20SP	G15_042	FROM->TO	GRPRAR1-LNX3345.00 - HOLT.CO3 345.00 345KV CKT 1	720	720	0.03234	103.8698	103RD & ROKEBY - MOORE 345KV CKT 1
FDNS	00NR	3	20SP	G15_042	FROM->TO	GRPRAR1-LNX3345.00 - HOLT.CO3 345.00 345KV CKT 1	720	720	0.0343	103.867	MINGO - RED WILLOW 345KV CKT 1
FDNS	00NR	3	20SP	G15_042	FROM->TO	GRPRAR1-LNX3345.00 - HOLT.CO3 345.00 345KV CKT 1	720	720	0.0343	103.867	MINGO - RED WILLOW 345KV CKT 1
FDNS	00NR	3	20SP	G15_042	FROM->TO	GRPRAR1-LNX3345.00 - HOLT.CO3 345.00 345KV CKT 1	720	720	0.03425	103.8548	AINSWORTH - AINSWORTH 115KV CKT 1
FDNS	00NR	3	20SP	G15_042	FROM->TO	GRPRAR1-LNX3345.00 - HOLT.CO3 345.00 345KV CKT 1	720	720	0.03165	103.8437	FT THOMPSON - OAHE 230KV CKT 3
FDNS	00NR	3	20SP	G15_042	FROM->TO	GRPRAR1-LNX3345.00 - HOLT.CO3 345.00 345KV CKT 1	720	720	0.03165	103.8437	FT THOMPSON - OAHE 230KV CKT 3
FDNS	00NR	3	20SP	G15_042	FROM->TO	GRPRAR1-LNX3345.00 - HOLT.CO3 345.00 345KV CKT 1	720	720	0.03165	103.8437	FT THOMPSON - OAHE 230KV CKT 4
FDNS	00NR	3	20SP	G15_042	FROM->TO	GRPRAR1-LNX3345.00 - HOLT.CO3 345.00 345KV CKT 1	720	720	0.03165	103.8437	FT THOMPSON - OAHE 230KV CKT 4
FDNS	00NR	3	20SP	G15_042	FROM->TO	GRPRAR1-LNX3345.00 - HOLT.CO3 345.00 345KV CKT 1	720	720	0.03272	103.839	ANTELOPE 7115.00 - COUNTY LINE 115KV CKT 1
FDNS	00NR	3	20SP	G15_042	FROM->TO	GRPRAR1-LNX3345.00 - HOLT.CO3 345.00 345KV CKT 1	720	720	0.03218	103.8087	AXTELL - POST ROCK 345KV CKT 1
FDNS	00NR	3	20SP	G15_042	FROM->TO	GRPRAR1-LNX3345.00 - HOLT.CO3 345.00 345KV CKT 1	720	720	0.03141	103.8056	BISMARK - L3 HAWDON 230KV CKT 1
FDNS	00NR	3	20SP	G15_042	FROM->TO	GRPRAR1-LNX3345.00 - HOLT.CO3 345.00 345KV CKT 1	720	720	0.03173	103.8029	FALLOW 3 345.00 - GRIMES 345KV CKT 1
FDNS	00NR	3	20SP	G15_042	FROM->TO	GRPRAR1-LNX3345.00 - HOLT.CO3 345.00 345KV CKT 1	720	720	0.03159	103.7972	G11_051T 345.00 - WOODWARD DISTRICT EHV 345KV CKT 1
FDNS	00NR	3	20SP	G15_042	FROM->TO	GRPRAR1-LNX3345.00 - HOLT.CO3 345.00 345KV CKT 1	720	720	0.03148	103.7883	GEN659147 1-PIONEER 1G13.800
FDNS	00NR	3	20SP	G15_042	FROM->TO	GRPRAR1-LNX3345.00 - HOLT.CO3 345.00 345KV CKT 1	720	720	0.03148	103.7883	GEN659158 2-PIONEER G213.800
FDNS	00NR	3	20SP	G15_042	FROM->TO	GRPRAR1-LNX3345.00 - HOLT.CO3 345.00 345KV CKT 1	720	720	0.03148	103.7883	GEN659159 3-PIONEER G313.800
FDNS	00NR	3	20SP	G15_042	FROM->TO	GRPRAR1-LNX3345.00 - HOLT.CO3 345.00 345KV CKT 1	720	720	0.03148	103.7878	GEN659148 1-LONESMCRK 1G13.800
FDNS	00NR	3	20SP	G15_042	FROM->TO	GRPRAR1-LNX3345.00 - HOLT.CO3 345.00 345KV CKT 1	720	720	0.03148	103.7878	GEN659156 2-LONESMCRK 2G13.800
FDNS	00NR	3	20SP	G15_042	FROM->TO	GRPRAR1-LNX3345.00 - HOLT.CO3 345.00 345KV CKT 1	720	720	0.03148	103.7878	GEN659157 3-LONESMCRK 3G13.800
FDNS	00NR	3	20SP	G15_042	FROM->TO	GRPRAR1-LNX3345.00 - HOLT.CO3 345.00 345KV CKT 1	720	720	0.03148	103.7822	GEN657964 1-ASH2GEN9 0.5750

SOLUTION	GROUP	SCENARIO	SEASON	SOURCE	DIRECTION	MONITORED ELEMENT	RATEA (MVA)	RATEB(MVA)	TDF	TC%LOADING (% MVA)	CONTINGENCY
FDNS	00NR	3	20SP	G15_042	FROM->TO	GRPRAR1-LNX3345.00 - HOLT.CO3 345.00 345KV CKT 1	720	720	0.03148	103.7814	GEN672367 1-MERIDIAN GENERATOR 1 GT1
FDNS	00NR	3	20SP	G15_042	FROM->TO	GRPRAR1-LNX3345.00 - HOLT.CO3 345.00 345KV CKT 1	720	720	0.03148	103.7814	GEN672368 2-MERIDIAN GENERATOR 2 GT2
FDNS	00NR	3	20SP	G15_042	FROM->TO	GRPRAR1-LNX3345.00 - HOLT.CO3 345.00 345KV CKT 1	720	720	0.03148	103.7805	GEN672358 1-CHAPLN1W 0.6900
FDNS	00NR	3	20SP	G15_042	FROM->TO	GRPRAR1-LNX3345.00 - HOLT.CO3 345.00 345KV CKT 1	720	720	0.03144	103.7659	G14-021T 345.00 - MULLNCR7 345.00 345KV CKT 1
FDNS	00NR	3	20SP	G15_042	FROM->TO	GRPRAR1-LNX3345.00 - HOLT.CO3 345.00 345KV CKT 1	720	720	0.03144	103.7627	G15-005T 345.00 - MULLNCR7 345.00 345KV CKT 1
FDNS	00NR	3	20SP	G15_042	FROM->TO	GRPRAR1-LNX3345.00 - HOLT.CO3 345.00 345KV CKT 1	720	720	0.03148	103.7578	GEN672349 3-CORY COGEN GENERATOR 3 ST
FDNS	00NR	3	20SP	G15_042	FROM->TO	GRPRAR1-LNX3345.00 - HOLT.CO3 345.00 345KV CKT 1	720	720	0.03148	103.7555	GEN672350 1-NIPAWIN GENERATOR 1
FDNS	00NR	3	20SP	G15_042	FROM->TO	GRPRAR1-LNX3345.00 - HOLT.CO3 345.00 345KV CKT 1	720	720	0.03148	103.7555	GEN672351 2-NIPAWIN GENERATOR 2
FDNS	00NR	3	20SP	G15_042	FROM->TO	GRPRAR1-LNX3345.00 - HOLT.CO3 345.00 345KV CKT 1	720	720	0.03148	103.7555	GEN672352 3-NIPAWIN GENERATOR 3
FDNS	00NR	3	20SP	G15_042	FROM->TO	GRPRAR1-LNX3345.00 - HOLT.CO3 345.00 345KV CKT 1	720	720	0.03163	103.7553	POST ROCK (POSTROCK T1) 345/230/13.8KV TRANSFORMER CKT 1
FDNSLock	00NR	3	20SP	G15_042	FROM->TO	GRPRAR1-LNX3345.00 - HOLT.CO3 345.00 345KV CKT 1	720	720	0.03131	103.7503	WATERTOWN (WT2 KU1A) 345/230/13.8KV TRANSFORMER CKT 1
FDNS	00NR	3	20SP	G15_042	FROM->TO	GRPRAR1-LNX3345.00 - HOLT.CO3 345.00 345KV CKT 1	720	720	0.03148	103.75	GEN600012 2-BLACK DOG GEN 2
FDNS	00NR	3	20SP	G15_042	FROM->TO	GRPRAR1-LNX3345.00 - HOLT.CO3 345.00 345KV CKT 1	720	720	0.03304	103.7304	G15061_T 345.00 - SETAB 345KV CKT 1
FDNS	00NR	3	20SP	G15_042	FROM->TO	GRPRAR1-LNX3345.00 - HOLT.CO3 345.00 345KV CKT 1	720	720	0.03148	103.73	GEN590010 1-ERCOT EQUIVALENCE
FDNS	00NR	3	20SP	G15_042	FROM->TO	GRPRAR1-LNX3345.00 - HOLT.CO3 345.00 345KV CKT 1	720	720	0.03023	103.7293	COOPER - MOORE 345KV CKT 1
FDNS	00NR	3	20SP	G15_042	FROM->TO	GRPRAR1-LNX3345.00 - HOLT.CO3 345.00 345KV CKT 1	720	720	0.03148	103.7209	GEN652548 5-FT RANDAL
FDNS	00NR	3	20SP	G15_042	FROM->TO	GRPRAR1-LNX3345.00 - HOLT.CO3 345.00 345KV CKT 1	720	720	0.03148	103.7209	GEN652549 7-FT RANDAL
FDNS	00NR	3	20SP	G15_042	FROM->TO	GRPRAR1-LNX3345.00 - HOLT.CO3 345.00 345KV CKT 1	720	720	0.03148	103.7199	GEN652546 1-FT RANDAL
FDNS	00NR	3	20SP	G15_042	FROM->TO	GRPRAR1-LNX3345.00 - HOLT.CO3 345.00 345KV CKT 1	720	720	0.03144	103.7164	G15-005T 345.00 - SIBLEY 345KV CKT 1
FDNS	00NR	3	20SP	G15_042	FROM->TO	GRPRAR1-LNX3345.00 - HOLT.CO3 345.00 345KV CKT 1	720	720	0.03148	103.7163	GEN652547 3-FT RANDAL
FDNS	00NR	3	20SP	G15_042	FROM->TO	GRPRAR1-LNX3345.00 - HOLT.CO3 345.00 345KV CKT 1	720	720	0.03148	103.7161	EMERY 161/18.0KV TRANSFORMER CKT 1
FDNS	00NR	3	20SP	G15_042	FROM->TO	GRPRAR1-LNX3345.00 - HOLT.CO3 345.00 345KV CKT 1	720	720	0.03148	103.7033	GEN590011 2-ERCOT EQUIVALENCE
FDNS	00NR	3	20SP	G15_042	FROM->TO	GRPRAR1-LNX3345.00 - HOLT.CO3 345.00 345KV CKT 1	720	720	0.03155	103.6984	ANTELOP-LNX3345.00 - BRDLAND-LNX3345.00 345KV CKT 1
FDNS	00NR	3	20SP	G15_042	FROM->TO	GRPRAR1-LNX3345.00 - HOLT.CO3 345.00 345KV CKT 1	720	720	0.03148	103.6906	GEN300003 1-THOMAS HILL UNIT 3
FDNS	00NR	3	20SP	G15_042	FROM->TO	GRPRAR1-LNX3345.00 - HOLT.CO3 345.00 345KV CKT 1	720	720	0.03175	103.6905	LARAMIE RIVER - STEGALL 345KV CKT 1
FDNS	00NR	3	20SP	G15_042	FROM->TO	GRPRAR1-LNX3345.00 - HOLT.CO3 345.00 345KV CKT 1	720	720	0.03148	103.6849	GEN600046 1-MECST
FDNS	00NR	3	20SP	G15_042	FROM->TO	GRPRAR1-LNX3345.00 - HOLT.CO3 345.00 345KV CKT 1	720	720	0.03148	103.6844	GEN659290 1-EDGECOL
FDNS	00NR	3	20SP	G15_042	FROM->TO	GRPRAR1-LNX3345.00 - HOLT.CO3 345.00 345KV CKT 1	720	720	0.03148	103.6843	GEN672339 16-QE 16G 13.800
FDNS	00NR	3	20SP	G15_042	FROM->TO	GRPRAR1-LNX3345.00 - HOLT.CO3 345.00 345KV CKT 1	720	720	0.03148	103.6703	GEN672393 2-NBECST2G 13.800
FDNS	00NR	3	20SP	G15_042	FROM->TO	GRPRAR1-LNX3345.00 - HOLT.CO3 345.00 345KV CKT 1	720	720	0.03152	103.6696	DRAYTON - LETELLIER 230KV CKT 1
FDNS	00NR	3	20SP	G15_042	FROM->TO	GRPRAR1-LNX3345.00 - HOLT.CO3 345.00 345KV CKT 1	720	720	0.03148	103.6676	GEN600050 1-FEP
FDNS	00NR	3	20SP	G15_042	FROM->TO	GRPRAR1-LNX3345.00 - HOLT.CO3 345.00 345KV CKT 1	720	720	0.03148	103.6557	GEN620324 3-HOOT LAKE 3 GEN
FDNS	00NR	3	20SP	G15_042	FROM->TO	GRPRAR1-LNX3345.00 - HOLT.CO3 345.00 345KV CKT 1	720	720	0.03148	103.649	GEN672342 3-QUEEN ELIZABETH GENERATOR 3
FDNS	00NR	3	20SP	G15_042	FROM->TO	GRPRAR1-LNX3345.00 - HOLT.CO3 345.00 345KV CKT 1	720	720	0.0326	103.6443	P12:115:NPPD:1163B:NELIGH 7:NORFK.N7:BTB
FDNS	00NR	3	20SP	G15_042	FROM->TO	GRPRAR1-LNX3345.00 - HOLT.CO3 345.00 345KV CKT 1	720	720	0.03148	103.6407	GEN652410 3-FT PECK
FDNS	00NR	3	20SP	G15_042	FROM->TO	GRPRAR1-LNX3345.00 - HOLT.CO3 345.00 345KV CKT 1	720	720	0.03148	103.6365	LADISH 115/13.2KV TRANSFORMER CKT 1
FDNS	00NR	3	20SP	G15_042	FROM->TO	GRPRAR1-LNX3345.00 - HOLT.CO3 345.00 345KV CKT 1	720	720	0.03201	103.6352	THEDFRD3 345.00 (THEDFORDT2) 345/115/13.8KV TRANSFORMER CKT 1
FDNS	00NR	3	20SP	G15_042	FROM->TO	GRPRAR1-LNX3345.00 - HOLT.CO3 345.00 345KV CKT 1	720	720	0.03148	103.632	GEN600047 1-MECCT1
FDNS	00NR	3	20SP	G15_042	FROM->TO	GRPRAR1-LNX3345.00 - HOLT.CO3 345.00 345KV CKT 1	720	720	0.03148	103.6192	GEN660003 3-HURON WEST PARK
FDNS	00NR	3	20SP	G15_042	FROM->TO	GRPRAR1-LNX3345.00 - HOLT.CO3 345.00 345KV CKT 1	720	720	0.03148	103.6069	GEN660001 2-ABERDEEN SIEBRECHT
FDNS	00NR	3	20SP	G15_042	FROM->TO	GRPRAR1-LNX3345.00 - HOLT.CO3 345.00 345KV CKT 1	720	720	0.03148	103.5835	GEN600063 1-COLVILLE GEN 1
FDNS	00NR	3	20SP	G15_042	FROM->TO	GRPRAR1-LNX3345.00 - HOLT.CO3 345.00 345KV CKT 1	720	720	0.03148	103.5835	GEN600064 2-COLVILLE GEN 2
FDNS	00NR	3	20SP	G15_042	FROM->TO	GRPRAR1-LNX3345.00 - HOLT.CO3 345.00 345KV CKT 1	720	720	0.03148	103.5778	GEN652414 4-FT PECK
FDNS	00NR	3	20SP	G15_042	FROM->TO	GRPRAR1-LNX3345.00 - HOLT.CO3 345.00 345KV CKT 1	720	720	0.03148	103.5778	GEN652415 5-FT PECK
FDNS	00NR	3	20SP	G15_042	FROM->TO	GRPRAR1-LNX3345.00 - HOLT.CO3 345.00 345KV CKT 1	720	720	0.03148	103.5707	GEN681522 3-GENOA 3
FDNS	00NR	3	20SP	G15_042	FROM->TO	GRPRAR1-LNX3345.00 - HOLT.CO3 345.00 345KV CKT 1	720	720	0.03148	103.5687	GEN652345 W-G07_023IS_2 0.6900
FDNS	00NR	3	20SP	G15_042	FROM->TO	GRPRAR1-LNX3345.00 - HOLT.CO3 345.00 345KV CKT 1	720	720	0.03148	103.5667	GEN300007 1-NEW MADRID UNIT 2
FDNS	00NR	3	20SP	G15_042	FROM->TO	GRPRAR1-LNX3345.00 - HOLT.CO3 345.00 345KV CKT 1	720	720	0.03148	103.5619	GEN 11104 1-J262_GEN 0.6000
FDNS	00NR	3	20SP	G15_042	FROM->TO	GRPRAR1-LNX3345.00 - HOLT.CO3 345.00 345KV CKT 1	720	720	0.03148	103.5619	GEN 11108 1-J263_GEN 0.6000
FDNS	00NR	3	20SP	G15_042	FROM->TO	GRPRAR1-LNX3345.00 - HOLT.CO3 345.00 345KV CKT 1	720	720	0.03148	103.5616	GEN300006 1-NEW MADRID UNIT 1
FDNS	00NR	3	20SP	G15_042	FROM->TO	GRPRAR1-LNX3345.00 - HOLT.CO3 345.00 345KV CKT 1	720	720	0.033	103.561	GERALD GENTLEMAN STATION - RED WILLOW 345KV CKT 1
FDNS	00NR	3	20SP	G15_042	FROM->TO	GRPRAR1-LNX3345.00 - HOLT.CO3 345.00 345KV CKT 1	720	720	0.03148	103.5569	GEN600043 7-BLUE LAKE5
FDNS	00NR	3	20SP	G15_042	FROM->TO	GRPRAR1-LNX3345.00 - HOLT.CO3 345.00 345KV CKT 1	720	720	0.03148	103.5569	GEN600044 8-BLUE LAKE6
FDNS	00NR	3	20SP	G15_042	FROM->TO	GRPRAR1-LNX3345.00 - HOLT.CO3 345.00 345KV CKT 1	720	720	0.03148	103.5379	G830_SUB 115.00 - GRE-MCHENRY7115.00 115KV CKT 1
FDNS	00NR	3	20SP	G15_042	FROM->TO	GRPRAR1-LNX3345.00 - HOLT.CO3 345.00 345KV CKT 1	720	720	0.03148	103.5318	GEN600014 4-BLACK DOG GEN 4
FDNS	00NR	3	20SP	G15_042	FROM->TO	GRPRAR1-LNX3345.00 - HOLT.CO3 345.00 345KV CKT 1	720	720	0.03148	103.5279	GEN600065 7-HIGH BRIDGE
FDNS	00NR	3	20SP	G15_042	FROM->TO	GRPRAR1-LNX3345.00 - HOLT.CO3 345.00 345KV CKT 1	720	720	0.03148	103.5279	GEN600066 8-HIGH BRIDGE
FDNS	00NR	3	20SP	G15_042	FROM->TO	GRPRAR1-LNX3345.00 - HOLT.CO3 345.00 345KV CKT 1	720	720	0.03148	103.5272	G830_SUB 115.00 115/34.5KV TRANSFORMER CKT 1
FDNS	00NR	3	20SP	G15_042	FROM->TO	GRPRAR1-LNX3345.00 - HOLT.CO3 345.00 345KV CKT 1	720	720	0.03148	103.5251	GEN600011 5-BLACK DOG GEN 1
FDNS	00NR	3	25SP	G15_042	FROM->TO	GRPRAR1-LNX3345.00 - HOLT.CO3 345.00 345KV CKT 1	720	720	0.0318	103.5225	BASE CASE
FDNS	00NR	3	20SP	G15_042	FROM->TO	GRPRAR1-LNX3345.00 - HOLT.CO3 345.00 345KV CKT 1	720	720	0.03148	103.5146	GEN600071 10-RIVER SIDE
FDNS	00NR	3	20SP	G15_042	FROM->TO	GRPRAR1-LNX3345.00 - HOLT.CO3 345.00 345KV CKT 1	720	720	0.03148	103.5144	GEN600070 9-RIVER SIDE
FDNS	00NR	3	20SP	G15_042	FROM->TO	GRPRAR1-LNX3345.00 - HOLT.CO3 345.00 345KV CKT 1	720	720	0.03148	103.5123	LANSING WEST 161/22.0KV TRANSFORMER CKT 1
FDNS	00NR	3	20SP	G15_042	FROM->TO	GRPRAR1-LNX3345.00 - HOLT.CO3 345.00 345KV CKT 1	720	720	0.03148	103.5033	GEN600007 7-RIVERSIDE GEN 7
FDNS	00NR	3	20SP	G15_042	FROM->TO	GRPRAR1-LNX3345.00 - HOLT.CO3 345.00 345KV CKT 1	720	720	0.03148	103.4896	GEN600017 C-LS POWER CT
FDNS	00NR	3	20SP	G15_042	FROM->TO	GRPRAR1-LNX3345.00 - HOLT.CO3 345.00 345KV CKT 1	720	720	0.03148	103.4852	GEN600045 4-ANSON
FDNS	00NR	3	20SP	G15_042	FROM->TO	GRPRAR1-LNX3345.00 - HOLT.CO3 345.00 345KV CKT 1	720	720	0.03155	103.4592	BRDLAND-LNX3345.00 - HURON 345KV CKT Z
FDNS	00NR	3	20SP	G15_042	FROM->TO	GRPRAR1-LNX3345.00 - HOLT.CO3 345.00 345KV CKT 1	720	720	0.03159	103.4588	G11_051T 345.00 - TATONGA7 345.00 345KV CKT 1
FDNS	00NR	3	20SP	G15_042	FROM->TO	GRPRAR1-LNX3345.00 - HOLT.CO3 345.00 345KV CKT 1	720	720	0.03155	103.4585	BROADLAND - HURON 230KV CKT 1
FDNS	00NR	3	20SP	G15_042	FROM->TO	GRPRAR1-LNX3345.00 - HOLT.CO3 345.00 345KV CKT 1	720	720	0.03155	103.4585	HURON (BD KU2A) 345/230/13.8KV TRANSFORMER CKT 1
FDNS	00NR	3	20SP	G15_042	FROM->TO	GRPRAR1-LNX3345.00 - HOLT.CO3 345.00 345KV CKT 1	720	720	0.03155	103.4585	HURON (BD KU2A) 345/230/13.8KV TRANSFORMER CKT 1
FDNS	00NR	3	20SP	G15_042	FROM->TO	GRPRAR1-LNX3345.00 - HOLT.CO3 345.00 345KV CKT 1	720	720	0.03155	103.4544	P12:345:UMZB:# 103 #: BD IN SD. LOSS OF LINE
FDNS	00NR	3	20SP	G15_042	FROM->TO	GRPRAR1-LNX3345.00 - HOLT.CO3 345.00 345KV CKT 1	720	720	0.03155	103.453	P12:345:UMZB:# 102 #: AVS BD IN ND. AVS BRD LR
FDNS	00NR	3	20SP	G15_042	FROM->TO	GRPRAR1-LNX3345.00 - HOLT.CO3 345.00 345KV CKT 1	720	720	0.03148	103.4254	GEN659273 2-GROTON SYNC COND
FDNS	00NR	3	20SP	G15_042	FROM->TO	GRPRAR1-LNX3345.00 - HOLT.CO3 345.00 345KV CKT 1	720	720	0.03148	103.4254	GEN659294 1-WILTONCOL9
FDNS	00NR	3	20SP	G15_042	FROM->TO	GRPRAR1-LNX3345.00 - HOLT.CO3 345.00 345KV CKT 1	720	720	0.03148	103.4215	GEN615052 1-CAMBRIDGE GENERATING STATION
FDNS	00NR	3	20SP	G15_042	FROM->TO	GRPRAR1-LNX3345.00 - HOLT.CO3 345.00 345KV CKT 1	720	720	0.03148	103.4065	GEN615021 1-GRE-ER 14G 16.000
FDNS	00NR	3	20SP	G15_042	FROM->TO	GRPRAR1-LNX3345.00 - HOLT.CO3 345.00 345KV CKT 1	720	720	0.03155	103.4054	ANTELOP-LNX3345.00 - ANTELOPE VALLEY 345KV CKT Z
FDNS	00NR	3	20SP	G15_042	FROM->TO	GRPRAR1-LNX3345.00 - HOLT.CO3 345.00 345KV CKT 1	720	720	0.03141	103.3763	OAHE - SULLEY BUTTE 230KV CKT 1

SOLUTION	GROUP	SCENARIO	SEASON	SOURCE	DIRECTION	MONITORED ELEMENT	RATEA (MVA)	RATEB(MVA)	TDF	TC%LOADING (% MVA)	CONTINGENCY
FDNS	00NR	3	20SP	G15_042	FROM->TO	GRPRAR1-LNX3345.00 - HOLT.CO3 345.00 345KV CKT 1	720	720	0.03148	103.366	GEN 10648 1-G830_GEN 0.6900
FDNS	00NR	3	20SP	G15_042	FROM->TO	GRPRAR1-LNX3345.00 - HOLT.CO3 345.00 345KV CKT 1	720	720	0.03148	103.3642	GEN659192 6-LYNN
FDNS	00NR	3	20SP	G15_042	FROM->TO	GRPRAR1-LNX3345.00 - HOLT.CO3 345.00 345KV CKT 1	720	720	0.03148	103.3631	GEN659162 4-RED WLCK
FDNS	00NR	3	20SP	G15_042	FROM->TO	GRPRAR1-LNX3345.00 - HOLT.CO3 345.00 345KV CKT 1	720	720	0.03148	103.3631	GEN659163 5-BLACK WDCK
FDNS	00NR	3	20SP	G15_042	FROM->TO	GRPRAR1-LNX3345.00 - HOLT.CO3 345.00 345KV CKT 1	720	720	0.03148	103.3612	GEN659031 1-G12_014IS_4 0.6900
FDNS	00NR	3	20SP	G15_042	FROM->TO	GRPRAR1-LNX3345.00 - HOLT.CO3 345.00 345KV CKT 1	720	720	0.03009	103.333	HIGHLND 3 345.00 - OBRIEN 3 345.00 345KV CKT 1
FDNS	00NR	3	20SP	G15_042	FROM->TO	GRPRAR1-LNX3345.00 - HOLT.CO3 345.00 345KV CKT 1	720	720	0.03148	103.3283	GEN660016 1-B_H WIND 0.7000
FDNS	00NR	3	20SP	G15_042	FROM->TO	GRPRAR1-LNX3345.00 - HOLT.CO3 345.00 345KV CKT 1	720	720	0.03148	103.3279	GEN615015 1-GRE-SPRITWDG13.200
FDNS	00NR	3	20SP	G15_042	FROM->TO	GRPRAR1-LNX3345.00 - HOLT.CO3 345.00 345KV CKT 1	720	720	0.03148	103.2369	BISONMP4 230.00 - SQUARE BUTTE 230KV CKT 1
FDNS	00NR	3	20SP	G15_042	FROM->TO	GRPRAR1-LNX3345.00 - HOLT.CO3 345.00 345KV CKT 1	720	720	0.03159	103.229	MATHWSN7 345.00 - TATONGA7 345.00 345KV CKT 1
FDNS	00NR	3	20SP	G15_042	FROM->TO	GRPRAR1-LNX3345.00 - HOLT.CO3 345.00 345KV CKT 1	720	720	0.03141	103.2158	SULLEY BUTTE - SULLYBT-LNX3230.00 230KV CKT Z
FDNS	00NR	3	20SP	G15_042	FROM->TO	GRPRAR1-LNX3345.00 - HOLT.CO3 345.00 345KV CKT 1	720	720	0.03141	103.2153	SULLYBT-LNX3230.00 - WHITLOK 230KV CKT 1
FDNS	00NR	3	20SP	G15_042	FROM->TO	GRPRAR1-LNX3345.00 - HOLT.CO3 345.00 345KV CKT 1	720	720	0.03148	103.2088	GEN600067 9-HIGH BRIDGE
FDNS	00NR	3	25SP	G15_042	FROM->TO	GRPRAR1-LNX3345.00 - HOLT.CO3 345.00 345KV CKT 1	720	720	0.03136	103.1971	NELIGH - PETERSBRG.N7115.00 115KV CKT 1
FDNS	00NR	3	20SP	G15_042	FROM->TO	GRPRAR1-LNX3345.00 - HOLT.CO3 345.00 345KV CKT 1	720	720	0.03148	103.1861	GEN672305 5-BOUNDARY DAM GENERATOR 5
FDNS	00NR	3	20SP	G15_042	FROM->TO	GRPRAR1-LNX3345.00 - HOLT.CO3 345.00 345KV CKT 1	720	720	0.03148	103.186	GEN672303 3-BOUNDARY DAM GENERATOR 3
FDNS	00NR	3	20SP	G15_042	FROM->TO	GRPRAR1-LNX3345.00 - HOLT.CO3 345.00 345KV CKT 1	720	720	0.03148	103.186	GEN672304 4-BOUNDARY DAM GENERATOR 4
FDNS	00NR	3	20SP	G15_042	FROM->TO	GRPRAR1-LNX3345.00 - HOLT.CO3 345.00 345KV CKT 1	720	720	0.03141	103.1666	P12:230:UMZB:# 114 #: SB IN SD. SB-WK-GH
FDNS	00NR	3	20SP	G15_042	FROM->TO	GRPRAR1-LNX3345.00 - HOLT.CO3 345.00 345KV CKT 1	720	720	0.03141	103.1666	P12:230:UMZB:# 117 #: WK IN SD. SB-WK-GH
FDNS	00NR	3	20SP	G15_042	FROM->TO	GRPRAR1-LNX3345.00 - HOLT.CO3 345.00 345KV CKT 1	720	720	0.03148	103.1625	GEN659353 1-DEERCREK CTG18.000
FDNS	00NR	3	20SP	G15_042	FROM->TO	GRPRAR1-LNX3345.00 - HOLT.CO3 345.00 345KV CKT 1	720	720	0.03148	103.1616	GEN659354 1-DEERCREK STG18.000
FDNS	00NR	3	25SP	G15_042	FROM->TO	GRPRAR1-LNX3345.00 - HOLT.CO3 345.00 345KV CKT 1	720	720	0.03136	103.1505	ALBION - PETERSBURG 115KV CKT 1
FDNS	00NR	3	20SP	G15_042	FROM->TO	GRPRAR1-LNX3345.00 - HOLT.CO3 345.00 345KV CKT 1	720	720	0.03148	103.1342	GEN672392 1-NBECGT1G 18.000
FDNS	00NR	3	25SP	G15_042	FROM->TO	GRPRAR1-LNX3345.00 - HOLT.CO3 345.00 345KV CKT 1	720	720	0.03136	103.1295	PETERSBRG.N7115.00 - PETERSBURG 115KV CKT Z1
FDNS	00NR	3	25SP	G15_042	FROM->TO	GRPRAR1-LNX3345.00 - HOLT.CO3 345.00 345KV CKT 1	720	720	0.03136	103.1167	P12:115:NPPD:1168B:ALBION 7:PETERSBRG.N7:BTB
FDNS	00NR	3	20SP	G15_042	FROM->TO	GRPRAR1-LNX3345.00 - HOLT.CO3 345.00 345KV CKT 1	720	720	0.03141	103.1139	GLENHAM - WHITLOK 230KV CKT 1
FDNS	00NR	3	17SP	G15_042	FROM->TO	GRPRAR1-LNX3345.00 - HOLT.CO3 345.00 345KV CKT 1	720	720	0.03313	103.1052	GEN615001 1-COAL CREEK
FDNS	00NR	3	25SP	G15_042	FROM->TO	GRPRAR1-LNX3345.00 - HOLT.CO3 345.00 345KV CKT 1	720	720	0.03196	103.1042	FT THOMPSON - OAHE 230KV CKT 1
FDNS	00NR	3	25SP	G15_042	FROM->TO	GRPRAR1-LNX3345.00 - HOLT.CO3 345.00 345KV CKT 1	720	720	0.03196	103.1042	FT THOMPSON - OAHE 230KV CKT 1
FDNS	00NR	3	25SP	G15_042	FROM->TO	GRPRAR1-LNX3345.00 - HOLT.CO3 345.00 345KV CKT 1	720	720	0.03196	103.1042	FT THOMPSON - OAHE 230KV CKT 2
FDNS	00NR	3	25SP	G15_042	FROM->TO	GRPRAR1-LNX3345.00 - HOLT.CO3 345.00 345KV CKT 1	720	720	0.03196	103.1042	FT THOMPSON - OAHE 230KV CKT 2
FDNS	00NR	3	25SP	G15_042	FROM->TO	GRPRAR1-LNX3345.00 - HOLT.CO3 345.00 345KV CKT 1	720	720	0.03061	103.0979	COOPER - MOORE 345KV CKT 1
FDNS	00NR	3	25SP	G15_042	FROM->TO	GRPRAR1-LNX3345.00 - HOLT.CO3 345.00 345KV CKT 1	720	720	0.03197	103.0757	FT THOMPSON - OAHE 230KV CKT 3
FDNS	00NR	3	25SP	G15_042	FROM->TO	GRPRAR1-LNX3345.00 - HOLT.CO3 345.00 345KV CKT 1	720	720	0.03197	103.0757	FT THOMPSON - OAHE 230KV CKT 3
FDNS	00NR	3	25SP	G15_042	FROM->TO	GRPRAR1-LNX3345.00 - HOLT.CO3 345.00 345KV CKT 1	720	720	0.03197	103.0757	FT THOMPSON - OAHE 230KV CKT 4
FDNS	00NR	3	25SP	G15_042	FROM->TO	GRPRAR1-LNX3345.00 - HOLT.CO3 345.00 345KV CKT 1	720	720	0.03197	103.0757	FT THOMPSON - OAHE 230KV CKT 4
FDNS	00NR	3	25SP	G15_042	FROM->TO	GRPRAR1-LNX3345.00 - HOLT.CO3 345.00 345KV CKT 1	720	720	0.03305	103.0639	ANTELOPE 7115.00 - COUNTY LINE 115KV CKT 1
FDNS	00NR	3	25SP	G15_042	FROM->TO	GRPRAR1-LNX3345.00 - HOLT.CO3 345.00 345KV CKT 1	720	720	0.03205	103.0349	7MAYWOOD 345.00 - 7SPENCER 345.00 345KV CKT 1
FDNS	00NR	3	25SP	G15_042	FROM->TO	GRPRAR1-LNX3345.00 - HOLT.CO3 345.00 345KV CKT 1	720	720	0.03181	103.0291	P12:115:UMZZ:# 232 #: AB IN SD. ABERDEEN A TAP BETWEEN ELLENDALE AND ABERDEEN-SIEBRECHT.
FDNS	00NR	3	20SP	G15_042	FROM->TO	GRPRAR1-LNX3345.00 - HOLT.CO3 345.00 345KV CKT 1	720	720	0.03148	103.024	GEN681542 6-JP MADGETT
FDNS	00NR	3	25SP	G15_042	FROM->TO	GRPRAR1-LNX3345.00 - HOLT.CO3 345.00 345KV CKT 1	720	720	0.03176	103.0183	G14-021T 345.00 - MULLNCR7 345.00 345KV CKT 1
FDNS	00NR	3	25SP	G15_042	FROM->TO	GRPRAR1-LNX3345.00 - HOLT.CO3 345.00 345KV CKT 1	720	720	0.03173	103.0163	BISMARK - L3 HAWDON 230KV CKT 1
FDNS	00NR	3	25SP	G15_042	FROM->TO	GRPRAR1-LNX3345.00 - HOLT.CO3 345.00 345KV CKT 1	720	720	0.0318	103.0162	GEN672347 1-CORY COGEN GENERATOR 1 GT1
FDNS	00NR	3	25SP	G15_042	FROM->TO	GRPRAR1-LNX3345.00 - HOLT.CO3 345.00 345KV CKT 1	720	720	0.0318	103.0162	GEN672348 2-CORY COGEN GENERATOR 2 GT2
FDNS	00NR	3	25SP	G15_042	FROM->TO	GRPRAR1-LNX3345.00 - HOLT.CO3 345.00 345KV CKT 1	720	720	0.03176	103.0153	G15-005T 345.00 - MULLNCR7 345.00 345KV CKT 1
FDNS	00NR	3	20SP	G15_042	FROM->TO	GRPRAR1-LNX3345.00 - HOLT.CO3 345.00 345KV CKT 1	720	720	0.03148	103.0111	GEN662101 1-WESSINGTON190.5750
FDNS	00NR	3	25SP	G15_042	FROM->TO	GRPRAR1-LNX3345.00 - HOLT.CO3 345.00 345KV CKT 1	720	720	0.03187	103.0099	ANTELOP-LNX3345.00 - BRDLAND-LNX3345.00 345KV CKT 1
FDNS	00NR	3	25SP	G15_042	FROM->TO	GRPRAR1-LNX3345.00 - HOLT.CO3 345.00 345KV CKT 1	720	720	0.0318	103.0083	GEN300003 1-THOMAS HILL UNIT 3
FDNS	00NR	3	25SP	G15_042	FROM->TO	GRPRAR1-LNX3345.00 - HOLT.CO3 345.00 345KV CKT 1	720	720	0.03358	103.0031	ATCHSNT3 345.00 - BOONEVILLE 345KV CKT 1
FDNS	00NR	3	25SP	G15_042	FROM->TO	GRPRAR1-LNX3345.00 - HOLT.CO3 345.00 345KV CKT 1	720	720	0.03455	103.0026	AINSWORTH - AINSWORTH 115KV CKT 1
FDNS	00NR	3	25SP	G15_042	FROM->TO	GRPRAR1-LNX3345.00 - HOLT.CO3 345.00 345KV CKT 1	720	720	0.0318	102.9984	GEN659147 1-PIONEER 1G13.800
FDNS	00NR	3	25SP	G15_042	FROM->TO	GRPRAR1-LNX3345.00 - HOLT.CO3 345.00 345KV CKT 1	720	720	0.0318	102.9984	GEN659158 2-PIONEER G213.800
FDNS	00NR	3	25SP	G15_042	FROM->TO	GRPRAR1-LNX3345.00 - HOLT.CO3 345.00 345KV CKT 1	720	720	0.0318	102.9984	GEN659159 3-PIONEER G313.800
FDNS	00NR	3	25SP	G15_042	FROM->TO	GRPRAR1-LNX3345.00 - HOLT.CO3 345.00 345KV CKT 1	720	720	0.0318	102.9978	GEN672358 1-CHAPLN1W 0.6900
FDNS	00NR	3	25SP	G15_042	FROM->TO	GRPRAR1-LNX3345.00 - HOLT.CO3 345.00 345KV CKT 1	720	720	0.0318	102.9964	GEN659148 1-LONESMCRK 1G13.800
FDNS	00NR	3	25SP	G15_042	FROM->TO	GRPRAR1-LNX3345.00 - HOLT.CO3 345.00 345KV CKT 1	720	720	0.0318	102.9964	GEN659156 2-LONESMCRK 2G13.800
FDNS	00NR	3	25SP	G15_042	FROM->TO	GRPRAR1-LNX3345.00 - HOLT.CO3 345.00 345KV CKT 1	720	720	0.0318	102.9964	GEN659157 3-LONESMCRK 3G13.800
FDNS	00NR	3	20SP	G15_042	FROM->TO	GRPRAR1-LNX3345.00 - HOLT.CO3 345.00 345KV CKT 1	720	720	0.03148	102.9943	CENTER 230/22.0KV TRANSFORMER CKT 1
FDNS	00NR	3	25SP	G15_042	FROM->TO	GRPRAR1-LNX3345.00 - HOLT.CO3 345.00 345KV CKT 1	720	720	0.0318	102.9937	GEN659417 1X-BEPCPKFT 1GX13.800
FDNS	00NR	3	25SP	G15_042	FROM->TO	GRPRAR1-LNX3345.00 - HOLT.CO3 345.00 345KV CKT 1	720	720	0.0318	102.9937	GEN659418 2X-BEPCPKFT 2GX13.800
FDNS	00NR	3	25SP	G15_042	FROM->TO	GRPRAR1-LNX3345.00 - HOLT.CO3 345.00 345KV CKT 1	720	720	0.0318	102.9937	GEN659419 3X-BEPCPKFT 3GX13.800
FDNS	00NR	3	25SP	G15_042	FROM->TO	GRPRAR1-LNX3345.00 - HOLT.CO3 345.00 345KV CKT 1	720	720	0.03205	102.991	FALLOW 3 345.00 - GRIMES 345KV CKT 1
FDNS	00NR	3	25SP	G15_042	FROM->TO	GRPRAR1-LNX3345.00 - HOLT.CO3 345.00 345KV CKT 1	720	720	0.0318	102.9879	GEN657964 1-ASH2GEN9 0.5750
FDNS	00NR	3	20SP	G15_042	FROM->TO	GRPRAR1-LNX3345.00 - HOLT.CO3 345.00 345KV CKT 1	720	720	0.03292	102.9822	MISSION - WITTEN 115KV CKT 1
FDNS	00NR	3	17SP	G15_042	FROM->TO	GRPRAR1-LNX3345.00 - HOLT.CO3 345.00 345KV CKT 1	720	720	0.03313	102.9742	GEN615002 2-COAL CREEK
FDNS	00NR	3	25SP	G15_042	FROM->TO	GRPRAR1-LNX3345.00 - HOLT.CO3 345.00 345KV CKT 1	720	720	0.0318	102.9701	GEN672367 1-MERIDIAN GENERATOR 1 GT1
FDNS	00NR	3	25SP	G15_042	FROM->TO	GRPRAR1-LNX3345.00 - HOLT.CO3 345.00 345KV CKT 1	720	720	0.0318	102.9701	GEN672368 2-MERIDIAN GENERATOR 2 GT2
FDNS	00NR	3	25SP	G15_042	FROM->TO	GRPRAR1-LNX3345.00 - HOLT.CO3 345.00 345KV CKT 1	720	720	0.03176	102.9681	G15-005T 345.00 - SIBLEY 345KV CKT 1
FDNS	00NR	3	25SP	G15_042	FROM->TO	GRPRAR1-LNX3345.00 - HOLT.CO3 345.00 345KV CKT 1	720	720	0.0298	102.9677	COLUMEAST - NW68TH & HOLDREGE 345KV CKT 1
FDNS	00NR	3	25SP	G15_042	FROM->TO	GRPRAR1-LNX3345.00 - HOLT.CO3 345.00 345KV CKT 1	720	720	0.0298	102.9677	COLUMEAST - NW68TH & HOLDREGE 345KV CKT 1
FDNS	00NR	3	20SP	G15_042	FROM->TO	GRPRAR1-LNX3345.00 - HOLT.CO3 345.00 345KV CKT 1	720	720	0.03148	102.9665	GEN910006 1-G12_012IS_3 0.6900
FDNS	00NR	3	25SP	G15_042	FROM->TO	GRPRAR1-LNX3345.00 - HOLT.CO3 345.00 345KV CKT 1	720	720	0.0318	102.9574	GEN672350 1-NIPAWIN GENERATOR 1
FDNS	00NR	3	25SP	G15_042	FROM->TO	GRPRAR1-LNX3345.00 - HOLT.CO3 345.00 345KV CKT 1	720	720	0.0318	102.9574	GEN672351 2-NIPAWIN GENERATOR 2
FDNS	00NR	3	25SP	G15_042	FROM->TO	GRPRAR1-LNX3345.00 - HOLT.CO3 345.00 345KV CKT 1	720	720	0.0318	102.9574	GEN672352 3-NIPAWIN GENERATOR 3
FDNS	00NR	3	25SP	G15_042	FROM->TO	GRPRAR1-LNX3345.00 - HOLT.CO3 345.00 345KV CKT 1	720	720	0.0318	102.9499	GEN672349 3-CORY COGEN GENERATOR 3 ST
FDNS	00NR	3	25SP	G15_042	FROM->TO	GRPRAR1-LNX3345.00 - HOLT.CO3 345.00 345KV CKT 1	720	720	0.03281	102.9446	HOLCOMB - SETAB 345KV CKT 1
FDNS	00NR	3	25SP	G15_042	FROM->TO	GRPRAR1-LNX3345.00 - HOLT.CO3 345.00 345KV CKT 1	720	720	0.03281	102.9446	HOLCOMB - SETAB 345KV CKT 1
FDNS	00NR	3	25SP	G15_042	FROM->TO	GRPRAR1-LNX3345.00 - HOLT.CO3 345.00 345KV CKT 1	720	720	0.0318	102.9445	GEN600012 2-BLACK DOG GEN 2
FDNS	00NR	3	25SP	G15_042	FROM->TO	GRPRAR1-LNX3345.00 - HOLT.CO3 345.00 345KV CKT 1	720	720	0.0318	102.9428	GEN652548 5-FT RANDAL

SOLUTION	GROUP	SCENARIO	SEASON	SOURCE	DIRECTION	MONITORED ELEMENT	RATEA (MVA)	RATEB(MVA)	TDF	TC%LOADING (% MVA)	CONTINGENCY
FDNS	00NR	3	25SP	G15_042	FROM->TO	GRPRAR1-LNX3345.00 - HOLT.CO3 345.00 345KV CKT 1	720	720	0.0318	102.9428	GEN652549 7-FT RANDAL
FDNS	00NR	3	25SP	G15_042	FROM->TO	GRPRAR1-LNX3345.00 - HOLT.CO3 345.00 345KV CKT 1	720	720	0.0318	102.9425	GEN652546 1-FT RANDAL
FDNS	00NR	3	20SP	G15_042	FROM->TO	GRPRAR1-LNX3345.00 - HOLT.CO3 345.00 345KV CKT 1	720	720	0.03428	102.942	ANTELOPE 3345.00 (ANTELOPE T1) 345/115/13.8KV TRANSFORMER CKT 1
FDNS	00NR	3	25SP	G15_042	FROM->TO	GRPRAR1-LNX3345.00 - HOLT.CO3 345.00 345KV CKT 1	720	720	0.0318	102.9381	GEN652547 3-FT RANDAL
FDNS	00NR	3	25SP	G15_042	FROM->TO	GRPRAR1-LNX3345.00 - HOLT.CO3 345.00 345KV CKT 1	720	720	0.0318	102.9327	EMERY 161/18.0KV TRANSFORMER CKT 1
FDNS	00NR	3	25SP	G15_042	FROM->TO	GRPRAR1-LNX3345.00 - HOLT.CO3 345.00 345KV CKT 1	720	720	0.02962	102.9219	FT THOMPSON (FT2 KU1A) 345/230/13.8KV TRANSFORMER CKT 1
FDNS	00NR	3	25SP	G15_042	FROM->TO	GRPRAR1-LNX3345.00 - HOLT.CO3 345.00 345KV CKT 1	720	720	0.02961	102.9195	FT THOMPSON (FT2 KU1B) 345/230/13.8KV TRANSFORMER CKT 1
FDNSLock	00NR	3	25SP	G15_042	FROM->TO	GRPRAR1-LNX3345.00 - HOLT.CO3 345.00 345KV CKT 1	720	720	0.03164	102.9118	WATERTOWN (WT2 KU1A) 345/230/13.8KV TRANSFORMER CKT 1
FDNS	00NR	3	25SP	G15_042	FROM->TO	GRPRAR1-LNX3345.00 - HOLT.CO3 345.00 345KV CKT 1	720	720	0.0318	102.9065	GEN659290 1-EDGECOL
FDNS	00NR	3	25SP	G15_042	FROM->TO	GRPRAR1-LNX3345.00 - HOLT.CO3 345.00 345KV CKT 1	720	720	0.03211	102.8826	FINNEY SWITCHING STATION - WALKTAP7 345.00 345KV CKT 1
FDNS	00NR	3	25SP	G15_042	FROM->TO	GRPRAR1-LNX3345.00 - HOLT.CO3 345.00 345KV CKT 1	720	720	0.03211	102.8826	FINNEY SWITCHING STATION - WALKTAP7 345.00 345KV CKT 1
FDNS	00NR	3	25SP	G15_042	FROM->TO	GRPRAR1-LNX3345.00 - HOLT.CO3 345.00 345KV CKT 1	720	720	0.03207	102.8799	LARAMIE RIVER - STEGALL 345KV CKT 1
FDNS	00NR	3	25SP	G15_042	FROM->TO	GRPRAR1-LNX3345.00 - HOLT.CO3 345.00 345KV CKT 1	720	720	0.03293	102.8692	P12:115:NPPD:1163B:NELIGH 7:NORFK.N7:BTB
FDNS	00NR	3	25SP	G15_042	FROM->TO	GRPRAR1-LNX3345.00 - HOLT.CO3 345.00 345KV CKT 1	720	720	0.0318	102.868	GEN300007 1-NEW MADRID UNIT 2
FDNS	00NR	3	25SP	G15_042	FROM->TO	GRPRAR1-LNX3345.00 - HOLT.CO3 345.00 345KV CKT 1	720	720	0.0318	102.867	GEN672357 2-FUT-WL2X 13.800
FDNS	00NR	3	25SP	G15_042	FROM->TO	GRPRAR1-LNX3345.00 - HOLT.CO3 345.00 345KV CKT 1	720	720	0.0318	102.8632	GEN300006 1-NEW MADRID UNIT 1
FDNS	00NR	3	20SP	G15_042	FROM->TO	GRPRAR1-LNX3345.00 - HOLT.CO3 345.00 345KV CKT 1	720	720	0.03148	102.8593	CLAY BOSWELL 230/20.9KV TRANSFORMER CKT 1
FDNS	00NR	3	20SP	G15_042	FROM->TO	GRPRAR1-LNX3345.00 - HOLT.CO3 345.00 345KV CKT 1	720	720	0.03313	102.8567	AXTELL - SWEETWATER 345KV CKT 1
FDNS	00NR	3	25SP	G15_042	FROM->TO	GRPRAR1-LNX3345.00 - HOLT.CO3 345.00 345KV CKT 1	720	720	0.0318	102.8567	GEN672393 2-NBECST2G 13.800
FDNS	00NR	3	25SP	G15_042	FROM->TO	GRPRAR1-LNX3345.00 - HOLT.CO3 345.00 345KV CKT 1	720	720	0.02968	102.8556	COLUMEAST - SHELL CREEK 345KV CKT 1
FDNS	00NR	3	25SP	G15_042	FROM->TO	GRPRAR1-LNX3345.00 - HOLT.CO3 345.00 345KV CKT 1	720	720	0.0318	102.8526	GEN672390 2-FUT-SW2X 13.800
FDNS	00NR	3	25SP	G15_042	FROM->TO	GRPRAR1-LNX3345.00 - HOLT.CO3 345.00 345KV CKT 1	720	720	0.0318	102.8519	GEN620324 3-HOOT LAKE 3 GEN
FDNS	00NR	3	25SP	G15_042	FROM->TO	GRPRAR1-LNX3345.00 - HOLT.CO3 345.00 345KV CKT 1	720	720	0.0318	102.8519	GEN652410 3-FT PECK
FDNS	00NR	3	25SP	G15_042	FROM->TO	GRPRAR1-LNX3345.00 - HOLT.CO3 345.00 345KV CKT 1	720	720	0.0318	102.8507	GEN600050 1-FEP
FDNS	00NR	3	25SP	G15_042	FROM->TO	GRPRAR1-LNX3345.00 - HOLT.CO3 345.00 345KV CKT 1	720	720	0.03129	102.8448	HELENA - SHEAS LK3 345.00 345KV CKT 1
FDNS	00NR	3	25SP	G15_042	FROM->TO	GRPRAR1-LNX3345.00 - HOLT.CO3 345.00 345KV CKT 1	720	720	0.0318	102.8432	GEN660003 3-HURON WEST PARK
FDNS	00NR	3	25SP	G15_042	FROM->TO	GRPRAR1-LNX3345.00 - HOLT.CO3 345.00 345KV CKT 1	720	720	0.0318	102.8402	GEN600046 1-MECST
FDNS	00NR	3	20SP	G15_042	FROM->TO	GRPRAR1-LNX3345.00 - HOLT.CO3 345.00 345KV CKT 1	720	720	0.03296	102.8248	G15088_T 345.00 - MOORE 345KV CKT 1
FDNS	00NR	3	25SP	G15_042	FROM->TO	GRPRAR1-LNX3345.00 - HOLT.CO3 345.00 345KV CKT 1	720	720	0.0318	102.823	LADISH 115/13.2KV TRANSFORMER CKT 1
FDNS	00NR	3	25SP	G15_042	FROM->TO	GRPRAR1-LNX3345.00 - HOLT.CO3 345.00 345KV CKT 1	720	720	0.03227	102.819	Hitchland Interchange - WALKTAP7 345.00 345KV CKT 1
FDNS	00NR	3	25SP	G15_042	FROM->TO	GRPRAR1-LNX3345.00 - HOLT.CO3 345.00 345KV CKT 1	720	720	0.03227	102.819	Hitchland Interchange - WALKTAP7 345.00 345KV CKT 1
FDNS	00NR	3	25SP	G15_042	FROM->TO	GRPRAR1-LNX3345.00 - HOLT.CO3 345.00 345KV CKT 1	720	720	0.0318	102.8125	GEN660001 2-ABERDEEN SIEBRECHT
FDNS	00NR	3	25SP	G15_042	FROM->TO	GRPRAR1-LNX3345.00 - HOLT.CO3 345.00 345KV CKT 1	720	720	0.03227	102.8108	P12:345:SPS:J07.1.FINN.HITCH
FDNS	00NR	3	25SP	G15_042	FROM->TO	GRPRAR1-LNX3345.00 - HOLT.CO3 345.00 345KV CKT 1	720	720	0.0318	102.8095	GEN600047 1-MECCT1
FDNS	00NR	3	25SP	G15_042	FROM->TO	GRPRAR1-LNX3345.00 - HOLT.CO3 345.00 345KV CKT 1	720	720	0.0318	102.7923	GEN652345 W-G07_023IS_2 0.6900
FDNS	00NR	3	25SP	G15_042	FROM->TO	GRPRAR1-LNX3345.00 - HOLT.CO3 345.00 345KV CKT 1	720	720	0.0318	102.7879	GEN652414 4-FT PECK
FDNS	00NR	3	25SP	G15_042	FROM->TO	GRPRAR1-LNX3345.00 - HOLT.CO3 345.00 345KV CKT 1	720	720	0.0318	102.7879	GEN652415 5-FT PECK
FDNS	00NR	3	25SP	G15_042	FROM->TO	GRPRAR1-LNX3345.00 - HOLT.CO3 345.00 345KV CKT 1	720	720	0.03232	102.7847	THEDFRD3 345.00 (THEDFORDT2) 345/115/13.8KV TRANSFORMER CKT 1
FDNS	00NR	3	25SP	G15_042	FROM->TO	GRPRAR1-LNX3345.00 - HOLT.CO3 345.00 345KV CKT 1	720	720	0.03134	102.7748	SHEAS LK3 345.00 - WILMARTH 345KV CKT 1
FDNS	00NR	3	25SP	G15_042	FROM->TO	GRPRAR1-LNX3345.00 - HOLT.CO3 345.00 345KV CKT 1	720	720	0.0318	102.7652	GEN600063 1-COLVILLE GEN 1
FDNS	00NR	3	25SP	G15_042	FROM->TO	GRPRAR1-LNX3345.00 - HOLT.CO3 345.00 345KV CKT 1	720	720	0.0318	102.7652	GEN600064 2-COLVILLE GEN 2
FDNS	00NR	3	25SP	G15_042	FROM->TO	GRPRAR1-LNX3345.00 - HOLT.CO3 345.00 345KV CKT 1	720	720	0.03187	102.7643	BRDLAND-LNX3345.00 - HURON 345KV CKT Z
FDNS	00NR	3	25SP	G15_042	FROM->TO	GRPRAR1-LNX3345.00 - HOLT.CO3 345.00 345KV CKT 1	720	720	0.03187	102.7637	BROADLAND - HURON 230KV CKT 1
FDNS	00NR	3	25SP	G15_042	FROM->TO	GRPRAR1-LNX3345.00 - HOLT.CO3 345.00 345KV CKT 1	720	720	0.0318	102.7631	GEN590010 1-ERCOT EQUIVALENCE
FDNS	00NR	3	25SP	G15_042	FROM->TO	GRPRAR1-LNX3345.00 - HOLT.CO3 345.00 345KV CKT 1	720	720	0.03187	102.762	P12:345:UMZB:# 102 #: AVS BD IN ND. AVS BRD LR
FDNS	00NR	3	25SP	G15_042	FROM->TO	GRPRAR1-LNX3345.00 - HOLT.CO3 345.00 345KV CKT 1	720	720	0.03187	102.7619	HURON (BD KU2A) 345/230/13.8KV TRANSFORMER CKT 1
FDNS	00NR	3	25SP	G15_042	FROM->TO	GRPRAR1-LNX3345.00 - HOLT.CO3 345.00 345KV CKT 1	720	720	0.03187	102.7619	HURON (BD KU2A) 345/230/13.8KV TRANSFORMER CKT 1
FDNS	00NR	3	25SP	G15_042	FROM->TO	GRPRAR1-LNX3345.00 - HOLT.CO3 345.00 345KV CKT 1	720	720	0.0318	102.7609	GEN 11104 1-J262_GEN 0.6000
FDNS	00NR	3	25SP	G15_042	FROM->TO	GRPRAR1-LNX3345.00 - HOLT.CO3 345.00 345KV CKT 1	720	720	0.0318	102.7609	GEN 11108 1-J263_GEN 0.6000
FDNS	00NR	3	25SP	G15_042	FROM->TO	GRPRAR1-LNX3345.00 - HOLT.CO3 345.00 345KV CKT 1	720	720	0.03187	102.7595	P12:345:UMZB:# 103 #: BD IN SD. LOSS OF LINE
FDNS	00NR	3	25SP	G15_042	FROM->TO	GRPRAR1-LNX3345.00 - HOLT.CO3 345.00 345KV CKT 1	720	720	0.03118	102.7547	FIELD NORTH - LKFLDXL3 345KV CKT 1
FDNS	00NR	3	25SP	G15_042	FROM->TO	GRPRAR1-LNX3345.00 - HOLT.CO3 345.00 345KV CKT 1	720	720	0.03118	102.7539	FIELD SOUTH - WILMARTH 345KV CKT 1
FDNS	00NR	3	20SP	G15_042	FROM->TO	GRPRAR1-LNX3345.00 - HOLT.CO3 345.00 345KV CKT 1	720	720	0.03148	102.7482	GEN659289 1-DAYCNTYWND W0.6900
FDNS	00NR	3	25SP	G15_042	FROM->TO	GRPRAR1-LNX3345.00 - HOLT.CO3 345.00 345KV CKT 1	720	720	0.03118	102.7467	FIELD NORTH - FIELD SOUTH 345KV CKT 1
FDNS	00NR	3	25SP	G15_042	FROM->TO	GRPRAR1-LNX3345.00 - HOLT.CO3 345.00 345KV CKT 1	720	720	0.0318	102.7443	GEN600043 7-BLUE LAKE5
FDNS	00NR	3	25SP	G15_042	FROM->TO	GRPRAR1-LNX3345.00 - HOLT.CO3 345.00 345KV CKT 1	720	720	0.0318	102.7443	GEN600044 8-BLUE LAKE6
FDNS	00NR	3	25SP	G15_042	FROM->TO	GRPRAR1-LNX3345.00 - HOLT.CO3 345.00 345KV CKT 1	720	720	0.0318	102.7405	GEN590011 2-ERCOT EQUIVALENCE
FDNS	00NR	3	25SP	G15_042	FROM->TO	GRPRAR1-LNX3345.00 - HOLT.CO3 345.00 345KV CKT 1	720	720	0.0318	102.739	G830_SUB 115.00 - GRE-MCHENRY7115.00 115KV CKT 1
FDNS	00NR	3	25SP	G15_042	FROM->TO	GRPRAR1-LNX3345.00 - HOLT.CO3 345.00 345KV CKT 1	720	720	0.0318	102.7384	G830_SUB 115.00 115/34.5KV TRANSFORMER CKT 1
FDNS	00NR	3	25SP	G15_042	FROM->TO	GRPRAR1-LNX3345.00 - HOLT.CO3 345.00 345KV CKT 1	720	720	0.0318	102.7351	LANSING WEST 161/22.0KV TRANSFORMER CKT 1
FDNS	00NR	3	25SP	G15_042	FROM->TO	GRPRAR1-LNX3345.00 - HOLT.CO3 345.00 345KV CKT 1	720	720	0.0318	102.7223	GEN681522 3-GENOA 3
FDNS	00NR	3	25SP	G15_042	FROM->TO	GRPRAR1-LNX3345.00 - HOLT.CO3 345.00 345KV CKT 1	720	720	0.0318	102.7158	GEN600014 4-BLACK DOG GEN 4
FDNS	00NR	3	25SP	G15_042	FROM->TO	GRPRAR1-LNX3345.00 - HOLT.CO3 345.00 345KV CKT 1	720	720	0.0318	102.713	GEN600065 7-HIGH BRIDGE
FDNS	00NR	3	25SP	G15_042	FROM->TO	GRPRAR1-LNX3345.00 - HOLT.CO3 345.00 345KV CKT 1	720	720	0.0318	102.713	GEN600066 8-HIGH BRIDGE
FDNS	00NR	3	20SP	G15_042	FROM->TO	GRPRAR1-LNX3345.00 - HOLT.CO3 345.00 345KV CKT 1	720	720	0.03148	102.711	GEN563312 1-G15097_3 0.6900
FDNS	00NR	3	25SP	G15_042	FROM->TO	GRPRAR1-LNX3345.00 - HOLT.CO3 345.00 345KV CKT 1	720	720	0.0318	102.7102	GEN600011 5-BLACK DOG GEN 1
FDNS	00NR	3	25SP	G15_042	FROM->TO	GRPRAR1-LNX3345.00 - HOLT.CO3 345.00 345KV CKT 1	720	720	0.0318	102.7003	GEN600071 10-RIVER SIDE
FDNS	00NR	3	25SP	G15_042	FROM->TO	GRPRAR1-LNX3345.00 - HOLT.CO3 345.00 345KV CKT 1	720	720	0.0318	102.7001	GEN600070 9-RIVER SIDE
FDNS	00NR	3	25SP	G15_042	FROM->TO	GRPRAR1-LNX3345.00 - HOLT.CO3 345.00 345KV CKT 1	720	720	0.0318	102.6884	GEN600007 7-RIVERSIDE GEN 7
FDNS	00NR	3	20SP	G15_042	FROM->TO	GRPRAR1-LNX3345.00 - HOLT.CO3 345.00 345KV CKT 1	720	720	0.03148	102.6758	GEN659018 1-G14_003IS_3 0.6900
FDNS	00NR	3	25SP	G15_042	FROM->TO	GRPRAR1-LNX3345.00 - HOLT.CO3 345.00 345KV CKT 1	720	720	0.0318	102.6725	GEN600045 4-ANSON
FDNS	00NR	3	25SP	G15_042	FROM->TO	GRPRAR1-LNX3345.00 - HOLT.CO3 345.00 345KV CKT 1	720	720	0.0318	102.6713	GEN600017 C-LS POWER CT
FDNS	00NR	3	20SP	G15_042	FROM->TO	GRPRAR1-LNX3345.00 - HOLT.CO3 345.00 345KV CKT 1	720	720	0.03148	102.6654	GEN652906 1-G09_006IS_3 0.6900
FDNS	00NR	3	25SP	G15_042	FROM->TO	GRPRAR1-LNX3345.00 - HOLT.CO3 345.00 345KV CKT 1	720	720	0.0318	102.6412	GEN659273 2-GROTON SYNC COND
FDNS	00NR	3	25SP	G15_042	FROM->TO	GRPRAR1-LNX3345.00 - HOLT.CO3 345.00 345KV CKT 1	720	720	0.0318	102.6412	GEN659294 1-WILTONCOL9
FDNS	00NR	3	25SP	G15_042	FROM->TO	GRPRAR1-LNX3345.00 - HOLT.CO3 345.00 345KV CKT 1	720	720	0.03173	102.6333	OAHE - SULLEY BUTTE 230KV CKT 1
FDNS	00NR	3	20SP	G15_042	FROM->TO	GRPRAR1-LNX3345.00 - HOLT.CO3 345.00 345KV CKT 1	720	720	0.03148	102.6292	GEN652543 3-BIG BEND
FDNS	00NR	3	25SP	G15_042	FROM->TO	GRPRAR1-LNX3345.00 - HOLT.CO3 345.00 345KV CKT 1	720	720	0.03187	102.618	ANTELOP-LNX3345.00 - ANTELOPE VALLEY 345KV CKT Z
FDNS	00NR	3	25SP	G15_042	FROM->TO	GRPRAR1-LNX3345.00 - HOLT.CO3 345.00 345KV CKT 1	720	720	0.03255	102.6138	AXTELL - POST ROCK 345KV CKT 1

SOLUTION	GROUP	SCENARIO	SEASON	SOURCE	DIRECTION	MONITORED ELEMENT	RATEA (MVA)	RATEB(MVA)	TDF	TC%LOADING (% MVA)	CONTINGENCY
FDNS	00NR	3	25SP	G15_042	FROM->TO	GRPRAR1-LNX3345.00 - HOLT.CO3 345.00 345KV CKT 1	720	720	0.0318	102.6	GEN615052 1-CAMBRIDGE GENERATING STATION
FDNS	00NR	3	25SP	G15_042	FROM->TO	GRPRAR1-LNX3345.00 - HOLT.CO3 345.00 345KV CKT 1	720	720	0.0318	102.5811	GEN659031 1-G12_014IS_4 0.6900
FDNS	00NR	3	20SP	G15_042	FROM->TO	GRPRAR1-LNX3345.00 - HOLT.CO3 345.00 345KV CKT 1	720	720	0.03148	102.5671	COYOTE 345/24.0KV TRANSFORMER CKT 1
FDNS	00NR	3	25SP	G15_042	FROM->TO	GRPRAR1-LNX3345.00 - HOLT.CO3 345.00 345KV CKT 1	720	720	0.0318	102.5642	GEN 10648 1-G830_GEN 0.6900
FDNS	00NR	3	25SP	G15_042	FROM->TO	GRPRAR1-LNX3345.00 - HOLT.CO3 345.00 345KV CKT 1	720	720	0.0318	102.5599	GEN659192 6-LYNN
FDNS	00NR	3	25SP	G15_042	FROM->TO	GRPRAR1-LNX3345.00 - HOLT.CO3 345.00 345KV CKT 1	720	720	0.0318	102.5584	GEN659162 4-RED WLCK
FDNS	00NR	3	25SP	G15_042	FROM->TO	GRPRAR1-LNX3345.00 - HOLT.CO3 345.00 345KV CKT 1	720	720	0.0318	102.5584	GEN659163 5-BLACK WDCK
FDNS	00NR	3	25SP	G15_042	FROM->TO	GRPRAR1-LNX3345.00 - HOLT.CO3 345.00 345KV CKT 1	720	720	0.0318	102.5549	GEN660016 1-B_H WIND 0.7000
FDNS	00NR	3	20SP	G15_042	FROM->TO	GRPRAR1-LNX3345.00 - HOLT.CO3 345.00 345KV CKT 1	720	720	0.03148	102.547	GEN659194 1-NDPRAIRWND1W0.6900
FDNS	00NR	3	20SP	G15_042	FROM->TO	GRPRAR1-LNX3345.00 - HOLT.CO3 345.00 345KV CKT 1	720	720	0.03148	102.5445	GEN659010 4-G07_027IS_2 0.6900
FDNS	00NR	3	25SP	G15_042	FROM->TO	GRPRAR1-LNX3345.00 - HOLT.CO3 345.00 345KV CKT 1	720	720	0.0318	102.5322	GEN615021 1-GRE-ER 14G 16.000
FDNS	00NR	3	20SP	G15_042	FROM->TO	GRPRAR1-LNX3345.00 - HOLT.CO3 345.00 345KV CKT 1	720	720	0.03148	102.5306	GEN652460 4-GARRISON
FDNS	00NR	3	20SP	G15_042	FROM->TO	GRPRAR1-LNX3345.00 - HOLT.CO3 345.00 345KV CKT 1	720	720	0.03148	102.5305	GEN652461 5-GARRISON
FDNS	00NR	3	25SP	G15_042	FROM->TO	GRPRAR1-LNX3345.00 - HOLT.CO3 345.00 345KV CKT 1	720	720	0.0318	102.4982	GEN615015 1-GRE-SPRITWDG13.200
FDNS	00NR	3	20SP	G15_042	FROM->TO	GRPRAR1-LNX3345.00 - HOLT.CO3 345.00 345KV CKT 1	720	720	0.03141	102.4947	GLENHAM - L3 HAWDON 230KV CKT 1
FDNS	00NR	3	20SP	G15_042	FROM->TO	GRPRAR1-LNX3345.00 - HOLT.CO3 345.00 345KV CKT 1	720	720	0.03148	102.4909	GEN652559 1-OAHE
FDNS	00NR	3	20SP	G15_042	FROM->TO	GRPRAR1-LNX3345.00 - HOLT.CO3 345.00 345KV CKT 1	720	720	0.03148	102.4774	GEN652907 1-G09_007IS_3 0.6900
FDNS	00NR	3	20SP	G15_042	FROM->TO	GRPRAR1-LNX3345.00 - HOLT.CO3 345.00 345KV CKT 1	720	720	0.03148	102.4731	GEN652459 3-GARRISON
FDNS	00NR	3	20SP	G15_042	FROM->TO	GRPRAR1-LNX3345.00 - HOLT.CO3 345.00 345KV CKT 1	720	720	0.03148	102.473	GEN652457 1-GARRISON
FDNS	00NR	3	20SP	G15_042	FROM->TO	GRPRAR1-LNX3345.00 - HOLT.CO3 345.00 345KV CKT 1	720	720	0.03148	102.473	GEN652458 2-GARRISON
FDNS	00NR	3	25SP	G15_042	FROM->TO	GRPRAR1-LNX3345.00 - HOLT.CO3 345.00 345KV CKT 1	720	720	0.0318	102.4688	GEN657705 X-DRAYTON
FDNS	00NR	3	25SP	G15_042	FROM->TO	GRPRAR1-LNX3345.00 - HOLT.CO3 345.00 345KV CKT 1	720	720	0.03173	102.4656	SULLEY BUTTE - SULLYBT-LNX3230.00 230KV CKT Z
FDNS	00NR	3	25SP	G15_042	FROM->TO	GRPRAR1-LNX3345.00 - HOLT.CO3 345.00 345KV CKT 1	720	720	0.03173	102.4655	SULLYBT-LNX3230.00 - WHITLOK 230KV CKT 1
FDNS	00NR	3	20SP	G15_042	FROM->TO	GRPRAR1-LNX3345.00 - HOLT.CO3 345.00 345KV CKT 1	720	720	0.03148	102.446	GEN563342 1-G15098_3 0.6900
FDNS	00NR	3	25SP	G15_042	FROM->TO	GRPRAR1-LNX3345.00 - HOLT.CO3 345.00 345KV CKT 1	720	720	0.0318	102.4286	BISONMP4 230.00 - SQUARE BUTTE 230KV CKT 1
FDNS	00NR	3	20SP	G15_042	FROM->TO	GRPRAR1-LNX3345.00 - HOLT.CO3 345.00 345KV CKT 1	720	720	0.03148	102.4173	GEN659403 1-NDSUNFLWR W0.6900
FDNS	00NR	3	25SP	G15_042	FROM->TO	GRPRAR1-LNX3345.00 - HOLT.CO3 345.00 345KV CKT 1	720	720	0.03173	102.4098	P12:230:UMZB:# 114 #: SB IN SD. SB-WK-GH
FDNS	00NR	3	25SP	G15_042	FROM->TO	GRPRAR1-LNX3345.00 - HOLT.CO3 345.00 345KV CKT 1	720	720	0.03173	102.4098	P12:230:UMZB:# 117 #: WK IN SD. SB-WK-GH
FDNS	00NR	3	20SP	G15_042	FROM->TO	GRPRAR1-LNX3345.00 - HOLT.CO3 345.00 345KV CKT 1	720	720	0.03148	102.4077	GEN652542 1-BIG BEND
FDNS	00NR	3	25SP	G15_042	FROM->TO	GRPRAR1-LNX3345.00 - HOLT.CO3 345.00 345KV CKT 1	720	720	0.0318	102.3785	GEN659353 1-DEERCREK CTG18.000
FDNS	00NR	3	25SP	G15_042	FROM->TO	GRPRAR1-LNX3345.00 - HOLT.CO3 345.00 345KV CKT 1	720	720	0.0318	102.3784	GEN600067 9-HIGH BRIDGE
FDNS	00NR	3	25SP	G15_042	FROM->TO	GRPRAR1-LNX3345.00 - HOLT.CO3 345.00 345KV CKT 1	720	720	0.0318	102.3774	GEN659354 1-DEERCREK STG18.000
FDNS	00NR	3	25SP	G15_042	FROM->TO	GRPRAR1-LNX3345.00 - HOLT.CO3 345.00 345KV CKT 1	720	720	0.0318	102.3586	GEN672303 3-BOUNDARY DAM GENERATOR 3
FDNS	00NR	3	25SP	G15_042	FROM->TO	GRPRAR1-LNX3345.00 - HOLT.CO3 345.00 345KV CKT 1	720	720	0.0318	102.3586	GEN672304 4-BOUNDARY DAM GENERATOR 4
FDNS	00NR	3	25SP	G15_042	FROM->TO	GRPRAR1-LNX3345.00 - HOLT.CO3 345.00 345KV CKT 1	720	720	0.0318	102.3586	GEN672305 5-BOUNDARY DAM GENERATOR 5
FDNS	00NR	3	25SP	G15_042	FROM->TO	GRPRAR1-LNX3345.00 - HOLT.CO3 345.00 345KV CKT 1	720	720	0.03173	102.3581	GLENHAM - WHITLOK 230KV CKT 1
FDNS	00NR	3	25SP	G15_042	FROM->TO	GRPRAR1-LNX3345.00 - HOLT.CO3 345.00 345KV CKT 1	720	720	0.03337	102.342	G15061_T 345.00 - SETAB 345KV CKT 1
FDNS	00NR	3	20SP	G15_042	FROM->TO	GRPRAR1-LNX3345.00 - HOLT.CO3 345.00 345KV CKT 1	720	720	0.0336	102.3361	MCCOOL - MOORE 345KV CKT 1
FDNS	00NR	3	25SP	G15_042	FROM->TO	GRPRAR1-LNX3345.00 - HOLT.CO3 345.00 345KV CKT 1	720	720	0.03331	102.3351	GERALD GENTLEMAN STATION - RED WILLOW 345KV CKT 1
FDNS	00NR	3	25SP	G15_042	FROM->TO	GRPRAR1-LNX3345.00 - HOLT.CO3 345.00 345KV CKT 1	720	720	0.0318	102.3277	GEN672356 1-FUT-WL1X 18.000
FDNS	00NR	3	20SP	G15_042	FROM->TO	GRPRAR1-LNX3345.00 - HOLT.CO3 345.00 345KV CKT 1	720	720	0.03148	102.3231	STANTON 230/18.0KV TRANSFORMER CKT 1
FDNS	00NR	3	25SP	G15_042	FROM->TO	GRPRAR1-LNX3345.00 - HOLT.CO3 345.00 345KV CKT 1	720	720	0.0318	102.2967	GEN672389 1-FUT-SW1X 18.000
FDNS	00NR	3	25SP	G15_042	FROM->TO	GRPRAR1-LNX3345.00 - HOLT.CO3 345.00 345KV CKT 1	720	720	0.0318	102.2879	GEN672392 1-NBECGT1G 18.000
FDNS	00NR	3	25SP	G15_042	FROM->TO	GRPRAR1-LNX3345.00 - HOLT.CO3 345.00 345KV CKT 1	720	720	0.03322	102.2727	MISSION - WITTEN 115KV CKT 1
FDNS	00NR	3	20SP	G15_042	FROM->TO	GRPRAR1-LNX3345.00 - HOLT.CO3 345.00 345KV CKT 1	720	720	0.03148	102.2649	SQUARE BUTTE - YNG2 4 230.00 230KV CKT 1
FDNS	00NR	3	20SP	G15_042	FROM->TO	GRPRAR1-LNX3345.00 - HOLT.CO3 345.00 345KV CKT 1	720	720	0.03148	102.2644	YNG2 4 230.00 230/20.0KV TRANSFORMER CKT 1
FDNS	00NR	3	25SP	G15_042	FROM->TO	GRPRAR1-LNX3345.00 - HOLT.CO3 345.00 345KV CKT 1	720	720	0.03331	102.2433	G15088_T 345.00 - MOORE 345KV CKT 1
FDNS	00NR	3	25SP	G15_042	FROM->TO	GRPRAR1-LNX3345.00 - HOLT.CO3 345.00 345KV CKT 1	720	720	0.03462	102.2398	MINGO - RED WILLOW 345KV CKT 1
FDNS	00NR	3	25SP	G15_042	FROM->TO	GRPRAR1-LNX3345.00 - HOLT.CO3 345.00 345KV CKT 1	720	720	0.03462	102.2398	MINGO - RED WILLOW 345KV CKT 1
FDNS	00NR	3	25SP	G15_042	FROM->TO	GRPRAR1-LNX3345.00 - HOLT.CO3 345.00 345KV CKT 1	720	720	0.0318	102.2274	GEN662101 1-WESSINGTON190.5750
FDNS	00NR	3	25SP	G15_042	FROM->TO	GRPRAR1-LNX3345.00 - HOLT.CO3 345.00 345KV CKT 1	720	720	0.0318	102.1885	GEN681542 6-JP MADGETT
FDNS	00NR	3	25SP	G15_042	FROM->TO	GRPRAR1-LNX3345.00 - HOLT.CO3 345.00 345KV CKT 1	720	720	0.0318	102.1658	GEN910006 1-G12_012IS_3 0.6900
FDNS	00NR	3	25SP	G15_042	FROM->TO	GRPRAR1-LNX3345.00 - HOLT.CO3 345.00 345KV CKT 1	720	720	0.0318	102.1391	CENTER 230/22.0KV TRANSFORMER CKT 1
FDNS	00NR	3	20SP	G15_042	FROM->TO	GRPRAR1-LNX3345.00 - HOLT.CO3 345.00 345KV CKT 1	720	720	0.03148	102.0373	GEN659411 1-CAMPBLCNTY W0.6900
FDNS	00NR	3	25SP	G15_042	FROM->TO	GRPRAR1-LNX3345.00 - HOLT.CO3 345.00 345KV CKT 1	720	720	0.0346	102.0297	ANTELOPE 3345.00 (ANTELOPE T1) 345/115/13.8KV TRANSFORMER CKT 1
FDNS	00NR	3	25SP	G15_042	FROM->TO	GRPRAR1-LNX3345.00 - HOLT.CO3 345.00 345KV CKT 1	720	720	0.0318	101.9666	GEN659289 1-DAYCNTYWND W0.6900
FDNS	00NR	3	20SP	G15_042	FROM->TO	GRPRAR1-LNX3345.00 - HOLT.CO3 345.00 345KV CKT 1	720	720	0.03148	101.9635	GEN600004 2-PRAIRIE ISLAND G2
FDNS	00NR	3	20SP	G15_042	FROM->TO	GRPRAR1-LNX3345.00 - HOLT.CO3 345.00 345KV CKT 1	720	720	0.03148	101.9597	GEN600003 1-PRAIRIE ISLAND G1
FDNS	00NR	3	25SP	G15_042	FROM->TO	GRPRAR1-LNX3345.00 - HOLT.CO3 345.00 345KV CKT 1	720	720	0.03341	101.9503	AXTELL - SWEETWATER 345KV CKT 1
FDNS	00NR	3	25SP	G15_042	FROM->TO	GRPRAR1-LNX3345.00 - HOLT.CO3 345.00 345KV CKT 1	720	720	0.0318	101.93	GEN563312 1-G15097_3 0.6900
FDNS	00NR	3	20SP	G15_042	FROM->TO	GRPRAR1-LNX3345.00 - HOLT.CO3 345.00 345KV CKT 1	720	720	0.03148	101.9082	GEN672321 1-SHAND GENERATOR 1
FDNS	00NR	3	25SP	G15_042	FROM->TO	GRPRAR1-LNX3345.00 - HOLT.CO3 345.00 345KV CKT 1	720	720	0.0341	101.896	MCCOOL - MOORE 345KV CKT 1
FDNS	00NR	3	25SP	G15_042	FROM->TO	GRPRAR1-LNX3345.00 - HOLT.CO3 345.00 345KV CKT 1	720	720	0.0318	101.8782	GEN659018 1-G14_003IS_3 0.6900
FDNS	00NR	3	25SP	G15_042	FROM->TO	GRPRAR1-LNX3345.00 - HOLT.CO3 345.00 345KV CKT 1	720	720	0.0318	101.8713	GEN652906 1-G09_006IS_3 0.6900
FDNS	00NR	3	20SP	G15_042	FROM->TO	GRPRAR1-LNX3345.00 - HOLT.CO3 345.00 345KV CKT 1	720	720	0.03148	101.8477	GEN672310 1-POPLAR RIVER GENERATOR 1
FDNS	00NR	3	20SP	G15_042	FROM->TO	GRPRAR1-LNX3345.00 - HOLT.CO3 345.00 345KV CKT 1	720	720	0.03148	101.8476	GEN672311 2-POPLAR RIVER GENERATOR 2
FDNS	00NR	3	17SP	G15_042	FROM->TO	GRPRAR1-LNX3345.00 - HOLT.CO3 345.00 345KV CKT 1	720	720	0.03311	101.8428	FTTHOM1-LNX3345.00 - LELAND2-LNX3345.00 345KV CKT 1
FDNS	00NR	3	20SP	G15_042	FROM->TO	GRPRAR1-LNX3345.00 - HOLT.CO3 345.00 345KV CKT 1	720	720	0.03148	101.8297	GEN672306 6-BOUNDARY DAM GENERATOR 6
FDNS	00NR	3	20SP	G15_042	FROM->TO	GRPRAR1-LNX3345.00 - HOLT.CO3 345.00 345KV CKT 1	720	720	0.03148	101.8116	GEN659296 2-SDPRAIRWND1W0.6900
FDNS	00NR	3	20SP	G15_042	FROM->TO	GRPRAR1-LNX3345.00 - HOLT.CO3 345.00 345KV CKT 1	720	720	0.03148	101.7944	RCDC EAST 4230.00 - RED CEDAR DC 230KV CKT 1
FDNS	00NR	3	20SP	G15_042	FROM->TO	GRPRAR1-LNX3345.00 - HOLT.CO3 345.00 345KV CKT 1	720	720	0.03148	101.7864	P12:230:UMZB:# 112 #: NU IN SD. NU-RCDC & DRY CREEK XFMR
FDNS	00NR	3	25SP	G15_042	FROM->TO	GRPRAR1-LNX3345.00 - HOLT.CO3 345.00 345KV CKT 1	720	720	0.0318	101.7555	GEN659010 4-G07_027IS_2 0.6900
FDNS	00NR	3	25SP	G15_042	FROM->TO	GRPRAR1-LNX3345.00 - HOLT.CO3 345.00 345KV CKT 1	720	720	0.0318	101.7502	GEN659194 1-NDPRAIRWND1W0.6900
FDNS	00NR	3	25SP	G15_042	FROM->TO	GRPRAR1-LNX3345.00 - HOLT.CO3 345.00 345KV CKT 1	720	720	0.0318	101.7385	GEN652460 4-GARRISON
FDNS	00NR	3	25SP	G15_042	FROM->TO	GRPRAR1-LNX3345.00 - HOLT.CO3 345.00 345KV CKT 1	720	720	0.0318	101.7381	GEN652461 5-GARRISON
FDNS	00NR	3	25SP	G15_042	FROM->TO	GRPRAR1-LNX3345.00 - HOLT.CO3 345.00 345KV CKT 1	720	720	0.03173	101.7102	GLENHAM - L3 HAWDON 230KV CKT 1
FDNS	00NR	3	20SP	G15_042	FROM->TO	GRPRAR1-LNX3345.00 - HOLT.CO3 345.00 345KV CKT 1	720	720	0.03148	101.6972	GEN615010 1-STANTON4
FDNS	00NR	3	25SP	G15_042	FROM->TO	GRPRAR1-LNX3345.00 - HOLT.CO3 345.00 345KV CKT 1	720	720	0.0318	101.6837	GEN652907 1-G09_007IS_3 0.6900
FDNS	00NR	3	25SP	G15_042	FROM->TO	GRPRAR1-LNX3345.00 - HOLT.CO3 345.00 345KV CKT 1	720	720	0.0318	101.6817	GEN652458 2-GARRISON

SOLUTION	GROUP	SCENARIO	SEASON	SOURCE	DIRECTION	MONITORED ELEMENT	RATEA (MVA)	RATEB(MVA)	TDF	TC%LOADING (% MVA)	CONTINGENCY
FDNS	00NR	3	25SP	G15_042	FROM->TO	GRPRAR1-LNX3345.00 - HOLT.CO3 345.00 345KV CKT 1	720	720	0.0318	101.6816	GEN652457 1-GARRISON
FDNS	00NR	3	25SP	G15_042	FROM->TO	GRPRAR1-LNX3345.00 - HOLT.CO3 345.00 345KV CKT 1	720	720	0.0318	101.6816	GEN652459 3-GARRISON
FDNS	00NR	3	17SP	G15_042	FROM->TO	GRPRAR1-LNX3345.00 - HOLT.CO3 345.00 345KV CKT 1	720	720	0.03311	101.6789	P12:345:UMZB:# 108 #: LOS FT IN ND. LOS FT
FDNS	00NR	3	17SP	G15_042	FROM->TO	GRPRAR1-LNX3345.00 - HOLT.CO3 345.00 345KV CKT 1	720	720	0.03311	101.6699	FT THOMPSON - FTTHOM1-LNX3345.00 345KV CKT Z
FDNS	00NR	3	25SP	G15_042	FROM->TO	GRPRAR1-LNX3345.00 - HOLT.CO3 345.00 345KV CKT 1	720	720	0.03042	101.6608	HIGHLND 3 345.00 - OBRIEN 3 345.00 345KV CKT 1
FDNS	00NR	3	25SP	G15_042	FROM->TO	GRPRAR1-LNX3345.00 - HOLT.CO3 345.00 345KV CKT 1	720	720	0.0318	101.6413	GEN563342 1-G15098_3 0.6900
FDNS	00NR	3	25SP	G15_042	FROM->TO	GRPRAR1-LNX3345.00 - HOLT.CO3 345.00 345KV CKT 1	720	720	0.0318	101.6319	GEN652543 3-BIG BEND
FDNS	00NR	3	25SP	G15_042	FROM->TO	GRPRAR1-LNX3345.00 - HOLT.CO3 345.00 345KV CKT 1	720	720	0.0318	101.6241	GEN659403 1-NDSUNFLWR W0.6900
FDNS	00NR	3	25SP	G15_042	FROM->TO	GRPRAR1-LNX3345.00 - HOLT.CO3 345.00 345KV CKT 1	720	720	0.0318	101.6238	GEN652542 1-BIG BEND
FDNS	00NR	3	20SP	G15_042	FROM->TO	GRPRAR1-LNX3345.00 - HOLT.CO3 345.00 345KV CKT 1	720	720	0.03148	101.6138	GEN600006 1-AS KING
FDNS	00NR	3	20SP	G15_042	FROM->TO	GRPRAR1-LNX3345.00 - HOLT.CO3 345.00 345KV CKT 1	720	720	0.03148	101.5995	GEN659453 1-GI1414GEN W0.6900
FDNS	00NR	3	20SP	G15_042	FROM->TO	GRPRAR1-LNX3345.00 - HOLT.CO3 345.00 345KV CKT 1	720	720	0.03148	101.598	GEN563302 1-G15096_3 0.6900
FDNS	00NR	3	17SP	G15_042	FROM->TO	GRPRAR1-LNX3345.00 - HOLT.CO3 345.00 345KV CKT 1	720	720	0.03311	101.5841	LELAND OLDS - LELAND2-LNX3345.00 345KV CKT Z
FDNS	00NR	3	20SP	G15_042	FROM->TO	GRPRAR1-LNX3345.00 - HOLT.CO3 345.00 345KV CKT 1	720	720	0.03148	101.4986	GEN652556 2-OAHE
FDNS	00NR	3	20SP	G15_042	FROM->TO	GRPRAR1-LNX3345.00 - HOLT.CO3 345.00 345KV CKT 1	720	720	0.03148	101.4986	GEN652557 4-OAHE
FDNS	00NR	3	20SP	G15_042	FROM->TO	GRPRAR1-LNX3345.00 - HOLT.CO3 345.00 345KV CKT 1	720	720	0.03148	101.4986	GEN652558 6-OAHE
FDNS	00NR	3	20SP	G15_042	FROM->TO	GRPRAR1-LNX3345.00 - HOLT.CO3 345.00 345KV CKT 1	720	720	0.03148	101.4926	GEN659141 1-K10215A
FDNS	00NR	3	25SP	G15_042	FROM->TO	GRPRAR1-LNX3345.00 - HOLT.CO3 345.00 345KV CKT 1	720	720	0.0318	101.4795	STANTON 230/18.0KV TRANSFORMER CKT 1
FDNS	00NR	3	20SP	G15_042	FROM->TO	GRPRAR1-LNX3345.00 - HOLT.CO3 345.00 345KV CKT 1	720	720	0.03148	101.4639	GEN659110 1-LELAND OLDS UNIT1
FDNS	00NR	3	20SP	G15_042	FROM->TO	GRPRAR1-LNX3345.00 - HOLT.CO3 345.00 345KV CKT 1	720	720	0.03148	101.3112	GEN652173 1-G09_001IS_2 0.6900
FDNS	00NR	3	25SP	G15_042	FROM->TO	GRPRAR1-LNX3345.00 - HOLT.CO3 345.00 345KV CKT 1	720	720	0.0318	101.3083	GEN652559 1-OAHE
FDNS	00NR	3	25SP	G15_042	FROM->TO	GRPRAR1-LNX3345.00 - HOLT.CO3 345.00 345KV CKT 1	720	720	0.0318	101.2496	GEN659411 1-CAMPBLCNTY W0.6900
FDNS	00NR	3	20SP	G15_042	FROM->TO	GRPRAR1-LNX3345.00 - HOLT.CO3 345.00 345KV CKT 1	720	720	0.03148	101.0909	GEN657749 1-YOUNG 1 GENERATOR
FDNS	00NR	3	25SP	G15_042	FROM->TO	GRPRAR1-LNX3345.00 - HOLT.CO3 345.00 345KV CKT 1	720	720	0.0318	101.0895	SQUARE BUTTE - YNG2 4 230.00 230KV CKT 1
FDNS	00NR	3	20SP	G15_042	FROM->TO	GRPRAR1-LNX3345.00 - HOLT.CO3 345.00 345KV CKT 1	720	720	0.03354	101.0535	GRAND ISLAND - MCCOOL 345KV CKT 1
FDNS	00NR	3	25SP	G15_042	FROM->TO	GRPRAR1-LNX3345.00 - HOLT.CO3 345.00 345KV CKT 1	720	720	0.0318	101.0529	GEN600004 2-PRAIRIE ISLAND G2
FDNS	00NR	3	25SP	G15_042	FROM->TO	GRPRAR1-LNX3345.00 - HOLT.CO3 345.00 345KV CKT 1	720	720	0.0318	101.0487	GEN600003 1-PRAIRIE ISLAND G1
FDNS	00NR	3	25SP	G15_042	FROM->TO	GRPRAR1-LNX3345.00 - HOLT.CO3 345.00 345KV CKT 1	720	720	0.0318	101.0322	GEN672310 1-POPLAR RIVER GENERATOR 1
FDNS	00NR	3	25SP	G15_042	FROM->TO	GRPRAR1-LNX3345.00 - HOLT.CO3 345.00 345KV CKT 1	720	720	0.0318	101.0321	GEN672311 2-POPLAR RIVER GENERATOR 2
FDNS	00NR	3	25SP	G15_042	FROM->TO	GRPRAR1-LNX3345.00 - HOLT.CO3 345.00 345KV CKT 1	720	720	0.0318	101.0295	GEN659296 2-SDPRAIRWND1W0.6900
FDNS	00NR	3	25SP	G15_042	FROM->TO	GRPRAR1-LNX3345.00 - HOLT.CO3 345.00 345KV CKT 1	720	720	0.0318	101.0196	GEN672321 1-SHAND GENERATOR 1
FDNS	00NR	3	20SP	G15_042	FROM->TO	GRPRAR1-LNX3345.00 - HOLT.CO3 345.00 345KV CKT 1	720	720	0.03148	100.9897	GEN659407 1-ANTELPHILLSW0.6900
FDNS	00NR	3	25SP	G15_042	FROM->TO	GRPRAR1-LNX3345.00 - HOLT.CO3 345.00 345KV CKT 1	720	720	0.0318	100.9754	P12:230:UMZB:# 112 #: NU IN SD. NU-RCDC & DRY CREEK XFMR
FDNS	00NR	3	25SP	G15_042	FROM->TO	GRPRAR1-LNX3345.00 - HOLT.CO3 345.00 345KV CKT 1	720	720	0.0318	100.9666	RCDC EAST 4230.00 - RED CEDAR DC 230KV CKT 1
FDNS	00NR	3	25SP	G15_042	FROM->TO	GRPRAR1-LNX3345.00 - HOLT.CO3 345.00 345KV CKT 1	720	720	0.0318	100.9376	GEN672306 6-BOUNDARY DAM GENERATOR 6
FDNS	00NR	3	25SP	G15_042	FROM->TO	GRPRAR1-LNX3345.00 - HOLT.CO3 345.00 345KV CKT 1	720	720	0.0318	100.8219	GEN615010 1-STANTON4
FDNS	00NR	3	25SP	G15_042	FROM->TO	GRPRAR1-LNX3345.00 - HOLT.CO3 345.00 345KV CKT 1	720	720	0.0318	100.7955	GEN659453 1-GI1414GEN W0.6900
FDNS	00NR	3	25SP	G15_042	FROM->TO	GRPRAR1-LNX3345.00 - HOLT.CO3 345.00 345KV CKT 1	720	720	0.0318	100.7936	GEN563302 1-G15096_3 0.6900
FDNS	00NR	3	25SP	G15_042	FROM->TO	GRPRAR1-LNX3345.00 - HOLT.CO3 345.00 345KV CKT 1	720	720	0.0318	100.7102	GEN652557 4-OAHE
FDNS	00NR	3	25SP	G15_042	FROM->TO	GRPRAR1-LNX3345.00 - HOLT.CO3 345.00 345KV CKT 1	720	720	0.0318	100.7102	GEN652558 6-OAHE
FDNS	00NR	3	25SP	G15_042	FROM->TO	GRPRAR1-LNX3345.00 - HOLT.CO3 345.00 345KV CKT 1	720	720	0.0318	100.7101	GEN652556 2-OAHE
FDNS	00NR	3	25SP	G15_042	FROM->TO	GRPRAR1-LNX3345.00 - HOLT.CO3 345.00 345KV CKT 1	720	720	0.0318	100.7014	GEN600006 1-AS KING
FDNS	00NR	3	20SP	G15_042	FROM->TO	GRPRAR1-LNX3345.00 - HOLT.CO3 345.00 345KV CKT 1	720	720	0.03148	100.6857	GEN600005 1-MONTICELLO
FDNS	00NR	3	25SP	G15_042	FROM->TO	GRPRAR1-LNX3345.00 - HOLT.CO3 345.00 345KV CKT 1	720	720	0.0318	100.677	GEN659141 1-K10215A
FDNS	00NR	3	25SP	G15_042	FROM->TO	GRPRAR1-LNX3345.00 - HOLT.CO3 345.00 345KV CKT 1	720	720	0.0318	100.6307	GEN659110 1-LELAND OLDS UNIT1
FDNS	00NR	3	25SP	G15_042	FROM->TO	GRPRAR1-LNX3345.00 - HOLT.CO3 345.00 345KV CKT 1	720	720	0.03402	100.5883	GRAND ISLAND - MCCOOL 345KV CKT 1
FDNS	00NR	3	25SP	G15_042	FROM->TO	GRPRAR1-LNX3345.00 - HOLT.CO3 345.00 345KV CKT 1	720	720	0.0318	100.5331	GEN652173 1-G09_001IS_2 0.6900
FDNS	00NR	3	20SP	G15_042	FROM->TO	GRPRAR1-LNX3345.00 - HOLT.CO3 345.00 345KV CKT 1	720	720	0.03148	100.4508	GEN600000 1-SHERBURNECNTY G1
FDNS	00NR	3	25SP	G15_042	FROM->TO	GRPRAR1-LNX3345.00 - HOLT.CO3 345.00 345KV CKT 1	720	720	0.0318	100.2063	CLAY BOSWELL 230/20.9KV TRANSFORMER CKT 1
FDNS	00NR	3	20SP	G15_042	FROM->TO	GRPRAR1-LNX3345.00 - HOLT.CO3 345.00 345KV CKT 1	720	720	0.03148	100.1932	GEN600001 2-SHERBURNE CNTY G2
FDNS	00NR	3	25SP	G15_042	FROM->TO	GRPRAR1-LNX3345.00 - HOLT.CO3 345.00 345KV CKT 1	720	720	0.0318	100.1915	GEN659407 1-ANTELPHILLSW0.6900
FDNS	00NR	3	25SP	G15_042	FROM->TO	GRPRAR1-LNX3345.00 - HOLT.CO3 345.00 345KV CKT 1	720	720	0.0318	100.1747	GEN657749 1-YOUNG 1 GENERATOR
FDNS	00NR	3	20SP	G15_042	FROM->TO	GRPRAR1-LNX3345.00 - HOLT.CO3 345.00 345KV CKT 1	720	720	0.03148	100.056	GEN661015 1-COYOTE
FDNS	00NR	3	20SP	G15_042	FROM->TO	GRPRAR1-LNX3345.00 - HOLT.CO3 345.00 345KV CKT 1	720	720	0.03148	100	GEN620315 1-BIG STONE GEN
FDNS	00NR	3	25SP	G15_042	FROM->TO	GRPRAR1-LNX3345.00 - HOLT.CO3 345.00 345KV CKT 1	720	720	0.0318	99.9	GEN600005 1-MONTICELLO
FDNS	00NR	3	20SP	G15_042	FROM->TO	GRPRAR1-LNX3345.00 - HOLT.CO3 345.00 345KV CKT 1	720	720	0.03148	99.6	GEN600002 3-SHERBURNE CNTY G3
FDNS	00NR	3	25SP	G15_042	FROM->TO	GRPRAR1-LNX3345.00 - HOLT.CO3 345.00 345KV CKT 1	720	720	0.0318	99.6	GEN600000 1-SHERBURNECNTY G1
FDNS	00NR	3	17SP	G15_042	TO->FROM	SIDNEY - SIDNEY TRANSFORMER 230KV CKT 1	496	496	0.03422	106.2829	KEYSTONE - SIDNEY1-LNX3345.00 345KV CKT 1
FDNS	00NR	3	17SP	G15_042	TO->FROM	SIDNEY - SIDNEY TRANSFORMER 230KV CKT 1	496	496	0.03422	105.6764	SIDNEY - SIDNEY1-LNX3345.00 345KV CKT Z
FDNS	00NR	3	17SP	G15_042	FROM->TO	SIDNEY (SDQ KV2A) 345/230/13.8KV TRANSFORMER CKT 1	400	480	0.03422	111.8609	KEYSTONE - SIDNEY1-LNX3345.00 345KV CKT 1
FDNS	00NR	3	17SP	G15_042	FROM->TO	SIDNEY (SDQ KV2A) 345/230/13.8KV TRANSFORMER CKT 1	400	480	0.03422	111.3728	SIDNEY - SIDNEY1-LNX3345.00 345KV CKT Z
FDNS	00NR	3	17SP	G15_042	FROM->TO	SIDNEY (SDQ KV2A) 345/230/13.8KV TRANSFORMER CKT 1	400	480	0.03422	111.0342	KEYSTONE - SIDNEY1-LNX3345.00 345KV CKT 1
FDNS	00NR	3	17SP	G15_042	FROM->TO	SIDNEY (SDQ KV2A) 345/230/13.8KV TRANSFORMER CKT 1	400	480	0.03422	110.968	SIDNEY - SIDNEY1-LNX3345.00 345KV CKT Z
FDNS	00NR	3	20SP	G15_042	FROM->TO	SIDNEY (SDQ KV2A) 345/230/13.8KV TRANSFORMER CKT 1	400	480	0.03431	104.1696	KEYSTONE - SIDNEY1-LNX3345.00 345KV CKT 1
FDNS	00NR	3	20SP	G15_042	FROM->TO	SIDNEY (SDQ KV2A) 345/230/13.8KV TRANSFORMER CKT 1	400	480	0.03431	103.7549	SIDNEY - SIDNEY1-LNX3345.00 345KV CKT Z
FDNS	00NR	3	20SP	G15_042	FROM->TO	SIDNEY (SDQ KV2A) 345/230/13.8KV TRANSFORMER CKT 1	400	480	0.03431	103.543	KEYSTONE - SIDNEY1-LNX3345.00 345KV CKT 1
FDNS	00NR	3	20SP	G15_042	FROM->TO	SIDNEY (SDQ KV2A) 345/230/13.8KV TRANSFORMER CKT 1	400	480	0.03431	103.5202	SIDNEY - SIDNEY1-LNX3345.00 345KV CKT Z
FDNS	00NR	3	25SP	G15_042	FROM->TO	SIDNEY (SDQ KV2A) 345/230/13.8KV TRANSFORMER CKT 1	400	480	0.03407	103.5176	KEYSTONE - SIDNEY1-LNX3345.00 345KV CKT 1
FDNS	00NR	3	25SP	G15_042	FROM->TO	SIDNEY (SDQ KV2A) 345/230/13.8KV TRANSFORMER CKT 1	400	480	0.03407	103.0728	SIDNEY - SIDNEY1-LNX3345.00 345KV CKT Z
FDNS	00NR	3	25SP	G15_042	FROM->TO	SIDNEY (SDQ KV2A) 345/230/13.8KV TRANSFORMER CKT 1	400	480	0.03407	102.9056	KEYSTONE - SIDNEY1-LNX3345.00 345KV CKT 1
FDNS	00NR	3	25SP	G15_042	FROM->TO	SIDNEY (SDQ KV2A) 345/230/13.8KV TRANSFORMER CKT 1	400	480	0.03407	102.8515	SIDNEY - SIDNEY1-LNX3345.00 345KV CKT Z
FDNS	09ALL	3	20L	G15_042	TO->FROM	SIOUX CITY - TWIN CHURCH 230KV CKT 1	320	320	0.48326	110.304	DIXONCO 230.00 - HOSKINS 230KV CKT 1
FDNS	09ALL	3	20L	G15_042	TO->FROM	SIOUX CITY - TWIN CHURCH 230KV CKT 1	320	320	0.36095	104.9943	BELDEN 4 230.00 - RASMUSN 230KV CKT 1
FDNS	09NR	3	20L	G15_042	TO->FROM	SIOUX CITY - TWIN CHURCH 230KV CKT 1	320	320	0.47901	102.4013	DIXONCO 230.00 - HOSKINS 230KV CKT 1
FDNS	09ALL	3	20L	G15_042	TO->FROM	SIOUX CITY - TWIN CHURCH 230KV CKT 1	320	320	0.31677	101.9668	HOSKINS - RAUN 345KV CKT 1
FDNS	09ALL	3	20L	G15_042	TO->FROM	SIOUX CITY - TWIN CHURCH 230KV CKT 1	320	320	0.31677	101.9668	HOSKINS - RAUN 345KV CKT 1
FDNS	09ALL	3	17G	G15_042	TO->FROM	SIOUX CITY - TWIN CHURCH 230KV CKT 1	320	320	0.48484	101.6185	DIXONCO 230.00 - HOSKINS 230KV CKT 1
FDNS	00NR	4	17SP	G15_042	FROM->TO	COLUMEAST (COL.EAST T3) 230/115/13.8KV TRANSFORMER CKT 1	187	187	0.04028	109.4328	COLUMEAST - SHELL CREEK 345KV CKT 1
FDNS	00NR	4	17SP	G15_042	FROM->TO	COLUMEAST (COL.EAST T3) 230/115/13.8KV TRANSFORMER CKT 1	187	187	0.04028	108.7373	COLUMEAST - SHELL CREEK 345KV CKT 1

SOLUTION	GROUP	SCENARIO	SEASON	SOURCE	DIRECTION	MONITORED ELEMENT	RATEA (MVA)	RATEB(MVA)	TDF	TC%LOADING (% MVA)	CONTINGENCY
FDNS	00NR	4	20SP	G15_042	FROM->TO	COLUMEAST (COL.EAST T3) 230/115/13.8KV TRANSFORMER CKT 1	187	187	0.04067	105.9831	COLUMEAST - SHELL CREEK 345KV CKT 1
FDNS	00NR	4	20SP	G15_042	FROM->TO	COLUMEAST (COL.EAST T3) 230/115/13.8KV TRANSFORMER CKT 1	187	187	0.04067	105.2227	COLUMEAST - SHELL CREEK 345KV CKT 1
FDNS	00NR	4	25SP	G15_042	FROM->TO	COLUMEAST (COL.EAST T3) 230/115/13.8KV TRANSFORMER CKT 1	187	187	0.04026	102.5369	COLUMEAST - SHELL CREEK 345KV CKT 1
FDNS	00NR	4	16WP	G15_042	FROM->TO	COLUMEAST (COL.EAST T3) 230/115/13.8KV TRANSFORMER CKT 1	187	187	0.04127	102.2883	COLUMEAST - SHELL CREEK 345KV CKT 1
FDNS	00NR	4	25SP	G15_042	FROM->TO	COLUMEAST (COL.EAST T3) 230/115/13.8KV TRANSFORMER CKT 1	187	187	0.04026	101.8868	COLUMEAST - SHELL CREEK 345KV CKT 1
FDNS	00NR	4	16WP	G15_042	FROM->TO	COLUMEAST (COL.EAST T3) 230/115/13.8KV TRANSFORMER CKT 1	187	187	0.04127	100.7006	COLUMEAST - SHELL CREEK 345KV CKT 1
FDNS	00NR	4	20SP	G15_042	FROM->TO	DIXONCO 230.00 - HOSKINS 230KV CKT 1	320	320	0.58936	103.842	DIXONCO 230.00 - TWIN CHURCH 230KV CKT 1
FDNS	00NR	4	25SP	G15_042	FROM->TO	DIXONCO 230.00 - HOSKINS 230KV CKT 1	320	320	0.58946	103.4566	DIXONCO 230.00 - TWIN CHURCH 230KV CKT 1
FDNS	00NR	4	17SP	G15_042	FROM->TO	DIXONCO 230.00 - HOSKINS 230KV CKT 1	320	320	0.58966	103.1889	DIXONCO 230.00 - TWIN CHURCH 230KV CKT 1
FDNS	09NR	4	17G	G15_042	FROM->TO	DIXONCO 230.00 - HOSKINS 230KV CKT 1	320	320	0.5892	101.65	DIXONCO 230.00 - TWIN CHURCH 230KV CKT 1
FDNS	09NR	4	20L	G15_042	FROM->TO	DIXONCO 230.00 - HOSKINS 230KV CKT 1	320	320	0.58793	101.6345	DIXONCO 230.00 - TWIN CHURCH 230KV CKT 1
FDNS	09NR	4	17G	G15_042	FROM->TO	DIXONCO 230.00 - TWIN CHURCH 230KV CKT 1	320	320	0.5465	123.8102	DIXONCO 230.00 - HOSKINS 230KV CKT 1
FDNS	09NR	4	20L	G15_042	FROM->TO	DIXONCO 230.00 - TWIN CHURCH 230KV CKT 1	320	320	0.54737	120.1962	DIXONCO 230.00 - HOSKINS 230KV CKT 1
FDNS	09ALL	4	20WP	G15_042	FROM->TO	DIXONCO 230.00 - TWIN CHURCH 230KV CKT 1	320	320	0.34875	116.9941	HOSKINS - RAUN 345KV CKT 1
FDNS	09ALL	4	20L	G15_042	FROM->TO	DIXONCO 230.00 - TWIN CHURCH 230KV CKT 1	320	320	0.34744	113.8097	HOSKINS - RAUN 345KV CKT 1
FDNS	09NR	4	17G	G15_042	FROM->TO	DIXONCO 230.00 - TWIN CHURCH 230KV CKT 1	320	320	0.45331	113.2554	BELDEN 4 230.00 - DIXONCO 230.00 230KV CKT 1
FDNS	09ALL	4	16WP	G15_042	FROM->TO	DIXONCO 230.00 - TWIN CHURCH 230KV CKT 1	320	320	0.33303	112.5358	P13:230-345:NPPD:NUCOR-1
FDNS	09NR	4	17G	G15_042	FROM->TO	DIXONCO 230.00 - TWIN CHURCH 230KV CKT 1	320	320	0.32929	112.2247	HOSKINS - RAUN 345KV CKT 1
FDNS	09ALL	4	17G	G15_042	FROM->TO	DIXONCO 230.00 - TWIN CHURCH 230KV CKT 1	320	320	0.33309	111.886	P13:230-345:NPPD:NUCOR-1
FDNS	09ALL	4	20WP	G15_042	FROM->TO	DIXONCO 230.00 - TWIN CHURCH 230KV CKT 1	320	320	0.33359	111.7575	P13:230-345:NPPD:NUCOR-1
FDNS	09NR	4	17G	G15_042	FROM->TO	DIXONCO 230.00 - TWIN CHURCH 230KV CKT 1	320	320	0.36911	110.701	BELDEN 4 230.00 - RASMUSN 230KV CKT 1
FDNS	09ALL	4	16WP	G15_042	FROM->TO	DIXONCO 230.00 - TWIN CHURCH 230KV CKT 1	320	320	0.33303	109.8586	P13:115-230:NPPD:NUCOR-3
FDNS	09NR	4	20L	G15_042	FROM->TO	DIXONCO 230.00 - TWIN CHURCH 230KV CKT 1	320	320	0.45557	109.6474	BELDEN 4 230.00 - DIXONCO 230.00 230KV CKT 1
FDNS	09ALL	4	20L	G15_042	FROM->TO	DIXONCO 230.00 - TWIN CHURCH 230KV CKT 1	320	320	0.33281	109.1041	P13:230-345:NPPD:NUCOR-1
FDNS	09ALL	4	20WP	G15_042	FROM->TO	DIXONCO 230.00 - TWIN CHURCH 230KV CKT 1	320	320	0.33359	108.9922	P13:115-230:NPPD:NUCOR-3
FDNS	09NR	4	17G	G15_042	FROM->TO	DIXONCO 230.00 - TWIN CHURCH 230KV CKT 1	320	320	0.34067	108.2497	RASMUSN - SIOUX CITY 230KV CKT 1
FDNS	00NR	4	16WP	G15_042	FROM->TO	DIXONCO 230.00 - TWIN CHURCH 230KV CKT 1	320	320	0.5463	107.3303	DIXONCO 230.00 - HOSKINS 230KV CKT 1
FDNS	09ALL	4	20SP	G15_042	FROM->TO	DIXONCO 230.00 - TWIN CHURCH 230KV CKT 1	320	320	0.33323	107.1513	P13:230-345:NPPD:NUCOR-1
FDNS	09ALL	4	17G	G15_042	FROM->TO	DIXONCO 230.00 - TWIN CHURCH 230KV CKT 1	320	320	0.33309	107.0697	P13:115-230:NPPD:NUCOR-3
FDNS	09NR	4	20L	G15_042	FROM->TO	DIXONCO 230.00 - TWIN CHURCH 230KV CKT 1	320	320	0.37152	106.9756	BELDEN 4 230.00 - RASMUSN 230KV CKT 1
FDNS	09ALL	4	17SP	G15_042	FROM->TO	DIXONCO 230.00 - TWIN CHURCH 230KV CKT 1	320	320	0.33262	106.7941	P13:230-345:NPPD:NUCOR-1
FDNS	09ALL	4	17G	G15_042	FROM->TO	DIXONCO 230.00 - TWIN CHURCH 230KV CKT 1	320	320	0.3394	106.6752	COLUMEAST - NW68TH & HOLDREGE 345KV CKT 1
FDNS	09ALL	4	16WP	G15_042	FROM->TO	DIXONCO 230.00 - TWIN CHURCH 230KV CKT 1	320	320	0.33303	106.1876	P13:115-345:NPPD:NUCOR-2
FDNS	09ALL	4	17G	G15_042	FROM->TO	DIXONCO 230.00 - TWIN CHURCH 230KV CKT 1	320	320	0.41325	106.1479	HOSKINS (HOSKINS T2) 345/230/13.8KV TRANSFORMER CKT 1
FDNS	00NR	4	20WP	G15_042	FROM->TO	DIXONCO 230.00 - TWIN CHURCH 230KV CKT 1	320	320	0.54643	106.089	DIXONCO 230.00 - HOSKINS 230KV CKT 1
FDNS	09ALL	4	25SP	G15_042	FROM->TO	DIXONCO 230.00 - TWIN CHURCH 230KV CKT 1	320	320	0.33316	105.9932	P13:230-345:NPPD:NUCOR-1
FDNS	09ALL	4	16WP	G15_042	FROM->TO	DIXONCO 230.00 - TWIN CHURCH 230KV CKT 1	320	320	0.33923	105.9677	COLUMEAST - NW68TH & HOLDREGE 345KV CKT 1
FDNS	09ALL	4	20WP	G15_042	FROM->TO	DIXONCO 230.00 - TWIN CHURCH 230KV CKT 1	320	320	0.3246	105.8965	RAUN - SIOUX CITY 345KV CKT 1
FDNS	09NR	4	17G	G15_042	FROM->TO	DIXONCO 230.00 - TWIN CHURCH 230KV CKT 1	320	320	0.32221	105.7984	P13:230-345:NPPD:NUCOR-1
FDNS	09ALL	4	20WP	G15_042	FROM->TO	DIXONCO 230.00 - TWIN CHURCH 230KV CKT 1	320	320	0.33359	105.334	P13:115-345:NPPD:NUCOR-2
FDNS	09NR	4	20L	G15_042	FROM->TO	DIXONCO 230.00 - TWIN CHURCH 230KV CKT 1	320	320	0.3331	105.1851	HOSKINS - RAUN 345KV CKT 1
FDNS	09NR	4	20L	G15_042	FROM->TO	DIXONCO 230.00 - TWIN CHURCH 230KV CKT 1	320	320	0.3331	105.1851	HOSKINS - RAUN 345KV CKT 1
FDNS	09ALL	4	20WP	G15_042	FROM->TO	DIXONCO 230.00 - TWIN CHURCH 230KV CKT 1	320	320	0.33963	104.9564	COLUMEAST - NW68TH & HOLDREGE 345KV CKT 1
FDNS	09ALL	4	16WP	G15_042	FROM->TO	DIXONCO 230.00 - TWIN CHURCH 230KV CKT 1	320	320	0.33513	104.8925	GAVINS POINT - YANKON JCT 115KV CKT 1
FDNS	09ALL	4	16WP	G15_042	FROM->TO	DIXONCO 230.00 - TWIN CHURCH 230KV CKT 1	320	320	0.33484	104.8909	P12:115:NPPD:1166:STNTN.N7:BEEMER 7:BTB
FDNS	09ALL	4	25SP	G15_042	FROM->TO	DIXONCO 230.00 - TWIN CHURCH 230KV CKT 1	320	320	0.34811	104.561	HOSKINS - RAUN 345KV CKT 1
FDNS	09NR	4	17G	G15_042	FROM->TO	DIXONCO 230.00 - TWIN CHURCH 230KV CKT 1	320	320	0.32501	104.2743	BELDEN - TWIN CHURCH 115KV CKT 1
FDNS	09ALL	4	16WP	G15_042	FROM->TO	DIXONCO 230.00 - TWIN CHURCH 230KV CKT 1	320	320	0.3431	104.2542	HOSKINS (HOSKINS T1) 230/115/13.8KV TRANSFORMER CKT 1
FDNS	09ALL	4	17G	G15_042	FROM->TO	DIXONCO 230.00 - TWIN CHURCH 230KV CKT 1	320	320	0.33492	104.2186	P12:115:NPPD:1166:STNTN.N7:BEEMER 7:BTB
FDNS	09ALL	4	17G	G15_042	FROM->TO	DIXONCO 230.00 - TWIN CHURCH 230KV CKT 1	320	320	0.33309	104.1079	P13:115-345:NPPD:NUCOR-2
FDNS	09ALL	4	20WP	G15_042	FROM->TO	DIXONCO 230.00 - TWIN CHURCH 230KV CKT 1	320	320	0.33572	104.0862	GAVINS POINT - YANKON JCT 115KV CKT 1
FDNS	09ALL	4	17G	G15_042	FROM->TO	DIXONCO 230.00 - TWIN CHURCH 230KV CKT 1	320	320	0.33512	104.0656	GAVINS POINT - YANKON JCT 115KV CKT 1
FDNS	09ALL	4	16WP	G15_042	FROM->TO	DIXONCO 230.00 - TWIN CHURCH 230KV CKT 1	320	320	0.33437	103.9781	MINGO - RED WILLOW 345KV CKT 1
FDNS	09ALL	4	17G	G15_042	FROM->TO	DIXONCO 230.00 - TWIN CHURCH 230KV CKT 1	320	320	0.33452	103.9699	MINGO - RED WILLOW 345KV CKT 1
FDNS	09ALL	4	16WP	G15_042	FROM->TO	DIXONCO 230.00 - TWIN CHURCH 230KV CKT 1	320	320	0.33481	103.9028	P12:115:NPPD:1161:OAKLAND7:BEEMER 7:BTB
FDNS	09ALL	4	20WP	G15_042	FROM->TO	DIXONCO 230.00 - TWIN CHURCH 230KV CKT 1	320	320	0.33547	103.8967	P12:115:NPPD:1166:STNTN.N7:BEEMER 7:BTB
FDNS	09ALL	4	17G	G15_042	FROM->TO	DIXONCO 230.00 - TWIN CHURCH 230KV CKT 1	320	320	0.34317	103.7665	HOSKINS (HOSKINS T1) 230/115/13.8KV TRANSFORMER CKT 1
FDNS	09ALL	4	16WP	G15_042	FROM->TO	DIXONCO 230.00 - TWIN CHURCH 230KV CKT 1	320	320	0.33282	103.7248	SUB 3454 - WAGENER 345KV CKT 1
FDNS	09ALL	4	16WP	G15_042	FROM->TO	DIXONCO 230.00 - TWIN CHURCH 230KV CKT 1	320	320	0.33254	103.6729	ATCHSNT3 345.00 - BOONEVILLE 345KV CKT 1
FDNS	09ALL	4	17G	G15_042	FROM->TO	DIXONCO 230.00 - TWIN CHURCH 230KV CKT 1	320	320	0.33489	103.5473	P12:115:NPPD:1161:OAKLAND7:BEEMER 7:BTB
FDNS	09ALL	4	16WP	G15_042	FROM->TO	DIXONCO 230.00 - TWIN CHURCH 230KV CKT 1	320	320	0.33396	103.4909	NAPA JCT7 115.00 - UTICA 115KV CKT 1
FDNS	09ALL	4	16WP	G15_042	FROM->TO	DIXONCO 230.00 - TWIN CHURCH 230KV CKT 1	320	320	0.33396	103.4909	P12:115:UMZW:# 1910 #: YJ IN SD. YJ-UJ LINE FAULT
FDNS	09ALL	4	16WP	G15_042	FROM->TO	DIXONCO 230.00 - TWIN CHURCH 230KV CKT 1	320	320	0.33396	103.4904	NAPA JCT7 115.00 - YANKON JCT 115KV CKT 1
FDNS	09ALL	4	17G	G15_042	FROM->TO	DIXONCO 230.00 - TWIN CHURCH 230KV CKT 1	320	320	0.33309	103.4647	SHERBURNE CO 345/24.0KV TRANSFORMER CKT 1
FDNS	09ALL	4	16WP	G15_042	FROM->TO	DIXONCO 230.00 - TWIN CHURCH 230KV CKT 1	320	320	0.33274	103.445	P12:230:UMZB:# 116 #: ST IN SD. WSG-ST-VH
FDNS	09ALL	4	20L	G15_042	FROM->TO	DIXONCO 230.00 - TWIN CHURCH 230KV CKT 1	320	320	0.41239	103.3967	HOSKINS (HOSKINS T2) 345/230/13.8KV TRANSFORMER CKT 1
FDNS	09ALL	4	20WP	G15_042	FROM->TO	DIXONCO 230.00 - TWIN CHURCH 230KV CKT 1	320	320	0.34367	103.3895	HOSKINS (HOSKINS T1) 230/115/13.8KV TRANSFORMER CKT 1
FDNS	09ALL	4	17SP	G15_042	FROM->TO	DIXONCO 230.00 - TWIN CHURCH 230KV CKT 1	320	320	0.33262	103.3104	P13:115-230:NPPD:NUCOR-3
FDNS	09ALL	4	20L	G15_042	FROM->TO	DIXONCO 230.00 - TWIN CHURCH 230KV CKT 1	320	320	0.33281	103.303	P13:115-230:NPPD:NUCOR-3
FDNS	09ALL	4	20SP	G15_042	FROM->TO	DIXONCO 230.00 - TWIN CHURCH 230KV CKT 1	320	320	0.33323	103.2939	P13:115-230:NPPD:NUCOR-3
FDNS	09ALL	4	17G	G15_042	FROM->TO	DIXONCO 230.00 - TWIN CHURCH 230KV CKT 1	320	320	0.33287	103.1138	SUB 3454 - WAGENER 345KV CKT 1
FDNS	09ALL	4	17G	G15_042	FROM->TO	DIXONCO 230.00 - TWIN CHURCH 230KV CKT 1	320	320	0.33398	103.1011	NAPA JCT7 115.00 - UTICA 115KV CKT 1
FDNS	09ALL	4	17G	G15_042	FROM->TO	DIXONCO 230.00 - TWIN CHURCH 230KV CKT 1	320	320	0.33398	103.1011	P12:115:UMZW:# 1910 #: YJ IN SD. YJ-UJ LINE FAULT
FDNS	09ALL	4	17G	G15_042	FROM->TO	DIXONCO 230.00 - TWIN CHURCH 230KV CKT 1	320	320	0.33398	103.1003	NAPA JCT7 115.00 - YANKON JCT 115KV CKT 1
FDNS	09ALL	4	20WP	G15_042	FROM->TO	DIXONCO 230.00 - TWIN CHURCH 230KV CKT 1	320	320	0.33359	103.0689	SHERBURNE CO 345/24.0KV TRANSFORMER CKT 1
FDNS	00NR	4	20SP	G15_042	FROM->TO	DIXONCO 230.00 - TWIN CHURCH 230KV CKT 1	320	320	0.54631	103.0115	DIXONCO 230.00 - HOSKINS 230KV CKT 1
FDNS	09ALL	4	20WP	G15_042	FROM->TO	DIXONCO 230.00 - TWIN CHURCH 230KV CKT 1	320	320	0.33544	102.9389	P12:115:NPPD:1161:OAKLAND7:BEEMER 7:BTB
FDNS	09ALL	4	20WP	G15_042	FROM->TO	DIXONCO 230.00 - TWIN CHURCH 230KV CKT 1	320	320	0.33493	102.8336	MINGO - RED WILLOW 345KV CKT 1
FDNS	09ALL	4	20WP	G15_042	FROM->TO	DIXONCO 230.00 - TWIN CHURCH 230KV CKT 1	320	320	0.33318	102.8255	ATCHSNT3 345.00 - BOONEVILLE 345KV CKT 1

SOLUTION	GROUP	SCENARIO	SEASON	SOURCE	DIRECTION	MONITORED ELEMENT	RATEA (MVA)	RATEB(MVA)	TDF	TC%LOADING (% MVA)	CONTINGENCY
FDNS	09ALL	4	17G	G15_042	FROM->TO	DIXONCO 230.00 - TWIN CHURCH 230KV CKT 1	320	320	0.33309	102.8081	BIG STONE 230/24.0KV TRANSFORMER CKT 1
FDNS	09ALL	4	20WP	G15_042	FROM->TO	DIXONCO 230.00 - TWIN CHURCH 230KV CKT 1	320	320	0.33341	102.7972	SUB 3454 - WAGENER 345KV CKT 1
FDNS	09ALL	4	17G	G15_042	FROM->TO	DIXONCO 230.00 - TWIN CHURCH 230KV CKT 1	320	320	0.33259	102.7539	ATCHSNT3 345.00 - BOONEVILLE 345KV CKT 1
FDNS	09ALL	4	17G	G15_042	FROM->TO	DIXONCO 230.00 - TWIN CHURCH 230KV CKT 1	320	320	0.33284	102.6956	P12:230:UMZB:# 116 #: ST IN SD. WSG-ST-VH
FDNS	09ALL	4	20WP	G15_042	FROM->TO	DIXONCO 230.00 - TWIN CHURCH 230KV CKT 1	320	320	0.33359	102.6724	BIG STONE 230/24.0KV TRANSFORMER CKT 1
FDNS	09ALL	4	20WP	G15_042	FROM->TO	DIXONCO 230.00 - TWIN CHURCH 230KV CKT 1	320	320	0.33453	102.6377	NAPA JCT7 115.00 - UTICA 115KV CKT 1
FDNS	09ALL	4	20WP	G15_042	FROM->TO	DIXONCO 230.00 - TWIN CHURCH 230KV CKT 1	320	320	0.33453	102.6376	P12:115:UMZW:# 1910 #: YJ IN SD. YJ-UJ LINE FAULT
FDNS	09ALL	4	20WP	G15_042	FROM->TO	DIXONCO 230.00 - TWIN CHURCH 230KV CKT 1	320	320	0.33453	102.6373	NAPA JCT7 115.00 - YANKON JCT 115KV CKT 1
FDNS	09ALL	4	20WP	G15_042	FROM->TO	DIXONCO 230.00 - TWIN CHURCH 230KV CKT 1	320	320	0.31503	102.6307	P13:345:UMZW:# 260 #: SC2 IN IA. LOSS OF TRANSFORMER (KU1A
FDNS	09ALL	4	20WP	G15_042	FROM->TO	DIXONCO 230.00 - TWIN CHURCH 230KV CKT 1	320	320	0.33318	102.6127	ATCHSNT3 345.00 - COOPER 345KV CKT 1
FDNS	09ALL	4	20WP	G15_042	FROM->TO	DIXONCO 230.00 - TWIN CHURCH 230KV CKT 1	320	320	0.33332	102.5435	P12:230:UMZB:# 116 #: ST IN SD. WSG-ST-VH
FDNS	09ALL	4	16WP	G15_042	FROM->TO	DIXONCO 230.00 - TWIN CHURCH 230KV CKT 1	320	320	0.33303	102.3663	BASE CASE
FDNS	00NR	4	17SP	G15_042	FROM->TO	DIXONCO 230.00 - TWIN CHURCH 230KV CKT 1	320	320	0.5462	102.3272	DIXONCO 230.00 - HOSKINS 230KV CKT 1
FDNS	09ALL	4	25SP	G15_042	FROM->TO	DIXONCO 230.00 - TWIN CHURCH 230KV CKT 1	320	320	0.33316	102.2811	P13:115-230:NPPD:NUCOR-3
FDNS	09ALL	4	20L	G15_042	FROM->TO	DIXONCO 230.00 - TWIN CHURCH 230KV CKT 1	320	320	0.32418	102.2612	RAUN - SIOUX CITY 345KV CKT 1
FDNS	09ALL	4	20L	G15_042	FROM->TO	DIXONCO 230.00 - TWIN CHURCH 230KV CKT 1	320	320	0.33858	102.1646	COLUMEAST - NW68TH & HOLDREGE 345KV CKT 1
FDNS	00NR	4	25SP	G15_042	FROM->TO	DIXONCO 230.00 - TWIN CHURCH 230KV CKT 1	320	320	0.54627	102.0177	DIXONCO 230.00 - HOSKINS 230KV CKT 1
FDNS	09NR	4	20L	G15_042	FROM->TO	DIXONCO 230.00 - TWIN CHURCH 230KV CKT 1	320	320	0.32436	101.968	P13:230-345:NPPD:NUCOR-1
FDNS	09ALL	4	17G	G15_042	FROM->TO	DIXONCO 230.00 - TWIN CHURCH 230KV CKT 1	320	320	0.33309	101.7781	BASE CASE
FDNS	09NR	4	20L	G15_042	FROM->TO	DIXONCO 230.00 - TWIN CHURCH 230KV CKT 1	320	320	0.34327	101.711	RASMUSN - SIOUX CITY 230KV CKT 1
FDNS	09NR	4	17G	G15_042	FROM->TO	DIXONCO 230.00 - TWIN CHURCH 230KV CKT 1	320	320	0.32221	101.6959	P13:115-230:NPPD:NUCOR-3
FDNS	09NR	4	17G	G15_042	FROM->TO	DIXONCO 230.00 - TWIN CHURCH 230KV CKT 1	320	320	0.33495	101.6058	HOSKINS - SHELL CREEK 345KV CKT 1
FDNS	09ALL	4	20WP	G15_042	FROM->TO	DIXONCO 230.00 - TWIN CHURCH 230KV CKT 1	320	320	0.33359	101.5031	BASE CASE
FDNS	09ALL	4	16WP	G15_042	FROM->TO	DIXONCO 230.00 - TWIN CHURCH 230KV CKT 1	320	320	0.33668	101.2453	HOSKINS (HOSKN T4) 345/115/13.8KV TRANSFORMER CKT 1
FDNS	09ALL	4	16WP	G15_042	FROM->TO	DIXONCO 230.00 - TWIN CHURCH 230KV CKT 1	320	320	0.33208	101.2145	GRIMES - LEHIGH 345KV CKT 1
FDNS	09ALL	4	16WP	G15_042	FROM->TO	DIXONCO 230.00 - TWIN CHURCH 230KV CKT 1	320	320	0.33175	101.1065	TWIN CHURCH (TWNCHURCH T6) 230/115/13.8KV TRANSFORMER CKT 2
FDNS	09ALL	4	17G	G15_042	FROM->TO	DIXONCO 230.00 - TWIN CHURCH 230KV CKT 1	320	320	0.33138	100.8489	SUB 1226 - TEKAMAH 161KV CKT 1
FDNS	09NR	4	17G	G15_042	FROM->TO	DIXONCO 230.00 - TWIN CHURCH 230KV CKT 1	320	320	0.32815	100.8084	COLUMEAST - NW68TH & HOLDREGE 345KV CKT 1
FDNS	09NR	4	17G	G15_042	FROM->TO	DIXONCO 230.00 - TWIN CHURCH 230KV CKT 1	320	320	0.32815	100.8084	COLUMEAST - NW68TH & HOLDREGE 345KV CKT 1
FDNS	09ALL	4	17G	G15_042	FROM->TO	DIXONCO 230.00 - TWIN CHURCH 230KV CKT 1	320	320	0.33181	100.8058	TWIN CHURCH (TWNCHURCH T6) 230/115/13.8KV TRANSFORMER CKT 2
FDNS	09ALL	4	20L	G15_042	FROM->TO	DIXONCO 230.00 - TWIN CHURCH 230KV CKT 1	320	320	0.33281	100.782	P13:115-345:NPPD:NUCOR-2
FDNS	09ALL	4	16WP	G15_042	FROM->TO	DIXONCO 230.00 - TWIN CHURCH 230KV CKT 1	320	320	0.32978	100.7517	RAUN - SUB 3451 FT CAL 345KV CKT 1
FDNS	09ALL	4	17G	G15_042	FROM->TO	DIXONCO 230.00 - TWIN CHURCH 230KV CKT 1	320	320	0.33421	100.7349	P12:115:NPPD:1163B:NELIGH 7:NORFK.N7:BTB
FDNS	09ALL	4	20L	G15_042	FROM->TO	DIXONCO 230.00 - TWIN CHURCH 230KV CKT 1	320	320	0.3348	100.6921	GAVINS POINT - YANKON JCT 115KV CKT 1
FDNS	09ALL	4	16WP	G15_042	FROM->TO	DIXONCO 230.00 - TWIN CHURCH 230KV CKT 1	320	320	0.33077	100.6579	P12:345:UMZW:# 907 #: SC2-SR IN IA. SC2-SR 345 KV LINE
FDNS	09ALL	4	20WP	G15_042	FROM->TO	DIXONCO 230.00 - TWIN CHURCH 230KV CKT 1	320	320	0.33279	100.4501	GRIMES - LEHIGH 345KV CKT 1
FDNS	09ALL	4	17G	G15_042	FROM->TO	DIXONCO 230.00 - TWIN CHURCH 230KV CKT 1	320	320	0.33212	100.4392	GRIMES - LEHIGH 345KV CKT 1
FDNS	09ALL	4	20WP	G15_042	FROM->TO	DIXONCO 230.00 - TWIN CHURCH 230KV CKT 1	320	320	0.33723	100.3954	HOSKINS (HOSKN T4) 345/115/13.8KV TRANSFORMER CKT 1
FDNS	09NR	4	17G	G15_042	FROM->TO	DIXONCO 230.00 - TWIN CHURCH 230KV CKT 1	320	320	0.32793	100.3324	COLUMEAST - SHELL CREEK 345KV CKT 1
FDNS	09ALL	4	17G	G15_042	FROM->TO	DIXONCO 230.00 - TWIN CHURCH 230KV CKT 1	320	320	0.33103	100.3139	P12:345:UMZW:# 907 #: SC2-SR IN IA. SC2-SR 345 KV LINE
FDNS	09ALL	4	20WP	G15_042	FROM->TO	DIXONCO 230.00 - TWIN CHURCH 230KV CKT 1	320	320	0.33231	100.2778	TWIN CHURCH (TWNCHURCH T6) 230/115/13.8KV TRANSFORMER CKT 2
FDNS	09ALL	4	17G	G15_042	FROM->TO	DIXONCO 230.00 - TWIN CHURCH 230KV CKT 1	320	320	0.33103	100.2045	SIOUXCY-LNX3345.00 - SPLIT ROCK 345KV CKT 1
FDNS	09NR	4	17G	G15_042	FROM->TO	DIXONCO 230.00 - TWIN CHURCH 230KV CKT 1	320	320	0.4056	100.0983	HOSKINS (HOSKINS T2) 345/230/13.8KV TRANSFORMER CKT 1
FDNS	09NR	4	17G	G15_042	FROM->TO	DIXONCO 230.00 - TWIN CHURCH 230KV CKT 1	320	320	0.4056	100.0983	HOSKINS (HOSKINS T2) 345/230/13.8KV TRANSFORMER CKT 1
FDNS	09ALL	4	20L	G15_042	FROM->TO	DIXONCO 230.00 - TWIN CHURCH 230KV CKT 1	320	320	0.33462	100.0633	P12:115:NPPD:1166:STNTN.N7:BEEMER 7:BTB
FDNS	09ALL	4	16WP	G15_042	FROM->TO	DIXONCO 230.00 - TWIN CHURCH 230KV CKT 1	320	320	0.32152	100	P12:115:NPPD:1193:OAKLAND7:EMERSON7:BTB
FDNS	09ALL	4	20L	G15_042	FROM->TO	DIXONCO 230.00 - TWIN CHURCH 230KV CKT 1	320	320	0.34289	100	HOSKINS (HOSKINS T1) 230/115/13.8KV TRANSFORMER CKT 1
FDNS	09ALL	4	20WP	G15_042	FROM->TO	DIXONCO 230.00 - TWIN CHURCH 230KV CKT 1	320	320	0.33061	100	RAUN - SUB 3451 FT CAL 345KV CKT 1
FDNS	09ALL	4	20WP	G15_042	FROM->TO	DIXONCO 230.00 - TWIN CHURCH 230KV CKT 1	320	320	0.33123	99.9	P12:345:UMZW:# 907 #: SC2-SR IN IA. SC2-SR 345 KV LINE
FDNS	09ALL	4	16WP	G15_042	FROM->TO	DIXONCO 230.00 - TWIN CHURCH 230KV CKT 1	320	320	0.33043	99.8	TWIN CHURCH (TWNCHURCH T4) 230/115/13.8KV TRANSFORMER CKT 1
FDNS	09ALL	4	17G	G15_042	FROM->TO	DIXONCO 230.00 - TWIN CHURCH 230KV CKT 1	320	320	0.33048	99.8	TWIN CHURCH (TWNCHURCH T4) 230/115/13.8KV TRANSFORMER CKT 1
FDNS	09ALL	4	20L	G15_042	FROM->TO	DIXONCO 230.00 - TWIN CHURCH 230KV CKT 1	320	320	0.33281	99.8	SHERBURNE CO 345/24.0KV TRANSFORMER CKT 1
FDNS	09ALL	4	20WP	G15_042	FROM->TO	DIXONCO 230.00 - TWIN CHURCH 230KV CKT 1	320	320	0.33123	99.8	SIOUXCY-LNX3345.00 - SPLIT ROCK 345KV CKT 1
FDNS	09NR	4	17G	G15_042	FROM->TO	DIXONCO 230.00 - TWIN CHURCH 230KV CKT 1	320	320	0.3205	99.7	FT RANDAL - SIOUX CITY 230KV CKT 1
FDNS	09ALL	4	20L	G15_042	FROM->TO	DIXONCO 230.00 - TWIN CHURCH 230KV CKT 1	320	320	0.33459	99.6	P12:115:NPPD:1161:OAKLAND7:BEEMER 7:BTB
FDNS	09NR	4	17G	G15_042	FROM->TO	DIXONCO 230.00 - TWIN CHURCH 230KV CKT 1	320	320	0.31178	99.5	RAUN - SIOUX CITY 345KV CKT 1
FDNS	09ALL	4	20L	G15_042	FROM->TO	DIXONCO 230.00 - TWIN CHURCH 230KV CKT 1	320	320	0.33411	99.5	MINGO - RED WILLOW 345KV CKT 1
FDNS	09ALL	4	20L	G15_042	FROM->TO	DIXONCO 230.00 - TWIN CHURCH 230KV CKT 1	320	320	0.33364	99.5	NAPA JCT7 115.00 - UTICA 115KV CKT 1
FDNS	09ALL	4	20L	G15_042	FROM->TO	DIXONCO 230.00 - TWIN CHURCH 230KV CKT 1	320	320	0.33364	99.5	NAPA JCT7 115.00 - YANKON JCT 115KV CKT 1
FDNS	09ALL	4	20L	G15_042	FROM->TO	DIXONCO 230.00 - TWIN CHURCH 230KV CKT 1	320	320	0.33364	99.5	P12:115:UMZW:# 1910 #: YJ IN SD. YJ-UJ LINE FAULT
FDNS	00NR	4	17SP	G15_042	TO->FROM	GRPRAR1-LNX3345.00 - GRPRAR 345KV CKT Z	720	720	0.03047	120.62	P12:230:UMZB:# 116 #: ST IN SD. WSG-ST-VH
FDNS	00NR	4	17SP	G15_042	TO->FROM	GRPRAR1-LNX3345.00 - GRPRAR 345KV CKT Z	720	720	0.03651	120.3709	KELLY - MEADOWGROVE4230.00 230KV CKT 1
FDNS	00NR	4	17SP	G15_042	TO->FROM	GRPRAR1-LNX3345.00 - GRPRAR 345KV CKT Z	720	720	0.03167	119.7691	WATERTN-LNX3345.00 - WATERTOWN 345KV CKT Z
FDNS	00NR	4	17SP	G15_042	TO->FROM	GRPRAR1-LNX3345.00 - GRPRAR 345KV CKT Z	720	720	0.03167	119.7542	P12:345:UMZW:# 1747 #: WT2 IN SD. WT2-WHT LINE FAULT
FDNS	00NR	4	17SP	G15_042	TO->FROM	GRPRAR1-LNX3345.00 - GRPRAR 345KV CKT Z	720	720	0.03167	119.7141	WATERTN-LNX3345.00 - WHITE 345KV CKT 1
FDNS	00NR	4	17SP	G15_042	TO->FROM	GRPRAR1-LNX3345.00 - GRPRAR 345KV CKT Z	720	720	0.03085	119.6795	STORLA - WESSINGTON 230KV CKT 1
FDNS	00NR	4	17SP	G15_042	TO->FROM	GRPRAR1-LNX3345.00 - GRPRAR 345KV CKT Z	720	720	0.03236	119.0162	G09_001IST 345.00 - WATERTOWN 345KV CKT 1
FDNS	00NR	4	17SP	G15_042	TO->FROM	GRPRAR1-LNX3345.00 - GRPRAR 345KV CKT Z	720	720	0.0308	118.5761	HANLON - STORLA 230KV CKT 1
FDNS	00NR	4	17SP	G15_042	TO->FROM	GRPRAR1-LNX3345.00 - GRPRAR 345KV CKT Z	720	720	0.03036	117.9434	FT THOMPSON - LETCHER 230KV CKT 1
FDNS	00NR	4	17SP	G15_042	TO->FROM	GRPRAR1-LNX3345.00 - GRPRAR 345KV CKT Z	720	720	0.03036	117.9434	FT THOMPSON - LETCHER 230KV CKT 1
FDNS	00NR	4	17SP	G15_042	TO->FROM	GRPRAR1-LNX3345.00 - GRPRAR 345KV CKT Z	720	720	0.03266	117.5447	BUFFALO - JAMESTOWN 345KV CKT 1
FDNS	00NR	4	17SP	G15_042	TO->FROM	GRPRAR1-LNX3345.00 - GRPRAR 345KV CKT Z	720	720	0.03012	116.5247	FT RANDAL - G12_009IST 230.00 230KV CKT 1
FDNS	00NR	4	17SP	G15_042	TO->FROM	GRPRAR1-LNX3345.00 - GRPRAR 345KV CKT Z	720	720	0.03005	116.49	FT RANDAL - FT THOMPSON 230KV CKT 1
FDNS	00NR	4	17SP	G15_042	TO->FROM	GRPRAR1-LNX3345.00 - GRPRAR 345KV CKT Z	720	720	0.03005	116.49	FT RANDAL - FT THOMPSON 230KV CKT 1
FDNS	00NR	4	17SP	G15_042	TO->FROM	GRPRAR1-LNX3345.00 - GRPRAR 345KV CKT Z	720	720	0.03266	116.4579	CHISAGO COUNTY - FORBES 500KV CKT 1
FDNS	00NR	4	17SP	G15_042	TO->FROM	GRPRAR1-LNX3345.00 - GRPRAR 345KV CKT Z	720	720	0.03012	116.4106	FT THOMPSON - LAKE PLATT 230KV CKT 1
FDNS	00NR	4	17SP	G15_042	TO->FROM	GRPRAR1-LNX3345.00 - GRPRAR 345KV CKT Z	720	720	0.03012	116.4106	FT THOMPSON - LAKE PLATT 230KV CKT 1
FDNS	00NR	4	17SP	G15_042	TO->FROM	GRPRAR1-LNX3345.00 - GRPRAR 345KV CKT Z	720	720	0.03236	116.3859	G09_001IST 345.00 - GROTON 345KV CKT 1
FDNS	00NR	4	17SP	G15_042	TO->FROM	GRPRAR1-LNX3345.00 - GRPRAR 345KV CKT Z	720	720	0.04079	116.3368	NUNDRWD - WAYSIDE 230KV CKT 1

SOLUTION	GROUP	SCENARIO	SEASON	SOURCE	DIRECTION	MONITORED ELEMENT	RATEA (MVA)	RATEB(MVA)	TDF	TC%LOADING (% MVA)	CONTINGENCY
FDNS	00NR	4	17SP	G15_042	TO->FROM	GRPRAR1-LNX3345.00 - GRPRAR 345KV CKT Z	720	720	0.03012	116.0324	G12_009IST 230.00 - LAKE PLATT 230KV CKT 1
FDNS	00NR	4	17SP	G15_042	TO->FROM	GRPRAR1-LNX3345.00 - GRPRAR 345KV CKT Z	720	720	0.03266	115.9557	CENTER - JAMESTOWN 345KV CKT 1
FDNS	00NR	4	17SP	G15_042	TO->FROM	GRPRAR1-LNX3345.00 - GRPRAR 345KV CKT Z	720	720	0.03651	115.8442	FT RANDAL - MEADOWGROVE4230.00 230KV CKT 1
FDNS	00NR	4	17SP	G15_042	TO->FROM	GRPRAR1-LNX3345.00 - GRPRAR 345KV CKT Z	720	720	0.03134	115.7193	LETCHER - SIOUX FALLS 230KV CKT 1
FDNS	00NR	4	17SP	G15_042	TO->FROM	GRPRAR1-LNX3345.00 - GRPRAR 345KV CKT Z	720	720	0.03268	115.4811	GEN336821 1-GRAND GULF UNIT
FDNS	00NR	4	17SP	G15_042	TO->FROM	GRPRAR1-LNX3345.00 - GRPRAR 345KV CKT Z	720	720	0.03267	115.4547	BISON 3 345.00 - BUFFALO 345KV CKT 1
FDNS	00NR	4	17SP	G15_042	TO->FROM	GRPRAR1-LNX3345.00 - GRPRAR 345KV CKT Z	720	720	0.03268	115.3562	GEN635024 4-WALTER SCOTT UNIT 4
FDNS	00NR	4	17SP	G15_042	TO->FROM	GRPRAR1-LNX3345.00 - GRPRAR 345KV CKT Z	720	720	0.03107	115.2852	SPLIT ROCK - WHITE 345KV CKT 1
FDNS	00NR	4	17SP	G15_042	TO->FROM	GRPRAR1-LNX3345.00 - GRPRAR 345KV CKT Z	720	720	0.03107	115.2852	SPLIT ROCK - WHITE 345KV CKT 1
FDNS	00NR	4	17SP	G15_042	TO->FROM	GRPRAR1-LNX3345.00 - GRPRAR 345KV CKT Z	720	720	0.03268	115.0893	GEN344225 1-1CAL G1 25.000
FDNS	00NR	4	17SP	G15_042	TO->FROM	GRPRAR1-LNX3345.00 - GRPRAR 345KV CKT Z	720	720	0.03363	115.017	KEYSTONE - SIDNEY1-LNX3345.00 345KV CKT 1
FDNS	00NR	4	17SP	G15_042	TO->FROM	GRPRAR1-LNX3345.00 - GRPRAR 345KV CKT Z	720	720	0.03363	115.0048	SIDNEY - SIDNEY1-LNX3345.00 345KV CKT Z
FDNS	00NR	4	17SP	G15_042	TO->FROM	GRPRAR1-LNX3345.00 - GRPRAR 345KV CKT Z	720	720	0.03268	114.8836	GEN562714 1-G15_023_4 0.6900
FDNS	00NR	4	17SP	G15_042	TO->FROM	GRPRAR1-LNX3345.00 - GRPRAR 345KV CKT Z	720	720	0.03268	114.8836	GEN562715 1-G15_023_5 0.6900
FDNS	00NR	4	17SP	G15_042	TO->FROM	GRPRAR1-LNX3345.00 - GRPRAR 345KV CKT Z	720	720	0.03268	114.8826	GEN635023 3-WALTER SCOTT UNIT 3
FDNS	00NR	4	17SP	G15_042	TO->FROM	GRPRAR1-LNX3345.00 - GRPRAR 345KV CKT Z	720	720	0.03268	114.8453	GEN337911 1-ARKANSAS NUCLEAR ONE UNIT #2
FDNS	00NR	4	17SP	G15_042	TO->FROM	GRPRAR1-LNX3345.00 - GRPRAR 345KV CKT Z	720	720	0.03268	114.8157	GEN336153 1-WATERFORD UNIT#3
FDNS	00NR	4	17SP	G15_042	TO->FROM	GRPRAR1-LNX3345.00 - GRPRAR 345KV CKT Z	720	720	0.0307	114.8098	FT RANDAL - SIOUX CITY 230KV CKT 1
FDNS	00NR	4	17SP	G15_042	TO->FROM	GRPRAR1-LNX3345.00 - GRPRAR 345KV CKT Z	720	720	0.03239	114.7423	GROTON-LNX3 345.00 - LELAND1-LNX3345.00 345KV CKT 1
FDNS	00NR	4	17SP	G15_042	TO->FROM	GRPRAR1-LNX3345.00 - GRPRAR 345KV CKT Z	720	720	0.03239	114.6496	GROTON - GROTON-LNX3 345.00 345KV CKT Z
FDNS	00NR	4	17SP	G15_042	TO->FROM	GRPRAR1-LNX3345.00 - GRPRAR 345KV CKT Z	720	720	0.03239	114.6478	P12:345:UMZB:# 109 #: LOS GRT IN ND. LOS GRT
FDNS	00NR	4	17SP	G15_042	TO->FROM	GRPRAR1-LNX3345.00 - GRPRAR 345KV CKT Z	720	720	0.03239	114.6062	LELAND OLDS - LELAND1-LNX3345.00 345KV CKT Z
FDNS	00NR	4	17SP	G15_042	TO->FROM	GRPRAR1-LNX3345.00 - GRPRAR 345KV CKT Z	720	720	0.03297	114.564	ARROWHEAD - ARROWHEAD 230 230KV CKT 1
FDNS	00NR	4	17SP	G15_042	TO->FROM	GRPRAR1-LNX3345.00 - GRPRAR 345KV CKT Z	720	720	0.03184	114.5479	HANLON - SIOUX FALLS 230KV CKT 1
FDNS	00NR	4	17SP	G15_042	TO->FROM	GRPRAR1-LNX3345.00 - GRPRAR 345KV CKT Z	720	720	0.03326	114.5154	MISSION - ST FRANCIS 115KV CKT 1
FDNS	00NR	4	17SP	G15_042	TO->FROM	GRPRAR1-LNX3345.00 - GRPRAR 345KV CKT Z	720	720	0.03326	114.5007	P12:115:NPPD:1091:VALENTN7:MISSION7:BTB
FDNS	00NR	4	17SP	G15_042	TO->FROM	GRPRAR1-LNX3345.00 - GRPRAR 345KV CKT Z	720	720	0.03268	114.4704	GEN640010 1-GERALD GENTLEMAN STATION UNIT 1
FDNS	00NR	4	17SP	G15_042	TO->FROM	GRPRAR1-LNX3345.00 - GRPRAR 345KV CKT Z	720	720	0.03268	114.4695	GEN335831 1-RIVERBEND UNIT#1
FDNS	00NR	4	17SP	G15_042	TO->FROM	GRPRAR1-LNX3345.00 - GRPRAR 345KV CKT Z	720	720	0.03268	114.3791	GEN337910 1-ARKANSAS NUCLEAR ONE UNIT #1
FDNS	00NR	4	17SP	G15_042	TO->FROM	GRPRAR1-LNX3345.00 - GRPRAR 345KV CKT Z	720	720	0.02983	114.378	FT RANDAL - UTICA JCT 230KV CKT 1
FDNS	00NR	4	17SP	G15_042	TO->FROM	GRPRAR1-LNX3345.00 - GRPRAR 345KV CKT Z	720	720	0.03326	114.3516	HARMONY - ST FRANCIS 115KV CKT 1
FDNS	00NR	4	17SP	G15_042	TO->FROM	GRPRAR1-LNX3345.00 - GRPRAR 345KV CKT Z	720	720	0.0335	114.318	HAZLETON - MITCHLCO3 345.00 345KV CKT 1
FDNS	00NR	4	17SP	G15_042	TO->FROM	GRPRAR1-LNX3345.00 - GRPRAR 345KV CKT Z	720	720	0.03272	114.3084	ALEXMRES3 345.00 - BISON 3 345.00 345KV CKT 1
FDNS	00NR	4	17SP	G15_042	TO->FROM	GRPRAR1-LNX3345.00 - GRPRAR 345KV CKT Z	720	720	0.02998	114.2417	SIOUXCY-LNX3345.00 - SPLIT ROCK 345KV CKT 1
FDNS	00NR	4	17SP	G15_042	TO->FROM	GRPRAR1-LNX3345.00 - GRPRAR 345KV CKT Z	720	720	0.02998	114.2417	SIOUXCY-LNX3345.00 - SPLIT ROCK 345KV CKT 1
FDNS	00NR	4	17SP	G15_042	TO->FROM	GRPRAR1-LNX3345.00 - GRPRAR 345KV CKT Z	720	720	0.03267	114.2281	ELLENDALE - OAKES 230KV CKT 1
FDNS	00NR	4	17SP	G15_042	TO->FROM	GRPRAR1-LNX3345.00 - GRPRAR 345KV CKT Z	720	720	0.03267	114.2281	ELLENDALE - OAKES 230KV CKT 1
FDNS	00NR	4	17SP	G15_042	TO->FROM	GRPRAR1-LNX3345.00 - GRPRAR 345KV CKT Z	720	720	0.02998	114.2261	P12:345:UMZW:# 907 #: SC2-SR IN IA. SC2-SR 345 KV LINE
FDNS	00NR	4	17SP	G15_042	TO->FROM	GRPRAR1-LNX3345.00 - GRPRAR 345KV CKT Z	720	720	0.03431	114.208	FT RANDAL - SPENCER 115KV CKT 1
FDNS	00NR	4	17SP	G15_042	TO->FROM	GRPRAR1-LNX3345.00 - GRPRAR 345KV CKT Z	720	720	0.03268	114.1785	GEN640011 2-GERALD GENTLEMAN STATION UNIT 2
FDNS	00NR	4	17SP	G15_042	TO->FROM	GRPRAR1-LNX3345.00 - GRPRAR 345KV CKT Z	720	720	0.02998	114.1756	SIOUX CITY - SIOUXCY-LNX3345.00 345KV CKT Z
FDNS	00NR	4	17SP	G15_042	TO->FROM	GRPRAR1-LNX3345.00 - GRPRAR 345KV CKT Z	720	720	0.03431	114.1729	P12:115:NPPD:WAPA6:FTRANDL7:ONEILL 7:BTB
FDNS	00NR	4	17SP	G15_042	TO->FROM	GRPRAR1-LNX3345.00 - GRPRAR 345KV CKT Z	720	720	0.03431	114.1729	P12:115:UMZB:# 115 #: SE IN NE. FR-SE-ON
FDNS	00NR	4	17SP	G15_042	TO->FROM	GRPRAR1-LNX3345.00 - GRPRAR 345KV CKT Z	720	720	0.03736	114.1646	RAUN - SUB 3451 FT CAL 345KV CKT 1
FDNS	00NR	4	17SP	G15_042	TO->FROM	GRPRAR1-LNX3345.00 - GRPRAR 345KV CKT Z	720	720	0.03736	114.1646	RAUN - SUB 3451 FT CAL 345KV CKT 1
FDNS	00NR	4	17SP	G15_042	TO->FROM	GRPRAR1-LNX3345.00 - GRPRAR 345KV CKT Z	720	720	0.03326	114.1626	HARMONY - VALENTINE 115KV CKT 1
FDNS	00NR	4	17SP	G15_042	TO->FROM	GRPRAR1-LNX3345.00 - GRPRAR 345KV CKT Z	720	720	0.03267	114.1208	FORMAN - OAKES 230KV CKT 1
FDNS	00NR	4	17SP	G15_042	TO->FROM	GRPRAR1-LNX3345.00 - GRPRAR 345KV CKT Z	720	720	0.03406	114.1122	SIDNEY - STEGALL 345KV CKT 1
FDNS	00NR	4	17SP	G15_042	TO->FROM	GRPRAR1-LNX3345.00 - GRPRAR 345KV CKT Z	720	720	0.03296	114.1085	GERALD GENTLEMAN STATION - KEYSTONE 345KV CKT 1
FDNS	00NR	4	17SP	G15_042	TO->FROM	GRPRAR1-LNX3345.00 - GRPRAR 345KV CKT Z	720	720	0.03431	114.0512	ONEILL - SPENCER 115KV CKT 1
FDNS	00NR	4	17SP	G15_042	TO->FROM	GRPRAR1-LNX3345.00 - GRPRAR 345KV CKT Z	720	720	0.06428	114.0212	DIXONCO 230.00 - HOSKINS 230KV CKT 1
FDNS	00NR	4	17SP	G15_042	TO->FROM	GRPRAR1-LNX3345.00 - GRPRAR 345KV CKT Z	720	720	0.03301	113.9888	AS KING - EAU CLAIRE 345KV CKT 1
FDNS	00NR	4	17SP	G15_042	TO->FROM	GRPRAR1-LNX3345.00 - GRPRAR 345KV CKT Z	720	720	0.03256	113.9738	CARPENTER - HURON 230KV CKT 1
FDNS	00NR	4	17SP	G15_042	TO->FROM	GRPRAR1-LNX3345.00 - GRPRAR 345KV CKT Z	720	720	0.03096	113.9649	PAHOJA - SIOUX FALLS 230KV CKT 1
FDNS	00NR	4	17SP	G15_042	TO->FROM	GRPRAR1-LNX3345.00 - GRPRAR 345KV CKT Z	720	720	0.03268	113.8935	GEN337653 1-WHITE BLUFF UNIT #2
FDNS	00NR	4	17SP	G15_042	TO->FROM	GRPRAR1-LNX3345.00 - GRPRAR 345KV CKT Z	720	720	0.03268	113.8802	GEN337652 1-WHITE BLUFF UNIT #1
FDNS	00NR	4	17SP	G15_042	TO->FROM	GRPRAR1-LNX3345.00 - GRPRAR 345KV CKT Z	720	720	0.03256	113.8783	HURON - WATERTOWN 230KV CKT 2
FDNS	00NR	4	17SP	G15_042	TO->FROM	GRPRAR1-LNX3345.00 - GRPRAR 345KV CKT Z	720	720	0.03256	113.8783	HURON - WATERTOWN 230KV CKT 2
FDNS	00NR	4	17SP	G15_042	TO->FROM	GRPRAR1-LNX3345.00 - GRPRAR 345KV CKT Z	720	720	0.03268	113.828	GEN338146 1-INDEPENDENCE UNIT #2
FDNS	00NR	4	17SP	G15_042	TO->FROM	GRPRAR1-LNX3345.00 - GRPRAR 345KV CKT Z	720	720	0.03268	113.8216	GEN338143 1-INDEPENDENCE UNIT #1
FDNS	00NR	4	17SP	G15_042	TO->FROM	GRPRAR1-LNX3345.00 - GRPRAR 345KV CKT Z	720	720	0.03256	113.8207	CARPENTER - WATERTOWN 230KV CKT 1
FDNS	00NR	4	17SP	G15_042	TO->FROM	GRPRAR1-LNX3345.00 - GRPRAR 345KV CKT Z	720	720	0.03256	113.8207	CARPENTER - WATERTOWN 230KV CKT 1
FDNS	00NR	4	17SP	G15_042	TO->FROM	GRPRAR1-LNX3345.00 - GRPRAR 345KV CKT Z	720	720	0.03314	113.7783	ARPIN B4 345.00 - EAU CLAIRE 345KV CKT 1
FDNS	00NR	4	17SP	G15_042	TO->FROM	GRPRAR1-LNX3345.00 - GRPRAR 345KV CKT Z	720	720	0.03268	113.7601	GEN501801 1-DOLET HILLS UNIT1
FDNS	00NR	4	17SP	G15_042	TO->FROM	GRPRAR1-LNX3345.00 - GRPRAR 345KV CKT Z	720	720	0.03269	113.7243	FORMAN - HANKINSON 230KV CKT 1
FDNS	00NR	4	17SP	G15_042	TO->FROM	GRPRAR1-LNX3345.00 - GRPRAR 345KV CKT Z	720	720	0.03326	113.6346	AINSWORTH - VALENTINE 115KV CKT 1
FDNS	00NR	4	17SP	G15_042	TO->FROM	GRPRAR1-LNX3345.00 - GRPRAR 345KV CKT Z	720	720	0.03085	113.5771	FT THOMPSON - WESSINGTON 230KV CKT 1
FDNS	00NR	4	17SP	G15_042	TO->FROM	GRPRAR1-LNX3345.00 - GRPRAR 345KV CKT Z	720	720	0.03085	113.5771	FT THOMPSON - WESSINGTON 230KV CKT 1
FDNS	00NR	4	17SP	G15_042	TO->FROM	GRPRAR1-LNX3345.00 - GRPRAR 345KV CKT Z	720	720	0.03096	113.5436	EAGLE 4 230.00 - PAHOJA 230KV CKT 1
FDNS	00NR	4	17SP	G15_042	TO->FROM	GRPRAR1-LNX3345.00 - GRPRAR 345KV CKT Z	720	720	0.03295	113.5353	G15094_T 345.00 - SIDNEY2-LNX3345.00 345KV CKT 1
FDNS	00NR	4	17SP	G15_042	TO->FROM	GRPRAR1-LNX3345.00 - GRPRAR 345KV CKT Z	720	720	0.03269	113.5353	CNTSHNT3 345.00 - PRAIRIE3 345.00 345KV CKT 1
FDNS	00NR	4	17SP	G15_042	TO->FROM	GRPRAR1-LNX3345.00 - GRPRAR 345KV CKT Z	720	720	0.0335	113.5244	ADAMS - MITCHLCO3 345.00 345KV CKT 1
FDNS	00NR	4	17SP	G15_042	TO->FROM	GRPRAR1-LNX3345.00 - GRPRAR 345KV CKT Z	720	720	0.03295	113.5107	SIDNEY - SIDNEY2-LNX3345.00 345KV CKT Z
FDNS	00NR	4	17SP	G15_042	TO->FROM	GRPRAR1-LNX3345.00 - GRPRAR 345KV CKT Z	720	720	0.03268	113.4766	GEN336252 1-NINEMILE POINT UNIT#5
FDNS	00NR	4	17SP	G15_042	TO->FROM	GRPRAR1-LNX3345.00 - GRPRAR 345KV CKT Z	720	720	0.03268	113.4365	GEN501813 1-RODEMACHER UNIT 3
FDNS	00NR	4	17SP	G15_042	TO->FROM	GRPRAR1-LNX3345.00 - GRPRAR 345KV CKT Z	720	720	0.03268	113.3593	GEN336831 1-BAXTER WILSON SES
FDNS	00NR	4	17SP	G15_042	TO->FROM	GRPRAR1-LNX3345.00 - GRPRAR 345KV CKT Z	720	720	0.03325	113.3551	ADAMS - PLEASANT VALLEY 345KV CKT 1
FDNS	00NR	4	17SP	G15_042	TO->FROM	GRPRAR1-LNX3345.00 - GRPRAR 345KV CKT Z	720	720	0.03268	113.348	GEN336251 1-NINEMILE POINT UNIT#4
FDNS	00NR	4	17SP	G15_042	TO->FROM	GRPRAR1-LNX3345.00 - GRPRAR 345KV CKT Z	720	720	0.03268	113.2857	GEN337041 1-GERALD ANDRUS

SOLUTION	GROUP	SCENARIO	SEASON	SOURCE	DIRECTION	MONITORED ELEMENT	RATEA (MVA)	RATEB(MVA)	TDF	TC%LOADING (% MVA)	CONTINGENCY
FDNS	00NR	4	17SP	G15_042	TO->FROM	GRPRAR1-LNX3345.00 - GRPRAR 345KV CKT Z	720	720	0.03268	113.2746	GEN344897 4-1LAB G4 20.000
FDNS	00NR	4	17SP	G15_042	TO->FROM	GRPRAR1-LNX3345.00 - GRPRAR 345KV CKT Z	720	720	0.03268	113.2718	GEN344894 1-1LAB G1 20.000
FDNS	00NR	4	17SP	G15_042	TO->FROM	GRPRAR1-LNX3345.00 - GRPRAR 345KV CKT Z	720	720	0.03268	113.2717	GEN344896 3-1LAB G3 20.000
FDNS	00NR	4	17SP	G15_042	TO->FROM	GRPRAR1-LNX3345.00 - GRPRAR 345KV CKT Z	720	720	0.03268	113.265	GEN335206 1-NELSON UNIT 6
FDNS	00NR	4	17SP	G15_042	TO->FROM	GRPRAR1-LNX3345.00 - GRPRAR 345KV CKT Z	720	720	0.03268	113.2237	GEN344895 2-1LAB G2 20.000
FDNS	00NR	4	17SP	G15_042	TO->FROM	GRPRAR1-LNX3345.00 - GRPRAR 345KV CKT Z	720	720	0.03268	113.2113	GEN345670 1-1RUSH G1 18.000
FDNS	00NR	4	17SP	G15_042	TO->FROM	GRPRAR1-LNX3345.00 - GRPRAR 345KV CKT Z	720	720	0.03268	113.211	GEN345671 2-1RUSH G2 18.000
FDNS	00NR	4	17SP	G15_042	TO->FROM	GRPRAR1-LNX3345.00 - GRPRAR 345KV CKT Z	720	720	0.03268	113.1354	GEN501812 1-RODEMACHER UNIT 2
FDNS	00NR	4	17SP	G15_042	TO->FROM	GRPRAR1-LNX3345.00 - GRPRAR 345KV CKT Z	720	720	0.03353	113.1342	LAKEFIELD 3 - NOBLES 345KV CKT 1
FDNS	00NR	4	17SP	G15_042	TO->FROM	GRPRAR1-LNX3345.00 - GRPRAR 345KV CKT Z	720	720	0.03275	113.1228	ALEXMRES3 345.00 - WAITE PARK 345KV CKT 1
FDNS	00NR	4	17SP	G15_042	TO->FROM	GRPRAR1-LNX3345.00 - GRPRAR 345KV CKT Z	720	720	0.03268	113.1161	GEN334440 1-SABINE UNIT 4
FDNS	00NR	4	17SP	G15_042	TO->FROM	GRPRAR1-LNX3345.00 - GRPRAR 345KV CKT Z	720	720	0.03272	113.1123	BLAIR - GRANITE FALLS 230KV CKT 1
FDNS	00NR	4	17SP	G15_042	TO->FROM	GRPRAR1-LNX3345.00 - GRPRAR 345KV CKT Z	720	720	0.03272	113.1123	BLAIR - GRANITE FALLS 230KV CKT 1
FDNS	00NR	4	17SP	G15_042	TO->FROM	GRPRAR1-LNX3345.00 - GRPRAR 345KV CKT Z	720	720	0.03268	113.0884	GEN635214 4-NEAL UNIT 4
FDNS	00NR	4	17SP	G15_042	TO->FROM	GRPRAR1-LNX3345.00 - GRPRAR 345KV CKT Z	720	720	0.03267	113.0616	CENTER - COYOTE 345KV CKT 1
FDNS	00NR	4	17SP	G15_042	TO->FROM	GRPRAR1-LNX3345.00 - GRPRAR 345KV CKT Z	720	720	0.03302	113.0284	BROOKING COUNTY - LYON COUNTY 345KV CKT 1
FDNS	00NR	4	17SP	G15_042	TO->FROM	GRPRAR1-LNX3345.00 - GRPRAR 345KV CKT Z	720	720	0.03199	113.0097	MENNO JCT - TRIPP JCT 115KV CKT 1
FDNS	00NR	4	17SP	G15_042	TO->FROM	GRPRAR1-LNX3345.00 - GRPRAR 345KV CKT Z	720	720	0.03544	113.0061	STEGALL - STEGALL TRANSFORMER 230KV CKT 1
FDNS	00NR	4	17SP	G15_042	TO->FROM	GRPRAR1-LNX3345.00 - GRPRAR 345KV CKT Z	720	720	0.03272	112.9964	GLENBORO SOUTH - RUGBY 230KV CKT 1
FDNS	00NR	4	17SP	G15_042	TO->FROM	GRPRAR1-LNX3345.00 - GRPRAR 345KV CKT Z	720	720	0.03268	112.9925	GEN629075 1-OTTUMWA GENERATOR FOR OTTUMWA UNIT NO 1
FDNS	00NR	4	17SP	G15_042	TO->FROM	GRPRAR1-LNX3345.00 - GRPRAR 345KV CKT Z	720	720	0.03544	112.991	P13:230-345:NPPD:STEGALL3:KV3A
FDNS	00NR	4	17SP	G15_042	TO->FROM	GRPRAR1-LNX3345.00 - GRPRAR 345KV CKT Z	720	720	0.03268	112.9889	GEN336191 1-LITTLE GYPSY UNIT#3
FDNS	00NR	4	17SP	G15_042	TO->FROM	GRPRAR1-LNX3345.00 - GRPRAR 345KV CKT Z	720	720	0.03544	112.9833	STEGALL (SGQ KV3A) 345/230/13.8KV TRANSFORMER CKT 1
FDNS	00NR	4	17SP	G15_042	TO->FROM	GRPRAR1-LNX3345.00 - GRPRAR 345KV CKT Z	720	720	0.03274	112.9458	HANKINSON - WAHPETON 230KV CKT 1
FDNS	00NR	4	17SP	G15_042	TO->FROM	GRPRAR1-LNX3345.00 - GRPRAR 345KV CKT Z	720	720	0.03268	112.9389	GEN338388 1-1PLUM PT U1 23.000
FDNS	00NR	4	17SP	G15_042	TO->FROM	GRPRAR1-LNX3345.00 - GRPRAR 345KV CKT Z	720	720	0.03268	112.9214	P12:115:UMZW:# 162 #: NEL IN ND. FAULT ON ML-NEL-MX-GA 115 KV
FDNS	00NR	4	17SP	G15_042	TO->FROM	GRPRAR1-LNX3345.00 - GRPRAR 345KV CKT Z	720	720	0.03268	112.9126	GEN336801 1-BAXTER WILSON UNIT #1
FDNS	00NR	4	17SP	G15_042	TO->FROM	GRPRAR1-LNX3345.00 - GRPRAR 345KV CKT Z	720	720	0.03726	112.9015	STEGALL-LNX3230.00 - WAYSIDE 230KV CKT 1
FDNS	00NR	4	17SP	G15_042	TO->FROM	GRPRAR1-LNX3345.00 - GRPRAR 345KV CKT Z	720	720	0.03268	112.8986	GEN335614 1-WILLOW GLENN UNIT#4
FDNS	00NR	4	17SP	G15_042	TO->FROM	GRPRAR1-LNX3345.00 - GRPRAR 345KV CKT Z	720	720	0.03726	112.8959	STEGALL - STEGALL-LNX3230.00 230KV CKT Z
FDNS	00NR	4	17SP	G15_042	TO->FROM	GRPRAR1-LNX3345.00 - GRPRAR 345KV CKT Z	720	720	0.03331	112.895	KOSSUTH 3 345.00 - OBRIEN 3 345.00 345KV CKT 1
FDNS	00NR	4	17SP	G15_042	TO->FROM	GRPRAR1-LNX3345.00 - GRPRAR 345KV CKT Z	720	720	0.03199	112.8925	MENNO JCT - UTICA 115KV CKT 1
FDNS	00NR	4	17SP	G15_042	TO->FROM	GRPRAR1-LNX3345.00 - GRPRAR 345KV CKT Z	720	720	0.03268	112.8886	GEN334441 1-SABINE UNIT 5
FDNS	00NR	4	17SP	G15_042	TO->FROM	GRPRAR1-LNX3345.00 - GRPRAR 345KV CKT Z	720	720	0.03268	112.8859	GEN336464 1-MICHOUD UNIT #3
FDNS	00NR	4	17SP	G15_042	TO->FROM	GRPRAR1-LNX3345.00 - GRPRAR 345KV CKT Z	720	720	0.03268	112.8781	GEN563222 1-G15088_3 0.6900
FDNS	00NR	4	17SP	G15_042	TO->FROM	GRPRAR1-LNX3345.00 - GRPRAR 345KV CKT Z	720	720	0.03331	112.8753	KOSSUTH 3 345.00 - WEBSTER 345KV CKT 1
FDNS	00NR	4	17SP	G15_042	TO->FROM	GRPRAR1-LNX3345.00 - GRPRAR 345KV CKT Z	720	720	0.03268	112.8717	GEN335204 1-NELSON UNIT 4
FDNS	00NR	4	17SP	G15_042	TO->FROM	GRPRAR1-LNX3345.00 - GRPRAR 345KV CKT Z	720	720	0.03901	112.8713	RAUN - SIOUX CITY 345KV CKT 1
FDNS	00NR	4	17SP	G15_042	TO->FROM	GRPRAR1-LNX3345.00 - GRPRAR 345KV CKT Z	720	720	0.03901	112.8713	RAUN - SIOUX CITY 345KV CKT 1
FDNS	00NR	4	17SP	G15_042	TO->FROM	GRPRAR1-LNX3345.00 - GRPRAR 345KV CKT Z	720	720	0.03268	112.8589	GARRISON - JAMES TOWN 230KV CKT 1
FDNS	00NR	4	17SP	G15_042	TO->FROM	GRPRAR1-LNX3345.00 - GRPRAR 345KV CKT Z	720	720	0.03309	112.8382	BYRON - NORTH ROCHESTER 345KV CKT 1
FDNS	00NR	4	17SP	G15_042	TO->FROM	GRPRAR1-LNX3345.00 - GRPRAR 345KV CKT Z	720	720	0.03414	112.8244	GRIMES - LEHIGH 345KV CKT 1
FDNS	00NR	4	17SP	G15_042	TO->FROM	GRPRAR1-LNX3345.00 - GRPRAR 345KV CKT Z	720	720	0.03199	112.8227	P12:115:UMZZ:# 237 #: MEN IN SD. MENNO JUNCTION IS A TAP (UJ-MEN-TP).
FDNS	00NR	4	17SP	G15_042	TO->FROM	GRPRAR1-LNX3345.00 - GRPRAR 345KV CKT Z	720	720	0.03268	112.7515	GEN635213 3-NEAL UNIT 3
FDNS	00NR	4	17SP	G15_042	TO->FROM	GRPRAR1-LNX3345.00 - GRPRAR 345KV CKT Z	720	720	0.03277	112.7198	APPLEDORN 4 230.00 - WATERTOWN 230KV CKT 1
FDNS	00NR	4	17SP	G15_042	TO->FROM	GRPRAR1-LNX3345.00 - GRPRAR 345KV CKT Z	720	720	0.03277	112.7198	APPLEDORN 4 230.00 - WATERTOWN 230KV CKT 1
FDNS	00NR	4	17SP	G15_042	TO->FROM	GRPRAR1-LNX3345.00 - GRPRAR 345KV CKT Z	720	720	0.03268	112.7087	GEN334433 1-SABINE UNIT 3
FDNS	00NR	4	17SP	G15_042	TO->FROM	GRPRAR1-LNX3345.00 - GRPRAR 345KV CKT Z	720	720	0.03268	112.6929	GEN336222 1-LITTLE GYPSY UNIT#2
FDNS	00NR	4	17SP	G15_042	TO->FROM	GRPRAR1-LNX3345.00 - GRPRAR 345KV CKT Z	720	720	0.03268	112.6826	GEN303007 1-1BC2 U2
FDNS	00NR	4	17SP	G15_042	TO->FROM	GRPRAR1-LNX3345.00 - GRPRAR 345KV CKT Z	720	720	0.03268	112.6772	GEN303006 1-1BC2 U1
FDNS	00NR	4	17SP	G15_042	TO->FROM	GRPRAR1-LNX3345.00 - GRPRAR 345KV CKT Z	720	720	0.03268	112.6701	FARGO - JAMES TOWN 230KV CKT 1
FDNS	00NR	4	17SP	G15_042	TO->FROM	GRPRAR1-LNX3345.00 - GRPRAR 345KV CKT Z	720	720	0.03268	112.6624	GEN640009 1-COOPER NUCLEAR STATION
FDNS	00NR	4	17SP	G15_042	TO->FROM	GRPRAR1-LNX3345.00 - GRPRAR 345KV CKT Z	720	720	0.03283	112.654	NORTH ROCHESTER - PRAIRIE ISLAND 345KV CKT 1
FDNS	00NR	4	17SP	G15_042	TO->FROM	GRPRAR1-LNX3345.00 - GRPRAR 345KV CKT Z	720	720	0.03272	112.6495	FERGSFL4 230.00 - WAHPETON 230KV CKT 1
FDNS	00NR	4	17SP	G15_042	TO->FROM	GRPRAR1-LNX3345.00 - GRPRAR 345KV CKT Z	720	720	0.03295	112.6468	G15094_T 345.00 - LARAMIE RIVER 345KV CKT 1
FDNS	00NR	4	17SP	G15_042	TO->FROM	GRPRAR1-LNX3345.00 - GRPRAR 345KV CKT Z	720	720	0.03268	112.6467	P13:230:UMZW:# 2218 #: FP IN MT. LOSS OF TRANSFORMER (AT2).
FDNS	00NR	4	17SP	G15_042	TO->FROM	GRPRAR1-LNX3345.00 - GRPRAR 345KV CKT Z	720	720	0.03268	112.6458	FARGO - JAMES TOWN 230KV CKT 2
FDNS	00NR	4	17SP	G15_042	TO->FROM	GRPRAR1-LNX3345.00 - GRPRAR 345KV CKT Z	720	720	0.03277	112.6419	APPLEDORN 4 230.00 - GRANITE FALLS 230KV CKT 1
FDNS	00NR	4	17SP	G15_042	TO->FROM	GRPRAR1-LNX3345.00 - GRPRAR 345KV CKT Z	720	720	0.03277	112.6419	APPLEDORN 4 230.00 - GRANITE FALLS 230KV CKT 1
FDNS	00NR	4	17SP	G15_042	TO->FROM	GRPRAR1-LNX3345.00 - GRPRAR 345KV CKT Z	720	720	0.03268	112.6316	GEN336152 1-WATERFORD UNIT#2
FDNS	00NR	4	17SP	G15_042	TO->FROM	GRPRAR1-LNX3345.00 - GRPRAR 345KV CKT Z	720	720	0.03268	112.6313	GEN336151 1-WATERFORD UNIT#1
FDNS	00NR	4	17SP	G15_042	TO->FROM	GRPRAR1-LNX3345.00 - GRPRAR 345KV CKT Z	720	720	0.03268	112.6115	GEN303008 1-1BC2 U3
FDNS	00NR	4	17SP	G15_042	TO->FROM	GRPRAR1-LNX3345.00 - GRPRAR 345KV CKT Z	720	720	0.03268	112.607	GEN336170 1-GULF OXY U4
FDNS	00NR	4	17SP	G15_042	TO->FROM	GRPRAR1-LNX3345.00 - GRPRAR 345KV CKT Z	720	720	0.03309	112.6043	BYRON - PLEASANT VALLEY 345KV CKT 1
FDNS	00NR	4	17SP	G15_042	TO->FROM	GRPRAR1-LNX3345.00 - GRPRAR 345KV CKT Z	720	720	0.03267	112.5936	BISMARK - WEBER 230KV CKT 1
FDNS	00NR	4	17SP	G15_042	TO->FROM	GRPRAR1-LNX3345.00 - GRPRAR 345KV CKT Z	720	720	0.03267	112.5884	BISMARK - JAMES TOWN 230KV CKT 1
FDNS	00NR	4	17SP	G15_042	TO->FROM	GRPRAR1-LNX3345.00 - GRPRAR 345KV CKT Z	720	720	0.03268	112.5831	GEN641089 2-ENERGY CENTER 2
FDNS	00NR	4	17SP	G15_042	TO->FROM	GRPRAR1-LNX3345.00 - GRPRAR 345KV CKT Z	720	720	0.03315	112.5823	P13:230-345:NPPD:SIDNEY 3:KV2A
FDNS	00NR	4	17SP	G15_042	TO->FROM	GRPRAR1-LNX3345.00 - GRPRAR 345KV CKT Z	720	720	0.03315	112.5822	SIDNEY (SDQ KV2A) 345/230/13.8KV TRANSFORMER CKT 1
FDNS	00NR	4	17SP	G15_042	TO->FROM	GRPRAR1-LNX3345.00 - GRPRAR 345KV CKT Z	720	720	0.03524	112.5813	BLOOMFIELD - CREIGHTON 115KV CKT 1
FDNS	00NR	4	17SP	G15_042	TO->FROM	GRPRAR1-LNX3345.00 - GRPRAR 345KV CKT Z	720	720	0.03315	112.5799	SIDNEY - SIDNEY TRANSFORMER 230KV CKT 1
FDNS	00NR	4	17SP	G15_042	TO->FROM	GRPRAR1-LNX3345.00 - GRPRAR 345KV CKT Z	720	720	0.03317	112.5758	P13:115-230:TSGT:SIDNEY-KV1A
FDNS	00NR	4	17SP	G15_042	TO->FROM	GRPRAR1-LNX3345.00 - GRPRAR 345KV CKT Z	720	720	0.03183	112.5748	LAKEFIELD 3 - LKFLDXL3 345KV CKT 1
FDNS	00NR	4	17SP	G15_042	TO->FROM	GRPRAR1-LNX3345.00 - GRPRAR 345KV CKT Z	720	720	0.03267	112.5631	JAMES TOWN - WEBER 230KV CKT 1
FDNS	00NR	4	17SP	G15_042	TO->FROM	GRPRAR1-LNX3345.00 - GRPRAR 345KV CKT Z	720	720	0.03268	112.5547	GEN562921 1-G15054_2 0.6900
FDNS	00NR	4	17SP	G15_042	TO->FROM	GRPRAR1-LNX3345.00 - GRPRAR 345KV CKT Z	720	720	0.03267	112.522	ELM CREEK - MONTICELLO 345KV CKT 1
FDNS	00NR	4	17SP	G15_042	TO->FROM	GRPRAR1-LNX3345.00 - GRPRAR 345KV CKT Z	720	720	0.03268	112.5195	GEN562596 1-G14_059_3 0.6900
FDNS	00NR	4	17SP	G15_042	TO->FROM	GRPRAR1-LNX3345.00 - GRPRAR 345KV CKT Z	720	720	0.03524	112.5	BLOOMFIELD - GAVINS POINT 115KV CKT 1
FDNS	00NR	4	17SP	G15_042	TO->FROM	GRPRAR1-LNX3345.00 - GRPRAR 345KV CKT Z	720	720	0.03268	112.4988	GEN501811 1-RODEMACHER UNIT 1

SOLUTION	GROUP	SCENARIO	SEASON	SOURCE	DIRECTION	MONITORED ELEMENT	RATEA (MVA)	RATEB(MVA)	TDF	TC%LOADING (% MVA)	CONTINGENCY
FDNS	00NR	4	17SP	G15_042	TO->FROM	GRPRAR1-LNX3345.00 - GRPRAR 345KV CKT Z	720	720	0.0328	112.4962	ARKANSAS NUCLEAR ONE - FT SMITH 500KV CKT 1
FDNS	00NR	4	17SP	G15_042	TO->FROM	GRPRAR1-LNX3345.00 - GRPRAR 345KV CKT Z	720	720	0.0328	112.4962	ARKANSAS NUCLEAR ONE - FT SMITH 500KV CKT 1
FDNS	00NR	4	17SP	G15_042	TO->FROM	GRPRAR1-LNX3345.00 - GRPRAR 345KV CKT Z	720	720	0.03252	112.4854	MT VERN - STORLA 115KV CKT 1
FDNS	00NR	4	17SP	G15_042	TO->FROM	GRPRAR1-LNX3345.00 - GRPRAR 345KV CKT Z	720	720	0.0327	112.4852	AUDUBON - SHEYNNE 230KV CKT 1
FDNS	00NR	4	17SP	G15_042	TO->FROM	GRPRAR1-LNX3345.00 - GRPRAR 345KV CKT Z	720	720	0.03268	112.474	PRAIRIE ISLAND 345/20.0KV TRANSFORMER CKT 1
FDNS	00NR	4	17SP	G15_042	TO->FROM	GRPRAR1-LNX3345.00 - GRPRAR 345KV CKT Z	720	720	0.03271	112.4739	FERGSFL4 230.00 - GRE-SILVRLK4230.00 230KV CKT 1
FDNS	00NR	4	17SP	G15_042	TO->FROM	GRPRAR1-LNX3345.00 - GRPRAR 345KV CKT Z	720	720	0.03268	112.4706	PRAIRIE ISLAND 345/20.0KV TRANSFORMER CKT 2
FDNS	00NR	4	17SP	G15_042	TO->FROM	GRPRAR1-LNX3345.00 - GRPRAR 345KV CKT Z	720	720	0.03244	112.4682	FT THOMPSON - HURON 230KV CKT 1
FDNS	00NR	4	17SP	G15_042	TO->FROM	GRPRAR1-LNX3345.00 - GRPRAR 345KV CKT Z	720	720	0.03244	112.4682	FT THOMPSON - HURON 230KV CKT 1
FDNS	00NR	4	17SP	G15_042	TO->FROM	GRPRAR1-LNX3345.00 - GRPRAR 345KV CKT Z	720	720	0.03244	112.4682	FT THOMPSON - HURON 230KV CKT 2
FDNS	00NR	4	17SP	G15_042	TO->FROM	GRPRAR1-LNX3345.00 - GRPRAR 345KV CKT Z	720	720	0.03244	112.4682	FT THOMPSON - HURON 230KV CKT 2
FDNS	00NR	4	17SP	G15_042	TO->FROM	GRPRAR1-LNX3345.00 - GRPRAR 345KV CKT Z	720	720	0.03268	112.4677	BALTA - RAMSEY 230KV CKT 1
FDNS	00NR	4	17SP	G15_042	TO->FROM	GRPRAR1-LNX3345.00 - GRPRAR 345KV CKT Z	720	720	0.03258	112.4607	DKSN_CO5 161.00 - TRIBOJI NO1 + NO2 161KV CKT 1
FDNS	00NR	4	17SP	G15_042	TO->FROM	GRPRAR1-LNX3345.00 - GRPRAR 345KV CKT Z	720	720	0.03268	112.4578	GEN532751 1-WOLF CREEK GENERATING STATION UNIT 1
FDNS	00NR	4	17SP	G15_042	TO->FROM	GRPRAR1-LNX3345.00 - GRPRAR 345KV CKT Z	720	720	0.03319	112.4492	P12:115:NPPD:WAPA1:CHADRON7:BOXBUTE7:BTB
FDNS	00NR	4	17SP	G15_042	TO->FROM	GRPRAR1-LNX3345.00 - GRPRAR 345KV CKT Z	720	720	0.03268	112.4363	TOLK STATION EAST 230/24.0KV TRANSFORMER CKT 1
FDNS	00NR	4	17SP	G15_042	TO->FROM	GRPRAR1-LNX3345.00 - GRPRAR 345KV CKT Z	720	720	0.03271	112.4329	GRE-SILVRLK4230.00 - HENNING 230KV CKT 1
FDNS	00NR	4	17SP	G15_042	TO->FROM	GRPRAR1-LNX3345.00 - GRPRAR 345KV CKT Z	720	720	0.03298	112.4319	P13:115-230:NPPD:WAYSIDE4:T1
FDNS	00NR	4	17SP	G15_042	TO->FROM	GRPRAR1-LNX3345.00 - GRPRAR 345KV CKT Z	720	720	0.03298	112.4318	CHADRON - WAYSIDE 115KV CKT 1
FDNS	00NR	4	17SP	G15_042	TO->FROM	GRPRAR1-LNX3345.00 - GRPRAR 345KV CKT Z	720	720	0.03298	112.4309	WAYSIDE (WAYSIDE T1) 230/115/13.8KV TRANSFORMER CKT 1
FDNS	00NR	4	17SP	G15_042	TO->FROM	GRPRAR1-LNX3345.00 - GRPRAR 345KV CKT Z	720	720	0.03269	112.4213	BIG STONE (230/115) 230/115/13.8KV TRANSFORMER CKT 1
FDNS	00NR	4	17SP	G15_042	TO->FROM	GRPRAR1-LNX3345.00 - GRPRAR 345KV CKT Z	720	720	0.03268	112.4212	GEN334071 1-LEWIS CREEK 2
FDNS	00NR	4	17SP	G15_042	TO->FROM	GRPRAR1-LNX3345.00 - GRPRAR 345KV CKT Z	720	720	0.03268	112.4164	GEN334070 1-LEWIS CREEK 1
FDNS	00NR	4	17SP	G15_042	TO->FROM	GRPRAR1-LNX3345.00 - GRPRAR 345KV CKT Z	720	720	0.03268	112.416	GEN337766 1-TRACTEBEL UNIT S1
FDNS	00NR	4	17SP	G15_042	TO->FROM	GRPRAR1-LNX3345.00 - GRPRAR 345KV CKT Z	720	720	0.03268	112.4135	LAWRENCE ENERGY CENTER UNIT 5 - LAWRENCE HILL 230KV CKT 1
FDNS	00NR	4	17SP	G15_042	TO->FROM	GRPRAR1-LNX3345.00 - GRPRAR 345KV CKT Z	720	720	0.03268	112.4135	LAWRENCE ENERGY CENTER UNIT 5 230/24.0KV TRANSFORMER CKT 1
FDNS	00NR	4	17SP	G15_042	TO->FROM	GRPRAR1-LNX3345.00 - GRPRAR 345KV CKT Z	720	720	0.03336	112.4041	NOBLES - SPLIT ROCK 345KV CKT 1
FDNS	00NR	4	17SP	G15_042	TO->FROM	GRPRAR1-LNX3345.00 - GRPRAR 345KV CKT Z	720	720	0.03319	112.397	CHADRON - DUNLAP 115KV CKT 1
FDNS	00NR	4	17SP	G15_042	TO->FROM	GRPRAR1-LNX3345.00 - GRPRAR 345KV CKT Z	720	720	0.03268	112.3938	GEN659118 1-LARAMIE RIVER UNIT1
FDNS	00NR	4	17SP	G15_042	TO->FROM	GRPRAR1-LNX3345.00 - GRPRAR 345KV CKT Z	720	720	0.03268	112.3931	PRAIRIE - WINGER 230KV CKT 1
FDNS	00NR	4	17SP	G15_042	TO->FROM	GRPRAR1-LNX3345.00 - GRPRAR 345KV CKT Z	720	720	0.03319	112.3811	P12:115:NPPD:WAPA2:HEMINGF7:SNAKECK7:BTB
FDNS	00NR	4	17SP	G15_042	TO->FROM	GRPRAR1-LNX3345.00 - GRPRAR 345KV CKT Z	720	720	0.03242	112.3768	HURON WEST PARK - MITCHELL NW 115KV CKT 1
FDNS	00NR	4	17SP	G15_042	TO->FROM	GRPRAR1-LNX3345.00 - GRPRAR 345KV CKT Z	720	720	0.03242	112.3768	HURON WEST PARK - MITCHELL NW 115KV CKT 1
FDNS	00NR	4	17SP	G15_042	TO->FROM	GRPRAR1-LNX3345.00 - GRPRAR 345KV CKT Z	720	720	0.03268	112.3764	GEN501910 1-ACADIA UNIT ST1
FDNS	00NR	4	17SP	G15_042	TO->FROM	GRPRAR1-LNX3345.00 - GRPRAR 345KV CKT Z	720	720	0.03271	112.3708	HENNING - INMANN 230KV CKT 1
FDNS	00NR	4	17SP	G15_042	TO->FROM	GRPRAR1-LNX3345.00 - GRPRAR 345KV CKT Z	720	720	0.03271	112.3693	LELAND OLDS - STANTON 230KV CKT 1
FDNS	00NR	4	17SP	G15_042	TO->FROM	GRPRAR1-LNX3345.00 - GRPRAR 345KV CKT Z	720	720	0.03271	112.3693	LELAND OLDS - STANTON 230KV CKT 1
FDNS	00NR	4	17SP	G15_042	TO->FROM	GRPRAR1-LNX3345.00 - GRPRAR 345KV CKT Z	720	720	0.03306	112.3605	PALXFRASBTHI
FDNS	00NR	4	17SP	G15_042	TO->FROM	GRPRAR1-LNX3345.00 - GRPRAR 345KV CKT Z	720	720	0.03194	112.3551	FT RANDAL - WHITE SWAN 115KV CKT 1
FDNS	00NR	4	17SP	G15_042	TO->FROM	GRPRAR1-LNX3345.00 - GRPRAR 345KV CKT Z	720	720	0.03328	112.3412	EAGLE - PHILIP 115KV CKT 1
FDNS	00NR	4	17SP	G15_042	TO->FROM	GRPRAR1-LNX3345.00 - GRPRAR 345KV CKT Z	720	720	0.03306	112.3394	7PALM TAP 345.00 - SUB T 345KV CKT 1
FDNS	00NR	4	17SP	G15_042	TO->FROM	GRPRAR1-LNX3345.00 - GRPRAR 345KV CKT Z	720	720	0.03268	112.3368	GEN345765 H-1SIOUX 2 18.000
FDNS	00NR	4	17SP	G15_042	TO->FROM	GRPRAR1-LNX3345.00 - GRPRAR 345KV CKT Z	720	720	0.03267	112.3323	GRANT - MITCHELL 115KV CKT 1
FDNS	00NR	4	17SP	G15_042	TO->FROM	GRPRAR1-LNX3345.00 - GRPRAR 345KV CKT Z	720	720	0.03267	112.3323	GRANT - MITCHELL 115KV CKT 1
FDNS	00NR	4	17SP	G15_042	TO->FROM	GRPRAR1-LNX3345.00 - GRPRAR 345KV CKT Z	720	720	0.03194	112.3252	TYNDALL - WHITE SWAN 115KV CKT 1
FDNS	00NR	4	17SP	G15_042	TO->FROM	GRPRAR1-LNX3345.00 - GRPRAR 345KV CKT Z	720	720	0.03266	112.3244	GROTON (GROTON KU2A) 345/115/13.8KV TRANSFORMER CKT 1
FDNS	00NR	4	17SP	G15_042	TO->FROM	GRPRAR1-LNX3345.00 - GRPRAR 345KV CKT Z	720	720	0.03268	112.319	GEN337764 1-TRACTEBEL UNIT C1
FDNS	00NR	4	17SP	G15_042	TO->FROM	GRPRAR1-LNX3345.00 - GRPRAR 345KV CKT Z	720	720	0.03268	112.319	GEN337765 1-TRACTEBEL UNIT C2
FDNS	00NR	4	17SP	G15_042	TO->FROM	GRPRAR1-LNX3345.00 - GRPRAR 345KV CKT Z	720	720	0.0327	112.318	AUDUBON - HUBBARD 230KV CKT 1
FDNS	00NR	4	17SP	G15_042	TO->FROM	GRPRAR1-LNX3345.00 - GRPRAR 345KV CKT Z	720	720	0.03224	112.3143	CLEARWATER - ONEILL 115KV CKT 1
FDNS	00NR	4	17SP	G15_042	TO->FROM	GRPRAR1-LNX3345.00 - GRPRAR 345KV CKT Z	720	720	0.03271	112.3114	KARLSTAD - WINGER 230KV CKT 1
FDNS	00NR	4	17SP	G15_042	TO->FROM	GRPRAR1-LNX3345.00 - GRPRAR 345KV CKT Z	720	720	0.03277	112.3097	GENOA 161 - SENECA 161 161KV CKT 1
FDNS	00NR	4	17SP	G15_042	TO->FROM	GRPRAR1-LNX3345.00 - GRPRAR 345KV CKT Z	720	720	0.03268	112.3095	GEN345756 H-1SIOUX 1 18.000
FDNS	00NR	4	17SP	G15_042	TO->FROM	GRPRAR1-LNX3345.00 - GRPRAR 345KV CKT Z	720	720	0.03611	112.3008	BELDEN - HOSKINS 115KV CKT 1
FDNS	00NR	4	17SP	G15_042	TO->FROM	GRPRAR1-LNX3345.00 - GRPRAR 345KV CKT Z	720	720	0.03258	112.2988	DKSN_CO5 161.00 - LAKEFIELD 5 NO1 + NO 2 161KV CKT 1
FDNS	00NR	4	17SP	G15_042	TO->FROM	GRPRAR1-LNX3345.00 - GRPRAR 345KV CKT Z	720	720	0.03268	112.2978	GEN562912 1-G15053_3 0.6900
FDNS	00NR	4	17SP	G15_042	TO->FROM	GRPRAR1-LNX3345.00 - GRPRAR 345KV CKT Z	720	720	0.03268	112.2972	GRAND GULF 500/22.0KV TRANSFORMER CKT 1
FDNS	00NR	4	17SP	G15_042	TO->FROM	GRPRAR1-LNX3345.00 - GRPRAR 345KV CKT Z	720	720	0.03268	112.2896	PRAIRIE - RAMSEY 230KV CKT 1
FDNS	00NR	4	17SP	G15_042	TO->FROM	GRPRAR1-LNX3345.00 - GRPRAR 345KV CKT Z	720	720	0.0318	112.2882	P12:115:UMZW:# 1910 #: YJ IN SD. YJ-UJ LINE FAULT
FDNS	00NR	4	17SP	G15_042	TO->FROM	GRPRAR1-LNX3345.00 - GRPRAR 345KV CKT Z	720	720	0.0318	112.2881	NAPA JCT7 115.00 - UTICA 115KV CKT 1
FDNS	00NR	4	17SP	G15_042	TO->FROM	GRPRAR1-LNX3345.00 - GRPRAR 345KV CKT Z	720	720	0.0318	112.2881	NAPA JCT7 115.00 - UTICA 115KV CKT 1
FDNS	00NR	4	17SP	G15_042	TO->FROM	GRPRAR1-LNX3345.00 - GRPRAR 345KV CKT Z	720	720	0.03275	112.2857	NORTH LA CROSSE - NORTH ROCHESTER 345KV CKT 1
FDNS	00NR	4	17SP	G15_042	TO->FROM	GRPRAR1-LNX3345.00 - GRPRAR 345KV CKT Z	720	720	0.0318	112.285	NAPA JCT7 115.00 - YANKON JCT 115KV CKT 1
FDNS	00NR	4	17SP	G15_042	TO->FROM	GRPRAR1-LNX3345.00 - GRPRAR 345KV CKT Z	720	720	0.0318	112.285	NAPA JCT7 115.00 - YANKON JCT 115KV CKT 1
FDNS	00NR	4	17SP	G15_042	TO->FROM	GRPRAR1-LNX3345.00 - GRPRAR 345KV CKT Z	720	720	0.03268	112.2831	GEN336221 1-LITTLE GYPSY UNIT#1
FDNS	00NR	4	17SP	G15_042	TO->FROM	GRPRAR1-LNX3345.00 - GRPRAR 345KV CKT Z	720	720	0.03268	112.2804	GEN636641 1-LOUISA UNIT 1
FDNS	00NR	4	17SP	G15_042	TO->FROM	GRPRAR1-LNX3345.00 - GRPRAR 345KV CKT Z	720	720	0.03268	112.2803	JUDSON LARGE 115/15.0KV TRANSFORMER CKT 1
FDNS	00NR	4	17SP	G15_042	TO->FROM	GRPRAR1-LNX3345.00 - GRPRAR 345KV CKT Z	720	720	0.03268	112.2803	JUDSON LARGE 115/15.0KV TRANSFORMER CKT 1
FDNS	00NR	4	17SP	G15_042	TO->FROM	GRPRAR1-LNX3345.00 - GRPRAR 345KV CKT Z	720	720	0.03284	112.2788	HAMPTON CORNER - NORTH ROCHESTER 345KV CKT 1
FDNS	00NR	4	17SP	G15_042	TO->FROM	GRPRAR1-LNX3345.00 - GRPRAR 345KV CKT Z	720	720	0.03328	112.2765	EAGLE - MARTIN 115KV CKT 1
FDNS	00NR	4	17SP	G15_042	TO->FROM	GRPRAR1-LNX3345.00 - GRPRAR 345KV CKT Z	720	720	0.03268	112.2754	GEN337757 1-DUKE HOTSPRINGS STG1
FDNS	00NR	4	17SP	G15_042	TO->FROM	GRPRAR1-LNX3345.00 - GRPRAR 345KV CKT Z	720	720	0.03268	112.2753	GEN336242 1-1NMIL ST1 18.000
FDNS	00NR	4	17SP	G15_042	TO->FROM	GRPRAR1-LNX3345.00 - GRPRAR 345KV CKT Z	720	720	0.03268	112.2704	GEN334432 1-SABINE UNIT 2
FDNS	00NR	4	17SP	G15_042	TO->FROM	GRPRAR1-LNX3345.00 - GRPRAR 345KV CKT Z	720	720	0.03268	112.2703	GEN334431 1-SABINE UNIT 1
FDNS	00NR	4	17SP	G15_042	TO->FROM	GRPRAR1-LNX3345.00 - GRPRAR 345KV CKT Z	720	720	0.03279	112.2642	FRANKS - HUBEN 345KV CKT 1
FDNS	00NR	4	17SP	G15_042	TO->FROM	GRPRAR1-LNX3345.00 - GRPRAR 345KV CKT Z	720	720	0.03319	112.2627	BOXBUTE7 115.00 - DUNLAP 115KV CKT 1
FDNS	00NR	4	17SP	G15_042	TO->FROM	GRPRAR1-LNX3345.00 - GRPRAR 345KV CKT Z	720	720	0.03275	112.2528	NORTH LA CROSSE (10008630_001) 345/161/34.5KV TRANSFORMER CKT 9
FDNS	00NR	4	17SP	G15_042	TO->FROM	GRPRAR1-LNX3345.00 - GRPRAR 345KV CKT Z	720	720	0.03268	112.2504	GEN334030 1-FRONTIER UNIT 1
FDNS	00NR	4	17SP	G15_042	TO->FROM	GRPRAR1-LNX3345.00 - GRPRAR 345KV CKT Z	720	720	0.03268	112.2502	GEN334031 1-FRONTIER UNIT 2

SOLUTION	GROUP	SCENARIO	SEASON	SOURCE	DIRECTION	MONITORED ELEMENT	RATEA (MVA)	RATEB(MVA)	TDF	TC%LOADING (% MVA)	CONTINGENCY
FDNS	00NR	4	17SP	G15_042	TO->FROM	GRPRAR1-LNX3345.00 - GRPRAR 345KV CKT Z	720	720	0.03268	112.2496	GEN345832 1-1TS G1 13.800
FDNS	00NR	4	17SP	G15_042	TO->FROM	GRPRAR1-LNX3345.00 - GRPRAR 345KV CKT Z	720	720	0.03268	112.2495	GEN336446 1-MICHOUD UNIT #2
FDNS	00NR	4	17SP	G15_042	TO->FROM	GRPRAR1-LNX3345.00 - GRPRAR 345KV CKT Z	720	720	0.03268	112.2492	GEN345841 2-1TS G2 13.800
FDNS	00NR	4	17SP	G15_042	TO->FROM	GRPRAR1-LNX3345.00 - GRPRAR 345KV CKT Z	720	720	0.03268	112.2433	OKLAUN 345/24.0KV TRANSFORMER CKT 1
FDNS	00NR	4	17SP	G15_042	TO->FROM	GRPRAR1-LNX3345.00 - GRPRAR 345KV CKT Z	720	720	0.03268	112.2361	GEN501970 1-EVANGELINE UNIT 7
FDNS	00NR	4	17SP	G15_042	TO->FROM	GRPRAR1-LNX3345.00 - GRPRAR 345KV CKT Z	720	720	0.03268	112.214	GEN562438 1-G13-032 0.6900
FDNS	00NR	4	17SP	G15_042	TO->FROM	GRPRAR1-LNX3345.00 - GRPRAR 345KV CKT Z	720	720	0.03224	112.21	P12:115:NPPD:1164:ONEILL 7:JEFFREY9:BTB
FDNS	00NR	4	20SP	G15_042	TO->FROM	GRPRAR1-LNX3345.00 - GRPRAR 345KV CKT Z	720	720	0.03482	112.1191	KELLY - MEADOWGROVE4230.00 230KV CKT 1
FDNS	00NR	4	17SP	G15_042	TO->FROM	GRPRAR1-LNX3345.00 - GRPRAR 345KV CKT Z	720	720	0.03268	112.1156	GEN563282 1-G15094_3 0.6900
FDNS	00NR	4	17SP	G15_042	TO->FROM	GRPRAR1-LNX3345.00 - GRPRAR 345KV CKT Z	720	720	0.03268	111.7591	BASE CASE
FDNS	00NR	4	17SP	G15_042	TO->FROM	GRPRAR1-LNX3345.00 - GRPRAR 345KV CKT Z	720	720	0.03287	111.4229	BUCKNER7 345.00 - SPEARVILLE 345KV CKT 1
FDNS	00NR	4	17SP	G15_042	TO->FROM	GRPRAR1-LNX3345.00 - GRPRAR 345KV CKT Z	720	720	0.03287	111.4229	BUCKNER7 345.00 - SPEARVILLE 345KV CKT 1
FDNS	00NR	4	17SP	G15_042	TO->FROM	GRPRAR1-LNX3345.00 - GRPRAR 345KV CKT Z	720	720	0.03358	111.3203	103RD & ROKEBY - MOORE 345KV CKT 1
FDNS	00NR	4	17SP	G15_042	TO->FROM	GRPRAR1-LNX3345.00 - GRPRAR 345KV CKT Z	720	720	0.03358	111.3203	103RD & ROKEBY - MOORE 345KV CKT 1
FDNS	00NR	4	17SP	G15_042	TO->FROM	GRPRAR1-LNX3345.00 - GRPRAR 345KV CKT Z	720	720	0.03287	111.31	FT THOMPSON - OAHE 230KV CKT 1
FDNS	00NR	4	17SP	G15_042	TO->FROM	GRPRAR1-LNX3345.00 - GRPRAR 345KV CKT Z	720	720	0.03287	111.31	FT THOMPSON - OAHE 230KV CKT 1
FDNS	00NR	4	17SP	G15_042	TO->FROM	GRPRAR1-LNX3345.00 - GRPRAR 345KV CKT Z	720	720	0.03287	111.31	FT THOMPSON - OAHE 230KV CKT 2
FDNS	00NR	4	17SP	G15_042	TO->FROM	GRPRAR1-LNX3345.00 - GRPRAR 345KV CKT Z	720	720	0.03287	111.31	FT THOMPSON - OAHE 230KV CKT 2
FDNS	00NR	4	17SP	G15_042	TO->FROM	GRPRAR1-LNX3345.00 - GRPRAR 345KV CKT Z	720	720	0.03268	111.2899	GEN652546 1-FT RANDAL
FDNS	00NR	4	25SP	G15_042	TO->FROM	GRPRAR1-LNX3345.00 - GRPRAR 345KV CKT Z	720	720	0.03519	111.2748	KELLY - MEADOWGROVE4230.00 230KV CKT 1
FDNS	00NR	4	17SP	G15_042	TO->FROM	GRPRAR1-LNX3345.00 - GRPRAR 345KV CKT Z	720	720	0.03442	111.2576	NUNDRWD - PHILIP TAP 230KV CKT 1
FDNS	00NR	4	17SP	G15_042	TO->FROM	GRPRAR1-LNX3345.00 - GRPRAR 345KV CKT Z	720	720	0.03287	111.2521	FT THOMPSON - OAHE 230KV CKT 3
FDNS	00NR	4	17SP	G15_042	TO->FROM	GRPRAR1-LNX3345.00 - GRPRAR 345KV CKT Z	720	720	0.03287	111.2521	FT THOMPSON - OAHE 230KV CKT 3
FDNS	00NR	4	17SP	G15_042	TO->FROM	GRPRAR1-LNX3345.00 - GRPRAR 345KV CKT Z	720	720	0.03287	111.2521	FT THOMPSON - OAHE 230KV CKT 4
FDNS	00NR	4	17SP	G15_042	TO->FROM	GRPRAR1-LNX3345.00 - GRPRAR 345KV CKT Z	720	720	0.03287	111.2521	FT THOMPSON - OAHE 230KV CKT 4
FDNS	00NR	4	17SP	G15_042	TO->FROM	GRPRAR1-LNX3345.00 - GRPRAR 345KV CKT Z	720	720	0.03268	111.2493	MITCHLCO3 345.00 345/34.5KV TRANSFORMER CKT 1
FDNS	00NR	4	17SP	G15_042	TO->FROM	GRPRAR1-LNX3345.00 - GRPRAR 345KV CKT Z	720	720	0.03268	111.2424	GEN672347 1-CORY COGEN GENERATOR 1 GT1
FDNS	00NR	4	17SP	G15_042	TO->FROM	GRPRAR1-LNX3345.00 - GRPRAR 345KV CKT Z	720	720	0.03268	111.2424	GEN672348 2-CORY COGEN GENERATOR 2 GT2
FDNS	00NR	4	17SP	G15_042	TO->FROM	GRPRAR1-LNX3345.00 - GRPRAR 345KV CKT Z	720	720	0.03212	111.2364	NELIGH - PETERSBRG.N7115.00 115KV CKT 1
FDNS	00NR	4	17SP	G15_042	TO->FROM	GRPRAR1-LNX3345.00 - GRPRAR 345KV CKT Z	720	720	0.03268	111.2344	GEN600018 S-LS POWER STEAM
FDNS	00NR	4	17SP	G15_042	TO->FROM	GRPRAR1-LNX3345.00 - GRPRAR 345KV CKT Z	720	720	0.03283	111.2304	POST ROCK (POSTROCK T1) 345/230/13.8KV TRANSFORMER CKT 1
FDNS	00NR	4	17SP	G15_042	TO->FROM	GRPRAR1-LNX3345.00 - GRPRAR 345KV CKT Z	720	720	0.03268	111.2284	GEN300003 1-THOMAS HILL UNIT 3
FDNS	00NR	4	17SP	G15_042	TO->FROM	GRPRAR1-LNX3345.00 - GRPRAR 345KV CKT Z	720	720	0.03279	111.2276	G11_051T 345.00 - WOODWARD DISTRICT EHV 345KV CKT 1
FDNS	00NR	4	17SP	G15_042	TO->FROM	GRPRAR1-LNX3345.00 - GRPRAR 345KV CKT Z	720	720	0.03268	111.2235	GEN659158 2-PIONEER G213.800
FDNS	00NR	4	17SP	G15_042	TO->FROM	GRPRAR1-LNX3345.00 - GRPRAR 345KV CKT Z	720	720	0.03268	111.2235	GEN659159 3-PIONEER G313.800
FDNS	00NR	4	17SP	G15_042	TO->FROM	GRPRAR1-LNX3345.00 - GRPRAR 345KV CKT Z	720	720	0.03268	111.216	GEN659156 2-LONESMCRK 2G13.800
FDNS	00NR	4	17SP	G15_042	TO->FROM	GRPRAR1-LNX3345.00 - GRPRAR 345KV CKT Z	720	720	0.03268	111.216	GEN659157 3-LONESMCRK 3G13.800
FDNS	00NR	4	17SP	G15_042	TO->FROM	GRPRAR1-LNX3345.00 - GRPRAR 345KV CKT Z	720	720	0.03268	111.2115	GEN652548 5-FT RANDAL
FDNS	00NR	4	17SP	G15_042	TO->FROM	GRPRAR1-LNX3345.00 - GRPRAR 345KV CKT Z	720	720	0.03268	111.2115	GEN652549 7-FT RANDAL
FDNS	00NR	4	17SP	G15_042	TO->FROM	GRPRAR1-LNX3345.00 - GRPRAR 345KV CKT Z	720	720	0.03302	111.2109	P12:115:UMZW:# 172 #: WI IN SD.
FDNS	00NR	4	17SP	G15_042	TO->FROM	GRPRAR1-LNX3345.00 - GRPRAR 345KV CKT Z	720	720	0.03263	111.2091	G14-021T 345.00 - MULLNCR7 345.00 345KV CKT 1
FDNS	00NR	4	17SP	G15_042	TO->FROM	GRPRAR1-LNX3345.00 - GRPRAR 345KV CKT Z	720	720	0.03263	111.209	G15-005T 345.00 - MULLNCR7 345.00 345KV CKT 1
FDNS	00NR	4	17SP	G15_042	TO->FROM	GRPRAR1-LNX3345.00 - GRPRAR 345KV CKT Z	720	720	0.03268	111.2053	GEN590010 1-ERCOT EQUIVALENCE
FDNS	00NR	4	17SP	G15_042	TO->FROM	GRPRAR1-LNX3345.00 - GRPRAR 345KV CKT Z	720	720	0.03268	111.2012	GEN672367 1-MERIDIAN GENERATOR 1 GT1
FDNS	00NR	4	17SP	G15_042	TO->FROM	GRPRAR1-LNX3345.00 - GRPRAR 345KV CKT Z	720	720	0.03268	111.2012	GEN672368 2-MERIDIAN GENERATOR 2 GT2
FDNS	00NR	4	17SP	G15_042	TO->FROM	GRPRAR1-LNX3345.00 - GRPRAR 345KV CKT Z	720	720	0.03268	111.2002	GEN652547 3-FT RANDAL
FDNS	00NR	4	17SP	G15_042	TO->FROM	GRPRAR1-LNX3345.00 - GRPRAR 345KV CKT Z	720	720	0.0327	111.1995	P12:115:UMZZ:# 232 #: AB IN SD. ABERDEEN A TAP BETWEEN ELLENDALE AND ABERDEEN-SIEBRECHT.
FDNS	00NR	4	17SP	G15_042	TO->FROM	GRPRAR1-LNX3345.00 - GRPRAR 345KV CKT Z	720	720	0.03295	111.1988	LARAMIE RIVER - STEGALL 345KV CKT 1
FDNS	00NR	4	17SP	G15_042	TO->FROM	GRPRAR1-LNX3345.00 - GRPRAR 345KV CKT Z	720	720	0.03268	111.1966	GEN600021 3-ANGUS ANSON2
FDNS	00NR	4	17SP	G15_042	TO->FROM	GRPRAR1-LNX3345.00 - GRPRAR 345KV CKT Z	720	720	0.03268	111.1936	GEN600020 2-ANGUS ANSON1
FDNS	00NR	4	17SP	G15_042	TO->FROM	GRPRAR1-LNX3345.00 - GRPRAR 345KV CKT Z	720	720	0.03268	111.1898	GEN657964 1-ASH2GEN9 0.5750
FDNS	00NR	4	17SP	G15_042	TO->FROM	GRPRAR1-LNX3345.00 - GRPRAR 345KV CKT Z	720	720	0.03268	111.1886	GEN672352 3-NIPAWIN GENERATOR 3
FDNS	00NR	4	17SP	G15_042	TO->FROM	GRPRAR1-LNX3345.00 - GRPRAR 345KV CKT Z	720	720	0.03268	111.1885	GEN672350 1-NIPAWIN GENERATOR 1
FDNS	00NR	4	17SP	G15_042	TO->FROM	GRPRAR1-LNX3345.00 - GRPRAR 345KV CKT Z	720	720	0.03268	111.1885	GEN672351 2-NIPAWIN GENERATOR 2
FDNS	00NR	4	17SP	G15_042	TO->FROM	GRPRAR1-LNX3345.00 - GRPRAR 345KV CKT Z	720	720	0.03268	111.1798	GEN590011 2-ERCOT EQUIVALENCE
FDNS	00NR	4	17SP	G15_042	TO->FROM	GRPRAR1-LNX3345.00 - GRPRAR 345KV CKT Z	720	720	0.03268	111.1748	GEN672349 3-CORY COGEN GENERATOR 3 ST
FDNS	00NR	4	17SP	G15_042	TO->FROM	GRPRAR1-LNX3345.00 - GRPRAR 345KV CKT Z	720	720	0.03268	111.1703	GEN620324 3-HOOT LAKE 3 GEN
FDNS	00NR	4	17SP	G15_042	TO->FROM	GRPRAR1-LNX3345.00 - GRPRAR 345KV CKT Z	720	720	0.03268	111.1669	EASTDC - ERCOT EQUIVALENCE 345KV CKT 1
FDNS	00NR	4	17SP	G15_042	TO->FROM	GRPRAR1-LNX3345.00 - GRPRAR 345KV CKT Z	720	720	0.03268	111.1669	ERCOT EQUIVALENCE 345/24.0KV TRANSFORMER CKT 1
FDNS	00NR	4	17SP	G15_042	TO->FROM	GRPRAR1-LNX3345.00 - GRPRAR 345KV CKT Z	720	720	0.03434	111.1664	BATTLE CREEK - COUNTY LINE 115KV CKT 1
FDNS	00NR	4	17SP	G15_042	TO->FROM	GRPRAR1-LNX3345.00 - GRPRAR 345KV CKT Z	720	720	0.03263	111.1626	G15-005T 345.00 - SIBLEY 345KV CKT 1
FDNS	00NR	4	17SP	G15_042	TO->FROM	GRPRAR1-LNX3345.00 - GRPRAR 345KV CKT Z	720	720	0.03276	111.1553	ANTELOP-LNX3345.00 - BRDLAND-LNX3345.00 345KV CKT 1
FDNS	00NR	4	17SP	G15_042	TO->FROM	GRPRAR1-LNX3345.00 - GRPRAR 345KV CKT Z	720	720	0.03268	111.1477	GEN629072 4-LANSING GENERATOR FOR UNITS NO4 EIA CODE 1
FDNS	00NR	4	17SP	G15_042	TO->FROM	GRPRAR1-LNX3345.00 - GRPRAR 345KV CKT Z	720	720	0.03212	111.1469	ALBION - PETERSBURG 115KV CKT 1
FDNS	00NR	4	17SP	G15_042	TO->FROM	GRPRAR1-LNX3345.00 - GRPRAR 345KV CKT Z	720	720	0.03268	111.1455	GEN660003 3-HURON WEST PARK
FDNS	00NR	4	17SP	G15_042	TO->FROM	GRPRAR1-LNX3345.00 - GRPRAR 345KV CKT Z	720	720	0.03268	111.1384	GEN600012 2-BLACK DOG GEN 2
FDNS	00NR	4	17SP	G15_042	TO->FROM	GRPRAR1-LNX3345.00 - GRPRAR 345KV CKT Z	720	720	0.03338	111.1379	AXTELL - POST ROCK 345KV CKT 1
FDNS	00NR	4	17SP	G15_042	TO->FROM	GRPRAR1-LNX3345.00 - GRPRAR 345KV CKT Z	720	720	0.03068	111.1187	COLUMEAST - NW68TH & HOLDREGE 345KV CKT 1
FDNS	00NR	4	17SP	G15_042	TO->FROM	GRPRAR1-LNX3345.00 - GRPRAR 345KV CKT Z	720	720	0.03068	111.1187	COLUMEAST - NW68TH & HOLDREGE 345KV CKT 1
FDNS	00NR	4	17SP	G15_042	TO->FROM	GRPRAR1-LNX3345.00 - GRPRAR 345KV CKT Z	720	720	0.03212	111.1177	PETERSBRG.N7115.00 - PETERSBURG 115KV CKT Z1
FDNS	00NR	4	17SP	G15_042	TO->FROM	GRPRAR1-LNX3345.00 - GRPRAR 345KV CKT Z	720	720	0.03149	111.1148	COOPER - MOORE 345KV CKT 1
FDNS	00NR	4	17SP	G15_042	TO->FROM	GRPRAR1-LNX3345.00 - GRPRAR 345KV CKT Z	720	720	0.03434	111.1044	ANTELOPE 7115.00 - COUNTY LINE 115KV CKT 1
FDNS	00NR	4	17SP	G15_042	TO->FROM	GRPRAR1-LNX3345.00 - GRPRAR 345KV CKT Z	720	720	0.03268	111.1031	GEN659290 1-EDGECOL
FDNS	00NR	4	17SP	G15_042	TO->FROM	GRPRAR1-LNX3345.00 - GRPRAR 345KV CKT Z	720	720	0.03268	111.1012	EMERY 161/18.0KV TRANSFORMER CKT 1
FDNS	00NR	4	17SP	G15_042	TO->FROM	GRPRAR1-LNX3345.00 - GRPRAR 345KV CKT Z	720	720	0.03268	111.0982	GEN672339 16-QE 16G 13.800
FDNS	00NR	4	17SP	G15_042	TO->FROM	GRPRAR1-LNX3345.00 - GRPRAR 345KV CKT Z	720	720	0.03268	111.0982	GEN672342 3-QUEEN ELIZABETH GENERATOR 3
FDNS	00NR	4	17SP	G15_042	TO->FROM	GRPRAR1-LNX3345.00 - GRPRAR 345KV CKT Z	720	720	0.03268	111.097	GEN652410 3-FT PECK
FDNS	00NR	4	17SP	G15_042	TO->FROM	GRPRAR1-LNX3345.00 - GRPRAR 345KV CKT Z	720	720	0.03544	111.0922	MINGO - RED WILLOW 345KV CKT 1
FDNS	00NR	4	17SP	G15_042	TO->FROM	GRPRAR1-LNX3345.00 - GRPRAR 345KV CKT Z	720	720	0.03544	111.0922	MINGO - RED WILLOW 345KV CKT 1

SOLUTION	GROUP	SCENARIO	SEASON	SOURCE	DIRECTION	MONITORED ELEMENT	RATEA (MVA)	RATEB(MVA)	TDF	TC%LOADING (% MVA)	CONTINGENCY
FDNS	00NR	4	17SP	G15_042	TO->FROM	GRPRAR1-LNX3345.00 - GRPRAR 345KV CKT Z	720	720	0.03268	111.0829	GEN672393 2-NBECST2G 13.800
FDNS	00NR	4	17SP	G15_042	TO->FROM	GRPRAR1-LNX3345.00 - GRPRAR 345KV CKT Z	720	720	0.03212	111.0789	P12:115:NPPD:1168B:ALBION 7:PETERSBRG.N7:BTB
FDNS	00NR	4	17SP	G15_042	TO->FROM	GRPRAR1-LNX3345.00 - GRPRAR 345KV CKT Z	720	720	0.03067	111.0732	COLUMEAST - SHELL CREEK 345KV CKT 1
FDNS	00NR	4	17SP	G15_042	TO->FROM	GRPRAR1-LNX3345.00 - GRPRAR 345KV CKT Z	720	720	0.03268	111.0673	GEN600046 1-MECST
FDNS	00NR	4	17SP	G15_042	TO->FROM	GRPRAR1-LNX3345.00 - GRPRAR 345KV CKT Z	720	720	0.03268	111.0591	GEN300007 1-NEW MADRID UNIT 2
FDNS	00NR	4	17SP	G15_042	TO->FROM	GRPRAR1-LNX3345.00 - GRPRAR 345KV CKT Z	720	720	0.03268	111.0535	GEN300006 1-NEW MADRID UNIT 1
FDNS	00NR	4	17SP	G15_042	TO->FROM	GRPRAR1-LNX3345.00 - GRPRAR 345KV CKT Z	720	720	0.03268	111.043	GEN600047 1-MECCT1
FDNS	00NR	4	17SP	G15_042	TO->FROM	GRPRAR1-LNX3345.00 - GRPRAR 345KV CKT Z	720	720	0.03268	111.0331	GEN652414 4-FT PECK
FDNS	00NR	4	17SP	G15_042	TO->FROM	GRPRAR1-LNX3345.00 - GRPRAR 345KV CKT Z	720	720	0.03268	111.0331	GEN652415 5-FT PECK
FDNS	00NR	4	17SP	G15_042	TO->FROM	GRPRAR1-LNX3345.00 - GRPRAR 345KV CKT Z	720	720	0.03268	111.0281	GEN600050 1-FEP
FDNS	00NR	4	17SP	G15_042	TO->FROM	GRPRAR1-LNX3345.00 - GRPRAR 345KV CKT Z	720	720	0.03268	111.0165	GEN660001 2-ABERDEEN SIEBRECHT
FDNS	00NR	4	17SP	G15_042	TO->FROM	GRPRAR1-LNX3345.00 - GRPRAR 345KV CKT Z	720	720	0.03268	111.0032	LADISH 115/13.2KV TRANSFORMER CKT 1
FDNS	00NR	4	17SP	G15_042	TO->FROM	GRPRAR1-LNX3345.00 - GRPRAR 345KV CKT Z	720	720	0.03268	110.9836	GEN652345 W-G07_023IS_2 0.6900
FDNS	00NR	4	17SP	G15_042	TO->FROM	GRPRAR1-LNX3345.00 - GRPRAR 345KV CKT Z	720	720	0.03428	110.9662	G15061_T 345.00 - SETAB 345KV CKT 1
FDNS	00NR	4	17SP	G15_042	TO->FROM	GRPRAR1-LNX3345.00 - GRPRAR 345KV CKT Z	720	720	0.03264	110.9466	BISMARK - L3 HAWDON 230KV CKT 1
FDNS	00NR	4	17SP	G15_042	TO->FROM	GRPRAR1-LNX3345.00 - GRPRAR 345KV CKT Z	720	720	0.03268	110.945	GEN 11104 1-J262_GEN 0.6000
FDNS	00NR	4	17SP	G15_042	TO->FROM	GRPRAR1-LNX3345.00 - GRPRAR 345KV CKT Z	720	720	0.03268	110.945	GEN 11108 1-J263_GEN 0.6000
FDNS	00NR	4	17SP	G15_042	TO->FROM	GRPRAR1-LNX3345.00 - GRPRAR 345KV CKT Z	720	720	0.03268	110.9385	GEN600063 1-COLVILLE GEN 1
FDNS	00NR	4	17SP	G15_042	TO->FROM	GRPRAR1-LNX3345.00 - GRPRAR 345KV CKT Z	720	720	0.03268	110.9385	GEN600064 2-COLVILLE GEN 2
FDNS	00NR	4	17SP	G15_042	TO->FROM	GRPRAR1-LNX3345.00 - GRPRAR 345KV CKT Z	720	720	0.03415	110.936	GERALD GENTLEMAN STATION - RED WILLOW 345KV CKT 1
FDNS	00NR	4	17SP	G15_042	TO->FROM	GRPRAR1-LNX3345.00 - GRPRAR 345KV CKT Z	720	720	0.03268	110.93	GEN600045 4-ANSON
FDNS	00NR	4	17SP	G15_042	TO->FROM	GRPRAR1-LNX3345.00 - GRPRAR 345KV CKT Z	720	720	0.03268	110.926	GEN600043 7-BLUE LAKE5
FDNS	00NR	4	17SP	G15_042	TO->FROM	GRPRAR1-LNX3345.00 - GRPRAR 345KV CKT Z	720	720	0.03268	110.926	GEN600044 8-BLUE LAKE6
FDNS	00NR	4	17SP	G15_042	TO->FROM	GRPRAR1-LNX3345.00 - GRPRAR 345KV CKT Z	720	720	0.03268	110.9133	G830_SUB 115.00 - GRE-MCHENRY7115.00 115KV CKT 1
FDNS	00NR	4	17SP	G15_042	TO->FROM	GRPRAR1-LNX3345.00 - GRPRAR 345KV CKT Z	720	720	0.03268	110.8992	G830_SUB 115.00 115/34.5KV TRANSFORMER CKT 1
FDNS	00NR	4	17SP	G15_042	TO->FROM	GRPRAR1-LNX3345.00 - GRPRAR 345KV CKT Z	720	720	0.03279	110.8971	G11_051T 345.00 - TATONGA7 345.00 345KV CKT 1
FDNS	00NR	4	17SP	G15_042	TO->FROM	GRPRAR1-LNX3345.00 - GRPRAR 345KV CKT Z	720	720	0.03268	110.8939	GEN600014 4-BLACK DOG GEN 4
FDNS	00NR	4	17SP	G15_042	TO->FROM	GRPRAR1-LNX3345.00 - GRPRAR 345KV CKT Z	720	720	0.03422	110.8923	P12:115:NPPD:1163B:NELIGH 7:NORFK.N7:BTB
FDNS	00NR	4	17SP	G15_042	TO->FROM	GRPRAR1-LNX3345.00 - GRPRAR 345KV CKT Z	720	720	0.03268	110.892	GEN600065 7-HIGH BRIDGE
FDNS	00NR	4	17SP	G15_042	TO->FROM	GRPRAR1-LNX3345.00 - GRPRAR 345KV CKT Z	720	720	0.03268	110.892	GEN600066 8-HIGH BRIDGE
FDNS	00NR	4	17SP	G15_042	TO->FROM	GRPRAR1-LNX3345.00 - GRPRAR 345KV CKT Z	720	720	0.03268	110.8871	GEN600011 5-BLACK DOG GEN 1
FDNS	00NR	4	17SP	G15_042	TO->FROM	GRPRAR1-LNX3345.00 - GRPRAR 345KV CKT Z	720	720	0.03268	110.8758	GEN600071 10-RIVER SIDE
FDNS	00NR	4	17SP	G15_042	TO->FROM	GRPRAR1-LNX3345.00 - GRPRAR 345KV CKT Z	720	720	0.03268	110.8756	GEN600070 9-RIVER SIDE
FDNS	00NR	4	17SP	G15_042	TO->FROM	GRPRAR1-LNX3345.00 - GRPRAR 345KV CKT Z	720	720	0.03268	110.863	GEN600007 7-RIVERSIDE GEN 7
FDNS	00NR	4	17SP	G15_042	TO->FROM	GRPRAR1-LNX3345.00 - GRPRAR 345KV CKT Z	720	720	0.03268	110.8555	GEN652906 1-G09_006IS_3 0.6900
FDNS	00NR	4	17SP	G15_042	TO->FROM	GRPRAR1-LNX3345.00 - GRPRAR 345KV CKT Z	720	720	0.03043	110.8433	FT THOMPSON (FT2 KU1A) 345/230/13.8KV TRANSFORMER CKT 1
FDNS	00NR	4	17SP	G15_042	TO->FROM	GRPRAR1-LNX3345.00 - GRPRAR 345KV CKT Z	720	720	0.03268	110.8431	GEN600017 C-LS POWER CT
FDNS	00NR	4	17SP	G15_042	TO->FROM	GRPRAR1-LNX3345.00 - GRPRAR 345KV CKT Z	720	720	0.03043	110.8401	FT THOMPSON (FT2 KU1B) 345/230/13.8KV TRANSFORMER CKT 1
FDNS	00NR	4	17SP	G15_042	TO->FROM	GRPRAR1-LNX3345.00 - GRPRAR 345KV CKT Z	720	720	0.03268	110.8373	GEN659273 2-GROTON SYNC COND
FDNS	00NR	4	17SP	G15_042	TO->FROM	GRPRAR1-LNX3345.00 - GRPRAR 345KV CKT Z	720	720	0.03268	110.8373	GEN659294 1-WILTONCOL9
FDNS	00NR	4	17SP	G15_042	TO->FROM	GRPRAR1-LNX3345.00 - GRPRAR 345KV CKT Z	720	720	0.03268	110.8192	LANSING WEST 161/22.0KV TRANSFORMER CKT 1
FDNS	00NR	4	17SP	G15_042	TO->FROM	GRPRAR1-LNX3345.00 - GRPRAR 345KV CKT Z	720	720	0.03268	110.8022	GEN659192 6-LYNN
FDNS	00NR	4	17SP	G15_042	TO->FROM	GRPRAR1-LNX3345.00 - GRPRAR 345KV CKT Z	720	720	0.03268	110.8012	GEN659162 4-RED WLCK
FDNS	00NR	4	17SP	G15_042	TO->FROM	GRPRAR1-LNX3345.00 - GRPRAR 345KV CKT Z	720	720	0.03268	110.8012	GEN659163 5-BLACK WDCK
FDNS	00NR	4	17SP	G15_042	TO->FROM	GRPRAR1-LNX3345.00 - GRPRAR 345KV CKT Z	720	720	0.03268	110.7873	GEN681522 3-GENOA 3
FDNS	00NR	4	17SP	G15_042	TO->FROM	GRPRAR1-LNX3345.00 - GRPRAR 345KV CKT Z	720	720	0.03268	110.7802	GEN615021 1-GRE-ER 14G 16.000
FDNS	00NR	4	17SP	G15_042	TO->FROM	GRPRAR1-LNX3345.00 - GRPRAR 345KV CKT Z	720	720	0.03276	110.7689	BRDLAND-LNX3345.00 - HURON 345KV CKT Z
FDNS	00NR	4	17SP	G15_042	TO->FROM	GRPRAR1-LNX3345.00 - GRPRAR 345KV CKT Z	720	720	0.03276	110.7681	BROADLAND - HURON 230KV CKT 1
FDNS	00NR	4	17SP	G15_042	TO->FROM	GRPRAR1-LNX3345.00 - GRPRAR 345KV CKT Z	720	720	0.03276	110.7678	HURON (BD KU2A) 345/230/13.8KV TRANSFORMER CKT 1
FDNS	00NR	4	17SP	G15_042	TO->FROM	GRPRAR1-LNX3345.00 - GRPRAR 345KV CKT Z	720	720	0.03276	110.7678	HURON (BD KU2A) 345/230/13.8KV TRANSFORMER CKT 1
FDNS	00NR	4	17SP	G15_042	TO->FROM	GRPRAR1-LNX3345.00 - GRPRAR 345KV CKT Z	720	720	0.03268	110.7669	GEN615052 1-CAMBRIDGE GENERATING STATION
FDNS	00NR	4	17SP	G15_042	TO->FROM	GRPRAR1-LNX3345.00 - GRPRAR 345KV CKT Z	720	720	0.03276	110.763	P12:345:UMZB:# 102 #: AVS BD IN ND. AVS BRD LR
FDNS	00NR	4	17SP	G15_042	TO->FROM	GRPRAR1-LNX3345.00 - GRPRAR 345KV CKT Z	720	720	0.03268	110.763	CENTER 230/22.0KV TRANSFORMER CKT 1
FDNS	00NR	4	17SP	G15_042	TO->FROM	GRPRAR1-LNX3345.00 - GRPRAR 345KV CKT Z	720	720	0.03268	110.7626	GEN659031 1-G12_014IS_4 0.6900
FDNS	00NR	4	17SP	G15_042	TO->FROM	GRPRAR1-LNX3345.00 - GRPRAR 345KV CKT Z	720	720	0.03276	110.7624	P12:345:UMZB:# 103 #: BD IN SD. LOSS OF LINE
FDNS	00NR	4	17SP	G15_042	TO->FROM	GRPRAR1-LNX3345.00 - GRPRAR 345KV CKT Z	720	720	0.03268	110.7595	GEN652907 1-G09_007IS_3 0.6900
FDNS	00NR	4	17SP	G15_042	TO->FROM	GRPRAR1-LNX3345.00 - GRPRAR 345KV CKT Z	720	720	0.03268	110.7565	GEN 10648 1-G830_GEN 0.6900
FDNS	00NR	4	17SP	G15_042	TO->FROM	GRPRAR1-LNX3345.00 - GRPRAR 345KV CKT Z	720	720	0.03268	110.7502	GEN660016 1-B_H WIND 0.7000
FDNS	00NR	4	17SP	G15_042	TO->FROM	GRPRAR1-LNX3345.00 - GRPRAR 345KV CKT Z	720	720	0.03268	110.6862	GEN615015 1-GRE-SPRITWDG13.200
FDNS	00NR	4	17SP	G15_042	TO->FROM	GRPRAR1-LNX3345.00 - GRPRAR 345KV CKT Z	720	720	0.03279	110.6786	MATHWSN7 345.00 - TATONGA7 345.00 345KV CKT 1
FDNS	00NR	4	17SP	G15_042	TO->FROM	GRPRAR1-LNX3345.00 - GRPRAR 345KV CKT Z	720	720	0.03268	110.6215	GEN659353 1-DEERCREK CTG18.000
FDNS	00NR	4	17SP	G15_042	TO->FROM	GRPRAR1-LNX3345.00 - GRPRAR 345KV CKT Z	720	720	0.03268	110.6197	GEN659354 1-DEERCREK STG18.000
FDNS	00NR	4	17SP	G15_042	TO->FROM	GRPRAR1-LNX3345.00 - GRPRAR 345KV CKT Z	720	720	0.03276	110.6087	ANTELOP-LNX3345.00 - ANTELOPE VALLEY 345KV CKT Z
FDNS	00NR	4	17SP	G15_042	TO->FROM	GRPRAR1-LNX3345.00 - GRPRAR 345KV CKT Z	720	720	0.03268	110.5314	GEN600067 9-HIGH BRIDGE
FDNS	00NR	4	17SP	G15_042	TO->FROM	GRPRAR1-LNX3345.00 - GRPRAR 345KV CKT Z	720	720	0.03268	110.531	GEN672303 3-BOUNDARY DAM GENERATOR 3
FDNS	00NR	4	17SP	G15_042	TO->FROM	GRPRAR1-LNX3345.00 - GRPRAR 345KV CKT Z	720	720	0.03268	110.5309	GEN672305 5-BOUNDARY DAM GENERATOR 5
FDNS	00NR	4	17SP	G15_042	TO->FROM	GRPRAR1-LNX3345.00 - GRPRAR 345KV CKT Z	720	720	0.03268	110.5056	GEN672392 1-NBECGT1G 18.000
FDNS	00NR	4	17SP	G15_042	TO->FROM	GRPRAR1-LNX3345.00 - GRPRAR 345KV CKT Z	720	720	0.03264	110.4708	OAHE - SULLEY BUTTE 230KV CKT 1
FDNS	00NR	4	17SP	G15_042	TO->FROM	GRPRAR1-LNX3345.00 - GRPRAR 345KV CKT Z	720	720	0.03268	110.4425	GEN910006 1-G12_012IS_3 0.6900
FDNS	00NR	4	17SP	G15_042	TO->FROM	GRPRAR1-LNX3345.00 - GRPRAR 345KV CKT Z	720	720	0.03268	110.4315	BISONMP4 230.00 - SQUARE BUTTE 230KV CKT 1
FDNS	00NR	4	17SP	G15_042	TO->FROM	GRPRAR1-LNX3345.00 - GRPRAR 345KV CKT Z	720	720	0.03268	110.3899	GEN662101 1-WESSINGTON190.5750
FDNS	00NR	4	17SP	G15_042	TO->FROM	GRPRAR1-LNX3345.00 - GRPRAR 345KV CKT Z	720	720	0.03424	110.3555	AXTELL - SWEETWATER 345KV CKT 1
FDNS	00NR	4	17SP	G15_042	TO->FROM	GRPRAR1-LNX3345.00 - GRPRAR 345KV CKT Z	720	720	0.03264	110.3182	SULLEY BUTTE - SULLYBT-LNX3230.00 230KV CKT Z
FDNS	00NR	4	17SP	G15_042	TO->FROM	GRPRAR1-LNX3345.00 - GRPRAR 345KV CKT Z	720	720	0.03429	110.3163	G15088_T 345.00 - MOORE 345KV CKT 1
FDNS	00NR	4	17SP	G15_042	TO->FROM	GRPRAR1-LNX3345.00 - GRPRAR 345KV CKT Z	720	720	0.03264	110.3162	SULLYBT-LNX3230.00 - WHITLOK 230KV CKT 1
FDNS	00NR	4	17SP	G15_042	TO->FROM	GRPRAR1-LNX3345.00 - GRPRAR 345KV CKT Z	720	720	0.03264	110.2687	P12:230:UMZB:# 114 #: SB IN SD. SB-WK-GH
FDNS	00NR	4	17SP	G15_042	TO->FROM	GRPRAR1-LNX3345.00 - GRPRAR 345KV CKT Z	720	720	0.03264	110.2687	P12:230:UMZB:# 117 #: WK IN SD. SB-WK-GH
FDNS	00NR	4	17SP	G15_042	TO->FROM	GRPRAR1-LNX3345.00 - GRPRAR 345KV CKT Z	720	720	0.03268	110.2654	SQUARE BUTTE - YNG2 4 230.00 230KV CKT 1
FDNS	00NR	4	17SP	G15_042	TO->FROM	GRPRAR1-LNX3345.00 - GRPRAR 345KV CKT Z	720	720	0.03264	110.2162	GLENHAM - WHITLOK 230KV CKT 1

SOLUTION	GROUP	SCENARIO	SEASON	SOURCE	DIRECTION	MONITORED ELEMENT	RATEA (MVA)	RATEB(MVA)	TDF	TC%LOADING (% MVA)	CONTINGENCY
FDNS	00NR	4	17SP	G15_042	TO->FROM	GRPRAR1-LNX3345.00 - GRPRAR 345KV CKT Z	720	720	0.03268	110.2062	HESKETT 115/13.8KV TRANSFORMER CKT 1
FDNS	00NR	4	17SP	G15_042	TO->FROM	GRPRAR1-LNX3345.00 - GRPRAR 345KV CKT Z	720	720	0.03268	110.1611	GEN681542 6-JP MADGETT
FDNS	00NR	4	17SP	G15_042	TO->FROM	GRPRAR1-LNX3345.00 - GRPRAR 345KV CKT Z	720	720	0.03268	110.115	GEN659289 1-DAYCNTYWND W0.6900
FDNS	00NR	4	17SP	G15_042	TO->FROM	GRPRAR1-LNX3345.00 - GRPRAR 345KV CKT Z	720	720	0.03268	110.0973	GEN659018 1-G14_003IS_3 0.6900
FDNS	00NR	4	17SP	G15_042	TO->FROM	GRPRAR1-LNX3345.00 - GRPRAR 345KV CKT Z	720	720	0.03268	110.077	GEN652543 3-BIG BEND
FDNS	00NR	4	17SP	G15_042	TO->FROM	GRPRAR1-LNX3345.00 - GRPRAR 345KV CKT Z	720	720	0.03268	110.0767	GEN563312 1-G15097_3 0.6900
FDNS	00NR	4	25SP	G15_042	TO->FROM	GRPRAR1-LNX3345.00 - GRPRAR 345KV CKT Z	720	720	0.0296	110.0599	STORLA - WESSINGTON 230KV CKT 1
FDNS	00NR	4	17SP	G15_042	TO->FROM	GRPRAR1-LNX3345.00 - GRPRAR 345KV CKT Z	720	720	0.03268	109.9316	GEN659194 1-NDPRAIRWND1W0.6900
FDNS	00NR	4	17SP	G15_042	TO->FROM	GRPRAR1-LNX3345.00 - GRPRAR 345KV CKT Z	720	720	0.03268	109.9152	GEN659010 4-G07_027IS_2 0.6900
FDNS	00NR	4	17SP	G15_042	TO->FROM	GRPRAR1-LNX3345.00 - GRPRAR 345KV CKT Z	720	720	0.03268	109.9079	GEN652460 4-GARRISON
FDNS	00NR	4	17SP	G15_042	TO->FROM	GRPRAR1-LNX3345.00 - GRPRAR 345KV CKT Z	720	720	0.03268	109.9078	GEN652461 5-GARRISON
FDNS	00NR	4	17SP	G15_042	TO->FROM	GRPRAR1-LNX3345.00 - GRPRAR 345KV CKT Z	720	720	0.03268	109.8861	GEN563342 1-G15098_3 0.6900
FDNS	00NR	4	17SP	G15_042	TO->FROM	GRPRAR1-LNX3345.00 - GRPRAR 345KV CKT Z	720	720	0.03268	109.8495	GEN652458 2-GARRISON
FDNS	00NR	4	17SP	G15_042	TO->FROM	GRPRAR1-LNX3345.00 - GRPRAR 345KV CKT Z	720	720	0.03268	109.8495	GEN652459 3-GARRISON
FDNS	00NR	4	17SP	G15_042	TO->FROM	GRPRAR1-LNX3345.00 - GRPRAR 345KV CKT Z	720	720	0.03268	109.8494	GEN652457 1-GARRISON
FDNS	00NR	4	17SP	G15_042	TO->FROM	GRPRAR1-LNX3345.00 - GRPRAR 345KV CKT Z	720	720	0.03268	109.7956	GEN659403 1-NDSUNFLWR W0.6900
FDNS	00NR	4	17SP	G15_042	TO->FROM	GRPRAR1-LNX3345.00 - GRPRAR 345KV CKT Z	720	720	0.03268	109.7485	GEN652542 1-BIG BEND
FDNS	00NR	4	17SP	G15_042	TO->FROM	GRPRAR1-LNX3345.00 - GRPRAR 345KV CKT Z	720	720	0.03491	109.7158	MCCOOL - MOORE 345KV CKT 1
FDNS	00NR	4	17SP	G15_042	TO->FROM	GRPRAR1-LNX3345.00 - GRPRAR 345KV CKT Z	720	720	0.03268	109.6357	GEN652559 1-OAHE
FDNS	00NR	4	17SP	G15_042	TO->FROM	GRPRAR1-LNX3345.00 - GRPRAR 345KV CKT Z	720	720	0.03268	109.6344	STANTON 230/18.0KV TRANSFORMER CKT 1
FDNS	00NR	4	17SP	G15_042	TO->FROM	GRPRAR1-LNX3345.00 - GRPRAR 345KV CKT Z	720	720	0.03268	109.6331	CLAY BOSWELL 230/20.9KV TRANSFORMER CKT 1
FDNS	00NR	4	17SP	G15_042	TO->FROM	GRPRAR1-LNX3345.00 - GRPRAR 345KV CKT Z	720	720	0.03264	109.6064	GLENHAM - L3 HAWDON 230KV CKT 1
FDNS	00NR	4	17SP	G15_042	TO->FROM	GRPRAR1-LNX3345.00 - GRPRAR 345KV CKT Z	720	720	0.03268	109.3797	GEN659411 1-CAMPBLCNTY W0.6900
FDNS	00NR	4	20SP	G15_042	TO->FROM	GRPRAR1-LNX3345.00 - GRPRAR 345KV CKT Z	720	720	0.03103	109.2208	BUFFALO - JAMESTOWN 345KV CKT 1
FDNS	00NR	4	20SP	G15_042	TO->FROM	GRPRAR1-LNX3345.00 - GRPRAR 345KV CKT Z	720	720	0.03081	109.1737	G09_001IST 345.00 - WATERTOWN 345KV CKT 1
FDNS	00NR	4	17SP	G15_042	TO->FROM	GRPRAR1-LNX3345.00 - GRPRAR 345KV CKT Z	720	720	0.03268	109.1532	GEN659296 2-SDPRAIRWND1W0.6900
FDNS	00NR	4	17SP	G15_042	TO->FROM	GRPRAR1-LNX3345.00 - GRPRAR 345KV CKT Z	720	720	0.03268	109.1385	GEN672321 1-SHAND GENERATOR 1
FDNS	00NR	4	17SP	G15_042	TO->FROM	GRPRAR1-LNX3345.00 - GRPRAR 345KV CKT Z	720	720	0.03268	109.1286	GEN672311 2-POPLAR RIVER GENERATOR 2
FDNS	00NR	4	17SP	G15_042	TO->FROM	GRPRAR1-LNX3345.00 - GRPRAR 345KV CKT Z	720	720	0.03268	109.1282	GEN672310 1-POPLAR RIVER GENERATOR 1
FDNS	00NR	4	17SP	G15_042	TO->FROM	GRPRAR1-LNX3345.00 - GRPRAR 345KV CKT Z	720	720	0.03268	109.074	RCDC EAST 4230.00 - RED CEDAR DC 230KV CKT 1
FDNS	00NR	4	17SP	G15_042	TO->FROM	GRPRAR1-LNX3345.00 - GRPRAR 345KV CKT Z	720	720	0.03268	109.0588	GEN600004 2-PRAIRIE ISLAND G2
FDNS	00NR	4	17SP	G15_042	TO->FROM	GRPRAR1-LNX3345.00 - GRPRAR 345KV CKT Z	720	720	0.03269	109.055	P12:230:UMZB:# 112 #: NU IN SD. NU-RCDC & DRY CREEK XFMR
FDNS	00NR	4	17SP	G15_042	TO->FROM	GRPRAR1-LNX3345.00 - GRPRAR 345KV CKT Z	720	720	0.03268	109.0546	GEN600003 1-PRAIRIE ISLAND G1
FDNS	00NR	4	25SP	G15_042	TO->FROM	GRPRAR1-LNX3345.00 - GRPRAR 345KV CKT Z	720	720	0.02957	109.0508	HANLON - STORLA 230KV CKT 1
FDNS	00NR	4	17SP	G15_042	TO->FROM	GRPRAR1-LNX3345.00 - GRPRAR 345KV CKT Z	720	720	0.03268	109.0336	GEN672306 6-BOUNDARY DAM GENERATOR 6
FDNS	00NR	4	17SP	G15_042	TO->FROM	GRPRAR1-LNX3345.00 - GRPRAR 345KV CKT Z	720	720	0.03268	109.0008	GEN615010 1-STANTON4
FDNS	00NR	4	17SP	G15_042	TO->FROM	GRPRAR1-LNX3345.00 - GRPRAR 345KV CKT Z	720	720	0.03268	108.992	GEN659453 1-GI1414GEN W0.6900
FDNS	00NR	4	17SP	G15_042	TO->FROM	GRPRAR1-LNX3345.00 - GRPRAR 345KV CKT Z	720	720	0.03268	108.9901	GEN563302 1-G15096_3 0.6900
FDNS	00NR	4	17SP	G15_042	TO->FROM	GRPRAR1-LNX3345.00 - GRPRAR 345KV CKT Z	720	720	0.03268	108.885	GEN659141 1-K10215A
FDNS	00NR	4	17SP	G15_042	TO->FROM	GRPRAR1-LNX3345.00 - GRPRAR 345KV CKT Z	720	720	0.03268	108.8034	GEN652556 2-OAHE
FDNS	00NR	4	17SP	G15_042	TO->FROM	GRPRAR1-LNX3345.00 - GRPRAR 345KV CKT Z	720	720	0.03268	108.8034	GEN652557 4-OAHE
FDNS	00NR	4	17SP	G15_042	TO->FROM	GRPRAR1-LNX3345.00 - GRPRAR 345KV CKT Z	720	720	0.03268	108.8034	GEN652558 6-OAHE
FDNS	00NR	4	17SP	G15_042	TO->FROM	GRPRAR1-LNX3345.00 - GRPRAR 345KV CKT Z	720	720	0.03268	108.8021	GEN659110 1-LELAND OLDS UNIT1
FDNS	00NR	4	25SP	G15_042	TO->FROM	GRPRAR1-LNX3345.00 - GRPRAR 345KV CKT Z	720	720	0.03135	108.7781	BUFFALO - JAMESTOWN 345KV CKT 1
FDNS	00NR	4	17SP	G15_042	TO->FROM	GRPRAR1-LNX3345.00 - GRPRAR 345KV CKT Z	720	720	0.03268	108.7323	GEN657749 1-YOUNG 1 GENERATOR
FDNS	00NR	4	17SP	G15_042	TO->FROM	GRPRAR1-LNX3345.00 - GRPRAR 345KV CKT Z	720	720	0.03268	108.7154	GEN600006 1-AS KING
FDNS	00NR	4	17SP	G15_042	TO->FROM	GRPRAR1-LNX3345.00 - GRPRAR 345KV CKT Z	720	720	0.03268	108.6418	GEN652173 1-G09_001IS_2 0.6900
FDNS	00NR	4	17SP	G15_042	TO->FROM	GRPRAR1-LNX3345.00 - GRPRAR 345KV CKT Z	720	720	0.03475	108.59	GRAND ISLAND - MCCOOL 345KV CKT 1
FDNS	00NR	4	25SP	G15_042	TO->FROM	GRPRAR1-LNX3345.00 - GRPRAR 345KV CKT Z	720	720	0.03113	108.3682	G09_001IST 345.00 - WATERTOWN 345KV CKT 1
FDNS	00NR	4	17SP	G15_042	TO->FROM	GRPRAR1-LNX3345.00 - GRPRAR 345KV CKT Z	720	720	0.03268	108.3513	GEN659407 1-ANTELPHILLSW0.6900
FDNS	00NR	4	17SP	G15_042	TO->FROM	GRPRAR1-LNX3345.00 - GRPRAR 345KV CKT Z	720	720	0.03268	108.1623	GEN600005 1-MONTICELLO
FDNS	00NR	4	20SP	G15_042	TO->FROM	GRPRAR1-LNX3345.00 - GRPRAR 345KV CKT Z	720	720	0.03047	108.0505	WATERTN-LNX3345.00 - WHITE 345KV CKT 1
FDNS	00NR	4	20SP	G15_042	TO->FROM	GRPRAR1-LNX3345.00 - GRPRAR 345KV CKT Z	720	720	0.03047	107.9519	WATERTN-LNX3345.00 - WATERTOWN 345KV CKT Z
FDNS	00NR	4	20SP	G15_042	TO->FROM	GRPRAR1-LNX3345.00 - GRPRAR 345KV CKT Z	720	720	0.03047	107.9408	P12:345:UMZW:# 1747 #: WT2 IN SD. WT2-WHT LINE FAULT
FDNS	00NR	4	20SP	G15_042	TO->FROM	GRPRAR1-LNX3345.00 - GRPRAR 345KV CKT Z	720	720	0.03104	107.8146	GEN336821 1-GRAND GULF UNIT
FDNS	00NR	4	20SP	G15_042	TO->FROM	GRPRAR1-LNX3345.00 - GRPRAR 345KV CKT Z	720	720	0.03104	107.8063	GEN635024 4-WALTER SCOTT UNIT 4
FDNS	00NR	4	20SP	G15_042	TO->FROM	GRPRAR1-LNX3345.00 - GRPRAR 345KV CKT Z	720	720	0.03482	107.7836	FT RANDAL - MEADOWGROVE4230.00 230KV CKT 1
FDNS	00NR	4	20SP	G15_042	TO->FROM	GRPRAR1-LNX3345.00 - GRPRAR 345KV CKT Z	720	720	0.03102	107.7485	CENTER - JAMESTOWN 345KV CKT 1
FDNS	00NR	4	17SP	G15_042	TO->FROM	GRPRAR1-LNX3345.00 - GRPRAR 345KV CKT Z	720	720	0.03268	107.5077	GEN600000 1-SHERBURNECNTY G1
FDNS	00NR	4	20SP	G15_042	TO->FROM	GRPRAR1-LNX3345.00 - GRPRAR 345KV CKT Z	720	720	0.03105	107.4895	CHISAGO COUNTY - CHISAGO COUNTY 500KV CKT 1
FDNS	00NR	4	20SP	G15_042	TO->FROM	GRPRAR1-LNX3345.00 - GRPRAR 345KV CKT Z	720	720	0.03105	107.4656	CHISAGO COUNTY - FORBES 500KV CKT 1
FDNS	00NR	4	20SP	G15_042	TO->FROM	GRPRAR1-LNX3345.00 - GRPRAR 345KV CKT Z	720	720	0.03103	107.3545	BISON 3 345.00 - BUFFALO 345KV CKT 1
FDNS	00NR	4	20SP	G15_042	TO->FROM	GRPRAR1-LNX3345.00 - GRPRAR 345KV CKT Z	720	720	0.02977	107.3211	LETCHER - SIOUX FALLS 230KV CKT 1
FDNS	00NR	4	20SP	G15_042	TO->FROM	GRPRAR1-LNX3345.00 - GRPRAR 345KV CKT Z	720	720	0.03104	107.317	GEN635023 3-WALTER SCOTT UNIT 3
FDNS	00NR	4	20SP	G15_042	TO->FROM	GRPRAR1-LNX3345.00 - GRPRAR 345KV CKT Z	720	720	0.03104	107.2647	GEN562714 1-G15_023_4 0.6900
FDNS	00NR	4	20SP	G15_042	TO->FROM	GRPRAR1-LNX3345.00 - GRPRAR 345KV CKT Z	720	720	0.03104	107.2647	GEN562715 1-G15_023_5 0.6900
FDNS	00NR	4	20SP	G15_042	TO->FROM	GRPRAR1-LNX3345.00 - GRPRAR 345KV CKT Z	720	720	0.03104	107.2571	GEN344225 1-1CAL G1 25.000
FDNS	00NR	4	25SP	G15_042	TO->FROM	GRPRAR1-LNX3345.00 - GRPRAR 345KV CKT Z	720	720	0.0308	107.1739	WATERTN-LNX3345.00 - WHITE 345KV CKT 1
FDNS	00NR	4	20SP	G15_042	TO->FROM	GRPRAR1-LNX3345.00 - GRPRAR 345KV CKT Z	720	720	0.03104	107.1735	GEN337911 1-ARKANSAS NUCLEAR ONE UNIT #2
FDNS	00NR	4	17SP	G15_042	TO->FROM	GRPRAR1-LNX3345.00 - GRPRAR 345KV CKT Z	720	720	0.03268	107.1544	GEN600001 2-SHERBURNE CNTY G2
FDNS	00NR	4	25SP	G15_042	TO->FROM	GRPRAR1-LNX3345.00 - GRPRAR 345KV CKT Z	720	720	0.03135	107.1523	CENTER - JAMESTOWN 345KV CKT 1
FDNS	00NR	4	20SP	G15_042	TO->FROM	GRPRAR1-LNX3345.00 - GRPRAR 345KV CKT Z	720	720	0.03104	107.1444	GEN336153 1-WATERFORD UNIT#3
FDNS	00NR	4	20SP	G15_042	TO->FROM	GRPRAR1-LNX3345.00 - GRPRAR 345KV CKT Z	720	720	0.03205	107.13	MISSION - ST FRANCIS 115KV CKT 1
FDNS	00NR	4	20SP	G15_042	TO->FROM	GRPRAR1-LNX3345.00 - GRPRAR 345KV CKT Z	720	720	0.03205	107.1005	P12:115:NPPD:1091:VALENTN7:MISSION7:BTB
FDNS	00NR	4	25SP	G15_042	TO->FROM	GRPRAR1-LNX3345.00 - GRPRAR 345KV CKT Z	720	720	0.0308	107.0721	WATERTN-LNX3345.00 - WATERTOWN 345KV CKT Z
FDNS	00NR	4	20SP	G15_042	TO->FROM	GRPRAR1-LNX3345.00 - GRPRAR 345KV CKT Z	720	720	0.03202	107.0672	SIDNEY - SIDNEY1-LNX3345.00 345KV CKT Z
FDNS	00NR	4	25SP	G15_042	TO->FROM	GRPRAR1-LNX3345.00 - GRPRAR 345KV CKT Z	720	720	0.0308	107.0636	P12:345:UMZW:# 1747 #: WT2 IN SD. WT2-WHT LINE FAULT
FDNS	00NR	4	20SP	G15_042	TO->FROM	GRPRAR1-LNX3345.00 - GRPRAR 345KV CKT Z	720	720	0.03202	107.0471	KEYSTONE - SIDNEY1-LNX3345.00 345KV CKT 1
FDNS	00NR	4	20SP	G15_042	TO->FROM	GRPRAR1-LNX3345.00 - GRPRAR 345KV CKT Z	720	720	0.03879	106.9575	NUNDRWD - WAYSIDE 230KV CKT 1

SOLUTION	GROUP	SCENARIO	SEASON	SOURCE	DIRECTION	MONITORED ELEMENT	RATEA (MVA)	RATEB(MVA)	TDF	TC%LOADING (% MVA)	CONTINGENCY
FDNS	00NR	4	20SP	G15_042	TO->FROM	GRPRAR1-LNX3345.00 - GRPRAR 345KV CKT Z	720	720	0.03205	106.9547	HARMONY - ST FRANCIS 115KV CKT 1
FDNS	00NR	4	25SP	G15_042	TO->FROM	GRPRAR1-LNX3345.00 - GRPRAR 345KV CKT Z	720	720	0.03519	106.93	FT RANDAL - MEADOWGROVE4230.00 230KV CKT 1
FDNS	00NR	4	20SP	G15_042	TO->FROM	GRPRAR1-LNX3345.00 - GRPRAR 345KV CKT Z	720	720	0.03081	106.9266	G09_001IST 345.00 - GROTON 345KV CKT 1
FDNS	00NR	4	25SP	G15_042	TO->FROM	GRPRAR1-LNX3345.00 - GRPRAR 345KV CKT Z	720	720	0.03136	106.8632	GEN635024 4-WALTER SCOTT UNIT 4
FDNS	00NR	4	20SP	G15_042	TO->FROM	GRPRAR1-LNX3345.00 - GRPRAR 345KV CKT Z	720	720	0.03104	106.8133	GEN640010 1-GERALD GENTLEMAN STATION UNIT 1
FDNS	00NR	4	20SP	G15_042	TO->FROM	GRPRAR1-LNX3345.00 - GRPRAR 345KV CKT Z	720	720	0.03104	106.7987	GEN335831 1-RIVERBEND UNIT#1
FDNS	00NR	4	25SP	G15_042	TO->FROM	GRPRAR1-LNX3345.00 - GRPRAR 345KV CKT Z	720	720	0.03136	106.791	GEN336821 1-GRAND GULF UNIT
FDNS	00NR	4	25SP	G15_042	TO->FROM	GRPRAR1-LNX3345.00 - GRPRAR 345KV CKT Z	720	720	0.03136	106.7818	BISON 3 345.00 - BUFFALO 345KV CKT 1
FDNS	00NR	4	25SP	G15_042	TO->FROM	GRPRAR1-LNX3345.00 - GRPRAR 345KV CKT Z	720	720	0.03137	106.7702	CHISAGO COUNTY - CHISAGO COUNTY 500KV CKT 1
FDNS	00NR	4	25SP	G15_042	TO->FROM	GRPRAR1-LNX3345.00 - GRPRAR 345KV CKT Z	720	720	0.03136	106.7356	GEN640010 1-GERALD GENTLEMAN STATION UNIT 1
FDNS	00NR	4	20SP	G15_042	TO->FROM	GRPRAR1-LNX3345.00 - GRPRAR 345KV CKT Z	720	720	0.03104	106.7254	GEN640011 2-GERALD GENTLEMAN STATION UNIT 2
FDNS	00NR	4	25SP	G15_042	TO->FROM	GRPRAR1-LNX3345.00 - GRPRAR 345KV CKT Z	720	720	0.03137	106.7191	CHISAGO COUNTY - FORBES 500KV CKT 1
FDNS	00NR	4	25SP	G15_042	TO->FROM	GRPRAR1-LNX3345.00 - GRPRAR 345KV CKT Z	720	720	0.02965	106.7104	SPLIT ROCK - WHITE 345KV CKT 1
FDNS	00NR	4	25SP	G15_042	TO->FROM	GRPRAR1-LNX3345.00 - GRPRAR 345KV CKT Z	720	720	0.02965	106.7104	SPLIT ROCK - WHITE 345KV CKT 1
FDNS	00NR	4	20SP	G15_042	TO->FROM	GRPRAR1-LNX3345.00 - GRPRAR 345KV CKT Z	720	720	0.03104	106.7045	GEN337910 1-ARKANSAS NUCLEAR ONE UNIT #1
FDNS	00NR	4	20SP	G15_042	TO->FROM	GRPRAR1-LNX3345.00 - GRPRAR 345KV CKT Z	720	720	0.03205	106.6937	HARMONY - VALENTINE 115KV CKT 1
FDNS	00NR	4	17SP	G15_042	TO->FROM	GRPRAR1-LNX3345.00 - GRPRAR 345KV CKT Z	720	720	0.03268	106.6817	GEN620315 1-BIG STONE GEN
FDNS	00NR	4	17SP	G15_042	TO->FROM	GRPRAR1-LNX3345.00 - GRPRAR 345KV CKT Z	720	720	0.03268	106.6605	GEN661015 1-COYOTE
FDNS	00NR	4	20SP	G15_042	TO->FROM	GRPRAR1-LNX3345.00 - GRPRAR 345KV CKT Z	720	720	0.03264	106.5894	FT RANDAL - SPENCER 115KV CKT 1
FDNS	00NR	4	20SP	G15_042	TO->FROM	GRPRAR1-LNX3345.00 - GRPRAR 345KV CKT Z	720	720	0.03264	106.564	P12:115:NPPD:WAPA6:FTRANDL7:ONEILL 7:BTB
FDNS	00NR	4	20SP	G15_042	TO->FROM	GRPRAR1-LNX3345.00 - GRPRAR 345KV CKT Z	720	720	0.03264	106.564	P12:115:UMZB:# 115 #: SE IN NE. FR-SE-ON
FDNS	00NR	4	25SP	G15_042	TO->FROM	GRPRAR1-LNX3345.00 - GRPRAR 345KV CKT Z	720	720	0.03009	106.5307	LETCHER - SIOUX FALLS 230KV CKT 1
FDNS	00NR	4	25SP	G15_042	TO->FROM	GRPRAR1-LNX3345.00 - GRPRAR 345KV CKT Z	720	720	0.03136	106.5301	GEN562714 1-G15_023_4 0.6900
FDNS	00NR	4	25SP	G15_042	TO->FROM	GRPRAR1-LNX3345.00 - GRPRAR 345KV CKT Z	720	720	0.03136	106.5301	GEN562715 1-G15_023_5 0.6900
FDNS	00NR	4	17SP	G15_042	TO->FROM	GRPRAR1-LNX3345.00 - GRPRAR 345KV CKT Z	720	720	0.03268	106.4545	GEN600002 3-SHERBURNE CNTY G3
FDNS	00NR	4	25SP	G15_042	TO->FROM	GRPRAR1-LNX3345.00 - GRPRAR 345KV CKT Z	720	720	0.03238	106.4492	MISSION - ST FRANCIS 115KV CKT 1
FDNS	00NR	4	20SP	G15_042	TO->FROM	GRPRAR1-LNX3345.00 - GRPRAR 345KV CKT Z	720	720	0.03264	106.4455	ONEILL - SPENCER 115KV CKT 1
FDNS	00NR	4	25SP	G15_042	TO->FROM	GRPRAR1-LNX3345.00 - GRPRAR 345KV CKT Z	720	720	0.03136	106.4336	GEN640011 2-GERALD GENTLEMAN STATION UNIT 2
FDNS	00NR	4	25SP	G15_042	TO->FROM	GRPRAR1-LNX3345.00 - GRPRAR 345KV CKT Z	720	720	0.03136	106.4	GEN337911 1-ARKANSAS NUCLEAR ONE UNIT #2
FDNS	00NR	4	25SP	G15_042	TO->FROM	GRPRAR1-LNX3345.00 - GRPRAR 345KV CKT Z	720	720	0.03136	106.3988	GEN635023 3-WALTER SCOTT UNIT 3
FDNS	00NR	4	20SP	G15_042	TO->FROM	GRPRAR1-LNX3345.00 - GRPRAR 345KV CKT Z	720	720	0.03079	106.3977	GROTON-LNX3 345.00 - LELAND1-LNX3345.00 345KV CKT 1
FDNS	00NR	4	20SP	G15_042	TO->FROM	GRPRAR1-LNX3345.00 - GRPRAR 345KV CKT Z	720	720	0.06247	106.3707	DIXONCO 230.00 - HOSKINS 230KV CKT 1
FDNS	00NR	4	25SP	G15_042	TO->FROM	GRPRAR1-LNX3345.00 - GRPRAR 345KV CKT Z	720	720	0.03234	106.3453	KEYSTONE - SIDNEY1-LNX3345.00 345KV CKT 1
FDNS	00NR	4	20SP	G15_042	TO->FROM	GRPRAR1-LNX3345.00 - GRPRAR 345KV CKT Z	720	720	0.03079	106.3452	GROTON - GROTON-LNX3 345.00 345KV CKT Z
FDNS	00NR	4	20SP	G15_042	TO->FROM	GRPRAR1-LNX3345.00 - GRPRAR 345KV CKT Z	720	720	0.03025	106.3434	HANLON - SIOUX FALLS 230KV CKT 1
FDNS	00NR	4	20SP	G15_042	TO->FROM	GRPRAR1-LNX3345.00 - GRPRAR 345KV CKT Z	720	720	0.03079	106.3432	P12:345:UMZB:# 109 #: LOS GRT IN ND. LOS GRT
FDNS	00NR	4	25SP	G15_042	TO->FROM	GRPRAR1-LNX3345.00 - GRPRAR 345KV CKT Z	720	720	0.03234	106.3415	SIDNEY - SIDNEY1-LNX3345.00 345KV CKT Z
FDNS	00NR	4	20SP	G15_042	TO->FROM	GRPRAR1-LNX3345.00 - GRPRAR 345KV CKT Z	720	720	0.03079	106.337	LELAND OLDS - LELAND1-LNX3345.00 345KV CKT Z
FDNS	00NR	4	25SP	G15_042	TO->FROM	GRPRAR1-LNX3345.00 - GRPRAR 345KV CKT Z	720	720	0.03238	106.2594	HARMONY - ST FRANCIS 115KV CKT 1
FDNS	00NR	4	25SP	G15_042	TO->FROM	GRPRAR1-LNX3345.00 - GRPRAR 345KV CKT Z	720	720	0.03136	106.2573	GEN344225 1-1CAL G1 25.000
FDNS	00NR	4	20SP	G15_042	TO->FROM	GRPRAR1-LNX3345.00 - GRPRAR 345KV CKT Z	720	720	0.03202	106.2348	LAKEFIELD 3 - NOBLES 345KV CKT 1
FDNS	00NR	4	20SP	G15_042	TO->FROM	GRPRAR1-LNX3345.00 - GRPRAR 345KV CKT Z	720	720	0.03133	106.2342	GERALD GENTLEMAN STATION - KEYSTONE 345KV CKT 1
FDNS	00NR	4	20SP	G15_042	TO->FROM	GRPRAR1-LNX3345.00 - GRPRAR 345KV CKT Z	720	720	0.03104	106.2133	GEN337653 1-WHITE BLUFF UNIT #2
FDNS	00NR	4	17SP	G15_042	TO->FROM	GRPRAR1-LNX3345.00 - GRPRAR 345KV CKT Z	720	720	0.03268	106.2118	GEN657748 1-YOUNG 2 GENERATOR
FDNS	00NR	4	25SP	G15_042	TO->FROM	GRPRAR1-LNX3345.00 - GRPRAR 345KV CKT Z	720	720	0.03113	106.2062	G09_001IST 345.00 - GROTON 345KV CKT 1
FDNS	00NR	4	20SP	G15_042	TO->FROM	GRPRAR1-LNX3345.00 - GRPRAR 345KV CKT Z	720	720	0.03531	106.1744	RAUN - SUB 3451 FT CAL 345KV CKT 1
FDNS	00NR	4	20SP	G15_042	TO->FROM	GRPRAR1-LNX3345.00 - GRPRAR 345KV CKT Z	720	720	0.03531	106.1744	RAUN - SUB 3451 FT CAL 345KV CKT 1
FDNS	00NR	4	25SP	G15_042	TO->FROM	GRPRAR1-LNX3345.00 - GRPRAR 345KV CKT Z	720	720	0.03136	106.1669	GEN336153 1-WATERFORD UNIT#3
FDNS	00NR	4	20SP	G15_042	TO->FROM	GRPRAR1-LNX3345.00 - GRPRAR 345KV CKT Z	720	720	0.03104	106.1609	GEN337652 1-WHITE BLUFF UNIT #1
FDNS	00NR	4	25SP	G15_042	TO->FROM	GRPRAR1-LNX3345.00 - GRPRAR 345KV CKT Z	720	720	0.03908	106.1409	NUNDRWD - WAYSIDE 230KV CKT 1
FDNS	00NR	4	20SP	G15_042	TO->FROM	GRPRAR1-LNX3345.00 - GRPRAR 345KV CKT Z	720	720	0.03246	106.1377	SIDNEY - STEGALL 345KV CKT 1
FDNS	00NR	4	20SP	G15_042	TO->FROM	GRPRAR1-LNX3345.00 - GRPRAR 345KV CKT Z	720	720	0.03127	106.1321	ARROWHEAD - ARROWHEAD 230 230KV CKT 1
FDNS	00NR	4	20SP	G15_042	TO->FROM	GRPRAR1-LNX3345.00 - GRPRAR 345KV CKT Z	720	720	0.03205	106.1319	AINSWORTH - VALENTINE 115KV CKT 1
FDNS	00NR	4	20SP	G15_042	TO->FROM	GRPRAR1-LNX3345.00 - GRPRAR 345KV CKT Z	720	720	0.03104	106.106	GEN338146 1-INDEPENDENCE UNIT #2
FDNS	00NR	4	20SP	G15_042	TO->FROM	GRPRAR1-LNX3345.00 - GRPRAR 345KV CKT Z	720	720	0.03104	106.1025	GEN338143 1-INDEPENDENCE UNIT #1
FDNS	00NR	4	20SP	G15_042	TO->FROM	GRPRAR1-LNX3345.00 - GRPRAR 345KV CKT Z	720	720	0.03104	106.0798	GEN501801 1-DOLET HILLS UNIT1
FDNS	00NR	4	20SP	G15_042	TO->FROM	GRPRAR1-LNX3345.00 - GRPRAR 345KV CKT Z	720	720	0.0314	106.0534	BROOKING COUNTY - LYON COUNTY 345KV CKT 1
FDNS	00NR	4	20SP	G15_042	TO->FROM	GRPRAR1-LNX3345.00 - GRPRAR 345KV CKT Z	720	720	0.03109	106.0341	ALEXMRES3 345.00 - BISON 3 345.00 345KV CKT 1
FDNS	00NR	4	20SP	G15_042	TO->FROM	GRPRAR1-LNX3345.00 - GRPRAR 345KV CKT Z	720	720	0.03131	105.9681	AS KING - EAU CLAIRE 345KV CKT 1
FDNS	00NR	4	17SP	G15_042	TO->FROM	GRPRAR1-LNX3345.00 - GRPRAR 345KV CKT Z	720	720	0.03268	105.9629	GEN562872 1-G15046_3 0.6900
FDNS	00NR	4	20SP	G15_042	TO->FROM	GRPRAR1-LNX3345.00 - GRPRAR 345KV CKT Z	720	720	0.03104	105.9408	GEN336252 1-NINEMILE POINT UNIT#5
FDNS	00NR	4	25SP	G15_042	TO->FROM	GRPRAR1-LNX3345.00 - GRPRAR 345KV CKT Z	720	720	0.03296	105.9381	FT RANDAL - SPENCER 115KV CKT 1
FDNS	00NR	4	20SP	G15_042	TO->FROM	GRPRAR1-LNX3345.00 - GRPRAR 345KV CKT Z	720	720	0.03094	105.9284	CARPENTER - HURON 230KV CKT 1
FDNS	00NR	4	25SP	G15_042	TO->FROM	GRPRAR1-LNX3345.00 - GRPRAR 345KV CKT Z	720	720	0.03296	105.9077	P12:115:NPPD:WAPA6:FTRANDL7:ONEILL 7:BTB
FDNS	00NR	4	25SP	G15_042	TO->FROM	GRPRAR1-LNX3345.00 - GRPRAR 345KV CKT Z	720	720	0.03296	105.9077	P12:115:UMZB:# 115 #: SE IN NE. FR-SE-ON
FDNS	00NR	4	20SP	G15_042	TO->FROM	GRPRAR1-LNX3345.00 - GRPRAR 345KV CKT Z	720	720	0.03104	105.8607	GEN336251 1-NINEMILE POINT UNIT#4
FDNS	00NR	4	25SP	G15_042	TO->FROM	GRPRAR1-LNX3345.00 - GRPRAR 345KV CKT Z	720	720	0.03136	105.8463	GEN335831 1-RIVERBEND UNIT#1
FDNS	00NR	4	20SP	G15_042	TO->FROM	GRPRAR1-LNX3345.00 - GRPRAR 345KV CKT Z	720	720	0.03104	105.8422	GEN336831 1-BAXTER WILSON SES
FDNS	00NR	4	20SP	G15_042	TO->FROM	GRPRAR1-LNX3345.00 - GRPRAR 345KV CKT Z	720	720	0.03094	105.8249	HURON - WATERTOWN 230KV CKT 2
FDNS	00NR	4	20SP	G15_042	TO->FROM	GRPRAR1-LNX3345.00 - GRPRAR 345KV CKT Z	720	720	0.03094	105.8249	HURON - WATERTOWN 230KV CKT 2
FDNS	00NR	4	20SP	G15_042	TO->FROM	GRPRAR1-LNX3345.00 - GRPRAR 345KV CKT Z	720	720	0.03104	105.7892	GEN337041 1-GERALD ANDRUS
FDNS	00NR	4	25SP	G15_042	TO->FROM	GRPRAR1-LNX3345.00 - GRPRAR 345KV CKT Z	720	720	0.03136	105.7847	GEN337910 1-ARKANSAS NUCLEAR ONE UNIT #1
FDNS	00NR	4	20SP	G15_042	TO->FROM	GRPRAR1-LNX3345.00 - GRPRAR 345KV CKT Z	720	720	0.03094	105.7843	CARPENTER - WATERTOWN 230KV CKT 1
FDNS	00NR	4	20SP	G15_042	TO->FROM	GRPRAR1-LNX3345.00 - GRPRAR 345KV CKT Z	720	720	0.03094	105.7843	CARPENTER - WATERTOWN 230KV CKT 1
FDNS	00NR	4	25SP	G15_042	TO->FROM	GRPRAR1-LNX3345.00 - GRPRAR 345KV CKT Z	720	720	0.03296	105.7826	ONEILL - SPENCER 115KV CKT 1
FDNS	00NR	4	20SP	G15_042	TO->FROM	GRPRAR1-LNX3345.00 - GRPRAR 345KV CKT Z	720	720	0.03161	105.7574	HAZLETON - MITCHLCO3 345.00 345KV CKT 1
FDNS	00NR	4	20SP	G15_042	TO->FROM	GRPRAR1-LNX3345.00 - GRPRAR 345KV CKT Z	720	720	0.03104	105.7565	GEN501813 1-RODEMACHER UNIT 3
FDNS	00NR	4	25SP	G15_042	TO->FROM	GRPRAR1-LNX3345.00 - GRPRAR 345KV CKT Z	720	720	0.03111	105.6998	GROTON-LNX3 345.00 - LELAND1-LNX3345.00 345KV CKT 1
FDNS	00NR	4	20SP	G15_042	TO->FROM	GRPRAR1-LNX3345.00 - GRPRAR 345KV CKT Z	720	720	0.03131	105.6908	G15094_T 345.00 - SIDNEY2-LNX3345.00 345KV CKT 1

SOLUTION	GROUP	SCENARIO	SEASON	SOURCE	DIRECTION	MONITORED ELEMENT	RATEA (MVA)	RATEB(MVA)	TDF	TC%LOADING (% MVA)	CONTINGENCY
FDNS	00NR	4	20SP	G15_042	TO->FROM	GRPRAR1-LNX3345.00 - GRPRAR 345KV CKT Z	720	720	0.03105	105.6861	CNTSHNT3 345.00 - PRAIRIE3 345.00 345KV CKT 1
FDNS	00NR	4	20SP	G15_042	TO->FROM	GRPRAR1-LNX3345.00 - GRPRAR 345KV CKT Z	720	720	0.03131	105.6831	SIDNEY - SIDNEY2-LNX3345.00 345KV CKT Z
FDNS	00NR	4	17SP	G15_042	TO->FROM	GRPRAR1-LNX3345.00 - GRPRAR 345KV CKT Z	720	720	0.03268	105.6626	GEN659111 2-LELAND OLDS UNIT2
FDNS	00NR	4	25SP	G15_042	TO->FROM	GRPRAR1-LNX3345.00 - GRPRAR 345KV CKT Z	720	720	0.03111	105.6577	GROTON - GROTON-LNX3 345.00 345KV CKT Z
FDNS	00NR	4	25SP	G15_042	TO->FROM	GRPRAR1-LNX3345.00 - GRPRAR 345KV CKT Z	720	720	0.03111	105.656	P12:345:UMZB:# 109 #: LOS GRT IN ND. LOS GRT
FDNS	00NR	4	25SP	G15_042	TO->FROM	GRPRAR1-LNX3345.00 - GRPRAR 345KV CKT Z	720	720	0.03111	105.6496	LELAND OLDS - LELAND1-LNX3345.00 345KV CKT Z
FDNS	00NR	4	25SP	G15_042	TO->FROM	GRPRAR1-LNX3345.00 - GRPRAR 345KV CKT Z	720	720	0.06279	105.6268	DIXONCO 230.00 - HOSKINS 230KV CKT 1
FDNS	00NR	4	20SP	G15_042	TO->FROM	GRPRAR1-LNX3345.00 - GRPRAR 345KV CKT Z	720	720	0.03104	105.5878	GEN335206 1-NELSON UNIT 6
FDNS	00NR	4	20SP	G15_042	TO->FROM	GRPRAR1-LNX3345.00 - GRPRAR 345KV CKT Z	720	720	0.03104	105.5519	GEN344897 4-1LAB G4 20.000
FDNS	00NR	4	20SP	G15_042	TO->FROM	GRPRAR1-LNX3345.00 - GRPRAR 345KV CKT Z	720	720	0.03104	105.5503	GEN344894 1-1LAB G1 20.000
FDNS	00NR	4	20SP	G15_042	TO->FROM	GRPRAR1-LNX3345.00 - GRPRAR 345KV CKT Z	720	720	0.03104	105.5502	GEN344895 2-1LAB G2 20.000
FDNS	00NR	4	20SP	G15_042	TO->FROM	GRPRAR1-LNX3345.00 - GRPRAR 345KV CKT Z	720	720	0.03104	105.5501	GEN344896 3-1LAB G3 20.000
FDNS	00NR	4	20SP	G15_042	TO->FROM	GRPRAR1-LNX3345.00 - GRPRAR 345KV CKT Z	720	720	0.03104	105.5501	GEN635214 4-NEAL UNIT 4
FDNS	00NR	4	20SP	G15_042	TO->FROM	GRPRAR1-LNX3345.00 - GRPRAR 345KV CKT Z	720	720	0.03104	105.5443	GEN334440 1-SABINE UNIT 4
FDNS	00NR	4	20SP	G15_042	TO->FROM	GRPRAR1-LNX3345.00 - GRPRAR 345KV CKT Z	720	720	0.03135	105.5217	ARPIN B4 345.00 - EAU CLAIRE 345KV CKT 1
FDNS	00NR	4	25SP	G15_042	TO->FROM	GRPRAR1-LNX3345.00 - GRPRAR 345KV CKT Z	720	720	0.03057	105.518	HANLON - SIOUX FALLS 230KV CKT 1
FDNS	00NR	4	25SP	G15_042	TO->FROM	GRPRAR1-LNX3345.00 - GRPRAR 345KV CKT Z	720	720	0.03233	105.5154	LAKEFIELD 3 - NOBLES 345KV CKT 1
FDNS	00NR	4	20SP	G15_042	TO->FROM	GRPRAR1-LNX3345.00 - GRPRAR 345KV CKT Z	720	720	0.03104	105.4975	GEN345671 2-1RUSH G2 18.000
FDNS	00NR	4	20SP	G15_042	TO->FROM	GRPRAR1-LNX3345.00 - GRPRAR 345KV CKT Z	720	720	0.03104	105.4932	GEN345670 1-1RUSH G1 18.000
FDNS	00NR	4	25SP	G15_042	TO->FROM	GRPRAR1-LNX3345.00 - GRPRAR 345KV CKT Z	720	720	0.03166	105.4819	GERALD GENTLEMAN STATION - KEYSTONE 345KV CKT 1
FDNS	00NR	4	20SP	G15_042	TO->FROM	GRPRAR1-LNX3345.00 - GRPRAR 345KV CKT Z	720	720	0.03104	105.4531	GEN501812 1-RODEMACHER UNIT 2
FDNS	00NR	4	20SP	G15_042	TO->FROM	GRPRAR1-LNX3345.00 - GRPRAR 345KV CKT Z	720	720	0.03104	105.4202	GEN336191 1-LITTLE GYPSY UNIT#3
FDNS	00NR	4	25SP	G15_042	TO->FROM	GRPRAR1-LNX3345.00 - GRPRAR 345KV CKT Z	720	720	0.03562	105.4106	RAUN - SUB 3451 FT CAL 345KV CKT 1
FDNS	00NR	4	25SP	G15_042	TO->FROM	GRPRAR1-LNX3345.00 - GRPRAR 345KV CKT Z	720	720	0.03562	105.4106	RAUN - SUB 3451 FT CAL 345KV CKT 1
FDNS	00NR	4	25SP	G15_042	TO->FROM	GRPRAR1-LNX3345.00 - GRPRAR 345KV CKT Z	720	720	0.03136	105.4	GEN338143 1-INDEPENDENCE UNIT #1
FDNS	00NR	4	25SP	G15_042	TO->FROM	GRPRAR1-LNX3345.00 - GRPRAR 345KV CKT Z	720	720	0.03136	105.4	GEN338146 1-INDEPENDENCE UNIT #2
FDNS	00NR	4	20SP	G15_042	TO->FROM	GRPRAR1-LNX3345.00 - GRPRAR 345KV CKT Z	720	720	0.03104	105.3972	GEN338388 1-1PLUM PT U1 23.000
FDNS	00NR	4	20SP	G15_042	TO->FROM	GRPRAR1-LNX3345.00 - GRPRAR 345KV CKT Z	720	720	0.03104	105.3945	GEN629075 1-OTTUMWA GENERATOR FOR OTTUMWA UNIT NO 1
FDNS	00NR	4	25SP	G15_042	TO->FROM	GRPRAR1-LNX3345.00 - GRPRAR 345KV CKT Z	720	720	0.02962	105.394	PAHOJA - SIOUX FALLS 230KV CKT 1
FDNS	00NR	4	25SP	G15_042	TO->FROM	GRPRAR1-LNX3345.00 - GRPRAR 345KV CKT Z	720	720	0.03238	105.3802	AINSWORTH - VALENTINE 115KV CKT 1
FDNS	00NR	4	25SP	G15_042	TO->FROM	GRPRAR1-LNX3345.00 - GRPRAR 345KV CKT Z	720	720	0.03172	105.3795	BROOKING COUNTY - LYON COUNTY 345KV CKT 1
FDNS	00NR	4	25SP	G15_042	TO->FROM	GRPRAR1-LNX3345.00 - GRPRAR 345KV CKT Z	720	720	0.03277	105.3773	SIDNEY - STEGALL 345KV CKT 1
FDNS	00NR	4	20SP	G15_042	TO->FROM	GRPRAR1-LNX3345.00 - GRPRAR 345KV CKT Z	720	720	0.03104	105.3541	GEN335614 1-WILLOW GLENN UNIT#4
FDNS	00NR	4	20SP	G15_042	TO->FROM	GRPRAR1-LNX3345.00 - GRPRAR 345KV CKT Z	720	720	0.03104	105.3421	GEN336801 1-BAXTER WILSON UNIT #1
FDNS	00NR	4	20SP	G15_042	TO->FROM	GRPRAR1-LNX3345.00 - GRPRAR 345KV CKT Z	720	720	0.03104	105.3389	GEN336464 1-MICHOUD UNIT #3
FDNS	00NR	4	20SP	G15_042	TO->FROM	GRPRAR1-LNX3345.00 - GRPRAR 345KV CKT Z	720	720	0.03104	105.3279	GEN335204 1-NELSON UNIT 4
FDNS	00NR	4	20SP	G15_042	TO->FROM	GRPRAR1-LNX3345.00 - GRPRAR 345KV CKT Z	720	720	0.03104	105.3183	GEN334441 1-SABINE UNIT 5
FDNS	00NR	4	25SP	G15_042	TO->FROM	GRPRAR1-LNX3345.00 - GRPRAR 345KV CKT Z	720	720	0.03142	105.3153	ALEXMRES3 345.00 - BISON 3 345.00 345KV CKT 1
FDNS	00NR	4	25SP	G15_042	TO->FROM	GRPRAR1-LNX3345.00 - GRPRAR 345KV CKT Z	720	720	0.03136	105.3125	GEN337653 1-WHITE BLUFF UNIT #2
FDNS	00NR	4	20SP	G15_042	TO->FROM	GRPRAR1-LNX3345.00 - GRPRAR 345KV CKT Z	720	720	0.03258	105.3107	GRIMES - LEHIGH 345KV CKT 1
FDNS	00NR	4	20SP	G15_042	TO->FROM	GRPRAR1-LNX3345.00 - GRPRAR 345KV CKT Z	720	720	0.03126	105.2951	NORTH LA CROSSE - NORTH ROCHESTER 345KV CKT 1
FDNS	00NR	4	25SP	G15_042	TO->FROM	GRPRAR1-LNX3345.00 - GRPRAR 345KV CKT Z	720	720	0.03159	105.2748	ARROWHEAD - ARROWHEAD 230 230KV CKT 1
FDNS	00NR	4	20SP	G15_042	TO->FROM	GRPRAR1-LNX3345.00 - GRPRAR 345KV CKT Z	720	720	0.03159	105.2404	KOSSUTH 3 345.00 - WEBSTER 345KV CKT 1
FDNS	00NR	4	25SP	G15_042	TO->FROM	GRPRAR1-LNX3345.00 - GRPRAR 345KV CKT Z	720	720	0.03136	105.21	GEN501801 1-DOLET HILLS UNIT1
FDNS	00NR	4	17SP	G15_042	TO->FROM	GRPRAR1-LNX3345.00 - GRPRAR 345KV CKT Z	720	720	0.03268	105.2093	GEN659103 1-ANTELOPE VALLEY UNIT1
FDNS	00NR	4	17SP	G15_042	TO->FROM	GRPRAR1-LNX3345.00 - GRPRAR 345KV CKT Z	720	720	0.03268	105.2093	GEN659107 2-ANTELOPE VALLEY UNIT2
FDNS	00NR	4	20SP	G15_042	TO->FROM	GRPRAR1-LNX3345.00 - GRPRAR 345KV CKT Z	720	720	0.03104	105.2026	P12:115:UMZW:# 162 #: NEL IN ND. FAULT ON ML-NEL-MX-GA 115 KV
FDNS	00NR	4	20SP	G15_042	TO->FROM	GRPRAR1-LNX3345.00 - GRPRAR 345KV CKT Z	720	720	0.03104	105.2003	GEN563222 1-G15088_3 0.6900
FDNS	00NR	4	25SP	G15_042	TO->FROM	GRPRAR1-LNX3345.00 - GRPRAR 345KV CKT Z	720	720	0.03126	105.1942	CARPENTER - HURON 230KV CKT 1
FDNS	00NR	4	20SP	G15_042	TO->FROM	GRPRAR1-LNX3345.00 - GRPRAR 345KV CKT Z	720	720	0.03104	105.1838	GEN334433 1-SABINE UNIT 3
FDNS	00NR	4	20SP	G15_042	TO->FROM	GRPRAR1-LNX3345.00 - GRPRAR 345KV CKT Z	720	720	0.03085	105.1764	BROOKING COUNTY - BSSOUTH3 345.00 345KV CKT 1
FDNS	00NR	4	20SP	G15_042	TO->FROM	GRPRAR1-LNX3345.00 - GRPRAR 345KV CKT Z	720	720	0.03104	105.1715	GEN635213 3-NEAL UNIT 3
FDNS	00NR	4	17SP	G15_042	TO->FROM	GRPRAR1-LNX3345.00 - GRPRAR 345KV CKT Z	720	720	0.03268	105.1674	BIG STONE 230/24.0KV TRANSFORMER CKT 1
FDNS	00NR	4	25SP	G15_042	TO->FROM	GRPRAR1-LNX3345.00 - GRPRAR 345KV CKT Z	720	720	0.03163	105.1447	AS KING - EAU CLAIRE 345KV CKT 1
FDNS	00NR	4	20SP	G15_042	TO->FROM	GRPRAR1-LNX3345.00 - GRPRAR 345KV CKT Z	720	720	0.03037	105.1391	MENNO JCT - TRIPP JCT 115KV CKT 1
FDNS	00NR	4	20SP	G15_042	TO->FROM	GRPRAR1-LNX3345.00 - GRPRAR 345KV CKT Z	720	720	0.03358	105.1349	BLOOMFIELD - CREIGHTON 115KV CKT 1
FDNS	00NR	4	20SP	G15_042	TO->FROM	GRPRAR1-LNX3345.00 - GRPRAR 345KV CKT Z	720	720	0.03135	105.1337	NMA B3 345 345.00 - NORTH LA CROSSE 345KV CKT 1
FDNS	00NR	4	20SP	G15_042	TO->FROM	GRPRAR1-LNX3345.00 - GRPRAR 345KV CKT Z	720	720	0.03094	105.1316	HESKETT - WISHEK 230KV CKT 1
FDNS	00NR	4	20SP	G15_042	TO->FROM	GRPRAR1-LNX3345.00 - GRPRAR 345KV CKT Z	720	720	0.03161	105.1277	ADAMS - MITCHLCO3 345.00 345KV CKT 1
FDNS	00NR	4	20SP	G15_042	TO->FROM	GRPRAR1-LNX3345.00 - GRPRAR 345KV CKT Z	720	720	0.03734	105.1186	RAUN - SIOUX CITY 345KV CKT 1
FDNS	00NR	4	20SP	G15_042	TO->FROM	GRPRAR1-LNX3345.00 - GRPRAR 345KV CKT Z	720	720	0.03734	105.1186	RAUN - SIOUX CITY 345KV CKT 1
FDNS	00NR	4	20SP	G15_042	TO->FROM	GRPRAR1-LNX3345.00 - GRPRAR 345KV CKT Z	720	720	0.03103	105.1183	CENTER - COYOTE 345KV CKT 1
FDNS	00NR	4	20SP	G15_042	TO->FROM	GRPRAR1-LNX3345.00 - GRPRAR 345KV CKT Z	720	720	0.03104	105.1133	GEN336222 1-LITTLE GYPSY UNIT#2
FDNS	00NR	4	25SP	G15_042	TO->FROM	GRPRAR1-LNX3345.00 - GRPRAR 345KV CKT Z	720	720	0.03137	105.1016	CNTSHNT3 345.00 - PRAIRIE3 345.00 345KV CKT 1
FDNS	00NR	4	25SP	G15_042	TO->FROM	GRPRAR1-LNX3345.00 - GRPRAR 345KV CKT Z	720	720	0.03192	105.0977	HAZLETON - MITCHLCO3 345.00 345KV CKT 1
FDNS	00NR	4	25SP	G15_042	TO->FROM	GRPRAR1-LNX3345.00 - GRPRAR 345KV CKT Z	720	720	0.03126	105.0875	HURON - WATERTOWN 230KV CKT 2
FDNS	00NR	4	25SP	G15_042	TO->FROM	GRPRAR1-LNX3345.00 - GRPRAR 345KV CKT Z	720	720	0.03126	105.0875	HURON - WATERTOWN 230KV CKT 2
FDNS	00NR	4	20SP	G15_042	TO->FROM	GRPRAR1-LNX3345.00 - GRPRAR 345KV CKT Z	720	720	0.03108	105.0866	GLENBORO SOUTH - RUGBY 230KV CKT 1
FDNS	00NR	4	20SP	G15_042	TO->FROM	GRPRAR1-LNX3345.00 - GRPRAR 345KV CKT Z	720	720	0.03104	105.0784	GARRISON - JAMES TOWN 230KV CKT 1
FDNS	00NR	4	20SP	G15_042	TO->FROM	GRPRAR1-LNX3345.00 - GRPRAR 345KV CKT Z	720	720	0.03094	105.0665	MERRCRT4 230.00 - WISHEK 230KV CKT 1
FDNS	00NR	4	20SP	G15_042	TO->FROM	GRPRAR1-LNX3345.00 - GRPRAR 345KV CKT Z	720	720	0.03104	105.0639	GEN336152 1-WATERFORD UNIT#2
FDNS	00NR	4	20SP	G15_042	TO->FROM	GRPRAR1-LNX3345.00 - GRPRAR 345KV CKT Z	720	720	0.03104	105.0638	GEN336151 1-WATERFORD UNIT#1
FDNS	00NR	4	25SP	G15_042	TO->FROM	GRPRAR1-LNX3345.00 - GRPRAR 345KV CKT Z	720	720	0.03126	105.0455	CARPENTER - WATERTOWN 230KV CKT 1
FDNS	00NR	4	25SP	G15_042	TO->FROM	GRPRAR1-LNX3345.00 - GRPRAR 345KV CKT Z	720	720	0.03126	105.0455	CARPENTER - WATERTOWN 230KV CKT 1
FDNS	00NR	4	20SP	G15_042	TO->FROM	GRPRAR1-LNX3345.00 - GRPRAR 345KV CKT Z	720	720	0.03104	105.041	GEN531447 1-HOLCOMB GENERATOR
FDNS	00NR	4	20SP	G15_042	TO->FROM	GRPRAR1-LNX3345.00 - GRPRAR 345KV CKT Z	720	720	0.03358	105.0391	BLOOMFIELD - GAVINS POINT 115KV CKT 1
FDNS	00NR	4	20SP	G15_042	TO->FROM	GRPRAR1-LNX3345.00 - GRPRAR 345KV CKT Z	720	720	0.03104	105.034	GEN640009 1-COOPER NUCLEAR STATION
FDNS	00NR	4	20SP	G15_042	TO->FROM	GRPRAR1-LNX3345.00 - GRPRAR 345KV CKT Z	720	720	0.03141	105.0224	ADAMS - PLEASANT VALLEY 345KV CKT 1
FDNS	00NR	4	20SP	G15_042	TO->FROM	GRPRAR1-LNX3345.00 - GRPRAR 345KV CKT Z	720	720	0.03037	105.0156	MENNO JCT - UTICA 115KV CKT 1

SOLUTION	GROUP	SCENARIO	SEASON	SOURCE	DIRECTION	MONITORED ELEMENT	RATEA (MVA)	RATEB(MVA)	TDF	TC%LOADING (% MVA)	CONTINGENCY
FDNS	00NR	4	20SP	G15_042	TO->FROM	GRPRAR1-LNX3345.00 - GRPRAR 345KV CKT Z	720	720	0.03112	105.0114	APPLEDORN 4 230.00 - WATERTOWN 230KV CKT 1
FDNS	00NR	4	20SP	G15_042	TO->FROM	GRPRAR1-LNX3345.00 - GRPRAR 345KV CKT Z	720	720	0.03112	105.0114	APPLEDORN 4 230.00 - WATERTOWN 230KV CKT 1
FDNS	00NR	4	25SP	G15_042	TO->FROM	GRPRAR1-LNX3345.00 - GRPRAR 345KV CKT Z	720	720	0.03136	105.0017	GEN336251 1-NINEMILE POINT UNIT#4
FDNS	00NR	4	20SP	G15_042	TO->FROM	GRPRAR1-LNX3345.00 - GRPRAR 345KV CKT Z	720	720	0.03104	104.9975	GEN303007 1-1BC2 U2
FDNS	00NR	4	20SP	G15_042	TO->FROM	GRPRAR1-LNX3345.00 - GRPRAR 345KV CKT Z	720	720	0.03096	104.9914	BSSOUTH3 345.00 - ELLENDLMVP3 345.00 345KV CKT 1
FDNS	00NR	4	20SP	G15_042	TO->FROM	GRPRAR1-LNX3345.00 - GRPRAR 345KV CKT Z	720	720	0.03096	104.9914	BSSOUTH3 345.00 - ELLENDLMVP3 345.00 345KV CKT 1
FDNS	00NR	4	20SP	G15_042	TO->FROM	GRPRAR1-LNX3345.00 - GRPRAR 345KV CKT Z	720	720	0.03104	104.9913	GEN303006 1-1BC2 U1
FDNS	00NR	4	25SP	G15_042	TO->FROM	GRPRAR1-LNX3345.00 - GRPRAR 345KV CKT Z	720	720	0.03163	104.9756	G15094_T 345.00 - SIDNEY2-LNX3345.00 345KV CKT 1
FDNS	00NR	4	20SP	G15_042	TO->FROM	GRPRAR1-LNX3345.00 - GRPRAR 345KV CKT Z	720	720	0.03117	104.9753	ARKANSAS NUCLEAR ONE - FT SMITH 500KV CKT 1
FDNS	00NR	4	20SP	G15_042	TO->FROM	GRPRAR1-LNX3345.00 - GRPRAR 345KV CKT Z	720	720	0.03117	104.9753	ARKANSAS NUCLEAR ONE - FT SMITH 500KV CKT 1
FDNS	00NR	4	25SP	G15_042	TO->FROM	GRPRAR1-LNX3345.00 - GRPRAR 345KV CKT Z	720	720	0.03163	104.9749	SIDNEY - SIDNEY2-LNX3345.00 345KV CKT Z
FDNS	00NR	4	20SP	G15_042	TO->FROM	GRPRAR1-LNX3345.00 - GRPRAR 345KV CKT Z	720	720	0.03096	104.9707	ELLENDLMVP3 345.00 (1) 345/230/34.5KV TRANSFORMER CKT 1
FDNS	00NR	4	20SP	G15_042	TO->FROM	GRPRAR1-LNX3345.00 - GRPRAR 345KV CKT Z	720	720	0.03113	104.9665	ALEXMRES3 345.00 - WAITE PARK 345KV CKT 1
FDNS	00NR	4	25SP	G15_042	TO->FROM	GRPRAR1-LNX3345.00 - GRPRAR 345KV CKT Z	720	720	0.03136	104.9661	GEN336831 1-BAXTER WILSON SES
FDNS	00NR	4	20SP	G15_042	TO->FROM	GRPRAR1-LNX3345.00 - GRPRAR 345KV CKT Z	720	720	0.03037	104.9535	P12:115:UMZZ:# 237 #: MEN IN SD. MENNO JUNCTION IS A TAP (UJ-MEN-TP).
FDNS	00NR	4	20SP	G15_042	TO->FROM	GRPRAR1-LNX3345.00 - GRPRAR 345KV CKT Z	720	720	0.03112	104.9505	APPLEDORN 4 230.00 - GRANITE FALLS 230KV CKT 1
FDNS	00NR	4	20SP	G15_042	TO->FROM	GRPRAR1-LNX3345.00 - GRPRAR 345KV CKT Z	720	720	0.03112	104.9505	APPLEDORN 4 230.00 - GRANITE FALLS 230KV CKT 1
FDNS	00NR	4	20SP	G15_042	TO->FROM	GRPRAR1-LNX3345.00 - GRPRAR 345KV CKT Z	720	720	0.03057	104.9435	WINNER - WITTEN 115KV CKT 1
FDNS	00NR	4	20SP	G15_042	TO->FROM	GRPRAR1-LNX3345.00 - GRPRAR 345KV CKT Z	720	720	0.0311	104.9379	BLAIR - GRANITE FALLS 230KV CKT 1
FDNS	00NR	4	20SP	G15_042	TO->FROM	GRPRAR1-LNX3345.00 - GRPRAR 345KV CKT Z	720	720	0.0311	104.9379	BLAIR - GRANITE FALLS 230KV CKT 1
FDNS	00NR	4	20SP	G15_042	TO->FROM	GRPRAR1-LNX3345.00 - GRPRAR 345KV CKT Z	720	720	0.0312	104.9352	NORTH ROCHESTER - PRAIRIE ISLAND 345KV CKT 1
FDNS	00NR	4	25SP	G15_042	TO->FROM	GRPRAR1-LNX3345.00 - GRPRAR 345KV CKT Z	720	720	0.02962	104.9287	EAGLE 4 230.00 - PAHOJA 230KV CKT 1
FDNS	00NR	4	20SP	G15_042	TO->FROM	GRPRAR1-LNX3345.00 - GRPRAR 345KV CKT Z	720	720	0.03104	104.9253	GEN303008 1-1BC2 U3
FDNS	00NR	4	20SP	G15_042	TO->FROM	GRPRAR1-LNX3345.00 - GRPRAR 345KV CKT Z	720	720	0.03104	104.9203	GEN336170 1-GULF OXY U4
FDNS	00NR	4	25SP	G15_042	TO->FROM	GRPRAR1-LNX3345.00 - GRPRAR 345KV CKT Z	720	720	0.03136	104.9079	GEN337041 1-GERALD ANDRUS
FDNS	00NR	4	20SP	G15_042	TO->FROM	GRPRAR1-LNX3345.00 - GRPRAR 345KV CKT Z	720	720	0.03104	104.9072	GEN641089 2-ENERGY CENTER 2
FDNS	00NR	4	25SP	G15_042	TO->FROM	GRPRAR1-LNX3345.00 - GRPRAR 345KV CKT Z	720	720	0.03136	104.8877	GEN501813 1-RODEMACHER UNIT 3
FDNS	00NR	4	20SP	G15_042	TO->FROM	GRPRAR1-LNX3345.00 - GRPRAR 345KV CKT Z	720	720	0.03104	104.8859	GEN562921 1-G15054_2 0.6900
FDNS	00NR	4	20SP	G15_042	TO->FROM	GRPRAR1-LNX3345.00 - GRPRAR 345KV CKT Z	720	720	0.03386	104.8796	STEGALL - STEGALL TRANSFORMER 230KV CKT 1
FDNS	00NR	4	20SP	G15_042	TO->FROM	GRPRAR1-LNX3345.00 - GRPRAR 345KV CKT Z	720	720	0.03131	104.8764	G15094_T 345.00 - LARAMIE RIVER 345KV CKT 1
FDNS	00NR	4	20SP	G15_042	TO->FROM	GRPRAR1-LNX3345.00 - GRPRAR 345KV CKT Z	720	720	0.03386	104.8723	P13:230-345:NPPD:STEGALL3:KV3A
FDNS	00NR	4	20SP	G15_042	TO->FROM	GRPRAR1-LNX3345.00 - GRPRAR 345KV CKT Z	720	720	0.03147	104.8638	HUNTLEY3 345.00 - LEDYARD3 345.00 345KV CKT 1
FDNS	00NR	4	20SP	G15_042	TO->FROM	GRPRAR1-LNX3345.00 - GRPRAR 345KV CKT Z	720	720	0.03104	104.8638	FARGO - JAMES TOWN 230KV CKT 1
FDNSLock	00NR	4	20SP	G15_042	TO->FROM	GRPRAR1-LNX3345.00 - GRPRAR 345KV CKT Z	720	720	0.03386	104.8511	STEGALL (SGQ KV3A) 345/230/13.8KV TRANSFORMER CKT 1
FDNS	00NR	4	20SP	G15_042	TO->FROM	GRPRAR1-LNX3345.00 - GRPRAR 345KV CKT Z	720	720	0.03104	104.8427	FARGO - JAMES TOWN 230KV CKT 2
FDNS	00NR	4	20SP	G15_042	TO->FROM	GRPRAR1-LNX3345.00 - GRPRAR 345KV CKT Z	720	720	0.03104	104.8405	GEN501811 1-RODEMACHER UNIT 1
FDNS	00NR	4	20SP	G15_042	TO->FROM	GRPRAR1-LNX3345.00 - GRPRAR 345KV CKT Z	720	720	0.03104	104.8306	P13:230:UMZW:# 2218 #: FP IN MT. LOSS OF TRANSFORMER (AT2).
FDNS	00NR	4	20SP	G15_042	TO->FROM	GRPRAR1-LNX3345.00 - GRPRAR 345KV CKT Z	720	720	0.03104	104.828	GEN562596 1-G14_059_3 0.6900
FDNS	00NR	4	20SP	G15_042	TO->FROM	GRPRAR1-LNX3345.00 - GRPRAR 345KV CKT Z	720	720	0.03152	104.8218	P13:230-345:NPPD:SIDNEY 3:KV2A
FDNS	00NR	4	20SP	G15_042	TO->FROM	GRPRAR1-LNX3345.00 - GRPRAR 345KV CKT Z	720	720	0.03152	104.8218	SIDNEY (SDQ KV2A) 345/230/13.8KV TRANSFORMER CKT 1
FDNS	00NR	4	20SP	G15_042	TO->FROM	GRPRAR1-LNX3345.00 - GRPRAR 345KV CKT Z	720	720	0.03152	104.8216	SIDNEY - SIDNEY TRANSFORMER 230KV CKT 1
FDNS	00NR	4	20SP	G15_042	TO->FROM	GRPRAR1-LNX3345.00 - GRPRAR 345KV CKT Z	720	720	0.03103	104.8137	BISMARK - JAMES TOWN 230KV CKT 1
FDNS	00NR	4	20SP	G15_042	TO->FROM	GRPRAR1-LNX3345.00 - GRPRAR 345KV CKT Z	720	720	0.03103	104.805	BISMARK - WEBER 230KV CKT 1
FDNS	00NR	4	20SP	G15_042	TO->FROM	GRPRAR1-LNX3345.00 - GRPRAR 345KV CKT Z	720	720	0.03154	104.7984	P13:115-230:TSGT:SIDNEY-KV1A
FDNS	00NR	4	20SP	G15_042	TO->FROM	GRPRAR1-LNX3345.00 - GRPRAR 345KV CKT Z	720	720	0.03104	104.7957	TOLK STATION EAST 230/24.0KV TRANSFORMER CKT 1
FDNS	00NR	4	20SP	G15_042	TO->FROM	GRPRAR1-LNX3345.00 - GRPRAR 345KV CKT Z	720	720	0.03181	104.7935	NOBLES - SPLIT ROCK 345KV CKT 1
FDNS	00NR	4	20SP	G15_042	TO->FROM	GRPRAR1-LNX3345.00 - GRPRAR 345KV CKT Z	720	720	0.03103	104.7899	JAMES TOWN - WEBER 230KV CKT 1
FDNS	00NR	4	20SP	G15_042	TO->FROM	GRPRAR1-LNX3345.00 - GRPRAR 345KV CKT Z	720	720	0.03139	104.7891	HUNTLEY3 345.00 - LAKEFIELD 3 345KV CKT 1
FDNS	00NR	4	20SP	G15_042	TO->FROM	GRPRAR1-LNX3345.00 - GRPRAR 345KV CKT Z	720	720	0.03104	104.7891	GEN334071 1-LEWIS CREEK 2
FDNS	00NR	4	20SP	G15_042	TO->FROM	GRPRAR1-LNX3345.00 - GRPRAR 345KV CKT Z	720	720	0.03178	104.7873	P12:230:UMZW:# 733 #: FT IN SD. FT-BG2 LINE FAULT
FDNS	00NR	4	20SP	G15_042	TO->FROM	GRPRAR1-LNX3345.00 - GRPRAR 345KV CKT Z	720	720	0.03104	104.7858	GEN334070 1-LEWIS CREEK 1
FDNS	00NR	4	20SP	G15_042	TO->FROM	GRPRAR1-LNX3345.00 - GRPRAR 345KV CKT Z	720	720	0.03104	104.7788	GEN532751 1-WOLF CREEK GENERATING STATION UNIT 1
FDNS	00NR	4	20SP	G15_042	TO->FROM	GRPRAR1-LNX3345.00 - GRPRAR 345KV CKT Z	720	720	0.03079	104.778	FT THOMPSON - HURON 230KV CKT 1
FDNS	00NR	4	20SP	G15_042	TO->FROM	GRPRAR1-LNX3345.00 - GRPRAR 345KV CKT Z	720	720	0.03079	104.778	FT THOMPSON - HURON 230KV CKT 1
FDNS	00NR	4	20SP	G15_042	TO->FROM	GRPRAR1-LNX3345.00 - GRPRAR 345KV CKT Z	720	720	0.03079	104.778	FT THOMPSON - HURON 230KV CKT 2
FDNS	00NR	4	20SP	G15_042	TO->FROM	GRPRAR1-LNX3345.00 - GRPRAR 345KV CKT Z	720	720	0.03079	104.778	FT THOMPSON - HURON 230KV CKT 2
FDNS	00NR	4	20SP	G15_042	TO->FROM	GRPRAR1-LNX3345.00 - GRPRAR 345KV CKT Z	720	720	0.03104	104.7692	LAWRENCE ENERGY CENTER UNIT 5 - LAWRENCE HILL 230KV CKT 1
FDNS	00NR	4	20SP	G15_042	TO->FROM	GRPRAR1-LNX3345.00 - GRPRAR 345KV CKT Z	720	720	0.03104	104.7692	LAWRENCE ENERGY CENTER UNIT 5 230/24.0KV TRANSFORMER CKT 1
FDNS	00NR	4	20SP	G15_042	TO->FROM	GRPRAR1-LNX3345.00 - GRPRAR 345KV CKT Z	720	720	0.03057	104.7551	GREGORY - WINNER 115KV CKT 1
FDNS	00NR	4	20SP	G15_042	TO->FROM	GRPRAR1-LNX3345.00 - GRPRAR 345KV CKT Z	720	720	0.03104	104.754	GEN337766 1-TRACTEBEL UNIT S1
FDNS	00NR	4	20SP	G15_042	TO->FROM	GRPRAR1-LNX3345.00 - GRPRAR 345KV CKT Z	720	720	0.03104	104.7517	GEN636641 1-LOUISA UNIT 1
FDNS	00NR	4	20SP	G15_042	TO->FROM	GRPRAR1-LNX3345.00 - GRPRAR 345KV CKT Z	720	720	0.03104	104.7514	BALTA - RAMSEY 230KV CKT 1
FDNS	00NR	4	20SP	G15_042	TO->FROM	GRPRAR1-LNX3345.00 - GRPRAR 345KV CKT Z	720	720	0.03104	104.7512	PRAIRIE ISLAND 345/20.0KV TRANSFORMER CKT 1
FDNS	00NR	4	20SP	G15_042	TO->FROM	GRPRAR1-LNX3345.00 - GRPRAR 345KV CKT Z	720	720	0.03104	104.7499	PRAIRIE ISLAND 345/20.0KV TRANSFORMER CKT 2
FDNS	00NR	4	20SP	G15_042	TO->FROM	GRPRAR1-LNX3345.00 - GRPRAR 345KV CKT Z	720	720	0.03057	104.7454	P12:115:UMZW:# 172 #: WI IN SD.
FDNS	00NR	4	20SP	G15_042	TO->FROM	GRPRAR1-LNX3345.00 - GRPRAR 345KV CKT Z	720	720	0.03178	104.7414	LOWERBRULE 4230.00 - RELIANCE 4 230.00 230KV CKT 1
FDNS	00NR	4	20SP	G15_042	TO->FROM	GRPRAR1-LNX3345.00 - GRPRAR 345KV CKT Z	720	720	0.03104	104.7312	GEN659118 1-LARAMIE RIVER UNIT1
FDNS	00NR	4	25SP	G15_042	TO->FROM	GRPRAR1-LNX3345.00 - GRPRAR 345KV CKT Z	720	720	0.03167	104.7307	ARPIN B4 345.00 - EAU CLAIRE 345KV CKT 1
FDNS	00NR	4	25SP	G15_042	TO->FROM	GRPRAR1-LNX3345.00 - GRPRAR 345KV CKT Z	720	720	0.03136	104.7292	GEN335206 1-NELSON UNIT 6
FDNS	00NR	4	20SP	G15_042	TO->FROM	GRPRAR1-LNX3345.00 - GRPRAR 345KV CKT Z	720	720	0.03106	104.7262	FORMAN - HANKINSON 230KV CKT 1
FDNS	00NR	4	20SP	G15_042	TO->FROM	GRPRAR1-LNX3345.00 - GRPRAR 345KV CKT Z	720	720	0.03104	104.7185	GEN501910 1-ACADIA UNIT ST1
FDNS	00NR	4	25SP	G15_042	TO->FROM	GRPRAR1-LNX3345.00 - GRPRAR 345KV CKT Z	720	720	0.03136	104.7063	GEN334440 1-SABINE UNIT 4
FDNS	00NR	4	20SP	G15_042	TO->FROM	GRPRAR1-LNX3345.00 - GRPRAR 345KV CKT Z	720	720	0.03104	104.7054	ELM CREEK - MONTICELLO 345KV CKT 1
FDNS	00NR	4	20SP	G15_042	TO->FROM	GRPRAR1-LNX3345.00 - GRPRAR 345KV CKT Z	720	720	0.03104	104.6979	TATANKA 230/34.5KV TRANSFORMER CKT 1
FDNS	00NR	4	20SP	G15_042	TO->FROM	GRPRAR1-LNX3345.00 - GRPRAR 345KV CKT Z	720	720	0.03104	104.6884	GEN336221 1-LITTLE GYPSY UNIT#1
FDNS	00NR	4	20SP	G15_042	TO->FROM	GRPRAR1-LNX3345.00 - GRPRAR 345KV CKT Z	720	720	0.03104	104.6868	GEN337757 1-DUKE HOTSPRINGS STG1
FDNS	00NR	4	25SP	G15_042	TO->FROM	GRPRAR1-LNX3345.00 - GRPRAR 345KV CKT Z	720	720	0.03136	104.6742	GEN344897 4-1LAB G4 20.000
FDNS	00NR	4	25SP	G15_042	TO->FROM	GRPRAR1-LNX3345.00 - GRPRAR 345KV CKT Z	720	720	0.03136	104.6729	GEN344894 1-1LAB G1 20.000
FDNS	00NR	4	25SP	G15_042	TO->FROM	GRPRAR1-LNX3345.00 - GRPRAR 345KV CKT Z	720	720	0.03136	104.6729	GEN344895 2-1LAB G2 20.000

SOLUTION	GROUP	SCENARIO	SEASON	SOURCE	DIRECTION	MONITORED ELEMENT	RATEA (MVA)	RATEB(MVA)	TDF	TC%LOADING (% MVA)	CONTINGENCY
FDNS	00NR	4	25SP	G15_042	TO->FROM	GRPRAR1-LNX3345.00 - GRPRAR 345KV CKT Z	720	720	0.03136	104.6727	GEN344896 3-1LAB G3 20.000
FDNS	00NR	4	20SP	G15_042	TO->FROM	GRPRAR1-LNX3345.00 - GRPRAR 345KV CKT Z	720	720	0.03106	104.6693	AUDUBON - SHEYNNE 230KV CKT 1
FDNS	00NR	4	20SP	G15_042	TO->FROM	GRPRAR1-LNX3345.00 - GRPRAR 345KV CKT Z	720	720	0.03159	104.6581	P12:115:NPPD:WAPA1:CHADRON7:BOXBUTE7:BTB
FDNS	00NR	4	25SP	G15_042	TO->FROM	GRPRAR1-LNX3345.00 - GRPRAR 345KV CKT Z	720	720	0.0296	104.6554	FT THOMPSON - WESSINGTON 230KV CKT 1
FDNS	00NR	4	25SP	G15_042	TO->FROM	GRPRAR1-LNX3345.00 - GRPRAR 345KV CKT Z	720	720	0.0296	104.6554	FT THOMPSON - WESSINGTON 230KV CKT 1
FDNS	00NR	4	20SP	G15_042	TO->FROM	GRPRAR1-LNX3345.00 - GRPRAR 345KV CKT Z	720	720	0.03445	104.6548	BELDEN - HOSKINS 115KV CKT 1
FDNS	00NR	4	25SP	G15_042	TO->FROM	GRPRAR1-LNX3345.00 - GRPRAR 345KV CKT Z	720	720	0.03136	104.6546	GEN635214 4-NEAL UNIT 4
FDNS	00NR	4	20SP	G15_042	TO->FROM	GRPRAR1-LNX3345.00 - GRPRAR 345KV CKT Z	720	720	0.03088	104.6542	MT VERN - STORLA 115KV CKT 1
FDNS	00NR	4	20SP	G15_042	TO->FROM	GRPRAR1-LNX3345.00 - GRPRAR 345KV CKT Z	720	720	0.03116	104.6527	FRANKS - HUBEN 345KV CKT 1
FDNS	00NR	4	20SP	G15_042	TO->FROM	GRPRAR1-LNX3345.00 - GRPRAR 345KV CKT Z	720	720	0.03104	104.6525	GEN337764 1-TRACTEBEL UNIT C1
FDNS	00NR	4	20SP	G15_042	TO->FROM	GRPRAR1-LNX3345.00 - GRPRAR 345KV CKT Z	720	720	0.03104	104.6525	GEN337765 1-TRACTEBEL UNIT C2
FDNS	00NR	4	20SP	G15_042	TO->FROM	GRPRAR1-LNX3345.00 - GRPRAR 345KV CKT Z	720	720	0.03104	104.6495	GEN334431 1-SABINE UNIT 1
FDNS	00NR	4	20SP	G15_042	TO->FROM	GRPRAR1-LNX3345.00 - GRPRAR 345KV CKT Z	720	720	0.03104	104.6495	GEN334432 1-SABINE UNIT 2
FDNS	00NR	4	25SP	G15_042	TO->FROM	GRPRAR1-LNX3345.00 - GRPRAR 345KV CKT Z	720	720	0.0314	104.6495	GLENBORO SOUTH - RUGBY 230KV CKT 1
FDNS	00NR	4	20SP	G15_042	TO->FROM	GRPRAR1-LNX3345.00 - GRPRAR 345KV CKT Z	720	720	0.03104	104.6454	GEN336446 1-MICHOUD UNIT #2
FDNS	00NR	4	20SP	G15_042	TO->FROM	GRPRAR1-LNX3345.00 - GRPRAR 345KV CKT Z	720	720	0.03104	104.6437	GEN345765 H-1SIOUX 2 18.000
FDNS	00NR	4	20SP	G15_042	TO->FROM	GRPRAR1-LNX3345.00 - GRPRAR 345KV CKT Z	720	720	0.03106	104.6419	LELAND OLDS - STANTON 230KV CKT 1
FDNS	00NR	4	20SP	G15_042	TO->FROM	GRPRAR1-LNX3345.00 - GRPRAR 345KV CKT Z	720	720	0.03106	104.6419	LELAND OLDS - STANTON 230KV CKT 1
FDNS	00NR	4	20SP	G15_042	TO->FROM	GRPRAR1-LNX3345.00 - GRPRAR 345KV CKT Z	720	720	0.03127	104.6391	OVEXFRMCCOVE
FDNS	00NR	4	25SP	G15_042	TO->FROM	GRPRAR1-LNX3345.00 - GRPRAR 345KV CKT Z	720	720	0.03136	104.6257	GEN338388 1-1PLUM PT U1 23.000
FDNS	00NR	4	20SP	G15_042	TO->FROM	GRPRAR1-LNX3345.00 - GRPRAR 345KV CKT Z	720	720	0.03104	104.6225	GRAND GULF 500/22.0KV TRANSFORMER CKT 1
FDNS	00NR	4	20SP	G15_042	TO->FROM	GRPRAR1-LNX3345.00 - GRPRAR 345KV CKT Z	720	720	0.03104	104.6214	GEN562912 1-G15053_3 0.6900
FDNS	00NR	4	25SP	G15_042	TO->FROM	GRPRAR1-LNX3345.00 - GRPRAR 345KV CKT Z	720	720	0.03136	104.6212	GEN345671 2-1RUSH G2 18.000
FDNS	00NR	4	25SP	G15_042	TO->FROM	GRPRAR1-LNX3345.00 - GRPRAR 345KV CKT Z	720	720	0.03136	104.6173	GEN345670 1-1RUSH G1 18.000
FDNS	00NR	4	20SP	G15_042	TO->FROM	GRPRAR1-LNX3345.00 - GRPRAR 345KV CKT Z	720	720	0.03108	104.6163	FERGSFL4 230.00 - WAHPETON 230KV CKT 1
FDNS	00NR	4	20SP	G15_042	TO->FROM	GRPRAR1-LNX3345.00 - GRPRAR 345KV CKT Z	720	720	0.03104	104.6136	GEN336242 1-1NMIL ST1 18.000
FDNS	00NR	4	20SP	G15_042	TO->FROM	GRPRAR1-LNX3345.00 - GRPRAR 345KV CKT Z	720	720	0.03104	104.6124	GEN501823 1-TECHE UNIT 3
FDNS	00NR	4	20SP	G15_042	TO->FROM	GRPRAR1-LNX3345.00 - GRPRAR 345KV CKT Z	720	720	0.03105	104.6078	FORMAN - OAKES 230KV CKT 1
FDNS	00NR	4	20SP	G15_042	TO->FROM	GRPRAR1-LNX3345.00 - GRPRAR 345KV CKT Z	720	720	0.03105	104.607	ELLENDLMVP4 230.00 - OAKES 230KV CKT 1
FDNS	00NR	4	20SP	G15_042	TO->FROM	GRPRAR1-LNX3345.00 - GRPRAR 345KV CKT Z	720	720	0.03105	104.607	ELLENDLMVP4 230.00 - OAKES 230KV CKT 1
FDNS	00NR	4	25SP	G15_042	TO->FROM	GRPRAR1-LNX3345.00 - GRPRAR 345KV CKT Z	720	720	0.03136	104.6047	GEN501812 1-RODEMACHER UNIT 2
FDNS	00NR	4	25SP	G15_042	TO->FROM	GRPRAR1-LNX3345.00 - GRPRAR 345KV CKT Z	720	720	0.03136	104.6	GEN629075 1-OTTUMWA GENERATOR FOR OTTUMWA UNIT NO 1
FDNS	00NR	4	20SP	G15_042	TO->FROM	GRPRAR1-LNX3345.00 - GRPRAR 345KV CKT Z	720	720	0.03104	104.598	PRAIRIE - WINGER 230KV CKT 1
FDNS	00NR	4	20SP	G15_042	TO->FROM	GRPRAR1-LNX3345.00 - GRPRAR 345KV CKT Z	720	720	0.03104	104.5953	GEN345756 H-1SIOUX 1 18.000
FDNS	00NR	4	20SP	G15_042	TO->FROM	GRPRAR1-LNX3345.00 - GRPRAR 345KV CKT Z	720	720	0.03159	104.5939	CHADRON - DUNLAP 115KV CKT 1
FDNS	00NR	4	20SP	G15_042	TO->FROM	GRPRAR1-LNX3345.00 - GRPRAR 345KV CKT Z	720	720	0.03178	104.5913	RELIANCE 4 230.00 - WITTEN 4 230.00 230KV CKT 1
FDNS	00NR	4	20SP	G15_042	TO->FROM	GRPRAR1-LNX3345.00 - GRPRAR 345KV CKT Z	720	720	0.03109	104.5882	HANKINSON - WAHPETON 230KV CKT 1
FDNS	00NR	4	20SP	G15_042	TO->FROM	GRPRAR1-LNX3345.00 - GRPRAR 345KV CKT Z	720	720	0.03104	104.5878	J316_SUB 230.00 230/34.5KV TRANSFORMER CKT 1
FDNS	00NR	4	20SP	G15_042	TO->FROM	GRPRAR1-LNX3345.00 - GRPRAR 345KV CKT Z	720	720	0.03121	104.5874	HAMPTON CORNER - NORTH ROCHESTER 345KV CKT 1
FDNS	00NR	4	25SP	G15_042	TO->FROM	GRPRAR1-LNX3345.00 - GRPRAR 345KV CKT Z	720	720	0.03289	104.5868	GRIMES - LEHIGH 345KV CKT 1
FDNS	00NR	4	25SP	G15_042	TO->FROM	GRPRAR1-LNX3345.00 - GRPRAR 345KV CKT Z	720	720	0.03136	104.5825	GEN336191 1-LITTLE GYPSY UNIT#3
FDNS	00NR	4	20SP	G15_042	TO->FROM	GRPRAR1-LNX3345.00 - GRPRAR 345KV CKT Z	720	720	0.03108	104.5822	FERGSFL4 230.00 - GRE-SILVRLK4230.00 230KV CKT 1
FDNS	00NR	4	20SP	G15_042	TO->FROM	GRPRAR1-LNX3345.00 - GRPRAR 345KV CKT Z	720	720	0.03104	104.5787	GEN345832 1-1TS G1 13.800
FDNS	00NR	4	20SP	G15_042	TO->FROM	GRPRAR1-LNX3345.00 - GRPRAR 345KV CKT Z	720	720	0.03104	104.5784	GEN345841 2-1TS G2 13.800
FDNS	00NR	4	20SP	G15_042	TO->FROM	GRPRAR1-LNX3345.00 - GRPRAR 345KV CKT Z	720	720	0.03104	104.5768	GEN334031 1-FRONTIER UNIT 2
FDNS	00NR	4	20SP	G15_042	TO->FROM	GRPRAR1-LNX3345.00 - GRPRAR 345KV CKT Z	720	720	0.03104	104.5761	GEN334030 1-FRONTIER UNIT 1
FDNS	00NR	4	20SP	G15_042	TO->FROM	GRPRAR1-LNX3345.00 - GRPRAR 345KV CKT Z	720	720	0.03104	104.5746	JUDSON LARGE 115/15.0KV TRANSFORMER CKT 1
FDNS	00NR	4	20SP	G15_042	TO->FROM	GRPRAR1-LNX3345.00 - GRPRAR 345KV CKT Z	720	720	0.03104	104.5746	JUDSON LARGE 115/15.0KV TRANSFORMER CKT 1
FDNS	00NR	4	20SP	G15_042	TO->FROM	GRPRAR1-LNX3345.00 - GRPRAR 345KV CKT Z	720	720	0.03104	104.5719	GEN336944 1-REX BROWN
FDNS	00NR	4	20SP	G15_042	TO->FROM	GRPRAR1-LNX3345.00 - GRPRAR 345KV CKT Z	720	720	0.03104	104.5692	P13:230-345:NPPD:NUCOR-1
FDNS	00NR	4	20SP	G15_042	TO->FROM	GRPRAR1-LNX3345.00 - GRPRAR 345KV CKT Z	720	720	0.03104	104.5691	GEN501970 1-EVANGELINE UNIT 7
FDNS	00NR	4	20SP	G15_042	TO->FROM	GRPRAR1-LNX3345.00 - GRPRAR 345KV CKT Z	720	720	0.03179	104.5673	DENISON - SIOUX CITY 230KV CKT 1
FDNS	00NR	4	20SP	G15_042	TO->FROM	GRPRAR1-LNX3345.00 - GRPRAR 345KV CKT Z	720	720	0.03104	104.5659	OKLAUN 345/24.0KV TRANSFORMER CKT 1
FDNS	00NR	4	25SP	G15_042	TO->FROM	GRPRAR1-LNX3345.00 - GRPRAR 345KV CKT Z	720	720	0.03191	104.5658	KOSSUTH 3 345.00 - WEBSTER 345KV CKT 1
FDNS	00NR	4	20SP	G15_042	TO->FROM	GRPRAR1-LNX3345.00 - GRPRAR 345KV CKT Z	720	720	0.03104	104.5613	GEN335612 1-WILLOW GLENN UNIT#2
FDNS	00NR	4	20SP	G15_042	TO->FROM	GRPRAR1-LNX3345.00 - GRPRAR 345KV CKT Z	720	720	0.03203	104.5607	MARTIN - SHANNON 115KV CKT 1
FDNS	00NR	4	20SP	G15_042	TO->FROM	GRPRAR1-LNX3345.00 - GRPRAR 345KV CKT Z	720	720	0.03104	104.5598	GEN635693 3-GREATER DES MOINES ENERGY CENTER ST
FDNS	00NR	4	20SP	G15_042	TO->FROM	GRPRAR1-LNX3345.00 - GRPRAR 345KV CKT Z	720	720	0.03129	104.5593	BYRON - NORTH ROCHESTER 345KV CKT 1
FDNS	00NR	4	20SP	G15_042	TO->FROM	GRPRAR1-LNX3345.00 - GRPRAR 345KV CKT Z	720	720	0.03116	104.5573	GRE-CEDARMT3345.00 - HELENA 345KV CKT 1
FDNS	00NR	4	20SP	G15_042	TO->FROM	GRPRAR1-LNX3345.00 - GRPRAR 345KV CKT Z	720	720	0.03116	104.5573	GRE-CEDARMT3345.00 - HELENA 345KV CKT 2
FDNS	00NR	4	20SP	G15_042	TO->FROM	GRPRAR1-LNX3345.00 - GRPRAR 345KV CKT Z	720	720	0.03178	104.5548	WITTEN 4 230.00 () 230/115/13.8KV TRANSFORMER CKT 1
FDNS	00NR	4	20SP	G15_042	TO->FROM	GRPRAR1-LNX3345.00 - GRPRAR 345KV CKT Z	720	720	0.03218	104.5524	PLYMOUTH - SIOUX CITY 161KV CKT 1
FDNS	00NR	4	20SP	G15_042	TO->FROM	GRPRAR1-LNX3345.00 - GRPRAR 345KV CKT Z	720	720	0.03218	104.5524	PLYMOUTH - SIOUX CITY 161KV CKT 1
FDNS	00NR	4	20SP	G15_042	TO->FROM	GRPRAR1-LNX3345.00 - GRPRAR 345KV CKT Z	720	720	0.03104	104.5514	GEN337430 1-PERYVILLE UNIT #3
FDNS	00NR	4	20SP	G15_042	TO->FROM	GRPRAR1-LNX3345.00 - GRPRAR 345KV CKT Z	720	720	0.03104	104.5511	GEN337428 1-PERYVILLE UNIT #1
FDNS	00NR	4	20SP	G15_042	TO->FROM	GRPRAR1-LNX3345.00 - GRPRAR 345KV CKT Z	720	720	0.03024	104.5431	FT RANDAL - WHITE SWAN 115KV CKT 1
FDNS	00NR	4	25SP	G15_042	TO->FROM	GRPRAR1-LNX3345.00 - GRPRAR 345KV CKT Z	720	720	0.03136	104.5429	P12:115:UMZW:# 162 #: NEL IN ND. FAULT ON ML-NEL-MX-GA 115 KV
FDNS	00NR	4	20SP	G15_042	TO->FROM	GRPRAR1-LNX3345.00 - GRPRAR 345KV CKT Z	720	720	0.03104	104.5377	GEN562438 1-G13-032 0.6900
FDNS	00NR	4	20SP	G15_042	TO->FROM	GRPRAR1-LNX3345.00 - GRPRAR 345KV CKT Z	720	720	0.03104	104.5329	GEN338443 1-PANDA S1
FDNS	00NR	4	20SP	G15_042	TO->FROM	GRPRAR1-LNX3345.00 - GRPRAR 345KV CKT Z	720	720	0.03104	104.5306	GEN336240 1-1NMIL CT1 18.000
FDNS	00NR	4	20SP	G15_042	TO->FROM	GRPRAR1-LNX3345.00 - GRPRAR 345KV CKT Z	720	720	0.03104	104.5306	GEN336241 1-1NMIL CT2 18.000
FDNS	00NR	4	20SP	G15_042	TO->FROM	GRPRAR1-LNX3345.00 - GRPRAR 345KV CKT Z	720	720	0.03104	104.5286	P12:345:GRDA:CHOUTEAU-SPORTSMANACRES
FDNS	00NR	4	20SP	G15_042	TO->FROM	GRPRAR1-LNX3345.00 - GRPRAR 345KV CKT Z	720	720	0.03104	104.5284	GEN501912 1-ACADIA UNIT CT1B
FDNS	00NR	4	20SP	G15_042	TO->FROM	GRPRAR1-LNX3345.00 - GRPRAR 345KV CKT Z	720	720	0.03104	104.5282	GEN501911 1-ACADIA UNIT CT1A
FDNS	00NR	4	25SP	G15_042	TO->FROM	GRPRAR1-LNX3345.00 - GRPRAR 345KV CKT Z	720	720	0.03136	104.509	GEN335614 1-WILLOW GLENN UNIT#4
FDNS	00NR	4	25SP	G15_042	TO->FROM	GRPRAR1-LNX3345.00 - GRPRAR 345KV CKT Z	720	720	0.03136	104.5041	GEN336801 1-BAXTER WILSON UNIT #1
FDNS	00NR	4	25SP	G15_042	TO->FROM	GRPRAR1-LNX3345.00 - GRPRAR 345KV CKT Z	720	720	0.03136	104.4992	GEN334441 1-SABINE UNIT 5
FDNS	00NR	4	25SP	G15_042	TO->FROM	GRPRAR1-LNX3345.00 - GRPRAR 345KV CKT Z	720	720	0.03136	104.494	GEN336464 1-MICHOUD UNIT #3
FDNS	00NR	4	25SP	G15_042	TO->FROM	GRPRAR1-LNX3345.00 - GRPRAR 345KV CKT Z	720	720	0.03136	104.4915	GEN563222 1-G15088_3 0.6900

SOLUTION	GROUP	SCENARIO	SEASON	SOURCE	DIRECTION	MONITORED ELEMENT	RATEA (MVA)	RATEB(MVA)	TDF	TC%LOADING (% MVA)	CONTINGENCY
FDNS	00NR	4	25SP	G15_042	TO->FROM	GRPRAR1-LNX3345.00 - GRPRAR 345KV CKT Z	720	720	0.03136	104.4836	GEN335204 1-NELSON UNIT 4
FDNS	00NR	4	25SP	G15_042	TO->FROM	GRPRAR1-LNX3345.00 - GRPRAR 345KV CKT Z	720	720	0.03157	104.483	NORTH LA CROSSE - NORTH ROCHESTER 345KV CKT 1
FDNS	00NR	4	25SP	G15_042	TO->FROM	GRPRAR1-LNX3345.00 - GRPRAR 345KV CKT Z	720	720	0.03126	104.4737	HESKETT - WISHEK 230KV CKT 1
FDNS	00NR	4	25SP	G15_042	TO->FROM	GRPRAR1-LNX3345.00 - GRPRAR 345KV CKT Z	720	720	0.03192	104.4625	ADAMS - MITCHLCO3 345.00 345KV CKT 1
FDNS	00NR	4	20SP	G15_042	TO->FROM	GRPRAR1-LNX3345.00 - GRPRAR 345KV CKT Z	720	720	0.03104	104.4174	GEN563282 1-G15094_3 0.6900
FDNS	00NR	4	25SP	G15_042	TO->FROM	GRPRAR1-LNX3345.00 - GRPRAR 345KV CKT Z	720	720	0.03136	104.409	GEN640009 1-COOPER NUCLEAR STATION
FDNS	00NR	4	25SP	G15_042	TO->FROM	GRPRAR1-LNX3345.00 - GRPRAR 345KV CKT Z	720	720	0.03135	104.4033	CENTER - COYOTE 345KV CKT 1
FDNS	00NR	4	25SP	G15_042	TO->FROM	GRPRAR1-LNX3345.00 - GRPRAR 345KV CKT Z	720	720	0.03126	104.399	MERRCRT4 230.00 - WISHEK 230KV CKT 1
FDNS	00NR	4	25SP	G15_042	TO->FROM	GRPRAR1-LNX3345.00 - GRPRAR 345KV CKT Z	720	720	0.03391	104.3912	BLOOMFIELD - CREIGHTON 115KV CKT 1
FDNS	00NR	4	25SP	G15_042	TO->FROM	GRPRAR1-LNX3345.00 - GRPRAR 345KV CKT Z	720	720	0.0307	104.3797	MENNO JCT - TRIPP JCT 115KV CKT 1
FDNS	00NR	4	25SP	G15_042	TO->FROM	GRPRAR1-LNX3345.00 - GRPRAR 345KV CKT Z	720	720	0.03136	104.3657	GARRISON - JAMES TOWN 230KV CKT 1
FDNS	00NR	4	25SP	G15_042	TO->FROM	GRPRAR1-LNX3345.00 - GRPRAR 345KV CKT Z	720	720	0.03118	104.3656	BROOKING COUNTY - BSSOUTH3 345.00 345KV CKT 1
FDNS	00NR	4	25SP	G15_042	TO->FROM	GRPRAR1-LNX3345.00 - GRPRAR 345KV CKT Z	720	720	0.03136	104.3644	GEN334433 1-SABINE UNIT 3
FDNS	00NR	4	25SP	G15_042	TO->FROM	GRPRAR1-LNX3345.00 - GRPRAR 345KV CKT Z	720	720	0.03391	104.3435	BLOOMFIELD - GAVINS POINT 115KV CKT 1
FDNS	00NR	4	25SP	G15_042	TO->FROM	GRPRAR1-LNX3345.00 - GRPRAR 345KV CKT Z	720	720	0.03136	104.3288	GEN531447 1-HOLCOMB GENERATOR
FDNS	00NR	4	25SP	G15_042	TO->FROM	GRPRAR1-LNX3345.00 - GRPRAR 345KV CKT Z	720	720	0.03136	104.3121	GEN635213 3-NEAL UNIT 3
FDNS	00NR	4	25SP	G15_042	TO->FROM	GRPRAR1-LNX3345.00 - GRPRAR 345KV CKT Z	720	720	0.03136	104.3013	GEN336222 1-LITTLE GYPSY UNIT#2
FDNS	00NR	4	25SP	G15_042	TO->FROM	GRPRAR1-LNX3345.00 - GRPRAR 345KV CKT Z	720	720	0.03173	104.3	ADAMS - PLEASANT VALLEY 345KV CKT 1
FDNS	00NR	4	25SP	G15_042	TO->FROM	GRPRAR1-LNX3345.00 - GRPRAR 345KV CKT Z	720	720	0.03144	104.2859	APPLEDORN 4 230.00 - WATERTOWN 230KV CKT 1
FDNS	00NR	4	25SP	G15_042	TO->FROM	GRPRAR1-LNX3345.00 - GRPRAR 345KV CKT Z	720	720	0.03144	104.2859	APPLEDORN 4 230.00 - WATERTOWN 230KV CKT 1
FDNS	00NR	4	17SP	G15_042	TO->FROM	GRPRAR1-LNX3345.00 - GRPRAR 345KV CKT Z	720	720	0.03268	104.2743	GEN659125 1-COVEY
FDNS	00NR	4	25SP	G15_042	TO->FROM	GRPRAR1-LNX3345.00 - GRPRAR 345KV CKT Z	720	720	0.03149	104.2693	ARKANSAS NUCLEAR ONE - FT SMITH 500KV CKT 1
FDNS	00NR	4	25SP	G15_042	TO->FROM	GRPRAR1-LNX3345.00 - GRPRAR 345KV CKT Z	720	720	0.03149	104.2693	ARKANSAS NUCLEAR ONE - FT SMITH 500KV CKT 1
FDNS	00NR	4	25SP	G15_042	TO->FROM	GRPRAR1-LNX3345.00 - GRPRAR 345KV CKT Z	720	720	0.03128	104.25	BSSOUTH3 345.00 - ELLENDLMVP3 345.00 345KV CKT 1
FDNS	00NR	4	25SP	G15_042	TO->FROM	GRPRAR1-LNX3345.00 - GRPRAR 345KV CKT Z	720	720	0.03128	104.25	BSSOUTH3 345.00 - ELLENDLMVP3 345.00 345KV CKT 1
FDNS	00NR	4	25SP	G15_042	TO->FROM	GRPRAR1-LNX3345.00 - GRPRAR 345KV CKT Z	720	720	0.0307	104.2484	MENNO JCT - UTICA 115KV CKT 1
FDNS	00NR	4	25SP	G15_042	TO->FROM	GRPRAR1-LNX3345.00 - GRPRAR 345KV CKT Z	720	720	0.03136	104.2483	GEN336151 1-WATERFORD UNIT#1
FDNS	00NR	4	25SP	G15_042	TO->FROM	GRPRAR1-LNX3345.00 - GRPRAR 345KV CKT Z	720	720	0.03136	104.2483	GEN336152 1-WATERFORD UNIT#2
FDNS	00NR	4	25SP	G15_042	TO->FROM	GRPRAR1-LNX3345.00 - GRPRAR 345KV CKT Z	720	720	0.03128	104.229	ELLENDLMVP3 345.00 (1) 345/230/34.5KV TRANSFORMER CKT 1
FDNS	00NR	4	25SP	G15_042	TO->FROM	GRPRAR1-LNX3345.00 - GRPRAR 345KV CKT Z	720	720	0.03144	104.2214	APPLEDORN 4 230.00 - GRANITE FALLS 230KV CKT 1
FDNS	00NR	4	25SP	G15_042	TO->FROM	GRPRAR1-LNX3345.00 - GRPRAR 345KV CKT Z	720	720	0.03144	104.2214	APPLEDORN 4 230.00 - GRANITE FALLS 230KV CKT 1
FDNS	00NR	4	25SP	G15_042	TO->FROM	GRPRAR1-LNX3345.00 - GRPRAR 345KV CKT Z	720	720	0.03146	104.2207	ALEXMRES3 345.00 - WAITE PARK 345KV CKT 1
FDNS	00NR	4	25SP	G15_042	TO->FROM	GRPRAR1-LNX3345.00 - GRPRAR 345KV CKT Z	720	720	0.03142	104.2156	BLAIR - GRANITE FALLS 230KV CKT 1
FDNS	00NR	4	25SP	G15_042	TO->FROM	GRPRAR1-LNX3345.00 - GRPRAR 345KV CKT Z	720	720	0.03142	104.2156	BLAIR - GRANITE FALLS 230KV CKT 1
FDNS	00NR	4	25SP	G15_042	TO->FROM	GRPRAR1-LNX3345.00 - GRPRAR 345KV CKT Z	720	720	0.03165	104.2023	NMA B3 345 345.00 - NORTH LA CROSSE 345KV CKT 1
FDNS	00NR	4	25SP	G15_042	TO->FROM	GRPRAR1-LNX3345.00 - GRPRAR 345KV CKT Z	720	720	0.03089	104.1912	WINNER - WITTEN 115KV CKT 1
FDNS	00NR	4	25SP	G15_042	TO->FROM	GRPRAR1-LNX3345.00 - GRPRAR 345KV CKT Z	720	720	0.03136	104.1902	GEN641089 2-ENERGY CENTER 2
FDNS	00NR	4	25SP	G15_042	TO->FROM	GRPRAR1-LNX3345.00 - GRPRAR 345KV CKT Z	720	720	0.0307	104.1799	P12:115:UMZZ:# 237 #: MEN IN SD. MENNO JUNCTION IS A TAP (UJ-MEN-TP).
FDNS	00NR	4	25SP	G15_042	TO->FROM	GRPRAR1-LNX3345.00 - GRPRAR 345KV CKT Z	720	720	0.03136	104.1773	GEN303007 1-1BC2 U2
FDNS	00NR	4	25SP	G15_042	TO->FROM	GRPRAR1-LNX3345.00 - GRPRAR 345KV CKT Z	720	720	0.03136	104.1719	GEN303006 1-1BC2 U1
FDNS	00NR	4	25SP	G15_042	TO->FROM	GRPRAR1-LNX3345.00 - GRPRAR 345KV CKT Z	720	720	0.03136	104.1586	P13:230:UMZW:# 2218 #: FP IN MT. LOSS OF TRANSFORMER (AT2).
FDNS	00NR	4	25SP	G15_042	TO->FROM	GRPRAR1-LNX3345.00 - GRPRAR 345KV CKT Z	720	720	0.03136	104.1511	FARGO - JAMES TOWN 230KV CKT 1
FDNS	00NR	4	25SP	G15_042	TO->FROM	GRPRAR1-LNX3345.00 - GRPRAR 345KV CKT Z	720	720	0.03136	104.1477	GEN532751 1-WOLF CREEK GENERATING STATION UNIT 1
FDNS	00NR	4	25SP	G15_042	TO->FROM	GRPRAR1-LNX3345.00 - GRPRAR 345KV CKT Z	720	720	0.03152	104.1438	NORTH ROCHESTER - PRAIRIE ISLAND 345KV CKT 1
FDNS	00NR	4	25SP	G15_042	TO->FROM	GRPRAR1-LNX3345.00 - GRPRAR 345KV CKT Z	720	720	0.03766	104.1412	RAUN - SIOUX CITY 345KV CKT 1
FDNS	00NR	4	25SP	G15_042	TO->FROM	GRPRAR1-LNX3345.00 - GRPRAR 345KV CKT Z	720	720	0.03766	104.1412	RAUN - SIOUX CITY 345KV CKT 1
FDNS	00NR	4	25SP	G15_042	TO->FROM	GRPRAR1-LNX3345.00 - GRPRAR 345KV CKT Z	720	720	0.03136	104.14	GEN562921 1-G15054_2 0.6900
FDNS	00NR	4	25SP	G15_042	TO->FROM	GRPRAR1-LNX3345.00 - GRPRAR 345KV CKT Z	720	720	0.03163	104.1389	G15094_T 345.00 - LARAMIE RIVER 345KV CKT 1
FDNS	00NR	4	25SP	G15_042	TO->FROM	GRPRAR1-LNX3345.00 - GRPRAR 345KV CKT Z	720	720	0.03136	104.1293	FARGO - JAMES TOWN 230KV CKT 2
FDNS	00NR	4	25SP	G15_042	TO->FROM	GRPRAR1-LNX3345.00 - GRPRAR 345KV CKT Z	720	720	0.03179	104.1182	HUNTLEY3 345.00 - LEDYARD3 345.00 345KV CKT 1
FDNS	00NR	4	25SP	G15_042	TO->FROM	GRPRAR1-LNX3345.00 - GRPRAR 345KV CKT Z	720	720	0.03136	104.1107	GEN303008 1-1BC2 U3
FDNS	00NR	4	25SP	G15_042	TO->FROM	GRPRAR1-LNX3345.00 - GRPRAR 345KV CKT Z	720	720	0.03136	104.1083	BISMARK - JAMES TOWN 230KV CKT 1
FDNS	00NR	4	25SP	G15_042	TO->FROM	GRPRAR1-LNX3345.00 - GRPRAR 345KV CKT Z	720	720	0.03136	104.1052	GEN336170 1-GULF OXY U4
FDNS	00NR	4	25SP	G15_042	TO->FROM	GRPRAR1-LNX3345.00 - GRPRAR 345KV CKT Z	720	720	0.03136	104.0988	BISMARK - WEBER 230KV CKT 1
FDNS	00NR	4	25SP	G15_042	TO->FROM	GRPRAR1-LNX3345.00 - GRPRAR 345KV CKT Z	720	720	0.03136	104.0858	GEN562596 1-G14_059_3 0.6900
FDNS	00NR	4	25SP	G15_042	TO->FROM	GRPRAR1-LNX3345.00 - GRPRAR 345KV CKT Z	720	720	0.03136	104.0829	JAMES TOWN - WEBER 230KV CKT 1
FDNS	00NR	4	25SP	G15_042	TO->FROM	GRPRAR1-LNX3345.00 - GRPRAR 345KV CKT Z	720	720	0.03417	104.0787	P13:230-345:NPPD:STEGALL3:KV3A
FDNS	00NR	4	25SP	G15_042	TO->FROM	GRPRAR1-LNX3345.00 - GRPRAR 345KV CKT Z	720	720	0.03417	104.0751	STEGALL (SGQ KV3A) 345/230/13.8KV TRANSFORMER CKT 1
FDNS	00NR	4	25SP	G15_042	TO->FROM	GRPRAR1-LNX3345.00 - GRPRAR 345KV CKT Z	720	720	0.03184	104.0728	SIDNEY - SIDNEY TRANSFORMER 230KV CKT 1
FDNS	00NR	4	25SP	G15_042	TO->FROM	GRPRAR1-LNX3345.00 - GRPRAR 345KV CKT Z	720	720	0.03171	104.0716	HUNTLEY3 345.00 - LAKEFIELD 3 345KV CKT 1
FDNS	00NR	4	25SP	G15_042	TO->FROM	GRPRAR1-LNX3345.00 - GRPRAR 345KV CKT Z	720	720	0.03184	104.0712	P13:230-345:NPPD:SIDNEY 3:KV2A
FDNS	00NR	4	25SP	G15_042	TO->FROM	GRPRAR1-LNX3345.00 - GRPRAR 345KV CKT Z	720	720	0.03184	104.0712	SIDNEY (SDQ KV2A) 345/230/13.8KV TRANSFORMER CKT 1
FDNS	00NR	4	25SP	G15_042	TO->FROM	GRPRAR1-LNX3345.00 - GRPRAR 345KV CKT Z	720	720	0.03111	104.0711	FT THOMPSON - HURON 230KV CKT 1
FDNS	00NR	4	25SP	G15_042	TO->FROM	GRPRAR1-LNX3345.00 - GRPRAR 345KV CKT Z	720	720	0.03111	104.0711	FT THOMPSON - HURON 230KV CKT 1
FDNS	00NR	4	25SP	G15_042	TO->FROM	GRPRAR1-LNX3345.00 - GRPRAR 345KV CKT Z	720	720	0.03111	104.0711	FT THOMPSON - HURON 230KV CKT 2
FDNS	00NR	4	25SP	G15_042	TO->FROM	GRPRAR1-LNX3345.00 - GRPRAR 345KV CKT Z	720	720	0.03111	104.0711	FT THOMPSON - HURON 230KV CKT 2
FDNS	00NR	4	25SP	G15_042	TO->FROM	GRPRAR1-LNX3345.00 - GRPRAR 345KV CKT Z	720	720	0.03417	104.0671	STEGALL - STEGALL TRANSFORMER 230KV CKT 1
FDNS	00NR	4	20SP	G15_042	TO->FROM	GRPRAR1-LNX3345.00 - GRPRAR 345KV CKT Z	720	720	0.03104	104.0666	BASE CASE
FDNS	00NR	4	25SP	G15_042	TO->FROM	GRPRAR1-LNX3345.00 - GRPRAR 345KV CKT Z	720	720	0.03136	104.0631	BALTA - RAMSEY 230KV CKT 1
FDNS	00NR	4	25SP	G15_042	TO->FROM	GRPRAR1-LNX3345.00 - GRPRAR 345KV CKT Z	720	720	0.03209	104.0566	P12:230:UMZW:# 733 #: FT IN SD. FT-BG2 LINE FAULT
FDNS	00NR	4	25SP	G15_042	TO->FROM	GRPRAR1-LNX3345.00 - GRPRAR 345KV CKT Z	720	720	0.03209	104.0561	FT THOMPSON - LOWERBRULE 4230.00 230KV CKT 1
FDNS	00NR	4	25SP	G15_042	TO->FROM	GRPRAR1-LNX3345.00 - GRPRAR 345KV CKT Z	720	720	0.03209	104.0561	FT THOMPSON - LOWERBRULE 4230.00 230KV CKT 1
FDNS	00NR	4	25SP	G15_042	TO->FROM	GRPRAR1-LNX3345.00 - GRPRAR 345KV CKT Z	720	720	0.03209	104.0526	LOWERBRULE 4230.00 - RELIANCE 4 230.00 230KV CKT 1
FDNS	00NR	4	25SP	G15_042	TO->FROM	GRPRAR1-LNX3345.00 - GRPRAR 345KV CKT Z	720	720	0.03186	104.0461	P13:115-230:TSGT:SIDNEY-KV1A
FDNS	00NR	4	25SP	G15_042	TO->FROM	GRPRAR1-LNX3345.00 - GRPRAR 345KV CKT Z	720	720	0.03136	104.0359	GEN501811 1-RODEMACHER UNIT 1
FDNS	00NR	4	25SP	G15_042	TO->FROM	GRPRAR1-LNX3345.00 - GRPRAR 345KV CKT Z	720	720	0.03138	104.0128	FORMAN - HANKINSON 230KV CKT 1
FDNS	00NR	4	25SP	G15_042	TO->FROM	GRPRAR1-LNX3345.00 - GRPRAR 345KV CKT Z	720	720	0.03136	104.0069	LAWRENCE ENERGY CENTER UNIT 5 - LAWRENCE HILL 230KV CKT 1
FDNS	00NR	4	25SP	G15_042	TO->FROM	GRPRAR1-LNX3345.00 - GRPRAR 345KV CKT Z	720	720	0.03136	104.0069	LAWRENCE ENERGY CENTER UNIT 5 230/24.0KV TRANSFORMER CKT 1
FDNS	00NR	4	25SP	G15_042	TO->FROM	GRPRAR1-LNX3345.00 - GRPRAR 345KV CKT Z	720	720	0.03136	103.9971	PRAIRIE ISLAND 345/20.0KV TRANSFORMER CKT 1

SOLUTION	GROUP	SCENARIO	SEASON	SOURCE	DIRECTION	MONITORED ELEMENT	RATEA (MVA)	RATEB(MVA)	TDF	TC%LOADING (% MVA)	CONTINGENCY
FDNS	00NR	4	25SP	G15_042	TO->FROM	GRPRAR1-LNX3345.00 - GRPRAR 345KV CKT Z	720	720	0.03136	103.9958	PRAIRIE ISLAND 345/20.0KV TRANSFORMER CKT 2
FDNS	00NR	4	25SP	G15_042	TO->FROM	GRPRAR1-LNX3345.00 - GRPRAR 345KV CKT Z	720	720	0.03089	103.993	GREGORY - WINNER 115KV CKT 1
FDNS	00NR	4	25SP	G15_042	TO->FROM	GRPRAR1-LNX3345.00 - GRPRAR 345KV CKT Z	720	720	0.03136	103.9922	GEN659118 1-LARAMIE RIVER UNIT1
FDNS	00NR	4	25SP	G15_042	TO->FROM	GRPRAR1-LNX3345.00 - GRPRAR 345KV CKT Z	720	720	0.03136	103.9909	GEN334070 1-LEWIS CREEK 1
FDNS	00NR	4	25SP	G15_042	TO->FROM	GRPRAR1-LNX3345.00 - GRPRAR 345KV CKT Z	720	720	0.03136	103.9909	GEN334071 1-LEWIS CREEK 2
FDNS	00NR	4	25SP	G15_042	TO->FROM	GRPRAR1-LNX3345.00 - GRPRAR 345KV CKT Z	720	720	0.03089	103.9742	P12:115:UMZW:# 172 #: WI IN SD.
FDNS	00NR	4	25SP	G15_042	TO->FROM	GRPRAR1-LNX3345.00 - GRPRAR 345KV CKT Z	720	720	0.03136	103.9738	SEMINOLE 138/20.9KV TRANSFORMER CKT 1
FDNS	00NR	4	25SP	G15_042	TO->FROM	GRPRAR1-LNX3345.00 - GRPRAR 345KV CKT Z	720	720	0.03136	103.9721	TATANKA 230/34.5KV TRANSFORMER CKT 1
FDNS	00NR	4	25SP	G15_042	TO->FROM	GRPRAR1-LNX3345.00 - GRPRAR 345KV CKT Z	720	720	0.03136	103.9546	GEN337766 1-TRACTEBEL UNIT S1
FDNS	00NR	4	25SP	G15_042	TO->FROM	GRPRAR1-LNX3345.00 - GRPRAR 345KV CKT Z	720	720	0.03136	103.953	GEN645012 2-NEBRASKA CITY 2
FDNS	00NR	4	25SP	G15_042	TO->FROM	GRPRAR1-LNX3345.00 - GRPRAR 345KV CKT Z	720	720	0.03136	103.9417	GEN337757 1-DUKE HOTSPRINGS STG1
FDNS	00NR	4	25SP	G15_042	TO->FROM	GRPRAR1-LNX3345.00 - GRPRAR 345KV CKT Z	720	720	0.03136	103.9389	ELM CREEK - MONTICELLO 345KV CKT 1
FDNS	00NR	4	25SP	G15_042	TO->FROM	GRPRAR1-LNX3345.00 - GRPRAR 345KV CKT Z	720	720	0.03141	103.9261	HANKINSON - WAHPETON 230KV CKT 1
FDNS	00NR	4	25SP	G15_042	TO->FROM	GRPRAR1-LNX3345.00 - GRPRAR 345KV CKT Z	720	720	0.03138	103.9236	AUDUBON - SHEYNNE 230KV CKT 1
FDNS	00NR	4	25SP	G15_042	TO->FROM	GRPRAR1-LNX3345.00 - GRPRAR 345KV CKT Z	720	720	0.03136	103.92	GEN501910 1-ACADIA UNIT ST1
FDNS	00NR	4	25SP	G15_042	TO->FROM	GRPRAR1-LNX3345.00 - GRPRAR 345KV CKT Z	720	720	0.0312	103.9199	MT VERN - STORLA 115KV CKT 1
FDNS	00NR	4	25SP	G15_042	TO->FROM	GRPRAR1-LNX3345.00 - GRPRAR 345KV CKT Z	720	720	0.03191	103.9182	P12:115:NPPD:WAPA1:CHADRON7:BOXBUTE7:BTB
FDNS	00NR	4	25SP	G15_042	TO->FROM	GRPRAR1-LNX3345.00 - GRPRAR 345KV CKT Z	720	720	0.03136	103.9168	GEN645011 1-NEBRASKA CITY 1
FDNS	00NR	4	25SP	G15_042	TO->FROM	GRPRAR1-LNX3345.00 - GRPRAR 345KV CKT Z	720	720	0.03158	103.9145	OVEXFRMCCOVE
FDNS	00NR	4	25SP	G15_042	TO->FROM	GRPRAR1-LNX3345.00 - GRPRAR 345KV CKT Z	720	720	0.03137	103.911	ELLENDLMVP4 230.00 - OAKES 230KV CKT 1
FDNS	00NR	4	25SP	G15_042	TO->FROM	GRPRAR1-LNX3345.00 - GRPRAR 345KV CKT Z	720	720	0.03137	103.911	ELLENDLMVP4 230.00 - OAKES 230KV CKT 1
FDNS	00NR	4	25SP	G15_042	TO->FROM	GRPRAR1-LNX3345.00 - GRPRAR 345KV CKT Z	720	720	0.03137	103.9106	FORMAN - OAKES 230KV CKT 1
FDNS	00NR	4	25SP	G15_042	TO->FROM	GRPRAR1-LNX3345.00 - GRPRAR 345KV CKT Z	720	720	0.03477	103.9048	BELDEN - HOSKINS 115KV CKT 1
FDNS	00NR	4	25SP	G15_042	TO->FROM	GRPRAR1-LNX3345.00 - GRPRAR 345KV CKT Z	720	720	0.03136	103.897	GEN336221 1-LITTLE GYPSY UNIT#1
FDNS	00NR	4	25SP	G15_042	TO->FROM	GRPRAR1-LNX3345.00 - GRPRAR 345KV CKT Z	720	720	0.03141	103.893	FERGSFL4 230.00 - WAHPETON 230KV CKT 1
FDNS	00NR	4	25SP	G15_042	TO->FROM	GRPRAR1-LNX3345.00 - GRPRAR 345KV CKT Z	720	720	0.03148	103.891	FRANKS - HUBEN 345KV CKT 1
FDNS	00NR	4	25SP	G15_042	TO->FROM	GRPRAR1-LNX3345.00 - GRPRAR 345KV CKT Z	720	720	0.03136	103.8889	PRAIRIE - WINGER 230KV CKT 1
FDNS	00NR	4	25SP	G15_042	TO->FROM	GRPRAR1-LNX3345.00 - GRPRAR 345KV CKT Z	720	720	0.03209	103.8883	RELIANCE 4 230.00 - WITTEN 4 230.00 230KV CKT 1
FDNS	00NR	4	25SP	G15_042	TO->FROM	GRPRAR1-LNX3345.00 - GRPRAR 345KV CKT Z	720	720	0.03136	103.882	GEN532651 1-JEFFREY ENERGY CENTER UNIT 1
FDNS	00NR	4	25SP	G15_042	TO->FROM	GRPRAR1-LNX3345.00 - GRPRAR 345KV CKT Z	720	720	0.03213	103.8791	NOBLES - SPLIT ROCK 345KV CKT 1
FDNS	00NR	4	25SP	G15_042	TO->FROM	GRPRAR1-LNX3345.00 - GRPRAR 345KV CKT Z	720	720	0.03136	103.8766	GEN532652 1-JEFFREY ENERGY CENTER UNIT 2
FDNS	00NR	4	25SP	G15_042	TO->FROM	GRPRAR1-LNX3345.00 - GRPRAR 345KV CKT Z	720	720	0.03136	103.8765	GEN532653 1-JEFFREY ENERGY CENTER UNIT 3
FDNS	00NR	4	25SP	G15_042	TO->FROM	GRPRAR1-LNX3345.00 - GRPRAR 345KV CKT Z	720	720	0.03136	103.873	GEN562912 1-G15053_3 0.6900
FDNS	00NR	4	25SP	G15_042	TO->FROM	GRPRAR1-LNX3345.00 - GRPRAR 345KV CKT Z	720	720	0.03136	103.8688	GRAND GULF 500/22.0KV TRANSFORMER CKT 1
FDNS	00NR	4	25SP	G15_042	TO->FROM	GRPRAR1-LNX3345.00 - GRPRAR 345KV CKT Z	720	720	0.03136	103.868	J316_SUB 230.00 230/34.5KV TRANSFORMER CKT 1
FDNS	00NR	4	25SP	G15_042	TO->FROM	GRPRAR1-LNX3345.00 - GRPRAR 345KV CKT Z	720	720	0.03136	103.8638	GEN334431 1-SABINE UNIT 1
FDNS	00NR	4	25SP	G15_042	TO->FROM	GRPRAR1-LNX3345.00 - GRPRAR 345KV CKT Z	720	720	0.03136	103.8638	GEN334432 1-SABINE UNIT 2
FDNS	00NR	4	25SP	G15_042	TO->FROM	GRPRAR1-LNX3345.00 - GRPRAR 345KV CKT Z	720	720	0.03191	103.8629	CHADRON - DUNLAP 115KV CKT 1
FDNS	00NR	4	25SP	G15_042	TO->FROM	GRPRAR1-LNX3345.00 - GRPRAR 345KV CKT Z	720	720	0.03136	103.8603	GEN345765 H-1SIOUX 2 18.000
FDNS	00NR	4	25SP	G15_042	TO->FROM	GRPRAR1-LNX3345.00 - GRPRAR 345KV CKT Z	720	720	0.03136	103.8597	GEN337764 1-TRACTEBEL UNIT C1
FDNS	00NR	4	25SP	G15_042	TO->FROM	GRPRAR1-LNX3345.00 - GRPRAR 345KV CKT Z	720	720	0.03136	103.8597	GEN337765 1-TRACTEBEL UNIT C2
FDNS	00NR	4	25SP	G15_042	TO->FROM	GRPRAR1-LNX3345.00 - GRPRAR 345KV CKT Z	720	720	0.03136	103.8593	GEN336446 1-MICHOUD UNIT #2
FDNS	00NR	4	25SP	G15_042	TO->FROM	GRPRAR1-LNX3345.00 - GRPRAR 345KV CKT Z	720	720	0.03209	103.8548	WITTEN 4 230.00 () 230/115/13.8KV TRANSFORMER CKT 1
FDNS	00NR	4	25SP	G15_042	TO->FROM	GRPRAR1-LNX3345.00 - GRPRAR 345KV CKT Z	720	720	0.03191	103.844	P12:115:NPPD:WAPA2:HEMINGF7:SNAKECK7:BTB
FDNS	00NR	4	25SP	G15_042	TO->FROM	GRPRAR1-LNX3345.00 - GRPRAR 345KV CKT Z	720	720	0.0314	103.8414	FERGSFL4 230.00 - GRE-SILVRLK4230.00 230KV CKT 1
FDNS	00NR	4	25SP	G15_042	TO->FROM	GRPRAR1-LNX3345.00 - GRPRAR 345KV CKT Z	720	720	0.03137	103.8405	BALTA - MCHENRY 230KV CKT 1
FDNS	00NR	4	25SP	G15_042	TO->FROM	GRPRAR1-LNX3345.00 - GRPRAR 345KV CKT Z	720	720	0.03235	103.8341	MARTIN - SHANNON 115KV CKT 1
FDNS	00NR	4	25SP	G15_042	TO->FROM	GRPRAR1-LNX3345.00 - GRPRAR 345KV CKT Z	720	720	0.03148	103.83	GRE-CEDARMT3345.00 - HELENA 345KV CKT 1
FDNS	00NR	4	25SP	G15_042	TO->FROM	GRPRAR1-LNX3345.00 - GRPRAR 345KV CKT Z	720	720	0.03148	103.83	GRE-CEDARMT3345.00 - HELENA 345KV CKT 2
FDNS	00NR	4	25SP	G15_042	TO->FROM	GRPRAR1-LNX3345.00 - GRPRAR 345KV CKT Z	720	720	0.03136	103.8298	TOLK STATION EAST 230/24.0KV TRANSFORMER CKT 1
FDNS	00NR	4	25SP	G15_042	TO->FROM	GRPRAR1-LNX3345.00 - GRPRAR 345KV CKT Z	720	720	0.03136	103.8214	GEN501823 1-TECHE UNIT 3
FDNS	00NR	4	25SP	G15_042	TO->FROM	GRPRAR1-LNX3345.00 - GRPRAR 345KV CKT Z	720	720	0.03136	103.8206	GEN336242 1-1NMIL ST1 18.000
FDNS	00NR	4	25SP	G15_042	TO->FROM	GRPRAR1-LNX3345.00 - GRPRAR 345KV CKT Z	720	720	0.03153	103.8194	HAMPTON CORNER - NORTH ROCHESTER 345KV CKT 1
FDNS	00NR	4	25SP	G15_042	TO->FROM	GRPRAR1-LNX3345.00 - GRPRAR 345KV CKT Z	720	720	0.03373	103.8157	OAHE - PHILIP TAP 230KV CKT 1
FDNS	00NR	4	25SP	G15_042	TO->FROM	GRPRAR1-LNX3345.00 - GRPRAR 345KV CKT Z	720	720	0.03112	103.8155	HURON WEST PARK - MITCHELL NW 115KV CKT 1
FDNS	00NR	4	25SP	G15_042	TO->FROM	GRPRAR1-LNX3345.00 - GRPRAR 345KV CKT Z	720	720	0.03112	103.8155	HURON WEST PARK - MITCHELL NW 115KV CKT 1
FDNS	00NR	4	25SP	G15_042	TO->FROM	GRPRAR1-LNX3345.00 - GRPRAR 345KV CKT Z	720	720	0.03136	103.8139	GEN636641 1-LOUISA UNIT 1
FDNS	00NR	4	25SP	G15_042	TO->FROM	GRPRAR1-LNX3345.00 - GRPRAR 345KV CKT Z	720	720	0.03136	103.8095	JUDSON LARGE 115/15.0KV TRANSFORMER CKT 1
FDNS	00NR	4	25SP	G15_042	TO->FROM	GRPRAR1-LNX3345.00 - GRPRAR 345KV CKT Z	720	720	0.03136	103.8095	JUDSON LARGE 115/15.0KV TRANSFORMER CKT 1
FDNS	00NR	4	25SP	G15_042	TO->FROM	GRPRAR1-LNX3345.00 - GRPRAR 345KV CKT Z	720	720	0.03211	103.8091	DENISON - SIOUX CITY 230KV CKT 1
FDNS	00NR	4	25SP	G15_042	TO->FROM	GRPRAR1-LNX3345.00 - GRPRAR 345KV CKT Z	720	720	0.03136	103.8079	OKLAUN 345/24.0KV TRANSFORMER CKT 1
FDNS	00NR	4	25SP	G15_042	TO->FROM	GRPRAR1-LNX3345.00 - GRPRAR 345KV CKT Z	720	720	0.03136	103.8034	P13:230-345:NPPD:NUCOR-1
FDNS	00NR	4	25SP	G15_042	TO->FROM	GRPRAR1-LNX3345.00 - GRPRAR 345KV CKT Z	720	720	0.0314	103.8014	GRE-SILVRLK4230.00 - HENNING 230KV CKT 1
FDNS	00NR	4	25SP	G15_042	TO->FROM	GRPRAR1-LNX3345.00 - GRPRAR 345KV CKT Z	720	720	0.03146	103.8008	GRE-CEDARMT3345.00 - LYON COUNTY 345KV CKT 2
FDNS	00NR	4	25SP	G15_042	TO->FROM	GRPRAR1-LNX3345.00 - GRPRAR 345KV CKT Z	720	720	0.0325	103.7991	PLYMOUTH - SIOUX CITY 161KV CKT 1
FDNS	00NR	4	25SP	G15_042	TO->FROM	GRPRAR1-LNX3345.00 - GRPRAR 345KV CKT Z	720	720	0.0325	103.7991	PLYMOUTH - SIOUX CITY 161KV CKT 1
FDNS	00NR	4	25SP	G15_042	TO->FROM	GRPRAR1-LNX3345.00 - GRPRAR 345KV CKT Z	720	720	0.03146	103.7982	GRE-CEDARMT3345.00 - LYON COUNTY 345KV CKT 1
FDNS	00NR	4	25SP	G15_042	TO->FROM	GRPRAR1-LNX3345.00 - GRPRAR 345KV CKT Z	720	720	0.03159	103.7959	WAYSIDE (WAYSIDE T1) 230/115/13.8KV TRANSFORMER CKT 1
FDNS	00NR	4	25SP	G15_042	TO->FROM	GRPRAR1-LNX3345.00 - GRPRAR 345KV CKT Z	720	720	0.03136	103.7935	GEN334030 1-FRONTIER UNIT 1
FDNS	00NR	4	25SP	G15_042	TO->FROM	GRPRAR1-LNX3345.00 - GRPRAR 345KV CKT Z	720	720	0.03136	103.7932	GEN334031 1-FRONTIER UNIT 2
FDNS	00NR	4	25SP	G15_042	TO->FROM	GRPRAR1-LNX3345.00 - GRPRAR 345KV CKT Z	720	720	0.03136	103.7919	GEN345756 H-1SIOUX 1 18.000
FDNS	00NR	4	25SP	G15_042	TO->FROM	GRPRAR1-LNX3345.00 - GRPRAR 345KV CKT Z	720	720	0.03136	103.788	GEN562438 1-G13-032 0.6900
FDNS	00NR	4	25SP	G15_042	TO->FROM	GRPRAR1-LNX3345.00 - GRPRAR 345KV CKT Z	720	720	0.03136	103.7878	GEN338443 1-PANDA S1
FDNS	00NR	4	25SP	G15_042	TO->FROM	GRPRAR1-LNX3345.00 - GRPRAR 345KV CKT Z	720	720	0.03136	103.7871	P12:345:GRDA:CHOUTEAU-SPORTSMANACRES
FDNS	00NR	4	25SP	G15_042	TO->FROM	GRPRAR1-LNX3345.00 - GRPRAR 345KV CKT Z	720	720	0.03056	103.7862	FT RANDAL - WHITE SWAN 115KV CKT 1
FDNS	00NR	4	25SP	G15_042	TO->FROM	GRPRAR1-LNX3345.00 - GRPRAR 345KV CKT Z	720	720	0.03159	103.7851	CHADRON - WAYSIDE 115KV CKT 1
FDNS	00NR	4	25SP	G15_042	TO->FROM	GRPRAR1-LNX3345.00 - GRPRAR 345KV CKT Z	720	720	0.03159	103.7851	P13:115-230:NPPD:WAYSIDE4:T1
FDNS	00NR	4	25SP	G15_042	TO->FROM	GRPRAR1-LNX3345.00 - GRPRAR 345KV CKT Z	720	720	0.03136	103.7831	GEN336944 1-REX BROWN
FDNS	00NR	4	25SP	G15_042	TO->FROM	GRPRAR1-LNX3345.00 - GRPRAR 345KV CKT Z	720	720	0.03136	103.7815	GEN345832 1-1TS G1 13.800

SOLUTION	GROUP	SCENARIO	SEASON	SOURCE	DIRECTION	MONITORED ELEMENT	RATEA (MVA)	RATEB(MVA)	TDF	TC%LOADING (% MVA)	CONTINGENCY
FDNS	00NR	4	25SP	G15_042	TO->FROM	GRPRAR1-LNX3345.00 - GRPRAR 345KV CKT Z	720	720	0.03136	103.7811	GEN345841 2-1TS G2 13.800
FDNS	00NR	4	25SP	G15_042	TO->FROM	GRPRAR1-LNX3345.00 - GRPRAR 345KV CKT Z	720	720	0.03136	103.7807	GEN501970 1-EVANGELINE UNIT 7
FDNS	00NR	4	25SP	G15_042	TO->FROM	GRPRAR1-LNX3345.00 - GRPRAR 345KV CKT Z	720	720	0.03136	103.7735	GEN335612 1-WILLOW GLENN UNIT#2
FDNS	00NR	4	20SP	G15_042	TO->FROM	GRPRAR1-LNX3345.00 - GRPRAR 345KV CKT Z	720	720	0.03123	103.6877	BUCKNER7 345.00 - SPEARVILLE 345KV CKT 1
FDNS	00NR	4	20SP	G15_042	TO->FROM	GRPRAR1-LNX3345.00 - GRPRAR 345KV CKT Z	720	720	0.03123	103.6877	BUCKNER7 345.00 - SPEARVILLE 345KV CKT 1
FDNS	00NR	4	25SP	G15_042	TO->FROM	GRPRAR1-LNX3345.00 - GRPRAR 345KV CKT Z	720	720	0.03136	103.6706	GEN563282 1-G15094_3 0.6900
FDNS	00NR	4	20SP	G15_042	TO->FROM	GRPRAR1-LNX3345.00 - GRPRAR 345KV CKT Z	720	720	0.03385	103.6465	MINGO - RED WILLOW 345KV CKT 1
FDNS	00NR	4	20SP	G15_042	TO->FROM	GRPRAR1-LNX3345.00 - GRPRAR 345KV CKT Z	720	720	0.03385	103.6465	MINGO - RED WILLOW 345KV CKT 1
FDNS	00NR	4	20SP	G15_042	TO->FROM	GRPRAR1-LNX3345.00 - GRPRAR 345KV CKT Z	720	720	0.0312	103.6193	FT THOMPSON - OAHE 230KV CKT 1
FDNS	00NR	4	20SP	G15_042	TO->FROM	GRPRAR1-LNX3345.00 - GRPRAR 345KV CKT Z	720	720	0.0312	103.6193	FT THOMPSON - OAHE 230KV CKT 1
FDNS	00NR	4	20SP	G15_042	TO->FROM	GRPRAR1-LNX3345.00 - GRPRAR 345KV CKT Z	720	720	0.0312	103.6193	FT THOMPSON - OAHE 230KV CKT 2
FDNS	00NR	4	20SP	G15_042	TO->FROM	GRPRAR1-LNX3345.00 - GRPRAR 345KV CKT Z	720	720	0.0312	103.6193	FT THOMPSON - OAHE 230KV CKT 2
FDNS	00NR	4	20SP	G15_042	TO->FROM	GRPRAR1-LNX3345.00 - GRPRAR 345KV CKT Z	720	720	0.03044	103.597	NELIGH - PETERSBRG.N7115.00 115KV CKT 1
FDNS	00NR	4	20SP	G15_042	TO->FROM	GRPRAR1-LNX3345.00 - GRPRAR 345KV CKT Z	720	720	0.03121	103.5925	FT THOMPSON - OAHE 230KV CKT 3
FDNS	00NR	4	20SP	G15_042	TO->FROM	GRPRAR1-LNX3345.00 - GRPRAR 345KV CKT Z	720	720	0.03121	103.5925	FT THOMPSON - OAHE 230KV CKT 3
FDNS	00NR	4	20SP	G15_042	TO->FROM	GRPRAR1-LNX3345.00 - GRPRAR 345KV CKT Z	720	720	0.03121	103.5925	FT THOMPSON - OAHE 230KV CKT 4
FDNS	00NR	4	20SP	G15_042	TO->FROM	GRPRAR1-LNX3345.00 - GRPRAR 345KV CKT Z	720	720	0.03121	103.5925	FT THOMPSON - OAHE 230KV CKT 4
FDNS	00NR	4	20SP	G15_042	TO->FROM	GRPRAR1-LNX3345.00 - GRPRAR 345KV CKT Z	720	720	0.03174	103.573	AXTELL - POST ROCK 345KV CKT 1
FDNS	00NR	4	20SP	G15_042	TO->FROM	GRPRAR1-LNX3345.00 - GRPRAR 345KV CKT Z	720	720	0.03097	103.567	BISMARK - L3 HAWDON 230KV CKT 1
FDNS	00NR	4	20SP	G15_042	TO->FROM	GRPRAR1-LNX3345.00 - GRPRAR 345KV CKT Z	720	720	0.03115	103.5655	G11_051T 345.00 - WOODWARD DISTRICT EHV 345KV CKT 1
FDNS	00NR	4	20SP	G15_042	TO->FROM	GRPRAR1-LNX3345.00 - GRPRAR 345KV CKT Z	720	720	0.03129	103.5643	FALLOW 3 345.00 - GRIMES 345KV CKT 1
FDNS	00NR	4	20SP	G15_042	TO->FROM	GRPRAR1-LNX3345.00 - GRPRAR 345KV CKT Z	720	720	0.03104	103.5517	GEN659147 1-PIONEER 1G13.800
FDNS	00NR	4	20SP	G15_042	TO->FROM	GRPRAR1-LNX3345.00 - GRPRAR 345KV CKT Z	720	720	0.03104	103.5517	GEN659158 2-PIONEER G213.800
FDNS	00NR	4	20SP	G15_042	TO->FROM	GRPRAR1-LNX3345.00 - GRPRAR 345KV CKT Z	720	720	0.03104	103.5517	GEN659159 3-PIONEER G313.800
FDNS	00NR	4	20SP	G15_042	TO->FROM	GRPRAR1-LNX3345.00 - GRPRAR 345KV CKT Z	720	720	0.03104	103.5513	GEN659148 1-LONESMCRK 1G13.800
FDNS	00NR	4	20SP	G15_042	TO->FROM	GRPRAR1-LNX3345.00 - GRPRAR 345KV CKT Z	720	720	0.03104	103.5513	GEN659156 2-LONESMCRK 2G13.800
FDNS	00NR	4	20SP	G15_042	TO->FROM	GRPRAR1-LNX3345.00 - GRPRAR 345KV CKT Z	720	720	0.03104	103.5513	GEN659157 3-LONESMCRK 3G13.800
FDNS	00NR	4	20SP	G15_042	TO->FROM	GRPRAR1-LNX3345.00 - GRPRAR 345KV CKT Z	720	720	0.03104	103.5449	GEN657964 1-ASH2GEN9 0.5750
FDNS	00NR	4	20SP	G15_042	TO->FROM	GRPRAR1-LNX3345.00 - GRPRAR 345KV CKT Z	720	720	0.03104	103.5441	GEN672367 1-MERIDIAN GENERATOR 1 GT1
FDNS	00NR	4	20SP	G15_042	TO->FROM	GRPRAR1-LNX3345.00 - GRPRAR 345KV CKT Z	720	720	0.03104	103.544	GEN672368 2-MERIDIAN GENERATOR 2 GT2
FDNS	00NR	4	20SP	G15_042	TO->FROM	GRPRAR1-LNX3345.00 - GRPRAR 345KV CKT Z	720	720	0.03104	103.5433	GEN672358 1-CHAPLN1W 0.6900
FDNS	00NR	4	20SP	G15_042	TO->FROM	GRPRAR1-LNX3345.00 - GRPRAR 345KV CKT Z	720	720	0.03044	103.5396	ALBION - PETERSBURG 115KV CKT 1
FDNS	00NR	4	20SP	G15_042	TO->FROM	GRPRAR1-LNX3345.00 - GRPRAR 345KV CKT Z	720	720	0.031	103.5249	G14-021T 345.00 - MULLNCR7 345.00 345KV CKT 1
FDNS	00NR	4	20SP	G15_042	TO->FROM	GRPRAR1-LNX3345.00 - GRPRAR 345KV CKT Z	720	720	0.031	103.5223	G15-005T 345.00 - MULLNCR7 345.00 345KV CKT 1
FDNS	00NR	4	20SP	G15_042	TO->FROM	GRPRAR1-LNX3345.00 - GRPRAR 345KV CKT Z	720	720	0.03104	103.5203	GEN672349 3-CORY COGEN GENERATOR 3 ST
FDNS	00NR	4	20SP	G15_042	TO->FROM	GRPRAR1-LNX3345.00 - GRPRAR 345KV CKT Z	720	720	0.03104	103.5182	GEN672350 1-NIPAWIN GENERATOR 1
FDNS	00NR	4	20SP	G15_042	TO->FROM	GRPRAR1-LNX3345.00 - GRPRAR 345KV CKT Z	720	720	0.03104	103.5182	GEN672351 2-NIPAWIN GENERATOR 2
FDNS	00NR	4	20SP	G15_042	TO->FROM	GRPRAR1-LNX3345.00 - GRPRAR 345KV CKT Z	720	720	0.03104	103.5182	GEN672352 3-NIPAWIN GENERATOR 3
FDNS	00NR	4	20SP	G15_042	TO->FROM	GRPRAR1-LNX3345.00 - GRPRAR 345KV CKT Z	720	720	0.03119	103.5159	POST ROCK (POSTROCK T1) 345/230/13.8KV TRANSFORMER CKT 1
FDNS	00NR	4	20SP	G15_042	TO->FROM	GRPRAR1-LNX3345.00 - GRPRAR 345KV CKT Z	720	720	0.03104	103.5111	GEN600012 2-BLACK DOG GEN 2
FDNS	00NR	4	20SP	G15_042	TO->FROM	GRPRAR1-LNX3345.00 - GRPRAR 345KV CKT Z	720	720	0.03268	103.5086	BATTLE CREEK - COUNTY LINE 115KV CKT 1
FDNS	00NR	4	20SP	G15_042	TO->FROM	GRPRAR1-LNX3345.00 - GRPRAR 345KV CKT Z	720	720	0.0326	103.5067	G15061_T 345.00 - SETAB 345KV CKT 1
FDNS	00NR	4	20SP	G15_042	TO->FROM	GRPRAR1-LNX3345.00 - GRPRAR 345KV CKT Z	720	720	0.02979	103.5024	COOPER - MOORE 345KV CKT 1
FDNS	00NR	4	20SP	G15_042	TO->FROM	GRPRAR1-LNX3345.00 - GRPRAR 345KV CKT Z	720	720	0.03044	103.4992	P12:115:NPPD:1168B:ALBION 7:PETERSBRG.N7:BTB
FDNS	00NR	4	20SP	G15_042	TO->FROM	GRPRAR1-LNX3345.00 - GRPRAR 345KV CKT Z	720	720	0.03044	103.4968	PETERSBRG.N7115.00 - PETERSBURG 115KV CKT Z1
FDNS	00NR	4	20SP	G15_042	TO->FROM	GRPRAR1-LNX3345.00 - GRPRAR 345KV CKT Z	720	720	0.03104	103.4937	GEN590010 1-ERCOT EQUIVALENCE
FDNS	00NR	4	20SP	G15_042	TO->FROM	GRPRAR1-LNX3345.00 - GRPRAR 345KV CKT Z	720	720	0.03104	103.4845	GEN652546 1-FT RANDAL
FDNS	00NR	4	20SP	G15_042	TO->FROM	GRPRAR1-LNX3345.00 - GRPRAR 345KV CKT Z	720	720	0.03104	103.4818	GEN652548 5-FT RANDAL
FDNS	00NR	4	20SP	G15_042	TO->FROM	GRPRAR1-LNX3345.00 - GRPRAR 345KV CKT Z	720	720	0.03104	103.4818	GEN652549 7-FT RANDAL
FDNS	00NR	4	20SP	G15_042	TO->FROM	GRPRAR1-LNX3345.00 - GRPRAR 345KV CKT Z	720	720	0.03104	103.4807	EMERY 161/18.0KV TRANSFORMER CKT 1
FDNS	00NR	4	20SP	G15_042	TO->FROM	GRPRAR1-LNX3345.00 - GRPRAR 345KV CKT Z	720	720	0.03104	103.4772	GEN652547 3-FT RANDAL
FDNS	00NR	4	20SP	G15_042	TO->FROM	GRPRAR1-LNX3345.00 - GRPRAR 345KV CKT Z	720	720	0.031	103.4736	G15-005T 345.00 - SIBLEY 345KV CKT 1
FDNS	00NR	4	20SP	G15_042	TO->FROM	GRPRAR1-LNX3345.00 - GRPRAR 345KV CKT Z	720	720	0.03104	103.4671	GEN590011 2-ERCOT EQUIVALENCE
FDNS	00NR	4	20SP	G15_042	TO->FROM	GRPRAR1-LNX3345.00 - GRPRAR 345KV CKT Z	720	720	0.03104	103.4598	GEN300003 1-THOMAS HILL UNIT 3
FDNS	00NR	4	20SP	G15_042	TO->FROM	GRPRAR1-LNX3345.00 - GRPRAR 345KV CKT Z	720	720	0.03131	103.4583	LARAMIE RIVER - STEGALL 345KV CKT 1
FDNS	00NR	4	20SP	G15_042	TO->FROM	GRPRAR1-LNX3345.00 - GRPRAR 345KV CKT Z	720	720	0.03104	103.4474	GEN672339 16-QE 16G 13.800
FDNS	00NR	4	20SP	G15_042	TO->FROM	GRPRAR1-LNX3345.00 - GRPRAR 345KV CKT Z	720	720	0.03104	103.4472	GEN659290 1-EDGECOL
FDNS	00NR	4	20SP	G15_042	TO->FROM	GRPRAR1-LNX3345.00 - GRPRAR 345KV CKT Z	720	720	0.03268	103.4458	ANTELOPE 7115.00 - COUNTY LINE 115KV CKT 1
FDNS	00NR	4	20SP	G15_042	TO->FROM	GRPRAR1-LNX3345.00 - GRPRAR 345KV CKT Z	720	720	0.03104	103.4454	GEN600046 1-MECST
FDNS	00NR	4	20SP	G15_042	TO->FROM	GRPRAR1-LNX3345.00 - GRPRAR 345KV CKT Z	720	720	0.03108	103.4353	DRAYTON - LETELLIER 230KV CKT 1
FDNS	00NR	4	20SP	G15_042	TO->FROM	GRPRAR1-LNX3345.00 - GRPRAR 345KV CKT Z	720	720	0.03104	103.4334	GEN672393 2-NBECST2G 13.800
FDNS	00NR	4	20SP	G15_042	TO->FROM	GRPRAR1-LNX3345.00 - GRPRAR 345KV CKT Z	720	720	0.03104	103.4284	GEN600050 1-FEP
FDNS	00NR	4	20SP	G15_042	TO->FROM	GRPRAR1-LNX3345.00 - GRPRAR 345KV CKT Z	720	720	0.03154	103.4232	THEDFRD3 345.00 (THEDFORDT2) 345/115/13.8KV TRANSFORMER CKT 1
FDNS	00NR	4	20SP	G15_042	TO->FROM	GRPRAR1-LNX3345.00 - GRPRAR 345KV CKT Z	720	720	0.03104	103.4179	GEN620324 3-HOOT LAKE 3 GEN
FDNS	00NR	4	20SP	G15_042	TO->FROM	GRPRAR1-LNX3345.00 - GRPRAR 345KV CKT Z	720	720	0.03111	103.4152	ANTELOP-LNX3345.00 - BRDLAND-LNX3345.00 345KV CKT 1
FDNS	00NR	4	20SP	G15_042	TO->FROM	GRPRAR1-LNX3345.00 - GRPRAR 345KV CKT Z	720	720	0.03104	103.4119	GEN672342 3-QUEEN ELIZABETH GENERATOR 3
FDNS	00NR	4	20SP	G15_042	TO->FROM	GRPRAR1-LNX3345.00 - GRPRAR 345KV CKT Z	720	720	0.03104	103.4045	GEN652410 3-FT PECK
FDNS	00NR	4	20SP	G15_042	TO->FROM	GRPRAR1-LNX3345.00 - GRPRAR 345KV CKT Z	720	720	0.03104	103.4013	LADISH 115/13.2KV TRANSFORMER CKT 1
FDNS	00NR	4	20SP	G15_042	TO->FROM	GRPRAR1-LNX3345.00 - GRPRAR 345KV CKT Z	720	720	0.03104	103.3926	GEN600047 1-MECCT1
FDNS	00NR	4	20SP	G15_042	TO->FROM	GRPRAR1-LNX3345.00 - GRPRAR 345KV CKT Z	720	720	0.03104	103.3791	GEN660003 3-HURON WEST PARK
FDNS	00NR	4	20SP	G15_042	TO->FROM	GRPRAR1-LNX3345.00 - GRPRAR 345KV CKT Z	720	720	0.03104	103.3685	GEN660001 2-ABERDEEN SIEBRECHT
FDNS	00NR	4	20SP	G15_042	TO->FROM	GRPRAR1-LNX3345.00 - GRPRAR 345KV CKT Z	720	720	0.03255	103.348	GERALD GENTLEMAN STATION - RED WILLOW 345KV CKT 1
FDNS	00NR	4	20SP	G15_042	TO->FROM	GRPRAR1-LNX3345.00 - GRPRAR 345KV CKT Z	720	720	0.03104	103.3446	GEN600063 1-COLVILLE GEN 1
FDNS	00NR	4	20SP	G15_042	TO->FROM	GRPRAR1-LNX3345.00 - GRPRAR 345KV CKT Z	720	720	0.03104	103.3446	GEN600064 2-COLVILLE GEN 2
FDNS	00NR	4	20SP	G15_042	TO->FROM	GRPRAR1-LNX3345.00 - GRPRAR 345KV CKT Z	720	720	0.03104	103.342	GEN652414 4-FT PECK
FDNS	00NR	4	20SP	G15_042	TO->FROM	GRPRAR1-LNX3345.00 - GRPRAR 345KV CKT Z	720	720	0.03104	103.342	GEN652415 5-FT PECK
FDNS	00NR	4	20SP	G15_042	TO->FROM	GRPRAR1-LNX3345.00 - GRPRAR 345KV CKT Z	720	720	0.03104	103.3319	GEN300007 1-NEW MADRID UNIT 2
FDNS	00NR	4	20SP	G15_042	TO->FROM	GRPRAR1-LNX3345.00 - GRPRAR 345KV CKT Z	720	720	0.03104	103.3315	GEN681522 3-GENOA 3
FDNS	00NR	4	20SP	G15_042	TO->FROM	GRPRAR1-LNX3345.00 - GRPRAR 345KV CKT Z	720	720	0.03104	103.3309	GEN652345 W-G07_023IS_2 0.6900

SOLUTION	GROUP	SCENARIO	SEASON	SOURCE	DIRECTION	MONITORED ELEMENT	RATEA (MVA)	RATEB(MVA)	TDF	TC%LOADING (% MVA)	CONTINGENCY
FDNS	00NR	4	20SP	G15_042	TO->FROM	GRPRAR1-LNX3345.00 - GRPRAR 345KV CKT Z	720	720	0.03104	103.3269	GEN300006 1-NEW MADRID UNIT 1
FDNS	00NR	4	20SP	G15_042	TO->FROM	GRPRAR1-LNX3345.00 - GRPRAR 345KV CKT Z	720	720	0.03104	103.3256	GEN 11104 1-J262_GEN 0.6000
FDNS	00NR	4	20SP	G15_042	TO->FROM	GRPRAR1-LNX3345.00 - GRPRAR 345KV CKT Z	720	720	0.03104	103.3256	GEN 11108 1-J263_GEN 0.6000
FDNS	00NR	4	20SP	G15_042	TO->FROM	GRPRAR1-LNX3345.00 - GRPRAR 345KV CKT Z	720	720	0.03104	103.3181	GEN600043 7-BLUE LAKE5
FDNS	00NR	4	20SP	G15_042	TO->FROM	GRPRAR1-LNX3345.00 - GRPRAR 345KV CKT Z	720	720	0.03104	103.3181	GEN600044 8-BLUE LAKE6
FDNS	00NR	4	25SP	G15_042	TO->FROM	GRPRAR1-LNX3345.00 - GRPRAR 345KV CKT Z	720	720	0.03136	103.3129	BASE CASE
FDNS	00NR	4	17SP	G15_042	TO->FROM	GRPRAR1-LNX3345.00 - GRPRAR 345KV CKT Z	720	720	0.03268	103.3083	GEN615001 1-COAL CREEK
FDNS	00NR	4	20SP	G15_042	TO->FROM	GRPRAR1-LNX3345.00 - GRPRAR 345KV CKT Z	720	720	0.03104	103.3047	G830_SUB 115.00 - GRE-MCHENRY7115.00 115KV CKT 1
FDNS	00NR	4	20SP	G15_042	TO->FROM	GRPRAR1-LNX3345.00 - GRPRAR 345KV CKT Z	720	720	0.03104	103.2944	G830_SUB 115.00 115/34.5KV TRANSFORMER CKT 1
FDNS	00NR	4	20SP	G15_042	TO->FROM	GRPRAR1-LNX3345.00 - GRPRAR 345KV CKT Z	720	720	0.03104	103.2931	GEN600014 4-BLACK DOG GEN 4
FDNS	00NR	4	20SP	G15_042	TO->FROM	GRPRAR1-LNX3345.00 - GRPRAR 345KV CKT Z	720	720	0.03104	103.2896	GEN600065 7-HIGH BRIDGE
FDNS	00NR	4	20SP	G15_042	TO->FROM	GRPRAR1-LNX3345.00 - GRPRAR 345KV CKT Z	720	720	0.03104	103.2896	GEN600066 8-HIGH BRIDGE
FDNS	00NR	4	20SP	G15_042	TO->FROM	GRPRAR1-LNX3345.00 - GRPRAR 345KV CKT Z	720	720	0.03104	103.2864	GEN600011 5-BLACK DOG GEN 1
FDNS	00NR	4	20SP	G15_042	TO->FROM	GRPRAR1-LNX3345.00 - GRPRAR 345KV CKT Z	720	720	0.03104	103.2764	GEN600070 9-RIVER SIDE
FDNS	00NR	4	20SP	G15_042	TO->FROM	GRPRAR1-LNX3345.00 - GRPRAR 345KV CKT Z	720	720	0.03104	103.2764	GEN600071 10-RIVER SIDE
FDNS	00NR	4	20SP	G15_042	TO->FROM	GRPRAR1-LNX3345.00 - GRPRAR 345KV CKT Z	720	720	0.03104	103.2742	LANSING WEST 161/22.0KV TRANSFORMER CKT 1
FDNS	00NR	4	20SP	G15_042	TO->FROM	GRPRAR1-LNX3345.00 - GRPRAR 345KV CKT Z	720	720	0.03104	103.2651	GEN600007 7-RIVERSIDE GEN 7
FDNS	00NR	4	20SP	G15_042	TO->FROM	GRPRAR1-LNX3345.00 - GRPRAR 345KV CKT Z	720	720	0.03104	103.2515	GEN600017 C-LS POWER CT
FDNS	00NR	4	20SP	G15_042	TO->FROM	GRPRAR1-LNX3345.00 - GRPRAR 345KV CKT Z	720	720	0.03104	103.244	GEN600045 4-ANSON
FDNS	00NR	4	20SP	G15_042	TO->FROM	GRPRAR1-LNX3345.00 - GRPRAR 345KV CKT Z	720	720	0.03255	103.2333	P12:115:NPPD:1163B:NELIGH 7:NORFK.N7:BTB
FDNS	00NR	4	20SP	G15_042	TO->FROM	GRPRAR1-LNX3345.00 - GRPRAR 345KV CKT Z	720	720	0.03115	103.2312	G11_051T 345.00 - TATONGA7 345.00 345KV CKT 1
FDNS	00NR	4	20SP	G15_042	TO->FROM	GRPRAR1-LNX3345.00 - GRPRAR 345KV CKT Z	720	720	0.03111	103.1943	BRDLAND-LNX3345.00 - HURON 345KV CKT Z
FDNS	00NR	4	20SP	G15_042	TO->FROM	GRPRAR1-LNX3345.00 - GRPRAR 345KV CKT Z	720	720	0.03111	103.1936	HURON (BD KU2A) 345/230/13.8KV TRANSFORMER CKT 1
FDNS	00NR	4	20SP	G15_042	TO->FROM	GRPRAR1-LNX3345.00 - GRPRAR 345KV CKT Z	720	720	0.03111	103.1936	HURON (BD KU2A) 345/230/13.8KV TRANSFORMER CKT 1
FDNS	00NR	4	20SP	G15_042	TO->FROM	GRPRAR1-LNX3345.00 - GRPRAR 345KV CKT Z	720	720	0.03111	103.192	BROADLAND - HURON 230KV CKT 1
FDNS	00NR	4	20SP	G15_042	TO->FROM	GRPRAR1-LNX3345.00 - GRPRAR 345KV CKT Z	720	720	0.03104	103.19	GEN659273 2-GROTON SYNC COND
FDNS	00NR	4	20SP	G15_042	TO->FROM	GRPRAR1-LNX3345.00 - GRPRAR 345KV CKT Z	720	720	0.03104	103.19	GEN659294 1-WILTONCOL9
FDNS	00NR	4	20SP	G15_042	TO->FROM	GRPRAR1-LNX3345.00 - GRPRAR 345KV CKT Z	720	720	0.03111	103.1891	P12:345:UMZB:# 103 #: BD IN SD. LOSS OF LINE
FDNS	00NR	4	20SP	G15_042	TO->FROM	GRPRAR1-LNX3345.00 - GRPRAR 345KV CKT Z	720	720	0.03111	103.1875	P12:345:UMZB:# 102 #: AVS BD IN ND. AVS BRD LR
FDNS	00NR	4	20SP	G15_042	TO->FROM	GRPRAR1-LNX3345.00 - GRPRAR 345KV CKT Z	720	720	0.03104	103.1836	GEN615052 1-CAMBRIDGE GENERATING STATION
FDNS	00NR	4	17SP	G15_042	TO->FROM	GRPRAR1-LNX3345.00 - GRPRAR 345KV CKT Z	720	720	0.03268	103.1764	GEN615002 2-COAL CREEK
FDNS	00NR	4	20SP	G15_042	TO->FROM	GRPRAR1-LNX3345.00 - GRPRAR 345KV CKT Z	720	720	0.03104	103.1686	GEN615021 1-GRE-ER 14G 16.000
FDNS	00NR	4	20SP	G15_042	TO->FROM	GRPRAR1-LNX3345.00 - GRPRAR 345KV CKT Z	720	720	0.03111	103.1485	ANTELOP-LNX3345.00 - ANTELOPE VALLEY 345KV CKT Z
FDNS	00NR	4	20SP	G15_042	TO->FROM	GRPRAR1-LNX3345.00 - GRPRAR 345KV CKT Z	720	720	0.03097	103.1367	OAHE - SULLEY BUTTE 230KV CKT 1
FDNS	00NR	4	20SP	G15_042	TO->FROM	GRPRAR1-LNX3345.00 - GRPRAR 345KV CKT Z	720	720	0.03104	103.131	GEN 10648 1-G830_GEN 0.6900
FDNS	00NR	4	20SP	G15_042	TO->FROM	GRPRAR1-LNX3345.00 - GRPRAR 345KV CKT Z	720	720	0.03104	103.1294	GEN659192 6-LYNN
FDNS	00NR	4	20SP	G15_042	TO->FROM	GRPRAR1-LNX3345.00 - GRPRAR 345KV CKT Z	720	720	0.03104	103.1282	GEN659162 4-RED WLCK
FDNS	00NR	4	20SP	G15_042	TO->FROM	GRPRAR1-LNX3345.00 - GRPRAR 345KV CKT Z	720	720	0.03104	103.1282	GEN659163 5-BLACK WDCK
FDNS	00NR	4	20SP	G15_042	TO->FROM	GRPRAR1-LNX3345.00 - GRPRAR 345KV CKT Z	720	720	0.03104	103.1244	GEN659031 1-G12_014IS_4 0.6900
FDNS	00NR	4	20SP	G15_042	TO->FROM	GRPRAR1-LNX3345.00 - GRPRAR 345KV CKT Z	720	720	0.02965	103.1005	HIGHLND 3 345.00 - OBRIEN 3 345.00 345KV CKT 1
FDNS	00NR	4	20SP	G15_042	TO->FROM	GRPRAR1-LNX3345.00 - GRPRAR 345KV CKT Z	720	720	0.03104	103.096	GEN660016 1-B_H WIND 0.7000
FDNS	00NR	4	20SP	G15_042	TO->FROM	GRPRAR1-LNX3345.00 - GRPRAR 345KV CKT Z	720	720	0.03104	103.0921	GEN615015 1-GRE-SPRITWDG13.200
FDNS	00NR	4	20SP	G15_042	TO->FROM	GRPRAR1-LNX3345.00 - GRPRAR 345KV CKT Z	720	720	0.03115	103.0046	MATHWSN7 345.00 - TATONGA7 345.00 345KV CKT 1
FDNS	00NR	4	20SP	G15_042	TO->FROM	GRPRAR1-LNX3345.00 - GRPRAR 345KV CKT Z	720	720	0.03104	103.004	BISONMP4 230.00 - SQUARE BUTTE 230KV CKT 1
FDNS	00NR	4	20SP	G15_042	TO->FROM	GRPRAR1-LNX3345.00 - GRPRAR 345KV CKT Z	720	720	0.03097	102.9756	SULLEY BUTTE - SULLYBT-LNX3230.00 230KV CKT Z
FDNS	00NR	4	20SP	G15_042	TO->FROM	GRPRAR1-LNX3345.00 - GRPRAR 345KV CKT Z	720	720	0.03097	102.9751	SULLYBT-LNX3230.00 - WHITLOK 230KV CKT 1
FDNS	00NR	4	20SP	G15_042	TO->FROM	GRPRAR1-LNX3345.00 - GRPRAR 345KV CKT Z	720	720	0.03104	102.9708	GEN600067 9-HIGH BRIDGE
FDNS	00NR	4	20SP	G15_042	TO->FROM	GRPRAR1-LNX3345.00 - GRPRAR 345KV CKT Z	720	720	0.03104	102.9501	GEN672303 3-BOUNDARY DAM GENERATOR 3
FDNS	00NR	4	20SP	G15_042	TO->FROM	GRPRAR1-LNX3345.00 - GRPRAR 345KV CKT Z	720	720	0.03104	102.9501	GEN672304 4-BOUNDARY DAM GENERATOR 4
FDNS	00NR	4	20SP	G15_042	TO->FROM	GRPRAR1-LNX3345.00 - GRPRAR 345KV CKT Z	720	720	0.03104	102.9501	GEN672305 5-BOUNDARY DAM GENERATOR 5
FDNS	00NR	4	20SP	G15_042	TO->FROM	GRPRAR1-LNX3345.00 - GRPRAR 345KV CKT Z	720	720	0.03097	102.9281	P12:230:UMZB:# 114 #: SB IN SD. SB-WK-GH
FDNS	00NR	4	20SP	G15_042	TO->FROM	GRPRAR1-LNX3345.00 - GRPRAR 345KV CKT Z	720	720	0.03097	102.9281	P12:230:UMZB:# 117 #: WK IN SD. SB-WK-GH
FDNS	00NR	4	20SP	G15_042	TO->FROM	GRPRAR1-LNX3345.00 - GRPRAR 345KV CKT Z	720	720	0.03104	102.925	GEN659353 1-DEERCREK CTG18.000
FDNS	00NR	4	20SP	G15_042	TO->FROM	GRPRAR1-LNX3345.00 - GRPRAR 345KV CKT Z	720	720	0.03104	102.9241	GEN659354 1-DEERCREK STG18.000
FDNS	00NR	4	25SP	G15_042	TO->FROM	GRPRAR1-LNX3345.00 - GRPRAR 345KV CKT Z	720	720	0.03018	102.9081	COOPER - MOORE 345KV CKT 1
FDNS	00NR	4	20SP	G15_042	TO->FROM	GRPRAR1-LNX3345.00 - GRPRAR 345KV CKT Z	720	720	0.03104	102.8983	GEN672392 1-NBECGT1G 18.000
FDNS	00NR	4	25SP	G15_042	TO->FROM	GRPRAR1-LNX3345.00 - GRPRAR 345KV CKT Z	720	720	0.03153	102.887	FT THOMPSON - OAHE 230KV CKT 1
FDNS	00NR	4	25SP	G15_042	TO->FROM	GRPRAR1-LNX3345.00 - GRPRAR 345KV CKT Z	720	720	0.03153	102.887	FT THOMPSON - OAHE 230KV CKT 1
FDNS	00NR	4	25SP	G15_042	TO->FROM	GRPRAR1-LNX3345.00 - GRPRAR 345KV CKT Z	720	720	0.03153	102.887	FT THOMPSON - OAHE 230KV CKT 2
FDNS	00NR	4	25SP	G15_042	TO->FROM	GRPRAR1-LNX3345.00 - GRPRAR 345KV CKT Z	720	720	0.03153	102.887	FT THOMPSON - OAHE 230KV CKT 2
FDNS	00NR	4	20SP	G15_042	TO->FROM	GRPRAR1-LNX3345.00 - GRPRAR 345KV CKT Z	720	720	0.03097	102.8734	GLENHAM - WHITLOK 230KV CKT 1
FDNS	00NR	4	25SP	G15_042	TO->FROM	GRPRAR1-LNX3345.00 - GRPRAR 345KV CKT Z	720	720	0.03075	102.8612	NELIGH - PETERSBRG.N7115.00 115KV CKT 1
FDNS	00NR	4	25SP	G15_042	TO->FROM	GRPRAR1-LNX3345.00 - GRPRAR 345KV CKT Z	720	720	0.03153	102.8596	FT THOMPSON - OAHE 230KV CKT 3
FDNS	00NR	4	25SP	G15_042	TO->FROM	GRPRAR1-LNX3345.00 - GRPRAR 345KV CKT Z	720	720	0.03153	102.8596	FT THOMPSON - OAHE 230KV CKT 3
FDNS	00NR	4	25SP	G15_042	TO->FROM	GRPRAR1-LNX3345.00 - GRPRAR 345KV CKT Z	720	720	0.03153	102.8596	FT THOMPSON - OAHE 230KV CKT 4
FDNS	00NR	4	25SP	G15_042	TO->FROM	GRPRAR1-LNX3345.00 - GRPRAR 345KV CKT Z	720	720	0.03153	102.8596	FT THOMPSON - OAHE 230KV CKT 4
FDNS	00NR	4	25SP	G15_042	TO->FROM	GRPRAR1-LNX3345.00 - GRPRAR 345KV CKT Z	720	720	0.03401	102.8436	AINSWORTH - AINSWORTH 115KV CKT 1
FDNS	00NR	4	25SP	G15_042	TO->FROM	GRPRAR1-LNX3345.00 - GRPRAR 345KV CKT Z	720	720	0.03161	102.834	7MAYWOOD 345.00 - 7SPENCER 345.00 345KV CKT 1
FDNS	00NR	4	25SP	G15_042	TO->FROM	GRPRAR1-LNX3345.00 - GRPRAR 345KV CKT Z	720	720	0.03129	102.8134	BISMARK - L3 HAWDON 230KV CKT 1
FDNS	00NR	4	25SP	G15_042	TO->FROM	GRPRAR1-LNX3345.00 - GRPRAR 345KV CKT Z	720	720	0.03132	102.8119	G15-005T 345.00 - MULLNCR7 345.00 345KV CKT 1
FDNS	00NR	4	25SP	G15_042	TO->FROM	GRPRAR1-LNX3345.00 - GRPRAR 345KV CKT Z	720	720	0.03136	102.8075	GEN672348 2-CORY COGEN GENERATOR 2 GT2
FDNS	00NR	4	25SP	G15_042	TO->FROM	GRPRAR1-LNX3345.00 - GRPRAR 345KV CKT Z	720	720	0.03136	102.8074	GEN672347 1-CORY COGEN GENERATOR 1 GT1
FDNS	00NR	4	25SP	G15_042	TO->FROM	GRPRAR1-LNX3345.00 - GRPRAR 345KV CKT Z	720	720	0.03136	102.8045	GEN300003 1-THOMAS HILL UNIT 3
FDNS	00NR	4	25SP	G15_042	TO->FROM	GRPRAR1-LNX3345.00 - GRPRAR 345KV CKT Z	720	720	0.03314	102.8006	ATCHSNT3 345.00 - BOONEVILLE 345KV CKT 1
FDNS	00NR	4	25SP	G15_042	TO->FROM	GRPRAR1-LNX3345.00 - GRPRAR 345KV CKT Z	720	720	0.03136	102.7905	GEN659147 1-PIONEER 1G13.800
FDNS	00NR	4	25SP	G15_042	TO->FROM	GRPRAR1-LNX3345.00 - GRPRAR 345KV CKT Z	720	720	0.03136	102.7905	GEN659158 2-PIONEER G213.800
FDNS	00NR	4	25SP	G15_042	TO->FROM	GRPRAR1-LNX3345.00 - GRPRAR 345KV CKT Z	720	720	0.03136	102.7905	GEN659159 3-PIONEER G313.800
FDNS	00NR	4	25SP	G15_042	TO->FROM	GRPRAR1-LNX3345.00 - GRPRAR 345KV CKT Z	720	720	0.03136	102.7891	GEN672358 1-CHAPLN1W 0.6900
FDNS	00NR	4	25SP	G15_042	TO->FROM	GRPRAR1-LNX3345.00 - GRPRAR 345KV CKT Z	720	720	0.03136	102.7886	GEN659148 1-LONESMCRK 1G13.800

SOLUTION	GROUP	SCENARIO	SEASON	SOURCE	DIRECTION	MONITORED ELEMENT	RATEA (MVA)	RATEB(MVA)	TDF	TC%LOADING (% MVA)	CONTINGENCY
FDNS	00NR	4	25SP	G15_042	TO->FROM	GRPRAR1-LNX3345.00 - GRPRAR 345KV CKT Z	720	720	0.03136	102.7886	GEN659156 2-LONESMCRK 2G13.800
FDNS	00NR	4	25SP	G15_042	TO->FROM	GRPRAR1-LNX3345.00 - GRPRAR 345KV CKT Z	720	720	0.03136	102.7886	GEN659157 3-LONESMCRK 3G13.800
FDNS	00NR	4	25SP	G15_042	TO->FROM	GRPRAR1-LNX3345.00 - GRPRAR 345KV CKT Z	720	720	0.03161	102.7883	FALLOW 3 345.00 - GRIMES 345KV CKT 1
FDNS	00NR	4	20SP	G15_042	TO->FROM	GRPRAR1-LNX3345.00 - GRPRAR 345KV CKT Z	720	720	0.03104	102.786	GEN681542 6-JP MADGETT
FDNS	00NR	4	25SP	G15_042	TO->FROM	GRPRAR1-LNX3345.00 - GRPRAR 345KV CKT Z	720	720	0.03136	102.7858	GEN659417 1X-BEPCPKFT 1GX13.800
FDNS	00NR	4	25SP	G15_042	TO->FROM	GRPRAR1-LNX3345.00 - GRPRAR 345KV CKT Z	720	720	0.03136	102.7858	GEN659418 2X-BEPCPKFT 2GX13.800
FDNS	00NR	4	25SP	G15_042	TO->FROM	GRPRAR1-LNX3345.00 - GRPRAR 345KV CKT Z	720	720	0.03136	102.7858	GEN659419 3X-BEPCPKFT 3GX13.800
FDNS	00NR	4	25SP	G15_042	TO->FROM	GRPRAR1-LNX3345.00 - GRPRAR 345KV CKT Z	720	720	0.033	102.7822	BATTLE CREEK - COUNTY LINE 115KV CKT 1
FDNS	00NR	4	25SP	G15_042	TO->FROM	GRPRAR1-LNX3345.00 - GRPRAR 345KV CKT Z	720	720	0.03136	102.7793	GEN657964 1-ASH2GEN9 0.5750
FDNS	00NR	4	25SP	G15_042	TO->FROM	GRPRAR1-LNX3345.00 - GRPRAR 345KV CKT Z	720	720	0.03075	102.7758	ALBION - PETERSBURG 115KV CKT 1
FDNS	00NR	4	20SP	G15_042	TO->FROM	GRPRAR1-LNX3345.00 - GRPRAR 345KV CKT Z	720	720	0.03104	102.7721	GEN662101 1-WESSINGTON190.5750
FDNS	00NR	4	25SP	G15_042	TO->FROM	GRPRAR1-LNX3345.00 - GRPRAR 345KV CKT Z	720	720	0.03132	102.7661	G15-005T 345.00 - SIBLEY 345KV CKT 1
FDNS	00NR	4	25SP	G15_042	TO->FROM	GRPRAR1-LNX3345.00 - GRPRAR 345KV CKT Z	720	720	0.03143	102.7633	ANTELOP-LNX3345.00 - BRDLAND-LNX3345.00 345KV CKT 1
FDNS	00NR	4	20SP	G15_042	TO->FROM	GRPRAR1-LNX3345.00 - GRPRAR 345KV CKT Z	720	720	0.03104	102.7618	CENTER 230/22.0KV TRANSFORMER CKT 1
FDNS	00NR	4	25SP	G15_042	TO->FROM	GRPRAR1-LNX3345.00 - GRPRAR 345KV CKT Z	720	720	0.03136	102.7618	GEN672368 2-MERIDIAN GENERATOR 2 GT2
FDNS	00NR	4	25SP	G15_042	TO->FROM	GRPRAR1-LNX3345.00 - GRPRAR 345KV CKT Z	720	720	0.03136	102.7617	GEN672367 1-MERIDIAN GENERATOR 1 GT1
FDNS	00NR	4	25SP	G15_042	TO->FROM	GRPRAR1-LNX3345.00 - GRPRAR 345KV CKT Z	720	720	0.03237	102.7553	HOLCOMB - SETAB 345KV CKT 1
FDNS	00NR	4	25SP	G15_042	TO->FROM	GRPRAR1-LNX3345.00 - GRPRAR 345KV CKT Z	720	720	0.03237	102.7553	HOLCOMB - SETAB 345KV CKT 1
FDNS	00NR	4	25SP	G15_042	TO->FROM	GRPRAR1-LNX3345.00 - GRPRAR 345KV CKT Z	720	720	0.03136	102.7488	GEN672350 1-NIPAWIN GENERATOR 1
FDNS	00NR	4	25SP	G15_042	TO->FROM	GRPRAR1-LNX3345.00 - GRPRAR 345KV CKT Z	720	720	0.03136	102.7488	GEN672351 2-NIPAWIN GENERATOR 2
FDNS	00NR	4	25SP	G15_042	TO->FROM	GRPRAR1-LNX3345.00 - GRPRAR 345KV CKT Z	720	720	0.03136	102.7488	GEN672352 3-NIPAWIN GENERATOR 3
FDNS	00NR	4	20SP	G15_042	TO->FROM	GRPRAR1-LNX3345.00 - GRPRAR 345KV CKT Z	720	720	0.0325	102.7471	MISSION - WITTEN 115KV CKT 1
FDNS	00NR	4	25SP	G15_042	TO->FROM	GRPRAR1-LNX3345.00 - GRPRAR 345KV CKT Z	720	720	0.03075	102.7456	PETERSBRG.N7115.00 - PETERSBURG 115KV CKT Z1
FDNS	00NR	4	25SP	G15_042	TO->FROM	GRPRAR1-LNX3345.00 - GRPRAR 345KV CKT Z	720	720	0.03136	102.7414	GEN672349 3-CORY COGEN GENERATOR 3 ST
FDNS	00NR	4	25SP	G15_042	TO->FROM	GRPRAR1-LNX3345.00 - GRPRAR 345KV CKT Z	720	720	0.03136	102.7351	GEN652546 1-FT RANDAL
FDNS	00NR	4	25SP	G15_042	TO->FROM	GRPRAR1-LNX3345.00 - GRPRAR 345KV CKT Z	720	720	0.03136	102.7347	GEN600012 2-BLACK DOG GEN 2
FDNS	00NR	4	25SP	G15_042	TO->FROM	GRPRAR1-LNX3345.00 - GRPRAR 345KV CKT Z	720	720	0.03136	102.7335	EMERY 161/18.0KV TRANSFORMER CKT 1
FDNS	00NR	4	20SP	G15_042	TO->FROM	GRPRAR1-LNX3345.00 - GRPRAR 345KV CKT Z	720	720	0.03104	102.7328	GEN910006 1-G12_012IS_3 0.6900
FDNS	00NR	4	25SP	G15_042	TO->FROM	GRPRAR1-LNX3345.00 - GRPRAR 345KV CKT Z	720	720	0.03136	102.7324	GEN652548 5-FT RANDAL
FDNS	00NR	4	25SP	G15_042	TO->FROM	GRPRAR1-LNX3345.00 - GRPRAR 345KV CKT Z	720	720	0.03136	102.7324	GEN652549 7-FT RANDAL
FDNS	00NR	4	25SP	G15_042	TO->FROM	GRPRAR1-LNX3345.00 - GRPRAR 345KV CKT Z	720	720	0.03075	102.7319	P12:115:NPPD:1168B:ALBION 7:PETERSBRG.N7:BTB
FDNS	00NR	4	25SP	G15_042	TO->FROM	GRPRAR1-LNX3345.00 - GRPRAR 345KV CKT Z	720	720	0.03136	102.7278	GEN652547 3-FT RANDAL
FDNS	00NR	4	25SP	G15_042	TO->FROM	GRPRAR1-LNX3345.00 - GRPRAR 345KV CKT Z	720	720	0.033	102.7117	ANTELOPE 7115.00 - COUNTY LINE 115KV CKT 1
FDNSLock	00NR	4	25SP	G15_042	TO->FROM	GRPRAR1-LNX3345.00 - GRPRAR 345KV CKT Z	720	720	0.0312	102.7106	WATERTOWN (WT2 KU1A) 345/230/13.8KV TRANSFORMER CKT 1
FDNS	00NR	4	25SP	G15_042	TO->FROM	GRPRAR1-LNX3345.00 - GRPRAR 345KV CKT Z	720	720	0.03136	102.6981	GEN659290 1-EDGECOL
FDNS	00NR	4	25SP	G15_042	TO->FROM	GRPRAR1-LNX3345.00 - GRPRAR 345KV CKT Z	720	720	0.03163	102.6957	LARAMIE RIVER - STEGALL 345KV CKT 1
FDNS	00NR	4	25SP	G15_042	TO->FROM	GRPRAR1-LNX3345.00 - GRPRAR 345KV CKT Z	720	720	0.03167	102.6895	FINNEY SWITCHING STATION - WALKTAP7 345.00 345KV CKT 1
FDNS	00NR	4	25SP	G15_042	TO->FROM	GRPRAR1-LNX3345.00 - GRPRAR 345KV CKT Z	720	720	0.03167	102.6895	FINNEY SWITCHING STATION - WALKTAP7 345.00 345KV CKT 1
FDNS	00NR	4	20SP	G15_042	TO->FROM	GRPRAR1-LNX3345.00 - GRPRAR 345KV CKT Z	720	720	0.03267	102.6642	AXTELL - SWEETWATER 345KV CKT 1
FDNS	00NR	4	25SP	G15_042	TO->FROM	GRPRAR1-LNX3345.00 - GRPRAR 345KV CKT Z	720	720	0.03136	102.6616	GEN300007 1-NEW MADRID UNIT 2
FDNS	00NR	4	25SP	G15_042	TO->FROM	GRPRAR1-LNX3345.00 - GRPRAR 345KV CKT Z	720	720	0.03136	102.6586	GEN672357 2-FUT-WL2X 13.800
FDNS	00NR	4	25SP	G15_042	TO->FROM	GRPRAR1-LNX3345.00 - GRPRAR 345KV CKT Z	720	720	0.03136	102.6567	GEN300006 1-NEW MADRID UNIT 1
FDNS	00NR	4	25SP	G15_042	TO->FROM	GRPRAR1-LNX3345.00 - GRPRAR 345KV CKT Z	720	720	0.03136	102.6483	GEN672393 2-NBECST2G 13.800
FDNS	00NR	4	25SP	G15_042	TO->FROM	GRPRAR1-LNX3345.00 - GRPRAR 345KV CKT Z	720	720	0.03085	102.6448	HELENA - SHEAS LK3 345.00 345KV CKT 1
FDNS	00NR	4	25SP	G15_042	TO->FROM	GRPRAR1-LNX3345.00 - GRPRAR 345KV CKT Z	720	720	0.03136	102.6444	GEN652410 3-FT PECK
FDNS	00NR	4	25SP	G15_042	TO->FROM	GRPRAR1-LNX3345.00 - GRPRAR 345KV CKT Z	720	720	0.03136	102.6441	GEN672390 2-FUT-SW2X 13.800
FDNS	00NR	4	25SP	G15_042	TO->FROM	GRPRAR1-LNX3345.00 - GRPRAR 345KV CKT Z	720	720	0.03136	102.6429	GEN620324 3-HOOT LAKE 3 GEN
FDNS	00NR	4	25SP	G15_042	TO->FROM	GRPRAR1-LNX3345.00 - GRPRAR 345KV CKT Z	720	720	0.03136	102.6405	GEN600050 1-FEP
FDNS	00NR	4	25SP	G15_042	TO->FROM	GRPRAR1-LNX3345.00 - GRPRAR 345KV CKT Z	720	720	0.03136	102.6313	GEN660003 3-HURON WEST PARK
FDNS	00NR	4	25SP	G15_042	TO->FROM	GRPRAR1-LNX3345.00 - GRPRAR 345KV CKT Z	720	720	0.03136	102.6298	GEN600046 1-MECST
FDNS	00NR	4	25SP	G15_042	TO->FROM	GRPRAR1-LNX3345.00 - GRPRAR 345KV CKT Z	720	720	0.03183	102.627	Hitchland Interchange - WALKTAP7 345.00 345KV CKT 1
FDNS	00NR	4	25SP	G15_042	TO->FROM	GRPRAR1-LNX3345.00 - GRPRAR 345KV CKT Z	720	720	0.03183	102.627	Hitchland Interchange - WALKTAP7 345.00 345KV CKT 1
FDNS	00NR	4	20SP	G15_042	TO->FROM	GRPRAR1-LNX3345.00 - GRPRAR 345KV CKT Z	720	720	0.03104	102.6249	CLAY BOSWELL 230/20.9KV TRANSFORMER CKT 1
FDNS	00NR	4	25SP	G15_042	TO->FROM	GRPRAR1-LNX3345.00 - GRPRAR 345KV CKT Z	720	720	0.03136	102.6246	LADISH 115/13.2KV TRANSFORMER CKT 1
FDNS	00NR	4	20SP	G15_042	TO->FROM	GRPRAR1-LNX3345.00 - GRPRAR 345KV CKT Z	720	720	0.03252	102.6191	G15088_T 345.00 - MOORE 345KV CKT 1
FDNS	00NR	4	25SP	G15_042	TO->FROM	GRPRAR1-LNX3345.00 - GRPRAR 345KV CKT Z	720	720	0.03183	102.6188	P12:345:SPS:J07.1.FINN.HITCH
FDNS	00NR	4	25SP	G15_042	TO->FROM	GRPRAR1-LNX3345.00 - GRPRAR 345KV CKT Z	720	720	0.03186	102.6108	THEDFRD3 345.00 (THEDFORDT2) 345/115/13.8KV TRANSFORMER CKT 1
FDNS	00NR	4	25SP	G15_042	TO->FROM	GRPRAR1-LNX3345.00 - GRPRAR 345KV CKT Z	720	720	0.03136	102.6033	GEN660001 2-ABERDEEN SIEBRECHT
FDNS	00NR	4	25SP	G15_042	TO->FROM	GRPRAR1-LNX3345.00 - GRPRAR 345KV CKT Z	720	720	0.03136	102.5991	GEN600047 1-MECCT1
FDNS	00NR	4	25SP	G15_042	TO->FROM	GRPRAR1-LNX3345.00 - GRPRAR 345KV CKT Z	720	720	0.03136	102.5832	GEN652345 W-G07_023IS_2 0.6900
FDNS	00NR	4	25SP	G15_042	TO->FROM	GRPRAR1-LNX3345.00 - GRPRAR 345KV CKT Z	720	720	0.03136	102.5806	GEN652414 4-FT PECK
FDNS	00NR	4	25SP	G15_042	TO->FROM	GRPRAR1-LNX3345.00 - GRPRAR 345KV CKT Z	720	720	0.03136	102.5806	GEN652415 5-FT PECK
FDNS	00NR	4	20SP	G15_042	TO->FROM	GRPRAR1-LNX3345.00 - GRPRAR 345KV CKT Z	720	720	0.03104	102.5803	HESKETT 115/13.8KV TRANSFORMER CKT 1
FDNS	00NR	4	25SP	G15_042	TO->FROM	GRPRAR1-LNX3345.00 - GRPRAR 345KV CKT Z	720	720	0.0309	102.575	SHEAS LK3 345.00 - WILMARTH 345KV CKT 1
FDNS	00NR	4	25SP	G15_042	TO->FROM	GRPRAR1-LNX3345.00 - GRPRAR 345KV CKT Z	720	720	0.03074	102.557	FIELD NORTH - LKFLDXL3 345KV CKT 1
FDNS	00NR	4	25SP	G15_042	TO->FROM	GRPRAR1-LNX3345.00 - GRPRAR 345KV CKT Z	720	720	0.03136	102.5562	GEN590010 1-ERCOT EQUIVALENCE
FDNS	00NR	4	25SP	G15_042	TO->FROM	GRPRAR1-LNX3345.00 - GRPRAR 345KV CKT Z	720	720	0.03074	102.5557	FIELD SOUTH - WILMARTH 345KV CKT 1
FDNS	00NR	4	25SP	G15_042	TO->FROM	GRPRAR1-LNX3345.00 - GRPRAR 345KV CKT Z	720	720	0.03136	102.5554	GEN600063 1-COLVILLE GEN 1
FDNS	00NR	4	25SP	G15_042	TO->FROM	GRPRAR1-LNX3345.00 - GRPRAR 345KV CKT Z	720	720	0.03136	102.5554	GEN600064 2-COLVILLE GEN 2
FDNS	00NR	4	25SP	G15_042	TO->FROM	GRPRAR1-LNX3345.00 - GRPRAR 345KV CKT Z	720	720	0.03136	102.5532	GEN 11104 1-J262_GEN 0.6000
FDNS	00NR	4	25SP	G15_042	TO->FROM	GRPRAR1-LNX3345.00 - GRPRAR 345KV CKT Z	720	720	0.03136	102.5532	GEN 11108 1-J263_GEN 0.6000
FDNS	00NR	4	25SP	G15_042	TO->FROM	GRPRAR1-LNX3345.00 - GRPRAR 345KV CKT Z	720	720	0.03074	102.549	FIELD NORTH - FIELD SOUTH 345KV CKT 1
FDNS	00NR	4	25SP	G15_042	TO->FROM	GRPRAR1-LNX3345.00 - GRPRAR 345KV CKT Z	720	720	0.03136	102.5421	G830_SUB 115.00 - GRE-MCHENRY7115.00 115KV CKT 1
FDNS	00NR	4	25SP	G15_042	TO->FROM	GRPRAR1-LNX3345.00 - GRPRAR 345KV CKT Z	720	720	0.03136	102.5416	G830_SUB 115.00 115/34.5KV TRANSFORMER CKT 1
FDNS	00NR	4	25SP	G15_042	TO->FROM	GRPRAR1-LNX3345.00 - GRPRAR 345KV CKT Z	720	720	0.03143	102.536	BRDLAND-LNX3345.00 - HURON 345KV CKT Z
FDNS	00NR	4	25SP	G15_042	TO->FROM	GRPRAR1-LNX3345.00 - GRPRAR 345KV CKT Z	720	720	0.03143	102.5355	BROADLAND - HURON 230KV CKT 1
FDNS	00NR	4	25SP	G15_042	TO->FROM	GRPRAR1-LNX3345.00 - GRPRAR 345KV CKT Z	720	720	0.03136	102.5344	GEN600043 7-BLUE LAKE5
FDNS	00NR	4	25SP	G15_042	TO->FROM	GRPRAR1-LNX3345.00 - GRPRAR 345KV CKT Z	720	720	0.03136	102.5344	GEN600044 8-BLUE LAKE6
FDNS	00NR	4	25SP	G15_042	TO->FROM	GRPRAR1-LNX3345.00 - GRPRAR 345KV CKT Z	720	720	0.03136	102.5344	LANSING WEST 161/22.0KV TRANSFORMER CKT 1

SOLUTION	GROUP	SCENARIO	SEASON	SOURCE	DIRECTION	MONITORED ELEMENT	RATEA (MVA)	RATEB(MVA)	TDF	TC%LOADING (% MVA)	CONTINGENCY
FDNS	00NR	4	25SP	G15_042	TO->FROM	GRPRAR1-LNX3345.00 - GRPRAR 345KV CKT Z	720	720	0.03136	102.5339	GEN590011 2-ERCOT EQUIVALENCE
FDNS	00NR	4	25SP	G15_042	TO->FROM	GRPRAR1-LNX3345.00 - GRPRAR 345KV CKT Z	720	720	0.03143	102.5335	HURON (BD KU2A) 345/230/13.8KV TRANSFORMER CKT 1
FDNS	00NR	4	25SP	G15_042	TO->FROM	GRPRAR1-LNX3345.00 - GRPRAR 345KV CKT Z	720	720	0.03143	102.5335	HURON (BD KU2A) 345/230/13.8KV TRANSFORMER CKT 1
FDNS	00NR	4	25SP	G15_042	TO->FROM	GRPRAR1-LNX3345.00 - GRPRAR 345KV CKT Z	720	720	0.03143	102.5326	P12:345:UMZB:# 102 #: AVS BD IN ND. AVS BRD LR
FDNS	00NR	4	25SP	G15_042	TO->FROM	GRPRAR1-LNX3345.00 - GRPRAR 345KV CKT Z	720	720	0.03143	102.5302	P12:345:UMZB:# 103 #: BD IN SD. LOSS OF LINE
FDNS	00NR	4	20SP	G15_042	TO->FROM	GRPRAR1-LNX3345.00 - GRPRAR 345KV CKT Z	720	720	0.03104	102.5126	GEN659289 1-DAYCNTYWND W0.6900
FDNS	00NR	4	25SP	G15_042	TO->FROM	GRPRAR1-LNX3345.00 - GRPRAR 345KV CKT Z	720	720	0.03136	102.5121	GEN681522 3-GENOA 3
FDNS	00NR	4	25SP	G15_042	TO->FROM	GRPRAR1-LNX3345.00 - GRPRAR 345KV CKT Z	720	720	0.03136	102.5061	GEN600014 4-BLACK DOG GEN 4
FDNS	00NR	4	25SP	G15_042	TO->FROM	GRPRAR1-LNX3345.00 - GRPRAR 345KV CKT Z	720	720	0.03136	102.5032	GEN600065 7-HIGH BRIDGE
FDNS	00NR	4	25SP	G15_042	TO->FROM	GRPRAR1-LNX3345.00 - GRPRAR 345KV CKT Z	720	720	0.03136	102.5032	GEN600066 8-HIGH BRIDGE
FDNS	00NR	4	25SP	G15_042	TO->FROM	GRPRAR1-LNX3345.00 - GRPRAR 345KV CKT Z	720	720	0.03136	102.5002	GEN600011 5-BLACK DOG GEN 1
FDNS	00NR	4	25SP	G15_042	TO->FROM	GRPRAR1-LNX3345.00 - GRPRAR 345KV CKT Z	720	720	0.03287	102.4915	P12:115:NPPD:1163B:NELIGH 7:NORFK.N7:BTB
FDNS	00NR	4	25SP	G15_042	TO->FROM	GRPRAR1-LNX3345.00 - GRPRAR 345KV CKT Z	720	720	0.03136	102.4906	GEN600070 9-RIVER SIDE
FDNS	00NR	4	25SP	G15_042	TO->FROM	GRPRAR1-LNX3345.00 - GRPRAR 345KV CKT Z	720	720	0.03136	102.4906	GEN600071 10-RIVER SIDE
FDNS	00NR	4	25SP	G15_042	TO->FROM	GRPRAR1-LNX3345.00 - GRPRAR 345KV CKT Z	720	720	0.03136	102.4788	GEN600007 7-RIVERSIDE GEN 7
FDNS	00NR	4	20SP	G15_042	TO->FROM	GRPRAR1-LNX3345.00 - GRPRAR 345KV CKT Z	720	720	0.03104	102.4752	GEN563312 1-G15097_3 0.6900
FDNS	00NR	4	25SP	G15_042	TO->FROM	GRPRAR1-LNX3345.00 - GRPRAR 345KV CKT Z	720	720	0.03136	102.4615	GEN600017 C-LS POWER CT
FDNS	00NR	4	25SP	G15_042	TO->FROM	GRPRAR1-LNX3345.00 - GRPRAR 345KV CKT Z	720	720	0.03136	102.4603	GEN600045 4-ANSON
FDNS	00NR	4	20SP	G15_042	TO->FROM	GRPRAR1-LNX3345.00 - GRPRAR 345KV CKT Z	720	720	0.03104	102.4438	GEN659018 1-G14_003IS_3 0.6900
FDNS	00NR	4	25SP	G15_042	TO->FROM	GRPRAR1-LNX3345.00 - GRPRAR 345KV CKT Z	720	720	0.03136	102.4344	GEN659273 2-GROTON SYNC COND
FDNS	00NR	4	25SP	G15_042	TO->FROM	GRPRAR1-LNX3345.00 - GRPRAR 345KV CKT Z	720	720	0.03136	102.4344	GEN659294 1-WILTONCOL9
FDNS	00NR	4	25SP	G15_042	TO->FROM	GRPRAR1-LNX3345.00 - GRPRAR 345KV CKT Z	720	720	0.03129	102.4297	OAHE - SULLEY BUTTE 230KV CKT 1
FDNS	00NR	4	20SP	G15_042	TO->FROM	GRPRAR1-LNX3345.00 - GRPRAR 345KV CKT Z	720	720	0.03104	102.4253	GEN652906 1-G09_006IS_3 0.6900
FDNS	00NR	4	25SP	G15_042	TO->FROM	GRPRAR1-LNX3345.00 - GRPRAR 345KV CKT Z	720	720	0.03211	102.4162	AXTELL - POST ROCK 345KV CKT 1
FDNS	00NR	4	25SP	G15_042	TO->FROM	GRPRAR1-LNX3345.00 - GRPRAR 345KV CKT Z	720	720	0.03143	102.3967	ANTELOP-LNX3345.00 - ANTELOPE VALLEY 345KV CKT Z
FDNS	00NR	4	25SP	G15_042	TO->FROM	GRPRAR1-LNX3345.00 - GRPRAR 345KV CKT Z	720	720	0.03136	102.3906	GEN615052 1-CAMBRIDGE GENERATING STATION
FDNS	00NR	4	20SP	G15_042	TO->FROM	GRPRAR1-LNX3345.00 - GRPRAR 345KV CKT Z	720	720	0.03104	102.3814	GEN652543 3-BIG BEND
FDNS	00NR	4	25SP	G15_042	TO->FROM	GRPRAR1-LNX3345.00 - GRPRAR 345KV CKT Z	720	720	0.03136	102.3728	GEN659031 1-G12_014IS_4 0.6900
FDNS	00NR	4	25SP	G15_042	TO->FROM	GRPRAR1-LNX3345.00 - GRPRAR 345KV CKT Z	720	720	0.03136	102.3579	GEN 10648 1-G830_GEN 0.6900
FDNS	00NR	4	25SP	G15_042	TO->FROM	GRPRAR1-LNX3345.00 - GRPRAR 345KV CKT Z	720	720	0.03136	102.3537	GEN659192 6-LYNN
FDNS	00NR	4	25SP	G15_042	TO->FROM	GRPRAR1-LNX3345.00 - GRPRAR 345KV CKT Z	720	720	0.03136	102.3522	GEN659162 4-RED WLCK
FDNS	00NR	4	25SP	G15_042	TO->FROM	GRPRAR1-LNX3345.00 - GRPRAR 345KV CKT Z	720	720	0.03136	102.3522	GEN659163 5-BLACK WDCK
FDNS	00NR	4	25SP	G15_042	TO->FROM	GRPRAR1-LNX3345.00 - GRPRAR 345KV CKT Z	720	720	0.03136	102.3507	GEN660016 1-B_H WIND 0.7000
FDNS	00NR	4	20SP	G15_042	TO->FROM	GRPRAR1-LNX3345.00 - GRPRAR 345KV CKT Z	720	720	0.03104	102.3418	COYOTE 345/24.0KV TRANSFORMER CKT 1
FDNS	00NR	4	25SP	G15_042	TO->FROM	GRPRAR1-LNX3345.00 - GRPRAR 345KV CKT Z	720	720	0.03136	102.3228	GEN615021 1-GRE-ER 14G 16.000
FDNS	00NR	4	20SP	G15_042	TO->FROM	GRPRAR1-LNX3345.00 - GRPRAR 345KV CKT Z	720	720	0.03104	102.3155	GEN659194 1-NDPRAIRWND1W0.6900
FDNS	00NR	4	20SP	G15_042	TO->FROM	GRPRAR1-LNX3345.00 - GRPRAR 345KV CKT Z	720	720	0.03104	102.3121	GEN659010 4-G07_027IS_2 0.6900
FDNS	00NR	4	20SP	G15_042	TO->FROM	GRPRAR1-LNX3345.00 - GRPRAR 345KV CKT Z	720	720	0.03104	102.2987	GEN652460 4-GARRISON
FDNS	00NR	4	20SP	G15_042	TO->FROM	GRPRAR1-LNX3345.00 - GRPRAR 345KV CKT Z	720	720	0.03104	102.2987	GEN652461 5-GARRISON
FDNS	00NR	4	25SP	G15_042	TO->FROM	GRPRAR1-LNX3345.00 - GRPRAR 345KV CKT Z	720	720	0.03136	102.2913	GEN615015 1-GRE-SPRITWDG13.200
FDNS	00NR	4	25SP	G15_042	TO->FROM	GRPRAR1-LNX3345.00 - GRPRAR 345KV CKT Z	720	720	0.03129	102.262	SULLEY BUTTE - SULLYBT-LNX3230.00 230KV CKT Z
FDNS	00NR	4	25SP	G15_042	TO->FROM	GRPRAR1-LNX3345.00 - GRPRAR 345KV CKT Z	720	720	0.03136	102.2619	GEN657705 X-DRAYTON
FDNS	00NR	4	25SP	G15_042	TO->FROM	GRPRAR1-LNX3345.00 - GRPRAR 345KV CKT Z	720	720	0.03129	102.2618	SULLYBT-LNX3230.00 - WHITLOK 230KV CKT 1
FDNS	00NR	4	20SP	G15_042	TO->FROM	GRPRAR1-LNX3345.00 - GRPRAR 345KV CKT Z	720	720	0.03104	102.2577	GEN652559 1-OAHE
FDNS	00NR	4	20SP	G15_042	TO->FROM	GRPRAR1-LNX3345.00 - GRPRAR 345KV CKT Z	720	720	0.03097	102.2516	GLENHAM - L3 HAWDON 230KV CKT 1
FDNS	00NR	4	20SP	G15_042	TO->FROM	GRPRAR1-LNX3345.00 - GRPRAR 345KV CKT Z	720	720	0.03104	102.2416	GEN652457 1-GARRISON
FDNS	00NR	4	20SP	G15_042	TO->FROM	GRPRAR1-LNX3345.00 - GRPRAR 345KV CKT Z	720	720	0.03104	102.2416	GEN652458 2-GARRISON
FDNS	00NR	4	20SP	G15_042	TO->FROM	GRPRAR1-LNX3345.00 - GRPRAR 345KV CKT Z	720	720	0.03104	102.2416	GEN652459 3-GARRISON
FDNS	00NR	4	20SP	G15_042	TO->FROM	GRPRAR1-LNX3345.00 - GRPRAR 345KV CKT Z	720	720	0.03104	102.237	GEN652907 1-G09_007IS_3 0.6900
FDNS	00NR	4	25SP	G15_042	TO->FROM	GRPRAR1-LNX3345.00 - GRPRAR 345KV CKT Z	720	720	0.03136	102.2287	BISONMP4 230.00 - SQUARE BUTTE 230KV CKT 1
FDNS	00NR	4	20SP	G15_042	TO->FROM	GRPRAR1-LNX3345.00 - GRPRAR 345KV CKT Z	720	720	0.03104	102.2142	GEN563342 1-G15098_3 0.6900
FDNS	00NR	4	25SP	G15_042	TO->FROM	GRPRAR1-LNX3345.00 - GRPRAR 345KV CKT Z	720	720	0.03129	102.2076	P12:230:UMZB:# 114 #: SB IN SD. SB-WK-GH
FDNS	00NR	4	25SP	G15_042	TO->FROM	GRPRAR1-LNX3345.00 - GRPRAR 345KV CKT Z	720	720	0.03129	102.2076	P12:230:UMZB:# 117 #: WK IN SD. SB-WK-GH
FDNS	00NR	4	20SP	G15_042	TO->FROM	GRPRAR1-LNX3345.00 - GRPRAR 345KV CKT Z	720	720	0.03104	102.1853	GEN659403 1-NDSUNFLWR W0.6900
FDNS	00NR	4	25SP	G15_042	TO->FROM	GRPRAR1-LNX3345.00 - GRPRAR 345KV CKT Z	720	720	0.03286	102.1706	GERALD GENTLEMAN STATION - RED WILLOW 345KV CKT 1
FDNS	00NR	4	25SP	G15_042	TO->FROM	GRPRAR1-LNX3345.00 - GRPRAR 345KV CKT Z	720	720	0.03136	102.1691	GEN600067 9-HIGH BRIDGE
FDNS	00NR	4	25SP	G15_042	TO->FROM	GRPRAR1-LNX3345.00 - GRPRAR 345KV CKT Z	720	720	0.03136	102.1688	GEN659353 1-DEERCREK CTG18.000
FDNS	00NR	4	25SP	G15_042	TO->FROM	GRPRAR1-LNX3345.00 - GRPRAR 345KV CKT Z	720	720	0.03136	102.1682	GEN659354 1-DEERCREK STG18.000
FDNS	00NR	4	25SP	G15_042	TO->FROM	GRPRAR1-LNX3345.00 - GRPRAR 345KV CKT Z	720	720	0.03292	102.1663	G15061_T 345.00 - SETAB 345KV CKT 1
FDNS	00NR	4	20SP	G15_042	TO->FROM	GRPRAR1-LNX3345.00 - GRPRAR 345KV CKT Z	720	720	0.03104	102.1624	GEN652542 1-BIG BEND
FDNS	00NR	4	20SP	G15_042	TO->FROM	GRPRAR1-LNX3345.00 - GRPRAR 345KV CKT Z	720	720	0.03314	102.1576	MCCOOL - MOORE 345KV CKT 1
FDNS	00NR	4	25SP	G15_042	TO->FROM	GRPRAR1-LNX3345.00 - GRPRAR 345KV CKT Z	720	720	0.03129	102.154	GLENHAM - WHITLOK 230KV CKT 1
FDNS	00NR	4	25SP	G15_042	TO->FROM	GRPRAR1-LNX3345.00 - GRPRAR 345KV CKT Z	720	720	0.03136	102.1514	GEN672303 3-BOUNDARY DAM GENERATOR 3
FDNS	00NR	4	25SP	G15_042	TO->FROM	GRPRAR1-LNX3345.00 - GRPRAR 345KV CKT Z	720	720	0.03136	102.1514	GEN672304 4-BOUNDARY DAM GENERATOR 4
FDNS	00NR	4	25SP	G15_042	TO->FROM	GRPRAR1-LNX3345.00 - GRPRAR 345KV CKT Z	720	720	0.03136	102.1514	GEN672305 5-BOUNDARY DAM GENERATOR 5
FDNS	00NR	4	25SP	G15_042	TO->FROM	GRPRAR1-LNX3345.00 - GRPRAR 345KV CKT Z	720	720	0.03136	102.1205	GEN672356 1-FUT-WL1X 18.000
FDNS	00NR	4	20SP	G15_042	TO->FROM	GRPRAR1-LNX3345.00 - GRPRAR 345KV CKT Z	720	720	0.03104	102.099	STANTON 230/18.0KV TRANSFORMER CKT 1
FDNS	00NR	4	25SP	G15_042	TO->FROM	GRPRAR1-LNX3345.00 - GRPRAR 345KV CKT Z	720	720	0.03136	102.0901	GEN672389 1-FUT-SW1X 18.000
FDNS	00NR	4	25SP	G15_042	TO->FROM	GRPRAR1-LNX3345.00 - GRPRAR 345KV CKT Z	720	720	0.03136	102.0808	GEN672392 1-NBECGT1G 18.000
FDNS	00NR	4	25SP	G15_042	TO->FROM	GRPRAR1-LNX3345.00 - GRPRAR 345KV CKT Z	720	720	0.03279	102.0713	MISSION - WITTEN 115KV CKT 1
FDNS	00NR	4	25SP	G15_042	TO->FROM	GRPRAR1-LNX3345.00 - GRPRAR 345KV CKT Z	720	720	0.03416	102.0712	MINGO - RED WILLOW 345KV CKT 1
FDNS	00NR	4	25SP	G15_042	TO->FROM	GRPRAR1-LNX3345.00 - GRPRAR 345KV CKT Z	720	720	0.03416	102.0712	MINGO - RED WILLOW 345KV CKT 1
FDNS	00NR	4	25SP	G15_042	TO->FROM	GRPRAR1-LNX3345.00 - GRPRAR 345KV CKT Z	720	720	0.03286	102.0683	G15088_T 345.00 - MOORE 345KV CKT 1
FDNS	00NR	4	20SP	G15_042	TO->FROM	GRPRAR1-LNX3345.00 - GRPRAR 345KV CKT Z	720	720	0.03104	102.0397	SQUARE BUTTE - YNG2 4 230.00 230KV CKT 1
FDNS	00NR	4	20SP	G15_042	TO->FROM	GRPRAR1-LNX3345.00 - GRPRAR 345KV CKT Z	720	720	0.03104	102.0392	YNG2 4 230.00 230/20.0KV TRANSFORMER CKT 1
FDNS	00NR	4	17SP	G15_042	TO->FROM	GRPRAR1-LNX3345.00 - GRPRAR 345KV CKT Z	720	720	0.03267	102.0292	FTTHOM1-LNX3345.00 - LELAND2-LNX3345.00 345KV CKT 1
FDNS	00NR	4	25SP	G15_042	TO->FROM	GRPRAR1-LNX3345.00 - GRPRAR 345KV CKT Z	720	720	0.03136	102.0172	GEN662101 1-WESSINGTON190.5750
FDNS	00NR	4	25SP	G15_042	TO->FROM	GRPRAR1-LNX3345.00 - GRPRAR 345KV CKT Z	720	720	0.03136	101.9789	GEN681542 6-JP MADGETT
FDNS	00NR	4	25SP	G15_042	TO->FROM	GRPRAR1-LNX3345.00 - GRPRAR 345KV CKT Z	720	720	0.03136	101.9608	GEN910006 1-G12_012IS_3 0.6900

SOLUTION	GROUP	SCENARIO	SEASON	SOURCE	DIRECTION	MONITORED ELEMENT	RATEA (MVA)	RATEB(MVA)	TDF	TC%LOADING (% MVA)	CONTINGENCY
FDNS	00NR	4	25SP	G15_042	TO->FROM	GRPRAR1-LNX3345.00 - GRPRAR 345KV CKT Z	720	720	0.03136	101.9483	CENTER 230/22.0KV TRANSFORMER CKT 1
FDNS	00NR	4	17SP	G15_042	TO->FROM	GRPRAR1-LNX3345.00 - GRPRAR 345KV CKT Z	720	720	0.03267	101.8648	P12:345:UMZB:# 108 #: LOS FT IN ND. LOS FT
FDNS	00NR	4	17SP	G15_042	TO->FROM	GRPRAR1-LNX3345.00 - GRPRAR 345KV CKT Z	720	720	0.03267	101.8558	FT THOMPSON - FTTHOM1-LNX3345.00 345KV CKT Z
FDNS	00NR	4	25SP	G15_042	TO->FROM	GRPRAR1-LNX3345.00 - GRPRAR 345KV CKT Z	720	720	0.03136	101.846	HESKETT 115/13.8KV TRANSFORMER CKT 1
FDNS	00NR	4	20SP	G15_042	TO->FROM	GRPRAR1-LNX3345.00 - GRPRAR 345KV CKT Z	720	720	0.03104	101.8081	GEN659411 1-CAMPBLCNTY W0.6900
FDNS	00NR	4	25SP	G15_042	TO->FROM	GRPRAR1-LNX3345.00 - GRPRAR 345KV CKT Z	720	720	0.03296	101.7974	AXTELL - SWEETWATER 345KV CKT 1
FDNS	00NR	4	17SP	G15_042	TO->FROM	GRPRAR1-LNX3345.00 - GRPRAR 345KV CKT Z	720	720	0.03267	101.7676	LELAND OLDS - LELAND2-LNX3345.00 345KV CKT Z
FDNS	00NR	4	25SP	G15_042	TO->FROM	GRPRAR1-LNX3345.00 - GRPRAR 345KV CKT Z	720	720	0.03136	101.7593	GEN659289 1-DAYCNTYWND W0.6900
FDNS	00NR	4	25SP	G15_042	TO->FROM	GRPRAR1-LNX3345.00 - GRPRAR 345KV CKT Z	720	720	0.03364	101.7521	MCCOOL - MOORE 345KV CKT 1
FDNS	00NR	4	20SP	G15_042	TO->FROM	GRPRAR1-LNX3345.00 - GRPRAR 345KV CKT Z	720	720	0.03104	101.7233	GEN600004 2-PRAIRIE ISLAND G2
FDNS	00NR	4	25SP	G15_042	TO->FROM	GRPRAR1-LNX3345.00 - GRPRAR 345KV CKT Z	720	720	0.03136	101.7225	GEN563312 1-G15097_3 0.6900
FDNS	00NR	4	20SP	G15_042	TO->FROM	GRPRAR1-LNX3345.00 - GRPRAR 345KV CKT Z	720	720	0.03104	101.7193	GEN600003 1-PRAIRIE ISLAND G1
FDNS	00NR	4	25SP	G15_042	TO->FROM	GRPRAR1-LNX3345.00 - GRPRAR 345KV CKT Z	720	720	0.03136	101.6753	GEN659018 1-G14_003IS_3 0.6900
FDNS	00NR	4	20SP	G15_042	TO->FROM	GRPRAR1-LNX3345.00 - GRPRAR 345KV CKT Z	720	720	0.03104	101.6714	GEN672321 1-SHAND GENERATOR 1
FDNS	00NR	4	25SP	G15_042	TO->FROM	GRPRAR1-LNX3345.00 - GRPRAR 345KV CKT Z	720	720	0.03136	101.6634	GEN652906 1-G09_006IS_3 0.6900
FDNS	00NR	4	20SP	G15_042	TO->FROM	GRPRAR1-LNX3345.00 - GRPRAR 345KV CKT Z	720	720	0.03104	101.6115	GEN672310 1-POPLAR RIVER GENERATOR 1
FDNS	00NR	4	20SP	G15_042	TO->FROM	GRPRAR1-LNX3345.00 - GRPRAR 345KV CKT Z	720	720	0.03104	101.6115	GEN672311 2-POPLAR RIVER GENERATOR 2
FDNS	00NR	4	20SP	G15_042	TO->FROM	GRPRAR1-LNX3345.00 - GRPRAR 345KV CKT Z	720	720	0.03104	101.5936	GEN672306 6-BOUNDARY DAM GENERATOR 6
FDNS	00NR	4	20SP	G15_042	TO->FROM	GRPRAR1-LNX3345.00 - GRPRAR 345KV CKT Z	720	720	0.03104	101.5689	GEN659296 2-SDPRAIRWND1W0.6900
FDNS	00NR	4	25SP	G15_042	TO->FROM	GRPRAR1-LNX3345.00 - GRPRAR 345KV CKT Z	720	720	0.03136	101.5524	GEN659010 4-G07_027IS_2 0.6900
FDNS	00NR	4	20SP	G15_042	TO->FROM	GRPRAR1-LNX3345.00 - GRPRAR 345KV CKT Z	720	720	0.03104	101.5517	RCDC EAST 4230.00 - RED CEDAR DC 230KV CKT 1
FDNS	00NR	4	20SP	G15_042	TO->FROM	GRPRAR1-LNX3345.00 - GRPRAR 345KV CKT Z	720	720	0.03104	101.5487	P12:230:UMZB:# 112 #: NU IN SD. NU-RCDC & DRY CREEK XFMR
FDNS	00NR	4	25SP	G15_042	TO->FROM	GRPRAR1-LNX3345.00 - GRPRAR 345KV CKT Z	720	720	0.03136	101.5476	GEN659194 1-NDPRAIRWND1W0.6900
FDNS	00NR	4	25SP	G15_042	TO->FROM	GRPRAR1-LNX3345.00 - GRPRAR 345KV CKT Z	720	720	0.03136	101.5359	GEN652460 4-GARRISON
FDNS	00NR	4	25SP	G15_042	TO->FROM	GRPRAR1-LNX3345.00 - GRPRAR 345KV CKT Z	720	720	0.03136	101.5356	GEN652461 5-GARRISON
FDNS	00NR	4	25SP	G15_042	TO->FROM	GRPRAR1-LNX3345.00 - GRPRAR 345KV CKT Z	720	720	0.03129	101.502	GLENHAM - L3 HAWDON 230KV CKT 1
FDNS	00NR	4	25SP	G15_042	TO->FROM	GRPRAR1-LNX3345.00 - GRPRAR 345KV CKT Z	720	720	0.03136	101.4794	GEN652457 1-GARRISON
FDNS	00NR	4	25SP	G15_042	TO->FROM	GRPRAR1-LNX3345.00 - GRPRAR 345KV CKT Z	720	720	0.03136	101.4794	GEN652458 2-GARRISON
FDNS	00NR	4	25SP	G15_042	TO->FROM	GRPRAR1-LNX3345.00 - GRPRAR 345KV CKT Z	720	720	0.03136	101.4794	GEN652459 3-GARRISON
FDNS	00NR	4	25SP	G15_042	TO->FROM	GRPRAR1-LNX3345.00 - GRPRAR 345KV CKT Z	720	720	0.03136	101.476	GEN652907 1-G09_007IS_3 0.6900
FDNS	00NR	4	20SP	G15_042	TO->FROM	GRPRAR1-LNX3345.00 - GRPRAR 345KV CKT Z	720	720	0.03104	101.4654	GEN615010 1-STANTON4
FDNS	00NR	4	25SP	G15_042	TO->FROM	GRPRAR1-LNX3345.00 - GRPRAR 345KV CKT Z	720	720	0.02998	101.464	HIGHLND 3 345.00 - OBRIEN 3 345.00 345KV CKT 1
FDNS	00NR	4	25SP	G15_042	TO->FROM	GRPRAR1-LNX3345.00 - GRPRAR 345KV CKT Z	720	720	0.03136	101.4387	GEN563342 1-G15098_3 0.6900
FDNS	00NR	4	25SP	G15_042	TO->FROM	GRPRAR1-LNX3345.00 - GRPRAR 345KV CKT Z	720	720	0.03136	101.4215	GEN659403 1-NDSUNFLWR W0.6900
FDNS	00NR	4	25SP	G15_042	TO->FROM	GRPRAR1-LNX3345.00 - GRPRAR 345KV CKT Z	720	720	0.03136	101.4135	GEN652543 3-BIG BEND
FDNS	00NR	4	25SP	G15_042	TO->FROM	GRPRAR1-LNX3345.00 - GRPRAR 345KV CKT Z	720	720	0.03136	101.4072	GEN652542 1-BIG BEND
FDNS	00NR	4	20SP	G15_042	TO->FROM	GRPRAR1-LNX3345.00 - GRPRAR 345KV CKT Z	720	720	0.03104	101.3748	GEN600006 1-AS KING
FDNS	00NR	4	20SP	G15_042	TO->FROM	GRPRAR1-LNX3345.00 - GRPRAR 345KV CKT Z	720	720	0.03104	101.3688	GEN659453 1-GI1414GEN W0.6900
FDNS	00NR	4	20SP	G15_042	TO->FROM	GRPRAR1-LNX3345.00 - GRPRAR 345KV CKT Z	720	720	0.03104	101.3671	GEN563302 1-G15096_3 0.6900
FDNS	00NR	4	25SP	G15_042	TO->FROM	GRPRAR1-LNX3345.00 - GRPRAR 345KV CKT Z	720	720	0.03136	101.2875	STANTON 230/18.0KV TRANSFORMER CKT 1
FDNS	00NR	4	20SP	G15_042	TO->FROM	GRPRAR1-LNX3345.00 - GRPRAR 345KV CKT Z	720	720	0.03104	101.2628	GEN659141 1-K10215A
FDNS	00NR	4	20SP	G15_042	TO->FROM	GRPRAR1-LNX3345.00 - GRPRAR 345KV CKT Z	720	720	0.03104	101.2609	GEN652556 2-OAHE
FDNS	00NR	4	20SP	G15_042	TO->FROM	GRPRAR1-LNX3345.00 - GRPRAR 345KV CKT Z	720	720	0.03104	101.2608	GEN652557 4-OAHE
FDNS	00NR	4	20SP	G15_042	TO->FROM	GRPRAR1-LNX3345.00 - GRPRAR 345KV CKT Z	720	720	0.03104	101.2608	GEN652558 6-OAHE
FDNS	00NR	4	20SP	G15_042	TO->FROM	GRPRAR1-LNX3345.00 - GRPRAR 345KV CKT Z	720	720	0.03104	101.234	GEN659110 1-LELAND OLDS UNIT1
FDNS	00NR	4	25SP	G15_042	TO->FROM	GRPRAR1-LNX3345.00 - GRPRAR 345KV CKT Z	720	720	0.03136	101.1111	GEN652559 1-OAHE
FDNS	00NR	4	20SP	G15_042	TO->FROM	GRPRAR1-LNX3345.00 - GRPRAR 345KV CKT Z	720	720	0.03104	101.0748	GEN652173 1-G09_001IS_2 0.6900
FDNS	00NR	4	25SP	G15_042	TO->FROM	GRPRAR1-LNX3345.00 - GRPRAR 345KV CKT Z	720	720	0.03136	101.0447	GEN659411 1-CAMPBLCNTY W0.6900
FDNS	00NR	4	25SP	G15_042	TO->FROM	GRPRAR1-LNX3345.00 - GRPRAR 345KV CKT Z	720	720	0.03136	100.9031	SQUARE BUTTE - YNG2 4 230.00 230KV CKT 1
FDNS	00NR	4	20SP	G15_042	TO->FROM	GRPRAR1-LNX3345.00 - GRPRAR 345KV CKT Z	720	720	0.03307	100.8857	GRAND ISLAND - MCCOOL 345KV CKT 1
FDNS	00NR	4	20SP	G15_042	TO->FROM	GRPRAR1-LNX3345.00 - GRPRAR 345KV CKT Z	720	720	0.03104	100.8598	GEN657749 1-YOUNG 1 GENERATOR
FDNS	00NR	4	25SP	G15_042	TO->FROM	GRPRAR1-LNX3345.00 - GRPRAR 345KV CKT Z	720	720	0.03136	100.845	GEN600004 2-PRAIRIE ISLAND G2
FDNS	00NR	4	25SP	G15_042	TO->FROM	GRPRAR1-LNX3345.00 - GRPRAR 345KV CKT Z	720	720	0.03136	100.8411	GEN600003 1-PRAIRIE ISLAND G1
FDNS	00NR	4	25SP	G15_042	TO->FROM	GRPRAR1-LNX3345.00 - GRPRAR 345KV CKT Z	720	720	0.03136	100.8286	GEN672310 1-POPLAR RIVER GENERATOR 1
FDNS	00NR	4	25SP	G15_042	TO->FROM	GRPRAR1-LNX3345.00 - GRPRAR 345KV CKT Z	720	720	0.03136	100.8286	GEN672311 2-POPLAR RIVER GENERATOR 2
FDNS	00NR	4	25SP	G15_042	TO->FROM	GRPRAR1-LNX3345.00 - GRPRAR 345KV CKT Z	720	720	0.03136	100.8181	GEN659296 2-SDPRAIRWND1W0.6900
FDNS	00NR	4	25SP	G15_042	TO->FROM	GRPRAR1-LNX3345.00 - GRPRAR 345KV CKT Z	720	720	0.03136	100.8159	GEN672321 1-SHAND GENERATOR 1
FDNS	00NR	4	25SP	G15_042	TO->FROM	GRPRAR1-LNX3345.00 - GRPRAR 345KV CKT Z	720	720	0.03137	100.7747	P12:230:UMZB:# 112 #: NU IN SD. NU-RCDC & DRY CREEK XFMR
FDNS	00NR	4	25SP	G15_042	TO->FROM	GRPRAR1-LNX3345.00 - GRPRAR 345KV CKT Z	720	720	0.03136	100.7662	RCDC EAST 4230.00 - RED CEDAR DC 230KV CKT 1
FDNS	00NR	4	20SP	G15_042	TO->FROM	GRPRAR1-LNX3345.00 - GRPRAR 345KV CKT Z	720	720	0.03104	100.7592	GEN659407 1-ANTELPHILLSW0.6900
FDNS	00NR	4	25SP	G15_042	TO->FROM	GRPRAR1-LNX3345.00 - GRPRAR 345KV CKT Z	720	720	0.03136	100.734	GEN672306 6-BOUNDARY DAM GENERATOR 6
FDNS	00NR	4	25SP	G15_042	TO->FROM	GRPRAR1-LNX3345.00 - GRPRAR 345KV CKT Z	720	720	0.03136	100.622	GEN615010 1-STANTON4
FDNS	00NR	4	25SP	G15_042	TO->FROM	GRPRAR1-LNX3345.00 - GRPRAR 345KV CKT Z	720	720	0.03136	100.5962	GEN659453 1-GI1414GEN W0.6900
FDNS	00NR	4	25SP	G15_042	TO->FROM	GRPRAR1-LNX3345.00 - GRPRAR 345KV CKT Z	720	720	0.03136	100.5944	GEN563302 1-G15096_3 0.6900
FDNS	00NR	4	25SP	G15_042	TO->FROM	GRPRAR1-LNX3345.00 - GRPRAR 345KV CKT Z	720	720	0.03136	100.5041	GEN652557 4-OAHE
FDNS	00NR	4	25SP	G15_042	TO->FROM	GRPRAR1-LNX3345.00 - GRPRAR 345KV CKT Z	720	720	0.03136	100.5041	GEN652558 6-OAHE
FDNS	00NR	4	25SP	G15_042	TO->FROM	GRPRAR1-LNX3345.00 - GRPRAR 345KV CKT Z	720	720	0.03136	100.504	GEN652556 2-OAHE
FDNS	00NR	4	25SP	G15_042	TO->FROM	GRPRAR1-LNX3345.00 - GRPRAR 345KV CKT Z	720	720	0.03136	100.4934	GEN600006 1-AS KING
FDNS	00NR	4	25SP	G15_042	TO->FROM	GRPRAR1-LNX3345.00 - GRPRAR 345KV CKT Z	720	720	0.03136	100.4786	GEN659141 1-K10215A
FDNS	00NR	4	25SP	G15_042	TO->FROM	GRPRAR1-LNX3345.00 - GRPRAR 345KV CKT Z	720	720	0.03355	100.4552	GRAND ISLAND - MCCOOL 345KV CKT 1
FDNS	00NR	4	20SP	G15_042	TO->FROM	GRPRAR1-LNX3345.00 - GRPRAR 345KV CKT Z	720	720	0.03104	100.4463	GEN600005 1-MONTICELLO
FDNS	00NR	4	25SP	G15_042	TO->FROM	GRPRAR1-LNX3345.00 - GRPRAR 345KV CKT Z	720	720	0.03136	100.4321	GEN659110 1-LELAND OLDS UNIT1
FDNS	00NR	4	25SP	G15_042	TO->FROM	GRPRAR1-LNX3345.00 - GRPRAR 345KV CKT Z	720	720	0.03136	100.3275	GEN652173 1-G09_001IS_2 0.6900
FDNS	00NR	4	20SP	G15_042	TO->FROM	GRPRAR1-LNX3345.00 - GRPRAR 345KV CKT Z	720	720	0.03104	100.2115	GEN600000 1-SHERBURNECNTY G1
FDNS	00NR	4	20SP	G15_042	TO->FROM	GRPRAR1-LNX3345.00 - GRPRAR 345KV CKT Z	720	720	0.03104	100.1	GEN600001 2-SHERBURNE CNTY G2
FDNS	00NR	4	17SP	G15_042	TO->FROM	GRPRAR1-LNX3345.00 - GRPRAR 345KV CKT Z	720	720	0.06537	100	ANTELOPE 3345.00 - HOSKINS 345KV CKT 1
FDNS	00NR	4	25SP	G15_042	TO->FROM	GRPRAR1-LNX3345.00 - GRPRAR 345KV CKT Z	720	720	0.03136	100	CLAY BOSWELL 230/20.9KV TRANSFORMER CKT 1
FDNS	00NR	4	25SP	G15_042	TO->FROM	GRPRAR1-LNX3345.00 - GRPRAR 345KV CKT Z	720	720	0.03136	100	GEN657749 1-YOUNG 1 GENERATOR
FDNS	00NR	4	25SP	G15_042	TO->FROM	GRPRAR1-LNX3345.00 - GRPRAR 345KV CKT Z	720	720	0.03136	100	GEN659407 1-ANTELPHILLSW0.6900

SOLUTION	GROUP	SCENARIO	SEASON	SOURCE	DIRECTION	MONITORED ELEMENT	RATEA (MVA)	RATEB(MVA)	TDF	TC%LOADING (% MVA)	CONTINGENCY
FDNS	00NR	4	20SP	G15_042	TO->FROM	GRPRAR1-LNX3345.00 - GRPRAR 345KV CKT Z	720	720	0.03104	99.9	GEN661015 1-COYOTE
FDNS	00NR	4	20SP	G15_042	TO->FROM	GRPRAR1-LNX3345.00 - GRPRAR 345KV CKT Z	720	720	0.03104	99.7	GEN620315 1-BIG STONE GEN
FDNS	00NR	4	25SP	G15_042	TO->FROM	GRPRAR1-LNX3345.00 - GRPRAR 345KV CKT Z	720	720	0.03136	99.6	GEN600005 1-MONTICELLO
FDNS	00NR	4	17SP	G15_042	FROM->TO	GRPRAR1-LNX3345.00 - HOLT.CO3 345.00 345KV CKT 1	720	720	0.03047	120.62	P12:230:UMZB:# 116 #: ST IN SD. WSG-ST-VH
FDNS	00NR	4	17SP	G15_042	FROM->TO	GRPRAR1-LNX3345.00 - HOLT.CO3 345.00 345KV CKT 1	720	720	0.03651	120.3647	KELLY - MEADOWGROVE4230.00 230KV CKT 1
FDNS	00NR	4	17SP	G15_042	FROM->TO	GRPRAR1-LNX3345.00 - HOLT.CO3 345.00 345KV CKT 1	720	720	0.03167	119.7692	WATERTN-LNX3345.00 - WATERTOWN 345KV CKT Z
FDNS	00NR	4	17SP	G15_042	FROM->TO	GRPRAR1-LNX3345.00 - HOLT.CO3 345.00 345KV CKT 1	720	720	0.03167	119.7543	P12:345:UMZW:# 1747 #: WT2 IN SD. WT2-WHT LINE FAULT
FDNS	00NR	4	17SP	G15_042	FROM->TO	GRPRAR1-LNX3345.00 - HOLT.CO3 345.00 345KV CKT 1	720	720	0.03167	119.7143	WATERTN-LNX3345.00 - WHITE 345KV CKT 1
FDNS	00NR	4	17SP	G15_042	FROM->TO	GRPRAR1-LNX3345.00 - HOLT.CO3 345.00 345KV CKT 1	720	720	0.03085	119.6795	STORLA - WESSINGTON 230KV CKT 1
FDNS	00NR	4	17SP	G15_042	FROM->TO	GRPRAR1-LNX3345.00 - HOLT.CO3 345.00 345KV CKT 1	720	720	0.03236	119.016	G09_001IST 345.00 - WATERTOWN 345KV CKT 1
FDNS	00NR	4	17SP	G15_042	FROM->TO	GRPRAR1-LNX3345.00 - HOLT.CO3 345.00 345KV CKT 1	720	720	0.0308	118.5761	HANLON - STORLA 230KV CKT 1
FDNS	00NR	4	17SP	G15_042	FROM->TO	GRPRAR1-LNX3345.00 - HOLT.CO3 345.00 345KV CKT 1	720	720	0.03036	117.9434	FT THOMPSON - LETCHER 230KV CKT 1
FDNS	00NR	4	17SP	G15_042	FROM->TO	GRPRAR1-LNX3345.00 - HOLT.CO3 345.00 345KV CKT 1	720	720	0.03036	117.9434	FT THOMPSON - LETCHER 230KV CKT 1
FDNS	00NR	4	17SP	G15_042	FROM->TO	GRPRAR1-LNX3345.00 - HOLT.CO3 345.00 345KV CKT 1	720	720	0.03266	117.5447	BUFFALO - JAMESTOWN 345KV CKT 1
FDNS	00NR	4	17SP	G15_042	FROM->TO	GRPRAR1-LNX3345.00 - HOLT.CO3 345.00 345KV CKT 1	720	720	0.03012	116.5247	FT RANDAL - G12_009IST 230.00 230KV CKT 1
FDNS	00NR	4	17SP	G15_042	FROM->TO	GRPRAR1-LNX3345.00 - HOLT.CO3 345.00 345KV CKT 1	720	720	0.03005	116.4901	FT RANDAL - FT THOMPSON 230KV CKT 1
FDNS	00NR	4	17SP	G15_042	FROM->TO	GRPRAR1-LNX3345.00 - HOLT.CO3 345.00 345KV CKT 1	720	720	0.03005	116.4901	FT RANDAL - FT THOMPSON 230KV CKT 1
FDNS	00NR	4	17SP	G15_042	FROM->TO	GRPRAR1-LNX3345.00 - HOLT.CO3 345.00 345KV CKT 1	720	720	0.03266	116.4579	CHISAGO COUNTY - FORBES 500KV CKT 1
FDNS	00NR	4	17SP	G15_042	FROM->TO	GRPRAR1-LNX3345.00 - HOLT.CO3 345.00 345KV CKT 1	720	720	0.03012	116.4106	FT THOMPSON - LAKE PLATT 230KV CKT 1
FDNS	00NR	4	17SP	G15_042	FROM->TO	GRPRAR1-LNX3345.00 - HOLT.CO3 345.00 345KV CKT 1	720	720	0.03012	116.4106	FT THOMPSON - LAKE PLATT 230KV CKT 1
FDNS	00NR	4	17SP	G15_042	FROM->TO	GRPRAR1-LNX3345.00 - HOLT.CO3 345.00 345KV CKT 1	720	720	0.03236	116.3859	G09_001IST 345.00 - GROTON 345KV CKT 1
FDNS	00NR	4	17SP	G15_042	FROM->TO	GRPRAR1-LNX3345.00 - HOLT.CO3 345.00 345KV CKT 1	720	720	0.04079	116.3368	NUNDRWD - WAYSIDE 230KV CKT 1
FDNS	00NR	4	17SP	G15_042	FROM->TO	GRPRAR1-LNX3345.00 - HOLT.CO3 345.00 345KV CKT 1	720	720	0.03012	116.0325	G12_009IST 230.00 - LAKE PLATT 230KV CKT 1
FDNS	00NR	4	17SP	G15_042	FROM->TO	GRPRAR1-LNX3345.00 - HOLT.CO3 345.00 345KV CKT 1	720	720	0.03266	115.9559	CENTER - JAMESTOWN 345KV CKT 1
FDNS	00NR	4	17SP	G15_042	FROM->TO	GRPRAR1-LNX3345.00 - HOLT.CO3 345.00 345KV CKT 1	720	720	0.03651	115.8441	FT RANDAL - MEADOWGROVE4230.00 230KV CKT 1
FDNS	00NR	4	17SP	G15_042	FROM->TO	GRPRAR1-LNX3345.00 - HOLT.CO3 345.00 345KV CKT 1	720	720	0.03134	115.7193	LETCHER - SIOUX FALLS 230KV CKT 1
FDNS	00NR	4	17SP	G15_042	FROM->TO	GRPRAR1-LNX3345.00 - HOLT.CO3 345.00 345KV CKT 1	720	720	0.03268	115.4811	GEN336821 1-GRAND GULF UNIT
FDNS	00NR	4	17SP	G15_042	FROM->TO	GRPRAR1-LNX3345.00 - HOLT.CO3 345.00 345KV CKT 1	720	720	0.03267	115.4548	BISON 3 345.00 - BUFFALO 345KV CKT 1
FDNS	00NR	4	17SP	G15_042	FROM->TO	GRPRAR1-LNX3345.00 - HOLT.CO3 345.00 345KV CKT 1	720	720	0.03268	115.3562	GEN635024 4-WALTER SCOTT UNIT 4
FDNS	00NR	4	17SP	G15_042	FROM->TO	GRPRAR1-LNX3345.00 - HOLT.CO3 345.00 345KV CKT 1	720	720	0.03107	115.2823	SPLIT ROCK - WHITE 345KV CKT 1
FDNS	00NR	4	17SP	G15_042	FROM->TO	GRPRAR1-LNX3345.00 - HOLT.CO3 345.00 345KV CKT 1	720	720	0.03107	115.2823	SPLIT ROCK - WHITE 345KV CKT 1
FDNS	00NR	4	17SP	G15_042	FROM->TO	GRPRAR1-LNX3345.00 - HOLT.CO3 345.00 345KV CKT 1	720	720	0.03268	115.0893	GEN344225 1-1CAL G1 25.000
FDNS	00NR	4	17SP	G15_042	FROM->TO	GRPRAR1-LNX3345.00 - HOLT.CO3 345.00 345KV CKT 1	720	720	0.03363	115.017	KEYSTONE - SIDNEY1-LNX3345.00 345KV CKT 1
FDNS	00NR	4	17SP	G15_042	FROM->TO	GRPRAR1-LNX3345.00 - HOLT.CO3 345.00 345KV CKT 1	720	720	0.03363	115.0048	SIDNEY - SIDNEY1-LNX3345.00 345KV CKT Z
FDNS	00NR	4	17SP	G15_042	FROM->TO	GRPRAR1-LNX3345.00 - HOLT.CO3 345.00 345KV CKT 1	720	720	0.03268	114.8836	GEN562714 1-G15_023_4 0.6900
FDNS	00NR	4	17SP	G15_042	FROM->TO	GRPRAR1-LNX3345.00 - HOLT.CO3 345.00 345KV CKT 1	720	720	0.03268	114.8836	GEN562715 1-G15_023_5 0.6900
FDNS	00NR	4	17SP	G15_042	FROM->TO	GRPRAR1-LNX3345.00 - HOLT.CO3 345.00 345KV CKT 1	720	720	0.03268	114.8826	GEN635023 3-WALTER SCOTT UNIT 3
FDNS	00NR	4	17SP	G15_042	FROM->TO	GRPRAR1-LNX3345.00 - HOLT.CO3 345.00 345KV CKT 1	720	720	0.03268	114.8453	GEN337911 1-ARKANSAS NUCLEAR ONE UNIT #2
FDNS	00NR	4	17SP	G15_042	FROM->TO	GRPRAR1-LNX3345.00 - HOLT.CO3 345.00 345KV CKT 1	720	720	0.03268	114.8157	GEN336153 1-WATERFORD UNIT#3
FDNS	00NR	4	17SP	G15_042	FROM->TO	GRPRAR1-LNX3345.00 - HOLT.CO3 345.00 345KV CKT 1	720	720	0.0307	114.8098	FT RANDAL - SIOUX CITY 230KV CKT 1
FDNS	00NR	4	17SP	G15_042	FROM->TO	GRPRAR1-LNX3345.00 - HOLT.CO3 345.00 345KV CKT 1	720	720	0.03239	114.7425	GROTON-LNX3 345.00 - LELAND1-LNX3345.00 345KV CKT 1
FDNS	00NR	4	17SP	G15_042	FROM->TO	GRPRAR1-LNX3345.00 - HOLT.CO3 345.00 345KV CKT 1	720	720	0.03239	114.6496	GROTON - GROTON-LNX3 345.00 345KV CKT Z
FDNS	00NR	4	17SP	G15_042	FROM->TO	GRPRAR1-LNX3345.00 - HOLT.CO3 345.00 345KV CKT 1	720	720	0.03239	114.6478	P12:345:UMZB:# 109 #: LOS GRT IN ND. LOS GRT
FDNS	00NR	4	17SP	G15_042	FROM->TO	GRPRAR1-LNX3345.00 - HOLT.CO3 345.00 345KV CKT 1	720	720	0.03239	114.6062	LELAND OLDS - LELAND1-LNX3345.00 345KV CKT Z
FDNS	00NR	4	17SP	G15_042	FROM->TO	GRPRAR1-LNX3345.00 - HOLT.CO3 345.00 345KV CKT 1	720	720	0.03297	114.564	ARROWHEAD - ARROWHEAD 230 230KV CKT 1
FDNS	00NR	4	17SP	G15_042	FROM->TO	GRPRAR1-LNX3345.00 - HOLT.CO3 345.00 345KV CKT 1	720	720	0.03184	114.5479	HANLON - SIOUX FALLS 230KV CKT 1
FDNS	00NR	4	17SP	G15_042	FROM->TO	GRPRAR1-LNX3345.00 - HOLT.CO3 345.00 345KV CKT 1	720	720	0.03326	114.5154	MISSION - ST FRANCIS 115KV CKT 1
FDNS	00NR	4	17SP	G15_042	FROM->TO	GRPRAR1-LNX3345.00 - HOLT.CO3 345.00 345KV CKT 1	720	720	0.03326	114.5007	P12:115:NPPD:1091:VALENTN7:MISSION7:BTB
FDNS	00NR	4	17SP	G15_042	FROM->TO	GRPRAR1-LNX3345.00 - HOLT.CO3 345.00 345KV CKT 1	720	720	0.03268	114.4704	GEN640010 1-GERALD GENTLEMAN STATION UNIT 1
FDNS	00NR	4	17SP	G15_042	FROM->TO	GRPRAR1-LNX3345.00 - HOLT.CO3 345.00 345KV CKT 1	720	720	0.03268	114.4695	GEN335831 1-RIVERBEND UNIT#1
FDNS	00NR	4	17SP	G15_042	FROM->TO	GRPRAR1-LNX3345.00 - HOLT.CO3 345.00 345KV CKT 1	720	720	0.03268	114.3791	GEN337910 1-ARKANSAS NUCLEAR ONE UNIT #1
FDNS	00NR	4	17SP	G15_042	FROM->TO	GRPRAR1-LNX3345.00 - HOLT.CO3 345.00 345KV CKT 1	720	720	0.02983	114.378	FT RANDAL - UTICA JCT 230KV CKT 1
FDNS	00NR	4	17SP	G15_042	FROM->TO	GRPRAR1-LNX3345.00 - HOLT.CO3 345.00 345KV CKT 1	720	720	0.03326	114.3515	HARMONY - ST FRANCIS 115KV CKT 1
FDNS	00NR	4	17SP	G15_042	FROM->TO	GRPRAR1-LNX3345.00 - HOLT.CO3 345.00 345KV CKT 1	720	720	0.0335	114.318	HAZLETON - MITCHLCO3 345.00 345KV CKT 1
FDNS	00NR	4	17SP	G15_042	FROM->TO	GRPRAR1-LNX3345.00 - HOLT.CO3 345.00 345KV CKT 1	720	720	0.03272	114.3084	ALEXMRES3 345.00 - BISON 3 345.00 345KV CKT 1
FDNS	00NR	4	17SP	G15_042	FROM->TO	GRPRAR1-LNX3345.00 - HOLT.CO3 345.00 345KV CKT 1	720	720	0.02998	114.2417	SIOUXCY-LNX3345.00 - SPLIT ROCK 345KV CKT 1
FDNS	00NR	4	17SP	G15_042	FROM->TO	GRPRAR1-LNX3345.00 - HOLT.CO3 345.00 345KV CKT 1	720	720	0.02998	114.2417	SIOUXCY-LNX3345.00 - SPLIT ROCK 345KV CKT 1
FDNS	00NR	4	17SP	G15_042	FROM->TO	GRPRAR1-LNX3345.00 - HOLT.CO3 345.00 345KV CKT 1	720	720	0.03267	114.2281	ELLENDALE - OAKES 230KV CKT 1
FDNS	00NR	4	17SP	G15_042	FROM->TO	GRPRAR1-LNX3345.00 - HOLT.CO3 345.00 345KV CKT 1	720	720	0.03267	114.2281	ELLENDALE - OAKES 230KV CKT 1
FDNS	00NR	4	17SP	G15_042	FROM->TO	GRPRAR1-LNX3345.00 - HOLT.CO3 345.00 345KV CKT 1	720	720	0.02998	114.2261	P12:345:UMZW:# 907 #: SC2-SR IN IA. SC2-SR 345 KV LINE
FDNS	00NR	4	17SP	G15_042	FROM->TO	GRPRAR1-LNX3345.00 - HOLT.CO3 345.00 345KV CKT 1	720	720	0.03431	114.208	FT RANDAL - SPENCER 115KV CKT 1
FDNS	00NR	4	17SP	G15_042	FROM->TO	GRPRAR1-LNX3345.00 - HOLT.CO3 345.00 345KV CKT 1	720	720	0.03268	114.1785	GEN640011 2-GERALD GENTLEMAN STATION UNIT 2
FDNS	00NR	4	17SP	G15_042	FROM->TO	GRPRAR1-LNX3345.00 - HOLT.CO3 345.00 345KV CKT 1	720	720	0.02998	114.1756	SIOUX CITY - SIOUXCY-LNX3345.00 345KV CKT Z
FDNS	00NR	4	17SP	G15_042	FROM->TO	GRPRAR1-LNX3345.00 - HOLT.CO3 345.00 345KV CKT 1	720	720	0.03431	114.1729	P12:115:NPPD:WAPA6:FTRANDL7:ONEILL 7:BTB
FDNS	00NR	4	17SP	G15_042	FROM->TO	GRPRAR1-LNX3345.00 - HOLT.CO3 345.00 345KV CKT 1	720	720	0.03431	114.1729	P12:115:UMZB:# 115 #: SE IN NE. FR-SE-ON
FDNS	00NR	4	17SP	G15_042	FROM->TO	GRPRAR1-LNX3345.00 - HOLT.CO3 345.00 345KV CKT 1	720	720	0.03736	114.1646	RAUN - SUB 3451 FT CAL 345KV CKT 1
FDNS	00NR	4	17SP	G15_042	FROM->TO	GRPRAR1-LNX3345.00 - HOLT.CO3 345.00 345KV CKT 1	720	720	0.03736	114.1646	RAUN - SUB 3451 FT CAL 345KV CKT 1
FDNS	00NR	4	17SP	G15_042	FROM->TO	GRPRAR1-LNX3345.00 - HOLT.CO3 345.00 345KV CKT 1	720	720	0.03326	114.1626	HARMONY - VALENTINE 115KV CKT 1
FDNS	00NR	4	17SP	G15_042	FROM->TO	GRPRAR1-LNX3345.00 - HOLT.CO3 345.00 345KV CKT 1	720	720	0.03267	114.121	FORMAN - OAKES 230KV CKT 1
FDNS	00NR	4	17SP	G15_042	FROM->TO	GRPRAR1-LNX3345.00 - HOLT.CO3 345.00 345KV CKT 1	720	720	0.03406	114.1122	SIDNEY - STEGALL 345KV CKT 1
FDNS	00NR	4	17SP	G15_042	FROM->TO	GRPRAR1-LNX3345.00 - HOLT.CO3 345.00 345KV CKT 1	720	720	0.03296	114.1085	GERALD GENTLEMAN STATION - KEYSTONE 345KV CKT 1
FDNS	00NR	4	17SP	G15_042	FROM->TO	GRPRAR1-LNX3345.00 - HOLT.CO3 345.00 345KV CKT 1	720	720	0.03431	114.0512	ONEILL - SPENCER 115KV CKT 1
FDNS	00NR	4	17SP	G15_042	FROM->TO	GRPRAR1-LNX3345.00 - HOLT.CO3 345.00 345KV CKT 1	720	720	0.06428	114.0212	DIXONCO 230.00 - HOSKINS 230KV CKT 1
FDNS	00NR	4	17SP	G15_042	FROM->TO	GRPRAR1-LNX3345.00 - HOLT.CO3 345.00 345KV CKT 1	720	720	0.03301	113.9888	AS KING - EAU CLAIRE 345KV CKT 1
FDNS	00NR	4	17SP	G15_042	FROM->TO	GRPRAR1-LNX3345.00 - HOLT.CO3 345.00 345KV CKT 1	720	720	0.03256	113.9738	CARPENTER - HURON 230KV CKT 1
FDNS	00NR	4	17SP	G15_042	FROM->TO	GRPRAR1-LNX3345.00 - HOLT.CO3 345.00 345KV CKT 1	720	720	0.03096	113.9649	PAHOJA - SIOUX FALLS 230KV CKT 1
FDNS	00NR	4	17SP	G15_042	FROM->TO	GRPRAR1-LNX3345.00 - HOLT.CO3 345.00 345KV CKT 1	720	720	0.03268	113.8935	GEN337653 1-WHITE BLUFF UNIT #2
FDNS	00NR	4	17SP	G15_042	FROM->TO	GRPRAR1-LNX3345.00 - HOLT.CO3 345.00 345KV CKT 1	720	720	0.03268	113.8802	GEN337652 1-WHITE BLUFF UNIT #1
FDNS	00NR	4	17SP	G15_042	FROM->TO	GRPRAR1-LNX3345.00 - HOLT.CO3 345.00 345KV CKT 1	720	720	0.03256	113.8783	HURON - WATERTOWN 230KV CKT 2

SOLUTION	GROUP	SCENARIO	SEASON	SOURCE	DIRECTION	MONITORED ELEMENT	RATEA (MVA)	RATEB(MVA)	TDF	TC%LOADING (% MVA)	CONTINGENCY
FDNS	00NR	4	17SP	G15_042	FROM->TO	GRPRAR1-LNX3345.00 - HOLT.CO3 345.00 345KV CKT 1	720	720	0.03256	113.8783	HURON - WATERTOWN 230KV CKT 2
FDNS	00NR	4	17SP	G15_042	FROM->TO	GRPRAR1-LNX3345.00 - HOLT.CO3 345.00 345KV CKT 1	720	720	0.03268	113.828	GEN338146 1-INDEPENDENCE UNIT #2
FDNS	00NR	4	17SP	G15_042	FROM->TO	GRPRAR1-LNX3345.00 - HOLT.CO3 345.00 345KV CKT 1	720	720	0.03268	113.8216	GEN338143 1-INDEPENDENCE UNIT #1
FDNS	00NR	4	17SP	G15_042	FROM->TO	GRPRAR1-LNX3345.00 - HOLT.CO3 345.00 345KV CKT 1	720	720	0.03256	113.8207	CARPENTER - WATERTOWN 230KV CKT 1
FDNS	00NR	4	17SP	G15_042	FROM->TO	GRPRAR1-LNX3345.00 - HOLT.CO3 345.00 345KV CKT 1	720	720	0.03256	113.8207	CARPENTER - WATERTOWN 230KV CKT 1
FDNS	00NR	4	17SP	G15_042	FROM->TO	GRPRAR1-LNX3345.00 - HOLT.CO3 345.00 345KV CKT 1	720	720	0.03314	113.7783	ARPIN B4 345.00 - EAU CLAIRE 345KV CKT 1
FDNS	00NR	4	17SP	G15_042	FROM->TO	GRPRAR1-LNX3345.00 - HOLT.CO3 345.00 345KV CKT 1	720	720	0.03268	113.7601	GEN501801 1-DOLET HILLS UNIT1
FDNS	00NR	4	17SP	G15_042	FROM->TO	GRPRAR1-LNX3345.00 - HOLT.CO3 345.00 345KV CKT 1	720	720	0.03269	113.7244	FORMAN - HANKINSON 230KV CKT 1
FDNS	00NR	4	17SP	G15_042	FROM->TO	GRPRAR1-LNX3345.00 - HOLT.CO3 345.00 345KV CKT 1	720	720	0.03326	113.6346	AINSWORTH - VALENTINE 115KV CKT 1
FDNS	00NR	4	17SP	G15_042	FROM->TO	GRPRAR1-LNX3345.00 - HOLT.CO3 345.00 345KV CKT 1	720	720	0.03085	113.5771	FT THOMPSON - WESSINGTON 230KV CKT 1
FDNS	00NR	4	17SP	G15_042	FROM->TO	GRPRAR1-LNX3345.00 - HOLT.CO3 345.00 345KV CKT 1	720	720	0.03085	113.5771	FT THOMPSON - WESSINGTON 230KV CKT 1
FDNS	00NR	4	17SP	G15_042	FROM->TO	GRPRAR1-LNX3345.00 - HOLT.CO3 345.00 345KV CKT 1	720	720	0.03096	113.5436	EAGLE 4 230.00 - PAHOJA 230KV CKT 1
FDNS	00NR	4	17SP	G15_042	FROM->TO	GRPRAR1-LNX3345.00 - HOLT.CO3 345.00 345KV CKT 1	720	720	0.03295	113.5353	G15094_T 345.00 - SIDNEY2-LNX3345.00 345KV CKT 1
FDNS	00NR	4	17SP	G15_042	FROM->TO	GRPRAR1-LNX3345.00 - HOLT.CO3 345.00 345KV CKT 1	720	720	0.03269	113.5353	CNTSHNT3 345.00 - PRAIRIE3 345.00 345KV CKT 1
FDNS	00NR	4	17SP	G15_042	FROM->TO	GRPRAR1-LNX3345.00 - HOLT.CO3 345.00 345KV CKT 1	720	720	0.0335	113.5244	ADAMS - MITCHLCO3 345.00 345KV CKT 1
FDNS	00NR	4	17SP	G15_042	FROM->TO	GRPRAR1-LNX3345.00 - HOLT.CO3 345.00 345KV CKT 1	720	720	0.03295	113.5107	SIDNEY - SIDNEY2-LNX3345.00 345KV CKT Z
FDNS	00NR	4	17SP	G15_042	FROM->TO	GRPRAR1-LNX3345.00 - HOLT.CO3 345.00 345KV CKT 1	720	720	0.03268	113.4766	GEN336252 1-NINEMILE POINT UNIT#5
FDNS	00NR	4	17SP	G15_042	FROM->TO	GRPRAR1-LNX3345.00 - HOLT.CO3 345.00 345KV CKT 1	720	720	0.03268	113.4365	GEN501813 1-RODEMACHER UNIT 3
FDNS	00NR	4	17SP	G15_042	FROM->TO	GRPRAR1-LNX3345.00 - HOLT.CO3 345.00 345KV CKT 1	720	720	0.03268	113.3593	GEN336831 1-BAXTER WILSON SES
FDNS	00NR	4	17SP	G15_042	FROM->TO	GRPRAR1-LNX3345.00 - HOLT.CO3 345.00 345KV CKT 1	720	720	0.03325	113.3551	ADAMS - PLEASANT VALLEY 345KV CKT 1
FDNS	00NR	4	17SP	G15_042	FROM->TO	GRPRAR1-LNX3345.00 - HOLT.CO3 345.00 345KV CKT 1	720	720	0.03268	113.348	GEN336251 1-NINEMILE POINT UNIT#4
FDNS	00NR	4	17SP	G15_042	FROM->TO	GRPRAR1-LNX3345.00 - HOLT.CO3 345.00 345KV CKT 1	720	720	0.03268	113.2857	GEN337041 1-GERALD ANDRUS
FDNS	00NR	4	17SP	G15_042	FROM->TO	GRPRAR1-LNX3345.00 - HOLT.CO3 345.00 345KV CKT 1	720	720	0.03268	113.2746	GEN344897 4-1LAB G4 20.000
FDNS	00NR	4	17SP	G15_042	FROM->TO	GRPRAR1-LNX3345.00 - HOLT.CO3 345.00 345KV CKT 1	720	720	0.03268	113.2718	GEN344894 1-1LAB G1 20.000
FDNS	00NR	4	17SP	G15_042	FROM->TO	GRPRAR1-LNX3345.00 - HOLT.CO3 345.00 345KV CKT 1	720	720	0.03268	113.2717	GEN344896 3-1LAB G3 20.000
FDNS	00NR	4	17SP	G15_042	FROM->TO	GRPRAR1-LNX3345.00 - HOLT.CO3 345.00 345KV CKT 1	720	720	0.03268	113.265	GEN335206 1-NELSON UNIT 6
FDNS	00NR	4	17SP	G15_042	FROM->TO	GRPRAR1-LNX3345.00 - HOLT.CO3 345.00 345KV CKT 1	720	720	0.03268	113.2237	GEN344895 2-1LAB G2 20.000
FDNS	00NR	4	17SP	G15_042	FROM->TO	GRPRAR1-LNX3345.00 - HOLT.CO3 345.00 345KV CKT 1	720	720	0.03268	113.2113	GEN345670 1-1RUSH G1 18.000
FDNS	00NR	4	17SP	G15_042	FROM->TO	GRPRAR1-LNX3345.00 - HOLT.CO3 345.00 345KV CKT 1	720	720	0.03268	113.211	GEN345671 2-1RUSH G2 18.000
FDNS	00NR	4	17SP	G15_042	FROM->TO	GRPRAR1-LNX3345.00 - HOLT.CO3 345.00 345KV CKT 1	720	720	0.03268	113.1354	GEN501812 1-RODEMACHER UNIT 2
FDNS	00NR	4	17SP	G15_042	FROM->TO	GRPRAR1-LNX3345.00 - HOLT.CO3 345.00 345KV CKT 1	720	720	0.03353	113.1342	LAKEFIELD 3 - NOBLES 345KV CKT 1
FDNS	00NR	4	17SP	G15_042	FROM->TO	GRPRAR1-LNX3345.00 - HOLT.CO3 345.00 345KV CKT 1	720	720	0.03275	113.1228	ALEXMRES3 345.00 - WAITE PARK 345KV CKT 1
FDNS	00NR	4	17SP	G15_042	FROM->TO	GRPRAR1-LNX3345.00 - HOLT.CO3 345.00 345KV CKT 1	720	720	0.03268	113.1161	GEN334440 1-SABINE UNIT 4
FDNS	00NR	4	17SP	G15_042	FROM->TO	GRPRAR1-LNX3345.00 - HOLT.CO3 345.00 345KV CKT 1	720	720	0.03272	113.1124	BLAIR - GRANITE FALLS 230KV CKT 1
FDNS	00NR	4	17SP	G15_042	FROM->TO	GRPRAR1-LNX3345.00 - HOLT.CO3 345.00 345KV CKT 1	720	720	0.03272	113.1124	BLAIR - GRANITE FALLS 230KV CKT 1
FDNS	00NR	4	17SP	G15_042	FROM->TO	GRPRAR1-LNX3345.00 - HOLT.CO3 345.00 345KV CKT 1	720	720	0.03268	113.0884	GEN635214 4-NEAL UNIT 4
FDNS	00NR	4	17SP	G15_042	FROM->TO	GRPRAR1-LNX3345.00 - HOLT.CO3 345.00 345KV CKT 1	720	720	0.03267	113.0616	CENTER - COYOTE 345KV CKT 1
FDNS	00NR	4	17SP	G15_042	FROM->TO	GRPRAR1-LNX3345.00 - HOLT.CO3 345.00 345KV CKT 1	720	720	0.03302	113.0284	BROOKING COUNTY - LYON COUNTY 345KV CKT 1
FDNS	00NR	4	17SP	G15_042	FROM->TO	GRPRAR1-LNX3345.00 - HOLT.CO3 345.00 345KV CKT 1	720	720	0.03199	113.0096	MENNO JCT - TRIPP JCT 115KV CKT 1
FDNS	00NR	4	17SP	G15_042	FROM->TO	GRPRAR1-LNX3345.00 - HOLT.CO3 345.00 345KV CKT 1	720	720	0.03544	113.0061	STEGALL - STEGALL TRANSFORMER 230KV CKT 1
FDNS	00NR	4	17SP	G15_042	FROM->TO	GRPRAR1-LNX3345.00 - HOLT.CO3 345.00 345KV CKT 1	720	720	0.03272	112.9964	GLENBORO SOUTH - RUGBY 230KV CKT 1
FDNS	00NR	4	17SP	G15_042	FROM->TO	GRPRAR1-LNX3345.00 - HOLT.CO3 345.00 345KV CKT 1	720	720	0.03268	112.9925	GEN629075 1-OTTUMWA GENERATOR FOR OTTUMWA UNIT NO 1
FDNS	00NR	4	17SP	G15_042	FROM->TO	GRPRAR1-LNX3345.00 - HOLT.CO3 345.00 345KV CKT 1	720	720	0.03544	112.991	P13:230-345:NPPD:STEGALL3:KV3A
FDNS	00NR	4	17SP	G15_042	FROM->TO	GRPRAR1-LNX3345.00 - HOLT.CO3 345.00 345KV CKT 1	720	720	0.03268	112.9889	GEN336191 1-LITTLE GYPSY UNIT#3
FDNS	00NR	4	17SP	G15_042	FROM->TO	GRPRAR1-LNX3345.00 - HOLT.CO3 345.00 345KV CKT 1	720	720	0.03544	112.9833	STEGALL (SGQ KV3A) 345/230/13.8KV TRANSFORMER CKT 1
FDNS	00NR	4	17SP	G15_042	FROM->TO	GRPRAR1-LNX3345.00 - HOLT.CO3 345.00 345KV CKT 1	720	720	0.03274	112.9459	HANKINSON - WAHPETON 230KV CKT 1
FDNS	00NR	4	17SP	G15_042	FROM->TO	GRPRAR1-LNX3345.00 - HOLT.CO3 345.00 345KV CKT 1	720	720	0.03268	112.9389	GEN338388 1-1PLUM PT U1 23.000
FDNS	00NR	4	17SP	G15_042	FROM->TO	GRPRAR1-LNX3345.00 - HOLT.CO3 345.00 345KV CKT 1	720	720	0.03268	112.9214	P12:115:UMZW:# 162 #: NEL IN ND. FAULT ON ML-NEL-MX-GA 115 KV
FDNS	00NR	4	17SP	G15_042	FROM->TO	GRPRAR1-LNX3345.00 - HOLT.CO3 345.00 345KV CKT 1	720	720	0.03268	112.9126	GEN336801 1-BAXTER WILSON UNIT #1
FDNS	00NR	4	17SP	G15_042	FROM->TO	GRPRAR1-LNX3345.00 - HOLT.CO3 345.00 345KV CKT 1	720	720	0.03726	112.9015	STEGALL-LNX3230.00 - WAYSIDE 230KV CKT 1
FDNS	00NR	4	17SP	G15_042	FROM->TO	GRPRAR1-LNX3345.00 - HOLT.CO3 345.00 345KV CKT 1	720	720	0.03268	112.8986	GEN335614 1-WILLOW GLENN UNIT#4
FDNS	00NR	4	17SP	G15_042	FROM->TO	GRPRAR1-LNX3345.00 - HOLT.CO3 345.00 345KV CKT 1	720	720	0.03726	112.8959	STEGALL - STEGALL-LNX3230.00 230KV CKT Z
FDNS	00NR	4	17SP	G15_042	FROM->TO	GRPRAR1-LNX3345.00 - HOLT.CO3 345.00 345KV CKT 1	720	720	0.03331	112.895	KOSSUTH 3 345.00 - OBRIEN 3 345.00 345KV CKT 1
FDNS	00NR	4	17SP	G15_042	FROM->TO	GRPRAR1-LNX3345.00 - HOLT.CO3 345.00 345KV CKT 1	720	720	0.03199	112.8925	MENNO JCT - UTICA 115KV CKT 1
FDNS	00NR	4	17SP	G15_042	FROM->TO	GRPRAR1-LNX3345.00 - HOLT.CO3 345.00 345KV CKT 1	720	720	0.03268	112.8886	GEN334441 1-SABINE UNIT 5
FDNS	00NR	4	17SP	G15_042	FROM->TO	GRPRAR1-LNX3345.00 - HOLT.CO3 345.00 345KV CKT 1	720	720	0.03268	112.8859	GEN336464 1-MICHOUD UNIT #3
FDNS	00NR	4	17SP	G15_042	FROM->TO	GRPRAR1-LNX3345.00 - HOLT.CO3 345.00 345KV CKT 1	720	720	0.03268	112.8779	GEN563222 1-G15088_3 0.6900
FDNS	00NR	4	17SP	G15_042	FROM->TO	GRPRAR1-LNX3345.00 - HOLT.CO3 345.00 345KV CKT 1	720	720	0.03331	112.8754	KOSSUTH 3 345.00 - WEBSTER 345KV CKT 1
FDNS	00NR	4	17SP	G15_042	FROM->TO	GRPRAR1-LNX3345.00 - HOLT.CO3 345.00 345KV CKT 1	720	720	0.03268	112.8717	GEN335204 1-NELSON UNIT 4
FDNS	00NR	4	17SP	G15_042	FROM->TO	GRPRAR1-LNX3345.00 - HOLT.CO3 345.00 345KV CKT 1	720	720	0.03901	112.8713	RAUN - SIOUX CITY 345KV CKT 1
FDNS	00NR	4	17SP	G15_042	FROM->TO	GRPRAR1-LNX3345.00 - HOLT.CO3 345.00 345KV CKT 1	720	720	0.03901	112.8713	RAUN - SIOUX CITY 345KV CKT 1
FDNS	00NR	4	17SP	G15_042	FROM->TO	GRPRAR1-LNX3345.00 - HOLT.CO3 345.00 345KV CKT 1	720	720	0.03268	112.8589	GARRISON - JAMES TOWN 230KV CKT 1
FDNS	00NR	4	17SP	G15_042	FROM->TO	GRPRAR1-LNX3345.00 - HOLT.CO3 345.00 345KV CKT 1	720	720	0.03309	112.8382	BYRON - NORTH ROCHESTER 345KV CKT 1
FDNS	00NR	4	17SP	G15_042	FROM->TO	GRPRAR1-LNX3345.00 - HOLT.CO3 345.00 345KV CKT 1	720	720	0.03414	112.8244	GRIMES - LEHIGH 345KV CKT 1
FDNS	00NR	4	17SP	G15_042	FROM->TO	GRPRAR1-LNX3345.00 - HOLT.CO3 345.00 345KV CKT 1	720	720	0.03199	112.8227	P12:115:UMZZ:# 237 #: MEN IN SD. MENNO JUNCTION IS A TAP (UJ-MEN-TP).
FDNS	00NR	4	17SP	G15_042	FROM->TO	GRPRAR1-LNX3345.00 - HOLT.CO3 345.00 345KV CKT 1	720	720	0.03268	112.7515	GEN635213 3-NEAL UNIT 3
FDNS	00NR	4	17SP	G15_042	FROM->TO	GRPRAR1-LNX3345.00 - HOLT.CO3 345.00 345KV CKT 1	720	720	0.03277	112.7198	APPLEDORN 4 230.00 - WATERTOWN 230KV CKT 1
FDNS	00NR	4	17SP	G15_042	FROM->TO	GRPRAR1-LNX3345.00 - HOLT.CO3 345.00 345KV CKT 1	720	720	0.03277	112.7198	APPLEDORN 4 230.00 - WATERTOWN 230KV CKT 1
FDNS	00NR	4	17SP	G15_042	FROM->TO	GRPRAR1-LNX3345.00 - HOLT.CO3 345.00 345KV CKT 1	720	720	0.03268	112.7086	GEN334433 1-SABINE UNIT 3
FDNS	00NR	4	17SP	G15_042	FROM->TO	GRPRAR1-LNX3345.00 - HOLT.CO3 345.00 345KV CKT 1	720	720	0.03268	112.6929	GEN336222 1-LITTLE GYPSY UNIT#2
FDNS	00NR	4	17SP	G15_042	FROM->TO	GRPRAR1-LNX3345.00 - HOLT.CO3 345.00 345KV CKT 1	720	720	0.03268	112.6826	GEN303007 1-1BC2 U2
FDNS	00NR	4	17SP	G15_042	FROM->TO	GRPRAR1-LNX3345.00 - HOLT.CO3 345.00 345KV CKT 1	720	720	0.03268	112.6772	GEN303006 1-1BC2 U1
FDNS	00NR	4	17SP	G15_042	FROM->TO	GRPRAR1-LNX3345.00 - HOLT.CO3 345.00 345KV CKT 1	720	720	0.03268	112.6699	FARGO - JAMES TOWN 230KV CKT 1
FDNS	00NR	4	17SP	G15_042	FROM->TO	GRPRAR1-LNX3345.00 - HOLT.CO3 345.00 345KV CKT 1	720	720	0.03268	112.6624	GEN640009 1-COOPER NUCLEAR STATION
FDNS	00NR	4	17SP	G15_042	FROM->TO	GRPRAR1-LNX3345.00 - HOLT.CO3 345.00 345KV CKT 1	720	720	0.03283	112.654	NORTH ROCHESTER - PRAIRIE ISLAND 345KV CKT 1
FDNS	00NR	4	17SP	G15_042	FROM->TO	GRPRAR1-LNX3345.00 - HOLT.CO3 345.00 345KV CKT 1	720	720	0.03272	112.6496	FERGSFL4 230.00 - WAHPETON 230KV CKT 1
FDNS	00NR	4	17SP	G15_042	FROM->TO	GRPRAR1-LNX3345.00 - HOLT.CO3 345.00 345KV CKT 1	720	720	0.03295	112.6467	G15094_T 345.00 - LARAMIE RIVER 345KV CKT 1
FDNS	00NR	4	17SP	G15_042	FROM->TO	GRPRAR1-LNX3345.00 - HOLT.CO3 345.00 345KV CKT 1	720	720	0.03268	112.6467	P13:230:UMZW:# 2218 #: FP IN MT. LOSS OF TRANSFORMER (AT2).
FDNS	00NR	4	17SP	G15_042	FROM->TO	GRPRAR1-LNX3345.00 - HOLT.CO3 345.00 345KV CKT 1	720	720	0.03268	112.6457	FARGO - JAMES TOWN 230KV CKT 2

SOLUTION	GROUP	SCENARIO	SEASON	SOURCE	DIRECTION	MONITORED ELEMENT	RATEA (MVA)	RATEB(MVA)	TDF	TC%LOADING (% MVA)	CONTINGENCY
FDNS	00NR	4	17SP	G15_042	FROM->TO	GRPRAR1-LNX3345.00 - HOLT.CO3 345.00 345KV CKT 1	720	720	0.03277	112.6419	APPLEDORN 4 230.00 - GRANITE FALLS 230KV CKT 1
FDNS	00NR	4	17SP	G15_042	FROM->TO	GRPRAR1-LNX3345.00 - HOLT.CO3 345.00 345KV CKT 1	720	720	0.03277	112.6419	APPLEDORN 4 230.00 - GRANITE FALLS 230KV CKT 1
FDNS	00NR	4	17SP	G15_042	FROM->TO	GRPRAR1-LNX3345.00 - HOLT.CO3 345.00 345KV CKT 1	720	720	0.03268	112.6316	GEN336152 1-WATERFORD UNIT#2
FDNS	00NR	4	17SP	G15_042	FROM->TO	GRPRAR1-LNX3345.00 - HOLT.CO3 345.00 345KV CKT 1	720	720	0.03268	112.6313	GEN336151 1-WATERFORD UNIT#1
FDNS	00NR	4	17SP	G15_042	FROM->TO	GRPRAR1-LNX3345.00 - HOLT.CO3 345.00 345KV CKT 1	720	720	0.03268	112.6115	GEN303008 1-1BC2 U3
FDNS	00NR	4	17SP	G15_042	FROM->TO	GRPRAR1-LNX3345.00 - HOLT.CO3 345.00 345KV CKT 1	720	720	0.03268	112.607	GEN336170 1-GULF OXY U4
FDNS	00NR	4	17SP	G15_042	FROM->TO	GRPRAR1-LNX3345.00 - HOLT.CO3 345.00 345KV CKT 1	720	720	0.03309	112.6042	BYRON - PLEASANT VALLEY 345KV CKT 1
FDNS	00NR	4	17SP	G15_042	FROM->TO	GRPRAR1-LNX3345.00 - HOLT.CO3 345.00 345KV CKT 1	720	720	0.03267	112.5935	BISMARK - WEBER 230KV CKT 1
FDNS	00NR	4	17SP	G15_042	FROM->TO	GRPRAR1-LNX3345.00 - HOLT.CO3 345.00 345KV CKT 1	720	720	0.03267	112.5882	BISMARK - JAMES TOWN 230KV CKT 1
FDNS	00NR	4	17SP	G15_042	FROM->TO	GRPRAR1-LNX3345.00 - HOLT.CO3 345.00 345KV CKT 1	720	720	0.03268	112.5831	GEN641089 2-ENERGY CENTER 2
FDNS	00NR	4	17SP	G15_042	FROM->TO	GRPRAR1-LNX3345.00 - HOLT.CO3 345.00 345KV CKT 1	720	720	0.03315	112.5823	P13:230-345:NPPD:SIDNEY 3:KV2A
FDNS	00NR	4	17SP	G15_042	FROM->TO	GRPRAR1-LNX3345.00 - HOLT.CO3 345.00 345KV CKT 1	720	720	0.03315	112.5822	SIDNEY (SDQ KV2A) 345/230/13.8KV TRANSFORMER CKT 1
FDNS	00NR	4	17SP	G15_042	FROM->TO	GRPRAR1-LNX3345.00 - HOLT.CO3 345.00 345KV CKT 1	720	720	0.03524	112.5813	BLOOMFIELD - CREIGHTON 115KV CKT 1
FDNS	00NR	4	17SP	G15_042	FROM->TO	GRPRAR1-LNX3345.00 - HOLT.CO3 345.00 345KV CKT 1	720	720	0.03315	112.5799	SIDNEY - SIDNEY TRANSFORMER 230KV CKT 1
FDNS	00NR	4	17SP	G15_042	FROM->TO	GRPRAR1-LNX3345.00 - HOLT.CO3 345.00 345KV CKT 1	720	720	0.03317	112.5758	P13:115-230:TSGT:SIDNEY-KV1A
FDNS	00NR	4	17SP	G15_042	FROM->TO	GRPRAR1-LNX3345.00 - HOLT.CO3 345.00 345KV CKT 1	720	720	0.03183	112.5748	LAKEFIELD 3 - LKFLDXL3 345KV CKT 1
FDNS	00NR	4	17SP	G15_042	FROM->TO	GRPRAR1-LNX3345.00 - HOLT.CO3 345.00 345KV CKT 1	720	720	0.03267	112.563	JAMES TOWN - WEBER 230KV CKT 1
FDNS	00NR	4	17SP	G15_042	FROM->TO	GRPRAR1-LNX3345.00 - HOLT.CO3 345.00 345KV CKT 1	720	720	0.03268	112.5547	GEN562921 1-G15054_2 0.6900
FDNS	00NR	4	20SP	G15_042	FROM->TO	GRPRAR1-LNX3345.00 - HOLT.CO3 345.00 345KV CKT 1	720	720	0.03482	112.5533	KELLY - MEADOWGROVE4230.00 230KV CKT 1
FDNS	00NR	4	17SP	G15_042	FROM->TO	GRPRAR1-LNX3345.00 - HOLT.CO3 345.00 345KV CKT 1	720	720	0.03267	112.5202	ELM CREEK - MONTICELLO 345KV CKT 1
FDNS	00NR	4	17SP	G15_042	FROM->TO	GRPRAR1-LNX3345.00 - HOLT.CO3 345.00 345KV CKT 1	720	720	0.03268	112.5195	GEN562596 1-G14_059_3 0.6900
FDNS	00NR	4	17SP	G15_042	FROM->TO	GRPRAR1-LNX3345.00 - HOLT.CO3 345.00 345KV CKT 1	720	720	0.03524	112.5	BLOOMFIELD - GAVINS POINT 115KV CKT 1
FDNS	00NR	4	17SP	G15_042	FROM->TO	GRPRAR1-LNX3345.00 - HOLT.CO3 345.00 345KV CKT 1	720	720	0.03268	112.4988	GEN501811 1-RODEMACHER UNIT 1
FDNS	00NR	4	17SP	G15_042	FROM->TO	GRPRAR1-LNX3345.00 - HOLT.CO3 345.00 345KV CKT 1	720	720	0.0328	112.4962	ARKANSAS NUCLEAR ONE - FT SMITH 500KV CKT 1
FDNS	00NR	4	17SP	G15_042	FROM->TO	GRPRAR1-LNX3345.00 - HOLT.CO3 345.00 345KV CKT 1	720	720	0.0328	112.4962	ARKANSAS NUCLEAR ONE - FT SMITH 500KV CKT 1
FDNS	00NR	4	17SP	G15_042	FROM->TO	GRPRAR1-LNX3345.00 - HOLT.CO3 345.00 345KV CKT 1	720	720	0.03252	112.4859	MT VERN - STORLA 115KV CKT 1
FDNS	00NR	4	17SP	G15_042	FROM->TO	GRPRAR1-LNX3345.00 - HOLT.CO3 345.00 345KV CKT 1	720	720	0.0327	112.4852	AUDUBON - SHEYNNE 230KV CKT 1
FDNS	00NR	4	17SP	G15_042	FROM->TO	GRPRAR1-LNX3345.00 - HOLT.CO3 345.00 345KV CKT 1	720	720	0.03268	112.474	PRAIRIE ISLAND 345/20.0KV TRANSFORMER CKT 1
FDNS	00NR	4	17SP	G15_042	FROM->TO	GRPRAR1-LNX3345.00 - HOLT.CO3 345.00 345KV CKT 1	720	720	0.03271	112.4739	FERGSFL4 230.00 - GRE-SILVRLK4230.00 230KV CKT 1
FDNS	00NR	4	17SP	G15_042	FROM->TO	GRPRAR1-LNX3345.00 - HOLT.CO3 345.00 345KV CKT 1	720	720	0.03268	112.4706	PRAIRIE ISLAND 345/20.0KV TRANSFORMER CKT 2
FDNS	00NR	4	17SP	G15_042	FROM->TO	GRPRAR1-LNX3345.00 - HOLT.CO3 345.00 345KV CKT 1	720	720	0.03244	112.4681	FT THOMPSON - HURON 230KV CKT 1
FDNS	00NR	4	17SP	G15_042	FROM->TO	GRPRAR1-LNX3345.00 - HOLT.CO3 345.00 345KV CKT 1	720	720	0.03244	112.4681	FT THOMPSON - HURON 230KV CKT 1
FDNS	00NR	4	17SP	G15_042	FROM->TO	GRPRAR1-LNX3345.00 - HOLT.CO3 345.00 345KV CKT 1	720	720	0.03244	112.4681	FT THOMPSON - HURON 230KV CKT 2
FDNS	00NR	4	17SP	G15_042	FROM->TO	GRPRAR1-LNX3345.00 - HOLT.CO3 345.00 345KV CKT 1	720	720	0.03244	112.4681	FT THOMPSON - HURON 230KV CKT 2
FDNS	00NR	4	17SP	G15_042	FROM->TO	GRPRAR1-LNX3345.00 - HOLT.CO3 345.00 345KV CKT 1	720	720	0.03268	112.4677	BALTA - RAMSEY 230KV CKT 1
FDNS	00NR	4	17SP	G15_042	FROM->TO	GRPRAR1-LNX3345.00 - HOLT.CO3 345.00 345KV CKT 1	720	720	0.03258	112.4607	DKSN_CO5 161.00 - TRIBOJI NO1 + NO2 161KV CKT 1
FDNS	00NR	4	17SP	G15_042	FROM->TO	GRPRAR1-LNX3345.00 - HOLT.CO3 345.00 345KV CKT 1	720	720	0.03268	112.4578	GEN532751 1-WOLF CREEK GENERATING STATION UNIT 1
FDNS	00NR	4	17SP	G15_042	FROM->TO	GRPRAR1-LNX3345.00 - HOLT.CO3 345.00 345KV CKT 1	720	720	0.03319	112.4492	P12:115:NPPD:WAPA1:CHADRON7:BOXBUTE7:BTB
FDNS	00NR	4	17SP	G15_042	FROM->TO	GRPRAR1-LNX3345.00 - HOLT.CO3 345.00 345KV CKT 1	720	720	0.03268	112.4363	TOLK STATION EAST 230/24.0KV TRANSFORMER CKT 1
FDNS	00NR	4	17SP	G15_042	FROM->TO	GRPRAR1-LNX3345.00 - HOLT.CO3 345.00 345KV CKT 1	720	720	0.03271	112.4328	GRE-SILVRLK4230.00 - HENNING 230KV CKT 1
FDNS	00NR	4	17SP	G15_042	FROM->TO	GRPRAR1-LNX3345.00 - HOLT.CO3 345.00 345KV CKT 1	720	720	0.03298	112.4319	P13:115-230:NPPD:WAYSIDE4:T1
FDNS	00NR	4	17SP	G15_042	FROM->TO	GRPRAR1-LNX3345.00 - HOLT.CO3 345.00 345KV CKT 1	720	720	0.03298	112.4318	CHADRON - WAYSIDE 115KV CKT 1
FDNS	00NR	4	17SP	G15_042	FROM->TO	GRPRAR1-LNX3345.00 - HOLT.CO3 345.00 345KV CKT 1	720	720	0.03298	112.4309	WAYSIDE (WAYSIDE T1) 230/115/13.8KV TRANSFORMER CKT 1
FDNS	00NR	4	17SP	G15_042	FROM->TO	GRPRAR1-LNX3345.00 - HOLT.CO3 345.00 345KV CKT 1	720	720	0.03269	112.4213	BIG STONE (230/115) 230/115/13.8KV TRANSFORMER CKT 1
FDNS	00NR	4	17SP	G15_042	FROM->TO	GRPRAR1-LNX3345.00 - HOLT.CO3 345.00 345KV CKT 1	720	720	0.03268	112.4212	GEN334071 1-LEWIS CREEK 2
FDNS	00NR	4	17SP	G15_042	FROM->TO	GRPRAR1-LNX3345.00 - HOLT.CO3 345.00 345KV CKT 1	720	720	0.03268	112.4164	GEN334070 1-LEWIS CREEK 1
FDNS	00NR	4	17SP	G15_042	FROM->TO	GRPRAR1-LNX3345.00 - HOLT.CO3 345.00 345KV CKT 1	720	720	0.03268	112.416	GEN337766 1-TRACTEBEL UNIT S1
FDNS	00NR	4	17SP	G15_042	FROM->TO	GRPRAR1-LNX3345.00 - HOLT.CO3 345.00 345KV CKT 1	720	720	0.03268	112.4135	LAWRENCE ENERGY CENTER UNIT 5 - LAWRENCE HILL 230KV CKT 1
FDNS	00NR	4	17SP	G15_042	FROM->TO	GRPRAR1-LNX3345.00 - HOLT.CO3 345.00 345KV CKT 1	720	720	0.03268	112.4135	LAWRENCE ENERGY CENTER UNIT 5 230/24.0KV TRANSFORMER CKT 1
FDNS	00NR	4	17SP	G15_042	FROM->TO	GRPRAR1-LNX3345.00 - HOLT.CO3 345.00 345KV CKT 1	720	720	0.03336	112.4041	NOBLES - SPLIT ROCK 345KV CKT 1
FDNS	00NR	4	17SP	G15_042	FROM->TO	GRPRAR1-LNX3345.00 - HOLT.CO3 345.00 345KV CKT 1	720	720	0.03319	112.397	CHADRON - DUNLAP 115KV CKT 1
FDNS	00NR	4	17SP	G15_042	FROM->TO	GRPRAR1-LNX3345.00 - HOLT.CO3 345.00 345KV CKT 1	720	720	0.03268	112.3938	GEN659118 1-LARAMIE RIVER UNIT1
FDNS	00NR	4	17SP	G15_042	FROM->TO	GRPRAR1-LNX3345.00 - HOLT.CO3 345.00 345KV CKT 1	720	720	0.03268	112.3931	PRAIRIE - WINGER 230KV CKT 1
FDNS	00NR	4	17SP	G15_042	FROM->TO	GRPRAR1-LNX3345.00 - HOLT.CO3 345.00 345KV CKT 1	720	720	0.03319	112.3811	P12:115:NPPD:WAPA2:HEMINGF7:SNAKECK7:BTB
FDNS	00NR	4	17SP	G15_042	FROM->TO	GRPRAR1-LNX3345.00 - HOLT.CO3 345.00 345KV CKT 1	720	720	0.03242	112.3768	HURON WEST PARK - MITCHELL NW 115KV CKT 1
FDNS	00NR	4	17SP	G15_042	FROM->TO	GRPRAR1-LNX3345.00 - HOLT.CO3 345.00 345KV CKT 1	720	720	0.03242	112.3768	HURON WEST PARK - MITCHELL NW 115KV CKT 1
FDNS	00NR	4	17SP	G15_042	FROM->TO	GRPRAR1-LNX3345.00 - HOLT.CO3 345.00 345KV CKT 1	720	720	0.03268	112.3764	GEN501910 1-ACADIA UNIT ST1
FDNS	00NR	4	17SP	G15_042	FROM->TO	GRPRAR1-LNX3345.00 - HOLT.CO3 345.00 345KV CKT 1	720	720	0.03271	112.3707	HENNING - INMANN 230KV CKT 1
FDNS	00NR	4	17SP	G15_042	FROM->TO	GRPRAR1-LNX3345.00 - HOLT.CO3 345.00 345KV CKT 1	720	720	0.03271	112.3694	LELAND OLDS - STANTON 230KV CKT 1
FDNS	00NR	4	17SP	G15_042	FROM->TO	GRPRAR1-LNX3345.00 - HOLT.CO3 345.00 345KV CKT 1	720	720	0.03271	112.3694	LELAND OLDS - STANTON 230KV CKT 1
FDNS	00NR	4	17SP	G15_042	FROM->TO	GRPRAR1-LNX3345.00 - HOLT.CO3 345.00 345KV CKT 1	720	720	0.03306	112.3605	PALXFRASBTHI
FDNS	00NR	4	17SP	G15_042	FROM->TO	GRPRAR1-LNX3345.00 - HOLT.CO3 345.00 345KV CKT 1	720	720	0.03194	112.3551	FT RANDAL - WHITE SWAN 115KV CKT 1
FDNS	00NR	4	17SP	G15_042	FROM->TO	GRPRAR1-LNX3345.00 - HOLT.CO3 345.00 345KV CKT 1	720	720	0.03328	112.3413	EAGLE - PHILIP 115KV CKT 1
FDNS	00NR	4	17SP	G15_042	FROM->TO	GRPRAR1-LNX3345.00 - HOLT.CO3 345.00 345KV CKT 1	720	720	0.03306	112.3394	7PALM TAP 345.00 - SUB T 345KV CKT 1
FDNS	00NR	4	17SP	G15_042	FROM->TO	GRPRAR1-LNX3345.00 - HOLT.CO3 345.00 345KV CKT 1	720	720	0.03268	112.3368	GEN345765 H-1SIOUX 2 18.000
FDNS	00NR	4	17SP	G15_042	FROM->TO	GRPRAR1-LNX3345.00 - HOLT.CO3 345.00 345KV CKT 1	720	720	0.03267	112.3323	GRANT - MITCHELL 115KV CKT 1
FDNS	00NR	4	17SP	G15_042	FROM->TO	GRPRAR1-LNX3345.00 - HOLT.CO3 345.00 345KV CKT 1	720	720	0.03267	112.3323	GRANT - MITCHELL 115KV CKT 1
FDNS	00NR	4	17SP	G15_042	FROM->TO	GRPRAR1-LNX3345.00 - HOLT.CO3 345.00 345KV CKT 1	720	720	0.03194	112.3252	TYNDALL - WHITE SWAN 115KV CKT 1
FDNS	00NR	4	17SP	G15_042	FROM->TO	GRPRAR1-LNX3345.00 - HOLT.CO3 345.00 345KV CKT 1	720	720	0.03266	112.3245	GROTON (GROTON KU2A) 345/115/13.8KV TRANSFORMER CKT 1
FDNS	00NR	4	17SP	G15_042	FROM->TO	GRPRAR1-LNX3345.00 - HOLT.CO3 345.00 345KV CKT 1	720	720	0.03268	112.319	GEN337764 1-TRACTEBEL UNIT C1
FDNS	00NR	4	17SP	G15_042	FROM->TO	GRPRAR1-LNX3345.00 - HOLT.CO3 345.00 345KV CKT 1	720	720	0.03268	112.319	GEN337765 1-TRACTEBEL UNIT C2
FDNS	00NR	4	17SP	G15_042	FROM->TO	GRPRAR1-LNX3345.00 - HOLT.CO3 345.00 345KV CKT 1	720	720	0.0327	112.318	AUDUBON - HUBBARD 230KV CKT 1
FDNS	00NR	4	17SP	G15_042	FROM->TO	GRPRAR1-LNX3345.00 - HOLT.CO3 345.00 345KV CKT 1	720	720	0.03224	112.3143	CLEARWATER - ONEILL 115KV CKT 1
FDNS	00NR	4	17SP	G15_042	FROM->TO	GRPRAR1-LNX3345.00 - HOLT.CO3 345.00 345KV CKT 1	720	720	0.03271	112.3114	KARLSTAD - WINGER 230KV CKT 1
FDNS	00NR	4	17SP	G15_042	FROM->TO	GRPRAR1-LNX3345.00 - HOLT.CO3 345.00 345KV CKT 1	720	720	0.03277	112.3097	GENOA 161 - SENECA 161 161KV CKT 1
FDNS	00NR	4	17SP	G15_042	FROM->TO	GRPRAR1-LNX3345.00 - HOLT.CO3 345.00 345KV CKT 1	720	720	0.03268	112.3095	GEN345756 H-1SIOUX 1 18.000
FDNS	00NR	4	17SP	G15_042	FROM->TO	GRPRAR1-LNX3345.00 - HOLT.CO3 345.00 345KV CKT 1	720	720	0.03611	112.3008	BELDEN - HOSKINS 115KV CKT 1
FDNS	00NR	4	17SP	G15_042	FROM->TO	GRPRAR1-LNX3345.00 - HOLT.CO3 345.00 345KV CKT 1	720	720	0.03258	112.2988	DKSN_CO5 161.00 - LAKEFIELD 5 NO1 + NO 2 161KV CKT 1
FDNS	00NR	4	17SP	G15_042	FROM->TO	GRPRAR1-LNX3345.00 - HOLT.CO3 345.00 345KV CKT 1	720	720	0.03268	112.2978	GEN562912 1-G15053_3 0.6900

SOLUTION	GROUP	SCENARIO	SEASON	SOURCE	DIRECTION	MONITORED ELEMENT	RATEA (MVA)	RATEB(MVA)	TDF	TC%LOADING (% MVA)	CONTINGENCY
FDNS	00NR	4	17SP	G15_042	FROM->TO	GRPRAR1-LNX3345.00 - HOLT.CO3 345.00 345KV CKT 1	720	720	0.03268	112.2972	GRAND GULF 500/22.0KV TRANSFORMER CKT 1
FDNS	00NR	4	17SP	G15_042	FROM->TO	GRPRAR1-LNX3345.00 - HOLT.CO3 345.00 345KV CKT 1	720	720	0.03268	112.2896	PRAIRIE - RAMSEY 230KV CKT 1
FDNS	00NR	4	17SP	G15_042	FROM->TO	GRPRAR1-LNX3345.00 - HOLT.CO3 345.00 345KV CKT 1	720	720	0.0318	112.2882	NAPA JCT7 115.00 - UTICA 115KV CKT 1
FDNS	00NR	4	17SP	G15_042	FROM->TO	GRPRAR1-LNX3345.00 - HOLT.CO3 345.00 345KV CKT 1	720	720	0.0318	112.2882	NAPA JCT7 115.00 - UTICA 115KV CKT 1
FDNS	00NR	4	17SP	G15_042	FROM->TO	GRPRAR1-LNX3345.00 - HOLT.CO3 345.00 345KV CKT 1	720	720	0.0318	112.2882	P12:115:UMZW:# 1910 #: YJ IN SD. YJ-UJ LINE FAULT
FDNS	00NR	4	17SP	G15_042	FROM->TO	GRPRAR1-LNX3345.00 - HOLT.CO3 345.00 345KV CKT 1	720	720	0.03275	112.2857	NORTH LA CROSSE - NORTH ROCHESTER 345KV CKT 1
FDNS	00NR	4	17SP	G15_042	FROM->TO	GRPRAR1-LNX3345.00 - HOLT.CO3 345.00 345KV CKT 1	720	720	0.0318	112.285	NAPA JCT7 115.00 - YANKON JCT 115KV CKT 1
FDNS	00NR	4	17SP	G15_042	FROM->TO	GRPRAR1-LNX3345.00 - HOLT.CO3 345.00 345KV CKT 1	720	720	0.0318	112.285	NAPA JCT7 115.00 - YANKON JCT 115KV CKT 1
FDNS	00NR	4	17SP	G15_042	FROM->TO	GRPRAR1-LNX3345.00 - HOLT.CO3 345.00 345KV CKT 1	720	720	0.03268	112.2831	GEN336221 1-LITTLE GYPSY UNIT#1
FDNS	00NR	4	17SP	G15_042	FROM->TO	GRPRAR1-LNX3345.00 - HOLT.CO3 345.00 345KV CKT 1	720	720	0.03268	112.2804	GEN636641 1-LOUISA UNIT 1
FDNS	00NR	4	17SP	G15_042	FROM->TO	GRPRAR1-LNX3345.00 - HOLT.CO3 345.00 345KV CKT 1	720	720	0.03268	112.2803	JUDSON LARGE 115/15.0KV TRANSFORMER CKT 1
FDNS	00NR	4	17SP	G15_042	FROM->TO	GRPRAR1-LNX3345.00 - HOLT.CO3 345.00 345KV CKT 1	720	720	0.03268	112.2803	JUDSON LARGE 115/15.0KV TRANSFORMER CKT 1
FDNS	00NR	4	17SP	G15_042	FROM->TO	GRPRAR1-LNX3345.00 - HOLT.CO3 345.00 345KV CKT 1	720	720	0.03284	112.2788	HAMPTON CORNER - NORTH ROCHESTER 345KV CKT 1
FDNS	00NR	4	17SP	G15_042	FROM->TO	GRPRAR1-LNX3345.00 - HOLT.CO3 345.00 345KV CKT 1	720	720	0.03328	112.2765	EAGLE - MARTIN 115KV CKT 1
FDNS	00NR	4	17SP	G15_042	FROM->TO	GRPRAR1-LNX3345.00 - HOLT.CO3 345.00 345KV CKT 1	720	720	0.03268	112.2754	GEN337757 1-DUKE HOTSPRINGS STG1
FDNS	00NR	4	17SP	G15_042	FROM->TO	GRPRAR1-LNX3345.00 - HOLT.CO3 345.00 345KV CKT 1	720	720	0.03268	112.2753	GEN336242 1-1NMIL ST1 18.000
FDNS	00NR	4	17SP	G15_042	FROM->TO	GRPRAR1-LNX3345.00 - HOLT.CO3 345.00 345KV CKT 1	720	720	0.03268	112.2704	GEN334432 1-SABINE UNIT 2
FDNS	00NR	4	17SP	G15_042	FROM->TO	GRPRAR1-LNX3345.00 - HOLT.CO3 345.00 345KV CKT 1	720	720	0.03268	112.2703	GEN334431 1-SABINE UNIT 1
FDNS	00NR	4	17SP	G15_042	FROM->TO	GRPRAR1-LNX3345.00 - HOLT.CO3 345.00 345KV CKT 1	720	720	0.03279	112.2642	FRANKS - HUBEN 345KV CKT 1
FDNS	00NR	4	17SP	G15_042	FROM->TO	GRPRAR1-LNX3345.00 - HOLT.CO3 345.00 345KV CKT 1	720	720	0.03319	112.2624	BOXBUTE7 115.00 - DUNLAP 115KV CKT 1
FDNS	00NR	4	17SP	G15_042	FROM->TO	GRPRAR1-LNX3345.00 - HOLT.CO3 345.00 345KV CKT 1	720	720	0.03275	112.2529	NORTH LA CROSSE (10008630_001) 345/161/34.5KV TRANSFORMER CKT 9
FDNS	00NR	4	17SP	G15_042	FROM->TO	GRPRAR1-LNX3345.00 - HOLT.CO3 345.00 345KV CKT 1	720	720	0.03268	112.2504	GEN334030 1-FRONTIER UNIT 1
FDNS	00NR	4	17SP	G15_042	FROM->TO	GRPRAR1-LNX3345.00 - HOLT.CO3 345.00 345KV CKT 1	720	720	0.03268	112.2502	GEN334031 1-FRONTIER UNIT 2
FDNS	00NR	4	17SP	G15_042	FROM->TO	GRPRAR1-LNX3345.00 - HOLT.CO3 345.00 345KV CKT 1	720	720	0.03268	112.2496	GEN345832 1-1TS G1 13.800
FDNS	00NR	4	17SP	G15_042	FROM->TO	GRPRAR1-LNX3345.00 - HOLT.CO3 345.00 345KV CKT 1	720	720	0.03268	112.2495	GEN336446 1-MICHOUD UNIT #2
FDNS	00NR	4	17SP	G15_042	FROM->TO	GRPRAR1-LNX3345.00 - HOLT.CO3 345.00 345KV CKT 1	720	720	0.03268	112.2493	GEN345841 2-1TS G2 13.800
FDNS	00NR	4	17SP	G15_042	FROM->TO	GRPRAR1-LNX3345.00 - HOLT.CO3 345.00 345KV CKT 1	720	720	0.03268	112.2433	OKLAUN 345/24.0KV TRANSFORMER CKT 1
FDNS	00NR	4	17SP	G15_042	FROM->TO	GRPRAR1-LNX3345.00 - HOLT.CO3 345.00 345KV CKT 1	720	720	0.03268	112.2361	GEN501970 1-EVANGELINE UNIT 7
FDNS	00NR	4	17SP	G15_042	FROM->TO	GRPRAR1-LNX3345.00 - HOLT.CO3 345.00 345KV CKT 1	720	720	0.03268	112.2141	GEN562438 1-G13-032 0.6900
FDNS	00NR	4	17SP	G15_042	FROM->TO	GRPRAR1-LNX3345.00 - HOLT.CO3 345.00 345KV CKT 1	720	720	0.03224	112.21	P12:115:NPPD:1164:ONEILL 7:JEFFREY9:BTB
FDNS	00NR	4	17SP	G15_042	FROM->TO	GRPRAR1-LNX3345.00 - HOLT.CO3 345.00 345KV CKT 1	720	720	0.03268	112.1157	GEN563282 1-G15094_3 0.6900
FDNS	00NR	4	17SP	G15_042	FROM->TO	GRPRAR1-LNX3345.00 - HOLT.CO3 345.00 345KV CKT 1	720	720	0.03268	111.7591	BASE CASE
FDNS	00NR	4	25SP	G15_042	FROM->TO	GRPRAR1-LNX3345.00 - HOLT.CO3 345.00 345KV CKT 1	720	720	0.03519	111.6974	KELLY - MEADOWGROVE4230.00 230KV CKT 1
FDNS	00NR	4	17SP	G15_042	FROM->TO	GRPRAR1-LNX3345.00 - HOLT.CO3 345.00 345KV CKT 1	720	720	0.03287	111.4229	BUCKNER7 345.00 - SPEARVILLE 345KV CKT 1
FDNS	00NR	4	17SP	G15_042	FROM->TO	GRPRAR1-LNX3345.00 - HOLT.CO3 345.00 345KV CKT 1	720	720	0.03287	111.4229	BUCKNER7 345.00 - SPEARVILLE 345KV CKT 1
FDNS	00NR	4	17SP	G15_042	FROM->TO	GRPRAR1-LNX3345.00 - HOLT.CO3 345.00 345KV CKT 1	720	720	0.03358	111.3202	103RD & ROKEBY - MOORE 345KV CKT 1
FDNS	00NR	4	17SP	G15_042	FROM->TO	GRPRAR1-LNX3345.00 - HOLT.CO3 345.00 345KV CKT 1	720	720	0.03358	111.3202	103RD & ROKEBY - MOORE 345KV CKT 1
FDNS	00NR	4	17SP	G15_042	FROM->TO	GRPRAR1-LNX3345.00 - HOLT.CO3 345.00 345KV CKT 1	720	720	0.03287	111.31	FT THOMPSON - OAHE 230KV CKT 1
FDNS	00NR	4	17SP	G15_042	FROM->TO	GRPRAR1-LNX3345.00 - HOLT.CO3 345.00 345KV CKT 1	720	720	0.03287	111.31	FT THOMPSON - OAHE 230KV CKT 1
FDNS	00NR	4	17SP	G15_042	FROM->TO	GRPRAR1-LNX3345.00 - HOLT.CO3 345.00 345KV CKT 1	720	720	0.03287	111.31	FT THOMPSON - OAHE 230KV CKT 2
FDNS	00NR	4	17SP	G15_042	FROM->TO	GRPRAR1-LNX3345.00 - HOLT.CO3 345.00 345KV CKT 1	720	720	0.03287	111.31	FT THOMPSON - OAHE 230KV CKT 2
FDNS	00NR	4	17SP	G15_042	FROM->TO	GRPRAR1-LNX3345.00 - HOLT.CO3 345.00 345KV CKT 1	720	720	0.03268	111.2899	GEN652546 1-FT RANDAL
FDNS	00NR	4	17SP	G15_042	FROM->TO	GRPRAR1-LNX3345.00 - HOLT.CO3 345.00 345KV CKT 1	720	720	0.03442	111.2576	NUNDRWD - PHILIP TAP 230KV CKT 1
FDNS	00NR	4	17SP	G15_042	FROM->TO	GRPRAR1-LNX3345.00 - HOLT.CO3 345.00 345KV CKT 1	720	720	0.03287	111.2521	FT THOMPSON - OAHE 230KV CKT 3
FDNS	00NR	4	17SP	G15_042	FROM->TO	GRPRAR1-LNX3345.00 - HOLT.CO3 345.00 345KV CKT 1	720	720	0.03287	111.2521	FT THOMPSON - OAHE 230KV CKT 3
FDNS	00NR	4	17SP	G15_042	FROM->TO	GRPRAR1-LNX3345.00 - HOLT.CO3 345.00 345KV CKT 1	720	720	0.03287	111.2521	FT THOMPSON - OAHE 230KV CKT 4
FDNS	00NR	4	17SP	G15_042	FROM->TO	GRPRAR1-LNX3345.00 - HOLT.CO3 345.00 345KV CKT 1	720	720	0.03287	111.2521	FT THOMPSON - OAHE 230KV CKT 4
FDNS	00NR	4	17SP	G15_042	FROM->TO	GRPRAR1-LNX3345.00 - HOLT.CO3 345.00 345KV CKT 1	720	720	0.03268	111.2493	MITCHLCO3 345.00 345/34.5KV TRANSFORMER CKT 1
FDNS	00NR	4	17SP	G15_042	FROM->TO	GRPRAR1-LNX3345.00 - HOLT.CO3 345.00 345KV CKT 1	720	720	0.03268	111.2424	GEN672347 1-CORY COGEN GENERATOR 1 GT1
FDNS	00NR	4	17SP	G15_042	FROM->TO	GRPRAR1-LNX3345.00 - HOLT.CO3 345.00 345KV CKT 1	720	720	0.03268	111.2424	GEN672348 2-CORY COGEN GENERATOR 2 GT2
FDNS	00NR	4	17SP	G15_042	FROM->TO	GRPRAR1-LNX3345.00 - HOLT.CO3 345.00 345KV CKT 1	720	720	0.03212	111.2358	NELIGH - PETERSBRG.N7115.00 115KV CKT 1
FDNS	00NR	4	17SP	G15_042	FROM->TO	GRPRAR1-LNX3345.00 - HOLT.CO3 345.00 345KV CKT 1	720	720	0.03268	111.2344	GEN600018 S-LS POWER STEAM
FDNS	00NR	4	17SP	G15_042	FROM->TO	GRPRAR1-LNX3345.00 - HOLT.CO3 345.00 345KV CKT 1	720	720	0.03283	111.2304	POST ROCK (POSTROCK T1) 345/230/13.8KV TRANSFORMER CKT 1
FDNS	00NR	4	17SP	G15_042	FROM->TO	GRPRAR1-LNX3345.00 - HOLT.CO3 345.00 345KV CKT 1	720	720	0.03268	111.2284	GEN300003 1-THOMAS HILL UNIT 3
FDNS	00NR	4	17SP	G15_042	FROM->TO	GRPRAR1-LNX3345.00 - HOLT.CO3 345.00 345KV CKT 1	720	720	0.03279	111.2276	G11_051T 345.00 - WOODWARD DISTRICT EHV 345KV CKT 1
FDNS	00NR	4	17SP	G15_042	FROM->TO	GRPRAR1-LNX3345.00 - HOLT.CO3 345.00 345KV CKT 1	720	720	0.03268	111.2235	GEN659158 2-PIONEER G213.800
FDNS	00NR	4	17SP	G15_042	FROM->TO	GRPRAR1-LNX3345.00 - HOLT.CO3 345.00 345KV CKT 1	720	720	0.03268	111.2235	GEN659159 3-PIONEER G313.800
FDNS	00NR	4	17SP	G15_042	FROM->TO	GRPRAR1-LNX3345.00 - HOLT.CO3 345.00 345KV CKT 1	720	720	0.03268	111.216	GEN659156 2-LONESMCRK 2G13.800
FDNS	00NR	4	17SP	G15_042	FROM->TO	GRPRAR1-LNX3345.00 - HOLT.CO3 345.00 345KV CKT 1	720	720	0.03268	111.216	GEN659157 3-LONESMCRK 3G13.800
FDNS	00NR	4	17SP	G15_042	FROM->TO	GRPRAR1-LNX3345.00 - HOLT.CO3 345.00 345KV CKT 1	720	720	0.03268	111.2116	GEN652548 5-FT RANDAL
FDNS	00NR	4	17SP	G15_042	FROM->TO	GRPRAR1-LNX3345.00 - HOLT.CO3 345.00 345KV CKT 1	720	720	0.03268	111.2116	GEN652549 7-FT RANDAL
FDNS	00NR	4	17SP	G15_042	FROM->TO	GRPRAR1-LNX3345.00 - HOLT.CO3 345.00 345KV CKT 1	720	720	0.03302	111.211	P12:115:UMZW:# 172 #: WI IN SD.
FDNS	00NR	4	17SP	G15_042	FROM->TO	GRPRAR1-LNX3345.00 - HOLT.CO3 345.00 345KV CKT 1	720	720	0.03263	111.2091	G14-021T 345.00 - MULLNCR7 345.00 345KV CKT 1
FDNS	00NR	4	17SP	G15_042	FROM->TO	GRPRAR1-LNX3345.00 - HOLT.CO3 345.00 345KV CKT 1	720	720	0.03263	111.209	G15-005T 345.00 - MULLNCR7 345.00 345KV CKT 1
FDNS	00NR	4	17SP	G15_042	FROM->TO	GRPRAR1-LNX3345.00 - HOLT.CO3 345.00 345KV CKT 1	720	720	0.03268	111.2053	GEN590010 1-ERCOT EQUIVALENCE
FDNS	00NR	4	17SP	G15_042	FROM->TO	GRPRAR1-LNX3345.00 - HOLT.CO3 345.00 345KV CKT 1	720	720	0.03268	111.2012	GEN672367 1-MERIDIAN GENERATOR 1 GT1
FDNS	00NR	4	17SP	G15_042	FROM->TO	GRPRAR1-LNX3345.00 - HOLT.CO3 345.00 345KV CKT 1	720	720	0.03268	111.2012	GEN672368 2-MERIDIAN GENERATOR 2 GT2
FDNS	00NR	4	17SP	G15_042	FROM->TO	GRPRAR1-LNX3345.00 - HOLT.CO3 345.00 345KV CKT 1	720	720	0.03268	111.2002	GEN652547 3-FT RANDAL
FDNS	00NR	4	17SP	G15_042	FROM->TO	GRPRAR1-LNX3345.00 - HOLT.CO3 345.00 345KV CKT 1	720	720	0.0327	111.1995	P12:115:UMZZ:# 232 #: AB IN SD. ABERDEEN A TAP BETWEEN ELLENDALE AND ABERDEEN-SIEBRECHT.
FDNS	00NR	4	17SP	G15_042	FROM->TO	GRPRAR1-LNX3345.00 - HOLT.CO3 345.00 345KV CKT 1	720	720	0.03295	111.1988	LARAMIE RIVER - STEGALL 345KV CKT 1
FDNS	00NR	4	17SP	G15_042	FROM->TO	GRPRAR1-LNX3345.00 - HOLT.CO3 345.00 345KV CKT 1	720	720	0.03268	111.1966	GEN600021 3-ANGUS ANSON2
FDNS	00NR	4	17SP	G15_042	FROM->TO	GRPRAR1-LNX3345.00 - HOLT.CO3 345.00 345KV CKT 1	720	720	0.03268	111.1936	GEN600020 2-ANGUS ANSON1
FDNS	00NR	4	17SP	G15_042	FROM->TO	GRPRAR1-LNX3345.00 - HOLT.CO3 345.00 345KV CKT 1	720	720	0.03268	111.1898	GEN657964 1-ASH2GEN9 0.5750
FDNS	00NR	4	17SP	G15_042	FROM->TO	GRPRAR1-LNX3345.00 - HOLT.CO3 345.00 345KV CKT 1	720	720	0.03268	111.1886	GEN672352 3-NIPAWIN GENERATOR 3
FDNS	00NR	4	17SP	G15_042	FROM->TO	GRPRAR1-LNX3345.00 - HOLT.CO3 345.00 345KV CKT 1	720	720	0.03268	111.1885	GEN672350 1-NIPAWIN GENERATOR 1
FDNS	00NR	4	17SP	G15_042	FROM->TO	GRPRAR1-LNX3345.00 - HOLT.CO3 345.00 345KV CKT 1	720	720	0.03268	111.1885	GEN672351 2-NIPAWIN GENERATOR 2
FDNS	00NR	4	17SP	G15_042	FROM->TO	GRPRAR1-LNX3345.00 - HOLT.CO3 345.00 345KV CKT 1	720	720	0.03268	111.1798	GEN590011 2-ERCOT EQUIVALENCE
FDNS	00NR	4	17SP	G15_042	FROM->TO	GRPRAR1-LNX3345.00 - HOLT.CO3 345.00 345KV CKT 1	720	720	0.03268	111.1748	GEN672349 3-CORY COGEN GENERATOR 3 ST
FDNS	00NR	4	17SP	G15_042	FROM->TO	GRPRAR1-LNX3345.00 - HOLT.CO3 345.00 345KV CKT 1	720	720	0.03268	111.1704	GEN620324 3-HOOT LAKE 3 GEN

SOLUTION	GROUP	SCENARIO	SEASON	SOURCE	DIRECTION	MONITORED ELEMENT	RATEA (MVA)	RATEB(MVA)	TDF	TC%LOADING (% MVA)	CONTINGENCY
FDNS	00NR	4	17SP	G15_042	FROM->TO	GRPRAR1-LNX3345.00 - HOLT.CO3 345.00 345KV CKT 1	720	720	0.03268	111.1669	EASTDC - ERCOT EQUIVALENCE 345KV CKT 1
FDNS	00NR	4	17SP	G15_042	FROM->TO	GRPRAR1-LNX3345.00 - HOLT.CO3 345.00 345KV CKT 1	720	720	0.03268	111.1669	ERCOT EQUIVALENCE 345/24.0KV TRANSFORMER CKT 1
FDNS	00NR	4	17SP	G15_042	FROM->TO	GRPRAR1-LNX3345.00 - HOLT.CO3 345.00 345KV CKT 1	720	720	0.03434	111.1664	BATTLE CREEK - COUNTY LINE 115KV CKT 1
FDNS	00NR	4	17SP	G15_042	FROM->TO	GRPRAR1-LNX3345.00 - HOLT.CO3 345.00 345KV CKT 1	720	720	0.03263	111.1626	G15-005T 345.00 - SIBLEY 345KV CKT 1
FDNS	00NR	4	17SP	G15_042	FROM->TO	GRPRAR1-LNX3345.00 - HOLT.CO3 345.00 345KV CKT 1	720	720	0.03276	111.1553	ANTELOP-LNX3345.00 - BRDLAND-LNX3345.00 345KV CKT 1
FDNS	00NR	4	17SP	G15_042	FROM->TO	GRPRAR1-LNX3345.00 - HOLT.CO3 345.00 345KV CKT 1	720	720	0.03268	111.1477	GEN629072 4-LANSING GENERATOR FOR UNITS NO4 EIA CODE 1
FDNS	00NR	4	17SP	G15_042	FROM->TO	GRPRAR1-LNX3345.00 - HOLT.CO3 345.00 345KV CKT 1	720	720	0.03212	111.1465	ALBION - PETERSBURG 115KV CKT 1
FDNS	00NR	4	17SP	G15_042	FROM->TO	GRPRAR1-LNX3345.00 - HOLT.CO3 345.00 345KV CKT 1	720	720	0.03268	111.1456	GEN660003 3-HURON WEST PARK
FDNS	00NR	4	17SP	G15_042	FROM->TO	GRPRAR1-LNX3345.00 - HOLT.CO3 345.00 345KV CKT 1	720	720	0.03268	111.1384	GEN600012 2-BLACK DOG GEN 2
FDNS	00NR	4	17SP	G15_042	FROM->TO	GRPRAR1-LNX3345.00 - HOLT.CO3 345.00 345KV CKT 1	720	720	0.03338	111.1379	AXTELL - POST ROCK 345KV CKT 1
FDNS	00NR	4	17SP	G15_042	FROM->TO	GRPRAR1-LNX3345.00 - HOLT.CO3 345.00 345KV CKT 1	720	720	0.03068	111.1187	COLUMEAST - NW68TH & HOLDREGE 345KV CKT 1
FDNS	00NR	4	17SP	G15_042	FROM->TO	GRPRAR1-LNX3345.00 - HOLT.CO3 345.00 345KV CKT 1	720	720	0.03068	111.1187	COLUMEAST - NW68TH & HOLDREGE 345KV CKT 1
FDNS	00NR	4	17SP	G15_042	FROM->TO	GRPRAR1-LNX3345.00 - HOLT.CO3 345.00 345KV CKT 1	720	720	0.03212	111.1175	PETERSBRG.N7115.00 - PETERSBURG 115KV CKT Z1
FDNS	00NR	4	17SP	G15_042	FROM->TO	GRPRAR1-LNX3345.00 - HOLT.CO3 345.00 345KV CKT 1	720	720	0.03149	111.1148	COOPER - MOORE 345KV CKT 1
FDNS	00NR	4	17SP	G15_042	FROM->TO	GRPRAR1-LNX3345.00 - HOLT.CO3 345.00 345KV CKT 1	720	720	0.03434	111.1044	ANTELOPE 7115.00 - COUNTY LINE 115KV CKT 1
FDNS	00NR	4	17SP	G15_042	FROM->TO	GRPRAR1-LNX3345.00 - HOLT.CO3 345.00 345KV CKT 1	720	720	0.03268	111.1031	GEN659290 1-EDGECOL
FDNS	00NR	4	17SP	G15_042	FROM->TO	GRPRAR1-LNX3345.00 - HOLT.CO3 345.00 345KV CKT 1	720	720	0.03268	111.1012	EMERY 161/18.0KV TRANSFORMER CKT 1
FDNS	00NR	4	17SP	G15_042	FROM->TO	GRPRAR1-LNX3345.00 - HOLT.CO3 345.00 345KV CKT 1	720	720	0.03268	111.0982	GEN672339 16-QE 16G 13.800
FDNS	00NR	4	17SP	G15_042	FROM->TO	GRPRAR1-LNX3345.00 - HOLT.CO3 345.00 345KV CKT 1	720	720	0.03268	111.0982	GEN672342 3-QUEEN ELIZABETH GENERATOR 3
FDNS	00NR	4	17SP	G15_042	FROM->TO	GRPRAR1-LNX3345.00 - HOLT.CO3 345.00 345KV CKT 1	720	720	0.03268	111.097	GEN652410 3-FT PECK
FDNS	00NR	4	17SP	G15_042	FROM->TO	GRPRAR1-LNX3345.00 - HOLT.CO3 345.00 345KV CKT 1	720	720	0.03544	111.0922	MINGO - RED WILLOW 345KV CKT 1
FDNS	00NR	4	17SP	G15_042	FROM->TO	GRPRAR1-LNX3345.00 - HOLT.CO3 345.00 345KV CKT 1	720	720	0.03544	111.0922	MINGO - RED WILLOW 345KV CKT 1
FDNS	00NR	4	17SP	G15_042	FROM->TO	GRPRAR1-LNX3345.00 - HOLT.CO3 345.00 345KV CKT 1	720	720	0.03268	111.0829	GEN672393 2-NBECST2G 13.800
FDNS	00NR	4	17SP	G15_042	FROM->TO	GRPRAR1-LNX3345.00 - HOLT.CO3 345.00 345KV CKT 1	720	720	0.03212	111.0788	P12:115:NPPD:1168B:ALBION 7:PETERSBRG.N7:BTB
FDNS	00NR	4	17SP	G15_042	FROM->TO	GRPRAR1-LNX3345.00 - HOLT.CO3 345.00 345KV CKT 1	720	720	0.03067	111.0732	COLUMEAST - SHELL CREEK 345KV CKT 1
FDNS	00NR	4	17SP	G15_042	FROM->TO	GRPRAR1-LNX3345.00 - HOLT.CO3 345.00 345KV CKT 1	720	720	0.03268	111.0674	GEN600046 1-MECST
FDNS	00NR	4	17SP	G15_042	FROM->TO	GRPRAR1-LNX3345.00 - HOLT.CO3 345.00 345KV CKT 1	720	720	0.03268	111.0591	GEN300007 1-NEW MADRID UNIT 2
FDNS	00NR	4	17SP	G15_042	FROM->TO	GRPRAR1-LNX3345.00 - HOLT.CO3 345.00 345KV CKT 1	720	720	0.03268	111.0535	GEN300006 1-NEW MADRID UNIT 1
FDNS	00NR	4	17SP	G15_042	FROM->TO	GRPRAR1-LNX3345.00 - HOLT.CO3 345.00 345KV CKT 1	720	720	0.03268	111.043	GEN600047 1-MECCT1
FDNS	00NR	4	17SP	G15_042	FROM->TO	GRPRAR1-LNX3345.00 - HOLT.CO3 345.00 345KV CKT 1	720	720	0.03268	111.0331	GEN652414 4-FT PECK
FDNS	00NR	4	17SP	G15_042	FROM->TO	GRPRAR1-LNX3345.00 - HOLT.CO3 345.00 345KV CKT 1	720	720	0.03268	111.0331	GEN652415 5-FT PECK
FDNS	00NR	4	17SP	G15_042	FROM->TO	GRPRAR1-LNX3345.00 - HOLT.CO3 345.00 345KV CKT 1	720	720	0.03268	111.0281	GEN600050 1-FEP
FDNS	00NR	4	17SP	G15_042	FROM->TO	GRPRAR1-LNX3345.00 - HOLT.CO3 345.00 345KV CKT 1	720	720	0.03268	111.0165	GEN660001 2-ABERDEEN SIEBRECHT
FDNS	00NR	4	17SP	G15_042	FROM->TO	GRPRAR1-LNX3345.00 - HOLT.CO3 345.00 345KV CKT 1	720	720	0.03268	111.0032	LADISH 115/13.2KV TRANSFORMER CKT 1
FDNS	00NR	4	17SP	G15_042	FROM->TO	GRPRAR1-LNX3345.00 - HOLT.CO3 345.00 345KV CKT 1	720	720	0.03268	110.9836	GEN652345 W-G07_023IS_2 0.6900
FDNS	00NR	4	17SP	G15_042	FROM->TO	GRPRAR1-LNX3345.00 - HOLT.CO3 345.00 345KV CKT 1	720	720	0.03428	110.9662	G15061_T 345.00 - SETAB 345KV CKT 1
FDNS	00NR	4	17SP	G15_042	FROM->TO	GRPRAR1-LNX3345.00 - HOLT.CO3 345.00 345KV CKT 1	720	720	0.03264	110.9466	BISMARK - L3 HAWDON 230KV CKT 1
FDNS	00NR	4	17SP	G15_042	FROM->TO	GRPRAR1-LNX3345.00 - HOLT.CO3 345.00 345KV CKT 1	720	720	0.03268	110.945	GEN 11104 1-J262_GEN 0.6000
FDNS	00NR	4	17SP	G15_042	FROM->TO	GRPRAR1-LNX3345.00 - HOLT.CO3 345.00 345KV CKT 1	720	720	0.03268	110.945	GEN 11108 1-J263_GEN 0.6000
FDNS	00NR	4	17SP	G15_042	FROM->TO	GRPRAR1-LNX3345.00 - HOLT.CO3 345.00 345KV CKT 1	720	720	0.03268	110.9385	GEN600063 1-COLVILLE GEN 1
FDNS	00NR	4	17SP	G15_042	FROM->TO	GRPRAR1-LNX3345.00 - HOLT.CO3 345.00 345KV CKT 1	720	720	0.03268	110.9385	GEN600064 2-COLVILLE GEN 2
FDNS	00NR	4	17SP	G15_042	FROM->TO	GRPRAR1-LNX3345.00 - HOLT.CO3 345.00 345KV CKT 1	720	720	0.03415	110.936	GERALD GENTLEMAN STATION - RED WILLOW 345KV CKT 1
FDNS	00NR	4	17SP	G15_042	FROM->TO	GRPRAR1-LNX3345.00 - HOLT.CO3 345.00 345KV CKT 1	720	720	0.03268	110.93	GEN600045 4-ANSON
FDNS	00NR	4	17SP	G15_042	FROM->TO	GRPRAR1-LNX3345.00 - HOLT.CO3 345.00 345KV CKT 1	720	720	0.03268	110.926	GEN600043 7-BLUE LAKE5
FDNS	00NR	4	17SP	G15_042	FROM->TO	GRPRAR1-LNX3345.00 - HOLT.CO3 345.00 345KV CKT 1	720	720	0.03268	110.926	GEN600044 8-BLUE LAKE6
FDNS	00NR	4	17SP	G15_042	FROM->TO	GRPRAR1-LNX3345.00 - HOLT.CO3 345.00 345KV CKT 1	720	720	0.03268	110.9133	G830_SUB 115.00 - GRE-MCHENRY7115.00 115KV CKT 1
FDNS	00NR	4	17SP	G15_042	FROM->TO	GRPRAR1-LNX3345.00 - HOLT.CO3 345.00 345KV CKT 1	720	720	0.03268	110.8992	G830_SUB 115.00 115/34.5KV TRANSFORMER CKT 1
FDNS	00NR	4	17SP	G15_042	FROM->TO	GRPRAR1-LNX3345.00 - HOLT.CO3 345.00 345KV CKT 1	720	720	0.03279	110.8971	G11_051T 345.00 - TATONGA7 345.00 345KV CKT 1
FDNS	00NR	4	17SP	G15_042	FROM->TO	GRPRAR1-LNX3345.00 - HOLT.CO3 345.00 345KV CKT 1	720	720	0.03268	110.8939	GEN600014 4-BLACK DOG GEN 4
FDNS	00NR	4	17SP	G15_042	FROM->TO	GRPRAR1-LNX3345.00 - HOLT.CO3 345.00 345KV CKT 1	720	720	0.03422	110.8923	P12:115:NPPD:1163B:NELIGH 7:NORFK.N7:BTB
FDNS	00NR	4	17SP	G15_042	FROM->TO	GRPRAR1-LNX3345.00 - HOLT.CO3 345.00 345KV CKT 1	720	720	0.03268	110.892	GEN600065 7-HIGH BRIDGE
FDNS	00NR	4	17SP	G15_042	FROM->TO	GRPRAR1-LNX3345.00 - HOLT.CO3 345.00 345KV CKT 1	720	720	0.03268	110.892	GEN600066 8-HIGH BRIDGE
FDNS	00NR	4	17SP	G15_042	FROM->TO	GRPRAR1-LNX3345.00 - HOLT.CO3 345.00 345KV CKT 1	720	720	0.03268	110.8871	GEN600011 5-BLACK DOG GEN 1
FDNS	00NR	4	17SP	G15_042	FROM->TO	GRPRAR1-LNX3345.00 - HOLT.CO3 345.00 345KV CKT 1	720	720	0.03268	110.8758	GEN600071 10-RIVER SIDE
FDNS	00NR	4	17SP	G15_042	FROM->TO	GRPRAR1-LNX3345.00 - HOLT.CO3 345.00 345KV CKT 1	720	720	0.03268	110.8756	GEN600070 9-RIVER SIDE
FDNS	00NR	4	17SP	G15_042	FROM->TO	GRPRAR1-LNX3345.00 - HOLT.CO3 345.00 345KV CKT 1	720	720	0.03268	110.863	GEN600007 7-RIVERSIDE GEN 7
FDNS	00NR	4	17SP	G15_042	FROM->TO	GRPRAR1-LNX3345.00 - HOLT.CO3 345.00 345KV CKT 1	720	720	0.03268	110.8555	GEN652906 1-G09_006IS_3 0.6900
FDNS	00NR	4	17SP	G15_042	FROM->TO	GRPRAR1-LNX3345.00 - HOLT.CO3 345.00 345KV CKT 1	720	720	0.03043	110.8434	FT THOMPSON (FT2 KU1A) 345/230/13.8KV TRANSFORMER CKT 1
FDNS	00NR	4	17SP	G15_042	FROM->TO	GRPRAR1-LNX3345.00 - HOLT.CO3 345.00 345KV CKT 1	720	720	0.03268	110.8431	GEN600017 C-LS POWER CT
FDNS	00NR	4	17SP	G15_042	FROM->TO	GRPRAR1-LNX3345.00 - HOLT.CO3 345.00 345KV CKT 1	720	720	0.03043	110.8402	FT THOMPSON (FT2 KU1B) 345/230/13.8KV TRANSFORMER CKT 1
FDNS	00NR	4	17SP	G15_042	FROM->TO	GRPRAR1-LNX3345.00 - HOLT.CO3 345.00 345KV CKT 1	720	720	0.03268	110.8373	GEN659273 2-GROTON SYNC COND
FDNS	00NR	4	17SP	G15_042	FROM->TO	GRPRAR1-LNX3345.00 - HOLT.CO3 345.00 345KV CKT 1	720	720	0.03268	110.8373	GEN659294 1-WILTONCOL9
FDNS	00NR	4	17SP	G15_042	FROM->TO	GRPRAR1-LNX3345.00 - HOLT.CO3 345.00 345KV CKT 1	720	720	0.03268	110.8192	LANSING WEST 161/22.0KV TRANSFORMER CKT 1
FDNS	00NR	4	17SP	G15_042	FROM->TO	GRPRAR1-LNX3345.00 - HOLT.CO3 345.00 345KV CKT 1	720	720	0.03268	110.8022	GEN659192 6-LYNN
FDNS	00NR	4	17SP	G15_042	FROM->TO	GRPRAR1-LNX3345.00 - HOLT.CO3 345.00 345KV CKT 1	720	720	0.03268	110.8012	GEN659162 4-RED WLCK
FDNS	00NR	4	17SP	G15_042	FROM->TO	GRPRAR1-LNX3345.00 - HOLT.CO3 345.00 345KV CKT 1	720	720	0.03268	110.8012	GEN659163 5-BLACK WDCK
FDNS	00NR	4	17SP	G15_042	FROM->TO	GRPRAR1-LNX3345.00 - HOLT.CO3 345.00 345KV CKT 1	720	720	0.03268	110.7873	GEN681522 3-GENOA 3
FDNS	00NR	4	17SP	G15_042	FROM->TO	GRPRAR1-LNX3345.00 - HOLT.CO3 345.00 345KV CKT 1	720	720	0.03268	110.7802	GEN615021 1-GRE-ER 14G 16.000
FDNS	00NR	4	17SP	G15_042	FROM->TO	GRPRAR1-LNX3345.00 - HOLT.CO3 345.00 345KV CKT 1	720	720	0.03276	110.7689	BRDLAND-LNX3345.00 - HURON 345KV CKT Z
FDNS	00NR	4	17SP	G15_042	FROM->TO	GRPRAR1-LNX3345.00 - HOLT.CO3 345.00 345KV CKT 1	720	720	0.03276	110.7681	BROADLAND - HURON 230KV CKT 1
FDNS	00NR	4	17SP	G15_042	FROM->TO	GRPRAR1-LNX3345.00 - HOLT.CO3 345.00 345KV CKT 1	720	720	0.03276	110.7678	HURON (BD KU2A) 345/230/13.8KV TRANSFORMER CKT 1
FDNS	00NR	4	17SP	G15_042	FROM->TO	GRPRAR1-LNX3345.00 - HOLT.CO3 345.00 345KV CKT 1	720	720	0.03276	110.7678	HURON (BD KU2A) 345/230/13.8KV TRANSFORMER CKT 1
FDNS	00NR	4	17SP	G15_042	FROM->TO	GRPRAR1-LNX3345.00 - HOLT.CO3 345.00 345KV CKT 1	720	720	0.03268	110.7669	GEN615052 1-CAMBRIDGE GENERATING STATION
FDNS	00NR	4	17SP	G15_042	FROM->TO	GRPRAR1-LNX3345.00 - HOLT.CO3 345.00 345KV CKT 1	720	720	0.03276	110.763	P12:345:UMZB:# 102 #: AVS BD IN ND. AVS BRD LR
FDNS	00NR	4	17SP	G15_042	FROM->TO	GRPRAR1-LNX3345.00 - HOLT.CO3 345.00 345KV CKT 1	720	720	0.03268	110.763	CENTER 230/22.0KV TRANSFORMER CKT 1
FDNS	00NR	4	17SP	G15_042	FROM->TO	GRPRAR1-LNX3345.00 - HOLT.CO3 345.00 345KV CKT 1	720	720	0.03268	110.7626	GEN659031 1-G12_014IS_4 0.6900
FDNS	00NR	4	17SP	G15_042	FROM->TO	GRPRAR1-LNX3345.00 - HOLT.CO3 345.00 345KV CKT 1	720	720	0.03276	110.7624	P12:345:UMZB:# 103 #: BD IN SD. LOSS OF LINE
FDNS	00NR	4	17SP	G15_042	FROM->TO	GRPRAR1-LNX3345.00 - HOLT.CO3 345.00 345KV CKT 1	720	720	0.03268	110.7595	GEN652907 1-G09_007IS_3 0.6900
FDNS	00NR	4	17SP	G15_042	FROM->TO	GRPRAR1-LNX3345.00 - HOLT.CO3 345.00 345KV CKT 1	720	720	0.03268	110.7565	GEN 10648 1-G830_GEN 0.6900

SOLUTION	GROUP	SCENARIO	SEASON	SOURCE	DIRECTION	MONITORED ELEMENT	RATEA (MVA)	RATEB(MVA)	TDF	TC%LOADING (% MVA)	CONTINGENCY
FDNS	00NR	4	17SP	G15_042	FROM->TO	GRPRAR1-LNX3345.00 - HOLT.CO3 345.00 345KV CKT 1	720	720	0.03268	110.7502	GEN660016 1-B_H WIND 0.7000
FDNS	00NR	4	17SP	G15_042	FROM->TO	GRPRAR1-LNX3345.00 - HOLT.CO3 345.00 345KV CKT 1	720	720	0.03268	110.6862	GEN615015 1-GRE-SPRITWDG13.200
FDNS	00NR	4	17SP	G15_042	FROM->TO	GRPRAR1-LNX3345.00 - HOLT.CO3 345.00 345KV CKT 1	720	720	0.03279	110.6786	MATHWSN7 345.00 - TATONGA7 345.00 345KV CKT 1
FDNS	00NR	4	17SP	G15_042	FROM->TO	GRPRAR1-LNX3345.00 - HOLT.CO3 345.00 345KV CKT 1	720	720	0.03268	110.6215	GEN659353 1-DEERCREK CTG18.000
FDNS	00NR	4	17SP	G15_042	FROM->TO	GRPRAR1-LNX3345.00 - HOLT.CO3 345.00 345KV CKT 1	720	720	0.03268	110.6197	GEN659354 1-DEERCREK STG18.000
FDNS	00NR	4	17SP	G15_042	FROM->TO	GRPRAR1-LNX3345.00 - HOLT.CO3 345.00 345KV CKT 1	720	720	0.03276	110.6087	ANTELOP-LNX3345.00 - ANTELOPE VALLEY 345KV CKT Z
FDNS	00NR	4	17SP	G15_042	FROM->TO	GRPRAR1-LNX3345.00 - HOLT.CO3 345.00 345KV CKT 1	720	720	0.03268	110.5314	GEN600067 9-HIGH BRIDGE
FDNS	00NR	4	17SP	G15_042	FROM->TO	GRPRAR1-LNX3345.00 - HOLT.CO3 345.00 345KV CKT 1	720	720	0.03268	110.531	GEN672303 3-BOUNDARY DAM GENERATOR 3
FDNS	00NR	4	17SP	G15_042	FROM->TO	GRPRAR1-LNX3345.00 - HOLT.CO3 345.00 345KV CKT 1	720	720	0.03268	110.5309	GEN672305 5-BOUNDARY DAM GENERATOR 5
FDNS	00NR	4	25SP	G15_042	FROM->TO	GRPRAR1-LNX3345.00 - HOLT.CO3 345.00 345KV CKT 1	720	720	0.0296	110.513	STORLA - WESSINGTON 230KV CKT 1
FDNS	00NR	4	17SP	G15_042	FROM->TO	GRPRAR1-LNX3345.00 - HOLT.CO3 345.00 345KV CKT 1	720	720	0.03268	110.5056	GEN672392 1-NBECGT1G 18.000
FDNS	00NR	4	17SP	G15_042	FROM->TO	GRPRAR1-LNX3345.00 - HOLT.CO3 345.00 345KV CKT 1	720	720	0.03264	110.4708	OAHE - SULLEY BUTTE 230KV CKT 1
FDNS	00NR	4	17SP	G15_042	FROM->TO	GRPRAR1-LNX3345.00 - HOLT.CO3 345.00 345KV CKT 1	720	720	0.03268	110.4425	GEN910006 1-G12_012IS_3 0.6900
FDNS	00NR	4	17SP	G15_042	FROM->TO	GRPRAR1-LNX3345.00 - HOLT.CO3 345.00 345KV CKT 1	720	720	0.03268	110.4315	BISONMP4 230.00 - SQUARE BUTTE 230KV CKT 1
FDNS	00NR	4	17SP	G15_042	FROM->TO	GRPRAR1-LNX3345.00 - HOLT.CO3 345.00 345KV CKT 1	720	720	0.03268	110.3899	GEN662101 1-WESSINGTON190.5750
FDNS	00NR	4	17SP	G15_042	FROM->TO	GRPRAR1-LNX3345.00 - HOLT.CO3 345.00 345KV CKT 1	720	720	0.03424	110.3555	AXTELL - SWEETWATER 345KV CKT 1
FDNS	00NR	4	17SP	G15_042	FROM->TO	GRPRAR1-LNX3345.00 - HOLT.CO3 345.00 345KV CKT 1	720	720	0.03264	110.3182	SULLEY BUTTE - SULLYBT-LNX3230.00 230KV CKT Z
FDNS	00NR	4	17SP	G15_042	FROM->TO	GRPRAR1-LNX3345.00 - HOLT.CO3 345.00 345KV CKT 1	720	720	0.03429	110.3163	G15088_T 345.00 - MOORE 345KV CKT 1
FDNS	00NR	4	17SP	G15_042	FROM->TO	GRPRAR1-LNX3345.00 - HOLT.CO3 345.00 345KV CKT 1	720	720	0.03264	110.3162	SULLYBT-LNX3230.00 - WHITLOK 230KV CKT 1
FDNS	00NR	4	17SP	G15_042	FROM->TO	GRPRAR1-LNX3345.00 - HOLT.CO3 345.00 345KV CKT 1	720	720	0.03264	110.2687	P12:230:UMZB:# 114 #: SB IN SD. SB-WK-GH
FDNS	00NR	4	17SP	G15_042	FROM->TO	GRPRAR1-LNX3345.00 - HOLT.CO3 345.00 345KV CKT 1	720	720	0.03264	110.2687	P12:230:UMZB:# 117 #: WK IN SD. SB-WK-GH
FDNS	00NR	4	17SP	G15_042	FROM->TO	GRPRAR1-LNX3345.00 - HOLT.CO3 345.00 345KV CKT 1	720	720	0.03268	110.2655	SQUARE BUTTE - YNG2 4 230.00 230KV CKT 1
FDNS	00NR	4	17SP	G15_042	FROM->TO	GRPRAR1-LNX3345.00 - HOLT.CO3 345.00 345KV CKT 1	720	720	0.03264	110.2162	GLENHAM - WHITLOK 230KV CKT 1
FDNS	00NR	4	17SP	G15_042	FROM->TO	GRPRAR1-LNX3345.00 - HOLT.CO3 345.00 345KV CKT 1	720	720	0.03268	110.2062	HESKETT 115/13.8KV TRANSFORMER CKT 1
FDNS	00NR	4	17SP	G15_042	FROM->TO	GRPRAR1-LNX3345.00 - HOLT.CO3 345.00 345KV CKT 1	720	720	0.03268	110.1611	GEN681542 6-JP MADGETT
FDNS	00NR	4	17SP	G15_042	FROM->TO	GRPRAR1-LNX3345.00 - HOLT.CO3 345.00 345KV CKT 1	720	720	0.03268	110.115	GEN659289 1-DAYCNTYWND W0.6900
FDNS	00NR	4	17SP	G15_042	FROM->TO	GRPRAR1-LNX3345.00 - HOLT.CO3 345.00 345KV CKT 1	720	720	0.03268	110.0973	GEN659018 1-G14_003IS_3 0.6900
FDNS	00NR	4	17SP	G15_042	FROM->TO	GRPRAR1-LNX3345.00 - HOLT.CO3 345.00 345KV CKT 1	720	720	0.03268	110.077	GEN652543 3-BIG BEND
FDNS	00NR	4	17SP	G15_042	FROM->TO	GRPRAR1-LNX3345.00 - HOLT.CO3 345.00 345KV CKT 1	720	720	0.03268	110.0767	GEN563312 1-G15097_3 0.6900
FDNS	00NR	4	17SP	G15_042	FROM->TO	GRPRAR1-LNX3345.00 - HOLT.CO3 345.00 345KV CKT 1	720	720	0.03268	109.9316	GEN659194 1-NDPRAIRWND1W0.6900
FDNS	00NR	4	17SP	G15_042	FROM->TO	GRPRAR1-LNX3345.00 - HOLT.CO3 345.00 345KV CKT 1	720	720	0.03268	109.9152	GEN659010 4-G07_027IS_2 0.6900
FDNS	00NR	4	17SP	G15_042	FROM->TO	GRPRAR1-LNX3345.00 - HOLT.CO3 345.00 345KV CKT 1	720	720	0.03268	109.9079	GEN652460 4-GARRISON
FDNS	00NR	4	17SP	G15_042	FROM->TO	GRPRAR1-LNX3345.00 - HOLT.CO3 345.00 345KV CKT 1	720	720	0.03268	109.9078	GEN652461 5-GARRISON
FDNS	00NR	4	17SP	G15_042	FROM->TO	GRPRAR1-LNX3345.00 - HOLT.CO3 345.00 345KV CKT 1	720	720	0.03268	109.8861	GEN563342 1-G15098_3 0.6900
FDNS	00NR	4	17SP	G15_042	FROM->TO	GRPRAR1-LNX3345.00 - HOLT.CO3 345.00 345KV CKT 1	720	720	0.03268	109.8495	GEN652458 2-GARRISON
FDNS	00NR	4	17SP	G15_042	FROM->TO	GRPRAR1-LNX3345.00 - HOLT.CO3 345.00 345KV CKT 1	720	720	0.03268	109.8495	GEN652459 3-GARRISON
FDNS	00NR	4	17SP	G15_042	FROM->TO	GRPRAR1-LNX3345.00 - HOLT.CO3 345.00 345KV CKT 1	720	720	0.03268	109.8494	GEN652457 1-GARRISON
FDNS	00NR	4	17SP	G15_042	FROM->TO	GRPRAR1-LNX3345.00 - HOLT.CO3 345.00 345KV CKT 1	720	720	0.03268	109.7956	GEN659403 1-NDSUNFLWR W0.6900
FDNS	00NR	4	17SP	G15_042	FROM->TO	GRPRAR1-LNX3345.00 - HOLT.CO3 345.00 345KV CKT 1	720	720	0.03268	109.7485	GEN652542 1-BIG BEND
FDNS	00NR	4	17SP	G15_042	FROM->TO	GRPRAR1-LNX3345.00 - HOLT.CO3 345.00 345KV CKT 1	720	720	0.03491	109.7158	MCCOOL - MOORE 345KV CKT 1
FDNS	00NR	4	20SP	G15_042	FROM->TO	GRPRAR1-LNX3345.00 - HOLT.CO3 345.00 345KV CKT 1	720	720	0.03103	109.7078	BUFFALO - JAMESTOWN 345KV CKT 1
FDNS	00NR	4	20SP	G15_042	FROM->TO	GRPRAR1-LNX3345.00 - HOLT.CO3 345.00 345KV CKT 1	720	720	0.03081	109.6751	G09_001IST 345.00 - WATERTOWN 345KV CKT 1
FDNS	00NR	4	17SP	G15_042	FROM->TO	GRPRAR1-LNX3345.00 - HOLT.CO3 345.00 345KV CKT 1	720	720	0.03268	109.6357	GEN652559 1-OAHE
FDNS	00NR	4	17SP	G15_042	FROM->TO	GRPRAR1-LNX3345.00 - HOLT.CO3 345.00 345KV CKT 1	720	720	0.03268	109.6344	STANTON 230/18.0KV TRANSFORMER CKT 1
FDNS	00NR	4	17SP	G15_042	FROM->TO	GRPRAR1-LNX3345.00 - HOLT.CO3 345.00 345KV CKT 1	720	720	0.03268	109.6331	CLAY BOSWELL 230/20.9KV TRANSFORMER CKT 1
FDNS	00NR	4	17SP	G15_042	FROM->TO	GRPRAR1-LNX3345.00 - HOLT.CO3 345.00 345KV CKT 1	720	720	0.03264	109.6064	GLENHAM - L3 HAWDON 230KV CKT 1
FDNS	00NR	4	25SP	G15_042	FROM->TO	GRPRAR1-LNX3345.00 - HOLT.CO3 345.00 345KV CKT 1	720	720	0.02957	109.4941	HANLON - STORLA 230KV CKT 1
FDNS	00NR	4	17SP	G15_042	FROM->TO	GRPRAR1-LNX3345.00 - HOLT.CO3 345.00 345KV CKT 1	720	720	0.03268	109.3797	GEN659411 1-CAMPBLCNTY W0.6900
FDNS	00NR	4	25SP	G15_042	FROM->TO	GRPRAR1-LNX3345.00 - HOLT.CO3 345.00 345KV CKT 1	720	720	0.03135	109.2556	BUFFALO - JAMESTOWN 345KV CKT 1
FDNS	00NR	4	17SP	G15_042	FROM->TO	GRPRAR1-LNX3345.00 - HOLT.CO3 345.00 345KV CKT 1	720	720	0.03268	109.1532	GEN659296 2-SDPRAIRWND1W0.6900
FDNS	00NR	4	17SP	G15_042	FROM->TO	GRPRAR1-LNX3345.00 - HOLT.CO3 345.00 345KV CKT 1	720	720	0.03268	109.1385	GEN672321 1-SHAND GENERATOR 1
FDNS	00NR	4	17SP	G15_042	FROM->TO	GRPRAR1-LNX3345.00 - HOLT.CO3 345.00 345KV CKT 1	720	720	0.03268	109.1286	GEN672311 2-POPLAR RIVER GENERATOR 2
FDNS	00NR	4	17SP	G15_042	FROM->TO	GRPRAR1-LNX3345.00 - HOLT.CO3 345.00 345KV CKT 1	720	720	0.03268	109.1282	GEN672310 1-POPLAR RIVER GENERATOR 1
FDNS	00NR	4	17SP	G15_042	FROM->TO	GRPRAR1-LNX3345.00 - HOLT.CO3 345.00 345KV CKT 1	720	720	0.03268	109.074	RCDC EAST 4230.00 - RED CEDAR DC 230KV CKT 1
FDNS	00NR	4	17SP	G15_042	FROM->TO	GRPRAR1-LNX3345.00 - HOLT.CO3 345.00 345KV CKT 1	720	720	0.03268	109.0588	GEN600004 2-PRAIRIE ISLAND G2
FDNS	00NR	4	17SP	G15_042	FROM->TO	GRPRAR1-LNX3345.00 - HOLT.CO3 345.00 345KV CKT 1	720	720	0.03269	109.055	P12:230:UMZB:# 112 #: NU IN SD. NU-RCDC & DRY CREEK XFMR
FDNS	00NR	4	17SP	G15_042	FROM->TO	GRPRAR1-LNX3345.00 - HOLT.CO3 345.00 345KV CKT 1	720	720	0.03268	109.0546	GEN600003 1-PRAIRIE ISLAND G1
FDNS	00NR	4	17SP	G15_042	FROM->TO	GRPRAR1-LNX3345.00 - HOLT.CO3 345.00 345KV CKT 1	720	720	0.03268	109.0336	GEN672306 6-BOUNDARY DAM GENERATOR 6
FDNS	00NR	4	17SP	G15_042	FROM->TO	GRPRAR1-LNX3345.00 - HOLT.CO3 345.00 345KV CKT 1	720	720	0.03268	109.0008	GEN615010 1-STANTON4
FDNS	00NR	4	17SP	G15_042	FROM->TO	GRPRAR1-LNX3345.00 - HOLT.CO3 345.00 345KV CKT 1	720	720	0.03268	108.992	GEN659453 1-GI1414GEN W0.6900
FDNS	00NR	4	17SP	G15_042	FROM->TO	GRPRAR1-LNX3345.00 - HOLT.CO3 345.00 345KV CKT 1	720	720	0.03268	108.9902	GEN563302 1-G15096_3 0.6900
FDNS	00NR	4	17SP	G15_042	FROM->TO	GRPRAR1-LNX3345.00 - HOLT.CO3 345.00 345KV CKT 1	720	720	0.03268	108.885	GEN659141 1-K10215A
FDNS	00NR	4	25SP	G15_042	FROM->TO	GRPRAR1-LNX3345.00 - HOLT.CO3 345.00 345KV CKT 1	720	720	0.03113	108.8571	G09_001IST 345.00 - WATERTOWN 345KV CKT 1
FDNS	00NR	4	17SP	G15_042	FROM->TO	GRPRAR1-LNX3345.00 - HOLT.CO3 345.00 345KV CKT 1	720	720	0.03268	108.8034	GEN652556 2-OAHE
FDNS	00NR	4	17SP	G15_042	FROM->TO	GRPRAR1-LNX3345.00 - HOLT.CO3 345.00 345KV CKT 1	720	720	0.03268	108.8034	GEN652557 4-OAHE
FDNS	00NR	4	17SP	G15_042	FROM->TO	GRPRAR1-LNX3345.00 - HOLT.CO3 345.00 345KV CKT 1	720	720	0.03268	108.8034	GEN652558 6-OAHE
FDNS	00NR	4	17SP	G15_042	FROM->TO	GRPRAR1-LNX3345.00 - HOLT.CO3 345.00 345KV CKT 1	720	720	0.03268	108.8021	GEN659110 1-LELAND OLDS UNIT1
FDNS	00NR	4	17SP	G15_042	FROM->TO	GRPRAR1-LNX3345.00 - HOLT.CO3 345.00 345KV CKT 1	720	720	0.03268	108.7323	GEN657749 1-YOUNG 1 GENERATOR
FDNS	00NR	4	17SP	G15_042	FROM->TO	GRPRAR1-LNX3345.00 - HOLT.CO3 345.00 345KV CKT 1	720	720	0.03268	108.7154	GEN600006 1-AS KING
FDNS	00NR	4	17SP	G15_042	FROM->TO	GRPRAR1-LNX3345.00 - HOLT.CO3 345.00 345KV CKT 1	720	720	0.03268	108.6418	GEN652173 1-G09_001IS_2 0.6900
FDNS	00NR	4	17SP	G15_042	FROM->TO	GRPRAR1-LNX3345.00 - HOLT.CO3 345.00 345KV CKT 1	720	720	0.03475	108.59	GRAND ISLAND - MCCOOL 345KV CKT 1
FDNS	00NR	4	20SP	G15_042	FROM->TO	GRPRAR1-LNX3345.00 - HOLT.CO3 345.00 345KV CKT 1	720	720	0.03047	108.5192	WATERTN-LNX3345.00 - WHITE 345KV CKT 1
FDNS	00NR	4	20SP	G15_042	FROM->TO	GRPRAR1-LNX3345.00 - HOLT.CO3 345.00 345KV CKT 1	720	720	0.03047	108.4183	WATERTN-LNX3345.00 - WATERTOWN 345KV CKT Z
FDNS	00NR	4	20SP	G15_042	FROM->TO	GRPRAR1-LNX3345.00 - HOLT.CO3 345.00 345KV CKT 1	720	720	0.03047	108.4071	P12:345:UMZW:# 1747 #: WT2 IN SD. WT2-WHT LINE FAULT
FDNS	00NR	4	17SP	G15_042	FROM->TO	GRPRAR1-LNX3345.00 - HOLT.CO3 345.00 345KV CKT 1	720	720	0.03268	108.3513	GEN659407 1-ANTELPHILLSW0.6900
FDNS	00NR	4	20SP	G15_042	FROM->TO	GRPRAR1-LNX3345.00 - HOLT.CO3 345.00 345KV CKT 1	720	720	0.03104	108.2736	GEN336821 1-GRAND GULF UNIT
FDNS	00NR	4	20SP	G15_042	FROM->TO	GRPRAR1-LNX3345.00 - HOLT.CO3 345.00 345KV CKT 1	720	720	0.03104	108.2558	GEN635024 4-WALTER SCOTT UNIT 4
FDNS	00NR	4	20SP	G15_042	FROM->TO	GRPRAR1-LNX3345.00 - HOLT.CO3 345.00 345KV CKT 1	720	720	0.03482	108.2393	FT RANDAL - MEADOWGROVE4230.00 230KV CKT 1
FDNS	00NR	4	20SP	G15_042	FROM->TO	GRPRAR1-LNX3345.00 - HOLT.CO3 345.00 345KV CKT 1	720	720	0.03102	108.2271	CENTER - JAMESTOWN 345KV CKT 1

SOLUTION	GROUP	SCENARIO	SEASON	SOURCE	DIRECTION	MONITORED ELEMENT	RATEA (MVA)	RATEB(MVA)	TDF	TC%LOADING (% MVA)	CONTINGENCY
FDNS	00NR	4	17SP	G15_042	FROM->TO	GRPRAR1-LNX3345.00 - HOLT.CO3 345.00 345KV CKT 1	720	720	0.03268	108.1623	GEN600005 1-MONTICELLO
FDNS	00NR	4	20SP	G15_042	FROM->TO	GRPRAR1-LNX3345.00 - HOLT.CO3 345.00 345KV CKT 1	720	720	0.03105	107.9678	CHISAGO COUNTY - CHISAGO COUNTY 500KV CKT 1
FDNS	00NR	4	20SP	G15_042	FROM->TO	GRPRAR1-LNX3345.00 - HOLT.CO3 345.00 345KV CKT 1	720	720	0.03105	107.9399	CHISAGO COUNTY - FORBES 500KV CKT 1
FDNS	00NR	4	20SP	G15_042	FROM->TO	GRPRAR1-LNX3345.00 - HOLT.CO3 345.00 345KV CKT 1	720	720	0.03103	107.834	BISON 3 345.00 - BUFFALO 345KV CKT 1
FDNS	00NR	4	20SP	G15_042	FROM->TO	GRPRAR1-LNX3345.00 - HOLT.CO3 345.00 345KV CKT 1	720	720	0.02977	107.7725	LETCHER - SIOUX FALLS 230KV CKT 1
FDNS	00NR	4	20SP	G15_042	FROM->TO	GRPRAR1-LNX3345.00 - HOLT.CO3 345.00 345KV CKT 1	720	720	0.03104	107.7675	GEN635023 3-WALTER SCOTT UNIT 3
FDNS	00NR	4	20SP	G15_042	FROM->TO	GRPRAR1-LNX3345.00 - HOLT.CO3 345.00 345KV CKT 1	720	720	0.03104	107.7383	GEN562714 1-G15_023_4 0.6900
FDNS	00NR	4	20SP	G15_042	FROM->TO	GRPRAR1-LNX3345.00 - HOLT.CO3 345.00 345KV CKT 1	720	720	0.03104	107.7383	GEN562715 1-G15_023_5 0.6900
FDNS	00NR	4	20SP	G15_042	FROM->TO	GRPRAR1-LNX3345.00 - HOLT.CO3 345.00 345KV CKT 1	720	720	0.03104	107.7179	GEN344225 1-1CAL G1 25.000
FDNS	00NR	4	20SP	G15_042	FROM->TO	GRPRAR1-LNX3345.00 - HOLT.CO3 345.00 345KV CKT 1	720	720	0.03104	107.6355	GEN337911 1-ARKANSAS NUCLEAR ONE UNIT #2
FDNS	00NR	4	25SP	G15_042	FROM->TO	GRPRAR1-LNX3345.00 - HOLT.CO3 345.00 345KV CKT 1	720	720	0.0308	107.6314	WATERTN-LNX3345.00 - WHITE 345KV CKT 1
FDNS	00NR	4	25SP	G15_042	FROM->TO	GRPRAR1-LNX3345.00 - HOLT.CO3 345.00 345KV CKT 1	720	720	0.03135	107.62	CENTER - JAMESTOWN 345KV CKT 1
FDNS	00NR	4	20SP	G15_042	FROM->TO	GRPRAR1-LNX3345.00 - HOLT.CO3 345.00 345KV CKT 1	720	720	0.03104	107.6068	GEN336153 1-WATERFORD UNIT#3
FDNS	00NR	4	20SP	G15_042	FROM->TO	GRPRAR1-LNX3345.00 - HOLT.CO3 345.00 345KV CKT 1	720	720	0.03205	107.6049	MISSION - ST FRANCIS 115KV CKT 1
FDNS	00NR	4	20SP	G15_042	FROM->TO	GRPRAR1-LNX3345.00 - HOLT.CO3 345.00 345KV CKT 1	720	720	0.03205	107.5754	P12:115:NPPD:1091:VALENTN7:MISSION7:BTB
FDNS	00NR	4	20SP	G15_042	FROM->TO	GRPRAR1-LNX3345.00 - HOLT.CO3 345.00 345KV CKT 1	720	720	0.03202	107.5392	SIDNEY - SIDNEY1-LNX3345.00 345KV CKT Z
FDNS	00NR	4	25SP	G15_042	FROM->TO	GRPRAR1-LNX3345.00 - HOLT.CO3 345.00 345KV CKT 1	720	720	0.0308	107.5271	WATERTN-LNX3345.00 - WATERTOWN 345KV CKT Z
FDNS	00NR	4	25SP	G15_042	FROM->TO	GRPRAR1-LNX3345.00 - HOLT.CO3 345.00 345KV CKT 1	720	720	0.0308	107.5185	P12:345:UMZW:# 1747 #: WT2 IN SD. WT2-WHT LINE FAULT
FDNS	00NR	4	20SP	G15_042	FROM->TO	GRPRAR1-LNX3345.00 - HOLT.CO3 345.00 345KV CKT 1	720	720	0.03202	107.5162	KEYSTONE - SIDNEY1-LNX3345.00 345KV CKT 1
FDNS	00NR	4	17SP	G15_042	FROM->TO	GRPRAR1-LNX3345.00 - HOLT.CO3 345.00 345KV CKT 1	720	720	0.03268	107.5077	GEN600000 1-SHERBURNECNTY G1
FDNS	00NR	4	20SP	G15_042	FROM->TO	GRPRAR1-LNX3345.00 - HOLT.CO3 345.00 345KV CKT 1	720	720	0.03879	107.4302	NUNDRWD - WAYSIDE 230KV CKT 1
FDNS	00NR	4	20SP	G15_042	FROM->TO	GRPRAR1-LNX3345.00 - HOLT.CO3 345.00 345KV CKT 1	720	720	0.03205	107.4296	HARMONY - ST FRANCIS 115KV CKT 1
FDNS	00NR	4	20SP	G15_042	FROM->TO	GRPRAR1-LNX3345.00 - HOLT.CO3 345.00 345KV CKT 1	720	720	0.03081	107.4081	G09_001IST 345.00 - GROTON 345KV CKT 1
FDNS	00NR	4	25SP	G15_042	FROM->TO	GRPRAR1-LNX3345.00 - HOLT.CO3 345.00 345KV CKT 1	720	720	0.03519	107.3742	FT RANDAL - MEADOWGROVE4230.00 230KV CKT 1
FDNS	00NR	4	25SP	G15_042	FROM->TO	GRPRAR1-LNX3345.00 - HOLT.CO3 345.00 345KV CKT 1	720	720	0.03136	107.3021	GEN635024 4-WALTER SCOTT UNIT 4
FDNS	00NR	4	20SP	G15_042	FROM->TO	GRPRAR1-LNX3345.00 - HOLT.CO3 345.00 345KV CKT 1	720	720	0.03104	107.2978	GEN640010 1-GERALD GENTLEMAN STATION UNIT 1
FDNS	00NR	4	20SP	G15_042	FROM->TO	GRPRAR1-LNX3345.00 - HOLT.CO3 345.00 345KV CKT 1	720	720	0.03104	107.2609	GEN335831 1-RIVERBEND UNIT#1
FDNS	00NR	4	25SP	G15_042	FROM->TO	GRPRAR1-LNX3345.00 - HOLT.CO3 345.00 345KV CKT 1	720	720	0.03136	107.2469	BISON 3 345.00 - BUFFALO 345KV CKT 1
FDNS	00NR	4	25SP	G15_042	FROM->TO	GRPRAR1-LNX3345.00 - HOLT.CO3 345.00 345KV CKT 1	720	720	0.03136	107.241	GEN336821 1-GRAND GULF UNIT
FDNS	00NR	4	25SP	G15_042	FROM->TO	GRPRAR1-LNX3345.00 - HOLT.CO3 345.00 345KV CKT 1	720	720	0.03137	107.2371	CHISAGO COUNTY - CHISAGO COUNTY 500KV CKT 1
FDNS	00NR	4	25SP	G15_042	FROM->TO	GRPRAR1-LNX3345.00 - HOLT.CO3 345.00 345KV CKT 1	720	720	0.03136	107.2108	GEN640010 1-GERALD GENTLEMAN STATION UNIT 1
FDNS	00NR	4	20SP	G15_042	FROM->TO	GRPRAR1-LNX3345.00 - HOLT.CO3 345.00 345KV CKT 1	720	720	0.03104	107.2053	GEN640011 2-GERALD GENTLEMAN STATION UNIT 2
FDNS	00NR	4	25SP	G15_042	FROM->TO	GRPRAR1-LNX3345.00 - HOLT.CO3 345.00 345KV CKT 1	720	720	0.03137	107.1818	CHISAGO COUNTY - FORBES 500KV CKT 1
FDNS	00NR	4	25SP	G15_042	FROM->TO	GRPRAR1-LNX3345.00 - HOLT.CO3 345.00 345KV CKT 1	720	720	0.02965	107.1751	SPLIT ROCK - WHITE 345KV CKT 1
FDNS	00NR	4	25SP	G15_042	FROM->TO	GRPRAR1-LNX3345.00 - HOLT.CO3 345.00 345KV CKT 1	720	720	0.02965	107.1751	SPLIT ROCK - WHITE 345KV CKT 1
FDNS	00NR	4	20SP	G15_042	FROM->TO	GRPRAR1-LNX3345.00 - HOLT.CO3 345.00 345KV CKT 1	720	720	0.03205	107.1687	HARMONY - VALENTINE 115KV CKT 1
FDNS	00NR	4	20SP	G15_042	FROM->TO	GRPRAR1-LNX3345.00 - HOLT.CO3 345.00 345KV CKT 1	720	720	0.03104	107.1663	GEN337910 1-ARKANSAS NUCLEAR ONE UNIT #1
FDNS	00NR	4	17SP	G15_042	FROM->TO	GRPRAR1-LNX3345.00 - HOLT.CO3 345.00 345KV CKT 1	720	720	0.03268	107.1544	GEN600001 2-SHERBURNE CNTY G2
FDNS	00NR	4	20SP	G15_042	FROM->TO	GRPRAR1-LNX3345.00 - HOLT.CO3 345.00 345KV CKT 1	720	720	0.03264	107.0505	FT RANDAL - SPENCER 115KV CKT 1
FDNS	00NR	4	20SP	G15_042	FROM->TO	GRPRAR1-LNX3345.00 - HOLT.CO3 345.00 345KV CKT 1	720	720	0.03264	107.0257	P12:115:NPPD:WAPA6:FTRANDL7:ONEILL 7:BTB
FDNS	00NR	4	20SP	G15_042	FROM->TO	GRPRAR1-LNX3345.00 - HOLT.CO3 345.00 345KV CKT 1	720	720	0.03264	107.0257	P12:115:UMZB:# 115 #: SE IN NE. FR-SE-ON
FDNS	00NR	4	25SP	G15_042	FROM->TO	GRPRAR1-LNX3345.00 - HOLT.CO3 345.00 345KV CKT 1	720	720	0.03136	106.9886	GEN562714 1-G15_023_4 0.6900
FDNS	00NR	4	25SP	G15_042	FROM->TO	GRPRAR1-LNX3345.00 - HOLT.CO3 345.00 345KV CKT 1	720	720	0.03136	106.9886	GEN562715 1-G15_023_5 0.6900
FDNS	00NR	4	25SP	G15_042	FROM->TO	GRPRAR1-LNX3345.00 - HOLT.CO3 345.00 345KV CKT 1	720	720	0.03009	106.9709	LETCHER - SIOUX FALLS 230KV CKT 1
FDNS	00NR	4	25SP	G15_042	FROM->TO	GRPRAR1-LNX3345.00 - HOLT.CO3 345.00 345KV CKT 1	720	720	0.03238	106.9107	MISSION - ST FRANCIS 115KV CKT 1
FDNS	00NR	4	20SP	G15_042	FROM->TO	GRPRAR1-LNX3345.00 - HOLT.CO3 345.00 345KV CKT 1	720	720	0.03264	106.9077	ONEILL - SPENCER 115KV CKT 1
FDNS	00NR	4	25SP	G15_042	FROM->TO	GRPRAR1-LNX3345.00 - HOLT.CO3 345.00 345KV CKT 1	720	720	0.03136	106.9001	GEN640011 2-GERALD GENTLEMAN STATION UNIT 2
FDNS	00NR	4	20SP	G15_042	FROM->TO	GRPRAR1-LNX3345.00 - HOLT.CO3 345.00 345KV CKT 1	720	720	0.03079	106.8903	GROTON-LNX3 345.00 - LELAND1-LNX3345.00 345KV CKT 1
FDNS	00NR	4	25SP	G15_042	FROM->TO	GRPRAR1-LNX3345.00 - HOLT.CO3 345.00 345KV CKT 1	720	720	0.03136	106.8391	GEN635023 3-WALTER SCOTT UNIT 3
FDNS	00NR	4	20SP	G15_042	FROM->TO	GRPRAR1-LNX3345.00 - HOLT.CO3 345.00 345KV CKT 1	720	720	0.03079	106.8337	GROTON - GROTON-LNX3 345.00 345KV CKT Z
FDNS	00NR	4	20SP	G15_042	FROM->TO	GRPRAR1-LNX3345.00 - HOLT.CO3 345.00 345KV CKT 1	720	720	0.03079	106.832	P12:345:UMZB:# 109 #: LOS GRT IN ND. LOS GRT
FDNS	00NR	4	20SP	G15_042	FROM->TO	GRPRAR1-LNX3345.00 - HOLT.CO3 345.00 345KV CKT 1	720	720	0.03079	106.8257	LELAND OLDS - LELAND1-LNX3345.00 345KV CKT Z
FDNS	00NR	4	25SP	G15_042	FROM->TO	GRPRAR1-LNX3345.00 - HOLT.CO3 345.00 345KV CKT 1	720	720	0.03234	106.8022	KEYSTONE - SIDNEY1-LNX3345.00 345KV CKT 1
FDNS	00NR	4	20SP	G15_042	FROM->TO	GRPRAR1-LNX3345.00 - HOLT.CO3 345.00 345KV CKT 1	720	720	0.03025	106.8019	HANLON - SIOUX FALLS 230KV CKT 1
FDNS	00NR	4	25SP	G15_042	FROM->TO	GRPRAR1-LNX3345.00 - HOLT.CO3 345.00 345KV CKT 1	720	720	0.03234	106.8016	SIDNEY - SIDNEY1-LNX3345.00 345KV CKT Z
FDNS	00NR	4	25SP	G15_042	FROM->TO	GRPRAR1-LNX3345.00 - HOLT.CO3 345.00 345KV CKT 1	720	720	0.03136	106.8	GEN337911 1-ARKANSAS NUCLEAR ONE UNIT #2
FDNS	00NR	4	20SP	G15_042	FROM->TO	GRPRAR1-LNX3345.00 - HOLT.CO3 345.00 345KV CKT 1	720	720	0.06247	106.7929	DIXONCO 230.00 - HOSKINS 230KV CKT 1
FDNS	00NR	4	25SP	G15_042	FROM->TO	GRPRAR1-LNX3345.00 - HOLT.CO3 345.00 345KV CKT 1	720	720	0.03238	106.7206	HARMONY - ST FRANCIS 115KV CKT 1
FDNS	00NR	4	25SP	G15_042	FROM->TO	GRPRAR1-LNX3345.00 - HOLT.CO3 345.00 345KV CKT 1	720	720	0.03136	106.7064	GEN344225 1-1CAL G1 25.000
FDNS	00NR	4	20SP	G15_042	FROM->TO	GRPRAR1-LNX3345.00 - HOLT.CO3 345.00 345KV CKT 1	720	720	0.03133	106.7053	GERALD GENTLEMAN STATION - KEYSTONE 345KV CKT 1
FDNS	00NR	4	20SP	G15_042	FROM->TO	GRPRAR1-LNX3345.00 - HOLT.CO3 345.00 345KV CKT 1	720	720	0.03202	106.6875	LAKEFIELD 3 - NOBLES 345KV CKT 1
FDNS	00NR	4	17SP	G15_042	FROM->TO	GRPRAR1-LNX3345.00 - HOLT.CO3 345.00 345KV CKT 1	720	720	0.03268	106.6817	GEN620315 1-BIG STONE GEN
FDNS	00NR	4	25SP	G15_042	FROM->TO	GRPRAR1-LNX3345.00 - HOLT.CO3 345.00 345KV CKT 1	720	720	0.03113	106.6757	G09_001IST 345.00 - GROTON 345KV CKT 1
FDNS	00NR	4	20SP	G15_042	FROM->TO	GRPRAR1-LNX3345.00 - HOLT.CO3 345.00 345KV CKT 1	720	720	0.03104	106.675	GEN337653 1-WHITE BLUFF UNIT #2
FDNS	00NR	4	17SP	G15_042	FROM->TO	GRPRAR1-LNX3345.00 - HOLT.CO3 345.00 345KV CKT 1	720	720	0.03268	106.6605	GEN661015 1-COYOTE
FDNS	00NR	4	20SP	G15_042	FROM->TO	GRPRAR1-LNX3345.00 - HOLT.CO3 345.00 345KV CKT 1	720	720	0.03104	106.6226	GEN337652 1-WHITE BLUFF UNIT #1
FDNS	00NR	4	25SP	G15_042	FROM->TO	GRPRAR1-LNX3345.00 - HOLT.CO3 345.00 345KV CKT 1	720	720	0.03136	106.6168	GEN336153 1-WATERFORD UNIT#3
FDNS	00NR	4	20SP	G15_042	FROM->TO	GRPRAR1-LNX3345.00 - HOLT.CO3 345.00 345KV CKT 1	720	720	0.03531	106.6095	RAUN - SUB 3451 FT CAL 345KV CKT 1
FDNS	00NR	4	20SP	G15_042	FROM->TO	GRPRAR1-LNX3345.00 - HOLT.CO3 345.00 345KV CKT 1	720	720	0.03531	106.6095	RAUN - SUB 3451 FT CAL 345KV CKT 1
FDNS	00NR	4	20SP	G15_042	FROM->TO	GRPRAR1-LNX3345.00 - HOLT.CO3 345.00 345KV CKT 1	720	720	0.03246	106.6049	SIDNEY - STEGALL 345KV CKT 1
FDNS	00NR	4	20SP	G15_042	FROM->TO	GRPRAR1-LNX3345.00 - HOLT.CO3 345.00 345KV CKT 1	720	720	0.03205	106.6031	AINSWORTH - VALENTINE 115KV CKT 1
FDNS	00NR	4	25SP	G15_042	FROM->TO	GRPRAR1-LNX3345.00 - HOLT.CO3 345.00 345KV CKT 1	720	720	0.03908	106.6006	NUNDRWD - WAYSIDE 230KV CKT 1
FDNS	00NR	4	20SP	G15_042	FROM->TO	GRPRAR1-LNX3345.00 - HOLT.CO3 345.00 345KV CKT 1	720	720	0.03127	106.5958	ARROWHEAD - ARROWHEAD 230 230KV CKT 1
FDNS	00NR	4	20SP	G15_042	FROM->TO	GRPRAR1-LNX3345.00 - HOLT.CO3 345.00 345KV CKT 1	720	720	0.03104	106.5676	GEN338146 1-INDEPENDENCE UNIT #2
FDNS	00NR	4	20SP	G15_042	FROM->TO	GRPRAR1-LNX3345.00 - HOLT.CO3 345.00 345KV CKT 1	720	720	0.03104	106.5641	GEN338143 1-INDEPENDENCE UNIT #1
FDNS	00NR	4	20SP	G15_042	FROM->TO	GRPRAR1-LNX3345.00 - HOLT.CO3 345.00 345KV CKT 1	720	720	0.03104	106.5416	GEN501801 1-DOLET HILLS UNIT1
FDNS	00NR	4	20SP	G15_042	FROM->TO	GRPRAR1-LNX3345.00 - HOLT.CO3 345.00 345KV CKT 1	720	720	0.0314	106.5118	BROOKING COUNTY - LYON COUNTY 345KV CKT 1
FDNS	00NR	4	20SP	G15_042	FROM->TO	GRPRAR1-LNX3345.00 - HOLT.CO3 345.00 345KV CKT 1	720	720	0.03109	106.5041	ALEXMRES3 345.00 - BISON 3 345.00 345KV CKT 1
FDNS	00NR	4	17SP	G15_042	FROM->TO	GRPRAR1-LNX3345.00 - HOLT.CO3 345.00 345KV CKT 1	720	720	0.03268	106.4545	GEN600002 3-SHERBURNE CNTY G3

SOLUTION	GROUP	SCENARIO	SEASON	SOURCE	DIRECTION	MONITORED ELEMENT	RATEA (MVA)	RATEB(MVA)	TDF	TC%LOADING (% MVA)	CONTINGENCY
FDNS	00NR	4	20SP	G15_042	FROM->TO	GRPRAR1-LNX3345.00 - HOLT.CO3 345.00 345KV CKT 1	720	720	0.03131	106.4291	AS KING - EAU CLAIRE 345KV CKT 1
FDNS	00NR	4	20SP	G15_042	FROM->TO	GRPRAR1-LNX3345.00 - HOLT.CO3 345.00 345KV CKT 1	720	720	0.03104	106.4026	GEN336252 1-NINEMILE POINT UNIT#5
FDNS	00NR	4	20SP	G15_042	FROM->TO	GRPRAR1-LNX3345.00 - HOLT.CO3 345.00 345KV CKT 1	720	720	0.03094	106.3892	CARPENTER - HURON 230KV CKT 1
FDNS	00NR	4	25SP	G15_042	FROM->TO	GRPRAR1-LNX3345.00 - HOLT.CO3 345.00 345KV CKT 1	720	720	0.03296	106.3855	FT RANDAL - SPENCER 115KV CKT 1
FDNS	00NR	4	25SP	G15_042	FROM->TO	GRPRAR1-LNX3345.00 - HOLT.CO3 345.00 345KV CKT 1	720	720	0.03296	106.356	P12:115:NPPD:WAPA6:FTRANDL7:ONEILL 7:BTB
FDNS	00NR	4	25SP	G15_042	FROM->TO	GRPRAR1-LNX3345.00 - HOLT.CO3 345.00 345KV CKT 1	720	720	0.03296	106.356	P12:115:UMZB:# 115 #: SE IN NE. FR-SE-ON
FDNS	00NR	4	20SP	G15_042	FROM->TO	GRPRAR1-LNX3345.00 - HOLT.CO3 345.00 345KV CKT 1	720	720	0.03104	106.3224	GEN336251 1-NINEMILE POINT UNIT#4
FDNS	00NR	4	20SP	G15_042	FROM->TO	GRPRAR1-LNX3345.00 - HOLT.CO3 345.00 345KV CKT 1	720	720	0.03104	106.3039	GEN336831 1-BAXTER WILSON SES
FDNS	00NR	4	25SP	G15_042	FROM->TO	GRPRAR1-LNX3345.00 - HOLT.CO3 345.00 345KV CKT 1	720	720	0.03136	106.2961	GEN335831 1-RIVERBEND UNIT#1
FDNS	00NR	4	20SP	G15_042	FROM->TO	GRPRAR1-LNX3345.00 - HOLT.CO3 345.00 345KV CKT 1	720	720	0.03094	106.2868	HURON - WATERTOWN 230KV CKT 2
FDNS	00NR	4	20SP	G15_042	FROM->TO	GRPRAR1-LNX3345.00 - HOLT.CO3 345.00 345KV CKT 1	720	720	0.03094	106.2868	HURON - WATERTOWN 230KV CKT 2
FDNS	00NR	4	20SP	G15_042	FROM->TO	GRPRAR1-LNX3345.00 - HOLT.CO3 345.00 345KV CKT 1	720	720	0.03104	106.2508	GEN337041 1-GERALD ANDRUS
FDNS	00NR	4	20SP	G15_042	FROM->TO	GRPRAR1-LNX3345.00 - HOLT.CO3 345.00 345KV CKT 1	720	720	0.03094	106.2456	CARPENTER - WATERTOWN 230KV CKT 1
FDNS	00NR	4	20SP	G15_042	FROM->TO	GRPRAR1-LNX3345.00 - HOLT.CO3 345.00 345KV CKT 1	720	720	0.03094	106.2456	CARPENTER - WATERTOWN 230KV CKT 1
FDNS	00NR	4	25SP	G15_042	FROM->TO	GRPRAR1-LNX3345.00 - HOLT.CO3 345.00 345KV CKT 1	720	720	0.03136	106.234	GEN337910 1-ARKANSAS NUCLEAR ONE UNIT #1
FDNS	00NR	4	25SP	G15_042	FROM->TO	GRPRAR1-LNX3345.00 - HOLT.CO3 345.00 345KV CKT 1	720	720	0.03296	106.2313	ONEILL - SPENCER 115KV CKT 1
FDNS	00NR	4	20SP	G15_042	FROM->TO	GRPRAR1-LNX3345.00 - HOLT.CO3 345.00 345KV CKT 1	720	720	0.03104	106.2181	GEN501813 1-RODEMACHER UNIT 3
FDNS	00NR	4	20SP	G15_042	FROM->TO	GRPRAR1-LNX3345.00 - HOLT.CO3 345.00 345KV CKT 1	720	720	0.03161	106.2176	HAZLETON - MITCHLCO3 345.00 345KV CKT 1
FDNS	00NR	4	17SP	G15_042	FROM->TO	GRPRAR1-LNX3345.00 - HOLT.CO3 345.00 345KV CKT 1	720	720	0.03268	106.2118	GEN657748 1-YOUNG 2 GENERATOR
FDNS	00NR	4	25SP	G15_042	FROM->TO	GRPRAR1-LNX3345.00 - HOLT.CO3 345.00 345KV CKT 1	720	720	0.03111	106.1808	GROTON-LNX3 345.00 - LELAND1-LNX3345.00 345KV CKT 1
FDNS	00NR	4	20SP	G15_042	FROM->TO	GRPRAR1-LNX3345.00 - HOLT.CO3 345.00 345KV CKT 1	720	720	0.03131	106.156	G15094_T 345.00 - SIDNEY2-LNX3345.00 345KV CKT 1
FDNS	00NR	4	20SP	G15_042	FROM->TO	GRPRAR1-LNX3345.00 - HOLT.CO3 345.00 345KV CKT 1	720	720	0.03105	106.1551	CNTSHNT3 345.00 - PRAIRIE3 345.00 345KV CKT 1
FDNS	00NR	4	20SP	G15_042	FROM->TO	GRPRAR1-LNX3345.00 - HOLT.CO3 345.00 345KV CKT 1	720	720	0.03131	106.1486	SIDNEY - SIDNEY2-LNX3345.00 345KV CKT Z
FDNS	00NR	4	25SP	G15_042	FROM->TO	GRPRAR1-LNX3345.00 - HOLT.CO3 345.00 345KV CKT 1	720	720	0.03111	106.1347	GROTON - GROTON-LNX3 345.00 345KV CKT Z
FDNS	00NR	4	25SP	G15_042	FROM->TO	GRPRAR1-LNX3345.00 - HOLT.CO3 345.00 345KV CKT 1	720	720	0.03111	106.1332	P12:345:UMZB:# 109 #: LOS GRT IN ND. LOS GRT
FDNS	00NR	4	25SP	G15_042	FROM->TO	GRPRAR1-LNX3345.00 - HOLT.CO3 345.00 345KV CKT 1	720	720	0.03111	106.1267	LELAND OLDS - LELAND1-LNX3345.00 345KV CKT Z
FDNS	00NR	4	20SP	G15_042	FROM->TO	GRPRAR1-LNX3345.00 - HOLT.CO3 345.00 345KV CKT 1	720	720	0.03104	106.0493	GEN335206 1-NELSON UNIT 6
FDNS	00NR	4	25SP	G15_042	FROM->TO	GRPRAR1-LNX3345.00 - HOLT.CO3 345.00 345KV CKT 1	720	720	0.06279	106.0353	DIXONCO 230.00 - HOSKINS 230KV CKT 1
FDNS	00NR	4	20SP	G15_042	FROM->TO	GRPRAR1-LNX3345.00 - HOLT.CO3 345.00 345KV CKT 1	720	720	0.03104	106.0192	GEN635214 4-NEAL UNIT 4
FDNS	00NR	4	20SP	G15_042	FROM->TO	GRPRAR1-LNX3345.00 - HOLT.CO3 345.00 345KV CKT 1	720	720	0.03104	106.0128	GEN344897 4-1LAB G4 20.000
FDNS	00NR	4	20SP	G15_042	FROM->TO	GRPRAR1-LNX3345.00 - HOLT.CO3 345.00 345KV CKT 1	720	720	0.03104	106.0113	GEN344894 1-1LAB G1 20.000
FDNS	00NR	4	20SP	G15_042	FROM->TO	GRPRAR1-LNX3345.00 - HOLT.CO3 345.00 345KV CKT 1	720	720	0.03104	106.0112	GEN344895 2-1LAB G2 20.000
FDNS	00NR	4	20SP	G15_042	FROM->TO	GRPRAR1-LNX3345.00 - HOLT.CO3 345.00 345KV CKT 1	720	720	0.03104	106.011	GEN344896 3-1LAB G3 20.000
FDNS	00NR	4	20SP	G15_042	FROM->TO	GRPRAR1-LNX3345.00 - HOLT.CO3 345.00 345KV CKT 1	720	720	0.03104	106.0057	GEN334440 1-SABINE UNIT 4
FDNS	00NR	4	20SP	G15_042	FROM->TO	GRPRAR1-LNX3345.00 - HOLT.CO3 345.00 345KV CKT 1	720	720	0.03135	105.982	ARPIN B4 345.00 - EAU CLAIRE 345KV CKT 1
FDNS	00NR	4	25SP	G15_042	FROM->TO	GRPRAR1-LNX3345.00 - HOLT.CO3 345.00 345KV CKT 1	720	720	0.03057	105.9656	HANLON - SIOUX FALLS 230KV CKT 1
FDNS	00NR	4	17SP	G15_042	FROM->TO	GRPRAR1-LNX3345.00 - HOLT.CO3 345.00 345KV CKT 1	720	720	0.03268	105.9629	GEN562872 1-G15046_3 0.6900
FDNS	00NR	4	20SP	G15_042	FROM->TO	GRPRAR1-LNX3345.00 - HOLT.CO3 345.00 345KV CKT 1	720	720	0.03104	105.9586	GEN345671 2-1RUSH G2 18.000
FDNS	00NR	4	25SP	G15_042	FROM->TO	GRPRAR1-LNX3345.00 - HOLT.CO3 345.00 345KV CKT 1	720	720	0.03233	105.957	LAKEFIELD 3 - NOBLES 345KV CKT 1
FDNS	00NR	4	20SP	G15_042	FROM->TO	GRPRAR1-LNX3345.00 - HOLT.CO3 345.00 345KV CKT 1	720	720	0.03104	105.9543	GEN345670 1-1RUSH G1 18.000
FDNS	00NR	4	25SP	G15_042	FROM->TO	GRPRAR1-LNX3345.00 - HOLT.CO3 345.00 345KV CKT 1	720	720	0.03166	105.9408	GERALD GENTLEMAN STATION - KEYSTONE 345KV CKT 1
FDNS	00NR	4	20SP	G15_042	FROM->TO	GRPRAR1-LNX3345.00 - HOLT.CO3 345.00 345KV CKT 1	720	720	0.03104	105.9145	GEN501812 1-RODEMACHER UNIT 2
FDNS	00NR	4	25SP	G15_042	FROM->TO	GRPRAR1-LNX3345.00 - HOLT.CO3 345.00 345KV CKT 1	720	720	0.03136	105.9	GEN338143 1-INDEPENDENCE UNIT #1
FDNS	00NR	4	25SP	G15_042	FROM->TO	GRPRAR1-LNX3345.00 - HOLT.CO3 345.00 345KV CKT 1	720	720	0.03136	105.9	GEN338146 1-INDEPENDENCE UNIT #2
FDNS	00NR	4	20SP	G15_042	FROM->TO	GRPRAR1-LNX3345.00 - HOLT.CO3 345.00 345KV CKT 1	720	720	0.03104	105.8817	GEN336191 1-LITTLE GYPSY UNIT#3
FDNS	00NR	4	20SP	G15_042	FROM->TO	GRPRAR1-LNX3345.00 - HOLT.CO3 345.00 345KV CKT 1	720	720	0.03104	105.8585	GEN338388 1-1PLUM PT U1 23.000
FDNS	00NR	4	20SP	G15_042	FROM->TO	GRPRAR1-LNX3345.00 - HOLT.CO3 345.00 345KV CKT 1	720	720	0.03104	105.8564	GEN629075 1-OTTUMWA GENERATOR FOR OTTUMWA UNIT NO 1
FDNS	00NR	4	25SP	G15_042	FROM->TO	GRPRAR1-LNX3345.00 - HOLT.CO3 345.00 345KV CKT 1	720	720	0.03238	105.8384	AINSWORTH - VALENTINE 115KV CKT 1
FDNS	00NR	4	25SP	G15_042	FROM->TO	GRPRAR1-LNX3345.00 - HOLT.CO3 345.00 345KV CKT 1	720	720	0.02962	105.8377	PAHOJA - SIOUX FALLS 230KV CKT 1
FDNS	00NR	4	25SP	G15_042	FROM->TO	GRPRAR1-LNX3345.00 - HOLT.CO3 345.00 345KV CKT 1	720	720	0.03562	105.8335	RAUN - SUB 3451 FT CAL 345KV CKT 1
FDNS	00NR	4	25SP	G15_042	FROM->TO	GRPRAR1-LNX3345.00 - HOLT.CO3 345.00 345KV CKT 1	720	720	0.03562	105.8335	RAUN - SUB 3451 FT CAL 345KV CKT 1
FDNS	00NR	4	25SP	G15_042	FROM->TO	GRPRAR1-LNX3345.00 - HOLT.CO3 345.00 345KV CKT 1	720	720	0.03277	105.8328	SIDNEY - STEGALL 345KV CKT 1
FDNS	00NR	4	25SP	G15_042	FROM->TO	GRPRAR1-LNX3345.00 - HOLT.CO3 345.00 345KV CKT 1	720	720	0.03172	105.8264	BROOKING COUNTY - LYON COUNTY 345KV CKT 1
FDNS	00NR	4	20SP	G15_042	FROM->TO	GRPRAR1-LNX3345.00 - HOLT.CO3 345.00 345KV CKT 1	720	720	0.03104	105.8156	GEN335614 1-WILLOW GLENN UNIT#4
FDNS	00NR	4	20SP	G15_042	FROM->TO	GRPRAR1-LNX3345.00 - HOLT.CO3 345.00 345KV CKT 1	720	720	0.03104	105.8035	GEN336801 1-BAXTER WILSON UNIT #1
FDNS	00NR	4	20SP	G15_042	FROM->TO	GRPRAR1-LNX3345.00 - HOLT.CO3 345.00 345KV CKT 1	720	720	0.03104	105.8003	GEN336464 1-MICHOUD UNIT #3
FDNS	00NR	4	20SP	G15_042	FROM->TO	GRPRAR1-LNX3345.00 - HOLT.CO3 345.00 345KV CKT 1	720	720	0.03104	105.7893	GEN335204 1-NELSON UNIT 4
FDNS	00NR	4	20SP	G15_042	FROM->TO	GRPRAR1-LNX3345.00 - HOLT.CO3 345.00 345KV CKT 1	720	720	0.03104	105.7796	GEN334441 1-SABINE UNIT 5
FDNS	00NR	4	25SP	G15_042	FROM->TO	GRPRAR1-LNX3345.00 - HOLT.CO3 345.00 345KV CKT 1	720	720	0.03142	105.7739	ALEXMRES3 345.00 - BISON 3 345.00 345KV CKT 1
FDNS	00NR	4	20SP	G15_042	FROM->TO	GRPRAR1-LNX3345.00 - HOLT.CO3 345.00 345KV CKT 1	720	720	0.03258	105.7644	GRIMES - LEHIGH 345KV CKT 1
FDNS	00NR	4	25SP	G15_042	FROM->TO	GRPRAR1-LNX3345.00 - HOLT.CO3 345.00 345KV CKT 1	720	720	0.03136	105.762	GEN337653 1-WHITE BLUFF UNIT #2
FDNS	00NR	4	20SP	G15_042	FROM->TO	GRPRAR1-LNX3345.00 - HOLT.CO3 345.00 345KV CKT 1	720	720	0.03126	105.7548	NORTH LA CROSSE - NORTH ROCHESTER 345KV CKT 1
FDNS	00NR	4	25SP	G15_042	FROM->TO	GRPRAR1-LNX3345.00 - HOLT.CO3 345.00 345KV CKT 1	720	720	0.03159	105.7268	ARROWHEAD - ARROWHEAD 230 230KV CKT 1
FDNS	00NR	4	20SP	G15_042	FROM->TO	GRPRAR1-LNX3345.00 - HOLT.CO3 345.00 345KV CKT 1	720	720	0.03159	105.6993	KOSSUTH 3 345.00 - WEBSTER 345KV CKT 1
FDNS	00NR	4	17SP	G15_042	FROM->TO	GRPRAR1-LNX3345.00 - HOLT.CO3 345.00 345KV CKT 1	720	720	0.03268	105.6626	GEN659111 2-LELAND OLDS UNIT2
FDNS	00NR	4	20SP	G15_042	FROM->TO	GRPRAR1-LNX3345.00 - HOLT.CO3 345.00 345KV CKT 1	720	720	0.03104	105.6609	P12:115:UMZW:# 162 #: NEL IN ND. FAULT ON ML-NEL-MX-GA 115 KV
FDNS	00NR	4	25SP	G15_042	FROM->TO	GRPRAR1-LNX3345.00 - HOLT.CO3 345.00 345KV CKT 1	720	720	0.03136	105.6593	GEN501801 1-DOLET HILLS UNIT1
FDNS	00NR	4	20SP	G15_042	FROM->TO	GRPRAR1-LNX3345.00 - HOLT.CO3 345.00 345KV CKT 1	720	720	0.03104	105.6576	GEN563222 1-G15088_3 0.6900
FDNS	00NR	4	20SP	G15_042	FROM->TO	GRPRAR1-LNX3345.00 - HOLT.CO3 345.00 345KV CKT 1	720	720	0.03104	105.6451	GEN334433 1-SABINE UNIT 3
FDNS	00NR	4	20SP	G15_042	FROM->TO	GRPRAR1-LNX3345.00 - HOLT.CO3 345.00 345KV CKT 1	720	720	0.03085	105.6441	BROOKING COUNTY - BSSOUTH3 345.00 345KV CKT 1
FDNS	00NR	4	25SP	G15_042	FROM->TO	GRPRAR1-LNX3345.00 - HOLT.CO3 345.00 345KV CKT 1	720	720	0.03126	105.6436	CARPENTER - HURON 230KV CKT 1
FDNS	00NR	4	20SP	G15_042	FROM->TO	GRPRAR1-LNX3345.00 - HOLT.CO3 345.00 345KV CKT 1	720	720	0.03104	105.6385	GEN635213 3-NEAL UNIT 3
FDNS	00NR	4	20SP	G15_042	FROM->TO	GRPRAR1-LNX3345.00 - HOLT.CO3 345.00 345KV CKT 1	720	720	0.03037	105.6035	MENNO JCT - TRIPP JCT 115KV CKT 1
FDNS	00NR	4	20SP	G15_042	FROM->TO	GRPRAR1-LNX3345.00 - HOLT.CO3 345.00 345KV CKT 1	720	720	0.03094	105.6013	HESKETT - WISHEK 230KV CKT 1
FDNS	00NR	4	20SP	G15_042	FROM->TO	GRPRAR1-LNX3345.00 - HOLT.CO3 345.00 345KV CKT 1	720	720	0.03358	105.5975	BLOOMFIELD - CREIGHTON 115KV CKT 1
FDNS	00NR	4	25SP	G15_042	FROM->TO	GRPRAR1-LNX3345.00 - HOLT.CO3 345.00 345KV CKT 1	720	720	0.03163	105.5942	AS KING - EAU CLAIRE 345KV CKT 1
FDNS	00NR	4	20SP	G15_042	FROM->TO	GRPRAR1-LNX3345.00 - HOLT.CO3 345.00 345KV CKT 1	720	720	0.03135	105.5935	NMA B3 345 345.00 - NORTH LA CROSSE 345KV CKT 1
FDNS	00NR	4	20SP	G15_042	FROM->TO	GRPRAR1-LNX3345.00 - HOLT.CO3 345.00 345KV CKT 1	720	720	0.03161	105.588	ADAMS - MITCHLCO3 345.00 345KV CKT 1
FDNS	00NR	4	20SP	G15_042	FROM->TO	GRPRAR1-LNX3345.00 - HOLT.CO3 345.00 345KV CKT 1	720	720	0.03103	105.5851	CENTER - COYOTE 345KV CKT 1

SOLUTION	GROUP	SCENARIO	SEASON	SOURCE	DIRECTION	MONITORED ELEMENT	RATEA (MVA)	RATEB(MVA)	TDF	TC%LOADING (% MVA)	CONTINGENCY
FDNS	00NR	4	20SP	G15_042	FROM->TO	GRPRAR1-LNX3345.00 - HOLT.CO3 345.00 345KV CKT 1	720	720	0.03734	105.576	RAUN - SIOUX CITY 345KV CKT 1
FDNS	00NR	4	20SP	G15_042	FROM->TO	GRPRAR1-LNX3345.00 - HOLT.CO3 345.00 345KV CKT 1	720	720	0.03734	105.576	RAUN - SIOUX CITY 345KV CKT 1
FDNS	00NR	4	20SP	G15_042	FROM->TO	GRPRAR1-LNX3345.00 - HOLT.CO3 345.00 345KV CKT 1	720	720	0.03104	105.5745	GEN336222 1-LITTLE GYPSY UNIT#2
FDNS	00NR	4	25SP	G15_042	FROM->TO	GRPRAR1-LNX3345.00 - HOLT.CO3 345.00 345KV CKT 1	720	720	0.03137	105.5597	CNTSHNT3 345.00 - PRAIRIE3 345.00 345KV CKT 1
FDNS	00NR	4	20SP	G15_042	FROM->TO	GRPRAR1-LNX3345.00 - HOLT.CO3 345.00 345KV CKT 1	720	720	0.03108	105.5526	GLENBORO SOUTH - RUGBY 230KV CKT 1
FDNS	00NR	4	20SP	G15_042	FROM->TO	GRPRAR1-LNX3345.00 - HOLT.CO3 345.00 345KV CKT 1	720	720	0.03104	105.5473	GARRISON - JAMES TOWN 230KV CKT 1
FDNS	00NR	4	25SP	G15_042	FROM->TO	GRPRAR1-LNX3345.00 - HOLT.CO3 345.00 345KV CKT 1	720	720	0.03192	105.5463	HAZLETON - MITCHLCO3 345.00 345KV CKT 1
FDNS	00NR	4	25SP	G15_042	FROM->TO	GRPRAR1-LNX3345.00 - HOLT.CO3 345.00 345KV CKT 1	720	720	0.03126	105.538	HURON - WATERTOWN 230KV CKT 2
FDNS	00NR	4	25SP	G15_042	FROM->TO	GRPRAR1-LNX3345.00 - HOLT.CO3 345.00 345KV CKT 1	720	720	0.03126	105.538	HURON - WATERTOWN 230KV CKT 2
FDNS	00NR	4	20SP	G15_042	FROM->TO	GRPRAR1-LNX3345.00 - HOLT.CO3 345.00 345KV CKT 1	720	720	0.03094	105.5355	MERRCRT4 230.00 - WISHEK 230KV CKT 1
FDNS	00NR	4	20SP	G15_042	FROM->TO	GRPRAR1-LNX3345.00 - HOLT.CO3 345.00 345KV CKT 1	720	720	0.03104	105.5251	GEN336152 1-WATERFORD UNIT#2
FDNS	00NR	4	20SP	G15_042	FROM->TO	GRPRAR1-LNX3345.00 - HOLT.CO3 345.00 345KV CKT 1	720	720	0.03104	105.525	GEN336151 1-WATERFORD UNIT#1
FDNS	00NR	4	20SP	G15_042	FROM->TO	GRPRAR1-LNX3345.00 - HOLT.CO3 345.00 345KV CKT 1	720	720	0.03104	105.5097	GEN531447 1-HOLCOMB GENERATOR
FDNS	00NR	4	20SP	G15_042	FROM->TO	GRPRAR1-LNX3345.00 - HOLT.CO3 345.00 345KV CKT 1	720	720	0.03358	105.5049	BLOOMFIELD - GAVINS POINT 115KV CKT 1
FDNS	00NR	4	25SP	G15_042	FROM->TO	GRPRAR1-LNX3345.00 - HOLT.CO3 345.00 345KV CKT 1	720	720	0.03126	105.4953	CARPENTER - WATERTOWN 230KV CKT 1
FDNS	00NR	4	25SP	G15_042	FROM->TO	GRPRAR1-LNX3345.00 - HOLT.CO3 345.00 345KV CKT 1	720	720	0.03126	105.4953	CARPENTER - WATERTOWN 230KV CKT 1
FDNS	00NR	4	20SP	G15_042	FROM->TO	GRPRAR1-LNX3345.00 - HOLT.CO3 345.00 345KV CKT 1	720	720	0.03141	105.4832	ADAMS - PLEASANT VALLEY 345KV CKT 1
FDNS	00NR	4	20SP	G15_042	FROM->TO	GRPRAR1-LNX3345.00 - HOLT.CO3 345.00 345KV CKT 1	720	720	0.03037	105.4794	MENNO JCT - UTICA 115KV CKT 1
FDNS	00NR	4	20SP	G15_042	FROM->TO	GRPRAR1-LNX3345.00 - HOLT.CO3 345.00 345KV CKT 1	720	720	0.03104	105.4744	GEN640009 1-COOPER NUCLEAR STATION
FDNS	00NR	4	20SP	G15_042	FROM->TO	GRPRAR1-LNX3345.00 - HOLT.CO3 345.00 345KV CKT 1	720	720	0.03112	105.4708	APPLEDORN 4 230.00 - WATERTOWN 230KV CKT 1
FDNS	00NR	4	20SP	G15_042	FROM->TO	GRPRAR1-LNX3345.00 - HOLT.CO3 345.00 345KV CKT 1	720	720	0.03112	105.4708	APPLEDORN 4 230.00 - WATERTOWN 230KV CKT 1
FDNS	00NR	4	20SP	G15_042	FROM->TO	GRPRAR1-LNX3345.00 - HOLT.CO3 345.00 345KV CKT 1	720	720	0.03096	105.4589	BSSOUTH3 345.00 - ELLENDLMVP3 345.00 345KV CKT 1
FDNS	00NR	4	20SP	G15_042	FROM->TO	GRPRAR1-LNX3345.00 - HOLT.CO3 345.00 345KV CKT 1	720	720	0.03096	105.4589	BSSOUTH3 345.00 - ELLENDLMVP3 345.00 345KV CKT 1
FDNS	00NR	4	20SP	G15_042	FROM->TO	GRPRAR1-LNX3345.00 - HOLT.CO3 345.00 345KV CKT 1	720	720	0.03104	105.4587	GEN303007 1-1BC2 U2
FDNS	00NR	4	20SP	G15_042	FROM->TO	GRPRAR1-LNX3345.00 - HOLT.CO3 345.00 345KV CKT 1	720	720	0.03104	105.4525	GEN303006 1-1BC2 U1
FDNS	00NR	4	25SP	G15_042	FROM->TO	GRPRAR1-LNX3345.00 - HOLT.CO3 345.00 345KV CKT 1	720	720	0.03136	105.4512	GEN336251 1-NINEMILE POINT UNIT#4
FDNS	00NR	4	20SP	G15_042	FROM->TO	GRPRAR1-LNX3345.00 - HOLT.CO3 345.00 345KV CKT 1	720	720	0.03096	105.4379	ELLENDLMVP3 345.00 (1) 345/230/34.5KV TRANSFORMER CKT 1
FDNS	00NR	4	20SP	G15_042	FROM->TO	GRPRAR1-LNX3345.00 - HOLT.CO3 345.00 345KV CKT 1	720	720	0.03117	105.4361	ARKANSAS NUCLEAR ONE - FT SMITH 500KV CKT 1
FDNS	00NR	4	20SP	G15_042	FROM->TO	GRPRAR1-LNX3345.00 - HOLT.CO3 345.00 345KV CKT 1	720	720	0.03117	105.4361	ARKANSAS NUCLEAR ONE - FT SMITH 500KV CKT 1
FDNS	00NR	4	20SP	G15_042	FROM->TO	GRPRAR1-LNX3345.00 - HOLT.CO3 345.00 345KV CKT 1	720	720	0.03113	105.431	ALEXMRES3 345.00 - WAITE PARK 345KV CKT 1
FDNS	00NR	4	25SP	G15_042	FROM->TO	GRPRAR1-LNX3345.00 - HOLT.CO3 345.00 345KV CKT 1	720	720	0.03163	105.4288	G15094_T 345.00 - SIDNEY2-LNX3345.00 345KV CKT 1
FDNS	00NR	4	25SP	G15_042	FROM->TO	GRPRAR1-LNX3345.00 - HOLT.CO3 345.00 345KV CKT 1	720	720	0.03163	105.4286	SIDNEY - SIDNEY2-LNX3345.00 345KV CKT Z
FDNS	00NR	4	20SP	G15_042	FROM->TO	GRPRAR1-LNX3345.00 - HOLT.CO3 345.00 345KV CKT 1	720	720	0.03037	105.4171	P12:115:UMZZ:# 237 #: MEN IN SD. MENNO JUNCTION IS A TAP (UJ-MEN-TP).
FDNS	00NR	4	25SP	G15_042	FROM->TO	GRPRAR1-LNX3345.00 - HOLT.CO3 345.00 345KV CKT 1	720	720	0.03136	105.4157	GEN336831 1-BAXTER WILSON SES
FDNS	00NR	4	20SP	G15_042	FROM->TO	GRPRAR1-LNX3345.00 - HOLT.CO3 345.00 345KV CKT 1	720	720	0.03112	105.4094	APPLEDORN 4 230.00 - GRANITE FALLS 230KV CKT 1
FDNS	00NR	4	20SP	G15_042	FROM->TO	GRPRAR1-LNX3345.00 - HOLT.CO3 345.00 345KV CKT 1	720	720	0.03112	105.4094	APPLEDORN 4 230.00 - GRANITE FALLS 230KV CKT 1
FDNS	00NR	4	20SP	G15_042	FROM->TO	GRPRAR1-LNX3345.00 - HOLT.CO3 345.00 345KV CKT 1	720	720	0.03057	105.4081	WINNER - WITTEN 115KV CKT 1
FDNS	00NR	4	20SP	G15_042	FROM->TO	GRPRAR1-LNX3345.00 - HOLT.CO3 345.00 345KV CKT 1	720	720	0.0311	105.3983	BLAIR - GRANITE FALLS 230KV CKT 1
FDNS	00NR	4	20SP	G15_042	FROM->TO	GRPRAR1-LNX3345.00 - HOLT.CO3 345.00 345KV CKT 1	720	720	0.0311	105.3983	BLAIR - GRANITE FALLS 230KV CKT 1
FDNS	00NR	4	20SP	G15_042	FROM->TO	GRPRAR1-LNX3345.00 - HOLT.CO3 345.00 345KV CKT 1	720	720	0.0312	105.3964	NORTH ROCHESTER - PRAIRIE ISLAND 345KV CKT 1
FDNS	00NR	4	20SP	G15_042	FROM->TO	GRPRAR1-LNX3345.00 - HOLT.CO3 345.00 345KV CKT 1	720	720	0.03104	105.3865	GEN303008 1-1BC2 U3
FDNS	00NR	4	20SP	G15_042	FROM->TO	GRPRAR1-LNX3345.00 - HOLT.CO3 345.00 345KV CKT 1	720	720	0.03104	105.3814	GEN336170 1-GULF OXY U4
FDNS	00NR	4	25SP	G15_042	FROM->TO	GRPRAR1-LNX3345.00 - HOLT.CO3 345.00 345KV CKT 1	720	720	0.02962	105.374	EAGLE 4 230.00 - PAHOJA 230KV CKT 1
FDNS	00NR	4	20SP	G15_042	FROM->TO	GRPRAR1-LNX3345.00 - HOLT.CO3 345.00 345KV CKT 1	720	720	0.03104	105.3654	GEN641089 2-ENERGY CENTER 2
FDNS	00NR	4	25SP	G15_042	FROM->TO	GRPRAR1-LNX3345.00 - HOLT.CO3 345.00 345KV CKT 1	720	720	0.03136	105.3575	GEN337041 1-GERALD ANDRUS
FDNS	00NR	4	20SP	G15_042	FROM->TO	GRPRAR1-LNX3345.00 - HOLT.CO3 345.00 345KV CKT 1	720	720	0.03104	105.354	GEN562921 1-G15054_2 0.6900
FDNS	00NR	4	20SP	G15_042	FROM->TO	GRPRAR1-LNX3345.00 - HOLT.CO3 345.00 345KV CKT 1	720	720	0.03386	105.3435	STEGALL - STEGALL TRANSFORMER 230KV CKT 1
FDNS	00NR	4	20SP	G15_042	FROM->TO	GRPRAR1-LNX3345.00 - HOLT.CO3 345.00 345KV CKT 1	720	720	0.03131	105.3394	G15094_T 345.00 - LARAMIE RIVER 345KV CKT 1
FDNS	00NR	4	25SP	G15_042	FROM->TO	GRPRAR1-LNX3345.00 - HOLT.CO3 345.00 345KV CKT 1	720	720	0.03136	105.3372	GEN501813 1-RODEMACHER UNIT 3
FDNS	00NR	4	20SP	G15_042	FROM->TO	GRPRAR1-LNX3345.00 - HOLT.CO3 345.00 345KV CKT 1	720	720	0.03386	105.3364	P13:230-345:NPPD:STEGALL3:KV3A
FDNS	00NR	4	20SP	G15_042	FROM->TO	GRPRAR1-LNX3345.00 - HOLT.CO3 345.00 345KV CKT 1	720	720	0.03104	105.3291	FARGO - JAMES TOWN 230KV CKT 1
FDNS	00NR	4	20SP	G15_042	FROM->TO	GRPRAR1-LNX3345.00 - HOLT.CO3 345.00 345KV CKT 1	720	720	0.03147	105.323	HUNTLEY3 345.00 - LEDYARD3 345.00 345KV CKT 1
FDNSLock	00NR	4	20SP	G15_042	FROM->TO	GRPRAR1-LNX3345.00 - HOLT.CO3 345.00 345KV CKT 1	720	720	0.03386	105.3152	STEGALL (SGQ KV3A) 345/230/13.8KV TRANSFORMER CKT 1
FDNS	00NR	4	20SP	G15_042	FROM->TO	GRPRAR1-LNX3345.00 - HOLT.CO3 345.00 345KV CKT 1	720	720	0.03104	105.3078	FARGO - JAMES TOWN 230KV CKT 2
FDNS	00NR	4	20SP	G15_042	FROM->TO	GRPRAR1-LNX3345.00 - HOLT.CO3 345.00 345KV CKT 1	720	720	0.03104	105.305	GEN562596 1-G14_059_3 0.6900
FDNS	00NR	4	20SP	G15_042	FROM->TO	GRPRAR1-LNX3345.00 - HOLT.CO3 345.00 345KV CKT 1	720	720	0.03104	105.3016	GEN501811 1-RODEMACHER UNIT 1
FDNS	00NR	4	20SP	G15_042	FROM->TO	GRPRAR1-LNX3345.00 - HOLT.CO3 345.00 345KV CKT 1	720	720	0.03104	105.2886	P13:230:UMZW:# 2218 #: FP IN MT. LOSS OF TRANSFORMER (AT2).
FDNS	00NR	4	20SP	G15_042	FROM->TO	GRPRAR1-LNX3345.00 - HOLT.CO3 345.00 345KV CKT 1	720	720	0.03152	105.2814	P13:230-345:NPPD:SIDNEY 3:KV2A
FDNS	00NR	4	20SP	G15_042	FROM->TO	GRPRAR1-LNX3345.00 - HOLT.CO3 345.00 345KV CKT 1	720	720	0.03152	105.2813	SIDNEY (SDQ KV2A) 345/230/13.8KV TRANSFORMER CKT 1
FDNS	00NR	4	20SP	G15_042	FROM->TO	GRPRAR1-LNX3345.00 - HOLT.CO3 345.00 345KV CKT 1	720	720	0.03152	105.2812	SIDNEY - SIDNEY TRANSFORMER 230KV CKT 1
FDNS	00NR	4	20SP	G15_042	FROM->TO	GRPRAR1-LNX3345.00 - HOLT.CO3 345.00 345KV CKT 1	720	720	0.03103	105.2785	BISMARK - JAMES TOWN 230KV CKT 1
FDNS	00NR	4	20SP	G15_042	FROM->TO	GRPRAR1-LNX3345.00 - HOLT.CO3 345.00 345KV CKT 1	720	720	0.03103	105.2697	BISMARK - WEBER 230KV CKT 1
FDNS	00NR	4	20SP	G15_042	FROM->TO	GRPRAR1-LNX3345.00 - HOLT.CO3 345.00 345KV CKT 1	720	720	0.03178	105.2689	P12:230:UMZW:# 733 #: FT IN SD. FT-BG2 LINE FAULT
FDNS	00NR	4	20SP	G15_042	FROM->TO	GRPRAR1-LNX3345.00 - HOLT.CO3 345.00 345KV CKT 1	720	720	0.03104	105.2579	TOLK STATION EAST 230/24.0KV TRANSFORMER CKT 1
FDNS	00NR	4	20SP	G15_042	FROM->TO	GRPRAR1-LNX3345.00 - HOLT.CO3 345.00 345KV CKT 1	720	720	0.03154	105.2576	P13:115-230:TSGT:SIDNEY-KV1A
FDNS	00NR	4	20SP	G15_042	FROM->TO	GRPRAR1-LNX3345.00 - HOLT.CO3 345.00 345KV CKT 1	720	720	0.03103	105.2545	JAMES TOWN - WEBER 230KV CKT 1
FDNS	00NR	4	20SP	G15_042	FROM->TO	GRPRAR1-LNX3345.00 - HOLT.CO3 345.00 345KV CKT 1	720	720	0.03181	105.2511	NOBLES - SPLIT ROCK 345KV CKT 1
FDNS	00NR	4	20SP	G15_042	FROM->TO	GRPRAR1-LNX3345.00 - HOLT.CO3 345.00 345KV CKT 1	720	720	0.03104	105.2502	GEN334071 1-LEWIS CREEK 2
FDNS	00NR	4	20SP	G15_042	FROM->TO	GRPRAR1-LNX3345.00 - HOLT.CO3 345.00 345KV CKT 1	720	720	0.03139	105.2478	HUNTLEY3 345.00 - LAKEFIELD 3 345KV CKT 1
FDNS	00NR	4	20SP	G15_042	FROM->TO	GRPRAR1-LNX3345.00 - HOLT.CO3 345.00 345KV CKT 1	720	720	0.03104	105.2468	GEN334070 1-LEWIS CREEK 1
FDNS	00NR	4	20SP	G15_042	FROM->TO	GRPRAR1-LNX3345.00 - HOLT.CO3 345.00 345KV CKT 1	720	720	0.03079	105.2395	FT THOMPSON - HURON 230KV CKT 1
FDNS	00NR	4	20SP	G15_042	FROM->TO	GRPRAR1-LNX3345.00 - HOLT.CO3 345.00 345KV CKT 1	720	720	0.03079	105.2395	FT THOMPSON - HURON 230KV CKT 1
FDNS	00NR	4	20SP	G15_042	FROM->TO	GRPRAR1-LNX3345.00 - HOLT.CO3 345.00 345KV CKT 1	720	720	0.03079	105.2395	FT THOMPSON - HURON 230KV CKT 2
FDNS	00NR	4	20SP	G15_042	FROM->TO	GRPRAR1-LNX3345.00 - HOLT.CO3 345.00 345KV CKT 1	720	720	0.03079	105.2395	FT THOMPSON - HURON 230KV CKT 2
FDNS	00NR	4	20SP	G15_042	FROM->TO	GRPRAR1-LNX3345.00 - HOLT.CO3 345.00 345KV CKT 1	720	720	0.03104	105.2366	GEN532751 1-WOLF CREEK GENERATING STATION UNIT 1
FDNS	00NR	4	20SP	G15_042	FROM->TO	GRPRAR1-LNX3345.00 - HOLT.CO3 345.00 345KV CKT 1	720	720	0.03104	105.2281	LAWRENCE ENERGY CENTER UNIT 5 - LAWRENCE HILL 230KV CKT 1
FDNS	00NR	4	20SP	G15_042	FROM->TO	GRPRAR1-LNX3345.00 - HOLT.CO3 345.00 345KV CKT 1	720	720	0.03104	105.2281	LAWRENCE ENERGY CENTER UNIT 5 230/24.0KV TRANSFORMER CKT 1
FDNS	00NR	4	20SP	G15_042	FROM->TO	GRPRAR1-LNX3345.00 - HOLT.CO3 345.00 345KV CKT 1	720	720	0.03104	105.2263	GEN659118 1-LARAMIE RIVER UNIT1
FDNS	00NR	4	20SP	G15_042	FROM->TO	GRPRAR1-LNX3345.00 - HOLT.CO3 345.00 345KV CKT 1	720	720	0.03057	105.2187	GREGORY - WINNER 115KV CKT 1

SOLUTION	GROUP	SCENARIO	SEASON	SOURCE	DIRECTION	MONITORED ELEMENT	RATEA (MVA)	RATEB(MVA)	TDF	TC%LOADING (% MVA)	CONTINGENCY
FDNS	00NR	4	20SP	G15_042	FROM->TO	GRPRAR1-LNX3345.00 - HOLT.CO3 345.00 345KV CKT 1	720	720	0.03104	105.2164	PRAIRIE ISLAND 345/20.0KV TRANSFORMER CKT 1
FDNS	00NR	4	20SP	G15_042	FROM->TO	GRPRAR1-LNX3345.00 - HOLT.CO3 345.00 345KV CKT 1	720	720	0.03104	105.2156	BALTA - RAMSEY 230KV CKT 1
FDNS	00NR	4	20SP	G15_042	FROM->TO	GRPRAR1-LNX3345.00 - HOLT.CO3 345.00 345KV CKT 1	720	720	0.03104	105.2151	PRAIRIE ISLAND 345/20.0KV TRANSFORMER CKT 2
FDNS	00NR	4	20SP	G15_042	FROM->TO	GRPRAR1-LNX3345.00 - HOLT.CO3 345.00 345KV CKT 1	720	720	0.03104	105.215	GEN337766 1-TRACTEBEL UNIT S1
FDNS	00NR	4	20SP	G15_042	FROM->TO	GRPRAR1-LNX3345.00 - HOLT.CO3 345.00 345KV CKT 1	720	720	0.03104	105.2145	GEN636641 1-LOUISA UNIT 1
FDNS	00NR	4	17SP	G15_042	FROM->TO	GRPRAR1-LNX3345.00 - HOLT.CO3 345.00 345KV CKT 1	720	720	0.03268	105.2093	GEN659103 1-ANTELOPE VALLEY UNIT1
FDNS	00NR	4	17SP	G15_042	FROM->TO	GRPRAR1-LNX3345.00 - HOLT.CO3 345.00 345KV CKT 1	720	720	0.03268	105.2093	GEN659107 2-ANTELOPE VALLEY UNIT2
FDNS	00NR	4	20SP	G15_042	FROM->TO	GRPRAR1-LNX3345.00 - HOLT.CO3 345.00 345KV CKT 1	720	720	0.03057	105.2085	P12:115:UMZW:# 172 #: WI IN SD.
FDNS	00NR	4	20SP	G15_042	FROM->TO	GRPRAR1-LNX3345.00 - HOLT.CO3 345.00 345KV CKT 1	720	720	0.03178	105.2073	LOWERBRULE 4230.00 - RELIANCE 4 230.00 230KV CKT 1
FDNS	00NR	4	20SP	G15_042	FROM->TO	GRPRAR1-LNX3345.00 - HOLT.CO3 345.00 345KV CKT 1	720	720	0.03106	105.1891	FORMAN - HANKINSON 230KV CKT 1
FDNS	00NR	4	20SP	G15_042	FROM->TO	GRPRAR1-LNX3345.00 - HOLT.CO3 345.00 345KV CKT 1	720	720	0.03104	105.1795	GEN501910 1-ACADIA UNIT ST1
FDNS	00NR	4	25SP	G15_042	FROM->TO	GRPRAR1-LNX3345.00 - HOLT.CO3 345.00 345KV CKT 1	720	720	0.03167	105.1795	ARPIN B4 345.00 - EAU CLAIRE 345KV CKT 1
FDNS	00NR	4	25SP	G15_042	FROM->TO	GRPRAR1-LNX3345.00 - HOLT.CO3 345.00 345KV CKT 1	720	720	0.03136	105.1786	GEN335206 1-NELSON UNIT 6
FDNS	00NR	4	20SP	G15_042	FROM->TO	GRPRAR1-LNX3345.00 - HOLT.CO3 345.00 345KV CKT 1	720	720	0.03104	105.1689	ELM CREEK - MONTICELLO 345KV CKT 1
FDNS	00NR	4	17SP	G15_042	FROM->TO	GRPRAR1-LNX3345.00 - HOLT.CO3 345.00 345KV CKT 1	720	720	0.03268	105.1673	BIG STONE 230/24.0KV TRANSFORMER CKT 1
FDNS	00NR	4	20SP	G15_042	FROM->TO	GRPRAR1-LNX3345.00 - HOLT.CO3 345.00 345KV CKT 1	720	720	0.03104	105.164	TATANKA 230/34.5KV TRANSFORMER CKT 1
FDNS	00NR	4	25SP	G15_042	FROM->TO	GRPRAR1-LNX3345.00 - HOLT.CO3 345.00 345KV CKT 1	720	720	0.03136	105.1557	GEN334440 1-SABINE UNIT 4
FDNS	00NR	4	20SP	G15_042	FROM->TO	GRPRAR1-LNX3345.00 - HOLT.CO3 345.00 345KV CKT 1	720	720	0.03104	105.1495	GEN336221 1-LITTLE GYPSY UNIT#1
FDNS	00NR	4	20SP	G15_042	FROM->TO	GRPRAR1-LNX3345.00 - HOLT.CO3 345.00 345KV CKT 1	720	720	0.03104	105.1478	GEN337757 1-DUKE HOTSPRINGS STG1
FDNS	00NR	4	20SP	G15_042	FROM->TO	GRPRAR1-LNX3345.00 - HOLT.CO3 345.00 345KV CKT 1	720	720	0.03106	105.1323	AUDUBON - SHEYNNE 230KV CKT 1
FDNS	00NR	4	25SP	G15_042	FROM->TO	GRPRAR1-LNX3345.00 - HOLT.CO3 345.00 345KV CKT 1	720	720	0.03136	105.1235	GEN344897 4-1LAB G4 20.000
FDNS	00NR	4	25SP	G15_042	FROM->TO	GRPRAR1-LNX3345.00 - HOLT.CO3 345.00 345KV CKT 1	720	720	0.03136	105.1222	GEN344894 1-1LAB G1 20.000
FDNS	00NR	4	25SP	G15_042	FROM->TO	GRPRAR1-LNX3345.00 - HOLT.CO3 345.00 345KV CKT 1	720	720	0.03136	105.1222	GEN344895 2-1LAB G2 20.000
FDNS	00NR	4	25SP	G15_042	FROM->TO	GRPRAR1-LNX3345.00 - HOLT.CO3 345.00 345KV CKT 1	720	720	0.03136	105.122	GEN344896 3-1LAB G3 20.000
FDNS	00NR	4	20SP	G15_042	FROM->TO	GRPRAR1-LNX3345.00 - HOLT.CO3 345.00 345KV CKT 1	720	720	0.03159	105.1195	P12:115:NPPD:WAPA1:CHADRON7:BOXBUTE7:BTB
FDNS	00NR	4	20SP	G15_042	FROM->TO	GRPRAR1-LNX3345.00 - HOLT.CO3 345.00 345KV CKT 1	720	720	0.03445	105.118	BELDEN - HOSKINS 115KV CKT 1
FDNS	00NR	4	20SP	G15_042	FROM->TO	GRPRAR1-LNX3345.00 - HOLT.CO3 345.00 345KV CKT 1	720	720	0.03088	105.1176	MT VERN - STORLA 115KV CKT 1
FDNS	00NR	4	20SP	G15_042	FROM->TO	GRPRAR1-LNX3345.00 - HOLT.CO3 345.00 345KV CKT 1	720	720	0.03104	105.1134	GEN337764 1-TRACTEBEL UNIT C1
FDNS	00NR	4	20SP	G15_042	FROM->TO	GRPRAR1-LNX3345.00 - HOLT.CO3 345.00 345KV CKT 1	720	720	0.03104	105.1134	GEN337765 1-TRACTEBEL UNIT C2
FDNS	00NR	4	20SP	G15_042	FROM->TO	GRPRAR1-LNX3345.00 - HOLT.CO3 345.00 345KV CKT 1	720	720	0.03116	105.1132	FRANKS - HUBEN 345KV CKT 1
FDNS	00NR	4	25SP	G15_042	FROM->TO	GRPRAR1-LNX3345.00 - HOLT.CO3 345.00 345KV CKT 1	720	720	0.03136	105.1122	GEN635214 4-NEAL UNIT 4
FDNS	00NR	4	20SP	G15_042	FROM->TO	GRPRAR1-LNX3345.00 - HOLT.CO3 345.00 345KV CKT 1	720	720	0.03104	105.1105	GEN334432 1-SABINE UNIT 2
FDNS	00NR	4	20SP	G15_042	FROM->TO	GRPRAR1-LNX3345.00 - HOLT.CO3 345.00 345KV CKT 1	720	720	0.03104	105.1104	GEN334431 1-SABINE UNIT 1
FDNS	00NR	4	20SP	G15_042	FROM->TO	GRPRAR1-LNX3345.00 - HOLT.CO3 345.00 345KV CKT 1	720	720	0.03106	105.1074	LELAND OLDS - STANTON 230KV CKT 1
FDNS	00NR	4	20SP	G15_042	FROM->TO	GRPRAR1-LNX3345.00 - HOLT.CO3 345.00 345KV CKT 1	720	720	0.03106	105.1074	LELAND OLDS - STANTON 230KV CKT 1
FDNS	00NR	4	20SP	G15_042	FROM->TO	GRPRAR1-LNX3345.00 - HOLT.CO3 345.00 345KV CKT 1	720	720	0.03104	105.1064	GEN336446 1-MICHOUD UNIT #2
FDNS	00NR	4	25SP	G15_042	FROM->TO	GRPRAR1-LNX3345.00 - HOLT.CO3 345.00 345KV CKT 1	720	720	0.0314	105.1056	GLENBORO SOUTH - RUGBY 230KV CKT 1
FDNS	00NR	4	20SP	G15_042	FROM->TO	GRPRAR1-LNX3345.00 - HOLT.CO3 345.00 345KV CKT 1	720	720	0.03104	105.1045	GEN345765 H-1SIOUX 2 18.000
FDNS	00NR	4	25SP	G15_042	FROM->TO	GRPRAR1-LNX3345.00 - HOLT.CO3 345.00 345KV CKT 1	720	720	0.0296	105.1034	FT THOMPSON - WESSINGTON 230KV CKT 1
FDNS	00NR	4	25SP	G15_042	FROM->TO	GRPRAR1-LNX3345.00 - HOLT.CO3 345.00 345KV CKT 1	720	720	0.0296	105.1034	FT THOMPSON - WESSINGTON 230KV CKT 1
FDNS	00NR	4	20SP	G15_042	FROM->TO	GRPRAR1-LNX3345.00 - HOLT.CO3 345.00 345KV CKT 1	720	720	0.03127	105.0981	OVEXFRMCCOVE
FDNS	00NR	4	20SP	G15_042	FROM->TO	GRPRAR1-LNX3345.00 - HOLT.CO3 345.00 345KV CKT 1	720	720	0.03104	105.0872	GEN562912 1-G15053_3 0.6900
FDNS	00NR	4	20SP	G15_042	FROM->TO	GRPRAR1-LNX3345.00 - HOLT.CO3 345.00 345KV CKT 1	720	720	0.03104	105.0833	GRAND GULF 500/22.0KV TRANSFORMER CKT 1
FDNS	00NR	4	20SP	G15_042	FROM->TO	GRPRAR1-LNX3345.00 - HOLT.CO3 345.00 345KV CKT 1	720	720	0.03108	105.078	FERGSFL4 230.00 - WAHPETON 230KV CKT 1
FDNS	00NR	4	25SP	G15_042	FROM->TO	GRPRAR1-LNX3345.00 - HOLT.CO3 345.00 345KV CKT 1	720	720	0.03136	105.0751	GEN338388 1-1PLUM PT U1 23.000
FDNS	00NR	4	20SP	G15_042	FROM->TO	GRPRAR1-LNX3345.00 - HOLT.CO3 345.00 345KV CKT 1	720	720	0.03104	105.0746	GEN336242 1-1NMIL ST1 18.000
FDNS	00NR	4	20SP	G15_042	FROM->TO	GRPRAR1-LNX3345.00 - HOLT.CO3 345.00 345KV CKT 1	720	720	0.03104	105.0733	GEN501823 1-TECHE UNIT 3
FDNS	00NR	4	25SP	G15_042	FROM->TO	GRPRAR1-LNX3345.00 - HOLT.CO3 345.00 345KV CKT 1	720	720	0.03136	105.0706	GEN345671 2-1RUSH G2 18.000
FDNS	00NR	4	20SP	G15_042	FROM->TO	GRPRAR1-LNX3345.00 - HOLT.CO3 345.00 345KV CKT 1	720	720	0.03105	105.07	FORMAN - OAKES 230KV CKT 1
FDNS	00NR	4	20SP	G15_042	FROM->TO	GRPRAR1-LNX3345.00 - HOLT.CO3 345.00 345KV CKT 1	720	720	0.03105	105.069	ELLENDLMVP4 230.00 - OAKES 230KV CKT 1
FDNS	00NR	4	20SP	G15_042	FROM->TO	GRPRAR1-LNX3345.00 - HOLT.CO3 345.00 345KV CKT 1	720	720	0.03105	105.069	ELLENDLMVP4 230.00 - OAKES 230KV CKT 1
FDNS	00NR	4	25SP	G15_042	FROM->TO	GRPRAR1-LNX3345.00 - HOLT.CO3 345.00 345KV CKT 1	720	720	0.03136	105.0667	GEN345670 1-1RUSH G1 18.000
FDNS	00NR	4	20SP	G15_042	FROM->TO	GRPRAR1-LNX3345.00 - HOLT.CO3 345.00 345KV CKT 1	720	720	0.03104	105.0617	PRAIRIE - WINGER 230KV CKT 1
FDNS	00NR	4	20SP	G15_042	FROM->TO	GRPRAR1-LNX3345.00 - HOLT.CO3 345.00 345KV CKT 1	720	720	0.03159	105.0574	CHADRON - DUNLAP 115KV CKT 1
FDNS	00NR	4	20SP	G15_042	FROM->TO	GRPRAR1-LNX3345.00 - HOLT.CO3 345.00 345KV CKT 1	720	720	0.03104	105.056	GEN345756 H-1SIOUX 1 18.000
FDNS	00NR	4	20SP	G15_042	FROM->TO	GRPRAR1-LNX3345.00 - HOLT.CO3 345.00 345KV CKT 1	720	720	0.03178	105.0557	RELIANCE 4 230.00 - WITTEN 4 230.00 230KV CKT 1
FDNS	00NR	4	25SP	G15_042	FROM->TO	GRPRAR1-LNX3345.00 - HOLT.CO3 345.00 345KV CKT 1	720	720	0.03136	105.0541	GEN501812 1-RODEMACHER UNIT 2
FDNS	00NR	4	20SP	G15_042	FROM->TO	GRPRAR1-LNX3345.00 - HOLT.CO3 345.00 345KV CKT 1	720	720	0.03104	105.0529	J316_SUB 230.00 230/34.5KV TRANSFORMER CKT 1
FDNS	00NR	4	20SP	G15_042	FROM->TO	GRPRAR1-LNX3345.00 - HOLT.CO3 345.00 345KV CKT 1	720	720	0.03121	105.0479	HAMPTON CORNER - NORTH ROCHESTER 345KV CKT 1
FDNS	00NR	4	20SP	G15_042	FROM->TO	GRPRAR1-LNX3345.00 - HOLT.CO3 345.00 345KV CKT 1	720	720	0.03109	105.0471	HANKINSON - WAHPETON 230KV CKT 1
FDNS	00NR	4	20SP	G15_042	FROM->TO	GRPRAR1-LNX3345.00 - HOLT.CO3 345.00 345KV CKT 1	720	720	0.03108	105.0438	FERGSFL4 230.00 - GRE-SILVRLK4230.00 230KV CKT 1
FDNS	00NR	4	20SP	G15_042	FROM->TO	GRPRAR1-LNX3345.00 - HOLT.CO3 345.00 345KV CKT 1	720	720	0.03104	105.0395	GEN345832 1-1TS G1 13.800
FDNS	00NR	4	20SP	G15_042	FROM->TO	GRPRAR1-LNX3345.00 - HOLT.CO3 345.00 345KV CKT 1	720	720	0.03104	105.0392	GEN345841 2-1TS G2 13.800
FDNS	00NR	4	20SP	G15_042	FROM->TO	GRPRAR1-LNX3345.00 - HOLT.CO3 345.00 345KV CKT 1	720	720	0.03104	105.0377	GEN334031 1-FRONTIER UNIT 2
FDNS	00NR	4	20SP	G15_042	FROM->TO	GRPRAR1-LNX3345.00 - HOLT.CO3 345.00 345KV CKT 1	720	720	0.03104	105.037	GEN334030 1-FRONTIER UNIT 1
FDNS	00NR	4	20SP	G15_042	FROM->TO	GRPRAR1-LNX3345.00 - HOLT.CO3 345.00 345KV CKT 1	720	720	0.03104	105.036	JUDSON LARGE 115/15.0KV TRANSFORMER CKT 1
FDNS	00NR	4	20SP	G15_042	FROM->TO	GRPRAR1-LNX3345.00 - HOLT.CO3 345.00 345KV CKT 1	720	720	0.03104	105.036	JUDSON LARGE 115/15.0KV TRANSFORMER CKT 1
FDNS	00NR	4	20SP	G15_042	FROM->TO	GRPRAR1-LNX3345.00 - HOLT.CO3 345.00 345KV CKT 1	720	720	0.03104	105.0328	GEN336944 1-REX BROWN
FDNS	00NR	4	25SP	G15_042	FROM->TO	GRPRAR1-LNX3345.00 - HOLT.CO3 345.00 345KV CKT 1	720	720	0.03136	105.032	GEN336191 1-LITTLE GYPSY UNIT#3
FDNS	00NR	4	20SP	G15_042	FROM->TO	GRPRAR1-LNX3345.00 - HOLT.CO3 345.00 345KV CKT 1	720	720	0.03104	105.03	GEN501970 1-EVANGELINE UNIT 7
FDNS	00NR	4	25SP	G15_042	FROM->TO	GRPRAR1-LNX3345.00 - HOLT.CO3 345.00 345KV CKT 1	720	720	0.03289	105.0289	GRIMES - LEHIGH 345KV CKT 1
FDNS	00NR	4	20SP	G15_042	FROM->TO	GRPRAR1-LNX3345.00 - HOLT.CO3 345.00 345KV CKT 1	720	720	0.03104	105.0284	P13:230-345:NPPD:NUCOR-1
FDNS	00NR	4	20SP	G15_042	FROM->TO	GRPRAR1-LNX3345.00 - HOLT.CO3 345.00 345KV CKT 1	720	720	0.03104	105.0273	OKLAUN 345/24.0KV TRANSFORMER CKT 1
FDNS	00NR	4	20SP	G15_042	FROM->TO	GRPRAR1-LNX3345.00 - HOLT.CO3 345.00 345KV CKT 1	720	720	0.03203	105.0228	MARTIN - SHANNON 115KV CKT 1
FDNS	00NR	4	20SP	G15_042	FROM->TO	GRPRAR1-LNX3345.00 - HOLT.CO3 345.00 345KV CKT 1	720	720	0.03104	105.0222	GEN335612 1-WILLOW GLENN UNIT#2
FDNS	00NR	4	20SP	G15_042	FROM->TO	GRPRAR1-LNX3345.00 - HOLT.CO3 345.00 345KV CKT 1	720	720	0.03179	105.022	DENISON - SIOUX CITY 230KV CKT 1
FDNS	00NR	4	20SP	G15_042	FROM->TO	GRPRAR1-LNX3345.00 - HOLT.CO3 345.00 345KV CKT 1	720	720	0.03104	105.0205	GEN635693 3-GREATER DES MOINES ENERGY CENTER ST
FDNS	00NR	4	20SP	G15_042	FROM->TO	GRPRAR1-LNX3345.00 - HOLT.CO3 345.00 345KV CKT 1	720	720	0.03129	105.0202	BYRON - NORTH ROCHESTER 345KV CKT 1
FDNS	00NR	4	20SP	G15_042	FROM->TO	GRPRAR1-LNX3345.00 - HOLT.CO3 345.00 345KV CKT 1	720	720	0.03116	105.0171	GRE-CEDARMT3345.00 - HELENA 345KV CKT 1

SOLUTION	GROUP	SCENARIO	SEASON	SOURCE	DIRECTION	MONITORED ELEMENT	RATEA (MVA)	RATEB(MVA)	TDF	TC%LOADING (% MVA)	CONTINGENCY
FDNS	00NR	4	20SP	G15_042	FROM->TO	GRPRAR1-LNX3345.00 - HOLT.CO3 345.00 345KV CKT 1	720	720	0.03116	105.0171	GRE-CEDARMT3345.00 - HELENA 345KV CKT 2
FDNS	00NR	4	20SP	G15_042	FROM->TO	GRPRAR1-LNX3345.00 - HOLT.CO3 345.00 345KV CKT 1	720	720	0.03178	105.0138	WITTEN 4 230.00 () 230/115/13.8KV TRANSFORMER CKT 1
FDNS	00NR	4	25SP	G15_042	FROM->TO	GRPRAR1-LNX3345.00 - HOLT.CO3 345.00 345KV CKT 1	720	720	0.03191	105.0133	KOSSUTH 3 345.00 - WEBSTER 345KV CKT 1
FDNS	00NR	4	20SP	G15_042	FROM->TO	GRPRAR1-LNX3345.00 - HOLT.CO3 345.00 345KV CKT 1	720	720	0.03104	105.0123	GEN337430 1-PERYVILLE UNIT #3
FDNS	00NR	4	20SP	G15_042	FROM->TO	GRPRAR1-LNX3345.00 - HOLT.CO3 345.00 345KV CKT 1	720	720	0.03104	105.012	GEN337428 1-PERYVILLE UNIT #1
FDNS	00NR	4	20SP	G15_042	FROM->TO	GRPRAR1-LNX3345.00 - HOLT.CO3 345.00 345KV CKT 1	720	720	0.03218	105.0096	PLYMOUTH - SIOUX CITY 161KV CKT 1
FDNS	00NR	4	20SP	G15_042	FROM->TO	GRPRAR1-LNX3345.00 - HOLT.CO3 345.00 345KV CKT 1	720	720	0.03218	105.0096	PLYMOUTH - SIOUX CITY 161KV CKT 1
FDNS	00NR	4	20SP	G15_042	FROM->TO	GRPRAR1-LNX3345.00 - HOLT.CO3 345.00 345KV CKT 1	720	720	0.03104	105.0067	GEN562438 1-G13-032 0.6900
FDNS	00NR	4	20SP	G15_042	FROM->TO	GRPRAR1-LNX3345.00 - HOLT.CO3 345.00 345KV CKT 1	720	720	0.03024	105.0031	FT RANDAL - WHITE SWAN 115KV CKT 1
FDNS	00NR	4	25SP	G15_042	FROM->TO	GRPRAR1-LNX3345.00 - HOLT.CO3 345.00 345KV CKT 1	720	720	0.03136	105	GEN629075 1-OTTUMWA GENERATOR FOR OTTUMWA UNIT NO 1
FDNS	00NR	4	20SP	G15_042	FROM->TO	GRPRAR1-LNX3345.00 - HOLT.CO3 345.00 345KV CKT 1	720	720	0.03104	104.9938	GEN338443 1-PANDA S1
FDNS	00NR	4	20SP	G15_042	FROM->TO	GRPRAR1-LNX3345.00 - HOLT.CO3 345.00 345KV CKT 1	720	720	0.03104	104.9915	GEN336240 1-1NMIL CT1 18.000
FDNS	00NR	4	20SP	G15_042	FROM->TO	GRPRAR1-LNX3345.00 - HOLT.CO3 345.00 345KV CKT 1	720	720	0.03104	104.9915	GEN336241 1-1NMIL CT2 18.000
FDNS	00NR	4	25SP	G15_042	FROM->TO	GRPRAR1-LNX3345.00 - HOLT.CO3 345.00 345KV CKT 1	720	720	0.03136	104.9904	P12:115:UMZW:# 162 #: NEL IN ND. FAULT ON ML-NEL-MX-GA 115 KV
FDNS	00NR	4	20SP	G15_042	FROM->TO	GRPRAR1-LNX3345.00 - HOLT.CO3 345.00 345KV CKT 1	720	720	0.03104	104.9901	P12:345:GRDA:CHOUTEAU-SPORTSMANACRES
FDNS	00NR	4	20SP	G15_042	FROM->TO	GRPRAR1-LNX3345.00 - HOLT.CO3 345.00 345KV CKT 1	720	720	0.03104	104.9893	GEN501912 1-ACADIA UNIT CT1B
FDNS	00NR	4	20SP	G15_042	FROM->TO	GRPRAR1-LNX3345.00 - HOLT.CO3 345.00 345KV CKT 1	720	720	0.03104	104.9891	GEN501911 1-ACADIA UNIT CT1A
FDNS	00NR	4	25SP	G15_042	FROM->TO	GRPRAR1-LNX3345.00 - HOLT.CO3 345.00 345KV CKT 1	720	720	0.03136	104.9585	GEN335614 1-WILLOW GLENN UNIT#4
FDNS	00NR	4	25SP	G15_042	FROM->TO	GRPRAR1-LNX3345.00 - HOLT.CO3 345.00 345KV CKT 1	720	720	0.03136	104.9535	GEN336801 1-BAXTER WILSON UNIT #1
FDNS	00NR	4	25SP	G15_042	FROM->TO	GRPRAR1-LNX3345.00 - HOLT.CO3 345.00 345KV CKT 1	720	720	0.03136	104.9486	GEN334441 1-SABINE UNIT 5
FDNS	00NR	4	25SP	G15_042	FROM->TO	GRPRAR1-LNX3345.00 - HOLT.CO3 345.00 345KV CKT 1	720	720	0.03136	104.9434	GEN336464 1-MICHOUD UNIT #3
FDNS	00NR	4	25SP	G15_042	FROM->TO	GRPRAR1-LNX3345.00 - HOLT.CO3 345.00 345KV CKT 1	720	720	0.03136	104.9381	GEN563222 1-G15088_3 0.6900
FDNS	00NR	4	25SP	G15_042	FROM->TO	GRPRAR1-LNX3345.00 - HOLT.CO3 345.00 345KV CKT 1	720	720	0.03136	104.9329	GEN335204 1-NELSON UNIT 4
FDNS	00NR	4	25SP	G15_042	FROM->TO	GRPRAR1-LNX3345.00 - HOLT.CO3 345.00 345KV CKT 1	720	720	0.03126	104.9324	HESKETT - WISHEK 230KV CKT 1
FDNS	00NR	4	25SP	G15_042	FROM->TO	GRPRAR1-LNX3345.00 - HOLT.CO3 345.00 345KV CKT 1	720	720	0.03157	104.9312	NORTH LA CROSSE - NORTH ROCHESTER 345KV CKT 1
FDNS	00NR	4	25SP	G15_042	FROM->TO	GRPRAR1-LNX3345.00 - HOLT.CO3 345.00 345KV CKT 1	720	720	0.03192	104.9112	ADAMS - MITCHLCO3 345.00 345KV CKT 1
FDNS	00NR	4	20SP	G15_042	FROM->TO	GRPRAR1-LNX3345.00 - HOLT.CO3 345.00 345KV CKT 1	720	720	0.03104	104.8935	GEN563282 1-G15094_3 0.6900
FDNS	00NR	4	25SP	G15_042	FROM->TO	GRPRAR1-LNX3345.00 - HOLT.CO3 345.00 345KV CKT 1	720	720	0.03135	104.8587	CENTER - COYOTE 345KV CKT 1
FDNS	00NR	4	25SP	G15_042	FROM->TO	GRPRAR1-LNX3345.00 - HOLT.CO3 345.00 345KV CKT 1	720	720	0.03126	104.8571	MERRCRT4 230.00 - WISHEK 230KV CKT 1
FDNS	00NR	4	25SP	G15_042	FROM->TO	GRPRAR1-LNX3345.00 - HOLT.CO3 345.00 345KV CKT 1	720	720	0.03136	104.8406	GEN640009 1-COOPER NUCLEAR STATION
FDNS	00NR	4	25SP	G15_042	FROM->TO	GRPRAR1-LNX3345.00 - HOLT.CO3 345.00 345KV CKT 1	720	720	0.03391	104.8405	BLOOMFIELD - CREIGHTON 115KV CKT 1
FDNS	00NR	4	25SP	G15_042	FROM->TO	GRPRAR1-LNX3345.00 - HOLT.CO3 345.00 345KV CKT 1	720	720	0.0307	104.8325	MENNO JCT - TRIPP JCT 115KV CKT 1
FDNS	00NR	4	25SP	G15_042	FROM->TO	GRPRAR1-LNX3345.00 - HOLT.CO3 345.00 345KV CKT 1	720	720	0.03136	104.8232	GARRISON - JAMES TOWN 230KV CKT 1
FDNS	00NR	4	25SP	G15_042	FROM->TO	GRPRAR1-LNX3345.00 - HOLT.CO3 345.00 345KV CKT 1	720	720	0.03118	104.8213	BROOKING COUNTY - BSSOUTH3 345.00 345KV CKT 1
FDNS	00NR	4	25SP	G15_042	FROM->TO	GRPRAR1-LNX3345.00 - HOLT.CO3 345.00 345KV CKT 1	720	720	0.03136	104.8137	GEN334433 1-SABINE UNIT 3
FDNS	00NR	4	25SP	G15_042	FROM->TO	GRPRAR1-LNX3345.00 - HOLT.CO3 345.00 345KV CKT 1	720	720	0.03391	104.7976	BLOOMFIELD - GAVINS POINT 115KV CKT 1
FDNS	00NR	4	25SP	G15_042	FROM->TO	GRPRAR1-LNX3345.00 - HOLT.CO3 345.00 345KV CKT 1	720	720	0.03136	104.7815	GEN531447 1-HOLCOMB GENERATOR
FDNS	00NR	4	25SP	G15_042	FROM->TO	GRPRAR1-LNX3345.00 - HOLT.CO3 345.00 345KV CKT 1	720	720	0.03136	104.7672	GEN635213 3-NEAL UNIT 3
FDNS	00NR	4	25SP	G15_042	FROM->TO	GRPRAR1-LNX3345.00 - HOLT.CO3 345.00 345KV CKT 1	720	720	0.03136	104.7507	GEN336222 1-LITTLE GYPSY UNIT#2
FDNS	00NR	4	25SP	G15_042	FROM->TO	GRPRAR1-LNX3345.00 - HOLT.CO3 345.00 345KV CKT 1	720	720	0.03144	104.7337	APPLEDORN 4 230.00 - WATERTOWN 230KV CKT 1
FDNS	00NR	4	25SP	G15_042	FROM->TO	GRPRAR1-LNX3345.00 - HOLT.CO3 345.00 345KV CKT 1	720	720	0.03144	104.7337	APPLEDORN 4 230.00 - WATERTOWN 230KV CKT 1
FDNS	00NR	4	25SP	G15_042	FROM->TO	GRPRAR1-LNX3345.00 - HOLT.CO3 345.00 345KV CKT 1	720	720	0.03149	104.7179	ARKANSAS NUCLEAR ONE - FT SMITH 500KV CKT 1
FDNS	00NR	4	25SP	G15_042	FROM->TO	GRPRAR1-LNX3345.00 - HOLT.CO3 345.00 345KV CKT 1	720	720	0.03149	104.7179	ARKANSAS NUCLEAR ONE - FT SMITH 500KV CKT 1
FDNS	00NR	4	25SP	G15_042	FROM->TO	GRPRAR1-LNX3345.00 - HOLT.CO3 345.00 345KV CKT 1	720	720	0.03128	104.7058	BSSOUTH3 345.00 - ELLENDLMVP3 345.00 345KV CKT 1
FDNS	00NR	4	25SP	G15_042	FROM->TO	GRPRAR1-LNX3345.00 - HOLT.CO3 345.00 345KV CKT 1	720	720	0.03128	104.7058	BSSOUTH3 345.00 - ELLENDLMVP3 345.00 345KV CKT 1
FDNS	00NR	4	25SP	G15_042	FROM->TO	GRPRAR1-LNX3345.00 - HOLT.CO3 345.00 345KV CKT 1	720	720	0.0307	104.7006	MENNO JCT - UTICA 115KV CKT 1
FDNS	00NR	4	25SP	G15_042	FROM->TO	GRPRAR1-LNX3345.00 - HOLT.CO3 345.00 345KV CKT 1	720	720	0.03173	104.7	ADAMS - PLEASANT VALLEY 345KV CKT 1
FDNS	00NR	4	25SP	G15_042	FROM->TO	GRPRAR1-LNX3345.00 - HOLT.CO3 345.00 345KV CKT 1	720	720	0.03136	104.6977	GEN336151 1-WATERFORD UNIT#1
FDNS	00NR	4	25SP	G15_042	FROM->TO	GRPRAR1-LNX3345.00 - HOLT.CO3 345.00 345KV CKT 1	720	720	0.03136	104.6977	GEN336152 1-WATERFORD UNIT#2
FDNS	00NR	4	25SP	G15_042	FROM->TO	GRPRAR1-LNX3345.00 - HOLT.CO3 345.00 345KV CKT 1	720	720	0.03128	104.6845	ELLENDLMVP3 345.00 (1) 345/230/34.5KV TRANSFORMER CKT 1
FDNS	00NR	4	25SP	G15_042	FROM->TO	GRPRAR1-LNX3345.00 - HOLT.CO3 345.00 345KV CKT 1	720	720	0.03146	104.6735	ALEXMRES3 345.00 - WAITE PARK 345KV CKT 1
FDNS	00NR	4	25SP	G15_042	FROM->TO	GRPRAR1-LNX3345.00 - HOLT.CO3 345.00 345KV CKT 1	720	720	0.03144	104.6688	APPLEDORN 4 230.00 - GRANITE FALLS 230KV CKT 1
FDNS	00NR	4	25SP	G15_042	FROM->TO	GRPRAR1-LNX3345.00 - HOLT.CO3 345.00 345KV CKT 1	720	720	0.03144	104.6688	APPLEDORN 4 230.00 - GRANITE FALLS 230KV CKT 1
FDNS	00NR	4	25SP	G15_042	FROM->TO	GRPRAR1-LNX3345.00 - HOLT.CO3 345.00 345KV CKT 1	720	720	0.03142	104.6645	BLAIR - GRANITE FALLS 230KV CKT 1
FDNS	00NR	4	25SP	G15_042	FROM->TO	GRPRAR1-LNX3345.00 - HOLT.CO3 345.00 345KV CKT 1	720	720	0.03142	104.6645	BLAIR - GRANITE FALLS 230KV CKT 1
FDNS	00NR	4	25SP	G15_042	FROM->TO	GRPRAR1-LNX3345.00 - HOLT.CO3 345.00 345KV CKT 1	720	720	0.03165	104.6507	NMA B3 345 345.00 - NORTH LA CROSSE 345KV CKT 1
FDNS	00NR	4	25SP	G15_042	FROM->TO	GRPRAR1-LNX3345.00 - HOLT.CO3 345.00 345KV CKT 1	720	720	0.03089	104.6443	WINNER - WITTEN 115KV CKT 1
FDNS	00NR	4	25SP	G15_042	FROM->TO	GRPRAR1-LNX3345.00 - HOLT.CO3 345.00 345KV CKT 1	720	720	0.03136	104.6363	GEN641089 2-ENERGY CENTER 2
FDNS	00NR	4	25SP	G15_042	FROM->TO	GRPRAR1-LNX3345.00 - HOLT.CO3 345.00 345KV CKT 1	720	720	0.0307	104.6318	P12:115:UMZZ:# 237 #: MEN IN SD. MENNO JUNCTION IS A TAP (UJ-MEN-TP).
FDNS	00NR	4	25SP	G15_042	FROM->TO	GRPRAR1-LNX3345.00 - HOLT.CO3 345.00 345KV CKT 1	720	720	0.03136	104.6267	GEN303007 1-1BC2 U2
FDNS	00NR	4	25SP	G15_042	FROM->TO	GRPRAR1-LNX3345.00 - HOLT.CO3 345.00 345KV CKT 1	720	720	0.03136	104.6212	GEN303006 1-1BC2 U1
FDNS	00NR	4	25SP	G15_042	FROM->TO	GRPRAR1-LNX3345.00 - HOLT.CO3 345.00 345KV CKT 1	720	720	0.03136	104.6054	P13:230:UMZW:# 2218 #: FP IN MT. LOSS OF TRANSFORMER (AT2).
FDNS	00NR	4	25SP	G15_042	FROM->TO	GRPRAR1-LNX3345.00 - HOLT.CO3 345.00 345KV CKT 1	720	720	0.03136	104.605	FARGO - JAMES TOWN 230KV CKT 1
FDNS	00NR	4	25SP	G15_042	FROM->TO	GRPRAR1-LNX3345.00 - HOLT.CO3 345.00 345KV CKT 1	720	720	0.03136	104.5966	GEN562921 1-G15054_2 0.6900
FDNS	00NR	4	25SP	G15_042	FROM->TO	GRPRAR1-LNX3345.00 - HOLT.CO3 345.00 345KV CKT 1	720	720	0.03136	104.5948	GEN532751 1-WOLF CREEK GENERATING STATION UNIT 1
FDNS	00NR	4	25SP	G15_042	FROM->TO	GRPRAR1-LNX3345.00 - HOLT.CO3 345.00 345KV CKT 1	720	720	0.03152	104.5934	NORTH ROCHESTER - PRAIRIE ISLAND 345KV CKT 1
FDNS	00NR	4	25SP	G15_042	FROM->TO	GRPRAR1-LNX3345.00 - HOLT.CO3 345.00 345KV CKT 1	720	720	0.03163	104.5903	G15094_T 345.00 - LARAMIE RIVER 345KV CKT 1
FDNS	00NR	4	25SP	G15_042	FROM->TO	GRPRAR1-LNX3345.00 - HOLT.CO3 345.00 345KV CKT 1	720	720	0.03766	104.5885	RAUN - SIOUX CITY 345KV CKT 1
FDNS	00NR	4	25SP	G15_042	FROM->TO	GRPRAR1-LNX3345.00 - HOLT.CO3 345.00 345KV CKT 1	720	720	0.03766	104.5885	RAUN - SIOUX CITY 345KV CKT 1
FDNS	00NR	4	25SP	G15_042	FROM->TO	GRPRAR1-LNX3345.00 - HOLT.CO3 345.00 345KV CKT 1	720	720	0.03136	104.583	FARGO - JAMES TOWN 230KV CKT 2
FDNS	00NR	4	25SP	G15_042	FROM->TO	GRPRAR1-LNX3345.00 - HOLT.CO3 345.00 345KV CKT 1	720	720	0.03179	104.566	HUNTLEY3 345.00 - LEDYARD3 345.00 345KV CKT 1
FDNS	00NR	4	25SP	G15_042	FROM->TO	GRPRAR1-LNX3345.00 - HOLT.CO3 345.00 345KV CKT 1	720	720	0.03136	104.5618	BISMARK - JAMES TOWN 230KV CKT 1
FDNS	00NR	4	25SP	G15_042	FROM->TO	GRPRAR1-LNX3345.00 - HOLT.CO3 345.00 345KV CKT 1	720	720	0.03136	104.56	GEN303008 1-1BC2 U3
FDNS	00NR	4	25SP	G15_042	FROM->TO	GRPRAR1-LNX3345.00 - HOLT.CO3 345.00 345KV CKT 1	720	720	0.03136	104.5546	GEN336170 1-GULF OXY U4
FDNS	00NR	4	25SP	G15_042	FROM->TO	GRPRAR1-LNX3345.00 - HOLT.CO3 345.00 345KV CKT 1	720	720	0.03136	104.5523	BISMARK - WEBER 230KV CKT 1
FDNS	00NR	4	25SP	G15_042	FROM->TO	GRPRAR1-LNX3345.00 - HOLT.CO3 345.00 345KV CKT 1	720	720	0.03136	104.547	GEN562596 1-G14_059_3 0.6900
FDNS	00NR	4	25SP	G15_042	FROM->TO	GRPRAR1-LNX3345.00 - HOLT.CO3 345.00 345KV CKT 1	720	720	0.03136	104.5363	JAMES TOWN - WEBER 230KV CKT 1
FDNS	00NR	4	25SP	G15_042	FROM->TO	GRPRAR1-LNX3345.00 - HOLT.CO3 345.00 345KV CKT 1	720	720	0.03417	104.531	P13:230-345:NPPD:STEGALL3:KV3A
FDNS	00NR	4	25SP	G15_042	FROM->TO	GRPRAR1-LNX3345.00 - HOLT.CO3 345.00 345KV CKT 1	720	720	0.03417	104.5274	STEGALL (SGQ KV3A) 345/230/13.8KV TRANSFORMER CKT 1

SOLUTION	GROUP	SCENARIO	SEASON	SOURCE	DIRECTION	MONITORED ELEMENT	RATEA (MVA)	RATEB(MVA)	TDF	TC%LOADING (% MVA)	CONTINGENCY
FDNS	00NR	4	20SP	G15_042	FROM->TO	GRPRAR1-LNX3345.00 - HOLT.CO3 345.00 345KV CKT 1	720	720	0.03104	104.5272	BASE CASE
FDNS	00NR	4	25SP	G15_042	FROM->TO	GRPRAR1-LNX3345.00 - HOLT.CO3 345.00 345KV CKT 1	720	720	0.03111	104.5214	FT THOMPSON - HURON 230KV CKT 1
FDNS	00NR	4	25SP	G15_042	FROM->TO	GRPRAR1-LNX3345.00 - HOLT.CO3 345.00 345KV CKT 1	720	720	0.03111	104.5214	FT THOMPSON - HURON 230KV CKT 1
FDNS	00NR	4	25SP	G15_042	FROM->TO	GRPRAR1-LNX3345.00 - HOLT.CO3 345.00 345KV CKT 1	720	720	0.03111	104.5214	FT THOMPSON - HURON 230KV CKT 2
FDNS	00NR	4	25SP	G15_042	FROM->TO	GRPRAR1-LNX3345.00 - HOLT.CO3 345.00 345KV CKT 1	720	720	0.03111	104.5214	FT THOMPSON - HURON 230KV CKT 2
FDNS	00NR	4	25SP	G15_042	FROM->TO	GRPRAR1-LNX3345.00 - HOLT.CO3 345.00 345KV CKT 1	720	720	0.03184	104.5207	SIDNEY - SIDNEY TRANSFORMER 230KV CKT 1
FDNS	00NR	4	25SP	G15_042	FROM->TO	GRPRAR1-LNX3345.00 - HOLT.CO3 345.00 345KV CKT 1	720	720	0.03184	104.5193	P13:230-345:NPPD:SIDNEY 3:KV2A
FDNS	00NR	4	25SP	G15_042	FROM->TO	GRPRAR1-LNX3345.00 - HOLT.CO3 345.00 345KV CKT 1	720	720	0.03184	104.5193	SIDNEY (SDQ KV2A) 345/230/13.8KV TRANSFORMER CKT 1
FDNS	00NR	4	25SP	G15_042	FROM->TO	GRPRAR1-LNX3345.00 - HOLT.CO3 345.00 345KV CKT 1	720	720	0.03417	104.5191	STEGALL - STEGALL TRANSFORMER 230KV CKT 1
FDNS	00NR	4	25SP	G15_042	FROM->TO	GRPRAR1-LNX3345.00 - HOLT.CO3 345.00 345KV CKT 1	720	720	0.03171	104.5188	HUNTLEY3 345.00 - LAKEFIELD 3 345KV CKT 1
FDNS	00NR	4	25SP	G15_042	FROM->TO	GRPRAR1-LNX3345.00 - HOLT.CO3 345.00 345KV CKT 1	720	720	0.03136	104.5162	BALTA - RAMSEY 230KV CKT 1
FDNS	00NR	4	25SP	G15_042	FROM->TO	GRPRAR1-LNX3345.00 - HOLT.CO3 345.00 345KV CKT 1	720	720	0.03209	104.5133	P12:230:UMZW:# 733 #: FT IN SD. FT-BG2 LINE FAULT
FDNS	00NR	4	25SP	G15_042	FROM->TO	GRPRAR1-LNX3345.00 - HOLT.CO3 345.00 345KV CKT 1	720	720	0.03209	104.5129	FT THOMPSON - LOWERBRULE 4230.00 230KV CKT 1
FDNS	00NR	4	25SP	G15_042	FROM->TO	GRPRAR1-LNX3345.00 - HOLT.CO3 345.00 345KV CKT 1	720	720	0.03209	104.5129	FT THOMPSON - LOWERBRULE 4230.00 230KV CKT 1
FDNS	00NR	4	25SP	G15_042	FROM->TO	GRPRAR1-LNX3345.00 - HOLT.CO3 345.00 345KV CKT 1	720	720	0.03209	104.5081	LOWERBRULE 4230.00 - RELIANCE 4 230.00 230KV CKT 1
FDNS	00NR	4	25SP	G15_042	FROM->TO	GRPRAR1-LNX3345.00 - HOLT.CO3 345.00 345KV CKT 1	720	720	0.03186	104.4934	P13:115-230:TSGT:SIDNEY-KV1A
FDNS	00NR	4	25SP	G15_042	FROM->TO	GRPRAR1-LNX3345.00 - HOLT.CO3 345.00 345KV CKT 1	720	720	0.03136	104.4852	GEN501811 1-RODEMACHER UNIT 1
FDNS	00NR	4	25SP	G15_042	FROM->TO	GRPRAR1-LNX3345.00 - HOLT.CO3 345.00 345KV CKT 1	720	720	0.03136	104.4739	GEN659118 1-LARAMIE RIVER UNIT1
FDNS	00NR	4	25SP	G15_042	FROM->TO	GRPRAR1-LNX3345.00 - HOLT.CO3 345.00 345KV CKT 1	720	720	0.03138	104.4643	FORMAN - HANKINSON 230KV CKT 1
FDNS	00NR	4	25SP	G15_042	FROM->TO	GRPRAR1-LNX3345.00 - HOLT.CO3 345.00 345KV CKT 1	720	720	0.03136	104.4544	LAWRENCE ENERGY CENTER UNIT 5 - LAWRENCE HILL 230KV CKT 1
FDNS	00NR	4	25SP	G15_042	FROM->TO	GRPRAR1-LNX3345.00 - HOLT.CO3 345.00 345KV CKT 1	720	720	0.03136	104.4544	LAWRENCE ENERGY CENTER UNIT 5 230/24.0KV TRANSFORMER CKT 1
FDNS	00NR	4	25SP	G15_042	FROM->TO	GRPRAR1-LNX3345.00 - HOLT.CO3 345.00 345KV CKT 1	720	720	0.03136	104.4483	PRAIRIE ISLAND 345/20.0KV TRANSFORMER CKT 1
FDNS	00NR	4	25SP	G15_042	FROM->TO	GRPRAR1-LNX3345.00 - HOLT.CO3 345.00 345KV CKT 1	720	720	0.03136	104.447	PRAIRIE ISLAND 345/20.0KV TRANSFORMER CKT 2
FDNS	00NR	4	25SP	G15_042	FROM->TO	GRPRAR1-LNX3345.00 - HOLT.CO3 345.00 345KV CKT 1	720	720	0.03089	104.4451	GREGORY - WINNER 115KV CKT 1
FDNS	00NR	4	25SP	G15_042	FROM->TO	GRPRAR1-LNX3345.00 - HOLT.CO3 345.00 345KV CKT 1	720	720	0.03136	104.4401	GEN334070 1-LEWIS CREEK 1
FDNS	00NR	4	25SP	G15_042	FROM->TO	GRPRAR1-LNX3345.00 - HOLT.CO3 345.00 345KV CKT 1	720	720	0.03136	104.4401	GEN334071 1-LEWIS CREEK 2
FDNS	00NR	4	25SP	G15_042	FROM->TO	GRPRAR1-LNX3345.00 - HOLT.CO3 345.00 345KV CKT 1	720	720	0.03136	104.4268	TATANKA 230/34.5KV TRANSFORMER CKT 1
FDNS	00NR	4	25SP	G15_042	FROM->TO	GRPRAR1-LNX3345.00 - HOLT.CO3 345.00 345KV CKT 1	720	720	0.03089	104.4258	P12:115:UMZW:# 172 #: WI IN SD.
FDNS	00NR	4	25SP	G15_042	FROM->TO	GRPRAR1-LNX3345.00 - HOLT.CO3 345.00 345KV CKT 1	720	720	0.03136	104.4226	SEMINOLE 138/20.9KV TRANSFORMER CKT 1
FDNS	00NR	4	25SP	G15_042	FROM->TO	GRPRAR1-LNX3345.00 - HOLT.CO3 345.00 345KV CKT 1	720	720	0.03136	104.4038	GEN337766 1-TRACTEBEL UNIT S1
FDNS	00NR	4	25SP	G15_042	FROM->TO	GRPRAR1-LNX3345.00 - HOLT.CO3 345.00 345KV CKT 1	720	720	0.03136	104.3948	GEN645012 2-NEBRASKA CITY 2
FDNS	00NR	4	25SP	G15_042	FROM->TO	GRPRAR1-LNX3345.00 - HOLT.CO3 345.00 345KV CKT 1	720	720	0.03136	104.3909	GEN337757 1-DUKE HOTSPRINGS STG1
FDNS	00NR	4	25SP	G15_042	FROM->TO	GRPRAR1-LNX3345.00 - HOLT.CO3 345.00 345KV CKT 1	720	720	0.03136	104.3907	ELM CREEK - MONTICELLO 345KV CKT 1
FDNS	00NR	4	25SP	G15_042	FROM->TO	GRPRAR1-LNX3345.00 - HOLT.CO3 345.00 345KV CKT 1	720	720	0.03138	104.3751	AUDUBON - SHEYNNE 230KV CKT 1
FDNS	00NR	4	25SP	G15_042	FROM->TO	GRPRAR1-LNX3345.00 - HOLT.CO3 345.00 345KV CKT 1	720	720	0.03141	104.3736	HANKINSON - WAHPETON 230KV CKT 1
FDNS	00NR	4	25SP	G15_042	FROM->TO	GRPRAR1-LNX3345.00 - HOLT.CO3 345.00 345KV CKT 1	720	720	0.0312	104.3716	MT VERN - STORLA 115KV CKT 1
FDNS	00NR	4	25SP	G15_042	FROM->TO	GRPRAR1-LNX3345.00 - HOLT.CO3 345.00 345KV CKT 1	720	720	0.03136	104.3692	GEN501910 1-ACADIA UNIT ST1
FDNS	00NR	4	25SP	G15_042	FROM->TO	GRPRAR1-LNX3345.00 - HOLT.CO3 345.00 345KV CKT 1	720	720	0.03191	104.3682	P12:115:NPPD:WAPA1:CHADRON7:BOXBUTE7:BTB
FDNS	00NR	4	25SP	G15_042	FROM->TO	GRPRAR1-LNX3345.00 - HOLT.CO3 345.00 345KV CKT 1	720	720	0.03158	104.362	OVEXFRMCCOVE
FDNS	00NR	4	25SP	G15_042	FROM->TO	GRPRAR1-LNX3345.00 - HOLT.CO3 345.00 345KV CKT 1	720	720	0.03137	104.3617	ELLENDLMVP4 230.00 - OAKES 230KV CKT 1
FDNS	00NR	4	25SP	G15_042	FROM->TO	GRPRAR1-LNX3345.00 - HOLT.CO3 345.00 345KV CKT 1	720	720	0.03137	104.3617	ELLENDLMVP4 230.00 - OAKES 230KV CKT 1
FDNS	00NR	4	25SP	G15_042	FROM->TO	GRPRAR1-LNX3345.00 - HOLT.CO3 345.00 345KV CKT 1	720	720	0.03137	104.3615	FORMAN - OAKES 230KV CKT 1
FDNS	00NR	4	25SP	G15_042	FROM->TO	GRPRAR1-LNX3345.00 - HOLT.CO3 345.00 345KV CKT 1	720	720	0.03136	104.3595	GEN645011 1-NEBRASKA CITY 1
FDNS	00NR	4	25SP	G15_042	FROM->TO	GRPRAR1-LNX3345.00 - HOLT.CO3 345.00 345KV CKT 1	720	720	0.03477	104.357	BELDEN - HOSKINS 115KV CKT 1
FDNS	00NR	4	25SP	G15_042	FROM->TO	GRPRAR1-LNX3345.00 - HOLT.CO3 345.00 345KV CKT 1	720	720	0.03136	104.3463	GEN336221 1-LITTLE GYPSY UNIT#1
FDNS	00NR	4	25SP	G15_042	FROM->TO	GRPRAR1-LNX3345.00 - HOLT.CO3 345.00 345KV CKT 1	720	720	0.03141	104.3433	FERGSFL4 230.00 - WAHPETON 230KV CKT 1
FDNS	00NR	4	25SP	G15_042	FROM->TO	GRPRAR1-LNX3345.00 - HOLT.CO3 345.00 345KV CKT 1	720	720	0.03209	104.3419	RELIANCE 4 230.00 - WITTEN 4 230.00 230KV CKT 1
FDNS	00NR	4	25SP	G15_042	FROM->TO	GRPRAR1-LNX3345.00 - HOLT.CO3 345.00 345KV CKT 1	720	720	0.03136	104.3411	PRAIRIE - WINGER 230KV CKT 1
FDNS	00NR	4	25SP	G15_042	FROM->TO	GRPRAR1-LNX3345.00 - HOLT.CO3 345.00 345KV CKT 1	720	720	0.03148	104.3396	FRANKS - HUBEN 345KV CKT 1
FDNS	00NR	4	25SP	G15_042	FROM->TO	GRPRAR1-LNX3345.00 - HOLT.CO3 345.00 345KV CKT 1	720	720	0.03136	104.329	GEN532651 1-JEFFREY ENERGY CENTER UNIT 1
FDNS	00NR	4	25SP	G15_042	FROM->TO	GRPRAR1-LNX3345.00 - HOLT.CO3 345.00 345KV CKT 1	720	720	0.03136	104.3273	GEN562912 1-G15053_3 0.6900
FDNS	00NR	4	25SP	G15_042	FROM->TO	GRPRAR1-LNX3345.00 - HOLT.CO3 345.00 345KV CKT 1	720	720	0.03213	104.3263	NOBLES - SPLIT ROCK 345KV CKT 1
FDNS	00NR	4	25SP	G15_042	FROM->TO	GRPRAR1-LNX3345.00 - HOLT.CO3 345.00 345KV CKT 1	720	720	0.03136	104.3236	GEN532652 1-JEFFREY ENERGY CENTER UNIT 2
FDNS	00NR	4	25SP	G15_042	FROM->TO	GRPRAR1-LNX3345.00 - HOLT.CO3 345.00 345KV CKT 1	720	720	0.03136	104.3235	GEN532653 1-JEFFREY ENERGY CENTER UNIT 3
FDNS	00NR	4	25SP	G15_042	FROM->TO	GRPRAR1-LNX3345.00 - HOLT.CO3 345.00 345KV CKT 1	720	720	0.03136	104.3217	J316_SUB 230.00 230/34.5KV TRANSFORMER CKT 1
FDNS	00NR	4	25SP	G15_042	FROM->TO	GRPRAR1-LNX3345.00 - HOLT.CO3 345.00 345KV CKT 1	720	720	0.03136	104.3175	GRAND GULF 500/22.0KV TRANSFORMER CKT 1
FDNS	00NR	4	25SP	G15_042	FROM->TO	GRPRAR1-LNX3345.00 - HOLT.CO3 345.00 345KV CKT 1	720	720	0.03191	104.3142	CHADRON - DUNLAP 115KV CKT 1
FDNS	00NR	4	25SP	G15_042	FROM->TO	GRPRAR1-LNX3345.00 - HOLT.CO3 345.00 345KV CKT 1	720	720	0.03136	104.3131	GEN334432 1-SABINE UNIT 2
FDNS	00NR	4	25SP	G15_042	FROM->TO	GRPRAR1-LNX3345.00 - HOLT.CO3 345.00 345KV CKT 1	720	720	0.03136	104.313	GEN334431 1-SABINE UNIT 1
FDNS	00NR	4	25SP	G15_042	FROM->TO	GRPRAR1-LNX3345.00 - HOLT.CO3 345.00 345KV CKT 1	720	720	0.03136	104.3095	GEN345765 H-1SIOUX 2 18.000
FDNS	00NR	4	25SP	G15_042	FROM->TO	GRPRAR1-LNX3345.00 - HOLT.CO3 345.00 345KV CKT 1	720	720	0.03136	104.3089	GEN337764 1-TRACTEBEL UNIT C1
FDNS	00NR	4	25SP	G15_042	FROM->TO	GRPRAR1-LNX3345.00 - HOLT.CO3 345.00 345KV CKT 1	720	720	0.03136	104.3089	GEN337765 1-TRACTEBEL UNIT C2
FDNS	00NR	4	25SP	G15_042	FROM->TO	GRPRAR1-LNX3345.00 - HOLT.CO3 345.00 345KV CKT 1	720	720	0.03136	104.3086	GEN336446 1-MICHOUD UNIT #2
FDNS	00NR	4	25SP	G15_042	FROM->TO	GRPRAR1-LNX3345.00 - HOLT.CO3 345.00 345KV CKT 1	720	720	0.03209	104.3031	WITTEN 4 230.00 () 230/115/13.8KV TRANSFORMER CKT 1
FDNS	00NR	4	25SP	G15_042	FROM->TO	GRPRAR1-LNX3345.00 - HOLT.CO3 345.00 345KV CKT 1	720	720	0.03137	104.2922	BALTA - MCHENRY 230KV CKT 1
FDNS	00NR	4	25SP	G15_042	FROM->TO	GRPRAR1-LNX3345.00 - HOLT.CO3 345.00 345KV CKT 1	720	720	0.0314	104.2914	FERGSFL4 230.00 - GRE-SILVRLK4230.00 230KV CKT 1
FDNS	00NR	4	25SP	G15_042	FROM->TO	GRPRAR1-LNX3345.00 - HOLT.CO3 345.00 345KV CKT 1	720	720	0.03235	104.2847	MARTIN - SHANNON 115KV CKT 1
FDNS	00NR	4	25SP	G15_042	FROM->TO	GRPRAR1-LNX3345.00 - HOLT.CO3 345.00 345KV CKT 1	720	720	0.03136	104.2791	TOLK STATION EAST 230/24.0KV TRANSFORMER CKT 1
FDNS	00NR	4	25SP	G15_042	FROM->TO	GRPRAR1-LNX3345.00 - HOLT.CO3 345.00 345KV CKT 1	720	720	0.03148	104.2783	GRE-CEDARMT3345.00 - HELENA 345KV CKT 1
FDNS	00NR	4	25SP	G15_042	FROM->TO	GRPRAR1-LNX3345.00 - HOLT.CO3 345.00 345KV CKT 1	720	720	0.03148	104.2783	GRE-CEDARMT3345.00 - HELENA 345KV CKT 2
FDNS	00NR	4	17SP	G15_042	FROM->TO	GRPRAR1-LNX3345.00 - HOLT.CO3 345.00 345KV CKT 1	720	720	0.03268	104.2743	GEN659125 1-COVEY
FDNS	00NR	4	25SP	G15_042	FROM->TO	GRPRAR1-LNX3345.00 - HOLT.CO3 345.00 345KV CKT 1	720	720	0.03136	104.2706	GEN501823 1-TECHE UNIT 3
FDNS	00NR	4	25SP	G15_042	FROM->TO	GRPRAR1-LNX3345.00 - HOLT.CO3 345.00 345KV CKT 1	720	720	0.03136	104.2699	GEN336242 1-1NMIL ST1 18.000
FDNS	00NR	4	25SP	G15_042	FROM->TO	GRPRAR1-LNX3345.00 - HOLT.CO3 345.00 345KV CKT 1	720	720	0.03112	104.2688	HURON WEST PARK - MITCHELL NW 115KV CKT 1
FDNS	00NR	4	25SP	G15_042	FROM->TO	GRPRAR1-LNX3345.00 - HOLT.CO3 345.00 345KV CKT 1	720	720	0.03112	104.2688	HURON WEST PARK - MITCHELL NW 115KV CKT 1
FDNS	00NR	4	25SP	G15_042	FROM->TO	GRPRAR1-LNX3345.00 - HOLT.CO3 345.00 345KV CKT 1	720	720	0.03153	104.2683	HAMPTON CORNER - NORTH ROCHESTER 345KV CKT 1
FDNS	00NR	4	25SP	G15_042	FROM->TO	GRPRAR1-LNX3345.00 - HOLT.CO3 345.00 345KV CKT 1	720	720	0.03373	104.2661	OAHE - PHILIP TAP 230KV CKT 1
FDNS	00NR	4	25SP	G15_042	FROM->TO	GRPRAR1-LNX3345.00 - HOLT.CO3 345.00 345KV CKT 1	720	720	0.03136	104.2654	GEN636641 1-LOUISA UNIT 1
FDNS	00NR	4	25SP	G15_042	FROM->TO	GRPRAR1-LNX3345.00 - HOLT.CO3 345.00 345KV CKT 1	720	720	0.03136	104.2587	JUDSON LARGE 115/15.0KV TRANSFORMER CKT 1

SOLUTION	GROUP	SCENARIO	SEASON	SOURCE	DIRECTION	MONITORED ELEMENT	RATEA (MVA)	RATEB(MVA)	TDF	TC%LOADING (% MVA)	CONTINGENCY
FDNS	00NR	4	25SP	G15_042	FROM->TO	GRPRAR1-LNX3345.00 - HOLT.CO3 345.00 345KV CKT 1	720	720	0.03136	104.2587	JUDSON LARGE 115/15.0KV TRANSFORMER CKT 1
FDNS	00NR	4	25SP	G15_042	FROM->TO	GRPRAR1-LNX3345.00 - HOLT.CO3 345.00 345KV CKT 1	720	720	0.03136	104.257	OKLAUN 345/24.0KV TRANSFORMER CKT 1
FDNS	00NR	4	25SP	G15_042	FROM->TO	GRPRAR1-LNX3345.00 - HOLT.CO3 345.00 345KV CKT 1	720	720	0.03211	104.2525	DENISON - SIOUX CITY 230KV CKT 1
FDNS	00NR	4	25SP	G15_042	FROM->TO	GRPRAR1-LNX3345.00 - HOLT.CO3 345.00 345KV CKT 1	720	720	0.03136	104.2517	P13:230-345:NPPD:NUCOR-1
FDNS	00NR	4	25SP	G15_042	FROM->TO	GRPRAR1-LNX3345.00 - HOLT.CO3 345.00 345KV CKT 1	720	720	0.0314	104.2514	GRE-SILVRLK4230.00 - HENNING 230KV CKT 1
FDNS	00NR	4	25SP	G15_042	FROM->TO	GRPRAR1-LNX3345.00 - HOLT.CO3 345.00 345KV CKT 1	720	720	0.03146	104.2494	GRE-CEDARMT3345.00 - LYON COUNTY 345KV CKT 2
FDNS	00NR	4	25SP	G15_042	FROM->TO	GRPRAR1-LNX3345.00 - HOLT.CO3 345.00 345KV CKT 1	720	720	0.03159	104.2474	WAYSIDE (WAYSIDE T1) 230/115/13.8KV TRANSFORMER CKT 1
FDNS	00NR	4	25SP	G15_042	FROM->TO	GRPRAR1-LNX3345.00 - HOLT.CO3 345.00 345KV CKT 1	720	720	0.03146	104.2468	GRE-CEDARMT3345.00 - LYON COUNTY 345KV CKT 1
FDNS	00NR	4	25SP	G15_042	FROM->TO	GRPRAR1-LNX3345.00 - HOLT.CO3 345.00 345KV CKT 1	720	720	0.03136	104.2456	GEN562438 1-G13-032 0.6900
FDNS	00NR	4	25SP	G15_042	FROM->TO	GRPRAR1-LNX3345.00 - HOLT.CO3 345.00 345KV CKT 1	720	720	0.0325	104.2451	PLYMOUTH - SIOUX CITY 161KV CKT 1
FDNS	00NR	4	25SP	G15_042	FROM->TO	GRPRAR1-LNX3345.00 - HOLT.CO3 345.00 345KV CKT 1	720	720	0.0325	104.2451	PLYMOUTH - SIOUX CITY 161KV CKT 1
FDNS	00NR	4	25SP	G15_042	FROM->TO	GRPRAR1-LNX3345.00 - HOLT.CO3 345.00 345KV CKT 1	720	720	0.03136	104.2427	GEN334030 1-FRONTIER UNIT 1
FDNS	00NR	4	25SP	G15_042	FROM->TO	GRPRAR1-LNX3345.00 - HOLT.CO3 345.00 345KV CKT 1	720	720	0.03136	104.2424	GEN334031 1-FRONTIER UNIT 2
FDNS	00NR	4	25SP	G15_042	FROM->TO	GRPRAR1-LNX3345.00 - HOLT.CO3 345.00 345KV CKT 1	720	720	0.03136	104.2411	GEN345756 H-1SIOUX 1 18.000
FDNS	00NR	4	25SP	G15_042	FROM->TO	GRPRAR1-LNX3345.00 - HOLT.CO3 345.00 345KV CKT 1	720	720	0.03136	104.237	GEN338443 1-PANDA S1
FDNS	00NR	4	25SP	G15_042	FROM->TO	GRPRAR1-LNX3345.00 - HOLT.CO3 345.00 345KV CKT 1	720	720	0.03159	104.2366	CHADRON - WAYSIDE 115KV CKT 1
FDNS	00NR	4	25SP	G15_042	FROM->TO	GRPRAR1-LNX3345.00 - HOLT.CO3 345.00 345KV CKT 1	720	720	0.03159	104.2366	P13:115-230:NPPD:WAYSIDE4:T1
FDNS	00NR	4	25SP	G15_042	FROM->TO	GRPRAR1-LNX3345.00 - HOLT.CO3 345.00 345KV CKT 1	720	720	0.03136	104.2363	P12:345:GRDA:CHOUTEAU-SPORTSMANACRES
FDNS	00NR	4	25SP	G15_042	FROM->TO	GRPRAR1-LNX3345.00 - HOLT.CO3 345.00 345KV CKT 1	720	720	0.03056	104.2347	FT RANDAL - WHITE SWAN 115KV CKT 1
FDNS	00NR	4	25SP	G15_042	FROM->TO	GRPRAR1-LNX3345.00 - HOLT.CO3 345.00 345KV CKT 1	720	720	0.03136	104.2323	GEN336944 1-REX BROWN
FDNS	00NR	4	25SP	G15_042	FROM->TO	GRPRAR1-LNX3345.00 - HOLT.CO3 345.00 345KV CKT 1	720	720	0.03136	104.2307	GEN345832 1-1TS G1 13.800
FDNS	00NR	4	25SP	G15_042	FROM->TO	GRPRAR1-LNX3345.00 - HOLT.CO3 345.00 345KV CKT 1	720	720	0.03136	104.2303	GEN345841 2-1TS G2 13.800
FDNS	00NR	4	25SP	G15_042	FROM->TO	GRPRAR1-LNX3345.00 - HOLT.CO3 345.00 345KV CKT 1	720	720	0.03136	104.2299	GEN501970 1-EVANGELINE UNIT 7
FDNS	00NR	4	25SP	G15_042	FROM->TO	GRPRAR1-LNX3345.00 - HOLT.CO3 345.00 345KV CKT 1	720	720	0.03136	104.2227	GEN335612 1-WILLOW GLENN UNIT#2
FDNS	00NR	4	20SP	G15_042	FROM->TO	GRPRAR1-LNX3345.00 - HOLT.CO3 345.00 345KV CKT 1	720	720	0.03123	104.1377	BUCKNER7 345.00 - SPEARVILLE 345KV CKT 1
FDNS	00NR	4	20SP	G15_042	FROM->TO	GRPRAR1-LNX3345.00 - HOLT.CO3 345.00 345KV CKT 1	720	720	0.03123	104.1377	BUCKNER7 345.00 - SPEARVILLE 345KV CKT 1
FDNS	00NR	4	25SP	G15_042	FROM->TO	GRPRAR1-LNX3345.00 - HOLT.CO3 345.00 345KV CKT 1	720	720	0.03136	104.1314	GEN563282 1-G15094_3 0.6900
FDNS	00NR	4	20SP	G15_042	FROM->TO	GRPRAR1-LNX3345.00 - HOLT.CO3 345.00 345KV CKT 1	720	720	0.03385	104.0992	MINGO - RED WILLOW 345KV CKT 1
FDNS	00NR	4	20SP	G15_042	FROM->TO	GRPRAR1-LNX3345.00 - HOLT.CO3 345.00 345KV CKT 1	720	720	0.03385	104.0992	MINGO - RED WILLOW 345KV CKT 1
FDNS	00NR	4	20SP	G15_042	FROM->TO	GRPRAR1-LNX3345.00 - HOLT.CO3 345.00 345KV CKT 1	720	720	0.0319	104.0968	103RD & ROKEBY - MOORE 345KV CKT 1
FDNS	00NR	4	20SP	G15_042	FROM->TO	GRPRAR1-LNX3345.00 - HOLT.CO3 345.00 345KV CKT 1	720	720	0.0319	104.0968	103RD & ROKEBY - MOORE 345KV CKT 1
FDNS	00NR	4	20SP	G15_042	FROM->TO	GRPRAR1-LNX3345.00 - HOLT.CO3 345.00 345KV CKT 1	720	720	0.0312	104.0956	FT THOMPSON - OAHE 230KV CKT 1
FDNS	00NR	4	20SP	G15_042	FROM->TO	GRPRAR1-LNX3345.00 - HOLT.CO3 345.00 345KV CKT 1	720	720	0.0312	104.0956	FT THOMPSON - OAHE 230KV CKT 1
FDNS	00NR	4	20SP	G15_042	FROM->TO	GRPRAR1-LNX3345.00 - HOLT.CO3 345.00 345KV CKT 1	720	720	0.0312	104.0956	FT THOMPSON - OAHE 230KV CKT 2
FDNS	00NR	4	20SP	G15_042	FROM->TO	GRPRAR1-LNX3345.00 - HOLT.CO3 345.00 345KV CKT 1	720	720	0.0312	104.0956	FT THOMPSON - OAHE 230KV CKT 2
FDNS	00NR	4	20SP	G15_042	FROM->TO	GRPRAR1-LNX3345.00 - HOLT.CO3 345.00 345KV CKT 1	720	720	0.03121	104.0673	FT THOMPSON - OAHE 230KV CKT 3
FDNS	00NR	4	20SP	G15_042	FROM->TO	GRPRAR1-LNX3345.00 - HOLT.CO3 345.00 345KV CKT 1	720	720	0.03121	104.0673	FT THOMPSON - OAHE 230KV CKT 3
FDNS	00NR	4	20SP	G15_042	FROM->TO	GRPRAR1-LNX3345.00 - HOLT.CO3 345.00 345KV CKT 1	720	720	0.03121	104.0673	FT THOMPSON - OAHE 230KV CKT 4
FDNS	00NR	4	20SP	G15_042	FROM->TO	GRPRAR1-LNX3345.00 - HOLT.CO3 345.00 345KV CKT 1	720	720	0.03121	104.0673	FT THOMPSON - OAHE 230KV CKT 4
FDNS	00NR	4	20SP	G15_042	FROM->TO	GRPRAR1-LNX3345.00 - HOLT.CO3 345.00 345KV CKT 1	720	720	0.03174	104.0348	AXTELL - POST ROCK 345KV CKT 1
FDNS	00NR	4	20SP	G15_042	FROM->TO	GRPRAR1-LNX3345.00 - HOLT.CO3 345.00 345KV CKT 1	720	720	0.03097	104.0289	BISMARK - L3 HAWDON 230KV CKT 1
FDNS	00NR	4	20SP	G15_042	FROM->TO	GRPRAR1-LNX3345.00 - HOLT.CO3 345.00 345KV CKT 1	720	720	0.03044	104.0283	NELIGH - PETERSBRG.N7115.00 115KV CKT 1
FDNS	00NR	4	20SP	G15_042	FROM->TO	GRPRAR1-LNX3345.00 - HOLT.CO3 345.00 345KV CKT 1	720	720	0.03129	104.0271	FALLOW 3 345.00 - GRIMES 345KV CKT 1
FDNS	00NR	4	20SP	G15_042	FROM->TO	GRPRAR1-LNX3345.00 - HOLT.CO3 345.00 345KV CKT 1	720	720	0.03115	104.023	G11_051T 345.00 - WOODWARD DISTRICT EHV 345KV CKT 1
FDNS	00NR	4	20SP	G15_042	FROM->TO	GRPRAR1-LNX3345.00 - HOLT.CO3 345.00 345KV CKT 1	720	720	0.03104	104.0104	GEN659147 1-PIONEER 1G13.800
FDNS	00NR	4	20SP	G15_042	FROM->TO	GRPRAR1-LNX3345.00 - HOLT.CO3 345.00 345KV CKT 1	720	720	0.03104	104.0104	GEN659158 2-PIONEER G213.800
FDNS	00NR	4	20SP	G15_042	FROM->TO	GRPRAR1-LNX3345.00 - HOLT.CO3 345.00 345KV CKT 1	720	720	0.03104	104.0104	GEN659159 3-PIONEER G313.800
FDNS	00NR	4	20SP	G15_042	FROM->TO	GRPRAR1-LNX3345.00 - HOLT.CO3 345.00 345KV CKT 1	720	720	0.03104	104.0101	GEN659148 1-LONESMCRK 1G13.800
FDNS	00NR	4	20SP	G15_042	FROM->TO	GRPRAR1-LNX3345.00 - HOLT.CO3 345.00 345KV CKT 1	720	720	0.03104	104.0101	GEN659156 2-LONESMCRK 2G13.800
FDNS	00NR	4	20SP	G15_042	FROM->TO	GRPRAR1-LNX3345.00 - HOLT.CO3 345.00 345KV CKT 1	720	720	0.03104	104.0101	GEN659157 3-LONESMCRK 3G13.800
FDNS	00NR	4	20SP	G15_042	FROM->TO	GRPRAR1-LNX3345.00 - HOLT.CO3 345.00 345KV CKT 1	720	720	0.03104	104.0045	GEN657964 1-ASH2GEN9 0.5750
FDNS	00NR	4	20SP	G15_042	FROM->TO	GRPRAR1-LNX3345.00 - HOLT.CO3 345.00 345KV CKT 1	720	720	0.03104	104.0037	GEN672367 1-MERIDIAN GENERATOR 1 GT1
FDNS	00NR	4	20SP	G15_042	FROM->TO	GRPRAR1-LNX3345.00 - HOLT.CO3 345.00 345KV CKT 1	720	720	0.03104	104.0036	GEN672368 2-MERIDIAN GENERATOR 2 GT2
FDNS	00NR	4	20SP	G15_042	FROM->TO	GRPRAR1-LNX3345.00 - HOLT.CO3 345.00 345KV CKT 1	720	720	0.03104	104.0029	GEN672358 1-CHAPLN1W 0.6900
FDNS	00NR	4	20SP	G15_042	FROM->TO	GRPRAR1-LNX3345.00 - HOLT.CO3 345.00 345KV CKT 1	720	720	0.031	103.9893	G14-021T 345.00 - MULLNCR7 345.00 345KV CKT 1
FDNS	00NR	4	20SP	G15_042	FROM->TO	GRPRAR1-LNX3345.00 - HOLT.CO3 345.00 345KV CKT 1	720	720	0.031	103.9861	G15-005T 345.00 - MULLNCR7 345.00 345KV CKT 1
FDNS	00NR	4	20SP	G15_042	FROM->TO	GRPRAR1-LNX3345.00 - HOLT.CO3 345.00 345KV CKT 1	720	720	0.03044	103.9836	ALBION - PETERSBURG 115KV CKT 1
FDNS	00NR	4	20SP	G15_042	FROM->TO	GRPRAR1-LNX3345.00 - HOLT.CO3 345.00 345KV CKT 1	720	720	0.03119	103.9811	POST ROCK (POSTROCK T1) 345/230/13.8KV TRANSFORMER CKT 1
FDNS	00NR	4	20SP	G15_042	FROM->TO	GRPRAR1-LNX3345.00 - HOLT.CO3 345.00 345KV CKT 1	720	720	0.03104	103.9799	GEN672349 3-CORY COGEN GENERATOR 3 ST
FDNS	00NR	4	20SP	G15_042	FROM->TO	GRPRAR1-LNX3345.00 - HOLT.CO3 345.00 345KV CKT 1	720	720	0.03104	103.9778	GEN672350 1-NIPAWIN GENERATOR 1
FDNS	00NR	4	20SP	G15_042	FROM->TO	GRPRAR1-LNX3345.00 - HOLT.CO3 345.00 345KV CKT 1	720	720	0.03104	103.9778	GEN672351 2-NIPAWIN GENERATOR 2
FDNS	00NR	4	20SP	G15_042	FROM->TO	GRPRAR1-LNX3345.00 - HOLT.CO3 345.00 345KV CKT 1	720	720	0.03104	103.9778	GEN672352 3-NIPAWIN GENERATOR 3
FDNS	00NR	4	20SP	G15_042	FROM->TO	GRPRAR1-LNX3345.00 - HOLT.CO3 345.00 345KV CKT 1	720	720	0.03104	103.9725	GEN600012 2-BLACK DOG GEN 2
FDNS	00NR	4	20SP	G15_042	FROM->TO	GRPRAR1-LNX3345.00 - HOLT.CO3 345.00 345KV CKT 1	720	720	0.03268	103.9645	BATTLE CREEK - COUNTY LINE 115KV CKT 1
FDNS	00NR	4	20SP	G15_042	FROM->TO	GRPRAR1-LNX3345.00 - HOLT.CO3 345.00 345KV CKT 1	720	720	0.0326	103.9586	G15061_T 345.00 - SETAB 345KV CKT 1
FDNS	00NR	4	20SP	G15_042	FROM->TO	GRPRAR1-LNX3345.00 - HOLT.CO3 345.00 345KV CKT 1	720	720	0.02979	103.9563	COOPER - MOORE 345KV CKT 1
FDNS	00NR	4	20SP	G15_042	FROM->TO	GRPRAR1-LNX3345.00 - HOLT.CO3 345.00 345KV CKT 1	720	720	0.03104	103.9538	GEN590010 1-ERCOT EQUIVALENCE
FDNS	00NR	4	20SP	G15_042	FROM->TO	GRPRAR1-LNX3345.00 - HOLT.CO3 345.00 345KV CKT 1	720	720	0.03104	103.9484	GEN652546 1-FT RANDAL
FDNS	00NR	4	20SP	G15_042	FROM->TO	GRPRAR1-LNX3345.00 - HOLT.CO3 345.00 345KV CKT 1	720	720	0.03104	103.9465	GEN652548 5-FT RANDAL
FDNS	00NR	4	20SP	G15_042	FROM->TO	GRPRAR1-LNX3345.00 - HOLT.CO3 345.00 345KV CKT 1	720	720	0.03104	103.9465	GEN652549 7-FT RANDAL
FDNS	00NR	4	20SP	G15_042	FROM->TO	GRPRAR1-LNX3345.00 - HOLT.CO3 345.00 345KV CKT 1	720	720	0.03104	103.943	EMERY 161/18.0KV TRANSFORMER CKT 1
FDNS	00NR	4	20SP	G15_042	FROM->TO	GRPRAR1-LNX3345.00 - HOLT.CO3 345.00 345KV CKT 1	720	720	0.03044	103.9429	P12:115:NPPD:1168B:ALBION 7:PETERSBRG.N7:BTB
FDNS	00NR	4	20SP	G15_042	FROM->TO	GRPRAR1-LNX3345.00 - HOLT.CO3 345.00 345KV CKT 1	720	720	0.03104	103.9417	GEN652547 3-FT RANDAL
FDNS	00NR	4	20SP	G15_042	FROM->TO	GRPRAR1-LNX3345.00 - HOLT.CO3 345.00 345KV CKT 1	720	720	0.03044	103.9397	PETERSBRG.N7115.00 - PETERSBURG 115KV CKT Z1
FDNS	00NR	4	20SP	G15_042	FROM->TO	GRPRAR1-LNX3345.00 - HOLT.CO3 345.00 345KV CKT 1	720	720	0.031	103.938	G15-005T 345.00 - SIBLEY 345KV CKT 1
FDNS	00NR	4	20SP	G15_042	FROM->TO	GRPRAR1-LNX3345.00 - HOLT.CO3 345.00 345KV CKT 1	720	720	0.03104	103.9272	GEN590011 2-ERCOT EQUIVALENCE
FDNS	00NR	4	20SP	G15_042	FROM->TO	GRPRAR1-LNX3345.00 - HOLT.CO3 345.00 345KV CKT 1	720	720	0.03111	103.9249	ANTELOP-LNX3345.00 - BRDLAND-LNX3345.00 345KV CKT 1
FDNS	00NR	4	20SP	G15_042	FROM->TO	GRPRAR1-LNX3345.00 - HOLT.CO3 345.00 345KV CKT 1	720	720	0.03104	103.9172	GEN300003 1-THOMAS HILL UNIT 3
FDNS	00NR	4	20SP	G15_042	FROM->TO	GRPRAR1-LNX3345.00 - HOLT.CO3 345.00 345KV CKT 1	720	720	0.03131	103.9151	LARAMIE RIVER - STEGALL 345KV CKT 1

SOLUTION	GROUP	SCENARIO	SEASON	SOURCE	DIRECTION	MONITORED ELEMENT	RATEA (MVA)	RATEB(MVA)	TDF	TC%LOADING (% MVA)	CONTINGENCY
FDNS	00NR	4	20SP	G15_042	FROM->TO	GRPRAR1-LNX3345.00 - HOLT.CO3 345.00 345KV CKT 1	720	720	0.03104	103.9082	GEN600046 1-MECST
FDNS	00NR	4	20SP	G15_042	FROM->TO	GRPRAR1-LNX3345.00 - HOLT.CO3 345.00 345KV CKT 1	720	720	0.03104	103.9069	GEN659290 1-EDGECOL
FDNS	00NR	4	20SP	G15_042	FROM->TO	GRPRAR1-LNX3345.00 - HOLT.CO3 345.00 345KV CKT 1	720	720	0.03104	103.9069	GEN672339 16-QE 16G 13.800
FDNS	00NR	4	20SP	G15_042	FROM->TO	GRPRAR1-LNX3345.00 - HOLT.CO3 345.00 345KV CKT 1	720	720	0.03268	103.9014	ANTELOPE 7115.00 - COUNTY LINE 115KV CKT 1
FDNS	00NR	4	20SP	G15_042	FROM->TO	GRPRAR1-LNX3345.00 - HOLT.CO3 345.00 345KV CKT 1	720	720	0.03108	103.8935	DRAYTON - LETELLIER 230KV CKT 1
FDNS	00NR	4	20SP	G15_042	FROM->TO	GRPRAR1-LNX3345.00 - HOLT.CO3 345.00 345KV CKT 1	720	720	0.03104	103.8929	GEN672393 2-NBECST2G 13.800
FDNS	00NR	4	20SP	G15_042	FROM->TO	GRPRAR1-LNX3345.00 - HOLT.CO3 345.00 345KV CKT 1	720	720	0.03104	103.8903	GEN600050 1-FEP
FDNS	00NR	4	20SP	G15_042	FROM->TO	GRPRAR1-LNX3345.00 - HOLT.CO3 345.00 345KV CKT 1	720	720	0.03154	103.8824	THEDFRD3 345.00 (THEDFORDT2) 345/115/13.8KV TRANSFORMER CKT 1
FDNS	00NR	4	20SP	G15_042	FROM->TO	GRPRAR1-LNX3345.00 - HOLT.CO3 345.00 345KV CKT 1	720	720	0.03104	103.8783	GEN620324 3-HOOT LAKE 3 GEN
FDNS	00NR	4	20SP	G15_042	FROM->TO	GRPRAR1-LNX3345.00 - HOLT.CO3 345.00 345KV CKT 1	720	720	0.03104	103.8714	GEN672342 3-QUEEN ELIZABETH GENERATOR 3
FDNS	00NR	4	20SP	G15_042	FROM->TO	GRPRAR1-LNX3345.00 - HOLT.CO3 345.00 345KV CKT 1	720	720	0.03104	103.8629	GEN652410 3-FT PECK
FDNS	00NR	4	20SP	G15_042	FROM->TO	GRPRAR1-LNX3345.00 - HOLT.CO3 345.00 345KV CKT 1	720	720	0.03104	103.8592	LADISH 115/13.2KV TRANSFORMER CKT 1
FDNS	00NR	4	20SP	G15_042	FROM->TO	GRPRAR1-LNX3345.00 - HOLT.CO3 345.00 345KV CKT 1	720	720	0.03104	103.8554	GEN600047 1-MECCT1
FDNS	00NR	4	20SP	G15_042	FROM->TO	GRPRAR1-LNX3345.00 - HOLT.CO3 345.00 345KV CKT 1	720	720	0.03104	103.8415	GEN660003 3-HURON WEST PARK
FDNS	00NR	4	20SP	G15_042	FROM->TO	GRPRAR1-LNX3345.00 - HOLT.CO3 345.00 345KV CKT 1	720	720	0.03104	103.8296	GEN660001 2-ABERDEEN SIEBRECHT
FDNS	00NR	4	20SP	G15_042	FROM->TO	GRPRAR1-LNX3345.00 - HOLT.CO3 345.00 345KV CKT 1	720	720	0.03104	103.8063	GEN600063 1-COLVILLE GEN 1
FDNS	00NR	4	20SP	G15_042	FROM->TO	GRPRAR1-LNX3345.00 - HOLT.CO3 345.00 345KV CKT 1	720	720	0.03104	103.8063	GEN600064 2-COLVILLE GEN 2
FDNS	00NR	4	20SP	G15_042	FROM->TO	GRPRAR1-LNX3345.00 - HOLT.CO3 345.00 345KV CKT 1	720	720	0.03104	103.8003	GEN652414 4-FT PECK
FDNS	00NR	4	20SP	G15_042	FROM->TO	GRPRAR1-LNX3345.00 - HOLT.CO3 345.00 345KV CKT 1	720	720	0.03104	103.8003	GEN652415 5-FT PECK
FDNS	00NR	4	20SP	G15_042	FROM->TO	GRPRAR1-LNX3345.00 - HOLT.CO3 345.00 345KV CKT 1	720	720	0.03104	103.794	GEN681522 3-GENOA 3
FDNS	00NR	4	20SP	G15_042	FROM->TO	GRPRAR1-LNX3345.00 - HOLT.CO3 345.00 345KV CKT 1	720	720	0.03255	103.7926	GERALD GENTLEMAN STATION - RED WILLOW 345KV CKT 1
FDNS	00NR	4	20SP	G15_042	FROM->TO	GRPRAR1-LNX3345.00 - HOLT.CO3 345.00 345KV CKT 1	720	720	0.03104	103.7915	GEN300007 1-NEW MADRID UNIT 2
FDNS	00NR	4	20SP	G15_042	FROM->TO	GRPRAR1-LNX3345.00 - HOLT.CO3 345.00 345KV CKT 1	720	720	0.03104	103.7915	GEN652345 W-G07_023IS_2 0.6900
FDNS	00NR	4	20SP	G15_042	FROM->TO	GRPRAR1-LNX3345.00 - HOLT.CO3 345.00 345KV CKT 1	720	720	0.03104	103.7865	GEN300006 1-NEW MADRID UNIT 1
FDNS	00NR	4	20SP	G15_042	FROM->TO	GRPRAR1-LNX3345.00 - HOLT.CO3 345.00 345KV CKT 1	720	720	0.03104	103.7843	GEN 11104 1-J262_GEN 0.6000
FDNS	00NR	4	20SP	G15_042	FROM->TO	GRPRAR1-LNX3345.00 - HOLT.CO3 345.00 345KV CKT 1	720	720	0.03104	103.7843	GEN 11108 1-J263_GEN 0.6000
FDNS	00NR	4	20SP	G15_042	FROM->TO	GRPRAR1-LNX3345.00 - HOLT.CO3 345.00 345KV CKT 1	720	720	0.03104	103.7798	GEN600043 7-BLUE LAKE5
FDNS	00NR	4	20SP	G15_042	FROM->TO	GRPRAR1-LNX3345.00 - HOLT.CO3 345.00 345KV CKT 1	720	720	0.03104	103.7798	GEN600044 8-BLUE LAKE6
FDNS	00NR	4	25SP	G15_042	FROM->TO	GRPRAR1-LNX3345.00 - HOLT.CO3 345.00 345KV CKT 1	720	720	0.03136	103.7619	BASE CASE
FDNS	00NR	4	20SP	G15_042	FROM->TO	GRPRAR1-LNX3345.00 - HOLT.CO3 345.00 345KV CKT 1	720	720	0.03104	103.7616	G830_SUB 115.00 - GRE-MCHENRY7115.00 115KV CKT 1
FDNS	00NR	4	20SP	G15_042	FROM->TO	GRPRAR1-LNX3345.00 - HOLT.CO3 345.00 345KV CKT 1	720	720	0.03104	103.7548	GEN600014 4-BLACK DOG GEN 4
FDNS	00NR	4	20SP	G15_042	FROM->TO	GRPRAR1-LNX3345.00 - HOLT.CO3 345.00 345KV CKT 1	720	720	0.03104	103.7513	G830_SUB 115.00 115/34.5KV TRANSFORMER CKT 1
FDNS	00NR	4	20SP	G15_042	FROM->TO	GRPRAR1-LNX3345.00 - HOLT.CO3 345.00 345KV CKT 1	720	720	0.03104	103.751	GEN600065 7-HIGH BRIDGE
FDNS	00NR	4	20SP	G15_042	FROM->TO	GRPRAR1-LNX3345.00 - HOLT.CO3 345.00 345KV CKT 1	720	720	0.03104	103.751	GEN600066 8-HIGH BRIDGE
FDNS	00NR	4	20SP	G15_042	FROM->TO	GRPRAR1-LNX3345.00 - HOLT.CO3 345.00 345KV CKT 1	720	720	0.03104	103.7481	GEN600011 5-BLACK DOG GEN 1
FDNS	00NR	4	20SP	G15_042	FROM->TO	GRPRAR1-LNX3345.00 - HOLT.CO3 345.00 345KV CKT 1	720	720	0.03104	103.7378	GEN600070 9-RIVER SIDE
FDNS	00NR	4	20SP	G15_042	FROM->TO	GRPRAR1-LNX3345.00 - HOLT.CO3 345.00 345KV CKT 1	720	720	0.03104	103.7378	GEN600071 10-RIVER SIDE
FDNS	00NR	4	20SP	G15_042	FROM->TO	GRPRAR1-LNX3345.00 - HOLT.CO3 345.00 345KV CKT 1	720	720	0.03104	103.7358	LANSING WEST 161/22.0KV TRANSFORMER CKT 1
FDNS	00NR	4	20SP	G15_042	FROM->TO	GRPRAR1-LNX3345.00 - HOLT.CO3 345.00 345KV CKT 1	720	720	0.03104	103.7265	GEN600007 7-RIVERSIDE GEN 7
FDNS	00NR	4	20SP	G15_042	FROM->TO	GRPRAR1-LNX3345.00 - HOLT.CO3 345.00 345KV CKT 1	720	720	0.03104	103.7131	GEN600017 C-LS POWER CT
FDNS	00NR	4	20SP	G15_042	FROM->TO	GRPRAR1-LNX3345.00 - HOLT.CO3 345.00 345KV CKT 1	720	720	0.03104	103.7113	GEN600045 4-ANSON
FDNS	00NR	4	20SP	G15_042	FROM->TO	GRPRAR1-LNX3345.00 - HOLT.CO3 345.00 345KV CKT 1	720	720	0.03115	103.6862	G11_051T 345.00 - TATONGA7 345.00 345KV CKT 1
FDNS	00NR	4	20SP	G15_042	FROM->TO	GRPRAR1-LNX3345.00 - HOLT.CO3 345.00 345KV CKT 1	720	720	0.03111	103.6852	BRDLAND-LNX3345.00 - HURON 345KV CKT Z
FDNS	00NR	4	20SP	G15_042	FROM->TO	GRPRAR1-LNX3345.00 - HOLT.CO3 345.00 345KV CKT 1	720	720	0.03111	103.6844	HURON (BD KU2A) 345/230/13.8KV TRANSFORMER CKT 1
FDNS	00NR	4	20SP	G15_042	FROM->TO	GRPRAR1-LNX3345.00 - HOLT.CO3 345.00 345KV CKT 1	720	720	0.03111	103.6844	HURON (BD KU2A) 345/230/13.8KV TRANSFORMER CKT 1
FDNS	00NR	4	20SP	G15_042	FROM->TO	GRPRAR1-LNX3345.00 - HOLT.CO3 345.00 345KV CKT 1	720	720	0.03111	103.6828	BROADLAND - HURON 230KV CKT 1
FDNS	00NR	4	20SP	G15_042	FROM->TO	GRPRAR1-LNX3345.00 - HOLT.CO3 345.00 345KV CKT 1	720	720	0.03255	103.6823	P12:115:NPPD:1163B:NELIGH 7:NORFK.N7:BTB
FDNS	00NR	4	20SP	G15_042	FROM->TO	GRPRAR1-LNX3345.00 - HOLT.CO3 345.00 345KV CKT 1	720	720	0.03111	103.6809	P12:345:UMZB:# 103 #: BD IN SD. LOSS OF LINE
FDNS	00NR	4	20SP	G15_042	FROM->TO	GRPRAR1-LNX3345.00 - HOLT.CO3 345.00 345KV CKT 1	720	720	0.03111	103.6794	P12:345:UMZB:# 102 #: AVS BD IN ND. AVS BRD LR
FDNS	00NR	4	20SP	G15_042	FROM->TO	GRPRAR1-LNX3345.00 - HOLT.CO3 345.00 345KV CKT 1	720	720	0.03104	103.6481	GEN659273 2-GROTON SYNC COND
FDNS	00NR	4	20SP	G15_042	FROM->TO	GRPRAR1-LNX3345.00 - HOLT.CO3 345.00 345KV CKT 1	720	720	0.03104	103.6481	GEN659294 1-WILTONCOL9
FDNS	00NR	4	20SP	G15_042	FROM->TO	GRPRAR1-LNX3345.00 - HOLT.CO3 345.00 345KV CKT 1	720	720	0.03104	103.6448	GEN615052 1-CAMBRIDGE GENERATING STATION
FDNS	00NR	4	20SP	G15_042	FROM->TO	GRPRAR1-LNX3345.00 - HOLT.CO3 345.00 345KV CKT 1	720	720	0.03111	103.6319	ANTELOP-LNX3345.00 - ANTELOPE VALLEY 345KV CKT Z
FDNS	00NR	4	20SP	G15_042	FROM->TO	GRPRAR1-LNX3345.00 - HOLT.CO3 345.00 345KV CKT 1	720	720	0.03104	103.6298	GEN615021 1-GRE-ER 14G 16.000
FDNS	00NR	4	20SP	G15_042	FROM->TO	GRPRAR1-LNX3345.00 - HOLT.CO3 345.00 345KV CKT 1	720	720	0.03097	103.5998	OAHE - SULLEY BUTTE 230KV CKT 1
FDNS	00NR	4	20SP	G15_042	FROM->TO	GRPRAR1-LNX3345.00 - HOLT.CO3 345.00 345KV CKT 1	720	720	0.03104	103.5883	GEN 10648 1-G830_GEN 0.6900
FDNS	00NR	4	20SP	G15_042	FROM->TO	GRPRAR1-LNX3345.00 - HOLT.CO3 345.00 345KV CKT 1	720	720	0.03104	103.5868	GEN659192 6-LYNN
FDNS	00NR	4	20SP	G15_042	FROM->TO	GRPRAR1-LNX3345.00 - HOLT.CO3 345.00 345KV CKT 1	720	720	0.03104	103.5857	GEN659162 4-RED WLCK
FDNS	00NR	4	20SP	G15_042	FROM->TO	GRPRAR1-LNX3345.00 - HOLT.CO3 345.00 345KV CKT 1	720	720	0.03104	103.5857	GEN659163 5-BLACK WDCK
FDNS	00NR	4	20SP	G15_042	FROM->TO	GRPRAR1-LNX3345.00 - HOLT.CO3 345.00 345KV CKT 1	720	720	0.03104	103.5843	GEN659031 1-G12_014IS_4 0.6900
FDNS	00NR	4	20SP	G15_042	FROM->TO	GRPRAR1-LNX3345.00 - HOLT.CO3 345.00 345KV CKT 1	720	720	0.03104	103.5608	GEN660016 1-B_H WIND 0.7000
FDNS	00NR	4	20SP	G15_042	FROM->TO	GRPRAR1-LNX3345.00 - HOLT.CO3 345.00 345KV CKT 1	720	720	0.02965	103.5607	HIGHLND 3 345.00 - OBRIEN 3 345.00 345KV CKT 1
FDNS	00NR	4	20SP	G15_042	FROM->TO	GRPRAR1-LNX3345.00 - HOLT.CO3 345.00 345KV CKT 1	720	720	0.03104	103.5504	GEN615015 1-GRE-SPRITWDG13.200
FDNS	00NR	4	20SP	G15_042	FROM->TO	GRPRAR1-LNX3345.00 - HOLT.CO3 345.00 345KV CKT 1	720	720	0.03104	103.46	BISONMP4 230.00 - SQUARE BUTTE 230KV CKT 1
FDNS	00NR	4	20SP	G15_042	FROM->TO	GRPRAR1-LNX3345.00 - HOLT.CO3 345.00 345KV CKT 1	720	720	0.03115	103.4579	MATHWSN7 345.00 - TATONGA7 345.00 345KV CKT 1
FDNS	00NR	4	20SP	G15_042	FROM->TO	GRPRAR1-LNX3345.00 - HOLT.CO3 345.00 345KV CKT 1	720	720	0.03097	103.4393	SULLEY BUTTE - SULLYBT-LNX3230.00 230KV CKT Z
FDNS	00NR	4	20SP	G15_042	FROM->TO	GRPRAR1-LNX3345.00 - HOLT.CO3 345.00 345KV CKT 1	720	720	0.03097	103.4388	SULLYBT-LNX3230.00 - WHITLOK 230KV CKT 1
FDNS	00NR	4	20SP	G15_042	FROM->TO	GRPRAR1-LNX3345.00 - HOLT.CO3 345.00 345KV CKT 1	720	720	0.03104	103.4327	GEN600067 9-HIGH BRIDGE
FDNS	00NR	4	20SP	G15_042	FROM->TO	GRPRAR1-LNX3345.00 - HOLT.CO3 345.00 345KV CKT 1	720	720	0.03104	103.409	GEN672303 3-BOUNDARY DAM GENERATOR 3
FDNS	00NR	4	20SP	G15_042	FROM->TO	GRPRAR1-LNX3345.00 - HOLT.CO3 345.00 345KV CKT 1	720	720	0.03104	103.409	GEN672305 5-BOUNDARY DAM GENERATOR 5
FDNS	00NR	4	20SP	G15_042	FROM->TO	GRPRAR1-LNX3345.00 - HOLT.CO3 345.00 345KV CKT 1	720	720	0.03104	103.4089	GEN672304 4-BOUNDARY DAM GENERATOR 4
FDNS	00NR	4	20SP	G15_042	FROM->TO	GRPRAR1-LNX3345.00 - HOLT.CO3 345.00 345KV CKT 1	720	720	0.03097	103.392	P12:230:UMZB:# 114 #: SB IN SD. SB-WK-GH
FDNS	00NR	4	20SP	G15_042	FROM->TO	GRPRAR1-LNX3345.00 - HOLT.CO3 345.00 345KV CKT 1	720	720	0.03097	103.392	P12:230:UMZB:# 117 #: WK IN SD. SB-WK-GH
FDNS	00NR	4	20SP	G15_042	FROM->TO	GRPRAR1-LNX3345.00 - HOLT.CO3 345.00 345KV CKT 1	720	720	0.03104	103.3872	GEN659353 1-DEERCREK CTG18.000
FDNS	00NR	4	20SP	G15_042	FROM->TO	GRPRAR1-LNX3345.00 - HOLT.CO3 345.00 345KV CKT 1	720	720	0.03104	103.3863	GEN659354 1-DEERCREK STG18.000
FDNS	00NR	4	20SP	G15_042	FROM->TO	GRPRAR1-LNX3345.00 - HOLT.CO3 345.00 345KV CKT 1	720	720	0.03104	103.3572	GEN672392 1-NBECGT1G 18.000
FDNS	00NR	4	25SP	G15_042	FROM->TO	GRPRAR1-LNX3345.00 - HOLT.CO3 345.00 345KV CKT 1	720	720	0.03153	103.3527	FT THOMPSON - OAHE 230KV CKT 1
FDNS	00NR	4	25SP	G15_042	FROM->TO	GRPRAR1-LNX3345.00 - HOLT.CO3 345.00 345KV CKT 1	720	720	0.03153	103.3527	FT THOMPSON - OAHE 230KV CKT 1
FDNS	00NR	4	25SP	G15_042	FROM->TO	GRPRAR1-LNX3345.00 - HOLT.CO3 345.00 345KV CKT 1	720	720	0.03153	103.3527	FT THOMPSON - OAHE 230KV CKT 2

SOLUTION	GROUP	SCENARIO	SEASON	SOURCE	DIRECTION	MONITORED ELEMENT	RATEA (MVA)	RATEB(MVA)	TDF	TC%LOADING (% MVA)	CONTINGENCY
FDNS	00NR	4	25SP	G15_042	FROM->TO	GRPRAR1-LNX3345.00 - HOLT.CO3 345.00 345KV CKT 1	720	720	0.03153	103.3527	FT THOMPSON - OAHE 230KV CKT 2
FDNS	00NR	4	25SP	G15_042	FROM->TO	GRPRAR1-LNX3345.00 - HOLT.CO3 345.00 345KV CKT 1	720	720	0.03018	103.3486	COOPER - MOORE 345KV CKT 1
FDNS	00NR	4	20SP	G15_042	FROM->TO	GRPRAR1-LNX3345.00 - HOLT.CO3 345.00 345KV CKT 1	720	720	0.03097	103.3374	GLENHAM - WHITLOK 230KV CKT 1
FDNS	00NR	4	25SP	G15_042	FROM->TO	GRPRAR1-LNX3345.00 - HOLT.CO3 345.00 345KV CKT 1	720	720	0.03153	103.3238	FT THOMPSON - OAHE 230KV CKT 3
FDNS	00NR	4	25SP	G15_042	FROM->TO	GRPRAR1-LNX3345.00 - HOLT.CO3 345.00 345KV CKT 1	720	720	0.03153	103.3238	FT THOMPSON - OAHE 230KV CKT 3
FDNS	00NR	4	25SP	G15_042	FROM->TO	GRPRAR1-LNX3345.00 - HOLT.CO3 345.00 345KV CKT 1	720	720	0.03153	103.3238	FT THOMPSON - OAHE 230KV CKT 4
FDNS	00NR	4	25SP	G15_042	FROM->TO	GRPRAR1-LNX3345.00 - HOLT.CO3 345.00 345KV CKT 1	720	720	0.03153	103.3238	FT THOMPSON - OAHE 230KV CKT 4
FDNS	00NR	4	17SP	G15_042	FROM->TO	GRPRAR1-LNX3345.00 - HOLT.CO3 345.00 345KV CKT 1	720	720	0.03268	103.3083	GEN615001 1-COAL CREEK
FDNS	00NR	4	25SP	G15_042	FROM->TO	GRPRAR1-LNX3345.00 - HOLT.CO3 345.00 345KV CKT 1	720	720	0.03401	103.2848	AINSWORTH - AINSWORTH 115KV CKT 1
FDNS	00NR	4	25SP	G15_042	FROM->TO	GRPRAR1-LNX3345.00 - HOLT.CO3 345.00 345KV CKT 1	720	720	0.03161	103.284	7MAYWOOD 345.00 - 7SPENCER 345.00 345KV CKT 1
FDNS	00NR	4	25SP	G15_042	FROM->TO	GRPRAR1-LNX3345.00 - HOLT.CO3 345.00 345KV CKT 1	720	720	0.03075	103.2816	NELIGH - PETERSBRG.N7115.00 115KV CKT 1
FDNS	00NR	4	25SP	G15_042	FROM->TO	GRPRAR1-LNX3345.00 - HOLT.CO3 345.00 345KV CKT 1	720	720	0.03138	103.279	P12:115:UMZZ:# 232 #: AB IN SD. ABERDEEN A TAP BETWEEN ELLENDALE AND ABERDEEN-SIEBRECHT.
FDNS	00NR	4	25SP	G15_042	FROM->TO	GRPRAR1-LNX3345.00 - HOLT.CO3 345.00 345KV CKT 1	720	720	0.03129	103.2637	BISMARK - L3 HAWDON 230KV CKT 1
FDNS	00NR	4	25SP	G15_042	FROM->TO	GRPRAR1-LNX3345.00 - HOLT.CO3 345.00 345KV CKT 1	720	720	0.03132	103.2626	G15-005T 345.00 - MULLNCR7 345.00 345KV CKT 1
FDNS	00NR	4	25SP	G15_042	FROM->TO	GRPRAR1-LNX3345.00 - HOLT.CO3 345.00 345KV CKT 1	720	720	0.03143	103.2613	ANTELOP-LNX3345.00 - BRDLAND-LNX3345.00 345KV CKT 1
FDNS	00NR	4	25SP	G15_042	FROM->TO	GRPRAR1-LNX3345.00 - HOLT.CO3 345.00 345KV CKT 1	720	720	0.03136	103.2557	GEN672347 1-CORY COGEN GENERATOR 1 GT1
FDNS	00NR	4	25SP	G15_042	FROM->TO	GRPRAR1-LNX3345.00 - HOLT.CO3 345.00 345KV CKT 1	720	720	0.03136	103.2557	GEN672348 2-CORY COGEN GENERATOR 2 GT2
FDNS	00NR	4	25SP	G15_042	FROM->TO	GRPRAR1-LNX3345.00 - HOLT.CO3 345.00 345KV CKT 1	720	720	0.03136	103.2523	GEN300003 1-THOMAS HILL UNIT 3
FDNS	00NR	4	25SP	G15_042	FROM->TO	GRPRAR1-LNX3345.00 - HOLT.CO3 345.00 345KV CKT 1	720	720	0.03314	103.2518	ATCHSNT3 345.00 - BOONEVILLE 345KV CKT 1
FDNS	00NR	4	20SP	G15_042	FROM->TO	GRPRAR1-LNX3345.00 - HOLT.CO3 345.00 345KV CKT 1	720	720	0.03104	103.2488	GEN681542 6-JP MADGETT
FDNS	00NR	4	25SP	G15_042	FROM->TO	GRPRAR1-LNX3345.00 - HOLT.CO3 345.00 345KV CKT 1	720	720	0.03161	103.2395	FALLOW 3 345.00 - GRIMES 345KV CKT 1
FDNS	00NR	4	25SP	G15_042	FROM->TO	GRPRAR1-LNX3345.00 - HOLT.CO3 345.00 345KV CKT 1	720	720	0.03136	103.2378	GEN659147 1-PIONEER 1G13.800
FDNS	00NR	4	25SP	G15_042	FROM->TO	GRPRAR1-LNX3345.00 - HOLT.CO3 345.00 345KV CKT 1	720	720	0.03136	103.2378	GEN659158 2-PIONEER G213.800
FDNS	00NR	4	25SP	G15_042	FROM->TO	GRPRAR1-LNX3345.00 - HOLT.CO3 345.00 345KV CKT 1	720	720	0.03136	103.2378	GEN659159 3-PIONEER G313.800
FDNS	00NR	4	25SP	G15_042	FROM->TO	GRPRAR1-LNX3345.00 - HOLT.CO3 345.00 345KV CKT 1	720	720	0.03136	103.2373	GEN672358 1-CHAPLN1W 0.6900
FDNS	00NR	4	25SP	G15_042	FROM->TO	GRPRAR1-LNX3345.00 - HOLT.CO3 345.00 345KV CKT 1	720	720	0.03136	103.2359	GEN659148 1-LONESMCRK 1G13.800
FDNS	00NR	4	25SP	G15_042	FROM->TO	GRPRAR1-LNX3345.00 - HOLT.CO3 345.00 345KV CKT 1	720	720	0.03136	103.2359	GEN659156 2-LONESMCRK 2G13.800
FDNS	00NR	4	25SP	G15_042	FROM->TO	GRPRAR1-LNX3345.00 - HOLT.CO3 345.00 345KV CKT 1	720	720	0.03136	103.2359	GEN659157 3-LONESMCRK 3G13.800
FDNS	00NR	4	20SP	G15_042	FROM->TO	GRPRAR1-LNX3345.00 - HOLT.CO3 345.00 345KV CKT 1	720	720	0.03104	103.2348	GEN662101 1-WESSINGTON190.5750
FDNS	00NR	4	25SP	G15_042	FROM->TO	GRPRAR1-LNX3345.00 - HOLT.CO3 345.00 345KV CKT 1	720	720	0.03136	103.2331	GEN659417 1X-BEPCPKFT 1GX13.800
FDNS	00NR	4	25SP	G15_042	FROM->TO	GRPRAR1-LNX3345.00 - HOLT.CO3 345.00 345KV CKT 1	720	720	0.03136	103.2331	GEN659418 2X-BEPCPKFT 2GX13.800
FDNS	00NR	4	25SP	G15_042	FROM->TO	GRPRAR1-LNX3345.00 - HOLT.CO3 345.00 345KV CKT 1	720	720	0.03136	103.2331	GEN659419 3X-BEPCPKFT 3GX13.800
FDNS	00NR	4	25SP	G15_042	FROM->TO	GRPRAR1-LNX3345.00 - HOLT.CO3 345.00 345KV CKT 1	720	720	0.03136	103.2275	GEN657964 1-ASH2GEN9 0.5750
FDNS	00NR	4	25SP	G15_042	FROM->TO	GRPRAR1-LNX3345.00 - HOLT.CO3 345.00 345KV CKT 1	720	720	0.033	103.2265	BATTLE CREEK - COUNTY LINE 115KV CKT 1
FDNS	00NR	4	25SP	G15_042	FROM->TO	GRPRAR1-LNX3345.00 - HOLT.CO3 345.00 345KV CKT 1	720	720	0.03132	103.2172	G15-005T 345.00 - SIBLEY 345KV CKT 1
FDNS	00NR	4	20SP	G15_042	FROM->TO	GRPRAR1-LNX3345.00 - HOLT.CO3 345.00 345KV CKT 1	720	720	0.03104	103.2146	CENTER 230/22.0KV TRANSFORMER CKT 1
FDNS	00NR	4	25SP	G15_042	FROM->TO	GRPRAR1-LNX3345.00 - HOLT.CO3 345.00 345KV CKT 1	720	720	0.03136	103.21	GEN672368 2-MERIDIAN GENERATOR 2 GT2
FDNS	00NR	4	25SP	G15_042	FROM->TO	GRPRAR1-LNX3345.00 - HOLT.CO3 345.00 345KV CKT 1	720	720	0.03136	103.2099	GEN672367 1-MERIDIAN GENERATOR 1 GT1
FDNS	00NR	4	25SP	G15_042	FROM->TO	GRPRAR1-LNX3345.00 - HOLT.CO3 345.00 345KV CKT 1	720	720	0.03075	103.2083	ALBION - PETERSBURG 115KV CKT 1
FDNS	00NR	4	20SP	G15_042	FROM->TO	GRPRAR1-LNX3345.00 - HOLT.CO3 345.00 345KV CKT 1	720	720	0.0325	103.2034	MISSION - WITTEN 115KV CKT 1
FDNS	00NR	4	25SP	G15_042	FROM->TO	GRPRAR1-LNX3345.00 - HOLT.CO3 345.00 345KV CKT 1	720	720	0.03136	103.197	GEN672350 1-NIPAWIN GENERATOR 1
FDNS	00NR	4	25SP	G15_042	FROM->TO	GRPRAR1-LNX3345.00 - HOLT.CO3 345.00 345KV CKT 1	720	720	0.03136	103.197	GEN672351 2-NIPAWIN GENERATOR 2
FDNS	00NR	4	25SP	G15_042	FROM->TO	GRPRAR1-LNX3345.00 - HOLT.CO3 345.00 345KV CKT 1	720	720	0.03136	103.197	GEN672352 3-NIPAWIN GENERATOR 3
FDNS	00NR	4	25SP	G15_042	FROM->TO	GRPRAR1-LNX3345.00 - HOLT.CO3 345.00 345KV CKT 1	720	720	0.03237	103.1969	HOLCOMB - SETAB 345KV CKT 1
FDNS	00NR	4	25SP	G15_042	FROM->TO	GRPRAR1-LNX3345.00 - HOLT.CO3 345.00 345KV CKT 1	720	720	0.03237	103.1969	HOLCOMB - SETAB 345KV CKT 1
FDNS	00NR	4	25SP	G15_042	FROM->TO	GRPRAR1-LNX3345.00 - HOLT.CO3 345.00 345KV CKT 1	720	720	0.03136	103.1895	GEN672349 3-CORY COGEN GENERATOR 3 ST
FDNS	00NR	4	20SP	G15_042	FROM->TO	GRPRAR1-LNX3345.00 - HOLT.CO3 345.00 345KV CKT 1	720	720	0.03104	103.1893	GEN910006 1-G12_012IS_3 0.6900
FDNS	00NR	4	25SP	G15_042	FROM->TO	GRPRAR1-LNX3345.00 - HOLT.CO3 345.00 345KV CKT 1	720	720	0.03136	103.1876	GEN652546 1-FT RANDAL
FDNS	00NR	4	25SP	G15_042	FROM->TO	GRPRAR1-LNX3345.00 - HOLT.CO3 345.00 345KV CKT 1	720	720	0.03136	103.1856	GEN652548 5-FT RANDAL
FDNS	00NR	4	25SP	G15_042	FROM->TO	GRPRAR1-LNX3345.00 - HOLT.CO3 345.00 345KV CKT 1	720	720	0.03136	103.1856	GEN652549 7-FT RANDAL
FDNS	00NR	4	25SP	G15_042	FROM->TO	GRPRAR1-LNX3345.00 - HOLT.CO3 345.00 345KV CKT 1	720	720	0.03136	103.1846	GEN600012 2-BLACK DOG GEN 2
FDNS	00NR	4	25SP	G15_042	FROM->TO	GRPRAR1-LNX3345.00 - HOLT.CO3 345.00 345KV CKT 1	720	720	0.03136	103.1844	EMERY 161/18.0KV TRANSFORMER CKT 1
FDNS	00NR	4	25SP	G15_042	FROM->TO	GRPRAR1-LNX3345.00 - HOLT.CO3 345.00 345KV CKT 1	720	720	0.03136	103.181	GEN652547 3-FT RANDAL
FDNS	00NR	4	25SP	G15_042	FROM->TO	GRPRAR1-LNX3345.00 - HOLT.CO3 345.00 345KV CKT 1	720	720	0.03075	103.1767	PETERSBRG.N7115.00 - PETERSBURG 115KV CKT Z1
FDNS	00NR	4	17SP	G15_042	FROM->TO	GRPRAR1-LNX3345.00 - HOLT.CO3 345.00 345KV CKT 1	720	720	0.03268	103.1764	GEN615002 2-COAL CREEK
FDNS	00NR	4	25SP	G15_042	FROM->TO	GRPRAR1-LNX3345.00 - HOLT.CO3 345.00 345KV CKT 1	720	720	0.03075	103.1639	P12:115:NPPD:1168B:ALBION 7:PETERSBRG.N7:BTB
FDNSLock	00NR	4	25SP	G15_042	FROM->TO	GRPRAR1-LNX3345.00 - HOLT.CO3 345.00 345KV CKT 1	720	720	0.0312	103.1583	WATERTOWN (WT2 KU1A) 345/230/13.8KV TRANSFORMER CKT 1
FDNS	00NR	4	25SP	G15_042	FROM->TO	GRPRAR1-LNX3345.00 - HOLT.CO3 345.00 345KV CKT 1	720	720	0.033	103.1557	ANTELOPE 7115.00 - COUNTY LINE 115KV CKT 1
FDNS	00NR	4	25SP	G15_042	FROM->TO	GRPRAR1-LNX3345.00 - HOLT.CO3 345.00 345KV CKT 1	720	720	0.03136	103.1464	GEN659290 1-EDGECOL
FDNS	00NR	4	25SP	G15_042	FROM->TO	GRPRAR1-LNX3345.00 - HOLT.CO3 345.00 345KV CKT 1	720	720	0.03163	103.1409	LARAMIE RIVER - STEGALL 345KV CKT 1
FDNS	00NR	4	25SP	G15_042	FROM->TO	GRPRAR1-LNX3345.00 - HOLT.CO3 345.00 345KV CKT 1	720	720	0.03167	103.1341	FINNEY SWITCHING STATION - WALKTAP7 345.00 345KV CKT 1
FDNS	00NR	4	25SP	G15_042	FROM->TO	GRPRAR1-LNX3345.00 - HOLT.CO3 345.00 345KV CKT 1	720	720	0.03167	103.1341	FINNEY SWITCHING STATION - WALKTAP7 345.00 345KV CKT 1
FDNS	00NR	4	25SP	G15_042	FROM->TO	GRPRAR1-LNX3345.00 - HOLT.CO3 345.00 345KV CKT 1	720	720	0.03136	103.1108	GEN300007 1-NEW MADRID UNIT 2
FDNS	00NR	4	25SP	G15_042	FROM->TO	GRPRAR1-LNX3345.00 - HOLT.CO3 345.00 345KV CKT 1	720	720	0.03136	103.1067	GEN672357 2-FUT-WL2X 13.800
FDNS	00NR	4	25SP	G15_042	FROM->TO	GRPRAR1-LNX3345.00 - HOLT.CO3 345.00 345KV CKT 1	720	720	0.03136	103.1059	GEN300006 1-NEW MADRID UNIT 1
FDNS	00NR	4	25SP	G15_042	FROM->TO	GRPRAR1-LNX3345.00 - HOLT.CO3 345.00 345KV CKT 1	720	720	0.03136	103.0963	GEN672393 2-NBECST2G 13.800
FDNS	00NR	4	20SP	G15_042	FROM->TO	GRPRAR1-LNX3345.00 - HOLT.CO3 345.00 345KV CKT 1	720	720	0.03267	103.094	AXTELL - SWEETWATER 345KV CKT 1
FDNS	00NR	4	25SP	G15_042	FROM->TO	GRPRAR1-LNX3345.00 - HOLT.CO3 345.00 345KV CKT 1	720	720	0.03136	103.092	GEN672390 2-FUT-SW2X 13.800
FDNS	00NR	4	25SP	G15_042	FROM->TO	GRPRAR1-LNX3345.00 - HOLT.CO3 345.00 345KV CKT 1	720	720	0.03136	103.0919	GEN620324 3-HOOT LAKE 3 GEN
FDNS	00NR	4	25SP	G15_042	FROM->TO	GRPRAR1-LNX3345.00 - HOLT.CO3 345.00 345KV CKT 1	720	720	0.03085	103.0917	HELENA - SHEAS LK3 345.00 345KV CKT 1
FDNS	00NR	4	25SP	G15_042	FROM->TO	GRPRAR1-LNX3345.00 - HOLT.CO3 345.00 345KV CKT 1	720	720	0.03136	103.0914	GEN652410 3-FT PECK
FDNS	00NR	4	25SP	G15_042	FROM->TO	GRPRAR1-LNX3345.00 - HOLT.CO3 345.00 345KV CKT 1	720	720	0.03136	103.091	GEN600050 1-FEP
FDNS	00NR	4	20SP	G15_042	FROM->TO	GRPRAR1-LNX3345.00 - HOLT.CO3 345.00 345KV CKT 1	720	720	0.03104	103.0849	CLAY BOSWELL 230/20.9KV TRANSFORMER CKT 1
FDNS	00NR	4	25SP	G15_042	FROM->TO	GRPRAR1-LNX3345.00 - HOLT.CO3 345.00 345KV CKT 1	720	720	0.03136	103.083	GEN660003 3-HURON WEST PARK
FDNS	00NR	4	25SP	G15_042	FROM->TO	GRPRAR1-LNX3345.00 - HOLT.CO3 345.00 345KV CKT 1	720	720	0.03136	103.0812	GEN600046 1-MECST
FDNS	00NR	4	25SP	G15_042	FROM->TO	GRPRAR1-LNX3345.00 - HOLT.CO3 345.00 345KV CKT 1	720	720	0.03183	103.0709	Hitchland Interchange - WALKTAP7 345.00 345KV CKT 1
FDNS	00NR	4	25SP	G15_042	FROM->TO	GRPRAR1-LNX3345.00 - HOLT.CO3 345.00 345KV CKT 1	720	720	0.03183	103.0709	Hitchland Interchange - WALKTAP7 345.00 345KV CKT 1
FDNS	00NR	4	25SP	G15_042	FROM->TO	GRPRAR1-LNX3345.00 - HOLT.CO3 345.00 345KV CKT 1	720	720	0.03136	103.0708	LADISH 115/13.2KV TRANSFORMER CKT 1
FDNS	00NR	4	25SP	G15_042	FROM->TO	GRPRAR1-LNX3345.00 - HOLT.CO3 345.00 345KV CKT 1	720	720	0.03183	103.0628	P12:345:SPS:J07.1.FINN.HITCH

SOLUTION	GROUP	SCENARIO	SEASON	SOURCE	DIRECTION	MONITORED ELEMENT	RATEA (MVA)	RATEB(MVA)	TDF	TC%LOADING (% MVA)	CONTINGENCY
FDNS	00NR	4	20SP	G15_042	FROM->TO	GRPRAR1-LNX3345.00 - HOLT.CO3 345.00 345KV CKT 1	720	720	0.03252	103.0608	G15088_T 345.00 - MOORE 345KV CKT 1
FDNS	00NR	4	25SP	G15_042	FROM->TO	GRPRAR1-LNX3345.00 - HOLT.CO3 345.00 345KV CKT 1	720	720	0.03186	103.0582	THEDFRD3 345.00 (THEDFORDT2) 345/115/13.8KV TRANSFORMER CKT 1
FDNS	00NR	4	25SP	G15_042	FROM->TO	GRPRAR1-LNX3345.00 - HOLT.CO3 345.00 345KV CKT 1	720	720	0.03136	103.0525	GEN660001 2-ABERDEEN SIEBRECHT
FDNS	00NR	4	25SP	G15_042	FROM->TO	GRPRAR1-LNX3345.00 - HOLT.CO3 345.00 345KV CKT 1	720	720	0.03136	103.0504	GEN600047 1-MECCT1
FDNS	00NR	4	20SP	G15_042	FROM->TO	GRPRAR1-LNX3345.00 - HOLT.CO3 345.00 345KV CKT 1	720	720	0.03104	103.0376	HESKETT 115/13.8KV TRANSFORMER CKT 1
FDNS	00NR	4	25SP	G15_042	FROM->TO	GRPRAR1-LNX3345.00 - HOLT.CO3 345.00 345KV CKT 1	720	720	0.03136	103.0324	GEN652345 W-G07_023IS_2 0.6900
FDNS	00NR	4	25SP	G15_042	FROM->TO	GRPRAR1-LNX3345.00 - HOLT.CO3 345.00 345KV CKT 1	720	720	0.03136	103.0274	GEN652414 4-FT PECK
FDNS	00NR	4	25SP	G15_042	FROM->TO	GRPRAR1-LNX3345.00 - HOLT.CO3 345.00 345KV CKT 1	720	720	0.03136	103.0274	GEN652415 5-FT PECK
FDNS	00NR	4	25SP	G15_042	FROM->TO	GRPRAR1-LNX3345.00 - HOLT.CO3 345.00 345KV CKT 1	720	720	0.0309	103.0217	SHEAS LK3 345.00 - WILMARTH 345KV CKT 1
FDNS	00NR	4	25SP	G15_042	FROM->TO	GRPRAR1-LNX3345.00 - HOLT.CO3 345.00 345KV CKT 1	720	720	0.03143	103.015	BRDLAND-LNX3345.00 - HURON 345KV CKT Z
FDNS	00NR	4	25SP	G15_042	FROM->TO	GRPRAR1-LNX3345.00 - HOLT.CO3 345.00 345KV CKT 1	720	720	0.03143	103.0144	BROADLAND - HURON 230KV CKT 1
FDNS	00NR	4	25SP	G15_042	FROM->TO	GRPRAR1-LNX3345.00 - HOLT.CO3 345.00 345KV CKT 1	720	720	0.03143	103.0127	P12:345:UMZB:# 102 #: AVS BD IN ND. AVS BRD LR
FDNS	00NR	4	25SP	G15_042	FROM->TO	GRPRAR1-LNX3345.00 - HOLT.CO3 345.00 345KV CKT 1	720	720	0.03143	103.0125	HURON (BD KU2A) 345/230/13.8KV TRANSFORMER CKT 1
FDNS	00NR	4	25SP	G15_042	FROM->TO	GRPRAR1-LNX3345.00 - HOLT.CO3 345.00 345KV CKT 1	720	720	0.03143	103.0125	HURON (BD KU2A) 345/230/13.8KV TRANSFORMER CKT 1
FDNS	00NR	4	25SP	G15_042	FROM->TO	GRPRAR1-LNX3345.00 - HOLT.CO3 345.00 345KV CKT 1	720	720	0.03143	103.0102	P12:345:UMZB:# 103 #: BD IN SD. LOSS OF LINE
FDNS	00NR	4	25SP	G15_042	FROM->TO	GRPRAR1-LNX3345.00 - HOLT.CO3 345.00 345KV CKT 1	720	720	0.03136	103.0056	GEN600063 1-COLVILLE GEN 1
FDNS	00NR	4	25SP	G15_042	FROM->TO	GRPRAR1-LNX3345.00 - HOLT.CO3 345.00 345KV CKT 1	720	720	0.03136	103.0056	GEN600064 2-COLVILLE GEN 2
FDNS	00NR	4	25SP	G15_042	FROM->TO	GRPRAR1-LNX3345.00 - HOLT.CO3 345.00 345KV CKT 1	720	720	0.03136	103.0055	GEN590010 1-ERCOT EQUIVALENCE
FDNS	00NR	4	25SP	G15_042	FROM->TO	GRPRAR1-LNX3345.00 - HOLT.CO3 345.00 345KV CKT 1	720	720	0.03074	103.0035	FIELD NORTH - LKFLDXL3 345KV CKT 1
FDNS	00NR	4	25SP	G15_042	FROM->TO	GRPRAR1-LNX3345.00 - HOLT.CO3 345.00 345KV CKT 1	720	720	0.03074	103.0022	FIELD SOUTH - WILMARTH 345KV CKT 1
FDNS	00NR	4	25SP	G15_042	FROM->TO	GRPRAR1-LNX3345.00 - HOLT.CO3 345.00 345KV CKT 1	720	720	0.03136	103.0003	GEN 11104 1-J262_GEN 0.6000
FDNS	00NR	4	25SP	G15_042	FROM->TO	GRPRAR1-LNX3345.00 - HOLT.CO3 345.00 345KV CKT 1	720	720	0.03136	103.0003	GEN 11108 1-J263_GEN 0.6000
FDNS	00NR	4	25SP	G15_042	FROM->TO	GRPRAR1-LNX3345.00 - HOLT.CO3 345.00 345KV CKT 1	720	720	0.03074	102.9954	FIELD NORTH - FIELD SOUTH 345KV CKT 1
FDNS	00NR	4	25SP	G15_042	FROM->TO	GRPRAR1-LNX3345.00 - HOLT.CO3 345.00 345KV CKT 1	720	720	0.03136	102.9873	G830_SUB 115.00 - GRE-MCHENRY7115.00 115KV CKT 1
FDNS	00NR	4	25SP	G15_042	FROM->TO	GRPRAR1-LNX3345.00 - HOLT.CO3 345.00 345KV CKT 1	720	720	0.03136	102.9868	G830_SUB 115.00 115/34.5KV TRANSFORMER CKT 1
FDNS	00NR	4	25SP	G15_042	FROM->TO	GRPRAR1-LNX3345.00 - HOLT.CO3 345.00 345KV CKT 1	720	720	0.03136	102.9847	GEN600043 7-BLUE LAKE5
FDNS	00NR	4	25SP	G15_042	FROM->TO	GRPRAR1-LNX3345.00 - HOLT.CO3 345.00 345KV CKT 1	720	720	0.03136	102.9847	GEN600044 8-BLUE LAKE6
FDNS	00NR	4	25SP	G15_042	FROM->TO	GRPRAR1-LNX3345.00 - HOLT.CO3 345.00 345KV CKT 1	720	720	0.03136	102.9845	LANSING WEST 161/22.0KV TRANSFORMER CKT 1
FDNS	00NR	4	25SP	G15_042	FROM->TO	GRPRAR1-LNX3345.00 - HOLT.CO3 345.00 345KV CKT 1	720	720	0.03136	102.9832	GEN590011 2-ERCOT EQUIVALENCE
FDNS	00NR	4	20SP	G15_042	FROM->TO	GRPRAR1-LNX3345.00 - HOLT.CO3 345.00 345KV CKT 1	720	720	0.03104	102.9724	GEN659289 1-DAYCNTYWND W0.6900
FDNS	00NR	4	25SP	G15_042	FROM->TO	GRPRAR1-LNX3345.00 - HOLT.CO3 345.00 345KV CKT 1	720	720	0.03136	102.9632	GEN681522 3-GENOA 3
FDNS	00NR	4	25SP	G15_042	FROM->TO	GRPRAR1-LNX3345.00 - HOLT.CO3 345.00 345KV CKT 1	720	720	0.03136	102.9563	GEN600014 4-BLACK DOG GEN 4
FDNS	00NR	4	25SP	G15_042	FROM->TO	GRPRAR1-LNX3345.00 - HOLT.CO3 345.00 345KV CKT 1	720	720	0.03136	102.9532	GEN600065 7-HIGH BRIDGE
FDNS	00NR	4	25SP	G15_042	FROM->TO	GRPRAR1-LNX3345.00 - HOLT.CO3 345.00 345KV CKT 1	720	720	0.03136	102.9532	GEN600066 8-HIGH BRIDGE
FDNS	00NR	4	25SP	G15_042	FROM->TO	GRPRAR1-LNX3345.00 - HOLT.CO3 345.00 345KV CKT 1	720	720	0.03136	102.9505	GEN600011 5-BLACK DOG GEN 1
FDNS	00NR	4	25SP	G15_042	FROM->TO	GRPRAR1-LNX3345.00 - HOLT.CO3 345.00 345KV CKT 1	720	720	0.03136	102.9407	GEN600070 9-RIVER SIDE
FDNS	00NR	4	25SP	G15_042	FROM->TO	GRPRAR1-LNX3345.00 - HOLT.CO3 345.00 345KV CKT 1	720	720	0.03136	102.9407	GEN600071 10-RIVER SIDE
FDNS	00NR	4	20SP	G15_042	FROM->TO	GRPRAR1-LNX3345.00 - HOLT.CO3 345.00 345KV CKT 1	720	720	0.03104	102.9352	GEN563312 1-G15097_3 0.6900
FDNS	00NR	4	25SP	G15_042	FROM->TO	GRPRAR1-LNX3345.00 - HOLT.CO3 345.00 345KV CKT 1	720	720	0.03287	102.9303	P12:115:NPPD:1163B:NELIGH 7:NORFK.N7:BTB
FDNS	00NR	4	25SP	G15_042	FROM->TO	GRPRAR1-LNX3345.00 - HOLT.CO3 345.00 345KV CKT 1	720	720	0.03136	102.9288	GEN600007 7-RIVERSIDE GEN 7
FDNS	00NR	4	25SP	G15_042	FROM->TO	GRPRAR1-LNX3345.00 - HOLT.CO3 345.00 345KV CKT 1	720	720	0.03136	102.9161	GEN600045 4-ANSON
FDNS	00NR	4	25SP	G15_042	FROM->TO	GRPRAR1-LNX3345.00 - HOLT.CO3 345.00 345KV CKT 1	720	720	0.03136	102.9118	GEN600017 C-LS POWER CT
FDNS	00NR	4	20SP	G15_042	FROM->TO	GRPRAR1-LNX3345.00 - HOLT.CO3 345.00 345KV CKT 1	720	720	0.03104	102.8992	GEN659018 1-G14_003IS_3 0.6900
FDNS	00NR	4	20SP	G15_042	FROM->TO	GRPRAR1-LNX3345.00 - HOLT.CO3 345.00 345KV CKT 1	720	720	0.03104	102.8942	GEN652906 1-G09_006IS_3 0.6900
FDNS	00NR	4	25SP	G15_042	FROM->TO	GRPRAR1-LNX3345.00 - HOLT.CO3 345.00 345KV CKT 1	720	720	0.03136	102.881	GEN659273 2-GROTON SYNC COND
FDNS	00NR	4	25SP	G15_042	FROM->TO	GRPRAR1-LNX3345.00 - HOLT.CO3 345.00 345KV CKT 1	720	720	0.03136	102.881	GEN659294 1-WILTONCOL9
FDNS	00NR	4	25SP	G15_042	FROM->TO	GRPRAR1-LNX3345.00 - HOLT.CO3 345.00 345KV CKT 1	720	720	0.03129	102.8808	OAHE - SULLEY BUTTE 230KV CKT 1
FDNS	00NR	4	25SP	G15_042	FROM->TO	GRPRAR1-LNX3345.00 - HOLT.CO3 345.00 345KV CKT 1	720	720	0.03143	102.8675	ANTELOP-LNX3345.00 - ANTELOPE VALLEY 345KV CKT Z
FDNS	00NR	4	25SP	G15_042	FROM->TO	GRPRAR1-LNX3345.00 - HOLT.CO3 345.00 345KV CKT 1	720	720	0.03211	102.8659	AXTELL - POST ROCK 345KV CKT 1
FDNS	00NR	4	20SP	G15_042	FROM->TO	GRPRAR1-LNX3345.00 - HOLT.CO3 345.00 345KV CKT 1	720	720	0.03104	102.8519	GEN652543 3-BIG BEND
FDNS	00NR	4	25SP	G15_042	FROM->TO	GRPRAR1-LNX3345.00 - HOLT.CO3 345.00 345KV CKT 1	720	720	0.03136	102.8403	GEN615052 1-CAMBRIDGE GENERATING STATION
FDNS	00NR	4	25SP	G15_042	FROM->TO	GRPRAR1-LNX3345.00 - HOLT.CO3 345.00 345KV CKT 1	720	720	0.03136	102.8213	GEN659031 1-G12_014IS_4 0.6900
FDNS	00NR	4	25SP	G15_042	FROM->TO	GRPRAR1-LNX3345.00 - HOLT.CO3 345.00 345KV CKT 1	720	720	0.03136	102.8042	GEN660016 1-B_H WIND 0.7000
FDNS	00NR	4	25SP	G15_042	FROM->TO	GRPRAR1-LNX3345.00 - HOLT.CO3 345.00 345KV CKT 1	720	720	0.03136	102.8035	GEN 10648 1-G830_GEN 0.6900
FDNS	00NR	4	25SP	G15_042	FROM->TO	GRPRAR1-LNX3345.00 - HOLT.CO3 345.00 345KV CKT 1	720	720	0.03136	102.7996	GEN659192 6-LYNN
FDNS	00NR	4	25SP	G15_042	FROM->TO	GRPRAR1-LNX3345.00 - HOLT.CO3 345.00 345KV CKT 1	720	720	0.03136	102.7981	GEN659162 4-RED WLCK
FDNS	00NR	4	25SP	G15_042	FROM->TO	GRPRAR1-LNX3345.00 - HOLT.CO3 345.00 345KV CKT 1	720	720	0.03136	102.7981	GEN659163 5-BLACK WDCK
FDNS	00NR	4	20SP	G15_042	FROM->TO	GRPRAR1-LNX3345.00 - HOLT.CO3 345.00 345KV CKT 1	720	720	0.03104	102.7908	COYOTE 345/24.0KV TRANSFORMER CKT 1
FDNS	00NR	4	25SP	G15_042	FROM->TO	GRPRAR1-LNX3345.00 - HOLT.CO3 345.00 345KV CKT 1	720	720	0.03136	102.7727	GEN615021 1-GRE-ER 14G 16.000
FDNS	00NR	4	20SP	G15_042	FROM->TO	GRPRAR1-LNX3345.00 - HOLT.CO3 345.00 345KV CKT 1	720	720	0.03104	102.7708	GEN659194 1-NDPRAIRWND1W0.6900
FDNS	00NR	4	20SP	G15_042	FROM->TO	GRPRAR1-LNX3345.00 - HOLT.CO3 345.00 345KV CKT 1	720	720	0.03104	102.7678	GEN659010 4-G07_027IS_2 0.6900
FDNS	00NR	4	20SP	G15_042	FROM->TO	GRPRAR1-LNX3345.00 - HOLT.CO3 345.00 345KV CKT 1	720	720	0.03104	102.7539	GEN652460 4-GARRISON
FDNS	00NR	4	20SP	G15_042	FROM->TO	GRPRAR1-LNX3345.00 - HOLT.CO3 345.00 345KV CKT 1	720	720	0.03104	102.7539	GEN652461 5-GARRISON
FDNS	00NR	4	25SP	G15_042	FROM->TO	GRPRAR1-LNX3345.00 - HOLT.CO3 345.00 345KV CKT 1	720	720	0.03136	102.7379	GEN615015 1-GRE-SPRITWDG13.200
FDNS	00NR	4	20SP	G15_042	FROM->TO	GRPRAR1-LNX3345.00 - HOLT.CO3 345.00 345KV CKT 1	720	720	0.03097	102.7181	GLENHAM - L3 HAWDON 230KV CKT 1
FDNS	00NR	4	20SP	G15_042	FROM->TO	GRPRAR1-LNX3345.00 - HOLT.CO3 345.00 345KV CKT 1	720	720	0.03104	102.7172	GEN652559 1-OAHE
FDNS	00NR	4	25SP	G15_042	FROM->TO	GRPRAR1-LNX3345.00 - HOLT.CO3 345.00 345KV CKT 1	720	720	0.03129	102.7136	SULLEY BUTTE - SULLYBT-LNX3230.00 230KV CKT Z
FDNS	00NR	4	25SP	G15_042	FROM->TO	GRPRAR1-LNX3345.00 - HOLT.CO3 345.00 345KV CKT 1	720	720	0.03129	102.7134	SULLYBT-LNX3230.00 - WHITLOK 230KV CKT 1
FDNS	00NR	4	25SP	G15_042	FROM->TO	GRPRAR1-LNX3345.00 - HOLT.CO3 345.00 345KV CKT 1	720	720	0.03136	102.7088	GEN657705 X-DRAYTON
FDNS	00NR	4	20SP	G15_042	FROM->TO	GRPRAR1-LNX3345.00 - HOLT.CO3 345.00 345KV CKT 1	720	720	0.03104	102.7065	GEN652907 1-G09_007IS_3 0.6900
FDNS	00NR	4	20SP	G15_042	FROM->TO	GRPRAR1-LNX3345.00 - HOLT.CO3 345.00 345KV CKT 1	720	720	0.03104	102.6965	GEN652457 1-GARRISON
FDNS	00NR	4	20SP	G15_042	FROM->TO	GRPRAR1-LNX3345.00 - HOLT.CO3 345.00 345KV CKT 1	720	720	0.03104	102.6965	GEN652458 2-GARRISON
FDNS	00NR	4	20SP	G15_042	FROM->TO	GRPRAR1-LNX3345.00 - HOLT.CO3 345.00 345KV CKT 1	720	720	0.03104	102.6965	GEN652459 3-GARRISON
FDNS	00NR	4	25SP	G15_042	FROM->TO	GRPRAR1-LNX3345.00 - HOLT.CO3 345.00 345KV CKT 1	720	720	0.03136	102.6728	BISONMP4 230.00 - SQUARE BUTTE 230KV CKT 1
FDNS	00NR	4	20SP	G15_042	FROM->TO	GRPRAR1-LNX3345.00 - HOLT.CO3 345.00 345KV CKT 1	720	720	0.03104	102.6693	GEN563342 1-G15098_3 0.6900
FDNS	00NR	4	25SP	G15_042	FROM->TO	GRPRAR1-LNX3345.00 - HOLT.CO3 345.00 345KV CKT 1	720	720	0.03129	102.6592	P12:230:UMZB:# 114 #: SB IN SD. SB-WK-GH
FDNS	00NR	4	25SP	G15_042	FROM->TO	GRPRAR1-LNX3345.00 - HOLT.CO3 345.00 345KV CKT 1	720	720	0.03129	102.6592	P12:230:UMZB:# 117 #: WK IN SD. SB-WK-GH
FDNS	00NR	4	20SP	G15_042	FROM->TO	GRPRAR1-LNX3345.00 - HOLT.CO3 345.00 345KV CKT 1	720	720	0.03104	102.6407	GEN659403 1-NDSUNFLWR W0.6900
FDNS	00NR	4	20SP	G15_042	FROM->TO	GRPRAR1-LNX3345.00 - HOLT.CO3 345.00 345KV CKT 1	720	720	0.03104	102.6308	GEN652542 1-BIG BEND

SOLUTION	GROUP	SCENARIO	SEASON	SOURCE	DIRECTION	MONITORED ELEMENT	RATEA (MVA)	RATEB(MVA)	TDF	TC%LOADING (% MVA)	CONTINGENCY
FDNS	00NR	4	25SP	G15_042	FROM->TO	GRPRAR1-LNX3345.00 - HOLT.CO3 345.00 345KV CKT 1	720	720	0.03136	102.6199	GEN659353 1-DEERCREK CTG18.000
FDNS	00NR	4	25SP	G15_042	FROM->TO	GRPRAR1-LNX3345.00 - HOLT.CO3 345.00 345KV CKT 1	720	720	0.03136	102.6196	GEN600067 9-HIGH BRIDGE
FDNS	00NR	4	25SP	G15_042	FROM->TO	GRPRAR1-LNX3345.00 - HOLT.CO3 345.00 345KV CKT 1	720	720	0.03136	102.6193	GEN659354 1-DEERCREK STG18.000
FDNS	00NR	4	25SP	G15_042	FROM->TO	GRPRAR1-LNX3345.00 - HOLT.CO3 345.00 345KV CKT 1	720	720	0.03129	102.606	GLENHAM - WHITLOK 230KV CKT 1
FDNS	00NR	4	25SP	G15_042	FROM->TO	GRPRAR1-LNX3345.00 - HOLT.CO3 345.00 345KV CKT 1	720	720	0.03136	102.5987	GEN672303 3-BOUNDARY DAM GENERATOR 3
FDNS	00NR	4	25SP	G15_042	FROM->TO	GRPRAR1-LNX3345.00 - HOLT.CO3 345.00 345KV CKT 1	720	720	0.03136	102.5987	GEN672304 4-BOUNDARY DAM GENERATOR 4
FDNS	00NR	4	25SP	G15_042	FROM->TO	GRPRAR1-LNX3345.00 - HOLT.CO3 345.00 345KV CKT 1	720	720	0.03136	102.5987	GEN672305 5-BOUNDARY DAM GENERATOR 5
FDNS	00NR	4	25SP	G15_042	FROM->TO	GRPRAR1-LNX3345.00 - HOLT.CO3 345.00 345KV CKT 1	720	720	0.03292	102.5976	G15061_T 345.00 - SETAB 345KV CKT 1
FDNS	00NR	4	25SP	G15_042	FROM->TO	GRPRAR1-LNX3345.00 - HOLT.CO3 345.00 345KV CKT 1	720	720	0.03286	102.5958	GERALD GENTLEMAN STATION - RED WILLOW 345KV CKT 1
FDNS	00NR	4	20SP	G15_042	FROM->TO	GRPRAR1-LNX3345.00 - HOLT.CO3 345.00 345KV CKT 1	720	720	0.03314	102.5782	MCCOOL - MOORE 345KV CKT 1
FDNS	00NR	4	25SP	G15_042	FROM->TO	GRPRAR1-LNX3345.00 - HOLT.CO3 345.00 345KV CKT 1	720	720	0.03136	102.5678	GEN672356 1-FUT-WL1X 18.000
FDNS	00NR	4	20SP	G15_042	FROM->TO	GRPRAR1-LNX3345.00 - HOLT.CO3 345.00 345KV CKT 1	720	720	0.03104	102.5533	STANTON 230/18.0KV TRANSFORMER CKT 1
FDNS	00NR	4	25SP	G15_042	FROM->TO	GRPRAR1-LNX3345.00 - HOLT.CO3 345.00 345KV CKT 1	720	720	0.03136	102.5373	GEN672389 1-FUT-SW1X 18.000
FDNS	00NR	4	25SP	G15_042	FROM->TO	GRPRAR1-LNX3345.00 - HOLT.CO3 345.00 345KV CKT 1	720	720	0.03136	102.528	GEN672392 1-NBECGT1G 18.000
FDNS	00NR	4	25SP	G15_042	FROM->TO	GRPRAR1-LNX3345.00 - HOLT.CO3 345.00 345KV CKT 1	720	720	0.03279	102.5165	MISSION - WITTEN 115KV CKT 1
FDNS	00NR	4	25SP	G15_042	FROM->TO	GRPRAR1-LNX3345.00 - HOLT.CO3 345.00 345KV CKT 1	720	720	0.03286	102.5029	G15088_T 345.00 - MOORE 345KV CKT 1
FDNS	00NR	4	25SP	G15_042	FROM->TO	GRPRAR1-LNX3345.00 - HOLT.CO3 345.00 345KV CKT 1	720	720	0.03416	102.4986	MINGO - RED WILLOW 345KV CKT 1
FDNS	00NR	4	25SP	G15_042	FROM->TO	GRPRAR1-LNX3345.00 - HOLT.CO3 345.00 345KV CKT 1	720	720	0.03416	102.4986	MINGO - RED WILLOW 345KV CKT 1
FDNS	00NR	4	20SP	G15_042	FROM->TO	GRPRAR1-LNX3345.00 - HOLT.CO3 345.00 345KV CKT 1	720	720	0.03104	102.4864	SQUARE BUTTE - YNG2 4 230.00 230KV CKT 1
FDNS	00NR	4	20SP	G15_042	FROM->TO	GRPRAR1-LNX3345.00 - HOLT.CO3 345.00 345KV CKT 1	720	720	0.03104	102.486	YNG2 4 230.00 230/20.0KV TRANSFORMER CKT 1
FDNS	00NR	4	25SP	G15_042	FROM->TO	GRPRAR1-LNX3345.00 - HOLT.CO3 345.00 345KV CKT 1	720	720	0.03136	102.4682	GEN662101 1-WESSINGTON190.5750
FDNS	00NR	4	25SP	G15_042	FROM->TO	GRPRAR1-LNX3345.00 - HOLT.CO3 345.00 345KV CKT 1	720	720	0.03136	102.4303	GEN681542 6-JP MADGETT
FDNS	00NR	4	25SP	G15_042	FROM->TO	GRPRAR1-LNX3345.00 - HOLT.CO3 345.00 345KV CKT 1	720	720	0.03136	102.4057	GEN910006 1-G12_012IS_3 0.6900
FDNS	00NR	4	25SP	G15_042	FROM->TO	GRPRAR1-LNX3345.00 - HOLT.CO3 345.00 345KV CKT 1	720	720	0.03136	102.3859	CENTER 230/22.0KV TRANSFORMER CKT 1
FDNS	00NR	4	25SP	G15_042	FROM->TO	GRPRAR1-LNX3345.00 - HOLT.CO3 345.00 345KV CKT 1	720	720	0.03136	102.2916	HESKETT 115/13.8KV TRANSFORMER CKT 1
FDNS	00NR	4	20SP	G15_042	FROM->TO	GRPRAR1-LNX3345.00 - HOLT.CO3 345.00 345KV CKT 1	720	720	0.03104	102.2676	GEN659411 1-CAMPBLCNTY W0.6900
FDNS	00NR	4	25SP	G15_042	FROM->TO	GRPRAR1-LNX3345.00 - HOLT.CO3 345.00 345KV CKT 1	720	720	0.03296	102.2148	AXTELL - SWEETWATER 345KV CKT 1
FDNS	00NR	4	25SP	G15_042	FROM->TO	GRPRAR1-LNX3345.00 - HOLT.CO3 345.00 345KV CKT 1	720	720	0.03136	102.2076	GEN659289 1-DAYCNTYWND W0.6900
FDNS	00NR	4	20SP	G15_042	FROM->TO	GRPRAR1-LNX3345.00 - HOLT.CO3 345.00 345KV CKT 1	720	720	0.03104	102.1899	GEN600004 2-PRAIRIE ISLAND G2
FDNS	00NR	4	20SP	G15_042	FROM->TO	GRPRAR1-LNX3345.00 - HOLT.CO3 345.00 345KV CKT 1	720	720	0.03104	102.1859	GEN600003 1-PRAIRIE ISLAND G1
FDNS	00NR	4	25SP	G15_042	FROM->TO	GRPRAR1-LNX3345.00 - HOLT.CO3 345.00 345KV CKT 1	720	720	0.03136	102.171	GEN563312 1-G15097_3 0.6900
FDNS	00NR	4	25SP	G15_042	FROM->TO	GRPRAR1-LNX3345.00 - HOLT.CO3 345.00 345KV CKT 1	720	720	0.03364	102.1598	MCCOOL - MOORE 345KV CKT 1
FDNS	00NR	4	20SP	G15_042	FROM->TO	GRPRAR1-LNX3345.00 - HOLT.CO3 345.00 345KV CKT 1	720	720	0.03104	102.1318	GEN672321 1-SHAND GENERATOR 1
FDNS	00NR	4	25SP	G15_042	FROM->TO	GRPRAR1-LNX3345.00 - HOLT.CO3 345.00 345KV CKT 1	720	720	0.03136	102.1191	GEN659018 1-G14_003IS_3 0.6900
FDNS	00NR	4	25SP	G15_042	FROM->TO	GRPRAR1-LNX3345.00 - HOLT.CO3 345.00 345KV CKT 1	720	720	0.03136	102.1173	GEN652906 1-G09_006IS_3 0.6900
FDNS	00NR	4	20SP	G15_042	FROM->TO	GRPRAR1-LNX3345.00 - HOLT.CO3 345.00 345KV CKT 1	720	720	0.03104	102.072	GEN672310 1-POPLAR RIVER GENERATOR 1
FDNS	00NR	4	20SP	G15_042	FROM->TO	GRPRAR1-LNX3345.00 - HOLT.CO3 345.00 345KV CKT 1	720	720	0.03104	102.0719	GEN672311 2-POPLAR RIVER GENERATOR 2
FDNS	00NR	4	20SP	G15_042	FROM->TO	GRPRAR1-LNX3345.00 - HOLT.CO3 345.00 345KV CKT 1	720	720	0.03104	102.0539	GEN672306 6-BOUNDARY DAM GENERATOR 6
FDNS	00NR	4	20SP	G15_042	FROM->TO	GRPRAR1-LNX3345.00 - HOLT.CO3 345.00 345KV CKT 1	720	720	0.03104	102.0368	GEN659296 2-SDPRAIRWND1W0.6900
FDNS	00NR	4	17SP	G15_042	FROM->TO	GRPRAR1-LNX3345.00 - HOLT.CO3 345.00 345KV CKT 1	720	720	0.03267	102.0292	FTTHOM1-LNX3345.00 - LELAND2-LNX3345.00 345KV CKT 1
FDNS	00NR	4	20SP	G15_042	FROM->TO	GRPRAR1-LNX3345.00 - HOLT.CO3 345.00 345KV CKT 1	720	720	0.03104	102.0161	RCDC EAST 4230.00 - RED CEDAR DC 230KV CKT 1
FDNS	00NR	4	20SP	G15_042	FROM->TO	GRPRAR1-LNX3345.00 - HOLT.CO3 345.00 345KV CKT 1	720	720	0.03104	102.0132	P12:230:UMZB:# 112 #: NU IN SD. NU-RCDC & DRY CREEK XFMR
FDNS	00NR	4	25SP	G15_042	FROM->TO	GRPRAR1-LNX3345.00 - HOLT.CO3 345.00 345KV CKT 1	720	720	0.03136	101.9965	GEN659010 4-G07_027IS_2 0.6900
FDNS	00NR	4	25SP	G15_042	FROM->TO	GRPRAR1-LNX3345.00 - HOLT.CO3 345.00 345KV CKT 1	720	720	0.03136	101.9914	GEN659194 1-NDPRAIRWND1W0.6900
FDNS	00NR	4	25SP	G15_042	FROM->TO	GRPRAR1-LNX3345.00 - HOLT.CO3 345.00 345KV CKT 1	720	720	0.03136	101.9795	GEN652460 4-GARRISON
FDNS	00NR	4	25SP	G15_042	FROM->TO	GRPRAR1-LNX3345.00 - HOLT.CO3 345.00 345KV CKT 1	720	720	0.03136	101.9793	GEN652461 5-GARRISON
FDNS	00NR	4	25SP	G15_042	FROM->TO	GRPRAR1-LNX3345.00 - HOLT.CO3 345.00 345KV CKT 1	720	720	0.03129	101.9564	GLENHAM - L3 HAWDON 230KV CKT 1
FDNS	00NR	4	25SP	G15_042	FROM->TO	GRPRAR1-LNX3345.00 - HOLT.CO3 345.00 345KV CKT 1	720	720	0.03136	101.9306	GEN652907 1-G09_007IS_3 0.6900
FDNS	00NR	4	25SP	G15_042	FROM->TO	GRPRAR1-LNX3345.00 - HOLT.CO3 345.00 345KV CKT 1	720	720	0.03136	101.9227	GEN652457 1-GARRISON
FDNS	00NR	4	25SP	G15_042	FROM->TO	GRPRAR1-LNX3345.00 - HOLT.CO3 345.00 345KV CKT 1	720	720	0.03136	101.9227	GEN652458 2-GARRISON
FDNS	00NR	4	25SP	G15_042	FROM->TO	GRPRAR1-LNX3345.00 - HOLT.CO3 345.00 345KV CKT 1	720	720	0.03136	101.9227	GEN652459 3-GARRISON
FDNS	00NR	4	20SP	G15_042	FROM->TO	GRPRAR1-LNX3345.00 - HOLT.CO3 345.00 345KV CKT 1	720	720	0.03104	101.9202	GEN615010 1-STANTON4
FDNS	00NR	4	25SP	G15_042	FROM->TO	GRPRAR1-LNX3345.00 - HOLT.CO3 345.00 345KV CKT 1	720	720	0.02998	101.9117	HIGHLND 3 345.00 - OBRIEN 3 345.00 345KV CKT 1
FDNS	00NR	4	25SP	G15_042	FROM->TO	GRPRAR1-LNX3345.00 - HOLT.CO3 345.00 345KV CKT 1	720	720	0.03136	101.8823	GEN563342 1-G15098_3 0.6900
FDNS	00NR	4	25SP	G15_042	FROM->TO	GRPRAR1-LNX3345.00 - HOLT.CO3 345.00 345KV CKT 1	720	720	0.03136	101.8718	GEN652543 3-BIG BEND
FDNS	00NR	4	25SP	G15_042	FROM->TO	GRPRAR1-LNX3345.00 - HOLT.CO3 345.00 345KV CKT 1	720	720	0.03136	101.8653	GEN659403 1-NDSUNFLWR W0.6900
FDNS	00NR	4	17SP	G15_042	FROM->TO	GRPRAR1-LNX3345.00 - HOLT.CO3 345.00 345KV CKT 1	720	720	0.03267	101.8649	P12:345:UMZB:# 108 #: LOS FT IN ND. LOS FT
FDNS	00NR	4	25SP	G15_042	FROM->TO	GRPRAR1-LNX3345.00 - HOLT.CO3 345.00 345KV CKT 1	720	720	0.03136	101.8637	GEN652542 1-BIG BEND
FDNS	00NR	4	17SP	G15_042	FROM->TO	GRPRAR1-LNX3345.00 - HOLT.CO3 345.00 345KV CKT 1	720	720	0.03267	101.8558	FT THOMPSON - FTTHOM1-LNX3345.00 345KV CKT Z
FDNS	00NR	4	20SP	G15_042	FROM->TO	GRPRAR1-LNX3345.00 - HOLT.CO3 345.00 345KV CKT 1	720	720	0.03104	101.8406	GEN600006 1-AS KING
FDNS	00NR	4	20SP	G15_042	FROM->TO	GRPRAR1-LNX3345.00 - HOLT.CO3 345.00 345KV CKT 1	720	720	0.03104	101.8235	GEN659453 1-GI1414GEN W0.6900
FDNS	00NR	4	20SP	G15_042	FROM->TO	GRPRAR1-LNX3345.00 - HOLT.CO3 345.00 345KV CKT 1	720	720	0.03104	101.8218	GEN563302 1-G15096_3 0.6900
FDNS	00NR	4	17SP	G15_042	FROM->TO	GRPRAR1-LNX3345.00 - HOLT.CO3 345.00 345KV CKT 1	720	720	0.03267	101.7676	LELAND OLDS - LELAND2-LNX3345.00 345KV CKT Z
FDNS	00NR	4	25SP	G15_042	FROM->TO	GRPRAR1-LNX3345.00 - HOLT.CO3 345.00 345KV CKT 1	720	720	0.03136	101.7274	STANTON 230/18.0KV TRANSFORMER CKT 1
FDNS	00NR	4	20SP	G15_042	FROM->TO	GRPRAR1-LNX3345.00 - HOLT.CO3 345.00 345KV CKT 1	720	720	0.03104	101.7221	GEN652556 2-OAHE
FDNS	00NR	4	20SP	G15_042	FROM->TO	GRPRAR1-LNX3345.00 - HOLT.CO3 345.00 345KV CKT 1	720	720	0.03104	101.722	GEN652557 4-OAHE
FDNS	00NR	4	20SP	G15_042	FROM->TO	GRPRAR1-LNX3345.00 - HOLT.CO3 345.00 345KV CKT 1	720	720	0.03104	101.722	GEN652558 6-OAHE
FDNS	00NR	4	20SP	G15_042	FROM->TO	GRPRAR1-LNX3345.00 - HOLT.CO3 345.00 345KV CKT 1	720	720	0.03104	101.7168	GEN659141 1-K10215A
FDNS	00NR	4	20SP	G15_042	FROM->TO	GRPRAR1-LNX3345.00 - HOLT.CO3 345.00 345KV CKT 1	720	720	0.03104	101.688	GEN659110 1-LELAND OLDS UNIT1
FDNS	00NR	4	25SP	G15_042	FROM->TO	GRPRAR1-LNX3345.00 - HOLT.CO3 345.00 345KV CKT 1	720	720	0.03136	101.5586	GEN652559 1-OAHE
FDNS	00NR	4	20SP	G15_042	FROM->TO	GRPRAR1-LNX3345.00 - HOLT.CO3 345.00 345KV CKT 1	720	720	0.03104	101.538	GEN652173 1-G09_001IS_2 0.6900
FDNS	00NR	4	25SP	G15_042	FROM->TO	GRPRAR1-LNX3345.00 - HOLT.CO3 345.00 345KV CKT 1	720	720	0.03136	101.4904	GEN659411 1-CAMPBLCNTY W0.6900
FDNS	00NR	4	25SP	G15_042	FROM->TO	GRPRAR1-LNX3345.00 - HOLT.CO3 345.00 345KV CKT 1	720	720	0.03136	101.3332	SQUARE BUTTE - YNG2 4 230.00 230KV CKT 1
FDNS	00NR	4	20SP	G15_042	FROM->TO	GRPRAR1-LNX3345.00 - HOLT.CO3 345.00 345KV CKT 1	720	720	0.03104	101.3142	GEN657749 1-YOUNG 1 GENERATOR
FDNS	00NR	4	20SP	G15_042	FROM->TO	GRPRAR1-LNX3345.00 - HOLT.CO3 345.00 345KV CKT 1	720	720	0.03307	101.3085	GRAND ISLAND - MCCOOL 345KV CKT 1
FDNS	00NR	4	25SP	G15_042	FROM->TO	GRPRAR1-LNX3345.00 - HOLT.CO3 345.00 345KV CKT 1	720	720	0.03136	101.2982	GEN600004 2-PRAIRIE ISLAND G2
FDNS	00NR	4	25SP	G15_042	FROM->TO	GRPRAR1-LNX3345.00 - HOLT.CO3 345.00 345KV CKT 1	720	720	0.03136	101.2943	GEN600003 1-PRAIRIE ISLAND G1
FDNS	00NR	4	25SP	G15_042	FROM->TO	GRPRAR1-LNX3345.00 - HOLT.CO3 345.00 345KV CKT 1	720	720	0.03136	101.2745	GEN672310 1-POPLAR RIVER GENERATOR 1
FDNS	00NR	4	25SP	G15_042	FROM->TO	GRPRAR1-LNX3345.00 - HOLT.CO3 345.00 345KV CKT 1	720	720	0.03136	101.2745	GEN672311 2-POPLAR RIVER GENERATOR 2

SOLUTION	GROUP	SCENARIO	SEASON	SOURCE	DIRECTION	MONITORED ELEMENT	RATEA (MVA)	RATEB(MVA)	TDF	TC%LOADING (% MVA)	CONTINGENCY
FDNS	00NR	4	25SP	G15_042	FROM->TO	GRPRAR1-LNX3345.00 - HOLT.CO3 345.00 345KV CKT 1	720	720	0.03136	101.2724	GEN659296 2-SDPRAIRWND1W0.6900
FDNS	00NR	4	25SP	G15_042	FROM->TO	GRPRAR1-LNX3345.00 - HOLT.CO3 345.00 345KV CKT 1	720	720	0.03136	101.2618	GEN672321 1-SHAND GENERATOR 1
FDNS	00NR	4	25SP	G15_042	FROM->TO	GRPRAR1-LNX3345.00 - HOLT.CO3 345.00 345KV CKT 1	720	720	0.03137	101.224	P12:230:UMZB:# 112 #: NU IN SD. NU-RCDC & DRY CREEK XFMR
FDNS	00NR	4	25SP	G15_042	FROM->TO	GRPRAR1-LNX3345.00 - HOLT.CO3 345.00 345KV CKT 1	720	720	0.03136	101.2154	RCDC EAST 4230.00 - RED CEDAR DC 230KV CKT 1
FDNS	00NR	4	20SP	G15_042	FROM->TO	GRPRAR1-LNX3345.00 - HOLT.CO3 345.00 345KV CKT 1	720	720	0.03104	101.2112	GEN659407 1-ANTELPHILLSW0.6900
FDNS	00NR	4	25SP	G15_042	FROM->TO	GRPRAR1-LNX3345.00 - HOLT.CO3 345.00 345KV CKT 1	720	720	0.03136	101.1798	GEN672306 6-BOUNDARY DAM GENERATOR 6
FDNS	00NR	4	25SP	G15_042	FROM->TO	GRPRAR1-LNX3345.00 - HOLT.CO3 345.00 345KV CKT 1	720	720	0.03136	101.0627	GEN615010 1-STANTON4
FDNS	00NR	4	25SP	G15_042	FROM->TO	GRPRAR1-LNX3345.00 - HOLT.CO3 345.00 345KV CKT 1	720	720	0.03136	101.0372	GEN659453 1-GI1414GEN W0.6900
FDNS	00NR	4	25SP	G15_042	FROM->TO	GRPRAR1-LNX3345.00 - HOLT.CO3 345.00 345KV CKT 1	720	720	0.03136	101.0354	GEN563302 1-G15096_3 0.6900
FDNS	00NR	4	25SP	G15_042	FROM->TO	GRPRAR1-LNX3345.00 - HOLT.CO3 345.00 345KV CKT 1	720	720	0.03136	100.9513	GEN652556 2-OAHE
FDNS	00NR	4	25SP	G15_042	FROM->TO	GRPRAR1-LNX3345.00 - HOLT.CO3 345.00 345KV CKT 1	720	720	0.03136	100.9513	GEN652557 4-OAHE
FDNS	00NR	4	25SP	G15_042	FROM->TO	GRPRAR1-LNX3345.00 - HOLT.CO3 345.00 345KV CKT 1	720	720	0.03136	100.9513	GEN652558 6-OAHE
FDNS	00NR	4	25SP	G15_042	FROM->TO	GRPRAR1-LNX3345.00 - HOLT.CO3 345.00 345KV CKT 1	720	720	0.03136	100.9458	GEN600006 1-AS KING
FDNS	00NR	4	25SP	G15_042	FROM->TO	GRPRAR1-LNX3345.00 - HOLT.CO3 345.00 345KV CKT 1	720	720	0.03136	100.919	GEN659141 1-K10215A
FDNS	00NR	4	20SP	G15_042	FROM->TO	GRPRAR1-LNX3345.00 - HOLT.CO3 345.00 345KV CKT 1	720	720	0.03104	100.9131	GEN600005 1-MONTICELLO
FDNS	00NR	4	25SP	G15_042	FROM->TO	GRPRAR1-LNX3345.00 - HOLT.CO3 345.00 345KV CKT 1	720	720	0.03136	100.8724	GEN659110 1-LELAND OLDS UNIT1
FDNS	00NR	4	25SP	G15_042	FROM->TO	GRPRAR1-LNX3345.00 - HOLT.CO3 345.00 345KV CKT 1	720	720	0.03355	100.8673	GRAND ISLAND - MCCOOL 345KV CKT 1
FDNS	00NR	4	25SP	G15_042	FROM->TO	GRPRAR1-LNX3345.00 - HOLT.CO3 345.00 345KV CKT 1	720	720	0.03136	100.7773	GEN652173 1-G09_001IS_2 0.6900
FDNS	00NR	4	20SP	G15_042	FROM->TO	GRPRAR1-LNX3345.00 - HOLT.CO3 345.00 345KV CKT 1	720	720	0.03104	100.6786	GEN600000 1-SHERBURNECNTY G1
FDNS	00NR	4	25SP	G15_042	FROM->TO	GRPRAR1-LNX3345.00 - HOLT.CO3 345.00 345KV CKT 1	720	720	0.03136	100.4593	CLAY BOSWELL 230/20.9KV TRANSFORMER CKT 1
FDNS	00NR	4	25SP	G15_042	FROM->TO	GRPRAR1-LNX3345.00 - HOLT.CO3 345.00 345KV CKT 1	720	720	0.03136	100.4336	GEN659407 1-ANTELPHILLSW0.6900
FDNS	00NR	4	20SP	G15_042	FROM->TO	GRPRAR1-LNX3345.00 - HOLT.CO3 345.00 345KV CKT 1	720	720	0.03104	100.4219	GEN600001 2-SHERBURNE CNTY G2
FDNS	00NR	4	25SP	G15_042	FROM->TO	GRPRAR1-LNX3345.00 - HOLT.CO3 345.00 345KV CKT 1	720	720	0.03136	100.4177	GEN657749 1-YOUNG 1 GENERATOR
FDNS	00NR	4	20SP	G15_042	FROM->TO	GRPRAR1-LNX3345.00 - HOLT.CO3 345.00 345KV CKT 1	720	720	0.03104	100.28	GEN661015 1-COYOTE
FDNS	00NR	4	20SP	G15_042	FROM->TO	GRPRAR1-LNX3345.00 - HOLT.CO3 345.00 345KV CKT 1	720	720	0.03104	100.1247	GEN620315 1-BIG STONE GEN
FDNS	00NR	4	25SP	G15_042	FROM->TO	GRPRAR1-LNX3345.00 - HOLT.CO3 345.00 345KV CKT 1	720	720	0.03136	100.1	GEN600005 1-MONTICELLO
FDNS	00NR	4	17SP	G15_042	FROM->TO	GRPRAR1-LNX3345.00 - HOLT.CO3 345.00 345KV CKT 1	720	720	0.06537	100	ANTELOPE 3345.00 - HOSKINS 345KV CKT 1
FDNS	00NR	4	25SP	G15_042	FROM->TO	GRPRAR1-LNX3345.00 - HOLT.CO3 345.00 345KV CKT 1	720	720	0.03136	99.9	GEN600000 1-SHERBURNECNTY G1
FDNS	00NR	4	20SP	G15_042	FROM->TO	GRPRAR1-LNX3345.00 - HOLT.CO3 345.00 345KV CKT 1	720	720	0.03104	99.8	GEN600002 3-SHERBURNE CNTY G3
FDNS	00NR	4	25SP	G15_042	FROM->TO	GRPRAR1-LNX3345.00 - HOLT.CO3 345.00 345KV CKT 1	720	720	0.03136	99.6	GEN600001 2-SHERBURNE CNTY G2
FDNS	00NR	4	20SP	G15_042	FROM->TO	GRPRAR1-LNX3345.00 - HOLT.CO3 345.00 345KV CKT 1	720	720	0.03104	99.5	GEN657748 1-YOUNG 2 GENERATOR
FDNS	00NR	4	17SP	G15_042	TO->FROM	SIDNEY - SIDNEY TRANSFORMER 230KV CKT 1	496	496	0.03418	106.3008	KEYSTONE - SIDNEY1-LNX3345.00 345KV CKT 1
FDNS	00NR	4	17SP	G15_042	TO->FROM	SIDNEY - SIDNEY TRANSFORMER 230KV CKT 1	496	496	0.03418	105.6956	SIDNEY - SIDNEY1-LNX3345.00 345KV CKT Z
FDNS	00NR	4	17SP	G15_042	FROM->TO	SIDNEY (SDQ KV2A) 345/230/13.8KV TRANSFORMER CKT 1	400	480	0.03418	111.8796	KEYSTONE - SIDNEY1-LNX3345.00 345KV CKT 1
FDNS	00NR	4	17SP	G15_042	FROM->TO	SIDNEY (SDQ KV2A) 345/230/13.8KV TRANSFORMER CKT 1	400	480	0.03418	111.3929	SIDNEY - SIDNEY1-LNX3345.00 345KV CKT Z
FDNS	00NR	4	17SP	G15_042	FROM->TO	SIDNEY (SDQ KV2A) 345/230/13.8KV TRANSFORMER CKT 1	400	480	0.03418	111.0525	KEYSTONE - SIDNEY1-LNX3345.00 345KV CKT 1
FDNS	00NR	4	17SP	G15_042	FROM->TO	SIDNEY (SDQ KV2A) 345/230/13.8KV TRANSFORMER CKT 1	400	480	0.03418	110.9877	SIDNEY - SIDNEY1-LNX3345.00 345KV CKT Z
FDNS	00NR	4	20SP	G15_042	FROM->TO	SIDNEY (SDQ KV2A) 345/230/13.8KV TRANSFORMER CKT 1	400	480	0.03428	104.1852	KEYSTONE - SIDNEY1-LNX3345.00 345KV CKT 1
FDNS	00NR	4	20SP	G15_042	FROM->TO	SIDNEY (SDQ KV2A) 345/230/13.8KV TRANSFORMER CKT 1	400	480	0.03428	103.7706	SIDNEY - SIDNEY1-LNX3345.00 345KV CKT Z
FDNS	00NR	4	20SP	G15_042	FROM->TO	SIDNEY (SDQ KV2A) 345/230/13.8KV TRANSFORMER CKT 1	400	480	0.03428	103.5584	KEYSTONE - SIDNEY1-LNX3345.00 345KV CKT 1
FDNS	00NR	4	20SP	G15_042	FROM->TO	SIDNEY (SDQ KV2A) 345/230/13.8KV TRANSFORMER CKT 1	400	480	0.03428	103.5357	SIDNEY - SIDNEY1-LNX3345.00 345KV CKT Z
FDNS	00NR	4	25SP	G15_042	FROM->TO	SIDNEY (SDQ KV2A) 345/230/13.8KV TRANSFORMER CKT 1	400	480	0.03405	103.5347	KEYSTONE - SIDNEY1-LNX3345.00 345KV CKT 1
FDNS	00NR	4	25SP	G15_042	FROM->TO	SIDNEY (SDQ KV2A) 345/230/13.8KV TRANSFORMER CKT 1	400	480	0.03405	103.0899	SIDNEY - SIDNEY1-LNX3345.00 345KV CKT Z
FDNS	00NR	4	25SP	G15_042	FROM->TO	SIDNEY (SDQ KV2A) 345/230/13.8KV TRANSFORMER CKT 1	400	480	0.03405	102.9223	KEYSTONE - SIDNEY1-LNX3345.00 345KV CKT 1
FDNS	00NR	4	25SP	G15_042	FROM->TO	SIDNEY (SDQ KV2A) 345/230/13.8KV TRANSFORMER CKT 1	400	480	0.03405	102.8684	SIDNEY - SIDNEY1-LNX3345.00 345KV CKT Z
FDNS	09NR	4	20L	G15_042	TO->FROM	SIOUX CITY - TWIN CHURCH 230KV CKT 1	320	320	0.4788	102.1108	DIXONCO 230.00 - HOSKINS 230KV CKT 1
FDNS	09ALL	4	20L	G15_042	TO->FROM	SIOUX CITY - TWIN CHURCH 230KV CKT 1	320	320	0.31677	101.9413	HOSKINS - RAUN 345KV CKT 1
FDNS	00NR	5	17SP	G15_042	FROM->TO	COLUMEAST (COL.EAST T3) 230/115/13.8KV TRANSFORMER CKT 1	187	187	0.03851	109.3787	COLUMEAST - SHELL CREEK 345KV CKT 1
FDNS	00NR	5	17SP	G15_042	FROM->TO	COLUMEAST (COL.EAST T3) 230/115/13.8KV TRANSFORMER CKT 1	187	187	0.03851	108.6827	COLUMEAST - SHELL CREEK 345KV CKT 1
FDNS	00NR	5	20SP	G15_042	FROM->TO	COLUMEAST (COL.EAST T3) 230/115/13.8KV TRANSFORMER CKT 1	187	187	0.03881	105.8952	COLUMEAST - SHELL CREEK 345KV CKT 1
FDNS	00NR	5	20SP	G15_042	FROM->TO	COLUMEAST (COL.EAST T3) 230/115/13.8KV TRANSFORMER CKT 1	187	187	0.03881	105.1342	COLUMEAST - SHELL CREEK 345KV CKT 1
FDNS	00NR	5	25SP	G15_042	FROM->TO	COLUMEAST (COL.EAST T3) 230/115/13.8KV TRANSFORMER CKT 1	187	187	0.0384	102.482	COLUMEAST - SHELL CREEK 345KV CKT 1
FDNS	00NR	5	16WP	G15_042	FROM->TO	COLUMEAST (COL.EAST T3) 230/115/13.8KV TRANSFORMER CKT 1	187	187	0.0395	102.0346	COLUMEAST - SHELL CREEK 345KV CKT 1
FDNS	00NR	5	25SP	G15_042	FROM->TO	COLUMEAST (COL.EAST T3) 230/115/13.8KV TRANSFORMER CKT 1	187	187	0.0384	101.8314	COLUMEAST - SHELL CREEK 345KV CKT 1
FDNS	00NR	5	16WP	G15_042	FROM->TO	COLUMEAST (COL.EAST T3) 230/115/13.8KV TRANSFORMER CKT 1	187	187	0.0395	100.4516	COLUMEAST - SHELL CREEK 345KV CKT 1
FDNS	09ALL	5	25SP	G15_042	FROM->TO	DIXONCO 230.00 - HOSKINS 230KV CKT 1	320	320	0.57714	114.7947	DIXONCO 3 345.00 - TWINCH 3 345.00 345KV CKT 1
FDNS	09ALL	5	25SP	G15_042	FROM->TO	DIXONCO 230.00 - HOSKINS 230KV CKT 1	320	320	0.57714	114.7735	DIXONCO 3 345.00 (DIXON1) 345/230/13.8KV TRANSFORMER CKT 1
FDNS	09ALL	5	20SP	G15_042	FROM->TO	DIXONCO 230.00 - HOSKINS 230KV CKT 1	320	320	0.57693	114.3921	DIXONCO 3 345.00 - TWINCH 3 345.00 345KV CKT 1
FDNS	09ALL	5	20SP	G15_042	FROM->TO	DIXONCO 230.00 - HOSKINS 230KV CKT 1	320	320	0.57693	114.3341	DIXONCO 3 345.00 (DIXON1) 345/230/13.8KV TRANSFORMER CKT 1
FDNS	09ALL	5	17SP	G15_042	FROM->TO	DIXONCO 230.00 - HOSKINS 230KV CKT 1	320	320	0.57763	113.0887	DIXONCO 3 345.00 - TWINCH 3 345.00 345KV CKT 1
FDNS	09ALL	5	17SP	G15_042	FROM->TO	DIXONCO 230.00 - HOSKINS 230KV CKT 1	320	320	0.57763	113.0703	DIXONCO 3 345.00 (DIXON1) 345/230/13.8KV TRANSFORMER CKT 1
FDNS	09ALL	5	17G	G15_042	FROM->TO	DIXONCO 230.00 - HOSKINS 230KV CKT 1	320	320	0.57709	108.6753	DIXONCO 3 345.00 - TWINCH 3 345.00 345KV CKT 1
FDNS	09ALL	5	17G	G15_042	FROM->TO	DIXONCO 230.00 - HOSKINS 230KV CKT 1	320	320	0.57709	108.6439	DIXONCO 3 345.00 (DIXON1) 345/230/13.8KV TRANSFORMER CKT 1
FDNS	09ALL	5	20L	G15_042	FROM->TO	DIXONCO 230.00 - HOSKINS 230KV CKT 1	320	320	0.57472	107.4997	DIXONCO 3 345.00 - TWINCH 3 345.00 345KV CKT 1
FDNS	09ALL	5	20L	G15_042	FROM->TO	DIXONCO 230.00 - HOSKINS 230KV CKT 1	320	320	0.57472	107.464	DIXONCO 3 345.00 (DIXON1) 345/230/13.8KV TRANSFORMER CKT 1
FDNS	09ALL	5	16WP	G15_042	FROM->TO	DIXONCO 230.00 - HOSKINS 230KV CKT 1	320	320	0.57655	107.2001	DIXONCO 3 345.00 - TWINCH 3 345.00 345KV CKT 1
FDNS	09ALL	5	16WP	G15_042	FROM->TO	DIXONCO 230.00 - HOSKINS 230KV CKT 1	320	320	0.57655	107.1724	DIXONCO 3 345.00 (DIXON1) 345/230/13.8KV TRANSFORMER CKT 1
FDNS	09ALL	5	20WP	G15_042	FROM->TO	DIXONCO 230.00 - HOSKINS 230KV CKT 1	320	320	0.57612	107.041	DIXONCO 3 345.00 - TWINCH 3 345.00 345KV CKT 1
FDNS	09ALL	5	20WP	G15_042	FROM->TO	DIXONCO 230.00 - HOSKINS 230KV CKT 1	320	320	0.57612	106.9772	DIXONCO 3 345.00 (DIXON1) 345/230/13.8KV TRANSFORMER CKT 1
FDNS	00NR	5	20SP	G15_042	FROM->TO	DIXONCO 230.00 - HOSKINS 230KV CKT 1	320	320	0.5881	104.4844	DIXONCO 3 345.00 - TWINCH 3 345.00 345KV CKT 1
FDNS	00NR	5	20SP	G15_042	FROM->TO	DIXONCO 230.00 - HOSKINS 230KV CKT 1	320	320	0.5881	104.471	DIXONCO 3 345.00 (DIXON1) 345/230/13.8KV TRANSFORMER CKT 1
FDNS	00NR	5	25SP	G15_042	FROM->TO	DIXONCO 230.00 - HOSKINS 230KV CKT 1	320	320	0.5882	104.164	DIXONCO 3 345.00 - TWINCH 3 345.00 345KV CKT 1
FDNS	00NR	5	25SP	G15_042	FROM->TO	DIXONCO 230.00 - HOSKINS 230KV CKT 1	320	320	0.5882	104.1158	DIXONCO 3 345.00 (DIXON1) 345/230/13.8KV TRANSFORMER CKT 1
FDNS	00NR	5	17SP	G15_042	FROM->TO	DIXONCO 230.00 - HOSKINS 230KV CKT 1	320	320	0.58841	103.8364	DIXONCO 3 345.00 - TWINCH 3 345.00 345KV CKT 1
FDNS	00NR	5	17SP	G15_042	FROM->TO	DIXONCO 230.00 - HOSKINS 230KV CKT 1	320	320	0.58841	103.8215	DIXONCO 3 345.00 (DIXON1) 345/230/13.8KV TRANSFORMER CKT 1
FDNS	09NR	5	17G	G15_042	FROM->TO	DIXONCO 230.00 - HOSKINS 230KV CKT 1	320	320	0.58796	101.8097	DIXONCO 3 345.00 - TWINCH 3 345.00 345KV CKT 1
FDNS	09NR	5	17G	G15_042	FROM->TO	DIXONCO 230.00 - HOSKINS 230KV CKT 1	320	320	0.58796	101.7848	DIXONCO 3 345.00 (DIXON1) 345/230/13.8KV TRANSFORMER CKT 1
FDNS	09NR	5	20L	G15_042	FROM->TO	DIXONCO 230.00 - HOSKINS 230KV CKT 1	320	320	0.58665	101.7172	DIXONCO 3 345.00 - TWINCH 3 345.00 345KV CKT 1
FDNS	09NR	5	20L	G15_042	FROM->TO	DIXONCO 230.00 - HOSKINS 230KV CKT 1	320	320	0.58665	101.6524	DIXONCO 3 345.00 (DIXON1) 345/230/13.8KV TRANSFORMER CKT 1

SOLUTION	GROUP	SCENARIO	SEASON	SOURCE	DIRECTION	MONITORED ELEMENT	RATEA (MVA)	RATEB(MVA)	TDF	TC%LOADING (% MVA)	CONTINGENCY
FDNS	09ALL	5	17G	G15_042	FROM->TO	DIXONCO 3 345.00 (DIXON1) 345/230/13.8KV TRANSFORMER CKT 1	336	420	0.41014	114.6377	BASE CASE
FDNS	09ALL	5	17G	G15_042	FROM->TO	DIXONCO 3 345.00 (DIXON1) 345/230/13.8KV TRANSFORMER CKT 1	336	420	0.41014	114.3071	BASE CASE
FDNS	09ALL	5	17G	G15_042	FROM->TO	DIXONCO 3 345.00 (DIXON1) 345/230/13.8KV TRANSFORMER CKT 1	336	420	0.62345	112.698	DIXONCO 230.00 - HOSKINS 230KV CKT 1
FDNS	09ALL	5	17G	G15_042	FROM->TO	DIXONCO 3 345.00 (DIXON1) 345/230/13.8KV TRANSFORMER CKT 1	336	420	0.62345	112.5884	DIXONCO 230.00 - HOSKINS 230KV CKT 1
FDNS	09ALL	5	16WP	G15_042	FROM->TO	DIXONCO 3 345.00 (DIXON1) 345/230/13.8KV TRANSFORMER CKT 1	336	420	0.41012	112.2161	BASE CASE
FDNS	09ALL	5	16WP	G15_042	FROM->TO	DIXONCO 3 345.00 (DIXON1) 345/230/13.8KV TRANSFORMER CKT 1	336	420	0.41012	112.0272	BASE CASE
FDNS	09ALL	5	20L	G15_042	FROM->TO	DIXONCO 3 345.00 (DIXON1) 345/230/13.8KV TRANSFORMER CKT 1	336	420	0.40941	112.0004	BASE CASE
FDNS	09ALL	5	20L	G15_042	FROM->TO	DIXONCO 3 345.00 (DIXON1) 345/230/13.8KV TRANSFORMER CKT 1	336	420	0.40941	111.7535	BASE CASE
FDNS	09ALL	5	20WP	G15_042	FROM->TO	DIXONCO 3 345.00 (DIXON1) 345/230/13.8KV TRANSFORMER CKT 1	336	420	0.41098	111.2556	BASE CASE
FDNS	09ALL	5	20WP	G15_042	FROM->TO	DIXONCO 3 345.00 (DIXON1) 345/230/13.8KV TRANSFORMER CKT 1	336	420	0.41098	110.9944	BASE CASE
FDNS	09ALL	5	16WP	G15_042	FROM->TO	DIXONCO 3 345.00 (DIXON1) 345/230/13.8KV TRANSFORMER CKT 1	336	420	0.62315	110.8401	DIXONCO 230.00 - HOSKINS 230KV CKT 1
FDNS	09ALL	5	16WP	G15_042	FROM->TO	DIXONCO 3 345.00 (DIXON1) 345/230/13.8KV TRANSFORMER CKT 1	336	420	0.62315	110.8245	DIXONCO 230.00 - HOSKINS 230KV CKT 1
FDNS	09ALL	5	20L	G15_042	FROM->TO	DIXONCO 3 345.00 (DIXON1) 345/230/13.8KV TRANSFORMER CKT 1	336	420	0.62156	110.6597	DIXONCO 230.00 - HOSKINS 230KV CKT 1
FDNS	09ALL	5	20L	G15_042	FROM->TO	DIXONCO 3 345.00 (DIXON1) 345/230/13.8KV TRANSFORMER CKT 1	336	420	0.62156	110.6229	DIXONCO 230.00 - HOSKINS 230KV CKT 1
FDNS	09ALL	5	20WP	G15_042	FROM->TO	DIXONCO 3 345.00 (DIXON1) 345/230/13.8KV TRANSFORMER CKT 1	336	420	0.62347	110.2558	DIXONCO 230.00 - HOSKINS 230KV CKT 1
FDNS	09ALL	5	20WP	G15_042	FROM->TO	DIXONCO 3 345.00 (DIXON1) 345/230/13.8KV TRANSFORMER CKT 1	336	420	0.62347	110.1969	DIXONCO 230.00 - HOSKINS 230KV CKT 1
FDNS	09ALL	5	20SP	G15_042	FROM->TO	DIXONCO 3 345.00 (DIXON1) 345/230/13.8KV TRANSFORMER CKT 1	336	420	0.6237	108.8521	DIXONCO 230.00 - HOSKINS 230KV CKT 1
FDNS	09ALL	5	20SP	G15_042	FROM->TO	DIXONCO 3 345.00 (DIXON1) 345/230/13.8KV TRANSFORMER CKT 1	336	420	0.6237	108.6883	DIXONCO 230.00 - HOSKINS 230KV CKT 1
FDNS	09NR	5	17G	G15_042	FROM->TO	DIXONCO 3 345.00 (DIXON1) 345/230/13.8KV TRANSFORMER CKT 1	336	420	0.39604	108.2757	BASE CASE
FDNS	09ALL	5	17SP	G15_042	FROM->TO	DIXONCO 3 345.00 (DIXON1) 345/230/13.8KV TRANSFORMER CKT 1	336	420	0.62354	108.0729	DIXONCO 230.00 - HOSKINS 230KV CKT 1
FDNS	09NR	5	17G	G15_042	FROM->TO	DIXONCO 3 345.00 (DIXON1) 345/230/13.8KV TRANSFORMER CKT 1	336	420	0.39604	107.917	BASE CASE
FDNS	09ALL	5	17SP	G15_042	FROM->TO	DIXONCO 3 345.00 (DIXON1) 345/230/13.8KV TRANSFORMER CKT 1	336	420	0.62354	107.9068	DIXONCO 230.00 - HOSKINS 230KV CKT 1
FDNS	09ALL	5	25SP	G15_042	FROM->TO	DIXONCO 3 345.00 (DIXON1) 345/230/13.8KV TRANSFORMER CKT 1	336	420	0.62377	107.7406	DIXONCO 230.00 - HOSKINS 230KV CKT 1
FDNS	09ALL	5	17G	G15_042	FROM->TO	DIXONCO 3 345.00 (DIXON1) 345/230/13.8KV TRANSFORMER CKT 1	336	420	0.42191	107.6511	HOSKINS - RAUN 345KV CKT 1
FDNS	09ALL	5	25SP	G15_042	FROM->TO	DIXONCO 3 345.00 (DIXON1) 345/230/13.8KV TRANSFORMER CKT 1	336	420	0.62377	107.5579	DIXONCO 230.00 - HOSKINS 230KV CKT 1
FDNS	09ALL	5	17G	G15_042	FROM->TO	DIXONCO 3 345.00 (DIXON1) 345/230/13.8KV TRANSFORMER CKT 1	336	420	0.42191	107.5426	HOSKINS - RAUN 345KV CKT 1
FDNS	09NR	5	17G	G15_042	FROM->TO	DIXONCO 3 345.00 (DIXON1) 345/230/13.8KV TRANSFORMER CKT 1	336	420	0.6205	106.1828	DIXONCO 230.00 - HOSKINS 230KV CKT 1
FDNS	09NR	5	17G	G15_042	FROM->TO	DIXONCO 3 345.00 (DIXON1) 345/230/13.8KV TRANSFORMER CKT 1	336	420	0.6205	106.0015	DIXONCO 230.00 - HOSKINS 230KV CKT 1
FDNS	09ALL	5	17G	G15_042	FROM->TO	DIXONCO 3 345.00 (DIXON1) 345/230/13.8KV TRANSFORMER CKT 1	336	420	0.54198	105.2179	BELDEN 4 230.00 - DIXONCO 230.00 230KV CKT 1
FDNS	09ALL	5	16WP	G15_042	FROM->TO	DIXONCO 3 345.00 (DIXON1) 345/230/13.8KV TRANSFORMER CKT 1	336	420	0.42173	105.1405	HOSKINS - RAUN 345KV CKT 1
FDNS	09ALL	5	16WP	G15_042	FROM->TO	DIXONCO 3 345.00 (DIXON1) 345/230/13.8KV TRANSFORMER CKT 1	336	420	0.42173	105.1298	HOSKINS - RAUN 345KV CKT 1
FDNS	09ALL	5	17G	G15_042	FROM->TO	DIXONCO 3 345.00 (DIXON1) 345/230/13.8KV TRANSFORMER CKT 1	336	420	0.54198	104.972	BELDEN 4 230.00 - DIXONCO 230.00 230KV CKT 1
FDNS	09ALL	5	17G	G15_042	FROM->TO	DIXONCO 3 345.00 (DIXON1) 345/230/13.8KV TRANSFORMER CKT 1	336	420	0.46041	104.3068	BELDEN 4 230.00 - RASMUSN 230KV CKT 1
FDNS	09ALL	5	16WP	G15_042	FROM->TO	DIXONCO 3 345.00 (DIXON1) 345/230/13.8KV TRANSFORMER CKT 1	336	420	0.54229	104.2089	BELDEN 4 230.00 - DIXONCO 230.00 230KV CKT 1
FDNS	09ALL	5	20L	G15_042	FROM->TO	DIXONCO 3 345.00 (DIXON1) 345/230/13.8KV TRANSFORMER CKT 1	336	420	0.54281	104.1838	BELDEN 4 230.00 - DIXONCO 230.00 230KV CKT 1
FDNS	09ALL	5	20L	G15_042	FROM->TO	DIXONCO 3 345.00 (DIXON1) 345/230/13.8KV TRANSFORMER CKT 1	336	420	0.42084	104.1629	HOSKINS - RAUN 345KV CKT 1
FDNS	09ALL	5	20L	G15_042	FROM->TO	DIXONCO 3 345.00 (DIXON1) 345/230/13.8KV TRANSFORMER CKT 1	336	420	0.42084	104.1629	HOSKINS - RAUN 345KV CKT 1
FDNS	09ALL	5	17G	G15_042	FROM->TO	DIXONCO 3 345.00 (DIXON1) 345/230/13.8KV TRANSFORMER CKT 1	336	420	0.46041	104.1444	BELDEN 4 230.00 - RASMUSN 230KV CKT 1
FDNS	09ALL	5	20L	G15_042	FROM->TO	DIXONCO 3 345.00 (DIXON1) 345/230/13.8KV TRANSFORMER CKT 1	336	420	0.42084	104.1011	HOSKINS - RAUN 345KV CKT 1
FDNS	09ALL	5	20L	G15_042	FROM->TO	DIXONCO 3 345.00 (DIXON1) 345/230/13.8KV TRANSFORMER CKT 1	336	420	0.42084	104.1011	HOSKINS - RAUN 345KV CKT 1
FDNS	09ALL	5	16WP	G15_042	FROM->TO	DIXONCO 3 345.00 (DIXON1) 345/230/13.8KV TRANSFORMER CKT 1	336	420	0.54229	104.0707	BELDEN 4 230.00 - DIXONCO 230.00 230KV CKT 1
FDNS	09ALL	5	20L	G15_042	FROM->TO	DIXONCO 3 345.00 (DIXON1) 345/230/13.8KV TRANSFORMER CKT 1	336	420	0.54281	103.99	BELDEN 4 230.00 - DIXONCO 230.00 230KV CKT 1
FDNS	09ALL	5	20WP	G15_042	FROM->TO	DIXONCO 3 345.00 (DIXON1) 345/230/13.8KV TRANSFORMER CKT 1	336	420	0.42305	103.8696	HOSKINS - RAUN 345KV CKT 1
FDNS	09ALL	5	20WP	G15_042	FROM->TO	DIXONCO 3 345.00 (DIXON1) 345/230/13.8KV TRANSFORMER CKT 1	336	420	0.42305	103.8696	HOSKINS - RAUN 345KV CKT 1
FDNS	09ALL	5	20WP	G15_042	FROM->TO	DIXONCO 3 345.00 (DIXON1) 345/230/13.8KV TRANSFORMER CKT 1	336	420	0.42305	103.7807	HOSKINS - RAUN 345KV CKT 1
FDNS	09ALL	5	20WP	G15_042	FROM->TO	DIXONCO 3 345.00 (DIXON1) 345/230/13.8KV TRANSFORMER CKT 1	336	420	0.42305	103.7807	HOSKINS - RAUN 345KV CKT 1
FDNS	09NR	5	20L	G15_042	FROM->TO	DIXONCO 3 345.00 (DIXON1) 345/230/13.8KV TRANSFORMER CKT 1	336	420	0.39907	103.7279	BASE CASE
FDNS	09ALL	5	20WP	G15_042	FROM->TO	DIXONCO 3 345.00 (DIXON1) 345/230/13.8KV TRANSFORMER CKT 1	336	420	0.54319	103.7215	BELDEN 4 230.00 - DIXONCO 230.00 230KV CKT 1
FDNS	09NR	5	20L	G15_042	FROM->TO	DIXONCO 3 345.00 (DIXON1) 345/230/13.8KV TRANSFORMER CKT 1	336	420	0.62179	103.6134	DIXONCO 230.00 - HOSKINS 230KV CKT 1
FDNS	09ALL	5	20L	G15_042	FROM->TO	DIXONCO 3 345.00 (DIXON1) 345/230/13.8KV TRANSFORMER CKT 1	336	420	0.46021	103.5378	BELDEN 4 230.00 - RASMUSN 230KV CKT 1
FDNS	09NR	5	20L	G15_042	FROM->TO	DIXONCO 3 345.00 (DIXON1) 345/230/13.8KV TRANSFORMER CKT 1	336	420	0.62179	103.5299	DIXONCO 230.00 - HOSKINS 230KV CKT 1
FDNS	09ALL	5	20WP	G15_042	FROM->TO	DIXONCO 3 345.00 (DIXON1) 345/230/13.8KV TRANSFORMER CKT 1	336	420	0.54319	103.5178	BELDEN 4 230.00 - DIXONCO 230.00 230KV CKT 1
FDNS	09NR	5	20L	G15_042	FROM->TO	DIXONCO 3 345.00 (DIXON1) 345/230/13.8KV TRANSFORMER CKT 1	336	420	0.39907	103.475	BASE CASE
FDNS	09ALL	5	20L	G15_042	FROM->TO	DIXONCO 3 345.00 (DIXON1) 345/230/13.8KV TRANSFORMER CKT 1	336	420	0.46021	103.4601	BELDEN 4 230.00 - RASMUSN 230KV CKT 1
FDNS	09ALL	5	20SP	G15_042	FROM->TO	DIXONCO 3 345.00 (DIXON1) 345/230/13.8KV TRANSFORMER CKT 1	336	420	0.41059	102.2126	BASE CASE
FDNS	09ALL	5	20SP	G15_042	FROM->TO	DIXONCO 3 345.00 (DIXON1) 345/230/13.8KV TRANSFORMER CKT 1	336	420	0.41059	102.1467	BASE CASE
FDNS	09ALL	5	16WP	G15_042	FROM->TO	DIXONCO 3 345.00 (DIXON1) 345/230/13.8KV TRANSFORMER CKT 1	336	420	0.46061	102.1442	BELDEN 4 230.00 - RASMUSN 230KV CKT 1
FDNS	09ALL	5	16WP	G15_042	FROM->TO	DIXONCO 3 345.00 (DIXON1) 345/230/13.8KV TRANSFORMER CKT 1	336	420	0.46061	102.1094	BELDEN 4 230.00 - RASMUSN 230KV CKT 1
FDNS	09ALL	5	17SP	G15_042	FROM->TO	DIXONCO 3 345.00 (DIXON1) 345/230/13.8KV TRANSFORMER CKT 1	336	420	0.40974	102.0451	BASE CASE
FDNS	09ALL	5	17SP	G15_042	FROM->TO	DIXONCO 3 345.00 (DIXON1) 345/230/13.8KV TRANSFORMER CKT 1	336	420	0.40974	101.9875	BASE CASE
FDNS	09ALL	5	17G	G15_042	FROM->TO	DIXONCO 3 345.00 (DIXON1) 345/230/13.8KV TRANSFORMER CKT 1	336	420	0.42902	101.9535	RASMUSN - SIOUX CITY 230KV CKT 1
FDNS	09ALL	5	17G	G15_042	FROM->TO	DIXONCO 3 345.00 (DIXON1) 345/230/13.8KV TRANSFORMER CKT 1	336	420	0.42902	101.7737	RASMUSN - SIOUX CITY 230KV CKT 1
FDNS	09NR	5	17G	G15_042	FROM->TO	DIXONCO 3 345.00 (DIXON1) 345/230/13.8KV TRANSFORMER CKT 1	336	420	0.39752	101.5656	HOSKINS - RAUN 345KV CKT 1
FDNS	09ALL	5	20WP	G15_042	FROM->TO	DIXONCO 3 345.00 (DIXON1) 345/230/13.8KV TRANSFORMER CKT 1	336	420	0.46153	101.5393	BELDEN 4 230.00 - RASMUSN 230KV CKT 1
FDNS	09ALL	5	20WP	G15_042	FROM->TO	DIXONCO 3 345.00 (DIXON1) 345/230/13.8KV TRANSFORMER CKT 1	336	420	0.46153	101.438	BELDEN 4 230.00 - RASMUSN 230KV CKT 1
FDNS	09NR	5	17G	G15_042	FROM->TO	DIXONCO 3 345.00 (DIXON1) 345/230/13.8KV TRANSFORMER CKT 1	336	420	0.39752	101.3922	HOSKINS - RAUN 345KV CKT 1
FDNS	09ALL	5	25SP	G15_042	FROM->TO	DIXONCO 3 345.00 (DIXON1) 345/230/13.8KV TRANSFORMER CKT 1	336	420	0.41052	99.9	BASE CASE
FDNS	09ALL	5	25SP	G15_042	FROM->TO	DIXONCO 3 345.00 (DIXON1) 345/230/13.8KV TRANSFORMER CKT 1	336	420	0.41052	99.9	BASE CASE
FDNS	09ALL	5	16WP	G15_042	FROM->TO	DIXONCO 3 345.00 (DIXON1) 345/230/13.8KV TRANSFORMER CKT 1	336	420	0.42873	99.5	RASMUSN - SIOUX CITY 230KV CKT 1
FDNS	09ALL	5	16WP	G15_042	FROM->TO	DIXONCO 3 345.00 (DIXON1) 345/230/13.8KV TRANSFORMER CKT 1	336	420	0.42873	99.5	RASMUSN - SIOUX CITY 230KV CKT 1
FDNS	00NR	5	17SP	G15_042	TO->FROM	GRPRAR1-LNX3345.00 - GRPRAR 345KV CKT Z	720	720	0.03344	120.6396	P12:230:UMZB:# 116 #: ST IN SD. WSG-ST-VH
FDNS	00NR	5	17SP	G15_042	TO->FROM	GRPRAR1-LNX3345.00 - GRPRAR 345KV CKT Z	720	720	0.03957	120.4174	KELLY - MEADOWGROVE4230.00 230KV CKT 1
FDNS	00NR	5	17SP	G15_042	TO->FROM	GRPRAR1-LNX3345.00 - GRPRAR 345KV CKT Z	720	720	0.03443	119.7925	P12:345:UMZW:# 1747 #: WT2 IN SD. WT2-WHT LINE FAULT
FDNS	00NR	5	17SP	G15_042	TO->FROM	GRPRAR1-LNX3345.00 - GRPRAR 345KV CKT Z	720	720	0.03443	119.7914	WATERTN-LNX3345.00 - WATERTOWN 345KV CKT Z
FDNS	00NR	5	17SP	G15_042	TO->FROM	GRPRAR1-LNX3345.00 - GRPRAR 345KV CKT Z	720	720	0.03443	119.748	WATERTN-LNX3345.00 - WHITE 345KV CKT 1
FDNS	00NR	5	17SP	G15_042	TO->FROM	GRPRAR1-LNX3345.00 - GRPRAR 345KV CKT Z	720	720	0.03385	119.6977	STORLA - WESSINGTON 230KV CKT 1
FDNS	00NR	5	17SP	G15_042	TO->FROM	GRPRAR1-LNX3345.00 - GRPRAR 345KV CKT Z	720	720	0.03537	119.0473	G09_001IST 345.00 - WATERTOWN 345KV CKT 1
FDNS	00NR	5	17SP	G15_042	TO->FROM	GRPRAR1-LNX3345.00 - GRPRAR 345KV CKT Z	720	720	0.03376	118.5732	HANLON - STORLA 230KV CKT 1
FDNS	00NR	5	17SP	G15_042	TO->FROM	GRPRAR1-LNX3345.00 - GRPRAR 345KV CKT Z	720	720	0.03333	117.9634	FT THOMPSON - LETCHER 230KV CKT 1

SOLUTION	GROUP	SCENARIO	SEASON	SOURCE	DIRECTION	MONITORED ELEMENT	RATEA (MVA)	RATEB(MVA)	TDF	TC%LOADING (% MVA)	CONTINGENCY
FDNS	00NR	5	17SP	G15_042	TO->FROM	GRPRAR1-LNX3345.00 - GRPRAR 345KV CKT Z	720	720	0.03333	117.9634	FT THOMPSON - LETCHER 230KV CKT 1
FDNS	00NR	5	17SP	G15_042	TO->FROM	GRPRAR1-LNX3345.00 - GRPRAR 345KV CKT Z	720	720	0.03574	117.5677	BUFFALO - JAMESTOWN 345KV CKT 1
FDNS	00NR	5	17SP	G15_042	TO->FROM	GRPRAR1-LNX3345.00 - GRPRAR 345KV CKT Z	720	720	0.03368	116.5515	FT RANDAL - G12_009IST 230.00 230KV CKT 1
FDNS	00NR	5	17SP	G15_042	TO->FROM	GRPRAR1-LNX3345.00 - GRPRAR 345KV CKT Z	720	720	0.03362	116.5158	FT RANDAL - FT THOMPSON 230KV CKT 1
FDNS	00NR	5	17SP	G15_042	TO->FROM	GRPRAR1-LNX3345.00 - GRPRAR 345KV CKT Z	720	720	0.03362	116.5158	FT RANDAL - FT THOMPSON 230KV CKT 1
FDNS	00NR	5	17SP	G15_042	TO->FROM	GRPRAR1-LNX3345.00 - GRPRAR 345KV CKT Z	720	720	0.03575	116.4833	CHISAGO COUNTY - FORBES 500KV CKT 1
FDNS	00NR	5	17SP	G15_042	TO->FROM	GRPRAR1-LNX3345.00 - GRPRAR 345KV CKT Z	720	720	0.03368	116.4364	FT THOMPSON - LAKE PLATT 230KV CKT 1
FDNS	00NR	5	17SP	G15_042	TO->FROM	GRPRAR1-LNX3345.00 - GRPRAR 345KV CKT Z	720	720	0.03368	116.4364	FT THOMPSON - LAKE PLATT 230KV CKT 1
FDNS	00NR	5	17SP	G15_042	TO->FROM	GRPRAR1-LNX3345.00 - GRPRAR 345KV CKT Z	720	720	0.03537	116.4139	G09_001IST 345.00 - GROTON 345KV CKT 1
FDNS	00NR	5	17SP	G15_042	TO->FROM	GRPRAR1-LNX3345.00 - GRPRAR 345KV CKT Z	720	720	0.04398	116.359	NUNDRWD - WAYSIDE 230KV CKT 1
FDNS	00NR	5	17SP	G15_042	TO->FROM	GRPRAR1-LNX3345.00 - GRPRAR 345KV CKT Z	720	720	0.03368	116.062	G12_009IST 230.00 - LAKE PLATT 230KV CKT 1
FDNS	00NR	5	17SP	G15_042	TO->FROM	GRPRAR1-LNX3345.00 - GRPRAR 345KV CKT Z	720	720	0.03574	116.0003	CENTER - JAMESTOWN 345KV CKT 1
FDNS	00NR	5	17SP	G15_042	TO->FROM	GRPRAR1-LNX3345.00 - GRPRAR 345KV CKT Z	720	720	0.03957	115.8701	FT RANDAL - MEADOWGROVE4230.00 230KV CKT 1
FDNS	00NR	5	17SP	G15_042	TO->FROM	GRPRAR1-LNX3345.00 - GRPRAR 345KV CKT Z	720	720	0.0343	115.7398	LETCHER - SIOUX FALLS 230KV CKT 1
FDNS	00NR	5	17SP	G15_042	TO->FROM	GRPRAR1-LNX3345.00 - GRPRAR 345KV CKT Z	720	720	0.03579	115.4947	GEN336821 1-GRAND GULF UNIT
FDNS	00NR	5	17SP	G15_042	TO->FROM	GRPRAR1-LNX3345.00 - GRPRAR 345KV CKT Z	720	720	0.03576	115.479	BISON 3 345.00 - BUFFALO 345KV CKT 1
FDNS	00NR	5	17SP	G15_042	TO->FROM	GRPRAR1-LNX3345.00 - GRPRAR 345KV CKT Z	720	720	0.03579	115.3763	GEN635024 4-WALTER SCOTT UNIT 4
FDNS	00NR	5	17SP	G15_042	TO->FROM	GRPRAR1-LNX3345.00 - GRPRAR 345KV CKT Z	720	720	0.03379	115.3364	SPLIT ROCK - WHITE 345KV CKT 1
FDNS	00NR	5	17SP	G15_042	TO->FROM	GRPRAR1-LNX3345.00 - GRPRAR 345KV CKT Z	720	720	0.03379	115.3364	SPLIT ROCK - WHITE 345KV CKT 1
FDNS	00NR	5	17SP	G15_042	TO->FROM	GRPRAR1-LNX3345.00 - GRPRAR 345KV CKT Z	720	720	0.03579	115.1049	GEN344225 1-1CAL G1 25.000
FDNS	00NR	5	17SP	G15_042	TO->FROM	GRPRAR1-LNX3345.00 - GRPRAR 345KV CKT Z	720	720	0.03675	115.0424	KEYSTONE - SIDNEY1-LNX3345.00 345KV CKT 1
FDNS	00NR	5	17SP	G15_042	TO->FROM	GRPRAR1-LNX3345.00 - GRPRAR 345KV CKT Z	720	720	0.03675	115.0268	SIDNEY - SIDNEY1-LNX3345.00 345KV CKT Z
FDNS	00NR	5	17SP	G15_042	TO->FROM	GRPRAR1-LNX3345.00 - GRPRAR 345KV CKT Z	720	720	0.03579	114.9039	GEN635023 3-WALTER SCOTT UNIT 3
FDNS	00NR	5	17SP	G15_042	TO->FROM	GRPRAR1-LNX3345.00 - GRPRAR 345KV CKT Z	720	720	0.03579	114.9004	GEN562714 1-G15_023_4 0.6900
FDNS	00NR	5	17SP	G15_042	TO->FROM	GRPRAR1-LNX3345.00 - GRPRAR 345KV CKT Z	720	720	0.03579	114.9004	GEN562715 1-G15_023_5 0.6900
FDNS	00NR	5	17SP	G15_042	TO->FROM	GRPRAR1-LNX3345.00 - GRPRAR 345KV CKT Z	720	720	0.03579	114.8601	GEN337911 1-ARKANSAS NUCLEAR ONE UNIT #2
FDNS	00NR	5	17SP	G15_042	TO->FROM	GRPRAR1-LNX3345.00 - GRPRAR 345KV CKT Z	720	720	0.03579	114.8311	GEN336153 1-WATERFORD UNIT#3
FDNS	00NR	5	17SP	G15_042	TO->FROM	GRPRAR1-LNX3345.00 - GRPRAR 345KV CKT Z	720	720	0.03409	114.8147	FT RANDAL - SIOUX CITY 230KV CKT 1
FDNS	00NR	5	17SP	G15_042	TO->FROM	GRPRAR1-LNX3345.00 - GRPRAR 345KV CKT Z	720	720	0.03544	114.7701	GROTON-LNX3 345.00 - LELAND1-LNX3345.00 345KV CKT 1
FDNS	00NR	5	17SP	G15_042	TO->FROM	GRPRAR1-LNX3345.00 - GRPRAR 345KV CKT Z	720	720	0.03544	114.6504	LELAND OLDS - LELAND1-LNX3345.00 345KV CKT Z
FDNS	00NR	5	17SP	G15_042	TO->FROM	GRPRAR1-LNX3345.00 - GRPRAR 345KV CKT Z	720	720	0.03544	114.6392	GROTON - GROTON-LNX3 345.00 345KV CKT Z
FDNS	00NR	5	17SP	G15_042	TO->FROM	GRPRAR1-LNX3345.00 - GRPRAR 345KV CKT Z	720	720	0.03544	114.6374	P12:345:UMZB:# 109 #: LOS GRT IN ND. LOS GRT
FDNS	00NR	5	17SP	G15_042	TO->FROM	GRPRAR1-LNX3345.00 - GRPRAR 345KV CKT Z	720	720	0.03609	114.5848	ARROWHEAD - ARROWHEAD 230 230KV CKT 1
FDNS	00NR	5	17SP	G15_042	TO->FROM	GRPRAR1-LNX3345.00 - GRPRAR 345KV CKT Z	720	720	0.0348	114.5742	HANLON - SIOUX FALLS 230KV CKT 1
FDNS	00NR	5	17SP	G15_042	TO->FROM	GRPRAR1-LNX3345.00 - GRPRAR 345KV CKT Z	720	720	0.03638	114.538	MISSION - ST FRANCIS 115KV CKT 1
FDNS	00NR	5	17SP	G15_042	TO->FROM	GRPRAR1-LNX3345.00 - GRPRAR 345KV CKT Z	720	720	0.03638	114.5239	P12:115:NPPD:1091:VALENTN7:MISSION7:BTB
FDNS	00NR	5	17SP	G15_042	TO->FROM	GRPRAR1-LNX3345.00 - GRPRAR 345KV CKT Z	720	720	0.03579	114.486	GEN335831 1-RIVERBEND UNIT#1
FDNS	00NR	5	17SP	G15_042	TO->FROM	GRPRAR1-LNX3345.00 - GRPRAR 345KV CKT Z	720	720	0.03579	114.483	GEN640010 1-GERALD GENTLEMAN STATION UNIT 1
FDNS	00NR	5	17SP	G15_042	TO->FROM	GRPRAR1-LNX3345.00 - GRPRAR 345KV CKT Z	720	720	0.03638	114.3978	HARMONY - ST FRANCIS 115KV CKT 1
FDNS	00NR	5	17SP	G15_042	TO->FROM	GRPRAR1-LNX3345.00 - GRPRAR 345KV CKT Z	720	720	0.03579	114.3951	GEN337910 1-ARKANSAS NUCLEAR ONE UNIT #1
FDNS	00NR	5	17SP	G15_042	TO->FROM	GRPRAR1-LNX3345.00 - GRPRAR 345KV CKT Z	720	720	0.03316	114.3942	FT RANDAL - UTICA JCT 230KV CKT 1
FDNS	00NR	5	17SP	G15_042	TO->FROM	GRPRAR1-LNX3345.00 - GRPRAR 345KV CKT Z	720	720	0.03665	114.3356	HAZLETON - MITCHLCO3 345.00 345KV CKT 1
FDNS	00NR	5	17SP	G15_042	TO->FROM	GRPRAR1-LNX3345.00 - GRPRAR 345KV CKT Z	720	720	0.0358	114.3315	ALEXMRES3 345.00 - BISON 3 345.00 345KV CKT 1
FDNS	00NR	5	17SP	G15_042	TO->FROM	GRPRAR1-LNX3345.00 - GRPRAR 345KV CKT Z	720	720	0.03577	114.274	ELLENDALE - OAKES 230KV CKT 1
FDNS	00NR	5	17SP	G15_042	TO->FROM	GRPRAR1-LNX3345.00 - GRPRAR 345KV CKT Z	720	720	0.03577	114.274	ELLENDALE - OAKES 230KV CKT 1
FDNS	00NR	5	17SP	G15_042	TO->FROM	GRPRAR1-LNX3345.00 - GRPRAR 345KV CKT Z	720	720	0.0306	114.2592	SIOUXCY-LNX3345.00 - SPLIT ROCK 345KV CKT 1
FDNS	00NR	5	17SP	G15_042	TO->FROM	GRPRAR1-LNX3345.00 - GRPRAR 345KV CKT Z	720	720	0.0306	114.2592	SIOUXCY-LNX3345.00 - SPLIT ROCK 345KV CKT 1
FDNS	00NR	5	17SP	G15_042	TO->FROM	GRPRAR1-LNX3345.00 - GRPRAR 345KV CKT Z	720	720	0.0306	114.2577	P12:345:UMZW:# 907 #: SC2-SR IN IA. SC2-SR 345 KV LINE
FDNS	00NR	5	17SP	G15_042	TO->FROM	GRPRAR1-LNX3345.00 - GRPRAR 345KV CKT Z	720	720	0.03742	114.2135	FT RANDAL - SPENCER 115KV CKT 1
FDNS	00NR	5	17SP	G15_042	TO->FROM	GRPRAR1-LNX3345.00 - GRPRAR 345KV CKT Z	720	720	0.0306	114.1953	SIOUX CITY - SIOUXCY-LNX3345.00 345KV CKT Z
FDNS	00NR	5	17SP	G15_042	TO->FROM	GRPRAR1-LNX3345.00 - GRPRAR 345KV CKT Z	720	720	0.03579	114.1926	GEN640011 2-GERALD GENTLEMAN STATION UNIT 2
FDNS	00NR	5	17SP	G15_042	TO->FROM	GRPRAR1-LNX3345.00 - GRPRAR 345KV CKT Z	720	720	0.03638	114.1855	HARMONY - VALENTINE 115KV CKT 1
FDNS	00NR	5	17SP	G15_042	TO->FROM	GRPRAR1-LNX3345.00 - GRPRAR 345KV CKT Z	720	720	0.03576	114.1827	FORMAN - OAKES 230KV CKT 1
FDNS	00NR	5	17SP	G15_042	TO->FROM	GRPRAR1-LNX3345.00 - GRPRAR 345KV CKT Z	720	720	0.03742	114.1739	P12:115:NPPD:WAPA6:FTRANDL7:ONEILL 7:BTB
FDNS	00NR	5	17SP	G15_042	TO->FROM	GRPRAR1-LNX3345.00 - GRPRAR 345KV CKT Z	720	720	0.03742	114.1739	P12:115:UMZB:# 115 #: SE IN NE. FR-SE-ON
FDNS	00NR	5	17SP	G15_042	TO->FROM	GRPRAR1-LNX3345.00 - GRPRAR 345KV CKT Z	720	720	0.03718	114.1351	SIDNEY - STEGALL 345KV CKT 1
FDNS	00NR	5	17SP	G15_042	TO->FROM	GRPRAR1-LNX3345.00 - GRPRAR 345KV CKT Z	720	720	0.03608	114.1312	GERALD GENTLEMAN STATION - KEYSTONE 345KV CKT 1
FDNS	00NR	5	17SP	G15_042	TO->FROM	GRPRAR1-LNX3345.00 - GRPRAR 345KV CKT Z	720	720	0.04081	114.1281	RAUN - SUB 3451 FT CAL 345KV CKT 1
FDNS	00NR	5	17SP	G15_042	TO->FROM	GRPRAR1-LNX3345.00 - GRPRAR 345KV CKT Z	720	720	0.04081	114.1281	RAUN - SUB 3451 FT CAL 345KV CKT 1
FDNS	00NR	5	17SP	G15_042	TO->FROM	GRPRAR1-LNX3345.00 - GRPRAR 345KV CKT Z	720	720	0.03742	114.0523	ONEILL - SPENCER 115KV CKT 1
FDNS	00NR	5	17SP	G15_042	TO->FROM	GRPRAR1-LNX3345.00 - GRPRAR 345KV CKT Z	720	720	0.03613	114.0075	AS KING - EAU CLAIRE 345KV CKT 1
FDNS	00NR	5	17SP	G15_042	TO->FROM	GRPRAR1-LNX3345.00 - GRPRAR 345KV CKT Z	720	720	0.03551	113.9954	CARPENTER - HURON 230KV CKT 1
FDNS	00NR	5	17SP	G15_042	TO->FROM	GRPRAR1-LNX3345.00 - GRPRAR 345KV CKT Z	720	720	0.03469	113.9555	PAHOJA - SIOUX FALLS 230KV CKT 1
FDNS	00NR	5	17SP	G15_042	TO->FROM	GRPRAR1-LNX3345.00 - GRPRAR 345KV CKT Z	720	720	0.06341	113.914	DIXONCO 230.00 - HOSKINS 230KV CKT 1
FDNS	00NR	5	17SP	G15_042	TO->FROM	GRPRAR1-LNX3345.00 - GRPRAR 345KV CKT Z	720	720	0.03579	113.9112	GEN337653 1-WHITE BLUFF UNIT #2
FDNS	00NR	5	17SP	G15_042	TO->FROM	GRPRAR1-LNX3345.00 - GRPRAR 345KV CKT Z	720	720	0.03551	113.9022	HURON - WATERTOWN 230KV CKT 2
FDNS	00NR	5	17SP	G15_042	TO->FROM	GRPRAR1-LNX3345.00 - GRPRAR 345KV CKT Z	720	720	0.03551	113.9022	HURON - WATERTOWN 230KV CKT 2
FDNS	00NR	5	17SP	G15_042	TO->FROM	GRPRAR1-LNX3345.00 - GRPRAR 345KV CKT Z	720	720	0.03579	113.8977	GEN337652 1-WHITE BLUFF UNIT #1
FDNS	00NR	5	17SP	G15_042	TO->FROM	GRPRAR1-LNX3345.00 - GRPRAR 345KV CKT Z	720	720	0.03579	113.8459	GEN338146 1-INDEPENDENCE UNIT #2
FDNS	00NR	5	17SP	G15_042	TO->FROM	GRPRAR1-LNX3345.00 - GRPRAR 345KV CKT Z	720	720	0.03551	113.8422	CARPENTER - WATERTOWN 230KV CKT 1
FDNS	00NR	5	17SP	G15_042	TO->FROM	GRPRAR1-LNX3345.00 - GRPRAR 345KV CKT Z	720	720	0.03551	113.8422	CARPENTER - WATERTOWN 230KV CKT 1
FDNS	00NR	5	17SP	G15_042	TO->FROM	GRPRAR1-LNX3345.00 - GRPRAR 345KV CKT Z	720	720	0.03579	113.8395	GEN338143 1-INDEPENDENCE UNIT #1
FDNS	00NR	5	17SP	G15_042	TO->FROM	GRPRAR1-LNX3345.00 - GRPRAR 345KV CKT Z	720	720	0.03627	113.7968	ARPIN B4 345.00 - EAU CLAIRE 345KV CKT 1
FDNS	00NR	5	17SP	G15_042	TO->FROM	GRPRAR1-LNX3345.00 - GRPRAR 345KV CKT Z	720	720	0.03579	113.7491	FORMAN - HANKINSON 230KV CKT 1
FDNS	00NR	5	17SP	G15_042	TO->FROM	GRPRAR1-LNX3345.00 - GRPRAR 345KV CKT Z	720	720	0.03579	113.721	GEN501801 1-DOLET HILLS UNIT1
FDNS	00NR	5	17SP	G15_042	TO->FROM	GRPRAR1-LNX3345.00 - GRPRAR 345KV CKT Z	720	720	0.03202	113.6913	RASMUSN - UTICA JCT 230KV CKT 1
FDNS	00NR	5	17SP	G15_042	TO->FROM	GRPRAR1-LNX3345.00 - GRPRAR 345KV CKT Z	720	720	0.03638	113.657	AINSWORTH - VALENTINE 115KV CKT 1
FDNS	00NR	5	17SP	G15_042	TO->FROM	GRPRAR1-LNX3345.00 - GRPRAR 345KV CKT Z	720	720	0.03385	113.6156	FT THOMPSON - WESSINGTON 230KV CKT 1
FDNS	00NR	5	17SP	G15_042	TO->FROM	GRPRAR1-LNX3345.00 - GRPRAR 345KV CKT Z	720	720	0.03385	113.6156	FT THOMPSON - WESSINGTON 230KV CKT 1

SOLUTION	GROUP	SCENARIO	SEASON	SOURCE	DIRECTION	MONITORED ELEMENT	RATEA (MVA)	RATEB(MVA)	TDF	TC%LOADING (% MVA)	CONTINGENCY
FDNS	00NR	5	17SP	G15_042	TO->FROM	GRPRAR1-LNX3345.00 - GRPRAR 345KV CKT Z	720	720	0.03605	113.563	G15094_T 345.00 - SIDNEY2-LNX3345.00 345KV CKT 1
FDNS	00NR	5	17SP	G15_042	TO->FROM	GRPRAR1-LNX3345.00 - GRPRAR 345KV CKT Z	720	720	0.03579	113.5601	CNTSHNT3 345.00 - PRAIRIE3 345.00 345KV CKT 1
FDNS	00NR	5	17SP	G15_042	TO->FROM	GRPRAR1-LNX3345.00 - GRPRAR 345KV CKT Z	720	720	0.03605	113.5468	SIDNEY - SIDNEY2-LNX3345.00 345KV CKT Z
FDNS	00NR	5	17SP	G15_042	TO->FROM	GRPRAR1-LNX3345.00 - GRPRAR 345KV CKT Z	720	720	0.03469	113.545	EAGLE 4 230.00 - PAHOJA 230KV CKT 1
FDNS	00NR	5	17SP	G15_042	TO->FROM	GRPRAR1-LNX3345.00 - GRPRAR 345KV CKT Z	720	720	0.03665	113.5439	ADAMS - MITCHLCO3 345.00 345KV CKT 1
FDNS	00NR	5	17SP	G15_042	TO->FROM	GRPRAR1-LNX3345.00 - GRPRAR 345KV CKT Z	720	720	0.03579	113.4953	GEN336252 1-NINEMILE POINT UNIT#5
FDNS	00NR	5	17SP	G15_042	TO->FROM	GRPRAR1-LNX3345.00 - GRPRAR 345KV CKT Z	720	720	0.03579	113.4552	GEN501813 1-RODEMACHER UNIT 3
FDNS	00NR	5	17SP	G15_042	TO->FROM	GRPRAR1-LNX3345.00 - GRPRAR 345KV CKT Z	720	720	0.03579	113.3781	GEN336831 1-BAXTER WILSON SES
FDNS	00NR	5	17SP	G15_042	TO->FROM	GRPRAR1-LNX3345.00 - GRPRAR 345KV CKT Z	720	720	0.03638	113.3749	ADAMS - PLEASANT VALLEY 345KV CKT 1
FDNS	00NR	5	17SP	G15_042	TO->FROM	GRPRAR1-LNX3345.00 - GRPRAR 345KV CKT Z	720	720	0.03579	113.367	GEN336251 1-NINEMILE POINT UNIT#4
FDNS	00NR	5	17SP	G15_042	TO->FROM	GRPRAR1-LNX3345.00 - GRPRAR 345KV CKT Z	720	720	0.03579	113.3049	GEN337041 1-GERALD ANDRUS
FDNS	00NR	5	17SP	G15_042	TO->FROM	GRPRAR1-LNX3345.00 - GRPRAR 345KV CKT Z	720	720	0.03579	113.2942	GEN344897 4-1LAB G4 20.000
FDNS	00NR	5	17SP	G15_042	TO->FROM	GRPRAR1-LNX3345.00 - GRPRAR 345KV CKT Z	720	720	0.03579	113.2913	GEN344894 1-1LAB G1 20.000
FDNS	00NR	5	17SP	G15_042	TO->FROM	GRPRAR1-LNX3345.00 - GRPRAR 345KV CKT Z	720	720	0.03579	113.2912	GEN344896 3-1LAB G3 20.000
FDNS	00NR	5	17SP	G15_042	TO->FROM	GRPRAR1-LNX3345.00 - GRPRAR 345KV CKT Z	720	720	0.03579	113.284	GEN335206 1-NELSON UNIT 6
FDNS	00NR	5	17SP	G15_042	TO->FROM	GRPRAR1-LNX3345.00 - GRPRAR 345KV CKT Z	720	720	0.03579	113.2435	GEN344895 2-1LAB G2 20.000
FDNS	00NR	5	17SP	G15_042	TO->FROM	GRPRAR1-LNX3345.00 - GRPRAR 345KV CKT Z	720	720	0.03579	113.231	GEN345670 1-1RUSH G1 18.000
FDNS	00NR	5	17SP	G15_042	TO->FROM	GRPRAR1-LNX3345.00 - GRPRAR 345KV CKT Z	720	720	0.03579	113.2309	GEN345671 2-1RUSH G2 18.000
FDNS	00NR	5	17SP	G15_042	TO->FROM	GRPRAR1-LNX3345.00 - GRPRAR 345KV CKT Z	720	720	0.03579	113.1548	GEN501812 1-RODEMACHER UNIT 2
FDNS	00NR	5	17SP	G15_042	TO->FROM	GRPRAR1-LNX3345.00 - GRPRAR 345KV CKT Z	720	720	0.03579	113.1546	GEN635214 4-NEAL UNIT 4
FDNS	00NR	5	17SP	G15_042	TO->FROM	GRPRAR1-LNX3345.00 - GRPRAR 345KV CKT Z	720	720	0.03676	113.1478	LAKEFIELD 3 - NOBLES 345KV CKT 1
FDNS	00NR	5	17SP	G15_042	TO->FROM	GRPRAR1-LNX3345.00 - GRPRAR 345KV CKT Z	720	720	0.03584	113.1378	ALEXMRES3 345.00 - WAITE PARK 345KV CKT 1
FDNS	00NR	5	17SP	G15_042	TO->FROM	GRPRAR1-LNX3345.00 - GRPRAR 345KV CKT Z	720	720	0.03579	113.1357	GEN334440 1-SABINE UNIT 4
FDNS	00NR	5	17SP	G15_042	TO->FROM	GRPRAR1-LNX3345.00 - GRPRAR 345KV CKT Z	720	720	0.03581	113.1305	BLAIR - GRANITE FALLS 230KV CKT 1
FDNS	00NR	5	17SP	G15_042	TO->FROM	GRPRAR1-LNX3345.00 - GRPRAR 345KV CKT Z	720	720	0.03581	113.1305	BLAIR - GRANITE FALLS 230KV CKT 1
FDNS	00NR	5	17SP	G15_042	TO->FROM	GRPRAR1-LNX3345.00 - GRPRAR 345KV CKT Z	720	720	0.03577	113.0868	CENTER - COYOTE 345KV CKT 1
FDNS	00NR	5	17SP	G15_042	TO->FROM	GRPRAR1-LNX3345.00 - GRPRAR 345KV CKT Z	720	720	0.03616	113.0438	BROOKING COUNTY - LYON COUNTY 345KV CKT 1
FDNS	00NR	5	17SP	G15_042	TO->FROM	GRPRAR1-LNX3345.00 - GRPRAR 345KV CKT Z	720	720	0.03857	113.0283	STEGALL - STEGALL TRANSFORMER 230KV CKT 1
FDNS	00NR	5	17SP	G15_042	TO->FROM	GRPRAR1-LNX3345.00 - GRPRAR 345KV CKT Z	720	720	0.03525	113.0242	MENNO JCT - TRIPP JCT 115KV CKT 1
FDNS	00NR	5	17SP	G15_042	TO->FROM	GRPRAR1-LNX3345.00 - GRPRAR 345KV CKT Z	720	720	0.03581	113.0197	GLENBORO SOUTH - RUGBY 230KV CKT 1
FDNS	00NR	5	17SP	G15_042	TO->FROM	GRPRAR1-LNX3345.00 - GRPRAR 345KV CKT Z	720	720	0.03579	113.015	GEN629075 1-OTTUMWA GENERATOR FOR OTTUMWA UNIT NO 1
FDNS	00NR	5	17SP	G15_042	TO->FROM	GRPRAR1-LNX3345.00 - GRPRAR 345KV CKT Z	720	720	0.03857	113.0135	P13:230-345:NPPD:STEGALL3:KV3A
FDNS	00NR	5	17SP	G15_042	TO->FROM	GRPRAR1-LNX3345.00 - GRPRAR 345KV CKT Z	720	720	0.03579	113.0086	GEN336191 1-LITTLE GYPSY UNIT#3
FDNS	00NR	5	17SP	G15_042	TO->FROM	GRPRAR1-LNX3345.00 - GRPRAR 345KV CKT Z	720	720	0.03857	113.0058	STEGALL (SGQ KV3A) 345/230/13.8KV TRANSFORMER CKT 1
FDNS	00NR	5	17SP	G15_042	TO->FROM	GRPRAR1-LNX3345.00 - GRPRAR 345KV CKT Z	720	720	0.03585	112.9673	HANKINSON - WAHPETON 230KV CKT 1
FDNS	00NR	5	17SP	G15_042	TO->FROM	GRPRAR1-LNX3345.00 - GRPRAR 345KV CKT Z	720	720	0.03579	112.9589	GEN338388 1-1PLUM PT U1 23.000
FDNS	00NR	5	17SP	G15_042	TO->FROM	GRPRAR1-LNX3345.00 - GRPRAR 345KV CKT Z	720	720	0.03579	112.9433	P12:115:UMZW:# 162 #: NEL IN ND. FAULT ON ML-NEL-MX-GA 115 KV
FDNS	00NR	5	17SP	G15_042	TO->FROM	GRPRAR1-LNX3345.00 - GRPRAR 345KV CKT Z	720	720	0.03579	112.9325	GEN336801 1-BAXTER WILSON UNIT #1
FDNS	00NR	5	17SP	G15_042	TO->FROM	GRPRAR1-LNX3345.00 - GRPRAR 345KV CKT Z	720	720	0.0404	112.9242	STEGALL-LNX3230.00 - WAYSIDE 230KV CKT 1
FDNS	00NR	5	17SP	G15_042	TO->FROM	GRPRAR1-LNX3345.00 - GRPRAR 345KV CKT Z	720	720	0.03648	112.9215	KOSSUTH 3 345.00 - OBRIEN 3 345.00 345KV CKT 1
FDNS	00NR	5	17SP	G15_042	TO->FROM	GRPRAR1-LNX3345.00 - GRPRAR 345KV CKT Z	720	720	0.03579	112.9184	GEN335614 1-WILLOW GLENN UNIT#4
FDNS	00NR	5	17SP	G15_042	TO->FROM	GRPRAR1-LNX3345.00 - GRPRAR 345KV CKT Z	720	720	0.0404	112.9162	STEGALL - STEGALL-LNX3230.00 230KV CKT Z
FDNS	00NR	5	17SP	G15_042	TO->FROM	GRPRAR1-LNX3345.00 - GRPRAR 345KV CKT Z	720	720	0.03525	112.9106	MENNO JCT - UTICA 115KV CKT 1
FDNS	00NR	5	17SP	G15_042	TO->FROM	GRPRAR1-LNX3345.00 - GRPRAR 345KV CKT Z	720	720	0.03579	112.9057	GEN336464 1-MICHOUD UNIT #3
FDNS	00NR	5	17SP	G15_042	TO->FROM	GRPRAR1-LNX3345.00 - GRPRAR 345KV CKT Z	720	720	0.03579	112.8972	GEN563222 1-G15088_3 0.6900
FDNS	00NR	5	17SP	G15_042	TO->FROM	GRPRAR1-LNX3345.00 - GRPRAR 345KV CKT Z	720	720	0.03648	112.8897	KOSSUTH 3 345.00 - WEBSTER 345KV CKT 1
FDNS	00NR	5	17SP	G15_042	TO->FROM	GRPRAR1-LNX3345.00 - GRPRAR 345KV CKT Z	720	720	0.03578	112.8846	GARRISON - JAMES TOWN 230KV CKT 1
FDNS	00NR	5	17SP	G15_042	TO->FROM	GRPRAR1-LNX3345.00 - GRPRAR 345KV CKT Z	720	720	0.03579	112.8644	GEN334441 1-SABINE UNIT 5
FDNS	00NR	5	17SP	G15_042	TO->FROM	GRPRAR1-LNX3345.00 - GRPRAR 345KV CKT Z	720	720	0.03621	112.8596	BYRON - NORTH ROCHESTER 345KV CKT 1
FDNS	00NR	5	17SP	G15_042	TO->FROM	GRPRAR1-LNX3345.00 - GRPRAR 345KV CKT Z	720	720	0.03579	112.8462	GEN335204 1-NELSON UNIT 4
FDNS	00NR	5	17SP	G15_042	TO->FROM	GRPRAR1-LNX3345.00 - GRPRAR 345KV CKT Z	720	720	0.03734	112.8353	GRIMES - LEHIGH 345KV CKT 1
FDNS	00NR	5	17SP	G15_042	TO->FROM	GRPRAR1-LNX3345.00 - GRPRAR 345KV CKT Z	720	720	0.03525	112.8276	P12:115:UMZZ:# 237 #: MEN IN SD. MENNO JUNCTION IS A TAP (UJ-MEN-TP).
FDNS	00NR	5	17SP	G15_042	TO->FROM	GRPRAR1-LNX3345.00 - GRPRAR 345KV CKT Z	720	720	0.03579	112.8031	GEN635213 3-NEAL UNIT 3
FDNS	00NR	5	17SP	G15_042	TO->FROM	GRPRAR1-LNX3345.00 - GRPRAR 345KV CKT Z	720	720	0.04491	112.7752	RAUN - SIOUX CITY 345KV CKT 1
FDNS	00NR	5	17SP	G15_042	TO->FROM	GRPRAR1-LNX3345.00 - GRPRAR 345KV CKT Z	720	720	0.04491	112.7752	RAUN - SIOUX CITY 345KV CKT 1
FDNS	00NR	5	17SP	G15_042	TO->FROM	GRPRAR1-LNX3345.00 - GRPRAR 345KV CKT Z	720	720	0.03586	112.7423	APPLEDORN 4 230.00 - WATERTOWN 230KV CKT 1
FDNS	00NR	5	17SP	G15_042	TO->FROM	GRPRAR1-LNX3345.00 - GRPRAR 345KV CKT Z	720	720	0.03586	112.7423	APPLEDORN 4 230.00 - WATERTOWN 230KV CKT 1
FDNS	00NR	5	17SP	G15_042	TO->FROM	GRPRAR1-LNX3345.00 - GRPRAR 345KV CKT Z	720	720	0.03579	112.7294	GEN334433 1-SABINE UNIT 3
FDNS	00NR	5	17SP	G15_042	TO->FROM	GRPRAR1-LNX3345.00 - GRPRAR 345KV CKT Z	720	720	0.03579	112.7135	GEN336222 1-LITTLE GYPSY UNIT#2
FDNS	00NR	5	17SP	G15_042	TO->FROM	GRPRAR1-LNX3345.00 - GRPRAR 345KV CKT Z	720	720	0.03578	112.6926	FARGO - JAMES TOWN 230KV CKT 1
FDNS	00NR	5	17SP	G15_042	TO->FROM	GRPRAR1-LNX3345.00 - GRPRAR 345KV CKT Z	720	720	0.03579	112.686	GEN640009 1-COOPER NUCLEAR STATION
FDNS	00NR	5	17SP	G15_042	TO->FROM	GRPRAR1-LNX3345.00 - GRPRAR 345KV CKT Z	720	720	0.03595	112.6743	NORTH ROCHESTER - PRAIRIE ISLAND 345KV CKT 1
FDNS	00NR	5	17SP	G15_042	TO->FROM	GRPRAR1-LNX3345.00 - GRPRAR 345KV CKT Z	720	720	0.03579	112.6716	P13:230:UMZW:# 2218 #: FP IN MT. LOSS OF TRANSFORMER (AT2).
FDNS	00NR	5	17SP	G15_042	TO->FROM	GRPRAR1-LNX3345.00 - GRPRAR 345KV CKT Z	720	720	0.03605	112.669	G15094_T 345.00 - LARAMIE RIVER 345KV CKT 1
FDNS	00NR	5	17SP	G15_042	TO->FROM	GRPRAR1-LNX3345.00 - GRPRAR 345KV CKT Z	720	720	0.03578	112.6674	FARGO - JAMES TOWN 230KV CKT 2
FDNS	00NR	5	17SP	G15_042	TO->FROM	GRPRAR1-LNX3345.00 - GRPRAR 345KV CKT Z	720	720	0.03586	112.6644	APPLEDORN 4 230.00 - GRANITE FALLS 230KV CKT 1
FDNS	00NR	5	17SP	G15_042	TO->FROM	GRPRAR1-LNX3345.00 - GRPRAR 345KV CKT Z	720	720	0.03586	112.6644	APPLEDORN 4 230.00 - GRANITE FALLS 230KV CKT 1
FDNS	00NR	5	17SP	G15_042	TO->FROM	GRPRAR1-LNX3345.00 - GRPRAR 345KV CKT Z	720	720	0.03579	112.6592	GEN303007 1-1BC2 U2
FDNS	00NR	5	17SP	G15_042	TO->FROM	GRPRAR1-LNX3345.00 - GRPRAR 345KV CKT Z	720	720	0.03579	112.6539	GEN303006 1-1BC2 U1
FDNS	00NR	5	17SP	G15_042	TO->FROM	GRPRAR1-LNX3345.00 - GRPRAR 345KV CKT Z	720	720	0.03582	112.6415	FERGSFL4 230.00 - WAHPETON 230KV CKT 1
FDNS	00NR	5	17SP	G15_042	TO->FROM	GRPRAR1-LNX3345.00 - GRPRAR 345KV CKT Z	720	720	0.03577	112.6159	BISMARK - JAMES TOWN 230KV CKT 1
FDNS	00NR	5	17SP	G15_042	TO->FROM	GRPRAR1-LNX3345.00 - GRPRAR 345KV CKT Z	720	720	0.03622	112.6118	BYRON - PLEASANT VALLEY 345KV CKT 1
FDNS	00NR	5	17SP	G15_042	TO->FROM	GRPRAR1-LNX3345.00 - GRPRAR 345KV CKT Z	720	720	0.03579	112.6099	GEN336152 1-WATERFORD UNIT#2
FDNS	00NR	5	17SP	G15_042	TO->FROM	GRPRAR1-LNX3345.00 - GRPRAR 345KV CKT Z	720	720	0.03579	112.6096	GEN336151 1-WATERFORD UNIT#1
FDNS	00NR	5	17SP	G15_042	TO->FROM	GRPRAR1-LNX3345.00 - GRPRAR 345KV CKT Z	720	720	0.03577	112.6035	BISMARK - WEBER 230KV CKT 1
FDNS	00NR	5	17SP	G15_042	TO->FROM	GRPRAR1-LNX3345.00 - GRPRAR 345KV CKT Z	720	720	0.03579	112.6031	GEN641089 2-ENERGY CENTER 2
FDNS	00NR	5	17SP	G15_042	TO->FROM	GRPRAR1-LNX3345.00 - GRPRAR 345KV CKT Z	720	720	0.03625	112.6028	SIDNEY - SIDNEY TRANSFORMER 230KV CKT 1
FDNS	00NR	5	17SP	G15_042	TO->FROM	GRPRAR1-LNX3345.00 - GRPRAR 345KV CKT Z	720	720	0.03625	112.6027	SIDNEY (SDQ KV2A) 345/230/13.8KV TRANSFORMER CKT 1
FDNS	00NR	5	17SP	G15_042	TO->FROM	GRPRAR1-LNX3345.00 - GRPRAR 345KV CKT Z	720	720	0.03625	112.6026	P13:230-345:NPPD:SIDNEY 3:KV2A

SOLUTION	GROUP	SCENARIO	SEASON	SOURCE	DIRECTION	MONITORED ELEMENT	RATEA (MVA)	RATEB(MVA)	TDF	TC%LOADING (% MVA)	CONTINGENCY
FDNS	00NR	5	17SP	G15_042	TO->FROM	GRPRAR1-LNX3345.00 - GRPRAR 345KV CKT Z	720	720	0.03815	112.5991	BLOOMFIELD - CREIGHTON 115KV CKT 1
FDNS	00NR	5	17SP	G15_042	TO->FROM	GRPRAR1-LNX3345.00 - GRPRAR 345KV CKT Z	720	720	0.03628	112.598	P13:115-230:TSGT:SIDNEY-KV1A
FDNS	00NR	5	17SP	G15_042	TO->FROM	GRPRAR1-LNX3345.00 - GRPRAR 345KV CKT Z	720	720	0.03482	112.5976	LAKEFIELD 3 - LKFLDXL3 345KV CKT 1
FDNS	00NR	5	17SP	G15_042	TO->FROM	GRPRAR1-LNX3345.00 - GRPRAR 345KV CKT Z	720	720	0.03579	112.5917	GEN303008 1-1BC2 U3
FDNS	00NR	5	17SP	G15_042	TO->FROM	GRPRAR1-LNX3345.00 - GRPRAR 345KV CKT Z	720	720	0.03577	112.5902	JAMES TOWN - WEBER 230KV CKT 1
FDNS	00NR	5	17SP	G15_042	TO->FROM	GRPRAR1-LNX3345.00 - GRPRAR 345KV CKT Z	720	720	0.03579	112.5864	GEN336170 1-GULF OXY U4
FDNS	00NR	5	17SP	G15_042	TO->FROM	GRPRAR1-LNX3345.00 - GRPRAR 345KV CKT Z	720	720	0.03579	112.574	GEN562921 1-G15054_2 0.6900
FDNS	00NR	5	17SP	G15_042	TO->FROM	GRPRAR1-LNX3345.00 - GRPRAR 345KV CKT Z	720	720	0.03577	112.5529	ELM CREEK - MONTICELLO 345KV CKT 1
FDNS	00NR	5	17SP	G15_042	TO->FROM	GRPRAR1-LNX3345.00 - GRPRAR 345KV CKT Z	720	720	0.03579	112.5394	GEN562596 1-G14_059_3 0.6900
FDNS	00NR	5	17SP	G15_042	TO->FROM	GRPRAR1-LNX3345.00 - GRPRAR 345KV CKT Z	720	720	0.03579	112.5201	GEN501811 1-RODEMACHER UNIT 1
FDNS	00NR	5	17SP	G15_042	TO->FROM	GRPRAR1-LNX3345.00 - GRPRAR 345KV CKT Z	720	720	0.03571	112.5192	MT VERN - STORLA 115KV CKT 1
FDNS	00NR	5	17SP	G15_042	TO->FROM	GRPRAR1-LNX3345.00 - GRPRAR 345KV CKT Z	720	720	0.03591	112.5171	ARKANSAS NUCLEAR ONE - FT SMITH 500KV CKT 1
FDNS	00NR	5	17SP	G15_042	TO->FROM	GRPRAR1-LNX3345.00 - GRPRAR 345KV CKT Z	720	720	0.03591	112.5171	ARKANSAS NUCLEAR ONE - FT SMITH 500KV CKT 1
FDNS	00NR	5	17SP	G15_042	TO->FROM	GRPRAR1-LNX3345.00 - GRPRAR 345KV CKT Z	720	720	0.03815	112.516	BLOOMFIELD - GAVINS POINT 115KV CKT 1
FDNS	00NR	5	17SP	G15_042	TO->FROM	GRPRAR1-LNX3345.00 - GRPRAR 345KV CKT Z	720	720	0.0358	112.5085	AUDUBON - SHEYNNE 230KV CKT 1
FDNS	00NR	5	17SP	G15_042	TO->FROM	GRPRAR1-LNX3345.00 - GRPRAR 345KV CKT Z	720	720	0.03582	112.4972	FERGSFL4 230.00 - GRE-SILVRLK4230.00 230KV CKT 1
FDNS	00NR	5	17SP	G15_042	TO->FROM	GRPRAR1-LNX3345.00 - GRPRAR 345KV CKT Z	720	720	0.03579	112.4939	PRAIRIE ISLAND 345/20.0KV TRANSFORMER CKT 1
FDNS	00NR	5	17SP	G15_042	TO->FROM	GRPRAR1-LNX3345.00 - GRPRAR 345KV CKT Z	720	720	0.03579	112.4927	PRAIRIE ISLAND 345/20.0KV TRANSFORMER CKT 2
FDNS	00NR	5	17SP	G15_042	TO->FROM	GRPRAR1-LNX3345.00 - GRPRAR 345KV CKT Z	720	720	0.03579	112.4912	BALTA - RAMSEY 230KV CKT 1
FDNS	00NR	5	17SP	G15_042	TO->FROM	GRPRAR1-LNX3345.00 - GRPRAR 345KV CKT Z	720	720	0.03535	112.4849	FT THOMPSON - HURON 230KV CKT 1
FDNS	00NR	5	17SP	G15_042	TO->FROM	GRPRAR1-LNX3345.00 - GRPRAR 345KV CKT Z	720	720	0.03535	112.4849	FT THOMPSON - HURON 230KV CKT 1
FDNS	00NR	5	17SP	G15_042	TO->FROM	GRPRAR1-LNX3345.00 - GRPRAR 345KV CKT Z	720	720	0.03535	112.4849	FT THOMPSON - HURON 230KV CKT 2
FDNS	00NR	5	17SP	G15_042	TO->FROM	GRPRAR1-LNX3345.00 - GRPRAR 345KV CKT Z	720	720	0.03535	112.4849	FT THOMPSON - HURON 230KV CKT 2
FDNS	00NR	5	17SP	G15_042	TO->FROM	GRPRAR1-LNX3345.00 - GRPRAR 345KV CKT Z	720	720	0.03579	112.4804	GEN532751 1-WOLF CREEK GENERATING STATION UNIT 1
FDNS	00NR	5	17SP	G15_042	TO->FROM	GRPRAR1-LNX3345.00 - GRPRAR 345KV CKT Z	720	720	0.0363	112.4723	P12:115:NPPD:WAPA1:CHADRON7:BOXBUTE7:BTB
FDNS	00NR	5	17SP	G15_042	TO->FROM	GRPRAR1-LNX3345.00 - GRPRAR 345KV CKT Z	720	720	0.03579	112.4584	TOLK STATION EAST 230/24.0KV TRANSFORMER CKT 1
FDNS	00NR	5	17SP	G15_042	TO->FROM	GRPRAR1-LNX3345.00 - GRPRAR 345KV CKT Z	720	720	0.03575	112.457	DKSN_CO5 161.00 - TRIBOJI NO1 + NO2 161KV CKT 1
FDNS	00NR	5	17SP	G15_042	TO->FROM	GRPRAR1-LNX3345.00 - GRPRAR 345KV CKT Z	720	720	0.03609	112.4548	CHADRON - WAYSIDE 115KV CKT 1
FDNS	00NR	5	17SP	G15_042	TO->FROM	GRPRAR1-LNX3345.00 - GRPRAR 345KV CKT Z	720	720	0.03609	112.4548	P13:115-230:NPPD:WAYSIDE4:T1
FDNS	00NR	5	17SP	G15_042	TO->FROM	GRPRAR1-LNX3345.00 - GRPRAR 345KV CKT Z	720	720	0.03609	112.454	WAYSIDE (WAYSIDE T1) 230/115/13.8KV TRANSFORMER CKT 1
FDNS	00NR	5	17SP	G15_042	TO->FROM	GRPRAR1-LNX3345.00 - GRPRAR 345KV CKT Z	720	720	0.03582	112.4532	GRE-SILVRLK4230.00 - HENNING 230KV CKT 1
FDNS	00NR	5	17SP	G15_042	TO->FROM	GRPRAR1-LNX3345.00 - GRPRAR 345KV CKT Z	720	720	0.03579	112.4449	BIG STONE (230/115) 230/115/13.8KV TRANSFORMER CKT 1
FDNS	00NR	5	17SP	G15_042	TO->FROM	GRPRAR1-LNX3345.00 - GRPRAR 345KV CKT Z	720	720	0.03579	112.4427	GEN334071 1-LEWIS CREEK 2
FDNS	00NR	5	17SP	G15_042	TO->FROM	GRPRAR1-LNX3345.00 - GRPRAR 345KV CKT Z	720	720	0.03579	112.4379	GEN334070 1-LEWIS CREEK 1
FDNS	00NR	5	17SP	G15_042	TO->FROM	GRPRAR1-LNX3345.00 - GRPRAR 345KV CKT Z	720	720	0.03579	112.4375	GEN337766 1-TRACTEBEL UNIT S1
FDNS	00NR	5	17SP	G15_042	TO->FROM	GRPRAR1-LNX3345.00 - GRPRAR 345KV CKT Z	720	720	0.03579	112.4345	LAWRENCE ENERGY CENTER UNIT 5 230/24.0KV TRANSFORMER CKT 1
FDNS	00NR	5	17SP	G15_042	TO->FROM	GRPRAR1-LNX3345.00 - GRPRAR 345KV CKT Z	720	720	0.03579	112.4344	LAWRENCE ENERGY CENTER UNIT 5 - LAWRENCE HILL 230KV CKT 1
FDNS	00NR	5	17SP	G15_042	TO->FROM	GRPRAR1-LNX3345.00 - GRPRAR 345KV CKT Z	720	720	0.03657	112.4216	NOBLES - SPLIT ROCK 345KV CKT 1
FDNS	00NR	5	17SP	G15_042	TO->FROM	GRPRAR1-LNX3345.00 - GRPRAR 345KV CKT Z	720	720	0.03579	112.4199	PRAIRIE - WINGER 230KV CKT 1
FDNS	00NR	5	17SP	G15_042	TO->FROM	GRPRAR1-LNX3345.00 - GRPRAR 345KV CKT Z	720	720	0.03579	112.4095	GEN659118 1-LARAMIE RIVER UNIT1
FDNS	00NR	5	17SP	G15_042	TO->FROM	GRPRAR1-LNX3345.00 - GRPRAR 345KV CKT Z	720	720	0.0363	112.4045	P12:115:NPPD:WAPA2:HEMINGF7:SNAKECK7:BTB
FDNS	00NR	5	17SP	G15_042	TO->FROM	GRPRAR1-LNX3345.00 - GRPRAR 345KV CKT Z	720	720	0.0363	112.3992	CHADRON - DUNLAP 115KV CKT 1
FDNS	00NR	5	17SP	G15_042	TO->FROM	GRPRAR1-LNX3345.00 - GRPRAR 345KV CKT Z	720	720	0.03555	112.3983	HURON WEST PARK - MITCHELL NW 115KV CKT 1
FDNS	00NR	5	17SP	G15_042	TO->FROM	GRPRAR1-LNX3345.00 - GRPRAR 345KV CKT Z	720	720	0.03555	112.3983	HURON WEST PARK - MITCHELL NW 115KV CKT 1
FDNS	00NR	5	17SP	G15_042	TO->FROM	GRPRAR1-LNX3345.00 - GRPRAR 345KV CKT Z	720	720	0.03579	112.3981	GEN501910 1-ACADIA UNIT ST1
FDNS	00NR	5	17SP	G15_042	TO->FROM	GRPRAR1-LNX3345.00 - GRPRAR 345KV CKT Z	720	720	0.03582	112.3921	HENNING - INMANN 230KV CKT 1
FDNS	00NR	5	17SP	G15_042	TO->FROM	GRPRAR1-LNX3345.00 - GRPRAR 345KV CKT Z	720	720	0.0358	112.3921	LELAND OLDS - STANTON 230KV CKT 1
FDNS	00NR	5	17SP	G15_042	TO->FROM	GRPRAR1-LNX3345.00 - GRPRAR 345KV CKT Z	720	720	0.0358	112.3921	LELAND OLDS - STANTON 230KV CKT 1
FDNS	00NR	5	17SP	G15_042	TO->FROM	GRPRAR1-LNX3345.00 - GRPRAR 345KV CKT Z	720	720	0.03618	112.3814	PALXFRASBTHI
FDNS	00NR	5	17SP	G15_042	TO->FROM	GRPRAR1-LNX3345.00 - GRPRAR 345KV CKT Z	720	720	0.03513	112.3806	FT RANDAL - WHITE SWAN 115KV CKT 1
FDNS	00NR	5	17SP	G15_042	TO->FROM	GRPRAR1-LNX3345.00 - GRPRAR 345KV CKT Z	720	720	0.03642	112.3665	EAGLE - PHILIP 115KV CKT 1
FDNS	00NR	5	17SP	G15_042	TO->FROM	GRPRAR1-LNX3345.00 - GRPRAR 345KV CKT Z	720	720	0.03576	112.3613	GROTON (GROTON KU2A) 345/115/13.8KV TRANSFORMER CKT 1
FDNS	00NR	5	17SP	G15_042	TO->FROM	GRPRAR1-LNX3345.00 - GRPRAR 345KV CKT Z	720	720	0.03618	112.361	7PALM TAP 345.00 - SUB T 345KV CKT 1
FDNS	00NR	5	17SP	G15_042	TO->FROM	GRPRAR1-LNX3345.00 - GRPRAR 345KV CKT Z	720	720	0.03579	112.3588	GEN345765 H-1SIOUX 2 18.000
FDNS	00NR	5	17SP	G15_042	TO->FROM	GRPRAR1-LNX3345.00 - GRPRAR 345KV CKT Z	720	720	0.03513	112.3489	TYNDALL - WHITE SWAN 115KV CKT 1
FDNS	00NR	5	17SP	G15_042	TO->FROM	GRPRAR1-LNX3345.00 - GRPRAR 345KV CKT Z	720	720	0.0357	112.3431	GRANT - MITCHELL 115KV CKT 1
FDNS	00NR	5	17SP	G15_042	TO->FROM	GRPRAR1-LNX3345.00 - GRPRAR 345KV CKT Z	720	720	0.0357	112.3431	GRANT - MITCHELL 115KV CKT 1
FDNS	00NR	5	17SP	G15_042	TO->FROM	GRPRAR1-LNX3345.00 - GRPRAR 345KV CKT Z	720	720	0.03654	112.3421	DENISON - SIOUX CITY 230KV CKT 1
FDNS	00NR	5	17SP	G15_042	TO->FROM	GRPRAR1-LNX3345.00 - GRPRAR 345KV CKT Z	720	720	0.03579	112.3408	GEN337764 1-TRACTEBEL UNIT C1
FDNS	00NR	5	17SP	G15_042	TO->FROM	GRPRAR1-LNX3345.00 - GRPRAR 345KV CKT Z	720	720	0.03579	112.3408	GEN337765 1-TRACTEBEL UNIT C2
FDNS	00NR	5	17SP	G15_042	TO->FROM	GRPRAR1-LNX3345.00 - GRPRAR 345KV CKT Z	720	720	0.03581	112.3401	AUDUBON - HUBBARD 230KV CKT 1
FDNS	00NR	5	17SP	G15_042	TO->FROM	GRPRAR1-LNX3345.00 - GRPRAR 345KV CKT Z	720	720	0.03539	112.3372	CLEARWATER - ONEILL 115KV CKT 1
FDNS	00NR	5	17SP	G15_042	TO->FROM	GRPRAR1-LNX3345.00 - GRPRAR 345KV CKT Z	720	720	0.03581	112.3335	KARLSTAD - WINGER 230KV CKT 1
FDNS	00NR	5	17SP	G15_042	TO->FROM	GRPRAR1-LNX3345.00 - GRPRAR 345KV CKT Z	720	720	0.03588	112.333	GENOA 161 - SENECA 161 161KV CKT 1
FDNS	00NR	5	17SP	G15_042	TO->FROM	GRPRAR1-LNX3345.00 - GRPRAR 345KV CKT Z	720	720	0.03579	112.3317	GEN345756 H-1SIOUX 1 18.000
FDNS	00NR	5	17SP	G15_042	TO->FROM	GRPRAR1-LNX3345.00 - GRPRAR 345KV CKT Z	720	720	0.03877	112.3186	BELDEN - HOSKINS 115KV CKT 1
FDNS	00NR	5	17SP	G15_042	TO->FROM	GRPRAR1-LNX3345.00 - GRPRAR 345KV CKT Z	720	720	0.03579	112.3186	GEN562912 1-G15053_3 0.6900
FDNS	00NR	5	17SP	G15_042	TO->FROM	GRPRAR1-LNX3345.00 - GRPRAR 345KV CKT Z	720	720	0.03664	112.3165	PLYMOUTH - SIOUX CITY 161KV CKT 1
FDNS	00NR	5	17SP	G15_042	TO->FROM	GRPRAR1-LNX3345.00 - GRPRAR 345KV CKT Z	720	720	0.03664	112.3165	PLYMOUTH - SIOUX CITY 161KV CKT 1
FDNS	00NR	5	17SP	G15_042	TO->FROM	GRPRAR1-LNX3345.00 - GRPRAR 345KV CKT Z	720	720	0.03511	112.3154	P12:115:UMZW:# 1910 #: YJ IN SD. YJ-UJ LINE FAULT
FDNS	00NR	5	17SP	G15_042	TO->FROM	GRPRAR1-LNX3345.00 - GRPRAR 345KV CKT Z	720	720	0.03511	112.3153	NAPA JCT7 115.00 - UTICA 115KV CKT 1
FDNS	00NR	5	17SP	G15_042	TO->FROM	GRPRAR1-LNX3345.00 - GRPRAR 345KV CKT Z	720	720	0.03511	112.3153	NAPA JCT7 115.00 - UTICA 115KV CKT 1
FDNS	00NR	5	17SP	G15_042	TO->FROM	GRPRAR1-LNX3345.00 - GRPRAR 345KV CKT Z	720	720	0.03511	112.3121	NAPA JCT7 115.00 - YANKON JCT 115KV CKT 1
FDNS	00NR	5	17SP	G15_042	TO->FROM	GRPRAR1-LNX3345.00 - GRPRAR 345KV CKT Z	720	720	0.03511	112.3121	NAPA JCT7 115.00 - YANKON JCT 115KV CKT 1
FDNS	00NR	5	17SP	G15_042	TO->FROM	GRPRAR1-LNX3345.00 - GRPRAR 345KV CKT Z	720	720	0.03579	112.3101	PRAIRIE - RAMSEY 230KV CKT 1
FDNS	00NR	5	17SP	G15_042	TO->FROM	GRPRAR1-LNX3345.00 - GRPRAR 345KV CKT Z	720	720	0.03586	112.3071	NORTH LA CROSSE - NORTH ROCHESTER 345KV CKT 1
FDNS	00NR	5	17SP	G15_042	TO->FROM	GRPRAR1-LNX3345.00 - GRPRAR 345KV CKT Z	720	720	0.03575	112.3057	DKSN_CO5 161.00 - LAKEFIELD 5 NO1 + NO 2 161KV CKT 1
FDNS	00NR	5	17SP	G15_042	TO->FROM	GRPRAR1-LNX3345.00 - GRPRAR 345KV CKT Z	720	720	0.03579	112.305	GEN336221 1-LITTLE GYPSY UNIT#1
FDNS	00NR	5	17SP	G15_042	TO->FROM	GRPRAR1-LNX3345.00 - GRPRAR 345KV CKT Z	720	720	0.03579	112.305	GEN636641 1-LOUISA UNIT 1

SOLUTION	GROUP	SCENARIO	SEASON	SOURCE	DIRECTION	MONITORED ELEMENT	RATEA (MVA)	RATEB(MVA)	TDF	TC%LOADING (% MVA)	CONTINGENCY
FDNS	00NR	5	17SP	G15_042	TO->FROM	GRPRAR1-LNX3345.00 - GRPRAR 345KV CKT Z	720	720	0.03596	112.3039	HAMPTON CORNER - NORTH ROCHESTER 345KV CKT 1
FDNS	00NR	5	17SP	G15_042	TO->FROM	GRPRAR1-LNX3345.00 - GRPRAR 345KV CKT Z	720	720	0.03579	112.3031	JUDSON LARGE 115/15.0KV TRANSFORMER CKT 1
FDNS	00NR	5	17SP	G15_042	TO->FROM	GRPRAR1-LNX3345.00 - GRPRAR 345KV CKT Z	720	720	0.03579	112.3031	JUDSON LARGE 115/15.0KV TRANSFORMER CKT 1
FDNS	00NR	5	17SP	G15_042	TO->FROM	GRPRAR1-LNX3345.00 - GRPRAR 345KV CKT Z	720	720	0.03579	112.302	GRAND GULF 500/22.0KV TRANSFORMER CKT 1
FDNS	00NR	5	17SP	G15_042	TO->FROM	GRPRAR1-LNX3345.00 - GRPRAR 345KV CKT Z	720	720	0.03642	112.3018	EAGLE - MARTIN 115KV CKT 1
FDNS	00NR	5	17SP	G15_042	TO->FROM	GRPRAR1-LNX3345.00 - GRPRAR 345KV CKT Z	720	720	0.03579	112.2973	GEN336242 1-1NMIL ST1 18.000
FDNS	00NR	5	17SP	G15_042	TO->FROM	GRPRAR1-LNX3345.00 - GRPRAR 345KV CKT Z	720	720	0.03579	112.2973	GEN337757 1-DUKE HOTSPRINGS STG1
FDNS	00NR	5	17SP	G15_042	TO->FROM	GRPRAR1-LNX3345.00 - GRPRAR 345KV CKT Z	720	720	0.03579	112.2923	GEN334432 1-SABINE UNIT 2
FDNS	00NR	5	17SP	G15_042	TO->FROM	GRPRAR1-LNX3345.00 - GRPRAR 345KV CKT Z	720	720	0.03579	112.2922	GEN334431 1-SABINE UNIT 1
FDNS	00NR	5	17SP	G15_042	TO->FROM	GRPRAR1-LNX3345.00 - GRPRAR 345KV CKT Z	720	720	0.0359	112.286	FRANKS - HUBEN 345KV CKT 1
FDNS	00NR	5	17SP	G15_042	TO->FROM	GRPRAR1-LNX3345.00 - GRPRAR 345KV CKT Z	720	720	0.0363	112.2825	BOXBUTE7 115.00 - DUNLAP 115KV CKT 1
FDNS	00NR	5	17SP	G15_042	TO->FROM	GRPRAR1-LNX3345.00 - GRPRAR 345KV CKT Z	720	720	0.03579	112.2723	GEN334030 1-FRONTIER UNIT 1
FDNS	00NR	5	17SP	G15_042	TO->FROM	GRPRAR1-LNX3345.00 - GRPRAR 345KV CKT Z	720	720	0.03579	112.2721	GEN334031 1-FRONTIER UNIT 2
FDNS	00NR	5	17SP	G15_042	TO->FROM	GRPRAR1-LNX3345.00 - GRPRAR 345KV CKT Z	720	720	0.03579	112.2718	GEN345832 1-1TS G1 13.800
FDNS	00NR	5	17SP	G15_042	TO->FROM	GRPRAR1-LNX3345.00 - GRPRAR 345KV CKT Z	720	720	0.03579	112.2715	GEN336446 1-MICHOUD UNIT #2
FDNS	00NR	5	17SP	G15_042	TO->FROM	GRPRAR1-LNX3345.00 - GRPRAR 345KV CKT Z	720	720	0.03579	112.2715	GEN345841 2-1TS G2 13.800
FDNS	00NR	5	17SP	G15_042	TO->FROM	GRPRAR1-LNX3345.00 - GRPRAR 345KV CKT Z	720	720	0.03579	112.2658	OKLAUN 345/24.0KV TRANSFORMER CKT 1
FDNS	00NR	5	17SP	G15_042	TO->FROM	GRPRAR1-LNX3345.00 - GRPRAR 345KV CKT Z	720	720	0.03579	112.2581	GEN501970 1-EVANGELINE UNIT 7
FDNS	00NR	5	17SP	G15_042	TO->FROM	GRPRAR1-LNX3345.00 - GRPRAR 345KV CKT Z	720	720	0.03579	112.2365	GEN562438 1-G13-032 0.6900
FDNS	00NR	5	17SP	G15_042	TO->FROM	GRPRAR1-LNX3345.00 - GRPRAR 345KV CKT Z	720	720	0.03539	112.2336	P12:115:NPPD:1164:ONEILL 7:JEFFREY9:BTB
FDNS	00NR	5	20SP	G15_042	TO->FROM	GRPRAR1-LNX3345.00 - GRPRAR 345KV CKT Z	720	720	0.03776	112.1553	KELLY - MEADOWGROVE4230.00 230KV CKT 1
FDNS	00NR	5	17SP	G15_042	TO->FROM	GRPRAR1-LNX3345.00 - GRPRAR 345KV CKT Z	720	720	0.03579	112.1362	GEN563282 1-G15094_3 0.6900
FDNS	00NR	5	17SP	G15_042	TO->FROM	GRPRAR1-LNX3345.00 - GRPRAR 345KV CKT Z	720	720	0.03579	111.7843	BASE CASE
FDNS	00NR	5	20SP	G15_042	TO->FROM	GRPRAR1-LNX3345.00 - GRPRAR 345KV CKT Z	720	720	0.03179	111.5734	P12:230:UMZB:# 116 #: ST IN SD. WSG-ST-VH
FDNS	00NR	5	17SP	G15_042	TO->FROM	GRPRAR1-LNX3345.00 - GRPRAR 345KV CKT Z	720	720	0.03598	111.4483	BUCKNER7 345.00 - SPEARVILLE 345KV CKT 1
FDNS	00NR	5	17SP	G15_042	TO->FROM	GRPRAR1-LNX3345.00 - GRPRAR 345KV CKT Z	720	720	0.03598	111.4483	BUCKNER7 345.00 - SPEARVILLE 345KV CKT 1
FDNS	00NR	5	17SP	G15_042	TO->FROM	GRPRAR1-LNX3345.00 - GRPRAR 345KV CKT Z	720	720	0.03674	111.3486	103RD & ROKEBY - MOORE 345KV CKT 1
FDNS	00NR	5	17SP	G15_042	TO->FROM	GRPRAR1-LNX3345.00 - GRPRAR 345KV CKT Z	720	720	0.03674	111.3486	103RD & ROKEBY - MOORE 345KV CKT 1
FDNS	00NR	5	17SP	G15_042	TO->FROM	GRPRAR1-LNX3345.00 - GRPRAR 345KV CKT Z	720	720	0.03597	111.3312	FT THOMPSON - OAHE 230KV CKT 1
FDNS	00NR	5	17SP	G15_042	TO->FROM	GRPRAR1-LNX3345.00 - GRPRAR 345KV CKT Z	720	720	0.03597	111.3312	FT THOMPSON - OAHE 230KV CKT 1
FDNS	00NR	5	17SP	G15_042	TO->FROM	GRPRAR1-LNX3345.00 - GRPRAR 345KV CKT Z	720	720	0.03597	111.3312	FT THOMPSON - OAHE 230KV CKT 2
FDNS	00NR	5	17SP	G15_042	TO->FROM	GRPRAR1-LNX3345.00 - GRPRAR 345KV CKT Z	720	720	0.03597	111.3312	FT THOMPSON - OAHE 230KV CKT 2
FDNS	00NR	5	17SP	G15_042	TO->FROM	GRPRAR1-LNX3345.00 - GRPRAR 345KV CKT Z	720	720	0.03579	111.3097	GEN652546 1-FT RANDAL
FDNS	00NR	5	25SP	G15_042	TO->FROM	GRPRAR1-LNX3345.00 - GRPRAR 345KV CKT Z	720	720	0.03812	111.2876	KELLY - MEADOWGROVE4230.00 230KV CKT 1
FDNS	00NR	5	17SP	G15_042	TO->FROM	GRPRAR1-LNX3345.00 - GRPRAR 345KV CKT Z	720	720	0.03579	111.2767	MITCHLCO3 345.00 345/34.5KV TRANSFORMER CKT 1
FDNS	00NR	5	17SP	G15_042	TO->FROM	GRPRAR1-LNX3345.00 - GRPRAR 345KV CKT Z	720	720	0.03597	111.2737	FT THOMPSON - OAHE 230KV CKT 3
FDNS	00NR	5	17SP	G15_042	TO->FROM	GRPRAR1-LNX3345.00 - GRPRAR 345KV CKT Z	720	720	0.03597	111.2737	FT THOMPSON - OAHE 230KV CKT 3
FDNS	00NR	5	17SP	G15_042	TO->FROM	GRPRAR1-LNX3345.00 - GRPRAR 345KV CKT Z	720	720	0.03597	111.2737	FT THOMPSON - OAHE 230KV CKT 4
FDNS	00NR	5	17SP	G15_042	TO->FROM	GRPRAR1-LNX3345.00 - GRPRAR 345KV CKT Z	720	720	0.03597	111.2737	FT THOMPSON - OAHE 230KV CKT 4
FDNS	00NR	5	17SP	G15_042	TO->FROM	GRPRAR1-LNX3345.00 - GRPRAR 345KV CKT Z	720	720	0.03579	111.2676	GEN672347 1-CORY COGEN GENERATOR 1 GT1
FDNS	00NR	5	17SP	G15_042	TO->FROM	GRPRAR1-LNX3345.00 - GRPRAR 345KV CKT Z	720	720	0.03579	111.2676	GEN672348 2-CORY COGEN GENERATOR 2 GT2
FDNS	00NR	5	17SP	G15_042	TO->FROM	GRPRAR1-LNX3345.00 - GRPRAR 345KV CKT Z	720	720	0.03525	111.263	NELIGH - PETERSBRG.N7115.00 115KV CKT 1
FDNS	00NR	5	17SP	G15_042	TO->FROM	GRPRAR1-LNX3345.00 - GRPRAR 345KV CKT Z	720	720	0.03579	111.2612	GEN600018 S-LS POWER STEAM
FDNS	00NR	5	17SP	G15_042	TO->FROM	GRPRAR1-LNX3345.00 - GRPRAR 345KV CKT Z	720	720	0.03595	111.2574	POST ROCK (POSTROCK T1) 345/230/13.8KV TRANSFORMER CKT 1
FDNS	00NR	5	17SP	G15_042	TO->FROM	GRPRAR1-LNX3345.00 - GRPRAR 345KV CKT Z	720	720	0.03752	111.2569	NUNDRWD - PHILIP TAP 230KV CKT 1
FDNS	00NR	5	17SP	G15_042	TO->FROM	GRPRAR1-LNX3345.00 - GRPRAR 345KV CKT Z	720	720	0.03579	111.2553	GEN300003 1-THOMAS HILL UNIT 3
FDNS	00NR	5	17SP	G15_042	TO->FROM	GRPRAR1-LNX3345.00 - GRPRAR 345KV CKT Z	720	720	0.0359	111.2522	G11_051T 345.00 - WOODWARD DISTRICT EHV 345KV CKT 1
FDNS	00NR	5	17SP	G15_042	TO->FROM	GRPRAR1-LNX3345.00 - GRPRAR 345KV CKT Z	720	720	0.03579	111.2487	GEN659158 2-PIONEER G213.800
FDNS	00NR	5	17SP	G15_042	TO->FROM	GRPRAR1-LNX3345.00 - GRPRAR 345KV CKT Z	720	720	0.03579	111.2487	GEN659159 3-PIONEER G313.800
FDNS	00NR	5	17SP	G15_042	TO->FROM	GRPRAR1-LNX3345.00 - GRPRAR 345KV CKT Z	720	720	0.03579	111.2412	GEN659156 2-LONESMCRK 2G13.800
FDNS	00NR	5	17SP	G15_042	TO->FROM	GRPRAR1-LNX3345.00 - GRPRAR 345KV CKT Z	720	720	0.03579	111.2412	GEN659157 3-LONESMCRK 3G13.800
FDNS	00NR	5	17SP	G15_042	TO->FROM	GRPRAR1-LNX3345.00 - GRPRAR 345KV CKT Z	720	720	0.03612	111.2329	P12:115:UMZW:# 172 #: WI IN SD.
FDNS	00NR	5	17SP	G15_042	TO->FROM	GRPRAR1-LNX3345.00 - GRPRAR 345KV CKT Z	720	720	0.03574	111.2323	G14-021T 345.00 - MULLNCR7 345.00 345KV CKT 1
FDNS	00NR	5	17SP	G15_042	TO->FROM	GRPRAR1-LNX3345.00 - GRPRAR 345KV CKT Z	720	720	0.03574	111.232	G15-005T 345.00 - MULLNCR7 345.00 345KV CKT 1
FDNS	00NR	5	17SP	G15_042	TO->FROM	GRPRAR1-LNX3345.00 - GRPRAR 345KV CKT Z	720	720	0.03579	111.2311	GEN590010 1-ERCOT EQUIVALENCE
FDNS	00NR	5	17SP	G15_042	TO->FROM	GRPRAR1-LNX3345.00 - GRPRAR 345KV CKT Z	720	720	0.03579	111.2298	GEN652548 5-FT RANDAL
FDNS	00NR	5	17SP	G15_042	TO->FROM	GRPRAR1-LNX3345.00 - GRPRAR 345KV CKT Z	720	720	0.03579	111.2298	GEN652549 7-FT RANDAL
FDNS	00NR	5	17SP	G15_042	TO->FROM	GRPRAR1-LNX3345.00 - GRPRAR 345KV CKT Z	720	720	0.03579	111.2265	GEN672367 1-MERIDIAN GENERATOR 1 GT1
FDNS	00NR	5	17SP	G15_042	TO->FROM	GRPRAR1-LNX3345.00 - GRPRAR 345KV CKT Z	720	720	0.03579	111.2265	GEN672368 2-MERIDIAN GENERATOR 2 GT2
FDNS	00NR	5	17SP	G15_042	TO->FROM	GRPRAR1-LNX3345.00 - GRPRAR 345KV CKT Z	720	720	0.03579	111.2234	GEN600021 3-ANGUS ANSON2
FDNS	00NR	5	17SP	G15_042	TO->FROM	GRPRAR1-LNX3345.00 - GRPRAR 345KV CKT Z	720	720	0.03605	111.2213	LARAMIE RIVER - STEGALL 345KV CKT 1
FDNS	00NR	5	17SP	G15_042	TO->FROM	GRPRAR1-LNX3345.00 - GRPRAR 345KV CKT Z	720	720	0.03581	111.2198	P12:115:UMZZ:# 232 #: AB IN SD. ABERDEEN A TAP BETWEEN ELLENDALE AND ABERDEEN-SIEBRECHT.
FDNS	00NR	5	17SP	G15_042	TO->FROM	GRPRAR1-LNX3345.00 - GRPRAR 345KV CKT Z	720	720	0.03579	111.2198	GEN600020 2-ANGUS ANSON1
FDNS	00NR	5	17SP	G15_042	TO->FROM	GRPRAR1-LNX3345.00 - GRPRAR 345KV CKT Z	720	720	0.03579	111.2195	GEN652547 3-FT RANDAL
FDNS	00NR	5	17SP	G15_042	TO->FROM	GRPRAR1-LNX3345.00 - GRPRAR 345KV CKT Z	720	720	0.03579	111.2136	GEN672352 3-NIPAWIN GENERATOR 3
FDNS	00NR	5	17SP	G15_042	TO->FROM	GRPRAR1-LNX3345.00 - GRPRAR 345KV CKT Z	720	720	0.03579	111.2135	GEN672350 1-NIPAWIN GENERATOR 1
FDNS	00NR	5	17SP	G15_042	TO->FROM	GRPRAR1-LNX3345.00 - GRPRAR 345KV CKT Z	720	720	0.03579	111.2135	GEN672351 2-NIPAWIN GENERATOR 2
FDNS	00NR	5	17SP	G15_042	TO->FROM	GRPRAR1-LNX3345.00 - GRPRAR 345KV CKT Z	720	720	0.03579	111.2055	GEN590011 2-ERCOT EQUIVALENCE
FDNS	00NR	5	17SP	G15_042	TO->FROM	GRPRAR1-LNX3345.00 - GRPRAR 345KV CKT Z	720	720	0.03579	111.2002	GEN672349 3-CORY COGEN GENERATOR 3 ST
FDNS	00NR	5	17SP	G15_042	TO->FROM	GRPRAR1-LNX3345.00 - GRPRAR 345KV CKT Z	720	720	0.03579	111.1963	GEN620324 3-HOOT LAKE 3 GEN
FDNS	00NR	5	17SP	G15_042	TO->FROM	GRPRAR1-LNX3345.00 - GRPRAR 345KV CKT Z	720	720	0.03579	111.1935	EASTDC - ERCOT EQUIVALENCE 345KV CKT 1
FDNS	00NR	5	17SP	G15_042	TO->FROM	GRPRAR1-LNX3345.00 - GRPRAR 345KV CKT Z	720	720	0.03579	111.1935	ERCOT EQUIVALENCE 345/24.0KV TRANSFORMER CKT 1
FDNS	00NR	5	17SP	G15_042	TO->FROM	GRPRAR1-LNX3345.00 - GRPRAR 345KV CKT Z	720	720	0.03579	111.1916	GEN657964 1-ASH2GEN9 0.5750
FDNS	00NR	5	17SP	G15_042	TO->FROM	GRPRAR1-LNX3345.00 - GRPRAR 345KV CKT Z	720	720	0.03574	111.1855	G15-005T 345.00 - SIBLEY 345KV CKT 1
FDNS	00NR	5	17SP	G15_042	TO->FROM	GRPRAR1-LNX3345.00 - GRPRAR 345KV CKT Z	720	720	0.0373	111.1831	BATTLE CREEK - COUNTY LINE 115KV CKT 1
FDNS	00NR	5	17SP	G15_042	TO->FROM	GRPRAR1-LNX3345.00 - GRPRAR 345KV CKT Z	720	720	0.03579	111.1756	GEN629072 4-LANSING GENERATOR FOR UNITS NO4 EIA CODE 1
FDNS	00NR	5	17SP	G15_042	TO->FROM	GRPRAR1-LNX3345.00 - GRPRAR 345KV CKT Z	720	720	0.03525	111.1738	ALBION - PETERSBURG 115KV CKT 1
FDNS	00NR	5	17SP	G15_042	TO->FROM	GRPRAR1-LNX3345.00 - GRPRAR 345KV CKT Z	720	720	0.03586	111.1694	ANTELOP-LNX3345.00 - BRDLAND-LNX3345.00 345KV CKT 1
FDNS	00NR	5	17SP	G15_042	TO->FROM	GRPRAR1-LNX3345.00 - GRPRAR 345KV CKT Z	720	720	0.03579	111.1684	GEN660003 3-HURON WEST PARK

SOLUTION	GROUP	SCENARIO	SEASON	SOURCE	DIRECTION	MONITORED ELEMENT	RATEA (MVA)	RATEB(MVA)	TDF	TC%LOADING (% MVA)	CONTINGENCY
FDNS	00NR	5	17SP	G15_042	TO->FROM	GRPRAR1-LNX3345.00 - GRPRAR 345KV CKT Z	720	720	0.03579	111.1658	GEN600012 2-BLACK DOG GEN 2
FDNS	00NR	5	17SP	G15_042	TO->FROM	GRPRAR1-LNX3345.00 - GRPRAR 345KV CKT Z	720	720	0.03654	111.1657	AXTELL - POST ROCK 345KV CKT 1
FDNS	00NR	5	17SP	G15_042	TO->FROM	GRPRAR1-LNX3345.00 - GRPRAR 345KV CKT Z	720	720	0.03399	111.1645	COLUMEAST - NW68TH & HOLDREGE 345KV CKT 1
FDNS	00NR	5	17SP	G15_042	TO->FROM	GRPRAR1-LNX3345.00 - GRPRAR 345KV CKT Z	720	720	0.03399	111.1645	COLUMEAST - NW68TH & HOLDREGE 345KV CKT 1
FDNS	00NR	5	17SP	G15_042	TO->FROM	GRPRAR1-LNX3345.00 - GRPRAR 345KV CKT Z	720	720	0.03525	111.1447	PETERSBRG.N7115.00 - PETERSBURG 115KV CKT Z1
FDNS	00NR	5	17SP	G15_042	TO->FROM	GRPRAR1-LNX3345.00 - GRPRAR 345KV CKT Z	720	720	0.03579	111.1282	GEN659290 1-EDGECOL
FDNS	00NR	5	17SP	G15_042	TO->FROM	GRPRAR1-LNX3345.00 - GRPRAR 345KV CKT Z	720	720	0.03579	111.1279	EMERY 161/18.0KV TRANSFORMER CKT 1
FDNS	00NR	5	17SP	G15_042	TO->FROM	GRPRAR1-LNX3345.00 - GRPRAR 345KV CKT Z	720	720	0.03468	111.1251	COOPER - MOORE 345KV CKT 1
FDNS	00NR	5	17SP	G15_042	TO->FROM	GRPRAR1-LNX3345.00 - GRPRAR 345KV CKT Z	720	720	0.03579	111.1227	GEN652410 3-FT PECK
FDNS	00NR	5	17SP	G15_042	TO->FROM	GRPRAR1-LNX3345.00 - GRPRAR 345KV CKT Z	720	720	0.03579	111.1212	GEN672339 16-QE 16G 13.800
FDNS	00NR	5	17SP	G15_042	TO->FROM	GRPRAR1-LNX3345.00 - GRPRAR 345KV CKT Z	720	720	0.03579	111.1212	GEN672342 3-QUEEN ELIZABETH GENERATOR 3
FDNS	00NR	5	17SP	G15_042	TO->FROM	GRPRAR1-LNX3345.00 - GRPRAR 345KV CKT Z	720	720	0.0373	111.1206	ANTELOPE 7115.00 - COUNTY LINE 115KV CKT 1
FDNS	00NR	5	17SP	G15_042	TO->FROM	GRPRAR1-LNX3345.00 - GRPRAR 345KV CKT Z	720	720	0.0386	111.1198	MINGO - RED WILLOW 345KV CKT 1
FDNS	00NR	5	17SP	G15_042	TO->FROM	GRPRAR1-LNX3345.00 - GRPRAR 345KV CKT Z	720	720	0.0386	111.1198	MINGO - RED WILLOW 345KV CKT 1
FDNS	00NR	5	17SP	G15_042	TO->FROM	GRPRAR1-LNX3345.00 - GRPRAR 345KV CKT Z	720	720	0.03394	111.1126	COLUMEAST - SHELL CREEK 345KV CKT 1
FDNS	00NR	5	17SP	G15_042	TO->FROM	GRPRAR1-LNX3345.00 - GRPRAR 345KV CKT Z	720	720	0.03579	111.1086	GEN672393 2-NBECST2G 13.800
FDNS	00NR	5	17SP	G15_042	TO->FROM	GRPRAR1-LNX3345.00 - GRPRAR 345KV CKT Z	720	720	0.03525	111.1064	P12:115:NPPD:1168B:ALBION 7:PETERSBRG.N7:BTB
FDNS	00NR	5	17SP	G15_042	TO->FROM	GRPRAR1-LNX3345.00 - GRPRAR 345KV CKT Z	720	720	0.03579	111.0979	GEN600046 1-MECST
FDNS	00NR	5	17SP	G15_042	TO->FROM	GRPRAR1-LNX3345.00 - GRPRAR 345KV CKT Z	720	720	0.03579	111.0861	GEN300007 1-NEW MADRID UNIT 2
FDNS	00NR	5	17SP	G15_042	TO->FROM	GRPRAR1-LNX3345.00 - GRPRAR 345KV CKT Z	720	720	0.03579	111.0806	GEN300006 1-NEW MADRID UNIT 1
FDNS	00NR	5	17SP	G15_042	TO->FROM	GRPRAR1-LNX3345.00 - GRPRAR 345KV CKT Z	720	720	0.03579	111.0736	GEN600047 1-MECCT1
FDNS	00NR	5	17SP	G15_042	TO->FROM	GRPRAR1-LNX3345.00 - GRPRAR 345KV CKT Z	720	720	0.03579	111.0588	GEN652414 4-FT PECK
FDNS	00NR	5	17SP	G15_042	TO->FROM	GRPRAR1-LNX3345.00 - GRPRAR 345KV CKT Z	720	720	0.03579	111.0588	GEN652415 5-FT PECK
FDNS	00NR	5	17SP	G15_042	TO->FROM	GRPRAR1-LNX3345.00 - GRPRAR 345KV CKT Z	720	720	0.03579	111.0566	GEN600050 1-FEP
FDNS	00NR	5	17SP	G15_042	TO->FROM	GRPRAR1-LNX3345.00 - GRPRAR 345KV CKT Z	720	720	0.03579	111.0417	GEN660001 2-ABERDEEN SIEBRECHT
FDNS	00NR	5	17SP	G15_042	TO->FROM	GRPRAR1-LNX3345.00 - GRPRAR 345KV CKT Z	720	720	0.03579	111.028	LADISH 115/13.2KV TRANSFORMER CKT 1
FDNS	00NR	5	17SP	G15_042	TO->FROM	GRPRAR1-LNX3345.00 - GRPRAR 345KV CKT Z	720	720	0.03579	111.009	GEN652345 W-G07_023IS_2 0.6900
FDNS	00NR	5	17SP	G15_042	TO->FROM	GRPRAR1-LNX3345.00 - GRPRAR 345KV CKT Z	720	720	0.03742	110.9937	G15061_T 345.00 - SETAB 345KV CKT 1
FDNS	00NR	5	17SP	G15_042	TO->FROM	GRPRAR1-LNX3345.00 - GRPRAR 345KV CKT Z	720	720	0.03579	110.9715	GEN 11104 1-J262_GEN 0.6000
FDNS	00NR	5	17SP	G15_042	TO->FROM	GRPRAR1-LNX3345.00 - GRPRAR 345KV CKT Z	720	720	0.03579	110.9715	GEN 11108 1-J263_GEN 0.6000
FDNS	00NR	5	17SP	G15_042	TO->FROM	GRPRAR1-LNX3345.00 - GRPRAR 345KV CKT Z	720	720	0.03579	110.9668	GEN600063 1-COLVILLE GEN 1
FDNS	00NR	5	17SP	G15_042	TO->FROM	GRPRAR1-LNX3345.00 - GRPRAR 345KV CKT Z	720	720	0.03579	110.9668	GEN600064 2-COLVILLE GEN 2
FDNS	00NR	5	17SP	G15_042	TO->FROM	GRPRAR1-LNX3345.00 - GRPRAR 345KV CKT Z	720	720	0.03565	110.9655	BISMARK - L3 HAWDON 230KV CKT 1
FDNS	00NR	5	17SP	G15_042	TO->FROM	GRPRAR1-LNX3345.00 - GRPRAR 345KV CKT Z	720	720	0.03729	110.9631	GERALD GENTLEMAN STATION - RED WILLOW 345KV CKT 1
FDNS	00NR	5	17SP	G15_042	TO->FROM	GRPRAR1-LNX3345.00 - GRPRAR 345KV CKT Z	720	720	0.03579	110.9553	GEN600045 4-ANSON
FDNS	00NR	5	17SP	G15_042	TO->FROM	GRPRAR1-LNX3345.00 - GRPRAR 345KV CKT Z	720	720	0.03579	110.9541	GEN600043 7-BLUE LAKE5
FDNS	00NR	5	17SP	G15_042	TO->FROM	GRPRAR1-LNX3345.00 - GRPRAR 345KV CKT Z	720	720	0.03579	110.9541	GEN600044 8-BLUE LAKE6
FDNS	00NR	5	17SP	G15_042	TO->FROM	GRPRAR1-LNX3345.00 - GRPRAR 345KV CKT Z	720	720	0.03579	110.938	G830_SUB 115.00 - GRE-MCHENRY7115.00 115KV CKT 1
FDNS	00NR	5	17SP	G15_042	TO->FROM	GRPRAR1-LNX3345.00 - GRPRAR 345KV CKT Z	720	720	0.03579	110.9294	G830_SUB 115.00 115/34.5KV TRANSFORMER CKT 1
FDNS	00NR	5	17SP	G15_042	TO->FROM	GRPRAR1-LNX3345.00 - GRPRAR 345KV CKT Z	720	720	0.0359	110.9231	G11_051T 345.00 - TATONGA7 345.00 345KV CKT 1
FDNS	00NR	5	17SP	G15_042	TO->FROM	GRPRAR1-LNX3345.00 - GRPRAR 345KV CKT Z	720	720	0.03579	110.9221	GEN600014 4-BLACK DOG GEN 4
FDNS	00NR	5	17SP	G15_042	TO->FROM	GRPRAR1-LNX3345.00 - GRPRAR 345KV CKT Z	720	720	0.03579	110.9198	GEN600065 7-HIGH BRIDGE
FDNS	00NR	5	17SP	G15_042	TO->FROM	GRPRAR1-LNX3345.00 - GRPRAR 345KV CKT Z	720	720	0.03579	110.9198	GEN600066 8-HIGH BRIDGE
FDNS	00NR	5	17SP	G15_042	TO->FROM	GRPRAR1-LNX3345.00 - GRPRAR 345KV CKT Z	720	720	0.03579	110.9155	GEN600011 5-BLACK DOG GEN 1
FDNS	00NR	5	17SP	G15_042	TO->FROM	GRPRAR1-LNX3345.00 - GRPRAR 345KV CKT Z	720	720	0.03719	110.9117	P12:115:NPPD:1163B:NELIGH 7:NORFK.N7:BTB
FDNS	00NR	5	17SP	G15_042	TO->FROM	GRPRAR1-LNX3345.00 - GRPRAR 345KV CKT Z	720	720	0.03579	110.9037	GEN600070 9-RIVER SIDE
FDNS	00NR	5	17SP	G15_042	TO->FROM	GRPRAR1-LNX3345.00 - GRPRAR 345KV CKT Z	720	720	0.03579	110.9037	GEN600071 10-RIVER SIDE
FDNS	00NR	5	17SP	G15_042	TO->FROM	GRPRAR1-LNX3345.00 - GRPRAR 345KV CKT Z	720	720	0.03579	110.8909	GEN600007 7-RIVERSIDE GEN 7
FDNS	00NR	5	17SP	G15_042	TO->FROM	GRPRAR1-LNX3345.00 - GRPRAR 345KV CKT Z	720	720	0.03579	110.8763	GEN652906 1-G09_006IS_3 0.6900
FDNS	00NR	5	17SP	G15_042	TO->FROM	GRPRAR1-LNX3345.00 - GRPRAR 345KV CKT Z	720	720	0.03579	110.8716	GEN600017 C-LS POWER CT
FDNS	00NR	5	17SP	G15_042	TO->FROM	GRPRAR1-LNX3345.00 - GRPRAR 345KV CKT Z	720	720	0.03532	110.8701	HOSKINS - RAUN 345KV CKT 1
FDNS	00NR	5	17SP	G15_042	TO->FROM	GRPRAR1-LNX3345.00 - GRPRAR 345KV CKT Z	720	720	0.03532	110.8701	HOSKINS - RAUN 345KV CKT 1
FDNS	00NR	5	17SP	G15_042	TO->FROM	GRPRAR1-LNX3345.00 - GRPRAR 345KV CKT Z	720	720	0.03345	110.8692	FT THOMPSON (FT2 KU1A) 345/230/13.8KV TRANSFORMER CKT 1
FDNS	00NR	5	17SP	G15_042	TO->FROM	GRPRAR1-LNX3345.00 - GRPRAR 345KV CKT Z	720	720	0.03344	110.866	FT THOMPSON (FT2 KU1B) 345/230/13.8KV TRANSFORMER CKT 1
FDNS	00NR	5	17SP	G15_042	TO->FROM	GRPRAR1-LNX3345.00 - GRPRAR 345KV CKT Z	720	720	0.03579	110.8633	GEN659273 2-GROTON SYNC COND
FDNS	00NR	5	17SP	G15_042	TO->FROM	GRPRAR1-LNX3345.00 - GRPRAR 345KV CKT Z	720	720	0.03579	110.8633	GEN659294 1-WILTONCOL9
FDNS	00NR	5	17SP	G15_042	TO->FROM	GRPRAR1-LNX3345.00 - GRPRAR 345KV CKT Z	720	720	0.03579	110.8467	LANSING WEST 161/22.0KV TRANSFORMER CKT 1
FDNS	00NR	5	17SP	G15_042	TO->FROM	GRPRAR1-LNX3345.00 - GRPRAR 345KV CKT Z	720	720	0.03579	110.828	GEN659192 6-LYNN
FDNS	00NR	5	17SP	G15_042	TO->FROM	GRPRAR1-LNX3345.00 - GRPRAR 345KV CKT Z	720	720	0.03579	110.827	GEN659162 4-RED WLCK
FDNS	00NR	5	17SP	G15_042	TO->FROM	GRPRAR1-LNX3345.00 - GRPRAR 345KV CKT Z	720	720	0.03579	110.827	GEN659163 5-BLACK WDCK
FDNS	00NR	5	25SP	G15_042	TO->FROM	GRPRAR1-LNX3345.00 - GRPRAR 345KV CKT Z	720	720	0.0321	110.8194	P12:230:UMZB:# 116 #: ST IN SD. WSG-ST-VH
FDNS	00NR	5	17SP	G15_042	TO->FROM	GRPRAR1-LNX3345.00 - GRPRAR 345KV CKT Z	720	720	0.03579	110.8168	GEN681522 3-GENOA 3
FDNS	00NR	5	17SP	G15_042	TO->FROM	GRPRAR1-LNX3345.00 - GRPRAR 345KV CKT Z	720	720	0.03579	110.8079	GEN615021 1-GRE-ER 14G 16.000
FDNS	00NR	5	20SP	G15_042	TO->FROM	GRPRAR1-LNX3345.00 - GRPRAR 345KV CKT Z	720	720	0.03218	110.8007	STORLA - WESSINGTON 230KV CKT 1
FDNS	00NR	5	17SP	G15_042	TO->FROM	GRPRAR1-LNX3345.00 - GRPRAR 345KV CKT Z	720	720	0.03579	110.7945	GEN615052 1-CAMBRIDGE GENERATING STATION
FDNS	00NR	5	17SP	G15_042	TO->FROM	GRPRAR1-LNX3345.00 - GRPRAR 345KV CKT Z	720	720	0.03586	110.7895	BRDLAND-LNX3345.00 - HURON 345KV CKT Z
FDNS	00NR	5	17SP	G15_042	TO->FROM	GRPRAR1-LNX3345.00 - GRPRAR 345KV CKT Z	720	720	0.03579	110.7894	GEN659031 1-G12_014IS_4 0.6900
FDNS	00NR	5	17SP	G15_042	TO->FROM	GRPRAR1-LNX3345.00 - GRPRAR 345KV CKT Z	720	720	0.03586	110.7887	BROADLAND - HURON 230KV CKT 1
FDNS	00NR	5	17SP	G15_042	TO->FROM	GRPRAR1-LNX3345.00 - GRPRAR 345KV CKT Z	720	720	0.03586	110.7884	HURON (BD KU2A) 345/230/13.8KV TRANSFORMER CKT 1
FDNS	00NR	5	17SP	G15_042	TO->FROM	GRPRAR1-LNX3345.00 - GRPRAR 345KV CKT Z	720	720	0.03586	110.7884	HURON (BD KU2A) 345/230/13.8KV TRANSFORMER CKT 1
FDNS	00NR	5	17SP	G15_042	TO->FROM	GRPRAR1-LNX3345.00 - GRPRAR 345KV CKT Z	720	720	0.03579	110.7848	CENTER 230/22.0KV TRANSFORMER CKT 1
FDNS	00NR	5	17SP	G15_042	TO->FROM	GRPRAR1-LNX3345.00 - GRPRAR 345KV CKT Z	720	720	0.03586	110.7831	P12:345:UMZB:# 103 #: BD IN SD. LOSS OF LINE
FDNS	00NR	5	17SP	G15_042	TO->FROM	GRPRAR1-LNX3345.00 - GRPRAR 345KV CKT Z	720	720	0.03579	110.782	GEN 10648 1-G830_GEN 0.6900
FDNS	00NR	5	17SP	G15_042	TO->FROM	GRPRAR1-LNX3345.00 - GRPRAR 345KV CKT Z	720	720	0.03586	110.7819	P12:345:UMZB:# 102 #: AVS BD IN ND. AVS BRD LR
FDNS	00NR	5	17SP	G15_042	TO->FROM	GRPRAR1-LNX3345.00 - GRPRAR 345KV CKT Z	720	720	0.03579	110.781	GEN652907 1-G09_007IS_3 0.6900
FDNS	00NR	5	17SP	G15_042	TO->FROM	GRPRAR1-LNX3345.00 - GRPRAR 345KV CKT Z	720	720	0.03579	110.768	GEN660016 1-B_H WIND 0.7000
FDNS	00NR	5	17SP	G15_042	TO->FROM	GRPRAR1-LNX3345.00 - GRPRAR 345KV CKT Z	720	720	0.03579	110.7123	GEN615015 1-GRE-SPRITWDG13.200
FDNS	00NR	5	17SP	G15_042	TO->FROM	GRPRAR1-LNX3345.00 - GRPRAR 345KV CKT Z	720	720	0.0359	110.7054	MATHWSN7 345.00 - TATONGA7 345.00 345KV CKT 1
FDNS	00NR	5	17SP	G15_042	TO->FROM	GRPRAR1-LNX3345.00 - GRPRAR 345KV CKT Z	720	720	0.03579	110.6508	GEN659353 1-DEERCREK CTG18.000

SOLUTION	GROUP	SCENARIO	SEASON	SOURCE	DIRECTION	MONITORED ELEMENT	RATEA (MVA)	RATEB(MVA)	TDF	TC%LOADING (% MVA)	CONTINGENCY
FDNS	00NR	5	17SP	G15_042	TO->FROM	GRPRAR1-LNX3345.00 - GRPRAR 345KV CKT Z	720	720	0.03579	110.6491	GEN659354 1-DEERCREK STG18.000
FDNS	00NR	5	17SP	G15_042	TO->FROM	GRPRAR1-LNX3345.00 - GRPRAR 345KV CKT Z	720	720	0.03586	110.6302	ANTELOP-LNX3345.00 - ANTELOPE VALLEY 345KV CKT Z
FDNS	00NR	5	17SP	G15_042	TO->FROM	GRPRAR1-LNX3345.00 - GRPRAR 345KV CKT Z	720	720	0.03579	110.5607	GEN600067 9-HIGH BRIDGE
FDNS	00NR	5	17SP	G15_042	TO->FROM	GRPRAR1-LNX3345.00 - GRPRAR 345KV CKT Z	720	720	0.03579	110.5574	GEN672303 3-BOUNDARY DAM GENERATOR 3
FDNS	00NR	5	17SP	G15_042	TO->FROM	GRPRAR1-LNX3345.00 - GRPRAR 345KV CKT Z	720	720	0.03579	110.5574	GEN672305 5-BOUNDARY DAM GENERATOR 5
FDNS	00NR	5	17SP	G15_042	TO->FROM	GRPRAR1-LNX3345.00 - GRPRAR 345KV CKT Z	720	720	0.03579	110.5328	GEN672392 1-NBECGT1G 18.000
FDNS	00NR	5	17SP	G15_042	TO->FROM	GRPRAR1-LNX3345.00 - GRPRAR 345KV CKT Z	720	720	0.03565	110.4891	OAHE - SULLEY BUTTE 230KV CKT 1
FDNS	00NR	5	17SP	G15_042	TO->FROM	GRPRAR1-LNX3345.00 - GRPRAR 345KV CKT Z	720	720	0.03579	110.4686	GEN910006 1-G12_012IS_3 0.6900
FDNS	00NR	5	17SP	G15_042	TO->FROM	GRPRAR1-LNX3345.00 - GRPRAR 345KV CKT Z	720	720	0.03579	110.4611	BISONMP4 230.00 - SQUARE BUTTE 230KV CKT 1
FDNS	00NR	5	17SP	G15_042	TO->FROM	GRPRAR1-LNX3345.00 - GRPRAR 345KV CKT Z	720	720	0.03579	110.4132	GEN662101 1-WESSINGTON190.5750
FDNS	00NR	5	17SP	G15_042	TO->FROM	GRPRAR1-LNX3345.00 - GRPRAR 345KV CKT Z	720	720	0.03738	110.3851	AXTELL - SWEETWATER 345KV CKT 1
FDNS	00NR	5	17SP	G15_042	TO->FROM	GRPRAR1-LNX3345.00 - GRPRAR 345KV CKT Z	720	720	0.03742	110.3459	G15088_T 345.00 - MOORE 345KV CKT 1
FDNS	00NR	5	17SP	G15_042	TO->FROM	GRPRAR1-LNX3345.00 - GRPRAR 345KV CKT Z	720	720	0.03565	110.3348	SULLEY BUTTE - SULLYBT-LNX3230.00 230KV CKT Z
FDNS	00NR	5	17SP	G15_042	TO->FROM	GRPRAR1-LNX3345.00 - GRPRAR 345KV CKT Z	720	720	0.03565	110.3319	SULLYBT-LNX3230.00 - WHITLOK 230KV CKT 1
FDNS	00NR	5	17SP	G15_042	TO->FROM	GRPRAR1-LNX3345.00 - GRPRAR 345KV CKT Z	720	720	0.03565	110.2858	P12:230:UMZB:# 114 #: SB IN SD. SB-WK-GH
FDNS	00NR	5	17SP	G15_042	TO->FROM	GRPRAR1-LNX3345.00 - GRPRAR 345KV CKT Z	720	720	0.03565	110.2858	P12:230:UMZB:# 117 #: WK IN SD. SB-WK-GH
FDNS	00NR	5	17SP	G15_042	TO->FROM	GRPRAR1-LNX3345.00 - GRPRAR 345KV CKT Z	720	720	0.03003	110.2775	HOSKINS - SHELL CREEK 345KV CKT 1
FDNS	00NR	5	17SP	G15_042	TO->FROM	GRPRAR1-LNX3345.00 - GRPRAR 345KV CKT Z	720	720	0.03579	110.2641	SQUARE BUTTE - YNG2 4 230.00 230KV CKT 1
FDNS	00NR	5	17SP	G15_042	TO->FROM	GRPRAR1-LNX3345.00 - GRPRAR 345KV CKT Z	720	720	0.03565	110.235	GLENHAM - WHITLOK 230KV CKT 1
FDNS	00NR	5	17SP	G15_042	TO->FROM	GRPRAR1-LNX3345.00 - GRPRAR 345KV CKT Z	720	720	0.03579	110.2327	HESKETT 115/13.8KV TRANSFORMER CKT 1
FDNS	00NR	5	17SP	G15_042	TO->FROM	GRPRAR1-LNX3345.00 - GRPRAR 345KV CKT Z	720	720	0.03579	110.1927	GEN681542 6-JP MADGETT
FDNS	00NR	5	17SP	G15_042	TO->FROM	GRPRAR1-LNX3345.00 - GRPRAR 345KV CKT Z	720	720	0.03579	110.1429	GEN659289 1-DAYCNTYWND W0.6900
FDNS	00NR	5	17SP	G15_042	TO->FROM	GRPRAR1-LNX3345.00 - GRPRAR 345KV CKT Z	720	720	0.03579	110.1242	GEN659018 1-G14_003IS_3 0.6900
FDNS	00NR	5	17SP	G15_042	TO->FROM	GRPRAR1-LNX3345.00 - GRPRAR 345KV CKT Z	720	720	0.03579	110.1046	GEN563312 1-G15097_3 0.6900
FDNS	00NR	5	17SP	G15_042	TO->FROM	GRPRAR1-LNX3345.00 - GRPRAR 345KV CKT Z	720	720	0.03579	110.1001	GEN652543 3-BIG BEND
FDNS	00NR	5	25SP	G15_042	TO->FROM	GRPRAR1-LNX3345.00 - GRPRAR 345KV CKT Z	720	720	0.03249	110.0579	STORLA - WESSINGTON 230KV CKT 1
FDNS	00NR	5	17SP	G15_042	TO->FROM	GRPRAR1-LNX3345.00 - GRPRAR 345KV CKT Z	720	720	0.03579	109.9591	GEN659194 1-NDPRAIRWND1W0.6900
FDNS	00NR	5	17SP	G15_042	TO->FROM	GRPRAR1-LNX3345.00 - GRPRAR 345KV CKT Z	720	720	0.03579	109.9425	GEN659010 4-G07_027IS_2 0.6900
FDNS	00NR	5	17SP	G15_042	TO->FROM	GRPRAR1-LNX3345.00 - GRPRAR 345KV CKT Z	720	720	0.03579	109.9353	GEN652461 5-GARRISON
FDNS	00NR	5	17SP	G15_042	TO->FROM	GRPRAR1-LNX3345.00 - GRPRAR 345KV CKT Z	720	720	0.03579	109.9352	GEN652460 4-GARRISON
FDNS	00NR	5	17SP	G15_042	TO->FROM	GRPRAR1-LNX3345.00 - GRPRAR 345KV CKT Z	720	720	0.03579	109.9132	GEN563342 1-G15098_3 0.6900
FDNS	00NR	5	17SP	G15_042	TO->FROM	GRPRAR1-LNX3345.00 - GRPRAR 345KV CKT Z	720	720	0.03579	109.8769	GEN652459 3-GARRISON
FDNS	00NR	5	17SP	G15_042	TO->FROM	GRPRAR1-LNX3345.00 - GRPRAR 345KV CKT Z	720	720	0.03579	109.8768	GEN652457 1-GARRISON
FDNS	00NR	5	17SP	G15_042	TO->FROM	GRPRAR1-LNX3345.00 - GRPRAR 345KV CKT Z	720	720	0.03579	109.8768	GEN652458 2-GARRISON
FDNS	00NR	5	20SP	G15_042	TO->FROM	GRPRAR1-LNX3345.00 - GRPRAR 345KV CKT Z	720	720	0.03211	109.8238	HANLON - STORLA 230KV CKT 1
FDNS	00NR	5	17SP	G15_042	TO->FROM	GRPRAR1-LNX3345.00 - GRPRAR 345KV CKT Z	720	720	0.03579	109.823	GEN659403 1-NDSUNFLWR W0.6900
FDNS	00NR	5	17SP	G15_042	TO->FROM	GRPRAR1-LNX3345.00 - GRPRAR 345KV CKT Z	720	720	0.03579	109.7713	GEN652542 1-BIG BEND
FDNS	00NR	5	17SP	G15_042	TO->FROM	GRPRAR1-LNX3345.00 - GRPRAR 345KV CKT Z	720	720	0.03822	109.7493	MCCOOL - MOORE 345KV CKT 1
FDNS	00NR	5	17SP	G15_042	TO->FROM	GRPRAR1-LNX3345.00 - GRPRAR 345KV CKT Z	720	720	0.03579	109.672	GEN652559 1-OAHE
FDNS	00NR	5	17SP	G15_042	TO->FROM	GRPRAR1-LNX3345.00 - GRPRAR 345KV CKT Z	720	720	0.03579	109.6561	CLAY BOSWELL 230/20.9KV TRANSFORMER CKT 1
FDNS	00NR	5	17SP	G15_042	TO->FROM	GRPRAR1-LNX3345.00 - GRPRAR 345KV CKT Z	720	720	0.03579	109.6232	STANTON 230/18.0KV TRANSFORMER CKT 1
FDNS	00NR	5	17SP	G15_042	TO->FROM	GRPRAR1-LNX3345.00 - GRPRAR 345KV CKT Z	720	720	0.03565	109.6214	GLENHAM - L3 HAWDON 230KV CKT 1
FDNS	00NR	5	17SP	G15_042	TO->FROM	GRPRAR1-LNX3345.00 - GRPRAR 345KV CKT Z	720	720	0.03579	109.4059	GEN659411 1-CAMPBLCNTY W0.6900
FDNS	00NR	5	20SP	G15_042	TO->FROM	GRPRAR1-LNX3345.00 - GRPRAR 345KV CKT Z	720	720	0.03399	109.2506	BUFFALO - JAMESTOWN 345KV CKT 1
FDNS	00NR	5	20SP	G15_042	TO->FROM	GRPRAR1-LNX3345.00 - GRPRAR 345KV CKT Z	720	720	0.03372	109.2034	G09_001IST 345.00 - WATERTOWN 345KV CKT 1
FDNS	00NR	5	20SP	G15_042	TO->FROM	GRPRAR1-LNX3345.00 - GRPRAR 345KV CKT Z	720	720	0.03168	109.184	FT THOMPSON - LETCHER 230KV CKT 1
FDNS	00NR	5	20SP	G15_042	TO->FROM	GRPRAR1-LNX3345.00 - GRPRAR 345KV CKT Z	720	720	0.03168	109.184	FT THOMPSON - LETCHER 230KV CKT 1
FDNS	00NR	5	17SP	G15_042	TO->FROM	GRPRAR1-LNX3345.00 - GRPRAR 345KV CKT Z	720	720	0.03579	109.1754	GEN659296 2-SDPRAIRWND1W0.6900
FDNS	00NR	5	17SP	G15_042	TO->FROM	GRPRAR1-LNX3345.00 - GRPRAR 345KV CKT Z	720	720	0.03579	109.1678	GEN672321 1-SHAND GENERATOR 1
FDNS	00NR	5	17SP	G15_042	TO->FROM	GRPRAR1-LNX3345.00 - GRPRAR 345KV CKT Z	720	720	0.03579	109.1578	GEN672310 1-POPLAR RIVER GENERATOR 1
FDNS	00NR	5	17SP	G15_042	TO->FROM	GRPRAR1-LNX3345.00 - GRPRAR 345KV CKT Z	720	720	0.03579	109.1577	GEN672311 2-POPLAR RIVER GENERATOR 2
FDNS	00NR	5	17SP	G15_042	TO->FROM	GRPRAR1-LNX3345.00 - GRPRAR 345KV CKT Z	720	720	0.03579	109.0969	RCDC EAST 4230.00 - RED CEDAR DC 230KV CKT 1
FDNS	00NR	5	17SP	G15_042	TO->FROM	GRPRAR1-LNX3345.00 - GRPRAR 345KV CKT Z	720	720	0.03579	109.0946	GEN600004 2-PRAIRIE ISLAND G2
FDNS	00NR	5	17SP	G15_042	TO->FROM	GRPRAR1-LNX3345.00 - GRPRAR 345KV CKT Z	720	720	0.03579	109.0905	GEN600003 1-PRAIRIE ISLAND G1
FDNS	00NR	5	17SP	G15_042	TO->FROM	GRPRAR1-LNX3345.00 - GRPRAR 345KV CKT Z	720	720	0.03579	109.0764	P12:230:UMZB:# 112 #: NU IN SD. NU-RCDC & DRY CREEK XFMR
FDNS	00NR	5	17SP	G15_042	TO->FROM	GRPRAR1-LNX3345.00 - GRPRAR 345KV CKT Z	720	720	0.03579	109.063	GEN672306 6-BOUNDARY DAM GENERATOR 6
FDNS	00NR	5	25SP	G15_042	TO->FROM	GRPRAR1-LNX3345.00 - GRPRAR 345KV CKT Z	720	720	0.03243	109.0484	HANLON - STORLA 230KV CKT 1
FDNS	00NR	5	17SP	G15_042	TO->FROM	GRPRAR1-LNX3345.00 - GRPRAR 345KV CKT Z	720	720	0.03579	109.0275	GEN615010 1-STANTON4
FDNS	00NR	5	17SP	G15_042	TO->FROM	GRPRAR1-LNX3345.00 - GRPRAR 345KV CKT Z	720	720	0.03579	109.0194	GEN659453 1-GI1414GEN W0.6900
FDNS	00NR	5	17SP	G15_042	TO->FROM	GRPRAR1-LNX3345.00 - GRPRAR 345KV CKT Z	720	720	0.03579	109.0175	GEN563302 1-G15096_3 0.6900
FDNS	00NR	5	17SP	G15_042	TO->FROM	GRPRAR1-LNX3345.00 - GRPRAR 345KV CKT Z	720	720	0.03579	108.9132	GEN659141 1-K10215A
FDNS	00NR	5	17SP	G15_042	TO->FROM	GRPRAR1-LNX3345.00 - GRPRAR 345KV CKT Z	720	720	0.03579	108.8299	GEN659110 1-LELAND OLDS UNIT1
FDNS	00NR	5	17SP	G15_042	TO->FROM	GRPRAR1-LNX3345.00 - GRPRAR 345KV CKT Z	720	720	0.03579	108.8276	GEN652556 2-OAHE
FDNS	00NR	5	17SP	G15_042	TO->FROM	GRPRAR1-LNX3345.00 - GRPRAR 345KV CKT Z	720	720	0.03579	108.8275	GEN652557 4-OAHE
FDNS	00NR	5	17SP	G15_042	TO->FROM	GRPRAR1-LNX3345.00 - GRPRAR 345KV CKT Z	720	720	0.03579	108.8275	GEN652558 6-OAHE
FDNS	00NR	5	25SP	G15_042	TO->FROM	GRPRAR1-LNX3345.00 - GRPRAR 345KV CKT Z	720	720	0.03431	108.7845	BUFFALO - JAMESTOWN 345KV CKT 1
FDNS	00NR	5	17SP	G15_042	TO->FROM	GRPRAR1-LNX3345.00 - GRPRAR 345KV CKT Z	720	720	0.03579	108.7599	GEN657749 1-YOUNG 1 GENERATOR
FDNS	00NR	5	17SP	G15_042	TO->FROM	GRPRAR1-LNX3345.00 - GRPRAR 345KV CKT Z	720	720	0.03579	108.7501	GEN600006 1-AS KING
FDNS	00NR	5	17SP	G15_042	TO->FROM	GRPRAR1-LNX3345.00 - GRPRAR 345KV CKT Z	720	720	0.03579	108.6753	GEN652173 1-G09_001IS_2 0.6900
FDNS	00NR	5	17SP	G15_042	TO->FROM	GRPRAR1-LNX3345.00 - GRPRAR 345KV CKT Z	720	720	0.03807	108.6266	GRAND ISLAND - MCCOOL 345KV CKT 1
FDNS	00NR	5	25SP	G15_042	TO->FROM	GRPRAR1-LNX3345.00 - GRPRAR 345KV CKT Z	720	720	0.032	108.4037	FT THOMPSON - LETCHER 230KV CKT 1
FDNS	00NR	5	25SP	G15_042	TO->FROM	GRPRAR1-LNX3345.00 - GRPRAR 345KV CKT Z	720	720	0.032	108.4037	FT THOMPSON - LETCHER 230KV CKT 1
FDNS	00NR	5	17SP	G15_042	TO->FROM	GRPRAR1-LNX3345.00 - GRPRAR 345KV CKT Z	720	720	0.03579	108.3788	GEN659407 1-ANTELPHILLSW0.6900
FDNS	00NR	5	25SP	G15_042	TO->FROM	GRPRAR1-LNX3345.00 - GRPRAR 345KV CKT Z	720	720	0.03404	108.3775	G09_001IST 345.00 - WATERTOWN 345KV CKT 1
FDNS	00NR	5	17SP	G15_042	TO->FROM	GRPRAR1-LNX3345.00 - GRPRAR 345KV CKT Z	720	720	0.03579	108.1988	GEN600005 1-MONTICELLO
FDNS	00NR	5	20SP	G15_042	TO->FROM	GRPRAR1-LNX3345.00 - GRPRAR 345KV CKT Z	720	720	0.03324	108.0777	WATERTN-LNX3345.00 - WHITE 345KV CKT 1
FDNS	00NR	5	20SP	G15_042	TO->FROM	GRPRAR1-LNX3345.00 - GRPRAR 345KV CKT Z	720	720	0.03195	108.0146	FT RANDAL - G12_009IST 230.00 230KV CKT 1
FDNS	00NR	5	20SP	G15_042	TO->FROM	GRPRAR1-LNX3345.00 - GRPRAR 345KV CKT Z	720	720	0.03324	107.9794	WATERTN-LNX3345.00 - WATERTOWN 345KV CKT Z
FDNS	00NR	5	20SP	G15_042	TO->FROM	GRPRAR1-LNX3345.00 - GRPRAR 345KV CKT Z	720	720	0.03324	107.9704	P12:345:UMZW:# 1747 #: WT2 IN SD. WT2-WHT LINE FAULT

SOLUTION	GROUP	SCENARIO	SEASON	SOURCE	DIRECTION	MONITORED ELEMENT	RATEA (MVA)	RATEB(MVA)	TDF	TC%LOADING (% MVA)	CONTINGENCY
FDNS	00NR	5	20SP	G15_042	TO->FROM	GRPRAR1-LNX3345.00 - GRPRAR 345KV CKT Z	720	720	0.03195	107.9273	FT THOMPSON - LAKE PLATT 230KV CKT 1
FDNS	00NR	5	20SP	G15_042	TO->FROM	GRPRAR1-LNX3345.00 - GRPRAR 345KV CKT Z	720	720	0.03195	107.9273	FT THOMPSON - LAKE PLATT 230KV CKT 1
FDNS	00NR	5	20SP	G15_042	TO->FROM	GRPRAR1-LNX3345.00 - GRPRAR 345KV CKT Z	720	720	0.0319	107.9215	FT RANDAL - FT THOMPSON 230KV CKT 1
FDNS	00NR	5	20SP	G15_042	TO->FROM	GRPRAR1-LNX3345.00 - GRPRAR 345KV CKT Z	720	720	0.0319	107.9215	FT RANDAL - FT THOMPSON 230KV CKT 1
FDNS	00NR	5	20SP	G15_042	TO->FROM	GRPRAR1-LNX3345.00 - GRPRAR 345KV CKT Z	720	720	0.03403	107.8312	GEN336821 1-GRAND GULF UNIT
FDNS	00NR	5	20SP	G15_042	TO->FROM	GRPRAR1-LNX3345.00 - GRPRAR 345KV CKT Z	720	720	0.03403	107.826	GEN635024 4-WALTER SCOTT UNIT 4
FDNS	00NR	5	20SP	G15_042	TO->FROM	GRPRAR1-LNX3345.00 - GRPRAR 345KV CKT Z	720	720	0.03776	107.8097	FT RANDAL - MEADOWGROVE4230.00 230KV CKT 1
FDNS	00NR	5	20SP	G15_042	TO->FROM	GRPRAR1-LNX3345.00 - GRPRAR 345KV CKT Z	720	720	0.03399	107.7766	CENTER - JAMESTOWN 345KV CKT 1
FDNS	00NR	5	20SP	G15_042	TO->FROM	GRPRAR1-LNX3345.00 - GRPRAR 345KV CKT Z	720	720	0.03191	107.7141	SPLIT ROCK - WHITE 345KV CKT 1
FDNS	00NR	5	20SP	G15_042	TO->FROM	GRPRAR1-LNX3345.00 - GRPRAR 345KV CKT Z	720	720	0.03191	107.7141	SPLIT ROCK - WHITE 345KV CKT 1
FDNS	00NR	5	20SP	G15_042	TO->FROM	GRPRAR1-LNX3345.00 - GRPRAR 345KV CKT Z	720	720	0.03195	107.5527	G12_009IST 230.00 - LAKE PLATT 230KV CKT 1
FDNS	00NR	5	17SP	G15_042	TO->FROM	GRPRAR1-LNX3345.00 - GRPRAR 345KV CKT Z	720	720	0.03579	107.5491	GEN600000 1-SHERBURNECNTY G1
FDNS	00NR	5	20SP	G15_042	TO->FROM	GRPRAR1-LNX3345.00 - GRPRAR 345KV CKT Z	720	720	0.03402	107.5152	CHISAGO COUNTY - CHISAGO COUNTY 500KV CKT 1
FDNS	00NR	5	20SP	G15_042	TO->FROM	GRPRAR1-LNX3345.00 - GRPRAR 345KV CKT Z	720	720	0.03402	107.4928	CHISAGO COUNTY - FORBES 500KV CKT 1
FDNS	00NR	5	20SP	G15_042	TO->FROM	GRPRAR1-LNX3345.00 - GRPRAR 345KV CKT Z	720	720	0.034	107.3803	BISON 3 345.00 - BUFFALO 345KV CKT 1
FDNS	00NR	5	20SP	G15_042	TO->FROM	GRPRAR1-LNX3345.00 - GRPRAR 345KV CKT Z	720	720	0.03262	107.3412	LETCHER - SIOUX FALLS 230KV CKT 1
FDNS	00NR	5	20SP	G15_042	TO->FROM	GRPRAR1-LNX3345.00 - GRPRAR 345KV CKT Z	720	720	0.03403	107.3374	GEN635023 3-WALTER SCOTT UNIT 3
FDNS	00NR	5	20SP	G15_042	TO->FROM	GRPRAR1-LNX3345.00 - GRPRAR 345KV CKT Z	720	720	0.03403	107.2828	GEN562714 1-G15_023_4 0.6900
FDNS	00NR	5	20SP	G15_042	TO->FROM	GRPRAR1-LNX3345.00 - GRPRAR 345KV CKT Z	720	720	0.03403	107.2828	GEN562715 1-G15_023_5 0.6900
FDNS	00NR	5	20SP	G15_042	TO->FROM	GRPRAR1-LNX3345.00 - GRPRAR 345KV CKT Z	720	720	0.03403	107.2752	GEN344225 1-1CAL G1 25.000
FDNS	00NR	5	17SP	G15_042	TO->FROM	GRPRAR1-LNX3345.00 - GRPRAR 345KV CKT Z	720	720	0.03579	107.1955	GEN600001 2-SHERBURNE CNTY G2
FDNS	00NR	5	20SP	G15_042	TO->FROM	GRPRAR1-LNX3345.00 - GRPRAR 345KV CKT Z	720	720	0.03403	107.1904	GEN337911 1-ARKANSAS NUCLEAR ONE UNIT #2
FDNS	00NR	5	25SP	G15_042	TO->FROM	GRPRAR1-LNX3345.00 - GRPRAR 345KV CKT Z	720	720	0.03228	107.187	FT RANDAL - G12_009IST 230.00 230KV CKT 1
FDNS	00NR	5	25SP	G15_042	TO->FROM	GRPRAR1-LNX3345.00 - GRPRAR 345KV CKT Z	720	720	0.03356	107.1795	WATERTN-LNX3345.00 - WHITE 345KV CKT 1
FDNS	00NR	5	25SP	G15_042	TO->FROM	GRPRAR1-LNX3345.00 - GRPRAR 345KV CKT Z	720	720	0.0343	107.1639	CENTER - JAMESTOWN 345KV CKT 1
FDNS	00NR	5	20SP	G15_042	TO->FROM	GRPRAR1-LNX3345.00 - GRPRAR 345KV CKT Z	720	720	0.03403	107.1622	GEN336153 1-WATERFORD UNIT#3
FDNS	00NR	5	20SP	G15_042	TO->FROM	GRPRAR1-LNX3345.00 - GRPRAR 345KV CKT Z	720	720	0.03508	107.1499	MISSION - ST FRANCIS 115KV CKT 1
FDNS	00NR	5	20SP	G15_042	TO->FROM	GRPRAR1-LNX3345.00 - GRPRAR 345KV CKT Z	720	720	0.03508	107.1232	P12:115:NPPD:1091:VALENTN7:MISSION7:BTB
FDNS	00NR	5	25SP	G15_042	TO->FROM	GRPRAR1-LNX3345.00 - GRPRAR 345KV CKT Z	720	720	0.03228	107.1151	FT THOMPSON - LAKE PLATT 230KV CKT 1
FDNS	00NR	5	25SP	G15_042	TO->FROM	GRPRAR1-LNX3345.00 - GRPRAR 345KV CKT Z	720	720	0.03228	107.1151	FT THOMPSON - LAKE PLATT 230KV CKT 1
FDNS	00NR	5	25SP	G15_042	TO->FROM	GRPRAR1-LNX3345.00 - GRPRAR 345KV CKT Z	720	720	0.03222	107.1038	FT RANDAL - FT THOMPSON 230KV CKT 1
FDNS	00NR	5	25SP	G15_042	TO->FROM	GRPRAR1-LNX3345.00 - GRPRAR 345KV CKT Z	720	720	0.03222	107.1038	FT RANDAL - FT THOMPSON 230KV CKT 1
FDNS	00NR	5	20SP	G15_042	TO->FROM	GRPRAR1-LNX3345.00 - GRPRAR 345KV CKT Z	720	720	0.03502	107.0889	SIDNEY - SIDNEY1-LNX3345.00 345KV CKT Z
FDNS	00NR	5	25SP	G15_042	TO->FROM	GRPRAR1-LNX3345.00 - GRPRAR 345KV CKT Z	720	720	0.03356	107.0799	WATERTN-LNX3345.00 - WATERTOWN 345KV CKT Z
FDNS	00NR	5	25SP	G15_042	TO->FROM	GRPRAR1-LNX3345.00 - GRPRAR 345KV CKT Z	720	720	0.03356	107.0712	P12:345:UMZW:# 1747 #: WT2 IN SD. WT2-WHT LINE FAULT
FDNS	00NR	5	20SP	G15_042	TO->FROM	GRPRAR1-LNX3345.00 - GRPRAR 345KV CKT Z	720	720	0.03502	107.0693	KEYSTONE - SIDNEY1-LNX3345.00 345KV CKT 1
FDNS	00NR	5	20SP	G15_042	TO->FROM	GRPRAR1-LNX3345.00 - GRPRAR 345KV CKT Z	720	720	0.04186	106.9791	NUNDRWD - WAYSIDE 230KV CKT 1
FDNS	00NR	5	20SP	G15_042	TO->FROM	GRPRAR1-LNX3345.00 - GRPRAR 345KV CKT Z	720	720	0.03508	106.9762	HARMONY - ST FRANCIS 115KV CKT 1
FDNS	00NR	5	20SP	G15_042	TO->FROM	GRPRAR1-LNX3345.00 - GRPRAR 345KV CKT Z	720	720	0.03372	106.9559	G09_001IST 345.00 - GROTON 345KV CKT 1
FDNS	00NR	5	25SP	G15_042	TO->FROM	GRPRAR1-LNX3345.00 - GRPRAR 345KV CKT Z	720	720	0.03812	106.9297	FT RANDAL - MEADOWGROVE4230.00 230KV CKT 1
FDNS	00NR	5	25SP	G15_042	TO->FROM	GRPRAR1-LNX3345.00 - GRPRAR 345KV CKT Z	720	720	0.03435	106.8697	GEN635024 4-WALTER SCOTT UNIT 4
FDNS	00NR	5	20SP	G15_042	TO->FROM	GRPRAR1-LNX3345.00 - GRPRAR 345KV CKT Z	720	720	0.03232	106.8586	FT RANDAL - SIOUX CITY 230KV CKT 1
FDNS	00NR	5	20SP	G15_042	TO->FROM	GRPRAR1-LNX3345.00 - GRPRAR 345KV CKT Z	720	720	0.03403	106.8283	GEN640010 1-GERALD GENTLEMAN STATION UNIT 1
FDNS	00NR	5	20SP	G15_042	TO->FROM	GRPRAR1-LNX3345.00 - GRPRAR 345KV CKT Z	720	720	0.03403	106.8172	GEN335831 1-RIVERBEND UNIT#1
FDNS	00NR	5	25SP	G15_042	TO->FROM	GRPRAR1-LNX3345.00 - GRPRAR 345KV CKT Z	720	720	0.03435	106.7943	GEN336821 1-GRAND GULF UNIT
FDNS	00NR	5	25SP	G15_042	TO->FROM	GRPRAR1-LNX3345.00 - GRPRAR 345KV CKT Z	720	720	0.03432	106.7856	BISON 3 345.00 - BUFFALO 345KV CKT 1
FDNS	00NR	5	25SP	G15_042	TO->FROM	GRPRAR1-LNX3345.00 - GRPRAR 345KV CKT Z	720	720	0.03434	106.7737	CHISAGO COUNTY - CHISAGO COUNTY 500KV CKT 1
FDNS	00NR	5	20SP	G15_042	TO->FROM	GRPRAR1-LNX3345.00 - GRPRAR 345KV CKT Z	720	720	0.03403	106.7414	GEN640011 2-GERALD GENTLEMAN STATION UNIT 2
FDNS	00NR	5	25SP	G15_042	TO->FROM	GRPRAR1-LNX3345.00 - GRPRAR 345KV CKT Z	720	720	0.03435	106.7313	GEN640010 1-GERALD GENTLEMAN STATION UNIT 1
FDNS	00NR	5	25SP	G15_042	TO->FROM	GRPRAR1-LNX3345.00 - GRPRAR 345KV CKT Z	720	720	0.03224	106.7265	SPLIT ROCK - WHITE 345KV CKT 1
FDNS	00NR	5	25SP	G15_042	TO->FROM	GRPRAR1-LNX3345.00 - GRPRAR 345KV CKT Z	720	720	0.03224	106.7265	SPLIT ROCK - WHITE 345KV CKT 1
FDNS	00NR	5	25SP	G15_042	TO->FROM	GRPRAR1-LNX3345.00 - GRPRAR 345KV CKT Z	720	720	0.03228	106.7246	G12_009IST 230.00 - LAKE PLATT 230KV CKT 1
FDNS	00NR	5	20SP	G15_042	TO->FROM	GRPRAR1-LNX3345.00 - GRPRAR 345KV CKT Z	720	720	0.03403	106.7224	GEN337910 1-ARKANSAS NUCLEAR ONE UNIT #1
FDNS	00NR	5	25SP	G15_042	TO->FROM	GRPRAR1-LNX3345.00 - GRPRAR 345KV CKT Z	720	720	0.03434	106.7224	CHISAGO COUNTY - FORBES 500KV CKT 1
FDNS	00NR	5	17SP	G15_042	TO->FROM	GRPRAR1-LNX3345.00 - GRPRAR 345KV CKT Z	720	720	0.03579	106.716	GEN620315 1-BIG STONE GEN
FDNS	00NR	5	20SP	G15_042	TO->FROM	GRPRAR1-LNX3345.00 - GRPRAR 345KV CKT Z	720	720	0.03508	106.7158	HARMONY - VALENTINE 115KV CKT 1
FDNS	00NR	5	17SP	G15_042	TO->FROM	GRPRAR1-LNX3345.00 - GRPRAR 345KV CKT Z	720	720	0.03579	106.6876	GEN661015 1-COYOTE
FDNS	00NR	5	20SP	G15_042	TO->FROM	GRPRAR1-LNX3345.00 - GRPRAR 345KV CKT Z	720	720	0.03563	106.605	FT RANDAL - SPENCER 115KV CKT 1
FDNS	00NR	5	20SP	G15_042	TO->FROM	GRPRAR1-LNX3345.00 - GRPRAR 345KV CKT Z	720	720	0.03563	106.5708	P12:115:NPPD:WAPA6:FTRANDL7:ONEILL 7:BTB
FDNS	00NR	5	20SP	G15_042	TO->FROM	GRPRAR1-LNX3345.00 - GRPRAR 345KV CKT Z	720	720	0.03563	106.5708	P12:115:UMZB:# 115 #: SE IN NE. FR-SE-ON
FDNS	00NR	5	25SP	G15_042	TO->FROM	GRPRAR1-LNX3345.00 - GRPRAR 345KV CKT Z	720	720	0.03435	106.5327	GEN562714 1-G15_023_4 0.6900
FDNS	00NR	5	25SP	G15_042	TO->FROM	GRPRAR1-LNX3345.00 - GRPRAR 345KV CKT Z	720	720	0.03435	106.5327	GEN562715 1-G15_023_5 0.6900
FDNS	00NR	5	25SP	G15_042	TO->FROM	GRPRAR1-LNX3345.00 - GRPRAR 345KV CKT Z	720	720	0.03294	106.5291	LETCHER - SIOUX FALLS 230KV CKT 1
FDNS	00NR	5	17SP	G15_042	TO->FROM	GRPRAR1-LNX3345.00 - GRPRAR 345KV CKT Z	720	720	0.03579	106.5051	GEN600002 3-SHERBURNE CNTY G3
FDNS	00NR	5	20SP	G15_042	TO->FROM	GRPRAR1-LNX3345.00 - GRPRAR 345KV CKT Z	720	720	0.03563	106.4515	ONEILL - SPENCER 115KV CKT 1
FDNS	00NR	5	25SP	G15_042	TO->FROM	GRPRAR1-LNX3345.00 - GRPRAR 345KV CKT Z	720	720	0.0354	106.4476	MISSION - ST FRANCIS 115KV CKT 1
FDNS	00NR	5	25SP	G15_042	TO->FROM	GRPRAR1-LNX3345.00 - GRPRAR 345KV CKT Z	720	720	0.03435	106.4311	GEN640011 2-GERALD GENTLEMAN STATION UNIT 2
FDNS	00NR	5	20SP	G15_042	TO->FROM	GRPRAR1-LNX3345.00 - GRPRAR 345KV CKT Z	720	720	0.03373	106.4243	GROTON-LNX3 345.00 - LELAND1-LNX3345.00 345KV CKT 1
FDNS	00NR	5	25SP	G15_042	TO->FROM	GRPRAR1-LNX3345.00 - GRPRAR 345KV CKT Z	720	720	0.03435	106.4059	GEN635023 3-WALTER SCOTT UNIT 3
FDNS	00NR	5	25SP	G15_042	TO->FROM	GRPRAR1-LNX3345.00 - GRPRAR 345KV CKT Z	720	720	0.03435	106.4	GEN337911 1-ARKANSAS NUCLEAR ONE UNIT #2
FDNS	00NR	5	20SP	G15_042	TO->FROM	GRPRAR1-LNX3345.00 - GRPRAR 345KV CKT Z	720	720	0.03138	106.3915	FT RANDAL - UTICA JCT 230KV CKT 1
FDNS	00NR	5	20SP	G15_042	TO->FROM	GRPRAR1-LNX3345.00 - GRPRAR 345KV CKT Z	720	720	0.03373	106.3839	GROTON - GROTON-LNX3 345.00 345KV CKT Z
FDNS	00NR	5	20SP	G15_042	TO->FROM	GRPRAR1-LNX3345.00 - GRPRAR 345KV CKT Z	720	720	0.03373	106.3756	LELAND OLDS - LELAND1-LNX3345.00 345KV CKT Z
FDNS	00NR	5	20SP	G15_042	TO->FROM	GRPRAR1-LNX3345.00 - GRPRAR 345KV CKT Z	720	720	0.03373	106.3705	P12:345:UMZB:# 109 #: LOS GRT IN ND. LOS GRT
FDNS	00NR	5	20SP	G15_042	TO->FROM	GRPRAR1-LNX3345.00 - GRPRAR 345KV CKT Z	720	720	0.0331	106.3648	HANLON - SIOUX FALLS 230KV CKT 1
FDNS	00NR	5	25SP	G15_042	TO->FROM	GRPRAR1-LNX3345.00 - GRPRAR 345KV CKT Z	720	720	0.03533	106.3443	KEYSTONE - SIDNEY1-LNX3345.00 345KV CKT 1
FDNS	00NR	5	25SP	G15_042	TO->FROM	GRPRAR1-LNX3345.00 - GRPRAR 345KV CKT Z	720	720	0.03533	106.3405	SIDNEY - SIDNEY1-LNX3345.00 345KV CKT Z
FDNS	00NR	5	25SP	G15_042	TO->FROM	GRPRAR1-LNX3345.00 - GRPRAR 345KV CKT Z	720	720	0.03435	106.2625	GEN344225 1-1CAL G1 25.000
FDNS	00NR	5	25SP	G15_042	TO->FROM	GRPRAR1-LNX3345.00 - GRPRAR 345KV CKT Z	720	720	0.0354	106.2572	HARMONY - ST FRANCIS 115KV CKT 1

SOLUTION	GROUP	SCENARIO	SEASON	SOURCE	DIRECTION	MONITORED ELEMENT	RATEA (MVA)	RATEB(MVA)	TDF	TC%LOADING (% MVA)	CONTINGENCY
FDNS	00NR	5	20SP	G15_042	TO->FROM	GRPRAR1-LNX3345.00 - GRPRAR 345KV CKT Z	720	720	0.06142	106.2567	DIXONCO 230.00 - HOSKINS 230KV CKT 1
FDNS	00NR	5	20SP	G15_042	TO->FROM	GRPRAR1-LNX3345.00 - GRPRAR 345KV CKT Z	720	720	0.03433	106.2561	GERALD GENTLEMAN STATION - KEYSTONE 345KV CKT 1
FDNS	00NR	5	20SP	G15_042	TO->FROM	GRPRAR1-LNX3345.00 - GRPRAR 345KV CKT Z	720	720	0.03514	106.2409	LAKEFIELD 3 - NOBLES 345KV CKT 1
FDNS	00NR	5	17SP	G15_042	TO->FROM	GRPRAR1-LNX3345.00 - GRPRAR 345KV CKT Z	720	720	0.03579	106.2382	GEN657748 1-YOUNG 2 GENERATOR
FDNS	00NR	5	20SP	G15_042	TO->FROM	GRPRAR1-LNX3345.00 - GRPRAR 345KV CKT Z	720	720	0.03403	106.2334	GEN337653 1-WHITE BLUFF UNIT #2
FDNS	00NR	5	25SP	G15_042	TO->FROM	GRPRAR1-LNX3345.00 - GRPRAR 345KV CKT Z	720	720	0.03404	106.2118	G09_001IST 345.00 - GROTON 345KV CKT 1
FDNS	00NR	5	20SP	G15_042	TO->FROM	GRPRAR1-LNX3345.00 - GRPRAR 345KV CKT Z	720	720	0.03403	106.1807	GEN337652 1-WHITE BLUFF UNIT #1
FDNS	00NR	5	20SP	G15_042	TO->FROM	GRPRAR1-LNX3345.00 - GRPRAR 345KV CKT Z	720	720	0.03289	106.1768	PAHOJA - SIOUX FALLS 230KV CKT 1
FDNS	00NR	5	25SP	G15_042	TO->FROM	GRPRAR1-LNX3345.00 - GRPRAR 345KV CKT Z	720	720	0.03435	106.1715	GEN336153 1-WATERFORD UNIT#3
FDNS	00NR	5	20SP	G15_042	TO->FROM	GRPRAR1-LNX3345.00 - GRPRAR 345KV CKT Z	720	720	0.03546	106.1582	SIDNEY - STEGALL 345KV CKT 1
FDNS	00NR	5	20SP	G15_042	TO->FROM	GRPRAR1-LNX3345.00 - GRPRAR 345KV CKT Z	720	720	0.03508	106.1542	AINSWORTH - VALENTINE 115KV CKT 1
FDNS	00NR	5	20SP	G15_042	TO->FROM	GRPRAR1-LNX3345.00 - GRPRAR 345KV CKT Z	720	720	0.03427	106.1524	ARROWHEAD - ARROWHEAD 230 230KV CKT 1
FDNS	00NR	5	20SP	G15_042	TO->FROM	GRPRAR1-LNX3345.00 - GRPRAR 345KV CKT Z	720	720	0.03862	106.1469	RAUN - SUB 3451 FT CAL 345KV CKT 1
FDNS	00NR	5	20SP	G15_042	TO->FROM	GRPRAR1-LNX3345.00 - GRPRAR 345KV CKT Z	720	720	0.03862	106.1469	RAUN - SUB 3451 FT CAL 345KV CKT 1
FDNS	00NR	5	25SP	G15_042	TO->FROM	GRPRAR1-LNX3345.00 - GRPRAR 345KV CKT Z	720	720	0.04214	106.1393	NUNDRWD - WAYSIDE 230KV CKT 1
FDNS	00NR	5	20SP	G15_042	TO->FROM	GRPRAR1-LNX3345.00 - GRPRAR 345KV CKT Z	720	720	0.03403	106.1258	GEN338146 1-INDEPENDENCE UNIT #2
FDNS	00NR	5	20SP	G15_042	TO->FROM	GRPRAR1-LNX3345.00 - GRPRAR 345KV CKT Z	720	720	0.03403	106.1224	GEN338143 1-INDEPENDENCE UNIT #1
FDNS	00NR	5	20SP	G15_042	TO->FROM	GRPRAR1-LNX3345.00 - GRPRAR 345KV CKT Z	720	720	0.03403	106.0994	GEN501801 1-DOLET HILLS UNIT1
FDNS	00NR	5	20SP	G15_042	TO->FROM	GRPRAR1-LNX3345.00 - GRPRAR 345KV CKT Z	720	720	0.03441	106.0654	BROOKING COUNTY - LYON COUNTY 345KV CKT 1
FDNS	00NR	5	20SP	G15_042	TO->FROM	GRPRAR1-LNX3345.00 - GRPRAR 345KV CKT Z	720	720	0.03406	106.058	ALEXMRES3 345.00 - BISON 3 345.00 345KV CKT 1
FDNS	00NR	5	17SP	G15_042	TO->FROM	GRPRAR1-LNX3345.00 - GRPRAR 345KV CKT Z	720	720	0.03579	106.0255	GEN562872 1-G15046_3 0.6900
FDNS	00NR	5	25SP	G15_042	TO->FROM	GRPRAR1-LNX3345.00 - GRPRAR 345KV CKT Z	720	720	0.03264	106.0043	FT RANDAL - SIOUX CITY 230KV CKT 1
FDNS	00NR	5	20SP	G15_042	TO->FROM	GRPRAR1-LNX3345.00 - GRPRAR 345KV CKT Z	720	720	0.03431	105.988	AS KING - EAU CLAIRE 345KV CKT 1
FDNS	00NR	5	20SP	G15_042	TO->FROM	GRPRAR1-LNX3345.00 - GRPRAR 345KV CKT Z	720	720	0.03403	105.961	GEN336252 1-NINEMILE POINT UNIT#5
FDNS	00NR	5	20SP	G15_042	TO->FROM	GRPRAR1-LNX3345.00 - GRPRAR 345KV CKT Z	720	720	0.03377	105.9503	CARPENTER - HURON 230KV CKT 1
FDNS	00NR	5	25SP	G15_042	TO->FROM	GRPRAR1-LNX3345.00 - GRPRAR 345KV CKT Z	720	720	0.03594	105.9186	FT RANDAL - SPENCER 115KV CKT 1
FDNS	00NR	5	25SP	G15_042	TO->FROM	GRPRAR1-LNX3345.00 - GRPRAR 345KV CKT Z	720	720	0.03594	105.8882	P12:115:NPPD:WAPA6:FTRANDL7:ONEILL 7:BTB
FDNS	00NR	5	25SP	G15_042	TO->FROM	GRPRAR1-LNX3345.00 - GRPRAR 345KV CKT Z	720	720	0.03594	105.8882	P12:115:UMZB:# 115 #: SE IN NE. FR-SE-ON
FDNS	00NR	5	20SP	G15_042	TO->FROM	GRPRAR1-LNX3345.00 - GRPRAR 345KV CKT Z	720	720	0.03403	105.8808	GEN336251 1-NINEMILE POINT UNIT#4
FDNS	00NR	5	20SP	G15_042	TO->FROM	GRPRAR1-LNX3345.00 - GRPRAR 345KV CKT Z	720	720	0.03403	105.8626	GEN336831 1-BAXTER WILSON SES
FDNS	00NR	5	20SP	G15_042	TO->FROM	GRPRAR1-LNX3345.00 - GRPRAR 345KV CKT Z	720	720	0.03024	105.8534	RASMUSN - UTICA JCT 230KV CKT 1
FDNS	00NR	5	25SP	G15_042	TO->FROM	GRPRAR1-LNX3345.00 - GRPRAR 345KV CKT Z	720	720	0.03435	105.8512	GEN335831 1-RIVERBEND UNIT#1
FDNS	00NR	5	20SP	G15_042	TO->FROM	GRPRAR1-LNX3345.00 - GRPRAR 345KV CKT Z	720	720	0.03377	105.8447	HURON - WATERTOWN 230KV CKT 2
FDNS	00NR	5	20SP	G15_042	TO->FROM	GRPRAR1-LNX3345.00 - GRPRAR 345KV CKT Z	720	720	0.03377	105.8447	HURON - WATERTOWN 230KV CKT 2
FDNS	00NR	5	20SP	G15_042	TO->FROM	GRPRAR1-LNX3345.00 - GRPRAR 345KV CKT Z	720	720	0.03403	105.8096	GEN337041 1-GERALD ANDRUS
FDNS	00NR	5	20SP	G15_042	TO->FROM	GRPRAR1-LNX3345.00 - GRPRAR 345KV CKT Z	720	720	0.03377	105.8037	CARPENTER - WATERTOWN 230KV CKT 1
FDNS	00NR	5	20SP	G15_042	TO->FROM	GRPRAR1-LNX3345.00 - GRPRAR 345KV CKT Z	720	720	0.03377	105.8037	CARPENTER - WATERTOWN 230KV CKT 1
FDNS	00NR	5	20SP	G15_042	TO->FROM	GRPRAR1-LNX3345.00 - GRPRAR 345KV CKT Z	720	720	0.03403	105.7772	GEN501813 1-RODEMACHER UNIT 3
FDNS	00NR	5	20SP	G15_042	TO->FROM	GRPRAR1-LNX3345.00 - GRPRAR 345KV CKT Z	720	720	0.03463	105.7764	HAZLETON - MITCHLCO3 345.00 345KV CKT 1
FDNS	00NR	5	25SP	G15_042	TO->FROM	GRPRAR1-LNX3345.00 - GRPRAR 345KV CKT Z	720	720	0.03594	105.7656	ONEILL - SPENCER 115KV CKT 1
FDNS	00NR	5	20SP	G15_042	TO->FROM	GRPRAR1-LNX3345.00 - GRPRAR 345KV CKT Z	720	720	0.03289	105.7533	EAGLE 4 230.00 - PAHOJA 230KV CKT 1
FDNS	00NR	5	20SP	G15_042	TO->FROM	GRPRAR1-LNX3345.00 - GRPRAR 345KV CKT Z	720	720	0.0343	105.7111	G15094_T 345.00 - SIDNEY2-LNX3345.00 345KV CKT 1
FDNS	00NR	5	20SP	G15_042	TO->FROM	GRPRAR1-LNX3345.00 - GRPRAR 345KV CKT Z	720	720	0.03403	105.7103	CNTSHNT3 345.00 - PRAIRIE3 345.00 345KV CKT 1
FDNS	00NR	5	20SP	G15_042	TO->FROM	GRPRAR1-LNX3345.00 - GRPRAR 345KV CKT Z	720	720	0.0343	105.7053	SIDNEY - SIDNEY2-LNX3345.00 345KV CKT Z
FDNS	00NR	5	25SP	G15_042	TO->FROM	GRPRAR1-LNX3345.00 - GRPRAR 345KV CKT Z	720	720	0.03405	105.7044	GROTON-LNX3 345.00 - LELAND1-LNX3345.00 345KV CKT 1
FDNS	00NR	5	17SP	G15_042	TO->FROM	GRPRAR1-LNX3345.00 - GRPRAR 345KV CKT Z	720	720	0.03579	105.6897	GEN659111 2-LELAND OLDS UNIT2
FDNS	00NR	5	25SP	G15_042	TO->FROM	GRPRAR1-LNX3345.00 - GRPRAR 345KV CKT Z	720	720	0.03405	105.6627	GROTON - GROTON-LNX3 345.00 345KV CKT Z
FDNS	00NR	5	25SP	G15_042	TO->FROM	GRPRAR1-LNX3345.00 - GRPRAR 345KV CKT Z	720	720	0.03405	105.6609	P12:345:UMZB:# 109 #: LOS GRT IN ND. LOS GRT
FDNS	00NR	5	25SP	G15_042	TO->FROM	GRPRAR1-LNX3345.00 - GRPRAR 345KV CKT Z	720	720	0.03405	105.6545	LELAND OLDS - LELAND1-LNX3345.00 345KV CKT Z
FDNS	00NR	5	25SP	G15_042	TO->FROM	GRPRAR1-LNX3345.00 - GRPRAR 345KV CKT Z	720	720	0.03169	105.6251	FT RANDAL - UTICA JCT 230KV CKT 1
FDNS	00NR	5	20SP	G15_042	TO->FROM	GRPRAR1-LNX3345.00 - GRPRAR 345KV CKT Z	720	720	0.03403	105.6214	GEN635214 4-NEAL UNIT 4
FDNS	00NR	5	20SP	G15_042	TO->FROM	GRPRAR1-LNX3345.00 - GRPRAR 345KV CKT Z	720	720	0.03403	105.6087	GEN335206 1-NELSON UNIT 6
FDNS	00NR	5	20SP	G15_042	TO->FROM	GRPRAR1-LNX3345.00 - GRPRAR 345KV CKT Z	720	720	0.03403	105.5733	GEN344897 4-1LAB G4 20.000
FDNS	00NR	5	20SP	G15_042	TO->FROM	GRPRAR1-LNX3345.00 - GRPRAR 345KV CKT Z	720	720	0.03403	105.5719	GEN344894 1-1LAB G1 20.000
FDNS	00NR	5	20SP	G15_042	TO->FROM	GRPRAR1-LNX3345.00 - GRPRAR 345KV CKT Z	720	720	0.03403	105.5719	GEN344895 2-1LAB G2 20.000
FDNS	00NR	5	20SP	G15_042	TO->FROM	GRPRAR1-LNX3345.00 - GRPRAR 345KV CKT Z	720	720	0.03403	105.5718	GEN344896 3-1LAB G3 20.000
FDNS	00NR	5	20SP	G15_042	TO->FROM	GRPRAR1-LNX3345.00 - GRPRAR 345KV CKT Z	720	720	0.03403	105.5653	GEN334440 1-SABINE UNIT 4
FDNS	00NR	5	20SP	G15_042	TO->FROM	GRPRAR1-LNX3345.00 - GRPRAR 345KV CKT Z	720	720	0.03436	105.5428	ARPIN B4 345.00 - EAU CLAIRE 345KV CKT 1
FDNS	00NR	5	20SP	G15_042	TO->FROM	GRPRAR1-LNX3345.00 - GRPRAR 345KV CKT Z	720	720	0.03403	105.5192	GEN345671 2-1RUSH G2 18.000
FDNS	00NR	5	25SP	G15_042	TO->FROM	GRPRAR1-LNX3345.00 - GRPRAR 345KV CKT Z	720	720	0.03342	105.5176	HANLON - SIOUX FALLS 230KV CKT 1
FDNS	00NR	5	20SP	G15_042	TO->FROM	GRPRAR1-LNX3345.00 - GRPRAR 345KV CKT Z	720	720	0.03403	105.5149	GEN345670 1-1RUSH G1 18.000
FDNS	00NR	5	25SP	G15_042	TO->FROM	GRPRAR1-LNX3345.00 - GRPRAR 345KV CKT Z	720	720	0.06174	105.5047	DIXONCO 230.00 - HOSKINS 230KV CKT 1
FDNS	00NR	5	25SP	G15_042	TO->FROM	GRPRAR1-LNX3345.00 - GRPRAR 345KV CKT Z	720	720	0.03435	105.5	GEN338146 1-INDEPENDENCE UNIT #2
FDNS	00NR	5	25SP	G15_042	TO->FROM	GRPRAR1-LNX3345.00 - GRPRAR 345KV CKT Z	720	720	0.03545	105.4981	LAKEFIELD 3 - NOBLES 345KV CKT 1
FDNS	00NR	5	25SP	G15_042	TO->FROM	GRPRAR1-LNX3345.00 - GRPRAR 345KV CKT Z	720	720	0.03465	105.481	GERALD GENTLEMAN STATION - KEYSTONE 345KV CKT 1
FDNS	00NR	5	20SP	G15_042	TO->FROM	GRPRAR1-LNX3345.00 - GRPRAR 345KV CKT Z	720	720	0.03403	105.4742	GEN501812 1-RODEMACHER UNIT 2
FDNS	00NR	5	20SP	G15_042	TO->FROM	GRPRAR1-LNX3345.00 - GRPRAR 345KV CKT Z	720	720	0.03403	105.4416	GEN336191 1-LITTLE GYPSY UNIT#3
FDNS	00NR	5	20SP	G15_042	TO->FROM	GRPRAR1-LNX3345.00 - GRPRAR 345KV CKT Z	720	720	0.03218	105.4263	FT THOMPSON - WESSINGTON 230KV CKT 1
FDNS	00NR	5	20SP	G15_042	TO->FROM	GRPRAR1-LNX3345.00 - GRPRAR 345KV CKT Z	720	720	0.03218	105.4263	FT THOMPSON - WESSINGTON 230KV CKT 1
FDNS	00NR	5	20SP	G15_042	TO->FROM	GRPRAR1-LNX3345.00 - GRPRAR 345KV CKT Z	720	720	0.03403	105.4189	GEN338388 1-1PLUM PT U1 23.000
FDNS	00NR	5	20SP	G15_042	TO->FROM	GRPRAR1-LNX3345.00 - GRPRAR 345KV CKT Z	720	720	0.03403	105.4179	GEN629075 1-OTTUMWA GENERATOR FOR OTTUMWA UNIT NO 1
FDNS	00NR	5	25SP	G15_042	TO->FROM	GRPRAR1-LNX3345.00 - GRPRAR 345KV CKT Z	720	720	0.03435	105.4	GEN338143 1-INDEPENDENCE UNIT #1
FDNS	00NR	5	25SP	G15_042	TO->FROM	GRPRAR1-LNX3345.00 - GRPRAR 345KV CKT Z	720	720	0.0354	105.3796	AINSWORTH - VALENTINE 115KV CKT 1
FDNS	00NR	5	20SP	G15_042	TO->FROM	GRPRAR1-LNX3345.00 - GRPRAR 345KV CKT Z	720	720	0.03403	105.3755	GEN335614 1-WILLOW GLENN UNIT#4
FDNS	00NR	5	25SP	G15_042	TO->FROM	GRPRAR1-LNX3345.00 - GRPRAR 345KV CKT Z	720	720	0.03577	105.375	SIDNEY - STEGALL 345KV CKT 1
FDNS	00NR	5	25SP	G15_042	TO->FROM	GRPRAR1-LNX3345.00 - GRPRAR 345KV CKT Z	720	720	0.03473	105.3726	BROOKING COUNTY - LYON COUNTY 345KV CKT 1
FDNS	00NR	5	25SP	G15_042	TO->FROM	GRPRAR1-LNX3345.00 - GRPRAR 345KV CKT Z	720	720	0.03321	105.3652	PAHOJA - SIOUX FALLS 230KV CKT 1
FDNS	00NR	5	20SP	G15_042	TO->FROM	GRPRAR1-LNX3345.00 - GRPRAR 345KV CKT Z	720	720	0.03403	105.3638	GEN336801 1-BAXTER WILSON UNIT #1
FDNS	00NR	5	20SP	G15_042	TO->FROM	GRPRAR1-LNX3345.00 - GRPRAR 345KV CKT Z	720	720	0.03403	105.3604	GEN336464 1-MICHOUD UNIT #3

SOLUTION	GROUP	SCENARIO	SEASON	SOURCE	DIRECTION	MONITORED ELEMENT	RATEA (MVA)	RATEB(MVA)	TDF	TC%LOADING (% MVA)	CONTINGENCY
FDNS	00NR	5	25SP	G15_042	TO->FROM	GRPRAR1-LNX3345.00 - GRPRAR 345KV CKT Z	720	720	0.03893	105.3554	RAUN - SUB 3451 FT CAL 345KV CKT 1
FDNS	00NR	5	25SP	G15_042	TO->FROM	GRPRAR1-LNX3345.00 - GRPRAR 345KV CKT Z	720	720	0.03893	105.3554	RAUN - SUB 3451 FT CAL 345KV CKT 1
FDNS	00NR	5	20SP	G15_042	TO->FROM	GRPRAR1-LNX3345.00 - GRPRAR 345KV CKT Z	720	720	0.03403	105.3494	GEN335204 1-NELSON UNIT 4
FDNS	00NR	5	20SP	G15_042	TO->FROM	GRPRAR1-LNX3345.00 - GRPRAR 345KV CKT Z	720	720	0.03403	105.3397	GEN334441 1-SABINE UNIT 5
FDNS	00NR	5	20SP	G15_042	TO->FROM	GRPRAR1-LNX3345.00 - GRPRAR 345KV CKT Z	720	720	0.03566	105.3219	GRIMES - LEHIGH 345KV CKT 1
FDNS	00NR	5	25SP	G15_042	TO->FROM	GRPRAR1-LNX3345.00 - GRPRAR 345KV CKT Z	720	720	0.03435	105.3193	GEN337653 1-WHITE BLUFF UNIT #2
FDNS	00NR	5	25SP	G15_042	TO->FROM	GRPRAR1-LNX3345.00 - GRPRAR 345KV CKT Z	720	720	0.03438	105.3167	ALEXMRES3 345.00 - BISON 3 345.00 345KV CKT 1
FDNS	00NR	5	20SP	G15_042	TO->FROM	GRPRAR1-LNX3345.00 - GRPRAR 345KV CKT Z	720	720	0.03426	105.3146	NORTH LA CROSSE - NORTH ROCHESTER 345KV CKT 1
FDNS	00NR	5	25SP	G15_042	TO->FROM	GRPRAR1-LNX3345.00 - GRPRAR 345KV CKT Z	720	720	0.03459	105.2724	ARROWHEAD - ARROWHEAD 230 230KV CKT 1
FDNS	00NR	5	20SP	G15_042	TO->FROM	GRPRAR1-LNX3345.00 - GRPRAR 345KV CKT Z	720	720	0.03463	105.2592	KOSSUTH 3 345.00 - WEBSTER 345KV CKT 1
FDNS	00NR	5	17SP	G15_042	TO->FROM	GRPRAR1-LNX3345.00 - GRPRAR 345KV CKT Z	720	720	0.03579	105.2385	GEN659103 1-ANTELOPE VALLEY UNIT1
FDNS	00NR	5	17SP	G15_042	TO->FROM	GRPRAR1-LNX3345.00 - GRPRAR 345KV CKT Z	720	720	0.03579	105.2385	GEN659107 2-ANTELOPE VALLEY UNIT2
FDNS	00NR	5	20SP	G15_042	TO->FROM	GRPRAR1-LNX3345.00 - GRPRAR 345KV CKT Z	720	720	0.03403	105.2324	P12:115:UMZW:# 162 #: NEL IN ND. FAULT ON ML-NEL-MX-GA 115 KV
FDNS	00NR	5	20SP	G15_042	TO->FROM	GRPRAR1-LNX3345.00 - GRPRAR 345KV CKT Z	720	720	0.03403	105.2298	GEN635213 3-NEAL UNIT 3
FDNS	00NR	5	20SP	G15_042	TO->FROM	GRPRAR1-LNX3345.00 - GRPRAR 345KV CKT Z	720	720	0.03403	105.2203	GEN563222 1-G15088_3 0.6900
FDNS	00NR	5	17SP	G15_042	TO->FROM	GRPRAR1-LNX3345.00 - GRPRAR 345KV CKT Z	720	720	0.03579	105.2176	BIG STONE 230/24.0KV TRANSFORMER CKT 1
FDNS	00NR	5	25SP	G15_042	TO->FROM	GRPRAR1-LNX3345.00 - GRPRAR 345KV CKT Z	720	720	0.03435	105.2157	GEN501801 1-DOLET HILLS UNIT1
FDNS	00NR	5	20SP	G15_042	TO->FROM	GRPRAR1-LNX3345.00 - GRPRAR 345KV CKT Z	720	720	0.03403	105.2056	GEN334433 1-SABINE UNIT 3
FDNS	00NR	5	20SP	G15_042	TO->FROM	GRPRAR1-LNX3345.00 - GRPRAR 345KV CKT Z	720	720	0.0338	105.2025	BROOKING COUNTY - BSSOUTH3 345.00 345KV CKT 1
FDNS	00NR	5	25SP	G15_042	TO->FROM	GRPRAR1-LNX3345.00 - GRPRAR 345KV CKT Z	720	720	0.03409	105.1944	CARPENTER - HURON 230KV CKT 1
FDNS	00NR	5	20SP	G15_042	TO->FROM	GRPRAR1-LNX3345.00 - GRPRAR 345KV CKT Z	720	720	0.03351	105.1572	MENNO JCT - TRIPP JCT 115KV CKT 1
FDNS	00NR	5	20SP	G15_042	TO->FROM	GRPRAR1-LNX3345.00 - GRPRAR 345KV CKT Z	720	720	0.03391	105.1565	HESKETT - WISHEK 230KV CKT 1
FDNS	00NR	5	20SP	G15_042	TO->FROM	GRPRAR1-LNX3345.00 - GRPRAR 345KV CKT Z	720	720	0.03436	105.1538	NMA B3 345 345.00 - NORTH LA CROSSE 345KV CKT 1
FDNS	00NR	5	20SP	G15_042	TO->FROM	GRPRAR1-LNX3345.00 - GRPRAR 345KV CKT Z	720	720	0.03637	105.1524	BLOOMFIELD - CREIGHTON 115KV CKT 1
FDNS	00NR	5	20SP	G15_042	TO->FROM	GRPRAR1-LNX3345.00 - GRPRAR 345KV CKT Z	720	720	0.03463	105.1485	ADAMS - MITCHLCO3 345.00 345KV CKT 1
FDNS	00NR	5	20SP	G15_042	TO->FROM	GRPRAR1-LNX3345.00 - GRPRAR 345KV CKT Z	720	720	0.03401	105.1428	CENTER - COYOTE 345KV CKT 1
FDNS	00NR	5	25SP	G15_042	TO->FROM	GRPRAR1-LNX3345.00 - GRPRAR 345KV CKT Z	720	720	0.03463	105.141	AS KING - EAU CLAIRE 345KV CKT 1
FDNS	00NR	5	20SP	G15_042	TO->FROM	GRPRAR1-LNX3345.00 - GRPRAR 345KV CKT Z	720	720	0.03403	105.1353	GEN336222 1-LITTLE GYPSY UNIT#2
FDNS	00NR	5	25SP	G15_042	TO->FROM	GRPRAR1-LNX3345.00 - GRPRAR 345KV CKT Z	720	720	0.03435	105.1093	CNTSHNT3 345.00 - PRAIRIE3 345.00 345KV CKT 1
FDNS	00NR	5	20SP	G15_042	TO->FROM	GRPRAR1-LNX3345.00 - GRPRAR 345KV CKT Z	720	720	0.03406	105.1092	GLENBORO SOUTH - RUGBY 230KV CKT 1
FDNS	00NR	5	20SP	G15_042	TO->FROM	GRPRAR1-LNX3345.00 - GRPRAR 345KV CKT Z	720	720	0.03402	105.102	GARRISON - JAMES TOWN 230KV CKT 1
FDNS	00NR	5	25SP	G15_042	TO->FROM	GRPRAR1-LNX3345.00 - GRPRAR 345KV CKT Z	720	720	0.03493	105.0934	HAZLETON - MITCHLCO3 345.00 345KV CKT 1
FDNS	00NR	5	20SP	G15_042	TO->FROM	GRPRAR1-LNX3345.00 - GRPRAR 345KV CKT Z	720	720	0.03391	105.0909	MERRCRT4 230.00 - WISHEK 230KV CKT 1
FDNS	00NR	5	25SP	G15_042	TO->FROM	GRPRAR1-LNX3345.00 - GRPRAR 345KV CKT Z	720	720	0.03409	105.0873	HURON - WATERTOWN 230KV CKT 2
FDNS	00NR	5	25SP	G15_042	TO->FROM	GRPRAR1-LNX3345.00 - GRPRAR 345KV CKT Z	720	720	0.03409	105.0873	HURON - WATERTOWN 230KV CKT 2
FDNS	00NR	5	20SP	G15_042	TO->FROM	GRPRAR1-LNX3345.00 - GRPRAR 345KV CKT Z	720	720	0.03403	105.0861	GEN336152 1-WATERFORD UNIT#2
FDNS	00NR	5	20SP	G15_042	TO->FROM	GRPRAR1-LNX3345.00 - GRPRAR 345KV CKT Z	720	720	0.03403	105.086	GEN336151 1-WATERFORD UNIT#1
FDNS	00NR	5	20SP	G15_042	TO->FROM	GRPRAR1-LNX3345.00 - GRPRAR 345KV CKT Z	720	720	0.03403	105.0624	GEN531447 1-HOLCOMB GENERATOR
FDNS	00NR	5	20SP	G15_042	TO->FROM	GRPRAR1-LNX3345.00 - GRPRAR 345KV CKT Z	720	720	0.03637	105.0593	BLOOMFIELD - GAVINS POINT 115KV CKT 1
FDNS	00NR	5	20SP	G15_042	TO->FROM	GRPRAR1-LNX3345.00 - GRPRAR 345KV CKT Z	720	720	0.04322	105.0586	RAUN - SIOUX CITY 345KV CKT 1
FDNS	00NR	5	20SP	G15_042	TO->FROM	GRPRAR1-LNX3345.00 - GRPRAR 345KV CKT Z	720	720	0.04322	105.0586	RAUN - SIOUX CITY 345KV CKT 1
FDNS	00NR	5	20SP	G15_042	TO->FROM	GRPRAR1-LNX3345.00 - GRPRAR 345KV CKT Z	720	720	0.03403	105.0581	GEN640009 1-COOPER NUCLEAR STATION
FDNS	00NR	5	25SP	G15_042	TO->FROM	GRPRAR1-LNX3345.00 - GRPRAR 345KV CKT Z	720	720	0.03409	105.0451	CARPENTER - WATERTOWN 230KV CKT 1
FDNS	00NR	5	25SP	G15_042	TO->FROM	GRPRAR1-LNX3345.00 - GRPRAR 345KV CKT Z	720	720	0.03409	105.0451	CARPENTER - WATERTOWN 230KV CKT 1
FDNS	00NR	5	20SP	G15_042	TO->FROM	GRPRAR1-LNX3345.00 - GRPRAR 345KV CKT Z	720	720	0.03442	105.0369	ADAMS - PLEASANT VALLEY 345KV CKT 1
FDNS	00NR	5	20SP	G15_042	TO->FROM	GRPRAR1-LNX3345.00 - GRPRAR 345KV CKT Z	720	720	0.0341	105.0346	APPLEDORN 4 230.00 - WATERTOWN 230KV CKT 1
FDNS	00NR	5	20SP	G15_042	TO->FROM	GRPRAR1-LNX3345.00 - GRPRAR 345KV CKT Z	720	720	0.0341	105.0346	APPLEDORN 4 230.00 - WATERTOWN 230KV CKT 1
FDNS	00NR	5	20SP	G15_042	TO->FROM	GRPRAR1-LNX3345.00 - GRPRAR 345KV CKT Z	720	720	0.03351	105.0267	MENNO JCT - UTICA 115KV CKT 1
FDNS	00NR	5	20SP	G15_042	TO->FROM	GRPRAR1-LNX3345.00 - GRPRAR 345KV CKT Z	720	720	0.03403	105.0199	GEN303007 1-1BC2 U2
FDNS	00NR	5	20SP	G15_042	TO->FROM	GRPRAR1-LNX3345.00 - GRPRAR 345KV CKT Z	720	720	0.03393	105.0168	BSSOUTH3 345.00 - ELLENDLMVP3 345.00 345KV CKT 1
FDNS	00NR	5	20SP	G15_042	TO->FROM	GRPRAR1-LNX3345.00 - GRPRAR 345KV CKT Z	720	720	0.03393	105.0168	BSSOUTH3 345.00 - ELLENDLMVP3 345.00 345KV CKT 1
FDNS	00NR	5	20SP	G15_042	TO->FROM	GRPRAR1-LNX3345.00 - GRPRAR 345KV CKT Z	720	720	0.03403	105.0136	GEN303006 1-1BC2 U1
FDNS	00NR	5	25SP	G15_042	TO->FROM	GRPRAR1-LNX3345.00 - GRPRAR 345KV CKT Z	720	720	0.03435	105.0081	GEN336251 1-NINEMILE POINT UNIT#4
FDNS	00NR	5	20SP	G15_042	TO->FROM	GRPRAR1-LNX3345.00 - GRPRAR 345KV CKT Z	720	720	0.03416	104.9955	ARKANSAS NUCLEAR ONE - FT SMITH 500KV CKT 1
FDNS	00NR	5	20SP	G15_042	TO->FROM	GRPRAR1-LNX3345.00 - GRPRAR 345KV CKT Z	720	720	0.03416	104.9955	ARKANSAS NUCLEAR ONE - FT SMITH 500KV CKT 1
FDNS	00NR	5	20SP	G15_042	TO->FROM	GRPRAR1-LNX3345.00 - GRPRAR 345KV CKT Z	720	720	0.03393	104.9955	ELLENDLMVP3 345.00 (1) 345/230/34.5KV TRANSFORMER CKT 1
FDNS	00NR	5	20SP	G15_042	TO->FROM	GRPRAR1-LNX3345.00 - GRPRAR 345KV CKT Z	720	720	0.03411	104.9886	ALEXMRES3 345.00 - WAITE PARK 345KV CKT 1
FDNS	00NR	5	25SP	G15_042	TO->FROM	GRPRAR1-LNX3345.00 - GRPRAR 345KV CKT Z	720	720	0.03056	104.9798	RASMUSN - UTICA JCT 230KV CKT 1
FDNS	00NR	5	25SP	G15_042	TO->FROM	GRPRAR1-LNX3345.00 - GRPRAR 345KV CKT Z	720	720	0.03462	104.9752	G15094_T 345.00 - SIDNEY2-LNX3345.00 345KV CKT 1
FDNS	00NR	5	25SP	G15_042	TO->FROM	GRPRAR1-LNX3345.00 - GRPRAR 345KV CKT Z	720	720	0.03462	104.9745	SIDNEY - SIDNEY2-LNX3345.00 345KV CKT Z
FDNS	00NR	5	25SP	G15_042	TO->FROM	GRPRAR1-LNX3345.00 - GRPRAR 345KV CKT Z	720	720	0.03435	104.973	GEN336831 1-BAXTER WILSON SES
FDNS	00NR	5	20SP	G15_042	TO->FROM	GRPRAR1-LNX3345.00 - GRPRAR 345KV CKT Z	720	720	0.03351	104.9729	P12:115:UMZZ:# 237 #: MEN IN SD. MENNO JUNCTION IS A TAP (UJ-MEN-TP).
FDNS	00NR	5	20SP	G15_042	TO->FROM	GRPRAR1-LNX3345.00 - GRPRAR 345KV CKT Z	720	720	0.0341	104.9713	APPLEDORN 4 230.00 - GRANITE FALLS 230KV CKT 1
FDNS	00NR	5	20SP	G15_042	TO->FROM	GRPRAR1-LNX3345.00 - GRPRAR 345KV CKT Z	720	720	0.0341	104.9713	APPLEDORN 4 230.00 - GRANITE FALLS 230KV CKT 1
FDNS	00NR	5	20SP	G15_042	TO->FROM	GRPRAR1-LNX3345.00 - GRPRAR 345KV CKT Z	720	720	0.03409	104.9634	BLAIR - GRANITE FALLS 230KV CKT 1
FDNS	00NR	5	20SP	G15_042	TO->FROM	GRPRAR1-LNX3345.00 - GRPRAR 345KV CKT Z	720	720	0.03409	104.9634	BLAIR - GRANITE FALLS 230KV CKT 1
FDNS	00NR	5	20SP	G15_042	TO->FROM	GRPRAR1-LNX3345.00 - GRPRAR 345KV CKT Z	720	720	0.03419	104.9565	NORTH ROCHESTER - PRAIRIE ISLAND 345KV CKT 1
FDNS	00NR	5	20SP	G15_042	TO->FROM	GRPRAR1-LNX3345.00 - GRPRAR 345KV CKT Z	720	720	0.0336	104.9503	WINNER - WITTEN 115KV CKT 1
FDNS	00NR	5	20SP	G15_042	TO->FROM	GRPRAR1-LNX3345.00 - GRPRAR 345KV CKT Z	720	720	0.03403	104.9478	GEN303008 1-1BC2 U3
FDNS	00NR	5	20SP	G15_042	TO->FROM	GRPRAR1-LNX3345.00 - GRPRAR 345KV CKT Z	720	720	0.03403	104.9426	GEN336170 1-GULF OXY U4
FDNS	00NR	5	20SP	G15_042	TO->FROM	GRPRAR1-LNX3345.00 - GRPRAR 345KV CKT Z	720	720	0.03403	104.9285	GEN641089 2-ENERGY CENTER 2
FDNS	00NR	5	25SP	G15_042	TO->FROM	GRPRAR1-LNX3345.00 - GRPRAR 345KV CKT Z	720	720	0.03435	104.9151	GEN337041 1-GERALD ANDRUS
FDNS	00NR	5	25SP	G15_042	TO->FROM	GRPRAR1-LNX3345.00 - GRPRAR 345KV CKT Z	720	720	0.03321	104.9088	EAGLE 4 230.00 - PAHOJA 230KV CKT 1
FDNS	00NR	5	20SP	G15_042	TO->FROM	GRPRAR1-LNX3345.00 - GRPRAR 345KV CKT Z	720	720	0.0343	104.9066	G15094_T 345.00 - LARAMIE RIVER 345KV CKT 1
FDNS	00NR	5	20SP	G15_042	TO->FROM	GRPRAR1-LNX3345.00 - GRPRAR 345KV CKT Z	720	720	0.03403	104.9055	GEN562921 1-G15054_2 0.6900
FDNS	00NR	5	20SP	G15_042	TO->FROM	GRPRAR1-LNX3345.00 - GRPRAR 345KV CKT Z	720	720	0.03687	104.9017	STEGALL - STEGALL TRANSFORMER 230KV CKT 1
FDNS	00NR	5	25SP	G15_042	TO->FROM	GRPRAR1-LNX3345.00 - GRPRAR 345KV CKT Z	720	720	0.03435	104.8946	GEN501813 1-RODEMACHER UNIT 3
FDNS	00NR	5	20SP	G15_042	TO->FROM	GRPRAR1-LNX3345.00 - GRPRAR 345KV CKT Z	720	720	0.03687	104.8944	P13:230-345:NPPD:STEGALL3:KV3A
FDNS	00NR	5	20SP	G15_042	TO->FROM	GRPRAR1-LNX3345.00 - GRPRAR 345KV CKT Z	720	720	0.03402	104.8872	FARGO - JAMES TOWN 230KV CKT 1

SOLUTION	GROUP	SCENARIO	SEASON	SOURCE	DIRECTION	MONITORED ELEMENT	RATEA (MVA)	RATEB(MVA)	TDF	TC%LOADING (% MVA)	CONTINGENCY
FDNS	00NR	5	20SP	G15_042	TO->FROM	GRPRAR1-LNX3345.00 - GRPRAR 345KV CKT Z	720	720	0.03449	104.886	HUNTLEY3 345.00 - LEDYARD3 345.00 345KV CKT 1
FDNSLock	00NR	5	20SP	G15_042	TO->FROM	GRPRAR1-LNX3345.00 - GRPRAR 345KV CKT Z	720	720	0.03687	104.8731	STEGALL (SGQ KV3A) 345/230/13.8KV TRANSFORMER CKT 1
FDNS	00NR	5	20SP	G15_042	TO->FROM	GRPRAR1-LNX3345.00 - GRPRAR 345KV CKT Z	720	720	0.03403	104.8693	P13:230:UMZW:# 2218 #: FP IN MT. LOSS OF TRANSFORMER (AT2).
FDNS	00NR	5	20SP	G15_042	TO->FROM	GRPRAR1-LNX3345.00 - GRPRAR 345KV CKT Z	720	720	0.03402	104.8661	FARGO - JAMES TOWN 230KV CKT 2
FDNS	00NR	5	20SP	G15_042	TO->FROM	GRPRAR1-LNX3345.00 - GRPRAR 345KV CKT Z	720	720	0.03403	104.8632	GEN501811 1-RODEMACHER UNIT 1
FDNS	00NR	5	20SP	G15_042	TO->FROM	GRPRAR1-LNX3345.00 - GRPRAR 345KV CKT Z	720	720	0.03403	104.8505	GEN562596 1-G14_059_3 0.6900
FDNS	00NR	5	20SP	G15_042	TO->FROM	GRPRAR1-LNX3345.00 - GRPRAR 345KV CKT Z	720	720	0.03451	104.8442	P13:230-345:NPPD:SIDNEY 3:KV2A
FDNS	00NR	5	20SP	G15_042	TO->FROM	GRPRAR1-LNX3345.00 - GRPRAR 345KV CKT Z	720	720	0.03451	104.8441	SIDNEY (SDQ KV2A) 345/230/13.8KV TRANSFORMER CKT 1
FDNS	00NR	5	20SP	G15_042	TO->FROM	GRPRAR1-LNX3345.00 - GRPRAR 345KV CKT Z	720	720	0.03451	104.844	SIDNEY - SIDNEY TRANSFORMER 230KV CKT 1
FDNS	00NR	5	20SP	G15_042	TO->FROM	GRPRAR1-LNX3345.00 - GRPRAR 345KV CKT Z	720	720	0.03402	104.8371	BISMARK - JAMES TOWN 230KV CKT 1
FDNS	00NR	5	20SP	G15_042	TO->FROM	GRPRAR1-LNX3345.00 - GRPRAR 345KV CKT Z	720	720	0.03402	104.8285	BISMARK - WEBER 230KV CKT 1
FDNS	00NR	5	20SP	G15_042	TO->FROM	GRPRAR1-LNX3345.00 - GRPRAR 345KV CKT Z	720	720	0.03454	104.8196	P13:115-230:TSGT:SIDNEY-KV1A
FDNS	00NR	5	20SP	G15_042	TO->FROM	GRPRAR1-LNX3345.00 - GRPRAR 345KV CKT Z	720	720	0.03403	104.8178	TOLK STATION EAST 230/24.0KV TRANSFORMER CKT 1
FDNS	00NR	5	20SP	G15_042	TO->FROM	GRPRAR1-LNX3345.00 - GRPRAR 345KV CKT Z	720	720	0.03402	104.8133	JAMES TOWN - WEBER 230KV CKT 1
FDNS	00NR	5	20SP	G15_042	TO->FROM	GRPRAR1-LNX3345.00 - GRPRAR 345KV CKT Z	720	720	0.03485	104.812	P12:230:UMZW:# 733 #: FT IN SD. FT-BG2 LINE FAULT
FDNS	00NR	5	20SP	G15_042	TO->FROM	GRPRAR1-LNX3345.00 - GRPRAR 345KV CKT Z	720	720	0.03403	104.8116	GEN334071 1-LEWIS CREEK 2
FDNS	00NR	5	20SP	G15_042	TO->FROM	GRPRAR1-LNX3345.00 - GRPRAR 345KV CKT Z	720	720	0.03441	104.8094	HUNTLEY3 345.00 - LAKEFIELD 3 345KV CKT 1
FDNS	00NR	5	20SP	G15_042	TO->FROM	GRPRAR1-LNX3345.00 - GRPRAR 345KV CKT Z	720	720	0.03403	104.8083	GEN334070 1-LEWIS CREEK 1
FDNS	00NR	5	20SP	G15_042	TO->FROM	GRPRAR1-LNX3345.00 - GRPRAR 345KV CKT Z	720	720	0.03492	104.8066	NOBLES - SPLIT ROCK 345KV CKT 1
FDNS	00NR	5	20SP	G15_042	TO->FROM	GRPRAR1-LNX3345.00 - GRPRAR 345KV CKT Z	720	720	0.03403	104.8028	GEN532751 1-WOLF CREEK GENERATING STATION UNIT 1
FDNS	00NR	5	20SP	G15_042	TO->FROM	GRPRAR1-LNX3345.00 - GRPRAR 345KV CKT Z	720	720	0.03359	104.7949	FT THOMPSON - HURON 230KV CKT 1
FDNS	00NR	5	20SP	G15_042	TO->FROM	GRPRAR1-LNX3345.00 - GRPRAR 345KV CKT Z	720	720	0.03359	104.7949	FT THOMPSON - HURON 230KV CKT 1
FDNS	00NR	5	20SP	G15_042	TO->FROM	GRPRAR1-LNX3345.00 - GRPRAR 345KV CKT Z	720	720	0.03359	104.7949	FT THOMPSON - HURON 230KV CKT 2
FDNS	00NR	5	20SP	G15_042	TO->FROM	GRPRAR1-LNX3345.00 - GRPRAR 345KV CKT Z	720	720	0.03359	104.7949	FT THOMPSON - HURON 230KV CKT 2
FDNS	00NR	5	20SP	G15_042	TO->FROM	GRPRAR1-LNX3345.00 - GRPRAR 345KV CKT Z	720	720	0.03403	104.7914	LAWRENCE ENERGY CENTER UNIT 5 - LAWRENCE HILL 230KV CKT 1
FDNS	00NR	5	20SP	G15_042	TO->FROM	GRPRAR1-LNX3345.00 - GRPRAR 345KV CKT Z	720	720	0.03403	104.7914	LAWRENCE ENERGY CENTER UNIT 5 230/24.0KV TRANSFORMER CKT 1
FDNS	00NR	5	20SP	G15_042	TO->FROM	GRPRAR1-LNX3345.00 - GRPRAR 345KV CKT Z	720	720	0.03403	104.778	GEN636641 1-LOUISA UNIT 1
FDNS	00NR	5	20SP	G15_042	TO->FROM	GRPRAR1-LNX3345.00 - GRPRAR 345KV CKT Z	720	720	0.0336	104.7769	GREGORY - WINNER 115KV CKT 1
FDNS	00NR	5	20SP	G15_042	TO->FROM	GRPRAR1-LNX3345.00 - GRPRAR 345KV CKT Z	720	720	0.03403	104.7767	GEN337766 1-TRACTEBEL UNIT S1
FDNS	00NR	5	20SP	G15_042	TO->FROM	GRPRAR1-LNX3345.00 - GRPRAR 345KV CKT Z	720	720	0.03403	104.7747	BALTA - RAMSEY 230KV CKT 1
FDNS	00NR	5	20SP	G15_042	TO->FROM	GRPRAR1-LNX3345.00 - GRPRAR 345KV CKT Z	720	720	0.03403	104.7737	PRAIRIE ISLAND 345/20.0KV TRANSFORMER CKT 1
FDNS	00NR	5	20SP	G15_042	TO->FROM	GRPRAR1-LNX3345.00 - GRPRAR 345KV CKT Z	720	720	0.03403	104.7722	PRAIRIE ISLAND 345/20.0KV TRANSFORMER CKT 2
FDNS	00NR	5	20SP	G15_042	TO->FROM	GRPRAR1-LNX3345.00 - GRPRAR 345KV CKT Z	720	720	0.0336	104.7677	P12:115:UMZW:# 172 #: WI IN SD.
FDNS	00NR	5	20SP	G15_042	TO->FROM	GRPRAR1-LNX3345.00 - GRPRAR 345KV CKT Z	720	720	0.03485	104.7665	LOWERBRULE 4230.00 - RELIANCE 4 230.00 230KV CKT 1
FDNS	00NR	5	20SP	G15_042	TO->FROM	GRPRAR1-LNX3345.00 - GRPRAR 345KV CKT Z	720	720	0.03405	104.7493	FORMAN - HANKINSON 230KV CKT 1
FDNS	00NR	5	20SP	G15_042	TO->FROM	GRPRAR1-LNX3345.00 - GRPRAR 345KV CKT Z	720	720	0.03403	104.7475	GEN659118 1-LARAMIE RIVER UNIT1
FDNS	00NR	5	20SP	G15_042	TO->FROM	GRPRAR1-LNX3345.00 - GRPRAR 345KV CKT Z	720	720	0.03403	104.7413	GEN501910 1-ACADIA UNIT ST1
FDNS	00NR	5	25SP	G15_042	TO->FROM	GRPRAR1-LNX3345.00 - GRPRAR 345KV CKT Z	720	720	0.03435	104.7364	GEN335206 1-NELSON UNIT 6
FDNS	00NR	5	20SP	G15_042	TO->FROM	GRPRAR1-LNX3345.00 - GRPRAR 345KV CKT Z	720	720	0.03402	104.729	ELM CREEK - MONTICELLO 345KV CKT 1
FDNS	00NR	5	25SP	G15_042	TO->FROM	GRPRAR1-LNX3345.00 - GRPRAR 345KV CKT Z	720	720	0.03468	104.7274	ARPIN B4 345.00 - EAU CLAIRE 345KV CKT 1
FDNS	00NR	5	20SP	G15_042	TO->FROM	GRPRAR1-LNX3345.00 - GRPRAR 345KV CKT Z	720	720	0.03403	104.7223	TATANKA 230/34.5KV TRANSFORMER CKT 1
FDNS	00NR	5	25SP	G15_042	TO->FROM	GRPRAR1-LNX3345.00 - GRPRAR 345KV CKT Z	720	720	0.03435	104.7136	GEN334440 1-SABINE UNIT 4
FDNS	00NR	5	25SP	G15_042	TO->FROM	GRPRAR1-LNX3345.00 - GRPRAR 345KV CKT Z	720	720	0.03435	104.7122	GEN635214 4-NEAL UNIT 4
FDNS	00NR	5	20SP	G15_042	TO->FROM	GRPRAR1-LNX3345.00 - GRPRAR 345KV CKT Z	720	720	0.03403	104.7114	GEN336221 1-LITTLE GYPSY UNIT#1
FDNS	00NR	5	20SP	G15_042	TO->FROM	GRPRAR1-LNX3345.00 - GRPRAR 345KV CKT Z	720	720	0.03403	104.7096	GEN337757 1-DUKE HOTSPRINGS STG1
FDNS	00NR	5	20SP	G15_042	TO->FROM	GRPRAR1-LNX3345.00 - GRPRAR 345KV CKT Z	720	720	0.03405	104.6921	AUDUBON - SHEYNNE 230KV CKT 1
FDNS	00NR	5	20SP	G15_042	TO->FROM	GRPRAR1-LNX3345.00 - GRPRAR 345KV CKT Z	720	720	0.03403	104.6902	GEN345765 H-1SIOUX 2 18.000
FDNS	00NR	5	25SP	G15_042	TO->FROM	GRPRAR1-LNX3345.00 - GRPRAR 345KV CKT Z	720	720	0.03435	104.6822	GEN344897 4-1LAB G4 20.000
FDNS	00NR	5	25SP	G15_042	TO->FROM	GRPRAR1-LNX3345.00 - GRPRAR 345KV CKT Z	720	720	0.03435	104.6809	GEN344894 1-1LAB G1 20.000
FDNS	00NR	5	25SP	G15_042	TO->FROM	GRPRAR1-LNX3345.00 - GRPRAR 345KV CKT Z	720	720	0.03435	104.6809	GEN344895 2-1LAB G2 20.000
FDNS	00NR	5	25SP	G15_042	TO->FROM	GRPRAR1-LNX3345.00 - GRPRAR 345KV CKT Z	720	720	0.03435	104.6808	GEN344896 3-1LAB G3 20.000
FDNS	00NR	5	20SP	G15_042	TO->FROM	GRPRAR1-LNX3345.00 - GRPRAR 345KV CKT Z	720	720	0.03394	104.6764	MT VERN - STORLA 115KV CKT 1
FDNS	00NR	5	20SP	G15_042	TO->FROM	GRPRAR1-LNX3345.00 - GRPRAR 345KV CKT Z	720	720	0.03403	104.6754	GEN337764 1-TRACTEBEL UNIT C1
FDNS	00NR	5	20SP	G15_042	TO->FROM	GRPRAR1-LNX3345.00 - GRPRAR 345KV CKT Z	720	720	0.03403	104.6754	GEN337765 1-TRACTEBEL UNIT C2
FDNS	00NR	5	20SP	G15_042	TO->FROM	GRPRAR1-LNX3345.00 - GRPRAR 345KV CKT Z	720	720	0.03415	104.6736	FRANKS - HUBEN 345KV CKT 1
FDNS	00NR	5	20SP	G15_042	TO->FROM	GRPRAR1-LNX3345.00 - GRPRAR 345KV CKT Z	720	720	0.03403	104.6725	GEN334431 1-SABINE UNIT 1
FDNS	00NR	5	20SP	G15_042	TO->FROM	GRPRAR1-LNX3345.00 - GRPRAR 345KV CKT Z	720	720	0.03403	104.6725	GEN334432 1-SABINE UNIT 2
FDNS	00NR	5	20SP	G15_042	TO->FROM	GRPRAR1-LNX3345.00 - GRPRAR 345KV CKT Z	720	720	0.03403	104.6684	GEN336446 1-MICHOUD UNIT #2
FDNS	00NR	5	20SP	G15_042	TO->FROM	GRPRAR1-LNX3345.00 - GRPRAR 345KV CKT Z	720	720	0.03458	104.6678	P12:115:NPPD:WAPA1:CHADRON7:BOXBUTE7:BTB
FDNS	00NR	5	20SP	G15_042	TO->FROM	GRPRAR1-LNX3345.00 - GRPRAR 345KV CKT Z	720	720	0.03699	104.6661	BELDEN - HOSKINS 115KV CKT 1
FDNS	00NR	5	20SP	G15_042	TO->FROM	GRPRAR1-LNX3345.00 - GRPRAR 345KV CKT Z	720	720	0.03403	104.6644	LELAND OLDS - STANTON 230KV CKT 1
FDNS	00NR	5	20SP	G15_042	TO->FROM	GRPRAR1-LNX3345.00 - GRPRAR 345KV CKT Z	720	720	0.03403	104.6644	LELAND OLDS - STANTON 230KV CKT 1
FDNS	00NR	5	20SP	G15_042	TO->FROM	GRPRAR1-LNX3345.00 - GRPRAR 345KV CKT Z	720	720	0.03426	104.6605	OVEXFRMCCOVE
FDNS	00NR	5	25SP	G15_042	TO->FROM	GRPRAR1-LNX3345.00 - GRPRAR 345KV CKT Z	720	720	0.03249	104.6547	FT THOMPSON - WESSINGTON 230KV CKT 1
FDNS	00NR	5	25SP	G15_042	TO->FROM	GRPRAR1-LNX3345.00 - GRPRAR 345KV CKT Z	720	720	0.03249	104.6547	FT THOMPSON - WESSINGTON 230KV CKT 1
FDNS	00NR	5	25SP	G15_042	TO->FROM	GRPRAR1-LNX3345.00 - GRPRAR 345KV CKT Z	720	720	0.03437	104.6497	GLENBORO SOUTH - RUGBY 230KV CKT 1
FDNS	00NR	5	20SP	G15_042	TO->FROM	GRPRAR1-LNX3345.00 - GRPRAR 345KV CKT Z	720	720	0.03475	104.6487	DENISON - SIOUX CITY 230KV CKT 1
FDNS	00NR	5	20SP	G15_042	TO->FROM	GRPRAR1-LNX3345.00 - GRPRAR 345KV CKT Z	720	720	0.03403	104.6437	GRAND GULF 500/22.0KV TRANSFORMER CKT 1
FDNS	00NR	5	20SP	G15_042	TO->FROM	GRPRAR1-LNX3345.00 - GRPRAR 345KV CKT Z	720	720	0.03403	104.6426	GEN562912 1-G15053_3 0.6900
FDNS	00NR	5	20SP	G15_042	TO->FROM	GRPRAR1-LNX3345.00 - GRPRAR 345KV CKT Z	720	720	0.03488	104.642	PLYMOUTH - SIOUX CITY 161KV CKT 1
FDNS	00NR	5	20SP	G15_042	TO->FROM	GRPRAR1-LNX3345.00 - GRPRAR 345KV CKT Z	720	720	0.03488	104.642	PLYMOUTH - SIOUX CITY 161KV CKT 1
FDNS	00NR	5	20SP	G15_042	TO->FROM	GRPRAR1-LNX3345.00 - GRPRAR 345KV CKT Z	720	720	0.03407	104.6386	FERGSFL4 230.00 - WAHPETON 230KV CKT 1
FDNS	00NR	5	20SP	G15_042	TO->FROM	GRPRAR1-LNX3345.00 - GRPRAR 345KV CKT Z	720	720	0.03403	104.6367	GEN336242 1-1NMIL ST1 18.000
FDNS	00NR	5	20SP	G15_042	TO->FROM	GRPRAR1-LNX3345.00 - GRPRAR 345KV CKT Z	720	720	0.03403	104.6354	GEN501823 1-TECHE UNIT 3
FDNS	00NR	5	25SP	G15_042	TO->FROM	GRPRAR1-LNX3345.00 - GRPRAR 345KV CKT Z	720	720	0.03435	104.6333	GEN338388 1-1PLUM PT U1 23.000
FDNS	00NR	5	20SP	G15_042	TO->FROM	GRPRAR1-LNX3345.00 - GRPRAR 345KV CKT Z	720	720	0.03404	104.6306	FORMAN - OAKES 230KV CKT 1
FDNS	00NR	5	25SP	G15_042	TO->FROM	GRPRAR1-LNX3345.00 - GRPRAR 345KV CKT Z	720	720	0.03435	104.6293	GEN345671 2-1RUSH G2 18.000
FDNS	00NR	5	20SP	G15_042	TO->FROM	GRPRAR1-LNX3345.00 - GRPRAR 345KV CKT Z	720	720	0.03404	104.6279	ELLENDLMVP4 230.00 - OAKES 230KV CKT 1
FDNS	00NR	5	20SP	G15_042	TO->FROM	GRPRAR1-LNX3345.00 - GRPRAR 345KV CKT Z	720	720	0.03404	104.6279	ELLENDLMVP4 230.00 - OAKES 230KV CKT 1

SOLUTION	GROUP	SCENARIO	SEASON	SOURCE	DIRECTION	MONITORED ELEMENT	RATEA (MVA)	RATEB(MVA)	TDF	TC%LOADING (% MVA)	CONTINGENCY
FDNS	00NR	5	25SP	G15_042	TO->FROM	GRPRAR1-LNX3345.00 - GRPRAR 345KV CKT Z	720	720	0.03435	104.6254	GEN345670 1-1RUSH G1 18.000
FDNS	00NR	5	20SP	G15_042	TO->FROM	GRPRAR1-LNX3345.00 - GRPRAR 345KV CKT Z	720	720	0.03403	104.622	PRAIRIE - WINGER 230KV CKT 1
FDNS	00NR	5	20SP	G15_042	TO->FROM	GRPRAR1-LNX3345.00 - GRPRAR 345KV CKT Z	720	720	0.03403	104.6191	GEN345756 H-1SIOUX 1 18.000
FDNS	00NR	5	20SP	G15_042	TO->FROM	GRPRAR1-LNX3345.00 - GRPRAR 345KV CKT Z	720	720	0.03458	104.6171	CHADRON - DUNLAP 115KV CKT 1
FDNS	00NR	5	20SP	G15_042	TO->FROM	GRPRAR1-LNX3345.00 - GRPRAR 345KV CKT Z	720	720	0.03485	104.6136	RELIANCE 4 230.00 - WITTEN 4 230.00 230KV CKT 1
FDNS	00NR	5	25SP	G15_042	TO->FROM	GRPRAR1-LNX3345.00 - GRPRAR 345KV CKT Z	720	720	0.03435	104.6122	GEN501812 1-RODEMACHER UNIT 2
FDNS	00NR	5	20SP	G15_042	TO->FROM	GRPRAR1-LNX3345.00 - GRPRAR 345KV CKT Z	720	720	0.03403	104.6114	J316_SUB 230.00 230/34.5KV TRANSFORMER CKT 1
FDNS	00NR	5	20SP	G15_042	TO->FROM	GRPRAR1-LNX3345.00 - GRPRAR 345KV CKT Z	720	720	0.03408	104.6098	HANKINSON - WAHPETON 230KV CKT 1
FDNS	00NR	5	20SP	G15_042	TO->FROM	GRPRAR1-LNX3345.00 - GRPRAR 345KV CKT Z	720	720	0.03421	104.6093	HAMPTON CORNER - NORTH ROCHESTER 345KV CKT 1
FDNS	00NR	5	20SP	G15_042	TO->FROM	GRPRAR1-LNX3345.00 - GRPRAR 345KV CKT Z	720	720	0.03407	104.6055	FERGSFL4 230.00 - GRE-SILVRLK4230.00 230KV CKT 1
FDNS	00NR	5	20SP	G15_042	TO->FROM	GRPRAR1-LNX3345.00 - GRPRAR 345KV CKT Z	720	720	0.03403	104.602	GEN345832 1-1TS G1 13.800
FDNS	00NR	5	20SP	G15_042	TO->FROM	GRPRAR1-LNX3345.00 - GRPRAR 345KV CKT Z	720	720	0.03403	104.6017	GEN345841 2-1TS G2 13.800
FDNS	00NR	5	25SP	G15_042	TO->FROM	GRPRAR1-LNX3345.00 - GRPRAR 345KV CKT Z	720	720	0.03435	104.6	GEN629075 1-OTTUMWA GENERATOR FOR OTTUMWA UNIT NO 1
FDNS	00NR	5	20SP	G15_042	TO->FROM	GRPRAR1-LNX3345.00 - GRPRAR 345KV CKT Z	720	720	0.03403	104.5997	GEN334031 1-FRONTIER UNIT 2
FDNS	00NR	5	20SP	G15_042	TO->FROM	GRPRAR1-LNX3345.00 - GRPRAR 345KV CKT Z	720	720	0.03403	104.5991	GEN334030 1-FRONTIER UNIT 1
FDNS	00NR	5	20SP	G15_042	TO->FROM	GRPRAR1-LNX3345.00 - GRPRAR 345KV CKT Z	720	720	0.03403	104.5956	JUDSON LARGE 115/15.0KV TRANSFORMER CKT 1
FDNS	00NR	5	20SP	G15_042	TO->FROM	GRPRAR1-LNX3345.00 - GRPRAR 345KV CKT Z	720	720	0.03403	104.5956	JUDSON LARGE 115/15.0KV TRANSFORMER CKT 1
FDNS	00NR	5	20SP	G15_042	TO->FROM	GRPRAR1-LNX3345.00 - GRPRAR 345KV CKT Z	720	720	0.03403	104.5951	GEN336944 1-REX BROWN
FDNS	00NR	5	20SP	G15_042	TO->FROM	GRPRAR1-LNX3345.00 - GRPRAR 345KV CKT Z	720	720	0.03403	104.5922	GEN501970 1-EVANGELINE UNIT 7
FDNS	00NR	5	25SP	G15_042	TO->FROM	GRPRAR1-LNX3345.00 - GRPRAR 345KV CKT Z	720	720	0.03435	104.5901	GEN336191 1-LITTLE GYPSY UNIT#3
FDNS	00NR	5	20SP	G15_042	TO->FROM	GRPRAR1-LNX3345.00 - GRPRAR 345KV CKT Z	720	720	0.03403	104.5895	OKLAUN 345/24.0KV TRANSFORMER CKT 1
FDNS	00NR	5	20SP	G15_042	TO->FROM	GRPRAR1-LNX3345.00 - GRPRAR 345KV CKT Z	720	720	0.03403	104.5845	GEN335612 1-WILLOW GLENN UNIT#2
FDNS	00NR	5	20SP	G15_042	TO->FROM	GRPRAR1-LNX3345.00 - GRPRAR 345KV CKT Z	720	720	0.03403	104.5841	GEN635693 3-GREATER DES MOINES ENERGY CENTER ST
FDNS	00NR	5	20SP	G15_042	TO->FROM	GRPRAR1-LNX3345.00 - GRPRAR 345KV CKT Z	720	720	0.03502	104.5839	MARTIN - SHANNON 115KV CKT 1
FDNS	00NR	5	20SP	G15_042	TO->FROM	GRPRAR1-LNX3345.00 - GRPRAR 345KV CKT Z	720	720	0.03429	104.5813	BYRON - NORTH ROCHESTER 345KV CKT 1
FDNS	00NR	5	20SP	G15_042	TO->FROM	GRPRAR1-LNX3345.00 - GRPRAR 345KV CKT Z	720	720	0.03415	104.5789	GRE-CEDARMT3345.00 - HELENA 345KV CKT 1
FDNS	00NR	5	20SP	G15_042	TO->FROM	GRPRAR1-LNX3345.00 - GRPRAR 345KV CKT Z	720	720	0.03415	104.5789	GRE-CEDARMT3345.00 - HELENA 345KV CKT 2
FDNS	00NR	5	25SP	G15_042	TO->FROM	GRPRAR1-LNX3345.00 - GRPRAR 345KV CKT Z	720	720	0.03598	104.5754	GRIMES - LEHIGH 345KV CKT 1
FDNS	00NR	5	20SP	G15_042	TO->FROM	GRPRAR1-LNX3345.00 - GRPRAR 345KV CKT Z	720	720	0.03403	104.5745	GEN337430 1-PERYVILLE UNIT #3
FDNS	00NR	5	20SP	G15_042	TO->FROM	GRPRAR1-LNX3345.00 - GRPRAR 345KV CKT Z	720	720	0.03403	104.5743	GEN337428 1-PERYVILLE UNIT #1
FDNS	00NR	5	20SP	G15_042	TO->FROM	GRPRAR1-LNX3345.00 - GRPRAR 345KV CKT Z	720	720	0.03403	104.5708	P13:230-345:NPPD:NUCOR-1
FDNS	00NR	5	20SP	G15_042	TO->FROM	GRPRAR1-LNX3345.00 - GRPRAR 345KV CKT Z	720	720	0.03333	104.568	FT RANDAL - WHITE SWAN 115KV CKT 1
FDNS	00NR	5	20SP	G15_042	TO->FROM	GRPRAR1-LNX3345.00 - GRPRAR 345KV CKT Z	720	720	0.03485	104.5624	WITTEN 4 230.00 () 230/115/13.8KV TRANSFORMER CKT 1
FDNS	00NR	5	25SP	G15_042	TO->FROM	GRPRAR1-LNX3345.00 - GRPRAR 345KV CKT Z	720	720	0.03495	104.5612	KOSSUTH 3 345.00 - WEBSTER 345KV CKT 1
FDNS	00NR	5	20SP	G15_042	TO->FROM	GRPRAR1-LNX3345.00 - GRPRAR 345KV CKT Z	720	720	0.03403	104.5596	GEN562438 1-G13-032 0.6900
FDNS	00NR	5	20SP	G15_042	TO->FROM	GRPRAR1-LNX3345.00 - GRPRAR 345KV CKT Z	720	720	0.03403	104.556	GEN338443 1-PANDA S1
FDNS	00NR	5	20SP	G15_042	TO->FROM	GRPRAR1-LNX3345.00 - GRPRAR 345KV CKT Z	720	720	0.03403	104.5539	GEN336240 1-1NMIL CT1 18.000
FDNS	00NR	5	20SP	G15_042	TO->FROM	GRPRAR1-LNX3345.00 - GRPRAR 345KV CKT Z	720	720	0.03403	104.5539	GEN336241 1-1NMIL CT2 18.000
FDNS	00NR	5	20SP	G15_042	TO->FROM	GRPRAR1-LNX3345.00 - GRPRAR 345KV CKT Z	720	720	0.03403	104.5516	GEN501912 1-ACADIA UNIT CT1B
FDNS	00NR	5	20SP	G15_042	TO->FROM	GRPRAR1-LNX3345.00 - GRPRAR 345KV CKT Z	720	720	0.03403	104.5514	GEN501911 1-ACADIA UNIT CT1A
FDNS	00NR	5	25SP	G15_042	TO->FROM	GRPRAR1-LNX3345.00 - GRPRAR 345KV CKT Z	720	720	0.03435	104.5501	P12:115:UMZW:# 162 #: NEL IN ND. FAULT ON ML-NEL-MX-GA 115 KV
FDNS	00NR	5	20SP	G15_042	TO->FROM	GRPRAR1-LNX3345.00 - GRPRAR 345KV CKT Z	720	720	0.03403	104.5498	P12:345:GRDA:CHOUTEAU-SPORTSMANACRES
FDNS	00NR	5	25SP	G15_042	TO->FROM	GRPRAR1-LNX3345.00 - GRPRAR 345KV CKT Z	720	720	0.03435	104.5169	GEN335614 1-WILLOW GLENN UNIT#4
FDNS	00NR	5	25SP	G15_042	TO->FROM	GRPRAR1-LNX3345.00 - GRPRAR 345KV CKT Z	720	720	0.03435	104.5118	GEN336801 1-BAXTER WILSON UNIT #1
FDNS	00NR	5	25SP	G15_042	TO->FROM	GRPRAR1-LNX3345.00 - GRPRAR 345KV CKT Z	720	720	0.03435	104.5068	GEN334441 1-SABINE UNIT 5
FDNS	00NR	5	25SP	G15_042	TO->FROM	GRPRAR1-LNX3345.00 - GRPRAR 345KV CKT Z	720	720	0.03435	104.5015	GEN336464 1-MICHOUD UNIT #3
FDNS	00NR	5	25SP	G15_042	TO->FROM	GRPRAR1-LNX3345.00 - GRPRAR 345KV CKT Z	720	720	0.03435	104.4978	GEN563222 1-G15088_3 0.6900
FDNS	00NR	5	25SP	G15_042	TO->FROM	GRPRAR1-LNX3345.00 - GRPRAR 345KV CKT Z	720	720	0.03435	104.4912	GEN335204 1-NELSON UNIT 4
FDNS	00NR	5	25SP	G15_042	TO->FROM	GRPRAR1-LNX3345.00 - GRPRAR 345KV CKT Z	720	720	0.03423	104.4882	HESKETT - WISHEK 230KV CKT 1
FDNS	00NR	5	25SP	G15_042	TO->FROM	GRPRAR1-LNX3345.00 - GRPRAR 345KV CKT Z	720	720	0.03457	104.4789	NORTH LA CROSSE - NORTH ROCHESTER 345KV CKT 1
FDNS	00NR	5	25SP	G15_042	TO->FROM	GRPRAR1-LNX3345.00 - GRPRAR 345KV CKT Z	720	720	0.03493	104.4598	ADAMS - MITCHLCO3 345.00 345KV CKT 1
FDNS	00NR	5	20SP	G15_042	TO->FROM	GRPRAR1-LNX3345.00 - GRPRAR 345KV CKT Z	720	720	0.03403	104.4404	GEN563282 1-G15094_3 0.6900
FDNS	00NR	5	25SP	G15_042	TO->FROM	GRPRAR1-LNX3345.00 - GRPRAR 345KV CKT Z	720	720	0.03435	104.4191	GEN640009 1-COOPER NUCLEAR STATION
FDNS	00NR	5	25SP	G15_042	TO->FROM	GRPRAR1-LNX3345.00 - GRPRAR 345KV CKT Z	720	720	0.03433	104.4057	CENTER - COYOTE 345KV CKT 1
FDNS	00NR	5	25SP	G15_042	TO->FROM	GRPRAR1-LNX3345.00 - GRPRAR 345KV CKT Z	720	720	0.03423	104.4028	MERRCRT4 230.00 - WISHEK 230KV CKT 1
FDNS	00NR	5	25SP	G15_042	TO->FROM	GRPRAR1-LNX3345.00 - GRPRAR 345KV CKT Z	720	720	0.0367	104.3867	BLOOMFIELD - CREIGHTON 115KV CKT 1
FDNS	00NR	5	25SP	G15_042	TO->FROM	GRPRAR1-LNX3345.00 - GRPRAR 345KV CKT Z	720	720	0.03383	104.3742	MENNO JCT - TRIPP JCT 115KV CKT 1
FDNS	00NR	5	25SP	G15_042	TO->FROM	GRPRAR1-LNX3345.00 - GRPRAR 345KV CKT Z	720	720	0.03435	104.3723	GEN334433 1-SABINE UNIT 3
FDNS	00NR	5	25SP	G15_042	TO->FROM	GRPRAR1-LNX3345.00 - GRPRAR 345KV CKT Z	720	720	0.03412	104.3669	BROOKING COUNTY - BSSOUTH3 345.00 345KV CKT 1
FDNS	00NR	5	25SP	G15_042	TO->FROM	GRPRAR1-LNX3345.00 - GRPRAR 345KV CKT Z	720	720	0.03434	104.3667	GARRISON - JAMES TOWN 230KV CKT 1
FDNS	00NR	5	25SP	G15_042	TO->FROM	GRPRAR1-LNX3345.00 - GRPRAR 345KV CKT Z	720	720	0.03435	104.3568	GEN635213 3-NEAL UNIT 3
FDNS	00NR	5	25SP	G15_042	TO->FROM	GRPRAR1-LNX3345.00 - GRPRAR 345KV CKT Z	720	720	0.0367	104.3403	BLOOMFIELD - GAVINS POINT 115KV CKT 1
FDNS	00NR	5	25SP	G15_042	TO->FROM	GRPRAR1-LNX3345.00 - GRPRAR 345KV CKT Z	720	720	0.03435	104.336	GEN531447 1-HOLCOMB GENERATOR
FDNS	00NR	5	25SP	G15_042	TO->FROM	GRPRAR1-LNX3345.00 - GRPRAR 345KV CKT Z	720	720	0.03435	104.3095	GEN336222 1-LITTLE GYPSY UNIT#2
FDNS	00NR	5	17SP	G15_042	TO->FROM	GRPRAR1-LNX3345.00 - GRPRAR 345KV CKT Z	720	720	0.03579	104.3052	GEN659125 1-COVEY
FDNS	00NR	5	25SP	G15_042	TO->FROM	GRPRAR1-LNX3345.00 - GRPRAR 345KV CKT Z	720	720	0.03473	104.3	ADAMS - PLEASANT VALLEY 345KV CKT 1
FDNS	00NR	5	25SP	G15_042	TO->FROM	GRPRAR1-LNX3345.00 - GRPRAR 345KV CKT Z	720	720	0.03442	104.2865	APPLEDORN 4 230.00 - WATERTOWN 230KV CKT 1
FDNS	00NR	5	25SP	G15_042	TO->FROM	GRPRAR1-LNX3345.00 - GRPRAR 345KV CKT Z	720	720	0.03442	104.2865	APPLEDORN 4 230.00 - WATERTOWN 230KV CKT 1
FDNS	00NR	5	25SP	G15_042	TO->FROM	GRPRAR1-LNX3345.00 - GRPRAR 345KV CKT Z	720	720	0.03448	104.2664	ARKANSAS NUCLEAR ONE - FT SMITH 500KV CKT 1
FDNS	00NR	5	25SP	G15_042	TO->FROM	GRPRAR1-LNX3345.00 - GRPRAR 345KV CKT Z	720	720	0.03448	104.2664	ARKANSAS NUCLEAR ONE - FT SMITH 500KV CKT 1
FDNS	00NR	5	25SP	G15_042	TO->FROM	GRPRAR1-LNX3345.00 - GRPRAR 345KV CKT Z	720	720	0.03435	104.2567	GEN336152 1-WATERFORD UNIT#2
FDNS	00NR	5	25SP	G15_042	TO->FROM	GRPRAR1-LNX3345.00 - GRPRAR 345KV CKT Z	720	720	0.03435	104.2566	GEN336151 1-WATERFORD UNIT#1
FDNS	00NR	5	25SP	G15_042	TO->FROM	GRPRAR1-LNX3345.00 - GRPRAR 345KV CKT Z	720	720	0.03425	104.2527	BSSOUTH3 345.00 - ELLENDLMVP3 345.00 345KV CKT 1
FDNS	00NR	5	25SP	G15_042	TO->FROM	GRPRAR1-LNX3345.00 - GRPRAR 345KV CKT Z	720	720	0.03425	104.2527	BSSOUTH3 345.00 - ELLENDLMVP3 345.00 345KV CKT 1
FDNS	00NR	5	25SP	G15_042	TO->FROM	GRPRAR1-LNX3345.00 - GRPRAR 345KV CKT Z	720	720	0.03383	104.2404	MENNO JCT - UTICA 115KV CKT 1
FDNS	00NR	5	25SP	G15_042	TO->FROM	GRPRAR1-LNX3345.00 - GRPRAR 345KV CKT Z	720	720	0.03425	104.2313	ELLENDLMVP3 345.00 (1) 345/230/34.5KV TRANSFORMER CKT 1
FDNS	00NR	5	25SP	G15_042	TO->FROM	GRPRAR1-LNX3345.00 - GRPRAR 345KV CKT Z	720	720	0.03442	104.2219	APPLEDORN 4 230.00 - GRANITE FALLS 230KV CKT 1
FDNS	00NR	5	25SP	G15_042	TO->FROM	GRPRAR1-LNX3345.00 - GRPRAR 345KV CKT Z	720	720	0.03442	104.2219	APPLEDORN 4 230.00 - GRANITE FALLS 230KV CKT 1
FDNS	00NR	5	25SP	G15_042	TO->FROM	GRPRAR1-LNX3345.00 - GRPRAR 345KV CKT Z	720	720	0.03442	104.2206	ALEXMRES3 345.00 - WAITE PARK 345KV CKT 1

SOLUTION	GROUP	SCENARIO	SEASON	SOURCE	DIRECTION	MONITORED ELEMENT	RATEA (MVA)	RATEB(MVA)	TDF	TC%LOADING (% MVA)	CONTINGENCY
FDNS	00NR	5	25SP	G15_042	TO->FROM	GRPRAR1-LNX3345.00 - GRPRAR 345KV CKT Z	720	720	0.03441	104.2156	BLAIR - GRANITE FALLS 230KV CKT 1
FDNS	00NR	5	25SP	G15_042	TO->FROM	GRPRAR1-LNX3345.00 - GRPRAR 345KV CKT Z	720	720	0.03441	104.2156	BLAIR - GRANITE FALLS 230KV CKT 1
FDNS	00NR	5	25SP	G15_042	TO->FROM	GRPRAR1-LNX3345.00 - GRPRAR 345KV CKT Z	720	720	0.03465	104.1998	NMA B3 345 345.00 - NORTH LA CROSSE 345KV CKT 1
FDNS	00NR	5	25SP	G15_042	TO->FROM	GRPRAR1-LNX3345.00 - GRPRAR 345KV CKT Z	720	720	0.03435	104.1973	GEN641089 2-ENERGY CENTER 2
FDNS	00NR	5	25SP	G15_042	TO->FROM	GRPRAR1-LNX3345.00 - GRPRAR 345KV CKT Z	720	720	0.03435	104.1854	GEN303007 1-1BC2 U2
FDNS	00NR	5	25SP	G15_042	TO->FROM	GRPRAR1-LNX3345.00 - GRPRAR 345KV CKT Z	720	720	0.03435	104.1801	GEN303006 1-1BC2 U1
FDNS	00NR	5	25SP	G15_042	TO->FROM	GRPRAR1-LNX3345.00 - GRPRAR 345KV CKT Z	720	720	0.03392	104.1754	WINNER - WITTEN 115KV CKT 1
FDNS	00NR	5	25SP	G15_042	TO->FROM	GRPRAR1-LNX3345.00 - GRPRAR 345KV CKT Z	720	720	0.03435	104.1692	P13:230:UMZW:# 2218 #: FP IN MT. LOSS OF TRANSFORMER (AT2).
FDNS	00NR	5	25SP	G15_042	TO->FROM	GRPRAR1-LNX3345.00 - GRPRAR 345KV CKT Z	720	720	0.03435	104.1576	GEN532751 1-WOLF CREEK GENERATING STATION UNIT 1
FDNS	00NR	5	25SP	G15_042	TO->FROM	GRPRAR1-LNX3345.00 - GRPRAR 345KV CKT Z	720	720	0.03434	104.1518	FARGO - JAMES TOWN 230KV CKT 1
FDNS	00NR	5	25SP	G15_042	TO->FROM	GRPRAR1-LNX3345.00 - GRPRAR 345KV CKT Z	720	720	0.03435	104.1454	GEN562921 1-G15054_2 0.6900
FDNS	00NR	5	25SP	G15_042	TO->FROM	GRPRAR1-LNX3345.00 - GRPRAR 345KV CKT Z	720	720	0.03383	104.1412	P12:115:UMZZ:# 237 #: MEN IN SD. MENNO JUNCTION IS A TAP (UJ-MEN-TP).
FDNS	00NR	5	25SP	G15_042	TO->FROM	GRPRAR1-LNX3345.00 - GRPRAR 345KV CKT Z	720	720	0.03451	104.1405	NORTH ROCHESTER - PRAIRIE ISLAND 345KV CKT 1
FDNS	00NR	5	25SP	G15_042	TO->FROM	GRPRAR1-LNX3345.00 - GRPRAR 345KV CKT Z	720	720	0.03462	104.1391	G15094_T 345.00 - LARAMIE RIVER 345KV CKT 1
FDNS	00NR	5	25SP	G15_042	TO->FROM	GRPRAR1-LNX3345.00 - GRPRAR 345KV CKT Z	720	720	0.03434	104.1299	FARGO - JAMES TOWN 230KV CKT 2
FDNS	00NR	5	25SP	G15_042	TO->FROM	GRPRAR1-LNX3345.00 - GRPRAR 345KV CKT Z	720	720	0.03435	104.1192	GEN303008 1-1BC2 U3
FDNS	00NR	5	25SP	G15_042	TO->FROM	GRPRAR1-LNX3345.00 - GRPRAR 345KV CKT Z	720	720	0.0348	104.1173	HUNTLEY3 345.00 - LEDYARD3 345.00 345KV CKT 1
FDNS	00NR	5	25SP	G15_042	TO->FROM	GRPRAR1-LNX3345.00 - GRPRAR 345KV CKT Z	720	720	0.03435	104.1137	GEN336170 1-GULF OXY U4
FDNS	00NR	5	25SP	G15_042	TO->FROM	GRPRAR1-LNX3345.00 - GRPRAR 345KV CKT Z	720	720	0.03434	104.1122	BISMARK - JAMES TOWN 230KV CKT 1
FDNS	00NR	5	25SP	G15_042	TO->FROM	GRPRAR1-LNX3345.00 - GRPRAR 345KV CKT Z	720	720	0.03434	104.0997	BISMARK - WEBER 230KV CKT 1
FDNS	00NR	5	25SP	G15_042	TO->FROM	GRPRAR1-LNX3345.00 - GRPRAR 345KV CKT Z	720	720	0.04353	104.0953	RAUN - SIOUX CITY 345KV CKT 1
FDNS	00NR	5	25SP	G15_042	TO->FROM	GRPRAR1-LNX3345.00 - GRPRAR 345KV CKT Z	720	720	0.04353	104.0953	RAUN - SIOUX CITY 345KV CKT 1
FDNS	00NR	5	25SP	G15_042	TO->FROM	GRPRAR1-LNX3345.00 - GRPRAR 345KV CKT Z	720	720	0.03435	104.092	GEN562596 1-G14_059_3 0.6900
FDNS	00NR	5	20SP	G15_042	TO->FROM	GRPRAR1-LNX3345.00 - GRPRAR 345KV CKT Z	720	720	0.03403	104.0913	BASE CASE
FDNS	00NR	5	25SP	G15_042	TO->FROM	GRPRAR1-LNX3345.00 - GRPRAR 345KV CKT Z	720	720	0.03434	104.0865	JAMES TOWN - WEBER 230KV CKT 1
FDNS	00NR	5	25SP	G15_042	TO->FROM	GRPRAR1-LNX3345.00 - GRPRAR 345KV CKT Z	720	720	0.03718	104.0785	P13:230-345:NPPD:STEGALL3:KV3A
FDNS	00NR	5	25SP	G15_042	TO->FROM	GRPRAR1-LNX3345.00 - GRPRAR 345KV CKT Z	720	720	0.03718	104.0744	STEGALL (SGQ KV3A) 345/230/13.8KV TRANSFORMER CKT 1
FDNS	00NR	5	25SP	G15_042	TO->FROM	GRPRAR1-LNX3345.00 - GRPRAR 345KV CKT Z	720	720	0.03483	104.0708	SIDNEY - SIDNEY TRANSFORMER 230KV CKT 1
FDNS	00NR	5	25SP	G15_042	TO->FROM	GRPRAR1-LNX3345.00 - GRPRAR 345KV CKT Z	720	720	0.03483	104.0707	P13:230-345:NPPD:SIDNEY 3:KV2A
FDNS	00NR	5	25SP	G15_042	TO->FROM	GRPRAR1-LNX3345.00 - GRPRAR 345KV CKT Z	720	720	0.03483	104.0707	SIDNEY (SDQ KV2A) 345/230/13.8KV TRANSFORMER CKT 1
FDNS	00NR	5	25SP	G15_042	TO->FROM	GRPRAR1-LNX3345.00 - GRPRAR 345KV CKT Z	720	720	0.03472	104.0692	HUNTLEY3 345.00 - LAKEFIELD 3 345KV CKT 1
FDNS	00NR	5	25SP	G15_042	TO->FROM	GRPRAR1-LNX3345.00 - GRPRAR 345KV CKT Z	720	720	0.03391	104.0662	FT THOMPSON - HURON 230KV CKT 1
FDNS	00NR	5	25SP	G15_042	TO->FROM	GRPRAR1-LNX3345.00 - GRPRAR 345KV CKT Z	720	720	0.03391	104.0662	FT THOMPSON - HURON 230KV CKT 1
FDNS	00NR	5	25SP	G15_042	TO->FROM	GRPRAR1-LNX3345.00 - GRPRAR 345KV CKT Z	720	720	0.03391	104.0662	FT THOMPSON - HURON 230KV CKT 2
FDNS	00NR	5	25SP	G15_042	TO->FROM	GRPRAR1-LNX3345.00 - GRPRAR 345KV CKT Z	720	720	0.03391	104.0662	FT THOMPSON - HURON 230KV CKT 2
FDNS	00NR	5	25SP	G15_042	TO->FROM	GRPRAR1-LNX3345.00 - GRPRAR 345KV CKT Z	720	720	0.03718	104.0659	STEGALL - STEGALL TRANSFORMER 230KV CKT 1
FDNS	00NR	5	25SP	G15_042	TO->FROM	GRPRAR1-LNX3345.00 - GRPRAR 345KV CKT Z	720	720	0.03435	104.0637	BALTA - RAMSEY 230KV CKT 1
FDNS	00NR	5	25SP	G15_042	TO->FROM	GRPRAR1-LNX3345.00 - GRPRAR 345KV CKT Z	720	720	0.03515	104.0589	P12:230:UMZW:# 733 #: FT IN SD. FT-BG2 LINE FAULT
FDNS	00NR	5	25SP	G15_042	TO->FROM	GRPRAR1-LNX3345.00 - GRPRAR 345KV CKT Z	720	720	0.03515	104.0584	FT THOMPSON - LOWERBRULE 4230.00 230KV CKT 1
FDNS	00NR	5	25SP	G15_042	TO->FROM	GRPRAR1-LNX3345.00 - GRPRAR 345KV CKT Z	720	720	0.03515	104.0584	FT THOMPSON - LOWERBRULE 4230.00 230KV CKT 1
FDNS	00NR	5	25SP	G15_042	TO->FROM	GRPRAR1-LNX3345.00 - GRPRAR 345KV CKT Z	720	720	0.03515	104.0548	LOWERBRULE 4230.00 - RELIANCE 4 230.00 230KV CKT 1
FDNS	00NR	5	25SP	G15_042	TO->FROM	GRPRAR1-LNX3345.00 - GRPRAR 345KV CKT Z	720	720	0.03485	104.0454	P13:115-230:TSGT:SIDNEY-KV1A
FDNS	00NR	5	25SP	G15_042	TO->FROM	GRPRAR1-LNX3345.00 - GRPRAR 345KV CKT Z	720	720	0.03435	104.0444	GEN501811 1-RODEMACHER UNIT 1
FDNS	00NR	5	25SP	G15_042	TO->FROM	GRPRAR1-LNX3345.00 - GRPRAR 345KV CKT Z	720	720	0.03436	104.0131	FORMAN - HANKINSON 230KV CKT 1
FDNS	00NR	5	25SP	G15_042	TO->FROM	GRPRAR1-LNX3345.00 - GRPRAR 345KV CKT Z	720	720	0.03435	104.0047	LAWRENCE ENERGY CENTER UNIT 5 - LAWRENCE HILL 230KV CKT 1
FDNS	00NR	5	25SP	G15_042	TO->FROM	GRPRAR1-LNX3345.00 - GRPRAR 345KV CKT Z	720	720	0.03435	104.0047	LAWRENCE ENERGY CENTER UNIT 5 230/24.0KV TRANSFORMER CKT 1
FDNS	00NR	5	25SP	G15_042	TO->FROM	GRPRAR1-LNX3345.00 - GRPRAR 345KV CKT Z	720	720	0.03435	103.9994	GEN334070 1-LEWIS CREEK 1
FDNS	00NR	5	25SP	G15_042	TO->FROM	GRPRAR1-LNX3345.00 - GRPRAR 345KV CKT Z	720	720	0.03435	103.9993	GEN334071 1-LEWIS CREEK 2
FDNS	00NR	5	25SP	G15_042	TO->FROM	GRPRAR1-LNX3345.00 - GRPRAR 345KV CKT Z	720	720	0.03435	103.997	PRAIRIE ISLAND 345/20.0KV TRANSFORMER CKT 1
FDNS	00NR	5	25SP	G15_042	TO->FROM	GRPRAR1-LNX3345.00 - GRPRAR 345KV CKT Z	720	720	0.03435	103.9958	PRAIRIE ISLAND 345/20.0KV TRANSFORMER CKT 2
FDNS	00NR	5	25SP	G15_042	TO->FROM	GRPRAR1-LNX3345.00 - GRPRAR 345KV CKT Z	720	720	0.03435	103.9925	GEN659118 1-LARAMIE RIVER UNIT1
FDNS	00NR	5	25SP	G15_042	TO->FROM	GRPRAR1-LNX3345.00 - GRPRAR 345KV CKT Z	720	720	0.03392	103.9923	GREGORY - WINNER 115KV CKT 1
FDNS	00NR	5	25SP	G15_042	TO->FROM	GRPRAR1-LNX3345.00 - GRPRAR 345KV CKT Z	720	720	0.03435	103.9792	SEMINOLE 138/20.9KV TRANSFORMER CKT 1
FDNS	00NR	5	25SP	G15_042	TO->FROM	GRPRAR1-LNX3345.00 - GRPRAR 345KV CKT Z	720	720	0.03435	103.9741	TATANKA 230/34.5KV TRANSFORMER CKT 1
FDNS	00NR	5	25SP	G15_042	TO->FROM	GRPRAR1-LNX3345.00 - GRPRAR 345KV CKT Z	720	720	0.03392	103.9705	P12:115:UMZW:# 172 #: WI IN SD.
FDNS	00NR	5	25SP	G15_042	TO->FROM	GRPRAR1-LNX3345.00 - GRPRAR 345KV CKT Z	720	720	0.03435	103.9637	GEN645012 2-NEBRASKA CITY 2
FDNS	00NR	5	25SP	G15_042	TO->FROM	GRPRAR1-LNX3345.00 - GRPRAR 345KV CKT Z	720	720	0.03435	103.9633	GEN337766 1-TRACTEBEL UNIT S1
FDNS	00NR	5	25SP	G15_042	TO->FROM	GRPRAR1-LNX3345.00 - GRPRAR 345KV CKT Z	720	720	0.03435	103.9505	GEN337757 1-DUKE HOTSPRINGS STG1
FDNS	00NR	5	25SP	G15_042	TO->FROM	GRPRAR1-LNX3345.00 - GRPRAR 345KV CKT Z	720	720	0.03434	103.9396	ELM CREEK - MONTICELLO 345KV CKT 1
FDNS	00NR	5	25SP	G15_042	TO->FROM	GRPRAR1-LNX3345.00 - GRPRAR 345KV CKT Z	720	720	0.03435	103.9287	GEN501910 1-ACADIA UNIT ST1
FDNS	00NR	5	25SP	G15_042	TO->FROM	GRPRAR1-LNX3345.00 - GRPRAR 345KV CKT Z	720	720	0.03435	103.9275	GEN645011 1-NEBRASKA CITY 1
FDNS	00NR	5	25SP	G15_042	TO->FROM	GRPRAR1-LNX3345.00 - GRPRAR 345KV CKT Z	720	720	0.0344	103.9241	HANKINSON - WAHPETON 230KV CKT 1
FDNS	00NR	5	25SP	G15_042	TO->FROM	GRPRAR1-LNX3345.00 - GRPRAR 345KV CKT Z	720	720	0.03436	103.9235	AUDUBON - SHEYNNE 230KV CKT 1
FDNS	00NR	5	25SP	G15_042	TO->FROM	GRPRAR1-LNX3345.00 - GRPRAR 345KV CKT Z	720	720	0.03426	103.9201	MT VERN - STORLA 115KV CKT 1
FDNS	00NR	5	25SP	G15_042	TO->FROM	GRPRAR1-LNX3345.00 - GRPRAR 345KV CKT Z	720	720	0.0349	103.9179	P12:115:NPPD:WAPA1:CHADRON7:BOXBUTE7:BTB
FDNS	00NR	5	25SP	G15_042	TO->FROM	GRPRAR1-LNX3345.00 - GRPRAR 345KV CKT Z	720	720	0.03458	103.913	OVEXFRMCCOVE
FDNS	00NR	5	25SP	G15_042	TO->FROM	GRPRAR1-LNX3345.00 - GRPRAR 345KV CKT Z	720	720	0.03436	103.911	ELLENDLMVP4 230.00 - OAKES 230KV CKT 1
FDNS	00NR	5	25SP	G15_042	TO->FROM	GRPRAR1-LNX3345.00 - GRPRAR 345KV CKT Z	720	720	0.03436	103.911	ELLENDLMVP4 230.00 - OAKES 230KV CKT 1
FDNS	00NR	5	25SP	G15_042	TO->FROM	GRPRAR1-LNX3345.00 - GRPRAR 345KV CKT Z	720	720	0.03436	103.9108	FORMAN - OAKES 230KV CKT 1
FDNS	00NR	5	25SP	G15_042	TO->FROM	GRPRAR1-LNX3345.00 - GRPRAR 345KV CKT Z	720	720	0.03435	103.9059	GEN336221 1-LITTLE GYPSY UNIT#1
FDNS	00NR	5	25SP	G15_042	TO->FROM	GRPRAR1-LNX3345.00 - GRPRAR 345KV CKT Z	720	720	0.03731	103.8948	BELDEN - HOSKINS 115KV CKT 1
FDNS	00NR	5	25SP	G15_042	TO->FROM	GRPRAR1-LNX3345.00 - GRPRAR 345KV CKT Z	720	720	0.03439	103.8926	FERGSFL4 230.00 - WAHPETON 230KV CKT 1
FDNS	00NR	5	25SP	G15_042	TO->FROM	GRPRAR1-LNX3345.00 - GRPRAR 345KV CKT Z	720	720	0.03515	103.8918	RELIANCE 4 230.00 - WITTEN 4 230.00 230KV CKT 1
FDNS	00NR	5	25SP	G15_042	TO->FROM	GRPRAR1-LNX3345.00 - GRPRAR 345KV CKT Z	720	720	0.03435	103.8915	GEN532651 1-JEFFREY ENERGY CENTER UNIT 1
FDNS	00NR	5	25SP	G15_042	TO->FROM	GRPRAR1-LNX3345.00 - GRPRAR 345KV CKT Z	720	720	0.03447	103.8892	FRANKS - HUBEN 345KV CKT 1
FDNS	00NR	5	25SP	G15_042	TO->FROM	GRPRAR1-LNX3345.00 - GRPRAR 345KV CKT Z	720	720	0.03435	103.8892	PRAIRIE - WINGER 230KV CKT 1
FDNS	00NR	5	25SP	G15_042	TO->FROM	GRPRAR1-LNX3345.00 - GRPRAR 345KV CKT Z	720	720	0.03435	103.8862	GEN532652 1-JEFFREY ENERGY CENTER UNIT 2
FDNS	00NR	5	25SP	G15_042	TO->FROM	GRPRAR1-LNX3345.00 - GRPRAR 345KV CKT Z	720	720	0.03435	103.8861	GEN532653 1-JEFFREY ENERGY CENTER UNIT 3
FDNS	00NR	5	25SP	G15_042	TO->FROM	GRPRAR1-LNX3345.00 - GRPRAR 345KV CKT Z	720	720	0.03435	103.88	GEN562912 1-G15053_3 0.6900

SOLUTION	GROUP	SCENARIO	SEASON	SOURCE	DIRECTION	MONITORED ELEMENT	RATEA (MVA)	RATEB(MVA)	TDF	TC%LOADING (% MVA)	CONTINGENCY
FDNS	00NR	5	25SP	G15_042	TO->FROM	GRPRAR1-LNX3345.00 - GRPRAR 345KV CKT Z	720	720	0.03523	103.8734	NOBLES - SPLIT ROCK 345KV CKT 1
FDNS	00NR	5	25SP	G15_042	TO->FROM	GRPRAR1-LNX3345.00 - GRPRAR 345KV CKT Z	720	720	0.03435	103.8727	GEN334431 1-SABINE UNIT 1
FDNS	00NR	5	25SP	G15_042	TO->FROM	GRPRAR1-LNX3345.00 - GRPRAR 345KV CKT Z	720	720	0.03435	103.8727	GEN334432 1-SABINE UNIT 2
FDNS	00NR	5	25SP	G15_042	TO->FROM	GRPRAR1-LNX3345.00 - GRPRAR 345KV CKT Z	720	720	0.03435	103.8695	GEN345765 H-1SIOUX 2 18.000
FDNS	00NR	5	25SP	G15_042	TO->FROM	GRPRAR1-LNX3345.00 - GRPRAR 345KV CKT Z	720	720	0.03435	103.8691	J316_SUB 230.00 230/34.5KV TRANSFORMER CKT 1
FDNS	00NR	5	25SP	G15_042	TO->FROM	GRPRAR1-LNX3345.00 - GRPRAR 345KV CKT Z	720	720	0.03435	103.8686	GEN337764 1-TRACTEBEL UNIT C1
FDNS	00NR	5	25SP	G15_042	TO->FROM	GRPRAR1-LNX3345.00 - GRPRAR 345KV CKT Z	720	720	0.03435	103.8686	GEN337765 1-TRACTEBEL UNIT C2
FDNS	00NR	5	25SP	G15_042	TO->FROM	GRPRAR1-LNX3345.00 - GRPRAR 345KV CKT Z	720	720	0.03435	103.8684	GEN336446 1-MICHOUD UNIT #2
FDNS	00NR	5	25SP	G15_042	TO->FROM	GRPRAR1-LNX3345.00 - GRPRAR 345KV CKT Z	720	720	0.03435	103.8681	GRAND GULF 500/22.0KV TRANSFORMER CKT 1
FDNS	00NR	5	25SP	G15_042	TO->FROM	GRPRAR1-LNX3345.00 - GRPRAR 345KV CKT Z	720	720	0.0349	103.8639	CHADRON - DUNLAP 115KV CKT 1
FDNS	00NR	5	25SP	G15_042	TO->FROM	GRPRAR1-LNX3345.00 - GRPRAR 345KV CKT Z	720	720	0.0352	103.8626	PLYMOUTH - SIOUX CITY 161KV CKT 1
FDNS	00NR	5	25SP	G15_042	TO->FROM	GRPRAR1-LNX3345.00 - GRPRAR 345KV CKT Z	720	720	0.0352	103.8626	PLYMOUTH - SIOUX CITY 161KV CKT 1
FDNS	00NR	5	25SP	G15_042	TO->FROM	GRPRAR1-LNX3345.00 - GRPRAR 345KV CKT Z	720	720	0.03506	103.8618	DENISON - SIOUX CITY 230KV CKT 1
FDNS	00NR	5	25SP	G15_042	TO->FROM	GRPRAR1-LNX3345.00 - GRPRAR 345KV CKT Z	720	720	0.03515	103.8584	WITTEN 4 230.00 () 230/115/13.8KV TRANSFORMER CKT 1
FDNS	00NR	5	25SP	G15_042	TO->FROM	GRPRAR1-LNX3345.00 - GRPRAR 345KV CKT Z	720	720	0.03439	103.8408	FERGSFL4 230.00 - GRE-SILVRLK4230.00 230KV CKT 1
FDNS	00NR	5	25SP	G15_042	TO->FROM	GRPRAR1-LNX3345.00 - GRPRAR 345KV CKT Z	720	720	0.03435	103.8408	BALTA - MCHENRY 230KV CKT 1
FDNS	00NR	5	25SP	G15_042	TO->FROM	GRPRAR1-LNX3345.00 - GRPRAR 345KV CKT Z	720	720	0.03533	103.835	MARTIN - SHANNON 115KV CKT 1
FDNS	00NR	5	25SP	G15_042	TO->FROM	GRPRAR1-LNX3345.00 - GRPRAR 345KV CKT Z	720	720	0.03435	103.8305	TOLK STATION EAST 230/24.0KV TRANSFORMER CKT 1
FDNS	00NR	5	25SP	G15_042	TO->FROM	GRPRAR1-LNX3345.00 - GRPRAR 345KV CKT Z	720	720	0.03435	103.8303	GEN501823 1-TECHE UNIT 3
FDNS	00NR	5	25SP	G15_042	TO->FROM	GRPRAR1-LNX3345.00 - GRPRAR 345KV CKT Z	720	720	0.03435	103.8296	GEN336242 1-1NMIL ST1 18.000
FDNS	00NR	5	25SP	G15_042	TO->FROM	GRPRAR1-LNX3345.00 - GRPRAR 345KV CKT Z	720	720	0.03447	103.8288	GRE-CEDARMT3345.00 - HELENA 345KV CKT 1
FDNS	00NR	5	25SP	G15_042	TO->FROM	GRPRAR1-LNX3345.00 - GRPRAR 345KV CKT Z	720	720	0.03447	103.8288	GRE-CEDARMT3345.00 - HELENA 345KV CKT 2
FDNS	00NR	5	25SP	G15_042	TO->FROM	GRPRAR1-LNX3345.00 - GRPRAR 345KV CKT Z	720	720	0.03435	103.8267	GEN636641 1-LOUISA UNIT 1
FDNS	00NR	5	25SP	G15_042	TO->FROM	GRPRAR1-LNX3345.00 - GRPRAR 345KV CKT Z	720	720	0.03452	103.8178	HAMPTON CORNER - NORTH ROCHESTER 345KV CKT 1
FDNS	00NR	5	25SP	G15_042	TO->FROM	GRPRAR1-LNX3345.00 - GRPRAR 345KV CKT Z	720	720	0.03671	103.8168	OAHE - PHILIP TAP 230KV CKT 1
FDNS	00NR	5	25SP	G15_042	TO->FROM	GRPRAR1-LNX3345.00 - GRPRAR 345KV CKT Z	720	720	0.03435	103.8121	JUDSON LARGE 115/15.0KV TRANSFORMER CKT 1
FDNS	00NR	5	25SP	G15_042	TO->FROM	GRPRAR1-LNX3345.00 - GRPRAR 345KV CKT Z	720	720	0.03435	103.8121	JUDSON LARGE 115/15.0KV TRANSFORMER CKT 1
FDNS	00NR	5	25SP	G15_042	TO->FROM	GRPRAR1-LNX3345.00 - GRPRAR 345KV CKT Z	720	720	0.03435	103.8059	OKLAUN 345/24.0KV TRANSFORMER CKT 1
FDNS	00NR	5	25SP	G15_042	TO->FROM	GRPRAR1-LNX3345.00 - GRPRAR 345KV CKT Z	720	720	0.03435	103.8024	GEN334030 1-FRONTIER UNIT 1
FDNS	00NR	5	25SP	G15_042	TO->FROM	GRPRAR1-LNX3345.00 - GRPRAR 345KV CKT Z	720	720	0.03435	103.8021	GEN334031 1-FRONTIER UNIT 2
FDNS	00NR	5	25SP	G15_042	TO->FROM	GRPRAR1-LNX3345.00 - GRPRAR 345KV CKT Z	720	720	0.03435	103.8016	GEN345756 H-1SIOUX 1 18.000
FDNS	00NR	5	25SP	G15_042	TO->FROM	GRPRAR1-LNX3345.00 - GRPRAR 345KV CKT Z	720	720	0.03445	103.7995	GRE-CEDARMT3345.00 - LYON COUNTY 345KV CKT 2
FDNS	00NR	5	25SP	G15_042	TO->FROM	GRPRAR1-LNX3345.00 - GRPRAR 345KV CKT Z	720	720	0.03435	103.7974	P13:230-345:NPPD:NUCOR-1
FDNS	00NR	5	25SP	G15_042	TO->FROM	GRPRAR1-LNX3345.00 - GRPRAR 345KV CKT Z	720	720	0.03435	103.7968	GEN338443 1-PANDA S1
FDNS	00NR	5	25SP	G15_042	TO->FROM	GRPRAR1-LNX3345.00 - GRPRAR 345KV CKT Z	720	720	0.03458	103.7963	CHADRON - WAYSIDE 115KV CKT 1
FDNS	00NR	5	25SP	G15_042	TO->FROM	GRPRAR1-LNX3345.00 - GRPRAR 345KV CKT Z	720	720	0.03458	103.7963	P13:115-230:NPPD:WAYSIDE4:T1
FDNS	00NR	5	25SP	G15_042	TO->FROM	GRPRAR1-LNX3345.00 - GRPRAR 345KV CKT Z	720	720	0.03435	103.7957	GEN562438 1-G13-032 0.6900
FDNS	00NR	5	25SP	G15_042	TO->FROM	GRPRAR1-LNX3345.00 - GRPRAR 345KV CKT Z	720	720	0.03365	103.7938	FT RANDAL - WHITE SWAN 115KV CKT 1
FDNS	00NR	5	25SP	G15_042	TO->FROM	GRPRAR1-LNX3345.00 - GRPRAR 345KV CKT Z	720	720	0.03458	103.7929	WAYSIDE (WAYSIDE T1) 230/115/13.8KV TRANSFORMER CKT 1
FDNS	00NR	5	25SP	G15_042	TO->FROM	GRPRAR1-LNX3345.00 - GRPRAR 345KV CKT Z	720	720	0.03435	103.7922	GEN336944 1-REX BROWN
FDNS	00NR	5	25SP	G15_042	TO->FROM	GRPRAR1-LNX3345.00 - GRPRAR 345KV CKT Z	720	720	0.03435	103.7908	GEN345832 1-1TS G1 13.800
FDNS	00NR	5	25SP	G15_042	TO->FROM	GRPRAR1-LNX3345.00 - GRPRAR 345KV CKT Z	720	720	0.03435	103.7905	GEN345841 2-1TS G2 13.800
FDNS	00NR	5	25SP	G15_042	TO->FROM	GRPRAR1-LNX3345.00 - GRPRAR 345KV CKT Z	720	720	0.03435	103.7898	GEN501970 1-EVANGELINE UNIT 7
FDNS	00NR	5	25SP	G15_042	TO->FROM	GRPRAR1-LNX3345.00 - GRPRAR 345KV CKT Z	720	720	0.03435	103.7826	GEN335612 1-WILLOW GLENN UNIT#2
FDNS	00NR	5	20SP	G15_042	TO->FROM	GRPRAR1-LNX3345.00 - GRPRAR 345KV CKT Z	720	720	0.03422	103.7091	BUCKNER7 345.00 - SPEARVILLE 345KV CKT 1
FDNS	00NR	5	20SP	G15_042	TO->FROM	GRPRAR1-LNX3345.00 - GRPRAR 345KV CKT Z	720	720	0.03422	103.7091	BUCKNER7 345.00 - SPEARVILLE 345KV CKT 1
FDNS	00NR	5	25SP	G15_042	TO->FROM	GRPRAR1-LNX3345.00 - GRPRAR 345KV CKT Z	720	720	0.03435	103.6772	GEN563282 1-G15094_3 0.6900
FDNS	00NR	5	20SP	G15_042	TO->FROM	GRPRAR1-LNX3345.00 - GRPRAR 345KV CKT Z	720	720	0.03689	103.6521	MINGO - RED WILLOW 345KV CKT 1
FDNS	00NR	5	20SP	G15_042	TO->FROM	GRPRAR1-LNX3345.00 - GRPRAR 345KV CKT Z	720	720	0.03689	103.6521	MINGO - RED WILLOW 345KV CKT 1
FDNS	00NR	5	20SP	G15_042	TO->FROM	GRPRAR1-LNX3345.00 - GRPRAR 345KV CKT Z	720	720	0.03419	103.6407	FT THOMPSON - OAHE 230KV CKT 1
FDNS	00NR	5	20SP	G15_042	TO->FROM	GRPRAR1-LNX3345.00 - GRPRAR 345KV CKT Z	720	720	0.03419	103.6407	FT THOMPSON - OAHE 230KV CKT 1
FDNS	00NR	5	20SP	G15_042	TO->FROM	GRPRAR1-LNX3345.00 - GRPRAR 345KV CKT Z	720	720	0.03419	103.6407	FT THOMPSON - OAHE 230KV CKT 2
FDNS	00NR	5	20SP	G15_042	TO->FROM	GRPRAR1-LNX3345.00 - GRPRAR 345KV CKT Z	720	720	0.03419	103.6407	FT THOMPSON - OAHE 230KV CKT 2
FDNS	00NR	5	20SP	G15_042	TO->FROM	GRPRAR1-LNX3345.00 - GRPRAR 345KV CKT Z	720	720	0.03345	103.6193	NELIGH - PETERSBRG.N7115.00 115KV CKT 1
FDNS	00NR	5	20SP	G15_042	TO->FROM	GRPRAR1-LNX3345.00 - GRPRAR 345KV CKT Z	720	720	0.03419	103.6157	FT THOMPSON - OAHE 230KV CKT 3
FDNS	00NR	5	20SP	G15_042	TO->FROM	GRPRAR1-LNX3345.00 - GRPRAR 345KV CKT Z	720	720	0.03419	103.6157	FT THOMPSON - OAHE 230KV CKT 3
FDNS	00NR	5	20SP	G15_042	TO->FROM	GRPRAR1-LNX3345.00 - GRPRAR 345KV CKT Z	720	720	0.03419	103.6157	FT THOMPSON - OAHE 230KV CKT 4
FDNS	00NR	5	20SP	G15_042	TO->FROM	GRPRAR1-LNX3345.00 - GRPRAR 345KV CKT Z	720	720	0.03419	103.6157	FT THOMPSON - OAHE 230KV CKT 4
FDNS	00NR	5	20SP	G15_042	TO->FROM	GRPRAR1-LNX3345.00 - GRPRAR 345KV CKT Z	720	720	0.03478	103.6004	AXTELL - POST ROCK 345KV CKT 1
FDNS	00NR	5	20SP	G15_042	TO->FROM	GRPRAR1-LNX3345.00 - GRPRAR 345KV CKT Z	720	720	0.03415	103.5904	G11_051T 345.00 - WOODWARD DISTRICT EHV 345KV CKT 1
FDNS	00NR	5	20SP	G15_042	TO->FROM	GRPRAR1-LNX3345.00 - GRPRAR 345KV CKT Z	720	720	0.03387	103.5847	BISMARK - L3 HAWDON 230KV CKT 1
FDNS	00NR	5	20SP	G15_042	TO->FROM	GRPRAR1-LNX3345.00 - GRPRAR 345KV CKT Z	720	720	0.0343	103.58	FALLOW 3 345.00 - GRIMES 345KV CKT 1
FDNS	00NR	5	20SP	G15_042	TO->FROM	GRPRAR1-LNX3345.00 - GRPRAR 345KV CKT Z	720	720	0.03403	103.5788	GEN659147 1-PIONEER 1G13.800
FDNS	00NR	5	20SP	G15_042	TO->FROM	GRPRAR1-LNX3345.00 - GRPRAR 345KV CKT Z	720	720	0.03403	103.5788	GEN659158 2-PIONEER G213.800
FDNS	00NR	5	20SP	G15_042	TO->FROM	GRPRAR1-LNX3345.00 - GRPRAR 345KV CKT Z	720	720	0.03403	103.5788	GEN659159 3-PIONEER G313.800
FDNS	00NR	5	20SP	G15_042	TO->FROM	GRPRAR1-LNX3345.00 - GRPRAR 345KV CKT Z	720	720	0.03403	103.5783	GEN659148 1-LONESMCRK 1G13.800
FDNS	00NR	5	20SP	G15_042	TO->FROM	GRPRAR1-LNX3345.00 - GRPRAR 345KV CKT Z	720	720	0.03403	103.5783	GEN659156 2-LONESMCRK 2G13.800
FDNS	00NR	5	20SP	G15_042	TO->FROM	GRPRAR1-LNX3345.00 - GRPRAR 345KV CKT Z	720	720	0.03403	103.5783	GEN659157 3-LONESMCRK 3G13.800
FDNS	00NR	5	20SP	G15_042	TO->FROM	GRPRAR1-LNX3345.00 - GRPRAR 345KV CKT Z	720	720	0.03403	103.5728	GEN657964 1-ASH2GEN9 0.5750
FDNS	00NR	5	20SP	G15_042	TO->FROM	GRPRAR1-LNX3345.00 - GRPRAR 345KV CKT Z	720	720	0.03403	103.5718	GEN672367 1-MERIDIAN GENERATOR 1 GT1
FDNS	00NR	5	20SP	G15_042	TO->FROM	GRPRAR1-LNX3345.00 - GRPRAR 345KV CKT Z	720	720	0.03403	103.5718	GEN672368 2-MERIDIAN GENERATOR 2 GT2
FDNS	00NR	5	20SP	G15_042	TO->FROM	GRPRAR1-LNX3345.00 - GRPRAR 345KV CKT Z	720	720	0.03403	103.571	GEN672358 1-CHAPLN1W 0.6900
FDNS	00NR	5	20SP	G15_042	TO->FROM	GRPRAR1-LNX3345.00 - GRPRAR 345KV CKT Z	720	720	0.03345	103.5661	ALBION - PETERSBURG 115KV CKT 1
FDNS	00NR	5	20SP	G15_042	TO->FROM	GRPRAR1-LNX3345.00 - GRPRAR 345KV CKT Z	720	720	0.03399	103.5539	G14-021T 345.00 - MULLNCR7 345.00 345KV CKT 1
FDNS	00NR	5	20SP	G15_042	TO->FROM	GRPRAR1-LNX3345.00 - GRPRAR 345KV CKT Z	720	720	0.03403	103.5483	GEN672349 3-CORY COGEN GENERATOR 3 ST
FDNS	00NR	5	20SP	G15_042	TO->FROM	GRPRAR1-LNX3345.00 - GRPRAR 345KV CKT Z	720	720	0.03399	103.5463	G15-005T 345.00 - MULLNCR7 345.00 345KV CKT 1
FDNS	00NR	5	20SP	G15_042	TO->FROM	GRPRAR1-LNX3345.00 - GRPRAR 345KV CKT Z	720	720	0.03403	103.5459	GEN672350 1-NIPAWIN GENERATOR 1
FDNS	00NR	5	20SP	G15_042	TO->FROM	GRPRAR1-LNX3345.00 - GRPRAR 345KV CKT Z	720	720	0.03403	103.5459	GEN672351 2-NIPAWIN GENERATOR 2
FDNS	00NR	5	20SP	G15_042	TO->FROM	GRPRAR1-LNX3345.00 - GRPRAR 345KV CKT Z	720	720	0.03403	103.5459	GEN672352 3-NIPAWIN GENERATOR 3

SOLUTION	GROUP	SCENARIO	SEASON	SOURCE	DIRECTION	MONITORED ELEMENT	RATEA (MVA)	RATEB(MVA)	TDF	TC%LOADING (% MVA)	CONTINGENCY
FDNS	00NR	5	20SP	G15_042	TO->FROM	GRPRAR1-LNX3345.00 - GRPRAR 345KV CKT Z	720	720	0.03419	103.54	POST ROCK (POSTROCK T1) 345/230/13.8KV TRANSFORMER CKT 1
FDNS	00NR	5	20SP	G15_042	TO->FROM	GRPRAR1-LNX3345.00 - GRPRAR 345KV CKT Z	720	720	0.03403	103.5388	GEN600012 2-BLACK DOG GEN 2
FDNSLock	00NR	5	20SP	G15_042	TO->FROM	GRPRAR1-LNX3345.00 - GRPRAR 345KV CKT Z	720	720	0.03378	103.5353	WATERTOWN (WT2 KU1A) 345/230/13.8KV TRANSFORMER CKT 1
FDNS	00NR	5	20SP	G15_042	TO->FROM	GRPRAR1-LNX3345.00 - GRPRAR 345KV CKT Z	720	720	0.03562	103.5327	G15061_T 345.00 - SETAB 345KV CKT 1
FDNS	00NR	5	20SP	G15_042	TO->FROM	GRPRAR1-LNX3345.00 - GRPRAR 345KV CKT Z	720	720	0.03287	103.5312	COOPER - MOORE 345KV CKT 1
FDNS	00NR	5	20SP	G15_042	TO->FROM	GRPRAR1-LNX3345.00 - GRPRAR 345KV CKT Z	720	720	0.03345	103.5259	P12:115:NPPD:1168B:ALBION 7:PETERSBRG.N7:BTB
FDNS	00NR	5	20SP	G15_042	TO->FROM	GRPRAR1-LNX3345.00 - GRPRAR 345KV CKT Z	720	720	0.03553	103.5248	BATTLE CREEK - COUNTY LINE 115KV CKT 1
FDNS	00NR	5	20SP	G15_042	TO->FROM	GRPRAR1-LNX3345.00 - GRPRAR 345KV CKT Z	720	720	0.03345	103.5233	PETERSBRG.N7115.00 - PETERSBURG 115KV CKT Z1
FDNS	00NR	5	20SP	G15_042	TO->FROM	GRPRAR1-LNX3345.00 - GRPRAR 345KV CKT Z	720	720	0.03403	103.5215	GEN590010 1-ERCOT EQUIVALENCE
FDNS	00NR	5	20SP	G15_042	TO->FROM	GRPRAR1-LNX3345.00 - GRPRAR 345KV CKT Z	720	720	0.03222	103.5146	COLUMEAST - NW68TH & HOLDREGE 345KV CKT 1
FDNS	00NR	5	20SP	G15_042	TO->FROM	GRPRAR1-LNX3345.00 - GRPRAR 345KV CKT Z	720	720	0.03222	103.5146	COLUMEAST - NW68TH & HOLDREGE 345KV CKT 1
FDNS	00NR	5	20SP	G15_042	TO->FROM	GRPRAR1-LNX3345.00 - GRPRAR 345KV CKT Z	720	720	0.03403	103.5031	GEN652548 5-FT RANDAL
FDNS	00NR	5	20SP	G15_042	TO->FROM	GRPRAR1-LNX3345.00 - GRPRAR 345KV CKT Z	720	720	0.03403	103.5031	GEN652549 7-FT RANDAL
FDNS	00NR	5	20SP	G15_042	TO->FROM	GRPRAR1-LNX3345.00 - GRPRAR 345KV CKT Z	720	720	0.03399	103.5026	G15-005T 345.00 - SIBLEY 345KV CKT 1
FDNS	00NR	5	20SP	G15_042	TO->FROM	GRPRAR1-LNX3345.00 - GRPRAR 345KV CKT Z	720	720	0.03403	103.4992	EMERY 161/18.0KV TRANSFORMER CKT 1
FDNS	00NR	5	20SP	G15_042	TO->FROM	GRPRAR1-LNX3345.00 - GRPRAR 345KV CKT Z	720	720	0.03403	103.4985	GEN652547 3-FT RANDAL
FDNS	00NR	5	20SP	G15_042	TO->FROM	GRPRAR1-LNX3345.00 - GRPRAR 345KV CKT Z	720	720	0.03403	103.4976	GEN652546 1-FT RANDAL
FDNS	00NR	5	20SP	G15_042	TO->FROM	GRPRAR1-LNX3345.00 - GRPRAR 345KV CKT Z	720	720	0.03403	103.4951	GEN590011 2-ERCOT EQUIVALENCE
FDNS	00NR	5	20SP	G15_042	TO->FROM	GRPRAR1-LNX3345.00 - GRPRAR 345KV CKT Z	720	720	0.03403	103.4888	GEN300003 1-THOMAS HILL UNIT 3
FDNS	00NR	5	20SP	G15_042	TO->FROM	GRPRAR1-LNX3345.00 - GRPRAR 345KV CKT Z	720	720	0.03407	103.484	DRAYTON - LETELLIER 230KV CKT 1
FDNS	00NR	5	20SP	G15_042	TO->FROM	GRPRAR1-LNX3345.00 - GRPRAR 345KV CKT Z	720	720	0.0343	103.4836	LARAMIE RIVER - STEGALL 345KV CKT 1
FDNS	00NR	5	20SP	G15_042	TO->FROM	GRPRAR1-LNX3345.00 - GRPRAR 345KV CKT Z	720	720	0.03403	103.4752	GEN600046 1-MECST
FDNS	00NR	5	20SP	G15_042	TO->FROM	GRPRAR1-LNX3345.00 - GRPRAR 345KV CKT Z	720	720	0.03403	103.4751	GEN672339 16-QE 16G 13.800
FDNS	00NR	5	20SP	G15_042	TO->FROM	GRPRAR1-LNX3345.00 - GRPRAR 345KV CKT Z	720	720	0.03403	103.4749	GEN659290 1-EDGECOL
FDNS	00NR	5	20SP	G15_042	TO->FROM	GRPRAR1-LNX3345.00 - GRPRAR 345KV CKT Z	720	720	0.03553	103.4616	ANTELOPE 7115.00 - COUNTY LINE 115KV CKT 1
FDNS	00NR	5	20SP	G15_042	TO->FROM	GRPRAR1-LNX3345.00 - GRPRAR 345KV CKT Z	720	720	0.03403	103.4611	GEN672393 2-NBECST2G 13.800
FDNS	00NR	5	20SP	G15_042	TO->FROM	GRPRAR1-LNX3345.00 - GRPRAR 345KV CKT Z	720	720	0.03403	103.457	GEN600050 1-FEP
FDNS	00NR	5	20SP	G15_042	TO->FROM	GRPRAR1-LNX3345.00 - GRPRAR 345KV CKT Z	720	720	0.03212	103.4509	COLUMEAST - SHELL CREEK 345KV CKT 1
FDNS	00NR	5	20SP	G15_042	TO->FROM	GRPRAR1-LNX3345.00 - GRPRAR 345KV CKT Z	720	720	0.03403	103.4466	GEN620324 3-HOOT LAKE 3 GEN
FDNS	00NR	5	20SP	G15_042	TO->FROM	GRPRAR1-LNX3345.00 - GRPRAR 345KV CKT Z	720	720	0.03453	103.4458	THEDFRD3 345.00 (THEDFORDT2) 345/115/13.8KV TRANSFORMER CKT 1
FDNS	00NR	5	20SP	G15_042	TO->FROM	GRPRAR1-LNX3345.00 - GRPRAR 345KV CKT Z	720	720	0.03403	103.4399	GEN672342 3-QUEEN ELIZABETH GENERATOR 3
FDNS	00NR	5	20SP	G15_042	TO->FROM	GRPRAR1-LNX3345.00 - GRPRAR 345KV CKT Z	720	720	0.03403	103.4317	GEN652410 3-FT PECK
FDNS	00NR	5	20SP	G15_042	TO->FROM	GRPRAR1-LNX3345.00 - GRPRAR 345KV CKT Z	720	720	0.0341	103.4316	ANTELOP-LNX3345.00 - BRDLAND-LNX3345.00 345KV CKT 1
FDNS	00NR	5	20SP	G15_042	TO->FROM	GRPRAR1-LNX3345.00 - GRPRAR 345KV CKT Z	720	720	0.03403	103.4271	LADISH 115/13.2KV TRANSFORMER CKT 1
FDNS	00NR	5	20SP	G15_042	TO->FROM	GRPRAR1-LNX3345.00 - GRPRAR 345KV CKT Z	720	720	0.03181	103.4243	FT THOMPSON (FT2 KU1A) 345/230/13.8KV TRANSFORMER CKT 1
FDNS	00NR	5	20SP	G15_042	TO->FROM	GRPRAR1-LNX3345.00 - GRPRAR 345KV CKT Z	720	720	0.03403	103.4221	GEN600047 1-MECCT1
FDNS	00NR	5	20SP	G15_042	TO->FROM	GRPRAR1-LNX3345.00 - GRPRAR 345KV CKT Z	720	720	0.0318	103.4217	FT THOMPSON (FT2 KU1B) 345/230/13.8KV TRANSFORMER CKT 1
FDNS	00NR	5	20SP	G15_042	TO->FROM	GRPRAR1-LNX3345.00 - GRPRAR 345KV CKT Z	720	720	0.03403	103.4051	GEN660003 3-HURON WEST PARK
FDNS	00NR	5	20SP	G15_042	TO->FROM	GRPRAR1-LNX3345.00 - GRPRAR 345KV CKT Z	720	720	0.03403	103.3962	GEN660001 2-ABERDEEN SIEBRECHT
FDNS	00NR	5	20SP	G15_042	TO->FROM	GRPRAR1-LNX3345.00 - GRPRAR 345KV CKT Z	720	720	0.03403	103.3744	GEN600063 1-COLVILLE GEN 1
FDNS	00NR	5	20SP	G15_042	TO->FROM	GRPRAR1-LNX3345.00 - GRPRAR 345KV CKT Z	720	720	0.03403	103.3744	GEN600064 2-COLVILLE GEN 2
FDNS	00NR	5	20SP	G15_042	TO->FROM	GRPRAR1-LNX3345.00 - GRPRAR 345KV CKT Z	720	720	0.03557	103.3739	GERALD GENTLEMAN STATION - RED WILLOW 345KV CKT 1
FDNS	00NR	5	20SP	G15_042	TO->FROM	GRPRAR1-LNX3345.00 - GRPRAR 345KV CKT Z	720	720	0.03403	103.3692	GEN652414 4-FT PECK
FDNS	00NR	5	20SP	G15_042	TO->FROM	GRPRAR1-LNX3345.00 - GRPRAR 345KV CKT Z	720	720	0.03403	103.3692	GEN652415 5-FT PECK
FDNS	00NR	5	20SP	G15_042	TO->FROM	GRPRAR1-LNX3345.00 - GRPRAR 345KV CKT Z	720	720	0.03403	103.361	GEN300007 1-NEW MADRID UNIT 2
FDNS	00NR	5	20SP	G15_042	TO->FROM	GRPRAR1-LNX3345.00 - GRPRAR 345KV CKT Z	720	720	0.03403	103.3606	GEN681522 3-GENOA 3
FDNS	00NR	5	20SP	G15_042	TO->FROM	GRPRAR1-LNX3345.00 - GRPRAR 345KV CKT Z	720	720	0.03403	103.3592	GEN652345 W-G07_023IS_2 0.6900
FDNS	00NR	5	20SP	G15_042	TO->FROM	GRPRAR1-LNX3345.00 - GRPRAR 345KV CKT Z	720	720	0.03403	103.3559	GEN300006 1-NEW MADRID UNIT 1
FDNS	00NR	5	20SP	G15_042	TO->FROM	GRPRAR1-LNX3345.00 - GRPRAR 345KV CKT Z	720	720	0.03403	103.3531	GEN 11104 1-J262_GEN 0.6000
FDNS	00NR	5	20SP	G15_042	TO->FROM	GRPRAR1-LNX3345.00 - GRPRAR 345KV CKT Z	720	720	0.03403	103.3531	GEN 11108 1-J263_GEN 0.6000
FDNS	00NR	5	20SP	G15_042	TO->FROM	GRPRAR1-LNX3345.00 - GRPRAR 345KV CKT Z	720	720	0.03403	103.348	GEN600043 7-BLUE LAKE5
FDNS	00NR	5	20SP	G15_042	TO->FROM	GRPRAR1-LNX3345.00 - GRPRAR 345KV CKT Z	720	720	0.03403	103.348	GEN600044 8-BLUE LAKE6
FDNS	00NR	5	17SP	G15_042	TO->FROM	GRPRAR1-LNX3345.00 - GRPRAR 345KV CKT Z	720	720	0.03579	103.3379	GEN615001 1-COAL CREEK
FDNS	00NR	5	20SP	G15_042	TO->FROM	GRPRAR1-LNX3345.00 - GRPRAR 345KV CKT Z	720	720	0.03403	103.3305	G830_SUB 115.00 - GRE-MCHENRY7115.00 115KV CKT 1
FDNS	00NR	5	25SP	G15_042	TO->FROM	GRPRAR1-LNX3345.00 - GRPRAR 345KV CKT Z	720	720	0.03435	103.3234	BASE CASE
FDNS	00NR	5	20SP	G15_042	TO->FROM	GRPRAR1-LNX3345.00 - GRPRAR 345KV CKT Z	720	720	0.03403	103.3232	GEN600014 4-BLACK DOG GEN 4
FDNS	00NR	5	20SP	G15_042	TO->FROM	GRPRAR1-LNX3345.00 - GRPRAR 345KV CKT Z	720	720	0.03403	103.3196	GEN600065 7-HIGH BRIDGE
FDNS	00NR	5	20SP	G15_042	TO->FROM	GRPRAR1-LNX3345.00 - GRPRAR 345KV CKT Z	720	720	0.03403	103.3196	GEN600066 8-HIGH BRIDGE
FDNS	00NR	5	20SP	G15_042	TO->FROM	GRPRAR1-LNX3345.00 - GRPRAR 345KV CKT Z	720	720	0.03403	103.3188	G830_SUB 115.00 115/34.5KV TRANSFORMER CKT 1
FDNS	00NR	5	20SP	G15_042	TO->FROM	GRPRAR1-LNX3345.00 - GRPRAR 345KV CKT Z	720	720	0.03403	103.3165	GEN600011 5-BLACK DOG GEN 1
FDNS	00NR	5	20SP	G15_042	TO->FROM	GRPRAR1-LNX3345.00 - GRPRAR 345KV CKT Z	720	720	0.03403	103.3064	GEN600071 10-RIVER SIDE
FDNS	00NR	5	20SP	G15_042	TO->FROM	GRPRAR1-LNX3345.00 - GRPRAR 345KV CKT Z	720	720	0.03403	103.3063	GEN600070 9-RIVER SIDE
FDNS	00NR	5	20SP	G15_042	TO->FROM	GRPRAR1-LNX3345.00 - GRPRAR 345KV CKT Z	720	720	0.03403	103.3034	LANSING WEST 161/22.0KV TRANSFORMER CKT 1
FDNS	00NR	5	20SP	G15_042	TO->FROM	GRPRAR1-LNX3345.00 - GRPRAR 345KV CKT Z	720	720	0.03403	103.295	GEN600007 7-RIVERSIDE GEN 7
FDNS	00NR	5	20SP	G15_042	TO->FROM	GRPRAR1-LNX3345.00 - GRPRAR 345KV CKT Z	720	720	0.03403	103.2818	GEN600017 C-LS POWER CT
FDNS	00NR	5	20SP	G15_042	TO->FROM	GRPRAR1-LNX3345.00 - GRPRAR 345KV CKT Z	720	720	0.03403	103.2708	GEN600045 4-ANSON
FDNS	00NR	5	20SP	G15_042	TO->FROM	GRPRAR1-LNX3345.00 - GRPRAR 345KV CKT Z	720	720	0.03415	103.2567	G11_051T 345.00 - TATONGA7 345.00 345KV CKT 1
FDNS	00NR	5	20SP	G15_042	TO->FROM	GRPRAR1-LNX3345.00 - GRPRAR 345KV CKT Z	720	720	0.0354	103.2479	P12:115:NPPD:1163B:NELIGH 7:NORFK.N7:BTB
FDNS	00NR	5	20SP	G15_042	TO->FROM	GRPRAR1-LNX3345.00 - GRPRAR 345KV CKT Z	720	720	0.03403	103.2176	GEN659273 2-GROTON SYNC COND
FDNS	00NR	5	20SP	G15_042	TO->FROM	GRPRAR1-LNX3345.00 - GRPRAR 345KV CKT Z	720	720	0.03403	103.2176	GEN659294 1-WILTONCOL9
FDNS	00NR	5	20SP	G15_042	TO->FROM	GRPRAR1-LNX3345.00 - GRPRAR 345KV CKT Z	720	720	0.0341	103.2149	BRDLAND-LNX3345.00 - HURON 345KV CKT Z
FDNS	00NR	5	20SP	G15_042	TO->FROM	GRPRAR1-LNX3345.00 - GRPRAR 345KV CKT Z	720	720	0.0341	103.214	HURON (BD KU2A) 345/230/13.8KV TRANSFORMER CKT 1
FDNS	00NR	5	20SP	G15_042	TO->FROM	GRPRAR1-LNX3345.00 - GRPRAR 345KV CKT Z	720	720	0.0341	103.214	HURON (BD KU2A) 345/230/13.8KV TRANSFORMER CKT 1
FDNS	00NR	5	20SP	G15_042	TO->FROM	GRPRAR1-LNX3345.00 - GRPRAR 345KV CKT Z	720	720	0.03403	103.2136	GEN615052 1-CAMBRIDGE GENERATING STATION
FDNS	00NR	5	20SP	G15_042	TO->FROM	GRPRAR1-LNX3345.00 - GRPRAR 345KV CKT Z	720	720	0.0341	103.2124	BROADLAND - HURON 230KV CKT 1
FDNS	00NR	5	20SP	G15_042	TO->FROM	GRPRAR1-LNX3345.00 - GRPRAR 345KV CKT Z	720	720	0.0341	103.2095	P12:345:UMZB:# 103 #: BD IN SD. LOSS OF LINE
FDNS	00NR	5	20SP	G15_042	TO->FROM	GRPRAR1-LNX3345.00 - GRPRAR 345KV CKT Z	720	720	0.0341	103.2086	P12:345:UMZB:# 102 #: AVS BD IN ND. AVS BRD LR
FDNS	00NR	5	17SP	G15_042	TO->FROM	GRPRAR1-LNX3345.00 - GRPRAR 345KV CKT Z	720	720	0.03579	103.2062	GEN615002 2-COAL CREEK
FDNS	00NR	5	20SP	G15_042	TO->FROM	GRPRAR1-LNX3345.00 - GRPRAR 345KV CKT Z	720	720	0.03403	103.1986	GEN615021 1-GRE-ER 14G 16.000

SOLUTION	GROUP	SCENARIO	SEASON	SOURCE	DIRECTION	MONITORED ELEMENT	RATEA (MVA)	RATEB(MVA)	TDF	TC%LOADING (% MVA)	CONTINGENCY
FDNS	00NR	5	20SP	G15_042	TO->FROM	GRPRAR1-LNX3345.00 - GRPRAR 345KV CKT Z	720	720	0.03344	103.1777	HOSKINS - RAUN 345KV CKT 1
FDNS	00NR	5	20SP	G15_042	TO->FROM	GRPRAR1-LNX3345.00 - GRPRAR 345KV CKT Z	720	720	0.03344	103.1777	HOSKINS - RAUN 345KV CKT 1
FDNS	00NR	5	20SP	G15_042	TO->FROM	GRPRAR1-LNX3345.00 - GRPRAR 345KV CKT Z	720	720	0.0341	103.1678	ANTELOP-LNX3345.00 - ANTELOPE VALLEY 345KV CKT Z
FDNS	00NR	5	20SP	G15_042	TO->FROM	GRPRAR1-LNX3345.00 - GRPRAR 345KV CKT Z	720	720	0.03403	103.1582	GEN 10648 1-G830_GEN 0.6900
FDNS	00NR	5	20SP	G15_042	TO->FROM	GRPRAR1-LNX3345.00 - GRPRAR 345KV CKT Z	720	720	0.03403	103.1568	GEN659192 6-LYNN
FDNS	00NR	5	20SP	G15_042	TO->FROM	GRPRAR1-LNX3345.00 - GRPRAR 345KV CKT Z	720	720	0.03403	103.1556	GEN659162 4-RED WLCK
FDNS	00NR	5	20SP	G15_042	TO->FROM	GRPRAR1-LNX3345.00 - GRPRAR 345KV CKT Z	720	720	0.03403	103.1556	GEN659163 5-BLACK WDCK
FDNS	00NR	5	20SP	G15_042	TO->FROM	GRPRAR1-LNX3345.00 - GRPRAR 345KV CKT Z	720	720	0.03387	103.1549	OAHE - SULLEY BUTTE 230KV CKT 1
FDNS	00NR	5	20SP	G15_042	TO->FROM	GRPRAR1-LNX3345.00 - GRPRAR 345KV CKT Z	720	720	0.03403	103.1529	GEN659031 1-G12_014IS_4 0.6900
FDNS	00NR	5	20SP	G15_042	TO->FROM	GRPRAR1-LNX3345.00 - GRPRAR 345KV CKT Z	720	720	0.03403	103.1198	GEN615015 1-GRE-SPRITWDG13.200
FDNS	00NR	5	20SP	G15_042	TO->FROM	GRPRAR1-LNX3345.00 - GRPRAR 345KV CKT Z	720	720	0.03403	103.116	GEN660016 1-B_H WIND 0.7000
FDNS	00NR	5	20SP	G15_042	TO->FROM	GRPRAR1-LNX3345.00 - GRPRAR 345KV CKT Z	720	720	0.03234	103.1047	HIGHLND 3 345.00 - OBRIEN 3 345.00 345KV CKT 1
FDNS	00NR	5	20SP	G15_042	TO->FROM	GRPRAR1-LNX3345.00 - GRPRAR 345KV CKT Z	720	720	0.03403	103.0349	BISONMP4 230.00 - SQUARE BUTTE 230KV CKT 1
FDNS	00NR	5	20SP	G15_042	TO->FROM	GRPRAR1-LNX3345.00 - GRPRAR 345KV CKT Z	720	720	0.03415	103.0308	MATHWSN7 345.00 - TATONGA7 345.00 345KV CKT 1
FDNS	00NR	5	20SP	G15_042	TO->FROM	GRPRAR1-LNX3345.00 - GRPRAR 345KV CKT Z	720	720	0.03403	103.0019	GEN600067 9-HIGH BRIDGE
FDNS	00NR	5	20SP	G15_042	TO->FROM	GRPRAR1-LNX3345.00 - GRPRAR 345KV CKT Z	720	720	0.03387	102.9933	SULLEY BUTTE - SULLYBT-LNX3230.00 230KV CKT Z
FDNS	00NR	5	20SP	G15_042	TO->FROM	GRPRAR1-LNX3345.00 - GRPRAR 345KV CKT Z	720	720	0.03387	102.9929	SULLYBT-LNX3230.00 - WHITLOK 230KV CKT 1
FDNS	00NR	5	20SP	G15_042	TO->FROM	GRPRAR1-LNX3345.00 - GRPRAR 345KV CKT Z	720	720	0.03403	102.9796	GEN672303 3-BOUNDARY DAM GENERATOR 3
FDNS	00NR	5	20SP	G15_042	TO->FROM	GRPRAR1-LNX3345.00 - GRPRAR 345KV CKT Z	720	720	0.03403	102.9795	GEN672304 4-BOUNDARY DAM GENERATOR 4
FDNS	00NR	5	20SP	G15_042	TO->FROM	GRPRAR1-LNX3345.00 - GRPRAR 345KV CKT Z	720	720	0.03403	102.9795	GEN672305 5-BOUNDARY DAM GENERATOR 5
FDNS	00NR	5	20SP	G15_042	TO->FROM	GRPRAR1-LNX3345.00 - GRPRAR 345KV CKT Z	720	720	0.03403	102.9564	GEN659353 1-DEERCREK CTG18.000
FDNS	00NR	5	20SP	G15_042	TO->FROM	GRPRAR1-LNX3345.00 - GRPRAR 345KV CKT Z	720	720	0.03403	102.9556	GEN659354 1-DEERCREK STG18.000
FDNS	00NR	5	20SP	G15_042	TO->FROM	GRPRAR1-LNX3345.00 - GRPRAR 345KV CKT Z	720	720	0.03387	102.9455	P12:230:UMZB:# 114 #: SB IN SD. SB-WK-GH
FDNS	00NR	5	20SP	G15_042	TO->FROM	GRPRAR1-LNX3345.00 - GRPRAR 345KV CKT Z	720	720	0.03387	102.9455	P12:230:UMZB:# 117 #: WK IN SD. SB-WK-GH
FDNS	00NR	5	20SP	G15_042	TO->FROM	GRPRAR1-LNX3345.00 - GRPRAR 345KV CKT Z	720	720	0.03403	102.9272	GEN672392 1-NBECGT1G 18.000
FDNS	00NR	5	25SP	G15_042	TO->FROM	GRPRAR1-LNX3345.00 - GRPRAR 345KV CKT Z	720	720	0.03325	102.9007	COOPER - MOORE 345KV CKT 1
FDNS	00NR	5	20SP	G15_042	TO->FROM	GRPRAR1-LNX3345.00 - GRPRAR 345KV CKT Z	720	720	0.03387	102.8927	GLENHAM - WHITLOK 230KV CKT 1
FDNS	00NR	5	25SP	G15_042	TO->FROM	GRPRAR1-LNX3345.00 - GRPRAR 345KV CKT Z	720	720	0.03451	102.886	FT THOMPSON - OAHE 230KV CKT 1
FDNS	00NR	5	25SP	G15_042	TO->FROM	GRPRAR1-LNX3345.00 - GRPRAR 345KV CKT Z	720	720	0.03451	102.886	FT THOMPSON - OAHE 230KV CKT 1
FDNS	00NR	5	25SP	G15_042	TO->FROM	GRPRAR1-LNX3345.00 - GRPRAR 345KV CKT Z	720	720	0.03451	102.886	FT THOMPSON - OAHE 230KV CKT 2
FDNS	00NR	5	25SP	G15_042	TO->FROM	GRPRAR1-LNX3345.00 - GRPRAR 345KV CKT Z	720	720	0.03451	102.886	FT THOMPSON - OAHE 230KV CKT 2
FDNS	00NR	5	25SP	G15_042	TO->FROM	GRPRAR1-LNX3345.00 - GRPRAR 345KV CKT Z	720	720	0.03376	102.8622	NELIGH - PETERSBRG.N7115.00 115KV CKT 1
FDNS	00NR	5	25SP	G15_042	TO->FROM	GRPRAR1-LNX3345.00 - GRPRAR 345KV CKT Z	720	720	0.03451	102.8607	FT THOMPSON - OAHE 230KV CKT 3
FDNS	00NR	5	25SP	G15_042	TO->FROM	GRPRAR1-LNX3345.00 - GRPRAR 345KV CKT Z	720	720	0.03451	102.8607	FT THOMPSON - OAHE 230KV CKT 3
FDNS	00NR	5	25SP	G15_042	TO->FROM	GRPRAR1-LNX3345.00 - GRPRAR 345KV CKT Z	720	720	0.03451	102.8607	FT THOMPSON - OAHE 230KV CKT 4
FDNS	00NR	5	25SP	G15_042	TO->FROM	GRPRAR1-LNX3345.00 - GRPRAR 345KV CKT Z	720	720	0.03451	102.8607	FT THOMPSON - OAHE 230KV CKT 4
FDNS	00NR	5	25SP	G15_042	TO->FROM	GRPRAR1-LNX3345.00 - GRPRAR 345KV CKT Z	720	720	0.03698	102.8452	AINSWORTH - AINSWORTH 115KV CKT 1
FDNS	00NR	5	25SP	G15_042	TO->FROM	GRPRAR1-LNX3345.00 - GRPRAR 345KV CKT Z	720	720	0.0346	102.8375	7MAYWOOD 345.00 - 7SPENCER 345.00 345KV CKT 1
FDNS	00NR	5	25SP	G15_042	TO->FROM	GRPRAR1-LNX3345.00 - GRPRAR 345KV CKT Z	720	720	0.03285	102.8372	P13:345:UMZW:# 260 #: SC2 IN IA. LOSS OF TRANSFORMER (KU1A
FDNS	00NR	5	25SP	G15_042	TO->FROM	GRPRAR1-LNX3345.00 - GRPRAR 345KV CKT Z	720	720	0.03436	102.8288	P12:115:UMZZ:# 232 #: AB IN SD. ABERDEEN A TAP BETWEEN ELLENDALE AND ABERDEEN-SIEBRECHT.
FDNS	00NR	5	25SP	G15_042	TO->FROM	GRPRAR1-LNX3345.00 - GRPRAR 345KV CKT Z	720	720	0.03435	102.8194	GEN300003 1-THOMAS HILL UNIT 3
FDNS	00NR	5	20SP	G15_042	TO->FROM	GRPRAR1-LNX3345.00 - GRPRAR 345KV CKT Z	720	720	0.03403	102.8187	GEN681542 6-JP MADGETT
FDNS	00NR	5	25SP	G15_042	TO->FROM	GRPRAR1-LNX3345.00 - GRPRAR 345KV CKT Z	720	720	0.03435	102.8186	GEN672348 2-CORY COGEN GENERATOR 2 GT2
FDNS	00NR	5	25SP	G15_042	TO->FROM	GRPRAR1-LNX3345.00 - GRPRAR 345KV CKT Z	720	720	0.03435	102.8185	GEN672347 1-CORY COGEN GENERATOR 1 GT1
FDNS	00NR	5	25SP	G15_042	TO->FROM	GRPRAR1-LNX3345.00 - GRPRAR 345KV CKT Z	720	720	0.03431	102.813	G14-021T 345.00 - MULLNCR7 345.00 345KV CKT 1
FDNS	00NR	5	25SP	G15_042	TO->FROM	GRPRAR1-LNX3345.00 - GRPRAR 345KV CKT Z	720	720	0.03431	102.8105	G15-005T 345.00 - MULLNCR7 345.00 345KV CKT 1
FDNS	00NR	5	25SP	G15_042	TO->FROM	GRPRAR1-LNX3345.00 - GRPRAR 345KV CKT Z	720	720	0.03419	102.8082	BISMARK - L3 HAWDON 230KV CKT 1
FDNS	00NR	5	25SP	G15_042	TO->FROM	GRPRAR1-LNX3345.00 - GRPRAR 345KV CKT Z	720	720	0.03617	102.8051	ATCHSNT3 345.00 - BOONEVILLE 345KV CKT 1
FDNS	00NR	5	25SP	G15_042	TO->FROM	GRPRAR1-LNX3345.00 - GRPRAR 345KV CKT Z	720	720	0.03435	102.8012	GEN659147 1-PIONEER 1G13.800
FDNS	00NR	5	25SP	G15_042	TO->FROM	GRPRAR1-LNX3345.00 - GRPRAR 345KV CKT Z	720	720	0.03435	102.8012	GEN659158 2-PIONEER G213.800
FDNS	00NR	5	25SP	G15_042	TO->FROM	GRPRAR1-LNX3345.00 - GRPRAR 345KV CKT Z	720	720	0.03435	102.8012	GEN659159 3-PIONEER G313.800
FDNS	00NR	5	25SP	G15_042	TO->FROM	GRPRAR1-LNX3345.00 - GRPRAR 345KV CKT Z	720	720	0.03435	102.8002	GEN672358 1-CHAPLN1W 0.6900
FDNS	00NR	5	25SP	G15_042	TO->FROM	GRPRAR1-LNX3345.00 - GRPRAR 345KV CKT Z	720	720	0.03383	102.7998	HOSKINS - RAUN 345KV CKT 1
FDNS	00NR	5	25SP	G15_042	TO->FROM	GRPRAR1-LNX3345.00 - GRPRAR 345KV CKT Z	720	720	0.03383	102.7998	HOSKINS - RAUN 345KV CKT 1
FDNS	00NR	5	25SP	G15_042	TO->FROM	GRPRAR1-LNX3345.00 - GRPRAR 345KV CKT Z	720	720	0.03435	102.7992	GEN659148 1-LONESMCRK 1G13.800
FDNS	00NR	5	25SP	G15_042	TO->FROM	GRPRAR1-LNX3345.00 - GRPRAR 345KV CKT Z	720	720	0.03435	102.7992	GEN659156 2-LONESMCRK 2G13.800
FDNS	00NR	5	25SP	G15_042	TO->FROM	GRPRAR1-LNX3345.00 - GRPRAR 345KV CKT Z	720	720	0.03435	102.7992	GEN659157 3-LONESMCRK 3G13.800
FDNS	00NR	5	20SP	G15_042	TO->FROM	GRPRAR1-LNX3345.00 - GRPRAR 345KV CKT Z	720	720	0.03403	102.7976	GEN662101 1-WESSINGTON190.5750
FDNS	00NR	5	25SP	G15_042	TO->FROM	GRPRAR1-LNX3345.00 - GRPRAR 345KV CKT Z	720	720	0.03435	102.7964	GEN659417 1X-BEPCPKFT 1GX13.800
FDNS	00NR	5	25SP	G15_042	TO->FROM	GRPRAR1-LNX3345.00 - GRPRAR 345KV CKT Z	720	720	0.03435	102.7964	GEN659418 2X-BEPCPKFT 2GX13.800
FDNS	00NR	5	25SP	G15_042	TO->FROM	GRPRAR1-LNX3345.00 - GRPRAR 345KV CKT Z	720	720	0.03435	102.7964	GEN659419 3X-BEPCPKFT 3GX13.800
FDNS	00NR	5	25SP	G15_042	TO->FROM	GRPRAR1-LNX3345.00 - GRPRAR 345KV CKT Z	720	720	0.03255	102.794	COLUMEAST - NW68TH & HOLDREGE 345KV CKT 1
FDNS	00NR	5	25SP	G15_042	TO->FROM	GRPRAR1-LNX3345.00 - GRPRAR 345KV CKT Z	720	720	0.03255	102.794	COLUMEAST - NW68TH & HOLDREGE 345KV CKT 1
FDNS	00NR	5	25SP	G15_042	TO->FROM	GRPRAR1-LNX3345.00 - GRPRAR 345KV CKT Z	720	720	0.03435	102.7908	GEN657964 1-ASH2GEN9 0.5750
FDNS	00NR	5	20SP	G15_042	TO->FROM	GRPRAR1-LNX3345.00 - GRPRAR 345KV CKT Z	720	720	0.03403	102.7845	CENTER 230/22.0KV TRANSFORMER CKT 1
FDNS	00NR	5	25SP	G15_042	TO->FROM	GRPRAR1-LNX3345.00 - GRPRAR 345KV CKT Z	720	720	0.03376	102.7803	ALBION - PETERSBURG 115KV CKT 1
FDNS	00NR	5	25SP	G15_042	TO->FROM	GRPRAR1-LNX3345.00 - GRPRAR 345KV CKT Z	720	720	0.03462	102.7796	FALLOW 3 345.00 - GRIMES 345KV CKT 1
FDNS	00NR	5	25SP	G15_042	TO->FROM	GRPRAR1-LNX3345.00 - GRPRAR 345KV CKT Z	720	720	0.03585	102.7765	BATTLE CREEK - COUNTY LINE 115KV CKT 1
FDNS	00NR	5	25SP	G15_042	TO->FROM	GRPRAR1-LNX3345.00 - GRPRAR 345KV CKT Z	720	720	0.03435	102.773	GEN672367 1-MERIDIAN GENERATOR 1 GT1
FDNS	00NR	5	25SP	G15_042	TO->FROM	GRPRAR1-LNX3345.00 - GRPRAR 345KV CKT Z	720	720	0.03435	102.7729	GEN672368 2-MERIDIAN GENERATOR 2 GT2
FDNS	00NR	5	20SP	G15_042	TO->FROM	GRPRAR1-LNX3345.00 - GRPRAR 345KV CKT Z	720	720	0.03549	102.7714	MISSION - WITTEN 115KV CKT 1
FDNS	00NR	5	25SP	G15_042	TO->FROM	GRPRAR1-LNX3345.00 - GRPRAR 345KV CKT Z	720	720	0.03431	102.7646	G15-005T 345.00 - SIBLEY 345KV CKT 1
FDNS	00NR	5	20SP	G15_042	TO->FROM	GRPRAR1-LNX3345.00 - GRPRAR 345KV CKT Z	720	720	0.03403	102.7605	GEN910006 1-G12_012IS_3 0.6900
FDNS	00NR	5	25SP	G15_042	TO->FROM	GRPRAR1-LNX3345.00 - GRPRAR 345KV CKT Z	720	720	0.03435	102.7602	GEN672352 3-NIPAWIN GENERATOR 3
FDNS	00NR	5	25SP	G15_042	TO->FROM	GRPRAR1-LNX3345.00 - GRPRAR 345KV CKT Z	720	720	0.03435	102.76	GEN672350 1-NIPAWIN GENERATOR 1
FDNS	00NR	5	25SP	G15_042	TO->FROM	GRPRAR1-LNX3345.00 - GRPRAR 345KV CKT Z	720	720	0.03435	102.76	GEN672351 2-NIPAWIN GENERATOR 2
FDNS	00NR	5	25SP	G15_042	TO->FROM	GRPRAR1-LNX3345.00 - GRPRAR 345KV CKT Z	720	720	0.03538	102.758	HOLCOMB - SETAB 345KV CKT 1
FDNS	00NR	5	25SP	G15_042	TO->FROM	GRPRAR1-LNX3345.00 - GRPRAR 345KV CKT Z	720	720	0.03538	102.758	HOLCOMB - SETAB 345KV CKT 1
FDNS	00NR	5	25SP	G15_042	TO->FROM	GRPRAR1-LNX3345.00 - GRPRAR 345KV CKT Z	720	720	0.03442	102.7577	ANTELOP-LNX3345.00 - BRDLAND-LNX3345.00 345KV CKT 1

SOLUTION	GROUP	SCENARIO	SEASON	SOURCE	DIRECTION	MONITORED ELEMENT	RATEA (MVA)	RATEB(MVA)	TDF	TC%LOADING (% MVA)	CONTINGENCY
FDNS	00NR	5	25SP	G15_042	TO->FROM	GRPRAR1-LNX3345.00 - GRPRAR 345KV CKT Z	720	720	0.03435	102.7526	GEN672349 3-CORY COGEN GENERATOR 3 ST
FDNS	00NR	5	25SP	G15_042	TO->FROM	GRPRAR1-LNX3345.00 - GRPRAR 345KV CKT Z	720	720	0.03376	102.7502	PETERSBRG.N7115.00 - PETERSBURG 115KV CKT Z1
FDNS	00NR	5	25SP	G15_042	TO->FROM	GRPRAR1-LNX3345.00 - GRPRAR 345KV CKT Z	720	720	0.03435	102.7474	GEN600012 2-BLACK DOG GEN 2
FDNS	00NR	5	25SP	G15_042	TO->FROM	GRPRAR1-LNX3345.00 - GRPRAR 345KV CKT Z	720	720	0.03435	102.7394	GEN652548 5-FT RANDAL
FDNS	00NR	5	25SP	G15_042	TO->FROM	GRPRAR1-LNX3345.00 - GRPRAR 345KV CKT Z	720	720	0.03435	102.7394	GEN652549 7-FT RANDAL
FDNS	00NR	5	25SP	G15_042	TO->FROM	GRPRAR1-LNX3345.00 - GRPRAR 345KV CKT Z	720	720	0.03376	102.7366	P12:115:NPPD:1168B:ALBION 7:PETERSBRG.N7:BTB
FDNS	00NR	5	25SP	G15_042	TO->FROM	GRPRAR1-LNX3345.00 - GRPRAR 345KV CKT Z	720	720	0.03435	102.7349	GEN652547 3-FT RANDAL
FDNS	00NR	5	25SP	G15_042	TO->FROM	GRPRAR1-LNX3345.00 - GRPRAR 345KV CKT Z	720	720	0.03435	102.7347	EMERY 161/18.0KV TRANSFORMER CKT 1
FDNS	00NR	5	25SP	G15_042	TO->FROM	GRPRAR1-LNX3345.00 - GRPRAR 345KV CKT Z	720	720	0.03435	102.7346	GEN652546 1-FT RANDAL
FDNS	00NR	5	25SP	G15_042	TO->FROM	GRPRAR1-LNX3345.00 - GRPRAR 345KV CKT Z	720	720	0.03435	102.7093	GEN659290 1-EDGECOL
FDNS	00NR	5	25SP	G15_042	TO->FROM	GRPRAR1-LNX3345.00 - GRPRAR 345KV CKT Z	720	720	0.03244	102.708	COLUMEAST - SHELL CREEK 345KV CKT 1
FDNSLock	00NR	5	25SP	G15_042	TO->FROM	GRPRAR1-LNX3345.00 - GRPRAR 345KV CKT Z	720	720	0.0341	102.7065	WATERTOWN (WT2 KU1A) 345/230/13.8KV TRANSFORMER CKT 1
FDNS	00NR	5	25SP	G15_042	TO->FROM	GRPRAR1-LNX3345.00 - GRPRAR 345KV CKT Z	720	720	0.03585	102.7057	ANTELOPE 7115.00 - COUNTY LINE 115KV CKT 1
FDNS	00NR	5	25SP	G15_042	TO->FROM	GRPRAR1-LNX3345.00 - GRPRAR 345KV CKT Z	720	720	0.03462	102.6957	LARAMIE RIVER - STEGALL 345KV CKT 1
FDNS	00NR	5	20SP	G15_042	TO->FROM	GRPRAR1-LNX3345.00 - GRPRAR 345KV CKT Z	720	720	0.0357	102.6922	AXTELL - SWEETWATER 345KV CKT 1
FDNS	00NR	5	25SP	G15_042	TO->FROM	GRPRAR1-LNX3345.00 - GRPRAR 345KV CKT Z	720	720	0.03467	102.6918	FINNEY SWITCHING STATION - WALKTAP7 345.00 345KV CKT 1
FDNS	00NR	5	25SP	G15_042	TO->FROM	GRPRAR1-LNX3345.00 - GRPRAR 345KV CKT Z	720	720	0.03467	102.6918	FINNEY SWITCHING STATION - WALKTAP7 345.00 345KV CKT 1
FDNS	00NR	5	25SP	G15_042	TO->FROM	GRPRAR1-LNX3345.00 - GRPRAR 345KV CKT Z	720	720	0.03435	102.6763	GEN300007 1-NEW MADRID UNIT 2
FDNS	00NR	5	25SP	G15_042	TO->FROM	GRPRAR1-LNX3345.00 - GRPRAR 345KV CKT Z	720	720	0.03435	102.6714	GEN300006 1-NEW MADRID UNIT 1
FDNS	00NR	5	25SP	G15_042	TO->FROM	GRPRAR1-LNX3345.00 - GRPRAR 345KV CKT Z	720	720	0.03435	102.6701	GEN672357 2-FUT-WL2X 13.800
FDNS	00NR	5	25SP	G15_042	TO->FROM	GRPRAR1-LNX3345.00 - GRPRAR 345KV CKT Z	720	720	0.03435	102.6695	GEN600046 1-MECST
FDNS	00NR	5	25SP	G15_042	TO->FROM	GRPRAR1-LNX3345.00 - GRPRAR 345KV CKT Z	720	720	0.03435	102.6598	GEN672393 2-NBECST2G 13.800
FDNS	00NR	5	25SP	G15_042	TO->FROM	GRPRAR1-LNX3345.00 - GRPRAR 345KV CKT Z	720	720	0.03211	102.6586	FT THOMPSON (FT2 KU1A) 345/230/13.8KV TRANSFORMER CKT 1
FDNS	00NR	5	20SP	G15_042	TO->FROM	GRPRAR1-LNX3345.00 - GRPRAR 345KV CKT Z	720	720	0.03403	102.6571	CLAY BOSWELL 230/20.9KV TRANSFORMER CKT 1
FDNS	00NR	5	25SP	G15_042	TO->FROM	GRPRAR1-LNX3345.00 - GRPRAR 345KV CKT Z	720	720	0.0321	102.6561	FT THOMPSON (FT2 KU1B) 345/230/13.8KV TRANSFORMER CKT 1
FDNS	00NR	5	25SP	G15_042	TO->FROM	GRPRAR1-LNX3345.00 - GRPRAR 345KV CKT Z	720	720	0.03435	102.6557	GEN672390 2-FUT-SW2X 13.800
FDNS	00NR	5	25SP	G15_042	TO->FROM	GRPRAR1-LNX3345.00 - GRPRAR 345KV CKT Z	720	720	0.03435	102.6551	GEN620324 3-HOOT LAKE 3 GEN
FDNS	00NR	5	25SP	G15_042	TO->FROM	GRPRAR1-LNX3345.00 - GRPRAR 345KV CKT Z	720	720	0.03435	102.655	GEN652410 3-FT PECK
FDNS	00NR	5	25SP	G15_042	TO->FROM	GRPRAR1-LNX3345.00 - GRPRAR 345KV CKT Z	720	720	0.03435	102.6542	GEN600050 1-FEP
FDNS	00NR	5	20SP	G15_042	TO->FROM	GRPRAR1-LNX3345.00 - GRPRAR 345KV CKT Z	720	720	0.03553	102.648	G15088_T 345.00 - MOORE 345KV CKT 1
FDNS	00NR	5	25SP	G15_042	TO->FROM	GRPRAR1-LNX3345.00 - GRPRAR 345KV CKT Z	720	720	0.03435	102.6409	GEN660003 3-HURON WEST PARK
FDNS	00NR	5	25SP	G15_042	TO->FROM	GRPRAR1-LNX3345.00 - GRPRAR 345KV CKT Z	720	720	0.03435	102.6394	GEN600047 1-MECCT1
FDNS	00NR	5	25SP	G15_042	TO->FROM	GRPRAR1-LNX3345.00 - GRPRAR 345KV CKT Z	720	720	0.03376	102.6381	HELENA - SHEAS LK3 345.00 345KV CKT 1
FDNS	00NR	5	25SP	G15_042	TO->FROM	GRPRAR1-LNX3345.00 - GRPRAR 345KV CKT Z	720	720	0.03483	102.6296	Hitchland Interchange - WALKTAP7 345.00 345KV CKT 1
FDNS	00NR	5	25SP	G15_042	TO->FROM	GRPRAR1-LNX3345.00 - GRPRAR 345KV CKT Z	720	720	0.03483	102.6296	Hitchland Interchange - WALKTAP7 345.00 345KV CKT 1
FDNS	00NR	5	25SP	G15_042	TO->FROM	GRPRAR1-LNX3345.00 - GRPRAR 345KV CKT Z	720	720	0.03435	102.6237	LADISH 115/13.2KV TRANSFORMER CKT 1
FDNS	00NR	5	25SP	G15_042	TO->FROM	GRPRAR1-LNX3345.00 - GRPRAR 345KV CKT Z	720	720	0.03483	102.6216	P12:345:SPS:J07.1.FINN.HITCH
FDNS	00NR	5	25SP	G15_042	TO->FROM	GRPRAR1-LNX3345.00 - GRPRAR 345KV CKT Z	720	720	0.03435	102.6145	GEN660001 2-ABERDEEN SIEBRECHT
FDNS	00NR	5	25SP	G15_042	TO->FROM	GRPRAR1-LNX3345.00 - GRPRAR 345KV CKT Z	720	720	0.03484	102.611	THEDFRD3 345.00 (THEDFORDT2) 345/115/13.8KV TRANSFORMER CKT 1
FDNS	00NR	5	20SP	G15_042	TO->FROM	GRPRAR1-LNX3345.00 - GRPRAR 345KV CKT Z	720	720	0.03403	102.6061	HESKETT 115/13.8KV TRANSFORMER CKT 1
FDNS	00NR	5	25SP	G15_042	TO->FROM	GRPRAR1-LNX3345.00 - GRPRAR 345KV CKT Z	720	720	0.03435	102.5948	GEN652345 W-G07_023IS_2 0.6900
FDNS	00NR	5	25SP	G15_042	TO->FROM	GRPRAR1-LNX3345.00 - GRPRAR 345KV CKT Z	720	720	0.03435	102.5912	GEN652414 4-FT PECK
FDNS	00NR	5	25SP	G15_042	TO->FROM	GRPRAR1-LNX3345.00 - GRPRAR 345KV CKT Z	720	720	0.03435	102.5912	GEN652415 5-FT PECK
FDNS	00NR	5	25SP	G15_042	TO->FROM	GRPRAR1-LNX3345.00 - GRPRAR 345KV CKT Z	720	720	0.03435	102.5716	GEN590010 1-ERCOT EQUIVALENCE
FDNS	00NR	5	25SP	G15_042	TO->FROM	GRPRAR1-LNX3345.00 - GRPRAR 345KV CKT Z	720	720	0.03435	102.569	GEN600063 1-COLVILLE GEN 1
FDNS	00NR	5	25SP	G15_042	TO->FROM	GRPRAR1-LNX3345.00 - GRPRAR 345KV CKT Z	720	720	0.03435	102.569	GEN600064 2-COLVILLE GEN 2
FDNS	00NR	5	25SP	G15_042	TO->FROM	GRPRAR1-LNX3345.00 - GRPRAR 345KV CKT Z	720	720	0.03383	102.5685	SHEAS LK3 345.00 - WILMARTH 345KV CKT 1
FDNS	00NR	5	25SP	G15_042	TO->FROM	GRPRAR1-LNX3345.00 - GRPRAR 345KV CKT Z	720	720	0.03435	102.5641	GEN 11104 1-J262_GEN 0.6000
FDNS	00NR	5	25SP	G15_042	TO->FROM	GRPRAR1-LNX3345.00 - GRPRAR 345KV CKT Z	720	720	0.03435	102.5641	GEN 11108 1-J263_GEN 0.6000
FDNS	00NR	5	25SP	G15_042	TO->FROM	GRPRAR1-LNX3345.00 - GRPRAR 345KV CKT Z	720	720	0.03435	102.5492	GEN590011 2-ERCOT EQUIVALENCE
FDNS	00NR	5	25SP	G15_042	TO->FROM	GRPRAR1-LNX3345.00 - GRPRAR 345KV CKT Z	720	720	0.03365	102.5487	FIELD NORTH - LKFLDXL3 345KV CKT 1
FDNS	00NR	5	25SP	G15_042	TO->FROM	GRPRAR1-LNX3345.00 - GRPRAR 345KV CKT Z	720	720	0.03435	102.5479	GEN600043 7-BLUE LAKE5
FDNS	00NR	5	25SP	G15_042	TO->FROM	GRPRAR1-LNX3345.00 - GRPRAR 345KV CKT Z	720	720	0.03435	102.5479	GEN600044 8-BLUE LAKE6
FDNS	00NR	5	25SP	G15_042	TO->FROM	GRPRAR1-LNX3345.00 - GRPRAR 345KV CKT Z	720	720	0.03365	102.5479	FIELD SOUTH - WILMARTH 345KV CKT 1
FDNS	00NR	5	25SP	G15_042	TO->FROM	GRPRAR1-LNX3345.00 - GRPRAR 345KV CKT Z	720	720	0.03435	102.5424	G830_SUB 115.00 - GRE-MCHENRY7115.00 115KV CKT 1
FDNS	00NR	5	25SP	G15_042	TO->FROM	GRPRAR1-LNX3345.00 - GRPRAR 345KV CKT Z	720	720	0.03435	102.5422	G830_SUB 115.00 115/34.5KV TRANSFORMER CKT 1
FDNS	00NR	5	20SP	G15_042	TO->FROM	GRPRAR1-LNX3345.00 - GRPRAR 345KV CKT Z	720	720	0.03403	102.5419	GEN659289 1-DAYCNTYWND W0.6900
FDNS	00NR	5	25SP	G15_042	TO->FROM	GRPRAR1-LNX3345.00 - GRPRAR 345KV CKT Z	720	720	0.03365	102.5408	FIELD NORTH - FIELD SOUTH 345KV CKT 1
FDNS	00NR	5	25SP	G15_042	TO->FROM	GRPRAR1-LNX3345.00 - GRPRAR 345KV CKT Z	720	720	0.03435	102.5368	LANSING WEST 161/22.0KV TRANSFORMER CKT 1
FDNS	00NR	5	25SP	G15_042	TO->FROM	GRPRAR1-LNX3345.00 - GRPRAR 345KV CKT Z	720	720	0.03442	102.5306	HURON (BD KU2A) 345/230/13.8KV TRANSFORMER CKT 1
FDNS	00NR	5	25SP	G15_042	TO->FROM	GRPRAR1-LNX3345.00 - GRPRAR 345KV CKT Z	720	720	0.03442	102.5306	HURON (BD KU2A) 345/230/13.8KV TRANSFORMER CKT 1
FDNS	00NR	5	25SP	G15_042	TO->FROM	GRPRAR1-LNX3345.00 - GRPRAR 345KV CKT Z	720	720	0.03442	102.5297	BRDLAND-LNX3345.00 - HURON 345KV CKT Z
FDNS	00NR	5	25SP	G15_042	TO->FROM	GRPRAR1-LNX3345.00 - GRPRAR 345KV CKT Z	720	720	0.03442	102.5291	BROADLAND - HURON 230KV CKT 1
FDNS	00NR	5	25SP	G15_042	TO->FROM	GRPRAR1-LNX3345.00 - GRPRAR 345KV CKT Z	720	720	0.03442	102.5282	P12:345:UMZB:# 102 #: AVS BD IN ND. AVS BRD LR
FDNS	00NR	5	25SP	G15_042	TO->FROM	GRPRAR1-LNX3345.00 - GRPRAR 345KV CKT Z	720	720	0.03435	102.5273	GEN681522 3-GENOA 3
FDNS	00NR	5	25SP	G15_042	TO->FROM	GRPRAR1-LNX3345.00 - GRPRAR 345KV CKT Z	720	720	0.03442	102.5256	P12:345:UMZB:# 103 #: BD IN SD. LOSS OF LINE
FDNS	00NR	5	25SP	G15_042	TO->FROM	GRPRAR1-LNX3345.00 - GRPRAR 345KV CKT Z	720	720	0.03435	102.5196	GEN600014 4-BLACK DOG GEN 4
FDNS	00NR	5	25SP	G15_042	TO->FROM	GRPRAR1-LNX3345.00 - GRPRAR 345KV CKT Z	720	720	0.03435	102.5169	GEN600065 7-HIGH BRIDGE
FDNS	00NR	5	25SP	G15_042	TO->FROM	GRPRAR1-LNX3345.00 - GRPRAR 345KV CKT Z	720	720	0.03435	102.5169	GEN600066 8-HIGH BRIDGE
FDNS	00NR	5	25SP	G15_042	TO->FROM	GRPRAR1-LNX3345.00 - GRPRAR 345KV CKT Z	720	720	0.03435	102.514	GEN600011 5-BLACK DOG GEN 1
FDNS	00NR	5	20SP	G15_042	TO->FROM	GRPRAR1-LNX3345.00 - GRPRAR 345KV CKT Z	720	720	0.03403	102.5046	GEN563312 1-G15097_3 0.6900
FDNS	00NR	5	25SP	G15_042	TO->FROM	GRPRAR1-LNX3345.00 - GRPRAR 345KV CKT Z	720	720	0.03435	102.5042	GEN600071 10-RIVER SIDE
FDNS	00NR	5	25SP	G15_042	TO->FROM	GRPRAR1-LNX3345.00 - GRPRAR 345KV CKT Z	720	720	0.03435	102.5041	GEN600070 9-RIVER SIDE
FDNS	00NR	5	25SP	G15_042	TO->FROM	GRPRAR1-LNX3345.00 - GRPRAR 345KV CKT Z	720	720	0.03435	102.4925	GEN600007 7-RIVERSIDE GEN 7
FDNS	00NR	5	25SP	G15_042	TO->FROM	GRPRAR1-LNX3345.00 - GRPRAR 345KV CKT Z	720	720	0.03572	102.4889	P12:115:NPPD:1163B:NELIGH 7:NORFK.N7:BTB
FDNS	00NR	5	25SP	G15_042	TO->FROM	GRPRAR1-LNX3345.00 - GRPRAR 345KV CKT Z	720	720	0.03435	102.4755	GEN600017 C-LS POWER CT
FDNS	00NR	5	25SP	G15_042	TO->FROM	GRPRAR1-LNX3345.00 - GRPRAR 345KV CKT Z	720	720	0.03435	102.4731	GEN600045 4-ANSON
FDNS	00NR	5	20SP	G15_042	TO->FROM	GRPRAR1-LNX3345.00 - GRPRAR 345KV CKT Z	720	720	0.03403	102.4716	GEN659018 1-G14_003IS_3 0.6900
FDNS	00NR	5	20SP	G15_042	TO->FROM	GRPRAR1-LNX3345.00 - GRPRAR 345KV CKT Z	720	720	0.03403	102.4492	GEN652906 1-G09_006IS_3 0.6900

SOLUTION	GROUP	SCENARIO	SEASON	SOURCE	DIRECTION	MONITORED ELEMENT	RATEA (MVA)	RATEB(MVA)	TDF	TC%LOADING (% MVA)	CONTINGENCY
FDNS	00NR	5	25SP	G15_042	TO->FROM	GRPRAR1-LNX3345.00 - GRPRAR 345KV CKT Z	720	720	0.03435	102.4454	GEN659273 2-GROTON SYNC COND
FDNS	00NR	5	25SP	G15_042	TO->FROM	GRPRAR1-LNX3345.00 - GRPRAR 345KV CKT Z	720	720	0.03435	102.4454	GEN659294 1-WILTONCOL9
FDNS	00NR	5	25SP	G15_042	TO->FROM	GRPRAR1-LNX3345.00 - GRPRAR 345KV CKT Z	720	720	0.03419	102.4269	OAHE - SULLEY BUTTE 230KV CKT 1
FDNS	00NR	5	25SP	G15_042	TO->FROM	GRPRAR1-LNX3345.00 - GRPRAR 345KV CKT Z	720	720	0.03515	102.4206	AXTELL - POST ROCK 345KV CKT 1
FDNS	00NR	5	20SP	G15_042	TO->FROM	GRPRAR1-LNX3345.00 - GRPRAR 345KV CKT Z	720	720	0.03403	102.4067	GEN652543 3-BIG BEND
FDNS	00NR	5	25SP	G15_042	TO->FROM	GRPRAR1-LNX3345.00 - GRPRAR 345KV CKT Z	720	720	0.03435	102.4042	GEN615052 1-CAMBRIDGE GENERATING STATION
FDNS	00NR	5	25SP	G15_042	TO->FROM	GRPRAR1-LNX3345.00 - GRPRAR 345KV CKT Z	720	720	0.03442	102.3949	ANTELOP-LNX3345.00 - ANTELOPE VALLEY 345KV CKT Z
FDNS	00NR	5	25SP	G15_042	TO->FROM	GRPRAR1-LNX3345.00 - GRPRAR 345KV CKT Z	720	720	0.03435	102.3845	GEN659031 1-G12_014IS_4 0.6900
FDNS	00NR	5	25SP	G15_042	TO->FROM	GRPRAR1-LNX3345.00 - GRPRAR 345KV CKT Z	720	720	0.03435	102.3684	GEN 10648 1-G830_GEN 0.6900
FDNS	00NR	5	25SP	G15_042	TO->FROM	GRPRAR1-LNX3345.00 - GRPRAR 345KV CKT Z	720	720	0.03435	102.3645	GEN659192 6-LYNN
FDNS	00NR	5	25SP	G15_042	TO->FROM	GRPRAR1-LNX3345.00 - GRPRAR 345KV CKT Z	720	720	0.03435	102.3629	GEN659162 4-RED WLCK
FDNS	00NR	5	25SP	G15_042	TO->FROM	GRPRAR1-LNX3345.00 - GRPRAR 345KV CKT Z	720	720	0.03435	102.3629	GEN659163 5-BLACK WDCK
FDNS	00NR	5	20SP	G15_042	TO->FROM	GRPRAR1-LNX3345.00 - GRPRAR 345KV CKT Z	720	720	0.03403	102.3594	COYOTE 345/24.0KV TRANSFORMER CKT 1
FDNS	00NR	5	25SP	G15_042	TO->FROM	GRPRAR1-LNX3345.00 - GRPRAR 345KV CKT Z	720	720	0.03435	102.3542	GEN660016 1-B_H WIND 0.7000
FDNS	00NR	5	20SP	G15_042	TO->FROM	GRPRAR1-LNX3345.00 - GRPRAR 345KV CKT Z	720	720	0.03403	102.3434	GEN659194 1-NDPRAIRWND1W0.6900
FDNS	00NR	5	20SP	G15_042	TO->FROM	GRPRAR1-LNX3345.00 - GRPRAR 345KV CKT Z	720	720	0.03403	102.3405	GEN659010 4-G07_027IS_2 0.6900
FDNS	00NR	5	25SP	G15_042	TO->FROM	GRPRAR1-LNX3345.00 - GRPRAR 345KV CKT Z	720	720	0.03435	102.3367	GEN615021 1-GRE-ER 14G 16.000
FDNS	00NR	5	20SP	G15_042	TO->FROM	GRPRAR1-LNX3345.00 - GRPRAR 345KV CKT Z	720	720	0.03403	102.3272	GEN652461 5-GARRISON
FDNS	00NR	5	20SP	G15_042	TO->FROM	GRPRAR1-LNX3345.00 - GRPRAR 345KV CKT Z	720	720	0.03403	102.3271	GEN652460 4-GARRISON
FDNS	00NR	5	25SP	G15_042	TO->FROM	GRPRAR1-LNX3345.00 - GRPRAR 345KV CKT Z	720	720	0.03435	102.3027	GEN615015 1-GRE-SPRITWDG13.200
FDNS	00NR	5	20SP	G15_042	TO->FROM	GRPRAR1-LNX3345.00 - GRPRAR 345KV CKT Z	720	720	0.03403	102.301	GEN652559 1-OAHE
FDNS	00NR	5	25SP	G15_042	TO->FROM	GRPRAR1-LNX3345.00 - GRPRAR 345KV CKT Z	720	720	0.03435	102.2733	GEN657705 X-DRAYTON
FDNS	00NR	5	20SP	G15_042	TO->FROM	GRPRAR1-LNX3345.00 - GRPRAR 345KV CKT Z	720	720	0.03403	102.2704	GEN652457 1-GARRISON
FDNS	00NR	5	20SP	G15_042	TO->FROM	GRPRAR1-LNX3345.00 - GRPRAR 345KV CKT Z	720	720	0.03403	102.2704	GEN652458 2-GARRISON
FDNS	00NR	5	20SP	G15_042	TO->FROM	GRPRAR1-LNX3345.00 - GRPRAR 345KV CKT Z	720	720	0.03403	102.2704	GEN652459 3-GARRISON
FDNS	00NR	5	20SP	G15_042	TO->FROM	GRPRAR1-LNX3345.00 - GRPRAR 345KV CKT Z	720	720	0.03387	102.267	GLENHAM - L3 HAWDON 230KV CKT 1
FDNS	00NR	5	20SP	G15_042	TO->FROM	GRPRAR1-LNX3345.00 - GRPRAR 345KV CKT Z	720	720	0.03403	102.2607	GEN652907 1-G09_007IS_3 0.6900
FDNS	00NR	5	25SP	G15_042	TO->FROM	GRPRAR1-LNX3345.00 - GRPRAR 345KV CKT Z	720	720	0.03419	102.2596	SULLEY BUTTE - SULLYBT-LNX3230.00 230KV CKT Z
FDNS	00NR	5	25SP	G15_042	TO->FROM	GRPRAR1-LNX3345.00 - GRPRAR 345KV CKT Z	720	720	0.03419	102.2595	SULLYBT-LNX3230.00 - WHITLOK 230KV CKT 1
FDNS	00NR	5	20SP	G15_042	TO->FROM	GRPRAR1-LNX3345.00 - GRPRAR 345KV CKT Z	720	720	0.03403	102.2469	GEN563342 1-G15098_3 0.6900
FDNS	00NR	5	25SP	G15_042	TO->FROM	GRPRAR1-LNX3345.00 - GRPRAR 345KV CKT Z	720	720	0.03435	102.2273	BISONMP4 230.00 - SQUARE BUTTE 230KV CKT 1
FDNS	00NR	5	20SP	G15_042	TO->FROM	GRPRAR1-LNX3345.00 - GRPRAR 345KV CKT Z	720	720	0.03403	102.2134	GEN659403 1-NDSUNFLWR W0.6900
FDNS	00NR	5	25SP	G15_042	TO->FROM	GRPRAR1-LNX3345.00 - GRPRAR 345KV CKT Z	720	720	0.03419	102.2029	P12:230:UMZB:# 114 #: SB IN SD. SB-WK-GH
FDNS	00NR	5	25SP	G15_042	TO->FROM	GRPRAR1-LNX3345.00 - GRPRAR 345KV CKT Z	720	720	0.03419	102.2029	P12:230:UMZB:# 117 #: WK IN SD. SB-WK-GH
FDNS	00NR	5	20SP	G15_042	TO->FROM	GRPRAR1-LNX3345.00 - GRPRAR 345KV CKT Z	720	720	0.03633	102.19	MCCOOL - MOORE 345KV CKT 1
FDNS	00NR	5	20SP	G15_042	TO->FROM	GRPRAR1-LNX3345.00 - GRPRAR 345KV CKT Z	720	720	0.03403	102.1874	GEN652542 1-BIG BEND
FDNS	00NR	5	25SP	G15_042	TO->FROM	GRPRAR1-LNX3345.00 - GRPRAR 345KV CKT Z	720	720	0.03435	102.1843	GEN659353 1-DEERCREK CTG18.000
FDNS	00NR	5	25SP	G15_042	TO->FROM	GRPRAR1-LNX3345.00 - GRPRAR 345KV CKT Z	720	720	0.03435	102.184	GEN600067 9-HIGH BRIDGE
FDNS	00NR	5	25SP	G15_042	TO->FROM	GRPRAR1-LNX3345.00 - GRPRAR 345KV CKT Z	720	720	0.03435	102.1833	GEN659354 1-DEERCREK STG18.000
FDNS	00NR	5	25SP	G15_042	TO->FROM	GRPRAR1-LNX3345.00 - GRPRAR 345KV CKT Z	720	720	0.03588	102.1755	GERALD GENTLEMAN STATION - RED WILLOW 345KV CKT 1
FDNS	00NR	5	25SP	G15_042	TO->FROM	GRPRAR1-LNX3345.00 - GRPRAR 345KV CKT Z	720	720	0.03594	102.1718	G15061_T 345.00 - SETAB 345KV CKT 1
FDNS	00NR	5	25SP	G15_042	TO->FROM	GRPRAR1-LNX3345.00 - GRPRAR 345KV CKT Z	720	720	0.03435	102.1637	GEN672303 3-BOUNDARY DAM GENERATOR 3
FDNS	00NR	5	25SP	G15_042	TO->FROM	GRPRAR1-LNX3345.00 - GRPRAR 345KV CKT Z	720	720	0.03435	102.1637	GEN672304 4-BOUNDARY DAM GENERATOR 4
FDNS	00NR	5	25SP	G15_042	TO->FROM	GRPRAR1-LNX3345.00 - GRPRAR 345KV CKT Z	720	720	0.03435	102.1637	GEN672305 5-BOUNDARY DAM GENERATOR 5
FDNS	00NR	5	25SP	G15_042	TO->FROM	GRPRAR1-LNX3345.00 - GRPRAR 345KV CKT Z	720	720	0.03419	102.1492	GLENHAM - WHITLOK 230KV CKT 1
FDNS	00NR	5	20SP	G15_042	TO->FROM	GRPRAR1-LNX3345.00 - GRPRAR 345KV CKT Z	720	720	0.03403	102.1483	ALMA 161 161/24.0KV TRANSFORMER CKT 1
FDNS	00NR	5	25SP	G15_042	TO->FROM	GRPRAR1-LNX3345.00 - GRPRAR 345KV CKT Z	720	720	0.03435	102.1329	GEN672356 1-FUT-WL1X 18.000
FDNS	00NR	5	25SP	G15_042	TO->FROM	GRPRAR1-LNX3345.00 - GRPRAR 345KV CKT Z	720	720	0.03435	102.1024	GEN672389 1-FUT-SW1X 18.000
FDNS	00NR	5	25SP	G15_042	TO->FROM	GRPRAR1-LNX3345.00 - GRPRAR 345KV CKT Z	720	720	0.03435	102.0932	GEN672392 1-NBECGT1G 18.000
FDNS	00NR	5	25SP	G15_042	TO->FROM	GRPRAR1-LNX3345.00 - GRPRAR 345KV CKT Z	720	720	0.03721	102.0777	MINGO - RED WILLOW 345KV CKT 1
FDNS	00NR	5	25SP	G15_042	TO->FROM	GRPRAR1-LNX3345.00 - GRPRAR 345KV CKT Z	720	720	0.03721	102.0777	MINGO - RED WILLOW 345KV CKT 1
FDNS	00NR	5	25SP	G15_042	TO->FROM	GRPRAR1-LNX3345.00 - GRPRAR 345KV CKT Z	720	720	0.03588	102.073	G15088_T 345.00 - MOORE 345KV CKT 1
FDNS	00NR	5	25SP	G15_042	TO->FROM	GRPRAR1-LNX3345.00 - GRPRAR 345KV CKT Z	720	720	0.03578	102.0706	MISSION - WITTEN 115KV CKT 1
FDNS	00NR	5	20SP	G15_042	TO->FROM	GRPRAR1-LNX3345.00 - GRPRAR 345KV CKT Z	720	720	0.03403	102.0592	SQUARE BUTTE - YNG2 4 230.00 230KV CKT 1
FDNS	00NR	5	20SP	G15_042	TO->FROM	GRPRAR1-LNX3345.00 - GRPRAR 345KV CKT Z	720	720	0.03403	102.0587	YNG2 4 230.00 230/20.0KV TRANSFORMER CKT 1
FDNS	00NR	5	17SP	G15_042	TO->FROM	GRPRAR1-LNX3345.00 - GRPRAR 345KV CKT Z	720	720	0.03539	102.0298	FTTHOM1-LNX3345.00 - LELAND2-LNX3345.00 345KV CKT 1
FDNS	00NR	5	25SP	G15_042	TO->FROM	GRPRAR1-LNX3345.00 - GRPRAR 345KV CKT Z	720	720	0.03435	102.0262	GEN662101 1-WESSINGTON190.5750
FDNS	00NR	5	25SP	G15_042	TO->FROM	GRPRAR1-LNX3345.00 - GRPRAR 345KV CKT Z	720	720	0.03435	101.9953	GEN681542 6-JP MADGETT
FDNS	00NR	5	25SP	G15_042	TO->FROM	GRPRAR1-LNX3345.00 - GRPRAR 345KV CKT Z	720	720	0.03435	101.9734	GEN910006 1-G12_012IS_3 0.6900
FDNS	00NR	5	25SP	G15_042	TO->FROM	GRPRAR1-LNX3345.00 - GRPRAR 345KV CKT Z	720	720	0.03435	101.946	CENTER 230/22.0KV TRANSFORMER CKT 1
FDNS	00NR	5	17SP	G15_042	TO->FROM	GRPRAR1-LNX3345.00 - GRPRAR 345KV CKT Z	720	720	0.03539	101.8619	P12:345:UMZB:# 108 #: LOS FT IN ND. LOS FT
FDNS	00NR	5	17SP	G15_042	TO->FROM	GRPRAR1-LNX3345.00 - GRPRAR 345KV CKT Z	720	720	0.03539	101.8531	FT THOMPSON - FTTHOM1-LNX3345.00 345KV CKT Z
FDNS	00NR	5	25SP	G15_042	TO->FROM	GRPRAR1-LNX3345.00 - GRPRAR 345KV CKT Z	720	720	0.03435	101.8501	HESKETT 115/13.8KV TRANSFORMER CKT 1
FDNS	00NR	5	20SP	G15_042	TO->FROM	GRPRAR1-LNX3345.00 - GRPRAR 345KV CKT Z	720	720	0.03403	101.8344	GEN659411 1-CAMPBLCNTY W0.6900
FDNS	00NR	5	25SP	G15_042	TO->FROM	GRPRAR1-LNX3345.00 - GRPRAR 345KV CKT Z	720	720	0.03599	101.8023	AXTELL - SWEETWATER 345KV CKT 1
FDNS	00NR	5	25SP	G15_042	TO->FROM	GRPRAR1-LNX3345.00 - GRPRAR 345KV CKT Z	720	720	0.03435	101.7731	GEN659289 1-DAYCNTYWND W0.6900
FDNS	00NR	5	17SP	G15_042	TO->FROM	GRPRAR1-LNX3345.00 - GRPRAR 345KV CKT Z	720	720	0.03539	101.7689	LELAND OLDS - LELAND2-LNX3345.00 345KV CKT Z
FDNS	00NR	5	25SP	G15_042	TO->FROM	GRPRAR1-LNX3345.00 - GRPRAR 345KV CKT Z	720	720	0.03683	101.7614	MCCOOL - MOORE 345KV CKT 1
FDNS	00NR	5	20SP	G15_042	TO->FROM	GRPRAR1-LNX3345.00 - GRPRAR 345KV CKT Z	720	720	0.03403	101.7604	GEN600004 2-PRAIRIE ISLAND G2
FDNS	00NR	5	20SP	G15_042	TO->FROM	GRPRAR1-LNX3345.00 - GRPRAR 345KV CKT Z	720	720	0.03403	101.7565	GEN600003 1-PRAIRIE ISLAND G1
FDNS	00NR	5	25SP	G15_042	TO->FROM	GRPRAR1-LNX3345.00 - GRPRAR 345KV CKT Z	720	720	0.03435	101.7365	GEN563312 1-G15097_3 0.6900
FDNS	00NR	5	20SP	G15_042	TO->FROM	GRPRAR1-LNX3345.00 - GRPRAR 345KV CKT Z	720	720	0.03403	101.7025	GEN672321 1-SHAND GENERATOR 1
FDNS	00NR	5	25SP	G15_042	TO->FROM	GRPRAR1-LNX3345.00 - GRPRAR 345KV CKT Z	720	720	0.03435	101.6887	GEN659018 1-G14_003IS_3 0.6900
FDNS	00NR	5	25SP	G15_042	TO->FROM	GRPRAR1-LNX3345.00 - GRPRAR 345KV CKT Z	720	720	0.03435	101.6729	GEN652906 1-G09_006IS_3 0.6900
FDNS	00NR	5	20SP	G15_042	TO->FROM	GRPRAR1-LNX3345.00 - GRPRAR 345KV CKT Z	720	720	0.03403	101.6422	GEN672311 2-POPLAR RIVER GENERATOR 2
FDNS	00NR	5	20SP	G15_042	TO->FROM	GRPRAR1-LNX3345.00 - GRPRAR 345KV CKT Z	720	720	0.03403	101.6421	GEN672310 1-POPLAR RIVER GENERATOR 1
FDNS	00NR	5	20SP	G15_042	TO->FROM	GRPRAR1-LNX3345.00 - GRPRAR 345KV CKT Z	720	720	0.03403	101.6249	GEN672306 6-BOUNDARY DAM GENERATOR 6
FDNS	00NR	5	20SP	G15_042	TO->FROM	GRPRAR1-LNX3345.00 - GRPRAR 345KV CKT Z	720	720	0.03403	101.5931	GEN659296 2-SDPRAIRWND1W0.6900
FDNS	00NR	5	20SP	G15_042	TO->FROM	GRPRAR1-LNX3345.00 - GRPRAR 345KV CKT Z	720	720	0.03403	101.5763	RCDC EAST 4230.00 - RED CEDAR DC 230KV CKT 1

SOLUTION	GROUP	SCENARIO	SEASON	SOURCE	DIRECTION	MONITORED ELEMENT	RATEA (MVA)	RATEB(MVA)	TDF	TC%LOADING (% MVA)	CONTINGENCY
FDNS	00NR	5	20SP	G15_042	TO->FROM	GRPRAR1-LNX3345.00 - GRPRAR 345KV CKT Z	720	720	0.03403	101.5707	P12:230:UMZB:# 112 #: NU IN SD. NU-RCDC & DRY CREEK XFMR
FDNS	00NR	5	25SP	G15_042	TO->FROM	GRPRAR1-LNX3345.00 - GRPRAR 345KV CKT Z	720	720	0.03435	101.5662	GEN659010 4-G07_027IS_2 0.6900
FDNS	00NR	5	25SP	G15_042	TO->FROM	GRPRAR1-LNX3345.00 - GRPRAR 345KV CKT Z	720	720	0.03435	101.5613	GEN659194 1-NDPRAIRWND1W0.6900
FDNS	00NR	5	25SP	G15_042	TO->FROM	GRPRAR1-LNX3345.00 - GRPRAR 345KV CKT Z	720	720	0.03435	101.5495	GEN652460 4-GARRISON
FDNS	00NR	5	25SP	G15_042	TO->FROM	GRPRAR1-LNX3345.00 - GRPRAR 345KV CKT Z	720	720	0.03435	101.5494	GEN652461 5-GARRISON
FDNS	00NR	5	25SP	G15_042	TO->FROM	GRPRAR1-LNX3345.00 - GRPRAR 345KV CKT Z	720	720	0.03419	101.4953	GLENHAM - L3 HAWDON 230KV CKT 1
FDNS	00NR	5	25SP	G15_042	TO->FROM	GRPRAR1-LNX3345.00 - GRPRAR 345KV CKT Z	720	720	0.03435	101.4932	GEN652457 1-GARRISON
FDNS	00NR	5	25SP	G15_042	TO->FROM	GRPRAR1-LNX3345.00 - GRPRAR 345KV CKT Z	720	720	0.03435	101.4932	GEN652458 2-GARRISON
FDNS	00NR	5	25SP	G15_042	TO->FROM	GRPRAR1-LNX3345.00 - GRPRAR 345KV CKT Z	720	720	0.03435	101.4932	GEN652459 3-GARRISON
FDNS	00NR	5	20SP	G15_042	TO->FROM	GRPRAR1-LNX3345.00 - GRPRAR 345KV CKT Z	720	720	0.03403	101.4928	GEN615010 1-STANTON4
FDNS	00NR	5	25SP	G15_042	TO->FROM	GRPRAR1-LNX3345.00 - GRPRAR 345KV CKT Z	720	720	0.03435	101.4852	GEN652907 1-G09_007IS_3 0.6900
FDNS	00NR	5	25SP	G15_042	TO->FROM	GRPRAR1-LNX3345.00 - GRPRAR 345KV CKT Z	720	720	0.03435	101.4519	GEN563342 1-G15098_3 0.6900
FDNS	00NR	5	25SP	G15_042	TO->FROM	GRPRAR1-LNX3345.00 - GRPRAR 345KV CKT Z	720	720	0.03435	101.4351	GEN659403 1-NDSUNFLWR W0.6900
FDNS	00NR	5	25SP	G15_042	TO->FROM	GRPRAR1-LNX3345.00 - GRPRAR 345KV CKT Z	720	720	0.03267	101.4347	HIGHLND 3 345.00 - OBRIEN 3 345.00 345KV CKT 1
FDNS	00NR	5	25SP	G15_042	TO->FROM	GRPRAR1-LNX3345.00 - GRPRAR 345KV CKT Z	720	720	0.03435	101.4221	GEN652543 3-BIG BEND
FDNS	00NR	5	25SP	G15_042	TO->FROM	GRPRAR1-LNX3345.00 - GRPRAR 345KV CKT Z	720	720	0.03435	101.4167	GEN652542 1-BIG BEND
FDNS	00NR	5	20SP	G15_042	TO->FROM	GRPRAR1-LNX3345.00 - GRPRAR 345KV CKT Z	720	720	0.03403	101.4117	GEN600006 1-AS KING
FDNS	00NR	5	20SP	G15_042	TO->FROM	GRPRAR1-LNX3345.00 - GRPRAR 345KV CKT Z	720	720	0.03403	101.3974	GEN659453 1-GI1414GEN W0.6900
FDNS	00NR	5	20SP	G15_042	TO->FROM	GRPRAR1-LNX3345.00 - GRPRAR 345KV CKT Z	720	720	0.03403	101.3957	GEN563302 1-G15096_3 0.6900
FDNS	00NR	5	20SP	G15_042	TO->FROM	GRPRAR1-LNX3345.00 - GRPRAR 345KV CKT Z	720	720	0.03403	101.2915	GEN659141 1-K10215A
FDNS	00NR	5	25SP	G15_042	TO->FROM	GRPRAR1-LNX3345.00 - GRPRAR 345KV CKT Z	720	720	0.03435	101.2871	STANTON 230/18.0KV TRANSFORMER CKT 1
FDNS	00NR	5	20SP	G15_042	TO->FROM	GRPRAR1-LNX3345.00 - GRPRAR 345KV CKT Z	720	720	0.03403	101.2856	GEN652557 4-OAHE
FDNS	00NR	5	20SP	G15_042	TO->FROM	GRPRAR1-LNX3345.00 - GRPRAR 345KV CKT Z	720	720	0.03403	101.2856	GEN652558 6-OAHE
FDNS	00NR	5	20SP	G15_042	TO->FROM	GRPRAR1-LNX3345.00 - GRPRAR 345KV CKT Z	720	720	0.03403	101.2855	GEN652556 2-OAHE
FDNS	00NR	5	20SP	G15_042	TO->FROM	GRPRAR1-LNX3345.00 - GRPRAR 345KV CKT Z	720	720	0.03403	101.2626	GEN659110 1-LELAND OLDS UNIT1
FDNS	00NR	5	25SP	G15_042	TO->FROM	GRPRAR1-LNX3345.00 - GRPRAR 345KV CKT Z	720	720	0.03435	101.1275	GEN652559 1-OAHE
FDNS	00NR	5	20SP	G15_042	TO->FROM	GRPRAR1-LNX3345.00 - GRPRAR 345KV CKT Z	720	720	0.03403	101.1071	GEN652173 1-G09_001IS_2 0.6900
FDNS	00NR	5	25SP	G15_042	TO->FROM	GRPRAR1-LNX3345.00 - GRPRAR 345KV CKT Z	720	720	0.03435	101.057	GEN659411 1-CAMPBLCNTY W0.6900
FDNS	00NR	5	20SP	G15_042	TO->FROM	GRPRAR1-LNX3345.00 - GRPRAR 345KV CKT Z	720	720	0.03628	100.9218	GRAND ISLAND - MCCOOL 345KV CKT 1
FDNS	00NR	5	25SP	G15_042	TO->FROM	GRPRAR1-LNX3345.00 - GRPRAR 345KV CKT Z	720	720	0.03435	100.8973	SQUARE BUTTE - YNG2 4 230.00 230KV CKT 1
FDNS	00NR	5	20SP	G15_042	TO->FROM	GRPRAR1-LNX3345.00 - GRPRAR 345KV CKT Z	720	720	0.03403	100.8876	GEN657749 1-YOUNG 1 GENERATOR
FDNS	00NR	5	25SP	G15_042	TO->FROM	GRPRAR1-LNX3345.00 - GRPRAR 345KV CKT Z	720	720	0.03435	100.8659	GEN600004 2-PRAIRIE ISLAND G2
FDNS	00NR	5	25SP	G15_042	TO->FROM	GRPRAR1-LNX3345.00 - GRPRAR 345KV CKT Z	720	720	0.03435	100.8618	GEN600003 1-PRAIRIE ISLAND G1
FDNS	00NR	5	25SP	G15_042	TO->FROM	GRPRAR1-LNX3345.00 - GRPRAR 345KV CKT Z	720	720	0.03435	100.8453	GEN672310 1-POPLAR RIVER GENERATOR 1
FDNS	00NR	5	25SP	G15_042	TO->FROM	GRPRAR1-LNX3345.00 - GRPRAR 345KV CKT Z	720	720	0.03435	100.8453	GEN672311 2-POPLAR RIVER GENERATOR 2
FDNS	00NR	5	25SP	G15_042	TO->FROM	GRPRAR1-LNX3345.00 - GRPRAR 345KV CKT Z	720	720	0.03435	100.8302	GEN672321 1-SHAND GENERATOR 1
FDNS	00NR	5	25SP	G15_042	TO->FROM	GRPRAR1-LNX3345.00 - GRPRAR 345KV CKT Z	720	720	0.03435	100.8279	GEN659296 2-SDPRAIRWND1W0.6900
FDNS	00NR	5	20SP	G15_042	TO->FROM	GRPRAR1-LNX3345.00 - GRPRAR 345KV CKT Z	720	720	0.03403	100.7878	GEN659407 1-ANTELPHILLSW0.6900
FDNS	00NR	5	25SP	G15_042	TO->FROM	GRPRAR1-LNX3345.00 - GRPRAR 345KV CKT Z	720	720	0.03435	100.7716	P12:230:UMZB:# 112 #: NU IN SD. NU-RCDC & DRY CREEK XFMR
FDNS	00NR	5	25SP	G15_042	TO->FROM	GRPRAR1-LNX3345.00 - GRPRAR 345KV CKT Z	720	720	0.03435	100.7679	RCDC EAST 4230.00 - RED CEDAR DC 230KV CKT 1
FDNS	00NR	5	25SP	G15_042	TO->FROM	GRPRAR1-LNX3345.00 - GRPRAR 345KV CKT Z	720	720	0.03435	100.7484	GEN672306 6-BOUNDARY DAM GENERATOR 6
FDNS	00NR	5	25SP	G15_042	TO->FROM	GRPRAR1-LNX3345.00 - GRPRAR 345KV CKT Z	720	720	0.03435	100.6326	GEN615010 1-STANTON4
FDNS	00NR	5	25SP	G15_042	TO->FROM	GRPRAR1-LNX3345.00 - GRPRAR 345KV CKT Z	720	720	0.03435	100.6101	GEN659453 1-GI1414GEN W0.6900
FDNS	00NR	5	25SP	G15_042	TO->FROM	GRPRAR1-LNX3345.00 - GRPRAR 345KV CKT Z	720	720	0.03435	100.6082	GEN563302 1-G15096_3 0.6900
FDNS	00NR	5	20SP	G15_042	TO->FROM	GRPRAR1-LNX3345.00 - GRPRAR 345KV CKT Z	720	720	0.03403	100.5516	GEN600005 1-MONTICELLO
FDNS	00NR	5	25SP	G15_042	TO->FROM	GRPRAR1-LNX3345.00 - GRPRAR 345KV CKT Z	720	720	0.03435	100.5148	GEN600006 1-AS KING
FDNS	00NR	5	25SP	G15_042	TO->FROM	GRPRAR1-LNX3345.00 - GRPRAR 345KV CKT Z	720	720	0.03435	100.5142	GEN652556 2-OAHE
FDNS	00NR	5	25SP	G15_042	TO->FROM	GRPRAR1-LNX3345.00 - GRPRAR 345KV CKT Z	720	720	0.03435	100.5142	GEN652557 4-OAHE
FDNS	00NR	5	25SP	G15_042	TO->FROM	GRPRAR1-LNX3345.00 - GRPRAR 345KV CKT Z	720	720	0.03435	100.5142	GEN652558 6-OAHE
FDNS	00NR	5	25SP	G15_042	TO->FROM	GRPRAR1-LNX3345.00 - GRPRAR 345KV CKT Z	720	720	0.03435	100.4928	GEN659141 1-K10215A
FDNS	00NR	5	25SP	G15_042	TO->FROM	GRPRAR1-LNX3345.00 - GRPRAR 345KV CKT Z	720	720	0.03675	100.4662	GRAND ISLAND - MCCOOL 345KV CKT 1
FDNS	00NR	5	25SP	G15_042	TO->FROM	GRPRAR1-LNX3345.00 - GRPRAR 345KV CKT Z	720	720	0.03435	100.4464	GEN659110 1-LELAND OLDS UNIT1
FDNS	00NR	5	25SP	G15_042	TO->FROM	GRPRAR1-LNX3345.00 - GRPRAR 345KV CKT Z	720	720	0.03435	100.3433	GEN652173 1-G09_001IS_2 0.6900
FDNS	00NR	5	20SP	G15_042	TO->FROM	GRPRAR1-LNX3345.00 - GRPRAR 345KV CKT Z	720	720	0.03403	100.2519	GEN600000 1-SHERBURNECNTY G1
FDNS	00NR	5	20SP	G15_042	TO->FROM	GRPRAR1-LNX3345.00 - GRPRAR 345KV CKT Z	720	720	0.03403	100.1	GEN600001 2-SHERBURNE CNTY G2
FDNS	00NR	5	17SP	G15_042	TO->FROM	GRPRAR1-LNX3345.00 - GRPRAR 345KV CKT Z	720	720	0.06753	100	ANTELOPE 3345.00 - HOSKINS 345KV CKT 1
FDNS	00NR	5	25SP	G15_042	TO->FROM	GRPRAR1-LNX3345.00 - GRPRAR 345KV CKT Z	720	720	0.03435	100	CLAY BOSWELL 230/20.9KV TRANSFORMER CKT 1
FDNS	00NR	5	25SP	G15_042	TO->FROM	GRPRAR1-LNX3345.00 - GRPRAR 345KV CKT Z	720	720	0.03435	100	GEN657749 1-YOUNG 1 GENERATOR
FDNS	00NR	5	25SP	G15_042	TO->FROM	GRPRAR1-LNX3345.00 - GRPRAR 345KV CKT Z	720	720	0.03435	100	GEN659407 1-ANTELPHILLSW0.6900
FDNS	00NR	5	20SP	G15_042	TO->FROM	GRPRAR1-LNX3345.00 - GRPRAR 345KV CKT Z	720	720	0.03403	99.9	GEN661015 1-COYOTE
FDNS	00NR	5	20SP	G15_042	TO->FROM	GRPRAR1-LNX3345.00 - GRPRAR 345KV CKT Z	720	720	0.03403	99.8	GEN620315 1-BIG STONE GEN
FDNS	00NR	5	25SP	G15_042	TO->FROM	GRPRAR1-LNX3345.00 - GRPRAR 345KV CKT Z	720	720	0.03435	99.7	GEN600005 1-MONTICELLO
FDNS	00NR	5	17SP	G15_042	FROM->TO	GRPRAR1-LNX3345.00 - HOLT.CO3 345.00 345KV CKT 1	720	720	0.03344	120.6396	P12:230:UMZB:# 116 #: ST IN SD. WSG-ST-VH
FDNS	00NR	5	17SP	G15_042	FROM->TO	GRPRAR1-LNX3345.00 - HOLT.CO3 345.00 345KV CKT 1	720	720	0.03957	120.4167	KELLY - MEADOWGROVE4230.00 230KV CKT 1
FDNS	00NR	5	17SP	G15_042	FROM->TO	GRPRAR1-LNX3345.00 - HOLT.CO3 345.00 345KV CKT 1	720	720	0.03443	119.7926	P12:345:UMZW:# 1747 #: WT2 IN SD. WT2-WHT LINE FAULT
FDNS	00NR	5	17SP	G15_042	FROM->TO	GRPRAR1-LNX3345.00 - HOLT.CO3 345.00 345KV CKT 1	720	720	0.03443	119.7914	WATERTN-LNX3345.00 - WATERTOWN 345KV CKT Z
FDNS	00NR	5	17SP	G15_042	FROM->TO	GRPRAR1-LNX3345.00 - HOLT.CO3 345.00 345KV CKT 1	720	720	0.03443	119.7482	WATERTN-LNX3345.00 - WHITE 345KV CKT 1
FDNS	00NR	5	17SP	G15_042	FROM->TO	GRPRAR1-LNX3345.00 - HOLT.CO3 345.00 345KV CKT 1	720	720	0.03385	119.6977	STORLA - WESSINGTON 230KV CKT 1
FDNS	00NR	5	17SP	G15_042	FROM->TO	GRPRAR1-LNX3345.00 - HOLT.CO3 345.00 345KV CKT 1	720	720	0.03537	119.0471	G09_001IST 345.00 - WATERTOWN 345KV CKT 1
FDNS	00NR	5	17SP	G15_042	FROM->TO	GRPRAR1-LNX3345.00 - HOLT.CO3 345.00 345KV CKT 1	720	720	0.03376	118.5691	HANLON - STORLA 230KV CKT 1
FDNS	00NR	5	17SP	G15_042	FROM->TO	GRPRAR1-LNX3345.00 - HOLT.CO3 345.00 345KV CKT 1	720	720	0.03333	117.9634	FT THOMPSON - LETCHER 230KV CKT 1
FDNS	00NR	5	17SP	G15_042	FROM->TO	GRPRAR1-LNX3345.00 - HOLT.CO3 345.00 345KV CKT 1	720	720	0.03333	117.9634	FT THOMPSON - LETCHER 230KV CKT 1
FDNS	00NR	5	17SP	G15_042	FROM->TO	GRPRAR1-LNX3345.00 - HOLT.CO3 345.00 345KV CKT 1	720	720	0.03574	117.5677	BUFFALO - JAMESTOWN 345KV CKT 1
FDNS	00NR	5	17SP	G15_042	FROM->TO	GRPRAR1-LNX3345.00 - HOLT.CO3 345.00 345KV CKT 1	720	720	0.03368	116.5515	FT RANDAL - G12_009IST 230.00 230KV CKT 1
FDNS	00NR	5	17SP	G15_042	FROM->TO	GRPRAR1-LNX3345.00 - HOLT.CO3 345.00 345KV CKT 1	720	720	0.03362	116.5158	FT RANDAL - FT THOMPSON 230KV CKT 1
FDNS	00NR	5	17SP	G15_042	FROM->TO	GRPRAR1-LNX3345.00 - HOLT.CO3 345.00 345KV CKT 1	720	720	0.03362	116.5158	FT RANDAL - FT THOMPSON 230KV CKT 1
FDNS	00NR	5	17SP	G15_042	FROM->TO	GRPRAR1-LNX3345.00 - HOLT.CO3 345.00 345KV CKT 1	720	720	0.03575	116.4833	CHISAGO COUNTY - FORBES 500KV CKT 1
FDNS	00NR	5	17SP	G15_042	FROM->TO	GRPRAR1-LNX3345.00 - HOLT.CO3 345.00 345KV CKT 1	720	720	0.03368	116.4364	FT THOMPSON - LAKE PLATT 230KV CKT 1
FDNS	00NR	5	17SP	G15_042	FROM->TO	GRPRAR1-LNX3345.00 - HOLT.CO3 345.00 345KV CKT 1	720	720	0.03368	116.4364	FT THOMPSON - LAKE PLATT 230KV CKT 1

SOLUTION	GROUP	SCENARIO	SEASON	SOURCE	DIRECTION	MONITORED ELEMENT	RATEA (MVA)	RATEB(MVA)	TDF	TC%LOADING (% MVA)	CONTINGENCY
FDNS	00NR	5	17SP	G15_042	FROM->TO	GRPRAR1-LNX3345.00 - HOLT.CO3 345.00 345KV CKT 1	720	720	0.03537	116.4139	G09_001IST 345.00 - GROTON 345KV CKT 1
FDNS	00NR	5	17SP	G15_042	FROM->TO	GRPRAR1-LNX3345.00 - HOLT.CO3 345.00 345KV CKT 1	720	720	0.04398	116.359	NUNDRWD - WAYSIDE 230KV CKT 1
FDNS	00NR	5	17SP	G15_042	FROM->TO	GRPRAR1-LNX3345.00 - HOLT.CO3 345.00 345KV CKT 1	720	720	0.03368	116.062	G12_009IST 230.00 - LAKE PLATT 230KV CKT 1
FDNS	00NR	5	17SP	G15_042	FROM->TO	GRPRAR1-LNX3345.00 - HOLT.CO3 345.00 345KV CKT 1	720	720	0.03574	116.0005	CENTER - JAMESTOWN 345KV CKT 1
FDNS	00NR	5	17SP	G15_042	FROM->TO	GRPRAR1-LNX3345.00 - HOLT.CO3 345.00 345KV CKT 1	720	720	0.03957	115.8701	FT RANDAL - MEADOWGROVE4230.00 230KV CKT 1
FDNS	00NR	5	17SP	G15_042	FROM->TO	GRPRAR1-LNX3345.00 - HOLT.CO3 345.00 345KV CKT 1	720	720	0.0343	115.7398	LETCHER - SIOUX FALLS 230KV CKT 1
FDNS	00NR	5	17SP	G15_042	FROM->TO	GRPRAR1-LNX3345.00 - HOLT.CO3 345.00 345KV CKT 1	720	720	0.03579	115.4947	GEN336821 1-GRAND GULF UNIT
FDNS	00NR	5	17SP	G15_042	FROM->TO	GRPRAR1-LNX3345.00 - HOLT.CO3 345.00 345KV CKT 1	720	720	0.03576	115.4791	BISON 3 345.00 - BUFFALO 345KV CKT 1
FDNS	00NR	5	17SP	G15_042	FROM->TO	GRPRAR1-LNX3345.00 - HOLT.CO3 345.00 345KV CKT 1	720	720	0.03579	115.3763	GEN635024 4-WALTER SCOTT UNIT 4
FDNS	00NR	5	17SP	G15_042	FROM->TO	GRPRAR1-LNX3345.00 - HOLT.CO3 345.00 345KV CKT 1	720	720	0.03379	115.3364	SPLIT ROCK - WHITE 345KV CKT 1
FDNS	00NR	5	17SP	G15_042	FROM->TO	GRPRAR1-LNX3345.00 - HOLT.CO3 345.00 345KV CKT 1	720	720	0.03379	115.3364	SPLIT ROCK - WHITE 345KV CKT 1
FDNS	00NR	5	17SP	G15_042	FROM->TO	GRPRAR1-LNX3345.00 - HOLT.CO3 345.00 345KV CKT 1	720	720	0.03579	115.1049	GEN344225 1-1CAL G1 25.000
FDNS	00NR	5	17SP	G15_042	FROM->TO	GRPRAR1-LNX3345.00 - HOLT.CO3 345.00 345KV CKT 1	720	720	0.03675	115.0424	KEYSTONE - SIDNEY1-LNX3345.00 345KV CKT 1
FDNS	00NR	5	17SP	G15_042	FROM->TO	GRPRAR1-LNX3345.00 - HOLT.CO3 345.00 345KV CKT 1	720	720	0.03675	115.0268	SIDNEY - SIDNEY1-LNX3345.00 345KV CKT Z
FDNS	00NR	5	17SP	G15_042	FROM->TO	GRPRAR1-LNX3345.00 - HOLT.CO3 345.00 345KV CKT 1	720	720	0.03579	114.9039	GEN635023 3-WALTER SCOTT UNIT 3
FDNS	00NR	5	17SP	G15_042	FROM->TO	GRPRAR1-LNX3345.00 - HOLT.CO3 345.00 345KV CKT 1	720	720	0.03579	114.9004	GEN562714 1-G15_023_4 0.6900
FDNS	00NR	5	17SP	G15_042	FROM->TO	GRPRAR1-LNX3345.00 - HOLT.CO3 345.00 345KV CKT 1	720	720	0.03579	114.9004	GEN562715 1-G15_023_5 0.6900
FDNS	00NR	5	17SP	G15_042	FROM->TO	GRPRAR1-LNX3345.00 - HOLT.CO3 345.00 345KV CKT 1	720	720	0.03579	114.8601	GEN337911 1-ARKANSAS NUCLEAR ONE UNIT #2
FDNS	00NR	5	17SP	G15_042	FROM->TO	GRPRAR1-LNX3345.00 - HOLT.CO3 345.00 345KV CKT 1	720	720	0.03579	114.8311	GEN336153 1-WATERFORD UNIT#3
FDNS	00NR	5	17SP	G15_042	FROM->TO	GRPRAR1-LNX3345.00 - HOLT.CO3 345.00 345KV CKT 1	720	720	0.03409	114.8146	FT RANDAL - SIOUX CITY 230KV CKT 1
FDNS	00NR	5	17SP	G15_042	FROM->TO	GRPRAR1-LNX3345.00 - HOLT.CO3 345.00 345KV CKT 1	720	720	0.03544	114.7703	GROTON-LNX3 345.00 - LELAND1-LNX3345.00 345KV CKT 1
FDNS	00NR	5	17SP	G15_042	FROM->TO	GRPRAR1-LNX3345.00 - HOLT.CO3 345.00 345KV CKT 1	720	720	0.03544	114.6512	LELAND OLDS - LELAND1-LNX3345.00 345KV CKT Z
FDNS	00NR	5	17SP	G15_042	FROM->TO	GRPRAR1-LNX3345.00 - HOLT.CO3 345.00 345KV CKT 1	720	720	0.03544	114.6392	GROTON - GROTON-LNX3 345.00 345KV CKT Z
FDNS	00NR	5	17SP	G15_042	FROM->TO	GRPRAR1-LNX3345.00 - HOLT.CO3 345.00 345KV CKT 1	720	720	0.03544	114.6374	P12:345:UMZB:# 109 #: LOS GRT IN ND. LOS GRT
FDNS	00NR	5	17SP	G15_042	FROM->TO	GRPRAR1-LNX3345.00 - HOLT.CO3 345.00 345KV CKT 1	720	720	0.03609	114.5848	ARROWHEAD - ARROWHEAD 230 230KV CKT 1
FDNS	00NR	5	17SP	G15_042	FROM->TO	GRPRAR1-LNX3345.00 - HOLT.CO3 345.00 345KV CKT 1	720	720	0.0348	114.5742	HANLON - SIOUX FALLS 230KV CKT 1
FDNS	00NR	5	17SP	G15_042	FROM->TO	GRPRAR1-LNX3345.00 - HOLT.CO3 345.00 345KV CKT 1	720	720	0.03638	114.538	MISSION - ST FRANCIS 115KV CKT 1
FDNS	00NR	5	17SP	G15_042	FROM->TO	GRPRAR1-LNX3345.00 - HOLT.CO3 345.00 345KV CKT 1	720	720	0.03638	114.5239	P12:115:NPPD:1091:VALENTN7:MISSION7:BTB
FDNS	00NR	5	17SP	G15_042	FROM->TO	GRPRAR1-LNX3345.00 - HOLT.CO3 345.00 345KV CKT 1	720	720	0.03579	114.486	GEN335831 1-RIVERBEND UNIT#1
FDNS	00NR	5	17SP	G15_042	FROM->TO	GRPRAR1-LNX3345.00 - HOLT.CO3 345.00 345KV CKT 1	720	720	0.03579	114.483	GEN640010 1-GERALD GENTLEMAN STATION UNIT 1
FDNS	00NR	5	17SP	G15_042	FROM->TO	GRPRAR1-LNX3345.00 - HOLT.CO3 345.00 345KV CKT 1	720	720	0.03638	114.3978	HARMONY - ST FRANCIS 115KV CKT 1
FDNS	00NR	5	17SP	G15_042	FROM->TO	GRPRAR1-LNX3345.00 - HOLT.CO3 345.00 345KV CKT 1	720	720	0.03579	114.3951	GEN337910 1-ARKANSAS NUCLEAR ONE UNIT #1
FDNS	00NR	5	17SP	G15_042	FROM->TO	GRPRAR1-LNX3345.00 - HOLT.CO3 345.00 345KV CKT 1	720	720	0.03316	114.3942	FT RANDAL - UTICA JCT 230KV CKT 1
FDNS	00NR	5	17SP	G15_042	FROM->TO	GRPRAR1-LNX3345.00 - HOLT.CO3 345.00 345KV CKT 1	720	720	0.03665	114.3357	HAZLETON - MITCHLCO3 345.00 345KV CKT 1
FDNS	00NR	5	17SP	G15_042	FROM->TO	GRPRAR1-LNX3345.00 - HOLT.CO3 345.00 345KV CKT 1	720	720	0.0358	114.3315	ALEXMRES3 345.00 - BISON 3 345.00 345KV CKT 1
FDNS	00NR	5	17SP	G15_042	FROM->TO	GRPRAR1-LNX3345.00 - HOLT.CO3 345.00 345KV CKT 1	720	720	0.03577	114.2741	ELLENDALE - OAKES 230KV CKT 1
FDNS	00NR	5	17SP	G15_042	FROM->TO	GRPRAR1-LNX3345.00 - HOLT.CO3 345.00 345KV CKT 1	720	720	0.03577	114.2741	ELLENDALE - OAKES 230KV CKT 1
FDNS	00NR	5	17SP	G15_042	FROM->TO	GRPRAR1-LNX3345.00 - HOLT.CO3 345.00 345KV CKT 1	720	720	0.0306	114.2592	SIOUXCY-LNX3345.00 - SPLIT ROCK 345KV CKT 1
FDNS	00NR	5	17SP	G15_042	FROM->TO	GRPRAR1-LNX3345.00 - HOLT.CO3 345.00 345KV CKT 1	720	720	0.0306	114.2592	SIOUXCY-LNX3345.00 - SPLIT ROCK 345KV CKT 1
FDNS	00NR	5	17SP	G15_042	FROM->TO	GRPRAR1-LNX3345.00 - HOLT.CO3 345.00 345KV CKT 1	720	720	0.0306	114.2577	P12:345:UMZW:# 907 #: SC2-SR IN IA. SC2-SR 345 KV LINE
FDNS	00NR	5	17SP	G15_042	FROM->TO	GRPRAR1-LNX3345.00 - HOLT.CO3 345.00 345KV CKT 1	720	720	0.03742	114.213	FT RANDAL - SPENCER 115KV CKT 1
FDNS	00NR	5	17SP	G15_042	FROM->TO	GRPRAR1-LNX3345.00 - HOLT.CO3 345.00 345KV CKT 1	720	720	0.0306	114.1953	SIOUX CITY - SIOUXCY-LNX3345.00 345KV CKT Z
FDNS	00NR	5	17SP	G15_042	FROM->TO	GRPRAR1-LNX3345.00 - HOLT.CO3 345.00 345KV CKT 1	720	720	0.03579	114.1926	GEN640011 2-GERALD GENTLEMAN STATION UNIT 2
FDNS	00NR	5	17SP	G15_042	FROM->TO	GRPRAR1-LNX3345.00 - HOLT.CO3 345.00 345KV CKT 1	720	720	0.03638	114.1855	HARMONY - VALENTINE 115KV CKT 1
FDNS	00NR	5	17SP	G15_042	FROM->TO	GRPRAR1-LNX3345.00 - HOLT.CO3 345.00 345KV CKT 1	720	720	0.03576	114.1827	FORMAN - OAKES 230KV CKT 1
FDNS	00NR	5	17SP	G15_042	FROM->TO	GRPRAR1-LNX3345.00 - HOLT.CO3 345.00 345KV CKT 1	720	720	0.03742	114.1739	P12:115:NPPD:WAPA6:FTRANDL7:ONEILL 7:BTB
FDNS	00NR	5	17SP	G15_042	FROM->TO	GRPRAR1-LNX3345.00 - HOLT.CO3 345.00 345KV CKT 1	720	720	0.03742	114.1739	P12:115:UMZB:# 115 #: SE IN NE. FR-SE-ON
FDNS	00NR	5	17SP	G15_042	FROM->TO	GRPRAR1-LNX3345.00 - HOLT.CO3 345.00 345KV CKT 1	720	720	0.03718	114.1351	SIDNEY - STEGALL 345KV CKT 1
FDNS	00NR	5	17SP	G15_042	FROM->TO	GRPRAR1-LNX3345.00 - HOLT.CO3 345.00 345KV CKT 1	720	720	0.03608	114.1312	GERALD GENTLEMAN STATION - KEYSTONE 345KV CKT 1
FDNS	00NR	5	17SP	G15_042	FROM->TO	GRPRAR1-LNX3345.00 - HOLT.CO3 345.00 345KV CKT 1	720	720	0.04081	114.1281	RAUN - SUB 3451 FT CAL 345KV CKT 1
FDNS	00NR	5	17SP	G15_042	FROM->TO	GRPRAR1-LNX3345.00 - HOLT.CO3 345.00 345KV CKT 1	720	720	0.04081	114.1281	RAUN - SUB 3451 FT CAL 345KV CKT 1
FDNS	00NR	5	17SP	G15_042	FROM->TO	GRPRAR1-LNX3345.00 - HOLT.CO3 345.00 345KV CKT 1	720	720	0.03742	114.052	ONEILL - SPENCER 115KV CKT 1
FDNS	00NR	5	17SP	G15_042	FROM->TO	GRPRAR1-LNX3345.00 - HOLT.CO3 345.00 345KV CKT 1	720	720	0.03613	114.0075	AS KING - EAU CLAIRE 345KV CKT 1
FDNS	00NR	5	17SP	G15_042	FROM->TO	GRPRAR1-LNX3345.00 - HOLT.CO3 345.00 345KV CKT 1	720	720	0.03551	113.9954	CARPENTER - HURON 230KV CKT 1
FDNS	00NR	5	17SP	G15_042	FROM->TO	GRPRAR1-LNX3345.00 - HOLT.CO3 345.00 345KV CKT 1	720	720	0.03469	113.9555	PAHOJA - SIOUX FALLS 230KV CKT 1
FDNS	00NR	5	17SP	G15_042	FROM->TO	GRPRAR1-LNX3345.00 - HOLT.CO3 345.00 345KV CKT 1	720	720	0.06341	113.914	DIXONCO 230.00 - HOSKINS 230KV CKT 1
FDNS	00NR	5	17SP	G15_042	FROM->TO	GRPRAR1-LNX3345.00 - HOLT.CO3 345.00 345KV CKT 1	720	720	0.03579	113.9112	GEN337653 1-WHITE BLUFF UNIT #2
FDNS	00NR	5	17SP	G15_042	FROM->TO	GRPRAR1-LNX3345.00 - HOLT.CO3 345.00 345KV CKT 1	720	720	0.03551	113.9022	HURON - WATERTOWN 230KV CKT 2
FDNS	00NR	5	17SP	G15_042	FROM->TO	GRPRAR1-LNX3345.00 - HOLT.CO3 345.00 345KV CKT 1	720	720	0.03551	113.9022	HURON - WATERTOWN 230KV CKT 2
FDNS	00NR	5	17SP	G15_042	FROM->TO	GRPRAR1-LNX3345.00 - HOLT.CO3 345.00 345KV CKT 1	720	720	0.03579	113.8977	GEN337652 1-WHITE BLUFF UNIT #1
FDNS	00NR	5	17SP	G15_042	FROM->TO	GRPRAR1-LNX3345.00 - HOLT.CO3 345.00 345KV CKT 1	720	720	0.03579	113.846	GEN338146 1-INDEPENDENCE UNIT #2
FDNS	00NR	5	17SP	G15_042	FROM->TO	GRPRAR1-LNX3345.00 - HOLT.CO3 345.00 345KV CKT 1	720	720	0.03551	113.8422	CARPENTER - WATERTOWN 230KV CKT 1
FDNS	00NR	5	17SP	G15_042	FROM->TO	GRPRAR1-LNX3345.00 - HOLT.CO3 345.00 345KV CKT 1	720	720	0.03551	113.8422	CARPENTER - WATERTOWN 230KV CKT 1
FDNS	00NR	5	17SP	G15_042	FROM->TO	GRPRAR1-LNX3345.00 - HOLT.CO3 345.00 345KV CKT 1	720	720	0.03579	113.8395	GEN338143 1-INDEPENDENCE UNIT #1
FDNS	00NR	5	17SP	G15_042	FROM->TO	GRPRAR1-LNX3345.00 - HOLT.CO3 345.00 345KV CKT 1	720	720	0.03627	113.7968	ARPIN B4 345.00 - EAU CLAIRE 345KV CKT 1
FDNS	00NR	5	17SP	G15_042	FROM->TO	GRPRAR1-LNX3345.00 - HOLT.CO3 345.00 345KV CKT 1	720	720	0.03579	113.7491	FORMAN - HANKINSON 230KV CKT 1
FDNS	00NR	5	17SP	G15_042	FROM->TO	GRPRAR1-LNX3345.00 - HOLT.CO3 345.00 345KV CKT 1	720	720	0.03579	113.721	GEN501801 1-DOLET HILLS UNIT1
FDNS	00NR	5	17SP	G15_042	FROM->TO	GRPRAR1-LNX3345.00 - HOLT.CO3 345.00 345KV CKT 1	720	720	0.03202	113.6913	RASMUSN - UTICA JCT 230KV CKT 1
FDNS	00NR	5	17SP	G15_042	FROM->TO	GRPRAR1-LNX3345.00 - HOLT.CO3 345.00 345KV CKT 1	720	720	0.03638	113.657	AINSWORTH - VALENTINE 115KV CKT 1
FDNS	00NR	5	17SP	G15_042	FROM->TO	GRPRAR1-LNX3345.00 - HOLT.CO3 345.00 345KV CKT 1	720	720	0.03385	113.6155	FT THOMPSON - WESSINGTON 230KV CKT 1
FDNS	00NR	5	17SP	G15_042	FROM->TO	GRPRAR1-LNX3345.00 - HOLT.CO3 345.00 345KV CKT 1	720	720	0.03385	113.6155	FT THOMPSON - WESSINGTON 230KV CKT 1
FDNS	00NR	5	17SP	G15_042	FROM->TO	GRPRAR1-LNX3345.00 - HOLT.CO3 345.00 345KV CKT 1	720	720	0.03605	113.5612	G15094_T 345.00 - SIDNEY2-LNX3345.00 345KV CKT 1
FDNS	00NR	5	17SP	G15_042	FROM->TO	GRPRAR1-LNX3345.00 - HOLT.CO3 345.00 345KV CKT 1	720	720	0.03579	113.5601	CNTSHNT3 345.00 - PRAIRIE3 345.00 345KV CKT 1
FDNS	00NR	5	17SP	G15_042	FROM->TO	GRPRAR1-LNX3345.00 - HOLT.CO3 345.00 345KV CKT 1	720	720	0.03605	113.5466	SIDNEY - SIDNEY2-LNX3345.00 345KV CKT Z
FDNS	00NR	5	17SP	G15_042	FROM->TO	GRPRAR1-LNX3345.00 - HOLT.CO3 345.00 345KV CKT 1	720	720	0.03469	113.545	EAGLE 4 230.00 - PAHOJA 230KV CKT 1
FDNS	00NR	5	17SP	G15_042	FROM->TO	GRPRAR1-LNX3345.00 - HOLT.CO3 345.00 345KV CKT 1	720	720	0.03665	113.5439	ADAMS - MITCHLCO3 345.00 345KV CKT 1
FDNS	00NR	5	17SP	G15_042	FROM->TO	GRPRAR1-LNX3345.00 - HOLT.CO3 345.00 345KV CKT 1	720	720	0.03579	113.4954	GEN336252 1-NINEMILE POINT UNIT#5
FDNS	00NR	5	17SP	G15_042	FROM->TO	GRPRAR1-LNX3345.00 - HOLT.CO3 345.00 345KV CKT 1	720	720	0.03579	113.4552	GEN501813 1-RODEMACHER UNIT 3
FDNS	00NR	5	17SP	G15_042	FROM->TO	GRPRAR1-LNX3345.00 - HOLT.CO3 345.00 345KV CKT 1	720	720	0.03579	113.3781	GEN336831 1-BAXTER WILSON SES

SOLUTION	GROUP	SCENARIO	SEASON	SOURCE	DIRECTION	MONITORED ELEMENT	RATEA (MVA)	RATEB(MVA)	TDF	TC%LOADING (% MVA)	CONTINGENCY
FDNS	00NR	5	17SP	G15_042	FROM->TO	GRPRAR1-LNX3345.00 - HOLT.CO3 345.00 345KV CKT 1	720	720	0.03638	113.3749	ADAMS - PLEASANT VALLEY 345KV CKT 1
FDNS	00NR	5	17SP	G15_042	FROM->TO	GRPRAR1-LNX3345.00 - HOLT.CO3 345.00 345KV CKT 1	720	720	0.03579	113.367	GEN336251 1-NINEMILE POINT UNIT#4
FDNS	00NR	5	17SP	G15_042	FROM->TO	GRPRAR1-LNX3345.00 - HOLT.CO3 345.00 345KV CKT 1	720	720	0.03579	113.3049	GEN337041 1-GERALD ANDRUS
FDNS	00NR	5	17SP	G15_042	FROM->TO	GRPRAR1-LNX3345.00 - HOLT.CO3 345.00 345KV CKT 1	720	720	0.03579	113.2942	GEN344897 4-1LAB G4 20.000
FDNS	00NR	5	17SP	G15_042	FROM->TO	GRPRAR1-LNX3345.00 - HOLT.CO3 345.00 345KV CKT 1	720	720	0.03579	113.2913	GEN344894 1-1LAB G1 20.000
FDNS	00NR	5	17SP	G15_042	FROM->TO	GRPRAR1-LNX3345.00 - HOLT.CO3 345.00 345KV CKT 1	720	720	0.03579	113.2912	GEN344896 3-1LAB G3 20.000
FDNS	00NR	5	17SP	G15_042	FROM->TO	GRPRAR1-LNX3345.00 - HOLT.CO3 345.00 345KV CKT 1	720	720	0.03579	113.284	GEN335206 1-NELSON UNIT 6
FDNS	00NR	5	17SP	G15_042	FROM->TO	GRPRAR1-LNX3345.00 - HOLT.CO3 345.00 345KV CKT 1	720	720	0.03579	113.2435	GEN344895 2-1LAB G2 20.000
FDNS	00NR	5	17SP	G15_042	FROM->TO	GRPRAR1-LNX3345.00 - HOLT.CO3 345.00 345KV CKT 1	720	720	0.03579	113.231	GEN345670 1-1RUSH G1 18.000
FDNS	00NR	5	17SP	G15_042	FROM->TO	GRPRAR1-LNX3345.00 - HOLT.CO3 345.00 345KV CKT 1	720	720	0.03579	113.2309	GEN345671 2-1RUSH G2 18.000
FDNS	00NR	5	17SP	G15_042	FROM->TO	GRPRAR1-LNX3345.00 - HOLT.CO3 345.00 345KV CKT 1	720	720	0.03579	113.1548	GEN501812 1-RODEMACHER UNIT 2
FDNS	00NR	5	17SP	G15_042	FROM->TO	GRPRAR1-LNX3345.00 - HOLT.CO3 345.00 345KV CKT 1	720	720	0.03579	113.1546	GEN635214 4-NEAL UNIT 4
FDNS	00NR	5	17SP	G15_042	FROM->TO	GRPRAR1-LNX3345.00 - HOLT.CO3 345.00 345KV CKT 1	720	720	0.03676	113.1478	LAKEFIELD 3 - NOBLES 345KV CKT 1
FDNS	00NR	5	17SP	G15_042	FROM->TO	GRPRAR1-LNX3345.00 - HOLT.CO3 345.00 345KV CKT 1	720	720	0.03584	113.1378	ALEXMRES3 345.00 - WAITE PARK 345KV CKT 1
FDNS	00NR	5	17SP	G15_042	FROM->TO	GRPRAR1-LNX3345.00 - HOLT.CO3 345.00 345KV CKT 1	720	720	0.03579	113.1357	GEN334440 1-SABINE UNIT 4
FDNS	00NR	5	17SP	G15_042	FROM->TO	GRPRAR1-LNX3345.00 - HOLT.CO3 345.00 345KV CKT 1	720	720	0.03581	113.1305	BLAIR - GRANITE FALLS 230KV CKT 1
FDNS	00NR	5	17SP	G15_042	FROM->TO	GRPRAR1-LNX3345.00 - HOLT.CO3 345.00 345KV CKT 1	720	720	0.03581	113.1305	BLAIR - GRANITE FALLS 230KV CKT 1
FDNS	00NR	5	17SP	G15_042	FROM->TO	GRPRAR1-LNX3345.00 - HOLT.CO3 345.00 345KV CKT 1	720	720	0.03577	113.0868	CENTER - COYOTE 345KV CKT 1
FDNS	00NR	5	17SP	G15_042	FROM->TO	GRPRAR1-LNX3345.00 - HOLT.CO3 345.00 345KV CKT 1	720	720	0.03616	113.0439	BROOKING COUNTY - LYON COUNTY 345KV CKT 1
FDNS	00NR	5	17SP	G15_042	FROM->TO	GRPRAR1-LNX3345.00 - HOLT.CO3 345.00 345KV CKT 1	720	720	0.03857	113.0283	STEGALL - STEGALL TRANSFORMER 230KV CKT 1
FDNS	00NR	5	17SP	G15_042	FROM->TO	GRPRAR1-LNX3345.00 - HOLT.CO3 345.00 345KV CKT 1	720	720	0.03525	113.0242	MENNO JCT - TRIPP JCT 115KV CKT 1
FDNS	00NR	5	17SP	G15_042	FROM->TO	GRPRAR1-LNX3345.00 - HOLT.CO3 345.00 345KV CKT 1	720	720	0.03581	113.0197	GLENBORO SOUTH - RUGBY 230KV CKT 1
FDNS	00NR	5	17SP	G15_042	FROM->TO	GRPRAR1-LNX3345.00 - HOLT.CO3 345.00 345KV CKT 1	720	720	0.03579	113.015	GEN629075 1-OTTUMWA GENERATOR FOR OTTUMWA UNIT NO 1
FDNS	00NR	5	17SP	G15_042	FROM->TO	GRPRAR1-LNX3345.00 - HOLT.CO3 345.00 345KV CKT 1	720	720	0.03857	113.0135	P13:230-345:NPPD:STEGALL3:KV3A
FDNS	00NR	5	17SP	G15_042	FROM->TO	GRPRAR1-LNX3345.00 - HOLT.CO3 345.00 345KV CKT 1	720	720	0.03579	113.0086	GEN336191 1-LITTLE GYPSY UNIT#3
FDNS	00NR	5	17SP	G15_042	FROM->TO	GRPRAR1-LNX3345.00 - HOLT.CO3 345.00 345KV CKT 1	720	720	0.03857	113.0058	STEGALL (SGQ KV3A) 345/230/13.8KV TRANSFORMER CKT 1
FDNS	00NR	5	17SP	G15_042	FROM->TO	GRPRAR1-LNX3345.00 - HOLT.CO3 345.00 345KV CKT 1	720	720	0.03585	112.9673	HANKINSON - WAHPETON 230KV CKT 1
FDNS	00NR	5	17SP	G15_042	FROM->TO	GRPRAR1-LNX3345.00 - HOLT.CO3 345.00 345KV CKT 1	720	720	0.03579	112.9589	GEN338388 1-1PLUM PT U1 23.000
FDNS	00NR	5	17SP	G15_042	FROM->TO	GRPRAR1-LNX3345.00 - HOLT.CO3 345.00 345KV CKT 1	720	720	0.03579	112.9433	P12:115:UMZW:# 162 #: NEL IN ND. FAULT ON ML-NEL-MX-GA 115 KV
FDNS	00NR	5	17SP	G15_042	FROM->TO	GRPRAR1-LNX3345.00 - HOLT.CO3 345.00 345KV CKT 1	720	720	0.03579	112.9325	GEN336801 1-BAXTER WILSON UNIT #1
FDNS	00NR	5	17SP	G15_042	FROM->TO	GRPRAR1-LNX3345.00 - HOLT.CO3 345.00 345KV CKT 1	720	720	0.0404	112.9242	STEGALL-LNX3230.00 - WAYSIDE 230KV CKT 1
FDNS	00NR	5	17SP	G15_042	FROM->TO	GRPRAR1-LNX3345.00 - HOLT.CO3 345.00 345KV CKT 1	720	720	0.03648	112.9214	KOSSUTH 3 345.00 - OBRIEN 3 345.00 345KV CKT 1
FDNS	00NR	5	17SP	G15_042	FROM->TO	GRPRAR1-LNX3345.00 - HOLT.CO3 345.00 345KV CKT 1	720	720	0.03579	112.9184	GEN335614 1-WILLOW GLENN UNIT#4
FDNS	00NR	5	17SP	G15_042	FROM->TO	GRPRAR1-LNX3345.00 - HOLT.CO3 345.00 345KV CKT 1	720	720	0.0404	112.9162	STEGALL - STEGALL-LNX3230.00 230KV CKT Z
FDNS	00NR	5	17SP	G15_042	FROM->TO	GRPRAR1-LNX3345.00 - HOLT.CO3 345.00 345KV CKT 1	720	720	0.03525	112.9106	MENNO JCT - UTICA 115KV CKT 1
FDNS	00NR	5	17SP	G15_042	FROM->TO	GRPRAR1-LNX3345.00 - HOLT.CO3 345.00 345KV CKT 1	720	720	0.03579	112.9057	GEN336464 1-MICHOUD UNIT #3
FDNS	00NR	5	17SP	G15_042	FROM->TO	GRPRAR1-LNX3345.00 - HOLT.CO3 345.00 345KV CKT 1	720	720	0.03579	112.8971	GEN563222 1-G15088_3 0.6900
FDNS	00NR	5	17SP	G15_042	FROM->TO	GRPRAR1-LNX3345.00 - HOLT.CO3 345.00 345KV CKT 1	720	720	0.03648	112.8897	KOSSUTH 3 345.00 - WEBSTER 345KV CKT 1
FDNS	00NR	5	17SP	G15_042	FROM->TO	GRPRAR1-LNX3345.00 - HOLT.CO3 345.00 345KV CKT 1	720	720	0.03578	112.8846	GARRISON - JAMES TOWN 230KV CKT 1
FDNS	00NR	5	17SP	G15_042	FROM->TO	GRPRAR1-LNX3345.00 - HOLT.CO3 345.00 345KV CKT 1	720	720	0.03579	112.8644	GEN334441 1-SABINE UNIT 5
FDNS	00NR	5	17SP	G15_042	FROM->TO	GRPRAR1-LNX3345.00 - HOLT.CO3 345.00 345KV CKT 1	720	720	0.03621	112.8596	BYRON - NORTH ROCHESTER 345KV CKT 1
FDNS	00NR	5	17SP	G15_042	FROM->TO	GRPRAR1-LNX3345.00 - HOLT.CO3 345.00 345KV CKT 1	720	720	0.03579	112.8462	GEN335204 1-NELSON UNIT 4
FDNS	00NR	5	17SP	G15_042	FROM->TO	GRPRAR1-LNX3345.00 - HOLT.CO3 345.00 345KV CKT 1	720	720	0.03734	112.8353	GRIMES - LEHIGH 345KV CKT 1
FDNS	00NR	5	17SP	G15_042	FROM->TO	GRPRAR1-LNX3345.00 - HOLT.CO3 345.00 345KV CKT 1	720	720	0.03525	112.8277	P12:115:UMZZ:# 237 #: MEN IN SD. MENNO JUNCTION IS A TAP (UJ-MEN-TP).
FDNS	00NR	5	17SP	G15_042	FROM->TO	GRPRAR1-LNX3345.00 - HOLT.CO3 345.00 345KV CKT 1	720	720	0.03579	112.8031	GEN635213 3-NEAL UNIT 3
FDNS	00NR	5	17SP	G15_042	FROM->TO	GRPRAR1-LNX3345.00 - HOLT.CO3 345.00 345KV CKT 1	720	720	0.04491	112.7752	RAUN - SIOUX CITY 345KV CKT 1
FDNS	00NR	5	17SP	G15_042	FROM->TO	GRPRAR1-LNX3345.00 - HOLT.CO3 345.00 345KV CKT 1	720	720	0.04491	112.7752	RAUN - SIOUX CITY 345KV CKT 1
FDNS	00NR	5	17SP	G15_042	FROM->TO	GRPRAR1-LNX3345.00 - HOLT.CO3 345.00 345KV CKT 1	720	720	0.03586	112.7423	APPLEDORN 4 230.00 - WATERTOWN 230KV CKT 1
FDNS	00NR	5	17SP	G15_042	FROM->TO	GRPRAR1-LNX3345.00 - HOLT.CO3 345.00 345KV CKT 1	720	720	0.03586	112.7423	APPLEDORN 4 230.00 - WATERTOWN 230KV CKT 1
FDNS	00NR	5	17SP	G15_042	FROM->TO	GRPRAR1-LNX3345.00 - HOLT.CO3 345.00 345KV CKT 1	720	720	0.03579	112.7294	GEN334433 1-SABINE UNIT 3
FDNS	00NR	5	17SP	G15_042	FROM->TO	GRPRAR1-LNX3345.00 - HOLT.CO3 345.00 345KV CKT 1	720	720	0.03579	112.7135	GEN336222 1-LITTLE GYPSY UNIT#2
FDNS	00NR	5	17SP	G15_042	FROM->TO	GRPRAR1-LNX3345.00 - HOLT.CO3 345.00 345KV CKT 1	720	720	0.03578	112.6926	FARGO - JAMES TOWN 230KV CKT 1
FDNS	00NR	5	17SP	G15_042	FROM->TO	GRPRAR1-LNX3345.00 - HOLT.CO3 345.00 345KV CKT 1	720	720	0.03579	112.686	GEN640009 1-COOPER NUCLEAR STATION
FDNS	00NR	5	17SP	G15_042	FROM->TO	GRPRAR1-LNX3345.00 - HOLT.CO3 345.00 345KV CKT 1	720	720	0.03595	112.6743	NORTH ROCHESTER - PRAIRIE ISLAND 345KV CKT 1
FDNS	00NR	5	17SP	G15_042	FROM->TO	GRPRAR1-LNX3345.00 - HOLT.CO3 345.00 345KV CKT 1	720	720	0.03579	112.6716	P13:230:UMZW:# 2218 #: FP IN MT. LOSS OF TRANSFORMER (AT2).
FDNS	00NR	5	17SP	G15_042	FROM->TO	GRPRAR1-LNX3345.00 - HOLT.CO3 345.00 345KV CKT 1	720	720	0.03605	112.669	G15094_T 345.00 - LARAMIE RIVER 345KV CKT 1
FDNS	00NR	5	17SP	G15_042	FROM->TO	GRPRAR1-LNX3345.00 - HOLT.CO3 345.00 345KV CKT 1	720	720	0.03578	112.6674	FARGO - JAMES TOWN 230KV CKT 2
FDNS	00NR	5	17SP	G15_042	FROM->TO	GRPRAR1-LNX3345.00 - HOLT.CO3 345.00 345KV CKT 1	720	720	0.03586	112.6644	APPLEDORN 4 230.00 - GRANITE FALLS 230KV CKT 1
FDNS	00NR	5	17SP	G15_042	FROM->TO	GRPRAR1-LNX3345.00 - HOLT.CO3 345.00 345KV CKT 1	720	720	0.03586	112.6644	APPLEDORN 4 230.00 - GRANITE FALLS 230KV CKT 1
FDNS	00NR	5	17SP	G15_042	FROM->TO	GRPRAR1-LNX3345.00 - HOLT.CO3 345.00 345KV CKT 1	720	720	0.03579	112.6592	GEN303007 1-1BC2 U2
FDNS	00NR	5	17SP	G15_042	FROM->TO	GRPRAR1-LNX3345.00 - HOLT.CO3 345.00 345KV CKT 1	720	720	0.03579	112.6539	GEN303006 1-1BC2 U1
FDNS	00NR	5	17SP	G15_042	FROM->TO	GRPRAR1-LNX3345.00 - HOLT.CO3 345.00 345KV CKT 1	720	720	0.03582	112.6415	FERGSFL4 230.00 - WAHPETON 230KV CKT 1
FDNS	00NR	5	17SP	G15_042	FROM->TO	GRPRAR1-LNX3345.00 - HOLT.CO3 345.00 345KV CKT 1	720	720	0.03577	112.6159	BISMARK - JAMES TOWN 230KV CKT 1
FDNS	00NR	5	17SP	G15_042	FROM->TO	GRPRAR1-LNX3345.00 - HOLT.CO3 345.00 345KV CKT 1	720	720	0.03622	112.6119	BYRON - PLEASANT VALLEY 345KV CKT 1
FDNS	00NR	5	17SP	G15_042	FROM->TO	GRPRAR1-LNX3345.00 - HOLT.CO3 345.00 345KV CKT 1	720	720	0.03579	112.6099	GEN336152 1-WATERFORD UNIT#2
FDNS	00NR	5	17SP	G15_042	FROM->TO	GRPRAR1-LNX3345.00 - HOLT.CO3 345.00 345KV CKT 1	720	720	0.03579	112.6096	GEN336151 1-WATERFORD UNIT#1
FDNS	00NR	5	17SP	G15_042	FROM->TO	GRPRAR1-LNX3345.00 - HOLT.CO3 345.00 345KV CKT 1	720	720	0.03577	112.6035	BISMARK - WEBER 230KV CKT 1
FDNS	00NR	5	17SP	G15_042	FROM->TO	GRPRAR1-LNX3345.00 - HOLT.CO3 345.00 345KV CKT 1	720	720	0.03579	112.6031	GEN641089 2-ENERGY CENTER 2
FDNS	00NR	5	17SP	G15_042	FROM->TO	GRPRAR1-LNX3345.00 - HOLT.CO3 345.00 345KV CKT 1	720	720	0.03625	112.6028	SIDNEY - SIDNEY TRANSFORMER 230KV CKT 1
FDNS	00NR	5	17SP	G15_042	FROM->TO	GRPRAR1-LNX3345.00 - HOLT.CO3 345.00 345KV CKT 1	720	720	0.03625	112.6027	SIDNEY (SDQ KV2A) 345/230/13.8KV TRANSFORMER CKT 1
FDNS	00NR	5	17SP	G15_042	FROM->TO	GRPRAR1-LNX3345.00 - HOLT.CO3 345.00 345KV CKT 1	720	720	0.03625	112.6026	P13:230-345:NPPD:SIDNEY 3:KV2A
FDNS	00NR	5	17SP	G15_042	FROM->TO	GRPRAR1-LNX3345.00 - HOLT.CO3 345.00 345KV CKT 1	720	720	0.03815	112.599	BLOOMFIELD - CREIGHTON 115KV CKT 1
FDNS	00NR	5	17SP	G15_042	FROM->TO	GRPRAR1-LNX3345.00 - HOLT.CO3 345.00 345KV CKT 1	720	720	0.03628	112.598	P13:115-230:TSGT:SIDNEY-KV1A
FDNS	00NR	5	17SP	G15_042	FROM->TO	GRPRAR1-LNX3345.00 - HOLT.CO3 345.00 345KV CKT 1	720	720	0.03482	112.5976	LAKEFIELD 3 - LKFLDXL3 345KV CKT 1
FDNS	00NR	5	17SP	G15_042	FROM->TO	GRPRAR1-LNX3345.00 - HOLT.CO3 345.00 345KV CKT 1	720	720	0.03579	112.5917	GEN303008 1-1BC2 U3
FDNS	00NR	5	17SP	G15_042	FROM->TO	GRPRAR1-LNX3345.00 - HOLT.CO3 345.00 345KV CKT 1	720	720	0.03577	112.5902	JAMES TOWN - WEBER 230KV CKT 1
FDNS	00NR	5	20SP	G15_042	FROM->TO	GRPRAR1-LNX3345.00 - HOLT.CO3 345.00 345KV CKT 1	720	720	0.03776	112.5901	KELLY - MEADOWGROVE4230.00 230KV CKT 1
FDNS	00NR	5	17SP	G15_042	FROM->TO	GRPRAR1-LNX3345.00 - HOLT.CO3 345.00 345KV CKT 1	720	720	0.03579	112.5864	GEN336170 1-GULF OXY U4
FDNS	00NR	5	17SP	G15_042	FROM->TO	GRPRAR1-LNX3345.00 - HOLT.CO3 345.00 345KV CKT 1	720	720	0.03579	112.574	GEN562921 1-G15054_2 0.6900

SOLUTION	GROUP	SCENARIO	SEASON	SOURCE	DIRECTION	MONITORED ELEMENT	RATEA (MVA)	RATEB(MVA)	TDF	TC%LOADING (% MVA)	CONTINGENCY
FDNS	00NR	5	17SP	G15_042	FROM->TO	GRPRAR1-LNX3345.00 - HOLT.CO3 345.00 345KV CKT 1	720	720	0.03577	112.5529	ELM CREEK - MONTICELLO 345KV CKT 1
FDNS	00NR	5	17SP	G15_042	FROM->TO	GRPRAR1-LNX3345.00 - HOLT.CO3 345.00 345KV CKT 1	720	720	0.03579	112.5394	GEN562596 1-G14_059_3 0.6900
FDNS	00NR	5	17SP	G15_042	FROM->TO	GRPRAR1-LNX3345.00 - HOLT.CO3 345.00 345KV CKT 1	720	720	0.03579	112.5201	GEN501811 1-RODEMACHER UNIT 1
FDNS	00NR	5	17SP	G15_042	FROM->TO	GRPRAR1-LNX3345.00 - HOLT.CO3 345.00 345KV CKT 1	720	720	0.03571	112.5193	MT VERN - STORLA 115KV CKT 1
FDNS	00NR	5	17SP	G15_042	FROM->TO	GRPRAR1-LNX3345.00 - HOLT.CO3 345.00 345KV CKT 1	720	720	0.03591	112.517	ARKANSAS NUCLEAR ONE - FT SMITH 500KV CKT 1
FDNS	00NR	5	17SP	G15_042	FROM->TO	GRPRAR1-LNX3345.00 - HOLT.CO3 345.00 345KV CKT 1	720	720	0.03591	112.517	ARKANSAS NUCLEAR ONE - FT SMITH 500KV CKT 1
FDNS	00NR	5	17SP	G15_042	FROM->TO	GRPRAR1-LNX3345.00 - HOLT.CO3 345.00 345KV CKT 1	720	720	0.03815	112.516	BLOOMFIELD - GAVINS POINT 115KV CKT 1
FDNS	00NR	5	17SP	G15_042	FROM->TO	GRPRAR1-LNX3345.00 - HOLT.CO3 345.00 345KV CKT 1	720	720	0.0358	112.5085	AUDUBON - SHEYNNE 230KV CKT 1
FDNS	00NR	5	17SP	G15_042	FROM->TO	GRPRAR1-LNX3345.00 - HOLT.CO3 345.00 345KV CKT 1	720	720	0.03582	112.4972	FERGSFL4 230.00 - GRE-SILVRLK4230.00 230KV CKT 1
FDNS	00NR	5	17SP	G15_042	FROM->TO	GRPRAR1-LNX3345.00 - HOLT.CO3 345.00 345KV CKT 1	720	720	0.03579	112.4939	PRAIRIE ISLAND 345/20.0KV TRANSFORMER CKT 1
FDNS	00NR	5	17SP	G15_042	FROM->TO	GRPRAR1-LNX3345.00 - HOLT.CO3 345.00 345KV CKT 1	720	720	0.03579	112.4927	PRAIRIE ISLAND 345/20.0KV TRANSFORMER CKT 2
FDNS	00NR	5	17SP	G15_042	FROM->TO	GRPRAR1-LNX3345.00 - HOLT.CO3 345.00 345KV CKT 1	720	720	0.03579	112.4912	BALTA - RAMSEY 230KV CKT 1
FDNS	00NR	5	17SP	G15_042	FROM->TO	GRPRAR1-LNX3345.00 - HOLT.CO3 345.00 345KV CKT 1	720	720	0.03535	112.4848	FT THOMPSON - HURON 230KV CKT 1
FDNS	00NR	5	17SP	G15_042	FROM->TO	GRPRAR1-LNX3345.00 - HOLT.CO3 345.00 345KV CKT 1	720	720	0.03535	112.4848	FT THOMPSON - HURON 230KV CKT 1
FDNS	00NR	5	17SP	G15_042	FROM->TO	GRPRAR1-LNX3345.00 - HOLT.CO3 345.00 345KV CKT 1	720	720	0.03535	112.4848	FT THOMPSON - HURON 230KV CKT 2
FDNS	00NR	5	17SP	G15_042	FROM->TO	GRPRAR1-LNX3345.00 - HOLT.CO3 345.00 345KV CKT 1	720	720	0.03535	112.4848	FT THOMPSON - HURON 230KV CKT 2
FDNS	00NR	5	17SP	G15_042	FROM->TO	GRPRAR1-LNX3345.00 - HOLT.CO3 345.00 345KV CKT 1	720	720	0.03579	112.4804	GEN532751 1-WOLF CREEK GENERATING STATION UNIT 1
FDNS	00NR	5	17SP	G15_042	FROM->TO	GRPRAR1-LNX3345.00 - HOLT.CO3 345.00 345KV CKT 1	720	720	0.0363	112.4723	P12:115:NPPD:WAPA1:CHADRON7:BOXBUTE7:BTB
FDNS	00NR	5	17SP	G15_042	FROM->TO	GRPRAR1-LNX3345.00 - HOLT.CO3 345.00 345KV CKT 1	720	720	0.03579	112.4584	TOLK STATION EAST 230/24.0KV TRANSFORMER CKT 1
FDNS	00NR	5	17SP	G15_042	FROM->TO	GRPRAR1-LNX3345.00 - HOLT.CO3 345.00 345KV CKT 1	720	720	0.03575	112.457	DKSN_CO5 161.00 - TRIBOJI NO1 + NO2 161KV CKT 1
FDNS	00NR	5	17SP	G15_042	FROM->TO	GRPRAR1-LNX3345.00 - HOLT.CO3 345.00 345KV CKT 1	720	720	0.03609	112.4548	CHADRON - WAYSIDE 115KV CKT 1
FDNS	00NR	5	17SP	G15_042	FROM->TO	GRPRAR1-LNX3345.00 - HOLT.CO3 345.00 345KV CKT 1	720	720	0.03609	112.4548	P13:115-230:NPPD:WAYSIDE4:T1
FDNS	00NR	5	17SP	G15_042	FROM->TO	GRPRAR1-LNX3345.00 - HOLT.CO3 345.00 345KV CKT 1	720	720	0.03609	112.454	WAYSIDE (WAYSIDE T1) 230/115/13.8KV TRANSFORMER CKT 1
FDNS	00NR	5	17SP	G15_042	FROM->TO	GRPRAR1-LNX3345.00 - HOLT.CO3 345.00 345KV CKT 1	720	720	0.03582	112.4532	GRE-SILVRLK4230.00 - HENNING 230KV CKT 1
FDNS	00NR	5	17SP	G15_042	FROM->TO	GRPRAR1-LNX3345.00 - HOLT.CO3 345.00 345KV CKT 1	720	720	0.03579	112.4449	BIG STONE (230/115) 230/115/13.8KV TRANSFORMER CKT 1
FDNS	00NR	5	17SP	G15_042	FROM->TO	GRPRAR1-LNX3345.00 - HOLT.CO3 345.00 345KV CKT 1	720	720	0.03579	112.4427	GEN334071 1-LEWIS CREEK 2
FDNS	00NR	5	17SP	G15_042	FROM->TO	GRPRAR1-LNX3345.00 - HOLT.CO3 345.00 345KV CKT 1	720	720	0.03579	112.4379	GEN334070 1-LEWIS CREEK 1
FDNS	00NR	5	17SP	G15_042	FROM->TO	GRPRAR1-LNX3345.00 - HOLT.CO3 345.00 345KV CKT 1	720	720	0.03579	112.4375	GEN337766 1-TRACTEBEL UNIT S1
FDNS	00NR	5	17SP	G15_042	FROM->TO	GRPRAR1-LNX3345.00 - HOLT.CO3 345.00 345KV CKT 1	720	720	0.03579	112.4345	LAWRENCE ENERGY CENTER UNIT 5 230/24.0KV TRANSFORMER CKT 1
FDNS	00NR	5	17SP	G15_042	FROM->TO	GRPRAR1-LNX3345.00 - HOLT.CO3 345.00 345KV CKT 1	720	720	0.03579	112.4344	LAWRENCE ENERGY CENTER UNIT 5 - LAWRENCE HILL 230KV CKT 1
FDNS	00NR	5	17SP	G15_042	FROM->TO	GRPRAR1-LNX3345.00 - HOLT.CO3 345.00 345KV CKT 1	720	720	0.03657	112.4216	NOBLES - SPLIT ROCK 345KV CKT 1
FDNS	00NR	5	17SP	G15_042	FROM->TO	GRPRAR1-LNX3345.00 - HOLT.CO3 345.00 345KV CKT 1	720	720	0.03579	112.4199	PRAIRIE - WINGER 230KV CKT 1
FDNS	00NR	5	17SP	G15_042	FROM->TO	GRPRAR1-LNX3345.00 - HOLT.CO3 345.00 345KV CKT 1	720	720	0.03579	112.4095	GEN659118 1-LARAMIE RIVER UNIT1
FDNS	00NR	5	17SP	G15_042	FROM->TO	GRPRAR1-LNX3345.00 - HOLT.CO3 345.00 345KV CKT 1	720	720	0.0363	112.4045	P12:115:NPPD:WAPA2:HEMINGF7:SNAKECK7:BTB
FDNS	00NR	5	17SP	G15_042	FROM->TO	GRPRAR1-LNX3345.00 - HOLT.CO3 345.00 345KV CKT 1	720	720	0.0363	112.3999	CHADRON - DUNLAP 115KV CKT 1
FDNS	00NR	5	17SP	G15_042	FROM->TO	GRPRAR1-LNX3345.00 - HOLT.CO3 345.00 345KV CKT 1	720	720	0.03555	112.3983	HURON WEST PARK - MITCHELL NW 115KV CKT 1
FDNS	00NR	5	17SP	G15_042	FROM->TO	GRPRAR1-LNX3345.00 - HOLT.CO3 345.00 345KV CKT 1	720	720	0.03555	112.3983	HURON WEST PARK - MITCHELL NW 115KV CKT 1
FDNS	00NR	5	17SP	G15_042	FROM->TO	GRPRAR1-LNX3345.00 - HOLT.CO3 345.00 345KV CKT 1	720	720	0.03579	112.3981	GEN501910 1-ACADIA UNIT ST1
FDNS	00NR	5	17SP	G15_042	FROM->TO	GRPRAR1-LNX3345.00 - HOLT.CO3 345.00 345KV CKT 1	720	720	0.03582	112.3921	HENNING - INMANN 230KV CKT 1
FDNS	00NR	5	17SP	G15_042	FROM->TO	GRPRAR1-LNX3345.00 - HOLT.CO3 345.00 345KV CKT 1	720	720	0.0358	112.3921	LELAND OLDS - STANTON 230KV CKT 1
FDNS	00NR	5	17SP	G15_042	FROM->TO	GRPRAR1-LNX3345.00 - HOLT.CO3 345.00 345KV CKT 1	720	720	0.0358	112.3921	LELAND OLDS - STANTON 230KV CKT 1
FDNS	00NR	5	17SP	G15_042	FROM->TO	GRPRAR1-LNX3345.00 - HOLT.CO3 345.00 345KV CKT 1	720	720	0.03618	112.3814	PALXFRASBTHI
FDNS	00NR	5	17SP	G15_042	FROM->TO	GRPRAR1-LNX3345.00 - HOLT.CO3 345.00 345KV CKT 1	720	720	0.03513	112.3806	FT RANDAL - WHITE SWAN 115KV CKT 1
FDNS	00NR	5	17SP	G15_042	FROM->TO	GRPRAR1-LNX3345.00 - HOLT.CO3 345.00 345KV CKT 1	720	720	0.03642	112.3666	EAGLE - PHILIP 115KV CKT 1
FDNS	00NR	5	17SP	G15_042	FROM->TO	GRPRAR1-LNX3345.00 - HOLT.CO3 345.00 345KV CKT 1	720	720	0.03576	112.3614	GROTON (GROTON KU2A) 345/115/13.8KV TRANSFORMER CKT 1
FDNS	00NR	5	17SP	G15_042	FROM->TO	GRPRAR1-LNX3345.00 - HOLT.CO3 345.00 345KV CKT 1	720	720	0.03618	112.361	7PALM TAP 345.00 - SUB T 345KV CKT 1
FDNS	00NR	5	17SP	G15_042	FROM->TO	GRPRAR1-LNX3345.00 - HOLT.CO3 345.00 345KV CKT 1	720	720	0.03579	112.3589	GEN345765 H-1SIOUX 2 18.000
FDNS	00NR	5	17SP	G15_042	FROM->TO	GRPRAR1-LNX3345.00 - HOLT.CO3 345.00 345KV CKT 1	720	720	0.03513	112.3489	TYNDALL - WHITE SWAN 115KV CKT 1
FDNS	00NR	5	17SP	G15_042	FROM->TO	GRPRAR1-LNX3345.00 - HOLT.CO3 345.00 345KV CKT 1	720	720	0.0357	112.343	GRANT - MITCHELL 115KV CKT 1
FDNS	00NR	5	17SP	G15_042	FROM->TO	GRPRAR1-LNX3345.00 - HOLT.CO3 345.00 345KV CKT 1	720	720	0.0357	112.343	GRANT - MITCHELL 115KV CKT 1
FDNS	00NR	5	17SP	G15_042	FROM->TO	GRPRAR1-LNX3345.00 - HOLT.CO3 345.00 345KV CKT 1	720	720	0.03654	112.3421	DENISON - SIOUX CITY 230KV CKT 1
FDNS	00NR	5	17SP	G15_042	FROM->TO	GRPRAR1-LNX3345.00 - HOLT.CO3 345.00 345KV CKT 1	720	720	0.03579	112.3408	GEN337764 1-TRACTEBEL UNIT C1
FDNS	00NR	5	17SP	G15_042	FROM->TO	GRPRAR1-LNX3345.00 - HOLT.CO3 345.00 345KV CKT 1	720	720	0.03579	112.3408	GEN337765 1-TRACTEBEL UNIT C2
FDNS	00NR	5	17SP	G15_042	FROM->TO	GRPRAR1-LNX3345.00 - HOLT.CO3 345.00 345KV CKT 1	720	720	0.03581	112.3401	AUDUBON - HUBBARD 230KV CKT 1
FDNS	00NR	5	17SP	G15_042	FROM->TO	GRPRAR1-LNX3345.00 - HOLT.CO3 345.00 345KV CKT 1	720	720	0.03539	112.3372	CLEARWATER - ONEILL 115KV CKT 1
FDNS	00NR	5	17SP	G15_042	FROM->TO	GRPRAR1-LNX3345.00 - HOLT.CO3 345.00 345KV CKT 1	720	720	0.03581	112.3335	KARLSTAD - WINGER 230KV CKT 1
FDNS	00NR	5	17SP	G15_042	FROM->TO	GRPRAR1-LNX3345.00 - HOLT.CO3 345.00 345KV CKT 1	720	720	0.03588	112.333	GENOA 161 - SENECA 161 161KV CKT 1
FDNS	00NR	5	17SP	G15_042	FROM->TO	GRPRAR1-LNX3345.00 - HOLT.CO3 345.00 345KV CKT 1	720	720	0.03579	112.3317	GEN345756 H-1SIOUX 1 18.000
FDNS	00NR	5	17SP	G15_042	FROM->TO	GRPRAR1-LNX3345.00 - HOLT.CO3 345.00 345KV CKT 1	720	720	0.03877	112.3186	BELDEN - HOSKINS 115KV CKT 1
FDNS	00NR	5	17SP	G15_042	FROM->TO	GRPRAR1-LNX3345.00 - HOLT.CO3 345.00 345KV CKT 1	720	720	0.03579	112.3186	GEN562912 1-G15053_3 0.6900
FDNS	00NR	5	17SP	G15_042	FROM->TO	GRPRAR1-LNX3345.00 - HOLT.CO3 345.00 345KV CKT 1	720	720	0.03664	112.3165	PLYMOUTH - SIOUX CITY 161KV CKT 1
FDNS	00NR	5	17SP	G15_042	FROM->TO	GRPRAR1-LNX3345.00 - HOLT.CO3 345.00 345KV CKT 1	720	720	0.03664	112.3165	PLYMOUTH - SIOUX CITY 161KV CKT 1
FDNS	00NR	5	17SP	G15_042	FROM->TO	GRPRAR1-LNX3345.00 - HOLT.CO3 345.00 345KV CKT 1	720	720	0.03511	112.3155	P12:115:UMZW:# 1910 #: YJ IN SD. YJ-UJ LINE FAULT
FDNS	00NR	5	17SP	G15_042	FROM->TO	GRPRAR1-LNX3345.00 - HOLT.CO3 345.00 345KV CKT 1	720	720	0.03511	112.3154	NAPA JCT7 115.00 - UTICA 115KV CKT 1
FDNS	00NR	5	17SP	G15_042	FROM->TO	GRPRAR1-LNX3345.00 - HOLT.CO3 345.00 345KV CKT 1	720	720	0.03511	112.3154	NAPA JCT7 115.00 - UTICA 115KV CKT 1
FDNS	00NR	5	17SP	G15_042	FROM->TO	GRPRAR1-LNX3345.00 - HOLT.CO3 345.00 345KV CKT 1	720	720	0.03511	112.3122	NAPA JCT7 115.00 - YANKON JCT 115KV CKT 1
FDNS	00NR	5	17SP	G15_042	FROM->TO	GRPRAR1-LNX3345.00 - HOLT.CO3 345.00 345KV CKT 1	720	720	0.03511	112.3122	NAPA JCT7 115.00 - YANKON JCT 115KV CKT 1
FDNS	00NR	5	17SP	G15_042	FROM->TO	GRPRAR1-LNX3345.00 - HOLT.CO3 345.00 345KV CKT 1	720	720	0.03579	112.3102	PRAIRIE - RAMSEY 230KV CKT 1
FDNS	00NR	5	17SP	G15_042	FROM->TO	GRPRAR1-LNX3345.00 - HOLT.CO3 345.00 345KV CKT 1	720	720	0.03586	112.3071	NORTH LA CROSSE - NORTH ROCHESTER 345KV CKT 1
FDNS	00NR	5	17SP	G15_042	FROM->TO	GRPRAR1-LNX3345.00 - HOLT.CO3 345.00 345KV CKT 1	720	720	0.03575	112.3057	DKSN_CO5 161.00 - LAKEFIELD 5 NO1 + NO 2 161KV CKT 1
FDNS	00NR	5	17SP	G15_042	FROM->TO	GRPRAR1-LNX3345.00 - HOLT.CO3 345.00 345KV CKT 1	720	720	0.03579	112.305	GEN336221 1-LITTLE GYPSY UNIT#1
FDNS	00NR	5	17SP	G15_042	FROM->TO	GRPRAR1-LNX3345.00 - HOLT.CO3 345.00 345KV CKT 1	720	720	0.03579	112.305	GEN636641 1-LOUISA UNIT 1
FDNS	00NR	5	17SP	G15_042	FROM->TO	GRPRAR1-LNX3345.00 - HOLT.CO3 345.00 345KV CKT 1	720	720	0.03596	112.3039	HAMPTON CORNER - NORTH ROCHESTER 345KV CKT 1
FDNS	00NR	5	17SP	G15_042	FROM->TO	GRPRAR1-LNX3345.00 - HOLT.CO3 345.00 345KV CKT 1	720	720	0.03579	112.3031	JUDSON LARGE 115/15.0KV TRANSFORMER CKT 1
FDNS	00NR	5	17SP	G15_042	FROM->TO	GRPRAR1-LNX3345.00 - HOLT.CO3 345.00 345KV CKT 1	720	720	0.03579	112.3031	JUDSON LARGE 115/15.0KV TRANSFORMER CKT 1
FDNS	00NR	5	17SP	G15_042	FROM->TO	GRPRAR1-LNX3345.00 - HOLT.CO3 345.00 345KV CKT 1	720	720	0.03579	112.302	GRAND GULF 500/22.0KV TRANSFORMER CKT 1
FDNS	00NR	5	17SP	G15_042	FROM->TO	GRPRAR1-LNX3345.00 - HOLT.CO3 345.00 345KV CKT 1	720	720	0.03642	112.3019	EAGLE - MARTIN 115KV CKT 1
FDNS	00NR	5	17SP	G15_042	FROM->TO	GRPRAR1-LNX3345.00 - HOLT.CO3 345.00 345KV CKT 1	720	720	0.03579	112.2973	GEN336242 1-1NMIL ST1 18.000
FDNS	00NR	5	17SP	G15_042	FROM->TO	GRPRAR1-LNX3345.00 - HOLT.CO3 345.00 345KV CKT 1	720	720	0.03579	112.2973	GEN337757 1-DUKE HOTSPRINGS STG1

SOLUTION	GROUP	SCENARIO	SEASON	SOURCE	DIRECTION	MONITORED ELEMENT	RATEA (MVA)	RATEB(MVA)	TDF	TC%LOADING (% MVA)	CONTINGENCY
FDNS	00NR	5	17SP	G15_042	FROM->TO	GRPRAR1-LNX3345.00 - HOLT.CO3 345.00 345KV CKT 1	720	720	0.03579	112.2923	GEN334432 1-SABINE UNIT 2
FDNS	00NR	5	17SP	G15_042	FROM->TO	GRPRAR1-LNX3345.00 - HOLT.CO3 345.00 345KV CKT 1	720	720	0.03579	112.2922	GEN334431 1-SABINE UNIT 1
FDNS	00NR	5	17SP	G15_042	FROM->TO	GRPRAR1-LNX3345.00 - HOLT.CO3 345.00 345KV CKT 1	720	720	0.0359	112.286	FRANKS - HUBEN 345KV CKT 1
FDNS	00NR	5	17SP	G15_042	FROM->TO	GRPRAR1-LNX3345.00 - HOLT.CO3 345.00 345KV CKT 1	720	720	0.0363	112.2823	BOXBUTE7 115.00 - DUNLAP 115KV CKT 1
FDNS	00NR	5	17SP	G15_042	FROM->TO	GRPRAR1-LNX3345.00 - HOLT.CO3 345.00 345KV CKT 1	720	720	0.03579	112.2723	GEN334030 1-FRONTIER UNIT 1
FDNS	00NR	5	17SP	G15_042	FROM->TO	GRPRAR1-LNX3345.00 - HOLT.CO3 345.00 345KV CKT 1	720	720	0.03579	112.2721	GEN334031 1-FRONTIER UNIT 2
FDNS	00NR	5	17SP	G15_042	FROM->TO	GRPRAR1-LNX3345.00 - HOLT.CO3 345.00 345KV CKT 1	720	720	0.03579	112.2718	GEN345832 1-1TS G1 13.800
FDNS	00NR	5	17SP	G15_042	FROM->TO	GRPRAR1-LNX3345.00 - HOLT.CO3 345.00 345KV CKT 1	720	720	0.03579	112.2716	GEN336446 1-MICHOUD UNIT #2
FDNS	00NR	5	17SP	G15_042	FROM->TO	GRPRAR1-LNX3345.00 - HOLT.CO3 345.00 345KV CKT 1	720	720	0.03579	112.2715	GEN345841 2-1TS G2 13.800
FDNS	00NR	5	17SP	G15_042	FROM->TO	GRPRAR1-LNX3345.00 - HOLT.CO3 345.00 345KV CKT 1	720	720	0.03579	112.2658	OKLAUN 345/24.0KV TRANSFORMER CKT 1
FDNS	00NR	5	17SP	G15_042	FROM->TO	GRPRAR1-LNX3345.00 - HOLT.CO3 345.00 345KV CKT 1	720	720	0.03579	112.2582	GEN501970 1-EVANGELINE UNIT 7
FDNS	00NR	5	17SP	G15_042	FROM->TO	GRPRAR1-LNX3345.00 - HOLT.CO3 345.00 345KV CKT 1	720	720	0.03579	112.2365	GEN562438 1-G13-032 0.6900
FDNS	00NR	5	17SP	G15_042	FROM->TO	GRPRAR1-LNX3345.00 - HOLT.CO3 345.00 345KV CKT 1	720	720	0.03539	112.2336	P12:115:NPPD:1164:ONEILL 7:JEFFREY9:BTB
FDNS	00NR	5	17SP	G15_042	FROM->TO	GRPRAR1-LNX3345.00 - HOLT.CO3 345.00 345KV CKT 1	720	720	0.03579	112.1362	GEN563282 1-G15094_3 0.6900
FDNS	00NR	5	20SP	G15_042	FROM->TO	GRPRAR1-LNX3345.00 - HOLT.CO3 345.00 345KV CKT 1	720	720	0.03179	112.0377	P12:230:UMZB:# 116 #: ST IN SD. WSG-ST-VH
FDNS	00NR	5	17SP	G15_042	FROM->TO	GRPRAR1-LNX3345.00 - HOLT.CO3 345.00 345KV CKT 1	720	720	0.03579	111.7843	BASE CASE
FDNS	00NR	5	25SP	G15_042	FROM->TO	GRPRAR1-LNX3345.00 - HOLT.CO3 345.00 345KV CKT 1	720	720	0.03812	111.711	KELLY - MEADOWGROVE4230.00 230KV CKT 1
FDNS	00NR	5	17SP	G15_042	FROM->TO	GRPRAR1-LNX3345.00 - HOLT.CO3 345.00 345KV CKT 1	720	720	0.03598	111.4483	BUCKNER7 345.00 - SPEARVILLE 345KV CKT 1
FDNS	00NR	5	17SP	G15_042	FROM->TO	GRPRAR1-LNX3345.00 - HOLT.CO3 345.00 345KV CKT 1	720	720	0.03598	111.4483	BUCKNER7 345.00 - SPEARVILLE 345KV CKT 1
FDNS	00NR	5	17SP	G15_042	FROM->TO	GRPRAR1-LNX3345.00 - HOLT.CO3 345.00 345KV CKT 1	720	720	0.03674	111.3486	103RD & ROKEBY - MOORE 345KV CKT 1
FDNS	00NR	5	17SP	G15_042	FROM->TO	GRPRAR1-LNX3345.00 - HOLT.CO3 345.00 345KV CKT 1	720	720	0.03674	111.3486	103RD & ROKEBY - MOORE 345KV CKT 1
FDNS	00NR	5	17SP	G15_042	FROM->TO	GRPRAR1-LNX3345.00 - HOLT.CO3 345.00 345KV CKT 1	720	720	0.03597	111.3312	FT THOMPSON - OAHE 230KV CKT 1
FDNS	00NR	5	17SP	G15_042	FROM->TO	GRPRAR1-LNX3345.00 - HOLT.CO3 345.00 345KV CKT 1	720	720	0.03597	111.3312	FT THOMPSON - OAHE 230KV CKT 1
FDNS	00NR	5	17SP	G15_042	FROM->TO	GRPRAR1-LNX3345.00 - HOLT.CO3 345.00 345KV CKT 1	720	720	0.03597	111.3312	FT THOMPSON - OAHE 230KV CKT 2
FDNS	00NR	5	17SP	G15_042	FROM->TO	GRPRAR1-LNX3345.00 - HOLT.CO3 345.00 345KV CKT 1	720	720	0.03597	111.3312	FT THOMPSON - OAHE 230KV CKT 2
FDNS	00NR	5	17SP	G15_042	FROM->TO	GRPRAR1-LNX3345.00 - HOLT.CO3 345.00 345KV CKT 1	720	720	0.03579	111.3097	GEN652546 1-FT RANDAL
FDNS	00NR	5	17SP	G15_042	FROM->TO	GRPRAR1-LNX3345.00 - HOLT.CO3 345.00 345KV CKT 1	720	720	0.03579	111.2767	MITCHLCO3 345.00 345/34.5KV TRANSFORMER CKT 1
FDNS	00NR	5	17SP	G15_042	FROM->TO	GRPRAR1-LNX3345.00 - HOLT.CO3 345.00 345KV CKT 1	720	720	0.03597	111.2737	FT THOMPSON - OAHE 230KV CKT 3
FDNS	00NR	5	17SP	G15_042	FROM->TO	GRPRAR1-LNX3345.00 - HOLT.CO3 345.00 345KV CKT 1	720	720	0.03597	111.2737	FT THOMPSON - OAHE 230KV CKT 3
FDNS	00NR	5	17SP	G15_042	FROM->TO	GRPRAR1-LNX3345.00 - HOLT.CO3 345.00 345KV CKT 1	720	720	0.03597	111.2737	FT THOMPSON - OAHE 230KV CKT 4
FDNS	00NR	5	17SP	G15_042	FROM->TO	GRPRAR1-LNX3345.00 - HOLT.CO3 345.00 345KV CKT 1	720	720	0.03597	111.2737	FT THOMPSON - OAHE 230KV CKT 4
FDNS	00NR	5	25SP	G15_042	FROM->TO	GRPRAR1-LNX3345.00 - HOLT.CO3 345.00 345KV CKT 1	720	720	0.0321	111.273	P12:230:UMZB:# 116 #: ST IN SD. WSG-ST-VH
FDNS	00NR	5	17SP	G15_042	FROM->TO	GRPRAR1-LNX3345.00 - HOLT.CO3 345.00 345KV CKT 1	720	720	0.03579	111.2676	GEN672347 1-CORY COGEN GENERATOR 1 GT1
FDNS	00NR	5	17SP	G15_042	FROM->TO	GRPRAR1-LNX3345.00 - HOLT.CO3 345.00 345KV CKT 1	720	720	0.03579	111.2676	GEN672348 2-CORY COGEN GENERATOR 2 GT2
FDNS	00NR	5	20SP	G15_042	FROM->TO	GRPRAR1-LNX3345.00 - HOLT.CO3 345.00 345KV CKT 1	720	720	0.03218	111.2653	STORLA - WESSINGTON 230KV CKT 1
FDNS	00NR	5	17SP	G15_042	FROM->TO	GRPRAR1-LNX3345.00 - HOLT.CO3 345.00 345KV CKT 1	720	720	0.03525	111.2624	NELIGH - PETERSBRG.N7115.00 115KV CKT 1
FDNS	00NR	5	17SP	G15_042	FROM->TO	GRPRAR1-LNX3345.00 - HOLT.CO3 345.00 345KV CKT 1	720	720	0.03579	111.2612	GEN600018 S-LS POWER STEAM
FDNS	00NR	5	17SP	G15_042	FROM->TO	GRPRAR1-LNX3345.00 - HOLT.CO3 345.00 345KV CKT 1	720	720	0.03595	111.2574	POST ROCK (POSTROCK T1) 345/230/13.8KV TRANSFORMER CKT 1
FDNS	00NR	5	17SP	G15_042	FROM->TO	GRPRAR1-LNX3345.00 - HOLT.CO3 345.00 345KV CKT 1	720	720	0.03752	111.2569	NUNDRWD - PHILIP TAP 230KV CKT 1
FDNS	00NR	5	17SP	G15_042	FROM->TO	GRPRAR1-LNX3345.00 - HOLT.CO3 345.00 345KV CKT 1	720	720	0.03579	111.2553	GEN300003 1-THOMAS HILL UNIT 3
FDNS	00NR	5	17SP	G15_042	FROM->TO	GRPRAR1-LNX3345.00 - HOLT.CO3 345.00 345KV CKT 1	720	720	0.0359	111.2522	G11_051T 345.00 - WOODWARD DISTRICT EHV 345KV CKT 1
FDNS	00NR	5	17SP	G15_042	FROM->TO	GRPRAR1-LNX3345.00 - HOLT.CO3 345.00 345KV CKT 1	720	720	0.03579	111.2487	GEN659158 2-PIONEER G213.800
FDNS	00NR	5	17SP	G15_042	FROM->TO	GRPRAR1-LNX3345.00 - HOLT.CO3 345.00 345KV CKT 1	720	720	0.03579	111.2487	GEN659159 3-PIONEER G313.800
FDNS	00NR	5	17SP	G15_042	FROM->TO	GRPRAR1-LNX3345.00 - HOLT.CO3 345.00 345KV CKT 1	720	720	0.03579	111.2412	GEN659156 2-LONESMCRK 2G13.800
FDNS	00NR	5	17SP	G15_042	FROM->TO	GRPRAR1-LNX3345.00 - HOLT.CO3 345.00 345KV CKT 1	720	720	0.03579	111.2412	GEN659157 3-LONESMCRK 3G13.800
FDNS	00NR	5	17SP	G15_042	FROM->TO	GRPRAR1-LNX3345.00 - HOLT.CO3 345.00 345KV CKT 1	720	720	0.03612	111.233	P12:115:UMZW:# 172 #: WI IN SD.
FDNS	00NR	5	17SP	G15_042	FROM->TO	GRPRAR1-LNX3345.00 - HOLT.CO3 345.00 345KV CKT 1	720	720	0.03574	111.2323	G14-021T 345.00 - MULLNCR7 345.00 345KV CKT 1
FDNS	00NR	5	17SP	G15_042	FROM->TO	GRPRAR1-LNX3345.00 - HOLT.CO3 345.00 345KV CKT 1	720	720	0.03574	111.232	G15-005T 345.00 - MULLNCR7 345.00 345KV CKT 1
FDNS	00NR	5	17SP	G15_042	FROM->TO	GRPRAR1-LNX3345.00 - HOLT.CO3 345.00 345KV CKT 1	720	720	0.03579	111.2311	GEN590010 1-ERCOT EQUIVALENCE
FDNS	00NR	5	17SP	G15_042	FROM->TO	GRPRAR1-LNX3345.00 - HOLT.CO3 345.00 345KV CKT 1	720	720	0.03579	111.2298	GEN652548 5-FT RANDAL
FDNS	00NR	5	17SP	G15_042	FROM->TO	GRPRAR1-LNX3345.00 - HOLT.CO3 345.00 345KV CKT 1	720	720	0.03579	111.2298	GEN652549 7-FT RANDAL
FDNS	00NR	5	17SP	G15_042	FROM->TO	GRPRAR1-LNX3345.00 - HOLT.CO3 345.00 345KV CKT 1	720	720	0.03579	111.2265	GEN672367 1-MERIDIAN GENERATOR 1 GT1
FDNS	00NR	5	17SP	G15_042	FROM->TO	GRPRAR1-LNX3345.00 - HOLT.CO3 345.00 345KV CKT 1	720	720	0.03579	111.2265	GEN672368 2-MERIDIAN GENERATOR 2 GT2
FDNS	00NR	5	17SP	G15_042	FROM->TO	GRPRAR1-LNX3345.00 - HOLT.CO3 345.00 345KV CKT 1	720	720	0.03579	111.2234	GEN600021 3-ANGUS ANSON2
FDNS	00NR	5	17SP	G15_042	FROM->TO	GRPRAR1-LNX3345.00 - HOLT.CO3 345.00 345KV CKT 1	720	720	0.03605	111.2213	LARAMIE RIVER - STEGALL 345KV CKT 1
FDNS	00NR	5	17SP	G15_042	FROM->TO	GRPRAR1-LNX3345.00 - HOLT.CO3 345.00 345KV CKT 1	720	720	0.03579	111.2198	GEN600020 2-ANGUS ANSON1
FDNS	00NR	5	17SP	G15_042	FROM->TO	GRPRAR1-LNX3345.00 - HOLT.CO3 345.00 345KV CKT 1	720	720	0.03581	111.2197	P12:115:UMZZ:# 232 #: AB IN SD. ABERDEEN A TAP BETWEEN ELLENDALE AND ABERDEEN-SIEBRECHT.
FDNS	00NR	5	17SP	G15_042	FROM->TO	GRPRAR1-LNX3345.00 - HOLT.CO3 345.00 345KV CKT 1	720	720	0.03579	111.2195	GEN652547 3-FT RANDAL
FDNS	00NR	5	17SP	G15_042	FROM->TO	GRPRAR1-LNX3345.00 - HOLT.CO3 345.00 345KV CKT 1	720	720	0.03579	111.2136	GEN672352 3-NIPAWIN GENERATOR 3
FDNS	00NR	5	17SP	G15_042	FROM->TO	GRPRAR1-LNX3345.00 - HOLT.CO3 345.00 345KV CKT 1	720	720	0.03579	111.2135	GEN672350 1-NIPAWIN GENERATOR 1
FDNS	00NR	5	17SP	G15_042	FROM->TO	GRPRAR1-LNX3345.00 - HOLT.CO3 345.00 345KV CKT 1	720	720	0.03579	111.2135	GEN672351 2-NIPAWIN GENERATOR 2
FDNS	00NR	5	17SP	G15_042	FROM->TO	GRPRAR1-LNX3345.00 - HOLT.CO3 345.00 345KV CKT 1	720	720	0.03579	111.2055	GEN590011 2-ERCOT EQUIVALENCE
FDNS	00NR	5	17SP	G15_042	FROM->TO	GRPRAR1-LNX3345.00 - HOLT.CO3 345.00 345KV CKT 1	720	720	0.03579	111.2002	GEN672349 3-CORY COGEN GENERATOR 3 ST
FDNS	00NR	5	17SP	G15_042	FROM->TO	GRPRAR1-LNX3345.00 - HOLT.CO3 345.00 345KV CKT 1	720	720	0.03579	111.1963	GEN620324 3-HOOT LAKE 3 GEN
FDNS	00NR	5	17SP	G15_042	FROM->TO	GRPRAR1-LNX3345.00 - HOLT.CO3 345.00 345KV CKT 1	720	720	0.03579	111.1935	EASTDC - ERCOT EQUIVALENCE 345KV CKT 1
FDNS	00NR	5	17SP	G15_042	FROM->TO	GRPRAR1-LNX3345.00 - HOLT.CO3 345.00 345KV CKT 1	720	720	0.03579	111.1935	ERCOT EQUIVALENCE 345/24.0KV TRANSFORMER CKT 1
FDNS	00NR	5	17SP	G15_042	FROM->TO	GRPRAR1-LNX3345.00 - HOLT.CO3 345.00 345KV CKT 1	720	720	0.03579	111.1916	GEN657964 1-ASH2GEN9 0.5750
FDNS	00NR	5	17SP	G15_042	FROM->TO	GRPRAR1-LNX3345.00 - HOLT.CO3 345.00 345KV CKT 1	720	720	0.03574	111.1855	G15-005T 345.00 - SIBLEY 345KV CKT 1
FDNS	00NR	5	17SP	G15_042	FROM->TO	GRPRAR1-LNX3345.00 - HOLT.CO3 345.00 345KV CKT 1	720	720	0.0373	111.183	BATTLE CREEK - COUNTY LINE 115KV CKT 1
FDNS	00NR	5	17SP	G15_042	FROM->TO	GRPRAR1-LNX3345.00 - HOLT.CO3 345.00 345KV CKT 1	720	720	0.03579	111.1756	GEN629072 4-LANSING GENERATOR FOR UNITS NO4 EIA CODE 1
FDNS	00NR	5	17SP	G15_042	FROM->TO	GRPRAR1-LNX3345.00 - HOLT.CO3 345.00 345KV CKT 1	720	720	0.03525	111.1734	ALBION - PETERSBURG 115KV CKT 1
FDNS	00NR	5	17SP	G15_042	FROM->TO	GRPRAR1-LNX3345.00 - HOLT.CO3 345.00 345KV CKT 1	720	720	0.03586	111.1693	ANTELOP-LNX3345.00 - BRDLAND-LNX3345.00 345KV CKT 1
FDNS	00NR	5	17SP	G15_042	FROM->TO	GRPRAR1-LNX3345.00 - HOLT.CO3 345.00 345KV CKT 1	720	720	0.03579	111.1686	GEN660003 3-HURON WEST PARK
FDNS	00NR	5	17SP	G15_042	FROM->TO	GRPRAR1-LNX3345.00 - HOLT.CO3 345.00 345KV CKT 1	720	720	0.03579	111.1658	GEN600012 2-BLACK DOG GEN 2
FDNS	00NR	5	17SP	G15_042	FROM->TO	GRPRAR1-LNX3345.00 - HOLT.CO3 345.00 345KV CKT 1	720	720	0.03654	111.1657	AXTELL - POST ROCK 345KV CKT 1
FDNS	00NR	5	17SP	G15_042	FROM->TO	GRPRAR1-LNX3345.00 - HOLT.CO3 345.00 345KV CKT 1	720	720	0.03399	111.1646	COLUMEAST - NW68TH & HOLDREGE 345KV CKT 1
FDNS	00NR	5	17SP	G15_042	FROM->TO	GRPRAR1-LNX3345.00 - HOLT.CO3 345.00 345KV CKT 1	720	720	0.03399	111.1646	COLUMEAST - NW68TH & HOLDREGE 345KV CKT 1
FDNS	00NR	5	17SP	G15_042	FROM->TO	GRPRAR1-LNX3345.00 - HOLT.CO3 345.00 345KV CKT 1	720	720	0.03525	111.1445	PETERSBRG.N7115.00 - PETERSBURG 115KV CKT Z1
FDNS	00NR	5	17SP	G15_042	FROM->TO	GRPRAR1-LNX3345.00 - HOLT.CO3 345.00 345KV CKT 1	720	720	0.03579	111.1282	GEN659290 1-EDGECOL

SOLUTION	GROUP	SCENARIO	SEASON	SOURCE	DIRECTION	MONITORED ELEMENT	RATEA (MVA)	RATEB(MVA)	TDF	TC%LOADING (% MVA)	CONTINGENCY
FDNS	00NR	5	17SP	G15_042	FROM->TO	GRPRAR1-LNX3345.00 - HOLT.CO3 345.00 345KV CKT 1	720	720	0.03579	111.1279	EMERY 161/18.0KV TRANSFORMER CKT 1
FDNS	00NR	5	17SP	G15_042	FROM->TO	GRPRAR1-LNX3345.00 - HOLT.CO3 345.00 345KV CKT 1	720	720	0.03468	111.1251	COOPER - MOORE 345KV CKT 1
FDNS	00NR	5	17SP	G15_042	FROM->TO	GRPRAR1-LNX3345.00 - HOLT.CO3 345.00 345KV CKT 1	720	720	0.03579	111.1227	GEN652410 3-FT PECK
FDNS	00NR	5	17SP	G15_042	FROM->TO	GRPRAR1-LNX3345.00 - HOLT.CO3 345.00 345KV CKT 1	720	720	0.03579	111.1212	GEN672339 16-QE 16G 13.800
FDNS	00NR	5	17SP	G15_042	FROM->TO	GRPRAR1-LNX3345.00 - HOLT.CO3 345.00 345KV CKT 1	720	720	0.03579	111.1212	GEN672342 3-QUEEN ELIZABETH GENERATOR 3
FDNS	00NR	5	17SP	G15_042	FROM->TO	GRPRAR1-LNX3345.00 - HOLT.CO3 345.00 345KV CKT 1	720	720	0.0373	111.1206	ANTELOPE 7115.00 - COUNTY LINE 115KV CKT 1
FDNS	00NR	5	17SP	G15_042	FROM->TO	GRPRAR1-LNX3345.00 - HOLT.CO3 345.00 345KV CKT 1	720	720	0.0386	111.1198	MINGO - RED WILLOW 345KV CKT 1
FDNS	00NR	5	17SP	G15_042	FROM->TO	GRPRAR1-LNX3345.00 - HOLT.CO3 345.00 345KV CKT 1	720	720	0.0386	111.1198	MINGO - RED WILLOW 345KV CKT 1
FDNS	00NR	5	17SP	G15_042	FROM->TO	GRPRAR1-LNX3345.00 - HOLT.CO3 345.00 345KV CKT 1	720	720	0.03394	111.1126	COLUMEAST - SHELL CREEK 345KV CKT 1
FDNS	00NR	5	17SP	G15_042	FROM->TO	GRPRAR1-LNX3345.00 - HOLT.CO3 345.00 345KV CKT 1	720	720	0.03579	111.1086	GEN672393 2-NBECST2G 13.800
FDNS	00NR	5	17SP	G15_042	FROM->TO	GRPRAR1-LNX3345.00 - HOLT.CO3 345.00 345KV CKT 1	720	720	0.03525	111.1063	P12:115:NPPD:1168B:ALBION 7:PETERSBRG.N7:BTB
FDNS	00NR	5	17SP	G15_042	FROM->TO	GRPRAR1-LNX3345.00 - HOLT.CO3 345.00 345KV CKT 1	720	720	0.03579	111.0979	GEN600046 1-MECST
FDNS	00NR	5	17SP	G15_042	FROM->TO	GRPRAR1-LNX3345.00 - HOLT.CO3 345.00 345KV CKT 1	720	720	0.03579	111.0861	GEN300007 1-NEW MADRID UNIT 2
FDNS	00NR	5	17SP	G15_042	FROM->TO	GRPRAR1-LNX3345.00 - HOLT.CO3 345.00 345KV CKT 1	720	720	0.03579	111.0806	GEN300006 1-NEW MADRID UNIT 1
FDNS	00NR	5	17SP	G15_042	FROM->TO	GRPRAR1-LNX3345.00 - HOLT.CO3 345.00 345KV CKT 1	720	720	0.03579	111.0736	GEN600047 1-MECCT1
FDNS	00NR	5	17SP	G15_042	FROM->TO	GRPRAR1-LNX3345.00 - HOLT.CO3 345.00 345KV CKT 1	720	720	0.03579	111.0588	GEN652414 4-FT PECK
FDNS	00NR	5	17SP	G15_042	FROM->TO	GRPRAR1-LNX3345.00 - HOLT.CO3 345.00 345KV CKT 1	720	720	0.03579	111.0588	GEN652415 5-FT PECK
FDNS	00NR	5	17SP	G15_042	FROM->TO	GRPRAR1-LNX3345.00 - HOLT.CO3 345.00 345KV CKT 1	720	720	0.03579	111.0566	GEN600050 1-FEP
FDNS	00NR	5	17SP	G15_042	FROM->TO	GRPRAR1-LNX3345.00 - HOLT.CO3 345.00 345KV CKT 1	720	720	0.03579	111.0417	GEN660001 2-ABERDEEN SIEBRECHT
FDNS	00NR	5	17SP	G15_042	FROM->TO	GRPRAR1-LNX3345.00 - HOLT.CO3 345.00 345KV CKT 1	720	720	0.03579	111.028	LADISH 115/13.2KV TRANSFORMER CKT 1
FDNS	00NR	5	17SP	G15_042	FROM->TO	GRPRAR1-LNX3345.00 - HOLT.CO3 345.00 345KV CKT 1	720	720	0.03579	111.009	GEN652345 W-G07_023IS_2 0.6900
FDNS	00NR	5	17SP	G15_042	FROM->TO	GRPRAR1-LNX3345.00 - HOLT.CO3 345.00 345KV CKT 1	720	720	0.03742	110.9937	G15061_T 345.00 - SETAB 345KV CKT 1
FDNS	00NR	5	17SP	G15_042	FROM->TO	GRPRAR1-LNX3345.00 - HOLT.CO3 345.00 345KV CKT 1	720	720	0.03579	110.9715	GEN 11104 1-J262_GEN 0.6000
FDNS	00NR	5	17SP	G15_042	FROM->TO	GRPRAR1-LNX3345.00 - HOLT.CO3 345.00 345KV CKT 1	720	720	0.03579	110.9715	GEN 11108 1-J263_GEN 0.6000
FDNS	00NR	5	17SP	G15_042	FROM->TO	GRPRAR1-LNX3345.00 - HOLT.CO3 345.00 345KV CKT 1	720	720	0.03579	110.9668	GEN600063 1-COLVILLE GEN 1
FDNS	00NR	5	17SP	G15_042	FROM->TO	GRPRAR1-LNX3345.00 - HOLT.CO3 345.00 345KV CKT 1	720	720	0.03579	110.9668	GEN600064 2-COLVILLE GEN 2
FDNS	00NR	5	17SP	G15_042	FROM->TO	GRPRAR1-LNX3345.00 - HOLT.CO3 345.00 345KV CKT 1	720	720	0.03565	110.9655	BISMARK - L3 HAWDON 230KV CKT 1
FDNS	00NR	5	17SP	G15_042	FROM->TO	GRPRAR1-LNX3345.00 - HOLT.CO3 345.00 345KV CKT 1	720	720	0.03729	110.9631	GERALD GENTLEMAN STATION - RED WILLOW 345KV CKT 1
FDNS	00NR	5	17SP	G15_042	FROM->TO	GRPRAR1-LNX3345.00 - HOLT.CO3 345.00 345KV CKT 1	720	720	0.03579	110.9553	GEN600045 4-ANSON
FDNS	00NR	5	17SP	G15_042	FROM->TO	GRPRAR1-LNX3345.00 - HOLT.CO3 345.00 345KV CKT 1	720	720	0.03579	110.9541	GEN600043 7-BLUE LAKE5
FDNS	00NR	5	17SP	G15_042	FROM->TO	GRPRAR1-LNX3345.00 - HOLT.CO3 345.00 345KV CKT 1	720	720	0.03579	110.9541	GEN600044 8-BLUE LAKE6
FDNS	00NR	5	17SP	G15_042	FROM->TO	GRPRAR1-LNX3345.00 - HOLT.CO3 345.00 345KV CKT 1	720	720	0.03579	110.938	G830_SUB 115.00 - GRE-MCHENRY7115.00 115KV CKT 1
FDNS	00NR	5	17SP	G15_042	FROM->TO	GRPRAR1-LNX3345.00 - HOLT.CO3 345.00 345KV CKT 1	720	720	0.03579	110.9294	G830_SUB 115.00 115/34.5KV TRANSFORMER CKT 1
FDNS	00NR	5	17SP	G15_042	FROM->TO	GRPRAR1-LNX3345.00 - HOLT.CO3 345.00 345KV CKT 1	720	720	0.0359	110.9231	G11_051T 345.00 - TATONGA7 345.00 345KV CKT 1
FDNS	00NR	5	17SP	G15_042	FROM->TO	GRPRAR1-LNX3345.00 - HOLT.CO3 345.00 345KV CKT 1	720	720	0.03579	110.9221	GEN600014 4-BLACK DOG GEN 4
FDNS	00NR	5	17SP	G15_042	FROM->TO	GRPRAR1-LNX3345.00 - HOLT.CO3 345.00 345KV CKT 1	720	720	0.03579	110.9198	GEN600065 7-HIGH BRIDGE
FDNS	00NR	5	17SP	G15_042	FROM->TO	GRPRAR1-LNX3345.00 - HOLT.CO3 345.00 345KV CKT 1	720	720	0.03579	110.9198	GEN600066 8-HIGH BRIDGE
FDNS	00NR	5	17SP	G15_042	FROM->TO	GRPRAR1-LNX3345.00 - HOLT.CO3 345.00 345KV CKT 1	720	720	0.03579	110.9155	GEN600011 5-BLACK DOG GEN 1
FDNS	00NR	5	17SP	G15_042	FROM->TO	GRPRAR1-LNX3345.00 - HOLT.CO3 345.00 345KV CKT 1	720	720	0.03719	110.9117	P12:115:NPPD:1163B:NELIGH 7:NORFK.N7:BTB
FDNS	00NR	5	17SP	G15_042	FROM->TO	GRPRAR1-LNX3345.00 - HOLT.CO3 345.00 345KV CKT 1	720	720	0.03579	110.9037	GEN600070 9-RIVER SIDE
FDNS	00NR	5	17SP	G15_042	FROM->TO	GRPRAR1-LNX3345.00 - HOLT.CO3 345.00 345KV CKT 1	720	720	0.03579	110.9037	GEN600071 10-RIVER SIDE
FDNS	00NR	5	17SP	G15_042	FROM->TO	GRPRAR1-LNX3345.00 - HOLT.CO3 345.00 345KV CKT 1	720	720	0.03579	110.8909	GEN600007 7-RIVERSIDE GEN 7
FDNS	00NR	5	17SP	G15_042	FROM->TO	GRPRAR1-LNX3345.00 - HOLT.CO3 345.00 345KV CKT 1	720	720	0.03579	110.8763	GEN652906 1-G09_006IS_3 0.6900
FDNS	00NR	5	17SP	G15_042	FROM->TO	GRPRAR1-LNX3345.00 - HOLT.CO3 345.00 345KV CKT 1	720	720	0.03579	110.8716	GEN600017 C-LS POWER CT
FDNS	00NR	5	17SP	G15_042	FROM->TO	GRPRAR1-LNX3345.00 - HOLT.CO3 345.00 345KV CKT 1	720	720	0.03532	110.87	HOSKINS - RAUN 345KV CKT 1
FDNS	00NR	5	17SP	G15_042	FROM->TO	GRPRAR1-LNX3345.00 - HOLT.CO3 345.00 345KV CKT 1	720	720	0.03532	110.87	HOSKINS - RAUN 345KV CKT 1
FDNS	00NR	5	17SP	G15_042	FROM->TO	GRPRAR1-LNX3345.00 - HOLT.CO3 345.00 345KV CKT 1	720	720	0.03345	110.8693	FT THOMPSON (FT2 KU1A) 345/230/13.8KV TRANSFORMER CKT 1
FDNS	00NR	5	17SP	G15_042	FROM->TO	GRPRAR1-LNX3345.00 - HOLT.CO3 345.00 345KV CKT 1	720	720	0.03344	110.8661	FT THOMPSON (FT2 KU1B) 345/230/13.8KV TRANSFORMER CKT 1
FDNS	00NR	5	17SP	G15_042	FROM->TO	GRPRAR1-LNX3345.00 - HOLT.CO3 345.00 345KV CKT 1	720	720	0.03579	110.8633	GEN659273 2-GROTON SYNC COND
FDNS	00NR	5	17SP	G15_042	FROM->TO	GRPRAR1-LNX3345.00 - HOLT.CO3 345.00 345KV CKT 1	720	720	0.03579	110.8633	GEN659294 1-WILTONCOL9
FDNS	00NR	5	17SP	G15_042	FROM->TO	GRPRAR1-LNX3345.00 - HOLT.CO3 345.00 345KV CKT 1	720	720	0.03579	110.8467	LANSING WEST 161/22.0KV TRANSFORMER CKT 1
FDNS	00NR	5	17SP	G15_042	FROM->TO	GRPRAR1-LNX3345.00 - HOLT.CO3 345.00 345KV CKT 1	720	720	0.03579	110.8281	GEN659192 6-LYNN
FDNS	00NR	5	17SP	G15_042	FROM->TO	GRPRAR1-LNX3345.00 - HOLT.CO3 345.00 345KV CKT 1	720	720	0.03579	110.827	GEN659162 4-RED WLCK
FDNS	00NR	5	17SP	G15_042	FROM->TO	GRPRAR1-LNX3345.00 - HOLT.CO3 345.00 345KV CKT 1	720	720	0.03579	110.827	GEN659163 5-BLACK WDCK
FDNS	00NR	5	17SP	G15_042	FROM->TO	GRPRAR1-LNX3345.00 - HOLT.CO3 345.00 345KV CKT 1	720	720	0.03579	110.8168	GEN681522 3-GENOA 3
FDNS	00NR	5	17SP	G15_042	FROM->TO	GRPRAR1-LNX3345.00 - HOLT.CO3 345.00 345KV CKT 1	720	720	0.03579	110.8079	GEN615021 1-GRE-ER 14G 16.000
FDNS	00NR	5	17SP	G15_042	FROM->TO	GRPRAR1-LNX3345.00 - HOLT.CO3 345.00 345KV CKT 1	720	720	0.03579	110.7946	GEN615052 1-CAMBRIDGE GENERATING STATION
FDNS	00NR	5	17SP	G15_042	FROM->TO	GRPRAR1-LNX3345.00 - HOLT.CO3 345.00 345KV CKT 1	720	720	0.03586	110.7895	BRDLAND-LNX3345.00 - HURON 345KV CKT Z
FDNS	00NR	5	17SP	G15_042	FROM->TO	GRPRAR1-LNX3345.00 - HOLT.CO3 345.00 345KV CKT 1	720	720	0.03579	110.7894	GEN659031 1-G12_014IS_4 0.6900
FDNS	00NR	5	17SP	G15_042	FROM->TO	GRPRAR1-LNX3345.00 - HOLT.CO3 345.00 345KV CKT 1	720	720	0.03586	110.7887	BROADLAND - HURON 230KV CKT 1
FDNS	00NR	5	17SP	G15_042	FROM->TO	GRPRAR1-LNX3345.00 - HOLT.CO3 345.00 345KV CKT 1	720	720	0.03586	110.7884	HURON (BD KU2A) 345/230/13.8KV TRANSFORMER CKT 1
FDNS	00NR	5	17SP	G15_042	FROM->TO	GRPRAR1-LNX3345.00 - HOLT.CO3 345.00 345KV CKT 1	720	720	0.03586	110.7884	HURON (BD KU2A) 345/230/13.8KV TRANSFORMER CKT 1
FDNS	00NR	5	17SP	G15_042	FROM->TO	GRPRAR1-LNX3345.00 - HOLT.CO3 345.00 345KV CKT 1	720	720	0.03579	110.7848	CENTER 230/22.0KV TRANSFORMER CKT 1
FDNS	00NR	5	17SP	G15_042	FROM->TO	GRPRAR1-LNX3345.00 - HOLT.CO3 345.00 345KV CKT 1	720	720	0.03586	110.7831	P12:345:UMZB:# 103 #: BD IN SD. LOSS OF LINE
FDNS	00NR	5	17SP	G15_042	FROM->TO	GRPRAR1-LNX3345.00 - HOLT.CO3 345.00 345KV CKT 1	720	720	0.03579	110.782	GEN 10648 1-G830_GEN 0.6900
FDNS	00NR	5	17SP	G15_042	FROM->TO	GRPRAR1-LNX3345.00 - HOLT.CO3 345.00 345KV CKT 1	720	720	0.03586	110.7819	P12:345:UMZB:# 102 #: AVS BD IN ND. AVS BRD LR
FDNS	00NR	5	17SP	G15_042	FROM->TO	GRPRAR1-LNX3345.00 - HOLT.CO3 345.00 345KV CKT 1	720	720	0.03579	110.781	GEN652907 1-G09_007IS_3 0.6900
FDNS	00NR	5	17SP	G15_042	FROM->TO	GRPRAR1-LNX3345.00 - HOLT.CO3 345.00 345KV CKT 1	720	720	0.03579	110.7681	GEN660016 1-B_H WIND 0.7000
FDNS	00NR	5	17SP	G15_042	FROM->TO	GRPRAR1-LNX3345.00 - HOLT.CO3 345.00 345KV CKT 1	720	720	0.03579	110.7123	GEN615015 1-GRE-SPRITWDG13.200
FDNS	00NR	5	17SP	G15_042	FROM->TO	GRPRAR1-LNX3345.00 - HOLT.CO3 345.00 345KV CKT 1	720	720	0.0359	110.7054	MATHWSN7 345.00 - TATONGA7 345.00 345KV CKT 1
FDNS	00NR	5	17SP	G15_042	FROM->TO	GRPRAR1-LNX3345.00 - HOLT.CO3 345.00 345KV CKT 1	720	720	0.03579	110.6508	GEN659353 1-DEERCREK CTG18.000
FDNS	00NR	5	17SP	G15_042	FROM->TO	GRPRAR1-LNX3345.00 - HOLT.CO3 345.00 345KV CKT 1	720	720	0.03579	110.6491	GEN659354 1-DEERCREK STG18.000
FDNS	00NR	5	17SP	G15_042	FROM->TO	GRPRAR1-LNX3345.00 - HOLT.CO3 345.00 345KV CKT 1	720	720	0.03586	110.6302	ANTELOP-LNX3345.00 - ANTELOPE VALLEY 345KV CKT Z
FDNS	00NR	5	17SP	G15_042	FROM->TO	GRPRAR1-LNX3345.00 - HOLT.CO3 345.00 345KV CKT 1	720	720	0.03579	110.5607	GEN600067 9-HIGH BRIDGE
FDNS	00NR	5	17SP	G15_042	FROM->TO	GRPRAR1-LNX3345.00 - HOLT.CO3 345.00 345KV CKT 1	720	720	0.03579	110.5574	GEN672303 3-BOUNDARY DAM GENERATOR 3
FDNS	00NR	5	17SP	G15_042	FROM->TO	GRPRAR1-LNX3345.00 - HOLT.CO3 345.00 345KV CKT 1	720	720	0.03579	110.5574	GEN672305 5-BOUNDARY DAM GENERATOR 5
FDNS	00NR	5	17SP	G15_042	FROM->TO	GRPRAR1-LNX3345.00 - HOLT.CO3 345.00 345KV CKT 1	720	720	0.03579	110.5329	GEN672392 1-NBECGT1G 18.000
FDNS	00NR	5	25SP	G15_042	FROM->TO	GRPRAR1-LNX3345.00 - HOLT.CO3 345.00 345KV CKT 1	720	720	0.03249	110.5116	STORLA - WESSINGTON 230KV CKT 1
FDNS	00NR	5	17SP	G15_042	FROM->TO	GRPRAR1-LNX3345.00 - HOLT.CO3 345.00 345KV CKT 1	720	720	0.03565	110.4891	OAHE - SULLEY BUTTE 230KV CKT 1

SOLUTION	GROUP	SCENARIO	SEASON	SOURCE	DIRECTION	MONITORED ELEMENT	RATEA (MVA)	RATEB(MVA)	TDF	TC%LOADING (% MVA)	CONTINGENCY
FDNS	00NR	5	17SP	G15_042	FROM->TO	GRPRAR1-LNX3345.00 - HOLT.CO3 345.00 345KV CKT 1	720	720	0.03579	110.4686	GEN910006 1-G12_012IS_3 0.6900
FDNS	00NR	5	17SP	G15_042	FROM->TO	GRPRAR1-LNX3345.00 - HOLT.CO3 345.00 345KV CKT 1	720	720	0.03579	110.4611	BISONMP4 230.00 - SQUARE BUTTE 230KV CKT 1
FDNS	00NR	5	17SP	G15_042	FROM->TO	GRPRAR1-LNX3345.00 - HOLT.CO3 345.00 345KV CKT 1	720	720	0.03579	110.4132	GEN662101 1-WESSINGTON190.5750
FDNS	00NR	5	17SP	G15_042	FROM->TO	GRPRAR1-LNX3345.00 - HOLT.CO3 345.00 345KV CKT 1	720	720	0.03738	110.3851	AXTELL - SWEETWATER 345KV CKT 1
FDNS	00NR	5	17SP	G15_042	FROM->TO	GRPRAR1-LNX3345.00 - HOLT.CO3 345.00 345KV CKT 1	720	720	0.03742	110.346	G15088_T 345.00 - MOORE 345KV CKT 1
FDNS	00NR	5	17SP	G15_042	FROM->TO	GRPRAR1-LNX3345.00 - HOLT.CO3 345.00 345KV CKT 1	720	720	0.03565	110.3348	SULLEY BUTTE - SULLYBT-LNX3230.00 230KV CKT Z
FDNS	00NR	5	17SP	G15_042	FROM->TO	GRPRAR1-LNX3345.00 - HOLT.CO3 345.00 345KV CKT 1	720	720	0.03565	110.3319	SULLYBT-LNX3230.00 - WHITLOK 230KV CKT 1
FDNS	00NR	5	17SP	G15_042	FROM->TO	GRPRAR1-LNX3345.00 - HOLT.CO3 345.00 345KV CKT 1	720	720	0.03565	110.2858	P12:230:UMZB:# 114 #: SB IN SD. SB-WK-GH
FDNS	00NR	5	17SP	G15_042	FROM->TO	GRPRAR1-LNX3345.00 - HOLT.CO3 345.00 345KV CKT 1	720	720	0.03565	110.2858	P12:230:UMZB:# 117 #: WK IN SD. SB-WK-GH
FDNS	00NR	5	20SP	G15_042	FROM->TO	GRPRAR1-LNX3345.00 - HOLT.CO3 345.00 345KV CKT 1	720	720	0.03211	110.2788	HANLON - STORLA 230KV CKT 1
FDNS	00NR	5	17SP	G15_042	FROM->TO	GRPRAR1-LNX3345.00 - HOLT.CO3 345.00 345KV CKT 1	720	720	0.03003	110.2775	HOSKINS - SHELL CREEK 345KV CKT 1
FDNS	00NR	5	17SP	G15_042	FROM->TO	GRPRAR1-LNX3345.00 - HOLT.CO3 345.00 345KV CKT 1	720	720	0.03579	110.2641	SQUARE BUTTE - YNG2_4 230.00 230KV CKT 1
FDNS	00NR	5	17SP	G15_042	FROM->TO	GRPRAR1-LNX3345.00 - HOLT.CO3 345.00 345KV CKT 1	720	720	0.03565	110.2349	GLENHAM - WHITLOK 230KV CKT 1
FDNS	00NR	5	17SP	G15_042	FROM->TO	GRPRAR1-LNX3345.00 - HOLT.CO3 345.00 345KV CKT 1	720	720	0.03579	110.2327	HESKETT 115/13.8KV TRANSFORMER CKT 1
FDNS	00NR	5	17SP	G15_042	FROM->TO	GRPRAR1-LNX3345.00 - HOLT.CO3 345.00 345KV CKT 1	720	720	0.03579	110.1927	GEN681542 6-JP MADGETT
FDNS	00NR	5	17SP	G15_042	FROM->TO	GRPRAR1-LNX3345.00 - HOLT.CO3 345.00 345KV CKT 1	720	720	0.03579	110.1429	GEN659289 1-DAYCNTYWND W0.6900
FDNS	00NR	5	17SP	G15_042	FROM->TO	GRPRAR1-LNX3345.00 - HOLT.CO3 345.00 345KV CKT 1	720	720	0.03579	110.1242	GEN659018 1-G14_003IS_3 0.6900
FDNS	00NR	5	17SP	G15_042	FROM->TO	GRPRAR1-LNX3345.00 - HOLT.CO3 345.00 345KV CKT 1	720	720	0.03579	110.1046	GEN563312 1-G15097_3 0.6900
FDNS	00NR	5	17SP	G15_042	FROM->TO	GRPRAR1-LNX3345.00 - HOLT.CO3 345.00 345KV CKT 1	720	720	0.03579	110.1001	GEN652543 3-BIG BEND
FDNS	00NR	5	17SP	G15_042	FROM->TO	GRPRAR1-LNX3345.00 - HOLT.CO3 345.00 345KV CKT 1	720	720	0.03579	109.9591	GEN659194 1-NDPRAIRWND1W0.6900
FDNS	00NR	5	17SP	G15_042	FROM->TO	GRPRAR1-LNX3345.00 - HOLT.CO3 345.00 345KV CKT 1	720	720	0.03579	109.9425	GEN659010 4-G07_027IS_2 0.6900
FDNS	00NR	5	17SP	G15_042	FROM->TO	GRPRAR1-LNX3345.00 - HOLT.CO3 345.00 345KV CKT 1	720	720	0.03579	109.9353	GEN652461 5-GARRISON
FDNS	00NR	5	17SP	G15_042	FROM->TO	GRPRAR1-LNX3345.00 - HOLT.CO3 345.00 345KV CKT 1	720	720	0.03579	109.9352	GEN652460 4-GARRISON
FDNS	00NR	5	17SP	G15_042	FROM->TO	GRPRAR1-LNX3345.00 - HOLT.CO3 345.00 345KV CKT 1	720	720	0.03579	109.9133	GEN563342 1-G15098_3 0.6900
FDNS	00NR	5	17SP	G15_042	FROM->TO	GRPRAR1-LNX3345.00 - HOLT.CO3 345.00 345KV CKT 1	720	720	0.03579	109.8769	GEN652459 3-GARRISON
FDNS	00NR	5	17SP	G15_042	FROM->TO	GRPRAR1-LNX3345.00 - HOLT.CO3 345.00 345KV CKT 1	720	720	0.03579	109.8768	GEN652457 1-GARRISON
FDNS	00NR	5	17SP	G15_042	FROM->TO	GRPRAR1-LNX3345.00 - HOLT.CO3 345.00 345KV CKT 1	720	720	0.03579	109.8768	GEN652458 2-GARRISON
FDNS	00NR	5	17SP	G15_042	FROM->TO	GRPRAR1-LNX3345.00 - HOLT.CO3 345.00 345KV CKT 1	720	720	0.03579	109.823	GEN659403 1-NDSUNFLWR W0.6900
FDNS	00NR	5	17SP	G15_042	FROM->TO	GRPRAR1-LNX3345.00 - HOLT.CO3 345.00 345KV CKT 1	720	720	0.03579	109.7713	GEN652542 1-BIG BEND
FDNS	00NR	5	17SP	G15_042	FROM->TO	GRPRAR1-LNX3345.00 - HOLT.CO3 345.00 345KV CKT 1	720	720	0.03822	109.7493	MCCOOL - MOORE 345KV CKT 1
FDNS	00NR	5	20SP	G15_042	FROM->TO	GRPRAR1-LNX3345.00 - HOLT.CO3 345.00 345KV CKT 1	720	720	0.03399	109.7384	BUFFALO - JAMESTOWN 345KV CKT 1
FDNS	00NR	5	20SP	G15_042	FROM->TO	GRPRAR1-LNX3345.00 - HOLT.CO3 345.00 345KV CKT 1	720	720	0.03372	109.7054	G09_001IST 345.00 - WATERTOWN 345KV CKT 1
FDNS	00NR	5	17SP	G15_042	FROM->TO	GRPRAR1-LNX3345.00 - HOLT.CO3 345.00 345KV CKT 1	720	720	0.03579	109.672	GEN652559 1-OAHE
FDNS	00NR	5	17SP	G15_042	FROM->TO	GRPRAR1-LNX3345.00 - HOLT.CO3 345.00 345KV CKT 1	720	720	0.03579	109.656	CLAY BOSWELL 230/20.9KV TRANSFORMER CKT 1
FDNS	00NR	5	20SP	G15_042	FROM->TO	GRPRAR1-LNX3345.00 - HOLT.CO3 345.00 345KV CKT 1	720	720	0.03168	109.6347	FT THOMPSON - LETCHER 230KV CKT 1
FDNS	00NR	5	20SP	G15_042	FROM->TO	GRPRAR1-LNX3345.00 - HOLT.CO3 345.00 345KV CKT 1	720	720	0.03168	109.6347	FT THOMPSON - LETCHER 230KV CKT 1
FDNS	00NR	5	17SP	G15_042	FROM->TO	GRPRAR1-LNX3345.00 - HOLT.CO3 345.00 345KV CKT 1	720	720	0.03579	109.6232	STANTON 230/18.0KV TRANSFORMER CKT 1
FDNS	00NR	5	17SP	G15_042	FROM->TO	GRPRAR1-LNX3345.00 - HOLT.CO3 345.00 345KV CKT 1	720	720	0.03565	109.6214	GLENHAM - L3 HAWDON 230KV CKT 1
FDNS	00NR	5	25SP	G15_042	FROM->TO	GRPRAR1-LNX3345.00 - HOLT.CO3 345.00 345KV CKT 1	720	720	0.03243	109.4924	HANLON - STORLA 230KV CKT 1
FDNS	00NR	5	17SP	G15_042	FROM->TO	GRPRAR1-LNX3345.00 - HOLT.CO3 345.00 345KV CKT 1	720	720	0.03579	109.406	GEN659411 1-CAMPBLCNTY W0.6900
FDNS	00NR	5	25SP	G15_042	FROM->TO	GRPRAR1-LNX3345.00 - HOLT.CO3 345.00 345KV CKT 1	720	720	0.03431	109.2628	BUFFALO - JAMESTOWN 345KV CKT 1
FDNS	00NR	5	17SP	G15_042	FROM->TO	GRPRAR1-LNX3345.00 - HOLT.CO3 345.00 345KV CKT 1	720	720	0.03579	109.1754	GEN659296 2-SDPRAIRWND1W0.6900
FDNS	00NR	5	17SP	G15_042	FROM->TO	GRPRAR1-LNX3345.00 - HOLT.CO3 345.00 345KV CKT 1	720	720	0.03579	109.1678	GEN672321 1-SHAND GENERATOR 1
FDNS	00NR	5	17SP	G15_042	FROM->TO	GRPRAR1-LNX3345.00 - HOLT.CO3 345.00 345KV CKT 1	720	720	0.03579	109.1578	GEN672310 1-POPLAR RIVER GENERATOR 1
FDNS	00NR	5	17SP	G15_042	FROM->TO	GRPRAR1-LNX3345.00 - HOLT.CO3 345.00 345KV CKT 1	720	720	0.03579	109.1578	GEN672311 2-POPLAR RIVER GENERATOR 2
FDNS	00NR	5	17SP	G15_042	FROM->TO	GRPRAR1-LNX3345.00 - HOLT.CO3 345.00 345KV CKT 1	720	720	0.03579	109.0969	RCDC EAST 4230.00 - RED CEDAR DC 230KV CKT 1
FDNS	00NR	5	17SP	G15_042	FROM->TO	GRPRAR1-LNX3345.00 - HOLT.CO3 345.00 345KV CKT 1	720	720	0.03579	109.0946	GEN600004 2-PRAIRIE ISLAND G2
FDNS	00NR	5	17SP	G15_042	FROM->TO	GRPRAR1-LNX3345.00 - HOLT.CO3 345.00 345KV CKT 1	720	720	0.03579	109.0905	GEN600003 1-PRAIRIE ISLAND G1
FDNS	00NR	5	17SP	G15_042	FROM->TO	GRPRAR1-LNX3345.00 - HOLT.CO3 345.00 345KV CKT 1	720	720	0.03579	109.0764	P12:230:UMZB:# 112 #: NU IN SD. NU-RCDC & DRY CREEK XFMR
FDNS	00NR	5	17SP	G15_042	FROM->TO	GRPRAR1-LNX3345.00 - HOLT.CO3 345.00 345KV CKT 1	720	720	0.03579	109.063	GEN672306 6-BOUNDARY DAM GENERATOR 6
FDNS	00NR	5	17SP	G15_042	FROM->TO	GRPRAR1-LNX3345.00 - HOLT.CO3 345.00 345KV CKT 1	720	720	0.03579	109.0275	GEN615010 1-STANTON4
FDNS	00NR	5	17SP	G15_042	FROM->TO	GRPRAR1-LNX3345.00 - HOLT.CO3 345.00 345KV CKT 1	720	720	0.03579	109.0194	GEN659453 1-GI1414GEN W0.6900
FDNS	00NR	5	17SP	G15_042	FROM->TO	GRPRAR1-LNX3345.00 - HOLT.CO3 345.00 345KV CKT 1	720	720	0.03579	109.0176	GEN563302 1-G15096_3 0.6900
FDNS	00NR	5	17SP	G15_042	FROM->TO	GRPRAR1-LNX3345.00 - HOLT.CO3 345.00 345KV CKT 1	720	720	0.03579	108.9132	GEN659141 1-K10215A
FDNS	00NR	5	25SP	G15_042	FROM->TO	GRPRAR1-LNX3345.00 - HOLT.CO3 345.00 345KV CKT 1	720	720	0.03404	108.8671	G09_001IST 345.00 - WATERTOWN 345KV CKT 1
FDNS	00NR	5	25SP	G15_042	FROM->TO	GRPRAR1-LNX3345.00 - HOLT.CO3 345.00 345KV CKT 1	720	720	0.032	108.8435	FT THOMPSON - LETCHER 230KV CKT 1
FDNS	00NR	5	25SP	G15_042	FROM->TO	GRPRAR1-LNX3345.00 - HOLT.CO3 345.00 345KV CKT 1	720	720	0.032	108.8435	FT THOMPSON - LETCHER 230KV CKT 1
FDNS	00NR	5	17SP	G15_042	FROM->TO	GRPRAR1-LNX3345.00 - HOLT.CO3 345.00 345KV CKT 1	720	720	0.03579	108.8298	GEN659110 1-LELAND OLDS UNIT1
FDNS	00NR	5	17SP	G15_042	FROM->TO	GRPRAR1-LNX3345.00 - HOLT.CO3 345.00 345KV CKT 1	720	720	0.03579	108.8276	GEN652556 2-OAHE
FDNS	00NR	5	17SP	G15_042	FROM->TO	GRPRAR1-LNX3345.00 - HOLT.CO3 345.00 345KV CKT 1	720	720	0.03579	108.8275	GEN652557 4-OAHE
FDNS	00NR	5	17SP	G15_042	FROM->TO	GRPRAR1-LNX3345.00 - HOLT.CO3 345.00 345KV CKT 1	720	720	0.03579	108.8275	GEN652558 6-OAHE
FDNS	00NR	5	17SP	G15_042	FROM->TO	GRPRAR1-LNX3345.00 - HOLT.CO3 345.00 345KV CKT 1	720	720	0.03579	108.7599	GEN657749 1-YOUNG 1 GENERATOR
FDNS	00NR	5	17SP	G15_042	FROM->TO	GRPRAR1-LNX3345.00 - HOLT.CO3 345.00 345KV CKT 1	720	720	0.03579	108.7501	GEN600006 1-AS KING
FDNS	00NR	5	17SP	G15_042	FROM->TO	GRPRAR1-LNX3345.00 - HOLT.CO3 345.00 345KV CKT 1	720	720	0.03579	108.6753	GEN652173 1-G09_001IS_2 0.6900
FDNS	00NR	5	17SP	G15_042	FROM->TO	GRPRAR1-LNX3345.00 - HOLT.CO3 345.00 345KV CKT 1	720	720	0.03807	108.6266	GRAND ISLAND - MCCOOL 345KV CKT 1
FDNS	00NR	5	20SP	G15_042	FROM->TO	GRPRAR1-LNX3345.00 - HOLT.CO3 345.00 345KV CKT 1	720	720	0.03324	108.5473	WATERTN-LNX3345.00 - WHITE 345KV CKT 1
FDNS	00NR	5	20SP	G15_042	FROM->TO	GRPRAR1-LNX3345.00 - HOLT.CO3 345.00 345KV CKT 1	720	720	0.03195	108.4819	FT RANDAL - G12_009IST 230.00 230KV CKT 1
FDNS	00NR	5	20SP	G15_042	FROM->TO	GRPRAR1-LNX3345.00 - HOLT.CO3 345.00 345KV CKT 1	720	720	0.03324	108.4466	WATERTN-LNX3345.00 - WATERTOWN 345KV CKT Z
FDNS	00NR	5	20SP	G15_042	FROM->TO	GRPRAR1-LNX3345.00 - HOLT.CO3 345.00 345KV CKT 1	720	720	0.03324	108.4374	P12:345:UMZW:# 1747 #: WT2 IN SD. WT2-WHT LINE FAULT
FDNS	00NR	5	20SP	G15_042	FROM->TO	GRPRAR1-LNX3345.00 - HOLT.CO3 345.00 345KV CKT 1	720	720	0.03195	108.4006	FT THOMPSON - LAKE PLATT 230KV CKT 1
FDNS	00NR	5	20SP	G15_042	FROM->TO	GRPRAR1-LNX3345.00 - HOLT.CO3 345.00 345KV CKT 1	720	720	0.03195	108.4006	FT THOMPSON - LAKE PLATT 230KV CKT 1
FDNS	00NR	5	20SP	G15_042	FROM->TO	GRPRAR1-LNX3345.00 - HOLT.CO3 345.00 345KV CKT 1	720	720	0.0319	108.3935	FT RANDAL - FT THOMPSON 230KV CKT 1
FDNS	00NR	5	20SP	G15_042	FROM->TO	GRPRAR1-LNX3345.00 - HOLT.CO3 345.00 345KV CKT 1	720	720	0.0319	108.3935	FT RANDAL - FT THOMPSON 230KV CKT 1
FDNS	00NR	5	17SP	G15_042	FROM->TO	GRPRAR1-LNX3345.00 - HOLT.CO3 345.00 345KV CKT 1	720	720	0.03579	108.3788	GEN659407 1-ANTELPHILLSW0.6900
FDNS	00NR	5	20SP	G15_042	FROM->TO	GRPRAR1-LNX3345.00 - HOLT.CO3 345.00 345KV CKT 1	720	720	0.03403	108.2945	GEN336821 1-GRAND GULF UNIT
FDNS	00NR	5	20SP	G15_042	FROM->TO	GRPRAR1-LNX3345.00 - HOLT.CO3 345.00 345KV CKT 1	720	720	0.03403	108.2761	GEN635024 4-WALTER SCOTT UNIT 4
FDNS	00NR	5	20SP	G15_042	FROM->TO	GRPRAR1-LNX3345.00 - HOLT.CO3 345.00 345KV CKT 1	720	720	0.03776	108.266	FT RANDAL - MEADOWGROVE4230.00 230KV CKT 1
FDNS	00NR	5	20SP	G15_042	FROM->TO	GRPRAR1-LNX3345.00 - HOLT.CO3 345.00 345KV CKT 1	720	720	0.03399	108.256	CENTER - JAMESTOWN 345KV CKT 1
FDNS	00NR	5	17SP	G15_042	FROM->TO	GRPRAR1-LNX3345.00 - HOLT.CO3 345.00 345KV CKT 1	720	720	0.03579	108.1988	GEN600005 1-MONTICELLO

SOLUTION	GROUP	SCENARIO	SEASON	SOURCE	DIRECTION	MONITORED ELEMENT	RATEA (MVA)	RATEB(MVA)	TDF	TC%LOADING (% MVA)	CONTINGENCY
FDNS	00NR	5	20SP	G15_042	FROM->TO	GRPRAR1-LNX3345.00 - HOLT.CO3 345.00 345KV CKT 1	720	720	0.03191	108.1917	SPLIT ROCK - WHITE 345KV CKT 1
FDNS	00NR	5	20SP	G15_042	FROM->TO	GRPRAR1-LNX3345.00 - HOLT.CO3 345.00 345KV CKT 1	720	720	0.03191	108.1917	SPLIT ROCK - WHITE 345KV CKT 1
FDNS	00NR	5	20SP	G15_042	FROM->TO	GRPRAR1-LNX3345.00 - HOLT.CO3 345.00 345KV CKT 1	720	720	0.03195	108.0227	G12_009IST 230.00 - LAKE PLATT 230KV CKT 1
FDNS	00NR	5	20SP	G15_042	FROM->TO	GRPRAR1-LNX3345.00 - HOLT.CO3 345.00 345KV CKT 1	720	720	0.03402	107.9942	CHISAGO COUNTY - CHISAGO COUNTY 500KV CKT 1
FDNS	00NR	5	20SP	G15_042	FROM->TO	GRPRAR1-LNX3345.00 - HOLT.CO3 345.00 345KV CKT 1	720	720	0.03402	107.9716	CHISAGO COUNTY - FORBES 500KV CKT 1
FDNS	00NR	5	20SP	G15_042	FROM->TO	GRPRAR1-LNX3345.00 - HOLT.CO3 345.00 345KV CKT 1	720	720	0.034	107.8605	BISON 3 345.00 - BUFFALO 345KV CKT 1
FDNS	00NR	5	20SP	G15_042	FROM->TO	GRPRAR1-LNX3345.00 - HOLT.CO3 345.00 345KV CKT 1	720	720	0.03262	107.7933	LETCHER - SIOUX FALLS 230KV CKT 1
FDNS	00NR	5	20SP	G15_042	FROM->TO	GRPRAR1-LNX3345.00 - HOLT.CO3 345.00 345KV CKT 1	720	720	0.03403	107.7884	GEN635023 3-WALTER SCOTT UNIT 3
FDNS	00NR	5	20SP	G15_042	FROM->TO	GRPRAR1-LNX3345.00 - HOLT.CO3 345.00 345KV CKT 1	720	720	0.03403	107.757	GEN562714 1-G15_023_4 0.6900
FDNS	00NR	5	20SP	G15_042	FROM->TO	GRPRAR1-LNX3345.00 - HOLT.CO3 345.00 345KV CKT 1	720	720	0.03403	107.757	GEN562715 1-G15_023_5 0.6900
FDNS	00NR	5	20SP	G15_042	FROM->TO	GRPRAR1-LNX3345.00 - HOLT.CO3 345.00 345KV CKT 1	720	720	0.03403	107.7366	GEN344225 1-1CAL G1 25.000
FDNS	00NR	5	20SP	G15_042	FROM->TO	GRPRAR1-LNX3345.00 - HOLT.CO3 345.00 345KV CKT 1	720	720	0.03403	107.6529	GEN337911 1-ARKANSAS NUCLEAR ONE UNIT #2
FDNS	00NR	5	25SP	G15_042	FROM->TO	GRPRAR1-LNX3345.00 - HOLT.CO3 345.00 345KV CKT 1	720	720	0.03228	107.6433	FT RANDAL - G12_009IST 230.00 230KV CKT 1
FDNS	00NR	5	25SP	G15_042	FROM->TO	GRPRAR1-LNX3345.00 - HOLT.CO3 345.00 345KV CKT 1	720	720	0.03356	107.6378	WATERTN-LNX3345.00 - WHITE 345KV CKT 1
FDNS	00NR	5	25SP	G15_042	FROM->TO	GRPRAR1-LNX3345.00 - HOLT.CO3 345.00 345KV CKT 1	720	720	0.0343	107.6324	CENTER - JAMESTOWN 345KV CKT 1
FDNS	00NR	5	20SP	G15_042	FROM->TO	GRPRAR1-LNX3345.00 - HOLT.CO3 345.00 345KV CKT 1	720	720	0.03508	107.6256	MISSION - ST FRANCIS 115KV CKT 1
FDNS	00NR	5	20SP	G15_042	FROM->TO	GRPRAR1-LNX3345.00 - HOLT.CO3 345.00 345KV CKT 1	720	720	0.03403	107.6251	GEN336153 1-WATERFORD UNIT#3
FDNS	00NR	5	20SP	G15_042	FROM->TO	GRPRAR1-LNX3345.00 - HOLT.CO3 345.00 345KV CKT 1	720	720	0.03508	107.5987	P12:115:NPPD:1091:VALENTN7:MISSION7:BTB
FDNS	00NR	5	25SP	G15_042	FROM->TO	GRPRAR1-LNX3345.00 - HOLT.CO3 345.00 345KV CKT 1	720	720	0.03228	107.5776	FT THOMPSON - LAKE PLATT 230KV CKT 1
FDNS	00NR	5	25SP	G15_042	FROM->TO	GRPRAR1-LNX3345.00 - HOLT.CO3 345.00 345KV CKT 1	720	720	0.03228	107.5776	FT THOMPSON - LAKE PLATT 230KV CKT 1
FDNS	00NR	5	25SP	G15_042	FROM->TO	GRPRAR1-LNX3345.00 - HOLT.CO3 345.00 345KV CKT 1	720	720	0.03222	107.565	FT RANDAL - FT THOMPSON 230KV CKT 1
FDNS	00NR	5	25SP	G15_042	FROM->TO	GRPRAR1-LNX3345.00 - HOLT.CO3 345.00 345KV CKT 1	720	720	0.03222	107.565	FT RANDAL - FT THOMPSON 230KV CKT 1
FDNS	00NR	5	20SP	G15_042	FROM->TO	GRPRAR1-LNX3345.00 - HOLT.CO3 345.00 345KV CKT 1	720	720	0.03502	107.5615	SIDNEY - SIDNEY1-LNX3345.00 345KV CKT Z
FDNS	00NR	5	17SP	G15_042	FROM->TO	GRPRAR1-LNX3345.00 - HOLT.CO3 345.00 345KV CKT 1	720	720	0.03579	107.5491	GEN600000 1-SHERBURNECNTY G1
FDNS	00NR	5	20SP	G15_042	FROM->TO	GRPRAR1-LNX3345.00 - HOLT.CO3 345.00 345KV CKT 1	720	720	0.03502	107.539	KEYSTONE - SIDNEY1-LNX3345.00 345KV CKT 1
FDNS	00NR	5	25SP	G15_042	FROM->TO	GRPRAR1-LNX3345.00 - HOLT.CO3 345.00 345KV CKT 1	720	720	0.03356	107.5357	WATERTN-LNX3345.00 - WATERTOWN 345KV CKT Z
FDNS	00NR	5	25SP	G15_042	FROM->TO	GRPRAR1-LNX3345.00 - HOLT.CO3 345.00 345KV CKT 1	720	720	0.03356	107.5269	P12:345:UMZW:# 1747 #: WT2 IN SD. WT2-WHT LINE FAULT
FDNS	00NR	5	20SP	G15_042	FROM->TO	GRPRAR1-LNX3345.00 - HOLT.CO3 345.00 345KV CKT 1	720	720	0.04186	107.4524	NUNDRWD - WAYSIDE 230KV CKT 1
FDNS	00NR	5	20SP	G15_042	FROM->TO	GRPRAR1-LNX3345.00 - HOLT.CO3 345.00 345KV CKT 1	720	720	0.03508	107.4518	HARMONY - ST FRANCIS 115KV CKT 1
FDNS	00NR	5	20SP	G15_042	FROM->TO	GRPRAR1-LNX3345.00 - HOLT.CO3 345.00 345KV CKT 1	720	720	0.03372	107.438	G09_001IST 345.00 - GROTON 345KV CKT 1
FDNS	00NR	5	25SP	G15_042	FROM->TO	GRPRAR1-LNX3345.00 - HOLT.CO3 345.00 345KV CKT 1	720	720	0.03812	107.3745	FT RANDAL - MEADOWGROVE4230.00 230KV CKT 1
FDNS	00NR	5	20SP	G15_042	FROM->TO	GRPRAR1-LNX3345.00 - HOLT.CO3 345.00 345KV CKT 1	720	720	0.03403	107.3134	GEN640010 1-GERALD GENTLEMAN STATION UNIT 1
FDNS	00NR	5	25SP	G15_042	FROM->TO	GRPRAR1-LNX3345.00 - HOLT.CO3 345.00 345KV CKT 1	720	720	0.03435	107.3092	GEN635024 4-WALTER SCOTT UNIT 4
FDNS	00NR	5	20SP	G15_042	FROM->TO	GRPRAR1-LNX3345.00 - HOLT.CO3 345.00 345KV CKT 1	720	720	0.03232	107.3061	FT RANDAL - SIOUX CITY 230KV CKT 1
FDNS	00NR	5	20SP	G15_042	FROM->TO	GRPRAR1-LNX3345.00 - HOLT.CO3 345.00 345KV CKT 1	720	720	0.03403	107.28	GEN335831 1-RIVERBEND UNIT#1
FDNS	00NR	5	25SP	G15_042	FROM->TO	GRPRAR1-LNX3345.00 - HOLT.CO3 345.00 345KV CKT 1	720	720	0.03432	107.2514	BISON 3 345.00 - BUFFALO 345KV CKT 1
FDNS	00NR	5	25SP	G15_042	FROM->TO	GRPRAR1-LNX3345.00 - HOLT.CO3 345.00 345KV CKT 1	720	720	0.03435	107.2449	GEN336821 1-GRAND GULF UNIT
FDNS	00NR	5	25SP	G15_042	FROM->TO	GRPRAR1-LNX3345.00 - HOLT.CO3 345.00 345KV CKT 1	720	720	0.03434	107.2413	CHISAGO COUNTY - CHISAGO COUNTY 500KV CKT 1
FDNS	00NR	5	20SP	G15_042	FROM->TO	GRPRAR1-LNX3345.00 - HOLT.CO3 345.00 345KV CKT 1	720	720	0.03403	107.2219	GEN640011 2-GERALD GENTLEMAN STATION UNIT 2
FDNS	00NR	5	25SP	G15_042	FROM->TO	GRPRAR1-LNX3345.00 - HOLT.CO3 345.00 345KV CKT 1	720	720	0.03435	107.2072	GEN640010 1-GERALD GENTLEMAN STATION UNIT 1
FDNS	00NR	5	17SP	G15_042	FROM->TO	GRPRAR1-LNX3345.00 - HOLT.CO3 345.00 345KV CKT 1	720	720	0.03579	107.1955	GEN600001 2-SHERBURNE CNTY G2
FDNS	00NR	5	25SP	G15_042	FROM->TO	GRPRAR1-LNX3345.00 - HOLT.CO3 345.00 345KV CKT 1	720	720	0.03224	107.1921	SPLIT ROCK - WHITE 345KV CKT 1
FDNS	00NR	5	25SP	G15_042	FROM->TO	GRPRAR1-LNX3345.00 - HOLT.CO3 345.00 345KV CKT 1	720	720	0.03224	107.1921	SPLIT ROCK - WHITE 345KV CKT 1
FDNS	00NR	5	20SP	G15_042	FROM->TO	GRPRAR1-LNX3345.00 - HOLT.CO3 345.00 345KV CKT 1	720	720	0.03508	107.1914	HARMONY - VALENTINE 115KV CKT 1
FDNS	00NR	5	25SP	G15_042	FROM->TO	GRPRAR1-LNX3345.00 - HOLT.CO3 345.00 345KV CKT 1	720	720	0.03434	107.1897	CHISAGO COUNTY - FORBES 500KV CKT 1
FDNS	00NR	5	20SP	G15_042	FROM->TO	GRPRAR1-LNX3345.00 - HOLT.CO3 345.00 345KV CKT 1	720	720	0.03403	107.1847	GEN337910 1-ARKANSAS NUCLEAR ONE UNIT #1
FDNS	00NR	5	25SP	G15_042	FROM->TO	GRPRAR1-LNX3345.00 - HOLT.CO3 345.00 345KV CKT 1	720	720	0.03228	107.1837	G12_009IST 230.00 - LAKE PLATT 230KV CKT 1
FDNS	00NR	5	20SP	G15_042	FROM->TO	GRPRAR1-LNX3345.00 - HOLT.CO3 345.00 345KV CKT 1	720	720	0.03563	107.0666	FT RANDAL - SPENCER 115KV CKT 1
FDNS	00NR	5	20SP	G15_042	FROM->TO	GRPRAR1-LNX3345.00 - HOLT.CO3 345.00 345KV CKT 1	720	720	0.03563	107.0332	P12:115:NPPD:WAPA6:FTRANDL7:ONEILL 7:BTB
FDNS	00NR	5	20SP	G15_042	FROM->TO	GRPRAR1-LNX3345.00 - HOLT.CO3 345.00 345KV CKT 1	720	720	0.03563	107.0332	P12:115:UMZB:# 115 #: SE IN NE. FR-SE-ON
FDNS	00NR	5	25SP	G15_042	FROM->TO	GRPRAR1-LNX3345.00 - HOLT.CO3 345.00 345KV CKT 1	720	720	0.03435	106.992	GEN562714 1-G15_023_4 0.6900
FDNS	00NR	5	25SP	G15_042	FROM->TO	GRPRAR1-LNX3345.00 - HOLT.CO3 345.00 345KV CKT 1	720	720	0.03435	106.992	GEN562715 1-G15_023_5 0.6900
FDNS	00NR	5	25SP	G15_042	FROM->TO	GRPRAR1-LNX3345.00 - HOLT.CO3 345.00 345KV CKT 1	720	720	0.03294	106.9701	LETCHER - SIOUX FALLS 230KV CKT 1
FDNS	00NR	5	20SP	G15_042	FROM->TO	GRPRAR1-LNX3345.00 - HOLT.CO3 345.00 345KV CKT 1	720	720	0.03373	106.9176	GROTON-LNX3 345.00 - LELAND1-LNX3345.00 345KV CKT 1
FDNS	00NR	5	20SP	G15_042	FROM->TO	GRPRAR1-LNX3345.00 - HOLT.CO3 345.00 345KV CKT 1	720	720	0.03563	106.9142	ONEILL - SPENCER 115KV CKT 1
FDNS	00NR	5	25SP	G15_042	FROM->TO	GRPRAR1-LNX3345.00 - HOLT.CO3 345.00 345KV CKT 1	720	720	0.0354	106.9097	MISSION - ST FRANCIS 115KV CKT 1
FDNS	00NR	5	25SP	G15_042	FROM->TO	GRPRAR1-LNX3345.00 - HOLT.CO3 345.00 345KV CKT 1	720	720	0.03435	106.8982	GEN640011 2-GERALD GENTLEMAN STATION UNIT 2
FDNS	00NR	5	20SP	G15_042	FROM->TO	GRPRAR1-LNX3345.00 - HOLT.CO3 345.00 345KV CKT 1	720	720	0.03373	106.873	GROTON - GROTON-LNX3 345.00 345KV CKT Z
FDNS	00NR	5	20SP	G15_042	FROM->TO	GRPRAR1-LNX3345.00 - HOLT.CO3 345.00 345KV CKT 1	720	720	0.03373	106.8649	LELAND OLDS - LELAND1-LNX3345.00 345KV CKT Z
FDNS	00NR	5	20SP	G15_042	FROM->TO	GRPRAR1-LNX3345.00 - HOLT.CO3 345.00 345KV CKT 1	720	720	0.03373	106.86	P12:345:UMZB:# 109 #: LOS GRT IN ND. LOS GRT
FDNS	00NR	5	25SP	G15_042	FROM->TO	GRPRAR1-LNX3345.00 - HOLT.CO3 345.00 345KV CKT 1	720	720	0.03435	106.8469	GEN635023 3-WALTER SCOTT UNIT 3
FDNS	00NR	5	20SP	G15_042	FROM->TO	GRPRAR1-LNX3345.00 - HOLT.CO3 345.00 345KV CKT 1	720	720	0.03138	106.846	FT RANDAL - UTICA JCT 230KV CKT 1
FDNS	00NR	5	20SP	G15_042	FROM->TO	GRPRAR1-LNX3345.00 - HOLT.CO3 345.00 345KV CKT 1	720	720	0.0331	106.824	HANLON - SIOUX FALLS 230KV CKT 1
FDNS	00NR	5	25SP	G15_042	FROM->TO	GRPRAR1-LNX3345.00 - HOLT.CO3 345.00 345KV CKT 1	720	720	0.03533	106.8019	KEYSTONE - SIDNEY1-LNX3345.00 345KV CKT 1
FDNS	00NR	5	25SP	G15_042	FROM->TO	GRPRAR1-LNX3345.00 - HOLT.CO3 345.00 345KV CKT 1	720	720	0.03533	106.8013	SIDNEY - SIDNEY1-LNX3345.00 345KV CKT Z
FDNS	00NR	5	25SP	G15_042	FROM->TO	GRPRAR1-LNX3345.00 - HOLT.CO3 345.00 345KV CKT 1	720	720	0.03435	106.8	GEN337911 1-ARKANSAS NUCLEAR ONE UNIT #2
FDNS	00NR	5	20SP	G15_042	FROM->TO	GRPRAR1-LNX3345.00 - HOLT.CO3 345.00 345KV CKT 1	720	720	0.03433	106.7278	GERALD GENTLEMAN STATION - KEYSTONE 345KV CKT 1
FDNS	00NR	5	25SP	G15_042	FROM->TO	GRPRAR1-LNX3345.00 - HOLT.CO3 345.00 345KV CKT 1	720	720	0.0354	106.7191	HARMONY - ST FRANCIS 115KV CKT 1
FDNS	00NR	5	17SP	G15_042	FROM->TO	GRPRAR1-LNX3345.00 - HOLT.CO3 345.00 345KV CKT 1	720	720	0.03579	106.716	GEN620315 1-BIG STONE GEN
FDNS	00NR	5	25SP	G15_042	FROM->TO	GRPRAR1-LNX3345.00 - HOLT.CO3 345.00 345KV CKT 1	720	720	0.03435	106.7122	GEN344225 1-1CAL G1 25.000
FDNS	00NR	5	20SP	G15_042	FROM->TO	GRPRAR1-LNX3345.00 - HOLT.CO3 345.00 345KV CKT 1	720	720	0.03403	106.6956	GEN337653 1-WHITE BLUFF UNIT #2
FDNS	00NR	5	20SP	G15_042	FROM->TO	GRPRAR1-LNX3345.00 - HOLT.CO3 345.00 345KV CKT 1	720	720	0.03514	106.6942	LAKEFIELD 3 - NOBLES 345KV CKT 1
FDNS	00NR	5	17SP	G15_042	FROM->TO	GRPRAR1-LNX3345.00 - HOLT.CO3 345.00 345KV CKT 1	720	720	0.03579	106.6876	GEN661015 1-COYOTE
FDNS	00NR	5	20SP	G15_042	FROM->TO	GRPRAR1-LNX3345.00 - HOLT.CO3 345.00 345KV CKT 1	720	720	0.06142	106.6855	DIXONCO 230.00 - HOSKINS 230KV CKT 1
FDNS	00NR	5	25SP	G15_042	FROM->TO	GRPRAR1-LNX3345.00 - HOLT.CO3 345.00 345KV CKT 1	720	720	0.03404	106.6821	G09_001IST 345.00 - GROTON 345KV CKT 1
FDNS	00NR	5	20SP	G15_042	FROM->TO	GRPRAR1-LNX3345.00 - HOLT.CO3 345.00 345KV CKT 1	720	720	0.03403	106.643	GEN337652 1-WHITE BLUFF UNIT #1
FDNS	00NR	5	20SP	G15_042	FROM->TO	GRPRAR1-LNX3345.00 - HOLT.CO3 345.00 345KV CKT 1	720	720	0.03289	106.6322	PAHOJA - SIOUX FALLS 230KV CKT 1
FDNS	00NR	5	20SP	G15_042	FROM->TO	GRPRAR1-LNX3345.00 - HOLT.CO3 345.00 345KV CKT 1	720	720	0.03508	106.6261	AINSWORTH - VALENTINE 115KV CKT 1
FDNS	00NR	5	20SP	G15_042	FROM->TO	GRPRAR1-LNX3345.00 - HOLT.CO3 345.00 345KV CKT 1	720	720	0.03546	106.626	SIDNEY - STEGALL 345KV CKT 1

SOLUTION	GROUP	SCENARIO	SEASON	SOURCE	DIRECTION	MONITORED ELEMENT	RATEA (MVA)	RATEB(MVA)	TDF	TC%LOADING (% MVA)	CONTINGENCY
FDNS	00NR	5	25SP	G15_042	FROM->TO	GRPRAR1-LNX3345.00 - HOLT.CO3 345.00 345KV CKT 1	720	720	0.03435	106.622	GEN336153 1-WATERFORD UNIT#3
FDNS	00NR	5	20SP	G15_042	FROM->TO	GRPRAR1-LNX3345.00 - HOLT.CO3 345.00 345KV CKT 1	720	720	0.03427	106.6167	ARROWHEAD - ARROWHEAD 230 230KV CKT 1
FDNS	00NR	5	25SP	G15_042	FROM->TO	GRPRAR1-LNX3345.00 - HOLT.CO3 345.00 345KV CKT 1	720	720	0.04214	106.5997	NUNDRWD - WAYSIDE 230KV CKT 1
FDNS	00NR	5	20SP	G15_042	FROM->TO	GRPRAR1-LNX3345.00 - HOLT.CO3 345.00 345KV CKT 1	720	720	0.03403	106.588	GEN338146 1-INDEPENDENCE UNIT #2
FDNS	00NR	5	20SP	G15_042	FROM->TO	GRPRAR1-LNX3345.00 - HOLT.CO3 345.00 345KV CKT 1	720	720	0.03403	106.5845	GEN338143 1-INDEPENDENCE UNIT #1
FDNS	00NR	5	20SP	G15_042	FROM->TO	GRPRAR1-LNX3345.00 - HOLT.CO3 345.00 345KV CKT 1	720	720	0.03862	106.5816	RAUN - SUB 3451 FT CAL 345KV CKT 1
FDNS	00NR	5	20SP	G15_042	FROM->TO	GRPRAR1-LNX3345.00 - HOLT.CO3 345.00 345KV CKT 1	720	720	0.03862	106.5816	RAUN - SUB 3451 FT CAL 345KV CKT 1
FDNS	00NR	5	20SP	G15_042	FROM->TO	GRPRAR1-LNX3345.00 - HOLT.CO3 345.00 345KV CKT 1	720	720	0.03403	106.5617	GEN501801 1-DOLET HILLS UNIT1
FDNS	00NR	5	20SP	G15_042	FROM->TO	GRPRAR1-LNX3345.00 - HOLT.CO3 345.00 345KV CKT 1	720	720	0.03406	106.5287	ALEXMRES3 345.00 - BISON 3 345.00 345KV CKT 1
FDNS	00NR	5	20SP	G15_042	FROM->TO	GRPRAR1-LNX3345.00 - HOLT.CO3 345.00 345KV CKT 1	720	720	0.03441	106.5243	BROOKING COUNTY - LYON COUNTY 345KV CKT 1
FDNS	00NR	5	17SP	G15_042	FROM->TO	GRPRAR1-LNX3345.00 - HOLT.CO3 345.00 345KV CKT 1	720	720	0.03579	106.5052	GEN600002 3-SHERBURNE CNTY G3
FDNS	00NR	5	20SP	G15_042	FROM->TO	GRPRAR1-LNX3345.00 - HOLT.CO3 345.00 345KV CKT 1	720	720	0.03431	106.4497	AS KING - EAU CLAIRE 345KV CKT 1
FDNS	00NR	5	25SP	G15_042	FROM->TO	GRPRAR1-LNX3345.00 - HOLT.CO3 345.00 345KV CKT 1	720	720	0.03264	106.445	FT RANDAL - SIOUX CITY 230KV CKT 1
FDNS	00NR	5	20SP	G15_042	FROM->TO	GRPRAR1-LNX3345.00 - HOLT.CO3 345.00 345KV CKT 1	720	720	0.03403	106.4233	GEN336252 1-NINEMILE POINT UNIT#5
FDNS	00NR	5	20SP	G15_042	FROM->TO	GRPRAR1-LNX3345.00 - HOLT.CO3 345.00 345KV CKT 1	720	720	0.03377	106.4119	CARPENTER - HURON 230KV CKT 1
FDNS	00NR	5	25SP	G15_042	FROM->TO	GRPRAR1-LNX3345.00 - HOLT.CO3 345.00 345KV CKT 1	720	720	0.03594	106.3662	FT RANDAL - SPENCER 115KV CKT 1
FDNS	00NR	5	20SP	G15_042	FROM->TO	GRPRAR1-LNX3345.00 - HOLT.CO3 345.00 345KV CKT 1	720	720	0.03403	106.3431	GEN336251 1-NINEMILE POINT UNIT#4
FDNS	00NR	5	25SP	G15_042	FROM->TO	GRPRAR1-LNX3345.00 - HOLT.CO3 345.00 345KV CKT 1	720	720	0.03594	106.3368	P12:115:NPPD:WAPA6:FTRANDL7:ONEILL 7:BTB
FDNS	00NR	5	25SP	G15_042	FROM->TO	GRPRAR1-LNX3345.00 - HOLT.CO3 345.00 345KV CKT 1	720	720	0.03594	106.3368	P12:115:UMZB:# 115 #: SE IN NE. FR-SE-ON
FDNS	00NR	5	20SP	G15_042	FROM->TO	GRPRAR1-LNX3345.00 - HOLT.CO3 345.00 345KV CKT 1	720	720	0.03403	106.3249	GEN336831 1-BAXTER WILSON SES
FDNS	00NR	5	20SP	G15_042	FROM->TO	GRPRAR1-LNX3345.00 - HOLT.CO3 345.00 345KV CKT 1	720	720	0.03024	106.3097	RASMUSN - UTICA JCT 230KV CKT 1
FDNS	00NR	5	20SP	G15_042	FROM->TO	GRPRAR1-LNX3345.00 - HOLT.CO3 345.00 345KV CKT 1	720	720	0.03377	106.3074	HURON - WATERTOWN 230KV CKT 2
FDNS	00NR	5	20SP	G15_042	FROM->TO	GRPRAR1-LNX3345.00 - HOLT.CO3 345.00 345KV CKT 1	720	720	0.03377	106.3074	HURON - WATERTOWN 230KV CKT 2
FDNS	00NR	5	25SP	G15_042	FROM->TO	GRPRAR1-LNX3345.00 - HOLT.CO3 345.00 345KV CKT 1	720	720	0.03435	106.3016	GEN335831 1-RIVERBEND UNIT#1
FDNS	00NR	5	20SP	G15_042	FROM->TO	GRPRAR1-LNX3345.00 - HOLT.CO3 345.00 345KV CKT 1	720	720	0.03403	106.2718	GEN337041 1-GERALD ANDRUS
FDNS	00NR	5	20SP	G15_042	FROM->TO	GRPRAR1-LNX3345.00 - HOLT.CO3 345.00 345KV CKT 1	720	720	0.03377	106.2658	CARPENTER - WATERTOWN 230KV CKT 1
FDNS	00NR	5	20SP	G15_042	FROM->TO	GRPRAR1-LNX3345.00 - HOLT.CO3 345.00 345KV CKT 1	720	720	0.03377	106.2658	CARPENTER - WATERTOWN 230KV CKT 1
FDNS	00NR	5	20SP	G15_042	FROM->TO	GRPRAR1-LNX3345.00 - HOLT.CO3 345.00 345KV CKT 1	720	720	0.03403	106.2393	GEN501813 1-RODEMACHER UNIT 3
FDNS	00NR	5	17SP	G15_042	FROM->TO	GRPRAR1-LNX3345.00 - HOLT.CO3 345.00 345KV CKT 1	720	720	0.03579	106.2382	GEN657748 1-YOUNG 2 GENERATOR
FDNS	00NR	5	20SP	G15_042	FROM->TO	GRPRAR1-LNX3345.00 - HOLT.CO3 345.00 345KV CKT 1	720	720	0.03463	106.2373	HAZLETON - MITCHLCO3 345.00 345KV CKT 1
FDNS	00NR	5	25SP	G15_042	FROM->TO	GRPRAR1-LNX3345.00 - HOLT.CO3 345.00 345KV CKT 1	720	720	0.03594	106.2146	ONEILL - SPENCER 115KV CKT 1
FDNS	00NR	5	20SP	G15_042	FROM->TO	GRPRAR1-LNX3345.00 - HOLT.CO3 345.00 345KV CKT 1	720	720	0.03289	106.2101	EAGLE 4 230.00 - PAHOJA 230KV CKT 1
FDNS	00NR	5	25SP	G15_042	FROM->TO	GRPRAR1-LNX3345.00 - HOLT.CO3 345.00 345KV CKT 1	720	720	0.03405	106.1861	GROTON-LNX3 345.00 - LELAND1-LNX3345.00 345KV CKT 1
FDNS	00NR	5	20SP	G15_042	FROM->TO	GRPRAR1-LNX3345.00 - HOLT.CO3 345.00 345KV CKT 1	720	720	0.03403	106.18	CNTSHNT3 345.00 - PRAIRIE3 345.00 345KV CKT 1
FDNS	00NR	5	20SP	G15_042	FROM->TO	GRPRAR1-LNX3345.00 - HOLT.CO3 345.00 345KV CKT 1	720	720	0.0343	106.1768	G15094_T 345.00 - SIDNEY2-LNX3345.00 345KV CKT 1
FDNS	00NR	5	20SP	G15_042	FROM->TO	GRPRAR1-LNX3345.00 - HOLT.CO3 345.00 345KV CKT 1	720	720	0.0343	106.1714	SIDNEY - SIDNEY2-LNX3345.00 345KV CKT Z
FDNS	00NR	5	25SP	G15_042	FROM->TO	GRPRAR1-LNX3345.00 - HOLT.CO3 345.00 345KV CKT 1	720	720	0.03405	106.1404	GROTON - GROTON-LNX3 345.00 345KV CKT Z
FDNS	00NR	5	25SP	G15_042	FROM->TO	GRPRAR1-LNX3345.00 - HOLT.CO3 345.00 345KV CKT 1	720	720	0.03405	106.1389	P12:345:UMZB:# 109 #: LOS GRT IN ND. LOS GRT
FDNS	00NR	5	25SP	G15_042	FROM->TO	GRPRAR1-LNX3345.00 - HOLT.CO3 345.00 345KV CKT 1	720	720	0.03405	106.1324	LELAND OLDS - LELAND1-LNX3345.00 345KV CKT Z
FDNS	00NR	5	20SP	G15_042	FROM->TO	GRPRAR1-LNX3345.00 - HOLT.CO3 345.00 345KV CKT 1	720	720	0.03403	106.0925	GEN635214 4-NEAL UNIT 4
FDNS	00NR	5	20SP	G15_042	FROM->TO	GRPRAR1-LNX3345.00 - HOLT.CO3 345.00 345KV CKT 1	720	720	0.03403	106.0708	GEN335206 1-NELSON UNIT 6
FDNS	00NR	5	25SP	G15_042	FROM->TO	GRPRAR1-LNX3345.00 - HOLT.CO3 345.00 345KV CKT 1	720	720	0.03169	106.0686	FT RANDAL - UTICA JCT 230KV CKT 1
FDNS	00NR	5	20SP	G15_042	FROM->TO	GRPRAR1-LNX3345.00 - HOLT.CO3 345.00 345KV CKT 1	720	720	0.03403	106.0349	GEN344897 4-1LAB G4 20.000
FDNS	00NR	5	20SP	G15_042	FROM->TO	GRPRAR1-LNX3345.00 - HOLT.CO3 345.00 345KV CKT 1	720	720	0.03403	106.0335	GEN344894 1-1LAB G1 20.000
FDNS	00NR	5	20SP	G15_042	FROM->TO	GRPRAR1-LNX3345.00 - HOLT.CO3 345.00 345KV CKT 1	720	720	0.03403	106.0335	GEN344895 2-1LAB G2 20.000
FDNS	00NR	5	20SP	G15_042	FROM->TO	GRPRAR1-LNX3345.00 - HOLT.CO3 345.00 345KV CKT 1	720	720	0.03403	106.0333	GEN344896 3-1LAB G3 20.000
FDNS	00NR	5	20SP	G15_042	FROM->TO	GRPRAR1-LNX3345.00 - HOLT.CO3 345.00 345KV CKT 1	720	720	0.03403	106.0274	GEN334440 1-SABINE UNIT 4
FDNS	00NR	5	17SP	G15_042	FROM->TO	GRPRAR1-LNX3345.00 - HOLT.CO3 345.00 345KV CKT 1	720	720	0.03579	106.0255	GEN562872 1-G15046_3 0.6900
FDNS	00NR	5	20SP	G15_042	FROM->TO	GRPRAR1-LNX3345.00 - HOLT.CO3 345.00 345KV CKT 1	720	720	0.03436	106.0038	ARPIN B4 345.00 - EAU CLAIRE 345KV CKT 1
FDNS	00NR	5	20SP	G15_042	FROM->TO	GRPRAR1-LNX3345.00 - HOLT.CO3 345.00 345KV CKT 1	720	720	0.03403	105.9809	GEN345671 2-1RUSH G2 18.000
FDNS	00NR	5	20SP	G15_042	FROM->TO	GRPRAR1-LNX3345.00 - HOLT.CO3 345.00 345KV CKT 1	720	720	0.03403	105.9766	GEN345670 1-1RUSH G1 18.000
FDNS	00NR	5	25SP	G15_042	FROM->TO	GRPRAR1-LNX3345.00 - HOLT.CO3 345.00 345KV CKT 1	720	720	0.03342	105.966	HANLON - SIOUX FALLS 230KV CKT 1
FDNS	00NR	5	25SP	G15_042	FROM->TO	GRPRAR1-LNX3345.00 - HOLT.CO3 345.00 345KV CKT 1	720	720	0.03465	105.9406	GERALD GENTLEMAN STATION - KEYSTONE 345KV CKT 1
FDNS	00NR	5	25SP	G15_042	FROM->TO	GRPRAR1-LNX3345.00 - HOLT.CO3 345.00 345KV CKT 1	720	720	0.03545	105.9403	LAKEFIELD 3 - NOBLES 345KV CKT 1
FDNS	00NR	5	20SP	G15_042	FROM->TO	GRPRAR1-LNX3345.00 - HOLT.CO3 345.00 345KV CKT 1	720	720	0.03403	105.9362	GEN501812 1-RODEMACHER UNIT 2
FDNS	00NR	5	25SP	G15_042	FROM->TO	GRPRAR1-LNX3345.00 - HOLT.CO3 345.00 345KV CKT 1	720	720	0.06174	105.9171	DIXONCO 230.00 - HOSKINS 230KV CKT 1
FDNS	00NR	5	20SP	G15_042	FROM->TO	GRPRAR1-LNX3345.00 - HOLT.CO3 345.00 345KV CKT 1	720	720	0.03403	105.9037	GEN336191 1-LITTLE GYPSY UNIT#3
FDNS	00NR	5	25SP	G15_042	FROM->TO	GRPRAR1-LNX3345.00 - HOLT.CO3 345.00 345KV CKT 1	720	720	0.03435	105.9	GEN338143 1-INDEPENDENCE UNIT #1
FDNS	00NR	5	25SP	G15_042	FROM->TO	GRPRAR1-LNX3345.00 - HOLT.CO3 345.00 345KV CKT 1	720	720	0.03435	105.9	GEN338146 1-INDEPENDENCE UNIT #2
FDNS	00NR	5	20SP	G15_042	FROM->TO	GRPRAR1-LNX3345.00 - HOLT.CO3 345.00 345KV CKT 1	720	720	0.03218	105.8863	FT THOMPSON - WESSINGTON 230KV CKT 1
FDNS	00NR	5	20SP	G15_042	FROM->TO	GRPRAR1-LNX3345.00 - HOLT.CO3 345.00 345KV CKT 1	720	720	0.03218	105.8863	FT THOMPSON - WESSINGTON 230KV CKT 1
FDNS	00NR	5	20SP	G15_042	FROM->TO	GRPRAR1-LNX3345.00 - HOLT.CO3 345.00 345KV CKT 1	720	720	0.03403	105.8809	GEN338388 1-1PLUM PT U1 23.000
FDNS	00NR	5	20SP	G15_042	FROM->TO	GRPRAR1-LNX3345.00 - HOLT.CO3 345.00 345KV CKT 1	720	720	0.03403	105.8803	GEN629075 1-OTTUMWA GENERATOR FOR OTTUMWA UNIT NO 1
FDNS	00NR	5	25SP	G15_042	FROM->TO	GRPRAR1-LNX3345.00 - HOLT.CO3 345.00 345KV CKT 1	720	720	0.0354	105.8385	AINSWORTH - VALENTINE 115KV CKT 1
FDNS	00NR	5	20SP	G15_042	FROM->TO	GRPRAR1-LNX3345.00 - HOLT.CO3 345.00 345KV CKT 1	720	720	0.03403	105.8375	GEN335614 1-WILLOW GLENN UNIT#4
FDNS	00NR	5	25SP	G15_042	FROM->TO	GRPRAR1-LNX3345.00 - HOLT.CO3 345.00 345KV CKT 1	720	720	0.03577	105.8311	SIDNEY - STEGALL 345KV CKT 1
FDNS	00NR	5	20SP	G15_042	FROM->TO	GRPRAR1-LNX3345.00 - HOLT.CO3 345.00 345KV CKT 1	720	720	0.03403	105.8258	GEN336801 1-BAXTER WILSON UNIT #1
FDNS	00NR	5	20SP	G15_042	FROM->TO	GRPRAR1-LNX3345.00 - HOLT.CO3 345.00 345KV CKT 1	720	720	0.03403	105.8224	GEN336464 1-MICHOUD UNIT #3
FDNS	00NR	5	25SP	G15_042	FROM->TO	GRPRAR1-LNX3345.00 - HOLT.CO3 345.00 345KV CKT 1	720	720	0.03473	105.8202	BROOKING COUNTY - LYON COUNTY 345KV CKT 1
FDNS	00NR	5	20SP	G15_042	FROM->TO	GRPRAR1-LNX3345.00 - HOLT.CO3 345.00 345KV CKT 1	720	720	0.03403	105.8114	GEN335204 1-NELSON UNIT 4
FDNS	00NR	5	25SP	G15_042	FROM->TO	GRPRAR1-LNX3345.00 - HOLT.CO3 345.00 345KV CKT 1	720	720	0.03321	105.8093	PAHOJA - SIOUX FALLS 230KV CKT 1
FDNS	00NR	5	20SP	G15_042	FROM->TO	GRPRAR1-LNX3345.00 - HOLT.CO3 345.00 345KV CKT 1	720	720	0.03403	105.8016	GEN334441 1-SABINE UNIT 5
FDNS	00NR	5	25SP	G15_042	FROM->TO	GRPRAR1-LNX3345.00 - HOLT.CO3 345.00 345KV CKT 1	720	720	0.03893	105.7784	RAUN - SUB 3451 FT CAL 345KV CKT 1
FDNS	00NR	5	25SP	G15_042	FROM->TO	GRPRAR1-LNX3345.00 - HOLT.CO3 345.00 345KV CKT 1	720	720	0.03893	105.7784	RAUN - SUB 3451 FT CAL 345KV CKT 1
FDNS	00NR	5	25SP	G15_042	FROM->TO	GRPRAR1-LNX3345.00 - HOLT.CO3 345.00 345KV CKT 1	720	720	0.03438	105.7761	ALEXMRES3 345.00 - BISON 3 345.00 345KV CKT 1
FDNS	00NR	5	20SP	G15_042	FROM->TO	GRPRAR1-LNX3345.00 - HOLT.CO3 345.00 345KV CKT 1	720	720	0.03566	105.776	GRIMES - LEHIGH 345KV CKT 1
FDNS	00NR	5	20SP	G15_042	FROM->TO	GRPRAR1-LNX3345.00 - HOLT.CO3 345.00 345KV CKT 1	720	720	0.03426	105.7749	NORTH LA CROSSE - NORTH ROCHESTER 345KV CKT 1
FDNS	00NR	5	25SP	G15_042	FROM->TO	GRPRAR1-LNX3345.00 - HOLT.CO3 345.00 345KV CKT 1	720	720	0.03435	105.7694	GEN337653 1-WHITE BLUFF UNIT #2
FDNS	00NR	5	25SP	G15_042	FROM->TO	GRPRAR1-LNX3345.00 - HOLT.CO3 345.00 345KV CKT 1	720	720	0.03459	105.7251	ARROWHEAD - ARROWHEAD 230 230KV CKT 1

SOLUTION	GROUP	SCENARIO	SEASON	SOURCE	DIRECTION	MONITORED ELEMENT	RATEA (MVA)	RATEB(MVA)	TDF	TC%LOADING (% MVA)	CONTINGENCY
FDNS	00NR	5	20SP	G15_042	FROM->TO	GRPRAR1-LNX3345.00 - HOLT.CO3 345.00 345KV CKT 1	720	720	0.03463	105.7187	KOSSUTH 3 345.00 - WEBSTER 345KV CKT 1
FDNS	00NR	5	20SP	G15_042	FROM->TO	GRPRAR1-LNX3345.00 - HOLT.CO3 345.00 345KV CKT 1	720	720	0.03403	105.6987	GEN635213 3-NEAL UNIT 3
FDNS	00NR	5	20SP	G15_042	FROM->TO	GRPRAR1-LNX3345.00 - HOLT.CO3 345.00 345KV CKT 1	720	720	0.03403	105.6934	P12:115:UMZW:# 162 #: NEL IN ND. FAULT ON ML-NEL-MX-GA 115 KV
FDNS	00NR	5	17SP	G15_042	FROM->TO	GRPRAR1-LNX3345.00 - HOLT.CO3 345.00 345KV CKT 1	720	720	0.03579	105.6897	GEN659111 2-LELAND OLDS UNIT2
FDNS	00NR	5	20SP	G15_042	FROM->TO	GRPRAR1-LNX3345.00 - HOLT.CO3 345.00 345KV CKT 1	720	720	0.03403	105.6782	GEN563222 1-G15088_3 0.6900
FDNS	00NR	5	20SP	G15_042	FROM->TO	GRPRAR1-LNX3345.00 - HOLT.CO3 345.00 345KV CKT 1	720	720	0.0338	105.6708	BROOKING COUNTY - BSSOUTH3 345.00 345KV CKT 1
FDNS	00NR	5	20SP	G15_042	FROM->TO	GRPRAR1-LNX3345.00 - HOLT.CO3 345.00 345KV CKT 1	720	720	0.03403	105.6674	GEN334433 1-SABINE UNIT 3
FDNS	00NR	5	25SP	G15_042	FROM->TO	GRPRAR1-LNX3345.00 - HOLT.CO3 345.00 345KV CKT 1	720	720	0.03435	105.6656	GEN501801 1-DOLET HILLS UNIT1
FDNS	00NR	5	25SP	G15_042	FROM->TO	GRPRAR1-LNX3345.00 - HOLT.CO3 345.00 345KV CKT 1	720	720	0.03409	105.6445	CARPENTER - HURON 230KV CKT 1
FDNS	00NR	5	20SP	G15_042	FROM->TO	GRPRAR1-LNX3345.00 - HOLT.CO3 345.00 345KV CKT 1	720	720	0.03391	105.6268	HESKETT - WISHEK 230KV CKT 1
FDNS	00NR	5	20SP	G15_042	FROM->TO	GRPRAR1-LNX3345.00 - HOLT.CO3 345.00 345KV CKT 1	720	720	0.03351	105.6221	MENNO JCT - TRIPP JCT 115KV CKT 1
FDNS	00NR	5	20SP	G15_042	FROM->TO	GRPRAR1-LNX3345.00 - HOLT.CO3 345.00 345KV CKT 1	720	720	0.03637	105.6158	BLOOMFIELD - CREIGHTON 115KV CKT 1
FDNS	00NR	5	20SP	G15_042	FROM->TO	GRPRAR1-LNX3345.00 - HOLT.CO3 345.00 345KV CKT 1	720	720	0.03436	105.6142	NMA B3 345 345.00 - NORTH LA CROSSE 345KV CKT 1
FDNS	00NR	5	20SP	G15_042	FROM->TO	GRPRAR1-LNX3345.00 - HOLT.CO3 345.00 345KV CKT 1	720	720	0.03401	105.6103	CENTER - COYOTE 345KV CKT 1
FDNS	00NR	5	20SP	G15_042	FROM->TO	GRPRAR1-LNX3345.00 - HOLT.CO3 345.00 345KV CKT 1	720	720	0.03463	105.6095	ADAMS - MITCHLCO3 345.00 345KV CKT 1
FDNS	00NR	5	20SP	G15_042	FROM->TO	GRPRAR1-LNX3345.00 - HOLT.CO3 345.00 345KV CKT 1	720	720	0.03403	105.5972	GEN336222 1-LITTLE GYPSY UNIT#2
FDNS	00NR	5	25SP	G15_042	FROM->TO	GRPRAR1-LNX3345.00 - HOLT.CO3 345.00 345KV CKT 1	720	720	0.03463	105.5911	AS KING - EAU CLAIRE 345KV CKT 1
FDNS	00NR	5	20SP	G15_042	FROM->TO	GRPRAR1-LNX3345.00 - HOLT.CO3 345.00 345KV CKT 1	720	720	0.03406	105.5758	GLENBORO SOUTH - RUGBY 230KV CKT 1
FDNS	00NR	5	20SP	G15_042	FROM->TO	GRPRAR1-LNX3345.00 - HOLT.CO3 345.00 345KV CKT 1	720	720	0.03402	105.5716	GARRISON - JAMES TOWN 230KV CKT 1
FDNS	00NR	5	25SP	G15_042	FROM->TO	GRPRAR1-LNX3345.00 - HOLT.CO3 345.00 345KV CKT 1	720	720	0.03435	105.5683	CNTSHNT3 345.00 - PRAIRIE3 345.00 345KV CKT 1
FDNS	00NR	5	20SP	G15_042	FROM->TO	GRPRAR1-LNX3345.00 - HOLT.CO3 345.00 345KV CKT 1	720	720	0.03391	105.5606	MERRCRT4 230.00 - WISHEK 230KV CKT 1
FDNS	00NR	5	20SP	G15_042	FROM->TO	GRPRAR1-LNX3345.00 - HOLT.CO3 345.00 345KV CKT 1	720	720	0.03403	105.5479	GEN336152 1-WATERFORD UNIT#2
FDNS	00NR	5	20SP	G15_042	FROM->TO	GRPRAR1-LNX3345.00 - HOLT.CO3 345.00 345KV CKT 1	720	720	0.03403	105.5478	GEN336151 1-WATERFORD UNIT#1
FDNS	00NR	5	25SP	G15_042	FROM->TO	GRPRAR1-LNX3345.00 - HOLT.CO3 345.00 345KV CKT 1	720	720	0.03493	105.5427	HAZLETON - MITCHLCO3 345.00 345KV CKT 1
FDNS	00NR	5	25SP	G15_042	FROM->TO	GRPRAR1-LNX3345.00 - HOLT.CO3 345.00 345KV CKT 1	720	720	0.03409	105.5386	HURON - WATERTOWN 230KV CKT 2
FDNS	00NR	5	25SP	G15_042	FROM->TO	GRPRAR1-LNX3345.00 - HOLT.CO3 345.00 345KV CKT 1	720	720	0.03409	105.5386	HURON - WATERTOWN 230KV CKT 2
FDNS	00NR	5	20SP	G15_042	FROM->TO	GRPRAR1-LNX3345.00 - HOLT.CO3 345.00 345KV CKT 1	720	720	0.03403	105.5317	GEN531447 1-HOLCOMB GENERATOR
FDNS	00NR	5	20SP	G15_042	FROM->TO	GRPRAR1-LNX3345.00 - HOLT.CO3 345.00 345KV CKT 1	720	720	0.03637	105.5255	BLOOMFIELD - GAVINS POINT 115KV CKT 1
FDNS	00NR	5	20SP	G15_042	FROM->TO	GRPRAR1-LNX3345.00 - HOLT.CO3 345.00 345KV CKT 1	720	720	0.04322	105.5152	RAUN - SIOUX CITY 345KV CKT 1
FDNS	00NR	5	20SP	G15_042	FROM->TO	GRPRAR1-LNX3345.00 - HOLT.CO3 345.00 345KV CKT 1	720	720	0.04322	105.5152	RAUN - SIOUX CITY 345KV CKT 1
FDNS	00NR	5	20SP	G15_042	FROM->TO	GRPRAR1-LNX3345.00 - HOLT.CO3 345.00 345KV CKT 1	720	720	0.03403	105.4991	GEN640009 1-COOPER NUCLEAR STATION
FDNS	00NR	5	20SP	G15_042	FROM->TO	GRPRAR1-LNX3345.00 - HOLT.CO3 345.00 345KV CKT 1	720	720	0.03442	105.4982	ADAMS - PLEASANT VALLEY 345KV CKT 1
FDNS	00NR	5	25SP	G15_042	FROM->TO	GRPRAR1-LNX3345.00 - HOLT.CO3 345.00 345KV CKT 1	720	720	0.03409	105.4957	CARPENTER - WATERTOWN 230KV CKT 1
FDNS	00NR	5	25SP	G15_042	FROM->TO	GRPRAR1-LNX3345.00 - HOLT.CO3 345.00 345KV CKT 1	720	720	0.03409	105.4957	CARPENTER - WATERTOWN 230KV CKT 1
FDNS	00NR	5	20SP	G15_042	FROM->TO	GRPRAR1-LNX3345.00 - HOLT.CO3 345.00 345KV CKT 1	720	720	0.0341	105.4947	APPLEDORN 4 230.00 - WATERTOWN 230KV CKT 1
FDNS	00NR	5	20SP	G15_042	FROM->TO	GRPRAR1-LNX3345.00 - HOLT.CO3 345.00 345KV CKT 1	720	720	0.0341	105.4947	APPLEDORN 4 230.00 - WATERTOWN 230KV CKT 1
FDNS	00NR	5	20SP	G15_042	FROM->TO	GRPRAR1-LNX3345.00 - HOLT.CO3 345.00 345KV CKT 1	720	720	0.03351	105.4911	MENNO JCT - UTICA 115KV CKT 1
FDNS	00NR	5	20SP	G15_042	FROM->TO	GRPRAR1-LNX3345.00 - HOLT.CO3 345.00 345KV CKT 1	720	720	0.03393	105.4849	BSSOUTH3 345.00 - ELLENDLMVP3 345.00 345KV CKT 1
FDNS	00NR	5	20SP	G15_042	FROM->TO	GRPRAR1-LNX3345.00 - HOLT.CO3 345.00 345KV CKT 1	720	720	0.03393	105.4849	BSSOUTH3 345.00 - ELLENDLMVP3 345.00 345KV CKT 1
FDNS	00NR	5	20SP	G15_042	FROM->TO	GRPRAR1-LNX3345.00 - HOLT.CO3 345.00 345KV CKT 1	720	720	0.03403	105.4817	GEN303007 1-1BC2 U2
FDNS	00NR	5	20SP	G15_042	FROM->TO	GRPRAR1-LNX3345.00 - HOLT.CO3 345.00 345KV CKT 1	720	720	0.03403	105.4754	GEN303006 1-1BC2 U1
FDNS	00NR	5	20SP	G15_042	FROM->TO	GRPRAR1-LNX3345.00 - HOLT.CO3 345.00 345KV CKT 1	720	720	0.03393	105.4633	ELLENDLMVP3 345.00 (1) 345/230/34.5KV TRANSFORMER CKT 1
FDNS	00NR	5	25SP	G15_042	FROM->TO	GRPRAR1-LNX3345.00 - HOLT.CO3 345.00 345KV CKT 1	720	720	0.03435	105.4583	GEN336251 1-NINEMILE POINT UNIT#4
FDNS	00NR	5	20SP	G15_042	FROM->TO	GRPRAR1-LNX3345.00 - HOLT.CO3 345.00 345KV CKT 1	720	720	0.03416	105.457	ARKANSAS NUCLEAR ONE - FT SMITH 500KV CKT 1
FDNS	00NR	5	20SP	G15_042	FROM->TO	GRPRAR1-LNX3345.00 - HOLT.CO3 345.00 345KV CKT 1	720	720	0.03416	105.457	ARKANSAS NUCLEAR ONE - FT SMITH 500KV CKT 1
FDNS	00NR	5	20SP	G15_042	FROM->TO	GRPRAR1-LNX3345.00 - HOLT.CO3 345.00 345KV CKT 1	720	720	0.03411	105.4537	ALEXMRES3 345.00 - WAITE PARK 345KV CKT 1
FDNS	00NR	5	20SP	G15_042	FROM->TO	GRPRAR1-LNX3345.00 - HOLT.CO3 345.00 345KV CKT 1	720	720	0.03351	105.4371	P12:115:UMZZ:# 237 #: MEN IN SD. MENNO JUNCTION IS A TAP (UJ-MEN-TP).
FDNS	00NR	5	20SP	G15_042	FROM->TO	GRPRAR1-LNX3345.00 - HOLT.CO3 345.00 345KV CKT 1	720	720	0.0341	105.4309	APPLEDORN 4 230.00 - GRANITE FALLS 230KV CKT 1
FDNS	00NR	5	20SP	G15_042	FROM->TO	GRPRAR1-LNX3345.00 - HOLT.CO3 345.00 345KV CKT 1	720	720	0.0341	105.4309	APPLEDORN 4 230.00 - GRANITE FALLS 230KV CKT 1
FDNS	00NR	5	25SP	G15_042	FROM->TO	GRPRAR1-LNX3345.00 - HOLT.CO3 345.00 345KV CKT 1	720	720	0.03462	105.4291	G15094_T 345.00 - SIDNEY2-LNX3345.00 345KV CKT 1
FDNS	00NR	5	25SP	G15_042	FROM->TO	GRPRAR1-LNX3345.00 - HOLT.CO3 345.00 345KV CKT 1	720	720	0.03462	105.4289	SIDNEY - SIDNEY2-LNX3345.00 345KV CKT Z
FDNS	00NR	5	25SP	G15_042	FROM->TO	GRPRAR1-LNX3345.00 - HOLT.CO3 345.00 345KV CKT 1	720	720	0.03056	105.4255	RASMUSN - UTICA JCT 230KV CKT 1
FDNS	00NR	5	20SP	G15_042	FROM->TO	GRPRAR1-LNX3345.00 - HOLT.CO3 345.00 345KV CKT 1	720	720	0.03409	105.4244	BLAIR - GRANITE FALLS 230KV CKT 1
FDNS	00NR	5	20SP	G15_042	FROM->TO	GRPRAR1-LNX3345.00 - HOLT.CO3 345.00 345KV CKT 1	720	720	0.03409	105.4244	BLAIR - GRANITE FALLS 230KV CKT 1
FDNS	00NR	5	25SP	G15_042	FROM->TO	GRPRAR1-LNX3345.00 - HOLT.CO3 345.00 345KV CKT 1	720	720	0.03435	105.4232	GEN336831 1-BAXTER WILSON SES
FDNS	00NR	5	20SP	G15_042	FROM->TO	GRPRAR1-LNX3345.00 - HOLT.CO3 345.00 345KV CKT 1	720	720	0.03419	105.4183	NORTH ROCHESTER - PRAIRIE ISLAND 345KV CKT 1
FDNS	00NR	5	20SP	G15_042	FROM->TO	GRPRAR1-LNX3345.00 - HOLT.CO3 345.00 345KV CKT 1	720	720	0.0336	105.4156	WINNER - WITTEN 115KV CKT 1
FDNS	00NR	5	20SP	G15_042	FROM->TO	GRPRAR1-LNX3345.00 - HOLT.CO3 345.00 345KV CKT 1	720	720	0.03403	105.4096	GEN303008 1-1BC2 U3
FDNS	00NR	5	20SP	G15_042	FROM->TO	GRPRAR1-LNX3345.00 - HOLT.CO3 345.00 345KV CKT 1	720	720	0.03403	105.4044	GEN336170 1-GULF OXY U4
FDNS	00NR	5	20SP	G15_042	FROM->TO	GRPRAR1-LNX3345.00 - HOLT.CO3 345.00 345KV CKT 1	720	720	0.03403	105.3874	GEN641089 2-ENERGY CENTER 2
FDNS	00NR	5	20SP	G15_042	FROM->TO	GRPRAR1-LNX3345.00 - HOLT.CO3 345.00 345KV CKT 1	720	720	0.03403	105.3742	GEN562921 1-G15054_2 0.6900
FDNS	00NR	5	20SP	G15_042	FROM->TO	GRPRAR1-LNX3345.00 - HOLT.CO3 345.00 345KV CKT 1	720	720	0.0343	105.3702	G15094_T 345.00 - LARAMIE RIVER 345KV CKT 1
FDNS	00NR	5	20SP	G15_042	FROM->TO	GRPRAR1-LNX3345.00 - HOLT.CO3 345.00 345KV CKT 1	720	720	0.03687	105.3662	STEGALL - STEGALL TRANSFORMER 230KV CKT 1
FDNS	00NR	5	25SP	G15_042	FROM->TO	GRPRAR1-LNX3345.00 - HOLT.CO3 345.00 345KV CKT 1	720	720	0.03435	105.3653	GEN337041 1-GERALD ANDRUS
FDNS	00NR	5	20SP	G15_042	FROM->TO	GRPRAR1-LNX3345.00 - HOLT.CO3 345.00 345KV CKT 1	720	720	0.03687	105.3591	P13:230-345:NPPD:STEGALL3:KV3A
FDNS	00NR	5	25SP	G15_042	FROM->TO	GRPRAR1-LNX3345.00 - HOLT.CO3 345.00 345KV CKT 1	720	720	0.03321	105.3547	EAGLE 4 230.00 - PAHOJA 230KV CKT 1
FDNS	00NR	5	20SP	G15_042	FROM->TO	GRPRAR1-LNX3345.00 - HOLT.CO3 345.00 345KV CKT 1	720	720	0.03402	105.3531	FARGO - JAMES TOWN 230KV CKT 1
FDNS	00NR	5	20SP	G15_042	FROM->TO	GRPRAR1-LNX3345.00 - HOLT.CO3 345.00 345KV CKT 1	720	720	0.03449	105.3458	HUNTLEY3 345.00 - LEDYARD3 345.00 345KV CKT 1
FDNS	00NR	5	25SP	G15_042	FROM->TO	GRPRAR1-LNX3345.00 - HOLT.CO3 345.00 345KV CKT 1	720	720	0.03435	105.3447	GEN501813 1-RODEMACHER UNIT 3
FDNSLock	00NR	5	20SP	G15_042	FROM->TO	GRPRAR1-LNX3345.00 - HOLT.CO3 345.00 345KV CKT 1	720	720	0.03687	105.3378	STEGALL (SGQ KV3A) 345/230/13.8KV TRANSFORMER CKT 1
FDNS	00NR	5	20SP	G15_042	FROM->TO	GRPRAR1-LNX3345.00 - HOLT.CO3 345.00 345KV CKT 1	720	720	0.03402	105.3318	FARGO - JAMES TOWN 230KV CKT 2
FDNS	00NR	5	20SP	G15_042	FROM->TO	GRPRAR1-LNX3345.00 - HOLT.CO3 345.00 345KV CKT 1	720	720	0.03403	105.33	P13:230:UMZW:# 2218 #: FP IN MT. LOSS OF TRANSFORMER (AT2).
FDNS	00NR	5	20SP	G15_042	FROM->TO	GRPRAR1-LNX3345.00 - HOLT.CO3 345.00 345KV CKT 1	720	720	0.03403	105.3281	GEN562596 1-G14_059_3 0.6900
FDNS	00NR	5	20SP	G15_042	FROM->TO	GRPRAR1-LNX3345.00 - HOLT.CO3 345.00 345KV CKT 1	720	720	0.03403	105.3249	GEN501811 1-RODEMACHER UNIT 1
FDNS	00NR	5	20SP	G15_042	FROM->TO	GRPRAR1-LNX3345.00 - HOLT.CO3 345.00 345KV CKT 1	720	720	0.03451	105.3044	P13:230-345:NPPD:SIDNEY 3:KV2A
FDNS	00NR	5	20SP	G15_042	FROM->TO	GRPRAR1-LNX3345.00 - HOLT.CO3 345.00 345KV CKT 1	720	720	0.03451	105.3043	SIDNEY (SDQ KV2A) 345/230/13.8KV TRANSFORMER CKT 1
FDNS	00NR	5	20SP	G15_042	FROM->TO	GRPRAR1-LNX3345.00 - HOLT.CO3 345.00 345KV CKT 1	720	720	0.03451	105.3042	SIDNEY - SIDNEY TRANSFORMER 230KV CKT 1
FDNS	00NR	5	20SP	G15_042	FROM->TO	GRPRAR1-LNX3345.00 - HOLT.CO3 345.00 345KV CKT 1	720	720	0.03402	105.3026	BISMARK - JAMES TOWN 230KV CKT 1
FDNS	00NR	5	20SP	G15_042	FROM->TO	GRPRAR1-LNX3345.00 - HOLT.CO3 345.00 345KV CKT 1	720	720	0.03485	105.2943	P12:230:UMZW:# 733 #: FT IN SD. FT-BG2 LINE FAULT

SOLUTION	GROUP	SCENARIO	SEASON	SOURCE	DIRECTION	MONITORED ELEMENT	RATEA (MVA)	RATEB(MVA)	TDF	TC%LOADING (% MVA)	CONTINGENCY
FDNS	00NR	5	20SP	G15_042	FROM->TO	GRPRAR1-LNX3345.00 - HOLT.CO3 345.00 345KV CKT 1	720	720	0.03402	105.2939	BISMARK - WEBER 230KV CKT 1
FDNS	00NR	5	20SP	G15_042	FROM->TO	GRPRAR1-LNX3345.00 - HOLT.CO3 345.00 345KV CKT 1	720	720	0.03403	105.2804	TOLK STATION EAST 230/24.0KV TRANSFORMER CKT 1
FDNS	00NR	5	20SP	G15_042	FROM->TO	GRPRAR1-LNX3345.00 - HOLT.CO3 345.00 345KV CKT 1	720	720	0.03454	105.2794	P13:115-230:TSGT:SIDNEY-KV1A
FDNS	00NR	5	20SP	G15_042	FROM->TO	GRPRAR1-LNX3345.00 - HOLT.CO3 345.00 345KV CKT 1	720	720	0.03402	105.2786	JAMES TOWN - WEBER 230KV CKT 1
FDNS	00NR	5	20SP	G15_042	FROM->TO	GRPRAR1-LNX3345.00 - HOLT.CO3 345.00 345KV CKT 1	720	720	0.03403	105.2732	GEN334071 1-LEWIS CREEK 2
FDNS	00NR	5	20SP	G15_042	FROM->TO	GRPRAR1-LNX3345.00 - HOLT.CO3 345.00 345KV CKT 1	720	720	0.03403	105.2699	GEN334070 1-LEWIS CREEK 1
FDNS	00NR	5	20SP	G15_042	FROM->TO	GRPRAR1-LNX3345.00 - HOLT.CO3 345.00 345KV CKT 1	720	720	0.03441	105.2688	HUNTLEY3 345.00 - LAKEFIELD 3 345KV CKT 1
FDNS	00NR	5	20SP	G15_042	FROM->TO	GRPRAR1-LNX3345.00 - HOLT.CO3 345.00 345KV CKT 1	720	720	0.03492	105.2647	NOBLES - SPLIT ROCK 345KV CKT 1
FDNS	00NR	5	20SP	G15_042	FROM->TO	GRPRAR1-LNX3345.00 - HOLT.CO3 345.00 345KV CKT 1	720	720	0.03403	105.2612	GEN532751 1-WOLF CREEK GENERATING STATION UNIT 1
FDNS	00NR	5	20SP	G15_042	FROM->TO	GRPRAR1-LNX3345.00 - HOLT.CO3 345.00 345KV CKT 1	720	720	0.03359	105.2571	FT THOMPSON - HURON 230KV CKT 1
FDNS	00NR	5	20SP	G15_042	FROM->TO	GRPRAR1-LNX3345.00 - HOLT.CO3 345.00 345KV CKT 1	720	720	0.03359	105.2571	FT THOMPSON - HURON 230KV CKT 1
FDNS	00NR	5	20SP	G15_042	FROM->TO	GRPRAR1-LNX3345.00 - HOLT.CO3 345.00 345KV CKT 1	720	720	0.03359	105.2571	FT THOMPSON - HURON 230KV CKT 2
FDNS	00NR	5	20SP	G15_042	FROM->TO	GRPRAR1-LNX3345.00 - HOLT.CO3 345.00 345KV CKT 1	720	720	0.03359	105.2571	FT THOMPSON - HURON 230KV CKT 2
FDNS	00NR	5	20SP	G15_042	FROM->TO	GRPRAR1-LNX3345.00 - HOLT.CO3 345.00 345KV CKT 1	720	720	0.03403	105.2509	LAWRENCE ENERGY CENTER UNIT 5 - LAWRENCE HILL 230KV CKT 1
FDNS	00NR	5	20SP	G15_042	FROM->TO	GRPRAR1-LNX3345.00 - HOLT.CO3 345.00 345KV CKT 1	720	720	0.03403	105.2509	LAWRENCE ENERGY CENTER UNIT 5 230/24.0KV TRANSFORMER CKT 1
FDNS	00NR	5	20SP	G15_042	FROM->TO	GRPRAR1-LNX3345.00 - HOLT.CO3 345.00 345KV CKT 1	720	720	0.03403	105.2432	GEN659118 1-LARAMIE RIVER UNIT1
FDNS	00NR	5	20SP	G15_042	FROM->TO	GRPRAR1-LNX3345.00 - HOLT.CO3 345.00 345KV CKT 1	720	720	0.03403	105.2414	GEN636641 1-LOUISA UNIT 1
FDNS	00NR	5	20SP	G15_042	FROM->TO	GRPRAR1-LNX3345.00 - HOLT.CO3 345.00 345KV CKT 1	720	720	0.0336	105.2412	GREGORY - WINNER 115KV CKT 1
FDNS	00NR	5	20SP	G15_042	FROM->TO	GRPRAR1-LNX3345.00 - HOLT.CO3 345.00 345KV CKT 1	720	720	0.03403	105.2395	BALTA - RAMSEY 230KV CKT 1
FDNS	00NR	5	20SP	G15_042	FROM->TO	GRPRAR1-LNX3345.00 - HOLT.CO3 345.00 345KV CKT 1	720	720	0.03403	105.2395	PRAIRIE ISLAND 345/20.0KV TRANSFORMER CKT 1
FDNS	00NR	5	17SP	G15_042	FROM->TO	GRPRAR1-LNX3345.00 - HOLT.CO3 345.00 345KV CKT 1	720	720	0.03579	105.2385	GEN659103 1-ANTELOPE VALLEY UNIT1
FDNS	00NR	5	17SP	G15_042	FROM->TO	GRPRAR1-LNX3345.00 - HOLT.CO3 345.00 345KV CKT 1	720	720	0.03579	105.2385	GEN659107 2-ANTELOPE VALLEY UNIT2
FDNS	00NR	5	20SP	G15_042	FROM->TO	GRPRAR1-LNX3345.00 - HOLT.CO3 345.00 345KV CKT 1	720	720	0.03403	105.2383	GEN337766 1-TRACTEBEL UNIT S1
FDNS	00NR	5	20SP	G15_042	FROM->TO	GRPRAR1-LNX3345.00 - HOLT.CO3 345.00 345KV CKT 1	720	720	0.03403	105.238	PRAIRIE ISLAND 345/20.0KV TRANSFORMER CKT 2
FDNS	00NR	5	20SP	G15_042	FROM->TO	GRPRAR1-LNX3345.00 - HOLT.CO3 345.00 345KV CKT 1	720	720	0.03485	105.233	LOWERBRULE 4230.00 - RELIANCE 4 230.00 230KV CKT 1
FDNS	00NR	5	20SP	G15_042	FROM->TO	GRPRAR1-LNX3345.00 - HOLT.CO3 345.00 345KV CKT 1	720	720	0.0336	105.2314	P12:115:UMZW:# 172 #: WI IN SD.
FDNS	00NR	5	17SP	G15_042	FROM->TO	GRPRAR1-LNX3345.00 - HOLT.CO3 345.00 345KV CKT 1	720	720	0.03579	105.2176	BIG STONE 230/24.0KV TRANSFORMER CKT 1
FDNS	00NR	5	20SP	G15_042	FROM->TO	GRPRAR1-LNX3345.00 - HOLT.CO3 345.00 345KV CKT 1	720	720	0.03405	105.2128	FORMAN - HANKINSON 230KV CKT 1
FDNS	00NR	5	20SP	G15_042	FROM->TO	GRPRAR1-LNX3345.00 - HOLT.CO3 345.00 345KV CKT 1	720	720	0.03403	105.203	GEN501910 1-ACADIA UNIT ST1
FDNS	00NR	5	20SP	G15_042	FROM->TO	GRPRAR1-LNX3345.00 - HOLT.CO3 345.00 345KV CKT 1	720	720	0.03402	105.1931	ELM CREEK - MONTICELLO 345KV CKT 1
FDNS	00NR	5	20SP	G15_042	FROM->TO	GRPRAR1-LNX3345.00 - HOLT.CO3 345.00 345KV CKT 1	720	720	0.03403	105.1891	TATANKA 230/34.5KV TRANSFORMER CKT 1
FDNS	00NR	5	25SP	G15_042	FROM->TO	GRPRAR1-LNX3345.00 - HOLT.CO3 345.00 345KV CKT 1	720	720	0.03435	105.1864	GEN335206 1-NELSON UNIT 6
FDNS	00NR	5	25SP	G15_042	FROM->TO	GRPRAR1-LNX3345.00 - HOLT.CO3 345.00 345KV CKT 1	720	720	0.03468	105.1768	ARPIN B4 345.00 - EAU CLAIRE 345KV CKT 1
FDNS	00NR	5	20SP	G15_042	FROM->TO	GRPRAR1-LNX3345.00 - HOLT.CO3 345.00 345KV CKT 1	720	720	0.03403	105.1731	GEN336221 1-LITTLE GYPSY UNIT#1
FDNS	00NR	5	25SP	G15_042	FROM->TO	GRPRAR1-LNX3345.00 - HOLT.CO3 345.00 345KV CKT 1	720	720	0.03435	105.1719	GEN635214 4-NEAL UNIT 4
FDNS	00NR	5	20SP	G15_042	FROM->TO	GRPRAR1-LNX3345.00 - HOLT.CO3 345.00 345KV CKT 1	720	720	0.03403	105.1712	GEN337757 1-DUKE HOTSPRINGS STG1
FDNS	00NR	5	25SP	G15_042	FROM->TO	GRPRAR1-LNX3345.00 - HOLT.CO3 345.00 345KV CKT 1	720	720	0.03435	105.1636	GEN334440 1-SABINE UNIT 4
FDNS	00NR	5	20SP	G15_042	FROM->TO	GRPRAR1-LNX3345.00 - HOLT.CO3 345.00 345KV CKT 1	720	720	0.03405	105.1558	AUDUBON - SHEYNNE 230KV CKT 1
FDNS	00NR	5	20SP	G15_042	FROM->TO	GRPRAR1-LNX3345.00 - HOLT.CO3 345.00 345KV CKT 1	720	720	0.03403	105.1516	GEN345765 H-1SIOUX 2 18.000
FDNS	00NR	5	20SP	G15_042	FROM->TO	GRPRAR1-LNX3345.00 - HOLT.CO3 345.00 345KV CKT 1	720	720	0.03394	105.1405	MT VERN - STORLA 115KV CKT 1
FDNS	00NR	5	20SP	G15_042	FROM->TO	GRPRAR1-LNX3345.00 - HOLT.CO3 345.00 345KV CKT 1	720	720	0.03403	105.1369	GEN337764 1-TRACTEBEL UNIT C1
FDNS	00NR	5	20SP	G15_042	FROM->TO	GRPRAR1-LNX3345.00 - HOLT.CO3 345.00 345KV CKT 1	720	720	0.03403	105.1369	GEN337765 1-TRACTEBEL UNIT C2
FDNS	00NR	5	20SP	G15_042	FROM->TO	GRPRAR1-LNX3345.00 - HOLT.CO3 345.00 345KV CKT 1	720	720	0.03415	105.1348	FRANKS - HUBEN 345KV CKT 1
FDNS	00NR	5	20SP	G15_042	FROM->TO	GRPRAR1-LNX3345.00 - HOLT.CO3 345.00 345KV CKT 1	720	720	0.03403	105.1341	GEN334431 1-SABINE UNIT 1
FDNS	00NR	5	20SP	G15_042	FROM->TO	GRPRAR1-LNX3345.00 - HOLT.CO3 345.00 345KV CKT 1	720	720	0.03403	105.134	GEN334432 1-SABINE UNIT 2
FDNS	00NR	5	25SP	G15_042	FROM->TO	GRPRAR1-LNX3345.00 - HOLT.CO3 345.00 345KV CKT 1	720	720	0.03435	105.1322	GEN344897 4-1LAB G4 20.000
FDNS	00NR	5	25SP	G15_042	FROM->TO	GRPRAR1-LNX3345.00 - HOLT.CO3 345.00 345KV CKT 1	720	720	0.03435	105.1308	GEN344894 1-1LAB G1 20.000
FDNS	00NR	5	25SP	G15_042	FROM->TO	GRPRAR1-LNX3345.00 - HOLT.CO3 345.00 345KV CKT 1	720	720	0.03435	105.1308	GEN344895 2-1LAB G2 20.000
FDNS	00NR	5	25SP	G15_042	FROM->TO	GRPRAR1-LNX3345.00 - HOLT.CO3 345.00 345KV CKT 1	720	720	0.03435	105.1307	GEN344896 3-1LAB G3 20.000
FDNS	00NR	5	20SP	G15_042	FROM->TO	GRPRAR1-LNX3345.00 - HOLT.CO3 345.00 345KV CKT 1	720	720	0.03403	105.1305	LELAND OLDS - STANTON 230KV CKT 1
FDNS	00NR	5	20SP	G15_042	FROM->TO	GRPRAR1-LNX3345.00 - HOLT.CO3 345.00 345KV CKT 1	720	720	0.03403	105.1305	LELAND OLDS - STANTON 230KV CKT 1
FDNS	00NR	5	20SP	G15_042	FROM->TO	GRPRAR1-LNX3345.00 - HOLT.CO3 345.00 345KV CKT 1	720	720	0.03699	105.13	BELDEN - HOSKINS 115KV CKT 1
FDNS	00NR	5	20SP	G15_042	FROM->TO	GRPRAR1-LNX3345.00 - HOLT.CO3 345.00 345KV CKT 1	720	720	0.03403	105.13	GEN336446 1-MICHOUD UNIT #2
FDNS	00NR	5	20SP	G15_042	FROM->TO	GRPRAR1-LNX3345.00 - HOLT.CO3 345.00 345KV CKT 1	720	720	0.03458	105.1296	P12:115:NPPD:WAPA1:CHADRON7:BOXBUTE7:BTB
FDNS	00NR	5	20SP	G15_042	FROM->TO	GRPRAR1-LNX3345.00 - HOLT.CO3 345.00 345KV CKT 1	720	720	0.03426	105.1201	OVEXFRMCCOVE
FDNS	00NR	5	20SP	G15_042	FROM->TO	GRPRAR1-LNX3345.00 - HOLT.CO3 345.00 345KV CKT 1	720	720	0.03403	105.109	GEN562912 1-G15053_3 0.6900
FDNS	00NR	5	25SP	G15_042	FROM->TO	GRPRAR1-LNX3345.00 - HOLT.CO3 345.00 345KV CKT 1	720	720	0.03437	105.1066	GLENBORO SOUTH - RUGBY 230KV CKT 1
FDNS	00NR	5	20SP	G15_042	FROM->TO	GRPRAR1-LNX3345.00 - HOLT.CO3 345.00 345KV CKT 1	720	720	0.03403	105.1051	GRAND GULF 500/22.0KV TRANSFORMER CKT 1
FDNS	00NR	5	20SP	G15_042	FROM->TO	GRPRAR1-LNX3345.00 - HOLT.CO3 345.00 345KV CKT 1	720	720	0.03475	105.1043	DENISON - SIOUX CITY 230KV CKT 1
FDNS	00NR	5	25SP	G15_042	FROM->TO	GRPRAR1-LNX3345.00 - HOLT.CO3 345.00 345KV CKT 1	720	720	0.03249	105.1035	FT THOMPSON - WESSINGTON 230KV CKT 1
FDNS	00NR	5	25SP	G15_042	FROM->TO	GRPRAR1-LNX3345.00 - HOLT.CO3 345.00 345KV CKT 1	720	720	0.03249	105.1035	FT THOMPSON - WESSINGTON 230KV CKT 1
FDNS	00NR	5	20SP	G15_042	FROM->TO	GRPRAR1-LNX3345.00 - HOLT.CO3 345.00 345KV CKT 1	720	720	0.03407	105.101	FERGSFL4 230.00 - WAHPETON 230KV CKT 1
FDNS	00NR	5	20SP	G15_042	FROM->TO	GRPRAR1-LNX3345.00 - HOLT.CO3 345.00 345KV CKT 1	720	720	0.03488	105.1004	PLYMOUTH - SIOUX CITY 161KV CKT 1
FDNS	00NR	5	20SP	G15_042	FROM->TO	GRPRAR1-LNX3345.00 - HOLT.CO3 345.00 345KV CKT 1	720	720	0.03488	105.1004	PLYMOUTH - SIOUX CITY 161KV CKT 1
FDNS	00NR	5	20SP	G15_042	FROM->TO	GRPRAR1-LNX3345.00 - HOLT.CO3 345.00 345KV CKT 1	720	720	0.03403	105.0983	GEN336242 1-1NMIL ST1 18.000
FDNS	00NR	5	20SP	G15_042	FROM->TO	GRPRAR1-LNX3345.00 - HOLT.CO3 345.00 345KV CKT 1	720	720	0.03403	105.0969	GEN501823 1-TECHE UNIT 3
FDNS	00NR	5	20SP	G15_042	FROM->TO	GRPRAR1-LNX3345.00 - HOLT.CO3 345.00 345KV CKT 1	720	720	0.03404	105.0934	FORMAN - OAKES 230KV CKT 1
FDNS	00NR	5	20SP	G15_042	FROM->TO	GRPRAR1-LNX3345.00 - HOLT.CO3 345.00 345KV CKT 1	720	720	0.03404	105.0908	ELLENDLMVP4 230.00 - OAKES 230KV CKT 1
FDNS	00NR	5	20SP	G15_042	FROM->TO	GRPRAR1-LNX3345.00 - HOLT.CO3 345.00 345KV CKT 1	720	720	0.03404	105.0908	ELLENDLMVP4 230.00 - OAKES 230KV CKT 1
FDNS	00NR	5	20SP	G15_042	FROM->TO	GRPRAR1-LNX3345.00 - HOLT.CO3 345.00 345KV CKT 1	720	720	0.03403	105.0864	PRAIRIE - WINGER 230KV CKT 1
FDNS	00NR	5	25SP	G15_042	FROM->TO	GRPRAR1-LNX3345.00 - HOLT.CO3 345.00 345KV CKT 1	720	720	0.03435	105.0834	GEN338388 1-1PLUM PT U1 23.000
FDNS	00NR	5	20SP	G15_042	FROM->TO	GRPRAR1-LNX3345.00 - HOLT.CO3 345.00 345KV CKT 1	720	720	0.03458	105.0812	CHADRON - DUNLAP 115KV CKT 1
FDNS	00NR	5	20SP	G15_042	FROM->TO	GRPRAR1-LNX3345.00 - HOLT.CO3 345.00 345KV CKT 1	720	720	0.03403	105.0804	GEN345756 H-1SIOUX 1 18.000
FDNS	00NR	5	25SP	G15_042	FROM->TO	GRPRAR1-LNX3345.00 - HOLT.CO3 345.00 345KV CKT 1	720	720	0.03435	105.0794	GEN345671 2-1RUSH G2 18.000
FDNS	00NR	5	20SP	G15_042	FROM->TO	GRPRAR1-LNX3345.00 - HOLT.CO3 345.00 345KV CKT 1	720	720	0.03485	105.0784	RELIANCE 4 230.00 - WITTEN 4 230.00 230KV CKT 1
FDNS	00NR	5	20SP	G15_042	FROM->TO	GRPRAR1-LNX3345.00 - HOLT.CO3 345.00 345KV CKT 1	720	720	0.03403	105.0771	J316_SUB 230.00 230/34.5KV TRANSFORMER CKT 1
FDNS	00NR	5	25SP	G15_042	FROM->TO	GRPRAR1-LNX3345.00 - HOLT.CO3 345.00 345KV CKT 1	720	720	0.03435	105.0754	GEN345670 1-1RUSH G1 18.000
FDNS	00NR	5	20SP	G15_042	FROM->TO	GRPRAR1-LNX3345.00 - HOLT.CO3 345.00 345KV CKT 1	720	720	0.03421	105.0704	HAMPTON CORNER - NORTH ROCHESTER 345KV CKT 1
FDNS	00NR	5	20SP	G15_042	FROM->TO	GRPRAR1-LNX3345.00 - HOLT.CO3 345.00 345KV CKT 1	720	720	0.03408	105.0692	HANKINSON - WAHPETON 230KV CKT 1

SOLUTION	GROUP	SCENARIO	SEASON	SOURCE	DIRECTION	MONITORED ELEMENT	RATEA (MVA)	RATEB(MVA)	TDF	TC%LOADING (% MVA)	CONTINGENCY
FDNS	00NR	5	20SP	G15_042	FROM->TO	GRPRAR1-LNX3345.00 - HOLT.CO3 345.00 345KV CKT 1	720	720	0.03407	105.0676	FERGSFL4 230.00 - GRE-SILVRLK4230.00 230KV CKT 1
FDNS	00NR	5	20SP	G15_042	FROM->TO	GRPRAR1-LNX3345.00 - HOLT.CO3 345.00 345KV CKT 1	720	720	0.03403	105.0634	GEN345832 1-1TS G1 13.800
FDNS	00NR	5	20SP	G15_042	FROM->TO	GRPRAR1-LNX3345.00 - HOLT.CO3 345.00 345KV CKT 1	720	720	0.03403	105.0631	GEN345841 2-1TS G2 13.800
FDNS	00NR	5	25SP	G15_042	FROM->TO	GRPRAR1-LNX3345.00 - HOLT.CO3 345.00 345KV CKT 1	720	720	0.03435	105.0622	GEN501812 1-RODEMACHER UNIT 2
FDNS	00NR	5	20SP	G15_042	FROM->TO	GRPRAR1-LNX3345.00 - HOLT.CO3 345.00 345KV CKT 1	720	720	0.03403	105.0613	GEN334031 1-FRONTIER UNIT 2
FDNS	00NR	5	20SP	G15_042	FROM->TO	GRPRAR1-LNX3345.00 - HOLT.CO3 345.00 345KV CKT 1	720	720	0.03403	105.0607	GEN334030 1-FRONTIER UNIT 1
FDNS	00NR	5	20SP	G15_042	FROM->TO	GRPRAR1-LNX3345.00 - HOLT.CO3 345.00 345KV CKT 1	720	720	0.03403	105.0577	JUDSON LARGE 115/15.0KV TRANSFORMER CKT 1
FDNS	00NR	5	20SP	G15_042	FROM->TO	GRPRAR1-LNX3345.00 - HOLT.CO3 345.00 345KV CKT 1	720	720	0.03403	105.0577	JUDSON LARGE 115/15.0KV TRANSFORMER CKT 1
FDNS	00NR	5	20SP	G15_042	FROM->TO	GRPRAR1-LNX3345.00 - HOLT.CO3 345.00 345KV CKT 1	720	720	0.03403	105.0566	GEN336944 1-REX BROWN
FDNS	00NR	5	20SP	G15_042	FROM->TO	GRPRAR1-LNX3345.00 - HOLT.CO3 345.00 345KV CKT 1	720	720	0.03403	105.0538	GEN501970 1-EVANGELINE UNIT 7
FDNS	00NR	5	20SP	G15_042	FROM->TO	GRPRAR1-LNX3345.00 - HOLT.CO3 345.00 345KV CKT 1	720	720	0.03403	105.0515	OKLAUN 345/24.0KV TRANSFORMER CKT 1
FDNS	00NR	5	20SP	G15_042	FROM->TO	GRPRAR1-LNX3345.00 - HOLT.CO3 345.00 345KV CKT 1	720	720	0.03502	105.0467	MARTIN - SHANNON 115KV CKT 1
FDNS	00NR	5	20SP	G15_042	FROM->TO	GRPRAR1-LNX3345.00 - HOLT.CO3 345.00 345KV CKT 1	720	720	0.03403	105.046	GEN335612 1-WILLOW GLENN UNIT#2
FDNS	00NR	5	20SP	G15_042	FROM->TO	GRPRAR1-LNX3345.00 - HOLT.CO3 345.00 345KV CKT 1	720	720	0.03403	105.0455	GEN635693 3-GREATER DES MOINES ENERGY CENTER ST
FDNS	00NR	5	20SP	G15_042	FROM->TO	GRPRAR1-LNX3345.00 - HOLT.CO3 345.00 345KV CKT 1	720	720	0.03429	105.0428	BYRON - NORTH ROCHESTER 345KV CKT 1
FDNS	00NR	5	25SP	G15_042	FROM->TO	GRPRAR1-LNX3345.00 - HOLT.CO3 345.00 345KV CKT 1	720	720	0.03435	105.0403	GEN336191 1-LITTLE GYPSY UNIT#3
FDNS	00NR	5	20SP	G15_042	FROM->TO	GRPRAR1-LNX3345.00 - HOLT.CO3 345.00 345KV CKT 1	720	720	0.03415	105.0393	GRE-CEDARMT3345.00 - HELENA 345KV CKT 1
FDNS	00NR	5	20SP	G15_042	FROM->TO	GRPRAR1-LNX3345.00 - HOLT.CO3 345.00 345KV CKT 1	720	720	0.03415	105.0393	GRE-CEDARMT3345.00 - HELENA 345KV CKT 2
FDNS	00NR	5	20SP	G15_042	FROM->TO	GRPRAR1-LNX3345.00 - HOLT.CO3 345.00 345KV CKT 1	720	720	0.03403	105.036	GEN337430 1-PERYVILLE UNIT #3
FDNS	00NR	5	20SP	G15_042	FROM->TO	GRPRAR1-LNX3345.00 - HOLT.CO3 345.00 345KV CKT 1	720	720	0.03403	105.0358	GEN337428 1-PERYVILLE UNIT #1
FDNS	00NR	5	20SP	G15_042	FROM->TO	GRPRAR1-LNX3345.00 - HOLT.CO3 345.00 345KV CKT 1	720	720	0.03403	105.0312	P13:230-345:NPPD:NUCOR-1
FDNS	00NR	5	20SP	G15_042	FROM->TO	GRPRAR1-LNX3345.00 - HOLT.CO3 345.00 345KV CKT 1	720	720	0.03403	105.0293	GEN562438 1-G13-032 0.6900
FDNS	00NR	5	20SP	G15_042	FROM->TO	GRPRAR1-LNX3345.00 - HOLT.CO3 345.00 345KV CKT 1	720	720	0.03333	105.0286	FT RANDAL - WHITE SWAN 115KV CKT 1
FDNS	00NR	5	20SP	G15_042	FROM->TO	GRPRAR1-LNX3345.00 - HOLT.CO3 345.00 345KV CKT 1	720	720	0.03485	105.0222	WITTEN 4 230.00 () 230/115/13.8KV TRANSFORMER CKT 1
FDNS	00NR	5	25SP	G15_042	FROM->TO	GRPRAR1-LNX3345.00 - HOLT.CO3 345.00 345KV CKT 1	720	720	0.03598	105.0181	GRIMES - LEHIGH 345KV CKT 1
FDNS	00NR	5	20SP	G15_042	FROM->TO	GRPRAR1-LNX3345.00 - HOLT.CO3 345.00 345KV CKT 1	720	720	0.03403	105.0175	GEN338443 1-PANDA S1
FDNS	00NR	5	20SP	G15_042	FROM->TO	GRPRAR1-LNX3345.00 - HOLT.CO3 345.00 345KV CKT 1	720	720	0.03403	105.0155	GEN336240 1-1NMIL CT1 18.000
FDNS	00NR	5	20SP	G15_042	FROM->TO	GRPRAR1-LNX3345.00 - HOLT.CO3 345.00 345KV CKT 1	720	720	0.03403	105.0155	GEN336241 1-1NMIL CT2 18.000
FDNS	00NR	5	20SP	G15_042	FROM->TO	GRPRAR1-LNX3345.00 - HOLT.CO3 345.00 345KV CKT 1	720	720	0.03403	105.0131	GEN501912 1-ACADIA UNIT CT1B
FDNS	00NR	5	20SP	G15_042	FROM->TO	GRPRAR1-LNX3345.00 - HOLT.CO3 345.00 345KV CKT 1	720	720	0.03403	105.0129	GEN501911 1-ACADIA UNIT CT1A
FDNS	00NR	5	20SP	G15_042	FROM->TO	GRPRAR1-LNX3345.00 - HOLT.CO3 345.00 345KV CKT 1	720	720	0.03403	105.0119	P12:345:GRDA:CHOUTEAU-SPORTSMANACRES
FDNS	00NR	5	25SP	G15_042	FROM->TO	GRPRAR1-LNX3345.00 - HOLT.CO3 345.00 345KV CKT 1	720	720	0.03495	105.0093	KOSSUTH 3 345.00 - WEBSTER 345KV CKT 1
FDNS	00NR	5	25SP	G15_042	FROM->TO	GRPRAR1-LNX3345.00 - HOLT.CO3 345.00 345KV CKT 1	720	720	0.03435	105	GEN629075 1-OTTUMWA GENERATOR FOR OTTUMWA UNIT NO 1
FDNS	00NR	5	25SP	G15_042	FROM->TO	GRPRAR1-LNX3345.00 - HOLT.CO3 345.00 345KV CKT 1	720	720	0.03435	104.9982	P12:115:UMZW:# 162 #: NEL IN ND. FAULT ON ML-NEL-MX-GA 115 KV
FDNS	00NR	5	25SP	G15_042	FROM->TO	GRPRAR1-LNX3345.00 - HOLT.CO3 345.00 345KV CKT 1	720	720	0.03435	104.9669	GEN335614 1-WILLOW GLENN UNIT#4
FDNS	00NR	5	25SP	G15_042	FROM->TO	GRPRAR1-LNX3345.00 - HOLT.CO3 345.00 345KV CKT 1	720	720	0.03435	104.9619	GEN336801 1-BAXTER WILSON UNIT #1
FDNS	00NR	5	25SP	G15_042	FROM->TO	GRPRAR1-LNX3345.00 - HOLT.CO3 345.00 345KV CKT 1	720	720	0.03435	104.9568	GEN334441 1-SABINE UNIT 5
FDNS	00NR	5	25SP	G15_042	FROM->TO	GRPRAR1-LNX3345.00 - HOLT.CO3 345.00 345KV CKT 1	720	720	0.03435	104.9517	GEN336464 1-MICHOUD UNIT #3
FDNS	00NR	5	25SP	G15_042	FROM->TO	GRPRAR1-LNX3345.00 - HOLT.CO3 345.00 345KV CKT 1	720	720	0.03423	104.9477	HESKETT - WISHEK 230KV CKT 1
FDNS	00NR	5	25SP	G15_042	FROM->TO	GRPRAR1-LNX3345.00 - HOLT.CO3 345.00 345KV CKT 1	720	720	0.03435	104.9451	GEN563222 1-G15088_3 0.6900
FDNS	00NR	5	25SP	G15_042	FROM->TO	GRPRAR1-LNX3345.00 - HOLT.CO3 345.00 345KV CKT 1	720	720	0.03435	104.9412	GEN335204 1-NELSON UNIT 4
FDNS	00NR	5	25SP	G15_042	FROM->TO	GRPRAR1-LNX3345.00 - HOLT.CO3 345.00 345KV CKT 1	720	720	0.03457	104.9278	NORTH LA CROSSE - NORTH ROCHESTER 345KV CKT 1
FDNS	00NR	5	20SP	G15_042	FROM->TO	GRPRAR1-LNX3345.00 - HOLT.CO3 345.00 345KV CKT 1	720	720	0.03403	104.9172	GEN563282 1-G15094_3 0.6900
FDNS	00NR	5	25SP	G15_042	FROM->TO	GRPRAR1-LNX3345.00 - HOLT.CO3 345.00 345KV CKT 1	720	720	0.03493	104.9092	ADAMS - MITCHLCO3 345.00 345KV CKT 1
FDNS	00NR	5	25SP	G15_042	FROM->TO	GRPRAR1-LNX3345.00 - HOLT.CO3 345.00 345KV CKT 1	720	720	0.03433	104.8618	CENTER - COYOTE 345KV CKT 1
FDNS	00NR	5	25SP	G15_042	FROM->TO	GRPRAR1-LNX3345.00 - HOLT.CO3 345.00 345KV CKT 1	720	720	0.03423	104.8616	MERRCRT4 230.00 - WISHEK 230KV CKT 1
FDNS	00NR	5	25SP	G15_042	FROM->TO	GRPRAR1-LNX3345.00 - HOLT.CO3 345.00 345KV CKT 1	720	720	0.03435	104.8521	GEN640009 1-COOPER NUCLEAR STATION
FDNS	00NR	5	25SP	G15_042	FROM->TO	GRPRAR1-LNX3345.00 - HOLT.CO3 345.00 345KV CKT 1	720	720	0.0367	104.8367	BLOOMFIELD - CREIGHTON 115KV CKT 1
FDNS	00NR	5	25SP	G15_042	FROM->TO	GRPRAR1-LNX3345.00 - HOLT.CO3 345.00 345KV CKT 1	720	720	0.03383	104.8277	MENNO JCT - TRIPP JCT 115KV CKT 1
FDNS	00NR	5	25SP	G15_042	FROM->TO	GRPRAR1-LNX3345.00 - HOLT.CO3 345.00 345KV CKT 1	720	720	0.03434	104.825	GARRISON - JAMES TOWN 230KV CKT 1
FDNS	00NR	5	25SP	G15_042	FROM->TO	GRPRAR1-LNX3345.00 - HOLT.CO3 345.00 345KV CKT 1	720	720	0.03412	104.8234	BROOKING COUNTY - BSSOUTH3 345.00 345KV CKT 1
FDNS	00NR	5	25SP	G15_042	FROM->TO	GRPRAR1-LNX3345.00 - HOLT.CO3 345.00 345KV CKT 1	720	720	0.03435	104.8223	GEN334433 1-SABINE UNIT 3
FDNS	00NR	5	25SP	G15_042	FROM->TO	GRPRAR1-LNX3345.00 - HOLT.CO3 345.00 345KV CKT 1	720	720	0.03435	104.8139	GEN635213 3-NEAL UNIT 3
FDNS	00NR	5	25SP	G15_042	FROM->TO	GRPRAR1-LNX3345.00 - HOLT.CO3 345.00 345KV CKT 1	720	720	0.0367	104.7951	BLOOMFIELD - GAVINS POINT 115KV CKT 1
FDNS	00NR	5	25SP	G15_042	FROM->TO	GRPRAR1-LNX3345.00 - HOLT.CO3 345.00 345KV CKT 1	720	720	0.03435	104.7895	GEN531447 1-HOLCOMB GENERATOR
FDNS	00NR	5	25SP	G15_042	FROM->TO	GRPRAR1-LNX3345.00 - HOLT.CO3 345.00 345KV CKT 1	720	720	0.03435	104.7595	GEN336222 1-LITTLE GYPSY UNIT#2
FDNS	00NR	5	25SP	G15_042	FROM->TO	GRPRAR1-LNX3345.00 - HOLT.CO3 345.00 345KV CKT 1	720	720	0.03442	104.7351	APPLEDORN 4 230.00 - WATERTOWN 230KV CKT 1
FDNS	00NR	5	25SP	G15_042	FROM->TO	GRPRAR1-LNX3345.00 - HOLT.CO3 345.00 345KV CKT 1	720	720	0.03442	104.7351	APPLEDORN 4 230.00 - WATERTOWN 230KV CKT 1
FDNS	00NR	5	25SP	G15_042	FROM->TO	GRPRAR1-LNX3345.00 - HOLT.CO3 345.00 345KV CKT 1	720	720	0.03448	104.7156	ARKANSAS NUCLEAR ONE - FT SMITH 500KV CKT 1
FDNS	00NR	5	25SP	G15_042	FROM->TO	GRPRAR1-LNX3345.00 - HOLT.CO3 345.00 345KV CKT 1	720	720	0.03448	104.7156	ARKANSAS NUCLEAR ONE - FT SMITH 500KV CKT 1
FDNS	00NR	5	25SP	G15_042	FROM->TO	GRPRAR1-LNX3345.00 - HOLT.CO3 345.00 345KV CKT 1	720	720	0.03425	104.7091	BSSOUTH3 345.00 - ELLENDLMVP3 345.00 345KV CKT 1
FDNS	00NR	5	25SP	G15_042	FROM->TO	GRPRAR1-LNX3345.00 - HOLT.CO3 345.00 345KV CKT 1	720	720	0.03425	104.7091	BSSOUTH3 345.00 - ELLENDLMVP3 345.00 345KV CKT 1
FDNS	00NR	5	25SP	G15_042	FROM->TO	GRPRAR1-LNX3345.00 - HOLT.CO3 345.00 345KV CKT 1	720	720	0.03435	104.7067	GEN336152 1-WATERFORD UNIT#2
FDNS	00NR	5	25SP	G15_042	FROM->TO	GRPRAR1-LNX3345.00 - HOLT.CO3 345.00 345KV CKT 1	720	720	0.03435	104.7066	GEN336151 1-WATERFORD UNIT#1
FDNS	00NR	5	25SP	G15_042	FROM->TO	GRPRAR1-LNX3345.00 - HOLT.CO3 345.00 345KV CKT 1	720	720	0.03473	104.7	ADAMS - PLEASANT VALLEY 345KV CKT 1
FDNS	00NR	5	25SP	G15_042	FROM->TO	GRPRAR1-LNX3345.00 - HOLT.CO3 345.00 345KV CKT 1	720	720	0.03383	104.6932	MENNO JCT - UTICA 115KV CKT 1
FDNS	00NR	5	25SP	G15_042	FROM->TO	GRPRAR1-LNX3345.00 - HOLT.CO3 345.00 345KV CKT 1	720	720	0.03425	104.6875	ELLENDLMVP3 345.00 (1) 345/230/34.5KV TRANSFORMER CKT 1
FDNS	00NR	5	25SP	G15_042	FROM->TO	GRPRAR1-LNX3345.00 - HOLT.CO3 345.00 345KV CKT 1	720	720	0.03442	104.6741	ALEXMRES3 345.00 - WAITE PARK 345KV CKT 1
FDNS	00NR	5	25SP	G15_042	FROM->TO	GRPRAR1-LNX3345.00 - HOLT.CO3 345.00 345KV CKT 1	720	720	0.03442	104.67	APPLEDORN 4 230.00 - GRANITE FALLS 230KV CKT 1
FDNS	00NR	5	25SP	G15_042	FROM->TO	GRPRAR1-LNX3345.00 - HOLT.CO3 345.00 345KV CKT 1	720	720	0.03442	104.67	APPLEDORN 4 230.00 - GRANITE FALLS 230KV CKT 1
FDNS	00NR	5	25SP	G15_042	FROM->TO	GRPRAR1-LNX3345.00 - HOLT.CO3 345.00 345KV CKT 1	720	720	0.03441	104.6652	BLAIR - GRANITE FALLS 230KV CKT 1
FDNS	00NR	5	25SP	G15_042	FROM->TO	GRPRAR1-LNX3345.00 - HOLT.CO3 345.00 345KV CKT 1	720	720	0.03441	104.6652	BLAIR - GRANITE FALLS 230KV CKT 1
FDNS	00NR	5	25SP	G15_042	FROM->TO	GRPRAR1-LNX3345.00 - HOLT.CO3 345.00 345KV CKT 1	720	720	0.03465	104.6489	NMA B3 345 345.00 - NORTH LA CROSSE 345KV CKT 1
FDNS	00NR	5	25SP	G15_042	FROM->TO	GRPRAR1-LNX3345.00 - HOLT.CO3 345.00 345KV CKT 1	720	720	0.03435	104.6441	GEN641089 2-ENERGY CENTER 2
FDNS	00NR	5	25SP	G15_042	FROM->TO	GRPRAR1-LNX3345.00 - HOLT.CO3 345.00 345KV CKT 1	720	720	0.03435	104.6354	GEN303007 1-1BC2 U2
FDNS	00NR	5	25SP	G15_042	FROM->TO	GRPRAR1-LNX3345.00 - HOLT.CO3 345.00 345KV CKT 1	720	720	0.03435	104.6301	GEN303006 1-1BC2 U1
FDNS	00NR	5	25SP	G15_042	FROM->TO	GRPRAR1-LNX3345.00 - HOLT.CO3 345.00 345KV CKT 1	720	720	0.03392	104.6291	WINNER - WITTEN 115KV CKT 1
FDNS	00NR	5	25SP	G15_042	FROM->TO	GRPRAR1-LNX3345.00 - HOLT.CO3 345.00 345KV CKT 1	720	720	0.03435	104.6168	P13:230:UMZW:# 2218 #: FP IN MT. LOSS OF TRANSFORMER (AT2).
FDNS	00NR	5	25SP	G15_042	FROM->TO	GRPRAR1-LNX3345.00 - HOLT.CO3 345.00 345KV CKT 1	720	720	0.03434	104.6064	FARGO - JAMES TOWN 230KV CKT 1

SOLUTION	GROUP	SCENARIO	SEASON	SOURCE	DIRECTION	MONITORED ELEMENT	RATEA (MVA)	RATEB(MVA)	TDF	TC%LOADING (% MVA)	CONTINGENCY
FDNS	00NR	5	25SP	G15_042	FROM->TO	GRPRAR1-LNX3345.00 - HOLT.CO3 345.00 345KV CKT 1	720	720	0.03435	104.6054	GEN532751 1-WOLF CREEK GENERATING STATION UNIT 1
FDNS	00NR	5	25SP	G15_042	FROM->TO	GRPRAR1-LNX3345.00 - HOLT.CO3 345.00 345KV CKT 1	720	720	0.03435	104.6028	GEN562921 1-G15054_2 0.6900
FDNS	00NR	5	25SP	G15_042	FROM->TO	GRPRAR1-LNX3345.00 - HOLT.CO3 345.00 345KV CKT 1	720	720	0.03383	104.5938	P12:115:UMZZ:# 237 #: MEN IN SD. MENNO JUNCTION IS A TAP (UJ-MEN-TP).
FDNS	00NR	5	25SP	G15_042	FROM->TO	GRPRAR1-LNX3345.00 - HOLT.CO3 345.00 345KV CKT 1	720	720	0.03462	104.5911	G15094_T 345.00 - LARAMIE RIVER 345KV CKT 1
FDNS	00NR	5	25SP	G15_042	FROM->TO	GRPRAR1-LNX3345.00 - HOLT.CO3 345.00 345KV CKT 1	720	720	0.03451	104.5908	NORTH ROCHESTER - PRAIRIE ISLAND 345KV CKT 1
FDNS	00NR	5	25SP	G15_042	FROM->TO	GRPRAR1-LNX3345.00 - HOLT.CO3 345.00 345KV CKT 1	720	720	0.03434	104.5844	FARGO - JAMES TOWN 230KV CKT 2
FDNS	00NR	5	25SP	G15_042	FROM->TO	GRPRAR1-LNX3345.00 - HOLT.CO3 345.00 345KV CKT 1	720	720	0.03435	104.5692	GEN303008 1-1BC2 U3
FDNS	00NR	5	25SP	G15_042	FROM->TO	GRPRAR1-LNX3345.00 - HOLT.CO3 345.00 345KV CKT 1	720	720	0.03434	104.5665	BISMARK - JAMES TOWN 230KV CKT 1
FDNS	00NR	5	25SP	G15_042	FROM->TO	GRPRAR1-LNX3345.00 - HOLT.CO3 345.00 345KV CKT 1	720	720	0.0348	104.5657	HUNTLEY3 345.00 - LEDYARD3 345.00 345KV CKT 1
FDNS	00NR	5	25SP	G15_042	FROM->TO	GRPRAR1-LNX3345.00 - HOLT.CO3 345.00 345KV CKT 1	720	720	0.03435	104.5637	GEN336170 1-GULF OXY U4
FDNS	00NR	5	25SP	G15_042	FROM->TO	GRPRAR1-LNX3345.00 - HOLT.CO3 345.00 345KV CKT 1	720	720	0.03435	104.5538	GEN562596 1-G14_059_3 0.6900
FDNS	00NR	5	25SP	G15_042	FROM->TO	GRPRAR1-LNX3345.00 - HOLT.CO3 345.00 345KV CKT 1	720	720	0.03434	104.5538	BISMARK - WEBER 230KV CKT 1
FDNS	00NR	5	20SP	G15_042	FROM->TO	GRPRAR1-LNX3345.00 - HOLT.CO3 345.00 345KV CKT 1	720	720	0.03403	104.5526	BASE CASE
FDNS	00NR	5	25SP	G15_042	FROM->TO	GRPRAR1-LNX3345.00 - HOLT.CO3 345.00 345KV CKT 1	720	720	0.04353	104.5419	RAUN - SIOUX CITY 345KV CKT 1
FDNS	00NR	5	25SP	G15_042	FROM->TO	GRPRAR1-LNX3345.00 - HOLT.CO3 345.00 345KV CKT 1	720	720	0.04353	104.5419	RAUN - SIOUX CITY 345KV CKT 1
FDNS	00NR	5	25SP	G15_042	FROM->TO	GRPRAR1-LNX3345.00 - HOLT.CO3 345.00 345KV CKT 1	720	720	0.03434	104.5406	JAMES TOWN - WEBER 230KV CKT 1
FDNS	00NR	5	25SP	G15_042	FROM->TO	GRPRAR1-LNX3345.00 - HOLT.CO3 345.00 345KV CKT 1	720	720	0.03718	104.5314	P13:230-345:NPPD:STEGALL3:KV3A
FDNS	00NR	5	25SP	G15_042	FROM->TO	GRPRAR1-LNX3345.00 - HOLT.CO3 345.00 345KV CKT 1	720	720	0.03718	104.5273	STEGALL (SGQ KV3A) 345/230/13.8KV TRANSFORMER CKT 1
FDNS	00NR	5	25SP	G15_042	FROM->TO	GRPRAR1-LNX3345.00 - HOLT.CO3 345.00 345KV CKT 1	720	720	0.03483	104.5195	SIDNEY - SIDNEY TRANSFORMER 230KV CKT 1
FDNS	00NR	5	25SP	G15_042	FROM->TO	GRPRAR1-LNX3345.00 - HOLT.CO3 345.00 345KV CKT 1	720	720	0.03483	104.5195	SIDNEY (SDQ KV2A) 345/230/13.8KV TRANSFORMER CKT 1
FDNS	00NR	5	25SP	G15_042	FROM->TO	GRPRAR1-LNX3345.00 - HOLT.CO3 345.00 345KV CKT 1	720	720	0.03483	104.5194	P13:230-345:NPPD:SIDNEY 3:KV2A
FDNS	00NR	5	25SP	G15_042	FROM->TO	GRPRAR1-LNX3345.00 - HOLT.CO3 345.00 345KV CKT 1	720	720	0.03718	104.5186	STEGALL - STEGALL TRANSFORMER 230KV CKT 1
FDNS	00NR	5	25SP	G15_042	FROM->TO	GRPRAR1-LNX3345.00 - HOLT.CO3 345.00 345KV CKT 1	720	720	0.03435	104.5175	BALTA - RAMSEY 230KV CKT 1
FDNS	00NR	5	25SP	G15_042	FROM->TO	GRPRAR1-LNX3345.00 - HOLT.CO3 345.00 345KV CKT 1	720	720	0.03391	104.5172	FT THOMPSON - HURON 230KV CKT 1
FDNS	00NR	5	25SP	G15_042	FROM->TO	GRPRAR1-LNX3345.00 - HOLT.CO3 345.00 345KV CKT 1	720	720	0.03391	104.5172	FT THOMPSON - HURON 230KV CKT 1
FDNS	00NR	5	25SP	G15_042	FROM->TO	GRPRAR1-LNX3345.00 - HOLT.CO3 345.00 345KV CKT 1	720	720	0.03391	104.5172	FT THOMPSON - HURON 230KV CKT 2
FDNS	00NR	5	25SP	G15_042	FROM->TO	GRPRAR1-LNX3345.00 - HOLT.CO3 345.00 345KV CKT 1	720	720	0.03391	104.5172	FT THOMPSON - HURON 230KV CKT 2
FDNS	00NR	5	25SP	G15_042	FROM->TO	GRPRAR1-LNX3345.00 - HOLT.CO3 345.00 345KV CKT 1	720	720	0.03472	104.517	HUNTLEY3 345.00 - LAKEFIELD 3 345KV CKT 1
FDNS	00NR	5	25SP	G15_042	FROM->TO	GRPRAR1-LNX3345.00 - HOLT.CO3 345.00 345KV CKT 1	720	720	0.03515	104.5163	P12:230:UMZW:# 733 #: FT IN SD. FT-BG2 LINE FAULT
FDNS	00NR	5	25SP	G15_042	FROM->TO	GRPRAR1-LNX3345.00 - HOLT.CO3 345.00 345KV CKT 1	720	720	0.03515	104.5158	FT THOMPSON - LOWERBRULE 4230.00 230KV CKT 1
FDNS	00NR	5	25SP	G15_042	FROM->TO	GRPRAR1-LNX3345.00 - HOLT.CO3 345.00 345KV CKT 1	720	720	0.03515	104.5158	FT THOMPSON - LOWERBRULE 4230.00 230KV CKT 1
FDNS	00NR	5	25SP	G15_042	FROM->TO	GRPRAR1-LNX3345.00 - HOLT.CO3 345.00 345KV CKT 1	720	720	0.03515	104.5109	LOWERBRULE 4230.00 - RELIANCE 4 230.00 230KV CKT 1
FDNS	00NR	5	25SP	G15_042	FROM->TO	GRPRAR1-LNX3345.00 - HOLT.CO3 345.00 345KV CKT 1	720	720	0.03435	104.4943	GEN501811 1-RODEMACHER UNIT 1
FDNS	00NR	5	25SP	G15_042	FROM->TO	GRPRAR1-LNX3345.00 - HOLT.CO3 345.00 345KV CKT 1	720	720	0.03485	104.4934	P13:115-230:TSGT:SIDNEY-KV1A
FDNS	00NR	5	25SP	G15_042	FROM->TO	GRPRAR1-LNX3345.00 - HOLT.CO3 345.00 345KV CKT 1	720	720	0.03435	104.4749	GEN659118 1-LARAMIE RIVER UNIT1
FDNS	00NR	5	25SP	G15_042	FROM->TO	GRPRAR1-LNX3345.00 - HOLT.CO3 345.00 345KV CKT 1	720	720	0.03436	104.4653	FORMAN - HANKINSON 230KV CKT 1
FDNS	00NR	5	25SP	G15_042	FROM->TO	GRPRAR1-LNX3345.00 - HOLT.CO3 345.00 345KV CKT 1	720	720	0.03435	104.4529	LAWRENCE ENERGY CENTER UNIT 5 - LAWRENCE HILL 230KV CKT 1
FDNS	00NR	5	25SP	G15_042	FROM->TO	GRPRAR1-LNX3345.00 - HOLT.CO3 345.00 345KV CKT 1	720	720	0.03435	104.4529	LAWRENCE ENERGY CENTER UNIT 5 230/24.0KV TRANSFORMER CKT 1
FDNS	00NR	5	25SP	G15_042	FROM->TO	GRPRAR1-LNX3345.00 - HOLT.CO3 345.00 345KV CKT 1	720	720	0.03435	104.4492	GEN334070 1-LEWIS CREEK 1
FDNS	00NR	5	25SP	G15_042	FROM->TO	GRPRAR1-LNX3345.00 - HOLT.CO3 345.00 345KV CKT 1	720	720	0.03435	104.4492	GEN334071 1-LEWIS CREEK 2
FDNS	00NR	5	25SP	G15_042	FROM->TO	GRPRAR1-LNX3345.00 - HOLT.CO3 345.00 345KV CKT 1	720	720	0.03435	104.4489	PRAIRIE ISLAND 345/20.0KV TRANSFORMER CKT 1
FDNS	00NR	5	25SP	G15_042	FROM->TO	GRPRAR1-LNX3345.00 - HOLT.CO3 345.00 345KV CKT 1	720	720	0.03435	104.4477	PRAIRIE ISLAND 345/20.0KV TRANSFORMER CKT 2
FDNS	00NR	5	25SP	G15_042	FROM->TO	GRPRAR1-LNX3345.00 - HOLT.CO3 345.00 345KV CKT 1	720	720	0.03392	104.4451	GREGORY - WINNER 115KV CKT 1
FDNS	00NR	5	25SP	G15_042	FROM->TO	GRPRAR1-LNX3345.00 - HOLT.CO3 345.00 345KV CKT 1	720	720	0.03435	104.4295	TATANKA 230/34.5KV TRANSFORMER CKT 1
FDNS	00NR	5	25SP	G15_042	FROM->TO	GRPRAR1-LNX3345.00 - HOLT.CO3 345.00 345KV CKT 1	720	720	0.03435	104.4288	SEMINOLE 138/20.9KV TRANSFORMER CKT 1
FDNS	00NR	5	25SP	G15_042	FROM->TO	GRPRAR1-LNX3345.00 - HOLT.CO3 345.00 345KV CKT 1	720	720	0.03392	104.4227	P12:115:UMZW:# 172 #: WI IN SD.
FDNS	00NR	5	25SP	G15_042	FROM->TO	GRPRAR1-LNX3345.00 - HOLT.CO3 345.00 345KV CKT 1	720	720	0.03435	104.4132	GEN337766 1-TRACTEBEL UNIT S1
FDNS	00NR	5	25SP	G15_042	FROM->TO	GRPRAR1-LNX3345.00 - HOLT.CO3 345.00 345KV CKT 1	720	720	0.03435	104.4063	GEN645012 2-NEBRASKA CITY 2
FDNS	00NR	5	25SP	G15_042	FROM->TO	GRPRAR1-LNX3345.00 - HOLT.CO3 345.00 345KV CKT 1	720	720	0.03435	104.4003	GEN337757 1-DUKE HOTSPRINGS STG1
FDNS	00NR	5	25SP	G15_042	FROM->TO	GRPRAR1-LNX3345.00 - HOLT.CO3 345.00 345KV CKT 1	720	720	0.03434	104.3922	ELM CREEK - MONTICELLO 345KV CKT 1
FDNS	00NR	5	25SP	G15_042	FROM->TO	GRPRAR1-LNX3345.00 - HOLT.CO3 345.00 345KV CKT 1	720	720	0.03435	104.3786	GEN501910 1-ACADIA UNIT ST1
FDNS	00NR	5	25SP	G15_042	FROM->TO	GRPRAR1-LNX3345.00 - HOLT.CO3 345.00 345KV CKT 1	720	720	0.03436	104.3757	AUDUBON - SHEYNNE 230KV CKT 1
FDNS	00NR	5	25SP	G15_042	FROM->TO	GRPRAR1-LNX3345.00 - HOLT.CO3 345.00 345KV CKT 1	720	720	0.03426	104.3727	MT VERN - STORLA 115KV CKT 1
FDNS	00NR	5	25SP	G15_042	FROM->TO	GRPRAR1-LNX3345.00 - HOLT.CO3 345.00 345KV CKT 1	720	720	0.0344	104.3722	HANKINSON - WAHPETON 230KV CKT 1
FDNS	00NR	5	25SP	G15_042	FROM->TO	GRPRAR1-LNX3345.00 - HOLT.CO3 345.00 345KV CKT 1	720	720	0.03435	104.3709	GEN645011 1-NEBRASKA CITY 1
FDNS	00NR	5	25SP	G15_042	FROM->TO	GRPRAR1-LNX3345.00 - HOLT.CO3 345.00 345KV CKT 1	720	720	0.0349	104.3685	P12:115:NPPD:WAPA1:CHADRON7:BOXBUTE7:BTB
FDNS	00NR	5	25SP	G15_042	FROM->TO	GRPRAR1-LNX3345.00 - HOLT.CO3 345.00 345KV CKT 1	720	720	0.03436	104.3624	ELLENDLMVP4 230.00 - OAKES 230KV CKT 1
FDNS	00NR	5	25SP	G15_042	FROM->TO	GRPRAR1-LNX3345.00 - HOLT.CO3 345.00 345KV CKT 1	720	720	0.03436	104.3624	ELLENDLMVP4 230.00 - OAKES 230KV CKT 1
FDNS	00NR	5	25SP	G15_042	FROM->TO	GRPRAR1-LNX3345.00 - HOLT.CO3 345.00 345KV CKT 1	720	720	0.03436	104.3623	FORMAN - OAKES 230KV CKT 1
FDNS	00NR	5	25SP	G15_042	FROM->TO	GRPRAR1-LNX3345.00 - HOLT.CO3 345.00 345KV CKT 1	720	720	0.03458	104.3612	OVEXFRMCCOVE
FDNS	00NR	5	25SP	G15_042	FROM->TO	GRPRAR1-LNX3345.00 - HOLT.CO3 345.00 345KV CKT 1	720	720	0.03435	104.3558	GEN336221 1-LITTLE GYPSY UNIT#1
FDNS	00NR	5	25SP	G15_042	FROM->TO	GRPRAR1-LNX3345.00 - HOLT.CO3 345.00 345KV CKT 1	720	720	0.03731	104.3477	BELDEN - HOSKINS 115KV CKT 1
FDNS	00NR	5	25SP	G15_042	FROM->TO	GRPRAR1-LNX3345.00 - HOLT.CO3 345.00 345KV CKT 1	720	720	0.03515	104.3462	RELIANCE 4 230.00 - WITTEN 4 230.00 230KV CKT 1
FDNS	00NR	5	25SP	G15_042	FROM->TO	GRPRAR1-LNX3345.00 - HOLT.CO3 345.00 345KV CKT 1	720	720	0.03439	104.3435	FERGSFL4 230.00 - WAHPETON 230KV CKT 1
FDNS	00NR	5	25SP	G15_042	FROM->TO	GRPRAR1-LNX3345.00 - HOLT.CO3 345.00 345KV CKT 1	720	720	0.03435	104.3421	PRAIRIE - WINGER 230KV CKT 1
FDNS	00NR	5	25SP	G15_042	FROM->TO	GRPRAR1-LNX3345.00 - HOLT.CO3 345.00 345KV CKT 1	720	720	0.03435	104.3393	GEN532651 1-JEFFREY ENERGY CENTER UNIT 1
FDNS	00NR	5	25SP	G15_042	FROM->TO	GRPRAR1-LNX3345.00 - HOLT.CO3 345.00 345KV CKT 1	720	720	0.03447	104.3385	FRANKS - HUBEN 345KV CKT 1
FDNS	00NR	5	25SP	G15_042	FROM->TO	GRPRAR1-LNX3345.00 - HOLT.CO3 345.00 345KV CKT 1	720	720	0.03435	104.3351	GEN562912 1-G15053_3 0.6900
FDNS	00NR	5	25SP	G15_042	FROM->TO	GRPRAR1-LNX3345.00 - HOLT.CO3 345.00 345KV CKT 1	720	720	0.03435	104.3339	GEN532652 1-JEFFREY ENERGY CENTER UNIT 2
FDNS	00NR	5	25SP	G15_042	FROM->TO	GRPRAR1-LNX3345.00 - HOLT.CO3 345.00 345KV CKT 1	720	720	0.03435	104.3338	GEN532653 1-JEFFREY ENERGY CENTER UNIT 3
FDNS	00NR	5	25SP	G15_042	FROM->TO	GRPRAR1-LNX3345.00 - HOLT.CO3 345.00 345KV CKT 1	720	720	0.03435	104.3235	J316_SUB 230.00 230/34.5KV TRANSFORMER CKT 1
FDNS	00NR	5	25SP	G15_042	FROM->TO	GRPRAR1-LNX3345.00 - HOLT.CO3 345.00 345KV CKT 1	720	720	0.03435	104.3226	GEN334431 1-SABINE UNIT 1
FDNS	00NR	5	25SP	G15_042	FROM->TO	GRPRAR1-LNX3345.00 - HOLT.CO3 345.00 345KV CKT 1	720	720	0.03435	104.3226	GEN334432 1-SABINE UNIT 2
FDNS	00NR	5	25SP	G15_042	FROM->TO	GRPRAR1-LNX3345.00 - HOLT.CO3 345.00 345KV CKT 1	720	720	0.03523	104.3212	NOBLES - SPLIT ROCK 345KV CKT 1
FDNS	00NR	5	25SP	G15_042	FROM->TO	GRPRAR1-LNX3345.00 - HOLT.CO3 345.00 345KV CKT 1	720	720	0.03435	104.3194	GEN345765 H-1SIOUX 2 18.000
FDNS	00NR	5	25SP	G15_042	FROM->TO	GRPRAR1-LNX3345.00 - HOLT.CO3 345.00 345KV CKT 1	720	720	0.03435	104.3185	GEN337764 1-TRACTEBEL UNIT C1
FDNS	00NR	5	25SP	G15_042	FROM->TO	GRPRAR1-LNX3345.00 - HOLT.CO3 345.00 345KV CKT 1	720	720	0.03435	104.3185	GEN337765 1-TRACTEBEL UNIT C2
FDNS	00NR	5	25SP	G15_042	FROM->TO	GRPRAR1-LNX3345.00 - HOLT.CO3 345.00 345KV CKT 1	720	720	0.03435	104.3183	GEN336446 1-MICHOUD UNIT #2
FDNS	00NR	5	25SP	G15_042	FROM->TO	GRPRAR1-LNX3345.00 - HOLT.CO3 345.00 345KV CKT 1	720	720	0.03435	104.3175	GRAND GULF 500/22.0KV TRANSFORMER CKT 1

SOLUTION	GROUP	SCENARIO	SEASON	SOURCE	DIRECTION	MONITORED ELEMENT	RATEA (MVA)	RATEB(MVA)	TDF	TC%LOADING (% MVA)	CONTINGENCY
FDNS	00NR	5	25SP	G15_042	FROM->TO	GRPRAR1-LNX3345.00 - HOLT.CO3 345.00 345KV CKT 1	720	720	0.0349	104.3159	CHADRON - DUNLAP 115KV CKT 1
FDNS	00NR	5	25SP	G15_042	FROM->TO	GRPRAR1-LNX3345.00 - HOLT.CO3 345.00 345KV CKT 1	720	720	0.0352	104.3096	PLYMOUTH - SIOUX CITY 161KV CKT 1
FDNS	00NR	5	25SP	G15_042	FROM->TO	GRPRAR1-LNX3345.00 - HOLT.CO3 345.00 345KV CKT 1	720	720	0.0352	104.3096	PLYMOUTH - SIOUX CITY 161KV CKT 1
FDNS	00NR	5	25SP	G15_042	FROM->TO	GRPRAR1-LNX3345.00 - HOLT.CO3 345.00 345KV CKT 1	720	720	0.03515	104.3074	WITTEN 4 230.00 () 230/115/13.8KV TRANSFORMER CKT 1
FDNS	00NR	5	25SP	G15_042	FROM->TO	GRPRAR1-LNX3345.00 - HOLT.CO3 345.00 345KV CKT 1	720	720	0.03506	104.3061	DENISON - SIOUX CITY 230KV CKT 1
FDNS	00NR	5	17SP	G15_042	FROM->TO	GRPRAR1-LNX3345.00 - HOLT.CO3 345.00 345KV CKT 1	720	720	0.03579	104.3052	GEN659125 1-COVEY
FDNS	00NR	5	25SP	G15_042	FROM->TO	GRPRAR1-LNX3345.00 - HOLT.CO3 345.00 345KV CKT 1	720	720	0.03435	104.2932	BALTA - MCHENRY 230KV CKT 1
FDNS	00NR	5	25SP	G15_042	FROM->TO	GRPRAR1-LNX3345.00 - HOLT.CO3 345.00 345KV CKT 1	720	720	0.03439	104.2915	FERGSFL4 230.00 - GRE-SILVRLK4230.00 230KV CKT 1
FDNS	00NR	5	25SP	G15_042	FROM->TO	GRPRAR1-LNX3345.00 - HOLT.CO3 345.00 345KV CKT 1	720	720	0.03533	104.2862	MARTIN - SHANNON 115KV CKT 1
FDNS	00NR	5	25SP	G15_042	FROM->TO	GRPRAR1-LNX3345.00 - HOLT.CO3 345.00 345KV CKT 1	720	720	0.03435	104.2805	TOLK STATION EAST 230/24.0KV TRANSFORMER CKT 1
FDNS	00NR	5	25SP	G15_042	FROM->TO	GRPRAR1-LNX3345.00 - HOLT.CO3 345.00 345KV CKT 1	720	720	0.03435	104.2802	GEN501823 1-TECHE UNIT 3
FDNS	00NR	5	25SP	G15_042	FROM->TO	GRPRAR1-LNX3345.00 - HOLT.CO3 345.00 345KV CKT 1	720	720	0.03435	104.2796	GEN336242 1-1NMIL ST1 18.000
FDNS	00NR	5	25SP	G15_042	FROM->TO	GRPRAR1-LNX3345.00 - HOLT.CO3 345.00 345KV CKT 1	720	720	0.03435	104.279	GEN636641 1-LOUISA UNIT 1
FDNS	00NR	5	25SP	G15_042	FROM->TO	GRPRAR1-LNX3345.00 - HOLT.CO3 345.00 345KV CKT 1	720	720	0.03447	104.2778	GRE-CEDARMT3345.00 - HELENA 345KV CKT 1
FDNS	00NR	5	25SP	G15_042	FROM->TO	GRPRAR1-LNX3345.00 - HOLT.CO3 345.00 345KV CKT 1	720	720	0.03447	104.2778	GRE-CEDARMT3345.00 - HELENA 345KV CKT 2
FDNS	00NR	5	25SP	G15_042	FROM->TO	GRPRAR1-LNX3345.00 - HOLT.CO3 345.00 345KV CKT 1	720	720	0.03671	104.2681	OAHE - PHILIP TAP 230KV CKT 1
FDNS	00NR	5	25SP	G15_042	FROM->TO	GRPRAR1-LNX3345.00 - HOLT.CO3 345.00 345KV CKT 1	720	720	0.03452	104.2674	HAMPTON CORNER - NORTH ROCHESTER 345KV CKT 1
FDNS	00NR	5	25SP	G15_042	FROM->TO	GRPRAR1-LNX3345.00 - HOLT.CO3 345.00 345KV CKT 1	720	720	0.03435	104.262	JUDSON LARGE 115/15.0KV TRANSFORMER CKT 1
FDNS	00NR	5	25SP	G15_042	FROM->TO	GRPRAR1-LNX3345.00 - HOLT.CO3 345.00 345KV CKT 1	720	720	0.03435	104.262	JUDSON LARGE 115/15.0KV TRANSFORMER CKT 1
FDNS	00NR	5	25SP	G15_042	FROM->TO	GRPRAR1-LNX3345.00 - HOLT.CO3 345.00 345KV CKT 1	720	720	0.03435	104.2557	OKLAUN 345/24.0KV TRANSFORMER CKT 1
FDNS	00NR	5	25SP	G15_042	FROM->TO	GRPRAR1-LNX3345.00 - HOLT.CO3 345.00 345KV CKT 1	720	720	0.03435	104.2541	GEN562438 1-G13-032 0.6900
FDNS	00NR	5	25SP	G15_042	FROM->TO	GRPRAR1-LNX3345.00 - HOLT.CO3 345.00 345KV CKT 1	720	720	0.03435	104.2522	GEN334030 1-FRONTIER UNIT 1
FDNS	00NR	5	25SP	G15_042	FROM->TO	GRPRAR1-LNX3345.00 - HOLT.CO3 345.00 345KV CKT 1	720	720	0.03435	104.2519	GEN334031 1-FRONTIER UNIT 2
FDNS	00NR	5	25SP	G15_042	FROM->TO	GRPRAR1-LNX3345.00 - HOLT.CO3 345.00 345KV CKT 1	720	720	0.03435	104.2515	GEN345756 H-1SIOUX 1 18.000
FDNS	00NR	5	25SP	G15_042	FROM->TO	GRPRAR1-LNX3345.00 - HOLT.CO3 345.00 345KV CKT 1	720	720	0.03445	104.2488	GRE-CEDARMT3345.00 - LYON COUNTY 345KV CKT 2
FDNS	00NR	5	25SP	G15_042	FROM->TO	GRPRAR1-LNX3345.00 - HOLT.CO3 345.00 345KV CKT 1	720	720	0.03458	104.2485	CHADRON - WAYSIDE 115KV CKT 1
FDNS	00NR	5	25SP	G15_042	FROM->TO	GRPRAR1-LNX3345.00 - HOLT.CO3 345.00 345KV CKT 1	720	720	0.03458	104.2485	P13:115-230:NPPD:WAYSIDE4:T1
FDNS	00NR	5	25SP	G15_042	FROM->TO	GRPRAR1-LNX3345.00 - HOLT.CO3 345.00 345KV CKT 1	720	720	0.03435	104.2466	GEN338443 1-PANDA S1
FDNS	00NR	5	25SP	G15_042	FROM->TO	GRPRAR1-LNX3345.00 - HOLT.CO3 345.00 345KV CKT 1	720	720	0.03435	104.2466	P13:230-345:NPPD:NUCOR-1
FDNS	00NR	5	25SP	G15_042	FROM->TO	GRPRAR1-LNX3345.00 - HOLT.CO3 345.00 345KV CKT 1	720	720	0.03458	104.2452	WAYSIDE (WAYSIDE T1) 230/115/13.8KV TRANSFORMER CKT 1
FDNS	00NR	5	25SP	G15_042	FROM->TO	GRPRAR1-LNX3345.00 - HOLT.CO3 345.00 345KV CKT 1	720	720	0.03365	104.243	FT RANDAL - WHITE SWAN 115KV CKT 1
FDNS	00NR	5	25SP	G15_042	FROM->TO	GRPRAR1-LNX3345.00 - HOLT.CO3 345.00 345KV CKT 1	720	720	0.03435	104.2421	GEN336944 1-REX BROWN
FDNS	00NR	5	25SP	G15_042	FROM->TO	GRPRAR1-LNX3345.00 - HOLT.CO3 345.00 345KV CKT 1	720	720	0.03435	104.2406	GEN345832 1-1TS G1 13.800
FDNS	00NR	5	25SP	G15_042	FROM->TO	GRPRAR1-LNX3345.00 - HOLT.CO3 345.00 345KV CKT 1	720	720	0.03435	104.2403	GEN345841 2-1TS G2 13.800
FDNS	00NR	5	25SP	G15_042	FROM->TO	GRPRAR1-LNX3345.00 - HOLT.CO3 345.00 345KV CKT 1	720	720	0.03435	104.2397	GEN501970 1-EVANGELINE UNIT 7
FDNS	00NR	5	25SP	G15_042	FROM->TO	GRPRAR1-LNX3345.00 - HOLT.CO3 345.00 345KV CKT 1	720	720	0.03435	104.2325	GEN335612 1-WILLOW GLENN UNIT#2
FDNS	00NR	5	20SP	G15_042	FROM->TO	GRPRAR1-LNX3345.00 - HOLT.CO3 345.00 345KV CKT 1	720	720	0.03422	104.1598	BUCKNER7 345.00 - SPEARVILLE 345KV CKT 1
FDNS	00NR	5	20SP	G15_042	FROM->TO	GRPRAR1-LNX3345.00 - HOLT.CO3 345.00 345KV CKT 1	720	720	0.03422	104.1598	BUCKNER7 345.00 - SPEARVILLE 345KV CKT 1
FDNS	00NR	5	25SP	G15_042	FROM->TO	GRPRAR1-LNX3345.00 - HOLT.CO3 345.00 345KV CKT 1	720	720	0.03435	104.1388	GEN563282 1-G15094_3 0.6900
FDNS	00NR	5	20SP	G15_042	FROM->TO	GRPRAR1-LNX3345.00 - HOLT.CO3 345.00 345KV CKT 1	720	720	0.03419	104.1177	FT THOMPSON - OAHE 230KV CKT 1
FDNS	00NR	5	20SP	G15_042	FROM->TO	GRPRAR1-LNX3345.00 - HOLT.CO3 345.00 345KV CKT 1	720	720	0.03419	104.1177	FT THOMPSON - OAHE 230KV CKT 1
FDNS	00NR	5	20SP	G15_042	FROM->TO	GRPRAR1-LNX3345.00 - HOLT.CO3 345.00 345KV CKT 1	720	720	0.03419	104.1177	FT THOMPSON - OAHE 230KV CKT 2
FDNS	00NR	5	20SP	G15_042	FROM->TO	GRPRAR1-LNX3345.00 - HOLT.CO3 345.00 345KV CKT 1	720	720	0.03419	104.1177	FT THOMPSON - OAHE 230KV CKT 2
FDNS	00NR	5	20SP	G15_042	FROM->TO	GRPRAR1-LNX3345.00 - HOLT.CO3 345.00 345KV CKT 1	720	720	0.03689	104.1054	MINGO - RED WILLOW 345KV CKT 1
FDNS	00NR	5	20SP	G15_042	FROM->TO	GRPRAR1-LNX3345.00 - HOLT.CO3 345.00 345KV CKT 1	720	720	0.03689	104.1054	MINGO - RED WILLOW 345KV CKT 1
FDNS	00NR	5	20SP	G15_042	FROM->TO	GRPRAR1-LNX3345.00 - HOLT.CO3 345.00 345KV CKT 1	720	720	0.03419	104.0911	FT THOMPSON - OAHE 230KV CKT 3
FDNS	00NR	5	20SP	G15_042	FROM->TO	GRPRAR1-LNX3345.00 - HOLT.CO3 345.00 345KV CKT 1	720	720	0.03419	104.0911	FT THOMPSON - OAHE 230KV CKT 3
FDNS	00NR	5	20SP	G15_042	FROM->TO	GRPRAR1-LNX3345.00 - HOLT.CO3 345.00 345KV CKT 1	720	720	0.03419	104.0911	FT THOMPSON - OAHE 230KV CKT 4
FDNS	00NR	5	20SP	G15_042	FROM->TO	GRPRAR1-LNX3345.00 - HOLT.CO3 345.00 345KV CKT 1	720	720	0.03419	104.0911	FT THOMPSON - OAHE 230KV CKT 4
FDNS	00NR	5	20SP	G15_042	FROM->TO	GRPRAR1-LNX3345.00 - HOLT.CO3 345.00 345KV CKT 1	720	720	0.03478	104.063	AXTELL - POST ROCK 345KV CKT 1
FDNS	00NR	5	20SP	G15_042	FROM->TO	GRPRAR1-LNX3345.00 - HOLT.CO3 345.00 345KV CKT 1	720	720	0.03345	104.0513	NELIGH - PETERSBRG.N7115.00 115KV CKT 1
FDNS	00NR	5	20SP	G15_042	FROM->TO	GRPRAR1-LNX3345.00 - HOLT.CO3 345.00 345KV CKT 1	720	720	0.03415	104.0485	G11_051T 345.00 - WOODWARD DISTRICT EHV 345KV CKT 1
FDNS	00NR	5	20SP	G15_042	FROM->TO	GRPRAR1-LNX3345.00 - HOLT.CO3 345.00 345KV CKT 1	720	720	0.03387	104.0474	BISMARK - L3 HAWDON 230KV CKT 1
FDNS	00NR	5	20SP	G15_042	FROM->TO	GRPRAR1-LNX3345.00 - HOLT.CO3 345.00 345KV CKT 1	720	720	0.0343	104.0434	FALLOW 3 345.00 - GRIMES 345KV CKT 1
FDNS	00NR	5	20SP	G15_042	FROM->TO	GRPRAR1-LNX3345.00 - HOLT.CO3 345.00 345KV CKT 1	720	720	0.03403	104.0383	GEN659147 1-PIONEER 1G13.800
FDNS	00NR	5	20SP	G15_042	FROM->TO	GRPRAR1-LNX3345.00 - HOLT.CO3 345.00 345KV CKT 1	720	720	0.03403	104.0383	GEN659158 2-PIONEER G213.800
FDNS	00NR	5	20SP	G15_042	FROM->TO	GRPRAR1-LNX3345.00 - HOLT.CO3 345.00 345KV CKT 1	720	720	0.03403	104.0383	GEN659159 3-PIONEER G313.800
FDNS	00NR	5	20SP	G15_042	FROM->TO	GRPRAR1-LNX3345.00 - HOLT.CO3 345.00 345KV CKT 1	720	720	0.03403	104.0378	GEN659148 1-LONESMCRK 1G13.800
FDNS	00NR	5	20SP	G15_042	FROM->TO	GRPRAR1-LNX3345.00 - HOLT.CO3 345.00 345KV CKT 1	720	720	0.03403	104.0378	GEN659156 2-LONESMCRK 2G13.800
FDNS	00NR	5	20SP	G15_042	FROM->TO	GRPRAR1-LNX3345.00 - HOLT.CO3 345.00 345KV CKT 1	720	720	0.03403	104.0378	GEN659157 3-LONESMCRK 3G13.800
FDNS	00NR	5	20SP	G15_042	FROM->TO	GRPRAR1-LNX3345.00 - HOLT.CO3 345.00 345KV CKT 1	720	720	0.03403	104.0331	GEN657964 1-ASH2GEN9 0.5750
FDNS	00NR	5	20SP	G15_042	FROM->TO	GRPRAR1-LNX3345.00 - HOLT.CO3 345.00 345KV CKT 1	720	720	0.03403	104.0322	GEN672367 1-MERIDIAN GENERATOR 1 GT1
FDNS	00NR	5	20SP	G15_042	FROM->TO	GRPRAR1-LNX3345.00 - HOLT.CO3 345.00 345KV CKT 1	720	720	0.03403	104.0322	GEN672368 2-MERIDIAN GENERATOR 2 GT2
FDNS	00NR	5	20SP	G15_042	FROM->TO	GRPRAR1-LNX3345.00 - HOLT.CO3 345.00 345KV CKT 1	720	720	0.03403	104.0314	GEN672358 1-CHAPLN1W 0.6900
FDNS	00NR	5	20SP	G15_042	FROM->TO	GRPRAR1-LNX3345.00 - HOLT.CO3 345.00 345KV CKT 1	720	720	0.03399	104.0109	G15-005T 345.00 - MULLNCR7 345.00 345KV CKT 1
FDNS	00NR	5	20SP	G15_042	FROM->TO	GRPRAR1-LNX3345.00 - HOLT.CO3 345.00 345KV CKT 1	720	720	0.03345	104.0107	ALBION - PETERSBURG 115KV CKT 1
FDNS	00NR	5	20SP	G15_042	FROM->TO	GRPRAR1-LNX3345.00 - HOLT.CO3 345.00 345KV CKT 1	720	720	0.03403	104.0087	GEN672349 3-CORY COGEN GENERATOR 3 ST
FDNS	00NR	5	20SP	G15_042	FROM->TO	GRPRAR1-LNX3345.00 - HOLT.CO3 345.00 345KV CKT 1	720	720	0.03403	104.0063	GEN672350 1-NIPAWIN GENERATOR 1
FDNS	00NR	5	20SP	G15_042	FROM->TO	GRPRAR1-LNX3345.00 - HOLT.CO3 345.00 345KV CKT 1	720	720	0.03403	104.0063	GEN672351 2-NIPAWIN GENERATOR 2
FDNS	00NR	5	20SP	G15_042	FROM->TO	GRPRAR1-LNX3345.00 - HOLT.CO3 345.00 345KV CKT 1	720	720	0.03403	104.0063	GEN672352 3-NIPAWIN GENERATOR 3
FDNS	00NR	5	20SP	G15_042	FROM->TO	GRPRAR1-LNX3345.00 - HOLT.CO3 345.00 345KV CKT 1	720	720	0.03419	104.0059	POST ROCK (POSTROCK T1) 345/230/13.8KV TRANSFORMER CKT 1
FDNS	00NR	5	20SP	G15_042	FROM->TO	GRPRAR1-LNX3345.00 - HOLT.CO3 345.00 345KV CKT 1	720	720	0.03403	104.0009	GEN600012 2-BLACK DOG GEN 2
FDNSLock	00NR	5	20SP	G15_042	FROM->TO	GRPRAR1-LNX3345.00 - HOLT.CO3 345.00 345KV CKT 1	720	720	0.03378	103.9949	WATERTOWN (WT2 KU1A) 345/230/13.8KV TRANSFORMER CKT 1
FDNS	00NR	5	20SP	G15_042	FROM->TO	GRPRAR1-LNX3345.00 - HOLT.CO3 345.00 345KV CKT 1	720	720	0.03287	103.9857	COOPER - MOORE 345KV CKT 1
FDNS	00NR	5	20SP	G15_042	FROM->TO	GRPRAR1-LNX3345.00 - HOLT.CO3 345.00 345KV CKT 1	720	720	0.03562	103.9853	G15061_T 345.00 - SETAB 345KV CKT 1
FDNS	00NR	5	20SP	G15_042	FROM->TO	GRPRAR1-LNX3345.00 - HOLT.CO3 345.00 345KV CKT 1	720	720	0.03403	103.9823	GEN590010 1-ERCOT EQUIVALENCE
FDNS	00NR	5	20SP	G15_042	FROM->TO	GRPRAR1-LNX3345.00 - HOLT.CO3 345.00 345KV CKT 1	720	720	0.03553	103.9812	BATTLE CREEK - COUNTY LINE 115KV CKT 1
FDNS	00NR	5	20SP	G15_042	FROM->TO	GRPRAR1-LNX3345.00 - HOLT.CO3 345.00 345KV CKT 1	720	720	0.03345	103.9703	P12:115:NPPD:1168B:ALBION 7:PETERSBRG.N7:BTB
FDNS	00NR	5	20SP	G15_042	FROM->TO	GRPRAR1-LNX3345.00 - HOLT.CO3 345.00 345KV CKT 1	720	720	0.03399	103.9698	G15-005T 345.00 - SIBLEY 345KV CKT 1

SOLUTION	GROUP	SCENARIO	SEASON	SOURCE	DIRECTION	MONITORED ELEMENT	RATEA (MVA)	RATEB(MVA)	TDF	TC%LOADING (% MVA)	CONTINGENCY
FDNS	00NR	5	20SP	G15_042	FROM->TO	GRPRAR1-LNX3345.00 - HOLT.CO3 345.00 345KV CKT 1	720	720	0.03403	103.9684	GEN652548 5-FT RANDAL
FDNS	00NR	5	20SP	G15_042	FROM->TO	GRPRAR1-LNX3345.00 - HOLT.CO3 345.00 345KV CKT 1	720	720	0.03403	103.9684	GEN652549 7-FT RANDAL
FDNS	00NR	5	20SP	G15_042	FROM->TO	GRPRAR1-LNX3345.00 - HOLT.CO3 345.00 345KV CKT 1	720	720	0.03345	103.9669	PETERSBRG.N7115.00 - PETERSBURG 115KV CKT Z1
FDNS	00NR	5	20SP	G15_042	FROM->TO	GRPRAR1-LNX3345.00 - HOLT.CO3 345.00 345KV CKT 1	720	720	0.03403	103.9638	GEN652547 3-FT RANDAL
FDNS	00NR	5	20SP	G15_042	FROM->TO	GRPRAR1-LNX3345.00 - HOLT.CO3 345.00 345KV CKT 1	720	720	0.03403	103.9623	EMERY 161/18.0KV TRANSFORMER CKT 1
FDNS	00NR	5	20SP	G15_042	FROM->TO	GRPRAR1-LNX3345.00 - HOLT.CO3 345.00 345KV CKT 1	720	720	0.03222	103.9621	COLUMEAST - NW68TH & HOLDREGE 345KV CKT 1
FDNS	00NR	5	20SP	G15_042	FROM->TO	GRPRAR1-LNX3345.00 - HOLT.CO3 345.00 345KV CKT 1	720	720	0.03222	103.9621	COLUMEAST - NW68TH & HOLDREGE 345KV CKT 1
FDNS	00NR	5	20SP	G15_042	FROM->TO	GRPRAR1-LNX3345.00 - HOLT.CO3 345.00 345KV CKT 1	720	720	0.03403	103.962	GEN652546 1-FT RANDAL
FDNS	00NR	5	20SP	G15_042	FROM->TO	GRPRAR1-LNX3345.00 - HOLT.CO3 345.00 345KV CKT 1	720	720	0.03403	103.9558	GEN590011 2-ERCOT EQUIVALENCE
FDNS	00NR	5	20SP	G15_042	FROM->TO	GRPRAR1-LNX3345.00 - HOLT.CO3 345.00 345KV CKT 1	720	720	0.03403	103.9469	GEN300003 1-THOMAS HILL UNIT 3
FDNS	00NR	5	20SP	G15_042	FROM->TO	GRPRAR1-LNX3345.00 - HOLT.CO3 345.00 345KV CKT 1	720	720	0.03407	103.943	DRAYTON - LETELLIER 230KV CKT 1
FDNS	00NR	5	20SP	G15_042	FROM->TO	GRPRAR1-LNX3345.00 - HOLT.CO3 345.00 345KV CKT 1	720	720	0.0341	103.9419	ANTELOP-LNX3345.00 - BRDLAND-LNX3345.00 345KV CKT 1
FDNS	00NR	5	20SP	G15_042	FROM->TO	GRPRAR1-LNX3345.00 - HOLT.CO3 345.00 345KV CKT 1	720	720	0.0343	103.9411	LARAMIE RIVER - STEGALL 345KV CKT 1
FDNS	00NR	5	20SP	G15_042	FROM->TO	GRPRAR1-LNX3345.00 - HOLT.CO3 345.00 345KV CKT 1	720	720	0.03403	103.9386	GEN600046 1-MECST
FDNS	00NR	5	20SP	G15_042	FROM->TO	GRPRAR1-LNX3345.00 - HOLT.CO3 345.00 345KV CKT 1	720	720	0.03181	103.9371	FT THOMPSON (FT2 KU1A) 345/230/13.8KV TRANSFORMER CKT 1
FDNS	00NR	5	20SP	G15_042	FROM->TO	GRPRAR1-LNX3345.00 - HOLT.CO3 345.00 345KV CKT 1	720	720	0.03403	103.9353	GEN659290 1-EDGECOL
FDNS	00NR	5	20SP	G15_042	FROM->TO	GRPRAR1-LNX3345.00 - HOLT.CO3 345.00 345KV CKT 1	720	720	0.03403	103.9353	GEN672339 16-QE 16G 13.800
FDNS	00NR	5	20SP	G15_042	FROM->TO	GRPRAR1-LNX3345.00 - HOLT.CO3 345.00 345KV CKT 1	720	720	0.0318	103.9346	FT THOMPSON (FT2 KU1B) 345/230/13.8KV TRANSFORMER CKT 1
FDNS	00NR	5	20SP	G15_042	FROM->TO	GRPRAR1-LNX3345.00 - HOLT.CO3 345.00 345KV CKT 1	720	720	0.03403	103.9214	GEN672393 2-NBECST2G 13.800
FDNS	00NR	5	20SP	G15_042	FROM->TO	GRPRAR1-LNX3345.00 - HOLT.CO3 345.00 345KV CKT 1	720	720	0.03403	103.9196	GEN600050 1-FEP
FDNS	00NR	5	20SP	G15_042	FROM->TO	GRPRAR1-LNX3345.00 - HOLT.CO3 345.00 345KV CKT 1	720	720	0.03553	103.9177	ANTELOPE 7115.00 - COUNTY LINE 115KV CKT 1
FDNS	00NR	5	20SP	G15_042	FROM->TO	GRPRAR1-LNX3345.00 - HOLT.CO3 345.00 345KV CKT 1	720	720	0.03403	103.9077	GEN620324 3-HOOT LAKE 3 GEN
FDNS	00NR	5	20SP	G15_042	FROM->TO	GRPRAR1-LNX3345.00 - HOLT.CO3 345.00 345KV CKT 1	720	720	0.03453	103.9057	THEDFRD3 345.00 (THEDFORDT2) 345/115/13.8KV TRANSFORMER CKT 1
FDNS	00NR	5	20SP	G15_042	FROM->TO	GRPRAR1-LNX3345.00 - HOLT.CO3 345.00 345KV CKT 1	720	720	0.03403	103.9001	GEN672342 3-QUEEN ELIZABETH GENERATOR 3
FDNS	00NR	5	20SP	G15_042	FROM->TO	GRPRAR1-LNX3345.00 - HOLT.CO3 345.00 345KV CKT 1	720	720	0.03212	103.8986	COLUMEAST - SHELL CREEK 345KV CKT 1
FDNS	00NR	5	20SP	G15_042	FROM->TO	GRPRAR1-LNX3345.00 - HOLT.CO3 345.00 345KV CKT 1	720	720	0.03403	103.8909	GEN652410 3-FT PECK
FDNS	00NR	5	20SP	G15_042	FROM->TO	GRPRAR1-LNX3345.00 - HOLT.CO3 345.00 345KV CKT 1	720	720	0.03403	103.8857	LADISH 115/13.2KV TRANSFORMER CKT 1
FDNS	00NR	5	20SP	G15_042	FROM->TO	GRPRAR1-LNX3345.00 - HOLT.CO3 345.00 345KV CKT 1	720	720	0.03403	103.8856	GEN600047 1-MECCT1
FDNS	00NR	5	20SP	G15_042	FROM->TO	GRPRAR1-LNX3345.00 - HOLT.CO3 345.00 345KV CKT 1	720	720	0.03403	103.8682	GEN660003 3-HURON WEST PARK
FDNS	00NR	5	20SP	G15_042	FROM->TO	GRPRAR1-LNX3345.00 - HOLT.CO3 345.00 345KV CKT 1	720	720	0.03403	103.858	GEN660001 2-ABERDEEN SIEBRECHT
FDNS	00NR	5	20SP	G15_042	FROM->TO	GRPRAR1-LNX3345.00 - HOLT.CO3 345.00 345KV CKT 1	720	720	0.03403	103.8368	GEN600063 1-COLVILLE GEN 1
FDNS	00NR	5	20SP	G15_042	FROM->TO	GRPRAR1-LNX3345.00 - HOLT.CO3 345.00 345KV CKT 1	720	720	0.03403	103.8368	GEN600064 2-COLVILLE GEN 2
FDNS	00NR	5	20SP	G15_042	FROM->TO	GRPRAR1-LNX3345.00 - HOLT.CO3 345.00 345KV CKT 1	720	720	0.03403	103.8282	GEN652414 4-FT PECK
FDNS	00NR	5	20SP	G15_042	FROM->TO	GRPRAR1-LNX3345.00 - HOLT.CO3 345.00 345KV CKT 1	720	720	0.03403	103.8282	GEN652415 5-FT PECK
FDNS	00NR	5	20SP	G15_042	FROM->TO	GRPRAR1-LNX3345.00 - HOLT.CO3 345.00 345KV CKT 1	720	720	0.03403	103.8238	GEN681522 3-GENOA 3
FDNS	00NR	5	20SP	G15_042	FROM->TO	GRPRAR1-LNX3345.00 - HOLT.CO3 345.00 345KV CKT 1	720	720	0.03403	103.8212	GEN300007 1-NEW MADRID UNIT 2
FDNS	00NR	5	20SP	G15_042	FROM->TO	GRPRAR1-LNX3345.00 - HOLT.CO3 345.00 345KV CKT 1	720	720	0.03403	103.8205	GEN652345 W-G07_023IS_2 0.6900
FDNS	00NR	5	20SP	G15_042	FROM->TO	GRPRAR1-LNX3345.00 - HOLT.CO3 345.00 345KV CKT 1	720	720	0.03557	103.8192	GERALD GENTLEMAN STATION - RED WILLOW 345KV CKT 1
FDNS	00NR	5	20SP	G15_042	FROM->TO	GRPRAR1-LNX3345.00 - HOLT.CO3 345.00 345KV CKT 1	720	720	0.03403	103.8161	GEN300006 1-NEW MADRID UNIT 1
FDNS	00NR	5	20SP	G15_042	FROM->TO	GRPRAR1-LNX3345.00 - HOLT.CO3 345.00 345KV CKT 1	720	720	0.03403	103.8126	GEN 11104 1-J262_GEN 0.6000
FDNS	00NR	5	20SP	G15_042	FROM->TO	GRPRAR1-LNX3345.00 - HOLT.CO3 345.00 345KV CKT 1	720	720	0.03403	103.8126	GEN 11108 1-J263_GEN 0.6000
FDNS	00NR	5	20SP	G15_042	FROM->TO	GRPRAR1-LNX3345.00 - HOLT.CO3 345.00 345KV CKT 1	720	720	0.03403	103.8104	GEN600043 7-BLUE LAKE5
FDNS	00NR	5	20SP	G15_042	FROM->TO	GRPRAR1-LNX3345.00 - HOLT.CO3 345.00 345KV CKT 1	720	720	0.03403	103.8104	GEN600044 8-BLUE LAKE6
FDNS	00NR	5	20SP	G15_042	FROM->TO	GRPRAR1-LNX3345.00 - HOLT.CO3 345.00 345KV CKT 1	720	720	0.03403	103.7881	G830_SUB 115.00 - GRE-MCHENRY7115.00 115KV CKT 1
FDNS	00NR	5	20SP	G15_042	FROM->TO	GRPRAR1-LNX3345.00 - HOLT.CO3 345.00 345KV CKT 1	720	720	0.03403	103.7856	GEN600014 4-BLACK DOG GEN 4
FDNS	00NR	5	20SP	G15_042	FROM->TO	GRPRAR1-LNX3345.00 - HOLT.CO3 345.00 345KV CKT 1	720	720	0.03403	103.7818	GEN600065 7-HIGH BRIDGE
FDNS	00NR	5	20SP	G15_042	FROM->TO	GRPRAR1-LNX3345.00 - HOLT.CO3 345.00 345KV CKT 1	720	720	0.03403	103.7818	GEN600066 8-HIGH BRIDGE
FDNS	00NR	5	20SP	G15_042	FROM->TO	GRPRAR1-LNX3345.00 - HOLT.CO3 345.00 345KV CKT 1	720	720	0.03403	103.7789	GEN600011 5-BLACK DOG GEN 1
FDNS	00NR	5	20SP	G15_042	FROM->TO	GRPRAR1-LNX3345.00 - HOLT.CO3 345.00 345KV CKT 1	720	720	0.03403	103.7764	G830_SUB 115.00 115/34.5KV TRANSFORMER CKT 1
FDNS	00NR	5	25SP	G15_042	FROM->TO	GRPRAR1-LNX3345.00 - HOLT.CO3 345.00 345KV CKT 1	720	720	0.03435	103.7732	BASE CASE
FDNS	00NR	5	20SP	G15_042	FROM->TO	GRPRAR1-LNX3345.00 - HOLT.CO3 345.00 345KV CKT 1	720	720	0.03403	103.7686	GEN600071 10-RIVER SIDE
FDNS	00NR	5	20SP	G15_042	FROM->TO	GRPRAR1-LNX3345.00 - HOLT.CO3 345.00 345KV CKT 1	720	720	0.03403	103.7685	GEN600070 9-RIVER SIDE
FDNS	00NR	5	20SP	G15_042	FROM->TO	GRPRAR1-LNX3345.00 - HOLT.CO3 345.00 345KV CKT 1	720	720	0.03403	103.7657	LANSING WEST 161/22.0KV TRANSFORMER CKT 1
FDNS	00NR	5	20SP	G15_042	FROM->TO	GRPRAR1-LNX3345.00 - HOLT.CO3 345.00 345KV CKT 1	720	720	0.03403	103.7572	GEN600007 7-RIVERSIDE GEN 7
FDNS	00NR	5	20SP	G15_042	FROM->TO	GRPRAR1-LNX3345.00 - HOLT.CO3 345.00 345KV CKT 1	720	720	0.03403	103.7442	GEN600017 C-LS POWER CT
FDNS	00NR	5	20SP	G15_042	FROM->TO	GRPRAR1-LNX3345.00 - HOLT.CO3 345.00 345KV CKT 1	720	720	0.03403	103.7387	GEN600045 4-ANSON
FDNS	00NR	5	20SP	G15_042	FROM->TO	GRPRAR1-LNX3345.00 - HOLT.CO3 345.00 345KV CKT 1	720	720	0.03415	103.7123	G11_051T 345.00 - TATONGA7 345.00 345KV CKT 1
FDNS	00NR	5	20SP	G15_042	FROM->TO	GRPRAR1-LNX3345.00 - HOLT.CO3 345.00 345KV CKT 1	720	720	0.0341	103.7064	BRDLAND-LNX3345.00 - HURON 345KV CKT Z
FDNS	00NR	5	20SP	G15_042	FROM->TO	GRPRAR1-LNX3345.00 - HOLT.CO3 345.00 345KV CKT 1	720	720	0.0341	103.7055	HURON (BD KU2A) 345/230/13.8KV TRANSFORMER CKT 1
FDNS	00NR	5	20SP	G15_042	FROM->TO	GRPRAR1-LNX3345.00 - HOLT.CO3 345.00 345KV CKT 1	720	720	0.0341	103.7055	HURON (BD KU2A) 345/230/13.8KV TRANSFORMER CKT 1
FDNS	00NR	5	20SP	G15_042	FROM->TO	GRPRAR1-LNX3345.00 - HOLT.CO3 345.00 345KV CKT 1	720	720	0.0341	103.7039	BROADLAND - HURON 230KV CKT 1
FDNS	00NR	5	20SP	G15_042	FROM->TO	GRPRAR1-LNX3345.00 - HOLT.CO3 345.00 345KV CKT 1	720	720	0.0341	103.7019	P12:345:UMZB:# 103 #: BD IN SD. LOSS OF LINE
FDNS	00NR	5	20SP	G15_042	FROM->TO	GRPRAR1-LNX3345.00 - HOLT.CO3 345.00 345KV CKT 1	720	720	0.0341	103.7011	P12:345:UMZB:# 102 #: AVS BD IN ND. AVS BRD LR
FDNS	00NR	5	20SP	G15_042	FROM->TO	GRPRAR1-LNX3345.00 - HOLT.CO3 345.00 345KV CKT 1	720	720	0.0354	103.6974	P12:115:NPPD:1163B:NELIGH 7:NORFK.N7:BTB
FDNS	00NR	5	20SP	G15_042	FROM->TO	GRPRAR1-LNX3345.00 - HOLT.CO3 345.00 345KV CKT 1	720	720	0.03403	103.6764	GEN659273 2-GROTON SYNC COND
FDNS	00NR	5	20SP	G15_042	FROM->TO	GRPRAR1-LNX3345.00 - HOLT.CO3 345.00 345KV CKT 1	720	720	0.03403	103.6764	GEN659294 1-WILTONCOL9
FDNS	00NR	5	20SP	G15_042	FROM->TO	GRPRAR1-LNX3345.00 - HOLT.CO3 345.00 345KV CKT 1	720	720	0.03403	103.6755	GEN615052 1-CAMBRIDGE GENERATING STATION
FDNS	00NR	5	20SP	G15_042	FROM->TO	GRPRAR1-LNX3345.00 - HOLT.CO3 345.00 345KV CKT 1	720	720	0.03403	103.6606	GEN615021 1-GRE-ER 14G 16.000
FDNS	00NR	5	20SP	G15_042	FROM->TO	GRPRAR1-LNX3345.00 - HOLT.CO3 345.00 345KV CKT 1	720	720	0.0341	103.6519	ANTELOP-LNX3345.00 - ANTELOPE VALLEY 345KV CKT Z
FDNS	00NR	5	20SP	G15_042	FROM->TO	GRPRAR1-LNX3345.00 - HOLT.CO3 345.00 345KV CKT 1	720	720	0.03387	103.6188	OAHE - SULLEY BUTTE 230KV CKT 1
FDNS	00NR	5	20SP	G15_042	FROM->TO	GRPRAR1-LNX3345.00 - HOLT.CO3 345.00 345KV CKT 1	720	720	0.03403	103.6162	GEN 10648 1-G830_GEN 0.6900
FDNS	00NR	5	20SP	G15_042	FROM->TO	GRPRAR1-LNX3345.00 - HOLT.CO3 345.00 345KV CKT 1	720	720	0.03403	103.6149	GEN659192 6-LYNN
FDNS	00NR	5	20SP	G15_042	FROM->TO	GRPRAR1-LNX3345.00 - HOLT.CO3 345.00 345KV CKT 1	720	720	0.03403	103.6138	GEN659162 4-RED WLCK
FDNS	00NR	5	20SP	G15_042	FROM->TO	GRPRAR1-LNX3345.00 - HOLT.CO3 345.00 345KV CKT 1	720	720	0.03403	103.6138	GEN659163 5-BLACK WDCK
FDNS	00NR	5	20SP	G15_042	FROM->TO	GRPRAR1-LNX3345.00 - HOLT.CO3 345.00 345KV CKT 1	720	720	0.03403	103.6135	GEN659031 1-G12_014IS_4 0.6900
FDNS	00NR	5	20SP	G15_042	FROM->TO	GRPRAR1-LNX3345.00 - HOLT.CO3 345.00 345KV CKT 1	720	720	0.03403	103.5815	GEN660016 1-B_H WIND 0.7000
FDNS	00NR	5	20SP	G15_042	FROM->TO	GRPRAR1-LNX3345.00 - HOLT.CO3 345.00 345KV CKT 1	720	720	0.03403	103.5789	GEN615015 1-GRE-SPRITWDG13.200
FDNS	00NR	5	20SP	G15_042	FROM->TO	GRPRAR1-LNX3345.00 - HOLT.CO3 345.00 345KV CKT 1	720	720	0.03344	103.5699	HOSKINS - RAUN 345KV CKT 1
FDNS	00NR	5	20SP	G15_042	FROM->TO	GRPRAR1-LNX3345.00 - HOLT.CO3 345.00 345KV CKT 1	720	720	0.03344	103.5699	HOSKINS - RAUN 345KV CKT 1

SOLUTION	GROUP	SCENARIO	SEASON	SOURCE	DIRECTION	MONITORED ELEMENT	RATEA (MVA)	RATEB(MVA)	TDF	TC%LOADING (% MVA)	CONTINGENCY
FDNS	00NR	5	20SP	G15_042	FROM->TO	GRPRAR1-LNX3345.00 - HOLT.CO3 345.00 345KV CKT 1	720	720	0.03234	103.5656	HIGHLND 3 345.00 - OBRIEN 3 345.00 345KV CKT 1
FDNS	00NR	5	20SP	G15_042	FROM->TO	GRPRAR1-LNX3345.00 - HOLT.CO3 345.00 345KV CKT 1	720	720	0.03403	103.4937	BISONMP4 230.00 - SQUARE BUTTE 230KV CKT 1
FDNS	00NR	5	20SP	G15_042	FROM->TO	GRPRAR1-LNX3345.00 - HOLT.CO3 345.00 345KV CKT 1	720	720	0.03415	103.4848	MATHWSN7 345.00 - TATONGA7 345.00 345KV CKT 1
FDNS	00NR	5	20SP	G15_042	FROM->TO	GRPRAR1-LNX3345.00 - HOLT.CO3 345.00 345KV CKT 1	720	720	0.03403	103.4645	GEN600067 9-HIGH BRIDGE
FDNS	00NR	5	20SP	G15_042	FROM->TO	GRPRAR1-LNX3345.00 - HOLT.CO3 345.00 345KV CKT 1	720	720	0.03387	103.4578	SULLEY BUTTE - SULLYBT-LNX3230.00 230KV CKT Z
FDNS	00NR	5	20SP	G15_042	FROM->TO	GRPRAR1-LNX3345.00 - HOLT.CO3 345.00 345KV CKT 1	720	720	0.03387	103.4573	SULLYBT-LNX3230.00 - WHITLOK 230KV CKT 1
FDNS	00NR	5	20SP	G15_042	FROM->TO	GRPRAR1-LNX3345.00 - HOLT.CO3 345.00 345KV CKT 1	720	720	0.03403	103.4392	GEN672303 3-BOUNDARY DAM GENERATOR 3
FDNS	00NR	5	20SP	G15_042	FROM->TO	GRPRAR1-LNX3345.00 - HOLT.CO3 345.00 345KV CKT 1	720	720	0.03403	103.4392	GEN672304 4-BOUNDARY DAM GENERATOR 4
FDNS	00NR	5	20SP	G15_042	FROM->TO	GRPRAR1-LNX3345.00 - HOLT.CO3 345.00 345KV CKT 1	720	720	0.03403	103.4392	GEN672305 5-BOUNDARY DAM GENERATOR 5
FDNS	00NR	5	20SP	G15_042	FROM->TO	GRPRAR1-LNX3345.00 - HOLT.CO3 345.00 345KV CKT 1	720	720	0.03403	103.4194	GEN659353 1-DEERCREK CTG18.000
FDNS	00NR	5	20SP	G15_042	FROM->TO	GRPRAR1-LNX3345.00 - HOLT.CO3 345.00 345KV CKT 1	720	720	0.03403	103.4186	GEN659354 1-DEERCREK STG18.000
FDNS	00NR	5	20SP	G15_042	FROM->TO	GRPRAR1-LNX3345.00 - HOLT.CO3 345.00 345KV CKT 1	720	720	0.03387	103.4101	P12:230:UMZB:# 114 #: SB IN SD. SB-WK-GH
FDNS	00NR	5	20SP	G15_042	FROM->TO	GRPRAR1-LNX3345.00 - HOLT.CO3 345.00 345KV CKT 1	720	720	0.03387	103.4101	P12:230:UMZB:# 117 #: WK IN SD. SB-WK-GH
FDNS	00NR	5	20SP	G15_042	FROM->TO	GRPRAR1-LNX3345.00 - HOLT.CO3 345.00 345KV CKT 1	720	720	0.03403	103.3868	GEN672392 1-NBECGT1G 18.000
FDNS	00NR	5	20SP	G15_042	FROM->TO	GRPRAR1-LNX3345.00 - HOLT.CO3 345.00 345KV CKT 1	720	720	0.03387	103.3575	GLENHAM - WHITLOK 230KV CKT 1
FDNS	00NR	5	25SP	G15_042	FROM->TO	GRPRAR1-LNX3345.00 - HOLT.CO3 345.00 345KV CKT 1	720	720	0.03451	103.3523	FT THOMPSON - OAHE 230KV CKT 1
FDNS	00NR	5	25SP	G15_042	FROM->TO	GRPRAR1-LNX3345.00 - HOLT.CO3 345.00 345KV CKT 1	720	720	0.03451	103.3523	FT THOMPSON - OAHE 230KV CKT 1
FDNS	00NR	5	25SP	G15_042	FROM->TO	GRPRAR1-LNX3345.00 - HOLT.CO3 345.00 345KV CKT 1	720	720	0.03451	103.3523	FT THOMPSON - OAHE 230KV CKT 2
FDNS	00NR	5	25SP	G15_042	FROM->TO	GRPRAR1-LNX3345.00 - HOLT.CO3 345.00 345KV CKT 1	720	720	0.03451	103.3523	FT THOMPSON - OAHE 230KV CKT 2
FDNS	00NR	5	25SP	G15_042	FROM->TO	GRPRAR1-LNX3345.00 - HOLT.CO3 345.00 345KV CKT 1	720	720	0.03325	103.342	COOPER - MOORE 345KV CKT 1
FDNS	00NR	5	17SP	G15_042	FROM->TO	GRPRAR1-LNX3345.00 - HOLT.CO3 345.00 345KV CKT 1	720	720	0.03579	103.3379	GEN615001 1-COAL CREEK
FDNS	00NR	5	25SP	G15_042	FROM->TO	GRPRAR1-LNX3345.00 - HOLT.CO3 345.00 345KV CKT 1	720	720	0.03451	103.3256	FT THOMPSON - OAHE 230KV CKT 3
FDNS	00NR	5	25SP	G15_042	FROM->TO	GRPRAR1-LNX3345.00 - HOLT.CO3 345.00 345KV CKT 1	720	720	0.03451	103.3256	FT THOMPSON - OAHE 230KV CKT 3
FDNS	00NR	5	25SP	G15_042	FROM->TO	GRPRAR1-LNX3345.00 - HOLT.CO3 345.00 345KV CKT 1	720	720	0.03451	103.3256	FT THOMPSON - OAHE 230KV CKT 4
FDNS	00NR	5	25SP	G15_042	FROM->TO	GRPRAR1-LNX3345.00 - HOLT.CO3 345.00 345KV CKT 1	720	720	0.03451	103.3256	FT THOMPSON - OAHE 230KV CKT 4
FDNS	00NR	5	25SP	G15_042	FROM->TO	GRPRAR1-LNX3345.00 - HOLT.CO3 345.00 345KV CKT 1	720	720	0.03285	103.2906	P13:345:UMZW:# 260 #: SC2 IN IA. LOSS OF TRANSFORMER (KU1A
FDNS	00NR	5	25SP	G15_042	FROM->TO	GRPRAR1-LNX3345.00 - HOLT.CO3 345.00 345KV CKT 1	720	720	0.0346	103.2883	7MAYWOOD 345.00 - 7SPENCER 345.00 345KV CKT 1
FDNS	00NR	5	25SP	G15_042	FROM->TO	GRPRAR1-LNX3345.00 - HOLT.CO3 345.00 345KV CKT 1	720	720	0.03698	103.2874	AINSWORTH - AINSWORTH 115KV CKT 1
FDNS	00NR	5	25SP	G15_042	FROM->TO	GRPRAR1-LNX3345.00 - HOLT.CO3 345.00 345KV CKT 1	720	720	0.03376	103.2836	NELIGH - PETERSBRG.N7115.00 115KV CKT 1
FDNS	00NR	5	20SP	G15_042	FROM->TO	GRPRAR1-LNX3345.00 - HOLT.CO3 345.00 345KV CKT 1	720	720	0.03403	103.2822	GEN681542 6-JP MADGETT
FDNS	00NR	5	25SP	G15_042	FROM->TO	GRPRAR1-LNX3345.00 - HOLT.CO3 345.00 345KV CKT 1	720	720	0.03436	103.2775	P12:115:UMZZ:# 232 #: AB IN SD. ABERDEEN A TAP BETWEEN ELLENDALE AND ABERDEEN-SIEBRECHT.
FDNS	00NR	5	25SP	G15_042	FROM->TO	GRPRAR1-LNX3345.00 - HOLT.CO3 345.00 345KV CKT 1	720	720	0.03435	103.2679	GEN300003 1-THOMAS HILL UNIT 3
FDNS	00NR	5	25SP	G15_042	FROM->TO	GRPRAR1-LNX3345.00 - HOLT.CO3 345.00 345KV CKT 1	720	720	0.03435	103.2676	GEN672348 2-CORY COGEN GENERATOR 2 GT2
FDNS	00NR	5	25SP	G15_042	FROM->TO	GRPRAR1-LNX3345.00 - HOLT.CO3 345.00 345KV CKT 1	720	720	0.03435	103.2675	GEN672347 1-CORY COGEN GENERATOR 1 GT1
FDNS	00NR	5	25SP	G15_042	FROM->TO	GRPRAR1-LNX3345.00 - HOLT.CO3 345.00 345KV CKT 1	720	720	0.03431	103.2651	G14-021T 345.00 - MULLNCR7 345.00 345KV CKT 1
FDNS	00NR	5	25SP	G15_042	FROM->TO	GRPRAR1-LNX3345.00 - HOLT.CO3 345.00 345KV CKT 1	720	720	0.03431	103.2621	G15-005T 345.00 - MULLNCR7 345.00 345KV CKT 1
FDNS	00NR	5	20SP	G15_042	FROM->TO	GRPRAR1-LNX3345.00 - HOLT.CO3 345.00 345KV CKT 1	720	720	0.03403	103.261	GEN662101 1-WESSINGTON190.5750
FDNS	00NR	5	25SP	G15_042	FROM->TO	GRPRAR1-LNX3345.00 - HOLT.CO3 345.00 345KV CKT 1	720	720	0.03419	103.2593	BISMARK - L3 HAWDON 230KV CKT 1
FDNS	00NR	5	25SP	G15_042	FROM->TO	GRPRAR1-LNX3345.00 - HOLT.CO3 345.00 345KV CKT 1	720	720	0.03617	103.2572	ATCHSNT3 345.00 - BOONEVILLE 345KV CKT 1
FDNS	00NR	5	25SP	G15_042	FROM->TO	GRPRAR1-LNX3345.00 - HOLT.CO3 345.00 345KV CKT 1	720	720	0.03442	103.2563	ANTELOP-LNX3345.00 - BRDLAND-LNX3345.00 345KV CKT 1
FDNS	00NR	5	25SP	G15_042	FROM->TO	GRPRAR1-LNX3345.00 - HOLT.CO3 345.00 345KV CKT 1	720	720	0.03435	103.2492	GEN659147 1-PIONEER 1G13.800
FDNS	00NR	5	25SP	G15_042	FROM->TO	GRPRAR1-LNX3345.00 - HOLT.CO3 345.00 345KV CKT 1	720	720	0.03435	103.2492	GEN659158 2-PIONEER G213.800
FDNS	00NR	5	25SP	G15_042	FROM->TO	GRPRAR1-LNX3345.00 - HOLT.CO3 345.00 345KV CKT 1	720	720	0.03435	103.2492	GEN659159 3-PIONEER G313.800
FDNS	00NR	5	25SP	G15_042	FROM->TO	GRPRAR1-LNX3345.00 - HOLT.CO3 345.00 345KV CKT 1	720	720	0.03435	103.2492	GEN672358 1-CHAPLN1W 0.6900
FDNS	00NR	5	25SP	G15_042	FROM->TO	GRPRAR1-LNX3345.00 - HOLT.CO3 345.00 345KV CKT 1	720	720	0.03435	103.2472	GEN659148 1-LONESMCRK 1G13.800
FDNS	00NR	5	25SP	G15_042	FROM->TO	GRPRAR1-LNX3345.00 - HOLT.CO3 345.00 345KV CKT 1	720	720	0.03435	103.2472	GEN659156 2-LONESMCRK 2G13.800
FDNS	00NR	5	25SP	G15_042	FROM->TO	GRPRAR1-LNX3345.00 - HOLT.CO3 345.00 345KV CKT 1	720	720	0.03435	103.2472	GEN659157 3-LONESMCRK 3G13.800
FDNS	00NR	5	25SP	G15_042	FROM->TO	GRPRAR1-LNX3345.00 - HOLT.CO3 345.00 345KV CKT 1	720	720	0.03435	103.2445	GEN659417 1X-BEPCPKFT 1GX13.800
FDNS	00NR	5	25SP	G15_042	FROM->TO	GRPRAR1-LNX3345.00 - HOLT.CO3 345.00 345KV CKT 1	720	720	0.03435	103.2445	GEN659418 2X-BEPCPKFT 2GX13.800
FDNS	00NR	5	25SP	G15_042	FROM->TO	GRPRAR1-LNX3345.00 - HOLT.CO3 345.00 345KV CKT 1	720	720	0.03435	103.2445	GEN659419 3X-BEPCPKFT 3GX13.800
FDNS	00NR	5	25SP	G15_042	FROM->TO	GRPRAR1-LNX3345.00 - HOLT.CO3 345.00 345KV CKT 1	720	720	0.03435	103.2398	GEN657964 1-ASH2GEN9 0.5750
FDNS	00NR	5	20SP	G15_042	FROM->TO	GRPRAR1-LNX3345.00 - HOLT.CO3 345.00 345KV CKT 1	720	720	0.03403	103.238	CENTER 230/22.0KV TRANSFORMER CKT 1
FDNS	00NR	5	25SP	G15_042	FROM->TO	GRPRAR1-LNX3345.00 - HOLT.CO3 345.00 345KV CKT 1	720	720	0.03462	103.2317	FALLOW 3 345.00 - GRIMES 345KV CKT 1
FDNS	00NR	5	25SP	G15_042	FROM->TO	GRPRAR1-LNX3345.00 - HOLT.CO3 345.00 345KV CKT 1	720	720	0.03255	103.2286	COLUMEAST - NW68TH & HOLDREGE 345KV CKT 1
FDNS	00NR	5	25SP	G15_042	FROM->TO	GRPRAR1-LNX3345.00 - HOLT.CO3 345.00 345KV CKT 1	720	720	0.03255	103.2286	COLUMEAST - NW68TH & HOLDREGE 345KV CKT 1
FDNS	00NR	5	20SP	G15_042	FROM->TO	GRPRAR1-LNX3345.00 - HOLT.CO3 345.00 345KV CKT 1	720	720	0.03549	103.2284	MISSION - WITTEN 115KV CKT 1
FDNS	00NR	5	25SP	G15_042	FROM->TO	GRPRAR1-LNX3345.00 - HOLT.CO3 345.00 345KV CKT 1	720	720	0.03435	103.2219	GEN672367 1-MERIDIAN GENERATOR 1 GT1
FDNS	00NR	5	25SP	G15_042	FROM->TO	GRPRAR1-LNX3345.00 - HOLT.CO3 345.00 345KV CKT 1	720	720	0.03435	103.2219	GEN672368 2-MERIDIAN GENERATOR 2 GT2
FDNS	00NR	5	25SP	G15_042	FROM->TO	GRPRAR1-LNX3345.00 - HOLT.CO3 345.00 345KV CKT 1	720	720	0.03585	103.2215	BATTLE CREEK - COUNTY LINE 115KV CKT 1
FDNS	00NR	5	20SP	G15_042	FROM->TO	GRPRAR1-LNX3345.00 - HOLT.CO3 345.00 345KV CKT 1	720	720	0.03403	103.2178	GEN910006 1-G12_012IS_3 0.6900
FDNS	00NR	5	25SP	G15_042	FROM->TO	GRPRAR1-LNX3345.00 - HOLT.CO3 345.00 345KV CKT 1	720	720	0.03431	103.2165	G15-005T 345.00 - SIBLEY 345KV CKT 1
FDNS	00NR	5	25SP	G15_042	FROM->TO	GRPRAR1-LNX3345.00 - HOLT.CO3 345.00 345KV CKT 1	720	720	0.03376	103.2135	ALBION - PETERSBURG 115KV CKT 1
FDNS	00NR	5	25SP	G15_042	FROM->TO	GRPRAR1-LNX3345.00 - HOLT.CO3 345.00 345KV CKT 1	720	720	0.03435	103.2091	GEN672352 3-NIPAWIN GENERATOR 3
FDNS	00NR	5	25SP	G15_042	FROM->TO	GRPRAR1-LNX3345.00 - HOLT.CO3 345.00 345KV CKT 1	720	720	0.03435	103.209	GEN672350 1-NIPAWIN GENERATOR 1
FDNS	00NR	5	25SP	G15_042	FROM->TO	GRPRAR1-LNX3345.00 - HOLT.CO3 345.00 345KV CKT 1	720	720	0.03435	103.209	GEN672351 2-NIPAWIN GENERATOR 2
FDNS	00NR	5	17SP	G15_042	FROM->TO	GRPRAR1-LNX3345.00 - HOLT.CO3 345.00 345KV CKT 1	720	720	0.03579	103.2062	GEN615002 2-COAL CREEK
FDNS	00NR	5	25SP	G15_042	FROM->TO	GRPRAR1-LNX3345.00 - HOLT.CO3 345.00 345KV CKT 1	720	720	0.03435	103.2015	GEN672349 3-CORY COGEN GENERATOR 3 ST
FDNS	00NR	5	25SP	G15_042	FROM->TO	GRPRAR1-LNX3345.00 - HOLT.CO3 345.00 345KV CKT 1	720	720	0.03538	103.2003	HOLCOMB - SETAB 345KV CKT 1
FDNS	00NR	5	25SP	G15_042	FROM->TO	GRPRAR1-LNX3345.00 - HOLT.CO3 345.00 345KV CKT 1	720	720	0.03538	103.2003	HOLCOMB - SETAB 345KV CKT 1
FDNS	00NR	5	25SP	G15_042	FROM->TO	GRPRAR1-LNX3345.00 - HOLT.CO3 345.00 345KV CKT 1	720	720	0.03435	103.1981	GEN600012 2-BLACK DOG GEN 2
FDNS	00NR	5	25SP	G15_042	FROM->TO	GRPRAR1-LNX3345.00 - HOLT.CO3 345.00 345KV CKT 1	720	720	0.03435	103.1934	GEN652548 5-FT RANDAL
FDNS	00NR	5	25SP	G15_042	FROM->TO	GRPRAR1-LNX3345.00 - HOLT.CO3 345.00 345KV CKT 1	720	720	0.03435	103.1934	GEN652549 7-FT RANDAL
FDNS	00NR	5	25SP	G15_042	FROM->TO	GRPRAR1-LNX3345.00 - HOLT.CO3 345.00 345KV CKT 1	720	720	0.03435	103.1888	GEN652547 3-FT RANDAL
FDNS	00NR	5	25SP	G15_042	FROM->TO	GRPRAR1-LNX3345.00 - HOLT.CO3 345.00 345KV CKT 1	720	720	0.03435	103.1878	GEN652546 1-FT RANDAL
FDNS	00NR	5	25SP	G15_042	FROM->TO	GRPRAR1-LNX3345.00 - HOLT.CO3 345.00 345KV CKT 1	720	720	0.03435	103.1865	EMERY 161/18.0KV TRANSFORMER CKT 1
FDNS	00NR	5	25SP	G15_042	FROM->TO	GRPRAR1-LNX3345.00 - HOLT.CO3 345.00 345KV CKT 1	720	720	0.03376	103.1821	PETERSBRG.N7115.00 - PETERSBURG 115KV CKT Z1
FDNS	00NR	5	25SP	G15_042	FROM->TO	GRPRAR1-LNX3345.00 - HOLT.CO3 345.00 345KV CKT 1	720	720	0.03383	103.1744	HOSKINS - RAUN 345KV CKT 1
FDNS	00NR	5	25SP	G15_042	FROM->TO	GRPRAR1-LNX3345.00 - HOLT.CO3 345.00 345KV CKT 1	720	720	0.03383	103.1744	HOSKINS - RAUN 345KV CKT 1
FDNS	00NR	5	25SP	G15_042	FROM->TO	GRPRAR1-LNX3345.00 - HOLT.CO3 345.00 345KV CKT 1	720	720	0.03376	103.1694	P12:115:NPPD:1168B:ALBION 7:PETERSBRG.N7:BTB

SOLUTION	GROUP	SCENARIO	SEASON	SOURCE	DIRECTION	MONITORED ELEMENT	RATEA (MVA)	RATEB(MVA)	TDF	TC%LOADING (% MVA)	CONTINGENCY
FDNS	00NR	5	25SP	G15_042	FROM->TO	GRPRAR1-LNX3345.00 - HOLT.CO3 345.00 345KV CKT 1	720	720	0.03435	103.1584	GEN659290 1-EDGECOL
FDNS	00NR	5	25SP	G15_042	FROM->TO	GRPRAR1-LNX3345.00 - HOLT.CO3 345.00 345KV CKT 1	720	720	0.03211	103.1583	FT THOMPSON (FT2 KU1A) 345/230/13.8KV TRANSFORMER CKT 1
FDNS	00NR	5	25SP	G15_042	FROM->TO	GRPRAR1-LNX3345.00 - HOLT.CO3 345.00 345KV CKT 1	720	720	0.0321	103.1559	FT THOMPSON (FT2 KU1B) 345/230/13.8KV TRANSFORMER CKT 1
FDNSLock	00NR	5	25SP	G15_042	FROM->TO	GRPRAR1-LNX3345.00 - HOLT.CO3 345.00 345KV CKT 1	720	720	0.0341	103.1549	WATERTOWN (WT2 KU1A) 345/230/13.8KV TRANSFORMER CKT 1
FDNS	00NR	5	25SP	G15_042	FROM->TO	GRPRAR1-LNX3345.00 - HOLT.CO3 345.00 345KV CKT 1	720	720	0.03585	103.1503	ANTELOPE 7115.00 - COUNTY LINE 115KV CKT 1
FDNS	00NR	5	25SP	G15_042	FROM->TO	GRPRAR1-LNX3345.00 - HOLT.CO3 345.00 345KV CKT 1	720	720	0.03244	103.1441	COLUMEAST - SHELL CREEK 345KV CKT 1
FDNS	00NR	5	25SP	G15_042	FROM->TO	GRPRAR1-LNX3345.00 - HOLT.CO3 345.00 345KV CKT 1	720	720	0.03462	103.1417	LARAMIE RIVER - STEGALL 345KV CKT 1
FDNS	00NR	5	25SP	G15_042	FROM->TO	GRPRAR1-LNX3345.00 - HOLT.CO3 345.00 345KV CKT 1	720	720	0.03467	103.1371	FINNEY SWITCHING STATION - WALKTAP7 345.00 345KV CKT 1
FDNS	00NR	5	25SP	G15_042	FROM->TO	GRPRAR1-LNX3345.00 - HOLT.CO3 345.00 345KV CKT 1	720	720	0.03467	103.1371	FINNEY SWITCHING STATION - WALKTAP7 345.00 345KV CKT 1
FDNS	00NR	5	20SP	G15_042	FROM->TO	GRPRAR1-LNX3345.00 - HOLT.CO3 345.00 345KV CKT 1	720	720	0.0357	103.1267	AXTELL - SWEETWATER 345KV CKT 1
FDNS	00NR	5	25SP	G15_042	FROM->TO	GRPRAR1-LNX3345.00 - HOLT.CO3 345.00 345KV CKT 1	720	720	0.03435	103.1262	GEN300007 1-NEW MADRID UNIT 2
FDNS	00NR	5	25SP	G15_042	FROM->TO	GRPRAR1-LNX3345.00 - HOLT.CO3 345.00 345KV CKT 1	720	720	0.03435	103.1217	GEN600046 1-MECST
FDNS	00NR	5	25SP	G15_042	FROM->TO	GRPRAR1-LNX3345.00 - HOLT.CO3 345.00 345KV CKT 1	720	720	0.03435	103.1214	GEN300006 1-NEW MADRID UNIT 1
FDNS	00NR	5	20SP	G15_042	FROM->TO	GRPRAR1-LNX3345.00 - HOLT.CO3 345.00 345KV CKT 1	720	720	0.03403	103.12	CLAY BOSWELL 230/20.9KV TRANSFORMER CKT 1
FDNS	00NR	5	25SP	G15_042	FROM->TO	GRPRAR1-LNX3345.00 - HOLT.CO3 345.00 345KV CKT 1	720	720	0.03435	103.1189	GEN672357 2-FUT-WL2X 13.800
FDNS	00NR	5	25SP	G15_042	FROM->TO	GRPRAR1-LNX3345.00 - HOLT.CO3 345.00 345KV CKT 1	720	720	0.03435	103.1085	GEN672393 2-NBECST2G 13.800
FDNS	00NR	5	25SP	G15_042	FROM->TO	GRPRAR1-LNX3345.00 - HOLT.CO3 345.00 345KV CKT 1	720	720	0.03435	103.1055	GEN600050 1-FEP
FDNS	00NR	5	25SP	G15_042	FROM->TO	GRPRAR1-LNX3345.00 - HOLT.CO3 345.00 345KV CKT 1	720	720	0.03435	103.1048	GEN620324 3-HOOT LAKE 3 GEN
FDNS	00NR	5	25SP	G15_042	FROM->TO	GRPRAR1-LNX3345.00 - HOLT.CO3 345.00 345KV CKT 1	720	720	0.03435	103.1045	GEN672390 2-FUT-SW2X 13.800
FDNS	00NR	5	25SP	G15_042	FROM->TO	GRPRAR1-LNX3345.00 - HOLT.CO3 345.00 345KV CKT 1	720	720	0.03435	103.1028	GEN652410 3-FT PECK
FDNS	00NR	5	25SP	G15_042	FROM->TO	GRPRAR1-LNX3345.00 - HOLT.CO3 345.00 345KV CKT 1	720	720	0.03435	103.0934	GEN660003 3-HURON WEST PARK
FDNS	00NR	5	25SP	G15_042	FROM->TO	GRPRAR1-LNX3345.00 - HOLT.CO3 345.00 345KV CKT 1	720	720	0.03435	103.0915	GEN600047 1-MECCT1
FDNS	00NR	5	20SP	G15_042	FROM->TO	GRPRAR1-LNX3345.00 - HOLT.CO3 345.00 345KV CKT 1	720	720	0.03553	103.0904	G15088_T 345.00 - MOORE 345KV CKT 1
FDNS	00NR	5	25SP	G15_042	FROM->TO	GRPRAR1-LNX3345.00 - HOLT.CO3 345.00 345KV CKT 1	720	720	0.03376	103.0858	HELENA - SHEAS LK3 345.00 345KV CKT 1
FDNS	00NR	5	25SP	G15_042	FROM->TO	GRPRAR1-LNX3345.00 - HOLT.CO3 345.00 345KV CKT 1	720	720	0.03483	103.0743	Hitchland Interchange - WALKTAP7 345.00 345KV CKT 1
FDNS	00NR	5	25SP	G15_042	FROM->TO	GRPRAR1-LNX3345.00 - HOLT.CO3 345.00 345KV CKT 1	720	720	0.03483	103.0743	Hitchland Interchange - WALKTAP7 345.00 345KV CKT 1
FDNS	00NR	5	25SP	G15_042	FROM->TO	GRPRAR1-LNX3345.00 - HOLT.CO3 345.00 345KV CKT 1	720	720	0.03435	103.0706	LADISH 115/13.2KV TRANSFORMER CKT 1
FDNS	00NR	5	25SP	G15_042	FROM->TO	GRPRAR1-LNX3345.00 - HOLT.CO3 345.00 345KV CKT 1	720	720	0.03483	103.0663	P12:345:SPS:J07.1.FINN.HITCH
FDNS	00NR	5	25SP	G15_042	FROM->TO	GRPRAR1-LNX3345.00 - HOLT.CO3 345.00 345KV CKT 1	720	720	0.03435	103.0644	GEN660001 2-ABERDEEN SIEBRECHT
FDNS	00NR	5	20SP	G15_042	FROM->TO	GRPRAR1-LNX3345.00 - HOLT.CO3 345.00 345KV CKT 1	720	720	0.03403	103.0639	HESKETT 115/13.8KV TRANSFORMER CKT 1
FDNS	00NR	5	25SP	G15_042	FROM->TO	GRPRAR1-LNX3345.00 - HOLT.CO3 345.00 345KV CKT 1	720	720	0.03484	103.0592	THEDFRD3 345.00 (THEDFORDT2) 345/115/13.8KV TRANSFORMER CKT 1
FDNS	00NR	5	25SP	G15_042	FROM->TO	GRPRAR1-LNX3345.00 - HOLT.CO3 345.00 345KV CKT 1	720	720	0.03435	103.0448	GEN652345 W-G07_023IS_2 0.6900
FDNS	00NR	5	25SP	G15_042	FROM->TO	GRPRAR1-LNX3345.00 - HOLT.CO3 345.00 345KV CKT 1	720	720	0.03435	103.0388	GEN652414 4-FT PECK
FDNS	00NR	5	25SP	G15_042	FROM->TO	GRPRAR1-LNX3345.00 - HOLT.CO3 345.00 345KV CKT 1	720	720	0.03435	103.0388	GEN652415 5-FT PECK
FDNS	00NR	5	25SP	G15_042	FROM->TO	GRPRAR1-LNX3345.00 - HOLT.CO3 345.00 345KV CKT 1	720	720	0.03435	103.0218	GEN590010 1-ERCOT EQUIVALENCE
FDNS	00NR	5	25SP	G15_042	FROM->TO	GRPRAR1-LNX3345.00 - HOLT.CO3 345.00 345KV CKT 1	720	720	0.03435	103.02	GEN600063 1-COLVILLE GEN 1
FDNS	00NR	5	25SP	G15_042	FROM->TO	GRPRAR1-LNX3345.00 - HOLT.CO3 345.00 345KV CKT 1	720	720	0.03435	103.02	GEN600064 2-COLVILLE GEN 2
FDNS	00NR	5	25SP	G15_042	FROM->TO	GRPRAR1-LNX3345.00 - HOLT.CO3 345.00 345KV CKT 1	720	720	0.03383	103.016	SHEAS LK3 345.00 - WILMARTH 345KV CKT 1
FDNS	00NR	5	25SP	G15_042	FROM->TO	GRPRAR1-LNX3345.00 - HOLT.CO3 345.00 345KV CKT 1	720	720	0.03435	103.012	GEN 11104 1-J262_GEN 0.6000
FDNS	00NR	5	25SP	G15_042	FROM->TO	GRPRAR1-LNX3345.00 - HOLT.CO3 345.00 345KV CKT 1	720	720	0.03435	103.012	GEN 11108 1-J263_GEN 0.6000
FDNS	00NR	5	25SP	G15_042	FROM->TO	GRPRAR1-LNX3345.00 - HOLT.CO3 345.00 345KV CKT 1	720	720	0.03442	103.0103	HURON (BD KU2A) 345/230/13.8KV TRANSFORMER CKT 1
FDNS	00NR	5	25SP	G15_042	FROM->TO	GRPRAR1-LNX3345.00 - HOLT.CO3 345.00 345KV CKT 1	720	720	0.03442	103.0103	HURON (BD KU2A) 345/230/13.8KV TRANSFORMER CKT 1
FDNS	00NR	5	25SP	G15_042	FROM->TO	GRPRAR1-LNX3345.00 - HOLT.CO3 345.00 345KV CKT 1	720	720	0.03442	103.0095	BRDLAND-LNX3345.00 - HURON 345KV CKT Z
FDNS	00NR	5	25SP	G15_042	FROM->TO	GRPRAR1-LNX3345.00 - HOLT.CO3 345.00 345KV CKT 1	720	720	0.03442	103.009	P12:345:UMZB:# 102 #: AVS BD IN ND. AVS BRD LR
FDNS	00NR	5	25SP	G15_042	FROM->TO	GRPRAR1-LNX3345.00 - HOLT.CO3 345.00 345KV CKT 1	720	720	0.03442	103.0088	BROADLAND - HURON 230KV CKT 1
FDNS	00NR	5	25SP	G15_042	FROM->TO	GRPRAR1-LNX3345.00 - HOLT.CO3 345.00 345KV CKT 1	720	720	0.03442	103.0064	P12:345:UMZB:# 103 #: BD IN SD. LOSS OF LINE
FDNS	00NR	5	20SP	G15_042	FROM->TO	GRPRAR1-LNX3345.00 - HOLT.CO3 345.00 345KV CKT 1	720	720	0.03403	103.0024	GEN659289 1-DAYCNTYWND W0.6900
FDNS	00NR	5	25SP	G15_042	FROM->TO	GRPRAR1-LNX3345.00 - HOLT.CO3 345.00 345KV CKT 1	720	720	0.03435	102.9994	GEN590011 2-ERCOT EQUIVALENCE
FDNS	00NR	5	25SP	G15_042	FROM->TO	GRPRAR1-LNX3345.00 - HOLT.CO3 345.00 345KV CKT 1	720	720	0.03435	102.999	GEN600043 7-BLUE LAKE5
FDNS	00NR	5	25SP	G15_042	FROM->TO	GRPRAR1-LNX3345.00 - HOLT.CO3 345.00 345KV CKT 1	720	720	0.03435	102.999	GEN600044 8-BLUE LAKE6
FDNS	00NR	5	25SP	G15_042	FROM->TO	GRPRAR1-LNX3345.00 - HOLT.CO3 345.00 345KV CKT 1	720	720	0.03365	102.9959	FIELD NORTH - LKFLDXL3 345KV CKT 1
FDNS	00NR	5	25SP	G15_042	FROM->TO	GRPRAR1-LNX3345.00 - HOLT.CO3 345.00 345KV CKT 1	720	720	0.03365	102.9951	FIELD SOUTH - WILMARTH 345KV CKT 1
FDNS	00NR	5	25SP	G15_042	FROM->TO	GRPRAR1-LNX3345.00 - HOLT.CO3 345.00 345KV CKT 1	720	720	0.03435	102.9883	G830_SUB 115.00 - GRE-MCHENRY7115.00 115KV CKT 1
FDNS	00NR	5	25SP	G15_042	FROM->TO	GRPRAR1-LNX3345.00 - HOLT.CO3 345.00 345KV CKT 1	720	720	0.03435	102.9882	G830_SUB 115.00 115/34.5KV TRANSFORMER CKT 1
FDNS	00NR	5	25SP	G15_042	FROM->TO	GRPRAR1-LNX3345.00 - HOLT.CO3 345.00 345KV CKT 1	720	720	0.03365	102.988	FIELD NORTH - FIELD SOUTH 345KV CKT 1
FDNS	00NR	5	25SP	G15_042	FROM->TO	GRPRAR1-LNX3345.00 - HOLT.CO3 345.00 345KV CKT 1	720	720	0.03435	102.9877	LANSING WEST 161/22.0KV TRANSFORMER CKT 1
FDNS	00NR	5	25SP	G15_042	FROM->TO	GRPRAR1-LNX3345.00 - HOLT.CO3 345.00 345KV CKT 1	720	720	0.03435	102.9792	GEN681522 3-GENOA 3
FDNS	00NR	5	25SP	G15_042	FROM->TO	GRPRAR1-LNX3345.00 - HOLT.CO3 345.00 345KV CKT 1	720	720	0.03435	102.9706	GEN600014 4-BLACK DOG GEN 4
FDNS	00NR	5	25SP	G15_042	FROM->TO	GRPRAR1-LNX3345.00 - HOLT.CO3 345.00 345KV CKT 1	720	720	0.03435	102.9677	GEN600065 7-HIGH BRIDGE
FDNS	00NR	5	25SP	G15_042	FROM->TO	GRPRAR1-LNX3345.00 - HOLT.CO3 345.00 345KV CKT 1	720	720	0.03435	102.9677	GEN600066 8-HIGH BRIDGE
FDNS	00NR	5	20SP	G15_042	FROM->TO	GRPRAR1-LNX3345.00 - HOLT.CO3 345.00 345KV CKT 1	720	720	0.03403	102.9653	GEN563312 1-G15097_3 0.6900
FDNS	00NR	5	25SP	G15_042	FROM->TO	GRPRAR1-LNX3345.00 - HOLT.CO3 345.00 345KV CKT 1	720	720	0.03435	102.965	GEN600011 5-BLACK DOG GEN 1
FDNS	00NR	5	25SP	G15_042	FROM->TO	GRPRAR1-LNX3345.00 - HOLT.CO3 345.00 345KV CKT 1	720	720	0.03435	102.955	GEN600071 10-RIVER SIDE
FDNS	00NR	5	25SP	G15_042	FROM->TO	GRPRAR1-LNX3345.00 - HOLT.CO3 345.00 345KV CKT 1	720	720	0.03435	102.9549	GEN600070 9-RIVER SIDE
FDNS	00NR	5	25SP	G15_042	FROM->TO	GRPRAR1-LNX3345.00 - HOLT.CO3 345.00 345KV CKT 1	720	720	0.03435	102.9433	GEN600007 7-RIVERSIDE GEN 7
FDNS	00NR	5	25SP	G15_042	FROM->TO	GRPRAR1-LNX3345.00 - HOLT.CO3 345.00 345KV CKT 1	720	720	0.03435	102.9298	GEN600045 4-ANSON
FDNS	00NR	5	25SP	G15_042	FROM->TO	GRPRAR1-LNX3345.00 - HOLT.CO3 345.00 345KV CKT 1	720	720	0.03572	102.9283	P12:115:NPPD:1163B:NELIGH 7:NORFK.N7:BTB
FDNS	00NR	5	20SP	G15_042	FROM->TO	GRPRAR1-LNX3345.00 - HOLT.CO3 345.00 345KV CKT 1	720	720	0.03403	102.9277	GEN659018 1-G14_003IS_3 0.6900
FDNS	00NR	5	25SP	G15_042	FROM->TO	GRPRAR1-LNX3345.00 - HOLT.CO3 345.00 345KV CKT 1	720	720	0.03435	102.9265	GEN600017 C-LS POWER CT
FDNS	00NR	5	20SP	G15_042	FROM->TO	GRPRAR1-LNX3345.00 - HOLT.CO3 345.00 345KV CKT 1	720	720	0.03403	102.9187	GEN652906 1-G09_006IS_3 0.6900
FDNS	00NR	5	25SP	G15_042	FROM->TO	GRPRAR1-LNX3345.00 - HOLT.CO3 345.00 345KV CKT 1	720	720	0.03435	102.8927	GEN659273 2-GROTON SYNC COND
FDNS	00NR	5	25SP	G15_042	FROM->TO	GRPRAR1-LNX3345.00 - HOLT.CO3 345.00 345KV CKT 1	720	720	0.03435	102.8927	GEN659294 1-WILTONCOL9
FDNS	00NR	5	25SP	G15_042	FROM->TO	GRPRAR1-LNX3345.00 - HOLT.CO3 345.00 345KV CKT 1	720	720	0.03419	102.8788	OAHE - SULLEY BUTTE 230KV CKT 1
FDNS	00NR	5	20SP	G15_042	FROM->TO	GRPRAR1-LNX3345.00 - HOLT.CO3 345.00 345KV CKT 1	720	720	0.03403	102.878	GEN652543 3-BIG BEND
FDNS	00NR	5	25SP	G15_042	FROM->TO	GRPRAR1-LNX3345.00 - HOLT.CO3 345.00 345KV CKT 1	720	720	0.03515	102.8712	AXTELL - POST ROCK 345KV CKT 1
FDNS	00NR	5	25SP	G15_042	FROM->TO	GRPRAR1-LNX3345.00 - HOLT.CO3 345.00 345KV CKT 1	720	720	0.03442	102.8664	ANTELOP-LNX3345.00 - ANTELOPE VALLEY 345KV CKT Z
FDNS	00NR	5	25SP	G15_042	FROM->TO	GRPRAR1-LNX3345.00 - HOLT.CO3 345.00 345KV CKT 1	720	720	0.03435	102.8547	GEN615052 1-CAMBRIDGE GENERATING STATION
FDNS	00NR	5	25SP	G15_042	FROM->TO	GRPRAR1-LNX3345.00 - HOLT.CO3 345.00 345KV CKT 1	720	720	0.03435	102.8338	GEN659031 1-G12_014IS_4 0.6900
FDNS	00NR	5	25SP	G15_042	FROM->TO	GRPRAR1-LNX3345.00 - HOLT.CO3 345.00 345KV CKT 1	720	720	0.03435	102.8148	GEN 10648 1-G830_GEN 0.6900

SOLUTION	GROUP	SCENARIO	SEASON	SOURCE	DIRECTION	MONITORED ELEMENT	RATEA (MVA)	RATEB(MVA)	TDF	TC%LOADING (% MVA)	CONTINGENCY
FDNS	00NR	5	25SP	G15_042	FROM->TO	GRPRAR1-LNX3345.00 - HOLT.CO3 345.00 345KV CKT 1	720	720	0.03435	102.8112	GEN659192 6-LYNN
FDNS	00NR	5	25SP	G15_042	FROM->TO	GRPRAR1-LNX3345.00 - HOLT.CO3 345.00 345KV CKT 1	720	720	0.03435	102.8096	GEN659162 4-RED WLCK
FDNS	00NR	5	25SP	G15_042	FROM->TO	GRPRAR1-LNX3345.00 - HOLT.CO3 345.00 345KV CKT 1	720	720	0.03435	102.8096	GEN659163 5-BLACK WDCK
FDNS	00NR	5	20SP	G15_042	FROM->TO	GRPRAR1-LNX3345.00 - HOLT.CO3 345.00 345KV CKT 1	720	720	0.03403	102.8091	COYOTE 345/24.0KV TRANSFORMER CKT 1
FDNS	00NR	5	25SP	G15_042	FROM->TO	GRPRAR1-LNX3345.00 - HOLT.CO3 345.00 345KV CKT 1	720	720	0.03435	102.8084	GEN660016 1-B_H WIND 0.7000
FDNS	00NR	5	20SP	G15_042	FROM->TO	GRPRAR1-LNX3345.00 - HOLT.CO3 345.00 345KV CKT 1	720	720	0.03403	102.7995	GEN659194 1-NDPRAIRWND1W0.6900
FDNS	00NR	5	20SP	G15_042	FROM->TO	GRPRAR1-LNX3345.00 - HOLT.CO3 345.00 345KV CKT 1	720	720	0.03403	102.7969	GEN659010 4-G07_027IS_2 0.6900
FDNS	00NR	5	25SP	G15_042	FROM->TO	GRPRAR1-LNX3345.00 - HOLT.CO3 345.00 345KV CKT 1	720	720	0.03435	102.7873	GEN615021 1-GRE-ER 14G 16.000
FDNS	00NR	5	20SP	G15_042	FROM->TO	GRPRAR1-LNX3345.00 - HOLT.CO3 345.00 345KV CKT 1	720	720	0.03403	102.7831	GEN652460 4-GARRISON
FDNS	00NR	5	20SP	G15_042	FROM->TO	GRPRAR1-LNX3345.00 - HOLT.CO3 345.00 345KV CKT 1	720	720	0.03403	102.7831	GEN652461 5-GARRISON
FDNS	00NR	5	20SP	G15_042	FROM->TO	GRPRAR1-LNX3345.00 - HOLT.CO3 345.00 345KV CKT 1	720	720	0.03403	102.7635	GEN652559 1-OAHE
FDNS	00NR	5	25SP	G15_042	FROM->TO	GRPRAR1-LNX3345.00 - HOLT.CO3 345.00 345KV CKT 1	720	720	0.03435	102.75	GEN615015 1-GRE-SPRITWDG13.200
FDNS	00NR	5	20SP	G15_042	FROM->TO	GRPRAR1-LNX3345.00 - HOLT.CO3 345.00 345KV CKT 1	720	720	0.03387	102.7343	GLENHAM - L3 HAWDON 230KV CKT 1
FDNS	00NR	5	20SP	G15_042	FROM->TO	GRPRAR1-LNX3345.00 - HOLT.CO3 345.00 345KV CKT 1	720	720	0.03403	102.7309	GEN652907 1-G09_007IS_3 0.6900
FDNS	00NR	5	20SP	G15_042	FROM->TO	GRPRAR1-LNX3345.00 - HOLT.CO3 345.00 345KV CKT 1	720	720	0.03403	102.726	GEN652457 1-GARRISON
FDNS	00NR	5	20SP	G15_042	FROM->TO	GRPRAR1-LNX3345.00 - HOLT.CO3 345.00 345KV CKT 1	720	720	0.03403	102.726	GEN652458 2-GARRISON
FDNS	00NR	5	20SP	G15_042	FROM->TO	GRPRAR1-LNX3345.00 - HOLT.CO3 345.00 345KV CKT 1	720	720	0.03403	102.726	GEN652459 3-GARRISON
FDNS	00NR	5	25SP	G15_042	FROM->TO	GRPRAR1-LNX3345.00 - HOLT.CO3 345.00 345KV CKT 1	720	720	0.03435	102.7211	GEN657705 X-DRAYTON
FDNS	00NR	5	25SP	G15_042	FROM->TO	GRPRAR1-LNX3345.00 - HOLT.CO3 345.00 345KV CKT 1	720	720	0.03419	102.712	SULLEY BUTTE - SULLYBT-LNX3230.00 230KV CKT Z
FDNS	00NR	5	25SP	G15_042	FROM->TO	GRPRAR1-LNX3345.00 - HOLT.CO3 345.00 345KV CKT 1	720	720	0.03419	102.7119	SULLYBT-LNX3230.00 - WHITLOK 230KV CKT 1
FDNS	00NR	5	20SP	G15_042	FROM->TO	GRPRAR1-LNX3345.00 - HOLT.CO3 345.00 345KV CKT 1	720	720	0.03403	102.7049	GEN563342 1-G15098_3 0.6900
FDNS	00NR	5	25SP	G15_042	FROM->TO	GRPRAR1-LNX3345.00 - HOLT.CO3 345.00 345KV CKT 1	720	720	0.03435	102.6723	BISONMP4 230.00 - SQUARE BUTTE 230KV CKT 1
FDNS	00NR	5	20SP	G15_042	FROM->TO	GRPRAR1-LNX3345.00 - HOLT.CO3 345.00 345KV CKT 1	720	720	0.03403	102.6696	GEN659403 1-NDSUNFLWR W0.6900
FDNS	00NR	5	20SP	G15_042	FROM->TO	GRPRAR1-LNX3345.00 - HOLT.CO3 345.00 345KV CKT 1	720	720	0.03403	102.6565	GEN652542 1-BIG BEND
FDNS	00NR	5	25SP	G15_042	FROM->TO	GRPRAR1-LNX3345.00 - HOLT.CO3 345.00 345KV CKT 1	720	720	0.03419	102.6554	P12:230:UMZB:# 114 #: SB IN SD. SB-WK-GH
FDNS	00NR	5	25SP	G15_042	FROM->TO	GRPRAR1-LNX3345.00 - HOLT.CO3 345.00 345KV CKT 1	720	720	0.03419	102.6554	P12:230:UMZB:# 117 #: WK IN SD. SB-WK-GH
FDNS	00NR	5	25SP	G15_042	FROM->TO	GRPRAR1-LNX3345.00 - HOLT.CO3 345.00 345KV CKT 1	720	720	0.03435	102.6362	GEN659353 1-DEERCREK CTG18.000
FDNS	00NR	5	25SP	G15_042	FROM->TO	GRPRAR1-LNX3345.00 - HOLT.CO3 345.00 345KV CKT 1	720	720	0.03435	102.6352	GEN600067 9-HIGH BRIDGE
FDNS	00NR	5	25SP	G15_042	FROM->TO	GRPRAR1-LNX3345.00 - HOLT.CO3 345.00 345KV CKT 1	720	720	0.03435	102.6352	GEN659354 1-DEERCREK STG18.000
FDNS	00NR	5	20SP	G15_042	FROM->TO	GRPRAR1-LNX3345.00 - HOLT.CO3 345.00 345KV CKT 1	720	720	0.03403	102.6134	ALMA 161 161/24.0KV TRANSFORMER CKT 1
FDNS	00NR	5	25SP	G15_042	FROM->TO	GRPRAR1-LNX3345.00 - HOLT.CO3 345.00 345KV CKT 1	720	720	0.03435	102.6118	GEN672303 3-BOUNDARY DAM GENERATOR 3
FDNS	00NR	5	25SP	G15_042	FROM->TO	GRPRAR1-LNX3345.00 - HOLT.CO3 345.00 345KV CKT 1	720	720	0.03435	102.6117	GEN672304 4-BOUNDARY DAM GENERATOR 4
FDNS	00NR	5	25SP	G15_042	FROM->TO	GRPRAR1-LNX3345.00 - HOLT.CO3 345.00 345KV CKT 1	720	720	0.03435	102.6117	GEN672305 5-BOUNDARY DAM GENERATOR 5
FDNS	00NR	5	20SP	G15_042	FROM->TO	GRPRAR1-LNX3345.00 - HOLT.CO3 345.00 345KV CKT 1	720	720	0.03633	102.6112	MCCOOL - MOORE 345KV CKT 1
FDNS	00NR	5	25SP	G15_042	FROM->TO	GRPRAR1-LNX3345.00 - HOLT.CO3 345.00 345KV CKT 1	720	720	0.03594	102.6038	G15061_T 345.00 - SETAB 345KV CKT 1
FDNS	00NR	5	25SP	G15_042	FROM->TO	GRPRAR1-LNX3345.00 - HOLT.CO3 345.00 345KV CKT 1	720	720	0.03419	102.602	GLENHAM - WHITLOK 230KV CKT 1
FDNS	00NR	5	25SP	G15_042	FROM->TO	GRPRAR1-LNX3345.00 - HOLT.CO3 345.00 345KV CKT 1	720	720	0.03588	102.6015	GERALD GENTLEMAN STATION - RED WILLOW 345KV CKT 1
FDNS	00NR	5	25SP	G15_042	FROM->TO	GRPRAR1-LNX3345.00 - HOLT.CO3 345.00 345KV CKT 1	720	720	0.03435	102.5809	GEN672356 1-FUT-WL1X 18.000
FDNS	00NR	5	25SP	G15_042	FROM->TO	GRPRAR1-LNX3345.00 - HOLT.CO3 345.00 345KV CKT 1	720	720	0.03435	102.5504	GEN672389 1-FUT-SW1X 18.000
FDNS	00NR	5	25SP	G15_042	FROM->TO	GRPRAR1-LNX3345.00 - HOLT.CO3 345.00 345KV CKT 1	720	720	0.03435	102.5412	GEN672392 1-NBECGT1G 18.000
FDNS	00NR	5	25SP	G15_042	FROM->TO	GRPRAR1-LNX3345.00 - HOLT.CO3 345.00 345KV CKT 1	720	720	0.03578	102.5165	MISSION - WITTEN 115KV CKT 1
FDNS	00NR	5	25SP	G15_042	FROM->TO	GRPRAR1-LNX3345.00 - HOLT.CO3 345.00 345KV CKT 1	720	720	0.03588	102.5083	G15088_T 345.00 - MOORE 345KV CKT 1
FDNS	00NR	5	20SP	G15_042	FROM->TO	GRPRAR1-LNX3345.00 - HOLT.CO3 345.00 345KV CKT 1	720	720	0.03403	102.5065	SQUARE BUTTE - YNG2 4 230.00 230KV CKT 1
FDNS	00NR	5	20SP	G15_042	FROM->TO	GRPRAR1-LNX3345.00 - HOLT.CO3 345.00 345KV CKT 1	720	720	0.03403	102.506	YNG2 4 230.00 230/20.0KV TRANSFORMER CKT 1
FDNS	00NR	5	25SP	G15_042	FROM->TO	GRPRAR1-LNX3345.00 - HOLT.CO3 345.00 345KV CKT 1	720	720	0.03721	102.5058	MINGO - RED WILLOW 345KV CKT 1
FDNS	00NR	5	25SP	G15_042	FROM->TO	GRPRAR1-LNX3345.00 - HOLT.CO3 345.00 345KV CKT 1	720	720	0.03721	102.5058	MINGO - RED WILLOW 345KV CKT 1
FDNS	00NR	5	25SP	G15_042	FROM->TO	GRPRAR1-LNX3345.00 - HOLT.CO3 345.00 345KV CKT 1	720	720	0.03435	102.478	GEN662101 1-WESSINGTON190.5750
FDNS	00NR	5	25SP	G15_042	FROM->TO	GRPRAR1-LNX3345.00 - HOLT.CO3 345.00 345KV CKT 1	720	720	0.03435	102.4476	GEN681542 6-JP MADGETT
FDNS	00NR	5	25SP	G15_042	FROM->TO	GRPRAR1-LNX3345.00 - HOLT.CO3 345.00 345KV CKT 1	720	720	0.03435	102.4191	GEN910006 1-G12_012IS_3 0.6900
FDNS	00NR	5	25SP	G15_042	FROM->TO	GRPRAR1-LNX3345.00 - HOLT.CO3 345.00 345KV CKT 1	720	720	0.03435	102.3843	CENTER 230/22.0KV TRANSFORMER CKT 1
FDNS	00NR	5	25SP	G15_042	FROM->TO	GRPRAR1-LNX3345.00 - HOLT.CO3 345.00 345KV CKT 1	720	720	0.03435	102.2964	HESKETT 115/13.8KV TRANSFORMER CKT 1
FDNS	00NR	5	20SP	G15_042	FROM->TO	GRPRAR1-LNX3345.00 - HOLT.CO3 345.00 345KV CKT 1	720	720	0.03403	102.2947	GEN659411 1-CAMPBLCNTY W0.6900
FDNS	00NR	5	20SP	G15_042	FROM->TO	GRPRAR1-LNX3345.00 - HOLT.CO3 345.00 345KV CKT 1	720	720	0.03403	102.2278	GEN600004 2-PRAIRIE ISLAND G2
FDNS	00NR	5	25SP	G15_042	FROM->TO	GRPRAR1-LNX3345.00 - HOLT.CO3 345.00 345KV CKT 1	720	720	0.03599	102.2243	AXTELL - SWEETWATER 345KV CKT 1
FDNS	00NR	5	20SP	G15_042	FROM->TO	GRPRAR1-LNX3345.00 - HOLT.CO3 345.00 345KV CKT 1	720	720	0.03403	102.2239	GEN600003 1-PRAIRIE ISLAND G1
FDNS	00NR	5	25SP	G15_042	FROM->TO	GRPRAR1-LNX3345.00 - HOLT.CO3 345.00 345KV CKT 1	720	720	0.03435	102.2222	GEN659289 1-DAYCNTYWND W0.6900
FDNS	00NR	5	25SP	G15_042	FROM->TO	GRPRAR1-LNX3345.00 - HOLT.CO3 345.00 345KV CKT 1	720	720	0.03435	102.1858	GEN563312 1-G15097_3 0.6900
FDNS	00NR	5	25SP	G15_042	FROM->TO	GRPRAR1-LNX3345.00 - HOLT.CO3 345.00 345KV CKT 1	720	720	0.03683	102.1698	MCCOOL - MOORE 345KV CKT 1
FDNS	00NR	5	20SP	G15_042	FROM->TO	GRPRAR1-LNX3345.00 - HOLT.CO3 345.00 345KV CKT 1	720	720	0.03403	102.1636	GEN672321 1-SHAND GENERATOR 1
FDNS	00NR	5	25SP	G15_042	FROM->TO	GRPRAR1-LNX3345.00 - HOLT.CO3 345.00 345KV CKT 1	720	720	0.03435	102.1332	GEN659018 1-G14_003IS_3 0.6900
FDNS	00NR	5	25SP	G15_042	FROM->TO	GRPRAR1-LNX3345.00 - HOLT.CO3 345.00 345KV CKT 1	720	720	0.03435	102.1277	GEN652906 1-G09_006IS_3 0.6900
FDNS	00NR	5	20SP	G15_042	FROM->TO	GRPRAR1-LNX3345.00 - HOLT.CO3 345.00 345KV CKT 1	720	720	0.03403	102.1032	GEN672310 1-POPLAR RIVER GENERATOR 1
FDNS	00NR	5	20SP	G15_042	FROM->TO	GRPRAR1-LNX3345.00 - HOLT.CO3 345.00 345KV CKT 1	720	720	0.03403	102.1032	GEN672311 2-POPLAR RIVER GENERATOR 2
FDNS	00NR	5	20SP	G15_042	FROM->TO	GRPRAR1-LNX3345.00 - HOLT.CO3 345.00 345KV CKT 1	720	720	0.03403	102.0859	GEN672306 6-BOUNDARY DAM GENERATOR 6
FDNS	00NR	5	20SP	G15_042	FROM->TO	GRPRAR1-LNX3345.00 - HOLT.CO3 345.00 345KV CKT 1	720	720	0.03403	102.0616	GEN659296 2-SDPRAIRWND1W0.6900
FDNS	00NR	5	20SP	G15_042	FROM->TO	GRPRAR1-LNX3345.00 - HOLT.CO3 345.00 345KV CKT 1	720	720	0.03403	102.0413	RCDC EAST 4230.00 - RED CEDAR DC 230KV CKT 1
FDNS	00NR	5	20SP	G15_042	FROM->TO	GRPRAR1-LNX3345.00 - HOLT.CO3 345.00 345KV CKT 1	720	720	0.03403	102.0358	P12:230:UMZB:# 112 #: NU IN SD. NU-RCDC & DRY CREEK XFMR
FDNS	00NR	5	17SP	G15_042	FROM->TO	GRPRAR1-LNX3345.00 - HOLT.CO3 345.00 345KV CKT 1	720	720	0.03539	102.0299	FTTHOM1-LNX3345.00 - LELAND2-LNX3345.00 345KV CKT 1
FDNS	00NR	5	25SP	G15_042	FROM->TO	GRPRAR1-LNX3345.00 - HOLT.CO3 345.00 345KV CKT 1	720	720	0.03435	102.0112	GEN659010 4-G07_027IS_2 0.6900
FDNS	00NR	5	25SP	G15_042	FROM->TO	GRPRAR1-LNX3345.00 - HOLT.CO3 345.00 345KV CKT 1	720	720	0.03435	102.006	GEN659194 1-NDPRAIRWND1W0.6900
FDNS	00NR	5	25SP	G15_042	FROM->TO	GRPRAR1-LNX3345.00 - HOLT.CO3 345.00 345KV CKT 1	720	720	0.03435	101.994	GEN652460 4-GARRISON
FDNS	00NR	5	25SP	G15_042	FROM->TO	GRPRAR1-LNX3345.00 - HOLT.CO3 345.00 345KV CKT 1	720	720	0.03435	101.9939	GEN652461 5-GARRISON
FDNS	00NR	5	25SP	G15_042	FROM->TO	GRPRAR1-LNX3345.00 - HOLT.CO3 345.00 345KV CKT 1	720	720	0.03419	101.9505	GLENHAM - L3 HAWDON 230KV CKT 1
FDNS	00NR	5	20SP	G15_042	FROM->TO	GRPRAR1-LNX3345.00 - HOLT.CO3 345.00 345KV CKT 1	720	720	0.03403	101.9483	GEN615010 1-STANTON4
FDNS	00NR	5	25SP	G15_042	FROM->TO	GRPRAR1-LNX3345.00 - HOLT.CO3 345.00 345KV CKT 1	720	720	0.03435	101.9406	GEN652907 1-G09_007IS_3 0.6900
FDNS	00NR	5	25SP	G15_042	FROM->TO	GRPRAR1-LNX3345.00 - HOLT.CO3 345.00 345KV CKT 1	720	720	0.03435	101.9374	GEN652457 1-GARRISON
FDNS	00NR	5	25SP	G15_042	FROM->TO	GRPRAR1-LNX3345.00 - HOLT.CO3 345.00 345KV CKT 1	720	720	0.03435	101.9374	GEN652458 2-GARRISON
FDNS	00NR	5	25SP	G15_042	FROM->TO	GRPRAR1-LNX3345.00 - HOLT.CO3 345.00 345KV CKT 1	720	720	0.03435	101.9374	GEN652459 3-GARRISON
FDNS	00NR	5	25SP	G15_042	FROM->TO	GRPRAR1-LNX3345.00 - HOLT.CO3 345.00 345KV CKT 1	720	720	0.03435	101.8964	GEN563342 1-G15098_3 0.6900

SOLUTION	GROUP	SCENARIO	SEASON	SOURCE	DIRECTION	MONITORED ELEMENT	RATEA (MVA)	RATEB(MVA)	TDF	TC%LOADING (% MVA)	CONTINGENCY
FDNS	00NR	5	25SP	G15_042	FROM->TO	GRPRAR1-LNX3345.00 - HOLT.CO3 345.00 345KV CKT 1	720	720	0.03267	101.8831	HIGHLND 3 345.00 - OBRIEN 3 345.00 345KV CKT 1
FDNS	00NR	5	25SP	G15_042	FROM->TO	GRPRAR1-LNX3345.00 - HOLT.CO3 345.00 345KV CKT 1	720	720	0.03435	101.8812	GEN652543 3-BIG BEND
FDNS	00NR	5	25SP	G15_042	FROM->TO	GRPRAR1-LNX3345.00 - HOLT.CO3 345.00 345KV CKT 1	720	720	0.03435	101.8798	GEN659403 1-NDSUNFLWR W0.6900
FDNS	00NR	5	20SP	G15_042	FROM->TO	GRPRAR1-LNX3345.00 - HOLT.CO3 345.00 345KV CKT 1	720	720	0.03403	101.8782	GEN600006 1-AS KING
FDNS	00NR	5	25SP	G15_042	FROM->TO	GRPRAR1-LNX3345.00 - HOLT.CO3 345.00 345KV CKT 1	720	720	0.03435	101.874	GEN652542 1-BIG BEND
FDNS	00NR	5	17SP	G15_042	FROM->TO	GRPRAR1-LNX3345.00 - HOLT.CO3 345.00 345KV CKT 1	720	720	0.03539	101.8619	P12:345:UMZB:# 108 #: LOS FT IN ND. LOS FT
FDNS	00NR	5	17SP	G15_042	FROM->TO	GRPRAR1-LNX3345.00 - HOLT.CO3 345.00 345KV CKT 1	720	720	0.03539	101.8531	FT THOMPSON - FTTHOM1-LNX3345.00 345KV CKT Z
FDNS	00NR	5	20SP	G15_042	FROM->TO	GRPRAR1-LNX3345.00 - HOLT.CO3 345.00 345KV CKT 1	720	720	0.03403	101.8528	GEN659453 1-GI1414GEN W0.6900
FDNS	00NR	5	20SP	G15_042	FROM->TO	GRPRAR1-LNX3345.00 - HOLT.CO3 345.00 345KV CKT 1	720	720	0.03403	101.8512	GEN563302 1-G15096_3 0.6900
FDNS	00NR	5	17SP	G15_042	FROM->TO	GRPRAR1-LNX3345.00 - HOLT.CO3 345.00 345KV CKT 1	720	720	0.03539	101.7689	LELAND OLDS - LELAND2-LNX3345.00 345KV CKT Z
FDNS	00NR	5	20SP	G15_042	FROM->TO	GRPRAR1-LNX3345.00 - HOLT.CO3 345.00 345KV CKT 1	720	720	0.03403	101.7476	GEN652557 4-OAHE
FDNS	00NR	5	20SP	G15_042	FROM->TO	GRPRAR1-LNX3345.00 - HOLT.CO3 345.00 345KV CKT 1	720	720	0.03403	101.7476	GEN652558 6-OAHE
FDNS	00NR	5	20SP	G15_042	FROM->TO	GRPRAR1-LNX3345.00 - HOLT.CO3 345.00 345KV CKT 1	720	720	0.03403	101.7475	GEN652556 2-OAHE
FDNS	00NR	5	20SP	G15_042	FROM->TO	GRPRAR1-LNX3345.00 - HOLT.CO3 345.00 345KV CKT 1	720	720	0.03403	101.7462	GEN659141 1-K10215A
FDNS	00NR	5	25SP	G15_042	FROM->TO	GRPRAR1-LNX3345.00 - HOLT.CO3 345.00 345KV CKT 1	720	720	0.03435	101.7279	STANTON 230/18.0KV TRANSFORMER CKT 1
FDNS	00NR	5	20SP	G15_042	FROM->TO	GRPRAR1-LNX3345.00 - HOLT.CO3 345.00 345KV CKT 1	720	720	0.03403	101.7174	GEN659110 1-LELAND OLDS UNIT1
FDNS	00NR	5	25SP	G15_042	FROM->TO	GRPRAR1-LNX3345.00 - HOLT.CO3 345.00 345KV CKT 1	720	720	0.03435	101.5759	GEN652559 1-OAHE
FDNS	00NR	5	20SP	G15_042	FROM->TO	GRPRAR1-LNX3345.00 - HOLT.CO3 345.00 345KV CKT 1	720	720	0.03403	101.5711	GEN652173 1-G09_001IS_2 0.6900
FDNS	00NR	5	25SP	G15_042	FROM->TO	GRPRAR1-LNX3345.00 - HOLT.CO3 345.00 345KV CKT 1	720	720	0.03435	101.5035	GEN659411 1-CAMPBLCNTY W0.6900
FDNS	00NR	5	20SP	G15_042	FROM->TO	GRPRAR1-LNX3345.00 - HOLT.CO3 345.00 345KV CKT 1	720	720	0.03628	101.3452	GRAND ISLAND - MCCOOL 345KV CKT 1
FDNS	00NR	5	20SP	G15_042	FROM->TO	GRPRAR1-LNX3345.00 - HOLT.CO3 345.00 345KV CKT 1	720	720	0.03403	101.3427	GEN657749 1-YOUNG 1 GENERATOR
FDNS	00NR	5	25SP	G15_042	FROM->TO	GRPRAR1-LNX3345.00 - HOLT.CO3 345.00 345KV CKT 1	720	720	0.03435	101.3281	SQUARE BUTTE - YNG2 4 230.00 230KV CKT 1
FDNS	00NR	5	25SP	G15_042	FROM->TO	GRPRAR1-LNX3345.00 - HOLT.CO3 345.00 345KV CKT 1	720	720	0.03435	101.3204	GEN600004 2-PRAIRIE ISLAND G2
FDNS	00NR	5	25SP	G15_042	FROM->TO	GRPRAR1-LNX3345.00 - HOLT.CO3 345.00 345KV CKT 1	720	720	0.03435	101.3162	GEN600003 1-PRAIRIE ISLAND G1
FDNS	00NR	5	25SP	G15_042	FROM->TO	GRPRAR1-LNX3345.00 - HOLT.CO3 345.00 345KV CKT 1	720	720	0.03435	101.2921	GEN672310 1-POPLAR RIVER GENERATOR 1
FDNS	00NR	5	25SP	G15_042	FROM->TO	GRPRAR1-LNX3345.00 - HOLT.CO3 345.00 345KV CKT 1	720	720	0.03435	101.2921	GEN672311 2-POPLAR RIVER GENERATOR 2
FDNS	00NR	5	25SP	G15_042	FROM->TO	GRPRAR1-LNX3345.00 - HOLT.CO3 345.00 345KV CKT 1	720	720	0.03435	101.2831	GEN659296 2-SDPRAIRWND1W0.6900
FDNS	00NR	5	25SP	G15_042	FROM->TO	GRPRAR1-LNX3345.00 - HOLT.CO3 345.00 345KV CKT 1	720	720	0.03435	101.2773	GEN672321 1-SHAND GENERATOR 1
FDNS	00NR	5	20SP	G15_042	FROM->TO	GRPRAR1-LNX3345.00 - HOLT.CO3 345.00 345KV CKT 1	720	720	0.03403	101.2405	GEN659407 1-ANTELPHILLSW0.6900
FDNS	00NR	5	25SP	G15_042	FROM->TO	GRPRAR1-LNX3345.00 - HOLT.CO3 345.00 345KV CKT 1	720	720	0.03435	101.2217	P12:230:UMZB:# 112 #: NU IN SD. NU-RCDC & DRY CREEK XFMR
FDNS	00NR	5	25SP	G15_042	FROM->TO	GRPRAR1-LNX3345.00 - HOLT.CO3 345.00 345KV CKT 1	720	720	0.03435	101.2178	RCDC EAST 4230.00 - RED CEDAR DC 230KV CKT 1
FDNS	00NR	5	25SP	G15_042	FROM->TO	GRPRAR1-LNX3345.00 - HOLT.CO3 345.00 345KV CKT 1	720	720	0.03435	101.1955	GEN672306 6-BOUNDARY DAM GENERATOR 6
FDNS	00NR	5	25SP	G15_042	FROM->TO	GRPRAR1-LNX3345.00 - HOLT.CO3 345.00 345KV CKT 1	720	720	0.03435	101.0744	GEN615010 1-STANTON4
FDNS	00NR	5	25SP	G15_042	FROM->TO	GRPRAR1-LNX3345.00 - HOLT.CO3 345.00 345KV CKT 1	720	720	0.03435	101.052	GEN659453 1-GI1414GEN W0.6900
FDNS	00NR	5	25SP	G15_042	FROM->TO	GRPRAR1-LNX3345.00 - HOLT.CO3 345.00 345KV CKT 1	720	720	0.03435	101.0501	GEN563302 1-G15096_3 0.6900
FDNS	00NR	5	20SP	G15_042	FROM->TO	GRPRAR1-LNX3345.00 - HOLT.CO3 345.00 345KV CKT 1	720	720	0.03403	101.0196	GEN600005 1-MONTICELLO
FDNS	00NR	5	25SP	G15_042	FROM->TO	GRPRAR1-LNX3345.00 - HOLT.CO3 345.00 345KV CKT 1	720	720	0.03435	100.9684	GEN600006 1-AS KING
FDNS	00NR	5	25SP	G15_042	FROM->TO	GRPRAR1-LNX3345.00 - HOLT.CO3 345.00 345KV CKT 1	720	720	0.03435	100.9623	GEN652556 2-OAHE
FDNS	00NR	5	25SP	G15_042	FROM->TO	GRPRAR1-LNX3345.00 - HOLT.CO3 345.00 345KV CKT 1	720	720	0.03435	100.9623	GEN652557 4-OAHE
FDNS	00NR	5	25SP	G15_042	FROM->TO	GRPRAR1-LNX3345.00 - HOLT.CO3 345.00 345KV CKT 1	720	720	0.03435	100.9623	GEN652558 6-OAHE
FDNS	00NR	5	25SP	G15_042	FROM->TO	GRPRAR1-LNX3345.00 - HOLT.CO3 345.00 345KV CKT 1	720	720	0.03435	100.9341	GEN659141 1-K10215A
FDNS	00NR	5	25SP	G15_042	FROM->TO	GRPRAR1-LNX3345.00 - HOLT.CO3 345.00 345KV CKT 1	720	720	0.03435	100.8875	GEN659110 1-LELAND OLDS UNIT1
FDNS	00NR	5	25SP	G15_042	FROM->TO	GRPRAR1-LNX3345.00 - HOLT.CO3 345.00 345KV CKT 1	720	720	0.03675	100.8791	GRAND ISLAND - MCCOOL 345KV CKT 1
FDNS	00NR	5	25SP	G15_042	FROM->TO	GRPRAR1-LNX3345.00 - HOLT.CO3 345.00 345KV CKT 1	720	720	0.03435	100.7944	GEN652173 1-G09_001IS_2 0.6900
FDNS	00NR	5	20SP	G15_042	FROM->TO	GRPRAR1-LNX3345.00 - HOLT.CO3 345.00 345KV CKT 1	720	720	0.03403	100.7199	GEN600000 1-SHERBURNECNTY G1
FDNS	00NR	5	25SP	G15_042	FROM->TO	GRPRAR1-LNX3345.00 - HOLT.CO3 345.00 345KV CKT 1	720	720	0.03435	100.4699	CLAY BOSWELL 230/20.9KV TRANSFORMER CKT 1
FDNS	00NR	5	20SP	G15_042	FROM->TO	GRPRAR1-LNX3345.00 - HOLT.CO3 345.00 345KV CKT 1	720	720	0.03403	100.4635	GEN600001 2-SHERBURNE CNTY G2
FDNS	00NR	5	25SP	G15_042	FROM->TO	GRPRAR1-LNX3345.00 - HOLT.CO3 345.00 345KV CKT 1	720	720	0.03435	100.4465	GEN659407 1-ANTELPHILLSW0.6900
FDNS	00NR	5	25SP	G15_042	FROM->TO	GRPRAR1-LNX3345.00 - HOLT.CO3 345.00 345KV CKT 1	720	720	0.03435	100.43	GEN657749 1-YOUNG 1 GENERATOR
FDNS	00NR	5	20SP	G15_042	FROM->TO	GRPRAR1-LNX3345.00 - HOLT.CO3 345.00 345KV CKT 1	720	720	0.03403	100.3088	GEN661015 1-COYOTE
FDNS	00NR	5	20SP	G15_042	FROM->TO	GRPRAR1-LNX3345.00 - HOLT.CO3 345.00 345KV CKT 1	720	720	0.03403	100.1637	GEN620315 1-BIG STONE GEN
FDNS	00NR	5	25SP	G15_042	FROM->TO	GRPRAR1-LNX3345.00 - HOLT.CO3 345.00 345KV CKT 1	720	720	0.03435	100.1	GEN600005 1-MONTICELLO
FDNS	00NR	5	17SP	G15_042	FROM->TO	GRPRAR1-LNX3345.00 - HOLT.CO3 345.00 345KV CKT 1	720	720	0.06753	100	ANTELOPE 3345.00 - HOSKINS 345KV CKT 1
FDNS	00NR	5	20SP	G15_042	FROM->TO	GRPRAR1-LNX3345.00 - HOLT.CO3 345.00 345KV CKT 1	720	720	0.03403	99.9	GEN600002 3-SHERBURNE CNTY G3
FDNS	00NR	5	25SP	G15_042	FROM->TO	GRPRAR1-LNX3345.00 - HOLT.CO3 345.00 345KV CKT 1	720	720	0.03435	99.9	GEN600000 1-SHERBURNECNTY G1
FDNS	00NR	5	25SP	G15_042	FROM->TO	GRPRAR1-LNX3345.00 - HOLT.CO3 345.00 345KV CKT 1	720	720	0.03435	99.7	GEN600001 2-SHERBURNE CNTY G2
FDNS	00NR	5	20SP	G15_042	FROM->TO	GRPRAR1-LNX3345.00 - HOLT.CO3 345.00 345KV CKT 1	720	720	0.03403	99.5	GEN657748 1-YOUNG 2 GENERATOR
FDNS	00NR	5	17SP	G15_042	TO->FROM	SIDNEY - SIDNEY TRANSFORMER 230KV CKT 1	496	496	0.03441	106.2973	KEYSTONE - SIDNEY1-LNX3345.00 345KV CKT 1
FDNS	00NR	5	17SP	G15_042	TO->FROM	SIDNEY - SIDNEY TRANSFORMER 230KV CKT 1	496	496	0.03441	105.6907	SIDNEY - SIDNEY1-LNX3345.00 345KV CKT Z
FDNS	00NR	5	17SP	G15_042	FROM->TO	SIDNEY (SDQ KV2A) 345/230/13.8KV TRANSFORMER CKT 1	400	480	0.03441	111.876	KEYSTONE - SIDNEY1-LNX3345.00 345KV CKT 1
FDNS	00NR	5	17SP	G15_042	FROM->TO	SIDNEY (SDQ KV2A) 345/230/13.8KV TRANSFORMER CKT 1	400	480	0.03441	111.3877	SIDNEY - SIDNEY1-LNX3345.00 345KV CKT Z
FDNS	00NR	5	17SP	G15_042	FROM->TO	SIDNEY (SDQ KV2A) 345/230/13.8KV TRANSFORMER CKT 1	400	480	0.03441	111.0489	KEYSTONE - SIDNEY1-LNX3345.00 345KV CKT 1
FDNS	00NR	5	17SP	G15_042	FROM->TO	SIDNEY (SDQ KV2A) 345/230/13.8KV TRANSFORMER CKT 1	400	480	0.03441	110.9826	SIDNEY - SIDNEY1-LNX3345.00 345KV CKT Z
FDNS	00NR	5	20SP	G15_042	FROM->TO	SIDNEY (SDQ KV2A) 345/230/13.8KV TRANSFORMER CKT 1	400	480	0.03453	104.1809	KEYSTONE - SIDNEY1-LNX3345.00 345KV CKT 1
FDNS	00NR	5	20SP	G15_042	FROM->TO	SIDNEY (SDQ KV2A) 345/230/13.8KV TRANSFORMER CKT 1	400	480	0.03453	103.7661	SIDNEY - SIDNEY1-LNX3345.00 345KV CKT Z
FDNS	00NR	5	20SP	G15_042	FROM->TO	SIDNEY (SDQ KV2A) 345/230/13.8KV TRANSFORMER CKT 1	400	480	0.03453	103.5541	KEYSTONE - SIDNEY1-LNX3345.00 345KV CKT 1
FDNS	00NR	5	20SP	G15_042	FROM->TO	SIDNEY (SDQ KV2A) 345/230/13.8KV TRANSFORMER CKT 1	400	480	0.03453	103.5311	SIDNEY - SIDNEY1-LNX3345.00 345KV CKT Z
FDNS	00NR	5	25SP	G15_042	FROM->TO	SIDNEY (SDQ KV2A) 345/230/13.8KV TRANSFORMER CKT 1	400	480	0.03429	103.5279	KEYSTONE - SIDNEY1-LNX3345.00 345KV CKT 1
FDNS	00NR	5	25SP	G15_042	FROM->TO	SIDNEY (SDQ KV2A) 345/230/13.8KV TRANSFORMER CKT 1	400	480	0.03429	103.0832	SIDNEY - SIDNEY1-LNX3345.00 345KV CKT Z
FDNS	00NR	5	25SP	G15_042	FROM->TO	SIDNEY (SDQ KV2A) 345/230/13.8KV TRANSFORMER CKT 1	400	480	0.03429	102.9157	KEYSTONE - SIDNEY1-LNX3345.00 345KV CKT 1
FDNS	00NR	5	25SP	G15_042	FROM->TO	SIDNEY (SDQ KV2A) 345/230/13.8KV TRANSFORMER CKT 1	400	480	0.03429	102.8617	SIDNEY - SIDNEY1-LNX3345.00 345KV CKT Z
FDNS	00NR	6	20SP	G15_042	FROM->TO	DIXONCO 230.00 - HOSKINS 230KV CKT 1	320	320	0.58806	103.9591	DIXONCO 3 345.00 - TWINCH 3 345.00 345KV CKT 1
FDNS	00NR	6	20SP	G15_042	FROM->TO	DIXONCO 230.00 - HOSKINS 230KV CKT 1	320	320	0.58806	103.947	DIXONCO 3 345.00 (DIXON1) 345/230/13.8KV TRANSFORMER CKT 1
FDNS	00NR	6	25SP	G15_042	FROM->TO	DIXONCO 230.00 - HOSKINS 230KV CKT 1	320	320	0.58816	103.6518	DIXONCO 3 345.00 - TWINCH 3 345.00 345KV CKT 1
FDNS	00NR	6	25SP	G15_042	FROM->TO	DIXONCO 230.00 - HOSKINS 230KV CKT 1	320	320	0.58816	103.5899	DIXONCO 3 345.00 (DIXON1) 345/230/13.8KV TRANSFORMER CKT 1
FDNS	00NR	6	17SP	G15_042	FROM->TO	DIXONCO 230.00 - HOSKINS 230KV CKT 1	320	320	0.58839	103.2436	DIXONCO 3 345.00 (DIXON1) 345/230/13.8KV TRANSFORMER CKT 1
FDNS	00NR	6	17SP	G15_042	FROM->TO	DIXONCO 230.00 - HOSKINS 230KV CKT 1	320	320	0.58839	103.2419	DIXONCO 3 345.00 - TWINCH 3 345.00 345KV CKT 1
FDNS	09NR	6	17G	G15_042	FROM->TO	DIXONCO 230.00 - HOSKINS 230KV CKT 1	320	320	0.58794	101.7592	DIXONCO 3 345.00 - TWINCH 3 345.00 345KV CKT 1
FDNS	09NR	6	17G	G15_042	FROM->TO	DIXONCO 230.00 - HOSKINS 230KV CKT 1	320	320	0.58794	101.7308	DIXONCO 3 345.00 (DIXON1) 345/230/13.8KV TRANSFORMER CKT 1

SOLUTION	GROUP	SCENARIO	SEASON	SOURCE	DIRECTION	MONITORED ELEMENT	RATEA (MVA)	RATEB(MVA)	TDF	TC%LOADING (% MVA)	CONTINGENCY
FDNS	09NR	6	20L	G15_042	FROM->TO	DIXONCO 230.00 - HOSKINS 230KV CKT 1	320	320	0.58664	101.6954	DIXONCO 3 345.00 - TWINCH 3 345.00 345KV CKT 1
FDNS	09NR	6	20L	G15_042	FROM->TO	DIXONCO 230.00 - HOSKINS 230KV CKT 1	320	320	0.58664	101.6622	DIXONCO 3 345.00 (DIXON1) 345/230/13.8KV TRANSFORMER CKT 1
FDNS	09NR	6	17G	G15_042	FROM->TO	DIXONCO 3 345.00 (DIXON1) 345/230/13.8KV TRANSFORMER CKT 1	336	420	0.3961	108.3463	BASE CASE
FDNS	09NR	6	17G	G15_042	FROM->TO	DIXONCO 3 345.00 (DIXON1) 345/230/13.8KV TRANSFORMER CKT 1	336	420	0.3961	107.9901	BASE CASE
FDNS	09NR	6	17G	G15_042	FROM->TO	DIXONCO 3 345.00 (DIXON1) 345/230/13.8KV TRANSFORMER CKT 1	336	420	0.62051	106.1774	DIXONCO 230.00 - HOSKINS 230KV CKT 1
FDNS	09NR	6	17G	G15_042	FROM->TO	DIXONCO 3 345.00 (DIXON1) 345/230/13.8KV TRANSFORMER CKT 1	336	420	0.62051	105.9985	DIXONCO 230.00 - HOSKINS 230KV CKT 1
FDNS	09NR	6	20L	G15_042	FROM->TO	DIXONCO 3 345.00 (DIXON1) 345/230/13.8KV TRANSFORMER CKT 1	336	420	0.39911	103.7394	BASE CASE
FDNS	09NR	6	20L	G15_042	FROM->TO	DIXONCO 3 345.00 (DIXON1) 345/230/13.8KV TRANSFORMER CKT 1	336	420	0.62179	103.6037	DIXONCO 230.00 - HOSKINS 230KV CKT 1
FDNS	09NR	6	20L	G15_042	FROM->TO	DIXONCO 3 345.00 (DIXON1) 345/230/13.8KV TRANSFORMER CKT 1	336	420	0.62179	103.5214	DIXONCO 230.00 - HOSKINS 230KV CKT 1
FDNS	09NR	6	20L	G15_042	FROM->TO	DIXONCO 3 345.00 (DIXON1) 345/230/13.8KV TRANSFORMER CKT 1	336	420	0.39911	103.488	BASE CASE
FDNS	09NR	6	17G	G15_042	FROM->TO	DIXONCO 3 345.00 (DIXON1) 345/230/13.8KV TRANSFORMER CKT 1	336	420	0.39761	101.625	HOSKINS - RAUN 345KV CKT 1
FDNS	09NR	6	17G	G15_042	FROM->TO	DIXONCO 3 345.00 (DIXON1) 345/230/13.8KV TRANSFORMER CKT 1	336	420	0.39761	101.454	HOSKINS - RAUN 345KV CKT 1
FDNS	00NR	6	17SP	G15_042	TO->FROM	SIDNEY - SIDNEY TRANSFORMER 230KV CKT 1	496	496	0.03516	108.2092	KEYSTONE - SIDNEY1-LNX3345.00 345KV CKT 1
FDNS	00NR	6	17SP	G15_042	TO->FROM	SIDNEY - SIDNEY TRANSFORMER 230KV CKT 1	496	496	0.03516	107.559	SIDNEY - SIDNEY1-LNX3345.00 345KV CKT Z
FDNS	00NR	6	20SP	G15_042	TO->FROM	SIDNEY - SIDNEY TRANSFORMER 230KV CKT 1	496	496	0.03527	100.7153	KEYSTONE - SIDNEY1-LNX3345.00 345KV CKT 1
FDNS	00NR	6	20SP	G15_042	TO->FROM	SIDNEY - SIDNEY TRANSFORMER 230KV CKT 1	496	496	0.03527	100.1554	SIDNEY - SIDNEY1-LNX3345.00 345KV CKT Z
FDNS	00NR	6	25SP	G15_042	TO->FROM	SIDNEY - SIDNEY TRANSFORMER 230KV CKT 1	496	496	0.03503	100.0541	KEYSTONE - SIDNEY1-LNX3345.00 345KV CKT 1
FDNS	00NR	6	25SP	G15_042	TO->FROM	SIDNEY - SIDNEY TRANSFORMER 230KV CKT 1	496	496	0.03503	99.6	SIDNEY - SIDNEY1-LNX3345.00 345KV CKT Z
FDNS	00NR	0	17SP	G15_043	FROM->TO	EVANS ENERGY CENTER NORTH - MAIZEW 4 138.00 138KV CKT 1	369	382	0.03914	100.625	BENTON - WICHITA 345KV CKT 1
FDNS	00NR	0	20WP	G15_043	TO->FROM	MATHWSN7 345.00 - TATONGA7 345.00 345KV CKT 1	1195	1195	0.03511	111.0527	G14-074T 345.00 - OKLAUNION 345KV CKT 1
FDNS	00NR	0	16WP	G15_043	TO->FROM	MATHWSN7 345.00 - TATONGA7 345.00 345KV CKT 1	1195	1195	0.03505	109.4708	G14-074T 345.00 - OKLAUNION 345KV CKT 1
FDNS	00NR	0	20WP	G15_043	TO->FROM	MATHWSN7 345.00 - TATONGA7 345.00 345KV CKT 1	1195	1195	0.03357	102.755	CHISHOLM6 230.00 - SWEETWATER 230KV CKT 1
FDNS	00NR	0	20WP	G15_043	TO->FROM	MATHWSN7 345.00 - TATONGA7 345.00 345KV CKT 1	1195	1195	0.03511	102.648	G14-074T 345.00 - TUCO INTERCHANGE 345KV CKT 1
FDNS	00NR	0	20WP	G15_043	TO->FROM	MATHWSN7 345.00 - TATONGA7 345.00 345KV CKT 1	1195	1195	0.03369	102.5313	P12:230:AEPW:ELKCITY6:SWEETWT6
FDNS	00NR	0	16WP	G15_043	TO->FROM	MATHWSN7 345.00 - TATONGA7 345.00 345KV CKT 1	1195	1195	0.03505	101.336	G14-074T 345.00 - TUCO INTERCHANGE 345KV CKT 1
FDNS	00NR	0	16WP	G15_043	TO->FROM	MATHWSN7 345.00 - TATONGA7 345.00 345KV CKT 1	1195	1195	0.0335	101.2796	CHISHOLM6 230.00 - SWEETWATER 230KV CKT 1
FDNS	00NR	0	16WP	G15_043	TO->FROM	MATHWSN7 345.00 - TATONGA7 345.00 345KV CKT 1	1195	1195	0.03362	101.1173	P12:230:AEPW:ELKCITY6:SWEETWT6
FDNS	00NR	0	20WP	G15_043	TO->FROM	MATHWSN7 345.00 - TATONGA7 345.00 345KV CKT 1	1195	1195	0.03234	101.0657	CIMARRON - MINCO 345KV CKT 1
FDNS	00NR	0	20WP	G15_043	TO->FROM	MATHWSN7 345.00 - TATONGA7 345.00 345KV CKT 1	1195	1195	0.03357	100.5522	STLN-DEMARC6 - SWEETWATER 230KV CKT 1
FDNS	00NR	0	20WP	G15_043	TO->FROM	MATHWSN7 345.00 - TATONGA7 345.00 345KV CKT 1	1195	1195	0.03357	100.5393	P12:230:AEPW-SPS:SWEETWT6:WHEELER 6
FDNS	00NR	0	20WP	G15_043	TO->FROM	MATHWSN7 345.00 - TATONGA7 345.00 345KV CKT 1	1195	1195	0.03357	100.5385	STATELINE INTERCHANGE - STLN-DEMARC6 230KV CKT 1
FDNS	00NR	0	16WP	G15_043	TO->FROM	MATHWSN7 345.00 - TATONGA7 345.00 345KV CKT 1	1195	1195	0.03224	100.2834	CIMARRON - MINCO 345KV CKT 1
FDNS	00NR	2	17SP	G15_043	FROM->TO	EVANS ENERGY CENTER NORTH - MAIZEW 4 138.00 138KV CKT 1	369	382	0.03914	100.5975	BENTON - WICHITA 345KV CKT 1
FDNS	00NR	0	16WP	G15_044	FROM->TO	CIMARRON - DRAPER LAKE 345KV CKT 1	717	717	0.20974	132.6508	G14-057T 345.00 - SUNNYSIDE 345KV CKT 1
FDNS	00NR	0	16WP	G15_044	FROM->TO	CIMARRON - DRAPER LAKE 345KV CKT 1	717	717	0.20974	122.0003	G14-057T 345.00 - LAWTON EASTSIDE 345KV CKT 1
FDNS	00NR	0	16WP	G15_044	FROM->TO	CIMARRON - DRAPER LAKE 345KV CKT 1	717	717	0.18563	116.5817	ARCADIA - SEMINOLE 345KV CKT 1
FDNS	00NR	0	16WP	G15_044	FROM->TO	CIMARRON - DRAPER LAKE 345KV CKT 1	717	717	0.1865	115.588	CLEVELAND - G15066_T 345.00 345KV CKT 1
FDNS	00NR	0	16WP	G15_044	FROM->TO	CIMARRON - DRAPER LAKE 345KV CKT 1	717	717	0.2369	115.2993	ARCADIA - NORTHWEST 345KV CKT 1
FDNS	00NR	0	16WP	G15_044	FROM->TO	CIMARRON - DRAPER LAKE 345KV CKT 1	717	717	0.1865	114.8063	G15066_T 345.00 - SOONER 345KV CKT 1
FDNS	00NR	0	16WP	G15_044	FROM->TO	CIMARRON - DRAPER LAKE 345KV CKT 1	717	717	0.18519	110.2756	CLEVELAND - TULSA NORTH 345KV CKT 1
FDNS	00NR	0	16WP	G15_044	FROM->TO	CIMARRON - DRAPER LAKE 345KV CKT 1	717	717	0.18519	110.2756	CLEVELAND - TULSA NORTH 345KV CKT 1
FDNS	00NR	0	16WP	G15_044	FROM->TO	CIMARRON - DRAPER LAKE 345KV CKT 1	717	717	0.19108	110.1142	MATHWSN7 345.00 - NORTHWEST 345KV CKT 1
FDNS	00NR	0	16WP	G15_044	FROM->TO	CIMARRON - DRAPER LAKE 345KV CKT 1	717	717	0.18676	109.2409	CIMARRON - SARA 138KV CKT 1
FDNS	00NR	0	16WP	G15_044	FROM->TO	CIMARRON - DRAPER LAKE 345KV CKT 1	717	717	0.1881	108.713	P12:138:WFEC:MSL03
FDNS	00NR	0	16WP	G15_044	FROM->TO	CIMARRON - DRAPER LAKE 345KV CKT 1	717	717	0.1872	108.0689	CIMARRON (CIMARON2) 345/138/13.8KV TRANSFORMER CKT 1
FDNS	00NR	0	16WP	G15_044	FROM->TO	CIMARRON - DRAPER LAKE 345KV CKT 1	717	717	0.18676	107.9446	SARA - STHLAKE4 138.00 138KV CKT 1
FDNS	00NR	0	16WP	G15_044	FROM->TO	CIMARRON - DRAPER LAKE 345KV CKT 1	717	717	0.18702	107.899	CIMARRON (CIMARON1) 345/138/13.8KV TRANSFORMER CKT 1
FDNS	00NR	0	16WP	G15_044	FROM->TO	CIMARRON - DRAPER LAKE 345KV CKT 1	717	717	0.18676	107.745	MCCLAIN - STHLAKE4 138.00 138KV CKT 1
FDNS	00NR	0	16WP	G15_044	FROM->TO	CIMARRON - DRAPER LAKE 345KV CKT 1	717	717	0.18613	107.4685	CIMARRON - CZECH HALL 138KV CKT 1
FDNS	00NR	0	16WP	G15_044	FROM->TO	CIMARRON - DRAPER LAKE 345KV CKT 1	717	717	0.18613	107.112	CZECH HALL - XEROX 138KV CKT 1
FDNS	00NR	0	16WP	G15_044	FROM->TO	CIMARRON - DRAPER LAKE 345KV CKT 1	717	717	0.18613	107.0924	MORGAN - XEROX 138KV CKT 1
FDNS	00NR	0	16WP	G15_044	FROM->TO	CIMARRON - DRAPER LAKE 345KV CKT 1	717	717	0.18573	106.9919	ANADARKO - POCASSETT 138KV CKT 1
FDNS	00NR	0	16WP	G15_044	FROM->TO	CIMARRON - DRAPER LAKE 345KV CKT 1	717	717	0.18613	106.9752	MORGAN - MUSTANG 138KV CKT 1
FDNS	00NR	0	16WP	G15_044	FROM->TO	CIMARRON - DRAPER LAKE 345KV CKT 1	717	717	0.18573	106.7926	POCASSETT - TUTTLE 138KV CKT 1
FDNS	00NR	0	16WP	G15_044	FROM->TO	CIMARRON - DRAPER LAKE 345KV CKT 1	717	717	0.18231	106.703	GEN515040 1-SEMINOLE 1G
FDNS	00NR	0	16WP	G15_044	FROM->TO	CIMARRON - DRAPER LAKE 345KV CKT 1	717	717	0.18258	106.6763	LACYGNE - WAVERLY7 345.00 345KV CKT 1
FDNS	00NR	0	16WP	G15_044	FROM->TO	CIMARRON - DRAPER LAKE 345KV CKT 1	717	717	0.1878	106.5853	JOHNSON COUNTY - SUNNYSIDE 345KV CKT 1
FDNS	00NR	0	16WP	G15_044	FROM->TO	CIMARRON - DRAPER LAKE 345KV CKT 1	717	717	0.18258	106.4587	WAVERLY7 345.00 - WOLF CREEK 345KV CKT 1
FDNSLock	00NR	0	16WP	G15_044	FROM->TO	CIMARRON - DRAPER LAKE 345KV CKT 1	717	717	0.18231	106.456	GEN509403 1-PIRKEY GENERATION
FDNS	00NR	0	16WP	G15_044	FROM->TO	CIMARRON - DRAPER LAKE 345KV CKT 1	717	717	0.18512	106.4058	CORN TAP - NAPLESTP 138.00 138KV CKT 1
FDNS	00NR	0	16WP	G15_044	FROM->TO	CIMARRON - DRAPER LAKE 345KV CKT 1	717	717	0.18231	106.3792	GEN509416 1-TURK GENERATION
FDNS	00NR	0	16WP	G15_044	FROM->TO	CIMARRON - DRAPER LAKE 345KV CKT 1	717	717	0.18231	106.3605	GEN501801 1-DOLET HILLS UNIT1
FDNS	00NR	0	16WP	G15_044	FROM->TO	CIMARRON - DRAPER LAKE 345KV CKT 1	717	717	0.18512	106.3121	NAPLESTP 138.00 - PAYNE 138.00 138KV CKT 1
FDNS	00NR	0	16WP	G15_044	FROM->TO	CIMARRON - DRAPER LAKE 345KV CKT 1	717	717	0.18573	106.2787	BRIDGECR 138.00 - TUTTLE 138KV CKT 1
FDNS	00NR	0	16WP	G15_044	FROM->TO	CIMARRON - DRAPER LAKE 345KV CKT 1	717	717	0.18314	106.2342	CANEYRV7 345.00 - NEOSHO 345KV CKT 1
FDNS	00NR	0	17SP	G15_044	FROM->TO	CIMARRON - DRAPER LAKE 345KV CKT 1	717	717	0.19886	106.1697	G14-057T 345.00 - SUNNYSIDE 345KV CKT 1
FDNSLock	00NR	0	16WP	G15_044	FROM->TO	CIMARRON - DRAPER LAKE 345KV CKT 1	717	717	0.18231	106.0246	GEN336821 1-GRAND GULF UNIT
FDNS	00NR	0	16WP	G15_044	FROM->TO	CIMARRON - DRAPER LAKE 345KV CKT 1	717	717	0.18231	105.9922	GEN515042 1-SEMINOLE 3G
FDNS	00NR	0	16WP	G15_044	FROM->TO	CIMARRON - DRAPER LAKE 345KV CKT 1	717	717	0.18314	105.9562	CANEYRV7 345.00 - LATHAMS7 345.00 345KV CKT 1
FDNS	00NR	0	16WP	G15_044	FROM->TO	CIMARRON - DRAPER LAKE 345KV CKT 1	717	717	0.18573	105.9048	BRIDGECR 138.00 - SUNSHINE CANYON 138KV CKT 1
FDNS	00NR	0	16WP	G15_044	FROM->TO	CIMARRON - DRAPER LAKE 345KV CKT 1	717	717	0.18573	105.894	P12:138:WFEC:MSL01
FDNS	00NR	0	16WP	G15_044	FROM->TO	CIMARRON - DRAPER LAKE 345KV CKT 1	717	717	0.18231	105.7583	GEN515041 1-SEMINOLE 2G
FDNSLock	00NR	0	16WP	G15_044	FROM->TO	CIMARRON - DRAPER LAKE 345KV CKT 1	717	717	0.18231	105.7266	GEN336153 1-WATERFORD UNIT#3
FDNS	00NR	0	16WP	G15_044	FROM->TO	CIMARRON - DRAPER LAKE 345KV CKT 1	717	717	0.20785	105.5516	CIMARRON - NORTHWEST 345KV CKT 1
FDNS	00NR	0	16WP	G15_044	FROM->TO	CIMARRON - DRAPER LAKE 345KV CKT 1	717	717	0.18231	105.5263	GEN509406 1-WELSH #3
FDNS	00NR	0	16WP	G15_044	FROM->TO	CIMARRON - DRAPER LAKE 345KV CKT 1	717	717	0.18231	105.5261	GEN509404 1-WELSH #1
FDNS	00NR	0	16WP	G15_044	FROM->TO	CIMARRON - DRAPER LAKE 345KV CKT 1	717	717	0.18314	105.5155	LATHAMS7 345.00 - ROSE HILL 345KV CKT 1
FDNSLock	00NR	0	16WP	G15_044	FROM->TO	CIMARRON - DRAPER LAKE 345KV CKT 1	717	717	0.18231	105.4219	GEN335831 1-RIVERBEND UNIT#1
FDNSLock	00NR	0	16WP	G15_044	FROM->TO	CIMARRON - DRAPER LAKE 345KV CKT 1	717	717	0.18231	105.406	GEN337911 1-ARKANSAS NUCLEAR ONE UNIT #2

SOLUTION	GROUP	SCENARIO	SEASON	SOURCE	DIRECTION	MONITORED ELEMENT	RATEA (MVA)	RATEB(MVA)	TDF	TC%LOADING (% MVA)	CONTINGENCY
FDNS	00NR	0	16WP	G15_044	FROM->TO	CIMARRON - DRAPER LAKE 345KV CKT 1	717	717	0.18351	105.1336	HUGO - SUNNYSIDE 345KV CKT 1
FDNS	00NR	0	16WP	G15_044	FROM->TO	CIMARRON - DRAPER LAKE 345KV CKT 1	717	717	0.17781	105.1183	CANADIAN RIVER - MUSKOGEE 345KV CKT 1
FDNS	00NR	0	16WP	G15_044	FROM->TO	CIMARRON - DRAPER LAKE 345KV CKT 1	717	717	0.18238	105.0337	P12:138:OKGE:3TERM14
FDNS	00NR	0	16WP	G15_044	FROM->TO	CIMARRON - DRAPER LAKE 345KV CKT 1	717	717	0.18231	105.0296	GRAND GULF 500/22.0KV TRANSFORMER CKT 1
FDNS	00NR	0	16WP	G15_044	FROM->TO	CIMARRON - DRAPER LAKE 345KV CKT 1	717	717	0.18231	105.0273	GEN337910 1-ARKANSAS NUCLEAR ONE UNIT #1
FDNS	00NR	0	16WP	G15_044	FROM->TO	CIMARRON - DRAPER LAKE 345KV CKT 1	717	717	0.18756	105.0144	JOHNSON COUNTY - PITTSBURG 345KV CKT 1
FDNS	00NR	0	16WP	G15_044	FROM->TO	CIMARRON - DRAPER LAKE 345KV CKT 1	717	717	0.18756	105.0144	JOHNSON COUNTY - PITTSBURG 345KV CKT 1
FDNS	00NR	0	16WP	G15_044	FROM->TO	CIMARRON - DRAPER LAKE 345KV CKT 1	717	717	0.18326	104.9951	HORSESHOE LAKE - JONES TAP 138KV CKT 1
FDNS	00NR	0	16WP	G15_044	FROM->TO	CIMARRON - DRAPER LAKE 345KV CKT 1	717	717	0.18198	104.9687	MORISNT4 138.00 - STILLWATER 138KV CKT 1
FDNS	00NR	0	16WP	G15_044	FROM->TO	CIMARRON - DRAPER LAKE 345KV CKT 1	717	717	0.182	104.9641	P12:138:OKGE:3TERM2
FDNS	00NR	0	16WP	G15_044	FROM->TO	CIMARRON - DRAPER LAKE 345KV CKT 1	717	717	0.18367	104.9439	REDBUD - RIVERSIDE STATION 345KV CKT 1
FDNS	00NR	0	16WP	G15_044	FROM->TO	CIMARRON - DRAPER LAKE 345KV CKT 1	717	717	0.18367	104.9439	REDBUD - RIVERSIDE STATION 345KV CKT 1
FDNS	00NR	0	16WP	G15_044	FROM->TO	CIMARRON - DRAPER LAKE 345KV CKT 1	717	717	0.18231	104.8928	GEN515226 1-MUSKOGEE 6G
FDNS	00NR	0	16WP	G15_044	FROM->TO	CIMARRON - DRAPER LAKE 345KV CKT 1	717	717	0.18231	104.879	GEN501813 1-RODEMACHER UNIT 3
FDNS	00NR	0	16WP	G15_044	FROM->TO	CIMARRON - DRAPER LAKE 345KV CKT 1	717	717	0.18657	104.8291	BAILEY4 138.00 - SUNSHINE CANYON 138KV CKT 1
FDNS	00NR	0	16WP	G15_044	FROM->TO	CIMARRON - DRAPER LAKE 345KV CKT 1	717	717	0.1829	104.7782	NORTHWEST (NORTWST2) 345/138/13.8KV TRANSFORMER CKT 1
FDNS	00NR	0	16WP	G15_044	FROM->TO	CIMARRON - DRAPER LAKE 345KV CKT 1	717	717	0.18206	104.7766	7SAREPTA% 345.00 - LONGWOOD 345KV CKT 1
FDNS	00NR	0	16WP	G15_044	FROM->TO	CIMARRON - DRAPER LAKE 345KV CKT 1	717	717	0.18206	104.7766	7SAREPTA% 345.00 - LONGWOOD 345KV CKT 1
FDNS	00NR	0	16WP	G15_044	FROM->TO	CIMARRON - DRAPER LAKE 345KV CKT 1	717	717	0.18176	104.7749	ARCADIA - KAMO MEMORIAL 138KV CKT 1
FDNS	00NR	0	16WP	G15_044	FROM->TO	CIMARRON - DRAPER LAKE 345KV CKT 1	717	717	0.18239	104.7555	P12:138:OKGE:3TERM12
FDNS	00NR	0	16WP	G15_044	FROM->TO	CIMARRON - DRAPER LAKE 345KV CKT 1	717	717	0.18221	104.7399	DOLET HILLS - SOUTHWEST SHREVEPORT 345KV CKT 1
FDNS	00NR	0	16WP	G15_044	FROM->TO	CIMARRON - DRAPER LAKE 345KV CKT 1	717	717	0.18221	104.7399	DOLET HILLS - SOUTHWEST SHREVEPORT 345KV CKT 1
FDNS	00NR	0	16WP	G15_044	FROM->TO	CIMARRON - DRAPER LAKE 345KV CKT 1	717	717	0.18231	104.6942	GEN515225 1-MUSKOGEE 5G
FDNS	00NR	0	16WP	G15_044	FROM->TO	CIMARRON - DRAPER LAKE 345KV CKT 1	717	717	0.18231	104.694	GEN515223 1-MUSKOGEE 4G
FDNS	00NR	0	16WP	G15_044	FROM->TO	CIMARRON - DRAPER LAKE 345KV CKT 1	717	717	0.18231	104.6904	GEN335206 1-NELSON UNIT 6
FDNS	00NR	0	16WP	G15_044	FROM->TO	CIMARRON - DRAPER LAKE 345KV CKT 1	717	717	0.1832	104.68	MEMORIAL - SKYLINE 138KV CKT 1
FDNS	00NR	0	16WP	G15_044	FROM->TO	CIMARRON - DRAPER LAKE 345KV CKT 1	717	717	0.19048	104.583	GRACEMONT (BANK 1) 345/138/13.8KV TRANSFORMER CKT 1
FDNS	00NR	0	16WP	G15_044	FROM->TO	CIMARRON - DRAPER LAKE 345KV CKT 1	717	717	0.18381	104.5721	QUAIL CREEK - SKYLINE 138KV CKT 1
FDNS	00NR	0	16WP	G15_044	FROM->TO	CIMARRON - DRAPER LAKE 345KV CKT 1	717	717	0.18231	104.5492	GEN509409 1-WILKES #3
FDNS	00NR	0	16WP	G15_044	FROM->TO	CIMARRON - DRAPER LAKE 345KV CKT 1	717	717	0.18231	104.5474	GEN337653 1-WHITE BLUFF UNIT #2
FDNS	00NR	0	16WP	G15_044	FROM->TO	CIMARRON - DRAPER LAKE 345KV CKT 1	717	717	0.18338	104.5355	P12:138:OKGE:3TERM18
FDNS	00NR	0	16WP	G15_044	FROM->TO	CIMARRON - DRAPER LAKE 345KV CKT 1	717	717	0.18657	104.5271	BAILEY4 138.00 - WESTMOORE 138KV CKT 1
FDNS	00NR	0	16WP	G15_044	FROM->TO	CIMARRON - DRAPER LAKE 345KV CKT 1	717	717	0.18231	104.519	GEN501812 1-RODEMACHER UNIT 2
FDNS	00NR	0	16WP	G15_044	FROM->TO	CIMARRON - DRAPER LAKE 345KV CKT 1	717	717	0.18285	104.5145	NORTHWEST (NORTWST4) 345/138/13.8KV TRANSFORMER CKT 1
FDNS	00NR	0	16WP	G15_044	FROM->TO	CIMARRON - DRAPER LAKE 345KV CKT 1	717	717	0.18231	104.4548	NEW MADRID 161/22.0KV TRANSFORMER CKT 1
FDNS	00NR	0	16WP	G15_044	FROM->TO	CIMARRON - DRAPER LAKE 345KV CKT 1	717	717	0.1833	104.4542	36 & MERIDIAN - CHEMTRON 138KV CKT 1
FDNS	00NR	0	16WP	G15_044	FROM->TO	CIMARRON - DRAPER LAKE 345KV CKT 1	717	717	0.18295	104.4515	THISTLE7 345.00 - WOODWARD DISTRICT EHV 345KV CKT 1
FDNS	00NR	0	16WP	G15_044	FROM->TO	CIMARRON - DRAPER LAKE 345KV CKT 1	717	717	0.18295	104.4515	THISTLE7 345.00 - WOODWARD DISTRICT EHV 345KV CKT 1
FDNS	00NR	0	16WP	G15_044	FROM->TO	CIMARRON - DRAPER LAKE 345KV CKT 1	717	717	0.18295	104.4515	THISTLE7 345.00 - WOODWARD DISTRICT EHV 345KV CKT 2
FDNS	00NR	0	16WP	G15_044	FROM->TO	CIMARRON - DRAPER LAKE 345KV CKT 1	717	717	0.18295	104.4515	THISTLE7 345.00 - WOODWARD DISTRICT EHV 345KV CKT 2
FDNS	00NR	0	16WP	G15_044	FROM->TO	CIMARRON - DRAPER LAKE 345KV CKT 1	717	717	0.18231	104.4411	NEW MADRID 345/22.0KV TRANSFORMER CKT 1
FDNS	00NR	0	16WP	G15_044	FROM->TO	CIMARRON - DRAPER LAKE 345KV CKT 1	717	717	0.18231	104.4225	GEN520947 1-HUGO1
FDNS	00NR	0	16WP	G15_044	FROM->TO	CIMARRON - DRAPER LAKE 345KV CKT 1	717	717	0.18231	104.4148	GEN337652 1-WHITE BLUFF UNIT #1
FDNS	00NR	0	16WP	G15_044	FROM->TO	CIMARRON - DRAPER LAKE 345KV CKT 1	717	717	0.18285	104.3894	NORTHWEST (NORTWST3) 345/138/13.8KV TRANSFORMER CKT 1
FDNS	00NR	0	16WP	G15_044	FROM->TO	CIMARRON - DRAPER LAKE 345KV CKT 1	717	717	0.18217	104.376	3TR3AR8EL7EL
FDNS	00NR	0	16WP	G15_044	FROM->TO	CIMARRON - DRAPER LAKE 345KV CKT 1	717	717	0.18217	104.376	7SAREPTA% 345.00 - ELDORADO EHV 345KV CKT 1
FDNS	00NR	0	16WP	G15_044	FROM->TO	CIMARRON - DRAPER LAKE 345KV CKT 1	717	717	0.18217	104.3682	ELDORADO EHV 500/345KV TRANSFORMER CKT 1
FDNS	00NR	0	16WP	G15_044	FROM->TO	CIMARRON - DRAPER LAKE 345KV CKT 1	717	717	0.1833	104.3672	CHEMTRON - PENNSYLVANIA 138KV CKT 1
FDNS	00NR	0	16WP	G15_044	FROM->TO	CIMARRON - DRAPER LAKE 345KV CKT 1	717	717	0.18208	104.3371	G15052_T 345.00 - ROSE HILL 345KV CKT 1
FDNS	00NR	0	16WP	G15_044	FROM->TO	CIMARRON - DRAPER LAKE 345KV CKT 1	717	717	0.18242	104.3332	G15074_T 345.00 - HOYT 345KV CKT 1
FDNS	00NR	0	16WP	G15_044	FROM->TO	CIMARRON - DRAPER LAKE 345KV CKT 1	717	717	0.18515	104.3021	BLANCHARD - CORNVILLE 138KV CKT 1
FDNS	00NR	0	16WP	G15_044	FROM->TO	CIMARRON - DRAPER LAKE 345KV CKT 1	717	717	0.18327	104.3015	COMANCHE - LOCO 138KV CKT 1
FDNS	00NR	0	16WP	G15_044	FROM->TO	CIMARRON - DRAPER LAKE 345KV CKT 1	717	717	0.18265	104.2791	P12:138:OKGE:3TERM17
FDNS	00NR	0	16WP	G15_044	FROM->TO	CIMARRON - DRAPER LAKE 345KV CKT 1	717	717	0.18231	104.2625	GEN515577 1-ARBWND11 0.6900
FDNS	00NR	0	16WP	G15_044	FROM->TO	CIMARRON - DRAPER LAKE 345KV CKT 1	717	717	0.18657	104.2438	FRANKLIN SW - WESTMOORE 138KV CKT 1
FDNS	00NR	0	16WP	G15_044	FROM->TO	CIMARRON - DRAPER LAKE 345KV CKT 1	717	717	0.18375	104.2374	P12:138:OKGE:3TERM11
FDNS	00NR	0	16WP	G15_044	FROM->TO	CIMARRON - DRAPER LAKE 345KV CKT 1	717	717	0.18231	104.2237	GEN334440 1-SABINE UNIT 4
FDNS	00NR	0	16WP	G15_044	FROM->TO	CIMARRON - DRAPER LAKE 345KV CKT 1	717	717	0.18272	104.2165	LONEOAK - NORTHWEST 138KV CKT 1
FDNS	00NR	0	16WP	G15_044	FROM->TO	CIMARRON - DRAPER LAKE 345KV CKT 1	717	717	0.18515	104.211	P12:138:AEPW-OGE:CORNVIL4:MAUD 4
FDNS	00NR	0	16WP	G15_044	FROM->TO	CIMARRON - DRAPER LAKE 345KV CKT 1	717	717	0.18386	104.2024	KETCH TAP - NORTHWEST 138KV CKT 1
FDNS	00NR	0	16WP	G15_044	FROM->TO	CIMARRON - DRAPER LAKE 345KV CKT 1	717	717	0.18231	104.2023	DELL 500 - ESSEX UNIT 2 500KV CKT Z1
FDNS	00NR	0	16WP	G15_044	FROM->TO	CIMARRON - DRAPER LAKE 345KV CKT 1	717	717	0.18321	104.1938	DIVISION AVE - LAKESIDE 138KV CKT 1
FDNS	00NR	0	16WP	G15_044	FROM->TO	CIMARRON - DRAPER LAKE 345KV CKT 1	717	717	0.18135	104.1729	HORSESHOE LAKE - KAMO MEMORIAL 138KV CKT 1
FDNS	00NR	0	16WP	G15_044	FROM->TO	CIMARRON - DRAPER LAKE 345KV CKT 1	717	717	0.18241	104.1303	NORTHWEST - PANTHER 138KV CKT 1
FDNS	00NR	0	16WP	G15_044	FROM->TO	CIMARRON - DRAPER LAKE 345KV CKT 1	717	717	0.18158	104.1253	G14-074T 345.00 - OKLAUNION 345KV CKT 1
FDNS	00NR	0	16WP	G15_044	FROM->TO	CIMARRON - DRAPER LAKE 345KV CKT 1	717	717	0.18439	104.1217	CLARKSVILLE - ONETA 345KV CKT 1
FDNS	00NR	0	16WP	G15_044	FROM->TO	CIMARRON - DRAPER LAKE 345KV CKT 1	717	717	0.18439	104.1217	CLARKSVILLE - ONETA 345KV CKT 1
FDNS	00NR	0	16WP	G15_044	FROM->TO	CIMARRON - DRAPER LAKE 345KV CKT 1	717	717	0.18215	104.1144	P12:138:OKGE:3TERM20
FDNS	00NR	0	16WP	G15_044	FROM->TO	CIMARRON - DRAPER LAKE 345KV CKT 1	717	717	0.18515	104.1089	BLANCHARD - MAUD 138KV CKT 1
FDNS	00NR	0	16WP	G15_044	FROM->TO	CIMARRON - DRAPER LAKE 345KV CKT 1	717	717	0.18397	104.1015	CIMARRON - HAYMAKER 138KV CKT 1
FDNS	00NR	0	16WP	G15_044	FROM->TO	CIMARRON - DRAPER LAKE 345KV CKT 1	717	717	0.18242	104.0977	P12:138:OKGE:3TERM47
FDNS	00NR	0	16WP	G15_044	FROM->TO	CIMARRON - DRAPER LAKE 345KV CKT 1	717	717	0.18231	104.0931	GEN336252 1-NINEMILE POINT UNIT#5
FDNS	00NR	0	16WP	G15_044	FROM->TO	CIMARRON - DRAPER LAKE 345KV CKT 1	717	717	0.18301	104.0857	FINNEY SWITCHING STATION - HOLCOMB 345KV CKT 1
FDNS	00NR	0	16WP	G15_044	FROM->TO	CIMARRON - DRAPER LAKE 345KV CKT 1	717	717	0.18301	104.0857	FINNEY SWITCHING STATION - HOLCOMB 345KV CKT 1
FDNS	00NR	0	16WP	G15_044	FROM->TO	CIMARRON - DRAPER LAKE 345KV CKT 1	717	717	0.18231	104.0808	DOLET HILLS 345/24.0KV TRANSFORMER CKT 1
FDNS	00NR	0	16WP	G15_044	FROM->TO	CIMARRON - DRAPER LAKE 345KV CKT 1	717	717	0.18241	104.08	PANTHER - SILVER LAKE 138KV CKT 1
FDNS	00NR	0	16WP	G15_044	FROM->TO	CIMARRON - DRAPER LAKE 345KV CKT 1	717	717	0.18321	104.0723	HEFNER - LAKESIDE 138KV CKT 1
FDNS	00NR	0	16WP	G15_044	FROM->TO	CIMARRON - DRAPER LAKE 345KV CKT 1	717	717	0.18254	104.041	BLACKBERRY - NEOSHO 345KV CKT 1
FDNS	00NR	0	16WP	G15_044	FROM->TO	CIMARRON - DRAPER LAKE 345KV CKT 1	717	717	0.18231	104.0356	WHITE BLUFF 500/26.0KV TRANSFORMER CKT 1

SOLUTION	GROUP	SCENARIO	SEASON	SOURCE	DIRECTION	MONITORED ELEMENT	RATEA (MVA)	RATEB(MVA)	TDF	TC%LOADING (% MVA)	CONTINGENCY
FDNS	00NR	0	16WP	G15_044	FROM->TO	CIMARRON - DRAPER LAKE 345KV CKT 1	717	717	0.18279	104.0273	KETCH - KETCH TAP 138KV CKT 1
FDNS	00NR	0	16WP	G15_044	FROM->TO	CIMARRON - DRAPER LAKE 345KV CKT 1	717	717	0.18257	104.02	EMPORIA ENERGY CENTER - G14_001T 345.00 345KV CKT 1
FDNS	00NR	0	16WP	G15_044	FROM->TO	CIMARRON - DRAPER LAKE 345KV CKT 1	717	717	0.18242	104.0189	HOYT - STRANGER CREEK 345KV CKT 1
FDNS	00NR	0	16WP	G15_044	FROM->TO	CIMARRON - DRAPER LAKE 345KV CKT 1	717	717	0.18235	104.0086	DIVISION AVE - MUSTANG 138KV CKT 1
FDNS	00NR	0	16WP	G15_044	FROM->TO	CIMARRON - DRAPER LAKE 345KV CKT 1	717	717	0.18237	104	G15088_T 345.00 - MOORE 345KV CKT 1
FDNS	00NR	0	16WP	G15_044	FROM->TO	CIMARRON - DRAPER LAKE 345KV CKT 1	717	717	0.18231	104	GEN300006 1-NEW MADRID UNIT 1
FDNS	00NR	0	16WP	G15_044	FROM->TO	CIMARRON - DRAPER LAKE 345KV CKT 1	717	717	0.18231	104	GEN300007 1-NEW MADRID UNIT 2
FDNS	00NR	0	16WP	G15_044	FROM->TO	CIMARRON - DRAPER LAKE 345KV CKT 1	717	717	0.18287	103.999	P12:138:WFEC:MSL02
FDNS	00NR	0	16WP	G15_044	FROM->TO	CIMARRON - DRAPER LAKE 345KV CKT 1	717	717	0.18397	103.998	DIVISION AVE - HAYMAKER 138KV CKT 1
FDNS	00NR	0	16WP	G15_044	FROM->TO	CIMARRON - DRAPER LAKE 345KV CKT 1	717	717	0.18231	103.9886	GEN509408 1-WILKES #2
FDNS	00NR	0	16WP	G15_044	FROM->TO	CIMARRON - DRAPER LAKE 345KV CKT 1	717	717	0.18241	103.9879	P12:138:AEPW-OGE:SHIDLER4:OSAGE 4
FDNS	00NR	0	16WP	G15_044	FROM->TO	CIMARRON - DRAPER LAKE 345KV CKT 1	717	717	0.18347	103.975	MCCLAIN - PLEASANT VALLEY 138KV CKT 1
FDNS	00NR	0	16WP	G15_044	FROM->TO	CIMARRON - DRAPER LAKE 345KV CKT 1	717	717	0.18247	103.9746	SWISSVALE - WEST GARDNER 345KV CKT 1
FDNS	00NR	0	16WP	G15_044	FROM->TO	CIMARRON - DRAPER LAKE 345KV CKT 1	717	717	0.18242	103.9659	G15074_T 345.00 - JEFFREY ENERGY CENTER 345KV CKT 1
FDNS	00NR	0	16WP	G15_044	FROM->TO	CIMARRON - DRAPER LAKE 345KV CKT 1	717	717	0.18275	103.962	ANADARKO - GEORGIA 138KV CKT 1
FDNS	00NR	0	16WP	G15_044	FROM->TO	CIMARRON - DRAPER LAKE 345KV CKT 1	717	717	0.18231	103.9525	GEN335204 1-NELSON UNIT 4
FDNS	00NR	0	16WP	G15_044	FROM->TO	CIMARRON - DRAPER LAKE 345KV CKT 1	717	717	0.18231	103.9519	GEN336831 1-BAXTER WILSON SES
FDNS	00NR	0	16WP	G15_044	FROM->TO	CIMARRON - DRAPER LAKE 345KV CKT 1	717	717	0.18182	103.9391	P12:138:AEPW:OKMULGE4:R.S.S-4
FDNS	00NR	0	16WP	G15_044	FROM->TO	CIMARRON - DRAPER LAKE 345KV CKT 1	717	717	0.18231	103.9208	GEN506754 1-LEBROCK STEAM 1
FDNS	00NR	0	16WP	G15_044	FROM->TO	CIMARRON - DRAPER LAKE 345KV CKT 1	717	717	0.18327	103.919	CLASSEN - ROBINSON 138KV CKT 1
FDNS	00NR	0	16WP	G15_044	FROM->TO	CIMARRON - DRAPER LAKE 345KV CKT 1	717	717	0.18231	103.9013	GEN334441 1-SABINE UNIT 5
FDNS	00NR	0	16WP	G15_044	FROM->TO	CIMARRON - DRAPER LAKE 345KV CKT 1	717	717	0.18231	103.8962	GEN334071 1-LEWIS CREEK 2
FDNS	00NR	0	16WP	G15_044	FROM->TO	CIMARRON - DRAPER LAKE 345KV CKT 1	717	717	0.18275	103.8953	FLETCHER - GEORGIA 138KV CKT 1
FDNS	00NR	0	16WP	G15_044	FROM->TO	CIMARRON - DRAPER LAKE 345KV CKT 1	717	717	0.18257	103.8915	G14_001T 345.00 - WICHITA 345KV CKT 1
FDNS	00NR	0	16WP	G15_044	FROM->TO	CIMARRON - DRAPER LAKE 345KV CKT 1	717	717	0.18231	103.8883	GEN334070 1-LEWIS CREEK 1
FDNS	00NR	0	16WP	G15_044	FROM->TO	CIMARRON - DRAPER LAKE 345KV CKT 1	717	717	0.18276	103.8865	BENTON - WICHITA 345KV CKT 1
FDNS	00NR	0	16WP	G15_044	FROM->TO	CIMARRON - DRAPER LAKE 345KV CKT 1	717	717	0.18301	103.8864	FINNEY SWITCHING STATION - Hitchland Interchange 345KV CKT 1
FDNS	00NR	0	16WP	G15_044	FROM->TO	CIMARRON - DRAPER LAKE 345KV CKT 1	717	717	0.18231	103.8862	GEN336251 1-NINEMILE POINT UNIT#4
FDNS	00NR	0	16WP	G15_044	FROM->TO	CIMARRON - DRAPER LAKE 345KV CKT 1	717	717	0.18228	103.8786	WEBRE - WELLS 500KV CKT 1
FDNS	00NR	0	16WP	G15_044	FROM->TO	CIMARRON - DRAPER LAKE 345KV CKT 1	717	717	0.18261	103.8775	LACYGNE - NEOSHO 345KV CKT 1
FDNSLock	00NR	0	16WP	G15_044	FROM->TO	CIMARRON - DRAPER LAKE 345KV CKT 1	717	717	0.18231	103.8742	GEN590011 2-ERCOT EQUIVALENCE
FDNS	00NR	0	16WP	G15_044	FROM->TO	CIMARRON - DRAPER LAKE 345KV CKT 1	717	717	0.18244	103.862	EMPORIA ENERGY CENTER - SWISSVALE 345KV CKT 1
FDNS	00NR	0	16WP	G15_044	FROM->TO	CIMARRON - DRAPER LAKE 345KV CKT 1	717	717	0.18278	103.8385	EMPIRE - FLETCHER 138KV CKT 1
FDNSLock	00NR	0	16WP	G15_044	FROM->TO	CIMARRON - DRAPER LAKE 345KV CKT 1	717	717	0.18231	103.8317	GEN590010 1-ERCOT EQUIVALENCE
FDNS	00NR	0	16WP	G15_044	FROM->TO	CIMARRON - DRAPER LAKE 345KV CKT 1	717	717	0.18252	103.8223	G1524G1525 345.00 - THISTLE7 345.00 345KV CKT 1
FDNS	00NR	0	16WP	G15_044	FROM->TO	CIMARRON - DRAPER LAKE 345KV CKT 1	717	717	0.18252	103.8223	G1524G1525 345.00 - THISTLE7 345.00 345KV CKT 2
FDNS	00NR	0	16WP	G15_044	FROM->TO	CIMARRON - DRAPER LAKE 345KV CKT 1	717	717	0.18231	103.8186	GEN503909 1-FULTONU1 1 16.000
FDNSLock	00NR	0	16WP	G15_044	FROM->TO	CIMARRON - DRAPER LAKE 345KV CKT 1	717	717	0.18231	103.8129	GEN338146 1-INDEPENDENCE UNIT #2
FDNS	00NR	0	16WP	G15_044	FROM->TO	CIMARRON - DRAPER LAKE 345KV CKT 1	717	717	0.18272	103.8126	LONEOAK - QUAIL CREEK 138KV CKT 1
FDNS	00NR	0	16WP	G15_044	FROM->TO	CIMARRON - DRAPER LAKE 345KV CKT 1	717	717	0.18231	103.809	GEN501811 1-RODEMACHER UNIT 1
FDNS	00NR	0	16WP	G15_044	FROM->TO	CIMARRON - DRAPER LAKE 345KV CKT 1	717	717	0.18296	103.8044	WOODRING (WOODRNG2) 345/138/13.8KV TRANSFORMER CKT 1
FDNS	00NR	0	16WP	G15_044	FROM->TO	CIMARRON - DRAPER LAKE 345KV CKT 1	717	717	0.18426	103.7918	CRINER - PAYNE 138.00 138KV CKT 1
FDNS	00NR	0	16WP	G15_044	FROM->TO	CIMARRON - DRAPER LAKE 345KV CKT 1	717	717	0.18241	103.7817	OSAGE - WEBB CITY TAP 138KV CKT 1
FDNS	00NR	0	16WP	G15_044	FROM->TO	CIMARRON - DRAPER LAKE 345KV CKT 1	717	717	0.18278	103.7768	COMANCHE - EMPIRE 138KV CKT 1
FDNS	00NR	0	16WP	G15_044	FROM->TO	CIMARRON - DRAPER LAKE 345KV CKT 1	717	717	0.18231	103.7748	FRONTIER - GRIMES 345KV CKT 1
FDNS	00NR	0	16WP	G15_044	FROM->TO	CIMARRON - DRAPER LAKE 345KV CKT 1	717	717	0.18231	103.7716	GEN334433 1-SABINE UNIT 3
FDNS	00NR	0	16WP	G15_044	FROM->TO	CIMARRON - DRAPER LAKE 345KV CKT 1	717	717	0.18231	103.7693	P12:069:OKGE:3TERM4
FDNS	00NR	0	16WP	G15_044	FROM->TO	CIMARRON - DRAPER LAKE 345KV CKT 1	717	717	0.18231	103.7671	GEN334030 1-FRONTIER UNIT 1
FDNS	00NR	0	16WP	G15_044	FROM->TO	CIMARRON - DRAPER LAKE 345KV CKT 1	717	717	0.18231	103.7661	GEN334031 1-FRONTIER UNIT 2
FDNS	00NR	0	16WP	G15_044	FROM->TO	CIMARRON - DRAPER LAKE 345KV CKT 1	717	717	0.18231	103.764	GEN303007 1-1BC2 U2
FDNS	00NR	0	16WP	G15_044	FROM->TO	CIMARRON - DRAPER LAKE 345KV CKT 1	717	717	0.18251	103.7619	SPVALLY4 138.00 - STILLWATER 138KV CKT 1
FDNS	00NR	0	16WP	G15_044	FROM->TO	CIMARRON - DRAPER LAKE 345KV CKT 1	717	717	0.18231	103.7587	GEN303006 1-1BC2 U1
FDNS	00NR	0	16WP	G15_044	FROM->TO	CIMARRON - DRAPER LAKE 345KV CKT 1	717	717	0.18231	103.7582	GEN337041 1-GERALD ANDRUS
FDNS	00NR	0	16WP	G15_044	FROM->TO	CIMARRON - DRAPER LAKE 345KV CKT 1	717	717	0.18231	103.7551	P12:161:AEPW:DYESS 5:HYLAND 5
FDNS	00NR	0	16WP	G15_044	FROM->TO	CIMARRON - DRAPER LAKE 345KV CKT 1	717	717	0.18231	103.7415	GEN336191 1-LITTLE GYPSY UNIT#3
FDNS	00NR	0	16WP	G15_044	FROM->TO	CIMARRON - DRAPER LAKE 345KV CKT 1	717	717	0.18231	103.7374	8DANIEL8 500.00 - MCKNIGHT 500KV CKT 1
FDNS	00NR	0	16WP	G15_044	FROM->TO	CIMARRON - DRAPER LAKE 345KV CKT 1	717	717	0.18231	103.7345	GEN509393 S1-ARSENAL HILL GENS #4 (STALL)
FDNS	00NR	0	16WP	G15_044	FROM->TO	CIMARRON - DRAPER LAKE 345KV CKT 1	717	717	0.18243	103.7342	CLEAVELAND - CLEVLND 4 138.00 138KV CKT Z1
FDNS	00NR	0	16WP	G15_044	FROM->TO	CIMARRON - DRAPER LAKE 345KV CKT 1	717	717	0.18243	103.7339	CLEVELAND (CLVAUTO1) 345/138/13.8KV TRANSFORMER CKT 1
FDNS	00NR	0	16WP	G15_044	FROM->TO	CIMARRON - DRAPER LAKE 345KV CKT 1	717	717	0.18243	103.7339	CLEVELAND (CLVAUTO1) 345/138/13.8KV TRANSFORMER CKT 1
FDNS	00NR	0	16WP	G15_044	FROM->TO	CIMARRON - DRAPER LAKE 345KV CKT 1	717	717	0.18251	103.7325	PAYNESB4 138.00 - SPVALLY4 138.00 138KV CKT 1
FDNS	00NR	0	16WP	G15_044	FROM->TO	CIMARRON - DRAPER LAKE 345KV CKT 1	717	717	0.18248	103.7308	P12:138:OKGE:3TERM13
FDNS	00NR	0	16WP	G15_044	FROM->TO	CIMARRON - DRAPER LAKE 345KV CKT 1	717	717	0.18307	103.7266	ARKANSAS NUCLEAR ONE - FT SMITH 500KV CKT 1
FDNS	00NR	0	16WP	G15_044	FROM->TO	CIMARRON - DRAPER LAKE 345KV CKT 1	717	717	0.18307	103.7266	ARKANSAS NUCLEAR ONE - FT SMITH 500KV CKT 1
FDNS	00NR	0	16WP	G15_044	FROM->TO	CIMARRON - DRAPER LAKE 345KV CKT 1	717	717	0.18231	103.7179	GEN509392 G2-ARSENAL HILL GENS #3 (STALL)
FDNS	00NR	0	16WP	G15_044	FROM->TO	CIMARRON - DRAPER LAKE 345KV CKT 1	717	717	0.18231	103.7178	GEN509391 G1-ARSENAL HILL GENS #2 (STALL)
FDNS	00NR	0	16WP	G15_044	FROM->TO	CIMARRON - DRAPER LAKE 345KV CKT 1	717	717	0.18251	103.7169	CUSHING - PAYNESB4 138.00 138KV CKT 1
FDNS	00NR	0	16WP	G15_044	FROM->TO	CIMARRON - DRAPER LAKE 345KV CKT 1	717	717	0.18231	103.711	GEN335614 1-WILLOW GLENN UNIT#4
FDNS	00NR	0	16WP	G15_044	FROM->TO	CIMARRON - DRAPER LAKE 345KV CKT 1	717	717	0.18278	103.7087	DAYTON - MUSTANG 138KV CKT 1
FDNS	00NR	0	16WP	G15_044	FROM->TO	CIMARRON - DRAPER LAKE 345KV CKT 1	717	717	0.18278	103.7038	DAYTON - HOBBY LOBBY 138KV CKT 1
FDNS	00NR	0	16WP	G15_044	FROM->TO	CIMARRON - DRAPER LAKE 345KV CKT 1	717	717	0.18231	103.6985	GEN303008 1-1BC2 U3
FDNS	00NR	0	16WP	G15_044	FROM->TO	CIMARRON - DRAPER LAKE 345KV CKT 1	717	717	0.1777	103.6895	CANADIAN RIVER - PITTSBURG 345KV CKT 1
FDNS	00NR	0	16WP	G15_044	FROM->TO	CIMARRON - DRAPER LAKE 345KV CKT 1	717	717	0.1777	103.6895	CANADIAN RIVER - PITTSBURG 345KV CKT 1
FDNS	00NR	0	16WP	G15_044	FROM->TO	CIMARRON - DRAPER LAKE 345KV CKT 1	717	717	0.1829	103.6882	MUSTANG - SW 5TH 138KV CKT 1
FDNS	00NR	0	16WP	G15_044	FROM->TO	CIMARRON - DRAPER LAKE 345KV CKT 1	717	717	0.18231	103.6855	GEN338143 1-INDEPENDENCE UNIT #1
FDNS	00NR	0	16WP	G15_044	FROM->TO	CIMARRON - DRAPER LAKE 345KV CKT 1	717	717	0.18226	103.6766	ELDORADO EHV - MOUNT OLIVE 500KV CKT 1
FDNS	00NR	0	16WP	G15_044	FROM->TO	CIMARRON - DRAPER LAKE 345KV CKT 1	717	717	0.18231	103.6764	GEN336170 1-GULF OXY U4
FDNS	00NR	0	16WP	G15_044	FROM->TO	CIMARRON - DRAPER LAKE 345KV CKT 1	717	717	0.18231	103.6751	GEN336464 1-MICHOUD UNIT #3
FDNS	00NR	0	16WP	G15_044	FROM->TO	CIMARRON - DRAPER LAKE 345KV CKT 1	717	717	0.18426	103.6693	COLE - CRINER 138KV CKT 1

SOLUTION	GROUP	SCENARIO	SEASON	SOURCE	DIRECTION	MONITORED ELEMENT	RATEA (MVA)	RATEB(MVA)	TDF	TC%LOADING (% MVA)	CONTINGENCY
FDNS	00NR	0	16WP	G15_044	FROM->TO	CIMARRON - DRAPER LAKE 345KV CKT 1	717	717	0.18237	103.6516	P12:069:OKGE:3TERM19
FDNS	00NR	0	16WP	G15_044	FROM->TO	CIMARRON - DRAPER LAKE 345KV CKT 1	717	717	0.18231	103.6516	ESSEX UNIT 2 500/18.0KV TRANSFORMER CKT 1
FDNS	00NR	0	16WP	G15_044	FROM->TO	CIMARRON - DRAPER LAKE 345KV CKT 1	717	717	0.18235	103.6427	7LUTESVIL 345.00 - 7ST FRANC 345.00 345KV CKT 1
FDNS	00NR	0	16WP	G15_044	FROM->TO	CIMARRON - DRAPER LAKE 345KV CKT 1	717	717	0.18277	103.6334	OUMED 4 - STONEWALL 138KV CKT 1
FDNS	00NR	0	16WP	G15_044	FROM->TO	CIMARRON - DRAPER LAKE 345KV CKT 1	717	717	0.18231	103.6302	GEN336801 1-BAXTER WILSON UNIT #1
FDNS	00NR	0	16WP	G15_044	FROM->TO	CIMARRON - DRAPER LAKE 345KV CKT 1	717	717	0.18327	103.6262	LIGHTNING CREEK - ROBINSON 138KV CKT 1
FDNS	00NR	0	16WP	G15_044	FROM->TO	CIMARRON - DRAPER LAKE 345KV CKT 1	717	717	0.18175	103.6225	ARCADIA - LGARBER4 138.00 138KV CKT 1
FDNS	00NR	0	16WP	G15_044	FROM->TO	CIMARRON - DRAPER LAKE 345KV CKT 1	717	717	0.18231	103.6136	GEN506752 1-LEBROCK GAS 1
FDNS	00NR	0	16WP	G15_044	FROM->TO	CIMARRON - DRAPER LAKE 345KV CKT 1	717	717	0.18231	103.6135	GEN506753 1-LEBROCK GAS 2
FDNS	00NR	0	16WP	G15_044	FROM->TO	CIMARRON - DRAPER LAKE 345KV CKT 1	717	717	0.18232	103.6057	7JASPER 345.00 - BLACKBERRY 345KV CKT 1
FDNS	00NR	0	16WP	G15_044	FROM->TO	CIMARRON - DRAPER LAKE 345KV CKT 1	717	717	0.18241	103.6018	FAIRFAX TAP - SHIDLER 138KV CKT 1
FDNS	00NR	0	16WP	G15_044	FROM->TO	CIMARRON - DRAPER LAKE 345KV CKT 1	717	717	0.18241	103.6017	FAIRFAX TAP - WEBB CITY TAP 138KV CKT 1
FDNS	00NR	0	16WP	G15_044	FROM->TO	CIMARRON - DRAPER LAKE 345KV CKT 1	717	717	0.18175	103.5927	CHITWOOD - LGARBER4 138.00 138KV CKT 1
FDNS	00NR	0	16WP	G15_044	FROM->TO	CIMARRON - DRAPER LAKE 345KV CKT 1	717	717	0.18231	103.5925	GEN501910 1-ACADIA UNIT ST1
FDNS	00NR	0	16WP	G15_044	FROM->TO	CIMARRON - DRAPER LAKE 345KV CKT 1	717	717	0.18231	103.5817	RODEMACHER 230/22.0KV TRANSFORMER CKT 1
FDNS	00NR	0	16WP	G15_044	FROM->TO	CIMARRON - DRAPER LAKE 345KV CKT 1	717	717	0.18175	103.5804	CHITWOOD - JONES TAP 138KV CKT 1
FDNS	00NR	0	16WP	G15_044	FROM->TO	CIMARRON - DRAPER LAKE 345KV CKT 1	717	717	0.18231	103.5784	GEN511843 1-RIVERSIDE STATION #2
FDNS	00NR	0	16WP	G15_044	FROM->TO	CIMARRON - DRAPER LAKE 345KV CKT 1	717	717	0.18218	103.5772	P12:138:AEPW-OGE:WTH_JCT4:JENSEN4
FDNS	00NR	0	16WP	G15_044	FROM->TO	CIMARRON - DRAPER LAKE 345KV CKT 1	717	717	0.18279	103.571	TULSA NORTH - WEKIWA 345KV CKT 1
FDNS	00NR	0	16WP	G15_044	FROM->TO	CIMARRON - DRAPER LAKE 345KV CKT 1	717	717	0.18279	103.571	TULSA NORTH - WEKIWA 345KV CKT 1
FDNS	00NR	0	16WP	G15_044	FROM->TO	CIMARRON - DRAPER LAKE 345KV CKT 1	717	717	0.18224	103.5684	6LAYFLD 230.00 - CARROLL 230KV CKT 1
FDNS	00NR	0	16WP	G15_044	FROM->TO	CIMARRON - DRAPER LAKE 345KV CKT 1	717	717	0.18236	103.5641	8WNEWMADRID 500.00 - DELL 500 500KV CKT 1
FDNS	00NR	0	16WP	G15_044	FROM->TO	CIMARRON - DRAPER LAKE 345KV CKT 1	717	717	0.18232	103.5615	P12:345:GRDA:CHOUTEAU-SPORTSMANACRES
FDNS	00NR	0	16WP	G15_044	FROM->TO	CIMARRON - DRAPER LAKE 345KV CKT 1	717	717	0.18222	103.5548	ELDORADO EHV - SHERIDAN EHV 500KV CKT 1
FDNS	00NR	0	16WP	G15_044	FROM->TO	CIMARRON - DRAPER LAKE 345KV CKT 1	717	717	0.18286	103.5535	CHISHOLM6 230.00 - ELK CITY 230KV 230KV CKT 1
FDNS	00NR	0	16WP	G15_044	FROM->TO	CIMARRON - DRAPER LAKE 345KV CKT 1	717	717	0.18286	103.5504	ELK CITY 230KV (ELKCTY-6) 230/138/13.8KV TRANSFORMER CKT 1
FDNS	00NR	0	16WP	G15_044	FROM->TO	CIMARRON - DRAPER LAKE 345KV CKT 1	717	717	0.18286	103.5504	ELK CITY 230KV (ELKCTY-6) 230/138/13.8KV TRANSFORMER CKT 1
FDNS	00NR	0	16WP	G15_044	FROM->TO	CIMARRON - DRAPER LAKE 345KV CKT 1	717	717	0.18252	103.5453	G13-010T 345.00 - POST ROCK 345KV CKT 1
FDNS	00NR	0	16WP	G15_044	FROM->TO	CIMARRON - DRAPER LAKE 345KV CKT 1	717	717	0.18234	103.5337	P12:138:AEPW:N.E.S.-4:CATOOSA4
FDNS	00NR	0	16WP	G15_044	FROM->TO	CIMARRON - DRAPER LAKE 345KV CKT 1	717	717	0.18277	103.5322	OUMED 4 - PARK PLACE 138KV CKT 1
FDNS	00NR	0	16WP	G15_044	FROM->TO	CIMARRON - DRAPER LAKE 345KV CKT 1	717	717	0.18221	103.5255	FULTON 115 - HOPE 115KV CKT 1
FDNS	00NR	0	16WP	G15_044	FROM->TO	CIMARRON - DRAPER LAKE 345KV CKT 1	717	717	0.18221	103.5255	FULTON 115 - HOPE 115KV CKT 1
FDNS	00NR	0	16WP	G15_044	FROM->TO	CIMARRON - DRAPER LAKE 345KV CKT 1	717	717	0.18238	103.5186	P13:138-161:WERE:NSES_TX-4OR5::
FDNS	00NR	0	16WP	G15_044	FROM->TO	CIMARRON - DRAPER LAKE 345KV CKT 1	717	717	0.18231	103.5156	8CAJUN2 500/24.0KV TRANSFORMER CKT 1
FDNS	00NR	0	16WP	G15_044	FROM->TO	CIMARRON - DRAPER LAKE 345KV CKT 1	717	717	0.18208	103.5154	MORISNT4 138.00 - SOONER 138KV CKT 1
FDNS	00NR	0	16WP	G15_044	FROM->TO	CIMARRON - DRAPER LAKE 345KV CKT 1	717	717	0.18236	103.5113	P12:138:AEPW:CATOOSA4:T.S.E.-4
FDNS	00NR	0	16WP	G15_044	FROM->TO	CIMARRON - DRAPER LAKE 345KV CKT 1	717	717	0.18231	103.5052	ST FRANCIS - ST FRANCIS 1 161KV CKT Z1
FDNS	00NR	0	16WP	G15_044	FROM->TO	CIMARRON - DRAPER LAKE 345KV CKT 1	717	717	0.18234	103.5015	7JASPER 345.00 - MORGAN 345KV CKT 1
FDNS	00NR	0	16WP	G15_044	FROM->TO	CIMARRON - DRAPER LAKE 345KV CKT 1	717	717	0.18231	103.4974	P12:069:OKGE:3TERM3
FDNS	00NR	0	16WP	G15_044	FROM->TO	CIMARRON - DRAPER LAKE 345KV CKT 1	717	717	0.18283	103.4908	HUGO - VALLIANT 345KV CKT 1
FDNS	00NR	0	16WP	G15_044	FROM->TO	CIMARRON - DRAPER LAKE 345KV CKT 1	717	717	0.18283	103.4908	HUGO - VALLIANT 345KV CKT 1
FDNS	00NR	0	16WP	G15_044	FROM->TO	CIMARRON - DRAPER LAKE 345KV CKT 1	717	717	0.18231	103.4903	GEN509394 1-FLINT CREEK
FDNS	00NR	0	16WP	G15_044	FROM->TO	CIMARRON - DRAPER LAKE 345KV CKT 1	717	717	0.18231	103.4898	GEN300015 1-1SGPDEL 18.000
FDNS	00NR	0	16WP	G15_044	FROM->TO	CIMARRON - DRAPER LAKE 345KV CKT 1	717	717	0.18252	103.4897	G13-010T 345.00 - SPEARVILLE 345KV CKT 1
FDNS	00NR	0	16WP	G15_044	FROM->TO	CIMARRON - DRAPER LAKE 345KV CKT 1	717	717	0.1832	103.4895	DALE - HORSESHOE LAKE 138KV CKT 1
FDNS	00NR	0	16WP	G15_044	FROM->TO	CIMARRON - DRAPER LAKE 345KV CKT 1	717	717	0.18327	103.4888	LIGHTNING CREEK - TROSPER 138KV CKT 1
FDNS	00NR	0	16WP	G15_044	FROM->TO	CIMARRON - DRAPER LAKE 345KV CKT 1	717	717	0.18231	103.4794	GEN337766 1-TRACTEBEL UNIT S1
FDNS	00NR	0	16WP	G15_044	FROM->TO	CIMARRON - DRAPER LAKE 345KV CKT 1	717	717	0.18231	103.4788	P12:138:AEPW:SHERID4:112GORE4
FDNS	00NR	0	16WP	G15_044	FROM->TO	CIMARRON - DRAPER LAKE 345KV CKT 1	717	717	0.18231	103.4762	GEN515564 1-ORIGIN11 0.6900
FDNS	00NR	0	16WP	G15_044	FROM->TO	CIMARRON - DRAPER LAKE 345KV CKT 1	717	717	0.18231	103.4762	GEN515565 1-ORIGIN21 0.6900
FDNS	00NR	0	16WP	G15_044	FROM->TO	CIMARRON - DRAPER LAKE 345KV CKT 1	717	717	0.18278	103.4744	36 & MERIDIAN - HOBBY LOBBY 138KV CKT 1
FDNS	00NR	0	16WP	G15_044	FROM->TO	CIMARRON - DRAPER LAKE 345KV CKT 1	717	717	0.18245	103.474	HAMMETT TAP - HAMMETT2 138KV CKT 1
FDNS	00NR	0	16WP	G15_044	FROM->TO	CIMARRON - DRAPER LAKE 345KV CKT 1	717	717	0.18438	103.4732	ANADARKO - GRACMNT4 138.00 138KV CKT 1
FDNS	00NR	0	16WP	G15_044	FROM->TO	CIMARRON - DRAPER LAKE 345KV CKT 1	717	717	0.18231	103.4731	GEN336222 1-LITTLE GYPSY UNIT#2
FDNS	00NR	0	16WP	G15_044	FROM->TO	CIMARRON - DRAPER LAKE 345KV CKT 1	717	717	0.1832	103.4701	NORTHEAST STATION - ONETA 345KV CKT 1
FDNS	00NR	0	16WP	G15_044	FROM->TO	CIMARRON - DRAPER LAKE 345KV CKT 1	717	717	0.1832	103.4701	NORTHEAST STATION - ONETA 345KV CKT 1
FDNS	00NR	0	16WP	G15_044	FROM->TO	CIMARRON - DRAPER LAKE 345KV CKT 1	717	717	0.18243	103.4701	P12:138:OKGE:3TERM28
FDNS	00NR	0	16WP	G15_044	FROM->TO	CIMARRON - DRAPER LAKE 345KV CKT 1	717	717	0.18246	103.4665	FLETCHER - MARLOW JCT 69KV CKT 1
FDNS	00NR	0	16WP	G15_044	FROM->TO	CIMARRON - DRAPER LAKE 345KV CKT 1	717	717	0.18231	103.4622	GEN501970 1-EVANGELINE UNIT 7
FDNS	00NR	0	16WP	G15_044	FROM->TO	CIMARRON - DRAPER LAKE 345KV CKT 1	717	717	0.18231	103.4621	NELSON 230/20.0KV TRANSFORMER CKT 1
FDNS	00NR	0	16WP	G15_044	FROM->TO	CIMARRON - DRAPER LAKE 345KV CKT 1	717	717	0.18227	103.4586	NW164TH4 138.00 - PIEDMONT 138KV CKT 1
FDNS	00NR	0	16WP	G15_044	FROM->TO	CIMARRON - DRAPER LAKE 345KV CKT 1	717	717	0.18232	103.458	P12:161:AEPW:EROGERS5:ECNTRTN5
FDNS	00NR	0	16WP	G15_044	FROM->TO	CIMARRON - DRAPER LAKE 345KV CKT 1	717	717	0.18229	103.4577	P12:138:OKGE-AEPW:JENSEN4:REDROCKRD4
FDNS	00NR	0	16WP	G15_044	FROM->TO	CIMARRON - DRAPER LAKE 345KV CKT 1	717	717	0.18227	103.4567	NORTHWEST - NW164TH4 138.00 138KV CKT 1
FDNS	00NR	0	16WP	G15_044	FROM->TO	CIMARRON - DRAPER LAKE 345KV CKT 1	717	717	0.18231	103.4555	ESSEX UNIT 2 500/18.0KV TRANSFORMER CKT 1
FDNS	00NR	0	16WP	G15_044	FROM->TO	CIMARRON - DRAPER LAKE 345KV CKT 1	717	717	0.18234	103.4553	P12:161:AEPW-SWPA:BEAVER5:EROGERS5
FDNS	00NR	0	16WP	G15_044	FROM->TO	CIMARRON - DRAPER LAKE 345KV CKT 1	717	717	0.18259	103.4548	COMANCHE TAP - OMPA-DUNCAN 840 138KV CKT 1
FDNS	00NR	0	16WP	G15_044	FROM->TO	CIMARRON - DRAPER LAKE 345KV CKT 1	717	717	0.18284	103.4517	CORN TAP - SEQUOYAHJ4 138.00 138KV CKT 1
FDNS	00NR	0	16WP	G15_044	FROM->TO	CIMARRON - DRAPER LAKE 345KV CKT 1	717	717	0.18266	103.4516	P12:138:AEPW:CORNVIL4:S.W.S.-4
FDNS	00NR	0	16WP	G15_044	FROM->TO	CIMARRON - DRAPER LAKE 345KV CKT 1	717	717	0.18284	103.4513	ANADARKO - SEQUOYAHJ4 138.00 138KV CKT 1
FDNS	00NR	0	16WP	G15_044	FROM->TO	CIMARRON - DRAPER LAKE 345KV CKT 1	717	717	0.1832	103.448	DALE - SQUIRL CREEK 138KV CKT 1
FDNS	00NR	0	16WP	G15_044	FROM->TO	CIMARRON - DRAPER LAKE 345KV CKT 1	717	717	0.18289	103.4464	HEALDTON - LOCO 138KV CKT 1
FDNS	00NR	0	16WP	G15_044	FROM->TO	CIMARRON - DRAPER LAKE 345KV CKT 1	717	717	0.18231	103.4463	P12:161:AEPW:DYESS5:ELMSPRNG:TONTITN5
FDNS	00NR	0	16WP	G15_044	FROM->TO	CIMARRON - DRAPER LAKE 345KV CKT 1	717	717	0.18231	103.4425	GEN336152 1-WATERFORD UNIT#2
FDNS	00NR	0	16WP	G15_044	FROM->TO	CIMARRON - DRAPER LAKE 345KV CKT 1	717	717	0.18231	103.4415	GEN336151 1-WATERFORD UNIT#1
FDNS	00NR	0	16WP	G15_044	FROM->TO	CIMARRON - DRAPER LAKE 345KV CKT 1	717	717	0.18231	103.4407	ST FRANCIS 345/161KV TRANSFORMER CKT 1
FDNS	00NR	0	16WP	G15_044	FROM->TO	CIMARRON - DRAPER LAKE 345KV CKT 1	717	717	0.18256	103.4351	CORN TAP - CORNVILLE 138KV CKT 1
FDNS	00NR	0	16WP	G15_044	FROM->TO	CIMARRON - DRAPER LAKE 345KV CKT 1	717	717	0.18235	103.4322	MARSHALL - WOODRING 138KV CKT 1
FDNS	00NR	0	16WP	G15_044	FROM->TO	CIMARRON - DRAPER LAKE 345KV CKT 1	717	717	0.18231	103.4302	GEN334392 1-EXXON MOBIL IPP 1

SOLUTION	GROUP	SCENARIO	SEASON	SOURCE	DIRECTION	MONITORED ELEMENT	RATEA (MVA)	RATEB(MVA)	TDF	TC%LOADING (% MVA)	CONTINGENCY
FDNS	00NR	0	16WP	G15_044	FROM->TO	CIMARRON - DRAPER LAKE 345KV CKT 1	717	717	0.18235	103.4299	COTTONWOOD CREEK - MARSHALL 138KV CKT 1
FDNS	00NR	0	16WP	G15_044	FROM->TO	CIMARRON - DRAPER LAKE 345KV CKT 1	717	717	0.18251	103.4289	HEFNER - TULSA 138KV CKT 1
FDNS	00NR	0	16WP	G15_044	FROM->TO	CIMARRON - DRAPER LAKE 345KV CKT 1	717	717	0.18426	103.4279	COLE - OUSW4 138KV CKT 1
FDNS	00NR	0	16WP	G15_044	FROM->TO	CIMARRON - DRAPER LAKE 345KV CKT 1	717	717	0.18227	103.426	MC NIEL 500/115KV TRANSFORMER CKT 1
FDNS	00NR	0	16WP	G15_044	FROM->TO	CIMARRON - DRAPER LAKE 345KV CKT 1	717	717	0.18231	103.424	GEN334393 1-EXXON MOBIL IPP 2
FDNS	00NR	0	16WP	G15_044	FROM->TO	CIMARRON - DRAPER LAKE 345KV CKT 1	717	717	0.18231	103.424	GEN334394 1-EXXON MOBIL IPP 3
FDNS	00NR	0	16WP	G15_044	FROM->TO	CIMARRON - DRAPER LAKE 345KV CKT 1	717	717	0.18239	103.4222	P12:138:AEPW:MOUNDRD4:SHIDLER4
FDNS	00NR	0	16WP	G15_044	FROM->TO	CIMARRON - DRAPER LAKE 345KV CKT 1	717	717	0.18223	103.4218	BISMARK - HOT SPRINGS WEST BUS 115KV CKT 1
FDNS	00NR	0	16WP	G15_044	FROM->TO	CIMARRON - DRAPER LAKE 345KV CKT 1	717	717	0.18245	103.4138	EL RENO SW - MUSTANG2 69.000 69KV CKT 1
FDNS	00NR	0	16WP	G15_044	FROM->TO	CIMARRON - DRAPER LAKE 345KV CKT 1	717	717	0.18224	103.4132	BRISTOW - SILVER CITY 138KV CKT 1
FDNS	00NR	0	16WP	G15_044	FROM->TO	CIMARRON - DRAPER LAKE 345KV CKT 1	717	717	0.18217	103.4123	KELLYAV4 138.00 - MEMORIAL 138KV CKT 1
FDNS	00NR	0	16WP	G15_044	FROM->TO	CIMARRON - DRAPER LAKE 345KV CKT 1	717	717	0.18231	103.4084	GEN501972 1-EVANGELINE UNIT 7-2
FDNS	00NR	0	16WP	G15_044	FROM->TO	CIMARRON - DRAPER LAKE 345KV CKT 1	717	717	0.18231	103.4083	GEN501971 1-EVANGELINE UNIT 7-1
FDNS	00NR	0	16WP	G15_044	FROM->TO	CIMARRON - DRAPER LAKE 345KV CKT 1	717	717	0.18239	103.4049	SHIDLER - WEST PAWHUSKA 138KV CKT 1
FDNS	00NR	0	16WP	G15_044	FROM->TO	CIMARRON - DRAPER LAKE 345KV CKT 1	717	717	0.18289	103.4047	HEALDTON - RINGLING 138KV CKT 1
FDNS	00NR	0	16WP	G15_044	FROM->TO	CIMARRON - DRAPER LAKE 345KV CKT 1	717	717	0.18231	103.3987	GEN334431 1-SABINE UNIT 1
FDNS	00NR	0	16WP	G15_044	FROM->TO	CIMARRON - DRAPER LAKE 345KV CKT 1	717	717	0.18231	103.3986	GEN334432 1-SABINE UNIT 2
FDNS	00NR	0	16WP	G15_044	FROM->TO	CIMARRON - DRAPER LAKE 345KV CKT 1	717	717	0.18231	103.3959	GEN336242 1-1NMIL ST1 18.000
FDNS	00NR	0	16WP	G15_044	FROM->TO	CIMARRON - DRAPER LAKE 345KV CKT 1	717	717	0.18231	103.3954	GEN337764 1-TRACTEBEL UNIT C1
FDNS	00NR	0	16WP	G15_044	FROM->TO	CIMARRON - DRAPER LAKE 345KV CKT 1	717	717	0.18231	103.3954	GEN337765 1-TRACTEBEL UNIT C2
FDNS	00NR	0	16WP	G15_044	FROM->TO	CIMARRON - DRAPER LAKE 345KV CKT 1	717	717	0.18237	103.3939	BROOKLINE - MORGAN 345KV CKT 1
FDNS	00NR	0	16WP	G15_044	FROM->TO	CIMARRON - DRAPER LAKE 345KV CKT 1	717	717	0.18237	103.3939	BROOKLINE - MORGAN 345KV CKT 1
FDNS	00NR	0	16WP	G15_044	FROM->TO	CIMARRON - DRAPER LAKE 345KV CKT 1	717	717	0.18231	103.3938	GEN501912 1-ACADIA UNIT CT1B
FDNS	00NR	0	16WP	G15_044	FROM->TO	CIMARRON - DRAPER LAKE 345KV CKT 1	717	717	0.18231	103.3931	GEN501911 1-ACADIA UNIT CT1A
FDNS	00NR	0	16WP	G15_044	FROM->TO	CIMARRON - DRAPER LAKE 345KV CKT 1	717	717	0.18277	103.3919	BODLE - PARK PLACE 138KV CKT 1
FDNS	00NR	0	16WP	G15_044	FROM->TO	CIMARRON - DRAPER LAKE 345KV CKT 1	717	717	0.18266	103.3911	COUNCIL - MUSTANG 138KV CKT 1
FDNS	00NR	0	16WP	G15_044	FROM->TO	CIMARRON - DRAPER LAKE 345KV CKT 1	717	717	0.18424	103.391	BRYANT - MEMORIAL 138KV CKT 1
FDNS	00NR	0	16WP	G15_044	FROM->TO	CIMARRON - DRAPER LAKE 345KV CKT 1	717	717	0.18239	103.3884	PAWHUSKA TAP - WEST PAWHUSKA 138KV CKT 1
FDNS	00NR	0	16WP	G15_044	FROM->TO	CIMARRON - DRAPER LAKE 345KV CKT 1	717	717	0.18223	103.3884	ALPINE AECC - BISMARK 115KV CKT 1
FDNS	00NR	0	16WP	G15_044	FROM->TO	CIMARRON - DRAPER LAKE 345KV CKT 1	717	717	0.1823	103.388	CYPRESS - HARTBURG 500KV CKT 1
FDNS	00NR	0	16WP	G15_044	FROM->TO	CIMARRON - DRAPER LAKE 345KV CKT 1	717	717	0.18227	103.3831	PIEDMONT - RICHRDS 138KV CKT 1
FDNS	00NR	0	16WP	G15_044	FROM->TO	CIMARRON - DRAPER LAKE 345KV CKT 1	717	717	0.18231	103.3827	P12:69:AEPW:L.E.S.-2:LAW WC2
FDNS	00NR	0	16WP	G15_044	FROM->TO	CIMARRON - DRAPER LAKE 345KV CKT 1	717	717	0.18217	103.3809	KELLYAV4 138.00 - REMNGTON PARK 138KV CKT 1
FDNS	00NR	0	16WP	G15_044	FROM->TO	CIMARRON - DRAPER LAKE 345KV CKT 1	717	717	0.18245	103.3808	HAMMETT2 - MEEKER 138KV CKT 1
FDNS	00NR	0	16WP	G15_044	FROM->TO	CIMARRON - DRAPER LAKE 345KV CKT 1	717	717	0.1827	103.375	HAMMETT TAP - HORSESHOE LAKE 138KV CKT 1
FDNS	00NR	0	16WP	G15_044	FROM->TO	CIMARRON - DRAPER LAKE 345KV CKT 1	717	717	0.18227	103.3697	LAYFLD8 500.00 - MOUNT OLIVE 500KV CKT 1
FDNS	00NR	0	16WP	G15_044	FROM->TO	CIMARRON - DRAPER LAKE 345KV CKT 1	717	717	0.18227	103.3697	LAYFLD8 500.00 - MOUNT OLIVE 500KV CKT 1
FDNS	00NR	0	16WP	G15_044	FROM->TO	CIMARRON - DRAPER LAKE 345KV CKT 1	717	717	0.18289	103.3631	RINGLING - SOUTH WILSON 138KV CKT 1
FDNS	00NR	0	16WP	G15_044	FROM->TO	CIMARRON - DRAPER LAKE 345KV CKT 1	717	717	0.18293	103.3457	CIVIT - PAOLI 138KV CKT 1
FDNS	00NR	0	16WP	G15_044	FROM->TO	CIMARRON - DRAPER LAKE 345KV CKT 1	717	717	0.18231	103.3404	LACYGNE - STILWELL 345KV CKT 1
FDNS	00NR	0	16WP	G15_044	FROM->TO	CIMARRON - DRAPER LAKE 345KV CKT 1	717	717	0.20509	103.3399	GRACEMONT - LAWTON EASTSIDE 345KV CKT 1
FDNS	00NR	0	16WP	G15_044	FROM->TO	CIMARRON - DRAPER LAKE 345KV CKT 1	717	717	0.20509	103.3399	GRACEMONT - LAWTON EASTSIDE 345KV CKT 1
FDNS	00NR	0	16WP	G15_044	FROM->TO	CIMARRON - DRAPER LAKE 345KV CKT 1	717	717	0.18266	103.3365	COUNCIL - WESTOAKS 138KV CKT 1
FDNS	00NR	0	16WP	G15_044	FROM->TO	CIMARRON - DRAPER LAKE 345KV CKT 1	717	717	0.18231	102.9113	BASE CASE
FDNS	00NR	0	16WP	G15_044	FROM->TO	CIMARRON - DRAPER LAKE 345KV CKT 1	717	717	0.18242	102.5994	GRAPEVINE INTERCHANGE - NICHOLS STATION 230KV CKT 1
FDNS	00NR	0	16WP	G15_044	FROM->TO	CIMARRON - DRAPER LAKE 345KV CKT 1	717	717	0.18242	102.5994	GRAPEVINE INTERCHANGE - NICHOLS STATION 230KV CKT 1
FDNS	00NR	0	16WP	G15_044	FROM->TO	CIMARRON - DRAPER LAKE 345KV CKT 1	717	717	0.19497	102.5967	G15063_T 345.00 - WOODRING 345KV CKT 1
FDNS	00NR	0	16WP	G15_044	FROM->TO	CIMARRON - DRAPER LAKE 345KV CKT 1	717	717	0.18322	102.5371	BURGETT4 138.00 - RNDBARN4 138.00 138KV CKT 1
FDNS	00NR	0	16WP	G15_044	FROM->TO	CIMARRON - DRAPER LAKE 345KV CKT 1	717	717	0.18322	102.5354	BURGETT4 138.00 - DANFORTH 138KV CKT 1
FDNS	00NR	0	16WP	G15_044	FROM->TO	CIMARRON - DRAPER LAKE 345KV CKT 1	717	717	0.18322	102.5245	ARCADIA - RNDBARN4 138.00 138KV CKT 1
FDNS	00NR	0	16WP	G15_044	FROM->TO	CIMARRON - DRAPER LAKE 345KV CKT 1	717	717	0.18231	102.495	GEN659125 1-COVEY
FDNS	00NR	0	16WP	G15_044	FROM->TO	CIMARRON - DRAPER LAKE 345KV CKT 1	717	717	0.18231	102.4903	GEN515550 1-MNCWND31 0.6900
FDNS	00NR	0	16WP	G15_044	FROM->TO	CIMARRON - DRAPER LAKE 345KV CKT 1	717	717	0.18248	102.482	GRAPEVINE INTERCHANGE - STATELINE INTERCHANGE 230KV CKT 1
FDNS	00NR	0	16WP	G15_044	FROM->TO	CIMARRON - DRAPER LAKE 345KV CKT 1	717	717	0.18248	102.482	GRAPEVINE INTERCHANGE - STATELINE INTERCHANGE 230KV CKT 1
FDNS	00NR	0	16WP	G15_044	FROM->TO	CIMARRON - DRAPER LAKE 345KV CKT 1	717	717	0.18231	102.477	GEN562611 1-G14_064_3 0.6900
FDNS	00NR	0	16WP	G15_044	FROM->TO	CIMARRON - DRAPER LAKE 345KV CKT 1	717	717	0.18231	102.4715	GEN511848 1-SOUTHWESTERN STATION #3
FDNS	00NR	0	16WP	G15_044	FROM->TO	CIMARRON - DRAPER LAKE 345KV CKT 1	717	717	0.18231	102.4453	GEN515601 1-KNGFSR11 0.7000
FDNS	00NR	0	16WP	G15_044	FROM->TO	CIMARRON - DRAPER LAKE 345KV CKT 1	717	717	0.18231	102.4414	GEN600071 10-RIVER SIDE
FDNS	00NR	0	16WP	G15_044	FROM->TO	CIMARRON - DRAPER LAKE 345KV CKT 1	717	717	0.18231	102.4413	GEN600070 9-RIVER SIDE
FDNS	00NR	0	16WP	G15_044	FROM->TO	CIMARRON - DRAPER LAKE 345KV CKT 1	717	717	0.18231	102.4362	GEN672303 3-BOUNDARY DAM GENERATOR 3
FDNS	00NR	0	16WP	G15_044	FROM->TO	CIMARRON - DRAPER LAKE 345KV CKT 1	717	717	0.18231	102.4362	GEN672304 4-BOUNDARY DAM GENERATOR 4
FDNS	00NR	0	16WP	G15_044	FROM->TO	CIMARRON - DRAPER LAKE 345KV CKT 1	717	717	0.18231	102.4362	GEN672305 5-BOUNDARY DAM GENERATOR 5
FDNS	00NR	0	16WP	G15_044	FROM->TO	CIMARRON - DRAPER LAKE 345KV CKT 1	717	717	0.18231	102.4353	GEN600007 7-RIVERSIDE GEN 7
FDNS	00NR	0	16WP	G15_044	FROM->TO	CIMARRON - DRAPER LAKE 345KV CKT 1	717	717	0.18231	102.4347	GEN600067 9-HIGH BRIDGE
FDNS	00NR	0	16WP	G15_044	FROM->TO	CIMARRON - DRAPER LAKE 345KV CKT 1	717	717	0.18231	102.4338	GEN563062 1-G15071_3 0.6900
FDNS	00NR	0	16WP	G15_044	FROM->TO	CIMARRON - DRAPER LAKE 345KV CKT 1	717	717	0.18231	102.4307	GEN615052 1-CAMBRIDGE GENERATING STATION
FDNS	00NR	0	16WP	G15_044	FROM->TO	CIMARRON - DRAPER LAKE 345KV CKT 1	717	717	0.18231	102.4274	GEN541151 3-SIBLEY GENERATING UNIT #3
FDNS	00NR	0	16WP	G15_044	FROM->TO	CIMARRON - DRAPER LAKE 345KV CKT 1	717	717	0.18147	102.4256	CHISNEY - CLARKSVILLE 138KV CKT 1
FDNSLock	00NR	0	16WP	G15_044	FROM->TO	CIMARRON - DRAPER LAKE 345KV CKT 1	717	717	0.18231	102.4224	GEN600014 4-BLACK DOG GEN 4
FDNS	00NR	0	16WP	G15_044	FROM->TO	CIMARRON - DRAPER LAKE 345KV CKT 1	717	717	0.18231	102.4218	GEN563282 1-G15094_3 0.6900
FDNS	00NR	0	16WP	G15_044	FROM->TO	CIMARRON - DRAPER LAKE 345KV CKT 1	717	717	0.18231	102.4212	GEN652353 2-GR PRAIRIEG 0.6900
FDNS	00NR	0	16WP	G15_044	FROM->TO	CIMARRON - DRAPER LAKE 345KV CKT 1	717	717	0.18231	102.4168	GEN629067 1-EMERY GAS TURBINE 1
FDNS	00NR	0	16WP	G15_044	FROM->TO	CIMARRON - DRAPER LAKE 345KV CKT 1	717	717	0.1824	102.4148	7MCCREDIE 345.00 - 7MONTGMRY 345.00 345KV CKT 1
FDNS	00NR	0	16WP	G15_044	FROM->TO	CIMARRON - DRAPER LAKE 345KV CKT 1	717	717	0.18231	102.4032	GEN563102 1-G15075_3 0.5500
FDNS	00NR	0	16WP	G15_044	FROM->TO	CIMARRON - DRAPER LAKE 345KV CKT 1	717	717	0.18231	102.4015	GEN515591 1-PALDRW11 0.6900
FDNS	00NR	0	16WP	G15_044	FROM->TO	CIMARRON - DRAPER LAKE 345KV CKT 1	717	717	0.18231	102.4	GEN300003 1-THOMAS HILL UNIT 3
FDNS	00NR	0	16WP	G15_044	FROM->TO	CIMARRON - DRAPER LAKE 345KV CKT 1	717	717	0.18231	102.4	GEN600011 5-BLACK DOG GEN 1
FDNS	00NR	0	16WP	G15_044	FROM->TO	CIMARRON - DRAPER LAKE 345KV CKT 1	717	717	0.18231	102.4	GEN615032 2-PLEASANT VALLEY
FDNS	00NR	0	16WP	G15_044	FROM->TO	CIMARRON - DRAPER LAKE 345KV CKT 1	717	717	0.18231	102.3966	GEN562602 1-G15_029_3 0.6900

SOLUTION	GROUP	SCENARIO	SEASON	SOURCE	DIRECTION	MONITORED ELEMENT	RATEA (MVA)	RATEB(MVA)	TDF	TC%LOADING (% MVA)	CONTINGENCY
FDNS	00NR	0	16WP	G15_044	FROM->TO	CIMARRON - DRAPER LAKE 345KV CKT 1	717	717	0.18291	102.3868	SEMINOLE - VANOSTP4 138.00 138KV CKT 1
FDNS	00NR	0	16WP	G15_044	FROM->TO	CIMARRON - DRAPER LAKE 345KV CKT 1	717	717	0.18231	102.3864	GEN600017 C-LS POWER CT
FDNS	00NR	0	16WP	G15_044	FROM->TO	CIMARRON - DRAPER LAKE 345KV CKT 1	717	717	0.18231	102.3828	GEN562812 1-G15040_3 0.3570
FDNS	00NR	0	16WP	G15_044	FROM->TO	CIMARRON - DRAPER LAKE 345KV CKT 1	717	717	0.18231	102.3765	GEN563132 1-G15078_3 0.3570
FDNS	00NR	0	16WP	G15_044	FROM->TO	CIMARRON - DRAPER LAKE 345KV CKT 1	717	717	0.18354	102.3681	FOREST HILL - MAUD 138KV CKT 1
FDNS	00NR	0	16WP	G15_044	FROM->TO	CIMARRON - DRAPER LAKE 345KV CKT 1	717	717	0.18231	102.3672	GEN524285 1-WILDORADO WIND GEN
FDNS	00NR	0	16WP	G15_044	FROM->TO	CIMARRON - DRAPER LAKE 345KV CKT 1	717	717	0.18203	102.366	P12:138:AEPW:WELETK4:EARLSBORO4
FDNS	00NR	0	16WP	G15_044	FROM->TO	CIMARRON - DRAPER LAKE 345KV CKT 1	717	717	0.18203	102.366	P12:138:OKGE:3TERM36
FDNS	00NR	0	16WP	G15_044	FROM->TO	CIMARRON - DRAPER LAKE 345KV CKT 1	717	717	0.18231	102.3624	GEN562074 1-G1149G1504 0.6900
FDNS	00NR	0	16WP	G15_044	FROM->TO	CIMARRON - DRAPER LAKE 345KV CKT 1	717	717	0.18231	102.3559	GEN672392 1-NBECGT1G 18.000
FDNS	00NR	0	16WP	G15_044	FROM->TO	CIMARRON - DRAPER LAKE 345KV CKT 1	717	717	0.18231	102.3552	GEN629070 2-BEAVER CHANNEL GENERATORFOR UNIT NO 2
FDNS	00NR	0	16WP	G15_044	FROM->TO	CIMARRON - DRAPER LAKE 345KV CKT 1	717	717	0.18212	102.3552	EARLSBORO 4138.00 - FIXICO TAP 138KV CKT 1
FDNS	00NR	0	16WP	G15_044	FROM->TO	CIMARRON - DRAPER LAKE 345KV CKT 1	717	717	0.18231	102.3445	GEN526331 1-JONES GEN #1 22 KV
FDNS	00NR	0	16WP	G15_044	FROM->TO	CIMARRON - DRAPER LAKE 345KV CKT 1	717	717	0.18231	102.3445	GEN526332 1-JONES GEN #2 21 KV
FDNS	00NR	0	16WP	G15_044	FROM->TO	CIMARRON - DRAPER LAKE 345KV CKT 1	717	717	0.18243	102.3431	CANADIAN RIVER - MCALESTER SOUTH 138KV CKT 1
FDNS	00NR	0	16WP	G15_044	FROM->TO	CIMARRON - DRAPER LAKE 345KV CKT 1	717	717	0.18243	102.3431	CANADIAN RIVER - MCALESTER SOUTH 138KV CKT 1
FDNS	00NR	0	16WP	G15_044	FROM->TO	CIMARRON - DRAPER LAKE 345KV CKT 1	717	717	0.18231	102.343	GEN562596 1-G14_059_3 0.6900
FDNS	00NR	0	16WP	G15_044	FROM->TO	CIMARRON - DRAPER LAKE 345KV CKT 1	717	717	0.18243	102.3417	CANADIAN RIVER () 345/138/13.8KV TRANSFORMER CKT 1
FDNS	00NR	0	16WP	G15_044	FROM->TO	CIMARRON - DRAPER LAKE 345KV CKT 1	717	717	0.18243	102.3417	CANADIAN RIVER () 345/138/13.8KV TRANSFORMER CKT 1
FDNS	00NR	0	16WP	G15_044	FROM->TO	CIMARRON - DRAPER LAKE 345KV CKT 1	717	717	0.18231	102.336	GEN615010 1-STANTON4
FDNS	00NR	0	16WP	G15_044	FROM->TO	CIMARRON - DRAPER LAKE 345KV CKT 1	717	717	0.18231	102.3359	GEN629071 1-BURLINGTON GENERATOR FOR UNIT NO 1 E
FDNS	00NR	0	16WP	G15_044	FROM->TO	CIMARRON - DRAPER LAKE 345KV CKT 1	717	717	0.18147	102.3342	CHISNEY - HIGHLAND 138KV CKT 1
FDNS	00NR	0	16WP	G15_044	FROM->TO	CIMARRON - DRAPER LAKE 345KV CKT 1	717	717	0.18231	102.3307	GEN515365 1-CENT 21 0.7000
FDNS	00NR	0	16WP	G15_044	FROM->TO	CIMARRON - DRAPER LAKE 345KV CKT 1	717	717	0.18231	102.3205	GEN562983 1-G15061_4 0.6900
FDNS	00NR	0	16WP	G15_044	FROM->TO	CIMARRON - DRAPER LAKE 345KV CKT 1	717	717	0.18231	102.3205	GEN562984 1-G15061_5 0.6900
FDNS	00NR	0	16WP	G15_044	FROM->TO	CIMARRON - DRAPER LAKE 345KV CKT 1	717	717	0.18231	102.3203	P12:138:WFEC:MSL07
FDNS	00NR	0	16WP	G15_044	FROM->TO	CIMARRON - DRAPER LAKE 345KV CKT 1	717	717	0.18231	102.3203	P12:138:WFEC-AEPW:HUGOPP4:ATOKA--4
FDNS	00NR	0	16WP	G15_044	FROM->TO	CIMARRON - DRAPER LAKE 345KV CKT 1	717	717	0.18231	102.3161	GEN562017 1-G11_022_3 0.6900
FDNS	00NR	0	16WP	G15_044	FROM->TO	CIMARRON - DRAPER LAKE 345KV CKT 1	717	717	0.18231	102.3138	GEN615021 1-GRE-ER 14G 16.000
FDNS	00NR	0	16WP	G15_044	FROM->TO	CIMARRON - DRAPER LAKE 345KV CKT 1	717	717	0.18233	102.3122	GRPRAR1-LNX3345.00 - HOLT.CO3 345.00 345KV CKT 1
FDNS	00NR	0	16WP	G15_044	FROM->TO	CIMARRON - DRAPER LAKE 345KV CKT 1	717	717	0.18229	102.3107	P12:138:AEPW:SHAM4WT:CHILD4WT
FDNS	00NR	0	16WP	G15_044	FROM->TO	CIMARRON - DRAPER LAKE 345KV CKT 1	717	717	0.18233	102.3086	GRPRAR1-LNX3345.00 - GRPRAR 345KV CKT Z
FDNS	00NR	0	16WP	G15_044	FROM->TO	CIMARRON - DRAPER LAKE 345KV CKT 1	717	717	0.18231	102.3034	GEN562429 1-G13-029 0.6900
FDNS	00NR	0	16WP	G15_044	FROM->TO	CIMARRON - DRAPER LAKE 345KV CKT 1	717	717	0.18231	102.3021	GEN562432 1-G13-030 0.6900
FDNS	00NR	0	16WP	G15_044	FROM->TO	CIMARRON - DRAPER LAKE 345KV CKT 1	717	717	0.18231	102.3019	GEN560105 1-G08-22 0.6900
FDNS	00NR	0	16WP	G15_044	FROM->TO	CIMARRON - DRAPER LAKE 345KV CKT 1	717	717	0.18231	102.3006	INDEPENDENCE 500/26.0KV TRANSFORMER CKT 1
FDNS	00NR	0	16WP	G15_044	FROM->TO	CIMARRON - DRAPER LAKE 345KV CKT 1	717	717	0.18231	102.2985	GEN532663 1-LAWRENCE ENERGY CENTER UNIT 5
FDNS	00NR	0	16WP	G15_044	FROM->TO	CIMARRON - DRAPER LAKE 345KV CKT 1	717	717	0.18223	102.2985	P12:138:AEPW-SWPA:LONEOAK4:TUPELO4
FDNS	00NR	0	16WP	G15_044	FROM->TO	CIMARRON - DRAPER LAKE 345KV CKT 1	717	717	0.18223	102.2984	P12:138:WFEC:MSL06
FDNS	00NR	0	16WP	G15_044	FROM->TO	CIMARRON - DRAPER LAKE 345KV CKT 1	717	717	0.18241	102.2966	OVEXFRMCCOVE
FDNS	00NR	0	16WP	G15_044	FROM->TO	CIMARRON - DRAPER LAKE 345KV CKT 1	717	717	0.18237	102.2931	DELL 500 - INDEPENDENCE 500KV CKT 1
FDNS	00NR	0	16WP	G15_044	FROM->TO	CIMARRON - DRAPER LAKE 345KV CKT 1	717	717	0.18231	102.2894	BURLINGTON NO1 + NO 2 + NO 3 161/20.0KV TRANSFORMER CKT 1
FDNS	00NR	0	16WP	G15_044	FROM->TO	CIMARRON - DRAPER LAKE 345KV CKT 1	717	717	0.18203	102.2839	P12:138:AEPW-OGE:WELETK4:MAUD 4
FDNS	00NR	0	16WP	G15_044	FROM->TO	CIMARRON - DRAPER LAKE 345KV CKT 1	717	717	0.1836	102.2797	P12:230:AEPW:ELKCITY6:SWEETWT6
FDNS	00NR	0	16WP	G15_044	FROM->TO	CIMARRON - DRAPER LAKE 345KV CKT 1	717	717	0.18231	102.2752	GEN527882 1-CUNNINGHAM GEN #2 20 KV
FDNS	00NR	0	16WP	G15_044	FROM->TO	CIMARRON - DRAPER LAKE 345KV CKT 1	717	717	0.18256	102.2741	P12:138:WFEC:MSL16
FDNS	00NR	0	16WP	G15_044	FROM->TO	CIMARRON - DRAPER LAKE 345KV CKT 1	717	717	0.18212	102.2712	EARLSBORO 4138.00 - MAUD 138KV CKT 1
FDNS	00NR	0	16WP	G15_044	FROM->TO	CIMARRON - DRAPER LAKE 345KV CKT 1	717	717	0.18212	102.2712	EARLSBORO 4138.00 - MAUD 138KV CKT 1
FDNS	00NR	0	16WP	G15_044	FROM->TO	CIMARRON - DRAPER LAKE 345KV CKT 1	717	717	0.18231	102.2674	GEN562550 1-G14_040_3 0.6900
FDNS	00NR	0	16WP	G15_044	FROM->TO	CIMARRON - DRAPER LAKE 345KV CKT 1	717	717	0.18231	102.2642	GEN524295 1-SPNSPUR_WND10.6900
FDNS	00NR	0	16WP	G15_044	FROM->TO	CIMARRON - DRAPER LAKE 345KV CKT 1	717	717	0.18231	102.2579	GEN562832 1-G15042_3 0.6900
FDNS	00NR	0	16WP	G15_044	FROM->TO	CIMARRON - DRAPER LAKE 345KV CKT 1	717	717	0.18346	102.2486	MAUD - SEMINOLE 138KV CKT 1
FDNS	00NR	0	16WP	G15_044	FROM->TO	CIMARRON - DRAPER LAKE 345KV CKT 1	717	717	0.18263	102.2397	STLN-DEMARC6 - SWEETWATER 230KV CKT 1
FDNS	00NR	0	16WP	G15_044	FROM->TO	CIMARRON - DRAPER LAKE 345KV CKT 1	717	717	0.18263	102.2392	P12:230:AEPW-SPS:SWEETWT6:WHEELER 6
FDNS	00NR	0	16WP	G15_044	FROM->TO	CIMARRON - DRAPER LAKE 345KV CKT 1	717	717	0.18263	102.2372	STATELINE INTERCHANGE - STLN-DEMARC6 230KV CKT 1
FDNS	00NR	0	16WP	G15_044	FROM->TO	CIMARRON - DRAPER LAKE 345KV CKT 1	717	717	0.18231	102.221	GEN531447 1-HOLCOMB GENERATOR
FDNS	00NR	0	16WP	G15_044	FROM->TO	CIMARRON - DRAPER LAKE 345KV CKT 1	717	717	0.18231	102.2207	P12:230:UMZB:# 112 #: NU IN SD. NU-RCDC & DRY CREEK XFMR
FDNS	00NR	0	16WP	G15_044	FROM->TO	CIMARRON - DRAPER LAKE 345KV CKT 1	717	717	0.18231	102.2195	RCDC EAST 4230.00 - RED CEDAR DC 230KV CKT 1
FDNS	00NR	0	16WP	G15_044	FROM->TO	CIMARRON - DRAPER LAKE 345KV CKT 1	717	717	0.18231	102.2165	GEN645011 1-NEBRASKA CITY 1
FDNS	00NR	0	16WP	G15_044	FROM->TO	CIMARRON - DRAPER LAKE 345KV CKT 1	717	717	0.18231	102.2156	GEN345671 2-1RUSH G2 18.000
FDNS	00NR	0	16WP	G15_044	FROM->TO	CIMARRON - DRAPER LAKE 345KV CKT 1	717	717	0.18231	102.2137	GEN345670 1-1RUSH G1 18.000
FDNS	00NR	0	16WP	G15_044	FROM->TO	CIMARRON - DRAPER LAKE 345KV CKT 1	717	717	0.18231	102.2132	GEN515606 1-CANDN11 0.6900
FDNS	00NR	0	16WP	G15_044	FROM->TO	CIMARRON - DRAPER LAKE 345KV CKT 1	717	717	0.18231	102.2132	GEN515607 1-CANDN12 0.6900
FDNS	00NR	0	16WP	G15_044	FROM->TO	CIMARRON - DRAPER LAKE 345KV CKT 1	717	717	0.18147	102.2079	HIGHLAND - PINK SW 138KV CKT 1
FDNS	00NR	0	16WP	G15_044	FROM->TO	CIMARRON - DRAPER LAKE 345KV CKT 1	717	717	0.18231	102.1858	GEN515443 1-MNCOWND1 0.7000
FDNS	00NR	0	16WP	G15_044	FROM->TO	CIMARRON - DRAPER LAKE 345KV CKT 1	717	717	0.18231	102.1851	GEN562794 1-G15038_5 0.6900
FDNS	00NR	0	16WP	G15_044	FROM->TO	CIMARRON - DRAPER LAKE 345KV CKT 1	717	717	0.18231	102.1851	GEN562795 1-G15038_6 0.6900
FDNS	00NR	0	16WP	G15_044	FROM->TO	CIMARRON - DRAPER LAKE 345KV CKT 1	717	717	0.18231	102.1817	GEN563092 1-G15074_3 0.6900
FDNS	00NR	0	16WP	G15_044	FROM->TO	CIMARRON - DRAPER LAKE 345KV CKT 1	717	717	0.18272	102.1805	FT SMITH - MUSKOGEE 345KV CKT 1
FDNS	00NR	0	16WP	G15_044	FROM->TO	CIMARRON - DRAPER LAKE 345KV CKT 1	717	717	0.18231	102.1774	GEN542951 5-HAWTHORN UNIT #5
FDNS	00NR	0	16WP	G15_044	FROM->TO	CIMARRON - DRAPER LAKE 345KV CKT 1	717	717	0.18231	102.1724	GEN645012 2-NEBRASKA CITY 2
FDNSLock	00NR	0	16WP	G15_044	FROM->TO	CIMARRON - DRAPER LAKE 345KV CKT 1	717	717	0.18231	102.1642	GEN629072 4-LANSING GENERATOR FOR UNITS NO4 EIA CODE 1
FDNS	00NR	0	16WP	G15_044	FROM->TO	CIMARRON - DRAPER LAKE 345KV CKT 1	717	717	0.18231	102.1533	GEN562512 1-G14_020_3 0.6900
FDNS	00NR	0	16WP	G15_044	FROM->TO	CIMARRON - DRAPER LAKE 345KV CKT 1	717	717	0.1824	102.1446	KEO EHV - WEST MEMPHIS 500 500KV CKT 1
FDNS	00NR	0	16WP	G15_044	FROM->TO	CIMARRON - DRAPER LAKE 345KV CKT 1	717	717	0.18263	102.1408	CHISHOLM6 230.00 - SWEETWATER 230KV CKT 1
FDNS	00NR	0	16WP	G15_044	FROM->TO	CIMARRON - DRAPER LAKE 345KV CKT 1	717	717	0.18231	102.134	GEN657749 1-YOUNG 1 GENERATOR
FDNS	00NR	0	16WP	G15_044	FROM->TO	CIMARRON - DRAPER LAKE 345KV CKT 1	717	717	0.18231	102.1262	GEN562699 1-G15_018_3 0.6900
FDNS	00NR	0	16WP	G15_044	FROM->TO	CIMARRON - DRAPER LAKE 345KV CKT 1	717	717	0.18231	102.1114	GEN640009 1-COOPER NUCLEAR STATION
FDNS	00NR	0	16WP	G15_044	FROM->TO	CIMARRON - DRAPER LAKE 345KV CKT 1	717	717	0.18231	102.1042	GEN529201 1-OMCDLEC1 13.800

SOLUTION	GROUP	SCENARIO	SEASON	SOURCE	DIRECTION	MONITORED ELEMENT	RATEA (MVA)	RATEB(MVA)	TDF	TC%LOADING (% MVA)	CONTINGENCY
FDNS	00NR	0	16WP	G15_044	FROM->TO	CIMARRON - DRAPER LAKE 345KV CKT 1	717	717	0.18263	102.1014	FRISCCO4 138.00 - LULA 138KV CKT 1
FDNS	00NR	0	16WP	G15_044	FROM->TO	CIMARRON - DRAPER LAKE 345KV CKT 1	717	717	0.18231	102.0883	GEN563122 1-G15077_3 0.3850
FDNS	00NR	0	16WP	G15_044	FROM->TO	CIMARRON - DRAPER LAKE 345KV CKT 1	717	717	0.18231	102.0793	GEN563182 1-G15083_3 0.6900
FDNSLock	00NR	0	16WP	G15_044	FROM->TO	CIMARRON - DRAPER LAKE 345KV CKT 1	717	717	0.18231	102.0662	GEN681522 3-GENOA 3
FDNS	00NR	0	16WP	G15_044	FROM->TO	CIMARRON - DRAPER LAKE 345KV CKT 1	717	717	0.18231	102.0608	GEN562685 1-G15_013_3 0.3550
FDNS	00NR	0	16WP	G15_044	FROM->TO	CIMARRON - DRAPER LAKE 345KV CKT 1	717	717	0.18343	102.0437	HOLLYWOOD - MIDWEST TAP 138KV CKT 1
FDNS	00NR	0	16WP	G15_044	FROM->TO	CIMARRON - DRAPER LAKE 345KV CKT 1	717	717	0.18231	102.0354	GEN344895 2-1LAB G2 20.000
FDNS	00NR	0	16WP	G15_044	FROM->TO	CIMARRON - DRAPER LAKE 345KV CKT 1	717	717	0.18201	102.0328	TUPELO - TUPELO TAP 138KV CKT 1
FDNS	00NR	0	16WP	G15_044	FROM->TO	CIMARRON - DRAPER LAKE 345KV CKT 1	717	717	0.18365	102.0286	CHISHOLM7 345.00 - GRACEMONT 345KV CKT 1
FDNS	00NR	0	16WP	G15_044	FROM->TO	CIMARRON - DRAPER LAKE 345KV CKT 1	717	717	0.18231	102.0223	GEN563222 1-G15088_3 0.6900
FDNS	00NR	0	16WP	G15_044	FROM->TO	CIMARRON - DRAPER LAKE 345KV CKT 1	717	717	0.18231	102.0212	4SIOUX 1 138.00 138/18.0KV TRANSFORMER CKT 1
FDNS	00NR	0	16WP	G15_044	FROM->TO	CIMARRON - DRAPER LAKE 345KV CKT 1	717	717	0.18133	102.0151	CIMARRON - TUTTLE CONOCO TAP 138KV CKT 1
FDNS	00NR	0	16WP	G15_044	FROM->TO	CIMARRON - DRAPER LAKE 345KV CKT 1	717	717	0.18263	102.0133	FRISCCO4 138.00 - HARDEN 4 138.00 138KV CKT 1
FDNS	00NR	0	16WP	G15_044	FROM->TO	CIMARRON - DRAPER LAKE 345KV CKT 1	717	717	0.18231	102.0083	GEN523461 1-BLACKHAWK GEN #1
FDNS	00NR	0	16WP	G15_044	FROM->TO	CIMARRON - DRAPER LAKE 345KV CKT 1	717	717	0.18231	102.0082	GEN523462 1-BLACKHAWK GEN #2
FDNS	00NR	0	16WP	G15_044	FROM->TO	CIMARRON - DRAPER LAKE 345KV CKT 1	717	717	0.18231	102.0073	GEN344896 3-1LAB G3 20.000
FDNS	00NR	0	16WP	G15_044	FROM->TO	CIMARRON - DRAPER LAKE 345KV CKT 1	717	717	0.18231	102.0058	GEN344894 1-1LAB G1 20.000
FDNS	00NR	0	16WP	G15_044	FROM->TO	CIMARRON - DRAPER LAKE 345KV CKT 1	717	717	0.18231	102.0047	GEN344897 4-1LAB G4 20.000
FDNS	00NR	0	16WP	G15_044	FROM->TO	CIMARRON - DRAPER LAKE 345KV CKT 1	717	717	0.18231	102.0003	GEN562587 1-G14_056_3 0.6900
FDNS	00NR	0	16WP	G15_044	FROM->TO	CIMARRON - DRAPER LAKE 345KV CKT 1	717	717	0.18231	101.9772	GEN515602 1-KNGFSR12 0.7000
FDNS	00NR	0	16WP	G15_044	FROM->TO	CIMARRON - DRAPER LAKE 345KV CKT 1	717	717	0.18231	101.9571	GEN563082 1-G15073_3 0.6900
FDNS	00NR	0	16WP	G15_044	FROM->TO	CIMARRON - DRAPER LAKE 345KV CKT 1	717	717	0.18133	101.9436	TUTTLE - TUTTLE CONOCO TAP 138KV CKT 1
FDNS	00NR	0	16WP	G15_044	FROM->TO	CIMARRON - DRAPER LAKE 345KV CKT 1	717	717	0.18365	101.9367	CHISHOLM7 345.00 (CHISHOLM) 345/230/13.2KV TRANSFORMER CKT 1
FDNS	00NR	0	16WP	G15_044	FROM->TO	CIMARRON - DRAPER LAKE 345KV CKT 1	717	717	0.18231	101.9307	GEN562704 1-G15_020_3 0.3550
FDNS	00NR	0	16WP	G15_044	FROM->TO	CIMARRON - DRAPER LAKE 345KV CKT 1	717	717	0.18231	101.9129	GEN563202 1-G15085_3 0.5500
FDNS	00NR	0	16WP	G15_044	FROM->TO	CIMARRON - DRAPER LAKE 345KV CKT 1	717	717	0.18231	101.9087	CLAY BOSWELL 230/20.9KV TRANSFORMER CKT 1
FDNS	00NR	0	16WP	G15_044	FROM->TO	CIMARRON - DRAPER LAKE 345KV CKT 1	717	717	0.18231	101.8974	GEN640010 1-GERALD GENTLEMAN STATION UNIT 1
FDNS	00NR	0	16WP	G15_044	FROM->TO	CIMARRON - DRAPER LAKE 345KV CKT 1	717	717	0.18231	101.8665	GEN672321 1-SHAND GENERATOR 1
FDNS	00NR	0	16WP	G15_044	FROM->TO	CIMARRON - DRAPER LAKE 345KV CKT 1	717	717	0.18277	101.8497	LULA - TUPELO TAP 138KV CKT 1
FDNS	00NR	0	16WP	G15_044	FROM->TO	CIMARRON - DRAPER LAKE 345KV CKT 1	717	717	0.18214	101.8468	NORTHWEST TEXARKANA - VALLIANT 345KV CKT 1
FDNS	00NR	0	16WP	G15_044	FROM->TO	CIMARRON - DRAPER LAKE 345KV CKT 1	717	717	0.18214	101.8468	NORTHWEST TEXARKANA - VALLIANT 345KV CKT 1
FDNS	00NR	0	16WP	G15_044	FROM->TO	CIMARRON - DRAPER LAKE 345KV CKT 1	717	717	0.18231	101.8436	GEN562710 1-G15_022_3 0.5500
FDNS	00NR	0	16WP	G15_044	FROM->TO	CIMARRON - DRAPER LAKE 345KV CKT 1	717	717	0.18175	101.8429	SEMINOLE (SEMINOL1) 345/138/14.4KV TRANSFORMER CKT 1
FDNS	00NR	0	16WP	G15_044	FROM->TO	CIMARRON - DRAPER LAKE 345KV CKT 1	717	717	0.18231	101.8407	GEN672310 1-POPLAR RIVER GENERATOR 1
FDNS	00NR	0	16WP	G15_044	FROM->TO	CIMARRON - DRAPER LAKE 345KV CKT 1	717	717	0.18231	101.8406	GEN672311 2-POPLAR RIVER GENERATOR 2
FDNS	00NR	0	16WP	G15_044	FROM->TO	CIMARRON - DRAPER LAKE 345KV CKT 1	717	717	0.18231	101.8304	GEN672306 6-BOUNDARY DAM GENERATOR 6
FDNS	00NR	0	16WP	G15_044	FROM->TO	CIMARRON - DRAPER LAKE 345KV CKT 1	717	717	0.18231	101.8297	GEN640011 2-GERALD GENTLEMAN STATION UNIT 2
FDNS	00NR	0	16WP	G15_044	FROM->TO	CIMARRON - DRAPER LAKE 345KV CKT 1	717	717	0.18231	101.8274	GEN542956 2-LACYGNE UNIT #2
FDNS	00NR	0	16WP	G15_044	FROM->TO	CIMARRON - DRAPER LAKE 345KV CKT 1	717	717	0.18231	101.8181	GEN659118 1-LARAMIE RIVER UNIT1
FDNS	00NR	0	16WP	G15_044	FROM->TO	CIMARRON - DRAPER LAKE 345KV CKT 1	717	717	0.18263	101.7929	ETNA - HARDEN 4 138.00 138KV CKT 1
FDNS	00NR	0	16WP	G15_044	FROM->TO	CIMARRON - DRAPER LAKE 345KV CKT 1	717	717	0.18298	101.7872	RENFROW7 345.00 - VIOLA 7 345.00 345KV CKT 1
FDNS	01NR	0	17G	G15_044	FROM->TO	CIMARRON - DRAPER LAKE 345KV CKT 1	717	717	0.20976	101.7747	G14-057T 345.00 - SUNNYSIDE 345KV CKT 1
FDNS	00NR	0	16WP	G15_044	FROM->TO	CIMARRON - DRAPER LAKE 345KV CKT 1	717	717	0.18312	101.7737	P12:138:OKGE:3TERM22
FDNS	00NR	0	16WP	G15_044	FROM->TO	CIMARRON - DRAPER LAKE 345KV CKT 1	717	717	0.18311	101.7718	DRAPER LAKE - SOONER TAP 138KV CKT 1
FDNS	00NR	0	16WP	G15_044	FROM->TO	CIMARRON - DRAPER LAKE 345KV CKT 1	717	717	0.18147	101.7634	P12:138:WFEC:MSL08
FDNS	00NR	0	16WP	G15_044	FROM->TO	CIMARRON - DRAPER LAKE 345KV CKT 1	717	717	0.18147	101.7516	FRANKLIN - PINK SW 138KV CKT 1
FDNS	00NR	0	16WP	G15_044	FROM->TO	CIMARRON - DRAPER LAKE 345KV CKT 1	717	717	0.18245	101.7502	P12:138:WFEC:MSL09
FDNS	00NR	0	16WP	G15_044	FROM->TO	CIMARRON - DRAPER LAKE 345KV CKT 1	717	717	0.1839	101.7466	OAKCREEK - WILD MARY 138KV CKT 1
FDNS	00NR	0	16WP	G15_044	FROM->TO	CIMARRON - DRAPER LAKE 345KV CKT 1	717	717	0.18231	101.7397	GEN542957 1-IATAN UNIT #1
FDNSLock	00NR	0	16WP	G15_044	FROM->TO	CIMARRON - DRAPER LAKE 345KV CKT 1	717	717	0.18231	101.7355	GEN681542 6-JP MADGETT
FDNS	00NR	0	16WP	G15_044	FROM->TO	CIMARRON - DRAPER LAKE 345KV CKT 1	717	717	0.18231	101.7124	GEN530690 1-PRWINDG1 0.6900
FDNS	00NR	0	16WP	G15_044	FROM->TO	CIMARRON - DRAPER LAKE 345KV CKT 1	717	717	0.18263	101.7075	ETNA - PARK LANE 138KV CKT 1
FDNS	00NR	0	16WP	G15_044	FROM->TO	CIMARRON - DRAPER LAKE 345KV CKT 1	717	717	0.18231	101.7	GEN645001 1-FORT CALHOUN 1
FDNS	00NR	0	16WP	G15_044	FROM->TO	CIMARRON - DRAPER LAKE 345KV CKT 1	717	717	0.18332	101.6997	HUNTERS7 345.00 - RENFROW7 345.00 345KV CKT 1
FDNS	00NR	0	16WP	G15_044	FROM->TO	CIMARRON - DRAPER LAKE 345KV CKT 1	717	717	0.18231	101.658	GEN542955 1-LACYGNE UNIT #1
FDNS	00NR	0	16WP	G15_044	FROM->TO	CIMARRON - DRAPER LAKE 345KV CKT 1	717	717	0.18231	101.6477	GEN562754 1-G15031_5 0.6900
FDNS	00NR	0	16WP	G15_044	FROM->TO	CIMARRON - DRAPER LAKE 345KV CKT 1	717	717	0.18231	101.6356	GEN562556 1-G14_046_3 0.3420
FDNS	00NR	0	16WP	G15_044	FROM->TO	CIMARRON - DRAPER LAKE 345KV CKT 1	717	717	0.18164	101.6321	SEMINOLE (SEMINOL2) 345/138/14.4KV TRANSFORMER CKT 1
FDNS	00NR	0	16WP	G15_044	FROM->TO	CIMARRON - DRAPER LAKE 345KV CKT 1	717	717	0.18231	101.6108	GEN661015 1-COYOTE
FDNS	00NR	0	16WP	G15_044	FROM->TO	CIMARRON - DRAPER LAKE 345KV CKT 1	717	717	0.18231	101.6042	GEN562756 1-G15031_7 0.6900
FDNS	00NR	0	16WP	G15_044	FROM->TO	CIMARRON - DRAPER LAKE 345KV CKT 1	717	717	0.18231	101.6013	GEN532653 1-JEFFREY ENERGY CENTER UNIT 3
FDNS	00NR	0	16WP	G15_044	FROM->TO	CIMARRON - DRAPER LAKE 345KV CKT 1	717	717	0.18231	101.6012	GEN532652 1-JEFFREY ENERGY CENTER UNIT 2
FDNS	00NR	0	16WP	G15_044	FROM->TO	CIMARRON - DRAPER LAKE 345KV CKT 1	717	717	0.18231	101.5971	GEN532651 1-JEFFREY ENERGY CENTER UNIT 1
FDNS	00NR	0	16WP	G15_044	FROM->TO	CIMARRON - DRAPER LAKE 345KV CKT 1	717	717	0.18231	101.5894	GEN562974 1-G15060_5 0.6900
FDNS	00NR	0	16WP	G15_044	FROM->TO	CIMARRON - DRAPER LAKE 345KV CKT 1	717	717	0.18231	101.5883	GEN563142 1-G15079_3 0.5500
FDNS	00NR	0	16WP	G15_044	FROM->TO	CIMARRON - DRAPER LAKE 345KV CKT 1	717	717	0.18231	101.5883	GEN563151 1-G15080_2 0.5500
FDNS	00NR	0	16WP	G15_044	FROM->TO	CIMARRON - DRAPER LAKE 345KV CKT 1	717	717	0.18231	101.5778	GEN563042 1-G15068_3 0.6900
FDNS	00NR	0	16WP	G15_044	FROM->TO	CIMARRON - DRAPER LAKE 345KV CKT 1	717	717	0.18231	101.5733	GEN562973 1-G15060_4 0.6900
FDNS	00NR	0	16WP	G15_044	FROM->TO	CIMARRON - DRAPER LAKE 345KV CKT 1	717	717	0.18231	101.5428	GEN562078 1-G11_051_3 0.6900
FDNS	00NR	0	16WP	G15_044	FROM->TO	CIMARRON - DRAPER LAKE 345KV CKT 1	717	717	0.18231	101.531	GEN562691 1-G15_015_3 0.6900
FDNS	00NR	0	16WP	G15_044	FROM->TO	CIMARRON - DRAPER LAKE 345KV CKT 1	717	717	0.1839	101.52	AIRDEPT4 138.00 - WILD MARY 138KV CKT 1
FDNS	00NR	0	16WP	G15_044	FROM->TO	CIMARRON - DRAPER LAKE 345KV CKT 1	717	717	0.18335	101.4938	PARK LANE - SEMINOLE 138KV CKT 1
FDNS	00NR	0	16WP	G15_044	FROM->TO	CIMARRON - DRAPER LAKE 345KV CKT 1	717	717	0.18231	101.4886	GEN562655 1-G14_074_3 0.6900
FDNS	00NR	0	16WP	G15_044	FROM->TO	CIMARRON - DRAPER LAKE 345KV CKT 1	717	717	0.18231	101.4881	GEN562762 1-G15033_3 0.6900
FDNS	00NR	0	16WP	G15_044	FROM->TO	CIMARRON - DRAPER LAKE 345KV CKT 1	717	717	0.18231	101.4826	GEN657748 1-YOUNG 2 GENERATOR
FDNS	00NR	0	16WP	G15_044	FROM->TO	CIMARRON - DRAPER LAKE 345KV CKT 1	717	717	0.18147	101.468	FRANKLIN - FRANKLIN SW 138KV CKT 1
FDNS	00NR	0	16WP	G15_044	FROM->TO	CIMARRON - DRAPER LAKE 345KV CKT 1	717	717	0.18231	101.4312	GEN527901 1-HOBBS PLANT #1 (CT)
FDNS	00NR	0	16WP	G15_044	FROM->TO	CIMARRON - DRAPER LAKE 345KV CKT 1	717	717	0.18231	101.4312	GEN527902 1-HOBBS PLANT #2 (CT)
FDNS	00NR	0	16WP	G15_044	FROM->TO	CIMARRON - DRAPER LAKE 345KV CKT 1	717	717	0.18231	101.405	GEN563273 2-G15093_4 0.6900

SOLUTION	GROUP	SCENARIO	SEASON	SOURCE	DIRECTION	MONITORED ELEMENT	RATEA (MVA)	RATEB(MVA)	TDF	TC%LOADING (% MVA)	CONTINGENCY
FDNS	00NR	0	16WP	G15_044	FROM->TO	CIMARRON - DRAPER LAKE 345KV CKT 1	717	717	0.18231	101.389	GEN563043 1-G15068_4 0.6900
FDNS	00NR	0	16WP	G15_044	FROM->TO	CIMARRON - DRAPER LAKE 345KV CKT 1	717	717	0.18207	101.3853	LYDIA - WELSH 345KV CKT 1
FDNS	00NR	0	16WP	G15_044	FROM->TO	CIMARRON - DRAPER LAKE 345KV CKT 1	717	717	0.18207	101.3853	LYDIA - WELSH 345KV CKT 1
FDNS	00NR	0	16WP	G15_044	FROM->TO	CIMARRON - DRAPER LAKE 345KV CKT 1	717	717	0.18231	101.3678	GEN563052 1-G15069_3 0.6900
FDNS	00NR	0	16WP	G15_044	FROM->TO	CIMARRON - DRAPER LAKE 345KV CKT 1	717	717	0.18231	101.3481	GEN525845 1-ELK_2 1 138.00
FDNS	00NR	0	16WP	G15_044	FROM->TO	CIMARRON - DRAPER LAKE 345KV CKT 1	717	717	0.18231	101.3447	GEN525844 1-ELK_1 118.000
FDNS	00NR	0	16WP	G15_044	FROM->TO	CIMARRON - DRAPER LAKE 345KV CKT 1	717	717	0.18231	101.3169	GEN563242 1-G15090_3 0.6900
FDNS	00NR	0	16WP	G15_044	FROM->TO	CIMARRON - DRAPER LAKE 345KV CKT 1	717	717	0.18231	101.298	GEN526333 1-JONES GEN #3 21 KV
FDNS	00NR	0	16WP	G15_044	FROM->TO	CIMARRON - DRAPER LAKE 345KV CKT 1	717	717	0.18231	101.298	GEN526334 1-JONES_4 116.500
FDNS	00NR	0	16WP	G15_044	FROM->TO	CIMARRON - DRAPER LAKE 345KV CKT 1	717	717	0.18133	101.2942	P12:138:AEPW-OGE:CORNVIL4:CIMARON4
FDNS	00NR	0	16WP	G15_044	FROM->TO	CIMARRON - DRAPER LAKE 345KV CKT 1	717	717	0.18231	101.2934	GEN620315 1-BIG STONE GEN
FDNS	00NR	0	16WP	G15_044	FROM->TO	CIMARRON - DRAPER LAKE 345KV CKT 1	717	717	0.1839	101.2904	AIRDEPT4 138.00 - GM 138KV CKT 1
FDNS	00NR	0	16WP	G15_044	FROM->TO	CIMARRON - DRAPER LAKE 345KV CKT 1	717	717	0.18231	101.2796	GEN562772 1-G15034_3 0.6900
FDNS	00NR	0	16WP	G15_044	FROM->TO	CIMARRON - DRAPER LAKE 345KV CKT 1	717	717	0.18332	101.2661	HUNTERS7 345.00 - WOODRING 345KV CKT 1
FDNS	00NR	0	16WP	G15_044	FROM->TO	CIMARRON - DRAPER LAKE 345KV CKT 1	717	717	0.18231	101.2635	GEN523971 1-HARRINGTON GEN #1 24 KV
FDNS	00NR	0	16WP	G15_044	FROM->TO	CIMARRON - DRAPER LAKE 345KV CKT 1	717	717	0.18231	101.2635	GEN523972 1-HARRINGTON GEN #2 24 KV
FDNS	00NR	0	16WP	G15_044	FROM->TO	CIMARRON - DRAPER LAKE 345KV CKT 1	717	717	0.18231	101.2635	GEN523973 1-HARRINGTON GEN #3 24 KV
FDNS	00NR	0	16WP	G15_044	FROM->TO	CIMARRON - DRAPER LAKE 345KV CKT 1	717	717	0.18208	101.2533	RANCHRD7 345.00 - SOONER 345KV CKT 1
FDNS	00NR	0	16WP	G15_044	FROM->TO	CIMARRON - DRAPER LAKE 345KV CKT 1	717	717	0.18231	101.2384	GEN600004 2-PRAIRIE ISLAND G2
FDNS	00NR	0	16WP	G15_044	FROM->TO	CIMARRON - DRAPER LAKE 345KV CKT 1	717	717	0.18231	101.2354	GEN600003 1-PRAIRIE ISLAND G1
FDNSLock	00NR	0	16WP	G15_044	FROM->TO	CIMARRON - DRAPER LAKE 345KV CKT 1	717	717	0.18231	101.2218	GEN600006 1-AS KING
FDNSLock	00NR	0	16WP	G15_044	FROM->TO	CIMARRON - DRAPER LAKE 345KV CKT 1	717	717	0.18231	101.201	GEN636641 1-LOUISA UNIT 1
FDNS	00NR	0	16WP	G15_044	FROM->TO	CIMARRON - DRAPER LAKE 345KV CKT 1	717	717	0.17198	101.136	MUSKOGEE - SEMINOLE 345KV CKT 1
FDNS	00NR	0	16WP	G15_044	FROM->TO	CIMARRON - DRAPER LAKE 345KV CKT 1	717	717	0.18231	101.1035	GEN563292 1-G15095_3 0.6900
FDNS	00NR	0	16WP	G15_044	FROM->TO	CIMARRON - DRAPER LAKE 345KV CKT 1	717	717	0.18231	101.1	GEN542962 2-IATAN UNIT #2
FDNS	00NR	0	16WP	G15_044	FROM->TO	CIMARRON - DRAPER LAKE 345KV CKT 1	717	717	0.18231	101.1	GEN615002 2-COAL CREEK
FDNS	00NR	0	16WP	G15_044	FROM->TO	CIMARRON - DRAPER LAKE 345KV CKT 1	717	717	0.1896	101.0885	NORTHWEST - SPRING CREEK 345KV CKT 1
FDNS	00NR	0	16WP	G15_044	FROM->TO	CIMARRON - DRAPER LAKE 345KV CKT 1	717	717	0.18231	101.0833	GEN600005 1-MONTICELLO
FDNS	00NR	0	16WP	G15_044	FROM->TO	CIMARRON - DRAPER LAKE 345KV CKT 1	717	717	0.1839	101.082	DRAPER LAKE - GM 138KV CKT 1
FDNS	00NR	0	16WP	G15_044	FROM->TO	CIMARRON - DRAPER LAKE 345KV CKT 1	717	717	0.18231	101.0628	GEN527166 1-MUSTANG_6 118.000
FDNS	00NR	0	16WP	G15_044	FROM->TO	CIMARRON - DRAPER LAKE 345KV CKT 1	717	717	0.18231	101.0553	GEN525562 1-TOLK GEN #2 24 KV
FDNS	00NR	0	16WP	G15_044	FROM->TO	CIMARRON - DRAPER LAKE 345KV CKT 1	717	717	0.1896	101.0485	SOONER - SPRING CREEK 345KV CKT 1
FDNS	00NR	0	16WP	G15_044	FROM->TO	CIMARRON - DRAPER LAKE 345KV CKT 1	717	717	0.18632	101.0368	CLARKSVILLE - MUSKOGEE 345KV CKT 1
FDNS	00NR	0	16WP	G15_044	FROM->TO	CIMARRON - DRAPER LAKE 345KV CKT 1	717	717	0.18632	101.0368	CLARKSVILLE - MUSKOGEE 345KV CKT 1
FDNS	00NR	0	16WP	G15_044	FROM->TO	CIMARRON - DRAPER LAKE 345KV CKT 1	717	717	0.18231	101.0116	GEN562952 1-G15057_3 0.6500
FDNS	00NR	0	16WP	G15_044	FROM->TO	CIMARRON - DRAPER LAKE 345KV CKT 1	717	717	0.18231	101.0001	GEN563272 1-G15093_3 0.6900
FDNS	00NR	0	16WP	G15_044	FROM->TO	CIMARRON - DRAPER LAKE 345KV CKT 1	717	717	0.18231	101	GEN629074 1-ARNOLD LOWSIDE OF GSU XFMR
FDNS	00NR	0	16WP	G15_044	FROM->TO	CIMARRON - DRAPER LAKE 345KV CKT 1	717	717	0.18231	100.9585	GEN635213 3-NEAL UNIT 3
FDNS	00NR	0	16WP	G15_044	FROM->TO	CIMARRON - DRAPER LAKE 345KV CKT 1	717	717	0.18403	100.9479	FRANKLIN SW - MIDWEST TAP 138KV CKT 1
FDNS	00NR	0	16WP	G15_044	FROM->TO	CIMARRON - DRAPER LAKE 345KV CKT 1	717	717	0.17417	100.9426	DRAPER LAKE - SEMINOLE 345KV CKT 3
FDNS	00NR	0	16WP	G15_044	FROM->TO	CIMARRON - DRAPER LAKE 345KV CKT 1	717	717	0.18231	100.9128	GEN562892 1-G15048_3 0.6900
FDNS	00NR	0	16WP	G15_044	FROM->TO	CIMARRON - DRAPER LAKE 345KV CKT 1	717	717	0.18231	100.9011	BIG STONE 230/24.0KV TRANSFORMER CKT 1
FDNS	00NR	0	16WP	G15_044	FROM->TO	CIMARRON - DRAPER LAKE 345KV CKT 1	717	717	0.18231	100.8665	GEN563173 1-G15082_3 0.6900
FDNS	00NR	0	16WP	G15_044	FROM->TO	CIMARRON - DRAPER LAKE 345KV CKT 1	717	717	0.18293	100.8575	CHAMBER SPRINGS - CLARKSVILLE 345KV CKT 1
FDNS	00NR	0	16WP	G15_044	FROM->TO	CIMARRON - DRAPER LAKE 345KV CKT 1	717	717	0.18231	100.8263	GEN562902 1-G15052_3 0.6900
FDNS	00NR	0	16WP	G15_044	FROM->TO	CIMARRON - DRAPER LAKE 345KV CKT 1	717	717	0.18198	100.8149	LYDIA - VALLIANT 345KV CKT 1
FDNS	00NR	0	16WP	G15_044	FROM->TO	CIMARRON - DRAPER LAKE 345KV CKT 1	717	717	0.18198	100.8149	LYDIA - VALLIANT 345KV CKT 1
FDNS	00NR	0	16WP	G15_044	FROM->TO	CIMARRON - DRAPER LAKE 345KV CKT 1	717	717	0.18231	100.81	GEN514805 1-SOONER UNIT 1
FDNS	00NR	0	16WP	G15_044	FROM->TO	CIMARRON - DRAPER LAKE 345KV CKT 1	717	717	0.18231	100.787	GEN527903 1-HOBBS PLANT #3 (ST)
FDNS	00NR	0	16WP	G15_044	FROM->TO	CIMARRON - DRAPER LAKE 345KV CKT 1	717	717	0.18231	100.7504	GEN525561 1-TOLK GEN #1 24 KV
FDNSLock	00NR	0	16WP	G15_044	FROM->TO	CIMARRON - DRAPER LAKE 345KV CKT 1	717	717	0.18231	100.7392	GEN600000 1-SHERBURNECNTY G1
FDNS	00NR	0	16WP	G15_044	FROM->TO	CIMARRON - DRAPER LAKE 345KV CKT 1	717	717	0.1809	100.6808	P12:138:OKGE:3TERM23
FDNS	00NR	0	16WP	G15_044	FROM->TO	CIMARRON - DRAPER LAKE 345KV CKT 1	717	717	0.18231	100.6578	GEN600001 2-SHERBURNE CNTY G2
FDNS	00NR	0	16WP	G15_044	FROM->TO	CIMARRON - DRAPER LAKE 345KV CKT 1	717	717	0.1809	100.6216	BARNES 4 138.00 - DRAPER LAKE 138KV CKT 1
FDNS	00NR	0	16WP	G15_044	FROM->TO	CIMARRON - DRAPER LAKE 345KV CKT 1	717	717	0.18231	100.6	GEN344225 1-1CAL G1 25.000
FDNS	00NR	0	16WP	G15_044	FROM->TO	CIMARRON - DRAPER LAKE 345KV CKT 1	717	717	0.18231	100.5641	GEN514806 1-SOONER UNIT 2
FDNSLock	00NR	0	16WP	G15_044	FROM->TO	CIMARRON - DRAPER LAKE 345KV CKT 1	717	717	0.18231	100.5438	GEN629075 1-OTTUMWA GENERATOR FOR OTTUMWA UNIT NO 1
FDNS	00NR	0	16WP	G15_044	FROM->TO	CIMARRON - DRAPER LAKE 345KV CKT 1	717	717	0.18231	100.5167	GEN563162 1-G15081_3 0.6900
FDNS	00NR	0	16WP	G15_044	FROM->TO	CIMARRON - DRAPER LAKE 345KV CKT 1	717	717	0.18391	100.3768	DRAPER LAKE (DRAPER2) 345/138/13.8KV TRANSFORMER CKT 1
FDNS	00NR	0	16WP	G15_044	FROM->TO	CIMARRON - DRAPER LAKE 345KV CKT 1	717	717	0.18231	100.3192	SHERBURNE CO 345/24.0KV TRANSFORMER CKT 1
FDNS	00NR	0	16WP	G15_044	FROM->TO	CIMARRON - DRAPER LAKE 345KV CKT 1	717	717	0.18928	100.2891	CIMARRON - MATHWSN7 345.00 345KV CKT 1
FDNS	00NR	0	16WP	G15_044	FROM->TO	CIMARRON - DRAPER LAKE 345KV CKT 1	717	717	0.18928	100.2891	CIMARRON - MATHWSN7 345.00 345KV CKT 2
FDNS	00NR	0	16WP	G15_044	FROM->TO	CIMARRON - DRAPER LAKE 345KV CKT 1	717	717	0.18391	100.286	DRAPER LAKE (DRAPER3) 345/138/13.8KV TRANSFORMER CKT 1
FDNS	00NR	0	16WP	G15_044	FROM->TO	CIMARRON - DRAPER LAKE 345KV CKT 1	717	717	0.18391	100.286	DRAPER LAKE (DRAPER4) 345/138/13.8KV TRANSFORMER CKT 1
FDNSLock	00NR	0	16WP	G15_044	FROM->TO	CIMARRON - DRAPER LAKE 345KV CKT 1	717	717	0.18231	100.2812	GEN635214 4-NEAL UNIT 4
FDNS	00NR	0	16WP	G15_044	FROM->TO	CIMARRON - DRAPER LAKE 345KV CKT 1	717	717	0.18231	100.2003	GEN562882 1-G15047_3 0.6900
FDNS	00NR	0	16WP	G15_044	FROM->TO	CIMARRON - DRAPER LAKE 345KV CKT 1	717	717	0.18231	100.1889	GEN600002 3-SHERBURNE CNTY G3
FDNS	00NR	0	16WP	G15_044	FROM->TO	CIMARRON - DRAPER LAKE 345KV CKT 1	717	717	0.18231	99.8	GEN635023 3-WALTER SCOTT UNIT 3
FDNS	00NR	0	16WP	G15_044	FROM->TO	CIMARRON - DRAPER LAKE 345KV CKT 1	717	717	0.18231	99.7	GEN562023 1-G11_020_3 0.6900
FDNS	00NR	0	16WP	G15_044	FROM->TO	CIMARRON - DRAPER LAKE 345KV CKT 1	717	717	0.18231	99.7	GEN562026 1-G11_019_3 0.6900
FDNS	00NR	0	16WP	G15_044	FROM->TO	CIMARRON - DRAPER LAKE 345KV CKT 1	717	717	0.18231	99.6	EASTDC - ERCOT EQUIVALENCE 345KV CKT 1
FDNS	00NR	0	16WP	G15_044	FROM->TO	CIMARRON - DRAPER LAKE 345KV CKT 1	717	717	0.16711	99.5	DRAPER LAKE - SEMINOLE 345KV CKT 1
FDNS	00NR	0	16WP	G15_044	FROM->TO	CIMARRON - DRAPER LAKE 345KV CKT 1	717	717	0.16711	99.5	DRAPER LAKE - SEMINOLE 345KV CKT 2
FDNS	00NR	0	20WP	G15_044	TO->FROM	CIMARRON - MINCO 345KV CKT 1	956	956	0.79195	113.1031	G14-057T 345.00 - SUNNYSIDE 345KV CKT 1
FDNS	00NR	0	16WP	G15_044	TO->FROM	CIMARRON - MINCO 345KV CKT 1	956	956	0.79269	112.6453	G14-057T 345.00 - SUNNYSIDE 345KV CKT 1
FDNS	00NR	0	16WP	G15_044	FROM->TO	G14-057T 345.00 - SUNNYSIDE 345KV CKT 1	717	789	0.36019	141.3261	CIMARRON - MINCO 345KV CKT 1
FDNS	00NR	0	20WP	G15_044	FROM->TO	G14-057T 345.00 - SUNNYSIDE 345KV CKT 1	717	789	0.35881	139.8556	CIMARRON - MINCO 345KV CKT 1
FDNS	00NR	0	16WP	G15_044	FROM->TO	G14-057T 345.00 - SUNNYSIDE 345KV CKT 1	717	789	0.11447	125.8516	PITTSBURG - SEMINOLE 345KV CKT 1
FDNS	00NR	0	16WP	G15_044	FROM->TO	G14-057T 345.00 - SUNNYSIDE 345KV CKT 1	717	789	0.11447	125.8516	PITTSBURG - SEMINOLE 345KV CKT 1

SOLUTION	GROUP	SCENARIO	SEASON	SOURCE	DIRECTION	MONITORED ELEMENT	RATEA (MVA)	RATEB(MVA)	TDF	TC%LOADING (% MVA)	CONTINGENCY
FDNS	00NR	0	16WP	G15_044	FROM->TO	G14-057T 345.00 - SUNNYSIDE 345KV CKT 1	717	789	0.11699	125.7317	BASE CASE
FDNS	00NR	0	20WP	G15_044	FROM->TO	G14-057T 345.00 - SUNNYSIDE 345KV CKT 1	717	789	0.11665	123.4961	BASE CASE
FDNS	00NR	0	16WP	G15_044	FROM->TO	G14-057T 345.00 - SUNNYSIDE 345KV CKT 1	717	789	0.13392	123.2027	CIMARRON - DRAPER LAKE 345KV CKT 1
FDNS	00NR	0	20WP	G15_044	FROM->TO	G14-057T 345.00 - SUNNYSIDE 345KV CKT 1	717	789	0.11402	122.942	PITTSBURG - SEMINOLE 345KV CKT 1
FDNS	00NR	0	20WP	G15_044	FROM->TO	G14-057T 345.00 - SUNNYSIDE 345KV CKT 1	717	789	0.11402	122.942	PITTSBURG - SEMINOLE 345KV CKT 1
FDNS	00NR	0	20WP	G15_044	FROM->TO	G14-057T 345.00 - SUNNYSIDE 345KV CKT 1	717	789	0.13354	120.8155	CIMARRON - DRAPER LAKE 345KV CKT 1
FDNS	00NR	0	16WP	G15_044	FROM->TO	G14-057T 345.00 - SUNNYSIDE 345KV CKT 1	717	789	0.126	120.3338	P12:138:WFEC:MSL03
FDNS	00NR	0	16WP	G15_044	FROM->TO	G14-057T 345.00 - SUNNYSIDE 345KV CKT 1	717	789	0.11642	119.7169	PITTSBURG - VALLIANT 345KV CKT 1
FDNS	00NR	0	16WP	G15_044	FROM->TO	G14-057T 345.00 - SUNNYSIDE 345KV CKT 1	717	789	0.11642	119.7169	PITTSBURG - VALLIANT 345KV CKT 1
FDNSLock	00NR	0	16WP	G15_044	FROM->TO	G14-057T 345.00 - SUNNYSIDE 345KV CKT 1	717	789	0.11699	119.4097	GEN509403 1-PIRKEY GENERATION
FDNS	00NR	0	16WP	G15_044	FROM->TO	G14-057T 345.00 - SUNNYSIDE 345KV CKT 1	717	789	0.11699	119.3291	GEN509416 1-TURK GENERATION
FDNS	00NR	0	16WP	G15_044	FROM->TO	G14-057T 345.00 - SUNNYSIDE 345KV CKT 1	717	789	0.11868	119.038	CLEVELAND - G15066_T 345.00 345KV CKT 1
FDNS	00NR	0	16WP	G15_044	FROM->TO	G14-057T 345.00 - SUNNYSIDE 345KV CKT 1	717	789	0.11868	118.7424	G15066_T 345.00 - SOONER 345KV CKT 1
FDNS	00NR	0	20WP	G15_044	FROM->TO	G14-057T 345.00 - SUNNYSIDE 345KV CKT 1	717	789	0.12577	118.4531	P12:138:WFEC:MSL03
FDNS	00NR	0	16WP	G15_044	FROM->TO	G14-057T 345.00 - SUNNYSIDE 345KV CKT 1	717	789	0.11699	118.4277	GEN501801 1-DOLET HILLS UNIT1
FDNS	00NR	0	16WP	G15_044	FROM->TO	G14-057T 345.00 - SUNNYSIDE 345KV CKT 1	717	789	0.11699	118.0417	GEN509404 1-WELSH #1
FDNS	00NR	0	16WP	G15_044	FROM->TO	G14-057T 345.00 - SUNNYSIDE 345KV CKT 1	717	789	0.11699	118.0417	GEN509406 1-WELSH #3
FDNS	00NR	0	16WP	G15_044	FROM->TO	G14-057T 345.00 - SUNNYSIDE 345KV CKT 1	717	789	0.11875	117.7945	BORDER 7345.00 - WOODWARD DISTRICT EHV 345KV CKT 1
FDNS	00NR	0	16WP	G15_044	FROM->TO	G14-057T 345.00 - SUNNYSIDE 345KV CKT 1	717	789	0.11649	117.3154	7SAREPTA% 345.00 - LONGWOOD 345KV CKT 1
FDNS	00NR	0	16WP	G15_044	FROM->TO	G14-057T 345.00 - SUNNYSIDE 345KV CKT 1	717	789	0.11649	117.3154	7SAREPTA% 345.00 - LONGWOOD 345KV CKT 1
FDNS	00NR	0	20WP	G15_044	FROM->TO	G14-057T 345.00 - SUNNYSIDE 345KV CKT 1	717	789	0.11665	117.2677	GEN509403 1-PIRKEY GENERATION
FDNS	00NR	0	16WP	G15_044	FROM->TO	G14-057T 345.00 - SUNNYSIDE 345KV CKT 1	717	789	0.11954	117.2341	CORN TAP - NAPLESTP 138.00 138KV CKT 1
FDNS	00NR	0	20WP	G15_044	FROM->TO	G14-057T 345.00 - SUNNYSIDE 345KV CKT 1	717	789	0.11665	117.1868	GEN509416 1-TURK GENERATION
FDNS	00NR	0	16WP	G15_044	FROM->TO	G14-057T 345.00 - SUNNYSIDE 345KV CKT 1	717	789	0.11954	117.1497	NAPLESTP 138.00 - PAYNE 138.00 138KV CKT 1
FDNS	00NR	0	16WP	G15_044	FROM->TO	G14-057T 345.00 - SUNNYSIDE 345KV CKT 1	717	789	0.1168	117.1471	DOLET HILLS - SOUTHWEST SHREVEPORT 345KV CKT 1
FDNS	00NR	0	16WP	G15_044	FROM->TO	G14-057T 345.00 - SUNNYSIDE 345KV CKT 1	717	789	0.1168	117.1471	DOLET HILLS - SOUTHWEST SHREVEPORT 345KV CKT 1
FDNS	00NR	0	16WP	G15_044	FROM->TO	G14-057T 345.00 - SUNNYSIDE 345KV CKT 1	717	789	0.1195	117.1448	ANADARKO - POCASSETT 138KV CKT 1
FDNSLock	00NR	0	16WP	G15_044	FROM->TO	G14-057T 345.00 - SUNNYSIDE 345KV CKT 1	717	789	0.11699	117.1301	GEN336821 1-GRAND GULF UNIT
FDNS	00NR	0	16WP	G15_044	FROM->TO	G14-057T 345.00 - SUNNYSIDE 345KV CKT 1	717	789	0.11819	117.0898	CLEVELAND - TULSA NORTH 345KV CKT 1
FDNS	00NR	0	16WP	G15_044	FROM->TO	G14-057T 345.00 - SUNNYSIDE 345KV CKT 1	717	789	0.11819	117.0898	CLEVELAND - TULSA NORTH 345KV CKT 1
FDNS	00NR	0	16WP	G15_044	FROM->TO	G14-057T 345.00 - SUNNYSIDE 345KV CKT 1	717	789	0.11912	117.0742	COMANCHE - LOCO 138KV CKT 1
FDNSLock	00NR	0	16WP	G15_044	FROM->TO	G14-057T 345.00 - SUNNYSIDE 345KV CKT 1	717	789	0.11699	117.0352	GEN336153 1-WATERFORD UNIT#3
FDNS	00NR	0	16WP	G15_044	FROM->TO	G14-057T 345.00 - SUNNYSIDE 345KV CKT 1	717	789	0.11067	117.0161	CANADIAN RIVER - MUSKOGEE 345KV CKT 1
FDNS	00NR	0	16WP	G15_044	FROM->TO	G14-057T 345.00 - SUNNYSIDE 345KV CKT 1	717	789	0.1195	116.9961	POCASSETT - TUTTLE 138KV CKT 1
FDNS	00NR	0	20WP	G15_044	FROM->TO	G14-057T 345.00 - SUNNYSIDE 345KV CKT 1	717	789	0.11828	116.9383	CLEVELAND - G15066_T 345.00 345KV CKT 1
FDNSLock	00NR	0	16WP	G15_044	FROM->TO	G14-057T 345.00 - SUNNYSIDE 345KV CKT 1	717	789	0.11653	116.891	MATHWSN7 345.00 - TATONGA7 345.00 345KV CKT 1
FDNS	00NR	0	16WP	G15_044	FROM->TO	G14-057T 345.00 - SUNNYSIDE 345KV CKT 1	717	789	0.11875	116.8671	BORDER 7345.00 - TUCO_2 345.00 345KV CKT 1
FDNS	00NR	0	20WP	G15_044	FROM->TO	G14-057T 345.00 - SUNNYSIDE 345KV CKT 1	717	789	0.11607	116.8606	PITTSBURG - VALLIANT 345KV CKT 1
FDNS	00NR	0	20WP	G15_044	FROM->TO	G14-057T 345.00 - SUNNYSIDE 345KV CKT 1	717	789	0.11607	116.8606	PITTSBURG - VALLIANT 345KV CKT 1
FDNS	00NR	0	16WP	G15_044	FROM->TO	G14-057T 345.00 - SUNNYSIDE 345KV CKT 1	717	789	0.12846	116.8117	ARCADIA - NORTHWEST 345KV CKT 1
FDNS	00NR	0	16WP	G15_044	FROM->TO	G14-057T 345.00 - SUNNYSIDE 345KV CKT 1	717	789	0.11699	116.7419	GRAND GULF 500/22.0KV TRANSFORMER CKT 1
FDNSLock	00NR	0	16WP	G15_044	FROM->TO	G14-057T 345.00 - SUNNYSIDE 345KV CKT 1	717	789	0.11699	116.7414	GEN335831 1-RIVERBEND UNIT#1
FDNS	00NR	0	16WP	G15_044	FROM->TO	G14-057T 345.00 - SUNNYSIDE 345KV CKT 1	717	789	0.11699	116.7065	GEN515577 1-ARBWND11 0.6900
FDNS	00NR	0	16WP	G15_044	FROM->TO	G14-057T 345.00 - SUNNYSIDE 345KV CKT 1	717	789	0.11762	116.6977	ARCADIA - SEMINOLE 345KV CKT 1
FDNS	00NR	0	16WP	G15_044	FROM->TO	G14-057T 345.00 - SUNNYSIDE 345KV CKT 1	717	789	0.11699	116.6641	GEN509409 1-WILKES #3
FDNS	00NR	0	16WP	G15_044	FROM->TO	G14-057T 345.00 - SUNNYSIDE 345KV CKT 1	717	789	0.11671	116.6569	7SAREPTA% 345.00 - ELDORADO EHV 345KV CKT 1
FDNS	00NR	0	16WP	G15_044	FROM->TO	G14-057T 345.00 - SUNNYSIDE 345KV CKT 1	717	789	0.11671	116.6567	3TR3AR8EL7EL
FDNS	00NR	0	16WP	G15_044	FROM->TO	G14-057T 345.00 - SUNNYSIDE 345KV CKT 1	717	789	0.11671	116.6476	ELDORADO EHV 500/345KV TRANSFORMER CKT 1
FDNS	00NR	0	20WP	G15_044	FROM->TO	G14-057T 345.00 - SUNNYSIDE 345KV CKT 1	717	789	0.11828	116.6463	G15066_T 345.00 - SOONER 345KV CKT 1
FDNS	00NR	0	16WP	G15_044	FROM->TO	G14-057T 345.00 - SUNNYSIDE 345KV CKT 1	717	789	0.11834	116.6347	P12:138:AEPW:DUNCAN-4:L.E.S.-4
FDNS	00NR	0	16WP	G15_044	FROM->TO	G14-057T 345.00 - SUNNYSIDE 345KV CKT 1	717	789	0.1195	116.6144	BRIDGECR 138.00 - TUTTLE 138KV CKT 1
FDNS	00NR	0	16WP	G15_044	FROM->TO	G14-057T 345.00 - SUNNYSIDE 345KV CKT 1	717	789	0.11834	116.5237	COMANCHE TAP - OMPA-DUNCAN 840 138KV CKT 1
FDNS	00NR	0	16WP	G15_044	FROM->TO	G14-057T 345.00 - SUNNYSIDE 345KV CKT 1	717	789	0.1194	116.4781	HEALDTON - LOCO 138KV CKT 1
FDNS	00NR	0	20WP	G15_044	FROM->TO	G14-057T 345.00 - SUNNYSIDE 345KV CKT 1	717	789	0.11665	116.4704	GEN501801 1-DOLET HILLS UNIT1
FDNS	00NR	0	16WP	G15_044	FROM->TO	G14-057T 345.00 - SUNNYSIDE 345KV CKT 1	717	789	0.11833	116.4505	FINNEY SWITCHING STATION - HOLCOMB 345KV CKT 1
FDNS	00NR	0	16WP	G15_044	FROM->TO	G14-057T 345.00 - SUNNYSIDE 345KV CKT 1	717	789	0.11833	116.4505	FINNEY SWITCHING STATION - HOLCOMB 345KV CKT 1
FDNS	00NR	0	16WP	G15_044	FROM->TO	G14-057T 345.00 - SUNNYSIDE 345KV CKT 1	717	789	0.11699	116.4	GEN300006 1-NEW MADRID UNIT 1
FDNS	00NR	0	16WP	G15_044	FROM->TO	G14-057T 345.00 - SUNNYSIDE 345KV CKT 1	717	789	0.11699	116.4	GEN300007 1-NEW MADRID UNIT 2
FDNS	00NR	0	16WP	G15_044	FROM->TO	G14-057T 345.00 - SUNNYSIDE 345KV CKT 1	717	789	0.11716	116.3928	LACYGNE - WAVERLY7 345.00 345KV CKT 1
FDNS	00NR	0	16WP	G15_044	FROM->TO	G14-057T 345.00 - SUNNYSIDE 345KV CKT 1	717	789	0.11699	116.369	GEN501813 1-RODEMACHER UNIT 3
FDNS	00NR	0	16WP	G15_044	FROM->TO	G14-057T 345.00 - SUNNYSIDE 345KV CKT 1	717	789	0.1195	116.3452	P12:138:WFEC:MSL01
FDNS	00NR	0	16WP	G15_044	FROM->TO	G14-057T 345.00 - SUNNYSIDE 345KV CKT 1	717	789	0.1195	116.3403	BRIDGECR 138.00 - SUNSHINE CANYON 138KV CKT 1
FDNS	00NR	0	16WP	G15_044	FROM->TO	G14-057T 345.00 - SUNNYSIDE 345KV CKT 1	717	789	0.1194	116.3386	HEALDTON - RINGLING 138KV CKT 1
FDNS	00NR	0	16WP	G15_044	FROM->TO	G14-057T 345.00 - SUNNYSIDE 345KV CKT 1	717	789	0.11716	116.2527	WAVERLY7 345.00 - WOLF CREEK 345KV CKT 1
FDNS	00NR	0	16WP	G15_044	FROM->TO	G14-057T 345.00 - SUNNYSIDE 345KV CKT 1	717	789	0.11699	116.2503	GEN520947 1-HUGO1
FDNS	00NR	0	16WP	G15_044	FROM->TO	G14-057T 345.00 - SUNNYSIDE 345KV CKT 1	717	789	0.11834	116.2417	DUNCAN - OMPA-DUNCAN 840 138KV CKT 1
FDNS	00NR	0	16WP	G15_044	FROM->TO	G14-057T 345.00 - SUNNYSIDE 345KV CKT 1	717	789	0.11834	116.2417	DUNCAN - OMPA-DUNCAN 840 138KV CKT 1
FDNS	00NR	0	20WP	G15_044	FROM->TO	G14-057T 345.00 - SUNNYSIDE 345KV CKT 1	717	789	0.11836	116.2407	BORDER 7345.00 - WOODWARD DISTRICT EHV 345KV CKT 1
FDNSLock	00NR	0	16WP	G15_044	FROM->TO	G14-057T 345.00 - SUNNYSIDE 345KV CKT 1	717	789	0.11653	116.2034	G11_051T 345.00 - TATONGA7 345.00 345KV CKT 1
FDNS	00NR	0	16WP	G15_044	FROM->TO	G14-057T 345.00 - SUNNYSIDE 345KV CKT 1	717	789	0.1194	116.1742	RINGLING - SOUTH WILSON 138KV CKT 1
FDNS	00NR	0	16WP	G15_044	FROM->TO	G14-057T 345.00 - SUNNYSIDE 345KV CKT 1	717	789	0.11699	116.1685	GEN335206 1-NELSON UNIT 6
FDNS	00NR	0	16WP	G15_044	FROM->TO	G14-057T 345.00 - SUNNYSIDE 345KV CKT 1	717	789	0.11833	116.0651	FINNEY SWITCHING STATION - Hitchland Interchange 345KV CKT 1
FDNS	00NR	0	16WP	G15_044	FROM->TO	G14-057T 345.00 - SUNNYSIDE 345KV CKT 1	717	789	0.11699	116.0517	DOLET HILLS 345/24.0KV TRANSFORMER CKT 1
FDNS	00NR	0	16WP	G15_044	FROM->TO	G14-057T 345.00 - SUNNYSIDE 345KV CKT 1	717	789	0.117	116.0067	P12:138:AEPW:SHERID4:112GORE4
FDNS	00NR	0	16WP	G15_044	FROM->TO	G14-057T 345.00 - SUNNYSIDE 345KV CKT 1	717	789	0.11576	115.998	PARK LANE - SEMINOLE 138KV CKT 1
FDNSLock	00NR	0	16WP	G15_044	FROM->TO	G14-057T 345.00 - SUNNYSIDE 345KV CKT 1	717	789	0.11699	115.9851	GEN590011 2-ERCOT EQUIVALENCE
FDNS	00NR	0	16WP	G15_044	FROM->TO	G14-057T 345.00 - SUNNYSIDE 345KV CKT 1	717	789	0.11699	115.9826	GEN501812 1-RODEMACHER UNIT 2
FDNS	00NR	0	16WP	G15_044	FROM->TO	G14-057T 345.00 - SUNNYSIDE 345KV CKT 1	717	789	0.11771	115.9522	THISTLE7 345.00 - WOODWARD DISTRICT EHV 345KV CKT 1
FDNS	00NR	0	16WP	G15_044	FROM->TO	G14-057T 345.00 - SUNNYSIDE 345KV CKT 1	717	789	0.11771	115.9522	THISTLE7 345.00 - WOODWARD DISTRICT EHV 345KV CKT 1

SOLUTION	GROUP	SCENARIO	SEASON	SOURCE	DIRECTION	MONITORED ELEMENT	RATEA (MVA)	RATEB(MVA)	TDF	TC%LOADING (% MVA)	CONTINGENCY
FDNS	00NR	0	16WP	G15_044	FROM->TO	G14-057T 345.00 - SUNNYSIDE 345KV CKT 1	717	789	0.11771	115.9522	THISTLE7 345.00 - WOODWARD DISTRICT EHV 345KV CKT 2
FDNS	00NR	0	16WP	G15_044	FROM->TO	G14-057T 345.00 - SUNNYSIDE 345KV CKT 1	717	789	0.11771	115.9522	THISTLE7 345.00 - WOODWARD DISTRICT EHV 345KV CKT 2
FDNS	00NR	0	20WP	G15_044	FROM->TO	G14-057T 345.00 - SUNNYSIDE 345KV CKT 1	717	789	0.11665	115.9478	GEN509406 1-WELSH #3
FDNS	00NR	0	20WP	G15_044	FROM->TO	G14-057T 345.00 - SUNNYSIDE 345KV CKT 1	717	789	0.11665	115.9475	GEN509404 1-WELSH #1
FDNS	00NR	0	16WP	G15_044	FROM->TO	G14-057T 345.00 - SUNNYSIDE 345KV CKT 1	717	789	0.11746	115.9348	CANEYRV7 345.00 - NEOSHO 345KV CKT 1
FDNS	00NR	0	16WP	G15_044	FROM->TO	G14-057T 345.00 - SUNNYSIDE 345KV CKT 1	717	789	0.11699	115.9221	GEN515564 1-ORIGIN11 0.6900
FDNS	00NR	0	16WP	G15_044	FROM->TO	G14-057T 345.00 - SUNNYSIDE 345KV CKT 1	717	789	0.11699	115.9221	GEN515565 1-ORIGIN21 0.6900
FDNSLock	00NR	0	16WP	G15_044	FROM->TO	G14-057T 345.00 - SUNNYSIDE 345KV CKT 1	717	789	0.11699	115.9096	GEN590010 1-ERCOT EQUIVALENCE
FDNS	00NR	0	16WP	G15_044	FROM->TO	G14-057T 345.00 - SUNNYSIDE 345KV CKT 1	717	789	0.1194	115.8986	MARIETTA - SOUTH WILSON 138KV CKT 1
FDNS	00NR	0	16WP	G15_044	FROM->TO	G14-057T 345.00 - SUNNYSIDE 345KV CKT 1	717	789	0.11699	115.8352	GEN509408 1-WILKES #2
FDNS	00NR	0	16WP	G15_044	FROM->TO	G14-057T 345.00 - SUNNYSIDE 345KV CKT 1	717	789	0.1194	115.8012	P12:138:WFEC:MSL17
FDNS	00NR	0	16WP	G15_044	FROM->TO	G14-057T 345.00 - SUNNYSIDE 345KV CKT 1	717	789	0.11746	115.7954	CANEYRV7 345.00 - LATHAMS7 345.00 345KV CKT 1
FDNS	00NR	0	16WP	G15_044	FROM->TO	G14-057T 345.00 - SUNNYSIDE 345KV CKT 1	717	789	0.11785	115.7632	P12:138:WFEC:MSL02
FDNS	00NR	0	16WP	G15_044	FROM->TO	G14-057T 345.00 - SUNNYSIDE 345KV CKT 1	717	789	0.11699	115.7471	P12:161:AEPW:DYESS 5:HYLAND 5
FDNS	00NR	0	16WP	G15_044	FROM->TO	G14-057T 345.00 - SUNNYSIDE 345KV CKT 1	717	789	0.11699	115.7452	GEN506754 1-LEBROCK STEAM 1
FDNS	00NR	0	16WP	G15_044	FROM->TO	G14-057T 345.00 - SUNNYSIDE 345KV CKT 1	717	789	0.11699	115.7417	P12:69:AEPW:L.E.S.-2:LAW WC2
FDNS	00NR	0	16WP	G15_044	FROM->TO	G14-057T 345.00 - SUNNYSIDE 345KV CKT 1	717	789	0.11806	115.7311	REDBUD - RIVERSIDE STATION 345KV CKT 1
FDNS	00NR	0	16WP	G15_044	FROM->TO	G14-057T 345.00 - SUNNYSIDE 345KV CKT 1	717	789	0.11806	115.7311	REDBUD - RIVERSIDE STATION 345KV CKT 1
FDNS	00NR	0	16WP	G15_044	FROM->TO	G14-057T 345.00 - SUNNYSIDE 345KV CKT 1	717	789	0.11687	115.7085	ELDORADO EHV - MOUNT OLIVE 500KV CKT 1
FDNS	00NR	0	16WP	G15_044	FROM->TO	G14-057T 345.00 - SUNNYSIDE 345KV CKT 1	717	789	0.11699	115.6998	GEN334440 1-SABINE UNIT 4
FDNS	00NR	0	16WP	G15_044	FROM->TO	G14-057T 345.00 - SUNNYSIDE 345KV CKT 1	717	789	0.11896	115.6769	CIVIT - PAOLI 138KV CKT 1
FDNS	00NR	0	16WP	G15_044	FROM->TO	G14-057T 345.00 - SUNNYSIDE 345KV CKT 1	717	789	0.11766	115.675	ANADARKO - GEORGIA 138KV CKT 1
FDNS	00NR	0	16WP	G15_044	FROM->TO	G14-057T 345.00 - SUNNYSIDE 345KV CKT 1	717	789	0.11882	115.6471	MATHWSN7 345.00 - NORTHWEST 345KV CKT 1
FDNS	00NR	0	16WP	G15_044	FROM->TO	G14-057T 345.00 - SUNNYSIDE 345KV CKT 1	717	789	0.117	115.6371	P12:138:AEPW:112GORE4:L.E.S.-4
FDNS	00NR	0	16WP	G15_044	FROM->TO	G14-057T 345.00 - SUNNYSIDE 345KV CKT 1	717	789	0.11675	115.6268	ELDORADO EHV - SHERIDAN EHV 500KV CKT 1
FDNS	00NR	0	16WP	G15_044	FROM->TO	G14-057T 345.00 - SUNNYSIDE 345KV CKT 1	717	789	0.11976	115.6192	P12:138:AEPW-OGE:CORNVIL4:MAUD 4
FDNS	00NR	0	16WP	G15_044	FROM->TO	G14-057T 345.00 - SUNNYSIDE 345KV CKT 1	717	789	0.11699	115.6004	NEW MADRID 161/22.0KV TRANSFORMER CKT 1
FDNS	00NR	0	16WP	G15_044	FROM->TO	G14-057T 345.00 - SUNNYSIDE 345KV CKT 1	717	789	0.11694	115.5963	WEBRE - WELLS 500KV CKT 1
FDNS	00NR	0	16WP	G15_044	FROM->TO	G14-057T 345.00 - SUNNYSIDE 345KV CKT 1	717	789	0.11747	115.5952	PAOLI - PAYNE 138.00 138KV CKT 1
FDNS	00NR	0	16WP	G15_044	FROM->TO	G14-057T 345.00 - SUNNYSIDE 345KV CKT 1	717	789	0.11699	115.5952	GEN503909 1-FULTONU1 1 16.000
FDNS	00NR	0	16WP	G15_044	FROM->TO	G14-057T 345.00 - SUNNYSIDE 345KV CKT 1	717	789	0.11699	115.5865	NEW MADRID 345/22.0KV TRANSFORMER CKT 1
FDNS	00NR	0	16WP	G15_044	FROM->TO	G14-057T 345.00 - SUNNYSIDE 345KV CKT 1	717	789	0.11766	115.5859	FLETCHER - GEORGIA 138KV CKT 1
FDNS	00NR	0	16WP	G15_044	FROM->TO	G14-057T 345.00 - SUNNYSIDE 345KV CKT 1	717	789	0.11746	115.5778	LATHAMS7 345.00 - ROSE HILL 345KV CKT 1
FDNS	00NR	0	16WP	G15_044	FROM->TO	G14-057T 345.00 - SUNNYSIDE 345KV CKT 1	717	789	0.11766	115.5671	LAWTON EASTSIDE (LES 5) 345/138/13.8KV TRANSFORMER CKT 2
FDNS	00NR	0	16WP	G15_044	FROM->TO	G14-057T 345.00 - SUNNYSIDE 345KV CKT 1	717	789	0.11766	115.5671	LAWTON EASTSIDE (LES 5) 345/138/13.8KV TRANSFORMER CKT 2
FDNS	00NR	0	16WP	G15_044	FROM->TO	G14-057T 345.00 - SUNNYSIDE 345KV CKT 1	717	789	0.11699	115.5633	FRONTIER - GRIMES 345KV CKT 1
FDNS	00NR	0	16WP	G15_044	FROM->TO	G14-057T 345.00 - SUNNYSIDE 345KV CKT 1	717	789	0.11773	115.5527	EMPIRE - FLETCHER 138KV CKT 1
FDNS	00NR	0	16WP	G15_044	FROM->TO	G14-057T 345.00 - SUNNYSIDE 345KV CKT 1	717	789	0.11976	115.5491	BLANCHARD - CORNVILLE 138KV CKT 1
FDNS	00NR	0	16WP	G15_044	FROM->TO	G14-057T 345.00 - SUNNYSIDE 345KV CKT 1	717	789	0.11896	115.5364	CIVIT - STRATFORD 138KV CKT 1
FDNS	00NR	0	16WP	G15_044	FROM->TO	G14-057T 345.00 - SUNNYSIDE 345KV CKT 1	717	789	0.11751	115.5229	TUPELO - TUPELO TAP 138KV CKT 1
FDNS	00NR	0	16WP	G15_044	FROM->TO	G14-057T 345.00 - SUNNYSIDE 345KV CKT 1	717	789	0.11773	115.4711	COMANCHE - EMPIRE 138KV CKT 1
FDNS	00NR	0	16WP	G15_044	FROM->TO	G14-057T 345.00 - SUNNYSIDE 345KV CKT 1	717	789	0.11731	115.4691	G1524G1525 345.00 - THISTLE7 345.00 345KV CKT 1
FDNS	00NR	0	16WP	G15_044	FROM->TO	G14-057T 345.00 - SUNNYSIDE 345KV CKT 1	717	789	0.11731	115.4691	G1524G1525 345.00 - THISTLE7 345.00 345KV CKT 2
FDNS	00NR	0	16WP	G15_044	FROM->TO	G14-057T 345.00 - SUNNYSIDE 345KV CKT 1	717	789	0.11699	115.4679	GEN509393 S1-ARSENAL HILL GENS #4 (STALL)
FDNS	00NR	0	16WP	G15_044	FROM->TO	G14-057T 345.00 - SUNNYSIDE 345KV CKT 1	717	789	0.11699	115.4437	GEN509392 G2-ARSENAL HILL GENS #3 (STALL)
FDNS	00NR	0	16WP	G15_044	FROM->TO	G14-057T 345.00 - SUNNYSIDE 345KV CKT 1	717	789	0.11699	115.4436	GEN509391 G1-ARSENAL HILL GENS #2 (STALL)
FDNS	00NR	0	16WP	G15_044	FROM->TO	G14-057T 345.00 - SUNNYSIDE 345KV CKT 1	717	789	0.11699	115.429	GEN336252 1-NINEMILE POINT UNIT#5
FDNS	00NR	0	16WP	G15_044	FROM->TO	G14-057T 345.00 - SUNNYSIDE 345KV CKT 1	717	789	0.11896	115.419	OIL CENTER - STRATFORD 138KV CKT 1
FDNS	00NR	0	16WP	G15_044	FROM->TO	G14-057T 345.00 - SUNNYSIDE 345KV CKT 1	717	789	0.11699	115.4027	DELL 500 - ESSEX UNIT 2 500KV CKT Z1
FDNS	00NR	0	16WP	G15_044	FROM->TO	G14-057T 345.00 - SUNNYSIDE 345KV CKT 1	717	789	0.11699	115.3907	GEN334071 1-LEWIS CREEK 2
FDNS	00NR	0	16WP	G15_044	FROM->TO	G14-057T 345.00 - SUNNYSIDE 345KV CKT 1	717	789	0.11699	115.3817	GEN334070 1-LEWIS CREEK 1
FDNS	00NR	0	16WP	G15_044	FROM->TO	G14-057T 345.00 - SUNNYSIDE 345KV CKT 1	717	789	0.11699	115.3782	GEN335204 1-NELSON UNIT 4
FDNS	00NR	0	20WP	G15_044	FROM->TO	G14-057T 345.00 - SUNNYSIDE 345KV CKT 1	717	789	0.11616	115.3748	7SAREPTA% 345.00 - LONGWOOD 345KV CKT 1
FDNS	00NR	0	20WP	G15_044	FROM->TO	G14-057T 345.00 - SUNNYSIDE 345KV CKT 1	717	789	0.11616	115.3748	7SAREPTA% 345.00 - LONGWOOD 345KV CKT 1
FDNS	00NR	0	20WP	G15_044	FROM->TO	G14-057T 345.00 - SUNNYSIDE 345KV CKT 1	717	789	0.11929	115.3669	CORN TAP - NAPLESTP 138.00 138KV CKT 1
FDNS	00NR	0	16WP	G15_044	FROM->TO	G14-057T 345.00 - SUNNYSIDE 345KV CKT 1	717	789	0.11733	115.3542	DUNCAN (DUNCAN) 138/69/13.8KV TRANSFORMER CKT 1
FDNS	00NR	0	16WP	G15_044	FROM->TO	G14-057T 345.00 - SUNNYSIDE 345KV CKT 1	717	789	0.11733	115.3542	DUNCAN (DUNCAN) 138/69/13.8KV TRANSFORMER CKT 1
FDNS	00NR	0	16WP	G15_044	FROM->TO	G14-057T 345.00 - SUNNYSIDE 345KV CKT 1	717	789	0.11976	115.3522	BLANCHARD - MAUD 138KV CKT 1
FDNS	00NR	0	16WP	G15_044	FROM->TO	G14-057T 345.00 - SUNNYSIDE 345KV CKT 1	717	789	0.11699	115.3434	GEN334441 1-SABINE UNIT 5
FDNS	00NR	0	16WP	G15_044	FROM->TO	G14-057T 345.00 - SUNNYSIDE 345KV CKT 1	717	789	0.11699	115.3149	GEN337653 1-WHITE BLUFF UNIT #2
FDNS	00NR	0	20WP	G15_044	FROM->TO	G14-057T 345.00 - SUNNYSIDE 345KV CKT 1	717	789	0.11836	115.3146	BORDER 7345.00 - TUCO_2 345.00 345KV CKT 1
FDNS	00NR	0	16WP	G15_044	FROM->TO	G14-057T 345.00 - SUNNYSIDE 345KV CKT 1	717	789	0.11701	115.3081	P12:138:AEPW:CATOOSA4:T.S.E.-4
FDNS	00NR	0	16WP	G15_044	FROM->TO	G14-057T 345.00 - SUNNYSIDE 345KV CKT 1	717	789	0.11699	115.3065	P12:161:AEPW-SWPA:BEAVER5:EROGERS5
FDNS	00NR	0	16WP	G15_044	FROM->TO	G14-057T 345.00 - SUNNYSIDE 345KV CKT 1	717	789	0.11699	115.3	GEN300003 1-THOMAS HILL UNIT 3
FDNS	00NR	0	16WP	G15_044	FROM->TO	G14-057T 345.00 - SUNNYSIDE 345KV CKT 1	717	789	0.11685	115.2966	6LAYFLD 230.00 - CARROLL 230KV CKT 1
FDNS	00NR	0	16WP	G15_044	FROM->TO	G14-057T 345.00 - SUNNYSIDE 345KV CKT 1	717	789	0.11699	115.2935	GEN506752 1-LEBROCK GAS 1
FDNS	00NR	0	16WP	G15_044	FROM->TO	G14-057T 345.00 - SUNNYSIDE 345KV CKT 1	717	789	0.11699	115.2933	GEN506753 1-LEBROCK GAS 2
FDNS	00NR	0	16WP	G15_044	FROM->TO	G14-057T 345.00 - SUNNYSIDE 345KV CKT 1	717	789	0.11699	115.2879	GEN334030 1-FRONTIER UNIT 1
FDNS	00NR	0	16WP	G15_044	FROM->TO	G14-057T 345.00 - SUNNYSIDE 345KV CKT 1	717	789	0.11792	115.2871	TUTTLE - TUTTLE CONOCO TAP 138KV CKT 1
FDNS	00NR	0	16WP	G15_044	FROM->TO	G14-057T 345.00 - SUNNYSIDE 345KV CKT 1	717	789	0.11699	115.2864	GEN334031 1-FRONTIER UNIT 2
FDNS	00NR	0	20WP	G15_044	FROM->TO	G14-057T 345.00 - SUNNYSIDE 345KV CKT 1	717	789	0.11929	115.2754	NAPLESTP 138.00 - PAYNE 138.00 138KV CKT 1
FDNS	00NR	0	16WP	G15_044	FROM->TO	G14-057T 345.00 - SUNNYSIDE 345KV CKT 1	717	789	0.11944	115.2707	BAILEY4 138.00 - SUNSHINE CANYON 138KV CKT 1
FDNS	00NR	0	16WP	G15_044	FROM->TO	G14-057T 345.00 - SUNNYSIDE 345KV CKT 1	717	789	0.11699	115.2699	GEN515040 1-SEMINOLE 1G
FDNS	00NR	0	16WP	G15_044	FROM->TO	G14-057T 345.00 - SUNNYSIDE 345KV CKT 1	717	789	0.05732	115.2647	GRACEMONT - LAWTON EASTSIDE 345KV CKT 1
FDNS	00NR	0	16WP	G15_044	FROM->TO	G14-057T 345.00 - SUNNYSIDE 345KV CKT 1	717	789	0.05732	115.2647	GRACEMONT - LAWTON EASTSIDE 345KV CKT 1
FDNS	00NR	0	16WP	G15_044	FROM->TO	G14-057T 345.00 - SUNNYSIDE 345KV CKT 1	717	789	0.11679	115.2642	FULTON 115 - HOPE 115KV CKT 1
FDNS	00NR	0	16WP	G15_044	FROM->TO	G14-057T 345.00 - SUNNYSIDE 345KV CKT 1	717	789	0.11679	115.2642	FULTON 115 - HOPE 115KV CKT 1
FDNS	00NR	0	16WP	G15_044	FROM->TO	G14-057T 345.00 - SUNNYSIDE 345KV CKT 1	717	789	0.11699	115.249	8DANIEL8 500.00 - MCKNIGHT 500KV CKT 1
FDNS	00NR	0	16WP	G15_044	FROM->TO	G14-057T 345.00 - SUNNYSIDE 345KV CKT 1	717	789	0.11896	115.2478	LATTA JCT - OIL CENTER 138KV CKT 1

SOLUTION	GROUP	SCENARIO	SEASON	SOURCE	DIRECTION	MONITORED ELEMENT	RATEA (MVA)	RATEB(MVA)	TDF	TC%LOADING (% MVA)	CONTINGENCY
FDNS	00NR	0	16WP	G15_044	FROM->TO	G14-057T 345.00 - SUNNYSIDE 345KV CKT 1	717	789	0.11699	115.2473	GEN515226 1-MUSKOGEE 6G
FDNS	00NR	0	16WP	G15_044	FROM->TO	G14-057T 345.00 - SUNNYSIDE 345KV CKT 1	717	789	0.11785	115.2426	P12:138:AEPW-OGE:WTH_JCT4:JENSEN4
FDNS	00NR	0	16WP	G15_044	FROM->TO	G14-057T 345.00 - SUNNYSIDE 345KV CKT 1	717	789	0.11699	115.2333	GEN300015 1-1SGPDEL 18.000
FDNSLock	00NR	0	16WP	G15_044	FROM->TO	G14-057T 345.00 - SUNNYSIDE 345KV CKT 1	717	789	0.11699	115.2307	GEN337911 1-ARKANSAS NUCLEAR ONE UNIT #2
FDNS	00NR	0	16WP	G15_044	FROM->TO	G14-057T 345.00 - SUNNYSIDE 345KV CKT 1	717	789	0.11699	115.2299	P12:161:AEPW:DYESS5:ELMSPRNG:TONTITN5
FDNS	00NR	0	16WP	G15_044	FROM->TO	G14-057T 345.00 - SUNNYSIDE 345KV CKT 1	717	789	0.11699	115.2278	GEN337652 1-WHITE BLUFF UNIT #1
FDNS	00NR	0	16WP	G15_044	FROM->TO	G14-057T 345.00 - SUNNYSIDE 345KV CKT 1	717	789	0.11699	115.2235	GEN336251 1-NINEMILE POINT UNIT#4
FDNS	00NR	0	16WP	G15_044	FROM->TO	G14-057T 345.00 - SUNNYSIDE 345KV CKT 1	717	789	0.11763	115.2215	P12:138:AEPW:CORNVIL4:S.W.S.-4
FDNS	00NR	0	16WP	G15_044	FROM->TO	G14-057T 345.00 - SUNNYSIDE 345KV CKT 1	717	789	0.11699	115.2199	GEN501811 1-RODEMACHER UNIT 1
FDNS	00NR	0	16WP	G15_044	FROM->TO	G14-057T 345.00 - SUNNYSIDE 345KV CKT 1	717	789	0.11699	115.2185	GEN336831 1-BAXTER WILSON SES
FDNS	00NR	0	16WP	G15_044	FROM->TO	G14-057T 345.00 - SUNNYSIDE 345KV CKT 1	717	789	0.11762	115.2077	P12:138:AEPW:CORNVIL4:DUNCAN-4
FDNS	00NR	0	16WP	G15_044	FROM->TO	G14-057T 345.00 - SUNNYSIDE 345KV CKT 1	717	789	0.11707	115.2071	G15074_T 345.00 - HOYT 345KV CKT 1
FDNS	00NR	0	16WP	G15_044	FROM->TO	G14-057T 345.00 - SUNNYSIDE 345KV CKT 1	717	789	0.11792	115.206	CIMARRON - TUTTLE CONOCO TAP 138KV CKT 1
FDNS	00NR	0	20WP	G15_044	FROM->TO	G14-057T 345.00 - SUNNYSIDE 345KV CKT 1	717	789	0.11665	115.2011	GEN336821 1-GRAND GULF UNIT
FDNS	00NR	0	16WP	G15_044	FROM->TO	G14-057T 345.00 - SUNNYSIDE 345KV CKT 1	717	789	0.11706	115.2	G15088_T 345.00 - MOORE 345KV CKT 1
FDNS	00NR	0	16WP	G15_044	FROM->TO	G14-057T 345.00 - SUNNYSIDE 345KV CKT 1	717	789	0.11699	115.1975	GEN334433 1-SABINE UNIT 3
FDNS	00NR	0	16WP	G15_044	FROM->TO	G14-057T 345.00 - SUNNYSIDE 345KV CKT 1	717	789	0.11733	115.1706	P12:69:WFEC-AEPW:COMANCH2:DUNCAN-2
FDNS	00NR	0	16WP	G15_044	FROM->TO	G14-057T 345.00 - SUNNYSIDE 345KV CKT 1	717	789	0.11719	115.1663	BUCKNER7 345.00 - SPEARVILLE 345KV CKT 1
FDNS	00NR	0	16WP	G15_044	FROM->TO	G14-057T 345.00 - SUNNYSIDE 345KV CKT 1	717	789	0.11719	115.1663	BUCKNER7 345.00 - SPEARVILLE 345KV CKT 1
FDNS	00NR	0	16WP	G15_044	FROM->TO	G14-057T 345.00 - SUNNYSIDE 345KV CKT 1	717	789	0.11699	115.164	GEN562783 1-G15036_4 0.6900
FDNS	00NR	0	16WP	G15_044	FROM->TO	G14-057T 345.00 - SUNNYSIDE 345KV CKT 1	717	789	0.11699	115.164	GEN562784 1-G15036_5 0.6900
FDNSLock	00NR	0	16WP	G15_044	FROM->TO	G14-057T 345.00 - SUNNYSIDE 345KV CKT 1	717	789	0.11699	115.1601	GEN505432 1-SIKESTON
FDNS	00NR	0	16WP	G15_044	FROM->TO	G14-057T 345.00 - SUNNYSIDE 345KV CKT 1	717	789	0.11775	115.158	CIMARRON - CZECH HALL 138KV CKT 1
FDNS	00NR	0	16WP	G15_044	FROM->TO	G14-057T 345.00 - SUNNYSIDE 345KV CKT 1	717	789	0.11699	115.1483	GEN515223 1-MUSKOGEE 4G
FDNS	00NR	0	16WP	G15_044	FROM->TO	G14-057T 345.00 - SUNNYSIDE 345KV CKT 1	717	789	0.11699	115.1483	GEN515225 1-MUSKOGEE 5G
FDNS	00NR	0	16WP	G15_044	FROM->TO	G14-057T 345.00 - SUNNYSIDE 345KV CKT 1	717	789	0.1175	115.1473	P12:138:AEPW:WTHWF4:CLINTJC4
FDNS	00NR	0	16WP	G15_044	FROM->TO	G14-057T 345.00 - SUNNYSIDE 345KV CKT 1	717	789	0.11762	115.1258	CIMARRON - SARA 138KV CKT 1
FDNS	00NR	0	16WP	G15_044	FROM->TO	G14-057T 345.00 - SUNNYSIDE 345KV CKT 1	717	789	0.11699	115.1244	P12:161:AEPW:EROGERS5:ECNTRTN5
FDNS	00NR	0	16WP	G15_044	FROM->TO	G14-057T 345.00 - SUNNYSIDE 345KV CKT 1	717	789	0.11689	115.1205	LAYFLD8 500.00 - MOUNT OLIVE 500KV CKT 1
FDNS	00NR	0	16WP	G15_044	FROM->TO	G14-057T 345.00 - SUNNYSIDE 345KV CKT 1	717	789	0.11689	115.1205	LAYFLD8 500.00 - MOUNT OLIVE 500KV CKT 1
FDNS	00NR	0	16WP	G15_044	FROM->TO	G14-057T 345.00 - SUNNYSIDE 345KV CKT 1	717	789	0.11733	115.1191	DUNCAN - TOSCO 69KV CKT 1
FDNS	00NR	0	16WP	G15_044	FROM->TO	G14-057T 345.00 - SUNNYSIDE 345KV CKT 1	717	789	0.11699	115.1185	RODEMACHER 230/22.0KV TRANSFORMER CKT 1
FDNS	00NR	0	16WP	G15_044	FROM->TO	G14-057T 345.00 - SUNNYSIDE 345KV CKT 1	717	789	0.11699	115.118	WHITE BLUFF 500/26.0KV TRANSFORMER CKT 1
FDNS	00NR	0	16WP	G15_044	FROM->TO	G14-057T 345.00 - SUNNYSIDE 345KV CKT 1	717	789	0.1175	115.1125	P12:138:AEPW:WTHWF4:WTH_SE4
FDNS	00NR	0	16WP	G15_044	FROM->TO	G14-057T 345.00 - SUNNYSIDE 345KV CKT 1	717	789	0.11691	115.1104	MC NIEL 500/115KV TRANSFORMER CKT 1
FDNS	00NR	0	16WP	G15_044	FROM->TO	G14-057T 345.00 - SUNNYSIDE 345KV CKT 1	717	789	0.11073	115.1076	CANADIAN RIVER - PITTSBURG 345KV CKT 1
FDNS	00NR	0	16WP	G15_044	FROM->TO	G14-057T 345.00 - SUNNYSIDE 345KV CKT 1	717	789	0.11073	115.1076	CANADIAN RIVER - PITTSBURG 345KV CKT 1
FDNS	00NR	0	20WP	G15_044	FROM->TO	G14-057T 345.00 - SUNNYSIDE 345KV CKT 1	717	789	0.11914	115.1068	ANADARKO - POCASSETT 138KV CKT 1
FDNS	00NR	0	16WP	G15_044	FROM->TO	G14-057T 345.00 - SUNNYSIDE 345KV CKT 1	717	789	0.11684	115.1055	BISMARK - HOT SPRINGS WEST BUS 115KV CKT 1
FDNS	00NR	0	16WP	G15_044	FROM->TO	G14-057T 345.00 - SUNNYSIDE 345KV CKT 1	717	789	0.11699	115.1045	GEN303007 1-1BC2 U2
FDNS	00NR	0	16WP	G15_044	FROM->TO	G14-057T 345.00 - SUNNYSIDE 345KV CKT 1	717	789	0.11944	115.1009	BAILEY4 138.00 - WESTMOORE 138KV CKT 1
FDNS	00NR	0	16WP	G15_044	FROM->TO	G14-057T 345.00 - SUNNYSIDE 345KV CKT 1	717	789	0.11691	115.1003	HOT SPRINGS EHV - MAGNET COVE 500KV CKT 1
FDNS	00NR	0	16WP	G15_044	FROM->TO	G14-057T 345.00 - SUNNYSIDE 345KV CKT 1	717	789	0.11699	115.0992	GEN303006 1-1BC2 U1
FDNS	00NR	0	16WP	G15_044	FROM->TO	G14-057T 345.00 - SUNNYSIDE 345KV CKT 1	717	789	0.11715	115.0967	CLEO CORNER - CLEOPLT4 138.00 138KV CKT 1
FDNS	00NR	0	16WP	G15_044	FROM->TO	G14-057T 345.00 - SUNNYSIDE 345KV CKT 1	717	789	0.1161	115.0929	ARBWIND4 138.00 - CARTER 138KV CKT 1
FDNS	00NR	0	16WP	G15_044	FROM->TO	G14-057T 345.00 - SUNNYSIDE 345KV CKT 1	717	789	0.11713	115.0928	G15095_T 138.00 - ROSE_VALLEY 138.00 138KV CKT 1
FDNS	00NR	0	16WP	G15_044	FROM->TO	G14-057T 345.00 - SUNNYSIDE 345KV CKT 1	717	789	0.11722	115.0921	P12:69:AEPW-OMPA:COMANC-2:OMWALTR2
FDNS	00NR	0	20WP	G15_044	FROM->TO	G14-057T 345.00 - SUNNYSIDE 345KV CKT 1	717	789	0.11665	115.0919	GEN336153 1-WATERFORD UNIT#3
FDNS	00NR	0	16WP	G15_044	FROM->TO	G14-057T 345.00 - SUNNYSIDE 345KV CKT 1	717	789	0.11699	115.0853	GEN337910 1-ARKANSAS NUCLEAR ONE UNIT #1
FDNS	00NR	0	16WP	G15_044	FROM->TO	G14-057T 345.00 - SUNNYSIDE 345KV CKT 1	717	789	0.11605	115.0838	SEMINOLE - VANOSTP4 138.00 138KV CKT 1
FDNS	00NR	0	16WP	G15_044	FROM->TO	G14-057T 345.00 - SUNNYSIDE 345KV CKT 1	717	789	0.11715	115.0828	CLEOPLT4 138.00 - MEN TAP 138KV CKT 1
FDNS	00NR	0	16WP	G15_044	FROM->TO	G14-057T 345.00 - SUNNYSIDE 345KV CKT 1	717	789	0.11699	115.0797	GEN300010 1-ST FRANCIS UNIT 1
FDNS	00NR	0	16WP	G15_044	FROM->TO	G14-057T 345.00 - SUNNYSIDE 345KV CKT 1	717	789	0.11699	115.0766	GEN336191 1-LITTLE GYPSY UNIT#3
FDNS	00NR	0	16WP	G15_044	FROM->TO	G14-057T 345.00 - SUNNYSIDE 345KV CKT 1	717	789	0.11715	115.0709	IMO TAP - MEN TAP 138KV CKT 1
FDNS	00NR	0	16WP	G15_044	FROM->TO	G14-057T 345.00 - SUNNYSIDE 345KV CKT 1	717	789	0.11775	115.0701	CZECH HALL - XEROX 138KV CKT 1
FDNS	00NR	0	16WP	G15_044	FROM->TO	G14-057T 345.00 - SUNNYSIDE 345KV CKT 1	717	789	0.11775	115.0657	MORGAN - XEROX 138KV CKT 1
FDNS	00NR	0	16WP	G15_044	FROM->TO	G14-057T 345.00 - SUNNYSIDE 345KV CKT 1	717	789	0.117	115.057	P12:138:AEPW:N.E.S.-4:CATOOSA4
FDNS	00NR	0	16WP	G15_044	FROM->TO	G14-057T 345.00 - SUNNYSIDE 345KV CKT 1	717	789	0.11699	115.0559	NELSON 230/20.0KV TRANSFORMER CKT 1
FDNS	00NR	0	16WP	G15_044	FROM->TO	G14-057T 345.00 - SUNNYSIDE 345KV CKT 1	717	789	0.11684	115.0529	ALPINE AECC - BISMARK 115KV CKT 1
FDNS	00NR	0	16WP	G15_044	FROM->TO	G14-057T 345.00 - SUNNYSIDE 345KV CKT 1	717	789	0.11699	115.0513	GEN335614 1-WILLOW GLENN UNIT#4
FDNS	00NR	0	16WP	G15_044	FROM->TO	G14-057T 345.00 - SUNNYSIDE 345KV CKT 1	717	789	0.11733	115.0494	COMANCHE TAP - TOSCO 69KV CKT 1
FDNS	00NR	0	16WP	G15_044	FROM->TO	G14-057T 345.00 - SUNNYSIDE 345KV CKT 1	717	789	0.11775	115.0419	MORGAN - MUSTANG 138KV CKT 1
FDNS	00NR	0	16WP	G15_044	FROM->TO	G14-057T 345.00 - SUNNYSIDE 345KV CKT 1	717	789	0.11739	115.0417	BENTON - WICHITA 345KV CKT 1
FDNS	00NR	0	16WP	G15_044	FROM->TO	G14-057T 345.00 - SUNNYSIDE 345KV CKT 1	717	789	0.11699	115.0396	GEN303008 1-1BC2 U3
FDNS	00NR	0	16WP	G15_044	FROM->TO	G14-057T 345.00 - SUNNYSIDE 345KV CKT 1	717	789	0.11699	115.03	GEN300011 1-ST FRANCIS UNIT 2
FDNS	00NR	0	16WP	G15_044	FROM->TO	G14-057T 345.00 - SUNNYSIDE 345KV CKT 1	717	789	0.11713	115.0247	NOEL_SW 138.00 - ROSE_VALLEY 138.00 138KV CKT 1
FDNS	00NR	0	16WP	G15_044	FROM->TO	G14-057T 345.00 - SUNNYSIDE 345KV CKT 1	717	789	0.11699	115.0126	GEN336170 1-GULF OXY U4
FDNS	00NR	0	16WP	G15_044	FROM->TO	G14-057T 345.00 - SUNNYSIDE 345KV CKT 1	717	789	0.11786	115.0103	WEATHERFORD JCT. - WEATHERFORD SOUTHEAST 138KV CKT 1
FDNS	00NR	0	16WP	G15_044	FROM->TO	G14-057T 345.00 - SUNNYSIDE 345KV CKT 1	717	789	0.11786	115.0103	WEATHERFORD JCT. - WEATHERFORD SOUTHEAST 138KV CKT 1
FDNS	00NR	0	16WP	G15_044	FROM->TO	G14-057T 345.00 - SUNNYSIDE 345KV CKT 1	717	789	0.11698	115.0093	CYPRESS - HARTBURG 500KV CKT 1
FDNS	00NR	0	16WP	G15_044	FROM->TO	G14-057T 345.00 - SUNNYSIDE 345KV CKT 1	717	789	0.11684	115.0092	ALPINE AECC - AMITY SS 115KV CKT 1
FDNS	00NR	0	16WP	G15_044	FROM->TO	G14-057T 345.00 - SUNNYSIDE 345KV CKT 1	717	789	0.11699	115.0076	GEN336464 1-MICHOUD UNIT #3
FDNS	00NR	0	20WP	G15_044	FROM->TO	G14-057T 345.00 - SUNNYSIDE 345KV CKT 1	717	789	0.11782	115.0036	CLEVELAND - TULSA NORTH 345KV CKT 1
FDNS	00NR	0	20WP	G15_044	FROM->TO	G14-057T 345.00 - SUNNYSIDE 345KV CKT 1	717	789	0.11782	115.0036	CLEVELAND - TULSA NORTH 345KV CKT 1
FDNS	00NR	0	16WP	G15_044	FROM->TO	G14-057T 345.00 - SUNNYSIDE 345KV CKT 1	717	789	0.11707	114.998	HOYT - STRANGER CREEK 345KV CKT 1
FDNS	00NR	0	16WP	G15_044	FROM->TO	G14-057T 345.00 - SUNNYSIDE 345KV CKT 1	717	789	0.1177	114.9964	CHISHOLM6 230.00 - ELK CITY 230KV 230KV CKT 1
FDNS	00NR	0	20WP	G15_044	FROM->TO	G14-057T 345.00 - SUNNYSIDE 345KV CKT 1	717	789	0.11875	114.9957	COMANCHE - LOCO 138KV CKT 1
FDNS	00NR	0	16WP	G15_044	FROM->TO	G14-057T 345.00 - SUNNYSIDE 345KV CKT 1	717	789	0.11733	114.9952	COMANCHE - COMANCHE TAP 69KV CKT 1
FDNS	00NR	0	16WP	G15_044	FROM->TO	G14-057T 345.00 - SUNNYSIDE 345KV CKT 1	717	789	0.1177	114.9949	ELK CITY 230KV (ELKCTY-6) 230/138/13.8KV TRANSFORMER CKT 1

SOLUTION	GROUP	SCENARIO	SEASON	SOURCE	DIRECTION	MONITORED ELEMENT	RATEA (MVA)	RATEB(MVA)	TDF	TC%LOADING (% MVA)	CONTINGENCY
FDNS	00NR	0	16WP	G15_044	FROM->TO	G14-057T 345.00 - SUNNYSIDE 345KV CKT 1	717	789	0.1177	114.9949	ELK CITY 230KV (ELKCTY-6) 230/138/13.8KV TRANSFORMER CKT 1
FDNS	00NR	0	16WP	G15_044	FROM->TO	G14-057T 345.00 - SUNNYSIDE 345KV CKT 1	717	789	0.11699	114.9914	GEN300016 1-1G1GPDEL 18.000
FDNS	00NR	0	16WP	G15_044	FROM->TO	G14-057T 345.00 - SUNNYSIDE 345KV CKT 1	717	789	0.11699	114.9913	8CAJUN2 500/24.0KV TRANSFORMER CKT 1
FDNS	00NR	0	20WP	G15_044	FROM->TO	G14-057T 345.00 - SUNNYSIDE 345KV CKT 1	717	789	0.05715	114.9873	GRACEMONT - LAWTON EASTSIDE 345KV CKT 1
FDNS	00NR	0	20WP	G15_044	FROM->TO	G14-057T 345.00 - SUNNYSIDE 345KV CKT 1	717	789	0.05715	114.9873	GRACEMONT - LAWTON EASTSIDE 345KV CKT 1
FDNS	00NR	0	16WP	G15_044	FROM->TO	G14-057T 345.00 - SUNNYSIDE 345KV CKT 1	717	789	0.11721	114.9818	P12:138:OKGE-AEPW:JENSEN4:REDROCKRD4
FDNS	00NR	0	16WP	G15_044	FROM->TO	G14-057T 345.00 - SUNNYSIDE 345KV CKT 1	717	789	0.11699	114.9768	GEN337041 1-GERALD ANDRUS
FDNS	00NR	0	16WP	G15_044	FROM->TO	G14-057T 345.00 - SUNNYSIDE 345KV CKT 1	717	789	0.11852	114.9721	CANADIAN - NOBLE 138KV CKT 1
FDNS	00NR	0	16WP	G15_044	FROM->TO	G14-057T 345.00 - SUNNYSIDE 345KV CKT 1	717	789	0.11699	114.9655	GEN501910 1-ACADIA UNIT ST1
FDNS	00NR	0	16WP	G15_044	FROM->TO	G14-057T 345.00 - SUNNYSIDE 345KV CKT 1	717	789	0.11699	114.9604	P12:138:AEPW:R.S.S.-4:S.HUD.-4
FDNS	00NR	0	16WP	G15_044	FROM->TO	G14-057T 345.00 - SUNNYSIDE 345KV CKT 1	717	789	0.11896	114.9568	LASALLE - LATTA JCT 138KV CKT 1
FDNS	00NR	0	16WP	G15_044	FROM->TO	G14-057T 345.00 - SUNNYSIDE 345KV CKT 1	717	789	0.11786	114.9568	P12:138:AEPW:REDROCKRD4:WTH_JCT4
FDNS	00NR	0	16WP	G15_044	FROM->TO	G14-057T 345.00 - SUNNYSIDE 345KV CKT 1	717	789	0.117	114.9566	7JASPER 345.00 - BLACKBERRY 345KV CKT 1
FDNS	00NR	0	16WP	G15_044	FROM->TO	G14-057T 345.00 - SUNNYSIDE 345KV CKT 1	717	789	0.11733	114.955	WALTERS - WALTERS 69KV CKT 1
FDNS	00NR	0	16WP	G15_044	FROM->TO	G14-057T 345.00 - SUNNYSIDE 345KV CKT 1	717	789	0.11856	114.9539	P12:138:OKGE:3TERM27
FDNS	00NR	0	20WP	G15_044	FROM->TO	G14-057T 345.00 - SUNNYSIDE 345KV CKT 1	717	789	0.11914	114.9532	POCASSETT - TUTTLE 138KV CKT 1
FDNS	00NR	0	16WP	G15_044	FROM->TO	G14-057T 345.00 - SUNNYSIDE 345KV CKT 1	717	789	0.11707	114.9521	G15074_T 345.00 - JEFFREY ENERGY CENTER 345KV CKT 1
FDNS	00NR	0	16WP	G15_044	FROM->TO	G14-057T 345.00 - SUNNYSIDE 345KV CKT 1	717	789	0.11715	114.9482	BLACKBERRY - NEOSHO 345KV CKT 1
FDNS	00NR	0	16WP	G15_044	FROM->TO	G14-057T 345.00 - SUNNYSIDE 345KV CKT 1	717	789	0.11711	114.9468	SWISSVALE - WEST GARDNER 345KV CKT 1
FDNS	00NR	0	16WP	G15_044	FROM->TO	G14-057T 345.00 - SUNNYSIDE 345KV CKT 1	717	789	0.11768	114.9464	NORGE ROAD - SOUTHWESTERN STATION 138KV CKT 1
FDNS	00NR	0	16WP	G15_044	FROM->TO	G14-057T 345.00 - SUNNYSIDE 345KV CKT 1	717	789	0.11768	114.9464	NORGE ROAD - SOUTHWESTERN STATION 138KV CKT 1
FDNS	00NR	0	16WP	G15_044	FROM->TO	G14-057T 345.00 - SUNNYSIDE 345KV CKT 1	717	789	0.11944	114.9431	FRANKLIN SW - WESTMOORE 138KV CKT 1
FDNS	00NR	0	16WP	G15_044	FROM->TO	G14-057T 345.00 - SUNNYSIDE 345KV CKT 1	717	789	0.12016	114.9374	DRAPER LAKE - SEMINOLE 345KV CKT 2
FDNS	00NR	0	16WP	G15_044	FROM->TO	G14-057T 345.00 - SUNNYSIDE 345KV CKT 1	717	789	0.12016	114.9373	DRAPER LAKE - SEMINOLE 345KV CKT 1
FDNS	00NR	0	20WP	G15_044	FROM->TO	G14-057T 345.00 - SUNNYSIDE 345KV CKT 1	717	789	0.11647	114.9356	DOLET HILLS - SOUTHWEST SHREVEPORT 345KV CKT 1
FDNS	00NR	0	20WP	G15_044	FROM->TO	G14-057T 345.00 - SUNNYSIDE 345KV CKT 1	717	789	0.11647	114.9356	DOLET HILLS - SOUTHWEST SHREVEPORT 345KV CKT 1
FDNS	00NR	0	16WP	G15_044	FROM->TO	G14-057T 345.00 - SUNNYSIDE 345KV CKT 1	717	789	0.11762	114.933	SARA - STHLAKE4 138.00 138KV CKT 1
FDNS	00NR	0	16WP	G15_044	FROM->TO	G14-057T 345.00 - SUNNYSIDE 345KV CKT 1	717	789	0.11791	114.9289	G14_038T 345.00 - Hitchland Interchange 345KV CKT 1
FDNS	00NR	0	16WP	G15_044	FROM->TO	G14-057T 345.00 - SUNNYSIDE 345KV CKT 1	717	789	0.1169	114.9274	ETTA (DUKE HOTSPRINGS) - MC NIEL 500KV CKT 1
FDNS	00NR	0	16WP	G15_044	FROM->TO	G14-057T 345.00 - SUNNYSIDE 345KV CKT 1	717	789	0.11699	114.9218	P12:138:AEPW:YARCH-S4:T.S.E.-4
FDNS	00NR	0	16WP	G15_044	FROM->TO	G14-057T 345.00 - SUNNYSIDE 345KV CKT 1	717	789	0.11722	114.9213	LAWTON RELIFT TAP - OMPA-WALTERS 69KV CKT 1
FDNS	00NR	0	16WP	G15_044	FROM->TO	G14-057T 345.00 - SUNNYSIDE 345KV CKT 1	717	789	0.11699	114.9181	SABINE 230/24.0KV TRANSFORMER CKT 1
FDNS	00NR	0	16WP	G15_044	FROM->TO	G14-057T 345.00 - SUNNYSIDE 345KV CKT 1	717	789	0.11699	114.9164	ESSEX UNIT 2 500/18.0KV TRANSFORMER CKT 1
FDNS	00NR	0	16WP	G15_044	FROM->TO	G14-057T 345.00 - SUNNYSIDE 345KV CKT 1	717	789	0.11699	114.9157	P12:69:AEPW:NROGERS2:ECNTRTN2
FDNS	00NR	0	16WP	G15_044	FROM->TO	G14-057T 345.00 - SUNNYSIDE 345KV CKT 1	717	789	0.117	114.9156	P12:138:AEPW:BA_71ST4:T.S.E.-4
FDNS	00NR	0	16WP	G15_044	FROM->TO	G14-057T 345.00 - SUNNYSIDE 345KV CKT 1	717	789	0.11699	114.9151	GEN336801 1-BAXTER WILSON UNIT #1
FDNS	00NR	0	16WP	G15_044	FROM->TO	G14-057T 345.00 - SUNNYSIDE 345KV CKT 1	717	789	0.11717	114.9126	EMPORIA ENERGY CENTER - G14_001T 345.00 345KV CKT 1
FDNS	00NR	0	16WP	G15_044	FROM->TO	G14-057T 345.00 - SUNNYSIDE 345KV CKT 1	717	789	0.11703	114.9076	7LUTESVIL 345.00 - 7ST FRANC 345.00 345KV CKT 1
FDNS	00NR	0	16WP	G15_044	FROM->TO	G14-057T 345.00 - SUNNYSIDE 345KV CKT 1	717	789	0.11762	114.9039	MCCLAIN - STHLAKE4 138.00 138KV CKT 1
FDNS	00NR	0	16WP	G15_044	FROM->TO	G14-057T 345.00 - SUNNYSIDE 345KV CKT 1	717	789	0.11699	114.8963	FRONTIER 345/18.0KV TRANSFORMER CKT 1
FDNS	00NR	0	16WP	G15_044	FROM->TO	G14-057T 345.00 - SUNNYSIDE 345KV CKT 1	717	789	0.11679	114.8959	HOPE - MCNAB REC 115KV CKT 1
FDNS	00NR	0	16WP	G15_044	FROM->TO	G14-057T 345.00 - SUNNYSIDE 345KV CKT 1	717	789	0.11699	114.8947	FRONTIER 345/18.0KV TRANSFORMER CKT 1
FDNS	00NR	0	16WP	G15_044	FROM->TO	G14-057T 345.00 - SUNNYSIDE 345KV CKT 1	717	789	0.11703	114.888	P12:138:AEPW-OGE:SHIDLER4:OSAGE 4
FDNS	00NR	0	16WP	G15_044	FROM->TO	G14-057T 345.00 - SUNNYSIDE 345KV CKT 1	717	789	0.11679	114.887	P12:115:AEPW:TURK3:HOPE3
FDNS	00NR	0	16WP	G15_044	FROM->TO	G14-057T 345.00 - SUNNYSIDE 345KV CKT 1	717	789	0.11699	114.8839	P12:161:AEPW:CHAMSPR5:FARMING5
FDNS	00NR	0	16WP	G15_044	FROM->TO	G14-057T 345.00 - SUNNYSIDE 345KV CKT 1	717	789	0.11763	114.8809	SOUTHWESTERN STATION - VERDEN 138KV CKT 1
FDNS	00NR	0	16WP	G15_044	FROM->TO	G14-057T 345.00 - SUNNYSIDE 345KV CKT 1	717	789	0.11852	114.8807	NOBLE - PURCELL4 138.00 138KV CKT 1
FDNS	00NR	0	16WP	G15_044	FROM->TO	G14-057T 345.00 - SUNNYSIDE 345KV CKT 1	717	789	0.11786	114.8796	HINTON - WEATHERFORD JCT. 138KV CKT 1
FDNS	00NR	0	16WP	G15_044	FROM->TO	G14-057T 345.00 - SUNNYSIDE 345KV CKT 1	717	789	0.11683	114.8773	ENOWILT - LONE OAK 138KV CKT 1
FDNS	00NR	0	16WP	G15_044	FROM->TO	G14-057T 345.00 - SUNNYSIDE 345KV CKT 1	717	789	0.11772	114.8748	ANADARKO - SEQUOYAHJ4 138.00 138KV CKT 1
FDNS	00NR	0	16WP	G15_044	FROM->TO	G14-057T 345.00 - SUNNYSIDE 345KV CKT 1	717	789	0.11772	114.8744	CORN TAP - SEQUOYAHJ4 138.00 138KV CKT 1
FDNS	00NR	0	16WP	G15_044	FROM->TO	G14-057T 345.00 - SUNNYSIDE 345KV CKT 1	717	789	0.11542	114.8724	ARBUCKLE - VANOSTP4 138.00 138KV CKT 1
FDNS	00NR	0	16WP	G15_044	FROM->TO	G14-057T 345.00 - SUNNYSIDE 345KV CKT 1	717	789	0.1175	114.872	WEATHERFORD TAP - WEATHERFORD WIND FARM 138KV CKT 1
FDNS	00NR	0	16WP	G15_044	FROM->TO	G14-057T 345.00 - SUNNYSIDE 345KV CKT 1	717	789	0.11704	114.8684	8WNEWMADRID 500.00 - DELL 500 500KV CKT 1
FDNS	00NR	0	16WP	G15_044	FROM->TO	G14-057T 345.00 - SUNNYSIDE 345KV CKT 1	717	789	0.11683	114.8684	ENOWILT - SARDIS 138KV CKT 1
FDNS	00NR	0	16WP	G15_044	FROM->TO	G14-057T 345.00 - SUNNYSIDE 345KV CKT 1	717	789	0.11699	114.8662	GEN505616 1-BROKEN BOW
FDNS	00NR	0	16WP	G15_044	FROM->TO	G14-057T 345.00 - SUNNYSIDE 345KV CKT 1	717	789	0.11721	114.8654	CLINTON JUNCTION - ELK CITY 138KV CKT 1
FDNS	00NR	0	16WP	G15_044	FROM->TO	G14-057T 345.00 - SUNNYSIDE 345KV CKT 1	717	789	0.11721	114.8654	CLINTON JUNCTION - ELK CITY 138KV CKT 1
FDNS	00NR	0	16WP	G15_044	FROM->TO	G14-057T 345.00 - SUNNYSIDE 345KV CKT 1	717	789	0.11679	114.8645	MCNAB REC - Turk 115 115KV CKT 1
FDNS	00NR	0	16WP	G15_044	FROM->TO	G14-057T 345.00 - SUNNYSIDE 345KV CKT 1	717	789	0.11679	114.8645	TURK (TURK 1) 138/115/13.2KV TRANSFORMER CKT 1
FDNS	00NR	0	16WP	G15_044	FROM->TO	G14-057T 345.00 - SUNNYSIDE 345KV CKT 1	717	789	0.11679	114.8645	TURK (TURK 1) 138/115/13.2KV TRANSFORMER CKT 1
FDNS	00NR	0	16WP	G15_044	FROM->TO	G14-057T 345.00 - SUNNYSIDE 345KV CKT 1	717	789	0.11763	114.86	NORTH 29TH CHICKASHA - VERDEN 138KV CKT 1
FDNS	00NR	0	16WP	G15_044	FROM->TO	G14-057T 345.00 - SUNNYSIDE 345KV CKT 1	717	789	0.11717	114.8591	G14_001T 345.00 - WICHITA 345KV CKT 1
FDNS	00NR	0	16WP	G15_044	FROM->TO	G14-057T 345.00 - SUNNYSIDE 345KV CKT 1	717	789	0.11699	114.8585	LEWIS CREEK SWITCHYARD 138/22.0KV TRANSFORMER CKT 1
FDNS	00NR	0	16WP	G15_044	FROM->TO	G14-057T 345.00 - SUNNYSIDE 345KV CKT 1	717	789	0.11722	114.8545	OMPA-WALTERS - WALTERS 69KV CKT 1
FDNS	00NR	0	16WP	G15_044	FROM->TO	G14-057T 345.00 - SUNNYSIDE 345KV CKT 1	717	789	0.11722	114.8545	OMPA-WALTERS - WALTERS 69KV CKT 1
FDNS	00NR	0	16WP	G15_044	FROM->TO	G14-057T 345.00 - SUNNYSIDE 345KV CKT 1	717	789	0.11721	114.8545	G13-010T 345.00 - POST ROCK 345KV CKT 1
FDNS	00NR	0	16WP	G15_044	FROM->TO	G14-057T 345.00 - SUNNYSIDE 345KV CKT 1	717	789	0.11688	114.8539	COUCH SES - MC NIEL 115KV CKT 1
FDNS	00NR	0	16WP	G15_044	FROM->TO	G14-057T 345.00 - SUNNYSIDE 345KV CKT 1	717	789	0.11699	114.8536	LEWIS CREEK SWITCHYARD 138/22.0KV TRANSFORMER CKT 1
FDNS	00NR	0	16WP	G15_044	FROM->TO	G14-057T 345.00 - SUNNYSIDE 345KV CKT 1	717	789	0.11708	114.8433	EMPORIA ENERGY CENTER - SWISSVALE 345KV CKT 1
FDNS	00NR	0	16WP	G15_044	FROM->TO	G14-057T 345.00 - SUNNYSIDE 345KV CKT 1	717	789	0.11733	114.8397	P12:69:WFEC-AEPW:COMANCH2:WALTRS-2
FDNS	00NR	0	16WP	G15_044	FROM->TO	G14-057T 345.00 - SUNNYSIDE 345KV CKT 1	717	789	0.11699	114.8396	GEN501970 1-EVANGELINE UNIT 7
FDNS	00NR	0	16WP	G15_044	FROM->TO	G14-057T 345.00 - SUNNYSIDE 345KV CKT 1	717	789	0.11689	114.835	MORISNT4 138.00 - STILLWATER 138KV CKT 1
FDNS	00NR	0	16WP	G15_044	FROM->TO	G14-057T 345.00 - SUNNYSIDE 345KV CKT 1	717	789	0.11683	114.8336	CLAYTON - SARDIS 138KV CKT 1
FDNS	00NR	0	16WP	G15_044	FROM->TO	G14-057T 345.00 - SUNNYSIDE 345KV CKT 1	717	789	0.11691	114.8296	P12:138:OKGE:3TERM2
FDNS	00NR	0	16WP	G15_044	FROM->TO	G14-057T 345.00 - SUNNYSIDE 345KV CKT 1	717	789	0.11786	114.8285	HINTON - REDROCKRD4 138.00 138KV CKT 1
FDNS	00NR	0	16WP	G15_044	FROM->TO	G14-057T 345.00 - SUNNYSIDE 345KV CKT 1	717	789	0.11699	114.8271	GEN334392 1-EXXON MOBIL IPP 1
FDNS	00NR	0	16WP	G15_044	FROM->TO	G14-057T 345.00 - SUNNYSIDE 345KV CKT 1	717	789	0.11768	114.826	CORNVILLE - NORGE ROAD 138KV CKT 1
FDNS	00NR	0	16WP	G15_044	FROM->TO	G14-057T 345.00 - SUNNYSIDE 345KV CKT 1	717	789	0.11768	114.826	CORNVILLE - NORGE ROAD 138KV CKT 1

SOLUTION	GROUP	SCENARIO	SEASON	SOURCE	DIRECTION	MONITORED ELEMENT	RATEA (MVA)	RATEB(MVA)	TDF	TC%LOADING (% MVA)	CONTINGENCY
FDNS	00NR	0	16WP	G15_044	FROM->TO	G14-057T 345.00 - SUNNYSIDE 345KV CKT 1	717	789	0.11896	114.822	LASALLE - STONEWAL LH138.00 138KV CKT 1
FDNS	00NR	0	16WP	G15_044	FROM->TO	G14-057T 345.00 - SUNNYSIDE 345KV CKT 1	717	789	0.11699	114.8203	GEN334393 1-EXXON MOBIL IPP 2
FDNS	00NR	0	16WP	G15_044	FROM->TO	G14-057T 345.00 - SUNNYSIDE 345KV CKT 1	717	789	0.11699	114.8203	GEN334394 1-EXXON MOBIL IPP 3
FDNS	00NR	0	16WP	G15_044	FROM->TO	G14-057T 345.00 - SUNNYSIDE 345KV CKT 1	717	789	0.11709	114.8155	P12:138:OKGE:3TERM12
FDNS	00NR	0	16WP	G15_044	FROM->TO	G14-057T 345.00 - SUNNYSIDE 345KV CKT 1	717	789	0.11699	114.812	GEN336222 1-LITTLE GYPSY UNIT#2
FDNS	00NR	0	16WP	G15_044	FROM->TO	G14-057T 345.00 - SUNNYSIDE 345KV CKT 1	717	789	0.11896	114.807	STONEWAL LH138.00 - TUPELO TAP 138KV CKT 1
FDNS	00NR	0	16WP	G15_044	FROM->TO	G14-057T 345.00 - SUNNYSIDE 345KV CKT 1	717	789	0.11683	114.8059	P12:138:AEPW-SWPA:LONEOAK4:BRKNBW4
FDNS	00NR	0	16WP	G15_044	FROM->TO	G14-057T 345.00 - SUNNYSIDE 345KV CKT 1	717	789	0.11714	114.803	FLETCHER - MARLOW JCT 69KV CKT 1
FDNS	00NR	0	20WP	G15_044	FROM->TO	G14-057T 345.00 - SUNNYSIDE 345KV CKT 1	717	789	0.11665	114.7966	GEN335831 1-RIVERBEND UNIT#1
FDNS	00NR	0	16WP	G15_044	FROM->TO	G14-057T 345.00 - SUNNYSIDE 345KV CKT 1	717	789	0.11702	114.7955	7JASPER 345.00 - MORGAN 345KV CKT 1
FDNS	00NR	0	16WP	G15_044	FROM->TO	G14-057T 345.00 - SUNNYSIDE 345KV CKT 1	717	789	0.117	114.7941	P12:138:AEPW:R.S.S-4:T.P.S.-4
FDNS	00NR	0	16WP	G15_044	FROM->TO	G14-057T 345.00 - SUNNYSIDE 345KV CKT 1	717	789	0.11699	114.7937	GEN506749 1-EASTMAN GENERATION A
FDNS	00NR	0	16WP	G15_044	FROM->TO	G14-057T 345.00 - SUNNYSIDE 345KV CKT 1	717	789	0.11683	114.792	CLAYTON - NASHOBA 138KV CKT 1
FDNS	00NR	0	16WP	G15_044	FROM->TO	G14-057T 345.00 - SUNNYSIDE 345KV CKT 1	717	789	0.118	114.7904	CLARKSVILLE - ONETA 345KV CKT 1
FDNS	00NR	0	16WP	G15_044	FROM->TO	G14-057T 345.00 - SUNNYSIDE 345KV CKT 1	717	789	0.118	114.7904	CLARKSVILLE - ONETA 345KV CKT 1
FDNS	00NR	0	16WP	G15_044	FROM->TO	G14-057T 345.00 - SUNNYSIDE 345KV CKT 1	717	789	0.11763	114.7904	CORNVILLE - NORTH 29TH CHICKASHA 138KV CKT 1
FDNS	00NR	0	16WP	G15_044	FROM->TO	G14-057T 345.00 - SUNNYSIDE 345KV CKT 1	717	789	0.11699	114.7901	GEN334431 1-SABINE UNIT 1
FDNS	00NR	0	16WP	G15_044	FROM->TO	G14-057T 345.00 - SUNNYSIDE 345KV CKT 1	717	789	0.11699	114.79	GEN334432 1-SABINE UNIT 2
FDNS	00NR	0	16WP	G15_044	FROM->TO	G14-057T 345.00 - SUNNYSIDE 345KV CKT 1	717	789	0.11728	114.785	FRANKLIN - FRANKLIN SW 138KV CKT 1
FDNS	00NR	0	16WP	G15_044	FROM->TO	G14-057T 345.00 - SUNNYSIDE 345KV CKT 1	717	789	0.1175	114.7845	WEATHERFORD SOUTHEAST - WEATHERFORD TAP 138KV CKT 1
FDNS	00NR	0	16WP	G15_044	FROM->TO	G14-057T 345.00 - SUNNYSIDE 345KV CKT 1	717	789	0.11699	114.7829	GEN501972 1-EVANGELINE UNIT 7-2
FDNS	00NR	0	16WP	G15_044	FROM->TO	G14-057T 345.00 - SUNNYSIDE 345KV CKT 1	717	789	0.11699	114.7828	GEN501971 1-EVANGELINE UNIT 7-1
FDNS	00NR	0	16WP	G15_044	FROM->TO	G14-057T 345.00 - SUNNYSIDE 345KV CKT 1	717	789	0.11699	114.7826	GEN336152 1-WATERFORD UNIT#2
FDNS	00NR	0	16WP	G15_044	FROM->TO	G14-057T 345.00 - SUNNYSIDE 345KV CKT 1	717	789	0.11699	114.7815	GEN336151 1-WATERFORD UNIT#1
FDNS	00NR	0	16WP	G15_044	FROM->TO	G14-057T 345.00 - SUNNYSIDE 345KV CKT 1	717	789	0.11683	114.779	BETHEL - NASHOBA 138KV CKT 1
FDNS	00NR	0	16WP	G15_044	FROM->TO	G14-057T 345.00 - SUNNYSIDE 345KV CKT 1	717	789	0.11699	114.7698	P12:138:AEPW:R.S.S.-4:R:96YALE-4
FDNS	00NR	0	20WP	G15_044	FROM->TO	G14-057T 345.00 - SUNNYSIDE 345KV CKT 1	717	789	0.12813	114.7697	ARCADIA - NORTHWEST 345KV CKT 1
FDNS	00NR	0	20WP	G15_044	FROM->TO	G14-057T 345.00 - SUNNYSIDE 345KV CKT 1	717	789	0.11665	114.7537	GRAND GULF 500/22.0KV TRANSFORMER CKT 1
FDNS	00NR	0	16WP	G15_044	FROM->TO	G14-057T 345.00 - SUNNYSIDE 345KV CKT 1	717	789	0.1194	114.7505	MARIETTA - MARIETTA4 138.00 138KV CKT 1
FDNS	00NR	0	16WP	G15_044	FROM->TO	G14-057T 345.00 - SUNNYSIDE 345KV CKT 1	717	789	0.11721	114.7347	Canadian Pump Station - REDROCKRD4 138.00 138KV CKT 1
FDNS	00NR	0	16WP	G15_044	FROM->TO	G14-057T 345.00 - SUNNYSIDE 345KV CKT 1	717	789	0.1175	114.73	CLINTON JUNCTION - CLINTON NATURAL GAS TAP 138KV CKT 1
FDNS	00NR	0	16WP	G15_044	FROM->TO	G14-057T 345.00 - SUNNYSIDE 345KV CKT 1	717	789	0.11719	114.7223	P12:138:OKGE:3TERM47
FDNS	00NR	0	16WP	G15_044	FROM->TO	G14-057T 345.00 - SUNNYSIDE 345KV CKT 1	717	789	0.12157	114.7209	CIMARRON - NORTHWEST 345KV CKT 1
FDNS	00NR	0	16WP	G15_044	FROM->TO	G14-057T 345.00 - SUNNYSIDE 345KV CKT 1	717	789	0.11734	114.7076	HAMMETT TAP - HORSESHOE LAKE 138KV CKT 1
FDNS	00NR	0	20WP	G15_044	FROM->TO	G14-057T 345.00 - SUNNYSIDE 345KV CKT 1	717	789	0.11638	114.7044	7SAREPTA% 345.00 - ELDORADO EHV 345KV CKT 1
FDNS	00NR	0	20WP	G15_044	FROM->TO	G14-057T 345.00 - SUNNYSIDE 345KV CKT 1	717	789	0.11638	114.7042	3TR3AR8EL7EL
FDNS	00NR	0	20WP	G15_044	FROM->TO	G14-057T 345.00 - SUNNYSIDE 345KV CKT 1	717	789	0.11638	114.6934	ELDORADO EHV 500/345KV TRANSFORMER CKT 1
FDNS	00NR	0	20WP	G15_044	FROM->TO	G14-057T 345.00 - SUNNYSIDE 345KV CKT 1	717	789	0.11798	114.6786	P12:138:AEPW:DUNCAN-4:L.E.S.-4
FDNS	00NR	0	16WP	G15_044	FROM->TO	G14-057T 345.00 - SUNNYSIDE 345KV CKT 1	717	789	0.11733	114.6677	COMANCHE - WALTERS 69KV CKT 1
FDNS	00NR	0	20WP	G15_044	FROM->TO	G14-057T 345.00 - SUNNYSIDE 345KV CKT 1	717	789	0.11665	114.608	GEN515577 1-ARBWND11 0.6900
FDNS	00NR	0	20WP	G15_044	FROM->TO	G14-057T 345.00 - SUNNYSIDE 345KV CKT 1	717	789	0.1162	114.5615	MATHWSN7 345.00 - TATONGA7 345.00 345KV CKT 1
FDNS	00NR	0	20WP	G15_044	FROM->TO	G14-057T 345.00 - SUNNYSIDE 345KV CKT 1	717	789	0.11798	114.5571	COMANCHE TAP - OMPA-DUNCAN 840 138KV CKT 1
FDNS	00NR	0	20WP	G15_044	FROM->TO	G14-057T 345.00 - SUNNYSIDE 345KV CKT 1	717	789	0.11914	114.5549	BRIDGECR 138.00 - TUTTLE 138KV CKT 1
FDNS	00NR	0	20WP	G15_044	FROM->TO	G14-057T 345.00 - SUNNYSIDE 345KV CKT 1	717	789	0.11039	114.5467	CANADIAN RIVER - MUSKOGEE 345KV CKT 1
FDNS	00NR	0	20WP	G15_044	FROM->TO	G14-057T 345.00 - SUNNYSIDE 345KV CKT 1	717	789	0.11665	114.4684	GEN509409 1-WILKES #3
FDNS	00NR	0	20WP	G15_044	FROM->TO	G14-057T 345.00 - SUNNYSIDE 345KV CKT 1	717	789	0.11805	114.4388	Hitchland Interchange - WALKTAP7 345.00 345KV CKT 1
FDNS	00NR	0	20WP	G15_044	FROM->TO	G14-057T 345.00 - SUNNYSIDE 345KV CKT 1	717	789	0.11805	114.4388	Hitchland Interchange - WALKTAP7 345.00 345KV CKT 1
FDNS	00NR	0	20WP	G15_044	FROM->TO	G14-057T 345.00 - SUNNYSIDE 345KV CKT 1	717	789	0.11905	114.4317	HEALDTON - LOCO 138KV CKT 1
FDNS	00NR	0	20WP	G15_044	FROM->TO	G14-057T 345.00 - SUNNYSIDE 345KV CKT 1	717	789	0.11726	114.4268	ARCADIA - SEMINOLE 345KV CKT 1
FDNS	00NR	0	20WP	G15_044	FROM->TO	G14-057T 345.00 - SUNNYSIDE 345KV CKT 1	717	789	0.11805	114.4189	P12:345:SPS:J07.1.FINN.HITCH
FDNS	00NR	0	20WP	G15_044	FROM->TO	G14-057T 345.00 - SUNNYSIDE 345KV CKT 1	717	789	0.11665	114.4089	GEN501813 1-RODEMACHER UNIT 3
FDNS	00NR	0	20WP	G15_044	FROM->TO	G14-057T 345.00 - SUNNYSIDE 345KV CKT 1	717	789	0.11665	114.3121	GEN300006 1-NEW MADRID UNIT 1
FDNS	00NR	0	20WP	G15_044	FROM->TO	G14-057T 345.00 - SUNNYSIDE 345KV CKT 1	717	789	0.11665	114.2922	GEN300007 1-NEW MADRID UNIT 2
FDNS	00NR	0	20WP	G15_044	FROM->TO	G14-057T 345.00 - SUNNYSIDE 345KV CKT 1	717	789	0.11905	114.2876	HEALDTON - RINGLING 138KV CKT 1
FDNS	00NR	0	20WP	G15_044	FROM->TO	G14-057T 345.00 - SUNNYSIDE 345KV CKT 1	717	789	0.11682	114.2757	LACYGNE - WAVERLY7 345.00 345KV CKT 1
FDNS	00NR	0	20WP	G15_044	FROM->TO	G14-057T 345.00 - SUNNYSIDE 345KV CKT 1	717	789	0.11798	114.2686	DUNCAN - OMPA-DUNCAN 840 138KV CKT 1
FDNS	00NR	0	20WP	G15_044	FROM->TO	G14-057T 345.00 - SUNNYSIDE 345KV CKT 1	717	789	0.11798	114.2686	DUNCAN - OMPA-DUNCAN 840 138KV CKT 1
FDNS	00NR	0	20WP	G15_044	FROM->TO	G14-057T 345.00 - SUNNYSIDE 345KV CKT 1	717	789	0.11914	114.2678	P12:138:WFEC:MSL01
FDNS	00NR	0	16WP	G15_044	FROM->TO	G14-057T 345.00 - SUNNYSIDE 345KV CKT 1	717	789	0.11699	114.2581	803-OKLAUNION
FDNS	00NR	0	20WP	G15_044	FROM->TO	G14-057T 345.00 - SUNNYSIDE 345KV CKT 1	717	789	0.11914	114.2563	BRIDGECR 138.00 - SUNSHINE CANYON 138KV CKT 1
FDNS	00NR	0	20WP	G15_044	FROM->TO	G14-057T 345.00 - SUNNYSIDE 345KV CKT 1	717	789	0.11665	114.1972	GEN335206 1-NELSON UNIT 6
FDNS	00NR	0	20WP	G15_044	FROM->TO	G14-057T 345.00 - SUNNYSIDE 345KV CKT 1	717	789	0.11682	114.1543	WAVERLY7 345.00 - WOLF CREEK 345KV CKT 1
FDNS	00NR	0	20WP	G15_044	FROM->TO	G14-057T 345.00 - SUNNYSIDE 345KV CKT 1	717	789	0.11665	114.1257	GEN520947 1-HUGO1
FDNS	00NR	0	20WP	G15_044	FROM->TO	G14-057T 345.00 - SUNNYSIDE 345KV CKT 1	717	789	0.11905	114.1171	RINGLING - SOUTH WILSON 138KV CKT 1
FDNS	00NR	0	16WP	G15_044	FROM->TO	G14-057T 345.00 - SUNNYSIDE 345KV CKT 1	717	789	0.11538	114.0994	P12:138:OKGE:3TERM39
FDNS	00NR	0	20WP	G15_044	FROM->TO	G14-057T 345.00 - SUNNYSIDE 345KV CKT 1	717	789	0.1162	114.0411	G11_051T 345.00 - TATONGA7 345.00 345KV CKT 1
FDNS	00NR	0	20WP	G15_044	FROM->TO	G14-057T 345.00 - SUNNYSIDE 345KV CKT 1	717	789	0.11653	114.0258	ELDORADO EHV - MOUNT OLIVE 500KV CKT 1
FDNS	00NR	0	20WP	G15_044	FROM->TO	G14-057T 345.00 - SUNNYSIDE 345KV CKT 1	717	789	0.11665	114.0121	GEN501812 1-RODEMACHER UNIT 2
FDNS	00NR	0	20WP	G15_044	FROM->TO	G14-057T 345.00 - SUNNYSIDE 345KV CKT 1	717	789	0.11666	114.0071	P12:138:AEPW:SHERID4:112GORE4
FDNS	00NR	0	20WP	G15_044	FROM->TO	G14-057T 345.00 - SUNNYSIDE 345KV CKT 1	717	789	0.11665	114.0013	DOLET HILLS 345/24.0KV TRANSFORMER CKT 1
FDNS	00NR	0	20WP	G15_044	FROM->TO	G14-057T 345.00 - SUNNYSIDE 345KV CKT 1	717	789	0.11735	113.9961	THISTLE7 345.00 - WOODWARD DISTRICT EHV 345KV CKT 1
FDNS	00NR	0	20WP	G15_044	FROM->TO	G14-057T 345.00 - SUNNYSIDE 345KV CKT 1	717	789	0.11735	113.9961	THISTLE7 345.00 - WOODWARD DISTRICT EHV 345KV CKT 1
FDNS	00NR	0	20WP	G15_044	FROM->TO	G14-057T 345.00 - SUNNYSIDE 345KV CKT 1	717	789	0.11735	113.9961	THISTLE7 345.00 - WOODWARD DISTRICT EHV 345KV CKT 2
FDNS	00NR	0	20WP	G15_044	FROM->TO	G14-057T 345.00 - SUNNYSIDE 345KV CKT 1	717	789	0.11735	113.9961	THISTLE7 345.00 - WOODWARD DISTRICT EHV 345KV CKT 2
FDNS	00NR	0	20WP	G15_044	FROM->TO	G14-057T 345.00 - SUNNYSIDE 345KV CKT 1	717	789	0.11541	113.9283	PARK LANE - SEMINOLE 138KV CKT 1
FDNS	00NR	0	20WP	G15_044	FROM->TO	G14-057T 345.00 - SUNNYSIDE 345KV CKT 1	717	789	0.1166	113.8762	WEBRE - WELLS 500KV CKT 1
FDNS	00NR	0	20WP	G15_044	FROM->TO	G14-057T 345.00 - SUNNYSIDE 345KV CKT 1	717	789	0.11665	113.875	GEN515564 1-ORIGIN11 0.6900
FDNS	00NR	0	20WP	G15_044	FROM->TO	G14-057T 345.00 - SUNNYSIDE 345KV CKT 1	717	789	0.11665	113.875	GEN515565 1-ORIGIN21 0.6900
FDNS	00NR	0	16WP	G15_044	FROM->TO	G14-057T 345.00 - SUNNYSIDE 345KV CKT 1	717	789	0.11586	113.8718	MAYSVILLE - MAYSVLT4 138.00 138KV CKT 1

SOLUTION	GROUP	SCENARIO	SEASON	SOURCE	DIRECTION	MONITORED ELEMENT	RATEA (MVA)	RATEB(MVA)	TDF	TC%LOADING (% MVA)	CONTINGENCY
FDNS	00NR	0	16WP	G15_044	FROM->TO	G14-057T 345.00 - SUNNYSIDE 345KV CKT 1	717	789	0.11743	113.8663	DRAPER LAKE - MIDWEST TAP 138KV CKT 1
FDNS	00NR	0	16WP	G15_044	FROM->TO	G14-057T 345.00 - SUNNYSIDE 345KV CKT 1	717	789	0.11708	113.8628	GLASSES - MADILL INDUSTRIAL TAP 138KV CKT 1
FDNS	00NR	0	20WP	G15_044	FROM->TO	G14-057T 345.00 - SUNNYSIDE 345KV CKT 1	717	789	0.11665	113.8527	GEN334440 1-SABINE UNIT 4
FDNS	00NR	0	16WP	G15_044	FROM->TO	G14-057T 345.00 - SUNNYSIDE 345KV CKT 1	717	789	0.11809	113.8517	CIMARRON - MATHWSN7 345.00 345KV CKT 1
FDNS	00NR	0	16WP	G15_044	FROM->TO	G14-057T 345.00 - SUNNYSIDE 345KV CKT 1	717	789	0.11809	113.8517	CIMARRON - MATHWSN7 345.00 345KV CKT 2
FDNS	00NR	0	16WP	G15_044	FROM->TO	G14-057T 345.00 - SUNNYSIDE 345KV CKT 1	717	789	0.11699	113.8451	GEN562691 1-G15_015_3 0.6900
FDNS	00NR	0	16WP	G15_044	FROM->TO	G14-057T 345.00 - SUNNYSIDE 345KV CKT 1	717	789	0.11699	113.8449	GEN562772 1-G15034_3 0.6900
FDNS	00NR	0	16WP	G15_044	FROM->TO	G14-057T 345.00 - SUNNYSIDE 345KV CKT 1	717	789	0.11747	113.8438	P12:138:OKGE:3TERM21
FDNS	00NR	0	16WP	G15_044	FROM->TO	G14-057T 345.00 - SUNNYSIDE 345KV CKT 1	717	789	0.11692	113.8375	HUGO (HUGO 1) 345/138/13.8KV TRANSFORMER CKT 1
FDNS	00NR	0	20WP	G15_044	FROM->TO	G14-057T 345.00 - SUNNYSIDE 345KV CKT 1	717	789	0.11711	113.8344	CANEYRV7 345.00 - NEOSHO 345KV CKT 1
FDNS	00NR	0	20WP	G15_044	FROM->TO	G14-057T 345.00 - SUNNYSIDE 345KV CKT 1	717	789	0.11905	113.8289	MARIETTA - SOUTH WILSON 138KV CKT 1
FDNS	00NR	0	20WP	G15_044	FROM->TO	G14-057T 345.00 - SUNNYSIDE 345KV CKT 1	717	789	0.11665	113.8232	GEN590011 2-ERCOT EQUIVALENCE
FDNS	00NR	0	16WP	G15_044	FROM->TO	G14-057T 345.00 - SUNNYSIDE 345KV CKT 1	717	789	0.11699	113.8171	GEN521103 1-BLUE CANYON WIND FARM
FDNS	00NR	0	16WP	G15_044	FROM->TO	G14-057T 345.00 - SUNNYSIDE 345KV CKT 1	717	789	0.11699	113.8166	GEN520812 1-ANADRK5
FDNS	00NR	0	16WP	G15_044	FROM->TO	G14-057T 345.00 - SUNNYSIDE 345KV CKT 1	717	789	0.11699	113.8165	GEN520813 1-ANADRK6
FDNS	00NR	0	16WP	G15_044	FROM->TO	G14-057T 345.00 - SUNNYSIDE 345KV CKT 1	717	789	0.11586	113.8102	MAYSVLT4 138.00 - PRAIRIE POINT 138KV CKT 1
FDNS	00NR	0	16WP	G15_044	FROM->TO	G14-057T 345.00 - SUNNYSIDE 345KV CKT 1	717	789	0.11708	113.8033	GLASSES - RUSSETT 138KV CKT 1
FDNS	00NR	0	20WP	G15_044	FROM->TO	G14-057T 345.00 - SUNNYSIDE 345KV CKT 1	717	789	0.11665	113.7939	DELL 500 - ESSEX UNIT 2 500KV CKT Z1
FDNS	00NR	0	20WP	G15_044	FROM->TO	G14-057T 345.00 - SUNNYSIDE 345KV CKT 1	717	789	0.11665	113.7926	P12:161:AEPW:DYESS 5:HYLAND 5
FDNS	00NR	0	16WP	G15_044	FROM->TO	G14-057T 345.00 - SUNNYSIDE 345KV CKT 1	717	789	0.1161	113.785	ARBUCKLE - SULPHR 4 138.00 138KV CKT 1
FDNS	00NR	0	20WP	G15_044	FROM->TO	G14-057T 345.00 - SUNNYSIDE 345KV CKT 1	717	789	0.11773	113.7845	REDBUD - RIVERSIDE STATION 345KV CKT 1
FDNS	00NR	0	20WP	G15_044	FROM->TO	G14-057T 345.00 - SUNNYSIDE 345KV CKT 1	717	789	0.11773	113.7845	REDBUD - RIVERSIDE STATION 345KV CKT 1
FDNS	00NR	0	16WP	G15_044	FROM->TO	G14-057T 345.00 - SUNNYSIDE 345KV CKT 1	717	789	0.11697	113.7802	P12:138:WFEC:MSL11
FDNS	00NR	0	16WP	G15_044	FROM->TO	G14-057T 345.00 - SUNNYSIDE 345KV CKT 1	717	789	0.11697	113.7802	P12:138:WFEC-AEPW:PHAROAH4:LONEOAK4
FDNS	00NR	0	16WP	G15_044	FROM->TO	G14-057T 345.00 - SUNNYSIDE 345KV CKT 1	717	789	0.11708	113.7755	CANEY CREEK - JOHNSON COUNTY 138KV CKT 1
FDNS	00NR	0	16WP	G15_044	FROM->TO	G14-057T 345.00 - SUNNYSIDE 345KV CKT 1	717	789	0.11699	113.7736	GEN511961 1-DEMPSEY-WTG10.7000
FDNS	00NR	0	16WP	G15_044	FROM->TO	G14-057T 345.00 - SUNNYSIDE 345KV CKT 1	717	789	0.11699	113.758	P12:069:OKGE:3TERM42
FDNS	00NR	0	20WP	G15_044	FROM->TO	G14-057T 345.00 - SUNNYSIDE 345KV CKT 1	717	789	0.11665	113.7534	GEN590010 1-ERCOT EQUIVALENCE
FDNS	00NR	0	20WP	G15_044	FROM->TO	G14-057T 345.00 - SUNNYSIDE 345KV CKT 1	717	789	0.11665	113.7453	P12:69:AEPW:L.E.S.-2:LAW WC2
FDNS	00NR	0	20WP	G15_044	FROM->TO	G14-057T 345.00 - SUNNYSIDE 345KV CKT 1	717	789	0.11731	113.7442	LAWTON EASTSIDE (LES 5) 345/138/13.8KV TRANSFORMER CKT 2
FDNS	00NR	0	20WP	G15_044	FROM->TO	G14-057T 345.00 - SUNNYSIDE 345KV CKT 1	717	789	0.11731	113.7442	LAWTON EASTSIDE (LES 5) 345/138/13.8KV TRANSFORMER CKT 2
FDNS	00NR	0	16WP	G15_044	FROM->TO	G14-057T 345.00 - SUNNYSIDE 345KV CKT 1	717	789	0.11699	113.7348	GEN629070 2-BEAVER CHANNEL GENERATORFOR UNIT NO 2
FDNS	00NR	0	16WP	G15_044	FROM->TO	G14-057T 345.00 - SUNNYSIDE 345KV CKT 1	717	789	0.11701	113.7272	GRPRAR1-LNX3345.00 - HOLT.CO3 345.00 345KV CKT 1
FDNS	00NR	0	20WP	G15_044	FROM->TO	G14-057T 345.00 - SUNNYSIDE 345KV CKT 1	717	789	0.11905	113.7272	P12:138:WFEC:MSL17
FDNS	00NR	0	16WP	G15_044	FROM->TO	G14-057T 345.00 - SUNNYSIDE 345KV CKT 1	717	789	0.11699	113.7271	GEN515443 1-MNCOWND1 0.7000
FDNS	00NR	0	16WP	G15_044	FROM->TO	G14-057T 345.00 - SUNNYSIDE 345KV CKT 1	717	789	0.11701	113.7234	GRPRAR1-LNX3345.00 - GRPRAR 345KV CKT Z
FDNS	00NR	0	20WP	G15_044	FROM->TO	G14-057T 345.00 - SUNNYSIDE 345KV CKT 1	717	789	0.1175	113.7227	P12:138:WFEC:MSL02
FDNS	00NR	0	16WP	G15_044	FROM->TO	G14-057T 345.00 - SUNNYSIDE 345KV CKT 1	717	789	0.11728	113.7218	P12:138:WFEC:MSL08
FDNS	00NR	0	16WP	G15_044	FROM->TO	G14-057T 345.00 - SUNNYSIDE 345KV CKT 1	717	789	0.11699	113.7183	GEN615021 1-GRE-ER 14G 16.000
FDNS	00NR	0	16WP	G15_044	FROM->TO	G14-057T 345.00 - SUNNYSIDE 345KV CKT 1	717	789	0.11699	113.7147	GEN562902 1-G15052_3 0.6900
FDNS	00NR	0	16WP	G15_044	FROM->TO	G14-057T 345.00 - SUNNYSIDE 345KV CKT 1	717	789	0.11586	113.7129	PRAIRIE POINT - RATLIFF 138KV CKT 1
FDNS	00NR	0	16WP	G15_044	FROM->TO	G14-057T 345.00 - SUNNYSIDE 345KV CKT 1	717	789	0.11687	113.7093	CARTER - CHICKASAW 138KV CKT 1
FDNS	00NR	0	16WP	G15_044	FROM->TO	G14-057T 345.00 - SUNNYSIDE 345KV CKT 1	717	789	0.11699	113.7078	GEN563242 1-G15090_3 0.6900
FDNS	00NR	0	16WP	G15_044	FROM->TO	G14-057T 345.00 - SUNNYSIDE 345KV CKT 1	717	789	0.11699	113.7066	GEN560183 1-REDHIL-WTG1 12.000
FDNS	00NR	0	16WP	G15_044	FROM->TO	G14-057T 345.00 - SUNNYSIDE 345KV CKT 1	717	789	0.11699	113.7049	GEN629071 1-BURLINGTON GENERATOR FOR UNIT NO 1 E
FDNS	00NR	0	16WP	G15_044	FROM->TO	G14-057T 345.00 - SUNNYSIDE 345KV CKT 1	717	789	0.11712	113.7009	CANADIAN RIVER - MCALESTER SOUTH 138KV CKT 1
FDNS	00NR	0	16WP	G15_044	FROM->TO	G14-057T 345.00 - SUNNYSIDE 345KV CKT 1	717	789	0.11712	113.7009	CANADIAN RIVER - MCALESTER SOUTH 138KV CKT 1
FDNS	00NR	0	16WP	G15_044	FROM->TO	G14-057T 345.00 - SUNNYSIDE 345KV CKT 1	717	789	0.11712	113.6996	CANADIAN RIVER () 345/138/13.8KV TRANSFORMER CKT 1
FDNS	00NR	0	16WP	G15_044	FROM->TO	G14-057T 345.00 - SUNNYSIDE 345KV CKT 1	717	789	0.11712	113.6996	CANADIAN RIVER () 345/138/13.8KV TRANSFORMER CKT 1
FDNS	00NR	0	16WP	G15_044	FROM->TO	G14-057T 345.00 - SUNNYSIDE 345KV CKT 1	717	789	0.11928	113.6995	NORTHWEST - SPRING CREEK 345KV CKT 1
FDNS	00NR	0	16WP	G15_044	FROM->TO	G14-057T 345.00 - SUNNYSIDE 345KV CKT 1	717	789	0.11824	113.6963	MOREWOOD SW - NINE MILE 138KV CKT 1
FDNS	00NR	0	16WP	G15_044	FROM->TO	G14-057T 345.00 - SUNNYSIDE 345KV CKT 1	717	789	0.1166	113.6922	ROCKY POINT - SPRINGDALE 138KV CKT 1
FDNS	00NR	0	16WP	G15_044	FROM->TO	G14-057T 345.00 - SUNNYSIDE 345KV CKT 1	717	789	0.11928	113.6897	SOONER - SPRING CREEK 345KV CKT 1
FDNS	00NR	0	20WP	G15_044	FROM->TO	G14-057T 345.00 - SUNNYSIDE 345KV CKT 1	717	789	0.11711	113.687	CANEYRV7 345.00 - LATHAMS7 345.00 345KV CKT 1
FDNS	00NR	0	16WP	G15_044	FROM->TO	G14-057T 345.00 - SUNNYSIDE 345KV CKT 1	717	789	0.11699	113.679	INDEPENDENCE 500/26.0KV TRANSFORMER CKT 1
FDNS	00NR	0	16WP	G15_044	FROM->TO	G14-057T 345.00 - SUNNYSIDE 345KV CKT 1	717	789	0.11699	113.6766	BURLINGTON NO1 + NO 2 + NO 3 161/20.0KV TRANSFORMER CKT 1
FDNS	00NR	0	20WP	G15_044	FROM->TO	G14-057T 345.00 - SUNNYSIDE 345KV CKT 1	717	789	0.11665	113.676	GEN509408 1-WILKES #2
FDNS	00NR	0	16WP	G15_044	FROM->TO	G14-057T 345.00 - SUNNYSIDE 345KV CKT 1	717	789	0.11704	113.6747	ALTUS JUNCTION - RUSSELL 138KV CKT 1
FDNS	00NR	0	16WP	G15_044	FROM->TO	G14-057T 345.00 - SUNNYSIDE 345KV CKT 1	717	789	0.11704	113.6747	ALTUS JUNCTION - RUSSELL 138KV CKT 1
FDNS	00NR	0	16WP	G15_044	FROM->TO	G14-057T 345.00 - SUNNYSIDE 345KV CKT 1	717	789	0.1169	113.6724	NORTHWEST TEXARKANA - WELSH 345KV CKT 1
FDNS	00NR	0	16WP	G15_044	FROM->TO	G14-057T 345.00 - SUNNYSIDE 345KV CKT 1	717	789	0.1169	113.6724	NORTHWEST TEXARKANA - WELSH 345KV CKT 1
FDNS	00NR	0	16WP	G15_044	FROM->TO	G14-057T 345.00 - SUNNYSIDE 345KV CKT 1	717	789	0.11699	113.6705	GEN514805 1-SOONER UNIT 1
FDNS	00NR	0	16WP	G15_044	FROM->TO	G14-057T 345.00 - SUNNYSIDE 345KV CKT 1	717	789	0.11699	113.6637	GEN514806 1-SOONER UNIT 2
FDNS	00NR	0	20WP	G15_044	FROM->TO	G14-057T 345.00 - SUNNYSIDE 345KV CKT 1	717	789	0.11716	113.6598	PAOLI - PAYNE 138.00 138KV CKT 1
FDNS	00NR	0	20WP	G15_044	FROM->TO	G14-057T 345.00 - SUNNYSIDE 345KV CKT 1	717	789	0.11641	113.6598	ELDORADO EHV - SHERIDAN EHV 500KV CKT 1
FDNS	00NR	0	16WP	G15_044	FROM->TO	G14-057T 345.00 - SUNNYSIDE 345KV CKT 1	717	789	0.11707	113.6579	KEO EHV - WEST MEMPHIS 500 500KV CKT 1
FDNS	00NR	0	16WP	G15_044	FROM->TO	G14-057T 345.00 - SUNNYSIDE 345KV CKT 1	717	789	0.11719	113.6508	CHAMBER SPRINGS - CLARKSVILLE 345KV CKT 1
FDNS	00NR	0	20WP	G15_044	FROM->TO	G14-057T 345.00 - SUNNYSIDE 345KV CKT 1	717	789	0.11665	113.6501	GEN506754 1-LEBROCK STEAM 1
FDNS	00NR	0	16WP	G15_044	FROM->TO	G14-057T 345.00 - SUNNYSIDE 345KV CKT 1	717	789	0.11699	113.6474	GEN562078 1-G11_051_3 0.6900
FDNS	00NR	0	20WP	G15_044	FROM->TO	G14-057T 345.00 - SUNNYSIDE 345KV CKT 1	717	789	0.11731	113.6428	ANADARKO - GEORGIA 138KV CKT 1
FDNS	00NR	0	16WP	G15_044	FROM->TO	G14-057T 345.00 - SUNNYSIDE 345KV CKT 1	717	789	0.11699	113.6379	P12:230:UMZB:# 112 #: NU IN SD. NU-RCDC & DRY CREEK XFMR
FDNS	00NR	0	16WP	G15_044	FROM->TO	G14-057T 345.00 - SUNNYSIDE 345KV CKT 1	717	789	0.11699	113.6365	RCDC EAST 4230.00 - RED CEDAR DC 230KV CKT 1
FDNS	00NR	0	16WP	G15_044	FROM->TO	G14-057T 345.00 - SUNNYSIDE 345KV CKT 1	717	789	0.1161	113.6334	JOLLYVILLE - SULPHR 4 138.00 138KV CKT 1
FDNS	00NR	0	16WP	G15_044	FROM->TO	G14-057T 345.00 - SUNNYSIDE 345KV CKT 1	717	789	0.11699	113.6189	GEN562802 1-G15039_3 0.3570
FDNS	00NR	0	20WP	G15_044	FROM->TO	G14-057T 345.00 - SUNNYSIDE 345KV CKT 1	717	789	0.11666	113.6137	P12:138:AEPW:112GORE4:L.E.S.-4
FDNS	00NR	0	16WP	G15_044	FROM->TO	G14-057T 345.00 - SUNNYSIDE 345KV CKT 1	717	789	0.11699	113.6124	GEN524285 1-WILDORADO WIND GEN
FDNS	00NR	0	20WP	G15_044	FROM->TO	G14-057T 345.00 - SUNNYSIDE 345KV CKT 1	717	789	0.11863	113.6016	CIVIT - PAOLI 138KV CKT 1
FDNS	00NR	0	20WP	G15_044	FROM->TO	G14-057T 345.00 - SUNNYSIDE 345KV CKT 1	717	789	0.11847	113.5945	MATHWSN7 345.00 - NORTHWEST 345KV CKT 1
FDNS	00NR	0	16WP	G15_044	FROM->TO	G14-057T 345.00 - SUNNYSIDE 345KV CKT 1	717	789	0.11699	113.5926	GEN524295 1-SPNSPUR_WND10.6900

SOLUTION	GROUP	SCENARIO	SEASON	SOURCE	DIRECTION	MONITORED ELEMENT	RATEA (MVA)	RATEB(MVA)	TDF	TC%LOADING (% MVA)	CONTINGENCY
FDNS	00NR	0	16WP	G15_044	FROM->TO	G14-057T 345.00 - SUNNYSIDE 345KV CKT 1	717	789	0.11699	113.5923	GEN562587 1-G14_056_3 0.6900
FDNS	00NR	0	16WP	G15_044	FROM->TO	G14-057T 345.00 - SUNNYSIDE 345KV CKT 1	717	789	0.11699	113.5856	GEN560331 1-G10-46 13.800
FDNS	00NR	0	16WP	G15_044	FROM->TO	G14-057T 345.00 - SUNNYSIDE 345KV CKT 1	717	789	0.11627	113.5745	ARKANSAS NUCLEAR ONE - FT SMITH 500KV CKT 1
FDNS	00NR	0	16WP	G15_044	FROM->TO	G14-057T 345.00 - SUNNYSIDE 345KV CKT 1	717	789	0.11627	113.5745	ARKANSAS NUCLEAR ONE - FT SMITH 500KV CKT 1
FDNSLock	00NR	0	16WP	G15_044	FROM->TO	G14-057T 345.00 - SUNNYSIDE 345KV CKT 1	717	789	0.11699	113.5733	GEN629072 4-LANSING GENERATOR FOR UNITS NO4 EIA CODE 1
FDNS	00NR	0	20WP	G15_044	FROM->TO	G14-057T 345.00 - SUNNYSIDE 345KV CKT 1	717	789	0.11665	113.5691	GEN336252 1-NINEMILE POINT UNIT#5
FDNS	00NR	0	16WP	G15_044	FROM->TO	G14-057T 345.00 - SUNNYSIDE 345KV CKT 1	717	789	0.1161	113.5649	JOLLYVILLE - KERR MCGEE CIMARRON 138KV CKT 1
FDNS	00NR	0	16WP	G15_044	FROM->TO	G14-057T 345.00 - SUNNYSIDE 345KV CKT 1	717	789	0.11699	113.5641	GEN562882 1-G15047_3 0.6900
FDNS	00NR	0	16WP	G15_044	FROM->TO	G14-057T 345.00 - SUNNYSIDE 345KV CKT 1	717	789	0.11824	113.5619	BEARCAT 138.00 - NINE MILE 138KV CKT 1
FDNS	00NR	0	16WP	G15_044	FROM->TO	G14-057T 345.00 - SUNNYSIDE 345KV CKT 1	717	789	0.11699	113.555	GEN562269 1-G12-020-1 0.6900
FDNS	00NR	0	16WP	G15_044	FROM->TO	G14-057T 345.00 - SUNNYSIDE 345KV CKT 1	717	789	0.11699	113.5529	GEN657749 1-YOUNG 1 GENERATOR
FDNS	00NR	0	20WP	G15_044	FROM->TO	G14-057T 345.00 - SUNNYSIDE 345KV CKT 1	717	789	0.11731	113.5467	FLETCHER - GEORGIA 138KV CKT 1
FDNS	00NR	0	20WP	G15_044	FROM->TO	G14-057T 345.00 - SUNNYSIDE 345KV CKT 1	717	789	0.11944	113.5386	P12:138:AEPW-OGE:CORNVIL4:MAUD 4
FDNS	00NR	0	20WP	G15_044	FROM->TO	G14-057T 345.00 - SUNNYSIDE 345KV CKT 1	717	789	0.11665	113.5228	FRONTIER - GRIMES 345KV CKT 1
FDNS	00NR	0	16WP	G15_044	FROM->TO	G14-057T 345.00 - SUNNYSIDE 345KV CKT 1	717	789	0.1161	113.5143	ARBWIND4 138.00 - KERR MCGEE CIMARRON 138KV CKT 1
FDNS	00NR	0	20WP	G15_044	FROM->TO	G14-057T 345.00 - SUNNYSIDE 345KV CKT 1	717	789	0.11665	113.5117	GEN335204 1-NELSON UNIT 4
FDNS	00NR	0	16WP	G15_044	FROM->TO	G14-057T 345.00 - SUNNYSIDE 345KV CKT 1	717	789	0.11699	113.51	GEN562270 1-G12-020-2 0.6900
FDNS	00NR	0	20WP	G15_044	FROM->TO	G14-057T 345.00 - SUNNYSIDE 345KV CKT 1	717	789	0.11665	113.5052	GEN503909 1-FULTONU1 1 16.000
FDNS	00NR	0	20WP	G15_044	FROM->TO	G14-057T 345.00 - SUNNYSIDE 345KV CKT 1	717	789	0.11665	113.5045	GEN334441 1-SABINE UNIT 5
FDNS	00NR	0	16WP	G15_044	FROM->TO	G14-057T 345.00 - SUNNYSIDE 345KV CKT 1	717	789	0.11699	113.5044	GEN562812 1-G15040_3 0.3570
FDNS	00NR	0	20WP	G15_044	FROM->TO	G14-057T 345.00 - SUNNYSIDE 345KV CKT 1	717	789	0.11737	113.5041	EMPIRE - FLETCHER 138KV CKT 1
FDNS	00NR	0	16WP	G15_044	FROM->TO	G14-057T 345.00 - SUNNYSIDE 345KV CKT 1	717	789	0.11718	113.503	P12:138:AEPW:112GORE4:SNYDER-4
FDNS	00NR	0	16WP	G15_044	FROM->TO	G14-057T 345.00 - SUNNYSIDE 345KV CKT 1	717	789	0.11876	113.5027	CLARKSVILLE - MUSKOGEE 345KV CKT 1
FDNS	00NR	0	16WP	G15_044	FROM->TO	G14-057T 345.00 - SUNNYSIDE 345KV CKT 1	717	789	0.11876	113.5027	CLARKSVILLE - MUSKOGEE 345KV CKT 1
FDNS	00NR	0	16WP	G15_044	FROM->TO	G14-057T 345.00 - SUNNYSIDE 345KV CKT 1	717	789	0.11699	113.5015	GEN563102 1-G15075_3 0.5500
FDNS	00NR	0	16WP	G15_044	FROM->TO	G14-057T 345.00 - SUNNYSIDE 345KV CKT 1	717	789	0.11699	113.4982	GEN562974 1-G15060_5 0.6900
FDNS	00NR	0	16WP	G15_044	FROM->TO	G14-057T 345.00 - SUNNYSIDE 345KV CKT 1	717	789	0.11699	113.4946	GEN563062 1-G15071_3 0.6900
FDNS	00NR	0	16WP	G15_044	FROM->TO	G14-057T 345.00 - SUNNYSIDE 345KV CKT 1	717	789	0.11699	113.4938	GEN563132 1-G15078_3 0.3570
FDNS	00NR	0	16WP	G15_044	FROM->TO	G14-057T 345.00 - SUNNYSIDE 345KV CKT 1	717	789	0.11699	113.4887	GEN562973 1-G15060_4 0.6900
FDNS	00NR	0	20WP	G15_044	FROM->TO	G14-057T 345.00 - SUNNYSIDE 345KV CKT 1	717	789	0.11716	113.4836	TUPELO - TUPELO TAP 138KV CKT 1
FDNSLock	00NR	0	16WP	G15_044	FROM->TO	G14-057T 345.00 - SUNNYSIDE 345KV CKT 1	717	789	0.11699	113.4834	GEN681522 3-GENOA 3
FDNS	00NR	0	16WP	G15_044	FROM->TO	G14-057T 345.00 - SUNNYSIDE 345KV CKT 1	717	789	0.11824	113.4794	P12:138:WFEC:MSL14
FDNS	00NR	0	20WP	G15_044	FROM->TO	G14-057T 345.00 - SUNNYSIDE 345KV CKT 1	717	789	0.11711	113.4741	LATHAMS7 345.00 - ROSE HILL 345KV CKT 1
FDNS	00NR	0	16WP	G15_044	FROM->TO	G14-057T 345.00 - SUNNYSIDE 345KV CKT 1	717	789	0.11824	113.4666	BEARCAT 138.00 - MOORELAND 138KV CKT 1
FDNS	00NR	0	20WP	G15_044	FROM->TO	G14-057T 345.00 - SUNNYSIDE 345KV CKT 1	717	789	0.11944	113.4632	BLANCHARD - CORNVILLE 138KV CKT 1
FDNS	00NR	0	20WP	G15_044	FROM->TO	G14-057T 345.00 - SUNNYSIDE 345KV CKT 1	717	789	0.11863	113.4605	CIVIT - STRATFORD 138KV CKT 1
FDNS	00NR	0	16WP	G15_044	FROM->TO	G14-057T 345.00 - SUNNYSIDE 345KV CKT 1	717	789	0.11679	113.4561	BROWN - RUSSETT 138KV CKT 1
FDNS	00NR	0	16WP	G15_044	FROM->TO	G14-057T 345.00 - SUNNYSIDE 345KV CKT 1	717	789	0.1162	113.4351	CHICKASAW - TOTAL 138KV CKT 1
FDNS	00NR	0	16WP	G15_044	FROM->TO	G14-057T 345.00 - SUNNYSIDE 345KV CKT 1	717	789	0.11675	113.4301	RUSSETT - SPRINGDALE 138KV CKT 1
FDNS	00NR	0	16WP	G15_044	FROM->TO	G14-057T 345.00 - SUNNYSIDE 345KV CKT 1	717	789	0.11699	113.4267	GEN345671 2-1RUSH G2 18.000
FDNS	00NR	0	16WP	G15_044	FROM->TO	G14-057T 345.00 - SUNNYSIDE 345KV CKT 1	717	789	0.11699	113.4248	GEN345670 1-1RUSH G1 18.000
FDNS	00NR	0	20WP	G15_044	FROM->TO	G14-057T 345.00 - SUNNYSIDE 345KV CKT 1	717	789	0.11737	113.4227	COMANCHE - EMPIRE 138KV CKT 1
FDNS	00NR	0	20WP	G15_044	FROM->TO	G14-057T 345.00 - SUNNYSIDE 345KV CKT 1	717	789	0.11655	113.4172	LAYFLD8 500.00 - MOUNT OLIVE 500KV CKT 1
FDNS	00NR	0	20WP	G15_044	FROM->TO	G14-057T 345.00 - SUNNYSIDE 345KV CKT 1	717	789	0.11655	113.4172	LAYFLD8 500.00 - MOUNT OLIVE 500KV CKT 1
FDNS	00NR	0	16WP	G15_044	FROM->TO	G14-057T 345.00 - SUNNYSIDE 345KV CKT 1	717	789	0.11699	113.4132	GEN526331 1-JONES GEN #1 22 KV
FDNS	00NR	0	16WP	G15_044	FROM->TO	G14-057T 345.00 - SUNNYSIDE 345KV CKT 1	717	789	0.11699	113.4131	GEN526332 1-JONES GEN #2 21 KV
FDNS	00NR	0	16WP	G15_044	FROM->TO	G14-057T 345.00 - SUNNYSIDE 345KV CKT 1	717	789	0.11699	113.4028	GEN560105 1-G08-22 0.6900
FDNS	00NR	0	16WP	G15_044	FROM->TO	G14-057T 345.00 - SUNNYSIDE 345KV CKT 1	717	789	0.11699	113.3993	GEN562550 1-G14_040_3 0.6900
FDNS	00NR	0	16WP	G15_044	FROM->TO	G14-057T 345.00 - SUNNYSIDE 345KV CKT 1	717	789	0.11645	113.3982	ROCKY POINT - SUNNYSIDE 138KV CKT 1
FDNS	00NR	0	20WP	G15_044	FROM->TO	G14-057T 345.00 - SUNNYSIDE 345KV CKT 1	717	789	0.11665	113.3982	GEN336251 1-NINEMILE POINT UNIT#4
FDNS	00NR	0	20WP	G15_044	FROM->TO	G14-057T 345.00 - SUNNYSIDE 345KV CKT 1	717	789	0.11696	113.393	G1524G1525 345.00 - THISTLE7 345.00 345KV CKT 1
FDNS	00NR	0	20WP	G15_044	FROM->TO	G14-057T 345.00 - SUNNYSIDE 345KV CKT 1	717	789	0.11696	113.393	G1524G1525 345.00 - THISTLE7 345.00 345KV CKT 2
FDNS	00NR	0	20WP	G15_044	FROM->TO	G14-057T 345.00 - SUNNYSIDE 345KV CKT 1	717	789	0.11749	113.3929	FINNEY SWITCHING STATION - HOLCOMB 345KV CKT 1
FDNS	00NR	0	20WP	G15_044	FROM->TO	G14-057T 345.00 - SUNNYSIDE 345KV CKT 1	717	789	0.11749	113.3929	FINNEY SWITCHING STATION - HOLCOMB 345KV CKT 1
FDNS	00NR	0	20WP	G15_044	FROM->TO	G14-057T 345.00 - SUNNYSIDE 345KV CKT 1	717	789	0.11665	113.3927	GEN334071 1-LEWIS CREEK 2
FDNS	00NR	0	16WP	G15_044	FROM->TO	G14-057T 345.00 - SUNNYSIDE 345KV CKT 1	717	789	0.11679	113.3879	RUSSETT - RUSSETT 138KV CKT 1
FDNS	00NR	0	20WP	G15_044	FROM->TO	G14-057T 345.00 - SUNNYSIDE 345KV CKT 1	717	789	0.11665	113.3843	GEN334070 1-LEWIS CREEK 1
FDNS	00NR	0	16WP	G15_044	FROM->TO	G14-057T 345.00 - SUNNYSIDE 345KV CKT 1	717	789	0.11699	113.3775	4SIOUX 1 138.00 138/18.0KV TRANSFORMER CKT 1
FDNS	00NR	0	16WP	G15_044	FROM->TO	G14-057T 345.00 - SUNNYSIDE 345KV CKT 1	717	789	0.11699	113.3694	P12:138:WFEC:MSL07
FDNS	00NR	0	16WP	G15_044	FROM->TO	G14-057T 345.00 - SUNNYSIDE 345KV CKT 1	717	789	0.11699	113.3694	P12:138:WFEC-AEPW:HUGOPP4:ATOKA--4
FDNS	00NR	0	20WP	G15_044	FROM->TO	G14-057T 345.00 - SUNNYSIDE 345KV CKT 1	717	789	0.11665	113.3642	P12:161:AEPW-SWPA:BEAVERS:EROGERS5
FDNS	00NR	0	20WP	G15_044	FROM->TO	G14-057T 345.00 - SUNNYSIDE 345KV CKT 1	717	789	0.11665	113.3603	GEN509392 G2-ARSENAL HILL GENS #3 (STALL)
FDNS	00NR	0	20WP	G15_044	FROM->TO	G14-057T 345.00 - SUNNYSIDE 345KV CKT 1	717	789	0.11665	113.3602	GEN509391 G1-ARSENAL HILL GENS #2 (STALL)
FDNS	00NR	0	16WP	G15_044	FROM->TO	G14-057T 345.00 - SUNNYSIDE 345KV CKT 1	717	789	0.11699	113.3591	GEN511962 2-RKYRDGW2-1 0.7000
FDNS	00NR	0	20WP	G15_044	FROM->TO	G14-057T 345.00 - SUNNYSIDE 345KV CKT 1	717	789	0.11665	113.3581	GEN509393 S1-ARSENAL HILL GENS #4 (STALL)
FDNS	00NR	0	16WP	G15_044	FROM->TO	G14-057T 345.00 - SUNNYSIDE 345KV CKT 1	717	789	0.11699	113.3577	GEN521112 1-ORME3 13.800
FDNS	00NR	0	16WP	G15_044	FROM->TO	G14-057T 345.00 - SUNNYSIDE 345KV CKT 1	717	789	0.11699	113.3553	CLAY BOSWELL 230/20.9KV TRANSFORMER CKT 1
FDNS	00NR	0	16WP	G15_044	FROM->TO	G14-057T 345.00 - SUNNYSIDE 345KV CKT 1	717	789	0.11699	113.3532	GEN527882 1-CUNNINGHAM GEN #2 20 KV
FDNS	00NR	0	20WP	G15_044	FROM->TO	G14-057T 345.00 - SUNNYSIDE 345KV CKT 1	717	789	0.11665	113.3465	GEN334433 1-SABINE UNIT 3
FDNS	00NR	0	20WP	G15_044	FROM->TO	G14-057T 345.00 - SUNNYSIDE 345KV CKT 1	717	789	0.11863	113.3428	OIL CENTER - STRATFORD 138KV CKT 1
FDNS	00NR	0	16WP	G15_044	FROM->TO	G14-057T 345.00 - SUNNYSIDE 345KV CKT 1	717	789	0.11699	113.3369	GEN562892 1-G15048_3 0.6900
FDNS	00NR	0	20WP	G15_044	FROM->TO	G14-057T 345.00 - SUNNYSIDE 345KV CKT 1	717	789	0.11665	113.3339	GEN337653 1-WHITE BLUFF UNIT #2
FDNS	00NR	0	16WP	G15_044	FROM->TO	G14-057T 345.00 - SUNNYSIDE 345KV CKT 1	717	789	0.11582	113.3312	ARDMORE WEST - CARTER 138KV CKT 1
FDNS	00NR	0	16WP	G15_044	FROM->TO	G14-057T 345.00 - SUNNYSIDE 345KV CKT 1	717	789	0.11699	113.3247	GEN562512 1-G14_020_3 0.6900
FDNS	00NR	0	20WP	G15_044	FROM->TO	G14-057T 345.00 - SUNNYSIDE 345KV CKT 1	717	789	0.11665	113.323	GEN336831 1-BAXTER WILSON SES
FDNS	00NR	0	16WP	G15_044	FROM->TO	G14-057T 345.00 - SUNNYSIDE 345KV CKT 1	717	789	0.11699	113.3179	GEN672321 1-SHAND GENERATOR 1
FDNS	00NR	0	16WP	G15_044	FROM->TO	G14-057T 345.00 - SUNNYSIDE 345KV CKT 1	717	789	0.11699	113.3158	GEN563192 1-G15084_3 0.5500
FDNS	00NR	0	20WP	G15_044	FROM->TO	G14-057T 345.00 - SUNNYSIDE 345KV CKT 1	717	789	0.11681	113.3115	P12:138:AEPW:S.W.S.-4:L.E.S.-4
FDNS	00NR	0	16WP	G15_044	FROM->TO	G14-057T 345.00 - SUNNYSIDE 345KV CKT 1	717	789	0.11699	113.3067	GEN511853 1-COMANCHE #3

SOLUTION	GROUP	SCENARIO	SEASON	SOURCE	DIRECTION	MONITORED ELEMENT	RATEA (MVA)	RATEB(MVA)	TDF	TC%LOADING (% MVA)	CONTINGENCY
FDNS	00NR	0	20WP	G15_044	FROM->TO	G14-057T 345.00 - SUNNYSIDE 345KV CKT 1	717	789	0.11665	113.3019	P12:161:AEPW:DYESS5:ELMSPRNG:TONTITN5
FDNS	00NR	0	20WP	G15_044	FROM->TO	G14-057T 345.00 - SUNNYSIDE 345KV CKT 1	717	789	0.11699	113.2967	DUNCAN (DUNCAN) 138/69/13.8KV TRANSFORMER CKT 1
FDNS	00NR	0	20WP	G15_044	FROM->TO	G14-057T 345.00 - SUNNYSIDE 345KV CKT 1	717	789	0.11699	113.2967	DUNCAN (DUNCAN) 138/69/13.8KV TRANSFORMER CKT 1
FDNS	00NR	0	16WP	G15_044	FROM->TO	G14-057T 345.00 - SUNNYSIDE 345KV CKT 1	717	789	0.11699	113.2937	GEN672310 1-POPLAR RIVER GENERATOR 1
FDNS	00NR	0	16WP	G15_044	FROM->TO	G14-057T 345.00 - SUNNYSIDE 345KV CKT 1	717	789	0.11699	113.2937	GEN672311 2-POPLAR RIVER GENERATOR 2
FDNS	00NR	0	16WP	G15_044	FROM->TO	G14-057T 345.00 - SUNNYSIDE 345KV CKT 1	717	789	0.1171	113.2933	P12:138:WFEC:MSL16
FDNS	00NR	0	16WP	G15_044	FROM->TO	G14-057T 345.00 - SUNNYSIDE 345KV CKT 1	717	789	0.1169	113.2886	P12:138:WFEC-AEPW:GOLDENSW4:CRAIGJT4
FDNS	00NR	0	16WP	G15_044	FROM->TO	G14-057T 345.00 - SUNNYSIDE 345KV CKT 1	717	789	0.11699	113.2851	GEN672306 6-BOUNDARY DAM GENERATOR 6
FDNS	00NR	0	16WP	G15_044	FROM->TO	G14-057T 345.00 - SUNNYSIDE 345KV CKT 1	717	789	0.11589	113.2851	SUNNYSIDE (SUNNYSD5) 345/138/13.8KV TRANSFORMER CKT 1
FDNS	00NR	0	20WP	G15_044	FROM->TO	G14-057T 345.00 - SUNNYSIDE 345KV CKT 1	717	789	0.11665	113.2821	GEN337911 1-ARKANSAS NUCLEAR ONE UNIT #2
FDNS	00NR	0	20WP	G15_044	FROM->TO	G14-057T 345.00 - SUNNYSIDE 345KV CKT 1	717	789	0.11665	113.2788	GEN515040 1-SEMINOLE 1G
FDNS	00NR	0	20WP	G15_044	FROM->TO	G14-057T 345.00 - SUNNYSIDE 345KV CKT 1	717	789	0.11759	113.2722	G14_038T 345.00 - Hitchland Interchange 345KV CKT 1
FDNS	00NR	0	20WP	G15_044	FROM->TO	G14-057T 345.00 - SUNNYSIDE 345KV CKT 1	717	789	0.11665	113.2716	GEN334030 1-FRONTIER UNIT 1
FDNS	00NR	0	16WP	G15_044	FROM->TO	G14-057T 345.00 - SUNNYSIDE 345KV CKT 1	717	789	0.11699	113.271	GEN344895 2-1LAB G2 20.000
FDNS	00NR	0	20WP	G15_044	FROM->TO	G14-057T 345.00 - SUNNYSIDE 345KV CKT 1	717	789	0.11665	113.2693	GEN334031 1-FRONTIER UNIT 2
FDNS	00NR	0	16WP	G15_044	FROM->TO	G14-057T 345.00 - SUNNYSIDE 345KV CKT 1	717	789	0.11699	113.2581	GEN523461 1-BLACKHAWK GEN #1
FDNS	00NR	0	16WP	G15_044	FROM->TO	G14-057T 345.00 - SUNNYSIDE 345KV CKT 1	717	789	0.11699	113.258	GEN523462 1-BLACKHAWK GEN #2
FDNS	00NR	0	20WP	G15_044	FROM->TO	G14-057T 345.00 - SUNNYSIDE 345KV CKT 1	717	789	0.11759	113.2548	TUTTLE - TUTTLE CONOCO TAP 138KV CKT 1
FDNS	00NR	0	16WP	G15_044	FROM->TO	G14-057T 345.00 - SUNNYSIDE 345KV CKT 1	717	789	0.11699	113.2537	GEN511852 1-COMANCHE #2
FDNS	00NR	0	20WP	G15_044	FROM->TO	G14-057T 345.00 - SUNNYSIDE 345KV CKT 1	717	789	0.11667	113.2501	P12:138:AEPW:CATOOSA4:T.S.E.-4
FDNS	00NR	0	20WP	G15_044	FROM->TO	G14-057T 345.00 - SUNNYSIDE 345KV CKT 1	717	789	0.11944	113.2433	BLANCHARD - MAUD 138KV CKT 1
FDNS	00NR	0	16WP	G15_044	FROM->TO	G14-057T 345.00 - SUNNYSIDE 345KV CKT 1	717	789	0.11699	113.2389	GEN344896 3-1LAB G3 20.000
FDNS	00NR	0	16WP	G15_044	FROM->TO	G14-057T 345.00 - SUNNYSIDE 345KV CKT 1	717	789	0.11699	113.2375	GEN344894 1-1LAB G1 20.000
FDNS	00NR	0	16WP	G15_044	FROM->TO	G14-057T 345.00 - SUNNYSIDE 345KV CKT 1	717	789	0.11699	113.2361	GEN344897 4-1LAB G4 20.000
FDNS	00NR	0	20WP	G15_044	FROM->TO	G14-057T 345.00 - SUNNYSIDE 345KV CKT 1	717	789	0.11646	113.2345	FULTON 115 - HOPE 115KV CKT 1
FDNS	00NR	0	20WP	G15_044	FROM->TO	G14-057T 345.00 - SUNNYSIDE 345KV CKT 1	717	789	0.11646	113.2345	FULTON 115 - HOPE 115KV CKT 1
FDNS	00NR	0	20WP	G15_044	FROM->TO	G14-057T 345.00 - SUNNYSIDE 345KV CKT 1	717	789	0.11751	113.2314	P12:138:AEPW-OGE:WTH_JCT4:JENSEN4
FDNS	00NR	0	20WP	G15_044	FROM->TO	G14-057T 345.00 - SUNNYSIDE 345KV CKT 1	717	789	0.11665	113.2306	GEN337652 1-WHITE BLUFF UNIT #1
FDNS	00NR	0	20WP	G15_044	FROM->TO	G14-057T 345.00 - SUNNYSIDE 345KV CKT 1	717	789	0.11665	113.2297	GEN501811 1-RODEMACHER UNIT 1
FDNS	00NR	0	20WP	G15_044	FROM->TO	G14-057T 345.00 - SUNNYSIDE 345KV CKT 1	717	789	0.11727	113.2296	P12:138:AEPW:CORNVIL4:DUNCAN-4
FDNS	00NR	0	20WP	G15_044	FROM->TO	G14-057T 345.00 - SUNNYSIDE 345KV CKT 1	717	789	0.11665	113.2154	GEN506752 1-LEBROCK GAS 1
FDNS	00NR	0	16WP	G15_044	FROM->TO	G14-057T 345.00 - SUNNYSIDE 345KV CKT 1	717	789	0.11582	113.2152	ARDMORE WEST - UNIROYAL 138KV CKT 1
FDNS	00NR	0	20WP	G15_044	FROM->TO	G14-057T 345.00 - SUNNYSIDE 345KV CKT 1	717	789	0.11665	113.2151	GEN506753 1-LEBROCK GAS 2
FDNS	00NR	0	20WP	G15_044	FROM->TO	G14-057T 345.00 - SUNNYSIDE 345KV CKT 1	717	789	0.11665	113.212	GEN300015 1-1SGPDEL 18.000
FDNS	00NR	0	20WP	G15_044	FROM->TO	G14-057T 345.00 - SUNNYSIDE 345KV CKT 1	717	789	0.11665	113.2097	GEN515226 1-MUSKOGEE 6G
FDNS	00NR	0	20WP	G15_044	FROM->TO	G14-057T 345.00 - SUNNYSIDE 345KV CKT 1	717	789	0.11665	113.2086	GEN300003 1-THOMAS HILL UNIT 3
FDNS	00NR	0	16WP	G15_044	FROM->TO	G14-057T 345.00 - SUNNYSIDE 345KV CKT 1	717	789	0.11693	113.2023	P12:138:AEPW-SWPA:LONEOAK4:TUPELO4
FDNS	00NR	0	16WP	G15_044	FROM->TO	G14-057T 345.00 - SUNNYSIDE 345KV CKT 1	717	789	0.11693	113.2023	P12:138:WFEC:MSL06
FDNS	00NR	0	16WP	G15_044	FROM->TO	G14-057T 345.00 - SUNNYSIDE 345KV CKT 1	717	789	0.1165	113.2022	P12:138:OKGE:3TERM40
FDNS	00NR	0	20WP	G15_044	FROM->TO	G14-057T 345.00 - SUNNYSIDE 345KV CKT 1	717	789	0.11665	113.197	GEN336191 1-LITTLE GYPSY UNIT#3
FDNS	00NR	0	16WP	G15_044	FROM->TO	G14-057T 345.00 - SUNNYSIDE 345KV CKT 1	717	789	0.11699	113.1818	GEN563162 1-G15081_3 0.6900
FDNSLock	00NR	0	16WP	G15_044	FROM->TO	G14-057T 345.00 - SUNNYSIDE 345KV CKT 1	717	789	0.11699	113.1814	GEN681542 6-JP MADGETT
FDNS	00NR	0	16WP	G15_044	FROM->TO	G14-057T 345.00 - SUNNYSIDE 345KV CKT 1	717	789	0.11699	113.1784	GEN521110 1-ORME1 13.800
FDNS	00NR	0	16WP	G15_044	FROM->TO	G14-057T 345.00 - SUNNYSIDE 345KV CKT 1	717	789	0.11699	113.1784	GEN521111 1-ORME2 13.800
FDNS	00NR	0	20WP	G15_044	FROM->TO	G14-057T 345.00 - SUNNYSIDE 345KV CKT 1	717	789	0.11727	113.1781	P12:138:AEPW:CORNVIL4:S.W.S.-4
FDNS	00NR	0	20WP	G15_044	FROM->TO	G14-057T 345.00 - SUNNYSIDE 345KV CKT 1	717	789	0.11652	113.1775	6LAYFLD 230.00 - CARROLL 230KV CKT 1
FDNS	00NR	0	16WP	G15_044	FROM->TO	G14-057T 345.00 - SUNNYSIDE 345KV CKT 1	717	789	0.11699	113.1714	GEN562699 1-G15_018_3 0.6900
FDNS	00NR	0	16WP	G15_044	FROM->TO	G14-057T 345.00 - SUNNYSIDE 345KV CKT 1	717	789	0.11704	113.1706	G15085_T 138.00 - RUSSELL 138KV CKT 1
FDNS	00NR	0	16WP	G15_044	FROM->TO	G14-057T 345.00 - SUNNYSIDE 345KV CKT 1	717	789	0.11624	113.1705	CARTRCO4 138.00 - RATLIFF 138KV CKT 1
FDNS	00NR	0	20WP	G15_044	FROM->TO	G14-057T 345.00 - SUNNYSIDE 345KV CKT 1	717	789	0.11863	113.1702	LATTA JCT - OIL CENTER 138KV CKT 1
FDNS	00NR	0	20WP	G15_044	FROM->TO	G14-057T 345.00 - SUNNYSIDE 345KV CKT 1	717	789	0.11665	113.1681	GEN335614 1-WILLOW GLENN UNIT#4
FDNS	00NR	0	20WP	G15_044	FROM->TO	G14-057T 345.00 - SUNNYSIDE 345KV CKT 1	717	789	0.11759	113.162	CIMARRON - TUTTLE CONOCO TAP 138KV CKT 1
FDNS	00NR	0	16WP	G15_044	FROM->TO	G14-057T 345.00 - SUNNYSIDE 345KV CKT 1	717	789	0.11699	113.159	GEN563292 1-G15095_3 0.6900
FDNS	00NR	0	20WP	G15_044	FROM->TO	G14-057T 345.00 - SUNNYSIDE 345KV CKT 1	717	789	0.11665	113.1529	8DANIEL8 500.00 - MCKNIGHT 500KV CKT 1
FDNS	00NR	0	20WP	G15_044	FROM->TO	G14-057T 345.00 - SUNNYSIDE 345KV CKT 1	717	789	0.11908	113.1398	BAILEY4 138.00 - SUNSHINE CANYON 138KV CKT 1
FDNS	00NR	0	20WP	G15_044	FROM->TO	G14-057T 345.00 - SUNNYSIDE 345KV CKT 1	717	789	0.11678	113.1297	G15095_T 138.00 - ROSE_VALLEY 138.00 138KV CKT 1
FDNS	00NR	0	16WP	G15_044	FROM->TO	G14-057T 345.00 - SUNNYSIDE 345KV CKT 1	717	789	0.11993	113.1295	G15063_T 345.00 - MATHWSN7 345.00 345KV CKT 1
FDNS	00NR	0	20WP	G15_044	FROM->TO	G14-057T 345.00 - SUNNYSIDE 345KV CKT 1	717	789	0.11665	113.1261	GEN337910 1-ARKANSAS NUCLEAR ONE UNIT #1
FDNS	00NR	0	20WP	G15_044	FROM->TO	G14-057T 345.00 - SUNNYSIDE 345KV CKT 1	717	789	0.11665	113.1241	P12:161:AEPW:EROGERS5:ECNTRTN5
FDNS	00NR	0	20WP	G15_044	FROM->TO	G14-057T 345.00 - SUNNYSIDE 345KV CKT 1	717	789	0.11683	113.1228	BUCKNER7 345.00 - SPEARVILLE 345KV CKT 1
FDNS	00NR	0	20WP	G15_044	FROM->TO	G14-057T 345.00 - SUNNYSIDE 345KV CKT 1	717	789	0.11683	113.1228	BUCKNER7 345.00 - SPEARVILLE 345KV CKT 1
FDNS	00NR	0	20WP	G15_044	FROM->TO	G14-057T 345.00 - SUNNYSIDE 345KV CKT 1	717	789	0.11665	113.122	GEN303007 1-1BC2 U2
FDNS	00NR	0	20WP	G15_044	FROM->TO	G14-057T 345.00 - SUNNYSIDE 345KV CKT 1	717	789	0.11749	113.1199	FINNEY SWITCHING STATION - WALKTAP7 345.00 345KV CKT 1
FDNS	00NR	0	20WP	G15_044	FROM->TO	G14-057T 345.00 - SUNNYSIDE 345KV CKT 1	717	789	0.11749	113.1199	FINNEY SWITCHING STATION - WALKTAP7 345.00 345KV CKT 1
FDNS	00NR	0	16WP	G15_044	FROM->TO	G14-057T 345.00 - SUNNYSIDE 345KV CKT 1	717	789	0.11718	113.1195	CACHE - SNYDER 138KV CKT 1
FDNS	00NR	0	20WP	G15_044	FROM->TO	G14-057T 345.00 - SUNNYSIDE 345KV CKT 1	717	789	0.11665	113.1171	GEN336464 1-MICHOUD UNIT #3
FDNS	00NR	0	20WP	G15_044	FROM->TO	G14-057T 345.00 - SUNNYSIDE 345KV CKT 1	717	789	0.11665	113.116	GEN303006 1-1BC2 U1
FDNS	00NR	0	20WP	G15_044	FROM->TO	G14-057T 345.00 - SUNNYSIDE 345KV CKT 1	717	789	0.11716	113.1158	P12:138:AEPW:WTHWF4:CLINTJC4
FDNS	00NR	0	20WP	G15_044	FROM->TO	G14-057T 345.00 - SUNNYSIDE 345KV CKT 1	717	789	0.11665	113.1142	WHITE BLUFF 500/26.0KV TRANSFORMER CKT 1
FDNS	00NR	0	20WP	G15_044	FROM->TO	G14-057T 345.00 - SUNNYSIDE 345KV CKT 1	717	789	0.11699	113.1123	P12:69:WFEC-AEPW:COMANCH2:DUNCAN-2
FDNS	00NR	0	20WP	G15_044	FROM->TO	G14-057T 345.00 - SUNNYSIDE 345KV CKT 1	717	789	0.11665	113.1123	GEN515223 1-MUSKOGEE 4G
FDNS	00NR	0	20WP	G15_044	FROM->TO	G14-057T 345.00 - SUNNYSIDE 345KV CKT 1	717	789	0.11665	113.1123	GEN515225 1-MUSKOGEE 5G
FDNS	00NR	0	20WP	G15_044	FROM->TO	G14-057T 345.00 - SUNNYSIDE 345KV CKT 1	717	789	0.11665	113.1096	GEN562783 1-G15036_4 0.6900
FDNS	00NR	0	20WP	G15_044	FROM->TO	G14-057T 345.00 - SUNNYSIDE 345KV CKT 1	717	789	0.11665	113.1096	GEN562784 1-G15036_5 0.6900
FDNS	00NR	0	20WP	G15_044	FROM->TO	G14-057T 345.00 - SUNNYSIDE 345KV CKT 1	717	789	0.11671	113.1077	G15088_T 345.00 - MOORE 345KV CKT 1
FDNS	00NR	0	20WP	G15_044	FROM->TO	G14-057T 345.00 - SUNNYSIDE 345KV CKT 1	717	789	0.11687	113.1046	P12:69:AEPW-OMPA:COMANC-2:OMWALTR2
FDNS	00NR	0	20WP	G15_044	FROM->TO	G14-057T 345.00 - SUNNYSIDE 345KV CKT 1	717	789	0.1165	113.0985	BISMARK - HOT SPRINGS WEST BUS 115KV CKT 1
FDNS	00NR	0	20WP	G15_044	FROM->TO	G14-057T 345.00 - SUNNYSIDE 345KV CKT 1	717	789	0.11739	113.0959	CIMARRON - CZECH HALL 138KV CKT 1
FDNS	00NR	0	20WP	G15_044	FROM->TO	G14-057T 345.00 - SUNNYSIDE 345KV CKT 1	717	789	0.11673	113.0936	G15074_T 345.00 - HOYT 345KV CKT 1

SOLUTION	GROUP	SCENARIO	SEASON	SOURCE	DIRECTION	MONITORED ELEMENT	RATEA (MVA)	RATEB(MVA)	TDF	TC%LOADING (% MVA)	CONTINGENCY
FDNS	00NR	0	20WP	G15_044	FROM->TO	G14-057T 345.00 - SUNNYSIDE 345KV CKT 1	717	789	0.11657	113.0914	MC NIEL 500/115KV TRANSFORMER CKT 1
FDNS	00NR	0	20WP	G15_044	FROM->TO	G14-057T 345.00 - SUNNYSIDE 345KV CKT 1	717	789	0.11665	113.0857	GEN300010 1-ST FRANCIS UNIT 1
FDNS	00NR	0	20WP	G15_044	FROM->TO	G14-057T 345.00 - SUNNYSIDE 345KV CKT 1	717	789	0.11699	113.0853	DUNCAN - TOSCO 69KV CKT 1
FDNS	00NR	0	20WP	G15_044	FROM->TO	G14-057T 345.00 - SUNNYSIDE 345KV CKT 1	717	789	0.11716	113.0823	P12:138:AEPW:WTHWF4:WTH_SE4
FDNS	00NR	0	16WP	G15_044	FROM->TO	G14-057T 345.00 - SUNNYSIDE 345KV CKT 1	717	789	0.11699	113.0731	GEN563122 1-G15077_3 0.3850
FDNS	00NR	0	16WP	G15_044	FROM->TO	G14-057T 345.00 - SUNNYSIDE 345KV CKT 1	717	789	0.11699	113.0722	GEN661015 1-COYOTE
FDNS	00NR	0	20WP	G15_044	FROM->TO	G14-057T 345.00 - SUNNYSIDE 345KV CKT 1	717	789	0.11657	113.0703	HOT SPRINGS EHV - MAGNET COVE 500KV CKT 1
FDNS	00NR	0	20WP	G15_044	FROM->TO	G14-057T 345.00 - SUNNYSIDE 345KV CKT 1	717	789	0.1168	113.0696	CLEO CORNER - CLEOPLT4 138.00 138KV CKT 1
FDNS	00NR	0	20WP	G15_044	FROM->TO	G14-057T 345.00 - SUNNYSIDE 345KV CKT 1	717	789	0.11665	113.0607	GEN337041 1-GERALD ANDRUS
FDNS	00NR	0	20WP	G15_044	FROM->TO	G14-057T 345.00 - SUNNYSIDE 345KV CKT 1	717	789	0.11665	113.059	GEN505432 1-SIKESTON
FDNS	00NR	0	16WP	G15_044	FROM->TO	G14-057T 345.00 - SUNNYSIDE 345KV CKT 1	717	789	0.11699	113.0554	GEN562861 1-G15045_2 0.4800
FDNS	00NR	0	20WP	G15_044	FROM->TO	G14-057T 345.00 - SUNNYSIDE 345KV CKT 1	717	789	0.11665	113.0543	GEN303008 1-1BC2 U3
FDNS	00NR	0	20WP	G15_044	FROM->TO	G14-057T 345.00 - SUNNYSIDE 345KV CKT 1	717	789	0.11736	113.0517	CHISHOLM6 230.00 - ELK CITY 230KV 230KV CKT 1
FDNS	00NR	0	20WP	G15_044	FROM->TO	G14-057T 345.00 - SUNNYSIDE 345KV CKT 1	717	789	0.11678	113.0491	NOEL_SW 138.00 - ROSE_VALLEY 138.00 138KV CKT 1
FDNS	00NR	0	20WP	G15_044	FROM->TO	G14-057T 345.00 - SUNNYSIDE 345KV CKT 1	717	789	0.11736	113.0487	ELK CITY 230KV (ELKCTY-6) 230/138/13.8KV TRANSFORMER CKT 1
FDNS	00NR	0	20WP	G15_044	FROM->TO	G14-057T 345.00 - SUNNYSIDE 345KV CKT 1	717	789	0.11736	113.0487	ELK CITY 230KV (ELKCTY-6) 230/138/13.8KV TRANSFORMER CKT 1
FDNS	00NR	0	20WP	G15_044	FROM->TO	G14-057T 345.00 - SUNNYSIDE 345KV CKT 1	717	789	0.1168	113.0487	CLEOPLT4 138.00 - MEN TAP 138KV CKT 1
FDNS	00NR	0	20WP	G15_044	FROM->TO	G14-057T 345.00 - SUNNYSIDE 345KV CKT 1	717	789	0.1165	113.047	ALPINE AECC - BISMARK 115KV CKT 1
FDNS	00NR	0	16WP	G15_044	FROM->TO	G14-057T 345.00 - SUNNYSIDE 345KV CKT 1	717	789	0.11699	113.0454	GEN520811 1-ANADRK4
FDNS	00NR	0	20WP	G15_044	FROM->TO	G14-057T 345.00 - SUNNYSIDE 345KV CKT 1	717	789	0.11729	113.0419	CIMARRON - SARA 138KV CKT 1
FDNS	00NR	0	20WP	G15_044	FROM->TO	G14-057T 345.00 - SUNNYSIDE 345KV CKT 1	717	789	0.1168	113.0367	IMO TAP - MEN TAP 138KV CKT 1
FDNS	00NR	0	20WP	G15_044	FROM->TO	G14-057T 345.00 - SUNNYSIDE 345KV CKT 1	717	789	0.11665	113.0282	GEN300011 1-ST FRANCIS UNIT 2
FDNS	00NR	0	20WP	G15_044	FROM->TO	G14-057T 345.00 - SUNNYSIDE 345KV CKT 1	717	789	0.11665	113.0251	GEN336170 1-GULF OXY U4
FDNS	00NR	0	20WP	G15_044	FROM->TO	G14-057T 345.00 - SUNNYSIDE 345KV CKT 1	717	789	0.11666	113.0227	P12:138:AEPW:N.E.S.-4:CATOOSA4
FDNSLock	00NR	0	16WP	G15_044	FROM->TO	G14-057T 345.00 - SUNNYSIDE 345KV CKT 1	717	789	0.11699	113.0211	GEN532751 1-WOLF CREEK GENERATING STATION UNIT 1
FDNS	00NR	0	20WP	G15_044	FROM->TO	G14-057T 345.00 - SUNNYSIDE 345KV CKT 1	717	789	0.1157	113.0209	SEMINOLE - VANOSTP4 138.00 138KV CKT 1
FDNS	00NR	0	20WP	G15_044	FROM->TO	G14-057T 345.00 - SUNNYSIDE 345KV CKT 1	717	789	0.11739	113.0172	CZECH HALL - XEROX 138KV CKT 1
FDNS	00NR	0	20WP	G15_044	FROM->TO	G14-057T 345.00 - SUNNYSIDE 345KV CKT 1	717	789	0.11699	113.0167	COMANCHE TAP - TOSCO 69KV CKT 1
FDNS	00NR	0	20WP	G15_044	FROM->TO	G14-057T 345.00 - SUNNYSIDE 345KV CKT 1	717	789	0.11665	113.0167	NELSON 230/20.0KV TRANSFORMER CKT 1
FDNS	00NR	0	16WP	G15_044	FROM->TO	G14-057T 345.00 - SUNNYSIDE 345KV CKT 1	717	789	0.11712	113.0164	P12:138:WFEC:MSL15
FDNS	00NR	0	20WP	G15_044	FROM->TO	G14-057T 345.00 - SUNNYSIDE 345KV CKT 1	717	789	0.11739	113.0131	MORGAN - XEROX 138KV CKT 1
FDNS	00NR	0	20WP	G15_044	FROM->TO	G14-057T 345.00 - SUNNYSIDE 345KV CKT 1	717	789	0.11665	113.0062	GEN336801 1-BAXTER WILSON UNIT #1
FDNS	00NR	0	20WP	G15_044	FROM->TO	G14-057T 345.00 - SUNNYSIDE 345KV CKT 1	717	789	0.1165	112.9982	ALPINE AECC - AMITY SS 115KV CKT 1
FDNS	00NR	0	20WP	G15_044	FROM->TO	G14-057T 345.00 - SUNNYSIDE 345KV CKT 1	717	789	0.11575	112.9962	ARBWIND4 138.00 - CARTER 138KV CKT 1
FDNS	00NR	0	16WP	G15_044	FROM->TO	G14-057T 345.00 - SUNNYSIDE 345KV CKT 1	717	789	0.11582	112.9937	SUNNYSIDE - UNIROYAL 138KV CKT 1
FDNS	00NR	0	20WP	G15_044	FROM->TO	G14-057T 345.00 - SUNNYSIDE 345KV CKT 1	717	789	0.11739	112.9905	MORGAN - MUSTANG 138KV CKT 1
FDNS	00NR	0	20WP	G15_044	FROM->TO	G14-057T 345.00 - SUNNYSIDE 345KV CKT 1	717	789	0.11751	112.9897	WEATHERFORD JCT. - WEATHERFORD SOUTHEAST 138KV CKT 1
FDNS	00NR	0	20WP	G15_044	FROM->TO	G14-057T 345.00 - SUNNYSIDE 345KV CKT 1	717	789	0.11751	112.9897	WEATHERFORD JCT. - WEATHERFORD SOUTHEAST 138KV CKT 1
FDNS	00NR	0	20WP	G15_044	FROM->TO	G14-057T 345.00 - SUNNYSIDE 345KV CKT 1	717	789	0.11665	112.9775	8CAJUN2 500/24.0KV TRANSFORMER CKT 1
FDNS	00NR	0	20WP	G15_044	FROM->TO	G14-057T 345.00 - SUNNYSIDE 345KV CKT 1	717	789	0.11665	112.9766	GEN501910 1-ACADIA UNIT ST1
FDNS	00NR	0	16WP	G15_044	FROM->TO	G14-057T 345.00 - SUNNYSIDE 345KV CKT 1	717	789	0.11699	112.9741	GEN562992 1-G15063_3 0.6900
FDNS	00NR	0	20WP	G15_044	FROM->TO	G14-057T 345.00 - SUNNYSIDE 345KV CKT 1	717	789	0.11746	112.9676	ANADARKO - SEQUOYAHJ4 138.00 138KV CKT 1
FDNS	00NR	0	20WP	G15_044	FROM->TO	G14-057T 345.00 - SUNNYSIDE 345KV CKT 1	717	789	0.11746	112.9661	CORN TAP - SEQUOYAHJ4 138.00 138KV CKT 1
FDNS	00NR	0	20WP	G15_044	FROM->TO	G14-057T 345.00 - SUNNYSIDE 345KV CKT 1	717	789	0.11699	112.9645	COMANCHE - COMANCHE TAP 69KV CKT 1
FDNS	00NR	0	20WP	G15_044	FROM->TO	G14-057T 345.00 - SUNNYSIDE 345KV CKT 1	717	789	0.11908	112.9615	BAILEY4 138.00 - WESTMOORE 138KV CKT 1
FDNS	00NR	0	16WP	G15_044	FROM->TO	G14-057T 345.00 - SUNNYSIDE 345KV CKT 1	717	789	0.11699	112.9554	GEN657748 1-YOUNG 2 GENERATOR
FDNS	00NR	0	16WP	G15_044	FROM->TO	G14-057T 345.00 - SUNNYSIDE 345KV CKT 1	717	789	0.11757	112.9501	GRAPEVINE INTERCHANGE - STATELINE INTERCHANGE 230KV CKT 1
FDNS	00NR	0	16WP	G15_044	FROM->TO	G14-057T 345.00 - SUNNYSIDE 345KV CKT 1	717	789	0.11757	112.9501	GRAPEVINE INTERCHANGE - STATELINE INTERCHANGE 230KV CKT 1
FDNS	00NR	0	20WP	G15_044	FROM->TO	G14-057T 345.00 - SUNNYSIDE 345KV CKT 1	717	789	0.11687	112.95	P12:138:OKGE-AEPW:JENSEN4:REDROCKRD4
FDNS	00NR	0	20WP	G15_044	FROM->TO	G14-057T 345.00 - SUNNYSIDE 345KV CKT 1	717	789	0.11698	112.94	WALTERS - WALTERS 69KV CKT 1
FDNS	00NR	0	20WP	G15_044	FROM->TO	G14-057T 345.00 - SUNNYSIDE 345KV CKT 1	717	789	0.11751	112.9379	P12:138:AEPW:REDROCKRD4:WTH_JCT4
FDNS	00NR	0	20WP	G15_044	FROM->TO	G14-057T 345.00 - SUNNYSIDE 345KV CKT 1	717	789	0.11665	112.9375	SABINE 230/24.0KV TRANSFORMER CKT 1
FDNS	00NR	0	20WP	G15_044	FROM->TO	G14-057T 345.00 - SUNNYSIDE 345KV CKT 1	717	789	0.11665	112.9335	GEN300016 1-1G1GPDEL 18.000
FDNS	00NR	0	20WP	G15_044	FROM->TO	G14-057T 345.00 - SUNNYSIDE 345KV CKT 1	717	789	0.11729	112.9306	SARA - STHLAKE4 138.00 138KV CKT 1
FDNS	00NR	0	16WP	G15_044	FROM->TO	G14-057T 345.00 - SUNNYSIDE 345KV CKT 1	717	789	0.1194	112.9294	CANEY CREEK - TEXOMA JCT 138KV CKT 1
FDNS	00NR	0	20WP	G15_044	FROM->TO	G14-057T 345.00 - SUNNYSIDE 345KV CKT 1	717	789	0.11665	112.9286	P12:138:AEPW:R.S.S.-4:S.HUD.-4
FDNS	00NR	0	20WP	G15_044	FROM->TO	G14-057T 345.00 - SUNNYSIDE 345KV CKT 1	717	789	0.11656	112.9232	ETTA (DUKE HOTSPRINGS) - MC NIEL 500KV CKT 1
FDNS	00NR	0	20WP	G15_044	FROM->TO	G14-057T 345.00 - SUNNYSIDE 345KV CKT 1	717	789	0.11665	112.9218	GEN336222 1-LITTLE GYPSY UNIT#2
FDNS	00NR	0	16WP	G15_044	FROM->TO	G14-057T 345.00 - SUNNYSIDE 345KV CKT 1	717	789	0.11704	112.9113	P12:138:AEPW:SHAM4WT:CHILD4WT
FDNS	00NR	0	20WP	G15_044	FROM->TO	G14-057T 345.00 - SUNNYSIDE 345KV CKT 1	717	789	0.11687	112.9105	LAWTON RELIFT TAP - OMPA-WALTERS 69KV CKT 1
FDNS	00NR	0	20WP	G15_044	FROM->TO	G14-057T 345.00 - SUNNYSIDE 345KV CKT 1	717	789	0.11729	112.9005	MCCLAIN - STHLAKE4 138.00 138KV CKT 1
FDNS	00NR	0	20WP	G15_044	FROM->TO	G14-057T 345.00 - SUNNYSIDE 345KV CKT 1	717	789	0.11665	112.897	P12:69:AEPW:NROGERS2:ECNTRTN2
FDNS	00NR	0	20WP	G15_044	FROM->TO	G14-057T 345.00 - SUNNYSIDE 345KV CKT 1	717	789	0.11687	112.8964	G13-010T 345.00 - POST ROCK 345KV CKT 1
FDNS	00NR	0	16WP	G15_044	FROM->TO	G14-057T 345.00 - SUNNYSIDE 345KV CKT 1	717	789	0.11699	112.8952	GEN562704 1-G15_020_3 0.3550
FDNS	00NR	0	20WP	G15_044	FROM->TO	G14-057T 345.00 - SUNNYSIDE 345KV CKT 1	717	789	0.11863	112.8932	LASALLE - LATTA JCT 138KV CKT 1
FDNS	00NR	0	20WP	G15_044	FROM->TO	G14-057T 345.00 - SUNNYSIDE 345KV CKT 1	717	789	0.11731	112.8928	NORGE ROAD - SOUTHWESTERN STATION 138KV CKT 1
FDNS	00NR	0	20WP	G15_044	FROM->TO	G14-057T 345.00 - SUNNYSIDE 345KV CKT 1	717	789	0.11731	112.8928	NORGE ROAD - SOUTHWESTERN STATION 138KV CKT 1
FDNS	00NR	0	16WP	G15_044	FROM->TO	G14-057T 345.00 - SUNNYSIDE 345KV CKT 1	717	789	0.11699	112.8914	GEN562952 1-G15057_3 0.6500
FDNS	00NR	0	20WP	G15_044	FROM->TO	G14-057T 345.00 - SUNNYSIDE 345KV CKT 1	717	789	0.11665	112.8872	GEN336152 1-WATERFORD UNIT#2
FDNS	00NR	0	20WP	G15_044	FROM->TO	G14-057T 345.00 - SUNNYSIDE 345KV CKT 1	717	789	0.11665	112.8868	P12:138:AEPW:BA_71ST4:T.S.E.-4
FDNS	00NR	0	20WP	G15_044	FROM->TO	G14-057T 345.00 - SUNNYSIDE 345KV CKT 1	717	789	0.11665	112.8864	GEN336151 1-WATERFORD UNIT#1
FDNS	00NR	0	20WP	G15_044	FROM->TO	G14-057T 345.00 - SUNNYSIDE 345KV CKT 1	717	789	0.11665	112.882	P12:138:AEPW:YARCH-S4:T.S.E.-4
FDNS	00NR	0	20WP	G15_044	FROM->TO	G14-057T 345.00 - SUNNYSIDE 345KV CKT 1	717	789	0.11682	112.8781	EMPORIA ENERGY CENTER - G14_001T 345.00 345KV CKT 1
FDNS	00NR	0	20WP	G15_044	FROM->TO	G14-057T 345.00 - SUNNYSIDE 345KV CKT 1	717	789	0.11673	112.8777	HOYT - STRANGER CREEK 345KV CKT 1
FDNS	00NR	0	20WP	G15_044	FROM->TO	G14-057T 345.00 - SUNNYSIDE 345KV CKT 1	717	789	0.11669	112.8772	P12:138:AEPW-OGE:SHIDLER4:OSAGE 4
FDNS	00NR	0	20WP	G15_044	FROM->TO	G14-057T 345.00 - SUNNYSIDE 345KV CKT 1	717	789	0.11665	112.875	GEN300017 1-1G2GPDEL 18.000
FDNS	00NR	0	20WP	G15_044	FROM->TO	G14-057T 345.00 - SUNNYSIDE 345KV CKT 1	717	789	0.11665	112.8749	FRONTIER 345/18.0KV TRANSFORMER CKT 1
FDNS	00NR	0	20WP	G15_044	FROM->TO	G14-057T 345.00 - SUNNYSIDE 345KV CKT 1	717	789	0.11665	112.8727	FRONTIER 345/18.0KV TRANSFORMER CKT 1
FDNS	00NR	0	20WP	G15_044	FROM->TO	G14-057T 345.00 - SUNNYSIDE 345KV CKT 1	717	789	0.11654	112.8685	P12:138:OKGE:3TERM2

SOLUTION	GROUP	SCENARIO	SEASON	SOURCE	DIRECTION	MONITORED ELEMENT	RATEA (MVA)	RATEB(MVA)	TDF	TC%LOADING (% MVA)	CONTINGENCY
FDNS	00NR	0	20WP	G15_044	FROM->TO	G14-057T 345.00 - SUNNYSIDE 345KV CKT 1	717	789	0.11687	112.8667	CLINTON JUNCTION - ELK CITY 138KV CKT 1
FDNS	00NR	0	20WP	G15_044	FROM->TO	G14-057T 345.00 - SUNNYSIDE 345KV CKT 1	717	789	0.11687	112.8667	CLINTON JUNCTION - ELK CITY 138KV CKT 1
FDNS	00NR	0	20WP	G15_044	FROM->TO	G14-057T 345.00 - SUNNYSIDE 345KV CKT 1	717	789	0.11646	112.8667	HOPE - MCNAB REC 115KV CKT 1
FDNS	00NR	0	20WP	G15_044	FROM->TO	G14-057T 345.00 - SUNNYSIDE 345KV CKT 1	717	789	0.11652	112.8653	MORISNT4 138.00 - STILLWATER 138KV CKT 1
FDNS	00NR	0	20WP	G15_044	FROM->TO	G14-057T 345.00 - SUNNYSIDE 345KV CKT 1	717	789	0.11646	112.856	P12:115:AEPW:TURK3:HOPE3
FDNS	00NR	0	20WP	G15_044	FROM->TO	G14-057T 345.00 - SUNNYSIDE 345KV CKT 1	717	789	0.11699	112.8552	BENTON - WICHITA 345KV CKT 1
FDNS	00NR	0	20WP	G15_044	FROM->TO	G14-057T 345.00 - SUNNYSIDE 345KV CKT 1	717	789	0.11673	112.853	G15074_T 345.00 - JEFFREY ENERGY CENTER 345KV CKT 1
FDNS	00NR	0	16WP	G15_044	FROM->TO	G14-057T 345.00 - SUNNYSIDE 345KV CKT 1	717	789	0.11699	112.8518	GEN563173 1-G15082_3 0.6900
FDNS	00NR	0	20WP	G15_044	FROM->TO	G14-057T 345.00 - SUNNYSIDE 345KV CKT 1	717	789	0.11687	112.8505	G13-010T 345.00 - SPEARVILLE 345KV CKT 1
FDNS	00NR	0	20WP	G15_044	FROM->TO	G14-057T 345.00 - SUNNYSIDE 345KV CKT 1	717	789	0.11654	112.8485	COUCH SES - MC NIEL 115KV CKT 1
FDNS	00NR	0	20WP	G15_044	FROM->TO	G14-057T 345.00 - SUNNYSIDE 345KV CKT 1	717	789	0.11716	112.8447	WEATHERFORD TAP - WEATHERFORD WIND FARM 138KV CKT 1
FDNS	00NR	0	20WP	G15_044	FROM->TO	G14-057T 345.00 - SUNNYSIDE 345KV CKT 1	717	789	0.1168	112.8444	BLACKBERRY - NEOSHO 345KV CKT 1
FDNS	00NR	0	20WP	G15_044	FROM->TO	G14-057T 345.00 - SUNNYSIDE 345KV CKT 1	717	789	0.11665	112.8441	LEWIS CREEK SWITCHYARD 138/22.0KV TRANSFORMER CKT 1
FDNS	00NR	0	20WP	G15_044	FROM->TO	G14-057T 345.00 - SUNNYSIDE 345KV CKT 1	717	789	0.11751	112.8435	HINTON - WEATHERFORD JCT. 138KV CKT 1
FDNS	00NR	0	20WP	G15_044	FROM->TO	G14-057T 345.00 - SUNNYSIDE 345KV CKT 1	717	789	0.11665	112.8396	LEWIS CREEK SWITCHYARD 138/22.0KV TRANSFORMER CKT 1
FDNS	00NR	0	16WP	G15_044	FROM->TO	G14-057T 345.00 - SUNNYSIDE 345KV CKT 1	717	789	0.11754	112.8375	GRAPEVINE INTERCHANGE - NICHOLS STATION 230KV CKT 1
FDNS	00NR	0	16WP	G15_044	FROM->TO	G14-057T 345.00 - SUNNYSIDE 345KV CKT 1	717	789	0.11754	112.8375	GRAPEVINE INTERCHANGE - NICHOLS STATION 230KV CKT 1
FDNS	00NR	0	20WP	G15_044	FROM->TO	G14-057T 345.00 - SUNNYSIDE 345KV CKT 1	717	789	0.11687	112.8369	OMPA-WALTERS - WALTERS 69KV CKT 1
FDNS	00NR	0	20WP	G15_044	FROM->TO	G14-057T 345.00 - SUNNYSIDE 345KV CKT 1	717	789	0.11687	112.8369	OMPA-WALTERS - WALTERS 69KV CKT 1
FDNS	00NR	0	20WP	G15_044	FROM->TO	G14-057T 345.00 - SUNNYSIDE 345KV CKT 1	717	789	0.11664	112.8359	CYPRESS - HARTBURG 500KV CKT 1
FDNS	00NR	0	20WP	G15_044	FROM->TO	G14-057T 345.00 - SUNNYSIDE 345KV CKT 1	717	789	0.11727	112.8325	SOUTHWESTERN STATION - VERDEN 138KV CKT 1
FDNS	00NR	0	20WP	G15_044	FROM->TO	G14-057T 345.00 - SUNNYSIDE 345KV CKT 1	717	789	0.11665	112.8315	GEN334432 1-SABINE UNIT 2
FDNS	00NR	0	20WP	G15_044	FROM->TO	G14-057T 345.00 - SUNNYSIDE 345KV CKT 1	717	789	0.11665	112.831	GEN334431 1-SABINE UNIT 1
FDNS	00NR	0	20WP	G15_044	FROM->TO	G14-057T 345.00 - SUNNYSIDE 345KV CKT 1	717	789	0.11646	112.8308	TURK (TURK 1) 138/115/13.2KV TRANSFORMER CKT 1
FDNS	00NR	0	20WP	G15_044	FROM->TO	G14-057T 345.00 - SUNNYSIDE 345KV CKT 1	717	789	0.11646	112.8308	TURK (TURK 1) 138/115/13.2KV TRANSFORMER CKT 1
FDNS	00NR	0	20WP	G15_044	FROM->TO	G14-057T 345.00 - SUNNYSIDE 345KV CKT 1	717	789	0.11646	112.8307	MCNAB REC - Turk 115 115KV CKT 1
FDNS	00NR	0	20WP	G15_044	FROM->TO	G14-057T 345.00 - SUNNYSIDE 345KV CKT 1	717	789	0.11666	112.8301	7JASPER 345.00 - BLACKBERRY 345KV CKT 1
FDNS	00NR	0	20WP	G15_044	FROM->TO	G14-057T 345.00 - SUNNYSIDE 345KV CKT 1	717	789	0.11665	112.8268	GEN501823 1-TECHE UNIT 3
FDNS	00NR	0	20WP	G15_044	FROM->TO	G14-057T 345.00 - SUNNYSIDE 345KV CKT 1	717	789	0.11665	112.8248	GEN501970 1-EVANGELINE UNIT 7
FDNS	00NR	0	20WP	G15_044	FROM->TO	G14-057T 345.00 - SUNNYSIDE 345KV CKT 1	717	789	0.11665	112.8197	GEN505616 1-BROKEN BOW
FDNS	00NR	0	20WP	G15_044	FROM->TO	G14-057T 345.00 - SUNNYSIDE 345KV CKT 1	717	789	0.11698	112.8185	P12:69:WFEC-AEPW:COMANCH2:WALTRS-2
FDNS	00NR	0	20WP	G15_044	FROM->TO	G14-057T 345.00 - SUNNYSIDE 345KV CKT 1	717	789	0.11817	112.8114	CANADIAN - NOBLE 138KV CKT 1
FDNS	00NR	0	20WP	G15_044	FROM->TO	G14-057T 345.00 - SUNNYSIDE 345KV CKT 1	717	789	0.11727	112.8107	NORTH 29TH CHICKASHA - VERDEN 138KV CKT 1
FDNS	00NR	0	20WP	G15_044	FROM->TO	G14-057T 345.00 - SUNNYSIDE 345KV CKT 1	717	789	0.11665	112.8098	P12:161:AEPW:CHAMSPR5:FARMING5
FDNS	00NR	0	16WP	G15_044	FROM->TO	G14-057T 345.00 - SUNNYSIDE 345KV CKT 1	717	789	0.11699	112.8084	GEN562710 1-G15_022_3 0.5500
FDNS	00NR	0	20WP	G15_044	FROM->TO	G14-057T 345.00 - SUNNYSIDE 345KV CKT 1	717	789	0.11669	112.8043	7LUTESVIL 345.00 - 7ST FRANC 345.00 345KV CKT 1
FDNS	00NR	0	20WP	G15_044	FROM->TO	G14-057T 345.00 - SUNNYSIDE 345KV CKT 1	717	789	0.11665	112.8033	GEN334392 1-EXXON MOBIL IPP 1
FDNS	00NR	0	20WP	G15_044	FROM->TO	G14-057T 345.00 - SUNNYSIDE 345KV CKT 1	717	789	0.11682	112.8	G14_001T 345.00 - WICHITA 345KV CKT 1
FDNS	00NR	0	20WP	G15_044	FROM->TO	G14-057T 345.00 - SUNNYSIDE 345KV CKT 1	717	789	0.11665	112.7969	GEN334393 1-EXXON MOBIL IPP 2
FDNS	00NR	0	20WP	G15_044	FROM->TO	G14-057T 345.00 - SUNNYSIDE 345KV CKT 1	717	789	0.11665	112.7969	GEN334394 1-EXXON MOBIL IPP 3
FDNS	00NR	0	20WP	G15_044	FROM->TO	G14-057T 345.00 - SUNNYSIDE 345KV CKT 1	717	789	0.11908	112.7939	FRANKLIN SW - WESTMOORE 138KV CKT 1
FDNS	00NR	0	20WP	G15_044	FROM->TO	G14-057T 345.00 - SUNNYSIDE 345KV CKT 1	717	789	0.11666	112.7921	LAKEOVER - MCADAMS 500KV CKT 1
FDNS	00NR	0	16WP	G15_044	FROM->TO	G14-057T 345.00 - SUNNYSIDE 345KV CKT 1	717	789	0.11699	112.7898	GEN620315 1-BIG STONE GEN
FDNS	00NR	0	20WP	G15_044	FROM->TO	G14-057T 345.00 - SUNNYSIDE 345KV CKT 1	717	789	0.11822	112.7872	P12:138:OKGE:3TERM27
FDNS	00NR	0	20WP	G15_044	FROM->TO	G14-057T 345.00 - SUNNYSIDE 345KV CKT 1	717	789	0.11674	112.7859	EMPORIA ENERGY CENTER - SWISSVALE 345KV CKT 1
FDNS	00NR	0	20WP	G15_044	FROM->TO	G14-057T 345.00 - SUNNYSIDE 345KV CKT 1	717	789	0.11665	112.7835	ST FRANCIS - ST FRANCIS 1 161KV CKT Z1
FDNS	00NR	0	20WP	G15_044	FROM->TO	G14-057T 345.00 - SUNNYSIDE 345KV CKT 1	717	789	0.11667	112.7809	MCADAMS - WOLF CREEK 500KV CKT 1
FDNS	00NR	0	20WP	G15_044	FROM->TO	G14-057T 345.00 - SUNNYSIDE 345KV CKT 1	717	789	0.11665	112.779	SABINE 230/22.0KV TRANSFORMER CKT 1
FDNS	00NR	0	20WP	G15_044	FROM->TO	G14-057T 345.00 - SUNNYSIDE 345KV CKT 1	717	789	0.1168	112.7787	FLETCHER - MARLOW JCT 69KV CKT 1
FDNS	00NR	0	20WP	G15_044	FROM->TO	G14-057T 345.00 - SUNNYSIDE 345KV CKT 1	717	789	0.11676	112.7734	SWISSVALE - WEST GARDNER 345KV CKT 1
FDNS	00NR	0	20WP	G15_044	FROM->TO	G14-057T 345.00 - SUNNYSIDE 345KV CKT 1	717	789	0.11751	112.7689	HINTON - REDROCKRD4 138.00 138KV CKT 1
FDNS	00NR	0	16WP	G15_044	FROM->TO	G14-057T 345.00 - SUNNYSIDE 345KV CKT 1	717	789	0.11699	112.7677	GEN511851 1-COMANCHE #1
FDNS	00NR	0	20WP	G15_044	FROM->TO	G14-057T 345.00 - SUNNYSIDE 345KV CKT 1	717	789	0.11665	112.7667	GEN501972 1-EVANGELINE UNIT 7-2
FDNS	00NR	0	20WP	G15_044	FROM->TO	G14-057T 345.00 - SUNNYSIDE 345KV CKT 1	717	789	0.11665	112.7666	GEN501971 1-EVANGELINE UNIT 7-1
FDNS	00NR	0	20WP	G15_044	FROM->TO	G14-057T 345.00 - SUNNYSIDE 345KV CKT 1	717	789	0.11665	112.7601	P12:138:AEPW:R.S.S-4:T.P.S.-4
FDNS	00NR	0	20WP	G15_044	FROM->TO	G14-057T 345.00 - SUNNYSIDE 345KV CKT 1	717	789	0.11731	112.7558	CORNVILLE - NORGE ROAD 138KV CKT 1
FDNS	00NR	0	20WP	G15_044	FROM->TO	G14-057T 345.00 - SUNNYSIDE 345KV CKT 1	717	789	0.11731	112.7558	CORNVILLE - NORGE ROAD 138KV CKT 1
FDNS	00NR	0	20WP	G15_044	FROM->TO	G14-057T 345.00 - SUNNYSIDE 345KV CKT 1	717	789	0.11675	112.7544	P12:138:OKGE:3TERM12
FDNS	00NR	0	20WP	G15_044	FROM->TO	G14-057T 345.00 - SUNNYSIDE 345KV CKT 1	717	789	0.11649	112.7529	ENOWILT - LONE OAK 138KV CKT 1
FDNS	00NR	0	20WP	G15_044	FROM->TO	G14-057T 345.00 - SUNNYSIDE 345KV CKT 1	717	789	0.11716	112.7506	WEATHERFORD SOUTHEAST - WEATHERFORD TAP 138KV CKT 1
FDNS	00NR	0	20WP	G15_044	FROM->TO	G14-057T 345.00 - SUNNYSIDE 345KV CKT 1	717	789	0.11649	112.7442	ENOWILT - SARDIS 138KV CKT 1
FDNS	00NR	0	20WP	G15_044	FROM->TO	G14-057T 345.00 - SUNNYSIDE 345KV CKT 1	717	789	0.11665	112.7431	GEN501912 1-ACADIA UNIT CT1B
FDNS	00NR	0	20WP	G15_044	FROM->TO	G14-057T 345.00 - SUNNYSIDE 345KV CKT 1	717	789	0.11694	112.743	FRANKLIN - FRANKLIN SW 138KV CKT 1
FDNS	00NR	0	20WP	G15_044	FROM->TO	G14-057T 345.00 - SUNNYSIDE 345KV CKT 1	717	789	0.1167	112.7424	P12:138:WFEC-AEPW:ELKCTY-4:ERICK4
FDNS	00NR	0	20WP	G15_044	FROM->TO	G14-057T 345.00 - SUNNYSIDE 345KV CKT 1	717	789	0.11665	112.7423	GEN501911 1-ACADIA UNIT CT1A
FDNS	00NR	0	20WP	G15_044	FROM->TO	G14-057T 345.00 - SUNNYSIDE 345KV CKT 1	717	789	0.11863	112.7421	LASALLE - STONEWAL LH138.00 138KV CKT 1
FDNS	00NR	0	20WP	G15_044	FROM->TO	G14-057T 345.00 - SUNNYSIDE 345KV CKT 1	717	789	0.1165	112.7364	AMITY SS - MURFREESBORO EAST (AECC) 115KV CKT 1
FDNS	00NR	0	20WP	G15_044	FROM->TO	G14-057T 345.00 - SUNNYSIDE 345KV CKT 1	717	789	0.11665	112.7343	P12:138:AEPW:R.S.S.-4:R:96YALE-4
FDNS	00NR	0	16WP	G15_044	FROM->TO	G14-057T 345.00 - SUNNYSIDE 345KV CKT 1	717	789	0.11699	112.7303	GEN600004 2-PRAIRIE ISLAND G2
FDNS	00NR	0	16WP	G15_044	FROM->TO	G14-057T 345.00 - SUNNYSIDE 345KV CKT 1	717	789	0.11699	112.7275	GEN600003 1-PRAIRIE ISLAND G1
FDNS	00NR	0	20WP	G15_044	FROM->TO	G14-057T 345.00 - SUNNYSIDE 345KV CKT 1	717	789	0.11727	112.7268	CORNVILLE - NORTH 29TH CHICKASHA 138KV CKT 1
FDNS	00NR	0	20WP	G15_044	FROM->TO	G14-057T 345.00 - SUNNYSIDE 345KV CKT 1	717	789	0.11863	112.724	STONEWAL LH138.00 - TUPELO TAP 138KV CKT 1
FDNS	00NR	0	20WP	G15_044	FROM->TO	G14-057T 345.00 - SUNNYSIDE 345KV CKT 1	717	789	0.11817	112.7182	NOBLE - PURCELL4 138.00 138KV CKT 1
FDNSLock	00NR	0	16WP	G15_044	FROM->TO	G14-057T 345.00 - SUNNYSIDE 345KV CKT 1	717	789	0.11699	112.715	GEN600006 1-AS KING
FDNS	00NR	0	20WP	G15_044	FROM->TO	G14-057T 345.00 - SUNNYSIDE 345KV CKT 1	717	789	0.12123	112.7058	CIMARRON - NORTHWEST 345KV CKT 1
FDNS	00NR	0	20WP	G15_044	FROM->TO	G14-057T 345.00 - SUNNYSIDE 345KV CKT 1	717	789	0.11716	112.7001	CLINTON JUNCTION - CLINTON NATURAL GAS TAP 138KV CKT 1
FDNS	00NR	0	20WP	G15_044	FROM->TO	G14-057T 345.00 - SUNNYSIDE 345KV CKT 1	717	789	0.11687	112.6983	Canadian Pump Station - REDROCKRD4 138.00 138KV CKT 1
FDNS	00NR	0	20WP	G15_044	FROM->TO	G14-057T 345.00 - SUNNYSIDE 345KV CKT 1	717	789	0.11758	112.6767	CRINER - PAYNE 138.00 138KV CKT 1
FDNS	00NR	0	16WP	G15_044	FROM->TO	G14-057T 345.00 - SUNNYSIDE 345KV CKT 1	717	789	0.11708	112.6686	P12:138:WFEC:MSL09

SOLUTION	GROUP	SCENARIO	SEASON	SOURCE	DIRECTION	MONITORED ELEMENT	RATEA (MVA)	RATEB(MVA)	TDF	TC%LOADING (% MVA)	CONTINGENCY
FDNS	00NR	0	16WP	G15_044	FROM->TO	G14-057T 345.00 - SUNNYSIDE 345KV CKT 1	717	789	0.11792	112.6633	P12:138:AEPW-OGE:CORNVIL4:CIMARON4
FDNS	00NR	0	20WP	G15_044	FROM->TO	G14-057T 345.00 - SUNNYSIDE 345KV CKT 1	717	789	0.11698	112.6419	COMANCHE - WALTERS 69KV CKT 1
FDNSLock	00NR	0	16WP	G15_044	FROM->TO	G14-057T 345.00 - SUNNYSIDE 345KV CKT 1	717	789	0.11699	112.6382	GEN636641 1-LOUISA UNIT 1
FDNS	00NR	0	16WP	G15_044	FROM->TO	G14-057T 345.00 - SUNNYSIDE 345KV CKT 1	717	789	0.11699	112.6	GEN615002 2-COAL CREEK
FDNS	00NR	0	16WP	G15_044	FROM->TO	G14-057T 345.00 - SUNNYSIDE 345KV CKT 1	717	789	0.11699	112.5883	GEN600005 1-MONTICELLO
FDNS	00NR	0	16WP	G15_044	FROM->TO	G14-057T 345.00 - SUNNYSIDE 345KV CKT 1	717	789	0.11946	112.5634	CHISHOLM7 345.00 (CHISHOLM) 345/230/13.2KV TRANSFORMER CKT 1
FDNS	00NR	0	16WP	G15_044	FROM->TO	G14-057T 345.00 - SUNNYSIDE 345KV CKT 1	717	789	0.11699	112.5594	GEN562754 1-G15031_5 0.6900
FDNS	00NR	0	16WP	G15_044	FROM->TO	G14-057T 345.00 - SUNNYSIDE 345KV CKT 1	717	789	0.11699	112.5259	GEN635213 3-NEAL UNIT 3
FDNS	00NR	0	16WP	G15_044	FROM->TO	G14-057T 345.00 - SUNNYSIDE 345KV CKT 1	717	789	0.11699	112.5005	GEN562756 1-G15031_7 0.6900
FDNS	00NR	0	16WP	G15_044	FROM->TO	G14-057T 345.00 - SUNNYSIDE 345KV CKT 1	717	789	0.11699	112.5	GEN629074 1-ARNOLD LOWSIDE OF GSU XFMR
FDNS	00NR	0	16WP	G15_044	FROM->TO	G14-057T 345.00 - SUNNYSIDE 345KV CKT 1	717	789	0.11699	112.4623	GEN562023 1-G11_020_3 0.6900
FDNS	00NR	0	16WP	G15_044	FROM->TO	G14-057T 345.00 - SUNNYSIDE 345KV CKT 1	717	789	0.11699	112.4623	GEN562026 1-G11_019_3 0.6900
FDNS	00NR	0	16WP	G15_044	FROM->TO	G14-057T 345.00 - SUNNYSIDE 345KV CKT 1	717	789	0.11699	112.4584	GEN562556 1-G14_046_3 0.3420
FDNS	00NR	0	16WP	G15_044	FROM->TO	G14-057T 345.00 - SUNNYSIDE 345KV CKT 1	717	789	0.11946	112.4526	CHISHOLM7 345.00 - GRACEMONT 345KV CKT 1
FDNS	00NR	0	16WP	G15_044	FROM->TO	G14-057T 345.00 - SUNNYSIDE 345KV CKT 1	717	789	0.11699	112.451	BIG STONE 230/24.0KV TRANSFORMER CKT 1
FDNS	00NR	0	16WP	G15_044	FROM->TO	G14-057T 345.00 - SUNNYSIDE 345KV CKT 1	717	789	0.11699	112.3702	GEN563142 1-G15079_3 0.5500
FDNS	00NR	0	16WP	G15_044	FROM->TO	G14-057T 345.00 - SUNNYSIDE 345KV CKT 1	717	789	0.11699	112.3702	GEN563151 1-G15080_2 0.5500
FDNS	00NR	0	16WP	G15_044	FROM->TO	G14-057T 345.00 - SUNNYSIDE 345KV CKT 1	717	789	0.11699	112.3332	GEN523971 1-HARRINGTON GEN #1 24 KV
FDNS	00NR	0	16WP	G15_044	FROM->TO	G14-057T 345.00 - SUNNYSIDE 345KV CKT 1	717	789	0.11699	112.3331	GEN523973 1-HARRINGTON GEN #3 24 KV
FDNS	00NR	0	16WP	G15_044	FROM->TO	G14-057T 345.00 - SUNNYSIDE 345KV CKT 1	717	789	0.11699	112.333	GEN523972 1-HARRINGTON GEN #2 24 KV
FDNS	00NR	0	16WP	G15_044	FROM->TO	G14-057T 345.00 - SUNNYSIDE 345KV CKT 1	717	789	0.11665	112.293	NORTHWEST TEXARKANA - VALLIANT 345KV CKT 1
FDNS	00NR	0	16WP	G15_044	FROM->TO	G14-057T 345.00 - SUNNYSIDE 345KV CKT 1	717	789	0.11665	112.293	NORTHWEST TEXARKANA - VALLIANT 345KV CKT 1
FDNS	00NR	0	16WP	G15_044	FROM->TO	G14-057T 345.00 - SUNNYSIDE 345KV CKT 1	717	789	0.11803	112.2788	P12:230:AEPW-SPS:SWEETWT6:WHEELER 6
FDNS	00NR	0	16WP	G15_044	FROM->TO	G14-057T 345.00 - SUNNYSIDE 345KV CKT 1	717	789	0.11803	112.2782	STLN-DEMARC6 - SWEETWATER 230KV CKT 1
FDNS	00NR	0	16WP	G15_044	FROM->TO	G14-057T 345.00 - SUNNYSIDE 345KV CKT 1	717	789	0.11803	112.2771	STATELINE INTERCHANGE - STLN-DEMARC6 230KV CKT 1
FDNSLock	00NR	0	16WP	G15_044	FROM->TO	G14-057T 345.00 - SUNNYSIDE 345KV CKT 1	717	789	0.11699	112.2748	GEN600000 1-SHERBURNECNTY G1
FDNS	00NR	0	16WP	G15_044	FROM->TO	G14-057T 345.00 - SUNNYSIDE 345KV CKT 1	717	789	0.11699	112.2359	GEN511848 1-SOUTHWESTERN STATION #3
FDNS	00NR	0	20WP	G15_044	FROM->TO	G14-057T 345.00 - SUNNYSIDE 345KV CKT 1	717	789	0.11665	112.2265	803-OKLAUNION
FDNS	00NR	0	16WP	G15_044	FROM->TO	G14-057T 345.00 - SUNNYSIDE 345KV CKT 1	717	789	0.11699	112.2003	GEN600001 2-SHERBURNE CNTY G2
FDNS	00NR	0	16WP	G15_044	FROM->TO	G14-057T 345.00 - SUNNYSIDE 345KV CKT 1	717	789	0.11699	112.163	GEN563042 1-G15068_3 0.6900
FDNS	00NR	0	16WP	G15_044	FROM->TO	G14-057T 345.00 - SUNNYSIDE 345KV CKT 1	717	789	0.11699	112.1422	GEN527901 1-HOBBS PLANT #1 (CT)
FDNS	00NR	0	16WP	G15_044	FROM->TO	G14-057T 345.00 - SUNNYSIDE 345KV CKT 1	717	789	0.11699	112.1422	GEN527902 1-HOBBS PLANT #2 (CT)
FDNSLock	00NR	0	16WP	G15_044	FROM->TO	G14-057T 345.00 - SUNNYSIDE 345KV CKT 1	717	789	0.11699	112.0855	GEN629075 1-OTTUMWA GENERATOR FOR OTTUMWA UNIT NO 1
FDNS	00NR	0	20WP	G15_044	FROM->TO	G14-057T 345.00 - SUNNYSIDE 345KV CKT 1	717	789	0.11503	111.9515	P12:138:OKGE:3TERM39
FDNSLock	00NR	0	16WP	G15_044	FROM->TO	G14-057T 345.00 - SUNNYSIDE 345KV CKT 1	717	789	0.11699	111.9266	GEN635214 4-NEAL UNIT 4
FDNS	00NR	0	16WP	G15_044	FROM->TO	G14-057T 345.00 - SUNNYSIDE 345KV CKT 1	717	789	0.11699	111.9233	SHERBURNE CO 345/24.0KV TRANSFORMER CKT 1
FDNS	00NR	0	20WP	G15_044	FROM->TO	G14-057T 345.00 - SUNNYSIDE 345KV CKT 1	717	789	0.11661	111.9074	RANCHRD7 345.00 - SOONER 345KV CKT 1
FDNS	00NR	0	20WP	G15_044	FROM->TO	G14-057T 345.00 - SUNNYSIDE 345KV CKT 1	717	789	0.11674	111.8943	CHILDRESS - LAKE PAULINE 138KV CKT 1
FDNS	00NR	0	20WP	G15_044	FROM->TO	G14-057T 345.00 - SUNNYSIDE 345KV CKT 1	717	789	0.11674	111.8943	CHILDRESS - LAKE PAULINE 138KV CKT 1
FDNS	00NR	0	20WP	G15_044	FROM->TO	G14-057T 345.00 - SUNNYSIDE 345KV CKT 1	717	789	0.1167	111.8901	CHILDRESS - HOLLIS TAP 138KV CKT 1
FDNS	00NR	0	20WP	G15_044	FROM->TO	G14-057T 345.00 - SUNNYSIDE 345KV CKT 1	717	789	0.11665	111.8664	GEN562084 1-G11_050_3 0.6900
FDNS	00NR	0	16WP	G15_044	FROM->TO	G14-057T 345.00 - SUNNYSIDE 345KV CKT 1	717	789	0.11699	111.861	GEN563043 1-G15068_4 0.6900
FDNS	00NR	0	16WP	G15_044	FROM->TO	G14-057T 345.00 - SUNNYSIDE 345KV CKT 1	717	789	0.11699	111.8591	GEN563273 2-G15093_4 0.6900
FDNS	00NR	0	20WP	G15_044	FROM->TO	G14-057T 345.00 - SUNNYSIDE 345KV CKT 1	717	789	0.11551	111.847	MAYSVILLE - PAOLI 138KV CKT 1
FDNS	00NR	0	20WP	G15_044	FROM->TO	G14-057T 345.00 - SUNNYSIDE 345KV CKT 1	717	789	0.11665	111.8386	GEN560187 1-WTH WIND 0.5750
FDNS	00NR	0	16WP	G15_044	FROM->TO	G14-057T 345.00 - SUNNYSIDE 345KV CKT 1	717	789	0.11699	111.8362	GEN526333 1-JONES GEN #3 21 KV
FDNS	00NR	0	16WP	G15_044	FROM->TO	G14-057T 345.00 - SUNNYSIDE 345KV CKT 1	717	789	0.11699	111.8361	GEN526334 1-JONES_4 116.500
FDNS	00NR	0	20WP	G15_044	FROM->TO	G14-057T 345.00 - SUNNYSIDE 345KV CKT 1	717	789	0.11775	111.8224	CIMARRON - MATHWSN7 345.00 345KV CKT 1
FDNS	00NR	0	20WP	G15_044	FROM->TO	G14-057T 345.00 - SUNNYSIDE 345KV CKT 1	717	789	0.11775	111.8224	CIMARRON - MATHWSN7 345.00 345KV CKT 2
FDNS	00NR	0	20WP	G15_044	FROM->TO	G14-057T 345.00 - SUNNYSIDE 345KV CKT 1	717	789	0.11665	111.8182	GEN560112 1-G08_037_3 0.6900
FDNS	00NR	0	16WP	G15_044	FROM->TO	G14-057T 345.00 - SUNNYSIDE 345KV CKT 1	717	789	0.11699	111.8	GEN344225 1-1CAL G1 25.000
FDNS	00NR	0	16WP	G15_044	FROM->TO	G14-057T 345.00 - SUNNYSIDE 345KV CKT 1	717	789	0.11953	111.7926	P12:230:AEPW:ELKCITY6:SWEETWT6
FDNS	00NR	0	16WP	G15_044	FROM->TO	G14-057T 345.00 - SUNNYSIDE 345KV CKT 1	717	789	0.11699	111.7857	GEN525844 1-ELK_1 118.000
FDNS	00NR	0	20WP	G15_044	FROM->TO	G14-057T 345.00 - SUNNYSIDE 345KV CKT 1	717	789	0.11665	111.7821	GEN521103 1-BLUE CANYON WIND FARM
FDNS	00NR	0	20WP	G15_044	FROM->TO	G14-057T 345.00 - SUNNYSIDE 345KV CKT 1	717	789	0.11665	111.7799	GEN520812 1-ANADRK5
FDNS	00NR	0	20WP	G15_044	FROM->TO	G14-057T 345.00 - SUNNYSIDE 345KV CKT 1	717	789	0.11665	111.7798	GEN520813 1-ANADRK6
FDNS	00NR	0	20WP	G15_044	FROM->TO	G14-057T 345.00 - SUNNYSIDE 345KV CKT 1	717	789	0.11709	111.7795	DRAPER LAKE - MIDWEST TAP 138KV CKT 1
FDNS	00NR	0	16WP	G15_044	FROM->TO	G14-057T 345.00 - SUNNYSIDE 345KV CKT 1	717	789	0.11699	111.779	GEN525845 1-ELK_2 1 138.00
FDNS	00NR	0	20WP	G15_044	FROM->TO	G14-057T 345.00 - SUNNYSIDE 345KV CKT 1	717	789	0.11665	111.7781	GEN563052 1-G15069_3 0.6900
FDNS	00NR	0	16WP	G15_044	FROM->TO	G14-057T 345.00 - SUNNYSIDE 345KV CKT 1	717	789	0.11699	111.7743	GEN600002 3-SHERBURNE CNTY G3
FDNS	00NR	0	20WP	G15_044	FROM->TO	G14-057T 345.00 - SUNNYSIDE 345KV CKT 1	717	789	0.11551	111.7716	MAYSVILLE - MAYSVLT4 138.00 138KV CKT 1
FDNS	00NR	0	20WP	G15_044	FROM->TO	G14-057T 345.00 - SUNNYSIDE 345KV CKT 1	717	789	0.11714	111.7619	P12:138:OKGE:3TERM21
FDNS	00NR	0	20WP	G15_044	FROM->TO	G14-057T 345.00 - SUNNYSIDE 345KV CKT 1	717	789	0.11665	111.7611	GEN562691 1-G15_015_3 0.6900
FDNS	00NR	0	20WP	G15_044	FROM->TO	G14-057T 345.00 - SUNNYSIDE 345KV CKT 1	717	789	0.11665	111.7556	GEN562772 1-G15034_3 0.6900
FDNS	00NR	0	20WP	G15_044	FROM->TO	G14-057T 345.00 - SUNNYSIDE 345KV CKT 1	717	789	0.11665	111.7408	GEN511961 1-DEMPSEY-WTG10.7000
FDNS	00NR	0	20WP	G15_044	FROM->TO	G14-057T 345.00 - SUNNYSIDE 345KV CKT 1	717	789	0.1189	111.7297	SOONER - SPRING CREEK 345KV CKT 1
FDNS	00NR	0	20WP	G15_044	FROM->TO	G14-057T 345.00 - SUNNYSIDE 345KV CKT 1	717	789	0.11665	111.7267	P12:069:OKGE:3TERM42
FDNS	00NR	0	20WP	G15_044	FROM->TO	G14-057T 345.00 - SUNNYSIDE 345KV CKT 1	717	789	0.1189	111.7265	NORTHWEST - SPRING CREEK 345KV CKT 1
FDNS	00NR	0	20WP	G15_044	FROM->TO	G14-057T 345.00 - SUNNYSIDE 345KV CKT 1	717	789	0.11575	111.7238	ARBUCKLE - SULPHR 4 138.00 138KV CKT 1
FDNS	00NR	0	20WP	G15_044	FROM->TO	G14-057T 345.00 - SUNNYSIDE 345KV CKT 1	717	789	0.11674	111.7062	GLASSES - MADILL INDUSTRIAL TAP 138KV CKT 1
FDNS	00NR	0	20WP	G15_044	FROM->TO	G14-057T 345.00 - SUNNYSIDE 345KV CKT 1	717	789	0.11551	111.7055	MAYSVLT4 138.00 - PRAIRIE POINT 138KV CKT 1
FDNS	00NR	0	20WP	G15_044	FROM->TO	G14-057T 345.00 - SUNNYSIDE 345KV CKT 1	717	789	0.11663	111.7005	P12:138:WFEC:MSL11
FDNS	00NR	0	20WP	G15_044	FROM->TO	G14-057T 345.00 - SUNNYSIDE 345KV CKT 1	717	789	0.11663	111.7005	P12:138:WFEC-AEPW:PHAROAH4:LONEOAK4
FDNS	00NR	0	20WP	G15_044	FROM->TO	G14-057T 345.00 - SUNNYSIDE 345KV CKT 1	717	789	0.11674	111.6941	CANEY CREEK - JOHNSON COUNTY 138KV CKT 1
FDNS	00NR	0	20WP	G15_044	FROM->TO	G14-057T 345.00 - SUNNYSIDE 345KV CKT 1	717	789	0.11665	111.689	GEN515443 1-MNCOWND1 0.7000
FDNS	00NR	0	20WP	G15_044	FROM->TO	G14-057T 345.00 - SUNNYSIDE 345KV CKT 1	717	789	0.1179	111.6853	MOREWOOD SW - NINE MILE 138KV CKT 1
FDNS	00NR	0	20WP	G15_044	FROM->TO	G14-057T 345.00 - SUNNYSIDE 345KV CKT 1	717	789	0.1167	111.6712	ALTUS JUNCTION - RUSSELL 138KV CKT 1
FDNS	00NR	0	20WP	G15_044	FROM->TO	G14-057T 345.00 - SUNNYSIDE 345KV CKT 1	717	789	0.1167	111.6712	ALTUS JUNCTION - RUSSELL 138KV CKT 1
FDNS	00NR	0	20WP	G15_044	FROM->TO	G14-057T 345.00 - SUNNYSIDE 345KV CKT 1	717	789	0.11665	111.6708	GEN560183 1-REDHIL-WTG1 12.000

SOLUTION	GROUP	SCENARIO	SEASON	SOURCE	DIRECTION	MONITORED ELEMENT	RATEA (MVA)	RATEB(MVA)	TDF	TC%LOADING (% MVA)	CONTINGENCY
FDNS	00NR	0	20WP	G15_044	FROM->TO	G14-057T 345.00 - SUNNYSIDE 345KV CKT 1	717	789	0.11665	111.6625	INDEPENDENCE 500/26.0KV TRANSFORMER CKT 1
FDNS	00NR	0	20WP	G15_044	FROM->TO	G14-057T 345.00 - SUNNYSIDE 345KV CKT 1	717	789	0.11674	111.6578	GLASSES - RUSSETT 138KV CKT 1
FDNS	00NR	0	20WP	G15_044	FROM->TO	G14-057T 345.00 - SUNNYSIDE 345KV CKT 1	717	789	0.11665	111.654	GEN600067 9-HIGH BRIDGE
FDNS	00NR	0	20WP	G15_044	FROM->TO	G14-057T 345.00 - SUNNYSIDE 345KV CKT 1	717	789	0.11673	111.6529	OVEXFRMCCOVE
FDNS	00NR	0	20WP	G15_044	FROM->TO	G14-057T 345.00 - SUNNYSIDE 345KV CKT 1	717	789	0.11694	111.6441	P12:138:WFEC:MSL08
FDNS	00NR	0	16WP	G15_044	FROM->TO	G14-057T 345.00 - SUNNYSIDE 345KV CKT 1	717	789	0.11699	111.6433	GEN525562 1-TOLK GEN #2 24 KV
FDNS	00NR	0	20WP	G15_044	FROM->TO	G14-057T 345.00 - SUNNYSIDE 345KV CKT 1	717	789	0.11652	111.6433	CARTER - CHICKASAW 138KV CKT 1
FDNS	00NR	0	16WP	G15_044	FROM->TO	G14-057T 345.00 - SUNNYSIDE 345KV CKT 1	717	789	0.11699	111.6359	GEN563202 1-G15085_3 0.5500
FDNS	00NR	0	20WP	G15_044	FROM->TO	G14-057T 345.00 - SUNNYSIDE 345KV CKT 1	717	789	0.11678	111.6359	CANADIAN RIVER - MCALESTER SOUTH 138KV CKT 1
FDNS	00NR	0	20WP	G15_044	FROM->TO	G14-057T 345.00 - SUNNYSIDE 345KV CKT 1	717	789	0.11678	111.6359	CANADIAN RIVER - MCALESTER SOUTH 138KV CKT 1
FDNS	00NR	0	20WP	G15_044	FROM->TO	G14-057T 345.00 - SUNNYSIDE 345KV CKT 1	717	789	0.11905	111.6344	LEBANON - TEXOMA JCT 138KV CKT 1
FDNS	00NR	0	20WP	G15_044	FROM->TO	G14-057T 345.00 - SUNNYSIDE 345KV CKT 1	717	789	0.11678	111.6341	CANADIAN RIVER () 345/138/13.8KV TRANSFORMER CKT 1
FDNS	00NR	0	20WP	G15_044	FROM->TO	G14-057T 345.00 - SUNNYSIDE 345KV CKT 1	717	789	0.11678	111.6341	CANADIAN RIVER () 345/138/13.8KV TRANSFORMER CKT 1
FDNS	00NR	0	20WP	G15_044	FROM->TO	G14-057T 345.00 - SUNNYSIDE 345KV CKT 1	717	789	0.11665	111.6328	P12:230:UMZB:# 112 #: NU IN SD. NU-RCDC & DRY CREEK XFMR
FDNS	00NR	0	16WP	G15_044	FROM->TO	G14-057T 345.00 - SUNNYSIDE 345KV CKT 1	717	789	0.11653	111.6299	LYDIA - WELSH 345KV CKT 1
FDNS	00NR	0	16WP	G15_044	FROM->TO	G14-057T 345.00 - SUNNYSIDE 345KV CKT 1	717	789	0.11653	111.6299	LYDIA - WELSH 345KV CKT 1
FDNS	00NR	0	20WP	G15_044	FROM->TO	G14-057T 345.00 - SUNNYSIDE 345KV CKT 1	717	789	0.11665	111.627	RCDC EAST 4230.00 - RED CEDAR DC 230KV CKT 1
FDNS	00NR	0	20WP	G15_044	FROM->TO	G14-057T 345.00 - SUNNYSIDE 345KV CKT 1	717	789	0.11626	111.6223	ROCKY POINT - SPRINGDALE 138KV CKT 1
FDNS	00NR	0	20WP	G15_044	FROM->TO	G14-057T 345.00 - SUNNYSIDE 345KV CKT 1	717	789	0.11665	111.6211	GEN562902 1-G15052_3 0.6900
FDNS	00NR	0	20WP	G15_044	FROM->TO	G14-057T 345.00 - SUNNYSIDE 345KV CKT 1	717	789	0.11658	111.621	HUGO (HUGO 1) 345/138/13.8KV TRANSFORMER CKT 1
FDNS	00NR	0	20WP	G15_044	FROM->TO	G14-057T 345.00 - SUNNYSIDE 345KV CKT 1	717	789	0.11665	111.6184	GEN563242 1-G15090_3 0.6900
FDNS	00NR	0	20WP	G15_044	FROM->TO	G14-057T 345.00 - SUNNYSIDE 345KV CKT 1	717	789	0.11551	111.6131	PRAIRIE POINT - RATLIFF 138KV CKT 1
FDNS	00NR	0	20WP	G15_044	FROM->TO	G14-057T 345.00 - SUNNYSIDE 345KV CKT 1	717	789	0.11685	111.6118	CHAMBER SPRINGS - CLARKSVILLE 345KV CKT 1
FDNS	00NR	0	20WP	G15_044	FROM->TO	G14-057T 345.00 - SUNNYSIDE 345KV CKT 1	717	789	0.11668	111.6064	GRPRAR1-LNX3345.00 - GRPRAR 345KV CKT Z
FDNS	00NR	0	20WP	G15_044	FROM->TO	G14-057T 345.00 - SUNNYSIDE 345KV CKT 1	717	789	0.11668	111.606	GRPRAR1-LNX3345.00 - HOLT.CO3 345.00 345KV CKT 1
FDNS	00NR	0	16WP	G15_044	FROM->TO	G14-057T 345.00 - SUNNYSIDE 345KV CKT 1	717	789	0.11699	111.5979	GEN527166 1-MUSTANG_6 118.000
FDNS	00NR	0	20WP	G15_044	FROM->TO	G14-057T 345.00 - SUNNYSIDE 345KV CKT 1	717	789	0.11665	111.5943	GEN629072 4-LANSING GENERATOR FOR UNITS NO4 EIA CODE 1
FDNS	00NR	0	16WP	G15_044	FROM->TO	G14-057T 345.00 - SUNNYSIDE 345KV CKT 1	717	789	0.11803	111.5888	CHISHOLM6 230.00 - SWEETWATER 230KV CKT 1
FDNS	00NR	0	20WP	G15_044	FROM->TO	G14-057T 345.00 - SUNNYSIDE 345KV CKT 1	717	789	0.11665	111.5796	GEN562078 1-G11_051_3 0.6900
FDNS	00NR	0	20WP	G15_044	FROM->TO	G14-057T 345.00 - SUNNYSIDE 345KV CKT 1	717	789	0.11684	111.5767	P12:138:AEPW:112GORE4:SNYDER-4
FDNS	00NR	0	20WP	G15_044	FROM->TO	G14-057T 345.00 - SUNNYSIDE 345KV CKT 1	717	789	0.11665	111.5711	GEN524285 1-WILDORADO WIND GEN
FDNS	00NR	0	20WP	G15_044	FROM->TO	G14-057T 345.00 - SUNNYSIDE 345KV CKT 1	717	789	0.11575	111.5694	JOLLYVILLE - SULPHR 4 138.00 138KV CKT 1
FDNS	00NR	0	20WP	G15_044	FROM->TO	G14-057T 345.00 - SUNNYSIDE 345KV CKT 1	717	789	0.11665	111.5522	GEN562587 1-G14_056_3 0.6900
FDNS	00NR	0	20WP	G15_044	FROM->TO	G14-057T 345.00 - SUNNYSIDE 345KV CKT 1	717	789	0.11665	111.5512	GEN514805 1-SOONER UNIT 1
FDNS	00NR	0	20WP	G15_044	FROM->TO	G14-057T 345.00 - SUNNYSIDE 345KV CKT 1	717	789	0.1179	111.5491	BEARCAT 138.00 - NINE MILE 138KV CKT 1
FDNS	00NR	0	20WP	G15_044	FROM->TO	G14-057T 345.00 - SUNNYSIDE 345KV CKT 1	717	789	0.11665	111.5454	GEN524295 1-SPNSPUR_WND10.6900
FDNS	00NR	0	20WP	G15_044	FROM->TO	G14-057T 345.00 - SUNNYSIDE 345KV CKT 1	717	789	0.11665	111.5399	GEN657749 1-YOUNG 1 GENERATOR
FDNS	00NR	0	16WP	G15_044	FROM->TO	G14-057T 345.00 - SUNNYSIDE 345KV CKT 1	717	789	0.11644	111.5346	JOHNSON COUNTY (JOHNCO) 345/138/13.8KV TRANSFORMER CKT 1
FDNS	00NR	0	16WP	G15_044	FROM->TO	G14-057T 345.00 - SUNNYSIDE 345KV CKT 1	717	789	0.11699	111.5255	GEN635023 3-WALTER SCOTT UNIT 3
FDNS	00NR	0	20WP	G15_044	FROM->TO	G14-057T 345.00 - SUNNYSIDE 345KV CKT 1	717	789	0.11665	111.5198	GEN514806 1-SOONER UNIT 2
FDNS	00NR	0	20WP	G15_044	FROM->TO	G14-057T 345.00 - SUNNYSIDE 345KV CKT 1	717	789	0.11665	111.5196	GEN524023 1-NICHOLS GEN #3 22 KV
FDNS	00NR	0	16WP	G15_044	FROM->TO	G14-057T 345.00 - SUNNYSIDE 345KV CKT 1	717	789	0.11699	111.5165	GEN562590 1-G14_057_3 0.6900
FDNS	00NR	0	20WP	G15_044	FROM->TO	G14-057T 345.00 - SUNNYSIDE 345KV CKT 1	717	789	0.11655	111.5107	CROCKETT - TENASKA RUSK COUNTY 345KV CKT 1
FDNS	00NR	0	20WP	G15_044	FROM->TO	G14-057T 345.00 - SUNNYSIDE 345KV CKT 1	717	789	0.11655	111.5059	LEBROCK - TENASKA RUSK COUNTY 345KV CKT 1
FDNS	00NR	0	20WP	G15_044	FROM->TO	G14-057T 345.00 - SUNNYSIDE 345KV CKT 1	717	789	0.11575	111.4877	JOLLYVILLE - KERR MCGEE CIMARRON 138KV CKT 1
FDNS	00NR	0	20WP	G15_044	FROM->TO	G14-057T 345.00 - SUNNYSIDE 345KV CKT 1	717	789	0.11665	111.4834	GEN562812 1-G15040_3 0.3570
FDNS	00NR	0	20WP	G15_044	FROM->TO	G14-057T 345.00 - SUNNYSIDE 345KV CKT 1	717	789	0.11665	111.4785	GEN562270 1-G12-020-2 0.6900
FDNS	00NR	0	20WP	G15_044	FROM->TO	G14-057T 345.00 - SUNNYSIDE 345KV CKT 1	717	789	0.11665	111.4769	GEN562882 1-G15047_3 0.6900
FDNS	00NR	0	20WP	G15_044	FROM->TO	G14-057T 345.00 - SUNNYSIDE 345KV CKT 1	717	789	0.11665	111.4766	GEN563132 1-G15078_3 0.3570
FDNS	00NR	0	20WP	G15_044	FROM->TO	G14-057T 345.00 - SUNNYSIDE 345KV CKT 1	717	789	0.11665	111.4697	GEN563102 1-G15075_3 0.5500
FDNS	00NR	0	20WP	G15_044	FROM->TO	G14-057T 345.00 - SUNNYSIDE 345KV CKT 1	717	789	0.11665	111.4569	GEN563062 1-G15071_3 0.6900
FDNS	00NR	0	20WP	G15_044	FROM->TO	G14-057T 345.00 - SUNNYSIDE 345KV CKT 1	717	789	0.1179	111.4547	BEARCAT 138.00 - MOORELAND 138KV CKT 1
FDNS	00NR	0	20WP	G15_044	FROM->TO	G14-057T 345.00 - SUNNYSIDE 345KV CKT 1	717	789	0.1179	111.4501	P12:138:WFEC:MSL14
FDNS	00NR	0	20WP	G15_044	FROM->TO	G14-057T 345.00 - SUNNYSIDE 345KV CKT 1	717	789	0.11575	111.4369	ARBWIND4 138.00 - KERR MCGEE CIMARRON 138KV CKT 1
FDNS	00NR	0	20WP	G15_044	FROM->TO	G14-057T 345.00 - SUNNYSIDE 345KV CKT 1	717	789	0.11665	111.4202	GEN562974 1-G15060_5 0.6900
FDNS	00NR	0	20WP	G15_044	FROM->TO	G14-057T 345.00 - SUNNYSIDE 345KV CKT 1	717	789	0.11665	111.4197	GEN521112 1-ORME3 13.800
FDNS	00NR	0	20WP	G15_044	FROM->TO	G14-057T 345.00 - SUNNYSIDE 345KV CKT 1	717	789	0.11645	111.4177	BROWN - RUSSETT 138KV CKT 1
FDNS	00NR	0	16WP	G15_044	FROM->TO	G14-057T 345.00 - SUNNYSIDE 345KV CKT 1	717	789	0.11699	111.4166	GEN562762 1-G15033_3 0.6900
FDNS	00NR	0	20WP	G15_044	FROM->TO	G14-057T 345.00 - SUNNYSIDE 345KV CKT 1	717	789	0.11665	111.4113	GEN345671 2-1RUSH G2 18.000
FDNS	00NR	0	20WP	G15_044	FROM->TO	G14-057T 345.00 - SUNNYSIDE 345KV CKT 1	717	789	0.11665	111.4104	GEN562973 1-G15060_4 0.6900
FDNS	00NR	0	20WP	G15_044	FROM->TO	G14-057T 345.00 - SUNNYSIDE 345KV CKT 1	717	789	0.11665	111.4094	GEN345670 1-1RUSH G1 18.000
FDNS	00NR	0	16WP	G15_044	FROM->TO	G14-057T 345.00 - SUNNYSIDE 345KV CKT 1	717	789	0.11699	111.4055	GEN562655 1-G14_074_3 0.6900
FDNS	00NR	0	20WP	G15_044	FROM->TO	G14-057T 345.00 - SUNNYSIDE 345KV CKT 1	717	789	0.11586	111.3964	CHICKASAW - TOTAL 138KV CKT 1
FDNS	00NR	0	20WP	G15_044	FROM->TO	G14-057T 345.00 - SUNNYSIDE 345KV CKT 1	717	789	0.11665	111.3839	GEN560105 1-G08-22 0.6900
FDNS	00NR	0	20WP	G15_044	FROM->TO	G14-057T 345.00 - SUNNYSIDE 345KV CKT 1	717	789	0.11665	111.3817	4SIOUX 1 138.00 138/18.0KV TRANSFORMER CKT 1
FDNS	00NR	0	20WP	G15_044	FROM->TO	G14-057T 345.00 - SUNNYSIDE 345KV CKT 1	717	789	0.11645	111.372	RUSSETT - RUSSETT 138KV CKT 1
FDNS	00NR	0	20WP	G15_044	FROM->TO	G14-057T 345.00 - SUNNYSIDE 345KV CKT 1	717	789	0.11665	111.3666	GEN562550 1-G14_040_3 0.6900
FDNS	00NR	0	20WP	G15_044	FROM->TO	G14-057T 345.00 - SUNNYSIDE 345KV CKT 1	717	789	0.11665	111.3633	GEN681522 3-GENOA 3
FDNS	00NR	0	16WP	G15_044	FROM->TO	G14-057T 345.00 - SUNNYSIDE 345KV CKT 1	717	789	0.11699	111.3403	GEN562685 1-G15_013_3 0.3550
FDNS	00NR	0	20WP	G15_044	FROM->TO	G14-057T 345.00 - SUNNYSIDE 345KV CKT 1	717	789	0.11665	111.3293	GEN511853 1-COMANCHE #3
FDNS	00NR	0	20WP	G15_044	FROM->TO	G14-057T 345.00 - SUNNYSIDE 345KV CKT 1	717	789	0.11665	111.3226	GEN527161 1-MUSTANG GEN #1
FDNS	00NR	0	20WP	G15_044	FROM->TO	G14-057T 345.00 - SUNNYSIDE 345KV CKT 1	717	789	0.11665	111.3226	GEN527162 1-MUSTANG GEN #2
FDNS	00NR	0	20WP	G15_044	FROM->TO	G14-057T 345.00 - SUNNYSIDE 345KV CKT 1	717	789	0.11611	111.3211	ROCKY POINT - SUNNYSIDE 138KV CKT 1
FDNS	00NR	0	20WP	G15_044	FROM->TO	G14-057T 345.00 - SUNNYSIDE 345KV CKT 1	717	789	0.11665	111.3161	EASTDC - ERCOT EQUIVALENCE 345KV CKT 1
FDNS	00NR	0	20WP	G15_044	FROM->TO	G14-057T 345.00 - SUNNYSIDE 345KV CKT 1	717	789	0.11665	111.3113	GEN511962 2-RKYRDGW2-1 0.7000
FDNS	00NR	0	20WP	G15_044	FROM->TO	G14-057T 345.00 - SUNNYSIDE 345KV CKT 1	717	789	0.11665	111.2988	GEN672321 1-SHAND GENERATOR 1
FDNS	00NR	0	20WP	G15_044	FROM->TO	G14-057T 345.00 - SUNNYSIDE 345KV CKT 1	717	789	0.11641	111.2978	RUSSETT - SPRINGDALE 138KV CKT 1
FDNS	00NR	0	20WP	G15_044	FROM->TO	G14-057T 345.00 - SUNNYSIDE 345KV CKT 1	717	789	0.11665	111.2896	GEN525494 1-PLANT X GEN #4 20 KV
FDNS	00NR	0	20WP	G15_044	FROM->TO	G14-057T 345.00 - SUNNYSIDE 345KV CKT 1	717	789	0.11959	111.2832	G15063_T 345.00 - MATHWSN7 345.00 345KV CKT 1

SOLUTION	GROUP	SCENARIO	SEASON	SOURCE	DIRECTION	MONITORED ELEMENT	RATEA (MVA)	RATEB(MVA)	TDF	TC%LOADING (% MVA)	CONTINGENCY
FDNS	00NR	0	20WP	G15_044	FROM->TO	G14-057T 345.00 - SUNNYSIDE 345KV CKT 1	717	789	0.11665	111.2755	GEN672310 1-POPLAR RIVER GENERATOR 1
FDNS	00NR	0	20WP	G15_044	FROM->TO	G14-057T 345.00 - SUNNYSIDE 345KV CKT 1	717	789	0.11665	111.2755	GEN672311 2-POPLAR RIVER GENERATOR 2
FDNS	00NR	0	20WP	G15_044	FROM->TO	G14-057T 345.00 - SUNNYSIDE 345KV CKT 1	717	789	0.11665	111.2739	GEN527882 1-CUNNINGHAM GEN #2 20 KV
FDNS	00NR	0	20WP	G15_044	FROM->TO	G14-057T 345.00 - SUNNYSIDE 345KV CKT 1	717	789	0.11665	111.266	GEN672306 6-BOUNDARY DAM GENERATOR 6
FDNS	00NR	0	20WP	G15_044	FROM->TO	G14-057T 345.00 - SUNNYSIDE 345KV CKT 1	717	789	0.11665	111.2655	GEN563192 1-G15084_3 0.5500
FDNS	00NR	0	20WP	G15_044	FROM->TO	G14-057T 345.00 - SUNNYSIDE 345KV CKT 1	717	789	0.11665	111.2616	GEN562512 1-G14_020_3 0.6900
FDNS	00NR	0	20WP	G15_044	FROM->TO	G14-057T 345.00 - SUNNYSIDE 345KV CKT 1	717	789	0.11665	111.2595	GEN511852 1-COMANCHE #2
FDNS	00NR	0	20WP	G15_044	FROM->TO	G14-057T 345.00 - SUNNYSIDE 345KV CKT 1	717	789	0.11665	111.2591	GEN344895 2-1LAB G2 20.000
FDNS	00NR	0	20WP	G15_044	FROM->TO	G14-057T 345.00 - SUNNYSIDE 345KV CKT 1	717	789	0.11665	111.258	GEN527163 1-MUSTANG GEN #3 22 KV
FDNS	00NR	0	20WP	G15_044	FROM->TO	G14-057T 345.00 - SUNNYSIDE 345KV CKT 1	717	789	0.11656	111.2526	P12:138:WFEC-AEPW:GOLDENSW4:CRAIGJT4
FDNS	00NR	0	20WP	G15_044	FROM->TO	G14-057T 345.00 - SUNNYSIDE 345KV CKT 1	717	789	0.11665	111.2434	GEN562892 1-G15048_3 0.6900
FDNS	00NR	0	20WP	G15_044	FROM->TO	G14-057T 345.00 - SUNNYSIDE 345KV CKT 1	717	789	0.11665	111.2366	GEN681542 6-JP MADGETT
FDNS	00NR	0	20WP	G15_044	FROM->TO	G14-057T 345.00 - SUNNYSIDE 345KV CKT 1	717	789	0.11594	111.235	ARKANSAS NUCLEAR ONE - FT SMITH 500KV CKT 1
FDNS	00NR	0	20WP	G15_044	FROM->TO	G14-057T 345.00 - SUNNYSIDE 345KV CKT 1	717	789	0.11594	111.235	ARKANSAS NUCLEAR ONE - FT SMITH 500KV CKT 1
FDNS	00NR	0	20WP	G15_044	FROM->TO	G14-057T 345.00 - SUNNYSIDE 345KV CKT 1	717	789	0.11665	111.2295	GEN344896 3-1LAB G3 20.000
FDNS	00NR	0	20WP	G15_044	FROM->TO	G14-057T 345.00 - SUNNYSIDE 345KV CKT 1	717	789	0.11665	111.2284	GEN344897 4-1LAB G4 20.000
FDNS	00NR	0	20WP	G15_044	FROM->TO	G14-057T 345.00 - SUNNYSIDE 345KV CKT 1	717	789	0.11665	111.2281	GEN344894 1-1LAB G1 20.000
FDNS	00NR	0	20WP	G15_044	FROM->TO	G14-057T 345.00 - SUNNYSIDE 345KV CKT 1	717	789	0.11675	111.2223	P12:138:WFEC:MSL16
FDNS	00NR	0	20WP	G15_044	FROM->TO	G14-057T 345.00 - SUNNYSIDE 345KV CKT 1	717	789	0.11547	111.2221	ARDMORE WEST - CARTER 138KV CKT 1
FDNS	00NR	0	16WP	G15_044	FROM->TO	G14-057T 345.00 - SUNNYSIDE 345KV CKT 1	717	789	0.11699	111.2074	GEN525561 1-TOLK GEN #1 24 KV
FDNS	00NR	0	16WP	G15_044	FROM->TO	G14-057T 345.00 - SUNNYSIDE 345KV CKT 1	717	789	0.11699	111.2074	GEN527903 1-HOBBS PLANT #3 (ST)
FDNS	00NR	0	16WP	G15_044	FROM->TO	G14-057T 345.00 - SUNNYSIDE 345KV CKT 1	717	789	0.11699	111.2054	GEN563272 1-G15093_3 0.6900
FDNS	00NR	0	20WP	G15_044	FROM->TO	G14-057T 345.00 - SUNNYSIDE 345KV CKT 1	717	789	0.11665	111.2032	GEN523461 1-BLACKHAWK GEN #1
FDNS	00NR	0	20WP	G15_044	FROM->TO	G14-057T 345.00 - SUNNYSIDE 345KV CKT 1	717	789	0.11665	111.2031	GEN523462 1-BLACKHAWK GEN #2
FDNS	00NR	0	20WP	G15_044	FROM->TO	G14-057T 345.00 - SUNNYSIDE 345KV CKT 1	717	789	0.11684	111.1791	CACHE - SNYDER 138KV CKT 1
FDNS	00NR	0	20WP	G15_044	FROM->TO	G14-057T 345.00 - SUNNYSIDE 345KV CKT 1	717	789	0.11665	111.1605	P12:138:WFEC:MSL07
FDNS	00NR	0	20WP	G15_044	FROM->TO	G14-057T 345.00 - SUNNYSIDE 345KV CKT 1	717	789	0.11665	111.1605	P12:138:WFEC-AEPW:HUGOPP4:ATOKA--4
FDNS	00NR	0	20WP	G15_044	FROM->TO	G14-057T 345.00 - SUNNYSIDE 345KV CKT 1	717	789	0.11659	111.1553	P12:138:AEPW-SWPA:LONEOAK4:TUPELO4
FDNS	00NR	0	20WP	G15_044	FROM->TO	G14-057T 345.00 - SUNNYSIDE 345KV CKT 1	717	789	0.11659	111.1553	P12:138:WFEC:MSL06
FDNS	00NR	0	20WP	G15_044	FROM->TO	G14-057T 345.00 - SUNNYSIDE 345KV CKT 1	717	789	0.11665	111.1514	GEN521111 1-ORME2 13.800
FDNS	00NR	0	20WP	G15_044	FROM->TO	G14-057T 345.00 - SUNNYSIDE 345KV CKT 1	717	789	0.11665	111.1465	GEN562699 1-G15_018_3 0.6900
FDNS	00NR	0	20WP	G15_044	FROM->TO	G14-057T 345.00 - SUNNYSIDE 345KV CKT 1	717	789	0.11555	111.1385	SUNNYSIDE (SUNNYSD5) 345/138/13.8KV TRANSFORMER CKT 1
FDNS	00NR	0	20WP	G15_044	FROM->TO	G14-057T 345.00 - SUNNYSIDE 345KV CKT 1	717	789	0.11665	111.1382	GEN521110 1-ORME1 13.800
FDNS	00NR	0	20WP	G15_044	FROM->TO	G14-057T 345.00 - SUNNYSIDE 345KV CKT 1	717	789	0.11843	111.1308	CLARKSVILLE - MUSKOGEE 345KV CKT 1
FDNS	00NR	0	20WP	G15_044	FROM->TO	G14-057T 345.00 - SUNNYSIDE 345KV CKT 1	717	789	0.11843	111.1308	CLARKSVILLE - MUSKOGEE 345KV CKT 1
FDNS	00NR	0	20WP	G15_044	FROM->TO	G14-057T 345.00 - SUNNYSIDE 345KV CKT 1	717	789	0.1167	111.1294	G15085_T 138.00 - RUSSELL 138KV CKT 1
FDNS	00NR	0	20WP	G15_044	FROM->TO	G14-057T 345.00 - SUNNYSIDE 345KV CKT 1	717	789	0.11547	111.1097	ARDMORE WEST - UNIROYAL 138KV CKT 1
FDNS	00NR	0	16WP	G15_044	FROM->TO	G14-057T 345.00 - SUNNYSIDE 345KV CKT 1	717	789	0.11699	111.1021	GEN635024 4-WALTER SCOTT UNIT 4
FDNS	00NR	0	20WP	G15_044	FROM->TO	G14-057T 345.00 - SUNNYSIDE 345KV CKT 1	717	789	0.11665	111.0967	GEN520811 1-ANADRK4
FDNS	00NR	0	20WP	G15_044	FROM->TO	G14-057T 345.00 - SUNNYSIDE 345KV CKT 1	717	789	0.11665	111.0961	GEN563162 1-G15081_3 0.6900
FDNS	00NR	0	20WP	G15_044	FROM->TO	G14-057T 345.00 - SUNNYSIDE 345KV CKT 1	717	789	0.11665	111.0703	GEN661015 1-COYOTE
FDNS	00NR	0	20WP	G15_044	FROM->TO	G14-057T 345.00 - SUNNYSIDE 345KV CKT 1	717	789	0.11665	111.0659	GEN563292 1-G15095_3 0.6900
FDNS	00NR	0	20WP	G15_044	FROM->TO	G14-057T 345.00 - SUNNYSIDE 345KV CKT 1	717	789	0.11616	111.0612	P12:138:OKGE:3TERM40
FDNS	00NR	0	20WP	G15_044	FROM->TO	G14-057T 345.00 - SUNNYSIDE 345KV CKT 1	717	789	0.11589	111.0535	CARTRCO4 138.00 - RATLIFF 138KV CKT 1
FDNS	00NR	0	20WP	G15_044	FROM->TO	G14-057T 345.00 - SUNNYSIDE 345KV CKT 1	717	789	0.11665	111.0431	GEN563122 1-G15077_3 0.3850
FDNS	00NR	0	20WP	G15_044	FROM->TO	G14-057T 345.00 - SUNNYSIDE 345KV CKT 1	717	789	0.11665	111.0154	GEN562861 1-G15045_2 0.4800
FDNS	00NR	0	20WP	G15_044	FROM->TO	G14-057T 345.00 - SUNNYSIDE 345KV CKT 1	717	789	0.11665	110.9573	GEN657748 1-YOUNG 2 GENERATOR
FDNS	00NR	0	20WP	G15_044	FROM->TO	G14-057T 345.00 - SUNNYSIDE 345KV CKT 1	717	789	0.11665	110.9312	GEN527883 1-CUNNINGHAM GEN #3 22 KV
FDNS	00NR	0	20WP	G15_044	FROM->TO	G14-057T 345.00 - SUNNYSIDE 345KV CKT 1	717	789	0.11665	110.9282	GEN527884 1-CUNNINGHAM GEN #4 22 KV
FDNS	00NR	0	20WP	G15_044	FROM->TO	G14-057T 345.00 - SUNNYSIDE 345KV CKT 1	717	789	0.11677	110.9202	P12:138:WFEC:MSL15
FDNS	00NR	0	20WP	G15_044	FROM->TO	G14-057T 345.00 - SUNNYSIDE 345KV CKT 1	717	789	0.11665	110.8807	GEN562992 1-G15063_3 0.6900
FDNS	00NR	0	20WP	G15_044	FROM->TO	G14-057T 345.00 - SUNNYSIDE 345KV CKT 1	717	789	0.11547	110.8733	SUNNYSIDE - UNIROYAL 138KV CKT 1
FDNS	00NR	0	20WP	G15_044	FROM->TO	G14-057T 345.00 - SUNNYSIDE 345KV CKT 1	717	789	0.1167	110.8647	P12:138:AEPW:SHAM4WT:CHILD4WT
FDNS	00NR	0	20WP	G15_044	FROM->TO	G14-057T 345.00 - SUNNYSIDE 345KV CKT 1	717	789	0.11665	110.8625	GEN562704 1-G15_020_3 0.3550
FDNS	00NR	0	20WP	G15_044	FROM->TO	G14-057T 345.00 - SUNNYSIDE 345KV CKT 1	717	789	0.11665	110.8623	GEN526331 1-JONES GEN #1 22 KV
FDNS	00NR	0	20WP	G15_044	FROM->TO	G14-057T 345.00 - SUNNYSIDE 345KV CKT 1	717	789	0.11665	110.8621	GEN526332 1-JONES GEN #2 21 KV
FDNS	00NR	0	20WP	G15_044	FROM->TO	G14-057T 345.00 - SUNNYSIDE 345KV CKT 1	717	789	0.11665	110.8621	GEN620315 1-BIG STONE GEN
FDNS	00NR	0	20WP	G15_044	FROM->TO	G14-057T 345.00 - SUNNYSIDE 345KV CKT 1	717	789	0.11665	110.8294	GEN562952 1-G15057_3 0.6500
FDNS	00NR	0	20WP	G15_044	FROM->TO	G14-057T 345.00 - SUNNYSIDE 345KV CKT 1	717	789	0.11665	110.7897	GEN511851 1-COMANCHE #1
FDNS	00NR	0	20WP	G15_044	FROM->TO	G14-057T 345.00 - SUNNYSIDE 345KV CKT 1	717	789	0.11665	110.7889	GEN600004 2-PRAIRIE ISLAND G2
FDNS	00NR	0	17SP	G15_044	FROM->TO	G14-057T 345.00 - SUNNYSIDE 345KV CKT 1	717	789	0.35365	110.7884	CIMARRON - MINCO 345KV CKT 1
FDNS	00NR	0	20WP	G15_044	FROM->TO	G14-057T 345.00 - SUNNYSIDE 345KV CKT 1	717	789	0.11665	110.7863	GEN600003 1-PRAIRIE ISLAND G1
FDNS	00NR	0	20WP	G15_044	FROM->TO	G14-057T 345.00 - SUNNYSIDE 345KV CKT 1	717	789	0.11665	110.7686	GEN600006 1-AS KING
FDNS	00NR	0	20WP	G15_044	FROM->TO	G14-057T 345.00 - SUNNYSIDE 345KV CKT 1	717	789	0.11665	110.7635	GEN563173 1-G15082_3 0.6900
FDNS	00NR	0	20WP	G15_044	FROM->TO	G14-057T 345.00 - SUNNYSIDE 345KV CKT 1	717	789	0.11665	110.7507	GEN562710 1-G15_022_3 0.5500
FDNS	00NR	0	20WP	G15_044	FROM->TO	G14-057T 345.00 - SUNNYSIDE 345KV CKT 1	717	789	0.11905	110.7451	CANEY CREEK - TEXOMA JCT 138KV CKT 1
FDNS	00NR	0	20WP	G15_044	FROM->TO	G14-057T 345.00 - SUNNYSIDE 345KV CKT 1	717	789	0.11723	110.7436	GRAPEVINE INTERCHANGE - STATELINE INTERCHANGE 230KV CKT 1
FDNS	00NR	0	20WP	G15_044	FROM->TO	G14-057T 345.00 - SUNNYSIDE 345KV CKT 1	717	789	0.11723	110.7436	GRAPEVINE INTERCHANGE - STATELINE INTERCHANGE 230KV CKT 1
FDNS	00NR	0	20WP	G15_044	FROM->TO	G14-057T 345.00 - SUNNYSIDE 345KV CKT 1	717	789	0.11665	110.7218	GEN532751 1-WOLF CREEK GENERATING STATION UNIT 1
FDNS	00NR	0	20WP	G15_044	FROM->TO	G14-057T 345.00 - SUNNYSIDE 345KV CKT 1	717	789	0.11759	110.6708	P12:138:AEPW-OGE:CORNVIL4:CIMARON4
FDNS	00NR	0	20WP	G15_044	FROM->TO	G14-057T 345.00 - SUNNYSIDE 345KV CKT 1	717	789	0.11719	110.6105	GRAPEVINE INTERCHANGE - NICHOLS STATION 230KV CKT 1
FDNS	00NR	0	20WP	G15_044	FROM->TO	G14-057T 345.00 - SUNNYSIDE 345KV CKT 1	717	789	0.11719	110.6105	GRAPEVINE INTERCHANGE - NICHOLS STATION 230KV CKT 1
FDNS	00NR	0	20WP	G15_044	FROM->TO	G14-057T 345.00 - SUNNYSIDE 345KV CKT 1	717	789	0.11665	110.6	GEN615002 2-COAL CREEK
FDNS	00NR	0	20WP	G15_044	FROM->TO	G14-057T 345.00 - SUNNYSIDE 345KV CKT 1	717	789	0.11665	110.5967	GEN635213 3-NEAL UNIT 3
FDNS	00NR	0	20WP	G15_044	FROM->TO	G14-057T 345.00 - SUNNYSIDE 345KV CKT 1	717	789	0.11665	110.5961	GEN629074 1-ARNOLD LOWSIDE OF GSU XFMR
FDNS	00NR	0	20WP	G15_044	FROM->TO	G14-057T 345.00 - SUNNYSIDE 345KV CKT 1	717	789	0.11631	110.531	NORTHWEST TEXARKANA - VALLIANT 345KV CKT 1
FDNS	00NR	0	20WP	G15_044	FROM->TO	G14-057T 345.00 - SUNNYSIDE 345KV CKT 1	717	789	0.11631	110.531	NORTHWEST TEXARKANA - VALLIANT 345KV CKT 1
FDNS	00NR	0	20WP	G15_044	FROM->TO	G14-057T 345.00 - SUNNYSIDE 345KV CKT 1	717	789	0.11672	110.5277	P12:138:WFEC:MSL09
FDNS	00NR	0	16WP	G15_044	FROM->TO	G14-057T 345.00 - SUNNYSIDE 345KV CKT 1	717	789	0.11633	110.5148	LYDIA - VALLIANT 345KV CKT 1

SOLUTION	GROUP	SCENARIO	SEASON	SOURCE	DIRECTION	MONITORED ELEMENT	RATEA (MVA)	RATEB(MVA)	TDF	TC%LOADING (% MVA)	CONTINGENCY
FDNS	00NR	0	16WP	G15_044	FROM->TO	G14-057T 345.00 - SUNNYSIDE 345KV CKT 1	717	789	0.11633	110.5148	LYDIA - VALLIANT 345KV CKT 1
FDNS	00NR	0	20WP	G15_044	FROM->TO	G14-057T 345.00 - SUNNYSIDE 345KV CKT 1	717	789	0.11665	110.5037	GEN636641 1-LOUISA UNIT 1
FDNS	00NR	0	20WP	G15_044	FROM->TO	G14-057T 345.00 - SUNNYSIDE 345KV CKT 1	717	789	0.11665	110.5028	GEN562754 1-G15031_5 0.6900
FDNS	00NR	0	20WP	G15_044	FROM->TO	G14-057T 345.00 - SUNNYSIDE 345KV CKT 1	717	789	0.11665	110.469	GEN600005 1-MONTICELLO
FDNS	00NR	0	20WP	G15_044	FROM->TO	G14-057T 345.00 - SUNNYSIDE 345KV CKT 1	717	789	0.1191	110.4636	CHISHOLM7 345.00 () 345/230/13.2KV TRANSFORMER CKT 1
FDNS	00NR	0	20WP	G15_044	FROM->TO	G14-057T 345.00 - SUNNYSIDE 345KV CKT 1	717	789	0.11665	110.445	GEN562556 1-G14_046_3 0.3420
FDNS	00NR	0	20WP	G15_044	FROM->TO	G14-057T 345.00 - SUNNYSIDE 345KV CKT 1	717	789	0.11665	110.444	GEN562756 1-G15031_7 0.6900
FDNS	00NR	0	20WP	G15_044	FROM->TO	G14-057T 345.00 - SUNNYSIDE 345KV CKT 1	717	789	0.1191	110.3828	CHISHOLM7 345.00 - GRACEMONT 345KV CKT 1
FDNS	00NR	0	20WP	G15_044	FROM->TO	G14-057T 345.00 - SUNNYSIDE 345KV CKT 1	717	789	0.11665	110.3618	GEN563142 1-G15079_3 0.5500
FDNS	00NR	0	20WP	G15_044	FROM->TO	G14-057T 345.00 - SUNNYSIDE 345KV CKT 1	717	789	0.11665	110.3618	GEN563151 1-G15080_2 0.5500
FDNS	00NR	0	20WP	G15_044	FROM->TO	G14-057T 345.00 - SUNNYSIDE 345KV CKT 1	717	789	0.11665	110.3553	GEN562023 1-G11_020_3 0.6900
FDNS	00NR	0	20WP	G15_044	FROM->TO	G14-057T 345.00 - SUNNYSIDE 345KV CKT 1	717	789	0.11665	110.3553	GEN562026 1-G11_019_3 0.6900
FDNS	00NR	0	20WP	G15_044	FROM->TO	G14-057T 345.00 - SUNNYSIDE 345KV CKT 1	717	789	0.11665	110.3434	GEN600000 1-SHERBURNECNTY G1
FDNS	00NR	0	20WP	G15_044	FROM->TO	G14-057T 345.00 - SUNNYSIDE 345KV CKT 1	717	789	0.11665	110.3082	GEN629075 1-OTTUMWA GENERATOR FOR OTTUMWA UNIT NO 1
FDNS	00NR	0	20WP	G15_044	FROM->TO	G14-057T 345.00 - SUNNYSIDE 345KV CKT 1	717	789	0.11665	110.2904	GEN600001 2-SHERBURNE CNTY G2
FDNS	00NR	0	20WP	G15_044	FROM->TO	G14-057T 345.00 - SUNNYSIDE 345KV CKT 1	717	789	0.11665	110.2626	GEN523971 1-HARRINGTON GEN #1 24 KV
FDNS	00NR	0	20WP	G15_044	FROM->TO	G14-057T 345.00 - SUNNYSIDE 345KV CKT 1	717	789	0.11665	110.2626	GEN523972 1-HARRINGTON GEN #2 24 KV
FDNS	00NR	0	20WP	G15_044	FROM->TO	G14-057T 345.00 - SUNNYSIDE 345KV CKT 1	717	789	0.11665	110.2626	GEN523973 1-HARRINGTON GEN #3 24 KV
FDNS	00NR	0	20WP	G15_044	FROM->TO	G14-057T 345.00 - SUNNYSIDE 345KV CKT 1	717	789	0.11665	110.2331	GEN511848 1-SOUTHWESTERN STATION #3
FDNS	00NR	0	20WP	G15_044	FROM->TO	G14-057T 345.00 - SUNNYSIDE 345KV CKT 1	717	789	0.11619	110.1764	LYDIA - WELSH 345KV CKT 1
FDNS	00NR	0	20WP	G15_044	FROM->TO	G14-057T 345.00 - SUNNYSIDE 345KV CKT 1	717	789	0.11619	110.1764	LYDIA - WELSH 345KV CKT 1
FDNS	00NR	0	20WP	G15_044	FROM->TO	G14-057T 345.00 - SUNNYSIDE 345KV CKT 1	717	789	0.11665	110.163	GEN527901 1-HOBBS PLANT #1 (CT)
FDNS	00NR	0	20WP	G15_044	FROM->TO	G14-057T 345.00 - SUNNYSIDE 345KV CKT 1	717	789	0.11665	110.163	GEN527902 1-HOBBS PLANT #2 (CT)
FDNS	00NR	0	20WP	G15_044	FROM->TO	G14-057T 345.00 - SUNNYSIDE 345KV CKT 1	717	789	0.11665	110.1255	GEN563042 1-G15068_3 0.6900
FDNS	00NR	0	20WP	G15_044	FROM->TO	G14-057T 345.00 - SUNNYSIDE 345KV CKT 1	717	789	0.11665	110.028	GEN635214 4-NEAL UNIT 4
FDNS	00NR	0	20WP	G15_044	FROM->TO	G14-057T 345.00 - SUNNYSIDE 345KV CKT 1	717	789	0.11768	109.9254	STATELINE INTERCHANGE - STLN-DEMARC6 230KV CKT 1
FDNS	00NR	0	20WP	G15_044	FROM->TO	G14-057T 345.00 - SUNNYSIDE 345KV CKT 1	717	789	0.11768	109.9227	STLN-DEMARC6 - SWEETWATER 230KV CKT 1
FDNS	00NR	0	20WP	G15_044	FROM->TO	G14-057T 345.00 - SUNNYSIDE 345KV CKT 1	717	789	0.11768	109.9175	P12:230:AEPW-SPS:SWEETWT6:WHEELER 6
FDNS	00NR	0	20WP	G15_044	FROM->TO	G14-057T 345.00 - SUNNYSIDE 345KV CKT 1	717	789	0.11665	109.8577	GEN600002 3-SHERBURNE CNTY G3
FDNS	00NR	0	20WP	G15_044	FROM->TO	G14-057T 345.00 - SUNNYSIDE 345KV CKT 1	717	789	0.11665	109.827	GEN563043 1-G15068_4 0.6900
FDNS	00NR	0	20WP	G15_044	FROM->TO	G14-057T 345.00 - SUNNYSIDE 345KV CKT 1	717	789	0.11665	109.8013	GEN526333 1-JONES GEN #3 21 KV
FDNS	00NR	0	20WP	G15_044	FROM->TO	G14-057T 345.00 - SUNNYSIDE 345KV CKT 1	717	789	0.11665	109.8012	GEN526334 1-JONES_4 116.500
FDNS	00NR	0	20WP	G15_044	FROM->TO	G14-057T 345.00 - SUNNYSIDE 345KV CKT 1	717	789	0.11665	109.7846	GEN563273 2-G15093_4 0.6900
FDNS	00NR	0	20WP	G15_044	FROM->TO	G14-057T 345.00 - SUNNYSIDE 345KV CKT 1	717	789	0.11665	109.7685	GEN344225 1-1CAL G1 25.000
FDNS	00NR	0	20WP	G15_044	FROM->TO	G14-057T 345.00 - SUNNYSIDE 345KV CKT 1	717	789	0.11665	109.7635	GEN525844 1-ELK_1 118.000
FDNS	00NR	0	20WP	G15_044	FROM->TO	G14-057T 345.00 - SUNNYSIDE 345KV CKT 1	717	789	0.11665	109.7458	GEN525845 1-ELK_2 1 18.000
FDNS	00NR	0	20WP	G15_044	FROM->TO	G14-057T 345.00 - SUNNYSIDE 345KV CKT 1	717	789	0.11665	109.6155	GEN527166 1-MUSTANG_6 118.000
FDNS	00NR	0	20WP	G15_044	FROM->TO	G14-057T 345.00 - SUNNYSIDE 345KV CKT 1	717	789	0.11665	109.5706	GEN635023 3-WALTER SCOTT UNIT 3
FDNS	00NR	0	20WP	G15_044	FROM->TO	G14-057T 345.00 - SUNNYSIDE 345KV CKT 1	717	789	0.11665	109.5526	GEN563202 1-G15085_3 0.5500
FDNS	00NR	0	20WP	G15_044	FROM->TO	G14-057T 345.00 - SUNNYSIDE 345KV CKT 1	717	789	0.11665	109.5515	GEN528501 1-G14_012 24.000
FDNS	00NR	0	20WP	G15_044	FROM->TO	G14-057T 345.00 - SUNNYSIDE 345KV CKT 1	717	789	0.11917	109.4942	P12:230:AEPW:ELKCITY6:SWEETWT6
FDNS	00NR	0	20WP	G15_044	FROM->TO	G14-057T 345.00 - SUNNYSIDE 345KV CKT 1	717	789	0.11665	109.4928	GEN562590 1-G14_057_3 0.6900
FDNS	00NR	0	16WP	G15_044	FROM->TO	G14-057T 345.00 - SUNNYSIDE 345KV CKT 1	717	789	0.11699	109.4478	EASTDC - ERCOT EQUIVALENCE 345KV CKT 1
FDNS	00NR	0	20WP	G15_044	FROM->TO	G14-057T 345.00 - SUNNYSIDE 345KV CKT 1	717	789	0.11665	109.3772	GEN562762 1-G15033_3 0.6900
FDNS	00NR	0	20WP	G15_044	FROM->TO	G14-057T 345.00 - SUNNYSIDE 345KV CKT 1	717	789	0.11665	109.3658	GEN562655 1-G14_074_3 0.6900
FDNS	00NR	0	20WP	G15_044	FROM->TO	G14-057T 345.00 - SUNNYSIDE 345KV CKT 1	717	789	0.11665	109.3638	GEN525562 1-TOLK GEN #2 24 KV
FDNS	00NR	0	20WP	G15_044	FROM->TO	G14-057T 345.00 - SUNNYSIDE 345KV CKT 1	717	789	0.1161	109.2753	JOHNSON COUNTY (JOHNCO) 345/138/13.8KV TRANSFORMER CKT 1
FDNS	00NR	0	20WP	G15_044	FROM->TO	G14-057T 345.00 - SUNNYSIDE 345KV CKT 1	717	789	0.11665	109.27	GEN562685 1-G15_013_3 0.3550
FDNS	00NR	0	20WP	G15_044	FROM->TO	G14-057T 345.00 - SUNNYSIDE 345KV CKT 1	717	789	0.11665	109.2675	GEN527903 1-HOBBS PLANT #3 (ST)
FDNS	00NR	0	20WP	G15_044	FROM->TO	G14-057T 345.00 - SUNNYSIDE 345KV CKT 1	717	789	0.11768	109.2452	CHISHOLM6 230.00 - SWEETWATER 230KV CKT 1
FDNS	00NR	0	20WP	G15_044	FROM->TO	G14-057T 345.00 - SUNNYSIDE 345KV CKT 1	717	789	0.11665	109.1665	GEN635024 4-WALTER SCOTT UNIT 4
FDNS	00NR	0	20WP	G15_044	FROM->TO	G14-057T 345.00 - SUNNYSIDE 345KV CKT 1	717	789	0.11665	109.1256	GEN563272 1-G15093_3 0.6900
FDNS	00NR	0	20WP	G15_044	FROM->TO	G14-057T 345.00 - SUNNYSIDE 345KV CKT 1	717	789	0.116	109.1187	LYDIA - VALLIANT 345KV CKT 1
FDNS	00NR	0	20WP	G15_044	FROM->TO	G14-057T 345.00 - SUNNYSIDE 345KV CKT 1	717	789	0.116	109.1187	LYDIA - VALLIANT 345KV CKT 1
FDNS	00NR	0	20WP	G15_044	FROM->TO	G14-057T 345.00 - SUNNYSIDE 345KV CKT 1	717	789	0.11665	108.7846	GEN525561 1-TOLK GEN #1 24 KV
FDNS	00NR	0	16WP	G15_044	FROM->TO	G14-057T 345.00 - SUNNYSIDE 345KV CKT 1	717	789	0.1	108.4243	JOHNSON COUNTY - PITTSBURG 345KV CKT 1
FDNS	00NR	0	16WP	G15_044	FROM->TO	G14-057T 345.00 - SUNNYSIDE 345KV CKT 1	717	789	0.1	108.4243	JOHNSON COUNTY - PITTSBURG 345KV CKT 1
FDNS	00NR	0	16WP	G15_044	FROM->TO	G14-057T 345.00 - SUNNYSIDE 345KV CKT 1	717	789	0.11699	108.057	GEN563263 1-G15092_4 0.6900
FDNS	00NR	0	16WP	G15_044	FROM->TO	G14-057T 345.00 - SUNNYSIDE 345KV CKT 1	717	789	0.11307	107.6655	HUGO - VALLIANT 345KV CKT 1
FDNS	00NR	0	16WP	G15_044	FROM->TO	G14-057T 345.00 - SUNNYSIDE 345KV CKT 1	717	789	0.11307	107.6655	HUGO - VALLIANT 345KV CKT 1
FDNS	00NR	0	20WP	G15_044	FROM->TO	G14-057T 345.00 - SUNNYSIDE 345KV CKT 1	717	789	0.09971	106.869	JOHNSON COUNTY - PITTSBURG 345KV CKT 1
FDNS	00NR	0	20WP	G15_044	FROM->TO	G14-057T 345.00 - SUNNYSIDE 345KV CKT 1	717	789	0.09971	106.869	JOHNSON COUNTY - PITTSBURG 345KV CKT 1
FDNS	00NR	0	20WP	G15_044	FROM->TO	G14-057T 345.00 - SUNNYSIDE 345KV CKT 1	717	789	0.11275	106.5939	HUGO - VALLIANT 345KV CKT 1
FDNS	00NR	0	20WP	G15_044	FROM->TO	G14-057T 345.00 - SUNNYSIDE 345KV CKT 1	717	789	0.11275	106.5939	HUGO - VALLIANT 345KV CKT 1
FDNS	00NR	0	16WP	G15_044	FROM->TO	G14-057T 345.00 - SUNNYSIDE 345KV CKT 1	717	789	0.11699	106.381	GEN563262 1-G15092_3 0.6900
FDNS	00NR	0	20WP	G15_044	FROM->TO	G14-057T 345.00 - SUNNYSIDE 345KV CKT 1	717	789	0.11665	105.9962	GEN563263 1-G15092_4 0.6900
FDNS	00NR	0	16WP	G15_044	FROM->TO	G14-057T 345.00 - SUNNYSIDE 345KV CKT 1	717	789	0.12233	104.8432	G14-074T 345.00 - TUCO INTERCHANGE 345KV CKT 1
FDNS	00NR	0	20WP	G15_044	FROM->TO	G14-057T 345.00 - SUNNYSIDE 345KV CKT 1	717	789	0.11665	104.3167	GEN563262 1-G15092_3 0.6900
FDNS	00NR	0	16WP	G15_044	FROM->TO	G14-057T 345.00 - SUNNYSIDE 345KV CKT 1	717	789	0.09662	102.6669	JOHNSON COUNTY - SUNNYSIDE 345KV CKT 1
FDNS	00NR	0	20WP	G15_044	FROM->TO	G14-057T 345.00 - SUNNYSIDE 345KV CKT 1	717	789	0.12202	101.6269	G14-074T 345.00 - TUCO INTERCHANGE 345KV CKT 1
FDNS	00NR	0	20SP	G15_044	FROM->TO	G14-057T 345.00 - SUNNYSIDE 345KV CKT 1	717	789	0.35252	100.8006	CIMARRON - MINCO 345KV CKT 1
FDNS	00NR	0	20WP	G15_044	FROM->TO	G14-057T 345.00 - SUNNYSIDE 345KV CKT 1	717	789	0.09632	100.3152	JOHNSON COUNTY - SUNNYSIDE 345KV CKT 1
FDNS	00NR	0	20WP	G15_044	TO->FROM	MATHWSN7 345.00 - TATONGA7 345.00 345KV CKT 1	1195	1195	0.06734	100.869	CIMARRON - MINCO 345KV CKT 1
FDNS	00NR	0	17SP	G15_044	TO->FROM	NORGE ROAD - SOUTHWESTERN STATION 138KV CKT 1	136	136	0.05595	101.3795	CIMARRON - MINCO 345KV CKT 1
FDNS	00NR	2	16WP	G15_044	FROM->TO	CIMARRON - DRAPER LAKE 345KV CKT 1	717	717	0.2088	138.5163	G14-057T 345.00 - SUNNYSIDE 345KV CKT 1
FDNS	00NR	2	16WP	G15_044	FROM->TO	CIMARRON - DRAPER LAKE 345KV CKT 1	717	717	0.2088	127.9321	G14-057T 345.00 - LAWTON EASTSIDE 345KV CKT 1
FDNS	00NR	2	16WP	G15_044	FROM->TO	CIMARRON - DRAPER LAKE 345KV CKT 1	717	717	0.18448	123.3108	ARCADIA - SEMINOLE 345KV CKT 1
FDNS	00NR	2	16WP	G15_044	FROM->TO	CIMARRON - DRAPER LAKE 345KV CKT 1	717	717	0.235	122.7954	ARCADIA - NORTHWEST 345KV CKT 1
FDNS	00NR	2	16WP	G15_044	FROM->TO	CIMARRON - DRAPER LAKE 345KV CKT 1	717	717	0.18539	121.7993	CLEVELAND - G15066_T 345.00 345KV CKT 1

SOLUTION	GROUP	SCENARIO	SEASON	SOURCE	DIRECTION	MONITORED ELEMENT	RATEA (MVA)	RATEB(MVA)	TDF	TC%LOADING (% MVA)	CONTINGENCY
FDNS	00NR	2	16WP	G15_044	FROM->TO	CIMARRON - DRAPER LAKE 345KV CKT 1	717	717	0.18539	121.0311	G15066_T 345.00 - SOONER 345KV CKT 1
FDNS	00NR	2	16WP	G15_044	FROM->TO	CIMARRON - DRAPER LAKE 345KV CKT 1	717	717	0.18948	117.2211	MATHWSN7 345.00 - NORTHWEST 345KV CKT 1
FDNS	00NR	2	16WP	G15_044	FROM->TO	CIMARRON - DRAPER LAKE 345KV CKT 1	717	717	0.18409	116.4604	CLEVELAND - TULSA NORTH 345KV CKT 1
FDNS	00NR	2	16WP	G15_044	FROM->TO	CIMARRON - DRAPER LAKE 345KV CKT 1	717	717	0.18409	116.4604	CLEVELAND - TULSA NORTH 345KV CKT 1
FDNS	00NR	2	16WP	G15_044	FROM->TO	CIMARRON - DRAPER LAKE 345KV CKT 1	717	717	0.18568	115.4921	CIMARRON - SARA 138KV CKT 1
FDNS	00NR	2	16WP	G15_044	FROM->TO	CIMARRON - DRAPER LAKE 345KV CKT 1	717	717	0.18721	115.0647	P12:138:WFEC:MSL03
FDNS	00NR	2	16WP	G15_044	FROM->TO	CIMARRON - DRAPER LAKE 345KV CKT 1	717	717	0.18604	114.6517	CIMARRON (CIMARON2) 345/138/13.8KV TRANSFORMER CKT 1
FDNS	00NR	2	16WP	G15_044	FROM->TO	CIMARRON - DRAPER LAKE 345KV CKT 1	717	717	0.18586	114.4634	CIMARRON (CIMARON1) 345/138/13.8KV TRANSFORMER CKT 1
FDNS	00NR	2	16WP	G15_044	FROM->TO	CIMARRON - DRAPER LAKE 345KV CKT 1	717	717	0.18568	114.2038	SARA - STHLAKE4 138.00 138KV CKT 1
FDNS	00NR	2	16WP	G15_044	FROM->TO	CIMARRON - DRAPER LAKE 345KV CKT 1	717	717	0.18568	114.0059	MCCLAIN - STHLAKE4 138.00 138KV CKT 1
FDNS	00NR	2	16WP	G15_044	FROM->TO	CIMARRON - DRAPER LAKE 345KV CKT 1	717	717	0.18507	113.6497	CIMARRON - CZECH HALL 138KV CKT 1
FDNS	00NR	2	16WP	G15_044	FROM->TO	CIMARRON - DRAPER LAKE 345KV CKT 1	717	717	0.18507	113.2982	CZECH HALL - XEROX 138KV CKT 1
FDNS	00NR	2	16WP	G15_044	FROM->TO	CIMARRON - DRAPER LAKE 345KV CKT 1	717	717	0.18507	113.2785	MORGAN - XEROX 138KV CKT 1
FDNS	00NR	2	16WP	G15_044	FROM->TO	CIMARRON - DRAPER LAKE 345KV CKT 1	717	717	0.18507	113.1619	MORGAN - MUSTANG 138KV CKT 1
FDNS	00NR	2	16WP	G15_044	FROM->TO	CIMARRON - DRAPER LAKE 345KV CKT 1	717	717	0.18468	112.9719	ANADARKO - POCASSETT 138KV CKT 1
FDNS	00NR	2	16WP	G15_044	FROM->TO	CIMARRON - DRAPER LAKE 345KV CKT 1	717	717	0.18154	112.8432	LACYGNE - WAVERLY7 345.00 345KV CKT 1
FDNS	00NR	2	16WP	G15_044	FROM->TO	CIMARRON - DRAPER LAKE 345KV CKT 1	717	717	0.18468	112.7767	POCASSETT - TUTTLE 138KV CKT 1
FDNS	00NR	2	16WP	G15_044	FROM->TO	CIMARRON - DRAPER LAKE 345KV CKT 1	717	717	0.18418	112.7323	CORN TAP - NAPLESTP 138.00 138KV CKT 1
FDNS	00NR	2	16WP	G15_044	FROM->TO	CIMARRON - DRAPER LAKE 345KV CKT 1	717	717	0.18126	112.7075	GEN509403 1-PIRKEY GENERATION
FDNS	00NR	2	16WP	G15_044	FROM->TO	CIMARRON - DRAPER LAKE 345KV CKT 1	717	717	0.18679	112.653	JOHNSON COUNTY - SUNNYSIDE 345KV CKT 1
FDNS	00NR	2	16WP	G15_044	FROM->TO	CIMARRON - DRAPER LAKE 345KV CKT 1	717	717	0.18154	112.6524	WAVERLY7 345.00 - WOLF CREEK 345KV CKT 1
FDNS	00NR	2	16WP	G15_044	FROM->TO	CIMARRON - DRAPER LAKE 345KV CKT 1	717	717	0.18126	112.646	GEN515040 1-SEMINOLE 1G
FDNS	00NR	2	16WP	G15_044	FROM->TO	CIMARRON - DRAPER LAKE 345KV CKT 1	717	717	0.18418	112.6379	NAPLESTP 138.00 - PAYNE 138.00 138KV CKT 1
FDNS	00NR	2	16WP	G15_044	FROM->TO	CIMARRON - DRAPER LAKE 345KV CKT 1	717	717	0.18126	112.6335	GEN509416 1-TURK GENERATION
FDNS	00NR	2	16WP	G15_044	FROM->TO	CIMARRON - DRAPER LAKE 345KV CKT 1	717	717	0.18126	112.6294	GEN501801 1-DOLET HILLS UNIT1
FDNS	00NR	2	16WP	G15_044	FROM->TO	CIMARRON - DRAPER LAKE 345KV CKT 1	717	717	0.18214	112.3918	CANEYRV7 345.00 - NEOSHO 345KV CKT 1
FDNSLock	00NR	2	16WP	G15_044	FROM->TO	CIMARRON - DRAPER LAKE 345KV CKT 1	717	717	0.18126	112.3144	GEN336821 1-GRAND GULF UNIT
FDNS	00NR	2	16WP	G15_044	FROM->TO	CIMARRON - DRAPER LAKE 345KV CKT 1	717	717	0.18126	112.2754	GEN515042 1-SEMINOLE 3G
FDNS	00NR	2	16WP	G15_044	FROM->TO	CIMARRON - DRAPER LAKE 345KV CKT 1	717	717	0.18468	112.2707	BRIDGECR 138.00 - TUTTLE 138KV CKT 1
FDNS	00NR	2	16WP	G15_044	FROM->TO	CIMARRON - DRAPER LAKE 345KV CKT 1	717	717	0.18214	112.1307	CANEYRV7 345.00 - LATHAMS7 345.00 345KV CKT 1
FDNS	00NR	2	16WP	G15_044	FROM->TO	CIMARRON - DRAPER LAKE 345KV CKT 1	717	717	0.18126	112.0314	GEN515041 1-SEMINOLE 2G
FDNSLock	00NR	2	16WP	G15_044	FROM->TO	CIMARRON - DRAPER LAKE 345KV CKT 1	717	717	0.18126	111.9956	GEN336153 1-WATERFORD UNIT#3
FDNS	00NR	2	16WP	G15_044	FROM->TO	CIMARRON - DRAPER LAKE 345KV CKT 1	717	717	0.18468	111.9022	BRIDGECR 138.00 - SUNSHINE CANYON 138KV CKT 1
FDNS	00NR	2	16WP	G15_044	FROM->TO	CIMARRON - DRAPER LAKE 345KV CKT 1	717	717	0.18468	111.8969	P12:138:WFEC:MSL01
FDNS	00NR	2	16WP	G15_044	FROM->TO	CIMARRON - DRAPER LAKE 345KV CKT 1	717	717	0.18126	111.7618	GEN509406 1-WELSH #3
FDNS	00NR	2	16WP	G15_044	FROM->TO	CIMARRON - DRAPER LAKE 345KV CKT 1	717	717	0.18126	111.7616	GEN509404 1-WELSH #1
FDNS	00NR	2	16WP	G15_044	FROM->TO	CIMARRON - DRAPER LAKE 345KV CKT 1	717	717	0.20676	111.74	CIMARRON - NORTHWEST 345KV CKT 1
FDNS	00NR	2	16WP	G15_044	FROM->TO	CIMARRON - DRAPER LAKE 345KV CKT 1	717	717	0.18126	111.7115	GEN337911 1-ARKANSAS NUCLEAR ONE UNIT #2
FDNS	00NR	2	16WP	G15_044	FROM->TO	CIMARRON - DRAPER LAKE 345KV CKT 1	717	717	0.18126	111.7	GEN335831 1-RIVERBEND UNIT#1
FDNS	00NR	2	16WP	G15_044	FROM->TO	CIMARRON - DRAPER LAKE 345KV CKT 1	717	717	0.18214	111.6632	LATHAMS7 345.00 - ROSE HILL 345KV CKT 1
FDNS	00NR	2	16WP	G15_044	FROM->TO	CIMARRON - DRAPER LAKE 345KV CKT 1	717	717	0.18032	111.6284	G14-074T 345.00 - OKLAUNION 345KV CKT 1
FDNS	00NR	2	16WP	G15_044	FROM->TO	CIMARRON - DRAPER LAKE 345KV CKT 1	717	717	0.18126	111.3146	GEN337910 1-ARKANSAS NUCLEAR ONE UNIT #1
FDNS	00NR	2	16WP	G15_044	FROM->TO	CIMARRON - DRAPER LAKE 345KV CKT 1	717	717	0.18245	111.2653	HUGO - SUNNYSIDE 345KV CKT 1
FDNS	00NR	2	16WP	G15_044	FROM->TO	CIMARRON - DRAPER LAKE 345KV CKT 1	717	717	0.18126	111.2482	GRAND GULF 500/22.0KV TRANSFORMER CKT 1
FDNS	00NR	2	16WP	G15_044	FROM->TO	CIMARRON - DRAPER LAKE 345KV CKT 1	717	717	0.18133	111.2407	P12:138:OKGE:3TERM14
FDNS	00NR	2	16WP	G15_044	FROM->TO	CIMARRON - DRAPER LAKE 345KV CKT 1	717	717	0.18219	111.239	HORSESHOE LAKE - JONES TAP 138KV CKT 1
FDNS	00NR	2	16WP	G15_044	FROM->TO	CIMARRON - DRAPER LAKE 345KV CKT 1	717	717	0.17673	111.1952	CANADIAN RIVER - MUSKOGEE 345KV CKT 1
FDNS	00NR	2	16WP	G15_044	FROM->TO	CIMARRON - DRAPER LAKE 345KV CKT 1	717	717	0.18252	111.1914	REDBUD - RIVERSIDE STATION 345KV CKT 1
FDNS	00NR	2	16WP	G15_044	FROM->TO	CIMARRON - DRAPER LAKE 345KV CKT 1	717	717	0.18252	111.1914	REDBUD - RIVERSIDE STATION 345KV CKT 1
FDNS	00NR	2	16WP	G15_044	FROM->TO	CIMARRON - DRAPER LAKE 345KV CKT 1	717	717	0.18126	111.1598	GEN515226 1-MUSKOGEE 6G
FDNS	00NR	2	17SP	G15_044	FROM->TO	CIMARRON - DRAPER LAKE 345KV CKT 1	717	717	0.19815	111.1228	G14-057T 345.00 - SUNNYSIDE 345KV CKT 1
FDNS	00NR	2	16WP	G15_044	FROM->TO	CIMARRON - DRAPER LAKE 345KV CKT 1	717	717	0.18653	111.1158	JOHNSON COUNTY - PITTSBURG 345KV CKT 1
FDNS	00NR	2	16WP	G15_044	FROM->TO	CIMARRON - DRAPER LAKE 345KV CKT 1	717	717	0.18653	111.1158	JOHNSON COUNTY - PITTSBURG 345KV CKT 1
FDNS	00NR	2	16WP	G15_044	FROM->TO	CIMARRON - DRAPER LAKE 345KV CKT 1	717	717	0.18126	111.1049	GEN501813 1-RODEMACHER UNIT 3
FDNS	00NR	2	16WP	G15_044	FROM->TO	CIMARRON - DRAPER LAKE 345KV CKT 1	717	717	0.18094	111.0937	MORISNT4 138.00 - STILLWATER 138KV CKT 1
FDNS	00NR	2	16WP	G15_044	FROM->TO	CIMARRON - DRAPER LAKE 345KV CKT 1	717	717	0.18096	111.0878	P12:138:OKGE:3TERM2
FDNS	00NR	2	16WP	G15_044	FROM->TO	CIMARRON - DRAPER LAKE 345KV CKT 1	717	717	0.18183	111.0381	NORTHWEST (NORTWST2) 345/138/13.8KV TRANSFORMER CKT 1
FDNS	00NR	2	16WP	G15_044	FROM->TO	CIMARRON - DRAPER LAKE 345KV CKT 1	717	717	0.18126	110.9515	GEN515225 1-MUSKOGEE 5G
FDNS	00NR	2	16WP	G15_044	FROM->TO	CIMARRON - DRAPER LAKE 345KV CKT 1	717	717	0.18126	110.9513	GEN515223 1-MUSKOGEE 4G
FDNS	00NR	2	16WP	G15_044	FROM->TO	CIMARRON - DRAPER LAKE 345KV CKT 1	717	717	0.18071	110.9487	ARCADIA - KAMO MEMORIAL 138KV CKT 1
FDNS	00NR	2	16WP	G15_044	FROM->TO	CIMARRON - DRAPER LAKE 345KV CKT 1	717	717	0.18101	110.9474	7SAREPTA% 345.00 - LONGWOOD 345KV CKT 1
FDNS	00NR	2	16WP	G15_044	FROM->TO	CIMARRON - DRAPER LAKE 345KV CKT 1	717	717	0.18101	110.9474	7SAREPTA% 345.00 - LONGWOOD 345KV CKT 1
FDNS	00NR	2	16WP	G15_044	FROM->TO	CIMARRON - DRAPER LAKE 345KV CKT 1	717	717	0.18942	110.9451	GRACEMONT (BANK 1) 345/138/13.8KV TRANSFORMER CKT 1
FDNS	00NR	2	16WP	G15_044	FROM->TO	CIMARRON - DRAPER LAKE 345KV CKT 1	717	717	0.18134	110.9352	P12:138:OKGE:3TERM12
FDNS	00NR	2	16WP	G15_044	FROM->TO	CIMARRON - DRAPER LAKE 345KV CKT 1	717	717	0.18116	110.9233	DOLET HILLS - SOUTHWEST SHREVEPORT 345KV CKT 1
FDNS	00NR	2	16WP	G15_044	FROM->TO	CIMARRON - DRAPER LAKE 345KV CKT 1	717	717	0.18116	110.9233	DOLET HILLS - SOUTHWEST SHREVEPORT 345KV CKT 1
FDNS	00NR	2	16WP	G15_044	FROM->TO	CIMARRON - DRAPER LAKE 345KV CKT 1	717	717	0.18126	110.9111	GEN335206 1-NELSON UNIT 6
FDNS	00NR	2	16WP	G15_044	FROM->TO	CIMARRON - DRAPER LAKE 345KV CKT 1	717	717	0.18213	110.9033	MEMORIAL - SKYLINE 138KV CKT 1
FDNS	00NR	2	16WP	G15_044	FROM->TO	CIMARRON - DRAPER LAKE 345KV CKT 1	717	717	0.18274	110.8183	QUAIL CREEK - SKYLINE 138KV CKT 1
FDNS	00NR	2	16WP	G15_044	FROM->TO	CIMARRON - DRAPER LAKE 345KV CKT 1	717	717	0.18552	110.8028	BAILEY4 138.00 - SUNSHINE CANYON 138KV CKT 1
FDNS	00NR	2	16WP	G15_044	FROM->TO	CIMARRON - DRAPER LAKE 345KV CKT 1	717	717	0.18126	110.794	GEN337653 1-WHITE BLUFF UNIT #2
FDNS	00NR	2	16WP	G15_044	FROM->TO	CIMARRON - DRAPER LAKE 345KV CKT 1	717	717	0.18232	110.7684	P12:138:OKGE:3TERM18
FDNS	00NR	2	16WP	G15_044	FROM->TO	CIMARRON - DRAPER LAKE 345KV CKT 1	717	717	0.18126	110.7493	GEN509409 1-WILKES #3
FDNS	00NR	2	16WP	G15_044	FROM->TO	CIMARRON - DRAPER LAKE 345KV CKT 1	717	717	0.18179	110.7439	NORTHWEST (NORTWST4) 345/138/13.8KV TRANSFORMER CKT 1
FDNS	00NR	2	16WP	G15_044	FROM->TO	CIMARRON - DRAPER LAKE 345KV CKT 1	717	717	0.18126	110.7352	GEN501812 1-RODEMACHER UNIT 2
FDNS	00NR	2	16WP	G15_044	FROM->TO	CIMARRON - DRAPER LAKE 345KV CKT 1	717	717	0.19274	110.717	G15063_T 345.00 - WOODRING 345KV CKT 1
FDNS	00NR	2	16WP	G15_044	FROM->TO	CIMARRON - DRAPER LAKE 345KV CKT 1	717	717	0.18224	110.686	36 & MERIDIAN - CHEMTRON 138KV CKT 1
FDNS	00NR	2	16WP	G15_044	FROM->TO	CIMARRON - DRAPER LAKE 345KV CKT 1	717	717	0.18126	110.6806	NEW MADRID 161/22.0KV TRANSFORMER CKT 1
FDNS	00NR	2	16WP	G15_044	FROM->TO	CIMARRON - DRAPER LAKE 345KV CKT 1	717	717	0.18218	110.6721	THISTLE7 345.00 - WOODWARD DISTRICT EHV 345KV CKT 1

SOLUTION	GROUP	SCENARIO	SEASON	SOURCE	DIRECTION	MONITORED ELEMENT	RATEA (MVA)	RATEB(MVA)	TDF	TC%LOADING (% MVA)	CONTINGENCY
FDNS	00NR	2	16WP	G15_044	FROM->TO	CIMARRON - DRAPER LAKE 345KV CKT 1	717	717	0.18218	110.6721	THISTLE7 345.00 - WOODWARD DISTRICT EHV 345KV CKT 1
FDNS	00NR	2	16WP	G15_044	FROM->TO	CIMARRON - DRAPER LAKE 345KV CKT 1	717	717	0.18218	110.6721	THISTLE7 345.00 - WOODWARD DISTRICT EHV 345KV CKT 2
FDNS	00NR	2	16WP	G15_044	FROM->TO	CIMARRON - DRAPER LAKE 345KV CKT 1	717	717	0.18218	110.6721	THISTLE7 345.00 - WOODWARD DISTRICT EHV 345KV CKT 2
FDNS	00NR	2	16WP	G15_044	FROM->TO	CIMARRON - DRAPER LAKE 345KV CKT 1	717	717	0.18126	110.6721	NEW MADRID 345/22.0KV TRANSFORMER CKT 1
FDNS	00NR	2	16WP	G15_044	FROM->TO	CIMARRON - DRAPER LAKE 345KV CKT 1	717	717	0.18126	110.6423	GEN337652 1-WHITE BLUFF UNIT #1
FDNS	00NR	2	16WP	G15_044	FROM->TO	CIMARRON - DRAPER LAKE 345KV CKT 1	717	717	0.18179	110.6326	NORTHWEST (NORTWST3) 345/138/13.8KV TRANSFORMER CKT 1
FDNS	00NR	2	16WP	G15_044	FROM->TO	CIMARRON - DRAPER LAKE 345KV CKT 1	717	717	0.18126	110.6075	GEN520947 1-HUGO1
FDNS	00NR	2	16WP	G15_044	FROM->TO	CIMARRON - DRAPER LAKE 345KV CKT 1	717	717	0.18224	110.5989	CHEMTRON - PENNSYLVANIA 138KV CKT 1
FDNS	00NR	2	16WP	G15_044	FROM->TO	CIMARRON - DRAPER LAKE 345KV CKT 1	717	717	0.18138	110.559	G15074_T 345.00 - HOYT 345KV CKT 1
FDNS	00NR	2	16WP	G15_044	FROM->TO	CIMARRON - DRAPER LAKE 345KV CKT 1	717	717	0.18112	110.542	7SAREPTA% 345.00 - ELDORADO EHV 345KV CKT 1
FDNS	00NR	2	16WP	G15_044	FROM->TO	CIMARRON - DRAPER LAKE 345KV CKT 1	717	717	0.18112	110.5419	3TR3AR8EL7EL
FDNS	00NR	2	16WP	G15_044	FROM->TO	CIMARRON - DRAPER LAKE 345KV CKT 1	717	717	0.18112	110.5352	ELDORADO EHV 500/345KV TRANSFORMER CKT 1
FDNS	00NR	2	16WP	G15_044	FROM->TO	CIMARRON - DRAPER LAKE 345KV CKT 1	717	717	0.18552	110.5003	BAILEY4 138.00 - WESTMOORE 138KV CKT 1
FDNS	00NR	2	16WP	G15_044	FROM->TO	CIMARRON - DRAPER LAKE 345KV CKT 1	717	717	0.18265	110.4913	P12:138:OKGE:3TERM11
FDNS	00NR	2	16WP	G15_044	FROM->TO	CIMARRON - DRAPER LAKE 345KV CKT 1	717	717	0.18159	110.4789	P12:138:OKGE:3TERM17
FDNS	00NR	2	16WP	G15_044	FROM->TO	CIMARRON - DRAPER LAKE 345KV CKT 1	717	717	0.18278	110.4645	KETCH TAP - NORTHWEST 138KV CKT 1
FDNS	00NR	2	16WP	G15_044	FROM->TO	CIMARRON - DRAPER LAKE 345KV CKT 1	717	717	0.18104	110.4544	G15052_T 345.00 - ROSE HILL 345KV CKT 1
FDNS	00NR	2	16WP	G15_044	FROM->TO	CIMARRON - DRAPER LAKE 345KV CKT 1	717	717	0.18126	110.4503	GEN515577 1-ARBWND11 0.6900
FDNS	00NR	2	16WP	G15_044	FROM->TO	CIMARRON - DRAPER LAKE 345KV CKT 1	717	717	0.18412	110.4459	BLANCHARD - CORNVILLE 138KV CKT 1
FDNS	00NR	2	16WP	G15_044	FROM->TO	CIMARRON - DRAPER LAKE 345KV CKT 1	717	717	0.18221	110.4322	COMANCHE - LOCO 138KV CKT 1
FDNS	00NR	2	16WP	G15_044	FROM->TO	CIMARRON - DRAPER LAKE 345KV CKT 1	717	717	0.18126	110.4298	GEN334440 1-SABINE UNIT 4
FDNS	00NR	2	16WP	G15_044	FROM->TO	CIMARRON - DRAPER LAKE 345KV CKT 1	717	717	0.18166	110.4213	LONEOAK - NORTHWEST 138KV CKT 1
FDNS	00NR	2	16WP	G15_044	FROM->TO	CIMARRON - DRAPER LAKE 345KV CKT 1	717	717	0.18126	110.4198	DELL 500 - ESSEX UNIT 2 500KV CKT Z1
FDNS	00NR	2	16WP	G15_044	FROM->TO	CIMARRON - DRAPER LAKE 345KV CKT 1	717	717	0.18215	110.3933	DIVISION AVE - LAKESIDE 138KV CKT 1
FDNS	00NR	2	16WP	G15_044	FROM->TO	CIMARRON - DRAPER LAKE 345KV CKT 1	717	717	0.18412	110.3524	P12:138:AEPW-OGE:CORNVIL4:MAUD 4
FDNS	00NR	2	16WP	G15_044	FROM->TO	CIMARRON - DRAPER LAKE 345KV CKT 1	717	717	0.1803	110.3418	HORSESHOE LAKE - KAMO MEMORIAL 138KV CKT 1
FDNS	00NR	2	16WP	G15_044	FROM->TO	CIMARRON - DRAPER LAKE 345KV CKT 1	717	717	0.18135	110.34	NORTHWEST - PANTHER 138KV CKT 1
FDNS	00NR	2	16WP	G15_044	FROM->TO	CIMARRON - DRAPER LAKE 345KV CKT 1	717	717	0.18109	110.3362	P12:138:OKGE:3TERM20
FDNS	00NR	2	16WP	G15_044	FROM->TO	CIMARRON - DRAPER LAKE 345KV CKT 1	717	717	0.18135	110.2907	PANTHER - SILVER LAKE 138KV CKT 1
FDNS	00NR	2	16WP	G15_044	FROM->TO	CIMARRON - DRAPER LAKE 345KV CKT 1	717	717	0.18335	110.2891	CLARKSVILLE - ONETA 345KV CKT 1
FDNS	00NR	2	16WP	G15_044	FROM->TO	CIMARRON - DRAPER LAKE 345KV CKT 1	717	717	0.18335	110.2891	CLARKSVILLE - ONETA 345KV CKT 1
FDNS	00NR	2	16WP	G15_044	FROM->TO	CIMARRON - DRAPER LAKE 345KV CKT 1	717	717	0.18126	110.2863	GEN336252 1-NINEMILE POINT UNIT#5
FDNS	00NR	2	16WP	G15_044	FROM->TO	CIMARRON - DRAPER LAKE 345KV CKT 1	717	717	0.18136	110.281	P12:138:OKGE:3TERM47
FDNS	00NR	2	16WP	G15_044	FROM->TO	CIMARRON - DRAPER LAKE 345KV CKT 1	717	717	0.18215	110.2734	HEFNER - LAKESIDE 138KV CKT 1
FDNS	00NR	2	16WP	G15_044	FROM->TO	CIMARRON - DRAPER LAKE 345KV CKT 1	717	717	0.18213	110.2624	FINNEY SWITCHING STATION - HOLCOMB 345KV CKT 1
FDNS	00NR	2	16WP	G15_044	FROM->TO	CIMARRON - DRAPER LAKE 345KV CKT 1	717	717	0.18213	110.2624	FINNEY SWITCHING STATION - HOLCOMB 345KV CKT 1
FDNSLock	00NR	2	16WP	G15_044	FROM->TO	CIMARRON - DRAPER LAKE 345KV CKT 1	717	717	0.18126	110.2617	GEN300006 1-NEW MADRID UNIT 1
FDNS	00NR	2	16WP	G15_044	FROM->TO	CIMARRON - DRAPER LAKE 345KV CKT 1	717	717	0.18126	110.2574	DOLET HILLS 345/24.0KV TRANSFORMER CKT 1
FDNS	00NR	2	16WP	G15_044	FROM->TO	CIMARRON - DRAPER LAKE 345KV CKT 1	717	717	0.18293	110.2573	CIMARRON - HAYMAKER 138KV CKT 1
FDNS	00NR	2	16WP	G15_044	FROM->TO	CIMARRON - DRAPER LAKE 345KV CKT 1	717	717	0.18126	110.2508	WHITE BLUFF 500/26.0KV TRANSFORMER CKT 1
FDNS	00NR	2	16WP	G15_044	FROM->TO	CIMARRON - DRAPER LAKE 345KV CKT 1	717	717	0.18412	110.2504	BLANCHARD - MAUD 138KV CKT 1
FDNSLock	00NR	2	16WP	G15_044	FROM->TO	CIMARRON - DRAPER LAKE 345KV CKT 1	717	717	0.18126	110.2483	GEN300007 1-NEW MADRID UNIT 2
FDNS	00NR	2	16WP	G15_044	FROM->TO	CIMARRON - DRAPER LAKE 345KV CKT 1	717	717	0.18138	110.2273	HOYT - STRANGER CREEK 345KV CKT 1
FDNS	00NR	2	16WP	G15_044	FROM->TO	CIMARRON - DRAPER LAKE 345KV CKT 1	717	717	0.1813	110.2187	DIVISION AVE - MUSTANG 138KV CKT 1
FDNS	00NR	2	16WP	G15_044	FROM->TO	CIMARRON - DRAPER LAKE 345KV CKT 1	717	717	0.18552	110.2176	FRANKLIN SW - WESTMOORE 138KV CKT 1
FDNS	00NR	2	16WP	G15_044	FROM->TO	CIMARRON - DRAPER LAKE 345KV CKT 1	717	717	0.18151	110.2117	BLACKBERRY - NEOSHO 345KV CKT 1
FDNS	00NR	2	16WP	G15_044	FROM->TO	CIMARRON - DRAPER LAKE 345KV CKT 1	717	717	0.18151	110.2117	BLACKBERRY - NEOSHO 345KV CKT 1
FDNSLock	00NR	2	16WP	G15_044	FROM->TO	CIMARRON - DRAPER LAKE 345KV CKT 1	717	717	0.18134	110.2049	G15088_T 345.00 - MOORE 345KV CKT 1
FDNS	00NR	2	16WP	G15_044	FROM->TO	CIMARRON - DRAPER LAKE 345KV CKT 1	717	717	0.18174	110.198	KETCH - KETCH TAP 138KV CKT 1
FDNS	00NR	2	16WP	G15_044	FROM->TO	CIMARRON - DRAPER LAKE 345KV CKT 1	717	717	0.18241	110.1926	MCCLAIN - PLEASANT VALLEY 138KV CKT 1
FDNS	00NR	2	16WP	G15_044	FROM->TO	CIMARRON - DRAPER LAKE 345KV CKT 1	717	717	0.18154	110.1894	EMPORIA ENERGY CENTER - G14_001T 345.00 345KV CKT 1
FDNS	00NR	2	16WP	G15_044	FROM->TO	CIMARRON - DRAPER LAKE 345KV CKT 1	717	717	0.18144	110.1765	SWISSVALE - WEST GARDNER 345KV CKT 1
FDNS	00NR	2	16WP	G15_044	FROM->TO	CIMARRON - DRAPER LAKE 345KV CKT 1	717	717	0.18138	110.1722	G15074_T 345.00 - JEFFREY ENERGY CENTER 345KV CKT 1
FDNS	00NR	2	16WP	G15_044	FROM->TO	CIMARRON - DRAPER LAKE 345KV CKT 1	717	717	0.18126	110.1532	GEN335204 1-NELSON UNIT 4
FDNS	00NR	2	16WP	G15_044	FROM->TO	CIMARRON - DRAPER LAKE 345KV CKT 1	717	717	0.18293	110.1501	DIVISION AVE - HAYMAKER 138KV CKT 1
FDNS	00NR	2	16WP	G15_044	FROM->TO	CIMARRON - DRAPER LAKE 345KV CKT 1	717	717	0.18126	110.1465	GEN336831 1-BAXTER WILSON SES
FDNS	00NR	2	16WP	G15_044	FROM->TO	CIMARRON - DRAPER LAKE 345KV CKT 1	717	717	0.18136	110.142	P12:138:AEPW-OGE:SHIDLER4:OSAGE 4
FDNS	00NR	2	16WP	G15_044	FROM->TO	CIMARRON - DRAPER LAKE 345KV CKT 1	717	717	0.18159	110.1408	G1524G1525 345.00 - THISTLE7 345.00 345KV CKT 1
FDNS	00NR	2	16WP	G15_044	FROM->TO	CIMARRON - DRAPER LAKE 345KV CKT 1	717	717	0.18159	110.1408	G1524G1525 345.00 - THISTLE7 345.00 345KV CKT 2
FDNS	00NR	2	16WP	G15_044	FROM->TO	CIMARRON - DRAPER LAKE 345KV CKT 1	717	717	0.18221	110.1313	CLASSEN - ROBINSON 138KV CKT 1
FDNS	00NR	2	16WP	G15_044	FROM->TO	CIMARRON - DRAPER LAKE 345KV CKT 1	717	717	0.18126	110.1229	GEN509408 1-WILKES #2
FDNS	00NR	2	16WP	G15_044	FROM->TO	CIMARRON - DRAPER LAKE 345KV CKT 1	717	717	0.18187	110.1196	WOODRING (WOODRNG2) 345/138/13.8KV TRANSFORMER CKT 1
FDNS	00NR	2	16WP	G15_044	FROM->TO	CIMARRON - DRAPER LAKE 345KV CKT 1	717	717	0.1818	110.1103	P12:138:WFEC:MSL02
FDNS	00NR	2	16WP	G15_044	FROM->TO	CIMARRON - DRAPER LAKE 345KV CKT 1	717	717	0.20343	110.1089	GRACEMONT - LAWTON EASTSIDE 345KV CKT 1
FDNS	00NR	2	16WP	G15_044	FROM->TO	CIMARRON - DRAPER LAKE 345KV CKT 1	717	717	0.20343	110.1089	GRACEMONT - LAWTON EASTSIDE 345KV CKT 1
FDNS	00NR	2	16WP	G15_044	FROM->TO	CIMARRON - DRAPER LAKE 345KV CKT 1	717	717	0.18126	110.1058	GEN506754 1-LEBROCK STEAM 1
FDNS	00NR	2	16WP	G15_044	FROM->TO	CIMARRON - DRAPER LAKE 345KV CKT 1	717	717	0.18126	110.0993	GEN334441 1-SABINE UNIT 5
FDNS	00NR	2	16WP	G15_044	FROM->TO	CIMARRON - DRAPER LAKE 345KV CKT 1	717	717	0.18077	110.0911	P12:138:AEPW:OKMULGE4:R.S.S-4
FDNS	00NR	2	16WP	G15_044	FROM->TO	CIMARRON - DRAPER LAKE 345KV CKT 1	717	717	0.18126	110.0893	GEN334071 1-LEWIS CREEK 2
FDNS	00NR	2	16WP	G15_044	FROM->TO	CIMARRON - DRAPER LAKE 345KV CKT 1	717	717	0.18032	110.0837	G14-074T 345.00 - TUCO INTERCHANGE 345KV CKT 1
FDNS	00NR	2	16WP	G15_044	FROM->TO	CIMARRON - DRAPER LAKE 345KV CKT 1	717	717	0.18126	110.0813	GEN334070 1-LEWIS CREEK 1
FDNS	00NR	2	16WP	G15_044	FROM->TO	CIMARRON - DRAPER LAKE 345KV CKT 1	717	717	0.18169	110.077	ANADARKO - GEORGIA 138KV CKT 1
FDNS	00NR	2	16WP	G15_044	FROM->TO	CIMARRON - DRAPER LAKE 345KV CKT 1	717	717	0.18126	110.0764	GEN590011 2-ERCOT EQUIVALENCE
FDNS	00NR	2	16WP	G15_044	FROM->TO	CIMARRON - DRAPER LAKE 345KV CKT 1	717	717	0.18126	110.076	GEN336251 1-NINEMILE POINT UNIT#4
FDNS	00NR	2	16WP	G15_044	FROM->TO	CIMARRON - DRAPER LAKE 345KV CKT 1	717	717	0.1814	110.0627	EMPORIA ENERGY CENTER - SWISSVALE 345KV CKT 1
FDNS	00NR	2	16WP	G15_044	FROM->TO	CIMARRON - DRAPER LAKE 345KV CKT 1	717	717	0.18154	110.0613	G14_001T 345.00 - WICHITA 345KV CKT 1
FDNS	00NR	2	16WP	G15_044	FROM->TO	CIMARRON - DRAPER LAKE 345KV CKT 1	717	717	0.18183	110.0605	BENTON - WICHITA 345KV CKT 1
FDNS	00NR	2	16WP	G15_044	FROM->TO	CIMARRON - DRAPER LAKE 345KV CKT 1	717	717	0.18123	110.0582	WEBRE - WELLS 500KV CKT 1
FDNS	00NR	2	16WP	G15_044	FROM->TO	CIMARRON - DRAPER LAKE 345KV CKT 1	717	717	0.18126	110.0407	GEN338146 1-INDEPENDENCE UNIT #2

SOLUTION	GROUP	SCENARIO	SEASON	SOURCE	DIRECTION	MONITORED ELEMENT	RATEA (MVA)	RATEB(MVA)	TDF	TC%LOADING (% MVA)	CONTINGENCY
FDNS	00NR	2	16WP	G15_044	FROM->TO	CIMARRON - DRAPER LAKE 345KV CKT 1	717	717	0.1816	110.0387	LACYGNE - NEOSHO 345KV CKT 1
FDNS	00NR	2	16WP	G15_044	FROM->TO	CIMARRON - DRAPER LAKE 345KV CKT 1	717	717	0.18126	110.0326	GEN590010 1-ERCOT EQUIVALENCE
FDNS	00NR	2	16WP	G15_044	FROM->TO	CIMARRON - DRAPER LAKE 345KV CKT 1	717	717	0.18166	110.0242	LONEOAK - QUAIL CREEK 138KV CKT 1
FDNS	00NR	2	16WP	G15_044	FROM->TO	CIMARRON - DRAPER LAKE 345KV CKT 1	717	717	0.18169	110.0153	FLETCHER - GEORGIA 138KV CKT 1
FDNS	00NR	2	16WP	G15_044	FROM->TO	CIMARRON - DRAPER LAKE 345KV CKT 1	717	717	0.18126	110.0076	GEN501811 1-RODEMACHER UNIT 1
FDNS	00NR	2	16WP	G15_044	FROM->TO	CIMARRON - DRAPER LAKE 345KV CKT 1	717	717	0.18126	110.0014	GEN503909 1-FULTONU1 1 16.000
FDNS	00NR	2	16WP	G15_044	FROM->TO	CIMARRON - DRAPER LAKE 345KV CKT 1	717	717	0.18126	109.9689	GEN334433 1-SABINE UNIT 3
FDNS	00NR	2	16WP	G15_044	FROM->TO	CIMARRON - DRAPER LAKE 345KV CKT 1	717	717	0.18126	109.9657	GEN303007 1-1BC2 U2
FDNS	00NR	2	16WP	G15_044	FROM->TO	CIMARRON - DRAPER LAKE 345KV CKT 1	717	717	0.1833	109.9604	CRINER - PAYNE 138.00 138KV CKT 1
FDNS	00NR	2	16WP	G15_044	FROM->TO	CIMARRON - DRAPER LAKE 345KV CKT 1	717	717	0.18126	109.9604	GEN303006 1-1BC2 U1
FDNS	00NR	2	16WP	G15_044	FROM->TO	CIMARRON - DRAPER LAKE 345KV CKT 1	717	717	0.18172	109.9588	EMPIRE - FLETCHER 138KV CKT 1
FDNS	00NR	2	16WP	G15_044	FROM->TO	CIMARRON - DRAPER LAKE 345KV CKT 1	717	717	0.18126	109.9579	GEN334030 1-FRONTIER UNIT 1
FDNS	00NR	2	16WP	G15_044	FROM->TO	CIMARRON - DRAPER LAKE 345KV CKT 1	717	717	0.18126	109.9568	GEN334031 1-FRONTIER UNIT 2
FDNS	00NR	2	16WP	G15_044	FROM->TO	CIMARRON - DRAPER LAKE 345KV CKT 1	717	717	0.18126	109.9538	FRONTIER - GRIMES 345KV CKT 1
FDNS	00NR	2	16WP	G15_044	FROM->TO	CIMARRON - DRAPER LAKE 345KV CKT 1	717	717	0.18126	109.9498	GEN337041 1-GERALD ANDRUS
FDNS	00NR	2	16WP	G15_044	FROM->TO	CIMARRON - DRAPER LAKE 345KV CKT 1	717	717	0.18138	109.9445	CLEAVELAND - CLEVLND 4 138.00 138KV CKT Z1
FDNS	00NR	2	16WP	G15_044	FROM->TO	CIMARRON - DRAPER LAKE 345KV CKT 1	717	717	0.18138	109.9445	CLEAVELAND - CLEVLND 4 138.00 138KV CKT Z1
FDNS	00NR	2	16WP	G15_044	FROM->TO	CIMARRON - DRAPER LAKE 345KV CKT 1	717	717	0.18138	109.9443	CLEVELAND (CLVAUTO1) 345/138/13.8KV TRANSFORMER CKT 1
FDNS	00NR	2	16WP	G15_044	FROM->TO	CIMARRON - DRAPER LAKE 345KV CKT 1	717	717	0.18138	109.9443	CLEVELAND (CLVAUTO1) 345/138/13.8KV TRANSFORMER CKT 1
FDNS	00NR	2	16WP	G15_044	FROM->TO	CIMARRON - DRAPER LAKE 345KV CKT 1	717	717	0.18126	109.9431	GEN336191 1-LITTLE GYPSY UNIT#3
FDNS	00NR	2	16WP	G15_044	FROM->TO	CIMARRON - DRAPER LAKE 345KV CKT 1	717	717	0.18126	109.9391	P12:069:OKGE:3TERM4
FDNS	00NR	2	16WP	G15_044	FROM->TO	CIMARRON - DRAPER LAKE 345KV CKT 1	717	717	0.18146	109.9328	SPVALLY4 138.00 - STILLWATER 138KV CKT 1
FDNS	00NR	2	16WP	G15_044	FROM->TO	CIMARRON - DRAPER LAKE 345KV CKT 1	717	717	0.18208	109.9301	ARKANSAS NUCLEAR ONE - FT SMITH 500KV CKT 1
FDNS	00NR	2	16WP	G15_044	FROM->TO	CIMARRON - DRAPER LAKE 345KV CKT 1	717	717	0.18208	109.9301	ARKANSAS NUCLEAR ONE - FT SMITH 500KV CKT 1
FDNS	00NR	2	16WP	G15_044	FROM->TO	CIMARRON - DRAPER LAKE 345KV CKT 1	717	717	0.18127	109.9269	8DANIEL8 500.00 - MCKNIGHT 500KV CKT 1
FDNS	00NR	2	16WP	G15_044	FROM->TO	CIMARRON - DRAPER LAKE 345KV CKT 1	717	717	0.18136	109.924	OSAGE - WEBB CITY TAP 138KV CKT 1
FDNS	00NR	2	16WP	G15_044	FROM->TO	CIMARRON - DRAPER LAKE 345KV CKT 1	717	717	0.18143	109.9207	P12:138:OKGE:3TERM13
FDNS	00NR	2	16WP	G15_044	FROM->TO	CIMARRON - DRAPER LAKE 345KV CKT 1	717	717	0.18213	109.9176	FINNEY SWITCHING STATION - Hitchland Interchange 345KV CKT 1
FDNS	00NR	2	16WP	G15_044	FROM->TO	CIMARRON - DRAPER LAKE 345KV CKT 1	717	717	0.18126	109.917	GEN509393 S1-ARSENAL HILL GENS #4 (STALL)
FDNS	00NR	2	16WP	G15_044	FROM->TO	CIMARRON - DRAPER LAKE 345KV CKT 1	717	717	0.18126	109.9111	GEN335614 1-WILLOW GLENN UNIT#4
FDNS	00NR	2	16WP	G15_044	FROM->TO	CIMARRON - DRAPER LAKE 345KV CKT 1	717	717	0.18126	109.91	GEN338143 1-INDEPENDENCE UNIT #1
FDNS	00NR	2	16WP	G15_044	FROM->TO	CIMARRON - DRAPER LAKE 345KV CKT 1	717	717	0.18146	109.9037	PAYNESB4 138.00 - SPVALLY4 138.00 138KV CKT 1
FDNS	00NR	2	16WP	G15_044	FROM->TO	CIMARRON - DRAPER LAKE 345KV CKT 1	717	717	0.18172	109.9028	DAYTON - MUSTANG 138KV CKT 1
FDNS	00NR	2	16WP	G15_044	FROM->TO	CIMARRON - DRAPER LAKE 345KV CKT 1	717	717	0.18126	109.9018	P12:161:AEPW:DYESS 5:HYLAND 5
FDNS	00NR	2	16WP	G15_044	FROM->TO	CIMARRON - DRAPER LAKE 345KV CKT 1	717	717	0.18172	109.9004	COMANCHE - EMPIRE 138KV CKT 1
FDNS	00NR	2	16WP	G15_044	FROM->TO	CIMARRON - DRAPER LAKE 345KV CKT 1	717	717	0.18126	109.9001	GEN509392 G2-ARSENAL HILL GENS #3 (STALL)
FDNS	00NR	2	16WP	G15_044	FROM->TO	CIMARRON - DRAPER LAKE 345KV CKT 1	717	717	0.18126	109.9	GEN509391 G1-ARSENAL HILL GENS #2 (STALL)
FDNS	00NR	2	16WP	G15_044	FROM->TO	CIMARRON - DRAPER LAKE 345KV CKT 1	717	717	0.18126	109.8983	GEN303008 1-1BC2 U3
FDNS	00NR	2	16WP	G15_044	FROM->TO	CIMARRON - DRAPER LAKE 345KV CKT 1	717	717	0.18172	109.8979	DAYTON - HOBBY LOBBY 138KV CKT 1
FDNS	00NR	2	16WP	G15_044	FROM->TO	CIMARRON - DRAPER LAKE 345KV CKT 1	717	717	0.18146	109.8881	CUSHING - PAYNESB4 138.00 138KV CKT 1
FDNS	00NR	2	16WP	G15_044	FROM->TO	CIMARRON - DRAPER LAKE 345KV CKT 1	717	717	0.18185	109.8766	MUSTANG - SW 5TH 138KV CKT 1
FDNS	00NR	2	16WP	G15_044	FROM->TO	CIMARRON - DRAPER LAKE 345KV CKT 1	717	717	0.18126	109.8758	GEN336170 1-GULF OXY U4
FDNS	00NR	2	16WP	G15_044	FROM->TO	CIMARRON - DRAPER LAKE 345KV CKT 1	717	717	0.18126	109.8747	GEN336464 1-MICHOUD UNIT #3
FDNS	00NR	2	16WP	G15_044	FROM->TO	CIMARRON - DRAPER LAKE 345KV CKT 1	717	717	0.1833	109.8558	COLE - CRINER 138KV CKT 1
FDNS	00NR	2	16WP	G15_044	FROM->TO	CIMARRON - DRAPER LAKE 345KV CKT 1	717	717	0.18128	109.853	P12:345:GRDA:CHOUTEAU-SPORTSMANACRES
FDNS	00NR	2	16WP	G15_044	FROM->TO	CIMARRON - DRAPER LAKE 345KV CKT 1	717	717	0.18121	109.8424	ELDORADO EHV - MOUNT OLIVE 500KV CKT 1
FDNS	00NR	2	16WP	G15_044	FROM->TO	CIMARRON - DRAPER LAKE 345KV CKT 1	717	717	0.18221	109.8373	LIGHTNING CREEK - ROBINSON 138KV CKT 1
FDNS	00NR	2	16WP	G15_044	FROM->TO	CIMARRON - DRAPER LAKE 345KV CKT 1	717	717	0.18126	109.837	GEN511843 1-RIVERSIDE STATION #2
FDNS	00NR	2	16WP	G15_044	FROM->TO	CIMARRON - DRAPER LAKE 345KV CKT 1	717	717	0.18126	109.8363	ESSEX UNIT 2 500/18.0KV TRANSFORMER CKT 1
FDNS	00NR	2	16WP	G15_044	FROM->TO	CIMARRON - DRAPER LAKE 345KV CKT 1	717	717	0.18133	109.8338	P12:069:OKGE:3TERM19
FDNS	00NR	2	16WP	G15_044	FROM->TO	CIMARRON - DRAPER LAKE 345KV CKT 1	717	717	0.18172	109.8329	OUMED 4 - STONEWALL 138KV CKT 1
FDNS	00NR	2	16WP	G15_044	FROM->TO	CIMARRON - DRAPER LAKE 345KV CKT 1	717	717	0.18126	109.8308	GEN336801 1-BAXTER WILSON UNIT #1
FDNS	00NR	2	16WP	G15_044	FROM->TO	CIMARRON - DRAPER LAKE 345KV CKT 1	717	717	0.1813	109.8302	7LUTESVIL 345.00 - 7ST FRANC 345.00 345KV CKT 1
FDNS	00NR	2	16WP	G15_044	FROM->TO	CIMARRON - DRAPER LAKE 345KV CKT 1	717	717	0.18126	109.7953	GEN506752 1-LEBROCK GAS 1
FDNS	00NR	2	16WP	G15_044	FROM->TO	CIMARRON - DRAPER LAKE 345KV CKT 1	717	717	0.18126	109.7952	GEN506753 1-LEBROCK GAS 2
FDNS	00NR	2	16WP	G15_044	FROM->TO	CIMARRON - DRAPER LAKE 345KV CKT 1	717	717	0.18126	109.7868	GEN501910 1-ACADIA UNIT ST1
FDNS	00NR	2	16WP	G15_044	FROM->TO	CIMARRON - DRAPER LAKE 345KV CKT 1	717	717	0.1807	109.786	ARCADIA - LGARBER4 138.00 138KV CKT 1
FDNS	00NR	2	16WP	G15_044	FROM->TO	CIMARRON - DRAPER LAKE 345KV CKT 1	717	717	0.18126	109.7675	RODEMACHER 230/22.0KV TRANSFORMER CKT 1
FDNS	00NR	2	16WP	G15_044	FROM->TO	CIMARRON - DRAPER LAKE 345KV CKT 1	717	717	0.18123	109.7661	IODINE - WOODWARD EHV 138KV CKT 1
FDNS	00NR	2	16WP	G15_044	FROM->TO	CIMARRON - DRAPER LAKE 345KV CKT 1	717	717	0.18127	109.765	7JASPER 345.00 - BLACKBERRY 345KV CKT 1
FDNS	00NR	2	16WP	G15_044	FROM->TO	CIMARRON - DRAPER LAKE 345KV CKT 1	717	717	0.1807	109.7562	CHITWOOD - LGARBER4 138.00 138KV CKT 1
FDNS	00NR	2	16WP	G15_044	FROM->TO	CIMARRON - DRAPER LAKE 345KV CKT 1	717	717	0.18114	109.7538	P12:138:AEPW-OGE:WTH_JCT4:JENSEN4
FDNS	00NR	2	16WP	G15_044	FROM->TO	CIMARRON - DRAPER LAKE 345KV CKT 1	717	717	0.18126	109.7511	GEN509394 1-FLINT CREEK
FDNS	00NR	2	16WP	G15_044	FROM->TO	CIMARRON - DRAPER LAKE 345KV CKT 1	717	717	0.18136	109.75	FAIRFAX TAP - SHIDLER 138KV CKT 1
FDNS	00NR	2	16WP	G15_044	FROM->TO	CIMARRON - DRAPER LAKE 345KV CKT 1	717	717	0.18136	109.75	FAIRFAX TAP - WEBB CITY TAP 138KV CKT 1
FDNS	00NR	2	16WP	G15_044	FROM->TO	CIMARRON - DRAPER LAKE 345KV CKT 1	717	717	0.17662	109.7486	CANADIAN RIVER - PITTSBURG 345KV CKT 1
FDNS	00NR	2	16WP	G15_044	FROM->TO	CIMARRON - DRAPER LAKE 345KV CKT 1	717	717	0.17662	109.7486	CANADIAN RIVER - PITTSBURG 345KV CKT 1
FDNS	00NR	2	16WP	G15_044	FROM->TO	CIMARRON - DRAPER LAKE 345KV CKT 1	717	717	0.18131	109.7457	8WNEWMADRID 500.00 - DELL 500 500KV CKT 1
FDNS	00NR	2	16WP	G15_044	FROM->TO	CIMARRON - DRAPER LAKE 345KV CKT 1	717	717	0.1807	109.7446	CHITWOOD - JONES TAP 138KV CKT 1
FDNS	00NR	2	16WP	G15_044	FROM->TO	CIMARRON - DRAPER LAKE 345KV CKT 1	717	717	0.18119	109.7367	6LAYFLD 230.00 - CARROLL 230KV CKT 1
FDNS	00NR	2	16WP	G15_044	FROM->TO	CIMARRON - DRAPER LAKE 345KV CKT 1	717	717	0.18181	109.7359	CHISHOLM6 230.00 - ELK CITY 230KV 230KV CKT 1
FDNS	00NR	2	16WP	G15_044	FROM->TO	CIMARRON - DRAPER LAKE 345KV CKT 1	717	717	0.18181	109.7329	ELK CITY 230KV (ELKCTY-6) 230/138/13.8KV TRANSFORMER CKT 1
FDNS	00NR	2	16WP	G15_044	FROM->TO	CIMARRON - DRAPER LAKE 345KV CKT 1	717	717	0.18181	109.7329	ELK CITY 230KV (ELKCTY-6) 230/138/13.8KV TRANSFORMER CKT 1
FDNS	00NR	2	16WP	G15_044	FROM->TO	CIMARRON - DRAPER LAKE 345KV CKT 1	717	717	0.18172	109.7324	OUMED 4 - PARK PLACE 138KV CKT 1
FDNS	00NR	2	16WP	G15_044	FROM->TO	CIMARRON - DRAPER LAKE 345KV CKT 1	717	717	0.18542	109.7312	SOONER - WOODRING 345KV CKT 1
FDNS	00NR	2	16WP	G15_044	FROM->TO	CIMARRON - DRAPER LAKE 345KV CKT 1	717	717	0.18123	109.7232	DEWEY - IODINE 138KV CKT 1
FDNS	00NR	2	16WP	G15_044	FROM->TO	CIMARRON - DRAPER LAKE 345KV CKT 1	717	717	0.18176	109.7216	TULSA NORTH - WEKIWA 345KV CKT 1
FDNS	00NR	2	16WP	G15_044	FROM->TO	CIMARRON - DRAPER LAKE 345KV CKT 1	717	717	0.18176	109.7216	TULSA NORTH - WEKIWA 345KV CKT 1
FDNS	00NR	2	16WP	G15_044	FROM->TO	CIMARRON - DRAPER LAKE 345KV CKT 1	717	717	0.18214	109.7214	DALE - HORSESHOE LAKE 138KV CKT 1

SOLUTION	GROUP	SCENARIO	SEASON	SOURCE	DIRECTION	MONITORED ELEMENT	RATEA (MVA)	RATEB(MVA)	TDF	TC%LOADING (% MVA)	CONTINGENCY
FDNS	00NR	2	16WP	G15_044	FROM->TO	CIMARRON - DRAPER LAKE 345KV CKT 1	717	717	0.18117	109.7203	ELDORADO EHV - SHERIDAN EHV 500KV CKT 1
FDNS	00NR	2	16WP	G15_044	FROM->TO	CIMARRON - DRAPER LAKE 345KV CKT 1	717	717	0.18151	109.7082	G13-010T 345.00 - POST ROCK 345KV CKT 1
FDNS	00NR	2	16WP	G15_044	FROM->TO	CIMARRON - DRAPER LAKE 345KV CKT 1	717	717	0.18186	109.7051	ANADARKO - SEQUOYAHJ4 138.00 138KV CKT 1
FDNS	00NR	2	16WP	G15_044	FROM->TO	CIMARRON - DRAPER LAKE 345KV CKT 1	717	717	0.18186	109.7037	CORN TAP - SEQUOYAHJ4 138.00 138KV CKT 1
FDNS	00NR	2	16WP	G15_044	FROM->TO	CIMARRON - DRAPER LAKE 345KV CKT 1	717	717	0.18129	109.7031	P12:138:AEPW:N.E.S.-4:CATOOSA4
FDNS	00NR	2	16WP	G15_044	FROM->TO	CIMARRON - DRAPER LAKE 345KV CKT 1	717	717	0.18133	109.7019	P13:138-161:WERE:NSES_TX-4OR5::
FDNS	00NR	2	16WP	G15_044	FROM->TO	CIMARRON - DRAPER LAKE 345KV CKT 1	717	717	0.18221	109.6999	LIGHTNING CREEK - TROSPER 138KV CKT 1
FDNS	00NR	2	16WP	G15_044	FROM->TO	CIMARRON - DRAPER LAKE 345KV CKT 1	717	717	0.18126	109.6988	ST FRANCIS 161/16.0KV TRANSFORMER CKT 1
FDNS	00NR	2	16WP	G15_044	FROM->TO	CIMARRON - DRAPER LAKE 345KV CKT 1	717	717	0.18126	109.6987	ST FRANCIS - ST FRANCIS 1 161KV CKT Z1
FDNS	00NR	2	16WP	G15_044	FROM->TO	CIMARRON - DRAPER LAKE 345KV CKT 1	717	717	0.18116	109.6925	FULTON 115 - HOPE 115KV CKT 1
FDNS	00NR	2	16WP	G15_044	FROM->TO	CIMARRON - DRAPER LAKE 345KV CKT 1	717	717	0.18116	109.6925	FULTON 115 - HOPE 115KV CKT 1
FDNS	00NR	2	16WP	G15_044	FROM->TO	CIMARRON - DRAPER LAKE 345KV CKT 1	717	717	0.18126	109.6904	8CAJUN2 500/24.0KV TRANSFORMER CKT 1
FDNS	00NR	2	16WP	G15_044	FROM->TO	CIMARRON - DRAPER LAKE 345KV CKT 1	717	717	0.18126	109.6805	GEN300015 1-1SGPDEL 18.000
FDNS	00NR	2	16WP	G15_044	FROM->TO	CIMARRON - DRAPER LAKE 345KV CKT 1	717	717	0.18214	109.6804	DALE - SQUIRL CREEK 138KV CKT 1
FDNS	00NR	2	16WP	G15_044	FROM->TO	CIMARRON - DRAPER LAKE 345KV CKT 1	717	717	0.18177	109.6801	HUGO - VALLIANT 345KV CKT 1
FDNS	00NR	2	16WP	G15_044	FROM->TO	CIMARRON - DRAPER LAKE 345KV CKT 1	717	717	0.18177	109.6801	HUGO - VALLIANT 345KV CKT 1
FDNS	00NR	2	16WP	G15_044	FROM->TO	CIMARRON - DRAPER LAKE 345KV CKT 1	717	717	0.18126	109.679	GEN337766 1-TRACTEBEL UNIT S1
FDNS	00NR	2	16WP	G15_044	FROM->TO	CIMARRON - DRAPER LAKE 345KV CKT 1	717	717	0.18336	109.6776	ANADARKO - GRACMNT4 138.00 138KV CKT 1
FDNS	00NR	2	16WP	G15_044	FROM->TO	CIMARRON - DRAPER LAKE 345KV CKT 1	717	717	0.18129	109.6741	7JASPER 345.00 - MORGAN 345KV CKT 1
FDNS	00NR	2	16WP	G15_044	FROM->TO	CIMARRON - DRAPER LAKE 345KV CKT 1	717	717	0.18127	109.6734	P12:069:OKGE:3TERM3
FDNS	00NR	2	16WP	G15_044	FROM->TO	CIMARRON - DRAPER LAKE 345KV CKT 1	717	717	0.18126	109.6712	GEN515564 1-ORIGIN11 0.6900
FDNS	00NR	2	16WP	G15_044	FROM->TO	CIMARRON - DRAPER LAKE 345KV CKT 1	717	717	0.18126	109.6712	GEN515565 1-ORIGIN21 0.6900
FDNS	00NR	2	16WP	G15_044	FROM->TO	CIMARRON - DRAPER LAKE 345KV CKT 1	717	717	0.18103	109.6681	MORISNT4 138.00 - SOONER 138KV CKT 1
FDNS	00NR	2	16WP	G15_044	FROM->TO	CIMARRON - DRAPER LAKE 345KV CKT 1	717	717	0.18172	109.6678	36 & MERIDIAN - HOBBY LOBBY 138KV CKT 1
FDNS	00NR	2	16WP	G15_044	FROM->TO	CIMARRON - DRAPER LAKE 345KV CKT 1	717	717	0.18126	109.6659	GEN336222 1-LITTLE GYPSY UNIT#2
FDNS	00NR	2	16WP	G15_044	FROM->TO	CIMARRON - DRAPER LAKE 345KV CKT 1	717	717	0.18125	109.6617	P12:138:OKGE-AEPW:JENSEN4:REDROCKRD4
FDNS	00NR	2	16WP	G15_044	FROM->TO	CIMARRON - DRAPER LAKE 345KV CKT 1	717	717	0.18132	109.6528	P12:138:AEPW:CATOOSA4:T.S.E.-4
FDNS	00NR	2	16WP	G15_044	FROM->TO	CIMARRON - DRAPER LAKE 345KV CKT 1	717	717	0.18126	109.6521	GEN501970 1-EVANGELINE UNIT 7
FDNS	00NR	2	16WP	G15_044	FROM->TO	CIMARRON - DRAPER LAKE 345KV CKT 1	717	717	0.18126	109.6519	GEN511842 1-RIVERSIDE STATION #1
FDNS	00NR	2	16WP	G15_044	FROM->TO	CIMARRON - DRAPER LAKE 345KV CKT 1	717	717	0.18138	109.6503	P12:138:OKGE:3TERM28
FDNS	00NR	2	16WP	G15_044	FROM->TO	CIMARRON - DRAPER LAKE 345KV CKT 1	717	717	0.18121	109.6488	NW164TH4 138.00 - PIEDMONT 138KV CKT 1
FDNS	00NR	2	16WP	G15_044	FROM->TO	CIMARRON - DRAPER LAKE 345KV CKT 1	717	717	0.1814	109.648	HAMMETT TAP - HAMMETT2 138KV CKT 1
FDNS	00NR	2	16WP	G15_044	FROM->TO	CIMARRON - DRAPER LAKE 345KV CKT 1	717	717	0.18126	109.647	ESSEX UNIT 2 500/18.0KV TRANSFORMER CKT 1
FDNS	00NR	2	16WP	G15_044	FROM->TO	CIMARRON - DRAPER LAKE 345KV CKT 1	717	717	0.18121	109.647	NORTHWEST - NW164TH4 138.00 138KV CKT 1
FDNS	00NR	2	16WP	G15_044	FROM->TO	CIMARRON - DRAPER LAKE 345KV CKT 1	717	717	0.18151	109.6454	G13-010T 345.00 - SPEARVILLE 345KV CKT 1
FDNS	00NR	2	16WP	G15_044	FROM->TO	CIMARRON - DRAPER LAKE 345KV CKT 1	717	717	0.18126	109.6402	NELSON 230/20.0KV TRANSFORMER CKT 1
FDNS	00NR	2	16WP	G15_044	FROM->TO	CIMARRON - DRAPER LAKE 345KV CKT 1	717	717	0.18127	109.637	AS KING - EAU CLAIRE 345KV CKT 1
FDNS	00NR	2	16WP	G15_044	FROM->TO	CIMARRON - DRAPER LAKE 345KV CKT 1	717	717	0.18126	109.6345	GEN336152 1-WATERFORD UNIT#2
FDNS	00NR	2	16WP	G15_044	FROM->TO	CIMARRON - DRAPER LAKE 345KV CKT 1	717	717	0.18126	109.6339	ST FRANCIS 2 161/16.0KV TRANSFORMER CKT 2
FDNS	00NR	2	16WP	G15_044	FROM->TO	CIMARRON - DRAPER LAKE 345KV CKT 1	717	717	0.18126	109.6338	ST FRANCIS 345/161KV TRANSFORMER CKT 1
FDNS	00NR	2	16WP	G15_044	FROM->TO	CIMARRON - DRAPER LAKE 345KV CKT 1	717	717	0.18126	109.6334	GEN336151 1-WATERFORD UNIT#1
FDNS	00NR	2	16WP	G15_044	FROM->TO	CIMARRON - DRAPER LAKE 345KV CKT 1	717	717	0.18317	109.6324	BRYANT - MEMORIAL 138KV CKT 1
FDNS	00NR	2	16WP	G15_044	FROM->TO	CIMARRON - DRAPER LAKE 345KV CKT 1	717	717	0.18127	109.6287	P12:161:AEPW:EROGERS5:ECNTRTN5
FDNS	00NR	2	16WP	G15_044	FROM->TO	CIMARRON - DRAPER LAKE 345KV CKT 1	717	717	0.18126	109.6274	P12:138:AEPW:SHERID4:112GORE4
FDNS	00NR	2	16WP	G15_044	FROM->TO	CIMARRON - DRAPER LAKE 345KV CKT 1	717	717	0.18184	109.6258	HEALDTON - LOCO 138KV CKT 1
FDNS	00NR	2	16WP	G15_044	FROM->TO	CIMARRON - DRAPER LAKE 345KV CKT 1	717	717	0.18127	109.6228	P12:161:AEPW:DYESS5:ELMSPRNG:TONTITN5
FDNS	00NR	2	16WP	G15_044	FROM->TO	CIMARRON - DRAPER LAKE 345KV CKT 1	717	717	0.18161	109.6205	P12:138:AEPW:CORNVIL4:S.W.S.-4
FDNS	00NR	2	16WP	G15_044	FROM->TO	CIMARRON - DRAPER LAKE 345KV CKT 1	717	717	0.18129	109.6186	GRAND ISLAND - MCCOOL 345KV CKT 1
FDNS	00NR	2	16WP	G15_044	FROM->TO	CIMARRON - DRAPER LAKE 345KV CKT 1	717	717	0.18126	109.618	GEN334392 1-EXXON MOBIL IPP 1
FDNS	00NR	2	16WP	G15_044	FROM->TO	CIMARRON - DRAPER LAKE 345KV CKT 1	717	717	0.18146	109.6153	HEFNER - TULSA 138KV CKT 1
FDNS	00NR	2	16WP	G15_044	FROM->TO	CIMARRON - DRAPER LAKE 345KV CKT 1	717	717	0.18129	109.6133	P12:161:AEPW-SWPA:BEAVERS:EROGERS5
FDNS	00NR	2	16WP	G15_044	FROM->TO	CIMARRON - DRAPER LAKE 345KV CKT 1	717	717	0.18154	109.6125	COMANCHE TAP - OMPA-DUNCAN 840 138KV CKT 1
FDNS	00NR	2	16WP	G15_044	FROM->TO	CIMARRON - DRAPER LAKE 345KV CKT 1	717	717	0.18126	109.6118	GEN334393 1-EXXON MOBIL IPP 2
FDNS	00NR	2	16WP	G15_044	FROM->TO	CIMARRON - DRAPER LAKE 345KV CKT 1	717	717	0.18126	109.6118	GEN334394 1-EXXON MOBIL IPP 3
FDNS	00NR	2	16WP	G15_044	FROM->TO	CIMARRON - DRAPER LAKE 345KV CKT 1	717	717	0.1814	109.6101	FLETCHER - MARLOW JCT 69KV CKT 1
FDNS	00NR	2	16WP	G15_044	FROM->TO	CIMARRON - DRAPER LAKE 345KV CKT 1	717	717	0.18134	109.6034	G15088_T 345.00 - PAULINE 345KV CKT 1
FDNS	00NR	2	16WP	G15_044	FROM->TO	CIMARRON - DRAPER LAKE 345KV CKT 1	717	717	0.18123	109.5977	MC NIEL 500/115KV TRANSFORMER CKT 1
FDNS	00NR	2	16WP	G15_044	FROM->TO	CIMARRON - DRAPER LAKE 345KV CKT 1	717	717	0.18126	109.5972	GEN501972 1-EVANGELINE UNIT 7-2
FDNS	00NR	2	16WP	G15_044	FROM->TO	CIMARRON - DRAPER LAKE 345KV CKT 1	717	717	0.18126	109.5971	GEN501971 1-EVANGELINE UNIT 7-1
FDNS	00NR	2	16WP	G15_044	FROM->TO	CIMARRON - DRAPER LAKE 345KV CKT 1	717	717	0.18112	109.5939	KELLYAV4 138.00 - MEMORIAL 138KV CKT 1
FDNS	00NR	2	16WP	G15_044	FROM->TO	CIMARRON - DRAPER LAKE 345KV CKT 1	717	717	0.18133	109.5932	BROOKLINE - MORGAN 345KV CKT 1
FDNS	00NR	2	16WP	G15_044	FROM->TO	CIMARRON - DRAPER LAKE 345KV CKT 1	717	717	0.18133	109.5932	BROOKLINE - MORGAN 345KV CKT 1
FDNS	00NR	2	16WP	G15_044	FROM->TO	CIMARRON - DRAPER LAKE 345KV CKT 1	717	717	0.18134	109.593	P12:138:AEPW:MOUNDRD4:SHIDLER4
FDNS	00NR	2	16WP	G15_044	FROM->TO	CIMARRON - DRAPER LAKE 345KV CKT 1	717	717	0.18119	109.5926	BISMARK - HOT SPRINGS WEST BUS 115KV CKT 1
FDNS	00NR	2	16WP	G15_044	FROM->TO	CIMARRON - DRAPER LAKE 345KV CKT 1	717	717	0.18172	109.5925	BODLE - PARK PLACE 138KV CKT 1
FDNS	00NR	2	16WP	G15_044	FROM->TO	CIMARRON - DRAPER LAKE 345KV CKT 1	717	717	0.18126	109.5919	GEN337764 1-TRACTEBEL UNIT C1
FDNS	00NR	2	16WP	G15_044	FROM->TO	CIMARRON - DRAPER LAKE 345KV CKT 1	717	717	0.18126	109.5919	GEN337765 1-TRACTEBEL UNIT C2
FDNS	00NR	2	16WP	G15_044	FROM->TO	CIMARRON - DRAPER LAKE 345KV CKT 1	717	717	0.18129	109.5882	MCCOOL - MOORE 345KV CKT 1
FDNS	00NR	2	16WP	G15_044	FROM->TO	CIMARRON - DRAPER LAKE 345KV CKT 1	717	717	0.18218	109.5879	NORTHEAST STATION - ONETA 345KV CKT 1
FDNS	00NR	2	16WP	G15_044	FROM->TO	CIMARRON - DRAPER LAKE 345KV CKT 1	717	717	0.18218	109.5879	NORTHEAST STATION - ONETA 345KV CKT 1
FDNS	00NR	2	16WP	G15_044	FROM->TO	CIMARRON - DRAPER LAKE 345KV CKT 1	717	717	0.18128	109.5873	P12:138:WFEC:MSL15
FDNS	00NR	2	16WP	G15_044	FROM->TO	CIMARRON - DRAPER LAKE 345KV CKT 1	717	717	0.18126	109.5868	GEN336242 1-1NMIL ST1 18.000
FDNS	00NR	2	16WP	G15_044	FROM->TO	CIMARRON - DRAPER LAKE 345KV CKT 1	717	717	0.18126	109.5861	GEN334431 1-SABINE UNIT 1
FDNS	00NR	2	16WP	G15_044	FROM->TO	CIMARRON - DRAPER LAKE 345KV CKT 1	717	717	0.18126	109.5861	GEN334432 1-SABINE UNIT 2
FDNS	00NR	2	16WP	G15_044	FROM->TO	CIMARRON - DRAPER LAKE 345KV CKT 1	717	717	0.18184	109.5851	HEALDTON - RINGLING 138KV CKT 1
FDNS	00NR	2	16WP	G15_044	FROM->TO	CIMARRON - DRAPER LAKE 345KV CKT 1	717	717	0.18119	109.5847	BRISTOW - SILVER CITY 138KV CKT 1
FDNS	00NR	2	16WP	G15_044	FROM->TO	CIMARRON - DRAPER LAKE 345KV CKT 1	717	717	0.18126	109.5828	GEN501912 1-ACADIA UNIT CT1B
FDNS	00NR	2	16WP	G15_044	FROM->TO	CIMARRON - DRAPER LAKE 345KV CKT 1	717	717	0.18126	109.5821	GEN501911 1-ACADIA UNIT CT1A
FDNS	00NR	2	16WP	G15_044	FROM->TO	CIMARRON - DRAPER LAKE 345KV CKT 1	717	717	0.1833	109.5808	COLE - OUSW4 138KV CKT 1

SOLUTION	GROUP	SCENARIO	SEASON	SOURCE	DIRECTION	MONITORED ELEMENT	RATEA (MVA)	RATEB(MVA)	TDF	TC%LOADING (% MVA)	CONTINGENCY
FDNS	00NR	2	16WP	G15_044	FROM->TO	CIMARRON - DRAPER LAKE 345KV CKT 1	717	717	0.18131	109.5802	COTTONWOOD CREEK - MARSHALL 138KV CKT 1
FDNS	00NR	2	16WP	G15_044	FROM->TO	CIMARRON - DRAPER LAKE 345KV CKT 1	717	717	0.18164	109.5794	HAMMETT TAP - HORSESHOE LAKE 138KV CKT 1
FDNS	00NR	2	16WP	G15_044	FROM->TO	CIMARRON - DRAPER LAKE 345KV CKT 1	717	717	0.18131	109.576	MARSHALL - WOODRING 138KV CKT 1
FDNS	00NR	2	16WP	G15_044	FROM->TO	CIMARRON - DRAPER LAKE 345KV CKT 1	717	717	0.18134	109.5759	SHIDLER - WEST PAWHUSKA 138KV CKT 1
FDNS	00NR	2	16WP	G15_044	FROM->TO	CIMARRON - DRAPER LAKE 345KV CKT 1	717	717	0.18121	109.5747	PIEDMONT - RICHRDS 138KV CKT 1
FDNS	00NR	2	16WP	G15_044	FROM->TO	CIMARRON - DRAPER LAKE 345KV CKT 1	717	717	0.18161	109.5712	COUNCIL - MUSTANG 138KV CKT 1
FDNS	00NR	2	16WP	G15_044	FROM->TO	CIMARRON - DRAPER LAKE 345KV CKT 1	717	717	0.18128	109.5683	ARPIN B4 345.00 - EAU CLAIRE 345KV CKT 1
FDNS	00NR	2	16WP	G15_044	FROM->TO	CIMARRON - DRAPER LAKE 345KV CKT 1	717	717	0.18126	109.565	CYPRESS - HARTBURG 500KV CKT 1
FDNS	00NR	2	16WP	G15_044	FROM->TO	CIMARRON - DRAPER LAKE 345KV CKT 1	717	717	0.18112	109.5628	KELLYAV4 138.00 - REMNGTON PARK 138KV CKT 1
FDNS	00NR	2	16WP	G15_044	FROM->TO	CIMARRON - DRAPER LAKE 345KV CKT 1	717	717	0.18134	109.5601	PAWHUSKA TAP - WEST PAWHUSKA 138KV CKT 1
FDNS	00NR	2	16WP	G15_044	FROM->TO	CIMARRON - DRAPER LAKE 345KV CKT 1	717	717	0.18119	109.5595	ALPINE AECC - BISMARK 115KV CKT 1
FDNS	00NR	2	16WP	G15_044	FROM->TO	CIMARRON - DRAPER LAKE 345KV CKT 1	717	717	0.18126	109.5594	GEN515266 1-AES 1G
FDNS	00NR	2	16WP	G15_044	FROM->TO	CIMARRON - DRAPER LAKE 345KV CKT 1	717	717	0.18126	109.5594	GEN515267 1-AES 2G
FDNS	00NR	2	16WP	G15_044	FROM->TO	CIMARRON - DRAPER LAKE 345KV CKT 1	717	717	0.1814	109.5584	HAMMETT2 - MEEKER 138KV CKT 1
FDNS	00NR	2	16WP	G15_044	FROM->TO	CIMARRON - DRAPER LAKE 345KV CKT 1	717	717	0.18189	109.557	CIVIT - PAOLI 138KV CKT 1
FDNS	00NR	2	16WP	G15_044	FROM->TO	CIMARRON - DRAPER LAKE 345KV CKT 1	717	717	0.18146	109.5559	CORN TAP - CORNVILLE 138KV CKT 1
FDNS	00NR	2	16WP	G15_044	FROM->TO	CIMARRON - DRAPER LAKE 345KV CKT 1	717	717	0.18317	109.5546	ACORN 4 138.00 - BRYANT 138KV CKT 1
FDNS	00NR	2	16WP	G15_044	FROM->TO	CIMARRON - DRAPER LAKE 345KV CKT 1	717	717	0.18126	109.544	GEN337430 1-PERYVILLE UNIT #3
FDNS	00NR	2	16WP	G15_044	FROM->TO	CIMARRON - DRAPER LAKE 345KV CKT 1	717	717	0.18184	109.5437	RINGLING - SOUTH WILSON 138KV CKT 1
FDNS	00NR	2	16WP	G15_044	FROM->TO	CIMARRON - DRAPER LAKE 345KV CKT 1	717	717	0.18126	109.5431	GEN337428 1-PERYVILLE UNIT #1
FDNS	00NR	2	16WP	G15_044	FROM->TO	CIMARRON - DRAPER LAKE 345KV CKT 1	717	717	0.18126	109.5426	P12:69:AEPW:L.E.S.-2:LAW WC2
FDNS	00NR	2	16WP	G15_044	FROM->TO	CIMARRON - DRAPER LAKE 345KV CKT 1	717	717	0.18126	109.5408	SABINE 230/24.0KV TRANSFORMER CKT 1
FDNS	00NR	2	16WP	G15_044	FROM->TO	CIMARRON - DRAPER LAKE 345KV CKT 1	717	717	0.18122	109.5391	LAYFLD8 500.00 - MOUNT OLIVE 500KV CKT 1
FDNS	00NR	2	16WP	G15_044	FROM->TO	CIMARRON - DRAPER LAKE 345KV CKT 1	717	717	0.18122	109.5391	LAYFLD8 500.00 - MOUNT OLIVE 500KV CKT 1
FDNS	00NR	2	16WP	G15_044	FROM->TO	CIMARRON - DRAPER LAKE 345KV CKT 1	717	717	0.18112	109.5293	REMNGTON PARK - STONEWALL 138KV CKT 1
FDNS	00NR	2	16WP	G15_044	FROM->TO	CIMARRON - DRAPER LAKE 345KV CKT 1	717	717	0.18161	109.5182	COUNCIL - WESTOAKS 138KV CKT 1
FDNS	00NR	2	16WP	G15_044	FROM->TO	CIMARRON - DRAPER LAKE 345KV CKT 1	717	717	0.18151	109.5129	CHERRY CREEK - PLEASANT VALLEY 138KV CKT 1
FDNS	00NR	2	16WP	G15_044	FROM->TO	CIMARRON - DRAPER LAKE 345KV CKT 1	717	717	0.18126	109.0896	BASE CASE
FDNS	00NR	2	16WP	G15_044	FROM->TO	CIMARRON - DRAPER LAKE 345KV CKT 1	717	717	0.18136	108.8045	CHISHOLM6 230.00 - SWEETWATER 230KV CKT 1
FDNS	00NR	2	16WP	G15_044	FROM->TO	CIMARRON - DRAPER LAKE 345KV CKT 1	717	717	0.18216	108.713	BURGETT4 138.00 - DANFORTH 138KV CKT 1
FDNS	00NR	2	16WP	G15_044	FROM->TO	CIMARRON - DRAPER LAKE 345KV CKT 1	717	717	0.18216	108.7122	BURGETT4 138.00 - RNDBARN4 138.00 138KV CKT 1
FDNS	00NR	2	16WP	G15_044	FROM->TO	CIMARRON - DRAPER LAKE 345KV CKT 1	717	717	0.18216	108.6996	ARCADIA - RNDBARN4 138.00 138KV CKT 1
FDNS	00NR	2	16WP	G15_044	FROM->TO	CIMARRON - DRAPER LAKE 345KV CKT 1	717	717	0.18126	108.6816	GEN511848 1-SOUTHWESTERN STATION #3
FDNS	00NR	2	16WP	G15_044	FROM->TO	CIMARRON - DRAPER LAKE 345KV CKT 1	717	717	0.18126	108.6812	GEN515550 1-MNCWND31 0.6900
FDNS	00NR	2	16WP	G15_044	FROM->TO	CIMARRON - DRAPER LAKE 345KV CKT 1	717	717	0.18126	108.6699	GEN562611 1-G14_064_3 0.6900
FDNS	00NR	2	16WP	G15_044	FROM->TO	CIMARRON - DRAPER LAKE 345KV CKT 1	717	717	0.18087	108.6635	BORDER 7345.00 - TUCO_2 345.00 345KV CKT 1
FDNS	00NR	2	16WP	G15_044	FROM->TO	CIMARRON - DRAPER LAKE 345KV CKT 1	717	717	0.18122	108.6493	G11-14T 345.00 - WOODWARD DISTRICT EHV 345KV CKT 1
FDNS	00NR	2	16WP	G15_044	FROM->TO	CIMARRON - DRAPER LAKE 345KV CKT 1	717	717	0.18122	108.6493	G11-14T 345.00 - WOODWARD DISTRICT EHV 345KV CKT 2
FDNS	00NR	2	16WP	G15_044	FROM->TO	CIMARRON - DRAPER LAKE 345KV CKT 1	717	717	0.18248	108.6383	FOREST HILL - MAUD 138KV CKT 1
FDNS	00NR	2	16WP	G15_044	FROM->TO	CIMARRON - DRAPER LAKE 345KV CKT 1	717	717	0.18126	108.633	GEN515601 1-KNGFSR11 0.7000
FDNS	00NR	2	16WP	G15_044	FROM->TO	CIMARRON - DRAPER LAKE 345KV CKT 1	717	717	0.18126	108.6311	GEN629066 4-PRAIRIE CREEK GENERATORFOR UNIT NO4
FDNS	00NR	2	16WP	G15_044	FROM->TO	CIMARRON - DRAPER LAKE 345KV CKT 1	717	717	0.18126	108.6302	GEN641089 2-ENERGY CENTER 2
FDNS	00NR	2	16WP	G15_044	FROM->TO	CIMARRON - DRAPER LAKE 345KV CKT 1	717	717	0.18126	108.6252	GEN659125 1-COVEY
FDNS	00NR	2	16WP	G15_044	FROM->TO	CIMARRON - DRAPER LAKE 345KV CKT 1	717	717	0.18126	108.6245	GEN563062 1-G15071_3 0.6900
FDNS	00NR	2	16WP	G15_044	FROM->TO	CIMARRON - DRAPER LAKE 345KV CKT 1	717	717	0.18126	108.6224	GEN600050 1-FEP
FDNS	00NR	2	16WP	G15_044	FROM->TO	CIMARRON - DRAPER LAKE 345KV CKT 1	717	717	0.18133	108.6174	7MCCREDIE 345.00 - 7OVERTON 345.00 345KV CKT 1
FDNS	00NR	2	16WP	G15_044	FROM->TO	CIMARRON - DRAPER LAKE 345KV CKT 1	717	717	0.18206	108.6162	HUNTERS7 345.00 - RENFROW7 345.00 345KV CKT 1
FDNS	00NR	2	16WP	G15_044	FROM->TO	CIMARRON - DRAPER LAKE 345KV CKT 1	717	717	0.18126	108.615	GEN562042 1-G11_014_3 0.6900
FDNS	00NR	2	16WP	G15_044	FROM->TO	CIMARRON - DRAPER LAKE 345KV CKT 1	717	717	0.18076	108.6121	P12:138:WFEC:MSL10
FDNS	00NR	2	16WP	G15_044	FROM->TO	CIMARRON - DRAPER LAKE 345KV CKT 1	717	717	0.18126	108.6068	GEN539670 4-JUDSON LARGE GENERATOR
FDNS	00NR	2	16WP	G15_044	FROM->TO	CIMARRON - DRAPER LAKE 345KV CKT 1	717	717	0.18126	108.6008	GEN600071 10-RIVER SIDE
FDNS	00NR	2	16WP	G15_044	FROM->TO	CIMARRON - DRAPER LAKE 345KV CKT 1	717	717	0.18126	108.6007	GEN600070 9-RIVER SIDE
FDNS	00NR	2	16WP	G15_044	FROM->TO	CIMARRON - DRAPER LAKE 345KV CKT 1	717	717	0.18126	108.5955	GEN672303 3-BOUNDARY DAM GENERATOR 3
FDNS	00NR	2	16WP	G15_044	FROM->TO	CIMARRON - DRAPER LAKE 345KV CKT 1	717	717	0.18126	108.5955	GEN672304 4-BOUNDARY DAM GENERATOR 4
FDNS	00NR	2	16WP	G15_044	FROM->TO	CIMARRON - DRAPER LAKE 345KV CKT 1	717	717	0.18126	108.5955	GEN672305 5-BOUNDARY DAM GENERATOR 5
FDNS	00NR	2	16WP	G15_044	FROM->TO	CIMARRON - DRAPER LAKE 345KV CKT 1	717	717	0.18126	108.5944	GEN600007 7-RIVERSIDE GEN 7
FDNS	00NR	2	16WP	G15_044	FROM->TO	CIMARRON - DRAPER LAKE 345KV CKT 1	717	717	0.18126	108.5939	GEN600067 9-HIGH BRIDGE
FDNS	00NR	2	16WP	G15_044	FROM->TO	CIMARRON - DRAPER LAKE 345KV CKT 1	717	717	0.18126	108.5938	GEN562270 1-G12-020-2 0.6900
FDNS	00NR	2	16WP	G15_044	FROM->TO	CIMARRON - DRAPER LAKE 345KV CKT 1	717	717	0.18126	108.5905	GEN615052 1-CAMBRIDGE GENERATING STATION
FDNS	00NR	2	16WP	G15_044	FROM->TO	CIMARRON - DRAPER LAKE 345KV CKT 1	717	717	0.18177	108.5895	RENFROW7 345.00 - VIOLA 7 345.00 345KV CKT 1
FDNS	00NR	2	16WP	G15_044	FROM->TO	CIMARRON - DRAPER LAKE 345KV CKT 1	717	717	0.18126	108.5879	GEN600011 5-BLACK DOG GEN 1
FDNS	00NR	2	16WP	G15_044	FROM->TO	CIMARRON - DRAPER LAKE 345KV CKT 1	717	717	0.18126	108.5835	GEN541151 3-SIBLEY GENERATING UNIT #3
FDNS	00NR	2	16WP	G15_044	FROM->TO	CIMARRON - DRAPER LAKE 345KV CKT 1	717	717	0.18126	108.5825	GEN600014 4-BLACK DOG GEN 4
FDNS	00NR	2	16WP	G15_044	FROM->TO	CIMARRON - DRAPER LAKE 345KV CKT 1	717	717	0.18126	108.576	GEN629067 1-EMERY GAS TURBINE 1
FDNS	00NR	2	16WP	G15_044	FROM->TO	CIMARRON - DRAPER LAKE 345KV CKT 1	717	717	0.18126	108.5756	GEN562802 1-G15039_3 0.3570
FDNS	00NR	2	16WP	G15_044	FROM->TO	CIMARRON - DRAPER LAKE 345KV CKT 1	717	717	0.18126	108.5753	GEN615032 2-PLEASANT VALLEY
FDNS	00NR	2	16WP	G15_044	FROM->TO	CIMARRON - DRAPER LAKE 345KV CKT 1	717	717	0.18126	108.5747	GEN563102 1-G15075_3 0.5500
FDNS	00NR	2	16WP	G15_044	FROM->TO	CIMARRON - DRAPER LAKE 345KV CKT 1	717	717	0.18178	108.5713	DELAWARE - NORTHEAST STATION 345KV CKT 1
FDNS	00NR	2	16WP	G15_044	FROM->TO	CIMARRON - DRAPER LAKE 345KV CKT 1	717	717	0.18178	108.5713	DELAWARE - NORTHEAST STATION 345KV CKT 1
FDNS	00NR	2	16WP	G15_044	FROM->TO	CIMARRON - DRAPER LAKE 345KV CKT 1	717	717	0.18126	108.5713	GEN562602 1-G15_029_3 0.6900
FDNS	00NR	2	16WP	G15_044	FROM->TO	CIMARRON - DRAPER LAKE 345KV CKT 1	717	717	0.18126	108.5709	GEN515611 1-NBUFFRG1 0.6900
FDNS	00NR	2	16WP	G15_044	FROM->TO	CIMARRON - DRAPER LAKE 345KV CKT 1	717	717	0.18126	108.5709	GEN560217 1-G07_062_6 0.6900
FDNS	00NR	2	16WP	G15_044	FROM->TO	CIMARRON - DRAPER LAKE 345KV CKT 1	717	717	0.18126	108.5709	GEN560218 1-G07_062_7 0.6900
FDNS	00NR	2	16WP	G15_044	FROM->TO	CIMARRON - DRAPER LAKE 345KV CKT 1	717	717	0.18087	108.5669	BORDER 7345.00 - WOODWARD DISTRICT EHV 345KV CKT 1
FDNS	00NR	2	16WP	G15_044	FROM->TO	CIMARRON - DRAPER LAKE 345KV CKT 1	717	717	0.18042	108.5629	CHISNEY - CLARKSVILLE 138KV CKT 1
FDNS	00NR	2	16WP	G15_044	FROM->TO	CIMARRON - DRAPER LAKE 345KV CKT 1	717	717	0.18136	108.5624	7MCCREDIE 345.00 - 7MONTGMRY 345.00 345KV CKT 1
FDNS	00NR	2	16WP	G15_044	FROM->TO	CIMARRON - DRAPER LAKE 345KV CKT 1	717	717	0.18126	108.554	GEN652353 2-GR PRAIRIEG 0.6900
FDNS	00NR	2	16WP	G15_044	FROM->TO	CIMARRON - DRAPER LAKE 345KV CKT 1	717	717	0.18126	108.5534	GEN563282 1-G15094_3 0.6900
FDNS	00NR	2	16WP	G15_044	FROM->TO	CIMARRON - DRAPER LAKE 345KV CKT 1	717	717	0.18126	108.5504	GEN562812 1-G15040_3 0.3570

SOLUTION	GROUP	SCENARIO	SEASON	SOURCE	DIRECTION	MONITORED ELEMENT	RATEA (MVA)	RATEB(MVA)	TDF	TC%LOADING (% MVA)	CONTINGENCY
FDNS	00NR	2	16WP	G15_044	FROM->TO	CIMARRON - DRAPER LAKE 345KV CKT 1	717	717	0.18126	108.5441	GEN563132 1-G15078_3 0.3570
FDNS	00NR	2	16WP	G15_044	FROM->TO	CIMARRON - DRAPER LAKE 345KV CKT 1	717	717	0.18126	108.5439	GEN600017 C-LS POWER CT
FDNS	00NR	2	16WP	G15_044	FROM->TO	CIMARRON - DRAPER LAKE 345KV CKT 1	717	717	0.18187	108.5308	SEMINOLE - VANOSTP4 138.00 138KV CKT 1
FDNS	00NR	2	16WP	G15_044	FROM->TO	CIMARRON - DRAPER LAKE 345KV CKT 1	717	717	0.18233	108.5283	CHISHOLM7 345.00 - GRACEMONT 345KV CKT 1
FDNS	00NR	2	16WP	G15_044	FROM->TO	CIMARRON - DRAPER LAKE 345KV CKT 1	717	717	0.18126	108.5225	GEN515591 1-PALDRW11 0.6900
FDNS	00NR	2	16WP	G15_044	FROM->TO	CIMARRON - DRAPER LAKE 345KV CKT 1	717	717	0.18126	108.5225	GEN524285 1-WILDORADO WIND GEN
FDNS	00NR	2	16WP	G15_044	FROM->TO	CIMARRON - DRAPER LAKE 345KV CKT 1	717	717	0.18124	108.5199	P12:138:AEPW:SHAM4WT:CHILD4WT
FDNS	00NR	2	16WP	G15_044	FROM->TO	CIMARRON - DRAPER LAKE 345KV CKT 1	717	717	0.18098	108.5167	P12:138:OKGE:3TERM36
FDNS	00NR	2	16WP	G15_044	FROM->TO	CIMARRON - DRAPER LAKE 345KV CKT 1	717	717	0.18126	108.516	GEN629070 2-BEAVER CHANNEL GENERATORFOR UNIT NO 2
FDNS	00NR	2	16WP	G15_044	FROM->TO	CIMARRON - DRAPER LAKE 345KV CKT 1	717	717	0.18126	108.515	GEN526331 1-JONES GEN #1 22 KV
FDNS	00NR	2	16WP	G15_044	FROM->TO	CIMARRON - DRAPER LAKE 345KV CKT 1	717	717	0.18126	108.515	GEN526332 1-JONES GEN #2 21 KV
FDNS	00NR	2	16WP	G15_044	FROM->TO	CIMARRON - DRAPER LAKE 345KV CKT 1	717	717	0.18126	108.5128	GEN672392 1-NBECGT1G 18.000
FDNS	00NR	2	16WP	G15_044	FROM->TO	CIMARRON - DRAPER LAKE 345KV CKT 1	717	717	0.18126	108.5107	P12:138:WFEC:MSL07
FDNS	00NR	2	16WP	G15_044	FROM->TO	CIMARRON - DRAPER LAKE 345KV CKT 1	717	717	0.18126	108.5107	P12:138:WFEC-AEPW:HUGOPP4:ATOKA--4
FDNS	00NR	2	16WP	G15_044	FROM->TO	CIMARRON - DRAPER LAKE 345KV CKT 1	717	717	0.18138	108.5101	CANADIAN RIVER - MCALESTER SOUTH 138KV CKT 1
FDNS	00NR	2	16WP	G15_044	FROM->TO	CIMARRON - DRAPER LAKE 345KV CKT 1	717	717	0.18138	108.5101	CANADIAN RIVER - MCALESTER SOUTH 138KV CKT 1
FDNS	00NR	2	16WP	G15_044	FROM->TO	CIMARRON - DRAPER LAKE 345KV CKT 1	717	717	0.18138	108.5091	CANADIAN RIVER () 345/138/13.8KV TRANSFORMER CKT 1
FDNS	00NR	2	16WP	G15_044	FROM->TO	CIMARRON - DRAPER LAKE 345KV CKT 1	717	717	0.18138	108.5091	CANADIAN RIVER () 345/138/13.8KV TRANSFORMER CKT 1
FDNS	00NR	2	16WP	G15_044	FROM->TO	CIMARRON - DRAPER LAKE 345KV CKT 1	717	717	0.18098	108.5058	P12:138:AEPW:WELETK4:EARLSBORO4
FDNS	00NR	2	16WP	G15_044	FROM->TO	CIMARRON - DRAPER LAKE 345KV CKT 1	717	717	0.18126	108.5051	GEN629071 1-BURLINGTON GENERATOR FOR UNIT NO 1 E
FDNS	00NR	2	16WP	G15_044	FROM->TO	CIMARRON - DRAPER LAKE 345KV CKT 1	717	717	0.18107	108.5042	EARLSBORO 4138.00 - FIXICO TAP 138KV CKT 1
FDNS	00NR	2	16WP	G15_044	FROM->TO	CIMARRON - DRAPER LAKE 345KV CKT 1	717	717	0.18126	108.5	GEN300003 1-THOMAS HILL UNIT 3
FDNS	00NR	2	16WP	G15_044	FROM->TO	CIMARRON - DRAPER LAKE 345KV CKT 1	717	717	0.18118	108.4969	P12:138:AEPW-SWPA:LONEOAK4:TUPELO4
FDNS	00NR	2	16WP	G15_044	FROM->TO	CIMARRON - DRAPER LAKE 345KV CKT 1	717	717	0.18118	108.4969	P12:138:WFEC:MSL06
FDNS	00NR	2	16WP	G15_044	FROM->TO	CIMARRON - DRAPER LAKE 345KV CKT 1	717	717	0.18126	108.4909	GEN615010 1-STANTON4
FDNS	00NR	2	16WP	G15_044	FROM->TO	CIMARRON - DRAPER LAKE 345KV CKT 1	717	717	0.18126	108.4902	GEN562429 1-G13-029 0.6900
FDNS	00NR	2	16WP	G15_044	FROM->TO	CIMARRON - DRAPER LAKE 345KV CKT 1	717	717	0.18151	108.485	P12:138:WFEC:MSL16
FDNS	00NR	2	16WP	G15_044	FROM->TO	CIMARRON - DRAPER LAKE 345KV CKT 1	717	717	0.18126	108.4837	GEN562074 1-G1149G1504 0.6900
FDNS	00NR	2	16WP	G15_044	FROM->TO	CIMARRON - DRAPER LAKE 345KV CKT 1	717	717	0.18126	108.4787	GEN532663 1-LAWRENCE ENERGY CENTER UNIT 5
FDNS	00NR	2	16WP	G15_044	FROM->TO	CIMARRON - DRAPER LAKE 345KV CKT 1	717	717	0.18126	108.4699	GEN615021 1-GRE-ER 14G 16.000
FDNS	00NR	2	16WP	G15_044	FROM->TO	CIMARRON - DRAPER LAKE 345KV CKT 1	717	717	0.18042	108.469	CHISNEY - HIGHLAND 138KV CKT 1
FDNS	00NR	2	16WP	G15_044	FROM->TO	CIMARRON - DRAPER LAKE 345KV CKT 1	717	717	0.18126	108.4688	GEN562596 1-G14_059_3 0.6900
FDNS	00NR	2	16WP	G15_044	FROM->TO	CIMARRON - DRAPER LAKE 345KV CKT 1	717	717	0.18126	108.4672	INDEPENDENCE 500/26.0KV TRANSFORMER CKT 1
FDNS	00NR	2	16WP	G15_044	FROM->TO	CIMARRON - DRAPER LAKE 345KV CKT 1	717	717	0.18126	108.4663	GEN560105 1-G08-22 0.6900
FDNS	00NR	2	16WP	G15_044	FROM->TO	CIMARRON - DRAPER LAKE 345KV CKT 1	717	717	0.18126	108.4561	GEN515365 1-CENT 21 0.7000
FDNS	00NR	2	16WP	G15_044	FROM->TO	CIMARRON - DRAPER LAKE 345KV CKT 1	717	717	0.18233	108.4546	CHISHOLM7 345.00 (CHISHOLM) 345/230/13.2KV TRANSFORMER CKT 1
FDNS	00NR	2	16WP	G15_044	FROM->TO	CIMARRON - DRAPER LAKE 345KV CKT 1	717	717	0.18126	108.4545	BURLINGTON NO1 + NO 2 + NO 3 161/20.0KV TRANSFORMER CKT 1
FDNS	00NR	2	16WP	G15_044	FROM->TO	CIMARRON - DRAPER LAKE 345KV CKT 1	717	717	0.18241	108.4532	MAUD - SEMINOLE 138KV CKT 1
FDNS	00NR	2	16WP	G15_044	FROM->TO	CIMARRON - DRAPER LAKE 345KV CKT 1	717	717	0.18126	108.4471	GEN562983 1-G15061_4 0.6900
FDNS	00NR	2	16WP	G15_044	FROM->TO	CIMARRON - DRAPER LAKE 345KV CKT 1	717	717	0.18126	108.4471	GEN562984 1-G15061_5 0.6900
FDNS	00NR	2	16WP	G15_044	FROM->TO	CIMARRON - DRAPER LAKE 345KV CKT 1	717	717	0.18129	108.4465	GRPRAR1-LNX3345.00 - HOLT.CO3 345.00 345KV CKT 1
FDNS	00NR	2	16WP	G15_044	FROM->TO	CIMARRON - DRAPER LAKE 345KV CKT 1	717	717	0.18126	108.4398	GEN527882 1-CUNNINGHAM GEN #2 20 KV
FDNS	00NR	2	16WP	G15_044	FROM->TO	CIMARRON - DRAPER LAKE 345KV CKT 1	717	717	0.18137	108.4394	OVEXFRMCCOVE
FDNS	00NR	2	16WP	G15_044	FROM->TO	CIMARRON - DRAPER LAKE 345KV CKT 1	717	717	0.18129	108.4385	GRPRAR1-LNX3345.00 - GRPRAR 345KV CKT Z
FDNS	00NR	2	16WP	G15_044	FROM->TO	CIMARRON - DRAPER LAKE 345KV CKT 1	717	717	0.18158	108.436	MINGO - SETAB 345KV CKT 1
FDNS	00NR	2	16WP	G15_044	FROM->TO	CIMARRON - DRAPER LAKE 345KV CKT 1	717	717	0.18158	108.436	MINGO - SETAB 345KV CKT 1
FDNS	00NR	2	16WP	G15_044	FROM->TO	CIMARRON - DRAPER LAKE 345KV CKT 1	717	717	0.18126	108.4327	GEN562017 1-G11_022_3 0.6900
FDNS	00NR	2	16WP	G15_044	FROM->TO	CIMARRON - DRAPER LAKE 345KV CKT 1	717	717	0.18133	108.4316	DELL 500 - INDEPENDENCE 500KV CKT 1
FDNS	00NR	2	16WP	G15_044	FROM->TO	CIMARRON - DRAPER LAKE 345KV CKT 1	717	717	0.18126	108.427	GEN562550 1-G14_040_3 0.6900
FDNS	00NR	2	16WP	G15_044	FROM->TO	CIMARRON - DRAPER LAKE 345KV CKT 1	717	717	0.18098	108.4219	P12:138:AEPW-OGE:WELETK4:MAUD 4
FDNS	00NR	2	16WP	G15_044	FROM->TO	CIMARRON - DRAPER LAKE 345KV CKT 1	717	717	0.18107	108.4183	EARLSBORO 4138.00 - MAUD 138KV CKT 1
FDNS	00NR	2	16WP	G15_044	FROM->TO	CIMARRON - DRAPER LAKE 345KV CKT 1	717	717	0.18107	108.4183	EARLSBORO 4138.00 - MAUD 138KV CKT 1
FDNS	00NR	2	16WP	G15_044	FROM->TO	CIMARRON - DRAPER LAKE 345KV CKT 1	717	717	0.18126	108.4115	GEN562432 1-G13-030 0.6900
FDNS	00NR	2	16WP	G15_044	FROM->TO	CIMARRON - DRAPER LAKE 345KV CKT 1	717	717	0.18126	108.4055	GEN515606 1-CANDN11 0.6900
FDNS	00NR	2	16WP	G15_044	FROM->TO	CIMARRON - DRAPER LAKE 345KV CKT 1	717	717	0.18126	108.4055	GEN515607 1-CANDN12 0.6900
FDNS	00NR	2	16WP	G15_044	FROM->TO	CIMARRON - DRAPER LAKE 345KV CKT 1	717	717	0.18126	108.4016	GEN524295 1-SPNSPUR_WND10.6900
FDNS	00NR	2	16WP	G15_044	FROM->TO	CIMARRON - DRAPER LAKE 345KV CKT 1	717	717	0.18126	108.3952	GEN345671 2-1RUSH G2 18.000
FDNS	00NR	2	16WP	G15_044	FROM->TO	CIMARRON - DRAPER LAKE 345KV CKT 1	717	717	0.18126	108.3932	GEN345670 1-1RUSH G1 18.000
FDNS	00NR	2	16WP	G15_044	FROM->TO	CIMARRON - DRAPER LAKE 345KV CKT 1	717	717	0.18126	108.3903	GEN562832 1-G15042_3 0.6900
FDNS	00NR	2	16WP	G15_044	FROM->TO	CIMARRON - DRAPER LAKE 345KV CKT 1	717	717	0.18126	108.384	GEN515443 1-MNCOWND1 0.7000
FDNS	00NR	2	16WP	G15_044	FROM->TO	CIMARRON - DRAPER LAKE 345KV CKT 1	717	717	0.18126	108.3788	GEN562794 1-G15038_5 0.6900
FDNS	00NR	2	16WP	G15_044	FROM->TO	CIMARRON - DRAPER LAKE 345KV CKT 1	717	717	0.18126	108.3788	GEN562795 1-G15038_6 0.6900
FDNS	00NR	2	16WP	G15_044	FROM->TO	CIMARRON - DRAPER LAKE 345KV CKT 1	717	717	0.18126	108.3752	THOMAS HILL 161/22.0KV TRANSFORMER CKT 1
FDNS	00NR	2	16WP	G15_044	FROM->TO	CIMARRON - DRAPER LAKE 345KV CKT 1	717	717	0.18126	108.3714	GEN562512 1-G14_020_3 0.6900
FDNS	00NR	2	16WP	G15_044	FROM->TO	CIMARRON - DRAPER LAKE 345KV CKT 1	717	717	0.18126	108.3713	P12:230:UMZB:# 112 #: NU IN SD. NU-RCDC & DRY CREEK XFMR
FDNS	00NR	2	16WP	G15_044	FROM->TO	CIMARRON - DRAPER LAKE 345KV CKT 1	717	717	0.18126	108.3706	RCDC EAST 4230.00 - RED CEDAR DC 230KV CKT 1
FDNS	00NR	2	16WP	G15_044	FROM->TO	CIMARRON - DRAPER LAKE 345KV CKT 1	717	717	0.18126	108.347	GEN645011 1-NEBRASKA CITY 1
FDNS	00NR	2	16WP	G15_044	FROM->TO	CIMARRON - DRAPER LAKE 345KV CKT 1	717	717	0.18042	108.3418	HIGHLAND - PINK SW 138KV CKT 1
FDNS	00NR	2	16WP	G15_044	FROM->TO	CIMARRON - DRAPER LAKE 345KV CKT 1	717	717	0.18126	108.3311	GEN531447 1-HOLCOMB GENERATOR
FDNS	00NR	2	16WP	G15_044	FROM->TO	CIMARRON - DRAPER LAKE 345KV CKT 1	717	717	0.18126	108.329	GEN542951 5-HAWTHORN UNIT #5
FDNS	00NR	2	16WP	G15_044	FROM->TO	CIMARRON - DRAPER LAKE 345KV CKT 1	717	717	0.18126	108.3281	GEN563092 1-G15074_3 0.6900
FDNS	00NR	2	16WP	G15_044	FROM->TO	CIMARRON - DRAPER LAKE 345KV CKT 1	717	717	0.18126	108.3203	GEN529201 1-OMCDLEC1 13.800
FDNS	00NR	2	16WP	G15_044	FROM->TO	CIMARRON - DRAPER LAKE 345KV CKT 1	717	717	0.18126	108.3182	GEN562685 1-G15_013_3 0.3550
FDNSLock	00NR	2	16WP	G15_044	FROM->TO	CIMARRON - DRAPER LAKE 345KV CKT 1	717	717	0.18126	108.3178	GEN629072 4-LANSING GENERATOR FOR UNITS NO4 EIA CODE 1
FDNS	00NR	2	16WP	G15_044	FROM->TO	CIMARRON - DRAPER LAKE 345KV CKT 1	717	717	0.18126	108.3005	GEN645012 2-NEBRASKA CITY 2
FDNS	00NR	2	16WP	G15_044	FROM->TO	CIMARRON - DRAPER LAKE 345KV CKT 1	717	717	0.18237	108.2934	HOLLYWOOD - MIDWEST TAP 138KV CKT 1
FDNS	00NR	2	16WP	G15_044	FROM->TO	CIMARRON - DRAPER LAKE 345KV CKT 1	717	717	0.18028	108.2885	CIMARRON - TUTTLE CONOCO TAP 138KV CKT 1
FDNS	00NR	2	16WP	G15_044	FROM->TO	CIMARRON - DRAPER LAKE 345KV CKT 1	717	717	0.18126	108.2841	GEN562699 1-G15_018_3 0.6900
FDNS	00NR	2	16WP	G15_044	FROM->TO	CIMARRON - DRAPER LAKE 345KV CKT 1	717	717	0.18126	108.2825	GEN657749 1-YOUNG 1 GENERATOR

SOLUTION	GROUP	SCENARIO	SEASON	SOURCE	DIRECTION	MONITORED ELEMENT	RATEA (MVA)	RATEB(MVA)	TDF	TC%LOADING (% MVA)	CONTINGENCY
FDNS	00NR	2	16WP	G15_044	FROM->TO	CIMARRON - DRAPER LAKE 345KV CKT 1	717	717	0.18136	108.2738	KEO EHV - WEST MEMPHIS 500 500KV CKT 1
FDNS	00NR	2	16WP	G15_044	FROM->TO	CIMARRON - DRAPER LAKE 345KV CKT 1	717	717	0.1817	108.2486	FT SMITH - MUSKOGEE 345KV CKT 1
FDNS	00NR	2	16WP	G15_044	FROM->TO	CIMARRON - DRAPER LAKE 345KV CKT 1	717	717	0.18126	108.2486	GEN563182 1-G15083_3 0.6900
FDNS	00NR	2	16WP	G15_044	FROM->TO	CIMARRON - DRAPER LAKE 345KV CKT 1	717	717	0.18126	108.2473	GEN563122 1-G15077_3 0.3850
FDNS	00NR	2	16WP	G15_044	FROM->TO	CIMARRON - DRAPER LAKE 345KV CKT 1	717	717	0.18126	108.2419	GEN640009 1-COOPER NUCLEAR STATION
FDNS	00NR	2	16WP	G15_044	FROM->TO	CIMARRON - DRAPER LAKE 345KV CKT 1	717	717	0.18159	108.2386	FRISCCO4 138.00 - LULA 138KV CKT 1
FDNS	00NR	2	16WP	G15_044	FROM->TO	CIMARRON - DRAPER LAKE 345KV CKT 1	717	717	0.18206	108.2233	HUNTERS7 345.00 - WOODRING 345KV CKT 1
FDNSLock	00NR	2	16WP	G15_044	FROM->TO	CIMARRON - DRAPER LAKE 345KV CKT 1	717	717	0.18126	108.2169	GEN681522 3-GENOA 3
FDNS	00NR	2	16WP	G15_044	FROM->TO	CIMARRON - DRAPER LAKE 345KV CKT 1	717	717	0.18028	108.2164	TUTTLE - TUTTLE CONOCO TAP 138KV CKT 1
FDNS	00NR	2	16WP	G15_044	FROM->TO	CIMARRON - DRAPER LAKE 345KV CKT 1	717	717	0.18126	108.2054	GEN562587 1-G14_056_3 0.6900
FDNS	00NR	2	16WP	G15_044	FROM->TO	CIMARRON - DRAPER LAKE 345KV CKT 1	717	717	0.18126	108.2007	GEN344895 2-1LAB G2 20.000
FDNS	00NR	2	16WP	G15_044	FROM->TO	CIMARRON - DRAPER LAKE 345KV CKT 1	717	717	0.18126	108.1869	4SIOUX 1 138.00 138/18.0KV TRANSFORMER CKT 1
FDNS	00NR	2	16WP	G15_044	FROM->TO	CIMARRON - DRAPER LAKE 345KV CKT 1	717	717	0.18126	108.1865	GEN563202 1-G15085_3 0.5500
FDNS	00NR	2	16WP	G15_044	FROM->TO	CIMARRON - DRAPER LAKE 345KV CKT 1	717	717	0.18126	108.1748	GEN515602 1-KNGFSR12 0.7000
FDNS	00NR	2	16WP	G15_044	FROM->TO	CIMARRON - DRAPER LAKE 345KV CKT 1	717	717	0.18126	108.1722	GEN344896 3-1LAB G3 20.000
FDNS	00NR	2	16WP	G15_044	FROM->TO	CIMARRON - DRAPER LAKE 345KV CKT 1	717	717	0.18126	108.1708	GEN344894 1-1LAB G1 20.000
FDNS	00NR	2	16WP	G15_044	FROM->TO	CIMARRON - DRAPER LAKE 345KV CKT 1	717	717	0.18126	108.1696	GEN344897 4-1LAB G4 20.000
FDNS	00NR	2	16WP	G15_044	FROM->TO	CIMARRON - DRAPER LAKE 345KV CKT 1	717	717	0.18096	108.1656	TUPELO - TUPELO TAP 138KV CKT 1
FDNS	00NR	2	16WP	G15_044	FROM->TO	CIMARRON - DRAPER LAKE 345KV CKT 1	717	717	0.18159	108.1525	FRISCCO4 138.00 - HARDEN 4 138.00 138KV CKT 1
FDNS	00NR	2	16WP	G15_044	FROM->TO	CIMARRON - DRAPER LAKE 345KV CKT 1	717	717	0.18126	108.1417	GEN563222 1-G15088_3 0.6900
FDNS	00NR	2	16WP	G15_044	FROM->TO	CIMARRON - DRAPER LAKE 345KV CKT 1	717	717	0.18126	108.1412	GEN523461 1-BLACKHAWK GEN #1
FDNS	00NR	2	16WP	G15_044	FROM->TO	CIMARRON - DRAPER LAKE 345KV CKT 1	717	717	0.18126	108.1411	GEN523462 1-BLACKHAWK GEN #2
FDNS	00NR	2	16WP	G15_044	FROM->TO	CIMARRON - DRAPER LAKE 345KV CKT 1	717	717	0.18126	108.0959	GEN563082 1-G15073_3 0.6900
FDNS	00NR	2	16WP	G15_044	FROM->TO	CIMARRON - DRAPER LAKE 345KV CKT 1	717	717	0.18126	108.0725	GEN562704 1-G15_020_3 0.3550
FDNS	00NR	2	16WP	G15_044	FROM->TO	CIMARRON - DRAPER LAKE 345KV CKT 1	717	717	0.18126	108.0523	CLAY BOSWELL 230/20.9KV TRANSFORMER CKT 1
FDNS	00NR	2	16WP	G15_044	FROM->TO	CIMARRON - DRAPER LAKE 345KV CKT 1	717	717	0.18126	108.0073	GEN672321 1-SHAND GENERATOR 1
FDNS	00NR	2	16WP	G15_044	FROM->TO	CIMARRON - DRAPER LAKE 345KV CKT 1	717	717	0.18807	108.0009	NORTHWEST - SPRING CREEK 345KV CKT 1
FDNS	00NR	2	16WP	G15_044	FROM->TO	CIMARRON - DRAPER LAKE 345KV CKT 1	717	717	0.18104	108	RANCHRD7 345.00 - SOONER 345KV CKT 1
FDNS	00NR	2	16WP	G15_044	FROM->TO	CIMARRON - DRAPER LAKE 345KV CKT 1	717	717	0.18126	107.9873	GEN640010 1-GERALD GENTLEMAN STATION UNIT 1
FDNS	00NR	2	16WP	G15_044	FROM->TO	CIMARRON - DRAPER LAKE 345KV CKT 1	717	717	0.18174	107.9823	LULA - TUPELO TAP 138KV CKT 1
FDNS	00NR	2	16WP	G15_044	FROM->TO	CIMARRON - DRAPER LAKE 345KV CKT 1	717	717	0.18109	107.9815	NORTHWEST TEXARKANA - VALLIANT 345KV CKT 1
FDNS	00NR	2	16WP	G15_044	FROM->TO	CIMARRON - DRAPER LAKE 345KV CKT 1	717	717	0.18109	107.9815	NORTHWEST TEXARKANA - VALLIANT 345KV CKT 1
FDNS	00NR	2	16WP	G15_044	FROM->TO	CIMARRON - DRAPER LAKE 345KV CKT 1	717	717	0.18126	107.9807	GEN672310 1-POPLAR RIVER GENERATOR 1
FDNS	00NR	2	16WP	G15_044	FROM->TO	CIMARRON - DRAPER LAKE 345KV CKT 1	717	717	0.18126	107.9807	GEN672311 2-POPLAR RIVER GENERATOR 2
FDNS	00NR	2	16WP	G15_044	FROM->TO	CIMARRON - DRAPER LAKE 345KV CKT 1	717	717	0.18126	107.976	GEN542956 2-LACYGNE UNIT #2
FDNS	00NR	2	16WP	G15_044	FROM->TO	CIMARRON - DRAPER LAKE 345KV CKT 1	717	717	0.18807	107.9705	SOONER - SPRING CREEK 345KV CKT 1
FDNS	00NR	2	16WP	G15_044	FROM->TO	CIMARRON - DRAPER LAKE 345KV CKT 1	717	717	0.18126	107.9705	GEN672306 6-BOUNDARY DAM GENERATOR 6
FDNS	00NR	2	16WP	G15_044	FROM->TO	CIMARRON - DRAPER LAKE 345KV CKT 1	717	717	0.18126	107.9622	GEN562710 1-G15_022_3 0.5500
FDNS	00NR	2	16WP	G15_044	FROM->TO	CIMARRON - DRAPER LAKE 345KV CKT 1	717	717	0.18284	107.9541	OAKCREEK - WILD MARY 138KV CKT 1
FDNS	00NR	2	16WP	G15_044	FROM->TO	CIMARRON - DRAPER LAKE 345KV CKT 1	717	717	0.1814	107.9537	P12:138:WFEC:MSL09
FDNS	00NR	2	16WP	G15_044	FROM->TO	CIMARRON - DRAPER LAKE 345KV CKT 1	717	717	0.18071	107.9467	SEMINOLE (SEMINOL1) 345/138/14.4KV TRANSFORMER CKT 1
FDNS	00NR	2	16WP	G15_044	FROM->TO	CIMARRON - DRAPER LAKE 345KV CKT 1	717	717	0.18159	107.9339	ETNA - HARDEN 4 138.00 138KV CKT 1
FDNS	00NR	2	16WP	G15_044	FROM->TO	CIMARRON - DRAPER LAKE 345KV CKT 1	717	717	0.18208	107.9148	P12:138:OKGE:3TERM22
FDNS	00NR	2	16WP	G15_044	FROM->TO	CIMARRON - DRAPER LAKE 345KV CKT 1	717	717	0.18207	107.9142	DRAPER LAKE - SOONER TAP 138KV CKT 1
FDNS	00NR	2	16WP	G15_044	FROM->TO	CIMARRON - DRAPER LAKE 345KV CKT 1	717	717	0.18126	107.9138	GEN640011 2-GERALD GENTLEMAN STATION UNIT 2
FDNS	00NR	2	16WP	G15_044	FROM->TO	CIMARRON - DRAPER LAKE 345KV CKT 1	717	717	0.18042	107.9092	P12:138:WFEC:MSL08
FDNS	00NR	2	16WP	G15_044	FROM->TO	CIMARRON - DRAPER LAKE 345KV CKT 1	717	717	0.18126	107.8986	GEN659118 1-LARAMIE RIVER UNIT1
FDNSLock	00NR	2	16WP	G15_044	FROM->TO	CIMARRON - DRAPER LAKE 345KV CKT 1	717	717	0.18126	107.8768	GEN681542 6-JP MADGETT
FDNS	00NR	2	16WP	G15_044	FROM->TO	CIMARRON - DRAPER LAKE 345KV CKT 1	717	717	0.18042	107.8758	FRANKLIN - PINK SW 138KV CKT 1
FDNS	00NR	2	16WP	G15_044	FROM->TO	CIMARRON - DRAPER LAKE 345KV CKT 1	717	717	0.18126	107.8683	GEN542957 1-IATAN UNIT #1
FDNS	00NR	2	16WP	G15_044	FROM->TO	CIMARRON - DRAPER LAKE 345KV CKT 1	717	717	0.18159	107.8349	ETNA - PARK LANE 138KV CKT 1
FDNS	00NR	2	16WP	G15_044	FROM->TO	CIMARRON - DRAPER LAKE 345KV CKT 1	717	717	0.18126	107.8275	GEN530690 1-PRWINDG1 0.6900
FDNS	00NR	2	16WP	G15_044	FROM->TO	CIMARRON - DRAPER LAKE 345KV CKT 1	717	717	0.18126	107.8063	GEN542955 1-LACYGNE UNIT #1
FDNS	00NR	2	16WP	G15_044	FROM->TO	CIMARRON - DRAPER LAKE 345KV CKT 1	717	717	0.18126	107.7768	GEN645001 1-FORT CALHOUN 1
FDNS	00NR	2	16WP	G15_044	FROM->TO	CIMARRON - DRAPER LAKE 345KV CKT 1	717	717	0.18126	107.7573	GEN562754 1-G15031_5 0.6900
FDNS	00NR	2	16WP	G15_044	FROM->TO	CIMARRON - DRAPER LAKE 345KV CKT 1	717	717	0.18126	107.7458	GEN562556 1-G14_046_3 0.3420
FDNS	00NR	2	16WP	G15_044	FROM->TO	CIMARRON - DRAPER LAKE 345KV CKT 1	717	717	0.18126	107.7425	GEN562691 1-G15_015_3 0.6900
FDNS	00NR	2	16WP	G15_044	FROM->TO	CIMARRON - DRAPER LAKE 345KV CKT 1	717	717	0.18126	107.7411	GEN661015 1-COYOTE
FDNS	00NR	2	16WP	G15_044	FROM->TO	CIMARRON - DRAPER LAKE 345KV CKT 1	717	717	0.18126	107.7264	GEN532653 1-JEFFREY ENERGY CENTER UNIT 3
FDNS	00NR	2	16WP	G15_044	FROM->TO	CIMARRON - DRAPER LAKE 345KV CKT 1	717	717	0.18126	107.7262	GEN532652 1-JEFFREY ENERGY CENTER UNIT 2
FDNS	00NR	2	16WP	G15_044	FROM->TO	CIMARRON - DRAPER LAKE 345KV CKT 1	717	717	0.18284	107.7256	AIRDEPT4 138.00 - WILD MARY 138KV CKT 1
FDNS	00NR	2	16WP	G15_044	FROM->TO	CIMARRON - DRAPER LAKE 345KV CKT 1	717	717	0.18126	107.7216	GEN532651 1-JEFFREY ENERGY CENTER UNIT 1
FDNS	00NR	2	16WP	G15_044	FROM->TO	CIMARRON - DRAPER LAKE 345KV CKT 1	717	717	0.18059	107.7211	SEMINOLE (SEMINOL2) 345/138/14.4KV TRANSFORMER CKT 1
FDNS	00NR	2	16WP	G15_044	FROM->TO	CIMARRON - DRAPER LAKE 345KV CKT 1	717	717	0.18126	107.7115	GEN562756 1-G15031_7 0.6900
FDNS	00NR	2	16WP	G15_044	FROM->TO	CIMARRON - DRAPER LAKE 345KV CKT 1	717	717	0.18126	107.7021	GEN563042 1-G15068_3 0.6900
FDNS	00NR	2	16WP	G15_044	FROM->TO	CIMARRON - DRAPER LAKE 345KV CKT 1	717	717	0.18126	107.6997	GEN563142 1-G15079_3 0.5500
FDNS	00NR	2	16WP	G15_044	FROM->TO	CIMARRON - DRAPER LAKE 345KV CKT 1	717	717	0.18126	107.6997	GEN563151 1-G15080_2 0.5500
FDNS	00NR	2	16WP	G15_044	FROM->TO	CIMARRON - DRAPER LAKE 345KV CKT 1	717	717	0.18126	107.6683	GEN563273 2-G15093_4 0.6900
FDNS	00NR	2	16WP	G15_044	FROM->TO	CIMARRON - DRAPER LAKE 345KV CKT 1	717	717	0.18126	107.6462	GEN562655 1-G14_074_3 0.6900
FDNS	00NR	2	16WP	G15_044	FROM->TO	CIMARRON - DRAPER LAKE 345KV CKT 1	717	717	0.18126	107.646	GEN562762 1-G15033_3 0.6900
FDNS	00NR	2	16WP	G15_044	FROM->TO	CIMARRON - DRAPER LAKE 345KV CKT 1	717	717	0.18126	107.6179	GEN562078 1-G11_051_3 0.6900
FDNS	00NR	2	16WP	G15_044	FROM->TO	CIMARRON - DRAPER LAKE 345KV CKT 1	717	717	0.18028	107.6099	P12:138:AEPW-OGE:CORNVIL4:CIMARON4
FDNS	00NR	2	16WP	G15_044	FROM->TO	CIMARRON - DRAPER LAKE 345KV CKT 1	717	717	0.18126	107.609	GEN657748 1-YOUNG 2 GENERATOR
FDNS	00NR	2	16WP	G15_044	FROM->TO	CIMARRON - DRAPER LAKE 345KV CKT 1	717	717	0.18232	107.601	PARK LANE - SEMINOLE 138KV CKT 1
FDNS	00NR	2	16WP	G15_044	FROM->TO	CIMARRON - DRAPER LAKE 345KV CKT 1	717	717	0.18155	107.5956	G11_051T 345.00 - WOODWARD DISTRICT EHV 345KV CKT 1
FDNS	00NR	2	16WP	G15_044	FROM->TO	CIMARRON - DRAPER LAKE 345KV CKT 1	717	717	0.18155	107.5956	G11_051T 345.00 - WOODWARD DISTRICT EHV 345KV CKT 2
FDNS	00NR	2	16WP	G15_044	FROM->TO	CIMARRON - DRAPER LAKE 345KV CKT 1	717	717	0.18126	107.5871	GEN562974 1-G15060_5 0.6900
FDNS	00NR	2	16WP	G15_044	FROM->TO	CIMARRON - DRAPER LAKE 345KV CKT 1	717	717	0.18042	107.5849	FRANKLIN - FRANKLIN SW 138KV CKT 1
FDNS	00NR	2	16WP	G15_044	FROM->TO	CIMARRON - DRAPER LAKE 345KV CKT 1	717	717	0.18126	107.5688	GEN562973 1-G15060_4 0.6900

SOLUTION	GROUP	SCENARIO	SEASON	SOURCE	DIRECTION	MONITORED ELEMENT	RATEA (MVA)	RATEB(MVA)	TDF	TC%LOADING (% MVA)	CONTINGENCY
FDNS	00NR	2	16WP	G15_044	FROM->TO	CIMARRON - DRAPER LAKE 345KV CKT 1	717	717	0.18126	107.5514	GEN562772 1-G15034_3 0.6900
FDNS	00NR	2	16WP	G15_044	FROM->TO	CIMARRON - DRAPER LAKE 345KV CKT 1	717	717	0.18126	107.5344	GEN527901 1-HOBBS PLANT #1 (CT)
FDNS	00NR	2	16WP	G15_044	FROM->TO	CIMARRON - DRAPER LAKE 345KV CKT 1	717	717	0.18126	107.5344	GEN527902 1-HOBBS PLANT #2 (CT)
FDNS	00NR	2	16WP	G15_044	FROM->TO	CIMARRON - DRAPER LAKE 345KV CKT 1	717	717	0.18102	107.5056	LYDIA - WELSH 345KV CKT 1
FDNS	00NR	2	16WP	G15_044	FROM->TO	CIMARRON - DRAPER LAKE 345KV CKT 1	717	717	0.18102	107.5056	LYDIA - WELSH 345KV CKT 1
FDNS	00NR	2	16WP	G15_044	FROM->TO	CIMARRON - DRAPER LAKE 345KV CKT 1	717	717	0.18126	107.5055	GEN563043 1-G15068_4 0.6900
FDNS	00NR	2	16WP	G15_044	FROM->TO	CIMARRON - DRAPER LAKE 345KV CKT 1	717	717	0.18284	107.4951	AIRDEPT4 138.00 - GM 138KV CKT 1
FDNS	00NR	2	16WP	G15_044	FROM->TO	CIMARRON - DRAPER LAKE 345KV CKT 1	717	717	0.18126	107.4769	GEN563052 1-G15069_3 0.6900
FDNS	00NR	2	16WP	G15_044	FROM->TO	CIMARRON - DRAPER LAKE 345KV CKT 1	717	717	0.18126	107.4625	GEN525845 1-ELK_2 1 138.00
FDNS	00NR	2	16WP	G15_044	FROM->TO	CIMARRON - DRAPER LAKE 345KV CKT 1	717	717	0.18126	107.4591	GEN525844 1-ELK_1 118.000
FDNS	00NR	2	16WP	G15_044	FROM->TO	CIMARRON - DRAPER LAKE 345KV CKT 1	717	717	0.18126	107.4207	GEN563242 1-G15090_3 0.6900
FDNS	00NR	2	16WP	G15_044	FROM->TO	CIMARRON - DRAPER LAKE 345KV CKT 1	717	717	0.18126	107.4155	GEN620315 1-BIG STONE GEN
FDNS	00NR	2	16WP	G15_044	FROM->TO	CIMARRON - DRAPER LAKE 345KV CKT 1	717	717	0.18126	107.4027	GEN526333 1-JONES GEN #3 21 KV
FDNS	00NR	2	16WP	G15_044	FROM->TO	CIMARRON - DRAPER LAKE 345KV CKT 1	717	717	0.18126	107.4027	GEN526334 1-JONES_4 116.500
FDNS	00NR	2	16WP	G15_044	FROM->TO	CIMARRON - DRAPER LAKE 345KV CKT 1	717	717	0.18126	107.4	GEN600006 1-AS KING
FDNS	00NR	2	16WP	G15_044	FROM->TO	CIMARRON - DRAPER LAKE 345KV CKT 1	717	717	0.18126	107.4	GEN636641 1-LOUISA UNIT 1
FDNSLock	00NR	2	16WP	G15_044	FROM->TO	CIMARRON - DRAPER LAKE 345KV CKT 1	717	717	0.18126	107.357	GEN600004 2-PRAIRIE ISLAND G2
FDNS	00NR	2	16WP	G15_044	FROM->TO	CIMARRON - DRAPER LAKE 345KV CKT 1	717	717	0.18126	107.3545	GEN523971 1-HARRINGTON GEN #1 24 KV
FDNS	00NR	2	16WP	G15_044	FROM->TO	CIMARRON - DRAPER LAKE 345KV CKT 1	717	717	0.18126	107.3545	GEN523972 1-HARRINGTON GEN #2 24 KV
FDNS	00NR	2	16WP	G15_044	FROM->TO	CIMARRON - DRAPER LAKE 345KV CKT 1	717	717	0.18126	107.3545	GEN523973 1-HARRINGTON GEN #3 24 KV
FDNSLock	00NR	2	16WP	G15_044	FROM->TO	CIMARRON - DRAPER LAKE 345KV CKT 1	717	717	0.18126	107.3539	GEN600003 1-PRAIRIE ISLAND G1
FDNS	00NR	2	16WP	G15_044	FROM->TO	CIMARRON - DRAPER LAKE 345KV CKT 1	717	717	0.18284	107.2843	DRAPER LAKE - GM 138KV CKT 1
FDNS	00NR	2	16WP	G15_044	FROM->TO	CIMARRON - DRAPER LAKE 345KV CKT 1	717	717	0.18126	107.2839	GEN563272 1-G15093_3 0.6900
FDNS	00NR	2	16WP	G15_044	FROM->TO	CIMARRON - DRAPER LAKE 345KV CKT 1	717	717	0.18126	107.247	GEN562952 1-G15057_3 0.6500
FDNS	00NR	2	16WP	G15_044	FROM->TO	CIMARRON - DRAPER LAKE 345KV CKT 1	717	717	0.18126	107.2441	GEN563292 1-G15095_3 0.6900
FDNS	00NR	2	16WP	G15_044	FROM->TO	CIMARRON - DRAPER LAKE 345KV CKT 1	717	717	0.18126	107.2439	GEN542962 2-IATAN UNIT #2
FDNS	00NR	2	16WP	G15_044	FROM->TO	CIMARRON - DRAPER LAKE 345KV CKT 1	717	717	0.18126	107.2	GEN629074 1-ARNOLD LOWSIDE OF GSU XFMR
FDNS	00NR	2	16WP	G15_044	FROM->TO	CIMARRON - DRAPER LAKE 345KV CKT 1	717	717	0.18126	107.1988	GEN600005 1-MONTICELLO
FDNS	00NR	2	16WP	G15_044	FROM->TO	CIMARRON - DRAPER LAKE 345KV CKT 1	717	717	0.18155	107.1887	G11_051T 345.00 - TATONGA7 345.00 345KV CKT 1
FDNS	00NR	2	16WP	G15_044	FROM->TO	CIMARRON - DRAPER LAKE 345KV CKT 1	717	717	0.18155	107.1887	G11_051T 345.00 - TATONGA7 345.00 345KV CKT 2
FDNS	00NR	2	16WP	G15_044	FROM->TO	CIMARRON - DRAPER LAKE 345KV CKT 1	717	717	0.18126	107.1487	GEN562892 1-G15048_3 0.6900
FDNS	00NR	2	16WP	G15_044	FROM->TO	CIMARRON - DRAPER LAKE 345KV CKT 1	717	717	0.18126	107.1476	GEN527166 1-MUSTANG_6 118.000
FDNS	00NR	2	16WP	G15_044	FROM->TO	CIMARRON - DRAPER LAKE 345KV CKT 1	717	717	0.18126	107.1361	GEN525562 1-TOLK GEN #2 24 KV
FDNS	00NR	2	16WP	G15_044	FROM->TO	CIMARRON - DRAPER LAKE 345KV CKT 1	717	717	0.18532	107.1046	CLARKSVILLE - MUSKOGEE 345KV CKT 1
FDNS	00NR	2	16WP	G15_044	FROM->TO	CIMARRON - DRAPER LAKE 345KV CKT 1	717	717	0.18532	107.1046	CLARKSVILLE - MUSKOGEE 345KV CKT 1
FDNS	00NR	2	16WP	G15_044	FROM->TO	CIMARRON - DRAPER LAKE 345KV CKT 1	717	717	0.18126	107.0693	GEN635213 3-NEAL UNIT 3
FDNS	00NR	2	16WP	G15_044	FROM->TO	CIMARRON - DRAPER LAKE 345KV CKT 1	717	717	0.18126	107.0624	GEN514805 1-SOONER UNIT 1
FDNS	00NR	2	16WP	G15_044	FROM->TO	CIMARRON - DRAPER LAKE 345KV CKT 1	717	717	0.18126	107.0421	GEN562902 1-G15052_3 0.6900
FDNS	00NR	2	16WP	G15_044	FROM->TO	CIMARRON - DRAPER LAKE 345KV CKT 1	717	717	0.18126	107.0031	BIG STONE 230/24.0KV TRANSFORMER CKT 1
FDNS	00NR	2	16WP	G15_044	FROM->TO	CIMARRON - DRAPER LAKE 345KV CKT 1	717	717	0.17313	106.9595	DRAPER LAKE - SEMINOLE 345KV CKT 3
FDNS	00NR	2	16WP	G15_044	FROM->TO	CIMARRON - DRAPER LAKE 345KV CKT 1	717	717	0.18302	106.9437	FRANKLIN SW - MIDWEST TAP 138KV CKT 1
FDNS	00NR	2	16WP	G15_044	FROM->TO	CIMARRON - DRAPER LAKE 345KV CKT 1	717	717	0.1819	106.9247	CHAMBER SPRINGS - CLARKSVILLE 345KV CKT 1
FDNS	00NR	2	16WP	G15_044	FROM->TO	CIMARRON - DRAPER LAKE 345KV CKT 1	717	717	0.18092	106.9076	LYDIA - VALLIANT 345KV CKT 1
FDNS	00NR	2	16WP	G15_044	FROM->TO	CIMARRON - DRAPER LAKE 345KV CKT 1	717	717	0.18092	106.9076	LYDIA - VALLIANT 345KV CKT 1
FDNS	00NR	2	16WP	G15_044	FROM->TO	CIMARRON - DRAPER LAKE 345KV CKT 1	717	717	0.18126	106.9058	GEN525561 1-TOLK GEN #1 24 KV
FDNS	00NR	2	16WP	G15_044	FROM->TO	CIMARRON - DRAPER LAKE 345KV CKT 1	717	717	0.18126	106.8562	GEN527903 1-HOBBS PLANT #3 (ST)
FDNS	00NR	2	16WP	G15_044	FROM->TO	CIMARRON - DRAPER LAKE 345KV CKT 1	717	717	0.18126	106.8462	GEN600000 1-SHERBURNECNTY G1
FDNS	00NR	2	16WP	G15_044	FROM->TO	CIMARRON - DRAPER LAKE 345KV CKT 1	717	717	0.18126	106.8417	GEN514806 1-SOONER UNIT 2
FDNS	00NR	2	16WP	G15_044	FROM->TO	CIMARRON - DRAPER LAKE 345KV CKT 1	717	717	0.17986	106.8165	P12:138:OKGE:3TERM23
FDNS	00NR	2	16WP	G15_044	FROM->TO	CIMARRON - DRAPER LAKE 345KV CKT 1	717	717	0.18126	106.8	GEN344225 1-1CAL G1 25.000
FDNS	00NR	2	16WP	G15_044	FROM->TO	CIMARRON - DRAPER LAKE 345KV CKT 1	717	717	0.18126	106.7888	GEN563173 1-G15082_3 0.6900
FDNS	00NR	2	16WP	G15_044	FROM->TO	CIMARRON - DRAPER LAKE 345KV CKT 1	717	717	0.17986	106.7574	BARNES 4 138.00 - DRAPER LAKE 138KV CKT 1
FDNS	00NR	2	16WP	G15_044	FROM->TO	CIMARRON - DRAPER LAKE 345KV CKT 1	717	717	0.18126	106.7559	GEN600001 2-SHERBURNE CNTY G2
FDNS	00NR	2	16WP	G15_044	FROM->TO	CIMARRON - DRAPER LAKE 345KV CKT 1	717	717	0.17092	106.751	MUSKOGEE - SEMINOLE 345KV CKT 1
FDNS	00NR	2	16WP	G15_044	FROM->TO	CIMARRON - DRAPER LAKE 345KV CKT 1	717	717	0.18126	106.638	GEN629075 1-OTTUMWA GENERATOR FOR OTTUMWA UNIT NO 1
FDNS	00NR	2	16WP	G15_044	FROM->TO	CIMARRON - DRAPER LAKE 345KV CKT 1	717	717	0.18126	106.5347	GEN562882 1-G15047_3 0.6900
FDNS	00NR	2	16WP	G15_044	FROM->TO	CIMARRON - DRAPER LAKE 345KV CKT 1	717	717	0.18126	106.5286	GEN563162 1-G15081_3 0.6900
FDNS	00NR	2	16WP	G15_044	FROM->TO	CIMARRON - DRAPER LAKE 345KV CKT 1	717	717	0.18287	106.489	DRAPER LAKE (DRAPER2) 345/138/13.8KV TRANSFORMER CKT 1
FDNS	00NR	2	16WP	G15_044	FROM->TO	CIMARRON - DRAPER LAKE 345KV CKT 1	717	717	0.18126	106.4011	SHERBURNE CO 345/24.0KV TRANSFORMER CKT 1
FDNS	00NR	2	16WP	G15_044	FROM->TO	CIMARRON - DRAPER LAKE 345KV CKT 1	717	717	0.18287	106.3847	DRAPER LAKE (DRAPER3) 345/138/13.8KV TRANSFORMER CKT 1
FDNS	00NR	2	16WP	G15_044	FROM->TO	CIMARRON - DRAPER LAKE 345KV CKT 1	717	717	0.18287	106.3847	DRAPER LAKE (DRAPER4) 345/138/13.8KV TRANSFORMER CKT 1
FDNS	00NR	2	16WP	G15_044	FROM->TO	CIMARRON - DRAPER LAKE 345KV CKT 1	717	717	0.18126	106.3589	GEN635214 4-NEAL UNIT 4
FDNS	00NR	2	16WP	G15_044	FROM->TO	CIMARRON - DRAPER LAKE 345KV CKT 1	717	717	0.18126	106.2661	GEN600002 3-SHERBURNE CNTY G3
FDNS	00NR	2	16WP	G15_044	FROM->TO	CIMARRON - DRAPER LAKE 345KV CKT 1	717	717	0.19274	106.0669	G15063_T 345.00 - MATHWSN7 345.00 345KV CKT 1
FDNS	00NR	2	16WP	G15_044	FROM->TO	CIMARRON - DRAPER LAKE 345KV CKT 1	717	717	0.18126	105.8567	GEN635023 3-WALTER SCOTT UNIT 3
FDNS	00NR	2	16WP	G15_044	FROM->TO	CIMARRON - DRAPER LAKE 345KV CKT 1	717	717	0.18126	105.7208	EASTDC - ERCOT EQUIVALENCE 345KV CKT 1
FDNS	00NR	2	16WP	G15_044	FROM->TO	CIMARRON - DRAPER LAKE 345KV CKT 1	717	717	0.18849	105.7036	CIMARRON - MATHWSN7 345.00 345KV CKT 1
FDNS	00NR	2	16WP	G15_044	FROM->TO	CIMARRON - DRAPER LAKE 345KV CKT 1	717	717	0.18849	105.7036	CIMARRON - MATHWSN7 345.00 345KV CKT 2
FDNS	00NR	2	16WP	G15_044	FROM->TO	CIMARRON - DRAPER LAKE 345KV CKT 1	717	717	0.18126	105.4117	GEN562023 1-G11_020_3 0.6900
FDNS	00NR	2	16WP	G15_044	FROM->TO	CIMARRON - DRAPER LAKE 345KV CKT 1	717	717	0.18126	105.4117	GEN562026 1-G11_019_3 0.6900
FDNS	00NR	2	16WP	G15_044	FROM->TO	CIMARRON - DRAPER LAKE 345KV CKT 1	717	717	0.18126	105.3526	GEN635024 4-WALTER SCOTT UNIT 4
FDNS	00NR	2	16WP	G15_044	FROM->TO	CIMARRON - DRAPER LAKE 345KV CKT 1	717	717	0.16608	105.3449	DRAPER LAKE - SEMINOLE 345KV CKT 1
FDNS	00NR	2	16WP	G15_044	FROM->TO	CIMARRON - DRAPER LAKE 345KV CKT 1	717	717	0.16608	105.3447	DRAPER LAKE - SEMINOLE 345KV CKT 2
FDNS	00NR	2	16WP	G15_044	FROM->TO	CIMARRON - DRAPER LAKE 345KV CKT 1	717	717	0.18186	104.7258	MATHWSN7 345.00 - TATONGA7 345.00 345KV CKT 1
FDNS	00NR	2	16WP	G15_044	FROM->TO	CIMARRON - DRAPER LAKE 345KV CKT 1	717	717	0.18186	104.7258	MATHWSN7 345.00 - TATONGA7 345.00 345KV CKT 2
FDNS	00NR	2	16WP	G15_044	FROM->TO	CIMARRON - DRAPER LAKE 345KV CKT 1	717	717	0.18126	104.4173	GEN562992 1-G15063_3 0.6900
FDNS	00NR	2	16WP	G15_044	FROM->TO	CIMARRON - DRAPER LAKE 345KV CKT 1	717	717	0.18656	103.5167	DRAPER LAKE - MIDWEST TAP 138KV CKT 1
FDNS	00NR	2	16WP	G15_044	FROM->TO	CIMARRON - DRAPER LAKE 345KV CKT 1	717	717	0.1866	103.4591	P12:138:OKGE:3TERM21
FDNSLock	00NR	2	16WP	G15_044	FROM->TO	CIMARRON - DRAPER LAKE 345KV CKT 1	717	717	0.18126	103.1655	GEN532751 1-WOLF CREEK GENERATING STATION UNIT 1

SOLUTION	GROUP	SCENARIO	SEASON	SOURCE	DIRECTION	MONITORED ELEMENT	RATEA (MVA)	RATEB(MVA)	TDF	TC%LOADING (% MVA)	CONTINGENCY
FDNS	00NR	2	16WP	G15_044	FROM->TO	CIMARRON - DRAPER LAKE 345KV CKT 1	717	717	0.18211	101.6899	PITTSBURG - VALLIANT 345KV CKT 1
FDNS	00NR	2	16WP	G15_044	FROM->TO	CIMARRON - DRAPER LAKE 345KV CKT 1	717	717	0.18211	101.6899	PITTSBURG - VALLIANT 345KV CKT 1
FDNS	00NR	2	17SP	G15_044	FROM->TO	CIMARRON - DRAPER LAKE 345KV CKT 1	717	717	0.19815	100.752	G14-057T 345.00 - LAWTON EASTSIDE 345KV CKT 1
FDNS	00NR	2	16WP	G15_044	FROM->TO	CIMARRON - DRAPER LAKE 345KV CKT 1	717	717	0.24458	100.6008	GRACEMONT - MINCO 345KV CKT 1
FDNS	00NR	2	17SP	G15_044	FROM->TO	CIMARRON - DRAPER LAKE 345KV CKT 1	717	717	0.17591	100.3183	CLEVELAND - G15066_T 345.00 345KV CKT 1
FDNS	00NR	2	17SP	G15_044	FROM->TO	CIMARRON - DRAPER LAKE 345KV CKT 1	717	717	0.17591	99.6	G15066_T 345.00 - SOONER 345KV CKT 1
FDNS	00NR	2	20WP	G15_044	TO->FROM	CIMARRON - MINCO 345KV CKT 1	956	956	0.79347	103.5354	G14-057T 345.00 - SUNNYSIDE 345KV CKT 1
FDNS	00NR	2	16WP	G15_044	TO->FROM	CIMARRON - MINCO 345KV CKT 1	956	956	0.79379	102.4479	G14-057T 345.00 - SUNNYSIDE 345KV CKT 1
FDNS	00NR	2	16WP	G15_044	FROM->TO	G14-057T 345.00 - SUNNYSIDE 345KV CKT 1	717	789	0.35696	135.2178	CIMARRON - MINCO 345KV CKT 1
FDNS	00NR	2	20WP	G15_044	FROM->TO	G14-057T 345.00 - SUNNYSIDE 345KV CKT 1	717	789	0.35637	134.0451	CIMARRON - MINCO 345KV CKT 1
FDNS	00NR	2	16WP	G15_044	FROM->TO	G14-057T 345.00 - SUNNYSIDE 345KV CKT 1	717	789	0.11447	125.0762	PITTSBURG - SEMINOLE 345KV CKT 1
FDNS	00NR	2	16WP	G15_044	FROM->TO	G14-057T 345.00 - SUNNYSIDE 345KV CKT 1	717	789	0.11447	125.0762	PITTSBURG - SEMINOLE 345KV CKT 1
FDNS	00NR	2	16WP	G15_044	FROM->TO	G14-057T 345.00 - SUNNYSIDE 345KV CKT 1	717	789	0.02968	124.4981	GRACEMONT - MINCO 345KV CKT 1
FDNS	00NR	2	16WP	G15_044	FROM->TO	G14-057T 345.00 - SUNNYSIDE 345KV CKT 1	717	789	0.11709	124.2437	BASE CASE
FDNS	00NR	2	20WP	G15_044	FROM->TO	G14-057T 345.00 - SUNNYSIDE 345KV CKT 1	717	789	0.02951	123.3431	GRACEMONT - MINCO 345KV CKT 1
FDNS	00NR	2	20WP	G15_044	FROM->TO	G14-057T 345.00 - SUNNYSIDE 345KV CKT 1	717	789	0.11413	122.3486	PITTSBURG - SEMINOLE 345KV CKT 1
FDNS	00NR	2	20WP	G15_044	FROM->TO	G14-057T 345.00 - SUNNYSIDE 345KV CKT 1	717	789	0.11413	122.3486	PITTSBURG - SEMINOLE 345KV CKT 1
FDNS	00NR	2	16WP	G15_044	FROM->TO	G14-057T 345.00 - SUNNYSIDE 345KV CKT 1	717	789	0.13395	122.2739	CIMARRON - DRAPER LAKE 345KV CKT 1
FDNS	00NR	2	20WP	G15_044	FROM->TO	G14-057T 345.00 - SUNNYSIDE 345KV CKT 1	717	789	0.11685	122.1851	BASE CASE
FDNS	00NR	2	20WP	G15_044	FROM->TO	G14-057T 345.00 - SUNNYSIDE 345KV CKT 1	717	789	0.13369	120.16	CIMARRON - DRAPER LAKE 345KV CKT 1
FDNS	00NR	2	16WP	G15_044	FROM->TO	G14-057T 345.00 - SUNNYSIDE 345KV CKT 1	717	789	0.12623	118.87	P12:138:WFEC:MSL03
FDNS	00NR	2	16WP	G15_044	FROM->TO	G14-057T 345.00 - SUNNYSIDE 345KV CKT 1	717	789	0.1165	118.2698	PITTSBURG - VALLIANT 345KV CKT 1
FDNS	00NR	2	16WP	G15_044	FROM->TO	G14-057T 345.00 - SUNNYSIDE 345KV CKT 1	717	789	0.1165	118.2698	PITTSBURG - VALLIANT 345KV CKT 1
FDNS	00NR	2	16WP	G15_044	FROM->TO	G14-057T 345.00 - SUNNYSIDE 345KV CKT 1	717	789	0.11709	118.0541	GEN509403 1-PIRKEY GENERATION
FDNS	00NR	2	16WP	G15_044	FROM->TO	G14-057T 345.00 - SUNNYSIDE 345KV CKT 1	717	789	0.11709	117.9575	GEN509416 1-TURK GENERATION
FDNS	00NR	2	16WP	G15_044	FROM->TO	G14-057T 345.00 - SUNNYSIDE 345KV CKT 1	717	789	0.11877	117.7208	CLEVELAND - G15066_T 345.00 345KV CKT 1
FDNS	00NR	2	16WP	G15_044	FROM->TO	G14-057T 345.00 - SUNNYSIDE 345KV CKT 1	717	789	0.11877	117.425	G15066_T 345.00 - SOONER 345KV CKT 1
FDNS	00NR	2	16WP	G15_044	FROM->TO	G14-057T 345.00 - SUNNYSIDE 345KV CKT 1	717	789	0.11709	117.0415	GEN501801 1-DOLET HILLS UNIT1
FDNS	00NR	2	16WP	G15_044	FROM->TO	G14-057T 345.00 - SUNNYSIDE 345KV CKT 1	717	789	0.11875	116.9648	BORDER 7345.00 - WOODWARD DISTRICT EHV 345KV CKT 1
FDNS	00NR	2	20WP	G15_044	FROM->TO	G14-057T 345.00 - SUNNYSIDE 345KV CKT 1	717	789	0.126	116.9352	P12:138:WFEC:MSL03
FDNS	00NR	2	16WP	G15_044	FROM->TO	G14-057T 345.00 - SUNNYSIDE 345KV CKT 1	717	789	0.11709	116.6536	GEN509406 1-WELSH #3
FDNS	00NR	2	16WP	G15_044	FROM->TO	G14-057T 345.00 - SUNNYSIDE 345KV CKT 1	717	789	0.11709	116.6535	GEN509404 1-WELSH #1
FDNS	00NR	2	20WP	G15_044	FROM->TO	G14-057T 345.00 - SUNNYSIDE 345KV CKT 1	717	789	0.11685	116.1036	GEN509403 1-PIRKEY GENERATION
FDNS	00NR	2	16WP	G15_044	FROM->TO	G14-057T 345.00 - SUNNYSIDE 345KV CKT 1	717	789	0.11875	116.0315	BORDER 7345.00 - TUCO_2 345.00 345KV CKT 1
FDNS	00NR	2	20WP	G15_044	FROM->TO	G14-057T 345.00 - SUNNYSIDE 345KV CKT 1	717	789	0.11685	116.0219	GEN509416 1-TURK GENERATION
FDNS	00NR	2	16WP	G15_044	FROM->TO	G14-057T 345.00 - SUNNYSIDE 345KV CKT 1	717	789	0.11973	115.9962	CORN TAP - NAPLESTP 138.00 138KV CKT 1
FDNS	00NR	2	16WP	G15_044	FROM->TO	G14-057T 345.00 - SUNNYSIDE 345KV CKT 1	717	789	0.11973	115.9136	NAPLESTP 138.00 - PAYNE 138.00 138KV CKT 1
FDNS	00NR	2	16WP	G15_044	FROM->TO	G14-057T 345.00 - SUNNYSIDE 345KV CKT 1	717	789	0.1166	115.9008	7SAREPTA% 345.00 - LONGWOOD 345KV CKT 1
FDNS	00NR	2	16WP	G15_044	FROM->TO	G14-057T 345.00 - SUNNYSIDE 345KV CKT 1	717	789	0.1166	115.9008	7SAREPTA% 345.00 - LONGWOOD 345KV CKT 1
FDNS	00NR	2	20WP	G15_044	FROM->TO	G14-057T 345.00 - SUNNYSIDE 345KV CKT 1	717	789	0.11848	115.8348	CLEVELAND - G15066_T 345.00 345KV CKT 1
FDNS	00NR	2	20WP	G15_044	FROM->TO	G14-057T 345.00 - SUNNYSIDE 345KV CKT 1	717	789	0.11626	115.7887	PITTSBURG - VALLIANT 345KV CKT 1
FDNS	00NR	2	20WP	G15_044	FROM->TO	G14-057T 345.00 - SUNNYSIDE 345KV CKT 1	717	789	0.11626	115.7887	PITTSBURG - VALLIANT 345KV CKT 1
FDNS	00NR	2	16WP	G15_044	FROM->TO	G14-057T 345.00 - SUNNYSIDE 345KV CKT 1	717	789	0.11691	115.7458	DOLET HILLS - SOUTHWEST SHREVEPORT 345KV CKT 1
FDNS	00NR	2	16WP	G15_044	FROM->TO	G14-057T 345.00 - SUNNYSIDE 345KV CKT 1	717	789	0.11691	115.7458	DOLET HILLS - SOUTHWEST SHREVEPORT 345KV CKT 1
FDNSLock	00NR	2	16WP	G15_044	FROM->TO	G14-057T 345.00 - SUNNYSIDE 345KV CKT 1	717	789	0.11709	115.743	GEN336821 1-GRAND GULF UNIT
FDNS	00NR	2	16WP	G15_044	FROM->TO	G14-057T 345.00 - SUNNYSIDE 345KV CKT 1	717	789	0.11829	115.7334	CLEVELAND - TULSA NORTH 345KV CKT 1
FDNS	00NR	2	16WP	G15_044	FROM->TO	G14-057T 345.00 - SUNNYSIDE 345KV CKT 1	717	789	0.11829	115.7334	CLEVELAND - TULSA NORTH 345KV CKT 1
FDNS	00NR	2	16WP	G15_044	FROM->TO	G14-057T 345.00 - SUNNYSIDE 345KV CKT 1	717	789	0.12857	115.6897	ARCADIA - NORTHWEST 345KV CKT 1
FDNSLock	00NR	2	16WP	G15_044	FROM->TO	G14-057T 345.00 - SUNNYSIDE 345KV CKT 1	717	789	0.11709	115.6496	GEN336153 1-WATERFORD UNIT#3
FDNS	00NR	2	16WP	G15_044	FROM->TO	G14-057T 345.00 - SUNNYSIDE 345KV CKT 1	717	789	0.11919	115.6286	COMANCHE - LOCO 138KV CKT 1
FDNS	00NR	2	20WP	G15_044	FROM->TO	G14-057T 345.00 - SUNNYSIDE 345KV CKT 1	717	789	0.11846	115.5939	BORDER 7345.00 - WOODWARD DISTRICT EHV 345KV CKT 1
FDNS	00NR	2	16WP	G15_044	FROM->TO	G14-057T 345.00 - SUNNYSIDE 345KV CKT 1	717	789	0.11956	115.5766	ANADARKO - POCASSETT 138KV CKT 1
FDNS	00NR	2	20WP	G15_044	FROM->TO	G14-057T 345.00 - SUNNYSIDE 345KV CKT 1	717	789	0.11848	115.5419	G15066_T 345.00 - SOONER 345KV CKT 1
FDNS	00NR	2	16WP	G15_044	FROM->TO	G14-057T 345.00 - SUNNYSIDE 345KV CKT 1	717	789	0.1108	115.526	CANADIAN RIVER - MUSKOGEE 345KV CKT 1
FDNS	00NR	2	16WP	G15_044	FROM->TO	G14-057T 345.00 - SUNNYSIDE 345KV CKT 1	717	789	0.11956	115.4359	POCASSETT - TUTTLE 138KV CKT 1
FDNS	00NR	2	16WP	G15_044	FROM->TO	G14-057T 345.00 - SUNNYSIDE 345KV CKT 1	717	789	0.1177	115.4251	ARCADIA - SEMINOLE 345KV CKT 1
FDNS	00NR	2	16WP	G15_044	FROM->TO	G14-057T 345.00 - SUNNYSIDE 345KV CKT 1	717	789	0.11709	115.4	GEN335831 1-RIVERBEND UNIT#1
FDNS	00NR	2	16WP	G15_044	FROM->TO	G14-057T 345.00 - SUNNYSIDE 345KV CKT 1	717	789	0.11709	115.3409	GRAND GULF 500/22.0KV TRANSFORMER CKT 1
FDNS	00NR	2	16WP	G15_044	FROM->TO	G14-057T 345.00 - SUNNYSIDE 345KV CKT 1	717	789	0.11709	115.3112	GEN515577 1-ARBWND11 0.6900
FDNS	00NR	2	16WP	G15_044	FROM->TO	G14-057T 345.00 - SUNNYSIDE 345KV CKT 1	717	789	0.11709	115.2739	GEN509409 1-WILKES #3
FDNS	00NR	2	20WP	G15_044	FROM->TO	G14-057T 345.00 - SUNNYSIDE 345KV CKT 1	717	789	0.11685	115.2633	GEN501801 1-DOLET HILLS UNIT1
FDNS	00NR	2	16WP	G15_044	FROM->TO	G14-057T 345.00 - SUNNYSIDE 345KV CKT 1	717	789	0.11682	115.2476	7SAREPTA% 345.00 - ELDORADO EHV 345KV CKT 1
FDNS	00NR	2	16WP	G15_044	FROM->TO	G14-057T 345.00 - SUNNYSIDE 345KV CKT 1	717	789	0.11682	115.2474	3TR3AR8EL7EL
FDNS	00NR	2	16WP	G15_044	FROM->TO	G14-057T 345.00 - SUNNYSIDE 345KV CKT 1	717	789	0.11682	115.2364	ELDORADO EHV 500/345KV TRANSFORMER CKT 1
FDNS	00NR	2	16WP	G15_044	FROM->TO	G14-057T 345.00 - SUNNYSIDE 345KV CKT 1	717	789	0.11843	115.1782	P12:138:AEPW:DUNCAN-4:L.E.S.-4
FDNS	00NR	2	16WP	G15_044	FROM->TO	G14-057T 345.00 - SUNNYSIDE 345KV CKT 1	717	789	0.1195	115.1393	HEALDTON - LOCO 138KV CKT 1
FDNS	00NR	2	16WP	G15_044	FROM->TO	G14-057T 345.00 - SUNNYSIDE 345KV CKT 1	717	789	0.11956	115.0715	BRIDGECR 138.00 - TUTTLE 138KV CKT 1
FDNS	00NR	2	16WP	G15_044	FROM->TO	G14-057T 345.00 - SUNNYSIDE 345KV CKT 1	717	789	0.11843	115.0688	COMANCHE TAP - OMPA-DUNCAN 840 138KV CKT 1
FDNS	00NR	2	16WP	G15_044	FROM->TO	G14-057T 345.00 - SUNNYSIDE 345KV CKT 1	717	789	0.1195	114.9991	HEALDTON - RINGLING 138KV CKT 1
FDNSLock	00NR	2	16WP	G15_044	FROM->TO	G14-057T 345.00 - SUNNYSIDE 345KV CKT 1	717	789	0.11709	114.9985	GEN300006 1-NEW MADRID UNIT 1
FDNSLock	00NR	2	16WP	G15_044	FROM->TO	G14-057T 345.00 - SUNNYSIDE 345KV CKT 1	717	789	0.11709	114.9861	GEN300007 1-NEW MADRID UNIT 2
FDNS	00NR	2	16WP	G15_044	FROM->TO	G14-057T 345.00 - SUNNYSIDE 345KV CKT 1	717	789	0.11709	114.9823	GEN501813 1-RODEMACHER UNIT 3
FDNS	00NR	2	16WP	G15_044	FROM->TO	G14-057T 345.00 - SUNNYSIDE 345KV CKT 1	717	789	0.11726	114.9332	LACYGNE - WAVERLY7 345.00 345KV CKT 1
FDNS	00NR	2	16WP	G15_044	FROM->TO	G14-057T 345.00 - SUNNYSIDE 345KV CKT 1	717	789	0.11709	114.8741	GEN520947 1-HUGO1
FDNS	00NR	2	16WP	G15_044	FROM->TO	G14-057T 345.00 - SUNNYSIDE 345KV CKT 1	717	789	0.1195	114.8347	RINGLING - SOUTH WILSON 138KV CKT 1
FDNS	00NR	2	16WP	G15_044	FROM->TO	G14-057T 345.00 - SUNNYSIDE 345KV CKT 1	717	789	0.11726	114.8211	WAVERLY7 345.00 - WOLF CREEK 345KV CKT 1
FDNS	00NR	2	16WP	G15_044	FROM->TO	G14-057T 345.00 - SUNNYSIDE 345KV CKT 1	717	789	0.11956	114.8175	P12:138:WFEC:MSL01
FDNS	00NR	2	16WP	G15_044	FROM->TO	G14-057T 345.00 - SUNNYSIDE 345KV CKT 1	717	789	0.11956	114.8094	BRIDGECR 138.00 - SUNSHINE CANYON 138KV CKT 1
FDNS	00NR	2	16WP	G15_044	FROM->TO	G14-057T 345.00 - SUNNYSIDE 345KV CKT 1	717	789	0.11843	114.7912	DUNCAN - OMPA-DUNCAN 840 138KV CKT 1

SOLUTION	GROUP	SCENARIO	SEASON	SOURCE	DIRECTION	MONITORED ELEMENT	RATEA (MVA)	RATEB(MVA)	TDF	TC%LOADING (% MVA)	CONTINGENCY
FDNS	00NR	2	16WP	G15_044	FROM->TO	G14-057T 345.00 - SUNNYSIDE 345KV CKT 1	717	789	0.11843	114.7912	DUNCAN - OMPA-DUNCAN 840 138KV CKT 1
FDNS	00NR	2	16WP	G15_044	FROM->TO	G14-057T 345.00 - SUNNYSIDE 345KV CKT 1	717	789	0.11709	114.7842	GEN335206 1-NELSON UNIT 6
FDNS	00NR	2	20WP	G15_044	FROM->TO	G14-057T 345.00 - SUNNYSIDE 345KV CKT 1	717	789	0.11685	114.743	GEN509406 1-WELSH #3
FDNS	00NR	2	20WP	G15_044	FROM->TO	G14-057T 345.00 - SUNNYSIDE 345KV CKT 1	717	789	0.11685	114.7427	GEN509404 1-WELSH #1
FDNS	00NR	2	16WP	G15_044	FROM->TO	G14-057T 345.00 - SUNNYSIDE 345KV CKT 1	717	789	0.11709	114.657	DOLET HILLS 345/24.0KV TRANSFORMER CKT 1
FDNS	00NR	2	20WP	G15_044	FROM->TO	G14-057T 345.00 - SUNNYSIDE 345KV CKT 1	717	789	0.11846	114.6473	BORDER 7345.00 - TUCO_2 345.00 345KV CKT 1
FDNS	00NR	2	16WP	G15_044	FROM->TO	G14-057T 345.00 - SUNNYSIDE 345KV CKT 1	717	789	0.11585	114.629	PARK LANE - SEMINOLE 138KV CKT 1
FDNS	00NR	2	16WP	G15_044	FROM->TO	G14-057T 345.00 - SUNNYSIDE 345KV CKT 1	717	789	0.1171	114.6276	P12:138:AEPW:SHERID4:112GORE4
FDNS	00NR	2	16WP	G15_044	FROM->TO	G14-057T 345.00 - SUNNYSIDE 345KV CKT 1	717	789	0.11844	114.6104	FINNEY SWITCHING STATION - HOLCOMB 345KV CKT 1
FDNS	00NR	2	16WP	G15_044	FROM->TO	G14-057T 345.00 - SUNNYSIDE 345KV CKT 1	717	789	0.11844	114.6104	FINNEY SWITCHING STATION - HOLCOMB 345KV CKT 1
FDNS	00NR	2	16WP	G15_044	FROM->TO	G14-057T 345.00 - SUNNYSIDE 345KV CKT 1	717	789	0.11709	114.6005	GEN501812 1-RODEMACHER UNIT 2
FDNS	00NR	2	16WP	G15_044	FROM->TO	G14-057T 345.00 - SUNNYSIDE 345KV CKT 1	717	789	0.11709	114.5989	GEN590011 2-ERCOT EQUIVALENCE
FDNS	00NR	2	16WP	G15_044	FROM->TO	G14-057T 345.00 - SUNNYSIDE 345KV CKT 1	717	789	0.11709	114.5597	GEN515564 1-ORIGIN11 0.6900
FDNS	00NR	2	16WP	G15_044	FROM->TO	G14-057T 345.00 - SUNNYSIDE 345KV CKT 1	717	789	0.11709	114.5597	GEN515565 1-ORIGIN21 0.6900
FDNS	00NR	2	16WP	G15_044	FROM->TO	G14-057T 345.00 - SUNNYSIDE 345KV CKT 1	717	789	0.1195	114.5596	MARIETTA - SOUTH WILSON 138KV CKT 1
FDNS	00NR	2	16WP	G15_044	FROM->TO	G14-057T 345.00 - SUNNYSIDE 345KV CKT 1	717	789	0.11815	114.5304	REDBUD - RIVERSIDE STATION 345KV CKT 1
FDNS	00NR	2	16WP	G15_044	FROM->TO	G14-057T 345.00 - SUNNYSIDE 345KV CKT 1	717	789	0.11815	114.5304	REDBUD - RIVERSIDE STATION 345KV CKT 1
FDNS	00NR	2	16WP	G15_044	FROM->TO	G14-057T 345.00 - SUNNYSIDE 345KV CKT 1	717	789	0.11709	114.5242	GEN590010 1-ERCOT EQUIVALENCE
FDNS	00NR	2	16WP	G15_044	FROM->TO	G14-057T 345.00 - SUNNYSIDE 345KV CKT 1	717	789	0.11892	114.5241	MATHWSN7 345.00 - NORTHWEST 345KV CKT 1
FDNS	00NR	2	16WP	G15_044	FROM->TO	G14-057T 345.00 - SUNNYSIDE 345KV CKT 1	717	789	0.1195	114.4751	P12:138:WFEC:MSL17
FDNS	00NR	2	16WP	G15_044	FROM->TO	G14-057T 345.00 - SUNNYSIDE 345KV CKT 1	717	789	0.11756	114.4675	CANEYRV7 345.00 - NEOSHO 345KV CKT 1
FDNS	00NR	2	16WP	G15_044	FROM->TO	G14-057T 345.00 - SUNNYSIDE 345KV CKT 1	717	789	0.11908	114.396	CIVIT - PAOLI 138KV CKT 1
FDNS	00NR	2	16WP	G15_044	FROM->TO	G14-057T 345.00 - SUNNYSIDE 345KV CKT 1	717	789	0.11709	114.3764	GEN509408 1-WILKES #2
FDNS	00NR	2	16WP	G15_044	FROM->TO	G14-057T 345.00 - SUNNYSIDE 345KV CKT 1	717	789	0.11709	114.3715	P12:69:AEPW:L.E.S.-2:LAW WC2
FDNS	00NR	2	16WP	G15_044	FROM->TO	G14-057T 345.00 - SUNNYSIDE 345KV CKT 1	717	789	0.11709	114.3599	GEN506754 1-LEBROCK STEAM 1
FDNS	00NR	2	16WP	G15_044	FROM->TO	G14-057T 345.00 - SUNNYSIDE 345KV CKT 1	717	789	0.11709	114.3488	P12:161:AEPW:DYESS 5:HYLAND 5
FDNS	00NR	2	16WP	G15_044	FROM->TO	G14-057T 345.00 - SUNNYSIDE 345KV CKT 1	717	789	0.1176	114.3421	PAOLI - PAYNE 138.00 138KV CKT 1
FDNS	00NR	2	16WP	G15_044	FROM->TO	G14-057T 345.00 - SUNNYSIDE 345KV CKT 1	717	789	0.11756	114.3411	CANEYRV7 345.00 - LATHAMS7 345.00 345KV CKT 1
FDNS	00NR	2	16WP	G15_044	FROM->TO	G14-057T 345.00 - SUNNYSIDE 345KV CKT 1	717	789	0.11697	114.3229	ELDORADO EHV - MOUNT OLIVE 500KV CKT 1
FDNS	00NR	2	16WP	G15_044	FROM->TO	G14-057T 345.00 - SUNNYSIDE 345KV CKT 1	717	789	0.11709	114.321	GEN334440 1-SABINE UNIT 4
FDNS	00NR	2	16WP	G15_044	FROM->TO	G14-057T 345.00 - SUNNYSIDE 345KV CKT 1	717	789	0.11793	114.3189	P12:138:WFEC:MSL02
FDNS	00NR	2	16WP	G15_044	FROM->TO	G14-057T 345.00 - SUNNYSIDE 345KV CKT 1	717	789	0.1171	114.2825	P12:138:AEPW:112GORE4:L.E.S.-4
FDNS	00NR	2	16WP	G15_044	FROM->TO	G14-057T 345.00 - SUNNYSIDE 345KV CKT 1	717	789	0.11908	114.2537	CIVIT - STRATFORD 138KV CKT 1
FDNS	00NR	2	16WP	G15_044	FROM->TO	G14-057T 345.00 - SUNNYSIDE 345KV CKT 1	717	789	0.11685	114.2476	ELDORADO EHV - SHERIDAN EHV 500KV CKT 1
FDNS	00NR	2	16WP	G15_044	FROM->TO	G14-057T 345.00 - SUNNYSIDE 345KV CKT 1	717	789	0.11774	114.2287	ANADARKO - GEORGIA 138KV CKT 1
FDNS	00NR	2	16WP	G15_044	FROM->TO	G14-057T 345.00 - SUNNYSIDE 345KV CKT 1	717	789	0.11761	114.2272	TUPELO - TUPELO TAP 138KV CKT 1
FDNS	00NR	2	16WP	G15_044	FROM->TO	G14-057T 345.00 - SUNNYSIDE 345KV CKT 1	717	789	0.11709	114.2205	NEW MADRID 161/22.0KV TRANSFORMER CKT 1
FDNS	00NR	2	16WP	G15_044	FROM->TO	G14-057T 345.00 - SUNNYSIDE 345KV CKT 1	717	789	0.11987	114.2147	P12:138:AEPW-OGE:CORNVIL4:MAUD 4
FDNS	00NR	2	16WP	G15_044	FROM->TO	G14-057T 345.00 - SUNNYSIDE 345KV CKT 1	717	789	0.11709	114.2114	GEN503909 1-FULTONU1 1 16.000
FDNS	00NR	2	16WP	G15_044	FROM->TO	G14-057T 345.00 - SUNNYSIDE 345KV CKT 1	717	789	0.11709	114.2089	NEW MADRID 345/22.0KV TRANSFORMER CKT 1
FDNS	00NR	2	16WP	G15_044	FROM->TO	G14-057T 345.00 - SUNNYSIDE 345KV CKT 1	717	789	0.11704	114.2028	WEBRE - WELLS 500KV CKT 1
FDNS	00NR	2	16WP	G15_044	FROM->TO	G14-057T 345.00 - SUNNYSIDE 345KV CKT 1	717	789	0.11709	114.1815	FRONTIER - GRIMES 345KV CKT 1
FDNS	00NR	2	16WP	G15_044	FROM->TO	G14-057T 345.00 - SUNNYSIDE 345KV CKT 1	717	789	0.11776	114.1592	LAWTON EASTSIDE (LES 5) 345/138/13.8KV TRANSFORMER CKT 2
FDNS	00NR	2	16WP	G15_044	FROM->TO	G14-057T 345.00 - SUNNYSIDE 345KV CKT 1	717	789	0.11776	114.1592	LAWTON EASTSIDE (LES 5) 345/138/13.8KV TRANSFORMER CKT 2
FDNS	00NR	2	16WP	G15_044	FROM->TO	G14-057T 345.00 - SUNNYSIDE 345KV CKT 1	717	789	0.11774	114.1507	FLETCHER - GEORGIA 138KV CKT 1
FDNS	00NR	2	20WP	G15_044	FROM->TO	G14-057T 345.00 - SUNNYSIDE 345KV CKT 1	717	789	0.1195	114.1488	CORN TAP - NAPLESTP 138.00 138KV CKT 1
FDNS	00NR	2	16WP	G15_044	FROM->TO	G14-057T 345.00 - SUNNYSIDE 345KV CKT 1	717	789	0.11987	114.1415	BLANCHARD - CORNVILLE 138KV CKT 1
FDNS	00NR	2	16WP	G15_044	FROM->TO	G14-057T 345.00 - SUNNYSIDE 345KV CKT 1	717	789	0.11908	114.1345	OIL CENTER - STRATFORD 138KV CKT 1
FDNS	00NR	2	16WP	G15_044	FROM->TO	G14-057T 345.00 - SUNNYSIDE 345KV CKT 1	717	789	0.11781	114.1208	EMPIRE - FLETCHER 138KV CKT 1
FDNS	00NR	2	16WP	G15_044	FROM->TO	G14-057T 345.00 - SUNNYSIDE 345KV CKT 1	717	789	0.11756	114.1115	LATHAMS7 345.00 - ROSE HILL 345KV CKT 1
FDNS	00NR	2	20WP	G15_044	FROM->TO	G14-057T 345.00 - SUNNYSIDE 345KV CKT 1	717	789	0.11637	114.0928	7SAREPTA% 345.00 - LONGWOOD 345KV CKT 1
FDNS	00NR	2	20WP	G15_044	FROM->TO	G14-057T 345.00 - SUNNYSIDE 345KV CKT 1	717	789	0.11637	114.0928	7SAREPTA% 345.00 - LONGWOOD 345KV CKT 1
FDNS	00NR	2	16WP	G15_044	FROM->TO	G14-057T 345.00 - SUNNYSIDE 345KV CKT 1	717	789	0.11844	114.0879	FINNEY SWITCHING STATION - Hitchland Interchange 345KV CKT 1
FDNS	00NR	2	16WP	G15_044	FROM->TO	G14-057T 345.00 - SUNNYSIDE 345KV CKT 1	717	789	0.11709	114.086	GEN509393 S1-ARSENAL HILL GENS #4 (STALL)
FDNS	00NR	2	20WP	G15_044	FROM->TO	G14-057T 345.00 - SUNNYSIDE 345KV CKT 1	717	789	0.1195	114.0652	NAPLESTP 138.00 - PAYNE 138.00 138KV CKT 1
FDNS	00NR	2	16WP	G15_044	FROM->TO	G14-057T 345.00 - SUNNYSIDE 345KV CKT 1	717	789	0.11709	114.0621	GEN509392 G2-ARSENAL HILL GENS #3 (STALL)
FDNS	00NR	2	16WP	G15_044	FROM->TO	G14-057T 345.00 - SUNNYSIDE 345KV CKT 1	717	789	0.11709	114.062	GEN509391 G1-ARSENAL HILL GENS #2 (STALL)
FDNS	00NR	2	16WP	G15_044	FROM->TO	G14-057T 345.00 - SUNNYSIDE 345KV CKT 1	717	789	0.11781	114.0424	COMANCHE - EMPIRE 138KV CKT 1
FDNS	00NR	2	16WP	G15_044	FROM->TO	G14-057T 345.00 - SUNNYSIDE 345KV CKT 1	717	789	0.11781	114.0392	THISTLE7 345.00 - WOODWARD DISTRICT EHV 345KV CKT 1
FDNS	00NR	2	16WP	G15_044	FROM->TO	G14-057T 345.00 - SUNNYSIDE 345KV CKT 1	717	789	0.11781	114.0392	THISTLE7 345.00 - WOODWARD DISTRICT EHV 345KV CKT 1
FDNS	00NR	2	16WP	G15_044	FROM->TO	G14-057T 345.00 - SUNNYSIDE 345KV CKT 1	717	789	0.11781	114.0392	THISTLE7 345.00 - WOODWARD DISTRICT EHV 345KV CKT 2
FDNS	00NR	2	16WP	G15_044	FROM->TO	G14-057T 345.00 - SUNNYSIDE 345KV CKT 1	717	789	0.11781	114.0392	THISTLE7 345.00 - WOODWARD DISTRICT EHV 345KV CKT 2
FDNS	00NR	2	16WP	G15_044	FROM->TO	G14-057T 345.00 - SUNNYSIDE 345KV CKT 1	717	789	0.11709	114.0312	GEN336252 1-NINEMILE POINT UNIT#5
FDNS	00NR	2	16WP	G15_044	FROM->TO	G14-057T 345.00 - SUNNYSIDE 345KV CKT 1	717	789	0.11709	114.0181	DELL 500 - ESSEX UNIT 2 500KV CKT Z1
FDNS	00NR	2	16WP	G15_044	FROM->TO	G14-057T 345.00 - SUNNYSIDE 345KV CKT 1	717	789	0.11709	114.0141	GEN334071 1-LEWIS CREEK 2
FDNS	00NR	2	16WP	G15_044	FROM->TO	G14-057T 345.00 - SUNNYSIDE 345KV CKT 1	717	789	0.11709	114.0052	GEN334070 1-LEWIS CREEK 1
FDNS	00NR	2	16WP	G15_044	FROM->TO	G14-057T 345.00 - SUNNYSIDE 345KV CKT 1	717	789	0.11709	114.0035	GEN335204 1-NELSON UNIT 4
FDNS	00NR	2	16WP	G15_044	FROM->TO	G14-057T 345.00 - SUNNYSIDE 345KV CKT 1	717	789	0.11709	114	GEN300003 1-THOMAS HILL UNIT 3
FDNS	00NR	2	20WP	G15_044	FROM->TO	G14-057T 345.00 - SUNNYSIDE 345KV CKT 1	717	789	0.11685	113.9826	GEN336821 1-GRAND GULF UNIT
FDNS	00NR	2	16WP	G15_044	FROM->TO	G14-057T 345.00 - SUNNYSIDE 345KV CKT 1	717	789	0.11743	113.9738	DUNCAN (DUNCAN) 138/69/13.8KV TRANSFORMER CKT 1
FDNS	00NR	2	16WP	G15_044	FROM->TO	G14-057T 345.00 - SUNNYSIDE 345KV CKT 1	717	789	0.11743	113.9738	DUNCAN (DUNCAN) 138/69/13.8KV TRANSFORMER CKT 1
FDNS	00NR	2	16WP	G15_044	FROM->TO	G14-057T 345.00 - SUNNYSIDE 345KV CKT 1	717	789	0.11709	113.9691	GEN334441 1-SABINE UNIT 5
FDNS	00NR	2	16WP	G15_044	FROM->TO	G14-057T 345.00 - SUNNYSIDE 345KV CKT 1	717	789	0.11987	113.9592	BLANCHARD - MAUD 138KV CKT 1
FDNS	00NR	2	16WP	G15_044	FROM->TO	G14-057T 345.00 - SUNNYSIDE 345KV CKT 1	717	789	0.11908	113.9558	LATTA JCT - OIL CENTER 138KV CKT 1
FDNS	00NR	2	16WP	G15_044	FROM->TO	G14-057T 345.00 - SUNNYSIDE 345KV CKT 1	717	789	0.11708	113.9424	P12:161:AEPW-SWPA:BEAVER5:EROGERS5
FDNS	00NR	2	16WP	G15_044	FROM->TO	G14-057T 345.00 - SUNNYSIDE 345KV CKT 1	717	789	0.11709	113.932	GEN337653 1-WHITE BLUFF UNIT #2
FDNS	00NR	2	16WP	G15_044	FROM->TO	G14-057T 345.00 - SUNNYSIDE 345KV CKT 1	717	789	0.1171	113.9237	P12:138:AEPW:CATOOSA4:T.S.E.-4
FDNS	00NR	2	16WP	G15_044	FROM->TO	G14-057T 345.00 - SUNNYSIDE 345KV CKT 1	717	789	0.11709	113.9184	GEN334030 1-FRONTIER UNIT 1
FDNS	00NR	2	16WP	G15_044	FROM->TO	G14-057T 345.00 - SUNNYSIDE 345KV CKT 1	717	789	0.11709	113.9183	GEN506752 1-LEBROCK GAS 1

SOLUTION	GROUP	SCENARIO	SEASON	SOURCE	DIRECTION	MONITORED ELEMENT	RATEA (MVA)	RATEB(MVA)	TDF	TC%LOADING (% MVA)	CONTINGENCY
FDNS	00NR	2	16WP	G15_044	FROM->TO	G14-057T 345.00 - SUNNYSIDE 345KV CKT 1	717	789	0.11709	113.9182	GEN506753 1-LEBROCK GAS 2
FDNS	00NR	2	16WP	G15_044	FROM->TO	G14-057T 345.00 - SUNNYSIDE 345KV CKT 1	717	789	0.11709	113.9168	GEN334031 1-FRONTIER UNIT 2
FDNS	00NR	2	16WP	G15_044	FROM->TO	G14-057T 345.00 - SUNNYSIDE 345KV CKT 1	717	789	0.11695	113.9117	6LAYFLD 230.00 - CARROLL 230KV CKT 1
FDNS	00NR	2	16WP	G15_044	FROM->TO	G14-057T 345.00 - SUNNYSIDE 345KV CKT 1	717	789	0.1169	113.8781	FULTON 115 - HOPE 115KV CKT 1
FDNS	00NR	2	16WP	G15_044	FROM->TO	G14-057T 345.00 - SUNNYSIDE 345KV CKT 1	717	789	0.1169	113.8781	FULTON 115 - HOPE 115KV CKT 1
FDNS	00NR	2	16WP	G15_044	FROM->TO	G14-057T 345.00 - SUNNYSIDE 345KV CKT 1	717	789	0.11709	113.8739	8DANIEL8 500.00 - MCKNIGHT 500KV CKT 1
FDNS	00NR	2	20WP	G15_044	FROM->TO	G14-057T 345.00 - SUNNYSIDE 345KV CKT 1	717	789	0.11685	113.8734	GEN336153 1-WATERFORD UNIT#3
FDNS	00NR	2	16WP	G15_044	FROM->TO	G14-057T 345.00 - SUNNYSIDE 345KV CKT 1	717	789	0.11709	113.8724	P12:161:AEPW:DYESS5:ELMSPRNG:TONTITN5
FDNS	00NR	2	16WP	G15_044	FROM->TO	G14-057T 345.00 - SUNNYSIDE 345KV CKT 1	717	789	0.11709	113.8662	GEN515226 1-MUSKOGEE 6G
FDNS	00NR	2	16WP	G15_044	FROM->TO	G14-057T 345.00 - SUNNYSIDE 345KV CKT 1	717	789	0.11709	113.8563	GEN300015 1-1SGPDEL 18.000
FDNS	00NR	2	16WP	G15_044	FROM->TO	G14-057T 345.00 - SUNNYSIDE 345KV CKT 1	717	789	0.11709	113.8512	GEN501811 1-RODEMACHER UNIT 1
FDNS	00NR	2	16WP	G15_044	FROM->TO	G14-057T 345.00 - SUNNYSIDE 345KV CKT 1	717	789	0.11709	113.8475	GEN337911 1-ARKANSAS NUCLEAR ONE UNIT #2
FDNS	00NR	2	20WP	G15_044	FROM->TO	G14-057T 345.00 - SUNNYSIDE 345KV CKT 1	717	789	0.11802	113.8412	CLEVELAND - TULSA NORTH 345KV CKT 1
FDNS	00NR	2	20WP	G15_044	FROM->TO	G14-057T 345.00 - SUNNYSIDE 345KV CKT 1	717	789	0.11802	113.8412	CLEVELAND - TULSA NORTH 345KV CKT 1
FDNS	00NR	2	16WP	G15_044	FROM->TO	G14-057T 345.00 - SUNNYSIDE 345KV CKT 1	717	789	0.11771	113.8378	P12:138:AEPW:CORNVIL4:S.W.S.-4
FDNS	00NR	2	16WP	G15_044	FROM->TO	G14-057T 345.00 - SUNNYSIDE 345KV CKT 1	717	789	0.11709	113.8339	GEN337652 1-WHITE BLUFF UNIT #1
FDNS	00NR	2	16WP	G15_044	FROM->TO	G14-057T 345.00 - SUNNYSIDE 345KV CKT 1	717	789	0.11709	113.8336	GEN336251 1-NINEMILE POINT UNIT#4
FDNS	00NR	2	16WP	G15_044	FROM->TO	G14-057T 345.00 - SUNNYSIDE 345KV CKT 1	717	789	0.11709	113.8297	GEN334433 1-SABINE UNIT 3
FDNS	00NR	2	16WP	G15_044	FROM->TO	G14-057T 345.00 - SUNNYSIDE 345KV CKT 1	717	789	0.11709	113.8278	GEN336831 1-BAXTER WILSON SES
FDNS	00NR	2	20WP	G15_044	FROM->TO	G14-057T 345.00 - SUNNYSIDE 345KV CKT 1	717	789	0.12835	113.8271	ARCADIA - NORTHWEST 345KV CKT 1
FDNS	00NR	2	16WP	G15_044	FROM->TO	G14-057T 345.00 - SUNNYSIDE 345KV CKT 1	717	789	0.11717	113.8082	G15074_T 345.00 - HOYT 345KV CKT 1
FDNS	00NR	2	16WP	G15_044	FROM->TO	G14-057T 345.00 - SUNNYSIDE 345KV CKT 1	717	789	0.11709	113.8061	GEN515040 1-SEMINOLE 1G
FDNS	00NR	2	16WP	G15_044	FROM->TO	G14-057T 345.00 - SUNNYSIDE 345KV CKT 1	717	789	0.11771	113.8049	P12:138:AEPW:CORNVIL4:DUNCAN-4
FDNS	00NR	2	16WP	G15_044	FROM->TO	G14-057T 345.00 - SUNNYSIDE 345KV CKT 1	717	789	0.11803	113.8024	TUTTLE - TUTTLE CONOCO TAP 138KV CKT 1
FDNS	00NR	2	16WP	G15_044	FROM->TO	G14-057T 345.00 - SUNNYSIDE 345KV CKT 1	717	789	0.11743	113.8023	P12:69:WFEC-AEPW:COMANCH2:DUNCAN-2
FDNS	00NR	2	16WP	G15_044	FROM->TO	G14-057T 345.00 - SUNNYSIDE 345KV CKT 1	717	789	0.11709	113.798	GEN562783 1-G15036_4 0.6900
FDNS	00NR	2	16WP	G15_044	FROM->TO	G14-057T 345.00 - SUNNYSIDE 345KV CKT 1	717	789	0.11709	113.798	GEN562784 1-G15036_5 0.6900
FDNS	00NR	2	16WP	G15_044	FROM->TO	G14-057T 345.00 - SUNNYSIDE 345KV CKT 1	717	789	0.11951	113.7868	BAILEY4 138.00 - SUNSHINE CANYON 138KV CKT 1
FDNS	00NR	2	16WP	G15_044	FROM->TO	G14-057T 345.00 - SUNNYSIDE 345KV CKT 1	717	789	0.11709	113.784	GEN505432 1-SIKESTON
FDNSLock	00NR	2	16WP	G15_044	FROM->TO	G14-057T 345.00 - SUNNYSIDE 345KV CKT 1	717	789	0.11715	113.7822	G15088_T 345.00 - MOORE 345KV CKT 1
FDNS	00NR	2	16WP	G15_044	FROM->TO	G14-057T 345.00 - SUNNYSIDE 345KV CKT 1	717	789	0.11741	113.7817	G1524G1525 345.00 - THISTLE7 345.00 345KV CKT 1
FDNS	00NR	2	16WP	G15_044	FROM->TO	G14-057T 345.00 - SUNNYSIDE 345KV CKT 1	717	789	0.11741	113.7817	G1524G1525 345.00 - THISTLE7 345.00 345KV CKT 2
FDNS	00NR	2	20WP	G15_044	FROM->TO	G14-057T 345.00 - SUNNYSIDE 345KV CKT 1	717	789	0.11934	113.781	ANADARKO - POCASSETT 138KV CKT 1
FDNS	00NR	2	16WP	G15_044	FROM->TO	G14-057T 345.00 - SUNNYSIDE 345KV CKT 1	717	789	0.11785	113.7807	CIMARRON - CZECH HALL 138KV CKT 1
FDNS	00NR	2	16WP	G15_044	FROM->TO	G14-057T 345.00 - SUNNYSIDE 345KV CKT 1	717	789	0.11795	113.7798	P12:138:AEPW-OGE:WTH_JCT4:JENSEN4
FDNS	00NR	2	16WP	G15_044	FROM->TO	G14-057T 345.00 - SUNNYSIDE 345KV CKT 1	717	789	0.11709	113.7691	GEN515223 1-MUSKOGEE 4G
FDNS	00NR	2	16WP	G15_044	FROM->TO	G14-057T 345.00 - SUNNYSIDE 345KV CKT 1	717	789	0.11709	113.7691	GEN515225 1-MUSKOGEE 5G
FDNS	00NR	2	16WP	G15_044	FROM->TO	G14-057T 345.00 - SUNNYSIDE 345KV CKT 1	717	789	0.11771	113.7635	CIMARRON - SARA 138KV CKT 1
FDNS	00NR	2	16WP	G15_044	FROM->TO	G14-057T 345.00 - SUNNYSIDE 345KV CKT 1	717	789	0.11709	113.7588	P12:161:AEPW:EROGERS5:ECNTRTN5
FDNS	00NR	2	16WP	G15_044	FROM->TO	G14-057T 345.00 - SUNNYSIDE 345KV CKT 1	717	789	0.11619	113.7564	ARBWIND4 138.00 - CARTER 138KV CKT 1
FDNS	00NR	2	16WP	G15_044	FROM->TO	G14-057T 345.00 - SUNNYSIDE 345KV CKT 1	717	789	0.11699	113.7486	LAYFLD8 500.00 - MOUNT OLIVE 500KV CKT 1
FDNS	00NR	2	16WP	G15_044	FROM->TO	G14-057T 345.00 - SUNNYSIDE 345KV CKT 1	717	789	0.11699	113.7486	LAYFLD8 500.00 - MOUNT OLIVE 500KV CKT 1
FDNS	00NR	2	16WP	G15_044	FROM->TO	G14-057T 345.00 - SUNNYSIDE 345KV CKT 1	717	789	0.11709	113.7485	RODEMACHER 230/22.0KV TRANSFORMER CKT 1
FDNS	00NR	2	16WP	G15_044	FROM->TO	G14-057T 345.00 - SUNNYSIDE 345KV CKT 1	717	789	0.11743	113.7479	DUNCAN - TOSCO 69KV CKT 1
FDNS	00NR	2	20WP	G15_044	FROM->TO	G14-057T 345.00 - SUNNYSIDE 345KV CKT 1	717	789	0.11895	113.7421	COMANCHE - LOCO 138KV CKT 1
FDNS	00NR	2	16WP	G15_044	FROM->TO	G14-057T 345.00 - SUNNYSIDE 345KV CKT 1	717	789	0.11709	113.7391	WHITE BLUFF 500/26.0KV TRANSFORMER CKT 1
FDNS	00NR	2	16WP	G15_044	FROM->TO	G14-057T 345.00 - SUNNYSIDE 345KV CKT 1	717	789	0.1176	113.7384	P12:138:AEPW:WTHWF4:CLINTJC4
FDNS	00NR	2	16WP	G15_044	FROM->TO	G14-057T 345.00 - SUNNYSIDE 345KV CKT 1	717	789	0.11709	113.737	GEN303007 1-1BC2 U2
FDNS	00NR	2	16WP	G15_044	FROM->TO	G14-057T 345.00 - SUNNYSIDE 345KV CKT 1	717	789	0.11701	113.7358	MC NIEL 500/115KV TRANSFORMER CKT 1
FDNS	00NR	2	16WP	G15_044	FROM->TO	G14-057T 345.00 - SUNNYSIDE 345KV CKT 1	717	789	0.11799	113.7357	G14_038T 345.00 - Hitchland Interchange 345KV CKT 1
FDNS	00NR	2	16WP	G15_044	FROM->TO	G14-057T 345.00 - SUNNYSIDE 345KV CKT 1	717	789	0.11614	113.7333	SEMINOLE - VANOSTP4 138.00 138KV CKT 1
FDNS	00NR	2	16WP	G15_044	FROM->TO	G14-057T 345.00 - SUNNYSIDE 345KV CKT 1	717	789	0.11709	113.732	GEN303006 1-1BC2 U1
FDNS	00NR	2	16WP	G15_044	FROM->TO	G14-057T 345.00 - SUNNYSIDE 345KV CKT 1	717	789	0.11701	113.7307	HOT SPRINGS EHV - MAGNET COVE 500KV CKT 1
FDNS	00NR	2	16WP	G15_044	FROM->TO	G14-057T 345.00 - SUNNYSIDE 345KV CKT 1	717	789	0.11694	113.7275	BISMARK - HOT SPRINGS WEST BUS 115KV CKT 1
FDNS	00NR	2	16WP	G15_044	FROM->TO	G14-057T 345.00 - SUNNYSIDE 345KV CKT 1	717	789	0.11732	113.7242	P12:69:AEPW-OMPA:COMANC-2:OMWALTR2
FDNS	00NR	2	16WP	G15_044	FROM->TO	G14-057T 345.00 - SUNNYSIDE 345KV CKT 1	717	789	0.11803	113.723	CIMARRON - TUTTLE CONOCO TAP 138KV CKT 1
FDNS	00NR	2	16WP	G15_044	FROM->TO	G14-057T 345.00 - SUNNYSIDE 345KV CKT 1	717	789	0.11729	113.7165	BUCKNER7 345.00 - SPEARVILLE 345KV CKT 1
FDNS	00NR	2	16WP	G15_044	FROM->TO	G14-057T 345.00 - SUNNYSIDE 345KV CKT 1	717	789	0.11729	113.7165	BUCKNER7 345.00 - SPEARVILLE 345KV CKT 1
FDNS	00NR	2	16WP	G15_044	FROM->TO	G14-057T 345.00 - SUNNYSIDE 345KV CKT 1	717	789	0.11709	113.7097	GEN336191 1-LITTLE GYPSY UNIT#3
FDNS	00NR	2	16WP	G15_044	FROM->TO	G14-057T 345.00 - SUNNYSIDE 345KV CKT 1	717	789	0.11709	113.7061	GEN337910 1-ARKANSAS NUCLEAR ONE UNIT #1
FDNS	00NR	2	16WP	G15_044	FROM->TO	G14-057T 345.00 - SUNNYSIDE 345KV CKT 1	717	789	0.11743	113.7056	COMANCHE TAP - TOSCO 69KV CKT 1
FDNS	00NR	2	16WP	G15_044	FROM->TO	G14-057T 345.00 - SUNNYSIDE 345KV CKT 1	717	789	0.11861	113.7048	CANADIAN - NOBLE 138KV CKT 1
FDNS	00NR	2	16WP	G15_044	FROM->TO	G14-057T 345.00 - SUNNYSIDE 345KV CKT 1	717	789	0.11709	113.7042	GEN300010 1-ST FRANCIS UNIT 1
FDNS	00NR	2	16WP	G15_044	FROM->TO	G14-057T 345.00 - SUNNYSIDE 345KV CKT 1	717	789	0.11785	113.7033	CZECH HALL - XEROX 138KV CKT 1
FDNS	00NR	2	16WP	G15_044	FROM->TO	G14-057T 345.00 - SUNNYSIDE 345KV CKT 1	717	789	0.11785	113.699	MORGAN - XEROX 138KV CKT 1
FDNS	00NR	2	16WP	G15_044	FROM->TO	G14-057T 345.00 - SUNNYSIDE 345KV CKT 1	717	789	0.1176	113.6923	P12:138:AEPW:WTHWF4:WTH_SE4
FDNS	00NR	2	16WP	G15_044	FROM->TO	G14-057T 345.00 - SUNNYSIDE 345KV CKT 1	717	789	0.1171	113.6922	P12:138:AEPW:N.E.S.-4:CATOOSA4
FDNS	00NR	2	16WP	G15_044	FROM->TO	G14-057T 345.00 - SUNNYSIDE 345KV CKT 1	717	789	0.11709	113.6847	GEN335614 1-WILLOW GLENN UNIT#4
FDNS	00NR	2	16WP	G15_044	FROM->TO	G14-057T 345.00 - SUNNYSIDE 345KV CKT 1	717	789	0.11908	113.6829	LASALLE - LATTA JCT 138KV CKT 1
FDNS	00NR	2	20WP	G15_044	FROM->TO	G14-057T 345.00 - SUNNYSIDE 345KV CKT 1	717	789	0.11667	113.6826	DOLET HILLS - SOUTHWEST SHREVEPORT 345KV CKT 1
FDNS	00NR	2	20WP	G15_044	FROM->TO	G14-057T 345.00 - SUNNYSIDE 345KV CKT 1	717	789	0.11667	113.6826	DOLET HILLS - SOUTHWEST SHREVEPORT 345KV CKT 1
FDNS	00NR	2	16WP	G15_044	FROM->TO	G14-057T 345.00 - SUNNYSIDE 345KV CKT 1	717	789	0.11709	113.6815	NELSON 230/20.0KV TRANSFORMER CKT 1
FDNS	00NR	2	16WP	G15_044	FROM->TO	G14-057T 345.00 - SUNNYSIDE 345KV CKT 1	717	789	0.11785	113.676	MORGAN - MUSTANG 138KV CKT 1
FDNS	00NR	2	16WP	G15_044	FROM->TO	G14-057T 345.00 - SUNNYSIDE 345KV CKT 1	717	789	0.11694	113.6759	ALPINE AECC - BISMARK 115KV CKT 1
FDNS	00NR	2	16WP	G15_044	FROM->TO	G14-057T 345.00 - SUNNYSIDE 345KV CKT 1	717	789	0.11866	113.6755	P12:138:OKGE:3TERM27
FDNS	00NR	2	16WP	G15_044	FROM->TO	G14-057T 345.00 - SUNNYSIDE 345KV CKT 1	717	789	0.11709	113.6731	GEN303008 1-1BC2 U3
FDNS	00NR	2	16WP	G15_044	FROM->TO	G14-057T 345.00 - SUNNYSIDE 345KV CKT 1	717	789	0.11709	113.6551	GEN300011 1-ST FRANCIS UNIT 2
FDNS	00NR	2	16WP	G15_044	FROM->TO	G14-057T 345.00 - SUNNYSIDE 345KV CKT 1	717	789	0.11709	113.6464	GEN336170 1-GULF OXY U4
FDNS	00NR	2	16WP	G15_044	FROM->TO	G14-057T 345.00 - SUNNYSIDE 345KV CKT 1	717	789	0.11743	113.6428	COMANCHE - COMANCHE TAP 69KV CKT 1

SOLUTION	GROUP	SCENARIO	SEASON	SOURCE	DIRECTION	MONITORED ELEMENT	RATEA (MVA)	RATEB(MVA)	TDF	TC%LOADING (% MVA)	CONTINGENCY
FDNS	00NR	2	16WP	G15_044	FROM->TO	G14-057T 345.00 - SUNNYSIDE 345KV CKT 1	717	789	0.11709	113.6415	GEN336464 1-MICHOUD UNIT #3
FDNS	00NR	2	16WP	G15_044	FROM->TO	G14-057T 345.00 - SUNNYSIDE 345KV CKT 1	717	789	0.11707	113.64	CYPRESS - HARTBURG 500KV CKT 1
FDNS	00NR	2	16WP	G15_044	FROM->TO	G14-057T 345.00 - SUNNYSIDE 345KV CKT 1	717	789	0.1178	113.6349	CHISHOLM6 230.00 - ELK CITY 230KV 230KV CKT 1
FDNS	00NR	2	16WP	G15_044	FROM->TO	G14-057T 345.00 - SUNNYSIDE 345KV CKT 1	717	789	0.1178	113.6346	ELK CITY 230KV (ELKCTY-6) 230/138/13.8KV TRANSFORMER CKT 1
FDNS	00NR	2	16WP	G15_044	FROM->TO	G14-057T 345.00 - SUNNYSIDE 345KV CKT 1	717	789	0.1178	113.6346	ELK CITY 230KV (ELKCTY-6) 230/138/13.8KV TRANSFORMER CKT 1
FDNS	00NR	2	16WP	G15_044	FROM->TO	G14-057T 345.00 - SUNNYSIDE 345KV CKT 1	717	789	0.11694	113.6333	ALPINE AECC - AMITY SS 115KV CKT 1
FDNS	00NR	2	16WP	G15_044	FROM->TO	G14-057T 345.00 - SUNNYSIDE 345KV CKT 1	717	789	0.12026	113.6314	DRAPER LAKE - SEMINOLE 345KV CKT 2
FDNS	00NR	2	16WP	G15_044	FROM->TO	G14-057T 345.00 - SUNNYSIDE 345KV CKT 1	717	789	0.12026	113.6313	DRAPER LAKE - SEMINOLE 345KV CKT 1
FDNS	00NR	2	20WP	G15_044	FROM->TO	G14-057T 345.00 - SUNNYSIDE 345KV CKT 1	717	789	0.11934	113.6285	POCASSETT - TUTTLE 138KV CKT 1
FDNS	00NR	2	16WP	G15_044	FROM->TO	G14-057T 345.00 - SUNNYSIDE 345KV CKT 1	717	789	0.11709	113.6232	8CAJUN2 500/24.0KV TRANSFORMER CKT 1
FDNS	00NR	2	16WP	G15_044	FROM->TO	G14-057T 345.00 - SUNNYSIDE 345KV CKT 1	717	789	0.11086	113.6224	CANADIAN RIVER - PITTSBURG 345KV CKT 1
FDNS	00NR	2	16WP	G15_044	FROM->TO	G14-057T 345.00 - SUNNYSIDE 345KV CKT 1	717	789	0.11086	113.6224	CANADIAN RIVER - PITTSBURG 345KV CKT 1
FDNS	00NR	2	16WP	G15_044	FROM->TO	G14-057T 345.00 - SUNNYSIDE 345KV CKT 1	717	789	0.11951	113.6206	BAILEY4 138.00 - WESTMOORE 138KV CKT 1
FDNS	00NR	2	16WP	G15_044	FROM->TO	G14-057T 345.00 - SUNNYSIDE 345KV CKT 1	717	789	0.12093	113.62	GRACEMONT (BANK 1) 345/138/13.8KV TRANSFORMER CKT 1
FDNS	00NR	2	16WP	G15_044	FROM->TO	G14-057T 345.00 - SUNNYSIDE 345KV CKT 1	717	789	0.11709	113.6184	GEN300016 1-1G1GPDEL 18.000
FDNS	00NR	2	16WP	G15_044	FROM->TO	G14-057T 345.00 - SUNNYSIDE 345KV CKT 1	717	789	0.11861	113.6133	NOBLE - PURCELL4 138.00 138KV CKT 1
FDNS	00NR	2	16WP	G15_044	FROM->TO	G14-057T 345.00 - SUNNYSIDE 345KV CKT 1	717	789	0.1171	113.609	7JASPER 345.00 - BLACKBERRY 345KV CKT 1
FDNS	00NR	2	16WP	G15_044	FROM->TO	G14-057T 345.00 - SUNNYSIDE 345KV CKT 1	717	789	0.11717	113.6043	HOYT - STRANGER CREEK 345KV CKT 1
FDNS	00NR	2	16WP	G15_044	FROM->TO	G14-057T 345.00 - SUNNYSIDE 345KV CKT 1	717	789	0.11709	113.6	GEN501910 1-ACADIA UNIT ST1
FDNS	00NR	2	16WP	G15_044	FROM->TO	G14-057T 345.00 - SUNNYSIDE 345KV CKT 1	717	789	0.11709	113.5983	P12:138:AEPW:R.S.S.-4:S.HUD.-4
FDNS	00NR	2	16WP	G15_044	FROM->TO	G14-057T 345.00 - SUNNYSIDE 345KV CKT 1	717	789	0.11709	113.5886	GEN337041 1-GERALD ANDRUS
FDNS	00NR	2	16WP	G15_044	FROM->TO	G14-057T 345.00 - SUNNYSIDE 345KV CKT 1	717	789	0.11789	113.5842	ANADARKO - SEQUOYAHJ4 138.00 138KV CKT 1
FDNS	00NR	2	16WP	G15_044	FROM->TO	G14-057T 345.00 - SUNNYSIDE 345KV CKT 1	717	789	0.11789	113.5819	CORN TAP - SEQUOYAHJ4 138.00 138KV CKT 1
FDNS	00NR	2	16WP	G15_044	FROM->TO	G14-057T 345.00 - SUNNYSIDE 345KV CKT 1	717	789	0.11771	113.5774	SARA - STHLAKE4 138.00 138KV CKT 1
FDNS	00NR	2	20WP	G15_044	FROM->TO	G14-057T 345.00 - SUNNYSIDE 345KV CKT 1	717	789	0.11685	113.5747	GEN335831 1-RIVERBEND UNIT#1
FDNS	00NR	2	16WP	G15_044	FROM->TO	G14-057T 345.00 - SUNNYSIDE 345KV CKT 1	717	789	0.11717	113.5699	G15074_T 345.00 - JEFFREY ENERGY CENTER 345KV CKT 1
FDNS	00NR	2	16WP	G15_044	FROM->TO	G14-057T 345.00 - SUNNYSIDE 345KV CKT 1	717	789	0.11742	113.5662	WALTERS - WALTERS 69KV CKT 1
FDNS	00NR	2	16WP	G15_044	FROM->TO	G14-057T 345.00 - SUNNYSIDE 345KV CKT 1	717	789	0.11709	113.5636	GEN512688 2-GRDA1 GSU2 22
FDNS	00NR	2	16WP	G15_044	FROM->TO	G14-057T 345.00 - SUNNYSIDE 345KV CKT 1	717	789	0.117	113.5627	ETTA (DUKE HOTSPRINGS) - MC NIEL 500KV CKT 1
FDNS	00NR	2	16WP	G15_044	FROM->TO	G14-057T 345.00 - SUNNYSIDE 345KV CKT 1	717	789	0.11709	113.5603	P12:138:AEPW:YARCH-S4:T.S.E.-4
FDNS	00NR	2	16WP	G15_044	FROM->TO	G14-057T 345.00 - SUNNYSIDE 345KV CKT 1	717	789	0.11722	113.5583	G15095_T 138.00 - ROSE_VALLEY 138.00 138KV CKT 1
FDNS	00NR	2	16WP	G15_044	FROM->TO	G14-057T 345.00 - SUNNYSIDE 345KV CKT 1	717	789	0.11796	113.5565	WEATHERFORD JCT. - WEATHERFORD SOUTHEAST 138KV CKT 1
FDNS	00NR	2	16WP	G15_044	FROM->TO	G14-057T 345.00 - SUNNYSIDE 345KV CKT 1	717	789	0.11796	113.5565	WEATHERFORD JCT. - WEATHERFORD SOUTHEAST 138KV CKT 1
FDNS	00NR	2	16WP	G15_044	FROM->TO	G14-057T 345.00 - SUNNYSIDE 345KV CKT 1	717	789	0.11725	113.5549	CLEO CORNER - CLEOPLT4 138.00 138KV CKT 1
FDNS	00NR	2	16WP	G15_044	FROM->TO	G14-057T 345.00 - SUNNYSIDE 345KV CKT 1	717	789	0.11709	113.5542	P12:138:AEPW:BA_71ST4:T.S.E.-4
FDNS	00NR	2	16WP	G15_044	FROM->TO	G14-057T 345.00 - SUNNYSIDE 345KV CKT 1	717	789	0.11709	113.5534	P12:69:AEPW:NROGERS2:ECNTRTN2
FDNS	00NR	2	16WP	G15_044	FROM->TO	G14-057T 345.00 - SUNNYSIDE 345KV CKT 1	717	789	0.11732	113.5532	LAWTON RELIFT TAP - OMPA-WALTERS 69KV CKT 1
FDNS	00NR	2	16WP	G15_044	FROM->TO	G14-057T 345.00 - SUNNYSIDE 345KV CKT 1	717	789	0.11709	113.55	GEN336801 1-BAXTER WILSON UNIT #1
FDNS	00NR	2	16WP	G15_044	FROM->TO	G14-057T 345.00 - SUNNYSIDE 345KV CKT 1	717	789	0.11771	113.5496	MCCLAIN - STHLAKE4 138.00 138KV CKT 1
FDNS	00NR	2	16WP	G15_044	FROM->TO	G14-057T 345.00 - SUNNYSIDE 345KV CKT 1	717	789	0.11709	113.5458	SABINE 230/24.0KV TRANSFORMER CKT 1
FDNS	00NR	2	16WP	G15_044	FROM->TO	G14-057T 345.00 - SUNNYSIDE 345KV CKT 1	717	789	0.11725	113.5397	BLACKBERRY - NEOSHO 345KV CKT 1
FDNS	00NR	2	16WP	G15_044	FROM->TO	G14-057T 345.00 - SUNNYSIDE 345KV CKT 1	717	789	0.11725	113.5397	BLACKBERRY - NEOSHO 345KV CKT 1
FDNS	00NR	2	16WP	G15_044	FROM->TO	G14-057T 345.00 - SUNNYSIDE 345KV CKT 1	717	789	0.11551	113.5347	ARBUCKLE - VANOSTP4 138.00 138KV CKT 1
FDNS	00NR	2	16WP	G15_044	FROM->TO	G14-057T 345.00 - SUNNYSIDE 345KV CKT 1	717	789	0.11713	113.5342	7LUTESVIL 345.00 - 7ST FRANC 345.00 345KV CKT 1
FDNS	00NR	2	16WP	G15_044	FROM->TO	G14-057T 345.00 - SUNNYSIDE 345KV CKT 1	717	789	0.11721	113.5317	SWISSVALE - WEST GARDNER 345KV CKT 1
FDNS	00NR	2	16WP	G15_044	FROM->TO	G14-057T 345.00 - SUNNYSIDE 345KV CKT 1	717	789	0.11709	113.5301	FRONTIER 345/18.0KV TRANSFORMER CKT 1
FDNS	00NR	2	20WP	G15_044	FROM->TO	G14-057T 345.00 - SUNNYSIDE 345KV CKT 1	717	789	0.11685	113.53	GRAND GULF 500/22.0KV TRANSFORMER CKT 1
FDNS	00NR	2	16WP	G15_044	FROM->TO	G14-057T 345.00 - SUNNYSIDE 345KV CKT 1	717	789	0.11709	113.5285	FRONTIER 345/18.0KV TRANSFORMER CKT 1
FDNS	00NR	2	16WP	G15_044	FROM->TO	G14-057T 345.00 - SUNNYSIDE 345KV CKT 1	717	789	0.11693	113.5283	ENOWILT - LONE OAK 138KV CKT 1
FDNS	00NR	2	16WP	G15_044	FROM->TO	G14-057T 345.00 - SUNNYSIDE 345KV CKT 1	717	789	0.11908	113.5266	LASALLE - STONEWAL LH138.00 138KV CKT 1
FDNS	00NR	2	16WP	G15_044	FROM->TO	G14-057T 345.00 - SUNNYSIDE 345KV CKT 1	717	789	0.11725	113.5225	CLEOPLT4 138.00 - MEN TAP 138KV CKT 1
FDNS	00NR	2	16WP	G15_044	FROM->TO	G14-057T 345.00 - SUNNYSIDE 345KV CKT 1	717	789	0.11709	113.5223	P12:161:AEPW:CHAMSPR5:FARMING5
FDNS	00NR	2	16WP	G15_044	FROM->TO	G14-057T 345.00 - SUNNYSIDE 345KV CKT 1	717	789	0.11732	113.5201	P12:138:OKGE-AEPW:JENSEN4:REDROCKRD4
FDNS	00NR	2	16WP	G15_044	FROM->TO	G14-057T 345.00 - SUNNYSIDE 345KV CKT 1	717	789	0.11709	113.52	ESSEX UNIT 2 500/18.0KV TRANSFORMER CKT 1
FDNS	00NR	2	16WP	G15_044	FROM->TO	G14-057T 345.00 - SUNNYSIDE 345KV CKT 1	717	789	0.11693	113.5194	ENOWILT - SARDIS 138KV CKT 1
FDNS	00NR	2	16WP	G15_044	FROM->TO	G14-057T 345.00 - SUNNYSIDE 345KV CKT 1	717	789	0.11727	113.5189	EMPORIA ENERGY CENTER - G14_001T 345.00 345KV CKT 1
FDNS	00NR	2	16WP	G15_044	FROM->TO	G14-057T 345.00 - SUNNYSIDE 345KV CKT 1	717	789	0.11713	113.5188	P12:138:AEPW-OGE:SHIDLER4:OSAGE 4
FDNS	00NR	2	16WP	G15_044	FROM->TO	G14-057T 345.00 - SUNNYSIDE 345KV CKT 1	717	789	0.11743	113.5178	TUCO INTERCHANGE - TUCO_2 345.00 345KV CKT 1
FDNS	00NR	2	16WP	G15_044	FROM->TO	G14-057T 345.00 - SUNNYSIDE 345KV CKT 1	717	789	0.1169	113.5157	HOPE - MCNAB REC 115KV CKT 1
FDNS	00NR	2	16WP	G15_044	FROM->TO	G14-057T 345.00 - SUNNYSIDE 345KV CKT 1	717	789	0.11775	113.5131	NORGE ROAD - SOUTHWESTERN STATION 138KV CKT 1
FDNS	00NR	2	16WP	G15_044	FROM->TO	G14-057T 345.00 - SUNNYSIDE 345KV CKT 1	717	789	0.11775	113.5131	NORGE ROAD - SOUTHWESTERN STATION 138KV CKT 1
FDNS	00NR	2	16WP	G15_044	FROM->TO	G14-057T 345.00 - SUNNYSIDE 345KV CKT 1	717	789	0.11725	113.5126	IMO TAP - MEN TAP 138KV CKT 1
FDNS	00NR	2	16WP	G15_044	FROM->TO	G14-057T 345.00 - SUNNYSIDE 345KV CKT 1	717	789	0.11908	113.5119	STONEWAL LH138.00 - TUPELO TAP 138KV CKT 1
FDNS	00NR	2	16WP	G15_044	FROM->TO	G14-057T 345.00 - SUNNYSIDE 345KV CKT 1	717	789	0.1169	113.5071	P12:115:AEPW:TURK3:HOPE3
FDNS	00NR	2	16WP	G15_044	FROM->TO	G14-057T 345.00 - SUNNYSIDE 345KV CKT 1	717	789	0.11796	113.5062	P12:138:AEPW:REDROCKRD4:WTH_JCT4
FDNS	00NR	2	16WP	G15_044	FROM->TO	G14-057T 345.00 - SUNNYSIDE 345KV CKT 1	717	789	0.11709	113.5011	GEN505616 1-BROKEN BOW
FDNS	00NR	2	16WP	G15_044	FROM->TO	G14-057T 345.00 - SUNNYSIDE 345KV CKT 1	717	789	0.11722	113.5002	NOEL_SW 138.00 - ROSE_VALLEY 138.00 138KV CKT 1
FDNS	00NR	2	16WP	G15_044	FROM->TO	G14-057T 345.00 - SUNNYSIDE 345KV CKT 1	717	789	0.11771	113.4988	SOUTHWESTERN STATION - VERDEN 138KV CKT 1
FDNS	00NR	2	16WP	G15_044	FROM->TO	G14-057T 345.00 - SUNNYSIDE 345KV CKT 1	717	789	0.11748	113.4972	BENTON - WICHITA 345KV CKT 1
FDNS	00NR	2	16WP	G15_044	FROM->TO	G14-057T 345.00 - SUNNYSIDE 345KV CKT 1	717	789	0.11714	113.4943	8WNEWMADRID 500.00 - DELL 500 500KV CKT 1
FDNS	00NR	2	16WP	G15_044	FROM->TO	G14-057T 345.00 - SUNNYSIDE 345KV CKT 1	717	789	0.11709	113.4932	LEWIS CREEK SWITCHYARD 138/22.0KV TRANSFORMER CKT 1
FDNS	00NR	2	16WP	G15_044	FROM->TO	G14-057T 345.00 - SUNNYSIDE 345KV CKT 1	717	789	0.11709	113.4884	LEWIS CREEK SWITCHYARD 138/22.0KV TRANSFORMER CKT 1
FDNS	00NR	2	16WP	G15_044	FROM->TO	G14-057T 345.00 - SUNNYSIDE 345KV CKT 1	717	789	0.11732	113.4861	OMPA-WALTERS - WALTERS 69KV CKT 1
FDNS	00NR	2	16WP	G15_044	FROM->TO	G14-057T 345.00 - SUNNYSIDE 345KV CKT 1	717	789	0.11732	113.4861	OMPA-WALTERS - WALTERS 69KV CKT 1
FDNS	00NR	2	16WP	G15_044	FROM->TO	G14-057T 345.00 - SUNNYSIDE 345KV CKT 1	717	789	0.1169	113.4853	MCNAB REC - Turk 115 115KV CKT 1
FDNS	00NR	2	16WP	G15_044	FROM->TO	G14-057T 345.00 - SUNNYSIDE 345KV CKT 1	717	789	0.11693	113.4852	CLAYTON - SARDIS 138KV CKT 1
FDNS	00NR	2	16WP	G15_044	FROM->TO	G14-057T 345.00 - SUNNYSIDE 345KV CKT 1	717	789	0.1169	113.4852	TURK (TURK 1) 138/115/13.2KV TRANSFORMER CKT 1
FDNS	00NR	2	16WP	G15_044	FROM->TO	G14-057T 345.00 - SUNNYSIDE 345KV CKT 1	717	789	0.1169	113.4852	TURK (TURK 1) 138/115/13.2KV TRANSFORMER CKT 1
FDNS	00NR	2	16WP	G15_044	FROM->TO	G14-057T 345.00 - SUNNYSIDE 345KV CKT 1	717	789	0.11698	113.4831	COUCH SES - MC NIEL 115KV CKT 1

SOLUTION	GROUP	SCENARIO	SEASON	SOURCE	DIRECTION	MONITORED ELEMENT	RATEA (MVA)	RATEB(MVA)	TDF	TC%LOADING (% MVA)	CONTINGENCY
FDNS	00NR	2	16WP	G15_044	FROM->TO	G14-057T 345.00 - SUNNYSIDE 345KV CKT 1	717	789	0.11771	113.4785	NORTH 29TH CHICKASHA - VERDEN 138KV CKT 1
FDNS	00NR	2	16WP	G15_044	FROM->TO	G14-057T 345.00 - SUNNYSIDE 345KV CKT 1	717	789	0.11709	113.476	GEN501970 1-EVANGELINE UNIT 7
FDNS	00NR	2	16WP	G15_044	FROM->TO	G14-057T 345.00 - SUNNYSIDE 345KV CKT 1	717	789	0.11709	113.4704	GEN659125 1-COVEY
FDNS	00NR	2	16WP	G15_044	FROM->TO	G14-057T 345.00 - SUNNYSIDE 345KV CKT 1	717	789	0.11709	113.4674	GEN509394 1-FLINT CREEK
FDNS	00NR	2	16WP	G15_044	FROM->TO	G14-057T 345.00 - SUNNYSIDE 345KV CKT 1	717	789	0.11951	113.4668	FRANKLIN SW - WESTMOORE 138KV CKT 1
FDNS	00NR	2	16WP	G15_044	FROM->TO	G14-057T 345.00 - SUNNYSIDE 345KV CKT 1	717	789	0.11718	113.4667	P12:138:OKGE:3TERM12
FDNS	00NR	2	16WP	G15_044	FROM->TO	G14-057T 345.00 - SUNNYSIDE 345KV CKT 1	717	789	0.11709	113.4638	GEN334392 1-EXXON MOBIL IPP 1
FDNS	00NR	2	16WP	G15_044	FROM->TO	G14-057T 345.00 - SUNNYSIDE 345KV CKT 1	717	789	0.11742	113.4631	P12:69:WFEC-AEPW:COMANCH2:WALTRS-2
FDNS	00NR	2	16WP	G15_044	FROM->TO	G14-057T 345.00 - SUNNYSIDE 345KV CKT 1	717	789	0.11718	113.4612	EMPORIA ENERGY CENTER - SWISSVALE 345KV CKT 1
FDNS	00NR	2	16WP	G15_044	FROM->TO	G14-057T 345.00 - SUNNYSIDE 345KV CKT 1	717	789	0.11693	113.4581	P12:138:AEPW-SWPA:LONEOAK4:BRKNBW4
FDNS	00NR	2	16WP	G15_044	FROM->TO	G14-057T 345.00 - SUNNYSIDE 345KV CKT 1	717	789	0.11709	113.4572	GEN334393 1-EXXON MOBIL IPP 2
FDNS	00NR	2	16WP	G15_044	FROM->TO	G14-057T 345.00 - SUNNYSIDE 345KV CKT 1	717	789	0.11709	113.4572	GEN334394 1-EXXON MOBIL IPP 3
FDNS	00NR	2	16WP	G15_044	FROM->TO	G14-057T 345.00 - SUNNYSIDE 345KV CKT 1	717	789	0.11799	113.4566	G14_038T 345.00 - POTTER COUNTY INTERCHANGE 345KV CKT 1
FDNS	00NR	2	16WP	G15_044	FROM->TO	G14-057T 345.00 - SUNNYSIDE 345KV CKT 1	717	789	0.11727	113.4552	G14_001T 345.00 - WICHITA 345KV CKT 1
FDNS	00NR	2	16WP	G15_044	FROM->TO	G14-057T 345.00 - SUNNYSIDE 345KV CKT 1	717	789	0.1176	113.4545	WEATHERFORD TAP - WEATHERFORD WIND FARM 138KV CKT 1
FDNS	00NR	2	16WP	G15_044	FROM->TO	G14-057T 345.00 - SUNNYSIDE 345KV CKT 1	717	789	0.11699	113.4538	MORISNT4 138.00 - STILLWATER 138KV CKT 1
FDNS	00NR	2	20WP	G15_044	FROM->TO	G14-057T 345.00 - SUNNYSIDE 345KV CKT 1	717	789	0.11658	113.452	7SAREPTA% 345.00 - ELDORADO EHV 345KV CKT 1
FDNS	00NR	2	20WP	G15_044	FROM->TO	G14-057T 345.00 - SUNNYSIDE 345KV CKT 1	717	789	0.11658	113.4518	3TR3AR8EL7EL
FDNS	00NR	2	16WP	G15_044	FROM->TO	G14-057T 345.00 - SUNNYSIDE 345KV CKT 1	717	789	0.11709	113.4485	GEN336222 1-LITTLE GYPSY UNIT#2
FDNS	00NR	2	16WP	G15_044	FROM->TO	G14-057T 345.00 - SUNNYSIDE 345KV CKT 1	717	789	0.11701	113.4484	P12:138:OKGE:3TERM2
FDNS	00NR	2	16WP	G15_044	FROM->TO	G14-057T 345.00 - SUNNYSIDE 345KV CKT 1	717	789	0.11693	113.4456	CLAYTON - NASHOBA 138KV CKT 1
FDNS	00NR	2	16WP	G15_044	FROM->TO	G14-057T 345.00 - SUNNYSIDE 345KV CKT 1	717	789	0.11738	113.4445	FRANKLIN - FRANKLIN SW 138KV CKT 1
FDNS	00NR	2	20WP	G15_044	FROM->TO	G14-057T 345.00 - SUNNYSIDE 345KV CKT 1	717	789	0.11658	113.4413	ELDORADO EHV 500/345KV TRANSFORMER CKT 1
FDNS	00NR	2	16WP	G15_044	FROM->TO	G14-057T 345.00 - SUNNYSIDE 345KV CKT 1	717	789	0.11712	113.4391	7JASPER 345.00 - MORGAN 345KV CKT 1
FDNS	00NR	2	16WP	G15_044	FROM->TO	G14-057T 345.00 - SUNNYSIDE 345KV CKT 1	717	789	0.11729	113.4377	BUCKNER7 345.00 - HOLCOMB 345KV CKT 1
FDNS	00NR	2	16WP	G15_044	FROM->TO	G14-057T 345.00 - SUNNYSIDE 345KV CKT 1	717	789	0.11729	113.4377	BUCKNER7 345.00 - HOLCOMB 345KV CKT 1
FDNS	00NR	2	16WP	G15_044	FROM->TO	G14-057T 345.00 - SUNNYSIDE 345KV CKT 1	717	789	0.1195	113.4365	MARIETTA - MARIETTA4 138.00 138KV CKT 1
FDNS	00NR	2	16WP	G15_044	FROM->TO	G14-057T 345.00 - SUNNYSIDE 345KV CKT 1	717	789	0.11709	113.434	P12:138:AEPW:R.S.S-4:T.P.S.-4
FDNS	00NR	2	16WP	G15_044	FROM->TO	G14-057T 345.00 - SUNNYSIDE 345KV CKT 1	717	789	0.11693	113.4327	BETHEL - NASHOBA 138KV CKT 1
FDNS	00NR	2	16WP	G15_044	FROM->TO	G14-057T 345.00 - SUNNYSIDE 345KV CKT 1	717	789	0.11709	113.4307	GEN506749 1-EASTMAN GENERATION A
FDNS	00NR	2	16WP	G15_044	FROM->TO	G14-057T 345.00 - SUNNYSIDE 345KV CKT 1	717	789	0.11731	113.4303	CLINTON JUNCTION - ELK CITY 138KV CKT 1
FDNS	00NR	2	16WP	G15_044	FROM->TO	G14-057T 345.00 - SUNNYSIDE 345KV CKT 1	717	789	0.11731	113.4303	CLINTON JUNCTION - ELK CITY 138KV CKT 1
FDNS	00NR	2	16WP	G15_044	FROM->TO	G14-057T 345.00 - SUNNYSIDE 345KV CKT 1	717	789	0.1181	113.4299	CLARKSVILLE - ONETA 345KV CKT 1
FDNS	00NR	2	16WP	G15_044	FROM->TO	G14-057T 345.00 - SUNNYSIDE 345KV CKT 1	717	789	0.1181	113.4299	CLARKSVILLE - ONETA 345KV CKT 1
FDNS	00NR	2	16WP	G15_044	FROM->TO	G14-057T 345.00 - SUNNYSIDE 345KV CKT 1	717	789	0.11796	113.4299	HINTON - WEATHERFORD JCT. 138KV CKT 1
FDNS	00NR	2	16WP	G15_044	FROM->TO	G14-057T 345.00 - SUNNYSIDE 345KV CKT 1	717	789	0.11709	113.4276	GEN334432 1-SABINE UNIT 2
FDNS	00NR	2	16WP	G15_044	FROM->TO	G14-057T 345.00 - SUNNYSIDE 345KV CKT 1	717	789	0.11709	113.4275	GEN334431 1-SABINE UNIT 1
FDNS	00NR	2	16WP	G15_044	FROM->TO	G14-057T 345.00 - SUNNYSIDE 345KV CKT 1	717	789	0.11709	113.4204	GEN501972 1-EVANGELINE UNIT 7-2
FDNS	00NR	2	16WP	G15_044	FROM->TO	G14-057T 345.00 - SUNNYSIDE 345KV CKT 1	717	789	0.11709	113.4203	GEN501971 1-EVANGELINE UNIT 7-1
FDNS	00NR	2	16WP	G15_044	FROM->TO	G14-057T 345.00 - SUNNYSIDE 345KV CKT 1	717	789	0.11709	113.4197	GEN336152 1-WATERFORD UNIT#2
FDNS	00NR	2	16WP	G15_044	FROM->TO	G14-057T 345.00 - SUNNYSIDE 345KV CKT 1	717	789	0.11709	113.4187	GEN336151 1-WATERFORD UNIT#1
FDNS	00NR	2	20WP	G15_044	FROM->TO	G14-057T 345.00 - SUNNYSIDE 345KV CKT 1	717	789	0.11685	113.4186	GEN515577 1-ARBWND11 0.6900
FDNS	00NR	2	20WP	G15_044	FROM->TO	G14-057T 345.00 - SUNNYSIDE 345KV CKT 1	717	789	0.11819	113.4146	P12:138:AEPW:DUNCAN-4:L.E.S.-4
FDNS	00NR	2	16WP	G15_044	FROM->TO	G14-057T 345.00 - SUNNYSIDE 345KV CKT 1	717	789	0.11771	113.4111	CORNVILLE - NORTH 29TH CHICKASHA 138KV CKT 1
FDNS	00NR	2	16WP	G15_044	FROM->TO	G14-057T 345.00 - SUNNYSIDE 345KV CKT 1	717	789	0.11709	113.4106	P12:138:AEPW:R.S.S.-4:R:96YALE-4
FDNS	00NR	2	16WP	G15_044	FROM->TO	G14-057T 345.00 - SUNNYSIDE 345KV CKT 1	717	789	0.11861	113.4047	PURCELL4 138.00 - WALNUT CREEK 138KV CKT 1
FDNS	00NR	2	16WP	G15_044	FROM->TO	G14-057T 345.00 - SUNNYSIDE 345KV CKT 1	717	789	0.11724	113.4022	FLETCHER - MARLOW JCT 69KV CKT 1
FDNS	00NR	2	16WP	G15_044	FROM->TO	G14-057T 345.00 - SUNNYSIDE 345KV CKT 1	717	789	0.11709	113.397	GEN501912 1-ACADIA UNIT CT1B
FDNS	00NR	2	16WP	G15_044	FROM->TO	G14-057T 345.00 - SUNNYSIDE 345KV CKT 1	717	789	0.11709	113.3963	GEN501911 1-ACADIA UNIT CT1A
FDNS	00NR	2	16WP	G15_044	FROM->TO	G14-057T 345.00 - SUNNYSIDE 345KV CKT 1	717	789	0.11775	113.3952	CORNVILLE - NORGE ROAD 138KV CKT 1
FDNS	00NR	2	16WP	G15_044	FROM->TO	G14-057T 345.00 - SUNNYSIDE 345KV CKT 1	717	789	0.11775	113.3952	CORNVILLE - NORGE ROAD 138KV CKT 1
FDNS	00NR	2	16WP	G15_044	FROM->TO	G14-057T 345.00 - SUNNYSIDE 345KV CKT 1	717	789	0.11709	113.3951	P12:138:AEPW:MOHAWK4:T.NO--4
FDNS	00NR	2	16WP	G15_044	FROM->TO	G14-057T 345.00 - SUNNYSIDE 345KV CKT 1	717	789	0.11744	113.3896	HAMMETT TAP - HORSESHOE LAKE 138KV CKT 1
FDNS	00NR	2	16WP	G15_044	FROM->TO	G14-057T 345.00 - SUNNYSIDE 345KV CKT 1	717	789	0.11709	113.3891	ST FRANCIS 161/16.0KV TRANSFORMER CKT 1
FDNS	00NR	2	16WP	G15_044	FROM->TO	G14-057T 345.00 - SUNNYSIDE 345KV CKT 1	717	789	0.11635	113.3891	ARBUCKLE - MILLCREEK 138KV CKT 1
FDNS	00NR	2	16WP	G15_044	FROM->TO	G14-057T 345.00 - SUNNYSIDE 345KV CKT 1	717	789	0.11709	113.389	ST FRANCIS - ST FRANCIS 1 161KV CKT Z1
FDNS	00NR	2	16WP	G15_044	FROM->TO	G14-057T 345.00 - SUNNYSIDE 345KV CKT 1	717	789	0.11686	113.3855	P12:138:AEPW:OKMULGE4:R.S.S-4
FDNS	00NR	2	16WP	G15_044	FROM->TO	G14-057T 345.00 - SUNNYSIDE 345KV CKT 1	717	789	0.11701	113.385	LAYFLD8 500.00 (LAYFLD AUTO) 500/230/13.8KV TRANSFORMER CKT 1
FDNS	00NR	2	16WP	G15_044	FROM->TO	G14-057T 345.00 - SUNNYSIDE 345KV CKT 1	717	789	0.11701	113.385	LAYFLD8 500.00 (LAYFLD AUTO) 500/230/13.8KV TRANSFORMER CKT 1
FDNS	00NR	2	16WP	G15_044	FROM->TO	G14-057T 345.00 - SUNNYSIDE 345KV CKT 1	717	789	0.11709	113.3786	SABINE 230/22.0KV TRANSFORMER CKT 1
FDNS	00NR	2	16WP	G15_044	FROM->TO	G14-057T 345.00 - SUNNYSIDE 345KV CKT 1	717	789	0.11693	113.378	BETHEL - BROKEN BOW 138KV CKT 1
FDNS	00NR	2	16WP	G15_044	FROM->TO	G14-057T 345.00 - SUNNYSIDE 345KV CKT 1	717	789	0.11796	113.3774	HINTON - REDROCKRD4 138.00 138KV CKT 1
FDNS	00NR	2	16WP	G15_044	FROM->TO	G14-057T 345.00 - SUNNYSIDE 345KV CKT 1	717	789	0.11694	113.3764	AMITY SS - MURFREESBORO EAST (AECC) 115KV CKT 1
FDNS	00NR	2	16WP	G15_044	FROM->TO	G14-057T 345.00 - SUNNYSIDE 345KV CKT 1	717	789	0.11714	113.3747	P12:138:WFEC-AEPW:ELKCTY-4:ERICK4
FDNS	00NR	2	16WP	G15_044	FROM->TO	G14-057T 345.00 - SUNNYSIDE 345KV CKT 1	717	789	0.11728	113.3729	P12:138:OKGE:3TERM47
FDNS	00NR	2	16WP	G15_044	FROM->TO	G14-057T 345.00 - SUNNYSIDE 345KV CKT 1	717	789	0.11709	113.3726	GEN336242 1-1NMIL ST1 18.000
FDNS	00NR	2	16WP	G15_044	FROM->TO	G14-057T 345.00 - SUNNYSIDE 345KV CKT 1	717	789	0.1176	113.3672	WEATHERFORD SOUTHEAST - WEATHERFORD TAP 138KV CKT 1
FDNS	00NR	2	16WP	G15_044	FROM->TO	G14-057T 345.00 - SUNNYSIDE 345KV CKT 1	717	789	0.11732	113.342	SEMINOLE (SEMINOL2) 345/138/14.4KV TRANSFORMER CKT 1
FDNS	00NR	2	20WP	G15_044	FROM->TO	G14-057T 345.00 - SUNNYSIDE 345KV CKT 1	717	789	0.11744	113.3415	ARCADIA - SEMINOLE 345KV CKT 1
FDNS	00NR	2	16WP	G15_044	FROM->TO	G14-057T 345.00 - SUNNYSIDE 345KV CKT 1	717	789	0.12167	113.3359	CIMARRON - NORTHWEST 345KV CKT 1
FDNS	00NR	2	20WP	G15_044	FROM->TO	G14-057T 345.00 - SUNNYSIDE 345KV CKT 1	717	789	0.11819	113.2973	COMANCHE TAP - OMPA-DUNCAN 840 138KV CKT 1
FDNS	00NR	2	20WP	G15_044	FROM->TO	G14-057T 345.00 - SUNNYSIDE 345KV CKT 1	717	789	0.11685	113.2559	GEN509409 1-WILKES #3
FDNS	00NR	2	20WP	G15_044	FROM->TO	G14-057T 345.00 - SUNNYSIDE 345KV CKT 1	717	789	0.11925	113.2462	HEALDTON - LOCO 138KV CKT 1
FDNS	00NR	2	20WP	G15_044	FROM->TO	G14-057T 345.00 - SUNNYSIDE 345KV CKT 1	717	789	0.11934	113.2368	BRIDGECR 138.00 - TUTTLE 138KV CKT 1
FDNS	00NR	2	20WP	G15_044	FROM->TO	G14-057T 345.00 - SUNNYSIDE 345KV CKT 1	717	789	0.11062	113.2314	CANADIAN RIVER - MUSKOGEE 345KV CKT 1
FDNS	00NR	2	20WP	G15_044	FROM->TO	G14-057T 345.00 - SUNNYSIDE 345KV CKT 1	717	789	0.11685	113.1925	GEN501813 1-RODEMACHER UNIT 3
FDNS	00NR	2	20WP	G15_044	FROM->TO	G14-057T 345.00 - SUNNYSIDE 345KV CKT 1	717	789	0.11685	113.1225	GEN300006 1-NEW MADRID UNIT 1
FDNS	00NR	2	20WP	G15_044	FROM->TO	G14-057T 345.00 - SUNNYSIDE 345KV CKT 1	717	789	0.11685	113.1022	GEN300007 1-NEW MADRID UNIT 2
FDNS	00NR	2	20WP	G15_044	FROM->TO	G14-057T 345.00 - SUNNYSIDE 345KV CKT 1	717	789	0.11925	113.102	HEALDTON - RINGLING 138KV CKT 1

SOLUTION	GROUP	SCENARIO	SEASON	SOURCE	DIRECTION	MONITORED ELEMENT	RATEA (MVA)	RATEB(MVA)	TDF	TC%LOADING (% MVA)	CONTINGENCY
FDNS	00NR	2	20WP	G15_044	FROM->TO	G14-057T 345.00 - SUNNYSIDE 345KV CKT 1	717	789	0.11702	113.0313	LACYGNE - WAVERLY7 345.00 345KV CKT 1
FDNS	00NR	2	20WP	G15_044	FROM->TO	G14-057T 345.00 - SUNNYSIDE 345KV CKT 1	717	789	0.11819	113.0115	DUNCAN - OMPA-DUNCAN 840 138KV CKT 1
FDNS	00NR	2	20WP	G15_044	FROM->TO	G14-057T 345.00 - SUNNYSIDE 345KV CKT 1	717	789	0.11819	113.0115	DUNCAN - OMPA-DUNCAN 840 138KV CKT 1
FDNS	00NR	2	20WP	G15_044	FROM->TO	G14-057T 345.00 - SUNNYSIDE 345KV CKT 1	717	789	0.11685	112.9819	GEN335206 1-NELSON UNIT 6
FDNS	00NR	2	20WP	G15_044	FROM->TO	G14-057T 345.00 - SUNNYSIDE 345KV CKT 1	717	789	0.11934	112.9602	P12:138:WFEC:MSL01
FDNS	00NR	2	20WP	G15_044	FROM->TO	G14-057T 345.00 - SUNNYSIDE 345KV CKT 1	717	789	0.11685	112.9576	GEN520947 1-HUGO1
FDNS	00NR	2	20WP	G15_044	FROM->TO	G14-057T 345.00 - SUNNYSIDE 345KV CKT 1	717	789	0.11934	112.9545	BRIDGECR 138.00 - SUNSHINE CANYON 138KV CKT 1
FDNS	00NR	2	20WP	G15_044	FROM->TO	G14-057T 345.00 - SUNNYSIDE 345KV CKT 1	717	789	0.11925	112.9309	RINGLING - SOUTH WILSON 138KV CKT 1
FDNS	00NR	2	20WP	G15_044	FROM->TO	G14-057T 345.00 - SUNNYSIDE 345KV CKT 1	717	789	0.11702	112.9199	WAVERLY7 345.00 - WOLF CREEK 345KV CKT 1
FDNS	00NR	2	16WP	G15_044	FROM->TO	G14-057T 345.00 - SUNNYSIDE 345KV CKT 1	717	789	0.11709	112.9058	803-OKLAUNION
FDNS	00NR	2	20WP	G15_044	FROM->TO	G14-057T 345.00 - SUNNYSIDE 345KV CKT 1	717	789	0.11673	112.8133	ELDORADO EHV - MOUNT OLIVE 500KV CKT 1
FDNS	00NR	2	20WP	G15_044	FROM->TO	G14-057T 345.00 - SUNNYSIDE 345KV CKT 1	717	789	0.11686	112.8085	P12:138:AEPW:SHERID4:112GORE4
FDNS	00NR	2	20WP	G15_044	FROM->TO	G14-057T 345.00 - SUNNYSIDE 345KV CKT 1	717	789	0.11685	112.7988	GEN501812 1-RODEMACHER UNIT 2
FDNS	00NR	2	20WP	G15_044	FROM->TO	G14-057T 345.00 - SUNNYSIDE 345KV CKT 1	717	789	0.11685	112.7873	DOLET HILLS 345/24.0KV TRANSFORMER CKT 1
FDNS	00NR	2	20WP	G15_044	FROM->TO	G14-057T 345.00 - SUNNYSIDE 345KV CKT 1	717	789	0.11827	112.7668	Hitchland Interchange - WALKTAP7 345.00 345KV CKT 1
FDNS	00NR	2	20WP	G15_044	FROM->TO	G14-057T 345.00 - SUNNYSIDE 345KV CKT 1	717	789	0.11827	112.7668	Hitchland Interchange - WALKTAP7 345.00 345KV CKT 1
FDNS	00NR	2	20WP	G15_044	FROM->TO	G14-057T 345.00 - SUNNYSIDE 345KV CKT 1	717	789	0.11827	112.7573	P12:345:SPS:J07.1.FINN.HITCH
FDNS	00NR	2	20WP	G15_044	FROM->TO	G14-057T 345.00 - SUNNYSIDE 345KV CKT 1	717	789	0.11792	112.7566	REDBUD - RIVERSIDE STATION 345KV CKT 1
FDNS	00NR	2	20WP	G15_044	FROM->TO	G14-057T 345.00 - SUNNYSIDE 345KV CKT 1	717	789	0.11792	112.7566	REDBUD - RIVERSIDE STATION 345KV CKT 1
FDNS	00NR	2	20WP	G15_044	FROM->TO	G14-057T 345.00 - SUNNYSIDE 345KV CKT 1	717	789	0.1156	112.7566	PARK LANE - SEMINOLE 138KV CKT 1
FDNS	00NR	2	20WP	G15_044	FROM->TO	G14-057T 345.00 - SUNNYSIDE 345KV CKT 1	717	789	0.11685	112.6762	GEN515564 1-ORIGIN11 0.6900
FDNS	00NR	2	20WP	G15_044	FROM->TO	G14-057T 345.00 - SUNNYSIDE 345KV CKT 1	717	789	0.11685	112.6762	GEN515565 1-ORIGIN21 0.6900
FDNS	00NR	2	20WP	G15_044	FROM->TO	G14-057T 345.00 - SUNNYSIDE 345KV CKT 1	717	789	0.11867	112.6549	MATHWSN7 345.00 - NORTHWEST 345KV CKT 1
FDNS	00NR	2	20WP	G15_044	FROM->TO	G14-057T 345.00 - SUNNYSIDE 345KV CKT 1	717	789	0.1168	112.653	WEBRE - WELLS 500KV CKT 1
FDNS	00NR	2	20WP	G15_044	FROM->TO	G14-057T 345.00 - SUNNYSIDE 345KV CKT 1	717	789	0.11925	112.6447	MARIETTA - SOUTH WILSON 138KV CKT 1
FDNS	00NR	2	20WP	G15_044	FROM->TO	G14-057T 345.00 - SUNNYSIDE 345KV CKT 1	717	789	0.11685	112.6408	GEN334440 1-SABINE UNIT 4
FDNS	00NR	2	20WP	G15_044	FROM->TO	G14-057T 345.00 - SUNNYSIDE 345KV CKT 1	717	789	0.11685	112.6136	P12:161:AEPW:DYESS 5:HYLAND 5
FDNS	00NR	2	20WP	G15_044	FROM->TO	G14-057T 345.00 - SUNNYSIDE 345KV CKT 1	717	789	0.11685	112.6129	GEN590011 2-ERCOT EQUIVALENCE
FDNS	00NR	2	20WP	G15_044	FROM->TO	G14-057T 345.00 - SUNNYSIDE 345KV CKT 1	717	789	0.11731	112.5805	CANEYRV7 345.00 - NEOSHO 345KV CKT 1
FDNS	00NR	2	20WP	G15_044	FROM->TO	G14-057T 345.00 - SUNNYSIDE 345KV CKT 1	717	789	0.11685	112.5779	DELL 500 - ESSEX UNIT 2 500KV CKT Z1
FDNS	00NR	2	20WP	G15_044	FROM->TO	G14-057T 345.00 - SUNNYSIDE 345KV CKT 1	717	789	0.11685	112.5497	P12:69:AEPW:L.E.S.-2:LAW WC2
FDNS	00NR	2	20WP	G15_044	FROM->TO	G14-057T 345.00 - SUNNYSIDE 345KV CKT 1	717	789	0.11925	112.5491	P12:138:WFEC:MSL17
FDNS	00NR	2	20WP	G15_044	FROM->TO	G14-057T 345.00 - SUNNYSIDE 345KV CKT 1	717	789	0.11685	112.5438	GEN590010 1-ERCOT EQUIVALENCE
FDNS	00NR	2	16WP	G15_044	FROM->TO	G14-057T 345.00 - SUNNYSIDE 345KV CKT 1	717	789	0.11941	112.5339	NORTHWEST - SPRING CREEK 345KV CKT 1
FDNS	00NR	2	16WP	G15_044	FROM->TO	G14-057T 345.00 - SUNNYSIDE 345KV CKT 1	717	789	0.11941	112.5258	SOONER - SPRING CREEK 345KV CKT 1
FDNS	00NR	2	16WP	G15_044	FROM->TO	G14-057T 345.00 - SUNNYSIDE 345KV CKT 1	717	789	0.11595	112.5199	MAYSVLT4 138.00 - PRAIRIE POINT 138KV CKT 1
FDNS	00NR	2	16WP	G15_044	FROM->TO	G14-057T 345.00 - SUNNYSIDE 345KV CKT 1	717	789	0.11713	112.5177	JOHNSON COUNTY - RUSSETT 138KV CKT 1
FDNS	00NR	2	16WP	G15_044	FROM->TO	G14-057T 345.00 - SUNNYSIDE 345KV CKT 1	717	789	0.11718	112.505	GLASSES - MADILL INDUSTRIAL TAP 138KV CKT 1
FDNS	00NR	2	16WP	G15_044	FROM->TO	G14-057T 345.00 - SUNNYSIDE 345KV CKT 1	717	789	0.11709	112.4983	GEN562772 1-G15034_3 0.6900
FDNS	00NR	2	16WP	G15_044	FROM->TO	G14-057T 345.00 - SUNNYSIDE 345KV CKT 1	717	789	0.11709	112.4879	GEN562691 1-G15_015_3 0.6900
FDNS	00NR	2	16WP	G15_044	FROM->TO	G14-057T 345.00 - SUNNYSIDE 345KV CKT 1	717	789	0.11709	112.481	GEN521103 1-BLUE CANYON WIND FARM
FDNS	00NR	2	20WP	G15_044	FROM->TO	G14-057T 345.00 - SUNNYSIDE 345KV CKT 1	717	789	0.1177	112.4804	P12:138:WFEC:MSL02
FDNS	00NR	2	16WP	G15_044	FROM->TO	G14-057T 345.00 - SUNNYSIDE 345KV CKT 1	717	789	0.11753	112.4799	DRAPER LAKE - MIDWEST TAP 138KV CKT 1
FDNS	00NR	2	16WP	G15_044	FROM->TO	G14-057T 345.00 - SUNNYSIDE 345KV CKT 1	717	789	0.11702	112.4775	HUGO (HUGO 1) 345/138/13.8KV TRANSFORMER CKT 1
FDNS	00NR	2	20WP	G15_044	FROM->TO	G14-057T 345.00 - SUNNYSIDE 345KV CKT 1	717	789	0.11736	112.4712	PAOLI - PAYNE 138.00 138KV CKT 1
FDNS	00NR	2	16WP	G15_044	FROM->TO	G14-057T 345.00 - SUNNYSIDE 345KV CKT 1	717	789	0.11833	112.4704	BEARCAT 138.00 - NINE MILE 138KV CKT 1
FDNS	00NR	2	20WP	G15_044	FROM->TO	G14-057T 345.00 - SUNNYSIDE 345KV CKT 1	717	789	0.11752	112.4648	LAWTON EASTSIDE (LES 5) 345/138/13.8KV TRANSFORMER CKT 2
FDNS	00NR	2	20WP	G15_044	FROM->TO	G14-057T 345.00 - SUNNYSIDE 345KV CKT 1	717	789	0.11752	112.4648	LAWTON EASTSIDE (LES 5) 345/138/13.8KV TRANSFORMER CKT 2
FDNS	00NR	2	16WP	G15_044	FROM->TO	G14-057T 345.00 - SUNNYSIDE 345KV CKT 1	717	789	0.11709	112.4615	GEN520812 1-ANADRK5
FDNS	00NR	2	16WP	G15_044	FROM->TO	G14-057T 345.00 - SUNNYSIDE 345KV CKT 1	717	789	0.11709	112.4614	GEN520813 1-ANADRK6
FDNS	00NR	2	20WP	G15_044	FROM->TO	G14-057T 345.00 - SUNNYSIDE 345KV CKT 1	717	789	0.11685	112.4609	GEN506754 1-LEBROCK STEAM 1
FDNS	00NR	2	16WP	G15_044	FROM->TO	G14-057T 345.00 - SUNNYSIDE 345KV CKT 1	717	789	0.11619	112.4585	ARBUCKLE - SULPHR 4 138.00 138KV CKT 1
FDNS	00NR	2	20WP	G15_044	FROM->TO	G14-057T 345.00 - SUNNYSIDE 345KV CKT 1	717	789	0.11661	112.4575	ELDORADO EHV - SHERIDAN EHV 500KV CKT 1
FDNS	00NR	2	16WP	G15_044	FROM->TO	G14-057T 345.00 - SUNNYSIDE 345KV CKT 1	717	789	0.11758	112.4486	P12:138:OKGE:3TERM21
FDNS	00NR	2	16WP	G15_044	FROM->TO	G14-057T 345.00 - SUNNYSIDE 345KV CKT 1	717	789	0.11718	112.4442	GLASSES - RUSSETT 138KV CKT 1
FDNS	00NR	2	16WP	G15_044	FROM->TO	G14-057T 345.00 - SUNNYSIDE 345KV CKT 1	717	789	0.11709	112.4418	GEN511961 1-DEMPSEY-WTG10.7000
FDNS	00NR	2	16WP	G15_044	FROM->TO	G14-057T 345.00 - SUNNYSIDE 345KV CKT 1	717	789	0.11706	112.4396	P12:138:WFEC:MSL11
FDNS	00NR	2	16WP	G15_044	FROM->TO	G14-057T 345.00 - SUNNYSIDE 345KV CKT 1	717	789	0.11706	112.4396	P12:138:WFEC-AEPW:PHAROAH4:LONEOAK4
FDNS	00NR	2	20WP	G15_044	FROM->TO	G14-057T 345.00 - SUNNYSIDE 345KV CKT 1	717	789	0.11731	112.4393	CANEYRV7 345.00 - LATHAMS7 345.00 345KV CKT 1
FDNS	00NR	2	20WP	G15_044	FROM->TO	G14-057T 345.00 - SUNNYSIDE 345KV CKT 1	717	789	0.11883	112.4313	CIVIT - PAOLI 138KV CKT 1
FDNS	00NR	2	20WP	G15_044	FROM->TO	G14-057T 345.00 - SUNNYSIDE 345KV CKT 1	717	789	0.11686	112.4267	P12:138:AEPW:112GORE4:L.E.S.-4
FDNS	00NR	2	16WP	G15_044	FROM->TO	G14-057T 345.00 - SUNNYSIDE 345KV CKT 1	717	789	0.11595	112.4229	PRAIRIE POINT - RATLIFF 138KV CKT 1
FDNS	00NR	2	16WP	G15_044	FROM->TO	G14-057T 345.00 - SUNNYSIDE 345KV CKT 1	717	789	0.11709	112.4178	P12:069:OKGE:3TERM42
FDNS	00NR	2	16WP	G15_044	FROM->TO	G14-057T 345.00 - SUNNYSIDE 345KV CKT 1	717	789	0.11738	112.4163	P12:138:WFEC:MSL08
FDNS	00NR	2	16WP	G15_044	FROM->TO	G14-057T 345.00 - SUNNYSIDE 345KV CKT 1	717	789	0.11709	112.4142	GEN672392 1-NBECGT1G 18.000
FDNS	00NR	2	16WP	G15_044	FROM->TO	G14-057T 345.00 - SUNNYSIDE 345KV CKT 1	717	789	0.11714	112.411	DELL 500 - INDEPENDENCE 500KV CKT 1
FDNS	00NR	2	20WP	G15_044	FROM->TO	G14-057T 345.00 - SUNNYSIDE 345KV CKT 1	717	789	0.11685	112.4103	GEN509408 1-WILKES #2
FDNS	00NR	2	20WP	G15_044	FROM->TO	G14-057T 345.00 - SUNNYSIDE 345KV CKT 1	717	789	0.11751	112.4096	ANADARKO - GEORGIA 138KV CKT 1
FDNS	00NR	2	16WP	G15_044	FROM->TO	G14-057T 345.00 - SUNNYSIDE 345KV CKT 1	717	789	0.11718	112.4067	OVEXFRMCCOVE
FDNS	00NR	2	16WP	G15_044	FROM->TO	G14-057T 345.00 - SUNNYSIDE 345KV CKT 1	717	789	0.11816	112.4049	CIMARRON - MATHWSN7 345.00 345KV CKT 1
FDNS	00NR	2	16WP	G15_044	FROM->TO	G14-057T 345.00 - SUNNYSIDE 345KV CKT 1	717	789	0.11816	112.4049	CIMARRON - MATHWSN7 345.00 345KV CKT 2
FDNS	00NR	2	16WP	G15_044	FROM->TO	G14-057T 345.00 - SUNNYSIDE 345KV CKT 1	717	789	0.11711	112.397	GRPRAR1-LNX3345.00 - HOLT.CO3 345.00 345KV CKT 1
FDNS	00NR	2	16WP	G15_044	FROM->TO	G14-057T 345.00 - SUNNYSIDE 345KV CKT 1	717	789	0.11709	112.3943	GEN615010 1-STANTON4
FDNS	00NR	2	16WP	G15_044	FROM->TO	G14-057T 345.00 - SUNNYSIDE 345KV CKT 1	717	789	0.11709	112.3886	GEN528361 1-MADDOX GEN #1
FDNS	00NR	2	16WP	G15_044	FROM->TO	G14-057T 345.00 - SUNNYSIDE 345KV CKT 1	717	789	0.11709	112.3881	GEN629070 2-BEAVER CHANNEL GENERATORFOR UNIT NO 2
FDNS	00NR	2	16WP	G15_044	FROM->TO	G14-057T 345.00 - SUNNYSIDE 345KV CKT 1	717	789	0.11711	112.3876	GRPRAR1-LNX3345.00 - GRPRAR 345KV CKT Z
FDNS	00NR	2	16WP	G15_044	FROM->TO	G14-057T 345.00 - SUNNYSIDE 345KV CKT 1	717	789	0.11833	112.3839	P12:138:WFEC:MSL14
FDNS	00NR	2	16WP	G15_044	FROM->TO	G14-057T 345.00 - SUNNYSIDE 345KV CKT 1	717	789	0.11718	112.378	CANEY CREEK - JOHNSON COUNTY 138KV CKT 1
FDNS	00NR	2	16WP	G15_044	FROM->TO	G14-057T 345.00 - SUNNYSIDE 345KV CKT 1	717	789	0.11709	112.374	GEN615021 1-GRE-ER 14G 16.000

SOLUTION	GROUP	SCENARIO	SEASON	SOURCE	DIRECTION	MONITORED ELEMENT	RATEA (MVA)	RATEB(MVA)	TDF	TC%LOADING (% MVA)	CONTINGENCY
FDNS	00NR	2	16WP	G15_044	FROM->TO	G14-057T 345.00 - SUNNYSIDE 345KV CKT 1	717	789	0.11709	112.3682	GEN515443 1-MNCOWND1 0.7000
FDNS	00NR	2	16WP	G15_044	FROM->TO	G14-057T 345.00 - SUNNYSIDE 345KV CKT 1	717	789	0.11709	112.3675	GEN560183 1-REDHIL-WTG1 12.000
FDNS	00NR	2	16WP	G15_044	FROM->TO	G14-057T 345.00 - SUNNYSIDE 345KV CKT 1	717	789	0.11709	112.366	GEN629071 1-BURLINGTON GENERATOR FOR UNIT NO 1 E
FDNS	00NR	2	20WP	G15_044	FROM->TO	G14-057T 345.00 - SUNNYSIDE 345KV CKT 1	717	789	0.11685	112.3608	GEN336252 1-NINEMILE POINT UNIT#5
FDNS	00NR	2	16WP	G15_044	FROM->TO	G14-057T 345.00 - SUNNYSIDE 345KV CKT 1	717	789	0.11709	112.3598	GEN563242 1-G15090_3 0.6900
FDNS	00NR	2	16WP	G15_044	FROM->TO	G14-057T 345.00 - SUNNYSIDE 345KV CKT 1	717	789	0.11696	112.3591	CARTER - CHICKASAW 138KV CKT 1
FDNS	00NR	2	16WP	G15_044	FROM->TO	G14-057T 345.00 - SUNNYSIDE 345KV CKT 1	717	789	0.11709	112.3585	GEN562902 1-G15052_3 0.6900
FDNS	00NR	2	16WP	G15_044	FROM->TO	G14-057T 345.00 - SUNNYSIDE 345KV CKT 1	717	789	0.11833	112.349	BEARCAT 138.00 - MOORELAND 138KV CKT 1
FDNS	00NR	2	16WP	G15_044	FROM->TO	G14-057T 345.00 - SUNNYSIDE 345KV CKT 1	717	789	0.11669	112.3483	ROCKY POINT - SPRINGDALE 138KV CKT 1
FDNS	00NR	2	16WP	G15_044	FROM->TO	G14-057T 345.00 - SUNNYSIDE 345KV CKT 1	717	789	0.11709	112.3439	BURLINGTON NO1 + NO 2 + NO 3 161/20.0KV TRANSFORMER CKT 1
FDNS	00NR	2	16WP	G15_044	FROM->TO	G14-057T 345.00 - SUNNYSIDE 345KV CKT 1	717	789	0.11709	112.3431	INDEPENDENCE 500/26.0KV TRANSFORMER CKT 1
FDNS	00NR	2	16WP	G15_044	FROM->TO	G14-057T 345.00 - SUNNYSIDE 345KV CKT 1	717	789	0.11722	112.3389	CANADIAN RIVER - MCALESTER SOUTH 138KV CKT 1
FDNS	00NR	2	16WP	G15_044	FROM->TO	G14-057T 345.00 - SUNNYSIDE 345KV CKT 1	717	789	0.11722	112.3389	CANADIAN RIVER - MCALESTER SOUTH 138KV CKT 1
FDNS	00NR	2	16WP	G15_044	FROM->TO	G14-057T 345.00 - SUNNYSIDE 345KV CKT 1	717	789	0.11722	112.3377	CANADIAN RIVER () 345/138/13.8KV TRANSFORMER CKT 1
FDNS	00NR	2	16WP	G15_044	FROM->TO	G14-057T 345.00 - SUNNYSIDE 345KV CKT 1	717	789	0.11722	112.3377	CANADIAN RIVER () 345/138/13.8KV TRANSFORMER CKT 1
FDNS	00NR	2	16WP	G15_044	FROM->TO	G14-057T 345.00 - SUNNYSIDE 345KV CKT 1	717	789	0.11713	112.3253	ALTUS JUNCTION - RUSSELL 138KV CKT 1
FDNS	00NR	2	16WP	G15_044	FROM->TO	G14-057T 345.00 - SUNNYSIDE 345KV CKT 1	717	789	0.11713	112.3253	ALTUS JUNCTION - RUSSELL 138KV CKT 1
FDNS	00NR	2	20WP	G15_044	FROM->TO	G14-057T 345.00 - SUNNYSIDE 345KV CKT 1	717	789	0.11751	112.3233	FLETCHER - GEORGIA 138KV CKT 1
FDNS	00NR	2	20WP	G15_044	FROM->TO	G14-057T 345.00 - SUNNYSIDE 345KV CKT 1	717	789	0.11685	112.3175	FRONTIER - GRIMES 345KV CKT 1
FDNS	00NR	2	16WP	G15_044	FROM->TO	G14-057T 345.00 - SUNNYSIDE 345KV CKT 1	717	789	0.117	112.3173	NORTHWEST TEXARKANA - WELSH 345KV CKT 1
FDNS	00NR	2	16WP	G15_044	FROM->TO	G14-057T 345.00 - SUNNYSIDE 345KV CKT 1	717	789	0.117	112.3173	NORTHWEST TEXARKANA - WELSH 345KV CKT 1
FDNS	00NR	2	20WP	G15_044	FROM->TO	G14-057T 345.00 - SUNNYSIDE 345KV CKT 1	717	789	0.11685	112.3172	GEN503909 1-FULTONU1 1 16.000
FDNS	00NR	2	16WP	G15_044	FROM->TO	G14-057T 345.00 - SUNNYSIDE 345KV CKT 1	717	789	0.11742	112.315	MINGO - SETAB 345KV CKT 1
FDNS	00NR	2	16WP	G15_044	FROM->TO	G14-057T 345.00 - SUNNYSIDE 345KV CKT 1	717	789	0.11742	112.315	MINGO - SETAB 345KV CKT 1
FDNS	00NR	2	20WP	G15_044	FROM->TO	G14-057T 345.00 - SUNNYSIDE 345KV CKT 1	717	789	0.11964	112.3124	P12:138:AEPW-OGE:CORNVIL4:MAUD 4
FDNS	00NR	2	16WP	G15_044	FROM->TO	G14-057T 345.00 - SUNNYSIDE 345KV CKT 1	717	789	0.11709	112.3119	GEN562078 1-G11_051_3 0.6900
FDNS	00NR	2	16WP	G15_044	FROM->TO	G14-057T 345.00 - SUNNYSIDE 345KV CKT 1	717	789	0.11709	112.3074	P12:230:UMZB:# 112 #: NU IN SD. NU-RCDC & DRY CREEK XFMR
FDNS	00NR	2	20WP	G15_044	FROM->TO	G14-057T 345.00 - SUNNYSIDE 345KV CKT 1	717	789	0.11736	112.307	TUPELO - TUPELO TAP 138KV CKT 1
FDNS	00NR	2	16WP	G15_044	FROM->TO	G14-057T 345.00 - SUNNYSIDE 345KV CKT 1	717	789	0.11709	112.3068	RCDC EAST 4230.00 - RED CEDAR DC 230KV CKT 1
FDNS	00NR	2	16WP	G15_044	FROM->TO	G14-057T 345.00 - SUNNYSIDE 345KV CKT 1	717	789	0.11619	112.3067	JOLLYVILLE - SULPHR 4 138.00 138KV CKT 1
FDNS	00NR	2	20WP	G15_044	FROM->TO	G14-057T 345.00 - SUNNYSIDE 345KV CKT 1	717	789	0.11685	112.3039	GEN335204 1-NELSON UNIT 4
FDNS	00NR	2	16WP	G15_044	FROM->TO	G14-057T 345.00 - SUNNYSIDE 345KV CKT 1	717	789	0.11728	112.3017	CHAMBER SPRINGS - CLARKSVILLE 345KV CKT 1
FDNS	00NR	2	20WP	G15_044	FROM->TO	G14-057T 345.00 - SUNNYSIDE 345KV CKT 1	717	789	0.11685	112.2968	GEN334441 1-SABINE UNIT 5
FDNS	00NR	2	20WP	G15_044	FROM->TO	G14-057T 345.00 - SUNNYSIDE 345KV CKT 1	717	789	0.11883	112.2911	CIVIT - STRATFORD 138KV CKT 1
FDNS	00NR	2	16WP	G15_044	FROM->TO	G14-057T 345.00 - SUNNYSIDE 345KV CKT 1	717	789	0.11709	112.291	GEN514805 1-SOONER UNIT 1
FDNS	00NR	2	16WP	G15_044	FROM->TO	G14-057T 345.00 - SUNNYSIDE 345KV CKT 1	717	789	0.11717	112.2896	KEO EHV - WEST MEMPHIS 500 500KV CKT 1
FDNS	00NR	2	16WP	G15_044	FROM->TO	G14-057T 345.00 - SUNNYSIDE 345KV CKT 1	717	789	0.11709	112.2892	GEN562802 1-G15039_3 0.3570
FDNS	00NR	2	16WP	G15_044	FROM->TO	G14-057T 345.00 - SUNNYSIDE 345KV CKT 1	717	789	0.11709	112.2841	GEN514806 1-SOONER UNIT 2
FDNS	00NR	2	16WP	G15_044	FROM->TO	G14-057T 345.00 - SUNNYSIDE 345KV CKT 1	717	789	0.11709	112.2833	GEN524285 1-WILDORADO WIND GEN
FDNS	00NR	2	16WP	G15_044	FROM->TO	G14-057T 345.00 - SUNNYSIDE 345KV CKT 1	717	789	0.11709	112.2707	THOMAS HILL 161/22.0KV TRANSFORMER CKT 1
FDNS	00NR	2	20WP	G15_044	FROM->TO	G14-057T 345.00 - SUNNYSIDE 345KV CKT 1	717	789	0.11757	112.2673	EMPIRE - FLETCHER 138KV CKT 1
FDNS	00NR	2	16WP	G15_044	FROM->TO	G14-057T 345.00 - SUNNYSIDE 345KV CKT 1	717	789	0.11709	112.2659	GEN524295 1-SPNSPUR_WND10.6900
FDNS	00NR	2	16WP	G15_044	FROM->TO	G14-057T 345.00 - SUNNYSIDE 345KV CKT 1	717	789	0.11709	112.257	GEN560331 1-G10-46 13.800
FDNS	00NR	2	16WP	G15_044	FROM->TO	G14-057T 345.00 - SUNNYSIDE 345KV CKT 1	717	789	0.11636	112.257	ARKANSAS NUCLEAR ONE - FT SMITH 500KV CKT 1
FDNS	00NR	2	16WP	G15_044	FROM->TO	G14-057T 345.00 - SUNNYSIDE 345KV CKT 1	717	789	0.11636	112.257	ARKANSAS NUCLEAR ONE - FT SMITH 500KV CKT 1
FDNS	00NR	2	20WP	G15_044	FROM->TO	G14-057T 345.00 - SUNNYSIDE 345KV CKT 1	717	789	0.11777	112.2493	G14_038T 345.00 - Hitchland Interchange 345KV CKT 1
FDNS	00NR	2	16WP	G15_044	FROM->TO	G14-057T 345.00 - SUNNYSIDE 345KV CKT 1	717	789	0.11619	112.2394	JOLLYVILLE - KERR MCGEE CIMARRON 138KV CKT 1
FDNS	00NR	2	20WP	G15_044	FROM->TO	G14-057T 345.00 - SUNNYSIDE 345KV CKT 1	717	789	0.11964	112.2354	BLANCHARD - CORNVILLE 138KV CKT 1
FDNS	00NR	2	16WP	G15_044	FROM->TO	G14-057T 345.00 - SUNNYSIDE 345KV CKT 1	717	789	0.11709	112.2337	GEN562587 1-G14_056_3 0.6900
FDNSLock	00NR	2	16WP	G15_044	FROM->TO	G14-057T 345.00 - SUNNYSIDE 345KV CKT 1	717	789	0.11709	112.2316	GEN629072 4-LANSING GENERATOR FOR UNITS NO4 EIA CODE 1
FDNS	00NR	2	16WP	G15_044	FROM->TO	G14-057T 345.00 - SUNNYSIDE 345KV CKT 1	717	789	0.11709	112.2277	GEN562269 1-G12-020-1 0.6900
FDNS	00NR	2	20WP	G15_044	FROM->TO	G14-057T 345.00 - SUNNYSIDE 345KV CKT 1	717	789	0.11675	112.2143	LAYFLD8 500.00 - MOUNT OLIVE 500KV CKT 1
FDNS	00NR	2	20WP	G15_044	FROM->TO	G14-057T 345.00 - SUNNYSIDE 345KV CKT 1	717	789	0.11675	112.2143	LAYFLD8 500.00 - MOUNT OLIVE 500KV CKT 1
FDNS	00NR	2	20WP	G15_044	FROM->TO	G14-057T 345.00 - SUNNYSIDE 345KV CKT 1	717	789	0.11731	112.2139	LATHAMS7 345.00 - ROSE HILL 345KV CKT 1
FDNS	00NR	2	16WP	G15_044	FROM->TO	G14-057T 345.00 - SUNNYSIDE 345KV CKT 1	717	789	0.11709	112.2134	GEN657749 1-YOUNG 1 GENERATOR
FDNS	00NR	2	16WP	G15_044	FROM->TO	G14-057T 345.00 - SUNNYSIDE 345KV CKT 1	717	789	0.11709	112.2085	GEN562882 1-G15047_3 0.6900
FDNS	00NR	2	20WP	G15_044	FROM->TO	G14-057T 345.00 - SUNNYSIDE 345KV CKT 1	717	789	0.11685	112.2063	GEN334071 1-LEWIS CREEK 2
FDNS	00NR	2	20WP	G15_044	FROM->TO	G14-057T 345.00 - SUNNYSIDE 345KV CKT 1	717	789	0.11755	112.2058	THISTLE7 345.00 - WOODWARD DISTRICT EHV 345KV CKT 1
FDNS	00NR	2	20WP	G15_044	FROM->TO	G14-057T 345.00 - SUNNYSIDE 345KV CKT 1	717	789	0.11755	112.2058	THISTLE7 345.00 - WOODWARD DISTRICT EHV 345KV CKT 1
FDNS	00NR	2	20WP	G15_044	FROM->TO	G14-057T 345.00 - SUNNYSIDE 345KV CKT 1	717	789	0.11755	112.2058	THISTLE7 345.00 - WOODWARD DISTRICT EHV 345KV CKT 2
FDNS	00NR	2	20WP	G15_044	FROM->TO	G14-057T 345.00 - SUNNYSIDE 345KV CKT 1	717	789	0.11755	112.2058	THISTLE7 345.00 - WOODWARD DISTRICT EHV 345KV CKT 2
FDNS	00NR	2	20WP	G15_044	FROM->TO	G14-057T 345.00 - SUNNYSIDE 345KV CKT 1	717	789	0.11685	112.1979	GEN334070 1-LEWIS CREEK 1
FDNS	00NR	2	16WP	G15_044	FROM->TO	G14-057T 345.00 - SUNNYSIDE 345KV CKT 1	717	789	0.12006	112.1939	G15063_T 345.00 - MATHWSN7 345.00 345KV CKT 1
FDNS	00NR	2	20WP	G15_044	FROM->TO	G14-057T 345.00 - SUNNYSIDE 345KV CKT 1	717	789	0.11685	112.191	GEN336251 1-NINEMILE POINT UNIT#4
FDNS	00NR	2	16WP	G15_044	FROM->TO	G14-057T 345.00 - SUNNYSIDE 345KV CKT 1	717	789	0.11619	112.1888	ARBWIND4 138.00 - KERR MCGEE CIMARRON 138KV CKT 1
FDNS	00NR	2	20WP	G15_044	FROM->TO	G14-057T 345.00 - SUNNYSIDE 345KV CKT 1	717	789	0.11757	112.1884	COMANCHE - EMPIRE 138KV CKT 1
FDNS	00NR	2	16WP	G15_044	FROM->TO	G14-057T 345.00 - SUNNYSIDE 345KV CKT 1	717	789	0.11709	112.1842	GEN562270 1-G12-020-2 0.6900
FDNS	00NR	2	16WP	G15_044	FROM->TO	G14-057T 345.00 - SUNNYSIDE 345KV CKT 1	717	789	0.11709	112.1799	GEN562974 1-G15060_5 0.6900
FDNS	00NR	2	16WP	G15_044	FROM->TO	G14-057T 345.00 - SUNNYSIDE 345KV CKT 1	717	789	0.11709	112.178	GEN562812 1-G15040_3 0.3570
FDNS	00NR	2	16WP	G15_044	FROM->TO	G14-057T 345.00 - SUNNYSIDE 345KV CKT 1	717	789	0.11709	112.1758	GEN563102 1-G15075_3 0.5500
FDNS	00NR	2	20WP	G15_044	FROM->TO	G14-057T 345.00 - SUNNYSIDE 345KV CKT 1	717	789	0.11685	112.1745	GEN509392 G2-ARSENAL HILL GENS #3 (STALL)
FDNS	00NR	2	20WP	G15_044	FROM->TO	G14-057T 345.00 - SUNNYSIDE 345KV CKT 1	717	789	0.11685	112.1744	GEN509391 G1-ARSENAL HILL GENS #2 (STALL)
FDNS	00NR	2	20WP	G15_044	FROM->TO	G14-057T 345.00 - SUNNYSIDE 345KV CKT 1	717	789	0.11883	112.1739	OIL CENTER - STRATFORD 138KV CKT 1
FDNS	00NR	2	20WP	G15_044	FROM->TO	G14-057T 345.00 - SUNNYSIDE 345KV CKT 1	717	789	0.11685	112.1724	GEN509393 S1-ARSENAL HILL GENS #4 (STALL)
FDNS	00NR	2	20WP	G15_044	FROM->TO	G14-057T 345.00 - SUNNYSIDE 345KV CKT 1	717	789	0.11685	112.1722	P12:161:AEPW-SWPA:BEAVER5:EROGERS5
FDNS	00NR	2	16WP	G15_044	FROM->TO	G14-057T 345.00 - SUNNYSIDE 345KV CKT 1	717	789	0.11709	112.1709	GEN562973 1-G15060_4 0.6900
FDNS	00NR	2	16WP	G15_044	FROM->TO	G14-057T 345.00 - SUNNYSIDE 345KV CKT 1	717	789	0.11709	112.1678	GEN563132 1-G15078_3 0.3570
FDNS	00NR	2	16WP	G15_044	FROM->TO	G14-057T 345.00 - SUNNYSIDE 345KV CKT 1	717	789	0.11728	112.1653	P12:138:AEPW:112GORE4:SNYDER-4
FDNS	00NR	2	20WP	G15_044	FROM->TO	G14-057T 345.00 - SUNNYSIDE 345KV CKT 1	717	789	0.11719	112.1515	DUNCAN (DUNCAN) 138/69/13.8KV TRANSFORMER CKT 1

SOLUTION	GROUP	SCENARIO	SEASON	SOURCE	DIRECTION	MONITORED ELEMENT	RATEA (MVA)	RATEB(MVA)	TDF	TC%LOADING (% MVA)	CONTINGENCY
FDNS	00NR	2	20WP	G15_044	FROM->TO	G14-057T 345.00 - SUNNYSIDE 345KV CKT 1	717	789	0.11719	112.1515	DUNCAN (DUNCAN) 138/69/13.8KV TRANSFORMER CKT 1
FDNS	00NR	2	16WP	G15_044	FROM->TO	G14-057T 345.00 - SUNNYSIDE 345KV CKT 1	717	789	0.11709	112.1501	GEN563062 1-G15071_3 0.6900
FDNSLock	00NR	2	16WP	G15_044	FROM->TO	G14-057T 345.00 - SUNNYSIDE 345KV CKT 1	717	789	0.11709	112.1439	GEN681522 3-GENOA 3
FDNS	00NR	2	20WP	G15_044	FROM->TO	G14-057T 345.00 - SUNNYSIDE 345KV CKT 1	717	789	0.11685	112.1404	GEN334433 1-SABINE UNIT 3
FDNS	00NR	2	20WP	G15_044	FROM->TO	G14-057T 345.00 - SUNNYSIDE 345KV CKT 1	717	789	0.11685	112.1323	P12:161:AEPW:DYESS5:ELMSPRNG:TONTITN5
FDNS	00NR	2	20WP	G15_044	FROM->TO	G14-057T 345.00 - SUNNYSIDE 345KV CKT 1	717	789	0.11685	112.1266	GEN337653 1-WHITE BLUFF UNIT #2
FDNS	00NR	2	16WP	G15_044	FROM->TO	G14-057T 345.00 - SUNNYSIDE 345KV CKT 1	717	789	0.11886	112.1239	CLARKSVILLE - MUSKOGEE 345KV CKT 1
FDNS	00NR	2	16WP	G15_044	FROM->TO	G14-057T 345.00 - SUNNYSIDE 345KV CKT 1	717	789	0.11886	112.1239	CLARKSVILLE - MUSKOGEE 345KV CKT 1
FDNS	00NR	2	20WP	G15_044	FROM->TO	G14-057T 345.00 - SUNNYSIDE 345KV CKT 1	717	789	0.11685	112.1172	GEN336831 1-BAXTER WILSON SES
FDNS	00NR	2	16WP	G15_044	FROM->TO	G14-057T 345.00 - SUNNYSIDE 345KV CKT 1	717	789	0.1163	112.1102	CHICKASAW - TOTAL 138KV CKT 1
FDNS	00NR	2	16WP	G15_044	FROM->TO	G14-057T 345.00 - SUNNYSIDE 345KV CKT 1	717	789	0.11689	112.0932	BROWN - RUSSETT 138KV CKT 1
FDNS	00NR	2	16WP	G15_044	FROM->TO	G14-057T 345.00 - SUNNYSIDE 345KV CKT 1	717	789	0.11709	112.0903	GEN526331 1-JONES GEN #1 22 KV
FDNS	00NR	2	16WP	G15_044	FROM->TO	G14-057T 345.00 - SUNNYSIDE 345KV CKT 1	717	789	0.11709	112.0902	GEN526332 1-JONES GEN #2 21 KV
FDNS	00NR	2	20WP	G15_044	FROM->TO	G14-057T 345.00 - SUNNYSIDE 345KV CKT 1	717	789	0.11685	112.086	GEN334030 1-FRONTIER UNIT 1
FDNS	00NR	2	20WP	G15_044	FROM->TO	G14-057T 345.00 - SUNNYSIDE 345KV CKT 1	717	789	0.11685	112.0837	GEN334031 1-FRONTIER UNIT 2
FDNS	00NR	2	16WP	G15_044	FROM->TO	G14-057T 345.00 - SUNNYSIDE 345KV CKT 1	717	789	0.11709	112.0806	GEN345671 2-1RUSH G2 18.000
FDNS	00NR	2	16WP	G15_044	FROM->TO	G14-057T 345.00 - SUNNYSIDE 345KV CKT 1	717	789	0.11709	112.0797	GEN560105 1-G08-22 0.6900
FDNS	00NR	2	16WP	G15_044	FROM->TO	G14-057T 345.00 - SUNNYSIDE 345KV CKT 1	717	789	0.11709	112.0788	GEN345670 1-1RUSH G1 18.000
FDNS	00NR	2	16WP	G15_044	FROM->TO	G14-057T 345.00 - SUNNYSIDE 345KV CKT 1	717	789	0.11709	112.0767	GEN562550 1-G14_040_3 0.6900
FDNS	00NR	2	16WP	G15_044	FROM->TO	G14-057T 345.00 - SUNNYSIDE 345KV CKT 1	717	789	0.11685	112.0755	RUSSETT - SPRINGDALE 138KV CKT 1
FDNS	00NR	2	20WP	G15_044	FROM->TO	G14-057T 345.00 - SUNNYSIDE 345KV CKT 1	717	789	0.11685	112.0717	GEN337911 1-ARKANSAS NUCLEAR ONE UNIT #2
FDNS	00NR	2	16WP	G15_044	FROM->TO	G14-057T 345.00 - SUNNYSIDE 345KV CKT 1	717	789	0.11655	112.0581	ROCKY POINT - SUNNYSIDE 138KV CKT 1
FDNS	00NR	2	20WP	G15_044	FROM->TO	G14-057T 345.00 - SUNNYSIDE 345KV CKT 1	717	789	0.11687	112.054	P12:138:AEPW:CATOOSA4:T.S.E.-4
FDNS	00NR	2	16WP	G15_044	FROM->TO	G14-057T 345.00 - SUNNYSIDE 345KV CKT 1	717	789	0.11709	112.0482	4SIOUX 1 138.00 138/18.0KV TRANSFORMER CKT 1
FDNS	00NR	2	16WP	G15_044	FROM->TO	G14-057T 345.00 - SUNNYSIDE 345KV CKT 1	717	789	0.11709	112.0471	P12:138:WFEC:MSL07
FDNS	00NR	2	16WP	G15_044	FROM->TO	G14-057T 345.00 - SUNNYSIDE 345KV CKT 1	717	789	0.11709	112.0471	P12:138:WFEC-AEPW:HUGOPP4:ATOKA--4
FDNS	00NR	2	16WP	G15_044	FROM->TO	G14-057T 345.00 - SUNNYSIDE 345KV CKT 1	717	789	0.11709	112.0367	GEN511962 2-RKYRDGW2-1 0.7000
FDNS	00NR	2	16WP	G15_044	FROM->TO	G14-057T 345.00 - SUNNYSIDE 345KV CKT 1	717	789	0.11709	112.0336	CLAY BOSWELL 230/20.9KV TRANSFORMER CKT 1
FDNS	00NR	2	16WP	G15_044	FROM->TO	G14-057T 345.00 - SUNNYSIDE 345KV CKT 1	717	789	0.11709	112.0317	GEN527882 1-CUNNINGHAM GEN #2 20 KV
FDNS	00NR	2	20WP	G15_044	FROM->TO	G14-057T 345.00 - SUNNYSIDE 345KV CKT 1	717	789	0.11685	112.0308	GEN506752 1-LEBROCK GAS 1
FDNS	00NR	2	20WP	G15_044	FROM->TO	G14-057T 345.00 - SUNNYSIDE 345KV CKT 1	717	789	0.11685	112.0305	GEN506753 1-LEBROCK GAS 2
FDNS	00NR	2	20WP	G15_044	FROM->TO	G14-057T 345.00 - SUNNYSIDE 345KV CKT 1	717	789	0.11964	112.0301	BLANCHARD - MAUD 138KV CKT 1
FDNS	00NR	2	16WP	G15_044	FROM->TO	G14-057T 345.00 - SUNNYSIDE 345KV CKT 1	717	789	0.11689	112.025	RUSSETT - RUSSETT 138KV CKT 1
FDNS	00NR	2	20WP	G15_044	FROM->TO	G14-057T 345.00 - SUNNYSIDE 345KV CKT 1	717	789	0.11685	112.0248	GEN501811 1-RODEMACHER UNIT 1
FDNS	00NR	2	20WP	G15_044	FROM->TO	G14-057T 345.00 - SUNNYSIDE 345KV CKT 1	717	789	0.11685	112.0241	GEN337652 1-WHITE BLUFF UNIT #1
FDNS	00NR	2	20WP	G15_044	FROM->TO	G14-057T 345.00 - SUNNYSIDE 345KV CKT 1	717	789	0.11666	112.0214	FULTON 115 - HOPE 115KV CKT 1
FDNS	00NR	2	20WP	G15_044	FROM->TO	G14-057T 345.00 - SUNNYSIDE 345KV CKT 1	717	789	0.11666	112.0214	FULTON 115 - HOPE 115KV CKT 1
FDNS	00NR	2	20WP	G15_044	FROM->TO	G14-057T 345.00 - SUNNYSIDE 345KV CKT 1	717	789	0.11685	112.021	GEN300003 1-THOMAS HILL UNIT 3
FDNS	00NR	2	16WP	G15_044	FROM->TO	G14-057T 345.00 - SUNNYSIDE 345KV CKT 1	717	789	0.11709	112.0207	GEN562892 1-G15048_3 0.6900
FDNS	00NR	2	16WP	G15_044	FROM->TO	G14-057T 345.00 - SUNNYSIDE 345KV CKT 1	717	789	0.11709	112.0142	GEN521112 1-ORME3 13.800
FDNS	00NR	2	20WP	G15_044	FROM->TO	G14-057T 345.00 - SUNNYSIDE 345KV CKT 1	717	789	0.11703	112.008	P12:138:AEPW:S.W.S.-4:L.E.S.-4
FDNS	00NR	2	20WP	G15_044	FROM->TO	G14-057T 345.00 - SUNNYSIDE 345KV CKT 1	717	789	0.11685	112.0065	GEN300015 1-1SGPDEL 18.000
FDNS	00NR	2	16WP	G15_044	FROM->TO	G14-057T 345.00 - SUNNYSIDE 345KV CKT 1	717	789	0.11709	112.0058	GEN563192 1-G15084_3 0.5500
FDNS	00NR	2	16WP	G15_044	FROM->TO	G14-057T 345.00 - SUNNYSIDE 345KV CKT 1	717	789	0.11591	112.0039	ARDMORE WEST - CARTER 138KV CKT 1
FDNS	00NR	2	20WP	G15_044	FROM->TO	G14-057T 345.00 - SUNNYSIDE 345KV CKT 1	717	789	0.11685	112.0015	GEN515226 1-MUSKOGEE 6G
FDNS	00NR	2	20WP	G15_044	FROM->TO	G14-057T 345.00 - SUNNYSIDE 345KV CKT 1	717	789	0.11883	112.001	LATTA JCT - OIL CENTER 138KV CKT 1
FDNS	00NR	2	16WP	G15_044	FROM->TO	G14-057T 345.00 - SUNNYSIDE 345KV CKT 1	717	789	0.11719	111.997	P12:138:WFEC:MSL16
FDNS	00NR	2	20WP	G15_044	FROM->TO	G14-057T 345.00 - SUNNYSIDE 345KV CKT 1	717	789	0.11747	111.993	P12:138:AEPW:CORNVIL4:DUNCAN-4
FDNS	00NR	2	20WP	G15_044	FROM->TO	G14-057T 345.00 - SUNNYSIDE 345KV CKT 1	717	789	0.11685	111.9922	GEN336191 1-LITTLE GYPSY UNIT#3
FDNS	00NR	2	16WP	G15_044	FROM->TO	G14-057T 345.00 - SUNNYSIDE 345KV CKT 1	717	789	0.11709	111.9843	GEN672321 1-SHAND GENERATOR 1
FDNS	00NR	2	20WP	G15_044	FROM->TO	G14-057T 345.00 - SUNNYSIDE 345KV CKT 1	717	789	0.11685	111.9714	GEN515040 1-SEMINOLE 1G
FDNS	00NR	2	16WP	G15_044	FROM->TO	G14-057T 345.00 - SUNNYSIDE 345KV CKT 1	717	789	0.11598	111.9656	SUNNYSIDE (SUNNYSD5) 345/138/13.8KV TRANSFORMER CKT 1
FDNS	00NR	2	20WP	G15_044	FROM->TO	G14-057T 345.00 - SUNNYSIDE 345KV CKT 1	717	789	0.11672	111.9655	6LAYFLD 230.00 - CARROLL 230KV CKT 1
FDNS	00NR	2	20WP	G15_044	FROM->TO	G14-057T 345.00 - SUNNYSIDE 345KV CKT 1	717	789	0.11717	111.9645	G1524G1525 345.00 - THISTLE7 345.00 345KV CKT 1
FDNS	00NR	2	20WP	G15_044	FROM->TO	G14-057T 345.00 - SUNNYSIDE 345KV CKT 1	717	789	0.11717	111.9645	G1524G1525 345.00 - THISTLE7 345.00 345KV CKT 2
FDNS	00NR	2	20WP	G15_044	FROM->TO	G14-057T 345.00 - SUNNYSIDE 345KV CKT 1	717	789	0.11685	111.9636	GEN335614 1-WILLOW GLENN UNIT#4
FDNS	00NR	2	16WP	G15_044	FROM->TO	G14-057T 345.00 - SUNNYSIDE 345KV CKT 1	717	789	0.11709	111.9608	GEN672310 1-POPLAR RIVER GENERATOR 1
FDNS	00NR	2	16WP	G15_044	FROM->TO	G14-057T 345.00 - SUNNYSIDE 345KV CKT 1	717	789	0.11709	111.9608	GEN672311 2-POPLAR RIVER GENERATOR 2
FDNS	00NR	2	20WP	G15_044	FROM->TO	G14-057T 345.00 - SUNNYSIDE 345KV CKT 1	717	789	0.11719	111.9597	P12:69:WFEC-AEPW:COMANCH2:DUNCAN-2
FDNS	00NR	2	16WP	G15_044	FROM->TO	G14-057T 345.00 - SUNNYSIDE 345KV CKT 1	717	789	0.11709	111.9557	GEN562512 1-G14_020_3 0.6900
FDNS	00NR	2	16WP	G15_044	FROM->TO	G14-057T 345.00 - SUNNYSIDE 345KV CKT 1	717	789	0.11709	111.9527	GEN672306 6-BOUNDARY DAM GENERATOR 6
FDNS	00NR	2	20WP	G15_044	FROM->TO	G14-057T 345.00 - SUNNYSIDE 345KV CKT 1	717	789	0.11685	111.9504	8DANIEL8 500.00 - MCKNIGHT 500KV CKT 1
FDNS	00NR	2	20WP	G15_044	FROM->TO	G14-057T 345.00 - SUNNYSIDE 345KV CKT 1	717	789	0.11747	111.9499	P12:138:AEPW:CORNVIL4:S.W.S.-4
FDNS	00NR	2	16WP	G15_044	FROM->TO	G14-057T 345.00 - SUNNYSIDE 345KV CKT 1	717	789	0.117	111.9491	P12:138:WFEC-AEPW:GOLDENSW4:CRAIGJT4
FDNS	00NR	2	20WP	G15_044	FROM->TO	G14-057T 345.00 - SUNNYSIDE 345KV CKT 1	717	789	0.11771	111.9426	P12:138:AEPW-OGE:WTH_JCT4:JENSEN4
FDNS	00NR	2	16WP	G15_044	FROM->TO	G14-057T 345.00 - SUNNYSIDE 345KV CKT 1	717	789	0.11709	111.9419	GEN523461 1-BLACKHAWK GEN #1
FDNS	00NR	2	16WP	G15_044	FROM->TO	G14-057T 345.00 - SUNNYSIDE 345KV CKT 1	717	789	0.11709	111.9418	GEN523462 1-BLACKHAWK GEN #2
FDNS	00NR	2	20WP	G15_044	FROM->TO	G14-057T 345.00 - SUNNYSIDE 345KV CKT 1	717	789	0.11777	111.9409	G14_038T 345.00 - POTTER COUNTY INTERCHANGE 345KV CKT 1
FDNS	00NR	2	20WP	G15_044	FROM->TO	G14-057T 345.00 - SUNNYSIDE 345KV CKT 1	717	789	0.11685	111.9316	P12:161:AEPW:EROGERS5:ECNTRTN5
FDNS	00NR	2	20WP	G15_044	FROM->TO	G14-057T 345.00 - SUNNYSIDE 345KV CKT 1	717	789	0.1178	111.9298	TUTTLE - TUTTLE CONOCO TAP 138KV CKT 1
FDNS	00NR	2	16WP	G15_044	FROM->TO	G14-057T 345.00 - SUNNYSIDE 345KV CKT 1	717	789	0.11709	111.9188	GEN520811 1-ANADRK4
FDNS	00NR	2	20WP	G15_044	FROM->TO	G14-057T 345.00 - SUNNYSIDE 345KV CKT 1	717	789	0.11685	111.918	GEN337910 1-ARKANSAS NUCLEAR ONE UNIT #1
FDNS	00NR	2	20WP	G15_044	FROM->TO	G14-057T 345.00 - SUNNYSIDE 345KV CKT 1	717	789	0.11685	111.9179	GEN303007 1-1BC2 U2
FDNS	00NR	2	20WP	G15_044	FROM->TO	G14-057T 345.00 - SUNNYSIDE 345KV CKT 1	717	789	0.11771	111.9134	FINNEY SWITCHING STATION - HOLCOMB 345KV CKT 1
FDNS	00NR	2	20WP	G15_044	FROM->TO	G14-057T 345.00 - SUNNYSIDE 345KV CKT 1	717	789	0.11771	111.9134	FINNEY SWITCHING STATION - HOLCOMB 345KV CKT 1
FDNS	00NR	2	16WP	G15_044	FROM->TO	G14-057T 345.00 - SUNNYSIDE 345KV CKT 1	717	789	0.11709	111.9132	GEN344895 2-1LAB G2 20.000
FDNS	00NR	2	20WP	G15_044	FROM->TO	G14-057T 345.00 - SUNNYSIDE 345KV CKT 1	717	789	0.11685	111.9131	GEN336464 1-MICHOUD UNIT #3
FDNS	00NR	2	20WP	G15_044	FROM->TO	G14-057T 345.00 - SUNNYSIDE 345KV CKT 1	717	789	0.11685	111.9121	GEN303006 1-1BC2 U1
FDNS	00NR	2	20WP	G15_044	FROM->TO	G14-057T 345.00 - SUNNYSIDE 345KV CKT 1	717	789	0.11685	111.9095	WHITE BLUFF 500/26.0KV TRANSFORMER CKT 1

SOLUTION	GROUP	SCENARIO	SEASON	SOURCE	DIRECTION	MONITORED ELEMENT	RATEA (MVA)	RATEB(MVA)	TDF	TC%LOADING (% MVA)	CONTINGENCY
FDNS	00NR	2	20WP	G15_044	FROM->TO	G14-057T 345.00 - SUNNYSIDE 345KV CKT 1	717	789	0.11719	111.909	DUNCAN - TOSCO 69KV CKT 1
FDNS	00NR	2	20WP	G15_044	FROM->TO	G14-057T 345.00 - SUNNYSIDE 345KV CKT 1	717	789	0.11685	111.9088	GEN562783 1-G15036_4 0.6900
FDNS	00NR	2	20WP	G15_044	FROM->TO	G14-057T 345.00 - SUNNYSIDE 345KV CKT 1	717	789	0.11685	111.9088	GEN562784 1-G15036_5 0.6900
FDNS	00NR	2	20WP	G15_044	FROM->TO	G14-057T 345.00 - SUNNYSIDE 345KV CKT 1	717	789	0.11685	111.9047	GEN515223 1-MUSKOGEE 4G
FDNS	00NR	2	20WP	G15_044	FROM->TO	G14-057T 345.00 - SUNNYSIDE 345KV CKT 1	717	789	0.11685	111.9047	GEN515225 1-MUSKOGEE 5G
FDNS	00NR	2	20WP	G15_044	FROM->TO	G14-057T 345.00 - SUNNYSIDE 345KV CKT 1	717	789	0.11759	111.8994	CIMARRON - CZECH HALL 138KV CKT 1
FDNS	00NR	2	16WP	G15_044	FROM->TO	G14-057T 345.00 - SUNNYSIDE 345KV CKT 1	717	789	0.11709	111.8991	GEN511853 1-COMANCHE #3
FDNS	00NR	2	20WP	G15_044	FROM->TO	G14-057T 345.00 - SUNNYSIDE 345KV CKT 1	717	789	0.1167	111.8936	BISMARK - HOT SPRINGS WEST BUS 115KV CKT 1
FDNS	00NR	2	20WP	G15_044	FROM->TO	G14-057T 345.00 - SUNNYSIDE 345KV CKT 1	717	789	0.11708	111.8896	P12:69:AEPW-OMPA:COMANC-2:OMWALTR2
FDNS	00NR	2	20WP	G15_044	FROM->TO	G14-057T 345.00 - SUNNYSIDE 345KV CKT 1	717	789	0.11685	111.8895	RODEMACHER 230/22.0KV TRANSFORMER CKT 1
FDNS	00NR	2	20WP	G15_044	FROM->TO	G14-057T 345.00 - SUNNYSIDE 345KV CKT 1	717	789	0.11678	111.8895	MC NIEL 500/115KV TRANSFORMER CKT 1
FDNS	00NR	2	16WP	G15_044	FROM->TO	G14-057T 345.00 - SUNNYSIDE 345KV CKT 1	717	789	0.11591	111.889	ARDMORE WEST - UNIROYAL 138KV CKT 1
FDNS	00NR	2	16WP	G15_044	FROM->TO	G14-057T 345.00 - SUNNYSIDE 345KV CKT 1	717	789	0.11709	111.8812	GEN344896 3-1LAB G3 20.000
FDNS	00NR	2	20WP	G15_044	FROM->TO	G14-057T 345.00 - SUNNYSIDE 345KV CKT 1	717	789	0.11685	111.8805	GEN300010 1-ST FRANCIS UNIT 1
FDNS	00NR	2	16WP	G15_044	FROM->TO	G14-057T 345.00 - SUNNYSIDE 345KV CKT 1	717	789	0.11709	111.8799	GEN344894 1-1LAB G1 20.000
FDNS	00NR	2	20WP	G15_044	FROM->TO	G14-057T 345.00 - SUNNYSIDE 345KV CKT 1	717	789	0.11691	111.8795	G15088_T 345.00 - MOORE 345KV CKT 1
FDNS	00NR	2	16WP	G15_044	FROM->TO	G14-057T 345.00 - SUNNYSIDE 345KV CKT 1	717	789	0.11709	111.8788	GEN563162 1-G15081_3 0.6900
FDNS	00NR	2	16WP	G15_044	FROM->TO	G14-057T 345.00 - SUNNYSIDE 345KV CKT 1	717	789	0.11709	111.8784	GEN344897 4-1LAB G4 20.000
FDNS	00NR	2	20WP	G15_044	FROM->TO	G14-057T 345.00 - SUNNYSIDE 345KV CKT 1	717	789	0.11736	111.8774	P12:138:AEPW:WTHWF4:CLINTJC4
FDNS	00NR	2	20WP	G15_044	FROM->TO	G14-057T 345.00 - SUNNYSIDE 345KV CKT 1	717	789	0.11677	111.8739	HOT SPRINGS EHV - MAGNET COVE 500KV CKT 1
FDNS	00NR	2	16WP	G15_044	FROM->TO	G14-057T 345.00 - SUNNYSIDE 345KV CKT 1	717	789	0.11702	111.8719	P12:138:AEPW-SWPA:LONEOAK4:TUPELO4
FDNS	00NR	2	16WP	G15_044	FROM->TO	G14-057T 345.00 - SUNNYSIDE 345KV CKT 1	717	789	0.11702	111.8719	P12:138:WFEC:MSL06
FDNS	00NR	2	20WP	G15_044	FROM->TO	G14-057T 345.00 - SUNNYSIDE 345KV CKT 1	717	789	0.11756	111.8666	CHISHOLM6 230.00 - ELK CITY 230KV 230KV CKT 1
FDNS	00NR	2	20WP	G15_044	FROM->TO	G14-057T 345.00 - SUNNYSIDE 345KV CKT 1	717	789	0.11756	111.866	ELK CITY 230KV (ELKCTY-6) 230/138/13.8KV TRANSFORMER CKT 1
FDNS	00NR	2	20WP	G15_044	FROM->TO	G14-057T 345.00 - SUNNYSIDE 345KV CKT 1	717	789	0.11756	111.866	ELK CITY 230KV (ELKCTY-6) 230/138/13.8KV TRANSFORMER CKT 1
FDNS	00NR	2	20WP	G15_044	FROM->TO	G14-057T 345.00 - SUNNYSIDE 345KV CKT 1	717	789	0.11929	111.8649	BAILEY4 138.00 - SUNSHINE CANYON 138KV CKT 1
FDNS	00NR	2	20WP	G15_044	FROM->TO	G14-057T 345.00 - SUNNYSIDE 345KV CKT 1	717	789	0.11749	111.8648	CIMARRON - SARA 138KV CKT 1
FDNS	00NR	2	20WP	G15_044	FROM->TO	G14-057T 345.00 - SUNNYSIDE 345KV CKT 1	717	789	0.11719	111.8635	COMANCHE TAP - TOSCO 69KV CKT 1
FDNS	00NR	2	16WP	G15_044	FROM->TO	G14-057T 345.00 - SUNNYSIDE 345KV CKT 1	717	789	0.11633	111.8634	CARTRCO4 138.00 - RATLIFF 138KV CKT 1
FDNS	00NR	2	16WP	G15_044	FROM->TO	G14-057T 345.00 - SUNNYSIDE 345KV CKT 1	717	789	0.11709	111.8631	GEN511852 1-COMANCHE #2
FDNS	00NR	2	20WP	G15_044	FROM->TO	G14-057T 345.00 - SUNNYSIDE 345KV CKT 1	717	789	0.11703	111.8593	BUCKNER7 345.00 - SPEARVILLE 345KV CKT 1
FDNS	00NR	2	20WP	G15_044	FROM->TO	G14-057T 345.00 - SUNNYSIDE 345KV CKT 1	717	789	0.11703	111.8593	BUCKNER7 345.00 - SPEARVILLE 345KV CKT 1
FDNS	00NR	2	20WP	G15_044	FROM->TO	G14-057T 345.00 - SUNNYSIDE 345KV CKT 1	717	789	0.11685	111.8568	GEN337041 1-GERALD ANDRUS
FDNS	00NR	2	20WP	G15_044	FROM->TO	G14-057T 345.00 - SUNNYSIDE 345KV CKT 1	717	789	0.11589	111.8554	SEMINOLE - VANOSTP4 138.00 138KV CKT 1
FDNS	00NR	2	16WP	G15_044	FROM->TO	G14-057T 345.00 - SUNNYSIDE 345KV CKT 1	717	789	0.11709	111.8549	GEN562699 1-G15_018_3 0.6900
FDNS	00NR	2	20WP	G15_044	FROM->TO	G14-057T 345.00 - SUNNYSIDE 345KV CKT 1	717	789	0.11685	111.8548	GEN505432 1-SIKESTON
FDNS	00NR	2	16WP	G15_044	FROM->TO	G14-057T 345.00 - SUNNYSIDE 345KV CKT 1	717	789	0.1166	111.8539	P12:138:OKGE:3TERM40
FDNS	00NR	2	20WP	G15_044	FROM->TO	G14-057T 345.00 - SUNNYSIDE 345KV CKT 1	717	789	0.11693	111.8536	G15074_T 345.00 - HOYT 345KV CKT 1
FDNS	00NR	2	20WP	G15_044	FROM->TO	G14-057T 345.00 - SUNNYSIDE 345KV CKT 1	717	789	0.11685	111.8511	GEN303008 1-1BC2 U3
FDNSLock	00NR	2	16WP	G15_044	FROM->TO	G14-057T 345.00 - SUNNYSIDE 345KV CKT 1	717	789	0.11709	111.8504	GEN681542 6-JP MADGETT
FDNS	00NR	2	20WP	G15_044	FROM->TO	G14-057T 345.00 - SUNNYSIDE 345KV CKT 1	717	789	0.1178	111.8503	CIMARRON - TUTTLE CONOCO TAP 138KV CKT 1
FDNS	00NR	2	20WP	G15_044	FROM->TO	G14-057T 345.00 - SUNNYSIDE 345KV CKT 1	717	789	0.11595	111.8445	ARBWIND4 138.00 - CARTER 138KV CKT 1
FDNS	00NR	2	20WP	G15_044	FROM->TO	G14-057T 345.00 - SUNNYSIDE 345KV CKT 1	717	789	0.1167	111.8396	ALPINE AECC - BISMARK 115KV CKT 1
FDNS	00NR	2	20WP	G15_044	FROM->TO	G14-057T 345.00 - SUNNYSIDE 345KV CKT 1	717	789	0.11736	111.8391	P12:138:AEPW:WTHWF4:WTH_SE4
FDNS	00NR	2	16WP	G15_044	FROM->TO	G14-057T 345.00 - SUNNYSIDE 345KV CKT 1	717	789	0.11709	111.8387	GEN521110 1-ORME1 13.800
FDNS	00NR	2	16WP	G15_044	FROM->TO	G14-057T 345.00 - SUNNYSIDE 345KV CKT 1	717	789	0.11709	111.8387	GEN521111 1-ORME2 13.800
FDNS	00NR	2	20WP	G15_044	FROM->TO	G14-057T 345.00 - SUNNYSIDE 345KV CKT 1	717	789	0.11686	111.8307	P12:138:AEPW:N.E.S.-4:CATOOSA4
FDNS	00NR	2	16WP	G15_044	FROM->TO	G14-057T 345.00 - SUNNYSIDE 345KV CKT 1	717	789	0.11714	111.8306	G15085_T 138.00 - RUSSELL 138KV CKT 1
FDNS	00NR	2	16WP	G15_044	FROM->TO	G14-057T 345.00 - SUNNYSIDE 345KV CKT 1	717	789	0.11709	111.8297	GEN563292 1-G15095_3 0.6900
FDNS	00NR	2	20WP	G15_044	FROM->TO	G14-057T 345.00 - SUNNYSIDE 345KV CKT 1	717	789	0.11759	111.8291	CZECH HALL - XEROX 138KV CKT 1
FDNS	00NR	2	20WP	G15_044	FROM->TO	G14-057T 345.00 - SUNNYSIDE 345KV CKT 1	717	789	0.11759	111.825	MORGAN - XEROX 138KV CKT 1
FDNS	00NR	2	20WP	G15_044	FROM->TO	G14-057T 345.00 - SUNNYSIDE 345KV CKT 1	717	789	0.11685	111.824	GEN300011 1-ST FRANCIS UNIT 2
FDNS	00NR	2	20WP	G15_044	FROM->TO	G14-057T 345.00 - SUNNYSIDE 345KV CKT 1	717	789	0.11685	111.8222	GEN336170 1-GULF OXY U4
FDNS	00NR	2	20WP	G15_044	FROM->TO	G14-057T 345.00 - SUNNYSIDE 345KV CKT 1	717	789	0.11685	111.8199	NELSON 230/20.0KV TRANSFORMER CKT 1
FDNS	00NR	2	16WP	G15_044	FROM->TO	G14-057T 345.00 - SUNNYSIDE 345KV CKT 1	717	789	0.05798	111.8167	GRACEMONT - LAWTON EASTSIDE 345KV CKT 1
FDNS	00NR	2	16WP	G15_044	FROM->TO	G14-057T 345.00 - SUNNYSIDE 345KV CKT 1	717	789	0.05798	111.8167	GRACEMONT - LAWTON EASTSIDE 345KV CKT 1
FDNS	00NR	2	20WP	G15_044	FROM->TO	G14-057T 345.00 - SUNNYSIDE 345KV CKT 1	717	789	0.1207	111.8066	GRACEMONT (BANK 1) 345/138/13.8KV TRANSFORMER CKT 1
FDNS	00NR	2	20WP	G15_044	FROM->TO	G14-057T 345.00 - SUNNYSIDE 345KV CKT 1	717	789	0.11685	111.803	GEN336801 1-BAXTER WILSON UNIT #1
FDNS	00NR	2	20WP	G15_044	FROM->TO	G14-057T 345.00 - SUNNYSIDE 345KV CKT 1	717	789	0.11759	111.8028	MORGAN - MUSTANG 138KV CKT 1
FDNS	00NR	2	20WP	G15_044	FROM->TO	G14-057T 345.00 - SUNNYSIDE 345KV CKT 1	717	789	0.1167	111.7914	ALPINE AECC - AMITY SS 115KV CKT 1
FDNS	00NR	2	20WP	G15_044	FROM->TO	G14-057T 345.00 - SUNNYSIDE 345KV CKT 1	717	789	0.11719	111.786	COMANCHE - COMANCHE TAP 69KV CKT 1
FDNS	00NR	2	16WP	G15_044	FROM->TO	G14-057T 345.00 - SUNNYSIDE 345KV CKT 1	717	789	0.11767	111.7803	GRAPEVINE INTERCHANGE - STATELINE INTERCHANGE 230KV CKT 1
FDNS	00NR	2	16WP	G15_044	FROM->TO	G14-057T 345.00 - SUNNYSIDE 345KV CKT 1	717	789	0.11767	111.7803	GRAPEVINE INTERCHANGE - STATELINE INTERCHANGE 230KV CKT 1
FDNS	00NR	2	20WP	G15_044	FROM->TO	G14-057T 345.00 - SUNNYSIDE 345KV CKT 1	717	789	0.11685	111.7746	GEN501910 1-ACADIA UNIT ST1
FDNS	00NR	2	20WP	G15_044	FROM->TO	G14-057T 345.00 - SUNNYSIDE 345KV CKT 1	717	789	0.11685	111.7693	8CAJUN2 500/24.0KV TRANSFORMER CKT 1
FDNS	00NR	2	20WP	G15_044	FROM->TO	G14-057T 345.00 - SUNNYSIDE 345KV CKT 1	717	789	0.11699	111.7656	G15095_T 138.00 - ROSE_VALLEY 138.00 138KV CKT 1
FDNS	00NR	2	16WP	G15_044	FROM->TO	G14-057T 345.00 - SUNNYSIDE 345KV CKT 1	717	789	0.11728	111.7608	CACHE - SNYDER 138KV CKT 1
FDNS	00NR	2	16WP	G15_044	FROM->TO	G14-057T 345.00 - SUNNYSIDE 345KV CKT 1	717	789	0.11709	111.7565	GEN563122 1-G15077_3 0.3850
FDNS	00NR	2	20WP	G15_044	FROM->TO	G14-057T 345.00 - SUNNYSIDE 345KV CKT 1	717	789	0.11749	111.7558	SARA - STHLAKE4 138.00 138KV CKT 1
FDNS	00NR	2	16WP	G15_044	FROM->TO	G14-057T 345.00 - SUNNYSIDE 345KV CKT 1	717	789	0.11709	111.7464	GEN562861 1-G15045_2 0.4800
FDNS	00NR	2	16WP	G15_044	FROM->TO	G14-057T 345.00 - SUNNYSIDE 345KV CKT 1	717	789	0.11709	111.7454	GEN661015 1-COYOTE
FDNS	00NR	2	20WP	G15_044	FROM->TO	G14-057T 345.00 - SUNNYSIDE 345KV CKT 1	717	789	0.11685	111.7376	P12:138:AEPW:R.S.S.-4:S.HUD.-4
FDNS	00NR	2	20WP	G15_044	FROM->TO	G14-057T 345.00 - SUNNYSIDE 345KV CKT 1	717	789	0.11685	111.7312	SABINE 230/24.0KV TRANSFORMER CKT 1
FDNS	00NR	2	20WP	G15_044	FROM->TO	G14-057T 345.00 - SUNNYSIDE 345KV CKT 1	717	789	0.11685	111.7308	GEN300016 1-1G1GPDEL 18.000
FDNS	00NR	2	20WP	G15_044	FROM->TO	G14-057T 345.00 - SUNNYSIDE 345KV CKT 1	717	789	0.11676	111.7295	ETTA (DUKE HOTSPRINGS) - MC NIEL 500KV CKT 1
FDNS	00NR	2	20WP	G15_044	FROM->TO	G14-057T 345.00 - SUNNYSIDE 345KV CKT 1	717	789	0.11718	111.727	LAWTON EASTSIDE (LES 4) 345/138/13.8KV TRANSFORMER CKT 1
FDNS	00NR	2	20WP	G15_044	FROM->TO	G14-057T 345.00 - SUNNYSIDE 345KV CKT 1	717	789	0.11718	111.727	LAWTON EASTSIDE (LES 4) 345/138/13.8KV TRANSFORMER CKT 1
FDNS	00NR	2	20WP	G15_044	FROM->TO	G14-057T 345.00 - SUNNYSIDE 345KV CKT 1	717	789	0.11749	111.7264	MCCLAIN - STHLAKE4 138.00 138KV CKT 1
FDNS	00NR	2	20WP	G15_044	FROM->TO	G14-057T 345.00 - SUNNYSIDE 345KV CKT 1	717	789	0.11719	111.7253	WALTERS - WALTERS 69KV CKT 1

SOLUTION	GROUP	SCENARIO	SEASON	SOURCE	DIRECTION	MONITORED ELEMENT	RATEA (MVA)	RATEB(MVA)	TDF	TC%LOADING (% MVA)	CONTINGENCY
FDNS	00NR	2	20WP	G15_044	FROM->TO	G14-057T 345.00 - SUNNYSIDE 345KV CKT 1	717	789	0.11883	111.7232	LASALLE - LATTA JCT 138KV CKT 1
FDNS	00NR	2	20WP	G15_044	FROM->TO	G14-057T 345.00 - SUNNYSIDE 345KV CKT 1	717	789	0.11685	111.7202	GEN336222 1-LITTLE GYPSY UNIT#2
FDNS	00NR	2	20WP	G15_044	FROM->TO	G14-057T 345.00 - SUNNYSIDE 345KV CKT 1	717	789	0.11708	111.7108	LAWTON RELIFT TAP - OMPA-WALTERS 69KV CKT 1
FDNS	00NR	2	20WP	G15_044	FROM->TO	G14-057T 345.00 - SUNNYSIDE 345KV CKT 1	717	789	0.11766	111.7078	ANADARKO - SEQUOYAHJ4 138.00 138KV CKT 1
FDNS	00NR	2	20WP	G15_044	FROM->TO	G14-057T 345.00 - SUNNYSIDE 345KV CKT 1	717	789	0.11685	111.7065	P12:69:AEPW:NROGERS2:ECNTRTN2
FDNS	00NR	2	20WP	G15_044	FROM->TO	G14-057T 345.00 - SUNNYSIDE 345KV CKT 1	717	789	0.11766	111.7049	CORN TAP - SEQUOYAHJ4 138.00 138KV CKT 1
FDNS	00NR	2	20WP	G15_044	FROM->TO	G14-057T 345.00 - SUNNYSIDE 345KV CKT 1	717	789	0.11772	111.6987	WEATHERFORD JCT. - WEATHERFORD SOUTHEAST 138KV CKT 1
FDNS	00NR	2	20WP	G15_044	FROM->TO	G14-057T 345.00 - SUNNYSIDE 345KV CKT 1	717	789	0.11772	111.6987	WEATHERFORD JCT. - WEATHERFORD SOUTHEAST 138KV CKT 1
FDNS	00NR	2	20WP	G15_044	FROM->TO	G14-057T 345.00 - SUNNYSIDE 345KV CKT 1	717	789	0.11699	111.6977	NOEL_SW 138.00 - ROSE_VALLEY 138.00 138KV CKT 1
FDNS	00NR	2	20WP	G15_044	FROM->TO	G14-057T 345.00 - SUNNYSIDE 345KV CKT 1	717	789	0.11685	111.6968	P12:138:AEPW:BA_71ST4:T.S.E.-4
FDNS	00NR	2	20WP	G15_044	FROM->TO	G14-057T 345.00 - SUNNYSIDE 345KV CKT 1	717	789	0.11701	111.6943	CLEO CORNER - CLEOPLT4 138.00 138KV CKT 1
FDNS	00NR	2	20WP	G15_044	FROM->TO	G14-057T 345.00 - SUNNYSIDE 345KV CKT 1	717	789	0.11836	111.6932	CANADIAN - NOBLE 138KV CKT 1
FDNS	00NR	2	20WP	G15_044	FROM->TO	G14-057T 345.00 - SUNNYSIDE 345KV CKT 1	717	789	0.11685	111.6915	P12:138:AEPW:YARCH-S4:T.S.E.-4
FDNS	00NR	2	20WP	G15_044	FROM->TO	G14-057T 345.00 - SUNNYSIDE 345KV CKT 1	717	789	0.11929	111.6898	BAILEY4 138.00 - WESTMOORE 138KV CKT 1
FDNS	00NR	2	20WP	G15_044	FROM->TO	G14-057T 345.00 - SUNNYSIDE 345KV CKT 1	717	789	0.11685	111.686	GEN336152 1-WATERFORD UNIT#2
FDNS	00NR	2	20WP	G15_044	FROM->TO	G14-057T 345.00 - SUNNYSIDE 345KV CKT 1	717	789	0.11685	111.6852	GEN336151 1-WATERFORD UNIT#1
FDNS	00NR	2	20WP	G15_044	FROM->TO	G14-057T 345.00 - SUNNYSIDE 345KV CKT 1	717	789	0.11689	111.6801	P12:138:AEPW-OGE:SHIDLER4:OSAGE 4
FDNS	00NR	2	20WP	G15_044	FROM->TO	G14-057T 345.00 - SUNNYSIDE 345KV CKT 1	717	789	0.11686	111.6786	7JASPER 345.00 - BLACKBERRY 345KV CKT 1
FDNS	00NR	2	20WP	G15_044	FROM->TO	G14-057T 345.00 - SUNNYSIDE 345KV CKT 1	717	789	0.11685	111.673	GEN300017 1-1G2GPDEL 18.000
FDNS	00NR	2	16WP	G15_044	FROM->TO	G14-057T 345.00 - SUNNYSIDE 345KV CKT 1	717	789	0.11591	111.6709	SUNNYSIDE - UNIROYAL 138KV CKT 1
FDNS	00NR	2	20WP	G15_044	FROM->TO	G14-057T 345.00 - SUNNYSIDE 345KV CKT 1	717	789	0.11751	111.6681	NORGE ROAD - SOUTHWESTERN STATION 138KV CKT 1
FDNS	00NR	2	20WP	G15_044	FROM->TO	G14-057T 345.00 - SUNNYSIDE 345KV CKT 1	717	789	0.11751	111.6681	NORGE ROAD - SOUTHWESTERN STATION 138KV CKT 1
FDNS	00NR	2	20WP	G15_044	FROM->TO	G14-057T 345.00 - SUNNYSIDE 345KV CKT 1	717	789	0.11685	111.6665	FRONTIER 345/18.0KV TRANSFORMER CKT 1
FDNS	00NR	2	20WP	G15_044	FROM->TO	G14-057T 345.00 - SUNNYSIDE 345KV CKT 1	717	789	0.11685	111.6643	FRONTIER 345/18.0KV TRANSFORMER CKT 1
FDNS	00NR	2	20WP	G15_044	FROM->TO	G14-057T 345.00 - SUNNYSIDE 345KV CKT 1	717	789	0.11841	111.6636	P12:138:OKGE:3TERM27
FDNS	00NR	2	20WP	G15_044	FROM->TO	G14-057T 345.00 - SUNNYSIDE 345KV CKT 1	717	789	0.11772	111.6636	P12:138:AEPW:REDROCKRD4:WTH_JCT4
FDNS	00NR	2	20WP	G15_044	FROM->TO	G14-057T 345.00 - SUNNYSIDE 345KV CKT 1	717	789	0.11708	111.6606	P12:138:OKGE-AEPW:JENSEN4:REDROCKRD4
FDNS	00NR	2	20WP	G15_044	FROM->TO	G14-057T 345.00 - SUNNYSIDE 345KV CKT 1	717	789	0.11701	111.6593	CLEOPLT4 138.00 - MEN TAP 138KV CKT 1
FDNS	00NR	2	20WP	G15_044	FROM->TO	G14-057T 345.00 - SUNNYSIDE 345KV CKT 1	717	789	0.11666	111.6576	HOPE - MCNAB REC 115KV CKT 1
FDNS	00NR	2	20WP	G15_044	FROM->TO	G14-057T 345.00 - SUNNYSIDE 345KV CKT 1	717	789	0.11771	111.6573	FINNEY SWITCHING STATION - WALKTAP7 345.00 345KV CKT 1
FDNS	00NR	2	20WP	G15_044	FROM->TO	G14-057T 345.00 - SUNNYSIDE 345KV CKT 1	717	789	0.11771	111.6573	FINNEY SWITCHING STATION - WALKTAP7 345.00 345KV CKT 1
FDNS	00NR	2	20WP	G15_044	FROM->TO	G14-057T 345.00 - SUNNYSIDE 345KV CKT 1	717	789	0.11672	111.6519	MORISNT4 138.00 - STILLWATER 138KV CKT 1
FDNS	00NR	2	20WP	G15_044	FROM->TO	G14-057T 345.00 - SUNNYSIDE 345KV CKT 1	717	789	0.11685	111.6512	GEN334432 1-SABINE UNIT 2
FDNS	00NR	2	20WP	G15_044	FROM->TO	G14-057T 345.00 - SUNNYSIDE 345KV CKT 1	717	789	0.11685	111.651	GEN334431 1-SABINE UNIT 1
FDNS	00NR	2	20WP	G15_044	FROM->TO	G14-057T 345.00 - SUNNYSIDE 345KV CKT 1	717	789	0.11527	111.65	ARBUCKLE - VANOSTP4 138.00 138KV CKT 1
FDNS	00NR	2	20WP	G15_044	FROM->TO	G14-057T 345.00 - SUNNYSIDE 345KV CKT 1	717	789	0.11701	111.6496	IMO TAP - MEN TAP 138KV CKT 1
FDNS	00NR	2	20WP	G15_044	FROM->TO	G14-057T 345.00 - SUNNYSIDE 345KV CKT 1	717	789	0.12	111.6485	DRAPER LAKE - SEMINOLE 345KV CKT 2
FDNS	00NR	2	20WP	G15_044	FROM->TO	G14-057T 345.00 - SUNNYSIDE 345KV CKT 1	717	789	0.12	111.6484	DRAPER LAKE - SEMINOLE 345KV CKT 1
FDNS	00NR	2	20WP	G15_044	FROM->TO	G14-057T 345.00 - SUNNYSIDE 345KV CKT 1	717	789	0.11666	111.6478	P12:115:AEPW:TURK3:HOPE3
FDNS	00NR	2	16WP	G15_044	FROM->TO	G14-057T 345.00 - SUNNYSIDE 345KV CKT 1	717	789	0.11764	111.6468	GRAPEVINE INTERCHANGE - NICHOLS STATION 230KV CKT 1
FDNS	00NR	2	16WP	G15_044	FROM->TO	G14-057T 345.00 - SUNNYSIDE 345KV CKT 1	717	789	0.11764	111.6468	GRAPEVINE INTERCHANGE - NICHOLS STATION 230KV CKT 1
FDNS	00NR	2	20WP	G15_044	FROM->TO	G14-057T 345.00 - SUNNYSIDE 345KV CKT 1	717	789	0.11685	111.6467	GEN501823 1-TECHE UNIT 3
FDNS	00NR	2	20WP	G15_044	FROM->TO	G14-057T 345.00 - SUNNYSIDE 345KV CKT 1	717	789	0.11674	111.6463	P12:138:OKGE:3TERM2
FDNS	00NR	2	20WP	G15_044	FROM->TO	G14-057T 345.00 - SUNNYSIDE 345KV CKT 1	717	789	0.11674	111.646	COUCH SES - MC NIEL 115KV CKT 1
FDNS	00NR	2	20WP	G15_044	FROM->TO	G14-057T 345.00 - SUNNYSIDE 345KV CKT 1	717	789	0.11693	111.6459	HOYT - STRANGER CREEK 345KV CKT 1
FDNS	00NR	2	20WP	G15_044	FROM->TO	G14-057T 345.00 - SUNNYSIDE 345KV CKT 1	717	789	0.11685	111.6448	GEN501970 1-EVANGELINE UNIT 7
FDNS	00NR	2	20WP	G15_044	FROM->TO	G14-057T 345.00 - SUNNYSIDE 345KV CKT 1	717	789	0.11708	111.6439	OMPA-WALTERS - WALTERS 69KV CKT 1
FDNS	00NR	2	20WP	G15_044	FROM->TO	G14-057T 345.00 - SUNNYSIDE 345KV CKT 1	717	789	0.11708	111.6439	OMPA-WALTERS - WALTERS 69KV CKT 1
FDNS	00NR	2	20WP	G15_044	FROM->TO	G14-057T 345.00 - SUNNYSIDE 345KV CKT 1	717	789	0.11684	111.6428	CYPRESS - HARTBURG 500KV CKT 1
FDNS	00NR	2	20WP	G15_044	FROM->TO	G14-057T 345.00 - SUNNYSIDE 345KV CKT 1	717	789	0.11981	111.6385	G15063_T 345.00 - WOODRING 345KV CKT 1
FDNS	00NR	2	20WP	G15_044	FROM->TO	G14-057T 345.00 - SUNNYSIDE 345KV CKT 1	717	789	0.11685	111.6362	LEWIS CREEK SWITCHYARD 138/22.0KV TRANSFORMER CKT 1
FDNS	00NR	2	20WP	G15_044	FROM->TO	G14-057T 345.00 - SUNNYSIDE 345KV CKT 1	717	789	0.11703	111.6356	EMPORIA ENERGY CENTER - G14_001T 345.00 345KV CKT 1
FDNS	00NR	2	20WP	G15_044	FROM->TO	G14-057T 345.00 - SUNNYSIDE 345KV CKT 1	717	789	0.11701	111.6328	BLACKBERRY - NEOSHO 345KV CKT 1
FDNS	00NR	2	20WP	G15_044	FROM->TO	G14-057T 345.00 - SUNNYSIDE 345KV CKT 1	717	789	0.11685	111.6318	LEWIS CREEK SWITCHYARD 138/22.0KV TRANSFORMER CKT 1
FDNS	00NR	2	16WP	G15_044	FROM->TO	G14-057T 345.00 - SUNNYSIDE 345KV CKT 1	717	789	0.11709	111.6317	GEN657748 1-YOUNG 2 GENERATOR
FDNS	00NR	2	20WP	G15_044	FROM->TO	G14-057T 345.00 - SUNNYSIDE 345KV CKT 1	717	789	0.11685	111.6236	GEN334392 1-EXXON MOBIL IPP 1
FDNS	00NR	2	20WP	G15_044	FROM->TO	G14-057T 345.00 - SUNNYSIDE 345KV CKT 1	717	789	0.11666	111.6221	MCNAB REC - Turk 115 115KV CKT 1
FDNS	00NR	2	20WP	G15_044	FROM->TO	G14-057T 345.00 - SUNNYSIDE 345KV CKT 1	717	789	0.11666	111.6221	TURK (TURK 1) 138/115/13.2KV TRANSFORMER CKT 1
FDNS	00NR	2	20WP	G15_044	FROM->TO	G14-057T 345.00 - SUNNYSIDE 345KV CKT 1	717	789	0.11666	111.6221	TURK (TURK 1) 138/115/13.2KV TRANSFORMER CKT 1
FDNS	00NR	2	20WP	G15_044	FROM->TO	G14-057T 345.00 - SUNNYSIDE 345KV CKT 1	717	789	0.11693	111.6216	G15074_T 345.00 - JEFFREY ENERGY CENTER 345KV CKT 1
FDNS	00NR	2	16WP	G15_044	FROM->TO	G14-057T 345.00 - SUNNYSIDE 345KV CKT 1	717	789	0.11714	111.6209	P12:138:AEPW:SHAM4WT:CHILD4WT
FDNS	00NR	2	20WP	G15_044	FROM->TO	G14-057T 345.00 - SUNNYSIDE 345KV CKT 1	717	789	0.11685	111.6208	GEN505616 1-BROKEN BOW
FDNS	00NR	2	20WP	G15_044	FROM->TO	G14-057T 345.00 - SUNNYSIDE 345KV CKT 1	717	789	0.11685	111.6197	P12:161:AEPW:CHAMSPR5:FARMING5
FDNS	00NR	2	20WP	G15_044	FROM->TO	G14-057T 345.00 - SUNNYSIDE 345KV CKT 1	717	789	0.11685	111.6175	GEN515042 1-SEMINOLE 3G
FDNSLock	00NR	2	16WP	G15_044	FROM->TO	G14-057T 345.00 - SUNNYSIDE 345KV CKT 1	717	789	0.11709	111.6174	GEN532751 1-WOLF CREEK GENERATING STATION UNIT 1
FDNS	00NR	2	20WP	G15_044	FROM->TO	G14-057T 345.00 - SUNNYSIDE 345KV CKT 1	717	789	0.11685	111.6173	GEN334393 1-EXXON MOBIL IPP 2
FDNS	00NR	2	20WP	G15_044	FROM->TO	G14-057T 345.00 - SUNNYSIDE 345KV CKT 1	717	789	0.11685	111.6173	GEN334394 1-EXXON MOBIL IPP 3
FDNS	00NR	2	16WP	G15_044	FROM->TO	G14-057T 345.00 - SUNNYSIDE 345KV CKT 1	717	789	0.11721	111.6149	P12:138:WFEC:MSL15
FDNS	00NR	2	20WP	G15_044	FROM->TO	G14-057T 345.00 - SUNNYSIDE 345KV CKT 1	717	789	0.11719	111.6141	P12:69:WFEC-AEPW:COMANCH2:WALTRS-2
FDNS	00NR	2	16WP	G15_044	FROM->TO	G14-057T 345.00 - SUNNYSIDE 345KV CKT 1	717	789	0.11955	111.6052	CHISHOLM7 345.00 (CHISHOLM) 345/230/13.2KV TRANSFORMER CKT 1
FDNS	00NR	2	20WP	G15_044	FROM->TO	G14-057T 345.00 - SUNNYSIDE 345KV CKT 1	717	789	0.11747	111.6041	SOUTHWESTERN STATION - VERDEN 138KV CKT 1
FDNS	00NR	2	20WP	G15_044	FROM->TO	G14-057T 345.00 - SUNNYSIDE 345KV CKT 1	717	789	0.11736	111.6029	WEATHERFORD TAP - WEATHERFORD WIND FARM 138KV CKT 1
FDNS	00NR	2	16WP	G15_044	FROM->TO	G14-057T 345.00 - SUNNYSIDE 345KV CKT 1	717	789	0.11709	111.6005	GEN562992 1-G15063_3 0.6900
FDNS	00NR	2	20WP	G15_044	FROM->TO	G14-057T 345.00 - SUNNYSIDE 345KV CKT 1	717	789	0.11689	111.6003	7LUTESVIL 345.00 - 7ST FRANC 345.00 345KV CKT 1
FDNS	00NR	2	20WP	G15_044	FROM->TO	G14-057T 345.00 - SUNNYSIDE 345KV CKT 1	717	789	0.11836	111.6002	NOBLE - PURCELL4 138.00 138KV CKT 1
FDNS	00NR	2	20WP	G15_044	FROM->TO	G14-057T 345.00 - SUNNYSIDE 345KV CKT 1	717	789	0.11708	111.5967	G13-010T 345.00 - POST ROCK 345KV CKT 1
FDNS	00NR	2	20WP	G15_044	FROM->TO	G14-057T 345.00 - SUNNYSIDE 345KV CKT 1	717	789	0.11707	111.5953	CLINTON JUNCTION - ELK CITY 138KV CKT 1
FDNS	00NR	2	20WP	G15_044	FROM->TO	G14-057T 345.00 - SUNNYSIDE 345KV CKT 1	717	789	0.11707	111.5953	CLINTON JUNCTION - ELK CITY 138KV CKT 1
FDNS	00NR	2	20WP	G15_044	FROM->TO	G14-057T 345.00 - SUNNYSIDE 345KV CKT 1	717	789	0.11685	111.587	GEN501971 1-EVANGELINE UNIT 7-1

SOLUTION	GROUP	SCENARIO	SEASON	SOURCE	DIRECTION	MONITORED ELEMENT	RATEA (MVA)	RATEB(MVA)	TDF	TC%LOADING (% MVA)	CONTINGENCY
FDNS	00NR	2	20WP	G15_044	FROM->TO	G14-057T 345.00 - SUNNYSIDE 345KV CKT 1	717	789	0.11685	111.587	GEN501972 1-EVANGELINE UNIT 7-2
FDNS	00NR	2	20WP	G15_044	FROM->TO	G14-057T 345.00 - SUNNYSIDE 345KV CKT 1	717	789	0.11685	111.5867	ST FRANCIS - ST FRANCIS 1 161KV CKT Z1
FDNS	00NR	2	20WP	G15_044	FROM->TO	G14-057T 345.00 - SUNNYSIDE 345KV CKT 1	717	789	0.11703	111.5864	BUCKNER7 345.00 - HOLCOMB 345KV CKT 1
FDNS	00NR	2	20WP	G15_044	FROM->TO	G14-057T 345.00 - SUNNYSIDE 345KV CKT 1	717	789	0.11703	111.5864	BUCKNER7 345.00 - HOLCOMB 345KV CKT 1
FDNS	00NR	2	20WP	G15_044	FROM->TO	G14-057T 345.00 - SUNNYSIDE 345KV CKT 1	717	789	0.11747	111.5844	NORTH 29TH CHICKASHA - VERDEN 138KV CKT 1
FDNS	00NR	2	20WP	G15_044	FROM->TO	G14-057T 345.00 - SUNNYSIDE 345KV CKT 1	717	789	0.11883	111.5833	LASALLE - STONEWAL LH138.00 138KV CKT 1
FDNS	00NR	2	20WP	G15_044	FROM->TO	G14-057T 345.00 - SUNNYSIDE 345KV CKT 1	717	789	0.11703	111.5813	G14_001T 345.00 - WICHITA 345KV CKT 1
FDNS	00NR	2	20WP	G15_044	FROM->TO	G14-057T 345.00 - SUNNYSIDE 345KV CKT 1	717	789	0.11714	111.5793	FRANKLIN - FRANKLIN SW 138KV CKT 1
FDNS	00NR	2	20WP	G15_044	FROM->TO	G14-057T 345.00 - SUNNYSIDE 345KV CKT 1	717	789	0.11686	111.5758	LAKEOVER - MCADAMS 500KV CKT 1
FDNS	00NR	2	20WP	G15_044	FROM->TO	G14-057T 345.00 - SUNNYSIDE 345KV CKT 1	717	789	0.11772	111.5743	HINTON - WEATHERFORD JCT. 138KV CKT 1
FDNS	00NR	2	20WP	G15_044	FROM->TO	G14-057T 345.00 - SUNNYSIDE 345KV CKT 1	717	789	0.11685	111.5739	SABINE 230/22.0KV TRANSFORMER CKT 1
FDNS	00NR	2	20WP	G15_044	FROM->TO	G14-057T 345.00 - SUNNYSIDE 345KV CKT 1	717	789	0.11694	111.5736	EMPORIA ENERGY CENTER - SWISSVALE 345KV CKT 1
FDNS	00NR	2	20WP	G15_044	FROM->TO	G14-057T 345.00 - SUNNYSIDE 345KV CKT 1	717	789	0.117	111.5732	FLETCHER - MARLOW JCT 69KV CKT 1
FDNS	00NR	2	20WP	G15_044	FROM->TO	G14-057T 345.00 - SUNNYSIDE 345KV CKT 1	717	789	0.11669	111.573	ENOWILT - LONE OAK 138KV CKT 1
FDNS	00NR	2	20WP	G15_044	FROM->TO	G14-057T 345.00 - SUNNYSIDE 345KV CKT 1	717	789	0.11695	111.5724	P12:138:OKGE:3TERM12
FDNS	00NR	2	16WP	G15_044	FROM->TO	G14-057T 345.00 - SUNNYSIDE 345KV CKT 1	717	789	0.1195	111.5718	CANEY CREEK - TEXOMA JCT 138KV CKT 1
FDNS	00NR	2	20WP	G15_044	FROM->TO	G14-057T 345.00 - SUNNYSIDE 345KV CKT 1	717	789	0.11685	111.5703	P12:138:AEPW:R.S.S-4:T.P.S.-4
FDNS	00NR	2	16WP	G15_044	FROM->TO	G14-057T 345.00 - SUNNYSIDE 345KV CKT 1	717	789	0.11709	111.5699	GEN562704 1-G15_020_3 0.3550
FDNS	00NR	2	20WP	G15_044	FROM->TO	G14-057T 345.00 - SUNNYSIDE 345KV CKT 1	717	789	0.11883	111.5681	STONEWAL LH138.00 - TUPELO TAP 138KV CKT 1
FDNS	00NR	2	20WP	G15_044	FROM->TO	G14-057T 345.00 - SUNNYSIDE 345KV CKT 1	717	789	0.11669	111.5643	ENOWILT - SARDIS 138KV CKT 1
FDNS	00NR	2	20WP	G15_044	FROM->TO	G14-057T 345.00 - SUNNYSIDE 345KV CKT 1	717	789	0.11685	111.564	GEN501912 1-ACADIA UNIT CT1B
FDNS	00NR	2	20WP	G15_044	FROM->TO	G14-057T 345.00 - SUNNYSIDE 345KV CKT 1	717	789	0.11685	111.5632	GEN501911 1-ACADIA UNIT CT1A
FDNS	00NR	2	16WP	G15_044	FROM->TO	G14-057T 345.00 - SUNNYSIDE 345KV CKT 1	717	789	0.11709	111.5628	GEN563173 1-G15082_3 0.6900
FDNS	00NR	2	20WP	G15_044	FROM->TO	G14-057T 345.00 - SUNNYSIDE 345KV CKT 1	717	789	0.11687	111.5586	MCADAMS - WOLF CREEK 500KV CKT 1
FDNS	00NR	2	20WP	G15_044	FROM->TO	G14-057T 345.00 - SUNNYSIDE 345KV CKT 1	717	789	0.1169	111.5573	P12:138:WFEC-AEPW:ELKCTY-4:ERICK4
FDNS	00NR	2	20WP	G15_044	FROM->TO	G14-057T 345.00 - SUNNYSIDE 345KV CKT 1	717	789	0.11708	111.5499	G13-010T 345.00 - SPEARVILLE 345KV CKT 1
FDNS	00NR	2	20WP	G15_044	FROM->TO	G14-057T 345.00 - SUNNYSIDE 345KV CKT 1	717	789	0.11685	111.5478	GEN506749 1-EASTMAN GENERATION A
FDNS	00NR	2	20WP	G15_044	FROM->TO	G14-057T 345.00 - SUNNYSIDE 345KV CKT 1	717	789	0.11696	111.5472	SWISSVALE - WEST GARDNER 345KV CKT 1
FDNS	00NR	2	20WP	G15_044	FROM->TO	G14-057T 345.00 - SUNNYSIDE 345KV CKT 1	717	789	0.11685	111.5451	P12:138:AEPW:R.S.S.-4:R:96YALE-4
FDNS	00NR	2	20WP	G15_044	FROM->TO	G14-057T 345.00 - SUNNYSIDE 345KV CKT 1	717	789	0.11685	111.5385	GEN336242 1-1NMIL ST1 18.000
FDNS	00NR	2	20WP	G15_044	FROM->TO	G14-057T 345.00 - SUNNYSIDE 345KV CKT 1	717	789	0.1167	111.5353	AMITY SS - MURFREESBORO EAST (AECC) 115KV CKT 1
FDNS	00NR	2	20WP	G15_044	FROM->TO	G14-057T 345.00 - SUNNYSIDE 345KV CKT 1	717	789	0.11685	111.5338	NELSON 230/24.0KV TRANSFORMER CKT 1
FDNS	00NR	2	16WP	G15_044	FROM->TO	G14-057T 345.00 - SUNNYSIDE 345KV CKT 1	717	789	0.11709	111.5291	GEN562952 1-G15057_3 0.6500
FDNS	00NR	2	20WP	G15_044	FROM->TO	G14-057T 345.00 - SUNNYSIDE 345KV CKT 1	717	789	0.1169	111.5289	8WNEWMADRID 500.00 - DELL 500 500KV CKT 1
FDNS	00NR	2	20WP	G15_044	FROM->TO	G14-057T 345.00 - SUNNYSIDE 345KV CKT 1	717	789	0.11929	111.5268	FRANKLIN SW - WESTMOORE 138KV CKT 1
FDNS	00NR	2	20WP	G15_044	FROM->TO	G14-057T 345.00 - SUNNYSIDE 345KV CKT 1	717	789	0.11669	111.5257	CLAYTON - SARDIS 138KV CKT 1
FDNS	00NR	2	20WP	G15_044	FROM->TO	G14-057T 345.00 - SUNNYSIDE 345KV CKT 1	717	789	0.11685	111.5241	ST FRANCIS 345/161KV TRANSFORMER CKT 1
FDNS	00NR	2	20WP	G15_044	FROM->TO	G14-057T 345.00 - SUNNYSIDE 345KV CKT 1	717	789	0.11685	111.5229	P12:138:AEPW:MOHAWK4:T.NO--4
FDNS	00NR	2	20WP	G15_044	FROM->TO	G14-057T 345.00 - SUNNYSIDE 345KV CKT 1	717	789	0.12143	111.5217	CIMARRON - NORTHWEST 345KV CKT 1
FDNS	00NR	2	20WP	G15_044	FROM->TO	G14-057T 345.00 - SUNNYSIDE 345KV CKT 1	717	789	0.11751	111.521	CORNVILLE - NORGE ROAD 138KV CKT 1
FDNS	00NR	2	20WP	G15_044	FROM->TO	G14-057T 345.00 - SUNNYSIDE 345KV CKT 1	717	789	0.11751	111.521	CORNVILLE - NORGE ROAD 138KV CKT 1
FDNS	00NR	2	20WP	G15_044	FROM->TO	G14-057T 345.00 - SUNNYSIDE 345KV CKT 1	717	789	0.11747	111.5184	CORNVILLE - NORTH 29TH CHICKASHA 138KV CKT 1
FDNS	00NR	2	20WP	G15_044	FROM->TO	G14-057T 345.00 - SUNNYSIDE 345KV CKT 1	717	789	0.11677	111.5172	LAYFLD8 500.00 (LAYFLD AUTO) 500/230/13.8KV TRANSFORMER CKT 1
FDNS	00NR	2	20WP	G15_044	FROM->TO	G14-057T 345.00 - SUNNYSIDE 345KV CKT 1	717	789	0.11677	111.5172	LAYFLD8 500.00 (LAYFLD AUTO) 500/230/13.8KV TRANSFORMER CKT 1
FDNS	00NR	2	20WP	G15_044	FROM->TO	G14-057T 345.00 - SUNNYSIDE 345KV CKT 1	717	789	0.11736	111.5162	WEATHERFORD SOUTHEAST - WEATHERFORD TAP 138KV CKT 1
FDNS	00NR	2	20WP	G15_044	FROM->TO	G14-057T 345.00 - SUNNYSIDE 345KV CKT 1	717	789	0.1161	111.5142	ARBUCKLE - MILLCREEK 138KV CKT 1
FDNS	00NR	2	20WP	G15_044	FROM->TO	G14-057T 345.00 - SUNNYSIDE 345KV CKT 1	717	789	0.11669	111.5029	P12:138:AEPW-SWPA:LONEOAK4:BRKNBW4
FDNS	00NR	2	20WP	G15_044	FROM->TO	G14-057T 345.00 - SUNNYSIDE 345KV CKT 1	717	789	0.11772	111.5013	HINTON - REDROCKRD4 138.00 138KV CKT 1
FDNS	00NR	2	16WP	G15_044	FROM->TO	G14-057T 345.00 - SUNNYSIDE 345KV CKT 1	717	789	0.11709	111.4986	GEN562710 1-G15_022_3 0.5500
FDNS	00NR	2	20WP	G15_044	FROM->TO	G14-057T 345.00 - SUNNYSIDE 345KV CKT 1	717	789	0.11685	111.4928	GEN338146 1-INDEPENDENCE UNIT #2
FDNS	00NR	2	20WP	G15_044	FROM->TO	G14-057T 345.00 - SUNNYSIDE 345KV CKT 1	717	789	0.11688	111.4903	7JASPER 345.00 - MORGAN 345KV CKT 1
FDNS	00NR	2	20WP	G15_044	FROM->TO	G14-057T 345.00 - SUNNYSIDE 345KV CKT 1	717	789	0.11709	111.4829	SEMINOLE (SEMINOL2) 345/138/14.4KV TRANSFORMER CKT 1
FDNS	00NR	2	16WP	G15_044	FROM->TO	G14-057T 345.00 - SUNNYSIDE 345KV CKT 1	717	789	0.11709	111.4703	GEN620315 1-BIG STONE GEN
FDNS	00NR	2	20WP	G15_044	FROM->TO	G14-057T 345.00 - SUNNYSIDE 345KV CKT 1	717	789	0.11736	111.4623	CLINTON JUNCTION - CLINTON NATURAL GAS TAP 138KV CKT 1
FDNS	00NR	2	20WP	G15_044	FROM->TO	G14-057T 345.00 - SUNNYSIDE 345KV CKT 1	717	789	0.11698	111.4562	P12:138:OKGE:3TERM20
FDNS	00NR	2	20WP	G15_044	FROM->TO	G14-057T 345.00 - SUNNYSIDE 345KV CKT 1	717	789	0.05789	111.4559	GRACEMONT - LAWTON EASTSIDE 345KV CKT 1
FDNS	00NR	2	20WP	G15_044	FROM->TO	G14-057T 345.00 - SUNNYSIDE 345KV CKT 1	717	789	0.05789	111.4559	GRACEMONT - LAWTON EASTSIDE 345KV CKT 1
FDNS	00NR	2	20WP	G15_044	FROM->TO	G14-057T 345.00 - SUNNYSIDE 345KV CKT 1	717	789	0.11719	111.4392	COMANCHE - WALTERS 69KV CKT 1
FDNSLock	00NR	2	16WP	G15_044	FROM->TO	G14-057T 345.00 - SUNNYSIDE 345KV CKT 1	717	789	0.11709	111.4052	GEN600004 2-PRAIRIE ISLAND G2
FDNSLock	00NR	2	16WP	G15_044	FROM->TO	G14-057T 345.00 - SUNNYSIDE 345KV CKT 1	717	789	0.11709	111.4025	GEN600003 1-PRAIRIE ISLAND G1
FDNS	00NR	2	16WP	G15_044	FROM->TO	G14-057T 345.00 - SUNNYSIDE 345KV CKT 1	717	789	0.11955	111.4012	CHISHOLM7 345.00 - GRACEMONT 345KV CKT 1
FDNS	00NR	2	16WP	G15_044	FROM->TO	G14-057T 345.00 - SUNNYSIDE 345KV CKT 1	717	789	0.11709	111.4	GEN600006 1-AS KING
FDNS	00NR	2	16WP	G15_044	FROM->TO	G14-057T 345.00 - SUNNYSIDE 345KV CKT 1	717	789	0.11709	111.4	GEN636641 1-LOUISA UNIT 1
FDNS	00NR	2	16WP	G15_044	FROM->TO	G14-057T 345.00 - SUNNYSIDE 345KV CKT 1	717	789	0.11718	111.3775	P12:138:WFEC:MSL09
FDNS	00NR	2	16WP	G15_044	FROM->TO	G14-057T 345.00 - SUNNYSIDE 345KV CKT 1	717	789	0.11709	111.3644	GEN511851 1-COMANCHE #1
FDNS	00NR	2	16WP	G15_044	FROM->TO	G14-057T 345.00 - SUNNYSIDE 345KV CKT 1	717	789	0.11709	111.2692	GEN600005 1-MONTICELLO
FDNS	00NR	2	16WP	G15_044	FROM->TO	G14-057T 345.00 - SUNNYSIDE 345KV CKT 1	717	789	0.11709	111.2563	GEN562754 1-G15031_5 0.6900
FDNS	00NR	2	16WP	G15_044	FROM->TO	G14-057T 345.00 - SUNNYSIDE 345KV CKT 1	717	789	0.11812	111.219	P12:230:AEPW-SPS:SWEETWT6:WHEELER 6
FDNS	00NR	2	16WP	G15_044	FROM->TO	G14-057T 345.00 - SUNNYSIDE 345KV CKT 1	717	789	0.11812	111.218	STATELINE INTERCHANGE - STLN-DEMARC6 230KV CKT 1
FDNS	00NR	2	16WP	G15_044	FROM->TO	G14-057T 345.00 - SUNNYSIDE 345KV CKT 1	717	789	0.11812	111.2168	STLN-DEMARC6 - SWEETWATER 230KV CKT 1
FDNS	00NR	2	16WP	G15_044	FROM->TO	G14-057T 345.00 - SUNNYSIDE 345KV CKT 1	717	789	0.11803	111.2158	P12:138:AEPW-OGE:CORNVIL4:CIMARON4
FDNS	00NR	2	16WP	G15_044	FROM->TO	G14-057T 345.00 - SUNNYSIDE 345KV CKT 1	717	789	0.11709	111.2103	GEN635213 3-NEAL UNIT 3
FDNS	00NR	2	16WP	G15_044	FROM->TO	G14-057T 345.00 - SUNNYSIDE 345KV CKT 1	717	789	0.11709	111.2	GEN629074 1-ARNOLD LOWSIDE OF GSU XFMR
FDNS	00NR	2	16WP	G15_044	FROM->TO	G14-057T 345.00 - SUNNYSIDE 345KV CKT 1	717	789	0.11709	111.1975	GEN562023 1-G11_020_3 0.6900
FDNS	00NR	2	16WP	G15_044	FROM->TO	G14-057T 345.00 - SUNNYSIDE 345KV CKT 1	717	789	0.11709	111.1975	GEN562026 1-G11_019_3 0.6900
FDNS	00NR	2	16WP	G15_044	FROM->TO	G14-057T 345.00 - SUNNYSIDE 345KV CKT 1	717	789	0.11709	111.1975	GEN562756 1-G15031_7 0.6900
FDNS	00NR	2	16WP	G15_044	FROM->TO	G14-057T 345.00 - SUNNYSIDE 345KV CKT 1	717	789	0.11709	111.1543	BIG STONE 230/24.0KV TRANSFORMER CKT 1
FDNS	00NR	2	16WP	G15_044	FROM->TO	G14-057T 345.00 - SUNNYSIDE 345KV CKT 1	717	789	0.11709	111.1481	GEN562556 1-G14_046_3 0.3420
FDNS	00NR	2	16WP	G15_044	FROM->TO	G14-057T 345.00 - SUNNYSIDE 345KV CKT 1	717	789	0.11709	111.0641	GEN563142 1-G15079_3 0.5500

SOLUTION	GROUP	SCENARIO	SEASON	SOURCE	DIRECTION	MONITORED ELEMENT	RATEA (MVA)	RATEB(MVA)	TDF	TC%LOADING (% MVA)	CONTINGENCY
FDNS	00NR	2	16WP	G15_044	FROM->TO	G14-057T 345.00 - SUNNYSIDE 345KV CKT 1	717	789	0.11709	111.0641	GEN563151 1-G15080_2 0.5500
FDNS	00NR	2	20WP	G15_044	FROM->TO	G14-057T 345.00 - SUNNYSIDE 345KV CKT 1	717	789	0.11685	111.0351	803-OKLAUNION
FDNS	00NR	2	16WP	G15_044	FROM->TO	G14-057T 345.00 - SUNNYSIDE 345KV CKT 1	717	789	0.11709	111.0276	GEN523971 1-HARRINGTON GEN #1 24 KV
FDNS	00NR	2	16WP	G15_044	FROM->TO	G14-057T 345.00 - SUNNYSIDE 345KV CKT 1	717	789	0.11709	111.0275	GEN523972 1-HARRINGTON GEN #2 24 KV
FDNS	00NR	2	16WP	G15_044	FROM->TO	G14-057T 345.00 - SUNNYSIDE 345KV CKT 1	717	789	0.11709	111.0275	GEN523973 1-HARRINGTON GEN #3 24 KV
FDNS	00NR	2	16WP	G15_044	FROM->TO	G14-057T 345.00 - SUNNYSIDE 345KV CKT 1	717	789	0.11709	110.9615	GEN600000 1-SHERBURNECNTY G1
FDNS	00NR	2	16WP	G15_044	FROM->TO	G14-057T 345.00 - SUNNYSIDE 345KV CKT 1	717	789	0.11675	110.9204	NORTHWEST TEXARKANA - VALLIANT 345KV CKT 1
FDNS	00NR	2	16WP	G15_044	FROM->TO	G14-057T 345.00 - SUNNYSIDE 345KV CKT 1	717	789	0.11675	110.9204	NORTHWEST TEXARKANA - VALLIANT 345KV CKT 1
FDNS	00NR	2	16WP	G15_044	FROM->TO	G14-057T 345.00 - SUNNYSIDE 345KV CKT 1	717	789	0.11709	110.8828	GEN600001 2-SHERBURNE CNTY G2
FDNS	00NR	2	16WP	G15_044	FROM->TO	G14-057T 345.00 - SUNNYSIDE 345KV CKT 1	717	789	0.11962	110.8617	P12:230:AEPW:ELKCITY6:SWEETWT6
FDNS	00NR	2	16WP	G15_044	FROM->TO	G14-057T 345.00 - SUNNYSIDE 345KV CKT 1	717	789	0.11709	110.8539	GEN563042 1-G15068_3 0.6900
FDNS	00NR	2	16WP	G15_044	FROM->TO	G14-057T 345.00 - SUNNYSIDE 345KV CKT 1	717	789	0.11709	110.8476	GEN511848 1-SOUTHWESTERN STATION #3
FDNS	00NR	2	16WP	G15_044	FROM->TO	G14-057T 345.00 - SUNNYSIDE 345KV CKT 1	717	789	0.11709	110.8364	GEN527901 1-HOBBS PLANT #1 (CT)
FDNS	00NR	2	16WP	G15_044	FROM->TO	G14-057T 345.00 - SUNNYSIDE 345KV CKT 1	717	789	0.11709	110.8364	GEN527902 1-HOBBS PLANT #2 (CT)
FDNS	00NR	2	20WP	G15_044	FROM->TO	G14-057T 345.00 - SUNNYSIDE 345KV CKT 1	717	789	0.11522	110.81	P12:138:OKGE:3TERM39
FDNS	00NR	2	16WP	G15_044	FROM->TO	G14-057T 345.00 - SUNNYSIDE 345KV CKT 1	717	789	0.11709	110.7558	GEN629075 1-OTTUMWA GENERATOR FOR OTTUMWA UNIT NO 1
FDNS	00NR	2	16WP	G15_044	FROM->TO	G14-057T 345.00 - SUNNYSIDE 345KV CKT 1	717	789	0.11709	110.6383	SHERBURNE CO 345/24.0KV TRANSFORMER CKT 1
FDNS	00NR	2	20WP	G15_044	FROM->TO	G14-057T 345.00 - SUNNYSIDE 345KV CKT 1	717	789	0.1157	110.6374	MAYSVILLE - MAYSVLT4 138.00 138KV CKT 1
FDNS	00NR	2	20WP	G15_044	FROM->TO	G14-057T 345.00 - SUNNYSIDE 345KV CKT 1	717	789	0.11676	110.6101	NORTHWEST TEXARKANA - WELSH 345KV CKT 1
FDNS	00NR	2	20WP	G15_044	FROM->TO	G14-057T 345.00 - SUNNYSIDE 345KV CKT 1	717	789	0.11676	110.6101	NORTHWEST TEXARKANA - WELSH 345KV CKT 1
FDNS	00NR	2	16WP	G15_044	FROM->TO	G14-057T 345.00 - SUNNYSIDE 345KV CKT 1	717	789	0.11709	110.61	GEN635214 4-NEAL UNIT 4
FDNS	00NR	2	20WP	G15_044	FROM->TO	G14-057T 345.00 - SUNNYSIDE 345KV CKT 1	717	789	0.11685	110.5991	GEN521103 1-BLUE CANYON WIND FARM
FDNS	00NR	2	20WP	G15_044	FROM->TO	G14-057T 345.00 - SUNNYSIDE 345KV CKT 1	717	789	0.11685	110.5928	GEN562691 1-G15_015_3 0.6900
FDNS	00NR	2	20WP	G15_044	FROM->TO	G14-057T 345.00 - SUNNYSIDE 345KV CKT 1	717	789	0.11685	110.5884	GEN520812 1-ANADRK5
FDNS	00NR	2	20WP	G15_044	FROM->TO	G14-057T 345.00 - SUNNYSIDE 345KV CKT 1	717	789	0.11685	110.5883	GEN520813 1-ANADRK6
FDNS	00NR	2	20WP	G15_044	FROM->TO	G14-057T 345.00 - SUNNYSIDE 345KV CKT 1	717	789	0.11685	110.586	GEN563052 1-G15069_3 0.6900
FDNS	00NR	2	20WP	G15_044	FROM->TO	G14-057T 345.00 - SUNNYSIDE 345KV CKT 1	717	789	0.11685	110.5804	GEN562772 1-G15034_3 0.6900
FDNS	00NR	2	20WP	G15_044	FROM->TO	G14-057T 345.00 - SUNNYSIDE 345KV CKT 1	717	789	0.11685	110.5721	GEN600046 1-MECST
FDNS	00NR	2	20WP	G15_044	FROM->TO	G14-057T 345.00 - SUNNYSIDE 345KV CKT 1	717	789	0.11729	110.5716	DRAPER LAKE - MIDWEST TAP 138KV CKT 1
FDNS	00NR	2	20WP	G15_044	FROM->TO	G14-057T 345.00 - SUNNYSIDE 345KV CKT 1	717	789	0.1157	110.5716	MAYSVLT4 138.00 - PRAIRIE POINT 138KV CKT 1
FDNS	00NR	2	20WP	G15_044	FROM->TO	G14-057T 345.00 - SUNNYSIDE 345KV CKT 1	717	789	0.11685	110.5614	GEN629070 2-BEAVER CHANNEL GENERATORFOR UNIT NO 2
FDNS	00NR	2	20WP	G15_044	FROM->TO	G14-057T 345.00 - SUNNYSIDE 345KV CKT 1	717	789	0.11685	110.5591	GEN511961 1-DEMPSEY-WTG10.7000
FDNS	00NR	2	20WP	G15_044	FROM->TO	G14-057T 345.00 - SUNNYSIDE 345KV CKT 1	717	789	0.11685	110.5581	GEN600047 1-MECCT1
FDNS	00NR	2	20WP	G15_044	FROM->TO	G14-057T 345.00 - SUNNYSIDE 345KV CKT 1	717	789	0.11595	110.5565	ARBUCKLE - SULPHR 4 138.00 138KV CKT 1
FDNS	00NR	2	20WP	G15_044	FROM->TO	G14-057T 345.00 - SUNNYSIDE 345KV CKT 1	717	789	0.11685	110.5533	GEN629071 1-BURLINGTON GENERATOR FOR UNIT NO 1 E
FDNS	00NR	2	16WP	G15_044	FROM->TO	G14-057T 345.00 - SUNNYSIDE 345KV CKT 1	717	789	0.11709	110.5521	GEN563043 1-G15068_4 0.6900
FDNS	00NR	2	20WP	G15_044	FROM->TO	G14-057T 345.00 - SUNNYSIDE 345KV CKT 1	717	789	0.11685	110.549	P12:069:OKGE:3TERM42
FDNS	00NR	2	16WP	G15_044	FROM->TO	G14-057T 345.00 - SUNNYSIDE 345KV CKT 1	717	789	0.11709	110.5485	GEN563273 2-G15093_4 0.6900
FDNS	00NR	2	20WP	G15_044	FROM->TO	G14-057T 345.00 - SUNNYSIDE 345KV CKT 1	717	789	0.11809	110.5478	P12:138:WFEC:MSL14
FDNS	00NR	2	20WP	G15_044	FROM->TO	G14-057T 345.00 - SUNNYSIDE 345KV CKT 1	717	789	0.11793	110.5476	CIMARRON - MATHWSN7 345.00 345KV CKT 1
FDNS	00NR	2	20WP	G15_044	FROM->TO	G14-057T 345.00 - SUNNYSIDE 345KV CKT 1	717	789	0.11793	110.5476	CIMARRON - MATHWSN7 345.00 345KV CKT 2
FDNS	00NR	2	20WP	G15_044	FROM->TO	G14-057T 345.00 - SUNNYSIDE 345KV CKT 1	717	789	0.11685	110.5385	BURLINGTON NO1 + NO 2 + NO 3 161/20.0KV TRANSFORMER CKT 1
FDNS	00NR	2	20WP	G15_044	FROM->TO	G14-057T 345.00 - SUNNYSIDE 345KV CKT 1	717	789	0.11734	110.536	P12:138:OKGE:3TERM21
FDNS	00NR	2	20WP	G15_044	FROM->TO	G14-057T 345.00 - SUNNYSIDE 345KV CKT 1	717	789	0.11685	110.5349	GEN615010 1-STANTON4
FDNS	00NR	2	20WP	G15_044	FROM->TO	G14-057T 345.00 - SUNNYSIDE 345KV CKT 1	717	789	0.11683	110.5303	P12:138:WFEC:MSL11
FDNS	00NR	2	20WP	G15_044	FROM->TO	G14-057T 345.00 - SUNNYSIDE 345KV CKT 1	717	789	0.11683	110.5303	P12:138:WFEC-AEPW:PHAROAH4:LONEOAK4
FDNS	00NR	2	16WP	G15_044	FROM->TO	G14-057T 345.00 - SUNNYSIDE 345KV CKT 1	717	789	0.11709	110.5301	GEN526333 1-JONES GEN #3 21 KV
FDNS	00NR	2	16WP	G15_044	FROM->TO	G14-057T 345.00 - SUNNYSIDE 345KV CKT 1	717	789	0.11709	110.5301	GEN526334 1-JONES_4 116.500
FDNS	00NR	2	20WP	G15_044	FROM->TO	G14-057T 345.00 - SUNNYSIDE 345KV CKT 1	717	789	0.11685	110.5291	GEN615021 1-GRE-ER 14G 16.000
FDNS	00NR	2	20WP	G15_044	FROM->TO	G14-057T 345.00 - SUNNYSIDE 345KV CKT 1	717	789	0.11981	110.526	G15063_T 345.00 - MATHWSN7 345.00 345KV CKT 1
FDNS	00NR	2	20WP	G15_044	FROM->TO	G14-057T 345.00 - SUNNYSIDE 345KV CKT 1	717	789	0.11694	110.5157	GLASSES - MADILL INDUSTRIAL TAP 138KV CKT 1
FDNS	00NR	2	16WP	G15_044	FROM->TO	G14-057T 345.00 - SUNNYSIDE 345KV CKT 1	717	789	0.11812	110.513	CHISHOLM6 230.00 - SWEETWATER 230KV CKT 1
FDNS	00NR	2	20WP	G15_044	FROM->TO	G14-057T 345.00 - SUNNYSIDE 345KV CKT 1	717	789	0.11809	110.5103	BEARCAT 138.00 - MOORELAND 138KV CKT 1
FDNS	00NR	2	20WP	G15_044	FROM->TO	G14-057T 345.00 - SUNNYSIDE 345KV CKT 1	717	789	0.11694	110.5026	CANEY CREEK - JOHNSON COUNTY 138KV CKT 1
FDNS	00NR	2	20WP	G15_044	FROM->TO	G14-057T 345.00 - SUNNYSIDE 345KV CKT 1	717	789	0.11714	110.4954	P12:138:WFEC:MSL08
FDNS	00NR	2	20WP	G15_044	FROM->TO	G14-057T 345.00 - SUNNYSIDE 345KV CKT 1	717	789	0.11685	110.4951	GEN531447 1-HOLCOMB GENERATOR
FDNS	00NR	2	20WP	G15_044	FROM->TO	G14-057T 345.00 - SUNNYSIDE 345KV CKT 1	717	789	0.11685	110.4945	GEN515443 1-MNCOWND1 0.7000
FDNS	00NR	2	20WP	G15_044	FROM->TO	G14-057T 345.00 - SUNNYSIDE 345KV CKT 1	717	789	0.11685	110.4869	INDEPENDENCE 500/26.0KV TRANSFORMER CKT 1
FDNS	00NR	2	20WP	G15_044	FROM->TO	G14-057T 345.00 - SUNNYSIDE 345KV CKT 1	717	789	0.11685	110.4854	GEN560183 1-REDHIL-WTG1 12.000
FDNS	00NR	2	20WP	G15_044	FROM->TO	G14-057T 345.00 - SUNNYSIDE 345KV CKT 1	717	789	0.11925	110.4852	LEBANON - TEXOMA JCT 138KV CKT 1
FDNS	00NR	2	20WP	G15_044	FROM->TO	G14-057T 345.00 - SUNNYSIDE 345KV CKT 1	717	789	0.1157	110.4796	PRAIRIE POINT - RATLIFF 138KV CKT 1
FDNS	00NR	2	16WP	G15_044	FROM->TO	G14-057T 345.00 - SUNNYSIDE 345KV CKT 1	717	789	0.11709	110.4775	GEN525844 1-ELK_1 118.000
FDNS	00NR	2	16WP	G15_044	FROM->TO	G14-057T 345.00 - SUNNYSIDE 345KV CKT 1	717	789	0.11709	110.4721	GEN525845 1-ELK_2 1 138.00
FDNS	00NR	2	20WP	G15_044	FROM->TO	G14-057T 345.00 - SUNNYSIDE 345KV CKT 1	717	789	0.11685	110.4691	GEN600067 9-HIGH BRIDGE
FDNS	00NR	2	20WP	G15_044	FROM->TO	G14-057T 345.00 - SUNNYSIDE 345KV CKT 1	717	789	0.11672	110.4611	CARTER - CHICKASAW 138KV CKT 1
FDNS	00NR	2	20WP	G15_044	FROM->TO	G14-057T 345.00 - SUNNYSIDE 345KV CKT 1	717	789	0.11693	110.461	OVEXFRMCCOVE
FDNS	00NR	2	20WP	G15_044	FROM->TO	G14-057T 345.00 - SUNNYSIDE 345KV CKT 1	717	789	0.11685	110.4606	P12:230:UMZB:# 112 #: NU IN SD. NU-RCDC & DRY CREEK XFMR
FDNS	00NR	2	20WP	G15_044	FROM->TO	G14-057T 345.00 - SUNNYSIDE 345KV CKT 1	717	789	0.11685	110.4602	RCDC EAST 4230.00 - RED CEDAR DC 230KV CKT 1
FDNS	00NR	2	16WP	G15_044	FROM->TO	G14-057T 345.00 - SUNNYSIDE 345KV CKT 1	717	789	0.11709	110.4577	GEN600002 3-SHERBURNE CNTY G3
FDNS	00NR	2	20WP	G15_044	FROM->TO	G14-057T 345.00 - SUNNYSIDE 345KV CKT 1	717	789	0.1169	110.4558	ALTUS JUNCTION - RUSSELL 138KV CKT 1
FDNS	00NR	2	20WP	G15_044	FROM->TO	G14-057T 345.00 - SUNNYSIDE 345KV CKT 1	717	789	0.1169	110.4558	ALTUS JUNCTION - RUSSELL 138KV CKT 1
FDNS	00NR	2	20WP	G15_044	FROM->TO	G14-057T 345.00 - SUNNYSIDE 345KV CKT 1	717	789	0.11694	110.4553	GLASSES - RUSSETT 138KV CKT 1
FDNS	00NR	2	20WP	G15_044	FROM->TO	G14-057T 345.00 - SUNNYSIDE 345KV CKT 1	717	789	0.11698	110.4489	CANADIAN RIVER - MCALESTER SOUTH 138KV CKT 1
FDNS	00NR	2	20WP	G15_044	FROM->TO	G14-057T 345.00 - SUNNYSIDE 345KV CKT 1	717	789	0.11698	110.4489	CANADIAN RIVER - MCALESTER SOUTH 138KV CKT 1
FDNS	00NR	2	20WP	G15_044	FROM->TO	G14-057T 345.00 - SUNNYSIDE 345KV CKT 1	717	789	0.11698	110.4471	CANADIAN RIVER () 345/138/13.8KV TRANSFORMER CKT 1
FDNS	00NR	2	20WP	G15_044	FROM->TO	G14-057T 345.00 - SUNNYSIDE 345KV CKT 1	717	789	0.11698	110.4471	CANADIAN RIVER () 345/138/13.8KV TRANSFORMER CKT 1
FDNS	00NR	2	20WP	G15_044	FROM->TO	G14-057T 345.00 - SUNNYSIDE 345KV CKT 1	717	789	0.11685	110.4464	GEN563242 1-G15090_3 0.6900
FDNS	00NR	2	20WP	G15_044	FROM->TO	G14-057T 345.00 - SUNNYSIDE 345KV CKT 1	717	789	0.11689	110.4435	GRPRAR1-LNX3345.00 - HOLT.CO3 345.00 345KV CKT 1
FDNS	00NR	2	20WP	G15_044	FROM->TO	G14-057T 345.00 - SUNNYSIDE 345KV CKT 1	717	789	0.11689	110.4413	GRPRAR1-LNX3345.00 - GRPRAR 345KV CKT Z

SOLUTION	GROUP	SCENARIO	SEASON	SOURCE	DIRECTION	MONITORED ELEMENT	RATEA (MVA)	RATEB(MVA)	TDF	TC%LOADING (% MVA)	CONTINGENCY
FDNS	00NR	2	20WP	G15_044	FROM->TO	G14-057T 345.00 - SUNNYSIDE 345KV CKT 1	717	789	0.11645	110.4393	ROCKY POINT - SPRINGDALE 138KV CKT 1
FDNS	00NR	2	20WP	G15_044	FROM->TO	G14-057T 345.00 - SUNNYSIDE 345KV CKT 1	717	789	0.11678	110.4338	HUGO (HUGO 1) 345/138/13.8KV TRANSFORMER CKT 1
FDNS	00NR	2	20WP	G15_044	FROM->TO	G14-057T 345.00 - SUNNYSIDE 345KV CKT 1	717	789	0.11685	110.4271	GEN562902 1-G15052_3 0.6900
FDNS	00NR	2	20WP	G15_044	FROM->TO	G14-057T 345.00 - SUNNYSIDE 345KV CKT 1	717	789	0.11705	110.4235	CHAMBER SPRINGS - CLARKSVILLE 345KV CKT 1
FDNS	00NR	2	20WP	G15_044	FROM->TO	G14-057T 345.00 - SUNNYSIDE 345KV CKT 1	717	789	0.11685	110.4118	GEN562078 1-G11_051_3 0.6900
FDNS	00NR	2	20WP	G15_044	FROM->TO	G14-057T 345.00 - SUNNYSIDE 345KV CKT 1	717	789	0.11595	110.4108	JOLLYVILLE - SULPHR 4 138.00 138KV CKT 1
FDNS	00NR	2	20WP	G15_044	FROM->TO	G14-057T 345.00 - SUNNYSIDE 345KV CKT 1	717	789	0.11703	110.4101	P12:138:AEPW:112GORE4:SNYDER-4
FDNS	00NR	2	20WP	G15_044	FROM->TO	G14-057T 345.00 - SUNNYSIDE 345KV CKT 1	717	789	0.11685	110.4096	GEN629072 4-LANSING GENERATOR FOR UNITS NO4 EIA CODE 1
FDNS	00NR	2	20WP	G15_044	FROM->TO	G14-057T 345.00 - SUNNYSIDE 345KV CKT 1	717	789	0.11685	110.4069	GEN562802 1-G15039_3 0.3570
FDNS	00NR	2	16WP	G15_044	FROM->TO	G14-057T 345.00 - SUNNYSIDE 345KV CKT 1	717	789	0.11709	110.4	GEN344225 1-1CAL G1 25.000
FDNS	00NR	2	20WP	G15_044	FROM->TO	G14-057T 345.00 - SUNNYSIDE 345KV CKT 1	717	789	0.11685	110.3954	GEN524285 1-WILDORADO WIND GEN
FDNS	00NR	2	20WP	G15_044	FROM->TO	G14-057T 345.00 - SUNNYSIDE 345KV CKT 1	717	789	0.11685	110.3778	GEN560331 1-G10-46 13.800
FDNS	00NR	2	20WP	G15_044	FROM->TO	G14-057T 345.00 - SUNNYSIDE 345KV CKT 1	717	789	0.11685	110.3726	GEN524295 1-SPNSPUR_WND10.6900
FDNS	00NR	2	16WP	G15_044	FROM->TO	G14-057T 345.00 - SUNNYSIDE 345KV CKT 1	717	789	0.11709	110.3722	GEN563202 1-G15085_3 0.5500
FDNS	00NR	2	20WP	G15_044	FROM->TO	G14-057T 345.00 - SUNNYSIDE 345KV CKT 1	717	789	0.11685	110.358	GEN514805 1-SOONER UNIT 1
FDNS	00NR	2	20WP	G15_044	FROM->TO	G14-057T 345.00 - SUNNYSIDE 345KV CKT 1	717	789	0.11685	110.358	GEN562587 1-G14_056_3 0.6900
FDNS	00NR	2	20WP	G15_044	FROM->TO	G14-057T 345.00 - SUNNYSIDE 345KV CKT 1	717	789	0.11685	110.3577	GEN657749 1-YOUNG 1 GENERATOR
FDNS	00NR	2	20WP	G15_044	FROM->TO	G14-057T 345.00 - SUNNYSIDE 345KV CKT 1	717	789	0.11685	110.3469	GEN562269 1-G12-020-1 0.6900
FDNS	00NR	2	20WP	G15_044	FROM->TO	G14-057T 345.00 - SUNNYSIDE 345KV CKT 1	717	789	0.11595	110.3469	JOLLYVILLE - KERR MCGEE CIMARRON 138KV CKT 1
FDNS	00NR	2	20WP	G15_044	FROM->TO	G14-057T 345.00 - SUNNYSIDE 345KV CKT 1	717	789	0.11685	110.3464	GEN524023 1-NICHOLS GEN #3 22 KV
FDNS	00NR	2	16WP	G15_044	FROM->TO	G14-057T 345.00 - SUNNYSIDE 345KV CKT 1	717	789	0.11709	110.3389	GEN525562 1-TOLK GEN #2 24 KV
FDNS	00NR	2	20WP	G15_044	FROM->TO	G14-057T 345.00 - SUNNYSIDE 345KV CKT 1	717	789	0.11685	110.3349	GEN514806 1-SOONER UNIT 2
FDNS	00NR	2	20WP	G15_044	FROM->TO	G14-057T 345.00 - SUNNYSIDE 345KV CKT 1	717	789	0.11675	110.3257	CROCKETT - TENASKA RUSK COUNTY 345KV CKT 1
FDNS	00NR	2	20WP	G15_044	FROM->TO	G14-057T 345.00 - SUNNYSIDE 345KV CKT 1	717	789	0.11675	110.321	LEBROCK - TENASKA RUSK COUNTY 345KV CKT 1
FDNS	00NR	2	20WP	G15_044	FROM->TO	G14-057T 345.00 - SUNNYSIDE 345KV CKT 1	717	789	0.11685	110.3077	GEN562812 1-G15040_3 0.3570
FDNS	00NR	2	20WP	G15_044	FROM->TO	G14-057T 345.00 - SUNNYSIDE 345KV CKT 1	717	789	0.11685	110.3034	GEN562270 1-G12-020-2 0.6900
FDNS	00NR	2	20WP	G15_044	FROM->TO	G14-057T 345.00 - SUNNYSIDE 345KV CKT 1	717	789	0.11685	110.3011	GEN563132 1-G15078_3 0.3570
FDNS	00NR	2	20WP	G15_044	FROM->TO	G14-057T 345.00 - SUNNYSIDE 345KV CKT 1	717	789	0.11595	110.2986	ARBWIND4 138.00 - KERR MCGEE CIMARRON 138KV CKT 1
FDNS	00NR	2	20WP	G15_044	FROM->TO	G14-057T 345.00 - SUNNYSIDE 345KV CKT 1	717	789	0.11685	110.2944	GEN563102 1-G15075_3 0.5500
FDNS	00NR	2	16WP	G15_044	FROM->TO	G14-057T 345.00 - SUNNYSIDE 345KV CKT 1	717	789	0.11709	110.2932	GEN527166 1-MUSTANG_6 118.000
FDNS	00NR	2	20WP	G15_044	FROM->TO	G14-057T 345.00 - SUNNYSIDE 345KV CKT 1	717	789	0.11685	110.2798	GEN562882 1-G15047_3 0.6900
FDNS	00NR	2	20WP	G15_044	FROM->TO	G14-057T 345.00 - SUNNYSIDE 345KV CKT 1	717	789	0.11685	110.2726	GEN562974 1-G15060_5 0.6900
FDNS	00NR	2	20WP	G15_044	FROM->TO	G14-057T 345.00 - SUNNYSIDE 345KV CKT 1	717	789	0.11685	110.2701	GEN563062 1-G15071_3 0.6900
FDNS	00NR	2	20WP	G15_044	FROM->TO	G14-057T 345.00 - SUNNYSIDE 345KV CKT 1	717	789	0.11685	110.2631	GEN562973 1-G15060_4 0.6900
FDNS	00NR	2	20WP	G15_044	FROM->TO	G14-057T 345.00 - SUNNYSIDE 345KV CKT 1	717	789	0.11685	110.2468	GEN345671 2-1RUSH G2 18.000
FDNS	00NR	2	20WP	G15_044	FROM->TO	G14-057T 345.00 - SUNNYSIDE 345KV CKT 1	717	789	0.11685	110.245	GEN345670 1-1RUSH G1 18.000
FDNS	00NR	2	20WP	G15_044	FROM->TO	G14-057T 345.00 - SUNNYSIDE 345KV CKT 1	717	789	0.11605	110.239	CHICKASAW - TOTAL 138KV CKT 1
FDNS	00NR	2	20WP	G15_044	FROM->TO	G14-057T 345.00 - SUNNYSIDE 345KV CKT 1	717	789	0.11685	110.2345	GEN521112 1-ORME3 13.800
FDNS	00NR	2	16WP	G15_044	FROM->TO	G14-057T 345.00 - SUNNYSIDE 345KV CKT 1	717	789	0.11664	110.2331	LYDIA - WELSH 345KV CKT 1
FDNS	00NR	2	16WP	G15_044	FROM->TO	G14-057T 345.00 - SUNNYSIDE 345KV CKT 1	717	789	0.11664	110.2331	LYDIA - WELSH 345KV CKT 1
FDNS	00NR	2	20WP	G15_044	FROM->TO	G14-057T 345.00 - SUNNYSIDE 345KV CKT 1	717	789	0.11665	110.232	BROWN - RUSSETT 138KV CKT 1
FDNS	00NR	2	16WP	G15_044	FROM->TO	G14-057T 345.00 - SUNNYSIDE 345KV CKT 1	717	789	0.11654	110.2125	JOHNSON COUNTY (JOHNCO) 345/138/13.8KV TRANSFORMER CKT 1
FDNS	00NR	2	20WP	G15_044	FROM->TO	G14-057T 345.00 - SUNNYSIDE 345KV CKT 1	717	789	0.11685	110.2105	GEN560105 1-G08-22 0.6900
FDNS	00NR	2	20WP	G15_044	FROM->TO	G14-057T 345.00 - SUNNYSIDE 345KV CKT 1	717	789	0.11685	110.2097	4SIOUX 1 138.00 138/18.0KV TRANSFORMER CKT 1
FDNS	00NR	2	16WP	G15_044	FROM->TO	G14-057T 345.00 - SUNNYSIDE 345KV CKT 1	717	789	0.11709	110.2069	GEN635023 3-WALTER SCOTT UNIT 3
FDNS	00NR	2	20WP	G15_044	FROM->TO	G14-057T 345.00 - SUNNYSIDE 345KV CKT 1	717	789	0.11685	110.1941	GEN562550 1-G14_040_3 0.6900
FDNS	00NR	2	20WP	G15_044	FROM->TO	G14-057T 345.00 - SUNNYSIDE 345KV CKT 1	717	789	0.11685	110.1821	GEN681522 3-GENOA 3
FDNS	00NR	2	20WP	G15_044	FROM->TO	G14-057T 345.00 - SUNNYSIDE 345KV CKT 1	717	789	0.11665	110.1633	RUSSETT - RUSSETT 138KV CKT 1
FDNS	00NR	2	20WP	G15_044	FROM->TO	G14-057T 345.00 - SUNNYSIDE 345KV CKT 1	717	789	0.11685	110.1507	GEN527161 1-MUSTANG GEN #1
FDNS	00NR	2	20WP	G15_044	FROM->TO	G14-057T 345.00 - SUNNYSIDE 345KV CKT 1	717	789	0.11685	110.1507	GEN527162 1-MUSTANG GEN #2
FDNS	00NR	2	20WP	G15_044	FROM->TO	G14-057T 345.00 - SUNNYSIDE 345KV CKT 1	717	789	0.11685	110.1455	EASTDC - ERCOT EQUIVALENCE 345KV CKT 1
FDNS	00NR	2	20WP	G15_044	FROM->TO	G14-057T 345.00 - SUNNYSIDE 345KV CKT 1	717	789	0.11631	110.1424	ROCKY POINT - SUNNYSIDE 138KV CKT 1
FDNS	00NR	2	20WP	G15_044	FROM->TO	G14-057T 345.00 - SUNNYSIDE 345KV CKT 1	717	789	0.11685	110.1404	GEN511962 2-RKYRDGW2-1 0.7000
FDNS	00NR	2	16WP	G15_044	FROM->TO	G14-057T 345.00 - SUNNYSIDE 345KV CKT 1	717	789	0.11709	110.1372	GEN562590 1-G14_057_3 0.6900
FDNS	00NR	2	16WP	G15_044	FROM->TO	G14-057T 345.00 - SUNNYSIDE 345KV CKT 1	717	789	0.11709	110.1203	GEN562762 1-G15033_3 0.6900
FDNS	00NR	2	20WP	G15_044	FROM->TO	G14-057T 345.00 - SUNNYSIDE 345KV CKT 1	717	789	0.11685	110.1199	GEN672321 1-SHAND GENERATOR 1
FDNS	00NR	2	20WP	G15_044	FROM->TO	G14-057T 345.00 - SUNNYSIDE 345KV CKT 1	717	789	0.11685	110.1185	GEN525494 1-PLANT X GEN #4 20 KV
FDNS	00NR	2	20WP	G15_044	FROM->TO	G14-057T 345.00 - SUNNYSIDE 345KV CKT 1	717	789	0.11661	110.1126	RUSSETT - SPRINGDALE 138KV CKT 1
FDNS	00NR	2	16WP	G15_044	FROM->TO	G14-057T 345.00 - SUNNYSIDE 345KV CKT 1	717	789	0.11709	110.1103	GEN562655 1-G14_074_3 0.6900
FDNS	00NR	2	20WP	G15_044	FROM->TO	G14-057T 345.00 - SUNNYSIDE 345KV CKT 1	717	789	0.11685	110.1031	GEN527882 1-CUNNINGHAM GEN #2 20 KV
FDNS	00NR	2	20WP	G15_044	FROM->TO	G14-057T 345.00 - SUNNYSIDE 345KV CKT 1	717	789	0.11685	110.1028	GEN563192 1-G15084_3 0.5500
FDNS	00NR	2	20WP	G15_044	FROM->TO	G14-057T 345.00 - SUNNYSIDE 345KV CKT 1	717	789	0.11685	110.1026	GEN562892 1-G15048_3 0.6900
FDNS	00NR	2	20WP	G15_044	FROM->TO	G14-057T 345.00 - SUNNYSIDE 345KV CKT 1	717	789	0.11685	110.097	GEN672310 1-POPLAR RIVER GENERATOR 1
FDNS	00NR	2	20WP	G15_044	FROM->TO	G14-057T 345.00 - SUNNYSIDE 345KV CKT 1	717	789	0.11685	110.097	GEN672311 2-POPLAR RIVER GENERATOR 2
FDNS	00NR	2	20WP	G15_044	FROM->TO	G14-057T 345.00 - SUNNYSIDE 345KV CKT 1	717	789	0.11685	110.0951	GEN344895 2-1LAB G2 20.000
FDNS	00NR	2	20WP	G15_044	FROM->TO	G14-057T 345.00 - SUNNYSIDE 345KV CKT 1	717	789	0.11685	110.0878	GEN672306 6-BOUNDARY DAM GENERATOR 6
FDNS	00NR	2	20WP	G15_044	FROM->TO	G14-057T 345.00 - SUNNYSIDE 345KV CKT 1	717	789	0.11685	110.0877	GEN527163 1-MUSTANG GEN #3 22 KV
FDNS	00NR	2	20WP	G15_044	FROM->TO	G14-057T 345.00 - SUNNYSIDE 345KV CKT 1	717	789	0.11676	110.0798	P12:138:WFEC-AEPW:GOLDENSW4:CRAIGJT4
FDNS	00NR	2	20WP	G15_044	FROM->TO	G14-057T 345.00 - SUNNYSIDE 345KV CKT 1	717	789	0.11685	110.0788	GEN520811 1-ANADRK4
FDNS	00NR	2	20WP	G15_044	FROM->TO	G14-057T 345.00 - SUNNYSIDE 345KV CKT 1	717	789	0.11685	110.0787	GEN511853 1-COMANCHE #3
FDNS	00NR	2	20WP	G15_044	FROM->TO	G14-057T 345.00 - SUNNYSIDE 345KV CKT 1	717	789	0.11613	110.0749	ARKANSAS NUCLEAR ONE - FT SMITH 500KV CKT 1
FDNS	00NR	2	20WP	G15_044	FROM->TO	G14-057T 345.00 - SUNNYSIDE 345KV CKT 1	717	789	0.11613	110.0749	ARKANSAS NUCLEAR ONE - FT SMITH 500KV CKT 1
FDNS	00NR	2	20WP	G15_044	FROM->TO	G14-057T 345.00 - SUNNYSIDE 345KV CKT 1	717	789	0.11685	110.0725	CLAY BOSWELL 230/20.9KV TRANSFORMER CKT 1
FDNS	00NR	2	20WP	G15_044	FROM->TO	G14-057T 345.00 - SUNNYSIDE 345KV CKT 1	717	789	0.11685	110.0704	GEN562512 1-G14_020_3 0.6900
FDNS	00NR	2	20WP	G15_044	FROM->TO	G14-057T 345.00 - SUNNYSIDE 345KV CKT 1	717	789	0.11685	110.066	GEN344896 3-1LAB G3 20.000
FDNS	00NR	2	20WP	G15_044	FROM->TO	G14-057T 345.00 - SUNNYSIDE 345KV CKT 1	717	789	0.11685	110.0648	GEN344897 4-1LAB G4 20.000
FDNS	00NR	2	20WP	G15_044	FROM->TO	G14-057T 345.00 - SUNNYSIDE 345KV CKT 1	717	789	0.11685	110.0645	GEN344894 1-1LAB G1 20.000
FDNS	00NR	2	20WP	G15_044	FROM->TO	G14-057T 345.00 - SUNNYSIDE 345KV CKT 1	717	789	0.11695	110.0622	P12:138:WFEC:MSL16
FDNS	00NR	2	20WP	G15_044	FROM->TO	G14-057T 345.00 - SUNNYSIDE 345KV CKT 1	717	789	0.11685	110.058	GEN681542 6-JP MADGETT

SOLUTION	GROUP	SCENARIO	SEASON	SOURCE	DIRECTION	MONITORED ELEMENT	RATEA (MVA)	RATEB(MVA)	TDF	TC%LOADING (% MVA)	CONTINGENCY
FDNS	00NR	2	20WP	G15_044	FROM->TO	G14-057T 345.00 - SUNNYSIDE 345KV CKT 1	717	789	0.11567	110.0555	ARDMORE WEST - CARTER 138KV CKT 1
FDNS	00NR	2	16WP	G15_044	FROM->TO	G14-057T 345.00 - SUNNYSIDE 345KV CKT 1	717	789	0.11709	110.0447	GEN562685 1-G15_013_3 0.3550
FDNS	00NR	2	20WP	G15_044	FROM->TO	G14-057T 345.00 - SUNNYSIDE 345KV CKT 1	717	789	0.11685	110.0381	GEN523461 1-BLACKHAWK GEN #1
FDNS	00NR	2	20WP	G15_044	FROM->TO	G14-057T 345.00 - SUNNYSIDE 345KV CKT 1	717	789	0.11685	110.038	GEN523462 1-BLACKHAWK GEN #2
FDNS	00NR	2	20WP	G15_044	FROM->TO	G14-057T 345.00 - SUNNYSIDE 345KV CKT 1	717	789	0.11685	110.0308	GEN511852 1-COMANCHE #2
FDNS	00NR	2	16WP	G15_044	FROM->TO	G14-057T 345.00 - SUNNYSIDE 345KV CKT 1	717	789	0.11709	110.0271	GEN525561 1-TOLK GEN #1 24 KV
FDNS	00NR	2	20WP	G15_044	FROM->TO	G14-057T 345.00 - SUNNYSIDE 345KV CKT 1	717	789	0.11685	110.0031	P12:138:WFEC:MSL07
FDNS	00NR	2	20WP	G15_044	FROM->TO	G14-057T 345.00 - SUNNYSIDE 345KV CKT 1	717	789	0.11685	110.0031	P12:138:WFEC-AEPW:HUGOPP4:ATOKA--4
FDNS	00NR	2	20WP	G15_044	FROM->TO	G14-057T 345.00 - SUNNYSIDE 345KV CKT 1	717	789	0.11703	110.0021	CACHE - SNYDER 138KV CKT 1
FDNS	00NR	2	20WP	G15_044	FROM->TO	G14-057T 345.00 - SUNNYSIDE 345KV CKT 1	717	789	0.11574	109.9932	SUNNYSIDE (SUNNYSD5) 345/138/13.8KV TRANSFORMER CKT 1
FDNS	00NR	2	20WP	G15_044	FROM->TO	G14-057T 345.00 - SUNNYSIDE 345KV CKT 1	717	789	0.11679	109.9818	P12:138:AEPW-SWPA:LONEOAK4:TUPELO4
FDNS	00NR	2	20WP	G15_044	FROM->TO	G14-057T 345.00 - SUNNYSIDE 345KV CKT 1	717	789	0.11679	109.9818	P12:138:WFEC:MSL06
FDNS	00NR	2	20WP	G15_044	FROM->TO	G14-057T 345.00 - SUNNYSIDE 345KV CKT 1	717	789	0.11685	109.9789	GEN562699 1-G15_018_3 0.6900
FDNS	00NR	2	20WP	G15_044	FROM->TO	G14-057T 345.00 - SUNNYSIDE 345KV CKT 1	717	789	0.11685	109.9718	GEN521111 1-ORME2 13.800
FDNS	00NR	2	20WP	G15_044	FROM->TO	G14-057T 345.00 - SUNNYSIDE 345KV CKT 1	717	789	0.11685	109.9664	GEN563162 1-G15081_3 0.6900
FDNS	00NR	2	20WP	G15_044	FROM->TO	G14-057T 345.00 - SUNNYSIDE 345KV CKT 1	717	789	0.11685	109.9588	GEN521110 1-ORME1 13.800
FDNS	00NR	2	20WP	G15_044	FROM->TO	G14-057T 345.00 - SUNNYSIDE 345KV CKT 1	717	789	0.1169	109.9549	G15085_T 138.00 - RUSSELL 138KV CKT 1
FDNS	00NR	2	20WP	G15_044	FROM->TO	G14-057T 345.00 - SUNNYSIDE 345KV CKT 1	717	789	0.11567	109.9441	ARDMORE WEST - UNIROYAL 138KV CKT 1
FDNS	00NR	2	20WP	G15_044	FROM->TO	G14-057T 345.00 - SUNNYSIDE 345KV CKT 1	717	789	0.11863	109.9188	CLARKSVILLE - MUSKOGEE 345KV CKT 1
FDNS	00NR	2	20WP	G15_044	FROM->TO	G14-057T 345.00 - SUNNYSIDE 345KV CKT 1	717	789	0.11863	109.9188	CLARKSVILLE - MUSKOGEE 345KV CKT 1
FDNS	00NR	2	20WP	G15_044	FROM->TO	G14-057T 345.00 - SUNNYSIDE 345KV CKT 1	717	789	0.11608	109.9096	CARTRCO4 138.00 - RATLIFF 138KV CKT 1
FDNS	00NR	2	20WP	G15_044	FROM->TO	G14-057T 345.00 - SUNNYSIDE 345KV CKT 1	717	789	0.11685	109.9078	GEN563292 1-G15095_3 0.6900
FDNS	00NR	2	16WP	G15_044	FROM->TO	G14-057T 345.00 - SUNNYSIDE 345KV CKT 1	717	789	0.11709	109.9037	GEN563272 1-G15093_3 0.6900
FDNS	00NR	2	16WP	G15_044	FROM->TO	G14-057T 345.00 - SUNNYSIDE 345KV CKT 1	717	789	0.11709	109.9029	GEN527903 1-HOBBS PLANT #3 (ST)
FDNS	00NR	2	20WP	G15_044	FROM->TO	G14-057T 345.00 - SUNNYSIDE 345KV CKT 1	717	789	0.11685	109.8956	GEN661015 1-COYOTE
FDNS	00NR	2	20WP	G15_044	FROM->TO	G14-057T 345.00 - SUNNYSIDE 345KV CKT 1	717	789	0.11636	109.883	P12:138:OKGE:3TERM40
FDNS	00NR	2	20WP	G15_044	FROM->TO	G14-057T 345.00 - SUNNYSIDE 345KV CKT 1	717	789	0.11685	109.8778	GEN563122 1-G15077_3 0.3850
FDNS	00NR	2	20WP	G15_044	FROM->TO	G14-057T 345.00 - SUNNYSIDE 345KV CKT 1	717	789	0.11685	109.8695	GEN562861 1-G15045_2 0.4800
FDNS	00NR	2	20WP	G15_044	FROM->TO	G14-057T 345.00 - SUNNYSIDE 345KV CKT 1	717	789	0.11743	109.7869	GRAPEVINE INTERCHANGE - STATELINE INTERCHANGE 230KV CKT 1
FDNS	00NR	2	20WP	G15_044	FROM->TO	G14-057T 345.00 - SUNNYSIDE 345KV CKT 1	717	789	0.11743	109.7869	GRAPEVINE INTERCHANGE - STATELINE INTERCHANGE 230KV CKT 1
FDNS	00NR	2	20WP	G15_044	FROM->TO	G14-057T 345.00 - SUNNYSIDE 345KV CKT 1	717	789	0.11685	109.7842	GEN657748 1-YOUNG 2 GENERATOR
FDNS	00NR	2	16WP	G15_044	FROM->TO	G14-057T 345.00 - SUNNYSIDE 345KV CKT 1	717	789	0.11709	109.784	GEN635024 4-WALTER SCOTT UNIT 4
FDNS	00NR	2	20WP	G15_044	FROM->TO	G14-057T 345.00 - SUNNYSIDE 345KV CKT 1	717	789	0.11685	109.7672	GEN527883 1-CUNNINGHAM GEN #3 22 KV
FDNS	00NR	2	20WP	G15_044	FROM->TO	G14-057T 345.00 - SUNNYSIDE 345KV CKT 1	717	789	0.11685	109.7641	GEN527884 1-CUNNINGHAM GEN #4 22 KV
FDNS	00NR	2	20WP	G15_044	FROM->TO	G14-057T 345.00 - SUNNYSIDE 345KV CKT 1	717	789	0.11567	109.7313	SUNNYSIDE - UNIROYAL 138KV CKT 1
FDNS	00NR	2	20WP	G15_044	FROM->TO	G14-057T 345.00 - SUNNYSIDE 345KV CKT 1	717	789	0.1169	109.726	P12:138:AEPW:SHAM4WT:CHILD4WT
FDNS	00NR	2	20WP	G15_044	FROM->TO	G14-057T 345.00 - SUNNYSIDE 345KV CKT 1	717	789	0.11929	109.7048	CHISHOLM7 345.00 () 345/230/13.2KV TRANSFORMER CKT 1
FDNS	00NR	2	20WP	G15_044	FROM->TO	G14-057T 345.00 - SUNNYSIDE 345KV CKT 1	717	789	0.11685	109.6975	GEN562704 1-G15_020_3 0.3550
FDNS	00NR	2	20WP	G15_044	FROM->TO	G14-057T 345.00 - SUNNYSIDE 345KV CKT 1	717	789	0.11685	109.6966	GEN526331 1-JONES GEN #1 22 KV
FDNS	00NR	2	20WP	G15_044	FROM->TO	G14-057T 345.00 - SUNNYSIDE 345KV CKT 1	717	789	0.11685	109.6964	GEN526332 1-JONES GEN #2 21 KV
FDNS	00NR	2	20WP	G15_044	FROM->TO	G14-057T 345.00 - SUNNYSIDE 345KV CKT 1	717	789	0.11698	109.6934	P12:138:WFEC:MSL15
FDNS	00NR	2	20WP	G15_044	FROM->TO	G14-057T 345.00 - SUNNYSIDE 345KV CKT 1	717	789	0.11685	109.6908	GEN620315 1-BIG STONE GEN
FDNS	00NR	2	20WP	G15_044	FROM->TO	G14-057T 345.00 - SUNNYSIDE 345KV CKT 1	717	789	0.11685	109.689	GEN562992 1-G15063_3 0.6900
FDNS	00NR	2	20WP	G15_044	FROM->TO	G14-057T 345.00 - SUNNYSIDE 345KV CKT 1	717	789	0.11685	109.6397	GEN562952 1-G15057_3 0.6500
FDNS	00NR	2	20WP	G15_044	FROM->TO	G14-057T 345.00 - SUNNYSIDE 345KV CKT 1	717	789	0.11685	109.6349	GEN563173 1-G15082_3 0.6900
FDNS	00NR	2	20WP	G15_044	FROM->TO	G14-057T 345.00 - SUNNYSIDE 345KV CKT 1	717	789	0.11739	109.6263	GRAPEVINE INTERCHANGE - NICHOLS STATION 230KV CKT 1
FDNS	00NR	2	20WP	G15_044	FROM->TO	G14-057T 345.00 - SUNNYSIDE 345KV CKT 1	717	789	0.11739	109.6263	GRAPEVINE INTERCHANGE - NICHOLS STATION 230KV CKT 1
FDNS	00NR	2	20WP	G15_044	FROM->TO	G14-057T 345.00 - SUNNYSIDE 345KV CKT 1	717	789	0.11685	109.6168	GEN600004 2-PRAIRIE ISLAND G2
FDNS	00NR	2	20WP	G15_044	FROM->TO	G14-057T 345.00 - SUNNYSIDE 345KV CKT 1	717	789	0.11685	109.6142	GEN600003 1-PRAIRIE ISLAND G1
FDNS	00NR	2	20WP	G15_044	FROM->TO	G14-057T 345.00 - SUNNYSIDE 345KV CKT 1	717	789	0.11685	109.597	GEN600006 1-AS KING
FDNS	00NR	2	20WP	G15_044	FROM->TO	G14-057T 345.00 - SUNNYSIDE 345KV CKT 1	717	789	0.11685	109.5964	GEN562710 1-G15_022_3 0.5500
FDNS	00NR	2	20WP	G15_044	FROM->TO	G14-057T 345.00 - SUNNYSIDE 345KV CKT 1	717	789	0.11925	109.5521	CANEY CREEK - TEXOMA JCT 138KV CKT 1
FDNS	00NR	2	20WP	G15_044	FROM->TO	G14-057T 345.00 - SUNNYSIDE 345KV CKT 1	717	789	0.11685	109.5482	GEN511851 1-COMANCHE #1
FDNS	00NR	2	20WP	G15_044	FROM->TO	G14-057T 345.00 - SUNNYSIDE 345KV CKT 1	717	789	0.11929	109.5367	CHISHOLM7 345.00 - GRACEMONT 345KV CKT 1
FDNS	00NR	2	20WP	G15_044	FROM->TO	G14-057T 345.00 - SUNNYSIDE 345KV CKT 1	717	789	0.11685	109.5221	GEN532751 1-WOLF CREEK GENERATING STATION UNIT 1
FDNS	00NR	2	20WP	G15_044	FROM->TO	G14-057T 345.00 - SUNNYSIDE 345KV CKT 1	717	789	0.11685	109.4309	GEN635213 3-NEAL UNIT 3
FDNS	00NR	2	20WP	G15_044	FROM->TO	G14-057T 345.00 - SUNNYSIDE 345KV CKT 1	717	789	0.11685	109.4244	GEN629074 1-ARNOLD LOWSIDE OF GSU XFMR
FDNS	00NR	2	20WP	G15_044	FROM->TO	G14-057T 345.00 - SUNNYSIDE 345KV CKT 1	717	789	0.11685	109.4213	GEN615001 1-COAL CREEK
FDNS	00NR	2	20WP	G15_044	FROM->TO	G14-057T 345.00 - SUNNYSIDE 345KV CKT 1	717	789	0.11685	109.4111	BIG STONE 230/24.0KV TRANSFORMER CKT 1
FDNS	00NR	2	20WP	G15_044	FROM->TO	G14-057T 345.00 - SUNNYSIDE 345KV CKT 1	717	789	0.11685	109.3965	GEN615002 2-COAL CREEK
FDNS	00NR	2	20WP	G15_044	FROM->TO	G14-057T 345.00 - SUNNYSIDE 345KV CKT 1	717	789	0.11692	109.3862	P12:138:WFEC:MSL09
FDNS	00NR	2	20WP	G15_044	FROM->TO	G14-057T 345.00 - SUNNYSIDE 345KV CKT 1	717	789	0.1178	109.3646	P12:138:AEPW-OGE:CORNVIL4:CIMARON4
FDNS	00NR	2	20WP	G15_044	FROM->TO	G14-057T 345.00 - SUNNYSIDE 345KV CKT 1	717	789	0.11685	109.3442	GEN562754 1-G15031_5 0.6900
FDNS	00NR	2	20WP	G15_044	FROM->TO	G14-057T 345.00 - SUNNYSIDE 345KV CKT 1	717	789	0.11685	109.3322	GEN636641 1-LOUISA UNIT 1
FDNS	00NR	2	20WP	G15_044	FROM->TO	G14-057T 345.00 - SUNNYSIDE 345KV CKT 1	717	789	0.11652	109.316	NORTHWEST TEXARKANA - VALLIANT 345KV CKT 1
FDNS	00NR	2	20WP	G15_044	FROM->TO	G14-057T 345.00 - SUNNYSIDE 345KV CKT 1	717	789	0.11652	109.316	NORTHWEST TEXARKANA - VALLIANT 345KV CKT 1
FDNS	00NR	2	20WP	G15_044	FROM->TO	G14-057T 345.00 - SUNNYSIDE 345KV CKT 1	717	789	0.11685	109.3023	GEN600005 1-MONTICELLO
FDNS	00NR	2	20WP	G15_044	FROM->TO	G14-057T 345.00 - SUNNYSIDE 345KV CKT 1	717	789	0.11685	109.2844	GEN562756 1-G15031_7 0.6900
FDNS	00NR	2	20WP	G15_044	FROM->TO	G14-057T 345.00 - SUNNYSIDE 345KV CKT 1	717	789	0.11685	109.2834	GEN562556 1-G14_046_3 0.3420
FDNS	00NR	2	20WP	G15_044	FROM->TO	G14-057T 345.00 - SUNNYSIDE 345KV CKT 1	717	789	0.11685	109.2418	GEN562023 1-G11_020_3 0.6900
FDNS	00NR	2	20WP	G15_044	FROM->TO	G14-057T 345.00 - SUNNYSIDE 345KV CKT 1	717	789	0.11685	109.2418	GEN562026 1-G11_019_3 0.6900
FDNS	00NR	2	20WP	G15_044	FROM->TO	G14-057T 345.00 - SUNNYSIDE 345KV CKT 1	717	789	0.11685	109.1989	GEN563142 1-G15079_3 0.5500
FDNS	00NR	2	20WP	G15_044	FROM->TO	G14-057T 345.00 - SUNNYSIDE 345KV CKT 1	717	789	0.11685	109.1989	GEN563151 1-G15080_2 0.5500
FDNS	00NR	2	20WP	G15_044	FROM->TO	G14-057T 345.00 - SUNNYSIDE 345KV CKT 1	717	789	0.11685	109.1785	GEN600000 1-SHERBURNECNTY G1
FDNS	00NR	2	20WP	G15_044	FROM->TO	G14-057T 345.00 - SUNNYSIDE 345KV CKT 1	717	789	0.11685	109.1392	GEN629075 1-OTTUMWA GENERATOR FOR OTTUMWA UNIT NO 1
FDNS	00NR	2	20WP	G15_044	FROM->TO	G14-057T 345.00 - SUNNYSIDE 345KV CKT 1	717	789	0.11787	109.1368	STLN-DEMARC6 - SWEETWATER 230KV CKT 1
FDNS	00NR	2	20WP	G15_044	FROM->TO	G14-057T 345.00 - SUNNYSIDE 345KV CKT 1	717	789	0.11787	109.1361	P12:230:AEPW-SPS:SWEETWT6:WHEELER 6
FDNS	00NR	2	20WP	G15_044	FROM->TO	G14-057T 345.00 - SUNNYSIDE 345KV CKT 1	717	789	0.11787	109.1345	STATELINE INTERCHANGE - STLN-DEMARC6 230KV CKT 1
FDNS	00NR	2	20WP	G15_044	FROM->TO	G14-057T 345.00 - SUNNYSIDE 345KV CKT 1	717	789	0.11685	109.1293	GEN600001 2-SHERBURNE CNTY G2

SOLUTION	GROUP	SCENARIO	SEASON	SOURCE	DIRECTION	MONITORED ELEMENT	RATEA (MVA)	RATEB(MVA)	TDF	TC%LOADING (% MVA)	CONTINGENCY
FDNS	00NR	2	16WP	G15_044	FROM->TO	G14-057T 345.00 - SUNNYSIDE 345KV CKT 1	717	789	0.11644	109.1144	LYDIA - VALLIANT 345KV CKT 1
FDNS	00NR	2	16WP	G15_044	FROM->TO	G14-057T 345.00 - SUNNYSIDE 345KV CKT 1	717	789	0.11644	109.1144	LYDIA - VALLIANT 345KV CKT 1
FDNS	00NR	2	20WP	G15_044	FROM->TO	G14-057T 345.00 - SUNNYSIDE 345KV CKT 1	717	789	0.11685	109.1057	GEN523971 1-HARRINGTON GEN #1 24 KV
FDNS	00NR	2	20WP	G15_044	FROM->TO	G14-057T 345.00 - SUNNYSIDE 345KV CKT 1	717	789	0.11685	109.1056	GEN523972 1-HARRINGTON GEN #2 24 KV
FDNS	00NR	2	20WP	G15_044	FROM->TO	G14-057T 345.00 - SUNNYSIDE 345KV CKT 1	717	789	0.11685	109.1056	GEN523973 1-HARRINGTON GEN #3 24 KV
FDNS	00NR	2	20WP	G15_044	FROM->TO	G14-057T 345.00 - SUNNYSIDE 345KV CKT 1	717	789	0.11685	109.0232	GEN511848 1-SOUTHWESTERN STATION #3
FDNS	00NR	2	20WP	G15_044	FROM->TO	G14-057T 345.00 - SUNNYSIDE 345KV CKT 1	717	789	0.11685	108.9966	GEN527901 1-HOBBS PLANT #1 (CT)
FDNS	00NR	2	20WP	G15_044	FROM->TO	G14-057T 345.00 - SUNNYSIDE 345KV CKT 1	717	789	0.11685	108.9966	GEN527902 1-HOBBS PLANT #2 (CT)
FDNS	00NR	2	20WP	G15_044	FROM->TO	G14-057T 345.00 - SUNNYSIDE 345KV CKT 1	717	789	0.11685	108.9571	GEN563042 1-G15068_3 0.6900
FDNS	00NR	2	20WP	G15_044	FROM->TO	G14-057T 345.00 - SUNNYSIDE 345KV CKT 1	717	789	0.1164	108.9522	LYDIA - WELSH 345KV CKT 1
FDNS	00NR	2	20WP	G15_044	FROM->TO	G14-057T 345.00 - SUNNYSIDE 345KV CKT 1	717	789	0.1164	108.9522	LYDIA - WELSH 345KV CKT 1
FDNS	00NR	2	20WP	G15_044	FROM->TO	G14-057T 345.00 - SUNNYSIDE 345KV CKT 1	717	789	0.11685	108.9029	SHERBURNE CO 345/24.0KV TRANSFORMER CKT 1
FDNS	00NR	2	20WP	G15_044	FROM->TO	G14-057T 345.00 - SUNNYSIDE 345KV CKT 1	717	789	0.11936	108.8988	P12:230:AEPW:ELKCITY6:SWEETWT6
FDNS	00NR	2	20WP	G15_044	FROM->TO	G14-057T 345.00 - SUNNYSIDE 345KV CKT 1	717	789	0.11685	108.8665	GEN635214 4-NEAL UNIT 4
FDNS	00NR	2	20WP	G15_044	FROM->TO	G14-057T 345.00 - SUNNYSIDE 345KV CKT 1	717	789	0.11685	108.6956	GEN600002 3-SHERBURNE CNTY G3
FDNS	00NR	2	20WP	G15_044	FROM->TO	G14-057T 345.00 - SUNNYSIDE 345KV CKT 1	717	789	0.11685	108.6565	GEN563043 1-G15068_4 0.6900
FDNS	00NR	2	20WP	G15_044	FROM->TO	G14-057T 345.00 - SUNNYSIDE 345KV CKT 1	717	789	0.11685	108.6463	GEN563273 2-G15093_4 0.6900
FDNS	00NR	2	20WP	G15_044	FROM->TO	G14-057T 345.00 - SUNNYSIDE 345KV CKT 1	717	789	0.11685	108.632	GEN526333 1-JONES GEN #3 21 KV
FDNS	00NR	2	20WP	G15_044	FROM->TO	G14-057T 345.00 - SUNNYSIDE 345KV CKT 1	717	789	0.11685	108.6319	GEN526334 1-JONES_4 116.500
FDNS	00NR	2	20WP	G15_044	FROM->TO	G14-057T 345.00 - SUNNYSIDE 345KV CKT 1	717	789	0.11685	108.6194	GEN344225 1-1CAL G1 25.000
FDNS	00NR	2	20WP	G15_044	FROM->TO	G14-057T 345.00 - SUNNYSIDE 345KV CKT 1	717	789	0.11685	108.5931	GEN525844 1-ELK_1 118.000
FDNS	00NR	2	20WP	G15_044	FROM->TO	G14-057T 345.00 - SUNNYSIDE 345KV CKT 1	717	789	0.11685	108.577	GEN525845 1-ELK_2 1 18.000
FDNS	00NR	2	20WP	G15_044	FROM->TO	G14-057T 345.00 - SUNNYSIDE 345KV CKT 1	717	789	0.11787	108.517	CHISHOLM6 230.00 - SWEETWATER 230KV CKT 1
FDNS	00NR	2	20WP	G15_044	FROM->TO	G14-057T 345.00 - SUNNYSIDE 345KV CKT 1	717	789	0.11685	108.4458	GEN527166 1-MUSTANG_6 118.000
FDNS	00NR	2	20WP	G15_044	FROM->TO	G14-057T 345.00 - SUNNYSIDE 345KV CKT 1	717	789	0.11685	108.4373	GEN563202 1-G15085_3 0.5500
FDNS	00NR	2	20WP	G15_044	FROM->TO	G14-057T 345.00 - SUNNYSIDE 345KV CKT 1	717	789	0.11685	108.4027	GEN635023 3-WALTER SCOTT UNIT 3
FDNS	00NR	2	20WP	G15_044	FROM->TO	G14-057T 345.00 - SUNNYSIDE 345KV CKT 1	717	789	0.11685	108.3819	GEN528501 1-G14_012 24.000
FDNS	00NR	2	20WP	G15_044	FROM->TO	G14-057T 345.00 - SUNNYSIDE 345KV CKT 1	717	789	0.11685	108.2764	GEN562590 1-G14_057_3 0.6900
FDNS	00NR	2	20WP	G15_044	FROM->TO	G14-057T 345.00 - SUNNYSIDE 345KV CKT 1	717	789	0.11685	108.223	GEN562762 1-G15033_3 0.6900
FDNS	00NR	2	20WP	G15_044	FROM->TO	G14-057T 345.00 - SUNNYSIDE 345KV CKT 1	717	789	0.11685	108.2129	GEN562655 1-G14_074_3 0.6900
FDNS	00NR	2	20WP	G15_044	FROM->TO	G14-057T 345.00 - SUNNYSIDE 345KV CKT 1	717	789	0.11685	108.1932	GEN525562 1-TOLK GEN #2 24 KV
FDNS	00NR	2	20WP	G15_044	FROM->TO	G14-057T 345.00 - SUNNYSIDE 345KV CKT 1	717	789	0.11685	108.1376	GEN562685 1-G15_013_3 0.3550
FDNS	00NR	2	20WP	G15_044	FROM->TO	G14-057T 345.00 - SUNNYSIDE 345KV CKT 1	717	789	0.11629	108.1347	JOHNSON COUNTY (JOHNCO) 345/138/13.8KV TRANSFORMER CKT 1
FDNS	00NR	2	16WP	G15_044	FROM->TO	G14-057T 345.00 - SUNNYSIDE 345KV CKT 1	717	789	0.11709	108.129	EASTDC - ERCOT EQUIVALENCE 345KV CKT 1
FDNS	00NR	2	20WP	G15_044	FROM->TO	G14-057T 345.00 - SUNNYSIDE 345KV CKT 1	717	789	0.11685	108.0974	GEN527903 1-HOBBS PLANT #3 (ST)
FDNS	00NR	2	20WP	G15_044	FROM->TO	G14-057T 345.00 - SUNNYSIDE 345KV CKT 1	717	789	0.11685	107.9947	GEN635024 4-WALTER SCOTT UNIT 4
FDNS	00NR	2	20WP	G15_044	FROM->TO	G14-057T 345.00 - SUNNYSIDE 345KV CKT 1	717	789	0.11685	107.9936	GEN563272 1-G15093_3 0.6900
FDNS	00NR	2	20WP	G15_044	FROM->TO	G14-057T 345.00 - SUNNYSIDE 345KV CKT 1	717	789	0.11621	107.8976	LYDIA - VALLIANT 345KV CKT 1
FDNS	00NR	2	20WP	G15_044	FROM->TO	G14-057T 345.00 - SUNNYSIDE 345KV CKT 1	717	789	0.11621	107.8976	LYDIA - VALLIANT 345KV CKT 1
FDNS	00NR	2	20WP	G15_044	FROM->TO	G14-057T 345.00 - SUNNYSIDE 345KV CKT 1	717	789	0.11685	107.7517	GEN525561 1-TOLK GEN #1 24 KV
FDNS	00NR	2	16WP	G15_044	FROM->TO	G14-057T 345.00 - SUNNYSIDE 345KV CKT 1	717	789	0.10007	107.1829	JOHNSON COUNTY - PITTSBURG 345KV CKT 1
FDNS	00NR	2	16WP	G15_044	FROM->TO	G14-057T 345.00 - SUNNYSIDE 345KV CKT 1	717	789	0.10007	107.1829	JOHNSON COUNTY - PITTSBURG 345KV CKT 1
FDNS	00NR	2	16WP	G15_044	FROM->TO	G14-057T 345.00 - SUNNYSIDE 345KV CKT 1	717	789	0.11709	106.7015	GEN563263 1-G15092_4 0.6900
FDNS	00NR	2	16WP	G15_044	FROM->TO	G14-057T 345.00 - SUNNYSIDE 345KV CKT 1	717	789	0.11318	106.2395	HUGO - VALLIANT 345KV CKT 1
FDNS	00NR	2	16WP	G15_044	FROM->TO	G14-057T 345.00 - SUNNYSIDE 345KV CKT 1	717	789	0.11318	106.2395	HUGO - VALLIANT 345KV CKT 1
FDNS	00NR	2	17SP	G15_044	FROM->TO	G14-057T 345.00 - SUNNYSIDE 345KV CKT 1	717	789	0.35022	105.974	CIMARRON - MINCO 345KV CKT 1
FDNS	00NR	2	20WP	G15_044	FROM->TO	G14-057T 345.00 - SUNNYSIDE 345KV CKT 1	717	789	0.09988	105.821	JOHNSON COUNTY - PITTSBURG 345KV CKT 1
FDNS	00NR	2	20WP	G15_044	FROM->TO	G14-057T 345.00 - SUNNYSIDE 345KV CKT 1	717	789	0.09988	105.821	JOHNSON COUNTY - PITTSBURG 345KV CKT 1
FDNS	00NR	2	20WP	G15_044	FROM->TO	G14-057T 345.00 - SUNNYSIDE 345KV CKT 1	717	789	0.11296	105.3214	HUGO - VALLIANT 345KV CKT 1
FDNS	00NR	2	20WP	G15_044	FROM->TO	G14-057T 345.00 - SUNNYSIDE 345KV CKT 1	717	789	0.11296	105.3214	HUGO - VALLIANT 345KV CKT 1
FDNS	00NR	2	16WP	G15_044	FROM->TO	G14-057T 345.00 - SUNNYSIDE 345KV CKT 1	717	789	0.12212	105.1927	G14-074T 345.00 - TUCO INTERCHANGE 345KV CKT 1
FDNS	00NR	2	16WP	G15_044	FROM->TO	G14-057T 345.00 - SUNNYSIDE 345KV CKT 1	717	789	0.11709	105.0358	GEN563262 1-G15092_3 0.6900
FDNS	00NR	2	20WP	G15_044	FROM->TO	G14-057T 345.00 - SUNNYSIDE 345KV CKT 1	717	789	0.11685	104.8292	GEN563263 1-G15092_4 0.6900
FDNS	00NR	2	20WP	G15_044	FROM->TO	G14-057T 345.00 - SUNNYSIDE 345KV CKT 1	717	789	0.11685	103.1643	GEN563262 1-G15092_3 0.6900
FDNS	00NR	2	20WP	G15_044	FROM->TO	G14-057T 345.00 - SUNNYSIDE 345KV CKT 1	717	789	0.12191	102.2472	G14-074T 345.00 - TUCO INTERCHANGE 345KV CKT 1
FDNS	00NR	2	16WP	G15_044	FROM->TO	G14-057T 345.00 - SUNNYSIDE 345KV CKT 1	717	789	0.09667	101.5797	JOHNSON COUNTY - SUNNYSIDE 345KV CKT 1
FDNS	00NR	3	16WP	G15_044	FROM->TO	G14-057T 345.00 - SUNNYSIDE 345KV CKT 1	717	789	0.35665	134.7924	CIMARRON - MINCO 345KV CKT 1
FDNS	00NR	3	20WP	G15_044	FROM->TO	G14-057T 345.00 - SUNNYSIDE 345KV CKT 1	717	789	0.35628	133.9604	CIMARRON - MINCO 345KV CKT 1
FDNS	00NR	3	16WP	G15_044	FROM->TO	G14-057T 345.00 - SUNNYSIDE 345KV CKT 1	717	789	0.11437	124.8136	PITTSBURG - SEMINOLE 345KV CKT 1
FDNS	00NR	3	16WP	G15_044	FROM->TO	G14-057T 345.00 - SUNNYSIDE 345KV CKT 1	717	789	0.11437	124.8136	PITTSBURG - SEMINOLE 345KV CKT 1
FDNS	00NR	3	16WP	G15_044	FROM->TO	G14-057T 345.00 - SUNNYSIDE 345KV CKT 1	717	789	0.02961	124.109	GRACEMONT - MINCO 345KV CKT 1
FDNS	00NR	3	16WP	G15_044	FROM->TO	G14-057T 345.00 - SUNNYSIDE 345KV CKT 1	717	789	0.117	124.008	BASE CASE
FDNS	00NR	3	20WP	G15_044	FROM->TO	G14-057T 345.00 - SUNNYSIDE 345KV CKT 1	717	789	0.11411	122.341	PITTSBURG - SEMINOLE 345KV CKT 1
FDNS	00NR	3	20WP	G15_044	FROM->TO	G14-057T 345.00 - SUNNYSIDE 345KV CKT 1	717	789	0.11411	122.341	PITTSBURG - SEMINOLE 345KV CKT 1
FDNS	00NR	3	20WP	G15_044	FROM->TO	G14-057T 345.00 - SUNNYSIDE 345KV CKT 1	717	789	0.11683	122.1742	BASE CASE
FDNS	00NR	3	16WP	G15_044	FROM->TO	G14-057T 345.00 - SUNNYSIDE 345KV CKT 1	717	789	0.13385	122.0119	CIMARRON - DRAPER LAKE 345KV CKT 1
FDNS	00NR	3	20WP	G15_044	FROM->TO	G14-057T 345.00 - SUNNYSIDE 345KV CKT 1	717	789	0.13368	120.1547	CIMARRON - DRAPER LAKE 345KV CKT 1
FDNS	00NR	3	16WP	G15_044	FROM->TO	G14-057T 345.00 - SUNNYSIDE 345KV CKT 1	717	789	0.12612	118.6121	P12:138:WFEC:MSL03
FDNS	00NR	3	16WP	G15_044	FROM->TO	G14-057T 345.00 - SUNNYSIDE 345KV CKT 1	717	789	0.11641	118.0416	PITTSBURG - VALLIANT 345KV CKT 1
FDNS	00NR	3	16WP	G15_044	FROM->TO	G14-057T 345.00 - SUNNYSIDE 345KV CKT 1	717	789	0.11641	118.0416	PITTSBURG - VALLIANT 345KV CKT 1
FDNS	00NR	3	16WP	G15_044	FROM->TO	G14-057T 345.00 - SUNNYSIDE 345KV CKT 1	717	789	0.117	117.8049	GEN509403 1-PIRKEY GENERATION
FDNS	00NR	3	16WP	G15_044	FROM->TO	G14-057T 345.00 - SUNNYSIDE 345KV CKT 1	717	789	0.117	117.7043	GEN509416 1-TURK GENERATION
FDNS	00NR	3	16WP	G15_044	FROM->TO	G14-057T 345.00 - SUNNYSIDE 345KV CKT 1	717	789	0.11868	117.4601	CLEVELAND - G15066_T 345.00 345KV CKT 1
FDNS	00NR	3	16WP	G15_044	FROM->TO	G14-057T 345.00 - SUNNYSIDE 345KV CKT 1	717	789	0.11868	117.173	G15066_T 345.00 - SOONER 345KV CKT 1
FDNS	00NR	3	20WP	G15_044	FROM->TO	G14-057T 345.00 - SUNNYSIDE 345KV CKT 1	717	789	0.12598	116.9133	P12:138:WFEC:MSL03
FDNS	00NR	3	16WP	G15_044	FROM->TO	G14-057T 345.00 - SUNNYSIDE 345KV CKT 1	717	789	0.117	116.8021	GEN501801 1-DOLET HILLS UNIT1
FDNS	00NR	3	16WP	G15_044	FROM->TO	G14-057T 345.00 - SUNNYSIDE 345KV CKT 1	717	789	0.11864	116.6882	BORDER 7345.00 - WOODWARD DISTRICT EHV 345KV CKT 1
FDNS	00NR	3	16WP	G15_044	FROM->TO	G14-057T 345.00 - SUNNYSIDE 345KV CKT 1	717	789	0.117	116.404	GEN509406 1-WELSH #3
FDNS	00NR	3	16WP	G15_044	FROM->TO	G14-057T 345.00 - SUNNYSIDE 345KV CKT 1	717	789	0.117	116.4039	GEN509404 1-WELSH #1

SOLUTION	GROUP	SCENARIO	SEASON	SOURCE	DIRECTION	MONITORED ELEMENT	RATEA (MVA)	RATEB(MVA)	TDF	TC%LOADING (% MVA)	CONTINGENCY
FDNS	00NR	3	20WP	G15_044	FROM->TO	G14-057T 345.00 - SUNNYSIDE 345KV CKT 1	717	789	0.11683	116.0922	GEN509403 1-PIRKEY GENERATION
FDNS	00NR	3	20WP	G15_044	FROM->TO	G14-057T 345.00 - SUNNYSIDE 345KV CKT 1	717	789	0.11683	116.0108	GEN509416 1-TURK GENERATION
FDNS	00NR	3	20WP	G15_044	FROM->TO	G14-057T 345.00 - SUNNYSIDE 345KV CKT 1	717	789	0.11846	115.8354	CLEVELAND - G15066_T 345.00 345KV CKT 1
FDNS	00NR	3	20WP	G15_044	FROM->TO	G14-057T 345.00 - SUNNYSIDE 345KV CKT 1	717	789	0.11624	115.7845	PITTSBURG - VALLIANT 345KV CKT 1
FDNS	00NR	3	20WP	G15_044	FROM->TO	G14-057T 345.00 - SUNNYSIDE 345KV CKT 1	717	789	0.11624	115.7845	PITTSBURG - VALLIANT 345KV CKT 1
FDNS	00NR	3	16WP	G15_044	FROM->TO	G14-057T 345.00 - SUNNYSIDE 345KV CKT 1	717	789	0.11963	115.7786	CORN TAP - NAPLESTP 138.00 138KV CKT 1
FDNS	00NR	3	16WP	G15_044	FROM->TO	G14-057T 345.00 - SUNNYSIDE 345KV CKT 1	717	789	0.11864	115.7529	BORDER 7345.00 - TUCO_2 345.00 345KV CKT 1
FDNS	00NR	3	16WP	G15_044	FROM->TO	G14-057T 345.00 - SUNNYSIDE 345KV CKT 1	717	789	0.11963	115.6961	NAPLESTP 138.00 - PAYNE 138.00 138KV CKT 1
FDNS	00NR	3	16WP	G15_044	FROM->TO	G14-057T 345.00 - SUNNYSIDE 345KV CKT 1	717	789	0.11651	115.6773	7SAREPTA% 345.00 - LONGWOOD 345KV CKT 1
FDNS	00NR	3	16WP	G15_044	FROM->TO	G14-057T 345.00 - SUNNYSIDE 345KV CKT 1	717	789	0.11651	115.6773	7SAREPTA% 345.00 - LONGWOOD 345KV CKT 1
FDNS	00NR	3	20WP	G15_044	FROM->TO	G14-057T 345.00 - SUNNYSIDE 345KV CKT 1	717	789	0.11845	115.5781	BORDER 7345.00 - WOODWARD DISTRICT EHV 345KV CKT 1
FDNS	00NR	3	20WP	G15_044	FROM->TO	G14-057T 345.00 - SUNNYSIDE 345KV CKT 1	717	789	0.11846	115.5413	G15066_T 345.00 - SOONER 345KV CKT 1
FDNS	00NR	3	16WP	G15_044	FROM->TO	G14-057T 345.00 - SUNNYSIDE 345KV CKT 1	717	789	0.11681	115.5202	DOLET HILLS - SOUTHWEST SHREVEPORT 345KV CKT 1
FDNS	00NR	3	16WP	G15_044	FROM->TO	G14-057T 345.00 - SUNNYSIDE 345KV CKT 1	717	789	0.11681	115.5202	DOLET HILLS - SOUTHWEST SHREVEPORT 345KV CKT 1
FDNS	00NR	3	16WP	G15_044	FROM->TO	G14-057T 345.00 - SUNNYSIDE 345KV CKT 1	717	789	0.11819	115.5069	CLEVELAND - TULSA NORTH 345KV CKT 1
FDNS	00NR	3	16WP	G15_044	FROM->TO	G14-057T 345.00 - SUNNYSIDE 345KV CKT 1	717	789	0.11819	115.5069	CLEVELAND - TULSA NORTH 345KV CKT 1
FDNSLock	00NR	3	16WP	G15_044	FROM->TO	G14-057T 345.00 - SUNNYSIDE 345KV CKT 1	717	789	0.117	115.4962	GEN336821 1-GRAND GULF UNIT
FDNS	00NR	3	16WP	G15_044	FROM->TO	G14-057T 345.00 - SUNNYSIDE 345KV CKT 1	717	789	0.12846	115.448	ARCADIA - NORTHWEST 345KV CKT 1
FDNSLock	00NR	3	16WP	G15_044	FROM->TO	G14-057T 345.00 - SUNNYSIDE 345KV CKT 1	717	789	0.117	115.4165	GEN336153 1-WATERFORD UNIT#3
FDNS	00NR	3	16WP	G15_044	FROM->TO	G14-057T 345.00 - SUNNYSIDE 345KV CKT 1	717	789	0.11909	115.4159	COMANCHE - LOCO 138KV CKT 1
FDNS	00NR	3	16WP	G15_044	FROM->TO	G14-057T 345.00 - SUNNYSIDE 345KV CKT 1	717	789	0.11947	115.353	ANADARKO - POCASSETT 138KV CKT 1
FDNS	00NR	3	16WP	G15_044	FROM->TO	G14-057T 345.00 - SUNNYSIDE 345KV CKT 1	717	789	0.1107	115.3212	CANADIAN RIVER - MUSKOGEE 345KV CKT 1
FDNS	00NR	3	20WP	G15_044	FROM->TO	G14-057T 345.00 - SUNNYSIDE 345KV CKT 1	717	789	0.11683	115.253	GEN501801 1-DOLET HILLS UNIT1
FDNS	00NR	3	16WP	G15_044	FROM->TO	G14-057T 345.00 - SUNNYSIDE 345KV CKT 1	717	789	0.11761	115.2138	ARCADIA - SEMINOLE 345KV CKT 1
FDNS	00NR	3	16WP	G15_044	FROM->TO	G14-057T 345.00 - SUNNYSIDE 345KV CKT 1	717	789	0.11947	115.2125	POCASSETT - TUTTLE 138KV CKT 1
FDNSLock	00NR	3	16WP	G15_044	FROM->TO	G14-057T 345.00 - SUNNYSIDE 345KV CKT 1	717	789	0.117	115.1249	GEN335831 1-RIVERBEND UNIT#1
FDNS	00NR	3	16WP	G15_044	FROM->TO	G14-057T 345.00 - SUNNYSIDE 345KV CKT 1	717	789	0.117	115.1143	GRAND GULF 500/22.0KV TRANSFORMER CKT 1
FDNS	00NR	3	16WP	G15_044	FROM->TO	G14-057T 345.00 - SUNNYSIDE 345KV CKT 1	717	789	0.117	115.0932	GEN515577 1-ARBWND11 0.6900
FDNS	00NR	3	16WP	G15_044	FROM->TO	G14-057T 345.00 - SUNNYSIDE 345KV CKT 1	717	789	0.11672	115.0342	7SAREPTA% 345.00 - ELDORADO EHV 345KV CKT 1
FDNS	00NR	3	16WP	G15_044	FROM->TO	G14-057T 345.00 - SUNNYSIDE 345KV CKT 1	717	789	0.11672	115.034	3TR3AR8EL7EL
FDNS	00NR	3	16WP	G15_044	FROM->TO	G14-057T 345.00 - SUNNYSIDE 345KV CKT 1	717	789	0.117	115.0265	GEN509409 1-WILKES #3
FDNS	00NR	3	16WP	G15_044	FROM->TO	G14-057T 345.00 - SUNNYSIDE 345KV CKT 1	717	789	0.11672	115.0233	ELDORADO EHV 500/345KV TRANSFORMER CKT 1
FDNS	00NR	3	16WP	G15_044	FROM->TO	G14-057T 345.00 - SUNNYSIDE 345KV CKT 1	717	789	0.11833	114.9623	P12:138:AEPW:DUNCAN-4:L.E.S.-4
FDNS	00NR	3	16WP	G15_044	FROM->TO	G14-057T 345.00 - SUNNYSIDE 345KV CKT 1	717	789	0.1194	114.9274	HEALDTON - LOCO 138KV CKT 1
FDNS	00NR	3	16WP	G15_044	FROM->TO	G14-057T 345.00 - SUNNYSIDE 345KV CKT 1	717	789	0.11947	114.8486	BRIDGECR 138.00 - TUTTLE 138KV CKT 1
FDNS	00NR	3	16WP	G15_044	FROM->TO	G14-057T 345.00 - SUNNYSIDE 345KV CKT 1	717	789	0.11833	114.8474	COMANCHE TAP - OMPA-DUNCAN 840 138KV CKT 1
FDNS	00NR	3	16WP	G15_044	FROM->TO	G14-057T 345.00 - SUNNYSIDE 345KV CKT 1	717	789	0.1194	114.7868	HEALDTON - RINGLING 138KV CKT 1
FDNS	00NR	3	16WP	G15_044	FROM->TO	G14-057T 345.00 - SUNNYSIDE 345KV CKT 1	717	789	0.117	114.7634	GEN501813 1-RODEMACHER UNIT 3
FDNSLock	00NR	3	16WP	G15_044	FROM->TO	G14-057T 345.00 - SUNNYSIDE 345KV CKT 1	717	789	0.117	114.7487	GEN300006 1-NEW MADRID UNIT 1
FDNSLock	00NR	3	16WP	G15_044	FROM->TO	G14-057T 345.00 - SUNNYSIDE 345KV CKT 1	717	789	0.117	114.7366	GEN300007 1-NEW MADRID UNIT 2
FDNS	00NR	3	20WP	G15_044	FROM->TO	G14-057T 345.00 - SUNNYSIDE 345KV CKT 1	717	789	0.11683	114.7319	GEN509406 1-WELSH #3
FDNS	00NR	3	20WP	G15_044	FROM->TO	G14-057T 345.00 - SUNNYSIDE 345KV CKT 1	717	789	0.11683	114.7317	GEN509404 1-WELSH #1
FDNS	00NR	3	16WP	G15_044	FROM->TO	G14-057T 345.00 - SUNNYSIDE 345KV CKT 1	717	789	0.11716	114.7109	LACYGNE - WAVERLY7 345.00 345KV CKT 1
FDNS	00NR	3	20WP	G15_044	FROM->TO	G14-057T 345.00 - SUNNYSIDE 345KV CKT 1	717	789	0.11845	114.6379	BORDER 7345.00 - TUCO_2 345.00 345KV CKT 1
FDNS	00NR	3	16WP	G15_044	FROM->TO	G14-057T 345.00 - SUNNYSIDE 345KV CKT 1	717	789	0.117	114.6254	GEN520947 1-HUGO1
FDNS	00NR	3	16WP	G15_044	FROM->TO	G14-057T 345.00 - SUNNYSIDE 345KV CKT 1	717	789	0.1194	114.6225	RINGLING - SOUTH WILSON 138KV CKT 1
FDNS	00NR	3	16WP	G15_044	FROM->TO	G14-057T 345.00 - SUNNYSIDE 345KV CKT 1	717	789	0.11716	114.5992	WAVERLY7 345.00 - WOLF CREEK 345KV CKT 1
FDNS	00NR	3	16WP	G15_044	FROM->TO	G14-057T 345.00 - SUNNYSIDE 345KV CKT 1	717	789	0.11947	114.5952	P12:138:WFEC:MSL01
FDNS	00NR	3	16WP	G15_044	FROM->TO	G14-057T 345.00 - SUNNYSIDE 345KV CKT 1	717	789	0.11947	114.5868	BRIDGECR 138.00 - SUNSHINE CANYON 138KV CKT 1
FDNS	00NR	3	16WP	G15_044	FROM->TO	G14-057T 345.00 - SUNNYSIDE 345KV CKT 1	717	789	0.11833	114.5765	DUNCAN - OMPA-DUNCAN 840 138KV CKT 1
FDNS	00NR	3	16WP	G15_044	FROM->TO	G14-057T 345.00 - SUNNYSIDE 345KV CKT 1	717	789	0.11833	114.5765	DUNCAN - OMPA-DUNCAN 840 138KV CKT 1
FDNS	00NR	3	16WP	G15_044	FROM->TO	G14-057T 345.00 - SUNNYSIDE 345KV CKT 1	717	789	0.117	114.566	GEN335206 1-NELSON UNIT 6
FDNS	00NR	3	16WP	G15_044	FROM->TO	G14-057T 345.00 - SUNNYSIDE 345KV CKT 1	717	789	0.117	114.4229	DOLET HILLS 345/24.0KV TRANSFORMER CKT 1
FDNS	00NR	3	16WP	G15_044	FROM->TO	G14-057T 345.00 - SUNNYSIDE 345KV CKT 1	717	789	0.11701	114.4188	P12:138:AEPW:SHERID4:112GORE4
FDNS	00NR	3	16WP	G15_044	FROM->TO	G14-057T 345.00 - SUNNYSIDE 345KV CKT 1	717	789	0.11575	114.4101	PARK LANE - SEMINOLE 138KV CKT 1
FDNS	00NR	3	16WP	G15_044	FROM->TO	G14-057T 345.00 - SUNNYSIDE 345KV CKT 1	717	789	0.117	114.3829	GEN501812 1-RODEMACHER UNIT 2
FDNS	00NR	3	16WP	G15_044	FROM->TO	G14-057T 345.00 - SUNNYSIDE 345KV CKT 1	717	789	0.117	114.3533	GEN590011 2-ERCOT EQUIVALENCE
FDNS	00NR	3	16WP	G15_044	FROM->TO	G14-057T 345.00 - SUNNYSIDE 345KV CKT 1	717	789	0.1194	114.3473	MARIETTA - SOUTH WILSON 138KV CKT 1
FDNS	00NR	3	16WP	G15_044	FROM->TO	G14-057T 345.00 - SUNNYSIDE 345KV CKT 1	717	789	0.117	114.3456	GEN515564 1-ORIGIN11 0.6900
FDNS	00NR	3	16WP	G15_044	FROM->TO	G14-057T 345.00 - SUNNYSIDE 345KV CKT 1	717	789	0.117	114.3456	GEN515565 1-ORIGIN21 0.6900
FDNS	00NR	3	16WP	G15_044	FROM->TO	G14-057T 345.00 - SUNNYSIDE 345KV CKT 1	717	789	0.11805	114.3132	REDBUD - RIVERSIDE STATION 345KV CKT 1
FDNS	00NR	3	16WP	G15_044	FROM->TO	G14-057T 345.00 - SUNNYSIDE 345KV CKT 1	717	789	0.11805	114.3132	REDBUD - RIVERSIDE STATION 345KV CKT 1
FDNS	00NR	3	16WP	G15_044	FROM->TO	G14-057T 345.00 - SUNNYSIDE 345KV CKT 1	717	789	0.11842	114.2953	Hitchland Interchange - WALKTAP7 345.00 345KV CKT 1
FDNS	00NR	3	16WP	G15_044	FROM->TO	G14-057T 345.00 - SUNNYSIDE 345KV CKT 1	717	789	0.11842	114.2953	Hitchland Interchange - WALKTAP7 345.00 345KV CKT 1
FDNS	00NR	3	16WP	G15_044	FROM->TO	G14-057T 345.00 - SUNNYSIDE 345KV CKT 1	717	789	0.11882	114.2952	MATHWSN7 345.00 - NORTHWEST 345KV CKT 1
FDNS	00NR	3	16WP	G15_044	FROM->TO	G14-057T 345.00 - SUNNYSIDE 345KV CKT 1	717	789	0.11842	114.2807	P12:345:SPS:J07.1.FINN.HITCH
FDNS	00NR	3	16WP	G15_044	FROM->TO	G14-057T 345.00 - SUNNYSIDE 345KV CKT 1	717	789	0.117	114.2786	GEN590010 1-ERCOT EQUIVALENCE
FDNS	00NR	3	16WP	G15_044	FROM->TO	G14-057T 345.00 - SUNNYSIDE 345KV CKT 1	717	789	0.1194	114.2632	P12:138:WFEC:MSL17
FDNS	00NR	3	16WP	G15_044	FROM->TO	G14-057T 345.00 - SUNNYSIDE 345KV CKT 1	717	789	0.11746	114.2419	CANEYRV7 345.00 - NEOSHO 345KV CKT 1
FDNS	00NR	3	16WP	G15_044	FROM->TO	G14-057T 345.00 - SUNNYSIDE 345KV CKT 1	717	789	0.11898	114.1859	CIVIT - PAOLI 138KV CKT 1
FDNS	00NR	3	16WP	G15_044	FROM->TO	G14-057T 345.00 - SUNNYSIDE 345KV CKT 1	717	789	0.117	114.1631	P12:69:AEPW:L.E.S.-2:LAW WC2
FDNS	00NR	3	16WP	G15_044	FROM->TO	G14-057T 345.00 - SUNNYSIDE 345KV CKT 1	717	789	0.117	114.1449	P12:161:AEPW:DYESS 5:HYLAND 5
FDNS	00NR	3	16WP	G15_044	FROM->TO	G14-057T 345.00 - SUNNYSIDE 345KV CKT 1	717	789	0.117	114.1444	GEN509408 1-WILKES #2
FDNS	00NR	3	20WP	G15_044	FROM->TO	G14-057T 345.00 - SUNNYSIDE 345KV CKT 1	717	789	0.11948	114.1414	CORN TAP - NAPLESTP 138.00 138KV CKT 1
FDNS	00NR	3	16WP	G15_044	FROM->TO	G14-057T 345.00 - SUNNYSIDE 345KV CKT 1	717	789	0.117	114.1339	GEN506754 1-LEBROCK STEAM 1
FDNS	00NR	3	16WP	G15_044	FROM->TO	G14-057T 345.00 - SUNNYSIDE 345KV CKT 1	717	789	0.11688	114.1161	ELDORADO EHV - MOUNT OLIVE 500KV CKT 1
FDNS	00NR	3	16WP	G15_044	FROM->TO	G14-057T 345.00 - SUNNYSIDE 345KV CKT 1	717	789	0.11746	114.1082	CANEYRV7 345.00 - LATHAMS7 345.00 345KV CKT 1
FDNS	00NR	3	16WP	G15_044	FROM->TO	G14-057T 345.00 - SUNNYSIDE 345KV CKT 1	717	789	0.11784	114.1072	P12:138:WFEC:MSL02
FDNS	00NR	3	16WP	G15_044	FROM->TO	G14-057T 345.00 - SUNNYSIDE 345KV CKT 1	717	789	0.11751	114.1066	PAOLI - PAYNE 138.00 138KV CKT 1

SOLUTION	GROUP	SCENARIO	SEASON	SOURCE	DIRECTION	MONITORED ELEMENT	RATEA (MVA)	RATEB(MVA)	TDF	TC%LOADING (% MVA)	CONTINGENCY
FDNS	00NR	3	16WP	G15_044	FROM->TO	G14-057T 345.00 - SUNNYSIDE 345KV CKT 1	717	789	0.117	114.1045	GEN334440 1-SABINE UNIT 4
FDNS	00NR	3	20WP	G15_044	FROM->TO	G14-057T 345.00 - SUNNYSIDE 345KV CKT 1	717	789	0.11635	114.0897	7SAREPTA% 345.00 - LONGWOOD 345KV CKT 1
FDNS	00NR	3	20WP	G15_044	FROM->TO	G14-057T 345.00 - SUNNYSIDE 345KV CKT 1	717	789	0.11635	114.0897	7SAREPTA% 345.00 - LONGWOOD 345KV CKT 1
FDNS	00NR	3	16WP	G15_044	FROM->TO	G14-057T 345.00 - SUNNYSIDE 345KV CKT 1	717	789	0.11701	114.0744	P12:138:AEPW:112GORE4:L.E.S.-4
FDNS	00NR	3	20WP	G15_044	FROM->TO	G14-057T 345.00 - SUNNYSIDE 345KV CKT 1	717	789	0.11948	114.0575	NAPLESTP 138.00 - PAYNE 138.00 138KV CKT 1
FDNS	00NR	3	16WP	G15_044	FROM->TO	G14-057T 345.00 - SUNNYSIDE 345KV CKT 1	717	789	0.11898	114.0436	CIVIT - STRATFORD 138KV CKT 1
FDNS	00NR	3	16WP	G15_044	FROM->TO	G14-057T 345.00 - SUNNYSIDE 345KV CKT 1	717	789	0.11676	114.0419	ELDORADO EHV - SHERIDAN EHV 500KV CKT 1
FDNS	00NR	3	16WP	G15_044	FROM->TO	G14-057T 345.00 - SUNNYSIDE 345KV CKT 1	717	789	0.11765	114.0191	ANADARKO - GEORGIA 138KV CKT 1
FDNS	00NR	3	16WP	G15_044	FROM->TO	G14-057T 345.00 - SUNNYSIDE 345KV CKT 1	717	789	0.11752	114.0156	TUPELO - TUPELO TAP 138KV CKT 1
FDNS	00NR	3	16WP	G15_044	FROM->TO	G14-057T 345.00 - SUNNYSIDE 345KV CKT 1	717	789	0.11695	113.9972	WEBRE - WELLS 500KV CKT 1
FDNS	00NR	3	16WP	G15_044	FROM->TO	G14-057T 345.00 - SUNNYSIDE 345KV CKT 1	717	789	0.11977	113.9928	P12:138:AEPW-OGE:CORNVIL4:MAUD 4
FDNS	00NR	3	16WP	G15_044	FROM->TO	G14-057T 345.00 - SUNNYSIDE 345KV CKT 1	717	789	0.117	113.9809	GEN503909 1-FULTONU1 1 16.000
FDNS	00NR	3	16WP	G15_044	FROM->TO	G14-057T 345.00 - SUNNYSIDE 345KV CKT 1	717	789	0.117	113.9741	FRONTIER - GRIMES 345KV CKT 1
FDNS	00NR	3	20WP	G15_044	FROM->TO	G14-057T 345.00 - SUNNYSIDE 345KV CKT 1	717	789	0.11683	113.9718	GEN336821 1-GRAND GULF UNIT
FDNS	00NR	3	16WP	G15_044	FROM->TO	G14-057T 345.00 - SUNNYSIDE 345KV CKT 1	717	789	0.11765	113.9406	FLETCHER - GEORGIA 138KV CKT 1
FDNS	00NR	3	16WP	G15_044	FROM->TO	G14-057T 345.00 - SUNNYSIDE 345KV CKT 1	717	789	0.11767	113.9351	LAWTON EASTSIDE (LES 5) 345/138/13.8KV TRANSFORMER CKT 2
FDNS	00NR	3	16WP	G15_044	FROM->TO	G14-057T 345.00 - SUNNYSIDE 345KV CKT 1	717	789	0.11767	113.9351	LAWTON EASTSIDE (LES 5) 345/138/13.8KV TRANSFORMER CKT 2
FDNS	00NR	3	16WP	G15_044	FROM->TO	G14-057T 345.00 - SUNNYSIDE 345KV CKT 1	717	789	0.11898	113.9244	OIL CENTER - STRATFORD 138KV CKT 1
FDNS	00NR	3	16WP	G15_044	FROM->TO	G14-057T 345.00 - SUNNYSIDE 345KV CKT 1	717	789	0.11977	113.9189	BLANCHARD - CORNVILLE 138KV CKT 1
FDNS	00NR	3	16WP	G15_044	FROM->TO	G14-057T 345.00 - SUNNYSIDE 345KV CKT 1	717	789	0.11771	113.9064	EMPIRE - FLETCHER 138KV CKT 1
FDNS	00NR	3	16WP	G15_044	FROM->TO	G14-057T 345.00 - SUNNYSIDE 345KV CKT 1	717	789	0.11746	113.8979	LATHAMS7 345.00 - ROSE HILL 345KV CKT 1
FDNS	00NR	3	20WP	G15_044	FROM->TO	G14-057T 345.00 - SUNNYSIDE 345KV CKT 1	717	789	0.11683	113.8628	GEN336153 1-WATERFORD UNIT#3
FDNS	00NR	3	16WP	G15_044	FROM->TO	G14-057T 345.00 - SUNNYSIDE 345KV CKT 1	717	789	0.117	113.855	GEN509393 S1-ARSENAL HILL GENS #4 (STALL)
FDNS	00NR	3	20WP	G15_044	FROM->TO	G14-057T 345.00 - SUNNYSIDE 345KV CKT 1	717	789	0.118	113.8408	CLEVELAND - TULSA NORTH 345KV CKT 1
FDNS	00NR	3	20WP	G15_044	FROM->TO	G14-057T 345.00 - SUNNYSIDE 345KV CKT 1	717	789	0.118	113.8408	CLEVELAND - TULSA NORTH 345KV CKT 1
FDNS	00NR	3	16WP	G15_044	FROM->TO	G14-057T 345.00 - SUNNYSIDE 345KV CKT 1	717	789	0.117	113.8313	GEN509392 G2-ARSENAL HILL GENS #3 (STALL)
FDNS	00NR	3	16WP	G15_044	FROM->TO	G14-057T 345.00 - SUNNYSIDE 345KV CKT 1	717	789	0.117	113.8312	GEN509391 G1-ARSENAL HILL GENS #2 (STALL)
FDNS	00NR	3	16WP	G15_044	FROM->TO	G14-057T 345.00 - SUNNYSIDE 345KV CKT 1	717	789	0.11771	113.8286	COMANCHE - EMPIRE 138KV CKT 1
FDNS	00NR	3	16WP	G15_044	FROM->TO	G14-057T 345.00 - SUNNYSIDE 345KV CKT 1	717	789	0.117	113.8154	GEN336252 1-NINEMILE POINT UNIT#5
FDNS	00NR	3	20WP	G15_044	FROM->TO	G14-057T 345.00 - SUNNYSIDE 345KV CKT 1	717	789	0.12833	113.8144	ARCADIA - NORTHWEST 345KV CKT 1
FDNS	00NR	3	16WP	G15_044	FROM->TO	G14-057T 345.00 - SUNNYSIDE 345KV CKT 1	717	789	0.117	113.7996	GEN334071 1-LEWIS CREEK 2
FDNS	00NR	3	16WP	G15_044	FROM->TO	G14-057T 345.00 - SUNNYSIDE 345KV CKT 1	717	789	0.117	113.7967	DELL 500 - ESSEX UNIT 2 500KV CKT Z1
FDNS	00NR	3	16WP	G15_044	FROM->TO	G14-057T 345.00 - SUNNYSIDE 345KV CKT 1	717	789	0.117	113.7907	GEN334070 1-LEWIS CREEK 1
FDNS	00NR	3	16WP	G15_044	FROM->TO	G14-057T 345.00 - SUNNYSIDE 345KV CKT 1	717	789	0.117	113.7883	GEN335204 1-NELSON UNIT 4
FDNS	00NR	3	16WP	G15_044	FROM->TO	G14-057T 345.00 - SUNNYSIDE 345KV CKT 1	717	789	0.11769	113.7671	THISTLE7 345.00 - WOODWARD DISTRICT EHV 345KV CKT 1
FDNS	00NR	3	16WP	G15_044	FROM->TO	G14-057T 345.00 - SUNNYSIDE 345KV CKT 1	717	789	0.11769	113.7671	THISTLE7 345.00 - WOODWARD DISTRICT EHV 345KV CKT 1
FDNS	00NR	3	16WP	G15_044	FROM->TO	G14-057T 345.00 - SUNNYSIDE 345KV CKT 1	717	789	0.11769	113.7671	THISTLE7 345.00 - WOODWARD DISTRICT EHV 345KV CKT 2
FDNS	00NR	3	16WP	G15_044	FROM->TO	G14-057T 345.00 - SUNNYSIDE 345KV CKT 1	717	789	0.11769	113.7671	THISTLE7 345.00 - WOODWARD DISTRICT EHV 345KV CKT 2
FDNS	00NR	3	20WP	G15_044	FROM->TO	G14-057T 345.00 - SUNNYSIDE 345KV CKT 1	717	789	0.11932	113.7671	ANADARKO - POCASSETT 138KV CKT 1
FDNS	00NR	3	16WP	G15_044	FROM->TO	G14-057T 345.00 - SUNNYSIDE 345KV CKT 1	717	789	0.11734	113.7574	DUNCAN (DUNCAN) 138/69/13.8KV TRANSFORMER CKT 1
FDNS	00NR	3	16WP	G15_044	FROM->TO	G14-057T 345.00 - SUNNYSIDE 345KV CKT 1	717	789	0.11734	113.7574	DUNCAN (DUNCAN) 138/69/13.8KV TRANSFORMER CKT 1
FDNS	00NR	3	16WP	G15_044	FROM->TO	G14-057T 345.00 - SUNNYSIDE 345KV CKT 1	717	789	0.117	113.7542	GEN334441 1-SABINE UNIT 5
FDNS	00NR	3	16WP	G15_044	FROM->TO	G14-057T 345.00 - SUNNYSIDE 345KV CKT 1	717	789	0.11898	113.7458	LATTA JCT - OIL CENTER 138KV CKT 1
FDNS	00NR	3	20WP	G15_044	FROM->TO	G14-057T 345.00 - SUNNYSIDE 345KV CKT 1	717	789	0.11893	113.7368	COMANCHE - LOCO 138KV CKT 1
FDNS	00NR	3	16WP	G15_044	FROM->TO	G14-057T 345.00 - SUNNYSIDE 345KV CKT 1	717	789	0.11699	113.7361	P12:161:AEPW-SWPA:BEAVERS:EROGERS5
FDNS	00NR	3	16WP	G15_044	FROM->TO	G14-057T 345.00 - SUNNYSIDE 345KV CKT 1	717	789	0.11977	113.7205	BLANCHARD - MAUD 138KV CKT 1
FDNS	00NR	3	16WP	G15_044	FROM->TO	G14-057T 345.00 - SUNNYSIDE 345KV CKT 1	717	789	0.11701	113.7186	P12:138:AEPW:CATOOSA4:T.S.E.-4
FDNS	00NR	3	16WP	G15_044	FROM->TO	G14-057T 345.00 - SUNNYSIDE 345KV CKT 1	717	789	0.117	113.709	GEN337653 1-WHITE BLUFF UNIT #2
FDNS	00NR	3	16WP	G15_044	FROM->TO	G14-057T 345.00 - SUNNYSIDE 345KV CKT 1	717	789	0.11686	113.708	6LAYFLD 230.00 - CARROLL 230KV CKT 1
FDNS	00NR	3	16WP	G15_044	FROM->TO	G14-057T 345.00 - SUNNYSIDE 345KV CKT 1	717	789	0.117	113.7044	GEN334030 1-FRONTIER UNIT 1
FDNS	00NR	3	16WP	G15_044	FROM->TO	G14-057T 345.00 - SUNNYSIDE 345KV CKT 1	717	789	0.117	113.7028	GEN334031 1-FRONTIER UNIT 2
FDNS	00NR	3	16WP	G15_044	FROM->TO	G14-057T 345.00 - SUNNYSIDE 345KV CKT 1	717	789	0.117	113.7	GEN300003 1-THOMAS HILL UNIT 3
FDNS	00NR	3	16WP	G15_044	FROM->TO	G14-057T 345.00 - SUNNYSIDE 345KV CKT 1	717	789	0.117	113.6896	GEN506752 1-LEBROCK GAS 1
FDNS	00NR	3	16WP	G15_044	FROM->TO	G14-057T 345.00 - SUNNYSIDE 345KV CKT 1	717	789	0.117	113.6894	GEN506753 1-LEBROCK GAS 2
FDNS	00NR	3	20WP	G15_044	FROM->TO	G14-057T 345.00 - SUNNYSIDE 345KV CKT 1	717	789	0.11665	113.6795	DOLET HILLS - SOUTHWEST SHREVEPORT 345KV CKT 1
FDNS	00NR	3	20WP	G15_044	FROM->TO	G14-057T 345.00 - SUNNYSIDE 345KV CKT 1	717	789	0.11665	113.6795	DOLET HILLS - SOUTHWEST SHREVEPORT 345KV CKT 1
FDNS	00NR	3	16WP	G15_044	FROM->TO	G14-057T 345.00 - SUNNYSIDE 345KV CKT 1	717	789	0.1168	113.6747	FULTON 115 - HOPE 115KV CKT 1
FDNS	00NR	3	16WP	G15_044	FROM->TO	G14-057T 345.00 - SUNNYSIDE 345KV CKT 1	717	789	0.1168	113.6747	FULTON 115 - HOPE 115KV CKT 1
FDNS	00NR	3	16WP	G15_044	FROM->TO	G14-057T 345.00 - SUNNYSIDE 345KV CKT 1	717	789	0.117	113.6675	8DANIEL8 500.00 - MCKNIGHT 500KV CKT 1
FDNS	00NR	3	16WP	G15_044	FROM->TO	G14-057T 345.00 - SUNNYSIDE 345KV CKT 1	717	789	0.117	113.6672	P12:161:AEPW:DYESS5:ELMSPRNG:TONTITN5
FDNS	00NR	3	16WP	G15_044	FROM->TO	G14-057T 345.00 - SUNNYSIDE 345KV CKT 1	717	789	0.117	113.637	GEN515226 1-MUSKOGEE 6G
FDNS	00NR	3	16WP	G15_044	FROM->TO	G14-057T 345.00 - SUNNYSIDE 345KV CKT 1	717	789	0.117	113.6367	GEN501811 1-RODEMACHER UNIT 1
FDNS	00NR	3	16WP	G15_044	FROM->TO	G14-057T 345.00 - SUNNYSIDE 345KV CKT 1	717	789	0.117	113.6288	GEN300015 1-1SGPDEL 18.000
FDNS	00NR	3	16WP	G15_044	FROM->TO	G14-057T 345.00 - SUNNYSIDE 345KV CKT 1	717	789	0.11761	113.6265	P12:138:AEPW:CORNVIL4:S.W.S.-4
FDNS	00NR	3	16WP	G15_044	FROM->TO	G14-057T 345.00 - SUNNYSIDE 345KV CKT 1	717	789	0.117	113.624	GEN337911 1-ARKANSAS NUCLEAR ONE UNIT #2
FDNS	00NR	3	16WP	G15_044	FROM->TO	G14-057T 345.00 - SUNNYSIDE 345KV CKT 1	717	789	0.117	113.6187	GEN336251 1-NINEMILE POINT UNIT#4
FDNS	00NR	3	16WP	G15_044	FROM->TO	G14-057T 345.00 - SUNNYSIDE 345KV CKT 1	717	789	0.117	113.618	GEN337652 1-WHITE BLUFF UNIT #1
FDNS	00NR	3	16WP	G15_044	FROM->TO	G14-057T 345.00 - SUNNYSIDE 345KV CKT 1	717	789	0.117	113.6154	GEN334433 1-SABINE UNIT 3
FDNS	00NR	3	20WP	G15_044	FROM->TO	G14-057T 345.00 - SUNNYSIDE 345KV CKT 1	717	789	0.11932	113.6148	POCASSETT - TUTTLE 138KV CKT 1
FDNS	00NR	3	16WP	G15_044	FROM->TO	G14-057T 345.00 - SUNNYSIDE 345KV CKT 1	717	789	0.117	113.6126	GEN336831 1-BAXTER WILSON SES
FDNS	00NR	3	16WP	G15_044	FROM->TO	G14-057T 345.00 - SUNNYSIDE 345KV CKT 1	717	789	0.11708	113.5975	G15074_T 345.00 - HOYT 345KV CKT 1
FDNS	00NR	3	16WP	G15_044	FROM->TO	G14-057T 345.00 - SUNNYSIDE 345KV CKT 1	717	789	0.11762	113.5963	P12:138:AEPW:CORNVIL4:DUNCAN-4
FDNS	00NR	3	16WP	G15_044	FROM->TO	G14-057T 345.00 - SUNNYSIDE 345KV CKT 1	717	789	0.11734	113.5953	P12:69:WFEC-AEPW:COMANCH2:DUNCAN-2
FDNS	00NR	3	16WP	G15_044	FROM->TO	G14-057T 345.00 - SUNNYSIDE 345KV CKT 1	717	789	0.117	113.5846	GEN562783 1-G15036_4 0.6900
FDNS	00NR	3	16WP	G15_044	FROM->TO	G14-057T 345.00 - SUNNYSIDE 345KV CKT 1	717	789	0.117	113.5846	GEN562784 1-G15036_5 0.6900
FDNS	00NR	3	16WP	G15_044	FROM->TO	G14-057T 345.00 - SUNNYSIDE 345KV CKT 1	717	789	0.11941	113.5764	BAILEY4 138.00 - SUNSHINE CANYON 138KV CKT 1
FDNS	00NR	3	16WP	G15_044	FROM->TO	G14-057T 345.00 - SUNNYSIDE 345KV CKT 1	717	789	0.11794	113.5753	TUTTLE - TUTTLE CONOCO TAP 138KV CKT 1
FDNSLock	00NR	3	16WP	G15_044	FROM->TO	G14-057T 345.00 - SUNNYSIDE 345KV CKT 1	717	789	0.11706	113.5721	G15088_T 345.00 - MOORE 345KV CKT 1
FDNS	00NR	3	16WP	G15_044	FROM->TO	G14-057T 345.00 - SUNNYSIDE 345KV CKT 1	717	789	0.11776	113.5699	CIMARRON - CZECH HALL 138KV CKT 1

SOLUTION	GROUP	SCENARIO	SEASON	SOURCE	DIRECTION	MONITORED ELEMENT	RATEA (MVA)	RATEB(MVA)	TDF	TC%LOADING (% MVA)	CONTINGENCY
FDNS	00NR	3	16WP	G15_044	FROM->TO	G14-057T 345.00 - SUNNYSIDE 345KV CKT 1	717	789	0.11732	113.565	G1524G1525 345.00 - THISTLE7 345.00 345KV CKT 1
FDNS	00NR	3	16WP	G15_044	FROM->TO	G14-057T 345.00 - SUNNYSIDE 345KV CKT 1	717	789	0.11732	113.565	G1524G1525 345.00 - THISTLE7 345.00 345KV CKT 2
FDNS	00NR	3	20WP	G15_044	FROM->TO	G14-057T 345.00 - SUNNYSIDE 345KV CKT 1	717	789	0.11683	113.5641	GEN335831 1-RIVERBEND UNIT#1
FDNS	00NR	3	16WP	G15_044	FROM->TO	G14-057T 345.00 - SUNNYSIDE 345KV CKT 1	717	789	0.11786	113.5595	P12:138:AEPW-OGE:WTH_JCT4:JENSEN4
FDNS	00NR	3	16WP	G15_044	FROM->TO	G14-057T 345.00 - SUNNYSIDE 345KV CKT 1	717	789	0.117	113.5563	GEN505432 1-SIKESTON
FDNS	00NR	3	16WP	G15_044	FROM->TO	G14-057T 345.00 - SUNNYSIDE 345KV CKT 1	717	789	0.117	113.554	P12:161:AEPW:EROGERS5:ECNTRTN5
FDNS	00NR	3	16WP	G15_044	FROM->TO	G14-057T 345.00 - SUNNYSIDE 345KV CKT 1	717	789	0.11762	113.5536	CIMARRON - SARA 138KV CKT 1
FDNS	00NR	3	16WP	G15_044	FROM->TO	G14-057T 345.00 - SUNNYSIDE 345KV CKT 1	717	789	0.117	113.5512	GEN515040 1-SEMINOLE 1G
FDNS	00NR	3	16WP	G15_044	FROM->TO	G14-057T 345.00 - SUNNYSIDE 345KV CKT 1	717	789	0.1169	113.545	LAYFLD8 500.00 - MOUNT OLIVE 500KV CKT 1
FDNS	00NR	3	16WP	G15_044	FROM->TO	G14-057T 345.00 - SUNNYSIDE 345KV CKT 1	717	789	0.1169	113.545	LAYFLD8 500.00 - MOUNT OLIVE 500KV CKT 1
FDNS	00NR	3	16WP	G15_044	FROM->TO	G14-057T 345.00 - SUNNYSIDE 345KV CKT 1	717	789	0.1161	113.5433	ARBWIND4 138.00 - CARTER 138KV CKT 1
FDNS	00NR	3	16WP	G15_044	FROM->TO	G14-057T 345.00 - SUNNYSIDE 345KV CKT 1	717	789	0.117	113.5426	RODEMACHER 230/22.0KV TRANSFORMER CKT 1
FDNS	00NR	3	16WP	G15_044	FROM->TO	G14-057T 345.00 - SUNNYSIDE 345KV CKT 1	717	789	0.11734	113.5415	DUNCAN - TOSCO 69KV CKT 1
FDNS	00NR	3	16WP	G15_044	FROM->TO	G14-057T 345.00 - SUNNYSIDE 345KV CKT 1	717	789	0.117	113.5409	GEN515223 1-MUSKOGEE 4G
FDNS	00NR	3	16WP	G15_044	FROM->TO	G14-057T 345.00 - SUNNYSIDE 345KV CKT 1	717	789	0.117	113.5409	GEN515225 1-MUSKOGEE 5G
FDNS	00NR	3	16WP	G15_044	FROM->TO	G14-057T 345.00 - SUNNYSIDE 345KV CKT 1	717	789	0.11791	113.5371	G14_038T 345.00 - Hitchland Interchange 345KV CKT 1
FDNS	00NR	3	16WP	G15_044	FROM->TO	G14-057T 345.00 - SUNNYSIDE 345KV CKT 1	717	789	0.1175	113.5328	P12:138:AEPW:WTHWF4:CLINTJC4
FDNS	00NR	3	16WP	G15_044	FROM->TO	G14-057T 345.00 - SUNNYSIDE 345KV CKT 1	717	789	0.11692	113.5321	MC NIEL 500/115KV TRANSFORMER CKT 1
FDNS	00NR	3	20WP	G15_044	FROM->TO	G14-057T 345.00 - SUNNYSIDE 345KV CKT 1	717	789	0.11683	113.527	GRAND GULF 500/22.0KV TRANSFORMER CKT 1
FDNS	00NR	3	16WP	G15_044	FROM->TO	G14-057T 345.00 - SUNNYSIDE 345KV CKT 1	717	789	0.11692	113.5264	HOT SPRINGS EHV - MAGNET COVE 500KV CKT 1
FDNS	00NR	3	16WP	G15_044	FROM->TO	G14-057T 345.00 - SUNNYSIDE 345KV CKT 1	717	789	0.11684	113.5229	BISMARK - HOT SPRINGS WEST BUS 115KV CKT 1
FDNS	00NR	3	16WP	G15_044	FROM->TO	G14-057T 345.00 - SUNNYSIDE 345KV CKT 1	717	789	0.117	113.5226	GEN303007 1-1BC2 U2
FDNS	00NR	3	16WP	G15_044	FROM->TO	G14-057T 345.00 - SUNNYSIDE 345KV CKT 1	717	789	0.117	113.5208	WHITE BLUFF 500/26.0KV TRANSFORMER CKT 1
FDNS	00NR	3	16WP	G15_044	FROM->TO	G14-057T 345.00 - SUNNYSIDE 345KV CKT 1	717	789	0.117	113.5177	GEN303006 1-1BC2 U1
FDNS	00NR	3	16WP	G15_044	FROM->TO	G14-057T 345.00 - SUNNYSIDE 345KV CKT 1	717	789	0.11722	113.5176	P12:69:AEPW-OMPA:COMANC-2:OMWALTR2
FDNS	00NR	3	16WP	G15_044	FROM->TO	G14-057T 345.00 - SUNNYSIDE 345KV CKT 1	717	789	0.11604	113.5174	SEMINOLE - VANOSTP4 138.00 138KV CKT 1
FDNS	00NR	3	16WP	G15_044	FROM->TO	G14-057T 345.00 - SUNNYSIDE 345KV CKT 1	717	789	0.11734	113.4974	COMANCHE TAP - TOSCO 69KV CKT 1
FDNS	00NR	3	16WP	G15_044	FROM->TO	G14-057T 345.00 - SUNNYSIDE 345KV CKT 1	717	789	0.11794	113.4956	CIMARRON - TUTTLE CONOCO TAP 138KV CKT 1
FDNS	00NR	3	16WP	G15_044	FROM->TO	G14-057T 345.00 - SUNNYSIDE 345KV CKT 1	717	789	0.117	113.4954	GEN336191 1-LITTLE GYPSY UNIT#3
FDNS	00NR	3	16WP	G15_044	FROM->TO	G14-057T 345.00 - SUNNYSIDE 345KV CKT 1	717	789	0.11852	113.4942	CANADIAN - NOBLE 138KV CKT 1
FDNS	00NR	3	16WP	G15_044	FROM->TO	G14-057T 345.00 - SUNNYSIDE 345KV CKT 1	717	789	0.11776	113.4938	CZECH HALL - XEROX 138KV CKT 1
FDNS	00NR	3	16WP	G15_044	FROM->TO	G14-057T 345.00 - SUNNYSIDE 345KV CKT 1	717	789	0.11776	113.4896	MORGAN - XEROX 138KV CKT 1
FDNS	00NR	3	16WP	G15_044	FROM->TO	G14-057T 345.00 - SUNNYSIDE 345KV CKT 1	717	789	0.11701	113.4871	P12:138:AEPW:N.E.S.-4:CATOOSA4
FDNS	00NR	3	16WP	G15_044	FROM->TO	G14-057T 345.00 - SUNNYSIDE 345KV CKT 1	717	789	0.117	113.4833	GEN337910 1-ARKANSAS NUCLEAR ONE UNIT #1
FDNS	00NR	3	16WP	G15_044	FROM->TO	G14-057T 345.00 - SUNNYSIDE 345KV CKT 1	717	789	0.11719	113.4805	BUCKNER7 345.00 - SPEARVILLE 345KV CKT 1
FDNS	00NR	3	16WP	G15_044	FROM->TO	G14-057T 345.00 - SUNNYSIDE 345KV CKT 1	717	789	0.11719	113.4805	BUCKNER7 345.00 - SPEARVILLE 345KV CKT 1
FDNS	00NR	3	16WP	G15_044	FROM->TO	G14-057T 345.00 - SUNNYSIDE 345KV CKT 1	717	789	0.117	113.4774	GEN300010 1-ST FRANCIS UNIT 1
FDNS	00NR	3	16WP	G15_044	FROM->TO	G14-057T 345.00 - SUNNYSIDE 345KV CKT 1	717	789	0.1175	113.4769	P12:138:AEPW:WTHWF4:WTH_SE4
FDNS	00NR	3	16WP	G15_044	FROM->TO	G14-057T 345.00 - SUNNYSIDE 345KV CKT 1	717	789	0.11898	113.473	LASALLE - LATTA JCT 138KV CKT 1
FDNS	00NR	3	16WP	G15_044	FROM->TO	G14-057T 345.00 - SUNNYSIDE 345KV CKT 1	717	789	0.117	113.4723	NELSON 230/20.0KV TRANSFORMER CKT 1
FDNS	00NR	3	16WP	G15_044	FROM->TO	G14-057T 345.00 - SUNNYSIDE 345KV CKT 1	717	789	0.11684	113.4715	ALPINE AECC - BISMARK 115KV CKT 1
FDNS	00NR	3	16WP	G15_044	FROM->TO	G14-057T 345.00 - SUNNYSIDE 345KV CKT 1	717	789	0.117	113.4706	GEN335614 1-WILLOW GLENN UNIT#4
FDNS	00NR	3	16WP	G15_044	FROM->TO	G14-057T 345.00 - SUNNYSIDE 345KV CKT 1	717	789	0.11776	113.4666	MORGAN - MUSTANG 138KV CKT 1
FDNS	00NR	3	16WP	G15_044	FROM->TO	G14-057T 345.00 - SUNNYSIDE 345KV CKT 1	717	789	0.11857	113.4645	P12:138:OKGE:3TERM27
FDNS	00NR	3	16WP	G15_044	FROM->TO	G14-057T 345.00 - SUNNYSIDE 345KV CKT 1	717	789	0.117	113.4591	GEN303008 1-1BC2 U3
FDNS	00NR	3	16WP	G15_044	FROM->TO	G14-057T 345.00 - SUNNYSIDE 345KV CKT 1	717	789	0.11785	113.4492	FINNEY SWITCHING STATION - HOLCOMB 345KV CKT 1
FDNS	00NR	3	16WP	G15_044	FROM->TO	G14-057T 345.00 - SUNNYSIDE 345KV CKT 1	717	789	0.11785	113.4492	FINNEY SWITCHING STATION - HOLCOMB 345KV CKT 1
FDNS	00NR	3	20WP	G15_044	FROM->TO	G14-057T 345.00 - SUNNYSIDE 345KV CKT 1	717	789	0.11657	113.4437	7SAREPTA% 345.00 - ELDORADO EHV 345KV CKT 1
FDNS	00NR	3	20WP	G15_044	FROM->TO	G14-057T 345.00 - SUNNYSIDE 345KV CKT 1	717	789	0.11657	113.4435	3TR3AR8EL7EL
FDNS	00NR	3	16WP	G15_044	FROM->TO	G14-057T 345.00 - SUNNYSIDE 345KV CKT 1	717	789	0.11734	113.4348	COMANCHE - COMANCHE TAP 69KV CKT 1
FDNS	00NR	3	16WP	G15_044	FROM->TO	G14-057T 345.00 - SUNNYSIDE 345KV CKT 1	717	789	0.11698	113.4347	CYPRESS - HARTBURG 500KV CKT 1
FDNS	00NR	3	20WP	G15_044	FROM->TO	G14-057T 345.00 - SUNNYSIDE 345KV CKT 1	717	789	0.11657	113.4329	ELDORADO EHV 500/345KV TRANSFORMER CKT 1
FDNS	00NR	3	16WP	G15_044	FROM->TO	G14-057T 345.00 - SUNNYSIDE 345KV CKT 1	717	789	0.117	113.4325	GEN336170 1-GULF OXY U4
FDNS	00NR	3	16WP	G15_044	FROM->TO	G14-057T 345.00 - SUNNYSIDE 345KV CKT 1	717	789	0.11684	113.4287	ALPINE AECC - AMITY SS 115KV CKT 1
FDNS	00NR	3	16WP	G15_044	FROM->TO	G14-057T 345.00 - SUNNYSIDE 345KV CKT 1	717	789	0.117	113.4284	GEN300011 1-ST FRANCIS UNIT 2
FDNS	00NR	3	16WP	G15_044	FROM->TO	G14-057T 345.00 - SUNNYSIDE 345KV CKT 1	717	789	0.117	113.4275	GEN336464 1-MICHOUD UNIT #3
FDNS	00NR	3	16WP	G15_044	FROM->TO	G14-057T 345.00 - SUNNYSIDE 345KV CKT 1	717	789	0.11771	113.4253	CHISHOLM6 230.00 - ELK CITY 230KV 230KV CKT 1
FDNS	00NR	3	16WP	G15_044	FROM->TO	G14-057T 345.00 - SUNNYSIDE 345KV CKT 1	717	789	0.11077	113.4235	CANADIAN RIVER - PITTSBURG 345KV CKT 1
FDNS	00NR	3	16WP	G15_044	FROM->TO	G14-057T 345.00 - SUNNYSIDE 345KV CKT 1	717	789	0.11077	113.4235	CANADIAN RIVER - PITTSBURG 345KV CKT 1
FDNS	00NR	3	16WP	G15_044	FROM->TO	G14-057T 345.00 - SUNNYSIDE 345KV CKT 1	717	789	0.117	113.4182	8CAJUN2 500/24.0KV TRANSFORMER CKT 1
FDNS	00NR	3	16WP	G15_044	FROM->TO	G14-057T 345.00 - SUNNYSIDE 345KV CKT 1	717	789	0.11771	113.4176	ELK CITY 230KV (ELKCTY-6) 230/138/13.8KV TRANSFORMER CKT 1
FDNS	00NR	3	16WP	G15_044	FROM->TO	G14-057T 345.00 - SUNNYSIDE 345KV CKT 1	717	789	0.11771	113.4176	ELK CITY 230KV (ELKCTY-6) 230/138/13.8KV TRANSFORMER CKT 1
FDNS	00NR	3	16WP	G15_044	FROM->TO	G14-057T 345.00 - SUNNYSIDE 345KV CKT 1	717	789	0.12084	113.4121	GRACEMONT (BANK 1) 345/138/13.8KV TRANSFORMER CKT 1
FDNS	00NR	3	20WP	G15_044	FROM->TO	G14-057T 345.00 - SUNNYSIDE 345KV CKT 1	717	789	0.11817	113.4112	P12:138:AEPW:DUNCAN-4:L.E.S.-4
FDNS	00NR	3	16WP	G15_044	FROM->TO	G14-057T 345.00 - SUNNYSIDE 345KV CKT 1	717	789	0.11941	113.4106	BAILEY4 138.00 - WESTMOORE 138KV CKT 1
FDNS	00NR	3	20WP	G15_044	FROM->TO	G14-057T 345.00 - SUNNYSIDE 345KV CKT 1	717	789	0.11683	113.409	GEN515577 1-ARBWND11 0.6900
FDNS	00NR	3	16WP	G15_044	FROM->TO	G14-057T 345.00 - SUNNYSIDE 345KV CKT 1	717	789	0.12016	113.4036	DRAPER LAKE - SEMINOLE 345KV CKT 1
FDNS	00NR	3	16WP	G15_044	FROM->TO	G14-057T 345.00 - SUNNYSIDE 345KV CKT 1	717	789	0.12016	113.4036	DRAPER LAKE - SEMINOLE 345KV CKT 2
FDNS	00NR	3	16WP	G15_044	FROM->TO	G14-057T 345.00 - SUNNYSIDE 345KV CKT 1	717	789	0.11852	113.4027	NOBLE - PURCELL4 138.00 138KV CKT 1
FDNS	00NR	3	16WP	G15_044	FROM->TO	G14-057T 345.00 - SUNNYSIDE 345KV CKT 1	717	789	0.11708	113.3955	HOYT - STRANGER CREEK 345KV CKT 1
FDNS	00NR	3	16WP	G15_044	FROM->TO	G14-057T 345.00 - SUNNYSIDE 345KV CKT 1	717	789	0.117	113.3936	7JASPER 345.00 - BLACKBERRY 345KV CKT 1
FDNS	00NR	3	16WP	G15_044	FROM->TO	G14-057T 345.00 - SUNNYSIDE 345KV CKT 1	717	789	0.117	113.393	GEN300016 1-1G1GPDEL 18.000
FDNS	00NR	3	16WP	G15_044	FROM->TO	G14-057T 345.00 - SUNNYSIDE 345KV CKT 1	717	789	0.117	113.3926	P12:138:AEPW:R.S.S.-4:S.HUD.-4
FDNS	00NR	3	16WP	G15_044	FROM->TO	G14-057T 345.00 - SUNNYSIDE 345KV CKT 1	717	789	0.117	113.3866	GEN501910 1-ACADIA UNIT ST1
FDNS	00NR	3	16WP	G15_044	FROM->TO	G14-057T 345.00 - SUNNYSIDE 345KV CKT 1	717	789	0.11713	113.3762	G15095_T 138.00 - ROSE_VALLEY 138.00 138KV CKT 1
FDNS	00NR	3	16WP	G15_044	FROM->TO	G14-057T 345.00 - SUNNYSIDE 345KV CKT 1	717	789	0.117	113.3742	GEN337041 1-GERALD ANDRUS
FDNS	00NR	3	16WP	G15_044	FROM->TO	G14-057T 345.00 - SUNNYSIDE 345KV CKT 1	717	789	0.11762	113.3698	SARA - STHLAKE4 138.00 138KV CKT 1
FDNS	00NR	3	16WP	G15_044	FROM->TO	G14-057T 345.00 - SUNNYSIDE 345KV CKT 1	717	789	0.11708	113.3592	G15074_T 345.00 - JEFFREY ENERGY CENTER 345KV CKT 1
FDNS	00NR	3	16WP	G15_044	FROM->TO	G14-057T 345.00 - SUNNYSIDE 345KV CKT 1	717	789	0.11691	113.3574	ETTA (DUKE HOTSPRINGS) - MC NIEL 500KV CKT 1

SOLUTION	GROUP	SCENARIO	SEASON	SOURCE	DIRECTION	MONITORED ELEMENT	RATEA (MVA)	RATEB(MVA)	TDF	TC%LOADING (% MVA)	CONTINGENCY
FDNS	00NR	3	16WP	G15_044	FROM->TO	G14-057T 345.00 - SUNNYSIDE 345KV CKT 1	717	789	0.117	113.3546	P12:138:AEPW:YARCH-S4:T.S.E.-4
FDNS	00NR	3	16WP	G15_044	FROM->TO	G14-057T 345.00 - SUNNYSIDE 345KV CKT 1	717	789	0.11733	113.3531	WALTERS - WALTERS 69KV CKT 1
FDNS	00NR	3	16WP	G15_044	FROM->TO	G14-057T 345.00 - SUNNYSIDE 345KV CKT 1	717	789	0.1178	113.3511	ANADARKO - SEQUOYAHJ4 138.00 138KV CKT 1
FDNS	00NR	3	16WP	G15_044	FROM->TO	G14-057T 345.00 - SUNNYSIDE 345KV CKT 1	717	789	0.117	113.3484	P12:138:AEPW:BA_71ST4:T.S.E.-4
FDNS	00NR	3	16WP	G15_044	FROM->TO	G14-057T 345.00 - SUNNYSIDE 345KV CKT 1	717	789	0.117	113.3477	P12:69:AEPW:NROGERS2:ECNTRTN2
FDNS	00NR	3	16WP	G15_044	FROM->TO	G14-057T 345.00 - SUNNYSIDE 345KV CKT 1	717	789	0.1178	113.3455	CORN TAP - SEQUOYAHJ4 138.00 138KV CKT 1
FDNS	00NR	3	20WP	G15_044	FROM->TO	G14-057T 345.00 - SUNNYSIDE 345KV CKT 1	717	789	0.11742	113.3441	ARCADIA - SEMINOLE 345KV CKT 1
FDNS	00NR	3	16WP	G15_044	FROM->TO	G14-057T 345.00 - SUNNYSIDE 345KV CKT 1	717	789	0.11762	113.3421	MCCLAIN - STHLAKE4 138.00 138KV CKT 1
FDNS	00NR	3	16WP	G15_044	FROM->TO	G14-057T 345.00 - SUNNYSIDE 345KV CKT 1	717	789	0.117	113.3405	SABINE 230/24.0KV TRANSFORMER CKT 1
FDNS	00NR	3	16WP	G15_044	FROM->TO	G14-057T 345.00 - SUNNYSIDE 345KV CKT 1	717	789	0.117	113.3362	GEN336801 1-BAXTER WILSON UNIT #1
FDNS	00NR	3	16WP	G15_044	FROM->TO	G14-057T 345.00 - SUNNYSIDE 345KV CKT 1	717	789	0.11786	113.3355	WEATHERFORD JCT. - WEATHERFORD SOUTHEAST 138KV CKT 1
FDNS	00NR	3	16WP	G15_044	FROM->TO	G14-057T 345.00 - SUNNYSIDE 345KV CKT 1	717	789	0.11786	113.3355	WEATHERFORD JCT. - WEATHERFORD SOUTHEAST 138KV CKT 1
FDNS	00NR	3	16WP	G15_044	FROM->TO	G14-057T 345.00 - SUNNYSIDE 345KV CKT 1	717	789	0.11716	113.3323	BLACKBERRY - NEOSHO 345KV CKT 1
FDNS	00NR	3	16WP	G15_044	FROM->TO	G14-057T 345.00 - SUNNYSIDE 345KV CKT 1	717	789	0.11722	113.3317	LAWTON RELIFT TAP - OMPA-WALTERS 69KV CKT 1
FDNS	00NR	3	16WP	G15_044	FROM->TO	G14-057T 345.00 - SUNNYSIDE 345KV CKT 1	717	789	0.11703	113.3282	7LUTESVIL 345.00 - 7ST FRANC 345.00 345KV CKT 1
FDNS	00NR	3	16WP	G15_044	FROM->TO	G14-057T 345.00 - SUNNYSIDE 345KV CKT 1	717	789	0.117	113.3247	FRONTIER 345/18.0KV TRANSFORMER CKT 1
FDNS	00NR	3	16WP	G15_044	FROM->TO	G14-057T 345.00 - SUNNYSIDE 345KV CKT 1	717	789	0.11711	113.3235	SWISSVALE - WEST GARDNER 345KV CKT 1
FDNS	00NR	3	16WP	G15_044	FROM->TO	G14-057T 345.00 - SUNNYSIDE 345KV CKT 1	717	789	0.117	113.323	FRONTIER 345/18.0KV TRANSFORMER CKT 1
FDNS	00NR	3	16WP	G15_044	FROM->TO	G14-057T 345.00 - SUNNYSIDE 345KV CKT 1	717	789	0.11684	113.3228	ENOWILT - LONE OAK 138KV CKT 1
FDNS	00NR	3	16WP	G15_044	FROM->TO	G14-057T 345.00 - SUNNYSIDE 345KV CKT 1	717	789	0.11713	113.3201	NOEL_SW 138.00 - ROSE_VALLEY 138.00 138KV CKT 1
FDNS	00NR	3	16WP	G15_044	FROM->TO	G14-057T 345.00 - SUNNYSIDE 345KV CKT 1	717	789	0.11766	113.3193	NORGE ROAD - SOUTHWESTERN STATION 138KV CKT 1
FDNS	00NR	3	16WP	G15_044	FROM->TO	G14-057T 345.00 - SUNNYSIDE 345KV CKT 1	717	789	0.11766	113.3193	NORGE ROAD - SOUTHWESTERN STATION 138KV CKT 1
FDNS	00NR	3	16WP	G15_044	FROM->TO	G14-057T 345.00 - SUNNYSIDE 345KV CKT 1	717	789	0.117	113.3188	GEN512688 2-GRDA1 GSU2 22
FDNS	00NR	3	16WP	G15_044	FROM->TO	G14-057T 345.00 - SUNNYSIDE 345KV CKT 1	717	789	0.11542	113.3185	ARBUCKLE - VANOSTP4 138.00 138KV CKT 1
FDNS	00NR	3	16WP	G15_044	FROM->TO	G14-057T 345.00 - SUNNYSIDE 345KV CKT 1	717	789	0.11898	113.3171	LASALLE - STONEWAL LH138.00 138KV CKT 1
FDNS	00NR	3	16WP	G15_044	FROM->TO	G14-057T 345.00 - SUNNYSIDE 345KV CKT 1	717	789	0.117	113.3165	P12:161:AEPW:CHAMSPR5:FARMING5
FDNS	00NR	3	16WP	G15_044	FROM->TO	G14-057T 345.00 - SUNNYSIDE 345KV CKT 1	717	789	0.11684	113.3139	ENOWILT - SARDIS 138KV CKT 1
FDNS	00NR	3	16WP	G15_044	FROM->TO	G14-057T 345.00 - SUNNYSIDE 345KV CKT 1	717	789	0.11722	113.3124	P12:138:OKGE-AEPW:JENSEN4:REDROCKRD4
FDNS	00NR	3	16WP	G15_044	FROM->TO	G14-057T 345.00 - SUNNYSIDE 345KV CKT 1	717	789	0.11704	113.312	P12:138:AEPW-OGE:SHIDLER4:OSAGE 4
FDNS	00NR	3	16WP	G15_044	FROM->TO	G14-057T 345.00 - SUNNYSIDE 345KV CKT 1	717	789	0.1168	113.3118	HOPE - MCNAB REC 115KV CKT 1
FDNS	00NR	3	16WP	G15_044	FROM->TO	G14-057T 345.00 - SUNNYSIDE 345KV CKT 1	717	789	0.11717	113.3064	EMPORIA ENERGY CENTER - G14_001T 345.00 345KV CKT 1
FDNS	00NR	3	16WP	G15_044	FROM->TO	G14-057T 345.00 - SUNNYSIDE 345KV CKT 1	717	789	0.1168	113.3033	P12:115:AEPW:TURK3:HOPE3
FDNS	00NR	3	16WP	G15_044	FROM->TO	G14-057T 345.00 - SUNNYSIDE 345KV CKT 1	717	789	0.11898	113.3024	STONEWAL LH138.00 - TUPELO TAP 138KV CKT 1
FDNS	00NR	3	16WP	G15_044	FROM->TO	G14-057T 345.00 - SUNNYSIDE 345KV CKT 1	717	789	0.11739	113.2971	BENTON - WICHITA 345KV CKT 1
FDNS	00NR	3	16WP	G15_044	FROM->TO	G14-057T 345.00 - SUNNYSIDE 345KV CKT 1	717	789	0.11716	113.2951	CLEO CORNER - CLEOPLT4 138.00 138KV CKT 1
FDNS	00NR	3	20WP	G15_044	FROM->TO	G14-057T 345.00 - SUNNYSIDE 345KV CKT 1	717	789	0.11817	113.2941	COMANCHE TAP - OMPA-DUNCAN 840 138KV CKT 1
FDNS	00NR	3	16WP	G15_044	FROM->TO	G14-057T 345.00 - SUNNYSIDE 345KV CKT 1	717	789	0.11704	113.2889	8WNEWMADRID 500.00 - DELL 500 500KV CKT 1
FDNS	00NR	3	16WP	G15_044	FROM->TO	G14-057T 345.00 - SUNNYSIDE 345KV CKT 1	717	789	0.117	113.2876	LEWIS CREEK SWITCHYARD 138/22.0KV TRANSFORMER CKT 1
FDNS	00NR	3	16WP	G15_044	FROM->TO	G14-057T 345.00 - SUNNYSIDE 345KV CKT 1	717	789	0.117	113.2872	GEN505616 1-BROKEN BOW
FDNS	00NR	3	16WP	G15_044	FROM->TO	G14-057T 345.00 - SUNNYSIDE 345KV CKT 1	717	789	0.11786	113.2857	P12:138:AEPW:REDROCKRD4:WTH_JCT4
FDNS	00NR	3	16WP	G15_044	FROM->TO	G14-057T 345.00 - SUNNYSIDE 345KV CKT 1	717	789	0.11716	113.2836	CLEOPLT4 138.00 - MEN TAP 138KV CKT 1
FDNS	00NR	3	16WP	G15_044	FROM->TO	G14-057T 345.00 - SUNNYSIDE 345KV CKT 1	717	789	0.117	113.2828	LEWIS CREEK SWITCHYARD 138/22.0KV TRANSFORMER CKT 1
FDNS	00NR	3	16WP	G15_044	FROM->TO	G14-057T 345.00 - SUNNYSIDE 345KV CKT 1	717	789	0.1168	113.2811	MCNAB REC - Turk 115 115KV CKT 1
FDNS	00NR	3	16WP	G15_044	FROM->TO	G14-057T 345.00 - SUNNYSIDE 345KV CKT 1	717	789	0.1168	113.2811	TURK (TURK 1) 138/115/13.2KV TRANSFORMER CKT 1
FDNS	00NR	3	16WP	G15_044	FROM->TO	G14-057T 345.00 - SUNNYSIDE 345KV CKT 1	717	789	0.1168	113.2811	TURK (TURK 1) 138/115/13.2KV TRANSFORMER CKT 1
FDNS	00NR	3	16WP	G15_044	FROM->TO	G14-057T 345.00 - SUNNYSIDE 345KV CKT 1	717	789	0.11684	113.2796	CLAYTON - SARDIS 138KV CKT 1
FDNS	00NR	3	16WP	G15_044	FROM->TO	G14-057T 345.00 - SUNNYSIDE 345KV CKT 1	717	789	0.11761	113.2795	SOUTHWESTERN STATION - VERDEN 138KV CKT 1
FDNS	00NR	3	16WP	G15_044	FROM->TO	G14-057T 345.00 - SUNNYSIDE 345KV CKT 1	717	789	0.11689	113.2784	COUCH SES - MC NIEL 115KV CKT 1
FDNS	00NR	3	16WP	G15_044	FROM->TO	G14-057T 345.00 - SUNNYSIDE 345KV CKT 1	717	789	0.11791	113.2751	G14_038T 345.00 - POTTER COUNTY INTERCHANGE 345KV CKT 1
FDNS	00NR	3	16WP	G15_044	FROM->TO	G14-057T 345.00 - SUNNYSIDE 345KV CKT 1	717	789	0.11716	113.2735	IMO TAP - MEN TAP 138KV CKT 1
FDNS	00NR	3	16WP	G15_044	FROM->TO	G14-057T 345.00 - SUNNYSIDE 345KV CKT 1	717	789	0.11722	113.2659	OMPA-WALTERS - WALTERS 69KV CKT 1
FDNS	00NR	3	16WP	G15_044	FROM->TO	G14-057T 345.00 - SUNNYSIDE 345KV CKT 1	717	789	0.11722	113.2659	OMPA-WALTERS - WALTERS 69KV CKT 1
FDNS	00NR	3	16WP	G15_044	FROM->TO	G14-057T 345.00 - SUNNYSIDE 345KV CKT 1	717	789	0.117	113.2631	GEN501970 1-EVANGELINE UNIT 7
FDNS	00NR	3	16WP	G15_044	FROM->TO	G14-057T 345.00 - SUNNYSIDE 345KV CKT 1	717	789	0.11709	113.2597	P12:138:OKGE:3TERM12
FDNS	00NR	3	16WP	G15_044	FROM->TO	G14-057T 345.00 - SUNNYSIDE 345KV CKT 1	717	789	0.11761	113.2593	NORTH 29TH CHICKASHA - VERDEN 138KV CKT 1
FDNS	00NR	3	16WP	G15_044	FROM->TO	G14-057T 345.00 - SUNNYSIDE 345KV CKT 1	717	789	0.11941	113.2549	FRANKLIN SW - WESTMOORE 138KV CKT 1
FDNS	00NR	3	16WP	G15_044	FROM->TO	G14-057T 345.00 - SUNNYSIDE 345KV CKT 1	717	789	0.11733	113.254	P12:69:WFEC-AEPW:COMANCH2:WALTRS-2
FDNS	00NR	3	16WP	G15_044	FROM->TO	G14-057T 345.00 - SUNNYSIDE 345KV CKT 1	717	789	0.11709	113.2526	EMPORIA ENERGY CENTER - SWISSVALE 345KV CKT 1
FDNS	00NR	3	16WP	G15_044	FROM->TO	G14-057T 345.00 - SUNNYSIDE 345KV CKT 1	717	789	0.11684	113.2521	P12:138:AEPW-SWPA:LONEOAK4:BRKNBW4
FDNS	00NR	3	16WP	G15_044	FROM->TO	G14-057T 345.00 - SUNNYSIDE 345KV CKT 1	717	789	0.117	113.2509	GEN334392 1-EXXON MOBIL IPP 1
FDNS	00NR	3	16WP	G15_044	FROM->TO	G14-057T 345.00 - SUNNYSIDE 345KV CKT 1	717	789	0.1169	113.2458	MORISNT4 138.00 - STILLWATER 138KV CKT 1
FDNS	00NR	3	20WP	G15_044	FROM->TO	G14-057T 345.00 - SUNNYSIDE 345KV CKT 1	717	789	0.11683	113.2451	GEN509409 1-WILKES #3
FDNS	00NR	3	16WP	G15_044	FROM->TO	G14-057T 345.00 - SUNNYSIDE 345KV CKT 1	717	789	0.117	113.2443	GEN334393 1-EXXON MOBIL IPP 2
FDNS	00NR	3	16WP	G15_044	FROM->TO	G14-057T 345.00 - SUNNYSIDE 345KV CKT 1	717	789	0.117	113.2443	GEN334394 1-EXXON MOBIL IPP 3
FDNS	00NR	3	16WP	G15_044	FROM->TO	G14-057T 345.00 - SUNNYSIDE 345KV CKT 1	717	789	0.11717	113.242	G14_001T 345.00 - WICHITA 345KV CKT 1
FDNS	00NR	3	16WP	G15_044	FROM->TO	G14-057T 345.00 - SUNNYSIDE 345KV CKT 1	717	789	0.117	113.2419	GEN659125 1-COVEY
FDNS	00NR	3	20WP	G15_044	FROM->TO	G14-057T 345.00 - SUNNYSIDE 345KV CKT 1	717	789	0.11924	113.2416	HEALDTON - LOCO 138KV CKT 1
FDNS	00NR	3	16WP	G15_044	FROM->TO	G14-057T 345.00 - SUNNYSIDE 345KV CKT 1	717	789	0.11691	113.2403	P12:138:OKGE:3TERM2
FDNS	00NR	3	16WP	G15_044	FROM->TO	G14-057T 345.00 - SUNNYSIDE 345KV CKT 1	717	789	0.1175	113.2392	WEATHERFORD TAP - WEATHERFORD WIND FARM 138KV CKT 1
FDNS	00NR	3	16WP	G15_044	FROM->TO	G14-057T 345.00 - SUNNYSIDE 345KV CKT 1	717	789	0.11684	113.2392	CLAYTON - NASHOBA 138KV CKT 1
FDNS	00NR	3	16WP	G15_044	FROM->TO	G14-057T 345.00 - SUNNYSIDE 345KV CKT 1	717	789	0.117	113.2373	GEN509394 1-FLINT CREEK
FDNS	00NR	3	20WP	G15_044	FROM->TO	G14-057T 345.00 - SUNNYSIDE 345KV CKT 1	717	789	0.1106	113.2365	CANADIAN RIVER - MUSKOGEE 345KV CKT 1
FDNS	00NR	3	16WP	G15_044	FROM->TO	G14-057T 345.00 - SUNNYSIDE 345KV CKT 1	717	789	0.117	113.2355	GEN336222 1-LITTLE GYPSY UNIT#2
FDNS	00NR	3	16WP	G15_044	FROM->TO	G14-057T 345.00 - SUNNYSIDE 345KV CKT 1	717	789	0.11728	113.2354	FRANKLIN - FRANKLIN SW 138KV CKT 1
FDNS	00NR	3	16WP	G15_044	FROM->TO	G14-057T 345.00 - SUNNYSIDE 345KV CKT 1	717	789	0.11719	113.2312	BUCKNER7 345.00 - HOLCOMB 345KV CKT 1
FDNS	00NR	3	16WP	G15_044	FROM->TO	G14-057T 345.00 - SUNNYSIDE 345KV CKT 1	717	789	0.11719	113.2312	BUCKNER7 345.00 - HOLCOMB 345KV CKT 1
FDNS	00NR	3	16WP	G15_044	FROM->TO	G14-057T 345.00 - SUNNYSIDE 345KV CKT 1	717	789	0.117	113.2279	P12:138:AEPW:R.S.S-4:T.P.S.-4
FDNS	00NR	3	16WP	G15_044	FROM->TO	G14-057T 345.00 - SUNNYSIDE 345KV CKT 1	717	789	0.11684	113.2263	BETHEL - NASHOBA 138KV CKT 1
FDNS	00NR	3	16WP	G15_044	FROM->TO	G14-057T 345.00 - SUNNYSIDE 345KV CKT 1	717	789	0.1194	113.2253	MARIETTA - MARIETTA4 138.00 138KV CKT 1

SOLUTION	GROUP	SCENARIO	SEASON	SOURCE	DIRECTION	MONITORED ELEMENT	RATEA (MVA)	RATEB(MVA)	TDF	TC%LOADING (% MVA)	CONTINGENCY
FDNS	00NR	3	16WP	G15_044	FROM->TO	G14-057T 345.00 - SUNNYSIDE 345KV CKT 1	717	789	0.11801	113.2238	CLARKSVILLE - ONETA 345KV CKT 1
FDNS	00NR	3	16WP	G15_044	FROM->TO	G14-057T 345.00 - SUNNYSIDE 345KV CKT 1	717	789	0.11801	113.2238	CLARKSVILLE - ONETA 345KV CKT 1
FDNS	00NR	3	20WP	G15_044	FROM->TO	G14-057T 345.00 - SUNNYSIDE 345KV CKT 1	717	789	0.11932	113.2232	BRIDGECR 138.00 - TUTTLE 138KV CKT 1
FDNS	00NR	3	16WP	G15_044	FROM->TO	G14-057T 345.00 - SUNNYSIDE 345KV CKT 1	717	789	0.117	113.2174	GEN506749 1-EASTMAN GENERATION A
FDNS	00NR	3	16WP	G15_044	FROM->TO	G14-057T 345.00 - SUNNYSIDE 345KV CKT 1	717	789	0.117	113.2146	GEN334432 1-SABINE UNIT 2
FDNS	00NR	3	16WP	G15_044	FROM->TO	G14-057T 345.00 - SUNNYSIDE 345KV CKT 1	717	789	0.11702	113.2145	7JASPER 345.00 - MORGAN 345KV CKT 1
FDNS	00NR	3	16WP	G15_044	FROM->TO	G14-057T 345.00 - SUNNYSIDE 345KV CKT 1	717	789	0.117	113.2145	GEN334431 1-SABINE UNIT 1
FDNS	00NR	3	16WP	G15_044	FROM->TO	G14-057T 345.00 - SUNNYSIDE 345KV CKT 1	717	789	0.11786	113.2094	HINTON - WEATHERFORD JCT. 138KV CKT 1
FDNS	00NR	3	16WP	G15_044	FROM->TO	G14-057T 345.00 - SUNNYSIDE 345KV CKT 1	717	789	0.117	113.2073	GEN501971 1-EVANGELINE UNIT 7-1
FDNS	00NR	3	16WP	G15_044	FROM->TO	G14-057T 345.00 - SUNNYSIDE 345KV CKT 1	717	789	0.117	113.2073	GEN501972 1-EVANGELINE UNIT 7-2
FDNS	00NR	3	16WP	G15_044	FROM->TO	G14-057T 345.00 - SUNNYSIDE 345KV CKT 1	717	789	0.117	113.2066	GEN336152 1-WATERFORD UNIT#2
FDNS	00NR	3	16WP	G15_044	FROM->TO	G14-057T 345.00 - SUNNYSIDE 345KV CKT 1	717	789	0.117	113.2056	GEN336151 1-WATERFORD UNIT#1
FDNS	00NR	3	16WP	G15_044	FROM->TO	G14-057T 345.00 - SUNNYSIDE 345KV CKT 1	717	789	0.117	113.2044	P12:138:AEPW:R.S.S.-4:R:96YALE-4
FDNS	00NR	3	16WP	G15_044	FROM->TO	G14-057T 345.00 - SUNNYSIDE 345KV CKT 1	717	789	0.11721	113.2038	CLINTON JUNCTION - ELK CITY 138KV CKT 1
FDNS	00NR	3	16WP	G15_044	FROM->TO	G14-057T 345.00 - SUNNYSIDE 345KV CKT 1	717	789	0.11721	113.2038	CLINTON JUNCTION - ELK CITY 138KV CKT 1
FDNS	00NR	3	16WP	G15_044	FROM->TO	G14-057T 345.00 - SUNNYSIDE 345KV CKT 1	717	789	0.11766	113.2005	CORNVILLE - NORGE ROAD 138KV CKT 1
FDNS	00NR	3	16WP	G15_044	FROM->TO	G14-057T 345.00 - SUNNYSIDE 345KV CKT 1	717	789	0.11766	113.2005	CORNVILLE - NORGE ROAD 138KV CKT 1
FDNS	00NR	3	16WP	G15_044	FROM->TO	G14-057T 345.00 - SUNNYSIDE 345KV CKT 1	717	789	0.11852	113.1938	PURCELL4 138.00 - WALNUT CREEK 138KV CKT 1
FDNS	00NR	3	16WP	G15_044	FROM->TO	G14-057T 345.00 - SUNNYSIDE 345KV CKT 1	717	789	0.11785	113.1938	FINNEY SWITCHING STATION - WALKTAP7 345.00 345KV CKT 1
FDNS	00NR	3	16WP	G15_044	FROM->TO	G14-057T 345.00 - SUNNYSIDE 345KV CKT 1	717	789	0.11785	113.1938	FINNEY SWITCHING STATION - WALKTAP7 345.00 345KV CKT 1
FDNS	00NR	3	16WP	G15_044	FROM->TO	G14-057T 345.00 - SUNNYSIDE 345KV CKT 1	717	789	0.11761	113.1935	CORNVILLE - NORTH 29TH CHICKASHA 138KV CKT 1
FDNS	00NR	3	16WP	G15_044	FROM->TO	G14-057T 345.00 - SUNNYSIDE 345KV CKT 1	717	789	0.117	113.189	P12:138:AEPW:MOHAWK4:T.NO--4
FDNS	00NR	3	16WP	G15_044	FROM->TO	G14-057T 345.00 - SUNNYSIDE 345KV CKT 1	717	789	0.117	113.1839	GEN501912 1-ACADIA UNIT CT1B
FDNS	00NR	3	16WP	G15_044	FROM->TO	G14-057T 345.00 - SUNNYSIDE 345KV CKT 1	717	789	0.11722	113.1837	G13-010T 345.00 - POST ROCK 345KV CKT 1
FDNS	00NR	3	16WP	G15_044	FROM->TO	G14-057T 345.00 - SUNNYSIDE 345KV CKT 1	717	789	0.117	113.1832	GEN501911 1-ACADIA UNIT CT1A
FDNS	00NR	3	16WP	G15_044	FROM->TO	G14-057T 345.00 - SUNNYSIDE 345KV CKT 1	717	789	0.117	113.1825	ST FRANCIS - ST FRANCIS 1 161KV CKT Z1
FDNS	00NR	3	20WP	G15_044	FROM->TO	G14-057T 345.00 - SUNNYSIDE 345KV CKT 1	717	789	0.11683	113.1822	GEN501813 1-RODEMACHER UNIT 3
FDNS	00NR	3	16WP	G15_044	FROM->TO	G14-057T 345.00 - SUNNYSIDE 345KV CKT 1	717	789	0.11734	113.181	HAMMETT TAP - HORSESHOE LAKE 138KV CKT 1
FDNS	00NR	3	16WP	G15_044	FROM->TO	G14-057T 345.00 - SUNNYSIDE 345KV CKT 1	717	789	0.11692	113.1799	LAYFLD8 500.00 (LAYFLD AUTO) 500/230/13.8KV TRANSFORMER CKT 1
FDNS	00NR	3	16WP	G15_044	FROM->TO	G14-057T 345.00 - SUNNYSIDE 345KV CKT 1	717	789	0.11692	113.1799	LAYFLD8 500.00 (LAYFLD AUTO) 500/230/13.8KV TRANSFORMER CKT 1
FDNS	00NR	3	16WP	G15_044	FROM->TO	G14-057T 345.00 - SUNNYSIDE 345KV CKT 1	717	789	0.11677	113.1784	P12:138:AEPW:OKMULGE4:R.S.S-4
FDNS	00NR	3	16WP	G15_044	FROM->TO	G14-057T 345.00 - SUNNYSIDE 345KV CKT 1	717	789	0.11625	113.1736	ARBUCKLE - MILLCREEK 138KV CKT 1
FDNS	00NR	3	16WP	G15_044	FROM->TO	G14-057T 345.00 - SUNNYSIDE 345KV CKT 1	717	789	0.117	113.1727	SABINE 230/22.0KV TRANSFORMER CKT 1
FDNS	00NR	3	16WP	G15_044	FROM->TO	G14-057T 345.00 - SUNNYSIDE 345KV CKT 1	717	789	0.11684	113.1722	BETHEL - BROKEN BOW 138KV CKT 1
FDNS	00NR	3	16WP	G15_044	FROM->TO	G14-057T 345.00 - SUNNYSIDE 345KV CKT 1	717	789	0.11684	113.1713	AMITY SS - MURFREESBORO EAST (AECC) 115KV CKT 1
FDNS	00NR	3	16WP	G15_044	FROM->TO	G14-057T 345.00 - SUNNYSIDE 345KV CKT 1	717	789	0.11714	113.1701	FLETCHER - MARLOW JCT 69KV CKT 1
FDNS	00NR	3	16WP	G15_044	FROM->TO	G14-057T 345.00 - SUNNYSIDE 345KV CKT 1	717	789	0.11719	113.1658	P12:138:OKGE:3TERM47
FDNS	00NR	3	16WP	G15_044	FROM->TO	G14-057T 345.00 - SUNNYSIDE 345KV CKT 1	717	789	0.11705	113.1648	P12:138:WFEC-AEPW:ELKCTY-4:ERICK4
FDNS	00NR	3	16WP	G15_044	FROM->TO	G14-057T 345.00 - SUNNYSIDE 345KV CKT 1	717	789	0.117	113.1593	GEN336242 1-1NMIL ST1 18.000
FDNS	00NR	3	16WP	G15_044	FROM->TO	G14-057T 345.00 - SUNNYSIDE 345KV CKT 1	717	789	0.11786	113.1531	HINTON - REDROCKRD4 138.00 138KV CKT 1
FDNS	00NR	3	16WP	G15_044	FROM->TO	G14-057T 345.00 - SUNNYSIDE 345KV CKT 1	717	789	0.1175	113.1518	WEATHERFORD SOUTHEAST - WEATHERFORD TAP 138KV CKT 1
FDNS	00NR	3	16WP	G15_044	FROM->TO	G14-057T 345.00 - SUNNYSIDE 345KV CKT 1	717	789	0.12156	113.1417	CIMARRON - NORTHWEST 345KV CKT 1
FDNS	00NR	3	16WP	G15_044	FROM->TO	G14-057T 345.00 - SUNNYSIDE 345KV CKT 1	717	789	0.11723	113.1395	SEMINOLE (SEMINOL2) 345/138/14.4KV TRANSFORMER CKT 1
FDNS	00NR	3	20WP	G15_044	FROM->TO	G14-057T 345.00 - SUNNYSIDE 345KV CKT 1	717	789	0.11683	113.11	GEN300006 1-NEW MADRID UNIT 1
FDNS	00NR	3	20WP	G15_044	FROM->TO	G14-057T 345.00 - SUNNYSIDE 345KV CKT 1	717	789	0.11924	113.0974	HEALDTON - RINGLING 138KV CKT 1
FDNS	00NR	3	20WP	G15_044	FROM->TO	G14-057T 345.00 - SUNNYSIDE 345KV CKT 1	717	789	0.11683	113.0898	GEN300007 1-NEW MADRID UNIT 2
FDNS	00NR	3	20WP	G15_044	FROM->TO	G14-057T 345.00 - SUNNYSIDE 345KV CKT 1	717	789	0.117	113.0279	LACYGNE - WAVERLY7 345.00 345KV CKT 1
FDNS	00NR	3	20WP	G15_044	FROM->TO	G14-057T 345.00 - SUNNYSIDE 345KV CKT 1	717	789	0.11817	113.0084	DUNCAN - OMPA-DUNCAN 840 138KV CKT 1
FDNS	00NR	3	20WP	G15_044	FROM->TO	G14-057T 345.00 - SUNNYSIDE 345KV CKT 1	717	789	0.11817	113.0084	DUNCAN - OMPA-DUNCAN 840 138KV CKT 1
FDNS	00NR	3	20WP	G15_044	FROM->TO	G14-057T 345.00 - SUNNYSIDE 345KV CKT 1	717	789	0.11683	112.9726	GEN335206 1-NELSON UNIT 6
FDNS	00NR	3	20WP	G15_044	FROM->TO	G14-057T 345.00 - SUNNYSIDE 345KV CKT 1	717	789	0.11932	112.9475	P12:138:WFEC:MSL01
FDNS	00NR	3	20WP	G15_044	FROM->TO	G14-057T 345.00 - SUNNYSIDE 345KV CKT 1	717	789	0.11683	112.9471	GEN520947 1-HUGO1
FDNS	00NR	3	20WP	G15_044	FROM->TO	G14-057T 345.00 - SUNNYSIDE 345KV CKT 1	717	789	0.11932	112.9409	BRIDGECR 138.00 - SUNSHINE CANYON 138KV CKT 1
FDNS	00NR	3	20WP	G15_044	FROM->TO	G14-057T 345.00 - SUNNYSIDE 345KV CKT 1	717	789	0.11924	112.9263	RINGLING - SOUTH WILSON 138KV CKT 1
FDNS	00NR	3	20WP	G15_044	FROM->TO	G14-057T 345.00 - SUNNYSIDE 345KV CKT 1	717	789	0.117	112.9164	WAVERLY7 345.00 - WOLF CREEK 345KV CKT 1
FDNS	00NR	3	20WP	G15_044	FROM->TO	G14-057T 345.00 - SUNNYSIDE 345KV CKT 1	717	789	0.11672	112.8103	ELDORADO EHV - MOUNT OLIVE 500KV CKT 1
FDNS	00NR	3	20WP	G15_044	FROM->TO	G14-057T 345.00 - SUNNYSIDE 345KV CKT 1	717	789	0.11684	112.8048	P12:138:AEPW:SHERID4:112GORE4
FDNS	00NR	3	20WP	G15_044	FROM->TO	G14-057T 345.00 - SUNNYSIDE 345KV CKT 1	717	789	0.11683	112.7894	GEN501812 1-RODEMACHER UNIT 2
FDNS	00NR	3	20WP	G15_044	FROM->TO	G14-057T 345.00 - SUNNYSIDE 345KV CKT 1	717	789	0.11683	112.7848	DOLET HILLS 345/24.0KV TRANSFORMER CKT 1
FDNS	00NR	3	20WP	G15_044	FROM->TO	G14-057T 345.00 - SUNNYSIDE 345KV CKT 1	717	789	0.11825	112.7635	Hitchland Interchange - WALKTAP7 345.00 345KV CKT 1
FDNS	00NR	3	20WP	G15_044	FROM->TO	G14-057T 345.00 - SUNNYSIDE 345KV CKT 1	717	789	0.11825	112.7635	Hitchland Interchange - WALKTAP7 345.00 345KV CKT 1
FDNS	00NR	3	20WP	G15_044	FROM->TO	G14-057T 345.00 - SUNNYSIDE 345KV CKT 1	717	789	0.1179	112.7532	REDBUD - RIVERSIDE STATION 345KV CKT 1
FDNS	00NR	3	20WP	G15_044	FROM->TO	G14-057T 345.00 - SUNNYSIDE 345KV CKT 1	717	789	0.1179	112.7532	REDBUD - RIVERSIDE STATION 345KV CKT 1
FDNS	00NR	3	20WP	G15_044	FROM->TO	G14-057T 345.00 - SUNNYSIDE 345KV CKT 1	717	789	0.11558	112.7515	PARK LANE - SEMINOLE 138KV CKT 1
FDNS	00NR	3	20WP	G15_044	FROM->TO	G14-057T 345.00 - SUNNYSIDE 345KV CKT 1	717	789	0.11825	112.7315	P12:345:SPS:J07.1.FINN.HITCH
FDNS	00NR	3	16WP	G15_044	FROM->TO	G14-057T 345.00 - SUNNYSIDE 345KV CKT 1	717	789	0.117	112.6917	803-OKLAUNION
FDNS	00NR	3	20WP	G15_044	FROM->TO	G14-057T 345.00 - SUNNYSIDE 345KV CKT 1	717	789	0.11683	112.6663	GEN515564 1-ORIGIN11 0.6900
FDNS	00NR	3	20WP	G15_044	FROM->TO	G14-057T 345.00 - SUNNYSIDE 345KV CKT 1	717	789	0.11683	112.6663	GEN515565 1-ORIGIN21 0.6900
FDNS	00NR	3	20WP	G15_044	FROM->TO	G14-057T 345.00 - SUNNYSIDE 345KV CKT 1	717	789	0.11679	112.6503	WEBRE - WELLS 500KV CKT 1
FDNS	00NR	3	20WP	G15_044	FROM->TO	G14-057T 345.00 - SUNNYSIDE 345KV CKT 1	717	789	0.11866	112.6484	MATHWSN7 345.00 - NORTHWEST 345KV CKT 1
FDNS	00NR	3	20WP	G15_044	FROM->TO	G14-057T 345.00 - SUNNYSIDE 345KV CKT 1	717	789	0.11924	112.6402	MARIETTA - SOUTH WILSON 138KV CKT 1
FDNS	00NR	3	20WP	G15_044	FROM->TO	G14-057T 345.00 - SUNNYSIDE 345KV CKT 1	717	789	0.11683	112.6312	GEN334440 1-SABINE UNIT 4
FDNS	00NR	3	20WP	G15_044	FROM->TO	G14-057T 345.00 - SUNNYSIDE 345KV CKT 1	717	789	0.11683	112.6087	P12:161:AEPW:DYESS 5:HYLAND 5
FDNS	00NR	3	20WP	G15_044	FROM->TO	G14-057T 345.00 - SUNNYSIDE 345KV CKT 1	717	789	0.11683	112.6022	GEN590011 2-ERCOT EQUIVALENCE
FDNS	00NR	3	20WP	G15_044	FROM->TO	G14-057T 345.00 - SUNNYSIDE 345KV CKT 1	717	789	0.1173	112.5781	CANEYRV7 345.00 - NEOSHO 345KV CKT 1
FDNS	00NR	3	20WP	G15_044	FROM->TO	G14-057T 345.00 - SUNNYSIDE 345KV CKT 1	717	789	0.11683	112.5754	DELL 500 - ESSEX UNIT 2 500KV CKT Z1
FDNS	00NR	3	20WP	G15_044	FROM->TO	G14-057T 345.00 - SUNNYSIDE 345KV CKT 1	717	789	0.11683	112.5462	P12:69:AEPW:L.E.S.-2:LAW WC2
FDNS	00NR	3	20WP	G15_044	FROM->TO	G14-057T 345.00 - SUNNYSIDE 345KV CKT 1	717	789	0.11924	112.5445	P12:138:WFEC:MSL17
FDNS	00NR	3	20WP	G15_044	FROM->TO	G14-057T 345.00 - SUNNYSIDE 345KV CKT 1	717	789	0.11683	112.5331	GEN590010 1-ERCOT EQUIVALENCE

SOLUTION	GROUP	SCENARIO	SEASON	SOURCE	DIRECTION	MONITORED ELEMENT	RATEA (MVA)	RATEB(MVA)	TDF	TC%LOADING (% MVA)	CONTINGENCY
FDNS	00NR	3	20WP	G15_044	FROM->TO	G14-057T 345.00 - SUNNYSIDE 345KV CKT 1	717	789	0.11768	112.4743	P12:138:WFEC:MSL02
FDNS	00NR	3	20WP	G15_044	FROM->TO	G14-057T 345.00 - SUNNYSIDE 345KV CKT 1	717	789	0.11734	112.4659	PAOLI - PAYNE 138.00 138KV CKT 1
FDNS	00NR	3	20WP	G15_044	FROM->TO	G14-057T 345.00 - SUNNYSIDE 345KV CKT 1	717	789	0.1166	112.457	ELDORADO EHV - SHERIDAN EHV 500KV CKT 1
FDNS	00NR	3	20WP	G15_044	FROM->TO	G14-057T 345.00 - SUNNYSIDE 345KV CKT 1	717	789	0.1175	112.4554	LAWTON EASTSIDE (LES 5) 345/138/13.8KV TRANSFORMER CKT 2
FDNS	00NR	3	20WP	G15_044	FROM->TO	G14-057T 345.00 - SUNNYSIDE 345KV CKT 1	717	789	0.1175	112.4554	LAWTON EASTSIDE (LES 5) 345/138/13.8KV TRANSFORMER CKT 2
FDNS	00NR	3	20WP	G15_044	FROM->TO	G14-057T 345.00 - SUNNYSIDE 345KV CKT 1	717	789	0.11683	112.4511	GEN506754 1-LEBROCK STEAM 1
FDNS	00NR	3	20WP	G15_044	FROM->TO	G14-057T 345.00 - SUNNYSIDE 345KV CKT 1	717	789	0.1173	112.4369	CANEYRV7 345.00 - LATHAMS7 345.00 345KV CKT 1
FDNS	00NR	3	20WP	G15_044	FROM->TO	G14-057T 345.00 - SUNNYSIDE 345KV CKT 1	717	789	0.11881	112.4276	CIVIT - PAOLI 138KV CKT 1
FDNS	00NR	3	20WP	G15_044	FROM->TO	G14-057T 345.00 - SUNNYSIDE 345KV CKT 1	717	789	0.11684	112.4232	P12:138:AEPW:112GORE4:L.E.S.-4
FDNS	00NR	3	20WP	G15_044	FROM->TO	G14-057T 345.00 - SUNNYSIDE 345KV CKT 1	717	789	0.11683	112.4064	GEN509408 1-WILKES #2
FDNS	00NR	3	20WP	G15_044	FROM->TO	G14-057T 345.00 - SUNNYSIDE 345KV CKT 1	717	789	0.11749	112.4035	ANADARKO - GEORGIA 138KV CKT 1
FDNS	00NR	3	20WP	G15_044	FROM->TO	G14-057T 345.00 - SUNNYSIDE 345KV CKT 1	717	789	0.11683	112.3511	GEN336252 1-NINEMILE POINT UNIT#5
FDNS	00NR	3	20WP	G15_044	FROM->TO	G14-057T 345.00 - SUNNYSIDE 345KV CKT 1	717	789	0.11749	112.3173	FLETCHER - GEORGIA 138KV CKT 1
FDNS	00NR	3	20WP	G15_044	FROM->TO	G14-057T 345.00 - SUNNYSIDE 345KV CKT 1	717	789	0.11683	112.3147	FRONTIER - GRIMES 345KV CKT 1
FDNS	00NR	3	16WP	G15_044	FROM->TO	G14-057T 345.00 - SUNNYSIDE 345KV CKT 1	717	789	0.11704	112.3105	JOHNSON COUNTY - RUSSETT 138KV CKT 1
FDNS	00NR	3	20WP	G15_044	FROM->TO	G14-057T 345.00 - SUNNYSIDE 345KV CKT 1	717	789	0.11962	112.3086	P12:138:AEPW-OGE:CORNVIL4:MAUD 4
FDNS	00NR	3	20WP	G15_044	FROM->TO	G14-057T 345.00 - SUNNYSIDE 345KV CKT 1	717	789	0.11683	112.3074	GEN503909 1-FULTONU1 1 16.000
FDNS	00NR	3	16WP	G15_044	FROM->TO	G14-057T 345.00 - SUNNYSIDE 345KV CKT 1	717	789	0.11586	112.305	MAYSVLT4 138.00 - PRAIRIE POINT 138KV CKT 1
FDNS	00NR	3	16WP	G15_044	FROM->TO	G14-057T 345.00 - SUNNYSIDE 345KV CKT 1	717	789	0.1193	112.3037	NORTHWEST - SPRING CREEK 345KV CKT 1
FDNS	00NR	3	20WP	G15_044	FROM->TO	G14-057T 345.00 - SUNNYSIDE 345KV CKT 1	717	789	0.11734	112.3024	TUPELO - TUPELO TAP 138KV CKT 1
FDNS	00NR	3	16WP	G15_044	FROM->TO	G14-057T 345.00 - SUNNYSIDE 345KV CKT 1	717	789	0.11708	112.2986	GLASSES - MADILL INDUSTRIAL TAP 138KV CKT 1
FDNS	00NR	3	16WP	G15_044	FROM->TO	G14-057T 345.00 - SUNNYSIDE 345KV CKT 1	717	789	0.1193	112.2965	SOONER - SPRING CREEK 345KV CKT 1
FDNS	00NR	3	20WP	G15_044	FROM->TO	G14-057T 345.00 - SUNNYSIDE 345KV CKT 1	717	789	0.11683	112.2943	GEN335204 1-NELSON UNIT 4
FDNS	00NR	3	20WP	G15_044	FROM->TO	G14-057T 345.00 - SUNNYSIDE 345KV CKT 1	717	789	0.11881	112.2874	CIVIT - STRATFORD 138KV CKT 1
FDNS	00NR	3	20WP	G15_044	FROM->TO	G14-057T 345.00 - SUNNYSIDE 345KV CKT 1	717	789	0.11683	112.2871	GEN334441 1-SABINE UNIT 5
FDNS	00NR	3	16WP	G15_044	FROM->TO	G14-057T 345.00 - SUNNYSIDE 345KV CKT 1	717	789	0.117	112.2764	GEN562772 1-G15034_3 0.6900
FDNS	00NR	3	16WP	G15_044	FROM->TO	G14-057T 345.00 - SUNNYSIDE 345KV CKT 1	717	789	0.11692	112.2747	HUGO (HUGO 1) 345/138/13.8KV TRANSFORMER CKT 1
FDNS	00NR	3	16WP	G15_044	FROM->TO	G14-057T 345.00 - SUNNYSIDE 345KV CKT 1	717	789	0.117	112.2677	GEN521103 1-BLUE CANYON WIND FARM
FDNS	00NR	3	16WP	G15_044	FROM->TO	G14-057T 345.00 - SUNNYSIDE 345KV CKT 1	717	789	0.117	112.264	GEN562691 1-G15_015_3 0.6900
FDNS	00NR	3	20WP	G15_044	FROM->TO	G14-057T 345.00 - SUNNYSIDE 345KV CKT 1	717	789	0.11755	112.262	EMPIRE - FLETCHER 138KV CKT 1
FDNS	00NR	3	16WP	G15_044	FROM->TO	G14-057T 345.00 - SUNNYSIDE 345KV CKT 1	717	789	0.11743	112.2614	DRAPER LAKE - MIDWEST TAP 138KV CKT 1
FDNS	00NR	3	20WP	G15_044	FROM->TO	G14-057T 345.00 - SUNNYSIDE 345KV CKT 1	717	789	0.11775	112.2457	G14_038T 345.00 - Hitchland Interchange 345KV CKT 1
FDNS	00NR	3	16WP	G15_044	FROM->TO	G14-057T 345.00 - SUNNYSIDE 345KV CKT 1	717	789	0.1161	112.2436	ARBUCKLE - SULPHR 4 138.00 138KV CKT 1
FDNS	00NR	3	16WP	G15_044	FROM->TO	G14-057T 345.00 - SUNNYSIDE 345KV CKT 1	717	789	0.117	112.2392	GEN520812 1-ANADRK5
FDNS	00NR	3	16WP	G15_044	FROM->TO	G14-057T 345.00 - SUNNYSIDE 345KV CKT 1	717	789	0.117	112.2391	GEN520813 1-ANADRK6
FDNS	00NR	3	16WP	G15_044	FROM->TO	G14-057T 345.00 - SUNNYSIDE 345KV CKT 1	717	789	0.11708	112.2379	GLASSES - RUSSETT 138KV CKT 1
FDNS	00NR	3	16WP	G15_044	FROM->TO	G14-057T 345.00 - SUNNYSIDE 345KV CKT 1	717	789	0.11697	112.2346	P12:138:WFEC:MSL11
FDNS	00NR	3	16WP	G15_044	FROM->TO	G14-057T 345.00 - SUNNYSIDE 345KV CKT 1	717	789	0.11697	112.2346	P12:138:WFEC-AEPW:PHAROAH4:LONEOAK4
FDNS	00NR	3	16WP	G15_044	FROM->TO	G14-057T 345.00 - SUNNYSIDE 345KV CKT 1	717	789	0.11823	112.2325	BEARCAT 138.00 - NINE MILE 138KV CKT 1
FDNS	00NR	3	20WP	G15_044	FROM->TO	G14-057T 345.00 - SUNNYSIDE 345KV CKT 1	717	789	0.11962	112.2312	BLANCHARD - CORNVILLE 138KV CKT 1
FDNS	00NR	3	16WP	G15_044	FROM->TO	G14-057T 345.00 - SUNNYSIDE 345KV CKT 1	717	789	0.117	112.2289	GEN511961 1-DEMPSEY-WTG10.7000
FDNS	00NR	3	16WP	G15_044	FROM->TO	G14-057T 345.00 - SUNNYSIDE 345KV CKT 1	717	789	0.117	112.2149	GEN600017 C-LS POWER CT
FDNS	00NR	3	16WP	G15_044	FROM->TO	G14-057T 345.00 - SUNNYSIDE 345KV CKT 1	717	789	0.11728	112.2118	P12:138:WFEC:MSL08
FDNS	00NR	3	16WP	G15_044	FROM->TO	G14-057T 345.00 - SUNNYSIDE 345KV CKT 1	717	789	0.11699	112.2113	P12:069:OKGE:3TERM42
FDNS	00NR	3	20WP	G15_044	FROM->TO	G14-057T 345.00 - SUNNYSIDE 345KV CKT 1	717	789	0.11673	112.2112	LAYFLD8 500.00 - MOUNT OLIVE 500KV CKT 1
FDNS	00NR	3	20WP	G15_044	FROM->TO	G14-057T 345.00 - SUNNYSIDE 345KV CKT 1	717	789	0.11673	112.2112	LAYFLD8 500.00 - MOUNT OLIVE 500KV CKT 1
FDNS	00NR	3	20WP	G15_044	FROM->TO	G14-057T 345.00 - SUNNYSIDE 345KV CKT 1	717	789	0.1173	112.2105	LATHAMS7 345.00 - ROSE HILL 345KV CKT 1
FDNS	00NR	3	16WP	G15_044	FROM->TO	G14-057T 345.00 - SUNNYSIDE 345KV CKT 1	717	789	0.11748	112.2096	P12:138:OKGE:3TERM21
FDNS	00NR	3	16WP	G15_044	FROM->TO	G14-057T 345.00 - SUNNYSIDE 345KV CKT 1	717	789	0.11586	112.2081	PRAIRIE POINT - RATLIFF 138KV CKT 1
FDNS	00NR	3	16WP	G15_044	FROM->TO	G14-057T 345.00 - SUNNYSIDE 345KV CKT 1	717	789	0.11705	112.2038	DELL 500 - INDEPENDENCE 500KV CKT 1
FDNS	00NR	3	20WP	G15_044	FROM->TO	G14-057T 345.00 - SUNNYSIDE 345KV CKT 1	717	789	0.11753	112.1996	THISTLE7 345.00 - WOODWARD DISTRICT EHV 345KV CKT 1
FDNS	00NR	3	20WP	G15_044	FROM->TO	G14-057T 345.00 - SUNNYSIDE 345KV CKT 1	717	789	0.11753	112.1996	THISTLE7 345.00 - WOODWARD DISTRICT EHV 345KV CKT 1
FDNS	00NR	3	20WP	G15_044	FROM->TO	G14-057T 345.00 - SUNNYSIDE 345KV CKT 1	717	789	0.11753	112.1996	THISTLE7 345.00 - WOODWARD DISTRICT EHV 345KV CKT 2
FDNS	00NR	3	20WP	G15_044	FROM->TO	G14-057T 345.00 - SUNNYSIDE 345KV CKT 1	717	789	0.11753	112.1996	THISTLE7 345.00 - WOODWARD DISTRICT EHV 345KV CKT 2
FDNS	00NR	3	16WP	G15_044	FROM->TO	G14-057T 345.00 - SUNNYSIDE 345KV CKT 1	717	789	0.11807	112.1984	CIMARRON - MATHWSN7 345.00 345KV CKT 1
FDNS	00NR	3	16WP	G15_044	FROM->TO	G14-057T 345.00 - SUNNYSIDE 345KV CKT 1	717	789	0.11807	112.1984	CIMARRON - MATHWSN7 345.00 345KV CKT 2
FDNS	00NR	3	20WP	G15_044	FROM->TO	G14-057T 345.00 - SUNNYSIDE 345KV CKT 1	717	789	0.11683	112.1966	GEN334071 1-LEWIS CREEK 2
FDNS	00NR	3	16WP	G15_044	FROM->TO	G14-057T 345.00 - SUNNYSIDE 345KV CKT 1	717	789	0.117	112.1901	GEN672392 1-NBECGT1G 18.000
FDNS	00NR	3	20WP	G15_044	FROM->TO	G14-057T 345.00 - SUNNYSIDE 345KV CKT 1	717	789	0.11683	112.1883	GEN334070 1-LEWIS CREEK 1
FDNS	00NR	3	16WP	G15_044	FROM->TO	G14-057T 345.00 - SUNNYSIDE 345KV CKT 1	717	789	0.11709	112.1877	OVEXFRMCCOVE
FDNS	00NR	3	20WP	G15_044	FROM->TO	G14-057T 345.00 - SUNNYSIDE 345KV CKT 1	717	789	0.11755	112.1831	COMANCHE - EMPIRE 138KV CKT 1
FDNS	00NR	3	20WP	G15_044	FROM->TO	G14-057T 345.00 - SUNNYSIDE 345KV CKT 1	717	789	0.11683	112.1813	GEN336251 1-NINEMILE POINT UNIT#4
FDNS	00NR	3	16WP	G15_044	FROM->TO	G14-057T 345.00 - SUNNYSIDE 345KV CKT 1	717	789	0.117	112.1744	GEN528361 1-MADDOX GEN #1
FDNS	00NR	3	16WP	G15_044	FROM->TO	G14-057T 345.00 - SUNNYSIDE 345KV CKT 1	717	789	0.11702	112.1735	GRPRAR1-LNX3345.00 - HOLT.CO3 345.00 345KV CKT 1
FDNS	00NR	3	16WP	G15_044	FROM->TO	G14-057T 345.00 - SUNNYSIDE 345KV CKT 1	717	789	0.11823	112.1726	P12:138:WFEC:MSL14
FDNS	00NR	3	16WP	G15_044	FROM->TO	G14-057T 345.00 - SUNNYSIDE 345KV CKT 1	717	789	0.11709	112.1714	CANEY CREEK - JOHNSON COUNTY 138KV CKT 1
FDNS	00NR	3	16WP	G15_044	FROM->TO	G14-057T 345.00 - SUNNYSIDE 345KV CKT 1	717	789	0.117	112.1704	GEN615010 1-STANTON4
FDNS	00NR	3	20WP	G15_044	FROM->TO	G14-057T 345.00 - SUNNYSIDE 345KV CKT 1	717	789	0.11881	112.1703	OIL CENTER - STRATFORD 138KV CKT 1
FDNS	00NR	3	20WP	G15_044	FROM->TO	G14-057T 345.00 - SUNNYSIDE 345KV CKT 1	717	789	0.11683	112.1694	P12:161:AEPW-SWPA:BEAVER5:EROGERS5
FDNS	00NR	3	20WP	G15_044	FROM->TO	G14-057T 345.00 - SUNNYSIDE 345KV CKT 1	717	789	0.11683	112.1647	GEN509392 G2-ARSENAL HILL GENS #3 (STALL)
FDNS	00NR	3	16WP	G15_044	FROM->TO	G14-057T 345.00 - SUNNYSIDE 345KV CKT 1	717	789	0.117	112.1645	GEN629070 2-BEAVER CHANNEL GENERATORFOR UNIT NO 2
FDNS	00NR	3	20WP	G15_044	FROM->TO	G14-057T 345.00 - SUNNYSIDE 345KV CKT 1	717	789	0.11683	112.1645	GEN509391 G1-ARSENAL HILL GENS #2 (STALL)
FDNS	00NR	3	16WP	G15_044	FROM->TO	G14-057T 345.00 - SUNNYSIDE 345KV CKT 1	717	789	0.11702	112.1628	GRPRAR1-LNX3345.00 - GRPRAR 345KV CKT Z
FDNS	00NR	3	20WP	G15_044	FROM->TO	G14-057T 345.00 - SUNNYSIDE 345KV CKT 1	717	789	0.11683	112.1625	GEN509393 S1-ARSENAL HILL GENS #4 (STALL)
FDNS	00NR	3	16WP	G15_044	FROM->TO	G14-057T 345.00 - SUNNYSIDE 345KV CKT 1	717	789	0.117	112.155	GEN560183 1-REDHIL-WTG1 12.000
FDNS	00NR	3	16WP	G15_044	FROM->TO	G14-057T 345.00 - SUNNYSIDE 345KV CKT 1	717	789	0.117	112.1545	GEN515443 1-MNCOWND1 0.7000
FDNS	00NR	3	16WP	G15_044	FROM->TO	G14-057T 345.00 - SUNNYSIDE 345KV CKT 1	717	789	0.117	112.15	GEN629071 1-BURLINGTON GENERATOR FOR UNIT NO 1 E
FDNS	00NR	3	16WP	G15_044	FROM->TO	G14-057T 345.00 - SUNNYSIDE 345KV CKT 1	717	789	0.117	112.1499	GEN615021 1-GRE-ER 14G 16.000
FDNS	00NR	3	20WP	G15_044	FROM->TO	G14-057T 345.00 - SUNNYSIDE 345KV CKT 1	717	789	0.11718	112.1481	DUNCAN (DUNCAN) 138/69/13.8KV TRANSFORMER CKT 1

SOLUTION	GROUP	SCENARIO	SEASON	SOURCE	DIRECTION	MONITORED ELEMENT	RATEA (MVA)	RATEB(MVA)	TDF	TC%LOADING (% MVA)	CONTINGENCY
FDNS	00NR	3	20WP	G15_044	FROM->TO	G14-057T 345.00 - SUNNYSIDE 345KV CKT 1	717	789	0.11718	112.1481	DUNCAN (DUNCAN) 138/69/13.8KV TRANSFORMER CKT 1
FDNS	00NR	3	16WP	G15_044	FROM->TO	G14-057T 345.00 - SUNNYSIDE 345KV CKT 1	717	789	0.11687	112.146	CARTER - CHICKASAW 138KV CKT 1
FDNS	00NR	3	16WP	G15_044	FROM->TO	G14-057T 345.00 - SUNNYSIDE 345KV CKT 1	717	789	0.117	112.1366	INDEPENDENCE 500/26.0KV TRANSFORMER CKT 1
FDNS	00NR	3	16WP	G15_044	FROM->TO	G14-057T 345.00 - SUNNYSIDE 345KV CKT 1	717	789	0.117	112.1349	GEN562902 1-G15052_3 0.6900
FDNS	00NR	3	16WP	G15_044	FROM->TO	G14-057T 345.00 - SUNNYSIDE 345KV CKT 1	717	789	0.117	112.1348	GEN563242 1-G15090_3 0.6900
FDNS	00NR	3	16WP	G15_044	FROM->TO	G14-057T 345.00 - SUNNYSIDE 345KV CKT 1	717	789	0.117	112.1346	BURLINGTON NO1 + NO 2 + NO 3 161/20.0KV TRANSFORMER CKT 1
FDNS	00NR	3	16WP	G15_044	FROM->TO	G14-057T 345.00 - SUNNYSIDE 345KV CKT 1	717	789	0.1166	112.1346	ROCKY POINT - SPRINGDALE 138KV CKT 1
FDNS	00NR	3	16WP	G15_044	FROM->TO	G14-057T 345.00 - SUNNYSIDE 345KV CKT 1	717	789	0.11823	112.134	BEARCAT 138.00 - MOORELAND 138KV CKT 1
FDNS	00NR	3	16WP	G15_044	FROM->TO	G14-057T 345.00 - SUNNYSIDE 345KV CKT 1	717	789	0.11712	112.131	CANADIAN RIVER - MCALESTER SOUTH 138KV CKT 1
FDNS	00NR	3	16WP	G15_044	FROM->TO	G14-057T 345.00 - SUNNYSIDE 345KV CKT 1	717	789	0.11712	112.131	CANADIAN RIVER - MCALESTER SOUTH 138KV CKT 1
FDNS	00NR	3	20WP	G15_044	FROM->TO	G14-057T 345.00 - SUNNYSIDE 345KV CKT 1	717	789	0.11683	112.1307	GEN334433 1-SABINE UNIT 3
FDNS	00NR	3	16WP	G15_044	FROM->TO	G14-057T 345.00 - SUNNYSIDE 345KV CKT 1	717	789	0.11712	112.1297	CANADIAN RIVER () 345/138/13.8KV TRANSFORMER CKT 1
FDNS	00NR	3	16WP	G15_044	FROM->TO	G14-057T 345.00 - SUNNYSIDE 345KV CKT 1	717	789	0.11712	112.1297	CANADIAN RIVER () 345/138/13.8KV TRANSFORMER CKT 1
FDNS	00NR	3	20WP	G15_044	FROM->TO	G14-057T 345.00 - SUNNYSIDE 345KV CKT 1	717	789	0.11683	112.1296	P12:161:AEPW:DYESS5:ELMSPRNG:TONTITN5
FDNS	00NR	3	20WP	G15_044	FROM->TO	G14-057T 345.00 - SUNNYSIDE 345KV CKT 1	717	789	0.11683	112.1167	GEN337653 1-WHITE BLUFF UNIT #2
FDNS	00NR	3	16WP	G15_044	FROM->TO	G14-057T 345.00 - SUNNYSIDE 345KV CKT 1	717	789	0.11704	112.1149	ALTUS JUNCTION - RUSSELL 138KV CKT 1
FDNS	00NR	3	16WP	G15_044	FROM->TO	G14-057T 345.00 - SUNNYSIDE 345KV CKT 1	717	789	0.11704	112.1149	ALTUS JUNCTION - RUSSELL 138KV CKT 1
FDNS	00NR	3	16WP	G15_044	FROM->TO	G14-057T 345.00 - SUNNYSIDE 345KV CKT 1	717	789	0.1169	112.1082	NORTHWEST TEXARKANA - WELSH 345KV CKT 1
FDNS	00NR	3	16WP	G15_044	FROM->TO	G14-057T 345.00 - SUNNYSIDE 345KV CKT 1	717	789	0.1169	112.1082	NORTHWEST TEXARKANA - WELSH 345KV CKT 1
FDNS	00NR	3	20WP	G15_044	FROM->TO	G14-057T 345.00 - SUNNYSIDE 345KV CKT 1	717	789	0.11683	112.1075	GEN336831 1-BAXTER WILSON SES
FDNS	00NR	3	16WP	G15_044	FROM->TO	G14-057T 345.00 - SUNNYSIDE 345KV CKT 1	717	789	0.117	112.1003	GEN562078 1-G11_051_3 0.6900
FDNS	00NR	3	16WP	G15_044	FROM->TO	G14-057T 345.00 - SUNNYSIDE 345KV CKT 1	717	789	0.11733	112.0975	MINGO - SETAB 345KV CKT 1
FDNS	00NR	3	16WP	G15_044	FROM->TO	G14-057T 345.00 - SUNNYSIDE 345KV CKT 1	717	789	0.11733	112.0975	MINGO - SETAB 345KV CKT 1
FDNS	00NR	3	16WP	G15_044	FROM->TO	G14-057T 345.00 - SUNNYSIDE 345KV CKT 1	717	789	0.11719	112.0928	CHAMBER SPRINGS - CLARKSVILLE 345KV CKT 1
FDNS	00NR	3	16WP	G15_044	FROM->TO	G14-057T 345.00 - SUNNYSIDE 345KV CKT 1	717	789	0.1161	112.0919	JOLLYVILLE - SULPHR 4 138.00 138KV CKT 1
FDNS	00NR	3	16WP	G15_044	FROM->TO	G14-057T 345.00 - SUNNYSIDE 345KV CKT 1	717	789	0.117	112.0854	P12:230:UMZB:# 112 #: NU IN SD. NU-RCDC & DRY CREEK XFMR
FDNS	00NR	3	16WP	G15_044	FROM->TO	G14-057T 345.00 - SUNNYSIDE 345KV CKT 1	717	789	0.117	112.0839	RCDC EAST 4230.00 - RED CEDAR DC 230KV CKT 1
FDNS	00NR	3	16WP	G15_044	FROM->TO	G14-057T 345.00 - SUNNYSIDE 345KV CKT 1	717	789	0.11708	112.0816	KEO EHV - WEST MEMPHIS 500 500KV CKT 1
FDNS	00NR	3	20WP	G15_044	FROM->TO	G14-057T 345.00 - SUNNYSIDE 345KV CKT 1	717	789	0.11683	112.0763	GEN334030 1-FRONTIER UNIT 1
FDNS	00NR	3	16WP	G15_044	FROM->TO	G14-057T 345.00 - SUNNYSIDE 345KV CKT 1	717	789	0.117	112.076	GEN562802 1-G15039_3 0.3570
FDNS	00NR	3	20WP	G15_044	FROM->TO	G14-057T 345.00 - SUNNYSIDE 345KV CKT 1	717	789	0.11683	112.074	GEN334031 1-FRONTIER UNIT 2
FDNS	00NR	3	16WP	G15_044	FROM->TO	G14-057T 345.00 - SUNNYSIDE 345KV CKT 1	717	789	0.117	112.0707	GEN524285 1-WILDORADO WIND GEN
FDNS	00NR	3	16WP	G15_044	FROM->TO	G14-057T 345.00 - SUNNYSIDE 345KV CKT 1	717	789	0.117	112.0633	GEN514805 1-SOONER UNIT 1
FDNS	00NR	3	20WP	G15_044	FROM->TO	G14-057T 345.00 - SUNNYSIDE 345KV CKT 1	717	789	0.11683	112.0614	GEN337911 1-ARKANSAS NUCLEAR ONE UNIT #2
FDNS	00NR	3	16WP	G15_044	FROM->TO	G14-057T 345.00 - SUNNYSIDE 345KV CKT 1	717	789	0.117	112.0546	GEN524295 1-SPNSPUR_WND10.6900
FDNS	00NR	3	16WP	G15_044	FROM->TO	G14-057T 345.00 - SUNNYSIDE 345KV CKT 1	717	789	0.117	112.0543	GEN514806 1-SOONER UNIT 2
FDNS	00NR	3	20WP	G15_044	FROM->TO	G14-057T 345.00 - SUNNYSIDE 345KV CKT 1	717	789	0.11685	112.0512	P12:138:AEPW:CATOOSA4:T.S.E.-4
FDNS	00NR	3	16WP	G15_044	FROM->TO	G14-057T 345.00 - SUNNYSIDE 345KV CKT 1	717	789	0.117	112.0426	GEN560331 1-G10-46 13.800
FDNS	00NR	3	16WP	G15_044	FROM->TO	G14-057T 345.00 - SUNNYSIDE 345KV CKT 1	717	789	0.11627	112.0377	ARKANSAS NUCLEAR ONE - FT SMITH 500KV CKT 1
FDNS	00NR	3	16WP	G15_044	FROM->TO	G14-057T 345.00 - SUNNYSIDE 345KV CKT 1	717	789	0.11627	112.0377	ARKANSAS NUCLEAR ONE - FT SMITH 500KV CKT 1
FDNS	00NR	3	20WP	G15_044	FROM->TO	G14-057T 345.00 - SUNNYSIDE 345KV CKT 1	717	789	0.11962	112.026	BLANCHARD - MAUD 138KV CKT 1
FDNS	00NR	3	16WP	G15_044	FROM->TO	G14-057T 345.00 - SUNNYSIDE 345KV CKT 1	717	789	0.1161	112.0245	JOLLYVILLE - KERR MCGEE CIMARRON 138KV CKT 1
FDNS	00NR	3	20WP	G15_044	FROM->TO	G14-057T 345.00 - SUNNYSIDE 345KV CKT 1	717	789	0.11664	112.0213	FULTON 115 - HOPE 115KV CKT 1
FDNS	00NR	3	20WP	G15_044	FROM->TO	G14-057T 345.00 - SUNNYSIDE 345KV CKT 1	717	789	0.11664	112.0213	FULTON 115 - HOPE 115KV CKT 1
FDNS	00NR	3	20WP	G15_044	FROM->TO	G14-057T 345.00 - SUNNYSIDE 345KV CKT 1	717	789	0.11683	112.021	GEN506752 1-LEBROCK GAS 1
FDNS	00NR	3	20WP	G15_044	FROM->TO	G14-057T 345.00 - SUNNYSIDE 345KV CKT 1	717	789	0.11683	112.0206	GEN506753 1-LEBROCK GAS 2
FDNS	00NR	3	16WP	G15_044	FROM->TO	G14-057T 345.00 - SUNNYSIDE 345KV CKT 1	717	789	0.117	112.0196	GEN562587 1-G14_056_3 0.6900
FDNS	00NR	3	20WP	G15_044	FROM->TO	G14-057T 345.00 - SUNNYSIDE 345KV CKT 1	717	789	0.11683	112.0151	GEN501811 1-RODEMACHER UNIT 1
FDNS	00NR	3	20WP	G15_044	FROM->TO	G14-057T 345.00 - SUNNYSIDE 345KV CKT 1	717	789	0.11683	112.0142	GEN337652 1-WHITE BLUFF UNIT #1
FDNS	00NR	3	16WP	G15_044	FROM->TO	G14-057T 345.00 - SUNNYSIDE 345KV CKT 1	717	789	0.117	112.0133	GEN562269 1-G12-020-1 0.6900
FDNS	00NR	3	20WP	G15_044	FROM->TO	G14-057T 345.00 - SUNNYSIDE 345KV CKT 1	717	789	0.11701	112.0111	P12:138:AEPW:S.W.S.-4:L.E.S.-4
FDNS	00NR	3	20WP	G15_044	FROM->TO	G14-057T 345.00 - SUNNYSIDE 345KV CKT 1	717	789	0.11683	112.0088	GEN300003 1-THOMAS HILL UNIT 3
FDNS	00NR	3	16WP	G15_044	FROM->TO	G14-057T 345.00 - SUNNYSIDE 345KV CKT 1	717	789	0.117	112.008	GEN629072 4-LANSING GENERATOR FOR UNITS NO4 EIA CODE 1
FDNS	00NR	3	20WP	G15_044	FROM->TO	G14-057T 345.00 - SUNNYSIDE 345KV CKT 1	717	789	0.11881	111.9975	LATTA JCT - OIL CENTER 138KV CKT 1
FDNS	00NR	3	20WP	G15_044	FROM->TO	G14-057T 345.00 - SUNNYSIDE 345KV CKT 1	717	789	0.11683	111.9962	GEN300015 1-1SGPDEL 18.000
FDNS	00NR	3	20WP	G15_044	FROM->TO	G14-057T 345.00 - SUNNYSIDE 345KV CKT 1	717	789	0.11683	111.9908	GEN515226 1-MUSKOGEE 6G
FDNS	00NR	3	20WP	G15_044	FROM->TO	G14-057T 345.00 - SUNNYSIDE 345KV CKT 1	717	789	0.11746	111.989	P12:138:AEPW:CORNVIL4:DUNCAN-4
FDNS	00NR	3	16WP	G15_044	FROM->TO	G14-057T 345.00 - SUNNYSIDE 345KV CKT 1	717	789	0.117	111.9885	GEN657749 1-YOUNG 1 GENERATOR
FDNS	00NR	3	16WP	G15_044	FROM->TO	G14-057T 345.00 - SUNNYSIDE 345KV CKT 1	717	789	0.117	111.9876	GEN562882 1-G15047_3 0.6900
FDNS	00NR	3	20WP	G15_044	FROM->TO	G14-057T 345.00 - SUNNYSIDE 345KV CKT 1	717	789	0.11683	111.9824	GEN336191 1-LITTLE GYPSY UNIT#3
FDNS	00NR	3	16WP	G15_044	FROM->TO	G14-057T 345.00 - SUNNYSIDE 345KV CKT 1	717	789	0.1161	111.9735	ARBWIND4 138.00 - KERR MCGEE CIMARRON 138KV CKT 1
FDNS	00NR	3	16WP	G15_044	FROM->TO	G14-057T 345.00 - SUNNYSIDE 345KV CKT 1	717	789	0.117	111.9699	GEN562270 1-G12-020-2 0.6900
FDNS	00NR	3	16WP	G15_044	FROM->TO	G14-057T 345.00 - SUNNYSIDE 345KV CKT 1	717	789	0.11993	111.9688	G15063_T 345.00 - MATHWSN7 345.00 345KV CKT 1
FDNS	00NR	3	16WP	G15_044	FROM->TO	G14-057T 345.00 - SUNNYSIDE 345KV CKT 1	717	789	0.117	111.964	GEN562812 1-G15040_3 0.3570
FDNS	00NR	3	20WP	G15_044	FROM->TO	G14-057T 345.00 - SUNNYSIDE 345KV CKT 1	717	789	0.1167	111.9635	6LAYFLD 230.00 - CARROLL 230KV CKT 1
FDNS	00NR	3	16WP	G15_044	FROM->TO	G14-057T 345.00 - SUNNYSIDE 345KV CKT 1	717	789	0.117	111.9615	GEN563102 1-G15075_3 0.5500
FDNS	00NR	3	20WP	G15_044	FROM->TO	G14-057T 345.00 - SUNNYSIDE 345KV CKT 1	717	789	0.11715	111.9575	G1524G1525 345.00 - THISTLE7 345.00 345KV CKT 1
FDNS	00NR	3	20WP	G15_044	FROM->TO	G14-057T 345.00 - SUNNYSIDE 345KV CKT 1	717	789	0.11715	111.9575	G1524G1525 345.00 - THISTLE7 345.00 345KV CKT 2
FDNS	00NR	3	16WP	G15_044	FROM->TO	G14-057T 345.00 - SUNNYSIDE 345KV CKT 1	717	789	0.117	111.9565	GEN562974 1-G15060_5 0.6900
FDNS	00NR	3	20WP	G15_044	FROM->TO	G14-057T 345.00 - SUNNYSIDE 345KV CKT 1	717	789	0.11718	111.9564	P12:69:WFEC-AEPW:COMANCH2:DUNCAN-2
FDNS	00NR	3	20WP	G15_044	FROM->TO	G14-057T 345.00 - SUNNYSIDE 345KV CKT 1	717	789	0.11683	111.9539	GEN335614 1-WILLOW GLENN UNIT#4
FDNS	00NR	3	16WP	G15_044	FROM->TO	G14-057T 345.00 - SUNNYSIDE 345KV CKT 1	717	789	0.117	111.9538	GEN563132 1-G15078_3 0.3570
FDNS	00NR	3	16WP	G15_044	FROM->TO	G14-057T 345.00 - SUNNYSIDE 345KV CKT 1	717	789	0.117	111.9476	GEN562973 1-G15060_4 0.6900
FDNS	00NR	3	20WP	G15_044	FROM->TO	G14-057T 345.00 - SUNNYSIDE 345KV CKT 1	717	789	0.11684	111.9476	8DANIEL8 500.00 - MCKNIGHT 500KV CKT 1
FDNS	00NR	3	20WP	G15_044	FROM->TO	G14-057T 345.00 - SUNNYSIDE 345KV CKT 1	717	789	0.11683	111.9452	GEN515040 1-SEMINOLE 1G
FDNS	00NR	3	16WP	G15_044	FROM->TO	G14-057T 345.00 - SUNNYSIDE 345KV CKT 1	717	789	0.11719	111.9451	P12:138:AEPW:112GORE4:SNYDER-4
FDNS	00NR	3	20WP	G15_044	FROM->TO	G14-057T 345.00 - SUNNYSIDE 345KV CKT 1	717	789	0.11745	111.9448	P12:138:AEPW:CORNVIL4:S.W.S.-4
FDNS	00NR	3	16WP	G15_044	FROM->TO	G14-057T 345.00 - SUNNYSIDE 345KV CKT 1	717	789	0.117	111.9371	GEN563062 1-G15071_3 0.6900
FDNS	00NR	3	20WP	G15_044	FROM->TO	G14-057T 345.00 - SUNNYSIDE 345KV CKT 1	717	789	0.11775	111.9367	G14_038T 345.00 - POTTER COUNTY INTERCHANGE 345KV CKT 1

SOLUTION	GROUP	SCENARIO	SEASON	SOURCE	DIRECTION	MONITORED ELEMENT	RATEA (MVA)	RATEB(MVA)	TDF	TC%LOADING (% MVA)	CONTINGENCY
FDNS	00NR	3	20WP	G15_044	FROM->TO	G14-057T 345.00 - SUNNYSIDE 345KV CKT 1	717	789	0.1177	111.9306	P12:138:AEPW-OGE:WTH_JCT4:JENSEN4
FDNS	00NR	3	20WP	G15_044	FROM->TO	G14-057T 345.00 - SUNNYSIDE 345KV CKT 1	717	789	0.11684	111.9287	P12:161:AEPW:EROGERS5:ECNTRTN5
FDNS	00NR	3	16WP	G15_044	FROM->TO	G14-057T 345.00 - SUNNYSIDE 345KV CKT 1	717	789	0.11877	111.9195	CLARKSVILLE - MUSKOGEE 345KV CKT 1
FDNS	00NR	3	16WP	G15_044	FROM->TO	G14-057T 345.00 - SUNNYSIDE 345KV CKT 1	717	789	0.11877	111.9195	CLARKSVILLE - MUSKOGEE 345KV CKT 1
FDNS	00NR	3	20WP	G15_044	FROM->TO	G14-057T 345.00 - SUNNYSIDE 345KV CKT 1	717	789	0.11778	111.919	TUTTLE - TUTTLE CONOCO TAP 138KV CKT 1
FDNS	00NR	3	20WP	G15_044	FROM->TO	G14-057T 345.00 - SUNNYSIDE 345KV CKT 1	717	789	0.11769	111.9104	FINNEY SWITCHING STATION - HOLCOMB 345KV CKT 1
FDNS	00NR	3	20WP	G15_044	FROM->TO	G14-057T 345.00 - SUNNYSIDE 345KV CKT 1	717	789	0.11769	111.9104	FINNEY SWITCHING STATION - HOLCOMB 345KV CKT 1
FDNS	00NR	3	20WP	G15_044	FROM->TO	G14-057T 345.00 - SUNNYSIDE 345KV CKT 1	717	789	0.11683	111.9081	GEN303007 1-1BC2 U2
FDNS	00NR	3	20WP	G15_044	FROM->TO	G14-057T 345.00 - SUNNYSIDE 345KV CKT 1	717	789	0.11683	111.9079	GEN337910 1-ARKANSAS NUCLEAR ONE UNIT #1
FDNS	00NR	3	20WP	G15_044	FROM->TO	G14-057T 345.00 - SUNNYSIDE 345KV CKT 1	717	789	0.11683	111.9067	WHITE BLUFF 500/26.0KV TRANSFORMER CKT 1
FDNS	00NR	3	20WP	G15_044	FROM->TO	G14-057T 345.00 - SUNNYSIDE 345KV CKT 1	717	789	0.11718	111.9057	DUNCAN - TOSCO 69KV CKT 1
FDNS	00NR	3	20WP	G15_044	FROM->TO	G14-057T 345.00 - SUNNYSIDE 345KV CKT 1	717	789	0.11683	111.9033	GEN336464 1-MICHOUD UNIT #3
FDNS	00NR	3	20WP	G15_044	FROM->TO	G14-057T 345.00 - SUNNYSIDE 345KV CKT 1	717	789	0.11683	111.9023	GEN303006 1-1BC2 U1
FDNS	00NR	3	20WP	G15_044	FROM->TO	G14-057T 345.00 - SUNNYSIDE 345KV CKT 1	717	789	0.11758	111.9021	CIMARRON - CZECH HALL 138KV CKT 1
FDNS	00NR	3	16WP	G15_044	FROM->TO	G14-057T 345.00 - SUNNYSIDE 345KV CKT 1	717	789	0.1162	111.9015	CHICKASAW - TOTAL 138KV CKT 1
FDNS	00NR	3	16WP	G15_044	FROM->TO	G14-057T 345.00 - SUNNYSIDE 345KV CKT 1	717	789	0.117	111.9	GEN681522 3-GENOA 3
FDNS	00NR	3	20WP	G15_044	FROM->TO	G14-057T 345.00 - SUNNYSIDE 345KV CKT 1	717	789	0.11683	111.8989	GEN562783 1-G15036_4 0.6900
FDNS	00NR	3	20WP	G15_044	FROM->TO	G14-057T 345.00 - SUNNYSIDE 345KV CKT 1	717	789	0.11683	111.8989	GEN562784 1-G15036_5 0.6900
FDNS	00NR	3	20WP	G15_044	FROM->TO	G14-057T 345.00 - SUNNYSIDE 345KV CKT 1	717	789	0.11683	111.8941	GEN515223 1-MUSKOGEE 4G
FDNS	00NR	3	20WP	G15_044	FROM->TO	G14-057T 345.00 - SUNNYSIDE 345KV CKT 1	717	789	0.11683	111.8941	GEN515225 1-MUSKOGEE 5G
FDNS	00NR	3	20WP	G15_044	FROM->TO	G14-057T 345.00 - SUNNYSIDE 345KV CKT 1	717	789	0.11668	111.8903	BISMARK - HOT SPRINGS WEST BUS 115KV CKT 1
FDNS	00NR	3	16WP	G15_044	FROM->TO	G14-057T 345.00 - SUNNYSIDE 345KV CKT 1	717	789	0.1168	111.887	BROWN - RUSSETT 138KV CKT 1
FDNS	00NR	3	20WP	G15_044	FROM->TO	G14-057T 345.00 - SUNNYSIDE 345KV CKT 1	717	789	0.11706	111.8865	P12:69:AEPW-OMPA:COMANC-2:OMWALTR2
FDNS	00NR	3	20WP	G15_044	FROM->TO	G14-057T 345.00 - SUNNYSIDE 345KV CKT 1	717	789	0.11683	111.8863	RODEMACHER 230/22.0KV TRANSFORMER CKT 1
FDNS	00NR	3	20WP	G15_044	FROM->TO	G14-057T 345.00 - SUNNYSIDE 345KV CKT 1	717	789	0.11676	111.8863	MC NIEL 500/115KV TRANSFORMER CKT 1
FDNS	00NR	3	16WP	G15_044	FROM->TO	G14-057T 345.00 - SUNNYSIDE 345KV CKT 1	717	789	0.117	111.876	GEN526331 1-JONES GEN #1 22 KV
FDNS	00NR	3	16WP	G15_044	FROM->TO	G14-057T 345.00 - SUNNYSIDE 345KV CKT 1	717	789	0.117	111.8759	GEN526332 1-JONES GEN #2 21 KV
FDNS	00NR	3	20WP	G15_044	FROM->TO	G14-057T 345.00 - SUNNYSIDE 345KV CKT 1	717	789	0.11689	111.8745	G15088_T 345.00 - MOORE 345KV CKT 1
FDNS	00NR	3	20WP	G15_044	FROM->TO	G14-057T 345.00 - SUNNYSIDE 345KV CKT 1	717	789	0.11676	111.8706	HOT SPRINGS EHV - MAGNET COVE 500KV CKT 1
FDNS	00NR	3	20WP	G15_044	FROM->TO	G14-057T 345.00 - SUNNYSIDE 345KV CKT 1	717	789	0.11683	111.8701	GEN300010 1-ST FRANCIS UNIT 1
FDNS	00NR	3	16WP	G15_044	FROM->TO	G14-057T 345.00 - SUNNYSIDE 345KV CKT 1	717	789	0.11675	111.87	RUSSETT - SPRINGDALE 138KV CKT 1
FDNS	00NR	3	20WP	G15_044	FROM->TO	G14-057T 345.00 - SUNNYSIDE 345KV CKT 1	717	789	0.11734	111.8695	P12:138:AEPW:WTHWF4:CLINTJC4
FDNS	00NR	3	20WP	G15_044	FROM->TO	G14-057T 345.00 - SUNNYSIDE 345KV CKT 1	717	789	0.11754	111.8682	CHISHOLM6 230.00 - ELK CITY 230KV 230KV CKT 1
FDNS	00NR	3	20WP	G15_044	FROM->TO	G14-057T 345.00 - SUNNYSIDE 345KV CKT 1	717	789	0.11754	111.8675	ELK CITY 230KV (ELKCTY-6) 230/138/13.8KV TRANSFORMER CKT 1
FDNS	00NR	3	20WP	G15_044	FROM->TO	G14-057T 345.00 - SUNNYSIDE 345KV CKT 1	717	789	0.11754	111.8675	ELK CITY 230KV (ELKCTY-6) 230/138/13.8KV TRANSFORMER CKT 1
FDNS	00NR	3	16WP	G15_044	FROM->TO	G14-057T 345.00 - SUNNYSIDE 345KV CKT 1	717	789	0.117	111.8657	GEN560105 1-G08-22 0.6900
FDNS	00NR	3	16WP	G15_044	FROM->TO	G14-057T 345.00 - SUNNYSIDE 345KV CKT 1	717	789	0.117	111.8633	GEN562550 1-G14_040_3 0.6900
FDNS	00NR	3	20WP	G15_044	FROM->TO	G14-057T 345.00 - SUNNYSIDE 345KV CKT 1	717	789	0.11747	111.8624	CIMARRON - SARA 138KV CKT 1
FDNS	00NR	3	20WP	G15_044	FROM->TO	G14-057T 345.00 - SUNNYSIDE 345KV CKT 1	717	789	0.11926	111.8621	BAILEY4 138.00 - SUNSHINE CANYON 138KV CKT 1
FDNS	00NR	3	20WP	G15_044	FROM->TO	G14-057T 345.00 - SUNNYSIDE 345KV CKT 1	717	789	0.11718	111.8602	COMANCHE TAP - TOSCO 69KV CKT 1
FDNS	00NR	3	16WP	G15_044	FROM->TO	G14-057T 345.00 - SUNNYSIDE 345KV CKT 1	717	789	0.117	111.8567	GEN345671 2-1RUSH G2 18.000
FDNS	00NR	3	20WP	G15_044	FROM->TO	G14-057T 345.00 - SUNNYSIDE 345KV CKT 1	717	789	0.11701	111.8552	BUCKNER7 345.00 - SPEARVILLE 345KV CKT 1
FDNS	00NR	3	20WP	G15_044	FROM->TO	G14-057T 345.00 - SUNNYSIDE 345KV CKT 1	717	789	0.11701	111.8552	BUCKNER7 345.00 - SPEARVILLE 345KV CKT 1
FDNS	00NR	3	16WP	G15_044	FROM->TO	G14-057T 345.00 - SUNNYSIDE 345KV CKT 1	717	789	0.117	111.8549	GEN345670 1-1RUSH G1 18.000
FDNS	00NR	3	20WP	G15_044	FROM->TO	G14-057T 345.00 - SUNNYSIDE 345KV CKT 1	717	789	0.11691	111.85	G15074_T 345.00 - HOYT 345KV CKT 1
FDNS	00NR	3	20WP	G15_044	FROM->TO	G14-057T 345.00 - SUNNYSIDE 345KV CKT 1	717	789	0.11683	111.847	GEN337041 1-GERALD ANDRUS
FDNS	00NR	3	16WP	G15_044	FROM->TO	G14-057T 345.00 - SUNNYSIDE 345KV CKT 1	717	789	0.11646	111.8445	ROCKY POINT - SUNNYSIDE 138KV CKT 1
FDNS	00NR	3	20WP	G15_044	FROM->TO	G14-057T 345.00 - SUNNYSIDE 345KV CKT 1	717	789	0.11683	111.8445	GEN505432 1-SIKESTON
FDNS	00NR	3	20WP	G15_044	FROM->TO	G14-057T 345.00 - SUNNYSIDE 345KV CKT 1	717	789	0.11588	111.8443	SEMINOLE - VANOSTP4 138.00 138KV CKT 1
FDNS	00NR	3	16WP	G15_044	FROM->TO	G14-057T 345.00 - SUNNYSIDE 345KV CKT 1	717	789	0.117	111.8418	P12:138:WFEC:MSL07
FDNS	00NR	3	16WP	G15_044	FROM->TO	G14-057T 345.00 - SUNNYSIDE 345KV CKT 1	717	789	0.117	111.8418	P12:138:WFEC-AEPW:HUGOPP4:ATOKA--4
FDNS	00NR	3	20WP	G15_044	FROM->TO	G14-057T 345.00 - SUNNYSIDE 345KV CKT 1	717	789	0.11683	111.8414	GEN303008 1-1BC2 U3
FDNS	00NR	3	20WP	G15_044	FROM->TO	G14-057T 345.00 - SUNNYSIDE 345KV CKT 1	717	789	0.11778	111.8396	CIMARRON - TUTTLE CONOCO TAP 138KV CKT 1
FDNS	00NR	3	16WP	G15_044	FROM->TO	G14-057T 345.00 - SUNNYSIDE 345KV CKT 1	717	789	0.117	111.8382	4SIOUX 1 138.00 138/18.0KV TRANSFORMER CKT 1
FDNS	00NR	3	20WP	G15_044	FROM->TO	G14-057T 345.00 - SUNNYSIDE 345KV CKT 1	717	789	0.11668	111.8363	ALPINE AECC - BISMARK 115KV CKT 1
FDNS	00NR	3	20WP	G15_044	FROM->TO	G14-057T 345.00 - SUNNYSIDE 345KV CKT 1	717	789	0.11593	111.834	ARBWIND4 138.00 - CARTER 138KV CKT 1
FDNS	00NR	3	20WP	G15_044	FROM->TO	G14-057T 345.00 - SUNNYSIDE 345KV CKT 1	717	789	0.11734	111.8304	P12:138:AEPW:WTHWF4:WTH_SE4
FDNS	00NR	3	20WP	G15_044	FROM->TO	G14-057T 345.00 - SUNNYSIDE 345KV CKT 1	717	789	0.11685	111.8279	P12:138:AEPW:N.E.S.-4:CATOOSA4
FDNS	00NR	3	20WP	G15_044	FROM->TO	G14-057T 345.00 - SUNNYSIDE 345KV CKT 1	717	789	0.11758	111.8273	CZECH HALL - XEROX 138KV CKT 1
FDNS	00NR	3	16WP	G15_044	FROM->TO	G14-057T 345.00 - SUNNYSIDE 345KV CKT 1	717	789	0.117	111.8246	GEN511962 2-RKYRDGW2-1 0.7000
FDNS	00NR	3	20WP	G15_044	FROM->TO	G14-057T 345.00 - SUNNYSIDE 345KV CKT 1	717	789	0.11758	111.8232	MORGAN - XEROX 138KV CKT 1
FDNS	00NR	3	16WP	G15_044	FROM->TO	G14-057T 345.00 - SUNNYSIDE 345KV CKT 1	717	789	0.1168	111.8183	RUSSETT - RUSSETT 138KV CKT 1
FDNS	00NR	3	16WP	G15_044	FROM->TO	G14-057T 345.00 - SUNNYSIDE 345KV CKT 1	717	789	0.117	111.8177	GEN527882 1-CUNNINGHAM GEN #2 20 KV
FDNS	00NR	3	20WP	G15_044	FROM->TO	G14-057T 345.00 - SUNNYSIDE 345KV CKT 1	717	789	0.11683	111.8171	NELSON 230/20.0KV TRANSFORMER CKT 1
FDNS	00NR	3	20WP	G15_044	FROM->TO	G14-057T 345.00 - SUNNYSIDE 345KV CKT 1	717	789	0.11683	111.8136	GEN300011 1-ST FRANCIS UNIT 2
FDNS	00NR	3	20WP	G15_044	FROM->TO	G14-057T 345.00 - SUNNYSIDE 345KV CKT 1	717	789	0.11683	111.8124	GEN336170 1-GULF OXY U4
FDNS	00NR	3	20WP	G15_044	FROM->TO	G14-057T 345.00 - SUNNYSIDE 345KV CKT 1	717	789	0.12069	111.8108	GRACEMONT (BANK 1) 345/138/13.8KV TRANSFORMER CKT 1
FDNS	00NR	3	16WP	G15_044	FROM->TO	G14-057T 345.00 - SUNNYSIDE 345KV CKT 1	717	789	0.117	111.8089	CLAY BOSWELL 230/20.9KV TRANSFORMER CKT 1
FDNS	00NR	3	20WP	G15_044	FROM->TO	G14-057T 345.00 - SUNNYSIDE 345KV CKT 1	717	789	0.11697	111.8014	G15095_T 138.00 - ROSE_VALLEY 138.00 138KV CKT 1
FDNS	00NR	3	20WP	G15_044	FROM->TO	G14-057T 345.00 - SUNNYSIDE 345KV CKT 1	717	789	0.11758	111.801	MORGAN - MUSTANG 138KV CKT 1
FDNS	00NR	3	16WP	G15_044	FROM->TO	G14-057T 345.00 - SUNNYSIDE 345KV CKT 1	717	789	0.117	111.7989	GEN521112 1-ORME3 13.800
FDNS	00NR	3	16WP	G15_044	FROM->TO	G14-057T 345.00 - SUNNYSIDE 345KV CKT 1	717	789	0.117	111.7937	GEN563192 1-G15084_3 0.5500
FDNS	00NR	3	20WP	G15_044	FROM->TO	G14-057T 345.00 - SUNNYSIDE 345KV CKT 1	717	789	0.11683	111.7932	GEN336801 1-BAXTER WILSON UNIT #1
FDNS	00NR	3	16WP	G15_044	FROM->TO	G14-057T 345.00 - SUNNYSIDE 345KV CKT 1	717	789	0.1171	111.7906	P12:138:WFEC:MSL16
FDNS	00NR	3	16WP	G15_044	FROM->TO	G14-057T 345.00 - SUNNYSIDE 345KV CKT 1	717	789	0.11582	111.7903	ARDMORE WEST - CARTER 138KV CKT 1
FDNS	00NR	3	20WP	G15_044	FROM->TO	G14-057T 345.00 - SUNNYSIDE 345KV CKT 1	717	789	0.11668	111.7887	ALPINE AECC - AMITY SS 115KV CKT 1
FDNS	00NR	3	20WP	G15_044	FROM->TO	G14-057T 345.00 - SUNNYSIDE 345KV CKT 1	717	789	0.11718	111.7828	COMANCHE - COMANCHE TAP 69KV CKT 1
FDNS	00NR	3	16WP	G15_044	FROM->TO	G14-057T 345.00 - SUNNYSIDE 345KV CKT 1	717	789	0.117	111.7721	GEN562892 1-G15048_3 0.6900
FDNS	00NR	3	16WP	G15_044	FROM->TO	G14-057T 345.00 - SUNNYSIDE 345KV CKT 1	717	789	0.117	111.7673	GEN520811 1-ANADRK4

SOLUTION	GROUP	SCENARIO	SEASON	SOURCE	DIRECTION	MONITORED ELEMENT	RATEA (MVA)	RATEB(MVA)	TDF	TC%LOADING (% MVA)	CONTINGENCY
FDNS	00NR	3	20WP	G15_044	FROM->TO	G14-057T 345.00 - SUNNYSIDE 345KV CKT 1	717	789	0.11683	111.7665	8CAJUN2 500/24.0KV TRANSFORMER CKT 1
FDNS	00NR	3	20WP	G15_044	FROM->TO	G14-057T 345.00 - SUNNYSIDE 345KV CKT 1	717	789	0.11683	111.7649	GEN501910 1-ACADIA UNIT ST1
FDNS	00NR	3	16WP	G15_044	FROM->TO	G14-057T 345.00 - SUNNYSIDE 345KV CKT 1	717	789	0.117	111.7579	GEN672321 1-SHAND GENERATOR 1
FDNS	00NR	3	20WP	G15_044	FROM->TO	G14-057T 345.00 - SUNNYSIDE 345KV CKT 1	717	789	0.11747	111.7535	SARA - STHLAKE4 138.00 138KV CKT 1
FDNS	00NR	3	16WP	G15_044	FROM->TO	G14-057T 345.00 - SUNNYSIDE 345KV CKT 1	717	789	0.11589	111.7506	SUNNYSIDE (SUNNYSD5) 345/138/13.8KV TRANSFORMER CKT 1
FDNS	00NR	3	16WP	G15_044	FROM->TO	G14-057T 345.00 - SUNNYSIDE 345KV CKT 1	717	789	0.11691	111.7436	P12:138:WFEC-AEPW:GOLDENSW4:CRAIGJT4
FDNS	00NR	3	16WP	G15_044	FROM->TO	G14-057T 345.00 - SUNNYSIDE 345KV CKT 1	717	789	0.117	111.7409	GEN562512 1-G14_020_3 0.6900
FDNS	00NR	3	20WP	G15_044	FROM->TO	G14-057T 345.00 - SUNNYSIDE 345KV CKT 1	717	789	0.11683	111.7346	P12:138:AEPW:R.S.S.-4:S.HUD.-4
FDNS	00NR	3	16WP	G15_044	FROM->TO	G14-057T 345.00 - SUNNYSIDE 345KV CKT 1	717	789	0.117	111.7343	GEN672310 1-POPLAR RIVER GENERATOR 1
FDNS	00NR	3	20WP	G15_044	FROM->TO	G14-057T 345.00 - SUNNYSIDE 345KV CKT 1	717	789	0.11697	111.7343	NOEL_SW 138.00 - ROSE_VALLEY 138.00 138KV CKT 1
FDNS	00NR	3	16WP	G15_044	FROM->TO	G14-057T 345.00 - SUNNYSIDE 345KV CKT 1	717	789	0.117	111.7342	GEN672311 2-POPLAR RIVER GENERATOR 2
FDNS	00NR	3	16WP	G15_044	FROM->TO	G14-057T 345.00 - SUNNYSIDE 345KV CKT 1	717	789	0.117	111.7315	GEN523461 1-BLACKHAWK GEN #1
FDNS	00NR	3	16WP	G15_044	FROM->TO	G14-057T 345.00 - SUNNYSIDE 345KV CKT 1	717	789	0.117	111.7314	GEN523462 1-BLACKHAWK GEN #2
FDNS	00NR	3	20WP	G15_044	FROM->TO	G14-057T 345.00 - SUNNYSIDE 345KV CKT 1	717	789	0.11683	111.7283	SABINE 230/24.0KV TRANSFORMER CKT 1
FDNS	00NR	3	20WP	G15_044	FROM->TO	G14-057T 345.00 - SUNNYSIDE 345KV CKT 1	717	789	0.11675	111.7263	ETTA (DUKE HOTSPRINGS) - MC NIEL 500KV CKT 1
FDNS	00NR	3	16WP	G15_044	FROM->TO	G14-057T 345.00 - SUNNYSIDE 345KV CKT 1	717	789	0.117	111.7262	GEN672306 6-BOUNDARY DAM GENERATOR 6
FDNS	00NR	3	20WP	G15_044	FROM->TO	G14-057T 345.00 - SUNNYSIDE 345KV CKT 1	717	789	0.11747	111.7241	MCCLAIN - STHLAKE4 138.00 138KV CKT 1
FDNS	00NR	3	20WP	G15_044	FROM->TO	G14-057T 345.00 - SUNNYSIDE 345KV CKT 1	717	789	0.11717	111.7215	WALTERS - WALTERS 69KV CKT 1
FDNS	00NR	3	20WP	G15_044	FROM->TO	G14-057T 345.00 - SUNNYSIDE 345KV CKT 1	717	789	0.11683	111.7206	GEN300016 1-1G1GPDEL 18.000
FDNS	00NR	3	20WP	G15_044	FROM->TO	G14-057T 345.00 - SUNNYSIDE 345KV CKT 1	717	789	0.11881	111.7186	LASALLE - LATTA JCT 138KV CKT 1
FDNS	00NR	3	20WP	G15_044	FROM->TO	G14-057T 345.00 - SUNNYSIDE 345KV CKT 1	717	789	0.11716	111.7178	LAWTON EASTSIDE (LES 4) 345/138/13.8KV TRANSFORMER CKT 1
FDNS	00NR	3	20WP	G15_044	FROM->TO	G14-057T 345.00 - SUNNYSIDE 345KV CKT 1	717	789	0.11716	111.7178	LAWTON EASTSIDE (LES 4) 345/138/13.8KV TRANSFORMER CKT 1
FDNS	00NR	3	20WP	G15_044	FROM->TO	G14-057T 345.00 - SUNNYSIDE 345KV CKT 1	717	789	0.11683	111.7104	GEN336222 1-LITTLE GYPSY UNIT#2
FDNS	00NR	3	20WP	G15_044	FROM->TO	G14-057T 345.00 - SUNNYSIDE 345KV CKT 1	717	789	0.11683	111.7036	P12:69:AEPW:NROGERS2:ECNTRTN2
FDNS	00NR	3	20WP	G15_044	FROM->TO	G14-057T 345.00 - SUNNYSIDE 345KV CKT 1	717	789	0.11764	111.7013	ANADARKO - SEQUOYAHJ4 138.00 138KV CKT 1
FDNS	00NR	3	20WP	G15_044	FROM->TO	G14-057T 345.00 - SUNNYSIDE 345KV CKT 1	717	789	0.11706	111.7011	LAWTON RELIFT TAP - OMPA-WALTERS 69KV CKT 1
FDNS	00NR	3	20WP	G15_044	FROM->TO	G14-057T 345.00 - SUNNYSIDE 345KV CKT 1	717	789	0.11764	111.6985	CORN TAP - SEQUOYAHJ4 138.00 138KV CKT 1
FDNS	00NR	3	16WP	G15_044	FROM->TO	G14-057T 345.00 - SUNNYSIDE 345KV CKT 1	717	789	0.117	111.6964	GEN344895 2-1LAB G2 20.000
FDNS	00NR	3	20WP	G15_044	FROM->TO	G14-057T 345.00 - SUNNYSIDE 345KV CKT 1	717	789	0.11684	111.6938	P12:138:AEPW:BA_71ST4:T.S.E.-4
FDNS	00NR	3	20WP	G15_044	FROM->TO	G14-057T 345.00 - SUNNYSIDE 345KV CKT 1	717	789	0.11683	111.6885	P12:138:AEPW:YARCH-S4:T.S.E.-4
FDNS	00NR	3	20WP	G15_044	FROM->TO	G14-057T 345.00 - SUNNYSIDE 345KV CKT 1	717	789	0.11926	111.6873	BAILEY4 138.00 - WESTMOORE 138KV CKT 1
FDNS	00NR	3	20WP	G15_044	FROM->TO	G14-057T 345.00 - SUNNYSIDE 345KV CKT 1	717	789	0.11835	111.6872	CANADIAN - NOBLE 138KV CKT 1
FDNS	00NR	3	20WP	G15_044	FROM->TO	G14-057T 345.00 - SUNNYSIDE 345KV CKT 1	717	789	0.1177	111.6867	WEATHERFORD JCT. - WEATHERFORD SOUTHEAST 138KV CKT 1
FDNS	00NR	3	20WP	G15_044	FROM->TO	G14-057T 345.00 - SUNNYSIDE 345KV CKT 1	717	789	0.1177	111.6867	WEATHERFORD JCT. - WEATHERFORD SOUTHEAST 138KV CKT 1
FDNS	00NR	3	20WP	G15_044	FROM->TO	G14-057T 345.00 - SUNNYSIDE 345KV CKT 1	717	789	0.11688	111.6785	P12:138:AEPW-OGE:SHIDLER4:OSAGE 4
FDNS	00NR	3	20WP	G15_044	FROM->TO	G14-057T 345.00 - SUNNYSIDE 345KV CKT 1	717	789	0.11684	111.6766	7JASPER 345.00 - BLACKBERRY 345KV CKT 1
FDNS	00NR	3	20WP	G15_044	FROM->TO	G14-057T 345.00 - SUNNYSIDE 345KV CKT 1	717	789	0.11683	111.6762	GEN336152 1-WATERFORD UNIT#2
FDNS	00NR	3	16WP	G15_044	FROM->TO	G14-057T 345.00 - SUNNYSIDE 345KV CKT 1	717	789	0.11582	111.6754	ARDMORE WEST - UNIROYAL 138KV CKT 1
FDNS	00NR	3	20WP	G15_044	FROM->TO	G14-057T 345.00 - SUNNYSIDE 345KV CKT 1	717	789	0.11683	111.6754	GEN336151 1-WATERFORD UNIT#1
FDNS	00NR	3	16WP	G15_044	FROM->TO	G14-057T 345.00 - SUNNYSIDE 345KV CKT 1	717	789	0.117	111.6717	GEN511853 1-COMANCHE #3
FDNS	00NR	3	16WP	G15_044	FROM->TO	G14-057T 345.00 - SUNNYSIDE 345KV CKT 1	717	789	0.11693	111.6662	P12:138:AEPW-SWPA:LONEOAK4:TUPELO4
FDNS	00NR	3	16WP	G15_044	FROM->TO	G14-057T 345.00 - SUNNYSIDE 345KV CKT 1	717	789	0.11693	111.6662	P12:138:WFEC:MSL06
FDNS	00NR	3	16WP	G15_044	FROM->TO	G14-057T 345.00 - SUNNYSIDE 345KV CKT 1	717	789	0.117	111.6643	GEN344896 3-1LAB G3 20.000
FDNS	00NR	3	20WP	G15_044	FROM->TO	G14-057T 345.00 - SUNNYSIDE 345KV CKT 1	717	789	0.11683	111.6636	FRONTIER 345/18.0KV TRANSFORMER CKT 1
FDNS	00NR	3	20WP	G15_044	FROM->TO	G14-057T 345.00 - SUNNYSIDE 345KV CKT 1	717	789	0.1175	111.6632	NORGE ROAD - SOUTHWESTERN STATION 138KV CKT 1
FDNS	00NR	3	20WP	G15_044	FROM->TO	G14-057T 345.00 - SUNNYSIDE 345KV CKT 1	717	789	0.1175	111.6632	NORGE ROAD - SOUTHWESTERN STATION 138KV CKT 1
FDNS	00NR	3	16WP	G15_044	FROM->TO	G14-057T 345.00 - SUNNYSIDE 345KV CKT 1	717	789	0.117	111.663	GEN344894 1-1LAB G1 20.000
FDNS	00NR	3	20WP	G15_044	FROM->TO	G14-057T 345.00 - SUNNYSIDE 345KV CKT 1	717	789	0.11683	111.6629	GEN300017 1-1G2GPDEL 18.000
FDNS	00NR	3	16WP	G15_044	FROM->TO	G14-057T 345.00 - SUNNYSIDE 345KV CKT 1	717	789	0.117	111.6622	GEN563162 1-G15081_3 0.6900
FDNS	00NR	3	16WP	G15_044	FROM->TO	G14-057T 345.00 - SUNNYSIDE 345KV CKT 1	717	789	0.117	111.6615	GEN344897 4-1LAB G4 20.000
FDNS	00NR	3	20WP	G15_044	FROM->TO	G14-057T 345.00 - SUNNYSIDE 345KV CKT 1	717	789	0.11683	111.6613	FRONTIER 345/18.0KV TRANSFORMER CKT 1
FDNS	00NR	3	20WP	G15_044	FROM->TO	G14-057T 345.00 - SUNNYSIDE 345KV CKT 1	717	789	0.11706	111.6592	P12:138:OKGE-AEPW:JENSEN4:REDROCKRD4
FDNS	00NR	3	20WP	G15_044	FROM->TO	G14-057T 345.00 - SUNNYSIDE 345KV CKT 1	717	789	0.1184	111.6575	P12:138:OKGE:3TERM27
FDNS	00NR	3	16WP	G15_044	FROM->TO	G14-057T 345.00 - SUNNYSIDE 345KV CKT 1	717	789	0.11624	111.656	CARTRCO4 138.00 - RATLIFF 138KV CKT 1
FDNS	00NR	3	20WP	G15_044	FROM->TO	G14-057T 345.00 - SUNNYSIDE 345KV CKT 1	717	789	0.11769	111.6547	FINNEY SWITCHING STATION - WALKTAP7 345.00 345KV CKT 1
FDNS	00NR	3	20WP	G15_044	FROM->TO	G14-057T 345.00 - SUNNYSIDE 345KV CKT 1	717	789	0.11769	111.6547	FINNEY SWITCHING STATION - WALKTAP7 345.00 345KV CKT 1
FDNS	00NR	3	20WP	G15_044	FROM->TO	G14-057T 345.00 - SUNNYSIDE 345KV CKT 1	717	789	0.11664	111.6543	HOPE - MCNAB REC 115KV CKT 1
FDNS	00NR	3	20WP	G15_044	FROM->TO	G14-057T 345.00 - SUNNYSIDE 345KV CKT 1	717	789	0.1177	111.6513	P12:138:AEPW:REDROCKRD4:WTH_JCT4
FDNS	00NR	3	20WP	G15_044	FROM->TO	G14-057T 345.00 - SUNNYSIDE 345KV CKT 1	717	789	0.11671	111.6507	MORISNT4 138.00 - STILLWATER 138KV CKT 1
FDNS	00NR	3	16WP	G15_044	FROM->TO	G14-057T 345.00 - SUNNYSIDE 345KV CKT 1	717	789	0.11651	111.6475	P12:138:OKGE:3TERM40
FDNS	00NR	3	20WP	G15_044	FROM->TO	G14-057T 345.00 - SUNNYSIDE 345KV CKT 1	717	789	0.11672	111.6449	P12:138:OKGE:3TERM2
FDNS	00NR	3	20WP	G15_044	FROM->TO	G14-057T 345.00 - SUNNYSIDE 345KV CKT 1	717	789	0.117	111.6448	CLEO CORNER - CLEOPLT4 138.00 138KV CKT 1
FDNS	00NR	3	20WP	G15_044	FROM->TO	G14-057T 345.00 - SUNNYSIDE 345KV CKT 1	717	789	0.11664	111.6444	P12:115:AEPW:TURK3:HOPE3
FDNS	00NR	3	20WP	G15_044	FROM->TO	G14-057T 345.00 - SUNNYSIDE 345KV CKT 1	717	789	0.11673	111.6427	COUCH SES - MC NIEL 115KV CKT 1
FDNS	00NR	3	20WP	G15_044	FROM->TO	G14-057T 345.00 - SUNNYSIDE 345KV CKT 1	717	789	0.11692	111.6425	HOYT - STRANGER CREEK 345KV CKT 1
FDNS	00NR	3	20WP	G15_044	FROM->TO	G14-057T 345.00 - SUNNYSIDE 345KV CKT 1	717	789	0.11683	111.6414	GEN334432 1-SABINE UNIT 2
FDNS	00NR	3	16WP	G15_044	FROM->TO	G14-057T 345.00 - SUNNYSIDE 345KV CKT 1	717	789	0.117	111.6412	GEN562699 1-G15_018_3 0.6900
FDNS	00NR	3	20WP	G15_044	FROM->TO	G14-057T 345.00 - SUNNYSIDE 345KV CKT 1	717	789	0.11683	111.6412	GEN334431 1-SABINE UNIT 1
FDNS	00NR	3	20WP	G15_044	FROM->TO	G14-057T 345.00 - SUNNYSIDE 345KV CKT 1	717	789	0.11682	111.6399	CYPRESS - HARTBURG 500KV CKT 1
FDNS	00NR	3	20WP	G15_044	FROM->TO	G14-057T 345.00 - SUNNYSIDE 345KV CKT 1	717	789	0.11999	111.6398	DRAPER LAKE - SEMINOLE 345KV CKT 1
FDNS	00NR	3	20WP	G15_044	FROM->TO	G14-057T 345.00 - SUNNYSIDE 345KV CKT 1	717	789	0.11999	111.6398	DRAPER LAKE - SEMINOLE 345KV CKT 2
FDNS	00NR	3	16WP	G15_044	FROM->TO	G14-057T 345.00 - SUNNYSIDE 345KV CKT 1	717	789	0.117	111.6389	GEN511852 1-COMANCHE #2
FDNS	00NR	3	20WP	G15_044	FROM->TO	G14-057T 345.00 - SUNNYSIDE 345KV CKT 1	717	789	0.11525	111.6383	ARBUCKLE - VANOSTP4 138.00 138KV CKT 1
FDNS	00NR	3	20WP	G15_044	FROM->TO	G14-057T 345.00 - SUNNYSIDE 345KV CKT 1	717	789	0.11683	111.6369	GEN501823 1-TECHE UNIT 3
FDNS	00NR	3	20WP	G15_044	FROM->TO	G14-057T 345.00 - SUNNYSIDE 345KV CKT 1	717	789	0.11683	111.635	GEN501970 1-EVANGELINE UNIT 7
FDNS	00NR	3	20WP	G15_044	FROM->TO	G14-057T 345.00 - SUNNYSIDE 345KV CKT 1	717	789	0.11706	111.6342	OMPA-WALTERS - WALTERS 69KV CKT 1
FDNS	00NR	3	20WP	G15_044	FROM->TO	G14-057T 345.00 - SUNNYSIDE 345KV CKT 1	717	789	0.11706	111.6342	OMPA-WALTERS - WALTERS 69KV CKT 1
FDNS	00NR	3	20WP	G15_044	FROM->TO	G14-057T 345.00 - SUNNYSIDE 345KV CKT 1	717	789	0.11683	111.6333	LEWIS CREEK SWITCHYARD 138/22.0KV TRANSFORMER CKT 1
FDNS	00NR	3	20WP	G15_044	FROM->TO	G14-057T 345.00 - SUNNYSIDE 345KV CKT 1	717	789	0.11701	111.6323	EMPORIA ENERGY CENTER - G14_001T 345.00 345KV CKT 1

SOLUTION	GROUP	SCENARIO	SEASON	SOURCE	DIRECTION	MONITORED ELEMENT	RATEA (MVA)	RATEB(MVA)	TDF	TC%LOADING (% MVA)	CONTINGENCY
FDNS	00NR	3	20WP	G15_044	FROM->TO	G14-057T 345.00 - SUNNYSIDE 345KV CKT 1	717	789	0.11699	111.6296	BLACKBERRY - NEOSHO 345KV CKT 1
FDNS	00NR	3	20WP	G15_044	FROM->TO	G14-057T 345.00 - SUNNYSIDE 345KV CKT 1	717	789	0.11683	111.6288	LEWIS CREEK SWITCHYARD 138/22.0KV TRANSFORMER CKT 1
FDNS	00NR	3	20WP	G15_044	FROM->TO	G14-057T 345.00 - SUNNYSIDE 345KV CKT 1	717	789	0.11978	111.6282	G15063_T 345.00 - WOODRING 345KV CKT 1
FDNS	00NR	3	20WP	G15_044	FROM->TO	G14-057T 345.00 - SUNNYSIDE 345KV CKT 1	717	789	0.117	111.6279	CLEOPLT4 138.00 - MEN TAP 138KV CKT 1
FDNS	00NR	3	16WP	G15_044	FROM->TO	G14-057T 345.00 - SUNNYSIDE 345KV CKT 1	717	789	0.117	111.6238	GEN521110 1-ORME1 13.800
FDNS	00NR	3	16WP	G15_044	FROM->TO	G14-057T 345.00 - SUNNYSIDE 345KV CKT 1	717	789	0.117	111.6238	GEN521111 1-ORME2 13.800
FDNS	00NR	3	16WP	G15_044	FROM->TO	G14-057T 345.00 - SUNNYSIDE 345KV CKT 1	717	789	0.117	111.6195	GEN563292 1-G15095_3 0.6900
FDNS	00NR	3	20WP	G15_044	FROM->TO	G14-057T 345.00 - SUNNYSIDE 345KV CKT 1	717	789	0.11664	111.6188	TURK (TURK 1) 138/115/13.2KV TRANSFORMER CKT 1
FDNS	00NR	3	20WP	G15_044	FROM->TO	G14-057T 345.00 - SUNNYSIDE 345KV CKT 1	717	789	0.11664	111.6188	TURK (TURK 1) 138/115/13.2KV TRANSFORMER CKT 1
FDNS	00NR	3	20WP	G15_044	FROM->TO	G14-057T 345.00 - SUNNYSIDE 345KV CKT 1	717	789	0.11664	111.6187	MCNAB REC - Turk 115 115KV CKT 1
FDNS	00NR	3	20WP	G15_044	FROM->TO	G14-057T 345.00 - SUNNYSIDE 345KV CKT 1	717	789	0.11691	111.6181	G15074_T 345.00 - JEFFREY ENERGY CENTER 345KV CKT 1
FDNS	00NR	3	20WP	G15_044	FROM->TO	G14-057T 345.00 - SUNNYSIDE 345KV CKT 1	717	789	0.117	111.618	IMO TAP - MEN TAP 138KV CKT 1
FDNS	00NR	3	20WP	G15_044	FROM->TO	G14-057T 345.00 - SUNNYSIDE 345KV CKT 1	717	789	0.11683	111.6167	P12:161:AEPW:CHAMSPR5:FARMING5
FDNS	00NR	3	20WP	G15_044	FROM->TO	G14-057T 345.00 - SUNNYSIDE 345KV CKT 1	717	789	0.11683	111.6138	GEN334392 1-EXXON MOBIL IPP 1
FDNS	00NR	3	20WP	G15_044	FROM->TO	G14-057T 345.00 - SUNNYSIDE 345KV CKT 1	717	789	0.11683	111.6109	GEN505616 1-BROKEN BOW
FDNS	00NR	3	20WP	G15_044	FROM->TO	G14-057T 345.00 - SUNNYSIDE 345KV CKT 1	717	789	0.11717	111.6104	P12:69:WFEC-AEPW:COMANCH2:WALTRS-2
FDNS	00NR	3	20WP	G15_044	FROM->TO	G14-057T 345.00 - SUNNYSIDE 345KV CKT 1	717	789	0.11683	111.6075	GEN334393 1-EXXON MOBIL IPP 2
FDNS	00NR	3	20WP	G15_044	FROM->TO	G14-057T 345.00 - SUNNYSIDE 345KV CKT 1	717	789	0.11683	111.6075	GEN334394 1-EXXON MOBIL IPP 3
FDNS	00NR	3	20WP	G15_044	FROM->TO	G14-057T 345.00 - SUNNYSIDE 345KV CKT 1	717	789	0.11683	111.606	GEN515042 1-SEMINOLE 3G
FDNS	00NR	3	16WP	G15_044	FROM->TO	G14-057T 345.00 - SUNNYSIDE 345KV CKT 1	717	789	0.11705	111.6031	G15085_T 138.00 - RUSSELL 138KV CKT 1
FDNS	00NR	3	20WP	G15_044	FROM->TO	G14-057T 345.00 - SUNNYSIDE 345KV CKT 1	717	789	0.11687	111.5974	7LUTESVIL 345.00 - 7ST FRANC 345.00 345KV CKT 1
FDNS	00NR	3	20WP	G15_044	FROM->TO	G14-057T 345.00 - SUNNYSIDE 345KV CKT 1	717	789	0.11734	111.5949	WEATHERFORD TAP - WEATHERFORD WIND FARM 138KV CKT 1
FDNS	00NR	3	20WP	G15_044	FROM->TO	G14-057T 345.00 - SUNNYSIDE 345KV CKT 1	717	789	0.11835	111.5943	NOBLE - PURCELL4 138.00 138KV CKT 1
FDNS	00NR	3	20WP	G15_044	FROM->TO	G14-057T 345.00 - SUNNYSIDE 345KV CKT 1	717	789	0.11745	111.5935	SOUTHWESTERN STATION - VERDEN 138KV CKT 1
FDNS	00NR	3	20WP	G15_044	FROM->TO	G14-057T 345.00 - SUNNYSIDE 345KV CKT 1	717	789	0.11706	111.592	G13-010T 345.00 - POST ROCK 345KV CKT 1
FDNS	00NR	3	20WP	G15_044	FROM->TO	G14-057T 345.00 - SUNNYSIDE 345KV CKT 1	717	789	0.11705	111.5879	CLINTON JUNCTION - ELK CITY 138KV CKT 1
FDNS	00NR	3	20WP	G15_044	FROM->TO	G14-057T 345.00 - SUNNYSIDE 345KV CKT 1	717	789	0.11705	111.5879	CLINTON JUNCTION - ELK CITY 138KV CKT 1
FDNS	00NR	3	20WP	G15_044	FROM->TO	G14-057T 345.00 - SUNNYSIDE 345KV CKT 1	717	789	0.11683	111.5838	ST FRANCIS - ST FRANCIS 1 161KV CKT Z1
FDNS	00NR	3	20WP	G15_044	FROM->TO	G14-057T 345.00 - SUNNYSIDE 345KV CKT 1	717	789	0.11701	111.5828	BUCKNER7 345.00 - HOLCOMB 345KV CKT 1
FDNS	00NR	3	20WP	G15_044	FROM->TO	G14-057T 345.00 - SUNNYSIDE 345KV CKT 1	717	789	0.11701	111.5828	BUCKNER7 345.00 - HOLCOMB 345KV CKT 1
FDNS	00NR	3	20WP	G15_044	FROM->TO	G14-057T 345.00 - SUNNYSIDE 345KV CKT 1	717	789	0.11881	111.5788	LASALLE - STONEWAL LH138.00 138KV CKT 1
FDNS	00NR	3	16WP	G15_044	FROM->TO	G14-057T 345.00 - SUNNYSIDE 345KV CKT 1	717	789	0.11759	111.5774	GRAPEVINE INTERCHANGE - STATELINE INTERCHANGE 230KV CKT 1
FDNS	00NR	3	16WP	G15_044	FROM->TO	G14-057T 345.00 - SUNNYSIDE 345KV CKT 1	717	789	0.11759	111.5774	GRAPEVINE INTERCHANGE - STATELINE INTERCHANGE 230KV CKT 1
FDNS	00NR	3	20WP	G15_044	FROM->TO	G14-057T 345.00 - SUNNYSIDE 345KV CKT 1	717	789	0.11683	111.5772	GEN501971 1-EVANGELINE UNIT 7-1
FDNS	00NR	3	20WP	G15_044	FROM->TO	G14-057T 345.00 - SUNNYSIDE 345KV CKT 1	717	789	0.11683	111.5772	GEN501972 1-EVANGELINE UNIT 7-2
FDNS	00NR	3	20WP	G15_044	FROM->TO	G14-057T 345.00 - SUNNYSIDE 345KV CKT 1	717	789	0.11701	111.5767	G14_001T 345.00 - WICHITA 345KV CKT 1
FDNS	00NR	3	20WP	G15_044	FROM->TO	G14-057T 345.00 - SUNNYSIDE 345KV CKT 1	717	789	0.11712	111.5754	FRANKLIN - FRANKLIN SW 138KV CKT 1
FDNS	00NR	3	20WP	G15_044	FROM->TO	G14-057T 345.00 - SUNNYSIDE 345KV CKT 1	717	789	0.11684	111.5725	LAKEOVER - MCADAMS 500KV CKT 1
FDNS	00NR	3	20WP	G15_044	FROM->TO	G14-057T 345.00 - SUNNYSIDE 345KV CKT 1	717	789	0.11745	111.5724	NORTH 29TH CHICKASHA - VERDEN 138KV CKT 1
FDNS	00NR	3	20WP	G15_044	FROM->TO	G14-057T 345.00 - SUNNYSIDE 345KV CKT 1	717	789	0.11683	111.5709	SABINE 230/22.0KV TRANSFORMER CKT 1
FDNS	00NR	3	20WP	G15_044	FROM->TO	G14-057T 345.00 - SUNNYSIDE 345KV CKT 1	717	789	0.11692	111.5705	EMPORIA ENERGY CENTER - SWISSVALE 345KV CKT 1
FDNS	00NR	3	20WP	G15_044	FROM->TO	G14-057T 345.00 - SUNNYSIDE 345KV CKT 1	717	789	0.11668	111.5696	ENOWILT - LONE OAK 138KV CKT 1
FDNS	00NR	3	20WP	G15_044	FROM->TO	G14-057T 345.00 - SUNNYSIDE 345KV CKT 1	717	789	0.11693	111.5693	P12:138:OKGE:3TERM12
FDNS	00NR	3	20WP	G15_044	FROM->TO	G14-057T 345.00 - SUNNYSIDE 345KV CKT 1	717	789	0.11698	111.5689	FLETCHER - MARLOW JCT 69KV CKT 1
FDNS	00NR	3	20WP	G15_044	FROM->TO	G14-057T 345.00 - SUNNYSIDE 345KV CKT 1	717	789	0.11684	111.5672	P12:138:AEPW:R.S.S-4:T.P.S.-4
FDNS	00NR	3	20WP	G15_044	FROM->TO	G14-057T 345.00 - SUNNYSIDE 345KV CKT 1	717	789	0.11881	111.5636	STONEWAL LH138.00 - TUPELO TAP 138KV CKT 1
FDNS	00NR	3	20WP	G15_044	FROM->TO	G14-057T 345.00 - SUNNYSIDE 345KV CKT 1	717	789	0.11668	111.5609	ENOWILT - SARDIS 138KV CKT 1
FDNS	00NR	3	16WP	G15_044	FROM->TO	G14-057T 345.00 - SUNNYSIDE 345KV CKT 1	717	789	0.11719	111.5593	CACHE - SNYDER 138KV CKT 1
FDNS	00NR	3	20WP	G15_044	FROM->TO	G14-057T 345.00 - SUNNYSIDE 345KV CKT 1	717	789	0.1177	111.5564	HINTON - WEATHERFORD JCT. 138KV CKT 1
FDNS	00NR	3	20WP	G15_044	FROM->TO	G14-057T 345.00 - SUNNYSIDE 345KV CKT 1	717	789	0.11686	111.5553	MCADAMS - WOLF CREEK 500KV CKT 1
FDNS	00NR	3	20WP	G15_044	FROM->TO	G14-057T 345.00 - SUNNYSIDE 345KV CKT 1	717	789	0.11683	111.5542	GEN501912 1-ACADIA UNIT CT1B
FDNS	00NR	3	20WP	G15_044	FROM->TO	G14-057T 345.00 - SUNNYSIDE 345KV CKT 1	717	789	0.11683	111.5534	GEN501911 1-ACADIA UNIT CT1A
FDNS	00NR	3	20WP	G15_044	FROM->TO	G14-057T 345.00 - SUNNYSIDE 345KV CKT 1	717	789	0.11689	111.5533	P12:138:WFEC-AEPW:ELKCTY-4:ERICK4
FDNS	00NR	3	20WP	G15_044	FROM->TO	G14-057T 345.00 - SUNNYSIDE 345KV CKT 1	717	789	0.11706	111.5453	G13-010T 345.00 - SPEARVILLE 345KV CKT 1
FDNS	00NR	3	20WP	G15_044	FROM->TO	G14-057T 345.00 - SUNNYSIDE 345KV CKT 1	717	789	0.11695	111.5441	SWISSVALE - WEST GARDNER 345KV CKT 1
FDNS	00NR	3	16WP	G15_044	FROM->TO	G14-057T 345.00 - SUNNYSIDE 345KV CKT 1	717	789	0.117	111.5424	GEN563122 1-G15077_3 0.3850
FDNS	00NR	3	20WP	G15_044	FROM->TO	G14-057T 345.00 - SUNNYSIDE 345KV CKT 1	717	789	0.11683	111.5421	P12:138:AEPW:R.S.S.-4:R:96YALE-4
FDNS	00NR	3	20WP	G15_044	FROM->TO	G14-057T 345.00 - SUNNYSIDE 345KV CKT 1	717	789	0.11683	111.5379	GEN506749 1-EASTMAN GENERATION A
FDNS	00NR	3	16WP	G15_044	FROM->TO	G14-057T 345.00 - SUNNYSIDE 345KV CKT 1	717	789	0.117	111.5346	GEN562861 1-G15045_2 0.4800
FDNS	00NR	3	20WP	G15_044	FROM->TO	G14-057T 345.00 - SUNNYSIDE 345KV CKT 1	717	789	0.1175	111.5342	CORNVILLE - NORGE ROAD 138KV CKT 1
FDNS	00NR	3	20WP	G15_044	FROM->TO	G14-057T 345.00 - SUNNYSIDE 345KV CKT 1	717	789	0.1175	111.5342	CORNVILLE - NORGE ROAD 138KV CKT 1
FDNS	00NR	3	20WP	G15_044	FROM->TO	G14-057T 345.00 - SUNNYSIDE 345KV CKT 1	717	789	0.11668	111.5319	AMITY SS - MURFREESBORO EAST (AECC) 115KV CKT 1
FDNS	00NR	3	20WP	G15_044	FROM->TO	G14-057T 345.00 - SUNNYSIDE 345KV CKT 1	717	789	0.11683	111.5307	NELSON 230/24.0KV TRANSFORMER CKT 1
FDNS	00NR	3	20WP	G15_044	FROM->TO	G14-057T 345.00 - SUNNYSIDE 345KV CKT 1	717	789	0.11683	111.5287	GEN336242 1-1NMIL ST1 18.000
FDNS	00NR	3	16WP	G15_044	FROM->TO	G14-057T 345.00 - SUNNYSIDE 345KV CKT 1	717	789	0.05789	111.5277	GRACEMONT - LAWTON EASTSIDE 345KV CKT 1
FDNS	00NR	3	16WP	G15_044	FROM->TO	G14-057T 345.00 - SUNNYSIDE 345KV CKT 1	717	789	0.05789	111.5277	GRACEMONT - LAWTON EASTSIDE 345KV CKT 1
FDNS	00NR	3	20WP	G15_044	FROM->TO	G14-057T 345.00 - SUNNYSIDE 345KV CKT 1	717	789	0.11688	111.5271	8WNEWMADRID 500.00 - DELL 500 500KV CKT 1
FDNS	00NR	3	20WP	G15_044	FROM->TO	G14-057T 345.00 - SUNNYSIDE 345KV CKT 1	717	789	0.11718	111.5252	BENTON - WICHITA 345KV CKT 1
FDNS	00NR	3	20WP	G15_044	FROM->TO	G14-057T 345.00 - SUNNYSIDE 345KV CKT 1	717	789	0.11926	111.5246	FRANKLIN SW - WESTMOORE 138KV CKT 1
FDNS	00NR	3	20WP	G15_044	FROM->TO	G14-057T 345.00 - SUNNYSIDE 345KV CKT 1	717	789	0.11668	111.5223	CLAYTON - SARDIS 138KV CKT 1
FDNS	00NR	3	20WP	G15_044	FROM->TO	G14-057T 345.00 - SUNNYSIDE 345KV CKT 1	717	789	0.11683	111.5212	ST FRANCIS 345/161KV TRANSFORMER CKT 1
FDNS	00NR	3	20WP	G15_044	FROM->TO	G14-057T 345.00 - SUNNYSIDE 345KV CKT 1	717	789	0.11684	111.5199	P12:138:AEPW:MOHAWK4:T.NO--4
FDNS	00NR	3	16WP	G15_044	FROM->TO	G14-057T 345.00 - SUNNYSIDE 345KV CKT 1	717	789	0.117	111.5178	GEN661015 1-COYOTE
FDNS	00NR	3	20WP	G15_044	FROM->TO	G14-057T 345.00 - SUNNYSIDE 345KV CKT 1	717	789	0.11676	111.5138	LAYFLD8 500.00 (LAYFLD AUTO) 500/230/13.8KV TRANSFORMER CKT 1
FDNS	00NR	3	20WP	G15_044	FROM->TO	G14-057T 345.00 - SUNNYSIDE 345KV CKT 1	717	789	0.11676	111.5138	LAYFLD8 500.00 (LAYFLD AUTO) 500/230/13.8KV TRANSFORMER CKT 1
FDNS	00NR	3	20WP	G15_044	FROM->TO	G14-057T 345.00 - SUNNYSIDE 345KV CKT 1	717	789	0.12141	111.5114	CIMARRON - NORTHWEST 345KV CKT 1
FDNS	00NR	3	20WP	G15_044	FROM->TO	G14-057T 345.00 - SUNNYSIDE 345KV CKT 1	717	789	0.11745	111.5059	CORNVILLE - NORTH 29TH CHICKASHA 138KV CKT 1
FDNS	00NR	3	20WP	G15_044	FROM->TO	G14-057T 345.00 - SUNNYSIDE 345KV CKT 1	717	789	0.11608	111.5036	ARBUCKLE - MILLCREEK 138KV CKT 1
FDNS	00NR	3	20WP	G15_044	FROM->TO	G14-057T 345.00 - SUNNYSIDE 345KV CKT 1	717	789	0.11734	111.5033	WEATHERFORD SOUTHEAST - WEATHERFORD TAP 138KV CKT 1

SOLUTION	GROUP	SCENARIO	SEASON	SOURCE	DIRECTION	MONITORED ELEMENT	RATEA (MVA)	RATEB(MVA)	TDF	TC%LOADING (% MVA)	CONTINGENCY
FDNS	00NR	3	20WP	G15_044	FROM->TO	G14-057T 345.00 - SUNNYSIDE 345KV CKT 1	717	789	0.11668	111.5001	P12:138:AEPW-SWPA:LONEOAK4:BRKNBW4
FDNS	00NR	3	20WP	G15_044	FROM->TO	G14-057T 345.00 - SUNNYSIDE 345KV CKT 1	717	789	0.11683	111.4992	SABINE 138/22.0KV TRANSFORMER CKT 1
FDNS	00NR	3	20WP	G15_044	FROM->TO	G14-057T 345.00 - SUNNYSIDE 345KV CKT 1	717	789	0.11668	111.489	CLAYTON - NASHOBA 138KV CKT 1
FDNS	00NR	3	20WP	G15_044	FROM->TO	G14-057T 345.00 - SUNNYSIDE 345KV CKT 1	717	789	0.11686	111.4879	7JASPER 345.00 - MORGAN 345KV CKT 1
FDNS	00NR	3	20WP	G15_044	FROM->TO	G14-057T 345.00 - SUNNYSIDE 345KV CKT 1	717	789	0.1177	111.4844	HINTON - REDROCKRD4 138.00 138KV CKT 1
FDNS	00NR	3	20WP	G15_044	FROM->TO	G14-057T 345.00 - SUNNYSIDE 345KV CKT 1	717	789	0.11707	111.4828	SEMINOLE (SEMINOL2) 345/138/14.4KV TRANSFORMER CKT 1
FDNS	00NR	3	20WP	G15_044	FROM->TO	G14-057T 345.00 - SUNNYSIDE 345KV CKT 1	717	789	0.11683	111.4828	GEN338146 1-INDEPENDENCE UNIT #2
FDNS	00NR	3	16WP	G15_044	FROM->TO	G14-057T 345.00 - SUNNYSIDE 345KV CKT 1	717	789	0.11582	111.4571	SUNNYSIDE - UNIROYAL 138KV CKT 1
FDNS	00NR	3	20WP	G15_044	FROM->TO	G14-057T 345.00 - SUNNYSIDE 345KV CKT 1	717	789	0.11696	111.4536	P12:138:OKGE:3TERM20
FDNS	00NR	3	20WP	G15_044	FROM->TO	G14-057T 345.00 - SUNNYSIDE 345KV CKT 1	717	789	0.11734	111.4533	CLINTON JUNCTION - CLINTON NATURAL GAS TAP 138KV CKT 1
FDNS	00NR	3	20WP	G15_044	FROM->TO	G14-057T 345.00 - SUNNYSIDE 345KV CKT 1	717	789	0.05787	111.4488	GRACEMONT - LAWTON EASTSIDE 345KV CKT 1
FDNS	00NR	3	20WP	G15_044	FROM->TO	G14-057T 345.00 - SUNNYSIDE 345KV CKT 1	717	789	0.05787	111.4488	GRACEMONT - LAWTON EASTSIDE 345KV CKT 1
FDNS	00NR	3	20WP	G15_044	FROM->TO	G14-057T 345.00 - SUNNYSIDE 345KV CKT 1	717	789	0.11924	111.4413	MARIETTA - MARIETTA4 138.00 138KV CKT 1
FDNS	00NR	3	16WP	G15_044	FROM->TO	G14-057T 345.00 - SUNNYSIDE 345KV CKT 1	717	789	0.11755	111.44	GRAPEVINE INTERCHANGE - NICHOLS STATION 230KV CKT 1
FDNS	00NR	3	16WP	G15_044	FROM->TO	G14-057T 345.00 - SUNNYSIDE 345KV CKT 1	717	789	0.11755	111.44	GRAPEVINE INTERCHANGE - NICHOLS STATION 230KV CKT 1
FDNS	00NR	3	20WP	G15_044	FROM->TO	G14-057T 345.00 - SUNNYSIDE 345KV CKT 1	717	789	0.11717	111.4355	COMANCHE - WALTERS 69KV CKT 1
FDNS	00NR	3	16WP	G15_044	FROM->TO	G14-057T 345.00 - SUNNYSIDE 345KV CKT 1	717	789	0.11705	111.4174	P12:138:AEPW:SHAM4WT:CHILD4WT
FDNS	00NR	3	16WP	G15_044	FROM->TO	G14-057T 345.00 - SUNNYSIDE 345KV CKT 1	717	789	0.11711	111.4115	P12:138:WFEC:MSL15
FDNS	00NR	3	16WP	G15_044	FROM->TO	G14-057T 345.00 - SUNNYSIDE 345KV CKT 1	717	789	0.11948	111.4067	CHISHOLM7 345.00 (CHISHOLM) 345/230/13.2KV TRANSFORMER CKT 1
FDNS	00NR	3	16WP	G15_044	FROM->TO	G14-057T 345.00 - SUNNYSIDE 345KV CKT 1	717	789	0.117	111.4034	GEN657748 1-YOUNG 2 GENERATOR
FDNS	00NR	3	16WP	G15_044	FROM->TO	G14-057T 345.00 - SUNNYSIDE 345KV CKT 1	717	789	0.117	111.4	GEN532751 1-WOLF CREEK GENERATING STATION UNIT 1
FDNS	00NR	3	16WP	G15_044	FROM->TO	G14-057T 345.00 - SUNNYSIDE 345KV CKT 1	717	789	0.117	111.3811	GEN562992 1-G15063_3 0.6900
FDNS	00NR	3	16WP	G15_044	FROM->TO	G14-057T 345.00 - SUNNYSIDE 345KV CKT 1	717	789	0.117	111.3562	GEN562704 1-G15_020_3 0.3550
FDNS	00NR	3	16WP	G15_044	FROM->TO	G14-057T 345.00 - SUNNYSIDE 345KV CKT 1	717	789	0.117	111.3542	GEN563173 1-G15082_3 0.6900
FDNS	00NR	3	16WP	G15_044	FROM->TO	G14-057T 345.00 - SUNNYSIDE 345KV CKT 1	717	789	0.1194	111.3478	CANEY CREEK - TEXOMA JCT 138KV CKT 1
FDNS	00NR	3	16WP	G15_044	FROM->TO	G14-057T 345.00 - SUNNYSIDE 345KV CKT 1	717	789	0.117	111.3165	GEN562952 1-G15057_3 0.6500
FDNS	00NR	3	16WP	G15_044	FROM->TO	G14-057T 345.00 - SUNNYSIDE 345KV CKT 1	717	789	0.117	111.2724	GEN562710 1-G15_022_3 0.5500
FDNS	00NR	3	16WP	G15_044	FROM->TO	G14-057T 345.00 - SUNNYSIDE 345KV CKT 1	717	789	0.117	111.2411	GEN620315 1-BIG STONE GEN
FDNS	00NR	3	16WP	G15_044	FROM->TO	G14-057T 345.00 - SUNNYSIDE 345KV CKT 1	717	789	0.11948	111.1801	CHISHOLM7 345.00 - GRACEMONT 345KV CKT 1
FDNSLock	00NR	3	16WP	G15_044	FROM->TO	G14-057T 345.00 - SUNNYSIDE 345KV CKT 1	717	789	0.117	111.1763	GEN600004 2-PRAIRIE ISLAND G2
FDNSLock	00NR	3	16WP	G15_044	FROM->TO	G14-057T 345.00 - SUNNYSIDE 345KV CKT 1	717	789	0.117	111.1736	GEN600003 1-PRAIRIE ISLAND G1
FDNS	00NR	3	16WP	G15_044	FROM->TO	G14-057T 345.00 - SUNNYSIDE 345KV CKT 1	717	789	0.11708	111.1734	P12:138:WFEC:MSL09
FDNSLock	00NR	3	16WP	G15_044	FROM->TO	G14-057T 345.00 - SUNNYSIDE 345KV CKT 1	717	789	0.117	111.1659	GEN600006 1-AS KING
FDNS	00NR	3	16WP	G15_044	FROM->TO	G14-057T 345.00 - SUNNYSIDE 345KV CKT 1	717	789	0.117	111.1295	GEN511851 1-COMANCHE #1
FDNS	00NR	3	16WP	G15_044	FROM->TO	G14-057T 345.00 - SUNNYSIDE 345KV CKT 1	717	789	0.117	111.1	GEN636641 1-LOUISA UNIT 1
FDNS	00NR	3	16WP	G15_044	FROM->TO	G14-057T 345.00 - SUNNYSIDE 345KV CKT 1	717	789	0.117	111.0396	GEN600005 1-MONTICELLO
FDNS	00NR	3	16WP	G15_044	FROM->TO	G14-057T 345.00 - SUNNYSIDE 345KV CKT 1	717	789	0.11804	111.0304	P12:230:AEPW-SPS:SWEETWT6:WHEELER 6
FDNS	00NR	3	16WP	G15_044	FROM->TO	G14-057T 345.00 - SUNNYSIDE 345KV CKT 1	717	789	0.11804	111.0294	STATELINE INTERCHANGE - STLN-DEMARC6 230KV CKT 1
FDNS	00NR	3	16WP	G15_044	FROM->TO	G14-057T 345.00 - SUNNYSIDE 345KV CKT 1	717	789	0.11804	111.0283	STLN-DEMARC6 - SWEETWATER 230KV CKT 1
FDNS	00NR	3	16WP	G15_044	FROM->TO	G14-057T 345.00 - SUNNYSIDE 345KV CKT 1	717	789	0.117	111.0266	GEN562754 1-G15031_5 0.6900
FDNS	00NR	3	20WP	G15_044	FROM->TO	G14-057T 345.00 - SUNNYSIDE 345KV CKT 1	717	789	0.11683	111.0252	803-OKLAUNION
FDNS	00NR	3	16WP	G15_044	FROM->TO	G14-057T 345.00 - SUNNYSIDE 345KV CKT 1	717	789	0.117	111.0089	GEN615002 2-COAL CREEK
FDNS	00NR	3	16WP	G15_044	FROM->TO	G14-057T 345.00 - SUNNYSIDE 345KV CKT 1	717	789	0.117	111	GEN629074 1-ARNOLD LOWSIDE OF GSU XFMR
FDNS	00NR	3	16WP	G15_044	FROM->TO	G14-057T 345.00 - SUNNYSIDE 345KV CKT 1	717	789	0.11794	110.9877	P12:138:AEPW-OGE:CORNVIL4:CIMARON4
FDNS	00NR	3	16WP	G15_044	FROM->TO	G14-057T 345.00 - SUNNYSIDE 345KV CKT 1	717	789	0.117	110.9862	GEN562023 1-G11_020_3 0.6900
FDNS	00NR	3	16WP	G15_044	FROM->TO	G14-057T 345.00 - SUNNYSIDE 345KV CKT 1	717	789	0.117	110.9862	GEN562026 1-G11_019_3 0.6900
FDNS	00NR	3	16WP	G15_044	FROM->TO	G14-057T 345.00 - SUNNYSIDE 345KV CKT 1	717	789	0.117	110.9797	GEN635213 3-NEAL UNIT 3
FDNS	00NR	3	16WP	G15_044	FROM->TO	G14-057T 345.00 - SUNNYSIDE 345KV CKT 1	717	789	0.117	110.9682	GEN562756 1-G15031_7 0.6900
FDNS	00NR	3	16WP	G15_044	FROM->TO	G14-057T 345.00 - SUNNYSIDE 345KV CKT 1	717	789	0.117	110.9258	BIG STONE 230/24.0KV TRANSFORMER CKT 1
FDNS	00NR	3	16WP	G15_044	FROM->TO	G14-057T 345.00 - SUNNYSIDE 345KV CKT 1	717	789	0.117	110.9216	GEN562556 1-G14_046_3 0.3420
FDNS	00NR	3	16WP	G15_044	FROM->TO	G14-057T 345.00 - SUNNYSIDE 345KV CKT 1	717	789	0.117	110.8335	GEN563142 1-G15079_3 0.5500
FDNS	00NR	3	16WP	G15_044	FROM->TO	G14-057T 345.00 - SUNNYSIDE 345KV CKT 1	717	789	0.117	110.8335	GEN563151 1-G15080_2 0.5500
FDNS	00NR	3	16WP	G15_044	FROM->TO	G14-057T 345.00 - SUNNYSIDE 345KV CKT 1	717	789	0.117	110.8185	GEN523971 1-HARRINGTON GEN #1 24 KV
FDNS	00NR	3	16WP	G15_044	FROM->TO	G14-057T 345.00 - SUNNYSIDE 345KV CKT 1	717	789	0.117	110.8185	GEN523973 1-HARRINGTON GEN #3 24 KV
FDNS	00NR	3	16WP	G15_044	FROM->TO	G14-057T 345.00 - SUNNYSIDE 345KV CKT 1	717	789	0.117	110.8184	GEN523972 1-HARRINGTON GEN #2 24 KV
FDNS	00NR	3	20WP	G15_044	FROM->TO	G14-057T 345.00 - SUNNYSIDE 345KV CKT 1	717	789	0.11521	110.8058	P12:138:OKGE:3TERM39
FDNS	00NR	3	16WP	G15_044	FROM->TO	G14-057T 345.00 - SUNNYSIDE 345KV CKT 1	717	789	0.117	110.7304	GEN600000 1-SHERBURNECNTY G1
FDNS	00NR	3	16WP	G15_044	FROM->TO	G14-057T 345.00 - SUNNYSIDE 345KV CKT 1	717	789	0.11666	110.7146	NORTHWEST TEXARKANA - VALLIANT 345KV CKT 1
FDNS	00NR	3	16WP	G15_044	FROM->TO	G14-057T 345.00 - SUNNYSIDE 345KV CKT 1	717	789	0.11666	110.7146	NORTHWEST TEXARKANA - VALLIANT 345KV CKT 1
FDNS	00NR	3	16WP	G15_044	FROM->TO	G14-057T 345.00 - SUNNYSIDE 345KV CKT 1	717	789	0.11955	110.6535	P12:230:AEPW:ELKCITY6:SWEETWT6
FDNS	00NR	3	16WP	G15_044	FROM->TO	G14-057T 345.00 - SUNNYSIDE 345KV CKT 1	717	789	0.117	110.6508	GEN600001 2-SHERBURNE CNTY G2
FDNS	00NR	3	20WP	G15_044	FROM->TO	G14-057T 345.00 - SUNNYSIDE 345KV CKT 1	717	789	0.11568	110.6277	MAYSVILLE - MAYSVLT4 138.00 138KV CKT 1
FDNS	00NR	3	16WP	G15_044	FROM->TO	G14-057T 345.00 - SUNNYSIDE 345KV CKT 1	717	789	0.117	110.6206	GEN563042 1-G15068_3 0.6900
FDNS	00NR	3	16WP	G15_044	FROM->TO	G14-057T 345.00 - SUNNYSIDE 345KV CKT 1	717	789	0.117	110.6069	GEN527901 1-HOBBS PLANT #1 (CT)
FDNS	00NR	3	16WP	G15_044	FROM->TO	G14-057T 345.00 - SUNNYSIDE 345KV CKT 1	717	789	0.117	110.6069	GEN527902 1-HOBBS PLANT #2 (CT)
FDNS	00NR	3	16WP	G15_044	FROM->TO	G14-057T 345.00 - SUNNYSIDE 345KV CKT 1	717	789	0.117	110.6027	GEN511848 1-SOUTHWESTERN STATION #3
FDNS	00NR	3	20WP	G15_044	FROM->TO	G14-057T 345.00 - SUNNYSIDE 345KV CKT 1	717	789	0.11807	110.5975	BEARCAT 138.00 - NINE MILE 138KV CKT 1
FDNS	00NR	3	20WP	G15_044	FROM->TO	G14-057T 345.00 - SUNNYSIDE 345KV CKT 1	717	789	0.11683	110.5893	GEN521103 1-BLUE CANYON WIND FARM
FDNS	00NR	3	20WP	G15_044	FROM->TO	G14-057T 345.00 - SUNNYSIDE 345KV CKT 1	717	789	0.11683	110.5787	GEN562691 1-G15_015_3 0.6900
FDNS	00NR	3	20WP	G15_044	FROM->TO	G14-057T 345.00 - SUNNYSIDE 345KV CKT 1	717	789	0.11683	110.5785	GEN520812 1-ANADRK5
FDNS	00NR	3	20WP	G15_044	FROM->TO	G14-057T 345.00 - SUNNYSIDE 345KV CKT 1	717	789	0.11683	110.5784	GEN520813 1-ANADRK6
FDNS	00NR	3	20WP	G15_044	FROM->TO	G14-057T 345.00 - SUNNYSIDE 345KV CKT 1	717	789	0.11683	110.5753	GEN563052 1-G15069_3 0.6900
FDNS	00NR	3	20WP	G15_044	FROM->TO	G14-057T 345.00 - SUNNYSIDE 345KV CKT 1	717	789	0.11683	110.5696	GEN562772 1-G15034_3 0.6900
FDNS	00NR	3	20WP	G15_044	FROM->TO	G14-057T 345.00 - SUNNYSIDE 345KV CKT 1	717	789	0.11727	110.5695	DRAPER LAKE - MIDWEST TAP 138KV CKT 1
FDNS	00NR	3	20WP	G15_044	FROM->TO	G14-057T 345.00 - SUNNYSIDE 345KV CKT 1	717	789	0.11683	110.5621	GEN600046 1-MECST
FDNS	00NR	3	20WP	G15_044	FROM->TO	G14-057T 345.00 - SUNNYSIDE 345KV CKT 1	717	789	0.11568	110.5618	MAYSVLT4 138.00 - PRAIRIE POINT 138KV CKT 1
FDNS	00NR	3	20WP	G15_044	FROM->TO	G14-057T 345.00 - SUNNYSIDE 345KV CKT 1	717	789	0.11683	110.5514	GEN629070 2-BEAVER CHANNEL GENERATORFOR UNIT NO 2
FDNS	00NR	3	20WP	G15_044	FROM->TO	G14-057T 345.00 - SUNNYSIDE 345KV CKT 1	717	789	0.11683	110.5496	GEN511961 1-DEMPSEY-WTG10.7000
FDNS	00NR	3	20WP	G15_044	FROM->TO	G14-057T 345.00 - SUNNYSIDE 345KV CKT 1	717	789	0.11683	110.5482	GEN600047 1-MECCT1

SOLUTION	GROUP	SCENARIO	SEASON	SOURCE	DIRECTION	MONITORED ELEMENT	RATEA (MVA)	RATEB(MVA)	TDF	TC%LOADING (% MVA)	CONTINGENCY
FDNS	00NR	3	20WP	G15_044	FROM->TO	G14-057T 345.00 - SUNNYSIDE 345KV CKT 1	717	789	0.11683	110.5464	P12:069:OKGE:3TERM42
FDNS	00NR	3	20WP	G15_044	FROM->TO	G14-057T 345.00 - SUNNYSIDE 345KV CKT 1	717	789	0.11593	110.546	ARBUCKLE - SULPHR 4 138.00 138KV CKT 1
FDNS	00NR	3	20WP	G15_044	FROM->TO	G14-057T 345.00 - SUNNYSIDE 345KV CKT 1	717	789	0.11683	110.5432	GEN629071 1-BURLINGTON GENERATOR FOR UNIT NO 1 E
FDNS	00NR	3	20WP	G15_044	FROM->TO	G14-057T 345.00 - SUNNYSIDE 345KV CKT 1	717	789	0.11791	110.5428	CIMARRON - MATHWSN7 345.00 345KV CKT 1
FDNS	00NR	3	20WP	G15_044	FROM->TO	G14-057T 345.00 - SUNNYSIDE 345KV CKT 1	717	789	0.11791	110.5428	CIMARRON - MATHWSN7 345.00 345KV CKT 2
FDNS	00NR	3	20WP	G15_044	FROM->TO	G14-057T 345.00 - SUNNYSIDE 345KV CKT 1	717	789	0.11807	110.5403	P12:138:WFEC:MSL14
FDNS	00NR	3	20WP	G15_044	FROM->TO	G14-057T 345.00 - SUNNYSIDE 345KV CKT 1	717	789	0.11732	110.5392	P12:138:OKGE:3TERM21
FDNS	00NR	3	20WP	G15_044	FROM->TO	G14-057T 345.00 - SUNNYSIDE 345KV CKT 1	717	789	0.11978	110.5365	G15063_T 345.00 - MATHWSN7 345.00 345KV CKT 1
FDNS	00NR	3	20WP	G15_044	FROM->TO	G14-057T 345.00 - SUNNYSIDE 345KV CKT 1	717	789	0.11683	110.5362	BURLINGTON NO1 + NO 2 + NO 3 161/20.0KV TRANSFORMER CKT 1
FDNSLock	00NR	3	16WP	G15_044	FROM->TO	G14-057T 345.00 - SUNNYSIDE 345KV CKT 1	717	789	0.117	110.5323	GEN629075 1-OTTUMWA GENERATOR FOR OTTUMWA UNIT NO 1
FDNS	00NR	3	20WP	G15_044	FROM->TO	G14-057T 345.00 - SUNNYSIDE 345KV CKT 1	717	789	0.11681	110.5286	P12:138:WFEC:MSL11
FDNS	00NR	3	20WP	G15_044	FROM->TO	G14-057T 345.00 - SUNNYSIDE 345KV CKT 1	717	789	0.11681	110.5286	P12:138:WFEC-AEPW:PHAROAH4:LONEOAK4
FDNS	00NR	3	20WP	G15_044	FROM->TO	G14-057T 345.00 - SUNNYSIDE 345KV CKT 1	717	789	0.11683	110.525	GEN615010 1-STANTON4
FDNS	00NR	3	20WP	G15_044	FROM->TO	G14-057T 345.00 - SUNNYSIDE 345KV CKT 1	717	789	0.11683	110.5192	GEN615021 1-GRE-ER 14G 16.000
FDNS	00NR	3	20WP	G15_044	FROM->TO	G14-057T 345.00 - SUNNYSIDE 345KV CKT 1	717	789	0.11692	110.5122	GLASSES - MADILL INDUSTRIAL TAP 138KV CKT 1
FDNS	00NR	3	20WP	G15_044	FROM->TO	G14-057T 345.00 - SUNNYSIDE 345KV CKT 1	717	789	0.11692	110.4994	CANEY CREEK - JOHNSON COUNTY 138KV CKT 1
FDNS	00NR	3	20WP	G15_044	FROM->TO	G14-057T 345.00 - SUNNYSIDE 345KV CKT 1	717	789	0.11807	110.4961	BEARCAT 138.00 - MOORELAND 138KV CKT 1
FDNS	00NR	3	20WP	G15_044	FROM->TO	G14-057T 345.00 - SUNNYSIDE 345KV CKT 1	717	789	0.11712	110.4941	P12:138:WFEC:MSL08
FDNS	00NR	3	20WP	G15_044	FROM->TO	G14-057T 345.00 - SUNNYSIDE 345KV CKT 1	717	789	0.11683	110.4852	GEN531447 1-HOLCOMB GENERATOR
FDNS	00NR	3	20WP	G15_044	FROM->TO	G14-057T 345.00 - SUNNYSIDE 345KV CKT 1	717	789	0.11683	110.4848	GEN515443 1-MNCOWND1 0.7000
FDNS	00NR	3	20WP	G15_044	FROM->TO	G14-057T 345.00 - SUNNYSIDE 345KV CKT 1	717	789	0.11683	110.4842	INDEPENDENCE 500/26.0KV TRANSFORMER CKT 1
FDNS	00NR	3	20WP	G15_044	FROM->TO	G14-057T 345.00 - SUNNYSIDE 345KV CKT 1	717	789	0.11924	110.4812	LEBANON - TEXOMA JCT 138KV CKT 1
FDNS	00NR	3	20WP	G15_044	FROM->TO	G14-057T 345.00 - SUNNYSIDE 345KV CKT 1	717	789	0.11683	110.4761	GEN560183 1-REDHIL-WTG1 12.000
FDNS	00NR	3	20WP	G15_044	FROM->TO	G14-057T 345.00 - SUNNYSIDE 345KV CKT 1	717	789	0.11568	110.4698	PRAIRIE POINT - RATLIFF 138KV CKT 1
FDNS	00NR	3	20WP	G15_044	FROM->TO	G14-057T 345.00 - SUNNYSIDE 345KV CKT 1	717	789	0.11683	110.4591	GEN600067 9-HIGH BRIDGE
FDNS	00NR	3	20WP	G15_044	FROM->TO	G14-057T 345.00 - SUNNYSIDE 345KV CKT 1	717	789	0.11683	110.4575	P12:230:UMZB:# 112 #: NU IN SD. NU-RCDC & DRY CREEK XFMR
FDNS	00NR	3	20WP	G15_044	FROM->TO	G14-057T 345.00 - SUNNYSIDE 345KV CKT 1	717	789	0.11683	110.4571	RCDC EAST 4230.00 - RED CEDAR DC 230KV CKT 1
FDNS	00NR	3	20WP	G15_044	FROM->TO	G14-057T 345.00 - SUNNYSIDE 345KV CKT 1	717	789	0.11692	110.4567	OVEXFRMCCOVE
FDNS	00NR	3	20WP	G15_044	FROM->TO	G14-057T 345.00 - SUNNYSIDE 345KV CKT 1	717	789	0.11671	110.4537	CARTER - CHICKASAW 138KV CKT 1
FDNS	00NR	3	20WP	G15_044	FROM->TO	G14-057T 345.00 - SUNNYSIDE 345KV CKT 1	717	789	0.11688	110.4531	ALTUS JUNCTION - RUSSELL 138KV CKT 1
FDNS	00NR	3	20WP	G15_044	FROM->TO	G14-057T 345.00 - SUNNYSIDE 345KV CKT 1	717	789	0.11688	110.4531	ALTUS JUNCTION - RUSSELL 138KV CKT 1
FDNS	00NR	3	20WP	G15_044	FROM->TO	G14-057T 345.00 - SUNNYSIDE 345KV CKT 1	717	789	0.11692	110.4518	GLASSES - RUSSETT 138KV CKT 1
FDNS	00NR	3	20WP	G15_044	FROM->TO	G14-057T 345.00 - SUNNYSIDE 345KV CKT 1	717	789	0.11696	110.4453	CANADIAN RIVER - MCALESTER SOUTH 138KV CKT 1
FDNS	00NR	3	20WP	G15_044	FROM->TO	G14-057T 345.00 - SUNNYSIDE 345KV CKT 1	717	789	0.11696	110.4453	CANADIAN RIVER - MCALESTER SOUTH 138KV CKT 1
FDNS	00NR	3	20WP	G15_044	FROM->TO	G14-057T 345.00 - SUNNYSIDE 345KV CKT 1	717	789	0.11696	110.4435	CANADIAN RIVER () 345/138/13.8KV TRANSFORMER CKT 1
FDNS	00NR	3	20WP	G15_044	FROM->TO	G14-057T 345.00 - SUNNYSIDE 345KV CKT 1	717	789	0.11696	110.4435	CANADIAN RIVER () 345/138/13.8KV TRANSFORMER CKT 1
FDNS	00NR	3	20WP	G15_044	FROM->TO	G14-057T 345.00 - SUNNYSIDE 345KV CKT 1	717	789	0.11687	110.4405	GRPRAR1-LNX3345.00 - HOLT.CO3 345.00 345KV CKT 1
FDNS	00NR	3	20WP	G15_044	FROM->TO	G14-057T 345.00 - SUNNYSIDE 345KV CKT 1	717	789	0.11687	110.4383	GRPRAR1-LNX3345.00 - GRPRAR 345KV CKT Z
FDNS	00NR	3	20WP	G15_044	FROM->TO	G14-057T 345.00 - SUNNYSIDE 345KV CKT 1	717	789	0.11683	110.4359	GEN563242 1-G15090_3 0.6900
FDNS	00NR	3	20WP	G15_044	FROM->TO	G14-057T 345.00 - SUNNYSIDE 345KV CKT 1	717	789	0.11676	110.4311	HUGO (HUGO 1) 345/138/13.8KV TRANSFORMER CKT 1
FDNS	00NR	3	20WP	G15_044	FROM->TO	G14-057T 345.00 - SUNNYSIDE 345KV CKT 1	717	789	0.11644	110.4292	ROCKY POINT - SPRINGDALE 138KV CKT 1
FDNS	00NR	3	20WP	G15_044	FROM->TO	G14-057T 345.00 - SUNNYSIDE 345KV CKT 1	717	789	0.11703	110.419	CHAMBER SPRINGS - CLARKSVILLE 345KV CKT 1
FDNS	00NR	3	20WP	G15_044	FROM->TO	G14-057T 345.00 - SUNNYSIDE 345KV CKT 1	717	789	0.11683	110.4157	GEN562902 1-G15052_3 0.6900
FDNS	00NR	3	20WP	G15_044	FROM->TO	G14-057T 345.00 - SUNNYSIDE 345KV CKT 1	717	789	0.11702	110.4053	P12:138:AEPW:112GORE4:SNYDER-4
FDNS	00NR	3	16WP	G15_044	FROM->TO	G14-057T 345.00 - SUNNYSIDE 345KV CKT 1	717	789	0.117	110.405	SHERBURNE CO 345/24.0KV TRANSFORMER CKT 1
FDNS	00NR	3	20WP	G15_044	FROM->TO	G14-057T 345.00 - SUNNYSIDE 345KV CKT 1	717	789	0.11683	110.4025	GEN562078 1-G11_051_3 0.6900
FDNS	00NR	3	20WP	G15_044	FROM->TO	G14-057T 345.00 - SUNNYSIDE 345KV CKT 1	717	789	0.11593	110.4003	JOLLYVILLE - SULPHR 4 138.00 138KV CKT 1
FDNS	00NR	3	16WP	G15_044	FROM->TO	G14-057T 345.00 - SUNNYSIDE 345KV CKT 1	717	789	0.117	110.4	GEN635214 4-NEAL UNIT 4
FDNS	00NR	3	20WP	G15_044	FROM->TO	G14-057T 345.00 - SUNNYSIDE 345KV CKT 1	717	789	0.11683	110.3996	GEN629072 4-LANSING GENERATOR FOR UNITS NO4 EIA CODE 1
FDNS	00NR	3	20WP	G15_044	FROM->TO	G14-057T 345.00 - SUNNYSIDE 345KV CKT 1	717	789	0.11683	110.397	GEN562802 1-G15039_3 0.3570
FDNS	00NR	3	20WP	G15_044	FROM->TO	G14-057T 345.00 - SUNNYSIDE 345KV CKT 1	717	789	0.11683	110.3855	GEN524285 1-WILDORADO WIND GEN
FDNS	00NR	3	20WP	G15_044	FROM->TO	G14-057T 345.00 - SUNNYSIDE 345KV CKT 1	717	789	0.11683	110.368	GEN560331 1-G10-46 13.800
FDNS	00NR	3	20WP	G15_044	FROM->TO	G14-057T 345.00 - SUNNYSIDE 345KV CKT 1	717	789	0.11683	110.3627	GEN524295 1-SPNSPUR_WND10.6900
FDNS	00NR	3	20WP	G15_044	FROM->TO	G14-057T 345.00 - SUNNYSIDE 345KV CKT 1	717	789	0.11683	110.3483	GEN562587 1-G14_056_3 0.6900
FDNS	00NR	3	20WP	G15_044	FROM->TO	G14-057T 345.00 - SUNNYSIDE 345KV CKT 1	717	789	0.11683	110.3477	GEN657749 1-YOUNG 1 GENERATOR
FDNS	00NR	3	20WP	G15_044	FROM->TO	G14-057T 345.00 - SUNNYSIDE 345KV CKT 1	717	789	0.11683	110.342	GEN514805 1-SOONER UNIT 1
FDNS	00NR	3	20WP	G15_044	FROM->TO	G14-057T 345.00 - SUNNYSIDE 345KV CKT 1	717	789	0.11683	110.337	GEN562269 1-G12-020-1 0.6900
FDNS	00NR	3	20WP	G15_044	FROM->TO	G14-057T 345.00 - SUNNYSIDE 345KV CKT 1	717	789	0.11683	110.3367	GEN524023 1-NICHOLS GEN #3 22 KV
FDNS	00NR	3	20WP	G15_044	FROM->TO	G14-057T 345.00 - SUNNYSIDE 345KV CKT 1	717	789	0.11593	110.3364	JOLLYVILLE - KERR MCGEE CIMARRON 138KV CKT 1
FDNS	00NR	3	16WP	G15_044	FROM->TO	G14-057T 345.00 - SUNNYSIDE 345KV CKT 1	717	789	0.117	110.328	GEN563273 2-G15093_4 0.6900
FDNS	00NR	3	20WP	G15_044	FROM->TO	G14-057T 345.00 - SUNNYSIDE 345KV CKT 1	717	789	0.11683	110.3222	GEN514806 1-SOONER UNIT 2
FDNS	00NR	3	20WP	G15_044	FROM->TO	G14-057T 345.00 - SUNNYSIDE 345KV CKT 1	717	789	0.11674	110.3219	CROCKETT - TENASKA RUSK COUNTY 345KV CKT 1
FDNS	00NR	3	16WP	G15_044	FROM->TO	G14-057T 345.00 - SUNNYSIDE 345KV CKT 1	717	789	0.117	110.3185	GEN563043 1-G15068_4 0.6900
FDNS	00NR	3	20WP	G15_044	FROM->TO	G14-057T 345.00 - SUNNYSIDE 345KV CKT 1	717	789	0.11674	110.3172	LEBROCK - TENASKA RUSK COUNTY 345KV CKT 1
FDNS	00NR	3	16WP	G15_044	FROM->TO	G14-057T 345.00 - SUNNYSIDE 345KV CKT 1	717	789	0.11804	110.3023	CHISHOLM6 230.00 - SWEETWATER 230KV CKT 1
FDNS	00NR	3	16WP	G15_044	FROM->TO	G14-057T 345.00 - SUNNYSIDE 345KV CKT 1	717	789	0.117	110.2979	GEN526333 1-JONES GEN #3 21 KV
FDNS	00NR	3	16WP	G15_044	FROM->TO	G14-057T 345.00 - SUNNYSIDE 345KV CKT 1	717	789	0.117	110.2979	GEN526334 1-JONES_4 116.500
FDNS	00NR	3	20WP	G15_044	FROM->TO	G14-057T 345.00 - SUNNYSIDE 345KV CKT 1	717	789	0.11683	110.2978	GEN562812 1-G15040_3 0.3570
FDNS	00NR	3	20WP	G15_044	FROM->TO	G14-057T 345.00 - SUNNYSIDE 345KV CKT 1	717	789	0.11683	110.2935	GEN562270 1-G12-020-2 0.6900
FDNS	00NR	3	20WP	G15_044	FROM->TO	G14-057T 345.00 - SUNNYSIDE 345KV CKT 1	717	789	0.11593	110.2924	ARBWIND4 138.00 - KERR MCGEE CIMARRON 138KV CKT 1
FDNS	00NR	3	20WP	G15_044	FROM->TO	G14-057T 345.00 - SUNNYSIDE 345KV CKT 1	717	789	0.11683	110.2912	GEN563132 1-G15078_3 0.3570
FDNS	00NR	3	20WP	G15_044	FROM->TO	G14-057T 345.00 - SUNNYSIDE 345KV CKT 1	717	789	0.11683	110.2846	GEN563102 1-G15075_3 0.5500
FDNS	00NR	3	20WP	G15_044	FROM->TO	G14-057T 345.00 - SUNNYSIDE 345KV CKT 1	717	789	0.11683	110.2683	GEN562882 1-G15047_3 0.6900
FDNS	00NR	3	20WP	G15_044	FROM->TO	G14-057T 345.00 - SUNNYSIDE 345KV CKT 1	717	789	0.11683	110.2606	GEN562974 1-G15060_5 0.6900
FDNS	00NR	3	20WP	G15_044	FROM->TO	G14-057T 345.00 - SUNNYSIDE 345KV CKT 1	717	789	0.11683	110.2605	GEN563062 1-G15071_3 0.6900
FDNS	00NR	3	20WP	G15_044	FROM->TO	G14-057T 345.00 - SUNNYSIDE 345KV CKT 1	717	789	0.11683	110.251	GEN562973 1-G15060_4 0.6900
FDNS	00NR	3	16WP	G15_044	FROM->TO	G14-057T 345.00 - SUNNYSIDE 345KV CKT 1	717	789	0.117	110.2441	GEN525844 1-ELK_1 118.000
FDNS	00NR	3	16WP	G15_044	FROM->TO	G14-057T 345.00 - SUNNYSIDE 345KV CKT 1	717	789	0.117	110.2387	GEN525845 1-ELK_2 1 138.00
FDNS	00NR	3	20WP	G15_044	FROM->TO	G14-057T 345.00 - SUNNYSIDE 345KV CKT 1	717	789	0.11683	110.2364	GEN345671 2-1RUSH G2 18.000

SOLUTION	GROUP	SCENARIO	SEASON	SOURCE	DIRECTION	MONITORED ELEMENT	RATEA (MVA)	RATEB(MVA)	TDF	TC%LOADING (% MVA)	CONTINGENCY
FDNS	00NR	3	20WP	G15_044	FROM->TO	G14-057T 345.00 - SUNNYSIDE 345KV CKT 1	717	789	0.11604	110.235	CHICKASAW - TOTAL 138KV CKT 1
FDNS	00NR	3	20WP	G15_044	FROM->TO	G14-057T 345.00 - SUNNYSIDE 345KV CKT 1	717	789	0.11683	110.2345	GEN345670 1-1RUSH G1 18.000
FDNS	00NR	3	20WP	G15_044	FROM->TO	G14-057T 345.00 - SUNNYSIDE 345KV CKT 1	717	789	0.11664	110.229	BROWN - RUSSETT 138KV CKT 1
FDNS	00NR	3	20WP	G15_044	FROM->TO	G14-057T 345.00 - SUNNYSIDE 345KV CKT 1	717	789	0.11683	110.2248	GEN521112 1-ORME3 13.800
FDNS	00NR	3	16WP	G15_044	FROM->TO	G14-057T 345.00 - SUNNYSIDE 345KV CKT 1	717	789	0.117	110.2242	GEN600002 3-SHERBURNE CNTY G3
FDNS	00NR	3	20WP	G15_044	FROM->TO	G14-057T 345.00 - SUNNYSIDE 345KV CKT 1	717	789	0.11683	110.2069	4SIOUX 1 138.00 138/18.0KV TRANSFORMER CKT 1
FDNS	00NR	3	20WP	G15_044	FROM->TO	G14-057T 345.00 - SUNNYSIDE 345KV CKT 1	717	789	0.11683	110.2006	GEN560105 1-G08-22 0.6900
FDNS	00NR	3	16WP	G15_044	FROM->TO	G14-057T 345.00 - SUNNYSIDE 345KV CKT 1	717	789	0.117	110.2	GEN344225 1-1CAL G1 25.000
FDNS	00NR	3	20WP	G15_044	FROM->TO	G14-057T 345.00 - SUNNYSIDE 345KV CKT 1	717	789	0.11683	110.1843	GEN562550 1-G14_040_3 0.6900
FDNS	00NR	3	20WP	G15_044	FROM->TO	G14-057T 345.00 - SUNNYSIDE 345KV CKT 1	717	789	0.11683	110.1721	GEN681522 3-GENOA 3
FDNS	00NR	3	20WP	G15_044	FROM->TO	G14-057T 345.00 - SUNNYSIDE 345KV CKT 1	717	789	0.11664	110.1597	RUSSETT - RUSSETT 138KV CKT 1
FDNS	00NR	3	20WP	G15_044	FROM->TO	G14-057T 345.00 - SUNNYSIDE 345KV CKT 1	717	789	0.11683	110.1569	GEN520811 1-ANADRK4
FDNS	00NR	3	16WP	G15_044	FROM->TO	G14-057T 345.00 - SUNNYSIDE 345KV CKT 1	717	789	0.117	110.1546	GEN563202 1-G15085_3 0.5500
FDNS	00NR	3	20WP	G15_044	FROM->TO	G14-057T 345.00 - SUNNYSIDE 345KV CKT 1	717	789	0.11683	110.1419	EASTDC - ERCOT EQUIVALENCE 345KV CKT 1
FDNS	00NR	3	20WP	G15_044	FROM->TO	G14-057T 345.00 - SUNNYSIDE 345KV CKT 1	717	789	0.11683	110.1409	GEN527161 1-MUSTANG GEN #1
FDNS	00NR	3	20WP	G15_044	FROM->TO	G14-057T 345.00 - SUNNYSIDE 345KV CKT 1	717	789	0.11683	110.1409	GEN527162 1-MUSTANG GEN #2
FDNS	00NR	3	20WP	G15_044	FROM->TO	G14-057T 345.00 - SUNNYSIDE 345KV CKT 1	717	789	0.11629	110.1322	ROCKY POINT - SUNNYSIDE 138KV CKT 1
FDNS	00NR	3	20WP	G15_044	FROM->TO	G14-057T 345.00 - SUNNYSIDE 345KV CKT 1	717	789	0.11683	110.1314	GEN511962 2-RKYRDGW2-1 0.7000
FDNS	00NR	3	20WP	G15_044	FROM->TO	G14-057T 345.00 - SUNNYSIDE 345KV CKT 1	717	789	0.11683	110.1099	GEN672321 1-SHAND GENERATOR 1
FDNS	00NR	3	20WP	G15_044	FROM->TO	G14-057T 345.00 - SUNNYSIDE 345KV CKT 1	717	789	0.11659	110.1098	RUSSETT - SPRINGDALE 138KV CKT 1
FDNS	00NR	3	20WP	G15_044	FROM->TO	G14-057T 345.00 - SUNNYSIDE 345KV CKT 1	717	789	0.11683	110.1087	GEN525494 1-PLANT X GEN #4 20 KV
FDNS	00NR	3	16WP	G15_044	FROM->TO	G14-057T 345.00 - SUNNYSIDE 345KV CKT 1	717	789	0.117	110.1083	GEN525562 1-TOLK GEN #2 24 KV
FDNS	00NR	3	20WP	G15_044	FROM->TO	G14-057T 345.00 - SUNNYSIDE 345KV CKT 1	717	789	0.11683	110.0936	GEN563192 1-G15084_3 0.5500
FDNS	00NR	3	20WP	G15_044	FROM->TO	G14-057T 345.00 - SUNNYSIDE 345KV CKT 1	717	789	0.11683	110.0933	GEN527882 1-CUNNINGHAM GEN #2 20 KV
FDNS	00NR	3	20WP	G15_044	FROM->TO	G14-057T 345.00 - SUNNYSIDE 345KV CKT 1	717	789	0.11683	110.087	GEN672310 1-POPLAR RIVER GENERATOR 1
FDNS	00NR	3	20WP	G15_044	FROM->TO	G14-057T 345.00 - SUNNYSIDE 345KV CKT 1	717	789	0.11683	110.087	GEN672311 2-POPLAR RIVER GENERATOR 2
FDNS	00NR	3	20WP	G15_044	FROM->TO	G14-057T 345.00 - SUNNYSIDE 345KV CKT 1	717	789	0.11683	110.0849	GEN344895 2-1LAB G2 20.000
FDNS	00NR	3	20WP	G15_044	FROM->TO	G14-057T 345.00 - SUNNYSIDE 345KV CKT 1	717	789	0.11675	110.0781	P12:138:WFEC-AEPW:GOLDENSW4:CRAIGJT4
FDNS	00NR	3	20WP	G15_044	FROM->TO	G14-057T 345.00 - SUNNYSIDE 345KV CKT 1	717	789	0.11683	110.0779	GEN527163 1-MUSTANG GEN #3 22 KV
FDNS	00NR	3	20WP	G15_044	FROM->TO	G14-057T 345.00 - SUNNYSIDE 345KV CKT 1	717	789	0.11683	110.0777	GEN672306 6-BOUNDARY DAM GENERATOR 6
FDNS	00NR	3	20WP	G15_044	FROM->TO	G14-057T 345.00 - SUNNYSIDE 345KV CKT 1	717	789	0.11611	110.0767	ARKANSAS NUCLEAR ONE - FT SMITH 500KV CKT 1
FDNS	00NR	3	20WP	G15_044	FROM->TO	G14-057T 345.00 - SUNNYSIDE 345KV CKT 1	717	789	0.11611	110.0767	ARKANSAS NUCLEAR ONE - FT SMITH 500KV CKT 1
FDNS	00NR	3	20WP	G15_044	FROM->TO	G14-057T 345.00 - SUNNYSIDE 345KV CKT 1	717	789	0.11683	110.0692	CLAY BOSWELL 230/20.9KV TRANSFORMER CKT 1
FDNS	00NR	3	20WP	G15_044	FROM->TO	G14-057T 345.00 - SUNNYSIDE 345KV CKT 1	717	789	0.11683	110.0685	GEN511853 1-COMANCHE #3
FDNS	00NR	3	16WP	G15_044	FROM->TO	G14-057T 345.00 - SUNNYSIDE 345KV CKT 1	717	789	0.117	110.0622	GEN527166 1-MUSTANG_6 118.000
FDNS	00NR	3	20WP	G15_044	FROM->TO	G14-057T 345.00 - SUNNYSIDE 345KV CKT 1	717	789	0.11683	110.0608	GEN562512 1-G14_020_3 0.6900
FDNS	00NR	3	20WP	G15_044	FROM->TO	G14-057T 345.00 - SUNNYSIDE 345KV CKT 1	717	789	0.11683	110.0598	GEN562892 1-G15048_3 0.6900
FDNS	00NR	3	20WP	G15_044	FROM->TO	G14-057T 345.00 - SUNNYSIDE 345KV CKT 1	717	789	0.11683	110.0557	GEN344896 3-1LAB G3 20.000
FDNS	00NR	3	20WP	G15_044	FROM->TO	G14-057T 345.00 - SUNNYSIDE 345KV CKT 1	717	789	0.11683	110.0546	GEN344897 4-1LAB G4 20.000
FDNS	00NR	3	20WP	G15_044	FROM->TO	G14-057T 345.00 - SUNNYSIDE 345KV CKT 1	717	789	0.11683	110.0543	GEN344894 1-1LAB G1 20.000
FDNS	00NR	3	20WP	G15_044	FROM->TO	G14-057T 345.00 - SUNNYSIDE 345KV CKT 1	717	789	0.11694	110.052	P12:138:WFEC:MSL16
FDNS	00NR	3	20WP	G15_044	FROM->TO	G14-057T 345.00 - SUNNYSIDE 345KV CKT 1	717	789	0.11683	110.048	GEN681542 6-JP MADGETT
FDNS	00NR	3	20WP	G15_044	FROM->TO	G14-057T 345.00 - SUNNYSIDE 345KV CKT 1	717	789	0.11565	110.045	ARDMORE WEST - CARTER 138KV CKT 1
FDNS	00NR	3	20WP	G15_044	FROM->TO	G14-057T 345.00 - SUNNYSIDE 345KV CKT 1	717	789	0.11683	110.0283	GEN523461 1-BLACKHAWK GEN #1
FDNS	00NR	3	20WP	G15_044	FROM->TO	G14-057T 345.00 - SUNNYSIDE 345KV CKT 1	717	789	0.11683	110.0282	GEN523462 1-BLACKHAWK GEN #2
FDNS	00NR	3	16WP	G15_044	FROM->TO	G14-057T 345.00 - SUNNYSIDE 345KV CKT 1	717	789	0.11654	110.0259	LYDIA - WELSH 345KV CKT 1
FDNS	00NR	3	16WP	G15_044	FROM->TO	G14-057T 345.00 - SUNNYSIDE 345KV CKT 1	717	789	0.11654	110.0259	LYDIA - WELSH 345KV CKT 1
FDNS	00NR	3	20WP	G15_044	FROM->TO	G14-057T 345.00 - SUNNYSIDE 345KV CKT 1	717	789	0.11683	110.0211	GEN511852 1-COMANCHE #2
FDNS	00NR	3	20WP	G15_044	FROM->TO	G14-057T 345.00 - SUNNYSIDE 345KV CKT 1	717	789	0.11683	110.0017	P12:138:WFEC:MSL07
FDNS	00NR	3	20WP	G15_044	FROM->TO	G14-057T 345.00 - SUNNYSIDE 345KV CKT 1	717	789	0.11683	110.0017	P12:138:WFEC-AEPW:HUGOPP4:ATOKA--4
FDNS	00NR	3	20WP	G15_044	FROM->TO	G14-057T 345.00 - SUNNYSIDE 345KV CKT 1	717	789	0.11702	109.9974	CACHE - SNYDER 138KV CKT 1
FDNS	00NR	3	16WP	G15_044	FROM->TO	G14-057T 345.00 - SUNNYSIDE 345KV CKT 1	717	789	0.11644	109.9851	JOHNSON COUNTY (JOHNCO) 345/138/13.8KV TRANSFORMER CKT 1
FDNS	00NR	3	20WP	G15_044	FROM->TO	G14-057T 345.00 - SUNNYSIDE 345KV CKT 1	717	789	0.11677	109.9835	P12:138:WFEC:MSL06
FDNS	00NR	3	20WP	G15_044	FROM->TO	G14-057T 345.00 - SUNNYSIDE 345KV CKT 1	717	789	0.11677	109.9834	P12:138:AEPW-SWPA:LONEOAK4:TUPELO4
FDNS	00NR	3	20WP	G15_044	FROM->TO	G14-057T 345.00 - SUNNYSIDE 345KV CKT 1	717	789	0.11572	109.9829	SUNNYSIDE (SUNNYSD5) 345/138/13.8KV TRANSFORMER CKT 1
FDNS	00NR	3	16WP	G15_044	FROM->TO	G14-057T 345.00 - SUNNYSIDE 345KV CKT 1	717	789	0.117	109.9726	GEN635023 3-WALTER SCOTT UNIT 3
FDNS	00NR	3	20WP	G15_044	FROM->TO	G14-057T 345.00 - SUNNYSIDE 345KV CKT 1	717	789	0.11683	109.9691	GEN562699 1-G15_018_3 0.6900
FDNS	00NR	3	20WP	G15_044	FROM->TO	G14-057T 345.00 - SUNNYSIDE 345KV CKT 1	717	789	0.11683	109.9656	GEN521111 1-ORME2 13.800
FDNS	00NR	3	20WP	G15_044	FROM->TO	G14-057T 345.00 - SUNNYSIDE 345KV CKT 1	717	789	0.11683	109.9576	GEN563162 1-G15081_3 0.6900
FDNS	00NR	3	20WP	G15_044	FROM->TO	G14-057T 345.00 - SUNNYSIDE 345KV CKT 1	717	789	0.11688	109.9548	G15085_T 138.00 - RUSSELL 138KV CKT 1
FDNS	00NR	3	20WP	G15_044	FROM->TO	G14-057T 345.00 - SUNNYSIDE 345KV CKT 1	717	789	0.11683	109.9527	GEN521110 1-ORME1 13.800
FDNS	00NR	3	20WP	G15_044	FROM->TO	G14-057T 345.00 - SUNNYSIDE 345KV CKT 1	717	789	0.11565	109.9336	ARDMORE WEST - UNIROYAL 138KV CKT 1
FDNS	00NR	3	16WP	G15_044	FROM->TO	G14-057T 345.00 - SUNNYSIDE 345KV CKT 1	717	789	0.117	109.9237	GEN562590 1-G14_057_3 0.6900
FDNS	00NR	3	20WP	G15_044	FROM->TO	G14-057T 345.00 - SUNNYSIDE 345KV CKT 1	717	789	0.11861	109.9147	CLARKSVILLE - MUSKOGEE 345KV CKT 1
FDNS	00NR	3	20WP	G15_044	FROM->TO	G14-057T 345.00 - SUNNYSIDE 345KV CKT 1	717	789	0.11861	109.9147	CLARKSVILLE - MUSKOGEE 345KV CKT 1
FDNS	00NR	3	20WP	G15_044	FROM->TO	G14-057T 345.00 - SUNNYSIDE 345KV CKT 1	717	789	0.11683	109.9067	GEN563292 1-G15095_3 0.6900
FDNS	00NR	3	20WP	G15_044	FROM->TO	G14-057T 345.00 - SUNNYSIDE 345KV CKT 1	717	789	0.11607	109.9062	CARTRCO4 138.00 - RATLIFF 138KV CKT 1
FDNS	00NR	3	16WP	G15_044	FROM->TO	G14-057T 345.00 - SUNNYSIDE 345KV CKT 1	717	789	0.117	109.8862	GEN562762 1-G15033_3 0.6900
FDNS	00NR	3	20WP	G15_044	FROM->TO	G14-057T 345.00 - SUNNYSIDE 345KV CKT 1	717	789	0.11683	109.8853	GEN661015 1-COYOTE
FDNS	00NR	3	20WP	G15_044	FROM->TO	G14-057T 345.00 - SUNNYSIDE 345KV CKT 1	717	789	0.11635	109.8801	P12:138:OKGE:3TERM40
FDNS	00NR	3	16WP	G15_044	FROM->TO	G14-057T 345.00 - SUNNYSIDE 345KV CKT 1	717	789	0.117	109.8763	GEN562655 1-G14_074_3 0.6900
FDNS	00NR	3	20WP	G15_044	FROM->TO	G14-057T 345.00 - SUNNYSIDE 345KV CKT 1	717	789	0.11683	109.868	GEN563122 1-G15077_3 0.3850
FDNS	00NR	3	20WP	G15_044	FROM->TO	G14-057T 345.00 - SUNNYSIDE 345KV CKT 1	717	789	0.11683	109.8597	GEN562861 1-G15045_2 0.4800
FDNS	00NR	3	16WP	G15_044	FROM->TO	G14-057T 345.00 - SUNNYSIDE 345KV CKT 1	717	789	0.117	109.827	GEN562685 1-G15_013_3 0.3550
FDNS	00NR	3	16WP	G15_044	FROM->TO	G14-057T 345.00 - SUNNYSIDE 345KV CKT 1	717	789	0.117	109.8155	GEN525561 1-TOLK GEN #1 24 KV
FDNS	00NR	3	20WP	G15_044	FROM->TO	G14-057T 345.00 - SUNNYSIDE 345KV CKT 1	717	789	0.11741	109.7898	GRAPEVINE INTERCHANGE - STATELINE INTERCHANGE 230KV CKT 1
FDNS	00NR	3	20WP	G15_044	FROM->TO	G14-057T 345.00 - SUNNYSIDE 345KV CKT 1	717	789	0.11741	109.7898	GRAPEVINE INTERCHANGE - STATELINE INTERCHANGE 230KV CKT 1
FDNS	00NR	3	20WP	G15_044	FROM->TO	G14-057T 345.00 - SUNNYSIDE 345KV CKT 1	717	789	0.11683	109.7741	GEN657748 1-YOUNG 2 GENERATOR
FDNS	00NR	3	20WP	G15_044	FROM->TO	G14-057T 345.00 - SUNNYSIDE 345KV CKT 1	717	789	0.11683	109.7573	GEN527883 1-CUNNINGHAM GEN #3 22 KV

SOLUTION	GROUP	SCENARIO	SEASON	SOURCE	DIRECTION	MONITORED ELEMENT	RATEA (MVA)	RATEB(MVA)	TDF	TC%LOADING (% MVA)	CONTINGENCY
FDNS	00NR	3	20WP	G15_044	FROM->TO	G14-057T 345.00 - SUNNYSIDE 345KV CKT 1	717	789	0.11683	109.7543	GEN527884 1-CUNNINGHAM GEN #4 22 KV
FDNS	00NR	3	20WP	G15_044	FROM->TO	G14-057T 345.00 - SUNNYSIDE 345KV CKT 1	717	789	0.11688	109.724	P12:138:AEPW:SHAM4WT:CHILD4WT
FDNS	00NR	3	20WP	G15_044	FROM->TO	G14-057T 345.00 - SUNNYSIDE 345KV CKT 1	717	789	0.11565	109.7208	SUNNYSIDE - UNIROYAL 138KV CKT 1
FDNS	00NR	3	20WP	G15_044	FROM->TO	G14-057T 345.00 - SUNNYSIDE 345KV CKT 1	717	789	0.11695	109.6964	P12:138:WFEC:MSL15
FDNS	00NR	3	20WP	G15_044	FROM->TO	G14-057T 345.00 - SUNNYSIDE 345KV CKT 1	717	789	0.11928	109.6947	CHISHOLM7 345.00 () 345/230/13.2KV TRANSFORMER CKT 1
FDNS	00NR	3	20WP	G15_044	FROM->TO	G14-057T 345.00 - SUNNYSIDE 345KV CKT 1	717	789	0.11683	109.6877	GEN562704 1-G15_020_3 0.3550
FDNS	00NR	3	16WP	G15_044	FROM->TO	G14-057T 345.00 - SUNNYSIDE 345KV CKT 1	717	789	0.117	109.6872	GEN563272 1-G15093_3 0.6900
FDNS	00NR	3	20WP	G15_044	FROM->TO	G14-057T 345.00 - SUNNYSIDE 345KV CKT 1	717	789	0.11683	109.6868	GEN526331 1-JONES GEN #1 22 KV
FDNS	00NR	3	20WP	G15_044	FROM->TO	G14-057T 345.00 - SUNNYSIDE 345KV CKT 1	717	789	0.11683	109.6866	GEN526332 1-JONES GEN #2 21 KV
FDNS	00NR	3	20WP	G15_044	FROM->TO	G14-057T 345.00 - SUNNYSIDE 345KV CKT 1	717	789	0.11683	109.6806	GEN620315 1-BIG STONE GEN
FDNS	00NR	3	20WP	G15_044	FROM->TO	G14-057T 345.00 - SUNNYSIDE 345KV CKT 1	717	789	0.11683	109.6773	GEN562992 1-G15063_3 0.6900
FDNS	00NR	3	16WP	G15_044	FROM->TO	G14-057T 345.00 - SUNNYSIDE 345KV CKT 1	717	789	0.117	109.6728	GEN527903 1-HOBBS PLANT #3 (ST)
FDNS	00NR	3	20WP	G15_044	FROM->TO	G14-057T 345.00 - SUNNYSIDE 345KV CKT 1	717	789	0.11683	109.6301	GEN562952 1-G15057_3 0.6500
FDNS	00NR	3	20WP	G15_044	FROM->TO	G14-057T 345.00 - SUNNYSIDE 345KV CKT 1	717	789	0.11737	109.6281	GRAPEVINE INTERCHANGE - NICHOLS STATION 230KV CKT 1
FDNS	00NR	3	20WP	G15_044	FROM->TO	G14-057T 345.00 - SUNNYSIDE 345KV CKT 1	717	789	0.11737	109.6281	GRAPEVINE INTERCHANGE - NICHOLS STATION 230KV CKT 1
FDNS	00NR	3	20WP	G15_044	FROM->TO	G14-057T 345.00 - SUNNYSIDE 345KV CKT 1	717	789	0.11683	109.6258	GEN563173 1-G15082_3 0.6900
FDNS	00NR	3	20WP	G15_044	FROM->TO	G14-057T 345.00 - SUNNYSIDE 345KV CKT 1	717	789	0.11683	109.6067	GEN600004 2-PRAIRIE ISLAND G2
FDNS	00NR	3	20WP	G15_044	FROM->TO	G14-057T 345.00 - SUNNYSIDE 345KV CKT 1	717	789	0.11683	109.6041	GEN600003 1-PRAIRIE ISLAND G1
FDNS	00NR	3	20WP	G15_044	FROM->TO	G14-057T 345.00 - SUNNYSIDE 345KV CKT 1	717	789	0.11683	109.5869	GEN600006 1-AS KING
FDNS	00NR	3	20WP	G15_044	FROM->TO	G14-057T 345.00 - SUNNYSIDE 345KV CKT 1	717	789	0.11683	109.5867	GEN562710 1-G15_022_3 0.5500
FDNS	00NR	3	16WP	G15_044	FROM->TO	G14-057T 345.00 - SUNNYSIDE 345KV CKT 1	717	789	0.117	109.5478	GEN635024 4-WALTER SCOTT UNIT 4
FDNS	00NR	3	20WP	G15_044	FROM->TO	G14-057T 345.00 - SUNNYSIDE 345KV CKT 1	717	789	0.11924	109.5472	CANEY CREEK - TEXOMA JCT 138KV CKT 1
FDNS	00NR	3	20WP	G15_044	FROM->TO	G14-057T 345.00 - SUNNYSIDE 345KV CKT 1	717	789	0.11683	109.5368	GEN511851 1-COMANCHE #1
FDNS	00NR	3	20WP	G15_044	FROM->TO	G14-057T 345.00 - SUNNYSIDE 345KV CKT 1	717	789	0.11928	109.5187	CHISHOLM7 345.00 - GRACEMONT 345KV CKT 1
FDNS	00NR	3	20WP	G15_044	FROM->TO	G14-057T 345.00 - SUNNYSIDE 345KV CKT 1	717	789	0.11683	109.509	GEN532751 1-WOLF CREEK GENERATING STATION UNIT 1
FDNS	00NR	3	20WP	G15_044	FROM->TO	G14-057T 345.00 - SUNNYSIDE 345KV CKT 1	717	789	0.11683	109.421	GEN635213 3-NEAL UNIT 3
FDNS	00NR	3	20WP	G15_044	FROM->TO	G14-057T 345.00 - SUNNYSIDE 345KV CKT 1	717	789	0.11683	109.4142	GEN629074 1-ARNOLD LOWSIDE OF GSU XFMR
FDNS	00NR	3	20WP	G15_044	FROM->TO	G14-057T 345.00 - SUNNYSIDE 345KV CKT 1	717	789	0.11683	109.4059	BIG STONE 230/24.0KV TRANSFORMER CKT 1
FDNSLock	00NR	3	20WP	G15_044	FROM->TO	G14-057T 345.00 - SUNNYSIDE 345KV CKT 1	717	789	0.11683	109.3781	GEN615002 2-COAL CREEK
FDNS	00NR	3	20WP	G15_044	FROM->TO	G14-057T 345.00 - SUNNYSIDE 345KV CKT 1	717	789	0.1169	109.3754	P12:138:WFEC:MSL09
FDNS	00NR	3	20WP	G15_044	FROM->TO	G14-057T 345.00 - SUNNYSIDE 345KV CKT 1	717	789	0.11778	109.354	P12:138:AEPW-OGE:CORNVIL4:CIMARON4
FDNS	00NR	3	20WP	G15_044	FROM->TO	G14-057T 345.00 - SUNNYSIDE 345KV CKT 1	717	789	0.11683	109.3349	GEN562754 1-G15031_5 0.6900
FDNS	00NR	3	20WP	G15_044	FROM->TO	G14-057T 345.00 - SUNNYSIDE 345KV CKT 1	717	789	0.11683	109.322	GEN636641 1-LOUISA UNIT 1
FDNS	00NR	3	20WP	G15_044	FROM->TO	G14-057T 345.00 - SUNNYSIDE 345KV CKT 1	717	789	0.1165	109.312	NORTHWEST TEXARKANA - VALLIANT 345KV CKT 1
FDNS	00NR	3	20WP	G15_044	FROM->TO	G14-057T 345.00 - SUNNYSIDE 345KV CKT 1	717	789	0.1165	109.312	NORTHWEST TEXARKANA - VALLIANT 345KV CKT 1
FDNS	00NR	3	20WP	G15_044	FROM->TO	G14-057T 345.00 - SUNNYSIDE 345KV CKT 1	717	789	0.11683	109.2925	GEN600005 1-MONTICELLO
FDNS	00NR	3	20WP	G15_044	FROM->TO	G14-057T 345.00 - SUNNYSIDE 345KV CKT 1	717	789	0.11683	109.2751	GEN562756 1-G15031_7 0.6900
FDNS	00NR	3	20WP	G15_044	FROM->TO	G14-057T 345.00 - SUNNYSIDE 345KV CKT 1	717	789	0.11683	109.274	GEN562556 1-G14_046_3 0.3420
FDNS	00NR	3	20WP	G15_044	FROM->TO	G14-057T 345.00 - SUNNYSIDE 345KV CKT 1	717	789	0.11683	109.2337	GEN562023 1-G11_020_3 0.6900
FDNS	00NR	3	20WP	G15_044	FROM->TO	G14-057T 345.00 - SUNNYSIDE 345KV CKT 1	717	789	0.11683	109.2337	GEN562026 1-G11_019_3 0.6900
FDNS	00NR	3	20WP	G15_044	FROM->TO	G14-057T 345.00 - SUNNYSIDE 345KV CKT 1	717	789	0.11683	109.1895	GEN563142 1-G15079_3 0.5500
FDNS	00NR	3	20WP	G15_044	FROM->TO	G14-057T 345.00 - SUNNYSIDE 345KV CKT 1	717	789	0.11683	109.1895	GEN563151 1-G15080_2 0.5500
FDNS	00NR	3	20WP	G15_044	FROM->TO	G14-057T 345.00 - SUNNYSIDE 345KV CKT 1	717	789	0.11683	109.1688	GEN600000 1-SHERBURNECNTY G1
FDNS	00NR	3	20WP	G15_044	FROM->TO	G14-057T 345.00 - SUNNYSIDE 345KV CKT 1	717	789	0.11786	109.1401	STLN-DEMARC6 - SWEETWATER 230KV CKT 1
FDNS	00NR	3	20WP	G15_044	FROM->TO	G14-057T 345.00 - SUNNYSIDE 345KV CKT 1	717	789	0.11786	109.1394	P12:230:AEPW-SPS:SWEETWT6:WHEELER 6
FDNS	00NR	3	20WP	G15_044	FROM->TO	G14-057T 345.00 - SUNNYSIDE 345KV CKT 1	717	789	0.11786	109.1378	STATELINE INTERCHANGE - STLN-DEMARC6 230KV CKT 1
FDNS	00NR	3	20WP	G15_044	FROM->TO	G14-057T 345.00 - SUNNYSIDE 345KV CKT 1	717	789	0.11683	109.1289	GEN629075 1-OTTUMWA GENERATOR FOR OTTUMWA UNIT NO 1
FDNS	00NR	3	20WP	G15_044	FROM->TO	G14-057T 345.00 - SUNNYSIDE 345KV CKT 1	717	789	0.11683	109.1195	GEN600001 2-SHERBURNE CNTY G2
FDNS	00NR	3	20WP	G15_044	FROM->TO	G14-057T 345.00 - SUNNYSIDE 345KV CKT 1	717	789	0.11683	109.097	GEN523971 1-HARRINGTON GEN #1 24 KV
FDNS	00NR	3	20WP	G15_044	FROM->TO	G14-057T 345.00 - SUNNYSIDE 345KV CKT 1	717	789	0.11683	109.0969	GEN523972 1-HARRINGTON GEN #2 24 KV
FDNS	00NR	3	20WP	G15_044	FROM->TO	G14-057T 345.00 - SUNNYSIDE 345KV CKT 1	717	789	0.11683	109.0969	GEN523973 1-HARRINGTON GEN #3 24 KV
FDNS	00NR	3	20WP	G15_044	FROM->TO	G14-057T 345.00 - SUNNYSIDE 345KV CKT 1	717	789	0.11683	109.0143	GEN511848 1-SOUTHWESTERN STATION #3
FDNS	00NR	3	20WP	G15_044	FROM->TO	G14-057T 345.00 - SUNNYSIDE 345KV CKT 1	717	789	0.11683	108.9872	GEN527901 1-HOBBS PLANT #1 (CT)
FDNS	00NR	3	20WP	G15_044	FROM->TO	G14-057T 345.00 - SUNNYSIDE 345KV CKT 1	717	789	0.11683	108.9872	GEN527902 1-HOBBS PLANT #2 (CT)
FDNS	00NR	3	20WP	G15_044	FROM->TO	G14-057T 345.00 - SUNNYSIDE 345KV CKT 1	717	789	0.11639	108.9494	LYDIA - WELSH 345KV CKT 1
FDNS	00NR	3	20WP	G15_044	FROM->TO	G14-057T 345.00 - SUNNYSIDE 345KV CKT 1	717	789	0.11639	108.9494	LYDIA - WELSH 345KV CKT 1
FDNS	00NR	3	20WP	G15_044	FROM->TO	G14-057T 345.00 - SUNNYSIDE 345KV CKT 1	717	789	0.11683	108.9486	GEN563042 1-G15068_3 0.6900
FDNS	00NR	3	20WP	G15_044	FROM->TO	G14-057T 345.00 - SUNNYSIDE 345KV CKT 1	717	789	0.11935	108.9039	P12:230:AEPW:ELKCITY6:SWEETWT6
FDNS	00NR	3	20WP	G15_044	FROM->TO	G14-057T 345.00 - SUNNYSIDE 345KV CKT 1	717	789	0.11683	108.8995	SHERBURNE CO 345/24.0KV TRANSFORMER CKT 1
FDNS	00NR	3	16WP	G15_044	FROM->TO	G14-057T 345.00 - SUNNYSIDE 345KV CKT 1	717	789	0.11635	108.8865	LYDIA - VALLIANT 345KV CKT 1
FDNS	00NR	3	16WP	G15_044	FROM->TO	G14-057T 345.00 - SUNNYSIDE 345KV CKT 1	717	789	0.11635	108.8865	LYDIA - VALLIANT 345KV CKT 1
FDNS	00NR	3	20WP	G15_044	FROM->TO	G14-057T 345.00 - SUNNYSIDE 345KV CKT 1	717	789	0.11683	108.8563	GEN635214 4-NEAL UNIT 4
FDNS	00NR	3	20WP	G15_044	FROM->TO	G14-057T 345.00 - SUNNYSIDE 345KV CKT 1	717	789	0.11683	108.6853	GEN600002 3-SHERBURNE CNTY G3
FDNS	00NR	3	20WP	G15_044	FROM->TO	G14-057T 345.00 - SUNNYSIDE 345KV CKT 1	717	789	0.11683	108.6493	GEN563043 1-G15068_4 0.6900
FDNS	00NR	3	20WP	G15_044	FROM->TO	G14-057T 345.00 - SUNNYSIDE 345KV CKT 1	717	789	0.11683	108.6374	GEN563273 2-G15093_4 0.6900
FDNS	00NR	3	20WP	G15_044	FROM->TO	G14-057T 345.00 - SUNNYSIDE 345KV CKT 1	717	789	0.11683	108.6252	GEN526333 1-JONES GEN #3 21 KV
FDNS	00NR	3	20WP	G15_044	FROM->TO	G14-057T 345.00 - SUNNYSIDE 345KV CKT 1	717	789	0.11683	108.6251	GEN526334 1-JONES_4 116.500
FDNS	00NR	3	20WP	G15_044	FROM->TO	G14-057T 345.00 - SUNNYSIDE 345KV CKT 1	717	789	0.11683	108.6086	GEN344225 1-1CAL G1 25.000
FDNS	00NR	3	20WP	G15_044	FROM->TO	G14-057T 345.00 - SUNNYSIDE 345KV CKT 1	717	789	0.11683	108.5859	GEN525844 1-ELK_1 118.000
FDNS	00NR	3	20WP	G15_044	FROM->TO	G14-057T 345.00 - SUNNYSIDE 345KV CKT 1	717	789	0.11683	108.5697	GEN525845 1-ELK_2 1 18.000
FDNS	00NR	3	20WP	G15_044	FROM->TO	G14-057T 345.00 - SUNNYSIDE 345KV CKT 1	717	789	0.11786	108.5198	CHISHOLM6 230.00 - SWEETWATER 230KV CKT 1
FDNS	00NR	3	20WP	G15_044	FROM->TO	G14-057T 345.00 - SUNNYSIDE 345KV CKT 1	717	789	0.11683	108.4391	GEN527166 1-MUSTANG_6 118.000
FDNS	00NR	3	20WP	G15_044	FROM->TO	G14-057T 345.00 - SUNNYSIDE 345KV CKT 1	717	789	0.11683	108.4294	GEN563202 1-G15085_3 0.5500
FDNS	00NR	3	20WP	G15_044	FROM->TO	G14-057T 345.00 - SUNNYSIDE 345KV CKT 1	717	789	0.11683	108.3924	GEN635023 3-WALTER SCOTT UNIT 3
FDNS	00NR	3	20WP	G15_044	FROM->TO	G14-057T 345.00 - SUNNYSIDE 345KV CKT 1	717	789	0.11683	108.3748	GEN528501 1-G14_012 24.000
FDNS	00NR	3	20WP	G15_044	FROM->TO	G14-057T 345.00 - SUNNYSIDE 345KV CKT 1	717	789	0.11683	108.2669	GEN562590 1-G14_057_3 0.6900
FDNS	00NR	3	20WP	G15_044	FROM->TO	G14-057T 345.00 - SUNNYSIDE 345KV CKT 1	717	789	0.11683	108.2159	GEN562762 1-G15033_3 0.6900
FDNS	00NR	3	20WP	G15_044	FROM->TO	G14-057T 345.00 - SUNNYSIDE 345KV CKT 1	717	789	0.11683	108.2058	GEN562655 1-G14_074_3 0.6900
FDNS	00NR	3	20WP	G15_044	FROM->TO	G14-057T 345.00 - SUNNYSIDE 345KV CKT 1	717	789	0.11683	108.1862	GEN525562 1-TOLK GEN #2 24 KV

SOLUTION	GROUP	SCENARIO	SEASON	SOURCE	DIRECTION	MONITORED ELEMENT	RATEA (MVA)	RATEB(MVA)	TDF	TC%LOADING (% MVA)	CONTINGENCY
FDNS	00NR	3	20WP	G15_044	FROM->TO	G14-057T 345.00 - SUNNYSIDE 345KV CKT 1	717	789	0.11627	108.1302	JOHNSON COUNTY (JOHNCO) 345/138/13.8KV TRANSFORMER CKT 1
FDNS	00NR	3	20WP	G15_044	FROM->TO	G14-057T 345.00 - SUNNYSIDE 345KV CKT 1	717	789	0.11683	108.1293	GEN562685 1-G15_013_3 0.3550
FDNS	00NR	3	20WP	G15_044	FROM->TO	G14-057T 345.00 - SUNNYSIDE 345KV CKT 1	717	789	0.11683	108.0904	GEN527903 1-HOBBS PLANT #3 (ST)
FDNS	00NR	3	20WP	G15_044	FROM->TO	G14-057T 345.00 - SUNNYSIDE 345KV CKT 1	717	789	0.11683	107.9849	GEN563272 1-G15093_3 0.6900
FDNS	00NR	3	20WP	G15_044	FROM->TO	G14-057T 345.00 - SUNNYSIDE 345KV CKT 1	717	789	0.11683	107.9844	GEN635024 4-WALTER SCOTT UNIT 4
FDNS	00NR	3	16WP	G15_044	FROM->TO	G14-057T 345.00 - SUNNYSIDE 345KV CKT 1	717	789	0.117	107.8948	EASTDC - ERCOT EQUIVALENCE 345KV CKT 1
FDNS	00NR	3	20WP	G15_044	FROM->TO	G14-057T 345.00 - SUNNYSIDE 345KV CKT 1	717	789	0.11619	107.8931	LYDIA - VALLIANT 345KV CKT 1
FDNS	00NR	3	20WP	G15_044	FROM->TO	G14-057T 345.00 - SUNNYSIDE 345KV CKT 1	717	789	0.11619	107.8931	LYDIA - VALLIANT 345KV CKT 1
FDNS	00NR	3	20WP	G15_044	FROM->TO	G14-057T 345.00 - SUNNYSIDE 345KV CKT 1	717	789	0.11683	107.7483	GEN525561 1-TOLK GEN #1 24 KV
FDNS	00NR	3	16WP	G15_044	FROM->TO	G14-057T 345.00 - SUNNYSIDE 345KV CKT 1	717	789	0.09999	106.9904	JOHNSON COUNTY - PITTSBURG 345KV CKT 1
FDNS	00NR	3	16WP	G15_044	FROM->TO	G14-057T 345.00 - SUNNYSIDE 345KV CKT 1	717	789	0.09999	106.9904	JOHNSON COUNTY - PITTSBURG 345KV CKT 1
FDNS	00NR	3	16WP	G15_044	FROM->TO	G14-057T 345.00 - SUNNYSIDE 345KV CKT 1	717	789	0.117	106.4713	GEN563263 1-G15092_4 0.6900
FDNS	00NR	3	16WP	G15_044	FROM->TO	G14-057T 345.00 - SUNNYSIDE 345KV CKT 1	717	789	0.11309	106.0336	HUGO - VALLIANT 345KV CKT 1
FDNS	00NR	3	16WP	G15_044	FROM->TO	G14-057T 345.00 - SUNNYSIDE 345KV CKT 1	717	789	0.11309	106.0336	HUGO - VALLIANT 345KV CKT 1
FDNS	00NR	3	17SP	G15_044	FROM->TO	G14-057T 345.00 - SUNNYSIDE 345KV CKT 1	717	789	0.35011	105.9521	CIMARRON - MINCO 345KV CKT 1
FDNS	00NR	3	20WP	G15_044	FROM->TO	G14-057T 345.00 - SUNNYSIDE 345KV CKT 1	717	789	0.09986	105.8204	JOHNSON COUNTY - PITTSBURG 345KV CKT 1
FDNS	00NR	3	20WP	G15_044	FROM->TO	G14-057T 345.00 - SUNNYSIDE 345KV CKT 1	717	789	0.09986	105.8204	JOHNSON COUNTY - PITTSBURG 345KV CKT 1
FDNS	00NR	3	20WP	G15_044	FROM->TO	G14-057T 345.00 - SUNNYSIDE 345KV CKT 1	717	789	0.11295	105.3179	HUGO - VALLIANT 345KV CKT 1
FDNS	00NR	3	20WP	G15_044	FROM->TO	G14-057T 345.00 - SUNNYSIDE 345KV CKT 1	717	789	0.11295	105.3179	HUGO - VALLIANT 345KV CKT 1
FDNS	00NR	3	16WP	G15_044	FROM->TO	G14-057T 345.00 - SUNNYSIDE 345KV CKT 1	717	789	0.12205	105.0413	G14-074T 345.00 - TUCO INTERCHANGE 345KV CKT 1
FDNS	00NR	3	20WP	G15_044	FROM->TO	G14-057T 345.00 - SUNNYSIDE 345KV CKT 1	717	789	0.11683	104.8195	GEN563263 1-G15092_4 0.6900
FDNS	00NR	3	16WP	G15_044	FROM->TO	G14-057T 345.00 - SUNNYSIDE 345KV CKT 1	717	789	0.117	104.7958	GEN563262 1-G15092_3 0.6900
FDNS	00NR	3	20WP	G15_044	FROM->TO	G14-057T 345.00 - SUNNYSIDE 345KV CKT 1	717	789	0.11683	103.1549	GEN563262 1-G15092_3 0.6900
FDNS	00NR	3	20WP	G15_044	FROM->TO	G14-057T 345.00 - SUNNYSIDE 345KV CKT 1	717	789	0.12189	102.2467	G14-074T 345.00 - TUCO INTERCHANGE 345KV CKT 1
FDNS	00NR	3	16WP	G15_044	FROM->TO	G14-057T 345.00 - SUNNYSIDE 345KV CKT 1	717	789	0.09659	101.3793	JOHNSON COUNTY - SUNNYSIDE 345KV CKT 1
FDNS	00NR	0	16WP	G15_045	FROM->TO	CIMARRON - DRAPER LAKE 345KV CKT 1	717	717	0.1454	132.6508	G14-057T 345.00 - SUNNYSIDE 345KV CKT 1
FDNS	00NR	0	16WP	G15_045	FROM->TO	CIMARRON - DRAPER LAKE 345KV CKT 1	717	717	0.04537	115.588	CLEVELAND - G15066_T 345.00 345KV CKT 1
FDNS	00NR	0	16WP	G15_045	FROM->TO	CIMARRON - DRAPER LAKE 345KV CKT 1	717	717	0.04999	115.2993	ARCADIA - NORTHWEST 345KV CKT 1
FDNS	00NR	0	16WP	G15_045	FROM->TO	CIMARRON - DRAPER LAKE 345KV CKT 1	717	717	0.04537	114.8063	G15066_T 345.00 - SOONER 345KV CKT 1
FDNS	00NR	0	16WP	G15_045	FROM->TO	CIMARRON - DRAPER LAKE 345KV CKT 1	717	717	0.04211	110.2756	CLEVELAND - TULSA NORTH 345KV CKT 1
FDNS	00NR	0	16WP	G15_045	FROM->TO	CIMARRON - DRAPER LAKE 345KV CKT 1	717	717	0.04211	110.2756	CLEVELAND - TULSA NORTH 345KV CKT 1
FDNS	00NR	0	16WP	G15_045	FROM->TO	CIMARRON - DRAPER LAKE 345KV CKT 1	717	717	0.03696	110.1142	MATHWSN7 345.00 - NORTHWEST 345KV CKT 1
FDNS	00NR	0	16WP	G15_045	FROM->TO	CIMARRON - DRAPER LAKE 345KV CKT 1	717	717	0.03483	109.2409	CIMARRON - SARA 138KV CKT 1
FDNS	00NR	0	16WP	G15_045	FROM->TO	CIMARRON - DRAPER LAKE 345KV CKT 1	717	717	0.03813	108.713	P12:138:WFEC:MSL03
FDNS	00NR	0	16WP	G15_045	FROM->TO	CIMARRON - DRAPER LAKE 345KV CKT 1	717	717	0.03415	108.0689	CIMARRON (CIMARON2) 345/138/13.8KV TRANSFORMER CKT 1
FDNS	00NR	0	16WP	G15_045	FROM->TO	CIMARRON - DRAPER LAKE 345KV CKT 1	717	717	0.03483	107.9446	SARA - STHLAKE4 138.00 138KV CKT 1
FDNS	00NR	0	16WP	G15_045	FROM->TO	CIMARRON - DRAPER LAKE 345KV CKT 1	717	717	0.03415	107.899	CIMARRON (CIMARON1) 345/138/13.8KV TRANSFORMER CKT 1
FDNS	00NR	0	16WP	G15_045	FROM->TO	CIMARRON - DRAPER LAKE 345KV CKT 1	717	717	0.03483	107.745	MCCLAIN - STHLAKE4 138.00 138KV CKT 1
FDNS	00NR	0	16WP	G15_045	FROM->TO	CIMARRON - DRAPER LAKE 345KV CKT 1	717	717	0.03567	107.4685	CIMARRON - CZECH HALL 138KV CKT 1
FDNS	00NR	0	16WP	G15_045	FROM->TO	CIMARRON - DRAPER LAKE 345KV CKT 1	717	717	0.03567	107.112	CZECH HALL - XEROX 138KV CKT 1
FDNS	00NR	0	16WP	G15_045	FROM->TO	CIMARRON - DRAPER LAKE 345KV CKT 1	717	717	0.03567	107.0924	MORGAN - XEROX 138KV CKT 1
FDNS	00NR	0	16WP	G15_045	FROM->TO	CIMARRON - DRAPER LAKE 345KV CKT 1	717	717	0.03757	106.9919	ANADARKO - POCASSETT 138KV CKT 1
FDNS	00NR	0	16WP	G15_045	FROM->TO	CIMARRON - DRAPER LAKE 345KV CKT 1	717	717	0.03567	106.9752	MORGAN - MUSTANG 138KV CKT 1
FDNS	00NR	0	16WP	G15_045	FROM->TO	CIMARRON - DRAPER LAKE 345KV CKT 1	717	717	0.03757	106.7926	POCASSETT - TUTTLE 138KV CKT 1
FDNS	00NR	0	16WP	G15_045	FROM->TO	CIMARRON - DRAPER LAKE 345KV CKT 1	717	717	0.03408	106.703	GEN515040 1-SEMINOLE 1G
FDNS	00NR	0	16WP	G15_045	FROM->TO	CIMARRON - DRAPER LAKE 345KV CKT 1	717	717	0.03475	106.6763	LACYGNE - WAVERLY7 345.00 345KV CKT 1
FDNS	00NR	0	16WP	G15_045	FROM->TO	CIMARRON - DRAPER LAKE 345KV CKT 1	717	717	0.05321	106.5853	JOHNSON COUNTY - SUNNYSIDE 345KV CKT 1
FDNS	00NR	0	16WP	G15_045	FROM->TO	CIMARRON - DRAPER LAKE 345KV CKT 1	717	717	0.03475	106.4587	WAVERLY7 345.00 - WOLF CREEK 345KV CKT 1
FDNSLock	00NR	0	16WP	G15_045	FROM->TO	CIMARRON - DRAPER LAKE 345KV CKT 1	717	717	0.03408	106.456	GEN509403 1-PIRKEY GENERATION
FDNS	00NR	0	16WP	G15_045	FROM->TO	CIMARRON - DRAPER LAKE 345KV CKT 1	717	717	0.03666	106.4058	CORN TAP - NAPLESTP 138.00 138KV CKT 1
FDNS	00NR	0	16WP	G15_045	FROM->TO	CIMARRON - DRAPER LAKE 345KV CKT 1	717	717	0.03408	106.3792	GEN509416 1-TURK GENERATION
FDNS	00NR	0	16WP	G15_045	FROM->TO	CIMARRON - DRAPER LAKE 345KV CKT 1	717	717	0.03408	106.3605	GEN501801 1-DOLET HILLS UNIT1
FDNS	00NR	0	16WP	G15_045	FROM->TO	CIMARRON - DRAPER LAKE 345KV CKT 1	717	717	0.03666	106.3121	NAPLESTP 138.00 - PAYNE 138.00 138KV CKT 1
FDNS	00NR	0	16WP	G15_045	FROM->TO	CIMARRON - DRAPER LAKE 345KV CKT 1	717	717	0.03757	106.2787	BRIDGECR 138.00 - TUTTLE 138KV CKT 1
FDNS	00NR	0	16WP	G15_045	FROM->TO	CIMARRON - DRAPER LAKE 345KV CKT 1	717	717	0.03578	106.2342	CANEYRV7 345.00 - NEOSHO 345KV CKT 1
FDNS	00NR	0	17SP	G15_045	FROM->TO	CIMARRON - DRAPER LAKE 345KV CKT 1	717	717	0.14614	106.1697	G14-057T 345.00 - SUNNYSIDE 345KV CKT 1
FDNSLock	00NR	0	16WP	G15_045	FROM->TO	CIMARRON - DRAPER LAKE 345KV CKT 1	717	717	0.03408	106.0246	GEN336821 1-GRAND GULF UNIT
FDNS	00NR	0	16WP	G15_045	FROM->TO	CIMARRON - DRAPER LAKE 345KV CKT 1	717	717	0.03408	105.9922	GEN515042 1-SEMINOLE 3G
FDNS	00NR	0	16WP	G15_045	FROM->TO	CIMARRON - DRAPER LAKE 345KV CKT 1	717	717	0.03578	105.9562	CANEYRV7 345.00 - LATHAMS7 345.00 345KV CKT 1
FDNS	00NR	0	16WP	G15_045	FROM->TO	CIMARRON - DRAPER LAKE 345KV CKT 1	717	717	0.03757	105.9048	BRIDGECR 138.00 - SUNSHINE CANYON 138KV CKT 1
FDNS	00NR	0	16WP	G15_045	FROM->TO	CIMARRON - DRAPER LAKE 345KV CKT 1	717	717	0.03757	105.894	P12:138:WFEC:MSL01
FDNS	00NR	0	16WP	G15_045	FROM->TO	CIMARRON - DRAPER LAKE 345KV CKT 1	717	717	0.03408	105.7583	GEN515041 1-SEMINOLE 2G
FDNSLock	00NR	0	16WP	G15_045	FROM->TO	CIMARRON - DRAPER LAKE 345KV CKT 1	717	717	0.03408	105.7266	GEN336153 1-WATERFORD UNIT#3
FDNS	00NR	0	16WP	G15_045	FROM->TO	CIMARRON - DRAPER LAKE 345KV CKT 1	717	717	0.04513	105.5516	CIMARRON - NORTHWEST 345KV CKT 1
FDNS	00NR	0	16WP	G15_045	FROM->TO	CIMARRON - DRAPER LAKE 345KV CKT 1	717	717	0.03408	105.5263	GEN509406 1-WELSH #3
FDNS	00NR	0	16WP	G15_045	FROM->TO	CIMARRON - DRAPER LAKE 345KV CKT 1	717	717	0.03408	105.5261	GEN509404 1-WELSH #1
FDNS	00NR	0	16WP	G15_045	FROM->TO	CIMARRON - DRAPER LAKE 345KV CKT 1	717	717	0.03578	105.5155	LATHAMS7 345.00 - ROSE HILL 345KV CKT 1
FDNSLock	00NR	0	16WP	G15_045	FROM->TO	CIMARRON - DRAPER LAKE 345KV CKT 1	717	717	0.03408	105.4219	GEN335831 1-RIVERBEND UNIT#1
FDNSLock	00NR	0	16WP	G15_045	FROM->TO	CIMARRON - DRAPER LAKE 345KV CKT 1	717	717	0.03408	105.406	GEN337911 1-ARKANSAS NUCLEAR ONE UNIT #2
FDNS	00NR	0	16WP	G15_045	FROM->TO	CIMARRON - DRAPER LAKE 345KV CKT 1	717	717	0.04048	105.1336	HUGO - SUNNYSIDE 345KV CKT 1
FDNS	00NR	0	16WP	G15_045	FROM->TO	CIMARRON - DRAPER LAKE 345KV CKT 1	717	717	0.03387	105.0337	P12:138:OKGE:3TERM14
FDNS	00NR	0	16WP	G15_045	FROM->TO	CIMARRON - DRAPER LAKE 345KV CKT 1	717	717	0.03408	105.0296	GRAND GULF 500/22.0KV TRANSFORMER CKT 1
FDNS	00NR	0	16WP	G15_045	FROM->TO	CIMARRON - DRAPER LAKE 345KV CKT 1	717	717	0.03408	105.0273	GEN337910 1-ARKANSAS NUCLEAR ONE UNIT #1
FDNS	00NR	0	16WP	G15_045	FROM->TO	CIMARRON - DRAPER LAKE 345KV CKT 1	717	717	0.0511	105.0144	JOHNSON COUNTY - PITTSBURG 345KV CKT 1
FDNS	00NR	0	16WP	G15_045	FROM->TO	CIMARRON - DRAPER LAKE 345KV CKT 1	717	717	0.0511	105.0144	JOHNSON COUNTY - PITTSBURG 345KV CKT 1
FDNS	00NR	0	16WP	G15_045	FROM->TO	CIMARRON - DRAPER LAKE 345KV CKT 1	717	717	0.03421	104.9951	HORSESHOE LAKE - JONES TAP 138KV CKT 1
FDNS	00NR	0	16WP	G15_045	FROM->TO	CIMARRON - DRAPER LAKE 345KV CKT 1	717	717	0.03454	104.9687	MORISNT4 138.00 - STILLWATER 138KV CKT 1
FDNS	00NR	0	16WP	G15_045	FROM->TO	CIMARRON - DRAPER LAKE 345KV CKT 1	717	717	0.03455	104.9641	P12:138:OKGE:3TERM2
FDNS	00NR	0	16WP	G15_045	FROM->TO	CIMARRON - DRAPER LAKE 345KV CKT 1	717	717	0.03908	104.9439	REDBUD - RIVERSIDE STATION 345KV CKT 1

SOLUTION	GROUP	SCENARIO	SEASON	SOURCE	DIRECTION	MONITORED ELEMENT	RATEA (MVA)	RATEB(MVA)	TDF	TC%LOADING (% MVA)	CONTINGENCY
FDNS	00NR	0	16WP	G15_045	FROM->TO	CIMARRON - DRAPER LAKE 345KV CKT 1	717	717	0.03908	104.9439	REDBUD - RIVERSIDE STATION 345KV CKT 1
FDNS	00NR	0	16WP	G15_045	FROM->TO	CIMARRON - DRAPER LAKE 345KV CKT 1	717	717	0.03408	104.8928	GEN515226 1-MUSKOGEE 6G
FDNS	00NR	0	16WP	G15_045	FROM->TO	CIMARRON - DRAPER LAKE 345KV CKT 1	717	717	0.03408	104.879	GEN501813 1-RODEMACHER UNIT 3
FDNS	00NR	0	16WP	G15_045	FROM->TO	CIMARRON - DRAPER LAKE 345KV CKT 1	717	717	0.03809	104.8291	BAILEY4 138.00 - SUNSHINE CANYON 138KV CKT 1
FDNS	00NR	0	16WP	G15_045	FROM->TO	CIMARRON - DRAPER LAKE 345KV CKT 1	717	717	0.03408	104.7782	NORTHWEST (NORTWST2) 345/138/13.8KV TRANSFORMER CKT 1
FDNS	00NR	0	16WP	G15_045	FROM->TO	CIMARRON - DRAPER LAKE 345KV CKT 1	717	717	0.03543	104.7766	7SAREPTA% 345.00 - LONGWOOD 345KV CKT 1
FDNS	00NR	0	16WP	G15_045	FROM->TO	CIMARRON - DRAPER LAKE 345KV CKT 1	717	717	0.03543	104.7766	7SAREPTA% 345.00 - LONGWOOD 345KV CKT 1
FDNS	00NR	0	16WP	G15_045	FROM->TO	CIMARRON - DRAPER LAKE 345KV CKT 1	717	717	0.034	104.7749	ARCADIA - KAMO MEMORIAL 138KV CKT 1
FDNS	00NR	0	16WP	G15_045	FROM->TO	CIMARRON - DRAPER LAKE 345KV CKT 1	717	717	0.03409	104.7555	P12:138:OKGE:3TERM12
FDNS	00NR	0	16WP	G15_045	FROM->TO	CIMARRON - DRAPER LAKE 345KV CKT 1	717	717	0.03463	104.7399	DOLET HILLS - SOUTHWEST SHREVEPORT 345KV CKT 1
FDNS	00NR	0	16WP	G15_045	FROM->TO	CIMARRON - DRAPER LAKE 345KV CKT 1	717	717	0.03463	104.7399	DOLET HILLS - SOUTHWEST SHREVEPORT 345KV CKT 1
FDNS	00NR	0	16WP	G15_045	FROM->TO	CIMARRON - DRAPER LAKE 345KV CKT 1	717	717	0.03408	104.6942	GEN515225 1-MUSKOGEE 5G
FDNS	00NR	0	16WP	G15_045	FROM->TO	CIMARRON - DRAPER LAKE 345KV CKT 1	717	717	0.03408	104.694	GEN515223 1-MUSKOGEE 4G
FDNS	00NR	0	16WP	G15_045	FROM->TO	CIMARRON - DRAPER LAKE 345KV CKT 1	717	717	0.03408	104.6904	GEN335206 1-NELSON UNIT 6
FDNS	00NR	0	16WP	G15_045	FROM->TO	CIMARRON - DRAPER LAKE 345KV CKT 1	717	717	0.03413	104.68	MEMORIAL - SKYLINE 138KV CKT 1
FDNS	00NR	0	16WP	G15_045	FROM->TO	CIMARRON - DRAPER LAKE 345KV CKT 1	717	717	0.03702	104.583	GRACEMONT (BANK 1) 345/138/13.8KV TRANSFORMER CKT 1
FDNS	00NR	0	16WP	G15_045	FROM->TO	CIMARRON - DRAPER LAKE 345KV CKT 1	717	717	0.03453	104.5721	QUAIL CREEK - SKYLINE 138KV CKT 1
FDNS	00NR	0	16WP	G15_045	FROM->TO	CIMARRON - DRAPER LAKE 345KV CKT 1	717	717	0.03408	104.5492	GEN509409 1-WILKES #3
FDNS	00NR	0	16WP	G15_045	FROM->TO	CIMARRON - DRAPER LAKE 345KV CKT 1	717	717	0.03408	104.5474	GEN337653 1-WHITE BLUFF UNIT #2
FDNS	00NR	0	16WP	G15_045	FROM->TO	CIMARRON - DRAPER LAKE 345KV CKT 1	717	717	0.03372	104.5355	P12:138:OKGE:3TERM18
FDNS	00NR	0	16WP	G15_045	FROM->TO	CIMARRON - DRAPER LAKE 345KV CKT 1	717	717	0.03809	104.5271	BAILEY4 138.00 - WESTMOORE 138KV CKT 1
FDNS	00NR	0	16WP	G15_045	FROM->TO	CIMARRON - DRAPER LAKE 345KV CKT 1	717	717	0.03408	104.519	GEN501812 1-RODEMACHER UNIT 2
FDNS	00NR	0	16WP	G15_045	FROM->TO	CIMARRON - DRAPER LAKE 345KV CKT 1	717	717	0.03408	104.5145	NORTHWEST (NORTWST4) 345/138/13.8KV TRANSFORMER CKT 1
FDNS	00NR	0	16WP	G15_045	FROM->TO	CIMARRON - DRAPER LAKE 345KV CKT 1	717	717	0.03408	104.4548	NEW MADRID 161/22.0KV TRANSFORMER CKT 1
FDNS	00NR	0	16WP	G15_045	FROM->TO	CIMARRON - DRAPER LAKE 345KV CKT 1	717	717	0.03369	104.4542	36 & MERIDIAN - CHEMTRON 138KV CKT 1
FDNS	00NR	0	16WP	G15_045	FROM->TO	CIMARRON - DRAPER LAKE 345KV CKT 1	717	717	0.03496	104.4515	THISTLE7 345.00 - WOODWARD DISTRICT EHV 345KV CKT 1
FDNS	00NR	0	16WP	G15_045	FROM->TO	CIMARRON - DRAPER LAKE 345KV CKT 1	717	717	0.03496	104.4515	THISTLE7 345.00 - WOODWARD DISTRICT EHV 345KV CKT 1
FDNS	00NR	0	16WP	G15_045	FROM->TO	CIMARRON - DRAPER LAKE 345KV CKT 1	717	717	0.03496	104.4515	THISTLE7 345.00 - WOODWARD DISTRICT EHV 345KV CKT 2
FDNS	00NR	0	16WP	G15_045	FROM->TO	CIMARRON - DRAPER LAKE 345KV CKT 1	717	717	0.03496	104.4515	THISTLE7 345.00 - WOODWARD DISTRICT EHV 345KV CKT 2
FDNS	00NR	0	16WP	G15_045	FROM->TO	CIMARRON - DRAPER LAKE 345KV CKT 1	717	717	0.03408	104.4411	NEW MADRID 345/22.0KV TRANSFORMER CKT 1
FDNS	00NR	0	16WP	G15_045	FROM->TO	CIMARRON - DRAPER LAKE 345KV CKT 1	717	717	0.03408	104.4225	GEN520947 1-HUGO1
FDNS	00NR	0	16WP	G15_045	FROM->TO	CIMARRON - DRAPER LAKE 345KV CKT 1	717	717	0.03408	104.4148	GEN337652 1-WHITE BLUFF UNIT #1
FDNS	00NR	0	16WP	G15_045	FROM->TO	CIMARRON - DRAPER LAKE 345KV CKT 1	717	717	0.03408	104.3894	NORTHWEST (NORTWST3) 345/138/13.8KV TRANSFORMER CKT 1
FDNS	00NR	0	16WP	G15_045	FROM->TO	CIMARRON - DRAPER LAKE 345KV CKT 1	717	717	0.03478	104.376	3TR3AR8EL7EL
FDNS	00NR	0	16WP	G15_045	FROM->TO	CIMARRON - DRAPER LAKE 345KV CKT 1	717	717	0.03478	104.376	7SAREPTA% 345.00 - ELDORADO EHV 345KV CKT 1
FDNS	00NR	0	16WP	G15_045	FROM->TO	CIMARRON - DRAPER LAKE 345KV CKT 1	717	717	0.03478	104.3682	ELDORADO EHV 500/345KV TRANSFORMER CKT 1
FDNS	00NR	0	16WP	G15_045	FROM->TO	CIMARRON - DRAPER LAKE 345KV CKT 1	717	717	0.03369	104.3672	CHEMTRON - PENNSYLVANIA 138KV CKT 1
FDNS	00NR	0	16WP	G15_045	FROM->TO	CIMARRON - DRAPER LAKE 345KV CKT 1	717	717	0.03462	104.3371	G15052_T 345.00 - ROSE HILL 345KV CKT 1
FDNS	00NR	0	16WP	G15_045	FROM->TO	CIMARRON - DRAPER LAKE 345KV CKT 1	717	717	0.03429	104.3332	G15074_T 345.00 - HOYT 345KV CKT 1
FDNS	00NR	0	16WP	G15_045	FROM->TO	CIMARRON - DRAPER LAKE 345KV CKT 1	717	717	0.03631	104.3021	BLANCHARD - CORNVILLE 138KV CKT 1
FDNS	00NR	0	16WP	G15_045	FROM->TO	CIMARRON - DRAPER LAKE 345KV CKT 1	717	717	0.03481	104.3015	COMANCHE - LOCO 138KV CKT 1
FDNS	00NR	0	16WP	G15_045	FROM->TO	CIMARRON - DRAPER LAKE 345KV CKT 1	717	717	0.03404	104.2791	P12:138:OKGE:3TERM17
FDNS	00NR	0	16WP	G15_045	FROM->TO	CIMARRON - DRAPER LAKE 345KV CKT 1	717	717	0.03408	104.2625	GEN515577 1-ARBWND11 0.6900
FDNS	00NR	0	16WP	G15_045	FROM->TO	CIMARRON - DRAPER LAKE 345KV CKT 1	717	717	0.03809	104.2438	FRANKLIN SW - WESTMOORE 138KV CKT 1
FDNS	00NR	0	16WP	G15_045	FROM->TO	CIMARRON - DRAPER LAKE 345KV CKT 1	717	717	0.03455	104.2374	P12:138:OKGE:3TERM11
FDNS	00NR	0	16WP	G15_045	FROM->TO	CIMARRON - DRAPER LAKE 345KV CKT 1	717	717	0.03408	104.2237	GEN334440 1-SABINE UNIT 4
FDNS	00NR	0	16WP	G15_045	FROM->TO	CIMARRON - DRAPER LAKE 345KV CKT 1	717	717	0.0341	104.2165	LONEOAK - NORTHWEST 138KV CKT 1
FDNS	00NR	0	16WP	G15_045	FROM->TO	CIMARRON - DRAPER LAKE 345KV CKT 1	717	717	0.03631	104.211	P12:138:AEPW-OGE:CORNVIL4:MAUD 4
FDNS	00NR	0	16WP	G15_045	FROM->TO	CIMARRON - DRAPER LAKE 345KV CKT 1	717	717	0.03466	104.2024	KETCH TAP - NORTHWEST 138KV CKT 1
FDNS	00NR	0	16WP	G15_045	FROM->TO	CIMARRON - DRAPER LAKE 345KV CKT 1	717	717	0.03408	104.2023	DELL 500 - ESSEX UNIT 2 500KV CKT Z1
FDNS	00NR	0	16WP	G15_045	FROM->TO	CIMARRON - DRAPER LAKE 345KV CKT 1	717	717	0.0344	104.1938	DIVISION AVE - LAKESIDE 138KV CKT 1
FDNS	00NR	0	16WP	G15_045	FROM->TO	CIMARRON - DRAPER LAKE 345KV CKT 1	717	717	0.03331	104.1729	HORSESHOE LAKE - KAMO MEMORIAL 138KV CKT 1
FDNS	00NR	0	16WP	G15_045	FROM->TO	CIMARRON - DRAPER LAKE 345KV CKT 1	717	717	0.03389	104.1303	NORTHWEST - PANTHER 138KV CKT 1
FDNS	00NR	0	16WP	G15_045	FROM->TO	CIMARRON - DRAPER LAKE 345KV CKT 1	717	717	0.03175	104.1253	G14-074T 345.00 - OKLAUNION 345KV CKT 1
FDNS	00NR	0	16WP	G15_045	FROM->TO	CIMARRON - DRAPER LAKE 345KV CKT 1	717	717	0.03126	104.1217	CLARKSVILLE - ONETA 345KV CKT 1
FDNS	00NR	0	16WP	G15_045	FROM->TO	CIMARRON - DRAPER LAKE 345KV CKT 1	717	717	0.03126	104.1217	CLARKSVILLE - ONETA 345KV CKT 1
FDNS	00NR	0	16WP	G15_045	FROM->TO	CIMARRON - DRAPER LAKE 345KV CKT 1	717	717	0.03306	104.1144	P12:138:OKGE:3TERM20
FDNS	00NR	0	16WP	G15_045	FROM->TO	CIMARRON - DRAPER LAKE 345KV CKT 1	717	717	0.03631	104.1089	BLANCHARD - MAUD 138KV CKT 1
FDNS	00NR	0	16WP	G15_045	FROM->TO	CIMARRON - DRAPER LAKE 345KV CKT 1	717	717	0.03499	104.1015	CIMARRON - HAYMAKER 138KV CKT 1
FDNS	00NR	0	16WP	G15_045	FROM->TO	CIMARRON - DRAPER LAKE 345KV CKT 1	717	717	0.03461	104.0977	P12:138:OKGE:3TERM47
FDNS	00NR	0	16WP	G15_045	FROM->TO	CIMARRON - DRAPER LAKE 345KV CKT 1	717	717	0.03408	104.0931	GEN336252 1-NINEMILE POINT UNIT#5
FDNS	00NR	0	16WP	G15_045	FROM->TO	CIMARRON - DRAPER LAKE 345KV CKT 1	717	717	0.03518	104.0857	FINNEY SWITCHING STATION - HOLCOMB 345KV CKT 1
FDNS	00NR	0	16WP	G15_045	FROM->TO	CIMARRON - DRAPER LAKE 345KV CKT 1	717	717	0.03518	104.0857	FINNEY SWITCHING STATION - HOLCOMB 345KV CKT 1
FDNS	00NR	0	16WP	G15_045	FROM->TO	CIMARRON - DRAPER LAKE 345KV CKT 1	717	717	0.03408	104.0808	DOLET HILLS 345/24.0KV TRANSFORMER CKT 1
FDNS	00NR	0	16WP	G15_045	FROM->TO	CIMARRON - DRAPER LAKE 345KV CKT 1	717	717	0.03389	104.08	PANTHER - SILVER LAKE 138KV CKT 1
FDNS	00NR	0	16WP	G15_045	FROM->TO	CIMARRON - DRAPER LAKE 345KV CKT 1	717	717	0.0344	104.0723	HEFNER - LAKESIDE 138KV CKT 1
FDNS	00NR	0	16WP	G15_045	FROM->TO	CIMARRON - DRAPER LAKE 345KV CKT 1	717	717	0.03452	104.041	BLACKBERRY - NEOSHO 345KV CKT 1
FDNS	00NR	0	16WP	G15_045	FROM->TO	CIMARRON - DRAPER LAKE 345KV CKT 1	717	717	0.03408	104.0356	WHITE BLUFF 500/26.0KV TRANSFORMER CKT 1
FDNS	00NR	0	16WP	G15_045	FROM->TO	CIMARRON - DRAPER LAKE 345KV CKT 1	717	717	0.03394	104.0273	KETCH - KETCH TAP 138KV CKT 1
FDNS	00NR	0	16WP	G15_045	FROM->TO	CIMARRON - DRAPER LAKE 345KV CKT 1	717	717	0.03463	104.02	EMPORIA ENERGY CENTER - G14_001T 345.00 345KV CKT 1
FDNS	00NR	0	16WP	G15_045	FROM->TO	CIMARRON - DRAPER LAKE 345KV CKT 1	717	717	0.0343	104.0189	HOYT - STRANGER CREEK 345KV CKT 1
FDNS	00NR	0	16WP	G15_045	FROM->TO	CIMARRON - DRAPER LAKE 345KV CKT 1	717	717	0.03382	104.0086	DIVISION AVE - MUSTANG 138KV CKT 1
FDNS	00NR	0	16WP	G15_045	FROM->TO	CIMARRON - DRAPER LAKE 345KV CKT 1	717	717	0.0342	104	G15088_T 345.00 - MOORE 345KV CKT 1
FDNS	00NR	0	16WP	G15_045	FROM->TO	CIMARRON - DRAPER LAKE 345KV CKT 1	717	717	0.03408	104	GEN300006 1-NEW MADRID UNIT 1
FDNS	00NR	0	16WP	G15_045	FROM->TO	CIMARRON - DRAPER LAKE 345KV CKT 1	717	717	0.03408	104	GEN300007 1-NEW MADRID UNIT 2
FDNS	00NR	0	16WP	G15_045	FROM->TO	CIMARRON - DRAPER LAKE 345KV CKT 1	717	717	0.03423	103.999	P12:138:WFEC:MSL02
FDNS	00NR	0	16WP	G15_045	FROM->TO	CIMARRON - DRAPER LAKE 345KV CKT 1	717	717	0.03499	103.998	DIVISION AVE - HAYMAKER 138KV CKT 1
FDNS	00NR	0	16WP	G15_045	FROM->TO	CIMARRON - DRAPER LAKE 345KV CKT 1	717	717	0.03408	103.9886	GEN509408 1-WILKES #2
FDNS	00NR	0	16WP	G15_045	FROM->TO	CIMARRON - DRAPER LAKE 345KV CKT 1	717	717	0.0348	103.9879	P12:138:AEPW-OGE:SHIDLER4:OSAGE 4

SOLUTION	GROUP	SCENARIO	SEASON	SOURCE	DIRECTION	MONITORED ELEMENT	RATEA (MVA)	RATEB(MVA)	TDF	TC%LOADING (% MVA)	CONTINGENCY
FDNS	00NR	0	16WP	G15_045	FROM->TO	CIMARRON - DRAPER LAKE 345KV CKT 1	717	717	0.03403	103.975	MCCLAIN - PLEASANT VALLEY 138KV CKT 1
FDNS	00NR	0	16WP	G15_045	FROM->TO	CIMARRON - DRAPER LAKE 345KV CKT 1	717	717	0.03438	103.9746	SWISSVALE - WEST GARDNER 345KV CKT 1
FDNS	00NR	0	16WP	G15_045	FROM->TO	CIMARRON - DRAPER LAKE 345KV CKT 1	717	717	0.03429	103.9659	G15074_T 345.00 - JEFFREY ENERGY CENTER 345KV CKT 1
FDNS	00NR	0	16WP	G15_045	FROM->TO	CIMARRON - DRAPER LAKE 345KV CKT 1	717	717	0.03422	103.962	ANADARKO - GEORGIA 138KV CKT 1
FDNS	00NR	0	16WP	G15_045	FROM->TO	CIMARRON - DRAPER LAKE 345KV CKT 1	717	717	0.03408	103.9525	GEN335204 1-NELSON UNIT 4
FDNS	00NR	0	16WP	G15_045	FROM->TO	CIMARRON - DRAPER LAKE 345KV CKT 1	717	717	0.03408	103.9519	GEN336831 1-BAXTER WILSON SES
FDNS	00NR	0	16WP	G15_045	FROM->TO	CIMARRON - DRAPER LAKE 345KV CKT 1	717	717	0.03236	103.9391	P12:138:AEPW:OKMULGE4:R.S.S-4
FDNS	00NR	0	16WP	G15_045	FROM->TO	CIMARRON - DRAPER LAKE 345KV CKT 1	717	717	0.03408	103.9208	GEN506754 1-LEBROCK STEAM 1
FDNS	00NR	0	16WP	G15_045	FROM->TO	CIMARRON - DRAPER LAKE 345KV CKT 1	717	717	0.03425	103.919	CLASSEN - ROBINSON 138KV CKT 1
FDNS	00NR	0	16WP	G15_045	FROM->TO	CIMARRON - DRAPER LAKE 345KV CKT 1	717	717	0.03408	103.9013	GEN334441 1-SABINE UNIT 5
FDNS	00NR	0	16WP	G15_045	FROM->TO	CIMARRON - DRAPER LAKE 345KV CKT 1	717	717	0.03408	103.8962	GEN334071 1-LEWIS CREEK 2
FDNS	00NR	0	16WP	G15_045	FROM->TO	CIMARRON - DRAPER LAKE 345KV CKT 1	717	717	0.03422	103.8953	FLETCHER - GEORGIA 138KV CKT 1
FDNS	00NR	0	16WP	G15_045	FROM->TO	CIMARRON - DRAPER LAKE 345KV CKT 1	717	717	0.03463	103.8915	G14_001T 345.00 - WICHITA 345KV CKT 1
FDNS	00NR	0	16WP	G15_045	FROM->TO	CIMARRON - DRAPER LAKE 345KV CKT 1	717	717	0.03408	103.8883	GEN334070 1-LEWIS CREEK 1
FDNS	00NR	0	16WP	G15_045	FROM->TO	CIMARRON - DRAPER LAKE 345KV CKT 1	717	717	0.03462	103.8865	BENTON - WICHITA 345KV CKT 1
FDNS	00NR	0	16WP	G15_045	FROM->TO	CIMARRON - DRAPER LAKE 345KV CKT 1	717	717	0.03518	103.8864	FINNEY SWITCHING STATION - Hitchland Interchange 345KV CKT 1
FDNS	00NR	0	16WP	G15_045	FROM->TO	CIMARRON - DRAPER LAKE 345KV CKT 1	717	717	0.03408	103.8862	GEN336251 1-NINEMILE POINT UNIT#4
FDNS	00NR	0	16WP	G15_045	FROM->TO	CIMARRON - DRAPER LAKE 345KV CKT 1	717	717	0.03443	103.8786	WEBRE - WELLS 500KV CKT 1
FDNS	00NR	0	16WP	G15_045	FROM->TO	CIMARRON - DRAPER LAKE 345KV CKT 1	717	717	0.03453	103.8775	LACYGNE - NEOSHO 345KV CKT 1
FDNSLock	00NR	0	16WP	G15_045	FROM->TO	CIMARRON - DRAPER LAKE 345KV CKT 1	717	717	0.03408	103.8742	GEN590011 2-ERCOT EQUIVALENCE
FDNS	00NR	0	16WP	G15_045	FROM->TO	CIMARRON - DRAPER LAKE 345KV CKT 1	717	717	0.03433	103.862	EMPORIA ENERGY CENTER - SWISSVALE 345KV CKT 1
FDNS	00NR	0	16WP	G15_045	FROM->TO	CIMARRON - DRAPER LAKE 345KV CKT 1	717	717	0.03419	103.8385	EMPIRE - FLETCHER 138KV CKT 1
FDNSLock	00NR	0	16WP	G15_045	FROM->TO	CIMARRON - DRAPER LAKE 345KV CKT 1	717	717	0.03408	103.8317	GEN590010 1-ERCOT EQUIVALENCE
FDNS	00NR	0	16WP	G15_045	FROM->TO	CIMARRON - DRAPER LAKE 345KV CKT 1	717	717	0.03436	103.8223	G1524G1525 345.00 - THISTLE7 345.00 345KV CKT 1
FDNS	00NR	0	16WP	G15_045	FROM->TO	CIMARRON - DRAPER LAKE 345KV CKT 1	717	717	0.03436	103.8223	G1524G1525 345.00 - THISTLE7 345.00 345KV CKT 2
FDNS	00NR	0	16WP	G15_045	FROM->TO	CIMARRON - DRAPER LAKE 345KV CKT 1	717	717	0.03408	103.8186	GEN503909 1-FULTONU1 1 16.000
FDNSLock	00NR	0	16WP	G15_045	FROM->TO	CIMARRON - DRAPER LAKE 345KV CKT 1	717	717	0.03408	103.8129	GEN338146 1-INDEPENDENCE UNIT #2
FDNS	00NR	0	16WP	G15_045	FROM->TO	CIMARRON - DRAPER LAKE 345KV CKT 1	717	717	0.0341	103.8126	LONEOAK - QUAIL CREEK 138KV CKT 1
FDNS	00NR	0	16WP	G15_045	FROM->TO	CIMARRON - DRAPER LAKE 345KV CKT 1	717	717	0.03408	103.809	GEN501811 1-RODEMACHER UNIT 1
FDNS	00NR	0	16WP	G15_045	FROM->TO	CIMARRON - DRAPER LAKE 345KV CKT 1	717	717	0.03418	103.8044	WOODRING (WOODRNG2) 345/138/13.8KV TRANSFORMER CKT 1
FDNS	00NR	0	16WP	G15_045	FROM->TO	CIMARRON - DRAPER LAKE 345KV CKT 1	717	717	0.03652	103.7918	CRINER - PAYNE 138.00 138KV CKT 1
FDNS	00NR	0	16WP	G15_045	FROM->TO	CIMARRON - DRAPER LAKE 345KV CKT 1	717	717	0.0348	103.7817	OSAGE - WEBB CITY TAP 138KV CKT 1
FDNS	00NR	0	16WP	G15_045	FROM->TO	CIMARRON - DRAPER LAKE 345KV CKT 1	717	717	0.03419	103.7768	COMANCHE - EMPIRE 138KV CKT 1
FDNS	00NR	0	16WP	G15_045	FROM->TO	CIMARRON - DRAPER LAKE 345KV CKT 1	717	717	0.03408	103.7748	FRONTIER - GRIMES 345KV CKT 1
FDNS	00NR	0	16WP	G15_045	FROM->TO	CIMARRON - DRAPER LAKE 345KV CKT 1	717	717	0.03408	103.7716	GEN334433 1-SABINE UNIT 3
FDNS	00NR	0	16WP	G15_045	FROM->TO	CIMARRON - DRAPER LAKE 345KV CKT 1	717	717	0.03409	103.7693	P12:069:OKGE:3TERM4
FDNS	00NR	0	16WP	G15_045	FROM->TO	CIMARRON - DRAPER LAKE 345KV CKT 1	717	717	0.03408	103.7671	GEN334030 1-FRONTIER UNIT 1
FDNS	00NR	0	16WP	G15_045	FROM->TO	CIMARRON - DRAPER LAKE 345KV CKT 1	717	717	0.03408	103.7661	GEN334031 1-FRONTIER UNIT 2
FDNS	00NR	0	16WP	G15_045	FROM->TO	CIMARRON - DRAPER LAKE 345KV CKT 1	717	717	0.03408	103.764	GEN303007 1-1BC2 U2
FDNS	00NR	0	16WP	G15_045	FROM->TO	CIMARRON - DRAPER LAKE 345KV CKT 1	717	717	0.03464	103.7619	SPVALLY4 138.00 - STILLWATER 138KV CKT 1
FDNS	00NR	0	16WP	G15_045	FROM->TO	CIMARRON - DRAPER LAKE 345KV CKT 1	717	717	0.03408	103.7587	GEN303006 1-1BC2 U1
FDNS	00NR	0	16WP	G15_045	FROM->TO	CIMARRON - DRAPER LAKE 345KV CKT 1	717	717	0.03408	103.7582	GEN337041 1-GERALD ANDRUS
FDNS	00NR	0	16WP	G15_045	FROM->TO	CIMARRON - DRAPER LAKE 345KV CKT 1	717	717	0.03408	103.7551	P12:161:AEPW:DYESS 5:HYLAND 5
FDNS	00NR	0	16WP	G15_045	FROM->TO	CIMARRON - DRAPER LAKE 345KV CKT 1	717	717	0.03408	103.7415	GEN336191 1-LITTLE GYPSY UNIT#3
FDNS	00NR	0	16WP	G15_045	FROM->TO	CIMARRON - DRAPER LAKE 345KV CKT 1	717	717	0.03415	103.7374	8DANIEL8 500.00 - MCKNIGHT 500KV CKT 1
FDNS	00NR	0	16WP	G15_045	FROM->TO	CIMARRON - DRAPER LAKE 345KV CKT 1	717	717	0.03408	103.7345	GEN509393 S1-ARSENAL HILL GENS #4 (STALL)
FDNS	00NR	0	16WP	G15_045	FROM->TO	CIMARRON - DRAPER LAKE 345KV CKT 1	717	717	0.03429	103.7342	CLEAVELAND - CLEVLND 4 138.00 138KV CKT Z1
FDNS	00NR	0	16WP	G15_045	FROM->TO	CIMARRON - DRAPER LAKE 345KV CKT 1	717	717	0.03429	103.7339	CLEVELAND (CLVAUTO1) 345/138/13.8KV TRANSFORMER CKT 1
FDNS	00NR	0	16WP	G15_045	FROM->TO	CIMARRON - DRAPER LAKE 345KV CKT 1	717	717	0.03429	103.7339	CLEVELAND (CLVAUTO1) 345/138/13.8KV TRANSFORMER CKT 1
FDNS	00NR	0	16WP	G15_045	FROM->TO	CIMARRON - DRAPER LAKE 345KV CKT 1	717	717	0.03464	103.7325	PAYNESB4 138.00 - SPVALLY4 138.00 138KV CKT 1
FDNS	00NR	0	16WP	G15_045	FROM->TO	CIMARRON - DRAPER LAKE 345KV CKT 1	717	717	0.03409	103.7308	P12:138:OKGE:3TERM13
FDNS	00NR	0	16WP	G15_045	FROM->TO	CIMARRON - DRAPER LAKE 345KV CKT 1	717	717	0.03338	103.7266	ARKANSAS NUCLEAR ONE - FT SMITH 500KV CKT 1
FDNS	00NR	0	16WP	G15_045	FROM->TO	CIMARRON - DRAPER LAKE 345KV CKT 1	717	717	0.03338	103.7266	ARKANSAS NUCLEAR ONE - FT SMITH 500KV CKT 1
FDNS	00NR	0	16WP	G15_045	FROM->TO	CIMARRON - DRAPER LAKE 345KV CKT 1	717	717	0.03408	103.7179	GEN509392 G2-ARSENAL HILL GENS #3 (STALL)
FDNS	00NR	0	16WP	G15_045	FROM->TO	CIMARRON - DRAPER LAKE 345KV CKT 1	717	717	0.03408	103.7178	GEN509391 G1-ARSENAL HILL GENS #2 (STALL)
FDNS	00NR	0	16WP	G15_045	FROM->TO	CIMARRON - DRAPER LAKE 345KV CKT 1	717	717	0.03464	103.7169	CUSHING - PAYNESB4 138.00 138KV CKT 1
FDNS	00NR	0	16WP	G15_045	FROM->TO	CIMARRON - DRAPER LAKE 345KV CKT 1	717	717	0.03408	103.711	GEN335614 1-WILLOW GLENN UNIT#4
FDNS	00NR	0	16WP	G15_045	FROM->TO	CIMARRON - DRAPER LAKE 345KV CKT 1	717	717	0.0341	103.7087	DAYTON - MUSTANG 138KV CKT 1
FDNS	00NR	0	16WP	G15_045	FROM->TO	CIMARRON - DRAPER LAKE 345KV CKT 1	717	717	0.0341	103.7038	DAYTON - HOBBY LOBBY 138KV CKT 1
FDNS	00NR	0	16WP	G15_045	FROM->TO	CIMARRON - DRAPER LAKE 345KV CKT 1	717	717	0.03408	103.6985	GEN303008 1-1BC2 U3
FDNS	00NR	0	16WP	G15_045	FROM->TO	CIMARRON - DRAPER LAKE 345KV CKT 1	717	717	0.03425	103.6882	MUSTANG - SW 5TH 138KV CKT 1
FDNS	00NR	0	16WP	G15_045	FROM->TO	CIMARRON - DRAPER LAKE 345KV CKT 1	717	717	0.03408	103.6855	GEN338143 1-INDEPENDENCE UNIT #1
FDNS	00NR	0	16WP	G15_045	FROM->TO	CIMARRON - DRAPER LAKE 345KV CKT 1	717	717	0.03431	103.6766	ELDORADO EHV - MOUNT OLIVE 500KV CKT 1
FDNS	00NR	0	16WP	G15_045	FROM->TO	CIMARRON - DRAPER LAKE 345KV CKT 1	717	717	0.03408	103.6764	GEN336170 1-GULF OXY U4
FDNS	00NR	0	16WP	G15_045	FROM->TO	CIMARRON - DRAPER LAKE 345KV CKT 1	717	717	0.03408	103.6751	GEN336464 1-MICHOUD UNIT #3
FDNS	00NR	0	16WP	G15_045	FROM->TO	CIMARRON - DRAPER LAKE 345KV CKT 1	717	717	0.03652	103.6693	COLE - CRINER 138KV CKT 1
FDNS	00NR	0	16WP	G15_045	FROM->TO	CIMARRON - DRAPER LAKE 345KV CKT 1	717	717	0.03408	103.6516	ESSEX UNIT 2 500/18.0KV TRANSFORMER CKT 1
FDNS	00NR	0	16WP	G15_045	FROM->TO	CIMARRON - DRAPER LAKE 345KV CKT 1	717	717	0.03408	103.6516	P12:069:OKGE:3TERM19
FDNS	00NR	0	16WP	G15_045	FROM->TO	CIMARRON - DRAPER LAKE 345KV CKT 1	717	717	0.03419	103.6427	7LUTESVIL 345.00 - 7ST FRANC 345.00 345KV CKT 1
FDNS	00NR	0	16WP	G15_045	FROM->TO	CIMARRON - DRAPER LAKE 345KV CKT 1	717	717	0.03414	103.6334	OUMED 4 - STONEWALL 138KV CKT 1
FDNS	00NR	0	16WP	G15_045	FROM->TO	CIMARRON - DRAPER LAKE 345KV CKT 1	717	717	0.03408	103.6302	GEN336801 1-BAXTER WILSON UNIT #1
FDNS	00NR	0	16WP	G15_045	FROM->TO	CIMARRON - DRAPER LAKE 345KV CKT 1	717	717	0.03425	103.6262	LIGHTNING CREEK - ROBINSON 138KV CKT 1
FDNS	00NR	0	16WP	G15_045	FROM->TO	CIMARRON - DRAPER LAKE 345KV CKT 1	717	717	0.03381	103.6225	ARCADIA - LGARBER4 138.00 138KV CKT 1
FDNS	00NR	0	16WP	G15_045	FROM->TO	CIMARRON - DRAPER LAKE 345KV CKT 1	717	717	0.03408	103.6136	GEN506752 1-LEBROCK GAS 1
FDNS	00NR	0	16WP	G15_045	FROM->TO	CIMARRON - DRAPER LAKE 345KV CKT 1	717	717	0.03408	103.6135	GEN506753 1-LEBROCK GAS 2
FDNS	00NR	0	16WP	G15_045	FROM->TO	CIMARRON - DRAPER LAKE 345KV CKT 1	717	717	0.03417	103.6057	7JASPER 345.00 - BLACKBERRY 345KV CKT 1
FDNS	00NR	0	16WP	G15_045	FROM->TO	CIMARRON - DRAPER LAKE 345KV CKT 1	717	717	0.0348	103.6018	FAIRFAX TAP - SHIDLER 138KV CKT 1
FDNS	00NR	0	16WP	G15_045	FROM->TO	CIMARRON - DRAPER LAKE 345KV CKT 1	717	717	0.0348	103.6017	FAIRFAX TAP - WEBB CITY TAP 138KV CKT 1
FDNS	00NR	0	16WP	G15_045	FROM->TO	CIMARRON - DRAPER LAKE 345KV CKT 1	717	717	0.03381	103.5927	CHITWOOD - LGARBER4 138.00 138KV CKT 1

SOLUTION	GROUP	SCENARIO	SEASON	SOURCE	DIRECTION	MONITORED ELEMENT	RATEA (MVA)	RATEB(MVA)	TDF	TC%LOADING (% MVA)	CONTINGENCY
FDNS	00NR	0	16WP	G15_045	FROM->TO	CIMARRON - DRAPER LAKE 345KV CKT 1	717	717	0.03408	103.5925	GEN501910 1-ACADIA UNIT ST1
FDNS	00NR	0	16WP	G15_045	FROM->TO	CIMARRON - DRAPER LAKE 345KV CKT 1	717	717	0.03408	103.5817	RODEMACHER 230/22.0KV TRANSFORMER CKT 1
FDNS	00NR	0	16WP	G15_045	FROM->TO	CIMARRON - DRAPER LAKE 345KV CKT 1	717	717	0.03381	103.5804	CHITWOOD - JONES TAP 138KV CKT 1
FDNS	00NR	0	16WP	G15_045	FROM->TO	CIMARRON - DRAPER LAKE 345KV CKT 1	717	717	0.03408	103.5784	GEN511843 1-RIVERSIDE STATION #2
FDNS	00NR	0	16WP	G15_045	FROM->TO	CIMARRON - DRAPER LAKE 345KV CKT 1	717	717	0.03391	103.5772	P12:138:AEPW-OGE:WTH_JCT4:JENSEN4
FDNS	00NR	0	16WP	G15_045	FROM->TO	CIMARRON - DRAPER LAKE 345KV CKT 1	717	717	0.03432	103.571	TULSA NORTH - WEKIWA 345KV CKT 1
FDNS	00NR	0	16WP	G15_045	FROM->TO	CIMARRON - DRAPER LAKE 345KV CKT 1	717	717	0.03432	103.571	TULSA NORTH - WEKIWA 345KV CKT 1
FDNS	00NR	0	16WP	G15_045	FROM->TO	CIMARRON - DRAPER LAKE 345KV CKT 1	717	717	0.03451	103.5684	6LAYFLD 230.00 - CARROLL 230KV CKT 1
FDNS	00NR	0	16WP	G15_045	FROM->TO	CIMARRON - DRAPER LAKE 345KV CKT 1	717	717	0.03421	103.5641	8WNEWMADRID 500.00 - DELL 500 500KV CKT 1
FDNS	00NR	0	16WP	G15_045	FROM->TO	CIMARRON - DRAPER LAKE 345KV CKT 1	717	717	0.03409	103.5615	P12:345:GRDA:CHOUTEAU-SPORTSMANACRES
FDNS	00NR	0	16WP	G15_045	FROM->TO	CIMARRON - DRAPER LAKE 345KV CKT 1	717	717	0.03438	103.5548	ELDORADO EHV - SHERIDAN EHV 500KV CKT 1
FDNS	00NR	0	16WP	G15_045	FROM->TO	CIMARRON - DRAPER LAKE 345KV CKT 1	717	717	0.0344	103.5535	CHISHOLM6 230.00 - ELK CITY 230KV 230KV CKT 1
FDNS	00NR	0	16WP	G15_045	FROM->TO	CIMARRON - DRAPER LAKE 345KV CKT 1	717	717	0.0344	103.5504	ELK CITY 230KV (ELKCTY-6) 230/138/13.8KV TRANSFORMER CKT 1
FDNS	00NR	0	16WP	G15_045	FROM->TO	CIMARRON - DRAPER LAKE 345KV CKT 1	717	717	0.0344	103.5504	ELK CITY 230KV (ELKCTY-6) 230/138/13.8KV TRANSFORMER CKT 1
FDNS	00NR	0	16WP	G15_045	FROM->TO	CIMARRON - DRAPER LAKE 345KV CKT 1	717	717	0.03444	103.5453	G13-010T 345.00 - POST ROCK 345KV CKT 1
FDNS	00NR	0	16WP	G15_045	FROM->TO	CIMARRON - DRAPER LAKE 345KV CKT 1	717	717	0.03384	103.5337	P12:138:AEPW:N.E.S.-4:CATOOSA4
FDNS	00NR	0	16WP	G15_045	FROM->TO	CIMARRON - DRAPER LAKE 345KV CKT 1	717	717	0.03414	103.5322	OUMED 4 - PARK PLACE 138KV CKT 1
FDNS	00NR	0	16WP	G15_045	FROM->TO	CIMARRON - DRAPER LAKE 345KV CKT 1	717	717	0.034	103.5255	FULTON 115 - HOPE 115KV CKT 1
FDNS	00NR	0	16WP	G15_045	FROM->TO	CIMARRON - DRAPER LAKE 345KV CKT 1	717	717	0.034	103.5255	FULTON 115 - HOPE 115KV CKT 1
FDNS	00NR	0	16WP	G15_045	FROM->TO	CIMARRON - DRAPER LAKE 345KV CKT 1	717	717	0.03421	103.5186	P13:138-161:WERE:NSES_TX-4OR5::
FDNS	00NR	0	16WP	G15_045	FROM->TO	CIMARRON - DRAPER LAKE 345KV CKT 1	717	717	0.03408	103.5156	8CAJUN2 500/24.0KV TRANSFORMER CKT 1
FDNS	00NR	0	16WP	G15_045	FROM->TO	CIMARRON - DRAPER LAKE 345KV CKT 1	717	717	0.03415	103.5154	MORISNT4 138.00 - SOONER 138KV CKT 1
FDNS	00NR	0	16WP	G15_045	FROM->TO	CIMARRON - DRAPER LAKE 345KV CKT 1	717	717	0.03403	103.5113	P12:138:AEPW:CATOOSA4:T.S.E.-4
FDNS	00NR	0	16WP	G15_045	FROM->TO	CIMARRON - DRAPER LAKE 345KV CKT 1	717	717	0.03408	103.5052	ST FRANCIS - ST FRANCIS 1 161KV CKT Z1
FDNS	00NR	0	16WP	G15_045	FROM->TO	CIMARRON - DRAPER LAKE 345KV CKT 1	717	717	0.03421	103.5015	7JASPER 345.00 - MORGAN 345KV CKT 1
FDNS	00NR	0	16WP	G15_045	FROM->TO	CIMARRON - DRAPER LAKE 345KV CKT 1	717	717	0.03409	103.4974	P12:069:OKGE:3TERM3
FDNS	00NR	0	16WP	G15_045	FROM->TO	CIMARRON - DRAPER LAKE 345KV CKT 1	717	717	0.03697	103.4908	HUGO - VALLIANT 345KV CKT 1
FDNS	00NR	0	16WP	G15_045	FROM->TO	CIMARRON - DRAPER LAKE 345KV CKT 1	717	717	0.03697	103.4908	HUGO - VALLIANT 345KV CKT 1
FDNS	00NR	0	16WP	G15_045	FROM->TO	CIMARRON - DRAPER LAKE 345KV CKT 1	717	717	0.03408	103.4903	GEN509394 1-FLINT CREEK
FDNS	00NR	0	16WP	G15_045	FROM->TO	CIMARRON - DRAPER LAKE 345KV CKT 1	717	717	0.03408	103.4898	GEN300015 1-1SGPDEL 18.000
FDNS	00NR	0	16WP	G15_045	FROM->TO	CIMARRON - DRAPER LAKE 345KV CKT 1	717	717	0.03444	103.4897	G13-010T 345.00 - SPEARVILLE 345KV CKT 1
FDNS	00NR	0	16WP	G15_045	FROM->TO	CIMARRON - DRAPER LAKE 345KV CKT 1	717	717	0.03398	103.4895	DALE - HORSESHOE LAKE 138KV CKT 1
FDNS	00NR	0	16WP	G15_045	FROM->TO	CIMARRON - DRAPER LAKE 345KV CKT 1	717	717	0.03425	103.4888	LIGHTNING CREEK - TROSPER 138KV CKT 1
FDNS	00NR	0	16WP	G15_045	FROM->TO	CIMARRON - DRAPER LAKE 345KV CKT 1	717	717	0.03408	103.4794	GEN337766 1-TRACTEBEL UNIT S1
FDNS	00NR	0	16WP	G15_045	FROM->TO	CIMARRON - DRAPER LAKE 345KV CKT 1	717	717	0.03408	103.4788	P12:138:AEPW:SHERID4:112GORE4
FDNS	00NR	0	16WP	G15_045	FROM->TO	CIMARRON - DRAPER LAKE 345KV CKT 1	717	717	0.03408	103.4762	GEN515564 1-ORIGIN11 0.6900
FDNS	00NR	0	16WP	G15_045	FROM->TO	CIMARRON - DRAPER LAKE 345KV CKT 1	717	717	0.03408	103.4762	GEN515565 1-ORIGIN21 0.6900
FDNS	00NR	0	16WP	G15_045	FROM->TO	CIMARRON - DRAPER LAKE 345KV CKT 1	717	717	0.0341	103.4744	36 & MERIDIAN - HOBBY LOBBY 138KV CKT 1
FDNS	00NR	0	16WP	G15_045	FROM->TO	CIMARRON - DRAPER LAKE 345KV CKT 1	717	717	0.0343	103.474	HAMMETT TAP - HAMMETT2 138KV CKT 1
FDNS	00NR	0	16WP	G15_045	FROM->TO	CIMARRON - DRAPER LAKE 345KV CKT 1	717	717	0.035	103.4732	ANADARKO - GRACMNT4 138.00 138KV CKT 1
FDNS	00NR	0	16WP	G15_045	FROM->TO	CIMARRON - DRAPER LAKE 345KV CKT 1	717	717	0.03408	103.4731	GEN336222 1-LITTLE GYPSY UNIT#2
FDNS	00NR	0	16WP	G15_045	FROM->TO	CIMARRON - DRAPER LAKE 345KV CKT 1	717	717	0.03459	103.4701	NORTHEAST STATION - ONETA 345KV CKT 1
FDNS	00NR	0	16WP	G15_045	FROM->TO	CIMARRON - DRAPER LAKE 345KV CKT 1	717	717	0.03459	103.4701	NORTHEAST STATION - ONETA 345KV CKT 1
FDNS	00NR	0	16WP	G15_045	FROM->TO	CIMARRON - DRAPER LAKE 345KV CKT 1	717	717	0.03415	103.4701	P12:138:OKGE:3TERM28
FDNS	00NR	0	16WP	G15_045	FROM->TO	CIMARRON - DRAPER LAKE 345KV CKT 1	717	717	0.03415	103.4665	FLETCHER - MARLOW JCT 69KV CKT 1
FDNS	00NR	0	16WP	G15_045	FROM->TO	CIMARRON - DRAPER LAKE 345KV CKT 1	717	717	0.03408	103.4622	GEN501970 1-EVANGELINE UNIT 7
FDNS	00NR	0	16WP	G15_045	FROM->TO	CIMARRON - DRAPER LAKE 345KV CKT 1	717	717	0.03408	103.4621	NELSON 230/20.0KV TRANSFORMER CKT 1
FDNS	00NR	0	16WP	G15_045	FROM->TO	CIMARRON - DRAPER LAKE 345KV CKT 1	717	717	0.03395	103.4586	NW164TH4 138.00 - PIEDMONT 138KV CKT 1
FDNS	00NR	0	16WP	G15_045	FROM->TO	CIMARRON - DRAPER LAKE 345KV CKT 1	717	717	0.03408	103.458	P12:161:AEPW:EROGERS5:ECNTRTN5
FDNS	00NR	0	16WP	G15_045	FROM->TO	CIMARRON - DRAPER LAKE 345KV CKT 1	717	717	0.03405	103.4577	P12:138:OKGE-AEPW:JENSEN4:REDROCKRD4
FDNS	00NR	0	16WP	G15_045	FROM->TO	CIMARRON - DRAPER LAKE 345KV CKT 1	717	717	0.03395	103.4567	NORTHWEST - NW164TH4 138.00 138KV CKT 1
FDNS	00NR	0	16WP	G15_045	FROM->TO	CIMARRON - DRAPER LAKE 345KV CKT 1	717	717	0.03408	103.4555	ESSEX UNIT 2 500/18.0KV TRANSFORMER CKT 1
FDNS	00NR	0	16WP	G15_045	FROM->TO	CIMARRON - DRAPER LAKE 345KV CKT 1	717	717	0.03411	103.4553	P12:161:AEPW-SWPA:BEAVER5:EROGERS5
FDNS	00NR	0	16WP	G15_045	FROM->TO	CIMARRON - DRAPER LAKE 345KV CKT 1	717	717	0.03503	103.4548	COMANCHE TAP - OMPA-DUNCAN 840 138KV CKT 1
FDNS	00NR	0	16WP	G15_045	FROM->TO	CIMARRON - DRAPER LAKE 345KV CKT 1	717	717	0.03446	103.4517	CORN TAP - SEQUOYAHJ4 138.00 138KV CKT 1
FDNS	00NR	0	16WP	G15_045	FROM->TO	CIMARRON - DRAPER LAKE 345KV CKT 1	717	717	0.03436	103.4516	P12:138:AEPW:CORNVIL4:S.W.S.-4
FDNS	00NR	0	16WP	G15_045	FROM->TO	CIMARRON - DRAPER LAKE 345KV CKT 1	717	717	0.03446	103.4513	ANADARKO - SEQUOYAHJ4 138.00 138KV CKT 1
FDNS	00NR	0	16WP	G15_045	FROM->TO	CIMARRON - DRAPER LAKE 345KV CKT 1	717	717	0.03398	103.448	DALE - SQUIRL CREEK 138KV CKT 1
FDNS	00NR	0	16WP	G15_045	FROM->TO	CIMARRON - DRAPER LAKE 345KV CKT 1	717	717	0.03419	103.4464	HEALDTON - LOCO 138KV CKT 1
FDNS	00NR	0	16WP	G15_045	FROM->TO	CIMARRON - DRAPER LAKE 345KV CKT 1	717	717	0.03408	103.4463	P12:161:AEPW:DYESS5:ELMSPRNG:TONTITN5
FDNS	00NR	0	16WP	G15_045	FROM->TO	CIMARRON - DRAPER LAKE 345KV CKT 1	717	717	0.03408	103.4425	GEN336152 1-WATERFORD UNIT#2
FDNS	00NR	0	16WP	G15_045	FROM->TO	CIMARRON - DRAPER LAKE 345KV CKT 1	717	717	0.03408	103.4415	GEN336151 1-WATERFORD UNIT#1
FDNS	00NR	0	16WP	G15_045	FROM->TO	CIMARRON - DRAPER LAKE 345KV CKT 1	717	717	0.03408	103.4407	ST FRANCIS 345/161KV TRANSFORMER CKT 1
FDNS	00NR	0	16WP	G15_045	FROM->TO	CIMARRON - DRAPER LAKE 345KV CKT 1	717	717	0.0345	103.4351	CORN TAP - CORNVILLE 138KV CKT 1
FDNS	00NR	0	16WP	G15_045	FROM->TO	CIMARRON - DRAPER LAKE 345KV CKT 1	717	717	0.03398	103.4322	MARSHALL - WOODRING 138KV CKT 1
FDNS	00NR	0	16WP	G15_045	FROM->TO	CIMARRON - DRAPER LAKE 345KV CKT 1	717	717	0.03408	103.4302	GEN334392 1-EXXON MOBIL IPP 1
FDNS	00NR	0	16WP	G15_045	FROM->TO	CIMARRON - DRAPER LAKE 345KV CKT 1	717	717	0.03398	103.4299	COTTONWOOD CREEK - MARSHALL 138KV CKT 1
FDNS	00NR	0	16WP	G15_045	FROM->TO	CIMARRON - DRAPER LAKE 345KV CKT 1	717	717	0.03411	103.4289	HEFNER - TULSA 138KV CKT 1
FDNS	00NR	0	16WP	G15_045	FROM->TO	CIMARRON - DRAPER LAKE 345KV CKT 1	717	717	0.03652	103.4279	COLE - OUSW4 138KV CKT 1
FDNS	00NR	0	16WP	G15_045	FROM->TO	CIMARRON - DRAPER LAKE 345KV CKT 1	717	717	0.03417	103.426	MC NIEL 500/115KV TRANSFORMER CKT 1
FDNS	00NR	0	16WP	G15_045	FROM->TO	CIMARRON - DRAPER LAKE 345KV CKT 1	717	717	0.03408	103.424	GEN334393 1-EXXON MOBIL IPP 2
FDNS	00NR	0	16WP	G15_045	FROM->TO	CIMARRON - DRAPER LAKE 345KV CKT 1	717	717	0.03408	103.424	GEN334394 1-EXXON MOBIL IPP 3
FDNS	00NR	0	16WP	G15_045	FROM->TO	CIMARRON - DRAPER LAKE 345KV CKT 1	717	717	0.03461	103.4222	P12:138:AEPW:MOUNDRD4:SHIDLER4
FDNS	00NR	0	16WP	G15_045	FROM->TO	CIMARRON - DRAPER LAKE 345KV CKT 1	717	717	0.03407	103.4218	BISMARK - HOT SPRINGS WEST BUS 115KV CKT 1
FDNS	00NR	0	16WP	G15_045	FROM->TO	CIMARRON - DRAPER LAKE 345KV CKT 1	717	717	0.03398	103.4138	EL RENO SW - MUSTANG2 69.000 69KV CKT 1
FDNS	00NR	0	16WP	G15_045	FROM->TO	CIMARRON - DRAPER LAKE 345KV CKT 1	717	717	0.03373	103.4132	BRISTOW - SILVER CITY 138KV CKT 1
FDNS	00NR	0	16WP	G15_045	FROM->TO	CIMARRON - DRAPER LAKE 345KV CKT 1	717	717	0.03392	103.4123	KELLYAV4 138.00 - MEMORIAL 138KV CKT 1
FDNS	00NR	0	16WP	G15_045	FROM->TO	CIMARRON - DRAPER LAKE 345KV CKT 1	717	717	0.03408	103.4084	GEN501972 1-EVANGELINE UNIT 7-2
FDNS	00NR	0	16WP	G15_045	FROM->TO	CIMARRON - DRAPER LAKE 345KV CKT 1	717	717	0.03408	103.4083	GEN501971 1-EVANGELINE UNIT 7-1

SOLUTION	GROUP	SCENARIO	SEASON	SOURCE	DIRECTION	MONITORED ELEMENT	RATEA (MVA)	RATEB(MVA)	TDF	TC%LOADING (% MVA)	CONTINGENCY
FDNS	00NR	0	16WP	G15_045	FROM->TO	CIMARRON - DRAPER LAKE 345KV CKT 1	717	717	0.03461	103.4049	SHIDLER - WEST PAWHUSKA 138KV CKT 1
FDNS	00NR	0	16WP	G15_045	FROM->TO	CIMARRON - DRAPER LAKE 345KV CKT 1	717	717	0.03419	103.4047	HEALDTON - RINGLING 138KV CKT 1
FDNS	00NR	0	16WP	G15_045	FROM->TO	CIMARRON - DRAPER LAKE 345KV CKT 1	717	717	0.03408	103.3987	GEN334431 1-SABINE UNIT 1
FDNS	00NR	0	16WP	G15_045	FROM->TO	CIMARRON - DRAPER LAKE 345KV CKT 1	717	717	0.03408	103.3986	GEN334432 1-SABINE UNIT 2
FDNS	00NR	0	16WP	G15_045	FROM->TO	CIMARRON - DRAPER LAKE 345KV CKT 1	717	717	0.03408	103.3959	GEN336242 1-1NMIL ST1 18.000
FDNS	00NR	0	16WP	G15_045	FROM->TO	CIMARRON - DRAPER LAKE 345KV CKT 1	717	717	0.03408	103.3954	GEN337764 1-TRACTEBEL UNIT C1
FDNS	00NR	0	16WP	G15_045	FROM->TO	CIMARRON - DRAPER LAKE 345KV CKT 1	717	717	0.03408	103.3954	GEN337765 1-TRACTEBEL UNIT C2
FDNS	00NR	0	16WP	G15_045	FROM->TO	CIMARRON - DRAPER LAKE 345KV CKT 1	717	717	0.03417	103.3939	BROOKLINE - MORGAN 345KV CKT 1
FDNS	00NR	0	16WP	G15_045	FROM->TO	CIMARRON - DRAPER LAKE 345KV CKT 1	717	717	0.03417	103.3939	BROOKLINE - MORGAN 345KV CKT 1
FDNS	00NR	0	16WP	G15_045	FROM->TO	CIMARRON - DRAPER LAKE 345KV CKT 1	717	717	0.03408	103.3938	GEN501912 1-ACADIA UNIT CT1B
FDNS	00NR	0	16WP	G15_045	FROM->TO	CIMARRON - DRAPER LAKE 345KV CKT 1	717	717	0.03408	103.3931	GEN501911 1-ACADIA UNIT CT1A
FDNS	00NR	0	16WP	G15_045	FROM->TO	CIMARRON - DRAPER LAKE 345KV CKT 1	717	717	0.03414	103.3919	BODLE - PARK PLACE 138KV CKT 1
FDNS	00NR	0	16WP	G15_045	FROM->TO	CIMARRON - DRAPER LAKE 345KV CKT 1	717	717	0.03423	103.3911	COUNCIL - MUSTANG 138KV CKT 1
FDNS	00NR	0	16WP	G15_045	FROM->TO	CIMARRON - DRAPER LAKE 345KV CKT 1	717	717	0.03476	103.391	BRYANT - MEMORIAL 138KV CKT 1
FDNS	00NR	0	16WP	G15_045	FROM->TO	CIMARRON - DRAPER LAKE 345KV CKT 1	717	717	0.03461	103.3884	PAWHUSKA TAP - WEST PAWHUSKA 138KV CKT 1
FDNS	00NR	0	16WP	G15_045	FROM->TO	CIMARRON - DRAPER LAKE 345KV CKT 1	717	717	0.03407	103.3884	ALPINE AECC - BISMARK 115KV CKT 1
FDNS	00NR	0	16WP	G15_045	FROM->TO	CIMARRON - DRAPER LAKE 345KV CKT 1	717	717	0.03415	103.388	CYPRESS - HARTBURG 500KV CKT 1
FDNS	00NR	0	16WP	G15_045	FROM->TO	CIMARRON - DRAPER LAKE 345KV CKT 1	717	717	0.03395	103.3831	PIEDMONT - RICHRDS 138KV CKT 1
FDNS	00NR	0	16WP	G15_045	FROM->TO	CIMARRON - DRAPER LAKE 345KV CKT 1	717	717	0.03408	103.3827	P12:69:AEPW:L.E.S.-2:LAW WC2
FDNS	00NR	0	16WP	G15_045	FROM->TO	CIMARRON - DRAPER LAKE 345KV CKT 1	717	717	0.03392	103.3809	KELLYAV4 138.00 - REMNGTON PARK 138KV CKT 1
FDNS	00NR	0	16WP	G15_045	FROM->TO	CIMARRON - DRAPER LAKE 345KV CKT 1	717	717	0.0343	103.3808	HAMMETT2 - MEEKER 138KV CKT 1
FDNS	00NR	0	16WP	G15_045	FROM->TO	CIMARRON - DRAPER LAKE 345KV CKT 1	717	717	0.03454	103.375	HAMMETT TAP - HORSESHOE LAKE 138KV CKT 1
FDNS	00NR	0	16WP	G15_045	FROM->TO	CIMARRON - DRAPER LAKE 345KV CKT 1	717	717	0.03428	103.3697	LAYFLD8 500.00 - MOUNT OLIVE 500KV CKT 1
FDNS	00NR	0	16WP	G15_045	FROM->TO	CIMARRON - DRAPER LAKE 345KV CKT 1	717	717	0.03428	103.3697	LAYFLD8 500.00 - MOUNT OLIVE 500KV CKT 1
FDNS	00NR	0	16WP	G15_045	FROM->TO	CIMARRON - DRAPER LAKE 345KV CKT 1	717	717	0.03419	103.3631	RINGLING - SOUTH WILSON 138KV CKT 1
FDNS	00NR	0	16WP	G15_045	FROM->TO	CIMARRON - DRAPER LAKE 345KV CKT 1	717	717	0.03463	103.3457	CIVIT - PAOLI 138KV CKT 1
FDNS	00NR	0	16WP	G15_045	FROM->TO	CIMARRON - DRAPER LAKE 345KV CKT 1	717	717	0.0341	103.3404	LACYGNE - STILWELL 345KV CKT 1
FDNS	00NR	0	16WP	G15_045	FROM->TO	CIMARRON - DRAPER LAKE 345KV CKT 1	717	717	0.03423	103.3365	COUNCIL - WESTOAKS 138KV CKT 1
FDNS	00NR	0	16WP	G15_045	FROM->TO	CIMARRON - DRAPER LAKE 345KV CKT 1	717	717	0.03408	102.9113	BASE CASE
FDNS	00NR	0	16WP	G15_045	FROM->TO	CIMARRON - DRAPER LAKE 345KV CKT 1	717	717	0.03416	102.5994	GRAPEVINE INTERCHANGE - NICHOLS STATION 230KV CKT 1
FDNS	00NR	0	16WP	G15_045	FROM->TO	CIMARRON - DRAPER LAKE 345KV CKT 1	717	717	0.03416	102.5994	GRAPEVINE INTERCHANGE - NICHOLS STATION 230KV CKT 1
FDNS	00NR	0	16WP	G15_045	FROM->TO	CIMARRON - DRAPER LAKE 345KV CKT 1	717	717	0.04342	102.5967	G15063_T 345.00 - WOODRING 345KV CKT 1
FDNS	00NR	0	16WP	G15_045	FROM->TO	CIMARRON - DRAPER LAKE 345KV CKT 1	717	717	0.03442	102.5371	BURGETT4 138.00 - RNDBARN4 138.00 138KV CKT 1
FDNS	00NR	0	16WP	G15_045	FROM->TO	CIMARRON - DRAPER LAKE 345KV CKT 1	717	717	0.03442	102.5354	BURGETT4 138.00 - DANFORTH 138KV CKT 1
FDNS	00NR	0	16WP	G15_045	FROM->TO	CIMARRON - DRAPER LAKE 345KV CKT 1	717	717	0.03442	102.5245	ARCADIA - RNDBARN4 138.00 138KV CKT 1
FDNS	00NR	0	16WP	G15_045	FROM->TO	CIMARRON - DRAPER LAKE 345KV CKT 1	717	717	0.03408	102.495	GEN659125 1-COVEY
FDNS	00NR	0	16WP	G15_045	FROM->TO	CIMARRON - DRAPER LAKE 345KV CKT 1	717	717	0.03408	102.4903	GEN515550 1-MNCWND31 0.6900
FDNS	00NR	0	16WP	G15_045	FROM->TO	CIMARRON - DRAPER LAKE 345KV CKT 1	717	717	0.0342	102.482	GRAPEVINE INTERCHANGE - STATELINE INTERCHANGE 230KV CKT 1
FDNS	00NR	0	16WP	G15_045	FROM->TO	CIMARRON - DRAPER LAKE 345KV CKT 1	717	717	0.0342	102.482	GRAPEVINE INTERCHANGE - STATELINE INTERCHANGE 230KV CKT 1
FDNS	00NR	0	16WP	G15_045	FROM->TO	CIMARRON - DRAPER LAKE 345KV CKT 1	717	717	0.03408	102.477	GEN562611 1-G14_064_3 0.6900
FDNS	00NR	0	16WP	G15_045	FROM->TO	CIMARRON - DRAPER LAKE 345KV CKT 1	717	717	0.03408	102.4715	GEN511848 1-SOUTHWESTERN STATION #3
FDNS	00NR	0	16WP	G15_045	FROM->TO	CIMARRON - DRAPER LAKE 345KV CKT 1	717	717	0.03408	102.4453	GEN515601 1-KNGFSR11 0.7000
FDNS	00NR	0	16WP	G15_045	FROM->TO	CIMARRON - DRAPER LAKE 345KV CKT 1	717	717	0.03408	102.4414	GEN600071 10-RIVER SIDE
FDNS	00NR	0	16WP	G15_045	FROM->TO	CIMARRON - DRAPER LAKE 345KV CKT 1	717	717	0.03408	102.4413	GEN600070 9-RIVER SIDE
FDNS	00NR	0	16WP	G15_045	FROM->TO	CIMARRON - DRAPER LAKE 345KV CKT 1	717	717	0.03408	102.4362	GEN672303 3-BOUNDARY DAM GENERATOR 3
FDNS	00NR	0	16WP	G15_045	FROM->TO	CIMARRON - DRAPER LAKE 345KV CKT 1	717	717	0.03408	102.4362	GEN672304 4-BOUNDARY DAM GENERATOR 4
FDNS	00NR	0	16WP	G15_045	FROM->TO	CIMARRON - DRAPER LAKE 345KV CKT 1	717	717	0.03408	102.4362	GEN672305 5-BOUNDARY DAM GENERATOR 5
FDNS	00NR	0	16WP	G15_045	FROM->TO	CIMARRON - DRAPER LAKE 345KV CKT 1	717	717	0.03408	102.4353	GEN600007 7-RIVERSIDE GEN 7
FDNS	00NR	0	16WP	G15_045	FROM->TO	CIMARRON - DRAPER LAKE 345KV CKT 1	717	717	0.03408	102.4347	GEN600067 9-HIGH BRIDGE
FDNS	00NR	0	16WP	G15_045	FROM->TO	CIMARRON - DRAPER LAKE 345KV CKT 1	717	717	0.03408	102.4338	GEN563062 1-G15071_3 0.6900
FDNS	00NR	0	16WP	G15_045	FROM->TO	CIMARRON - DRAPER LAKE 345KV CKT 1	717	717	0.03408	102.4307	GEN615052 1-CAMBRIDGE GENERATING STATION
FDNS	00NR	0	16WP	G15_045	FROM->TO	CIMARRON - DRAPER LAKE 345KV CKT 1	717	717	0.03408	102.4274	GEN541151 3-SIBLEY GENERATING UNIT #3
FDNS	00NR	0	16WP	G15_045	FROM->TO	CIMARRON - DRAPER LAKE 345KV CKT 1	717	717	0.033	102.4256	CHISNEY - CLARKSVILLE 138KV CKT 1
FDNSLock	00NR	0	16WP	G15_045	FROM->TO	CIMARRON - DRAPER LAKE 345KV CKT 1	717	717	0.03408	102.4224	GEN600014 4-BLACK DOG GEN 4
FDNS	00NR	0	16WP	G15_045	FROM->TO	CIMARRON - DRAPER LAKE 345KV CKT 1	717	717	0.03408	102.4218	GEN563282 1-G15094_3 0.6900
FDNS	00NR	0	16WP	G15_045	FROM->TO	CIMARRON - DRAPER LAKE 345KV CKT 1	717	717	0.03408	102.4212	GEN652353 2-GR PRAIRIEG 0.6900
FDNS	00NR	0	16WP	G15_045	FROM->TO	CIMARRON - DRAPER LAKE 345KV CKT 1	717	717	0.03408	102.4168	GEN629067 1-EMERY GAS TURBINE 1
FDNS	00NR	0	16WP	G15_045	FROM->TO	CIMARRON - DRAPER LAKE 345KV CKT 1	717	717	0.03432	102.4148	7MCCREDIE 345.00 - 7MONTGMRY 345.00 345KV CKT 1
FDNS	00NR	0	16WP	G15_045	FROM->TO	CIMARRON - DRAPER LAKE 345KV CKT 1	717	717	0.03408	102.4032	GEN563102 1-G15075_3 0.5500
FDNS	00NR	0	16WP	G15_045	FROM->TO	CIMARRON - DRAPER LAKE 345KV CKT 1	717	717	0.03408	102.4015	GEN515591 1-PALDRW11 0.6900
FDNS	00NR	0	16WP	G15_045	FROM->TO	CIMARRON - DRAPER LAKE 345KV CKT 1	717	717	0.03408	102.4	GEN300003 1-THOMAS HILL UNIT 3
FDNS	00NR	0	16WP	G15_045	FROM->TO	CIMARRON - DRAPER LAKE 345KV CKT 1	717	717	0.03408	102.4	GEN600011 5-BLACK DOG GEN 1
FDNS	00NR	0	16WP	G15_045	FROM->TO	CIMARRON - DRAPER LAKE 345KV CKT 1	717	717	0.03408	102.4	GEN615032 2-PLEASANT VALLEY
FDNS	00NR	0	16WP	G15_045	FROM->TO	CIMARRON - DRAPER LAKE 345KV CKT 1	717	717	0.03408	102.3966	GEN562602 1-G15_029_3 0.6900
FDNS	00NR	0	16WP	G15_045	FROM->TO	CIMARRON - DRAPER LAKE 345KV CKT 1	717	717	0.03504	102.3868	SEMINOLE - VANOSTP4 138.00 138KV CKT 1
FDNS	00NR	0	16WP	G15_045	FROM->TO	CIMARRON - DRAPER LAKE 345KV CKT 1	717	717	0.03408	102.3864	GEN600017 C-LS POWER CT
FDNS	00NR	0	16WP	G15_045	FROM->TO	CIMARRON - DRAPER LAKE 345KV CKT 1	717	717	0.03408	102.3828	GEN562812 1-G15040_3 0.3570
FDNS	00NR	0	16WP	G15_045	FROM->TO	CIMARRON - DRAPER LAKE 345KV CKT 1	717	717	0.03408	102.3765	GEN563132 1-G15078_3 0.3570
FDNS	00NR	0	16WP	G15_045	FROM->TO	CIMARRON - DRAPER LAKE 345KV CKT 1	717	717	0.03333	102.3681	FOREST HILL - MAUD 138KV CKT 1
FDNS	00NR	0	16WP	G15_045	FROM->TO	CIMARRON - DRAPER LAKE 345KV CKT 1	717	717	0.03408	102.3672	GEN524285 1-WILDORADO WIND GEN
FDNS	00NR	0	16WP	G15_045	FROM->TO	CIMARRON - DRAPER LAKE 345KV CKT 1	717	717	0.03289	102.366	P12:138:AEPW:WELETK4:EARLSBORO4
FDNS	00NR	0	16WP	G15_045	FROM->TO	CIMARRON - DRAPER LAKE 345KV CKT 1	717	717	0.03289	102.366	P12:138:OKGE:3TERM36
FDNS	00NR	0	16WP	G15_045	FROM->TO	CIMARRON - DRAPER LAKE 345KV CKT 1	717	717	0.03408	102.3624	GEN562074 1-G1149G1504 0.6900
FDNS	00NR	0	16WP	G15_045	FROM->TO	CIMARRON - DRAPER LAKE 345KV CKT 1	717	717	0.03408	102.3559	GEN672392 1-NBECGT1G 18.000
FDNS	00NR	0	16WP	G15_045	FROM->TO	CIMARRON - DRAPER LAKE 345KV CKT 1	717	717	0.03408	102.3552	GEN629070 2-BEAVER CHANNEL GENERATORFOR UNIT NO 2
FDNS	00NR	0	16WP	G15_045	FROM->TO	CIMARRON - DRAPER LAKE 345KV CKT 1	717	717	0.0332	102.3552	EARLSBORO 4138.00 - FIXICO TAP 138KV CKT 1
FDNS	00NR	0	16WP	G15_045	FROM->TO	CIMARRON - DRAPER LAKE 345KV CKT 1	717	717	0.03408	102.3445	GEN526331 1-JONES GEN #1 22 KV
FDNS	00NR	0	16WP	G15_045	FROM->TO	CIMARRON - DRAPER LAKE 345KV CKT 1	717	717	0.03408	102.3445	GEN526332 1-JONES GEN #2 21 KV
FDNS	00NR	0	16WP	G15_045	FROM->TO	CIMARRON - DRAPER LAKE 345KV CKT 1	717	717	0.03387	102.3431	CANADIAN RIVER - MCALESTER SOUTH 138KV CKT 1

SOLUTION	GROUP	SCENARIO	SEASON	SOURCE	DIRECTION	MONITORED ELEMENT	RATEA (MVA)	RATEB(MVA)	TDF	TC%LOADING (% MVA)	CONTINGENCY
FDNS	00NR	0	16WP	G15_045	FROM->TO	CIMARRON - DRAPER LAKE 345KV CKT 1	717	717	0.03387	102.3431	CANADIAN RIVER - MCALESTER SOUTH 138KV CKT 1
FDNS	00NR	0	16WP	G15_045	FROM->TO	CIMARRON - DRAPER LAKE 345KV CKT 1	717	717	0.03408	102.343	GEN562596 1-G14_059_3 0.6900
FDNS	00NR	0	16WP	G15_045	FROM->TO	CIMARRON - DRAPER LAKE 345KV CKT 1	717	717	0.03387	102.3417	CANADIAN RIVER () 345/138/13.8KV TRANSFORMER CKT 1
FDNS	00NR	0	16WP	G15_045	FROM->TO	CIMARRON - DRAPER LAKE 345KV CKT 1	717	717	0.03387	102.3417	CANADIAN RIVER () 345/138/13.8KV TRANSFORMER CKT 1
FDNS	00NR	0	16WP	G15_045	FROM->TO	CIMARRON - DRAPER LAKE 345KV CKT 1	717	717	0.03408	102.336	GEN615010 1-STANTON4
FDNS	00NR	0	16WP	G15_045	FROM->TO	CIMARRON - DRAPER LAKE 345KV CKT 1	717	717	0.03408	102.3359	GEN629071 1-BURLINGTON GENERATOR FOR UNIT NO 1 E
FDNS	00NR	0	16WP	G15_045	FROM->TO	CIMARRON - DRAPER LAKE 345KV CKT 1	717	717	0.033	102.3342	CHISNEY - HIGHLAND 138KV CKT 1
FDNS	00NR	0	16WP	G15_045	FROM->TO	CIMARRON - DRAPER LAKE 345KV CKT 1	717	717	0.03408	102.3307	GEN515365 1-CENT 21 0.7000
FDNS	00NR	0	16WP	G15_045	FROM->TO	CIMARRON - DRAPER LAKE 345KV CKT 1	717	717	0.03408	102.3205	GEN562983 1-G15061_4 0.6900
FDNS	00NR	0	16WP	G15_045	FROM->TO	CIMARRON - DRAPER LAKE 345KV CKT 1	717	717	0.03408	102.3205	GEN562984 1-G15061_5 0.6900
FDNS	00NR	0	16WP	G15_045	FROM->TO	CIMARRON - DRAPER LAKE 345KV CKT 1	717	717	0.03397	102.3203	P12:138:WFEC:MSL07
FDNS	00NR	0	16WP	G15_045	FROM->TO	CIMARRON - DRAPER LAKE 345KV CKT 1	717	717	0.03397	102.3203	P12:138:WFEC-AEPW:HUGOPP4:ATOKA--4
FDNS	00NR	0	16WP	G15_045	FROM->TO	CIMARRON - DRAPER LAKE 345KV CKT 1	717	717	0.03408	102.3161	GEN562017 1-G11_022_3 0.6900
FDNS	00NR	0	16WP	G15_045	FROM->TO	CIMARRON - DRAPER LAKE 345KV CKT 1	717	717	0.03408	102.3138	GEN615021 1-GRE-ER 14G 16.000
FDNS	00NR	0	16WP	G15_045	FROM->TO	CIMARRON - DRAPER LAKE 345KV CKT 1	717	717	0.03413	102.3122	GRPRAR1-LNX3345.00 - HOLT.CO3 345.00 345KV CKT 1
FDNS	00NR	0	16WP	G15_045	FROM->TO	CIMARRON - DRAPER LAKE 345KV CKT 1	717	717	0.03404	102.3107	P12:138:AEPW:SHAM4WT:CHILD4WT
FDNS	00NR	0	16WP	G15_045	FROM->TO	CIMARRON - DRAPER LAKE 345KV CKT 1	717	717	0.03413	102.3086	GRPRAR1-LNX3345.00 - GRPRAR 345KV CKT Z
FDNS	00NR	0	16WP	G15_045	FROM->TO	CIMARRON - DRAPER LAKE 345KV CKT 1	717	717	0.03408	102.3034	GEN562429 1-G13-029 0.6900
FDNS	00NR	0	16WP	G15_045	FROM->TO	CIMARRON - DRAPER LAKE 345KV CKT 1	717	717	0.03408	102.3021	GEN562432 1-G13-030 0.6900
FDNS	00NR	0	16WP	G15_045	FROM->TO	CIMARRON - DRAPER LAKE 345KV CKT 1	717	717	0.03408	102.3019	GEN560105 1-G08-22 0.6900
FDNS	00NR	0	16WP	G15_045	FROM->TO	CIMARRON - DRAPER LAKE 345KV CKT 1	717	717	0.03408	102.3006	INDEPENDENCE 500/26.0KV TRANSFORMER CKT 1
FDNS	00NR	0	16WP	G15_045	FROM->TO	CIMARRON - DRAPER LAKE 345KV CKT 1	717	717	0.03408	102.2985	GEN532663 1-LAWRENCE ENERGY CENTER UNIT 5
FDNS	00NR	0	16WP	G15_045	FROM->TO	CIMARRON - DRAPER LAKE 345KV CKT 1	717	717	0.03392	102.2985	P12:138:AEPW-SWPA:LONEOAK4:TUPELO4
FDNS	00NR	0	16WP	G15_045	FROM->TO	CIMARRON - DRAPER LAKE 345KV CKT 1	717	717	0.03392	102.2984	P12:138:WFEC:MSL06
FDNS	00NR	0	16WP	G15_045	FROM->TO	CIMARRON - DRAPER LAKE 345KV CKT 1	717	717	0.03435	102.2966	OVEXFRMCCOVE
FDNS	00NR	0	16WP	G15_045	FROM->TO	CIMARRON - DRAPER LAKE 345KV CKT 1	717	717	0.03417	102.2931	DELL 500 - INDEPENDENCE 500KV CKT 1
FDNS	00NR	0	16WP	G15_045	FROM->TO	CIMARRON - DRAPER LAKE 345KV CKT 1	717	717	0.03408	102.2894	BURLINGTON NO1 + NO 2 + NO 3 161/20.0KV TRANSFORMER CKT 1
FDNS	00NR	0	16WP	G15_045	FROM->TO	CIMARRON - DRAPER LAKE 345KV CKT 1	717	717	0.03289	102.2839	P12:138:AEPW-OGE:WELETK4:MAUD 4
FDNS	00NR	0	16WP	G15_045	FROM->TO	CIMARRON - DRAPER LAKE 345KV CKT 1	717	717	0.03489	102.2797	P12:230:AEPW:ELKCITY6:SWEETWT6
FDNS	00NR	0	16WP	G15_045	FROM->TO	CIMARRON - DRAPER LAKE 345KV CKT 1	717	717	0.03408	102.2752	GEN527882 1-CUNNINGHAM GEN #2 20 KV
FDNS	00NR	0	16WP	G15_045	FROM->TO	CIMARRON - DRAPER LAKE 345KV CKT 1	717	717	0.03453	102.2741	P12:138:WFEC:MSL16
FDNS	00NR	0	16WP	G15_045	FROM->TO	CIMARRON - DRAPER LAKE 345KV CKT 1	717	717	0.0332	102.2712	EARLSBORO 4138.00 - MAUD 138KV CKT 1
FDNS	00NR	0	16WP	G15_045	FROM->TO	CIMARRON - DRAPER LAKE 345KV CKT 1	717	717	0.0332	102.2712	EARLSBORO 4138.00 - MAUD 138KV CKT 1
FDNS	00NR	0	16WP	G15_045	FROM->TO	CIMARRON - DRAPER LAKE 345KV CKT 1	717	717	0.03408	102.2674	GEN562550 1-G14_040_3 0.6900
FDNS	00NR	0	16WP	G15_045	FROM->TO	CIMARRON - DRAPER LAKE 345KV CKT 1	717	717	0.03408	102.2642	GEN524295 1-SPNSPUR_WND10.6900
FDNS	00NR	0	16WP	G15_045	FROM->TO	CIMARRON - DRAPER LAKE 345KV CKT 1	717	717	0.03408	102.2579	GEN562832 1-G15042_3 0.6900
FDNS	00NR	0	16WP	G15_045	FROM->TO	CIMARRON - DRAPER LAKE 345KV CKT 1	717	717	0.03365	102.2486	MAUD - SEMINOLE 138KV CKT 1
FDNS	00NR	0	16WP	G15_045	FROM->TO	CIMARRON - DRAPER LAKE 345KV CKT 1	717	717	0.0343	102.2397	STLN-DEMARC6 - SWEETWATER 230KV CKT 1
FDNS	00NR	0	16WP	G15_045	FROM->TO	CIMARRON - DRAPER LAKE 345KV CKT 1	717	717	0.0343	102.2392	P12:230:AEPW-SPS:SWEETWT6:WHEELER 6
FDNS	00NR	0	16WP	G15_045	FROM->TO	CIMARRON - DRAPER LAKE 345KV CKT 1	717	717	0.0343	102.2372	STATELINE INTERCHANGE - STLN-DEMARC6 230KV CKT 1
FDNS	00NR	0	16WP	G15_045	FROM->TO	CIMARRON - DRAPER LAKE 345KV CKT 1	717	717	0.03408	102.221	GEN531447 1-HOLCOMB GENERATOR
FDNS	00NR	0	16WP	G15_045	FROM->TO	CIMARRON - DRAPER LAKE 345KV CKT 1	717	717	0.03408	102.2207	P12:230:UMZB:# 112 #: NU IN SD. NU-RCDC & DRY CREEK XFMR
FDNS	00NR	0	16WP	G15_045	FROM->TO	CIMARRON - DRAPER LAKE 345KV CKT 1	717	717	0.03408	102.2195	RCDC EAST 4230.00 - RED CEDAR DC 230KV CKT 1
FDNS	00NR	0	16WP	G15_045	FROM->TO	CIMARRON - DRAPER LAKE 345KV CKT 1	717	717	0.03408	102.2165	GEN645011 1-NEBRASKA CITY 1
FDNS	00NR	0	16WP	G15_045	FROM->TO	CIMARRON - DRAPER LAKE 345KV CKT 1	717	717	0.03408	102.2156	GEN345671 2-1RUSH G2 18.000
FDNS	00NR	0	16WP	G15_045	FROM->TO	CIMARRON - DRAPER LAKE 345KV CKT 1	717	717	0.03408	102.2137	GEN345670 1-1RUSH G1 18.000
FDNS	00NR	0	16WP	G15_045	FROM->TO	CIMARRON - DRAPER LAKE 345KV CKT 1	717	717	0.03408	102.2132	GEN515606 1-CANDN11 0.6900
FDNS	00NR	0	16WP	G15_045	FROM->TO	CIMARRON - DRAPER LAKE 345KV CKT 1	717	717	0.03408	102.2132	GEN515607 1-CANDN12 0.6900
FDNS	00NR	0	16WP	G15_045	FROM->TO	CIMARRON - DRAPER LAKE 345KV CKT 1	717	717	0.033	102.2079	HIGHLAND - PINK SW 138KV CKT 1
FDNS	00NR	0	16WP	G15_045	FROM->TO	CIMARRON - DRAPER LAKE 345KV CKT 1	717	717	0.03408	102.1858	GEN515443 1-MNCOWND1 0.7000
FDNS	00NR	0	16WP	G15_045	FROM->TO	CIMARRON - DRAPER LAKE 345KV CKT 1	717	717	0.03408	102.1851	GEN562794 1-G15038_5 0.6900
FDNS	00NR	0	16WP	G15_045	FROM->TO	CIMARRON - DRAPER LAKE 345KV CKT 1	717	717	0.03408	102.1851	GEN562795 1-G15038_6 0.6900
FDNS	00NR	0	16WP	G15_045	FROM->TO	CIMARRON - DRAPER LAKE 345KV CKT 1	717	717	0.03408	102.1817	GEN563092 1-G15074_3 0.6900
FDNS	00NR	0	16WP	G15_045	FROM->TO	CIMARRON - DRAPER LAKE 345KV CKT 1	717	717	0.03333	102.1805	FT SMITH - MUSKOGEE 345KV CKT 1
FDNS	00NR	0	16WP	G15_045	FROM->TO	CIMARRON - DRAPER LAKE 345KV CKT 1	717	717	0.03408	102.1774	GEN542951 5-HAWTHORN UNIT #5
FDNS	00NR	0	16WP	G15_045	FROM->TO	CIMARRON - DRAPER LAKE 345KV CKT 1	717	717	0.03408	102.1724	GEN645012 2-NEBRASKA CITY 2
FDNSLock	00NR	0	16WP	G15_045	FROM->TO	CIMARRON - DRAPER LAKE 345KV CKT 1	717	717	0.03408	102.1642	GEN629072 4-LANSING GENERATOR FOR UNITS NO4 EIA CODE 1
FDNS	00NR	0	16WP	G15_045	FROM->TO	CIMARRON - DRAPER LAKE 345KV CKT 1	717	717	0.03408	102.1533	GEN562512 1-G14_020_3 0.6900
FDNS	00NR	0	16WP	G15_045	FROM->TO	CIMARRON - DRAPER LAKE 345KV CKT 1	717	717	0.03421	102.1446	KEO EHV - WEST MEMPHIS 500 500KV CKT 1
FDNS	00NR	0	16WP	G15_045	FROM->TO	CIMARRON - DRAPER LAKE 345KV CKT 1	717	717	0.0343	102.1408	CHISHOLM6 230.00 - SWEETWATER 230KV CKT 1
FDNS	00NR	0	16WP	G15_045	FROM->TO	CIMARRON - DRAPER LAKE 345KV CKT 1	717	717	0.03408	102.134	GEN657749 1-YOUNG 1 GENERATOR
FDNS	00NR	0	16WP	G15_045	FROM->TO	CIMARRON - DRAPER LAKE 345KV CKT 1	717	717	0.03408	102.1262	GEN562699 1-G15_018_3 0.6900
FDNS	00NR	0	16WP	G15_045	FROM->TO	CIMARRON - DRAPER LAKE 345KV CKT 1	717	717	0.03408	102.1114	GEN640009 1-COOPER NUCLEAR STATION
FDNS	00NR	0	16WP	G15_045	FROM->TO	CIMARRON - DRAPER LAKE 345KV CKT 1	717	717	0.03408	102.1042	GEN529201 1-OMCDLEC1 13.800
FDNS	00NR	0	16WP	G15_045	FROM->TO	CIMARRON - DRAPER LAKE 345KV CKT 1	717	717	0.03362	102.1014	FRISCCO4 138.00 - LULA 138KV CKT 1
FDNS	00NR	0	16WP	G15_045	FROM->TO	CIMARRON - DRAPER LAKE 345KV CKT 1	717	717	0.03408	102.0883	GEN563122 1-G15077_3 0.3850
FDNS	00NR	0	16WP	G15_045	FROM->TO	CIMARRON - DRAPER LAKE 345KV CKT 1	717	717	0.03408	102.0793	GEN563182 1-G15083_3 0.6900
FDNSLock	00NR	0	16WP	G15_045	FROM->TO	CIMARRON - DRAPER LAKE 345KV CKT 1	717	717	0.03408	102.0662	GEN681522 3-GENOA 3
FDNS	00NR	0	16WP	G15_045	FROM->TO	CIMARRON - DRAPER LAKE 345KV CKT 1	717	717	0.03408	102.0608	GEN562685 1-G15_013_3 0.3550
FDNS	00NR	0	16WP	G15_045	FROM->TO	CIMARRON - DRAPER LAKE 345KV CKT 1	717	717	0.0338	102.0437	HOLLYWOOD - MIDWEST TAP 138KV CKT 1
FDNS	00NR	0	16WP	G15_045	FROM->TO	CIMARRON - DRAPER LAKE 345KV CKT 1	717	717	0.03408	102.0354	GEN344895 2-1LAB G2 20.000
FDNS	00NR	0	16WP	G15_045	FROM->TO	CIMARRON - DRAPER LAKE 345KV CKT 1	717	717	0.03321	102.0328	TUPELO - TUPELO TAP 138KV CKT 1
FDNS	00NR	0	16WP	G15_045	FROM->TO	CIMARRON - DRAPER LAKE 345KV CKT 1	717	717	0.03493	102.0286	CHISHOLM7 345.00 - GRACEMONT 345KV CKT 1
FDNS	00NR	0	16WP	G15_045	FROM->TO	CIMARRON - DRAPER LAKE 345KV CKT 1	717	717	0.03408	102.0223	GEN563222 1-G15088_3 0.6900
FDNS	00NR	0	16WP	G15_045	FROM->TO	CIMARRON - DRAPER LAKE 345KV CKT 1	717	717	0.03408	102.0212	4SIOUX 1 138.00 138/18.0KV TRANSFORMER CKT 1
FDNS	00NR	0	16WP	G15_045	FROM->TO	CIMARRON - DRAPER LAKE 345KV CKT 1	717	717	0.03176	102.0151	CIMARRON - TUTTLE CONOCO TAP 138KV CKT 1
FDNS	00NR	0	16WP	G15_045	FROM->TO	CIMARRON - DRAPER LAKE 345KV CKT 1	717	717	0.03362	102.0133	FRISCCO4 138.00 - HARDEN 4 138.00 138KV CKT 1
FDNS	00NR	0	16WP	G15_045	FROM->TO	CIMARRON - DRAPER LAKE 345KV CKT 1	717	717	0.03408	102.0083	GEN523461 1-BLACKHAWK GEN #1
FDNS	00NR	0	16WP	G15_045	FROM->TO	CIMARRON - DRAPER LAKE 345KV CKT 1	717	717	0.03408	102.0082	GEN523462 1-BLACKHAWK GEN #2

SOLUTION	GROUP	SCENARIO	SEASON	SOURCE	DIRECTION	MONITORED ELEMENT	RATEA (MVA)	RATEB(MVA)	TDF	TC%LOADING (% MVA)	CONTINGENCY
FDNS	00NR	0	16WP	G15_045	FROM->TO	CIMARRON - DRAPER LAKE 345KV CKT 1	717	717	0.03408	102.0073	GEN344896 3-1LAB G3 20.000
FDNS	00NR	0	16WP	G15_045	FROM->TO	CIMARRON - DRAPER LAKE 345KV CKT 1	717	717	0.03408	102.0058	GEN344894 1-1LAB G1 20.000
FDNS	00NR	0	16WP	G15_045	FROM->TO	CIMARRON - DRAPER LAKE 345KV CKT 1	717	717	0.03408	102.0047	GEN344897 4-1LAB G4 20.000
FDNS	00NR	0	16WP	G15_045	FROM->TO	CIMARRON - DRAPER LAKE 345KV CKT 1	717	717	0.03408	102.0003	GEN562587 1-G14_056_3 0.6900
FDNS	00NR	0	16WP	G15_045	FROM->TO	CIMARRON - DRAPER LAKE 345KV CKT 1	717	717	0.03408	101.9772	GEN515602 1-KNGFSR12 0.7000
FDNS	00NR	0	16WP	G15_045	FROM->TO	CIMARRON - DRAPER LAKE 345KV CKT 1	717	717	0.03408	101.9571	GEN563082 1-G15073_3 0.6900
FDNS	00NR	0	16WP	G15_045	FROM->TO	CIMARRON - DRAPER LAKE 345KV CKT 1	717	717	0.03176	101.9436	TUTTLE - TUTTLE CONOCO TAP 138KV CKT 1
FDNS	00NR	0	16WP	G15_045	FROM->TO	CIMARRON - DRAPER LAKE 345KV CKT 1	717	717	0.03493	101.9367	CHISHOLM7 345.00 (CHISHOLM) 345/230/13.2KV TRANSFORMER CKT 1
FDNS	00NR	0	16WP	G15_045	FROM->TO	CIMARRON - DRAPER LAKE 345KV CKT 1	717	717	0.03408	101.9307	GEN562704 1-G15_020_3 0.3550
FDNS	00NR	0	16WP	G15_045	FROM->TO	CIMARRON - DRAPER LAKE 345KV CKT 1	717	717	0.03408	101.9129	GEN563202 1-G15085_3 0.5500
FDNS	00NR	0	16WP	G15_045	FROM->TO	CIMARRON - DRAPER LAKE 345KV CKT 1	717	717	0.03408	101.9087	CLAY BOSWELL 230/20.9KV TRANSFORMER CKT 1
FDNS	00NR	0	16WP	G15_045	FROM->TO	CIMARRON - DRAPER LAKE 345KV CKT 1	717	717	0.03408	101.8974	GEN640010 1-GERALD GENTLEMAN STATION UNIT 1
FDNS	00NR	0	16WP	G15_045	FROM->TO	CIMARRON - DRAPER LAKE 345KV CKT 1	717	717	0.03408	101.8665	GEN672321 1-SHAND GENERATOR 1
FDNS	00NR	0	16WP	G15_045	FROM->TO	CIMARRON - DRAPER LAKE 345KV CKT 1	717	717	0.03343	101.8497	LULA - TUPELO TAP 138KV CKT 1
FDNS	00NR	0	16WP	G15_045	FROM->TO	CIMARRON - DRAPER LAKE 345KV CKT 1	717	717	0.03207	101.8468	NORTHWEST TEXARKANA - VALLIANT 345KV CKT 1
FDNS	00NR	0	16WP	G15_045	FROM->TO	CIMARRON - DRAPER LAKE 345KV CKT 1	717	717	0.03207	101.8468	NORTHWEST TEXARKANA - VALLIANT 345KV CKT 1
FDNS	00NR	0	16WP	G15_045	FROM->TO	CIMARRON - DRAPER LAKE 345KV CKT 1	717	717	0.03408	101.8436	GEN562710 1-G15_022_3 0.5500
FDNS	00NR	0	16WP	G15_045	FROM->TO	CIMARRON - DRAPER LAKE 345KV CKT 1	717	717	0.03546	101.8429	SEMINOLE (SEMINOL1) 345/138/14.4KV TRANSFORMER CKT 1
FDNS	00NR	0	16WP	G15_045	FROM->TO	CIMARRON - DRAPER LAKE 345KV CKT 1	717	717	0.03408	101.8407	GEN672310 1-POPLAR RIVER GENERATOR 1
FDNS	00NR	0	16WP	G15_045	FROM->TO	CIMARRON - DRAPER LAKE 345KV CKT 1	717	717	0.03408	101.8406	GEN672311 2-POPLAR RIVER GENERATOR 2
FDNS	00NR	0	16WP	G15_045	FROM->TO	CIMARRON - DRAPER LAKE 345KV CKT 1	717	717	0.03408	101.8304	GEN672306 6-BOUNDARY DAM GENERATOR 6
FDNS	00NR	0	16WP	G15_045	FROM->TO	CIMARRON - DRAPER LAKE 345KV CKT 1	717	717	0.03408	101.8297	GEN640011 2-GERALD GENTLEMAN STATION UNIT 2
FDNS	00NR	0	16WP	G15_045	FROM->TO	CIMARRON - DRAPER LAKE 345KV CKT 1	717	717	0.03408	101.8274	GEN542956 2-LACYGNE UNIT #2
FDNS	00NR	0	16WP	G15_045	FROM->TO	CIMARRON - DRAPER LAKE 345KV CKT 1	717	717	0.03408	101.8181	GEN659118 1-LARAMIE RIVER UNIT1
FDNS	00NR	0	16WP	G15_045	FROM->TO	CIMARRON - DRAPER LAKE 345KV CKT 1	717	717	0.03362	101.7929	ETNA - HARDEN 4 138.00 138KV CKT 1
FDNS	00NR	0	16WP	G15_045	FROM->TO	CIMARRON - DRAPER LAKE 345KV CKT 1	717	717	0.03539	101.7872	RENFROW7 345.00 - VIOLA 7 345.00 345KV CKT 1
FDNS	00NR	0	16WP	G15_045	FROM->TO	CIMARRON - DRAPER LAKE 345KV CKT 1	717	717	0.03496	101.7737	P12:138:OKGE:3TERM22
FDNS	00NR	0	16WP	G15_045	FROM->TO	CIMARRON - DRAPER LAKE 345KV CKT 1	717	717	0.03492	101.7718	DRAPER LAKE - SOONER TAP 138KV CKT 1
FDNS	00NR	0	16WP	G15_045	FROM->TO	CIMARRON - DRAPER LAKE 345KV CKT 1	717	717	0.033	101.7634	P12:138:WFEC:MSL08
FDNS	00NR	0	16WP	G15_045	FROM->TO	CIMARRON - DRAPER LAKE 345KV CKT 1	717	717	0.033	101.7516	FRANKLIN - PINK SW 138KV CKT 1
FDNS	00NR	0	16WP	G15_045	FROM->TO	CIMARRON - DRAPER LAKE 345KV CKT 1	717	717	0.0343	101.7502	P12:138:WFEC:MSL09
FDNS	00NR	0	16WP	G15_045	FROM->TO	CIMARRON - DRAPER LAKE 345KV CKT 1	717	717	0.03408	101.7466	OAKCREEK - WILD MARY 138KV CKT 1
FDNS	00NR	0	16WP	G15_045	FROM->TO	CIMARRON - DRAPER LAKE 345KV CKT 1	717	717	0.03408	101.7397	GEN542957 1-IATAN UNIT #1
FDNSLock	00NR	0	16WP	G15_045	FROM->TO	CIMARRON - DRAPER LAKE 345KV CKT 1	717	717	0.03408	101.7355	GEN681542 6-JP MADGETT
FDNS	00NR	0	16WP	G15_045	FROM->TO	CIMARRON - DRAPER LAKE 345KV CKT 1	717	717	0.03408	101.7124	GEN530690 1-PRWINDG1 0.6900
FDNS	00NR	0	16WP	G15_045	FROM->TO	CIMARRON - DRAPER LAKE 345KV CKT 1	717	717	0.03362	101.7075	ETNA - PARK LANE 138KV CKT 1
FDNS	00NR	0	16WP	G15_045	FROM->TO	CIMARRON - DRAPER LAKE 345KV CKT 1	717	717	0.03408	101.7	GEN645001 1-FORT CALHOUN 1
FDNS	00NR	0	16WP	G15_045	FROM->TO	CIMARRON - DRAPER LAKE 345KV CKT 1	717	717	0.03545	101.6997	HUNTERS7 345.00 - RENFROW7 345.00 345KV CKT 1
FDNS	00NR	0	16WP	G15_045	FROM->TO	CIMARRON - DRAPER LAKE 345KV CKT 1	717	717	0.03408	101.658	GEN542955 1-LACYGNE UNIT #1
FDNS	00NR	0	16WP	G15_045	FROM->TO	CIMARRON - DRAPER LAKE 345KV CKT 1	717	717	0.03408	101.6477	GEN562754 1-G15031_5 0.6900
FDNS	00NR	0	16WP	G15_045	FROM->TO	CIMARRON - DRAPER LAKE 345KV CKT 1	717	717	0.03408	101.6356	GEN562556 1-G14_046_3 0.3420
FDNS	00NR	0	16WP	G15_045	FROM->TO	CIMARRON - DRAPER LAKE 345KV CKT 1	717	717	0.03574	101.6321	SEMINOLE (SEMINOL2) 345/138/14.4KV TRANSFORMER CKT 1
FDNS	00NR	0	16WP	G15_045	FROM->TO	CIMARRON - DRAPER LAKE 345KV CKT 1	717	717	0.03408	101.6108	GEN661015 1-COYOTE
FDNS	00NR	0	16WP	G15_045	FROM->TO	CIMARRON - DRAPER LAKE 345KV CKT 1	717	717	0.03408	101.6042	GEN562756 1-G15031_7 0.6900
FDNS	00NR	0	16WP	G15_045	FROM->TO	CIMARRON - DRAPER LAKE 345KV CKT 1	717	717	0.03408	101.6013	GEN532653 1-JEFFREY ENERGY CENTER UNIT 3
FDNS	00NR	0	16WP	G15_045	FROM->TO	CIMARRON - DRAPER LAKE 345KV CKT 1	717	717	0.03408	101.6012	GEN532652 1-JEFFREY ENERGY CENTER UNIT 2
FDNS	00NR	0	16WP	G15_045	FROM->TO	CIMARRON - DRAPER LAKE 345KV CKT 1	717	717	0.03408	101.5971	GEN532651 1-JEFFREY ENERGY CENTER UNIT 1
FDNS	00NR	0	16WP	G15_045	FROM->TO	CIMARRON - DRAPER LAKE 345KV CKT 1	717	717	0.03408	101.5894	GEN562974 1-G15060_5 0.6900
FDNS	00NR	0	16WP	G15_045	FROM->TO	CIMARRON - DRAPER LAKE 345KV CKT 1	717	717	0.03408	101.5883	GEN563142 1-G15079_3 0.5500
FDNS	00NR	0	16WP	G15_045	FROM->TO	CIMARRON - DRAPER LAKE 345KV CKT 1	717	717	0.03408	101.5883	GEN563151 1-G15080_2 0.5500
FDNS	00NR	0	16WP	G15_045	FROM->TO	CIMARRON - DRAPER LAKE 345KV CKT 1	717	717	0.03408	101.5778	GEN563042 1-G15068_3 0.6900
FDNS	00NR	0	16WP	G15_045	FROM->TO	CIMARRON - DRAPER LAKE 345KV CKT 1	717	717	0.03408	101.5733	GEN562973 1-G15060_4 0.6900
FDNS	00NR	0	16WP	G15_045	FROM->TO	CIMARRON - DRAPER LAKE 345KV CKT 1	717	717	0.03408	101.5428	GEN562078 1-G11_051_3 0.6900
FDNS	00NR	0	16WP	G15_045	FROM->TO	CIMARRON - DRAPER LAKE 345KV CKT 1	717	717	0.03408	101.531	GEN562691 1-G15_015_3 0.6900
FDNS	00NR	0	16WP	G15_045	FROM->TO	CIMARRON - DRAPER LAKE 345KV CKT 1	717	717	0.03408	101.52	AIRDEPT4 138.00 - WILD MARY 138KV CKT 1
FDNS	00NR	0	16WP	G15_045	FROM->TO	CIMARRON - DRAPER LAKE 345KV CKT 1	717	717	0.03534	101.4938	PARK LANE - SEMINOLE 138KV CKT 1
FDNS	00NR	0	16WP	G15_045	FROM->TO	CIMARRON - DRAPER LAKE 345KV CKT 1	717	717	0.03408	101.4886	GEN562655 1-G14_074_3 0.6900
FDNS	00NR	0	16WP	G15_045	FROM->TO	CIMARRON - DRAPER LAKE 345KV CKT 1	717	717	0.03408	101.4881	GEN562762 1-G15033_3 0.6900
FDNS	00NR	0	16WP	G15_045	FROM->TO	CIMARRON - DRAPER LAKE 345KV CKT 1	717	717	0.03408	101.4826	GEN657748 1-YOUNG 2 GENERATOR
FDNS	00NR	0	16WP	G15_045	FROM->TO	CIMARRON - DRAPER LAKE 345KV CKT 1	717	717	0.033	101.468	FRANKLIN - FRANKLIN SW 138KV CKT 1
FDNS	00NR	0	16WP	G15_045	FROM->TO	CIMARRON - DRAPER LAKE 345KV CKT 1	717	717	0.03408	101.4312	GEN527901 1-HOBBS PLANT #1 (CT)
FDNS	00NR	0	16WP	G15_045	FROM->TO	CIMARRON - DRAPER LAKE 345KV CKT 1	717	717	0.03408	101.4312	GEN527902 1-HOBBS PLANT #2 (CT)
FDNS	00NR	0	16WP	G15_045	FROM->TO	CIMARRON - DRAPER LAKE 345KV CKT 1	717	717	0.03408	101.405	GEN563273 2-G15093_4 0.6900
FDNS	00NR	0	16WP	G15_045	FROM->TO	CIMARRON - DRAPER LAKE 345KV CKT 1	717	717	0.03408	101.389	GEN563043 1-G15068_4 0.6900
FDNS	00NR	0	16WP	G15_045	FROM->TO	CIMARRON - DRAPER LAKE 345KV CKT 1	717	717	0.03061	101.3853	LYDIA - WELSH 345KV CKT 1
FDNS	00NR	0	16WP	G15_045	FROM->TO	CIMARRON - DRAPER LAKE 345KV CKT 1	717	717	0.03061	101.3853	LYDIA - WELSH 345KV CKT 1
FDNS	00NR	0	16WP	G15_045	FROM->TO	CIMARRON - DRAPER LAKE 345KV CKT 1	717	717	0.03408	101.3678	GEN563052 1-G15069_3 0.6900
FDNS	00NR	0	16WP	G15_045	FROM->TO	CIMARRON - DRAPER LAKE 345KV CKT 1	717	717	0.03408	101.3481	GEN525845 1-ELK_2 1 138.00
FDNS	00NR	0	16WP	G15_045	FROM->TO	CIMARRON - DRAPER LAKE 345KV CKT 1	717	717	0.03408	101.3447	GEN525844 1-ELK_1 118.000
FDNS	00NR	0	16WP	G15_045	FROM->TO	CIMARRON - DRAPER LAKE 345KV CKT 1	717	717	0.03408	101.3169	GEN563242 1-G15090_3 0.6900
FDNS	00NR	0	16WP	G15_045	FROM->TO	CIMARRON - DRAPER LAKE 345KV CKT 1	717	717	0.03408	101.298	GEN526333 1-JONES GEN #3 21 KV
FDNS	00NR	0	16WP	G15_045	FROM->TO	CIMARRON - DRAPER LAKE 345KV CKT 1	717	717	0.03408	101.298	GEN526334 1-JONES_4 116.500
FDNS	00NR	0	16WP	G15_045	FROM->TO	CIMARRON - DRAPER LAKE 345KV CKT 1	717	717	0.03176	101.2942	P12:138:AEPW-OGE:CORNVIL4:CIMARON4
FDNS	00NR	0	16WP	G15_045	FROM->TO	CIMARRON - DRAPER LAKE 345KV CKT 1	717	717	0.03408	101.2934	GEN620315 1-BIG STONE GEN
FDNS	00NR	0	16WP	G15_045	FROM->TO	CIMARRON - DRAPER LAKE 345KV CKT 1	717	717	0.03408	101.2904	AIRDEPT4 138.00 - GM 138KV CKT 1
FDNS	00NR	0	16WP	G15_045	FROM->TO	CIMARRON - DRAPER LAKE 345KV CKT 1	717	717	0.03408	101.2796	GEN562772 1-G15034_3 0.6900
FDNS	00NR	0	16WP	G15_045	FROM->TO	CIMARRON - DRAPER LAKE 345KV CKT 1	717	717	0.03545	101.2661	HUNTERS7 345.00 - WOODRING 345KV CKT 1
FDNS	00NR	0	16WP	G15_045	FROM->TO	CIMARRON - DRAPER LAKE 345KV CKT 1	717	717	0.03408	101.2635	GEN523971 1-HARRINGTON GEN #1 24 KV
FDNS	00NR	0	16WP	G15_045	FROM->TO	CIMARRON - DRAPER LAKE 345KV CKT 1	717	717	0.03408	101.2635	GEN523972 1-HARRINGTON GEN #2 24 KV

SOLUTION	GROUP	SCENARIO	SEASON	SOURCE	DIRECTION	MONITORED ELEMENT	RATEA (MVA)	RATEB(MVA)	TDF	TC%LOADING (% MVA)	CONTINGENCY
FDNS	00NR	0	16WP	G15_045	FROM->TO	CIMARRON - DRAPER LAKE 345KV CKT 1	717	717	0.03408	101.2635	GEN523973 1-HARRINGTON GEN #3 24 KV
FDNS	00NR	0	16WP	G15_045	FROM->TO	CIMARRON - DRAPER LAKE 345KV CKT 1	717	717	0.03462	101.2533	RANCHRD7 345.00 - SOONER 345KV CKT 1
FDNS	00NR	0	16WP	G15_045	FROM->TO	CIMARRON - DRAPER LAKE 345KV CKT 1	717	717	0.03408	101.2384	GEN600004 2-PRAIRIE ISLAND G2
FDNS	00NR	0	16WP	G15_045	FROM->TO	CIMARRON - DRAPER LAKE 345KV CKT 1	717	717	0.03408	101.2354	GEN600003 1-PRAIRIE ISLAND G1
FDNSLock	00NR	0	16WP	G15_045	FROM->TO	CIMARRON - DRAPER LAKE 345KV CKT 1	717	717	0.03408	101.2218	GEN600006 1-AS KING
FDNSLock	00NR	0	16WP	G15_045	FROM->TO	CIMARRON - DRAPER LAKE 345KV CKT 1	717	717	0.03408	101.201	GEN636641 1-LOUISA UNIT 1
FDNS	00NR	0	16WP	G15_045	FROM->TO	CIMARRON - DRAPER LAKE 345KV CKT 1	717	717	0.03408	101.1035	GEN563292 1-G15095_3 0.6900
FDNS	00NR	0	16WP	G15_045	FROM->TO	CIMARRON - DRAPER LAKE 345KV CKT 1	717	717	0.03408	101.1	GEN542962 2-IATAN UNIT #2
FDNS	00NR	0	16WP	G15_045	FROM->TO	CIMARRON - DRAPER LAKE 345KV CKT 1	717	717	0.03408	101.1	GEN615002 2-COAL CREEK
FDNS	00NR	0	16WP	G15_045	FROM->TO	CIMARRON - DRAPER LAKE 345KV CKT 1	717	717	0.03997	101.0885	NORTHWEST - SPRING CREEK 345KV CKT 1
FDNS	00NR	0	16WP	G15_045	FROM->TO	CIMARRON - DRAPER LAKE 345KV CKT 1	717	717	0.03408	101.0833	GEN600005 1-MONTICELLO
FDNS	00NR	0	16WP	G15_045	FROM->TO	CIMARRON - DRAPER LAKE 345KV CKT 1	717	717	0.03408	101.082	DRAPER LAKE - GM 138KV CKT 1
FDNS	00NR	0	16WP	G15_045	FROM->TO	CIMARRON - DRAPER LAKE 345KV CKT 1	717	717	0.03408	101.0628	GEN527166 1-MUSTANG_6 118.000
FDNS	00NR	0	16WP	G15_045	FROM->TO	CIMARRON - DRAPER LAKE 345KV CKT 1	717	717	0.03408	101.0553	GEN525562 1-TOLK GEN #2 24 KV
FDNS	00NR	0	16WP	G15_045	FROM->TO	CIMARRON - DRAPER LAKE 345KV CKT 1	717	717	0.03997	101.0485	SOONER - SPRING CREEK 345KV CKT 1
FDNS	00NR	0	16WP	G15_045	FROM->TO	CIMARRON - DRAPER LAKE 345KV CKT 1	717	717	0.03408	101.0116	GEN562952 1-G15057_3 0.6500
FDNS	00NR	0	16WP	G15_045	FROM->TO	CIMARRON - DRAPER LAKE 345KV CKT 1	717	717	0.03408	101.0001	GEN563272 1-G15093_3 0.6900
FDNS	00NR	0	16WP	G15_045	FROM->TO	CIMARRON - DRAPER LAKE 345KV CKT 1	717	717	0.03408	101	GEN629074 1-ARNOLD LOWSIDE OF GSU XFMR
FDNS	00NR	0	16WP	G15_045	FROM->TO	CIMARRON - DRAPER LAKE 345KV CKT 1	717	717	0.03408	100.9585	GEN635213 3-NEAL UNIT 3
FDNS	00NR	0	16WP	G15_045	FROM->TO	CIMARRON - DRAPER LAKE 345KV CKT 1	717	717	0.03648	100.9479	FRANKLIN SW - MIDWEST TAP 138KV CKT 1
FDNS	00NR	0	16WP	G15_045	FROM->TO	CIMARRON - DRAPER LAKE 345KV CKT 1	717	717	0.03207	100.9426	DRAPER LAKE - SEMINOLE 345KV CKT 3
FDNS	00NR	0	16WP	G15_045	FROM->TO	CIMARRON - DRAPER LAKE 345KV CKT 1	717	717	0.03408	100.9128	GEN562892 1-G15048_3 0.6900
FDNS	00NR	0	16WP	G15_045	FROM->TO	CIMARRON - DRAPER LAKE 345KV CKT 1	717	717	0.03408	100.9011	BIG STONE 230/24.0KV TRANSFORMER CKT 1
FDNS	00NR	0	16WP	G15_045	FROM->TO	CIMARRON - DRAPER LAKE 345KV CKT 1	717	717	0.03408	100.8665	GEN563173 1-G15082_3 0.6900
FDNS	00NR	0	16WP	G15_045	FROM->TO	CIMARRON - DRAPER LAKE 345KV CKT 1	717	717	0.03353	100.8575	CHAMBER SPRINGS - CLARKSVILLE 345KV CKT 1
FDNS	00NR	0	16WP	G15_045	FROM->TO	CIMARRON - DRAPER LAKE 345KV CKT 1	717	717	0.03408	100.8263	GEN562902 1-G15052_3 0.6900
FDNS	00NR	0	16WP	G15_045	FROM->TO	CIMARRON - DRAPER LAKE 345KV CKT 1	717	717	0.02976	100.8149	LYDIA - VALLIANT 345KV CKT 1
FDNS	00NR	0	16WP	G15_045	FROM->TO	CIMARRON - DRAPER LAKE 345KV CKT 1	717	717	0.02976	100.8149	LYDIA - VALLIANT 345KV CKT 1
FDNS	00NR	0	16WP	G15_045	FROM->TO	CIMARRON - DRAPER LAKE 345KV CKT 1	717	717	0.03408	100.81	GEN514805 1-SOONER UNIT 1
FDNS	00NR	0	16WP	G15_045	FROM->TO	CIMARRON - DRAPER LAKE 345KV CKT 1	717	717	0.03408	100.787	GEN527903 1-HOBBS PLANT #3 (ST)
FDNS	00NR	0	16WP	G15_045	FROM->TO	CIMARRON - DRAPER LAKE 345KV CKT 1	717	717	0.03408	100.7504	GEN525561 1-TOLK GEN #1 24 KV
FDNSLock	00NR	0	16WP	G15_045	FROM->TO	CIMARRON - DRAPER LAKE 345KV CKT 1	717	717	0.03408	100.7392	GEN600000 1-SHERBURNECNTY G1
FDNS	00NR	0	16WP	G15_045	FROM->TO	CIMARRON - DRAPER LAKE 345KV CKT 1	717	717	0.03229	100.6808	P12:138:OKGE:3TERM23
FDNS	00NR	0	16WP	G15_045	FROM->TO	CIMARRON - DRAPER LAKE 345KV CKT 1	717	717	0.03408	100.6578	GEN600001 2-SHERBURNE CNTY G2
FDNS	00NR	0	16WP	G15_045	FROM->TO	CIMARRON - DRAPER LAKE 345KV CKT 1	717	717	0.03229	100.6216	BARNES 4 138.00 - DRAPER LAKE 138KV CKT 1
FDNS	00NR	0	16WP	G15_045	FROM->TO	CIMARRON - DRAPER LAKE 345KV CKT 1	717	717	0.03408	100.6	GEN344225 1-1CAL G1 25.000
FDNS	00NR	0	16WP	G15_045	FROM->TO	CIMARRON - DRAPER LAKE 345KV CKT 1	717	717	0.03408	100.5641	GEN514806 1-SOONER UNIT 2
FDNSLock	00NR	0	16WP	G15_045	FROM->TO	CIMARRON - DRAPER LAKE 345KV CKT 1	717	717	0.03408	100.5438	GEN629075 1-OTTUMWA GENERATOR FOR OTTUMWA UNIT NO 1
FDNS	00NR	0	16WP	G15_045	FROM->TO	CIMARRON - DRAPER LAKE 345KV CKT 1	717	717	0.03408	100.5167	GEN563162 1-G15081_3 0.6900
FDNS	00NR	0	16WP	G15_045	FROM->TO	CIMARRON - DRAPER LAKE 345KV CKT 1	717	717	0.035	100.3768	DRAPER LAKE (DRAPER2) 345/138/13.8KV TRANSFORMER CKT 1
FDNS	00NR	0	16WP	G15_045	FROM->TO	CIMARRON - DRAPER LAKE 345KV CKT 1	717	717	0.03408	100.3192	SHERBURNE CO 345/24.0KV TRANSFORMER CKT 1
FDNS	00NR	0	16WP	G15_045	FROM->TO	CIMARRON - DRAPER LAKE 345KV CKT 1	717	717	0.03759	100.2891	CIMARRON - MATHWSN7 345.00 345KV CKT 1
FDNS	00NR	0	16WP	G15_045	FROM->TO	CIMARRON - DRAPER LAKE 345KV CKT 1	717	717	0.03759	100.2891	CIMARRON - MATHWSN7 345.00 345KV CKT 2
FDNS	00NR	0	16WP	G15_045	FROM->TO	CIMARRON - DRAPER LAKE 345KV CKT 1	717	717	0.035	100.286	DRAPER LAKE (DRAPER3) 345/138/13.8KV TRANSFORMER CKT 1
FDNS	00NR	0	16WP	G15_045	FROM->TO	CIMARRON - DRAPER LAKE 345KV CKT 1	717	717	0.035	100.286	DRAPER LAKE (DRAPER4) 345/138/13.8KV TRANSFORMER CKT 1
FDNSLock	00NR	0	16WP	G15_045	FROM->TO	CIMARRON - DRAPER LAKE 345KV CKT 1	717	717	0.03408	100.2812	GEN635214 4-NEAL UNIT 4
FDNS	00NR	0	16WP	G15_045	FROM->TO	CIMARRON - DRAPER LAKE 345KV CKT 1	717	717	0.03408	100.2003	GEN562882 1-G15047_3 0.6900
FDNS	00NR	0	16WP	G15_045	FROM->TO	CIMARRON - DRAPER LAKE 345KV CKT 1	717	717	0.03408	100.1889	GEN600002 3-SHERBURNE CNTY G3
FDNS	00NR	0	16WP	G15_045	FROM->TO	CIMARRON - DRAPER LAKE 345KV CKT 1	717	717	0.03408	99.8	GEN635023 3-WALTER SCOTT UNIT 3
FDNS	00NR	0	16WP	G15_045	FROM->TO	CIMARRON - DRAPER LAKE 345KV CKT 1	717	717	0.03408	99.7	GEN562023 1-G11_020_3 0.6900
FDNS	00NR	0	16WP	G15_045	FROM->TO	CIMARRON - DRAPER LAKE 345KV CKT 1	717	717	0.03408	99.7	GEN562026 1-G11_019_3 0.6900
FDNS	00NR	0	16WP	G15_045	FROM->TO	CIMARRON - DRAPER LAKE 345KV CKT 1	717	717	0.03408	99.6	EASTDC - ERCOT EQUIVALENCE 345KV CKT 1
FDNS	00NR	0	16WP	G15_045	FROM->TO	CIMARRON - DRAPER LAKE 345KV CKT 1	717	717	0.03033	99.5	DRAPER LAKE - SEMINOLE 345KV CKT 1
FDNS	00NR	0	16WP	G15_045	FROM->TO	CIMARRON - DRAPER LAKE 345KV CKT 1	717	717	0.03033	99.5	DRAPER LAKE - SEMINOLE 345KV CKT 2
FDNS	00NR	0	20WP	G15_045	TO->FROM	CIMARRON - MINCO 345KV CKT 1	956	956	0.5051	113.1031	G14-057T 345.00 - SUNNYSIDE 345KV CKT 1
FDNS	00NR	0	16WP	G15_045	TO->FROM	CIMARRON - MINCO 345KV CKT 1	956	956	0.50726	112.6453	G14-057T 345.00 - SUNNYSIDE 345KV CKT 1
FDNS	00NR	0	17SP	G15_045	TO->FROM	CLEAVELAND - CLEVLND 4 138.00 138KV CKT Z1	305	371	0.03498	110.1318	CLEVELAND - TULSA NORTH 345KV CKT 1
FDNS	00NR	0	17SP	G15_045	TO->FROM	CLEAVELAND - CLEVLND 4 138.00 138KV CKT Z1	305	371	0.03498	110.1318	CLEVELAND - TULSA NORTH 345KV CKT 1
FDNS	00NR	0	20SP	G15_045	TO->FROM	CLEAVELAND - CLEVLND 4 138.00 138KV CKT Z1	305	371	0.0337	109.3313	CLEVELAND - TULSA NORTH 345KV CKT 1
FDNS	00NR	0	20SP	G15_045	TO->FROM	CLEAVELAND - CLEVLND 4 138.00 138KV CKT Z1	305	371	0.0337	109.3313	CLEVELAND - TULSA NORTH 345KV CKT 1
FDNS	00NR	0	16WP	G15_045	FROM->TO	G14-057T 345.00 - SUNNYSIDE 345KV CKT 1	717	789	0.56094	141.3261	CIMARRON - MINCO 345KV CKT 1
FDNS	00NR	0	20WP	G15_045	FROM->TO	G14-057T 345.00 - SUNNYSIDE 345KV CKT 1	717	789	0.56132	139.8556	CIMARRON - MINCO 345KV CKT 1
FDNS	00NR	0	16WP	G15_045	FROM->TO	G14-057T 345.00 - SUNNYSIDE 345KV CKT 1	717	789	0.56094	130.2319	GRACEMONT - MINCO 345KV CKT 1
FDNS	00NR	0	20WP	G15_045	FROM->TO	G14-057T 345.00 - SUNNYSIDE 345KV CKT 1	717	789	0.56132	128.6283	GRACEMONT - MINCO 345KV CKT 1
FDNS	00NR	0	16WP	G15_045	FROM->TO	G14-057T 345.00 - SUNNYSIDE 345KV CKT 1	717	789	0.47475	125.8516	PITTSBURG - SEMINOLE 345KV CKT 1
FDNS	00NR	0	16WP	G15_045	FROM->TO	G14-057T 345.00 - SUNNYSIDE 345KV CKT 1	717	789	0.47475	125.8516	PITTSBURG - SEMINOLE 345KV CKT 1
FDNS	00NR	0	16WP	G15_045	FROM->TO	G14-057T 345.00 - SUNNYSIDE 345KV CKT 1	717	789	0.47479	125.7317	BASE CASE
FDNS	00NR	0	20WP	G15_045	FROM->TO	G14-057T 345.00 - SUNNYSIDE 345KV CKT 1	717	789	0.47624	123.4961	BASE CASE
FDNS	00NR	0	16WP	G15_045	FROM->TO	G14-057T 345.00 - SUNNYSIDE 345KV CKT 1	717	789	0.47796	123.2027	CIMARRON - DRAPER LAKE 345KV CKT 1
FDNS	00NR	0	20WP	G15_045	FROM->TO	G14-057T 345.00 - SUNNYSIDE 345KV CKT 1	717	789	0.47678	122.942	PITTSBURG - SEMINOLE 345KV CKT 1
FDNS	00NR	0	20WP	G15_045	FROM->TO	G14-057T 345.00 - SUNNYSIDE 345KV CKT 1	717	789	0.47678	122.942	PITTSBURG - SEMINOLE 345KV CKT 1
FDNS	00NR	0	20WP	G15_045	FROM->TO	G14-057T 345.00 - SUNNYSIDE 345KV CKT 1	717	789	0.47948	120.8155	CIMARRON - DRAPER LAKE 345KV CKT 1
FDNS	00NR	0	16WP	G15_045	FROM->TO	G14-057T 345.00 - SUNNYSIDE 345KV CKT 1	717	789	0.48586	120.3338	P12:138:WFEC:MSL03
FDNS	00NR	0	16WP	G15_045	FROM->TO	G14-057T 345.00 - SUNNYSIDE 345KV CKT 1	717	789	0.48067	119.7169	PITTSBURG - VALLIANT 345KV CKT 1
FDNS	00NR	0	16WP	G15_045	FROM->TO	G14-057T 345.00 - SUNNYSIDE 345KV CKT 1	717	789	0.48067	119.7169	PITTSBURG - VALLIANT 345KV CKT 1
FDNSLock	00NR	0	16WP	G15_045	FROM->TO	G14-057T 345.00 - SUNNYSIDE 345KV CKT 1	717	789	0.47479	119.4097	GEN509403 1-PIRKEY GENERATION
FDNS	00NR	0	16WP	G15_045	FROM->TO	G14-057T 345.00 - SUNNYSIDE 345KV CKT 1	717	789	0.47479	119.3291	GEN509416 1-TURK GENERATION
FDNS	00NR	0	16WP	G15_045	FROM->TO	G14-057T 345.00 - SUNNYSIDE 345KV CKT 1	717	789	0.47934	119.038	CLEVELAND - G15066_T 345.00 345KV CKT 1
FDNS	00NR	0	16WP	G15_045	FROM->TO	G14-057T 345.00 - SUNNYSIDE 345KV CKT 1	717	789	0.47934	118.7424	G15066_T 345.00 - SOONER 345KV CKT 1

SOLUTION	GROUP	SCENARIO	SEASON	SOURCE	DIRECTION	MONITORED ELEMENT	RATEA (MVA)	RATEB(MVA)	TDF	TC%LOADING (% MVA)	CONTINGENCY
FDNS	00NR	0	20WP	G15_045	FROM->TO	G14-057T 345.00 - SUNNYSIDE 345KV CKT 1	717	789	0.48733	118.4531	P12:138:WFEC:MSL03
FDNS	00NR	0	16WP	G15_045	FROM->TO	G14-057T 345.00 - SUNNYSIDE 345KV CKT 1	717	789	0.47479	118.4277	GEN501801 1-DOLET HILLS UNIT1
FDNS	00NR	0	16WP	G15_045	FROM->TO	G14-057T 345.00 - SUNNYSIDE 345KV CKT 1	717	789	0.47479	118.0417	GEN509404 1-WELSH #1
FDNS	00NR	0	16WP	G15_045	FROM->TO	G14-057T 345.00 - SUNNYSIDE 345KV CKT 1	717	789	0.47479	118.0417	GEN509406 1-WELSH #3
FDNS	00NR	0	16WP	G15_045	FROM->TO	G14-057T 345.00 - SUNNYSIDE 345KV CKT 1	717	789	0.47905	117.7945	BORDER 7345.00 - WOODWARD DISTRICT EHV 345KV CKT 1
FDNS	00NR	0	16WP	G15_045	FROM->TO	G14-057T 345.00 - SUNNYSIDE 345KV CKT 1	717	789	0.47746	117.3154	7SAREPTA% 345.00 - LONGWOOD 345KV CKT 1
FDNS	00NR	0	16WP	G15_045	FROM->TO	G14-057T 345.00 - SUNNYSIDE 345KV CKT 1	717	789	0.47746	117.3154	7SAREPTA% 345.00 - LONGWOOD 345KV CKT 1
FDNS	00NR	0	20WP	G15_045	FROM->TO	G14-057T 345.00 - SUNNYSIDE 345KV CKT 1	717	789	0.47624	117.2677	GEN509403 1-PIRKEY GENERATION
FDNS	00NR	0	16WP	G15_045	FROM->TO	G14-057T 345.00 - SUNNYSIDE 345KV CKT 1	717	789	0.47713	117.2341	CORN TAP - NAPLESTP 138.00 138KV CKT 1
FDNS	00NR	0	20WP	G15_045	FROM->TO	G14-057T 345.00 - SUNNYSIDE 345KV CKT 1	717	789	0.47624	117.1868	GEN509416 1-TURK GENERATION
FDNS	00NR	0	16WP	G15_045	FROM->TO	G14-057T 345.00 - SUNNYSIDE 345KV CKT 1	717	789	0.47713	117.1497	NAPLESTP 138.00 - PAYNE 138.00 138KV CKT 1
FDNS	00NR	0	16WP	G15_045	FROM->TO	G14-057T 345.00 - SUNNYSIDE 345KV CKT 1	717	789	0.47583	117.1471	DOLET HILLS - SOUTHWEST SHREVEPORT 345KV CKT 1
FDNS	00NR	0	16WP	G15_045	FROM->TO	G14-057T 345.00 - SUNNYSIDE 345KV CKT 1	717	789	0.47583	117.1471	DOLET HILLS - SOUTHWEST SHREVEPORT 345KV CKT 1
FDNS	00NR	0	16WP	G15_045	FROM->TO	G14-057T 345.00 - SUNNYSIDE 345KV CKT 1	717	789	0.47735	117.1448	ANADARKO - POCASSETT 138KV CKT 1
FDNSLock	00NR	0	16WP	G15_045	FROM->TO	G14-057T 345.00 - SUNNYSIDE 345KV CKT 1	717	789	0.47479	117.1301	GEN336821 1-GRAND GULF UNIT
FDNS	00NR	0	16WP	G15_045	FROM->TO	G14-057T 345.00 - SUNNYSIDE 345KV CKT 1	717	789	0.47814	117.0898	CLEVELAND - TULSA NORTH 345KV CKT 1
FDNS	00NR	0	16WP	G15_045	FROM->TO	G14-057T 345.00 - SUNNYSIDE 345KV CKT 1	717	789	0.47814	117.0898	CLEVELAND - TULSA NORTH 345KV CKT 1
FDNS	00NR	0	16WP	G15_045	FROM->TO	G14-057T 345.00 - SUNNYSIDE 345KV CKT 1	717	789	0.4764	117.0742	COMANCHE - LOCO 138KV CKT 1
FDNSLock	00NR	0	16WP	G15_045	FROM->TO	G14-057T 345.00 - SUNNYSIDE 345KV CKT 1	717	789	0.47479	117.0352	GEN336153 1-WATERFORD UNIT#3
FDNS	00NR	0	16WP	G15_045	FROM->TO	G14-057T 345.00 - SUNNYSIDE 345KV CKT 1	717	789	0.46599	117.0161	CANADIAN RIVER - MUSKOGEE 345KV CKT 1
FDNS	00NR	0	16WP	G15_045	FROM->TO	G14-057T 345.00 - SUNNYSIDE 345KV CKT 1	717	789	0.47735	116.9961	POCASSETT - TUTTLE 138KV CKT 1
FDNS	00NR	0	20WP	G15_045	FROM->TO	G14-057T 345.00 - SUNNYSIDE 345KV CKT 1	717	789	0.48055	116.9383	CLEVELAND - G15066_T 345.00 345KV CKT 1
FDNSLock	00NR	0	16WP	G15_045	FROM->TO	G14-057T 345.00 - SUNNYSIDE 345KV CKT 1	717	789	0.47461	116.891	MATHWSN7 345.00 - TATONGA7 345.00 345KV CKT 1
FDNS	00NR	0	16WP	G15_045	FROM->TO	G14-057T 345.00 - SUNNYSIDE 345KV CKT 1	717	789	0.47905	116.8671	BORDER 7345.00 - TUCO_2 345.00 345KV CKT 1
FDNS	00NR	0	20WP	G15_045	FROM->TO	G14-057T 345.00 - SUNNYSIDE 345KV CKT 1	717	789	0.48249	116.8606	PITTSBURG - VALLIANT 345KV CKT 1
FDNS	00NR	0	20WP	G15_045	FROM->TO	G14-057T 345.00 - SUNNYSIDE 345KV CKT 1	717	789	0.48249	116.8606	PITTSBURG - VALLIANT 345KV CKT 1
FDNS	00NR	0	16WP	G15_045	FROM->TO	G14-057T 345.00 - SUNNYSIDE 345KV CKT 1	717	789	0.47814	116.8117	ARCADIA - NORTHWEST 345KV CKT 1
FDNS	00NR	0	16WP	G15_045	FROM->TO	G14-057T 345.00 - SUNNYSIDE 345KV CKT 1	717	789	0.47479	116.7419	GRAND GULF 500/22.0KV TRANSFORMER CKT 1
FDNSLock	00NR	0	16WP	G15_045	FROM->TO	G14-057T 345.00 - SUNNYSIDE 345KV CKT 1	717	789	0.47479	116.7414	GEN335831 1-RIVERBEND UNIT#1
FDNS	00NR	0	16WP	G15_045	FROM->TO	G14-057T 345.00 - SUNNYSIDE 345KV CKT 1	717	789	0.47479	116.7065	GEN515577 1-ARBWND11 0.6900
FDNS	00NR	0	16WP	G15_045	FROM->TO	G14-057T 345.00 - SUNNYSIDE 345KV CKT 1	717	789	0.47374	116.6977	ARCADIA - SEMINOLE 345KV CKT 1
FDNS	00NR	0	16WP	G15_045	FROM->TO	G14-057T 345.00 - SUNNYSIDE 345KV CKT 1	717	789	0.47479	116.6641	GEN509409 1-WILKES #3
FDNS	00NR	0	16WP	G15_045	FROM->TO	G14-057T 345.00 - SUNNYSIDE 345KV CKT 1	717	789	0.47617	116.6569	7SAREPTA% 345.00 - ELDORADO EHV 345KV CKT 1
FDNS	00NR	0	16WP	G15_045	FROM->TO	G14-057T 345.00 - SUNNYSIDE 345KV CKT 1	717	789	0.47617	116.6567	3TR3AR8EL7EL
FDNS	00NR	0	16WP	G15_045	FROM->TO	G14-057T 345.00 - SUNNYSIDE 345KV CKT 1	717	789	0.47617	116.6476	ELDORADO EHV 500/345KV TRANSFORMER CKT 1
FDNS	00NR	0	20WP	G15_045	FROM->TO	G14-057T 345.00 - SUNNYSIDE 345KV CKT 1	717	789	0.48055	116.6463	G15066_T 345.00 - SOONER 345KV CKT 1
FDNS	00NR	0	16WP	G15_045	FROM->TO	G14-057T 345.00 - SUNNYSIDE 345KV CKT 1	717	789	0.47943	116.6347	P12:138:AEPW:DUNCAN-4:L.E.S.-4
FDNS	00NR	0	16WP	G15_045	FROM->TO	G14-057T 345.00 - SUNNYSIDE 345KV CKT 1	717	789	0.47735	116.6144	BRIDGECR 138.00 - TUTTLE 138KV CKT 1
FDNS	00NR	0	16WP	G15_045	FROM->TO	G14-057T 345.00 - SUNNYSIDE 345KV CKT 1	717	789	0.4794	116.5237	COMANCHE TAP - OMPA-DUNCAN 840 138KV CKT 1
FDNS	00NR	0	16WP	G15_045	FROM->TO	G14-057T 345.00 - SUNNYSIDE 345KV CKT 1	717	789	0.47522	116.4781	HEALDTON - LOCO 138KV CKT 1
FDNS	00NR	0	20WP	G15_045	FROM->TO	G14-057T 345.00 - SUNNYSIDE 345KV CKT 1	717	789	0.47624	116.4704	GEN501801 1-DOLET HILLS UNIT1
FDNS	00NR	0	16WP	G15_045	FROM->TO	G14-057T 345.00 - SUNNYSIDE 345KV CKT 1	717	789	0.47692	116.4505	FINNEY SWITCHING STATION - HOLCOMB 345KV CKT 1
FDNS	00NR	0	16WP	G15_045	FROM->TO	G14-057T 345.00 - SUNNYSIDE 345KV CKT 1	717	789	0.47692	116.4505	FINNEY SWITCHING STATION - HOLCOMB 345KV CKT 1
FDNS	00NR	0	16WP	G15_045	FROM->TO	G14-057T 345.00 - SUNNYSIDE 345KV CKT 1	717	789	0.47479	116.4	GEN300006 1-NEW MADRID UNIT 1
FDNS	00NR	0	16WP	G15_045	FROM->TO	G14-057T 345.00 - SUNNYSIDE 345KV CKT 1	717	789	0.47479	116.4	GEN300007 1-NEW MADRID UNIT 2
FDNS	00NR	0	16WP	G15_045	FROM->TO	G14-057T 345.00 - SUNNYSIDE 345KV CKT 1	717	789	0.47521	116.3928	LACYGNE - WAVERLY7 345.00 345KV CKT 1
FDNS	00NR	0	16WP	G15_045	FROM->TO	G14-057T 345.00 - SUNNYSIDE 345KV CKT 1	717	789	0.47479	116.369	GEN501813 1-RODEMACHER UNIT 3
FDNS	00NR	0	16WP	G15_045	FROM->TO	G14-057T 345.00 - SUNNYSIDE 345KV CKT 1	717	789	0.47735	116.3452	P12:138:WFEC:MSL01
FDNS	00NR	0	16WP	G15_045	FROM->TO	G14-057T 345.00 - SUNNYSIDE 345KV CKT 1	717	789	0.47735	116.3403	BRIDGECR 138.00 - SUNSHINE CANYON 138KV CKT 1
FDNS	00NR	0	16WP	G15_045	FROM->TO	G14-057T 345.00 - SUNNYSIDE 345KV CKT 1	717	789	0.47522	116.3386	HEALDTON - RINGLING 138KV CKT 1
FDNS	00NR	0	16WP	G15_045	FROM->TO	G14-057T 345.00 - SUNNYSIDE 345KV CKT 1	717	789	0.47521	116.2527	WAVERLY7 345.00 - WOLF CREEK 345KV CKT 1
FDNS	00NR	0	16WP	G15_045	FROM->TO	G14-057T 345.00 - SUNNYSIDE 345KV CKT 1	717	789	0.47479	116.2503	GEN520947 1-HUGO1
FDNS	00NR	0	16WP	G15_045	FROM->TO	G14-057T 345.00 - SUNNYSIDE 345KV CKT 1	717	789	0.4794	116.2417	DUNCAN - OMPA-DUNCAN 840 138KV CKT 1
FDNS	00NR	0	16WP	G15_045	FROM->TO	G14-057T 345.00 - SUNNYSIDE 345KV CKT 1	717	789	0.4794	116.2417	DUNCAN - OMPA-DUNCAN 840 138KV CKT 1
FDNS	00NR	0	20WP	G15_045	FROM->TO	G14-057T 345.00 - SUNNYSIDE 345KV CKT 1	717	789	0.48034	116.2407	BORDER 7345.00 - WOODWARD DISTRICT EHV 345KV CKT 1
FDNSLock	00NR	0	16WP	G15_045	FROM->TO	G14-057T 345.00 - SUNNYSIDE 345KV CKT 1	717	789	0.47461	116.2034	G11_051T 345.00 - TATONGA7 345.00 345KV CKT 1
FDNS	00NR	0	16WP	G15_045	FROM->TO	G14-057T 345.00 - SUNNYSIDE 345KV CKT 1	717	789	0.47522	116.1742	RINGLING - SOUTH WILSON 138KV CKT 1
FDNS	00NR	0	16WP	G15_045	FROM->TO	G14-057T 345.00 - SUNNYSIDE 345KV CKT 1	717	789	0.47479	116.1685	GEN335206 1-NELSON UNIT 6
FDNS	00NR	0	16WP	G15_045	FROM->TO	G14-057T 345.00 - SUNNYSIDE 345KV CKT 1	717	789	0.47692	116.0651	FINNEY SWITCHING STATION - Hitchland Interchange 345KV CKT 1
FDNS	00NR	0	16WP	G15_045	FROM->TO	G14-057T 345.00 - SUNNYSIDE 345KV CKT 1	717	789	0.47479	116.0517	DOLET HILLS 345/24.0KV TRANSFORMER CKT 1
FDNS	00NR	0	16WP	G15_045	FROM->TO	G14-057T 345.00 - SUNNYSIDE 345KV CKT 1	717	789	0.47493	116.0067	P12:138:AEPW:SHERID4:112GORE4
FDNS	00NR	0	16WP	G15_045	FROM->TO	G14-057T 345.00 - SUNNYSIDE 345KV CKT 1	717	789	0.47331	115.998	PARK LANE - SEMINOLE 138KV CKT 1
FDNSLock	00NR	0	16WP	G15_045	FROM->TO	G14-057T 345.00 - SUNNYSIDE 345KV CKT 1	717	789	0.47479	115.9851	GEN590011 2-ERCOT EQUIVALENCE
FDNS	00NR	0	16WP	G15_045	FROM->TO	G14-057T 345.00 - SUNNYSIDE 345KV CKT 1	717	789	0.47479	115.9826	GEN501812 1-RODEMACHER UNIT 2
FDNS	00NR	0	16WP	G15_045	FROM->TO	G14-057T 345.00 - SUNNYSIDE 345KV CKT 1	717	789	0.47579	115.9522	THISTLE7 345.00 - WOODWARD DISTRICT EHV 345KV CKT 1
FDNS	00NR	0	16WP	G15_045	FROM->TO	G14-057T 345.00 - SUNNYSIDE 345KV CKT 1	717	789	0.47579	115.9522	THISTLE7 345.00 - WOODWARD DISTRICT EHV 345KV CKT 1
FDNS	00NR	0	16WP	G15_045	FROM->TO	G14-057T 345.00 - SUNNYSIDE 345KV CKT 1	717	789	0.47579	115.9522	THISTLE7 345.00 - WOODWARD DISTRICT EHV 345KV CKT 2
FDNS	00NR	0	16WP	G15_045	FROM->TO	G14-057T 345.00 - SUNNYSIDE 345KV CKT 1	717	789	0.47579	115.9522	THISTLE7 345.00 - WOODWARD DISTRICT EHV 345KV CKT 2
FDNS	00NR	0	20WP	G15_045	FROM->TO	G14-057T 345.00 - SUNNYSIDE 345KV CKT 1	717	789	0.47624	115.9478	GEN509406 1-WELSH #3
FDNS	00NR	0	20WP	G15_045	FROM->TO	G14-057T 345.00 - SUNNYSIDE 345KV CKT 1	717	789	0.47624	115.9475	GEN509404 1-WELSH #1
FDNS	00NR	0	16WP	G15_045	FROM->TO	G14-057T 345.00 - SUNNYSIDE 345KV CKT 1	717	789	0.47575	115.9348	CANEYRV7 345.00 - NEOSHO 345KV CKT 1
FDNS	00NR	0	16WP	G15_045	FROM->TO	G14-057T 345.00 - SUNNYSIDE 345KV CKT 1	717	789	0.47479	115.9221	GEN515564 1-ORIGIN11 0.6900
FDNS	00NR	0	16WP	G15_045	FROM->TO	G14-057T 345.00 - SUNNYSIDE 345KV CKT 1	717	789	0.47479	115.9221	GEN515565 1-ORIGIN21 0.6900
FDNSLock	00NR	0	16WP	G15_045	FROM->TO	G14-057T 345.00 - SUNNYSIDE 345KV CKT 1	717	789	0.47479	115.9096	GEN590010 1-ERCOT EQUIVALENCE
FDNS	00NR	0	16WP	G15_045	FROM->TO	G14-057T 345.00 - SUNNYSIDE 345KV CKT 1	717	789	0.47522	115.8986	MARIETTA - SOUTH WILSON 138KV CKT 1
FDNS	00NR	0	16WP	G15_045	FROM->TO	G14-057T 345.00 - SUNNYSIDE 345KV CKT 1	717	789	0.47479	115.8352	GEN509408 1-WILKES #2
FDNS	00NR	0	16WP	G15_045	FROM->TO	G14-057T 345.00 - SUNNYSIDE 345KV CKT 1	717	789	0.47522	115.8012	P12:138:WFEC:MSL17
FDNS	00NR	0	16WP	G15_045	FROM->TO	G14-057T 345.00 - SUNNYSIDE 345KV CKT 1	717	789	0.47575	115.7954	CANEYRV7 345.00 - LATHAMS7 345.00 345KV CKT 1
FDNS	00NR	0	16WP	G15_045	FROM->TO	G14-057T 345.00 - SUNNYSIDE 345KV CKT 1	717	789	0.47502	115.7632	P12:138:WFEC:MSL02

SOLUTION	GROUP	SCENARIO	SEASON	SOURCE	DIRECTION	MONITORED ELEMENT	RATEA (MVA)	RATEB(MVA)	TDF	TC%LOADING (% MVA)	CONTINGENCY
FDNS	00NR	0	16WP	G15_045	FROM->TO	G14-057T 345.00 - SUNNYSIDE 345KV CKT 1	717	789	0.47479	115.7471	P12:161:AEPW:DYESS 5:HYLAND 5
FDNS	00NR	0	16WP	G15_045	FROM->TO	G14-057T 345.00 - SUNNYSIDE 345KV CKT 1	717	789	0.47479	115.7452	GEN506754 1-LEBROCK STEAM 1
FDNS	00NR	0	16WP	G15_045	FROM->TO	G14-057T 345.00 - SUNNYSIDE 345KV CKT 1	717	789	0.47479	115.7417	P12:69:AEPW:L.E.S.-2:LAW WC2
FDNS	00NR	0	16WP	G15_045	FROM->TO	G14-057T 345.00 - SUNNYSIDE 345KV CKT 1	717	789	0.47874	115.7311	REDBUD - RIVERSIDE STATION 345KV CKT 1
FDNS	00NR	0	16WP	G15_045	FROM->TO	G14-057T 345.00 - SUNNYSIDE 345KV CKT 1	717	789	0.47874	115.7311	REDBUD - RIVERSIDE STATION 345KV CKT 1
FDNS	00NR	0	16WP	G15_045	FROM->TO	G14-057T 345.00 - SUNNYSIDE 345KV CKT 1	717	789	0.47531	115.7085	ELDORADO EHV - MOUNT OLIVE 500KV CKT 1
FDNS	00NR	0	16WP	G15_045	FROM->TO	G14-057T 345.00 - SUNNYSIDE 345KV CKT 1	717	789	0.47479	115.6998	GEN334440 1-SABINE UNIT 4
FDNS	00NR	0	16WP	G15_045	FROM->TO	G14-057T 345.00 - SUNNYSIDE 345KV CKT 1	717	789	0.47654	115.6769	CIVIT - PAOLI 138KV CKT 1
FDNS	00NR	0	16WP	G15_045	FROM->TO	G14-057T 345.00 - SUNNYSIDE 345KV CKT 1	717	789	0.47501	115.675	ANADARKO - GEORGIA 138KV CKT 1
FDNS	00NR	0	16WP	G15_045	FROM->TO	G14-057T 345.00 - SUNNYSIDE 345KV CKT 1	717	789	0.47539	115.6471	MATHWSN7 345.00 - NORTHWEST 345KV CKT 1
FDNS	00NR	0	16WP	G15_045	FROM->TO	G14-057T 345.00 - SUNNYSIDE 345KV CKT 1	717	789	0.47492	115.6371	P12:138:AEPW:112GORE4:L.E.S.-4
FDNS	00NR	0	16WP	G15_045	FROM->TO	G14-057T 345.00 - SUNNYSIDE 345KV CKT 1	717	789	0.47555	115.6268	ELDORADO EHV - SHERIDAN EHV 500KV CKT 1
FDNS	00NR	0	16WP	G15_045	FROM->TO	G14-057T 345.00 - SUNNYSIDE 345KV CKT 1	717	789	0.47697	115.6192	P12:138:AEPW-OGE:CORNVIL4:MAUD 4
FDNS	00NR	0	16WP	G15_045	FROM->TO	G14-057T 345.00 - SUNNYSIDE 345KV CKT 1	717	789	0.47479	115.6004	NEW MADRID 161/22.0KV TRANSFORMER CKT 1
FDNS	00NR	0	16WP	G15_045	FROM->TO	G14-057T 345.00 - SUNNYSIDE 345KV CKT 1	717	789	0.47536	115.5963	WEBRE - WELLS 500KV CKT 1
FDNS	00NR	0	16WP	G15_045	FROM->TO	G14-057T 345.00 - SUNNYSIDE 345KV CKT 1	717	789	0.4749	115.5952	PAOLI - PAYNE 138.00 138KV CKT 1
FDNS	00NR	0	16WP	G15_045	FROM->TO	G14-057T 345.00 - SUNNYSIDE 345KV CKT 1	717	789	0.47479	115.5952	GEN503909 1-FULTONU1 1 16.000
FDNS	00NR	0	16WP	G15_045	FROM->TO	G14-057T 345.00 - SUNNYSIDE 345KV CKT 1	717	789	0.47479	115.5865	NEW MADRID 345/22.0KV TRANSFORMER CKT 1
FDNS	00NR	0	16WP	G15_045	FROM->TO	G14-057T 345.00 - SUNNYSIDE 345KV CKT 1	717	789	0.47501	115.5859	FLETCHER - GEORGIA 138KV CKT 1
FDNS	00NR	0	16WP	G15_045	FROM->TO	G14-057T 345.00 - SUNNYSIDE 345KV CKT 1	717	789	0.47575	115.5778	LATHAMS7 345.00 - ROSE HILL 345KV CKT 1
FDNS	00NR	0	16WP	G15_045	FROM->TO	G14-057T 345.00 - SUNNYSIDE 345KV CKT 1	717	789	0.48213	115.5671	LAWTON EASTSIDE (LES 5) 345/138/13.8KV TRANSFORMER CKT 2
FDNS	00NR	0	16WP	G15_045	FROM->TO	G14-057T 345.00 - SUNNYSIDE 345KV CKT 1	717	789	0.48213	115.5671	LAWTON EASTSIDE (LES 5) 345/138/13.8KV TRANSFORMER CKT 2
FDNS	00NR	0	16WP	G15_045	FROM->TO	G14-057T 345.00 - SUNNYSIDE 345KV CKT 1	717	789	0.47479	115.5633	FRONTIER - GRIMES 345KV CKT 1
FDNS	00NR	0	16WP	G15_045	FROM->TO	G14-057T 345.00 - SUNNYSIDE 345KV CKT 1	717	789	0.47495	115.5527	EMPIRE - FLETCHER 138KV CKT 1
FDNS	00NR	0	16WP	G15_045	FROM->TO	G14-057T 345.00 - SUNNYSIDE 345KV CKT 1	717	789	0.47697	115.5491	BLANCHARD - CORNVILLE 138KV CKT 1
FDNS	00NR	0	16WP	G15_045	FROM->TO	G14-057T 345.00 - SUNNYSIDE 345KV CKT 1	717	789	0.47654	115.5364	CIVIT - STRATFORD 138KV CKT 1
FDNS	00NR	0	16WP	G15_045	FROM->TO	G14-057T 345.00 - SUNNYSIDE 345KV CKT 1	717	789	0.4763	115.5229	TUPELO - TUPELO TAP 138KV CKT 1
FDNS	00NR	0	16WP	G15_045	FROM->TO	G14-057T 345.00 - SUNNYSIDE 345KV CKT 1	717	789	0.47495	115.4711	COMANCHE - EMPIRE 138KV CKT 1
FDNS	00NR	0	16WP	G15_045	FROM->TO	G14-057T 345.00 - SUNNYSIDE 345KV CKT 1	717	789	0.47521	115.4691	G1524G1525 345.00 - THISTLE7 345.00 345KV CKT 1
FDNS	00NR	0	16WP	G15_045	FROM->TO	G14-057T 345.00 - SUNNYSIDE 345KV CKT 1	717	789	0.47521	115.4691	G1524G1525 345.00 - THISTLE7 345.00 345KV CKT 2
FDNS	00NR	0	16WP	G15_045	FROM->TO	G14-057T 345.00 - SUNNYSIDE 345KV CKT 1	717	789	0.47479	115.4679	GEN509393 S1-ARSENAL HILL GENS #4 (STALL)
FDNS	00NR	0	16WP	G15_045	FROM->TO	G14-057T 345.00 - SUNNYSIDE 345KV CKT 1	717	789	0.47479	115.4437	GEN509392 G2-ARSENAL HILL GENS #3 (STALL)
FDNS	00NR	0	16WP	G15_045	FROM->TO	G14-057T 345.00 - SUNNYSIDE 345KV CKT 1	717	789	0.47479	115.4436	GEN509391 G1-ARSENAL HILL GENS #2 (STALL)
FDNS	00NR	0	16WP	G15_045	FROM->TO	G14-057T 345.00 - SUNNYSIDE 345KV CKT 1	717	789	0.47479	115.429	GEN336252 1-NINEMILE POINT UNIT#5
FDNS	00NR	0	16WP	G15_045	FROM->TO	G14-057T 345.00 - SUNNYSIDE 345KV CKT 1	717	789	0.47654	115.419	OIL CENTER - STRATFORD 138KV CKT 1
FDNS	00NR	0	16WP	G15_045	FROM->TO	G14-057T 345.00 - SUNNYSIDE 345KV CKT 1	717	789	0.47479	115.4027	DELL 500 - ESSEX UNIT 2 500KV CKT Z1
FDNS	00NR	0	16WP	G15_045	FROM->TO	G14-057T 345.00 - SUNNYSIDE 345KV CKT 1	717	789	0.47479	115.3907	GEN334071 1-LEWIS CREEK 2
FDNS	00NR	0	16WP	G15_045	FROM->TO	G14-057T 345.00 - SUNNYSIDE 345KV CKT 1	717	789	0.47479	115.3817	GEN334070 1-LEWIS CREEK 1
FDNS	00NR	0	16WP	G15_045	FROM->TO	G14-057T 345.00 - SUNNYSIDE 345KV CKT 1	717	789	0.47479	115.3782	GEN335204 1-NELSON UNIT 4
FDNS	00NR	0	20WP	G15_045	FROM->TO	G14-057T 345.00 - SUNNYSIDE 345KV CKT 1	717	789	0.47923	115.3748	7SAREPTA% 345.00 - LONGWOOD 345KV CKT 1
FDNS	00NR	0	20WP	G15_045	FROM->TO	G14-057T 345.00 - SUNNYSIDE 345KV CKT 1	717	789	0.47923	115.3748	7SAREPTA% 345.00 - LONGWOOD 345KV CKT 1
FDNS	00NR	0	20WP	G15_045	FROM->TO	G14-057T 345.00 - SUNNYSIDE 345KV CKT 1	717	789	0.47865	115.3669	CORN TAP - NAPLESTP 138.00 138KV CKT 1
FDNS	00NR	0	16WP	G15_045	FROM->TO	G14-057T 345.00 - SUNNYSIDE 345KV CKT 1	717	789	0.4756	115.3542	DUNCAN (DUNCAN) 138/69/13.8KV TRANSFORMER CKT 1
FDNS	00NR	0	16WP	G15_045	FROM->TO	G14-057T 345.00 - SUNNYSIDE 345KV CKT 1	717	789	0.4756	115.3542	DUNCAN (DUNCAN) 138/69/13.8KV TRANSFORMER CKT 1
FDNS	00NR	0	16WP	G15_045	FROM->TO	G14-057T 345.00 - SUNNYSIDE 345KV CKT 1	717	789	0.47697	115.3522	BLANCHARD - MAUD 138KV CKT 1
FDNS	00NR	0	16WP	G15_045	FROM->TO	G14-057T 345.00 - SUNNYSIDE 345KV CKT 1	717	789	0.47479	115.3434	GEN334441 1-SABINE UNIT 5
FDNS	00NR	0	16WP	G15_045	FROM->TO	G14-057T 345.00 - SUNNYSIDE 345KV CKT 1	717	789	0.47479	115.3149	GEN337653 1-WHITE BLUFF UNIT #2
FDNS	00NR	0	20WP	G15_045	FROM->TO	G14-057T 345.00 - SUNNYSIDE 345KV CKT 1	717	789	0.48034	115.3146	BORDER 7345.00 - TUCO_2 345.00 345KV CKT 1
FDNS	00NR	0	16WP	G15_045	FROM->TO	G14-057T 345.00 - SUNNYSIDE 345KV CKT 1	717	789	0.47478	115.3081	P12:138:AEPW:CATOOSA4:T.S.E.-4
FDNS	00NR	0	16WP	G15_045	FROM->TO	G14-057T 345.00 - SUNNYSIDE 345KV CKT 1	717	789	0.47479	115.3065	P12:161:AEPW-SWPA:BEAVER5:EROGERS5
FDNS	00NR	0	16WP	G15_045	FROM->TO	G14-057T 345.00 - SUNNYSIDE 345KV CKT 1	717	789	0.47479	115.3	GEN300003 1-THOMAS HILL UNIT 3
FDNS	00NR	0	16WP	G15_045	FROM->TO	G14-057T 345.00 - SUNNYSIDE 345KV CKT 1	717	789	0.47559	115.2966	6LAYFLD 230.00 - CARROLL 230KV CKT 1
FDNS	00NR	0	16WP	G15_045	FROM->TO	G14-057T 345.00 - SUNNYSIDE 345KV CKT 1	717	789	0.47479	115.2935	GEN506752 1-LEBROCK GAS 1
FDNS	00NR	0	16WP	G15_045	FROM->TO	G14-057T 345.00 - SUNNYSIDE 345KV CKT 1	717	789	0.47479	115.2933	GEN506753 1-LEBROCK GAS 2
FDNS	00NR	0	16WP	G15_045	FROM->TO	G14-057T 345.00 - SUNNYSIDE 345KV CKT 1	717	789	0.47479	115.2879	GEN334030 1-FRONTIER UNIT 1
FDNS	00NR	0	16WP	G15_045	FROM->TO	G14-057T 345.00 - SUNNYSIDE 345KV CKT 1	717	789	0.47699	115.2871	TUTTLE - TUTTLE CONOCO TAP 138KV CKT 1
FDNS	00NR	0	16WP	G15_045	FROM->TO	G14-057T 345.00 - SUNNYSIDE 345KV CKT 1	717	789	0.47479	115.2864	GEN334031 1-FRONTIER UNIT 2
FDNS	00NR	0	20WP	G15_045	FROM->TO	G14-057T 345.00 - SUNNYSIDE 345KV CKT 1	717	789	0.47865	115.2754	NAPLESTP 138.00 - PAYNE 138.00 138KV CKT 1
FDNS	00NR	0	16WP	G15_045	FROM->TO	G14-057T 345.00 - SUNNYSIDE 345KV CKT 1	717	789	0.4771	115.2707	BAILEY4 138.00 - SUNSHINE CANYON 138KV CKT 1
FDNS	00NR	0	16WP	G15_045	FROM->TO	G14-057T 345.00 - SUNNYSIDE 345KV CKT 1	717	789	0.47479	115.2699	GEN515040 1-SEMINOLE 1G
FDNS	00NR	0	16WP	G15_045	FROM->TO	G14-057T 345.00 - SUNNYSIDE 345KV CKT 1	717	789	0.59807	115.2647	GRACEMONT - LAWTON EASTSIDE 345KV CKT 1
FDNS	00NR	0	16WP	G15_045	FROM->TO	G14-057T 345.00 - SUNNYSIDE 345KV CKT 1	717	789	0.59807	115.2647	GRACEMONT - LAWTON EASTSIDE 345KV CKT 1
FDNS	00NR	0	16WP	G15_045	FROM->TO	G14-057T 345.00 - SUNNYSIDE 345KV CKT 1	717	789	0.47463	115.2642	FULTON 115 - HOPE 115KV CKT 1
FDNS	00NR	0	16WP	G15_045	FROM->TO	G14-057T 345.00 - SUNNYSIDE 345KV CKT 1	717	789	0.47463	115.2642	FULTON 115 - HOPE 115KV CKT 1
FDNS	00NR	0	16WP	G15_045	FROM->TO	G14-057T 345.00 - SUNNYSIDE 345KV CKT 1	717	789	0.47488	115.249	8DANIEL8 500.00 - MCKNIGHT 500KV CKT 1
FDNS	00NR	0	16WP	G15_045	FROM->TO	G14-057T 345.00 - SUNNYSIDE 345KV CKT 1	717	789	0.47654	115.2478	LATTA JCT - OIL CENTER 138KV CKT 1
FDNS	00NR	0	16WP	G15_045	FROM->TO	G14-057T 345.00 - SUNNYSIDE 345KV CKT 1	717	789	0.47479	115.2473	GEN515226 1-MUSKOGEE 6G
FDNS	00NR	0	16WP	G15_045	FROM->TO	G14-057T 345.00 - SUNNYSIDE 345KV CKT 1	717	789	0.47588	115.2426	P12:138:AEPW-OGE:WTH_JCT4:JENSEN4
FDNS	00NR	0	16WP	G15_045	FROM->TO	G14-057T 345.00 - SUNNYSIDE 345KV CKT 1	717	789	0.47479	115.2333	GEN300015 1-1SGPDEL 18.000
FDNSLock	00NR	0	16WP	G15_045	FROM->TO	G14-057T 345.00 - SUNNYSIDE 345KV CKT 1	717	789	0.47479	115.2307	GEN337911 1-ARKANSAS NUCLEAR ONE UNIT #2
FDNS	00NR	0	16WP	G15_045	FROM->TO	G14-057T 345.00 - SUNNYSIDE 345KV CKT 1	717	789	0.47479	115.2299	P12:161:AEPW:DYESS5:ELMSPRNG:TONTITN5
FDNS	00NR	0	16WP	G15_045	FROM->TO	G14-057T 345.00 - SUNNYSIDE 345KV CKT 1	717	789	0.47479	115.2278	GEN337652 1-WHITE BLUFF UNIT #1
FDNS	00NR	0	16WP	G15_045	FROM->TO	G14-057T 345.00 - SUNNYSIDE 345KV CKT 1	717	789	0.47479	115.2235	GEN336251 1-NINEMILE POINT UNIT#4
FDNS	00NR	0	16WP	G15_045	FROM->TO	G14-057T 345.00 - SUNNYSIDE 345KV CKT 1	717	789	0.4753	115.2215	P12:138:AEPW:CORNVIL4:S.W.S.-4
FDNS	00NR	0	16WP	G15_045	FROM->TO	G14-057T 345.00 - SUNNYSIDE 345KV CKT 1	717	789	0.47479	115.2199	GEN501811 1-RODEMACHER UNIT 1
FDNS	00NR	0	16WP	G15_045	FROM->TO	G14-057T 345.00 - SUNNYSIDE 345KV CKT 1	717	789	0.47479	115.2185	GEN336831 1-BAXTER WILSON SES
FDNS	00NR	0	16WP	G15_045	FROM->TO	G14-057T 345.00 - SUNNYSIDE 345KV CKT 1	717	789	0.47731	115.2077	P12:138:AEPW:CORNVIL4:DUNCAN-4
FDNS	00NR	0	16WP	G15_045	FROM->TO	G14-057T 345.00 - SUNNYSIDE 345KV CKT 1	717	789	0.47495	115.2071	G15074_T 345.00 - HOYT 345KV CKT 1
FDNS	00NR	0	16WP	G15_045	FROM->TO	G14-057T 345.00 - SUNNYSIDE 345KV CKT 1	717	789	0.47699	115.206	CIMARRON - TUTTLE CONOCO TAP 138KV CKT 1

SOLUTION	GROUP	SCENARIO	SEASON	SOURCE	DIRECTION	MONITORED ELEMENT	RATEA (MVA)	RATEB(MVA)	TDF	TC%LOADING (% MVA)	CONTINGENCY
FDNS	00NR	0	20WP	G15_045	FROM->TO	G14-057T 345.00 - SUNNYSIDE 345KV CKT 1	717	789	0.47624	115.2011	GEN336821 1-GRAND GULF UNIT
FDNS	00NR	0	16WP	G15_045	FROM->TO	G14-057T 345.00 - SUNNYSIDE 345KV CKT 1	717	789	0.47491	115.2	G15088_T 345.00 - MOORE 345KV CKT 1
FDNS	00NR	0	16WP	G15_045	FROM->TO	G14-057T 345.00 - SUNNYSIDE 345KV CKT 1	717	789	0.47479	115.1975	GEN334433 1-SABINE UNIT 3
FDNS	00NR	0	16WP	G15_045	FROM->TO	G14-057T 345.00 - SUNNYSIDE 345KV CKT 1	717	789	0.4756	115.1706	P12:69:WFEC-AEPW:COMANCH2:DUNCAN-2
FDNS	00NR	0	16WP	G15_045	FROM->TO	G14-057T 345.00 - SUNNYSIDE 345KV CKT 1	717	789	0.47508	115.1663	BUCKNER7 345.00 - SPEARVILLE 345KV CKT 1
FDNS	00NR	0	16WP	G15_045	FROM->TO	G14-057T 345.00 - SUNNYSIDE 345KV CKT 1	717	789	0.47508	115.1663	BUCKNER7 345.00 - SPEARVILLE 345KV CKT 1
FDNS	00NR	0	16WP	G15_045	FROM->TO	G14-057T 345.00 - SUNNYSIDE 345KV CKT 1	717	789	0.47479	115.164	GEN562783 1-G15036_4 0.6900
FDNS	00NR	0	16WP	G15_045	FROM->TO	G14-057T 345.00 - SUNNYSIDE 345KV CKT 1	717	789	0.47479	115.164	GEN562784 1-G15036_5 0.6900
FDNSLock	00NR	0	16WP	G15_045	FROM->TO	G14-057T 345.00 - SUNNYSIDE 345KV CKT 1	717	789	0.47479	115.1601	GEN505432 1-SIKESTON
FDNS	00NR	0	16WP	G15_045	FROM->TO	G14-057T 345.00 - SUNNYSIDE 345KV CKT 1	717	789	0.47511	115.158	CIMARRON - CZECH HALL 138KV CKT 1
FDNS	00NR	0	16WP	G15_045	FROM->TO	G14-057T 345.00 - SUNNYSIDE 345KV CKT 1	717	789	0.47479	115.1483	GEN515223 1-MUSKOGEE 4G
FDNS	00NR	0	16WP	G15_045	FROM->TO	G14-057T 345.00 - SUNNYSIDE 345KV CKT 1	717	789	0.47479	115.1483	GEN515225 1-MUSKOGEE 5G
FDNS	00NR	0	16WP	G15_045	FROM->TO	G14-057T 345.00 - SUNNYSIDE 345KV CKT 1	717	789	0.47543	115.1473	P12:138:AEPW:WTHWF4:CLINTJC4
FDNS	00NR	0	16WP	G15_045	FROM->TO	G14-057T 345.00 - SUNNYSIDE 345KV CKT 1	717	789	0.4749	115.1258	CIMARRON - SARA 138KV CKT 1
FDNS	00NR	0	16WP	G15_045	FROM->TO	G14-057T 345.00 - SUNNYSIDE 345KV CKT 1	717	789	0.47479	115.1244	P12:161:AEPW:EROGERS5:ECNTRTN5
FDNS	00NR	0	16WP	G15_045	FROM->TO	G14-057T 345.00 - SUNNYSIDE 345KV CKT 1	717	789	0.47525	115.1205	LAYFLD8 500.00 - MOUNT OLIVE 500KV CKT 1
FDNS	00NR	0	16WP	G15_045	FROM->TO	G14-057T 345.00 - SUNNYSIDE 345KV CKT 1	717	789	0.47525	115.1205	LAYFLD8 500.00 - MOUNT OLIVE 500KV CKT 1
FDNS	00NR	0	16WP	G15_045	FROM->TO	G14-057T 345.00 - SUNNYSIDE 345KV CKT 1	717	789	0.4756	115.1191	DUNCAN - TOSCO 69KV CKT 1
FDNS	00NR	0	16WP	G15_045	FROM->TO	G14-057T 345.00 - SUNNYSIDE 345KV CKT 1	717	789	0.47479	115.1185	RODEMACHER 230/22.0KV TRANSFORMER CKT 1
FDNS	00NR	0	16WP	G15_045	FROM->TO	G14-057T 345.00 - SUNNYSIDE 345KV CKT 1	717	789	0.47479	115.118	WHITE BLUFF 500/26.0KV TRANSFORMER CKT 1
FDNS	00NR	0	16WP	G15_045	FROM->TO	G14-057T 345.00 - SUNNYSIDE 345KV CKT 1	717	789	0.47543	115.1125	P12:138:AEPW:WTHWF4:WTH_SE4
FDNS	00NR	0	16WP	G15_045	FROM->TO	G14-057T 345.00 - SUNNYSIDE 345KV CKT 1	717	789	0.47495	115.1104	MC NIEL 500/115KV TRANSFORMER CKT 1
FDNS	00NR	0	16WP	G15_045	FROM->TO	G14-057T 345.00 - SUNNYSIDE 345KV CKT 1	717	789	0.46469	115.1076	CANADIAN RIVER - PITTSBURG 345KV CKT 1
FDNS	00NR	0	16WP	G15_045	FROM->TO	G14-057T 345.00 - SUNNYSIDE 345KV CKT 1	717	789	0.46469	115.1076	CANADIAN RIVER - PITTSBURG 345KV CKT 1
FDNS	00NR	0	20WP	G15_045	FROM->TO	G14-057T 345.00 - SUNNYSIDE 345KV CKT 1	717	789	0.47875	115.1068	ANADARKO - POCASSETT 138KV CKT 1
FDNS	00NR	0	16WP	G15_045	FROM->TO	G14-057T 345.00 - SUNNYSIDE 345KV CKT 1	717	789	0.47477	115.1055	BISMARK - HOT SPRINGS WEST BUS 115KV CKT 1
FDNS	00NR	0	16WP	G15_045	FROM->TO	G14-057T 345.00 - SUNNYSIDE 345KV CKT 1	717	789	0.47479	115.1045	GEN303007 1-1BC2 U2
FDNS	00NR	0	16WP	G15_045	FROM->TO	G14-057T 345.00 - SUNNYSIDE 345KV CKT 1	717	789	0.4771	115.1009	BAILEY4 138.00 - WESTMOORE 138KV CKT 1
FDNS	00NR	0	16WP	G15_045	FROM->TO	G14-057T 345.00 - SUNNYSIDE 345KV CKT 1	717	789	0.475	115.1003	HOT SPRINGS EHV - MAGNET COVE 500KV CKT 1
FDNS	00NR	0	16WP	G15_045	FROM->TO	G14-057T 345.00 - SUNNYSIDE 345KV CKT 1	717	789	0.47479	115.0992	GEN303006 1-1BC2 U1
FDNS	00NR	0	16WP	G15_045	FROM->TO	G14-057T 345.00 - SUNNYSIDE 345KV CKT 1	717	789	0.47493	115.0967	CLEO CORNER - CLEOPLT4 138.00 138KV CKT 1
FDNS	00NR	0	16WP	G15_045	FROM->TO	G14-057T 345.00 - SUNNYSIDE 345KV CKT 1	717	789	0.47218	115.0929	ARBWIND4 138.00 - CARTER 138KV CKT 1
FDNS	00NR	0	16WP	G15_045	FROM->TO	G14-057T 345.00 - SUNNYSIDE 345KV CKT 1	717	789	0.47494	115.0928	G15095_T 138.00 - ROSE_VALLEY 138.00 138KV CKT 1
FDNS	00NR	0	16WP	G15_045	FROM->TO	G14-057T 345.00 - SUNNYSIDE 345KV CKT 1	717	789	0.47547	115.0921	P12:69:AEPW-OMPA:COMANC-2:OMWALTR2
FDNS	00NR	0	20WP	G15_045	FROM->TO	G14-057T 345.00 - SUNNYSIDE 345KV CKT 1	717	789	0.47624	115.0919	GEN336153 1-WATERFORD UNIT#3
FDNS	00NR	0	16WP	G15_045	FROM->TO	G14-057T 345.00 - SUNNYSIDE 345KV CKT 1	717	789	0.47479	115.0853	GEN337910 1-ARKANSAS NUCLEAR ONE UNIT #1
FDNS	00NR	0	16WP	G15_045	FROM->TO	G14-057T 345.00 - SUNNYSIDE 345KV CKT 1	717	789	0.47327	115.0838	SEMINOLE - VANOSTP4 138.00 138KV CKT 1
FDNS	00NR	0	16WP	G15_045	FROM->TO	G14-057T 345.00 - SUNNYSIDE 345KV CKT 1	717	789	0.47493	115.0828	CLEOPLT4 138.00 - MEN TAP 138KV CKT 1
FDNS	00NR	0	16WP	G15_045	FROM->TO	G14-057T 345.00 - SUNNYSIDE 345KV CKT 1	717	789	0.47479	115.0797	GEN300010 1-ST FRANCIS UNIT 1
FDNS	00NR	0	16WP	G15_045	FROM->TO	G14-057T 345.00 - SUNNYSIDE 345KV CKT 1	717	789	0.47479	115.0766	GEN336191 1-LITTLE GYPSY UNIT#3
FDNS	00NR	0	16WP	G15_045	FROM->TO	G14-057T 345.00 - SUNNYSIDE 345KV CKT 1	717	789	0.47493	115.0709	IMO TAP - MEN TAP 138KV CKT 1
FDNS	00NR	0	16WP	G15_045	FROM->TO	G14-057T 345.00 - SUNNYSIDE 345KV CKT 1	717	789	0.47511	115.0701	CZECH HALL - XEROX 138KV CKT 1
FDNS	00NR	0	16WP	G15_045	FROM->TO	G14-057T 345.00 - SUNNYSIDE 345KV CKT 1	717	789	0.47511	115.0657	MORGAN - XEROX 138KV CKT 1
FDNS	00NR	0	16WP	G15_045	FROM->TO	G14-057T 345.00 - SUNNYSIDE 345KV CKT 1	717	789	0.47469	115.057	P12:138:AEPW:N.E.S.-4:CATOOSA4
FDNS	00NR	0	16WP	G15_045	FROM->TO	G14-057T 345.00 - SUNNYSIDE 345KV CKT 1	717	789	0.47479	115.0559	NELSON 230/20.0KV TRANSFORMER CKT 1
FDNS	00NR	0	16WP	G15_045	FROM->TO	G14-057T 345.00 - SUNNYSIDE 345KV CKT 1	717	789	0.47477	115.0529	ALPINE AECC - BISMARK 115KV CKT 1
FDNS	00NR	0	16WP	G15_045	FROM->TO	G14-057T 345.00 - SUNNYSIDE 345KV CKT 1	717	789	0.47479	115.0513	GEN335614 1-WILLOW GLENN UNIT#4
FDNS	00NR	0	16WP	G15_045	FROM->TO	G14-057T 345.00 - SUNNYSIDE 345KV CKT 1	717	789	0.4756	115.0494	COMANCHE TAP - TOSCO 69KV CKT 1
FDNS	00NR	0	16WP	G15_045	FROM->TO	G14-057T 345.00 - SUNNYSIDE 345KV CKT 1	717	789	0.47511	115.0419	MORGAN - MUSTANG 138KV CKT 1
FDNS	00NR	0	16WP	G15_045	FROM->TO	G14-057T 345.00 - SUNNYSIDE 345KV CKT 1	717	789	0.47526	115.0417	BENTON - WICHITA 345KV CKT 1
FDNS	00NR	0	16WP	G15_045	FROM->TO	G14-057T 345.00 - SUNNYSIDE 345KV CKT 1	717	789	0.47479	115.0396	GEN303008 1-1BC2 U3
FDNS	00NR	0	16WP	G15_045	FROM->TO	G14-057T 345.00 - SUNNYSIDE 345KV CKT 1	717	789	0.47479	115.03	GEN300011 1-ST FRANCIS UNIT 2
FDNS	00NR	0	16WP	G15_045	FROM->TO	G14-057T 345.00 - SUNNYSIDE 345KV CKT 1	717	789	0.47494	115.0247	NOEL_SW 138.00 - ROSE_VALLEY 138.00 138KV CKT 1
FDNS	00NR	0	16WP	G15_045	FROM->TO	G14-057T 345.00 - SUNNYSIDE 345KV CKT 1	717	789	0.47479	115.0126	GEN336170 1-GULF OXY U4
FDNS	00NR	0	16WP	G15_045	FROM->TO	G14-057T 345.00 - SUNNYSIDE 345KV CKT 1	717	789	0.47588	115.0103	WEATHERFORD JCT. - WEATHERFORD SOUTHEAST 138KV CKT 1
FDNS	00NR	0	16WP	G15_045	FROM->TO	G14-057T 345.00 - SUNNYSIDE 345KV CKT 1	717	789	0.47588	115.0103	WEATHERFORD JCT. - WEATHERFORD SOUTHEAST 138KV CKT 1
FDNS	00NR	0	16WP	G15_045	FROM->TO	G14-057T 345.00 - SUNNYSIDE 345KV CKT 1	717	789	0.47491	115.0093	CYPRESS - HARTBURG 500KV CKT 1
FDNS	00NR	0	16WP	G15_045	FROM->TO	G14-057T 345.00 - SUNNYSIDE 345KV CKT 1	717	789	0.47477	115.0092	ALPINE AECC - AMITY SS 115KV CKT 1
FDNS	00NR	0	16WP	G15_045	FROM->TO	G14-057T 345.00 - SUNNYSIDE 345KV CKT 1	717	789	0.47479	115.0076	GEN336464 1-MICHOUD UNIT #3
FDNS	00NR	0	20WP	G15_045	FROM->TO	G14-057T 345.00 - SUNNYSIDE 345KV CKT 1	717	789	0.47943	115.0036	CLEVELAND - TULSA NORTH 345KV CKT 1
FDNS	00NR	0	20WP	G15_045	FROM->TO	G14-057T 345.00 - SUNNYSIDE 345KV CKT 1	717	789	0.47943	115.0036	CLEVELAND - TULSA NORTH 345KV CKT 1
FDNS	00NR	0	16WP	G15_045	FROM->TO	G14-057T 345.00 - SUNNYSIDE 345KV CKT 1	717	789	0.47496	114.998	HOYT - STRANGER CREEK 345KV CKT 1
FDNS	00NR	0	16WP	G15_045	FROM->TO	G14-057T 345.00 - SUNNYSIDE 345KV CKT 1	717	789	0.4752	114.9964	CHISHOLM6 230.00 - ELK CITY 230KV 230KV CKT 1
FDNS	00NR	0	20WP	G15_045	FROM->TO	G14-057T 345.00 - SUNNYSIDE 345KV CKT 1	717	789	0.47784	114.9957	COMANCHE - LOCO 138KV CKT 1
FDNS	00NR	0	16WP	G15_045	FROM->TO	G14-057T 345.00 - SUNNYSIDE 345KV CKT 1	717	789	0.4756	114.9952	COMANCHE - COMANCHE TAP 69KV CKT 1
FDNS	00NR	0	16WP	G15_045	FROM->TO	G14-057T 345.00 - SUNNYSIDE 345KV CKT 1	717	789	0.4752	114.9949	ELK CITY 230KV (ELKCTY-6) 230/138/13.8KV TRANSFORMER CKT 1
FDNS	00NR	0	16WP	G15_045	FROM->TO	G14-057T 345.00 - SUNNYSIDE 345KV CKT 1	717	789	0.4752	114.9949	ELK CITY 230KV (ELKCTY-6) 230/138/13.8KV TRANSFORMER CKT 1
FDNS	00NR	0	16WP	G15_045	FROM->TO	G14-057T 345.00 - SUNNYSIDE 345KV CKT 1	717	789	0.47479	114.9914	GEN300016 1-1G1GPDEL 18.000
FDNS	00NR	0	16WP	G15_045	FROM->TO	G14-057T 345.00 - SUNNYSIDE 345KV CKT 1	717	789	0.47479	114.9913	8CAJUN2 500/24.0KV TRANSFORMER CKT 1
FDNS	00NR	0	20WP	G15_045	FROM->TO	G14-057T 345.00 - SUNNYSIDE 345KV CKT 1	717	789	0.59869	114.9873	GRACEMONT - LAWTON EASTSIDE 345KV CKT 1
FDNS	00NR	0	20WP	G15_045	FROM->TO	G14-057T 345.00 - SUNNYSIDE 345KV CKT 1	717	789	0.59869	114.9873	GRACEMONT - LAWTON EASTSIDE 345KV CKT 1
FDNS	00NR	0	16WP	G15_045	FROM->TO	G14-057T 345.00 - SUNNYSIDE 345KV CKT 1	717	789	0.47509	114.9818	P12:138:OKGE-AEPW:JENSEN4:REDROCKRD4
FDNS	00NR	0	16WP	G15_045	FROM->TO	G14-057T 345.00 - SUNNYSIDE 345KV CKT 1	717	789	0.47479	114.9768	GEN337041 1-GERALD ANDRUS
FDNS	00NR	0	16WP	G15_045	FROM->TO	G14-057T 345.00 - SUNNYSIDE 345KV CKT 1	717	789	0.47302	114.9721	CANADIAN - NOBLE 138KV CKT 1
FDNS	00NR	0	16WP	G15_045	FROM->TO	G14-057T 345.00 - SUNNYSIDE 345KV CKT 1	717	789	0.47479	114.9655	GEN501910 1-ACADIA UNIT ST1
FDNS	00NR	0	16WP	G15_045	FROM->TO	G14-057T 345.00 - SUNNYSIDE 345KV CKT 1	717	789	0.47479	114.9604	P12:138:AEPW:R.S.S.-4:S.HUD.-4
FDNS	00NR	0	16WP	G15_045	FROM->TO	G14-057T 345.00 - SUNNYSIDE 345KV CKT 1	717	789	0.47654	114.9568	LASALLE - LATTA JCT 138KV CKT 1
FDNS	00NR	0	16WP	G15_045	FROM->TO	G14-057T 345.00 - SUNNYSIDE 345KV CKT 1	717	789	0.47588	114.9568	P12:138:AEPW:REDROCKRD4:WTH_JCT4
FDNS	00NR	0	16WP	G15_045	FROM->TO	G14-057T 345.00 - SUNNYSIDE 345KV CKT 1	717	789	0.4749	114.9566	7JASPER 345.00 - BLACKBERRY 345KV CKT 1

SOLUTION	GROUP	SCENARIO	SEASON	SOURCE	DIRECTION	MONITORED ELEMENT	RATEA (MVA)	RATEB(MVA)	TDF	TC%LOADING (% MVA)	CONTINGENCY
FDNS	00NR	0	16WP	G15_045	FROM->TO	G14-057T 345.00 - SUNNYSIDE 345KV CKT 1	717	789	0.47532	114.955	WALTERS - WALTERS 69KV CKT 1
FDNS	00NR	0	16WP	G15_045	FROM->TO	G14-057T 345.00 - SUNNYSIDE 345KV CKT 1	717	789	0.4731	114.9539	P12:138:OKGE:3TERM27
FDNS	00NR	0	20WP	G15_045	FROM->TO	G14-057T 345.00 - SUNNYSIDE 345KV CKT 1	717	789	0.47875	114.9532	POCASSETT - TUTTLE 138KV CKT 1
FDNS	00NR	0	16WP	G15_045	FROM->TO	G14-057T 345.00 - SUNNYSIDE 345KV CKT 1	717	789	0.47495	114.9521	G15074_T 345.00 - JEFFREY ENERGY CENTER 345KV CKT 1
FDNS	00NR	0	16WP	G15_045	FROM->TO	G14-057T 345.00 - SUNNYSIDE 345KV CKT 1	717	789	0.47509	114.9482	BLACKBERRY - NEOSHO 345KV CKT 1
FDNS	00NR	0	16WP	G15_045	FROM->TO	G14-057T 345.00 - SUNNYSIDE 345KV CKT 1	717	789	0.47501	114.9468	SWISSVALE - WEST GARDNER 345KV CKT 1
FDNS	00NR	0	16WP	G15_045	FROM->TO	G14-057T 345.00 - SUNNYSIDE 345KV CKT 1	717	789	0.47534	114.9464	NORGE ROAD - SOUTHWESTERN STATION 138KV CKT 1
FDNS	00NR	0	16WP	G15_045	FROM->TO	G14-057T 345.00 - SUNNYSIDE 345KV CKT 1	717	789	0.47534	114.9464	NORGE ROAD - SOUTHWESTERN STATION 138KV CKT 1
FDNS	00NR	0	16WP	G15_045	FROM->TO	G14-057T 345.00 - SUNNYSIDE 345KV CKT 1	717	789	0.4771	114.9431	FRANKLIN SW - WESTMOORE 138KV CKT 1
FDNS	00NR	0	16WP	G15_045	FROM->TO	G14-057T 345.00 - SUNNYSIDE 345KV CKT 1	717	789	0.47558	114.9374	DRAPER LAKE - SEMINOLE 345KV CKT 2
FDNS	00NR	0	16WP	G15_045	FROM->TO	G14-057T 345.00 - SUNNYSIDE 345KV CKT 1	717	789	0.47558	114.9373	DRAPER LAKE - SEMINOLE 345KV CKT 1
FDNS	00NR	0	20WP	G15_045	FROM->TO	G14-057T 345.00 - SUNNYSIDE 345KV CKT 1	717	789	0.4774	114.9356	DOLET HILLS - SOUTHWEST SHREVEPORT 345KV CKT 1
FDNS	00NR	0	20WP	G15_045	FROM->TO	G14-057T 345.00 - SUNNYSIDE 345KV CKT 1	717	789	0.4774	114.9356	DOLET HILLS - SOUTHWEST SHREVEPORT 345KV CKT 1
FDNS	00NR	0	16WP	G15_045	FROM->TO	G14-057T 345.00 - SUNNYSIDE 345KV CKT 1	717	789	0.4749	114.933	SARA - STHLAKE4 138.00 138KV CKT 1
FDNS	00NR	0	16WP	G15_045	FROM->TO	G14-057T 345.00 - SUNNYSIDE 345KV CKT 1	717	789	0.4764	114.9289	G14_038T 345.00 - Hitchland Interchange 345KV CKT 1
FDNS	00NR	0	16WP	G15_045	FROM->TO	G14-057T 345.00 - SUNNYSIDE 345KV CKT 1	717	789	0.47507	114.9274	ETTA (DUKE HOTSPRINGS) - MC NIEL 500KV CKT 1
FDNS	00NR	0	16WP	G15_045	FROM->TO	G14-057T 345.00 - SUNNYSIDE 345KV CKT 1	717	789	0.47479	114.9218	P12:138:AEPW:YARCH-S4:T.S.E.-4
FDNS	00NR	0	16WP	G15_045	FROM->TO	G14-057T 345.00 - SUNNYSIDE 345KV CKT 1	717	789	0.47547	114.9213	LAWTON RELIFT TAP - OMPA-WALTERS 69KV CKT 1
FDNS	00NR	0	16WP	G15_045	FROM->TO	G14-057T 345.00 - SUNNYSIDE 345KV CKT 1	717	789	0.47479	114.9181	SABINE 230/24.0KV TRANSFORMER CKT 1
FDNS	00NR	0	16WP	G15_045	FROM->TO	G14-057T 345.00 - SUNNYSIDE 345KV CKT 1	717	789	0.47479	114.9164	ESSEX UNIT 2 500/18.0KV TRANSFORMER CKT 1
FDNS	00NR	0	16WP	G15_045	FROM->TO	G14-057T 345.00 - SUNNYSIDE 345KV CKT 1	717	789	0.47479	114.9157	P12:69:AEPW:NROGERS2:ECNTRTN2
FDNS	00NR	0	16WP	G15_045	FROM->TO	G14-057T 345.00 - SUNNYSIDE 345KV CKT 1	717	789	0.4748	114.9156	P12:138:AEPW:BA_71ST4:T.S.E.-4
FDNS	00NR	0	16WP	G15_045	FROM->TO	G14-057T 345.00 - SUNNYSIDE 345KV CKT 1	717	789	0.47479	114.9151	GEN336801 1-BAXTER WILSON UNIT #1
FDNS	00NR	0	16WP	G15_045	FROM->TO	G14-057T 345.00 - SUNNYSIDE 345KV CKT 1	717	789	0.47516	114.9126	EMPORIA ENERGY CENTER - G14_001T 345.00 345KV CKT 1
FDNS	00NR	0	16WP	G15_045	FROM->TO	G14-057T 345.00 - SUNNYSIDE 345KV CKT 1	717	789	0.4749	114.9076	7LUTESVIL 345.00 - 7ST FRANC 345.00 345KV CKT 1
FDNS	00NR	0	16WP	G15_045	FROM->TO	G14-057T 345.00 - SUNNYSIDE 345KV CKT 1	717	789	0.4749	114.9039	MCCLAIN - STHLAKE4 138.00 138KV CKT 1
FDNS	00NR	0	16WP	G15_045	FROM->TO	G14-057T 345.00 - SUNNYSIDE 345KV CKT 1	717	789	0.47479	114.8963	FRONTIER 345/18.0KV TRANSFORMER CKT 1
FDNS	00NR	0	16WP	G15_045	FROM->TO	G14-057T 345.00 - SUNNYSIDE 345KV CKT 1	717	789	0.47463	114.8959	HOPE - MCNAB REC 115KV CKT 1
FDNS	00NR	0	16WP	G15_045	FROM->TO	G14-057T 345.00 - SUNNYSIDE 345KV CKT 1	717	789	0.47479	114.8947	FRONTIER 345/18.0KV TRANSFORMER CKT 1
FDNS	00NR	0	16WP	G15_045	FROM->TO	G14-057T 345.00 - SUNNYSIDE 345KV CKT 1	717	789	0.47511	114.888	P12:138:AEPW-OGE:SHIDLER4:OSAGE 4
FDNS	00NR	0	16WP	G15_045	FROM->TO	G14-057T 345.00 - SUNNYSIDE 345KV CKT 1	717	789	0.47463	114.887	P12:115:AEPW:TURK3:HOPE3
FDNS	00NR	0	16WP	G15_045	FROM->TO	G14-057T 345.00 - SUNNYSIDE 345KV CKT 1	717	789	0.47479	114.8839	P12:161:AEPW:CHAMSPR5:FARMING5
FDNS	00NR	0	16WP	G15_045	FROM->TO	G14-057T 345.00 - SUNNYSIDE 345KV CKT 1	717	789	0.4753	114.8809	SOUTHWESTERN STATION - VERDEN 138KV CKT 1
FDNS	00NR	0	16WP	G15_045	FROM->TO	G14-057T 345.00 - SUNNYSIDE 345KV CKT 1	717	789	0.47302	114.8807	NOBLE - PURCELL4 138.00 138KV CKT 1
FDNS	00NR	0	16WP	G15_045	FROM->TO	G14-057T 345.00 - SUNNYSIDE 345KV CKT 1	717	789	0.47588	114.8796	HINTON - WEATHERFORD JCT. 138KV CKT 1
FDNS	00NR	0	16WP	G15_045	FROM->TO	G14-057T 345.00 - SUNNYSIDE 345KV CKT 1	717	789	0.47524	114.8773	ENOWILT - LONE OAK 138KV CKT 1
FDNS	00NR	0	16WP	G15_045	FROM->TO	G14-057T 345.00 - SUNNYSIDE 345KV CKT 1	717	789	0.4753	114.8748	ANADARKO - SEQUOYAHJ4 138.00 138KV CKT 1
FDNS	00NR	0	16WP	G15_045	FROM->TO	G14-057T 345.00 - SUNNYSIDE 345KV CKT 1	717	789	0.4753	114.8744	CORN TAP - SEQUOYAHJ4 138.00 138KV CKT 1
FDNS	00NR	0	16WP	G15_045	FROM->TO	G14-057T 345.00 - SUNNYSIDE 345KV CKT 1	717	789	0.47164	114.8724	ARBUCKLE - VANOSTP4 138.00 138KV CKT 1
FDNS	00NR	0	16WP	G15_045	FROM->TO	G14-057T 345.00 - SUNNYSIDE 345KV CKT 1	717	789	0.47543	114.872	WEATHERFORD TAP - WEATHERFORD WIND FARM 138KV CKT 1
FDNS	00NR	0	16WP	G15_045	FROM->TO	G14-057T 345.00 - SUNNYSIDE 345KV CKT 1	717	789	0.47524	114.8684	ENOWILT - SARDIS 138KV CKT 1
FDNS	00NR	0	16WP	G15_045	FROM->TO	G14-057T 345.00 - SUNNYSIDE 345KV CKT 1	717	789	0.47493	114.8684	8WNEWMADRID 500.00 - DELL 500 500KV CKT 1
FDNS	00NR	0	16WP	G15_045	FROM->TO	G14-057T 345.00 - SUNNYSIDE 345KV CKT 1	717	789	0.47479	114.8662	GEN505616 1-BROKEN BOW
FDNS	00NR	0	16WP	G15_045	FROM->TO	G14-057T 345.00 - SUNNYSIDE 345KV CKT 1	717	789	0.47502	114.8654	CLINTON JUNCTION - ELK CITY 138KV CKT 1
FDNS	00NR	0	16WP	G15_045	FROM->TO	G14-057T 345.00 - SUNNYSIDE 345KV CKT 1	717	789	0.47502	114.8654	CLINTON JUNCTION - ELK CITY 138KV CKT 1
FDNS	00NR	0	16WP	G15_045	FROM->TO	G14-057T 345.00 - SUNNYSIDE 345KV CKT 1	717	789	0.47463	114.8645	MCNAB REC - Turk 115 115KV CKT 1
FDNS	00NR	0	16WP	G15_045	FROM->TO	G14-057T 345.00 - SUNNYSIDE 345KV CKT 1	717	789	0.47463	114.8645	TURK (TURK 1) 138/115/13.2KV TRANSFORMER CKT 1
FDNS	00NR	0	16WP	G15_045	FROM->TO	G14-057T 345.00 - SUNNYSIDE 345KV CKT 1	717	789	0.47463	114.8645	TURK (TURK 1) 138/115/13.2KV TRANSFORMER CKT 1
FDNS	00NR	0	16WP	G15_045	FROM->TO	G14-057T 345.00 - SUNNYSIDE 345KV CKT 1	717	789	0.4753	114.86	NORTH 29TH CHICKASHA - VERDEN 138KV CKT 1
FDNS	00NR	0	16WP	G15_045	FROM->TO	G14-057T 345.00 - SUNNYSIDE 345KV CKT 1	717	789	0.47516	114.8591	G14_001T 345.00 - WICHITA 345KV CKT 1
FDNS	00NR	0	16WP	G15_045	FROM->TO	G14-057T 345.00 - SUNNYSIDE 345KV CKT 1	717	789	0.47479	114.8585	LEWIS CREEK SWITCHYARD 138/22.0KV TRANSFORMER CKT 1
FDNS	00NR	0	16WP	G15_045	FROM->TO	G14-057T 345.00 - SUNNYSIDE 345KV CKT 1	717	789	0.47547	114.8545	OMPA-WALTERS - WALTERS 69KV CKT 1
FDNS	00NR	0	16WP	G15_045	FROM->TO	G14-057T 345.00 - SUNNYSIDE 345KV CKT 1	717	789	0.47547	114.8545	OMPA-WALTERS - WALTERS 69KV CKT 1
FDNS	00NR	0	16WP	G15_045	FROM->TO	G14-057T 345.00 - SUNNYSIDE 345KV CKT 1	717	789	0.47517	114.8545	G13-010T 345.00 - POST ROCK 345KV CKT 1
FDNS	00NR	0	16WP	G15_045	FROM->TO	G14-057T 345.00 - SUNNYSIDE 345KV CKT 1	717	789	0.4749	114.8539	COUCH SES - MC NIEL 115KV CKT 1
FDNS	00NR	0	16WP	G15_045	FROM->TO	G14-057T 345.00 - SUNNYSIDE 345KV CKT 1	717	789	0.47479	114.8536	LEWIS CREEK SWITCHYARD 138/22.0KV TRANSFORMER CKT 1
FDNS	00NR	0	16WP	G15_045	FROM->TO	G14-057T 345.00 - SUNNYSIDE 345KV CKT 1	717	789	0.47497	114.8433	EMPORIA ENERGY CENTER - SWISSVALE 345KV CKT 1
FDNS	00NR	0	16WP	G15_045	FROM->TO	G14-057T 345.00 - SUNNYSIDE 345KV CKT 1	717	789	0.47532	114.8397	P12:69:WFEC-AEPW:COMANCH2:WALTRS-2
FDNS	00NR	0	16WP	G15_045	FROM->TO	G14-057T 345.00 - SUNNYSIDE 345KV CKT 1	717	789	0.47479	114.8396	GEN501970 1-EVANGELINE UNIT 7
FDNS	00NR	0	16WP	G15_045	FROM->TO	G14-057T 345.00 - SUNNYSIDE 345KV CKT 1	717	789	0.47493	114.835	MORISNT4 138.00 - STILLWATER 138KV CKT 1
FDNS	00NR	0	16WP	G15_045	FROM->TO	G14-057T 345.00 - SUNNYSIDE 345KV CKT 1	717	789	0.47524	114.8336	CLAYTON - SARDIS 138KV CKT 1
FDNS	00NR	0	16WP	G15_045	FROM->TO	G14-057T 345.00 - SUNNYSIDE 345KV CKT 1	717	789	0.47494	114.8296	P12:138:OKGE:3TERM2
FDNS	00NR	0	16WP	G15_045	FROM->TO	G14-057T 345.00 - SUNNYSIDE 345KV CKT 1	717	789	0.47588	114.8285	HINTON - REDROCKRD4 138.00 138KV CKT 1
FDNS	00NR	0	16WP	G15_045	FROM->TO	G14-057T 345.00 - SUNNYSIDE 345KV CKT 1	717	789	0.47479	114.8271	GEN334392 1-EXXON MOBIL IPP 1
FDNS	00NR	0	16WP	G15_045	FROM->TO	G14-057T 345.00 - SUNNYSIDE 345KV CKT 1	717	789	0.47534	114.826	CORNVILLE - NORGE ROAD 138KV CKT 1
FDNS	00NR	0	16WP	G15_045	FROM->TO	G14-057T 345.00 - SUNNYSIDE 345KV CKT 1	717	789	0.47534	114.826	CORNVILLE - NORGE ROAD 138KV CKT 1
FDNS	00NR	0	16WP	G15_045	FROM->TO	G14-057T 345.00 - SUNNYSIDE 345KV CKT 1	717	789	0.47654	114.822	LASALLE - STONEWAL LH138.00 138KV CKT 1
FDNS	00NR	0	16WP	G15_045	FROM->TO	G14-057T 345.00 - SUNNYSIDE 345KV CKT 1	717	789	0.47479	114.8203	GEN334393 1-EXXON MOBIL IPP 2
FDNS	00NR	0	16WP	G15_045	FROM->TO	G14-057T 345.00 - SUNNYSIDE 345KV CKT 1	717	789	0.47479	114.8203	GEN334394 1-EXXON MOBIL IPP 3
FDNS	00NR	0	16WP	G15_045	FROM->TO	G14-057T 345.00 - SUNNYSIDE 345KV CKT 1	717	789	0.47484	114.8155	P12:138:OKGE:3TERM12
FDNS	00NR	0	16WP	G15_045	FROM->TO	G14-057T 345.00 - SUNNYSIDE 345KV CKT 1	717	789	0.47479	114.812	GEN336222 1-LITTLE GYPSY UNIT#2
FDNS	00NR	0	16WP	G15_045	FROM->TO	G14-057T 345.00 - SUNNYSIDE 345KV CKT 1	717	789	0.47654	114.807	STONEWAL LH138.00 - TUPELO TAP 138KV CKT 1
FDNS	00NR	0	16WP	G15_045	FROM->TO	G14-057T 345.00 - SUNNYSIDE 345KV CKT 1	717	789	0.47524	114.8059	P12:138:AEPW-SWPA:LONEOAK4:BRKNBW4
FDNS	00NR	0	16WP	G15_045	FROM->TO	G14-057T 345.00 - SUNNYSIDE 345KV CKT 1	717	789	0.47486	114.803	FLETCHER - MARLOW JCT 69KV CKT 1
FDNS	00NR	0	20WP	G15_045	FROM->TO	G14-057T 345.00 - SUNNYSIDE 345KV CKT 1	717	789	0.47624	114.7966	GEN335831 1-RIVERBEND UNIT#1
FDNS	00NR	0	16WP	G15_045	FROM->TO	G14-057T 345.00 - SUNNYSIDE 345KV CKT 1	717	789	0.47493	114.7955	7JASPER 345.00 - MORGAN 345KV CKT 1
FDNS	00NR	0	16WP	G15_045	FROM->TO	G14-057T 345.00 - SUNNYSIDE 345KV CKT 1	717	789	0.4748	114.7941	P12:138:AEPW:R.S.S-4:T.P.S.-4
FDNS	00NR	0	16WP	G15_045	FROM->TO	G14-057T 345.00 - SUNNYSIDE 345KV CKT 1	717	789	0.47479	114.7937	GEN506749 1-EASTMAN GENERATION A
FDNS	00NR	0	16WP	G15_045	FROM->TO	G14-057T 345.00 - SUNNYSIDE 345KV CKT 1	717	789	0.47524	114.792	CLAYTON - NASHOBA 138KV CKT 1

SOLUTION	GROUP	SCENARIO	SEASON	SOURCE	DIRECTION	MONITORED ELEMENT	RATEA (MVA)	RATEB(MVA)	TDF	TC%LOADING (% MVA)	CONTINGENCY
FDNS	00NR	0	16WP	G15_045	FROM->TO	G14-057T 345.00 - SUNNYSIDE 345KV CKT 1	717	789	0.4753	114.7904	CORNVILLE - NORTH 29TH CHICKASHA 138KV CKT 1
FDNS	00NR	0	16WP	G15_045	FROM->TO	G14-057T 345.00 - SUNNYSIDE 345KV CKT 1	717	789	0.47342	114.7904	CLARKSVILLE - ONETA 345KV CKT 1
FDNS	00NR	0	16WP	G15_045	FROM->TO	G14-057T 345.00 - SUNNYSIDE 345KV CKT 1	717	789	0.47342	114.7904	CLARKSVILLE - ONETA 345KV CKT 1
FDNS	00NR	0	16WP	G15_045	FROM->TO	G14-057T 345.00 - SUNNYSIDE 345KV CKT 1	717	789	0.47479	114.7901	GEN334431 1-SABINE UNIT 1
FDNS	00NR	0	16WP	G15_045	FROM->TO	G14-057T 345.00 - SUNNYSIDE 345KV CKT 1	717	789	0.47479	114.79	GEN334432 1-SABINE UNIT 2
FDNS	00NR	0	16WP	G15_045	FROM->TO	G14-057T 345.00 - SUNNYSIDE 345KV CKT 1	717	789	0.47516	114.785	FRANKLIN - FRANKLIN SW 138KV CKT 1
FDNS	00NR	0	16WP	G15_045	FROM->TO	G14-057T 345.00 - SUNNYSIDE 345KV CKT 1	717	789	0.47543	114.7845	WEATHERFORD SOUTHEAST - WEATHERFORD TAP 138KV CKT 1
FDNS	00NR	0	16WP	G15_045	FROM->TO	G14-057T 345.00 - SUNNYSIDE 345KV CKT 1	717	789	0.47479	114.7829	GEN501972 1-EVANGELINE UNIT 7-2
FDNS	00NR	0	16WP	G15_045	FROM->TO	G14-057T 345.00 - SUNNYSIDE 345KV CKT 1	717	789	0.47479	114.7828	GEN501971 1-EVANGELINE UNIT 7-1
FDNS	00NR	0	16WP	G15_045	FROM->TO	G14-057T 345.00 - SUNNYSIDE 345KV CKT 1	717	789	0.47479	114.7826	GEN336152 1-WATERFORD UNIT#2
FDNS	00NR	0	16WP	G15_045	FROM->TO	G14-057T 345.00 - SUNNYSIDE 345KV CKT 1	717	789	0.47479	114.7815	GEN336151 1-WATERFORD UNIT#1
FDNS	00NR	0	16WP	G15_045	FROM->TO	G14-057T 345.00 - SUNNYSIDE 345KV CKT 1	717	789	0.47524	114.779	BETHEL - NASHOBA 138KV CKT 1
FDNS	00NR	0	16WP	G15_045	FROM->TO	G14-057T 345.00 - SUNNYSIDE 345KV CKT 1	717	789	0.47479	114.7698	P12:138:AEPW:R.S.S.-4:R:96YALE-4
FDNS	00NR	0	20WP	G15_045	FROM->TO	G14-057T 345.00 - SUNNYSIDE 345KV CKT 1	717	789	0.47953	114.7697	ARCADIA - NORTHWEST 345KV CKT 1
FDNS	00NR	0	20WP	G15_045	FROM->TO	G14-057T 345.00 - SUNNYSIDE 345KV CKT 1	717	789	0.47624	114.7537	GRAND GULF 500/22.0KV TRANSFORMER CKT 1
FDNS	00NR	0	16WP	G15_045	FROM->TO	G14-057T 345.00 - SUNNYSIDE 345KV CKT 1	717	789	0.47522	114.7505	MARIETTA - MARIETTA4 138.00 138KV CKT 1
FDNS	00NR	0	16WP	G15_045	FROM->TO	G14-057T 345.00 - SUNNYSIDE 345KV CKT 1	717	789	0.47509	114.7347	Canadian Pump Station - REDROCKRD4 138.00 138KV CKT 1
FDNS	00NR	0	16WP	G15_045	FROM->TO	G14-057T 345.00 - SUNNYSIDE 345KV CKT 1	717	789	0.47543	114.73	CLINTON JUNCTION - CLINTON NATURAL GAS TAP 138KV CKT 1
FDNS	00NR	0	16WP	G15_045	FROM->TO	G14-057T 345.00 - SUNNYSIDE 345KV CKT 1	717	789	0.4752	114.7223	P12:138:OKGE:3TERM47
FDNS	00NR	0	16WP	G15_045	FROM->TO	G14-057T 345.00 - SUNNYSIDE 345KV CKT 1	717	789	0.47677	114.7209	CIMARRON - NORTHWEST 345KV CKT 1
FDNS	00NR	0	16WP	G15_045	FROM->TO	G14-057T 345.00 - SUNNYSIDE 345KV CKT 1	717	789	0.4752	114.7076	HAMMETT TAP - HORSESHOE LAKE 138KV CKT 1
FDNS	00NR	0	20WP	G15_045	FROM->TO	G14-057T 345.00 - SUNNYSIDE 345KV CKT 1	717	789	0.47779	114.7044	7SAREPTA% 345.00 - ELDORADO EHV 345KV CKT 1
FDNS	00NR	0	20WP	G15_045	FROM->TO	G14-057T 345.00 - SUNNYSIDE 345KV CKT 1	717	789	0.47779	114.7042	3TR3AR8EL7EL
FDNS	00NR	0	20WP	G15_045	FROM->TO	G14-057T 345.00 - SUNNYSIDE 345KV CKT 1	717	789	0.47779	114.6934	ELDORADO EHV 500/345KV TRANSFORMER CKT 1
FDNS	00NR	0	20WP	G15_045	FROM->TO	G14-057T 345.00 - SUNNYSIDE 345KV CKT 1	717	789	0.48083	114.6786	P12:138:AEPW:DUNCAN-4:L.E.S.-4
FDNS	00NR	0	16WP	G15_045	FROM->TO	G14-057T 345.00 - SUNNYSIDE 345KV CKT 1	717	789	0.47532	114.6677	COMANCHE - WALTERS 69KV CKT 1
FDNS	00NR	0	20WP	G15_045	FROM->TO	G14-057T 345.00 - SUNNYSIDE 345KV CKT 1	717	789	0.47624	114.608	GEN515577 1-ARBWND11 0.6900
FDNS	00NR	0	20WP	G15_045	FROM->TO	G14-057T 345.00 - SUNNYSIDE 345KV CKT 1	717	789	0.47606	114.5615	MATHWSN7 345.00 - TATONGA7 345.00 345KV CKT 1
FDNS	00NR	0	20WP	G15_045	FROM->TO	G14-057T 345.00 - SUNNYSIDE 345KV CKT 1	717	789	0.4808	114.5571	COMANCHE TAP - OMPA-DUNCAN 840 138KV CKT 1
FDNS	00NR	0	20WP	G15_045	FROM->TO	G14-057T 345.00 - SUNNYSIDE 345KV CKT 1	717	789	0.47875	114.5549	BRIDGECR 138.00 - TUTTLE 138KV CKT 1
FDNS	00NR	0	20WP	G15_045	FROM->TO	G14-057T 345.00 - SUNNYSIDE 345KV CKT 1	717	789	0.46798	114.5467	CANADIAN RIVER - MUSKOGEE 345KV CKT 1
FDNS	00NR	0	20WP	G15_045	FROM->TO	G14-057T 345.00 - SUNNYSIDE 345KV CKT 1	717	789	0.47624	114.4684	GEN509409 1-WILKES #3
FDNS	00NR	0	20WP	G15_045	FROM->TO	G14-057T 345.00 - SUNNYSIDE 345KV CKT 1	717	789	0.47848	114.4388	Hitchland Interchange - WALKTAP7 345.00 345KV CKT 1
FDNS	00NR	0	20WP	G15_045	FROM->TO	G14-057T 345.00 - SUNNYSIDE 345KV CKT 1	717	789	0.47848	114.4388	Hitchland Interchange - WALKTAP7 345.00 345KV CKT 1
FDNS	00NR	0	20WP	G15_045	FROM->TO	G14-057T 345.00 - SUNNYSIDE 345KV CKT 1	717	789	0.47671	114.4317	HEALDTON - LOCO 138KV CKT 1
FDNS	00NR	0	20WP	G15_045	FROM->TO	G14-057T 345.00 - SUNNYSIDE 345KV CKT 1	717	789	0.47526	114.4268	ARCADIA - SEMINOLE 345KV CKT 1
FDNS	00NR	0	20WP	G15_045	FROM->TO	G14-057T 345.00 - SUNNYSIDE 345KV CKT 1	717	789	0.47848	114.4189	P12:345:SPS:J07.1.FINN.HITCH
FDNS	00NR	0	20WP	G15_045	FROM->TO	G14-057T 345.00 - SUNNYSIDE 345KV CKT 1	717	789	0.47624	114.4089	GEN501813 1-RODEMACHER UNIT 3
FDNS	00NR	0	20WP	G15_045	FROM->TO	G14-057T 345.00 - SUNNYSIDE 345KV CKT 1	717	789	0.47624	114.3121	GEN300006 1-NEW MADRID UNIT 1
FDNS	00NR	0	20WP	G15_045	FROM->TO	G14-057T 345.00 - SUNNYSIDE 345KV CKT 1	717	789	0.47624	114.2922	GEN300007 1-NEW MADRID UNIT 2
FDNS	00NR	0	20WP	G15_045	FROM->TO	G14-057T 345.00 - SUNNYSIDE 345KV CKT 1	717	789	0.47671	114.2876	HEALDTON - RINGLING 138KV CKT 1
FDNS	00NR	0	20WP	G15_045	FROM->TO	G14-057T 345.00 - SUNNYSIDE 345KV CKT 1	717	789	0.47667	114.2757	LACYGNE - WAVERLY7 345.00 345KV CKT 1
FDNS	00NR	0	20WP	G15_045	FROM->TO	G14-057T 345.00 - SUNNYSIDE 345KV CKT 1	717	789	0.4808	114.2686	DUNCAN - OMPA-DUNCAN 840 138KV CKT 1
FDNS	00NR	0	20WP	G15_045	FROM->TO	G14-057T 345.00 - SUNNYSIDE 345KV CKT 1	717	789	0.4808	114.2686	DUNCAN - OMPA-DUNCAN 840 138KV CKT 1
FDNS	00NR	0	20WP	G15_045	FROM->TO	G14-057T 345.00 - SUNNYSIDE 345KV CKT 1	717	789	0.47875	114.2678	P12:138:WFEC:MSL01
FDNS	00NR	0	16WP	G15_045	FROM->TO	G14-057T 345.00 - SUNNYSIDE 345KV CKT 1	717	789	0.47479	114.2581	803-OKLAUNION
FDNS	00NR	0	20WP	G15_045	FROM->TO	G14-057T 345.00 - SUNNYSIDE 345KV CKT 1	717	789	0.47875	114.2563	BRIDGECR 138.00 - SUNSHINE CANYON 138KV CKT 1
FDNS	00NR	0	20WP	G15_045	FROM->TO	G14-057T 345.00 - SUNNYSIDE 345KV CKT 1	717	789	0.47624	114.1972	GEN335206 1-NELSON UNIT 6
FDNS	00NR	0	20WP	G15_045	FROM->TO	G14-057T 345.00 - SUNNYSIDE 345KV CKT 1	717	789	0.47667	114.1543	WAVERLY7 345.00 - WOLF CREEK 345KV CKT 1
FDNS	00NR	0	20WP	G15_045	FROM->TO	G14-057T 345.00 - SUNNYSIDE 345KV CKT 1	717	789	0.47624	114.1257	GEN520947 1-HUGO1
FDNS	00NR	0	20WP	G15_045	FROM->TO	G14-057T 345.00 - SUNNYSIDE 345KV CKT 1	717	789	0.47671	114.1171	RINGLING - SOUTH WILSON 138KV CKT 1
FDNS	00NR	0	16WP	G15_045	FROM->TO	G14-057T 345.00 - SUNNYSIDE 345KV CKT 1	717	789	0.46962	114.0994	P12:138:OKGE:3TERM39
FDNS	00NR	0	20WP	G15_045	FROM->TO	G14-057T 345.00 - SUNNYSIDE 345KV CKT 1	717	789	0.47606	114.0411	G11_051T 345.00 - TATONGA7 345.00 345KV CKT 1
FDNS	00NR	0	20WP	G15_045	FROM->TO	G14-057T 345.00 - SUNNYSIDE 345KV CKT 1	717	789	0.47682	114.0258	ELDORADO EHV - MOUNT OLIVE 500KV CKT 1
FDNS	00NR	0	20WP	G15_045	FROM->TO	G14-057T 345.00 - SUNNYSIDE 345KV CKT 1	717	789	0.47624	114.0121	GEN501812 1-RODEMACHER UNIT 2
FDNS	00NR	0	20WP	G15_045	FROM->TO	G14-057T 345.00 - SUNNYSIDE 345KV CKT 1	717	789	0.47638	114.0071	P12:138:AEPW:SHERID4:112GORE4
FDNS	00NR	0	20WP	G15_045	FROM->TO	G14-057T 345.00 - SUNNYSIDE 345KV CKT 1	717	789	0.47624	114.0013	DOLET HILLS 345/24.0KV TRANSFORMER CKT 1
FDNS	00NR	0	20WP	G15_045	FROM->TO	G14-057T 345.00 - SUNNYSIDE 345KV CKT 1	717	789	0.47721	113.9961	THISTLE7 345.00 - WOODWARD DISTRICT EHV 345KV CKT 1
FDNS	00NR	0	20WP	G15_045	FROM->TO	G14-057T 345.00 - SUNNYSIDE 345KV CKT 1	717	789	0.47721	113.9961	THISTLE7 345.00 - WOODWARD DISTRICT EHV 345KV CKT 1
FDNS	00NR	0	20WP	G15_045	FROM->TO	G14-057T 345.00 - SUNNYSIDE 345KV CKT 1	717	789	0.47721	113.9961	THISTLE7 345.00 - WOODWARD DISTRICT EHV 345KV CKT 2
FDNS	00NR	0	20WP	G15_045	FROM->TO	G14-057T 345.00 - SUNNYSIDE 345KV CKT 1	717	789	0.47721	113.9961	THISTLE7 345.00 - WOODWARD DISTRICT EHV 345KV CKT 2
FDNS	00NR	0	20WP	G15_045	FROM->TO	G14-057T 345.00 - SUNNYSIDE 345KV CKT 1	717	789	0.47479	113.9283	PARK LANE - SEMINOLE 138KV CKT 1
FDNS	00NR	0	20WP	G15_045	FROM->TO	G14-057T 345.00 - SUNNYSIDE 345KV CKT 1	717	789	0.47688	113.8762	WEBRE - WELLS 500KV CKT 1
FDNS	00NR	0	20WP	G15_045	FROM->TO	G14-057T 345.00 - SUNNYSIDE 345KV CKT 1	717	789	0.47624	113.875	GEN515564 1-ORIGIN11 0.6900
FDNS	00NR	0	20WP	G15_045	FROM->TO	G14-057T 345.00 - SUNNYSIDE 345KV CKT 1	717	789	0.47624	113.875	GEN515565 1-ORIGIN21 0.6900
FDNS	00NR	0	16WP	G15_045	FROM->TO	G14-057T 345.00 - SUNNYSIDE 345KV CKT 1	717	789	0.46994	113.8718	MAYSVILLE - MAYSVLT4 138.00 138KV CKT 1
FDNS	00NR	0	16WP	G15_045	FROM->TO	G14-057T 345.00 - SUNNYSIDE 345KV CKT 1	717	789	0.47514	113.8663	DRAPER LAKE - MIDWEST TAP 138KV CKT 1
FDNS	00NR	0	16WP	G15_045	FROM->TO	G14-057T 345.00 - SUNNYSIDE 345KV CKT 1	717	789	0.47445	113.8628	GLASSES - MADILL INDUSTRIAL TAP 138KV CKT 1
FDNS	00NR	0	20WP	G15_045	FROM->TO	G14-057T 345.00 - SUNNYSIDE 345KV CKT 1	717	789	0.47624	113.8527	GEN334440 1-SABINE UNIT 4
FDNS	00NR	0	16WP	G15_045	FROM->TO	G14-057T 345.00 - SUNNYSIDE 345KV CKT 1	717	789	0.47535	113.8517	CIMARRON - MATHWSN7 345.00 345KV CKT 1
FDNS	00NR	0	16WP	G15_045	FROM->TO	G14-057T 345.00 - SUNNYSIDE 345KV CKT 1	717	789	0.47535	113.8517	CIMARRON - MATHWSN7 345.00 345KV CKT 2
FDNS	00NR	0	16WP	G15_045	FROM->TO	G14-057T 345.00 - SUNNYSIDE 345KV CKT 1	717	789	0.47479	113.8451	GEN562691 1-G15_015_3 0.6900
FDNS	00NR	0	16WP	G15_045	FROM->TO	G14-057T 345.00 - SUNNYSIDE 345KV CKT 1	717	789	0.47479	113.8449	GEN562772 1-G15034_3 0.6900
FDNS	00NR	0	16WP	G15_045	FROM->TO	G14-057T 345.00 - SUNNYSIDE 345KV CKT 1	717	789	0.47525	113.8438	P12:138:OKGE:3TERM21
FDNS	00NR	0	16WP	G15_045	FROM->TO	G14-057T 345.00 - SUNNYSIDE 345KV CKT 1	717	789	0.47473	113.8375	HUGO (HUGO 1) 345/138/13.8KV TRANSFORMER CKT 1
FDNS	00NR	0	20WP	G15_045	FROM->TO	G14-057T 345.00 - SUNNYSIDE 345KV CKT 1	717	789	0.47717	113.8344	CANEYRV7 345.00 - NEOSHO 345KV CKT 1
FDNS	00NR	0	20WP	G15_045	FROM->TO	G14-057T 345.00 - SUNNYSIDE 345KV CKT 1	717	789	0.47671	113.8289	MARIETTA - SOUTH WILSON 138KV CKT 1
FDNS	00NR	0	20WP	G15_045	FROM->TO	G14-057T 345.00 - SUNNYSIDE 345KV CKT 1	717	789	0.47624	113.8232	GEN590011 2-ERCOT EQUIVALENCE
FDNS	00NR	0	16WP	G15_045	FROM->TO	G14-057T 345.00 - SUNNYSIDE 345KV CKT 1	717	789	0.47479	113.8171	GEN521103 1-BLUE CANYON WIND FARM

SOLUTION	GROUP	SCENARIO	SEASON	SOURCE	DIRECTION	MONITORED ELEMENT	RATEA (MVA)	RATEB(MVA)	TDF	TC%LOADING (% MVA)	CONTINGENCY
FDNS	00NR	0	16WP	G15_045	FROM->TO	G14-057T 345.00 - SUNNYSIDE 345KV CKT 1	717	789	0.47479	113.8166	GEN520812 1-ANADRK5
FDNS	00NR	0	16WP	G15_045	FROM->TO	G14-057T 345.00 - SUNNYSIDE 345KV CKT 1	717	789	0.47479	113.8165	GEN520813 1-ANADRK6
FDNS	00NR	0	16WP	G15_045	FROM->TO	G14-057T 345.00 - SUNNYSIDE 345KV CKT 1	717	789	0.46994	113.8102	MAYSVLT4 138.00 - PRAIRIE POINT 138KV CKT 1
FDNS	00NR	0	16WP	G15_045	FROM->TO	G14-057T 345.00 - SUNNYSIDE 345KV CKT 1	717	789	0.47445	113.8033	GLASSES - RUSSETT 138KV CKT 1
FDNS	00NR	0	20WP	G15_045	FROM->TO	G14-057T 345.00 - SUNNYSIDE 345KV CKT 1	717	789	0.47624	113.7939	DELL 500 - ESSEX UNIT 2 500KV CKT Z1
FDNS	00NR	0	20WP	G15_045	FROM->TO	G14-057T 345.00 - SUNNYSIDE 345KV CKT 1	717	789	0.47624	113.7926	P12:161:AEPW:DYESS 5:HYLAND 5
FDNS	00NR	0	16WP	G15_045	FROM->TO	G14-057T 345.00 - SUNNYSIDE 345KV CKT 1	717	789	0.47218	113.785	ARBUCKLE - SULPHR 4 138.00 138KV CKT 1
FDNS	00NR	0	20WP	G15_045	FROM->TO	G14-057T 345.00 - SUNNYSIDE 345KV CKT 1	717	789	0.47998	113.7845	REDBUD - RIVERSIDE STATION 345KV CKT 1
FDNS	00NR	0	20WP	G15_045	FROM->TO	G14-057T 345.00 - SUNNYSIDE 345KV CKT 1	717	789	0.47998	113.7845	REDBUD - RIVERSIDE STATION 345KV CKT 1
FDNS	00NR	0	16WP	G15_045	FROM->TO	G14-057T 345.00 - SUNNYSIDE 345KV CKT 1	717	789	0.47468	113.7802	P12:138:WFEC:MSL11
FDNS	00NR	0	16WP	G15_045	FROM->TO	G14-057T 345.00 - SUNNYSIDE 345KV CKT 1	717	789	0.47468	113.7802	P12:138:WFEC-AEPW:PHAROAH4:LONEOAK4
FDNS	00NR	0	16WP	G15_045	FROM->TO	G14-057T 345.00 - SUNNYSIDE 345KV CKT 1	717	789	0.47444	113.7755	CANEY CREEK - JOHNSON COUNTY 138KV CKT 1
FDNS	00NR	0	16WP	G15_045	FROM->TO	G14-057T 345.00 - SUNNYSIDE 345KV CKT 1	717	789	0.47479	113.7736	GEN511961 1-DEMPSEY-WTG10.7000
FDNS	00NR	0	16WP	G15_045	FROM->TO	G14-057T 345.00 - SUNNYSIDE 345KV CKT 1	717	789	0.4748	113.758	P12:069:OKGE:3TERM42
FDNS	00NR	0	20WP	G15_045	FROM->TO	G14-057T 345.00 - SUNNYSIDE 345KV CKT 1	717	789	0.47624	113.7534	GEN590010 1-ERCOT EQUIVALENCE
FDNS	00NR	0	20WP	G15_045	FROM->TO	G14-057T 345.00 - SUNNYSIDE 345KV CKT 1	717	789	0.47624	113.7453	P12:69:AEPW:L.E.S.-2:LAW WC2
FDNS	00NR	0	20WP	G15_045	FROM->TO	G14-057T 345.00 - SUNNYSIDE 345KV CKT 1	717	789	0.48358	113.7442	LAWTON EASTSIDE (LES 5) 345/138/13.8KV TRANSFORMER CKT 2
FDNS	00NR	0	20WP	G15_045	FROM->TO	G14-057T 345.00 - SUNNYSIDE 345KV CKT 1	717	789	0.48358	113.7442	LAWTON EASTSIDE (LES 5) 345/138/13.8KV TRANSFORMER CKT 2
FDNS	00NR	0	16WP	G15_045	FROM->TO	G14-057T 345.00 - SUNNYSIDE 345KV CKT 1	717	789	0.47479	113.7348	GEN629070 2-BEAVER CHANNEL GENERATORFOR UNIT NO 2
FDNS	00NR	0	16WP	G15_045	FROM->TO	G14-057T 345.00 - SUNNYSIDE 345KV CKT 1	717	789	0.47484	113.7272	GRPRAR1-LNX3345.00 - HOLT.CO3 345.00 345KV CKT 1
FDNS	00NR	0	20WP	G15_045	FROM->TO	G14-057T 345.00 - SUNNYSIDE 345KV CKT 1	717	789	0.47671	113.7272	P12:138:WFEC:MSL17
FDNS	00NR	0	16WP	G15_045	FROM->TO	G14-057T 345.00 - SUNNYSIDE 345KV CKT 1	717	789	0.47479	113.7271	GEN515443 1-MNCOWND1 0.7000
FDNS	00NR	0	16WP	G15_045	FROM->TO	G14-057T 345.00 - SUNNYSIDE 345KV CKT 1	717	789	0.47484	113.7234	GRPRAR1-LNX3345.00 - GRPRAR 345KV CKT Z
FDNS	00NR	0	20WP	G15_045	FROM->TO	G14-057T 345.00 - SUNNYSIDE 345KV CKT 1	717	789	0.47646	113.7227	P12:138:WFEC:MSL02
FDNS	00NR	0	16WP	G15_045	FROM->TO	G14-057T 345.00 - SUNNYSIDE 345KV CKT 1	717	789	0.47516	113.7218	P12:138:WFEC:MSL08
FDNS	00NR	0	16WP	G15_045	FROM->TO	G14-057T 345.00 - SUNNYSIDE 345KV CKT 1	717	789	0.47479	113.7183	GEN615021 1-GRE-ER 14G 16.000
FDNS	00NR	0	16WP	G15_045	FROM->TO	G14-057T 345.00 - SUNNYSIDE 345KV CKT 1	717	789	0.47479	113.7147	GEN562902 1-G15052_3 0.6900
FDNS	00NR	0	16WP	G15_045	FROM->TO	G14-057T 345.00 - SUNNYSIDE 345KV CKT 1	717	789	0.46994	113.7129	PRAIRIE POINT - RATLIFF 138KV CKT 1
FDNS	00NR	0	16WP	G15_045	FROM->TO	G14-057T 345.00 - SUNNYSIDE 345KV CKT 1	717	789	0.47423	113.7093	CARTER - CHICKASAW 138KV CKT 1
FDNS	00NR	0	16WP	G15_045	FROM->TO	G14-057T 345.00 - SUNNYSIDE 345KV CKT 1	717	789	0.47479	113.7078	GEN563242 1-G15090_3 0.6900
FDNS	00NR	0	16WP	G15_045	FROM->TO	G14-057T 345.00 - SUNNYSIDE 345KV CKT 1	717	789	0.47479	113.7066	GEN560183 1-REDHIL-WTG1 12.000
FDNS	00NR	0	16WP	G15_045	FROM->TO	G14-057T 345.00 - SUNNYSIDE 345KV CKT 1	717	789	0.47479	113.7049	GEN629071 1-BURLINGTON GENERATOR FOR UNIT NO 1 E
FDNS	00NR	0	16WP	G15_045	FROM->TO	G14-057T 345.00 - SUNNYSIDE 345KV CKT 1	717	789	0.47456	113.7009	CANADIAN RIVER - MCALESTER SOUTH 138KV CKT 1
FDNS	00NR	0	16WP	G15_045	FROM->TO	G14-057T 345.00 - SUNNYSIDE 345KV CKT 1	717	789	0.47456	113.7009	CANADIAN RIVER - MCALESTER SOUTH 138KV CKT 1
FDNS	00NR	0	16WP	G15_045	FROM->TO	G14-057T 345.00 - SUNNYSIDE 345KV CKT 1	717	789	0.47456	113.6996	CANADIAN RIVER () 345/138/13.8KV TRANSFORMER CKT 1
FDNS	00NR	0	16WP	G15_045	FROM->TO	G14-057T 345.00 - SUNNYSIDE 345KV CKT 1	717	789	0.47456	113.6996	CANADIAN RIVER () 345/138/13.8KV TRANSFORMER CKT 1
FDNS	00NR	0	16WP	G15_045	FROM->TO	G14-057T 345.00 - SUNNYSIDE 345KV CKT 1	717	789	0.47664	113.6995	NORTHWEST - SPRING CREEK 345KV CKT 1
FDNS	00NR	0	16WP	G15_045	FROM->TO	G14-057T 345.00 - SUNNYSIDE 345KV CKT 1	717	789	0.47617	113.6963	MOREWOOD SW - NINE MILE 138KV CKT 1
FDNS	00NR	0	16WP	G15_045	FROM->TO	G14-057T 345.00 - SUNNYSIDE 345KV CKT 1	717	789	0.47328	113.6922	ROCKY POINT - SPRINGDALE 138KV CKT 1
FDNS	00NR	0	16WP	G15_045	FROM->TO	G14-057T 345.00 - SUNNYSIDE 345KV CKT 1	717	789	0.47664	113.6897	SOONER - SPRING CREEK 345KV CKT 1
FDNS	00NR	0	20WP	G15_045	FROM->TO	G14-057T 345.00 - SUNNYSIDE 345KV CKT 1	717	789	0.47717	113.687	CANEYRV7 345.00 - LATHAMS7 345.00 345KV CKT 1
FDNS	00NR	0	16WP	G15_045	FROM->TO	G14-057T 345.00 - SUNNYSIDE 345KV CKT 1	717	789	0.47479	113.679	INDEPENDENCE 500/26.0KV TRANSFORMER CKT 1
FDNS	00NR	0	16WP	G15_045	FROM->TO	G14-057T 345.00 - SUNNYSIDE 345KV CKT 1	717	789	0.47479	113.6766	BURLINGTON NO1 + NO 2 + NO 3 161/20.0KV TRANSFORMER CKT 1
FDNS	00NR	0	20WP	G15_045	FROM->TO	G14-057T 345.00 - SUNNYSIDE 345KV CKT 1	717	789	0.47624	113.676	GEN509408 1-WILKES #2
FDNS	00NR	0	16WP	G15_045	FROM->TO	G14-057T 345.00 - SUNNYSIDE 345KV CKT 1	717	789	0.47491	113.6747	ALTUS JUNCTION - RUSSELL 138KV CKT 1
FDNS	00NR	0	16WP	G15_045	FROM->TO	G14-057T 345.00 - SUNNYSIDE 345KV CKT 1	717	789	0.47491	113.6747	ALTUS JUNCTION - RUSSELL 138KV CKT 1
FDNS	00NR	0	16WP	G15_045	FROM->TO	G14-057T 345.00 - SUNNYSIDE 345KV CKT 1	717	789	0.47317	113.6724	NORTHWEST TEXARKANA - WELSH 345KV CKT 1
FDNS	00NR	0	16WP	G15_045	FROM->TO	G14-057T 345.00 - SUNNYSIDE 345KV CKT 1	717	789	0.47317	113.6724	NORTHWEST TEXARKANA - WELSH 345KV CKT 1
FDNS	00NR	0	16WP	G15_045	FROM->TO	G14-057T 345.00 - SUNNYSIDE 345KV CKT 1	717	789	0.47479	113.6705	GEN514805 1-SOONER UNIT 1
FDNS	00NR	0	16WP	G15_045	FROM->TO	G14-057T 345.00 - SUNNYSIDE 345KV CKT 1	717	789	0.47479	113.6637	GEN514806 1-SOONER UNIT 2
FDNS	00NR	0	20WP	G15_045	FROM->TO	G14-057T 345.00 - SUNNYSIDE 345KV CKT 1	717	789	0.47709	113.6598	ELDORADO EHV - SHERIDAN EHV 500KV CKT 1
FDNS	00NR	0	20WP	G15_045	FROM->TO	G14-057T 345.00 - SUNNYSIDE 345KV CKT 1	717	789	0.47638	113.6598	PAOLI - PAYNE 138.00 138KV CKT 1
FDNS	00NR	0	16WP	G15_045	FROM->TO	G14-057T 345.00 - SUNNYSIDE 345KV CKT 1	717	789	0.4749	113.6579	KEO EHV - WEST MEMPHIS 500 500KV CKT 1
FDNS	00NR	0	16WP	G15_045	FROM->TO	G14-057T 345.00 - SUNNYSIDE 345KV CKT 1	717	789	0.47462	113.6508	CHAMBER SPRINGS - CLARKSVILLE 345KV CKT 1
FDNS	00NR	0	20WP	G15_045	FROM->TO	G14-057T 345.00 - SUNNYSIDE 345KV CKT 1	717	789	0.47624	113.6501	GEN506754 1-LEBROCK STEAM 1
FDNS	00NR	0	16WP	G15_045	FROM->TO	G14-057T 345.00 - SUNNYSIDE 345KV CKT 1	717	789	0.47479	113.6474	GEN562078 1-G11_051_3 0.6900
FDNS	00NR	0	20WP	G15_045	FROM->TO	G14-057T 345.00 - SUNNYSIDE 345KV CKT 1	717	789	0.47645	113.6428	ANADARKO - GEORGIA 138KV CKT 1
FDNS	00NR	0	16WP	G15_045	FROM->TO	G14-057T 345.00 - SUNNYSIDE 345KV CKT 1	717	789	0.47479	113.6379	P12:230:UMZB:# 112 #: NU IN SD. NU-RCDC & DRY CREEK XFMR
FDNS	00NR	0	16WP	G15_045	FROM->TO	G14-057T 345.00 - SUNNYSIDE 345KV CKT 1	717	789	0.47479	113.6365	RCDC EAST 4230.00 - RED CEDAR DC 230KV CKT 1
FDNS	00NR	0	16WP	G15_045	FROM->TO	G14-057T 345.00 - SUNNYSIDE 345KV CKT 1	717	789	0.47218	113.6334	JOLLYVILLE - SULPHR 4 138.00 138KV CKT 1
FDNS	00NR	0	16WP	G15_045	FROM->TO	G14-057T 345.00 - SUNNYSIDE 345KV CKT 1	717	789	0.47479	113.6189	GEN562802 1-G15039_3 0.3570
FDNS	00NR	0	20WP	G15_045	FROM->TO	G14-057T 345.00 - SUNNYSIDE 345KV CKT 1	717	789	0.47637	113.6137	P12:138:AEPW:112GORE4:L.E.S.-4
FDNS	00NR	0	16WP	G15_045	FROM->TO	G14-057T 345.00 - SUNNYSIDE 345KV CKT 1	717	789	0.47479	113.6124	GEN524285 1-WILDORADO WIND GEN
FDNS	00NR	0	20WP	G15_045	FROM->TO	G14-057T 345.00 - SUNNYSIDE 345KV CKT 1	717	789	0.47802	113.6016	CIVIT - PAOLI 138KV CKT 1
FDNS	00NR	0	20WP	G15_045	FROM->TO	G14-057T 345.00 - SUNNYSIDE 345KV CKT 1	717	789	0.47682	113.5945	MATHWSN7 345.00 - NORTHWEST 345KV CKT 1
FDNS	00NR	0	16WP	G15_045	FROM->TO	G14-057T 345.00 - SUNNYSIDE 345KV CKT 1	717	789	0.47479	113.5926	GEN524295 1-SPNSPUR_WND10.6900
FDNS	00NR	0	16WP	G15_045	FROM->TO	G14-057T 345.00 - SUNNYSIDE 345KV CKT 1	717	789	0.47479	113.5923	GEN562587 1-G14_056_3 0.6900
FDNS	00NR	0	16WP	G15_045	FROM->TO	G14-057T 345.00 - SUNNYSIDE 345KV CKT 1	717	789	0.47479	113.5856	GEN560331 1-G10-46 13.800
FDNS	00NR	0	16WP	G15_045	FROM->TO	G14-057T 345.00 - SUNNYSIDE 345KV CKT 1	717	789	0.47546	113.5745	ARKANSAS NUCLEAR ONE - FT SMITH 500KV CKT 1
FDNS	00NR	0	16WP	G15_045	FROM->TO	G14-057T 345.00 - SUNNYSIDE 345KV CKT 1	717	789	0.47546	113.5745	ARKANSAS NUCLEAR ONE - FT SMITH 500KV CKT 1
FDNSLock	00NR	0	16WP	G15_045	FROM->TO	G14-057T 345.00 - SUNNYSIDE 345KV CKT 1	717	789	0.47479	113.5733	GEN629072 4-LANSING GENERATOR FOR UNITS NO4 EIA CODE 1
FDNS	00NR	0	20WP	G15_045	FROM->TO	G14-057T 345.00 - SUNNYSIDE 345KV CKT 1	717	789	0.47624	113.5691	GEN336252 1-NINEMILE POINT UNIT#5
FDNS	00NR	0	16WP	G15_045	FROM->TO	G14-057T 345.00 - SUNNYSIDE 345KV CKT 1	717	789	0.47218	113.5649	JOLLYVILLE - KERR MCGEE CIMARRON 138KV CKT 1
FDNS	00NR	0	16WP	G15_045	FROM->TO	G14-057T 345.00 - SUNNYSIDE 345KV CKT 1	717	789	0.47479	113.5641	GEN562882 1-G15047_3 0.6900
FDNS	00NR	0	16WP	G15_045	FROM->TO	G14-057T 345.00 - SUNNYSIDE 345KV CKT 1	717	789	0.47617	113.5619	BEARCAT 138.00 - NINE MILE 138KV CKT 1
FDNS	00NR	0	16WP	G15_045	FROM->TO	G14-057T 345.00 - SUNNYSIDE 345KV CKT 1	717	789	0.47479	113.555	GEN562269 1-G12-020-1 0.6900
FDNS	00NR	0	16WP	G15_045	FROM->TO	G14-057T 345.00 - SUNNYSIDE 345KV CKT 1	717	789	0.47479	113.5529	GEN657749 1-YOUNG 1 GENERATOR
FDNS	00NR	0	20WP	G15_045	FROM->TO	G14-057T 345.00 - SUNNYSIDE 345KV CKT 1	717	789	0.47645	113.5467	FLETCHER - GEORGIA 138KV CKT 1
FDNS	00NR	0	20WP	G15_045	FROM->TO	G14-057T 345.00 - SUNNYSIDE 345KV CKT 1	717	789	0.47842	113.5386	P12:138:AEPW-OGE:CORNVIL4:MAUD 4

SOLUTION	GROUP	SCENARIO	SEASON	SOURCE	DIRECTION	MONITORED ELEMENT	RATEA (MVA)	RATEB(MVA)	TDF	TC%LOADING (% MVA)	CONTINGENCY
FDNS	00NR	0	20WP	G15_045	FROM->TO	G14-057T 345.00 - SUNNYSIDE 345KV CKT 1	717	789	0.47624	113.5228	FRONTIER - GRIMES 345KV CKT 1
FDNS	00NR	0	16WP	G15_045	FROM->TO	G14-057T 345.00 - SUNNYSIDE 345KV CKT 1	717	789	0.47218	113.5143	ARBWIND4 138.00 - KERR MCGEE CIMARRON 138KV CKT 1
FDNS	00NR	0	20WP	G15_045	FROM->TO	G14-057T 345.00 - SUNNYSIDE 345KV CKT 1	717	789	0.47624	113.5117	GEN335204 1-NELSON UNIT 4
FDNS	00NR	0	16WP	G15_045	FROM->TO	G14-057T 345.00 - SUNNYSIDE 345KV CKT 1	717	789	0.47479	113.51	GEN562270 1-G12-020-2 0.6900
FDNS	00NR	0	20WP	G15_045	FROM->TO	G14-057T 345.00 - SUNNYSIDE 345KV CKT 1	717	789	0.47624	113.5052	GEN503909 1-FULTONU1 1 16.000
FDNS	00NR	0	20WP	G15_045	FROM->TO	G14-057T 345.00 - SUNNYSIDE 345KV CKT 1	717	789	0.47624	113.5045	GEN334441 1-SABINE UNIT 5
FDNS	00NR	0	16WP	G15_045	FROM->TO	G14-057T 345.00 - SUNNYSIDE 345KV CKT 1	717	789	0.47479	113.5044	GEN562812 1-G15040_3 0.3570
FDNS	00NR	0	20WP	G15_045	FROM->TO	G14-057T 345.00 - SUNNYSIDE 345KV CKT 1	717	789	0.4764	113.5041	EMPIRE - FLETCHER 138KV CKT 1
FDNS	00NR	0	16WP	G15_045	FROM->TO	G14-057T 345.00 - SUNNYSIDE 345KV CKT 1	717	789	0.47728	113.503	P12:138:AEPW:112GORE4:SNYDER-4
FDNS	00NR	0	16WP	G15_045	FROM->TO	G14-057T 345.00 - SUNNYSIDE 345KV CKT 1	717	789	0.47261	113.5027	CLARKSVILLE - MUSKOGEE 345KV CKT 1
FDNS	00NR	0	16WP	G15_045	FROM->TO	G14-057T 345.00 - SUNNYSIDE 345KV CKT 1	717	789	0.47261	113.5027	CLARKSVILLE - MUSKOGEE 345KV CKT 1
FDNS	00NR	0	16WP	G15_045	FROM->TO	G14-057T 345.00 - SUNNYSIDE 345KV CKT 1	717	789	0.47479	113.5015	GEN563102 1-G15075_3 0.5500
FDNS	00NR	0	16WP	G15_045	FROM->TO	G14-057T 345.00 - SUNNYSIDE 345KV CKT 1	717	789	0.47479	113.4982	GEN562974 1-G15060_5 0.6900
FDNS	00NR	0	16WP	G15_045	FROM->TO	G14-057T 345.00 - SUNNYSIDE 345KV CKT 1	717	789	0.47479	113.4946	GEN563062 1-G15071_3 0.6900
FDNS	00NR	0	16WP	G15_045	FROM->TO	G14-057T 345.00 - SUNNYSIDE 345KV CKT 1	717	789	0.47479	113.4938	GEN563132 1-G15078_3 0.3570
FDNS	00NR	0	16WP	G15_045	FROM->TO	G14-057T 345.00 - SUNNYSIDE 345KV CKT 1	717	789	0.47479	113.4887	GEN562973 1-G15060_4 0.6900
FDNS	00NR	0	20WP	G15_045	FROM->TO	G14-057T 345.00 - SUNNYSIDE 345KV CKT 1	717	789	0.47778	113.4836	TUPELO - TUPELO TAP 138KV CKT 1
FDNSLock	00NR	0	16WP	G15_045	FROM->TO	G14-057T 345.00 - SUNNYSIDE 345KV CKT 1	717	789	0.47479	113.4834	GEN681522 3-GENOA 3
FDNS	00NR	0	16WP	G15_045	FROM->TO	G14-057T 345.00 - SUNNYSIDE 345KV CKT 1	717	789	0.47617	113.4794	P12:138:WFEC:MSL14
FDNS	00NR	0	20WP	G15_045	FROM->TO	G14-057T 345.00 - SUNNYSIDE 345KV CKT 1	717	789	0.47717	113.4741	LATHAMS7 345.00 - ROSE HILL 345KV CKT 1
FDNS	00NR	0	16WP	G15_045	FROM->TO	G14-057T 345.00 - SUNNYSIDE 345KV CKT 1	717	789	0.47617	113.4666	BEARCAT 138.00 - MOORELAND 138KV CKT 1
FDNS	00NR	0	20WP	G15_045	FROM->TO	G14-057T 345.00 - SUNNYSIDE 345KV CKT 1	717	789	0.47842	113.4632	BLANCHARD - CORNVILLE 138KV CKT 1
FDNS	00NR	0	20WP	G15_045	FROM->TO	G14-057T 345.00 - SUNNYSIDE 345KV CKT 1	717	789	0.47802	113.4605	CIVIT - STRATFORD 138KV CKT 1
FDNS	00NR	0	16WP	G15_045	FROM->TO	G14-057T 345.00 - SUNNYSIDE 345KV CKT 1	717	789	0.47359	113.4561	BROWN - RUSSETT 138KV CKT 1
FDNS	00NR	0	16WP	G15_045	FROM->TO	G14-057T 345.00 - SUNNYSIDE 345KV CKT 1	717	789	0.47255	113.4351	CHICKASAW - TOTAL 138KV CKT 1
FDNS	00NR	0	16WP	G15_045	FROM->TO	G14-057T 345.00 - SUNNYSIDE 345KV CKT 1	717	789	0.4732	113.4301	RUSSETT - SPRINGDALE 138KV CKT 1
FDNS	00NR	0	16WP	G15_045	FROM->TO	G14-057T 345.00 - SUNNYSIDE 345KV CKT 1	717	789	0.47479	113.4267	GEN345671 2-1RUSH G2 18.000
FDNS	00NR	0	16WP	G15_045	FROM->TO	G14-057T 345.00 - SUNNYSIDE 345KV CKT 1	717	789	0.47479	113.4248	GEN345670 1-1RUSH G1 18.000
FDNS	00NR	0	20WP	G15_045	FROM->TO	G14-057T 345.00 - SUNNYSIDE 345KV CKT 1	717	789	0.4764	113.4227	COMANCHE - EMPIRE 138KV CKT 1
FDNS	00NR	0	20WP	G15_045	FROM->TO	G14-057T 345.00 - SUNNYSIDE 345KV CKT 1	717	789	0.47676	113.4172	LAYFLD8 500.00 - MOUNT OLIVE 500KV CKT 1
FDNS	00NR	0	20WP	G15_045	FROM->TO	G14-057T 345.00 - SUNNYSIDE 345KV CKT 1	717	789	0.47676	113.4172	LAYFLD8 500.00 - MOUNT OLIVE 500KV CKT 1
FDNS	00NR	0	16WP	G15_045	FROM->TO	G14-057T 345.00 - SUNNYSIDE 345KV CKT 1	717	789	0.47479	113.4132	GEN526331 1-JONES GEN #1 22 KV
FDNS	00NR	0	16WP	G15_045	FROM->TO	G14-057T 345.00 - SUNNYSIDE 345KV CKT 1	717	789	0.47479	113.4131	GEN526332 1-JONES GEN #2 21 KV
FDNS	00NR	0	16WP	G15_045	FROM->TO	G14-057T 345.00 - SUNNYSIDE 345KV CKT 1	717	789	0.47479	113.4028	GEN560105 1-G08-22 0.6900
FDNS	00NR	0	16WP	G15_045	FROM->TO	G14-057T 345.00 - SUNNYSIDE 345KV CKT 1	717	789	0.47479	113.3993	GEN562550 1-G14_040_3 0.6900
FDNS	00NR	0	16WP	G15_045	FROM->TO	G14-057T 345.00 - SUNNYSIDE 345KV CKT 1	717	789	0.47278	113.3982	ROCKY POINT - SUNNYSIDE 138KV CKT 1
FDNS	00NR	0	20WP	G15_045	FROM->TO	G14-057T 345.00 - SUNNYSIDE 345KV CKT 1	717	789	0.47624	113.3982	GEN336251 1-NINEMILE POINT UNIT#4
FDNS	00NR	0	20WP	G15_045	FROM->TO	G14-057T 345.00 - SUNNYSIDE 345KV CKT 1	717	789	0.47664	113.393	G1524G1525 345.00 - THISTLE7 345.00 345KV CKT 1
FDNS	00NR	0	20WP	G15_045	FROM->TO	G14-057T 345.00 - SUNNYSIDE 345KV CKT 1	717	789	0.47664	113.393	G1524G1525 345.00 - THISTLE7 345.00 345KV CKT 2
FDNS	00NR	0	20WP	G15_045	FROM->TO	G14-057T 345.00 - SUNNYSIDE 345KV CKT 1	717	789	0.47759	113.3929	FINNEY SWITCHING STATION - HOLCOMB 345KV CKT 1
FDNS	00NR	0	20WP	G15_045	FROM->TO	G14-057T 345.00 - SUNNYSIDE 345KV CKT 1	717	789	0.47759	113.3929	FINNEY SWITCHING STATION - HOLCOMB 345KV CKT 1
FDNS	00NR	0	20WP	G15_045	FROM->TO	G14-057T 345.00 - SUNNYSIDE 345KV CKT 1	717	789	0.47624	113.3927	GEN334071 1-LEWIS CREEK 2
FDNS	00NR	0	16WP	G15_045	FROM->TO	G14-057T 345.00 - SUNNYSIDE 345KV CKT 1	717	789	0.47359	113.3879	RUSSETT - RUSSETT 138KV CKT 1
FDNS	00NR	0	20WP	G15_045	FROM->TO	G14-057T 345.00 - SUNNYSIDE 345KV CKT 1	717	789	0.47624	113.3843	GEN334070 1-LEWIS CREEK 1
FDNS	00NR	0	16WP	G15_045	FROM->TO	G14-057T 345.00 - SUNNYSIDE 345KV CKT 1	717	789	0.47479	113.3775	4SIOUX 1 138.00 138/18.0KV TRANSFORMER CKT 1
FDNS	00NR	0	16WP	G15_045	FROM->TO	G14-057T 345.00 - SUNNYSIDE 345KV CKT 1	717	789	0.47542	113.3694	P12:138:WFEC:MSL07
FDNS	00NR	0	16WP	G15_045	FROM->TO	G14-057T 345.00 - SUNNYSIDE 345KV CKT 1	717	789	0.47542	113.3694	P12:138:WFEC-AEPW:HUGOPP4:ATOKA--4
FDNS	00NR	0	20WP	G15_045	FROM->TO	G14-057T 345.00 - SUNNYSIDE 345KV CKT 1	717	789	0.47624	113.3642	P12:161:AEPW-SWPA:BEAVERS:EROGERS5
FDNS	00NR	0	20WP	G15_045	FROM->TO	G14-057T 345.00 - SUNNYSIDE 345KV CKT 1	717	789	0.47624	113.3603	GEN509392 G2-ARSENAL HILL GENS #3 (STALL)
FDNS	00NR	0	20WP	G15_045	FROM->TO	G14-057T 345.00 - SUNNYSIDE 345KV CKT 1	717	789	0.47624	113.3602	GEN509391 G1-ARSENAL HILL GENS #2 (STALL)
FDNS	00NR	0	16WP	G15_045	FROM->TO	G14-057T 345.00 - SUNNYSIDE 345KV CKT 1	717	789	0.47479	113.3591	GEN511962 2-RKYRDGW2-1 0.7000
FDNS	00NR	0	20WP	G15_045	FROM->TO	G14-057T 345.00 - SUNNYSIDE 345KV CKT 1	717	789	0.47624	113.3581	GEN509393 S1-ARSENAL HILL GENS #4 (STALL)
FDNS	00NR	0	16WP	G15_045	FROM->TO	G14-057T 345.00 - SUNNYSIDE 345KV CKT 1	717	789	0.47479	113.3577	GEN521112 1-ORME3 13.800
FDNS	00NR	0	16WP	G15_045	FROM->TO	G14-057T 345.00 - SUNNYSIDE 345KV CKT 1	717	789	0.47479	113.3553	CLAY BOSWELL 230/20.9KV TRANSFORMER CKT 1
FDNS	00NR	0	16WP	G15_045	FROM->TO	G14-057T 345.00 - SUNNYSIDE 345KV CKT 1	717	789	0.47479	113.3532	GEN527882 1-CUNNINGHAM GEN #2 20 KV
FDNS	00NR	0	20WP	G15_045	FROM->TO	G14-057T 345.00 - SUNNYSIDE 345KV CKT 1	717	789	0.47624	113.3465	GEN334433 1-SABINE UNIT 3
FDNS	00NR	0	20WP	G15_045	FROM->TO	G14-057T 345.00 - SUNNYSIDE 345KV CKT 1	717	789	0.47802	113.3428	OIL CENTER - STRATFORD 138KV CKT 1
FDNS	00NR	0	16WP	G15_045	FROM->TO	G14-057T 345.00 - SUNNYSIDE 345KV CKT 1	717	789	0.47479	113.3369	GEN562892 1-G15048_3 0.6900
FDNS	00NR	0	20WP	G15_045	FROM->TO	G14-057T 345.00 - SUNNYSIDE 345KV CKT 1	717	789	0.47624	113.3339	GEN337653 1-WHITE BLUFF UNIT #2
FDNS	00NR	0	16WP	G15_045	FROM->TO	G14-057T 345.00 - SUNNYSIDE 345KV CKT 1	717	789	0.4708	113.3312	ARDMORE WEST - CARTER 138KV CKT 1
FDNS	00NR	0	16WP	G15_045	FROM->TO	G14-057T 345.00 - SUNNYSIDE 345KV CKT 1	717	789	0.47479	113.3247	GEN562512 1-G14_020_3 0.6900
FDNS	00NR	0	20WP	G15_045	FROM->TO	G14-057T 345.00 - SUNNYSIDE 345KV CKT 1	717	789	0.47624	113.323	GEN336831 1-BAXTER WILSON SES
FDNS	00NR	0	16WP	G15_045	FROM->TO	G14-057T 345.00 - SUNNYSIDE 345KV CKT 1	717	789	0.47479	113.3179	GEN672321 1-SHAND GENERATOR 1
FDNS	00NR	0	16WP	G15_045	FROM->TO	G14-057T 345.00 - SUNNYSIDE 345KV CKT 1	717	789	0.47479	113.3158	GEN563192 1-G15084_3 0.5500
FDNS	00NR	0	20WP	G15_045	FROM->TO	G14-057T 345.00 - SUNNYSIDE 345KV CKT 1	717	789	0.48592	113.3115	P12:138:AEPW:S.W.S.-4:L.E.S.-4
FDNS	00NR	0	16WP	G15_045	FROM->TO	G14-057T 345.00 - SUNNYSIDE 345KV CKT 1	717	789	0.47479	113.3067	GEN511853 1-COMANCHE #3
FDNS	00NR	0	20WP	G15_045	FROM->TO	G14-057T 345.00 - SUNNYSIDE 345KV CKT 1	717	789	0.47624	113.3019	P12:161:AEPW:DYESS5:ELMSPRNG:TONTITN5
FDNS	00NR	0	20WP	G15_045	FROM->TO	G14-057T 345.00 - SUNNYSIDE 345KV CKT 1	717	789	0.47705	113.2967	DUNCAN (DUNCAN) 138/69/13.8KV TRANSFORMER CKT 1
FDNS	00NR	0	20WP	G15_045	FROM->TO	G14-057T 345.00 - SUNNYSIDE 345KV CKT 1	717	789	0.47705	113.2967	DUNCAN (DUNCAN) 138/69/13.8KV TRANSFORMER CKT 1
FDNS	00NR	0	16WP	G15_045	FROM->TO	G14-057T 345.00 - SUNNYSIDE 345KV CKT 1	717	789	0.47479	113.2937	GEN672310 1-POPLAR RIVER GENERATOR 1
FDNS	00NR	0	16WP	G15_045	FROM->TO	G14-057T 345.00 - SUNNYSIDE 345KV CKT 1	717	789	0.47479	113.2937	GEN672311 2-POPLAR RIVER GENERATOR 2
FDNS	00NR	0	16WP	G15_045	FROM->TO	G14-057T 345.00 - SUNNYSIDE 345KV CKT 1	717	789	0.47493	113.2933	P12:138:WFEC:MSL16
FDNS	00NR	0	16WP	G15_045	FROM->TO	G14-057T 345.00 - SUNNYSIDE 345KV CKT 1	717	789	0.47437	113.2886	P12:138:WFEC-AEPW:GOLDENSW4:CRAIGJT4
FDNS	00NR	0	16WP	G15_045	FROM->TO	G14-057T 345.00 - SUNNYSIDE 345KV CKT 1	717	789	0.47479	113.2851	GEN672306 6-BOUNDARY DAM GENERATOR 6
FDNS	00NR	0	16WP	G15_045	FROM->TO	G14-057T 345.00 - SUNNYSIDE 345KV CKT 1	717	789	0.47073	113.2851	SUNNYSIDE (SUNNYSD5) 345/138/13.8KV TRANSFORMER CKT 1
FDNS	00NR	0	20WP	G15_045	FROM->TO	G14-057T 345.00 - SUNNYSIDE 345KV CKT 1	717	789	0.47624	113.2821	GEN337911 1-ARKANSAS NUCLEAR ONE UNIT #2
FDNS	00NR	0	20WP	G15_045	FROM->TO	G14-057T 345.00 - SUNNYSIDE 345KV CKT 1	717	789	0.47624	113.2788	GEN515040 1-SEMINOLE 1G
FDNS	00NR	0	20WP	G15_045	FROM->TO	G14-057T 345.00 - SUNNYSIDE 345KV CKT 1	717	789	0.47789	113.2722	G14_038T 345.00 - Hitchland Interchange 345KV CKT 1
FDNS	00NR	0	20WP	G15_045	FROM->TO	G14-057T 345.00 - SUNNYSIDE 345KV CKT 1	717	789	0.47624	113.2716	GEN334030 1-FRONTIER UNIT 1

SOLUTION	GROUP	SCENARIO	SEASON	SOURCE	DIRECTION	MONITORED ELEMENT	RATEA (MVA)	RATEB(MVA)	TDF	TC%LOADING (% MVA)	CONTINGENCY
FDNS	00NR	0	16WP	G15_045	FROM->TO	G14-057T 345.00 - SUNNYSIDE 345KV CKT 1	717	789	0.47479	113.271	GEN344895 2-1LAB G2 20.000
FDNS	00NR	0	20WP	G15_045	FROM->TO	G14-057T 345.00 - SUNNYSIDE 345KV CKT 1	717	789	0.47624	113.2693	GEN334031 1-FRONTIER UNIT 2
FDNS	00NR	0	16WP	G15_045	FROM->TO	G14-057T 345.00 - SUNNYSIDE 345KV CKT 1	717	789	0.47479	113.2581	GEN523461 1-BLACKHAWK GEN #1
FDNS	00NR	0	16WP	G15_045	FROM->TO	G14-057T 345.00 - SUNNYSIDE 345KV CKT 1	717	789	0.47479	113.258	GEN523462 1-BLACKHAWK GEN #2
FDNS	00NR	0	20WP	G15_045	FROM->TO	G14-057T 345.00 - SUNNYSIDE 345KV CKT 1	717	789	0.47842	113.2548	TUTTLE - TUTTLE CONOCO TAP 138KV CKT 1
FDNS	00NR	0	16WP	G15_045	FROM->TO	G14-057T 345.00 - SUNNYSIDE 345KV CKT 1	717	789	0.47479	113.2537	GEN511852 1-COMANCHE #2
FDNS	00NR	0	20WP	G15_045	FROM->TO	G14-057T 345.00 - SUNNYSIDE 345KV CKT 1	717	789	0.47622	113.2501	P12:138:AEPW:CATOOSA4:T.S.E.-4
FDNS	00NR	0	20WP	G15_045	FROM->TO	G14-057T 345.00 - SUNNYSIDE 345KV CKT 1	717	789	0.47842	113.2433	BLANCHARD - MAUD 138KV CKT 1
FDNS	00NR	0	16WP	G15_045	FROM->TO	G14-057T 345.00 - SUNNYSIDE 345KV CKT 1	717	789	0.47479	113.2389	GEN344896 3-1LAB G3 20.000
FDNS	00NR	0	16WP	G15_045	FROM->TO	G14-057T 345.00 - SUNNYSIDE 345KV CKT 1	717	789	0.47479	113.2375	GEN344894 1-1LAB G1 20.000
FDNS	00NR	0	16WP	G15_045	FROM->TO	G14-057T 345.00 - SUNNYSIDE 345KV CKT 1	717	789	0.47479	113.2361	GEN344897 4-1LAB G4 20.000
FDNS	00NR	0	20WP	G15_045	FROM->TO	G14-057T 345.00 - SUNNYSIDE 345KV CKT 1	717	789	0.47612	113.2345	FULTON 115 - HOPE 115KV CKT 1
FDNS	00NR	0	20WP	G15_045	FROM->TO	G14-057T 345.00 - SUNNYSIDE 345KV CKT 1	717	789	0.47612	113.2345	FULTON 115 - HOPE 115KV CKT 1
FDNS	00NR	0	20WP	G15_045	FROM->TO	G14-057T 345.00 - SUNNYSIDE 345KV CKT 1	717	789	0.47731	113.2314	P12:138:AEPW-OGE:WTH_JCT4:JENSEN4
FDNS	00NR	0	20WP	G15_045	FROM->TO	G14-057T 345.00 - SUNNYSIDE 345KV CKT 1	717	789	0.47624	113.2306	GEN337652 1-WHITE BLUFF UNIT #1
FDNS	00NR	0	20WP	G15_045	FROM->TO	G14-057T 345.00 - SUNNYSIDE 345KV CKT 1	717	789	0.47624	113.2297	GEN501811 1-RODEMACHER UNIT 1
FDNS	00NR	0	20WP	G15_045	FROM->TO	G14-057T 345.00 - SUNNYSIDE 345KV CKT 1	717	789	0.47872	113.2296	P12:138:AEPW:CORNVIL4:DUNCAN-4
FDNS	00NR	0	20WP	G15_045	FROM->TO	G14-057T 345.00 - SUNNYSIDE 345KV CKT 1	717	789	0.47624	113.2154	GEN506752 1-LEBROCK GAS 1
FDNS	00NR	0	16WP	G15_045	FROM->TO	G14-057T 345.00 - SUNNYSIDE 345KV CKT 1	717	789	0.4708	113.2152	ARDMORE WEST - UNIROYAL 138KV CKT 1
FDNS	00NR	0	20WP	G15_045	FROM->TO	G14-057T 345.00 - SUNNYSIDE 345KV CKT 1	717	789	0.47624	113.2151	GEN506753 1-LEBROCK GAS 2
FDNS	00NR	0	20WP	G15_045	FROM->TO	G14-057T 345.00 - SUNNYSIDE 345KV CKT 1	717	789	0.47624	113.212	GEN300015 1-1SGPDEL 18.000
FDNS	00NR	0	20WP	G15_045	FROM->TO	G14-057T 345.00 - SUNNYSIDE 345KV CKT 1	717	789	0.47624	113.2097	GEN515226 1-MUSKOGEE 6G
FDNS	00NR	0	20WP	G15_045	FROM->TO	G14-057T 345.00 - SUNNYSIDE 345KV CKT 1	717	789	0.47624	113.2086	GEN300003 1-THOMAS HILL UNIT 3
FDNS	00NR	0	16WP	G15_045	FROM->TO	G14-057T 345.00 - SUNNYSIDE 345KV CKT 1	717	789	0.47465	113.2023	P12:138:AEPW-SWPA:LONEOAK4:TUPELO4
FDNS	00NR	0	16WP	G15_045	FROM->TO	G14-057T 345.00 - SUNNYSIDE 345KV CKT 1	717	789	0.47465	113.2023	P12:138:WFEC:MSL06
FDNS	00NR	0	16WP	G15_045	FROM->TO	G14-057T 345.00 - SUNNYSIDE 345KV CKT 1	717	789	0.47242	113.2022	P12:138:OKGE:3TERM40
FDNS	00NR	0	20WP	G15_045	FROM->TO	G14-057T 345.00 - SUNNYSIDE 345KV CKT 1	717	789	0.47624	113.197	GEN336191 1-LITTLE GYPSY UNIT#3
FDNS	00NR	0	16WP	G15_045	FROM->TO	G14-057T 345.00 - SUNNYSIDE 345KV CKT 1	717	789	0.47479	113.1818	GEN563162 1-G15081_3 0.6900
FDNSLock	00NR	0	16WP	G15_045	FROM->TO	G14-057T 345.00 - SUNNYSIDE 345KV CKT 1	717	789	0.47479	113.1814	GEN681542 6-JP MADGETT
FDNS	00NR	0	16WP	G15_045	FROM->TO	G14-057T 345.00 - SUNNYSIDE 345KV CKT 1	717	789	0.47479	113.1784	GEN521110 1-ORME1 13.800
FDNS	00NR	0	16WP	G15_045	FROM->TO	G14-057T 345.00 - SUNNYSIDE 345KV CKT 1	717	789	0.47479	113.1784	GEN521111 1-ORME2 13.800
FDNS	00NR	0	20WP	G15_045	FROM->TO	G14-057T 345.00 - SUNNYSIDE 345KV CKT 1	717	789	0.47673	113.1781	P12:138:AEPW:CORNVIL4:S.W.S.-4
FDNS	00NR	0	20WP	G15_045	FROM->TO	G14-057T 345.00 - SUNNYSIDE 345KV CKT 1	717	789	0.47714	113.1775	6LAYFLD 230.00 - CARROLL 230KV CKT 1
FDNS	00NR	0	16WP	G15_045	FROM->TO	G14-057T 345.00 - SUNNYSIDE 345KV CKT 1	717	789	0.47479	113.1714	GEN562699 1-G15_018_3 0.6900
FDNS	00NR	0	16WP	G15_045	FROM->TO	G14-057T 345.00 - SUNNYSIDE 345KV CKT 1	717	789	0.47492	113.1706	G15085_T 138.00 - RUSSELL 138KV CKT 1
FDNS	00NR	0	16WP	G15_045	FROM->TO	G14-057T 345.00 - SUNNYSIDE 345KV CKT 1	717	789	0.47156	113.1705	CARTRCO4 138.00 - RATLIFF 138KV CKT 1
FDNS	00NR	0	20WP	G15_045	FROM->TO	G14-057T 345.00 - SUNNYSIDE 345KV CKT 1	717	789	0.47802	113.1702	LATTA JCT - OIL CENTER 138KV CKT 1
FDNS	00NR	0	20WP	G15_045	FROM->TO	G14-057T 345.00 - SUNNYSIDE 345KV CKT 1	717	789	0.47624	113.1681	GEN335614 1-WILLOW GLENN UNIT#4
FDNS	00NR	0	20WP	G15_045	FROM->TO	G14-057T 345.00 - SUNNYSIDE 345KV CKT 1	717	789	0.47842	113.162	CIMARRON - TUTTLE CONOCO TAP 138KV CKT 1
FDNS	00NR	0	16WP	G15_045	FROM->TO	G14-057T 345.00 - SUNNYSIDE 345KV CKT 1	717	789	0.47479	113.159	GEN563292 1-G15095_3 0.6900
FDNS	00NR	0	20WP	G15_045	FROM->TO	G14-057T 345.00 - SUNNYSIDE 345KV CKT 1	717	789	0.47634	113.1529	8DANIEL8 500.00 - MCKNIGHT 500KV CKT 1
FDNS	00NR	0	20WP	G15_045	FROM->TO	G14-057T 345.00 - SUNNYSIDE 345KV CKT 1	717	789	0.47851	113.1398	BAILEY4 138.00 - SUNSHINE CANYON 138KV CKT 1
FDNS	00NR	0	20WP	G15_045	FROM->TO	G14-057T 345.00 - SUNNYSIDE 345KV CKT 1	717	789	0.47638	113.1297	G15095_T 138.00 - ROSE_VALLEY 138.00 138KV CKT 1
FDNS	00NR	0	16WP	G15_045	FROM->TO	G14-057T 345.00 - SUNNYSIDE 345KV CKT 1	717	789	0.47696	113.1295	G15063_T 345.00 - MATHWSN7 345.00 345KV CKT 1
FDNS	00NR	0	20WP	G15_045	FROM->TO	G14-057T 345.00 - SUNNYSIDE 345KV CKT 1	717	789	0.47624	113.1261	GEN337910 1-ARKANSAS NUCLEAR ONE UNIT #1
FDNS	00NR	0	20WP	G15_045	FROM->TO	G14-057T 345.00 - SUNNYSIDE 345KV CKT 1	717	789	0.47624	113.1241	P12:161:AEPW:EROGERS5:ECNTRTN5
FDNS	00NR	0	20WP	G15_045	FROM->TO	G14-057T 345.00 - SUNNYSIDE 345KV CKT 1	717	789	0.47649	113.1228	BUCKNER7 345.00 - SPEARVILLE 345KV CKT 1
FDNS	00NR	0	20WP	G15_045	FROM->TO	G14-057T 345.00 - SUNNYSIDE 345KV CKT 1	717	789	0.47649	113.1228	BUCKNER7 345.00 - SPEARVILLE 345KV CKT 1
FDNS	00NR	0	20WP	G15_045	FROM->TO	G14-057T 345.00 - SUNNYSIDE 345KV CKT 1	717	789	0.47624	113.122	GEN303007 1-1BC2 U2
FDNS	00NR	0	20WP	G15_045	FROM->TO	G14-057T 345.00 - SUNNYSIDE 345KV CKT 1	717	789	0.47759	113.1199	FINNEY SWITCHING STATION - WALKTAP7 345.00 345KV CKT 1
FDNS	00NR	0	20WP	G15_045	FROM->TO	G14-057T 345.00 - SUNNYSIDE 345KV CKT 1	717	789	0.47759	113.1199	FINNEY SWITCHING STATION - WALKTAP7 345.00 345KV CKT 1
FDNS	00NR	0	16WP	G15_045	FROM->TO	G14-057T 345.00 - SUNNYSIDE 345KV CKT 1	717	789	0.47728	113.1195	CACHE - SNYDER 138KV CKT 1
FDNS	00NR	0	20WP	G15_045	FROM->TO	G14-057T 345.00 - SUNNYSIDE 345KV CKT 1	717	789	0.47624	113.1171	GEN336464 1-MICHOUD UNIT #3
FDNS	00NR	0	20WP	G15_045	FROM->TO	G14-057T 345.00 - SUNNYSIDE 345KV CKT 1	717	789	0.47624	113.116	GEN303006 1-1BC2 U1
FDNS	00NR	0	20WP	G15_045	FROM->TO	G14-057T 345.00 - SUNNYSIDE 345KV CKT 1	717	789	0.47687	113.1158	P12:138:AEPW:WTHWF4:CLINTJC4
FDNS	00NR	0	20WP	G15_045	FROM->TO	G14-057T 345.00 - SUNNYSIDE 345KV CKT 1	717	789	0.47624	113.1142	WHITE BLUFF 500/26.0KV TRANSFORMER CKT 1
FDNS	00NR	0	20WP	G15_045	FROM->TO	G14-057T 345.00 - SUNNYSIDE 345KV CKT 1	717	789	0.47705	113.1123	P12:69:WFEC-AEPW:COMANCH2:DUNCAN-2
FDNS	00NR	0	20WP	G15_045	FROM->TO	G14-057T 345.00 - SUNNYSIDE 345KV CKT 1	717	789	0.47624	113.1123	GEN515223 1-MUSKOGEE 4G
FDNS	00NR	0	20WP	G15_045	FROM->TO	G14-057T 345.00 - SUNNYSIDE 345KV CKT 1	717	789	0.47624	113.1123	GEN515225 1-MUSKOGEE 5G
FDNS	00NR	0	20WP	G15_045	FROM->TO	G14-057T 345.00 - SUNNYSIDE 345KV CKT 1	717	789	0.47624	113.1096	GEN562783 1-G15036_4 0.6900
FDNS	00NR	0	20WP	G15_045	FROM->TO	G14-057T 345.00 - SUNNYSIDE 345KV CKT 1	717	789	0.47624	113.1096	GEN562784 1-G15036_5 0.6900
FDNS	00NR	0	20WP	G15_045	FROM->TO	G14-057T 345.00 - SUNNYSIDE 345KV CKT 1	717	789	0.47635	113.1077	G15088_T 345.00 - MOORE 345KV CKT 1
FDNS	00NR	0	20WP	G15_045	FROM->TO	G14-057T 345.00 - SUNNYSIDE 345KV CKT 1	717	789	0.47691	113.1046	P12:69:AEPW-OMPA:COMANC-2:OMWALTR2
FDNS	00NR	0	20WP	G15_045	FROM->TO	G14-057T 345.00 - SUNNYSIDE 345KV CKT 1	717	789	0.47625	113.0985	BISMARK - HOT SPRINGS WEST BUS 115KV CKT 1
FDNS	00NR	0	20WP	G15_045	FROM->TO	G14-057T 345.00 - SUNNYSIDE 345KV CKT 1	717	789	0.47655	113.0959	CIMARRON - CZECH HALL 138KV CKT 1
FDNS	00NR	0	20WP	G15_045	FROM->TO	G14-057T 345.00 - SUNNYSIDE 345KV CKT 1	717	789	0.4764	113.0936	G15074_T 345.00 - HOYT 345KV CKT 1
FDNS	00NR	0	20WP	G15_045	FROM->TO	G14-057T 345.00 - SUNNYSIDE 345KV CKT 1	717	789	0.47643	113.0914	MC NIEL 500/115KV TRANSFORMER CKT 1
FDNS	00NR	0	20WP	G15_045	FROM->TO	G14-057T 345.00 - SUNNYSIDE 345KV CKT 1	717	789	0.47624	113.0857	GEN300010 1-ST FRANCIS UNIT 1
FDNS	00NR	0	20WP	G15_045	FROM->TO	G14-057T 345.00 - SUNNYSIDE 345KV CKT 1	717	789	0.47705	113.0853	DUNCAN - TOSCO 69KV CKT 1
FDNS	00NR	0	20WP	G15_045	FROM->TO	G14-057T 345.00 - SUNNYSIDE 345KV CKT 1	717	789	0.47687	113.0823	P12:138:AEPW:WTHWF4:WTH_SE4
FDNS	00NR	0	16WP	G15_045	FROM->TO	G14-057T 345.00 - SUNNYSIDE 345KV CKT 1	717	789	0.47479	113.0731	GEN563122 1-G15077_3 0.3850
FDNS	00NR	0	16WP	G15_045	FROM->TO	G14-057T 345.00 - SUNNYSIDE 345KV CKT 1	717	789	0.47479	113.0722	GEN661015 1-COYOTE
FDNS	00NR	0	20WP	G15_045	FROM->TO	G14-057T 345.00 - SUNNYSIDE 345KV CKT 1	717	789	0.47647	113.0703	HOT SPRINGS EHV - MAGNET COVE 500KV CKT 1
FDNS	00NR	0	20WP	G15_045	FROM->TO	G14-057T 345.00 - SUNNYSIDE 345KV CKT 1	717	789	0.47637	113.0696	CLEO CORNER - CLEOPLT4 138.00 138KV CKT 1
FDNS	00NR	0	20WP	G15_045	FROM->TO	G14-057T 345.00 - SUNNYSIDE 345KV CKT 1	717	789	0.47624	113.0607	GEN337041 1-GERALD ANDRUS
FDNS	00NR	0	20WP	G15_045	FROM->TO	G14-057T 345.00 - SUNNYSIDE 345KV CKT 1	717	789	0.47624	113.059	GEN505432 1-SIKESTON
FDNS	00NR	0	16WP	G15_045	FROM->TO	G14-057T 345.00 - SUNNYSIDE 345KV CKT 1	717	789	0.47479	113.0554	GEN562861 1-G15045_2 0.4800
FDNS	00NR	0	20WP	G15_045	FROM->TO	G14-057T 345.00 - SUNNYSIDE 345KV CKT 1	717	789	0.47624	113.0543	GEN303008 1-1BC2 U3
FDNS	00NR	0	20WP	G15_045	FROM->TO	G14-057T 345.00 - SUNNYSIDE 345KV CKT 1	717	789	0.47664	113.0517	CHISHOLM6 230.00 - ELK CITY 230KV 230KV CKT 1

SOLUTION	GROUP	SCENARIO	SEASON	SOURCE	DIRECTION	MONITORED ELEMENT	RATEA (MVA)	RATEB(MVA)	TDF	TC%LOADING (% MVA)	CONTINGENCY
FDNS	00NR	0	20WP	G15_045	FROM->TO	G14-057T 345.00 - SUNNYSIDE 345KV CKT 1	717	789	0.47638	113.0491	NOEL_SW 138.00 - ROSE_VALLEY 138.00 138KV CKT 1
FDNS	00NR	0	20WP	G15_045	FROM->TO	G14-057T 345.00 - SUNNYSIDE 345KV CKT 1	717	789	0.47664	113.0487	ELK CITY 230KV (ELKCTY-6) 230/138/13.8KV TRANSFORMER CKT 1
FDNS	00NR	0	20WP	G15_045	FROM->TO	G14-057T 345.00 - SUNNYSIDE 345KV CKT 1	717	789	0.47664	113.0487	ELK CITY 230KV (ELKCTY-6) 230/138/13.8KV TRANSFORMER CKT 1
FDNS	00NR	0	20WP	G15_045	FROM->TO	G14-057T 345.00 - SUNNYSIDE 345KV CKT 1	717	789	0.47637	113.0487	CLEOPLT4 138.00 - MEN TAP 138KV CKT 1
FDNS	00NR	0	20WP	G15_045	FROM->TO	G14-057T 345.00 - SUNNYSIDE 345KV CKT 1	717	789	0.47625	113.047	ALPINE AECC - BISMARK 115KV CKT 1
FDNS	00NR	0	16WP	G15_045	FROM->TO	G14-057T 345.00 - SUNNYSIDE 345KV CKT 1	717	789	0.47479	113.0454	GEN520811 1-ANADRK4
FDNS	00NR	0	20WP	G15_045	FROM->TO	G14-057T 345.00 - SUNNYSIDE 345KV CKT 1	717	789	0.47635	113.0419	CIMARRON - SARA 138KV CKT 1
FDNS	00NR	0	20WP	G15_045	FROM->TO	G14-057T 345.00 - SUNNYSIDE 345KV CKT 1	717	789	0.47637	113.0367	IMO TAP - MEN TAP 138KV CKT 1
FDNS	00NR	0	20WP	G15_045	FROM->TO	G14-057T 345.00 - SUNNYSIDE 345KV CKT 1	717	789	0.47624	113.0282	GEN300011 1-ST FRANCIS UNIT 2
FDNS	00NR	0	20WP	G15_045	FROM->TO	G14-057T 345.00 - SUNNYSIDE 345KV CKT 1	717	789	0.47624	113.0251	GEN336170 1-GULF OXY U4
FDNS	00NR	0	20WP	G15_045	FROM->TO	G14-057T 345.00 - SUNNYSIDE 345KV CKT 1	717	789	0.47614	113.0227	P12:138:AEPW:N.E.S.-4:CATOOSA4
FDNSLock	00NR	0	16WP	G15_045	FROM->TO	G14-057T 345.00 - SUNNYSIDE 345KV CKT 1	717	789	0.47479	113.0211	GEN532751 1-WOLF CREEK GENERATING STATION UNIT 1
FDNS	00NR	0	20WP	G15_045	FROM->TO	G14-057T 345.00 - SUNNYSIDE 345KV CKT 1	717	789	0.47474	113.0209	SEMINOLE - VANOSTP4 138.00 138KV CKT 1
FDNS	00NR	0	20WP	G15_045	FROM->TO	G14-057T 345.00 - SUNNYSIDE 345KV CKT 1	717	789	0.47655	113.0172	CZECH HALL - XEROX 138KV CKT 1
FDNS	00NR	0	20WP	G15_045	FROM->TO	G14-057T 345.00 - SUNNYSIDE 345KV CKT 1	717	789	0.47705	113.0167	COMANCHE TAP - TOSCO 69KV CKT 1
FDNS	00NR	0	20WP	G15_045	FROM->TO	G14-057T 345.00 - SUNNYSIDE 345KV CKT 1	717	789	0.47624	113.0167	NELSON 230/20.0KV TRANSFORMER CKT 1
FDNS	00NR	0	16WP	G15_045	FROM->TO	G14-057T 345.00 - SUNNYSIDE 345KV CKT 1	717	789	0.47494	113.0164	P12:138:WFEC:MSL15
FDNS	00NR	0	20WP	G15_045	FROM->TO	G14-057T 345.00 - SUNNYSIDE 345KV CKT 1	717	789	0.47655	113.0131	MORGAN - XEROX 138KV CKT 1
FDNS	00NR	0	20WP	G15_045	FROM->TO	G14-057T 345.00 - SUNNYSIDE 345KV CKT 1	717	789	0.47624	113.0062	GEN336801 1-BAXTER WILSON UNIT #1
FDNS	00NR	0	20WP	G15_045	FROM->TO	G14-057T 345.00 - SUNNYSIDE 345KV CKT 1	717	789	0.47625	112.9982	ALPINE AECC - AMITY SS 115KV CKT 1
FDNS	00NR	0	20WP	G15_045	FROM->TO	G14-057T 345.00 - SUNNYSIDE 345KV CKT 1	717	789	0.47366	112.9962	ARBWIND4 138.00 - CARTER 138KV CKT 1
FDNS	00NR	0	16WP	G15_045	FROM->TO	G14-057T 345.00 - SUNNYSIDE 345KV CKT 1	717	789	0.4708	112.9937	SUNNYSIDE - UNIROYAL 138KV CKT 1
FDNS	00NR	0	20WP	G15_045	FROM->TO	G14-057T 345.00 - SUNNYSIDE 345KV CKT 1	717	789	0.47655	112.9905	MORGAN - MUSTANG 138KV CKT 1
FDNS	00NR	0	20WP	G15_045	FROM->TO	G14-057T 345.00 - SUNNYSIDE 345KV CKT 1	717	789	0.47732	112.9897	WEATHERFORD JCT. - WEATHERFORD SOUTHEAST 138KV CKT 1
FDNS	00NR	0	20WP	G15_045	FROM->TO	G14-057T 345.00 - SUNNYSIDE 345KV CKT 1	717	789	0.47732	112.9897	WEATHERFORD JCT. - WEATHERFORD SOUTHEAST 138KV CKT 1
FDNS	00NR	0	20WP	G15_045	FROM->TO	G14-057T 345.00 - SUNNYSIDE 345KV CKT 1	717	789	0.47624	112.9775	8CAJUN2 500/24.0KV TRANSFORMER CKT 1
FDNS	00NR	0	20WP	G15_045	FROM->TO	G14-057T 345.00 - SUNNYSIDE 345KV CKT 1	717	789	0.47624	112.9766	GEN501910 1-ACADIA UNIT ST1
FDNS	00NR	0	16WP	G15_045	FROM->TO	G14-057T 345.00 - SUNNYSIDE 345KV CKT 1	717	789	0.47479	112.9741	GEN562992 1-G15063_3 0.6900
FDNS	00NR	0	20WP	G15_045	FROM->TO	G14-057T 345.00 - SUNNYSIDE 345KV CKT 1	717	789	0.4768	112.9676	ANADARKO - SEQUOYAHJ4 138.00 138KV CKT 1
FDNS	00NR	0	20WP	G15_045	FROM->TO	G14-057T 345.00 - SUNNYSIDE 345KV CKT 1	717	789	0.4768	112.9661	CORN TAP - SEQUOYAHJ4 138.00 138KV CKT 1
FDNS	00NR	0	20WP	G15_045	FROM->TO	G14-057T 345.00 - SUNNYSIDE 345KV CKT 1	717	789	0.47705	112.9645	COMANCHE - COMANCHE TAP 69KV CKT 1
FDNS	00NR	0	20WP	G15_045	FROM->TO	G14-057T 345.00 - SUNNYSIDE 345KV CKT 1	717	789	0.47851	112.9615	BAILEY4 138.00 - WESTMOORE 138KV CKT 1
FDNS	00NR	0	16WP	G15_045	FROM->TO	G14-057T 345.00 - SUNNYSIDE 345KV CKT 1	717	789	0.47479	112.9554	GEN657748 1-YOUNG 2 GENERATOR
FDNS	00NR	0	16WP	G15_045	FROM->TO	G14-057T 345.00 - SUNNYSIDE 345KV CKT 1	717	789	0.4752	112.9501	GRAPEVINE INTERCHANGE - STATELINE INTERCHANGE 230KV CKT 1
FDNS	00NR	0	16WP	G15_045	FROM->TO	G14-057T 345.00 - SUNNYSIDE 345KV CKT 1	717	789	0.4752	112.9501	GRAPEVINE INTERCHANGE - STATELINE INTERCHANGE 230KV CKT 1
FDNS	00NR	0	20WP	G15_045	FROM->TO	G14-057T 345.00 - SUNNYSIDE 345KV CKT 1	717	789	0.47654	112.95	P12:138:OKGE-AEPW:JENSEN4:REDROCKRD4
FDNS	00NR	0	20WP	G15_045	FROM->TO	G14-057T 345.00 - SUNNYSIDE 345KV CKT 1	717	789	0.47676	112.94	WALTERS - WALTERS 69KV CKT 1
FDNS	00NR	0	20WP	G15_045	FROM->TO	G14-057T 345.00 - SUNNYSIDE 345KV CKT 1	717	789	0.47732	112.9379	P12:138:AEPW:REDROCKRD4:WTH_JCT4
FDNS	00NR	0	20WP	G15_045	FROM->TO	G14-057T 345.00 - SUNNYSIDE 345KV CKT 1	717	789	0.47624	112.9375	SABINE 230/24.0KV TRANSFORMER CKT 1
FDNS	00NR	0	20WP	G15_045	FROM->TO	G14-057T 345.00 - SUNNYSIDE 345KV CKT 1	717	789	0.47624	112.9335	GEN300016 1-1G1GPDEL 18.000
FDNS	00NR	0	20WP	G15_045	FROM->TO	G14-057T 345.00 - SUNNYSIDE 345KV CKT 1	717	789	0.47635	112.9306	SARA - STHLAKE4 138.00 138KV CKT 1
FDNS	00NR	0	16WP	G15_045	FROM->TO	G14-057T 345.00 - SUNNYSIDE 345KV CKT 1	717	789	0.47522	112.9294	CANEY CREEK - TEXOMA JCT 138KV CKT 1
FDNS	00NR	0	20WP	G15_045	FROM->TO	G14-057T 345.00 - SUNNYSIDE 345KV CKT 1	717	789	0.47624	112.9286	P12:138:AEPW:R.S.S.-4:S.HUD.-4
FDNS	00NR	0	20WP	G15_045	FROM->TO	G14-057T 345.00 - SUNNYSIDE 345KV CKT 1	717	789	0.47655	112.9232	ETTA (DUKE HOTSPRINGS) - MC NIEL 500KV CKT 1
FDNS	00NR	0	20WP	G15_045	FROM->TO	G14-057T 345.00 - SUNNYSIDE 345KV CKT 1	717	789	0.47624	112.9218	GEN336222 1-LITTLE GYPSY UNIT#2
FDNS	00NR	0	16WP	G15_045	FROM->TO	G14-057T 345.00 - SUNNYSIDE 345KV CKT 1	717	789	0.47491	112.9113	P12:138:AEPW:SHAM4WT:CHILD4WT
FDNS	00NR	0	20WP	G15_045	FROM->TO	G14-057T 345.00 - SUNNYSIDE 345KV CKT 1	717	789	0.47691	112.9105	LAWTON RELIFT TAP - OMPA-WALTERS 69KV CKT 1
FDNS	00NR	0	20WP	G15_045	FROM->TO	G14-057T 345.00 - SUNNYSIDE 345KV CKT 1	717	789	0.47635	112.9005	MCCLAIN - STHLAKE4 138.00 138KV CKT 1
FDNS	00NR	0	20WP	G15_045	FROM->TO	G14-057T 345.00 - SUNNYSIDE 345KV CKT 1	717	789	0.47624	112.897	P12:69:AEPW:NROGERS2:ECNTRTN2
FDNS	00NR	0	20WP	G15_045	FROM->TO	G14-057T 345.00 - SUNNYSIDE 345KV CKT 1	717	789	0.47663	112.8964	G13-010T 345.00 - POST ROCK 345KV CKT 1
FDNS	00NR	0	16WP	G15_045	FROM->TO	G14-057T 345.00 - SUNNYSIDE 345KV CKT 1	717	789	0.47479	112.8952	GEN562704 1-G15_020_3 0.3550
FDNS	00NR	0	20WP	G15_045	FROM->TO	G14-057T 345.00 - SUNNYSIDE 345KV CKT 1	717	789	0.47802	112.8932	LASALLE - LATTA JCT 138KV CKT 1
FDNS	00NR	0	20WP	G15_045	FROM->TO	G14-057T 345.00 - SUNNYSIDE 345KV CKT 1	717	789	0.47676	112.8928	NORGE ROAD - SOUTHWESTERN STATION 138KV CKT 1
FDNS	00NR	0	20WP	G15_045	FROM->TO	G14-057T 345.00 - SUNNYSIDE 345KV CKT 1	717	789	0.47676	112.8928	NORGE ROAD - SOUTHWESTERN STATION 138KV CKT 1
FDNS	00NR	0	16WP	G15_045	FROM->TO	G14-057T 345.00 - SUNNYSIDE 345KV CKT 1	717	789	0.47479	112.8914	GEN562952 1-G15057_3 0.6500
FDNS	00NR	0	20WP	G15_045	FROM->TO	G14-057T 345.00 - SUNNYSIDE 345KV CKT 1	717	789	0.47624	112.8872	GEN336152 1-WATERFORD UNIT#2
FDNS	00NR	0	20WP	G15_045	FROM->TO	G14-057T 345.00 - SUNNYSIDE 345KV CKT 1	717	789	0.47624	112.8868	P12:138:AEPW:BA_71ST4:T.S.E.-4
FDNS	00NR	0	20WP	G15_045	FROM->TO	G14-057T 345.00 - SUNNYSIDE 345KV CKT 1	717	789	0.47624	112.8864	GEN336151 1-WATERFORD UNIT#1
FDNS	00NR	0	20WP	G15_045	FROM->TO	G14-057T 345.00 - SUNNYSIDE 345KV CKT 1	717	789	0.47624	112.882	P12:138:AEPW:YARCH-S4:T.S.E.-4
FDNS	00NR	0	20WP	G15_045	FROM->TO	G14-057T 345.00 - SUNNYSIDE 345KV CKT 1	717	789	0.47661	112.8781	EMPORIA ENERGY CENTER - G14_001T 345.00 345KV CKT 1
FDNS	00NR	0	20WP	G15_045	FROM->TO	G14-057T 345.00 - SUNNYSIDE 345KV CKT 1	717	789	0.47641	112.8777	HOYT - STRANGER CREEK 345KV CKT 1
FDNS	00NR	0	20WP	G15_045	FROM->TO	G14-057T 345.00 - SUNNYSIDE 345KV CKT 1	717	789	0.47655	112.8772	P12:138:AEPW-OGE:SHIDLER4:OSAGE 4
FDNS	00NR	0	20WP	G15_045	FROM->TO	G14-057T 345.00 - SUNNYSIDE 345KV CKT 1	717	789	0.47624	112.875	GEN300017 1-1G2GPDEL 18.000
FDNS	00NR	0	20WP	G15_045	FROM->TO	G14-057T 345.00 - SUNNYSIDE 345KV CKT 1	717	789	0.47624	112.8749	FRONTIER 345/18.0KV TRANSFORMER CKT 1
FDNS	00NR	0	20WP	G15_045	FROM->TO	G14-057T 345.00 - SUNNYSIDE 345KV CKT 1	717	789	0.47624	112.8727	FRONTIER 345/18.0KV TRANSFORMER CKT 1
FDNS	00NR	0	20WP	G15_045	FROM->TO	G14-057T 345.00 - SUNNYSIDE 345KV CKT 1	717	789	0.47635	112.8685	P12:138:OKGE:3TERM2
FDNS	00NR	0	20WP	G15_045	FROM->TO	G14-057T 345.00 - SUNNYSIDE 345KV CKT 1	717	789	0.47646	112.8667	CLINTON JUNCTION - ELK CITY 138KV CKT 1
FDNS	00NR	0	20WP	G15_045	FROM->TO	G14-057T 345.00 - SUNNYSIDE 345KV CKT 1	717	789	0.47646	112.8667	CLINTON JUNCTION - ELK CITY 138KV CKT 1
FDNS	00NR	0	20WP	G15_045	FROM->TO	G14-057T 345.00 - SUNNYSIDE 345KV CKT 1	717	789	0.47612	112.8667	HOPE - MCNAB REC 115KV CKT 1
FDNS	00NR	0	20WP	G15_045	FROM->TO	G14-057T 345.00 - SUNNYSIDE 345KV CKT 1	717	789	0.47634	112.8653	MORISNT4 138.00 - STILLWATER 138KV CKT 1
FDNS	00NR	0	20WP	G15_045	FROM->TO	G14-057T 345.00 - SUNNYSIDE 345KV CKT 1	717	789	0.47612	112.856	P12:115:AEPW:TURK3:HOPE3
FDNS	00NR	0	20WP	G15_045	FROM->TO	G14-057T 345.00 - SUNNYSIDE 345KV CKT 1	717	789	0.47663	112.8552	BENTON - WICHITA 345KV CKT 1
FDNS	00NR	0	20WP	G15_045	FROM->TO	G14-057T 345.00 - SUNNYSIDE 345KV CKT 1	717	789	0.4764	112.853	G15074_T 345.00 - JEFFREY ENERGY CENTER 345KV CKT 1
FDNS	00NR	0	16WP	G15_045	FROM->TO	G14-057T 345.00 - SUNNYSIDE 345KV CKT 1	717	789	0.47479	112.8518	GEN563173 1-G15082_3 0.6900
FDNS	00NR	0	20WP	G15_045	FROM->TO	G14-057T 345.00 - SUNNYSIDE 345KV CKT 1	717	789	0.47663	112.8505	G13-010T 345.00 - SPEARVILLE 345KV CKT 1
FDNS	00NR	0	20WP	G15_045	FROM->TO	G14-057T 345.00 - SUNNYSIDE 345KV CKT 1	717	789	0.47638	112.8485	COUCH SES - MC NIEL 115KV CKT 1
FDNS	00NR	0	20WP	G15_045	FROM->TO	G14-057T 345.00 - SUNNYSIDE 345KV CKT 1	717	789	0.47687	112.8447	WEATHERFORD TAP - WEATHERFORD WIND FARM 138KV CKT 1
FDNS	00NR	0	20WP	G15_045	FROM->TO	G14-057T 345.00 - SUNNYSIDE 345KV CKT 1	717	789	0.47654	112.8444	BLACKBERRY - NEOSHO 345KV CKT 1
FDNS	00NR	0	20WP	G15_045	FROM->TO	G14-057T 345.00 - SUNNYSIDE 345KV CKT 1	717	789	0.47624	112.8441	LEWIS CREEK SWITCHYARD 138/22.0KV TRANSFORMER CKT 1

SOLUTION	GROUP	SCENARIO	SEASON	SOURCE	DIRECTION	MONITORED ELEMENT	RATEA (MVA)	RATEB(MVA)	TDF	TC%LOADING (% MVA)	CONTINGENCY
FDNS	00NR	0	20WP	G15_045	FROM->TO	G14-057T 345.00 - SUNNYSIDE 345KV CKT 1	717	789	0.47732	112.8435	HINTON - WEATHERFORD JCT. 138KV CKT 1
FDNS	00NR	0	20WP	G15_045	FROM->TO	G14-057T 345.00 - SUNNYSIDE 345KV CKT 1	717	789	0.47624	112.8396	LEWIS CREEK SWITCHYARD 138/22.0KV TRANSFORMER CKT 1
FDNS	00NR	0	16WP	G15_045	FROM->TO	G14-057T 345.00 - SUNNYSIDE 345KV CKT 1	717	789	0.47521	112.8375	GRAPEVINE INTERCHANGE - NICHOLS STATION 230KV CKT 1
FDNS	00NR	0	16WP	G15_045	FROM->TO	G14-057T 345.00 - SUNNYSIDE 345KV CKT 1	717	789	0.47521	112.8375	GRAPEVINE INTERCHANGE - NICHOLS STATION 230KV CKT 1
FDNS	00NR	0	20WP	G15_045	FROM->TO	G14-057T 345.00 - SUNNYSIDE 345KV CKT 1	717	789	0.47691	112.8369	OMPA-WALTERS - WALTERS 69KV CKT 1
FDNS	00NR	0	20WP	G15_045	FROM->TO	G14-057T 345.00 - SUNNYSIDE 345KV CKT 1	717	789	0.47691	112.8369	OMPA-WALTERS - WALTERS 69KV CKT 1
FDNS	00NR	0	20WP	G15_045	FROM->TO	G14-057T 345.00 - SUNNYSIDE 345KV CKT 1	717	789	0.47634	112.8359	CYPRESS - HARTBURG 500KV CKT 1
FDNS	00NR	0	20WP	G15_045	FROM->TO	G14-057T 345.00 - SUNNYSIDE 345KV CKT 1	717	789	0.47673	112.8325	SOUTHWESTERN STATION - VERDEN 138KV CKT 1
FDNS	00NR	0	20WP	G15_045	FROM->TO	G14-057T 345.00 - SUNNYSIDE 345KV CKT 1	717	789	0.47624	112.8315	GEN334432 1-SABINE UNIT 2
FDNS	00NR	0	20WP	G15_045	FROM->TO	G14-057T 345.00 - SUNNYSIDE 345KV CKT 1	717	789	0.47624	112.831	GEN334431 1-SABINE UNIT 1
FDNS	00NR	0	20WP	G15_045	FROM->TO	G14-057T 345.00 - SUNNYSIDE 345KV CKT 1	717	789	0.47612	112.8308	TURK (TURK 1) 138/115/13.2KV TRANSFORMER CKT 1
FDNS	00NR	0	20WP	G15_045	FROM->TO	G14-057T 345.00 - SUNNYSIDE 345KV CKT 1	717	789	0.47612	112.8308	TURK (TURK 1) 138/115/13.2KV TRANSFORMER CKT 1
FDNS	00NR	0	20WP	G15_045	FROM->TO	G14-057T 345.00 - SUNNYSIDE 345KV CKT 1	717	789	0.47612	112.8307	MCNAB REC - Turk 115 115KV CKT 1
FDNS	00NR	0	20WP	G15_045	FROM->TO	G14-057T 345.00 - SUNNYSIDE 345KV CKT 1	717	789	0.47636	112.8301	7JASPER 345.00 - BLACKBERRY 345KV CKT 1
FDNS	00NR	0	20WP	G15_045	FROM->TO	G14-057T 345.00 - SUNNYSIDE 345KV CKT 1	717	789	0.47624	112.8268	GEN501823 1-TECHE UNIT 3
FDNS	00NR	0	20WP	G15_045	FROM->TO	G14-057T 345.00 - SUNNYSIDE 345KV CKT 1	717	789	0.47624	112.8248	GEN501970 1-EVANGELINE UNIT 7
FDNS	00NR	0	20WP	G15_045	FROM->TO	G14-057T 345.00 - SUNNYSIDE 345KV CKT 1	717	789	0.47624	112.8197	GEN505616 1-BROKEN BOW
FDNS	00NR	0	20WP	G15_045	FROM->TO	G14-057T 345.00 - SUNNYSIDE 345KV CKT 1	717	789	0.47676	112.8185	P12:69:WFEC-AEPW:COMANCH2:WALTRS-2
FDNS	00NR	0	20WP	G15_045	FROM->TO	G14-057T 345.00 - SUNNYSIDE 345KV CKT 1	717	789	0.47451	112.8114	CANADIAN - NOBLE 138KV CKT 1
FDNS	00NR	0	20WP	G15_045	FROM->TO	G14-057T 345.00 - SUNNYSIDE 345KV CKT 1	717	789	0.47673	112.8107	NORTH 29TH CHICKASHA - VERDEN 138KV CKT 1
FDNS	00NR	0	20WP	G15_045	FROM->TO	G14-057T 345.00 - SUNNYSIDE 345KV CKT 1	717	789	0.47624	112.8098	P12:161:AEPW:CHAMSPR5:FARMING5
FDNS	00NR	0	16WP	G15_045	FROM->TO	G14-057T 345.00 - SUNNYSIDE 345KV CKT 1	717	789	0.47479	112.8084	GEN562710 1-G15_022_3 0.5500
FDNS	00NR	0	20WP	G15_045	FROM->TO	G14-057T 345.00 - SUNNYSIDE 345KV CKT 1	717	789	0.47635	112.8043	7LUTESVIL 345.00 - 7ST FRANC 345.00 345KV CKT 1
FDNS	00NR	0	20WP	G15_045	FROM->TO	G14-057T 345.00 - SUNNYSIDE 345KV CKT 1	717	789	0.47624	112.8033	GEN334392 1-EXXON MOBIL IPP 1
FDNS	00NR	0	20WP	G15_045	FROM->TO	G14-057T 345.00 - SUNNYSIDE 345KV CKT 1	717	789	0.47661	112.8	G14_001T 345.00 - WICHITA 345KV CKT 1
FDNS	00NR	0	20WP	G15_045	FROM->TO	G14-057T 345.00 - SUNNYSIDE 345KV CKT 1	717	789	0.47624	112.7969	GEN334393 1-EXXON MOBIL IPP 2
FDNS	00NR	0	20WP	G15_045	FROM->TO	G14-057T 345.00 - SUNNYSIDE 345KV CKT 1	717	789	0.47624	112.7969	GEN334394 1-EXXON MOBIL IPP 3
FDNS	00NR	0	20WP	G15_045	FROM->TO	G14-057T 345.00 - SUNNYSIDE 345KV CKT 1	717	789	0.47851	112.7939	FRANKLIN SW - WESTMOORE 138KV CKT 1
FDNS	00NR	0	20WP	G15_045	FROM->TO	G14-057T 345.00 - SUNNYSIDE 345KV CKT 1	717	789	0.47646	112.7921	LAKEOVER - MCADAMS 500KV CKT 1
FDNS	00NR	0	16WP	G15_045	FROM->TO	G14-057T 345.00 - SUNNYSIDE 345KV CKT 1	717	789	0.47479	112.7898	GEN620315 1-BIG STONE GEN
FDNS	00NR	0	20WP	G15_045	FROM->TO	G14-057T 345.00 - SUNNYSIDE 345KV CKT 1	717	789	0.47459	112.7872	P12:138:OKGE:3TERM27
FDNS	00NR	0	20WP	G15_045	FROM->TO	G14-057T 345.00 - SUNNYSIDE 345KV CKT 1	717	789	0.47642	112.7859	EMPORIA ENERGY CENTER - SWISSVALE 345KV CKT 1
FDNS	00NR	0	20WP	G15_045	FROM->TO	G14-057T 345.00 - SUNNYSIDE 345KV CKT 1	717	789	0.47624	112.7835	ST FRANCIS - ST FRANCIS 1 161KV CKT Z1
FDNS	00NR	0	20WP	G15_045	FROM->TO	G14-057T 345.00 - SUNNYSIDE 345KV CKT 1	717	789	0.47661	112.7809	MCADAMS - WOLF CREEK 500KV CKT 1
FDNS	00NR	0	20WP	G15_045	FROM->TO	G14-057T 345.00 - SUNNYSIDE 345KV CKT 1	717	789	0.47624	112.779	SABINE 230/22.0KV TRANSFORMER CKT 1
FDNS	00NR	0	20WP	G15_045	FROM->TO	G14-057T 345.00 - SUNNYSIDE 345KV CKT 1	717	789	0.47631	112.7787	FLETCHER - MARLOW JCT 69KV CKT 1
FDNS	00NR	0	20WP	G15_045	FROM->TO	G14-057T 345.00 - SUNNYSIDE 345KV CKT 1	717	789	0.47644	112.7734	SWISSVALE - WEST GARDNER 345KV CKT 1
FDNS	00NR	0	20WP	G15_045	FROM->TO	G14-057T 345.00 - SUNNYSIDE 345KV CKT 1	717	789	0.47732	112.7689	HINTON - REDROCKRD4 138.00 138KV CKT 1
FDNS	00NR	0	16WP	G15_045	FROM->TO	G14-057T 345.00 - SUNNYSIDE 345KV CKT 1	717	789	0.47479	112.7677	GEN511851 1-COMANCHE #1
FDNS	00NR	0	20WP	G15_045	FROM->TO	G14-057T 345.00 - SUNNYSIDE 345KV CKT 1	717	789	0.47624	112.7667	GEN501972 1-EVANGELINE UNIT 7-2
FDNS	00NR	0	20WP	G15_045	FROM->TO	G14-057T 345.00 - SUNNYSIDE 345KV CKT 1	717	789	0.47624	112.7666	GEN501971 1-EVANGELINE UNIT 7-1
FDNS	00NR	0	20WP	G15_045	FROM->TO	G14-057T 345.00 - SUNNYSIDE 345KV CKT 1	717	789	0.47625	112.7601	P12:138:AEPW:R.S.S-4:T.P.S.-4
FDNS	00NR	0	20WP	G15_045	FROM->TO	G14-057T 345.00 - SUNNYSIDE 345KV CKT 1	717	789	0.47676	112.7558	CORNVILLE - NORGE ROAD 138KV CKT 1
FDNS	00NR	0	20WP	G15_045	FROM->TO	G14-057T 345.00 - SUNNYSIDE 345KV CKT 1	717	789	0.47676	112.7558	CORNVILLE - NORGE ROAD 138KV CKT 1
FDNS	00NR	0	20WP	G15_045	FROM->TO	G14-057T 345.00 - SUNNYSIDE 345KV CKT 1	717	789	0.47629	112.7544	P12:138:OKGE:3TERM12
FDNS	00NR	0	20WP	G15_045	FROM->TO	G14-057T 345.00 - SUNNYSIDE 345KV CKT 1	717	789	0.47675	112.7529	ENOWILT - LONE OAK 138KV CKT 1
FDNS	00NR	0	20WP	G15_045	FROM->TO	G14-057T 345.00 - SUNNYSIDE 345KV CKT 1	717	789	0.47687	112.7506	WEATHERFORD SOUTHEAST - WEATHERFORD TAP 138KV CKT 1
FDNS	00NR	0	20WP	G15_045	FROM->TO	G14-057T 345.00 - SUNNYSIDE 345KV CKT 1	717	789	0.47675	112.7442	ENOWILT - SARDIS 138KV CKT 1
FDNS	00NR	0	20WP	G15_045	FROM->TO	G14-057T 345.00 - SUNNYSIDE 345KV CKT 1	717	789	0.47624	112.7431	GEN501912 1-ACADIA UNIT CT1B
FDNS	00NR	0	20WP	G15_045	FROM->TO	G14-057T 345.00 - SUNNYSIDE 345KV CKT 1	717	789	0.47661	112.743	FRANKLIN - FRANKLIN SW 138KV CKT 1
FDNS	00NR	0	20WP	G15_045	FROM->TO	G14-057T 345.00 - SUNNYSIDE 345KV CKT 1	717	789	0.4763	112.7424	P12:138:WFEC-AEPW:ELKCTY-4:ERICK4
FDNS	00NR	0	20WP	G15_045	FROM->TO	G14-057T 345.00 - SUNNYSIDE 345KV CKT 1	717	789	0.47624	112.7423	GEN501911 1-ACADIA UNIT CT1A
FDNS	00NR	0	20WP	G15_045	FROM->TO	G14-057T 345.00 - SUNNYSIDE 345KV CKT 1	717	789	0.47802	112.7421	LASALLE - STONEWAL LH138.00 138KV CKT 1
FDNS	00NR	0	20WP	G15_045	FROM->TO	G14-057T 345.00 - SUNNYSIDE 345KV CKT 1	717	789	0.47625	112.7364	AMITY SS - MURFREESBORO EAST (AECC) 115KV CKT 1
FDNS	00NR	0	20WP	G15_045	FROM->TO	G14-057T 345.00 - SUNNYSIDE 345KV CKT 1	717	789	0.47624	112.7343	P12:138:AEPW:R.S.S.-4:R:96YALE-4
FDNS	00NR	0	16WP	G15_045	FROM->TO	G14-057T 345.00 - SUNNYSIDE 345KV CKT 1	717	789	0.47479	112.7303	GEN600004 2-PRAIRIE ISLAND G2
FDNS	00NR	0	16WP	G15_045	FROM->TO	G14-057T 345.00 - SUNNYSIDE 345KV CKT 1	717	789	0.47479	112.7275	GEN600003 1-PRAIRIE ISLAND G1
FDNS	00NR	0	20WP	G15_045	FROM->TO	G14-057T 345.00 - SUNNYSIDE 345KV CKT 1	717	789	0.47673	112.7268	CORNVILLE - NORTH 29TH CHICKASHA 138KV CKT 1
FDNS	00NR	0	20WP	G15_045	FROM->TO	G14-057T 345.00 - SUNNYSIDE 345KV CKT 1	717	789	0.47802	112.724	STONEWAL LH138.00 - TUPELO TAP 138KV CKT 1
FDNS	00NR	0	20WP	G15_045	FROM->TO	G14-057T 345.00 - SUNNYSIDE 345KV CKT 1	717	789	0.47451	112.7182	NOBLE - PURCELL4 138.00 138KV CKT 1
FDNSLock	00NR	0	16WP	G15_045	FROM->TO	G14-057T 345.00 - SUNNYSIDE 345KV CKT 1	717	789	0.47479	112.715	GEN600006 1-AS KING
FDNS	00NR	0	20WP	G15_045	FROM->TO	G14-057T 345.00 - SUNNYSIDE 345KV CKT 1	717	789	0.47819	112.7058	CIMARRON - NORTHWEST 345KV CKT 1
FDNS	00NR	0	20WP	G15_045	FROM->TO	G14-057T 345.00 - SUNNYSIDE 345KV CKT 1	717	789	0.47687	112.7001	CLINTON JUNCTION - CLINTON NATURAL GAS TAP 138KV CKT 1
FDNS	00NR	0	20WP	G15_045	FROM->TO	G14-057T 345.00 - SUNNYSIDE 345KV CKT 1	717	789	0.47654	112.6983	Canadian Pump Station - REDROCKRD4 138.00 138KV CKT 1
FDNS	00NR	0	20WP	G15_045	FROM->TO	G14-057T 345.00 - SUNNYSIDE 345KV CKT 1	717	789	0.47737	112.6767	CRINER - PAYNE 138.00 138KV CKT 1
FDNS	00NR	0	16WP	G15_045	FROM->TO	G14-057T 345.00 - SUNNYSIDE 345KV CKT 1	717	789	0.47493	112.6686	P12:138:WFEC:MSL09
FDNS	00NR	0	16WP	G15_045	FROM->TO	G14-057T 345.00 - SUNNYSIDE 345KV CKT 1	717	789	0.47699	112.6633	P12:138:AEPW-OGE:CORNVIL4:CIMARON4
FDNS	00NR	0	20WP	G15_045	FROM->TO	G14-057T 345.00 - SUNNYSIDE 345KV CKT 1	717	789	0.47676	112.6419	COMANCHE - WALTERS 69KV CKT 1
FDNSLock	00NR	0	16WP	G15_045	FROM->TO	G14-057T 345.00 - SUNNYSIDE 345KV CKT 1	717	789	0.47479	112.6382	GEN636641 1-LOUISA UNIT 1
FDNS	00NR	0	16WP	G15_045	FROM->TO	G14-057T 345.00 - SUNNYSIDE 345KV CKT 1	717	789	0.47479	112.6	GEN615002 2-COAL CREEK
FDNS	00NR	0	16WP	G15_045	FROM->TO	G14-057T 345.00 - SUNNYSIDE 345KV CKT 1	717	789	0.47479	112.5883	GEN600005 1-MONTICELLO
FDNS	00NR	0	16WP	G15_045	FROM->TO	G14-057T 345.00 - SUNNYSIDE 345KV CKT 1	717	789	0.47635	112.5634	CHISHOLM7 345.00 (CHISHOLM) 345/230/13.2KV TRANSFORMER CKT 1
FDNS	00NR	0	16WP	G15_045	FROM->TO	G14-057T 345.00 - SUNNYSIDE 345KV CKT 1	717	789	0.47479	112.5594	GEN562754 1-G15031_5 0.6900
FDNS	00NR	0	16WP	G15_045	FROM->TO	G14-057T 345.00 - SUNNYSIDE 345KV CKT 1	717	789	0.47479	112.5259	GEN635213 3-NEAL UNIT 3
FDNS	00NR	0	16WP	G15_045	FROM->TO	G14-057T 345.00 - SUNNYSIDE 345KV CKT 1	717	789	0.47479	112.5005	GEN562756 1-G15031_7 0.6900
FDNS	00NR	0	16WP	G15_045	FROM->TO	G14-057T 345.00 - SUNNYSIDE 345KV CKT 1	717	789	0.47479	112.5	GEN629074 1-ARNOLD LOWSIDE OF GSU XFMR
FDNS	00NR	0	16WP	G15_045	FROM->TO	G14-057T 345.00 - SUNNYSIDE 345KV CKT 1	717	789	0.47479	112.4623	GEN562023 1-G11_020_3 0.6900
FDNS	00NR	0	16WP	G15_045	FROM->TO	G14-057T 345.00 - SUNNYSIDE 345KV CKT 1	717	789	0.47479	112.4623	GEN562026 1-G11_019_3 0.6900
FDNS	00NR	0	16WP	G15_045	FROM->TO	G14-057T 345.00 - SUNNYSIDE 345KV CKT 1	717	789	0.47479	112.4584	GEN562556 1-G14_046_3 0.3420

SOLUTION	GROUP	SCENARIO	SEASON	SOURCE	DIRECTION	MONITORED ELEMENT	RATEA (MVA)	RATEB(MVA)	TDF	TC%LOADING (% MVA)	CONTINGENCY
FDNS	00NR	0	16WP	G15_045	FROM->TO	G14-057T 345.00 - SUNNYSIDE 345KV CKT 1	717	789	0.47635	112.4526	CHISHOLM7 345.00 - GRACEMONT 345KV CKT 1
FDNS	00NR	0	16WP	G15_045	FROM->TO	G14-057T 345.00 - SUNNYSIDE 345KV CKT 1	717	789	0.47479	112.451	BIG STONE 230/24.0KV TRANSFORMER CKT 1
FDNS	00NR	0	16WP	G15_045	FROM->TO	G14-057T 345.00 - SUNNYSIDE 345KV CKT 1	717	789	0.47479	112.3702	GEN563142 1-G15079_3 0.5500
FDNS	00NR	0	16WP	G15_045	FROM->TO	G14-057T 345.00 - SUNNYSIDE 345KV CKT 1	717	789	0.47479	112.3702	GEN563151 1-G15080_2 0.5500
FDNS	00NR	0	16WP	G15_045	FROM->TO	G14-057T 345.00 - SUNNYSIDE 345KV CKT 1	717	789	0.47479	112.3332	GEN523971 1-HARRINGTON GEN #1 24 KV
FDNS	00NR	0	16WP	G15_045	FROM->TO	G14-057T 345.00 - SUNNYSIDE 345KV CKT 1	717	789	0.47479	112.3331	GEN523973 1-HARRINGTON GEN #3 24 KV
FDNS	00NR	0	16WP	G15_045	FROM->TO	G14-057T 345.00 - SUNNYSIDE 345KV CKT 1	717	789	0.47479	112.333	GEN523972 1-HARRINGTON GEN #2 24 KV
FDNS	00NR	0	16WP	G15_045	FROM->TO	G14-057T 345.00 - SUNNYSIDE 345KV CKT 1	717	789	0.47078	112.293	NORTHWEST TEXARKANA - VALLIANT 345KV CKT 1
FDNS	00NR	0	16WP	G15_045	FROM->TO	G14-057T 345.00 - SUNNYSIDE 345KV CKT 1	717	789	0.47078	112.293	NORTHWEST TEXARKANA - VALLIANT 345KV CKT 1
FDNS	00NR	0	16WP	G15_045	FROM->TO	G14-057T 345.00 - SUNNYSIDE 345KV CKT 1	717	789	0.4755	112.2788	P12:230:AEPW-SPS:SWEETWT6:WHEELER 6
FDNS	00NR	0	16WP	G15_045	FROM->TO	G14-057T 345.00 - SUNNYSIDE 345KV CKT 1	717	789	0.4755	112.2782	STLN-DEMARC6 - SWEETWATER 230KV CKT 1
FDNS	00NR	0	16WP	G15_045	FROM->TO	G14-057T 345.00 - SUNNYSIDE 345KV CKT 1	717	789	0.4755	112.2771	STATELINE INTERCHANGE - STLN-DEMARC6 230KV CKT 1
FDNSLock	00NR	0	16WP	G15_045	FROM->TO	G14-057T 345.00 - SUNNYSIDE 345KV CKT 1	717	789	0.47479	112.2748	GEN600000 1-SHERBURNECNTY G1
FDNS	00NR	0	16WP	G15_045	FROM->TO	G14-057T 345.00 - SUNNYSIDE 345KV CKT 1	717	789	0.47479	112.2359	GEN511848 1-SOUTHWESTERN STATION #3
FDNS	00NR	0	20WP	G15_045	FROM->TO	G14-057T 345.00 - SUNNYSIDE 345KV CKT 1	717	789	0.47624	112.2265	803-OKLAUNION
FDNS	00NR	0	16WP	G15_045	FROM->TO	G14-057T 345.00 - SUNNYSIDE 345KV CKT 1	717	789	0.47479	112.2003	GEN600001 2-SHERBURNE CNTY G2
FDNS	00NR	0	16WP	G15_045	FROM->TO	G14-057T 345.00 - SUNNYSIDE 345KV CKT 1	717	789	0.47479	112.163	GEN563042 1-G15068_3 0.6900
FDNS	00NR	0	16WP	G15_045	FROM->TO	G14-057T 345.00 - SUNNYSIDE 345KV CKT 1	717	789	0.47479	112.1422	GEN527901 1-HOBBS PLANT #1 (CT)
FDNS	00NR	0	16WP	G15_045	FROM->TO	G14-057T 345.00 - SUNNYSIDE 345KV CKT 1	717	789	0.47479	112.1422	GEN527902 1-HOBBS PLANT #2 (CT)
FDNSLock	00NR	0	16WP	G15_045	FROM->TO	G14-057T 345.00 - SUNNYSIDE 345KV CKT 1	717	789	0.47479	112.0855	GEN629075 1-OTTUMWA GENERATOR FOR OTTUMWA UNIT NO 1
FDNS	00NR	0	20WP	G15_045	FROM->TO	G14-057T 345.00 - SUNNYSIDE 345KV CKT 1	717	789	0.47111	111.9515	P12:138:OKGE:3TERM39
FDNSLock	00NR	0	16WP	G15_045	FROM->TO	G14-057T 345.00 - SUNNYSIDE 345KV CKT 1	717	789	0.47479	111.9266	GEN635214 4-NEAL UNIT 4
FDNS	00NR	0	16WP	G15_045	FROM->TO	G14-057T 345.00 - SUNNYSIDE 345KV CKT 1	717	789	0.47479	111.9233	SHERBURNE CO 345/24.0KV TRANSFORMER CKT 1
FDNS	00NR	0	20WP	G15_045	FROM->TO	G14-057T 345.00 - SUNNYSIDE 345KV CKT 1	717	789	0.47633	111.9074	RANCHRD7 345.00 - SOONER 345KV CKT 1
FDNS	00NR	0	20WP	G15_045	FROM->TO	G14-057T 345.00 - SUNNYSIDE 345KV CKT 1	717	789	0.47645	111.8943	CHILDRESS - LAKE PAULINE 138KV CKT 1
FDNS	00NR	0	20WP	G15_045	FROM->TO	G14-057T 345.00 - SUNNYSIDE 345KV CKT 1	717	789	0.47645	111.8943	CHILDRESS - LAKE PAULINE 138KV CKT 1
FDNS	00NR	0	20WP	G15_045	FROM->TO	G14-057T 345.00 - SUNNYSIDE 345KV CKT 1	717	789	0.47636	111.8901	CHILDRESS - HOLLIS TAP 138KV CKT 1
FDNS	00NR	0	20WP	G15_045	FROM->TO	G14-057T 345.00 - SUNNYSIDE 345KV CKT 1	717	789	0.47624	111.8664	GEN562084 1-G11_050_3 0.6900
FDNS	00NR	0	16WP	G15_045	FROM->TO	G14-057T 345.00 - SUNNYSIDE 345KV CKT 1	717	789	0.47479	111.861	GEN563043 1-G15068_4 0.6900
FDNS	00NR	0	16WP	G15_045	FROM->TO	G14-057T 345.00 - SUNNYSIDE 345KV CKT 1	717	789	0.47479	111.8591	GEN563273 2-G15093_4 0.6900
FDNS	00NR	0	20WP	G15_045	FROM->TO	G14-057T 345.00 - SUNNYSIDE 345KV CKT 1	717	789	0.47144	111.847	MAYSVILLE - PAOLI 138KV CKT 1
FDNS	00NR	0	20WP	G15_045	FROM->TO	G14-057T 345.00 - SUNNYSIDE 345KV CKT 1	717	789	0.47624	111.8386	GEN560187 1-WTH WIND 0.5750
FDNS	00NR	0	16WP	G15_045	FROM->TO	G14-057T 345.00 - SUNNYSIDE 345KV CKT 1	717	789	0.47479	111.8362	GEN526333 1-JONES GEN #3 21 KV
FDNS	00NR	0	16WP	G15_045	FROM->TO	G14-057T 345.00 - SUNNYSIDE 345KV CKT 1	717	789	0.47479	111.8361	GEN526334 1-JONES_4 116.500
FDNS	00NR	0	20WP	G15_045	FROM->TO	G14-057T 345.00 - SUNNYSIDE 345KV CKT 1	717	789	0.47679	111.8224	CIMARRON - MATHWSN7 345.00 345KV CKT 1
FDNS	00NR	0	20WP	G15_045	FROM->TO	G14-057T 345.00 - SUNNYSIDE 345KV CKT 1	717	789	0.47679	111.8224	CIMARRON - MATHWSN7 345.00 345KV CKT 2
FDNS	00NR	0	20WP	G15_045	FROM->TO	G14-057T 345.00 - SUNNYSIDE 345KV CKT 1	717	789	0.47624	111.8182	GEN560112 1-G08_037_3 0.6900
FDNS	00NR	0	16WP	G15_045	FROM->TO	G14-057T 345.00 - SUNNYSIDE 345KV CKT 1	717	789	0.47479	111.8	GEN344225 1-1CAL G1 25.000
FDNS	00NR	0	16WP	G15_045	FROM->TO	G14-057T 345.00 - SUNNYSIDE 345KV CKT 1	717	789	0.47641	111.7926	P12:230:AEPW:ELKCITY6:SWEETWT6
FDNS	00NR	0	16WP	G15_045	FROM->TO	G14-057T 345.00 - SUNNYSIDE 345KV CKT 1	717	789	0.47479	111.7857	GEN525844 1-ELK_1 118.000
FDNS	00NR	0	20WP	G15_045	FROM->TO	G14-057T 345.00 - SUNNYSIDE 345KV CKT 1	717	789	0.47624	111.7821	GEN521103 1-BLUE CANYON WIND FARM
FDNS	00NR	0	20WP	G15_045	FROM->TO	G14-057T 345.00 - SUNNYSIDE 345KV CKT 1	717	789	0.47624	111.7799	GEN520812 1-ANADRK5
FDNS	00NR	0	20WP	G15_045	FROM->TO	G14-057T 345.00 - SUNNYSIDE 345KV CKT 1	717	789	0.47624	111.7798	GEN520813 1-ANADRK6
FDNS	00NR	0	20WP	G15_045	FROM->TO	G14-057T 345.00 - SUNNYSIDE 345KV CKT 1	717	789	0.47659	111.7795	DRAPER LAKE - MIDWEST TAP 138KV CKT 1
FDNS	00NR	0	16WP	G15_045	FROM->TO	G14-057T 345.00 - SUNNYSIDE 345KV CKT 1	717	789	0.47479	111.779	GEN525845 1-ELK_2 1 138.00
FDNS	00NR	0	20WP	G15_045	FROM->TO	G14-057T 345.00 - SUNNYSIDE 345KV CKT 1	717	789	0.47624	111.7781	GEN563052 1-G15069_3 0.6900
FDNS	00NR	0	16WP	G15_045	FROM->TO	G14-057T 345.00 - SUNNYSIDE 345KV CKT 1	717	789	0.47479	111.7743	GEN600002 3-SHERBURNE CNTY G3
FDNS	00NR	0	20WP	G15_045	FROM->TO	G14-057T 345.00 - SUNNYSIDE 345KV CKT 1	717	789	0.47144	111.7716	MAYSVILLE - MAYSVLT4 138.00 138KV CKT 1
FDNS	00NR	0	20WP	G15_045	FROM->TO	G14-057T 345.00 - SUNNYSIDE 345KV CKT 1	717	789	0.4767	111.7619	P12:138:OKGE:3TERM21
FDNS	00NR	0	20WP	G15_045	FROM->TO	G14-057T 345.00 - SUNNYSIDE 345KV CKT 1	717	789	0.47624	111.7611	GEN562691 1-G15_015_3 0.6900
FDNS	00NR	0	20WP	G15_045	FROM->TO	G14-057T 345.00 - SUNNYSIDE 345KV CKT 1	717	789	0.47624	111.7556	GEN562772 1-G15034_3 0.6900
FDNS	00NR	0	20WP	G15_045	FROM->TO	G14-057T 345.00 - SUNNYSIDE 345KV CKT 1	717	789	0.47624	111.7408	GEN511961 1-DEMPSEY-WTG10.7000
FDNS	00NR	0	20WP	G15_045	FROM->TO	G14-057T 345.00 - SUNNYSIDE 345KV CKT 1	717	789	0.47802	111.7297	SOONER - SPRING CREEK 345KV CKT 1
FDNS	00NR	0	20WP	G15_045	FROM->TO	G14-057T 345.00 - SUNNYSIDE 345KV CKT 1	717	789	0.47625	111.7267	P12:069:OKGE:3TERM42
FDNS	00NR	0	20WP	G15_045	FROM->TO	G14-057T 345.00 - SUNNYSIDE 345KV CKT 1	717	789	0.47802	111.7265	NORTHWEST - SPRING CREEK 345KV CKT 1
FDNS	00NR	0	20WP	G15_045	FROM->TO	G14-057T 345.00 - SUNNYSIDE 345KV CKT 1	717	789	0.47366	111.7238	ARBUCKLE - SULPHR 4 138.00 138KV CKT 1
FDNS	00NR	0	20WP	G15_045	FROM->TO	G14-057T 345.00 - SUNNYSIDE 345KV CKT 1	717	789	0.4759	111.7062	GLASSES - MADILL INDUSTRIAL TAP 138KV CKT 1
FDNS	00NR	0	20WP	G15_045	FROM->TO	G14-057T 345.00 - SUNNYSIDE 345KV CKT 1	717	789	0.47144	111.7055	MAYSVLT4 138.00 - PRAIRIE POINT 138KV CKT 1
FDNS	00NR	0	20WP	G15_045	FROM->TO	G14-057T 345.00 - SUNNYSIDE 345KV CKT 1	717	789	0.47615	111.7005	P12:138:WFEC:MSL11
FDNS	00NR	0	20WP	G15_045	FROM->TO	G14-057T 345.00 - SUNNYSIDE 345KV CKT 1	717	789	0.47615	111.7005	P12:138:WFEC-AEPW:PHAROAH4:LONEOAK4
FDNS	00NR	0	20WP	G15_045	FROM->TO	G14-057T 345.00 - SUNNYSIDE 345KV CKT 1	717	789	0.47588	111.6941	CANEY CREEK - JOHNSON COUNTY 138KV CKT 1
FDNS	00NR	0	20WP	G15_045	FROM->TO	G14-057T 345.00 - SUNNYSIDE 345KV CKT 1	717	789	0.47624	111.689	GEN515443 1-MNCOWND1 0.7000
FDNS	00NR	0	20WP	G15_045	FROM->TO	G14-057T 345.00 - SUNNYSIDE 345KV CKT 1	717	789	0.47761	111.6853	MOREWOOD SW - NINE MILE 138KV CKT 1
FDNS	00NR	0	20WP	G15_045	FROM->TO	G14-057T 345.00 - SUNNYSIDE 345KV CKT 1	717	789	0.47636	111.6712	ALTUS JUNCTION - RUSSELL 138KV CKT 1
FDNS	00NR	0	20WP	G15_045	FROM->TO	G14-057T 345.00 - SUNNYSIDE 345KV CKT 1	717	789	0.47636	111.6712	ALTUS JUNCTION - RUSSELL 138KV CKT 1
FDNS	00NR	0	20WP	G15_045	FROM->TO	G14-057T 345.00 - SUNNYSIDE 345KV CKT 1	717	789	0.47624	111.6708	GEN560183 1-REDHIL-WTG1 12.000
FDNS	00NR	0	20WP	G15_045	FROM->TO	G14-057T 345.00 - SUNNYSIDE 345KV CKT 1	717	789	0.47624	111.6625	INDEPENDENCE 500/26.0KV TRANSFORMER CKT 1
FDNS	00NR	0	20WP	G15_045	FROM->TO	G14-057T 345.00 - SUNNYSIDE 345KV CKT 1	717	789	0.4759	111.6578	GLASSES - RUSSETT 138KV CKT 1
FDNS	00NR	0	20WP	G15_045	FROM->TO	G14-057T 345.00 - SUNNYSIDE 345KV CKT 1	717	789	0.47624	111.654	GEN600067 9-HIGH BRIDGE
FDNS	00NR	0	20WP	G15_045	FROM->TO	G14-057T 345.00 - SUNNYSIDE 345KV CKT 1	717	789	0.47647	111.6529	OVEXFRMCCOVE
FDNS	00NR	0	20WP	G15_045	FROM->TO	G14-057T 345.00 - SUNNYSIDE 345KV CKT 1	717	789	0.47661	111.6441	P12:138:WFEC:MSL08
FDNS	00NR	0	16WP	G15_045	FROM->TO	G14-057T 345.00 - SUNNYSIDE 345KV CKT 1	717	789	0.47479	111.6433	GEN525562 1-TOLK GEN #2 24 KV
FDNS	00NR	0	20WP	G15_045	FROM->TO	G14-057T 345.00 - SUNNYSIDE 345KV CKT 1	717	789	0.47568	111.6433	CARTER - CHICKASAW 138KV CKT 1
FDNS	00NR	0	16WP	G15_045	FROM->TO	G14-057T 345.00 - SUNNYSIDE 345KV CKT 1	717	789	0.47479	111.6359	GEN563202 1-G15085_3 0.5500
FDNS	00NR	0	20WP	G15_045	FROM->TO	G14-057T 345.00 - SUNNYSIDE 345KV CKT 1	717	789	0.476	111.6359	CANADIAN RIVER - MCALESTER SOUTH 138KV CKT 1
FDNS	00NR	0	20WP	G15_045	FROM->TO	G14-057T 345.00 - SUNNYSIDE 345KV CKT 1	717	789	0.476	111.6359	CANADIAN RIVER - MCALESTER SOUTH 138KV CKT 1
FDNS	00NR	0	20WP	G15_045	FROM->TO	G14-057T 345.00 - SUNNYSIDE 345KV CKT 1	717	789	0.47671	111.6344	LEBANON - TEXOMA JCT 138KV CKT 1
FDNS	00NR	0	20WP	G15_045	FROM->TO	G14-057T 345.00 - SUNNYSIDE 345KV CKT 1	717	789	0.476	111.6341	CANADIAN RIVER () 345/138/13.8KV TRANSFORMER CKT 1
FDNS	00NR	0	20WP	G15_045	FROM->TO	G14-057T 345.00 - SUNNYSIDE 345KV CKT 1	717	789	0.476	111.6341	CANADIAN RIVER () 345/138/13.8KV TRANSFORMER CKT 1

SOLUTION	GROUP	SCENARIO	SEASON	SOURCE	DIRECTION	MONITORED ELEMENT	RATEA (MVA)	RATEB(MVA)	TDF	TC%LOADING (% MVA)	CONTINGENCY
FDNS	00NR	0	20WP	G15_045	FROM->TO	G14-057T 345.00 - SUNNYSIDE 345KV CKT 1	717	789	0.47624	111.6328	P12:230:UMZB:# 112 #: NU IN SD. NU-RCDC & DRY CREEK XFMR
FDNS	00NR	0	16WP	G15_045	FROM->TO	G14-057T 345.00 - SUNNYSIDE 345KV CKT 1	717	789	0.46805	111.6299	LYDIA - WELSH 345KV CKT 1
FDNS	00NR	0	16WP	G15_045	FROM->TO	G14-057T 345.00 - SUNNYSIDE 345KV CKT 1	717	789	0.46805	111.6299	LYDIA - WELSH 345KV CKT 1
FDNS	00NR	0	20WP	G15_045	FROM->TO	G14-057T 345.00 - SUNNYSIDE 345KV CKT 1	717	789	0.47624	111.627	RCDC EAST 4230.00 - RED CEDAR DC 230KV CKT 1
FDNS	00NR	0	20WP	G15_045	FROM->TO	G14-057T 345.00 - SUNNYSIDE 345KV CKT 1	717	789	0.47474	111.6223	ROCKY POINT - SPRINGDALE 138KV CKT 1
FDNS	00NR	0	20WP	G15_045	FROM->TO	G14-057T 345.00 - SUNNYSIDE 345KV CKT 1	717	789	0.47624	111.6211	GEN562902 1-G15052_3 0.6900
FDNS	00NR	0	20WP	G15_045	FROM->TO	G14-057T 345.00 - SUNNYSIDE 345KV CKT 1	717	789	0.4762	111.621	HUGO (HUGO 1) 345/138/13.8KV TRANSFORMER CKT 1
FDNS	00NR	0	20WP	G15_045	FROM->TO	G14-057T 345.00 - SUNNYSIDE 345KV CKT 1	717	789	0.47624	111.6184	GEN563242 1-G15090_3 0.6900
FDNS	00NR	0	20WP	G15_045	FROM->TO	G14-057T 345.00 - SUNNYSIDE 345KV CKT 1	717	789	0.47144	111.6131	PRAIRIE POINT - RATLIFF 138KV CKT 1
FDNS	00NR	0	20WP	G15_045	FROM->TO	G14-057T 345.00 - SUNNYSIDE 345KV CKT 1	717	789	0.47604	111.6118	CHAMBER SPRINGS - CLARKSVILLE 345KV CKT 1
FDNS	00NR	0	20WP	G15_045	FROM->TO	G14-057T 345.00 - SUNNYSIDE 345KV CKT 1	717	789	0.47631	111.6064	GRPRAR1-LNX3345.00 - GRPRAR 345KV CKT Z
FDNS	00NR	0	20WP	G15_045	FROM->TO	G14-057T 345.00 - SUNNYSIDE 345KV CKT 1	717	789	0.47631	111.606	GRPRAR1-LNX3345.00 - HOLT.CO3 345.00 345KV CKT 1
FDNS	00NR	0	16WP	G15_045	FROM->TO	G14-057T 345.00 - SUNNYSIDE 345KV CKT 1	717	789	0.47479	111.5979	GEN527166 1-MUSTANG_6 118.000
FDNS	00NR	0	20WP	G15_045	FROM->TO	G14-057T 345.00 - SUNNYSIDE 345KV CKT 1	717	789	0.47624	111.5943	GEN629072 4-LANSING GENERATOR FOR UNITS NO4 EIA CODE 1
FDNS	00NR	0	16WP	G15_045	FROM->TO	G14-057T 345.00 - SUNNYSIDE 345KV CKT 1	717	789	0.4755	111.5888	CHISHOLM6 230.00 - SWEETWATER 230KV CKT 1
FDNS	00NR	0	20WP	G15_045	FROM->TO	G14-057T 345.00 - SUNNYSIDE 345KV CKT 1	717	789	0.47624	111.5796	GEN562078 1-G11_051_3 0.6900
FDNS	00NR	0	20WP	G15_045	FROM->TO	G14-057T 345.00 - SUNNYSIDE 345KV CKT 1	717	789	0.47871	111.5767	P12:138:AEPW:112GORE4:SNYDER-4
FDNS	00NR	0	20WP	G15_045	FROM->TO	G14-057T 345.00 - SUNNYSIDE 345KV CKT 1	717	789	0.47624	111.5711	GEN524285 1-WILDORADO WIND GEN
FDNS	00NR	0	20WP	G15_045	FROM->TO	G14-057T 345.00 - SUNNYSIDE 345KV CKT 1	717	789	0.47366	111.5694	JOLLYVILLE - SULPHR 4 138.00 138KV CKT 1
FDNS	00NR	0	20WP	G15_045	FROM->TO	G14-057T 345.00 - SUNNYSIDE 345KV CKT 1	717	789	0.47624	111.5522	GEN562587 1-G14_056_3 0.6900
FDNS	00NR	0	20WP	G15_045	FROM->TO	G14-057T 345.00 - SUNNYSIDE 345KV CKT 1	717	789	0.47624	111.5512	GEN514805 1-SOONER UNIT 1
FDNS	00NR	0	20WP	G15_045	FROM->TO	G14-057T 345.00 - SUNNYSIDE 345KV CKT 1	717	789	0.47761	111.5491	BEARCAT 138.00 - NINE MILE 138KV CKT 1
FDNS	00NR	0	20WP	G15_045	FROM->TO	G14-057T 345.00 - SUNNYSIDE 345KV CKT 1	717	789	0.47624	111.5454	GEN524295 1-SPNSPUR_WND10.6900
FDNS	00NR	0	20WP	G15_045	FROM->TO	G14-057T 345.00 - SUNNYSIDE 345KV CKT 1	717	789	0.47624	111.5399	GEN657749 1-YOUNG_1 GENERATOR
FDNS	00NR	0	16WP	G15_045	FROM->TO	G14-057T 345.00 - SUNNYSIDE 345KV CKT 1	717	789	0.47118	111.5346	JOHNSON COUNTY (JOHNCO) 345/138/13.8KV TRANSFORMER CKT 1
FDNS	00NR	0	16WP	G15_045	FROM->TO	G14-057T 345.00 - SUNNYSIDE 345KV CKT 1	717	789	0.47479	111.5255	GEN635023 3-WALTER SCOTT UNIT 3
FDNS	00NR	0	20WP	G15_045	FROM->TO	G14-057T 345.00 - SUNNYSIDE 345KV CKT 1	717	789	0.47624	111.5198	GEN514806 1-SOONER UNIT 2
FDNS	00NR	0	20WP	G15_045	FROM->TO	G14-057T 345.00 - SUNNYSIDE 345KV CKT 1	717	789	0.47624	111.5196	GEN524023 1-NICHOLS GEN #3 22 KV
FDNS	00NR	0	16WP	G15_045	FROM->TO	G14-057T 345.00 - SUNNYSIDE 345KV CKT 1	717	789	0.47479	111.5165	GEN562590 1-G14_057_3 0.6900
FDNS	00NR	0	20WP	G15_045	FROM->TO	G14-057T 345.00 - SUNNYSIDE 345KV CKT 1	717	789	0.47705	111.5107	CROCKETT - TENASKA RUSK COUNTY 345KV CKT 1
FDNS	00NR	0	20WP	G15_045	FROM->TO	G14-057T 345.00 - SUNNYSIDE 345KV CKT 1	717	789	0.47705	111.5059	LEBROCK - TENASKA RUSK COUNTY 345KV CKT 1
FDNS	00NR	0	20WP	G15_045	FROM->TO	G14-057T 345.00 - SUNNYSIDE 345KV CKT 1	717	789	0.47366	111.4877	JOLLYVILLE - KERR MCGEE CIMARRON 138KV CKT 1
FDNS	00NR	0	20WP	G15_045	FROM->TO	G14-057T 345.00 - SUNNYSIDE 345KV CKT 1	717	789	0.47624	111.4834	GEN562812 1-G15040_3 0.3570
FDNS	00NR	0	20WP	G15_045	FROM->TO	G14-057T 345.00 - SUNNYSIDE 345KV CKT 1	717	789	0.47624	111.4785	GEN562270 1-G12-020-2 0.6900
FDNS	00NR	0	20WP	G15_045	FROM->TO	G14-057T 345.00 - SUNNYSIDE 345KV CKT 1	717	789	0.47624	111.4769	GEN562882 1-G15047_3 0.6900
FDNS	00NR	0	20WP	G15_045	FROM->TO	G14-057T 345.00 - SUNNYSIDE 345KV CKT 1	717	789	0.47624	111.4766	GEN563132 1-G15078_3 0.3570
FDNS	00NR	0	20WP	G15_045	FROM->TO	G14-057T 345.00 - SUNNYSIDE 345KV CKT 1	717	789	0.47624	111.4697	GEN563102 1-G15075_3 0.5500
FDNS	00NR	0	20WP	G15_045	FROM->TO	G14-057T 345.00 - SUNNYSIDE 345KV CKT 1	717	789	0.47624	111.4569	GEN563062 1-G15071_3 0.6900
FDNS	00NR	0	20WP	G15_045	FROM->TO	G14-057T 345.00 - SUNNYSIDE 345KV CKT 1	717	789	0.47761	111.4547	BEARCAT 138.00 - MOORELAND 138KV CKT 1
FDNS	00NR	0	20WP	G15_045	FROM->TO	G14-057T 345.00 - SUNNYSIDE 345KV CKT 1	717	789	0.47761	111.4501	P12:138:WFEC:MSL14
FDNS	00NR	0	20WP	G15_045	FROM->TO	G14-057T 345.00 - SUNNYSIDE 345KV CKT 1	717	789	0.47366	111.4369	ARBWIND4 138.00 - KERR MCGEE CIMARRON 138KV CKT 1
FDNS	00NR	0	20WP	G15_045	FROM->TO	G14-057T 345.00 - SUNNYSIDE 345KV CKT 1	717	789	0.47624	111.4202	GEN562974 1-G15060_5 0.6900
FDNS	00NR	0	20WP	G15_045	FROM->TO	G14-057T 345.00 - SUNNYSIDE 345KV CKT 1	717	789	0.47624	111.4197	GEN521112 1-ORME3 13.800
FDNS	00NR	0	20WP	G15_045	FROM->TO	G14-057T 345.00 - SUNNYSIDE 345KV CKT 1	717	789	0.47503	111.4177	BROWN - RUSSETT 138KV CKT 1
FDNS	00NR	0	16WP	G15_045	FROM->TO	G14-057T 345.00 - SUNNYSIDE 345KV CKT 1	717	789	0.47479	111.4166	GEN562762 1-G15033_3 0.6900
FDNS	00NR	0	20WP	G15_045	FROM->TO	G14-057T 345.00 - SUNNYSIDE 345KV CKT 1	717	789	0.47624	111.4113	GEN345671 2-1RUSH G2 18.000
FDNS	00NR	0	20WP	G15_045	FROM->TO	G14-057T 345.00 - SUNNYSIDE 345KV CKT 1	717	789	0.47624	111.4104	GEN562973 1-G15060_4 0.6900
FDNS	00NR	0	20WP	G15_045	FROM->TO	G14-057T 345.00 - SUNNYSIDE 345KV CKT 1	717	789	0.47624	111.4094	GEN345670 1-1RUSH G1 18.000
FDNS	00NR	0	16WP	G15_045	FROM->TO	G14-057T 345.00 - SUNNYSIDE 345KV CKT 1	717	789	0.47479	111.4055	GEN562655 1-G14_074_3 0.6900
FDNS	00NR	0	20WP	G15_045	FROM->TO	G14-057T 345.00 - SUNNYSIDE 345KV CKT 1	717	789	0.47402	111.3964	CHICKASAW - TOTAL 138KV CKT 1
FDNS	00NR	0	20WP	G15_045	FROM->TO	G14-057T 345.00 - SUNNYSIDE 345KV CKT 1	717	789	0.47624	111.3839	GEN560105 1-G08-22 0.6900
FDNS	00NR	0	20WP	G15_045	FROM->TO	G14-057T 345.00 - SUNNYSIDE 345KV CKT 1	717	789	0.47624	111.3817	4SIOUX 1 138.00 138/18.0KV TRANSFORMER CKT 1
FDNS	00NR	0	20WP	G15_045	FROM->TO	G14-057T 345.00 - SUNNYSIDE 345KV CKT 1	717	789	0.47503	111.372	RUSSETT - RUSSETT 138KV CKT 1
FDNS	00NR	0	20WP	G15_045	FROM->TO	G14-057T 345.00 - SUNNYSIDE 345KV CKT 1	717	789	0.47624	111.3666	GEN562550 1-G14_040_3 0.6900
FDNS	00NR	0	20WP	G15_045	FROM->TO	G14-057T 345.00 - SUNNYSIDE 345KV CKT 1	717	789	0.47624	111.3633	GEN681522 3-GENOA 3
FDNS	00NR	0	16WP	G15_045	FROM->TO	G14-057T 345.00 - SUNNYSIDE 345KV CKT 1	717	789	0.47479	111.3403	GEN562685 1-G15_013_3 0.3550
FDNS	00NR	0	20WP	G15_045	FROM->TO	G14-057T 345.00 - SUNNYSIDE 345KV CKT 1	717	789	0.47624	111.3293	GEN511853 1-COMANCHE #3
FDNS	00NR	0	20WP	G15_045	FROM->TO	G14-057T 345.00 - SUNNYSIDE 345KV CKT 1	717	789	0.47624	111.3226	GEN527161 1-MUSTANG GEN #1
FDNS	00NR	0	20WP	G15_045	FROM->TO	G14-057T 345.00 - SUNNYSIDE 345KV CKT 1	717	789	0.47624	111.3226	GEN527162 1-MUSTANG GEN #2
FDNS	00NR	0	20WP	G15_045	FROM->TO	G14-057T 345.00 - SUNNYSIDE 345KV CKT 1	717	789	0.47424	111.3211	ROCKY POINT - SUNNYSIDE 138KV CKT 1
FDNS	00NR	0	20WP	G15_045	FROM->TO	G14-057T 345.00 - SUNNYSIDE 345KV CKT 1	717	789	0.47624	111.3161	EASTDC - ERCOT EQUIVALENCE 345KV CKT 1
FDNS	00NR	0	20WP	G15_045	FROM->TO	G14-057T 345.00 - SUNNYSIDE 345KV CKT 1	717	789	0.47624	111.3113	GEN511962 2-RKYRDGW2-1 0.7000
FDNS	00NR	0	20WP	G15_045	FROM->TO	G14-057T 345.00 - SUNNYSIDE 345KV CKT 1	717	789	0.47624	111.2988	GEN672321 1-SHAND GENERATOR 1
FDNS	00NR	0	20WP	G15_045	FROM->TO	G14-057T 345.00 - SUNNYSIDE 345KV CKT 1	717	789	0.47464	111.2978	RUSSETT - SPRINGDALE 138KV CKT 1
FDNS	00NR	0	20WP	G15_045	FROM->TO	G14-057T 345.00 - SUNNYSIDE 345KV CKT 1	717	789	0.47624	111.2896	GEN525494 1-PLANT X GEN #4 20 KV
FDNS	00NR	0	20WP	G15_045	FROM->TO	G14-057T 345.00 - SUNNYSIDE 345KV CKT 1	717	789	0.47838	111.2832	G15063_T 345.00 - MATHWSN7 345.00 345KV CKT 1
FDNS	00NR	0	20WP	G15_045	FROM->TO	G14-057T 345.00 - SUNNYSIDE 345KV CKT 1	717	789	0.47624	111.2755	GEN672310 1-POPLAR RIVER GENERATOR 1
FDNS	00NR	0	20WP	G15_045	FROM->TO	G14-057T 345.00 - SUNNYSIDE 345KV CKT 1	717	789	0.47624	111.2755	GEN672311 2-POPLAR RIVER GENERATOR 2
FDNS	00NR	0	20WP	G15_045	FROM->TO	G14-057T 345.00 - SUNNYSIDE 345KV CKT 1	717	789	0.47624	111.2739	GEN527882 1-CUNNINGHAM GEN #2 20 KV
FDNS	00NR	0	20WP	G15_045	FROM->TO	G14-057T 345.00 - SUNNYSIDE 345KV CKT 1	717	789	0.47624	111.266	GEN672306 6-BOUNDARY DAM GENERATOR 6
FDNS	00NR	0	20WP	G15_045	FROM->TO	G14-057T 345.00 - SUNNYSIDE 345KV CKT 1	717	789	0.47624	111.2655	GEN563192 1-G15084_3 0.5500
FDNS	00NR	0	20WP	G15_045	FROM->TO	G14-057T 345.00 - SUNNYSIDE 345KV CKT 1	717	789	0.47624	111.2616	GEN562512 1-G14_020_3 0.6900
FDNS	00NR	0	20WP	G15_045	FROM->TO	G14-057T 345.00 - SUNNYSIDE 345KV CKT 1	717	789	0.47624	111.2595	GEN511852 1-COMANCHE #2
FDNS	00NR	0	20WP	G15_045	FROM->TO	G14-057T 345.00 - SUNNYSIDE 345KV CKT 1	717	789	0.47624	111.2591	GEN344895 2-1LAB G2 20.000
FDNS	00NR	0	20WP	G15_045	FROM->TO	G14-057T 345.00 - SUNNYSIDE 345KV CKT 1	717	789	0.47624	111.258	GEN527163 1-MUSTANG GEN #3 22 KV
FDNS	00NR	0	20WP	G15_045	FROM->TO	G14-057T 345.00 - SUNNYSIDE 345KV CKT 1	717	789	0.47581	111.2526	P12:138:WFEC-AEPW:GOLDENSW4:CRAIGJT4
FDNS	00NR	0	20WP	G15_045	FROM->TO	G14-057T 345.00 - SUNNYSIDE 345KV CKT 1	717	789	0.47624	111.2434	GEN562892 1-G15048_3 0.6900
FDNS	00NR	0	20WP	G15_045	FROM->TO	G14-057T 345.00 - SUNNYSIDE 345KV CKT 1	717	789	0.47624	111.2366	GEN681542 6-JP MADGETT
FDNS	00NR	0	20WP	G15_045	FROM->TO	G14-057T 345.00 - SUNNYSIDE 345KV CKT 1	717	789	0.47697	111.235	ARKANSAS NUCLEAR ONE - FT SMITH 500KV CKT 1

SOLUTION	GROUP	SCENARIO	SEASON	SOURCE	DIRECTION	MONITORED ELEMENT	RATEA (MVA)	RATEB(MVA)	TDF	TC%LOADING (% MVA)	CONTINGENCY
FDNS	00NR	0	20WP	G15_045	FROM->TO	G14-057T 345.00 - SUNNYSIDE 345KV CKT 1	717	789	0.47697	111.235	ARKANSAS NUCLEAR ONE - FT SMITH 500KV CKT 1
FDNS	00NR	0	20WP	G15_045	FROM->TO	G14-057T 345.00 - SUNNYSIDE 345KV CKT 1	717	789	0.47624	111.2295	GEN344896 3-1LAB G3 20.000
FDNS	00NR	0	20WP	G15_045	FROM->TO	G14-057T 345.00 - SUNNYSIDE 345KV CKT 1	717	789	0.47624	111.2284	GEN344897 4-1LAB G4 20.000
FDNS	00NR	0	20WP	G15_045	FROM->TO	G14-057T 345.00 - SUNNYSIDE 345KV CKT 1	717	789	0.47624	111.2281	GEN344894 1-1LAB G1 20.000
FDNS	00NR	0	20WP	G15_045	FROM->TO	G14-057T 345.00 - SUNNYSIDE 345KV CKT 1	717	789	0.47636	111.2223	P12:138:WFEC:MSL16
FDNS	00NR	0	20WP	G15_045	FROM->TO	G14-057T 345.00 - SUNNYSIDE 345KV CKT 1	717	789	0.47228	111.2221	ARDMORE WEST - CARTER 138KV CKT 1
FDNS	00NR	0	16WP	G15_045	FROM->TO	G14-057T 345.00 - SUNNYSIDE 345KV CKT 1	717	789	0.47479	111.2074	GEN525561 1-TOLK GEN #1 24 KV
FDNS	00NR	0	16WP	G15_045	FROM->TO	G14-057T 345.00 - SUNNYSIDE 345KV CKT 1	717	789	0.47479	111.2074	GEN527903 1-HOBBS PLANT #3 (ST)
FDNS	00NR	0	16WP	G15_045	FROM->TO	G14-057T 345.00 - SUNNYSIDE 345KV CKT 1	717	789	0.47479	111.2054	GEN563272 1-G15093_3 0.6900
FDNS	00NR	0	20WP	G15_045	FROM->TO	G14-057T 345.00 - SUNNYSIDE 345KV CKT 1	717	789	0.47624	111.2032	GEN523461 1-BLACKHAWK GEN #1
FDNS	00NR	0	20WP	G15_045	FROM->TO	G14-057T 345.00 - SUNNYSIDE 345KV CKT 1	717	789	0.47624	111.2031	GEN523462 1-BLACKHAWK GEN #2
FDNS	00NR	0	20WP	G15_045	FROM->TO	G14-057T 345.00 - SUNNYSIDE 345KV CKT 1	717	789	0.47871	111.1791	CACHE - SNYDER 138KV CKT 1
FDNS	00NR	0	20WP	G15_045	FROM->TO	G14-057T 345.00 - SUNNYSIDE 345KV CKT 1	717	789	0.47692	111.1605	P12:138:WFEC:MSL07
FDNS	00NR	0	20WP	G15_045	FROM->TO	G14-057T 345.00 - SUNNYSIDE 345KV CKT 1	717	789	0.47692	111.1605	P12:138:WFEC-AEPW:HUGOPP4:ATOKA--4
FDNS	00NR	0	20WP	G15_045	FROM->TO	G14-057T 345.00 - SUNNYSIDE 345KV CKT 1	717	789	0.4761	111.1553	P12:138:AEPW-SWPA:LONEOAK4:TUPELO4
FDNS	00NR	0	20WP	G15_045	FROM->TO	G14-057T 345.00 - SUNNYSIDE 345KV CKT 1	717	789	0.4761	111.1553	P12:138:WFEC:MSL06
FDNS	00NR	0	20WP	G15_045	FROM->TO	G14-057T 345.00 - SUNNYSIDE 345KV CKT 1	717	789	0.47624	111.1514	GEN521111 1-ORME2 13.800
FDNS	00NR	0	20WP	G15_045	FROM->TO	G14-057T 345.00 - SUNNYSIDE 345KV CKT 1	717	789	0.47624	111.1465	GEN562699 1-G15_018_3 0.6900
FDNS	00NR	0	20WP	G15_045	FROM->TO	G14-057T 345.00 - SUNNYSIDE 345KV CKT 1	717	789	0.47221	111.1385	SUNNYSIDE (SUNNYSD5) 345/138/13.8KV TRANSFORMER CKT 1
FDNS	00NR	0	20WP	G15_045	FROM->TO	G14-057T 345.00 - SUNNYSIDE 345KV CKT 1	717	789	0.47624	111.1382	GEN521110 1-ORME1 13.800
FDNS	00NR	0	20WP	G15_045	FROM->TO	G14-057T 345.00 - SUNNYSIDE 345KV CKT 1	717	789	0.47429	111.1308	CLARKSVILLE - MUSKOGEE 345KV CKT 1
FDNS	00NR	0	20WP	G15_045	FROM->TO	G14-057T 345.00 - SUNNYSIDE 345KV CKT 1	717	789	0.47429	111.1308	CLARKSVILLE - MUSKOGEE 345KV CKT 1
FDNS	00NR	0	20WP	G15_045	FROM->TO	G14-057T 345.00 - SUNNYSIDE 345KV CKT 1	717	789	0.47636	111.1294	G15085_T 138.00 - RUSSELL 138KV CKT 1
FDNS	00NR	0	20WP	G15_045	FROM->TO	G14-057T 345.00 - SUNNYSIDE 345KV CKT 1	717	789	0.47228	111.1097	ARDMORE WEST - UNIROYAL 138KV CKT 1
FDNS	00NR	0	16WP	G15_045	FROM->TO	G14-057T 345.00 - SUNNYSIDE 345KV CKT 1	717	789	0.47479	111.1021	GEN635024 4-WALTER SCOTT UNIT 4
FDNS	00NR	0	20WP	G15_045	FROM->TO	G14-057T 345.00 - SUNNYSIDE 345KV CKT 1	717	789	0.47624	111.0967	GEN520811 1-ANADRK4
FDNS	00NR	0	20WP	G15_045	FROM->TO	G14-057T 345.00 - SUNNYSIDE 345KV CKT 1	717	789	0.47624	111.0961	GEN563162 1-G15081_3 0.6900
FDNS	00NR	0	20WP	G15_045	FROM->TO	G14-057T 345.00 - SUNNYSIDE 345KV CKT 1	717	789	0.47624	111.0703	GEN661015 1-COYOTE
FDNS	00NR	0	20WP	G15_045	FROM->TO	G14-057T 345.00 - SUNNYSIDE 345KV CKT 1	717	789	0.47624	111.0659	GEN563292 1-G15095_3 0.6900
FDNS	00NR	0	20WP	G15_045	FROM->TO	G14-057T 345.00 - SUNNYSIDE 345KV CKT 1	717	789	0.47387	111.0612	P12:138:OKGE:3TERM40
FDNS	00NR	0	20WP	G15_045	FROM->TO	G14-057T 345.00 - SUNNYSIDE 345KV CKT 1	717	789	0.47305	111.0535	CARTRCO4 138.00 - RATLIFF 138KV CKT 1
FDNS	00NR	0	20WP	G15_045	FROM->TO	G14-057T 345.00 - SUNNYSIDE 345KV CKT 1	717	789	0.47624	111.0431	GEN563122 1-G15077_3 0.3850
FDNS	00NR	0	20WP	G15_045	FROM->TO	G14-057T 345.00 - SUNNYSIDE 345KV CKT 1	717	789	0.47624	111.0154	GEN562861 1-G15045_2 0.4800
FDNS	00NR	0	20WP	G15_045	FROM->TO	G14-057T 345.00 - SUNNYSIDE 345KV CKT 1	717	789	0.47624	110.9573	GEN657748 1-YOUNG 2 GENERATOR
FDNS	00NR	0	20WP	G15_045	FROM->TO	G14-057T 345.00 - SUNNYSIDE 345KV CKT 1	717	789	0.47624	110.9312	GEN527883 1-CUNNINGHAM GEN #3 22 KV
FDNS	00NR	0	20WP	G15_045	FROM->TO	G14-057T 345.00 - SUNNYSIDE 345KV CKT 1	717	789	0.47624	110.9282	GEN527884 1-CUNNINGHAM GEN #4 22 KV
FDNS	00NR	0	20WP	G15_045	FROM->TO	G14-057T 345.00 - SUNNYSIDE 345KV CKT 1	717	789	0.47639	110.9202	P12:138:WFEC:MSL15
FDNS	00NR	0	20WP	G15_045	FROM->TO	G14-057T 345.00 - SUNNYSIDE 345KV CKT 1	717	789	0.47624	110.8807	GEN562992 1-G15063_3 0.6900
FDNS	00NR	0	20WP	G15_045	FROM->TO	G14-057T 345.00 - SUNNYSIDE 345KV CKT 1	717	789	0.47228	110.8733	SUNNYSIDE - UNIROYAL 138KV CKT 1
FDNS	00NR	0	20WP	G15_045	FROM->TO	G14-057T 345.00 - SUNNYSIDE 345KV CKT 1	717	789	0.47636	110.8647	P12:138:AEPW:SHAM4WT:CHILD4WT
FDNS	00NR	0	20WP	G15_045	FROM->TO	G14-057T 345.00 - SUNNYSIDE 345KV CKT 1	717	789	0.47624	110.8625	GEN562704 1-G15_020_3 0.3550
FDNS	00NR	0	20WP	G15_045	FROM->TO	G14-057T 345.00 - SUNNYSIDE 345KV CKT 1	717	789	0.47624	110.8623	GEN526331 1-JONES GEN #1 22 KV
FDNS	00NR	0	20WP	G15_045	FROM->TO	G14-057T 345.00 - SUNNYSIDE 345KV CKT 1	717	789	0.47624	110.8621	GEN526332 1-JONES GEN #2 21 KV
FDNS	00NR	0	20WP	G15_045	FROM->TO	G14-057T 345.00 - SUNNYSIDE 345KV CKT 1	717	789	0.47624	110.8621	GEN620315 1-BIG STONE GEN
FDNS	00NR	0	20WP	G15_045	FROM->TO	G14-057T 345.00 - SUNNYSIDE 345KV CKT 1	717	789	0.47624	110.8294	GEN562952 1-G15057_3 0.6500
FDNS	00NR	0	20WP	G15_045	FROM->TO	G14-057T 345.00 - SUNNYSIDE 345KV CKT 1	717	789	0.47624	110.7897	GEN511851 1-COMANCHE #1
FDNS	00NR	0	20WP	G15_045	FROM->TO	G14-057T 345.00 - SUNNYSIDE 345KV CKT 1	717	789	0.47624	110.7889	GEN600004 2-PRAIRIE ISLAND G2
FDNS	00NR	0	17SP	G15_045	FROM->TO	G14-057T 345.00 - SUNNYSIDE 345KV CKT 1	717	789	0.5597	110.7884	CIMARRON - MINCO 345KV CKT 1
FDNS	00NR	0	20WP	G15_045	FROM->TO	G14-057T 345.00 - SUNNYSIDE 345KV CKT 1	717	789	0.47624	110.7863	GEN600003 1-PRAIRIE ISLAND G1
FDNS	00NR	0	20WP	G15_045	FROM->TO	G14-057T 345.00 - SUNNYSIDE 345KV CKT 1	717	789	0.47624	110.7686	GEN600006 1-AS KING
FDNS	00NR	0	20WP	G15_045	FROM->TO	G14-057T 345.00 - SUNNYSIDE 345KV CKT 1	717	789	0.47624	110.7635	GEN563173 1-G15082_3 0.6900
FDNS	00NR	0	20WP	G15_045	FROM->TO	G14-057T 345.00 - SUNNYSIDE 345KV CKT 1	717	789	0.47624	110.7507	GEN562710 1-G15_022_3 0.5500
FDNS	00NR	0	20WP	G15_045	FROM->TO	G14-057T 345.00 - SUNNYSIDE 345KV CKT 1	717	789	0.47671	110.7451	CANEY CREEK - TEXOMA JCT 138KV CKT 1
FDNS	00NR	0	20WP	G15_045	FROM->TO	G14-057T 345.00 - SUNNYSIDE 345KV CKT 1	717	789	0.47663	110.7436	GRAPEVINE INTERCHANGE - STATELINE INTERCHANGE 230KV CKT 1
FDNS	00NR	0	20WP	G15_045	FROM->TO	G14-057T 345.00 - SUNNYSIDE 345KV CKT 1	717	789	0.47663	110.7436	GRAPEVINE INTERCHANGE - STATELINE INTERCHANGE 230KV CKT 1
FDNS	00NR	0	20WP	G15_045	FROM->TO	G14-057T 345.00 - SUNNYSIDE 345KV CKT 1	717	789	0.47624	110.7218	GEN532751 1-WOLF CREEK GENERATING STATION UNIT 1
FDNS	00NR	0	20WP	G15_045	FROM->TO	G14-057T 345.00 - SUNNYSIDE 345KV CKT 1	717	789	0.47842	110.6708	P12:138:AEPW-OGE:CORNVIL4:CIMARON4
FDNS	00NR	0	20WP	G15_045	FROM->TO	G14-057T 345.00 - SUNNYSIDE 345KV CKT 1	717	789	0.47664	110.6105	GRAPEVINE INTERCHANGE - NICHOLS STATION 230KV CKT 1
FDNS	00NR	0	20WP	G15_045	FROM->TO	G14-057T 345.00 - SUNNYSIDE 345KV CKT 1	717	789	0.47664	110.6105	GRAPEVINE INTERCHANGE - NICHOLS STATION 230KV CKT 1
FDNS	00NR	0	20WP	G15_045	FROM->TO	G14-057T 345.00 - SUNNYSIDE 345KV CKT 1	717	789	0.47624	110.6	GEN615002 2-COAL CREEK
FDNS	00NR	0	20WP	G15_045	FROM->TO	G14-057T 345.00 - SUNNYSIDE 345KV CKT 1	717	789	0.47624	110.5967	GEN635213 3-NEAL UNIT 3
FDNS	00NR	0	20WP	G15_045	FROM->TO	G14-057T 345.00 - SUNNYSIDE 345KV CKT 1	717	789	0.47624	110.5961	GEN629074 1-ARNOLD LOWSIDE OF GSU XFMR
FDNS	00NR	0	20WP	G15_045	FROM->TO	G14-057T 345.00 - SUNNYSIDE 345KV CKT 1	717	789	0.47205	110.531	NORTHWEST TEXARKANA - VALLIANT 345KV CKT 1
FDNS	00NR	0	20WP	G15_045	FROM->TO	G14-057T 345.00 - SUNNYSIDE 345KV CKT 1	717	789	0.47205	110.531	NORTHWEST TEXARKANA - VALLIANT 345KV CKT 1
FDNS	00NR	0	20WP	G15_045	FROM->TO	G14-057T 345.00 - SUNNYSIDE 345KV CKT 1	717	789	0.47635	110.5277	P12:138:WFEC:MSL09
FDNS	00NR	0	16WP	G15_045	FROM->TO	G14-057T 345.00 - SUNNYSIDE 345KV CKT 1	717	789	0.46629	110.5148	LYDIA - VALLIANT 345KV CKT 1
FDNS	00NR	0	16WP	G15_045	FROM->TO	G14-057T 345.00 - SUNNYSIDE 345KV CKT 1	717	789	0.46629	110.5148	LYDIA - VALLIANT 345KV CKT 1
FDNS	00NR	0	20WP	G15_045	FROM->TO	G14-057T 345.00 - SUNNYSIDE 345KV CKT 1	717	789	0.47624	110.5037	GEN636641 1-LOUISA UNIT 1
FDNS	00NR	0	20WP	G15_045	FROM->TO	G14-057T 345.00 - SUNNYSIDE 345KV CKT 1	717	789	0.47624	110.5028	GEN562754 1-G15031_5 0.6900
FDNS	00NR	0	20WP	G15_045	FROM->TO	G14-057T 345.00 - SUNNYSIDE 345KV CKT 1	717	789	0.47624	110.469	GEN600005 1-MONTICELLO
FDNS	00NR	0	20WP	G15_045	FROM->TO	G14-057T 345.00 - SUNNYSIDE 345KV CKT 1	717	789	0.47777	110.4636	CHISHOLM7 345.00 () 345/230/13.2KV TRANSFORMER CKT 1
FDNS	00NR	0	20WP	G15_045	FROM->TO	G14-057T 345.00 - SUNNYSIDE 345KV CKT 1	717	789	0.47624	110.445	GEN562556 1-G14_046_3 0.3420
FDNS	00NR	0	20WP	G15_045	FROM->TO	G14-057T 345.00 - SUNNYSIDE 345KV CKT 1	717	789	0.47624	110.444	GEN562756 1-G15031_7 0.6900
FDNS	00NR	0	20WP	G15_045	FROM->TO	G14-057T 345.00 - SUNNYSIDE 345KV CKT 1	717	789	0.47777	110.3828	CHISHOLM7 345.00 - GRACEMONT 345KV CKT 1
FDNS	00NR	0	20WP	G15_045	FROM->TO	G14-057T 345.00 - SUNNYSIDE 345KV CKT 1	717	789	0.47624	110.3618	GEN563142 1-G15079_3 0.5500
FDNS	00NR	0	20WP	G15_045	FROM->TO	G14-057T 345.00 - SUNNYSIDE 345KV CKT 1	717	789	0.47624	110.3618	GEN563151 1-G15080_2 0.5500
FDNS	00NR	0	20WP	G15_045	FROM->TO	G14-057T 345.00 - SUNNYSIDE 345KV CKT 1	717	789	0.47624	110.3553	GEN562023 1-G11_020_3 0.6900
FDNS	00NR	0	20WP	G15_045	FROM->TO	G14-057T 345.00 - SUNNYSIDE 345KV CKT 1	717	789	0.47624	110.3553	GEN562026 1-G11_019_3 0.6900
FDNS	00NR	0	20WP	G15_045	FROM->TO	G14-057T 345.00 - SUNNYSIDE 345KV CKT 1	717	789	0.47624	110.3434	GEN600000 1-SHERBURNECNTY G1

SOLUTION	GROUP	SCENARIO	SEASON	SOURCE	DIRECTION	MONITORED ELEMENT	RATEA (MVA)	RATEB(MVA)	TDF	TC%LOADING (% MVA)	CONTINGENCY
FDNS	00NR	0	20WP	G15_045	FROM->TO	G14-057T 345.00 - SUNNYSIDE 345KV CKT 1	717	789	0.47624	110.3082	GEN629075 1-OTTUMWA GENERATOR FOR OTTUMWA UNIT NO 1
FDNS	00NR	0	20WP	G15_045	FROM->TO	G14-057T 345.00 - SUNNYSIDE 345KV CKT 1	717	789	0.47624	110.2904	GEN600001 2-SHERBURNE CNTY G2
FDNS	00NR	0	20WP	G15_045	FROM->TO	G14-057T 345.00 - SUNNYSIDE 345KV CKT 1	717	789	0.47624	110.2626	GEN523971 1-HARRINGTON GEN #1 24 KV
FDNS	00NR	0	20WP	G15_045	FROM->TO	G14-057T 345.00 - SUNNYSIDE 345KV CKT 1	717	789	0.47624	110.2626	GEN523972 1-HARRINGTON GEN #2 24 KV
FDNS	00NR	0	20WP	G15_045	FROM->TO	G14-057T 345.00 - SUNNYSIDE 345KV CKT 1	717	789	0.47624	110.2626	GEN523973 1-HARRINGTON GEN #3 24 KV
FDNS	00NR	0	20WP	G15_045	FROM->TO	G14-057T 345.00 - SUNNYSIDE 345KV CKT 1	717	789	0.47624	110.2331	GEN511848 1-SOUTHWESTERN STATION #3
FDNS	00NR	0	20WP	G15_045	FROM->TO	G14-057T 345.00 - SUNNYSIDE 345KV CKT 1	717	789	0.46916	110.1764	LYDIA - WELSH 345KV CKT 1
FDNS	00NR	0	20WP	G15_045	FROM->TO	G14-057T 345.00 - SUNNYSIDE 345KV CKT 1	717	789	0.46916	110.1764	LYDIA - WELSH 345KV CKT 1
FDNS	00NR	0	20WP	G15_045	FROM->TO	G14-057T 345.00 - SUNNYSIDE 345KV CKT 1	717	789	0.47624	110.163	GEN527901 1-HOBBS PLANT #1 (CT)
FDNS	00NR	0	20WP	G15_045	FROM->TO	G14-057T 345.00 - SUNNYSIDE 345KV CKT 1	717	789	0.47624	110.163	GEN527902 1-HOBBS PLANT #2 (CT)
FDNS	00NR	0	20WP	G15_045	FROM->TO	G14-057T 345.00 - SUNNYSIDE 345KV CKT 1	717	789	0.47624	110.1255	GEN563042 1-G15068_3 0.6900
FDNS	00NR	0	20WP	G15_045	FROM->TO	G14-057T 345.00 - SUNNYSIDE 345KV CKT 1	717	789	0.47624	110.028	GEN635214 4-NEAL UNIT 4
FDNS	00NR	0	20WP	G15_045	FROM->TO	G14-057T 345.00 - SUNNYSIDE 345KV CKT 1	717	789	0.47693	109.9254	STATELINE INTERCHANGE - STLN-DEMARC6 230KV CKT 1
FDNS	00NR	0	20WP	G15_045	FROM->TO	G14-057T 345.00 - SUNNYSIDE 345KV CKT 1	717	789	0.47693	109.9227	STLN-DEMARC6 - SWEETWATER 230KV CKT 1
FDNS	00NR	0	20WP	G15_045	FROM->TO	G14-057T 345.00 - SUNNYSIDE 345KV CKT 1	717	789	0.47693	109.9175	P12:230:AEPW-SPS:SWEETWT6:WHEELER 6
FDNS	00NR	0	20WP	G15_045	FROM->TO	G14-057T 345.00 - SUNNYSIDE 345KV CKT 1	717	789	0.47624	109.8577	GEN600002 3-SHERBURNE CNTY G3
FDNS	00NR	0	20WP	G15_045	FROM->TO	G14-057T 345.00 - SUNNYSIDE 345KV CKT 1	717	789	0.47624	109.827	GEN563043 1-G15068_4 0.6900
FDNS	00NR	0	20WP	G15_045	FROM->TO	G14-057T 345.00 - SUNNYSIDE 345KV CKT 1	717	789	0.47624	109.8013	GEN526333 1-JONES GEN #3 21 KV
FDNS	00NR	0	20WP	G15_045	FROM->TO	G14-057T 345.00 - SUNNYSIDE 345KV CKT 1	717	789	0.47624	109.8012	GEN526334 1-JONES_4 116.500
FDNS	00NR	0	20WP	G15_045	FROM->TO	G14-057T 345.00 - SUNNYSIDE 345KV CKT 1	717	789	0.47624	109.7846	GEN563273 2-G15093_4 0.6900
FDNS	00NR	0	20WP	G15_045	FROM->TO	G14-057T 345.00 - SUNNYSIDE 345KV CKT 1	717	789	0.47624	109.7685	GEN344225 1-1CAL G1 25.000
FDNS	00NR	0	20WP	G15_045	FROM->TO	G14-057T 345.00 - SUNNYSIDE 345KV CKT 1	717	789	0.47624	109.7635	GEN525844 1-ELK_1 118.000
FDNS	00NR	0	20WP	G15_045	FROM->TO	G14-057T 345.00 - SUNNYSIDE 345KV CKT 1	717	789	0.47624	109.7458	GEN525845 1-ELK_2 1 18.000
FDNS	00NR	0	20WP	G15_045	FROM->TO	G14-057T 345.00 - SUNNYSIDE 345KV CKT 1	717	789	0.47624	109.6155	GEN527166 1-MUSTANG_6 118.000
FDNS	00NR	0	20WP	G15_045	FROM->TO	G14-057T 345.00 - SUNNYSIDE 345KV CKT 1	717	789	0.47624	109.5706	GEN635023 3-WALTER SCOTT UNIT 3
FDNS	00NR	0	20WP	G15_045	FROM->TO	G14-057T 345.00 - SUNNYSIDE 345KV CKT 1	717	789	0.47624	109.5526	GEN563202 1-G15085_3 0.5500
FDNS	00NR	0	20WP	G15_045	FROM->TO	G14-057T 345.00 - SUNNYSIDE 345KV CKT 1	717	789	0.47624	109.5515	GEN528501 1-G14_012 24.000
FDNS	00NR	0	20WP	G15_045	FROM->TO	G14-057T 345.00 - SUNNYSIDE 345KV CKT 1	717	789	0.47783	109.4942	P12:230:AEPW:ELKCITY6:SWEETWT6
FDNS	00NR	0	20WP	G15_045	FROM->TO	G14-057T 345.00 - SUNNYSIDE 345KV CKT 1	717	789	0.47624	109.4928	GEN562590 1-G14_057_3 0.6900
FDNS	00NR	0	16WP	G15_045	FROM->TO	G14-057T 345.00 - SUNNYSIDE 345KV CKT 1	717	789	0.47479	109.4478	EASTDC - ERCOT EQUIVALENCE 345KV CKT 1
FDNS	00NR	0	20WP	G15_045	FROM->TO	G14-057T 345.00 - SUNNYSIDE 345KV CKT 1	717	789	0.47624	109.3772	GEN562762 1-G15033_3 0.6900
FDNS	00NR	0	20WP	G15_045	FROM->TO	G14-057T 345.00 - SUNNYSIDE 345KV CKT 1	717	789	0.47624	109.3658	GEN562655 1-G14_074_3 0.6900
FDNS	00NR	0	20WP	G15_045	FROM->TO	G14-057T 345.00 - SUNNYSIDE 345KV CKT 1	717	789	0.47624	109.3638	GEN525562 1-TOLK GEN #2 24 KV
FDNS	00NR	0	20WP	G15_045	FROM->TO	G14-057T 345.00 - SUNNYSIDE 345KV CKT 1	717	789	0.47266	109.2753	JOHNSON COUNTY (JOHNCO) 345/138/13.8KV TRANSFORMER CKT 1
FDNS	00NR	0	20WP	G15_045	FROM->TO	G14-057T 345.00 - SUNNYSIDE 345KV CKT 1	717	789	0.47624	109.27	GEN562685 1-G15_013_3 0.3550
FDNS	00NR	0	20WP	G15_045	FROM->TO	G14-057T 345.00 - SUNNYSIDE 345KV CKT 1	717	789	0.47624	109.2675	GEN527903 1-HOBBS PLANT #3 (ST)
FDNS	00NR	0	20WP	G15_045	FROM->TO	G14-057T 345.00 - SUNNYSIDE 345KV CKT 1	717	789	0.47693	109.2452	CHISHOLM6 230.00 - SWEETWATER 230KV CKT 1
FDNS	00NR	0	20WP	G15_045	FROM->TO	G14-057T 345.00 - SUNNYSIDE 345KV CKT 1	717	789	0.47624	109.1665	GEN635024 4-WALTER SCOTT UNIT 4
FDNS	00NR	0	20WP	G15_045	FROM->TO	G14-057T 345.00 - SUNNYSIDE 345KV CKT 1	717	789	0.47624	109.1256	GEN563272 1-G15093_3 0.6900
FDNS	00NR	0	20WP	G15_045	FROM->TO	G14-057T 345.00 - SUNNYSIDE 345KV CKT 1	717	789	0.46733	109.1187	LYDIA - VALLIANT 345KV CKT 1
FDNS	00NR	0	20WP	G15_045	FROM->TO	G14-057T 345.00 - SUNNYSIDE 345KV CKT 1	717	789	0.46733	109.1187	LYDIA - VALLIANT 345KV CKT 1
FDNS	00NR	0	20WP	G15_045	FROM->TO	G14-057T 345.00 - SUNNYSIDE 345KV CKT 1	717	789	0.47624	108.7846	GEN525561 1-TOLK GEN #1 24 KV
FDNS	00NR	0	16WP	G15_045	FROM->TO	G14-057T 345.00 - SUNNYSIDE 345KV CKT 1	717	789	0.41963	108.4243	JOHNSON COUNTY - PITTSBURG 345KV CKT 1
FDNS	00NR	0	16WP	G15_045	FROM->TO	G14-057T 345.00 - SUNNYSIDE 345KV CKT 1	717	789	0.41963	108.4243	JOHNSON COUNTY - PITTSBURG 345KV CKT 1
FDNS	00NR	0	16WP	G15_045	FROM->TO	G14-057T 345.00 - SUNNYSIDE 345KV CKT 1	717	789	0.47479	108.057	GEN563263 1-G15092_4 0.6900
FDNS	00NR	0	16WP	G15_045	FROM->TO	G14-057T 345.00 - SUNNYSIDE 345KV CKT 1	717	789	0.45277	107.6655	HUGO - VALLIANT 345KV CKT 1
FDNS	00NR	0	16WP	G15_045	FROM->TO	G14-057T 345.00 - SUNNYSIDE 345KV CKT 1	717	789	0.45277	107.6655	HUGO - VALLIANT 345KV CKT 1
FDNS	00NR	0	20WP	G15_045	FROM->TO	G14-057T 345.00 - SUNNYSIDE 345KV CKT 1	717	789	0.42125	106.869	JOHNSON COUNTY - PITTSBURG 345KV CKT 1
FDNS	00NR	0	20WP	G15_045	FROM->TO	G14-057T 345.00 - SUNNYSIDE 345KV CKT 1	717	789	0.42125	106.869	JOHNSON COUNTY - PITTSBURG 345KV CKT 1
FDNS	00NR	0	20WP	G15_045	FROM->TO	G14-057T 345.00 - SUNNYSIDE 345KV CKT 1	717	789	0.45369	106.5939	HUGO - VALLIANT 345KV CKT 1
FDNS	00NR	0	20WP	G15_045	FROM->TO	G14-057T 345.00 - SUNNYSIDE 345KV CKT 1	717	789	0.45369	106.5939	HUGO - VALLIANT 345KV CKT 1
FDNS	00NR	0	16WP	G15_045	FROM->TO	G14-057T 345.00 - SUNNYSIDE 345KV CKT 1	717	789	0.47479	106.381	GEN563262 1-G15092_3 0.6900
FDNS	00NR	0	20WP	G15_045	FROM->TO	G14-057T 345.00 - SUNNYSIDE 345KV CKT 1	717	789	0.47624	105.9962	GEN563263 1-G15092_4 0.6900
FDNS	00NR	0	16WP	G15_045	FROM->TO	G14-057T 345.00 - SUNNYSIDE 345KV CKT 1	717	789	0.49173	104.8432	G14-074T 345.00 - TUCO INTERCHANGE 345KV CKT 1
FDNS	00NR	0	20WP	G15_045	FROM->TO	G14-057T 345.00 - SUNNYSIDE 345KV CKT 1	717	789	0.47624	104.3167	GEN563262 1-G15092_3 0.6900
FDNS	00NR	0	16WP	G15_045	FROM->TO	G14-057T 345.00 - SUNNYSIDE 345KV CKT 1	717	789	0.40379	102.6669	JOHNSON COUNTY - SUNNYSIDE 345KV CKT 1
FDNS	00NR	0	20WP	G15_045	FROM->TO	G14-057T 345.00 - SUNNYSIDE 345KV CKT 1	717	789	0.49322	101.6269	G14-074T 345.00 - TUCO INTERCHANGE 345KV CKT 1
FDNS	00NR	0	20SP	G15_045	FROM->TO	G14-057T 345.00 - SUNNYSIDE 345KV CKT 1	717	789	0.55707	100.8006	CIMARRON - MINCO 345KV CKT 1
FDNS	00NR	0	17SP	G15_045	FROM->TO	G14-057T 345.00 - SUNNYSIDE 345KV CKT 1	717	789	0.5597	100.4284	GRACEMONT - MINCO 345KV CKT 1
FDNS	00NR	0	20WP	G15_045	FROM->TO	G14-057T 345.00 - SUNNYSIDE 345KV CKT 1	717	789	0.40551	100.3152	JOHNSON COUNTY - SUNNYSIDE 345KV CKT 1
FDNS	00NR	0	16WP	G15_045	TO->FROM	PITTSBURG - SEMINOLE 345KV CKT 1	717	717	0.14345	101.4082	G14-057T 345.00 - SUNNYSIDE 345KV CKT 1
FDNS	00NR	0	16WP	G15_045	TO->FROM	TUPELO - TUPELO TAP 138KV CKT 1	143	143	0.04028	118.2481	G14-057T 345.00 - SUNNYSIDE 345KV CKT 1
FDNS	00NR	0	20WP	G15_045	TO->FROM	TUPELO - TUPELO TAP 138KV CKT 1	143	143	0.0407	116.2031	G14-057T 345.00 - SUNNYSIDE 345KV CKT 1
FDNS	00NR	0	20WP	G15_045	TO->FROM	TUPELO - TUPELO TAP 138KV CKT 1	143	143	0.02996	110.2278	HUGO - SUNNYSIDE 345KV CKT 1
FDNS	00NR	2	17SP	G15_045	TO->FROM	CLEAVELAND - CLEVLND 4 138.00 138KV CKT Z1	305	371	0.03493	110.0904	CLEVELAND - TULSA NORTH 345KV CKT 1
FDNS	00NR	2	17SP	G15_045	TO->FROM	CLEAVELAND - CLEVLND 4 138.00 138KV CKT Z1	305	371	0.03493	110.0904	CLEVELAND - TULSA NORTH 345KV CKT 1
FDNS	00NR	2	20SP	G15_045	TO->FROM	CLEAVELAND - CLEVLND 4 138.00 138KV CKT Z1	305	371	0.03365	109.2211	CLEVELAND - TULSA NORTH 345KV CKT 1
FDNS	00NR	2	20SP	G15_045	TO->FROM	CLEAVELAND - CLEVLND 4 138.00 138KV CKT Z1	305	371	0.03365	109.2211	CLEVELAND - TULSA NORTH 345KV CKT 1
FDNSLock-Blown up	16ALL	0	17SP	G15_046		Non-Converged Contingency	717	789	0.11901	-	G09_001IST 345.00 - GROTON 345KV CKT 1
FDNSLock-Blown up	16ALL	0	17SP	G15_046		Non-Converged Contingency	717	789	0.11901	-	G09_001IST 345.00 - WATERTOWN 345KV CKT 1
FDNSLock-Blown up	16ALL_B10T_DCTIE	0	17SP	G15_046		Non-Converged Contingency	717	789	0.11898	-	G09_001IST 345.00 - GROTON 345KV CKT 1
FDNSLock-Blown up	16ALL_B10T_DCTIE	0	17SP	G15_046		Non-Converged Contingency	717	789	0.11898	-	G09_001IST 345.00 - WATERTOWN 345KV CKT 1
FDNSLock-Blown up	16ALL	2	17SP	G15_046		Non-Converged Contingency	717	789	0.11892	-	G09_001IST 345.00 - GROTON 345KV CKT 1
FDNSLock-Blown up	16ALL	2	17SP	G15_046		Non-Converged Contingency	717	789	0.11892	-	G09_001IST 345.00 - WATERTOWN 345KV CKT 1
FDNSLock-Blown up	00NR	2	17SP	G15_046		Non-Converged Contingency	717	789	0.0491	-	G09_001IST 345.00 - GROTON 345KV CKT 1
FDNSLock-Blown up	00NR	2	17SP	G15_046		Non-Converged Contingency	717	789	0.0491	-	G09_001IST 345.00 - WATERTOWN 345KV CKT 1
FDNS	00NR	0	20WP	G15_046	FROM->TO	BLAISDELL 4230.00 (BLAISDL KV2A) 230/115/13.8KV TRANSFORMER CKT 1	166	166	0.055	103.4354	NESET 7 115.00 - WHTEARTHTP 7115.00 115KV CKT 1
FDNS	00NR	0	20WP	G15_046	FROM->TO	BLAISDELL 4230.00 (BLAISDL KV2A) 230/115/13.8KV TRANSFORMER CKT 1	166	166	0.055	102.1757	NESET 7 115.00 - WHTEARTHTP 7115.00 115KV CKT 1
FDNS	00NR	0	20WP	G15_046	FROM->TO	BLAISDELL 4230.00 (BLAISDL KV2A) 230/115/13.8KV TRANSFORMER CKT 1	166	166	0.055	100.5359	PVALLEY -MW7115.00 - WHTEARTHTP 7115.00 115KV CKT 1

SOLUTION	GROUP	SCENARIO	SEASON	SOURCE	DIRECTION	MONITORED ELEMENT	RATEA (MVA)	RATEB(MVA)	TDF	TC%LOADING (% MVA)	CONTINGENCY
FDNS	00NR	0	20WP	G15_046	FROM->TO	BLAISDELL 4230.00 (BLAISDL KV2A) 230/115/13.8KV TRANSFORMER CKT 1	166	166	0.055	99.9	PVALLEY -MW7115.00 - WHTEARTHTP 7115.00 115KV CKT 1
FDNS	16ALL_B10T_DCTIE	0	17SP	G15_046	FROM->TO	BROADLAND - HURON 230KV CKT 1	400	480	0.1361	104.0318	BASE CASE
FDNS	16ALL	0	17SP	G15_046	FROM->TO	BROADLAND - HURON 230KV CKT 1	400	480	0.13609	100.6167	BASE CASE
FDNS	00NR_B10T_DCTIE	0	17SP	G15_046	FROM->TO	DICKINSON (KW1A 100) 230/115/13.8KV TRANSFORMER CKT 1	100	125	0.03365	108.3164	HEBRON 4 230.00 - MANDAN 4 230.00 230KV CKT 1
FDNS	00NR	0	25SP	G15_046	FROM->TO	DICKINSON (KW1A 100) 230/115/13.8KV TRANSFORMER CKT 1	100	125	0.04005	107.3189	BOWMAN - RHAME 4 230.00 230KV CKT 1
FDNS	00NR_B10T_DCTIE	0	17SP	G15_046	FROM->TO	DICKINSON (KW1A 100) 230/115/13.8KV TRANSFORMER CKT 1	100	125	0.03365	107.294	HEBRON 4 230.00 - MANDAN 4 230.00 230KV CKT 1
FDNS	00NR	0	25SP	G15_046	FROM->TO	DICKINSON (KW1A 100) 230/115/13.8KV TRANSFORMER CKT 1	100	125	0.04005	106.2333	BOWMAN - RHAME 4 230.00 230KV CKT 1
FDNS	00NR	0	17SP	G15_046	FROM->TO	DICKINSON (KW1A 100) 230/115/13.8KV TRANSFORMER CKT 1	100	125	0.03365	104.8658	HEBRON 4 230.00 - MANDAN 4 230.00 230KV CKT 1
FDNS	00NR	0	20SP	G15_046	FROM->TO	DICKINSON (KW1A 100) 230/115/13.8KV TRANSFORMER CKT 1	100	125	0.0401	104.0128	BOWMAN - RHAME 4 230.00 230KV CKT 1
FDNS	00NR	0	17SP	G15_046	FROM->TO	DICKINSON (KW1A 100) 230/115/13.8KV TRANSFORMER CKT 1	100	125	0.03365	103.9007	HEBRON 4 230.00 - MANDAN 4 230.00 230KV CKT 1
FDNS	00NR_B10T_DCTIE	0	17SP	G15_046	FROM->TO	DICKINSON (KW1A 100) 230/115/13.8KV TRANSFORMER CKT 1	100	125	0.04129	103.4147	BOWMAN - RHAME 4 230.00 230KV CKT 1
FDNS	00NR	0	20SP	G15_046	FROM->TO	DICKINSON (KW1A 100) 230/115/13.8KV TRANSFORMER CKT 1	100	125	0.0401	102.5925	BOWMAN - RHAME 4 230.00 230KV CKT 1
FDNS	00NR	0	25SP	G15_046	FROM->TO	DICKINSON (KW1A 100) 230/115/13.8KV TRANSFORMER CKT 1	100	125	0.03317	102.538	HEBRON 4 230.00 - MANDAN 4 230.00 230KV CKT 1
FDNS	00NR_B10T_DCTIE	0	17SP	G15_046	FROM->TO	DICKINSON (KW1A 100) 230/115/13.8KV TRANSFORMER CKT 1	100	125	0.04129	102.4798	BOWMAN - RHAME 4 230.00 230KV CKT 1
FDNS	00NR	0	17SP	G15_046	FROM->TO	DICKINSON (KW1A 100) 230/115/13.8KV TRANSFORMER CKT 1	100	125	0.04129	102.297	BOWMAN - RHAME 4 230.00 230KV CKT 1
FDNS	00NR	0	25SP	G15_046	FROM->TO	DICKINSON (KW1A 100) 230/115/13.8KV TRANSFORMER CKT 1	100	125	0.03317	101.7574	HEBRON 4 230.00 - MANDAN 4 230.00 230KV CKT 1
FDNS	00NR	0	20SP	G15_046	FROM->TO	DICKINSON (KW1A 100) 230/115/13.8KV TRANSFORMER CKT 1	100	125	0.03313	101.4982	HEBRON 4 230.00 - MANDAN 4 230.00 230KV CKT 1
FDNS	00NR	0	17SP	G15_046	FROM->TO	DICKINSON (KW1A 100) 230/115/13.8KV TRANSFORMER CKT 1	100	125	0.04129	101.3661	BOWMAN - RHAME 4 230.00 230KV CKT 1
FDNS	00NR	0	20SP	G15_046	FROM->TO	DICKINSON (KW1A 100) 230/115/13.8KV TRANSFORMER CKT 1	100	125	0.03313	100.3184	HEBRON 4 230.00 - MANDAN 4 230.00 230KV CKT 1
FDNS	16NR	0	17G	G15_046	TO->FROM	GLENHAM - L3 HAWDON 230KV CKT 1	210	210	0.05517	118.9624	FT THOMPSON - FTTHOM1-LNX3345.00 345KV CKT Z
FDNS	16NR	0	17G	G15_046	TO->FROM	GLENHAM - L3 HAWDON 230KV CKT 1	210	210	0.05517	118.6238	P12:345:UMZB:# 108 #: LOS FT IN ND. LOS FT
FDNS	16NR	0	17G	G15_046	TO->FROM	GLENHAM - L3 HAWDON 230KV CKT 1	210	210	0.05517	118.6196	LELAND OLDS - LELAND2-LNX3345.00 345KV CKT Z
FDNS	16NR	0	17G	G15_046	TO->FROM	GLENHAM - L3 HAWDON 230KV CKT 1	210	210	0.05517	118.4953	FTTHOM1-LNX3345.00 - LELAND2-LNX3345.00 345KV CKT 1
FDNS	16NR	0	20L	G15_046	TO->FROM	GLENHAM - L3 HAWDON 230KV CKT 1	210	210	0.04592	113.0153	LELAND OLDS - LELAND2-LNX3345.00 345KV CKT Z
FDNS	16NR	0	20L	G15_046	TO->FROM	GLENHAM - L3 HAWDON 230KV CKT 1	210	210	0.04592	112.9734	P12:345:UMZB:# 108 #: LOS FT IN ND. LOS FT
FDNS	16NR	0	20L	G15_046	TO->FROM	GLENHAM - L3 HAWDON 230KV CKT 1	210	210	0.04592	112.9305	FT THOMPSON - FTTHOM1-LNX3345.00 345KV CKT Z
FDNS	16NR	0	20L	G15_046	TO->FROM	GLENHAM - L3 HAWDON 230KV CKT 1	210	210	0.04592	112.9032	FTTHOM1-LNX3345.00 - LELAND2-LNX3345.00 345KV CKT 1
FDNS	16NR	0	17G	G15_046	TO->FROM	GLENHAM - L3 HAWDON 230KV CKT 1	210	210	0.05121	110.9935	P12:345:UMZB:# 102 #: AVS BD IN ND. AVS BRD LR
FDNS	16NR	0	17G	G15_046	TO->FROM	GLENHAM - L3 HAWDON 230KV CKT 1	210	210	0.05121	110.993	P12:345:UMZB:# 103 #: BD IN SD. LOSS OF LINE
FDNS	16NR	0	17G	G15_046	TO->FROM	GLENHAM - L3 HAWDON 230KV CKT 1	210	210	0.05121	110.9056	ANTELOP-LNX3345.00 - ANTELOPE VALLEY 345KV CKT Z
FDNS	16NR	0	17G	G15_046	TO->FROM	GLENHAM - L3 HAWDON 230KV CKT 1	210	210	0.05121	110.6476	ANTELOP-LNX3345.00 - BRDLAND-LNX3345.00 345KV CKT 1
FDNS	16NR	0	17G	G15_046	TO->FROM	GLENHAM - L3 HAWDON 230KV CKT 1	210	210	0.05121	110.4136	BRDLAND-LNX3345.00 - HURON 345KV CKT Z
FDNS	16NR	0	17G	G15_046	TO->FROM	GLENHAM - L3 HAWDON 230KV CKT 1	210	210	0.05121	110.4134	HURON (BD KU2A) 345/230/13.8KV TRANSFORMER CKT 1
FDNS	16NR	0	17G	G15_046	TO->FROM	GLENHAM - L3 HAWDON 230KV CKT 1	210	210	0.05121	110.4134	HURON (BD KU2A) 345/230/13.8KV TRANSFORMER CKT 1
FDNS	16NR	0	17G	G15_046	TO->FROM	GLENHAM - L3 HAWDON 230KV CKT 1	210	210	0.05121	110.4114	BROADLAND - HURON 230KV CKT 1
FDNS	16NR	0	20L	G15_046	TO->FROM	GLENHAM - L3 HAWDON 230KV CKT 1	210	210	0.04696	107.6661	BISON - HETINGER 230KV CKT 1
FDNS	16NR	0	17G	G15_046	TO->FROM	GLENHAM - L3 HAWDON 230KV CKT 1	210	210	0.05506	106.4224	BISON - HETINGER 230KV CKT 1
FDNS	16NR	0	20L	G15_046	TO->FROM	GLENHAM - L3 HAWDON 230KV CKT 1	210	210	0.04696	106.3048	BISON - MAURINE 230KV CKT 1
FDNS	16NR	0	17G	G15_046	TO->FROM	GLENHAM - L3 HAWDON 230KV CKT 1	210	210	0.0479	105.9414	GROTON-LNX3 345.00 - LELAND1-LNX3345.00 345KV CKT 1
FDNS	16NR	0	17G	G15_046	TO->FROM	GLENHAM - L3 HAWDON 230KV CKT 1	210	210	0.0479	105.6238	P12:345:UMZB:# 109 #: LOS GRT IN ND. LOS GRT
FDNS	16NR	0	17G	G15_046	TO->FROM	GLENHAM - L3 HAWDON 230KV CKT 1	210	210	0.05506	105.6146	BISON - MAURINE 230KV CKT 1
FDNS	16NR	0	17G	G15_046	TO->FROM	GLENHAM - L3 HAWDON 230KV CKT 1	210	210	0.0479	105.6059	GROTON - GROTON-LNX3 345.00 345KV CKT Z
FDNS	16NR	0	17G	G15_046	TO->FROM	GLENHAM - L3 HAWDON 230KV CKT 1	210	210	0.0479	105.596	LELAND OLDS - LELAND1-LNX3345.00 345KV CKT Z
FDNS	16NR	0	20L	G15_046	TO->FROM	GLENHAM - L3 HAWDON 230KV CKT 1	210	210	0.04259	105.3126	ANTELOP-LNX3345.00 - BRDLAND-LNX3345.00 345KV CKT 1
FDNS	16NR	0	20L	G15_046	TO->FROM	GLENHAM - L3 HAWDON 230KV CKT 1	210	210	0.04259	105.1559	P12:345:UMZB:# 102 #: AVS BD IN ND. AVS BRD LR
FDNS	16NR	0	20L	G15_046	TO->FROM	GLENHAM - L3 HAWDON 230KV CKT 1	210	210	0.04259	105.1557	P12:345:UMZB:# 103 #: BD IN SD. LOSS OF LINE
FDNS	16NR	0	20L	G15_046	TO->FROM	GLENHAM - L3 HAWDON 230KV CKT 1	210	210	0.04259	105.1096	BROADLAND - HURON 230KV CKT 1
FDNS	16NR	0	20L	G15_046	TO->FROM	GLENHAM - L3 HAWDON 230KV CKT 1	210	210	0.04259	105.1094	BRDLAND-LNX3345.00 - HURON 345KV CKT Z
FDNS	16NR	0	20L	G15_046	TO->FROM	GLENHAM - L3 HAWDON 230KV CKT 1	210	210	0.04259	105.1092	HURON (BD KU2A) 345/230/13.8KV TRANSFORMER CKT 1
FDNS	16NR	0	20L	G15_046	TO->FROM	GLENHAM - L3 HAWDON 230KV CKT 1	210	210	0.04259	105.1092	HURON (BD KU2A) 345/230/13.8KV TRANSFORMER CKT 1
FDNS	16NR	0	20L	G15_046	TO->FROM	GLENHAM - L3 HAWDON 230KV CKT 1	210	210	0.04259	105.0973	ANTELOP-LNX3345.00 - ANTELOPE VALLEY 345KV CKT Z
FDNS	16NR	0	17G	G15_046	TO->FROM	GLENHAM - L3 HAWDON 230KV CKT 1	210	210	0.0467	101.9669	CENTER - JAMESTOWN 345KV CKT 1
FDNS	16NR	0	17G	G15_046	TO->FROM	GLENHAM - L3 HAWDON 230KV CKT 1	210	210	0.04595	101.1779	CHISAGO COUNTY - FORBES 500KV CKT 1
FDNS	16NR	0	17G	G15_046	TO->FROM	GLENHAM - L3 HAWDON 230KV CKT 1	210	210	0.04682	101.078	G09_001IST 345.00 - WATERTOWN 345KV CKT 1
FDNS	16NR	0	20L	G15_046	TO->FROM	GLENHAM - L3 HAWDON 230KV CKT 1	210	210	0.03904	101.0137	BUFFALO - JAMESTOWN 345KV CKT 1
FDNS	16NR	0	17G	G15_046	TO->FROM	GLENHAM - L3 HAWDON 230KV CKT 1	210	210	0.04682	100.9366	G09_001IST 345.00 - GROTON 345KV CKT 1
FDNS	16NR	0	17G	G15_046	TO->FROM	GLENHAM - L3 HAWDON 230KV CKT 1	210	210	0.04595	100.7507	CHISAGO COUNTY - CHISAGO COUNTY 500KV CKT 1
FDNS	16NR	0	20L	G15_046	TO->FROM	GLENHAM - L3 HAWDON 230KV CKT 1	210	210	0.03976	100.0929	GROTON-LNX3 345.00 - LELAND1-LNX3345.00 345KV CKT 1
FDNS	16NR	0	20L	G15_046	TO->FROM	GLENHAM - L3 HAWDON 230KV CKT 1	210	210	0.03976	99.9	GROTON - GROTON-LNX3 345.00 345KV CKT Z
FDNS	16NR	0	20L	G15_046	TO->FROM	GLENHAM - L3 HAWDON 230KV CKT 1	210	210	0.03976	99.9	LELAND OLDS - LELAND1-LNX3345.00 345KV CKT Z
FDNS	16NR	0	20L	G15_046	TO->FROM	GLENHAM - L3 HAWDON 230KV CKT 1	210	210	0.03976	99.9	P12:345:UMZB:# 109 #: LOS GRT IN ND. LOS GRT
FDNS	16NR	0	17G	G15_046	TO->FROM	GLENHAM - L3 HAWDON 230KV CKT 1	210	210	0.04627	99.6	ALEXMRES3 345.00 - BISON 3 345.00 345KV CKT 1
FDNS	16NR	0	17G	G15_046	TO->FROM	GLENHAM - L3 HAWDON 230KV CKT 1	210	210	0.04574	99.5	BISMARK - JAMES TOWN 230KV CKT 1
FDNS	16NR	0	17G	G15_046	TO->FROM	GLENHAM - L3 HAWDON 230KV CKT 1	210	210	0.04574	99.5	BISMARK - WEBER 230KV CKT 1
FDNS	16NR	0	17G	G15_046	TO->FROM	GLENHAM - L3 HAWDON 230KV CKT 1	210	210	0.04574	99.5	JAMES TOWN - WEBER 230KV CKT 1
FDNS	16NR	0	17G	G15_046	FROM->TO	HURON (BD KU2A) 345/230/13.8KV TRANSFORMER CKT 1	400	400	0.08651	114.1804	LELAND OLDS - LELAND2-LNX3345.00 345KV CKT Z
FDNS	16NR	0	17G	G15_046	FROM->TO	HURON (BD KU2A) 345/230/13.8KV TRANSFORMER CKT 1	400	400	0.08651	113.9679	FT THOMPSON - FTTHOM1-LNX3345.00 345KV CKT Z
FDNS	16NR	0	17G	G15_046	FROM->TO	HURON (BD KU2A) 345/230/13.8KV TRANSFORMER CKT 1	400	400	0.08651	113.6647	P12:345:UMZB:# 108 #: LOS FT IN ND. LOS FT
FDNS	16NR	0	17G	G15_046	FROM->TO	HURON (BD KU2A) 345/230/13.8KV TRANSFORMER CKT 1	400	400	0.08063	113.5579	LELAND OLDS - LELAND1-LNX3345.00 345KV CKT Z
FDNS	16NR	0	17G	G15_046	FROM->TO	HURON (BD KU2A) 345/230/13.8KV TRANSFORMER CKT 1	400	400	0.08063	113.5213	P12:345:UMZB:# 109 #: LOS GRT IN ND. LOS GRT
FDNS	16NR	0	17G	G15_046	FROM->TO	HURON (BD KU2A) 345/230/13.8KV TRANSFORMER CKT 1	400	400	0.08063	113.5163	GROTON - GROTON-LNX3 345.00 345KV CKT Z
FDNS	16NR	0	17G	G15_046	FROM->TO	HURON (BD KU2A) 345/230/13.8KV TRANSFORMER CKT 1	400	400	0.08651	113.2661	FTTHOM1-LNX3345.00 - LELAND2-LNX3345.00 345KV CKT 1
FDNS	16NR	0	17G	G15_046	FROM->TO	HURON (BD KU2A) 345/230/13.8KV TRANSFORMER CKT 1	400	400	0.08063	113.2137	GROTON-LNX3 345.00 - LELAND1-LNX3345.00 345KV CKT 1
FDNS	16NR	0	17G	G15_046	FROM->TO	HURON (BD KU2A) 345/230/13.8KV TRANSFORMER CKT 1	400	400	0.08651	109.841	LELAND OLDS - LELAND2-LNX3345.00 345KV CKT Z
FDNS	16NR	0	17G	G15_046	FROM->TO	HURON (BD KU2A) 345/230/13.8KV TRANSFORMER CKT 1	400	400	0.08651	109.684	FT THOMPSON - FTTHOM1-LNX3345.00 345KV CKT Z
FDNS	16NR	0	17G	G15_046	FROM->TO	HURON (BD KU2A) 345/230/13.8KV TRANSFORMER CKT 1	400	400	0.08651	109.393	P12:345:UMZB:# 108 #: LOS FT IN ND. LOS FT
FDNS	16NR	0	17G	G15_046	FROM->TO	HURON (BD KU2A) 345/230/13.8KV TRANSFORMER CKT 1	400	400	0.08063	109.3149	LELAND OLDS - LELAND1-LNX3345.00 345KV CKT Z
FDNS	16NR	0	17G	G15_046	FROM->TO	HURON (BD KU2A) 345/230/13.8KV TRANSFORMER CKT 1	400	400	0.08063	109.284	GROTON - GROTON-LNX3 345.00 345KV CKT Z
FDNS	16NR	0	17G	G15_046	FROM->TO	HURON (BD KU2A) 345/230/13.8KV TRANSFORMER CKT 1	400	400	0.08063	109.2831	P12:345:UMZB:# 109 #: LOS GRT IN ND. LOS GRT

SOLUTION	GROUP	SCENARIO	SEASON	SOURCE	DIRECTION	MONITORED ELEMENT	RATEA (MVA)	RATEB(MVA)	TDF	TC%LOADING (% MVA)	CONTINGENCY
FDNS	16NR	0	17G	G15_046	FROM->TO	HURON (BD KU2A) 345/230/13.8KV TRANSFORMER CKT 1	400	400	0.08651	109.0139	FTTHOM1-LNX3345.00 - LELAND2-LNX3345.00 345KV CKT 1
FDNS	16NR	0	17G	G15_046	FROM->TO	HURON (BD KU2A) 345/230/13.8KV TRANSFORMER CKT 1	400	400	0.08063	108.9684	GROTON-LNX3 345.00 - LELAND1-LNX3345.00 345KV CKT 1
FDNS	00NR_B10T_DCTIE	0	17SP	G15_046	FROM->TO	HURON (BD KU2A) 345/230/13.8KV TRANSFORMER CKT 1	400	400	0.09406	106.2248	LELAND OLDS - LELAND2-LNX3345.00 345KV CKT Z
FDNS	00NR_B10T_DCTIE	0	17SP	G15_046	FROM->TO	HURON (BD KU2A) 345/230/13.8KV TRANSFORMER CKT 1	400	400	0.09406	105.7378	P12:345:UMZB:# 108 #: LOS FT IN ND. LOS FT
FDNS	00NR_B10T_DCTIE	0	17SP	G15_046	FROM->TO	HURON (BD KU2A) 345/230/13.8KV TRANSFORMER CKT 1	400	400	0.09406	105.7264	FT THOMPSON - FTTHOM1-LNX3345.00 345KV CKT Z
FDNS	00NR_B10T_DCTIE	0	17SP	G15_046	FROM->TO	HURON (BD KU2A) 345/230/13.8KV TRANSFORMER CKT 1	400	400	0.09406	105.0881	FTTHOM1-LNX3345.00 - LELAND2-LNX3345.00 345KV CKT 1
FDNS	00NR_B10T_DCTIE	0	17SP	G15_046	FROM->TO	HURON (BD KU2A) 345/230/13.8KV TRANSFORMER CKT 1	400	400	0.08813	104.3591	LELAND OLDS - LELAND1-LNX3345.00 345KV CKT Z
FDNS	00NR_B10T_DCTIE	0	17SP	G15_046	FROM->TO	HURON (BD KU2A) 345/230/13.8KV TRANSFORMER CKT 1	400	400	0.08813	104.2434	GROTON - GROTON-LNX3 345.00 345KV CKT Z
FDNS	00NR_B10T_DCTIE	0	17SP	G15_046	FROM->TO	HURON (BD KU2A) 345/230/13.8KV TRANSFORMER CKT 1	400	400	0.08813	104.2392	P12:345:UMZB:# 109 #: LOS GRT IN ND. LOS GRT
FDNS	00NR	0	17SP	G15_046	FROM->TO	HURON (BD KU2A) 345/230/13.8KV TRANSFORMER CKT 1	400	400	0.09406	104.2379	LELAND OLDS - LELAND2-LNX3345.00 345KV CKT Z
FDNS	00NR	0	17SP	G15_046	FROM->TO	HURON (BD KU2A) 345/230/13.8KV TRANSFORMER CKT 1	400	400	0.09406	103.7749	P12:345:UMZB:# 108 #: LOS FT IN ND. LOS FT
FDNS	00NR	0	17SP	G15_046	FROM->TO	HURON (BD KU2A) 345/230/13.8KV TRANSFORMER CKT 1	400	400	0.09406	103.7693	FT THOMPSON - FTTHOM1-LNX3345.00 345KV CKT Z
FDNS	00NR_B10T_DCTIE	0	17SP	G15_046	FROM->TO	HURON (BD KU2A) 345/230/13.8KV TRANSFORMER CKT 1	400	400	0.08813	103.6769	GROTON-LNX3 345.00 - LELAND1-LNX3345.00 345KV CKT 1
FDNS	00NR	0	17SP	G15_046	FROM->TO	HURON (BD KU2A) 345/230/13.8KV TRANSFORMER CKT 1	400	400	0.09406	103.2836	FTTHOM1-LNX3345.00 - LELAND2-LNX3345.00 345KV CKT 1
FDNS	00NR_B10T_DCTIE	0	17SP	G15_046	FROM->TO	HURON (BD KU2A) 345/230/13.8KV TRANSFORMER CKT 1	400	400	0.09406	102.9326	LELAND OLDS - LELAND2-LNX3345.00 345KV CKT Z
FDNS	00NR_B10T_DCTIE	0	17SP	G15_046	FROM->TO	HURON (BD KU2A) 345/230/13.8KV TRANSFORMER CKT 1	400	400	0.09406	102.5294	FT THOMPSON - FTTHOM1-LNX3345.00 345KV CKT Z
FDNS	16NR	0	17G	G15_046	FROM->TO	HURON (BD KU2A) 345/230/13.8KV TRANSFORMER CKT 1	400	400	0.07458	102.5214	G09_001IST 345.00 - WATERTOWN 345KV CKT 1
FDNS	00NR_B10T_DCTIE	0	17SP	G15_046	FROM->TO	HURON (BD KU2A) 345/230/13.8KV TRANSFORMER CKT 1	400	400	0.09406	102.5105	P12:345:UMZB:# 108 #: LOS FT IN ND. LOS FT
FDNS	16NR	0	17G	G15_046	FROM->TO	HURON (BD KU2A) 345/230/13.8KV TRANSFORMER CKT 1	400	400	0.07458	102.506	G09_001IST 345.00 - GROTON 345KV CKT 1
FDNS	00NR	0	17SP	G15_046	FROM->TO	HURON (BD KU2A) 345/230/13.8KV TRANSFORMER CKT 1	400	400	0.08813	102.3438	GROTON-LNX3 345.00 - LELAND1-LNX3345.00 345KV CKT 1
FDNS	00NR	0	17SP	G15_046	FROM->TO	HURON (BD KU2A) 345/230/13.8KV TRANSFORMER CKT 1	400	400	0.08813	102.31	LELAND OLDS - LELAND1-LNX3345.00 345KV CKT Z
FDNS	00NR	0	17SP	G15_046	FROM->TO	HURON (BD KU2A) 345/230/13.8KV TRANSFORMER CKT 1	400	400	0.08813	102.2631	GROTON - GROTON-LNX3 345.00 345KV CKT Z
FDNS	00NR	0	17SP	G15_046	FROM->TO	HURON (BD KU2A) 345/230/13.8KV TRANSFORMER CKT 1	400	400	0.08813	102.2562	P12:345:UMZB:# 109 #: LOS GRT IN ND. LOS GRT
FDNS	00NR_B10T_DCTIE	0	17SP	G15_046	FROM->TO	HURON (BD KU2A) 345/230/13.8KV TRANSFORMER CKT 1	400	400	0.09406	101.9175	FTTHOM1-LNX3345.00 - LELAND2-LNX3345.00 345KV CKT 1
FDNS	16NR	0	17G	G15_046	FROM->TO	HURON (BD KU2A) 345/230/13.8KV TRANSFORMER CKT 1	400	400	0.0727	101.5859	CENTER - JAMESTOWN 345KV CKT 1
FDNS	16NR	0	17G	G15_046	FROM->TO	HURON (BD KU2A) 345/230/13.8KV TRANSFORMER CKT 1	400	400	0.07588	101.4238	GLENHAM - L3 HAWDON 230KV CKT 1
FDNS	00NR_B10T_DCTIE	0	17SP	G15_046	FROM->TO	HURON (BD KU2A) 345/230/13.8KV TRANSFORMER CKT 1	400	400	0.08813	101.3535	LELAND OLDS - LELAND1-LNX3345.00 345KV CKT Z
FDNS	16NR	0	17G	G15_046	FROM->TO	HURON (BD KU2A) 345/230/13.8KV TRANSFORMER CKT 1	400	400	0.08069	101.3284	BISON - HETINGER 230KV CKT 1
FDNS	00NR_B10T_DCTIE	0	17SP	G15_046	FROM->TO	HURON (BD KU2A) 345/230/13.8KV TRANSFORMER CKT 1	400	400	0.08813	101.2575	GROTON - GROTON-LNX3 345.00 345KV CKT Z
FDNS	00NR_B10T_DCTIE	0	17SP	G15_046	FROM->TO	HURON (BD KU2A) 345/230/13.8KV TRANSFORMER CKT 1	400	400	0.08813	101.2491	P12:345:UMZB:# 109 #: LOS GRT IN ND. LOS GRT
FDNS	00NR	0	17SP	G15_046	FROM->TO	HURON (BD KU2A) 345/230/13.8KV TRANSFORMER CKT 1	400	400	0.09406	101.1944	LELAND OLDS - LELAND2-LNX3345.00 345KV CKT Z
FDNS	16ALL_B10T_DCTIE	0	17SP	G15_046	FROM->TO	HURON (BD KU2A) 345/230/13.8KV TRANSFORMER CKT 1	400	400	0.1361	101.098	BASE CASE
FDNS	16NR	0	17G	G15_046	FROM->TO	HURON (BD KU2A) 345/230/13.8KV TRANSFORMER CKT 1	400	400	0.08069	100.9202	BISON - MAURINE 230KV CKT 1
FDNS	00NR	0	17SP	G15_046	FROM->TO	HURON (BD KU2A) 345/230/13.8KV TRANSFORMER CKT 1	400	400	0.09406	100.8153	FT THOMPSON - FTTHOM1-LNX3345.00 345KV CKT Z
FDNS	00NR	0	17SP	G15_046	FROM->TO	HURON (BD KU2A) 345/230/13.8KV TRANSFORMER CKT 1	400	400	0.09406	100.7927	P12:345:UMZB:# 108 #: LOS FT IN ND. LOS FT
FDNS	00NR_B10T_DCTIE	0	17SP	G15_046	FROM->TO	HURON (BD KU2A) 345/230/13.8KV TRANSFORMER CKT 1	400	400	0.08813	100.7225	GROTON-LNX3 345.00 - LELAND1-LNX3345.00 345KV CKT 1
FDNS	16NR	0	17G	G15_046	FROM->TO	HURON (BD KU2A) 345/230/13.8KV TRANSFORMER CKT 1	400	400	0.07563	100.3709	GLENHAM - WHITLOK 230KV CKT 1
FDNS	00NR	0	17SP	G15_046	FROM->TO	HURON (BD KU2A) 345/230/13.8KV TRANSFORMER CKT 1	400	400	0.09406	100.3411	FTTHOM1-LNX3345.00 - LELAND2-LNX3345.00 345KV CKT 1
FDNS	16NR	0	17G	G15_046	FROM->TO	HURON (BD KU2A) 345/230/13.8KV TRANSFORMER CKT 1	400	400	0.07563	100.2941	P12:230:UMZB:# 114 #: SB IN SD. SB-WK-GH
FDNS	16NR	0	17G	G15_046	FROM->TO	HURON (BD KU2A) 345/230/13.8KV TRANSFORMER CKT 1	400	400	0.07563	100.2941	P12:230:UMZB:# 117 #: WK IN SD. SB-WK-GH
FDNS	16NR	0	17G	G15_046	FROM->TO	HURON (BD KU2A) 345/230/13.8KV TRANSFORMER CKT 1	400	400	0.07563	100.1927	SULLYBT-LNX3230.00 - WHITLOK 230KV CKT 1
FDNS	16NR	0	17G	G15_046	FROM->TO	HURON (BD KU2A) 345/230/13.8KV TRANSFORMER CKT 1	400	400	0.07563	100.1906	SULLEY BUTTE - SULLYBT-LNX3230.00 230KV CKT Z
FDNS	16NR	0	17G	G15_046	FROM->TO	HURON (BD KU2A) 345/230/13.8KV TRANSFORMER CKT 1	400	400	0.07563	99.9	OAHE - SULLEY BUTTE 230KV CKT 1
FDNS	16NR	0	17G	G15_046	FROM->TO	HURON (BD KU2A) 345/230/13.8KV TRANSFORMER CKT 1	400	400	0.07458	99.7	G09_001IST 345.00 - GROTON 345KV CKT 1
FDNS	16NR	0	17G	G15_046	FROM->TO	HURON (BD KU2A) 345/230/13.8KV TRANSFORMER CKT 1	400	400	0.07458	99.7	G09_001IST 345.00 - WATERTOWN 345KV CKT 1
FDNS	00NR	0	17SP	G15_046	FROM->TO	HURON (BD KU2A) 345/230/13.8KV TRANSFORMER CKT 1	400	400	0.08813	99.6	GROTON-LNX3 345.00 - LELAND1-LNX3345.00 345KV CKT 1
FDNS	00NR	0	17SP	G15_046	FROM->TO	HURON (BD KU2A) 345/230/13.8KV TRANSFORMER CKT 1	400	400	0.08813	99.6	LELAND OLDS - LELAND1-LNX3345.00 345KV CKT Z
FDNS	00NR	0	17SP	G15_046	FROM->TO	HURON (BD KU2A) 345/230/13.8KV TRANSFORMER CKT 1	400	400	0.08813	99.5	GROTON - GROTON-LNX3 345.00 345KV CKT Z
FDNS	00NR	0	17SP	G15_046	FROM->TO	HURON (BD KU2A) 345/230/13.8KV TRANSFORMER CKT 1	400	400	0.08813	99.5	P12:345:UMZB:# 109 #: LOS GRT IN ND. LOS GRT
FDNS	16NR	0	17G	G15_046	FROM->TO	HURON (BD KU2A) 345/230/13.8KV TRANSFORMER CKT 1	400	400	0.07121	99.4	CHISAGO COUNTY - FORBES 500KV CKT 1
FDNS	16NR	0	17G	G15_046	FROM->TO	HURON (BD KU2A) 345/230/13.8KV TRANSFORMER CKT 1	400	400	0.07121	99.2	CHISAGO COUNTY - CHISAGO COUNTY 500KV CKT 1
FDNS	16NR	0	20L	G15_046	FROM->TO	NESET 4 230.00 - TIOGA 230KV CKT 1	200	200	0.90613	136.856	TANDE 3345.00 - TANDE-LNX 345.00 345KV CKT Z
FDNS	16NR	0	20L	G15_046	FROM->TO	NESET 4 230.00 - TIOGA 230KV CKT 1	200	200	0.90613	136.8455	JUDSON 3345.00 - TANDE-LNX 345.00 345KV CKT 1
FDNS	16ALL	0	20L	G15_046	FROM->TO	NESET 4 230.00 - TIOGA 230KV CKT 1	200	200	0.90567	136.7886	JUDSON 3345.00 - TANDE-LNX 345.00 345KV CKT 1
FDNS	16ALL	0	20L	G15_046	FROM->TO	NESET 4 230.00 - TIOGA 230KV CKT 1	200	200	0.90567	136.7364	TANDE 3345.00 - TANDE-LNX 345.00 345KV CKT Z
FDNS	00NR	0	17SP	G15_046	FROM->TO	NESET 4 230.00 - TIOGA 230KV CKT 1	200	200	0.90591	130.9655	JUDSON 3345.00 - TANDE-LNX 345.00 345KV CKT 1
FDNS	00NR	0	17SP	G15_046	FROM->TO	NESET 4 230.00 - TIOGA 230KV CKT 1	200	200	0.90591	130.9414	TANDE 3345.00 - TANDE-LNX 345.00 345KV CKT Z
FDNS	16ALL	0	17SP	G15_046	FROM->TO	NESET 4 230.00 - TIOGA 230KV CKT 1	200	200	0.90567	130.8224	JUDSON 3345.00 - TANDE-LNX 345.00 345KV CKT 1
FDNS	16ALL	0	17SP	G15_046	FROM->TO	NESET 4 230.00 - TIOGA 230KV CKT 1	200	200	0.90567	130.776	TANDE 3345.00 - TANDE-LNX 345.00 345KV CKT Z
FDNS	16ALL	0	17G	G15_046	FROM->TO	NESET 4 230.00 - TIOGA 230KV CKT 1	200	200	0.90564	127.3196	JUDSON 3345.00 - TANDE-LNX 345.00 345KV CKT 1
FDNS	16ALL	0	17G	G15_046	FROM->TO	NESET 4 230.00 - TIOGA 230KV CKT 1	200	200	0.90564	127.2877	TANDE 3345.00 - TANDE-LNX 345.00 345KV CKT Z
FDNS	16NR	0	17G	G15_046	FROM->TO	NESET 4 230.00 - TIOGA 230KV CKT 1	200	200	0.90583	127.1383	JUDSON 3345.00 - TANDE-LNX 345.00 345KV CKT 1
FDNS	16NR	0	17G	G15_046	FROM->TO	NESET 4 230.00 - TIOGA 230KV CKT 1	200	200	0.90583	127.1287	TANDE 3345.00 - TANDE-LNX 345.00 345KV CKT Z
FDNS	00NR	0	20SP	G15_046	FROM->TO	NESET 4 230.00 - TIOGA 230KV CKT 1	200	200	0.90592	126.3065	JUDSON 3345.00 - TANDE-LNX 345.00 345KV CKT 1
FDNS	00NR	0	20SP	G15_046	FROM->TO	NESET 4 230.00 - TIOGA 230KV CKT 1	200	200	0.90592	126.2924	TANDE 3345.00 - TANDE-LNX 345.00 345KV CKT Z
FDNS	16ALL	0	20SP	G15_046	FROM->TO	NESET 4 230.00 - TIOGA 230KV CKT 1	200	200	0.90566	125.8372	JUDSON 3345.00 - TANDE-LNX 345.00 345KV CKT 1
FDNS	16ALL	0	20SP	G15_046	FROM->TO	NESET 4 230.00 - TIOGA 230KV CKT 1	200	200	0.90566	125.8166	TANDE 3345.00 - TANDE-LNX 345.00 345KV CKT Z
FDNS	00NR_B10T_DCTIE	0	16WP	G15_046	FROM->TO	NESET 4 230.00 - TIOGA 230KV CKT 1	200	200	0.9059	125.3336	JUDSON 3345.00 - TANDE-LNX 345.00 345KV CKT 1
FDNS	00NR_B10T_DCTIE	0	16WP	G15_046	FROM->TO	NESET 4 230.00 - TIOGA 230KV CKT 1	200	200	0.9059	125.3312	TANDE 3345.00 - TANDE-LNX 345.00 345KV CKT Z
FDNS	16ALL_B10T_DCTIE	0	16WP	G15_046	FROM->TO	NESET 4 230.00 - TIOGA 230KV CKT 1	200	200	0.90565	124.8085	JUDSON 3345.00 - TANDE-LNX 345.00 345KV CKT 1
FDNS	16ALL_B10T_DCTIE	0	16WP	G15_046	FROM->TO	NESET 4 230.00 - TIOGA 230KV CKT 1	200	200	0.90565	124.7979	TANDE 3345.00 - TANDE-LNX 345.00 345KV CKT Z
FDNS	00NR_B10T_DCTIE	0	17SP	G15_046	FROM->TO	NESET 4 230.00 - TIOGA 230KV CKT 1	200	200	0.90591	123.8079	JUDSON 3345.00 - TANDE-LNX 345.00 345KV CKT 1
FDNS	00NR_B10T_DCTIE	0	17SP	G15_046	FROM->TO	NESET 4 230.00 - TIOGA 230KV CKT 1	200	200	0.90591	123.7486	TANDE 3345.00 - TANDE-LNX 345.00 345KV CKT Z
FDNS	16ALL_B10T_DCTIE	0	17SP	G15_046	FROM->TO	NESET 4 230.00 - TIOGA 230KV CKT 1	200	200	0.90567	122.6637	JUDSON 3345.00 - TANDE-LNX 345.00 345KV CKT 1
FDNS	16ALL_B10T_DCTIE	0	17SP	G15_046	FROM->TO	NESET 4 230.00 - TIOGA 230KV CKT 1	200	200	0.90567	122.5721	TANDE 3345.00 - TANDE-LNX 345.00 345KV CKT Z
FDNS	00NR	0	16WP	G15_046	FROM->TO	NESET 4 230.00 - TIOGA 230KV CKT 1	200	200	0.9059	122.4481	TANDE 3345.00 - TANDE-LNX 345.00 345KV CKT Z
FDNS	00NR	0	16WP	G15_046	FROM->TO	NESET 4 230.00 - TIOGA 230KV CKT 1	200	200	0.9059	122.44	JUDSON 3345.00 - TANDE-LNX 345.00 345KV CKT 1
FDNS	16ALL	0	16WP	G15_046	FROM->TO	NESET 4 230.00 - TIOGA 230KV CKT 1	200	200	0.90566	121.8955	TANDE 3345.00 - TANDE-LNX 345.00 345KV CKT Z
FDNS	16ALL	0	16WP	G15_046	FROM->TO	NESET 4 230.00 - TIOGA 230KV CKT 1	200	200	0.90566	121.893	JUDSON 3345.00 - TANDE-LNX 345.00 345KV CKT 1

SOLUTION	GROUP	SCENARIO	SEASON	SOURCE	DIRECTION	MONITORED ELEMENT	RATEA (MVA)	RATEB(MVA)	TDF	TC%LOADING (% MVA)	CONTINGENCY
FDNS	00NR	0	25SP	G15_046	FROM->TO	NESET 4 230.00 - TIOGA 230KV CKT 1	200	200	0.90592	120.7237	TANDE 3345.00 - TANDE-LNX 345.00 345KV CKT Z
FDNS	00NR	0	25SP	G15_046	FROM->TO	NESET 4 230.00 - TIOGA 230KV CKT 1	200	200	0.90592	120.7092	JUDSON 3345.00 - TANDE-LNX 345.00 345KV CKT 1
FDNS	16ALL	0	25SP	G15_046	FROM->TO	NESET 4 230.00 - TIOGA 230KV CKT 1	200	200	0.90566	120.4021	TANDE 3345.00 - TANDE-LNX 345.00 345KV CKT Z
FDNS	16ALL	0	25SP	G15_046	FROM->TO	NESET 4 230.00 - TIOGA 230KV CKT 1	200	200	0.90566	120.3904	JUDSON 3345.00 - TANDE-LNX 345.00 345KV CKT 1
FDNS	00NR	0	20WP	G15_046	FROM->TO	NESET 4 230.00 - TIOGA 230KV CKT 1	200	200	0.90565	115.4551	TANDE 3345.00 - TANDE-LNX 345.00 345KV CKT Z
FDNS	00NR	0	20WP	G15_046	FROM->TO	NESET 4 230.00 - TIOGA 230KV CKT 1	200	200	0.90565	115.4245	JUDSON 3345.00 - TANDE-LNX 345.00 345KV CKT 1
FDNS	16ALL_B10T_DCTIE	0	16WP	G15_046	FROM->TO	NESET 4 230.00 - TIOGA 230KV CKT 1	200	200	0.38224	115.0169	JUDSON 4230.00 - WILLISTON 230KV CKT 1
FDNS	16ALL_B10T_DCTIE	0	16WP	G15_046	FROM->TO	NESET 4 230.00 - TIOGA 230KV CKT 1	200	200	0.38224	115.0164	JUDSON 3345.00 (JUDSON KU1A) 345/230/13.8KV TRANSFORMER CKT 1
FDNS	16ALL	0	20WP	G15_046	FROM->TO	NESET 4 230.00 - TIOGA 230KV CKT 1	200	200	0.90563	114.9446	TANDE 3345.00 - TANDE-LNX 345.00 345KV CKT Z
FDNS	16ALL	0	20WP	G15_046	FROM->TO	NESET 4 230.00 - TIOGA 230KV CKT 1	200	200	0.90563	114.9228	JUDSON 3345.00 - TANDE-LNX 345.00 345KV CKT 1
FDNS	00NR_B10T_DCTIE	0	16WP	G15_046	FROM->TO	NESET 4 230.00 - TIOGA 230KV CKT 1	200	200	0.38524	110.7658	JUDSON 3345.00 (JUDSON KU1A) 345/230/13.8KV TRANSFORMER CKT 1
FDNS	00NR_B10T_DCTIE	0	16WP	G15_046	FROM->TO	NESET 4 230.00 - TIOGA 230KV CKT 1	200	200	0.38524	110.7645	JUDSON 4230.00 - WILLISTON 230KV CKT 1
FDNS	16ALL_B10T_DCTIE	0	16WP	G15_046	FROM->TO	NESET 4 230.00 - TIOGA 230KV CKT 1	200	200	0.37504	106.6413	NESET 4 230.00 () 230/115/13.8KV TRANSFORMER CKT 1
FDNS	00NR_B10T_DCTIE	0	16WP	G15_046	FROM->TO	NESET 4 230.00 - TIOGA 230KV CKT 1	200	200	0.3735	105.878	NESET 4 230.00 () 230/115/13.8KV TRANSFORMER CKT 1
FDNS	16ALL	0	20WP	G15_046	FROM->TO	NESET 4 230.00 - TIOGA 230KV CKT 1	200	200	0.37527	103.5173	NESET 4 230.00 () 230/115/13.8KV TRANSFORMER CKT 1
FDNS	00NR	0	20WP	G15_046	FROM->TO	NESET 4 230.00 - TIOGA 230KV CKT 1	200	200	0.37492	103.4862	NESET 4 230.00 () 230/115/13.8KV TRANSFORMER CKT 1
FDNS	16ALL	0	16WP	G15_046	FROM->TO	NESET 4 230.00 - TIOGA 230KV CKT 1	200	200	0.38224	102.7845	JUDSON 3345.00 (JUDSON KU1A) 345/230/13.8KV TRANSFORMER CKT 1
FDNS	16ALL	0	16WP	G15_046	FROM->TO	NESET 4 230.00 - TIOGA 230KV CKT 1	200	200	0.38224	102.7823	JUDSON 4230.00 - WILLISTON 230KV CKT 1
FDNS	16NR	0	17G	G15_046	FROM->TO	NESET 4 230.00 - TIOGA 230KV CKT 1	200	200	0.37997	101.1448	JUDSON 3345.00 (JUDSON KU1A) 345/230/13.8KV TRANSFORMER CKT 1
FDNS	16NR	0	17G	G15_046	FROM->TO	NESET 4 230.00 - TIOGA 230KV CKT 1	200	200	0.37997	101.1412	JUDSON 4230.00 - WILLISTON 230KV CKT 1
FDNS	16ALL_B10T_DCTIE	0	16WP	G15_046	FROM->TO	NESET 4 230.00 - TIOGA 230KV CKT 1	200	200	0.31083	100.8797	LELAND OLDS - LOGAN 230KV CKT 1
FDNS	00NR	0	20SP	G15_046	TO->FROM	SPLIT ROCK - WHITE 345KV CKT 1	717	717	0.03275	102.0892	GRPRAR1-LNX3345.00 - HOLT.CO3 345.00 345KV CKT 1
FDNS	00NR	0	20SP	G15_046	TO->FROM	SPLIT ROCK - WHITE 345KV CKT 1	717	717	0.03275	102.0854	GRPRAR1-LNX3345.00 - YANKTON 345KV CKT Z
FDNS	00NR	0	20SP	G15_046	TO->FROM	SPLIT ROCK - WHITE 345KV CKT 1	717	717	0.03096	100.8963	HANLON - STORLA 230KV CKT 1
FDNS	00NR	0	20SP	G15_046	TO->FROM	SPLIT ROCK - WHITE 345KV CKT 1	717	717	0.03102	100.6838	P12:230:UMZB:# 116 #: ST IN SD. WSG-ST-VH
FDNS	00NR	0	20SP	G15_046	TO->FROM	SPLIT ROCK - WHITE 345KV CKT 1	717	717	0.03128	100.1	GEN635214 4-NEAL UNIT 4
FDNS	00NR	0	20SP	G15_046	TO->FROM	SPLIT ROCK - WHITE 345KV CKT 1	717	717	0.03128	99.4	SQUARE BUTTE - YNG2 4 230.00 230KV CKT 1
FDNS	00NR_B10T_DCTIE	0	17SP	G15_046	TO->FROM	WATERTN-LNX3345.00 - WATERTOWN 345KV CKT Z	720	792	0.05768	99	BLAIR - GRANITE FALLS 230KV CKT 1
FDNS	00NR_B10T_DCTIE	0	17SP	G15_046	TO->FROM	WATERTN-LNX3345.00 - WATERTOWN 345KV CKT Z	720	792	0.05768	99	BLAIR - GRANITE FALLS 230KV CKT 1
FDNS	00NR_B10T_DCTIE	0	17SP	G15_046	FROM->TO	WATERTN-LNX3345.00 - WHITE 345KV CKT 1	720	792	0.05768	99.7	BLAIR - GRANITE FALLS 230KV CKT 1
FDNS	00NR_B10T_DCTIE	0	17SP	G15_046	FROM->TO	WATERTN-LNX3345.00 - WHITE 345KV CKT 1	720	792	0.05768	99.7	BLAIR - GRANITE FALLS 230KV CKT 1
FDNS	00NR	2	20WP	G15_046	FROM->TO	BLAISDELL 4230.00 (BLAISDL KV2A) 230/115/13.8KV TRANSFORMER CKT 1	166	166	0.05488	103.1162	NESET 7 115.00 - WHTEARTHTP 7115.00 115KV CKT 1
FDNS	00NR	2	20WP	G15_046	FROM->TO	BLAISDELL 4230.00 (BLAISDL KV2A) 230/115/13.8KV TRANSFORMER CKT 1	166	166	0.05488	101.8545	NESET 7 115.00 - WHTEARTHTP 7115.00 115KV CKT 1
FDNS	00NR	2	20WP	G15_046	FROM->TO	BLAISDELL 4230.00 (BLAISDL KV2A) 230/115/13.8KV TRANSFORMER CKT 1	166	166	0.05488	100.2117	PVALLEY -MW7115.00 - WHTEARTHTP 7115.00 115KV CKT 1
FDNS	00NR	2	20WP	G15_046	FROM->TO	BLAISDELL 4230.00 (BLAISDL KV2A) 230/115/13.8KV TRANSFORMER CKT 1	166	166	0.05488	99.6	PVALLEY -MW7115.00 - WHTEARTHTP 7115.00 115KV CKT 1
FDNS	16ALL	2	17SP	G15_046	FROM->TO	BROADLAND - HURON 230KV CKT 1	400	480	0.13587	100.4387	BASE CASE
FDNS	16NR	2	17G	G15_046	TO->FROM	GLENHAM - L3 HAWDON 230KV CKT 1	210	210	0.05526	119.1513	LELAND OLDS - LELAND2-LNX3345.00 345KV CKT Z
FDNS	16NR	2	17G	G15_046	TO->FROM	GLENHAM - L3 HAWDON 230KV CKT 1	210	210	0.05526	119.1451	P12:345:UMZB:# 108 #: LOS FT IN ND. LOS FT
FDNS	16NR	2	17G	G15_046	TO->FROM	GLENHAM - L3 HAWDON 230KV CKT 1	210	210	0.05526	118.9495	FT THOMPSON - FTTHOM1-LNX3345.00 345KV CKT Z
FDNS	16NR	2	17G	G15_046	TO->FROM	GLENHAM - L3 HAWDON 230KV CKT 1	210	210	0.05526	118.8726	FTTHOM1-LNX3345.00 - LELAND2-LNX3345.00 345KV CKT 1
FDNS	16NR	2	20L	G15_046	TO->FROM	GLENHAM - L3 HAWDON 230KV CKT 1	210	210	0.04601	113.3551	P12:345:UMZB:# 108 #: LOS FT IN ND. LOS FT
FDNS	16NR	2	20L	G15_046	TO->FROM	GLENHAM - L3 HAWDON 230KV CKT 1	210	210	0.04601	113.3455	LELAND OLDS - LELAND2-LNX3345.00 345KV CKT Z
FDNS	16NR	2	20L	G15_046	TO->FROM	GLENHAM - L3 HAWDON 230KV CKT 1	210	210	0.04601	113.3113	FT THOMPSON - FTTHOM1-LNX3345.00 345KV CKT Z
FDNS	16NR	2	20L	G15_046	TO->FROM	GLENHAM - L3 HAWDON 230KV CKT 1	210	210	0.04601	113.2882	FTTHOM1-LNX3345.00 - LELAND2-LNX3345.00 345KV CKT 1
FDNS	16NR	2	17G	G15_046	TO->FROM	GLENHAM - L3 HAWDON 230KV CKT 1	210	210	0.05131	111.3466	ANTELOP-LNX3345.00 - ANTELOPE VALLEY 345KV CKT Z
FDNS	16NR	2	17G	G15_046	TO->FROM	GLENHAM - L3 HAWDON 230KV CKT 1	210	210	0.05131	111.077	ANTELOP-LNX3345.00 - BRDLAND-LNX3345.00 345KV CKT 1
FDNS	16NR	2	17G	G15_046	TO->FROM	GLENHAM - L3 HAWDON 230KV CKT 1	210	210	0.05131	110.9102	P12:345:UMZB:# 102 #: AVS BD IN ND. AVS BRD LR
FDNS	16NR	2	17G	G15_046	TO->FROM	GLENHAM - L3 HAWDON 230KV CKT 1	210	210	0.05131	110.91	P12:345:UMZB:# 103 #: BD IN SD. LOSS OF LINE
FDNS	16NR	2	17G	G15_046	TO->FROM	GLENHAM - L3 HAWDON 230KV CKT 1	210	210	0.05131	110.8259	BROADLAND - HURON 230KV CKT 1
FDNS	16NR	2	17G	G15_046	TO->FROM	GLENHAM - L3 HAWDON 230KV CKT 1	210	210	0.05131	110.8257	BRDLAND-LNX3345.00 - HURON 345KV CKT Z
FDNS	16NR	2	17G	G15_046	TO->FROM	GLENHAM - L3 HAWDON 230KV CKT 1	210	210	0.05131	110.8254	HURON (BD KU2A) 345/230/13.8KV TRANSFORMER CKT 1
FDNS	16NR	2	17G	G15_046	TO->FROM	GLENHAM - L3 HAWDON 230KV CKT 1	210	210	0.05131	110.8254	HURON (BD KU2A) 345/230/13.8KV TRANSFORMER CKT 1
FDNS	16NR	2	20L	G15_046	TO->FROM	GLENHAM - L3 HAWDON 230KV CKT 1	210	210	0.04707	108.0231	BISON - HETINGER 230KV CKT 1
FDNS	16NR	2	17G	G15_046	TO->FROM	GLENHAM - L3 HAWDON 230KV CKT 1	210	210	0.05518	106.7878	BISON - HETINGER 230KV CKT 1
FDNS	16NR	2	20L	G15_046	TO->FROM	GLENHAM - L3 HAWDON 230KV CKT 1	210	210	0.04707	106.6545	BISON - MAURINE 230KV CKT 1
FDNS	16NR	2	17G	G15_046	TO->FROM	GLENHAM - L3 HAWDON 230KV CKT 1	210	210	0.04801	106.653	GROTON-LNX3 345.00 - LELAND1-LNX3345.00 345KV CKT 1
FDNS	16NR	2	17G	G15_046	TO->FROM	GLENHAM - L3 HAWDON 230KV CKT 1	210	210	0.04801	106.0747	P12:345:UMZB:# 109 #: LOS GRT IN ND. LOS GRT
FDNS	16NR	2	17G	G15_046	TO->FROM	GLENHAM - L3 HAWDON 230KV CKT 1	210	210	0.04801	106.0647	GROTON - GROTON-LNX3 345.00 345KV CKT Z
FDNS	16NR	2	17G	G15_046	TO->FROM	GLENHAM - L3 HAWDON 230KV CKT 1	210	210	0.04801	106.0613	LELAND OLDS - LELAND1-LNX3345.00 345KV CKT Z
FDNS	16NR	2	17G	G15_046	TO->FROM	GLENHAM - L3 HAWDON 230KV CKT 1	210	210	0.05518	105.9745	BISON - MAURINE 230KV CKT 1
FDNS	16NR	2	20L	G15_046	TO->FROM	GLENHAM - L3 HAWDON 230KV CKT 1	210	210	0.04269	105.71	ANTELOP-LNX3345.00 - BRDLAND-LNX3345.00 345KV CKT 1
FDNS	16NR	2	20L	G15_046	TO->FROM	GLENHAM - L3 HAWDON 230KV CKT 1	210	210	0.04269	105.5481	P12:345:UMZB:# 102 #: AVS BD IN ND. AVS BRD LR
FDNS	16NR	2	20L	G15_046	TO->FROM	GLENHAM - L3 HAWDON 230KV CKT 1	210	210	0.04269	105.5479	P12:345:UMZB:# 103 #: BD IN SD. LOSS OF LINE
FDNS	16NR	2	20L	G15_046	TO->FROM	GLENHAM - L3 HAWDON 230KV CKT 1	210	210	0.04269	105.5007	BROADLAND - HURON 230KV CKT 1
FDNS	16NR	2	20L	G15_046	TO->FROM	GLENHAM - L3 HAWDON 230KV CKT 1	210	210	0.04269	105.5005	BRDLAND-LNX3345.00 - HURON 345KV CKT Z
FDNS	16NR	2	20L	G15_046	TO->FROM	GLENHAM - L3 HAWDON 230KV CKT 1	210	210	0.04269	105.5003	HURON (BD KU2A) 345/230/13.8KV TRANSFORMER CKT 1
FDNS	16NR	2	20L	G15_046	TO->FROM	GLENHAM - L3 HAWDON 230KV CKT 1	210	210	0.04269	105.5003	HURON (BD KU2A) 345/230/13.8KV TRANSFORMER CKT 1
FDNS	16NR	2	20L	G15_046	TO->FROM	GLENHAM - L3 HAWDON 230KV CKT 1	210	210	0.04269	105.4892	ANTELOP-LNX3345.00 - ANTELOPE VALLEY 345KV CKT Z
FDNS	16NR	2	17G	G15_046	TO->FROM	GLENHAM - L3 HAWDON 230KV CKT 1	210	210	0.04682	102.3742	CENTER - JAMESTOWN 345KV CKT 1
FDNS	16NR	2	17G	G15_046	TO->FROM	GLENHAM - L3 HAWDON 230KV CKT 1	210	210	0.04629	102.0144	BISON 3 345.00 - BUFFALO 345KV CKT 1
FDNS	16NR	2	17G	G15_046	TO->FROM	GLENHAM - L3 HAWDON 230KV CKT 1	210	210	0.04606	101.5864	CHISAGO COUNTY - FORBES 500KV CKT 1
FDNS	16NR	2	17G	G15_046	TO->FROM	GLENHAM - L3 HAWDON 230KV CKT 1	210	210	0.04692	101.5412	G09_001IST 345.00 - WATERTOWN 345KV CKT 1
FDNS	16NR	2	20L	G15_046	TO->FROM	GLENHAM - L3 HAWDON 230KV CKT 1	210	210	0.03915	101.3823	BUFFALO - JAMESTOWN 345KV CKT 1
FDNS	16NR	2	17G	G15_046	TO->FROM	GLENHAM - L3 HAWDON 230KV CKT 1	210	210	0.04692	101.3807	G09_001IST 345.00 - GROTON 345KV CKT 1
FDNS	16NR	2	17G	G15_046	TO->FROM	GLENHAM - L3 HAWDON 230KV CKT 1	210	210	0.04606	101.1336	CHISAGO COUNTY - CHISAGO COUNTY 500KV CKT 1
FDNS	16NR	2	20L	G15_046	TO->FROM	GLENHAM - L3 HAWDON 230KV CKT 1	210	210	0.03987	100.4951	GROTON-LNX3 345.00 - LELAND1-LNX3345.00 345KV CKT 1
FDNS	16NR	2	20L	G15_046	TO->FROM	GLENHAM - L3 HAWDON 230KV CKT 1	210	210	0.03987	100.3299	P12:345:UMZB:# 109 #: LOS GRT IN ND. LOS GRT
FDNS	16NR	2	20L	G15_046	TO->FROM	GLENHAM - L3 HAWDON 230KV CKT 1	210	210	0.03987	100.3222	LELAND OLDS - LELAND1-LNX3345.00 345KV CKT Z
FDNS	16NR	2	20L	G15_046	TO->FROM	GLENHAM - L3 HAWDON 230KV CKT 1	210	210	0.03987	100.3206	GROTON - GROTON-LNX3 345.00 345KV CKT Z

SOLUTION	GROUP	SCENARIO	SEASON	SOURCE	DIRECTION	MONITORED ELEMENT	RATEA (MVA)	RATEB(MVA)	TDF	TC%LOADING (% MVA)	CONTINGENCY
FDNS	16NR	2	17G	G15_046	TO->FROM	GLENHAM - L3 HAWDON 230KV CKT 1	210	210	0.04638	100	ALEXMRES3 345.00 - BISON 3 345.00 345KV CKT 1
FDNS	16NR	2	17G	G15_046	TO->FROM	GLENHAM - L3 HAWDON 230KV CKT 1	210	210	0.04585	99.9	BISMARK - JAMES TOWN 230KV CKT 1
FDNS	16NR	2	17G	G15_046	TO->FROM	GLENHAM - L3 HAWDON 230KV CKT 1	210	210	0.04585	99.9	BISMARK - WEBER 230KV CKT 1
FDNS	16NR	2	17G	G15_046	TO->FROM	GLENHAM - L3 HAWDON 230KV CKT 1	210	210	0.04585	99.9	JAMES TOWN - WEBER 230KV CKT 1
FDNS	16NR	2	20L	G15_046	TO->FROM	GLENHAM - L3 HAWDON 230KV CKT 1	210	210	0.03848	99.4	CHISAGO COUNTY - FORBES 500KV CKT 1
FDNS	16NR	2	20L	G15_046	TO->FROM	GLENHAM - L3 HAWDON 230KV CKT 1	210	210	0.03848	99.3	CHISAGO COUNTY - CHISAGO COUNTY 500KV CKT 1
FDNS	16NR	2	17G	G15_046	TO->FROM	GLENHAM - L3 HAWDON 230KV CKT 1	210	210	0.04551	99	BIG STONE - BLAIR 230KV CKT 1
FDNS	16NR	2	17G	G15_046	TO->FROM	GLENHAM - L3 HAWDON 230KV CKT 1	210	210	0.04551	99	BIG STONE - BLAIR 230KV CKT 1
FDNS	16NR	2	17G	G15_046	FROM->TO	HURON (BD KU2A) 345/230/13.8KV TRANSFORMER CKT 1	400	400	0.0863	114.1034	LELAND OLDS - LELAND2-LNX3345.00 345KV CKT Z
FDNS	16NR	2	17G	G15_046	FROM->TO	HURON (BD KU2A) 345/230/13.8KV TRANSFORMER CKT 1	400	400	0.0863	113.6467	FT THOMPSON - FTTHOM1-LNX3345.00 345KV CKT Z
FDNS	16NR	2	17G	G15_046	FROM->TO	HURON (BD KU2A) 345/230/13.8KV TRANSFORMER CKT 1	400	400	0.0863	113.5758	P12:345:UMZB:# 108 #: LOS FT IN ND. LOS FT
FDNS	16NR	2	17G	G15_046	FROM->TO	HURON (BD KU2A) 345/230/13.8KV TRANSFORMER CKT 1	400	400	0.08042	113.4195	LELAND OLDS - LELAND1-LNX3345.00 345KV CKT Z
FDNS	16NR	2	17G	G15_046	FROM->TO	HURON (BD KU2A) 345/230/13.8KV TRANSFORMER CKT 1	400	400	0.08042	113.3774	P12:345:UMZB:# 109 #: LOS GRT IN ND. LOS GRT
FDNS	16NR	2	17G	G15_046	FROM->TO	HURON (BD KU2A) 345/230/13.8KV TRANSFORMER CKT 1	400	400	0.08042	113.3758	GROTON - GROTON-LNX3 345.00 345KV CKT Z
FDNS	16NR	2	17G	G15_046	FROM->TO	HURON (BD KU2A) 345/230/13.8KV TRANSFORMER CKT 1	400	400	0.08042	113.2252	GROTON-LNX3 345.00 - LELAND1-LNX3345.00 345KV CKT 1
FDNS	16NR	2	17G	G15_046	FROM->TO	HURON (BD KU2A) 345/230/13.8KV TRANSFORMER CKT 1	400	400	0.0863	113.1081	FTTHOM1-LNX3345.00 - LELAND2-LNX3345.00 345KV CKT 1
FDNS	16NR	2	17G	G15_046	FROM->TO	HURON (BD KU2A) 345/230/13.8KV TRANSFORMER CKT 1	400	400	0.0863	109.7794	LELAND OLDS - LELAND2-LNX3345.00 345KV CKT Z
FDNS	16NR	2	17G	G15_046	FROM->TO	HURON (BD KU2A) 345/230/13.8KV TRANSFORMER CKT 1	400	400	0.0863	109.4159	FT THOMPSON - FTTHOM1-LNX3345.00 345KV CKT Z
FDNS	16NR	2	17G	G15_046	FROM->TO	HURON (BD KU2A) 345/230/13.8KV TRANSFORMER CKT 1	400	400	0.0863	109.3213	P12:345:UMZB:# 108 #: LOS FT IN ND. LOS FT
FDNS	16NR	2	17G	G15_046	FROM->TO	HURON (BD KU2A) 345/230/13.8KV TRANSFORMER CKT 1	400	400	0.08042	109.202	LELAND OLDS - LELAND1-LNX3345.00 345KV CKT Z
FDNS	16NR	2	17G	G15_046	FROM->TO	HURON (BD KU2A) 345/230/13.8KV TRANSFORMER CKT 1	400	400	0.08042	109.1691	GROTON - GROTON-LNX3 345.00 345KV CKT Z
FDNS	16NR	2	17G	G15_046	FROM->TO	HURON (BD KU2A) 345/230/13.8KV TRANSFORMER CKT 1	400	400	0.08042	109.1654	P12:345:UMZB:# 109 #: LOS GRT IN ND. LOS GRT
FDNS	16NR	2	17G	G15_046	FROM->TO	HURON (BD KU2A) 345/230/13.8KV TRANSFORMER CKT 1	400	400	0.08042	108.9823	GROTON-LNX3 345.00 - LELAND1-LNX3345.00 345KV CKT 1
FDNS	16NR	2	17G	G15_046	FROM->TO	HURON (BD KU2A) 345/230/13.8KV TRANSFORMER CKT 1	400	400	0.0863	108.8839	FTTHOM1-LNX3345.00 - LELAND2-LNX3345.00 345KV CKT 1
FDNS	00NR	2	17SP	G15_046	FROM->TO	HURON (BD KU2A) 345/230/13.8KV TRANSFORMER CKT 1	400	400	0.09387	104.1141	LELAND OLDS - LELAND2-LNX3345.00 345KV CKT Z
FDNS	00NR	2	17SP	G15_046	FROM->TO	HURON (BD KU2A) 345/230/13.8KV TRANSFORMER CKT 1	400	400	0.09387	103.6391	P12:345:UMZB:# 108 #: LOS FT IN ND. LOS FT
FDNS	00NR	2	17SP	G15_046	FROM->TO	HURON (BD KU2A) 345/230/13.8KV TRANSFORMER CKT 1	400	400	0.09387	103.6385	FT THOMPSON - FTTHOM1-LNX3345.00 345KV CKT Z
FDNS	00NR	2	17SP	G15_046	FROM->TO	HURON (BD KU2A) 345/230/13.8KV TRANSFORMER CKT 1	400	400	0.09387	103.1306	FTTHOM1-LNX3345.00 - LELAND2-LNX3345.00 345KV CKT 1
FDNS	16NR	2	17G	G15_046	FROM->TO	HURON (BD KU2A) 345/230/13.8KV TRANSFORMER CKT 1	400	400	0.0744	102.4006	G09_001IST 345.00 - WATERTOWN 345KV CKT 1
FDNS	16NR	2	17G	G15_046	FROM->TO	HURON (BD KU2A) 345/230/13.8KV TRANSFORMER CKT 1	400	400	0.0744	102.2488	G09_001IST 345.00 - GROTON 345KV CKT 1
FDNS	00NR	2	17SP	G15_046	FROM->TO	HURON (BD KU2A) 345/230/13.8KV TRANSFORMER CKT 1	400	400	0.08793	102.0879	LELAND OLDS - LELAND1-LNX3345.00 345KV CKT Z
FDNS	00NR	2	17SP	G15_046	FROM->TO	HURON (BD KU2A) 345/230/13.8KV TRANSFORMER CKT 1	400	400	0.08793	102.0811	GROTON - GROTON-LNX3 345.00 345KV CKT Z
FDNS	00NR	2	17SP	G15_046	FROM->TO	HURON (BD KU2A) 345/230/13.8KV TRANSFORMER CKT 1	400	400	0.08793	102.0779	P12:345:UMZB:# 109 #: LOS GRT IN ND. LOS GRT
FDNS	00NR	2	17SP	G15_046	FROM->TO	HURON (BD KU2A) 345/230/13.8KV TRANSFORMER CKT 1	400	400	0.08793	101.6451	GROTON-LNX3 345.00 - LELAND1-LNX3345.00 345KV CKT 1
FDNS	16NR	2	17G	G15_046	FROM->TO	HURON (BD KU2A) 345/230/13.8KV TRANSFORMER CKT 1	400	400	0.07255	101.4818	CENTER - JAMESTOWN 345KV CKT 1
FDNS	16NR	2	17G	G15_046	FROM->TO	HURON (BD KU2A) 345/230/13.8KV TRANSFORMER CKT 1	400	400	0.07572	101.2215	GLENHAM - L3 HAWDON 230KV CKT 1
FDNS	16NR	2	17G	G15_046	FROM->TO	HURON (BD KU2A) 345/230/13.8KV TRANSFORMER CKT 1	400	400	0.08038	101.0941	BISON - HETINGER 230KV CKT 1
FDNS	00NR	2	17SP	G15_046	FROM->TO	HURON (BD KU2A) 345/230/13.8KV TRANSFORMER CKT 1	400	400	0.09387	101.0877	LELAND OLDS - LELAND2-LNX3345.00 345KV CKT Z
FDNS	16NR	2	17G	G15_046	FROM->TO	HURON (BD KU2A) 345/230/13.8KV TRANSFORMER CKT 1	400	400	0.07167	100.9521	BISON 3 345.00 - BUFFALO 345KV CKT 1
FDNS	00NR	2	17SP	G15_046	FROM->TO	HURON (BD KU2A) 345/230/13.8KV TRANSFORMER CKT 1	400	400	0.09387	100.7024	FT THOMPSON - FTTHOM1-LNX3345.00 345KV CKT Z
FDNS	16NR	2	17G	G15_046	FROM->TO	HURON (BD KU2A) 345/230/13.8KV TRANSFORMER CKT 1	400	400	0.08038	100.6872	BISON - MAURINE 230KV CKT 1
FDNS	00NR	2	17SP	G15_046	FROM->TO	HURON (BD KU2A) 345/230/13.8KV TRANSFORMER CKT 1	400	400	0.09387	100.6755	P12:345:UMZB:# 108 #: LOS FT IN ND. LOS FT
FDNS	16NR	2	17G	G15_046	FROM->TO	HURON (BD KU2A) 345/230/13.8KV TRANSFORMER CKT 1	400	400	0.07547	100.2529	GLENHAM - WHITLOK 230KV CKT 1
FDNS	00NR	2	17SP	G15_046	FROM->TO	HURON (BD KU2A) 345/230/13.8KV TRANSFORMER CKT 1	400	400	0.09387	100.2086	FTTHOM1-LNX3345.00 - LELAND2-LNX3345.00 345KV CKT 1
FDNS	16NR	2	17G	G15_046	FROM->TO	HURON (BD KU2A) 345/230/13.8KV TRANSFORMER CKT 1	400	400	0.07547	100.1761	P12:230:UMZB:# 114 #: SB IN SD. SB-WK-GH
FDNS	16NR	2	17G	G15_046	FROM->TO	HURON (BD KU2A) 345/230/13.8KV TRANSFORMER CKT 1	400	400	0.07547	100.1761	P12:230:UMZB:# 117 #: WK IN SD. SB-WK-GH
FDNS	16NR	2	17G	G15_046	FROM->TO	HURON (BD KU2A) 345/230/13.8KV TRANSFORMER CKT 1	400	400	0.07547	100.0737	SULLYBT-LNX3230.00 - WHITLOK 230KV CKT 1
FDNS	16NR	2	17G	G15_046	FROM->TO	HURON (BD KU2A) 345/230/13.8KV TRANSFORMER CKT 1	400	400	0.07547	100.0718	SULLEY BUTTE - SULLYBT-LNX3230.00 230KV CKT Z
FDNS	16NR	2	17G	G15_046	FROM->TO	HURON (BD KU2A) 345/230/13.8KV TRANSFORMER CKT 1	400	400	0.07547	99.8	OAHE - SULLEY BUTTE 230KV CKT 1
FDNS	16NR	2	17G	G15_046	FROM->TO	HURON (BD KU2A) 345/230/13.8KV TRANSFORMER CKT 1	400	400	0.0744	99.6	G09_001IST 345.00 - WATERTOWN 345KV CKT 1
FDNS	16NR	2	17G	G15_046	FROM->TO	HURON (BD KU2A) 345/230/13.8KV TRANSFORMER CKT 1	400	400	0.0744	99.5	G09_001IST 345.00 - GROTON 345KV CKT 1
FDNS	00NR	2	17SP	G15_046	FROM->TO	HURON (BD KU2A) 345/230/13.8KV TRANSFORMER CKT 1	400	400	0.08793	99.4	GROTON - GROTON-LNX3 345.00 345KV CKT Z
FDNS	00NR	2	17SP	G15_046	FROM->TO	HURON (BD KU2A) 345/230/13.8KV TRANSFORMER CKT 1	400	400	0.08793	99.4	LELAND OLDS - LELAND1-LNX3345.00 345KV CKT Z
FDNS	00NR	2	17SP	G15_046	FROM->TO	HURON (BD KU2A) 345/230/13.8KV TRANSFORMER CKT 1	400	400	0.08793	99.4	P12:345:UMZB:# 109 #: LOS GRT IN ND. LOS GRT
FDNS	16NR	2	17G	G15_046	FROM->TO	HURON (BD KU2A) 345/230/13.8KV TRANSFORMER CKT 1	400	400	0.07105	99.3	CHISAGO COUNTY - FORBES 500KV CKT 1
FDNS	16NR	2	17G	G15_046	FROM->TO	HURON (BD KU2A) 345/230/13.8KV TRANSFORMER CKT 1	400	400	0.07105	99.2	CHISAGO COUNTY - CHISAGO COUNTY 500KV CKT 1
FDNS	00NR	2	17SP	G15_046	FROM->TO	HURON (BD KU2A) 345/230/13.8KV TRANSFORMER CKT 1	400	400	0.08793	99	GROTON-LNX3 345.00 - LELAND1-LNX3345.00 345KV CKT 1
FDNS	00NR	2	20SP	G15_046	TO->FROM	SPLIT ROCK - WHITE 345KV CKT 1	717	717	0.03279	102.1548	GRPRAR1-LNX3345.00 - HOLT.CO3 345.00 345KV CKT 1
FDNS	00NR	2	20SP	G15_046	TO->FROM	SPLIT ROCK - WHITE 345KV CKT 1	717	717	0.03279	102.1513	GRPRAR1-LNX3345.00 - YANKTON 345KV CKT Z
FDNS	00NR	2	20SP	G15_046	TO->FROM	SPLIT ROCK - WHITE 345KV CKT 1	717	717	0.03099	100.9316	HANLON - STORLA 230KV CKT 1
FDNS	00NR	2	20SP	G15_046	TO->FROM	SPLIT ROCK - WHITE 345KV CKT 1	717	717	0.03105	100.7192	P12:230:UMZB:# 116 #: ST IN SD. WSG-ST-VH
FDNS	00NR	2	20SP	G15_046	TO->FROM	SPLIT ROCK - WHITE 345KV CKT 1	717	717	0.03131	100.1	GEN635214 4-NEAL UNIT 4
FDNS	00NR	2	20SP	G15_046	TO->FROM	SPLIT ROCK - WHITE 345KV CKT 1	717	717	0.03131	99.2	SQUARE BUTTE - YNG2_4 230.00 230KV CKT 1
FDNS	00NR	2	20SP	G15_046	TO->FROM	SPLIT ROCK - WHITE 345KV CKT 1	717	717	0.03144	99	GR ISLD-LNX3345.00 - HOLT.CO3 345.00 345KV CKT 1
FDNS	00NR	0	16WP	G15_047	FROM->TO	CIMARRON - DRAPER LAKE 345KV CKT 1	717	717	0.11885	134.3506	G14-057T 345.00 - SUNNYSIDE 345KV CKT 1
FDNS	00NR	0	16WP	G15_047	FROM->TO	CIMARRON - DRAPER LAKE 345KV CKT 1	717	717	0.11885	123.7884	G14-057T 345.00 - LAWTON EASTSIDE 345KV CKT 1
FDNS	00NR	0	16WP	G15_047	FROM->TO	CIMARRON - DRAPER LAKE 345KV CKT 1	717	717	0.12182	118.5269	ARCADIA - SEMINOLE 345KV CKT 1
FDNS	00NR	0	16WP	G15_047	FROM->TO	CIMARRON - DRAPER LAKE 345KV CKT 1	717	717	0.13732	117.4511	CLEVELAND - G15066_T 345.00 345KV CKT 1
FDNS	00NR	0	16WP	G15_047	FROM->TO	CIMARRON - DRAPER LAKE 345KV CKT 1	717	717	0.15723	117.2631	ARCADIA - NORTHWEST 345KV CKT 1
FDNS	00NR	0	16WP	G15_047	FROM->TO	CIMARRON - DRAPER LAKE 345KV CKT 1	717	717	0.13732	116.6742	G15066_T 345.00 - SOONER 345KV CKT 1
FDNS	00NR	0	16WP	G15_047	FROM->TO	CIMARRON - DRAPER LAKE 345KV CKT 1	717	717	0.1278	112.0614	CLEVELAND - TULSA NORTH 345KV CKT 1
FDNS	00NR	0	16WP	G15_047	FROM->TO	CIMARRON - DRAPER LAKE 345KV CKT 1	717	717	0.1278	112.0614	CLEVELAND - TULSA NORTH 345KV CKT 1
FDNS	00NR	0	16WP	G15_047	FROM->TO	CIMARRON - DRAPER LAKE 345KV CKT 1	717	717	0.11478	111.8128	MATHWSN7 345.00 - NORTHWEST 345KV CKT 1
FDNS	00NR	0	16WP	G15_047	FROM->TO	CIMARRON - DRAPER LAKE 345KV CKT 1	717	717	0.11459	110.8894	CIMARRON - SARA 138KV CKT 1
FDNS	00NR	0	16WP	G15_047	FROM->TO	CIMARRON - DRAPER LAKE 345KV CKT 1	717	717	0.11401	110.5522	P12:138:WFEC:MSL03
FDNS	00NR	0	16WP	G15_047	FROM->TO	CIMARRON - DRAPER LAKE 345KV CKT 1	717	717	0.11367	109.7061	CIMARRON (CIMARON2) 345/138/13.8KV TRANSFORMER CKT 1
FDNS	00NR	0	16WP	G15_047	FROM->TO	CIMARRON - DRAPER LAKE 345KV CKT 1	717	717	0.11459	109.5963	SARA - STHLAKE4 138.00 138KV CKT 1
FDNS	00NR	0	16WP	G15_047	FROM->TO	CIMARRON - DRAPER LAKE 345KV CKT 1	717	717	0.1136	109.5351	CIMARRON (CIMARON1) 345/138/13.8KV TRANSFORMER CKT 1
FDNS	00NR	0	16WP	G15_047	FROM->TO	CIMARRON - DRAPER LAKE 345KV CKT 1	717	717	0.11459	109.3968	MCCLAIN - STHLAKE4 138.00 138KV CKT 1

SOLUTION	GROUP	SCENARIO	SEASON	SOURCE	DIRECTION	MONITORED ELEMENT	RATEA (MVA)	RATEB(MVA)	TDF	TC%LOADING (% MVA)	CONTINGENCY
FDNS	00NR	0	16WP	G15_047	FROM->TO	CIMARRON - DRAPER LAKE 345KV CKT 1	717	717	0.11314	109.096	CIMARRON - CZECH HALL 138KV CKT 1
FDNS	00NR	0	16WP	G15_047	FROM->TO	CIMARRON - DRAPER LAKE 345KV CKT 1	717	717	0.11314	108.742	CZECH HALL - XEROX 138KV CKT 1
FDNS	00NR	0	16WP	G15_047	FROM->TO	CIMARRON - DRAPER LAKE 345KV CKT 1	717	717	0.11314	108.7224	MORGAN - XEROX 138KV CKT 1
FDNS	00NR	0	16WP	G15_047	FROM->TO	CIMARRON - DRAPER LAKE 345KV CKT 1	717	717	0.11314	108.6051	MORGAN - MUSTANG 138KV CKT 1
FDNS	00NR	0	16WP	G15_047	FROM->TO	CIMARRON - DRAPER LAKE 345KV CKT 1	717	717	0.1124	108.5311	ANADARKO - POCASSETT 138KV CKT 1
FDNS	00NR	0	16WP	G15_047	FROM->TO	CIMARRON - DRAPER LAKE 345KV CKT 1	717	717	0.11189	108.4112	GEN515040 1-SEMINOLE 1G
FDNS	00NR	0	16WP	G15_047	FROM->TO	CIMARRON - DRAPER LAKE 345KV CKT 1	717	717	0.1124	108.3378	POCASSETT - TUTTLE 138KV CKT 1
FDNS	00NR	0	16WP	G15_047	FROM->TO	CIMARRON - DRAPER LAKE 345KV CKT 1	717	717	0.11268	108.2504	LACYGNE - WAVERLY7 345.00 345KV CKT 1
FDNS	00NR	0	16WP	G15_047	FROM->TO	CIMARRON - DRAPER LAKE 345KV CKT 1	717	717	0.11257	108.2269	CORN TAP - NAPLESTP 138.00 138KV CKT 1
FDNS	00NR	0	16WP	G15_047	FROM->TO	CIMARRON - DRAPER LAKE 345KV CKT 1	717	717	0.11352	108.1986	JOHNSON COUNTY - SUNNYSIDE 345KV CKT 1
FDNS	00NR	0	16WP	G15_047	FROM->TO	CIMARRON - DRAPER LAKE 345KV CKT 1	717	717	0.11257	108.1312	NAPLESTP 138.00 - PAYNE 138.00 138KV CKT 1
FDNS	00NR	0	16WP	G15_047	FROM->TO	CIMARRON - DRAPER LAKE 345KV CKT 1	717	717	0.11268	108.0479	WAVERLY7 345.00 - WOLF CREEK 345KV CKT 1
FDNS	00NR	0	16WP	G15_047	FROM->TO	CIMARRON - DRAPER LAKE 345KV CKT 1	717	717	0.11189	108.0171	GEN509403 1-PIRKEY GENERATION
FDNS	00NR	0	16WP	G15_047	FROM->TO	CIMARRON - DRAPER LAKE 345KV CKT 1	717	717	0.11189	107.9678	GEN501801 1-DOLET HILLS UNIT1
FDNS	00NR	0	16WP	G15_047	FROM->TO	CIMARRON - DRAPER LAKE 345KV CKT 1	717	717	0.11189	107.9603	GEN509416 1-TURK GENERATION
FDNS	00NR	0	16WP	G15_047	FROM->TO	CIMARRON - DRAPER LAKE 345KV CKT 1	717	717	0.11361	107.9501	CANEYRV7 345.00 - NEOSHO 345KV CKT 1
FDNS	00NR	0	16WP	G15_047	FROM->TO	CIMARRON - DRAPER LAKE 345KV CKT 1	717	717	0.1124	107.828	BRIDGECR 138.00 - TUTTLE 138KV CKT 1
FDNS	00NR	0	16WP	G15_047	FROM->TO	CIMARRON - DRAPER LAKE 345KV CKT 1	717	717	0.11361	107.6474	CANEYRV7 345.00 - LATHAMS7 345.00 345KV CKT 1
FDNS	00NR	0	16WP	G15_047	FROM->TO	CIMARRON - DRAPER LAKE 345KV CKT 1	717	717	0.11189	107.6452	GEN336821 1-GRAND GULF UNIT
FDNS	00NR	0	16WP	G15_047	FROM->TO	CIMARRON - DRAPER LAKE 345KV CKT 1	717	717	0.11189	107.5478	GEN515042 1-SEMINOLE 3G
FDNS	00NR	0	16WP	G15_047	FROM->TO	CIMARRON - DRAPER LAKE 345KV CKT 1	717	717	0.1124	107.4572	BRIDGECR 138.00 - SUNSHINE CANYON 138KV CKT 1
FDNS	00NR	0	16WP	G15_047	FROM->TO	CIMARRON - DRAPER LAKE 345KV CKT 1	717	717	0.1124	107.4436	P12:138:WFEC:MSL01
FDNS	00NR	0	16WP	G15_047	FROM->TO	CIMARRON - DRAPER LAKE 345KV CKT 1	717	717	0.11189	107.3491	GEN336153 1-WATERFORD UNIT#3
FDNS	00NR	0	16WP	G15_047	FROM->TO	CIMARRON - DRAPER LAKE 345KV CKT 1	717	717	0.11189	107.3142	GEN515041 1-SEMINOLE 2G
FDNS	00NR	0	16WP	G15_047	FROM->TO	CIMARRON - DRAPER LAKE 345KV CKT 1	717	717	0.11361	107.2046	LATHAMS7 345.00 - ROSE HILL 345KV CKT 1
FDNS	00NR	0	16WP	G15_047	FROM->TO	CIMARRON - DRAPER LAKE 345KV CKT 1	717	717	0.11189	107.1162	GEN509406 1-WELSH #3
FDNS	00NR	0	16WP	G15_047	FROM->TO	CIMARRON - DRAPER LAKE 345KV CKT 1	717	717	0.11189	107.1161	GEN509404 1-WELSH #1
FDNS	00NR	0	16WP	G15_047	FROM->TO	CIMARRON - DRAPER LAKE 345KV CKT 1	717	717	0.10788	107.0907	CIMARRON - NORTHWEST 345KV CKT 1
FDNS	00NR	0	16WP	G15_047	FROM->TO	CIMARRON - DRAPER LAKE 345KV CKT 1	717	717	0.11189	107.0506	GEN335831 1-RIVERBEND UNIT#1
FDNS	00NR	0	16WP	G15_047	FROM->TO	CIMARRON - DRAPER LAKE 345KV CKT 1	717	717	0.11189	107.0233	GEN337911 1-ARKANSAS NUCLEAR ONE UNIT #2
FDNS	00NR	0	17SP	G15_047	FROM->TO	CIMARRON - DRAPER LAKE 345KV CKT 1	717	717	0.10805	106.8873	G14-057T 345.00 - SUNNYSIDE 345KV CKT 1
FDNS	00NR	0	16WP	G15_047	FROM->TO	CIMARRON - DRAPER LAKE 345KV CKT 1	717	717	0.11083	106.7664	CANADIAN RIVER - MUSKOGEE 345KV CKT 1
FDNS	00NR	0	16WP	G15_047	FROM->TO	CIMARRON - DRAPER LAKE 345KV CKT 1	717	717	0.112	106.7529	HUGO - SUNNYSIDE 345KV CKT 1
FDNS	00NR	0	16WP	G15_047	FROM->TO	CIMARRON - DRAPER LAKE 345KV CKT 1	717	717	0.11243	106.6582	P12:138:OKGE:3TERM14
FDNS	00NR	0	16WP	G15_047	FROM->TO	CIMARRON - DRAPER LAKE 345KV CKT 1	717	717	0.11335	106.6521	JOHNSON COUNTY - PITTSBURG 345KV CKT 1
FDNS	00NR	0	16WP	G15_047	FROM->TO	CIMARRON - DRAPER LAKE 345KV CKT 1	717	717	0.11335	106.6521	JOHNSON COUNTY - PITTSBURG 345KV CKT 1
FDNS	00NR	0	16WP	G15_047	FROM->TO	CIMARRON - DRAPER LAKE 345KV CKT 1	717	717	0.11189	106.6508	GRAND GULF 500/22.0KV TRANSFORMER CKT 1
FDNS	00NR	0	16WP	G15_047	FROM->TO	CIMARRON - DRAPER LAKE 345KV CKT 1	717	717	0.11189	106.6478	GEN337910 1-ARKANSAS NUCLEAR ONE UNIT #1
FDNS	00NR	0	16WP	G15_047	FROM->TO	CIMARRON - DRAPER LAKE 345KV CKT 1	717	717	0.11294	106.638	HORSESHOE LAKE - JONES TAP 138KV CKT 1
FDNS	00NR	0	16WP	G15_047	FROM->TO	CIMARRON - DRAPER LAKE 345KV CKT 1	717	717	0.11376	106.6264	MORISNT4 138.00 - STILLWATER 138KV CKT 1
FDNS	00NR	0	16WP	G15_047	FROM->TO	CIMARRON - DRAPER LAKE 345KV CKT 1	717	717	0.11374	106.6217	P12:138:OKGE:3TERM2
FDNS	00NR	0	16WP	G15_047	FROM->TO	CIMARRON - DRAPER LAKE 345KV CKT 1	717	717	0.11048	106.5968	REDBUD - RIVERSIDE STATION 345KV CKT 1
FDNS	00NR	0	16WP	G15_047	FROM->TO	CIMARRON - DRAPER LAKE 345KV CKT 1	717	717	0.11048	106.5968	REDBUD - RIVERSIDE STATION 345KV CKT 1
FDNS	00NR	0	16WP	G15_047	FROM->TO	CIMARRON - DRAPER LAKE 345KV CKT 1	717	717	0.11189	106.4972	GEN501813 1-RODEMACHER UNIT 3
FDNS	00NR	0	16WP	G15_047	FROM->TO	CIMARRON - DRAPER LAKE 345KV CKT 1	717	717	0.11189	106.4895	GEN515226 1-MUSKOGEE 6G
FDNS	00NR	0	16WP	G15_047	FROM->TO	CIMARRON - DRAPER LAKE 345KV CKT 1	717	717	0.11267	106.4055	NORTHWEST (NORTWST2) 345/138/13.8KV TRANSFORMER CKT 1
FDNS	00NR	0	16WP	G15_047	FROM->TO	CIMARRON - DRAPER LAKE 345KV CKT 1	717	717	0.1114	106.3991	ARCADIA - KAMO MEMORIAL 138KV CKT 1
FDNS	00NR	0	16WP	G15_047	FROM->TO	CIMARRON - DRAPER LAKE 345KV CKT 1	717	717	0.11284	106.3954	BAILEY4 138.00 - SUNSHINE CANYON 138KV CKT 1
FDNS	00NR	0	16WP	G15_047	FROM->TO	CIMARRON - DRAPER LAKE 345KV CKT 1	717	717	0.11196	106.372	P12:138:OKGE:3TERM12
FDNS	00NR	0	16WP	G15_047	FROM->TO	CIMARRON - DRAPER LAKE 345KV CKT 1	717	717	0.11201	106.3312	7SAREPTA% 345.00 - LONGWOOD 345KV CKT 1
FDNS	00NR	0	16WP	G15_047	FROM->TO	CIMARRON - DRAPER LAKE 345KV CKT 1	717	717	0.11201	106.3312	7SAREPTA% 345.00 - LONGWOOD 345KV CKT 1
FDNS	00NR	0	16WP	G15_047	FROM->TO	CIMARRON - DRAPER LAKE 345KV CKT 1	717	717	0.11299	106.3119	MEMORIAL - SKYLINE 138KV CKT 1
FDNS	00NR	0	16WP	G15_047	FROM->TO	CIMARRON - DRAPER LAKE 345KV CKT 1	717	717	0.11189	106.3084	GEN335206 1-NELSON UNIT 6
FDNS	00NR	0	16WP	G15_047	FROM->TO	CIMARRON - DRAPER LAKE 345KV CKT 1	717	717	0.11196	106.3062	DOLET HILLS - SOUTHWEST SHREVEPORT 345KV CKT 1
FDNS	00NR	0	16WP	G15_047	FROM->TO	CIMARRON - DRAPER LAKE 345KV CKT 1	717	717	0.11196	106.3062	DOLET HILLS - SOUTHWEST SHREVEPORT 345KV CKT 1
FDNS	00NR	0	16WP	G15_047	FROM->TO	CIMARRON - DRAPER LAKE 345KV CKT 1	717	717	0.11189	106.2932	GEN515225 1-MUSKOGEE 5G
FDNS	00NR	0	16WP	G15_047	FROM->TO	CIMARRON - DRAPER LAKE 345KV CKT 1	717	717	0.11189	106.293	GEN515223 1-MUSKOGEE 4G
FDNS	00NR	0	16WP	G15_047	FROM->TO	CIMARRON - DRAPER LAKE 345KV CKT 1	717	717	0.11265	106.2567	GRACEMONT (BANK 1) 345/138/13.8KV TRANSFORMER CKT 1
FDNS	00NR	0	16WP	G15_047	FROM->TO	CIMARRON - DRAPER LAKE 345KV CKT 1	717	717	0.11202	106.2077	G15074_T 345.00 - HOYT 345KV CKT 1
FDNS	00NR	0	16WP	G15_047	FROM->TO	CIMARRON - DRAPER LAKE 345KV CKT 1	717	717	0.11297	106.2007	QUAIL CREEK - SKYLINE 138KV CKT 1
FDNS	00NR	0	16WP	G15_047	FROM->TO	CIMARRON - DRAPER LAKE 345KV CKT 1	717	717	0.11326	106.1737	P12:138:OKGE:3TERM18
FDNS	00NR	0	16WP	G15_047	FROM->TO	CIMARRON - DRAPER LAKE 345KV CKT 1	717	717	0.11189	106.155	GEN509409 1-WILKES #3
FDNS	00NR	0	16WP	G15_047	FROM->TO	CIMARRON - DRAPER LAKE 345KV CKT 1	717	717	0.11189	106.1438	GEN337653 1-WHITE BLUFF UNIT #2
FDNS	00NR	0	16WP	G15_047	FROM->TO	CIMARRON - DRAPER LAKE 345KV CKT 1	717	717	0.1126	106.141	NORTHWEST (NORTWST4) 345/138/13.8KV TRANSFORMER CKT 1
FDNS	00NR	0	16WP	G15_047	FROM->TO	CIMARRON - DRAPER LAKE 345KV CKT 1	717	717	0.11189	106.1364	GEN501812 1-RODEMACHER UNIT 2
FDNS	00NR	0	16WP	G15_047	FROM->TO	CIMARRON - DRAPER LAKE 345KV CKT 1	717	717	0.11284	106.0956	BAILEY4 138.00 - WESTMOORE 138KV CKT 1
FDNS	00NR	0	16WP	G15_047	FROM->TO	CIMARRON - DRAPER LAKE 345KV CKT 1	717	717	0.11322	106.0919	36 & MERIDIAN - CHEMTRON 138KV CKT 1
FDNS	00NR	0	16WP	G15_047	FROM->TO	CIMARRON - DRAPER LAKE 345KV CKT 1	717	717	0.11189	106.0776	NEW MADRID 161/22.0KV TRANSFORMER CKT 1
FDNS	00NR	0	16WP	G15_047	FROM->TO	CIMARRON - DRAPER LAKE 345KV CKT 1	717	717	0.11189	106.065	NEW MADRID 345/22.0KV TRANSFORMER CKT 1
FDNS	00NR	0	16WP	G15_047	FROM->TO	CIMARRON - DRAPER LAKE 345KV CKT 1	717	717	0.11189	106.0426	GEN520947 1-HUGO1
FDNS	00NR	0	16WP	G15_047	FROM->TO	CIMARRON - DRAPER LAKE 345KV CKT 1	717	717	0.1126	106.0146	NORTHWEST (NORTWST3) 345/138/13.8KV TRANSFORMER CKT 1
FDNS	00NR	0	16WP	G15_047	FROM->TO	CIMARRON - DRAPER LAKE 345KV CKT 1	717	717	0.11189	106.0144	GEN337652 1-WHITE BLUFF UNIT #1
FDNS	00NR	0	16WP	G15_047	FROM->TO	CIMARRON - DRAPER LAKE 345KV CKT 1	717	717	0.11322	106.0049	CHEMTRON - PENNSYLVANIA 138KV CKT 1
FDNS	00NR	0	16WP	G15_047	FROM->TO	CIMARRON - DRAPER LAKE 345KV CKT 1	717	717	0.11155	105.9815	THISTLE7 345.00 - WOODWARD DISTRICT EHV 345KV CKT 1
FDNS	00NR	0	16WP	G15_047	FROM->TO	CIMARRON - DRAPER LAKE 345KV CKT 1	717	717	0.11155	105.9815	THISTLE7 345.00 - WOODWARD DISTRICT EHV 345KV CKT 1
FDNS	00NR	0	16WP	G15_047	FROM->TO	CIMARRON - DRAPER LAKE 345KV CKT 1	717	717	0.11155	105.9815	THISTLE7 345.00 - WOODWARD DISTRICT EHV 345KV CKT 2
FDNS	00NR	0	16WP	G15_047	FROM->TO	CIMARRON - DRAPER LAKE 345KV CKT 1	717	717	0.11155	105.9815	THISTLE7 345.00 - WOODWARD DISTRICT EHV 345KV CKT 2
FDNS	00NR	0	16WP	G15_047	FROM->TO	CIMARRON - DRAPER LAKE 345KV CKT 1	717	717	0.11196	105.9566	7SAREPTA% 345.00 - ELDORADO EHV 345KV CKT 1
FDNS	00NR	0	16WP	G15_047	FROM->TO	CIMARRON - DRAPER LAKE 345KV CKT 1	717	717	0.11196	105.9565	3TR3AR8EL7EL

SOLUTION	GROUP	SCENARIO	SEASON	SOURCE	DIRECTION	MONITORED ELEMENT	RATEA (MVA)	RATEB(MVA)	TDF	TC%LOADING (% MVA)	CONTINGENCY
FDNS	00NR	0	16WP	G15_047	FROM->TO	CIMARRON - DRAPER LAKE 345KV CKT 1	717	717	0.11196	105.9502	ELDORADO EHV 500/345KV TRANSFORMER CKT 1
FDNS	00NR	0	16WP	G15_047	FROM->TO	CIMARRON - DRAPER LAKE 345KV CKT 1	717	717	0.11297	105.9269	BLANCHARD - CORNVILLE 138KV CKT 1
FDNS	00NR	0	16WP	G15_047	FROM->TO	CIMARRON - DRAPER LAKE 345KV CKT 1	717	717	0.11236	105.9039	P12:138:OKGE:3TERM17
FDNS	00NR	0	16WP	G15_047	FROM->TO	CIMARRON - DRAPER LAKE 345KV CKT 1	717	717	0.11214	105.8927	COMANCHE - LOCO 138KV CKT 1
FDNS	00NR	0	16WP	G15_047	FROM->TO	CIMARRON - DRAPER LAKE 345KV CKT 1	717	717	0.11535	105.8801	G15052_T 345.00 - ROSE HILL 345KV CKT 1
FDNS	00NR	0	16WP	G15_047	FROM->TO	CIMARRON - DRAPER LAKE 345KV CKT 1	717	717	0.11285	105.8629	P12:138:OKGE:3TERM11
FDNS	00NR	0	16WP	G15_047	FROM->TO	CIMARRON - DRAPER LAKE 345KV CKT 1	717	717	0.11189	105.8597	GEN515577 1-ARBWND11 0.6900
FDNS	00NR	0	16WP	G15_047	FROM->TO	CIMARRON - DRAPER LAKE 345KV CKT 1	717	717	0.11189	105.8412	GEN334440 1-SABINE UNIT 4
FDNS	00NR	0	16WP	G15_047	FROM->TO	CIMARRON - DRAPER LAKE 345KV CKT 1	717	717	0.1124	105.8407	LONEOAK - NORTHWEST 138KV CKT 1
FDNS	00NR	0	16WP	G15_047	FROM->TO	CIMARRON - DRAPER LAKE 345KV CKT 1	717	717	0.11297	105.836	P12:138:AEPW-OGE:CORNVIL4:MAUD 4
FDNS	00NR	0	16WP	G15_047	FROM->TO	CIMARRON - DRAPER LAKE 345KV CKT 1	717	717	0.11202	105.8344	HOYT - STRANGER CREEK 345KV CKT 1
FDNS	00NR	0	16WP	G15_047	FROM->TO	CIMARRON - DRAPER LAKE 345KV CKT 1	717	717	0.11553	105.8287	CLARKSVILLE - ONETA 345KV CKT 1
FDNS	00NR	0	16WP	G15_047	FROM->TO	CIMARRON - DRAPER LAKE 345KV CKT 1	717	717	0.11553	105.8287	CLARKSVILLE - ONETA 345KV CKT 1
FDNS	00NR	0	16WP	G15_047	FROM->TO	CIMARRON - DRAPER LAKE 345KV CKT 1	717	717	0.11202	105.8278	G15074_T 345.00 - JEFFREY ENERGY CENTER 345KV CKT 1
FDNS	00NR	0	16WP	G15_047	FROM->TO	CIMARRON - DRAPER LAKE 345KV CKT 1	717	717	0.11189	105.8272	DELL 500 - ESSEX UNIT 2 500KV CKT Z1
FDNS	00NR	0	16WP	G15_047	FROM->TO	CIMARRON - DRAPER LAKE 345KV CKT 1	717	717	0.11273	105.8261	KETCH TAP - NORTHWEST 138KV CKT 1
FDNS	00NR	0	16WP	G15_047	FROM->TO	CIMARRON - DRAPER LAKE 345KV CKT 1	717	717	0.1124	105.8169	DIVISION AVE - LAKESIDE 138KV CKT 1
FDNS	00NR	0	16WP	G15_047	FROM->TO	CIMARRON - DRAPER LAKE 345KV CKT 1	717	717	0.11284	105.8143	FRANKLIN SW - WESTMOORE 138KV CKT 1
FDNS	00NR	0	16WP	G15_047	FROM->TO	CIMARRON - DRAPER LAKE 345KV CKT 1	717	717	0.1119	105.8006	HORSESHOE LAKE - KAMO MEMORIAL 138KV CKT 1
FDNS	00NR	0	16WP	G15_047	FROM->TO	CIMARRON - DRAPER LAKE 345KV CKT 1	717	717	0.11242	105.7553	NORTHWEST - PANTHER 138KV CKT 1
FDNS	00NR	0	16WP	G15_047	FROM->TO	CIMARRON - DRAPER LAKE 345KV CKT 1	717	717	0.1129	105.7501	P12:138:OKGE:3TERM20
FDNS	00NR	0	16WP	G15_047	FROM->TO	CIMARRON - DRAPER LAKE 345KV CKT 1	717	717	0.11297	105.7337	BLANCHARD - MAUD 138KV CKT 1
FDNS	00NR	0	16WP	G15_047	FROM->TO	CIMARRON - DRAPER LAKE 345KV CKT 1	717	717	0.11213	105.7247	P12:138:OKGE:3TERM47
FDNS	00NR	0	16WP	G15_047	FROM->TO	CIMARRON - DRAPER LAKE 345KV CKT 1	717	717	0.11206	105.7232	CIMARRON - HAYMAKER 138KV CKT 1
FDNS	00NR	0	16WP	G15_047	FROM->TO	CIMARRON - DRAPER LAKE 345KV CKT 1	717	717	0.11238	105.7124	BLACKBERRY - NEOSHO 345KV CKT 1
FDNS	00NR	0	16WP	G15_047	FROM->TO	CIMARRON - DRAPER LAKE 345KV CKT 1	717	717	0.11238	105.7124	BLACKBERRY - NEOSHO 345KV CKT 1
FDNS	00NR	0	16WP	G15_047	FROM->TO	CIMARRON - DRAPER LAKE 345KV CKT 1	717	717	0.11242	105.7049	PANTHER - SILVER LAKE 138KV CKT 1
FDNS	00NR	0	16WP	G15_047	FROM->TO	CIMARRON - DRAPER LAKE 345KV CKT 1	717	717	0.11226	105.7001	G14-074T 345.00 - OKLAUNION 345KV CKT 1
FDNS	00NR	0	16WP	G15_047	FROM->TO	CIMARRON - DRAPER LAKE 345KV CKT 1	717	717	0.11189	105.6978	DOLET HILLS 345/24.0KV TRANSFORMER CKT 1
FDNS	00NR	0	16WP	G15_047	FROM->TO	CIMARRON - DRAPER LAKE 345KV CKT 1	717	717	0.1124	105.6953	HEFNER - LAKESIDE 138KV CKT 1
FDNS	00NR	0	16WP	G15_047	FROM->TO	CIMARRON - DRAPER LAKE 345KV CKT 1	717	717	0.11189	105.6911	GEN336252 1-NINEMILE POINT UNIT#5
FDNS	00NR	0	16WP	G15_047	FROM->TO	CIMARRON - DRAPER LAKE 345KV CKT 1	717	717	0.11301	105.6582	KETCH - KETCH TAP 138KV CKT 1
FDNS	00NR	0	16WP	G15_047	FROM->TO	CIMARRON - DRAPER LAKE 345KV CKT 1	717	717	0.11189	105.6581	WHITE BLUFF 500/26.0KV TRANSFORMER CKT 1
FDNS	00NR	0	16WP	G15_047	FROM->TO	CIMARRON - DRAPER LAKE 345KV CKT 1	717	717	0.11205	105.6489	SWISSVALE - WEST GARDNER 345KV CKT 1
FDNS	00NR	0	16WP	G15_047	FROM->TO	CIMARRON - DRAPER LAKE 345KV CKT 1	717	717	0.11239	105.6337	DIVISION AVE - MUSTANG 138KV CKT 1
FDNS	00NR	0	16WP	G15_047	FROM->TO	CIMARRON - DRAPER LAKE 345KV CKT 1	717	717	0.11172	105.6281	FINNEY SWITCHING STATION - HOLCOMB 345KV CKT 1
FDNS	00NR	0	16WP	G15_047	FROM->TO	CIMARRON - DRAPER LAKE 345KV CKT 1	717	717	0.11172	105.6281	FINNEY SWITCHING STATION - HOLCOMB 345KV CKT 1
FDNS	00NR	0	16WP	G15_047	FROM->TO	CIMARRON - DRAPER LAKE 345KV CKT 1	717	717	0.11248	105.6273	P12:138:AEPW-OGE:SHIDLER4:OSAGE 4
FDNS	00NR	0	16WP	G15_047	FROM->TO	CIMARRON - DRAPER LAKE 345KV CKT 1	717	717	0.11189	105.6224	GEN509408 1-WILKES #2
FDNS	00NR	0	16WP	G15_047	FROM->TO	CIMARRON - DRAPER LAKE 345KV CKT 1	717	717	0.11206	105.6153	DIVISION AVE - HAYMAKER 138KV CKT 1
FDNS	00NR	0	16WP	G15_047	FROM->TO	CIMARRON - DRAPER LAKE 345KV CKT 1	717	717	0.11189	105.6104	GEN300006 1-NEW MADRID UNIT 1
FDNS	00NR	0	16WP	G15_047	FROM->TO	CIMARRON - DRAPER LAKE 345KV CKT 1	717	717	0.11282	105.606	MCCLAIN - PLEASANT VALLEY 138KV CKT 1
FDNS	00NR	0	16WP	G15_047	FROM->TO	CIMARRON - DRAPER LAKE 345KV CKT 1	717	717	0.11189	105.5979	GEN300007 1-NEW MADRID UNIT 2
FDNS	00NR	0	16WP	G15_047	FROM->TO	CIMARRON - DRAPER LAKE 345KV CKT 1	717	717	0.11212	105.5812	LACYGNE - NEOSHO 345KV CKT 1
FDNS	00NR	0	16WP	G15_047	FROM->TO	CIMARRON - DRAPER LAKE 345KV CKT 1	717	717	0.11202	105.5812	P12:138:WFEC:MSL02
FDNS	00NR	0	16WP	G15_047	FROM->TO	CIMARRON - DRAPER LAKE 345KV CKT 1	717	717	0.11232	105.5746	P12:138:AEPW:OKMULGE4:R.S.S-4
FDNS	00NR	0	16WP	G15_047	FROM->TO	CIMARRON - DRAPER LAKE 345KV CKT 1	717	717	0.11189	105.5699	GEN335204 1-NELSON UNIT 4
FDNS	00NR	0	16WP	G15_047	FROM->TO	CIMARRON - DRAPER LAKE 345KV CKT 1	717	717	0.11189	105.5521	GEN336831 1-BAXTER WILSON SES
FDNS	00NR	0	16WP	G15_047	FROM->TO	CIMARRON - DRAPER LAKE 345KV CKT 1	717	717	0.11192	105.5478	G15088_T 345.00 - MOORE 345KV CKT 1
FDNS	00NR	0	16WP	G15_047	FROM->TO	CIMARRON - DRAPER LAKE 345KV CKT 1	717	717	0.11267	105.5474	CLASSEN - ROBINSON 138KV CKT 1
FDNS	00NR	0	16WP	G15_047	FROM->TO	CIMARRON - DRAPER LAKE 345KV CKT 1	717	717	0.11199	105.5471	ANADARKO - GEORGIA 138KV CKT 1
FDNS	00NR	0	16WP	G15_047	FROM->TO	CIMARRON - DRAPER LAKE 345KV CKT 1	717	717	0.11205	105.5397	EMPORIA ENERGY CENTER - SWISSVALE 345KV CKT 1
FDNS	00NR	0	16WP	G15_047	FROM->TO	CIMARRON - DRAPER LAKE 345KV CKT 1	717	717	0.11141	105.5351	BENTON - WICHITA 345KV CKT 1
FDNS	00NR	0	16WP	G15_047	FROM->TO	CIMARRON - DRAPER LAKE 345KV CKT 1	717	717	0.11189	105.527	GEN506754 1-LEBROCK STEAM 1
FDNS	00NR	0	16WP	G15_047	FROM->TO	CIMARRON - DRAPER LAKE 345KV CKT 1	717	717	0.11229	105.5241	EMPORIA ENERGY CENTER - G14_001T 345.00 345KV CKT 1
FDNS	00NR	0	16WP	G15_047	FROM->TO	CIMARRON - DRAPER LAKE 345KV CKT 1	717	717	0.11189	105.5183	GEN334441 1-SABINE UNIT 5
FDNS	00NR	0	16WP	G15_047	FROM->TO	CIMARRON - DRAPER LAKE 345KV CKT 1	717	717	0.11189	105.5125	GEN334071 1-LEWIS CREEK 2
FDNS	00NR	0	16WP	G15_047	FROM->TO	CIMARRON - DRAPER LAKE 345KV CKT 1	717	717	0.11189	105.5046	GEN334070 1-LEWIS CREEK 1
FDNS	00NR	0	16WP	G15_047	FROM->TO	CIMARRON - DRAPER LAKE 345KV CKT 1	717	717	0.11219	105.4882	CRINER - PAYNE 138.00 138KV CKT 1
FDNS	00NR	0	16WP	G15_047	FROM->TO	CIMARRON - DRAPER LAKE 345KV CKT 1	717	717	0.11189	105.4875	GEN336251 1-NINEMILE POINT UNIT#4
FDNS	00NR	0	16WP	G15_047	FROM->TO	CIMARRON - DRAPER LAKE 345KV CKT 1	717	717	0.11199	105.4831	FLETCHER - GEORGIA 138KV CKT 1
FDNS	00NR	0	16WP	G15_047	FROM->TO	CIMARRON - DRAPER LAKE 345KV CKT 1	717	717	0.11189	105.4603	GEN590011 2-ERCOT EQUIVALENCE
FDNS	00NR	0	16WP	G15_047	FROM->TO	CIMARRON - DRAPER LAKE 345KV CKT 1	717	717	0.11196	105.4593	WEBRE - WELLS 500KV CKT 1
FDNS	00NR	0	16WP	G15_047	FROM->TO	CIMARRON - DRAPER LAKE 345KV CKT 1	717	717	0.11172	105.4403	FINNEY SWITCHING STATION - Hitchland Interchange 345KV CKT 1
FDNS	00NR	0	16WP	G15_047	FROM->TO	CIMARRON - DRAPER LAKE 345KV CKT 1	717	717	0.11313	105.4384	WOODRING (WOODRNG2) 345/138/13.8KV TRANSFORMER CKT 1
FDNS	00NR	0	16WP	G15_047	FROM->TO	CIMARRON - DRAPER LAKE 345KV CKT 1	717	717	0.1124	105.4361	LONEOAK - QUAIL CREEK 138KV CKT 1
FDNS	00NR	0	16WP	G15_047	FROM->TO	CIMARRON - DRAPER LAKE 345KV CKT 1	717	717	0.11201	105.4308	EMPIRE - FLETCHER 138KV CKT 1
FDNS	00NR	0	16WP	G15_047	FROM->TO	CIMARRON - DRAPER LAKE 345KV CKT 1	717	717	0.11189	105.427	GEN501811 1-RODEMACHER UNIT 1
FDNS	00NR	0	16WP	G15_047	FROM->TO	CIMARRON - DRAPER LAKE 345KV CKT 1	717	717	0.11248	105.4212	OSAGE - WEBB CITY TAP 138KV CKT 1
FDNS	00NR	0	16WP	G15_047	FROM->TO	CIMARRON - DRAPER LAKE 345KV CKT 1	717	717	0.11189	105.4196	GEN590010 1-ERCOT EQUIVALENCE
FDNS	00NR	0	16WP	G15_047	FROM->TO	CIMARRON - DRAPER LAKE 345KV CKT 1	717	717	0.11189	105.4129	GEN503909 1-FULTONU1 1 16.000
FDNS	00NR	0	16WP	G15_047	FROM->TO	CIMARRON - DRAPER LAKE 345KV CKT 1	717	717	0.11189	105.4096	GEN338146 1-INDEPENDENCE UNIT #2
FDNS	00NR	0	16WP	G15_047	FROM->TO	CIMARRON - DRAPER LAKE 345KV CKT 1	717	717	0.11173	105.3989	G1524G1525 345.00 - THISTLE7 345.00 345KV CKT 1
FDNS	00NR	0	16WP	G15_047	FROM->TO	CIMARRON - DRAPER LAKE 345KV CKT 1	717	717	0.11173	105.3989	G1524G1525 345.00 - THISTLE7 345.00 345KV CKT 2
FDNS	00NR	0	16WP	G15_047	FROM->TO	CIMARRON - DRAPER LAKE 345KV CKT 1	717	717	0.11271	105.3963	SPVALLY4 138.00 - STILLWATER 138KV CKT 1
FDNS	00NR	0	16WP	G15_047	FROM->TO	CIMARRON - DRAPER LAKE 345KV CKT 1	717	717	0.11189	105.3904	GEN334433 1-SABINE UNIT 3
FDNS	00NR	0	16WP	G15_047	FROM->TO	CIMARRON - DRAPER LAKE 345KV CKT 1	717	717	0.11229	105.3883	G14_001T 345.00 - WICHITA 345KV CKT 1
FDNS	00NR	0	16WP	G15_047	FROM->TO	CIMARRON - DRAPER LAKE 345KV CKT 1	717	717	0.11189	105.3876	P12:069:OKGE:3TERM4
FDNS	00NR	0	16WP	G15_047	FROM->TO	CIMARRON - DRAPER LAKE 345KV CKT 1	717	717	0.11189	105.3874	FRONTIER - GRIMES 345KV CKT 1

SOLUTION	GROUP	SCENARIO	SEASON	SOURCE	DIRECTION	MONITORED ELEMENT	RATEA (MVA)	RATEB(MVA)	TDF	TC%LOADING (% MVA)	CONTINGENCY
FDNS	00NR	0	16WP	G15_047	FROM->TO	CIMARRON - DRAPER LAKE 345KV CKT 1	717	717	0.11189	105.3845	GEN334030 1-FRONTIER UNIT 1
FDNS	00NR	0	16WP	G15_047	FROM->TO	CIMARRON - DRAPER LAKE 345KV CKT 1	717	717	0.11189	105.3833	GEN334031 1-FRONTIER UNIT 2
FDNS	00NR	0	16WP	G15_047	FROM->TO	CIMARRON - DRAPER LAKE 345KV CKT 1	717	717	0.11189	105.3819	GEN303007 1-1BC2 U2
FDNS	00NR	0	16WP	G15_047	FROM->TO	CIMARRON - DRAPER LAKE 345KV CKT 1	717	717	0.11189	105.3771	GEN303006 1-1BC2 U1
FDNS	00NR	0	16WP	G15_047	FROM->TO	CIMARRON - DRAPER LAKE 345KV CKT 1	717	717	0.11201	105.3681	COMANCHE - EMPIRE 138KV CKT 1
FDNS	00NR	0	16WP	G15_047	FROM->TO	CIMARRON - DRAPER LAKE 345KV CKT 1	717	717	0.11271	105.3668	PAYNESB4 138.00 - SPVALLY4 138.00 138KV CKT 1
FDNS	00NR	0	16WP	G15_047	FROM->TO	CIMARRON - DRAPER LAKE 345KV CKT 1	717	717	0.11219	105.3625	COLE - CRINER 138KV CKT 1
FDNS	00NR	0	16WP	G15_047	FROM->TO	CIMARRON - DRAPER LAKE 345KV CKT 1	717	717	0.11189	105.3603	GEN336191 1-LITTLE GYPSY UNIT#3
FDNS	00NR	0	16WP	G15_047	FROM->TO	CIMARRON - DRAPER LAKE 345KV CKT 1	717	717	0.11189	105.3582	GEN337041 1-GERALD ANDRUS
FDNS	00NR	0	16WP	G15_047	FROM->TO	CIMARRON - DRAPER LAKE 345KV CKT 1	717	717	0.11189	105.3531	P12:161:AEPW:DYESS 5:HYLAND 5
FDNS	00NR	0	16WP	G15_047	FROM->TO	CIMARRON - DRAPER LAKE 345KV CKT 1	717	717	0.11271	105.3512	CUSHING - PAYNESB4 138.00 138KV CKT 1
FDNS	00NR	0	16WP	G15_047	FROM->TO	CIMARRON - DRAPER LAKE 345KV CKT 1	717	717	0.11206	105.3504	P12:138:OKGE:3TERM13
FDNS	00NR	0	16WP	G15_047	FROM->TO	CIMARRON - DRAPER LAKE 345KV CKT 1	717	717	0.11191	105.3477	8DANIEL8 500.00 - MCKNIGHT 500KV CKT 1
FDNS	00NR	0	16WP	G15_047	FROM->TO	CIMARRON - DRAPER LAKE 345KV CKT 1	717	717	0.11124	105.3461	CANADIAN RIVER - PITTSBURG 345KV CKT 1
FDNS	00NR	0	16WP	G15_047	FROM->TO	CIMARRON - DRAPER LAKE 345KV CKT 1	717	717	0.11124	105.3461	CANADIAN RIVER - PITTSBURG 345KV CKT 1
FDNS	00NR	0	16WP	G15_047	FROM->TO	CIMARRON - DRAPER LAKE 345KV CKT 1	717	717	0.11313	105.3451	CLEAVELAND - CLEVLND 4 138.00 138KV CKT Z1
FDNS	00NR	0	16WP	G15_047	FROM->TO	CIMARRON - DRAPER LAKE 345KV CKT 1	717	717	0.11313	105.3451	CLEAVELAND - CLEVLND 4 138.00 138KV CKT Z1
FDNS	00NR	0	16WP	G15_047	FROM->TO	CIMARRON - DRAPER LAKE 345KV CKT 1	717	717	0.11313	105.3448	CLEVELAND (CLVAUTO1) 345/138/13.8KV TRANSFORMER CKT 1
FDNS	00NR	0	16WP	G15_047	FROM->TO	CIMARRON - DRAPER LAKE 345KV CKT 1	717	717	0.11313	105.3448	CLEVELAND (CLVAUTO1) 345/138/13.8KV TRANSFORMER CKT 1
FDNS	00NR	0	16WP	G15_047	FROM->TO	CIMARRON - DRAPER LAKE 345KV CKT 1	717	717	0.11189	105.3324	GEN509393 S1-ARSENAL HILL GENS #4 (STALL)
FDNS	00NR	0	16WP	G15_047	FROM->TO	CIMARRON - DRAPER LAKE 345KV CKT 1	717	717	0.1123	105.332	DAYTON - MUSTANG 138KV CKT 1
FDNS	00NR	0	16WP	G15_047	FROM->TO	CIMARRON - DRAPER LAKE 345KV CKT 1	717	717	0.11189	105.3283	GEN335614 1-WILLOW GLENN UNIT#4
FDNS	00NR	0	16WP	G15_047	FROM->TO	CIMARRON - DRAPER LAKE 345KV CKT 1	717	717	0.1123	105.327	DAYTON - HOBBY LOBBY 138KV CKT 1
FDNS	00NR	0	16WP	G15_047	FROM->TO	CIMARRON - DRAPER LAKE 345KV CKT 1	717	717	0.11189	105.3168	GEN303008 1-1BC2 U3
FDNS	00NR	0	16WP	G15_047	FROM->TO	CIMARRON - DRAPER LAKE 345KV CKT 1	717	717	0.11189	105.3135	GEN509392 G2-ARSENAL HILL GENS #3 (STALL)
FDNS	00NR	0	16WP	G15_047	FROM->TO	CIMARRON - DRAPER LAKE 345KV CKT 1	717	717	0.11189	105.3134	GEN509391 G1-ARSENAL HILL GENS #2 (STALL)
FDNS	00NR	0	16WP	G15_047	FROM->TO	CIMARRON - DRAPER LAKE 345KV CKT 1	717	717	0.11224	105.3098	MUSTANG - SW 5TH 138KV CKT 1
FDNS	00NR	0	16WP	G15_047	FROM->TO	CIMARRON - DRAPER LAKE 345KV CKT 1	717	717	0.11198	105.3026	7LUTESVIL 345.00 - 7ST FRANC 345.00 345KV CKT 1
FDNS	00NR	0	16WP	G15_047	FROM->TO	CIMARRON - DRAPER LAKE 345KV CKT 1	717	717	0.11189	105.2951	GEN336170 1-GULF OXY U4
FDNS	00NR	0	16WP	G15_047	FROM->TO	CIMARRON - DRAPER LAKE 345KV CKT 1	717	717	0.11189	105.2924	GEN336464 1-MICHOUD UNIT #3
FDNS	00NR	0	16WP	G15_047	FROM->TO	CIMARRON - DRAPER LAKE 345KV CKT 1	717	717	0.1119	105.2896	ELDORADO EHV - MOUNT OLIVE 500KV CKT 1
FDNS	00NR	0	16WP	G15_047	FROM->TO	CIMARRON - DRAPER LAKE 345KV CKT 1	717	717	0.11189	105.2808	GEN338143 1-INDEPENDENCE UNIT #1
FDNS	00NR	0	16WP	G15_047	FROM->TO	CIMARRON - DRAPER LAKE 345KV CKT 1	717	717	0.11195	105.2695	P12:069:OKGE:3TERM19
FDNS	00NR	0	16WP	G15_047	FROM->TO	CIMARRON - DRAPER LAKE 345KV CKT 1	717	717	0.11235	105.2578	OUMED 4 - STONEWALL 138KV CKT 1
FDNS	00NR	0	16WP	G15_047	FROM->TO	CIMARRON - DRAPER LAKE 345KV CKT 1	717	717	0.11189	105.2571	ESSEX UNIT 2 500/18.0KV TRANSFORMER CKT 1
FDNS	00NR	0	16WP	G15_047	FROM->TO	CIMARRON - DRAPER LAKE 345KV CKT 1	717	717	0.11267	105.2549	LIGHTNING CREEK - ROBINSON 138KV CKT 1
FDNS	00NR	0	16WP	G15_047	FROM->TO	CIMARRON - DRAPER LAKE 345KV CKT 1	717	717	0.11202	105.2531	7JASPER 345.00 - BLACKBERRY 345KV CKT 1
FDNS	00NR	0	16WP	G15_047	FROM->TO	CIMARRON - DRAPER LAKE 345KV CKT 1	717	717	0.11189	105.2474	GEN336801 1-BAXTER WILSON UNIT #1
FDNS	00NR	0	16WP	G15_047	FROM->TO	CIMARRON - DRAPER LAKE 345KV CKT 1	717	717	0.11164	105.2433	ARCADIA - LGARBER4 138.00 138KV CKT 1
FDNS	00NR	0	16WP	G15_047	FROM->TO	CIMARRON - DRAPER LAKE 345KV CKT 1	717	717	0.11248	105.2416	FAIRFAX TAP - SHIDLER 138KV CKT 1
FDNS	00NR	0	16WP	G15_047	FROM->TO	CIMARRON - DRAPER LAKE 345KV CKT 1	717	717	0.11248	105.2415	FAIRFAX TAP - WEBB CITY TAP 138KV CKT 1
FDNS	00NR	0	16WP	G15_047	FROM->TO	CIMARRON - DRAPER LAKE 345KV CKT 1	717	717	0.11201	105.2221	8WNEWMADRID 500.00 - DELL 500 500KV CKT 1
FDNS	00NR	0	16WP	G15_047	FROM->TO	CIMARRON - DRAPER LAKE 345KV CKT 1	717	717	0.11411	105.217	TULSA NORTH - WEKIWA 345KV CKT 1
FDNS	00NR	0	16WP	G15_047	FROM->TO	CIMARRON - DRAPER LAKE 345KV CKT 1	717	717	0.11411	105.217	TULSA NORTH - WEKIWA 345KV CKT 1
FDNS	00NR	0	16WP	G15_047	FROM->TO	CIMARRON - DRAPER LAKE 345KV CKT 1	717	717	0.11262	105.2167	ARKANSAS NUCLEAR ONE - FT SMITH 500KV CKT 1
FDNS	00NR	0	16WP	G15_047	FROM->TO	CIMARRON - DRAPER LAKE 345KV CKT 1	717	717	0.11262	105.2167	ARKANSAS NUCLEAR ONE - FT SMITH 500KV CKT 1
FDNS	00NR	0	16WP	G15_047	FROM->TO	CIMARRON - DRAPER LAKE 345KV CKT 1	717	717	0.11164	105.2134	CHITWOOD - LGARBER4 138.00 138KV CKT 1
FDNS	00NR	0	16WP	G15_047	FROM->TO	CIMARRON - DRAPER LAKE 345KV CKT 1	717	717	0.11189	105.2118	GEN506752 1-LEBROCK GAS 1
FDNS	00NR	0	16WP	G15_047	FROM->TO	CIMARRON - DRAPER LAKE 345KV CKT 1	717	717	0.11189	105.2116	GEN506753 1-LEBROCK GAS 2
FDNS	00NR	0	16WP	G15_047	FROM->TO	CIMARRON - DRAPER LAKE 345KV CKT 1	717	717	0.11189	105.21	GEN501910 1-ACADIA UNIT ST1
FDNS	00NR	0	16WP	G15_047	FROM->TO	CIMARRON - DRAPER LAKE 345KV CKT 1	717	717	0.11164	105.201	CHITWOOD - JONES TAP 138KV CKT 1
FDNS	00NR	0	16WP	G15_047	FROM->TO	CIMARRON - DRAPER LAKE 345KV CKT 1	717	717	0.11189	105.1977	RODEMACHER 230/22.0KV TRANSFORMER CKT 1
FDNS	00NR	0	16WP	G15_047	FROM->TO	CIMARRON - DRAPER LAKE 345KV CKT 1	717	717	0.1119	105.1943	P12:138:AEPW-OGE:WTH_JCT4:JENSEN4
FDNS	00NR	0	16WP	G15_047	FROM->TO	CIMARRON - DRAPER LAKE 345KV CKT 1	717	717	0.11192	105.1937	P12:345:GRDA:CHOUTEAU-SPORTSMANACRES
FDNS	00NR	0	16WP	G15_047	FROM->TO	CIMARRON - DRAPER LAKE 345KV CKT 1	717	717	0.11188	105.1881	ELDORADO EHV - SHERIDAN EHV 500KV CKT 1
FDNS	00NR	0	16WP	G15_047	FROM->TO	CIMARRON - DRAPER LAKE 345KV CKT 1	717	717	0.11199	105.1795	ANADARKO - SEQUOYAHJ4 138.00 138KV CKT 1
FDNS	00NR	0	16WP	G15_047	FROM->TO	CIMARRON - DRAPER LAKE 345KV CKT 1	717	717	0.11199	105.179	CORN TAP - SEQUOYAHJ4 138.00 138KV CKT 1
FDNS	00NR	0	16WP	G15_047	FROM->TO	CIMARRON - DRAPER LAKE 345KV CKT 1	717	717	0.11189	105.1749	GEN511843 1-RIVERSIDE STATION #2
FDNS	00NR	0	16WP	G15_047	FROM->TO	CIMARRON - DRAPER LAKE 345KV CKT 1	717	717	0.11187	105.1727	CHISHOLM6 230.00 - ELK CITY 230KV 230KV CKT 1
FDNS	00NR	0	16WP	G15_047	FROM->TO	CIMARRON - DRAPER LAKE 345KV CKT 1	717	717	0.11187	105.1696	ELK CITY 230KV (ELKCTY-6) 230/138/13.8KV TRANSFORMER CKT 1
FDNS	00NR	0	16WP	G15_047	FROM->TO	CIMARRON - DRAPER LAKE 345KV CKT 1	717	717	0.11187	105.1696	ELK CITY 230KV (ELKCTY-6) 230/138/13.8KV TRANSFORMER CKT 1
FDNS	00NR	0	16WP	G15_047	FROM->TO	CIMARRON - DRAPER LAKE 345KV CKT 1	717	717	0.11194	105.158	6LAYFLD 230.00 - CARROLL 230KV CKT 1
FDNS	00NR	0	16WP	G15_047	FROM->TO	CIMARRON - DRAPER LAKE 345KV CKT 1	717	717	0.11235	105.1566	OUMED 4 - PARK PLACE 138KV CKT 1
FDNS	00NR	0	16WP	G15_047	FROM->TO	CIMARRON - DRAPER LAKE 345KV CKT 1	717	717	0.11197	105.1528	P12:138:AEPW:N.E.S.-4:CATOOSA4
FDNS	00NR	0	16WP	G15_047	FROM->TO	CIMARRON - DRAPER LAKE 345KV CKT 1	717	717	0.11421	105.1452	NORTHEAST STATION - ONETA 345KV CKT 1
FDNS	00NR	0	16WP	G15_047	FROM->TO	CIMARRON - DRAPER LAKE 345KV CKT 1	717	717	0.11421	105.1452	NORTHEAST STATION - ONETA 345KV CKT 1
FDNS	00NR	0	16WP	G15_047	FROM->TO	CIMARRON - DRAPER LAKE 345KV CKT 1	717	717	0.11202	105.1444	P13:138-161:WERE:NSES_TX-4OR5::
FDNS	00NR	0	16WP	G15_047	FROM->TO	CIMARRON - DRAPER LAKE 345KV CKT 1	717	717	0.1125	105.1443	MORISNT4 138.00 - SOONER 138KV CKT 1
FDNS	00NR	0	16WP	G15_047	FROM->TO	CIMARRON - DRAPER LAKE 345KV CKT 1	717	717	0.11214	105.1413	ANADARKO - GRACMNT4 138.00 138KV CKT 1
FDNS	00NR	0	16WP	G15_047	FROM->TO	CIMARRON - DRAPER LAKE 345KV CKT 1	717	717	0.11205	105.1371	7JASPER 345.00 - MORGAN 345KV CKT 1
FDNS	00NR	0	16WP	G15_047	FROM->TO	CIMARRON - DRAPER LAKE 345KV CKT 1	717	717	0.11189	105.1304	8CAJUN2 500/24.0KV TRANSFORMER CKT 1
FDNS	00NR	0	16WP	G15_047	FROM->TO	CIMARRON - DRAPER LAKE 345KV CKT 1	717	717	0.11474	105.1269	GRACEMONT - LAWTON EASTSIDE 345KV CKT 1
FDNS	00NR	0	16WP	G15_047	FROM->TO	CIMARRON - DRAPER LAKE 345KV CKT 1	717	717	0.11474	105.1269	GRACEMONT - LAWTON EASTSIDE 345KV CKT 1
FDNS	00NR	0	16WP	G15_047	FROM->TO	CIMARRON - DRAPER LAKE 345KV CKT 1	717	717	0.11282	105.1243	DALE - HORSESHOE LAKE 138KV CKT 1
FDNS	00NR	0	16WP	G15_047	FROM->TO	CIMARRON - DRAPER LAKE 345KV CKT 1	717	717	0.11189	105.1235	ST FRANCIS - ST FRANCIS 1 161KV CKT Z1
FDNS	00NR	0	16WP	G15_047	FROM->TO	CIMARRON - DRAPER LAKE 345KV CKT 1	717	717	0.11189	105.1235	ST FRANCIS 161/16.0KV TRANSFORMER CKT 1
FDNS	00NR	0	16WP	G15_047	FROM->TO	CIMARRON - DRAPER LAKE 345KV CKT 1	717	717	0.11194	105.1208	FULTON 115 - HOPE 115KV CKT 1
FDNS	00NR	0	16WP	G15_047	FROM->TO	CIMARRON - DRAPER LAKE 345KV CKT 1	717	717	0.11194	105.1208	FULTON 115 - HOPE 115KV CKT 1
FDNS	00NR	0	16WP	G15_047	FROM->TO	CIMARRON - DRAPER LAKE 345KV CKT 1	717	717	0.11267	105.1175	LIGHTNING CREEK - TROSPER 138KV CKT 1

SOLUTION	GROUP	SCENARIO	SEASON	SOURCE	DIRECTION	MONITORED ELEMENT	RATEA (MVA)	RATEB(MVA)	TDF	TC%LOADING (% MVA)	CONTINGENCY
FDNS	00NR	0	16WP	G15_047	FROM->TO	CIMARRON - DRAPER LAKE 345KV CKT 1	717	717	0.11189	105.1151	P12:069:OKGE:3TERM3
FDNS	00NR	0	16WP	G15_047	FROM->TO	CIMARRON - DRAPER LAKE 345KV CKT 1	717	717	0.11219	105.1134	COLE - OUSW4 138KV CKT 1
FDNS	00NR	0	16WP	G15_047	FROM->TO	CIMARRON - DRAPER LAKE 345KV CKT 1	717	717	0.11195	105.112	G13-010T 345.00 - POST ROCK 345KV CKT 1
FDNS	00NR	0	16WP	G15_047	FROM->TO	CIMARRON - DRAPER LAKE 345KV CKT 1	717	717	0.11208	105.1086	P12:138:AEPW:CATOOSA4:T.S.E.-4
FDNS	00NR	0	16WP	G15_047	FROM->TO	CIMARRON - DRAPER LAKE 345KV CKT 1	717	717	0.1123	105.0977	36 & MERIDIAN - HOBBY LOBBY 138KV CKT 1
FDNS	00NR	0	16WP	G15_047	FROM->TO	CIMARRON - DRAPER LAKE 345KV CKT 1	717	717	0.11189	105.0962	GEN337766 1-TRACTEBEL UNIT S1
FDNS	00NR	0	16WP	G15_047	FROM->TO	CIMARRON - DRAPER LAKE 345KV CKT 1	717	717	0.11193	105.0932	HUGO - VALLIANT 345KV CKT 1
FDNS	00NR	0	16WP	G15_047	FROM->TO	CIMARRON - DRAPER LAKE 345KV CKT 1	717	717	0.11193	105.0932	HUGO - VALLIANT 345KV CKT 1
FDNS	00NR	0	16WP	G15_047	FROM->TO	CIMARRON - DRAPER LAKE 345KV CKT 1	717	717	0.11189	105.0928	P12:138:AEPW:SHERID4:112GORE4
FDNS	00NR	0	16WP	G15_047	FROM->TO	CIMARRON - DRAPER LAKE 345KV CKT 1	717	717	0.11192	105.0924	HAMMETT TAP - HAMMETT2 138KV CKT 1
FDNS	00NR	0	16WP	G15_047	FROM->TO	CIMARRON - DRAPER LAKE 345KV CKT 1	717	717	0.11189	105.0914	GEN336222 1-LITTLE GYPSY UNIT#2
FDNS	00NR	0	16WP	G15_047	FROM->TO	CIMARRON - DRAPER LAKE 345KV CKT 1	717	717	0.11189	105.0889	GEN515564 1-ORIGIN11 0.6900
FDNS	00NR	0	16WP	G15_047	FROM->TO	CIMARRON - DRAPER LAKE 345KV CKT 1	717	717	0.11189	105.0889	GEN515565 1-ORIGIN21 0.6900
FDNS	00NR	0	16WP	G15_047	FROM->TO	CIMARRON - DRAPER LAKE 345KV CKT 1	717	717	0.11194	105.0878	P12:138:OKGE:3TERM28
FDNS	00NR	0	16WP	G15_047	FROM->TO	CIMARRON - DRAPER LAKE 345KV CKT 1	717	717	0.11189	105.0868	GEN300015 1-1SGPDEL 18.000
FDNS	00NR	0	16WP	G15_047	FROM->TO	CIMARRON - DRAPER LAKE 345KV CKT 1	717	717	0.11282	105.0827	DALE - SQUIRL CREEK 138KV CKT 1
FDNS	00NR	0	16WP	G15_047	FROM->TO	CIMARRON - DRAPER LAKE 345KV CKT 1	717	717	0.11189	105.0826	NELSON 230/20.0KV TRANSFORMER CKT 1
FDNS	00NR	0	16WP	G15_047	FROM->TO	CIMARRON - DRAPER LAKE 345KV CKT 1	717	717	0.11189	105.0796	GEN501970 1-EVANGELINE UNIT 7
FDNS	00NR	0	16WP	G15_047	FROM->TO	CIMARRON - DRAPER LAKE 345KV CKT 1	717	717	0.1121	105.0794	NW164TH4 138.00 - PIEDMONT 138KV CKT 1
FDNS	00NR	0	16WP	G15_047	FROM->TO	CIMARRON - DRAPER LAKE 345KV CKT 1	717	717	0.11208	105.0782	HEALDTON - LOCO 138KV CKT 1
FDNS	00NR	0	16WP	G15_047	FROM->TO	CIMARRON - DRAPER LAKE 345KV CKT 1	717	717	0.1121	105.0775	NORTHWEST - NW164TH4 138.00 138KV CKT 1
FDNS	00NR	0	16WP	G15_047	FROM->TO	CIMARRON - DRAPER LAKE 345KV CKT 1	717	717	0.1119	105.0744	P12:161:AEPW:EROGERS5:ECNTRTN5
FDNS	00NR	0	16WP	G15_047	FROM->TO	CIMARRON - DRAPER LAKE 345KV CKT 1	717	717	0.1119	105.0733	AS KING - EAU CLAIRE 345KV CKT 1
FDNS	00NR	0	16WP	G15_047	FROM->TO	CIMARRON - DRAPER LAKE 345KV CKT 1	717	717	0.11189	105.0727	ESSEX UNIT 2 500/18.0KV TRANSFORMER CKT 1
FDNS	00NR	0	16WP	G15_047	FROM->TO	CIMARRON - DRAPER LAKE 345KV CKT 1	717	717	0.11188	105.0725	P12:138:OKGE-AEPW:JENSEN4:REDROCKRD4
FDNS	00NR	0	16WP	G15_047	FROM->TO	CIMARRON - DRAPER LAKE 345KV CKT 1	717	717	0.11193	105.0659	FLETCHER - MARLOW JCT 69KV CKT 1
FDNS	00NR	0	16WP	G15_047	FROM->TO	CIMARRON - DRAPER LAKE 345KV CKT 1	717	717	0.11193	105.0653	COMANCHE TAP - OMPA-DUNCAN 840 138KV CKT 1
FDNS	00NR	0	16WP	G15_047	FROM->TO	CIMARRON - DRAPER LAKE 345KV CKT 1	717	717	0.11266	105.0629	MARSHALL - WOODRING 138KV CKT 1
FDNS	00NR	0	16WP	G15_047	FROM->TO	CIMARRON - DRAPER LAKE 345KV CKT 1	717	717	0.11266	105.0619	COTTONWOOD CREEK - MARSHALL 138KV CKT 1
FDNS	00NR	0	16WP	G15_047	FROM->TO	CIMARRON - DRAPER LAKE 345KV CKT 1	717	717	0.11189	105.0617	P12:161:AEPW:DYESS5:ELMSPRNG:TONTITN5
FDNS	00NR	0	16WP	G15_047	FROM->TO	CIMARRON - DRAPER LAKE 345KV CKT 1	717	717	0.11195	105.0606	G13-010T 345.00 - SPEARVILLE 345KV CKT 1
FDNS	00NR	0	16WP	G15_047	FROM->TO	CIMARRON - DRAPER LAKE 345KV CKT 1	717	717	0.11189	105.0599	GEN336152 1-WATERFORD UNIT#2
FDNS	00NR	0	16WP	G15_047	FROM->TO	CIMARRON - DRAPER LAKE 345KV CKT 1	717	717	0.11189	105.0591	ST FRANCIS 345/161KV TRANSFORMER CKT 1
FDNS	00NR	0	16WP	G15_047	FROM->TO	CIMARRON - DRAPER LAKE 345KV CKT 1	717	717	0.11189	105.059	ST FRANCIS 2 161/16.0KV TRANSFORMER CKT 2
FDNS	00NR	0	16WP	G15_047	FROM->TO	CIMARRON - DRAPER LAKE 345KV CKT 1	717	717	0.11192	105.0589	P12:161:AEPW-SWPA:BEAVER5:EROGERS5
FDNS	00NR	0	16WP	G15_047	FROM->TO	CIMARRON - DRAPER LAKE 345KV CKT 1	717	717	0.11189	105.0588	GEN336151 1-WATERFORD UNIT#1
FDNS	00NR	0	16WP	G15_047	FROM->TO	CIMARRON - DRAPER LAKE 345KV CKT 1	717	717	0.11206	105.0488	HEFNER - TULSA 138KV CKT 1
FDNS	00NR	0	16WP	G15_047	FROM->TO	CIMARRON - DRAPER LAKE 345KV CKT 1	717	717	0.11223	105.0485	P12:138:AEPW:MOUNDRD4:SHIDLER4
FDNS	00NR	0	16WP	G15_047	FROM->TO	CIMARRON - DRAPER LAKE 345KV CKT 1	717	717	0.11189	105.0484	GEN334392 1-EXXON MOBIL IPP 1
FDNS	00NR	0	16WP	G15_047	FROM->TO	CIMARRON - DRAPER LAKE 345KV CKT 1	717	717	0.11194	105.046	P12:138:AEPW:CORNVIL4:S.W.S.-4
FDNS	00NR	0	16WP	G15_047	FROM->TO	CIMARRON - DRAPER LAKE 345KV CKT 1	717	717	0.11189	105.0414	GEN334393 1-EXXON MOBIL IPP 2
FDNS	00NR	0	16WP	G15_047	FROM->TO	CIMARRON - DRAPER LAKE 345KV CKT 1	717	717	0.11189	105.0414	GEN334394 1-EXXON MOBIL IPP 3
FDNS	00NR	0	16WP	G15_047	FROM->TO	CIMARRON - DRAPER LAKE 345KV CKT 1	717	717	0.11239	105.0411	BRISTOW - SILVER CITY 138KV CKT 1
FDNS	00NR	0	16WP	G15_047	FROM->TO	CIMARRON - DRAPER LAKE 345KV CKT 1	717	717	0.11622	105.0401	PECAN CREEK - RIVERSIDE STATION 345KV CKT 1
FDNS	00NR	0	16WP	G15_047	FROM->TO	CIMARRON - DRAPER LAKE 345KV CKT 1	717	717	0.11622	105.0401	PECAN CREEK - RIVERSIDE STATION 345KV CKT 1
FDNS	00NR	0	16WP	G15_047	FROM->TO	CIMARRON - DRAPER LAKE 345KV CKT 1	717	717	0.11214	105.0374	EL RENO SW - MUSTANG2 69.000 69KV CKT 1
FDNS	00NR	0	16WP	G15_047	FROM->TO	CIMARRON - DRAPER LAKE 345KV CKT 1	717	717	0.11208	105.0369	HEALDTON - RINGLING 138KV CKT 1
FDNS	00NR	0	16WP	G15_047	FROM->TO	CIMARRON - DRAPER LAKE 345KV CKT 1	717	717	0.11191	105.0351	MC NIEL 500/115KV TRANSFORMER CKT 1
FDNS	00NR	0	16WP	G15_047	FROM->TO	CIMARRON - DRAPER LAKE 345KV CKT 1	717	717	0.112	105.0326	KELLYAV4 138.00 - MEMORIAL 138KV CKT 1
FDNS	00NR	0	16WP	G15_047	FROM->TO	CIMARRON - DRAPER LAKE 345KV CKT 1	717	717	0.11223	105.0321	SHIDLER - WEST PAWHUSKA 138KV CKT 1
FDNS	00NR	0	16WP	G15_047	FROM->TO	CIMARRON - DRAPER LAKE 345KV CKT 1	717	717	0.11192	105.0275	BISMARK - HOT SPRINGS WEST BUS 115KV CKT 1
FDNS	00NR	0	16WP	G15_047	FROM->TO	CIMARRON - DRAPER LAKE 345KV CKT 1	717	717	0.11189	105.0258	GEN501972 1-EVANGELINE UNIT 7-2
FDNS	00NR	0	16WP	G15_047	FROM->TO	CIMARRON - DRAPER LAKE 345KV CKT 1	717	717	0.11189	105.0257	GEN501971 1-EVANGELINE UNIT 7-1
FDNS	00NR	0	16WP	G15_047	FROM->TO	CIMARRON - DRAPER LAKE 345KV CKT 1	717	717	0.11325	105.0243	BRYANT - MEMORIAL 138KV CKT 1
FDNS	00NR	0	16WP	G15_047	FROM->TO	CIMARRON - DRAPER LAKE 345KV CKT 1	717	717	0.11191	105.0183	ARPIN B4 345.00 - EAU CLAIRE 345KV CKT 1
FDNS	00NR	0	16WP	G15_047	FROM->TO	CIMARRON - DRAPER LAKE 345KV CKT 1	717	717	0.11189	105.0168	GEN334431 1-SABINE UNIT 1
FDNS	00NR	0	16WP	G15_047	FROM->TO	CIMARRON - DRAPER LAKE 345KV CKT 1	717	717	0.11189	105.0167	GEN334432 1-SABINE UNIT 2
FDNS	00NR	0	16WP	G15_047	FROM->TO	CIMARRON - DRAPER LAKE 345KV CKT 1	717	717	0.11235	105.0163	BODLE - PARK PLACE 138KV CKT 1
FDNS	00NR	0	16WP	G15_047	FROM->TO	CIMARRON - DRAPER LAKE 345KV CKT 1	717	717	0.11223	105.0152	PAWHUSKA TAP - WEST PAWHUSKA 138KV CKT 1
FDNS	00NR	0	16WP	G15_047	FROM->TO	CIMARRON - DRAPER LAKE 345KV CKT 1	717	717	0.11197	105.0143	BROOKLINE - MORGAN 345KV CKT 1
FDNS	00NR	0	16WP	G15_047	FROM->TO	CIMARRON - DRAPER LAKE 345KV CKT 1	717	717	0.11197	105.0143	BROOKLINE - MORGAN 345KV CKT 1
FDNS	00NR	0	16WP	G15_047	FROM->TO	CIMARRON - DRAPER LAKE 345KV CKT 1	717	717	0.11189	105.0133	GEN336242 1-1NMIL ST1 18.000
FDNS	00NR	0	16WP	G15_047	FROM->TO	CIMARRON - DRAPER LAKE 345KV CKT 1	717	717	0.11189	105.0124	GEN337765 1-TRACTEBEL UNIT C2
FDNS	00NR	0	16WP	G15_047	FROM->TO	CIMARRON - DRAPER LAKE 345KV CKT 1	717	717	0.11189	105.0123	GEN337764 1-TRACTEBEL UNIT C1
FDNS	00NR	0	16WP	G15_047	FROM->TO	CIMARRON - DRAPER LAKE 345KV CKT 1	717	717	0.11189	105.0112	GEN501912 1-ACADIA UNIT CT1B
FDNS	00NR	0	16WP	G15_047	FROM->TO	CIMARRON - DRAPER LAKE 345KV CKT 1	717	717	0.11189	105.0105	GEN501911 1-ACADIA UNIT CT1A
FDNS	00NR	0	16WP	G15_047	FROM->TO	CIMARRON - DRAPER LAKE 345KV CKT 1	717	717	0.11203	105.0101	COUNCIL - MUSTANG 138KV CKT 1
FDNS	00NR	0	16WP	G15_047	FROM->TO	CIMARRON - DRAPER LAKE 345KV CKT 1	717	717	0.1121	105.0038	PIEDMONT - RICHRDS 138KV CKT 1
FDNS	00NR	0	16WP	G15_047	FROM->TO	CIMARRON - DRAPER LAKE 345KV CKT 1	717	717	0.11192	105.0021	HAMMETT2 - MEEKER 138KV CKT 1
FDNS	00NR	0	16WP	G15_047	FROM->TO	CIMARRON - DRAPER LAKE 345KV CKT 1	717	717	0.1119	105.0018	CYPRESS - HARTBURG 500KV CKT 1
FDNS	00NR	0	16WP	G15_047	FROM->TO	CIMARRON - DRAPER LAKE 345KV CKT 1	717	717	0.112	105.0011	KELLYAV4 138.00 - REMNGTON PARK 138KV CKT 1
FDNS	00NR	0	16WP	G15_047	FROM->TO	CIMARRON - DRAPER LAKE 345KV CKT 1	717	717	0.11209	105.0002	CIVIT - PAOLI 138KV CKT 1
FDNS	00NR	0	16WP	G15_047	FROM->TO	CIMARRON - DRAPER LAKE 345KV CKT 1	717	717	0.11189	104.997	P12:69:AEPW:L.E.S.-2:LAW WC2
FDNS	00NR	0	16WP	G15_047	FROM->TO	CIMARRON - DRAPER LAKE 345KV CKT 1	717	717	0.11195	104.9966	HAMMETT TAP - HORSESHOE LAKE 138KV CKT 1
FDNS	00NR	0	16WP	G15_047	FROM->TO	CIMARRON - DRAPER LAKE 345KV CKT 1	717	717	0.11208	104.9951	RINGLING - SOUTH WILSON 138KV CKT 1
FDNS	00NR	0	16WP	G15_047	FROM->TO	CIMARRON - DRAPER LAKE 345KV CKT 1	717	717	0.11192	104.9943	ALPINE AECC - BISMARK 115KV CKT 1
FDNS	00NR	0	16WP	G15_047	FROM->TO	CIMARRON - DRAPER LAKE 345KV CKT 1	717	717	0.11189	104.9884	LAYFLD8 500.00 - MOUNT OLIVE 500KV CKT 1
FDNS	00NR	0	16WP	G15_047	FROM->TO	CIMARRON - DRAPER LAKE 345KV CKT 1	717	717	0.11189	104.9884	LAYFLD8 500.00 - MOUNT OLIVE 500KV CKT 1
FDNS	00NR	0	16WP	G15_047	FROM->TO	CIMARRON - DRAPER LAKE 345KV CKT 1	717	717	0.112	104.9787	CORN TAP - CORNVILLE 138KV CKT 1

SOLUTION	GROUP	SCENARIO	SEASON	SOURCE	DIRECTION	MONITORED ELEMENT	RATEA (MVA)	RATEB(MVA)	TDF	TC%LOADING (% MVA)	CONTINGENCY
FDNS	00NR	0	16WP	G15_047	FROM->TO	CIMARRON - DRAPER LAKE 345KV CKT 1	717	717	0.11203	104.9554	COUNCIL - WESTOAKS 138KV CKT 1
FDNS	00NR	0	16WP	G15_047	FROM->TO	CIMARRON - DRAPER LAKE 345KV CKT 1	717	717	0.11325	104.9463	ACORN 4 138.00 - BRYANT 138KV CKT 1
FDNS	00NR	0	16WP	G15_047	FROM->TO	CIMARRON - DRAPER LAKE 345KV CKT 1	717	717	0.11189	104.5287	BASE CASE
FDNS	00NR	0	16WP	G15_047	FROM->TO	CIMARRON - DRAPER LAKE 345KV CKT 1	717	717	0.11187	104.2117	GRAPEVINE INTERCHANGE - NICHOLS STATION 230KV CKT 1
FDNS	00NR	0	16WP	G15_047	FROM->TO	CIMARRON - DRAPER LAKE 345KV CKT 1	717	717	0.11187	104.2117	GRAPEVINE INTERCHANGE - NICHOLS STATION 230KV CKT 1
FDNS	00NR	0	16WP	G15_047	FROM->TO	CIMARRON - DRAPER LAKE 345KV CKT 1	717	717	0.11253	104.1606	BURGETT4 138.00 - RNDBARN4 138.00 138KV CKT 1
FDNS	00NR	0	16WP	G15_047	FROM->TO	CIMARRON - DRAPER LAKE 345KV CKT 1	717	717	0.11253	104.1583	BURGETT4 138.00 - DANFORTH 138KV CKT 1
FDNS	00NR	0	16WP	G15_047	FROM->TO	CIMARRON - DRAPER LAKE 345KV CKT 1	717	717	0.11253	104.1481	ARCADIA - RNDBARN4 138.00 138KV CKT 1
FDNS	00NR	0	16WP	G15_047	FROM->TO	CIMARRON - DRAPER LAKE 345KV CKT 1	717	717	0.11189	104.1054	GEN515550 1-MNCWND31 0.6900
FDNS	00NR	0	16WP	G15_047	FROM->TO	CIMARRON - DRAPER LAKE 345KV CKT 1	717	717	0.11189	104.0891	GEN562611 1-G14_064_3 0.6900
FDNS	00NR	0	16WP	G15_047	FROM->TO	CIMARRON - DRAPER LAKE 345KV CKT 1	717	717	0.11189	104.0845	GEN659125 1-COVEY
FDNS	00NR	0	16WP	G15_047	FROM->TO	CIMARRON - DRAPER LAKE 345KV CKT 1	717	717	0.11185	104.0804	GRAPEVINE INTERCHANGE - STATELINE INTERCHANGE 230KV CKT 1
FDNS	00NR	0	16WP	G15_047	FROM->TO	CIMARRON - DRAPER LAKE 345KV CKT 1	717	717	0.11185	104.0804	GRAPEVINE INTERCHANGE - STATELINE INTERCHANGE 230KV CKT 1
FDNS	00NR	0	16WP	G15_047	FROM->TO	CIMARRON - DRAPER LAKE 345KV CKT 1	717	717	0.11185	104.0687	P12:138:WFEC:MSL10
FDNS	00NR	0	16WP	G15_047	FROM->TO	CIMARRON - DRAPER LAKE 345KV CKT 1	717	717	0.11189	104.0684	GEN511848 1-SOUTHWESTERN STATION #3
FDNS	00NR	0	16WP	G15_047	FROM->TO	CIMARRON - DRAPER LAKE 345KV CKT 1	717	717	0.11189	104.0611	GEN672303 3-BOUNDARY DAM GENERATOR 3
FDNS	00NR	0	16WP	G15_047	FROM->TO	CIMARRON - DRAPER LAKE 345KV CKT 1	717	717	0.11189	104.0611	GEN672304 4-BOUNDARY DAM GENERATOR 4
FDNS	00NR	0	16WP	G15_047	FROM->TO	CIMARRON - DRAPER LAKE 345KV CKT 1	717	717	0.11189	104.0611	GEN672305 5-BOUNDARY DAM GENERATOR 5
FDNS	00NR	0	16WP	G15_047	FROM->TO	CIMARRON - DRAPER LAKE 345KV CKT 1	717	717	0.11189	104.0606	GEN515601 1-KNGFSR11 0.7000
FDNS	00NR	0	16WP	G15_047	FROM->TO	CIMARRON - DRAPER LAKE 345KV CKT 1	717	717	0.11189	104.0588	GEN600007 7-RIVERSIDE GEN 7
FDNS	00NR	0	16WP	G15_047	FROM->TO	CIMARRON - DRAPER LAKE 345KV CKT 1	717	717	0.11189	104.0583	GEN600067 9-HIGH BRIDGE
FDNS	00NR	0	16WP	G15_047	FROM->TO	CIMARRON - DRAPER LAKE 345KV CKT 1	717	717	0.11189	104.0537	GEN615052 1-CAMBRIDGE GENERATING STATION
FDNS	00NR	0	16WP	G15_047	FROM->TO	CIMARRON - DRAPER LAKE 345KV CKT 1	717	717	0.11189	104.0492	GEN600011 5-BLACK DOG GEN 1
FDNS	00NR	0	16WP	G15_047	FROM->TO	CIMARRON - DRAPER LAKE 345KV CKT 1	717	717	0.11189	104.0471	GEN563062 1-G15071_3 0.6900
FDNS	00NR	0	16WP	G15_047	FROM->TO	CIMARRON - DRAPER LAKE 345KV CKT 1	717	717	0.11189	104.0434	GEN600014 4-BLACK DOG GEN 4
FDNS	00NR	0	16WP	G15_047	FROM->TO	CIMARRON - DRAPER LAKE 345KV CKT 1	717	717	0.11189	104.0429	GEN640020 2-SHELDON STATION UNIT 2
FDNS	00NR	0	16WP	G15_047	FROM->TO	CIMARRON - DRAPER LAKE 345KV CKT 1	717	717	0.11189	104.0357	GEN615032 2-PLEASANT VALLEY
FDNS	00NR	0	16WP	G15_047	FROM->TO	CIMARRON - DRAPER LAKE 345KV CKT 1	717	717	0.11187	104.0338	CHISNEY - CLARKSVILLE 138KV CKT 1
FDNS	00NR	0	16WP	G15_047	FROM->TO	CIMARRON - DRAPER LAKE 345KV CKT 1	717	717	0.11189	104.0335	GEN541151 3-SIBLEY GENERATING UNIT #3
FDNS	00NR	0	16WP	G15_047	FROM->TO	CIMARRON - DRAPER LAKE 345KV CKT 1	717	717	0.1121	104.0303	OVEXFRMCCOVE
FDNS	00NR	0	16WP	G15_047	FROM->TO	CIMARRON - DRAPER LAKE 345KV CKT 1	717	717	0.11189	104.0286	GEN629067 1-EMERY GAS TURBINE 1
FDNS	00NR	0	16WP	G15_047	FROM->TO	CIMARRON - DRAPER LAKE 345KV CKT 1	717	717	0.11189	104.0274	GEN563282 1-G15094_3 0.6900
FDNS	00NR	0	16WP	G15_047	FROM->TO	CIMARRON - DRAPER LAKE 345KV CKT 1	717	717	0.11189	104.0231	GEN562802 1-G15039_3 0.3570
FDNS	00NR	0	16WP	G15_047	FROM->TO	CIMARRON - DRAPER LAKE 345KV CKT 1	717	717	0.11189	104.0218	GEN652353 2-GR PRAIRIEG 0.6900
FDNS	00NR	0	16WP	G15_047	FROM->TO	CIMARRON - DRAPER LAKE 345KV CKT 1	717	717	0.11189	104.0126	GEN515591 1-PALDRW11 0.6900
FDNS	00NR	0	16WP	G15_047	FROM->TO	CIMARRON - DRAPER LAKE 345KV CKT 1	717	717	0.11361	104.0116	FOREST HILL - MAUD 138KV CKT 1
FDNS	00NR	0	16WP	G15_047	FROM->TO	CIMARRON - DRAPER LAKE 345KV CKT 1	717	717	0.11189	104.0099	GEN600017 C-LS POWER CT
FDNS	00NR	0	16WP	G15_047	FROM->TO	CIMARRON - DRAPER LAKE 345KV CKT 1	717	717	0.11189	104.0098	GEN563102 1-G15075_3 0.5500
FDNS	00NR	0	16WP	G15_047	FROM->TO	CIMARRON - DRAPER LAKE 345KV CKT 1	717	717	0.11189	104.0095	GEN562602 1-G15_029_3 0.6900
FDNS	00NR	0	16WP	G15_047	FROM->TO	CIMARRON - DRAPER LAKE 345KV CKT 1	717	717	0.11195	103.9981	MINGO - SETAB 345KV CKT 1
FDNS	00NR	0	16WP	G15_047	FROM->TO	CIMARRON - DRAPER LAKE 345KV CKT 1	717	717	0.11195	103.9981	MINGO - SETAB 345KV CKT 1
FDNS	00NR	0	16WP	G15_047	FROM->TO	CIMARRON - DRAPER LAKE 345KV CKT 1	717	717	0.11189	103.9916	GEN562812 1-G15040_3 0.3570
FDNS	00NR	0	16WP	G15_047	FROM->TO	CIMARRON - DRAPER LAKE 345KV CKT 1	717	717	0.1123	103.9911	SEMINOLE - VANOSTP4 138.00 138KV CKT 1
FDNS	00NR	0	16WP	G15_047	FROM->TO	CIMARRON - DRAPER LAKE 345KV CKT 1	717	717	0.11189	103.9854	GEN563132 1-G15078_3 0.3570
FDNS	00NR	0	16WP	G15_047	FROM->TO	CIMARRON - DRAPER LAKE 345KV CKT 1	717	717	0.11189	103.9813	GEN672392 1-NBECGT1G 18.000
FDNS	00NR	0	16WP	G15_047	FROM->TO	CIMARRON - DRAPER LAKE 345KV CKT 1	717	717	0.11189	103.9764	GEN524285 1-WILDORADO WIND GEN
FDNS	00NR	0	16WP	G15_047	FROM->TO	CIMARRON - DRAPER LAKE 345KV CKT 1	717	717	0.11189	103.9735	GEN562074 1-G1149G1504 0.6900
FDNS	00NR	0	16WP	G15_047	FROM->TO	CIMARRON - DRAPER LAKE 345KV CKT 1	717	717	0.11189	103.9724	GEN629070 2-BEAVER CHANNEL GENERATORFOR UNIT NO 2
FDNS	00NR	0	16WP	G15_047	FROM->TO	CIMARRON - DRAPER LAKE 345KV CKT 1	717	717	0.11233	103.972	P12:138:AEPW:WELETK4:EARLSBORO4
FDNS	00NR	0	16WP	G15_047	FROM->TO	CIMARRON - DRAPER LAKE 345KV CKT 1	717	717	0.11233	103.972	P12:138:OKGE:3TERM36
FDNS	00NR	0	16WP	G15_047	FROM->TO	CIMARRON - DRAPER LAKE 345KV CKT 1	717	717	0.11224	103.9644	EARLSBORO 4138.00 - FIXICO TAP 138KV CKT 1
FDNS	00NR	0	16WP	G15_047	FROM->TO	CIMARRON - DRAPER LAKE 345KV CKT 1	717	717	0.11208	103.958	CANADIAN RIVER - MCALESTER SOUTH 138KV CKT 1
FDNS	00NR	0	16WP	G15_047	FROM->TO	CIMARRON - DRAPER LAKE 345KV CKT 1	717	717	0.11208	103.958	CANADIAN RIVER - MCALESTER SOUTH 138KV CKT 1
FDNS	00NR	0	16WP	G15_047	FROM->TO	CIMARRON - DRAPER LAKE 345KV CKT 1	717	717	0.11189	103.9579	GEN615010 1-STANTON4
FDNS	00NR	0	16WP	G15_047	FROM->TO	CIMARRON - DRAPER LAKE 345KV CKT 1	717	717	0.11208	103.9566	CANADIAN RIVER () 345/138/13.8KV TRANSFORMER CKT 1
FDNS	00NR	0	16WP	G15_047	FROM->TO	CIMARRON - DRAPER LAKE 345KV CKT 1	717	717	0.11208	103.9566	CANADIAN RIVER () 345/138/13.8KV TRANSFORMER CKT 1
FDNS	00NR	0	16WP	G15_047	FROM->TO	CIMARRON - DRAPER LAKE 345KV CKT 1	717	717	0.11189	103.9515	GEN526331 1-JONES GEN #1 22 KV
FDNS	00NR	0	16WP	G15_047	FROM->TO	CIMARRON - DRAPER LAKE 345KV CKT 1	717	717	0.11189	103.9514	GEN526332 1-JONES GEN #2 21 KV
FDNS	00NR	0	16WP	G15_047	FROM->TO	CIMARRON - DRAPER LAKE 345KV CKT 1	717	717	0.11189	103.9475	GEN562596 1-G14_059_3 0.6900
FDNS	00NR	0	16WP	G15_047	FROM->TO	CIMARRON - DRAPER LAKE 345KV CKT 1	717	717	0.11189	103.9433	GEN629071 1-BURLINGTON GENERATOR FOR UNIT NO 1 E
FDNS	00NR	0	16WP	G15_047	FROM->TO	CIMARRON - DRAPER LAKE 345KV CKT 1	717	717	0.11189	103.9421	GEN515365 1-CENT 21 0.7000
FDNS	00NR	0	16WP	G15_047	FROM->TO	CIMARRON - DRAPER LAKE 345KV CKT 1	717	717	0.11187	103.9416	CHISNEY - HIGHLAND 138KV CKT 1
FDNS	00NR	0	16WP	G15_047	FROM->TO	CIMARRON - DRAPER LAKE 345KV CKT 1	717	717	0.1119	103.9408	P12:138:WFEC:MSL07
FDNS	00NR	0	16WP	G15_047	FROM->TO	CIMARRON - DRAPER LAKE 345KV CKT 1	717	717	0.1119	103.9408	P12:138:WFEC-AEPW:HUGOPP4:ATOKA--4
FDNS	00NR	0	16WP	G15_047	FROM->TO	CIMARRON - DRAPER LAKE 345KV CKT 1	717	717	0.11189	103.9376	GEN615021 1-GRE-ER 14G 16.000
FDNS	00NR	0	16WP	G15_047	FROM->TO	CIMARRON - DRAPER LAKE 345KV CKT 1	717	717	0.11189	103.9343	INDEPENDENCE 500/26.0KV TRANSFORMER CKT 1
FDNS	00NR	0	16WP	G15_047	FROM->TO	CIMARRON - DRAPER LAKE 345KV CKT 1	717	717	0.11191	103.9325	GRPRAR1-LNX3345.00 - GRPRAR 345KV CKT Z
FDNS	00NR	0	16WP	G15_047	FROM->TO	CIMARRON - DRAPER LAKE 345KV CKT 1	717	717	0.11191	103.9304	P12:138:AEPW:SHAM4WT:CHILD4WT
FDNS	00NR	0	16WP	G15_047	FROM->TO	CIMARRON - DRAPER LAKE 345KV CKT 1	717	717	0.11191	103.9291	GRPRAR1-LNX3345.00 - HOLT.CO3 345.00 345KV CKT 1
FDNS	00NR	0	16WP	G15_047	FROM->TO	CIMARRON - DRAPER LAKE 345KV CKT 1	717	717	0.11189	103.927	GEN562983 1-G15061_4 0.6900
FDNS	00NR	0	16WP	G15_047	FROM->TO	CIMARRON - DRAPER LAKE 345KV CKT 1	717	717	0.11189	103.927	GEN562984 1-G15061_5 0.6900
FDNS	00NR	0	16WP	G15_047	FROM->TO	CIMARRON - DRAPER LAKE 345KV CKT 1	717	717	0.11189	103.9254	GEN562017 1-G11_022_3 0.6900
FDNS	00NR	0	16WP	G15_047	FROM->TO	CIMARRON - DRAPER LAKE 345KV CKT 1	717	717	0.11189	103.9203	P12:138:AEPW-SWPA:LONEOAK4:TUPELO4
FDNS	00NR	0	16WP	G15_047	FROM->TO	CIMARRON - DRAPER LAKE 345KV CKT 1	717	717	0.11189	103.9202	P12:138:WFEC:MSL06
FDNS	00NR	0	16WP	G15_047	FROM->TO	CIMARRON - DRAPER LAKE 345KV CKT 1	717	717	0.11189	103.9131	GEN562429 1-G13-029 0.6900
FDNS	00NR	0	16WP	G15_047	FROM->TO	CIMARRON - DRAPER LAKE 345KV CKT 1	717	717	0.11189	103.9116	GEN562432 1-G13-030 0.6900
FDNS	00NR	0	16WP	G15_047	FROM->TO	CIMARRON - DRAPER LAKE 345KV CKT 1	717	717	0.11189	103.9092	GEN560105 1-G08-22 0.6900
FDNS	00NR	0	16WP	G15_047	FROM->TO	CIMARRON - DRAPER LAKE 345KV CKT 1	717	717	0.11189	103.9056	GEN300003 1-THOMAS HILL UNIT 3
FDNS	00NR	0	16WP	G15_047	FROM->TO	CIMARRON - DRAPER LAKE 345KV CKT 1	717	717	0.0935	103.9018	G15063_T 345.00 - WOODRING 345KV CKT 1

SOLUTION	GROUP	SCENARIO	SEASON	SOURCE	DIRECTION	MONITORED ELEMENT	RATEA (MVA)	RATEB(MVA)	TDF	TC%LOADING (% MVA)	CONTINGENCY
FDNS	00NR	0	16WP	G15_047	FROM->TO	CIMARRON - DRAPER LAKE 345KV CKT 1	717	717	0.11189	103.8967	BURLINGTON NO1 + NO 2 + NO 3 161/20.0KV TRANSFORMER CKT 1
FDNS	00NR	0	16WP	G15_047	FROM->TO	CIMARRON - DRAPER LAKE 345KV CKT 1	717	717	0.11233	103.8902	P12:138:AEPW-OGE:WELETK4:MAUD 4
FDNS	00NR	0	16WP	G15_047	FROM->TO	CIMARRON - DRAPER LAKE 345KV CKT 1	717	717	0.11193	103.8864	P12:138:WFEC:MSL16
FDNS	00NR	0	16WP	G15_047	FROM->TO	CIMARRON - DRAPER LAKE 345KV CKT 1	717	717	0.11189	103.8824	GEN527882 1-CUNNINGHAM GEN #2 20 KV
FDNS	00NR	0	16WP	G15_047	FROM->TO	CIMARRON - DRAPER LAKE 345KV CKT 1	717	717	0.11224	103.8804	EARLSBORO 4138.00 - MAUD 138KV CKT 1
FDNS	00NR	0	16WP	G15_047	FROM->TO	CIMARRON - DRAPER LAKE 345KV CKT 1	717	717	0.11224	103.8804	EARLSBORO 4138.00 - MAUD 138KV CKT 1
FDNS	00NR	0	16WP	G15_047	FROM->TO	CIMARRON - DRAPER LAKE 345KV CKT 1	717	717	0.112	103.8782	DELL 500 - INDEPENDENCE 500KV CKT 1
FDNS	00NR	0	16WP	G15_047	FROM->TO	CIMARRON - DRAPER LAKE 345KV CKT 1	717	717	0.11189	103.8745	GEN562550 1-G14_040_3 0.6900
FDNS	00NR	0	16WP	G15_047	FROM->TO	CIMARRON - DRAPER LAKE 345KV CKT 1	717	717	0.11323	103.8731	MAUD - SEMINOLE 138KV CKT 1
FDNS	00NR	0	16WP	G15_047	FROM->TO	CIMARRON - DRAPER LAKE 345KV CKT 1	717	717	0.11189	103.8723	GEN524295 1-SPNSPUR_WND10.6900
FDNS	00NR	0	16WP	G15_047	FROM->TO	CIMARRON - DRAPER LAKE 345KV CKT 1	717	717	0.11189	103.8505	GEN562832 1-G15042_3 0.6900
FDNS	00NR	0	16WP	G15_047	FROM->TO	CIMARRON - DRAPER LAKE 345KV CKT 1	717	717	0.11173	103.8482	P12:230:AEPW:ELKCITY6:SWEETWT6
FDNS	00NR	0	16WP	G15_047	FROM->TO	CIMARRON - DRAPER LAKE 345KV CKT 1	717	717	0.11189	103.8446	P12:230:UMZB:# 112 #: NU IN SD. NU-RCDC & DRY CREEK XFMR
FDNS	00NR	0	16WP	G15_047	FROM->TO	CIMARRON - DRAPER LAKE 345KV CKT 1	717	717	0.11189	103.844	RCDC EAST 4230.00 - RED CEDAR DC 230KV CKT 1
FDNS	00NR	0	16WP	G15_047	FROM->TO	CIMARRON - DRAPER LAKE 345KV CKT 1	717	717	0.11189	103.8352	THOMAS HILL 161/22.0KV TRANSFORMER CKT 1
FDNS	00NR	0	16WP	G15_047	FROM->TO	CIMARRON - DRAPER LAKE 345KV CKT 1	717	717	0.11189	103.8274	GEN515606 1-CANDN11 0.6900
FDNS	00NR	0	16WP	G15_047	FROM->TO	CIMARRON - DRAPER LAKE 345KV CKT 1	717	717	0.11189	103.8274	GEN515607 1-CANDN12 0.6900
FDNS	00NR	0	16WP	G15_047	FROM->TO	CIMARRON - DRAPER LAKE 345KV CKT 1	717	717	0.11189	103.8273	GEN345671 2-1RUSH G2 18.000
FDNS	00NR	0	16WP	G15_047	FROM->TO	CIMARRON - DRAPER LAKE 345KV CKT 1	717	717	0.11182	103.826	STLN-DEMARC6 - SWEETWATER 230KV CKT 1
FDNS	00NR	0	16WP	G15_047	FROM->TO	CIMARRON - DRAPER LAKE 345KV CKT 1	717	717	0.11189	103.8253	GEN345670 1-1RUSH G1 18.000
FDNS	00NR	0	16WP	G15_047	FROM->TO	CIMARRON - DRAPER LAKE 345KV CKT 1	717	717	0.11189	103.8218	GEN531447 1-HOLCOMB GENERATOR
FDNS	00NR	0	16WP	G15_047	FROM->TO	CIMARRON - DRAPER LAKE 345KV CKT 1	717	717	0.11187	103.8152	HIGHLAND - PINK SW 138KV CKT 1
FDNS	00NR	0	16WP	G15_047	FROM->TO	CIMARRON - DRAPER LAKE 345KV CKT 1	717	717	0.11182	103.8149	P12:230:AEPW-SPS:SWEETWT6:WHEELER 6
FDNS	00NR	0	16WP	G15_047	FROM->TO	CIMARRON - DRAPER LAKE 345KV CKT 1	717	717	0.11182	103.8129	STATELINE INTERCHANGE - STLN-DEMARC6 230KV CKT 1
FDNS	00NR	0	16WP	G15_047	FROM->TO	CIMARRON - DRAPER LAKE 345KV CKT 1	717	717	0.11189	103.8022	GEN645011 1-NEBRASKA CITY 1
FDNS	00NR	0	16WP	G15_047	FROM->TO	CIMARRON - DRAPER LAKE 345KV CKT 1	717	717	0.11189	103.7992	GEN515443 1-MNCOWND1 0.7000
FDNS	00NR	0	16WP	G15_047	FROM->TO	CIMARRON - DRAPER LAKE 345KV CKT 1	717	717	0.11189	103.7992	GEN562794 1-G15038_5 0.6900
FDNS	00NR	0	16WP	G15_047	FROM->TO	CIMARRON - DRAPER LAKE 345KV CKT 1	717	717	0.11189	103.7992	GEN562795 1-G15038_6 0.6900
FDNS	00NR	0	16WP	G15_047	FROM->TO	CIMARRON - DRAPER LAKE 345KV CKT 1	717	717	0.11189	103.788	GEN629072 4-LANSING GENERATOR FOR UNITS NO4 EIA CODE 1
FDNS	00NR	0	16WP	G15_047	FROM->TO	CIMARRON - DRAPER LAKE 345KV CKT 1	717	717	0.11189	103.7758	GEN563092 1-G15074_3 0.6900
FDNS	00NR	0	16WP	G15_047	FROM->TO	CIMARRON - DRAPER LAKE 345KV CKT 1	717	717	0.11189	103.7641	GEN542951 5-HAWTHORN UNIT #5
FDNS	00NR	0	16WP	G15_047	FROM->TO	CIMARRON - DRAPER LAKE 345KV CKT 1	717	717	0.11189	103.7579	GEN657749 1-YOUNG 1 GENERATOR
FDNS	00NR	0	16WP	G15_047	FROM->TO	CIMARRON - DRAPER LAKE 345KV CKT 1	717	717	0.11189	103.7568	GEN645012 2-NEBRASKA CITY 2
FDNS	00NR	0	16WP	G15_047	FROM->TO	CIMARRON - DRAPER LAKE 345KV CKT 1	717	717	0.11189	103.7502	GEN562512 1-G14_020_3 0.6900
FDNS	00NR	0	16WP	G15_047	FROM->TO	CIMARRON - DRAPER LAKE 345KV CKT 1	717	717	0.11189	103.7299	GEN562699 1-G15_018_3 0.6900
FDNS	00NR	0	16WP	G15_047	FROM->TO	CIMARRON - DRAPER LAKE 345KV CKT 1	717	717	0.11182	103.713	CHISHOLM6 230.00 - SWEETWATER 230KV CKT 1
FDNS	00NR	0	16WP	G15_047	FROM->TO	CIMARRON - DRAPER LAKE 345KV CKT 1	717	717	0.11206	103.7064	KEO EHV - WEST MEMPHIS 500 500KV CKT 1
FDNS	00NR	0	16WP	G15_047	FROM->TO	CIMARRON - DRAPER LAKE 345KV CKT 1	717	717	0.11233	103.7033	FRISCCO4 138.00 - LULA 138KV CKT 1
FDNS	00NR	0	16WP	G15_047	FROM->TO	CIMARRON - DRAPER LAKE 345KV CKT 1	717	717	0.11189	103.7007	GEN529201 1-OMCDLEC1 13.800
FDNS	00NR	0	16WP	G15_047	FROM->TO	CIMARRON - DRAPER LAKE 345KV CKT 1	717	717	0.11338	103.692	HOLLYWOOD - MIDWEST TAP 138KV CKT 1
FDNS	00NR	0	16WP	G15_047	FROM->TO	CIMARRON - DRAPER LAKE 345KV CKT 1	717	717	0.11189	103.6906	GEN640009 1-COOPER NUCLEAR STATION
FDNS	00NR	0	16WP	G15_047	FROM->TO	CIMARRON - DRAPER LAKE 345KV CKT 1	717	717	0.11189	103.6906	GEN681522 3-GENOA 3
FDNS	00NR	0	16WP	G15_047	FROM->TO	CIMARRON - DRAPER LAKE 345KV CKT 1	717	717	0.11189	103.6891	GEN563122 1-G15077_3 0.3850
FDNS	00NR	0	16WP	G15_047	FROM->TO	CIMARRON - DRAPER LAKE 345KV CKT 1	717	717	0.11189	103.6723	GEN563182 1-G15083_3 0.6900
FDNS	00NR	0	16WP	G15_047	FROM->TO	CIMARRON - DRAPER LAKE 345KV CKT 1	717	717	0.11189	103.6598	GEN562685 1-G15_013_3 0.3550
FDNS	00NR	0	16WP	G15_047	FROM->TO	CIMARRON - DRAPER LAKE 345KV CKT 1	717	717	0.11236	103.6576	FT SMITH - MUSKOGEE 345KV CKT 1
FDNS	00NR	0	16WP	G15_047	FROM->TO	CIMARRON - DRAPER LAKE 345KV CKT 1	717	717	0.11189	103.6431	4SIOUX 1 138.00 138/18.0KV TRANSFORMER CKT 1
FDNS	00NR	0	16WP	G15_047	FROM->TO	CIMARRON - DRAPER LAKE 345KV CKT 1	717	717	0.11229	103.6414	CIMARRON - TUTTLE CONOCO TAP 138KV CKT 1
FDNS	00NR	0	16WP	G15_047	FROM->TO	CIMARRON - DRAPER LAKE 345KV CKT 1	717	717	0.11171	103.6327	CHISHOLM7 345.00 - GRACEMONT 345KV CKT 1
FDNS	00NR	0	16WP	G15_047	FROM->TO	CIMARRON - DRAPER LAKE 345KV CKT 1	717	717	0.11189	103.6323	GEN344895 2-1LAB G2 20.000
FDNS	00NR	0	16WP	G15_047	FROM->TO	CIMARRON - DRAPER LAKE 345KV CKT 1	717	717	0.11207	103.6289	TUPELO - TUPELO TAP 138KV CKT 1
FDNS	00NR	0	16WP	G15_047	FROM->TO	CIMARRON - DRAPER LAKE 345KV CKT 1	717	717	0.11189	103.6171	GEN563222 1-G15088_3 0.6900
FDNS	00NR	0	16WP	G15_047	FROM->TO	CIMARRON - DRAPER LAKE 345KV CKT 1	717	717	0.11189	103.6127	GEN562587 1-G14_056_3 0.6900
FDNS	00NR	0	16WP	G15_047	FROM->TO	CIMARRON - DRAPER LAKE 345KV CKT 1	717	717	0.11189	103.6124	GEN523461 1-BLACKHAWK GEN #1
FDNS	00NR	0	16WP	G15_047	FROM->TO	CIMARRON - DRAPER LAKE 345KV CKT 1	717	717	0.11189	103.6123	GEN523462 1-BLACKHAWK GEN #2
FDNS	00NR	0	16WP	G15_047	FROM->TO	CIMARRON - DRAPER LAKE 345KV CKT 1	717	717	0.11233	103.6082	FRISCCO4 138.00 - HARDEN 4 138.00 138KV CKT 1
FDNS	00NR	0	16WP	G15_047	FROM->TO	CIMARRON - DRAPER LAKE 345KV CKT 1	717	717	0.11189	103.6036	GEN344896 3-1LAB G3 20.000
FDNS	00NR	0	16WP	G15_047	FROM->TO	CIMARRON - DRAPER LAKE 345KV CKT 1	717	717	0.11189	103.6021	GEN344894 1-1LAB G1 20.000
FDNS	00NR	0	16WP	G15_047	FROM->TO	CIMARRON - DRAPER LAKE 345KV CKT 1	717	717	0.11189	103.6009	GEN344897 4-1LAB G4 20.000
FDNS	00NR	0	16WP	G15_047	FROM->TO	CIMARRON - DRAPER LAKE 345KV CKT 1	717	717	0.11189	103.5904	GEN515602 1-KNGFSR12 0.7000
FDNS	00NR	0	16WP	G15_047	FROM->TO	CIMARRON - DRAPER LAKE 345KV CKT 1	717	717	0.11229	103.5701	TUTTLE - TUTTLE CONOCO TAP 138KV CKT 1
FDNS	00NR	0	16WP	G15_047	FROM->TO	CIMARRON - DRAPER LAKE 345KV CKT 1	717	717	0.11189	103.5566	GEN563082 1-G15073_3 0.6900
FDNS	00NR	0	16WP	G15_047	FROM->TO	CIMARRON - DRAPER LAKE 345KV CKT 1	717	717	0.11171	103.5441	CHISHOLM7 345.00 (CHISHOLM) 345/230/13.2KV TRANSFORMER CKT 1
FDNS	00NR	0	16WP	G15_047	FROM->TO	CIMARRON - DRAPER LAKE 345KV CKT 1	717	717	0.11189	103.5224	CLAY BOSWELL 230/20.9KV TRANSFORMER CKT 1
FDNS	00NR	0	16WP	G15_047	FROM->TO	CIMARRON - DRAPER LAKE 345KV CKT 1	717	717	0.11189	103.5204	GEN562704 1-G15_020_3 0.3550
FDNS	00NR	0	16WP	G15_047	FROM->TO	CIMARRON - DRAPER LAKE 345KV CKT 1	717	717	0.11189	103.5105	GEN563202 1-G15085_3 0.5500
FDNS	00NR	0	16WP	G15_047	FROM->TO	CIMARRON - DRAPER LAKE 345KV CKT 1	717	717	0.11189	103.4932	GEN672321 1-SHAND GENERATOR 1
FDNS	00NR	0	16WP	G15_047	FROM->TO	CIMARRON - DRAPER LAKE 345KV CKT 1	717	717	0.11189	103.4917	GEN640010 1-GERALD GENTLEMAN STATION UNIT 1
FDNS	00NR	0	16WP	G15_047	FROM->TO	CIMARRON - DRAPER LAKE 345KV CKT 1	717	717	0.11189	103.4674	GEN672310 1-POPLAR RIVER GENERATOR 1
FDNS	00NR	0	16WP	G15_047	FROM->TO	CIMARRON - DRAPER LAKE 345KV CKT 1	717	717	0.11189	103.4674	GEN672311 2-POPLAR RIVER GENERATOR 2
FDNS	00NR	0	16WP	G15_047	FROM->TO	CIMARRON - DRAPER LAKE 345KV CKT 1	717	717	0.1111	103.4637	SEMINOLE (SEMINOL1) 345/138/14.4KV TRANSFORMER CKT 1
FDNS	00NR	0	16WP	G15_047	FROM->TO	CIMARRON - DRAPER LAKE 345KV CKT 1	717	717	0.11189	103.4579	GEN672306 6-BOUNDARY DAM GENERATOR 6
FDNS	00NR	0	16WP	G15_047	FROM->TO	CIMARRON - DRAPER LAKE 345KV CKT 1	717	717	0.11252	103.4387	LULA - TUPELO TAP 138KV CKT 1
FDNS	00NR	0	16WP	G15_047	FROM->TO	CIMARRON - DRAPER LAKE 345KV CKT 1	717	717	0.11189	103.4317	GEN562710 1-G15_022_3 0.5500
FDNS	00NR	0	16WP	G15_047	FROM->TO	CIMARRON - DRAPER LAKE 345KV CKT 1	717	717	0.11189	103.4227	GEN640011 2-GERALD GENTLEMAN STATION UNIT 2
FDNS	00NR	0	16WP	G15_047	FROM->TO	CIMARRON - DRAPER LAKE 345KV CKT 1	717	717	0.11199	103.4174	NORTHWEST TEXARKANA - VALLIANT 345KV CKT 1
FDNS	00NR	0	16WP	G15_047	FROM->TO	CIMARRON - DRAPER LAKE 345KV CKT 1	717	717	0.11199	103.4174	NORTHWEST TEXARKANA - VALLIANT 345KV CKT 1
FDNS	00NR	0	16WP	G15_047	FROM->TO	CIMARRON - DRAPER LAKE 345KV CKT 1	717	717	0.11189	103.4136	GEN542956 2-LACYGNE UNIT #2
FDNS	00NR	0	16WP	G15_047	FROM->TO	CIMARRON - DRAPER LAKE 345KV CKT 1	717	717	0.11189	103.4059	GEN659118 1-LARAMIE RIVER UNIT1

SOLUTION	GROUP	SCENARIO	SEASON	SOURCE	DIRECTION	MONITORED ELEMENT	RATEA (MVA)	RATEB(MVA)	TDF	TC%LOADING (% MVA)	CONTINGENCY
FDNS	00NR	0	16WP	G15_047	FROM->TO	CIMARRON - DRAPER LAKE 345KV CKT 1	717	717	0.11391	103.3991	OAKCREEK - WILD MARY 138KV CKT 1
FDNS	00NR	0	16WP	G15_047	FROM->TO	CIMARRON - DRAPER LAKE 345KV CKT 1	717	717	0.11237	103.3991	P12:138:OKGE:3TERM22
FDNS	00NR	0	16WP	G15_047	FROM->TO	CIMARRON - DRAPER LAKE 345KV CKT 1	717	717	0.11238	103.3973	DRAPER LAKE - SOONER TAP 138KV CKT 1
FDNS	00NR	0	16WP	G15_047	FROM->TO	CIMARRON - DRAPER LAKE 345KV CKT 1	717	717	0.11233	103.3924	ETNA - HARDEN 4 138.00 138KV CKT 1
FDNS	00NR	0	16WP	G15_047	FROM->TO	CIMARRON - DRAPER LAKE 345KV CKT 1	717	717	0.11187	103.375	P12:138:WFEC:MSL08
FDNS	00NR	0	16WP	G15_047	FROM->TO	CIMARRON - DRAPER LAKE 345KV CKT 1	717	717	0.11192	103.3611	P12:138:WFEC:MSL09
FDNS	00NR	0	16WP	G15_047	FROM->TO	CIMARRON - DRAPER LAKE 345KV CKT 1	717	717	0.11189	103.3604	GEN681542 6-JP MADGETT
FDNS	00NR	0	16WP	G15_047	FROM->TO	CIMARRON - DRAPER LAKE 345KV CKT 1	717	717	0.11187	103.3601	FRANKLIN - PINK SW 138KV CKT 1
FDNS	00NR	0	16WP	G15_047	FROM->TO	CIMARRON - DRAPER LAKE 345KV CKT 1	717	717	0.11189	103.3237	GEN542957 1-IATAN UNIT #1
FDNS	00NR	0	16WP	G15_047	FROM->TO	CIMARRON - DRAPER LAKE 345KV CKT 1	717	717	0.11233	103.3222	ETNA - PARK LANE 138KV CKT 1
FDNS	00NR	0	16WP	G15_047	FROM->TO	CIMARRON - DRAPER LAKE 345KV CKT 1	717	717	0.11189	103.2984	GEN530690 1-PRWINDG1 0.6900
FDNS	00NR	0	16WP	G15_047	FROM->TO	CIMARRON - DRAPER LAKE 345KV CKT 1	717	717	0.11189	103.259	GEN645001 1-FORT CALHOUN 1
FDNS	00NR	0	16WP	G15_047	FROM->TO	CIMARRON - DRAPER LAKE 345KV CKT 1	717	717	0.11094	103.2536	SEMINOLE (SEMINOL2) 345/138/14.4KV TRANSFORMER CKT 1
FDNS	00NR	0	16WP	G15_047	FROM->TO	CIMARRON - DRAPER LAKE 345KV CKT 1	717	717	0.11189	103.2424	ALMA 161 161/24.0KV TRANSFORMER CKT 1
FDNS	00NR	0	16WP	G15_047	FROM->TO	CIMARRON - DRAPER LAKE 345KV CKT 1	717	717	0.11189	103.2409	GEN542955 1-LACYGNE UNIT #1
FDNS	00NR	0	16WP	G15_047	FROM->TO	CIMARRON - DRAPER LAKE 345KV CKT 1	717	717	0.11189	103.2366	GEN661015 1-COYOTE
FDNS	00NR	0	16WP	G15_047	FROM->TO	CIMARRON - DRAPER LAKE 345KV CKT 1	717	717	0.11189	103.2318	GEN562754 1-G15031_5 0.6900
FDNS	00NR	0	16WP	G15_047	FROM->TO	CIMARRON - DRAPER LAKE 345KV CKT 1	717	717	0.11189	103.2195	GEN562556 1-G14_046_3 0.3420
FDNS	00NR	0	16WP	G15_047	FROM->TO	CIMARRON - DRAPER LAKE 345KV CKT 1	717	717	0.11299	103.2152	RENFROW7 345.00 - VIOLA 7 345.00 345KV CKT 1
FDNS	00NR	0	16WP	G15_047	FROM->TO	CIMARRON - DRAPER LAKE 345KV CKT 1	717	717	0.11189	103.1998	GEN532652 1-JEFFREY ENERGY CENTER UNIT 2
FDNS	00NR	0	16WP	G15_047	FROM->TO	CIMARRON - DRAPER LAKE 345KV CKT 1	717	717	0.11189	103.1962	GEN532651 1-JEFFREY ENERGY CENTER UNIT 1
FDNS	00NR	0	16WP	G15_047	FROM->TO	CIMARRON - DRAPER LAKE 345KV CKT 1	717	717	0.11189	103.1877	GEN562756 1-G15031_7 0.6900
FDNS	00NR	0	16WP	G15_047	FROM->TO	CIMARRON - DRAPER LAKE 345KV CKT 1	717	717	0.11189	103.1838	GEN562974 1-G15060_5 0.6900
FDNS	00NR	0	16WP	G15_047	FROM->TO	CIMARRON - DRAPER LAKE 345KV CKT 1	717	717	0.11391	103.1728	AIRDEPT4 138.00 - WILD MARY 138KV CKT 1
FDNS	00NR	0	16WP	G15_047	FROM->TO	CIMARRON - DRAPER LAKE 345KV CKT 1	717	717	0.11189	103.1716	GEN563142 1-G15079_3 0.5500
FDNS	00NR	0	16WP	G15_047	FROM->TO	CIMARRON - DRAPER LAKE 345KV CKT 1	717	717	0.11189	103.1716	GEN563151 1-G15080_2 0.5500
FDNS	00NR	0	16WP	G15_047	FROM->TO	CIMARRON - DRAPER LAKE 345KV CKT 1	717	717	0.11189	103.1676	GEN562973 1-G15060_4 0.6900
FDNS	00NR	0	16WP	G15_047	FROM->TO	CIMARRON - DRAPER LAKE 345KV CKT 1	717	717	0.11189	103.1581	GEN563042 1-G15068_3 0.6900
FDNS	00NR	0	16WP	G15_047	FROM->TO	CIMARRON - DRAPER LAKE 345KV CKT 1	717	717	0.11189	103.1393	GEN562078 1-G11_051_3 0.6900
FDNS	00NR	0	16WP	G15_047	FROM->TO	CIMARRON - DRAPER LAKE 345KV CKT 1	717	717	0.11189	103.1315	GEN562691 1-G15_015_3 0.6900
FDNS	00NR	0	16WP	G15_047	FROM->TO	CIMARRON - DRAPER LAKE 345KV CKT 1	717	717	0.1132	103.128	HUNTERS7 345.00 - RENFROW7 345.00 345KV CKT 1
FDNS	00NR	0	16WP	G15_047	FROM->TO	CIMARRON - DRAPER LAKE 345KV CKT 1	717	717	0.11189	103.1094	GEN657748 1-YOUNG 2 GENERATOR
FDNS	00NR	0	16WP	G15_047	FROM->TO	CIMARRON - DRAPER LAKE 345KV CKT 1	717	717	0.1127	103.0782	PARK LANE - SEMINOLE 138KV CKT 1
FDNS	00NR	0	16WP	G15_047	FROM->TO	CIMARRON - DRAPER LAKE 345KV CKT 1	717	717	0.11187	103.0762	FRANKLIN - FRANKLIN SW 138KV CKT 1
FDNS	00NR	0	16WP	G15_047	FROM->TO	CIMARRON - DRAPER LAKE 345KV CKT 1	717	717	0.11189	103.0759	GEN562655 1-G14_074_3 0.6900
FDNS	00NR	0	16WP	G15_047	FROM->TO	CIMARRON - DRAPER LAKE 345KV CKT 1	717	717	0.11189	103.0754	GEN562762 1-G15033_3 0.6900
FDNS	00NR	0	16WP	G15_047	FROM->TO	CIMARRON - DRAPER LAKE 345KV CKT 1	717	717	0.11189	103.0131	GEN527901 1-HOBBS PLANT #1 (CT)
FDNS	00NR	0	16WP	G15_047	FROM->TO	CIMARRON - DRAPER LAKE 345KV CKT 1	717	717	0.11189	103.0131	GEN527902 1-HOBBS PLANT #2 (CT)
FDNS	00NR	0	16WP	G15_047	FROM->TO	CIMARRON - DRAPER LAKE 345KV CKT 1	717	717	0.11189	103.0015	GEN563273 2-G15093_4 0.6900
FDNS	00NR	0	16WP	G15_047	FROM->TO	CIMARRON - DRAPER LAKE 345KV CKT 1	717	717	0.11189	102.9743	GEN563043 1-G15068_4 0.6900
FDNS	00NR	0	16WP	G15_047	FROM->TO	CIMARRON - DRAPER LAKE 345KV CKT 1	717	717	0.11189	102.9598	GEN563052 1-G15069_3 0.6900
FDNS	00NR	0	16WP	G15_047	FROM->TO	CIMARRON - DRAPER LAKE 345KV CKT 1	717	717	0.11391	102.9434	AIRDEPT4 138.00 - GM 138KV CKT 1
FDNS	00NR	0	16WP	G15_047	FROM->TO	CIMARRON - DRAPER LAKE 345KV CKT 1	717	717	0.11189	102.9328	GEN525845 1-ELK_2 1 138.00
FDNS	00NR	0	16WP	G15_047	FROM->TO	CIMARRON - DRAPER LAKE 345KV CKT 1	717	717	0.11189	102.9294	GEN525844 1-ELK_1 118.000
FDNS	00NR	0	16WP	G15_047	FROM->TO	CIMARRON - DRAPER LAKE 345KV CKT 1	717	717	0.11203	102.9285	LYDIA - WELSH 345KV CKT 1
FDNS	00NR	0	16WP	G15_047	FROM->TO	CIMARRON - DRAPER LAKE 345KV CKT 1	717	717	0.11203	102.9285	LYDIA - WELSH 345KV CKT 1
FDNS	00NR	0	16WP	G15_047	FROM->TO	CIMARRON - DRAPER LAKE 345KV CKT 1	717	717	0.11229	102.9208	P12:138:AEPW-OGE:CORNVIL4:CIMARON4
FDNS	00NR	0	16WP	G15_047	FROM->TO	CIMARRON - DRAPER LAKE 345KV CKT 1	717	717	0.11189	102.9195	GEN620315 1-BIG STONE GEN
FDNS	00NR	0	16WP	G15_047	FROM->TO	CIMARRON - DRAPER LAKE 345KV CKT 1	717	717	0.11189	102.9123	GEN563242 1-G15090_3 0.6900
FDNS	00NR	0	16WP	G15_047	FROM->TO	CIMARRON - DRAPER LAKE 345KV CKT 1	717	717	0.11189	102.8811	GEN526333 1-JONES GEN #3 21 KV
FDNS	00NR	0	16WP	G15_047	FROM->TO	CIMARRON - DRAPER LAKE 345KV CKT 1	717	717	0.11189	102.8811	GEN526334 1-JONES_4 116.500
FDNS	00NR	0	16WP	G15_047	FROM->TO	CIMARRON - DRAPER LAKE 345KV CKT 1	717	717	0.11189	102.874	GEN562772 1-G15034_3 0.6900
FDNS	00NR	0	16WP	G15_047	FROM->TO	CIMARRON - DRAPER LAKE 345KV CKT 1	717	717	0.11189	102.8671	GEN600004 2-PRAIRIE ISLAND G2
FDNS	00NR	0	16WP	G15_047	FROM->TO	CIMARRON - DRAPER LAKE 345KV CKT 1	717	717	0.11189	102.864	GEN600003 1-PRAIRIE ISLAND G1
FDNS	00NR	0	16WP	G15_047	FROM->TO	CIMARRON - DRAPER LAKE 345KV CKT 1	717	717	0.11189	102.8553	GEN600006 1-AS KING
FDNS	00NR	0	16WP	G15_047	FROM->TO	CIMARRON - DRAPER LAKE 345KV CKT 1	717	717	0.11189	102.8474	GEN523971 1-HARRINGTON GEN #1 24 KV
FDNS	00NR	0	16WP	G15_047	FROM->TO	CIMARRON - DRAPER LAKE 345KV CKT 1	717	717	0.11189	102.8473	GEN523972 1-HARRINGTON GEN #2 24 KV
FDNS	00NR	0	16WP	G15_047	FROM->TO	CIMARRON - DRAPER LAKE 345KV CKT 1	717	717	0.11189	102.8473	GEN523973 1-HARRINGTON GEN #3 24 KV
FDNS	00NR	0	16WP	G15_047	FROM->TO	CIMARRON - DRAPER LAKE 345KV CKT 1	717	717	0.11189	102.8213	GEN636641 1-LOUISA UNIT 1
FDNS	00NR	0	16WP	G15_047	FROM->TO	CIMARRON - DRAPER LAKE 345KV CKT 1	717	717	0.11892	102.7681	CLARKSVILLE - MUSKOGEE 345KV CKT 1
FDNS	00NR	0	16WP	G15_047	FROM->TO	CIMARRON - DRAPER LAKE 345KV CKT 1	717	717	0.11892	102.7681	CLARKSVILLE - MUSKOGEE 345KV CKT 1
FDNS	00NR	0	16WP	G15_047	FROM->TO	CIMARRON - DRAPER LAKE 345KV CKT 1	717	717	0.11535	102.7389	RANCHRD7 345.00 - SOONER 345KV CKT 1
FDNS	00NR	0	16WP	G15_047	FROM->TO	CIMARRON - DRAPER LAKE 345KV CKT 1	717	717	0.11391	102.7355	DRAPER LAKE - GM 138KV CKT 1
FDNS	00NR	0	16WP	G15_047	FROM->TO	CIMARRON - DRAPER LAKE 345KV CKT 1	717	717	0.11189	102.7125	GEN600005 1-MONTICELLO
FDNS	00NR	0	16WP	G15_047	FROM->TO	CIMARRON - DRAPER LAKE 345KV CKT 1	717	717	0.11189	102.7111	GEN542962 2-IATAN UNIT #2
FDNS	00NR	0	16WP	G15_047	FROM->TO	CIMARRON - DRAPER LAKE 345KV CKT 1	717	717	0.11189	102.7017	GEN563292 1-G15095_3 0.6900
FDNS	00NR	0	16WP	G15_047	FROM->TO	CIMARRON - DRAPER LAKE 345KV CKT 1	717	717	0.1132	102.6917	HUNTERS7 345.00 - WOODRING 345KV CKT 1
FDNS	00NR	0	16WP	G15_047	FROM->TO	CIMARRON - DRAPER LAKE 345KV CKT 1	717	717	0.11189	102.6463	GEN527166 1-MUSTANG_6 118.000
FDNS	00NR	0	16WP	G15_047	FROM->TO	CIMARRON - DRAPER LAKE 345KV CKT 1	717	717	0.11189	102.6368	GEN525562 1-TOLK GEN #2 24 KV
FDNS	00NR	0	16WP	G15_047	FROM->TO	CIMARRON - DRAPER LAKE 345KV CKT 1	717	717	0.11189	102.6194	GEN629074 1-ARNOLD LOWSIDE OF GSU XFMR
FDNS	00NR	0	16WP	G15_047	FROM->TO	CIMARRON - DRAPER LAKE 345KV CKT 1	717	717	0.11171	102.6103	MUSKOGEE - SEMINOLE 345KV CKT 1
FDNS	00NR	0	16WP	G15_047	FROM->TO	CIMARRON - DRAPER LAKE 345KV CKT 1	717	717	0.11189	102.61	GEN562952 1-G15057_3 0.6500
FDNS	00NR	0	16WP	G15_047	FROM->TO	CIMARRON - DRAPER LAKE 345KV CKT 1	717	717	0.11189	102.6048	GEN563272 1-G15093_3 0.6900
FDNS	00NR	0	16WP	G15_047	FROM->TO	CIMARRON - DRAPER LAKE 345KV CKT 1	717	717	0.09345	102.5846	NORTHWEST - SPRING CREEK 345KV CKT 1
FDNS	00NR	0	16WP	G15_047	FROM->TO	CIMARRON - DRAPER LAKE 345KV CKT 1	717	717	0.11189	102.5625	GEN635213 3-NEAL UNIT 3
FDNS	00NR	0	16WP	G15_047	FROM->TO	CIMARRON - DRAPER LAKE 345KV CKT 1	717	717	0.11224	102.5557	FRANKLIN SW - MIDWEST TAP 138KV CKT 1
FDNS	00NR	0	16WP	G15_047	FROM->TO	CIMARRON - DRAPER LAKE 345KV CKT 1	717	717	0.09345	102.5531	SOONER - SPRING CREEK 345KV CKT 1
FDNS	00NR	0	16WP	G15_047	FROM->TO	CIMARRON - DRAPER LAKE 345KV CKT 1	717	717	0.11189	102.5132	BIG STONE 230/24.0KV TRANSFORMER CKT 1
FDNS	00NR	0	16WP	G15_047	FROM->TO	CIMARRON - DRAPER LAKE 345KV CKT 1	717	717	0.11189	102.507	GEN562892 1-G15048_3 0.6900

SOLUTION	GROUP	SCENARIO	SEASON	SOURCE	DIRECTION	MONITORED ELEMENT	RATEA (MVA)	RATEB(MVA)	TDF	TC%LOADING (% MVA)	CONTINGENCY
FDNS	00NR	0	16WP	G15_047	FROM->TO	CIMARRON - DRAPER LAKE 345KV CKT 1	717	717	0.11299	102.4824	CHAMBER SPRINGS - CLARKSVILLE 345KV CKT 1
FDNS	00NR	0	16WP	G15_047	FROM->TO	CIMARRON - DRAPER LAKE 345KV CKT 1	717	717	0.10643	102.4731	DRAPER LAKE - SEMINOLE 345KV CKT 3
FDNS	00NR	0	16WP	G15_047	FROM->TO	CIMARRON - DRAPER LAKE 345KV CKT 1	717	717	0.11189	102.4615	GEN563173 1-G15082_3 0.6900
FDNS	00NR	0	16WP	G15_047	FROM->TO	CIMARRON - DRAPER LAKE 345KV CKT 1	717	717	0.11189	102.4099	GEN562902 1-G15052_3 0.6900
FDNS	00NR	0	16WP	G15_047	FROM->TO	CIMARRON - DRAPER LAKE 345KV CKT 1	717	717	0.11189	102.4	GEN514805 1-SOONER UNIT 1
FDNS	00NR	0	16WP	G15_047	FROM->TO	CIMARRON - DRAPER LAKE 345KV CKT 1	717	717	0.11189	102.3707	GEN600000 1-SHERBURNECNTY G1
FDNS	00NR	0	16WP	G15_047	FROM->TO	CIMARRON - DRAPER LAKE 345KV CKT 1	717	717	0.11189	102.3666	GEN527903 1-HOBBS PLANT #3 (ST)
FDNS	00NR	0	16WP	G15_047	FROM->TO	CIMARRON - DRAPER LAKE 345KV CKT 1	717	717	0.11189	102.3474	GEN525561 1-TOLK GEN #1 24 KV
FDNS	00NR	0	16WP	G15_047	FROM->TO	CIMARRON - DRAPER LAKE 345KV CKT 1	717	717	0.11276	102.3228	P12:138:OKGE:3TERM23
FDNS	00NR	0	16WP	G15_047	FROM->TO	CIMARRON - DRAPER LAKE 345KV CKT 1	717	717	0.11208	102.3201	LYDIA - VALLIANT 345KV CKT 1
FDNS	00NR	0	16WP	G15_047	FROM->TO	CIMARRON - DRAPER LAKE 345KV CKT 1	717	717	0.11208	102.3201	LYDIA - VALLIANT 345KV CKT 1
FDNS	00NR	0	16WP	G15_047	FROM->TO	CIMARRON - DRAPER LAKE 345KV CKT 1	717	717	0.11189	102.2716	GEN600001 2-SHERBURNE CNTY G2
FDNS	00NR	0	16WP	G15_047	FROM->TO	CIMARRON - DRAPER LAKE 345KV CKT 1	717	717	0.11276	102.2636	BARNES 4 138.00 - DRAPER LAKE 138KV CKT 1
FDNS	00NR	0	16WP	G15_047	FROM->TO	CIMARRON - DRAPER LAKE 345KV CKT 1	717	717	0.11189	102.1932	GEN344225 1-1CAL G1 25.000
FDNS	00NR	0	16WP	G15_047	FROM->TO	CIMARRON - DRAPER LAKE 345KV CKT 1	717	717	0.11189	102.1468	GEN514806 1-SOONER UNIT 2
FDNS	00NR	0	16WP	G15_047	FROM->TO	CIMARRON - DRAPER LAKE 345KV CKT 1	717	717	0.11189	102.1418	GEN629075 1-OTTUMWA GENERATOR FOR OTTUMWA UNIT NO 1
FDNS	00NR	0	16WP	G15_047	FROM->TO	CIMARRON - DRAPER LAKE 345KV CKT 1	717	717	0.11189	102.1124	GEN563162 1-G15081_3 0.6900
FDNS	00NR	0	16WP	G15_047	FROM->TO	CIMARRON - DRAPER LAKE 345KV CKT 1	717	717	0.11346	102.0198	DRAPER LAKE (DRAPER2) 345/138/13.8KV TRANSFORMER CKT 1
FDNS	00NR	0	16WP	G15_047	FROM->TO	CIMARRON - DRAPER LAKE 345KV CKT 1	717	717	0.11346	101.9327	DRAPER LAKE (DRAPER3) 345/138/13.8KV TRANSFORMER CKT 1
FDNS	00NR	0	16WP	G15_047	FROM->TO	CIMARRON - DRAPER LAKE 345KV CKT 1	717	717	0.11346	101.9327	DRAPER LAKE (DRAPER4) 345/138/13.8KV TRANSFORMER CKT 1
FDNS	00NR	0	16WP	G15_047	FROM->TO	CIMARRON - DRAPER LAKE 345KV CKT 1	717	717	0.11189	101.9167	SHERBURNE CO 345/24.0KV TRANSFORMER CKT 1
FDNS	00NR	0	16WP	G15_047	FROM->TO	CIMARRON - DRAPER LAKE 345KV CKT 1	717	717	0.11189	101.9096	GEN532653 1-JEFFREY ENERGY CENTER UNIT 3
FDNS	00NR	0	16WP	G15_047	FROM->TO	CIMARRON - DRAPER LAKE 345KV CKT 1	717	717	0.11189	101.9024	GEN635214 4-NEAL UNIT 4
FDNS	00NR	0	16WP	G15_047	FROM->TO	CIMARRON - DRAPER LAKE 345KV CKT 1	717	717	0.10848	101.8242	CIMARRON - MATHWSN7 345.00 345KV CKT 1
FDNS	00NR	0	16WP	G15_047	FROM->TO	CIMARRON - DRAPER LAKE 345KV CKT 1	717	717	0.10848	101.8242	CIMARRON - MATHWSN7 345.00 345KV CKT 2
FDNS	00NR	0	16WP	G15_047	FROM->TO	CIMARRON - DRAPER LAKE 345KV CKT 1	717	717	0.11189	101.8106	GEN600002 3-SHERBURNE CNTY G3
FDNS	00NR	0	16WP	G15_047	FROM->TO	CIMARRON - DRAPER LAKE 345KV CKT 1	717	717	0.11189	101.7843	GEN562882 1-G15047_3 0.6900
FDNS	00NR	0	16WP	G15_047	FROM->TO	CIMARRON - DRAPER LAKE 345KV CKT 1	717	717	0.11189	101.4209	GEN635023 3-WALTER SCOTT UNIT 3
FDNS	00NR	0	16WP	G15_047	FROM->TO	CIMARRON - DRAPER LAKE 345KV CKT 1	717	717	0.11189	101.2971	GEN562023 1-G11_020_3 0.6900
FDNS	00NR	0	16WP	G15_047	FROM->TO	CIMARRON - DRAPER LAKE 345KV CKT 1	717	717	0.11189	101.2971	GEN562026 1-G11_019_3 0.6900
FDNS	00NR	0	16WP	G15_047	FROM->TO	CIMARRON - DRAPER LAKE 345KV CKT 1	717	717	0.11189	101.2072	EASTDC - ERCOT EQUIVALENCE 345KV CKT 1
FDNS	00NR	0	16WP	G15_047	FROM->TO	CIMARRON - DRAPER LAKE 345KV CKT 1	717	717	0.10169	100.9489	DRAPER LAKE - SEMINOLE 345KV CKT 1
FDNS	00NR	0	16WP	G15_047	FROM->TO	CIMARRON - DRAPER LAKE 345KV CKT 1	717	717	0.10169	100.9487	DRAPER LAKE - SEMINOLE 345KV CKT 2
FDNS	00NR	0	16WP	G15_047	FROM->TO	CIMARRON - DRAPER LAKE 345KV CKT 1	717	717	0.11189	100.9406	GEN635024 4-WALTER SCOTT UNIT 4
FDNS	00NR	0	16WP	G15_047	FROM->TO	CIMARRON - DRAPER LAKE 345KV CKT 1	717	717	0.11189	99.6	GEN562992 1-G15063_3 0.6900
FDNS	08NR	0	20L	G15_047	TO->FROM	CLEAVELAND - CLEVLND 4 138.00 138KV CKT Z1	305	371	0.0916	114.5295	CLEVELAND - TULSA NORTH 345KV CKT 1
FDNS	08NR	0	20L	G15_047	TO->FROM	CLEAVELAND - CLEVLND 4 138.00 138KV CKT Z1	305	371	0.0916	114.5295	CLEVELAND - TULSA NORTH 345KV CKT 1
FDNS	00NR	0	17SP	G15_047	TO->FROM	CLEAVELAND - CLEVLND 4 138.00 138KV CKT Z1	305	371	0.09919	110.9479	CLEVELAND - TULSA NORTH 345KV CKT 1
FDNS	00NR	0	17SP	G15_047	TO->FROM	CLEAVELAND - CLEVLND 4 138.00 138KV CKT Z1	305	371	0.09919	110.9479	CLEVELAND - TULSA NORTH 345KV CKT 1
FDNS	00NR	0	20SP	G15_047	TO->FROM	CLEAVELAND - CLEVLND 4 138.00 138KV CKT Z1	305	371	0.09974	110.0566	CLEVELAND - TULSA NORTH 345KV CKT 1
FDNS	00NR	0	20SP	G15_047	TO->FROM	CLEAVELAND - CLEVLND 4 138.00 138KV CKT Z1	305	371	0.09974	110.0566	CLEVELAND - TULSA NORTH 345KV CKT 1
FDNS	08NR	0	20L	G15_047	FROM->TO	CLEAVELAND - SILVER CITY 138KV CKT 1	174	174	0.0399	116.3987	CLEVELAND - TULSA NORTH 345KV CKT 1
FDNS	08NR	0	20L	G15_047	FROM->TO	CLEAVELAND - SILVER CITY 138KV CKT 1	174	174	0.0399	116.3987	CLEVELAND - TULSA NORTH 345KV CKT 1
FDNS	00NR	0	16WP	G15_047	FROM->TO	G14-057T 345.00 - SUNNYSIDE 345KV CKT 1	717	789	0.0297	126.8401	BASE CASE
FDNS	00NR	0	16WP	G15_047	FROM->TO	G14-057T 345.00 - SUNNYSIDE 345KV CKT 1	717	789	0.04008	124.2897	CIMARRON - DRAPER LAKE 345KV CKT 1
FDNS	00NR	0	16WP	G15_047	FROM->TO	G14-057T 345.00 - SUNNYSIDE 345KV CKT 1	717	789	0.03138	121.5485	P12:138:WFEC:MSL03
FDNS	00NR	0	20WP	G15_047	FROM->TO	G14-057T 345.00 - SUNNYSIDE 345KV CKT 1	717	789	0.03976	121.2133	CIMARRON - DRAPER LAKE 345KV CKT 1
FDNS	00NR	0	16WP	G15_047	FROM->TO	G14-057T 345.00 - SUNNYSIDE 345KV CKT 1	717	789	0.0297	120.4075	GEN509403 1-PIRKEY GENERATION
FDNS	00NR	0	16WP	G15_047	FROM->TO	G14-057T 345.00 - SUNNYSIDE 345KV CKT 1	717	789	0.0297	120.3109	GEN509416 1-TURK GENERATION
FDNS	00NR	0	16WP	G15_047	FROM->TO	G14-057T 345.00 - SUNNYSIDE 345KV CKT 1	717	789	0.03994	120.1483	CLEVELAND - G15066_T 345.00 345KV CKT 1
FDNS	00NR	0	16WP	G15_047	FROM->TO	G14-057T 345.00 - SUNNYSIDE 345KV CKT 1	717	789	0.03994	119.8485	G15066_T 345.00 - SOONER 345KV CKT 1
FDNS	00NR	0	16WP	G15_047	FROM->TO	G14-057T 345.00 - SUNNYSIDE 345KV CKT 1	717	789	0.0297	119.4219	GEN501801 1-DOLET HILLS UNIT1
FDNS	00NR	0	16WP	G15_047	FROM->TO	G14-057T 345.00 - SUNNYSIDE 345KV CKT 1	717	789	0.0297	119.0388	GEN509404 1-WELSH #1
FDNS	00NR	0	16WP	G15_047	FROM->TO	G14-057T 345.00 - SUNNYSIDE 345KV CKT 1	717	789	0.0297	119.0388	GEN509406 1-WELSH #3
FDNS	00NR	0	20WP	G15_047	FROM->TO	G14-057T 345.00 - SUNNYSIDE 345KV CKT 1	717	789	0.03113	118.7744	P12:138:WFEC:MSL03
FDNS	00NR	0	16WP	G15_047	FROM->TO	G14-057T 345.00 - SUNNYSIDE 345KV CKT 1	717	789	0.03032	118.4383	CORN TAP - NAPLESTP 138.00 138KV CKT 1
FDNS	00NR	0	16WP	G15_047	FROM->TO	G14-057T 345.00 - SUNNYSIDE 345KV CKT 1	717	789	0.03032	118.3531	NAPLESTP 138.00 - PAYNE 138.00 138KV CKT 1
FDNS	00NR	0	16WP	G15_047	FROM->TO	G14-057T 345.00 - SUNNYSIDE 345KV CKT 1	717	789	0.02993	118.2426	7SAREPTA% 345.00 - LONGWOOD 345KV CKT 1
FDNS	00NR	0	16WP	G15_047	FROM->TO	G14-057T 345.00 - SUNNYSIDE 345KV CKT 1	717	789	0.02993	118.2426	7SAREPTA% 345.00 - LONGWOOD 345KV CKT 1
FDNS	00NR	0	16WP	G15_047	FROM->TO	G14-057T 345.00 - SUNNYSIDE 345KV CKT 1	717	789	0.0297	118.1594	GEN336821 1-GRAND GULF UNIT
FDNS	00NR	0	16WP	G15_047	FROM->TO	G14-057T 345.00 - SUNNYSIDE 345KV CKT 1	717	789	0.03634	118.1389	CLEVELAND - TULSA NORTH 345KV CKT 1
FDNS	00NR	0	16WP	G15_047	FROM->TO	G14-057T 345.00 - SUNNYSIDE 345KV CKT 1	717	789	0.03634	118.1389	CLEVELAND - TULSA NORTH 345KV CKT 1
FDNS	00NR	0	16WP	G15_047	FROM->TO	G14-057T 345.00 - SUNNYSIDE 345KV CKT 1	717	789	0.02983	118.0972	DOLET HILLS - SOUTHWEST SHREVEPORT 345KV CKT 1
FDNS	00NR	0	16WP	G15_047	FROM->TO	G14-057T 345.00 - SUNNYSIDE 345KV CKT 1	717	789	0.02983	118.0972	DOLET HILLS - SOUTHWEST SHREVEPORT 345KV CKT 1
FDNS	00NR	0	16WP	G15_047	FROM->TO	G14-057T 345.00 - SUNNYSIDE 345KV CKT 1	717	789	0.03007	118.0833	ANADARKO - POCASSETT 138KV CKT 1
FDNS	00NR	0	16WP	G15_047	FROM->TO	G14-057T 345.00 - SUNNYSIDE 345KV CKT 1	717	789	0.0297	118.0667	GEN336153 1-WATERFORD UNIT#3
FDNS	00NR	0	16WP	G15_047	FROM->TO	G14-057T 345.00 - SUNNYSIDE 345KV CKT 1	717	789	0.03024	118.0445	COMANCHE - LOCO 138KV CKT 1
FDNS	00NR	0	16WP	G15_047	FROM->TO	G14-057T 345.00 - SUNNYSIDE 345KV CKT 1	717	789	0.03007	117.9379	POCASSETT - TUTTLE 138KV CKT 1
FDNS	00NR	0	16WP	G15_047	FROM->TO	G14-057T 345.00 - SUNNYSIDE 345KV CKT 1	717	789	0.03922	117.8798	ARCADIA - NORTHWEST 345KV CKT 1
FDNS	00NR	0	16WP	G15_047	FROM->TO	G14-057T 345.00 - SUNNYSIDE 345KV CKT 1	717	789	0.0297	117.7674	GEN335831 1-RIVERBEND UNIT#1
FDNS	00NR	0	16WP	G15_047	FROM->TO	G14-057T 345.00 - SUNNYSIDE 345KV CKT 1	717	789	0.0297	117.7647	GRAND GULF 500/22.0KV TRANSFORMER CKT 1
FDNS	00NR	0	16WP	G15_047	FROM->TO	G14-057T 345.00 - SUNNYSIDE 345KV CKT 1	717	789	0.03158	117.7594	ARCADIA - SEMINOLE 345KV CKT 1
FDNS	00NR	0	16WP	G15_047	FROM->TO	G14-057T 345.00 - SUNNYSIDE 345KV CKT 1	717	789	0.0297	117.6887	GEN515577 1-ARBWND11 0.6900
FDNS	00NR	0	16WP	G15_047	FROM->TO	G14-057T 345.00 - SUNNYSIDE 345KV CKT 1	717	789	0.0297	117.6725	GEN509409 1-WILKES #3
FDNS	00NR	0	16WP	G15_047	FROM->TO	G14-057T 345.00 - SUNNYSIDE 345KV CKT 1	717	789	0.03	117.6393	MATHWSN7 345.00 - TATONGA7 345.00 345KV CKT 1
FDNS	00NR	0	16WP	G15_047	FROM->TO	G14-057T 345.00 - SUNNYSIDE 345KV CKT 1	717	789	0.02989	117.6117	P12:138:AEPW:DUNCAN-4:L.E.S.-4
FDNS	00NR	0	16WP	G15_047	FROM->TO	G14-057T 345.00 - SUNNYSIDE 345KV CKT 1	717	789	0.02983	117.6051	7SAREPTA% 345.00 - ELDORADO EHV 345KV CKT 1
FDNS	00NR	0	16WP	G15_047	FROM->TO	G14-057T 345.00 - SUNNYSIDE 345KV CKT 1	717	789	0.02983	117.6049	3TR3AR8EL7EL
FDNS	00NR	0	16WP	G15_047	FROM->TO	G14-057T 345.00 - SUNNYSIDE 345KV CKT 1	717	789	0.02983	117.5943	ELDORADO EHV 500/345KV TRANSFORMER CKT 1

SOLUTION	GROUP	SCENARIO	SEASON	SOURCE	DIRECTION	MONITORED ELEMENT	RATEA (MVA)	RATEB(MVA)	TDF	TC%LOADING (% MVA)	CONTINGENCY
FDNS	00NR	0	16WP	G15_047	FROM->TO	G14-057T 345.00 - SUNNYSIDE 345KV CKT 1	717	789	0.03007	117.5607	BRIDGECR 138.00 - TUTTLE 138KV CKT 1
FDNS	00NR	0	16WP	G15_047	FROM->TO	G14-057T 345.00 - SUNNYSIDE 345KV CKT 1	717	789	0.03048	117.5339	HEALDTON - LOCO 138KV CKT 1
FDNS	00NR	0	16WP	G15_047	FROM->TO	G14-057T 345.00 - SUNNYSIDE 345KV CKT 1	717	789	0.02989	117.5006	COMANCHE TAP - OMPA-DUNCAN 840 138KV CKT 1
FDNS	00NR	0	16WP	G15_047	FROM->TO	G14-057T 345.00 - SUNNYSIDE 345KV CKT 1	717	789	0.03048	117.3949	HEALDTON - RINGLING 138KV CKT 1
FDNS	00NR	0	16WP	G15_047	FROM->TO	G14-057T 345.00 - SUNNYSIDE 345KV CKT 1	717	789	0.0297	117.3736	GEN501813 1-RODEMACHER UNIT 3
FDNS	00NR	0	16WP	G15_047	FROM->TO	G14-057T 345.00 - SUNNYSIDE 345KV CKT 1	717	789	0.0297	117.3664	GEN300006 1-NEW MADRID UNIT 1
FDNS	00NR	0	16WP	G15_047	FROM->TO	G14-057T 345.00 - SUNNYSIDE 345KV CKT 1	717	789	0.03019	117.357	LACYGNE - WAVERLY7 345.00 345KV CKT 1
FDNS	00NR	0	16WP	G15_047	FROM->TO	G14-057T 345.00 - SUNNYSIDE 345KV CKT 1	717	789	0.0297	117.3547	GEN300007 1-NEW MADRID UNIT 2
FDNS	00NR	0	20WP	G15_047	FROM->TO	G14-057T 345.00 - SUNNYSIDE 345KV CKT 1	717	789	0.03957	117.3306	CLEVELAND - G15066_T 345.00 345KV CKT 1
FDNS	00NR	0	16WP	G15_047	FROM->TO	G14-057T 345.00 - SUNNYSIDE 345KV CKT 1	717	789	0.03007	117.2904	P12:138:WFEC:MSL01
FDNS	00NR	0	16WP	G15_047	FROM->TO	G14-057T 345.00 - SUNNYSIDE 345KV CKT 1	717	789	0.03007	117.2899	BRIDGECR 138.00 - SUNSHINE CANYON 138KV CKT 1
FDNS	00NR	0	16WP	G15_047	FROM->TO	G14-057T 345.00 - SUNNYSIDE 345KV CKT 1	717	789	0.0297	117.2551	GEN520947 1-HUGO1
FDNS	00NR	0	16WP	G15_047	FROM->TO	G14-057T 345.00 - SUNNYSIDE 345KV CKT 1	717	789	0.03019	117.2406	WAVERLY7 345.00 - WOLF CREEK 345KV CKT 1
FDNS	00NR	0	16WP	G15_047	FROM->TO	G14-057T 345.00 - SUNNYSIDE 345KV CKT 1	717	789	0.03048	117.23	RINGLING - SOUTH WILSON 138KV CKT 1
FDNS	00NR	0	16WP	G15_047	FROM->TO	G14-057T 345.00 - SUNNYSIDE 345KV CKT 1	717	789	0.02989	117.2191	DUNCAN - OMPA-DUNCAN 840 138KV CKT 1
FDNS	00NR	0	16WP	G15_047	FROM->TO	G14-057T 345.00 - SUNNYSIDE 345KV CKT 1	717	789	0.02989	117.2191	DUNCAN - OMPA-DUNCAN 840 138KV CKT 1
FDNS	00NR	0	16WP	G15_047	FROM->TO	G14-057T 345.00 - SUNNYSIDE 345KV CKT 1	717	789	0.0297	117.1733	GEN335206 1-NELSON UNIT 6
FDNS	00NR	0	16WP	G15_047	FROM->TO	G14-057T 345.00 - SUNNYSIDE 345KV CKT 1	717	789	0.0297	117.0655	DOLET HILLS 345/24.0KV TRANSFORMER CKT 1
FDNS	00NR	0	20WP	G15_047	FROM->TO	G14-057T 345.00 - SUNNYSIDE 345KV CKT 1	717	789	0.03957	117.0379	G15066_T 345.00 - SOONER 345KV CKT 1
FDNS	00NR	0	16WP	G15_047	FROM->TO	G14-057T 345.00 - SUNNYSIDE 345KV CKT 1	717	789	0.02969	117.0085	P12:138:AEPW:SHERID4:112GORE4
FDNS	00NR	0	16WP	G15_047	FROM->TO	G14-057T 345.00 - SUNNYSIDE 345KV CKT 1	717	789	0.03067	117.0036	CANEYRV7 345.00 - NEOSHO 345KV CKT 1
FDNS	00NR	0	16WP	G15_047	FROM->TO	G14-057T 345.00 - SUNNYSIDE 345KV CKT 1	717	789	0.0297	116.9868	GEN501812 1-RODEMACHER UNIT 2
FDNS	00NR	0	16WP	G15_047	FROM->TO	G14-057T 345.00 - SUNNYSIDE 345KV CKT 1	717	789	0.0297	116.9782	GEN590011 2-ERCOT EQUIVALENCE
FDNS	00NR	0	16WP	G15_047	FROM->TO	G14-057T 345.00 - SUNNYSIDE 345KV CKT 1	717	789	0.03048	116.9532	MARIETTA - SOUTH WILSON 138KV CKT 1
FDNS	00NR	0	16WP	G15_047	FROM->TO	G14-057T 345.00 - SUNNYSIDE 345KV CKT 1	717	789	0.0297	116.9263	GEN515564 1-ORIGIN11 0.6900
FDNS	00NR	0	16WP	G15_047	FROM->TO	G14-057T 345.00 - SUNNYSIDE 345KV CKT 1	717	789	0.0297	116.9263	GEN515565 1-ORIGIN21 0.6900
FDNS	00NR	0	16WP	G15_047	FROM->TO	G14-057T 345.00 - SUNNYSIDE 345KV CKT 1	717	789	0.0297	116.9041	GEN590010 1-ERCOT EQUIVALENCE
FDNS	00NR	0	16WP	G15_047	FROM->TO	G14-057T 345.00 - SUNNYSIDE 345KV CKT 1	717	789	0.0297	116.8838	GEN509408 1-WILKES #2
FDNS	00NR	0	16WP	G15_047	FROM->TO	G14-057T 345.00 - SUNNYSIDE 345KV CKT 1	717	789	0.03048	116.8563	P12:138:WFEC:MSL17
FDNS	00NR	0	16WP	G15_047	FROM->TO	G14-057T 345.00 - SUNNYSIDE 345KV CKT 1	717	789	0.03067	116.8184	CANEYRV7 345.00 - LATHAMS7 345.00 345KV CKT 1
FDNS	00NR	0	16WP	G15_047	FROM->TO	G14-057T 345.00 - SUNNYSIDE 345KV CKT 1	717	789	0.03031	116.7588	CIVIT - PAOLI 138KV CKT 1
FDNS	00NR	0	16WP	G15_047	FROM->TO	G14-057T 345.00 - SUNNYSIDE 345KV CKT 1	717	789	0.0297	116.7523	GEN506754 1-LEBROCK STEAM 1
FDNS	00NR	0	16WP	G15_047	FROM->TO	G14-057T 345.00 - SUNNYSIDE 345KV CKT 1	717	789	0.0297	116.7444	P12:69:AEPW:L.E.S.-2:LAW WC2
FDNS	00NR	0	16WP	G15_047	FROM->TO	G14-057T 345.00 - SUNNYSIDE 345KV CKT 1	717	789	0.0297	116.7274	P12:161:AEPW:DYESS 5:HYLAND 5
FDNS	00NR	0	16WP	G15_047	FROM->TO	G14-057T 345.00 - SUNNYSIDE 345KV CKT 1	717	789	0.02991	116.7253	P12:138:WFEC:MSL02
FDNS	00NR	0	16WP	G15_047	FROM->TO	G14-057T 345.00 - SUNNYSIDE 345KV CKT 1	717	789	0.02991	116.7112	PAOLI - PAYNE 138.00 138KV CKT 1
FDNS	00NR	0	16WP	G15_047	FROM->TO	G14-057T 345.00 - SUNNYSIDE 345KV CKT 1	717	789	0.02971	116.7092	ELDORADO EHV - MOUNT OLIVE 500KV CKT 1
FDNS	00NR	0	16WP	G15_047	FROM->TO	G14-057T 345.00 - SUNNYSIDE 345KV CKT 1	717	789	0.0297	116.7036	GEN334440 1-SABINE UNIT 4
FDNS	00NR	0	16WP	G15_047	FROM->TO	G14-057T 345.00 - SUNNYSIDE 345KV CKT 1	717	789	0.0303	116.6605	MATHWSN7 345.00 - NORTHWEST 345KV CKT 1
FDNS	00NR	0	16WP	G15_047	FROM->TO	G14-057T 345.00 - SUNNYSIDE 345KV CKT 1	717	789	0.02967	116.6588	ELDORADO EHV - SHERIDAN EHV 500KV CKT 1
FDNS	00NR	0	16WP	G15_047	FROM->TO	G14-057T 345.00 - SUNNYSIDE 345KV CKT 1	717	789	0.02969	116.6441	P12:138:AEPW:112GORE4:L.E.S.-4
FDNS	00NR	0	16WP	G15_047	FROM->TO	G14-057T 345.00 - SUNNYSIDE 345KV CKT 1	717	789	0.0297	116.6369	NEW MADRID 161/22.0KV TRANSFORMER CKT 1
FDNS	00NR	0	16WP	G15_047	FROM->TO	G14-057T 345.00 - SUNNYSIDE 345KV CKT 1	717	789	0.02985	116.6341	ANADARKO - GEORGIA 138KV CKT 1
FDNS	00NR	0	16WP	G15_047	FROM->TO	G14-057T 345.00 - SUNNYSIDE 345KV CKT 1	717	789	0.03075	116.6297	P12:138:AEPW-OGE:CORNVIL4:MAUD 4
FDNS	00NR	0	16WP	G15_047	FROM->TO	G14-057T 345.00 - SUNNYSIDE 345KV CKT 1	717	789	0.0297	116.6238	NEW MADRID 345/22.0KV TRANSFORMER CKT 1
FDNS	00NR	0	16WP	G15_047	FROM->TO	G14-057T 345.00 - SUNNYSIDE 345KV CKT 1	717	789	0.03031	116.616	CIVIT - STRATFORD 138KV CKT 1
FDNS	00NR	0	16WP	G15_047	FROM->TO	G14-057T 345.00 - SUNNYSIDE 345KV CKT 1	717	789	0.03067	116.601	LATHAMS7 345.00 - ROSE HILL 345KV CKT 1
FDNS	00NR	0	16WP	G15_047	FROM->TO	G14-057T 345.00 - SUNNYSIDE 345KV CKT 1	717	789	0.0297	116.5712	GEN503909 1-FULTONU1 1 16.000
FDNS	00NR	0	16WP	G15_047	FROM->TO	G14-057T 345.00 - SUNNYSIDE 345KV CKT 1	717	789	0.0297	116.5618	FRONTIER - GRIMES 345KV CKT 1
FDNS	00NR	0	16WP	G15_047	FROM->TO	G14-057T 345.00 - SUNNYSIDE 345KV CKT 1	717	789	0.03075	116.5579	BLANCHARD - CORNVILLE 138KV CKT 1
FDNS	00NR	0	16WP	G15_047	FROM->TO	G14-057T 345.00 - SUNNYSIDE 345KV CKT 1	717	789	0.02967	116.5565	LAWTON EASTSIDE (LES 5) 345/138/13.8KV TRANSFORMER CKT 2
FDNS	00NR	0	16WP	G15_047	FROM->TO	G14-057T 345.00 - SUNNYSIDE 345KV CKT 1	717	789	0.02967	116.5565	LAWTON EASTSIDE (LES 5) 345/138/13.8KV TRANSFORMER CKT 2
FDNS	00NR	0	16WP	G15_047	FROM->TO	G14-057T 345.00 - SUNNYSIDE 345KV CKT 1	717	789	0.02982	116.5529	WEBRE - WELLS 500KV CKT 1
FDNS	00NR	0	16WP	G15_047	FROM->TO	G14-057T 345.00 - SUNNYSIDE 345KV CKT 1	717	789	0.02985	116.5505	FLETCHER - GEORGIA 138KV CKT 1
FDNS	00NR	0	16WP	G15_047	FROM->TO	G14-057T 345.00 - SUNNYSIDE 345KV CKT 1	717	789	0.02988	116.5273	EMPIRE - FLETCHER 138KV CKT 1
FDNS	00NR	0	16WP	G15_047	FROM->TO	G14-057T 345.00 - SUNNYSIDE 345KV CKT 1	717	789	0.03031	116.4968	OIL CENTER - STRATFORD 138KV CKT 1
FDNS	00NR	0	16WP	G15_047	FROM->TO	G14-057T 345.00 - SUNNYSIDE 345KV CKT 1	717	789	0.0297	116.4483	GEN509393 S1-ARSENAL HILL GENS #4 (STALL)
FDNS	00NR	0	16WP	G15_047	FROM->TO	G14-057T 345.00 - SUNNYSIDE 345KV CKT 1	717	789	0.02988	116.4422	COMANCHE - EMPIRE 138KV CKT 1
FDNS	00NR	0	16WP	G15_047	FROM->TO	G14-057T 345.00 - SUNNYSIDE 345KV CKT 1	717	789	0.0297	116.4295	DELL 500 - ESSEX UNIT 2 500KV CKT Z1
FDNS	00NR	0	16WP	G15_047	FROM->TO	G14-057T 345.00 - SUNNYSIDE 345KV CKT 1	717	789	0.0297	116.4209	GEN509392 G2-ARSENAL HILL GENS #3 (STALL)
FDNS	00NR	0	16WP	G15_047	FROM->TO	G14-057T 345.00 - SUNNYSIDE 345KV CKT 1	717	789	0.0297	116.4207	GEN509391 G1-ARSENAL HILL GENS #2 (STALL)
FDNS	00NR	0	16WP	G15_047	FROM->TO	G14-057T 345.00 - SUNNYSIDE 345KV CKT 1	717	789	0.0297	116.409	GEN336252 1-NINEMILE POINT UNIT#5
FDNS	00NR	0	16WP	G15_047	FROM->TO	G14-057T 345.00 - SUNNYSIDE 345KV CKT 1	717	789	0.0297	116.3938	GEN334071 1-LEWIS CREEK 2
FDNS	00NR	0	16WP	G15_047	FROM->TO	G14-057T 345.00 - SUNNYSIDE 345KV CKT 1	717	789	0.0298	116.3886	G15074_T 345.00 - HOYT 345KV CKT 1
FDNS	00NR	0	16WP	G15_047	FROM->TO	G14-057T 345.00 - SUNNYSIDE 345KV CKT 1	717	789	0.0297	116.3847	GEN334070 1-LEWIS CREEK 1
FDNS	00NR	0	16WP	G15_047	FROM->TO	G14-057T 345.00 - SUNNYSIDE 345KV CKT 1	717	789	0.0297	116.3824	GEN335204 1-NELSON UNIT 4
FDNS	00NR	0	16WP	G15_047	FROM->TO	G14-057T 345.00 - SUNNYSIDE 345KV CKT 1	717	789	0.03075	116.3614	BLANCHARD - MAUD 138KV CKT 1
FDNS	00NR	0	16WP	G15_047	FROM->TO	G14-057T 345.00 - SUNNYSIDE 345KV CKT 1	717	789	0.02978	116.356	DUNCAN (DUNCAN) 138/69/13.8KV TRANSFORMER CKT 1
FDNS	00NR	0	16WP	G15_047	FROM->TO	G14-057T 345.00 - SUNNYSIDE 345KV CKT 1	717	789	0.02978	116.356	DUNCAN (DUNCAN) 138/69/13.8KV TRANSFORMER CKT 1
FDNS	00NR	0	16WP	G15_047	FROM->TO	G14-057T 345.00 - SUNNYSIDE 345KV CKT 1	717	789	0.0297	116.3474	GEN334441 1-SABINE UNIT 5
FDNS	00NR	0	16WP	G15_047	FROM->TO	G14-057T 345.00 - SUNNYSIDE 345KV CKT 1	717	789	0.03031	116.3242	LATTA JCT - OIL CENTER 138KV CKT 1
FDNS	00NR	0	16WP	G15_047	FROM->TO	G14-057T 345.00 - SUNNYSIDE 345KV CKT 1	717	789	0.0297	116.3101	P12:161:AEPW-SWPA:BEAVERS:EROGERS5
FDNS	00NR	0	16WP	G15_047	FROM->TO	G14-057T 345.00 - SUNNYSIDE 345KV CKT 1	717	789	0.0297	116.3075	GEN300003 1-THOMAS HILL UNIT 3
FDNS	00NR	0	16WP	G15_047	FROM->TO	G14-057T 345.00 - SUNNYSIDE 345KV CKT 1	717	789	0.0297	116.3024	GEN515040 1-SEMINOLE 1G
FDNS	00NR	0	16WP	G15_047	FROM->TO	G14-057T 345.00 - SUNNYSIDE 345KV CKT 1	717	789	0.0297	116.2944	GEN334030 1-FRONTIER UNIT 1
FDNS	00NR	0	16WP	G15_047	FROM->TO	G14-057T 345.00 - SUNNYSIDE 345KV CKT 1	717	789	0.0297	116.2927	GEN334031 1-FRONTIER UNIT 2
FDNS	00NR	0	16WP	G15_047	FROM->TO	G14-057T 345.00 - SUNNYSIDE 345KV CKT 1	717	789	0.0297	116.2917	GEN337653 1-WHITE BLUFF UNIT #2
FDNS	00NR	0	16WP	G15_047	FROM->TO	G14-057T 345.00 - SUNNYSIDE 345KV CKT 1	717	789	0.02976	116.2912	P12:138:AEPW:CATOOSA4:T.S.E.-4
FDNS	00NR	0	16WP	G15_047	FROM->TO	G14-057T 345.00 - SUNNYSIDE 345KV CKT 1	717	789	0.0297	116.2752	GEN506752 1-LEBROCK GAS 1

SOLUTION	GROUP	SCENARIO	SEASON	SOURCE	DIRECTION	MONITORED ELEMENT	RATEA (MVA)	RATEB(MVA)	TDF	TC%LOADING (% MVA)	CONTINGENCY
FDNS	00NR	0	16WP	G15_047	FROM->TO	G14-057T 345.00 - SUNNYSIDE 345KV CKT 1	717	789	0.0297	116.2749	GEN506753 1-LEBROCK GAS 2
FDNS	00NR	0	16WP	G15_047	FROM->TO	G14-057T 345.00 - SUNNYSIDE 345KV CKT 1	717	789	0.02979	116.2603	6LAYFLD 230.00 - CARROLL 230KV CKT 1
FDNS	00NR	0	16WP	G15_047	FROM->TO	G14-057T 345.00 - SUNNYSIDE 345KV CKT 1	717	789	0.02973	116.252	8DANIEL8 500.00 - MCKNIGHT 500KV CKT 1
FDNS	00NR	0	16WP	G15_047	FROM->TO	G14-057T 345.00 - SUNNYSIDE 345KV CKT 1	717	789	0.0297	116.2455	GEN515226 1-MUSKOGEE 6G
FDNS	00NR	0	16WP	G15_047	FROM->TO	G14-057T 345.00 - SUNNYSIDE 345KV CKT 1	717	789	0.0297	116.2437	GEN337911 1-ARKANSAS NUCLEAR ONE UNIT #2
FDNS	00NR	0	16WP	G15_047	FROM->TO	G14-057T 345.00 - SUNNYSIDE 345KV CKT 1	717	789	0.03024	116.2426	BAILEY4 138.00 - SUNSHINE CANYON 138KV CKT 1
FDNS	00NR	0	16WP	G15_047	FROM->TO	G14-057T 345.00 - SUNNYSIDE 345KV CKT 1	717	789	0.02969	116.2391	P12:138:AEPW-OGE:WTH_JCT4:JENSEN4
FDNS	00NR	0	16WP	G15_047	FROM->TO	G14-057T 345.00 - SUNNYSIDE 345KV CKT 1	717	789	0.0297	116.237	P12:161:AEPW:DYESS5:ELMSPRNG:TONTITN5
FDNS	00NR	0	16WP	G15_047	FROM->TO	G14-057T 345.00 - SUNNYSIDE 345KV CKT 1	717	789	0.0298	116.2353	FULTON 115 - HOPE 115KV CKT 1
FDNS	00NR	0	16WP	G15_047	FROM->TO	G14-057T 345.00 - SUNNYSIDE 345KV CKT 1	717	789	0.0298	116.2353	FULTON 115 - HOPE 115KV CKT 1
FDNS	00NR	0	16WP	G15_047	FROM->TO	G14-057T 345.00 - SUNNYSIDE 345KV CKT 1	717	789	0.0297	116.2351	GEN300015 1-1SGPDEL 18.000
FDNS	00NR	0	16WP	G15_047	FROM->TO	G14-057T 345.00 - SUNNYSIDE 345KV CKT 1	717	789	0.02973	116.2277	G15088_T 345.00 - MOORE 345KV CKT 1
FDNS	00NR	0	16WP	G15_047	FROM->TO	G14-057T 345.00 - SUNNYSIDE 345KV CKT 1	717	789	0.0297	116.2274	GEN501811 1-RODEMACHER UNIT 1
FDNS	00NR	0	16WP	G15_047	FROM->TO	G14-057T 345.00 - SUNNYSIDE 345KV CKT 1	717	789	0.0297	116.2101	GEN337652 1-WHITE BLUFF UNIT #1
FDNS	00NR	0	16WP	G15_047	FROM->TO	G14-057T 345.00 - SUNNYSIDE 345KV CKT 1	717	789	0.0297	116.209	GEN336251 1-NINEMILE POINT UNIT#4
FDNS	00NR	0	16WP	G15_047	FROM->TO	G14-057T 345.00 - SUNNYSIDE 345KV CKT 1	717	789	0.0297	116.2056	GEN334433 1-SABINE UNIT 3
FDNS	00NR	0	16WP	G15_047	FROM->TO	G14-057T 345.00 - SUNNYSIDE 345KV CKT 1	717	789	0.0297	116.2031	GEN336831 1-BAXTER WILSON SES
FDNS	00NR	0	16WP	G15_047	FROM->TO	G14-057T 345.00 - SUNNYSIDE 345KV CKT 1	717	789	0.0298	116.1983	P12:138:AEPW:CORNVIL4:S.W.S.-4
FDNS	00NR	0	16WP	G15_047	FROM->TO	G14-057T 345.00 - SUNNYSIDE 345KV CKT 1	717	789	0.02975	116.1934	P12:138:AEPW:CORNVIL4:DUNCAN-4
FDNS	00NR	0	16WP	G15_047	FROM->TO	G14-057T 345.00 - SUNNYSIDE 345KV CKT 1	717	789	0.02956	116.1804	BUCKNER7 345.00 - SPEARVILLE 345KV CKT 1
FDNS	00NR	0	16WP	G15_047	FROM->TO	G14-057T 345.00 - SUNNYSIDE 345KV CKT 1	717	789	0.02956	116.1804	BUCKNER7 345.00 - SPEARVILLE 345KV CKT 1
FDNS	00NR	0	16WP	G15_047	FROM->TO	G14-057T 345.00 - SUNNYSIDE 345KV CKT 1	717	789	0.02978	116.1728	P12:69:WFEC-AEPW:COMANCH2:DUNCAN-2
FDNS	00NR	0	16WP	G15_047	FROM->TO	G14-057T 345.00 - SUNNYSIDE 345KV CKT 1	717	789	0.0297	116.1725	GEN562783 1-G15036_4 0.6900
FDNS	00NR	0	16WP	G15_047	FROM->TO	G14-057T 345.00 - SUNNYSIDE 345KV CKT 1	717	789	0.0297	116.1725	GEN562784 1-G15036_5 0.6900
FDNS	00NR	0	16WP	G15_047	FROM->TO	G14-057T 345.00 - SUNNYSIDE 345KV CKT 1	717	789	0.0297	116.1607	GEN505432 1-SIKESTON
FDNS	00NR	0	16WP	G15_047	FROM->TO	G14-057T 345.00 - SUNNYSIDE 345KV CKT 1	717	789	0.02995	116.16	CIMARRON - CZECH HALL 138KV CKT 1
FDNS	00NR	0	16WP	G15_047	FROM->TO	G14-057T 345.00 - SUNNYSIDE 345KV CKT 1	717	789	0.0297	116.1487	GEN515223 1-MUSKOGEE 4G
FDNS	00NR	0	16WP	G15_047	FROM->TO	G14-057T 345.00 - SUNNYSIDE 345KV CKT 1	717	789	0.0297	116.1487	GEN515225 1-MUSKOGEE 5G
FDNS	00NR	0	16WP	G15_047	FROM->TO	G14-057T 345.00 - SUNNYSIDE 345KV CKT 1	717	789	0.02969	116.147	P12:138:AEPW:WTHWF4:CLINTJC4
FDNS	00NR	0	16WP	G15_047	FROM->TO	G14-057T 345.00 - SUNNYSIDE 345KV CKT 1	717	789	0.0297	116.1455	WHITE BLUFF 500/26.0KV TRANSFORMER CKT 1
FDNS	00NR	0	16WP	G15_047	FROM->TO	G14-057T 345.00 - SUNNYSIDE 345KV CKT 1	717	789	0.0298	116.1402	HOYT - STRANGER CREEK 345KV CKT 1
FDNS	00NR	0	16WP	G15_047	FROM->TO	G14-057T 345.00 - SUNNYSIDE 345KV CKT 1	717	789	0.0298	116.1352	G15074_T 345.00 - JEFFREY ENERGY CENTER 345KV CKT 1
FDNS	00NR	0	16WP	G15_047	FROM->TO	G14-057T 345.00 - SUNNYSIDE 345KV CKT 1	717	789	0.02971	116.1317	P12:161:AEPW:EROGERS5:ECNTRTN5
FDNS	00NR	0	16WP	G15_047	FROM->TO	G14-057T 345.00 - SUNNYSIDE 345KV CKT 1	717	789	0.0297	116.1296	LAYFLD8 500.00 - MOUNT OLIVE 500KV CKT 1
FDNS	00NR	0	16WP	G15_047	FROM->TO	G14-057T 345.00 - SUNNYSIDE 345KV CKT 1	717	789	0.0297	116.1296	LAYFLD8 500.00 - MOUNT OLIVE 500KV CKT 1
FDNS	00NR	0	16WP	G15_047	FROM->TO	G14-057T 345.00 - SUNNYSIDE 345KV CKT 1	717	789	0.03008	116.1276	CIMARRON - SARA 138KV CKT 1
FDNS	00NR	0	16WP	G15_047	FROM->TO	G14-057T 345.00 - SUNNYSIDE 345KV CKT 1	717	789	0.0297	116.1253	RODEMACHER 230/22.0KV TRANSFORMER CKT 1
FDNS	00NR	0	16WP	G15_047	FROM->TO	G14-057T 345.00 - SUNNYSIDE 345KV CKT 1	717	789	0.02978	116.122	DUNCAN - TOSCO 69KV CKT 1
FDNS	00NR	0	16WP	G15_047	FROM->TO	G14-057T 345.00 - SUNNYSIDE 345KV CKT 1	717	789	0.02971	116.1119	HOT SPRINGS EHV - MAGNET COVE 500KV CKT 1
FDNS	00NR	0	16WP	G15_047	FROM->TO	G14-057T 345.00 - SUNNYSIDE 345KV CKT 1	717	789	0.0297	116.1118	GEN303007 1-1BC2 U2
FDNS	00NR	0	16WP	G15_047	FROM->TO	G14-057T 345.00 - SUNNYSIDE 345KV CKT 1	717	789	0.02969	116.1104	P12:138:AEPW:WTHWF4:WTH_SE4
FDNS	00NR	0	16WP	G15_047	FROM->TO	G14-057T 345.00 - SUNNYSIDE 345KV CKT 1	717	789	0.0297	116.1071	GEN303006 1-1BC2 U1
FDNS	00NR	0	16WP	G15_047	FROM->TO	G14-057T 345.00 - SUNNYSIDE 345KV CKT 1	717	789	0.02973	116.1039	MC NIEL 500/115KV TRANSFORMER CKT 1
FDNS	00NR	0	16WP	G15_047	FROM->TO	G14-057T 345.00 - SUNNYSIDE 345KV CKT 1	717	789	0.0297	116.1005	GEN337910 1-ARKANSAS NUCLEAR ONE UNIT #1
FDNS	00NR	0	16WP	G15_047	FROM->TO	G14-057T 345.00 - SUNNYSIDE 345KV CKT 1	717	789	0.02958	116.0979	CLEO CORNER - CLEOPLT4 138.00 138KV CKT 1
FDNS	00NR	0	16WP	G15_047	FROM->TO	G14-057T 345.00 - SUNNYSIDE 345KV CKT 1	717	789	0.02973	116.095	P12:69:AEPW-OMPA:COMANC-2:OMWALTR2
FDNS	00NR	0	16WP	G15_047	FROM->TO	G14-057T 345.00 - SUNNYSIDE 345KV CKT 1	717	789	0.02976	116.0928	BISMARK - HOT SPRINGS WEST BUS 115KV CKT 1
FDNS	00NR	0	16WP	G15_047	FROM->TO	G14-057T 345.00 - SUNNYSIDE 345KV CKT 1	717	789	0.02958	116.0894	G15095_T 138.00 - ROSE_VALLEY 138.00 138KV CKT 1
FDNS	00NR	0	16WP	G15_047	FROM->TO	G14-057T 345.00 - SUNNYSIDE 345KV CKT 1	717	789	0.0297	116.0879	NELSON 230/20.0KV TRANSFORMER CKT 1
FDNS	00NR	0	16WP	G15_047	FROM->TO	G14-057T 345.00 - SUNNYSIDE 345KV CKT 1	717	789	0.0297	116.0848	GEN336191 1-LITTLE GYPSY UNIT#3
FDNS	00NR	0	16WP	G15_047	FROM->TO	G14-057T 345.00 - SUNNYSIDE 345KV CKT 1	717	789	0.02958	116.0841	CLEOPLT4 138.00 - MEN TAP 138KV CKT 1
FDNS	00NR	0	16WP	G15_047	FROM->TO	G14-057T 345.00 - SUNNYSIDE 345KV CKT 1	717	789	0.0297	116.0827	GEN300010 1-ST FRANCIS UNIT 1
FDNS	00NR	0	16WP	G15_047	FROM->TO	G14-057T 345.00 - SUNNYSIDE 345KV CKT 1	717	789	0.02995	116.0767	CZECH HALL - XEROX 138KV CKT 1
FDNS	00NR	0	16WP	G15_047	FROM->TO	G14-057T 345.00 - SUNNYSIDE 345KV CKT 1	717	789	0.03024	116.0749	BAILEY4 138.00 - WESTMOORE 138KV CKT 1
FDNS	00NR	0	16WP	G15_047	FROM->TO	G14-057T 345.00 - SUNNYSIDE 345KV CKT 1	717	789	0.02995	116.0723	MORGAN - XEROX 138KV CKT 1
FDNS	00NR	0	16WP	G15_047	FROM->TO	G14-057T 345.00 - SUNNYSIDE 345KV CKT 1	717	789	0.02958	116.0722	IMO TAP - MEN TAP 138KV CKT 1
FDNS	00NR	0	16WP	G15_047	FROM->TO	G14-057T 345.00 - SUNNYSIDE 345KV CKT 1	717	789	0.02973	116.0654	P12:138:AEPW:N.E.S.-4:CATOOSA4
FDNS	00NR	0	16WP	G15_047	FROM->TO	G14-057T 345.00 - SUNNYSIDE 345KV CKT 1	717	789	0.0297	116.0582	GEN335614 1-WILLOW GLENN UNIT#4
FDNS	00NR	0	16WP	G15_047	FROM->TO	G14-057T 345.00 - SUNNYSIDE 345KV CKT 1	717	789	0.02978	116.0523	COMANCHE TAP - TOSCO 69KV CKT 1
FDNS	00NR	0	16WP	G15_047	FROM->TO	G14-057T 345.00 - SUNNYSIDE 345KV CKT 1	717	789	0.02995	116.0486	MORGAN - MUSTANG 138KV CKT 1
FDNS	00NR	0	16WP	G15_047	FROM->TO	G14-057T 345.00 - SUNNYSIDE 345KV CKT 1	717	789	0.03031	116.0475	LASALLE - LATTA JCT 138KV CKT 1
FDNS	00NR	0	16WP	G15_047	FROM->TO	G14-057T 345.00 - SUNNYSIDE 345KV CKT 1	717	789	0.0297	116.0474	GEN303008 1-1BC2 U3
FDNS	00NR	0	16WP	G15_047	FROM->TO	G14-057T 345.00 - SUNNYSIDE 345KV CKT 1	717	789	0.02976	116.0404	ALPINE AECC - BISMARK 115KV CKT 1
FDNS	00NR	0	16WP	G15_047	FROM->TO	G14-057T 345.00 - SUNNYSIDE 345KV CKT 1	717	789	0.0297	116.0326	GEN300011 1-ST FRANCIS UNIT 2
FDNS	00NR	0	16WP	G15_047	FROM->TO	G14-057T 345.00 - SUNNYSIDE 345KV CKT 1	717	789	0.03096	116.0221	CANADIAN - NOBLE 138KV CKT 1
FDNS	00NR	0	16WP	G15_047	FROM->TO	G14-057T 345.00 - SUNNYSIDE 345KV CKT 1	717	789	0.02958	116.0217	NOEL_SW 138.00 - ROSE_VALLEY 138.00 138KV CKT 1
FDNS	00NR	0	16WP	G15_047	FROM->TO	G14-057T 345.00 - SUNNYSIDE 345KV CKT 1	717	789	0.0297	116.0207	GEN336170 1-GULF OXY U4
FDNS	00NR	0	16WP	G15_047	FROM->TO	G14-057T 345.00 - SUNNYSIDE 345KV CKT 1	717	789	0.0297	116.0145	GEN336464 1-MICHOUD UNIT #3
FDNS	00NR	0	16WP	G15_047	FROM->TO	G14-057T 345.00 - SUNNYSIDE 345KV CKT 1	717	789	0.02985	116.0109	7JASPER 345.00 - BLACKBERRY 345KV CKT 1
FDNS	00NR	0	16WP	G15_047	FROM->TO	G14-057T 345.00 - SUNNYSIDE 345KV CKT 1	717	789	0.02971	116.0107	CYPRESS - HARTBURG 500KV CKT 1
FDNS	00NR	0	16WP	G15_047	FROM->TO	G14-057T 345.00 - SUNNYSIDE 345KV CKT 1	717	789	0.02969	116.0055	WEATHERFORD JCT. - WEATHERFORD SOUTHEAST 138KV CKT 1
FDNS	00NR	0	16WP	G15_047	FROM->TO	G14-057T 345.00 - SUNNYSIDE 345KV CKT 1	717	789	0.02969	116.0055	WEATHERFORD JCT. - WEATHERFORD SOUTHEAST 138KV CKT 1
FDNS	00NR	0	16WP	G15_047	FROM->TO	G14-057T 345.00 - SUNNYSIDE 345KV CKT 1	717	789	0.02968	116.0021	CHISHOLM6 230.00 - ELK CITY 230KV 230KV CKT 1
FDNS	00NR	0	16WP	G15_047	FROM->TO	G14-057T 345.00 - SUNNYSIDE 345KV CKT 1	717	789	0.03095	116.0005	P12:138:OKGE:3TERM27
FDNS	00NR	0	16WP	G15_047	FROM->TO	G14-057T 345.00 - SUNNYSIDE 345KV CKT 1	717	789	0.02968	116.0004	ELK CITY 230KV (ELKCTY-6) 230/138/13.8KV TRANSFORMER CKT 1
FDNS	00NR	0	16WP	G15_047	FROM->TO	G14-057T 345.00 - SUNNYSIDE 345KV CKT 1	717	789	0.02968	116.0004	ELK CITY 230KV (ELKCTY-6) 230/138/13.8KV TRANSFORMER CKT 1
FDNS	00NR	0	16WP	G15_047	FROM->TO	G14-057T 345.00 - SUNNYSIDE 345KV CKT 1	717	789	0.0297	115.9993	GEN300016 1-1G1GPDEL 18.000
FDNS	00NR	0	16WP	G15_047	FROM->TO	G14-057T 345.00 - SUNNYSIDE 345KV CKT 1	717	789	0.02978	115.9982	COMANCHE - COMANCHE TAP 69KV CKT 1
FDNS	00NR	0	16WP	G15_047	FROM->TO	G14-057T 345.00 - SUNNYSIDE 345KV CKT 1	717	789	0.0297	115.997	8CAJUN2 500/24.0KV TRANSFORMER CKT 1

SOLUTION	GROUP	SCENARIO	SEASON	SOURCE	DIRECTION	MONITORED ELEMENT	RATEA (MVA)	RATEB(MVA)	TDF	TC%LOADING (% MVA)	CONTINGENCY
FDNS	00NR	0	16WP	G15_047	FROM->TO	G14-057T 345.00 - SUNNYSIDE 345KV CKT 1	717	789	0.02976	115.9968	ALPINE AECC - AMITY SS 115KV CKT 1
FDNS	00NR	0	16WP	G15_047	FROM->TO	G14-057T 345.00 - SUNNYSIDE 345KV CKT 1	717	789	0.02983	115.9966	ANADARKO - SEQUOYAHJ4 138.00 138KV CKT 1
FDNS	00NR	0	16WP	G15_047	FROM->TO	G14-057T 345.00 - SUNNYSIDE 345KV CKT 1	717	789	0.02983	115.9953	CORN TAP - SEQUOYAHJ4 138.00 138KV CKT 1
FDNS	00NR	0	16WP	G15_047	FROM->TO	G14-057T 345.00 - SUNNYSIDE 345KV CKT 1	717	789	0.02978	115.9874	P12:138:OKGE-AEPW:JENSEN4:REDROCKRD4
FDNS	00NR	0	16WP	G15_047	FROM->TO	G14-057T 345.00 - SUNNYSIDE 345KV CKT 1	717	789	0.02981	115.9797	SWISSVALE - WEST GARDNER 345KV CKT 1
FDNS	00NR	0	16WP	G15_047	FROM->TO	G14-057T 345.00 - SUNNYSIDE 345KV CKT 1	717	789	0.03003	115.9738	BLACKBERRY - NEOSHO 345KV CKT 1
FDNS	00NR	0	16WP	G15_047	FROM->TO	G14-057T 345.00 - SUNNYSIDE 345KV CKT 1	717	789	0.03003	115.9738	BLACKBERRY - NEOSHO 345KV CKT 1
FDNS	00NR	0	16WP	G15_047	FROM->TO	G14-057T 345.00 - SUNNYSIDE 345KV CKT 1	717	789	0.0297	115.9724	GEN501910 1-ACADIA UNIT ST1
FDNS	00NR	0	16WP	G15_047	FROM->TO	G14-057T 345.00 - SUNNYSIDE 345KV CKT 1	717	789	0.03183	115.97	DRAPER LAKE - SEMINOLE 345KV CKT 1
FDNS	00NR	0	16WP	G15_047	FROM->TO	G14-057T 345.00 - SUNNYSIDE 345KV CKT 1	717	789	0.03183	115.97	DRAPER LAKE - SEMINOLE 345KV CKT 2
FDNS	00NR	0	16WP	G15_047	FROM->TO	G14-057T 345.00 - SUNNYSIDE 345KV CKT 1	717	789	0.0297	115.9681	P12:138:AEPW:R.S.S.-4:S.HUD.-4
FDNS	00NR	0	16WP	G15_047	FROM->TO	G14-057T 345.00 - SUNNYSIDE 345KV CKT 1	717	789	0.0297	115.961	GEN337041 1-GERALD ANDRUS
FDNS	00NR	0	16WP	G15_047	FROM->TO	G14-057T 345.00 - SUNNYSIDE 345KV CKT 1	717	789	0.02978	115.9557	WALTERS - WALTERS 69KV CKT 1
FDNS	00NR	0	16WP	G15_047	FROM->TO	G14-057T 345.00 - SUNNYSIDE 345KV CKT 1	717	789	0.02979	115.954	7LUTESVIL 345.00 - 7ST FRANC 345.00 345KV CKT 1
FDNS	00NR	0	16WP	G15_047	FROM->TO	G14-057T 345.00 - SUNNYSIDE 345KV CKT 1	717	789	0.02969	115.9528	P12:138:AEPW:REDROCKRD4:WTH_JCT4
FDNS	00NR	0	16WP	G15_047	FROM->TO	G14-057T 345.00 - SUNNYSIDE 345KV CKT 1	717	789	0.02969	115.9432	ETTA (DUKE HOTSPRINGS) - MC NIEL 500KV CKT 1
FDNS	00NR	0	16WP	G15_047	FROM->TO	G14-057T 345.00 - SUNNYSIDE 345KV CKT 1	717	789	0.03008	115.9398	SARA - STHLAKE4 138.00 138KV CKT 1
FDNS	00NR	0	16WP	G15_047	FROM->TO	G14-057T 345.00 - SUNNYSIDE 345KV CKT 1	717	789	0.03096	115.9306	NOBLE - PURCELL4 138.00 138KV CKT 1
FDNS	00NR	0	16WP	G15_047	FROM->TO	G14-057T 345.00 - SUNNYSIDE 345KV CKT 1	717	789	0.0297	115.9293	P12:138:AEPW:YARCH-S4:T.S.E.-4
FDNS	00NR	0	16WP	G15_047	FROM->TO	G14-057T 345.00 - SUNNYSIDE 345KV CKT 1	717	789	0.0298	115.9283	NORGE ROAD - SOUTHWESTERN STATION 138KV CKT 1
FDNS	00NR	0	16WP	G15_047	FROM->TO	G14-057T 345.00 - SUNNYSIDE 345KV CKT 1	717	789	0.0298	115.9283	NORGE ROAD - SOUTHWESTERN STATION 138KV CKT 1
FDNS	00NR	0	16WP	G15_047	FROM->TO	G14-057T 345.00 - SUNNYSIDE 345KV CKT 1	717	789	0.02973	115.926	LAWTON RELIFT TAP - OMPA-WALTERS 69KV CKT 1
FDNS	00NR	0	16WP	G15_047	FROM->TO	G14-057T 345.00 - SUNNYSIDE 345KV CKT 1	717	789	0.02971	115.9231	P12:138:AEPW:BA_71ST4:T.S.E.-4
FDNS	00NR	0	16WP	G15_047	FROM->TO	G14-057T 345.00 - SUNNYSIDE 345KV CKT 1	717	789	0.0297	115.9227	P12:69:AEPW:NROGERS2:ECNTRTN2
FDNS	00NR	0	16WP	G15_047	FROM->TO	G14-057T 345.00 - SUNNYSIDE 345KV CKT 1	717	789	0.0297	115.9219	GEN336801 1-BAXTER WILSON UNIT #1
FDNS	00NR	0	16WP	G15_047	FROM->TO	G14-057T 345.00 - SUNNYSIDE 345KV CKT 1	717	789	0.0297	115.9198	SABINE 230/24.0KV TRANSFORMER CKT 1
FDNS	00NR	0	16WP	G15_047	FROM->TO	G14-057T 345.00 - SUNNYSIDE 345KV CKT 1	717	789	0.03024	115.919	FRANKLIN SW - WESTMOORE 138KV CKT 1
FDNS	00NR	0	16WP	G15_047	FROM->TO	G14-057T 345.00 - SUNNYSIDE 345KV CKT 1	717	789	0.02982	115.9167	8WNEWMADRID 500.00 - DELL 500 500KV CKT 1
FDNS	00NR	0	16WP	G15_047	FROM->TO	G14-057T 345.00 - SUNNYSIDE 345KV CKT 1	717	789	0.03008	115.9108	MCCLAIN - STHLAKE4 138.00 138KV CKT 1
FDNS	00NR	0	16WP	G15_047	FROM->TO	G14-057T 345.00 - SUNNYSIDE 345KV CKT 1	717	789	0.02966	115.9088	ENOWILT - LONE OAK 138KV CKT 1
FDNS	00NR	0	16WP	G15_047	FROM->TO	G14-057T 345.00 - SUNNYSIDE 345KV CKT 1	717	789	0.02997	115.904	P12:138:AEPW-OGE:SHIDLER4:OSAGE 4
FDNS	00NR	0	16WP	G15_047	FROM->TO	G14-057T 345.00 - SUNNYSIDE 345KV CKT 1	717	789	0.0297	115.9018	FRONTIER 345/18.0KV TRANSFORMER CKT 1
FDNS	00NR	0	16WP	G15_047	FROM->TO	G14-057T 345.00 - SUNNYSIDE 345KV CKT 1	717	789	0.0297	115.9002	FRONTIER 345/18.0KV TRANSFORMER CKT 1
FDNS	00NR	0	16WP	G15_047	FROM->TO	G14-057T 345.00 - SUNNYSIDE 345KV CKT 1	717	789	0.02966	115.8998	ENOWILT - SARDIS 138KV CKT 1
FDNS	00NR	0	16WP	G15_047	FROM->TO	G14-057T 345.00 - SUNNYSIDE 345KV CKT 1	717	789	0.0297	115.8945	ESSEX UNIT 2 500/18.0KV TRANSFORMER CKT 1
FDNS	00NR	0	16WP	G15_047	FROM->TO	G14-057T 345.00 - SUNNYSIDE 345KV CKT 1	717	789	0.0297	115.8914	P12:161:AEPW:CHAMSPR5:FARMING5
FDNS	00NR	0	16WP	G15_047	FROM->TO	G14-057T 345.00 - SUNNYSIDE 345KV CKT 1	717	789	0.02981	115.8885	EMPORIA ENERGY CENTER - SWISSVALE 345KV CKT 1
FDNS	00NR	0	16WP	G15_047	FROM->TO	G14-057T 345.00 - SUNNYSIDE 345KV CKT 1	717	789	0.03031	115.8881	LASALLE - STONEWAL LH138.00 138KV CKT 1
FDNS	00NR	0	16WP	G15_047	FROM->TO	G14-057T 345.00 - SUNNYSIDE 345KV CKT 1	717	789	0.02969	115.8755	HINTON - WEATHERFORD JCT. 138KV CKT 1
FDNS	00NR	0	16WP	G15_047	FROM->TO	G14-057T 345.00 - SUNNYSIDE 345KV CKT 1	717	789	0.03031	115.8727	STONEWAL LH138.00 - TUPELO TAP 138KV CKT 1
FDNS	00NR	0	16WP	G15_047	FROM->TO	G14-057T 345.00 - SUNNYSIDE 345KV CKT 1	717	789	0.0297	115.872	GEN505616 1-BROKEN BOW
FDNS	00NR	0	16WP	G15_047	FROM->TO	G14-057T 345.00 - SUNNYSIDE 345KV CKT 1	717	789	0.02969	115.8712	WEATHERFORD TAP - WEATHERFORD WIND FARM 138KV CKT 1
FDNS	00NR	0	16WP	G15_047	FROM->TO	G14-057T 345.00 - SUNNYSIDE 345KV CKT 1	717	789	0.02976	115.8701	CLINTON JUNCTION - ELK CITY 138KV CKT 1
FDNS	00NR	0	16WP	G15_047	FROM->TO	G14-057T 345.00 - SUNNYSIDE 345KV CKT 1	717	789	0.02976	115.8701	CLINTON JUNCTION - ELK CITY 138KV CKT 1
FDNS	00NR	0	16WP	G15_047	FROM->TO	G14-057T 345.00 - SUNNYSIDE 345KV CKT 1	717	789	0.0298	115.8677	HOPE - MCNAB REC 115KV CKT 1
FDNS	00NR	0	16WP	G15_047	FROM->TO	G14-057T 345.00 - SUNNYSIDE 345KV CKT 1	717	789	0.0297	115.8648	LEWIS CREEK SWITCHYARD 138/22.0KV TRANSFORMER CKT 1
FDNS	00NR	0	16WP	G15_047	FROM->TO	G14-057T 345.00 - SUNNYSIDE 345KV CKT 1	717	789	0.02966	115.8625	CLAYTON - SARDIS 138KV CKT 1
FDNS	00NR	0	16WP	G15_047	FROM->TO	G14-057T 345.00 - SUNNYSIDE 345KV CKT 1	717	789	0.0297	115.8599	LEWIS CREEK SWITCHYARD 138/22.0KV TRANSFORMER CKT 1
FDNS	00NR	0	16WP	G15_047	FROM->TO	G14-057T 345.00 - SUNNYSIDE 345KV CKT 1	717	789	0.02973	115.8591	OMPA-WALTERS - WALTERS 69KV CKT 1
FDNS	00NR	0	16WP	G15_047	FROM->TO	G14-057T 345.00 - SUNNYSIDE 345KV CKT 1	717	789	0.02973	115.8591	OMPA-WALTERS - WALTERS 69KV CKT 1
FDNS	00NR	0	16WP	G15_047	FROM->TO	G14-057T 345.00 - SUNNYSIDE 345KV CKT 1	717	789	0.0298	115.8588	SOUTHWESTERN STATION - VERDEN 138KV CKT 1
FDNS	00NR	0	16WP	G15_047	FROM->TO	G14-057T 345.00 - SUNNYSIDE 345KV CKT 1	717	789	0.0298	115.8587	P12:115:AEPW:TURK3:HOPE3
FDNS	00NR	0	16WP	G15_047	FROM->TO	G14-057T 345.00 - SUNNYSIDE 345KV CKT 1	717	789	0.02997	115.8523	EMPORIA ENERGY CENTER - G14_001T 345.00 345KV CKT 1
FDNS	00NR	0	16WP	G15_047	FROM->TO	G14-057T 345.00 - SUNNYSIDE 345KV CKT 1	717	789	0.03027	115.8516	MORISNT4 138.00 - STILLWATER 138KV CKT 1
FDNS	00NR	0	16WP	G15_047	FROM->TO	G14-057T 345.00 - SUNNYSIDE 345KV CKT 1	717	789	0.0297	115.8466	GEN501970 1-EVANGELINE UNIT 7
FDNS	00NR	0	16WP	G15_047	FROM->TO	G14-057T 345.00 - SUNNYSIDE 345KV CKT 1	717	789	0.03026	115.8461	P12:138:OKGE:3TERM2
FDNS	00NR	0	16WP	G15_047	FROM->TO	G14-057T 345.00 - SUNNYSIDE 345KV CKT 1	717	789	0.02978	115.8413	P12:69:WFEC-AEPW:COMANCH2:WALTRS-2
FDNS	00NR	0	16WP	G15_047	FROM->TO	G14-057T 345.00 - SUNNYSIDE 345KV CKT 1	717	789	0.02976	115.8385	COUCH SES - MC NIEL 115KV CKT 1
FDNS	00NR	0	16WP	G15_047	FROM->TO	G14-057T 345.00 - SUNNYSIDE 345KV CKT 1	717	789	0.0298	115.8384	NORTH 29TH CHICKASHA - VERDEN 138KV CKT 1
FDNS	00NR	0	16WP	G15_047	FROM->TO	G14-057T 345.00 - SUNNYSIDE 345KV CKT 1	717	789	0.03147	115.8372	CLARKSVILLE - ONETA 345KV CKT 1
FDNS	00NR	0	16WP	G15_047	FROM->TO	G14-057T 345.00 - SUNNYSIDE 345KV CKT 1	717	789	0.03147	115.8372	CLARKSVILLE - ONETA 345KV CKT 1
FDNS	00NR	0	16WP	G15_047	FROM->TO	G14-057T 345.00 - SUNNYSIDE 345KV CKT 1	717	789	0.02966	115.8369	P12:138:AEPW-SWPA:LONEOAK4:BRKNBW4
FDNS	00NR	0	16WP	G15_047	FROM->TO	G14-057T 345.00 - SUNNYSIDE 345KV CKT 1	717	789	0.0298	115.8362	MCNAB REC - Turk 115 115KV CKT 1
FDNS	00NR	0	16WP	G15_047	FROM->TO	G14-057T 345.00 - SUNNYSIDE 345KV CKT 1	717	789	0.0298	115.8362	TURK (TURK 1) 138/115/13.2KV TRANSFORMER CKT 1
FDNS	00NR	0	16WP	G15_047	FROM->TO	G14-057T 345.00 - SUNNYSIDE 345KV CKT 1	717	789	0.0298	115.8362	TURK (TURK 1) 138/115/13.2KV TRANSFORMER CKT 1
FDNS	00NR	0	16WP	G15_047	FROM->TO	G14-057T 345.00 - SUNNYSIDE 345KV CKT 1	717	789	0.0297	115.8349	GEN334392 1-EXXON MOBIL IPP 1
FDNS	00NR	0	16WP	G15_047	FROM->TO	G14-057T 345.00 - SUNNYSIDE 345KV CKT 1	717	789	0.0297	115.8273	GEN334393 1-EXXON MOBIL IPP 2
FDNS	00NR	0	16WP	G15_047	FROM->TO	G14-057T 345.00 - SUNNYSIDE 345KV CKT 1	717	789	0.0297	115.8273	GEN334394 1-EXXON MOBIL IPP 3
FDNS	00NR	0	16WP	G15_047	FROM->TO	G14-057T 345.00 - SUNNYSIDE 345KV CKT 1	717	789	0.02969	115.8245	HINTON - REDROCKRD4 138.00 138KV CKT 1
FDNS	00NR	0	16WP	G15_047	FROM->TO	G14-057T 345.00 - SUNNYSIDE 345KV CKT 1	717	789	0.02966	115.8219	CLAYTON - NASHOBA 138KV CKT 1
FDNS	00NR	0	16WP	G15_047	FROM->TO	G14-057T 345.00 - SUNNYSIDE 345KV CKT 1	717	789	0.02973	115.8217	P12:138:OKGE:3TERM12
FDNS	00NR	0	16WP	G15_047	FROM->TO	G14-057T 345.00 - SUNNYSIDE 345KV CKT 1	717	789	0.0297	115.8198	GEN336222 1-LITTLE GYPSY UNIT#2
FDNS	00NR	0	16WP	G15_047	FROM->TO	G14-057T 345.00 - SUNNYSIDE 345KV CKT 1	717	789	0.03048	115.8179	MARIETTA - MARIETTA4 138.00 138KV CKT 1
FDNS	00NR	0	16WP	G15_047	FROM->TO	G14-057T 345.00 - SUNNYSIDE 345KV CKT 1	717	789	0.02986	115.8089	7JASPER 345.00 - MORGAN 345KV CKT 1
FDNS	00NR	0	16WP	G15_047	FROM->TO	G14-057T 345.00 - SUNNYSIDE 345KV CKT 1	717	789	0.02966	115.8088	BETHEL - NASHOBA 138KV CKT 1
FDNS	00NR	0	16WP	G15_047	FROM->TO	G14-057T 345.00 - SUNNYSIDE 345KV CKT 1	717	789	0.02972	115.802	P12:138:AEPW:R.S.S-4:T.P.S.-4
FDNS	00NR	0	16WP	G15_047	FROM->TO	G14-057T 345.00 - SUNNYSIDE 345KV CKT 1	717	789	0.02971	115.7996	FRANKLIN - FRANKLIN SW 138KV CKT 1
FDNS	00NR	0	16WP	G15_047	FROM->TO	G14-057T 345.00 - SUNNYSIDE 345KV CKT 1	717	789	0.0297	115.7994	GEN506749 1-EASTMAN GENERATION A
FDNS	00NR	0	16WP	G15_047	FROM->TO	G14-057T 345.00 - SUNNYSIDE 345KV CKT 1	717	789	0.0297	115.7979	GEN334431 1-SABINE UNIT 1

SOLUTION	GROUP	SCENARIO	SEASON	SOURCE	DIRECTION	MONITORED ELEMENT	RATEA (MVA)	RATEB(MVA)	TDF	TC%LOADING (% MVA)	CONTINGENCY
FDNS	00NR	0	16WP	G15_047	FROM->TO	G14-057T 345.00 - SUNNYSIDE 345KV CKT 1	717	789	0.0297	115.7978	GEN334432 1-SABINE UNIT 2
FDNS	00NR	0	16WP	G15_047	FROM->TO	G14-057T 345.00 - SUNNYSIDE 345KV CKT 1	717	789	0.02997	115.7934	G14_001T 345.00 - WICHITA 345KV CKT 1
FDNS	00NR	0	16WP	G15_047	FROM->TO	G14-057T 345.00 - SUNNYSIDE 345KV CKT 1	717	789	0.0297	115.7899	GEN501971 1-EVANGELINE UNIT 7-1
FDNS	00NR	0	16WP	G15_047	FROM->TO	G14-057T 345.00 - SUNNYSIDE 345KV CKT 1	717	789	0.0297	115.7899	GEN501972 1-EVANGELINE UNIT 7-2
FDNS	00NR	0	16WP	G15_047	FROM->TO	G14-057T 345.00 - SUNNYSIDE 345KV CKT 1	717	789	0.0297	115.7896	GEN336152 1-WATERFORD UNIT#2
FDNS	00NR	0	16WP	G15_047	FROM->TO	G14-057T 345.00 - SUNNYSIDE 345KV CKT 1	717	789	0.0297	115.7885	GEN336151 1-WATERFORD UNIT#1
FDNS	00NR	0	16WP	G15_047	FROM->TO	G14-057T 345.00 - SUNNYSIDE 345KV CKT 1	717	789	0.02974	115.7879	FLETCHER - MARLOW JCT 69KV CKT 1
FDNS	00NR	0	16WP	G15_047	FROM->TO	G14-057T 345.00 - SUNNYSIDE 345KV CKT 1	717	789	0.02969	115.7843	WEATHERFORD SOUTHEAST - WEATHERFORD TAP 138KV CKT 1
FDNS	00NR	0	16WP	G15_047	FROM->TO	G14-057T 345.00 - SUNNYSIDE 345KV CKT 1	717	789	0.0298	115.7829	CORNVILLE - NORGE ROAD 138KV CKT 1
FDNS	00NR	0	16WP	G15_047	FROM->TO	G14-057T 345.00 - SUNNYSIDE 345KV CKT 1	717	789	0.0298	115.7829	CORNVILLE - NORGE ROAD 138KV CKT 1
FDNS	00NR	0	16WP	G15_047	FROM->TO	G14-057T 345.00 - SUNNYSIDE 345KV CKT 1	717	789	0.0298	115.7745	CORNVILLE - NORTH 29TH CHICKASHA 138KV CKT 1
FDNS	00NR	0	16WP	G15_047	FROM->TO	G14-057T 345.00 - SUNNYSIDE 345KV CKT 1	717	789	0.02978	115.7403	Canadian Pump Station - REDROCKRD4 138.00 138KV CKT 1
FDNS	00NR	0	16WP	G15_047	FROM->TO	G14-057T 345.00 - SUNNYSIDE 345KV CKT 1	717	789	0.02963	115.7322	P12:138:OKGE:3TERM47
FDNS	00NR	0	16WP	G15_047	FROM->TO	G14-057T 345.00 - SUNNYSIDE 345KV CKT 1	717	789	0.02969	115.7304	CLINTON JUNCTION - CLINTON NATURAL GAS TAP 138KV CKT 1
FDNS	00NR	0	16WP	G15_047	FROM->TO	G14-057T 345.00 - SUNNYSIDE 345KV CKT 1	717	789	0.03096	115.7216	PURCELL4 138.00 - WALNUT CREEK 138KV CKT 1
FDNS	00NR	0	16WP	G15_047	FROM->TO	G14-057T 345.00 - SUNNYSIDE 345KV CKT 1	717	789	0.02975	115.7197	HAMMETT TAP - HORSESHOE LAKE 138KV CKT 1
FDNS	00NR	0	20WP	G15_047	FROM->TO	G14-057T 345.00 - SUNNYSIDE 345KV CKT 1	717	789	0.0301	115.7085	CORN TAP - NAPLESTP 138.00 138KV CKT 1
FDNS	00NR	0	16WP	G15_047	FROM->TO	G14-057T 345.00 - SUNNYSIDE 345KV CKT 1	717	789	0.02978	115.6692	COMANCHE - WALTERS 69KV CKT 1
FDNS	00NR	0	20WP	G15_047	FROM->TO	G14-057T 345.00 - SUNNYSIDE 345KV CKT 1	717	789	0.02973	115.6541	7SAREPTA% 345.00 - LONGWOOD 345KV CKT 1
FDNS	00NR	0	20WP	G15_047	FROM->TO	G14-057T 345.00 - SUNNYSIDE 345KV CKT 1	717	789	0.02973	115.6541	7SAREPTA% 345.00 - LONGWOOD 345KV CKT 1
FDNS	00NR	0	20WP	G15_047	FROM->TO	G14-057T 345.00 - SUNNYSIDE 345KV CKT 1	717	789	0.0301	115.6237	NAPLESTP 138.00 - PAYNE 138.00 138KV CKT 1
FDNS	00NR	0	20WP	G15_047	FROM->TO	G14-057T 345.00 - SUNNYSIDE 345KV CKT 1	717	789	0.02985	115.441	ANADARKO - POCASSETT 138KV CKT 1
FDNS	00NR	0	20WP	G15_047	FROM->TO	G14-057T 345.00 - SUNNYSIDE 345KV CKT 1	717	789	0.03003	115.3645	COMANCHE - LOCO 138KV CKT 1
FDNS	00NR	0	20WP	G15_047	FROM->TO	G14-057T 345.00 - SUNNYSIDE 345KV CKT 1	717	789	0.036	115.36	CLEVELAND - TULSA NORTH 345KV CKT 1
FDNS	00NR	0	20WP	G15_047	FROM->TO	G14-057T 345.00 - SUNNYSIDE 345KV CKT 1	717	789	0.036	115.36	CLEVELAND - TULSA NORTH 345KV CKT 1
FDNS	00NR	0	20WP	G15_047	FROM->TO	G14-057T 345.00 - SUNNYSIDE 345KV CKT 1	717	789	0.02985	115.2933	POCASSETT - TUTTLE 138KV CKT 1
FDNS	00NR	0	16WP	G15_047	FROM->TO	G14-057T 345.00 - SUNNYSIDE 345KV CKT 1	717	789	0.0297	115.2654	803-OKLAUNION
FDNS	00NR	0	20WP	G15_047	FROM->TO	G14-057T 345.00 - SUNNYSIDE 345KV CKT 1	717	789	0.02962	115.2528	DOLET HILLS - SOUTHWEST SHREVEPORT 345KV CKT 1
FDNS	00NR	0	20WP	G15_047	FROM->TO	G14-057T 345.00 - SUNNYSIDE 345KV CKT 1	717	789	0.02962	115.2528	DOLET HILLS - SOUTHWEST SHREVEPORT 345KV CKT 1
FDNS	00NR	0	20WP	G15_047	FROM->TO	G14-057T 345.00 - SUNNYSIDE 345KV CKT 1	717	789	0.03899	115.0999	ARCADIA - NORTHWEST 345KV CKT 1
FDNS	00NR	0	20WP	G15_047	FROM->TO	G14-057T 345.00 - SUNNYSIDE 345KV CKT 1	717	789	0.02962	115.0303	7SAREPTA% 345.00 - ELDORADO EHV 345KV CKT 1
FDNS	00NR	0	20WP	G15_047	FROM->TO	G14-057T 345.00 - SUNNYSIDE 345KV CKT 1	717	789	0.02962	115.0301	3TR3AR8EL7EL
FDNS	00NR	0	20WP	G15_047	FROM->TO	G14-057T 345.00 - SUNNYSIDE 345KV CKT 1	717	789	0.02962	115.0196	ELDORADO EHV 500/345KV TRANSFORMER CKT 1
FDNS	00NR	0	20WP	G15_047	FROM->TO	G14-057T 345.00 - SUNNYSIDE 345KV CKT 1	717	789	0.02967	115.0113	P12:138:AEPW:DUNCAN-4:L.E.S.-4
FDNS	00NR	0	16WP	G15_047	FROM->TO	G14-057T 345.00 - SUNNYSIDE 345KV CKT 1	717	789	0.03031	114.9333	RANCHRD7 345.00 - SOONER 345KV CKT 1
FDNS	00NR	0	20WP	G15_047	FROM->TO	G14-057T 345.00 - SUNNYSIDE 345KV CKT 1	717	789	0.02977	114.9079	MATHWSN7 345.00 - TATONGA7 345.00 345KV CKT 1
FDNS	00NR	0	20WP	G15_047	FROM->TO	G14-057T 345.00 - SUNNYSIDE 345KV CKT 1	717	789	0.02967	114.8947	COMANCHE TAP - OMPA-DUNCAN 840 138KV CKT 1
FDNS	00NR	0	20WP	G15_047	FROM->TO	G14-057T 345.00 - SUNNYSIDE 345KV CKT 1	717	789	0.02985	114.8899	BRIDGECR 138.00 - TUTTLE 138KV CKT 1
FDNS	00NR	0	16WP	G15_047	FROM->TO	G14-057T 345.00 - SUNNYSIDE 345KV CKT 1	717	789	0.02973	114.8851	JOHNSON COUNTY - RUSSETT 138KV CKT 1
FDNS	00NR	0	16WP	G15_047	FROM->TO	G14-057T 345.00 - SUNNYSIDE 345KV CKT 1	717	789	0.02975	114.8666	GLASSES - MADILL INDUSTRIAL TAP 138KV CKT 1
FDNS	00NR	0	16WP	G15_047	FROM->TO	G14-057T 345.00 - SUNNYSIDE 345KV CKT 1	717	789	0.02997	114.8615	DRAPER LAKE - MIDWEST TAP 138KV CKT 1
FDNS	00NR	0	16WP	G15_047	FROM->TO	G14-057T 345.00 - SUNNYSIDE 345KV CKT 1	717	789	0.0297	114.8546	GEN562691 1-G15_015_3 0.6900
FDNS	00NR	0	16WP	G15_047	FROM->TO	G14-057T 345.00 - SUNNYSIDE 345KV CKT 1	717	789	0.0297	114.8501	GEN562772 1-G15034_3 0.6900
FDNS	00NR	0	16WP	G15_047	FROM->TO	G14-057T 345.00 - SUNNYSIDE 345KV CKT 1	717	789	0.02968	114.8417	HUGO (HUGO 1) 345/138/13.8KV TRANSFORMER CKT 1
FDNS	00NR	0	16WP	G15_047	FROM->TO	G14-057T 345.00 - SUNNYSIDE 345KV CKT 1	717	789	0.02995	114.8404	P12:138:OKGE:3TERM21
FDNS	00NR	0	16WP	G15_047	FROM->TO	G14-057T 345.00 - SUNNYSIDE 345KV CKT 1	717	789	0.0297	114.8235	GEN521103 1-BLUE CANYON WIND FARM
FDNS	00NR	0	16WP	G15_047	FROM->TO	G14-057T 345.00 - SUNNYSIDE 345KV CKT 1	717	789	0.0297	114.8218	GEN520812 1-ANADRK5
FDNS	00NR	0	16WP	G15_047	FROM->TO	G14-057T 345.00 - SUNNYSIDE 345KV CKT 1	717	789	0.0297	114.8217	GEN520813 1-ANADRK6
FDNS	00NR	0	16WP	G15_047	FROM->TO	G14-057T 345.00 - SUNNYSIDE 345KV CKT 1	717	789	0.02975	114.8069	GLASSES - RUSSETT 138KV CKT 1
FDNS	00NR	0	20WP	G15_047	FROM->TO	G14-057T 345.00 - SUNNYSIDE 345KV CKT 1	717	789	0.03133	114.7999	ARCADIA - SEMINOLE 345KV CKT 1
FDNS	00NR	0	16WP	G15_047	FROM->TO	G14-057T 345.00 - SUNNYSIDE 345KV CKT 1	717	789	0.0298	114.7931	P12:138:WFEC:MSL11
FDNS	00NR	0	16WP	G15_047	FROM->TO	G14-057T 345.00 - SUNNYSIDE 345KV CKT 1	717	789	0.0298	114.7931	P12:138:WFEC-AEPW:PHAROAH4:LONEOAK4
FDNS	00NR	0	20WP	G15_047	FROM->TO	G14-057T 345.00 - SUNNYSIDE 345KV CKT 1	717	789	0.03026	114.7869	HEALDTON - LOCO 138KV CKT 1
FDNS	00NR	0	16WP	G15_047	FROM->TO	G14-057T 345.00 - SUNNYSIDE 345KV CKT 1	717	789	0.0297	114.7787	GEN511961 1-DEMPSEY-WTG10.7000
FDNS	00NR	0	16WP	G15_047	FROM->TO	G14-057T 345.00 - SUNNYSIDE 345KV CKT 1	717	789	0.0297	114.7674	P12:069:OKGE:3TERM42
FDNS	00NR	0	16WP	G15_047	FROM->TO	G14-057T 345.00 - SUNNYSIDE 345KV CKT 1	717	789	0.02976	114.7484	CANEY CREEK - JOHNSON COUNTY 138KV CKT 1
FDNS	00NR	0	16WP	G15_047	FROM->TO	G14-057T 345.00 - SUNNYSIDE 345KV CKT 1	717	789	0.0298	114.7466	DELL 500 - INDEPENDENCE 500KV CKT 1
FDNS	00NR	0	16WP	G15_047	FROM->TO	G14-057T 345.00 - SUNNYSIDE 345KV CKT 1	717	789	0.02971	114.7396	P12:138:WFEC:MSL08
FDNS	00NR	0	16WP	G15_047	FROM->TO	G14-057T 345.00 - SUNNYSIDE 345KV CKT 1	717	789	0.0297	114.7303	GEN515443 1-MNCOWND1 0.7000
FDNS	00NR	0	16WP	G15_047	FROM->TO	G14-057T 345.00 - SUNNYSIDE 345KV CKT 1	717	789	0.0297	114.7275	INDEPENDENCE 500/26.0KV TRANSFORMER CKT 1
FDNS	00NR	0	16WP	G15_047	FROM->TO	G14-057T 345.00 - SUNNYSIDE 345KV CKT 1	717	789	0.02967	114.7167	CARTER - CHICKASAW 138KV CKT 1
FDNS	00NR	0	16WP	G15_047	FROM->TO	G14-057T 345.00 - SUNNYSIDE 345KV CKT 1	717	789	0.0297	114.7159	GEN532653 1-JEFFREY ENERGY CENTER UNIT 3
FDNS	00NR	0	16WP	G15_047	FROM->TO	G14-057T 345.00 - SUNNYSIDE 345KV CKT 1	717	789	0.0297	114.713	GEN563242 1-G15090_3 0.6900
FDNS	00NR	0	16WP	G15_047	FROM->TO	G14-057T 345.00 - SUNNYSIDE 345KV CKT 1	717	789	0.0297	114.7124	GEN562902 1-G15052_3 0.6900
FDNS	00NR	0	16WP	G15_047	FROM->TO	G14-057T 345.00 - SUNNYSIDE 345KV CKT 1	717	789	0.0297	114.7108	GEN560183 1-REDHIL-WTG1 12.000
FDNS	00NR	0	16WP	G15_047	FROM->TO	G14-057T 345.00 - SUNNYSIDE 345KV CKT 1	717	789	0.0297	114.7038	GEN629071 1-BURLINGTON GENERATOR FOR UNIT NO 1 E
FDNS	00NR	0	16WP	G15_047	FROM->TO	G14-057T 345.00 - SUNNYSIDE 345KV CKT 1	717	789	0.02991	114.7034	CANADIAN RIVER - MCALESTER SOUTH 138KV CKT 1
FDNS	00NR	0	16WP	G15_047	FROM->TO	G14-057T 345.00 - SUNNYSIDE 345KV CKT 1	717	789	0.02991	114.7034	CANADIAN RIVER - MCALESTER SOUTH 138KV CKT 1
FDNS	00NR	0	16WP	G15_047	FROM->TO	G14-057T 345.00 - SUNNYSIDE 345KV CKT 1	717	789	0.02956	114.703	ROCKY POINT - SPRINGDALE 138KV CKT 1
FDNS	00NR	0	16WP	G15_047	FROM->TO	G14-057T 345.00 - SUNNYSIDE 345KV CKT 1	717	789	0.02991	114.7019	CANADIAN RIVER () 345/138/13.8KV TRANSFORMER CKT 1
FDNS	00NR	0	16WP	G15_047	FROM->TO	G14-057T 345.00 - SUNNYSIDE 345KV CKT 1	717	789	0.02991	114.7019	CANADIAN RIVER () 345/138/13.8KV TRANSFORMER CKT 1
FDNS	00NR	0	16WP	G15_047	FROM->TO	G14-057T 345.00 - SUNNYSIDE 345KV CKT 1	717	789	0.02967	114.6917	ALTUS JUNCTION - RUSSELL 138KV CKT 1
FDNS	00NR	0	16WP	G15_047	FROM->TO	G14-057T 345.00 - SUNNYSIDE 345KV CKT 1	717	789	0.02967	114.6917	ALTUS JUNCTION - RUSSELL 138KV CKT 1
FDNS	00NR	0	16WP	G15_047	FROM->TO	G14-057T 345.00 - SUNNYSIDE 345KV CKT 1	717	789	0.0297	114.6731	BURLINGTON NO1 + NO 2 + NO 3 161/20.0KV TRANSFORMER CKT 1
FDNS	00NR	0	16WP	G15_047	FROM->TO	G14-057T 345.00 - SUNNYSIDE 345KV CKT 1	717	789	0.0297	114.668	GEN514805 1-SOONER UNIT 1
FDNS	00NR	0	16WP	G15_047	FROM->TO	G14-057T 345.00 - SUNNYSIDE 345KV CKT 1	717	789	0.03005	114.6641	CHAMBER SPRINGS - CLARKSVILLE 345KV CKT 1
FDNS	00NR	0	16WP	G15_047	FROM->TO	G14-057T 345.00 - SUNNYSIDE 345KV CKT 1	717	789	0.0297	114.6632	P12:230:UMZB:# 112 #: NU IN SD. NU-RCDC & DRY CREEK XFMR
FDNS	00NR	0	16WP	G15_047	FROM->TO	G14-057T 345.00 - SUNNYSIDE 345KV CKT 1	717	789	0.0297	114.6627	RCDC EAST 4230.00 - RED CEDAR DC 230KV CKT 1
FDNS	00NR	0	16WP	G15_047	FROM->TO	G14-057T 345.00 - SUNNYSIDE 345KV CKT 1	717	789	0.0297	114.6582	GEN514806 1-SOONER UNIT 2

SOLUTION	GROUP	SCENARIO	SEASON	SOURCE	DIRECTION	MONITORED ELEMENT	RATEA (MVA)	RATEB(MVA)	TDF	TC%LOADING (% MVA)	CONTINGENCY
FDNS	00NR	0	16WP	G15_047	FROM->TO	G14-057T 345.00 - SUNNYSIDE 345KV CKT 1	717	789	0.02976	114.6573	NORTHWEST TEXARKANA - WELSH 345KV CKT 1
FDNS	00NR	0	16WP	G15_047	FROM->TO	G14-057T 345.00 - SUNNYSIDE 345KV CKT 1	717	789	0.02976	114.6573	NORTHWEST TEXARKANA - WELSH 345KV CKT 1
FDNS	00NR	0	20WP	G15_047	FROM->TO	G14-057T 345.00 - SUNNYSIDE 345KV CKT 1	717	789	0.03026	114.6424	HEALDTON - RINGLING 138KV CKT 1
FDNS	00NR	0	16WP	G15_047	FROM->TO	G14-057T 345.00 - SUNNYSIDE 345KV CKT 1	717	789	0.0297	114.6336	THOMAS HILL 161/22.0KV TRANSFORMER CKT 1
FDNS	00NR	0	16WP	G15_047	FROM->TO	G14-057T 345.00 - SUNNYSIDE 345KV CKT 1	717	789	0.0297	114.6328	GEN562078 1-G11_051_3 0.6900
FDNS	00NR	0	16WP	G15_047	FROM->TO	G14-057T 345.00 - SUNNYSIDE 345KV CKT 1	717	789	0.0297	114.6215	GEN562802 1-G15039_3 0.3570
FDNS	00NR	0	16WP	G15_047	FROM->TO	G14-057T 345.00 - SUNNYSIDE 345KV CKT 1	717	789	0.0297	114.6151	GEN524285 1-WILDORADO WIND GEN
FDNS	00NR	0	16WP	G15_047	FROM->TO	G14-057T 345.00 - SUNNYSIDE 345KV CKT 1	717	789	0.02985	114.6082	KEO EHV - WEST MEMPHIS 500 500KV CKT 1
FDNS	00NR	0	20WP	G15_047	FROM->TO	G14-057T 345.00 - SUNNYSIDE 345KV CKT 1	717	789	0.02967	114.6043	DUNCAN - OMPA-DUNCAN 840 138KV CKT 1
FDNS	00NR	0	20WP	G15_047	FROM->TO	G14-057T 345.00 - SUNNYSIDE 345KV CKT 1	717	789	0.02967	114.6043	DUNCAN - OMPA-DUNCAN 840 138KV CKT 1
FDNS	00NR	0	16WP	G15_047	FROM->TO	G14-057T 345.00 - SUNNYSIDE 345KV CKT 1	717	789	0.0297	114.6	GEN629072 4-LANSING GENERATOR FOR UNITS NO4 EIA CODE 1
FDNS	00NR	0	20WP	G15_047	FROM->TO	G14-057T 345.00 - SUNNYSIDE 345KV CKT 1	717	789	0.02985	114.5997	BRIDGECR 138.00 - SUNSHINE CANYON 138KV CKT 1
FDNS	00NR	0	16WP	G15_047	FROM->TO	G14-057T 345.00 - SUNNYSIDE 345KV CKT 1	717	789	0.0297	114.5946	GEN562587 1-G14_056_3 0.6900
FDNS	00NR	0	16WP	G15_047	FROM->TO	G14-057T 345.00 - SUNNYSIDE 345KV CKT 1	717	789	0.0297	114.5945	GEN524295 1-SPNSPUR_WND10.6900
FDNS	00NR	0	20WP	G15_047	FROM->TO	G14-057T 345.00 - SUNNYSIDE 345KV CKT 1	717	789	0.02999	114.5927	LACYGNE - WAVERLY7 345.00 345KV CKT 1
FDNS	00NR	0	20WP	G15_047	FROM->TO	G14-057T 345.00 - SUNNYSIDE 345KV CKT 1	717	789	0.02985	114.589	P12:138:WFEC:MSL01
FDNS	00NR	0	16WP	G15_047	FROM->TO	G14-057T 345.00 - SUNNYSIDE 345KV CKT 1	717	789	0.0297	114.5875	GEN560331 1-G10-46 13.800
FDNS	00NR	0	16WP	G15_047	FROM->TO	G14-057T 345.00 - SUNNYSIDE 345KV CKT 1	717	789	0.0297	114.5795	GEN657749 1-YOUNG 1 GENERATOR
FDNS	00NR	0	16WP	G15_047	FROM->TO	G14-057T 345.00 - SUNNYSIDE 345KV CKT 1	717	789	0.0328	114.5669	CLARKSVILLE - MUSKOGEE 345KV CKT 1
FDNS	00NR	0	16WP	G15_047	FROM->TO	G14-057T 345.00 - SUNNYSIDE 345KV CKT 1	717	789	0.0328	114.5669	CLARKSVILLE - MUSKOGEE 345KV CKT 1
FDNS	00NR	0	16WP	G15_047	FROM->TO	G14-057T 345.00 - SUNNYSIDE 345KV CKT 1	717	789	0.0297	114.5606	GEN562882 1-G15047_3 0.6900
FDNS	00NR	0	16WP	G15_047	FROM->TO	G14-057T 345.00 - SUNNYSIDE 345KV CKT 1	717	789	0.0297	114.5566	GEN562269 1-G12-020-1 0.6900
FDNS	00NR	0	16WP	G15_047	FROM->TO	G14-057T 345.00 - SUNNYSIDE 345KV CKT 1	717	789	0.0297	114.5113	GEN562270 1-G12-020-2 0.6900
FDNS	00NR	0	16WP	G15_047	FROM->TO	G14-057T 345.00 - SUNNYSIDE 345KV CKT 1	717	789	0.0297	114.5107	GEN681522 3-GENOA 3
FDNS	00NR	0	16WP	G15_047	FROM->TO	G14-057T 345.00 - SUNNYSIDE 345KV CKT 1	717	789	0.0297	114.5063	GEN562812 1-G15040_3 0.3570
FDNS	00NR	0	16WP	G15_047	FROM->TO	G14-057T 345.00 - SUNNYSIDE 345KV CKT 1	717	789	0.0297	114.5002	GEN563102 1-G15075_3 0.5500
FDNS	00NR	0	16WP	G15_047	FROM->TO	G14-057T 345.00 - SUNNYSIDE 345KV CKT 1	717	789	0.0297	114.4984	GEN563062 1-G15071_3 0.6900
FDNS	00NR	0	16WP	G15_047	FROM->TO	G14-057T 345.00 - SUNNYSIDE 345KV CKT 1	717	789	0.0297	114.4959	GEN563132 1-G15078_3 0.3570
FDNS	00NR	0	16WP	G15_047	FROM->TO	G14-057T 345.00 - SUNNYSIDE 345KV CKT 1	717	789	0.02954	114.4939	P12:138:AEPW:112GORE4:SNYDER-4
FDNS	00NR	0	16WP	G15_047	FROM->TO	G14-057T 345.00 - SUNNYSIDE 345KV CKT 1	717	789	0.0297	114.4838	GEN562974 1-G15060_5 0.6900
FDNS	00NR	0	16WP	G15_047	FROM->TO	G14-057T 345.00 - SUNNYSIDE 345KV CKT 1	717	789	0.0297	114.4743	GEN562973 1-G15060_4 0.6900
FDNS	00NR	0	20WP	G15_047	FROM->TO	G14-057T 345.00 - SUNNYSIDE 345KV CKT 1	717	789	0.02999	114.4711	WAVERLY7 345.00 - WOLF CREEK 345KV CKT 1
FDNS	00NR	0	20WP	G15_047	FROM->TO	G14-057T 345.00 - SUNNYSIDE 345KV CKT 1	717	789	0.03026	114.4699	RINGLING - SOUTH WILSON 138KV CKT 1
FDNS	00NR	0	16WP	G15_047	FROM->TO	G14-057T 345.00 - SUNNYSIDE 345KV CKT 1	717	789	0.02971	114.4494	BROWN - RUSSETT 138KV CKT 1
FDNS	00NR	0	16WP	G15_047	FROM->TO	G14-057T 345.00 - SUNNYSIDE 345KV CKT 1	717	789	0.0297	114.442	GEN345671 2-1RUSH G2 18.000
FDNS	00NR	0	16WP	G15_047	FROM->TO	G14-057T 345.00 - SUNNYSIDE 345KV CKT 1	717	789	0.0297	114.4401	GEN345670 1-1RUSH G1 18.000
FDNS	00NR	0	16WP	G15_047	FROM->TO	G14-057T 345.00 - SUNNYSIDE 345KV CKT 1	717	789	0.0297	114.4315	RUSSETT - SPRINGDALE 138KV CKT 1
FDNS	00NR	0	16WP	G15_047	FROM->TO	G14-057T 345.00 - SUNNYSIDE 345KV CKT 1	717	789	0.0297	114.4131	GEN526331 1-JONES GEN #1 22 KV
FDNS	00NR	0	16WP	G15_047	FROM->TO	G14-057T 345.00 - SUNNYSIDE 345KV CKT 1	717	789	0.0297	114.413	GEN526332 1-JONES GEN #2 21 KV
FDNS	00NR	0	16WP	G15_047	FROM->TO	G14-057T 345.00 - SUNNYSIDE 345KV CKT 1	717	789	0.0297	114.4037	GEN560105 1-G08-22 0.6900
FDNS	00NR	0	16WP	G15_047	FROM->TO	G14-057T 345.00 - SUNNYSIDE 345KV CKT 1	717	789	0.0297	114.4003	GEN562550 1-G14_040_3 0.6900
FDNS	00NR	0	16WP	G15_047	FROM->TO	G14-057T 345.00 - SUNNYSIDE 345KV CKT 1	717	789	0.02965	114.3936	P12:138:WFEC:MSL07
FDNS	00NR	0	16WP	G15_047	FROM->TO	G14-057T 345.00 - SUNNYSIDE 345KV CKT 1	717	789	0.02965	114.3936	P12:138:WFEC-AEPW:HUGOPP4:ATOKA--4
FDNS	00NR	0	16WP	G15_047	FROM->TO	G14-057T 345.00 - SUNNYSIDE 345KV CKT 1	717	789	0.0297	114.3865	4SIOUX 1 138.00 138/18.0KV TRANSFORMER CKT 1
FDNS	00NR	0	16WP	G15_047	FROM->TO	G14-057T 345.00 - SUNNYSIDE 345KV CKT 1	717	789	0.02971	114.3812	RUSSETT - RUSSETT 138KV CKT 1
FDNS	00NR	0	20WP	G15_047	FROM->TO	G14-057T 345.00 - SUNNYSIDE 345KV CKT 1	717	789	0.02977	114.3781	G11_051T 345.00 - TATONGA7 345.00 345KV CKT 1
FDNS	00NR	0	16WP	G15_047	FROM->TO	G14-057T 345.00 - SUNNYSIDE 345KV CKT 1	717	789	0.0297	114.3717	CLAY BOSWELL 230/20.9KV TRANSFORMER CKT 1
FDNS	00NR	0	16WP	G15_047	FROM->TO	G14-057T 345.00 - SUNNYSIDE 345KV CKT 1	717	789	0.0297	114.3653	GEN521112 1-ORME3 13.800
FDNS	00NR	0	16WP	G15_047	FROM->TO	G14-057T 345.00 - SUNNYSIDE 345KV CKT 1	717	789	0.0297	114.3636	GEN511962 2-RKYRDGW2-1 0.7000
FDNS	00NR	0	16WP	G15_047	FROM->TO	G14-057T 345.00 - SUNNYSIDE 345KV CKT 1	717	789	0.0297	114.354	GEN527882 1-CUNNINGHAM GEN #2 20 KV
FDNS	00NR	0	16WP	G15_047	FROM->TO	G14-057T 345.00 - SUNNYSIDE 345KV CKT 1	717	789	0.0297	114.3476	GEN672321 1-SHAND GENERATOR 1
FDNS	00NR	0	16WP	G15_047	FROM->TO	G14-057T 345.00 - SUNNYSIDE 345KV CKT 1	717	789	0.0297	114.3429	GEN562892 1-G15048_3 0.6900
FDNS	00NR	0	16WP	G15_047	FROM->TO	G14-057T 345.00 - SUNNYSIDE 345KV CKT 1	717	789	0.0297	114.3236	GEN672310 1-POPLAR RIVER GENERATOR 1
FDNS	00NR	0	16WP	G15_047	FROM->TO	G14-057T 345.00 - SUNNYSIDE 345KV CKT 1	717	789	0.0297	114.3236	GEN672311 2-POPLAR RIVER GENERATOR 2
FDNS	00NR	0	16WP	G15_047	FROM->TO	G14-057T 345.00 - SUNNYSIDE 345KV CKT 1	717	789	0.0297	114.3194	GEN563192 1-G15084_3 0.5500
FDNS	00NR	0	16WP	G15_047	FROM->TO	G14-057T 345.00 - SUNNYSIDE 345KV CKT 1	717	789	0.0297	114.3156	GEN672306 6-BOUNDARY DAM GENERATOR 6
FDNS	00NR	0	16WP	G15_047	FROM->TO	G14-057T 345.00 - SUNNYSIDE 345KV CKT 1	717	789	0.0297	114.3069	GEN562512 1-G14_020_3 0.6900
FDNS	00NR	0	16WP	G15_047	FROM->TO	G14-057T 345.00 - SUNNYSIDE 345KV CKT 1	717	789	0.0297	114.3062	GEN511853 1-COMANCHE #3
FDNS	00NR	0	16WP	G15_047	FROM->TO	G14-057T 345.00 - SUNNYSIDE 345KV CKT 1	717	789	0.02972	114.3029	P12:138:WFEC:MSL16
FDNS	00NR	0	16WP	G15_047	FROM->TO	G14-057T 345.00 - SUNNYSIDE 345KV CKT 1	717	789	0.02971	114.2883	P12:138:WFEC-AEPW:GOLDENSW4:CRAIGJT4
FDNS	00NR	0	16WP	G15_047	FROM->TO	G14-057T 345.00 - SUNNYSIDE 345KV CKT 1	717	789	0.0297	114.2575	GEN523461 1-BLACKHAWK GEN #1
FDNS	00NR	0	16WP	G15_047	FROM->TO	G14-057T 345.00 - SUNNYSIDE 345KV CKT 1	717	789	0.0297	114.2574	GEN523462 1-BLACKHAWK GEN #2
FDNS	00NR	0	16WP	G15_047	FROM->TO	G14-057T 345.00 - SUNNYSIDE 345KV CKT 1	717	789	0.0297	114.2527	GEN344895 2-1LAB G2 20.000
FDNS	00NR	0	16WP	G15_047	FROM->TO	G14-057T 345.00 - SUNNYSIDE 345KV CKT 1	717	789	0.0297	114.2498	GEN511852 1-COMANCHE #2
FDNS	00NR	0	16WP	G15_047	FROM->TO	G14-057T 345.00 - SUNNYSIDE 345KV CKT 1	717	789	0.0297	114.2201	GEN344896 3-1LAB G3 20.000
FDNS	00NR	0	16WP	G15_047	FROM->TO	G14-057T 345.00 - SUNNYSIDE 345KV CKT 1	717	789	0.0297	114.2187	GEN344894 1-1LAB G1 20.000
FDNS	00NR	0	16WP	G15_047	FROM->TO	G14-057T 345.00 - SUNNYSIDE 345KV CKT 1	717	789	0.0297	114.2172	GEN344897 4-1LAB G4 20.000
FDNS	00NR	0	20WP	G15_047	FROM->TO	G14-057T 345.00 - SUNNYSIDE 345KV CKT 1	717	789	0.03045	114.215	CANEYRV7 345.00 - NEOSHO 345KV CKT 1
FDNS	00NR	0	16WP	G15_047	FROM->TO	G14-057T 345.00 - SUNNYSIDE 345KV CKT 1	717	789	0.0297	114.2146	P12:138:AEPW-SWPA:LONEOAK4:TUPELO4
FDNS	00NR	0	16WP	G15_047	FROM->TO	G14-057T 345.00 - SUNNYSIDE 345KV CKT 1	717	789	0.0297	114.2146	P12:138:WFEC:MSL06
FDNS	00NR	0	16WP	G15_047	FROM->TO	G14-057T 345.00 - SUNNYSIDE 345KV CKT 1	717	789	0.0297	114.2097	GEN681542 6-JP MADGETT
FDNS	00NR	0	16WP	G15_047	FROM->TO	G14-057T 345.00 - SUNNYSIDE 345KV CKT 1	717	789	0.02959	114.207	P12:138:OKGE:3TERM40
FDNS	00NR	0	20WP	G15_047	FROM->TO	G14-057T 345.00 - SUNNYSIDE 345KV CKT 1	717	789	0.02961	114.1947	WEBRE - WELLS 500KV CKT 1
FDNS	00NR	0	16WP	G15_047	FROM->TO	G14-057T 345.00 - SUNNYSIDE 345KV CKT 1	717	789	0.0297	114.1885	GEN563162 1-G15081_3 0.6900
FDNS	00NR	0	16WP	G15_047	FROM->TO	G14-057T 345.00 - SUNNYSIDE 345KV CKT 1	717	789	0.0297	114.1846	GEN521110 1-ORME1 13.800
FDNS	00NR	0	16WP	G15_047	FROM->TO	G14-057T 345.00 - SUNNYSIDE 345KV CKT 1	717	789	0.0297	114.1846	GEN521111 1-ORME2 13.800
FDNS	00NR	0	16WP	G15_047	FROM->TO	G14-057T 345.00 - SUNNYSIDE 345KV CKT 1	717	789	0.02967	114.1812	G15085_T 138.00 - RUSSELL 138KV CKT 1
FDNS	00NR	0	20WP	G15_047	FROM->TO	G14-057T 345.00 - SUNNYSIDE 345KV CKT 1	717	789	0.03026	114.1812	MARIETTA - SOUTH WILSON 138KV CKT 1
FDNS	00NR	0	16WP	G15_047	FROM->TO	G14-057T 345.00 - SUNNYSIDE 345KV CKT 1	717	789	0.0297	114.1693	GEN562699 1-G15_018_3 0.6900

SOLUTION	GROUP	SCENARIO	SEASON	SOURCE	DIRECTION	MONITORED ELEMENT	RATEA (MVA)	RATEB(MVA)	TDF	TC%LOADING (% MVA)	CONTINGENCY
FDNS	00NR	0	16WP	G15_047	FROM->TO	G14-057T 345.00 - SUNNYSIDE 345KV CKT 1	717	789	0.0297	114.1677	GEN563292 1-G15095_3 0.6900
FDNS	00NR	0	16WP	G15_047	FROM->TO	G14-057T 345.00 - SUNNYSIDE 345KV CKT 1	717	789	0.0297	114.1146	ALMA 161 161/24.0KV TRANSFORMER CKT 1
FDNS	00NR	0	16WP	G15_047	FROM->TO	G14-057T 345.00 - SUNNYSIDE 345KV CKT 1	717	789	0.02954	114.11	CACHE - SNYDER 138KV CKT 1
FDNS	00NR	0	16WP	G15_047	FROM->TO	G14-057T 345.00 - SUNNYSIDE 345KV CKT 1	717	789	0.0297	114.1019	GEN661015 1-COYOTE
FDNS	00NR	0	16WP	G15_047	FROM->TO	G14-057T 345.00 - SUNNYSIDE 345KV CKT 1	717	789	0.0297	114.083	GEN520811 1-ANADRK4
FDNS	00NR	0	20WP	G15_047	FROM->TO	G14-057T 345.00 - SUNNYSIDE 345KV CKT 1	717	789	0.03026	114.0746	P12:138:WFEC:MSL17
FDNS	00NR	0	20WP	G15_047	FROM->TO	G14-057T 345.00 - SUNNYSIDE 345KV CKT 1	717	789	0.03045	114.0675	CANEYRV7 345.00 - LATHAMS7 345.00 345KV CKT 1
FDNS	00NR	0	16WP	G15_047	FROM->TO	G14-057T 345.00 - SUNNYSIDE 345KV CKT 1	717	789	0.0297	114.0663	GEN563122 1-G15077_3 0.3850
FDNS	00NR	0	20WP	G15_047	FROM->TO	G14-057T 345.00 - SUNNYSIDE 345KV CKT 1	717	789	0.0297	114.0616	P12:138:WFEC:MSL02
FDNS	00NR	0	16WP	G15_047	FROM->TO	G14-057T 345.00 - SUNNYSIDE 345KV CKT 1	717	789	0.0297	114.0597	GEN562861 1-G15045_2 0.4800
FDNS	00NR	0	16WP	G15_047	FROM->TO	G14-057T 345.00 - SUNNYSIDE 345KV CKT 1	717	789	0.02957	114.0333	P12:138:WFEC:MSL15
FDNS	00NR	0	20WP	G15_047	FROM->TO	G14-057T 345.00 - SUNNYSIDE 345KV CKT 1	717	789	0.0297	114.0055	PAOLI - PAYNE 138.00 138KV CKT 1
FDNS	00NR	0	20WP	G15_047	FROM->TO	G14-057T 345.00 - SUNNYSIDE 345KV CKT 1	717	789	0.02964	113.9884	ANADARKO - GEORGIA 138KV CKT 1
FDNS	00NR	0	16WP	G15_047	FROM->TO	G14-057T 345.00 - SUNNYSIDE 345KV CKT 1	717	789	0.0297	113.986	GEN657748 1-YOUNG 2 GENERATOR
FDNS	00NR	0	16WP	G15_047	FROM->TO	G14-057T 345.00 - SUNNYSIDE 345KV CKT 1	717	789	0.03048	113.9715	CANEY CREEK - TEXOMA JCT 138KV CKT 1
FDNS	00NR	0	16WP	G15_047	FROM->TO	G14-057T 345.00 - SUNNYSIDE 345KV CKT 1	717	789	0.0297	113.9701	GEN562992 1-G15063_3 0.6900
FDNS	00NR	0	16WP	G15_047	FROM->TO	G14-057T 345.00 - SUNNYSIDE 345KV CKT 1	717	789	0.02957	113.9624	GRAPEVINE INTERCHANGE - STATELINE INTERCHANGE 230KV CKT 1
FDNS	00NR	0	16WP	G15_047	FROM->TO	G14-057T 345.00 - SUNNYSIDE 345KV CKT 1	717	789	0.02957	113.9624	GRAPEVINE INTERCHANGE - STATELINE INTERCHANGE 230KV CKT 1
FDNS	00NR	0	16WP	G15_047	FROM->TO	G14-057T 345.00 - SUNNYSIDE 345KV CKT 1	717	789	0.0297	113.9498	GEN532751 1-WOLF CREEK GENERATING STATION UNIT 1
FDNS	00NR	0	20WP	G15_047	FROM->TO	G14-057T 345.00 - SUNNYSIDE 345KV CKT 1	717	789	0.0301	113.9497	CIVIT - PAOLI 138KV CKT 1
FDNS	00NR	0	20WP	G15_047	FROM->TO	G14-057T 345.00 - SUNNYSIDE 345KV CKT 1	717	789	0.03008	113.9382	MATHWSN7 345.00 - NORTHWEST 345KV CKT 1
FDNS	00NR	0	16WP	G15_047	FROM->TO	G14-057T 345.00 - SUNNYSIDE 345KV CKT 1	717	789	0.02967	113.9211	P12:138:AEPW:SHAM4WT:CHILD4WT
FDNS	00NR	0	20WP	G15_047	FROM->TO	G14-057T 345.00 - SUNNYSIDE 345KV CKT 1	717	789	0.02964	113.8867	FLETCHER - GEORGIA 138KV CKT 1
FDNS	00NR	0	20WP	G15_047	FROM->TO	G14-057T 345.00 - SUNNYSIDE 345KV CKT 1	717	789	0.03052	113.8825	P12:138:AEPW-OGE:CORNVIL4:MAUD 4
FDNS	00NR	0	16WP	G15_047	FROM->TO	G14-057T 345.00 - SUNNYSIDE 345KV CKT 1	717	789	0.0297	113.8763	GEN562952 1-G15057_3 0.6500
FDNS	00NR	0	16WP	G15_047	FROM->TO	G14-057T 345.00 - SUNNYSIDE 345KV CKT 1	717	789	0.0297	113.8729	GEN562704 1-G15_020_3 0.3550
FDNS	00NR	0	16WP	G15_047	FROM->TO	G14-057T 345.00 - SUNNYSIDE 345KV CKT 1	717	789	0.0297	113.8575	GEN563173 1-G15082_3 0.6900
FDNS	00NR	0	20WP	G15_047	FROM->TO	G14-057T 345.00 - SUNNYSIDE 345KV CKT 1	717	789	0.03045	113.8496	LATHAMS7 345.00 - ROSE HILL 345KV CKT 1
FDNS	00NR	0	20WP	G15_047	FROM->TO	G14-057T 345.00 - SUNNYSIDE 345KV CKT 1	717	789	0.02967	113.8466	EMPIRE - FLETCHER 138KV CKT 1
FDNS	00NR	0	16WP	G15_047	FROM->TO	G14-057T 345.00 - SUNNYSIDE 345KV CKT 1	717	789	0.02957	113.8455	GRAPEVINE INTERCHANGE - NICHOLS STATION 230KV CKT 1
FDNS	00NR	0	16WP	G15_047	FROM->TO	G14-057T 345.00 - SUNNYSIDE 345KV CKT 1	717	789	0.02957	113.8455	GRAPEVINE INTERCHANGE - NICHOLS STATION 230KV CKT 1
FDNS	00NR	0	16WP	G15_047	FROM->TO	G14-057T 345.00 - SUNNYSIDE 345KV CKT 1	717	789	0.0297	113.82	GEN620315 1-BIG STONE GEN
FDNS	00NR	0	20WP	G15_047	FROM->TO	G14-057T 345.00 - SUNNYSIDE 345KV CKT 1	717	789	0.0301	113.8083	CIVIT - STRATFORD 138KV CKT 1
FDNS	00NR	0	20WP	G15_047	FROM->TO	G14-057T 345.00 - SUNNYSIDE 345KV CKT 1	717	789	0.03052	113.8081	BLANCHARD - CORNVILLE 138KV CKT 1
FDNS	00NR	0	16WP	G15_047	FROM->TO	G14-057T 345.00 - SUNNYSIDE 345KV CKT 1	717	789	0.0297	113.7852	GEN562710 1-G15_022_3 0.5500
FDNS	00NR	0	20WP	G15_047	FROM->TO	G14-057T 345.00 - SUNNYSIDE 345KV CKT 1	717	789	0.02967	113.7637	COMANCHE - EMPIRE 138KV CKT 1
FDNS	00NR	0	16WP	G15_047	FROM->TO	G14-057T 345.00 - SUNNYSIDE 345KV CKT 1	717	789	0.0297	113.7632	GEN600004 2-PRAIRIE ISLAND G2
FDNS	00NR	0	16WP	G15_047	FROM->TO	G14-057T 345.00 - SUNNYSIDE 345KV CKT 1	717	789	0.0297	113.7604	GEN600003 1-PRAIRIE ISLAND G1
FDNS	00NR	0	16WP	G15_047	FROM->TO	G14-057T 345.00 - SUNNYSIDE 345KV CKT 1	717	789	0.0297	113.7577	GEN511851 1-COMANCHE #1
FDNS	00NR	0	16WP	G15_047	FROM->TO	G14-057T 345.00 - SUNNYSIDE 345KV CKT 1	717	789	0.0297	113.7523	GEN600006 1-AS KING
FDNS	00NR	0	20WP	G15_047	FROM->TO	G14-057T 345.00 - SUNNYSIDE 345KV CKT 1	717	789	0.0301	113.6904	OIL CENTER - STRATFORD 138KV CKT 1
FDNS	00NR	0	16WP	G15_047	FROM->TO	G14-057T 345.00 - SUNNYSIDE 345KV CKT 1	717	789	0.02972	113.6876	P12:138:WFEC:MSL09
FDNS	00NR	0	16WP	G15_047	FROM->TO	G14-057T 345.00 - SUNNYSIDE 345KV CKT 1	717	789	0.0297	113.6636	GEN636641 1-LOUISA UNIT 1
FDNS	00NR	0	20WP	G15_047	FROM->TO	G14-057T 345.00 - SUNNYSIDE 345KV CKT 1	717	789	0.02958	113.6336	DUNCAN (DUNCAN) 138/69/13.8KV TRANSFORMER CKT 1
FDNS	00NR	0	20WP	G15_047	FROM->TO	G14-057T 345.00 - SUNNYSIDE 345KV CKT 1	717	789	0.02958	113.6336	DUNCAN (DUNCAN) 138/69/13.8KV TRANSFORMER CKT 1
FDNS	00NR	0	16WP	G15_047	FROM->TO	G14-057T 345.00 - SUNNYSIDE 345KV CKT 1	717	789	0.0297	113.6211	GEN600005 1-MONTICELLO
FDNS	00NR	0	20WP	G15_047	FROM->TO	G14-057T 345.00 - SUNNYSIDE 345KV CKT 1	717	789	0.02955	113.5913	P12:138:AEPW:CATOOSA4:T.S.E.-4
FDNS	00NR	0	20WP	G15_047	FROM->TO	G14-057T 345.00 - SUNNYSIDE 345KV CKT 1	717	789	0.03052	113.5864	BLANCHARD - MAUD 138KV CKT 1
FDNS	00NR	0	20WP	G15_047	FROM->TO	G14-057T 345.00 - SUNNYSIDE 345KV CKT 1	717	789	0.02954	113.5634	P12:138:AEPW:CORNVIL4:DUNCAN-4
FDNS	00NR	0	20WP	G15_047	FROM->TO	G14-057T 345.00 - SUNNYSIDE 345KV CKT 1	717	789	0.02959	113.559	FULTON 115 - HOPE 115KV CKT 1
FDNS	00NR	0	20WP	G15_047	FROM->TO	G14-057T 345.00 - SUNNYSIDE 345KV CKT 1	717	789	0.02959	113.559	FULTON 115 - HOPE 115KV CKT 1
FDNS	00NR	0	16WP	G15_047	FROM->TO	G14-057T 345.00 - SUNNYSIDE 345KV CKT 1	717	789	0.0297	113.536	GEN635213 3-NEAL UNIT 3
FDNS	00NR	0	16WP	G15_047	FROM->TO	G14-057T 345.00 - SUNNYSIDE 345KV CKT 1	717	789	0.0297	113.5331	GEN562754 1-G15031_5 0.6900
FDNS	00NR	0	20WP	G15_047	FROM->TO	G14-057T 345.00 - SUNNYSIDE 345KV CKT 1	717	789	0.0301	113.5177	LATTA JCT - OIL CENTER 138KV CKT 1
FDNS	00NR	0	20WP	G15_047	FROM->TO	G14-057T 345.00 - SUNNYSIDE 345KV CKT 1	717	789	0.02959	113.5164	P12:138:AEPW:CORNVIL4:S.W.S.-4
FDNS	00NR	0	16WP	G15_047	FROM->TO	G14-057T 345.00 - SUNNYSIDE 345KV CKT 1	717	789	0.0297	113.5076	GEN629074 1-ARNOLD LOWSIDE OF GSU XFMR
FDNS	00NR	0	20WP	G15_047	FROM->TO	G14-057T 345.00 - SUNNYSIDE 345KV CKT 1	717	789	0.02958	113.4965	6LAYFLD 230.00 - CARROLL 230KV CKT 1
FDNS	00NR	0	20WP	G15_047	FROM->TO	G14-057T 345.00 - SUNNYSIDE 345KV CKT 1	717	789	0.02952	113.4935	8DANIEL8 500.00 - MCKNIGHT 500KV CKT 1
FDNS	00NR	0	20WP	G15_047	FROM->TO	G14-057T 345.00 - SUNNYSIDE 345KV CKT 1	717	789	0.03002	113.4759	BAILEY4 138.00 - SUNSHINE CANYON 138KV CKT 1
FDNS	00NR	0	16WP	G15_047	FROM->TO	G14-057T 345.00 - SUNNYSIDE 345KV CKT 1	717	789	0.0297	113.4741	GEN562756 1-G15031_7 0.6900
FDNS	00NR	0	16WP	G15_047	FROM->TO	G14-057T 345.00 - SUNNYSIDE 345KV CKT 1	717	789	0.0297	113.4614	BIG STONE 230/24.0KV TRANSFORMER CKT 1
FDNS	00NR	0	20WP	G15_047	FROM->TO	G14-057T 345.00 - SUNNYSIDE 345KV CKT 1	717	789	0.02958	113.4595	P12:69:WFEC-AEPW:COMANCH2:DUNCAN-2
FDNS	00NR	0	16WP	G15_047	FROM->TO	G14-057T 345.00 - SUNNYSIDE 345KV CKT 1	717	789	0.0297	113.4548	GEN562023 1-G11_020_3 0.6900
FDNS	00NR	0	16WP	G15_047	FROM->TO	G14-057T 345.00 - SUNNYSIDE 345KV CKT 1	717	789	0.0297	113.4548	GEN562026 1-G11_019_3 0.6900
FDNS	00NR	0	20WP	G15_047	FROM->TO	G14-057T 345.00 - SUNNYSIDE 345KV CKT 1	717	789	0.02952	113.4435	P12:69:AEPW-OMPA:COMANC-2:OMWALTR2
FDNS	00NR	0	20WP	G15_047	FROM->TO	G14-057T 345.00 - SUNNYSIDE 345KV CKT 1	717	789	0.02972	113.4374	CIMARRON - CZECH HALL 138KV CKT 1
FDNS	00NR	0	20WP	G15_047	FROM->TO	G14-057T 345.00 - SUNNYSIDE 345KV CKT 1	717	789	0.02952	113.4339	G15088_T 345.00 - MOORE 345KV CKT 1
FDNS	00NR	0	16WP	G15_047	FROM->TO	G14-057T 345.00 - SUNNYSIDE 345KV CKT 1	717	789	0.0297	113.4308	GEN562556 1-G14_046_3 0.3420
FDNS	00NR	0	20WP	G15_047	FROM->TO	G14-057T 345.00 - SUNNYSIDE 345KV CKT 1	717	789	0.02956	113.4308	BISMARK - HOT SPRINGS WEST BUS 115KV CKT 1
FDNS	00NR	0	20WP	G15_047	FROM->TO	G14-057T 345.00 - SUNNYSIDE 345KV CKT 1	717	789	0.02958	113.427	DUNCAN - TOSCO 69KV CKT 1
FDNS	00NR	0	20WP	G15_047	FROM->TO	G14-057T 345.00 - SUNNYSIDE 345KV CKT 1	717	789	0.02952	113.4262	MC NIEL 500/115KV TRANSFORMER CKT 1
FDNS	00NR	0	20WP	G15_047	FROM->TO	G14-057T 345.00 - SUNNYSIDE 345KV CKT 1	717	789	0.02959	113.4235	G15074_T 345.00 - HOYT 345KV CKT 1
FDNS	00NR	0	20WP	G15_047	FROM->TO	G14-057T 345.00 - SUNNYSIDE 345KV CKT 1	717	789	0.02987	113.3855	CIMARRON - SARA 138KV CKT 1
FDNS	00NR	0	20WP	G15_047	FROM->TO	G14-057T 345.00 - SUNNYSIDE 345KV CKT 1	717	789	0.02956	113.379	ALPINE AECC - BISMARK 115KV CKT 1
FDNS	00NR	0	20WP	G15_047	FROM->TO	G14-057T 345.00 - SUNNYSIDE 345KV CKT 1	717	789	0.02972	113.3682	CZECH HALL - XEROX 138KV CKT 1
FDNS	00NR	0	20WP	G15_047	FROM->TO	G14-057T 345.00 - SUNNYSIDE 345KV CKT 1	717	789	0.02952	113.3644	P12:138:AEPW:N.E.S.-4:CATOOSA4
FDNS	00NR	0	20WP	G15_047	FROM->TO	G14-057T 345.00 - SUNNYSIDE 345KV CKT 1	717	789	0.02972	113.3642	MORGAN - XEROX 138KV CKT 1
FDNS	00NR	0	20WP	G15_047	FROM->TO	G14-057T 345.00 - SUNNYSIDE 345KV CKT 1	717	789	0.02958	113.3638	COMANCHE TAP - TOSCO 69KV CKT 1
FDNS	00NR	0	16WP	G15_047	FROM->TO	G14-057T 345.00 - SUNNYSIDE 345KV CKT 1	717	789	0.0297	113.3423	GEN563142 1-G15079_3 0.5500

SOLUTION	GROUP	SCENARIO	SEASON	SOURCE	DIRECTION	MONITORED ELEMENT	RATEA (MVA)	RATEB(MVA)	TDF	TC%LOADING (% MVA)	CONTINGENCY
FDNS	00NR	0	16WP	G15_047	FROM->TO	G14-057T 345.00 - SUNNYSIDE 345KV CKT 1	717	789	0.0297	113.3423	GEN563151 1-G15080_2 0.5500
FDNS	00NR	0	20WP	G15_047	FROM->TO	G14-057T 345.00 - SUNNYSIDE 345KV CKT 1	717	789	0.02972	113.3413	MORGAN - MUSTANG 138KV CKT 1
FDNS	00NR	0	20WP	G15_047	FROM->TO	G14-057T 345.00 - SUNNYSIDE 345KV CKT 1	717	789	0.02956	113.3302	ALPINE AECC - AMITY SS 115KV CKT 1
FDNS	00NR	0	16WP	G15_047	FROM->TO	G14-057T 345.00 - SUNNYSIDE 345KV CKT 1	717	789	0.0297	113.3117	GEN523971 1-HARRINGTON GEN #1 24 KV
FDNS	00NR	0	16WP	G15_047	FROM->TO	G14-057T 345.00 - SUNNYSIDE 345KV CKT 1	717	789	0.0297	113.3117	GEN523973 1-HARRINGTON GEN #3 24 KV
FDNS	00NR	0	16WP	G15_047	FROM->TO	G14-057T 345.00 - SUNNYSIDE 345KV CKT 1	717	789	0.0297	113.3116	GEN523972 1-HARRINGTON GEN #2 24 KV
FDNS	00NR	0	20WP	G15_047	FROM->TO	G14-057T 345.00 - SUNNYSIDE 345KV CKT 1	717	789	0.02958	113.3102	COMANCHE - COMANCHE TAP 69KV CKT 1
FDNS	00NR	0	16WP	G15_047	FROM->TO	G14-057T 345.00 - SUNNYSIDE 345KV CKT 1	717	789	0.0297	113.3067	GEN600000 1-SHERBURNECNTY G1
FDNS	00NR	0	20WP	G15_047	FROM->TO	G14-057T 345.00 - SUNNYSIDE 345KV CKT 1	717	789	0.02962	113.3027	ANADARKO - SEQUOYAHJ4 138.00 138KV CKT 1
FDNS	00NR	0	20WP	G15_047	FROM->TO	G14-057T 345.00 - SUNNYSIDE 345KV CKT 1	717	789	0.02962	113.3012	CORN TAP - SEQUOYAHJ4 138.00 138KV CKT 1
FDNS	00NR	0	20WP	G15_047	FROM->TO	G14-057T 345.00 - SUNNYSIDE 345KV CKT 1	717	789	0.03002	113.2991	BAILEY4 138.00 - WESTMOORE 138KV CKT 1
FDNS	00NR	0	20WP	G15_047	FROM->TO	G14-057T 345.00 - SUNNYSIDE 345KV CKT 1	717	789	0.02956	113.29	P12:138:OKGE-AEPW:JENSEN4:REDROCKRD4
FDNS	00NR	0	20WP	G15_047	FROM->TO	G14-057T 345.00 - SUNNYSIDE 345KV CKT 1	717	789	0.02987	113.276	SARA - STHLAKE4 138.00 138KV CKT 1
FDNS	00NR	0	20WP	G15_047	FROM->TO	G14-057T 345.00 - SUNNYSIDE 345KV CKT 1	717	789	0.02957	113.2756	WALTERS - WALTERS 69KV CKT 1
FDNS	00NR	0	20WP	G15_047	FROM->TO	G14-057T 345.00 - SUNNYSIDE 345KV CKT 1	717	789	0.02952	113.249	LAWTON RELIFT TAP - OMPA-WALTERS 69KV CKT 1
FDNS	00NR	0	20WP	G15_047	FROM->TO	G14-057T 345.00 - SUNNYSIDE 345KV CKT 1	717	789	0.02987	113.2459	MCCLAIN - STHLAKE4 138.00 138KV CKT 1
FDNS	00NR	0	20WP	G15_047	FROM->TO	G14-057T 345.00 - SUNNYSIDE 345KV CKT 1	717	789	0.02959	113.2337	NORGE ROAD - SOUTHWESTERN STATION 138KV CKT 1
FDNS	00NR	0	20WP	G15_047	FROM->TO	G14-057T 345.00 - SUNNYSIDE 345KV CKT 1	717	789	0.02959	113.2337	NORGE ROAD - SOUTHWESTERN STATION 138KV CKT 1
FDNS	00NR	0	20WP	G15_047	FROM->TO	G14-057T 345.00 - SUNNYSIDE 345KV CKT 1	717	789	0.0301	113.2249	LASALLE - LATTA JCT 138KV CKT 1
FDNS	00NR	0	20WP	G15_047	FROM->TO	G14-057T 345.00 - SUNNYSIDE 345KV CKT 1	717	789	0.02975	113.2206	P12:138:AEPW-OGE:SHIDLER4:OSAGE 4
FDNS	00NR	0	16WP	G15_047	FROM->TO	G14-057T 345.00 - SUNNYSIDE 345KV CKT 1	717	789	0.02989	113.22	NORTHWEST TEXARKANA - VALLIANT 345KV CKT 1
FDNS	00NR	0	16WP	G15_047	FROM->TO	G14-057T 345.00 - SUNNYSIDE 345KV CKT 1	717	789	0.02989	113.22	NORTHWEST TEXARKANA - VALLIANT 345KV CKT 1
FDNS	00NR	0	20WP	G15_047	FROM->TO	G14-057T 345.00 - SUNNYSIDE 345KV CKT 1	717	789	0.03015	113.2197	MORISNT4 138.00 - STILLWATER 138KV CKT 1
FDNS	00NR	0	16WP	G15_047	FROM->TO	G14-057T 345.00 - SUNNYSIDE 345KV CKT 1	717	789	0.0297	113.2157	GEN600001 2-SHERBURNE CNTY G2
FDNS	00NR	0	20WP	G15_047	FROM->TO	G14-057T 345.00 - SUNNYSIDE 345KV CKT 1	717	789	0.03013	113.2143	P12:138:OKGE:3TERM2
FDNS	00NR	0	20WP	G15_047	FROM->TO	G14-057T 345.00 - SUNNYSIDE 345KV CKT 1	717	789	0.02959	113.2053	HOYT - STRANGER CREEK 345KV CKT 1
FDNS	00NR	0	20WP	G15_047	FROM->TO	G14-057T 345.00 - SUNNYSIDE 345KV CKT 1	717	789	0.02981	113.2033	BLACKBERRY - NEOSHO 345KV CKT 1
FDNS	00NR	0	20WP	G15_047	FROM->TO	G14-057T 345.00 - SUNNYSIDE 345KV CKT 1	717	789	0.02955	113.2006	CLINTON JUNCTION - ELK CITY 138KV CKT 1
FDNS	00NR	0	20WP	G15_047	FROM->TO	G14-057T 345.00 - SUNNYSIDE 345KV CKT 1	717	789	0.02955	113.2006	CLINTON JUNCTION - ELK CITY 138KV CKT 1
FDNS	00NR	0	20WP	G15_047	FROM->TO	G14-057T 345.00 - SUNNYSIDE 345KV CKT 1	717	789	0.02963	113.2001	7JASPER 345.00 - BLACKBERRY 345KV CKT 1
FDNS	00NR	0	16WP	G15_047	FROM->TO	G14-057T 345.00 - SUNNYSIDE 345KV CKT 1	717	789	0.0297	113.2	GEN511848 1-SOUTHWESTERN STATION #3
FDNS	00NR	0	20WP	G15_047	FROM->TO	G14-057T 345.00 - SUNNYSIDE 345KV CKT 1	717	789	0.02959	113.1911	HOPE - MCNAB REC 115KV CKT 1
FDNS	00NR	0	20WP	G15_047	FROM->TO	G14-057T 345.00 - SUNNYSIDE 345KV CKT 1	717	789	0.02956	113.1899	G13-010T 345.00 - POST ROCK 345KV CKT 1
FDNS	00NR	0	20WP	G15_047	FROM->TO	G14-057T 345.00 - SUNNYSIDE 345KV CKT 1	717	789	0.02959	113.1862	G15074_T 345.00 - JEFFREY ENERGY CENTER 345KV CKT 1
FDNS	00NR	0	20WP	G15_047	FROM->TO	G14-057T 345.00 - SUNNYSIDE 345KV CKT 1	717	789	0.02959	113.1824	P12:115:AEPW:TURK3:HOPE3
FDNS	00NR	0	20WP	G15_047	FROM->TO	G14-057T 345.00 - SUNNYSIDE 345KV CKT 1	717	789	0.02955	113.1793	COUCH SES - MC NIEL 115KV CKT 1
FDNS	00NR	0	20WP	G15_047	FROM->TO	G14-057T 345.00 - SUNNYSIDE 345KV CKT 1	717	789	0.02952	113.1755	OMPA-WALTERS - WALTERS 69KV CKT 1
FDNS	00NR	0	20WP	G15_047	FROM->TO	G14-057T 345.00 - SUNNYSIDE 345KV CKT 1	717	789	0.02952	113.1755	OMPA-WALTERS - WALTERS 69KV CKT 1
FDNS	00NR	0	20WP	G15_047	FROM->TO	G14-057T 345.00 - SUNNYSIDE 345KV CKT 1	717	789	0.02959	113.1728	SOUTHWESTERN STATION - VERDEN 138KV CKT 1
FDNS	00NR	0	20WP	G15_047	FROM->TO	G14-057T 345.00 - SUNNYSIDE 345KV CKT 1	717	789	0.03075	113.168	CANADIAN - NOBLE 138KV CKT 1
FDNS	00NR	0	20WP	G15_047	FROM->TO	G14-057T 345.00 - SUNNYSIDE 345KV CKT 1	717	789	0.02958	113.1665	7LUTESVIL 345.00 - 7ST FRANC 345.00 345KV CKT 1
FDNS	00NR	0	20WP	G15_047	FROM->TO	G14-057T 345.00 - SUNNYSIDE 345KV CKT 1	717	789	0.02976	113.1642	EMPORIA ENERGY CENTER - G14_001T 345.00 345KV CKT 1
FDNS	00NR	0	20WP	G15_047	FROM->TO	G14-057T 345.00 - SUNNYSIDE 345KV CKT 1	717	789	0.02959	113.1552	TURK (TURK 1) 138/115/13.2KV TRANSFORMER CKT 1
FDNS	00NR	0	20WP	G15_047	FROM->TO	G14-057T 345.00 - SUNNYSIDE 345KV CKT 1	717	789	0.02959	113.1552	TURK (TURK 1) 138/115/13.2KV TRANSFORMER CKT 1
FDNS	00NR	0	20WP	G15_047	FROM->TO	G14-057T 345.00 - SUNNYSIDE 345KV CKT 1	717	789	0.02959	113.1551	MCNAB REC - Turk 115 115KV CKT 1
FDNS	00NR	0	20WP	G15_047	FROM->TO	G14-057T 345.00 - SUNNYSIDE 345KV CKT 1	717	789	0.02957	113.1547	P12:69:WFEC-AEPW:COMANCH2:WALTRS-2
FDNS	00NR	0	20WP	G15_047	FROM->TO	G14-057T 345.00 - SUNNYSIDE 345KV CKT 1	717	789	0.02959	113.1508	NORTH 29TH CHICKASHA - VERDEN 138KV CKT 1
FDNS	00NR	0	20WP	G15_047	FROM->TO	G14-057T 345.00 - SUNNYSIDE 345KV CKT 1	717	789	0.03074	113.1437	P12:138:OKGE:3TERM27
FDNS	00NR	0	20WP	G15_047	FROM->TO	G14-057T 345.00 - SUNNYSIDE 345KV CKT 1	717	789	0.02956	113.1415	G13-010T 345.00 - SPEARVILLE 345KV CKT 1
FDNS	00NR	0	20WP	G15_047	FROM->TO	G14-057T 345.00 - SUNNYSIDE 345KV CKT 1	717	789	0.03002	113.1333	FRANKLIN SW - WESTMOORE 138KV CKT 1
FDNS	00NR	0	20WP	G15_047	FROM->TO	G14-057T 345.00 - SUNNYSIDE 345KV CKT 1	717	789	0.0296	113.1327	SWISSVALE - WEST GARDNER 345KV CKT 1
FDNS	00NR	0	16WP	G15_047	FROM->TO	G14-057T 345.00 - SUNNYSIDE 345KV CKT 1	717	789	0.0297	113.1315	GEN563042 1-G15068_3 0.6900
FDNS	00NR	0	20WP	G15_047	FROM->TO	G14-057T 345.00 - SUNNYSIDE 345KV CKT 1	717	789	0.02953	113.1266	FLETCHER - MARLOW JCT 69KV CKT 1
FDNS	00NR	0	20WP	G15_047	FROM->TO	G14-057T 345.00 - SUNNYSIDE 345KV CKT 1	717	789	0.02957	113.1201	LAKEOVER - MCADAMS 500KV CKT 1
FDNS	00NR	0	20WP	G15_047	FROM->TO	G14-057T 345.00 - SUNNYSIDE 345KV CKT 1	717	789	0.0296	113.1171	EMPORIA ENERGY CENTER - SWISSVALE 345KV CKT 1
FDNS	00NR	0	16WP	G15_047	FROM->TO	G14-057T 345.00 - SUNNYSIDE 345KV CKT 1	717	789	0.0297	113.1143	GEN527901 1-HOBBS PLANT #1 (CT)
FDNS	00NR	0	16WP	G15_047	FROM->TO	G14-057T 345.00 - SUNNYSIDE 345KV CKT 1	717	789	0.0297	113.1143	GEN527902 1-HOBBS PLANT #2 (CT)
FDNS	00NR	0	20WP	G15_047	FROM->TO	G14-057T 345.00 - SUNNYSIDE 345KV CKT 1	717	789	0.02976	113.1061	G14_001T 345.00 - WICHITA 345KV CKT 1
FDNS	00NR	0	20WP	G15_047	FROM->TO	G14-057T 345.00 - SUNNYSIDE 345KV CKT 1	717	789	0.02959	113.1014	CORNVILLE - NORGE ROAD 138KV CKT 1
FDNS	00NR	0	20WP	G15_047	FROM->TO	G14-057T 345.00 - SUNNYSIDE 345KV CKT 1	717	789	0.02959	113.1014	CORNVILLE - NORGE ROAD 138KV CKT 1
FDNS	00NR	0	20WP	G15_047	FROM->TO	G14-057T 345.00 - SUNNYSIDE 345KV CKT 1	717	789	0.02951	113.1012	P12:138:AEPW:R.S.S-4:T.P.S.-4
FDNS	00NR	0	20WP	G15_047	FROM->TO	G14-057T 345.00 - SUNNYSIDE 345KV CKT 1	717	789	0.02952	113.0957	P12:138:OKGE:3TERM12
FDNS	00NR	0	20WP	G15_047	FROM->TO	G14-057T 345.00 - SUNNYSIDE 345KV CKT 1	717	789	0.02964	113.093	MCADAMS - WOLF CREEK 500KV CKT 1
FDNS	00NR	0	16WP	G15_047	FROM->TO	G14-057T 345.00 - SUNNYSIDE 345KV CKT 1	717	789	0.0297	113.0888	GEN629075 1-OTTUMWA GENERATOR FOR OTTUMWA UNIT NO 1
FDNS	00NR	0	20WP	G15_047	FROM->TO	G14-057T 345.00 - SUNNYSIDE 345KV CKT 1	717	789	0.0301	113.0866	LASALLE - STONEWAL LH138.00 138KV CKT 1
FDNS	00NR	0	20WP	G15_047	FROM->TO	G14-057T 345.00 - SUNNYSIDE 345KV CKT 1	717	789	0.02961	113.0761	8WNEWMADRID 500.00 - DELL 500 500KV CKT 1
FDNS	00NR	0	20WP	G15_047	FROM->TO	G14-057T 345.00 - SUNNYSIDE 345KV CKT 1	717	789	0.03075	113.0747	NOBLE - PURCELL4 138.00 138KV CKT 1
FDNS	00NR	0	20WP	G15_047	FROM->TO	G14-057T 345.00 - SUNNYSIDE 345KV CKT 1	717	789	0.0301	113.0712	STONEWAL LH138.00 - TUPELO TAP 138KV CKT 1
FDNS	00NR	0	20WP	G15_047	FROM->TO	G14-057T 345.00 - SUNNYSIDE 345KV CKT 1	717	789	0.02959	113.0668	CORNVILLE - NORTH 29TH CHICKASHA 138KV CKT 1
FDNS	00NR	0	20WP	G15_047	FROM->TO	G14-057T 345.00 - SUNNYSIDE 345KV CKT 1	717	789	0.02956	113.04	Canadian Pump Station - REDROCKRD4 138.00 138KV CKT 1
FDNS	00NR	0	20WP	G15_047	FROM->TO	G14-057T 345.00 - SUNNYSIDE 345KV CKT 1	717	789	0.02963	113.0069	CRINER - PAYNE 138.00 138KV CKT 1
FDNS	00NR	0	20WP	G15_047	FROM->TO	G14-057T 345.00 - SUNNYSIDE 345KV CKT 1	717	789	0.02957	112.978	COMANCHE - WALTERS 69KV CKT 1
FDNS	00NR	0	20WP	G15_047	FROM->TO	G14-057T 345.00 - SUNNYSIDE 345KV CKT 1	717	789	0.02959	112.9762	P12:138:OKGE:3TERM20
FDNS	00NR	0	16WP	G15_047	FROM->TO	G14-057T 345.00 - SUNNYSIDE 345KV CKT 1	717	789	0.0297	112.9469	GEN635214 4-NEAL UNIT 4
FDNS	00NR	0	16WP	G15_047	FROM->TO	G14-057T 345.00 - SUNNYSIDE 345KV CKT 1	717	789	0.0297	112.9141	SHERBURNE CO 345/24.0KV TRANSFORMER CKT 1
FDNS	00NR	0	16WP	G15_047	FROM->TO	G14-057T 345.00 - SUNNYSIDE 345KV CKT 1	717	789	0.0297	112.8505	GEN563043 1-G15068_4 0.6900
FDNS	00NR	0	16WP	G15_047	FROM->TO	G14-057T 345.00 - SUNNYSIDE 345KV CKT 1	717	789	0.0297	112.8432	GEN563273 2-G15093_4 0.6900
FDNS	00NR	0	16WP	G15_047	FROM->TO	G14-057T 345.00 - SUNNYSIDE 345KV CKT 1	717	789	0.0297	112.8228	GEN526333 1-JONES GEN #3 21 KV
FDNS	00NR	0	16WP	G15_047	FROM->TO	G14-057T 345.00 - SUNNYSIDE 345KV CKT 1	717	789	0.0297	112.8228	GEN526334 1-JONES_4 116.500

SOLUTION	GROUP	SCENARIO	SEASON	SOURCE	DIRECTION	MONITORED ELEMENT	RATEA (MVA)	RATEB(MVA)	TDF	TC%LOADING (% MVA)	CONTINGENCY
FDNS	00NR	0	16WP	G15_047	FROM->TO	G14-057T 345.00 - SUNNYSIDE 345KV CKT 1	717	789	0.0297	112.7951	GEN600002 3-SHERBURNE CNTY G3
FDNS	00NR	0	16WP	G15_047	FROM->TO	G14-057T 345.00 - SUNNYSIDE 345KV CKT 1	717	789	0.0297	112.7748	GEN525844 1-ELK_1 118.000
FDNS	00NR	0	16WP	G15_047	FROM->TO	G14-057T 345.00 - SUNNYSIDE 345KV CKT 1	717	789	0.0297	112.768	GEN525845 1-ELK_2 1 138.00
FDNS	00NR	0	16WP	G15_047	FROM->TO	G14-057T 345.00 - SUNNYSIDE 345KV CKT 1	717	789	0.0297	112.7011	GEN344225 1-1CAL G1 25.000
FDNS	00NR	0	16WP	G15_047	FROM->TO	G14-057T 345.00 - SUNNYSIDE 345KV CKT 1	717	789	0.0297	112.6306	GEN525562 1-TOLK GEN #2 24 KV
FDNS	00NR	0	16WP	G15_047	FROM->TO	G14-057T 345.00 - SUNNYSIDE 345KV CKT 1	717	789	0.0297	112.6222	GEN563202 1-G15085_3 0.5500
FDNS	00NR	0	16WP	G15_047	FROM->TO	G14-057T 345.00 - SUNNYSIDE 345KV CKT 1	717	789	0.0297	112.5874	GEN527166 1-MUSTANG_6 118.000
FDNS	00NR	0	16WP	G15_047	FROM->TO	G14-057T 345.00 - SUNNYSIDE 345KV CKT 1	717	789	0.0297	112.5489	GEN635023 3-WALTER SCOTT UNIT 3
FDNS	00NR	0	16WP	G15_047	FROM->TO	G14-057T 345.00 - SUNNYSIDE 345KV CKT 1	717	789	0.0297	112.5126	GEN562590 1-G14_057_3 0.6900
FDNS	00NR	0	16WP	G15_047	FROM->TO	G14-057T 345.00 - SUNNYSIDE 345KV CKT 1	717	789	0.02997	112.4979	LYDIA - WELSH 345KV CKT 1
FDNS	00NR	0	16WP	G15_047	FROM->TO	G14-057T 345.00 - SUNNYSIDE 345KV CKT 1	717	789	0.02997	112.4979	LYDIA - WELSH 345KV CKT 1
FDNS	00NR	0	16WP	G15_047	FROM->TO	G14-057T 345.00 - SUNNYSIDE 345KV CKT 1	717	789	0.0297	112.4088	GEN562762 1-G15033_3 0.6900
FDNS	00NR	0	16WP	G15_047	FROM->TO	G14-057T 345.00 - SUNNYSIDE 345KV CKT 1	717	789	0.0297	112.3978	GEN562655 1-G14_074_3 0.6900
FDNS	00NR	0	16WP	G15_047	FROM->TO	G14-057T 345.00 - SUNNYSIDE 345KV CKT 1	717	789	0.0297	112.3256	GEN562685 1-G15_013_3 0.3550
FDNS	00NR	0	20WP	G15_047	FROM->TO	G14-057T 345.00 - SUNNYSIDE 345KV CKT 1	717	789	0.03006	112.2413	RANCHRD7 345.00 - SOONER 345KV CKT 1
FDNS	00NR	0	16WP	G15_047	FROM->TO	G14-057T 345.00 - SUNNYSIDE 345KV CKT 1	717	789	0.0297	112.2195	GEN525561 1-TOLK GEN #1 24 KV
FDNS	00NR	0	16WP	G15_047	FROM->TO	G14-057T 345.00 - SUNNYSIDE 345KV CKT 1	717	789	0.0297	112.2163	GEN563272 1-G15093_3 0.6900
FDNS	00NR	0	16WP	G15_047	FROM->TO	G14-057T 345.00 - SUNNYSIDE 345KV CKT 1	717	789	0.0297	112.1939	GEN527903 1-HOBBS PLANT #3 (ST)
FDNS	00NR	0	16WP	G15_047	FROM->TO	G14-057T 345.00 - SUNNYSIDE 345KV CKT 1	717	789	0.0297	112.1285	GEN635024 4-WALTER SCOTT UNIT 4
FDNS	00NR	0	20WP	G15_047	FROM->TO	G14-057T 345.00 - SUNNYSIDE 345KV CKT 1	717	789	0.02976	112.1131	DRAPER LAKE - MIDWEST TAP 138KV CKT 1
FDNS	00NR	0	20WP	G15_047	FROM->TO	G14-057T 345.00 - SUNNYSIDE 345KV CKT 1	717	789	0.02974	112.1011	P12:138:OKGE:3TERM21
FDNS	00NR	0	20WP	G15_047	FROM->TO	G14-057T 345.00 - SUNNYSIDE 345KV CKT 1	717	789	0.02954	112.0432	GLASSES - MADILL INDUSTRIAL TAP 138KV CKT 1
FDNS	00NR	0	20WP	G15_047	FROM->TO	G14-057T 345.00 - SUNNYSIDE 345KV CKT 1	717	789	0.02959	112.0426	P12:138:WFEC:MSL11
FDNS	00NR	0	20WP	G15_047	FROM->TO	G14-057T 345.00 - SUNNYSIDE 345KV CKT 1	717	789	0.02959	112.0426	P12:138:WFEC-AEPW:PHAROAH4:LONEOAK4
FDNS	00NR	0	20WP	G15_047	FROM->TO	G14-057T 345.00 - SUNNYSIDE 345KV CKT 1	717	789	0.02955	112.0352	CANEY CREEK - JOHNSON COUNTY 138KV CKT 1
FDNS	00NR	0	20WP	G15_047	FROM->TO	G14-057T 345.00 - SUNNYSIDE 345KV CKT 1	717	789	0.02966	112.0342	OVEXFRMCCOVE
FDNS	00NR	0	20WP	G15_047	FROM->TO	G14-057T 345.00 - SUNNYSIDE 345KV CKT 1	717	789	0.02954	111.9908	GLASSES - RUSSETT 138KV CKT 1
FDNS	00NR	0	20WP	G15_047	FROM->TO	G14-057T 345.00 - SUNNYSIDE 345KV CKT 1	717	789	0.03026	111.9822	LEBANON - TEXOMA JCT 138KV CKT 1
FDNS	00NR	0	20WP	G15_047	FROM->TO	G14-057T 345.00 - SUNNYSIDE 345KV CKT 1	717	789	0.0297	111.9794	CANADIAN RIVER - MCALESTER SOUTH 138KV CKT 1
FDNS	00NR	0	20WP	G15_047	FROM->TO	G14-057T 345.00 - SUNNYSIDE 345KV CKT 1	717	789	0.0297	111.9794	CANADIAN RIVER - MCALESTER SOUTH 138KV CKT 1
FDNS	00NR	0	20WP	G15_047	FROM->TO	G14-057T 345.00 - SUNNYSIDE 345KV CKT 1	717	789	0.0297	111.9773	CANADIAN RIVER () 345/138/13.8KV TRANSFORMER CKT 1
FDNS	00NR	0	20WP	G15_047	FROM->TO	G14-057T 345.00 - SUNNYSIDE 345KV CKT 1	717	789	0.0297	111.9773	CANADIAN RIVER () 345/138/13.8KV TRANSFORMER CKT 1
FDNS	00NR	0	20WP	G15_047	FROM->TO	G14-057T 345.00 - SUNNYSIDE 345KV CKT 1	717	789	0.02984	111.9538	CHAMBER SPRINGS - CLARKSVILLE 345KV CKT 1
FDNS	00NR	0	20WP	G15_047	FROM->TO	G14-057T 345.00 - SUNNYSIDE 345KV CKT 1	717	789	0.02952	111.9489	GRPRAR1-LNX3345.00 - HOLT.CO3 345.00 345KV CKT 1
FDNS	00NR	0	20WP	G15_047	FROM->TO	G14-057T 345.00 - SUNNYSIDE 345KV CKT 1	717	789	0.02952	111.941	GRPRAR1-LNX3345.00 - GRPRAR 345KV CKT Z
FDNS	00NR	0	20WP	G15_047	FROM->TO	G14-057T 345.00 - SUNNYSIDE 345KV CKT 1	717	789	0.02957	111.8334	CROCKETT - TENASKA RUSK COUNTY 345KV CKT 1
FDNS	00NR	0	20WP	G15_047	FROM->TO	G14-057T 345.00 - SUNNYSIDE 345KV CKT 1	717	789	0.02957	111.8287	LEBROCK - TENASKA RUSK COUNTY 345KV CKT 1
FDNS	00NR	0	20WP	G15_047	FROM->TO	G14-057T 345.00 - SUNNYSIDE 345KV CKT 1	717	789	0.02951	111.7553	BROWN - RUSSETT 138KV CKT 1
FDNS	00NR	0	20WP	G15_047	FROM->TO	G14-057T 345.00 - SUNNYSIDE 345KV CKT 1	717	789	0.02951	111.7098	RUSSETT - RUSSETT 138KV CKT 1
FDNS	00NR	0	20WP	G15_047	FROM->TO	G14-057T 345.00 - SUNNYSIDE 345KV CKT 1	717	789	0.02952	111.5548	P12:138:WFEC:MSL16
FDNS	00NR	0	20WP	G15_047	FROM->TO	G14-057T 345.00 - SUNNYSIDE 345KV CKT 1	717	789	0.03257	111.4993	CLARKSVILLE - MUSKOGEE 345KV CKT 1
FDNS	00NR	0	20WP	G15_047	FROM->TO	G14-057T 345.00 - SUNNYSIDE 345KV CKT 1	717	789	0.03257	111.4993	CLARKSVILLE - MUSKOGEE 345KV CKT 1
FDNS	00NR	0	16WP	G15_047	FROM->TO	G14-057T 345.00 - SUNNYSIDE 345KV CKT 1	717	789	0.03007	111.3277	LYDIA - VALLIANT 345KV CKT 1
FDNS	00NR	0	16WP	G15_047	FROM->TO	G14-057T 345.00 - SUNNYSIDE 345KV CKT 1	717	789	0.03007	111.3277	LYDIA - VALLIANT 345KV CKT 1
FDNS	00NR	0	20WP	G15_047	FROM->TO	G14-057T 345.00 - SUNNYSIDE 345KV CKT 1	717	789	0.03026	111.0934	CANEY CREEK - TEXOMA JCT 138KV CKT 1
FDNS	00NR	0	20WP	G15_047	FROM->TO	G14-057T 345.00 - SUNNYSIDE 345KV CKT 1	717	789	0.02953	110.8668	P12:138:WFEC:MSL09
FDNS	00NR	0	20WP	G15_047	FROM->TO	G14-057T 345.00 - SUNNYSIDE 345KV CKT 1	717	789	0.02968	110.8309	NORTHWEST TEXARKANA - VALLIANT 345KV CKT 1
FDNS	00NR	0	20WP	G15_047	FROM->TO	G14-057T 345.00 - SUNNYSIDE 345KV CKT 1	717	789	0.02968	110.8309	NORTHWEST TEXARKANA - VALLIANT 345KV CKT 1
FDNS	00NR	0	16WP	G15_047	FROM->TO	G14-057T 345.00 - SUNNYSIDE 345KV CKT 1	717	789	0.0297	110.4622	EASTDC - ERCOT EQUIVALENCE 345KV CKT 1
FDNS	00NR	0	20WP	G15_047	FROM->TO	G14-057T 345.00 - SUNNYSIDE 345KV CKT 1	717	789	0.02976	110.4581	LYDIA - WELSH 345KV CKT 1
FDNS	00NR	0	20WP	G15_047	FROM->TO	G14-057T 345.00 - SUNNYSIDE 345KV CKT 1	717	789	0.02976	110.4581	LYDIA - WELSH 345KV CKT 1
FDNS	00NR	0	20WP	G15_047	FROM->TO	G14-057T 345.00 - SUNNYSIDE 345KV CKT 1	717	789	0.02986	109.3905	LYDIA - VALLIANT 345KV CKT 1
FDNS	00NR	0	20WP	G15_047	FROM->TO	G14-057T 345.00 - SUNNYSIDE 345KV CKT 1	717	789	0.02986	109.3905	LYDIA - VALLIANT 345KV CKT 1
FDNS	00NR	0	16WP	G15_047	FROM->TO	G14-057T 345.00 - SUNNYSIDE 345KV CKT 1	717	789	0.0297	109.0304	GEN563263 1-G15092_4 0.6900
FDNS	00NR	0	16WP	G15_047	FROM->TO	G14-057T 345.00 - SUNNYSIDE 345KV CKT 1	717	789	0.0297	107.3751	GEN563262 1-G15092_3 0.6900
FDNS	08ALL	0	25SP	G15_047	FROM->TO	G15063_T 345.00 - MATHWSN7 345.00 345KV CKT 1	956	956	0.20272	122.7751	NORTHWEST - SPRING CREEK 345KV CKT 1
FDNS	08ALL	0	25SP	G15_047	FROM->TO	G15063_T 345.00 - MATHWSN7 345.00 345KV CKT 1	956	956	0.20276	122	NORTHWEST - SPRING CREEK 345KV CKT 1
FDNS	08ALL	0	16WP	G15_047	FROM->TO	G15063_T 345.00 - MATHWSN7 345.00 345KV CKT 1	956	956	0.19685	120.4934	SOONER - SPRING CREEK 345KV CKT 1
FDNS	08ALL	0	16WP	G15_047	FROM->TO	G15063_T 345.00 - MATHWSN7 345.00 345KV CKT 1	956	956	0.19685	120.3955	NORTHWEST - SPRING CREEK 345KV CKT 1
FDNS	08ALL	0	17G	G15_047	FROM->TO	G15063_T 345.00 - MATHWSN7 345.00 345KV CKT 1	956	956	0.19827	116.0214	SOONER - SPRING CREEK 345KV CKT 1
FDNS	08ALL	0	17G	G15_047	FROM->TO	G15063_T 345.00 - MATHWSN7 345.00 345KV CKT 1	956	956	0.19827	115.9242	NORTHWEST - SPRING CREEK 345KV CKT 1
FDNS	08ALL	0	17SP	G15_047	FROM->TO	G15063_T 345.00 - MATHWSN7 345.00 345KV CKT 1	956	956	0.20162	115.5287	NORTHWEST - SPRING CREEK 345KV CKT 1
FDNS	08ALL	0	25SP	G15_047	FROM->TO	G15063_T 345.00 - MATHWSN7 345.00 345KV CKT 1	956	956	0.20339	115.4817	SOONER - SPRING CREEK 345KV CKT 1
FDNS	08ALL	0	25SP	G15_047	FROM->TO	G15063_T 345.00 - MATHWSN7 345.00 345KV CKT 1	956	956	0.20343	114.6846	SOONER - SPRING CREEK 345KV CKT 1
FDNS	08ALL	0	20WP	G15_047	FROM->TO	G15063_T 345.00 - MATHWSN7 345.00 345KV CKT 1	956	956	0.19595	114.0932	SOONER - SPRING CREEK 345KV CKT 1
FDNS	08ALL	0	20WP	G15_047	FROM->TO	G15063_T 345.00 - MATHWSN7 345.00 345KV CKT 1	956	956	0.19595	114.0069	NORTHWEST - SPRING CREEK 345KV CKT 1
FDNS	08ALL	0	20WP	G15_047	FROM->TO	G15063_T 345.00 - MATHWSN7 345.00 345KV CKT 1	956	956	0.1959	113.2299	SOONER - SPRING CREEK 345KV CKT 1
FDNS	08ALL	0	20WP	G15_047	FROM->TO	G15063_T 345.00 - MATHWSN7 345.00 345KV CKT 1	956	956	0.1959	113.1451	NORTHWEST - SPRING CREEK 345KV CKT 1
FDNS	08ALL	0	17SP	G15_047	FROM->TO	G15063_T 345.00 - MATHWSN7 345.00 345KV CKT 1	956	956	0.20229	108.1073	SOONER - SPRING CREEK 345KV CKT 1
FDNS	08ALL	0	20SP	G15_047	FROM->TO	G15063_T 345.00 - MATHWSN7 345.00 345KV CKT 1	956	956	0.19975	105.8099	NORTHWEST - SPRING CREEK 345KV CKT 1
FDNS	08NR	0	20L	G15_047	FROM->TO	G15063_T 345.00 - MATHWSN7 345.00 345KV CKT 1	956	956	0.20836	101.6468	SOONER - SPRING CREEK 345KV CKT 1
FDNS	08NR	0	20L	G15_047	FROM->TO	G15063_T 345.00 - MATHWSN7 345.00 345KV CKT 1	956	956	0.20836	101.6199	NORTHWEST - SPRING CREEK 345KV CKT 1
FDNS	08NR	0	17G	G15_047	TO->FROM	KINZE - MCELROY 138KV CKT 1	194	222	0.03744	100.5685	CLEVELAND - G15066_T 345.00 345KV CKT 1
FDNS	00NR	0	17SP	G15_047	FROM->TO	KINZE - STILLWATER KINZIE 138KV CKT 1	287	287	0.02958	99.8	CLEVELAND - G15066_T 345.00 345KV CKT 1
FDNS	00NR	2	16WP	G15_047	FROM->TO	CIMARRON - DRAPER LAKE 345KV CKT 1	717	717	0.11885	134.3343	G14-057T 345.00 - SUNNYSIDE 345KV CKT 1
FDNS	00NR	2	16WP	G15_047	FROM->TO	CIMARRON - DRAPER LAKE 345KV CKT 1	717	717	0.11885	123.771	G14-057T 345.00 - LAWTON EASTSIDE 345KV CKT 1
FDNS	00NR	2	16WP	G15_047	FROM->TO	CIMARRON - DRAPER LAKE 345KV CKT 1	717	717	0.12182	118.5113	ARCADIA - SEMINOLE 345KV CKT 1
FDNS	00NR	2	16WP	G15_047	FROM->TO	CIMARRON - DRAPER LAKE 345KV CKT 1	717	717	0.13732	117.4388	CLEVELAND - G15066_T 345.00 345KV CKT 1
FDNS	00NR	2	16WP	G15_047	FROM->TO	CIMARRON - DRAPER LAKE 345KV CKT 1	717	717	0.15723	117.2468	ARCADIA - NORTHWEST 345KV CKT 1

SOLUTION	GROUP	SCENARIO	SEASON	SOURCE	DIRECTION	MONITORED ELEMENT	RATEA (MVA)	RATEB(MVA)	TDF	TC%LOADING (% MVA)	CONTINGENCY
FDNS	00NR	2	16WP	G15_047	FROM->TO	CIMARRON - DRAPER LAKE 345KV CKT 1	717	717	0.13732	116.6621	G15066_T 345.00 - SOONER 345KV CKT 1
FDNS	00NR	2	16WP	G15_047	FROM->TO	CIMARRON - DRAPER LAKE 345KV CKT 1	717	717	0.12781	112.0487	CLEVELAND - TULSA NORTH 345KV CKT 1
FDNS	00NR	2	16WP	G15_047	FROM->TO	CIMARRON - DRAPER LAKE 345KV CKT 1	717	717	0.12781	112.0487	CLEVELAND - TULSA NORTH 345KV CKT 1
FDNS	00NR	2	16WP	G15_047	FROM->TO	CIMARRON - DRAPER LAKE 345KV CKT 1	717	717	0.11478	111.8034	MATHWSN7 345.00 - NORTHWEST 345KV CKT 1
FDNS	00NR	2	16WP	G15_047	FROM->TO	CIMARRON - DRAPER LAKE 345KV CKT 1	717	717	0.1146	110.8771	CIMARRON - SARA 138KV CKT 1
FDNS	00NR	2	16WP	G15_047	FROM->TO	CIMARRON - DRAPER LAKE 345KV CKT 1	717	717	0.11401	110.5381	P12:138:WFEC:MSL03
FDNS	00NR	2	16WP	G15_047	FROM->TO	CIMARRON - DRAPER LAKE 345KV CKT 1	717	717	0.11367	109.6954	CIMARRON (CIMARON2) 345/138/13.8KV TRANSFORMER CKT 1
FDNS	00NR	2	16WP	G15_047	FROM->TO	CIMARRON - DRAPER LAKE 345KV CKT 1	717	717	0.1146	109.5839	SARA - STHLAKE4 138.00 138KV CKT 1
FDNS	00NR	2	16WP	G15_047	FROM->TO	CIMARRON - DRAPER LAKE 345KV CKT 1	717	717	0.1136	109.5243	CIMARRON (CIMARON1) 345/138/13.8KV TRANSFORMER CKT 1
FDNS	00NR	2	16WP	G15_047	FROM->TO	CIMARRON - DRAPER LAKE 345KV CKT 1	717	717	0.1146	109.3844	MCCLAIN - STHLAKE4 138.00 138KV CKT 1
FDNS	00NR	2	16WP	G15_047	FROM->TO	CIMARRON - DRAPER LAKE 345KV CKT 1	717	717	0.11314	109.0835	CIMARRON - CZECH HALL 138KV CKT 1
FDNS	00NR	2	16WP	G15_047	FROM->TO	CIMARRON - DRAPER LAKE 345KV CKT 1	717	717	0.11314	108.7295	CZECH HALL - XEROX 138KV CKT 1
FDNS	00NR	2	16WP	G15_047	FROM->TO	CIMARRON - DRAPER LAKE 345KV CKT 1	717	717	0.11314	108.71	MORGAN - XEROX 138KV CKT 1
FDNS	00NR	2	16WP	G15_047	FROM->TO	CIMARRON - DRAPER LAKE 345KV CKT 1	717	717	0.11314	108.5927	MORGAN - MUSTANG 138KV CKT 1
FDNS	00NR	2	16WP	G15_047	FROM->TO	CIMARRON - DRAPER LAKE 345KV CKT 1	717	717	0.1124	108.5218	ANADARKO - POCASSETT 138KV CKT 1
FDNS	00NR	2	16WP	G15_047	FROM->TO	CIMARRON - DRAPER LAKE 345KV CKT 1	717	717	0.11189	108.4142	GEN515040 1-SEMINOLE 1G
FDNS	00NR	2	16WP	G15_047	FROM->TO	CIMARRON - DRAPER LAKE 345KV CKT 1	717	717	0.1124	108.3238	POCASSETT - TUTTLE 138KV CKT 1
FDNS	00NR	2	16WP	G15_047	FROM->TO	CIMARRON - DRAPER LAKE 345KV CKT 1	717	717	0.11268	108.2369	LACYGNE - WAVERLY7 345.00 345KV CKT 1
FDNS	00NR	2	16WP	G15_047	FROM->TO	CIMARRON - DRAPER LAKE 345KV CKT 1	717	717	0.11257	108.2139	CORN TAP - NAPLESTP 138.00 138KV CKT 1
FDNS	00NR	2	16WP	G15_047	FROM->TO	CIMARRON - DRAPER LAKE 345KV CKT 1	717	717	0.11352	108.1853	JOHNSON COUNTY - SUNNYSIDE 345KV CKT 1
FDNS	00NR	2	16WP	G15_047	FROM->TO	CIMARRON - DRAPER LAKE 345KV CKT 1	717	717	0.11257	108.1177	NAPLESTP 138.00 - PAYNE 138.00 138KV CKT 1
FDNS	00NR	2	16WP	G15_047	FROM->TO	CIMARRON - DRAPER LAKE 345KV CKT 1	717	717	0.11268	108.0345	WAVERLY7 345.00 - WOLF CREEK 345KV CKT 1
FDNS	00NR	2	16WP	G15_047	FROM->TO	CIMARRON - DRAPER LAKE 345KV CKT 1	717	717	0.11189	108.0025	GEN509403 1-PIRKEY GENERATION
FDNS	00NR	2	16WP	G15_047	FROM->TO	CIMARRON - DRAPER LAKE 345KV CKT 1	717	717	0.11189	107.9538	GEN501801 1-DOLET HILLS UNIT1
FDNS	00NR	2	16WP	G15_047	FROM->TO	CIMARRON - DRAPER LAKE 345KV CKT 1	717	717	0.11189	107.9462	GEN509416 1-TURK GENERATION
FDNS	00NR	2	16WP	G15_047	FROM->TO	CIMARRON - DRAPER LAKE 345KV CKT 1	717	717	0.11361	107.9364	CANEYRV7 345.00 - NEOSHO 345KV CKT 1
FDNS	00NR	2	16WP	G15_047	FROM->TO	CIMARRON - DRAPER LAKE 345KV CKT 1	717	717	0.1124	107.8144	BRIDGECR 138.00 - TUTTLE 138KV CKT 1
FDNS	00NR	2	16WP	G15_047	FROM->TO	CIMARRON - DRAPER LAKE 345KV CKT 1	717	717	0.11361	107.6338	CANEYRV7 345.00 - LATHAMS7 345.00 345KV CKT 1
FDNS	00NR	2	16WP	G15_047	FROM->TO	CIMARRON - DRAPER LAKE 345KV CKT 1	717	717	0.11189	107.6312	GEN336821 1-GRAND GULF UNIT
FDNS	00NR	2	16WP	G15_047	FROM->TO	CIMARRON - DRAPER LAKE 345KV CKT 1	717	717	0.11189	107.5364	GEN515042 1-SEMINOLE 3G
FDNS	00NR	2	16WP	G15_047	FROM->TO	CIMARRON - DRAPER LAKE 345KV CKT 1	717	717	0.1124	107.4437	BRIDGECR 138.00 - SUNSHINE CANYON 138KV CKT 1
FDNS	00NR	2	16WP	G15_047	FROM->TO	CIMARRON - DRAPER LAKE 345KV CKT 1	717	717	0.1124	107.4304	P12:138:WFEC:MSL01
FDNS	00NR	2	16WP	G15_047	FROM->TO	CIMARRON - DRAPER LAKE 345KV CKT 1	717	717	0.11189	107.3353	GEN336153 1-WATERFORD UNIT#3
FDNS	00NR	2	16WP	G15_047	FROM->TO	CIMARRON - DRAPER LAKE 345KV CKT 1	717	717	0.11189	107.3028	GEN515041 1-SEMINOLE 2G
FDNS	00NR	2	16WP	G15_047	FROM->TO	CIMARRON - DRAPER LAKE 345KV CKT 1	717	717	0.11361	107.1911	LATHAMS7 345.00 - ROSE HILL 345KV CKT 1
FDNS	00NR	2	16WP	G15_047	FROM->TO	CIMARRON - DRAPER LAKE 345KV CKT 1	717	717	0.11189	107.1021	GEN509406 1-WELSH #3
FDNS	00NR	2	16WP	G15_047	FROM->TO	CIMARRON - DRAPER LAKE 345KV CKT 1	717	717	0.11189	107.1019	GEN509404 1-WELSH #1
FDNS	00NR	2	16WP	G15_047	FROM->TO	CIMARRON - DRAPER LAKE 345KV CKT 1	717	717	0.10788	107.0778	CIMARRON - NORTHWEST 345KV CKT 1
FDNS	00NR	2	16WP	G15_047	FROM->TO	CIMARRON - DRAPER LAKE 345KV CKT 1	717	717	0.11189	107.0366	GEN335831 1-RIVERBEND UNIT#1
FDNS	00NR	2	16WP	G15_047	FROM->TO	CIMARRON - DRAPER LAKE 345KV CKT 1	717	717	0.11189	107.0093	GEN337911 1-ARKANSAS NUCLEAR ONE UNIT #2
FDNS	00NR	2	17SP	G15_047	FROM->TO	CIMARRON - DRAPER LAKE 345KV CKT 1	717	717	0.10805	106.8798	G14-057T 345.00 - SUNNYSIDE 345KV CKT 1
FDNS	00NR	2	16WP	G15_047	FROM->TO	CIMARRON - DRAPER LAKE 345KV CKT 1	717	717	0.11083	106.7532	CANADIAN RIVER - MUSKOGEE 345KV CKT 1
FDNS	00NR	2	16WP	G15_047	FROM->TO	CIMARRON - DRAPER LAKE 345KV CKT 1	717	717	0.112	106.7407	HUGO - SUNNYSIDE 345KV CKT 1
FDNS	00NR	2	16WP	G15_047	FROM->TO	CIMARRON - DRAPER LAKE 345KV CKT 1	717	717	0.11243	106.6461	P12:138:OKGE:3TERM14
FDNS	00NR	2	16WP	G15_047	FROM->TO	CIMARRON - DRAPER LAKE 345KV CKT 1	717	717	0.11335	106.6391	JOHNSON COUNTY - PITTSBURG 345KV CKT 1
FDNS	00NR	2	16WP	G15_047	FROM->TO	CIMARRON - DRAPER LAKE 345KV CKT 1	717	717	0.11335	106.6391	JOHNSON COUNTY - PITTSBURG 345KV CKT 1
FDNS	00NR	2	16WP	G15_047	FROM->TO	CIMARRON - DRAPER LAKE 345KV CKT 1	717	717	0.11189	106.638	GRAND GULF 500/22.0KV TRANSFORMER CKT 1
FDNS	00NR	2	16WP	G15_047	FROM->TO	CIMARRON - DRAPER LAKE 345KV CKT 1	717	717	0.11189	106.6339	GEN337910 1-ARKANSAS NUCLEAR ONE UNIT #1
FDNS	00NR	2	16WP	G15_047	FROM->TO	CIMARRON - DRAPER LAKE 345KV CKT 1	717	717	0.11294	106.6257	HORSESHOE LAKE - JONES TAP 138KV CKT 1
FDNS	00NR	2	16WP	G15_047	FROM->TO	CIMARRON - DRAPER LAKE 345KV CKT 1	717	717	0.11376	106.6133	MORISNT4 138.00 - STILLWATER 138KV CKT 1
FDNS	00NR	2	16WP	G15_047	FROM->TO	CIMARRON - DRAPER LAKE 345KV CKT 1	717	717	0.11374	106.6087	P12:138:OKGE:3TERM2
FDNS	00NR	2	16WP	G15_047	FROM->TO	CIMARRON - DRAPER LAKE 345KV CKT 1	717	717	0.11049	106.5858	REDBUD - RIVERSIDE STATION 345KV CKT 1
FDNS	00NR	2	16WP	G15_047	FROM->TO	CIMARRON - DRAPER LAKE 345KV CKT 1	717	717	0.11049	106.5858	REDBUD - RIVERSIDE STATION 345KV CKT 1
FDNS	00NR	2	16WP	G15_047	FROM->TO	CIMARRON - DRAPER LAKE 345KV CKT 1	717	717	0.11189	106.4831	GEN501813 1-RODEMACHER UNIT 3
FDNS	00NR	2	16WP	G15_047	FROM->TO	CIMARRON - DRAPER LAKE 345KV CKT 1	717	717	0.11189	106.4757	GEN515226 1-MUSKOGEE 6G
FDNS	00NR	2	16WP	G15_047	FROM->TO	CIMARRON - DRAPER LAKE 345KV CKT 1	717	717	0.11267	106.3936	NORTHWEST (NORTWST2) 345/138/13.8KV TRANSFORMER CKT 1
FDNS	00NR	2	16WP	G15_047	FROM->TO	CIMARRON - DRAPER LAKE 345KV CKT 1	717	717	0.1114	106.3867	ARCADIA - KAMO MEMORIAL 138KV CKT 1
FDNS	00NR	2	16WP	G15_047	FROM->TO	CIMARRON - DRAPER LAKE 345KV CKT 1	717	717	0.11284	106.382	BAILEY4 138.00 - SUNSHINE CANYON 138KV CKT 1
FDNS	00NR	2	16WP	G15_047	FROM->TO	CIMARRON - DRAPER LAKE 345KV CKT 1	717	717	0.11196	106.3599	P12:138:OKGE:3TERM12
FDNS	00NR	2	16WP	G15_047	FROM->TO	CIMARRON - DRAPER LAKE 345KV CKT 1	717	717	0.11201	106.3184	7SAREPTA% 345.00 - LONGWOOD 345KV CKT 1
FDNS	00NR	2	16WP	G15_047	FROM->TO	CIMARRON - DRAPER LAKE 345KV CKT 1	717	717	0.11201	106.3184	7SAREPTA% 345.00 - LONGWOOD 345KV CKT 1
FDNS	00NR	2	16WP	G15_047	FROM->TO	CIMARRON - DRAPER LAKE 345KV CKT 1	717	717	0.11196	106.3044	DOLET HILLS - SOUTHWEST SHREVEPORT 345KV CKT 1
FDNS	00NR	2	16WP	G15_047	FROM->TO	CIMARRON - DRAPER LAKE 345KV CKT 1	717	717	0.11196	106.3044	DOLET HILLS - SOUTHWEST SHREVEPORT 345KV CKT 1
FDNS	00NR	2	16WP	G15_047	FROM->TO	CIMARRON - DRAPER LAKE 345KV CKT 1	717	717	0.113	106.2996	MEMORIAL - SKYLINE 138KV CKT 1
FDNS	00NR	2	16WP	G15_047	FROM->TO	CIMARRON - DRAPER LAKE 345KV CKT 1	717	717	0.11189	106.2945	GEN335206 1-NELSON UNIT 6
FDNS	00NR	2	16WP	G15_047	FROM->TO	CIMARRON - DRAPER LAKE 345KV CKT 1	717	717	0.11189	106.2794	GEN515225 1-MUSKOGEE 5G
FDNS	00NR	2	16WP	G15_047	FROM->TO	CIMARRON - DRAPER LAKE 345KV CKT 1	717	717	0.11189	106.2793	GEN515223 1-MUSKOGEE 4G
FDNS	00NR	2	16WP	G15_047	FROM->TO	CIMARRON - DRAPER LAKE 345KV CKT 1	717	717	0.11265	106.2422	GRACEMONT (BANK 1) 345/138/13.8KV TRANSFORMER CKT 1
FDNS	00NR	2	16WP	G15_047	FROM->TO	CIMARRON - DRAPER LAKE 345KV CKT 1	717	717	0.11202	106.1951	G15074_T 345.00 - HOYT 345KV CKT 1
FDNS	00NR	2	16WP	G15_047	FROM->TO	CIMARRON - DRAPER LAKE 345KV CKT 1	717	717	0.11297	106.1886	QUAIL CREEK - SKYLINE 138KV CKT 1
FDNS	00NR	2	16WP	G15_047	FROM->TO	CIMARRON - DRAPER LAKE 345KV CKT 1	717	717	0.11326	106.1598	P12:138:OKGE:3TERM18
FDNS	00NR	2	16WP	G15_047	FROM->TO	CIMARRON - DRAPER LAKE 345KV CKT 1	717	717	0.11189	106.1411	GEN509409 1-WILKES #3
FDNS	00NR	2	16WP	G15_047	FROM->TO	CIMARRON - DRAPER LAKE 345KV CKT 1	717	717	0.11189	106.1299	GEN337653 1-WHITE BLUFF UNIT #2
FDNS	00NR	2	16WP	G15_047	FROM->TO	CIMARRON - DRAPER LAKE 345KV CKT 1	717	717	0.11261	106.129	NORTHWEST (NORTWST4) 345/138/13.8KV TRANSFORMER CKT 1
FDNS	00NR	2	16WP	G15_047	FROM->TO	CIMARRON - DRAPER LAKE 345KV CKT 1	717	717	0.11189	106.1234	GEN501812 1-RODEMACHER UNIT 2
FDNS	00NR	2	16WP	G15_047	FROM->TO	CIMARRON - DRAPER LAKE 345KV CKT 1	717	717	0.11284	106.0822	BAILEY4 138.00 - WESTMOORE 138KV CKT 1
FDNS	00NR	2	16WP	G15_047	FROM->TO	CIMARRON - DRAPER LAKE 345KV CKT 1	717	717	0.11322	106.0779	36 & MERIDIAN - CHEMTRON 138KV CKT 1
FDNS	00NR	2	16WP	G15_047	FROM->TO	CIMARRON - DRAPER LAKE 345KV CKT 1	717	717	0.11189	106.0648	NEW MADRID 161/22.0KV TRANSFORMER CKT 1
FDNS	00NR	2	16WP	G15_047	FROM->TO	CIMARRON - DRAPER LAKE 345KV CKT 1	717	717	0.11189	106.0522	NEW MADRID 345/22.0KV TRANSFORMER CKT 1

SOLUTION	GROUP	SCENARIO	SEASON	SOURCE	DIRECTION	MONITORED ELEMENT	RATEA (MVA)	RATEB(MVA)	TDF	TC%LOADING (% MVA)	CONTINGENCY
FDNS	00NR	2	16WP	G15_047	FROM->TO	CIMARRON - DRAPER LAKE 345KV CKT 1	717	717	0.11189	106.0286	GEN520947 1-HUGO1
FDNS	00NR	2	16WP	G15_047	FROM->TO	CIMARRON - DRAPER LAKE 345KV CKT 1	717	717	0.11261	106.0025	NORTHWEST (NORTWST3) 345/138/13.8KV TRANSFORMER CKT 1
FDNS	00NR	2	16WP	G15_047	FROM->TO	CIMARRON - DRAPER LAKE 345KV CKT 1	717	717	0.11189	106.001	GEN337652 1-WHITE BLUFF UNIT #1
FDNS	00NR	2	16WP	G15_047	FROM->TO	CIMARRON - DRAPER LAKE 345KV CKT 1	717	717	0.11322	105.991	CHEMTRON - PENNSYLVANIA 138KV CKT 1
FDNS	00NR	2	16WP	G15_047	FROM->TO	CIMARRON - DRAPER LAKE 345KV CKT 1	717	717	0.11156	105.9645	THISTLE7 345.00 - WOODWARD DISTRICT EHV 345KV CKT 1
FDNS	00NR	2	16WP	G15_047	FROM->TO	CIMARRON - DRAPER LAKE 345KV CKT 1	717	717	0.11156	105.9645	THISTLE7 345.00 - WOODWARD DISTRICT EHV 345KV CKT 1
FDNS	00NR	2	16WP	G15_047	FROM->TO	CIMARRON - DRAPER LAKE 345KV CKT 1	717	717	0.11156	105.9645	THISTLE7 345.00 - WOODWARD DISTRICT EHV 345KV CKT 2
FDNS	00NR	2	16WP	G15_047	FROM->TO	CIMARRON - DRAPER LAKE 345KV CKT 1	717	717	0.11156	105.9645	THISTLE7 345.00 - WOODWARD DISTRICT EHV 345KV CKT 2
FDNS	00NR	2	16WP	G15_047	FROM->TO	CIMARRON - DRAPER LAKE 345KV CKT 1	717	717	0.11196	105.943	7SAREPTA% 345.00 - ELDORADO EHV 345KV CKT 1
FDNS	00NR	2	16WP	G15_047	FROM->TO	CIMARRON - DRAPER LAKE 345KV CKT 1	717	717	0.11196	105.9429	3TR3AR8EL7EL
FDNS	00NR	2	16WP	G15_047	FROM->TO	CIMARRON - DRAPER LAKE 345KV CKT 1	717	717	0.11196	105.9366	ELDORADO EHV 500/345KV TRANSFORMER CKT 1
FDNS	00NR	2	16WP	G15_047	FROM->TO	CIMARRON - DRAPER LAKE 345KV CKT 1	717	717	0.11297	105.9137	BLANCHARD - CORNVILLE 138KV CKT 1
FDNS	00NR	2	16WP	G15_047	FROM->TO	CIMARRON - DRAPER LAKE 345KV CKT 1	717	717	0.11236	105.8917	P12:138:OKGE:3TERM17
FDNS	00NR	2	16WP	G15_047	FROM->TO	CIMARRON - DRAPER LAKE 345KV CKT 1	717	717	0.11214	105.8801	COMANCHE - LOCO 138KV CKT 1
FDNS	00NR	2	16WP	G15_047	FROM->TO	CIMARRON - DRAPER LAKE 345KV CKT 1	717	717	0.11535	105.869	G15052_T 345.00 - ROSE HILL 345KV CKT 1
FDNS	00NR	2	16WP	G15_047	FROM->TO	CIMARRON - DRAPER LAKE 345KV CKT 1	717	717	0.11286	105.8508	P12:138:OKGE:3TERM11
FDNS	00NR	2	16WP	G15_047	FROM->TO	CIMARRON - DRAPER LAKE 345KV CKT 1	717	717	0.11189	105.8458	GEN515577 1-ARBWND11 0.6900
FDNS	00NR	2	16WP	G15_047	FROM->TO	CIMARRON - DRAPER LAKE 345KV CKT 1	717	717	0.1124	105.8285	LONEOAK - NORTHWEST 138KV CKT 1
FDNS	00NR	2	16WP	G15_047	FROM->TO	CIMARRON - DRAPER LAKE 345KV CKT 1	717	717	0.11189	105.8273	GEN334440 1-SABINE UNIT 4
FDNS	00NR	2	16WP	G15_047	FROM->TO	CIMARRON - DRAPER LAKE 345KV CKT 1	717	717	0.11297	105.8228	P12:138:AEPW-OGE:CORNVIL4:MAUD 4
FDNS	00NR	2	16WP	G15_047	FROM->TO	CIMARRON - DRAPER LAKE 345KV CKT 1	717	717	0.11202	105.8211	HOYT - STRANGER CREEK 345KV CKT 1
FDNS	00NR	2	16WP	G15_047	FROM->TO	CIMARRON - DRAPER LAKE 345KV CKT 1	717	717	0.11553	105.8162	CLARKSVILLE - ONETA 345KV CKT 1
FDNS	00NR	2	16WP	G15_047	FROM->TO	CIMARRON - DRAPER LAKE 345KV CKT 1	717	717	0.11553	105.8162	CLARKSVILLE - ONETA 345KV CKT 1
FDNS	00NR	2	16WP	G15_047	FROM->TO	CIMARRON - DRAPER LAKE 345KV CKT 1	717	717	0.11202	105.8145	G15074_T 345.00 - JEFFREY ENERGY CENTER 345KV CKT 1
FDNS	00NR	2	16WP	G15_047	FROM->TO	CIMARRON - DRAPER LAKE 345KV CKT 1	717	717	0.11189	105.8145	DELL 500 - ESSEX UNIT 2 500KV CKT Z1
FDNS	00NR	2	16WP	G15_047	FROM->TO	CIMARRON - DRAPER LAKE 345KV CKT 1	717	717	0.11273	105.8141	KETCH TAP - NORTHWEST 138KV CKT 1
FDNS	00NR	2	16WP	G15_047	FROM->TO	CIMARRON - DRAPER LAKE 345KV CKT 1	717	717	0.1124	105.8047	DIVISION AVE - LAKESIDE 138KV CKT 1
FDNS	00NR	2	16WP	G15_047	FROM->TO	CIMARRON - DRAPER LAKE 345KV CKT 1	717	717	0.11284	105.8009	FRANKLIN SW - WESTMOORE 138KV CKT 1
FDNS	00NR	2	16WP	G15_047	FROM->TO	CIMARRON - DRAPER LAKE 345KV CKT 1	717	717	0.11191	105.7881	HORSESHOE LAKE - KAMO MEMORIAL 138KV CKT 1
FDNS	00NR	2	16WP	G15_047	FROM->TO	CIMARRON - DRAPER LAKE 345KV CKT 1	717	717	0.11242	105.7432	NORTHWEST - PANTHER 138KV CKT 1
FDNS	00NR	2	16WP	G15_047	FROM->TO	CIMARRON - DRAPER LAKE 345KV CKT 1	717	717	0.1129	105.7378	P12:138:OKGE:3TERM20
FDNS	00NR	2	16WP	G15_047	FROM->TO	CIMARRON - DRAPER LAKE 345KV CKT 1	717	717	0.11297	105.7206	BLANCHARD - MAUD 138KV CKT 1
FDNS	00NR	2	16WP	G15_047	FROM->TO	CIMARRON - DRAPER LAKE 345KV CKT 1	717	717	0.11213	105.7122	P12:138:OKGE:3TERM47
FDNS	00NR	2	16WP	G15_047	FROM->TO	CIMARRON - DRAPER LAKE 345KV CKT 1	717	717	0.11206	105.7091	CIMARRON - HAYMAKER 138KV CKT 1
FDNS	00NR	2	16WP	G15_047	FROM->TO	CIMARRON - DRAPER LAKE 345KV CKT 1	717	717	0.11238	105.6998	BLACKBERRY - NEOSHO 345KV CKT 1
FDNS	00NR	2	16WP	G15_047	FROM->TO	CIMARRON - DRAPER LAKE 345KV CKT 1	717	717	0.11238	105.6998	BLACKBERRY - NEOSHO 345KV CKT 1
FDNS	00NR	2	16WP	G15_047	FROM->TO	CIMARRON - DRAPER LAKE 345KV CKT 1	717	717	0.11226	105.6957	G14-074T 345.00 - OKLAUNION 345KV CKT 1
FDNS	00NR	2	16WP	G15_047	FROM->TO	CIMARRON - DRAPER LAKE 345KV CKT 1	717	717	0.11242	105.6927	PANTHER - SILVER LAKE 138KV CKT 1
FDNS	00NR	2	16WP	G15_047	FROM->TO	CIMARRON - DRAPER LAKE 345KV CKT 1	717	717	0.11189	105.685	DOLET HILLS 345/24.0KV TRANSFORMER CKT 1
FDNS	00NR	2	16WP	G15_047	FROM->TO	CIMARRON - DRAPER LAKE 345KV CKT 1	717	717	0.1124	105.6804	HEFNER - LAKESIDE 138KV CKT 1
FDNS	00NR	2	16WP	G15_047	FROM->TO	CIMARRON - DRAPER LAKE 345KV CKT 1	717	717	0.11189	105.6772	GEN336252 1-NINEMILE POINT UNIT#5
FDNS	00NR	2	16WP	G15_047	FROM->TO	CIMARRON - DRAPER LAKE 345KV CKT 1	717	717	0.11301	105.6457	KETCH - KETCH TAP 138KV CKT 1
FDNS	00NR	2	16WP	G15_047	FROM->TO	CIMARRON - DRAPER LAKE 345KV CKT 1	717	717	0.11189	105.6454	WHITE BLUFF 500/26.0KV TRANSFORMER CKT 1
FDNS	00NR	2	16WP	G15_047	FROM->TO	CIMARRON - DRAPER LAKE 345KV CKT 1	717	717	0.11205	105.636	SWISSVALE - WEST GARDNER 345KV CKT 1
FDNS	00NR	2	16WP	G15_047	FROM->TO	CIMARRON - DRAPER LAKE 345KV CKT 1	717	717	0.11239	105.6215	DIVISION AVE - MUSTANG 138KV CKT 1
FDNS	00NR	2	16WP	G15_047	FROM->TO	CIMARRON - DRAPER LAKE 345KV CKT 1	717	717	0.11249	105.6148	P12:138:AEPW-OGE:SHIDLER4:OSAGE 4
FDNS	00NR	2	16WP	G15_047	FROM->TO	CIMARRON - DRAPER LAKE 345KV CKT 1	717	717	0.11172	105.6086	FINNEY SWITCHING STATION - HOLCOMB 345KV CKT 1
FDNS	00NR	2	16WP	G15_047	FROM->TO	CIMARRON - DRAPER LAKE 345KV CKT 1	717	717	0.11172	105.6086	FINNEY SWITCHING STATION - HOLCOMB 345KV CKT 1
FDNS	00NR	2	16WP	G15_047	FROM->TO	CIMARRON - DRAPER LAKE 345KV CKT 1	717	717	0.11189	105.6079	GEN509408 1-WILKES #2
FDNS	00NR	2	16WP	G15_047	FROM->TO	CIMARRON - DRAPER LAKE 345KV CKT 1	717	717	0.11206	105.6013	DIVISION AVE - HAYMAKER 138KV CKT 1
FDNS	00NR	2	16WP	G15_047	FROM->TO	CIMARRON - DRAPER LAKE 345KV CKT 1	717	717	0.11189	105.5965	GEN300006 1-NEW MADRID UNIT 1
FDNS	00NR	2	16WP	G15_047	FROM->TO	CIMARRON - DRAPER LAKE 345KV CKT 1	717	717	0.11282	105.5922	MCCLAIN - PLEASANT VALLEY 138KV CKT 1
FDNS	00NR	2	16WP	G15_047	FROM->TO	CIMARRON - DRAPER LAKE 345KV CKT 1	717	717	0.11189	105.5839	GEN300007 1-NEW MADRID UNIT 2
FDNS	00NR	2	16WP	G15_047	FROM->TO	CIMARRON - DRAPER LAKE 345KV CKT 1	717	717	0.11202	105.5687	P12:138:WFEC:MSL02
FDNS	00NR	2	16WP	G15_047	FROM->TO	CIMARRON - DRAPER LAKE 345KV CKT 1	717	717	0.11212	105.5653	LACYGNE - NEOSHO 345KV CKT 1
FDNS	00NR	2	16WP	G15_047	FROM->TO	CIMARRON - DRAPER LAKE 345KV CKT 1	717	717	0.11232	105.562	P12:138:AEPW:OKMULGE4:R.S.S-4
FDNS	00NR	2	16WP	G15_047	FROM->TO	CIMARRON - DRAPER LAKE 345KV CKT 1	717	717	0.11189	105.556	GEN335204 1-NELSON UNIT 4
FDNS	00NR	2	16WP	G15_047	FROM->TO	CIMARRON - DRAPER LAKE 345KV CKT 1	717	717	0.11189	105.5382	GEN336831 1-BAXTER WILSON SES
FDNS	00NR	2	16WP	G15_047	FROM->TO	CIMARRON - DRAPER LAKE 345KV CKT 1	717	717	0.11199	105.5345	ANADARKO - GEORGIA 138KV CKT 1
FDNS	00NR	2	16WP	G15_047	FROM->TO	CIMARRON - DRAPER LAKE 345KV CKT 1	717	717	0.11193	105.5344	G15088_T 345.00 - MOORE 345KV CKT 1
FDNS	00NR	2	16WP	G15_047	FROM->TO	CIMARRON - DRAPER LAKE 345KV CKT 1	717	717	0.11267	105.5337	CLASSEN - ROBINSON 138KV CKT 1
FDNS	00NR	2	16WP	G15_047	FROM->TO	CIMARRON - DRAPER LAKE 345KV CKT 1	717	717	0.11205	105.5269	EMPORIA ENERGY CENTER - SWISSVALE 345KV CKT 1
FDNS	00NR	2	16WP	G15_047	FROM->TO	CIMARRON - DRAPER LAKE 345KV CKT 1	717	717	0.11141	105.521	BENTON - WICHITA 345KV CKT 1
FDNS	00NR	2	16WP	G15_047	FROM->TO	CIMARRON - DRAPER LAKE 345KV CKT 1	717	717	0.11189	105.5131	GEN506754 1-LEBROCK STEAM 1
FDNS	00NR	2	16WP	G15_047	FROM->TO	CIMARRON - DRAPER LAKE 345KV CKT 1	717	717	0.11229	105.5113	EMPORIA ENERGY CENTER - G14_001T 345.00 345KV CKT 1
FDNS	00NR	2	16WP	G15_047	FROM->TO	CIMARRON - DRAPER LAKE 345KV CKT 1	717	717	0.11189	105.5044	GEN334441 1-SABINE UNIT 5
FDNS	00NR	2	16WP	G15_047	FROM->TO	CIMARRON - DRAPER LAKE 345KV CKT 1	717	717	0.11189	105.4986	GEN334071 1-LEWIS CREEK 2
FDNS	00NR	2	16WP	G15_047	FROM->TO	CIMARRON - DRAPER LAKE 345KV CKT 1	717	717	0.11189	105.4908	GEN334070 1-LEWIS CREEK 1
FDNS	00NR	2	16WP	G15_047	FROM->TO	CIMARRON - DRAPER LAKE 345KV CKT 1	717	717	0.11219	105.474	CRINER - PAYNE 138.00 138KV CKT 1
FDNS	00NR	2	16WP	G15_047	FROM->TO	CIMARRON - DRAPER LAKE 345KV CKT 1	717	717	0.11189	105.4738	GEN336251 1-NINEMILE POINT UNIT#4
FDNS	00NR	2	16WP	G15_047	FROM->TO	CIMARRON - DRAPER LAKE 345KV CKT 1	717	717	0.11199	105.4706	FLETCHER - GEORGIA 138KV CKT 1
FDNS	00NR	2	16WP	G15_047	FROM->TO	CIMARRON - DRAPER LAKE 345KV CKT 1	717	717	0.11197	105.4467	WEBRE - WELLS 500KV CKT 1
FDNS	00NR	2	16WP	G15_047	FROM->TO	CIMARRON - DRAPER LAKE 345KV CKT 1	717	717	0.11189	105.4465	GEN590011 2-ERCOT EQUIVALENCE
FDNS	00NR	2	16WP	G15_047	FROM->TO	CIMARRON - DRAPER LAKE 345KV CKT 1	717	717	0.11313	105.4267	WOODRING (WOODRNG2) 345/138/13.8KV TRANSFORMER CKT 1
FDNS	00NR	2	16WP	G15_047	FROM->TO	CIMARRON - DRAPER LAKE 345KV CKT 1	717	717	0.11172	105.4241	FINNEY SWITCHING STATION - Hitchland Interchange 345KV CKT 1
FDNS	00NR	2	16WP	G15_047	FROM->TO	CIMARRON - DRAPER LAKE 345KV CKT 1	717	717	0.1124	105.4224	LONEOAK - QUAIL CREEK 138KV CKT 1
FDNS	00NR	2	16WP	G15_047	FROM->TO	CIMARRON - DRAPER LAKE 345KV CKT 1	717	717	0.11201	105.4183	EMPIRE - FLETCHER 138KV CKT 1
FDNS	00NR	2	16WP	G15_047	FROM->TO	CIMARRON - DRAPER LAKE 345KV CKT 1	717	717	0.11189	105.4132	GEN501811 1-RODEMACHER UNIT 1
FDNS	00NR	2	16WP	G15_047	FROM->TO	CIMARRON - DRAPER LAKE 345KV CKT 1	717	717	0.11249	105.4087	OSAGE - WEBB CITY TAP 138KV CKT 1

SOLUTION	GROUP	SCENARIO	SEASON	SOURCE	DIRECTION	MONITORED ELEMENT	RATEA (MVA)	RATEB(MVA)	TDF	TC%LOADING (% MVA)	CONTINGENCY
FDNS	00NR	2	16WP	G15_047	FROM->TO	CIMARRON - DRAPER LAKE 345KV CKT 1	717	717	0.11189	105.4058	GEN590010 1-ERCOT EQUIVALENCE
FDNS	00NR	2	16WP	G15_047	FROM->TO	CIMARRON - DRAPER LAKE 345KV CKT 1	717	717	0.11189	105.3996	GEN503909 1-FULTONU1 1 16.000
FDNS	00NR	2	16WP	G15_047	FROM->TO	CIMARRON - DRAPER LAKE 345KV CKT 1	717	717	0.11189	105.3959	GEN338146 1-INDEPENDENCE UNIT #2
FDNS	00NR	2	16WP	G15_047	FROM->TO	CIMARRON - DRAPER LAKE 345KV CKT 1	717	717	0.11189	105.3903	FRONTIER - GRIMES 345KV CKT 1
FDNS	00NR	2	16WP	G15_047	FROM->TO	CIMARRON - DRAPER LAKE 345KV CKT 1	717	717	0.11173	105.3841	G1524G1525 345.00 - THISTLE7 345.00 345KV CKT 1
FDNS	00NR	2	16WP	G15_047	FROM->TO	CIMARRON - DRAPER LAKE 345KV CKT 1	717	717	0.11173	105.3841	G1524G1525 345.00 - THISTLE7 345.00 345KV CKT 2
FDNS	00NR	2	16WP	G15_047	FROM->TO	CIMARRON - DRAPER LAKE 345KV CKT 1	717	717	0.11271	105.3824	SPVALLY4 138.00 - STILLWATER 138KV CKT 1
FDNS	00NR	2	16WP	G15_047	FROM->TO	CIMARRON - DRAPER LAKE 345KV CKT 1	717	717	0.11189	105.3766	GEN334433 1-SABINE UNIT 3
FDNS	00NR	2	16WP	G15_047	FROM->TO	CIMARRON - DRAPER LAKE 345KV CKT 1	717	717	0.11229	105.3756	G14_001T 345.00 - WICHITA 345KV CKT 1
FDNS	00NR	2	16WP	G15_047	FROM->TO	CIMARRON - DRAPER LAKE 345KV CKT 1	717	717	0.11189	105.3752	P12:069:OKGE:3TERM4
FDNS	00NR	2	16WP	G15_047	FROM->TO	CIMARRON - DRAPER LAKE 345KV CKT 1	717	717	0.11189	105.3707	GEN334030 1-FRONTIER UNIT 1
FDNS	00NR	2	16WP	G15_047	FROM->TO	CIMARRON - DRAPER LAKE 345KV CKT 1	717	717	0.11189	105.3695	GEN334031 1-FRONTIER UNIT 2
FDNS	00NR	2	16WP	G15_047	FROM->TO	CIMARRON - DRAPER LAKE 345KV CKT 1	717	717	0.11189	105.3681	GEN303007 1-1BC2 U2
FDNS	00NR	2	16WP	G15_047	FROM->TO	CIMARRON - DRAPER LAKE 345KV CKT 1	717	717	0.11189	105.3633	GEN303006 1-1BC2 U1
FDNS	00NR	2	16WP	G15_047	FROM->TO	CIMARRON - DRAPER LAKE 345KV CKT 1	717	717	0.11201	105.3556	COMANCHE - EMPIRE 138KV CKT 1
FDNS	00NR	2	16WP	G15_047	FROM->TO	CIMARRON - DRAPER LAKE 345KV CKT 1	717	717	0.11271	105.353	PAYNESB4 138.00 - SPVALLY4 138.00 138KV CKT 1
FDNS	00NR	2	16WP	G15_047	FROM->TO	CIMARRON - DRAPER LAKE 345KV CKT 1	717	717	0.11219	105.3494	COLE - CRINER 138KV CKT 1
FDNS	00NR	2	16WP	G15_047	FROM->TO	CIMARRON - DRAPER LAKE 345KV CKT 1	717	717	0.11189	105.3464	GEN336191 1-LITTLE GYPSY UNIT#3
FDNS	00NR	2	16WP	G15_047	FROM->TO	CIMARRON - DRAPER LAKE 345KV CKT 1	717	717	0.11189	105.3444	GEN337041 1-GERALD ANDRUS
FDNS	00NR	2	16WP	G15_047	FROM->TO	CIMARRON - DRAPER LAKE 345KV CKT 1	717	717	0.1119	105.3407	P12:161:AEPW:DYESS 5:HYLAND 5
FDNS	00NR	2	16WP	G15_047	FROM->TO	CIMARRON - DRAPER LAKE 345KV CKT 1	717	717	0.11207	105.3381	P12:138:OKGE:3TERM13
FDNS	00NR	2	16WP	G15_047	FROM->TO	CIMARRON - DRAPER LAKE 345KV CKT 1	717	717	0.11271	105.3373	CUSHING - PAYNESB4 138.00 138KV CKT 1
FDNS	00NR	2	16WP	G15_047	FROM->TO	CIMARRON - DRAPER LAKE 345KV CKT 1	717	717	0.11192	105.3353	8DANIEL8 500.00 - MCKNIGHT 500KV CKT 1
FDNS	00NR	2	16WP	G15_047	FROM->TO	CIMARRON - DRAPER LAKE 345KV CKT 1	717	717	0.11313	105.3336	CLEAVELAND - CLEVLND 4 138.00 138KV CKT Z1
FDNS	00NR	2	16WP	G15_047	FROM->TO	CIMARRON - DRAPER LAKE 345KV CKT 1	717	717	0.11313	105.3336	CLEAVELAND - CLEVLND 4 138.00 138KV CKT Z1
FDNS	00NR	2	16WP	G15_047	FROM->TO	CIMARRON - DRAPER LAKE 345KV CKT 1	717	717	0.11313	105.3333	CLEVELAND (CLVAUTO1) 345/138/13.8KV TRANSFORMER CKT 1
FDNS	00NR	2	16WP	G15_047	FROM->TO	CIMARRON - DRAPER LAKE 345KV CKT 1	717	717	0.11313	105.3333	CLEVELAND (CLVAUTO1) 345/138/13.8KV TRANSFORMER CKT 1
FDNS	00NR	2	16WP	G15_047	FROM->TO	CIMARRON - DRAPER LAKE 345KV CKT 1	717	717	0.11124	105.3313	CANADIAN RIVER - PITTSBURG 345KV CKT 1
FDNS	00NR	2	16WP	G15_047	FROM->TO	CIMARRON - DRAPER LAKE 345KV CKT 1	717	717	0.11124	105.3313	CANADIAN RIVER - PITTSBURG 345KV CKT 1
FDNS	00NR	2	16WP	G15_047	FROM->TO	CIMARRON - DRAPER LAKE 345KV CKT 1	717	717	0.11189	105.3185	GEN509393 S1-ARSENAL HILL GENS #4 (STALL)
FDNS	00NR	2	16WP	G15_047	FROM->TO	CIMARRON - DRAPER LAKE 345KV CKT 1	717	717	0.1123	105.3182	DAYTON - MUSTANG 138KV CKT 1
FDNS	00NR	2	16WP	G15_047	FROM->TO	CIMARRON - DRAPER LAKE 345KV CKT 1	717	717	0.11189	105.3145	GEN335614 1-WILLOW GLENN UNIT#4
FDNS	00NR	2	16WP	G15_047	FROM->TO	CIMARRON - DRAPER LAKE 345KV CKT 1	717	717	0.1123	105.3132	DAYTON - HOBBY LOBBY 138KV CKT 1
FDNS	00NR	2	16WP	G15_047	FROM->TO	CIMARRON - DRAPER LAKE 345KV CKT 1	717	717	0.11189	105.303	GEN303008 1-1BC2 U3
FDNS	00NR	2	16WP	G15_047	FROM->TO	CIMARRON - DRAPER LAKE 345KV CKT 1	717	717	0.11189	105.2997	GEN509392 G2-ARSENAL HILL GENS #3 (STALL)
FDNS	00NR	2	16WP	G15_047	FROM->TO	CIMARRON - DRAPER LAKE 345KV CKT 1	717	717	0.11189	105.2996	GEN509391 G1-ARSENAL HILL GENS #2 (STALL)
FDNS	00NR	2	16WP	G15_047	FROM->TO	CIMARRON - DRAPER LAKE 345KV CKT 1	717	717	0.11224	105.296	MUSTANG - SW 5TH 138KV CKT 1
FDNS	00NR	2	16WP	G15_047	FROM->TO	CIMARRON - DRAPER LAKE 345KV CKT 1	717	717	0.11198	105.2901	7LUTESVIL 345.00 - 7ST FRANC 345.00 345KV CKT 1
FDNS	00NR	2	16WP	G15_047	FROM->TO	CIMARRON - DRAPER LAKE 345KV CKT 1	717	717	0.11189	105.2812	GEN336170 1-GULF OXY U4
FDNS	00NR	2	16WP	G15_047	FROM->TO	CIMARRON - DRAPER LAKE 345KV CKT 1	717	717	0.11189	105.2786	GEN336464 1-MICHOUD UNIT #3
FDNS	00NR	2	16WP	G15_047	FROM->TO	CIMARRON - DRAPER LAKE 345KV CKT 1	717	717	0.1119	105.2772	ELDORADO EHV - MOUNT OLIVE 500KV CKT 1
FDNS	00NR	2	16WP	G15_047	FROM->TO	CIMARRON - DRAPER LAKE 345KV CKT 1	717	717	0.11189	105.267	GEN338143 1-INDEPENDENCE UNIT #1
FDNS	00NR	2	16WP	G15_047	FROM->TO	CIMARRON - DRAPER LAKE 345KV CKT 1	717	717	0.11196	105.2572	P12:069:OKGE:3TERM19
FDNS	00NR	2	16WP	G15_047	FROM->TO	CIMARRON - DRAPER LAKE 345KV CKT 1	717	717	0.11189	105.2447	ESSEX UNIT 2 500/18.0KV TRANSFORMER CKT 1
FDNS	00NR	2	16WP	G15_047	FROM->TO	CIMARRON - DRAPER LAKE 345KV CKT 1	717	717	0.11235	105.244	OUMED 4 - STONEWALL 138KV CKT 1
FDNS	00NR	2	16WP	G15_047	FROM->TO	CIMARRON - DRAPER LAKE 345KV CKT 1	717	717	0.11267	105.241	LIGHTNING CREEK - ROBINSON 138KV CKT 1
FDNS	00NR	2	16WP	G15_047	FROM->TO	CIMARRON - DRAPER LAKE 345KV CKT 1	717	717	0.11202	105.2408	7JASPER 345.00 - BLACKBERRY 345KV CKT 1
FDNS	00NR	2	16WP	G15_047	FROM->TO	CIMARRON - DRAPER LAKE 345KV CKT 1	717	717	0.11189	105.2336	GEN336801 1-BAXTER WILSON UNIT #1
FDNS	00NR	2	16WP	G15_047	FROM->TO	CIMARRON - DRAPER LAKE 345KV CKT 1	717	717	0.11164	105.2308	ARCADIA - LGARBER4 138.00 138KV CKT 1
FDNS	00NR	2	16WP	G15_047	FROM->TO	CIMARRON - DRAPER LAKE 345KV CKT 1	717	717	0.11249	105.2291	FAIRFAX TAP - SHIDLER 138KV CKT 1
FDNS	00NR	2	16WP	G15_047	FROM->TO	CIMARRON - DRAPER LAKE 345KV CKT 1	717	717	0.11249	105.229	FAIRFAX TAP - WEBB CITY TAP 138KV CKT 1
FDNS	00NR	2	16WP	G15_047	FROM->TO	CIMARRON - DRAPER LAKE 345KV CKT 1	717	717	0.11201	105.2096	8WNEWMADRID 500.00 - DELL 500 500KV CKT 1
FDNS	00NR	2	16WP	G15_047	FROM->TO	CIMARRON - DRAPER LAKE 345KV CKT 1	717	717	0.11411	105.2044	TULSA NORTH - WEKIWA 345KV CKT 1
FDNS	00NR	2	16WP	G15_047	FROM->TO	CIMARRON - DRAPER LAKE 345KV CKT 1	717	717	0.11411	105.2044	TULSA NORTH - WEKIWA 345KV CKT 1
FDNS	00NR	2	16WP	G15_047	FROM->TO	CIMARRON - DRAPER LAKE 345KV CKT 1	717	717	0.11262	105.2039	ARKANSAS NUCLEAR ONE - FT SMITH 500KV CKT 1
FDNS	00NR	2	16WP	G15_047	FROM->TO	CIMARRON - DRAPER LAKE 345KV CKT 1	717	717	0.11262	105.2039	ARKANSAS NUCLEAR ONE - FT SMITH 500KV CKT 1
FDNS	00NR	2	16WP	G15_047	FROM->TO	CIMARRON - DRAPER LAKE 345KV CKT 1	717	717	0.11164	105.2009	CHITWOOD - LGARBER4 138.00 138KV CKT 1
FDNS	00NR	2	16WP	G15_047	FROM->TO	CIMARRON - DRAPER LAKE 345KV CKT 1	717	717	0.11189	105.198	GEN506752 1-LEBROCK GAS 1
FDNS	00NR	2	16WP	G15_047	FROM->TO	CIMARRON - DRAPER LAKE 345KV CKT 1	717	717	0.11189	105.1978	GEN506753 1-LEBROCK GAS 2
FDNS	00NR	2	16WP	G15_047	FROM->TO	CIMARRON - DRAPER LAKE 345KV CKT 1	717	717	0.11189	105.1962	GEN501910 1-ACADIA UNIT ST1
FDNS	00NR	2	16WP	G15_047	FROM->TO	CIMARRON - DRAPER LAKE 345KV CKT 1	717	717	0.11164	105.1885	CHITWOOD - JONES TAP 138KV CKT 1
FDNS	00NR	2	16WP	G15_047	FROM->TO	CIMARRON - DRAPER LAKE 345KV CKT 1	717	717	0.11189	105.1852	RODEMACHER 230/22.0KV TRANSFORMER CKT 1
FDNS	00NR	2	16WP	G15_047	FROM->TO	CIMARRON - DRAPER LAKE 345KV CKT 1	717	717	0.1119	105.1817	P12:138:AEPW-OGE:WTH_JCT4:JENSEN4
FDNS	00NR	2	16WP	G15_047	FROM->TO	CIMARRON - DRAPER LAKE 345KV CKT 1	717	717	0.11192	105.1808	P12:345:GRDA:CHOUTEAU-SPORTSMANACRES
FDNS	00NR	2	16WP	G15_047	FROM->TO	CIMARRON - DRAPER LAKE 345KV CKT 1	717	717	0.11188	105.1757	ELDORADO EHV - SHERIDAN EHV 500KV CKT 1
FDNS	00NR	2	16WP	G15_047	FROM->TO	CIMARRON - DRAPER LAKE 345KV CKT 1	717	717	0.11199	105.1668	ANADARKO - SEQUOYAHJ4 138.00 138KV CKT 1
FDNS	00NR	2	16WP	G15_047	FROM->TO	CIMARRON - DRAPER LAKE 345KV CKT 1	717	717	0.11199	105.1663	CORN TAP - SEQUOYAHJ4 138.00 138KV CKT 1
FDNS	00NR	2	16WP	G15_047	FROM->TO	CIMARRON - DRAPER LAKE 345KV CKT 1	717	717	0.11189	105.1611	GEN511843 1-RIVERSIDE STATION #2
FDNS	00NR	2	16WP	G15_047	FROM->TO	CIMARRON - DRAPER LAKE 345KV CKT 1	717	717	0.11188	105.1602	CHISHOLM6 230.00 - ELK CITY 230KV 230KV CKT 1
FDNS	00NR	2	16WP	G15_047	FROM->TO	CIMARRON - DRAPER LAKE 345KV CKT 1	717	717	0.11188	105.1571	ELK CITY 230KV (ELKCTY-6) 230/138/13.8KV TRANSFORMER CKT 1
FDNS	00NR	2	16WP	G15_047	FROM->TO	CIMARRON - DRAPER LAKE 345KV CKT 1	717	717	0.11188	105.1571	ELK CITY 230KV (ELKCTY-6) 230/138/13.8KV TRANSFORMER CKT 1
FDNS	00NR	2	16WP	G15_047	FROM->TO	CIMARRON - DRAPER LAKE 345KV CKT 1	717	717	0.11194	105.1454	6LAYFLD 230.00 - CARROLL 230KV CKT 1
FDNS	00NR	2	16WP	G15_047	FROM->TO	CIMARRON - DRAPER LAKE 345KV CKT 1	717	717	0.11235	105.1428	OUMED 4 - PARK PLACE 138KV CKT 1
FDNS	00NR	2	16WP	G15_047	FROM->TO	CIMARRON - DRAPER LAKE 345KV CKT 1	717	717	0.11197	105.1404	P12:138:AEPW:N.E.S.-4:CATOOSA4
FDNS	00NR	2	16WP	G15_047	FROM->TO	CIMARRON - DRAPER LAKE 345KV CKT 1	717	717	0.11202	105.132	P13:138-161:WERE:NSES_TX-4OR5::
FDNS	00NR	2	16WP	G15_047	FROM->TO	CIMARRON - DRAPER LAKE 345KV CKT 1	717	717	0.1125	105.1317	MORISNT4 138.00 - SOONER 138KV CKT 1
FDNS	00NR	2	16WP	G15_047	FROM->TO	CIMARRON - DRAPER LAKE 345KV CKT 1	717	717	0.11421	105.131	NORTHEAST STATION - ONETA 345KV CKT 1
FDNS	00NR	2	16WP	G15_047	FROM->TO	CIMARRON - DRAPER LAKE 345KV CKT 1	717	717	0.11421	105.131	NORTHEAST STATION - ONETA 345KV CKT 1
FDNS	00NR	2	16WP	G15_047	FROM->TO	CIMARRON - DRAPER LAKE 345KV CKT 1	717	717	0.11214	105.1287	ANADARKO - GRACMNT4 138.00 138KV CKT 1

SOLUTION	GROUP	SCENARIO	SEASON	SOURCE	DIRECTION	MONITORED ELEMENT	RATEA (MVA)	RATEB(MVA)	TDF	TC%LOADING (% MVA)	CONTINGENCY
FDNS	00NR	2	16WP	G15_047	FROM->TO	CIMARRON - DRAPER LAKE 345KV CKT 1	717	717	0.11205	105.1248	7JASPER 345.00 - MORGAN 345KV CKT 1
FDNS	00NR	2	16WP	G15_047	FROM->TO	CIMARRON - DRAPER LAKE 345KV CKT 1	717	717	0.11189	105.118	8CAJUN2 500/24.0KV TRANSFORMER CKT 1
FDNS	00NR	2	16WP	G15_047	FROM->TO	CIMARRON - DRAPER LAKE 345KV CKT 1	717	717	0.11474	105.1161	GRACEMONT - LAWTON EASTSIDE 345KV CKT 1
FDNS	00NR	2	16WP	G15_047	FROM->TO	CIMARRON - DRAPER LAKE 345KV CKT 1	717	717	0.11474	105.1161	GRACEMONT - LAWTON EASTSIDE 345KV CKT 1
FDNS	00NR	2	16WP	G15_047	FROM->TO	CIMARRON - DRAPER LAKE 345KV CKT 1	717	717	0.11282	105.1116	DALE - HORSESHOE LAKE 138KV CKT 1
FDNS	00NR	2	16WP	G15_047	FROM->TO	CIMARRON - DRAPER LAKE 345KV CKT 1	717	717	0.11189	105.1113	ST FRANCIS - ST FRANCIS 1 161KV CKT Z1
FDNS	00NR	2	16WP	G15_047	FROM->TO	CIMARRON - DRAPER LAKE 345KV CKT 1	717	717	0.11189	105.1113	ST FRANCIS 161/16.0KV TRANSFORMER CKT 1
FDNS	00NR	2	16WP	G15_047	FROM->TO	CIMARRON - DRAPER LAKE 345KV CKT 1	717	717	0.11194	105.1084	FULTON 115 - HOPE 115KV CKT 1
FDNS	00NR	2	16WP	G15_047	FROM->TO	CIMARRON - DRAPER LAKE 345KV CKT 1	717	717	0.11194	105.1084	FULTON 115 - HOPE 115KV CKT 1
FDNS	00NR	2	16WP	G15_047	FROM->TO	CIMARRON - DRAPER LAKE 345KV CKT 1	717	717	0.11267	105.1037	LIGHTNING CREEK - TROSPER 138KV CKT 1
FDNS	00NR	2	16WP	G15_047	FROM->TO	CIMARRON - DRAPER LAKE 345KV CKT 1	717	717	0.11189	105.1027	P12:069:OKGE:3TERM3
FDNS	00NR	2	16WP	G15_047	FROM->TO	CIMARRON - DRAPER LAKE 345KV CKT 1	717	717	0.11195	105.1006	G13-010T 345.00 - POST ROCK 345KV CKT 1
FDNS	00NR	2	16WP	G15_047	FROM->TO	CIMARRON - DRAPER LAKE 345KV CKT 1	717	717	0.11219	105.099	COLE - OUSW4 138KV CKT 1
FDNS	00NR	2	16WP	G15_047	FROM->TO	CIMARRON - DRAPER LAKE 345KV CKT 1	717	717	0.11208	105.0962	P12:138:AEPW:CATOOSA4:T.S.E.-4
FDNS	00NR	2	16WP	G15_047	FROM->TO	CIMARRON - DRAPER LAKE 345KV CKT 1	717	717	0.11193	105.0879	HUGO - VALLIANT 345KV CKT 1
FDNS	00NR	2	16WP	G15_047	FROM->TO	CIMARRON - DRAPER LAKE 345KV CKT 1	717	717	0.11193	105.0879	HUGO - VALLIANT 345KV CKT 1
FDNS	00NR	2	16WP	G15_047	FROM->TO	CIMARRON - DRAPER LAKE 345KV CKT 1	717	717	0.1123	105.0838	36 & MERIDIAN - HOBBY LOBBY 138KV CKT 1
FDNS	00NR	2	16WP	G15_047	FROM->TO	CIMARRON - DRAPER LAKE 345KV CKT 1	717	717	0.11189	105.0825	GEN337766 1-TRACTEBEL UNIT S1
FDNS	00NR	2	16WP	G15_047	FROM->TO	CIMARRON - DRAPER LAKE 345KV CKT 1	717	717	0.1119	105.0805	P12:138:AEPW:SHERID4:112GORE4
FDNS	00NR	2	16WP	G15_047	FROM->TO	CIMARRON - DRAPER LAKE 345KV CKT 1	717	717	0.11192	105.0804	HAMMETT TAP - HAMMETT2 138KV CKT 1
FDNS	00NR	2	16WP	G15_047	FROM->TO	CIMARRON - DRAPER LAKE 345KV CKT 1	717	717	0.11189	105.0776	GEN336222 1-LITTLE GYPSY UNIT#2
FDNS	00NR	2	16WP	G15_047	FROM->TO	CIMARRON - DRAPER LAKE 345KV CKT 1	717	717	0.11194	105.0756	P12:138:OKGE:3TERM28
FDNS	00NR	2	16WP	G15_047	FROM->TO	CIMARRON - DRAPER LAKE 345KV CKT 1	717	717	0.11189	105.0751	GEN515564 1-ORIGIN11 0.6900
FDNS	00NR	2	16WP	G15_047	FROM->TO	CIMARRON - DRAPER LAKE 345KV CKT 1	717	717	0.11189	105.0751	GEN515565 1-ORIGIN21 0.6900
FDNS	00NR	2	16WP	G15_047	FROM->TO	CIMARRON - DRAPER LAKE 345KV CKT 1	717	717	0.11189	105.073	GEN300015 1-1SGPDEL 18.000
FDNS	00NR	2	16WP	G15_047	FROM->TO	CIMARRON - DRAPER LAKE 345KV CKT 1	717	717	0.11282	105.0701	DALE - SQUIRL CREEK 138KV CKT 1
FDNS	00NR	2	16WP	G15_047	FROM->TO	CIMARRON - DRAPER LAKE 345KV CKT 1	717	717	0.11189	105.07	NELSON 230/20.0KV TRANSFORMER CKT 1
FDNS	00NR	2	16WP	G15_047	FROM->TO	CIMARRON - DRAPER LAKE 345KV CKT 1	717	717	0.11189	105.0658	GEN501970 1-EVANGELINE UNIT 7
FDNS	00NR	2	16WP	G15_047	FROM->TO	CIMARRON - DRAPER LAKE 345KV CKT 1	717	717	0.11211	105.0657	NW164TH4 138.00 - PIEDMONT 138KV CKT 1
FDNS	00NR	2	16WP	G15_047	FROM->TO	CIMARRON - DRAPER LAKE 345KV CKT 1	717	717	0.11208	105.0657	HEALDTON - LOCO 138KV CKT 1
FDNS	00NR	2	16WP	G15_047	FROM->TO	CIMARRON - DRAPER LAKE 345KV CKT 1	717	717	0.11211	105.0637	NORTHWEST - NW164TH4 138.00 138KV CKT 1
FDNS	00NR	2	16WP	G15_047	FROM->TO	CIMARRON - DRAPER LAKE 345KV CKT 1	717	717	0.1119	105.062	P12:161:AEPW:EROGERS5:ECNTRTN5
FDNS	00NR	2	16WP	G15_047	FROM->TO	CIMARRON - DRAPER LAKE 345KV CKT 1	717	717	0.11191	105.0607	AS KING - EAU CLAIRE 345KV CKT 1
FDNS	00NR	2	16WP	G15_047	FROM->TO	CIMARRON - DRAPER LAKE 345KV CKT 1	717	717	0.11189	105.0604	ESSEX UNIT 2 500/18.0KV TRANSFORMER CKT 1
FDNS	00NR	2	16WP	G15_047	FROM->TO	CIMARRON - DRAPER LAKE 345KV CKT 1	717	717	0.11189	105.0601	P12:138:OKGE-AEPW:JENSEN4:REDROCKRD4
FDNS	00NR	2	16WP	G15_047	FROM->TO	CIMARRON - DRAPER LAKE 345KV CKT 1	717	717	0.11207	105.059	HEFNER - TULSA 138KV CKT 1
FDNS	00NR	2	16WP	G15_047	FROM->TO	CIMARRON - DRAPER LAKE 345KV CKT 1	717	717	0.11193	105.0534	FLETCHER - MARLOW JCT 69KV CKT 1
FDNS	00NR	2	16WP	G15_047	FROM->TO	CIMARRON - DRAPER LAKE 345KV CKT 1	717	717	0.11193	105.0528	COMANCHE TAP - OMPA-DUNCAN 840 138KV CKT 1
FDNS	00NR	2	16WP	G15_047	FROM->TO	CIMARRON - DRAPER LAKE 345KV CKT 1	717	717	0.1119	105.0493	P12:161:AEPW:DYESS5:ELMSPRNG:TONTITN5
FDNS	00NR	2	16WP	G15_047	FROM->TO	CIMARRON - DRAPER LAKE 345KV CKT 1	717	717	0.11266	105.0492	COTTONWOOD CREEK - MARSHALL 138KV CKT 1
FDNS	00NR	2	16WP	G15_047	FROM->TO	CIMARRON - DRAPER LAKE 345KV CKT 1	717	717	0.11266	105.0488	MARSHALL - WOODRING 138KV CKT 1
FDNS	00NR	2	16WP	G15_047	FROM->TO	CIMARRON - DRAPER LAKE 345KV CKT 1	717	717	0.11189	105.0466	ST FRANCIS 2 161/16.0KV TRANSFORMER CKT 2
FDNS	00NR	2	16WP	G15_047	FROM->TO	CIMARRON - DRAPER LAKE 345KV CKT 1	717	717	0.11189	105.0466	ST FRANCIS 345/161KV TRANSFORMER CKT 1
FDNS	00NR	2	16WP	G15_047	FROM->TO	CIMARRON - DRAPER LAKE 345KV CKT 1	717	717	0.11192	105.0465	P12:161:AEPW-SWPA:BEAVER5:EROGERS5
FDNS	00NR	2	16WP	G15_047	FROM->TO	CIMARRON - DRAPER LAKE 345KV CKT 1	717	717	0.11189	105.0461	GEN336152 1-WATERFORD UNIT#2
FDNS	00NR	2	16WP	G15_047	FROM->TO	CIMARRON - DRAPER LAKE 345KV CKT 1	717	717	0.11195	105.0457	G13-010T 345.00 - SPEARVILLE 345KV CKT 1
FDNS	00NR	2	16WP	G15_047	FROM->TO	CIMARRON - DRAPER LAKE 345KV CKT 1	717	717	0.11189	105.045	GEN336151 1-WATERFORD UNIT#1
FDNS	00NR	2	16WP	G15_047	FROM->TO	CIMARRON - DRAPER LAKE 345KV CKT 1	717	717	0.11223	105.0362	P12:138:AEPW:MOUNDRD4:SHIDLER4
FDNS	00NR	2	16WP	G15_047	FROM->TO	CIMARRON - DRAPER LAKE 345KV CKT 1	717	717	0.11189	105.0346	GEN334392 1-EXXON MOBIL IPP 1
FDNS	00NR	2	16WP	G15_047	FROM->TO	CIMARRON - DRAPER LAKE 345KV CKT 1	717	717	0.11195	105.0334	P12:138:AEPW:CORNVIL4:S.W.S.-4
FDNS	00NR	2	16WP	G15_047	FROM->TO	CIMARRON - DRAPER LAKE 345KV CKT 1	717	717	0.11239	105.0287	BRISTOW - SILVER CITY 138KV CKT 1
FDNS	00NR	2	16WP	G15_047	FROM->TO	CIMARRON - DRAPER LAKE 345KV CKT 1	717	717	0.11623	105.0276	PECAN CREEK - RIVERSIDE STATION 345KV CKT 1
FDNS	00NR	2	16WP	G15_047	FROM->TO	CIMARRON - DRAPER LAKE 345KV CKT 1	717	717	0.11623	105.0276	PECAN CREEK - RIVERSIDE STATION 345KV CKT 1
FDNS	00NR	2	16WP	G15_047	FROM->TO	CIMARRON - DRAPER LAKE 345KV CKT 1	717	717	0.11189	105.0276	GEN334393 1-EXXON MOBIL IPP 2
FDNS	00NR	2	16WP	G15_047	FROM->TO	CIMARRON - DRAPER LAKE 345KV CKT 1	717	717	0.11189	105.0276	GEN334394 1-EXXON MOBIL IPP 3
FDNS	00NR	2	16WP	G15_047	FROM->TO	CIMARRON - DRAPER LAKE 345KV CKT 1	717	717	0.11215	105.0249	EL RENO SW - MUSTANG2 69.000 69KV CKT 1
FDNS	00NR	2	16WP	G15_047	FROM->TO	CIMARRON - DRAPER LAKE 345KV CKT 1	717	717	0.11208	105.0245	HEALDTON - RINGLING 138KV CKT 1
FDNS	00NR	2	16WP	G15_047	FROM->TO	CIMARRON - DRAPER LAKE 345KV CKT 1	717	717	0.11191	105.0226	MC NIEL 500/115KV TRANSFORMER CKT 1
FDNS	00NR	2	16WP	G15_047	FROM->TO	CIMARRON - DRAPER LAKE 345KV CKT 1	717	717	0.11223	105.0199	SHIDLER - WEST PAWHUSKA 138KV CKT 1
FDNS	00NR	2	16WP	G15_047	FROM->TO	CIMARRON - DRAPER LAKE 345KV CKT 1	717	717	0.112	105.0188	KELLYAV4 138.00 - MEMORIAL 138KV CKT 1
FDNS	00NR	2	16WP	G15_047	FROM->TO	CIMARRON - DRAPER LAKE 345KV CKT 1	717	717	0.11193	105.0151	BISMARK - HOT SPRINGS WEST BUS 115KV CKT 1
FDNS	00NR	2	16WP	G15_047	FROM->TO	CIMARRON - DRAPER LAKE 345KV CKT 1	717	717	0.11189	105.012	GEN501972 1-EVANGELINE UNIT 7-2
FDNS	00NR	2	16WP	G15_047	FROM->TO	CIMARRON - DRAPER LAKE 345KV CKT 1	717	717	0.11189	105.0119	GEN501971 1-EVANGELINE UNIT 7-1
FDNS	00NR	2	16WP	G15_047	FROM->TO	CIMARRON - DRAPER LAKE 345KV CKT 1	717	717	0.11325	105.0105	BRYANT - MEMORIAL 138KV CKT 1
FDNS	00NR	2	16WP	G15_047	FROM->TO	CIMARRON - DRAPER LAKE 345KV CKT 1	717	717	0.11191	105.0056	ARPIN B4 345.00 - EAU CLAIRE 345KV CKT 1
FDNS	00NR	2	16WP	G15_047	FROM->TO	CIMARRON - DRAPER LAKE 345KV CKT 1	717	717	0.11189	105.003	GEN334431 1-SABINE UNIT 1
FDNS	00NR	2	16WP	G15_047	FROM->TO	CIMARRON - DRAPER LAKE 345KV CKT 1	717	717	0.11223	105.0029	PAWHUSKA TAP - WEST PAWHUSKA 138KV CKT 1
FDNS	00NR	2	16WP	G15_047	FROM->TO	CIMARRON - DRAPER LAKE 345KV CKT 1	717	717	0.11189	105.0029	GEN334432 1-SABINE UNIT 2
FDNS	00NR	2	16WP	G15_047	FROM->TO	CIMARRON - DRAPER LAKE 345KV CKT 1	717	717	0.11235	105.0025	BODLE - PARK PLACE 138KV CKT 1
FDNS	00NR	2	16WP	G15_047	FROM->TO	CIMARRON - DRAPER LAKE 345KV CKT 1	717	717	0.11197	105.0018	BROOKLINE - MORGAN 345KV CKT 1
FDNS	00NR	2	16WP	G15_047	FROM->TO	CIMARRON - DRAPER LAKE 345KV CKT 1	717	717	0.11197	105.0018	BROOKLINE - MORGAN 345KV CKT 1
FDNS	00NR	2	16WP	G15_047	FROM->TO	CIMARRON - DRAPER LAKE 345KV CKT 1	717	717	0.11189	104.9995	GEN336242 1-1NMIL ST1 18.000
FDNS	00NR	2	16WP	G15_047	FROM->TO	CIMARRON - DRAPER LAKE 345KV CKT 1	717	717	0.11189	104.9986	GEN337764 1-TRACTEBEL UNIT C1
FDNS	00NR	2	16WP	G15_047	FROM->TO	CIMARRON - DRAPER LAKE 345KV CKT 1	717	717	0.11189	104.9986	GEN337765 1-TRACTEBEL UNIT C2
FDNS	00NR	2	16WP	G15_047	FROM->TO	CIMARRON - DRAPER LAKE 345KV CKT 1	717	717	0.11204	104.9978	COUNCIL - MUSTANG 138KV CKT 1
FDNS	00NR	2	16WP	G15_047	FROM->TO	CIMARRON - DRAPER LAKE 345KV CKT 1	717	717	0.11189	104.9974	GEN501912 1-ACADIA UNIT CT1B
FDNS	00NR	2	16WP	G15_047	FROM->TO	CIMARRON - DRAPER LAKE 345KV CKT 1	717	717	0.11189	104.9967	GEN501911 1-ACADIA UNIT CT1A
FDNS	00NR	2	16WP	G15_047	FROM->TO	CIMARRON - DRAPER LAKE 345KV CKT 1	717	717	0.11211	104.99	PIEDMONT - RICHRDS 138KV CKT 1
FDNS	00NR	2	16WP	G15_047	FROM->TO	CIMARRON - DRAPER LAKE 345KV CKT 1	717	717	0.11192	104.99	HAMMETT2 - MEEKER 138KV CKT 1

SOLUTION	GROUP	SCENARIO	SEASON	SOURCE	DIRECTION	MONITORED ELEMENT	RATEA (MVA)	RATEB(MVA)	TDF	TC%LOADING (% MVA)	CONTINGENCY
FDNS	00NR	2	16WP	G15_047	FROM->TO	CIMARRON - DRAPER LAKE 345KV CKT 1	717	717	0.1119	104.9894	CYPRESS - HARTBURG 500KV CKT 1
FDNS	00NR	2	16WP	G15_047	FROM->TO	CIMARRON - DRAPER LAKE 345KV CKT 1	717	717	0.11209	104.9878	CIVIT - PAOLI 138KV CKT 1
FDNS	00NR	2	16WP	G15_047	FROM->TO	CIMARRON - DRAPER LAKE 345KV CKT 1	717	717	0.112	104.9873	KELLYAV4 138.00 - REMNGTON PARK 138KV CKT 1
FDNS	00NR	2	16WP	G15_047	FROM->TO	CIMARRON - DRAPER LAKE 345KV CKT 1	717	717	0.11189	104.9847	P12:69:AEPW:L.E.S.-2:LAW WC2
FDNS	00NR	2	16WP	G15_047	FROM->TO	CIMARRON - DRAPER LAKE 345KV CKT 1	717	717	0.11195	104.9844	HAMMETT TAP - HORSESHOE LAKE 138KV CKT 1
FDNS	00NR	2	16WP	G15_047	FROM->TO	CIMARRON - DRAPER LAKE 345KV CKT 1	717	717	0.11208	104.9827	RINGLING - SOUTH WILSON 138KV CKT 1
FDNS	00NR	2	16WP	G15_047	FROM->TO	CIMARRON - DRAPER LAKE 345KV CKT 1	717	717	0.11193	104.9818	ALPINE AECC - BISMARK 115KV CKT 1
FDNS	00NR	2	16WP	G15_047	FROM->TO	CIMARRON - DRAPER LAKE 345KV CKT 1	717	717	0.1119	104.9759	LAYFLD8 500.00 - MOUNT OLIVE 500KV CKT 1
FDNS	00NR	2	16WP	G15_047	FROM->TO	CIMARRON - DRAPER LAKE 345KV CKT 1	717	717	0.1119	104.9759	LAYFLD8 500.00 - MOUNT OLIVE 500KV CKT 1
FDNS	00NR	2	16WP	G15_047	FROM->TO	CIMARRON - DRAPER LAKE 345KV CKT 1	717	717	0.11201	104.9664	CORN TAP - CORNVILLE 138KV CKT 1
FDNS	00NR	2	16WP	G15_047	FROM->TO	CIMARRON - DRAPER LAKE 345KV CKT 1	717	717	0.11204	104.9416	COUNCIL - WESTOAKS 138KV CKT 1
FDNS	00NR	2	16WP	G15_047	FROM->TO	CIMARRON - DRAPER LAKE 345KV CKT 1	717	717	0.11325	104.9325	ACORN 4 138.00 - BRYANT 138KV CKT 1
FDNS	00NR	2	16WP	G15_047	FROM->TO	CIMARRON - DRAPER LAKE 345KV CKT 1	717	717	0.11189	104.5149	BASE CASE
FDNS	00NR	2	16WP	G15_047	FROM->TO	CIMARRON - DRAPER LAKE 345KV CKT 1	717	717	0.11187	104.1986	GRAPEVINE INTERCHANGE - NICHOLS STATION 230KV CKT 1
FDNS	00NR	2	16WP	G15_047	FROM->TO	CIMARRON - DRAPER LAKE 345KV CKT 1	717	717	0.11187	104.1986	GRAPEVINE INTERCHANGE - NICHOLS STATION 230KV CKT 1
FDNS	00NR	2	16WP	G15_047	FROM->TO	CIMARRON - DRAPER LAKE 345KV CKT 1	717	717	0.11253	104.148	BURGETT4 138.00 - RNDBARN4 138.00 138KV CKT 1
FDNS	00NR	2	16WP	G15_047	FROM->TO	CIMARRON - DRAPER LAKE 345KV CKT 1	717	717	0.11253	104.1457	BURGETT4 138.00 - DANFORTH 138KV CKT 1
FDNS	00NR	2	16WP	G15_047	FROM->TO	CIMARRON - DRAPER LAKE 345KV CKT 1	717	717	0.11253	104.1354	ARCADIA - RNDBARN4 138.00 138KV CKT 1
FDNS	00NR	2	16WP	G15_047	FROM->TO	CIMARRON - DRAPER LAKE 345KV CKT 1	717	717	0.11189	104.0916	GEN515550 1-MNCWND31 0.6900
FDNS	00NR	2	16WP	G15_047	FROM->TO	CIMARRON - DRAPER LAKE 345KV CKT 1	717	717	0.11186	104.0802	GRAPEVINE INTERCHANGE - STATELINE INTERCHANGE 230KV CKT 1
FDNS	00NR	2	16WP	G15_047	FROM->TO	CIMARRON - DRAPER LAKE 345KV CKT 1	717	717	0.11186	104.0802	GRAPEVINE INTERCHANGE - STATELINE INTERCHANGE 230KV CKT 1
FDNS	00NR	2	16WP	G15_047	FROM->TO	CIMARRON - DRAPER LAKE 345KV CKT 1	717	717	0.11189	104.0753	GEN562611 1-G14_064_3 0.6900
FDNS	00NR	2	16WP	G15_047	FROM->TO	CIMARRON - DRAPER LAKE 345KV CKT 1	717	717	0.11189	104.0709	GEN659125 1-COVEY
FDNS	00NR	2	16WP	G15_047	FROM->TO	CIMARRON - DRAPER LAKE 345KV CKT 1	717	717	0.11186	104.0563	P12:138:WFEC:MSL10
FDNS	00NR	2	16WP	G15_047	FROM->TO	CIMARRON - DRAPER LAKE 345KV CKT 1	717	717	0.11189	104.0543	GEN511848 1-SOUTHWESTERN STATION #3
FDNS	00NR	2	16WP	G15_047	FROM->TO	CIMARRON - DRAPER LAKE 345KV CKT 1	717	717	0.11189	104.0473	GEN672303 3-BOUNDARY DAM GENERATOR 3
FDNS	00NR	2	16WP	G15_047	FROM->TO	CIMARRON - DRAPER LAKE 345KV CKT 1	717	717	0.11189	104.0473	GEN672304 4-BOUNDARY DAM GENERATOR 4
FDNS	00NR	2	16WP	G15_047	FROM->TO	CIMARRON - DRAPER LAKE 345KV CKT 1	717	717	0.11189	104.0473	GEN672305 5-BOUNDARY DAM GENERATOR 5
FDNS	00NR	2	16WP	G15_047	FROM->TO	CIMARRON - DRAPER LAKE 345KV CKT 1	717	717	0.11189	104.0468	GEN515601 1-KNGFSR11 0.7000
FDNS	00NR	2	16WP	G15_047	FROM->TO	CIMARRON - DRAPER LAKE 345KV CKT 1	717	717	0.11189	104.045	GEN600007 7-RIVERSIDE GEN 7
FDNS	00NR	2	16WP	G15_047	FROM->TO	CIMARRON - DRAPER LAKE 345KV CKT 1	717	717	0.11189	104.0445	GEN600067 9-HIGH BRIDGE
FDNS	00NR	2	16WP	G15_047	FROM->TO	CIMARRON - DRAPER LAKE 345KV CKT 1	717	717	0.11189	104.0399	GEN615052 1-CAMBRIDGE GENERATING STATION
FDNS	00NR	2	16WP	G15_047	FROM->TO	CIMARRON - DRAPER LAKE 345KV CKT 1	717	717	0.11189	104.0353	GEN600011 5-BLACK DOG GEN 1
FDNS	00NR	2	16WP	G15_047	FROM->TO	CIMARRON - DRAPER LAKE 345KV CKT 1	717	717	0.11189	104.0334	GEN563062 1-G15071_3 0.6900
FDNS	00NR	2	16WP	G15_047	FROM->TO	CIMARRON - DRAPER LAKE 345KV CKT 1	717	717	0.11189	104.0296	GEN600014 4-BLACK DOG GEN 4
FDNS	00NR	2	16WP	G15_047	FROM->TO	CIMARRON - DRAPER LAKE 345KV CKT 1	717	717	0.11189	104.0293	GEN640020 2-SHELDON STATION UNIT 2
FDNS	00NR	2	16WP	G15_047	FROM->TO	CIMARRON - DRAPER LAKE 345KV CKT 1	717	717	0.11189	104.0218	GEN615032 2-PLEASANT VALLEY
FDNS	00NR	2	16WP	G15_047	FROM->TO	CIMARRON - DRAPER LAKE 345KV CKT 1	717	717	0.11187	104.0198	CHISNEY - CLARKSVILLE 138KV CKT 1
FDNS	00NR	2	16WP	G15_047	FROM->TO	CIMARRON - DRAPER LAKE 345KV CKT 1	717	717	0.11189	104.0197	GEN541151 3-SIBLEY GENERATING UNIT #3
FDNS	00NR	2	16WP	G15_047	FROM->TO	CIMARRON - DRAPER LAKE 345KV CKT 1	717	717	0.1121	104.0178	OVEXFRMCCOVE
FDNS	00NR	2	16WP	G15_047	FROM->TO	CIMARRON - DRAPER LAKE 345KV CKT 1	717	717	0.11189	104.0148	GEN629067 1-EMERY GAS TURBINE 1
FDNS	00NR	2	16WP	G15_047	FROM->TO	CIMARRON - DRAPER LAKE 345KV CKT 1	717	717	0.11189	104.0137	GEN563282 1-G15094_3 0.6900
FDNS	00NR	2	16WP	G15_047	FROM->TO	CIMARRON - DRAPER LAKE 345KV CKT 1	717	717	0.11189	104.0096	GEN562802 1-G15039_3 0.3570
FDNS	00NR	2	16WP	G15_047	FROM->TO	CIMARRON - DRAPER LAKE 345KV CKT 1	717	717	0.11189	104.008	GEN652353 2-GR PRAIRIEG 0.6900
FDNS	00NR	2	16WP	G15_047	FROM->TO	CIMARRON - DRAPER LAKE 345KV CKT 1	717	717	0.11189	103.9989	GEN515591 1-PALDRW11 0.6900
FDNS	00NR	2	16WP	G15_047	FROM->TO	CIMARRON - DRAPER LAKE 345KV CKT 1	717	717	0.11361	103.9985	FOREST HILL - MAUD 138KV CKT 1
FDNS	00NR	2	16WP	G15_047	FROM->TO	CIMARRON - DRAPER LAKE 345KV CKT 1	717	717	0.11189	103.9964	GEN563102 1-G15075_3 0.5500
FDNS	00NR	2	16WP	G15_047	FROM->TO	CIMARRON - DRAPER LAKE 345KV CKT 1	717	717	0.11189	103.9961	GEN562602 1-G15_029_3 0.6900
FDNS	00NR	2	16WP	G15_047	FROM->TO	CIMARRON - DRAPER LAKE 345KV CKT 1	717	717	0.11189	103.996	GEN600017 C-LS POWER CT
FDNS	00NR	2	16WP	G15_047	FROM->TO	CIMARRON - DRAPER LAKE 345KV CKT 1	717	717	0.11195	103.9854	MINGO - SETAB 345KV CKT 1
FDNS	00NR	2	16WP	G15_047	FROM->TO	CIMARRON - DRAPER LAKE 345KV CKT 1	717	717	0.11195	103.9854	MINGO - SETAB 345KV CKT 1
FDNS	00NR	2	16WP	G15_047	FROM->TO	CIMARRON - DRAPER LAKE 345KV CKT 1	717	717	0.11189	103.9781	GEN562812 1-G15040_3 0.3570
FDNS	00NR	2	16WP	G15_047	FROM->TO	CIMARRON - DRAPER LAKE 345KV CKT 1	717	717	0.1123	103.9769	SEMINOLE - VANOSTP4 138.00 138KV CKT 1
FDNS	00NR	2	16WP	G15_047	FROM->TO	CIMARRON - DRAPER LAKE 345KV CKT 1	717	717	0.11189	103.9719	GEN563132 1-G15078_3 0.3570
FDNS	00NR	2	16WP	G15_047	FROM->TO	CIMARRON - DRAPER LAKE 345KV CKT 1	717	717	0.11189	103.9675	GEN672392 1-NBECGT1G 18.000
FDNS	00NR	2	16WP	G15_047	FROM->TO	CIMARRON - DRAPER LAKE 345KV CKT 1	717	717	0.11189	103.9629	GEN524285 1-WILDORADO WIND GEN
FDNS	00NR	2	16WP	G15_047	FROM->TO	CIMARRON - DRAPER LAKE 345KV CKT 1	717	717	0.11189	103.9598	GEN562074 1-G1149G1504 0.6900
FDNS	00NR	2	16WP	G15_047	FROM->TO	CIMARRON - DRAPER LAKE 345KV CKT 1	717	717	0.11189	103.9585	GEN629070 2-BEAVER CHANNEL GENERATORFOR UNIT NO 2
FDNS	00NR	2	16WP	G15_047	FROM->TO	CIMARRON - DRAPER LAKE 345KV CKT 1	717	717	0.11233	103.9577	P12:138:AEPW:WELETK4:EARLSBORO4
FDNS	00NR	2	16WP	G15_047	FROM->TO	CIMARRON - DRAPER LAKE 345KV CKT 1	717	717	0.11233	103.9577	P12:138:OKGE:3TERM36
FDNS	00NR	2	16WP	G15_047	FROM->TO	CIMARRON - DRAPER LAKE 345KV CKT 1	717	717	0.11224	103.9503	EARLSBORO 4138.00 - FIXICO TAP 138KV CKT 1
FDNS	00NR	2	16WP	G15_047	FROM->TO	CIMARRON - DRAPER LAKE 345KV CKT 1	717	717	0.11208	103.9456	CANADIAN RIVER - MCALESTER SOUTH 138KV CKT 1
FDNS	00NR	2	16WP	G15_047	FROM->TO	CIMARRON - DRAPER LAKE 345KV CKT 1	717	717	0.11208	103.9456	CANADIAN RIVER - MCALESTER SOUTH 138KV CKT 1
FDNS	00NR	2	16WP	G15_047	FROM->TO	CIMARRON - DRAPER LAKE 345KV CKT 1	717	717	0.11208	103.9442	CANADIAN RIVER () 345/138/13.8KV TRANSFORMER CKT 1
FDNS	00NR	2	16WP	G15_047	FROM->TO	CIMARRON - DRAPER LAKE 345KV CKT 1	717	717	0.11208	103.9442	CANADIAN RIVER () 345/138/13.8KV TRANSFORMER CKT 1
FDNS	00NR	2	16WP	G15_047	FROM->TO	CIMARRON - DRAPER LAKE 345KV CKT 1	717	717	0.11189	103.9441	GEN615010 1-STANTON4
FDNS	00NR	2	16WP	G15_047	FROM->TO	CIMARRON - DRAPER LAKE 345KV CKT 1	717	717	0.11189	103.938	GEN526331 1-JONES GEN #1 22 KV
FDNS	00NR	2	16WP	G15_047	FROM->TO	CIMARRON - DRAPER LAKE 345KV CKT 1	717	717	0.11189	103.938	GEN526332 1-JONES GEN #2 21 KV
FDNS	00NR	2	16WP	G15_047	FROM->TO	CIMARRON - DRAPER LAKE 345KV CKT 1	717	717	0.11189	103.9338	GEN562596 1-G14_059_3 0.6900
FDNS	00NR	2	16WP	G15_047	FROM->TO	CIMARRON - DRAPER LAKE 345KV CKT 1	717	717	0.11189	103.9295	GEN629071 1-BURLINGTON GENERATOR FOR UNIT NO 1 E
FDNS	00NR	2	16WP	G15_047	FROM->TO	CIMARRON - DRAPER LAKE 345KV CKT 1	717	717	0.1119	103.9285	P12:138:WFEC:MSL07
FDNS	00NR	2	16WP	G15_047	FROM->TO	CIMARRON - DRAPER LAKE 345KV CKT 1	717	717	0.1119	103.9285	P12:138:WFEC-AEPW:HUGOPP4:ATOKA--4
FDNS	00NR	2	16WP	G15_047	FROM->TO	CIMARRON - DRAPER LAKE 345KV CKT 1	717	717	0.11189	103.9283	GEN515365 1-CENT 21 0.7000
FDNS	00NR	2	16WP	G15_047	FROM->TO	CIMARRON - DRAPER LAKE 345KV CKT 1	717	717	0.11187	103.9276	CHISNEY - HIGHLAND 138KV CKT 1
FDNS	00NR	2	16WP	G15_047	FROM->TO	CIMARRON - DRAPER LAKE 345KV CKT 1	717	717	0.11189	103.9238	GEN615021 1-GRE-ER 14G 16.000
FDNS	00NR	2	16WP	G15_047	FROM->TO	CIMARRON - DRAPER LAKE 345KV CKT 1	717	717	0.11189	103.922	INDEPENDENCE 500/26.0KV TRANSFORMER CKT 1
FDNS	00NR	2	16WP	G15_047	FROM->TO	CIMARRON - DRAPER LAKE 345KV CKT 1	717	717	0.11192	103.9203	GRPRAR1-LNX3345.00 - GRPRAR 345KV CKT Z
FDNS	00NR	2	16WP	G15_047	FROM->TO	CIMARRON - DRAPER LAKE 345KV CKT 1	717	717	0.11191	103.9181	P12:138:AEPW:SHAM4WT:CHILD4WT
FDNS	00NR	2	16WP	G15_047	FROM->TO	CIMARRON - DRAPER LAKE 345KV CKT 1	717	717	0.11192	103.917	GRPRAR1-LNX3345.00 - HOLT.CO3 345.00 345KV CKT 1

SOLUTION	GROUP	SCENARIO	SEASON	SOURCE	DIRECTION	MONITORED ELEMENT	RATEA (MVA)	RATEB(MVA)	TDF	TC%LOADING (% MVA)	CONTINGENCY
FDNS	00NR	2	16WP	G15_047	FROM->TO	CIMARRON - DRAPER LAKE 345KV CKT 1	717	717	0.11189	103.9133	GEN562983 1-G15061_4 0.6900
FDNS	00NR	2	16WP	G15_047	FROM->TO	CIMARRON - DRAPER LAKE 345KV CKT 1	717	717	0.11189	103.9133	GEN562984 1-G15061_5 0.6900
FDNS	00NR	2	16WP	G15_047	FROM->TO	CIMARRON - DRAPER LAKE 345KV CKT 1	717	717	0.11189	103.9117	GEN562017 1-G11_022_3 0.6900
FDNS	00NR	2	16WP	G15_047	FROM->TO	CIMARRON - DRAPER LAKE 345KV CKT 1	717	717	0.1119	103.908	P12:138:AEPW-SWPA:LONEOAK4:TUPELO4
FDNS	00NR	2	16WP	G15_047	FROM->TO	CIMARRON - DRAPER LAKE 345KV CKT 1	717	717	0.1119	103.9079	P12:138:WFEC:MSL06
FDNS	00NR	2	16WP	G15_047	FROM->TO	CIMARRON - DRAPER LAKE 345KV CKT 1	717	717	0.11189	103.8993	GEN562429 1-G13-029 0.6900
FDNS	00NR	2	16WP	G15_047	FROM->TO	CIMARRON - DRAPER LAKE 345KV CKT 1	717	717	0.11189	103.8979	GEN562432 1-G13-030 0.6900
FDNS	00NR	2	16WP	G15_047	FROM->TO	CIMARRON - DRAPER LAKE 345KV CKT 1	717	717	0.11189	103.8957	GEN560105 1-G08-22 0.6900
FDNS	00NR	2	16WP	G15_047	FROM->TO	CIMARRON - DRAPER LAKE 345KV CKT 1	717	717	0.09351	103.8945	G15063_T 345.00 - WOODRING 345KV CKT 1
FDNS	00NR	2	16WP	G15_047	FROM->TO	CIMARRON - DRAPER LAKE 345KV CKT 1	717	717	0.11189	103.8919	GEN300003 1-THOMAS HILL UNIT 3
FDNS	00NR	2	16WP	G15_047	FROM->TO	CIMARRON - DRAPER LAKE 345KV CKT 1	717	717	0.11323	103.8852	MAUD - SEMINOLE 138KV CKT 1
FDNS	00NR	2	16WP	G15_047	FROM->TO	CIMARRON - DRAPER LAKE 345KV CKT 1	717	717	0.11189	103.8845	BURLINGTON NO1 + NO 2 + NO 3 161/20.0KV TRANSFORMER CKT 1
FDNS	00NR	2	16WP	G15_047	FROM->TO	CIMARRON - DRAPER LAKE 345KV CKT 1	717	717	0.11233	103.8775	P12:138:AEPW-OGE:WELETK4:MAUD 4
FDNS	00NR	2	16WP	G15_047	FROM->TO	CIMARRON - DRAPER LAKE 345KV CKT 1	717	717	0.11193	103.8742	P12:138:WFEC:MSL16
FDNS	00NR	2	16WP	G15_047	FROM->TO	CIMARRON - DRAPER LAKE 345KV CKT 1	717	717	0.11189	103.8689	GEN527882 1-CUNNINGHAM GEN #2 20 KV
FDNS	00NR	2	16WP	G15_047	FROM->TO	CIMARRON - DRAPER LAKE 345KV CKT 1	717	717	0.11224	103.8663	EARLSBORO 4138.00 - MAUD 138KV CKT 1
FDNS	00NR	2	16WP	G15_047	FROM->TO	CIMARRON - DRAPER LAKE 345KV CKT 1	717	717	0.11224	103.8663	EARLSBORO 4138.00 - MAUD 138KV CKT 1
FDNS	00NR	2	16WP	G15_047	FROM->TO	CIMARRON - DRAPER LAKE 345KV CKT 1	717	717	0.11201	103.866	DELL 500 - INDEPENDENCE 500KV CKT 1
FDNS	00NR	2	16WP	G15_047	FROM->TO	CIMARRON - DRAPER LAKE 345KV CKT 1	717	717	0.11189	103.861	GEN562550 1-G14_040_3 0.6900
FDNS	00NR	2	16WP	G15_047	FROM->TO	CIMARRON - DRAPER LAKE 345KV CKT 1	717	717	0.11189	103.8588	GEN524295 1-SPNSPUR_WND10.6900
FDNS	00NR	2	16WP	G15_047	FROM->TO	CIMARRON - DRAPER LAKE 345KV CKT 1	717	717	0.11189	103.8369	GEN562832 1-G15042_3 0.6900
FDNS	00NR	2	16WP	G15_047	FROM->TO	CIMARRON - DRAPER LAKE 345KV CKT 1	717	717	0.11173	103.8333	P12:230:AEPW:ELKCITY6:SWEETWT6
FDNS	00NR	2	16WP	G15_047	FROM->TO	CIMARRON - DRAPER LAKE 345KV CKT 1	717	717	0.11189	103.8324	P12:230:UMZB:# 112 #: NU IN SD. NU-RCDC & DRY CREEK XFMR
FDNS	00NR	2	16WP	G15_047	FROM->TO	CIMARRON - DRAPER LAKE 345KV CKT 1	717	717	0.11189	103.8318	RCDC EAST 4230.00 - RED CEDAR DC 230KV CKT 1
FDNS	00NR	2	16WP	G15_047	FROM->TO	CIMARRON - DRAPER LAKE 345KV CKT 1	717	717	0.11189	103.823	THOMAS HILL 161/22.0KV TRANSFORMER CKT 1
FDNS	00NR	2	16WP	G15_047	FROM->TO	CIMARRON - DRAPER LAKE 345KV CKT 1	717	717	0.11189	103.8136	GEN515606 1-CANDN11 0.6900
FDNS	00NR	2	16WP	G15_047	FROM->TO	CIMARRON - DRAPER LAKE 345KV CKT 1	717	717	0.11189	103.8136	GEN515607 1-CANDN12 0.6900
FDNS	00NR	2	16WP	G15_047	FROM->TO	CIMARRON - DRAPER LAKE 345KV CKT 1	717	717	0.11189	103.8134	GEN345671 2-1RUSH G2 18.000
FDNS	00NR	2	16WP	G15_047	FROM->TO	CIMARRON - DRAPER LAKE 345KV CKT 1	717	717	0.11182	103.8125	P12:230:AEPW-SPS:SWEETWT6:WHEELER 6
FDNS	00NR	2	16WP	G15_047	FROM->TO	CIMARRON - DRAPER LAKE 345KV CKT 1	717	717	0.11182	103.8121	STLN-DEMARC6 - SWEETWATER 230KV CKT 1
FDNS	00NR	2	16WP	G15_047	FROM->TO	CIMARRON - DRAPER LAKE 345KV CKT 1	717	717	0.11189	103.8115	GEN345670 1-1RUSH G1 18.000
FDNS	00NR	2	16WP	G15_047	FROM->TO	CIMARRON - DRAPER LAKE 345KV CKT 1	717	717	0.11182	103.8105	STATELINE INTERCHANGE - STLN-DEMARC6 230KV CKT 1
FDNS	00NR	2	16WP	G15_047	FROM->TO	CIMARRON - DRAPER LAKE 345KV CKT 1	717	717	0.11189	103.8082	GEN531447 1-HOLCOMB GENERATOR
FDNS	00NR	2	16WP	G15_047	FROM->TO	CIMARRON - DRAPER LAKE 345KV CKT 1	717	717	0.11189	103.7885	GEN645011 1-NEBRASKA CITY 1
FDNS	00NR	2	16WP	G15_047	FROM->TO	CIMARRON - DRAPER LAKE 345KV CKT 1	717	717	0.11189	103.7854	GEN515443 1-MNCOWND1 0.7000
FDNS	00NR	2	16WP	G15_047	FROM->TO	CIMARRON - DRAPER LAKE 345KV CKT 1	717	717	0.11189	103.7854	GEN562794 1-G15038_5 0.6900
FDNS	00NR	2	16WP	G15_047	FROM->TO	CIMARRON - DRAPER LAKE 345KV CKT 1	717	717	0.11189	103.7854	GEN562795 1-G15038_6 0.6900
FDNS	00NR	2	16WP	G15_047	FROM->TO	CIMARRON - DRAPER LAKE 345KV CKT 1	717	717	0.11187	103.7826	HIGHLAND - PINK SW 138KV CKT 1
FDNS	00NR	2	16WP	G15_047	FROM->TO	CIMARRON - DRAPER LAKE 345KV CKT 1	717	717	0.11189	103.7741	GEN629072 4-LANSING GENERATOR FOR UNITS NO4 EIA CODE 1
FDNS	00NR	2	16WP	G15_047	FROM->TO	CIMARRON - DRAPER LAKE 345KV CKT 1	717	717	0.11189	103.7621	GEN563092 1-G15074_3 0.6900
FDNS	00NR	2	16WP	G15_047	FROM->TO	CIMARRON - DRAPER LAKE 345KV CKT 1	717	717	0.11189	103.7504	GEN542951 5-HAWTHORN UNIT #5
FDNS	00NR	2	16WP	G15_047	FROM->TO	CIMARRON - DRAPER LAKE 345KV CKT 1	717	717	0.11189	103.744	GEN657749 1-YOUNG 1 GENERATOR
FDNS	00NR	2	16WP	G15_047	FROM->TO	CIMARRON - DRAPER LAKE 345KV CKT 1	717	717	0.11189	103.7431	GEN645012 2-NEBRASKA CITY 2
FDNS	00NR	2	16WP	G15_047	FROM->TO	CIMARRON - DRAPER LAKE 345KV CKT 1	717	717	0.11189	103.7355	GEN562512 1-G14_020_3 0.6900
FDNS	00NR	2	16WP	G15_047	FROM->TO	CIMARRON - DRAPER LAKE 345KV CKT 1	717	717	0.11189	103.7165	GEN562699 1-G15_018_3 0.6900
FDNS	00NR	2	16WP	G15_047	FROM->TO	CIMARRON - DRAPER LAKE 345KV CKT 1	717	717	0.11182	103.6978	CHISHOLM6 230.00 - SWEETWATER 230KV CKT 1
FDNS	00NR	2	16WP	G15_047	FROM->TO	CIMARRON - DRAPER LAKE 345KV CKT 1	717	717	0.11206	103.6942	KEO EHV - WEST MEMPHIS 500 500KV CKT 1
FDNS	00NR	2	16WP	G15_047	FROM->TO	CIMARRON - DRAPER LAKE 345KV CKT 1	717	717	0.11233	103.6906	FRISCCO4 138.00 - LULA 138KV CKT 1
FDNS	00NR	2	16WP	G15_047	FROM->TO	CIMARRON - DRAPER LAKE 345KV CKT 1	717	717	0.11189	103.6869	GEN529201 1-OMCDLEC1 13.800
FDNS	00NR	2	16WP	G15_047	FROM->TO	CIMARRON - DRAPER LAKE 345KV CKT 1	717	717	0.11338	103.678	HOLLYWOOD - MIDWEST TAP 138KV CKT 1
FDNS	00NR	2	16WP	G15_047	FROM->TO	CIMARRON - DRAPER LAKE 345KV CKT 1	717	717	0.11189	103.6768	GEN640009 1-COOPER NUCLEAR STATION
FDNS	00NR	2	16WP	G15_047	FROM->TO	CIMARRON - DRAPER LAKE 345KV CKT 1	717	717	0.11189	103.6768	GEN681522 3-GENOA 3
FDNS	00NR	2	16WP	G15_047	FROM->TO	CIMARRON - DRAPER LAKE 345KV CKT 1	717	717	0.11189	103.6757	GEN563122 1-G15077_3 0.3850
FDNS	00NR	2	16WP	G15_047	FROM->TO	CIMARRON - DRAPER LAKE 345KV CKT 1	717	717	0.11189	103.6586	GEN563182 1-G15083_3 0.6900
FDNS	00NR	2	16WP	G15_047	FROM->TO	CIMARRON - DRAPER LAKE 345KV CKT 1	717	717	0.11189	103.6462	GEN562685 1-G15_013_3 0.3550
FDNS	00NR	2	16WP	G15_047	FROM->TO	CIMARRON - DRAPER LAKE 345KV CKT 1	717	717	0.11236	103.6451	FT SMITH - MUSKOGEE 345KV CKT 1
FDNS	00NR	2	16WP	G15_047	FROM->TO	CIMARRON - DRAPER LAKE 345KV CKT 1	717	717	0.11189	103.631	4SIOUX 1 138.00 138/18.0KV TRANSFORMER CKT 1
FDNS	00NR	2	16WP	G15_047	FROM->TO	CIMARRON - DRAPER LAKE 345KV CKT 1	717	717	0.11229	103.6291	CIMARRON - TUTTLE CONOCO TAP 138KV CKT 1
FDNS	00NR	2	16WP	G15_047	FROM->TO	CIMARRON - DRAPER LAKE 345KV CKT 1	717	717	0.11171	103.6205	CHISHOLM7 345.00 - GRACEMONT 345KV CKT 1
FDNS	00NR	2	16WP	G15_047	FROM->TO	CIMARRON - DRAPER LAKE 345KV CKT 1	717	717	0.11189	103.6185	GEN344895 2-1LAB G2 20.000
FDNS	00NR	2	16WP	G15_047	FROM->TO	CIMARRON - DRAPER LAKE 345KV CKT 1	717	717	0.11207	103.6162	TUPELO - TUPELO TAP 138KV CKT 1
FDNS	00NR	2	16WP	G15_047	FROM->TO	CIMARRON - DRAPER LAKE 345KV CKT 1	717	717	0.11189	103.6035	GEN563222 1-G15088_3 0.6900
FDNS	00NR	2	16WP	G15_047	FROM->TO	CIMARRON - DRAPER LAKE 345KV CKT 1	717	717	0.11189	103.599	GEN523461 1-BLACKHAWK GEN #1
FDNS	00NR	2	16WP	G15_047	FROM->TO	CIMARRON - DRAPER LAKE 345KV CKT 1	717	717	0.11189	103.5989	GEN523462 1-BLACKHAWK GEN #2
FDNS	00NR	2	16WP	G15_047	FROM->TO	CIMARRON - DRAPER LAKE 345KV CKT 1	717	717	0.11189	103.5989	GEN562587 1-G14_056_3 0.6900
FDNS	00NR	2	16WP	G15_047	FROM->TO	CIMARRON - DRAPER LAKE 345KV CKT 1	717	717	0.11233	103.5954	FRISCCO4 138.00 - HARDEN 4 138.00 138KV CKT 1
FDNS	00NR	2	16WP	G15_047	FROM->TO	CIMARRON - DRAPER LAKE 345KV CKT 1	717	717	0.11189	103.5898	GEN344896 3-1LAB G3 20.000
FDNS	00NR	2	16WP	G15_047	FROM->TO	CIMARRON - DRAPER LAKE 345KV CKT 1	717	717	0.11189	103.5883	GEN344894 1-1LAB G1 20.000
FDNS	00NR	2	16WP	G15_047	FROM->TO	CIMARRON - DRAPER LAKE 345KV CKT 1	717	717	0.11189	103.5872	GEN344897 4-1LAB G4 20.000
FDNS	00NR	2	16WP	G15_047	FROM->TO	CIMARRON - DRAPER LAKE 345KV CKT 1	717	717	0.11189	103.5766	GEN515602 1-KNGFSR12 0.7000
FDNS	00NR	2	16WP	G15_047	FROM->TO	CIMARRON - DRAPER LAKE 345KV CKT 1	717	717	0.11229	103.5578	TUTTLE - TUTTLE CONOCO TAP 138KV CKT 1
FDNS	00NR	2	16WP	G15_047	FROM->TO	CIMARRON - DRAPER LAKE 345KV CKT 1	717	717	0.11189	103.5428	GEN563082 1-G15073_3 0.6900
FDNS	00NR	2	16WP	G15_047	FROM->TO	CIMARRON - DRAPER LAKE 345KV CKT 1	717	717	0.11171	103.5323	CHISHOLM7 345.00 (CHISHOLM) 345/230/13.2KV TRANSFORMER CKT 1
FDNS	00NR	2	16WP	G15_047	FROM->TO	CIMARRON - DRAPER LAKE 345KV CKT 1	717	717	0.11189	103.5102	CLAY BOSWELL 230/20.9KV TRANSFORMER CKT 1
FDNS	00NR	2	16WP	G15_047	FROM->TO	CIMARRON - DRAPER LAKE 345KV CKT 1	717	717	0.11189	103.5071	GEN562704 1-G15_020_3 0.3550
FDNS	00NR	2	16WP	G15_047	FROM->TO	CIMARRON - DRAPER LAKE 345KV CKT 1	717	717	0.11189	103.497	GEN563202 1-G15085_3 0.5500
FDNS	00NR	2	16WP	G15_047	FROM->TO	CIMARRON - DRAPER LAKE 345KV CKT 1	717	717	0.11189	103.4794	GEN672321 1-SHAND GENERATOR 1
FDNS	00NR	2	16WP	G15_047	FROM->TO	CIMARRON - DRAPER LAKE 345KV CKT 1	717	717	0.11189	103.4781	GEN640010 1-GERALD GENTLEMAN STATION UNIT 1
FDNS	00NR	2	16WP	G15_047	FROM->TO	CIMARRON - DRAPER LAKE 345KV CKT 1	717	717	0.11189	103.4536	GEN672310 1-POPLAR RIVER GENERATOR 1

SOLUTION	GROUP	SCENARIO	SEASON	SOURCE	DIRECTION	MONITORED ELEMENT	RATEA (MVA)	RATEB(MVA)	TDF	TC%LOADING (% MVA)	CONTINGENCY
FDNS	00NR	2	16WP	G15_047	FROM->TO	CIMARRON - DRAPER LAKE 345KV CKT 1	717	717	0.11189	103.4536	GEN672311 2-POPLAR RIVER GENERATOR 2
FDNS	00NR	2	16WP	G15_047	FROM->TO	CIMARRON - DRAPER LAKE 345KV CKT 1	717	717	0.1111	103.4531	SEMINOLE (SEMINOL1) 345/138/14.4KV TRANSFORMER CKT 1
FDNS	00NR	2	16WP	G15_047	FROM->TO	CIMARRON - DRAPER LAKE 345KV CKT 1	717	717	0.11189	103.4441	GEN672306 6-BOUNDARY DAM GENERATOR 6
FDNS	00NR	2	16WP	G15_047	FROM->TO	CIMARRON - DRAPER LAKE 345KV CKT 1	717	717	0.11252	103.4258	LULA - TUPELO TAP 138KV CKT 1
FDNS	00NR	2	16WP	G15_047	FROM->TO	CIMARRON - DRAPER LAKE 345KV CKT 1	717	717	0.11189	103.4184	GEN562710 1-G15_022_3 0.5500
FDNS	00NR	2	16WP	G15_047	FROM->TO	CIMARRON - DRAPER LAKE 345KV CKT 1	717	717	0.11189	103.409	GEN640011 2-GERALD GENTLEMAN STATION UNIT 2
FDNS	00NR	2	16WP	G15_047	FROM->TO	CIMARRON - DRAPER LAKE 345KV CKT 1	717	717	0.11199	103.4051	NORTHWEST TEXARKANA - VALLIANT 345KV CKT 1
FDNS	00NR	2	16WP	G15_047	FROM->TO	CIMARRON - DRAPER LAKE 345KV CKT 1	717	717	0.11199	103.4051	NORTHWEST TEXARKANA - VALLIANT 345KV CKT 1
FDNS	00NR	2	16WP	G15_047	FROM->TO	CIMARRON - DRAPER LAKE 345KV CKT 1	717	717	0.11189	103.3998	GEN542956 2-LACYGNE UNIT #2
FDNS	00NR	2	16WP	G15_047	FROM->TO	CIMARRON - DRAPER LAKE 345KV CKT 1	717	717	0.11189	103.3923	GEN659118 1-LARAMIE RIVER UNIT1
FDNS	00NR	2	16WP	G15_047	FROM->TO	CIMARRON - DRAPER LAKE 345KV CKT 1	717	717	0.11237	103.3849	P12:138:OKGE:3TERM22
FDNS	00NR	2	16WP	G15_047	FROM->TO	CIMARRON - DRAPER LAKE 345KV CKT 1	717	717	0.11391	103.3848	OAKCREEK - WILD MARY 138KV CKT 1
FDNS	00NR	2	16WP	G15_047	FROM->TO	CIMARRON - DRAPER LAKE 345KV CKT 1	717	717	0.11238	103.3831	DRAPER LAKE - SOONER TAP 138KV CKT 1
FDNS	00NR	2	16WP	G15_047	FROM->TO	CIMARRON - DRAPER LAKE 345KV CKT 1	717	717	0.11233	103.3797	ETNA - HARDEN 4 138.00 138KV CKT 1
FDNS	00NR	2	16WP	G15_047	FROM->TO	CIMARRON - DRAPER LAKE 345KV CKT 1	717	717	0.11187	103.3625	P12:138:WFEC:MSL08
FDNS	00NR	2	16WP	G15_047	FROM->TO	CIMARRON - DRAPER LAKE 345KV CKT 1	717	717	0.11192	103.3492	P12:138:WFEC:MSL09
FDNS	00NR	2	16WP	G15_047	FROM->TO	CIMARRON - DRAPER LAKE 345KV CKT 1	717	717	0.11187	103.3474	FRANKLIN - PINK SW 138KV CKT 1
FDNS	00NR	2	16WP	G15_047	FROM->TO	CIMARRON - DRAPER LAKE 345KV CKT 1	717	717	0.11189	103.3467	GEN681542 6-JP MADGETT
FDNS	00NR	2	16WP	G15_047	FROM->TO	CIMARRON - DRAPER LAKE 345KV CKT 1	717	717	0.11189	103.31	GEN542957 1-IATAN UNIT #1
FDNS	00NR	2	16WP	G15_047	FROM->TO	CIMARRON - DRAPER LAKE 345KV CKT 1	717	717	0.11233	103.3095	ETNA - PARK LANE 138KV CKT 1
FDNS	00NR	2	16WP	G15_047	FROM->TO	CIMARRON - DRAPER LAKE 345KV CKT 1	717	717	0.11189	103.2846	GEN530690 1-PRWINDG1 0.6900
FDNS	00NR	2	16WP	G15_047	FROM->TO	CIMARRON - DRAPER LAKE 345KV CKT 1	717	717	0.11189	103.2451	GEN645001 1-FORT CALHOUN 1
FDNS	00NR	2	16WP	G15_047	FROM->TO	CIMARRON - DRAPER LAKE 345KV CKT 1	717	717	0.11094	103.2433	SEMINOLE (SEMINOL2) 345/138/14.4KV TRANSFORMER CKT 1
FDNS	00NR	2	16WP	G15_047	FROM->TO	CIMARRON - DRAPER LAKE 345KV CKT 1	717	717	0.11189	103.2302	ALMA 161 161/24.0KV TRANSFORMER CKT 1
FDNS	00NR	2	16WP	G15_047	FROM->TO	CIMARRON - DRAPER LAKE 345KV CKT 1	717	717	0.11189	103.2271	GEN542955 1-LACYGNE UNIT #1
FDNS	00NR	2	16WP	G15_047	FROM->TO	CIMARRON - DRAPER LAKE 345KV CKT 1	717	717	0.11189	103.2228	GEN661015 1-COYOTE
FDNS	00NR	2	16WP	G15_047	FROM->TO	CIMARRON - DRAPER LAKE 345KV CKT 1	717	717	0.11189	103.2191	GEN562754 1-G15031_5 0.6900
FDNS	00NR	2	16WP	G15_047	FROM->TO	CIMARRON - DRAPER LAKE 345KV CKT 1	717	717	0.11189	103.2067	GEN562556 1-G14_046_3 0.3420
FDNS	00NR	2	16WP	G15_047	FROM->TO	CIMARRON - DRAPER LAKE 345KV CKT 1	717	717	0.11299	103.2049	RENFROW7 345.00 - VIOLA 7 345.00 345KV CKT 1
FDNS	00NR	2	16WP	G15_047	FROM->TO	CIMARRON - DRAPER LAKE 345KV CKT 1	717	717	0.11189	103.1865	GEN532652 1-JEFFREY ENERGY CENTER UNIT 2
FDNS	00NR	2	16WP	G15_047	FROM->TO	CIMARRON - DRAPER LAKE 345KV CKT 1	717	717	0.11189	103.1829	GEN532651 1-JEFFREY ENERGY CENTER UNIT 1
FDNS	00NR	2	16WP	G15_047	FROM->TO	CIMARRON - DRAPER LAKE 345KV CKT 1	717	717	0.11189	103.175	GEN562756 1-G15031_7 0.6900
FDNS	00NR	2	16WP	G15_047	FROM->TO	CIMARRON - DRAPER LAKE 345KV CKT 1	717	717	0.11189	103.1705	GEN562974 1-G15060_5 0.6900
FDNS	00NR	2	16WP	G15_047	FROM->TO	CIMARRON - DRAPER LAKE 345KV CKT 1	717	717	0.11189	103.1589	GEN563142 1-G15079_3 0.5500
FDNS	00NR	2	16WP	G15_047	FROM->TO	CIMARRON - DRAPER LAKE 345KV CKT 1	717	717	0.11189	103.1589	GEN563151 1-G15080_2 0.5500
FDNS	00NR	2	16WP	G15_047	FROM->TO	CIMARRON - DRAPER LAKE 345KV CKT 1	717	717	0.11391	103.1584	AIRDEPT4 138.00 - WILD MARY 138KV CKT 1
FDNS	00NR	2	16WP	G15_047	FROM->TO	CIMARRON - DRAPER LAKE 345KV CKT 1	717	717	0.11189	103.1542	GEN562973 1-G15060_4 0.6900
FDNS	00NR	2	16WP	G15_047	FROM->TO	CIMARRON - DRAPER LAKE 345KV CKT 1	717	717	0.11189	103.1455	GEN563042 1-G15068_3 0.6900
FDNS	00NR	2	16WP	G15_047	FROM->TO	CIMARRON - DRAPER LAKE 345KV CKT 1	717	717	0.11189	103.1261	GEN562078 1-G11_051_3 0.6900
FDNS	00NR	2	16WP	G15_047	FROM->TO	CIMARRON - DRAPER LAKE 345KV CKT 1	717	717	0.11189	103.1178	GEN562691 1-G15_015_3 0.6900
FDNS	00NR	2	16WP	G15_047	FROM->TO	CIMARRON - DRAPER LAKE 345KV CKT 1	717	717	0.1132	103.1136	HUNTERS7 345.00 - RENFROW7 345.00 345KV CKT 1
FDNS	00NR	2	16WP	G15_047	FROM->TO	CIMARRON - DRAPER LAKE 345KV CKT 1	717	717	0.11189	103.0957	GEN657748 1-YOUNG 2 GENERATOR
FDNS	00NR	2	16WP	G15_047	FROM->TO	CIMARRON - DRAPER LAKE 345KV CKT 1	717	717	0.1127	103.0651	PARK LANE - SEMINOLE 138KV CKT 1
FDNS	00NR	2	16WP	G15_047	FROM->TO	CIMARRON - DRAPER LAKE 345KV CKT 1	717	717	0.11187	103.0635	FRANKLIN - FRANKLIN SW 138KV CKT 1
FDNS	00NR	2	16WP	G15_047	FROM->TO	CIMARRON - DRAPER LAKE 345KV CKT 1	717	717	0.11189	103.0633	GEN562655 1-G14_074_3 0.6900
FDNS	00NR	2	16WP	G15_047	FROM->TO	CIMARRON - DRAPER LAKE 345KV CKT 1	717	717	0.11189	103.0628	GEN562762 1-G15033_3 0.6900
FDNS	00NR	2	16WP	G15_047	FROM->TO	CIMARRON - DRAPER LAKE 345KV CKT 1	717	717	0.11189	103.0004	GEN527901 1-HOBBS PLANT #1 (CT)
FDNS	00NR	2	16WP	G15_047	FROM->TO	CIMARRON - DRAPER LAKE 345KV CKT 1	717	717	0.11189	103.0004	GEN527902 1-HOBBS PLANT #2 (CT)
FDNS	00NR	2	16WP	G15_047	FROM->TO	CIMARRON - DRAPER LAKE 345KV CKT 1	717	717	0.11189	102.988	GEN563273 2-G15093_4 0.6900
FDNS	00NR	2	16WP	G15_047	FROM->TO	CIMARRON - DRAPER LAKE 345KV CKT 1	717	717	0.11189	102.9617	GEN563043 1-G15068_4 0.6900
FDNS	00NR	2	16WP	G15_047	FROM->TO	CIMARRON - DRAPER LAKE 345KV CKT 1	717	717	0.11189	102.9457	GEN563052 1-G15069_3 0.6900
FDNS	00NR	2	16WP	G15_047	FROM->TO	CIMARRON - DRAPER LAKE 345KV CKT 1	717	717	0.11391	102.929	AIRDEPT4 138.00 - GM 138KV CKT 1
FDNS	00NR	2	16WP	G15_047	FROM->TO	CIMARRON - DRAPER LAKE 345KV CKT 1	717	717	0.11189	102.9202	GEN525845 1-ELK_2 1 138.00
FDNS	00NR	2	16WP	G15_047	FROM->TO	CIMARRON - DRAPER LAKE 345KV CKT 1	717	717	0.11189	102.9168	GEN525844 1-ELK_1 118.000
FDNS	00NR	2	16WP	G15_047	FROM->TO	CIMARRON - DRAPER LAKE 345KV CKT 1	717	717	0.11203	102.9163	LYDIA - WELSH 345KV CKT 1
FDNS	00NR	2	16WP	G15_047	FROM->TO	CIMARRON - DRAPER LAKE 345KV CKT 1	717	717	0.11203	102.9163	LYDIA - WELSH 345KV CKT 1
FDNS	00NR	2	16WP	G15_047	FROM->TO	CIMARRON - DRAPER LAKE 345KV CKT 1	717	717	0.11229	102.9086	P12:138:AEPW-OGE:CORNVIL4:CIMARON4
FDNS	00NR	2	16WP	G15_047	FROM->TO	CIMARRON - DRAPER LAKE 345KV CKT 1	717	717	0.11189	102.9058	GEN620315 1-BIG STONE GEN
FDNS	00NR	2	16WP	G15_047	FROM->TO	CIMARRON - DRAPER LAKE 345KV CKT 1	717	717	0.11189	102.8984	GEN563242 1-G15090_3 0.6900
FDNS	00NR	2	16WP	G15_047	FROM->TO	CIMARRON - DRAPER LAKE 345KV CKT 1	717	717	0.11189	102.8684	GEN526333 1-JONES GEN #3 21 KV
FDNS	00NR	2	16WP	G15_047	FROM->TO	CIMARRON - DRAPER LAKE 345KV CKT 1	717	717	0.11189	102.8684	GEN526334 1-JONES_4 116.500
FDNS	00NR	2	16WP	G15_047	FROM->TO	CIMARRON - DRAPER LAKE 345KV CKT 1	717	717	0.11189	102.8603	GEN562772 1-G15034_3 0.6900
FDNS	00NR	2	16WP	G15_047	FROM->TO	CIMARRON - DRAPER LAKE 345KV CKT 1	717	717	0.11189	102.8532	GEN600004 2-PRAIRIE ISLAND G2
FDNS	00NR	2	16WP	G15_047	FROM->TO	CIMARRON - DRAPER LAKE 345KV CKT 1	717	717	0.11189	102.8503	GEN600003 1-PRAIRIE ISLAND G1
FDNS	00NR	2	16WP	G15_047	FROM->TO	CIMARRON - DRAPER LAKE 345KV CKT 1	717	717	0.11189	102.8417	GEN600006 1-AS KING
FDNS	00NR	2	16WP	G15_047	FROM->TO	CIMARRON - DRAPER LAKE 345KV CKT 1	717	717	0.11189	102.8346	GEN523971 1-HARRINGTON GEN #1 24 KV
FDNS	00NR	2	16WP	G15_047	FROM->TO	CIMARRON - DRAPER LAKE 345KV CKT 1	717	717	0.11189	102.8346	GEN523972 1-HARRINGTON GEN #2 24 KV
FDNS	00NR	2	16WP	G15_047	FROM->TO	CIMARRON - DRAPER LAKE 345KV CKT 1	717	717	0.11189	102.8346	GEN523973 1-HARRINGTON GEN #3 24 KV
FDNS	00NR	2	16WP	G15_047	FROM->TO	CIMARRON - DRAPER LAKE 345KV CKT 1	717	717	0.11189	102.8075	GEN636641 1-LOUISA UNIT 1
FDNS	00NR	2	16WP	G15_047	FROM->TO	CIMARRON - DRAPER LAKE 345KV CKT 1	717	717	0.11892	102.7763	CLARKSVILLE - MUSKOGEE 345KV CKT 1
FDNS	00NR	2	16WP	G15_047	FROM->TO	CIMARRON - DRAPER LAKE 345KV CKT 1	717	717	0.11892	102.7763	CLARKSVILLE - MUSKOGEE 345KV CKT 1
FDNS	00NR	2	16WP	G15_047	FROM->TO	CIMARRON - DRAPER LAKE 345KV CKT 1	717	717	0.11535	102.7277	RANCHRD7 345.00 - SOONER 345KV CKT 1
FDNS	00NR	2	16WP	G15_047	FROM->TO	CIMARRON - DRAPER LAKE 345KV CKT 1	717	717	0.11391	102.721	DRAPER LAKE - GM 138KV CKT 1
FDNS	00NR	2	16WP	G15_047	FROM->TO	CIMARRON - DRAPER LAKE 345KV CKT 1	717	717	0.11189	102.6987	GEN600005 1-MONTICELLO
FDNS	00NR	2	16WP	G15_047	FROM->TO	CIMARRON - DRAPER LAKE 345KV CKT 1	717	717	0.11189	102.6974	GEN542962 2-IATAN UNIT #2
FDNS	00NR	2	16WP	G15_047	FROM->TO	CIMARRON - DRAPER LAKE 345KV CKT 1	717	717	0.11189	102.6882	GEN563292 1-G15095_3 0.6900
FDNS	00NR	2	16WP	G15_047	FROM->TO	CIMARRON - DRAPER LAKE 345KV CKT 1	717	717	0.1132	102.6811	HUNTERS7 345.00 - WOODRING 345KV CKT 1
FDNS	00NR	2	16WP	G15_047	FROM->TO	CIMARRON - DRAPER LAKE 345KV CKT 1	717	717	0.11189	102.6338	GEN527166 1-MUSTANG_6 118.000
FDNS	00NR	2	16WP	G15_047	FROM->TO	CIMARRON - DRAPER LAKE 345KV CKT 1	717	717	0.11189	102.6243	GEN525562 1-TOLK GEN #2 24 KV

SOLUTION	GROUP	SCENARIO	SEASON	SOURCE	DIRECTION	MONITORED ELEMENT	RATEA (MVA)	RATEB(MVA)	TDF	TC%LOADING (% MVA)	CONTINGENCY
FDNS	00NR	2	16WP	G15_047	FROM->TO	CIMARRON - DRAPER LAKE 345KV CKT 1	717	717	0.11189	102.6056	GEN629074 1-ARNOLD LOWSIDE OF GSU XFMR
FDNS	00NR	2	16WP	G15_047	FROM->TO	CIMARRON - DRAPER LAKE 345KV CKT 1	717	717	0.11189	102.5961	GEN562952 1-G15057_3 0.6500
FDNS	00NR	2	16WP	G15_047	FROM->TO	CIMARRON - DRAPER LAKE 345KV CKT 1	717	717	0.11171	102.592	MUSKOGEE - SEMINOLE 345KV CKT 1
FDNS	00NR	2	16WP	G15_047	FROM->TO	CIMARRON - DRAPER LAKE 345KV CKT 1	717	717	0.11189	102.5912	GEN563272 1-G15093_3 0.6900
FDNS	00NR	2	16WP	G15_047	FROM->TO	CIMARRON - DRAPER LAKE 345KV CKT 1	717	717	0.09345	102.5737	NORTHWEST - SPRING CREEK 345KV CKT 1
FDNS	00NR	2	16WP	G15_047	FROM->TO	CIMARRON - DRAPER LAKE 345KV CKT 1	717	717	0.11189	102.5488	GEN635213 3-NEAL UNIT 3
FDNS	00NR	2	16WP	G15_047	FROM->TO	CIMARRON - DRAPER LAKE 345KV CKT 1	717	717	0.11224	102.5423	FRANKLIN SW - MIDWEST TAP 138KV CKT 1
FDNS	00NR	2	16WP	G15_047	FROM->TO	CIMARRON - DRAPER LAKE 345KV CKT 1	717	717	0.09345	102.5415	SOONER - SPRING CREEK 345KV CKT 1
FDNS	00NR	2	16WP	G15_047	FROM->TO	CIMARRON - DRAPER LAKE 345KV CKT 1	717	717	0.11189	102.5016	BIG STONE 230/24.0KV TRANSFORMER CKT 1
FDNS	00NR	2	16WP	G15_047	FROM->TO	CIMARRON - DRAPER LAKE 345KV CKT 1	717	717	0.11189	102.4936	GEN562892 1-G15048_3 0.6900
FDNS	00NR	2	16WP	G15_047	FROM->TO	CIMARRON - DRAPER LAKE 345KV CKT 1	717	717	0.11299	102.4699	CHAMBER SPRINGS - CLARKSVILLE 345KV CKT 1
FDNS	00NR	2	16WP	G15_047	FROM->TO	CIMARRON - DRAPER LAKE 345KV CKT 1	717	717	0.10643	102.4616	DRAPER LAKE - SEMINOLE 345KV CKT 3
FDNS	00NR	2	16WP	G15_047	FROM->TO	CIMARRON - DRAPER LAKE 345KV CKT 1	717	717	0.11189	102.4485	GEN563173 1-G15082_3 0.6900
FDNS	00NR	2	16WP	G15_047	FROM->TO	CIMARRON - DRAPER LAKE 345KV CKT 1	717	717	0.11189	102.3962	GEN562902 1-G15052_3 0.6900
FDNS	00NR	2	16WP	G15_047	FROM->TO	CIMARRON - DRAPER LAKE 345KV CKT 1	717	717	0.11189	102.3855	GEN514805 1-SOONER UNIT 1
FDNS	00NR	2	16WP	G15_047	FROM->TO	CIMARRON - DRAPER LAKE 345KV CKT 1	717	717	0.11189	102.3571	GEN600000 1-SHERBURNECNTY G1
FDNS	00NR	2	16WP	G15_047	FROM->TO	CIMARRON - DRAPER LAKE 345KV CKT 1	717	717	0.11189	102.3543	GEN527903 1-HOBBS PLANT #3 (ST)
FDNS	00NR	2	16WP	G15_047	FROM->TO	CIMARRON - DRAPER LAKE 345KV CKT 1	717	717	0.11189	102.3358	GEN525561 1-TOLK GEN #1 24 KV
FDNS	00NR	2	16WP	G15_047	FROM->TO	CIMARRON - DRAPER LAKE 345KV CKT 1	717	717	0.11208	102.3139	LYDIA - VALLIANT 345KV CKT 1
FDNS	00NR	2	16WP	G15_047	FROM->TO	CIMARRON - DRAPER LAKE 345KV CKT 1	717	717	0.11208	102.3139	LYDIA - VALLIANT 345KV CKT 1
FDNS	00NR	2	16WP	G15_047	FROM->TO	CIMARRON - DRAPER LAKE 345KV CKT 1	717	717	0.11276	102.3097	P12:138:OKGE:3TERM23
FDNS	00NR	2	16WP	G15_047	FROM->TO	CIMARRON - DRAPER LAKE 345KV CKT 1	717	717	0.11189	102.2581	GEN600001 2-SHERBURNE CNTY G2
FDNS	00NR	2	16WP	G15_047	FROM->TO	CIMARRON - DRAPER LAKE 345KV CKT 1	717	717	0.11276	102.2506	BARNES 4 138.00 - DRAPER LAKE 138KV CKT 1
FDNS	00NR	2	16WP	G15_047	FROM->TO	CIMARRON - DRAPER LAKE 345KV CKT 1	717	717	0.11189	102.18	GEN344225 1-1CAL G1 25.000
FDNS	00NR	2	16WP	G15_047	FROM->TO	CIMARRON - DRAPER LAKE 345KV CKT 1	717	717	0.11189	102.1326	GEN514806 1-SOONER UNIT 2
FDNS	00NR	2	16WP	G15_047	FROM->TO	CIMARRON - DRAPER LAKE 345KV CKT 1	717	717	0.11189	102.1283	GEN629075 1-OTTUMWA GENERATOR FOR OTTUMWA UNIT NO 1
FDNS	00NR	2	16WP	G15_047	FROM->TO	CIMARRON - DRAPER LAKE 345KV CKT 1	717	717	0.11189	102.1	GEN563162 1-G15081_3 0.6900
FDNS	00NR	2	16WP	G15_047	FROM->TO	CIMARRON - DRAPER LAKE 345KV CKT 1	717	717	0.11346	102.0066	DRAPER LAKE (DRAPER2) 345/138/13.8KV TRANSFORMER CKT 1
FDNS	00NR	2	16WP	G15_047	FROM->TO	CIMARRON - DRAPER LAKE 345KV CKT 1	717	717	0.11346	101.9188	DRAPER LAKE (DRAPER3) 345/138/13.8KV TRANSFORMER CKT 1
FDNS	00NR	2	16WP	G15_047	FROM->TO	CIMARRON - DRAPER LAKE 345KV CKT 1	717	717	0.11346	101.9188	DRAPER LAKE (DRAPER4) 345/138/13.8KV TRANSFORMER CKT 1
FDNS	00NR	2	16WP	G15_047	FROM->TO	CIMARRON - DRAPER LAKE 345KV CKT 1	717	717	0.11189	101.9056	SHERBURNE CO 345/24.0KV TRANSFORMER CKT 1
FDNS	00NR	2	16WP	G15_047	FROM->TO	CIMARRON - DRAPER LAKE 345KV CKT 1	717	717	0.11189	101.8959	GEN532653 1-JEFFREY ENERGY CENTER UNIT 3
FDNS	00NR	2	16WP	G15_047	FROM->TO	CIMARRON - DRAPER LAKE 345KV CKT 1	717	717	0.11189	101.8892	GEN635214 4-NEAL UNIT 4
FDNS	00NR	2	16WP	G15_047	FROM->TO	CIMARRON - DRAPER LAKE 345KV CKT 1	717	717	0.10848	101.8113	CIMARRON - MATHWSN7 345.00 345KV CKT 1
FDNS	00NR	2	16WP	G15_047	FROM->TO	CIMARRON - DRAPER LAKE 345KV CKT 1	717	717	0.10848	101.8113	CIMARRON - MATHWSN7 345.00 345KV CKT 2
FDNS	00NR	2	16WP	G15_047	FROM->TO	CIMARRON - DRAPER LAKE 345KV CKT 1	717	717	0.11189	101.7972	GEN600002 3-SHERBURNE CNTY G3
FDNS	00NR	2	16WP	G15_047	FROM->TO	CIMARRON - DRAPER LAKE 345KV CKT 1	717	717	0.11189	101.7706	GEN562882 1-G15047_3 0.6900
FDNS	00NR	2	16WP	G15_047	FROM->TO	CIMARRON - DRAPER LAKE 345KV CKT 1	717	717	0.11189	101.4077	GEN635023 3-WALTER SCOTT UNIT 3
FDNS	00NR	2	16WP	G15_047	FROM->TO	CIMARRON - DRAPER LAKE 345KV CKT 1	717	717	0.11189	101.2842	GEN562023 1-G11_020_3 0.6900
FDNS	00NR	2	16WP	G15_047	FROM->TO	CIMARRON - DRAPER LAKE 345KV CKT 1	717	717	0.11189	101.2842	GEN562026 1-G11_019_3 0.6900
FDNS	00NR	2	16WP	G15_047	FROM->TO	CIMARRON - DRAPER LAKE 345KV CKT 1	717	717	0.11189	101.1938	EASTDC - ERCOT EQUIVALENCE 345KV CKT 1
FDNS	00NR	2	16WP	G15_047	FROM->TO	CIMARRON - DRAPER LAKE 345KV CKT 1	717	717	0.1017	100.9388	DRAPER LAKE - SEMINOLE 345KV CKT 1
FDNS	00NR	2	16WP	G15_047	FROM->TO	CIMARRON - DRAPER LAKE 345KV CKT 1	717	717	0.1017	100.9387	DRAPER LAKE - SEMINOLE 345KV CKT 2
FDNS	00NR	2	16WP	G15_047	FROM->TO	CIMARRON - DRAPER LAKE 345KV CKT 1	717	717	0.11189	100.9275	GEN635024 4-WALTER SCOTT UNIT 4
FDNS	00NR	2	16WP	G15_047	FROM->TO	CIMARRON - DRAPER LAKE 345KV CKT 1	717	717	0.11189	99.6	GEN562992 1-G15063_3 0.6900
FDNS	08NR	2	20L	G15_047	TO->FROM	CLEAVELAND - CLEVLND 4 138.00 138KV CKT Z1	305	371	0.0916	114.5277	CLEVELAND - TULSA NORTH 345KV CKT 1
FDNS	08NR	2	20L	G15_047	TO->FROM	CLEAVELAND - CLEVLND 4 138.00 138KV CKT Z1	305	371	0.0916	114.5277	CLEVELAND - TULSA NORTH 345KV CKT 1
FDNS	00NR	2	17SP	G15_047	TO->FROM	CLEAVELAND - CLEVLND 4 138.00 138KV CKT Z1	305	371	0.09919	110.9467	CLEVELAND - TULSA NORTH 345KV CKT 1
FDNS	00NR	2	17SP	G15_047	TO->FROM	CLEAVELAND - CLEVLND 4 138.00 138KV CKT Z1	305	371	0.09919	110.9467	CLEVELAND - TULSA NORTH 345KV CKT 1
FDNS	00NR	2	20SP	G15_047	TO->FROM	CLEAVELAND - CLEVLND 4 138.00 138KV CKT Z1	305	371	0.09974	110.0555	CLEVELAND - TULSA NORTH 345KV CKT 1
FDNS	00NR	2	20SP	G15_047	TO->FROM	CLEAVELAND - CLEVLND 4 138.00 138KV CKT Z1	305	371	0.09974	110.0555	CLEVELAND - TULSA NORTH 345KV CKT 1
FDNS	08NR	2	20L	G15_047	FROM->TO	CLEAVELAND - SILVER CITY 138KV CKT 1	174	174	0.0399	116.395	CLEVELAND - TULSA NORTH 345KV CKT 1
FDNS	08NR	2	20L	G15_047	FROM->TO	CLEAVELAND - SILVER CITY 138KV CKT 1	174	174	0.0399	116.395	CLEVELAND - TULSA NORTH 345KV CKT 1
FDNS	00NR	2	16WP	G15_047	FROM->TO	G14-057T 345.00 - SUNNYSIDE 345KV CKT 1	717	789	0.0297	126.8195	BASE CASE
FDNS	00NR	2	16WP	G15_047	FROM->TO	G14-057T 345.00 - SUNNYSIDE 345KV CKT 1	717	789	0.04008	124.2707	CIMARRON - DRAPER LAKE 345KV CKT 1
FDNS	00NR	2	16WP	G15_047	FROM->TO	G14-057T 345.00 - SUNNYSIDE 345KV CKT 1	717	789	0.03138	121.5267	P12:138:WFEC:MSL03
FDNS	00NR	2	20WP	G15_047	FROM->TO	G14-057T 345.00 - SUNNYSIDE 345KV CKT 1	717	789	0.03976	121.1948	CIMARRON - DRAPER LAKE 345KV CKT 1
FDNS	00NR	2	16WP	G15_047	FROM->TO	G14-057T 345.00 - SUNNYSIDE 345KV CKT 1	717	789	0.0297	120.3891	GEN509403 1-PIRKEY GENERATION
FDNS	00NR	2	16WP	G15_047	FROM->TO	G14-057T 345.00 - SUNNYSIDE 345KV CKT 1	717	789	0.0297	120.2923	GEN509416 1-TURK GENERATION
FDNS	00NR	2	16WP	G15_047	FROM->TO	G14-057T 345.00 - SUNNYSIDE 345KV CKT 1	717	789	0.03994	120.13	CLEVELAND - G15066_T 345.00 345KV CKT 1
FDNS	00NR	2	16WP	G15_047	FROM->TO	G14-057T 345.00 - SUNNYSIDE 345KV CKT 1	717	789	0.03994	119.8302	G15066_T 345.00 - SOONER 345KV CKT 1
FDNS	00NR	2	16WP	G15_047	FROM->TO	G14-057T 345.00 - SUNNYSIDE 345KV CKT 1	717	789	0.0297	119.4032	GEN501801 1-DOLET HILLS UNIT1
FDNS	00NR	2	16WP	G15_047	FROM->TO	G14-057T 345.00 - SUNNYSIDE 345KV CKT 1	717	789	0.0297	119.0201	GEN509404 1-WELSH #1
FDNS	00NR	2	16WP	G15_047	FROM->TO	G14-057T 345.00 - SUNNYSIDE 345KV CKT 1	717	789	0.0297	119.02	GEN509406 1-WELSH #3
FDNS	00NR	2	20WP	G15_047	FROM->TO	G14-057T 345.00 - SUNNYSIDE 345KV CKT 1	717	789	0.03113	118.7528	P12:138:WFEC:MSL03
FDNS	00NR	2	16WP	G15_047	FROM->TO	G14-057T 345.00 - SUNNYSIDE 345KV CKT 1	717	789	0.03032	118.4188	CORN TAP - NAPLESTP 138.00 138KV CKT 1
FDNS	00NR	2	16WP	G15_047	FROM->TO	G14-057T 345.00 - SUNNYSIDE 345KV CKT 1	717	789	0.03032	118.3333	NAPLESTP 138.00 - PAYNE 138.00 138KV CKT 1
FDNS	00NR	2	16WP	G15_047	FROM->TO	G14-057T 345.00 - SUNNYSIDE 345KV CKT 1	717	789	0.02993	118.2238	7SAREPTA% 345.00 - LONGWOOD 345KV CKT 1
FDNS	00NR	2	16WP	G15_047	FROM->TO	G14-057T 345.00 - SUNNYSIDE 345KV CKT 1	717	789	0.02993	118.2238	7SAREPTA% 345.00 - LONGWOOD 345KV CKT 1
FDNS	00NR	2	16WP	G15_047	FROM->TO	G14-057T 345.00 - SUNNYSIDE 345KV CKT 1	717	789	0.0297	118.1405	GEN336821 1-GRAND GULF UNIT
FDNS	00NR	2	16WP	G15_047	FROM->TO	G14-057T 345.00 - SUNNYSIDE 345KV CKT 1	717	789	0.03634	118.1204	CLEVELAND - TULSA NORTH 345KV CKT 1
FDNS	00NR	2	16WP	G15_047	FROM->TO	G14-057T 345.00 - SUNNYSIDE 345KV CKT 1	717	789	0.03634	118.1204	CLEVELAND - TULSA NORTH 345KV CKT 1
FDNS	00NR	2	16WP	G15_047	FROM->TO	G14-057T 345.00 - SUNNYSIDE 345KV CKT 1	717	789	0.02982	118.1089	DOLET HILLS - SOUTHWEST SHREVEPORT 345KV CKT 1
FDNS	00NR	2	16WP	G15_047	FROM->TO	G14-057T 345.00 - SUNNYSIDE 345KV CKT 1	717	789	0.02982	118.1089	DOLET HILLS - SOUTHWEST SHREVEPORT 345KV CKT 1
FDNS	00NR	2	16WP	G15_047	FROM->TO	G14-057T 345.00 - SUNNYSIDE 345KV CKT 1	717	789	0.03007	118.0656	ANADARKO - POCASSETT 138KV CKT 1
FDNS	00NR	2	16WP	G15_047	FROM->TO	G14-057T 345.00 - SUNNYSIDE 345KV CKT 1	717	789	0.0297	118.0479	GEN336153 1-WATERFORD UNIT#3
FDNS	00NR	2	16WP	G15_047	FROM->TO	G14-057T 345.00 - SUNNYSIDE 345KV CKT 1	717	789	0.03024	118.0254	COMANCHE - LOCO 138KV CKT 1
FDNS	00NR	2	16WP	G15_047	FROM->TO	G14-057T 345.00 - SUNNYSIDE 345KV CKT 1	717	789	0.03007	117.9108	POCASSETT - TUTTLE 138KV CKT 1
FDNS	00NR	2	16WP	G15_047	FROM->TO	G14-057T 345.00 - SUNNYSIDE 345KV CKT 1	717	789	0.03922	117.8602	ARCADIA - NORTHWEST 345KV CKT 1

SOLUTION	GROUP	SCENARIO	SEASON	SOURCE	DIRECTION	MONITORED ELEMENT	RATEA (MVA)	RATEB(MVA)	TDF	TC%LOADING (% MVA)	CONTINGENCY
FDNS	00NR	2	16WP	G15_047	FROM->TO	G14-057T 345.00 - SUNNYSIDE 345KV CKT 1	717	789	0.0297	117.7485	GEN335831 1-RIVERBEND UNIT#1
FDNS	00NR	2	16WP	G15_047	FROM->TO	G14-057T 345.00 - SUNNYSIDE 345KV CKT 1	717	789	0.0297	117.7459	GRAND GULF 500/22.0KV TRANSFORMER CKT 1
FDNS	00NR	2	16WP	G15_047	FROM->TO	G14-057T 345.00 - SUNNYSIDE 345KV CKT 1	717	789	0.03158	117.7399	ARCADIA - SEMINOLE 345KV CKT 1
FDNS	00NR	2	16WP	G15_047	FROM->TO	G14-057T 345.00 - SUNNYSIDE 345KV CKT 1	717	789	0.0297	117.67	GEN515577 1-ARBWND11 0.6900
FDNS	00NR	2	16WP	G15_047	FROM->TO	G14-057T 345.00 - SUNNYSIDE 345KV CKT 1	717	789	0.0297	117.6537	GEN509409 1-WILKES #3
FDNS	00NR	2	16WP	G15_047	FROM->TO	G14-057T 345.00 - SUNNYSIDE 345KV CKT 1	717	789	0.03	117.6376	MATHWSN7 345.00 - TATONGA7 345.00 345KV CKT 1
FDNS	00NR	2	16WP	G15_047	FROM->TO	G14-057T 345.00 - SUNNYSIDE 345KV CKT 1	717	789	0.02988	117.5924	P12:138:AEPW:DUNCAN-4:L.E.S.-4
FDNS	00NR	2	16WP	G15_047	FROM->TO	G14-057T 345.00 - SUNNYSIDE 345KV CKT 1	717	789	0.02983	117.5858	7SAREPTA% 345.00 - ELDORADO EHV 345KV CKT 1
FDNS	00NR	2	16WP	G15_047	FROM->TO	G14-057T 345.00 - SUNNYSIDE 345KV CKT 1	717	789	0.02983	117.5856	3TR3AR8EL7EL
FDNS	00NR	2	16WP	G15_047	FROM->TO	G14-057T 345.00 - SUNNYSIDE 345KV CKT 1	717	789	0.02983	117.575	ELDORADO EHV 500/345KV TRANSFORMER CKT 1
FDNS	00NR	2	16WP	G15_047	FROM->TO	G14-057T 345.00 - SUNNYSIDE 345KV CKT 1	717	789	0.03007	117.5347	BRIDGECR 138.00 - TUTTLE 138KV CKT 1
FDNS	00NR	2	16WP	G15_047	FROM->TO	G14-057T 345.00 - SUNNYSIDE 345KV CKT 1	717	789	0.03047	117.515	HEALDTON - LOCO 138KV CKT 1
FDNS	00NR	2	16WP	G15_047	FROM->TO	G14-057T 345.00 - SUNNYSIDE 345KV CKT 1	717	789	0.02989	117.4814	COMANCHE TAP - OMPA-DUNCAN 840 138KV CKT 1
FDNS	00NR	2	16WP	G15_047	FROM->TO	G14-057T 345.00 - SUNNYSIDE 345KV CKT 1	717	789	0.03047	117.376	HEALDTON - RINGLING 138KV CKT 1
FDNS	00NR	2	16WP	G15_047	FROM->TO	G14-057T 345.00 - SUNNYSIDE 345KV CKT 1	717	789	0.0297	117.3548	GEN501813 1-RODEMACHER UNIT 3
FDNS	00NR	2	16WP	G15_047	FROM->TO	G14-057T 345.00 - SUNNYSIDE 345KV CKT 1	717	789	0.0297	117.3476	GEN300006 1-NEW MADRID UNIT 1
FDNS	00NR	2	16WP	G15_047	FROM->TO	G14-057T 345.00 - SUNNYSIDE 345KV CKT 1	717	789	0.03019	117.338	LACYGNE - WAVERLY7 345.00 345KV CKT 1
FDNS	00NR	2	16WP	G15_047	FROM->TO	G14-057T 345.00 - SUNNYSIDE 345KV CKT 1	717	789	0.0297	117.3358	GEN300007 1-NEW MADRID UNIT 2
FDNS	00NR	2	20WP	G15_047	FROM->TO	G14-057T 345.00 - SUNNYSIDE 345KV CKT 1	717	789	0.03957	117.3123	CLEVELAND - G15066_T 345.00 345KV CKT 1
FDNS	00NR	2	16WP	G15_047	FROM->TO	G14-057T 345.00 - SUNNYSIDE 345KV CKT 1	717	789	0.03007	117.2709	P12:138:WFEC:MSL01
FDNS	00NR	2	16WP	G15_047	FROM->TO	G14-057T 345.00 - SUNNYSIDE 345KV CKT 1	717	789	0.03007	117.2647	BRIDGECR 138.00 - SUNSHINE CANYON 138KV CKT 1
FDNS	00NR	2	16WP	G15_047	FROM->TO	G14-057T 345.00 - SUNNYSIDE 345KV CKT 1	717	789	0.0297	117.2366	GEN520947 1-HUGO1
FDNS	00NR	2	16WP	G15_047	FROM->TO	G14-057T 345.00 - SUNNYSIDE 345KV CKT 1	717	789	0.03019	117.2216	WAVERLY7 345.00 - WOLF CREEK 345KV CKT 1
FDNS	00NR	2	16WP	G15_047	FROM->TO	G14-057T 345.00 - SUNNYSIDE 345KV CKT 1	717	789	0.03047	117.2111	RINGLING - SOUTH WILSON 138KV CKT 1
FDNS	00NR	2	16WP	G15_047	FROM->TO	G14-057T 345.00 - SUNNYSIDE 345KV CKT 1	717	789	0.02989	117.1999	DUNCAN - OMPA-DUNCAN 840 138KV CKT 1
FDNS	00NR	2	16WP	G15_047	FROM->TO	G14-057T 345.00 - SUNNYSIDE 345KV CKT 1	717	789	0.02989	117.1999	DUNCAN - OMPA-DUNCAN 840 138KV CKT 1
FDNS	00NR	2	16WP	G15_047	FROM->TO	G14-057T 345.00 - SUNNYSIDE 345KV CKT 1	717	789	0.0297	117.1546	GEN335206 1-NELSON UNIT 6
FDNS	00NR	2	16WP	G15_047	FROM->TO	G14-057T 345.00 - SUNNYSIDE 345KV CKT 1	717	789	0.0297	117.0466	DOLET HILLS 345/24.0KV TRANSFORMER CKT 1
FDNS	00NR	2	20WP	G15_047	FROM->TO	G14-057T 345.00 - SUNNYSIDE 345KV CKT 1	717	789	0.03957	117.0174	G15066_T 345.00 - SOONER 345KV CKT 1
FDNS	00NR	2	16WP	G15_047	FROM->TO	G14-057T 345.00 - SUNNYSIDE 345KV CKT 1	717	789	0.02969	116.9897	P12:138:AEPW:SHERID4:112GORE4
FDNS	00NR	2	16WP	G15_047	FROM->TO	G14-057T 345.00 - SUNNYSIDE 345KV CKT 1	717	789	0.03067	116.9842	CANEYRV7 345.00 - NEOSHO 345KV CKT 1
FDNS	00NR	2	16WP	G15_047	FROM->TO	G14-057T 345.00 - SUNNYSIDE 345KV CKT 1	717	789	0.0297	116.969	GEN501812 1-RODEMACHER UNIT 2
FDNS	00NR	2	16WP	G15_047	FROM->TO	G14-057T 345.00 - SUNNYSIDE 345KV CKT 1	717	789	0.0297	116.9593	GEN590011 2-ERCOT EQUIVALENCE
FDNS	00NR	2	16WP	G15_047	FROM->TO	G14-057T 345.00 - SUNNYSIDE 345KV CKT 1	717	789	0.03047	116.9343	MARIETTA - SOUTH WILSON 138KV CKT 1
FDNS	00NR	2	16WP	G15_047	FROM->TO	G14-057T 345.00 - SUNNYSIDE 345KV CKT 1	717	789	0.0297	116.9075	GEN515564 1-ORIGIN11 0.6900
FDNS	00NR	2	16WP	G15_047	FROM->TO	G14-057T 345.00 - SUNNYSIDE 345KV CKT 1	717	789	0.0297	116.9075	GEN515565 1-ORIGIN21 0.6900
FDNS	00NR	2	16WP	G15_047	FROM->TO	G14-057T 345.00 - SUNNYSIDE 345KV CKT 1	717	789	0.0297	116.8852	GEN590010 1-ERCOT EQUIVALENCE
FDNS	00NR	2	16WP	G15_047	FROM->TO	G14-057T 345.00 - SUNNYSIDE 345KV CKT 1	717	789	0.0297	116.8642	GEN509408 1-WILKES #2
FDNS	00NR	2	16WP	G15_047	FROM->TO	G14-057T 345.00 - SUNNYSIDE 345KV CKT 1	717	789	0.03047	116.8374	P12:138:WFEC:MSL17
FDNS	00NR	2	16WP	G15_047	FROM->TO	G14-057T 345.00 - SUNNYSIDE 345KV CKT 1	717	789	0.03067	116.7991	CANEYRV7 345.00 - LATHAMS7 345.00 345KV CKT 1
FDNS	00NR	2	16WP	G15_047	FROM->TO	G14-057T 345.00 - SUNNYSIDE 345KV CKT 1	717	789	0.03031	116.74	CIVIT - PAOLI 138KV CKT 1
FDNS	00NR	2	16WP	G15_047	FROM->TO	G14-057T 345.00 - SUNNYSIDE 345KV CKT 1	717	789	0.0297	116.7336	GEN506754 1-LEBROCK STEAM 1
FDNS	00NR	2	16WP	G15_047	FROM->TO	G14-057T 345.00 - SUNNYSIDE 345KV CKT 1	717	789	0.0297	116.7256	P12:69:AEPW:L.E.S.-2:LAW WC2
FDNS	00NR	2	16WP	G15_047	FROM->TO	G14-057T 345.00 - SUNNYSIDE 345KV CKT 1	717	789	0.0297	116.7088	P12:161:AEPW:DYESS 5:HYLAND 5
FDNS	00NR	2	16WP	G15_047	FROM->TO	G14-057T 345.00 - SUNNYSIDE 345KV CKT 1	717	789	0.0299	116.7066	P12:138:WFEC:MSL02
FDNS	00NR	2	16WP	G15_047	FROM->TO	G14-057T 345.00 - SUNNYSIDE 345KV CKT 1	717	789	0.02991	116.6926	PAOLI - PAYNE 138.00 138KV CKT 1
FDNS	00NR	2	16WP	G15_047	FROM->TO	G14-057T 345.00 - SUNNYSIDE 345KV CKT 1	717	789	0.02971	116.6907	ELDORADO EHV - MOUNT OLIVE 500KV CKT 1
FDNS	00NR	2	16WP	G15_047	FROM->TO	G14-057T 345.00 - SUNNYSIDE 345KV CKT 1	717	789	0.0297	116.6849	GEN334440 1-SABINE UNIT 4
FDNS	00NR	2	16WP	G15_047	FROM->TO	G14-057T 345.00 - SUNNYSIDE 345KV CKT 1	717	789	0.0303	116.6428	MATHWSN7 345.00 - NORTHWEST 345KV CKT 1
FDNS	00NR	2	16WP	G15_047	FROM->TO	G14-057T 345.00 - SUNNYSIDE 345KV CKT 1	717	789	0.02967	116.6402	ELDORADO EHV - SHERIDAN EHV 500KV CKT 1
FDNS	00NR	2	16WP	G15_047	FROM->TO	G14-057T 345.00 - SUNNYSIDE 345KV CKT 1	717	789	0.02969	116.6254	P12:138:AEPW:112GORE4:L.E.S.-4
FDNS	00NR	2	16WP	G15_047	FROM->TO	G14-057T 345.00 - SUNNYSIDE 345KV CKT 1	717	789	0.0297	116.6181	NEW MADRID 161/22.0KV TRANSFORMER CKT 1
FDNS	00NR	2	16WP	G15_047	FROM->TO	G14-057T 345.00 - SUNNYSIDE 345KV CKT 1	717	789	0.02985	116.6152	ANADARKO - GEORGIA 138KV CKT 1
FDNS	00NR	2	16WP	G15_047	FROM->TO	G14-057T 345.00 - SUNNYSIDE 345KV CKT 1	717	789	0.03075	116.6102	P12:138:AEPW-OGE:CORNVIL4:MAUD 4
FDNS	00NR	2	16WP	G15_047	FROM->TO	G14-057T 345.00 - SUNNYSIDE 345KV CKT 1	717	789	0.0297	116.6049	NEW MADRID 345/22.0KV TRANSFORMER CKT 1
FDNS	00NR	2	16WP	G15_047	FROM->TO	G14-057T 345.00 - SUNNYSIDE 345KV CKT 1	717	789	0.03031	116.5972	CIVIT - STRATFORD 138KV CKT 1
FDNS	00NR	2	16WP	G15_047	FROM->TO	G14-057T 345.00 - SUNNYSIDE 345KV CKT 1	717	789	0.03067	116.5818	LATHAMS7 345.00 - ROSE HILL 345KV CKT 1
FDNS	00NR	2	16WP	G15_047	FROM->TO	G14-057T 345.00 - SUNNYSIDE 345KV CKT 1	717	789	0.0297	116.5793	FRONTIER - GRIMES 345KV CKT 1
FDNS	00NR	2	16WP	G15_047	FROM->TO	G14-057T 345.00 - SUNNYSIDE 345KV CKT 1	717	789	0.0297	116.5525	GEN503909 1-FULTONU1 1 16.000
FDNS	00NR	2	16WP	G15_047	FROM->TO	G14-057T 345.00 - SUNNYSIDE 345KV CKT 1	717	789	0.03075	116.5384	BLANCHARD - CORNVILLE 138KV CKT 1
FDNS	00NR	2	16WP	G15_047	FROM->TO	G14-057T 345.00 - SUNNYSIDE 345KV CKT 1	717	789	0.02967	116.5372	LAWTON EASTSIDE (LES 5) 345/138/13.8KV TRANSFORMER CKT 2
FDNS	00NR	2	16WP	G15_047	FROM->TO	G14-057T 345.00 - SUNNYSIDE 345KV CKT 1	717	789	0.02967	116.5372	LAWTON EASTSIDE (LES 5) 345/138/13.8KV TRANSFORMER CKT 2
FDNS	00NR	2	16WP	G15_047	FROM->TO	G14-057T 345.00 - SUNNYSIDE 345KV CKT 1	717	789	0.02982	116.534	WEBRE - WELLS 500KV CKT 1
FDNS	00NR	2	16WP	G15_047	FROM->TO	G14-057T 345.00 - SUNNYSIDE 345KV CKT 1	717	789	0.02985	116.5316	FLETCHER - GEORGIA 138KV CKT 1
FDNS	00NR	2	16WP	G15_047	FROM->TO	G14-057T 345.00 - SUNNYSIDE 345KV CKT 1	717	789	0.02988	116.5084	EMPIRE - FLETCHER 138KV CKT 1
FDNS	00NR	2	16WP	G15_047	FROM->TO	G14-057T 345.00 - SUNNYSIDE 345KV CKT 1	717	789	0.03031	116.478	OIL CENTER - STRATFORD 138KV CKT 1
FDNS	00NR	2	16WP	G15_047	FROM->TO	G14-057T 345.00 - SUNNYSIDE 345KV CKT 1	717	789	0.0297	116.4296	GEN509393 S1-ARSENAL HILL GENS #4 (STALL)
FDNS	00NR	2	16WP	G15_047	FROM->TO	G14-057T 345.00 - SUNNYSIDE 345KV CKT 1	717	789	0.02988	116.4233	COMANCHE - EMPIRE 138KV CKT 1
FDNS	00NR	2	16WP	G15_047	FROM->TO	G14-057T 345.00 - SUNNYSIDE 345KV CKT 1	717	789	0.0297	116.4107	DELL 500 - ESSEX UNIT 2 500KV CKT Z1
FDNS	00NR	2	16WP	G15_047	FROM->TO	G14-057T 345.00 - SUNNYSIDE 345KV CKT 1	717	789	0.0297	116.4022	GEN509392 G2-ARSENAL HILL GENS #3 (STALL)
FDNS	00NR	2	16WP	G15_047	FROM->TO	G14-057T 345.00 - SUNNYSIDE 345KV CKT 1	717	789	0.0297	116.4021	GEN509391 G1-ARSENAL HILL GENS #2 (STALL)
FDNS	00NR	2	16WP	G15_047	FROM->TO	G14-057T 345.00 - SUNNYSIDE 345KV CKT 1	717	789	0.0297	116.3903	GEN336252 1-NINEMILE POINT UNIT#5
FDNS	00NR	2	16WP	G15_047	FROM->TO	G14-057T 345.00 - SUNNYSIDE 345KV CKT 1	717	789	0.0297	116.375	GEN334071 1-LEWIS CREEK 2
FDNS	00NR	2	16WP	G15_047	FROM->TO	G14-057T 345.00 - SUNNYSIDE 345KV CKT 1	717	789	0.0298	116.3699	G15074_T 345.00 - HOYT 345KV CKT 1
FDNS	00NR	2	16WP	G15_047	FROM->TO	G14-057T 345.00 - SUNNYSIDE 345KV CKT 1	717	789	0.0297	116.366	GEN334070 1-LEWIS CREEK 1
FDNS	00NR	2	16WP	G15_047	FROM->TO	G14-057T 345.00 - SUNNYSIDE 345KV CKT 1	717	789	0.0297	116.3637	GEN335204 1-NELSON UNIT 4
FDNS	00NR	2	16WP	G15_047	FROM->TO	G14-057T 345.00 - SUNNYSIDE 345KV CKT 1	717	789	0.03075	116.3419	BLANCHARD - MAUD 138KV CKT 1
FDNS	00NR	2	16WP	G15_047	FROM->TO	G14-057T 345.00 - SUNNYSIDE 345KV CKT 1	717	789	0.02978	116.3372	DUNCAN (DUNCAN) 138/69/13.8KV TRANSFORMER CKT 1
FDNS	00NR	2	16WP	G15_047	FROM->TO	G14-057T 345.00 - SUNNYSIDE 345KV CKT 1	717	789	0.02978	116.3372	DUNCAN (DUNCAN) 138/69/13.8KV TRANSFORMER CKT 1

SOLUTION	GROUP	SCENARIO	SEASON	SOURCE	DIRECTION	MONITORED ELEMENT	RATEA (MVA)	RATEB(MVA)	TDF	TC%LOADING (% MVA)	CONTINGENCY
FDNS	00NR	2	16WP	G15_047	FROM->TO	G14-057T 345.00 - SUNNYSIDE 345KV CKT 1	717	789	0.0297	116.3286	GEN334441 1-SABINE UNIT 5
FDNS	00NR	2	16WP	G15_047	FROM->TO	G14-057T 345.00 - SUNNYSIDE 345KV CKT 1	717	789	0.03031	116.3054	LATTA JCT - OIL CENTER 138KV CKT 1
FDNS	00NR	2	16WP	G15_047	FROM->TO	G14-057T 345.00 - SUNNYSIDE 345KV CKT 1	717	789	0.0297	116.2916	P12:161:AEPW-SWPA:BEAVER5:EROGERS5
FDNS	00NR	2	16WP	G15_047	FROM->TO	G14-057T 345.00 - SUNNYSIDE 345KV CKT 1	717	789	0.0297	116.2887	GEN300003 1-THOMAS HILL UNIT 3
FDNS	00NR	2	16WP	G15_047	FROM->TO	G14-057T 345.00 - SUNNYSIDE 345KV CKT 1	717	789	0.0297	116.2871	GEN515040 1-SEMINOLE 1G
FDNS	00NR	2	16WP	G15_047	FROM->TO	G14-057T 345.00 - SUNNYSIDE 345KV CKT 1	717	789	0.0297	116.2756	GEN334030 1-FRONTIER UNIT 1
FDNS	00NR	2	16WP	G15_047	FROM->TO	G14-057T 345.00 - SUNNYSIDE 345KV CKT 1	717	789	0.0297	116.2739	GEN334031 1-FRONTIER UNIT 2
FDNS	00NR	2	16WP	G15_047	FROM->TO	G14-057T 345.00 - SUNNYSIDE 345KV CKT 1	717	789	0.0297	116.2729	GEN337653 1-WHITE BLUFF UNIT #2
FDNS	00NR	2	16WP	G15_047	FROM->TO	G14-057T 345.00 - SUNNYSIDE 345KV CKT 1	717	789	0.02976	116.2726	P12:138:AEPW:CATOOSA4:T.S.E.-4
FDNS	00NR	2	16WP	G15_047	FROM->TO	G14-057T 345.00 - SUNNYSIDE 345KV CKT 1	717	789	0.0297	116.2565	GEN506752 1-LEBROCK GAS 1
FDNS	00NR	2	16WP	G15_047	FROM->TO	G14-057T 345.00 - SUNNYSIDE 345KV CKT 1	717	789	0.0297	116.2563	GEN506753 1-LEBROCK GAS 2
FDNS	00NR	2	16WP	G15_047	FROM->TO	G14-057T 345.00 - SUNNYSIDE 345KV CKT 1	717	789	0.02979	116.2416	6LAYFLD 230.00 - CARROLL 230KV CKT 1
FDNS	00NR	2	16WP	G15_047	FROM->TO	G14-057T 345.00 - SUNNYSIDE 345KV CKT 1	717	789	0.02973	116.2333	8DANIEL8 500.00 - MCKNIGHT 500KV CKT 1
FDNS	00NR	2	16WP	G15_047	FROM->TO	G14-057T 345.00 - SUNNYSIDE 345KV CKT 1	717	789	0.0297	116.2265	GEN515226 1-MUSKOGEE 6G
FDNS	00NR	2	16WP	G15_047	FROM->TO	G14-057T 345.00 - SUNNYSIDE 345KV CKT 1	717	789	0.0297	116.2246	GEN337911 1-ARKANSAS NUCLEAR ONE UNIT #2
FDNS	00NR	2	16WP	G15_047	FROM->TO	G14-057T 345.00 - SUNNYSIDE 345KV CKT 1	717	789	0.03024	116.2233	BAILEY4 138.00 - SUNSHINE CANYON 138KV CKT 1
FDNS	00NR	2	16WP	G15_047	FROM->TO	G14-057T 345.00 - SUNNYSIDE 345KV CKT 1	717	789	0.02969	116.2197	P12:138:AEPW-OGE:WTH_JCT4:JENSEN4
FDNS	00NR	2	16WP	G15_047	FROM->TO	G14-057T 345.00 - SUNNYSIDE 345KV CKT 1	717	789	0.0297	116.2185	P12:161:AEPW:DYESS5:ELMSPRNG:TONTITN5
FDNS	00NR	2	16WP	G15_047	FROM->TO	G14-057T 345.00 - SUNNYSIDE 345KV CKT 1	717	789	0.0298	116.2165	FULTON 115 - HOPE 115KV CKT 1
FDNS	00NR	2	16WP	G15_047	FROM->TO	G14-057T 345.00 - SUNNYSIDE 345KV CKT 1	717	789	0.0298	116.2165	FULTON 115 - HOPE 115KV CKT 1
FDNS	00NR	2	16WP	G15_047	FROM->TO	G14-057T 345.00 - SUNNYSIDE 345KV CKT 1	717	789	0.0297	116.2163	GEN300015 1-1SGPDEL 18.000
FDNS	00NR	2	16WP	G15_047	FROM->TO	G14-057T 345.00 - SUNNYSIDE 345KV CKT 1	717	789	0.0297	116.2086	GEN501811 1-RODEMACHER UNIT 1
FDNS	00NR	2	16WP	G15_047	FROM->TO	G14-057T 345.00 - SUNNYSIDE 345KV CKT 1	717	789	0.02973	116.2082	G15088_T 345.00 - MOORE 345KV CKT 1
FDNS	00NR	2	16WP	G15_047	FROM->TO	G14-057T 345.00 - SUNNYSIDE 345KV CKT 1	717	789	0.0297	116.1913	GEN337652 1-WHITE BLUFF UNIT #1
FDNS	00NR	2	16WP	G15_047	FROM->TO	G14-057T 345.00 - SUNNYSIDE 345KV CKT 1	717	789	0.0297	116.1903	GEN336251 1-NINEMILE POINT UNIT#4
FDNS	00NR	2	16WP	G15_047	FROM->TO	G14-057T 345.00 - SUNNYSIDE 345KV CKT 1	717	789	0.0297	116.1869	GEN334433 1-SABINE UNIT 3
FDNS	00NR	2	16WP	G15_047	FROM->TO	G14-057T 345.00 - SUNNYSIDE 345KV CKT 1	717	789	0.0297	116.1843	GEN336831 1-BAXTER WILSON SES
FDNS	00NR	2	16WP	G15_047	FROM->TO	G14-057T 345.00 - SUNNYSIDE 345KV CKT 1	717	789	0.0298	116.1794	P12:138:AEPW:CORNVIL4:S.W.S.-4
FDNS	00NR	2	16WP	G15_047	FROM->TO	G14-057T 345.00 - SUNNYSIDE 345KV CKT 1	717	789	0.02975	116.1744	P12:138:AEPW:CORNVIL4:DUNCAN-4
FDNS	00NR	2	16WP	G15_047	FROM->TO	G14-057T 345.00 - SUNNYSIDE 345KV CKT 1	717	789	0.02956	116.1606	BUCKNER7 345.00 - SPEARVILLE 345KV CKT 1
FDNS	00NR	2	16WP	G15_047	FROM->TO	G14-057T 345.00 - SUNNYSIDE 345KV CKT 1	717	789	0.02956	116.1606	BUCKNER7 345.00 - SPEARVILLE 345KV CKT 1
FDNS	00NR	2	16WP	G15_047	FROM->TO	G14-057T 345.00 - SUNNYSIDE 345KV CKT 1	717	789	0.02978	116.154	P12:69:WFEC-AEPW:COMANCH2:DUNCAN-2
FDNS	00NR	2	16WP	G15_047	FROM->TO	G14-057T 345.00 - SUNNYSIDE 345KV CKT 1	717	789	0.0297	116.1537	GEN562783 1-G15036_4 0.6900
FDNS	00NR	2	16WP	G15_047	FROM->TO	G14-057T 345.00 - SUNNYSIDE 345KV CKT 1	717	789	0.0297	116.1537	GEN562784 1-G15036_5 0.6900
FDNS	00NR	2	16WP	G15_047	FROM->TO	G14-057T 345.00 - SUNNYSIDE 345KV CKT 1	717	789	0.0297	116.1418	GEN505432 1-SIKESTON
FDNS	00NR	2	16WP	G15_047	FROM->TO	G14-057T 345.00 - SUNNYSIDE 345KV CKT 1	717	789	0.02995	116.1412	CIMARRON - CZECH HALL 138KV CKT 1
FDNS	00NR	2	16WP	G15_047	FROM->TO	G14-057T 345.00 - SUNNYSIDE 345KV CKT 1	717	789	0.0297	116.1297	GEN515223 1-MUSKOGEE 4G
FDNS	00NR	2	16WP	G15_047	FROM->TO	G14-057T 345.00 - SUNNYSIDE 345KV CKT 1	717	789	0.0297	116.1297	GEN515225 1-MUSKOGEE 5G
FDNS	00NR	2	16WP	G15_047	FROM->TO	G14-057T 345.00 - SUNNYSIDE 345KV CKT 1	717	789	0.02969	116.1281	P12:138:AEPW:WTHWF4:CLINTJC4
FDNS	00NR	2	16WP	G15_047	FROM->TO	G14-057T 345.00 - SUNNYSIDE 345KV CKT 1	717	789	0.0297	116.1265	WHITE BLUFF 500/26.0KV TRANSFORMER CKT 1
FDNS	00NR	2	16WP	G15_047	FROM->TO	G14-057T 345.00 - SUNNYSIDE 345KV CKT 1	717	789	0.0298	116.1209	HOYT - STRANGER CREEK 345KV CKT 1
FDNS	00NR	2	16WP	G15_047	FROM->TO	G14-057T 345.00 - SUNNYSIDE 345KV CKT 1	717	789	0.0298	116.1159	G15074_T 345.00 - JEFFREY ENERGY CENTER 345KV CKT 1
FDNS	00NR	2	16WP	G15_047	FROM->TO	G14-057T 345.00 - SUNNYSIDE 345KV CKT 1	717	789	0.02971	116.1131	P12:161:AEPW:EROGERS5:ECNTRTN5
FDNS	00NR	2	16WP	G15_047	FROM->TO	G14-057T 345.00 - SUNNYSIDE 345KV CKT 1	717	789	0.0297	116.1109	LAYFLD8 500.00 - MOUNT OLIVE 500KV CKT 1
FDNS	00NR	2	16WP	G15_047	FROM->TO	G14-057T 345.00 - SUNNYSIDE 345KV CKT 1	717	789	0.0297	116.1109	LAYFLD8 500.00 - MOUNT OLIVE 500KV CKT 1
FDNS	00NR	2	16WP	G15_047	FROM->TO	G14-057T 345.00 - SUNNYSIDE 345KV CKT 1	717	789	0.03008	116.1088	CIMARRON - SARA 138KV CKT 1
FDNS	00NR	2	16WP	G15_047	FROM->TO	G14-057T 345.00 - SUNNYSIDE 345KV CKT 1	717	789	0.0297	116.1066	RODEMACHER 230/22.0KV TRANSFORMER CKT 1
FDNS	00NR	2	16WP	G15_047	FROM->TO	G14-057T 345.00 - SUNNYSIDE 345KV CKT 1	717	789	0.02978	116.1033	DUNCAN - TOSCO 69KV CKT 1
FDNS	00NR	2	16WP	G15_047	FROM->TO	G14-057T 345.00 - SUNNYSIDE 345KV CKT 1	717	789	0.02971	116.0933	HOT SPRINGS EHV - MAGNET COVE 500KV CKT 1
FDNS	00NR	2	16WP	G15_047	FROM->TO	G14-057T 345.00 - SUNNYSIDE 345KV CKT 1	717	789	0.0297	116.093	GEN303007 1-1BC2 U2
FDNS	00NR	2	16WP	G15_047	FROM->TO	G14-057T 345.00 - SUNNYSIDE 345KV CKT 1	717	789	0.02969	116.0914	P12:138:AEPW:WTHWF4:WTH_SE4
FDNS	00NR	2	16WP	G15_047	FROM->TO	G14-057T 345.00 - SUNNYSIDE 345KV CKT 1	717	789	0.0297	116.0883	GEN303006 1-1BC2 U1
FDNS	00NR	2	16WP	G15_047	FROM->TO	G14-057T 345.00 - SUNNYSIDE 345KV CKT 1	717	789	0.02973	116.0852	MC NIEL 500/115KV TRANSFORMER CKT 1
FDNS	00NR	2	16WP	G15_047	FROM->TO	G14-057T 345.00 - SUNNYSIDE 345KV CKT 1	717	789	0.0297	116.0814	GEN337910 1-ARKANSAS NUCLEAR ONE UNIT #1
FDNS	00NR	2	16WP	G15_047	FROM->TO	G14-057T 345.00 - SUNNYSIDE 345KV CKT 1	717	789	0.02958	116.0779	CLEO CORNER - CLEOPLT4 138.00 138KV CKT 1
FDNS	00NR	2	16WP	G15_047	FROM->TO	G14-057T 345.00 - SUNNYSIDE 345KV CKT 1	717	789	0.02973	116.0763	P12:69:AEPW-OMPA:COMANC-2:OMWALTR2
FDNS	00NR	2	16WP	G15_047	FROM->TO	G14-057T 345.00 - SUNNYSIDE 345KV CKT 1	717	789	0.02976	116.0741	BISMARK - HOT SPRINGS WEST BUS 115KV CKT 1
FDNS	00NR	2	16WP	G15_047	FROM->TO	G14-057T 345.00 - SUNNYSIDE 345KV CKT 1	717	789	0.02958	116.0696	G15095_T 138.00 - ROSE_VALLEY 138.00 138KV CKT 1
FDNS	00NR	2	16WP	G15_047	FROM->TO	G14-057T 345.00 - SUNNYSIDE 345KV CKT 1	717	789	0.0297	116.069	NELSON 230/20.0KV TRANSFORMER CKT 1
FDNS	00NR	2	16WP	G15_047	FROM->TO	G14-057T 345.00 - SUNNYSIDE 345KV CKT 1	717	789	0.0297	116.066	GEN336191 1-LITTLE GYPSY UNIT#3
FDNS	00NR	2	16WP	G15_047	FROM->TO	G14-057T 345.00 - SUNNYSIDE 345KV CKT 1	717	789	0.02958	116.064	CLEOPLT4 138.00 - MEN TAP 138KV CKT 1
FDNS	00NR	2	16WP	G15_047	FROM->TO	G14-057T 345.00 - SUNNYSIDE 345KV CKT 1	717	789	0.0297	116.0638	GEN300010 1-ST FRANCIS UNIT 1
FDNS	00NR	2	16WP	G15_047	FROM->TO	G14-057T 345.00 - SUNNYSIDE 345KV CKT 1	717	789	0.02995	116.0579	CZECH HALL - XEROX 138KV CKT 1
FDNS	00NR	2	16WP	G15_047	FROM->TO	G14-057T 345.00 - SUNNYSIDE 345KV CKT 1	717	789	0.03024	116.0556	BAILEY4 138.00 - WESTMOORE 138KV CKT 1
FDNS	00NR	2	16WP	G15_047	FROM->TO	G14-057T 345.00 - SUNNYSIDE 345KV CKT 1	717	789	0.02995	116.0535	MORGAN - XEROX 138KV CKT 1
FDNS	00NR	2	16WP	G15_047	FROM->TO	G14-057T 345.00 - SUNNYSIDE 345KV CKT 1	717	789	0.02958	116.0522	IMO TAP - MEN TAP 138KV CKT 1
FDNS	00NR	2	16WP	G15_047	FROM->TO	G14-057T 345.00 - SUNNYSIDE 345KV CKT 1	717	789	0.02973	116.0468	P12:138:AEPW:N.E.S.-4:CATOOSA4
FDNS	00NR	2	16WP	G15_047	FROM->TO	G14-057T 345.00 - SUNNYSIDE 345KV CKT 1	717	789	0.0297	116.0394	GEN335614 1-WILLOW GLENN UNIT#4
FDNS	00NR	2	16WP	G15_047	FROM->TO	G14-057T 345.00 - SUNNYSIDE 345KV CKT 1	717	789	0.02978	116.0336	COMANCHE TAP - TOSCO 69KV CKT 1
FDNS	00NR	2	16WP	G15_047	FROM->TO	G14-057T 345.00 - SUNNYSIDE 345KV CKT 1	717	789	0.02995	116.0298	MORGAN - MUSTANG 138KV CKT 1
FDNS	00NR	2	16WP	G15_047	FROM->TO	G14-057T 345.00 - SUNNYSIDE 345KV CKT 1	717	789	0.03031	116.0288	LASALLE - LATTA JCT 138KV CKT 1
FDNS	00NR	2	16WP	G15_047	FROM->TO	G14-057T 345.00 - SUNNYSIDE 345KV CKT 1	717	789	0.0297	116.0286	GEN303008 1-1BC2 U3
FDNS	00NR	2	16WP	G15_047	FROM->TO	G14-057T 345.00 - SUNNYSIDE 345KV CKT 1	717	789	0.02976	116.0217	ALPINE AECC - BISMARK 115KV CKT 1
FDNS	00NR	2	16WP	G15_047	FROM->TO	G14-057T 345.00 - SUNNYSIDE 345KV CKT 1	717	789	0.0297	116.0137	GEN300011 1-ST FRANCIS UNIT 2
FDNS	00NR	2	16WP	G15_047	FROM->TO	G14-057T 345.00 - SUNNYSIDE 345KV CKT 1	717	789	0.03096	116.0031	CANADIAN - NOBLE 138KV CKT 1
FDNS	00NR	2	16WP	G15_047	FROM->TO	G14-057T 345.00 - SUNNYSIDE 345KV CKT 1	717	789	0.02958	116.0023	NOEL_SW 138.00 - ROSE_VALLEY 138.00 138KV CKT 1
FDNS	00NR	2	16WP	G15_047	FROM->TO	G14-057T 345.00 - SUNNYSIDE 345KV CKT 1	717	789	0.0297	116.0019	GEN336170 1-GULF OXY U4
FDNS	00NR	2	16WP	G15_047	FROM->TO	G14-057T 345.00 - SUNNYSIDE 345KV CKT 1	717	789	0.0297	115.9957	GEN336464 1-MICHOUD UNIT #3
FDNS	00NR	2	16WP	G15_047	FROM->TO	G14-057T 345.00 - SUNNYSIDE 345KV CKT 1	717	789	0.02985	115.9923	7JASPER 345.00 - BLACKBERRY 345KV CKT 1

SOLUTION	GROUP	SCENARIO	SEASON	SOURCE	DIRECTION	MONITORED ELEMENT	RATEA (MVA)	RATEB(MVA)	TDF	TC%LOADING (% MVA)	CONTINGENCY
FDNS	00NR	2	16WP	G15_047	FROM->TO	G14-057T 345.00 - SUNNYSIDE 345KV CKT 1	717	789	0.02971	115.992	CYPRESS - HARTBURG 500KV CKT 1
FDNS	00NR	2	16WP	G15_047	FROM->TO	G14-057T 345.00 - SUNNYSIDE 345KV CKT 1	717	789	0.02969	115.9862	WEATHERFORD JCT. - WEATHERFORD SOUTHEAST 138KV CKT 1
FDNS	00NR	2	16WP	G15_047	FROM->TO	G14-057T 345.00 - SUNNYSIDE 345KV CKT 1	717	789	0.02969	115.9862	WEATHERFORD JCT. - WEATHERFORD SOUTHEAST 138KV CKT 1
FDNS	00NR	2	16WP	G15_047	FROM->TO	G14-057T 345.00 - SUNNYSIDE 345KV CKT 1	717	789	0.03095	115.9815	P12:138:OKGE:3TERM27
FDNS	00NR	2	16WP	G15_047	FROM->TO	G14-057T 345.00 - SUNNYSIDE 345KV CKT 1	717	789	0.02968	115.9815	CHISHOLM6 230.00 - ELK CITY 230KV 230KV CKT 1
FDNS	00NR	2	16WP	G15_047	FROM->TO	G14-057T 345.00 - SUNNYSIDE 345KV CKT 1	717	789	0.0297	115.9805	GEN300016 1-1G1GPDEL 18.000
FDNS	00NR	2	16WP	G15_047	FROM->TO	G14-057T 345.00 - SUNNYSIDE 345KV CKT 1	717	789	0.02968	115.9801	ELK CITY 230KV (ELKCTY-6) 230/138/13.8KV TRANSFORMER CKT 1
FDNS	00NR	2	16WP	G15_047	FROM->TO	G14-057T 345.00 - SUNNYSIDE 345KV CKT 1	717	789	0.02968	115.9801	ELK CITY 230KV (ELKCTY-6) 230/138/13.8KV TRANSFORMER CKT 1
FDNS	00NR	2	16WP	G15_047	FROM->TO	G14-057T 345.00 - SUNNYSIDE 345KV CKT 1	717	789	0.02978	115.9794	COMANCHE - COMANCHE TAP 69KV CKT 1
FDNS	00NR	2	16WP	G15_047	FROM->TO	G14-057T 345.00 - SUNNYSIDE 345KV CKT 1	717	789	0.0297	115.9784	8CAJUN2 500/24.0KV TRANSFORMER CKT 1
FDNS	00NR	2	16WP	G15_047	FROM->TO	G14-057T 345.00 - SUNNYSIDE 345KV CKT 1	717	789	0.02976	115.978	ALPINE AECC - AMITY SS 115KV CKT 1
FDNS	00NR	2	16WP	G15_047	FROM->TO	G14-057T 345.00 - SUNNYSIDE 345KV CKT 1	717	789	0.02983	115.9775	ANADARKO - SEQUOYAHJ4 138.00 138KV CKT 1
FDNS	00NR	2	16WP	G15_047	FROM->TO	G14-057T 345.00 - SUNNYSIDE 345KV CKT 1	717	789	0.02983	115.9762	CORN TAP - SEQUOYAHJ4 138.00 138KV CKT 1
FDNS	00NR	2	16WP	G15_047	FROM->TO	G14-057T 345.00 - SUNNYSIDE 345KV CKT 1	717	789	0.02978	115.9681	P12:138:OKGE-AEPW:JENSEN4:REDROCKRD4
FDNS	00NR	2	16WP	G15_047	FROM->TO	G14-057T 345.00 - SUNNYSIDE 345KV CKT 1	717	789	0.02981	115.9607	SWISSVALE - WEST GARDNER 345KV CKT 1
FDNS	00NR	2	16WP	G15_047	FROM->TO	G14-057T 345.00 - SUNNYSIDE 345KV CKT 1	717	789	0.03003	115.955	BLACKBERRY - NEOSHO 345KV CKT 1
FDNS	00NR	2	16WP	G15_047	FROM->TO	G14-057T 345.00 - SUNNYSIDE 345KV CKT 1	717	789	0.03003	115.955	BLACKBERRY - NEOSHO 345KV CKT 1
FDNS	00NR	2	16WP	G15_047	FROM->TO	G14-057T 345.00 - SUNNYSIDE 345KV CKT 1	717	789	0.0297	115.9536	GEN501910 1-ACADIA UNIT ST1
FDNS	00NR	2	16WP	G15_047	FROM->TO	G14-057T 345.00 - SUNNYSIDE 345KV CKT 1	717	789	0.03183	115.9509	DRAPER LAKE - SEMINOLE 345KV CKT 2
FDNS	00NR	2	16WP	G15_047	FROM->TO	G14-057T 345.00 - SUNNYSIDE 345KV CKT 1	717	789	0.03183	115.9508	DRAPER LAKE - SEMINOLE 345KV CKT 1
FDNS	00NR	2	16WP	G15_047	FROM->TO	G14-057T 345.00 - SUNNYSIDE 345KV CKT 1	717	789	0.0297	115.9495	P12:138:AEPW:R.S.S.-4:S.HUD.-4
FDNS	00NR	2	16WP	G15_047	FROM->TO	G14-057T 345.00 - SUNNYSIDE 345KV CKT 1	717	789	0.0297	115.9422	GEN337041 1-GERALD ANDRUS
FDNS	00NR	2	16WP	G15_047	FROM->TO	G14-057T 345.00 - SUNNYSIDE 345KV CKT 1	717	789	0.02978	115.9367	WALTERS - WALTERS 69KV CKT 1
FDNS	00NR	2	16WP	G15_047	FROM->TO	G14-057T 345.00 - SUNNYSIDE 345KV CKT 1	717	789	0.02979	115.9352	7LUTESVIL 345.00 - 7ST FRANC 345.00 345KV CKT 1
FDNS	00NR	2	16WP	G15_047	FROM->TO	G14-057T 345.00 - SUNNYSIDE 345KV CKT 1	717	789	0.02969	115.9335	P12:138:AEPW:REDROCKRD4:WTH_JCT4
FDNS	00NR	2	16WP	G15_047	FROM->TO	G14-057T 345.00 - SUNNYSIDE 345KV CKT 1	717	789	0.02969	115.9245	ETTA (DUKE HOTSPRINGS) - MC NIEL 500KV CKT 1
FDNS	00NR	2	16WP	G15_047	FROM->TO	G14-057T 345.00 - SUNNYSIDE 345KV CKT 1	717	789	0.03008	115.9211	SARA - STHLAKE4 138.00 138KV CKT 1
FDNS	00NR	2	16WP	G15_047	FROM->TO	G14-057T 345.00 - SUNNYSIDE 345KV CKT 1	717	789	0.03096	115.9116	NOBLE - PURCELL4 138.00 138KV CKT 1
FDNS	00NR	2	16WP	G15_047	FROM->TO	G14-057T 345.00 - SUNNYSIDE 345KV CKT 1	717	789	0.0297	115.9107	P12:138:AEPW:YARCH-S4:T.S.E.-4
FDNS	00NR	2	16WP	G15_047	FROM->TO	G14-057T 345.00 - SUNNYSIDE 345KV CKT 1	717	789	0.0298	115.9094	NORGE ROAD - SOUTHWESTERN STATION 138KV CKT 1
FDNS	00NR	2	16WP	G15_047	FROM->TO	G14-057T 345.00 - SUNNYSIDE 345KV CKT 1	717	789	0.0298	115.9094	NORGE ROAD - SOUTHWESTERN STATION 138KV CKT 1
FDNS	00NR	2	16WP	G15_047	FROM->TO	G14-057T 345.00 - SUNNYSIDE 345KV CKT 1	717	789	0.02973	115.9072	LAWTON RELIFT TAP - OMPA-WALTERS 69KV CKT 1
FDNS	00NR	2	16WP	G15_047	FROM->TO	G14-057T 345.00 - SUNNYSIDE 345KV CKT 1	717	789	0.0297	115.9045	P12:138:AEPW:BA_71ST4:T.S.E.-4
FDNS	00NR	2	16WP	G15_047	FROM->TO	G14-057T 345.00 - SUNNYSIDE 345KV CKT 1	717	789	0.0297	115.9041	P12:69:AEPW:NROGERS2:ECNTRTN2
FDNS	00NR	2	16WP	G15_047	FROM->TO	G14-057T 345.00 - SUNNYSIDE 345KV CKT 1	717	789	0.0297	115.9031	GEN336801 1-BAXTER WILSON UNIT #1
FDNS	00NR	2	16WP	G15_047	FROM->TO	G14-057T 345.00 - SUNNYSIDE 345KV CKT 1	717	789	0.0297	115.9009	SABINE 230/24.0KV TRANSFORMER CKT 1
FDNS	00NR	2	16WP	G15_047	FROM->TO	G14-057T 345.00 - SUNNYSIDE 345KV CKT 1	717	789	0.03024	115.8997	FRANKLIN SW - WESTMOORE 138KV CKT 1
FDNS	00NR	2	16WP	G15_047	FROM->TO	G14-057T 345.00 - SUNNYSIDE 345KV CKT 1	717	789	0.02982	115.8979	8WNEWMADRID 500.00 - DELL 500 500KV CKT 1
FDNS	00NR	2	16WP	G15_047	FROM->TO	G14-057T 345.00 - SUNNYSIDE 345KV CKT 1	717	789	0.03008	115.8922	MCCLAIN - STHLAKE4 138.00 138KV CKT 1
FDNS	00NR	2	16WP	G15_047	FROM->TO	G14-057T 345.00 - SUNNYSIDE 345KV CKT 1	717	789	0.02966	115.8903	ENOWILT - LONE OAK 138KV CKT 1
FDNS	00NR	2	16WP	G15_047	FROM->TO	G14-057T 345.00 - SUNNYSIDE 345KV CKT 1	717	789	0.02997	115.8853	P12:138:AEPW-OGE:SHIDLER4:OSAGE 4
FDNS	00NR	2	16WP	G15_047	FROM->TO	G14-057T 345.00 - SUNNYSIDE 345KV CKT 1	717	789	0.0297	115.8832	FRONTIER 345/18.0KV TRANSFORMER CKT 1
FDNS	00NR	2	16WP	G15_047	FROM->TO	G14-057T 345.00 - SUNNYSIDE 345KV CKT 1	717	789	0.0297	115.8815	FRONTIER 345/18.0KV TRANSFORMER CKT 1
FDNS	00NR	2	16WP	G15_047	FROM->TO	G14-057T 345.00 - SUNNYSIDE 345KV CKT 1	717	789	0.02966	115.8813	ENOWILT - SARDIS 138KV CKT 1
FDNS	00NR	2	16WP	G15_047	FROM->TO	G14-057T 345.00 - SUNNYSIDE 345KV CKT 1	717	789	0.0297	115.8758	ESSEX UNIT 2 500/18.0KV TRANSFORMER CKT 1
FDNS	00NR	2	16WP	G15_047	FROM->TO	G14-057T 345.00 - SUNNYSIDE 345KV CKT 1	717	789	0.0297	115.8728	P12:161:AEPW:CHAMSPR5:FARMING5
FDNS	00NR	2	16WP	G15_047	FROM->TO	G14-057T 345.00 - SUNNYSIDE 345KV CKT 1	717	789	0.02981	115.8696	EMPORIA ENERGY CENTER - SWISSVALE 345KV CKT 1
FDNS	00NR	2	16WP	G15_047	FROM->TO	G14-057T 345.00 - SUNNYSIDE 345KV CKT 1	717	789	0.03031	115.8693	LASALLE - STONEWAL LH138.00 138KV CKT 1
FDNS	00NR	2	16WP	G15_047	FROM->TO	G14-057T 345.00 - SUNNYSIDE 345KV CKT 1	717	789	0.02969	115.865	HINTON - WEATHERFORD JCT. 138KV CKT 1
FDNS	00NR	2	16WP	G15_047	FROM->TO	G14-057T 345.00 - SUNNYSIDE 345KV CKT 1	717	789	0.03031	115.8539	STONEWAL LH138.00 - TUPELO TAP 138KV CKT 1
FDNS	00NR	2	16WP	G15_047	FROM->TO	G14-057T 345.00 - SUNNYSIDE 345KV CKT 1	717	789	0.0297	115.8532	GEN505616 1-BROKEN BOW
FDNS	00NR	2	16WP	G15_047	FROM->TO	G14-057T 345.00 - SUNNYSIDE 345KV CKT 1	717	789	0.02969	115.8521	WEATHERFORD TAP - WEATHERFORD WIND FARM 138KV CKT 1
FDNS	00NR	2	16WP	G15_047	FROM->TO	G14-057T 345.00 - SUNNYSIDE 345KV CKT 1	717	789	0.02976	115.851	CLINTON JUNCTION - ELK CITY 138KV CKT 1
FDNS	00NR	2	16WP	G15_047	FROM->TO	G14-057T 345.00 - SUNNYSIDE 345KV CKT 1	717	789	0.02976	115.851	CLINTON JUNCTION - ELK CITY 138KV CKT 1
FDNS	00NR	2	16WP	G15_047	FROM->TO	G14-057T 345.00 - SUNNYSIDE 345KV CKT 1	717	789	0.0298	115.8489	HOPE - MCNAB REC 115KV CKT 1
FDNS	00NR	2	16WP	G15_047	FROM->TO	G14-057T 345.00 - SUNNYSIDE 345KV CKT 1	717	789	0.0297	115.8461	LEWIS CREEK SWITCHYARD 138/22.0KV TRANSFORMER CKT 1
FDNS	00NR	2	16WP	G15_047	FROM->TO	G14-057T 345.00 - SUNNYSIDE 345KV CKT 1	717	789	0.02966	115.844	CLAYTON - SARDIS 138KV CKT 1
FDNS	00NR	2	16WP	G15_047	FROM->TO	G14-057T 345.00 - SUNNYSIDE 345KV CKT 1	717	789	0.0297	115.8412	LEWIS CREEK SWITCHYARD 138/22.0KV TRANSFORMER CKT 1
FDNS	00NR	2	16WP	G15_047	FROM->TO	G14-057T 345.00 - SUNNYSIDE 345KV CKT 1	717	789	0.02973	115.8402	OMPA-WALTERS - WALTERS 69KV CKT 1
FDNS	00NR	2	16WP	G15_047	FROM->TO	G14-057T 345.00 - SUNNYSIDE 345KV CKT 1	717	789	0.02973	115.8402	OMPA-WALTERS - WALTERS 69KV CKT 1
FDNS	00NR	2	16WP	G15_047	FROM->TO	G14-057T 345.00 - SUNNYSIDE 345KV CKT 1	717	789	0.0298	115.84	P12:115:AEPW:TURK3:HOPE3
FDNS	00NR	2	16WP	G15_047	FROM->TO	G14-057T 345.00 - SUNNYSIDE 345KV CKT 1	717	789	0.0298	115.8399	SOUTHWESTERN STATION - VERDEN 138KV CKT 1
FDNS	00NR	2	16WP	G15_047	FROM->TO	G14-057T 345.00 - SUNNYSIDE 345KV CKT 1	717	789	0.02997	115.8333	EMPORIA ENERGY CENTER - G14_001T 345.00 345KV CKT 1
FDNS	00NR	2	16WP	G15_047	FROM->TO	G14-057T 345.00 - SUNNYSIDE 345KV CKT 1	717	789	0.03027	115.8327	MORISNT4 138.00 - STILLWATER 138KV CKT 1
FDNS	00NR	2	16WP	G15_047	FROM->TO	G14-057T 345.00 - SUNNYSIDE 345KV CKT 1	717	789	0.0297	115.8278	GEN501970 1-EVANGELINE UNIT 7
FDNS	00NR	2	16WP	G15_047	FROM->TO	G14-057T 345.00 - SUNNYSIDE 345KV CKT 1	717	789	0.03026	115.8272	P12:138:OKGE:3TERM2
FDNS	00NR	2	16WP	G15_047	FROM->TO	G14-057T 345.00 - SUNNYSIDE 345KV CKT 1	717	789	0.02978	115.8224	P12:69:WFEC-AEPW:COMANCH2:WALTRS-2
FDNS	00NR	2	16WP	G15_047	FROM->TO	G14-057T 345.00 - SUNNYSIDE 345KV CKT 1	717	789	0.02976	115.8197	COUCH SES - MC NIEL 115KV CKT 1
FDNS	00NR	2	16WP	G15_047	FROM->TO	G14-057T 345.00 - SUNNYSIDE 345KV CKT 1	717	789	0.0298	115.8195	NORTH 29TH CHICKASHA - VERDEN 138KV CKT 1
FDNS	00NR	2	16WP	G15_047	FROM->TO	G14-057T 345.00 - SUNNYSIDE 345KV CKT 1	717	789	0.03147	115.8184	CLARKSVILLE - ONETA 345KV CKT 1
FDNS	00NR	2	16WP	G15_047	FROM->TO	G14-057T 345.00 - SUNNYSIDE 345KV CKT 1	717	789	0.03147	115.8184	CLARKSVILLE - ONETA 345KV CKT 1
FDNS	00NR	2	16WP	G15_047	FROM->TO	G14-057T 345.00 - SUNNYSIDE 345KV CKT 1	717	789	0.02966	115.8184	P12:138:AEPW-SWPA:LONEOAK4:BRKNBW4
FDNS	00NR	2	16WP	G15_047	FROM->TO	G14-057T 345.00 - SUNNYSIDE 345KV CKT 1	717	789	0.0298	115.8174	MCNAB REC - Turk 115 115KV CKT 1
FDNS	00NR	2	16WP	G15_047	FROM->TO	G14-057T 345.00 - SUNNYSIDE 345KV CKT 1	717	789	0.0298	115.8174	TURK (TURK 1) 138/115/13.2KV TRANSFORMER CKT 1
FDNS	00NR	2	16WP	G15_047	FROM->TO	G14-057T 345.00 - SUNNYSIDE 345KV CKT 1	717	789	0.0298	115.8174	TURK (TURK 1) 138/115/13.2KV TRANSFORMER CKT 1
FDNS	00NR	2	16WP	G15_047	FROM->TO	G14-057T 345.00 - SUNNYSIDE 345KV CKT 1	717	789	0.0297	115.8162	GEN334392 1-EXXON MOBIL IPP 1
FDNS	00NR	2	16WP	G15_047	FROM->TO	G14-057T 345.00 - SUNNYSIDE 345KV CKT 1	717	789	0.0297	115.8085	GEN334393 1-EXXON MOBIL IPP 2
FDNS	00NR	2	16WP	G15_047	FROM->TO	G14-057T 345.00 - SUNNYSIDE 345KV CKT 1	717	789	0.0297	115.8085	GEN334394 1-EXXON MOBIL IPP 3
FDNS	00NR	2	16WP	G15_047	FROM->TO	G14-057T 345.00 - SUNNYSIDE 345KV CKT 1	717	789	0.02969	115.8052	HINTON - REDROCKRD4 138.00 138KV CKT 1

SOLUTION	GROUP	SCENARIO	SEASON	SOURCE	DIRECTION	MONITORED ELEMENT	RATEA (MVA)	RATEB(MVA)	TDF	TC%LOADING (% MVA)	CONTINGENCY
FDNS	00NR	2	16WP	G15_047	FROM->TO	G14-057T 345.00 - SUNNYSIDE 345KV CKT 1	717	789	0.02966	115.8034	CLAYTON - NASHOBA 138KV CKT 1
FDNS	00NR	2	16WP	G15_047	FROM->TO	G14-057T 345.00 - SUNNYSIDE 345KV CKT 1	717	789	0.02973	115.8032	P12:138:OKGE:3TERM12
FDNS	00NR	2	16WP	G15_047	FROM->TO	G14-057T 345.00 - SUNNYSIDE 345KV CKT 1	717	789	0.0297	115.801	GEN336222 1-LITTLE GYPSY UNIT#2
FDNS	00NR	2	16WP	G15_047	FROM->TO	G14-057T 345.00 - SUNNYSIDE 345KV CKT 1	717	789	0.03047	115.7991	MARIETTA - MARIETTA4 138.00 138KV CKT 1
FDNS	00NR	2	16WP	G15_047	FROM->TO	G14-057T 345.00 - SUNNYSIDE 345KV CKT 1	717	789	0.02986	115.7904	7JASPER 345.00 - MORGAN 345KV CKT 1
FDNS	00NR	2	16WP	G15_047	FROM->TO	G14-057T 345.00 - SUNNYSIDE 345KV CKT 1	717	789	0.02966	115.7903	BETHEL - NASHOBA 138KV CKT 1
FDNS	00NR	2	16WP	G15_047	FROM->TO	G14-057T 345.00 - SUNNYSIDE 345KV CKT 1	717	789	0.02972	115.7834	P12:138:AEPW:R.S.S-4:T.P.S.-4
FDNS	00NR	2	16WP	G15_047	FROM->TO	G14-057T 345.00 - SUNNYSIDE 345KV CKT 1	717	789	0.02971	115.7809	FRANKLIN - FRANKLIN SW 138KV CKT 1
FDNS	00NR	2	16WP	G15_047	FROM->TO	G14-057T 345.00 - SUNNYSIDE 345KV CKT 1	717	789	0.0297	115.7807	GEN506749 1-EASTMAN GENERATION A
FDNS	00NR	2	16WP	G15_047	FROM->TO	G14-057T 345.00 - SUNNYSIDE 345KV CKT 1	717	789	0.0297	115.7791	GEN334431 1-SABINE UNIT 1
FDNS	00NR	2	16WP	G15_047	FROM->TO	G14-057T 345.00 - SUNNYSIDE 345KV CKT 1	717	789	0.0297	115.779	GEN334432 1-SABINE UNIT 2
FDNS	00NR	2	16WP	G15_047	FROM->TO	G14-057T 345.00 - SUNNYSIDE 345KV CKT 1	717	789	0.02997	115.7744	G14_001T 345.00 - WICHITA 345KV CKT 1
FDNS	00NR	2	16WP	G15_047	FROM->TO	G14-057T 345.00 - SUNNYSIDE 345KV CKT 1	717	789	0.0297	115.7712	GEN501972 1-EVANGELINE UNIT 7-2
FDNS	00NR	2	16WP	G15_047	FROM->TO	G14-057T 345.00 - SUNNYSIDE 345KV CKT 1	717	789	0.0297	115.7711	GEN501971 1-EVANGELINE UNIT 7-1
FDNS	00NR	2	16WP	G15_047	FROM->TO	G14-057T 345.00 - SUNNYSIDE 345KV CKT 1	717	789	0.0297	115.7708	GEN336152 1-WATERFORD UNIT#2
FDNS	00NR	2	16WP	G15_047	FROM->TO	G14-057T 345.00 - SUNNYSIDE 345KV CKT 1	717	789	0.0297	115.7697	GEN336151 1-WATERFORD UNIT#1
FDNS	00NR	2	16WP	G15_047	FROM->TO	G14-057T 345.00 - SUNNYSIDE 345KV CKT 1	717	789	0.02974	115.7691	FLETCHER - MARLOW JCT 69KV CKT 1
FDNS	00NR	2	16WP	G15_047	FROM->TO	G14-057T 345.00 - SUNNYSIDE 345KV CKT 1	717	789	0.02969	115.7652	WEATHERFORD SOUTHEAST - WEATHERFORD TAP 138KV CKT 1
FDNS	00NR	2	16WP	G15_047	FROM->TO	G14-057T 345.00 - SUNNYSIDE 345KV CKT 1	717	789	0.0298	115.7639	CORNVILLE - NORGE ROAD 138KV CKT 1
FDNS	00NR	2	16WP	G15_047	FROM->TO	G14-057T 345.00 - SUNNYSIDE 345KV CKT 1	717	789	0.0298	115.7639	CORNVILLE - NORGE ROAD 138KV CKT 1
FDNS	00NR	2	16WP	G15_047	FROM->TO	G14-057T 345.00 - SUNNYSIDE 345KV CKT 1	717	789	0.0299	115.7624	P12:138:AEPW:OKMULGE4:R.S.S-4
FDNS	00NR	2	16WP	G15_047	FROM->TO	G14-057T 345.00 - SUNNYSIDE 345KV CKT 1	717	789	0.0298	115.7556	CORNVILLE - NORTH 29TH CHICKASHA 138KV CKT 1
FDNS	00NR	2	16WP	G15_047	FROM->TO	G14-057T 345.00 - SUNNYSIDE 345KV CKT 1	717	789	0.02978	115.7211	Canadian Pump Station - REDROCKRD4 138.00 138KV CKT 1
FDNS	00NR	2	16WP	G15_047	FROM->TO	G14-057T 345.00 - SUNNYSIDE 345KV CKT 1	717	789	0.02963	115.7136	P12:138:OKGE:3TERM47
FDNS	00NR	2	16WP	G15_047	FROM->TO	G14-057T 345.00 - SUNNYSIDE 345KV CKT 1	717	789	0.02969	115.7134	CLINTON JUNCTION - CLINTON NATURAL GAS TAP 138KV CKT 1
FDNS	00NR	2	16WP	G15_047	FROM->TO	G14-057T 345.00 - SUNNYSIDE 345KV CKT 1	717	789	0.03096	115.7026	PURCELL4 138.00 - WALNUT CREEK 138KV CKT 1
FDNS	00NR	2	16WP	G15_047	FROM->TO	G14-057T 345.00 - SUNNYSIDE 345KV CKT 1	717	789	0.02975	115.7012	HAMMETT TAP - HORSESHOE LAKE 138KV CKT 1
FDNS	00NR	2	20WP	G15_047	FROM->TO	G14-057T 345.00 - SUNNYSIDE 345KV CKT 1	717	789	0.0301	115.689	CORN TAP - NAPLESTP 138.00 138KV CKT 1
FDNS	00NR	2	16WP	G15_047	FROM->TO	G14-057T 345.00 - SUNNYSIDE 345KV CKT 1	717	789	0.02984	115.6883	CRINER - PAYNE 138.00 138KV CKT 1
FDNS	00NR	2	16WP	G15_047	FROM->TO	G14-057T 345.00 - SUNNYSIDE 345KV CKT 1	717	789	0.02978	115.6503	COMANCHE - WALTERS 69KV CKT 1
FDNS	00NR	2	20WP	G15_047	FROM->TO	G14-057T 345.00 - SUNNYSIDE 345KV CKT 1	717	789	0.02973	115.6344	7SAREPTA% 345.00 - LONGWOOD 345KV CKT 1
FDNS	00NR	2	20WP	G15_047	FROM->TO	G14-057T 345.00 - SUNNYSIDE 345KV CKT 1	717	789	0.02973	115.6344	7SAREPTA% 345.00 - LONGWOOD 345KV CKT 1
FDNS	00NR	2	20WP	G15_047	FROM->TO	G14-057T 345.00 - SUNNYSIDE 345KV CKT 1	717	789	0.0301	115.6032	NAPLESTP 138.00 - PAYNE 138.00 138KV CKT 1
FDNS	00NR	2	20WP	G15_047	FROM->TO	G14-057T 345.00 - SUNNYSIDE 345KV CKT 1	717	789	0.02985	115.421	ANADARKO - POCASSETT 138KV CKT 1
FDNS	00NR	2	20WP	G15_047	FROM->TO	G14-057T 345.00 - SUNNYSIDE 345KV CKT 1	717	789	0.03003	115.3452	COMANCHE - LOCO 138KV CKT 1
FDNS	00NR	2	20WP	G15_047	FROM->TO	G14-057T 345.00 - SUNNYSIDE 345KV CKT 1	717	789	0.036	115.3406	CLEVELAND - TULSA NORTH 345KV CKT 1
FDNS	00NR	2	20WP	G15_047	FROM->TO	G14-057T 345.00 - SUNNYSIDE 345KV CKT 1	717	789	0.036	115.3406	CLEVELAND - TULSA NORTH 345KV CKT 1
FDNS	00NR	2	20WP	G15_047	FROM->TO	G14-057T 345.00 - SUNNYSIDE 345KV CKT 1	717	789	0.02985	115.264	POCASSETT - TUTTLE 138KV CKT 1
FDNS	00NR	2	16WP	G15_047	FROM->TO	G14-057T 345.00 - SUNNYSIDE 345KV CKT 1	717	789	0.0297	115.2466	803-OKLAUNION
FDNS	00NR	2	20WP	G15_047	FROM->TO	G14-057T 345.00 - SUNNYSIDE 345KV CKT 1	717	789	0.02962	115.2331	DOLET HILLS - SOUTHWEST SHREVEPORT 345KV CKT 1
FDNS	00NR	2	20WP	G15_047	FROM->TO	G14-057T 345.00 - SUNNYSIDE 345KV CKT 1	717	789	0.02962	115.2331	DOLET HILLS - SOUTHWEST SHREVEPORT 345KV CKT 1
FDNSLock	00NR	2	16WP	G15_047	FROM->TO	G14-057T 345.00 - SUNNYSIDE 345KV CKT 1	717	789	0.0297	115.169	OKLAUNION 345KV SWITCHED SHUNT
FDNS	00NR	2	16WP	G15_047	FROM->TO	G14-057T 345.00 - SUNNYSIDE 345KV CKT 1	717	789	0.0297	115.167	OKLAUNION 345KV SWITCHED SHUNT
FDNS	00NR	2	20WP	G15_047	FROM->TO	G14-057T 345.00 - SUNNYSIDE 345KV CKT 1	717	789	0.03899	115.1007	ARCADIA - NORTHWEST 345KV CKT 1
FDNS	00NR	2	20WP	G15_047	FROM->TO	G14-057T 345.00 - SUNNYSIDE 345KV CKT 1	717	789	0.02962	115.0107	7SAREPTA% 345.00 - ELDORADO EHV 345KV CKT 1
FDNS	00NR	2	20WP	G15_047	FROM->TO	G14-057T 345.00 - SUNNYSIDE 345KV CKT 1	717	789	0.02962	115.0105	3TR3AR8EL7EL
FDNS	00NR	2	20WP	G15_047	FROM->TO	G14-057T 345.00 - SUNNYSIDE 345KV CKT 1	717	789	0.02962	115	ELDORADO EHV 500/345KV TRANSFORMER CKT 1
FDNS	00NR	2	20WP	G15_047	FROM->TO	G14-057T 345.00 - SUNNYSIDE 345KV CKT 1	717	789	0.02967	114.9902	P12:138:AEPW:DUNCAN-4:L.E.S.-4
FDNS	00NR	2	20WP	G15_047	FROM->TO	G14-057T 345.00 - SUNNYSIDE 345KV CKT 1	717	789	0.02977	114.9314	MATHWSN7 345.00 - TATONGA7 345.00 345KV CKT 1
FDNS	00NR	2	16WP	G15_047	FROM->TO	G14-057T 345.00 - SUNNYSIDE 345KV CKT 1	717	789	0.03031	114.9144	RANCHRD7 345.00 - SOONER 345KV CKT 1
FDNS	00NR	2	20WP	G15_047	FROM->TO	G14-057T 345.00 - SUNNYSIDE 345KV CKT 1	717	789	0.02967	114.8725	COMANCHE TAP - OMPA-DUNCAN 840 138KV CKT 1
FDNS	00NR	2	20WP	G15_047	FROM->TO	G14-057T 345.00 - SUNNYSIDE 345KV CKT 1	717	789	0.02985	114.8702	BRIDGECR 138.00 - TUTTLE 138KV CKT 1
FDNS	00NR	2	16WP	G15_047	FROM->TO	G14-057T 345.00 - SUNNYSIDE 345KV CKT 1	717	789	0.02973	114.8665	JOHNSON COUNTY - RUSSETT 138KV CKT 1
FDNS	00NR	2	16WP	G15_047	FROM->TO	G14-057T 345.00 - SUNNYSIDE 345KV CKT 1	717	789	0.02975	114.8479	GLASSES - MADILL INDUSTRIAL TAP 138KV CKT 1
FDNS	00NR	2	16WP	G15_047	FROM->TO	G14-057T 345.00 - SUNNYSIDE 345KV CKT 1	717	789	0.02996	114.8427	DRAPER LAKE - MIDWEST TAP 138KV CKT 1
FDNS	00NR	2	16WP	G15_047	FROM->TO	G14-057T 345.00 - SUNNYSIDE 345KV CKT 1	717	789	0.0297	114.8356	GEN562691 1-G15_015_3 0.6900
FDNS	00NR	2	16WP	G15_047	FROM->TO	G14-057T 345.00 - SUNNYSIDE 345KV CKT 1	717	789	0.0297	114.8311	GEN562772 1-G15034_3 0.6900
FDNS	00NR	2	16WP	G15_047	FROM->TO	G14-057T 345.00 - SUNNYSIDE 345KV CKT 1	717	789	0.02968	114.8232	HUGO (HUGO 1) 345/138/13.8KV TRANSFORMER CKT 1
FDNS	00NR	2	16WP	G15_047	FROM->TO	G14-057T 345.00 - SUNNYSIDE 345KV CKT 1	717	789	0.02995	114.8216	P12:138:OKGE:3TERM21
FDNS	00NR	2	16WP	G15_047	FROM->TO	G14-057T 345.00 - SUNNYSIDE 345KV CKT 1	717	789	0.0297	114.8048	GEN521103 1-BLUE CANYON WIND FARM
FDNS	00NR	2	16WP	G15_047	FROM->TO	G14-057T 345.00 - SUNNYSIDE 345KV CKT 1	717	789	0.0297	114.803	GEN520812 1-ANADRK5
FDNS	00NR	2	16WP	G15_047	FROM->TO	G14-057T 345.00 - SUNNYSIDE 345KV CKT 1	717	789	0.0297	114.8029	GEN520813 1-ANADRK6
FDNS	00NR	2	16WP	G15_047	FROM->TO	G14-057T 345.00 - SUNNYSIDE 345KV CKT 1	717	789	0.02975	114.7883	GLASSES - RUSSETT 138KV CKT 1
FDNS	00NR	2	20WP	G15_047	FROM->TO	G14-057T 345.00 - SUNNYSIDE 345KV CKT 1	717	789	0.03133	114.7797	ARCADIA - SEMINOLE 345KV CKT 1
FDNS	00NR	2	16WP	G15_047	FROM->TO	G14-057T 345.00 - SUNNYSIDE 345KV CKT 1	717	789	0.0298	114.7746	P12:138:WFEC:MSL11
FDNS	00NR	2	16WP	G15_047	FROM->TO	G14-057T 345.00 - SUNNYSIDE 345KV CKT 1	717	789	0.0298	114.7746	P12:138:WFEC-AEPW:PHAROAH4:LONEOAK4
FDNS	00NR	2	20WP	G15_047	FROM->TO	G14-057T 345.00 - SUNNYSIDE 345KV CKT 1	717	789	0.03026	114.7671	HEALDTON - LOCO 138KV CKT 1
FDNS	00NR	2	16WP	G15_047	FROM->TO	G14-057T 345.00 - SUNNYSIDE 345KV CKT 1	717	789	0.0297	114.7601	GEN511961 1-DEMPSEY-WTG10.7000
FDNS	00NR	2	16WP	G15_047	FROM->TO	G14-057T 345.00 - SUNNYSIDE 345KV CKT 1	717	789	0.0297	114.7488	P12:069:OKGE:3TERM42
FDNS	00NR	2	16WP	G15_047	FROM->TO	G14-057T 345.00 - SUNNYSIDE 345KV CKT 1	717	789	0.02976	114.7296	CANEY CREEK - JOHNSON COUNTY 138KV CKT 1
FDNS	00NR	2	16WP	G15_047	FROM->TO	G14-057T 345.00 - SUNNYSIDE 345KV CKT 1	717	789	0.0298	114.7279	DELL 500 - INDEPENDENCE 500KV CKT 1
FDNS	00NR	2	16WP	G15_047	FROM->TO	G14-057T 345.00 - SUNNYSIDE 345KV CKT 1	717	789	0.02971	114.7211	P12:138:WFEC:MSL08
FDNS	00NR	2	16WP	G15_047	FROM->TO	G14-057T 345.00 - SUNNYSIDE 345KV CKT 1	717	789	0.0297	114.7116	GEN515443 1-MNCOWND1 0.7000
FDNS	00NR	2	16WP	G15_047	FROM->TO	G14-057T 345.00 - SUNNYSIDE 345KV CKT 1	717	789	0.0297	114.7087	INDEPENDENCE 500/26.0KV TRANSFORMER CKT 1
FDNS	00NR	2	16WP	G15_047	FROM->TO	G14-057T 345.00 - SUNNYSIDE 345KV CKT 1	717	789	0.02967	114.6981	CARTER - CHICKASAW 138KV CKT 1
FDNS	00NR	2	16WP	G15_047	FROM->TO	G14-057T 345.00 - SUNNYSIDE 345KV CKT 1	717	789	0.0297	114.6971	GEN532653 1-JEFFREY ENERGY CENTER UNIT 3
FDNS	00NR	2	16WP	G15_047	FROM->TO	G14-057T 345.00 - SUNNYSIDE 345KV CKT 1	717	789	0.0297	114.6941	GEN563242 1-G15090_3 0.6900
FDNS	00NR	2	16WP	G15_047	FROM->TO	G14-057T 345.00 - SUNNYSIDE 345KV CKT 1	717	789	0.0297	114.6934	GEN562902 1-G15052_3 0.6900
FDNS	00NR	2	16WP	G15_047	FROM->TO	G14-057T 345.00 - SUNNYSIDE 345KV CKT 1	717	789	0.0297	114.692	GEN560183 1-REDHIL-WTG1 12.000

SOLUTION	GROUP	SCENARIO	SEASON	SOURCE	DIRECTION	MONITORED ELEMENT	RATEA (MVA)	RATEB(MVA)	TDF	TC%LOADING (% MVA)	CONTINGENCY
FDNS	00NR	2	16WP	G15_047	FROM->TO	G14-057T 345.00 - SUNNYSIDE 345KV CKT 1	717	789	0.02977	114.6898	MINGO - SETAB 345KV CKT 1
FDNS	00NR	2	16WP	G15_047	FROM->TO	G14-057T 345.00 - SUNNYSIDE 345KV CKT 1	717	789	0.02977	114.6898	MINGO - SETAB 345KV CKT 1
FDNS	00NR	2	16WP	G15_047	FROM->TO	G14-057T 345.00 - SUNNYSIDE 345KV CKT 1	717	789	0.0297	114.685	GEN629071 1-BURLINGTON GENERATOR FOR UNIT NO 1 E
FDNS	00NR	2	16WP	G15_047	FROM->TO	G14-057T 345.00 - SUNNYSIDE 345KV CKT 1	717	789	0.02991	114.6846	CANADIAN RIVER - MCALESTER SOUTH 138KV CKT 1
FDNS	00NR	2	16WP	G15_047	FROM->TO	G14-057T 345.00 - SUNNYSIDE 345KV CKT 1	717	789	0.02991	114.6846	CANADIAN RIVER - MCALESTER SOUTH 138KV CKT 1
FDNS	00NR	2	16WP	G15_047	FROM->TO	G14-057T 345.00 - SUNNYSIDE 345KV CKT 1	717	789	0.02956	114.6837	ROCKY POINT - SPRINGDALE 138KV CKT 1
FDNS	00NR	2	16WP	G15_047	FROM->TO	G14-057T 345.00 - SUNNYSIDE 345KV CKT 1	717	789	0.02991	114.6832	CANADIAN RIVER () 345/138/13.8KV TRANSFORMER CKT 1
FDNS	00NR	2	16WP	G15_047	FROM->TO	G14-057T 345.00 - SUNNYSIDE 345KV CKT 1	717	789	0.02991	114.6832	CANADIAN RIVER () 345/138/13.8KV TRANSFORMER CKT 1
FDNS	00NR	2	16WP	G15_047	FROM->TO	G14-057T 345.00 - SUNNYSIDE 345KV CKT 1	717	789	0.02967	114.673	ALTUS JUNCTION - RUSSELL 138KV CKT 1
FDNS	00NR	2	16WP	G15_047	FROM->TO	G14-057T 345.00 - SUNNYSIDE 345KV CKT 1	717	789	0.02967	114.673	ALTUS JUNCTION - RUSSELL 138KV CKT 1
FDNS	00NR	2	16WP	G15_047	FROM->TO	G14-057T 345.00 - SUNNYSIDE 345KV CKT 1	717	789	0.0297	114.6544	BURLINGTON NO1 + NO 2 + NO 3 161/20.0KV TRANSFORMER CKT 1
FDNS	00NR	2	16WP	G15_047	FROM->TO	G14-057T 345.00 - SUNNYSIDE 345KV CKT 1	717	789	0.0297	114.6486	GEN514805 1-SOONER UNIT 1
FDNS	00NR	2	16WP	G15_047	FROM->TO	G14-057T 345.00 - SUNNYSIDE 345KV CKT 1	717	789	0.03005	114.6454	CHAMBER SPRINGS - CLARKSVILLE 345KV CKT 1
FDNS	00NR	2	16WP	G15_047	FROM->TO	G14-057T 345.00 - SUNNYSIDE 345KV CKT 1	717	789	0.0297	114.6445	P12:230:UMZB:# 112 #: NU IN SD. NU-RCDC & DRY CREEK XFMR
FDNS	00NR	2	16WP	G15_047	FROM->TO	G14-057T 345.00 - SUNNYSIDE 345KV CKT 1	717	789	0.0297	114.644	RCDC EAST 4230.00 - RED CEDAR DC 230KV CKT 1
FDNS	00NR	2	16WP	G15_047	FROM->TO	G14-057T 345.00 - SUNNYSIDE 345KV CKT 1	717	789	0.0297	114.639	GEN514806 1-SOONER UNIT 2
FDNS	00NR	2	16WP	G15_047	FROM->TO	G14-057T 345.00 - SUNNYSIDE 345KV CKT 1	717	789	0.02976	114.6385	NORTHWEST TEXARKANA - WELSH 345KV CKT 1
FDNS	00NR	2	16WP	G15_047	FROM->TO	G14-057T 345.00 - SUNNYSIDE 345KV CKT 1	717	789	0.02976	114.6385	NORTHWEST TEXARKANA - WELSH 345KV CKT 1
FDNS	00NR	2	20WP	G15_047	FROM->TO	G14-057T 345.00 - SUNNYSIDE 345KV CKT 1	717	789	0.03026	114.6227	HEALDTON - RINGLING 138KV CKT 1
FDNS	00NR	2	16WP	G15_047	FROM->TO	G14-057T 345.00 - SUNNYSIDE 345KV CKT 1	717	789	0.0297	114.6149	THOMAS HILL 161/22.0KV TRANSFORMER CKT 1
FDNS	00NR	2	16WP	G15_047	FROM->TO	G14-057T 345.00 - SUNNYSIDE 345KV CKT 1	717	789	0.0297	114.6144	GEN562078 1-G11_051_3 0.6900
FDNS	00NR	2	16WP	G15_047	FROM->TO	G14-057T 345.00 - SUNNYSIDE 345KV CKT 1	717	789	0.0297	114.6029	GEN562802 1-G15039_3 0.3570
FDNS	00NR	2	16WP	G15_047	FROM->TO	G14-057T 345.00 - SUNNYSIDE 345KV CKT 1	717	789	0.0297	114.5965	GEN524285 1-WILDORADO WIND GEN
FDNS	00NR	2	16WP	G15_047	FROM->TO	G14-057T 345.00 - SUNNYSIDE 345KV CKT 1	717	789	0.02985	114.5896	KEO EHV - WEST MEMPHIS 500 500KV CKT 1
FDNS	00NR	2	20WP	G15_047	FROM->TO	G14-057T 345.00 - SUNNYSIDE 345KV CKT 1	717	789	0.02967	114.5838	DUNCAN - OMPA-DUNCAN 840 138KV CKT 1
FDNS	00NR	2	20WP	G15_047	FROM->TO	G14-057T 345.00 - SUNNYSIDE 345KV CKT 1	717	789	0.02967	114.5838	DUNCAN - OMPA-DUNCAN 840 138KV CKT 1
FDNS	00NR	2	16WP	G15_047	FROM->TO	G14-057T 345.00 - SUNNYSIDE 345KV CKT 1	717	789	0.0297	114.5811	GEN629072 4-LANSING GENERATOR FOR UNITS NO4 EIA CODE 1
FDNS	00NR	2	20WP	G15_047	FROM->TO	G14-057T 345.00 - SUNNYSIDE 345KV CKT 1	717	789	0.02985	114.58	BRIDGECR 138.00 - SUNSHINE CANYON 138KV CKT 1
FDNS	00NR	2	20WP	G15_047	FROM->TO	G14-057T 345.00 - SUNNYSIDE 345KV CKT 1	717	789	0.02985	114.578	P12:138:WFEC:MSL01
FDNS	00NR	2	16WP	G15_047	FROM->TO	G14-057T 345.00 - SUNNYSIDE 345KV CKT 1	717	789	0.0297	114.576	GEN524295 1-SPNSPUR_WND10.6900
FDNS	00NR	2	16WP	G15_047	FROM->TO	G14-057T 345.00 - SUNNYSIDE 345KV CKT 1	717	789	0.0297	114.5758	GEN562587 1-G14_056_3 0.6900
FDNS	00NR	2	20WP	G15_047	FROM->TO	G14-057T 345.00 - SUNNYSIDE 345KV CKT 1	717	789	0.02999	114.5711	LACYGNE - WAVERLY7 345.00 345KV CKT 1
FDNS	00NR	2	16WP	G15_047	FROM->TO	G14-057T 345.00 - SUNNYSIDE 345KV CKT 1	717	789	0.0297	114.569	GEN560331 1-G10-46 13.800
FDNS	00NR	2	16WP	G15_047	FROM->TO	G14-057T 345.00 - SUNNYSIDE 345KV CKT 1	717	789	0.0297	114.5607	GEN657749 1-YOUNG 1 GENERATOR
FDNS	00NR	2	16WP	G15_047	FROM->TO	G14-057T 345.00 - SUNNYSIDE 345KV CKT 1	717	789	0.0328	114.5463	CLARKSVILLE - MUSKOGEE 345KV CKT 1
FDNS	00NR	2	16WP	G15_047	FROM->TO	G14-057T 345.00 - SUNNYSIDE 345KV CKT 1	717	789	0.0328	114.5463	CLARKSVILLE - MUSKOGEE 345KV CKT 1
FDNS	00NR	2	16WP	G15_047	FROM->TO	G14-057T 345.00 - SUNNYSIDE 345KV CKT 1	717	789	0.0297	114.5414	GEN562882 1-G15047_3 0.6900
FDNS	00NR	2	16WP	G15_047	FROM->TO	G14-057T 345.00 - SUNNYSIDE 345KV CKT 1	717	789	0.0297	114.538	GEN562269 1-G12-020-1 0.6900
FDNS	00NR	2	16WP	G15_047	FROM->TO	G14-057T 345.00 - SUNNYSIDE 345KV CKT 1	717	789	0.0297	114.4928	GEN562270 1-G12-020-2 0.6900
FDNS	00NR	2	16WP	G15_047	FROM->TO	G14-057T 345.00 - SUNNYSIDE 345KV CKT 1	717	789	0.0297	114.4918	GEN681522 3-GENOA 3
FDNS	00NR	2	16WP	G15_047	FROM->TO	G14-057T 345.00 - SUNNYSIDE 345KV CKT 1	717	789	0.0297	114.4877	GEN562812 1-G15040_3 0.3570
FDNS	00NR	2	16WP	G15_047	FROM->TO	G14-057T 345.00 - SUNNYSIDE 345KV CKT 1	717	789	0.0297	114.4816	GEN563102 1-G15075_3 0.5500
FDNS	00NR	2	16WP	G15_047	FROM->TO	G14-057T 345.00 - SUNNYSIDE 345KV CKT 1	717	789	0.0297	114.4798	GEN563062 1-G15071_3 0.6900
FDNS	00NR	2	16WP	G15_047	FROM->TO	G14-057T 345.00 - SUNNYSIDE 345KV CKT 1	717	789	0.0297	114.4773	GEN563132 1-G15078_3 0.3570
FDNS	00NR	2	16WP	G15_047	FROM->TO	G14-057T 345.00 - SUNNYSIDE 345KV CKT 1	717	789	0.02954	114.4752	P12:138:AEPW:112GORE4:SNYDER-4
FDNS	00NR	2	16WP	G15_047	FROM->TO	G14-057T 345.00 - SUNNYSIDE 345KV CKT 1	717	789	0.0297	114.4656	GEN562974 1-G15060_5 0.6900
FDNS	00NR	2	16WP	G15_047	FROM->TO	G14-057T 345.00 - SUNNYSIDE 345KV CKT 1	717	789	0.0297	114.4561	GEN562973 1-G15060_4 0.6900
FDNS	00NR	2	20WP	G15_047	FROM->TO	G14-057T 345.00 - SUNNYSIDE 345KV CKT 1	717	789	0.02999	114.4509	WAVERLY7 345.00 - WOLF CREEK 345KV CKT 1
FDNS	00NR	2	20WP	G15_047	FROM->TO	G14-057T 345.00 - SUNNYSIDE 345KV CKT 1	717	789	0.03026	114.4502	RINGLING - SOUTH WILSON 138KV CKT 1
FDNS	00NR	2	16WP	G15_047	FROM->TO	G14-057T 345.00 - SUNNYSIDE 345KV CKT 1	717	789	0.02971	114.4307	BROWN - RUSSETT 138KV CKT 1
FDNS	00NR	2	16WP	G15_047	FROM->TO	G14-057T 345.00 - SUNNYSIDE 345KV CKT 1	717	789	0.0297	114.423	GEN345671 2-1RUSH G2 18.000
FDNS	00NR	2	16WP	G15_047	FROM->TO	G14-057T 345.00 - SUNNYSIDE 345KV CKT 1	717	789	0.0297	114.4212	GEN345670 1-1RUSH G1 18.000
FDNS	00NR	2	16WP	G15_047	FROM->TO	G14-057T 345.00 - SUNNYSIDE 345KV CKT 1	717	789	0.0297	114.4128	RUSSETT - SPRINGDALE 138KV CKT 1
FDNS	00NR	2	16WP	G15_047	FROM->TO	G14-057T 345.00 - SUNNYSIDE 345KV CKT 1	717	789	0.0297	114.3945	GEN526331 1-JONES GEN #1 22 KV
FDNS	00NR	2	16WP	G15_047	FROM->TO	G14-057T 345.00 - SUNNYSIDE 345KV CKT 1	717	789	0.0297	114.3944	GEN526332 1-JONES GEN #2 21 KV
FDNS	00NR	2	16WP	G15_047	FROM->TO	G14-057T 345.00 - SUNNYSIDE 345KV CKT 1	717	789	0.0297	114.3851	GEN560105 1-G08-22 0.6900
FDNS	00NR	2	16WP	G15_047	FROM->TO	G14-057T 345.00 - SUNNYSIDE 345KV CKT 1	717	789	0.0297	114.3818	GEN562550 1-G14_040_3 0.6900
FDNS	00NR	2	16WP	G15_047	FROM->TO	G14-057T 345.00 - SUNNYSIDE 345KV CKT 1	717	789	0.02965	114.375	P12:138:WFEC:MSL07
FDNS	00NR	2	16WP	G15_047	FROM->TO	G14-057T 345.00 - SUNNYSIDE 345KV CKT 1	717	789	0.02965	114.375	P12:138:WFEC-AEPW:HUGOPP4:ATOKA--4
FDNS	00NR	2	20WP	G15_047	FROM->TO	G14-057T 345.00 - SUNNYSIDE 345KV CKT 1	717	789	0.02977	114.373	G11_051T 345.00 - TATONGA7 345.00 345KV CKT 1
FDNS	00NR	2	16WP	G15_047	FROM->TO	G14-057T 345.00 - SUNNYSIDE 345KV CKT 1	717	789	0.0297	114.3678	4SIOUX 1 138.00 138/18.0KV TRANSFORMER CKT 1
FDNS	00NR	2	16WP	G15_047	FROM->TO	G14-057T 345.00 - SUNNYSIDE 345KV CKT 1	717	789	0.02971	114.3625	RUSSETT - RUSSETT 138KV CKT 1
FDNS	00NR	2	16WP	G15_047	FROM->TO	G14-057T 345.00 - SUNNYSIDE 345KV CKT 1	717	789	0.0297	114.3535	CLAY BOSWELL 230/20.9KV TRANSFORMER CKT 1
FDNS	00NR	2	16WP	G15_047	FROM->TO	G14-057T 345.00 - SUNNYSIDE 345KV CKT 1	717	789	0.0297	114.3465	GEN521112 1-ORME3 13.800
FDNS	00NR	2	16WP	G15_047	FROM->TO	G14-057T 345.00 - SUNNYSIDE 345KV CKT 1	717	789	0.0297	114.3449	GEN511962 2-RKYRDGW2-1 0.7000
FDNS	00NR	2	16WP	G15_047	FROM->TO	G14-057T 345.00 - SUNNYSIDE 345KV CKT 1	717	789	0.0297	114.3355	GEN527882 1-CUNNINGHAM GEN #2 20 KV
FDNS	00NR	2	16WP	G15_047	FROM->TO	G14-057T 345.00 - SUNNYSIDE 345KV CKT 1	717	789	0.0297	114.3288	GEN672321 1-SHAND GENERATOR 1
FDNS	00NR	2	16WP	G15_047	FROM->TO	G14-057T 345.00 - SUNNYSIDE 345KV CKT 1	717	789	0.0297	114.3241	GEN562892 1-G15048_3 0.6900
FDNS	00NR	2	16WP	G15_047	FROM->TO	G14-057T 345.00 - SUNNYSIDE 345KV CKT 1	717	789	0.0297	114.3048	GEN672310 1-POPLAR RIVER GENERATOR 1
FDNS	00NR	2	16WP	G15_047	FROM->TO	G14-057T 345.00 - SUNNYSIDE 345KV CKT 1	717	789	0.0297	114.3048	GEN672311 2-POPLAR RIVER GENERATOR 2
FDNS	00NR	2	16WP	G15_047	FROM->TO	G14-057T 345.00 - SUNNYSIDE 345KV CKT 1	717	789	0.0297	114.3009	GEN563192 1-G15084_3 0.5500
FDNS	00NR	2	16WP	G15_047	FROM->TO	G14-057T 345.00 - SUNNYSIDE 345KV CKT 1	717	789	0.0297	114.2968	GEN672306 6-BOUNDARY DAM GENERATOR 6
FDNS	00NR	2	16WP	G15_047	FROM->TO	G14-057T 345.00 - SUNNYSIDE 345KV CKT 1	717	789	0.0297	114.2871	GEN511853 1-COMANCHE #3
FDNS	00NR	2	16WP	G15_047	FROM->TO	G14-057T 345.00 - SUNNYSIDE 345KV CKT 1	717	789	0.0297	114.2863	GEN562512 1-G14_020_3 0.6900
FDNS	00NR	2	16WP	G15_047	FROM->TO	G14-057T 345.00 - SUNNYSIDE 345KV CKT 1	717	789	0.02972	114.2844	P12:138:WFEC:MSL16
FDNS	00NR	2	16WP	G15_047	FROM->TO	G14-057T 345.00 - SUNNYSIDE 345KV CKT 1	717	789	0.02971	114.2696	P12:138:WFEC-AEPW:GOLDENSW4:CRAIGJT4
FDNS	00NR	2	16WP	G15_047	FROM->TO	G14-057T 345.00 - SUNNYSIDE 345KV CKT 1	717	789	0.0297	114.2391	GEN523461 1-BLACKHAWK GEN #1
FDNS	00NR	2	16WP	G15_047	FROM->TO	G14-057T 345.00 - SUNNYSIDE 345KV CKT 1	717	789	0.0297	114.239	GEN523462 1-BLACKHAWK GEN #2
FDNS	00NR	2	16WP	G15_047	FROM->TO	G14-057T 345.00 - SUNNYSIDE 345KV CKT 1	717	789	0.0297	114.2339	GEN344895 2-1LAB G2 20.000

SOLUTION	GROUP	SCENARIO	SEASON	SOURCE	DIRECTION	MONITORED ELEMENT	RATEA (MVA)	RATEB(MVA)	TDF	TC%LOADING (% MVA)	CONTINGENCY
FDNS	00NR	2	16WP	G15_047	FROM->TO	G14-057T 345.00 - SUNNYSIDE 345KV CKT 1	717	789	0.0297	114.2311	GEN511852 1-COMANCHE #2
FDNS	00NR	2	16WP	G15_047	FROM->TO	G14-057T 345.00 - SUNNYSIDE 345KV CKT 1	717	789	0.0297	114.2012	GEN344896 3-1LAB G3 20.000
FDNS	00NR	2	16WP	G15_047	FROM->TO	G14-057T 345.00 - SUNNYSIDE 345KV CKT 1	717	789	0.0297	114.1999	GEN344894 1-1LAB G1 20.000
FDNS	00NR	2	16WP	G15_047	FROM->TO	G14-057T 345.00 - SUNNYSIDE 345KV CKT 1	717	789	0.0297	114.1984	GEN344897 4-1LAB G4 20.000
FDNS	00NR	2	16WP	G15_047	FROM->TO	G14-057T 345.00 - SUNNYSIDE 345KV CKT 1	717	789	0.0297	114.196	P12:138:AEPW-SWPA:LONEOAK4:TUPELO4
FDNS	00NR	2	16WP	G15_047	FROM->TO	G14-057T 345.00 - SUNNYSIDE 345KV CKT 1	717	789	0.0297	114.1959	P12:138:WFEC:MSL06
FDNS	00NR	2	20WP	G15_047	FROM->TO	G14-057T 345.00 - SUNNYSIDE 345KV CKT 1	717	789	0.03045	114.1948	CANEYRV7 345.00 - NEOSHO 345KV CKT 1
FDNS	00NR	2	16WP	G15_047	FROM->TO	G14-057T 345.00 - SUNNYSIDE 345KV CKT 1	717	789	0.0297	114.1909	GEN681542 6-JP MADGETT
FDNS	00NR	2	16WP	G15_047	FROM->TO	G14-057T 345.00 - SUNNYSIDE 345KV CKT 1	717	789	0.02959	114.1884	P12:138:OKGE:3TERM40
FDNS	00NR	2	20WP	G15_047	FROM->TO	G14-057T 345.00 - SUNNYSIDE 345KV CKT 1	717	789	0.02961	114.1753	WEBRE - WELLS 500KV CKT 1
FDNS	00NR	2	16WP	G15_047	FROM->TO	G14-057T 345.00 - SUNNYSIDE 345KV CKT 1	717	789	0.0297	114.1711	GEN563162 1-G15081_3 0.6900
FDNS	00NR	2	16WP	G15_047	FROM->TO	G14-057T 345.00 - SUNNYSIDE 345KV CKT 1	717	789	0.0297	114.1671	GEN521110 1-ORME1 13.800
FDNS	00NR	2	16WP	G15_047	FROM->TO	G14-057T 345.00 - SUNNYSIDE 345KV CKT 1	717	789	0.0297	114.1671	GEN521111 1-ORME2 13.800
FDNS	00NR	2	16WP	G15_047	FROM->TO	G14-057T 345.00 - SUNNYSIDE 345KV CKT 1	717	789	0.02967	114.1625	G15085_T 138.00 - RUSSELL 138KV CKT 1
FDNS	00NR	2	20WP	G15_047	FROM->TO	G14-057T 345.00 - SUNNYSIDE 345KV CKT 1	717	789	0.03026	114.1615	MARIETTA - SOUTH WILSON 138KV CKT 1
FDNS	00NR	2	16WP	G15_047	FROM->TO	G14-057T 345.00 - SUNNYSIDE 345KV CKT 1	717	789	0.0297	114.1508	GEN562699 1-G15_018_3 0.6900
FDNS	00NR	2	16WP	G15_047	FROM->TO	G14-057T 345.00 - SUNNYSIDE 345KV CKT 1	717	789	0.0297	114.1491	GEN563292 1-G15095_3 0.6900
FDNS	00NR	2	16WP	G15_047	FROM->TO	G14-057T 345.00 - SUNNYSIDE 345KV CKT 1	717	789	0.0297	114.0959	ALMA 161 161/24.0KV TRANSFORMER CKT 1
FDNS	00NR	2	16WP	G15_047	FROM->TO	G14-057T 345.00 - SUNNYSIDE 345KV CKT 1	717	789	0.02954	114.0913	CACHE - SNYDER 138KV CKT 1
FDNS	00NR	2	16WP	G15_047	FROM->TO	G14-057T 345.00 - SUNNYSIDE 345KV CKT 1	717	789	0.0297	114.083	GEN661015 1-COYOTE
FDNS	00NR	2	16WP	G15_047	FROM->TO	G14-057T 345.00 - SUNNYSIDE 345KV CKT 1	717	789	0.0297	114.0652	GEN520811 1-ANADRK4
FDNS	00NR	2	20WP	G15_047	FROM->TO	G14-057T 345.00 - SUNNYSIDE 345KV CKT 1	717	789	0.03026	114.0572	P12:138:WFEC:MSL17
FDNS	00NR	2	16WP	G15_047	FROM->TO	G14-057T 345.00 - SUNNYSIDE 345KV CKT 1	717	789	0.0297	114.0478	GEN563122 1-G15077_3 0.3850
FDNS	00NR	2	20WP	G15_047	FROM->TO	G14-057T 345.00 - SUNNYSIDE 345KV CKT 1	717	789	0.03045	114.0474	CANEYRV7 345.00 - LATHAMS7 345.00 345KV CKT 1
FDNS	00NR	2	20WP	G15_047	FROM->TO	G14-057T 345.00 - SUNNYSIDE 345KV CKT 1	717	789	0.0297	114.0415	P12:138:WFEC:MSL02
FDNS	00NR	2	16WP	G15_047	FROM->TO	G14-057T 345.00 - SUNNYSIDE 345KV CKT 1	717	789	0.0297	114.0411	GEN562861 1-G15045_2 0.4800
FDNS	00NR	2	16WP	G15_047	FROM->TO	G14-057T 345.00 - SUNNYSIDE 345KV CKT 1	717	789	0.02957	114.0142	P12:138:WFEC:MSL15
FDNS	00NR	2	20WP	G15_047	FROM->TO	G14-057T 345.00 - SUNNYSIDE 345KV CKT 1	717	789	0.0297	113.9861	PAOLI - PAYNE 138.00 138KV CKT 1
FDNS	00NR	2	16WP	G15_047	FROM->TO	G14-057T 345.00 - SUNNYSIDE 345KV CKT 1	717	789	0.0297	113.9673	GEN657748 1-YOUNG 2 GENERATOR
FDNS	00NR	2	20WP	G15_047	FROM->TO	G14-057T 345.00 - SUNNYSIDE 345KV CKT 1	717	789	0.02964	113.9666	ANADARKO - GEORGIA 138KV CKT 1
FDNS	00NR	2	16WP	G15_047	FROM->TO	G14-057T 345.00 - SUNNYSIDE 345KV CKT 1	717	789	0.03047	113.9524	CANEY CREEK - TEXOMA JCT 138KV CKT 1
FDNS	00NR	2	16WP	G15_047	FROM->TO	G14-057T 345.00 - SUNNYSIDE 345KV CKT 1	717	789	0.0297	113.9507	GEN562992 1-G15063_3 0.6900
FDNS	00NR	2	16WP	G15_047	FROM->TO	G14-057T 345.00 - SUNNYSIDE 345KV CKT 1	717	789	0.02957	113.9436	GRAPEVINE INTERCHANGE - STATELINE INTERCHANGE 230KV CKT 1
FDNS	00NR	2	16WP	G15_047	FROM->TO	G14-057T 345.00 - SUNNYSIDE 345KV CKT 1	717	789	0.02957	113.9436	GRAPEVINE INTERCHANGE - STATELINE INTERCHANGE 230KV CKT 1
FDNS	00NR	2	16WP	G15_047	FROM->TO	G14-057T 345.00 - SUNNYSIDE 345KV CKT 1	717	789	0.0297	113.9305	GEN532751 1-WOLF CREEK GENERATING STATION UNIT 1
FDNS	00NR	2	20WP	G15_047	FROM->TO	G14-057T 345.00 - SUNNYSIDE 345KV CKT 1	717	789	0.0301	113.9301	CIVIT - PAOLI 138KV CKT 1
FDNS	00NR	2	20WP	G15_047	FROM->TO	G14-057T 345.00 - SUNNYSIDE 345KV CKT 1	717	789	0.03008	113.919	MATHWSN7 345.00 - NORTHWEST 345KV CKT 1
FDNS	00NR	2	16WP	G15_047	FROM->TO	G14-057T 345.00 - SUNNYSIDE 345KV CKT 1	717	789	0.02967	113.9027	P12:138:AEPW:SHAM4WT:CHILD4WT
FDNS	00NR	2	20WP	G15_047	FROM->TO	G14-057T 345.00 - SUNNYSIDE 345KV CKT 1	717	789	0.02964	113.8644	FLETCHER - GEORGIA 138KV CKT 1
FDNS	00NR	2	20WP	G15_047	FROM->TO	G14-057T 345.00 - SUNNYSIDE 345KV CKT 1	717	789	0.03052	113.8623	P12:138:AEPW-OGE:CORNVIL4:MAUD 4
FDNS	00NR	2	16WP	G15_047	FROM->TO	G14-057T 345.00 - SUNNYSIDE 345KV CKT 1	717	789	0.0297	113.8575	GEN562952 1-G15057_3 0.6500
FDNS	00NR	2	16WP	G15_047	FROM->TO	G14-057T 345.00 - SUNNYSIDE 345KV CKT 1	717	789	0.0297	113.8544	GEN562704 1-G15_020_3 0.3550
FDNS	00NR	2	16WP	G15_047	FROM->TO	G14-057T 345.00 - SUNNYSIDE 345KV CKT 1	717	789	0.0297	113.8401	GEN563173 1-G15082_3 0.6900
FDNS	00NR	2	20WP	G15_047	FROM->TO	G14-057T 345.00 - SUNNYSIDE 345KV CKT 1	717	789	0.03045	113.8302	LATHAMS7 345.00 - ROSE HILL 345KV CKT 1
FDNS	00NR	2	16WP	G15_047	FROM->TO	G14-057T 345.00 - SUNNYSIDE 345KV CKT 1	717	789	0.02956	113.8285	GRAPEVINE INTERCHANGE - NICHOLS STATION 230KV CKT 1
FDNS	00NR	2	16WP	G15_047	FROM->TO	G14-057T 345.00 - SUNNYSIDE 345KV CKT 1	717	789	0.02956	113.8285	GRAPEVINE INTERCHANGE - NICHOLS STATION 230KV CKT 1
FDNS	00NR	2	20WP	G15_047	FROM->TO	G14-057T 345.00 - SUNNYSIDE 345KV CKT 1	717	789	0.02967	113.8246	EMPIRE - FLETCHER 138KV CKT 1
FDNS	00NR	2	16WP	G15_047	FROM->TO	G14-057T 345.00 - SUNNYSIDE 345KV CKT 1	717	789	0.0297	113.8012	GEN620315 1-BIG STONE GEN
FDNS	00NR	2	20WP	G15_047	FROM->TO	G14-057T 345.00 - SUNNYSIDE 345KV CKT 1	717	789	0.0301	113.7887	CIVIT - STRATFORD 138KV CKT 1
FDNS	00NR	2	20WP	G15_047	FROM->TO	G14-057T 345.00 - SUNNYSIDE 345KV CKT 1	717	789	0.03052	113.7865	BLANCHARD - CORNVILLE 138KV CKT 1
FDNS	00NR	2	16WP	G15_047	FROM->TO	G14-057T 345.00 - SUNNYSIDE 345KV CKT 1	717	789	0.0297	113.7668	GEN562710 1-G15_022_3 0.5500
FDNS	00NR	2	16WP	G15_047	FROM->TO	G14-057T 345.00 - SUNNYSIDE 345KV CKT 1	717	789	0.0297	113.7443	GEN600004 2-PRAIRIE ISLAND G2
FDNS	00NR	2	16WP	G15_047	FROM->TO	G14-057T 345.00 - SUNNYSIDE 345KV CKT 1	717	789	0.0297	113.7416	GEN600003 1-PRAIRIE ISLAND G1
FDNS	00NR	2	20WP	G15_047	FROM->TO	G14-057T 345.00 - SUNNYSIDE 345KV CKT 1	717	789	0.02967	113.7415	COMANCHE - EMPIRE 138KV CKT 1
FDNS	00NR	2	16WP	G15_047	FROM->TO	G14-057T 345.00 - SUNNYSIDE 345KV CKT 1	717	789	0.0297	113.739	GEN511851 1-COMANCHE #1
FDNS	00NR	2	16WP	G15_047	FROM->TO	G14-057T 345.00 - SUNNYSIDE 345KV CKT 1	717	789	0.0297	113.7336	GEN600006 1-AS KING
FDNS	00NR	2	20WP	G15_047	FROM->TO	G14-057T 345.00 - SUNNYSIDE 345KV CKT 1	717	789	0.0301	113.6707	OIL CENTER - STRATFORD 138KV CKT 1
FDNS	00NR	2	16WP	G15_047	FROM->TO	G14-057T 345.00 - SUNNYSIDE 345KV CKT 1	717	789	0.02972	113.6693	P12:138:WFEC:MSL09
FDNS	00NR	2	16WP	G15_047	FROM->TO	G14-057T 345.00 - SUNNYSIDE 345KV CKT 1	717	789	0.0297	113.6449	GEN636641 1-LOUISA UNIT 1
FDNS	00NR	2	20WP	G15_047	FROM->TO	G14-057T 345.00 - SUNNYSIDE 345KV CKT 1	717	789	0.02957	113.6141	DUNCAN (DUNCAN) 138/69/13.8KV TRANSFORMER CKT 1
FDNS	00NR	2	20WP	G15_047	FROM->TO	G14-057T 345.00 - SUNNYSIDE 345KV CKT 1	717	789	0.02957	113.6141	DUNCAN (DUNCAN) 138/69/13.8KV TRANSFORMER CKT 1
FDNS	00NR	2	16WP	G15_047	FROM->TO	G14-057T 345.00 - SUNNYSIDE 345KV CKT 1	717	789	0.0297	113.6023	GEN600005 1-MONTICELLO
FDNS	00NR	2	20WP	G15_047	FROM->TO	G14-057T 345.00 - SUNNYSIDE 345KV CKT 1	717	789	0.02955	113.5721	P12:138:AEPW:CATOOSA4:T.S.E.-4
FDNS	00NR	2	20WP	G15_047	FROM->TO	G14-057T 345.00 - SUNNYSIDE 345KV CKT 1	717	789	0.03052	113.5654	BLANCHARD - MAUD 138KV CKT 1
FDNS	00NR	2	20WP	G15_047	FROM->TO	G14-057T 345.00 - SUNNYSIDE 345KV CKT 1	717	789	0.02954	113.5442	P12:138:AEPW:CORNVIL4:DUNCAN-4
FDNS	00NR	2	20WP	G15_047	FROM->TO	G14-057T 345.00 - SUNNYSIDE 345KV CKT 1	717	789	0.02959	113.5396	FULTON 115 - HOPE 115KV CKT 1
FDNS	00NR	2	20WP	G15_047	FROM->TO	G14-057T 345.00 - SUNNYSIDE 345KV CKT 1	717	789	0.02959	113.5396	FULTON 115 - HOPE 115KV CKT 1
FDNS	00NR	2	16WP	G15_047	FROM->TO	G14-057T 345.00 - SUNNYSIDE 345KV CKT 1	717	789	0.0297	113.5173	GEN635213 3-NEAL UNIT 3
FDNS	00NR	2	16WP	G15_047	FROM->TO	G14-057T 345.00 - SUNNYSIDE 345KV CKT 1	717	789	0.0297	113.5156	GEN562754 1-G15031_5 0.6900
FDNS	00NR	2	20WP	G15_047	FROM->TO	G14-057T 345.00 - SUNNYSIDE 345KV CKT 1	717	789	0.0301	113.4981	LATTA JCT - OIL CENTER 138KV CKT 1
FDNS	00NR	2	20WP	G15_047	FROM->TO	G14-057T 345.00 - SUNNYSIDE 345KV CKT 1	717	789	0.02958	113.4966	P12:138:AEPW:CORNVIL4:S.W.S.-4
FDNS	00NR	2	16WP	G15_047	FROM->TO	G14-057T 345.00 - SUNNYSIDE 345KV CKT 1	717	789	0.0297	113.4887	GEN629074 1-ARNOLD LOWSIDE OF GSU XFMR
FDNS	00NR	2	20WP	G15_047	FROM->TO	G14-057T 345.00 - SUNNYSIDE 345KV CKT 1	717	789	0.02958	113.4769	6LAYFLD 230.00 - CARROLL 230KV CKT 1
FDNS	00NR	2	20WP	G15_047	FROM->TO	G14-057T 345.00 - SUNNYSIDE 345KV CKT 1	717	789	0.02952	113.474	8DANIEL8 500.00 - MCKNIGHT 500KV CKT 1
FDNS	00NR	2	20WP	G15_047	FROM->TO	G14-057T 345.00 - SUNNYSIDE 345KV CKT 1	717	789	0.03002	113.4566	BAILEY4 138.00 - SUNSHINE CANYON 138KV CKT 1
FDNS	00NR	2	16WP	G15_047	FROM->TO	G14-057T 345.00 - SUNNYSIDE 345KV CKT 1	717	789	0.0297	113.4565	GEN562756 1-G15031_7 0.6900
FDNS	00NR	2	16WP	G15_047	FROM->TO	G14-057T 345.00 - SUNNYSIDE 345KV CKT 1	717	789	0.0297	113.4429	BIG STONE 230/24.0KV TRANSFORMER CKT 1
FDNS	00NR	2	20WP	G15_047	FROM->TO	G14-057T 345.00 - SUNNYSIDE 345KV CKT 1	717	789	0.02957	113.4402	P12:69:WFEC-AEPW:COMANCH2:DUNCAN-2
FDNS	00NR	2	16WP	G15_047	FROM->TO	G14-057T 345.00 - SUNNYSIDE 345KV CKT 1	717	789	0.0297	113.4377	GEN562023 1-G11_020_3 0.6900

SOLUTION	GROUP	SCENARIO	SEASON	SOURCE	DIRECTION	MONITORED ELEMENT	RATEA (MVA)	RATEB(MVA)	TDF	TC%LOADING (% MVA)	CONTINGENCY
FDNS	00NR	2	16WP	G15_047	FROM->TO	G14-057T 345.00 - SUNNYSIDE 345KV CKT 1	717	789	0.0297	113.4377	GEN562026 1-G11_019_3 0.6900
FDNS	00NR	2	20WP	G15_047	FROM->TO	G14-057T 345.00 - SUNNYSIDE 345KV CKT 1	717	789	0.02952	113.4237	P12:69:AEPW-OMPA:COMANC-2:OMWALTR2
FDNS	00NR	2	20WP	G15_047	FROM->TO	G14-057T 345.00 - SUNNYSIDE 345KV CKT 1	717	789	0.02972	113.4187	CIMARRON - CZECH HALL 138KV CKT 1
FDNS	00NR	2	20WP	G15_047	FROM->TO	G14-057T 345.00 - SUNNYSIDE 345KV CKT 1	717	789	0.02952	113.4136	G15088_T 345.00 - MOORE 345KV CKT 1
FDNS	00NR	2	16WP	G15_047	FROM->TO	G14-057T 345.00 - SUNNYSIDE 345KV CKT 1	717	789	0.0297	113.4132	GEN562556 1-G14_046_3 0.3420
FDNS	00NR	2	20WP	G15_047	FROM->TO	G14-057T 345.00 - SUNNYSIDE 345KV CKT 1	717	789	0.02955	113.4117	BISMARK - HOT SPRINGS WEST BUS 115KV CKT 1
FDNS	00NR	2	20WP	G15_047	FROM->TO	G14-057T 345.00 - SUNNYSIDE 345KV CKT 1	717	789	0.02957	113.4077	DUNCAN - TOSCO 69KV CKT 1
FDNS	00NR	2	20WP	G15_047	FROM->TO	G14-057T 345.00 - SUNNYSIDE 345KV CKT 1	717	789	0.02952	113.4068	MC NIEL 500/115KV TRANSFORMER CKT 1
FDNS	00NR	2	20WP	G15_047	FROM->TO	G14-057T 345.00 - SUNNYSIDE 345KV CKT 1	717	789	0.02959	113.4046	G15074_T 345.00 - HOYT 345KV CKT 1
FDNS	00NR	2	20WP	G15_047	FROM->TO	G14-057T 345.00 - SUNNYSIDE 345KV CKT 1	717	789	0.02987	113.3661	CIMARRON - SARA 138KV CKT 1
FDNS	00NR	2	20WP	G15_047	FROM->TO	G14-057T 345.00 - SUNNYSIDE 345KV CKT 1	717	789	0.02955	113.357	ALPINE AECC - BISMARK 115KV CKT 1
FDNS	00NR	2	20WP	G15_047	FROM->TO	G14-057T 345.00 - SUNNYSIDE 345KV CKT 1	717	789	0.02952	113.345	P12:138:AEPW:N.E.S.-4:CATOOSA4
FDNS	00NR	2	20WP	G15_047	FROM->TO	G14-057T 345.00 - SUNNYSIDE 345KV CKT 1	717	789	0.02957	113.3445	COMANCHE TAP - TOSCO 69KV CKT 1
FDNS	00NR	2	20WP	G15_047	FROM->TO	G14-057T 345.00 - SUNNYSIDE 345KV CKT 1	717	789	0.02972	113.3399	CZECH HALL - XEROX 138KV CKT 1
FDNS	00NR	2	20WP	G15_047	FROM->TO	G14-057T 345.00 - SUNNYSIDE 345KV CKT 1	717	789	0.02972	113.3358	MORGAN - XEROX 138KV CKT 1
FDNS	00NR	2	16WP	G15_047	FROM->TO	G14-057T 345.00 - SUNNYSIDE 345KV CKT 1	717	789	0.0297	113.3248	GEN563142 1-G15079_3 0.5500
FDNS	00NR	2	16WP	G15_047	FROM->TO	G14-057T 345.00 - SUNNYSIDE 345KV CKT 1	717	789	0.0297	113.3248	GEN563151 1-G15080_2 0.5500
FDNS	00NR	2	20WP	G15_047	FROM->TO	G14-057T 345.00 - SUNNYSIDE 345KV CKT 1	717	789	0.02972	113.3131	MORGAN - MUSTANG 138KV CKT 1
FDNS	00NR	2	20WP	G15_047	FROM->TO	G14-057T 345.00 - SUNNYSIDE 345KV CKT 1	717	789	0.02955	113.311	ALPINE AECC - AMITY SS 115KV CKT 1
FDNS	00NR	2	16WP	G15_047	FROM->TO	G14-057T 345.00 - SUNNYSIDE 345KV CKT 1	717	789	0.0297	113.2943	GEN523971 1-HARRINGTON GEN #1 24 KV
FDNS	00NR	2	16WP	G15_047	FROM->TO	G14-057T 345.00 - SUNNYSIDE 345KV CKT 1	717	789	0.0297	113.2942	GEN523973 1-HARRINGTON GEN #3 24 KV
FDNS	00NR	2	16WP	G15_047	FROM->TO	G14-057T 345.00 - SUNNYSIDE 345KV CKT 1	717	789	0.0297	113.2941	GEN523972 1-HARRINGTON GEN #2 24 KV
FDNS	00NR	2	20WP	G15_047	FROM->TO	G14-057T 345.00 - SUNNYSIDE 345KV CKT 1	717	789	0.02957	113.2908	COMANCHE - COMANCHE TAP 69KV CKT 1
FDNS	00NR	2	16WP	G15_047	FROM->TO	G14-057T 345.00 - SUNNYSIDE 345KV CKT 1	717	789	0.0297	113.288	GEN600000 1-SHERBURNECNTY G1
FDNS	00NR	2	20WP	G15_047	FROM->TO	G14-057T 345.00 - SUNNYSIDE 345KV CKT 1	717	789	0.02962	113.2805	ANADARKO - SEQUOYAHJ4 138.00 138KV CKT 1
FDNS	00NR	2	20WP	G15_047	FROM->TO	G14-057T 345.00 - SUNNYSIDE 345KV CKT 1	717	789	0.02962	113.2789	CORN TAP - SEQUOYAHJ4 138.00 138KV CKT 1
FDNS	00NR	2	20WP	G15_047	FROM->TO	G14-057T 345.00 - SUNNYSIDE 345KV CKT 1	717	789	0.03002	113.2787	BAILEY4 138.00 - WESTMOORE 138KV CKT 1
FDNS	00NR	2	20WP	G15_047	FROM->TO	G14-057T 345.00 - SUNNYSIDE 345KV CKT 1	717	789	0.02956	113.2707	P12:138:OKGE-AEPW:JENSEN4:REDROCKRD4
FDNS	00NR	2	20WP	G15_047	FROM->TO	G14-057T 345.00 - SUNNYSIDE 345KV CKT 1	717	789	0.02987	113.2567	SARA - STHLAKE4 138.00 138KV CKT 1
FDNS	00NR	2	20WP	G15_047	FROM->TO	G14-057T 345.00 - SUNNYSIDE 345KV CKT 1	717	789	0.02957	113.2557	WALTERS - WALTERS 69KV CKT 1
FDNS	00NR	2	20WP	G15_047	FROM->TO	G14-057T 345.00 - SUNNYSIDE 345KV CKT 1	717	789	0.02952	113.2294	LAWTON RELIFT TAP - OMPA-WALTERS 69KV CKT 1
FDNS	00NR	2	20WP	G15_047	FROM->TO	G14-057T 345.00 - SUNNYSIDE 345KV CKT 1	717	789	0.02987	113.2266	MCCLAIN - STHLAKE4 138.00 138KV CKT 1
FDNS	00NR	2	20WP	G15_047	FROM->TO	G14-057T 345.00 - SUNNYSIDE 345KV CKT 1	717	789	0.02959	113.2139	NORGE ROAD - SOUTHWESTERN STATION 138KV CKT 1
FDNS	00NR	2	20WP	G15_047	FROM->TO	G14-057T 345.00 - SUNNYSIDE 345KV CKT 1	717	789	0.02959	113.2139	NORGE ROAD - SOUTHWESTERN STATION 138KV CKT 1
FDNS	00NR	2	20WP	G15_047	FROM->TO	G14-057T 345.00 - SUNNYSIDE 345KV CKT 1	717	789	0.0301	113.2049	LASALLE - LATTA JCT 138KV CKT 1
FDNS	00NR	2	20WP	G15_047	FROM->TO	G14-057T 345.00 - SUNNYSIDE 345KV CKT 1	717	789	0.02975	113.2014	P12:138:AEPW-OGE:SHIDLER4:OSAGE 4
FDNS	00NR	2	16WP	G15_047	FROM->TO	G14-057T 345.00 - SUNNYSIDE 345KV CKT 1	717	789	0.02989	113.2012	NORTHWEST TEXARKANA - VALLIANT 345KV CKT 1
FDNS	00NR	2	16WP	G15_047	FROM->TO	G14-057T 345.00 - SUNNYSIDE 345KV CKT 1	717	789	0.02989	113.2012	NORTHWEST TEXARKANA - VALLIANT 345KV CKT 1
FDNS	00NR	2	20WP	G15_047	FROM->TO	G14-057T 345.00 - SUNNYSIDE 345KV CKT 1	717	789	0.03015	113.2008	MORISNT4 138.00 - STILLWATER 138KV CKT 1
FDNS	00NR	2	16WP	G15_047	FROM->TO	G14-057T 345.00 - SUNNYSIDE 345KV CKT 1	717	789	0.0297	113.1971	GEN600001 2-SHERBURNE CNTY G2
FDNS	00NR	2	20WP	G15_047	FROM->TO	G14-057T 345.00 - SUNNYSIDE 345KV CKT 1	717	789	0.03013	113.1945	P12:138:OKGE:3TERM2
FDNS	00NR	2	20WP	G15_047	FROM->TO	G14-057T 345.00 - SUNNYSIDE 345KV CKT 1	717	789	0.02956	113.1881	G13-010T 345.00 - POST ROCK 345KV CKT 1
FDNS	00NR	2	20WP	G15_047	FROM->TO	G14-057T 345.00 - SUNNYSIDE 345KV CKT 1	717	789	0.02959	113.1865	HOYT - STRANGER CREEK 345KV CKT 1
FDNS	00NR	2	20WP	G15_047	FROM->TO	G14-057T 345.00 - SUNNYSIDE 345KV CKT 1	717	789	0.02981	113.1838	BLACKBERRY - NEOSHO 345KV CKT 1
FDNS	00NR	2	16WP	G15_047	FROM->TO	G14-057T 345.00 - SUNNYSIDE 345KV CKT 1	717	789	0.0297	113.1811	GEN511848 1-SOUTHWESTERN STATION #3
FDNS	00NR	2	20WP	G15_047	FROM->TO	G14-057T 345.00 - SUNNYSIDE 345KV CKT 1	717	789	0.02955	113.1809	CLINTON JUNCTION - ELK CITY 138KV CKT 1
FDNS	00NR	2	20WP	G15_047	FROM->TO	G14-057T 345.00 - SUNNYSIDE 345KV CKT 1	717	789	0.02955	113.1809	CLINTON JUNCTION - ELK CITY 138KV CKT 1
FDNS	00NR	2	20WP	G15_047	FROM->TO	G14-057T 345.00 - SUNNYSIDE 345KV CKT 1	717	789	0.02963	113.1808	7JASPER 345.00 - BLACKBERRY 345KV CKT 1
FDNS	00NR	2	20WP	G15_047	FROM->TO	G14-057T 345.00 - SUNNYSIDE 345KV CKT 1	717	789	0.02959	113.1718	HOPE - MCNAB REC 115KV CKT 1
FDNS	00NR	2	20WP	G15_047	FROM->TO	G14-057T 345.00 - SUNNYSIDE 345KV CKT 1	717	789	0.02959	113.1672	G15074_T 345.00 - JEFFREY ENERGY CENTER 345KV CKT 1
FDNS	00NR	2	20WP	G15_047	FROM->TO	G14-057T 345.00 - SUNNYSIDE 345KV CKT 1	717	789	0.02959	113.1606	P12:115:AEPW:TURK3:HOPE3
FDNS	00NR	2	20WP	G15_047	FROM->TO	G14-057T 345.00 - SUNNYSIDE 345KV CKT 1	717	789	0.02955	113.16	COUCH SES - MC NIEL 115KV CKT 1
FDNS	00NR	2	20WP	G15_047	FROM->TO	G14-057T 345.00 - SUNNYSIDE 345KV CKT 1	717	789	0.02952	113.1557	OMPA-WALTERS - WALTERS 69KV CKT 1
FDNS	00NR	2	20WP	G15_047	FROM->TO	G14-057T 345.00 - SUNNYSIDE 345KV CKT 1	717	789	0.02952	113.1557	OMPA-WALTERS - WALTERS 69KV CKT 1
FDNS	00NR	2	20WP	G15_047	FROM->TO	G14-057T 345.00 - SUNNYSIDE 345KV CKT 1	717	789	0.02958	113.1529	SOUTHWESTERN STATION - VERDEN 138KV CKT 1
FDNS	00NR	2	20WP	G15_047	FROM->TO	G14-057T 345.00 - SUNNYSIDE 345KV CKT 1	717	789	0.03075	113.148	CANADIAN - NOBLE 138KV CKT 1
FDNS	00NR	2	20WP	G15_047	FROM->TO	G14-057T 345.00 - SUNNYSIDE 345KV CKT 1	717	789	0.02958	113.147	7LUTESVIL 345.00 - 7ST FRANC 345.00 345KV CKT 1
FDNS	00NR	2	20WP	G15_047	FROM->TO	G14-057T 345.00 - SUNNYSIDE 345KV CKT 1	717	789	0.02976	113.1445	EMPORIA ENERGY CENTER - G14_001T 345.00 345KV CKT 1
FDNS	00NR	2	20WP	G15_047	FROM->TO	G14-057T 345.00 - SUNNYSIDE 345KV CKT 1	717	789	0.02959	113.1358	TURK (TURK 1) 138/115/13.2KV TRANSFORMER CKT 1
FDNS	00NR	2	20WP	G15_047	FROM->TO	G14-057T 345.00 - SUNNYSIDE 345KV CKT 1	717	789	0.02959	113.1358	TURK (TURK 1) 138/115/13.2KV TRANSFORMER CKT 1
FDNS	00NR	2	20WP	G15_047	FROM->TO	G14-057T 345.00 - SUNNYSIDE 345KV CKT 1	717	789	0.02959	113.1357	MCNAB REC - Turk 115 115KV CKT 1
FDNS	00NR	2	20WP	G15_047	FROM->TO	G14-057T 345.00 - SUNNYSIDE 345KV CKT 1	717	789	0.02957	113.1349	P12:69:WFEC-AEPW:COMANCH2:WALTRS-2
FDNS	00NR	2	20WP	G15_047	FROM->TO	G14-057T 345.00 - SUNNYSIDE 345KV CKT 1	717	789	0.02958	113.1309	NORTH 29TH CHICKASHA - VERDEN 138KV CKT 1
FDNS	00NR	2	20WP	G15_047	FROM->TO	G14-057T 345.00 - SUNNYSIDE 345KV CKT 1	717	789	0.03074	113.1237	P12:138:OKGE:3TERM27
FDNS	00NR	2	20WP	G15_047	FROM->TO	G14-057T 345.00 - SUNNYSIDE 345KV CKT 1	717	789	0.02956	113.121	G13-010T 345.00 - SPEARVILLE 345KV CKT 1
FDNS	00NR	2	16WP	G15_047	FROM->TO	G14-057T 345.00 - SUNNYSIDE 345KV CKT 1	717	789	0.0297	113.1139	GEN563042 1-G15068_3 0.6900
FDNS	00NR	2	20WP	G15_047	FROM->TO	G14-057T 345.00 - SUNNYSIDE 345KV CKT 1	717	789	0.03002	113.1133	FRANKLIN SW - WESTMOORE 138KV CKT 1
FDNS	00NR	2	20WP	G15_047	FROM->TO	G14-057T 345.00 - SUNNYSIDE 345KV CKT 1	717	789	0.0296	113.1131	SWISSVALE - WEST GARDNER 345KV CKT 1
FDNS	00NR	2	20WP	G15_047	FROM->TO	G14-057T 345.00 - SUNNYSIDE 345KV CKT 1	717	789	0.02953	113.1028	FLETCHER - MARLOW JCT 69KV CKT 1
FDNS	00NR	2	20WP	G15_047	FROM->TO	G14-057T 345.00 - SUNNYSIDE 345KV CKT 1	717	789	0.02957	113.1006	LAKEOVER - MCADAMS 500KV CKT 1
FDNS	00NR	2	20WP	G15_047	FROM->TO	G14-057T 345.00 - SUNNYSIDE 345KV CKT 1	717	789	0.0296	113.0977	EMPORIA ENERGY CENTER - SWISSVALE 345KV CKT 1
FDNS	00NR	2	16WP	G15_047	FROM->TO	G14-057T 345.00 - SUNNYSIDE 345KV CKT 1	717	789	0.0297	113.0968	GEN527901 1-HOBBS PLANT #1 (CT)
FDNS	00NR	2	16WP	G15_047	FROM->TO	G14-057T 345.00 - SUNNYSIDE 345KV CKT 1	717	789	0.0297	113.0968	GEN527902 1-HOBBS PLANT #2 (CT)
FDNS	00NR	2	20WP	G15_047	FROM->TO	G14-057T 345.00 - SUNNYSIDE 345KV CKT 1	717	789	0.02976	113.0863	G14_001T 345.00 - WICHITA 345KV CKT 1
FDNS	00NR	2	20WP	G15_047	FROM->TO	G14-057T 345.00 - SUNNYSIDE 345KV CKT 1	717	789	0.02951	113.0818	P12:138:AEPW:R.S.S-4:T.P.S.-4
FDNS	00NR	2	20WP	G15_047	FROM->TO	G14-057T 345.00 - SUNNYSIDE 345KV CKT 1	717	789	0.02959	113.0816	CORNVILLE - NORGE ROAD 138KV CKT 1
FDNS	00NR	2	20WP	G15_047	FROM->TO	G14-057T 345.00 - SUNNYSIDE 345KV CKT 1	717	789	0.02959	113.0816	CORNVILLE - NORGE ROAD 138KV CKT 1
FDNS	00NR	2	20WP	G15_047	FROM->TO	G14-057T 345.00 - SUNNYSIDE 345KV CKT 1	717	789	0.02952	113.0763	P12:138:OKGE:3TERM12
FDNS	00NR	2	20WP	G15_047	FROM->TO	G14-057T 345.00 - SUNNYSIDE 345KV CKT 1	717	789	0.02963	113.0734	MCADAMS - WOLF CREEK 500KV CKT 1

SOLUTION	GROUP	SCENARIO	SEASON	SOURCE	DIRECTION	MONITORED ELEMENT	RATEA (MVA)	RATEB(MVA)	TDF	TC%LOADING (% MVA)	CONTINGENCY
FDNS	00NR	2	16WP	G15_047	FROM->TO	G14-057T 345.00 - SUNNYSIDE 345KV CKT 1	717	789	0.0297	113.0701	GEN629075 1-OTTUMWA GENERATOR FOR OTTUMWA UNIT NO 1
FDNS	00NR	2	20WP	G15_047	FROM->TO	G14-057T 345.00 - SUNNYSIDE 345KV CKT 1	717	789	0.0301	113.067	LASALLE - STONEWAL LH138.00 138KV CKT 1
FDNS	00NR	2	20WP	G15_047	FROM->TO	G14-057T 345.00 - SUNNYSIDE 345KV CKT 1	717	789	0.02961	113.0567	8WNEWMADRID 500.00 - DELL 500 500KV CKT 1
FDNS	00NR	2	20WP	G15_047	FROM->TO	G14-057T 345.00 - SUNNYSIDE 345KV CKT 1	717	789	0.03075	113.0547	NOBLE - PURCELL4 138.00 138KV CKT 1
FDNS	00NR	2	20WP	G15_047	FROM->TO	G14-057T 345.00 - SUNNYSIDE 345KV CKT 1	717	789	0.0301	113.0516	STONEWAL LH138.00 - TUPELO TAP 138KV CKT 1
FDNS	00NR	2	20WP	G15_047	FROM->TO	G14-057T 345.00 - SUNNYSIDE 345KV CKT 1	717	789	0.02958	113.047	CORNVILLE - NORTH 29TH CHICKASHA 138KV CKT 1
FDNS	00NR	2	20WP	G15_047	FROM->TO	G14-057T 345.00 - SUNNYSIDE 345KV CKT 1	717	789	0.02965	113.0298	7JASPER 345.00 - MORGAN 345KV CKT 1
FDNS	00NR	2	20WP	G15_047	FROM->TO	G14-057T 345.00 - SUNNYSIDE 345KV CKT 1	717	789	0.02956	113.0187	Canadian Pump Station - REDROCKRD4 138.00 138KV CKT 1
FDNS	00NR	2	20WP	G15_047	FROM->TO	G14-057T 345.00 - SUNNYSIDE 345KV CKT 1	717	789	0.02962	112.9872	CRINER - PAYNE 138.00 138KV CKT 1
FDNS	00NR	2	20WP	G15_047	FROM->TO	G14-057T 345.00 - SUNNYSIDE 345KV CKT 1	717	789	0.02957	112.9583	COMANCHE - WALTERS 69KV CKT 1
FDNS	00NR	2	20WP	G15_047	FROM->TO	G14-057T 345.00 - SUNNYSIDE 345KV CKT 1	717	789	0.02959	112.9567	P12:138:OKGE:3TERM20
FDNS	00NR	2	16WP	G15_047	FROM->TO	G14-057T 345.00 - SUNNYSIDE 345KV CKT 1	717	789	0.0297	112.929	GEN635214 4-NEAL UNIT 4
FDNS	00NR	2	16WP	G15_047	FROM->TO	G14-057T 345.00 - SUNNYSIDE 345KV CKT 1	717	789	0.0297	112.8968	SHERBURNE CO 345/24.0KV TRANSFORMER CKT 1
FDNS	00NR	2	16WP	G15_047	FROM->TO	G14-057T 345.00 - SUNNYSIDE 345KV CKT 1	717	789	0.0297	112.8327	GEN563043 1-G15068_4 0.6900
FDNS	00NR	2	16WP	G15_047	FROM->TO	G14-057T 345.00 - SUNNYSIDE 345KV CKT 1	717	789	0.0297	112.8246	GEN563273 2-G15093_4 0.6900
FDNS	00NR	2	16WP	G15_047	FROM->TO	G14-057T 345.00 - SUNNYSIDE 345KV CKT 1	717	789	0.0297	112.8052	GEN526333 1-JONES GEN #3 21 KV
FDNS	00NR	2	16WP	G15_047	FROM->TO	G14-057T 345.00 - SUNNYSIDE 345KV CKT 1	717	789	0.0297	112.8052	GEN526334 1-JONES_4 116.500
FDNS	00NR	2	16WP	G15_047	FROM->TO	G14-057T 345.00 - SUNNYSIDE 345KV CKT 1	717	789	0.0297	112.777	GEN600002 3-SHERBURNE CNTY G3
FDNS	00NR	2	16WP	G15_047	FROM->TO	G14-057T 345.00 - SUNNYSIDE 345KV CKT 1	717	789	0.0297	112.7572	GEN525844 1-ELK_1 118.000
FDNS	00NR	2	16WP	G15_047	FROM->TO	G14-057T 345.00 - SUNNYSIDE 345KV CKT 1	717	789	0.0297	112.7504	GEN525845 1-ELK_2 1 138.00
FDNS	00NR	2	16WP	G15_047	FROM->TO	G14-057T 345.00 - SUNNYSIDE 345KV CKT 1	717	789	0.0297	112.683	GEN344225 1-1CAL G1 25.000
FDNS	00NR	2	16WP	G15_047	FROM->TO	G14-057T 345.00 - SUNNYSIDE 345KV CKT 1	717	789	0.0297	112.613	GEN525562 1-TOLK GEN #2 24 KV
FDNS	00NR	2	16WP	G15_047	FROM->TO	G14-057T 345.00 - SUNNYSIDE 345KV CKT 1	717	789	0.0297	112.6037	GEN563202 1-G15085_3 0.5500
FDNS	00NR	2	16WP	G15_047	FROM->TO	G14-057T 345.00 - SUNNYSIDE 345KV CKT 1	717	789	0.0297	112.5699	GEN527166 1-MUSTANG_6 118.000
FDNS	00NR	2	16WP	G15_047	FROM->TO	G14-057T 345.00 - SUNNYSIDE 345KV CKT 1	717	789	0.0297	112.5311	GEN635023 3-WALTER SCOTT UNIT 3
FDNS	00NR	2	16WP	G15_047	FROM->TO	G14-057T 345.00 - SUNNYSIDE 345KV CKT 1	717	789	0.0297	112.494	GEN562590 1-G14_057_3 0.6900
FDNS	00NR	2	16WP	G15_047	FROM->TO	G14-057T 345.00 - SUNNYSIDE 345KV CKT 1	717	789	0.02997	112.4789	LYDIA - WELSH 345KV CKT 1
FDNS	00NR	2	16WP	G15_047	FROM->TO	G14-057T 345.00 - SUNNYSIDE 345KV CKT 1	717	789	0.02997	112.4789	LYDIA - WELSH 345KV CKT 1
FDNS	00NR	2	16WP	G15_047	FROM->TO	G14-057T 345.00 - SUNNYSIDE 345KV CKT 1	717	789	0.0297	112.3912	GEN562762 1-G15033_3 0.6900
FDNS	00NR	2	16WP	G15_047	FROM->TO	G14-057T 345.00 - SUNNYSIDE 345KV CKT 1	717	789	0.0297	112.3802	GEN562655 1-G14_074_3 0.6900
FDNS	00NR	2	16WP	G15_047	FROM->TO	G14-057T 345.00 - SUNNYSIDE 345KV CKT 1	717	789	0.0297	112.3071	GEN562685 1-G15_013_3 0.3550
FDNS	00NR	2	20WP	G15_047	FROM->TO	G14-057T 345.00 - SUNNYSIDE 345KV CKT 1	717	789	0.03006	112.2216	RANCHRD7 345.00 - SOONER 345KV CKT 1
FDNS	00NR	2	16WP	G15_047	FROM->TO	G14-057T 345.00 - SUNNYSIDE 345KV CKT 1	717	789	0.0297	112.2033	GEN525561 1-TOLK GEN #1 24 KV
FDNS	00NR	2	16WP	G15_047	FROM->TO	G14-057T 345.00 - SUNNYSIDE 345KV CKT 1	717	789	0.0297	112.1977	GEN563272 1-G15093_3 0.6900
FDNS	00NR	2	16WP	G15_047	FROM->TO	G14-057T 345.00 - SUNNYSIDE 345KV CKT 1	717	789	0.0297	112.1765	GEN527903 1-HOBBS PLANT #3 (ST)
FDNS	00NR	2	16WP	G15_047	FROM->TO	G14-057T 345.00 - SUNNYSIDE 345KV CKT 1	717	789	0.0297	112.1107	GEN635024 4-WALTER SCOTT UNIT 4
FDNS	00NR	2	20WP	G15_047	FROM->TO	G14-057T 345.00 - SUNNYSIDE 345KV CKT 1	717	789	0.02976	112.0936	DRAPER LAKE - MIDWEST TAP 138KV CKT 1
FDNS	00NR	2	20WP	G15_047	FROM->TO	G14-057T 345.00 - SUNNYSIDE 345KV CKT 1	717	789	0.02974	112.0817	P12:138:OKGE:3TERM21
FDNS	00NR	2	20WP	G15_047	FROM->TO	G14-057T 345.00 - SUNNYSIDE 345KV CKT 1	717	789	0.02954	112.0241	GLASSES - MADILL INDUSTRIAL TAP 138KV CKT 1
FDNS	00NR	2	20WP	G15_047	FROM->TO	G14-057T 345.00 - SUNNYSIDE 345KV CKT 1	717	789	0.02959	112.0233	P12:138:WFEC:MSL11
FDNS	00NR	2	20WP	G15_047	FROM->TO	G14-057T 345.00 - SUNNYSIDE 345KV CKT 1	717	789	0.02959	112.0233	P12:138:WFEC-AEPW:PHAROAH4:LONEOAK4
FDNS	00NR	2	20WP	G15_047	FROM->TO	G14-057T 345.00 - SUNNYSIDE 345KV CKT 1	717	789	0.02955	112.0157	CANEY CREEK - JOHNSON COUNTY 138KV CKT 1
FDNS	00NR	2	20WP	G15_047	FROM->TO	G14-057T 345.00 - SUNNYSIDE 345KV CKT 1	717	789	0.02966	112.0145	OVEXFRMCCOVE
FDNS	00NR	2	20WP	G15_047	FROM->TO	G14-057T 345.00 - SUNNYSIDE 345KV CKT 1	717	789	0.02954	111.9715	GLASSES - RUSSETT 138KV CKT 1
FDNS	00NR	2	20WP	G15_047	FROM->TO	G14-057T 345.00 - SUNNYSIDE 345KV CKT 1	717	789	0.03026	111.9626	LEBANON - TEXOMA JCT 138KV CKT 1
FDNS	00NR	2	20WP	G15_047	FROM->TO	G14-057T 345.00 - SUNNYSIDE 345KV CKT 1	717	789	0.0297	111.9598	CANADIAN RIVER - MCALESTER SOUTH 138KV CKT 1
FDNS	00NR	2	20WP	G15_047	FROM->TO	G14-057T 345.00 - SUNNYSIDE 345KV CKT 1	717	789	0.0297	111.9598	CANADIAN RIVER - MCALESTER SOUTH 138KV CKT 1
FDNS	00NR	2	20WP	G15_047	FROM->TO	G14-057T 345.00 - SUNNYSIDE 345KV CKT 1	717	789	0.0297	111.9577	CANADIAN RIVER () 345/138/13.8KV TRANSFORMER CKT 1
FDNS	00NR	2	20WP	G15_047	FROM->TO	G14-057T 345.00 - SUNNYSIDE 345KV CKT 1	717	789	0.0297	111.9577	CANADIAN RIVER () 345/138/13.8KV TRANSFORMER CKT 1
FDNS	00NR	2	20WP	G15_047	FROM->TO	G14-057T 345.00 - SUNNYSIDE 345KV CKT 1	717	789	0.02984	111.9351	CHAMBER SPRINGS - CLARKSVILLE 345KV CKT 1
FDNS	00NR	2	20WP	G15_047	FROM->TO	G14-057T 345.00 - SUNNYSIDE 345KV CKT 1	717	789	0.02952	111.9295	GRPRAR1-LNX3345.00 - HOLT.CO3 345.00 345KV CKT 1
FDNS	00NR	2	20WP	G15_047	FROM->TO	G14-057T 345.00 - SUNNYSIDE 345KV CKT 1	717	789	0.02952	111.9216	GRPRAR1-LNX3345.00 - GRPRAR 345KV CKT Z
FDNS	00NR	2	20WP	G15_047	FROM->TO	G14-057T 345.00 - SUNNYSIDE 345KV CKT 1	717	789	0.02957	111.8138	CROCKETT - TENASKA RUSK COUNTY 345KV CKT 1
FDNS	00NR	2	20WP	G15_047	FROM->TO	G14-057T 345.00 - SUNNYSIDE 345KV CKT 1	717	789	0.02957	111.8091	LEBROCK - TENASKA RUSK COUNTY 345KV CKT 1
FDNS	00NR	2	20WP	G15_047	FROM->TO	G14-057T 345.00 - SUNNYSIDE 345KV CKT 1	717	789	0.02951	111.7358	BROWN - RUSSETT 138KV CKT 1
FDNS	00NR	2	20WP	G15_047	FROM->TO	G14-057T 345.00 - SUNNYSIDE 345KV CKT 1	717	789	0.02951	111.6903	RUSSETT - RUSSETT 138KV CKT 1
FDNS	00NR	2	20WP	G15_047	FROM->TO	G14-057T 345.00 - SUNNYSIDE 345KV CKT 1	717	789	0.02952	111.5354	P12:138:WFEC:MSL16
FDNS	00NR	2	20WP	G15_047	FROM->TO	G14-057T 345.00 - SUNNYSIDE 345KV CKT 1	717	789	0.03257	111.4795	CLARKSVILLE - MUSKOGEE 345KV CKT 1
FDNS	00NR	2	20WP	G15_047	FROM->TO	G14-057T 345.00 - SUNNYSIDE 345KV CKT 1	717	789	0.03257	111.4795	CLARKSVILLE - MUSKOGEE 345KV CKT 1
FDNS	00NR	2	16WP	G15_047	FROM->TO	G14-057T 345.00 - SUNNYSIDE 345KV CKT 1	717	789	0.03007	111.3105	LYDIA - VALLIANT 345KV CKT 1
FDNS	00NR	2	16WP	G15_047	FROM->TO	G14-057T 345.00 - SUNNYSIDE 345KV CKT 1	717	789	0.03007	111.3105	LYDIA - VALLIANT 345KV CKT 1
FDNS	00NR	2	20WP	G15_047	FROM->TO	G14-057T 345.00 - SUNNYSIDE 345KV CKT 1	717	789	0.03026	111.0735	CANEY CREEK - TEXOMA JCT 138KV CKT 1
FDNS	00NR	2	20WP	G15_047	FROM->TO	G14-057T 345.00 - SUNNYSIDE 345KV CKT 1	717	789	0.02953	110.8476	P12:138:WFEC:MSL09
FDNS	00NR	2	20WP	G15_047	FROM->TO	G14-057T 345.00 - SUNNYSIDE 345KV CKT 1	717	789	0.02968	110.8111	NORTHWEST TEXARKANA - VALLIANT 345KV CKT 1
FDNS	00NR	2	20WP	G15_047	FROM->TO	G14-057T 345.00 - SUNNYSIDE 345KV CKT 1	717	789	0.02968	110.8111	NORTHWEST TEXARKANA - VALLIANT 345KV CKT 1
FDNS	00NR	2	16WP	G15_047	FROM->TO	G14-057T 345.00 - SUNNYSIDE 345KV CKT 1	717	789	0.0297	110.4424	EASTDC - ERCOT EQUIVALENCE 345KV CKT 1
FDNS	00NR	2	20WP	G15_047	FROM->TO	G14-057T 345.00 - SUNNYSIDE 345KV CKT 1	717	789	0.02976	110.4381	LYDIA - WELSH 345KV CKT 1
FDNS	00NR	2	20WP	G15_047	FROM->TO	G14-057T 345.00 - SUNNYSIDE 345KV CKT 1	717	789	0.02976	110.4381	LYDIA - WELSH 345KV CKT 1
FDNS	00NR	2	20WP	G15_047	FROM->TO	G14-057T 345.00 - SUNNYSIDE 345KV CKT 1	717	789	0.02986	109.3705	LYDIA - VALLIANT 345KV CKT 1
FDNS	00NR	2	20WP	G15_047	FROM->TO	G14-057T 345.00 - SUNNYSIDE 345KV CKT 1	717	789	0.02986	109.3705	LYDIA - VALLIANT 345KV CKT 1
FDNS	00NR	2	16WP	G15_047	FROM->TO	G14-057T 345.00 - SUNNYSIDE 345KV CKT 1	717	789	0.0297	109.0121	GEN563263 1-G15092_4 0.6900
FDNS	00NR	2	16WP	G15_047	FROM->TO	G14-057T 345.00 - SUNNYSIDE 345KV CKT 1	717	789	0.0297	107.3568	GEN563262 1-G15092_3 0.6900
FDNS	08NR	2	17G	G15_047	TO->FROM	KINZE - MCELROY 138KV CKT 1	194	222	0.03744	100.5631	CLEVELAND - G15066_T 345.00 345KV CKT 1
FDNS	00NR	2	17SP	G15_047	FROM->TO	KINZE - STILLWATER KINZIE 138KV CKT 1	287	287	0.02958	99.8	CLEVELAND - G15066_T 345.00 345KV CKT 1
FDNS	08NR	3	20L	G15_047	TO->FROM	CLEAVELAND - CLEVLND 4 138.00 138KV CKT Z1	305	371	0.09228	115.3548	CLEVELAND - TULSA NORTH 345KV CKT 1
FDNS	08NR	3	20L	G15_047	TO->FROM	CLEAVELAND - CLEVLND 4 138.00 138KV CKT Z1	305	371	0.09228	115.3548	CLEVELAND - TULSA NORTH 345KV CKT 1
FDNS	00NR	3	17SP	G15_047	TO->FROM	CLEAVELAND - CLEVLND 4 138.00 138KV CKT Z1	305	371	0.09979	110.6964	CLEVELAND - TULSA NORTH 345KV CKT 1
FDNS	00NR	3	17SP	G15_047	TO->FROM	CLEAVELAND - CLEVLND 4 138.00 138KV CKT Z1	305	371	0.09979	110.6964	CLEVELAND - TULSA NORTH 345KV CKT 1
FDNS	00NR	3	20SP	G15_047	TO->FROM	CLEAVELAND - CLEVLND 4 138.00 138KV CKT Z1	305	371	0.1005	110.6119	CLEVELAND - TULSA NORTH 345KV CKT 1

SOLUTION	GROUP	SCENARIO	SEASON	SOURCE	DIRECTION	MONITORED ELEMENT	RATEA (MVA)	RATEB(MVA)	TDF	TC%LOADING (% MVA)	CONTINGENCY
FDNS	00NR	3	20SP	G15_047	TO->FROM	CLEAVELAND - CLEVLND 4 138.00 138KV CKT Z1	305	371	0.1005	110.6119	CLEVELAND - TULSA NORTH 345KV CKT 1
FDNS	00NR	3	16WP	G15_047	FROM->TO	G14-057T 345.00 - SUNNYSIDE 345KV CKT 1	717	789	0.02968	126.6776	BASE CASE
FDNS	00NR	3	16WP	G15_047	FROM->TO	G14-057T 345.00 - SUNNYSIDE 345KV CKT 1	717	789	0.04005	124.106	CIMARRON - DRAPER LAKE 345KV CKT 1
FDNS	00NR	3	16WP	G15_047	FROM->TO	G14-057T 345.00 - SUNNYSIDE 345KV CKT 1	717	789	0.03136	121.3957	P12:138:WFEC:MSL03
FDNS	00NR	3	20WP	G15_047	FROM->TO	G14-057T 345.00 - SUNNYSIDE 345KV CKT 1	717	789	0.03975	121.2004	CIMARRON - DRAPER LAKE 345KV CKT 1
FDNS	00NR	3	16WP	G15_047	FROM->TO	G14-057T 345.00 - SUNNYSIDE 345KV CKT 1	717	789	0.02968	120.2612	GEN509403 1-PIRKEY GENERATION
FDNS	00NR	3	16WP	G15_047	FROM->TO	G14-057T 345.00 - SUNNYSIDE 345KV CKT 1	717	789	0.02968	120.1644	GEN509416 1-TURK GENERATION
FDNS	00NR	3	16WP	G15_047	FROM->TO	G14-057T 345.00 - SUNNYSIDE 345KV CKT 1	717	789	0.03989	119.9589	CLEVELAND - G15066_T 345.00 345KV CKT 1
FDNS	00NR	3	16WP	G15_047	FROM->TO	G14-057T 345.00 - SUNNYSIDE 345KV CKT 1	717	789	0.03989	119.66	G15066_T 345.00 - SOONER 345KV CKT 1
FDNS	00NR	3	16WP	G15_047	FROM->TO	G14-057T 345.00 - SUNNYSIDE 345KV CKT 1	717	789	0.02968	119.2763	GEN501801 1-DOLET HILLS UNIT1
FDNS	00NR	3	16WP	G15_047	FROM->TO	G14-057T 345.00 - SUNNYSIDE 345KV CKT 1	717	789	0.02968	118.8922	GEN509404 1-WELSH #1
FDNS	00NR	3	16WP	G15_047	FROM->TO	G14-057T 345.00 - SUNNYSIDE 345KV CKT 1	717	789	0.02968	118.8922	GEN509406 1-WELSH #3
FDNS	00NR	3	20WP	G15_047	FROM->TO	G14-057T 345.00 - SUNNYSIDE 345KV CKT 1	717	789	0.03112	118.7486	P12:138:WFEC:MSL03
FDNS	00NR	3	16WP	G15_047	FROM->TO	G14-057T 345.00 - SUNNYSIDE 345KV CKT 1	717	789	0.0303	118.2865	CORN TAP - NAPLESTP 138.00 138KV CKT 1
FDNS	00NR	3	16WP	G15_047	FROM->TO	G14-057T 345.00 - SUNNYSIDE 345KV CKT 1	717	789	0.0303	118.2013	NAPLESTP 138.00 - PAYNE 138.00 138KV CKT 1
FDNS	00NR	3	16WP	G15_047	FROM->TO	G14-057T 345.00 - SUNNYSIDE 345KV CKT 1	717	789	0.02992	118.0999	7SAREPTA% 345.00 - LONGWOOD 345KV CKT 1
FDNS	00NR	3	16WP	G15_047	FROM->TO	G14-057T 345.00 - SUNNYSIDE 345KV CKT 1	717	789	0.02992	118.0999	7SAREPTA% 345.00 - LONGWOOD 345KV CKT 1
FDNS	00NR	3	16WP	G15_047	FROM->TO	G14-057T 345.00 - SUNNYSIDE 345KV CKT 1	717	789	0.02968	118.0076	GEN336821 1-GRAND GULF UNIT
FDNS	00NR	3	16WP	G15_047	FROM->TO	G14-057T 345.00 - SUNNYSIDE 345KV CKT 1	717	789	0.02981	117.9828	DOLET HILLS - SOUTHWEST SHREVEPORT 345KV CKT 1
FDNS	00NR	3	16WP	G15_047	FROM->TO	G14-057T 345.00 - SUNNYSIDE 345KV CKT 1	717	789	0.02981	117.9828	DOLET HILLS - SOUTHWEST SHREVEPORT 345KV CKT 1
FDNS	00NR	3	16WP	G15_047	FROM->TO	G14-057T 345.00 - SUNNYSIDE 345KV CKT 1	717	789	0.03628	117.9553	CLEVELAND - TULSA NORTH 345KV CKT 1
FDNS	00NR	3	16WP	G15_047	FROM->TO	G14-057T 345.00 - SUNNYSIDE 345KV CKT 1	717	789	0.03628	117.9553	CLEVELAND - TULSA NORTH 345KV CKT 1
FDNS	00NR	3	16WP	G15_047	FROM->TO	G14-057T 345.00 - SUNNYSIDE 345KV CKT 1	717	789	0.03005	117.9269	ANADARKO - POCASSETT 138KV CKT 1
FDNS	00NR	3	16WP	G15_047	FROM->TO	G14-057T 345.00 - SUNNYSIDE 345KV CKT 1	717	789	0.02968	117.9149	GEN336153 1-WATERFORD UNIT#3
FDNS	00NR	3	16WP	G15_047	FROM->TO	G14-057T 345.00 - SUNNYSIDE 345KV CKT 1	717	789	0.03022	117.8932	COMANCHE - LOCO 138KV CKT 1
FDNS	00NR	3	16WP	G15_047	FROM->TO	G14-057T 345.00 - SUNNYSIDE 345KV CKT 1	717	789	0.03005	117.7807	POCASSETT - TUTTLE 138KV CKT 1
FDNS	00NR	3	16WP	G15_047	FROM->TO	G14-057T 345.00 - SUNNYSIDE 345KV CKT 1	717	789	0.03919	117.7066	ARCADIA - NORTHWEST 345KV CKT 1
FDNS	00NR	3	16WP	G15_047	FROM->TO	G14-057T 345.00 - SUNNYSIDE 345KV CKT 1	717	789	0.02968	117.6207	GEN335831 1-RIVERBEND UNIT#1
FDNS	00NR	3	16WP	G15_047	FROM->TO	G14-057T 345.00 - SUNNYSIDE 345KV CKT 1	717	789	0.02968	117.6178	GRAND GULF 500/22.0KV TRANSFORMER CKT 1
FDNS	00NR	3	16WP	G15_047	FROM->TO	G14-057T 345.00 - SUNNYSIDE 345KV CKT 1	717	789	0.03156	117.6049	ARCADIA - SEMINOLE 345KV CKT 1
FDNS	00NR	3	16WP	G15_047	FROM->TO	G14-057T 345.00 - SUNNYSIDE 345KV CKT 1	717	789	0.02998	117.5414	MATHWSN7 345.00 - TATONGA7 345.00 345KV CKT 1
FDNS	00NR	3	16WP	G15_047	FROM->TO	G14-057T 345.00 - SUNNYSIDE 345KV CKT 1	717	789	0.02968	117.5412	GEN515577 1-ARBWND11 0.6900
FDNS	00NR	3	16WP	G15_047	FROM->TO	G14-057T 345.00 - SUNNYSIDE 345KV CKT 1	717	789	0.02968	117.5245	GEN509409 1-WILKES #3
FDNS	00NR	3	16WP	G15_047	FROM->TO	G14-057T 345.00 - SUNNYSIDE 345KV CKT 1	717	789	0.02987	117.4633	P12:138:AEPW:DUNCAN-4:L.E.S.-4
FDNS	00NR	3	16WP	G15_047	FROM->TO	G14-057T 345.00 - SUNNYSIDE 345KV CKT 1	717	789	0.02981	117.4609	7SAREPTA% 345.00 - ELDORADO EHV 345KV CKT 1
FDNS	00NR	3	16WP	G15_047	FROM->TO	G14-057T 345.00 - SUNNYSIDE 345KV CKT 1	717	789	0.02981	117.4606	3TR3AR8EL7EL
FDNS	00NR	3	16WP	G15_047	FROM->TO	G14-057T 345.00 - SUNNYSIDE 345KV CKT 1	717	789	0.02981	117.4501	ELDORADO EHV 500/345KV TRANSFORMER CKT 1
FDNS	00NR	3	16WP	G15_047	FROM->TO	G14-057T 345.00 - SUNNYSIDE 345KV CKT 1	717	789	0.03005	117.4046	BRIDGECR 138.00 - TUTTLE 138KV CKT 1
FDNS	00NR	3	16WP	G15_047	FROM->TO	G14-057T 345.00 - SUNNYSIDE 345KV CKT 1	717	789	0.03046	117.3821	HEALDTON - LOCO 138KV CKT 1
FDNS	00NR	3	16WP	G15_047	FROM->TO	G14-057T 345.00 - SUNNYSIDE 345KV CKT 1	717	789	0.02987	117.3525	COMANCHE TAP - OMPA-DUNCAN 840 138KV CKT 1
FDNS	00NR	3	20WP	G15_047	FROM->TO	G14-057T 345.00 - SUNNYSIDE 345KV CKT 1	717	789	0.03957	117.3099	CLEVELAND - G15066_T 345.00 345KV CKT 1
FDNS	00NR	3	16WP	G15_047	FROM->TO	G14-057T 345.00 - SUNNYSIDE 345KV CKT 1	717	789	0.03046	117.243	HEALDTON - RINGLING 138KV CKT 1
FDNS	00NR	3	16WP	G15_047	FROM->TO	G14-057T 345.00 - SUNNYSIDE 345KV CKT 1	717	789	0.03018	117.2346	LACYGNE - WAVERLY7 345.00 345KV CKT 1
FDNS	00NR	3	16WP	G15_047	FROM->TO	G14-057T 345.00 - SUNNYSIDE 345KV CKT 1	717	789	0.02968	117.2263	GEN501813 1-RODEMACHER UNIT 3
FDNS	00NR	3	16WP	G15_047	FROM->TO	G14-057T 345.00 - SUNNYSIDE 345KV CKT 1	717	789	0.02968	117.2179	GEN300006 1-NEW MADRID UNIT 1
FDNS	00NR	3	16WP	G15_047	FROM->TO	G14-057T 345.00 - SUNNYSIDE 345KV CKT 1	717	789	0.02968	117.2062	GEN300007 1-NEW MADRID UNIT 2
FDNS	00NR	3	16WP	G15_047	FROM->TO	G14-057T 345.00 - SUNNYSIDE 345KV CKT 1	717	789	0.03005	117.1413	P12:138:WFEC:MSL01
FDNS	00NR	3	16WP	G15_047	FROM->TO	G14-057T 345.00 - SUNNYSIDE 345KV CKT 1	717	789	0.03005	117.1347	BRIDGECR 138.00 - SUNSHINE CANYON 138KV CKT 1
FDNS	00NR	3	16WP	G15_047	FROM->TO	G14-057T 345.00 - SUNNYSIDE 345KV CKT 1	717	789	0.03018	117.1176	WAVERLY7 345.00 - WOLF CREEK 345KV CKT 1
FDNS	00NR	3	16WP	G15_047	FROM->TO	G14-057T 345.00 - SUNNYSIDE 345KV CKT 1	717	789	0.02968	117.1083	GEN520947 1-HUGO1
FDNS	00NR	3	16WP	G15_047	FROM->TO	G14-057T 345.00 - SUNNYSIDE 345KV CKT 1	717	789	0.03046	117.0782	RINGLING - SOUTH WILSON 138KV CKT 1
FDNS	00NR	3	16WP	G15_047	FROM->TO	G14-057T 345.00 - SUNNYSIDE 345KV CKT 1	717	789	0.02987	117.071	DUNCAN - OMPA-DUNCAN 840 138KV CKT 1
FDNS	00NR	3	16WP	G15_047	FROM->TO	G14-057T 345.00 - SUNNYSIDE 345KV CKT 1	717	789	0.02987	117.071	DUNCAN - OMPA-DUNCAN 840 138KV CKT 1
FDNS	00NR	3	16WP	G15_047	FROM->TO	G14-057T 345.00 - SUNNYSIDE 345KV CKT 1	717	789	0.02968	117.0263	GEN335206 1-NELSON UNIT 6
FDNS	00NR	3	20WP	G15_047	FROM->TO	G14-057T 345.00 - SUNNYSIDE 345KV CKT 1	717	789	0.03957	117.017	G15066_T 345.00 - SOONER 345KV CKT 1
FDNS	00NR	3	16WP	G15_047	FROM->TO	G14-057T 345.00 - SUNNYSIDE 345KV CKT 1	717	789	0.02968	116.9182	DOLET HILLS 345/24.0KV TRANSFORMER CKT 1
FDNS	00NR	3	16WP	G15_047	FROM->TO	G14-057T 345.00 - SUNNYSIDE 345KV CKT 1	717	789	0.03066	116.8912	CANEYRV7 345.00 - NEOSHO 345KV CKT 1
FDNS	00NR	3	16WP	G15_047	FROM->TO	G14-057T 345.00 - SUNNYSIDE 345KV CKT 1	717	789	0.02968	116.86	P12:138:AEPW:SHERID4:112GORE4
FDNS	00NR	3	16WP	G15_047	FROM->TO	G14-057T 345.00 - SUNNYSIDE 345KV CKT 1	717	789	0.02968	116.8403	GEN501812 1-RODEMACHER UNIT 2
FDNS	00NR	3	16WP	G15_047	FROM->TO	G14-057T 345.00 - SUNNYSIDE 345KV CKT 1	717	789	0.02968	116.8296	GEN590011 2-ERCOT EQUIVALENCE
FDNS	00NR	3	16WP	G15_047	FROM->TO	G14-057T 345.00 - SUNNYSIDE 345KV CKT 1	717	789	0.03046	116.8015	MARIETTA - SOUTH WILSON 138KV CKT 1
FDNS	00NR	3	16WP	G15_047	FROM->TO	G14-057T 345.00 - SUNNYSIDE 345KV CKT 1	717	789	0.02968	116.7786	GEN515564 1-ORIGIN11 0.6900
FDNS	00NR	3	16WP	G15_047	FROM->TO	G14-057T 345.00 - SUNNYSIDE 345KV CKT 1	717	789	0.02968	116.7786	GEN515565 1-ORIGIN21 0.6900
FDNS	00NR	3	16WP	G15_047	FROM->TO	G14-057T 345.00 - SUNNYSIDE 345KV CKT 1	717	789	0.02968	116.7553	GEN590010 1-ERCOT EQUIVALENCE
FDNS	00NR	3	16WP	G15_047	FROM->TO	G14-057T 345.00 - SUNNYSIDE 345KV CKT 1	717	789	0.02968	116.7329	GEN509408 1-WILKES #2
FDNS	00NR	3	16WP	G15_047	FROM->TO	G14-057T 345.00 - SUNNYSIDE 345KV CKT 1	717	789	0.03046	116.7047	P12:138:WFEC:MSL17
FDNS	00NR	3	16WP	G15_047	FROM->TO	G14-057T 345.00 - SUNNYSIDE 345KV CKT 1	717	789	0.03066	116.7021	CANEYRV7 345.00 - LATHAMS7 345.00 345KV CKT 1
FDNS	00NR	3	16WP	G15_047	FROM->TO	G14-057T 345.00 - SUNNYSIDE 345KV CKT 1	717	789	0.03029	116.6073	CIVIT - PAOLI 138KV CKT 1
FDNS	00NR	3	16WP	G15_047	FROM->TO	G14-057T 345.00 - SUNNYSIDE 345KV CKT 1	717	789	0.02968	116.6042	GEN506754 1-LEBROCK STEAM 1
FDNS	00NR	3	16WP	G15_047	FROM->TO	G14-057T 345.00 - SUNNYSIDE 345KV CKT 1	717	789	0.02968	116.596	P12:69:AEPW:L.E.S.-2:LAW WC2
FDNS	00NR	3	16WP	G15_047	FROM->TO	G14-057T 345.00 - SUNNYSIDE 345KV CKT 1	717	789	0.02968	116.5827	P12:161:AEPW:DYESS 5:HYLAND 5
FDNS	00NR	3	16WP	G15_047	FROM->TO	G14-057T 345.00 - SUNNYSIDE 345KV CKT 1	717	789	0.02989	116.5761	P12:138:WFEC:MSL02
FDNS	00NR	3	16WP	G15_047	FROM->TO	G14-057T 345.00 - SUNNYSIDE 345KV CKT 1	717	789	0.02969	116.5657	ELDORADO EHV - MOUNT OLIVE 500KV CKT 1
FDNS	00NR	3	16WP	G15_047	FROM->TO	G14-057T 345.00 - SUNNYSIDE 345KV CKT 1	717	789	0.02989	116.5567	PAOLI - PAYNE 138.00 138KV CKT 1
FDNS	00NR	3	16WP	G15_047	FROM->TO	G14-057T 345.00 - SUNNYSIDE 345KV CKT 1	717	789	0.02968	116.5564	GEN334440 1-SABINE UNIT 4
FDNS	00NR	3	16WP	G15_047	FROM->TO	G14-057T 345.00 - SUNNYSIDE 345KV CKT 1	717	789	0.02966	116.5124	ELDORADO EHV - SHERIDAN EHV 500KV CKT 1
FDNS	00NR	3	16WP	G15_047	FROM->TO	G14-057T 345.00 - SUNNYSIDE 345KV CKT 1	717	789	0.03028	116.4998	MATHWSN7 345.00 - NORTHWEST 345KV CKT 1
FDNS	00NR	3	16WP	G15_047	FROM->TO	G14-057T 345.00 - SUNNYSIDE 345KV CKT 1	717	789	0.02968	116.4958	P12:138:AEPW:112GORE4:L.E.S.-4
FDNS	00NR	3	16WP	G15_047	FROM->TO	G14-057T 345.00 - SUNNYSIDE 345KV CKT 1	717	789	0.03066	116.4873	LATHAMS7 345.00 - ROSE HILL 345KV CKT 1

SOLUTION	GROUP	SCENARIO	SEASON	SOURCE	DIRECTION	MONITORED ELEMENT	RATEA (MVA)	RATEB(MVA)	TDF	TC%LOADING (% MVA)	CONTINGENCY
FDNS	00NR	3	16WP	G15_047	FROM->TO	G14-057T 345.00 - SUNNYSIDE 345KV CKT 1	717	789	0.02983	116.4851	ANADARKO - GEORGIA 138KV CKT 1
FDNS	00NR	3	16WP	G15_047	FROM->TO	G14-057T 345.00 - SUNNYSIDE 345KV CKT 1	717	789	0.03073	116.4788	P12:138:AEPW-OGE:CORNVIL4:MAUD 4
FDNS	00NR	3	16WP	G15_047	FROM->TO	G14-057T 345.00 - SUNNYSIDE 345KV CKT 1	717	789	0.03029	116.4646	CIVIT - STRATFORD 138KV CKT 1
FDNS	00NR	3	16WP	G15_047	FROM->TO	G14-057T 345.00 - SUNNYSIDE 345KV CKT 1	717	789	0.02968	116.4504	FRONTIER - GRIMES 345KV CKT 1
FDNS	00NR	3	16WP	G15_047	FROM->TO	G14-057T 345.00 - SUNNYSIDE 345KV CKT 1	717	789	0.02968	116.4236	GEN503909 1-FULTONU1 1 16.000
FDNS	00NR	3	16WP	G15_047	FROM->TO	G14-057T 345.00 - SUNNYSIDE 345KV CKT 1	717	789	0.02965	116.4095	LAWTON EASTSIDE (LES 5) 345/138/13.8KV TRANSFORMER CKT 2
FDNS	00NR	3	16WP	G15_047	FROM->TO	G14-057T 345.00 - SUNNYSIDE 345KV CKT 1	717	789	0.02965	116.4095	LAWTON EASTSIDE (LES 5) 345/138/13.8KV TRANSFORMER CKT 2
FDNS	00NR	3	16WP	G15_047	FROM->TO	G14-057T 345.00 - SUNNYSIDE 345KV CKT 1	717	789	0.03073	116.407	BLANCHARD - CORNVILLE 138KV CKT 1
FDNS	00NR	3	16WP	G15_047	FROM->TO	G14-057T 345.00 - SUNNYSIDE 345KV CKT 1	717	789	0.0298	116.4068	WEBRE - WELLS 500KV CKT 1
FDNS	00NR	3	16WP	G15_047	FROM->TO	G14-057T 345.00 - SUNNYSIDE 345KV CKT 1	717	789	0.02983	116.4016	FLETCHER - GEORGIA 138KV CKT 1
FDNS	00NR	3	16WP	G15_047	FROM->TO	G14-057T 345.00 - SUNNYSIDE 345KV CKT 1	717	789	0.02987	116.3716	EMPIRE - FLETCHER 138KV CKT 1
FDNS	00NR	3	16WP	G15_047	FROM->TO	G14-057T 345.00 - SUNNYSIDE 345KV CKT 1	717	789	0.03029	116.3454	OIL CENTER - STRATFORD 138KV CKT 1
FDNS	00NR	3	16WP	G15_047	FROM->TO	G14-057T 345.00 - SUNNYSIDE 345KV CKT 1	717	789	0.02968	116.3007	GEN509393 S1-ARSENAL HILL GENS #4 (STALL)
FDNS	00NR	3	16WP	G15_047	FROM->TO	G14-057T 345.00 - SUNNYSIDE 345KV CKT 1	717	789	0.02987	116.2931	COMANCHE - EMPIRE 138KV CKT 1
FDNS	00NR	3	16WP	G15_047	FROM->TO	G14-057T 345.00 - SUNNYSIDE 345KV CKT 1	717	789	0.02968	116.2825	DELL 500 - ESSEX UNIT 2 500KV CKT Z1
FDNS	00NR	3	16WP	G15_047	FROM->TO	G14-057T 345.00 - SUNNYSIDE 345KV CKT 1	717	789	0.02968	116.2732	GEN509392 G2-ARSENAL HILL GENS #3 (STALL)
FDNS	00NR	3	16WP	G15_047	FROM->TO	G14-057T 345.00 - SUNNYSIDE 345KV CKT 1	717	789	0.02968	116.2731	GEN509391 G1-ARSENAL HILL GENS #2 (STALL)
FDNS	00NR	3	16WP	G15_047	FROM->TO	G14-057T 345.00 - SUNNYSIDE 345KV CKT 1	717	789	0.02968	116.2616	GEN336252 1-NINEMILE POINT UNIT#5
FDNS	00NR	3	16WP	G15_047	FROM->TO	G14-057T 345.00 - SUNNYSIDE 345KV CKT 1	717	789	0.02968	116.2465	GEN334071 1-LEWIS CREEK 2
FDNS	00NR	3	16WP	G15_047	FROM->TO	G14-057T 345.00 - SUNNYSIDE 345KV CKT 1	717	789	0.02978	116.2397	G15074_T 345.00 - HOYT 345KV CKT 1
FDNS	00NR	3	16WP	G15_047	FROM->TO	G14-057T 345.00 - SUNNYSIDE 345KV CKT 1	717	789	0.02968	116.2374	GEN334070 1-LEWIS CREEK 1
FDNS	00NR	3	16WP	G15_047	FROM->TO	G14-057T 345.00 - SUNNYSIDE 345KV CKT 1	717	789	0.02968	116.2351	GEN335204 1-NELSON UNIT 4
FDNS	00NR	3	16WP	G15_047	FROM->TO	G14-057T 345.00 - SUNNYSIDE 345KV CKT 1	717	789	0.03073	116.2107	BLANCHARD - MAUD 138KV CKT 1
FDNS	00NR	3	16WP	G15_047	FROM->TO	G14-057T 345.00 - SUNNYSIDE 345KV CKT 1	717	789	0.02977	116.2075	DUNCAN (DUNCAN) 138/69/13.8KV TRANSFORMER CKT 1
FDNS	00NR	3	16WP	G15_047	FROM->TO	G14-057T 345.00 - SUNNYSIDE 345KV CKT 1	717	789	0.02977	116.2075	DUNCAN (DUNCAN) 138/69/13.8KV TRANSFORMER CKT 1
FDNS	00NR	3	16WP	G15_047	FROM->TO	G14-057T 345.00 - SUNNYSIDE 345KV CKT 1	717	789	0.02968	116.2	GEN334441 1-SABINE UNIT 5
FDNS	00NR	3	16WP	G15_047	FROM->TO	G14-057T 345.00 - SUNNYSIDE 345KV CKT 1	717	789	0.03029	116.1728	LATTA JCT - OIL CENTER 138KV CKT 1
FDNS	00NR	3	16WP	G15_047	FROM->TO	G14-057T 345.00 - SUNNYSIDE 345KV CKT 1	717	789	0.02968	116.1625	P12:161:AEPW-SWPA:BEAVERS:EROGERS5
FDNS	00NR	3	16WP	G15_047	FROM->TO	G14-057T 345.00 - SUNNYSIDE 345KV CKT 1	717	789	0.02968	116.1573	GEN300003 1-THOMAS HILL UNIT 3
FDNS	00NR	3	16WP	G15_047	FROM->TO	G14-057T 345.00 - SUNNYSIDE 345KV CKT 1	717	789	0.02968	116.1497	GEN515040 1-SEMINOLE 1G
FDNS	00NR	3	16WP	G15_047	FROM->TO	G14-057T 345.00 - SUNNYSIDE 345KV CKT 1	717	789	0.02968	116.1471	GEN334030 1-FRONTIER UNIT 1
FDNS	00NR	3	16WP	G15_047	FROM->TO	G14-057T 345.00 - SUNNYSIDE 345KV CKT 1	717	789	0.02968	116.1454	GEN334031 1-FRONTIER UNIT 2
FDNS	00NR	3	16WP	G15_047	FROM->TO	G14-057T 345.00 - SUNNYSIDE 345KV CKT 1	717	789	0.02968	116.1451	GEN337653 1-WHITE BLUFF UNIT #2
FDNS	00NR	3	16WP	G15_047	FROM->TO	G14-057T 345.00 - SUNNYSIDE 345KV CKT 1	717	789	0.02974	116.144	P12:138:AEPW:CATOOSA4:T.S.E.-4
FDNS	00NR	3	16WP	G15_047	FROM->TO	G14-057T 345.00 - SUNNYSIDE 345KV CKT 1	717	789	0.02968	116.1275	GEN506752 1-LEBROCK GAS 1
FDNS	00NR	3	16WP	G15_047	FROM->TO	G14-057T 345.00 - SUNNYSIDE 345KV CKT 1	717	789	0.02968	116.1273	GEN506753 1-LEBROCK GAS 2
FDNS	00NR	3	16WP	G15_047	FROM->TO	G14-057T 345.00 - SUNNYSIDE 345KV CKT 1	717	789	0.02977	116.1145	6LAYFLD 230.00 - CARROLL 230KV CKT 1
FDNS	00NR	3	16WP	G15_047	FROM->TO	G14-057T 345.00 - SUNNYSIDE 345KV CKT 1	717	789	0.02971	116.105	8DANIEL8 500.00 - MCKNIGHT 500KV CKT 1
FDNS	00NR	3	16WP	G15_047	FROM->TO	G14-057T 345.00 - SUNNYSIDE 345KV CKT 1	717	789	0.02968	116.0981	GEN515226 1-MUSKOGEE 6G
FDNS	00NR	3	16WP	G15_047	FROM->TO	G14-057T 345.00 - SUNNYSIDE 345KV CKT 1	717	789	0.02968	116.0968	GEN337911 1-ARKANSAS NUCLEAR ONE UNIT #2
FDNS	00NR	3	16WP	G15_047	FROM->TO	G14-057T 345.00 - SUNNYSIDE 345KV CKT 1	717	789	0.03022	116.093	BAILEY4 138.00 - SUNSHINE CANYON 138KV CKT 1
FDNS	00NR	3	16WP	G15_047	FROM->TO	G14-057T 345.00 - SUNNYSIDE 345KV CKT 1	717	789	0.02968	116.091	P12:138:AEPW-OGE:WTH_JCT4:JENSEN4
FDNS	00NR	3	16WP	G15_047	FROM->TO	G14-057T 345.00 - SUNNYSIDE 345KV CKT 1	717	789	0.02968	116.0896	P12:161:AEPW:DYESS5:ELMSPRNG:TONTITN5
FDNS	00NR	3	16WP	G15_047	FROM->TO	G14-057T 345.00 - SUNNYSIDE 345KV CKT 1	717	789	0.02978	116.0894	FULTON 115 - HOPE 115KV CKT 1
FDNS	00NR	3	16WP	G15_047	FROM->TO	G14-057T 345.00 - SUNNYSIDE 345KV CKT 1	717	789	0.02978	116.0894	FULTON 115 - HOPE 115KV CKT 1
FDNS	00NR	3	16WP	G15_047	FROM->TO	G14-057T 345.00 - SUNNYSIDE 345KV CKT 1	717	789	0.02968	116.0872	GEN300015 1-1SGPDEL 18.000
FDNS	00NR	3	16WP	G15_047	FROM->TO	G14-057T 345.00 - SUNNYSIDE 345KV CKT 1	717	789	0.02968	116.08	GEN501811 1-RODEMACHER UNIT 1
FDNS	00NR	3	16WP	G15_047	FROM->TO	G14-057T 345.00 - SUNNYSIDE 345KV CKT 1	717	789	0.02971	116.0784	G15088_T 345.00 - MOORE 345KV CKT 1
FDNS	00NR	3	16WP	G15_047	FROM->TO	G14-057T 345.00 - SUNNYSIDE 345KV CKT 1	717	789	0.02968	116.0635	GEN337652 1-WHITE BLUFF UNIT #1
FDNS	00NR	3	16WP	G15_047	FROM->TO	G14-057T 345.00 - SUNNYSIDE 345KV CKT 1	717	789	0.02968	116.0616	GEN336251 1-NINEMILE POINT UNIT#4
FDNS	00NR	3	16WP	G15_047	FROM->TO	G14-057T 345.00 - SUNNYSIDE 345KV CKT 1	717	789	0.02968	116.0583	GEN334433 1-SABINE UNIT 3
FDNS	00NR	3	16WP	G15_047	FROM->TO	G14-057T 345.00 - SUNNYSIDE 345KV CKT 1	717	789	0.02968	116.0556	GEN336831 1-BAXTER WILSON SES
FDNS	00NR	3	16WP	G15_047	FROM->TO	G14-057T 345.00 - SUNNYSIDE 345KV CKT 1	717	789	0.02978	116.05	P12:138:AEPW:CORNVIL4:S.W.S.-4
FDNS	00NR	3	16WP	G15_047	FROM->TO	G14-057T 345.00 - SUNNYSIDE 345KV CKT 1	717	789	0.02973	116.0453	P12:138:AEPW:CORNVIL4:DUNCAN-4
FDNS	00NR	3	16WP	G15_047	FROM->TO	G14-057T 345.00 - SUNNYSIDE 345KV CKT 1	717	789	0.02955	116.0269	BUCKNER7 345.00 - SPEARVILLE 345KV CKT 1
FDNS	00NR	3	16WP	G15_047	FROM->TO	G14-057T 345.00 - SUNNYSIDE 345KV CKT 1	717	789	0.02955	116.0269	BUCKNER7 345.00 - SPEARVILLE 345KV CKT 1
FDNS	00NR	3	16WP	G15_047	FROM->TO	G14-057T 345.00 - SUNNYSIDE 345KV CKT 1	717	789	0.02968	116.0247	GEN562783 1-G15036_4 0.6900
FDNS	00NR	3	16WP	G15_047	FROM->TO	G14-057T 345.00 - SUNNYSIDE 345KV CKT 1	717	789	0.02968	116.0247	GEN562784 1-G15036_5 0.6900
FDNS	00NR	3	16WP	G15_047	FROM->TO	G14-057T 345.00 - SUNNYSIDE 345KV CKT 1	717	789	0.02977	116.0243	P12:69:WFEC-AEPW:COMANCH2:DUNCAN-2
FDNS	00NR	3	16WP	G15_047	FROM->TO	G14-057T 345.00 - SUNNYSIDE 345KV CKT 1	717	789	0.02968	116.0128	GEN505432 1-SIKESTON
FDNS	00NR	3	16WP	G15_047	FROM->TO	G14-057T 345.00 - SUNNYSIDE 345KV CKT 1	717	789	0.02993	116.0103	CIMARRON - CZECH HALL 138KV CKT 1
FDNS	00NR	3	16WP	G15_047	FROM->TO	G14-057T 345.00 - SUNNYSIDE 345KV CKT 1	717	789	0.02968	116.0009	GEN515223 1-MUSKOGEE 4G
FDNS	00NR	3	16WP	G15_047	FROM->TO	G14-057T 345.00 - SUNNYSIDE 345KV CKT 1	717	789	0.02968	116.0009	GEN515225 1-MUSKOGEE 5G
FDNS	00NR	3	16WP	G15_047	FROM->TO	G14-057T 345.00 - SUNNYSIDE 345KV CKT 1	717	789	0.02968	115.999	P12:138:AEPW:WTHWF4:CLINTJC4
FDNS	00NR	3	16WP	G15_047	FROM->TO	G14-057T 345.00 - SUNNYSIDE 345KV CKT 1	717	789	0.02968	115.9977	WHITE BLUFF 500/26.0KV TRANSFORMER CKT 1
FDNS	00NR	3	16WP	G15_047	FROM->TO	G14-057T 345.00 - SUNNYSIDE 345KV CKT 1	717	789	0.02978	115.9916	HOYT - STRANGER CREEK 345KV CKT 1
FDNS	00NR	3	16WP	G15_047	FROM->TO	G14-057T 345.00 - SUNNYSIDE 345KV CKT 1	717	789	0.02978	115.9863	G15074_T 345.00 - JEFFREY ENERGY CENTER 345KV CKT 1
FDNS	00NR	3	16WP	G15_047	FROM->TO	G14-057T 345.00 - SUNNYSIDE 345KV CKT 1	717	789	0.02969	115.9843	P12:161:AEPW:EROGERS5:ECNTRTN5
FDNS	00NR	3	16WP	G15_047	FROM->TO	G14-057T 345.00 - SUNNYSIDE 345KV CKT 1	717	789	0.02969	115.9828	LAYFLD8 500.00 - MOUNT OLIVE 500KV CKT 1
FDNS	00NR	3	16WP	G15_047	FROM->TO	G14-057T 345.00 - SUNNYSIDE 345KV CKT 1	717	789	0.02969	115.9828	LAYFLD8 500.00 - MOUNT OLIVE 500KV CKT 1
FDNS	00NR	3	16WP	G15_047	FROM->TO	G14-057T 345.00 - SUNNYSIDE 345KV CKT 1	717	789	0.02968	115.978	RODEMACHER 230/22.0KV TRANSFORMER CKT 1
FDNS	00NR	3	16WP	G15_047	FROM->TO	G14-057T 345.00 - SUNNYSIDE 345KV CKT 1	717	789	0.03006	115.9778	CIMARRON - SARA 138KV CKT 1
FDNS	00NR	3	16WP	G15_047	FROM->TO	G14-057T 345.00 - SUNNYSIDE 345KV CKT 1	717	789	0.02977	115.9736	DUNCAN - TOSCO 69KV CKT 1
FDNS	00NR	3	16WP	G15_047	FROM->TO	G14-057T 345.00 - SUNNYSIDE 345KV CKT 1	717	789	0.02969	115.9648	HOT SPRINGS EHV - MAGNET COVE 500KV CKT 1
FDNS	00NR	3	16WP	G15_047	FROM->TO	G14-057T 345.00 - SUNNYSIDE 345KV CKT 1	717	789	0.02968	115.9644	GEN303007 1-1BC2 U2
FDNS	00NR	3	16WP	G15_047	FROM->TO	G14-057T 345.00 - SUNNYSIDE 345KV CKT 1	717	789	0.02968	115.9624	P12:138:AEPW:WTHWF4:WTH_SE4
FDNS	00NR	3	16WP	G15_047	FROM->TO	G14-057T 345.00 - SUNNYSIDE 345KV CKT 1	717	789	0.02968	115.9596	GEN303006 1-1BC2 U1
FDNS	00NR	3	16WP	G15_047	FROM->TO	G14-057T 345.00 - SUNNYSIDE 345KV CKT 1	717	789	0.02972	115.9572	MC NIEL 500/115KV TRANSFORMER CKT 1
FDNS	00NR	3	16WP	G15_047	FROM->TO	G14-057T 345.00 - SUNNYSIDE 345KV CKT 1	717	789	0.02968	115.9535	GEN337910 1-ARKANSAS NUCLEAR ONE UNIT #1

SOLUTION	GROUP	SCENARIO	SEASON	SOURCE	DIRECTION	MONITORED ELEMENT	RATEA (MVA)	RATEB(MVA)	TDF	TC%LOADING (% MVA)	CONTINGENCY
FDNS	00NR	3	16WP	G15_047	FROM->TO	G14-057T 345.00 - SUNNYSIDE 345KV CKT 1	717	789	0.02956	115.9526	CLEO CORNER - CLEOPLT4 138.00 138KV CKT 1
FDNS	00NR	3	16WP	G15_047	FROM->TO	G14-057T 345.00 - SUNNYSIDE 345KV CKT 1	717	789	0.02971	115.9471	P12:69:AEPW-OMPA:COMANC-2:OMWALTR2
FDNS	00NR	3	16WP	G15_047	FROM->TO	G14-057T 345.00 - SUNNYSIDE 345KV CKT 1	717	789	0.02975	115.9464	BISMARK - HOT SPRINGS WEST BUS 115KV CKT 1
FDNS	00NR	3	16WP	G15_047	FROM->TO	G14-057T 345.00 - SUNNYSIDE 345KV CKT 1	717	789	0.02968	115.9405	NELSON 230/20.0KV TRANSFORMER CKT 1
FDNS	00NR	3	16WP	G15_047	FROM->TO	G14-057T 345.00 - SUNNYSIDE 345KV CKT 1	717	789	0.02956	115.9388	CLEOPLT4 138.00 - MEN TAP 138KV CKT 1
FDNS	00NR	3	16WP	G15_047	FROM->TO	G14-057T 345.00 - SUNNYSIDE 345KV CKT 1	717	789	0.02956	115.9384	G15095_T 138.00 - ROSE_VALLEY 138.00 138KV CKT 1
FDNS	00NR	3	16WP	G15_047	FROM->TO	G14-057T 345.00 - SUNNYSIDE 345KV CKT 1	717	789	0.02968	115.9373	GEN336191 1-LITTLE GYPSY UNIT#3
FDNS	00NR	3	16WP	G15_047	FROM->TO	G14-057T 345.00 - SUNNYSIDE 345KV CKT 1	717	789	0.02968	115.9347	GEN300010 1-ST FRANCIS UNIT 1
FDNS	00NR	3	16WP	G15_047	FROM->TO	G14-057T 345.00 - SUNNYSIDE 345KV CKT 1	717	789	0.02993	115.9271	CZECH HALL - XEROX 138KV CKT 1
FDNS	00NR	3	16WP	G15_047	FROM->TO	G14-057T 345.00 - SUNNYSIDE 345KV CKT 1	717	789	0.02956	115.9269	IMO TAP - MEN TAP 138KV CKT 1
FDNS	00NR	3	16WP	G15_047	FROM->TO	G14-057T 345.00 - SUNNYSIDE 345KV CKT 1	717	789	0.03022	115.9254	BAILEY4 138.00 - WESTMOORE 138KV CKT 1
FDNS	00NR	3	16WP	G15_047	FROM->TO	G14-057T 345.00 - SUNNYSIDE 345KV CKT 1	717	789	0.02993	115.9227	MORGAN - XEROX 138KV CKT 1
FDNS	00NR	3	16WP	G15_047	FROM->TO	G14-057T 345.00 - SUNNYSIDE 345KV CKT 1	717	789	0.02972	115.9182	P12:138:AEPW:N.E.S.-4:CATOOSA4
FDNS	00NR	3	16WP	G15_047	FROM->TO	G14-057T 345.00 - SUNNYSIDE 345KV CKT 1	717	789	0.02968	115.9107	GEN335614 1-WILLOW GLENN UNIT#4
FDNS	00NR	3	16WP	G15_047	FROM->TO	G14-057T 345.00 - SUNNYSIDE 345KV CKT 1	717	789	0.02977	115.904	COMANCHE TAP - TOSCO 69KV CKT 1
FDNS	00NR	3	16WP	G15_047	FROM->TO	G14-057T 345.00 - SUNNYSIDE 345KV CKT 1	717	789	0.02968	115.8999	GEN303008 1-1BC2 U3
FDNS	00NR	3	16WP	G15_047	FROM->TO	G14-057T 345.00 - SUNNYSIDE 345KV CKT 1	717	789	0.02993	115.899	MORGAN - MUSTANG 138KV CKT 1
FDNS	00NR	3	16WP	G15_047	FROM->TO	G14-057T 345.00 - SUNNYSIDE 345KV CKT 1	717	789	0.03029	115.8963	LASALLE - LATTA JCT 138KV CKT 1
FDNS	00NR	3	16WP	G15_047	FROM->TO	G14-057T 345.00 - SUNNYSIDE 345KV CKT 1	717	789	0.02975	115.8939	ALPINE AECC - BISMARK 115KV CKT 1
FDNS	00NR	3	16WP	G15_047	FROM->TO	G14-057T 345.00 - SUNNYSIDE 345KV CKT 1	717	789	0.02968	115.8847	GEN300011 1-ST FRANCIS UNIT 2
FDNS	00NR	3	16WP	G15_047	FROM->TO	G14-057T 345.00 - SUNNYSIDE 345KV CKT 1	717	789	0.02956	115.8832	NOEL_SW 138.00 - ROSE_VALLEY 138.00 138KV CKT 1
FDNS	00NR	3	16WP	G15_047	FROM->TO	G14-057T 345.00 - SUNNYSIDE 345KV CKT 1	717	789	0.02968	115.8732	GEN336170 1-GULF OXY U4
FDNS	00NR	3	16WP	G15_047	FROM->TO	G14-057T 345.00 - SUNNYSIDE 345KV CKT 1	717	789	0.03094	115.8711	CANADIAN - NOBLE 138KV CKT 1
FDNS	00NR	3	16WP	G15_047	FROM->TO	G14-057T 345.00 - SUNNYSIDE 345KV CKT 1	717	789	0.02968	115.867	GEN336464 1-MICHOUD UNIT #3
FDNS	00NR	3	16WP	G15_047	FROM->TO	G14-057T 345.00 - SUNNYSIDE 345KV CKT 1	717	789	0.02983	115.8665	7JASPER 345.00 - BLACKBERRY 345KV CKT 1
FDNS	00NR	3	16WP	G15_047	FROM->TO	G14-057T 345.00 - SUNNYSIDE 345KV CKT 1	717	789	0.0297	115.8634	CYPRESS - HARTBURG 500KV CKT 1
FDNS	00NR	3	16WP	G15_047	FROM->TO	G14-057T 345.00 - SUNNYSIDE 345KV CKT 1	717	789	0.02967	115.8576	WEATHERFORD JCT. - WEATHERFORD SOUTHEAST 138KV CKT 1
FDNS	00NR	3	16WP	G15_047	FROM->TO	G14-057T 345.00 - SUNNYSIDE 345KV CKT 1	717	789	0.02967	115.8576	WEATHERFORD JCT. - WEATHERFORD SOUTHEAST 138KV CKT 1
FDNS	00NR	3	16WP	G15_047	FROM->TO	G14-057T 345.00 - SUNNYSIDE 345KV CKT 1	717	789	0.02966	115.8531	CHISHOLM6 230.00 - ELK CITY 230KV 230KV CKT 1
FDNS	00NR	3	16WP	G15_047	FROM->TO	G14-057T 345.00 - SUNNYSIDE 345KV CKT 1	717	789	0.02966	115.8517	ELK CITY 230KV (ELKCTY-6) 230/138/13.8KV TRANSFORMER CKT 1
FDNS	00NR	3	16WP	G15_047	FROM->TO	G14-057T 345.00 - SUNNYSIDE 345KV CKT 1	717	789	0.02966	115.8517	ELK CITY 230KV (ELKCTY-6) 230/138/13.8KV TRANSFORMER CKT 1
FDNS	00NR	3	16WP	G15_047	FROM->TO	G14-057T 345.00 - SUNNYSIDE 345KV CKT 1	717	789	0.02968	115.8505	GEN300016 1-1G1GPDEL 18.000
FDNS	00NR	3	16WP	G15_047	FROM->TO	G14-057T 345.00 - SUNNYSIDE 345KV CKT 1	717	789	0.02975	115.8503	ALPINE AECC - AMITY SS 115KV CKT 1
FDNS	00NR	3	16WP	G15_047	FROM->TO	G14-057T 345.00 - SUNNYSIDE 345KV CKT 1	717	789	0.02977	115.8498	COMANCHE - COMANCHE TAP 69KV CKT 1
FDNS	00NR	3	16WP	G15_047	FROM->TO	G14-057T 345.00 - SUNNYSIDE 345KV CKT 1	717	789	0.03093	115.8497	P12:138:OKGE:3TERM27
FDNS	00NR	3	16WP	G15_047	FROM->TO	G14-057T 345.00 - SUNNYSIDE 345KV CKT 1	717	789	0.02968	115.8497	8CAJUN2 500/24.0KV TRANSFORMER CKT 1
FDNS	00NR	3	16WP	G15_047	FROM->TO	G14-057T 345.00 - SUNNYSIDE 345KV CKT 1	717	789	0.02981	115.8479	ANADARKO - SEQUOYAHJ4 138.00 138KV CKT 1
FDNS	00NR	3	16WP	G15_047	FROM->TO	G14-057T 345.00 - SUNNYSIDE 345KV CKT 1	717	789	0.02981	115.8466	CORN TAP - SEQUOYAHJ4 138.00 138KV CKT 1
FDNS	00NR	3	16WP	G15_047	FROM->TO	G14-057T 345.00 - SUNNYSIDE 345KV CKT 1	717	789	0.02976	115.8391	P12:138:OKGE-AEPW:JENSEN4:REDROCKRD4
FDNS	00NR	3	16WP	G15_047	FROM->TO	G14-057T 345.00 - SUNNYSIDE 345KV CKT 1	717	789	0.03002	115.8348	BLACKBERRY - NEOSHO 345KV CKT 1
FDNS	00NR	3	16WP	G15_047	FROM->TO	G14-057T 345.00 - SUNNYSIDE 345KV CKT 1	717	789	0.02979	115.8276	SWISSVALE - WEST GARDNER 345KV CKT 1
FDNS	00NR	3	16WP	G15_047	FROM->TO	G14-057T 345.00 - SUNNYSIDE 345KV CKT 1	717	789	0.02968	115.8249	GEN501910 1-ACADIA UNIT ST1
FDNS	00NR	3	16WP	G15_047	FROM->TO	G14-057T 345.00 - SUNNYSIDE 345KV CKT 1	717	789	0.02969	115.8205	P12:138:AEPW:R.S.S.-4:S.HUD.-4
FDNS	00NR	3	16WP	G15_047	FROM->TO	G14-057T 345.00 - SUNNYSIDE 345KV CKT 1	717	789	0.03181	115.8155	DRAPER LAKE - SEMINOLE 345KV CKT 1
FDNS	00NR	3	16WP	G15_047	FROM->TO	G14-057T 345.00 - SUNNYSIDE 345KV CKT 1	717	789	0.03181	115.8155	DRAPER LAKE - SEMINOLE 345KV CKT 2
FDNS	00NR	3	16WP	G15_047	FROM->TO	G14-057T 345.00 - SUNNYSIDE 345KV CKT 1	717	789	0.02968	115.8134	GEN337041 1-GERALD ANDRUS
FDNS	00NR	3	16WP	G15_047	FROM->TO	G14-057T 345.00 - SUNNYSIDE 345KV CKT 1	717	789	0.02977	115.8073	7LUTESVIL 345.00 - 7ST FRANC 345.00 345KV CKT 1
FDNS	00NR	3	16WP	G15_047	FROM->TO	G14-057T 345.00 - SUNNYSIDE 345KV CKT 1	717	789	0.02976	115.8073	WALTERS - WALTERS 69KV CKT 1
FDNS	00NR	3	16WP	G15_047	FROM->TO	G14-057T 345.00 - SUNNYSIDE 345KV CKT 1	717	789	0.02967	115.8048	P12:138:AEPW:REDROCKRD4:WTH_JCT4
FDNS	00NR	3	16WP	G15_047	FROM->TO	G14-057T 345.00 - SUNNYSIDE 345KV CKT 1	717	789	0.02968	115.796	ETTA (DUKE HOTSPRINGS) - MC NIEL 500KV CKT 1
FDNS	00NR	3	16WP	G15_047	FROM->TO	G14-057T 345.00 - SUNNYSIDE 345KV CKT 1	717	789	0.03006	115.7903	SARA - STHLAKE4 138.00 138KV CKT 1
FDNS	00NR	3	16WP	G15_047	FROM->TO	G14-057T 345.00 - SUNNYSIDE 345KV CKT 1	717	789	0.02968	115.7817	P12:138:AEPW:YARCH-S4:T.S.E.-4
FDNS	00NR	3	16WP	G15_047	FROM->TO	G14-057T 345.00 - SUNNYSIDE 345KV CKT 1	717	789	0.02979	115.7801	NORGE ROAD - SOUTHWESTERN STATION 138KV CKT 1
FDNS	00NR	3	16WP	G15_047	FROM->TO	G14-057T 345.00 - SUNNYSIDE 345KV CKT 1	717	789	0.02979	115.7801	NORGE ROAD - SOUTHWESTERN STATION 138KV CKT 1
FDNS	00NR	3	16WP	G15_047	FROM->TO	G14-057T 345.00 - SUNNYSIDE 345KV CKT 1	717	789	0.03094	115.7796	NOBLE - PURCELL4 138.00 138KV CKT 1
FDNS	00NR	3	16WP	G15_047	FROM->TO	G14-057T 345.00 - SUNNYSIDE 345KV CKT 1	717	789	0.02971	115.7781	LAWTON RELIFT TAP - OMPA-WALTERS 69KV CKT 1
FDNS	00NR	3	16WP	G15_047	FROM->TO	G14-057T 345.00 - SUNNYSIDE 345KV CKT 1	717	789	0.02969	115.7755	P12:138:AEPW:BA_71ST4:T.S.E.-4
FDNS	00NR	3	16WP	G15_047	FROM->TO	G14-057T 345.00 - SUNNYSIDE 345KV CKT 1	717	789	0.02968	115.7752	P12:69:AEPW:NROGERS2:ECNTRTN2
FDNS	00NR	3	16WP	G15_047	FROM->TO	G14-057T 345.00 - SUNNYSIDE 345KV CKT 1	717	789	0.02968	115.7743	GEN336801 1-BAXTER WILSON UNIT #1
FDNS	00NR	3	16WP	G15_047	FROM->TO	G14-057T 345.00 - SUNNYSIDE 345KV CKT 1	717	789	0.02968	115.7721	SABINE 230/24.0KV TRANSFORMER CKT 1
FDNS	00NR	3	16WP	G15_047	FROM->TO	G14-057T 345.00 - SUNNYSIDE 345KV CKT 1	717	789	0.02981	115.7701	8WNEWMADRID 500.00 - DELL 500 500KV CKT 1
FDNS	00NR	3	16WP	G15_047	FROM->TO	G14-057T 345.00 - SUNNYSIDE 345KV CKT 1	717	789	0.03022	115.7695	FRANKLIN SW - WESTMOORE 138KV CKT 1
FDNS	00NR	3	16WP	G15_047	FROM->TO	G14-057T 345.00 - SUNNYSIDE 345KV CKT 1	717	789	0.03006	115.7613	MCCLAIN - STHLAKE4 138.00 138KV CKT 1
FDNS	00NR	3	16WP	G15_047	FROM->TO	G14-057T 345.00 - SUNNYSIDE 345KV CKT 1	717	789	0.02964	115.7612	ENOWILT - LONE OAK 138KV CKT 1
FDNS	00NR	3	16WP	G15_047	FROM->TO	G14-057T 345.00 - SUNNYSIDE 345KV CKT 1	717	789	0.02968	115.7544	FRONTIER 345/18.0KV TRANSFORMER CKT 1
FDNS	00NR	3	16WP	G15_047	FROM->TO	G14-057T 345.00 - SUNNYSIDE 345KV CKT 1	717	789	0.02995	115.7536	P12:138:AEPW-OGE:SHIDLER4:OSAGE 4
FDNS	00NR	3	16WP	G15_047	FROM->TO	G14-057T 345.00 - SUNNYSIDE 345KV CKT 1	717	789	0.02968	115.7527	FRONTIER 345/18.0KV TRANSFORMER CKT 1
FDNS	00NR	3	16WP	G15_047	FROM->TO	G14-057T 345.00 - SUNNYSIDE 345KV CKT 1	717	789	0.02964	115.7521	ENOWILT - SARDIS 138KV CKT 1
FDNS	00NR	3	16WP	G15_047	FROM->TO	G14-057T 345.00 - SUNNYSIDE 345KV CKT 1	717	789	0.02968	115.7439	P12:161:AEPW:CHAMSPR5:FARMING5
FDNS	00NR	3	16WP	G15_047	FROM->TO	G14-057T 345.00 - SUNNYSIDE 345KV CKT 1	717	789	0.02979	115.7375	EMPORIA ENERGY CENTER - SWISSVALE 345KV CKT 1
FDNS	00NR	3	16WP	G15_047	FROM->TO	G14-057T 345.00 - SUNNYSIDE 345KV CKT 1	717	789	0.03029	115.7369	LASALLE - STONEWAL LH138.00 138KV CKT 1
FDNS	00NR	3	16WP	G15_047	FROM->TO	G14-057T 345.00 - SUNNYSIDE 345KV CKT 1	717	789	0.02967	115.7276	HINTON - WEATHERFORD JCT. 138KV CKT 1
FDNS	00NR	3	16WP	G15_047	FROM->TO	G14-057T 345.00 - SUNNYSIDE 345KV CKT 1	717	789	0.02968	115.7243	GEN505616 1-BROKEN BOW
FDNS	00NR	3	16WP	G15_047	FROM->TO	G14-057T 345.00 - SUNNYSIDE 345KV CKT 1	717	789	0.02968	115.7233	WEATHERFORD TAP - WEATHERFORD WIND FARM 138KV CKT 1
FDNS	00NR	3	16WP	G15_047	FROM->TO	G14-057T 345.00 - SUNNYSIDE 345KV CKT 1	717	789	0.03026	115.7226	MORISNT4 138.00 - STILLWATER 138KV CKT 1
FDNS	00NR	3	16WP	G15_047	FROM->TO	G14-057T 345.00 - SUNNYSIDE 345KV CKT 1	717	789	0.02975	115.722	CLINTON JUNCTION - ELK CITY 138KV CKT 1
FDNS	00NR	3	16WP	G15_047	FROM->TO	G14-057T 345.00 - SUNNYSIDE 345KV CKT 1	717	789	0.02975	115.722	CLINTON JUNCTION - ELK CITY 138KV CKT 1
FDNS	00NR	3	16WP	G15_047	FROM->TO	G14-057T 345.00 - SUNNYSIDE 345KV CKT 1	717	789	0.02978	115.7216	HOPE - MCNAB REC 115KV CKT 1
FDNS	00NR	3	16WP	G15_047	FROM->TO	G14-057T 345.00 - SUNNYSIDE 345KV CKT 1	717	789	0.03029	115.7215	STONEWAL LH138.00 - TUPELO TAP 138KV CKT 1

SOLUTION	GROUP	SCENARIO	SEASON	SOURCE	DIRECTION	MONITORED ELEMENT	RATEA (MVA)	RATEB(MVA)	TDF	TC%LOADING (% MVA)	CONTINGENCY
FDNS	00NR	3	16WP	G15_047	FROM->TO	G14-057T 345.00 - SUNNYSIDE 345KV CKT 1	717	789	0.02968	115.7173	LEWIS CREEK SWITCHYARD 138/22.0KV TRANSFORMER CKT 1
FDNS	00NR	3	16WP	G15_047	FROM->TO	G14-057T 345.00 - SUNNYSIDE 345KV CKT 1	717	789	0.03025	115.7171	P12:138:OKGE:3TERM2
FDNS	00NR	3	16WP	G15_047	FROM->TO	G14-057T 345.00 - SUNNYSIDE 345KV CKT 1	717	789	0.02964	115.7149	CLAYTON - SARDIS 138KV CKT 1
FDNS	00NR	3	16WP	G15_047	FROM->TO	G14-057T 345.00 - SUNNYSIDE 345KV CKT 1	717	789	0.02978	115.7127	P12:115:AEPW:TURK3:HOPE3
FDNS	00NR	3	16WP	G15_047	FROM->TO	G14-057T 345.00 - SUNNYSIDE 345KV CKT 1	717	789	0.02968	115.7124	LEWIS CREEK SWITCHYARD 138/22.0KV TRANSFORMER CKT 1
FDNS	00NR	3	16WP	G15_047	FROM->TO	G14-057T 345.00 - SUNNYSIDE 345KV CKT 1	717	789	0.02971	115.7112	OMPA-WALTERS - WALTERS 69KV CKT 1
FDNS	00NR	3	16WP	G15_047	FROM->TO	G14-057T 345.00 - SUNNYSIDE 345KV CKT 1	717	789	0.02971	115.7112	OMPA-WALTERS - WALTERS 69KV CKT 1
FDNS	00NR	3	16WP	G15_047	FROM->TO	G14-057T 345.00 - SUNNYSIDE 345KV CKT 1	717	789	0.02978	115.7107	SOUTHWESTERN STATION - VERDEN 138KV CKT 1
FDNS	00NR	3	16WP	G15_047	FROM->TO	G14-057T 345.00 - SUNNYSIDE 345KV CKT 1	717	789	0.02968	115.6991	GEN501970 1-EVANGELINE UNIT 7
FDNS	00NR	3	16WP	G15_047	FROM->TO	G14-057T 345.00 - SUNNYSIDE 345KV CKT 1	717	789	0.02995	115.6981	EMPORIA ENERGY CENTER - G14_001T 345.00 345KV CKT 1
FDNS	00NR	3	16WP	G15_047	FROM->TO	G14-057T 345.00 - SUNNYSIDE 345KV CKT 1	717	789	0.02976	115.6929	P12:69:WFEC-AEPW:COMANCH2:WALTRS-2
FDNS	00NR	3	16WP	G15_047	FROM->TO	G14-057T 345.00 - SUNNYSIDE 345KV CKT 1	717	789	0.02974	115.6919	COUCH SES - MC NIEL 115KV CKT 1
FDNS	00NR	3	16WP	G15_047	FROM->TO	G14-057T 345.00 - SUNNYSIDE 345KV CKT 1	717	789	0.03145	115.6915	CLARKSVILLE - ONETA 345KV CKT 1
FDNS	00NR	3	16WP	G15_047	FROM->TO	G14-057T 345.00 - SUNNYSIDE 345KV CKT 1	717	789	0.03145	115.6915	CLARKSVILLE - ONETA 345KV CKT 1
FDNS	00NR	3	16WP	G15_047	FROM->TO	G14-057T 345.00 - SUNNYSIDE 345KV CKT 1	717	789	0.02978	115.6903	NORTH 29TH CHICKASHA - VERDEN 138KV CKT 1
FDNS	00NR	3	16WP	G15_047	FROM->TO	G14-057T 345.00 - SUNNYSIDE 345KV CKT 1	717	789	0.02978	115.6901	MCNAB REC - Turk 115 115KV CKT 1
FDNS	00NR	3	16WP	G15_047	FROM->TO	G14-057T 345.00 - SUNNYSIDE 345KV CKT 1	717	789	0.02978	115.6901	TURK (TURK 1) 138/115/13.2KV TRANSFORMER CKT 1
FDNS	00NR	3	16WP	G15_047	FROM->TO	G14-057T 345.00 - SUNNYSIDE 345KV CKT 1	717	789	0.02978	115.6901	TURK (TURK 1) 138/115/13.2KV TRANSFORMER CKT 1
FDNS	00NR	3	16WP	G15_047	FROM->TO	G14-057T 345.00 - SUNNYSIDE 345KV CKT 1	717	789	0.02964	115.6892	P12:138:AEPW-SWPA:LONEOAK4:BRKNBW4
FDNS	00NR	3	16WP	G15_047	FROM->TO	G14-057T 345.00 - SUNNYSIDE 345KV CKT 1	717	789	0.02968	115.6874	GEN334392 1-EXXON MOBIL IPP 1
FDNS	00NR	3	20WP	G15_047	FROM->TO	G14-057T 345.00 - SUNNYSIDE 345KV CKT 1	717	789	0.03009	115.685	CORN TAP - NAPLESTP 138.00 138KV CKT 1
FDNS	00NR	3	16WP	G15_047	FROM->TO	G14-057T 345.00 - SUNNYSIDE 345KV CKT 1	717	789	0.02968	115.6797	GEN334393 1-EXXON MOBIL IPP 2
FDNS	00NR	3	16WP	G15_047	FROM->TO	G14-057T 345.00 - SUNNYSIDE 345KV CKT 1	717	789	0.02968	115.6797	GEN334394 1-EXXON MOBIL IPP 3
FDNS	00NR	3	16WP	G15_047	FROM->TO	G14-057T 345.00 - SUNNYSIDE 345KV CKT 1	717	789	0.02967	115.6766	HINTON - REDROCKRD4 138.00 138KV CKT 1
FDNS	00NR	3	16WP	G15_047	FROM->TO	G14-057T 345.00 - SUNNYSIDE 345KV CKT 1	717	789	0.02964	115.6743	CLAYTON - NASHOBA 138KV CKT 1
FDNS	00NR	3	16WP	G15_047	FROM->TO	G14-057T 345.00 - SUNNYSIDE 345KV CKT 1	717	789	0.02971	115.6739	P12:138:OKGE:3TERM12
FDNS	00NR	3	16WP	G15_047	FROM->TO	G14-057T 345.00 - SUNNYSIDE 345KV CKT 1	717	789	0.02968	115.6722	GEN336222 1-LITTLE GYPSY UNIT#2
FDNS	00NR	3	16WP	G15_047	FROM->TO	G14-057T 345.00 - SUNNYSIDE 345KV CKT 1	717	789	0.03046	115.6665	MARIETTA - MARIETTA4 138.00 138KV CKT 1
FDNS	00NR	3	16WP	G15_047	FROM->TO	G14-057T 345.00 - SUNNYSIDE 345KV CKT 1	717	789	0.02985	115.6645	7JASPER 345.00 - MORGAN 345KV CKT 1
FDNS	00NR	3	16WP	G15_047	FROM->TO	G14-057T 345.00 - SUNNYSIDE 345KV CKT 1	717	789	0.02964	115.6612	BETHEL - NASHOBA 138KV CKT 1
FDNS	00NR	3	16WP	G15_047	FROM->TO	G14-057T 345.00 - SUNNYSIDE 345KV CKT 1	717	789	0.0297	115.6543	P12:138:AEPW:R.S.S-4:T.P.S.-4
FDNS	00NR	3	16WP	G15_047	FROM->TO	G14-057T 345.00 - SUNNYSIDE 345KV CKT 1	717	789	0.02968	115.6517	GEN506749 1-EASTMAN GENERATION A
FDNS	00NR	3	16WP	G15_047	FROM->TO	G14-057T 345.00 - SUNNYSIDE 345KV CKT 1	717	789	0.02968	115.6503	GEN334431 1-SABINE UNIT 1
FDNS	00NR	3	16WP	G15_047	FROM->TO	G14-057T 345.00 - SUNNYSIDE 345KV CKT 1	717	789	0.02968	115.6502	GEN334432 1-SABINE UNIT 2
FDNS	00NR	3	16WP	G15_047	FROM->TO	G14-057T 345.00 - SUNNYSIDE 345KV CKT 1	717	789	0.02969	115.65	FRANKLIN - FRANKLIN SW 138KV CKT 1
FDNS	00NR	3	16WP	G15_047	FROM->TO	G14-057T 345.00 - SUNNYSIDE 345KV CKT 1	717	789	0.02968	115.6424	GEN501972 1-EVANGELINE UNIT 7-2
FDNS	00NR	3	16WP	G15_047	FROM->TO	G14-057T 345.00 - SUNNYSIDE 345KV CKT 1	717	789	0.02968	115.6423	GEN501971 1-EVANGELINE UNIT 7-1
FDNS	00NR	3	16WP	G15_047	FROM->TO	G14-057T 345.00 - SUNNYSIDE 345KV CKT 1	717	789	0.02968	115.6419	GEN336152 1-WATERFORD UNIT#2
FDNS	00NR	3	16WP	G15_047	FROM->TO	G14-057T 345.00 - SUNNYSIDE 345KV CKT 1	717	789	0.02968	115.6409	GEN336151 1-WATERFORD UNIT#1
FDNS	00NR	3	16WP	G15_047	FROM->TO	G14-057T 345.00 - SUNNYSIDE 345KV CKT 1	717	789	0.02972	115.6396	FLETCHER - MARLOW JCT 69KV CKT 1
FDNS	00NR	3	16WP	G15_047	FROM->TO	G14-057T 345.00 - SUNNYSIDE 345KV CKT 1	717	789	0.02995	115.6373	G14_001T 345.00 - WICHITA 345KV CKT 1
FDNS	00NR	3	16WP	G15_047	FROM->TO	G14-057T 345.00 - SUNNYSIDE 345KV CKT 1	717	789	0.02968	115.6364	WEATHERFORD SOUTHEAST - WEATHERFORD TAP 138KV CKT 1
FDNS	00NR	3	16WP	G15_047	FROM->TO	G14-057T 345.00 - SUNNYSIDE 345KV CKT 1	717	789	0.02988	115.6347	P12:138:AEPW:OKMULGE4:R.S.S-4
FDNS	00NR	3	16WP	G15_047	FROM->TO	G14-057T 345.00 - SUNNYSIDE 345KV CKT 1	717	789	0.02979	115.6347	CORNVILLE - NORGE ROAD 138KV CKT 1
FDNS	00NR	3	16WP	G15_047	FROM->TO	G14-057T 345.00 - SUNNYSIDE 345KV CKT 1	717	789	0.02979	115.6347	CORNVILLE - NORGE ROAD 138KV CKT 1
FDNS	00NR	3	20WP	G15_047	FROM->TO	G14-057T 345.00 - SUNNYSIDE 345KV CKT 1	717	789	0.02972	115.6304	7SAREPTA% 345.00 - LONGWOOD 345KV CKT 1
FDNS	00NR	3	20WP	G15_047	FROM->TO	G14-057T 345.00 - SUNNYSIDE 345KV CKT 1	717	789	0.02972	115.6304	7SAREPTA% 345.00 - LONGWOOD 345KV CKT 1
FDNS	00NR	3	16WP	G15_047	FROM->TO	G14-057T 345.00 - SUNNYSIDE 345KV CKT 1	717	789	0.02978	115.6264	CORNVILLE - NORTH 29TH CHICKASHA 138KV CKT 1
FDNS	00NR	3	20WP	G15_047	FROM->TO	G14-057T 345.00 - SUNNYSIDE 345KV CKT 1	717	789	0.03009	115.5991	NAPLESTP 138.00 - PAYNE 138.00 138KV CKT 1
FDNS	00NR	3	16WP	G15_047	FROM->TO	G14-057T 345.00 - SUNNYSIDE 345KV CKT 1	717	789	0.02976	115.5922	Canadian Pump Station - REDROCKRD4 138.00 138KV CKT 1
FDNS	00NR	3	16WP	G15_047	FROM->TO	G14-057T 345.00 - SUNNYSIDE 345KV CKT 1	717	789	0.02968	115.5824	CLINTON JUNCTION - CLINTON NATURAL GAS TAP 138KV CKT 1
FDNS	00NR	3	16WP	G15_047	FROM->TO	G14-057T 345.00 - SUNNYSIDE 345KV CKT 1	717	789	0.02974	115.5797	HAMMETT TAP - HORSESHOE LAKE 138KV CKT 1
FDNS	00NR	3	16WP	G15_047	FROM->TO	G14-057T 345.00 - SUNNYSIDE 345KV CKT 1	717	789	0.03094	115.5707	PURCELL4 138.00 - WALNUT CREEK 138KV CKT 1
FDNS	00NR	3	16WP	G15_047	FROM->TO	G14-057T 345.00 - SUNNYSIDE 345KV CKT 1	717	789	0.02976	115.5209	COMANCHE - WALTERS 69KV CKT 1
FDNS	00NR	3	20WP	G15_047	FROM->TO	G14-057T 345.00 - SUNNYSIDE 345KV CKT 1	717	789	0.02985	115.417	ANADARKO - POCASSETT 138KV CKT 1
FDNS	00NR	3	20WP	G15_047	FROM->TO	G14-057T 345.00 - SUNNYSIDE 345KV CKT 1	717	789	0.03002	115.3412	COMANCHE - LOCO 138KV CKT 1
FDNS	00NR	3	20WP	G15_047	FROM->TO	G14-057T 345.00 - SUNNYSIDE 345KV CKT 1	717	789	0.03596	115.3237	CLEVELAND - TULSA NORTH 345KV CKT 1
FDNS	00NR	3	20WP	G15_047	FROM->TO	G14-057T 345.00 - SUNNYSIDE 345KV CKT 1	717	789	0.03596	115.3237	CLEVELAND - TULSA NORTH 345KV CKT 1
FDNS	00NR	3	20WP	G15_047	FROM->TO	G14-057T 345.00 - SUNNYSIDE 345KV CKT 1	717	789	0.02985	115.26	POCASSETT - TUTTLE 138KV CKT 1
FDNS	00NR	3	20WP	G15_047	FROM->TO	G14-057T 345.00 - SUNNYSIDE 345KV CKT 1	717	789	0.02961	115.2292	DOLET HILLS - SOUTHWEST SHREVEPORT 345KV CKT 1
FDNS	00NR	3	20WP	G15_047	FROM->TO	G14-057T 345.00 - SUNNYSIDE 345KV CKT 1	717	789	0.02961	115.2292	DOLET HILLS - SOUTHWEST SHREVEPORT 345KV CKT 1
FDNS	00NR	3	16WP	G15_047	FROM->TO	G14-057T 345.00 - SUNNYSIDE 345KV CKT 1	717	789	0.02968	115.1176	803-OKLAUNION
FDNS	00NR	3	20WP	G15_047	FROM->TO	G14-057T 345.00 - SUNNYSIDE 345KV CKT 1	717	789	0.03898	115.0957	ARCADIA - NORTHWEST 345KV CKT 1
FDNS	00NR	3	20WP	G15_047	FROM->TO	G14-057T 345.00 - SUNNYSIDE 345KV CKT 1	717	789	0.02961	115.0068	7SAREPTA% 345.00 - ELDORADO EHV 345KV CKT 1
FDNS	00NR	3	20WP	G15_047	FROM->TO	G14-057T 345.00 - SUNNYSIDE 345KV CKT 1	717	789	0.02961	115.0066	3TR3AR8EL7EL
FDNS	00NR	3	20WP	G15_047	FROM->TO	G14-057T 345.00 - SUNNYSIDE 345KV CKT 1	717	789	0.02961	114.996	ELDORADO EHV 500/345KV TRANSFORMER CKT 1
FDNS	00NR	3	20WP	G15_047	FROM->TO	G14-057T 345.00 - SUNNYSIDE 345KV CKT 1	717	789	0.02966	114.9863	P12:138:AEPW:DUNCAN-4:L.E.S.-4
FDNS	00NR	3	20WP	G15_047	FROM->TO	G14-057T 345.00 - SUNNYSIDE 345KV CKT 1	717	789	0.02977	114.9275	MATHWSN7 345.00 - TATONGA7 345.00 345KV CKT 1
FDNS	00NR	3	20WP	G15_047	FROM->TO	G14-057T 345.00 - SUNNYSIDE 345KV CKT 1	717	789	0.02966	114.8686	COMANCHE TAP - OMPA-DUNCAN 840 138KV CKT 1
FDNS	00NR	3	20WP	G15_047	FROM->TO	G14-057T 345.00 - SUNNYSIDE 345KV CKT 1	717	789	0.02985	114.8662	BRIDGECR 138.00 - TUTTLE 138KV CKT 1
FDNS	00NR	3	16WP	G15_047	FROM->TO	G14-057T 345.00 - SUNNYSIDE 345KV CKT 1	717	789	0.03025	114.8075	RANCHRD7 345.00 - SOONER 345KV CKT 1
FDNS	00NR	3	20WP	G15_047	FROM->TO	G14-057T 345.00 - SUNNYSIDE 345KV CKT 1	717	789	0.03132	114.7757	ARCADIA - SEMINOLE 345KV CKT 1
FDNS	00NR	3	20WP	G15_047	FROM->TO	G14-057T 345.00 - SUNNYSIDE 345KV CKT 1	717	789	0.03026	114.7632	HEALDTON - LOCO 138KV CKT 1
FDNS	00NR	3	16WP	G15_047	FROM->TO	G14-057T 345.00 - SUNNYSIDE 345KV CKT 1	717	789	0.02972	114.7374	JOHNSON COUNTY - RUSSETT 138KV CKT 1
FDNS	00NR	3	16WP	G15_047	FROM->TO	G14-057T 345.00 - SUNNYSIDE 345KV CKT 1	717	789	0.02973	114.7187	GLASSES - MADILL INDUSTRIAL TAP 138KV CKT 1
FDNS	00NR	3	16WP	G15_047	FROM->TO	G14-057T 345.00 - SUNNYSIDE 345KV CKT 1	717	789	0.02995	114.7136	DRAPER LAKE - MIDWEST TAP 138KV CKT 1
FDNS	00NR	3	16WP	G15_047	FROM->TO	G14-057T 345.00 - SUNNYSIDE 345KV CKT 1	717	789	0.02968	114.7011	GEN562772 1-G15034_3 0.6900
FDNS	00NR	3	16WP	G15_047	FROM->TO	G14-057T 345.00 - SUNNYSIDE 345KV CKT 1	717	789	0.02966	114.6947	HUGO (HUGO 1) 345/138/13.8KV TRANSFORMER CKT 1
FDNS	00NR	3	16WP	G15_047	FROM->TO	G14-057T 345.00 - SUNNYSIDE 345KV CKT 1	717	789	0.02993	114.6926	P12:138:OKGE:3TERM21

SOLUTION	GROUP	SCENARIO	SEASON	SOURCE	DIRECTION	MONITORED ELEMENT	RATEA (MVA)	RATEB(MVA)	TDF	TC%LOADING (% MVA)	CONTINGENCY
FDNS	00NR	3	16WP	G15_047	FROM->TO	G14-057T 345.00 - SUNNYSIDE 345KV CKT 1	717	789	0.02968	114.676	GEN521103 1-BLUE CANYON WIND FARM
FDNS	00NR	3	16WP	G15_047	FROM->TO	G14-057T 345.00 - SUNNYSIDE 345KV CKT 1	717	789	0.02968	114.6743	GEN520812 1-ANADRK5
FDNS	00NR	3	16WP	G15_047	FROM->TO	G14-057T 345.00 - SUNNYSIDE 345KV CKT 1	717	789	0.02968	114.6742	GEN520813 1-ANADRK6
FDNS	00NR	3	16WP	G15_047	FROM->TO	G14-057T 345.00 - SUNNYSIDE 345KV CKT 1	717	789	0.02973	114.6591	GLASSES - RUSSETT 138KV CKT 1
FDNS	00NR	3	16WP	G15_047	FROM->TO	G14-057T 345.00 - SUNNYSIDE 345KV CKT 1	717	789	0.02979	114.6462	P12:138:WFEC:MSL11
FDNS	00NR	3	16WP	G15_047	FROM->TO	G14-057T 345.00 - SUNNYSIDE 345KV CKT 1	717	789	0.02979	114.6462	P12:138:WFEC-AEPW:PHAROAH4:LONEOAK4
FDNS	00NR	3	16WP	G15_047	FROM->TO	G14-057T 345.00 - SUNNYSIDE 345KV CKT 1	717	789	0.02968	114.6314	GEN511961 1-DEMPSEY-WTG10.7000
FDNS	00NR	3	16WP	G15_047	FROM->TO	G14-057T 345.00 - SUNNYSIDE 345KV CKT 1	717	789	0.02968	114.6197	P12:069:OKGE:3TERM42
FDNS	00NR	3	20WP	G15_047	FROM->TO	G14-057T 345.00 - SUNNYSIDE 345KV CKT 1	717	789	0.03026	114.6187	HEALDTON - RINGLING 138KV CKT 1
FDNS	00NR	3	16WP	G15_047	FROM->TO	G14-057T 345.00 - SUNNYSIDE 345KV CKT 1	717	789	0.02974	114.6005	CANEY CREEK - JOHNSON COUNTY 138KV CKT 1
FDNS	00NR	3	16WP	G15_047	FROM->TO	G14-057T 345.00 - SUNNYSIDE 345KV CKT 1	717	789	0.02978	114.5989	DELL 500 - INDEPENDENCE 500KV CKT 1
FDNS	00NR	3	16WP	G15_047	FROM->TO	G14-057T 345.00 - SUNNYSIDE 345KV CKT 1	717	789	0.02969	114.592	P12:138:WFEC:MSL08
FDNS	00NR	3	16WP	G15_047	FROM->TO	G14-057T 345.00 - SUNNYSIDE 345KV CKT 1	717	789	0.02968	114.5831	GEN515443 1-MNCOWND1 0.7000
FDNS	00NR	3	20WP	G15_047	FROM->TO	G14-057T 345.00 - SUNNYSIDE 345KV CKT 1	717	789	0.02966	114.5799	DUNCAN - OMPA-DUNCAN 840 138KV CKT 1
FDNS	00NR	3	20WP	G15_047	FROM->TO	G14-057T 345.00 - SUNNYSIDE 345KV CKT 1	717	789	0.02966	114.5799	DUNCAN - OMPA-DUNCAN 840 138KV CKT 1
FDNS	00NR	3	16WP	G15_047	FROM->TO	G14-057T 345.00 - SUNNYSIDE 345KV CKT 1	717	789	0.02968	114.579	INDEPENDENCE 500/26.0KV TRANSFORMER CKT 1
FDNS	00NR	3	20WP	G15_047	FROM->TO	G14-057T 345.00 - SUNNYSIDE 345KV CKT 1	717	789	0.02985	114.576	BRIDGECR 138.00 - SUNSHINE CANYON 138KV CKT 1
FDNS	00NR	3	20WP	G15_047	FROM->TO	G14-057T 345.00 - SUNNYSIDE 345KV CKT 1	717	789	0.02985	114.574	P12:138:WFEC:MSL01
FDNS	00NR	3	16WP	G15_047	FROM->TO	G14-057T 345.00 - SUNNYSIDE 345KV CKT 1	717	789	0.02965	114.569	CARTER - CHICKASAW 138KV CKT 1
FDNS	00NR	3	20WP	G15_047	FROM->TO	G14-057T 345.00 - SUNNYSIDE 345KV CKT 1	717	789	0.02998	114.567	LACYGNE - WAVERLY7 345.00 345KV CKT 1
FDNS	00NR	3	16WP	G15_047	FROM->TO	G14-057T 345.00 - SUNNYSIDE 345KV CKT 1	717	789	0.02968	114.5662	GEN532653 1-JEFFREY ENERGY CENTER UNIT 3
FDNS	00NR	3	16WP	G15_047	FROM->TO	G14-057T 345.00 - SUNNYSIDE 345KV CKT 1	717	789	0.02968	114.5645	GEN563242 1-G15090_3 0.6900
FDNS	00NR	3	16WP	G15_047	FROM->TO	G14-057T 345.00 - SUNNYSIDE 345KV CKT 1	717	789	0.02968	114.5635	GEN560183 1-REDHIL-WTG1 12.000
FDNS	00NR	3	16WP	G15_047	FROM->TO	G14-057T 345.00 - SUNNYSIDE 345KV CKT 1	717	789	0.02968	114.5601	GEN562902 1-G15052_3 0.6900
FDNS	00NR	3	16WP	G15_047	FROM->TO	G14-057T 345.00 - SUNNYSIDE 345KV CKT 1	717	789	0.02975	114.5586	MINGO - SETAB 345KV CKT 1
FDNS	00NR	3	16WP	G15_047	FROM->TO	G14-057T 345.00 - SUNNYSIDE 345KV CKT 1	717	789	0.02975	114.5586	MINGO - SETAB 345KV CKT 1
FDNS	00NR	3	16WP	G15_047	FROM->TO	G14-057T 345.00 - SUNNYSIDE 345KV CKT 1	717	789	0.02968	114.5557	GEN629071 1-BURLINGTON GENERATOR FOR UNIT NO 1 E
FDNS	00NR	3	16WP	G15_047	FROM->TO	G14-057T 345.00 - SUNNYSIDE 345KV CKT 1	717	789	0.02954	114.5555	ROCKY POINT - SPRINGDALE 138KV CKT 1
FDNS	00NR	3	16WP	G15_047	FROM->TO	G14-057T 345.00 - SUNNYSIDE 345KV CKT 1	717	789	0.02989	114.5554	CANADIAN RIVER - MCALESTER SOUTH 138KV CKT 1
FDNS	00NR	3	16WP	G15_047	FROM->TO	G14-057T 345.00 - SUNNYSIDE 345KV CKT 1	717	789	0.02989	114.5554	CANADIAN RIVER - MCALESTER SOUTH 138KV CKT 1
FDNS	00NR	3	16WP	G15_047	FROM->TO	G14-057T 345.00 - SUNNYSIDE 345KV CKT 1	717	789	0.02989	114.554	CANADIAN RIVER () 345/138/13.8KV TRANSFORMER CKT 1
FDNS	00NR	3	16WP	G15_047	FROM->TO	G14-057T 345.00 - SUNNYSIDE 345KV CKT 1	717	789	0.02989	114.554	CANADIAN RIVER () 345/138/13.8KV TRANSFORMER CKT 1
FDNS	00NR	3	16WP	G15_047	FROM->TO	G14-057T 345.00 - SUNNYSIDE 345KV CKT 1	717	789	0.02965	114.5441	ALTUS JUNCTION - RUSSELL 138KV CKT 1
FDNS	00NR	3	16WP	G15_047	FROM->TO	G14-057T 345.00 - SUNNYSIDE 345KV CKT 1	717	789	0.02965	114.5441	ALTUS JUNCTION - RUSSELL 138KV CKT 1
FDNS	00NR	3	16WP	G15_047	FROM->TO	G14-057T 345.00 - SUNNYSIDE 345KV CKT 1	717	789	0.02968	114.525	BURLINGTON NO1 + NO 2 + NO 3 161/20.0KV TRANSFORMER CKT 1
FDNS	00NR	3	16WP	G15_047	FROM->TO	G14-057T 345.00 - SUNNYSIDE 345KV CKT 1	717	789	0.02968	114.5215	GEN514805 1-SOONER UNIT 1
FDNS	00NR	3	16WP	G15_047	FROM->TO	G14-057T 345.00 - SUNNYSIDE 345KV CKT 1	717	789	0.03003	114.5171	CHAMBER SPRINGS - CLARKSVILLE 345KV CKT 1
FDNS	00NR	3	16WP	G15_047	FROM->TO	G14-057T 345.00 - SUNNYSIDE 345KV CKT 1	717	789	0.02968	114.5151	P12:230:UMZB:# 112 #: NU IN SD. NU-RCDC & DRY CREEK XFMR
FDNS	00NR	3	16WP	G15_047	FROM->TO	G14-057T 345.00 - SUNNYSIDE 345KV CKT 1	717	789	0.02968	114.5146	RCDC EAST 4230.00 - RED CEDAR DC 230KV CKT 1
FDNS	00NR	3	16WP	G15_047	FROM->TO	G14-057T 345.00 - SUNNYSIDE 345KV CKT 1	717	789	0.02968	114.5126	GEN514806 1-SOONER UNIT 2
FDNS	00NR	3	16WP	G15_047	FROM->TO	G14-057T 345.00 - SUNNYSIDE 345KV CKT 1	717	789	0.02974	114.5102	NORTHWEST TEXARKANA - WELSH 345KV CKT 1
FDNS	00NR	3	16WP	G15_047	FROM->TO	G14-057T 345.00 - SUNNYSIDE 345KV CKT 1	717	789	0.02974	114.5102	NORTHWEST TEXARKANA - WELSH 345KV CKT 1
FDNS	00NR	3	16WP	G15_047	FROM->TO	G14-057T 345.00 - SUNNYSIDE 345KV CKT 1	717	789	0.02968	114.4865	GEN562078 1-G11_051_3 0.6900
FDNS	00NR	3	16WP	G15_047	FROM->TO	G14-057T 345.00 - SUNNYSIDE 345KV CKT 1	717	789	0.02968	114.4745	GEN562802 1-G15039_3 0.3570
FDNS	00NR	3	16WP	G15_047	FROM->TO	G14-057T 345.00 - SUNNYSIDE 345KV CKT 1	717	789	0.02968	114.4683	GEN524285 1-WILDORADO WIND GEN
FDNS	00NR	3	16WP	G15_047	FROM->TO	G14-057T 345.00 - SUNNYSIDE 345KV CKT 1	717	789	0.02983	114.4606	KEO EHV - WEST MEMPHIS 500 500KV CKT 1
FDNS	00NR	3	16WP	G15_047	FROM->TO	G14-057T 345.00 - SUNNYSIDE 345KV CKT 1	717	789	0.02968	114.4516	GEN629072 4-LANSING GENERATOR FOR UNITS NO4 EIA CODE 1
FDNS	00NR	3	16WP	G15_047	FROM->TO	G14-057T 345.00 - SUNNYSIDE 345KV CKT 1	717	789	0.02968	114.4478	GEN524295 1-SPNSPUR_WND10.6900
FDNS	00NR	3	16WP	G15_047	FROM->TO	G14-057T 345.00 - SUNNYSIDE 345KV CKT 1	717	789	0.02968	114.4475	GEN562587 1-G14_056_3 0.6900
FDNS	00NR	3	20WP	G15_047	FROM->TO	G14-057T 345.00 - SUNNYSIDE 345KV CKT 1	717	789	0.02998	114.4467	WAVERLY7 345.00 - WOLF CREEK 345KV CKT 1
FDNS	00NR	3	20WP	G15_047	FROM->TO	G14-057T 345.00 - SUNNYSIDE 345KV CKT 1	717	789	0.03026	114.4463	RINGLING - SOUTH WILSON 138KV CKT 1
FDNS	00NR	3	16WP	G15_047	FROM->TO	G14-057T 345.00 - SUNNYSIDE 345KV CKT 1	717	789	0.02968	114.4405	GEN560331 1-G10-46 13.800
FDNS	00NR	3	16WP	G15_047	FROM->TO	G14-057T 345.00 - SUNNYSIDE 345KV CKT 1	717	789	0.02968	114.4314	GEN657749 1-YOUNG 1 GENERATOR
FDNS	00NR	3	16WP	G15_047	FROM->TO	G14-057T 345.00 - SUNNYSIDE 345KV CKT 1	717	789	0.03279	114.4224	CLARKSVILLE - MUSKOGEE 345KV CKT 1
FDNS	00NR	3	16WP	G15_047	FROM->TO	G14-057T 345.00 - SUNNYSIDE 345KV CKT 1	717	789	0.03279	114.4224	CLARKSVILLE - MUSKOGEE 345KV CKT 1
FDNS	00NR	3	16WP	G15_047	FROM->TO	G14-057T 345.00 - SUNNYSIDE 345KV CKT 1	717	789	0.02968	114.414	GEN562882 1-G15047_3 0.6900
FDNS	00NR	3	16WP	G15_047	FROM->TO	G14-057T 345.00 - SUNNYSIDE 345KV CKT 1	717	789	0.02968	114.4096	GEN562269 1-G12-020-1 0.6900
FDNS	00NR	3	20WP	G15_047	FROM->TO	G14-057T 345.00 - SUNNYSIDE 345KV CKT 1	717	789	0.02977	114.3691	G11_051T 345.00 - TATONGA7 345.00 345KV CKT 1
FDNS	00NR	3	16WP	G15_047	FROM->TO	G14-057T 345.00 - SUNNYSIDE 345KV CKT 1	717	789	0.02968	114.3644	GEN562270 1-G12-020-2 0.6900
FDNS	00NR	3	16WP	G15_047	FROM->TO	G14-057T 345.00 - SUNNYSIDE 345KV CKT 1	717	789	0.02968	114.3623	GEN681522 3-GENOA 3
FDNS	00NR	3	16WP	G15_047	FROM->TO	G14-057T 345.00 - SUNNYSIDE 345KV CKT 1	717	789	0.02968	114.3594	GEN562812 1-G15040_3 0.3570
FDNS	00NR	3	16WP	G15_047	FROM->TO	G14-057T 345.00 - SUNNYSIDE 345KV CKT 1	717	789	0.02968	114.3533	GEN563102 1-G15075_3 0.5500
FDNS	00NR	3	16WP	G15_047	FROM->TO	G14-057T 345.00 - SUNNYSIDE 345KV CKT 1	717	789	0.02968	114.3512	GEN563062 1-G15071_3 0.6900
FDNS	00NR	3	16WP	G15_047	FROM->TO	G14-057T 345.00 - SUNNYSIDE 345KV CKT 1	717	789	0.02968	114.349	GEN563132 1-G15078_3 0.3570
FDNS	00NR	3	16WP	G15_047	FROM->TO	G14-057T 345.00 - SUNNYSIDE 345KV CKT 1	717	789	0.02952	114.3465	P12:138:AEPW:112GORE4:SNYDER-4
FDNS	00NR	3	16WP	G15_047	FROM->TO	G14-057T 345.00 - SUNNYSIDE 345KV CKT 1	717	789	0.02968	114.3385	GEN562974 1-G15060_5 0.6900
FDNS	00NR	3	16WP	G15_047	FROM->TO	G14-057T 345.00 - SUNNYSIDE 345KV CKT 1	717	789	0.02968	114.329	GEN562973 1-G15060_4 0.6900
FDNS	00NR	3	16WP	G15_047	FROM->TO	G14-057T 345.00 - SUNNYSIDE 345KV CKT 1	717	789	0.0297	114.3022	BROWN - RUSSETT 138KV CKT 1
FDNS	00NR	3	16WP	G15_047	FROM->TO	G14-057T 345.00 - SUNNYSIDE 345KV CKT 1	717	789	0.02968	114.293	GEN345671 2-1RUSH G2 18.000
FDNS	00NR	3	16WP	G15_047	FROM->TO	G14-057T 345.00 - SUNNYSIDE 345KV CKT 1	717	789	0.02968	114.2911	GEN345670 1-1RUSH G1 18.000
FDNS	00NR	3	16WP	G15_047	FROM->TO	G14-057T 345.00 - SUNNYSIDE 345KV CKT 1	717	789	0.02968	114.2845	RUSSETT - SPRINGDALE 138KV CKT 1
FDNS	00NR	3	16WP	G15_047	FROM->TO	G14-057T 345.00 - SUNNYSIDE 345KV CKT 1	717	789	0.02968	114.2662	GEN526331 1-JONES GEN #1 22 KV
FDNS	00NR	3	16WP	G15_047	FROM->TO	G14-057T 345.00 - SUNNYSIDE 345KV CKT 1	717	789	0.02968	114.2662	GEN526332 1-JONES GEN #2 21 KV
FDNS	00NR	3	16WP	G15_047	FROM->TO	G14-057T 345.00 - SUNNYSIDE 345KV CKT 1	717	789	0.02968	114.2569	GEN560105 1-G08-22 0.6900
FDNS	00NR	3	16WP	G15_047	FROM->TO	G14-057T 345.00 - SUNNYSIDE 345KV CKT 1	717	789	0.02968	114.2536	GEN562550 1-G14_040_3 0.6900
FDNS	00NR	3	16WP	G15_047	FROM->TO	G14-057T 345.00 - SUNNYSIDE 345KV CKT 1	717	789	0.02964	114.2457	P12:138:WFEC:MSL07
FDNS	00NR	3	16WP	G15_047	FROM->TO	G14-057T 345.00 - SUNNYSIDE 345KV CKT 1	717	789	0.02964	114.2457	P12:138:WFEC-AEPW:HUGOPP4:ATOKA--4
FDNS	00NR	3	16WP	G15_047	FROM->TO	G14-057T 345.00 - SUNNYSIDE 345KV CKT 1	717	789	0.02968	114.238	4SIOUX 1 138.00 138/18.0KV TRANSFORMER CKT 1
FDNS	00NR	3	16WP	G15_047	FROM->TO	G14-057T 345.00 - SUNNYSIDE 345KV CKT 1	717	789	0.0297	114.2341	RUSSETT - RUSSETT 138KV CKT 1

SOLUTION	GROUP	SCENARIO	SEASON	SOURCE	DIRECTION	MONITORED ELEMENT	RATEA (MVA)	RATEB(MVA)	TDF	TC%LOADING (% MVA)	CONTINGENCY
FDNS	00NR	3	16WP	G15_047	FROM->TO	G14-057T 345.00 - SUNNYSIDE 345KV CKT 1	717	789	0.02968	114.2239	CLAY BOSWELL 230/20.9KV TRANSFORMER CKT 1
FDNS	00NR	3	16WP	G15_047	FROM->TO	G14-057T 345.00 - SUNNYSIDE 345KV CKT 1	717	789	0.02968	114.2181	GEN521112 1-ORME3 13.800
FDNS	00NR	3	16WP	G15_047	FROM->TO	G14-057T 345.00 - SUNNYSIDE 345KV CKT 1	717	789	0.02968	114.2164	GEN511962 2-RKYRDGW2-1 0.7000
FDNS	00NR	3	16WP	G15_047	FROM->TO	G14-057T 345.00 - SUNNYSIDE 345KV CKT 1	717	789	0.02968	114.2073	GEN527882 1-CUNNINGHAM GEN #2 20 KV
FDNS	00NR	3	16WP	G15_047	FROM->TO	G14-057T 345.00 - SUNNYSIDE 345KV CKT 1	717	789	0.02968	114.1994	GEN672321 1-SHAND GENERATOR 1
FDNS	00NR	3	16WP	G15_047	FROM->TO	G14-057T 345.00 - SUNNYSIDE 345KV CKT 1	717	789	0.02968	114.1972	GEN562892 1-G15048_3 0.6900
FDNS	00NR	3	20WP	G15_047	FROM->TO	G14-057T 345.00 - SUNNYSIDE 345KV CKT 1	717	789	0.03044	114.1906	CANEYRV7 345.00 - NEOSHO 345KV CKT 1
FDNS	00NR	3	16WP	G15_047	FROM->TO	G14-057T 345.00 - SUNNYSIDE 345KV CKT 1	717	789	0.02968	114.1754	GEN672310 1-POPLAR RIVER GENERATOR 1
FDNS	00NR	3	16WP	G15_047	FROM->TO	G14-057T 345.00 - SUNNYSIDE 345KV CKT 1	717	789	0.02968	114.1754	GEN672311 2-POPLAR RIVER GENERATOR 2
FDNS	00NR	3	16WP	G15_047	FROM->TO	G14-057T 345.00 - SUNNYSIDE 345KV CKT 1	717	789	0.02968	114.1724	GEN563192 1-G15084_3 0.5500
FDNS	00NR	3	20WP	G15_047	FROM->TO	G14-057T 345.00 - SUNNYSIDE 345KV CKT 1	717	789	0.0296	114.1714	WEBRE - WELLS 500KV CKT 1
FDNS	00NR	3	16WP	G15_047	FROM->TO	G14-057T 345.00 - SUNNYSIDE 345KV CKT 1	717	789	0.02968	114.1674	GEN672306 6-BOUNDARY DAM GENERATOR 6
FDNS	00NR	3	16WP	G15_047	FROM->TO	G14-057T 345.00 - SUNNYSIDE 345KV CKT 1	717	789	0.02968	114.16	GEN562512 1-G14_020_3 0.6900
FDNS	00NR	3	16WP	G15_047	FROM->TO	G14-057T 345.00 - SUNNYSIDE 345KV CKT 1	717	789	0.02968	114.1584	GEN511853 1-COMANCHE #3
FDNS	00NR	3	20WP	G15_047	FROM->TO	G14-057T 345.00 - SUNNYSIDE 345KV CKT 1	717	789	0.03026	114.1575	MARIETTA - SOUTH WILSON 138KV CKT 1
FDNS	00NR	3	16WP	G15_047	FROM->TO	G14-057T 345.00 - SUNNYSIDE 345KV CKT 1	717	789	0.02971	114.1555	P12:138:WFEC:MSL16
FDNS	00NR	3	16WP	G15_047	FROM->TO	G14-057T 345.00 - SUNNYSIDE 345KV CKT 1	717	789	0.02969	114.1412	P12:138:WFEC-AEPW:GOLDENSW4:CRAIGJT4
FDNS	00NR	3	16WP	G15_047	FROM->TO	G14-057T 345.00 - SUNNYSIDE 345KV CKT 1	717	789	0.02968	114.1113	GEN523461 1-BLACKHAWK GEN #1
FDNS	00NR	3	16WP	G15_047	FROM->TO	G14-057T 345.00 - SUNNYSIDE 345KV CKT 1	717	789	0.02968	114.1111	GEN523462 1-BLACKHAWK GEN #2
FDNS	00NR	3	16WP	G15_047	FROM->TO	G14-057T 345.00 - SUNNYSIDE 345KV CKT 1	717	789	0.02968	114.1041	GEN344895 2-1LAB G2 20.000
FDNS	00NR	3	16WP	G15_047	FROM->TO	G14-057T 345.00 - SUNNYSIDE 345KV CKT 1	717	789	0.02968	114.1028	GEN511852 1-COMANCHE #2
FDNS	00NR	3	16WP	G15_047	FROM->TO	G14-057T 345.00 - SUNNYSIDE 345KV CKT 1	717	789	0.02968	114.0715	GEN344896 3-1LAB G3 20.000
FDNS	00NR	3	16WP	G15_047	FROM->TO	G14-057T 345.00 - SUNNYSIDE 345KV CKT 1	717	789	0.02968	114.0701	GEN344894 1-1LAB G1 20.000
FDNS	00NR	3	16WP	G15_047	FROM->TO	G14-057T 345.00 - SUNNYSIDE 345KV CKT 1	717	789	0.02968	114.0686	GEN344897 4-1LAB G4 20.000
FDNS	00NR	3	16WP	G15_047	FROM->TO	G14-057T 345.00 - SUNNYSIDE 345KV CKT 1	717	789	0.02969	114.0676	P12:138:AEPW-SWPA:LONEOAK4:TUPELO4
FDNS	00NR	3	16WP	G15_047	FROM->TO	G14-057T 345.00 - SUNNYSIDE 345KV CKT 1	717	789	0.02969	114.0675	P12:138:WFEC:MSL06
FDNS	00NR	3	16WP	G15_047	FROM->TO	G14-057T 345.00 - SUNNYSIDE 345KV CKT 1	717	789	0.02968	114.0613	GEN681542 6-JP MADGETT
FDNS	00NR	3	16WP	G15_047	FROM->TO	G14-057T 345.00 - SUNNYSIDE 345KV CKT 1	717	789	0.02957	114.0599	P12:138:OKGE:3TERM40
FDNS	00NR	3	20WP	G15_047	FROM->TO	G14-057T 345.00 - SUNNYSIDE 345KV CKT 1	717	789	0.03026	114.0532	P12:138:WFEC:MSL17
FDNS	00NR	3	16WP	G15_047	FROM->TO	G14-057T 345.00 - SUNNYSIDE 345KV CKT 1	717	789	0.02968	114.0441	GEN563162 1-G15081_3 0.6900
FDNS	00NR	3	20WP	G15_047	FROM->TO	G14-057T 345.00 - SUNNYSIDE 345KV CKT 1	717	789	0.03044	114.0433	CANEYRV7 345.00 - LATHAMS7 345.00 345KV CKT 1
FDNS	00NR	3	20WP	G15_047	FROM->TO	G14-057T 345.00 - SUNNYSIDE 345KV CKT 1	717	789	0.02969	114.0376	P12:138:WFEC:MSL02
FDNS	00NR	3	16WP	G15_047	FROM->TO	G14-057T 345.00 - SUNNYSIDE 345KV CKT 1	717	789	0.02968	114.0375	GEN521110 1-ORME1 13.800
FDNS	00NR	3	16WP	G15_047	FROM->TO	G14-057T 345.00 - SUNNYSIDE 345KV CKT 1	717	789	0.02968	114.0375	GEN521111 1-ORME2 13.800
FDNS	00NR	3	16WP	G15_047	FROM->TO	G14-057T 345.00 - SUNNYSIDE 345KV CKT 1	717	789	0.02965	114.0336	G15085_T 138.00 - RUSSELL 138KV CKT 1
FDNS	00NR	3	16WP	G15_047	FROM->TO	G14-057T 345.00 - SUNNYSIDE 345KV CKT 1	717	789	0.02968	114.0229	GEN562699 1-G15_018_3 0.6900
FDNS	00NR	3	16WP	G15_047	FROM->TO	G14-057T 345.00 - SUNNYSIDE 345KV CKT 1	717	789	0.02968	114.0225	GEN563292 1-G15095_3 0.6900
FDNS	00NR	3	20WP	G15_047	FROM->TO	G14-057T 345.00 - SUNNYSIDE 345KV CKT 1	717	789	0.0297	113.9822	PAOLI - PAYNE 138.00 138KV CKT 1
FDNS	00NR	3	16WP	G15_047	FROM->TO	G14-057T 345.00 - SUNNYSIDE 345KV CKT 1	717	789	0.02952	113.9628	CACHE - SNYDER 138KV CKT 1
FDNS	00NR	3	20WP	G15_047	FROM->TO	G14-057T 345.00 - SUNNYSIDE 345KV CKT 1	717	789	0.02963	113.9627	ANADARKO - GEORGIA 138KV CKT 1
FDNS	00NR	3	16WP	G15_047	FROM->TO	G14-057T 345.00 - SUNNYSIDE 345KV CKT 1	717	789	0.02968	113.9537	GEN661015 1-COYOTE
FDNS	00NR	3	16WP	G15_047	FROM->TO	G14-057T 345.00 - SUNNYSIDE 345KV CKT 1	717	789	0.02968	113.9363	GEN520811 1-ANADRK4
FDNS	00NR	3	20WP	G15_047	FROM->TO	G14-057T 345.00 - SUNNYSIDE 345KV CKT 1	717	789	0.03009	113.9261	CIVIT - PAOLI 138KV CKT 1
FDNS	00NR	3	16WP	G15_047	FROM->TO	G14-057T 345.00 - SUNNYSIDE 345KV CKT 1	717	789	0.02968	113.9199	GEN563122 1-G15077_3 0.3850
FDNS	00NR	3	20WP	G15_047	FROM->TO	G14-057T 345.00 - SUNNYSIDE 345KV CKT 1	717	789	0.03007	113.915	MATHWSN7 345.00 - NORTHWEST 345KV CKT 1
FDNS	00NR	3	16WP	G15_047	FROM->TO	G14-057T 345.00 - SUNNYSIDE 345KV CKT 1	717	789	0.02968	113.9124	GEN562861 1-G15045_2 0.4800
FDNS	00NR	3	16WP	G15_047	FROM->TO	G14-057T 345.00 - SUNNYSIDE 345KV CKT 1	717	789	0.02956	113.8901	P12:138:WFEC:MSL15
FDNS	00NR	3	20WP	G15_047	FROM->TO	G14-057T 345.00 - SUNNYSIDE 345KV CKT 1	717	789	0.02963	113.8605	FLETCHER - GEORGIA 138KV CKT 1
FDNS	00NR	3	20WP	G15_047	FROM->TO	G14-057T 345.00 - SUNNYSIDE 345KV CKT 1	717	789	0.03051	113.8583	P12:138:AEPW-OGE:CORNVIL4:MAUD 4
FDNS	00NR	3	16WP	G15_047	FROM->TO	G14-057T 345.00 - SUNNYSIDE 345KV CKT 1	717	789	0.02968	113.838	GEN657748 1-YOUNG 2 GENERATOR
FDNS	00NR	3	16WP	G15_047	FROM->TO	G14-057T 345.00 - SUNNYSIDE 345KV CKT 1	717	789	0.02968	113.8268	GEN562992 1-G15063_3 0.6900
FDNS	00NR	3	20WP	G15_047	FROM->TO	G14-057T 345.00 - SUNNYSIDE 345KV CKT 1	717	789	0.03044	113.8261	LATHAMS7 345.00 - ROSE HILL 345KV CKT 1
FDNS	00NR	3	20WP	G15_047	FROM->TO	G14-057T 345.00 - SUNNYSIDE 345KV CKT 1	717	789	0.02967	113.8207	EMPIRE - FLETCHER 138KV CKT 1
FDNS	00NR	3	16WP	G15_047	FROM->TO	G14-057T 345.00 - SUNNYSIDE 345KV CKT 1	717	789	0.03046	113.8202	CANEY CREEK - TEXOMA JCT 138KV CKT 1
FDNS	00NR	3	16WP	G15_047	FROM->TO	G14-057T 345.00 - SUNNYSIDE 345KV CKT 1	717	789	0.02955	113.8098	GRAPEVINE INTERCHANGE - STATELINE INTERCHANGE 230KV CKT 1
FDNS	00NR	3	16WP	G15_047	FROM->TO	G14-057T 345.00 - SUNNYSIDE 345KV CKT 1	717	789	0.02955	113.8098	GRAPEVINE INTERCHANGE - STATELINE INTERCHANGE 230KV CKT 1
FDNS	00NR	3	20WP	G15_047	FROM->TO	G14-057T 345.00 - SUNNYSIDE 345KV CKT 1	717	789	0.03009	113.7846	CIVIT - STRATFORD 138KV CKT 1
FDNS	00NR	3	20WP	G15_047	FROM->TO	G14-057T 345.00 - SUNNYSIDE 345KV CKT 1	717	789	0.03051	113.7825	BLANCHARD - CORNVILLE 138KV CKT 1
FDNS	00NR	3	16WP	G15_047	FROM->TO	G14-057T 345.00 - SUNNYSIDE 345KV CKT 1	717	789	0.02968	113.7762	GEN532751 1-WOLF CREEK GENERATING STATION UNIT 1
FDNS	00NR	3	16WP	G15_047	FROM->TO	G14-057T 345.00 - SUNNYSIDE 345KV CKT 1	717	789	0.02965	113.7738	P12:138:AEPW:SHAM4WT:CHILD4WT
FDNS	00NR	3	20WP	G15_047	FROM->TO	G14-057T 345.00 - SUNNYSIDE 345KV CKT 1	717	789	0.02967	113.7376	COMANCHE - EMPIRE 138KV CKT 1
FDNS	00NR	3	16WP	G15_047	FROM->TO	G14-057T 345.00 - SUNNYSIDE 345KV CKT 1	717	789	0.02968	113.7295	GEN562952 1-G15057_3 0.6500
FDNS	00NR	3	16WP	G15_047	FROM->TO	G14-057T 345.00 - SUNNYSIDE 345KV CKT 1	717	789	0.02968	113.7268	GEN562704 1-G15_020_3 0.3550
FDNS	00NR	3	16WP	G15_047	FROM->TO	G14-057T 345.00 - SUNNYSIDE 345KV CKT 1	717	789	0.02968	113.7132	GEN563173 1-G15082_3 0.6900
FDNS	00NR	3	16WP	G15_047	FROM->TO	G14-057T 345.00 - SUNNYSIDE 345KV CKT 1	717	789	0.02955	113.6993	GRAPEVINE INTERCHANGE - NICHOLS STATION 230KV CKT 1
FDNS	00NR	3	16WP	G15_047	FROM->TO	G14-057T 345.00 - SUNNYSIDE 345KV CKT 1	717	789	0.02955	113.6993	GRAPEVINE INTERCHANGE - NICHOLS STATION 230KV CKT 1
FDNS	00NR	3	16WP	G15_047	FROM->TO	G14-057T 345.00 - SUNNYSIDE 345KV CKT 1	717	789	0.02968	113.6718	GEN620315 1-BIG STONE GEN
FDNS	00NR	3	20WP	G15_047	FROM->TO	G14-057T 345.00 - SUNNYSIDE 345KV CKT 1	717	789	0.03009	113.6667	OIL CENTER - STRATFORD 138KV CKT 1
FDNS	00NR	3	16WP	G15_047	FROM->TO	G14-057T 345.00 - SUNNYSIDE 345KV CKT 1	717	789	0.02968	113.6394	GEN562710 1-G15_022_3 0.5500
FDNS	00NR	3	16WP	G15_047	FROM->TO	G14-057T 345.00 - SUNNYSIDE 345KV CKT 1	717	789	0.02968	113.6149	GEN600004 2-PRAIRIE ISLAND G2
FDNS	00NR	3	16WP	G15_047	FROM->TO	G14-057T 345.00 - SUNNYSIDE 345KV CKT 1	717	789	0.02968	113.6121	GEN600003 1-PRAIRIE ISLAND G1
FDNS	00NR	3	16WP	G15_047	FROM->TO	G14-057T 345.00 - SUNNYSIDE 345KV CKT 1	717	789	0.02968	113.611	GEN511851 1-COMANCHE #1
FDNS	00NR	3	20WP	G15_047	FROM->TO	G14-057T 345.00 - SUNNYSIDE 345KV CKT 1	717	789	0.02957	113.6102	DUNCAN (DUNCAN) 138/69/13.8KV TRANSFORMER CKT 1
FDNS	00NR	3	20WP	G15_047	FROM->TO	G14-057T 345.00 - SUNNYSIDE 345KV CKT 1	717	789	0.02957	113.6102	DUNCAN (DUNCAN) 138/69/13.8KV TRANSFORMER CKT 1
FDNS	00NR	3	16WP	G15_047	FROM->TO	G14-057T 345.00 - SUNNYSIDE 345KV CKT 1	717	789	0.02968	113.6041	GEN600006 1-AS KING
FDNS	00NR	3	20WP	G15_047	FROM->TO	G14-057T 345.00 - SUNNYSIDE 345KV CKT 1	717	789	0.02954	113.5682	P12:138:AEPW:CATOOSA4:T.S.E.-4
FDNS	00NR	3	20WP	G15_047	FROM->TO	G14-057T 345.00 - SUNNYSIDE 345KV CKT 1	717	789	0.03051	113.5613	BLANCHARD - MAUD 138KV CKT 1
FDNS	00NR	3	20WP	G15_047	FROM->TO	G14-057T 345.00 - SUNNYSIDE 345KV CKT 1	717	789	0.02953	113.5403	P12:138:AEPW:CORNVIL4:DUNCAN-4
FDNS	00NR	3	16WP	G15_047	FROM->TO	G14-057T 345.00 - SUNNYSIDE 345KV CKT 1	717	789	0.0297	113.54	P12:138:WFEC:MSL09

SOLUTION	GROUP	SCENARIO	SEASON	SOURCE	DIRECTION	MONITORED ELEMENT	RATEA (MVA)	RATEB(MVA)	TDF	TC%LOADING (% MVA)	CONTINGENCY
FDNS	00NR	3	20WP	G15_047	FROM->TO	G14-057T 345.00 - SUNNYSIDE 345KV CKT 1	717	789	0.02958	113.5357	FULTON 115 - HOPE 115KV CKT 1
FDNS	00NR	3	20WP	G15_047	FROM->TO	G14-057T 345.00 - SUNNYSIDE 345KV CKT 1	717	789	0.02958	113.5357	FULTON 115 - HOPE 115KV CKT 1
FDNS	00NR	3	16WP	G15_047	FROM->TO	G14-057T 345.00 - SUNNYSIDE 345KV CKT 1	717	789	0.02968	113.5149	GEN636641 1-LOUISA UNIT 1
FDNS	00NR	3	20WP	G15_047	FROM->TO	G14-057T 345.00 - SUNNYSIDE 345KV CKT 1	717	789	0.03009	113.494	LATTA JCT - OIL CENTER 138KV CKT 1
FDNS	00NR	3	20WP	G15_047	FROM->TO	G14-057T 345.00 - SUNNYSIDE 345KV CKT 1	717	789	0.02958	113.4927	P12:138:AEPW:CORNVIL4:S.W.S.-4
FDNS	00NR	3	20WP	G15_047	FROM->TO	G14-057T 345.00 - SUNNYSIDE 345KV CKT 1	717	789	0.02957	113.473	6LAYFLD 230.00 - CARROLL 230KV CKT 1
FDNS	00NR	3	16WP	G15_047	FROM->TO	G14-057T 345.00 - SUNNYSIDE 345KV CKT 1	717	789	0.02968	113.4728	GEN600005 1-MONTICELLO
FDNS	00NR	3	20WP	G15_047	FROM->TO	G14-057T 345.00 - SUNNYSIDE 345KV CKT 1	717	789	0.02952	113.4701	8DANIEL8 500.00 - MCKNIGHT 500KV CKT 1
FDNS	00NR	3	20WP	G15_047	FROM->TO	G14-057T 345.00 - SUNNYSIDE 345KV CKT 1	717	789	0.03001	113.4527	BAILEY4 138.00 - SUNSHINE CANYON 138KV CKT 1
FDNS	00NR	3	20WP	G15_047	FROM->TO	G14-057T 345.00 - SUNNYSIDE 345KV CKT 1	717	789	0.02957	113.4363	P12:69:WFEC-AEPW:COMANCH2:DUNCAN-2
FDNS	00NR	3	20WP	G15_047	FROM->TO	G14-057T 345.00 - SUNNYSIDE 345KV CKT 1	717	789	0.02951	113.4198	P12:69:AEPW-OMPA:COMANC-2:OMWALTR2
FDNS	00NR	3	20WP	G15_047	FROM->TO	G14-057T 345.00 - SUNNYSIDE 345KV CKT 1	717	789	0.02971	113.4148	CIMARRON - CZECH HALL 138KV CKT 1
FDNS	00NR	3	20WP	G15_047	FROM->TO	G14-057T 345.00 - SUNNYSIDE 345KV CKT 1	717	789	0.02951	113.4097	G15088_T 345.00 - MOORE 345KV CKT 1
FDNS	00NR	3	20WP	G15_047	FROM->TO	G14-057T 345.00 - SUNNYSIDE 345KV CKT 1	717	789	0.02955	113.4078	BISMARK - HOT SPRINGS WEST BUS 115KV CKT 1
FDNS	00NR	3	20WP	G15_047	FROM->TO	G14-057T 345.00 - SUNNYSIDE 345KV CKT 1	717	789	0.02957	113.4039	DUNCAN - TOSCO 69KV CKT 1
FDNS	00NR	3	20WP	G15_047	FROM->TO	G14-057T 345.00 - SUNNYSIDE 345KV CKT 1	717	789	0.02952	113.4029	MC NIEL 500/115KV TRANSFORMER CKT 1
FDNS	00NR	3	20WP	G15_047	FROM->TO	G14-057T 345.00 - SUNNYSIDE 345KV CKT 1	717	789	0.02958	113.4006	G15074_T 345.00 - HOYT 345KV CKT 1
FDNS	00NR	3	16WP	G15_047	FROM->TO	G14-057T 345.00 - SUNNYSIDE 345KV CKT 1	717	789	0.02968	113.3898	GEN562754 1-G15031_5 0.6900
FDNS	00NR	3	16WP	G15_047	FROM->TO	G14-057T 345.00 - SUNNYSIDE 345KV CKT 1	717	789	0.02968	113.3878	GEN635213 3-NEAL UNIT 3
FDNS	00NR	3	20WP	G15_047	FROM->TO	G14-057T 345.00 - SUNNYSIDE 345KV CKT 1	717	789	0.02986	113.3622	CIMARRON - SARA 138KV CKT 1
FDNS	00NR	3	16WP	G15_047	FROM->TO	G14-057T 345.00 - SUNNYSIDE 345KV CKT 1	717	789	0.02968	113.3588	GEN629074 1-ARNOLD LOWSIDE OF GSU XFMR
FDNS	00NR	3	20WP	G15_047	FROM->TO	G14-057T 345.00 - SUNNYSIDE 345KV CKT 1	717	789	0.02955	113.3532	ALPINE AECC - BISMARK 115KV CKT 1
FDNS	00NR	3	20WP	G15_047	FROM->TO	G14-057T 345.00 - SUNNYSIDE 345KV CKT 1	717	789	0.02952	113.3411	P12:138:AEPW:N.E.S.-4:CATOOSA4
FDNS	00NR	3	20WP	G15_047	FROM->TO	G14-057T 345.00 - SUNNYSIDE 345KV CKT 1	717	789	0.02957	113.3407	COMANCHE TAP - TOSCO 69KV CKT 1
FDNS	00NR	3	20WP	G15_047	FROM->TO	G14-057T 345.00 - SUNNYSIDE 345KV CKT 1	717	789	0.02971	113.336	CZECH HALL - XEROX 138KV CKT 1
FDNS	00NR	3	20WP	G15_047	FROM->TO	G14-057T 345.00 - SUNNYSIDE 345KV CKT 1	717	789	0.02971	113.3319	MORGAN - XEROX 138KV CKT 1
FDNS	00NR	3	16WP	G15_047	FROM->TO	G14-057T 345.00 - SUNNYSIDE 345KV CKT 1	717	789	0.02968	113.3308	GEN562756 1-G15031_7 0.6900
FDNS	00NR	3	16WP	G15_047	FROM->TO	G14-057T 345.00 - SUNNYSIDE 345KV CKT 1	717	789	0.02968	113.3132	BIG STONE 230/24.0KV TRANSFORMER CKT 1
FDNS	00NR	3	16WP	G15_047	FROM->TO	G14-057T 345.00 - SUNNYSIDE 345KV CKT 1	717	789	0.02968	113.3113	GEN562023 1-G11_020_3 0.6900
FDNS	00NR	3	16WP	G15_047	FROM->TO	G14-057T 345.00 - SUNNYSIDE 345KV CKT 1	717	789	0.02968	113.3113	GEN562026 1-G11_019_3 0.6900
FDNS	00NR	3	20WP	G15_047	FROM->TO	G14-057T 345.00 - SUNNYSIDE 345KV CKT 1	717	789	0.02971	113.3093	MORGAN - MUSTANG 138KV CKT 1
FDNS	00NR	3	20WP	G15_047	FROM->TO	G14-057T 345.00 - SUNNYSIDE 345KV CKT 1	717	789	0.02955	113.3068	ALPINE AECC - AMITY SS 115KV CKT 1
FDNS	00NR	3	16WP	G15_047	FROM->TO	G14-057T 345.00 - SUNNYSIDE 345KV CKT 1	717	789	0.02968	113.2875	GEN562556 1-G14_046_3 0.3420
FDNS	00NR	3	20WP	G15_047	FROM->TO	G14-057T 345.00 - SUNNYSIDE 345KV CKT 1	717	789	0.02957	113.2869	COMANCHE - COMANCHE TAP 69KV CKT 1
FDNS	00NR	3	20WP	G15_047	FROM->TO	G14-057T 345.00 - SUNNYSIDE 345KV CKT 1	717	789	0.02961	113.2766	ANADARKO - SEQUOYAHJ4 138.00 138KV CKT 1
FDNS	00NR	3	20WP	G15_047	FROM->TO	G14-057T 345.00 - SUNNYSIDE 345KV CKT 1	717	789	0.02961	113.275	CORN TAP - SEQUOYAHJ4 138.00 138KV CKT 1
FDNS	00NR	3	20WP	G15_047	FROM->TO	G14-057T 345.00 - SUNNYSIDE 345KV CKT 1	717	789	0.03001	113.2748	BAILEY4 138.00 - WESTMOORE 138KV CKT 1
FDNS	00NR	3	20WP	G15_047	FROM->TO	G14-057T 345.00 - SUNNYSIDE 345KV CKT 1	717	789	0.02956	113.2668	P12:138:OKGE-AEPW:JENSEN4:REDROCKRD4
FDNS	00NR	3	20WP	G15_047	FROM->TO	G14-057T 345.00 - SUNNYSIDE 345KV CKT 1	717	789	0.02986	113.2528	SARA - STHLAKE4 138.00 138KV CKT 1
FDNS	00NR	3	20WP	G15_047	FROM->TO	G14-057T 345.00 - SUNNYSIDE 345KV CKT 1	717	789	0.02956	113.2518	WALTERS - WALTERS 69KV CKT 1
FDNS	00NR	3	20WP	G15_047	FROM->TO	G14-057T 345.00 - SUNNYSIDE 345KV CKT 1	717	789	0.02951	113.2255	LAWTON RELIFT TAP - OMPA-WALTERS 69KV CKT 1
FDNS	00NR	3	20WP	G15_047	FROM->TO	G14-057T 345.00 - SUNNYSIDE 345KV CKT 1	717	789	0.02986	113.2227	MCCLAIN - STHLAKE4 138.00 138KV CKT 1
FDNS	00NR	3	20WP	G15_047	FROM->TO	G14-057T 345.00 - SUNNYSIDE 345KV CKT 1	717	789	0.02958	113.2101	NORGE ROAD - SOUTHWESTERN STATION 138KV CKT 1
FDNS	00NR	3	20WP	G15_047	FROM->TO	G14-057T 345.00 - SUNNYSIDE 345KV CKT 1	717	789	0.02958	113.2101	NORGE ROAD - SOUTHWESTERN STATION 138KV CKT 1
FDNS	00NR	3	20WP	G15_047	FROM->TO	G14-057T 345.00 - SUNNYSIDE 345KV CKT 1	717	789	0.03009	113.2012	LASALLE - LATTA JCT 138KV CKT 1
FDNS	00NR	3	16WP	G15_047	FROM->TO	G14-057T 345.00 - SUNNYSIDE 345KV CKT 1	717	789	0.02968	113.1991	GEN563142 1-G15079_3 0.5500
FDNS	00NR	3	16WP	G15_047	FROM->TO	G14-057T 345.00 - SUNNYSIDE 345KV CKT 1	717	789	0.02968	113.1991	GEN563151 1-G15080_2 0.5500
FDNS	00NR	3	20WP	G15_047	FROM->TO	G14-057T 345.00 - SUNNYSIDE 345KV CKT 1	717	789	0.02975	113.198	P12:138:AEPW-OGE:SHIDLER4:OSAGE 4
FDNS	00NR	3	20WP	G15_047	FROM->TO	G14-057T 345.00 - SUNNYSIDE 345KV CKT 1	717	789	0.03014	113.1961	MORISNT4 138.00 - STILLWATER 138KV CKT 1
FDNS	00NR	3	20WP	G15_047	FROM->TO	G14-057T 345.00 - SUNNYSIDE 345KV CKT 1	717	789	0.03012	113.1898	P12:138:OKGE:3TERM2
FDNS	00NR	3	20WP	G15_047	FROM->TO	G14-057T 345.00 - SUNNYSIDE 345KV CKT 1	717	789	0.02955	113.1843	G13-010T 345.00 - POST ROCK 345KV CKT 1
FDNS	00NR	3	20WP	G15_047	FROM->TO	G14-057T 345.00 - SUNNYSIDE 345KV CKT 1	717	789	0.02959	113.1826	HOYT - STRANGER CREEK 345KV CKT 1
FDNS	00NR	3	20WP	G15_047	FROM->TO	G14-057T 345.00 - SUNNYSIDE 345KV CKT 1	717	789	0.0298	113.1799	BLACKBERRY - NEOSHO 345KV CKT 1
FDNS	00NR	3	20WP	G15_047	FROM->TO	G14-057T 345.00 - SUNNYSIDE 345KV CKT 1	717	789	0.02954	113.177	CLINTON JUNCTION - ELK CITY 138KV CKT 1
FDNS	00NR	3	20WP	G15_047	FROM->TO	G14-057T 345.00 - SUNNYSIDE 345KV CKT 1	717	789	0.02954	113.177	CLINTON JUNCTION - ELK CITY 138KV CKT 1
FDNS	00NR	3	20WP	G15_047	FROM->TO	G14-057T 345.00 - SUNNYSIDE 345KV CKT 1	717	789	0.02962	113.1768	7JASPER 345.00 - BLACKBERRY 345KV CKT 1
FDNS	00NR	3	16WP	G15_047	FROM->TO	G14-057T 345.00 - SUNNYSIDE 345KV CKT 1	717	789	0.02968	113.1689	GEN523971 1-HARRINGTON GEN #1 24 KV
FDNS	00NR	3	16WP	G15_047	FROM->TO	G14-057T 345.00 - SUNNYSIDE 345KV CKT 1	717	789	0.02968	113.1689	GEN523973 1-HARRINGTON GEN #3 24 KV
FDNS	00NR	3	16WP	G15_047	FROM->TO	G14-057T 345.00 - SUNNYSIDE 345KV CKT 1	717	789	0.02968	113.1687	GEN523972 1-HARRINGTON GEN #2 24 KV
FDNS	00NR	3	20WP	G15_047	FROM->TO	G14-057T 345.00 - SUNNYSIDE 345KV CKT 1	717	789	0.02958	113.168	HOPE - MCNAB REC 115KV CKT 1
FDNS	00NR	3	20WP	G15_047	FROM->TO	G14-057T 345.00 - SUNNYSIDE 345KV CKT 1	717	789	0.02958	113.1633	G15074_T 345.00 - JEFFREY ENERGY CENTER 345KV CKT 1
FDNS	00NR	3	16WP	G15_047	FROM->TO	G14-057T 345.00 - SUNNYSIDE 345KV CKT 1	717	789	0.02968	113.1586	GEN600000 1-SHERBURNECNTY G1
FDNS	00NR	3	20WP	G15_047	FROM->TO	G14-057T 345.00 - SUNNYSIDE 345KV CKT 1	717	789	0.02958	113.1567	P12:115:AEPW:TURK3:HOPE3
FDNS	00NR	3	20WP	G15_047	FROM->TO	G14-057T 345.00 - SUNNYSIDE 345KV CKT 1	717	789	0.02954	113.1561	COUCH SES - MC NIEL 115KV CKT 1
FDNS	00NR	3	20WP	G15_047	FROM->TO	G14-057T 345.00 - SUNNYSIDE 345KV CKT 1	717	789	0.02951	113.1518	OMPA-WALTERS - WALTERS 69KV CKT 1
FDNS	00NR	3	20WP	G15_047	FROM->TO	G14-057T 345.00 - SUNNYSIDE 345KV CKT 1	717	789	0.02951	113.1518	OMPA-WALTERS - WALTERS 69KV CKT 1
FDNS	00NR	3	20WP	G15_047	FROM->TO	G14-057T 345.00 - SUNNYSIDE 345KV CKT 1	717	789	0.02958	113.149	SOUTHWESTERN STATION - VERDEN 138KV CKT 1
FDNS	00NR	3	20WP	G15_047	FROM->TO	G14-057T 345.00 - SUNNYSIDE 345KV CKT 1	717	789	0.03074	113.1441	CANADIAN - NOBLE 138KV CKT 1
FDNS	00NR	3	20WP	G15_047	FROM->TO	G14-057T 345.00 - SUNNYSIDE 345KV CKT 1	717	789	0.02957	113.1431	7LUTESVIL 345.00 - 7ST FRANC 345.00 345KV CKT 1
FDNS	00NR	3	20WP	G15_047	FROM->TO	G14-057T 345.00 - SUNNYSIDE 345KV CKT 1	717	789	0.02975	113.1406	EMPORIA ENERGY CENTER - G14_001T 345.00 345KV CKT 1
FDNS	00NR	3	20WP	G15_047	FROM->TO	G14-057T 345.00 - SUNNYSIDE 345KV CKT 1	717	789	0.02958	113.1319	TURK (TURK 1) 138/115/13.2KV TRANSFORMER CKT 1
FDNS	00NR	3	20WP	G15_047	FROM->TO	G14-057T 345.00 - SUNNYSIDE 345KV CKT 1	717	789	0.02958	113.1319	TURK (TURK 1) 138/115/13.2KV TRANSFORMER CKT 1
FDNS	00NR	3	20WP	G15_047	FROM->TO	G14-057T 345.00 - SUNNYSIDE 345KV CKT 1	717	789	0.02958	113.1318	MCNAB REC - Turk 115 115KV CKT 1
FDNS	00NR	3	20WP	G15_047	FROM->TO	G14-057T 345.00 - SUNNYSIDE 345KV CKT 1	717	789	0.02956	113.131	P12:69:WFEC-AEPW:COMANCH2:WALTRS-2
FDNS	00NR	3	20WP	G15_047	FROM->TO	G14-057T 345.00 - SUNNYSIDE 345KV CKT 1	717	789	0.02958	113.127	NORTH 29TH CHICKASHA - VERDEN 138KV CKT 1
FDNS	00NR	3	20WP	G15_047	FROM->TO	G14-057T 345.00 - SUNNYSIDE 345KV CKT 1	717	789	0.03073	113.1198	P12:138:OKGE:3TERM27
FDNS	00NR	3	20WP	G15_047	FROM->TO	G14-057T 345.00 - SUNNYSIDE 345KV CKT 1	717	789	0.02955	113.1171	G13-010T 345.00 - SPEARVILLE 345KV CKT 1
FDNS	00NR	3	20WP	G15_047	FROM->TO	G14-057T 345.00 - SUNNYSIDE 345KV CKT 1	717	789	0.03001	113.1094	FRANKLIN SW - WESTMOORE 138KV CKT 1
FDNS	00NR	3	20WP	G15_047	FROM->TO	G14-057T 345.00 - SUNNYSIDE 345KV CKT 1	717	789	0.02959	113.1092	SWISSVALE - WEST GARDNER 345KV CKT 1

SOLUTION	GROUP	SCENARIO	SEASON	SOURCE	DIRECTION	MONITORED ELEMENT	RATEA (MVA)	RATEB(MVA)	TDF	TC%LOADING (% MVA)	CONTINGENCY
FDNS	00NR	3	20WP	G15_047	FROM->TO	G14-057T 345.00 - SUNNYSIDE 345KV CKT 1	717	789	0.02952	113.0989	FLETCHER - MARLOW JCT 69KV CKT 1
FDNS	00NR	3	20WP	G15_047	FROM->TO	G14-057T 345.00 - SUNNYSIDE 345KV CKT 1	717	789	0.02956	113.0967	LAKEOVER - MCADAMS 500KV CKT 1
FDNS	00NR	3	20WP	G15_047	FROM->TO	G14-057T 345.00 - SUNNYSIDE 345KV CKT 1	717	789	0.02959	113.0938	EMPORIA ENERGY CENTER - SWISSVALE 345KV CKT 1
FDNS	00NR	3	20WP	G15_047	FROM->TO	G14-057T 345.00 - SUNNYSIDE 345KV CKT 1	717	789	0.02975	113.0823	G14_001T 345.00 - WICHITA 345KV CKT 1
FDNS	00NR	3	20WP	G15_047	FROM->TO	G14-057T 345.00 - SUNNYSIDE 345KV CKT 1	717	789	0.02958	113.0777	CORNVILLE - NORGE ROAD 138KV CKT 1
FDNS	00NR	3	20WP	G15_047	FROM->TO	G14-057T 345.00 - SUNNYSIDE 345KV CKT 1	717	789	0.02958	113.0777	CORNVILLE - NORGE ROAD 138KV CKT 1
FDNS	00NR	3	16WP	G15_047	FROM->TO	G14-057T 345.00 - SUNNYSIDE 345KV CKT 1	717	789	0.02987	113.0749	NORTHWEST TEXARKANA - VALLIANT 345KV CKT 1
FDNS	00NR	3	16WP	G15_047	FROM->TO	G14-057T 345.00 - SUNNYSIDE 345KV CKT 1	717	789	0.02987	113.0749	NORTHWEST TEXARKANA - VALLIANT 345KV CKT 1
FDNS	00NR	3	20WP	G15_047	FROM->TO	G14-057T 345.00 - SUNNYSIDE 345KV CKT 1	717	789	0.02951	113.0724	P12:138:OKGE:3TERM12
FDNS	00NR	3	20WP	G15_047	FROM->TO	G14-057T 345.00 - SUNNYSIDE 345KV CKT 1	717	789	0.02963	113.0695	MCADAMS - WOLF CREEK 500KV CKT 1
FDNS	00NR	3	16WP	G15_047	FROM->TO	G14-057T 345.00 - SUNNYSIDE 345KV CKT 1	717	789	0.02968	113.0676	GEN600001 2-SHERBURNE CNTY G2
FDNS	00NR	3	20WP	G15_047	FROM->TO	G14-057T 345.00 - SUNNYSIDE 345KV CKT 1	717	789	0.03009	113.063	LASALLE - STONEWAL LH138.00 138KV CKT 1
FDNS	00NR	3	16WP	G15_047	FROM->TO	G14-057T 345.00 - SUNNYSIDE 345KV CKT 1	717	789	0.02968	113.0537	GEN511848 1-SOUTHWESTERN STATION #3
FDNS	00NR	3	20WP	G15_047	FROM->TO	G14-057T 345.00 - SUNNYSIDE 345KV CKT 1	717	789	0.0296	113.0528	8WNEWMADRID 500.00 - DELL 500 500KV CKT 1
FDNS	00NR	3	20WP	G15_047	FROM->TO	G14-057T 345.00 - SUNNYSIDE 345KV CKT 1	717	789	0.03074	113.0508	NOBLE - PURCELL4 138.00 138KV CKT 1
FDNS	00NR	3	20WP	G15_047	FROM->TO	G14-057T 345.00 - SUNNYSIDE 345KV CKT 1	717	789	0.03009	113.0476	STONEWAL LH138.00 - TUPELO TAP 138KV CKT 1
FDNS	00NR	3	20WP	G15_047	FROM->TO	G14-057T 345.00 - SUNNYSIDE 345KV CKT 1	717	789	0.02958	113.0432	CORNVILLE - NORTH 29TH CHICKASHA 138KV CKT 1
FDNS	00NR	3	20WP	G15_047	FROM->TO	G14-057T 345.00 - SUNNYSIDE 345KV CKT 1	717	789	0.02964	113.0258	7JASPER 345.00 - MORGAN 345KV CKT 1
FDNS	00NR	3	20WP	G15_047	FROM->TO	G14-057T 345.00 - SUNNYSIDE 345KV CKT 1	717	789	0.02956	113.0148	Canadian Pump Station - REDROCKRD4 138.00 138KV CKT 1
FDNS	00NR	3	16WP	G15_047	FROM->TO	G14-057T 345.00 - SUNNYSIDE 345KV CKT 1	717	789	0.02968	112.9882	GEN563042 1-G15068_3 0.6900
FDNS	00NR	3	20WP	G15_047	FROM->TO	G14-057T 345.00 - SUNNYSIDE 345KV CKT 1	717	789	0.02962	112.9827	CRINER - PAYNE 138.00 138KV CKT 1
FDNS	00NR	3	16WP	G15_047	FROM->TO	G14-057T 345.00 - SUNNYSIDE 345KV CKT 1	717	789	0.02968	112.9712	GEN527901 1-HOBBS PLANT #1 (CT)
FDNS	00NR	3	16WP	G15_047	FROM->TO	G14-057T 345.00 - SUNNYSIDE 345KV CKT 1	717	789	0.02968	112.9712	GEN527902 1-HOBBS PLANT #2 (CT)
FDNS	00NR	3	20WP	G15_047	FROM->TO	G14-057T 345.00 - SUNNYSIDE 345KV CKT 1	717	789	0.02956	112.9544	COMANCHE - WALTERS 69KV CKT 1
FDNS	00NR	3	20WP	G15_047	FROM->TO	G14-057T 345.00 - SUNNYSIDE 345KV CKT 1	717	789	0.02958	112.9528	P12:138:OKGE:3TERM20
FDNS	00NR	3	16WP	G15_047	FROM->TO	G14-057T 345.00 - SUNNYSIDE 345KV CKT 1	717	789	0.02968	112.9402	GEN629075 1-OTTUMWA GENERATOR FOR OTTUMWA UNIT NO 1
FDNS	00NR	3	16WP	G15_047	FROM->TO	G14-057T 345.00 - SUNNYSIDE 345KV CKT 1	717	789	0.02968	112.8009	GEN635214 4-NEAL UNIT 4
FDNS	00NR	3	16WP	G15_047	FROM->TO	G14-057T 345.00 - SUNNYSIDE 345KV CKT 1	717	789	0.02968	112.7679	SHERBURNE CO 345/24.0KV TRANSFORMER CKT 1
FDNS	00NR	3	16WP	G15_047	FROM->TO	G14-057T 345.00 - SUNNYSIDE 345KV CKT 1	717	789	0.02968	112.707	GEN563043 1-G15068_4 0.6900
FDNS	00NR	3	16WP	G15_047	FROM->TO	G14-057T 345.00 - SUNNYSIDE 345KV CKT 1	717	789	0.02968	112.6968	GEN563273 2-G15093_4 0.6900
FDNS	00NR	3	16WP	G15_047	FROM->TO	G14-057T 345.00 - SUNNYSIDE 345KV CKT 1	717	789	0.02968	112.6795	GEN526333 1-JONES GEN #3 21 KV
FDNS	00NR	3	16WP	G15_047	FROM->TO	G14-057T 345.00 - SUNNYSIDE 345KV CKT 1	717	789	0.02968	112.6795	GEN526334 1-JONES_4 116.500
FDNS	00NR	3	16WP	G15_047	FROM->TO	G14-057T 345.00 - SUNNYSIDE 345KV CKT 1	717	789	0.02968	112.6491	GEN600002 3-SHERBURNE CNTY G3
FDNS	00NR	3	16WP	G15_047	FROM->TO	G14-057T 345.00 - SUNNYSIDE 345KV CKT 1	717	789	0.02968	112.6315	GEN525844 1-ELK_1 118.000
FDNS	00NR	3	16WP	G15_047	FROM->TO	G14-057T 345.00 - SUNNYSIDE 345KV CKT 1	717	789	0.02968	112.6247	GEN525845 1-ELK_2 1 138.00
FDNS	00NR	3	16WP	G15_047	FROM->TO	G14-057T 345.00 - SUNNYSIDE 345KV CKT 1	717	789	0.02968	112.5558	GEN344225 1-1CAL G1 25.000
FDNS	00NR	3	16WP	G15_047	FROM->TO	G14-057T 345.00 - SUNNYSIDE 345KV CKT 1	717	789	0.02968	112.4876	GEN525562 1-TOLK GEN #2 24 KV
FDNS	00NR	3	16WP	G15_047	FROM->TO	G14-057T 345.00 - SUNNYSIDE 345KV CKT 1	717	789	0.02968	112.476	GEN563202 1-G15085_3 0.5500
FDNS	00NR	3	16WP	G15_047	FROM->TO	G14-057T 345.00 - SUNNYSIDE 345KV CKT 1	717	789	0.02968	112.4445	GEN527166 1-MUSTANG_6 118.000
FDNS	00NR	3	16WP	G15_047	FROM->TO	G14-057T 345.00 - SUNNYSIDE 345KV CKT 1	717	789	0.02968	112.4027	GEN635023 3-WALTER SCOTT UNIT 3
FDNS	00NR	3	16WP	G15_047	FROM->TO	G14-057T 345.00 - SUNNYSIDE 345KV CKT 1	717	789	0.02968	112.366	GEN562590 1-G14_057_3 0.6900
FDNS	00NR	3	16WP	G15_047	FROM->TO	G14-057T 345.00 - SUNNYSIDE 345KV CKT 1	717	789	0.02995	112.3534	LYDIA - WELSH 345KV CKT 1
FDNS	00NR	3	16WP	G15_047	FROM->TO	G14-057T 345.00 - SUNNYSIDE 345KV CKT 1	717	789	0.02995	112.3534	LYDIA - WELSH 345KV CKT 1
FDNS	00NR	3	16WP	G15_047	FROM->TO	G14-057T 345.00 - SUNNYSIDE 345KV CKT 1	717	789	0.02968	112.2652	GEN562762 1-G15033_3 0.6900
FDNS	00NR	3	16WP	G15_047	FROM->TO	G14-057T 345.00 - SUNNYSIDE 345KV CKT 1	717	789	0.02968	112.2542	GEN562655 1-G14_074_3 0.6900
FDNS	00NR	3	20WP	G15_047	FROM->TO	G14-057T 345.00 - SUNNYSIDE 345KV CKT 1	717	789	0.03006	112.2177	RANCHRD7 345.00 - SOONER 345KV CKT 1
FDNS	00NR	3	16WP	G15_047	FROM->TO	G14-057T 345.00 - SUNNYSIDE 345KV CKT 1	717	789	0.02968	112.1794	GEN562685 1-G15_013_3 0.3550
FDNS	00NR	3	20WP	G15_047	FROM->TO	G14-057T 345.00 - SUNNYSIDE 345KV CKT 1	717	789	0.02975	112.0898	DRAPER LAKE - MIDWEST TAP 138KV CKT 1
FDNS	00NR	3	20WP	G15_047	FROM->TO	G14-057T 345.00 - SUNNYSIDE 345KV CKT 1	717	789	0.02973	112.0778	P12:138:OKGE:3TERM21
FDNS	00NR	3	16WP	G15_047	FROM->TO	G14-057T 345.00 - SUNNYSIDE 345KV CKT 1	717	789	0.02968	112.0777	GEN525561 1-TOLK GEN #1 24 KV
FDNS	00NR	3	16WP	G15_047	FROM->TO	G14-057T 345.00 - SUNNYSIDE 345KV CKT 1	717	789	0.02968	112.0698	GEN563272 1-G15093_3 0.6900
FDNS	00NR	3	16WP	G15_047	FROM->TO	G14-057T 345.00 - SUNNYSIDE 345KV CKT 1	717	789	0.02968	112.0515	GEN527903 1-HOBBS PLANT #3 (ST)
FDNS	00NR	3	20WP	G15_047	FROM->TO	G14-057T 345.00 - SUNNYSIDE 345KV CKT 1	717	789	0.02953	112.0203	GLASSES - MADILL INDUSTRIAL TAP 138KV CKT 1
FDNS	00NR	3	20WP	G15_047	FROM->TO	G14-057T 345.00 - SUNNYSIDE 345KV CKT 1	717	789	0.02959	112.0196	P12:138:WFEC:MSL11
FDNS	00NR	3	20WP	G15_047	FROM->TO	G14-057T 345.00 - SUNNYSIDE 345KV CKT 1	717	789	0.02959	112.0196	P12:138:WFEC-AEPW:PHAROAH4:LONEOAK4
FDNS	00NR	3	20WP	G15_047	FROM->TO	G14-057T 345.00 - SUNNYSIDE 345KV CKT 1	717	789	0.02954	112.0119	CANEY CREEK - JOHNSON COUNTY 138KV CKT 1
FDNS	00NR	3	20WP	G15_047	FROM->TO	G14-057T 345.00 - SUNNYSIDE 345KV CKT 1	717	789	0.02965	112.0107	OVEXFRMCCOVE
FDNS	00NR	3	16WP	G15_047	FROM->TO	G14-057T 345.00 - SUNNYSIDE 345KV CKT 1	717	789	0.02968	111.9822	GEN635024 4-WALTER SCOTT UNIT 4
FDNS	00NR	3	20WP	G15_047	FROM->TO	G14-057T 345.00 - SUNNYSIDE 345KV CKT 1	717	789	0.02953	111.9676	GLASSES - RUSSETT 138KV CKT 1
FDNS	00NR	3	20WP	G15_047	FROM->TO	G14-057T 345.00 - SUNNYSIDE 345KV CKT 1	717	789	0.03026	111.9587	LEBANON - TEXOMA JCT 138KV CKT 1
FDNS	00NR	3	20WP	G15_047	FROM->TO	G14-057T 345.00 - SUNNYSIDE 345KV CKT 1	717	789	0.02969	111.956	CANADIAN RIVER - MCALESTER SOUTH 138KV CKT 1
FDNS	00NR	3	20WP	G15_047	FROM->TO	G14-057T 345.00 - SUNNYSIDE 345KV CKT 1	717	789	0.02969	111.956	CANADIAN RIVER - MCALESTER SOUTH 138KV CKT 1
FDNS	00NR	3	20WP	G15_047	FROM->TO	G14-057T 345.00 - SUNNYSIDE 345KV CKT 1	717	789	0.02969	111.9539	CANADIAN RIVER () 345/138/13.8KV TRANSFORMER CKT 1
FDNS	00NR	3	20WP	G15_047	FROM->TO	G14-057T 345.00 - SUNNYSIDE 345KV CKT 1	717	789	0.02969	111.9539	CANADIAN RIVER () 345/138/13.8KV TRANSFORMER CKT 1
FDNS	00NR	3	20WP	G15_047	FROM->TO	G14-057T 345.00 - SUNNYSIDE 345KV CKT 1	717	789	0.02983	111.9315	CHAMBER SPRINGS - CLARKSVILLE 345KV CKT 1
FDNS	00NR	3	20WP	G15_047	FROM->TO	G14-057T 345.00 - SUNNYSIDE 345KV CKT 1	717	789	0.02951	111.9256	GRPRAR1-LNX3345.00 - HOLT.CO3 345.00 345KV CKT 1
FDNS	00NR	3	20WP	G15_047	FROM->TO	G14-057T 345.00 - SUNNYSIDE 345KV CKT 1	717	789	0.02951	111.9178	GRPRAR1-LNX3345.00 - GRPRAR 345KV CKT Z
FDNS	00NR	3	20WP	G15_047	FROM->TO	G14-057T 345.00 - SUNNYSIDE 345KV CKT 1	717	789	0.02956	111.8099	CROCKETT - TENASKA RUSK COUNTY 345KV CKT 1
FDNS	00NR	3	20WP	G15_047	FROM->TO	G14-057T 345.00 - SUNNYSIDE 345KV CKT 1	717	789	0.02956	111.8052	LEBROCK - TENASKA RUSK COUNTY 345KV CKT 1
FDNS	00NR	3	20WP	G15_047	FROM->TO	G14-057T 345.00 - SUNNYSIDE 345KV CKT 1	717	789	0.02951	111.5316	P12:138:WFEC:MSL16
FDNS	00NR	3	20WP	G15_047	FROM->TO	G14-057T 345.00 - SUNNYSIDE 345KV CKT 1	717	789	0.03256	111.4756	CLARKSVILLE - MUSKOGEE 345KV CKT 1
FDNS	00NR	3	20WP	G15_047	FROM->TO	G14-057T 345.00 - SUNNYSIDE 345KV CKT 1	717	789	0.03256	111.4756	CLARKSVILLE - MUSKOGEE 345KV CKT 1
FDNS	00NR	3	16WP	G15_047	FROM->TO	G14-057T 345.00 - SUNNYSIDE 345KV CKT 1	717	789	0.03005	111.1868	LYDIA - VALLIANT 345KV CKT 1
FDNS	00NR	3	16WP	G15_047	FROM->TO	G14-057T 345.00 - SUNNYSIDE 345KV CKT 1	717	789	0.03005	111.1868	LYDIA - VALLIANT 345KV CKT 1
FDNS	00NR	3	20WP	G15_047	FROM->TO	G14-057T 345.00 - SUNNYSIDE 345KV CKT 1	717	789	0.03026	111.0695	CANEY CREEK - TEXOMA JCT 138KV CKT 1
FDNS	00NR	3	20WP	G15_047	FROM->TO	G14-057T 345.00 - SUNNYSIDE 345KV CKT 1	717	789	0.02952	110.8438	P12:138:WFEC:MSL09
FDNS	00NR	3	20WP	G15_047	FROM->TO	G14-057T 345.00 - SUNNYSIDE 345KV CKT 1	717	789	0.02967	110.8073	NORTHWEST TEXARKANA - VALLIANT 345KV CKT 1
FDNS	00NR	3	20WP	G15_047	FROM->TO	G14-057T 345.00 - SUNNYSIDE 345KV CKT 1	717	789	0.02967	110.8073	NORTHWEST TEXARKANA - VALLIANT 345KV CKT 1
FDNS	00NR	3	20WP	G15_047	FROM->TO	G14-057T 345.00 - SUNNYSIDE 345KV CKT 1	717	789	0.02975	110.4342	LYDIA - WELSH 345KV CKT 1

SOLUTION	GROUP	SCENARIO	SEASON	SOURCE	DIRECTION	MONITORED ELEMENT	RATEA (MVA)	RATEB(MVA)	TDF	TC%LOADING (% MVA)	CONTINGENCY
FDNS	00NR	3	20WP	G15_047	FROM->TO	G14-057T 345.00 - SUNNYSIDE 345KV CKT 1	717	789	0.02975	110.4342	LYDIA - WELSH 345KV CKT 1
FDNS	00NR	3	16WP	G15_047	FROM->TO	G14-057T 345.00 - SUNNYSIDE 345KV CKT 1	717	789	0.02968	110.3126	EASTDC - ERCOT EQUIVALENCE 345KV CKT 1
FDNS	00NR	3	20WP	G15_047	FROM->TO	G14-057T 345.00 - SUNNYSIDE 345KV CKT 1	717	789	0.02985	109.3665	LYDIA - VALLIANT 345KV CKT 1
FDNS	00NR	3	20WP	G15_047	FROM->TO	G14-057T 345.00 - SUNNYSIDE 345KV CKT 1	717	789	0.02985	109.3665	LYDIA - VALLIANT 345KV CKT 1
FDNS	00NR	3	16WP	G15_047	FROM->TO	G14-057T 345.00 - SUNNYSIDE 345KV CKT 1	717	789	0.02968	108.8851	GEN563263 1-G15092_4 0.6900
FDNS	00NR	3	16WP	G15_047	FROM->TO	G14-057T 345.00 - SUNNYSIDE 345KV CKT 1	717	789	0.02968	107.23	GEN563262 1-G15092_3 0.6900
FDNSLock-Blown up	01NR	0	17G	G15_048		Non-Converged Contingency	1195	1195	0.07224	-	MATHWSN7 345.00 - TATONGA7 345.00 345KV CKT 1
FDNS	00NR	0	16WP	G15_048	FROM->TO	CIMARRON - DRAPER LAKE 345KV CKT 1	717	717	0.12947	132.6508	G14-057T 345.00 - SUNNYSIDE 345KV CKT 1
FDNS	00NR	0	16WP	G15_048	FROM->TO	CIMARRON - DRAPER LAKE 345KV CKT 1	717	717	0.12947	122.0003	G14-057T 345.00 - LAWTON EASTSIDE 345KV CKT 1
FDNS	00NR	0	16WP	G15_048	FROM->TO	CIMARRON - DRAPER LAKE 345KV CKT 1	717	717	0.12809	116.5817	ARCADIA - SEMINOLE 345KV CKT 1
FDNS	00NR	0	16WP	G15_048	FROM->TO	CIMARRON - DRAPER LAKE 345KV CKT 1	717	717	0.12583	115.588	CLEVELAND - G15066_T 345.00 345KV CKT 1
FDNS	00NR	0	16WP	G15_048	FROM->TO	CIMARRON - DRAPER LAKE 345KV CKT 1	717	717	0.15884	115.2993	ARCADIA - NORTHWEST 345KV CKT 1
FDNS	00NR	0	16WP	G15_048	FROM->TO	CIMARRON - DRAPER LAKE 345KV CKT 1	717	717	0.12583	114.8063	G15066_T 345.00 - SOONER 345KV CKT 1
FDNS	00NR	0	16WP	G15_048	FROM->TO	CIMARRON - DRAPER LAKE 345KV CKT 1	717	717	0.12372	110.2756	CLEVELAND - TULSA NORTH 345KV CKT 1
FDNS	00NR	0	16WP	G15_048	FROM->TO	CIMARRON - DRAPER LAKE 345KV CKT 1	717	717	0.12372	110.2756	CLEVELAND - TULSA NORTH 345KV CKT 1
FDNS	00NR	0	16WP	G15_048	FROM->TO	CIMARRON - DRAPER LAKE 345KV CKT 1	717	717	0.12621	110.1142	MATHWSN7 345.00 - NORTHWEST 345KV CKT 1
FDNS	00NR	0	16WP	G15_048	FROM->TO	CIMARRON - DRAPER LAKE 345KV CKT 1	717	717	0.1214	109.2409	CIMARRON - SARA 138KV CKT 1
FDNS	00NR	0	16WP	G15_048	FROM->TO	CIMARRON - DRAPER LAKE 345KV CKT 1	717	717	0.12109	108.713	P12:138:WFEC:MSL03
FDNS	00NR	0	16WP	G15_048	FROM->TO	CIMARRON - DRAPER LAKE 345KV CKT 1	717	717	0.11744	108.0689	CIMARRON (CIMARON2) 345/138/13.8KV TRANSFORMER CKT 1
FDNS	00NR	0	16WP	G15_048	FROM->TO	CIMARRON - DRAPER LAKE 345KV CKT 1	717	717	0.1214	107.9446	SARA - STHLAKE4 138.00 138KV CKT 1
FDNS	00NR	0	16WP	G15_048	FROM->TO	CIMARRON - DRAPER LAKE 345KV CKT 1	717	717	0.11746	107.899	CIMARRON (CIMARON1) 345/138/13.8KV TRANSFORMER CKT 1
FDNS	00NR	0	16WP	G15_048	FROM->TO	CIMARRON - DRAPER LAKE 345KV CKT 1	717	717	0.1214	107.745	MCCLAIN - STHLAKE4 138.00 138KV CKT 1
FDNS	00NR	0	16WP	G15_048	FROM->TO	CIMARRON - DRAPER LAKE 345KV CKT 1	717	717	0.11974	107.4685	CIMARRON - CZECH HALL 138KV CKT 1
FDNS	00NR	0	16WP	G15_048	FROM->TO	CIMARRON - DRAPER LAKE 345KV CKT 1	717	717	0.11974	107.112	CZECH HALL - XEROX 138KV CKT 1
FDNS	00NR	0	16WP	G15_048	FROM->TO	CIMARRON - DRAPER LAKE 345KV CKT 1	717	717	0.11974	107.0924	MORGAN - XEROX 138KV CKT 1
FDNS	00NR	0	16WP	G15_048	FROM->TO	CIMARRON - DRAPER LAKE 345KV CKT 1	717	717	0.11885	106.9919	ANADARKO - POCASSETT 138KV CKT 1
FDNS	00NR	0	16WP	G15_048	FROM->TO	CIMARRON - DRAPER LAKE 345KV CKT 1	717	717	0.11974	106.9752	MORGAN - MUSTANG 138KV CKT 1
FDNS	00NR	0	16WP	G15_048	FROM->TO	CIMARRON - DRAPER LAKE 345KV CKT 1	717	717	0.11885	106.7926	POCASSETT - TUTTLE 138KV CKT 1
FDNS	00NR	0	16WP	G15_048	FROM->TO	CIMARRON - DRAPER LAKE 345KV CKT 1	717	717	0.11783	106.703	GEN515040 1-SEMINOLE 1G
FDNS	00NR	0	16WP	G15_048	FROM->TO	CIMARRON - DRAPER LAKE 345KV CKT 1	717	717	0.11846	106.6763	LACYGNE - WAVERLY7 345.00 345KV CKT 1
FDNS	00NR	0	16WP	G15_048	FROM->TO	CIMARRON - DRAPER LAKE 345KV CKT 1	717	717	0.12039	106.5853	JOHNSON COUNTY - SUNNYSIDE 345KV CKT 1
FDNS	00NR	0	16WP	G15_048	FROM->TO	CIMARRON - DRAPER LAKE 345KV CKT 1	717	717	0.11846	106.4587	WAVERLY7 345.00 - WOLF CREEK 345KV CKT 1
FDNSLock	00NR	0	16WP	G15_048	FROM->TO	CIMARRON - DRAPER LAKE 345KV CKT 1	717	717	0.11783	106.456	GEN509403 1-PIRKEY GENERATION
FDNS	00NR	0	16WP	G15_048	FROM->TO	CIMARRON - DRAPER LAKE 345KV CKT 1	717	717	0.1191	106.4058	CORN TAP - NAPLESTP 138.00 138KV CKT 1
FDNS	00NR	0	16WP	G15_048	FROM->TO	CIMARRON - DRAPER LAKE 345KV CKT 1	717	717	0.11783	106.3792	GEN509416 1-TURK GENERATION
FDNS	00NR	0	16WP	G15_048	FROM->TO	CIMARRON - DRAPER LAKE 345KV CKT 1	717	717	0.11783	106.3605	GEN501801 1-DOLET HILLS UNIT1
FDNS	00NR	0	16WP	G15_048	FROM->TO	CIMARRON - DRAPER LAKE 345KV CKT 1	717	717	0.1191	106.3121	NAPLESTP 138.00 - PAYNE 138.00 138KV CKT 1
FDNS	00NR	0	16WP	G15_048	FROM->TO	CIMARRON - DRAPER LAKE 345KV CKT 1	717	717	0.11885	106.2787	BRIDGECR 138.00 - TUTTLE 138KV CKT 1
FDNS	00NR	0	16WP	G15_048	FROM->TO	CIMARRON - DRAPER LAKE 345KV CKT 1	717	717	0.11951	106.2342	CANEYRV7 345.00 - NEOSHO 345KV CKT 1
FDNS	00NR	0	17SP	G15_048	FROM->TO	CIMARRON - DRAPER LAKE 345KV CKT 1	717	717	0.1186	106.1697	G14-057T 345.00 - SUNNYSIDE 345KV CKT 1
FDNSLock	00NR	0	16WP	G15_048	FROM->TO	CIMARRON - DRAPER LAKE 345KV CKT 1	717	717	0.11783	106.0246	GEN336821 1-GRAND GULF UNIT
FDNS	00NR	0	16WP	G15_048	FROM->TO	CIMARRON - DRAPER LAKE 345KV CKT 1	717	717	0.11783	105.9922	GEN515042 1-SEMINOLE 3G
FDNS	00NR	0	16WP	G15_048	FROM->TO	CIMARRON - DRAPER LAKE 345KV CKT 1	717	717	0.11951	105.9562	CANEYRV7 345.00 - LATHAMS7 345.00 345KV CKT 1
FDNS	00NR	0	16WP	G15_048	FROM->TO	CIMARRON - DRAPER LAKE 345KV CKT 1	717	717	0.11885	105.9048	BRIDGECR 138.00 - SUNSHINE CANYON 138KV CKT 1
FDNS	00NR	0	16WP	G15_048	FROM->TO	CIMARRON - DRAPER LAKE 345KV CKT 1	717	717	0.11885	105.894	P12:138:WFEC:MSL01
FDNS	00NR	0	16WP	G15_048	FROM->TO	CIMARRON - DRAPER LAKE 345KV CKT 1	717	717	0.11783	105.7583	GEN515041 1-SEMINOLE 2G
FDNSLock	00NR	0	16WP	G15_048	FROM->TO	CIMARRON - DRAPER LAKE 345KV CKT 1	717	717	0.11783	105.7266	GEN336153 1-WATERFORD UNIT#3
FDNS	00NR	0	16WP	G15_048	FROM->TO	CIMARRON - DRAPER LAKE 345KV CKT 1	717	717	0.12064	105.5516	CIMARRON - NORTHWEST 345KV CKT 1
FDNS	00NR	0	16WP	G15_048	FROM->TO	CIMARRON - DRAPER LAKE 345KV CKT 1	717	717	0.11783	105.5263	GEN509406 1-WELSH #3
FDNS	00NR	0	16WP	G15_048	FROM->TO	CIMARRON - DRAPER LAKE 345KV CKT 1	717	717	0.11783	105.5261	GEN509404 1-WELSH #1
FDNS	00NR	0	16WP	G15_048	FROM->TO	CIMARRON - DRAPER LAKE 345KV CKT 1	717	717	0.11951	105.5155	LATHAMS7 345.00 - ROSE HILL 345KV CKT 1
FDNSLock	00NR	0	16WP	G15_048	FROM->TO	CIMARRON - DRAPER LAKE 345KV CKT 1	717	717	0.11783	105.4219	GEN335831 1-RIVERBEND UNIT#1
FDNSLock	00NR	0	16WP	G15_048	FROM->TO	CIMARRON - DRAPER LAKE 345KV CKT 1	717	717	0.11783	105.406	GEN337911 1-ARKANSAS NUCLEAR ONE UNIT #2
FDNS	00NR	0	16WP	G15_048	FROM->TO	CIMARRON - DRAPER LAKE 345KV CKT 1	717	717	0.1182	105.1336	HUGO - SUNNYSIDE 345KV CKT 1
FDNS	00NR	0	16WP	G15_048	FROM->TO	CIMARRON - DRAPER LAKE 345KV CKT 1	717	717	0.11555	105.1183	CANADIAN RIVER - MUSKOGEE 345KV CKT 1
FDNS	00NR	0	16WP	G15_048	FROM->TO	CIMARRON - DRAPER LAKE 345KV CKT 1	717	717	0.11797	105.0337	P12:138:OKGE:3TERM14
FDNS	00NR	0	16WP	G15_048	FROM->TO	CIMARRON - DRAPER LAKE 345KV CKT 1	717	717	0.11783	105.0296	GRAND GULF 500/22.0KV TRANSFORMER CKT 1
FDNS	00NR	0	16WP	G15_048	FROM->TO	CIMARRON - DRAPER LAKE 345KV CKT 1	717	717	0.11783	105.0273	GEN337910 1-ARKANSAS NUCLEAR ONE UNIT #1
FDNS	00NR	0	16WP	G15_048	FROM->TO	CIMARRON - DRAPER LAKE 345KV CKT 1	717	717	0.12028	105.0144	JOHNSON COUNTY - PITTSBURG 345KV CKT 1
FDNS	00NR	0	16WP	G15_048	FROM->TO	CIMARRON - DRAPER LAKE 345KV CKT 1	717	717	0.12028	105.0144	JOHNSON COUNTY - PITTSBURG 345KV CKT 1
FDNS	00NR	0	16WP	G15_048	FROM->TO	CIMARRON - DRAPER LAKE 345KV CKT 1	717	717	0.11934	104.9951	HORSESHOE LAKE - JONES TAP 138KV CKT 1
FDNS	00NR	0	16WP	G15_048	FROM->TO	CIMARRON - DRAPER LAKE 345KV CKT 1	717	717	0.11939	104.9687	MORISNT4 138.00 - STILLWATER 138KV CKT 1
FDNS	00NR	0	16WP	G15_048	FROM->TO	CIMARRON - DRAPER LAKE 345KV CKT 1	717	717	0.11949	104.9641	P12:138:OKGE:3TERM2
FDNS	00NR	0	16WP	G15_048	FROM->TO	CIMARRON - DRAPER LAKE 345KV CKT 1	717	717	0.11777	104.9439	REDBUD - RIVERSIDE STATION 345KV CKT 1
FDNS	00NR	0	16WP	G15_048	FROM->TO	CIMARRON - DRAPER LAKE 345KV CKT 1	717	717	0.11777	104.9439	REDBUD - RIVERSIDE STATION 345KV CKT 1
FDNS	00NR	0	16WP	G15_048	FROM->TO	CIMARRON - DRAPER LAKE 345KV CKT 1	717	717	0.11783	104.8928	GEN515226 1-MUSKOGEE 6G
FDNS	00NR	0	16WP	G15_048	FROM->TO	CIMARRON - DRAPER LAKE 345KV CKT 1	717	717	0.11783	104.879	GEN501813 1-RODEMACHER UNIT 3
FDNS	00NR	0	16WP	G15_048	FROM->TO	CIMARRON - DRAPER LAKE 345KV CKT 1	717	717	0.12022	104.8291	BAILEY4 138.00 - SUNSHINE CANYON 138KV CKT 1
FDNS	00NR	0	16WP	G15_048	FROM->TO	CIMARRON - DRAPER LAKE 345KV CKT 1	717	717	0.11793	104.7782	NORTHWEST (NORTWST2) 345/138/13.8KV TRANSFORMER CKT 1
FDNS	00NR	0	16WP	G15_048	FROM->TO	CIMARRON - DRAPER LAKE 345KV CKT 1	717	717	0.11787	104.7766	7SAREPTA% 345.00 - LONGWOOD 345KV CKT 1
FDNS	00NR	0	16WP	G15_048	FROM->TO	CIMARRON - DRAPER LAKE 345KV CKT 1	717	717	0.11787	104.7766	7SAREPTA% 345.00 - LONGWOOD 345KV CKT 1
FDNS	00NR	0	16WP	G15_048	FROM->TO	CIMARRON - DRAPER LAKE 345KV CKT 1	717	717	0.11762	104.7749	ARCADIA - KAMO MEMORIAL 138KV CKT 1
FDNS	00NR	0	16WP	G15_048	FROM->TO	CIMARRON - DRAPER LAKE 345KV CKT 1	717	717	0.11789	104.7555	P12:138:OKGE:3TERM12
FDNS	00NR	0	16WP	G15_048	FROM->TO	CIMARRON - DRAPER LAKE 345KV CKT 1	717	717	0.11786	104.7399	DOLET HILLS - SOUTHWEST SHREVEPORT 345KV CKT 1
FDNS	00NR	0	16WP	G15_048	FROM->TO	CIMARRON - DRAPER LAKE 345KV CKT 1	717	717	0.11786	104.7399	DOLET HILLS - SOUTHWEST SHREVEPORT 345KV CKT 1
FDNS	00NR	0	16WP	G15_048	FROM->TO	CIMARRON - DRAPER LAKE 345KV CKT 1	717	717	0.11783	104.6942	GEN515225 1-MUSKOGEE 5G
FDNS	00NR	0	16WP	G15_048	FROM->TO	CIMARRON - DRAPER LAKE 345KV CKT 1	717	717	0.11783	104.694	GEN515223 1-MUSKOGEE 4G
FDNS	00NR	0	16WP	G15_048	FROM->TO	CIMARRON - DRAPER LAKE 345KV CKT 1	717	717	0.11783	104.6904	GEN335206 1-NELSON UNIT 6
FDNS	00NR	0	16WP	G15_048	FROM->TO	CIMARRON - DRAPER LAKE 345KV CKT 1	717	717	0.11892	104.68	MEMORIAL - SKYLINE 138KV CKT 1

SOLUTION	GROUP	SCENARIO	SEASON	SOURCE	DIRECTION	MONITORED ELEMENT	RATEA (MVA)	RATEB(MVA)	TDF	TC%LOADING (% MVA)	CONTINGENCY
FDNS	00NR	0	16WP	G15_048	FROM->TO	CIMARRON - DRAPER LAKE 345KV CKT 1	717	717	0.11773	104.583	GRACEMONT (BANK 1) 345/138/13.8KV TRANSFORMER CKT 1
FDNS	00NR	0	16WP	G15_048	FROM->TO	CIMARRON - DRAPER LAKE 345KV CKT 1	717	717	0.11838	104.5721	QUAIL CREEK - SKYLINE 138KV CKT 1
FDNS	00NR	0	16WP	G15_048	FROM->TO	CIMARRON - DRAPER LAKE 345KV CKT 1	717	717	0.11783	104.5492	GEN509409 1-WILKES #3
FDNS	00NR	0	16WP	G15_048	FROM->TO	CIMARRON - DRAPER LAKE 345KV CKT 1	717	717	0.11783	104.5474	GEN337653 1-WHITE BLUFF UNIT #2
FDNS	00NR	0	16WP	G15_048	FROM->TO	CIMARRON - DRAPER LAKE 345KV CKT 1	717	717	0.11945	104.5355	P12:138:OKGE:3TERM18
FDNS	00NR	0	16WP	G15_048	FROM->TO	CIMARRON - DRAPER LAKE 345KV CKT 1	717	717	0.12022	104.5271	BAILEY4 138.00 - WESTMOORE 138KV CKT 1
FDNS	00NR	0	16WP	G15_048	FROM->TO	CIMARRON - DRAPER LAKE 345KV CKT 1	717	717	0.11783	104.519	GEN501812 1-RODEMACHER UNIT 2
FDNS	00NR	0	16WP	G15_048	FROM->TO	CIMARRON - DRAPER LAKE 345KV CKT 1	717	717	0.11792	104.5145	NORTHWEST (NORTWST4) 345/138/13.8KV TRANSFORMER CKT 1
FDNS	00NR	0	16WP	G15_048	FROM->TO	CIMARRON - DRAPER LAKE 345KV CKT 1	717	717	0.11783	104.4548	NEW MADRID 161/22.0KV TRANSFORMER CKT 1
FDNS	00NR	0	16WP	G15_048	FROM->TO	CIMARRON - DRAPER LAKE 345KV CKT 1	717	717	0.11939	104.4542	36 & MERIDIAN - CHEMTRON 138KV CKT 1
FDNS	00NR	0	16WP	G15_048	FROM->TO	CIMARRON - DRAPER LAKE 345KV CKT 1	717	717	0.11864	104.4515	THISTLE7 345.00 - WOODWARD DISTRICT EHV 345KV CKT 1
FDNS	00NR	0	16WP	G15_048	FROM->TO	CIMARRON - DRAPER LAKE 345KV CKT 1	717	717	0.11864	104.4515	THISTLE7 345.00 - WOODWARD DISTRICT EHV 345KV CKT 1
FDNS	00NR	0	16WP	G15_048	FROM->TO	CIMARRON - DRAPER LAKE 345KV CKT 1	717	717	0.11864	104.4515	THISTLE7 345.00 - WOODWARD DISTRICT EHV 345KV CKT 2
FDNS	00NR	0	16WP	G15_048	FROM->TO	CIMARRON - DRAPER LAKE 345KV CKT 1	717	717	0.11864	104.4515	THISTLE7 345.00 - WOODWARD DISTRICT EHV 345KV CKT 2
FDNS	00NR	0	16WP	G15_048	FROM->TO	CIMARRON - DRAPER LAKE 345KV CKT 1	717	717	0.11783	104.4411	NEW MADRID 345/22.0KV TRANSFORMER CKT 1
FDNS	00NR	0	16WP	G15_048	FROM->TO	CIMARRON - DRAPER LAKE 345KV CKT 1	717	717	0.11783	104.4225	GEN520947 1-HUGO1
FDNS	00NR	0	16WP	G15_048	FROM->TO	CIMARRON - DRAPER LAKE 345KV CKT 1	717	717	0.11783	104.4148	GEN337652 1-WHITE BLUFF UNIT #1
FDNS	00NR	0	16WP	G15_048	FROM->TO	CIMARRON - DRAPER LAKE 345KV CKT 1	717	717	0.11792	104.3894	NORTHWEST (NORTWST3) 345/138/13.8KV TRANSFORMER CKT 1
FDNS	00NR	0	16WP	G15_048	FROM->TO	CIMARRON - DRAPER LAKE 345KV CKT 1	717	717	0.11785	104.376	3TR3AR8EL7EL
FDNS	00NR	0	16WP	G15_048	FROM->TO	CIMARRON - DRAPER LAKE 345KV CKT 1	717	717	0.11785	104.376	7SAREPTA% 345.00 - ELDORADO EHV 345KV CKT 1
FDNS	00NR	0	16WP	G15_048	FROM->TO	CIMARRON - DRAPER LAKE 345KV CKT 1	717	717	0.11785	104.3682	ELDORADO EHV 500/345KV TRANSFORMER CKT 1
FDNS	00NR	0	16WP	G15_048	FROM->TO	CIMARRON - DRAPER LAKE 345KV CKT 1	717	717	0.11939	104.3672	CHEMTRON - PENNSYLVANIA 138KV CKT 1
FDNS	00NR	0	16WP	G15_048	FROM->TO	CIMARRON - DRAPER LAKE 345KV CKT 1	717	717	0.11739	104.3371	G15052_T 345.00 - ROSE HILL 345KV CKT 1
FDNS	00NR	0	16WP	G15_048	FROM->TO	CIMARRON - DRAPER LAKE 345KV CKT 1	717	717	0.11805	104.3332	G15074_T 345.00 - HOYT 345KV CKT 1
FDNS	00NR	0	16WP	G15_048	FROM->TO	CIMARRON - DRAPER LAKE 345KV CKT 1	717	717	0.11943	104.3021	BLANCHARD - CORNVILLE 138KV CKT 1
FDNS	00NR	0	16WP	G15_048	FROM->TO	CIMARRON - DRAPER LAKE 345KV CKT 1	717	717	0.1183	104.3015	COMANCHE - LOCO 138KV CKT 1
FDNS	00NR	0	16WP	G15_048	FROM->TO	CIMARRON - DRAPER LAKE 345KV CKT 1	717	717	0.1184	104.2791	P12:138:OKGE:3TERM17
FDNS	00NR	0	16WP	G15_048	FROM->TO	CIMARRON - DRAPER LAKE 345KV CKT 1	717	717	0.11783	104.2625	GEN515577 1-ARBWND11 0.6900
FDNS	00NR	0	16WP	G15_048	FROM->TO	CIMARRON - DRAPER LAKE 345KV CKT 1	717	717	0.12022	104.2438	FRANKLIN SW - WESTMOORE 138KV CKT 1
FDNS	00NR	0	16WP	G15_048	FROM->TO	CIMARRON - DRAPER LAKE 345KV CKT 1	717	717	0.11803	104.2374	P12:138:OKGE:3TERM11
FDNS	00NR	0	16WP	G15_048	FROM->TO	CIMARRON - DRAPER LAKE 345KV CKT 1	717	717	0.11783	104.2237	GEN334440 1-SABINE UNIT 4
FDNS	00NR	0	16WP	G15_048	FROM->TO	CIMARRON - DRAPER LAKE 345KV CKT 1	717	717	0.11803	104.2165	LONEOAK - NORTHWEST 138KV CKT 1
FDNS	00NR	0	16WP	G15_048	FROM->TO	CIMARRON - DRAPER LAKE 345KV CKT 1	717	717	0.11943	104.211	P12:138:AEPW-OGE:CORNVIL4:MAUD 4
FDNS	00NR	0	16WP	G15_048	FROM->TO	CIMARRON - DRAPER LAKE 345KV CKT 1	717	717	0.11757	104.2024	KETCH TAP - NORTHWEST 138KV CKT 1
FDNS	00NR	0	16WP	G15_048	FROM->TO	CIMARRON - DRAPER LAKE 345KV CKT 1	717	717	0.11783	104.2023	DELL 500 - ESSEX UNIT 2 500KV CKT Z1
FDNS	00NR	0	16WP	G15_048	FROM->TO	CIMARRON - DRAPER LAKE 345KV CKT 1	717	717	0.11826	104.1938	DIVISION AVE - LAKESIDE 138KV CKT 1
FDNS	00NR	0	16WP	G15_048	FROM->TO	CIMARRON - DRAPER LAKE 345KV CKT 1	717	717	0.11789	104.1729	HORSESHOE LAKE - KAMO MEMORIAL 138KV CKT 1
FDNS	00NR	0	16WP	G15_048	FROM->TO	CIMARRON - DRAPER LAKE 345KV CKT 1	717	717	0.11798	104.1303	NORTHWEST - PANTHER 138KV CKT 1
FDNS	00NR	0	16WP	G15_048	FROM->TO	CIMARRON - DRAPER LAKE 345KV CKT 1	717	717	0.11862	104.1253	G14-074T 345.00 - OKLAUNION 345KV CKT 1
FDNS	00NR	0	16WP	G15_048	FROM->TO	CIMARRON - DRAPER LAKE 345KV CKT 1	717	717	0.12073	104.1217	CLARKSVILLE - ONETA 345KV CKT 1
FDNS	00NR	0	16WP	G15_048	FROM->TO	CIMARRON - DRAPER LAKE 345KV CKT 1	717	717	0.12073	104.1217	CLARKSVILLE - ONETA 345KV CKT 1
FDNS	00NR	0	16WP	G15_048	FROM->TO	CIMARRON - DRAPER LAKE 345KV CKT 1	717	717	0.11897	104.1144	P12:138:OKGE:3TERM20
FDNS	00NR	0	16WP	G15_048	FROM->TO	CIMARRON - DRAPER LAKE 345KV CKT 1	717	717	0.11943	104.1089	BLANCHARD - MAUD 138KV CKT 1
FDNS	00NR	0	16WP	G15_048	FROM->TO	CIMARRON - DRAPER LAKE 345KV CKT 1	717	717	0.11847	104.1015	CIMARRON - HAYMAKER 138KV CKT 1
FDNS	00NR	0	16WP	G15_048	FROM->TO	CIMARRON - DRAPER LAKE 345KV CKT 1	717	717	0.1187	104.0977	P12:138:OKGE:3TERM47
FDNS	00NR	0	16WP	G15_048	FROM->TO	CIMARRON - DRAPER LAKE 345KV CKT 1	717	717	0.11783	104.0931	GEN336252 1-NINEMILE POINT UNIT#5
FDNS	00NR	0	16WP	G15_048	FROM->TO	CIMARRON - DRAPER LAKE 345KV CKT 1	717	717	0.11839	104.0857	FINNEY SWITCHING STATION - HOLCOMB 345KV CKT 1
FDNS	00NR	0	16WP	G15_048	FROM->TO	CIMARRON - DRAPER LAKE 345KV CKT 1	717	717	0.11839	104.0857	FINNEY SWITCHING STATION - HOLCOMB 345KV CKT 1
FDNS	00NR	0	16WP	G15_048	FROM->TO	CIMARRON - DRAPER LAKE 345KV CKT 1	717	717	0.11783	104.0808	DOLET HILLS 345/24.0KV TRANSFORMER CKT 1
FDNS	00NR	0	16WP	G15_048	FROM->TO	CIMARRON - DRAPER LAKE 345KV CKT 1	717	717	0.11798	104.08	PANTHER - SILVER LAKE 138KV CKT 1
FDNS	00NR	0	16WP	G15_048	FROM->TO	CIMARRON - DRAPER LAKE 345KV CKT 1	717	717	0.11826	104.0723	HEFNER - LAKESIDE 138KV CKT 1
FDNS	00NR	0	16WP	G15_048	FROM->TO	CIMARRON - DRAPER LAKE 345KV CKT 1	717	717	0.11832	104.041	BLACKBERRY - NEOSHO 345KV CKT 1
FDNS	00NR	0	16WP	G15_048	FROM->TO	CIMARRON - DRAPER LAKE 345KV CKT 1	717	717	0.11783	104.0356	WHITE BLUFF 500/26.0KV TRANSFORMER CKT 1
FDNS	00NR	0	16WP	G15_048	FROM->TO	CIMARRON - DRAPER LAKE 345KV CKT 1	717	717	0.11983	104.0273	KETCH - KETCH TAP 138KV CKT 1
FDNS	00NR	0	16WP	G15_048	FROM->TO	CIMARRON - DRAPER LAKE 345KV CKT 1	717	717	0.11843	104.02	EMPORIA ENERGY CENTER - G14_001T 345.00 345KV CKT 1
FDNS	00NR	0	16WP	G15_048	FROM->TO	CIMARRON - DRAPER LAKE 345KV CKT 1	717	717	0.11805	104.0189	HOYT - STRANGER CREEK 345KV CKT 1
FDNS	00NR	0	16WP	G15_048	FROM->TO	CIMARRON - DRAPER LAKE 345KV CKT 1	717	717	0.1181	104.0086	DIVISION AVE - MUSTANG 138KV CKT 1
FDNS	00NR	0	16WP	G15_048	FROM->TO	CIMARRON - DRAPER LAKE 345KV CKT 1	717	717	0.11793	104	G15088_T 345.00 - MOORE 345KV CKT 1
FDNS	00NR	0	16WP	G15_048	FROM->TO	CIMARRON - DRAPER LAKE 345KV CKT 1	717	717	0.11783	104	GEN300006 1-NEW MADRID UNIT 1
FDNS	00NR	0	16WP	G15_048	FROM->TO	CIMARRON - DRAPER LAKE 345KV CKT 1	717	717	0.11783	104	GEN300007 1-NEW MADRID UNIT 2
FDNS	00NR	0	16WP	G15_048	FROM->TO	CIMARRON - DRAPER LAKE 345KV CKT 1	717	717	0.11808	103.999	P12:138:WFEC:MSL02
FDNS	00NR	0	16WP	G15_048	FROM->TO	CIMARRON - DRAPER LAKE 345KV CKT 1	717	717	0.11847	103.998	DIVISION AVE - HAYMAKER 138KV CKT 1
FDNS	00NR	0	16WP	G15_048	FROM->TO	CIMARRON - DRAPER LAKE 345KV CKT 1	717	717	0.11783	103.9886	GEN509408 1-WILKES #2
FDNS	00NR	0	16WP	G15_048	FROM->TO	CIMARRON - DRAPER LAKE 345KV CKT 1	717	717	0.11909	103.9879	P12:138:AEPW-OGE:SHIDLER4:OSAGE 4
FDNS	00NR	0	16WP	G15_048	FROM->TO	CIMARRON - DRAPER LAKE 345KV CKT 1	717	717	0.11901	103.975	MCCLAIN - PLEASANT VALLEY 138KV CKT 1
FDNS	00NR	0	16WP	G15_048	FROM->TO	CIMARRON - DRAPER LAKE 345KV CKT 1	717	717	0.11815	103.9746	SWISSVALE - WEST GARDNER 345KV CKT 1
FDNS	00NR	0	16WP	G15_048	FROM->TO	CIMARRON - DRAPER LAKE 345KV CKT 1	717	717	0.11805	103.9659	G15074_T 345.00 - JEFFREY ENERGY CENTER 345KV CKT 1
FDNS	00NR	0	16WP	G15_048	FROM->TO	CIMARRON - DRAPER LAKE 345KV CKT 1	717	717	0.118	103.962	ANADARKO - GEORGIA 138KV CKT 1
FDNS	00NR	0	16WP	G15_048	FROM->TO	CIMARRON - DRAPER LAKE 345KV CKT 1	717	717	0.11783	103.9525	GEN335204 1-NELSON UNIT 4
FDNS	00NR	0	16WP	G15_048	FROM->TO	CIMARRON - DRAPER LAKE 345KV CKT 1	717	717	0.11783	103.9519	GEN336831 1-BAXTER WILSON SES
FDNS	00NR	0	16WP	G15_048	FROM->TO	CIMARRON - DRAPER LAKE 345KV CKT 1	717	717	0.11787	103.9391	P12:138:AEPW:OKMULGE4:R.S.S-4
FDNS	00NR	0	16WP	G15_048	FROM->TO	CIMARRON - DRAPER LAKE 345KV CKT 1	717	717	0.11783	103.9208	GEN506754 1-LEBROCK STEAM 1
FDNS	00NR	0	16WP	G15_048	FROM->TO	CIMARRON - DRAPER LAKE 345KV CKT 1	717	717	0.11879	103.919	CLASSEN - ROBINSON 138KV CKT 1
FDNS	00NR	0	16WP	G15_048	FROM->TO	CIMARRON - DRAPER LAKE 345KV CKT 1	717	717	0.11783	103.9013	GEN334441 1-SABINE UNIT 5
FDNS	00NR	0	16WP	G15_048	FROM->TO	CIMARRON - DRAPER LAKE 345KV CKT 1	717	717	0.11783	103.8962	GEN334071 1-LEWIS CREEK 2
FDNS	00NR	0	16WP	G15_048	FROM->TO	CIMARRON - DRAPER LAKE 345KV CKT 1	717	717	0.118	103.8953	FLETCHER - GEORGIA 138KV CKT 1
FDNS	00NR	0	16WP	G15_048	FROM->TO	CIMARRON - DRAPER LAKE 345KV CKT 1	717	717	0.11843	103.8915	G14_001T 345.00 - WICHITA 345KV CKT 1
FDNS	00NR	0	16WP	G15_048	FROM->TO	CIMARRON - DRAPER LAKE 345KV CKT 1	717	717	0.11783	103.8883	GEN334070 1-LEWIS CREEK 1
FDNS	00NR	0	16WP	G15_048	FROM->TO	CIMARRON - DRAPER LAKE 345KV CKT 1	717	717	0.11863	103.8865	BENTON - WICHITA 345KV CKT 1

SOLUTION	GROUP	SCENARIO	SEASON	SOURCE	DIRECTION	MONITORED ELEMENT	RATEA (MVA)	RATEB(MVA)	TDF	TC%LOADING (% MVA)	CONTINGENCY
FDNS	00NR	0	16WP	G15_048	FROM->TO	CIMARRON - DRAPER LAKE 345KV CKT 1	717	717	0.11839	103.8864	FINNEY SWITCHING STATION - Hitchland Interchange 345KV CKT 1
FDNS	00NR	0	16WP	G15_048	FROM->TO	CIMARRON - DRAPER LAKE 345KV CKT 1	717	717	0.11783	103.8862	GEN336251 1-NINEMILE POINT UNIT#4
FDNS	00NR	0	16WP	G15_048	FROM->TO	CIMARRON - DRAPER LAKE 345KV CKT 1	717	717	0.11789	103.8786	WEBRE - WELLS 500KV CKT 1
FDNS	00NR	0	16WP	G15_048	FROM->TO	CIMARRON - DRAPER LAKE 345KV CKT 1	717	717	0.11834	103.8775	LACYGNE - NEOSHO 345KV CKT 1
FDNSLock	00NR	0	16WP	G15_048	FROM->TO	CIMARRON - DRAPER LAKE 345KV CKT 1	717	717	0.11783	103.8742	GEN590011 2-ERCOT EQUIVALENCE
FDNS	00NR	0	16WP	G15_048	FROM->TO	CIMARRON - DRAPER LAKE 345KV CKT 1	717	717	0.1181	103.862	EMPORIA ENERGY CENTER - SWISSVALE 345KV CKT 1
FDNS	00NR	0	16WP	G15_048	FROM->TO	CIMARRON - DRAPER LAKE 345KV CKT 1	717	717	0.11807	103.8385	EMPIRE - FLETCHER 138KV CKT 1
FDNSLock	00NR	0	16WP	G15_048	FROM->TO	CIMARRON - DRAPER LAKE 345KV CKT 1	717	717	0.11783	103.8317	GEN590010 1-ERCOT EQUIVALENCE
FDNS	00NR	0	16WP	G15_048	FROM->TO	CIMARRON - DRAPER LAKE 345KV CKT 1	717	717	0.11804	103.8223	G1524G1525 345.00 - THISTLE7 345.00 345KV CKT 1
FDNS	00NR	0	16WP	G15_048	FROM->TO	CIMARRON - DRAPER LAKE 345KV CKT 1	717	717	0.11804	103.8223	G1524G1525 345.00 - THISTLE7 345.00 345KV CKT 2
FDNS	00NR	0	16WP	G15_048	FROM->TO	CIMARRON - DRAPER LAKE 345KV CKT 1	717	717	0.11783	103.8186	GEN503909 1-FULTONU1 1 16.000
FDNSLock	00NR	0	16WP	G15_048	FROM->TO	CIMARRON - DRAPER LAKE 345KV CKT 1	717	717	0.11783	103.8129	GEN338146 1-INDEPENDENCE UNIT #2
FDNS	00NR	0	16WP	G15_048	FROM->TO	CIMARRON - DRAPER LAKE 345KV CKT 1	717	717	0.11803	103.8126	LONEOAK - QUAIL CREEK 138KV CKT 1
FDNS	00NR	0	16WP	G15_048	FROM->TO	CIMARRON - DRAPER LAKE 345KV CKT 1	717	717	0.11783	103.809	GEN501811 1-RODEMACHER UNIT 1
FDNS	00NR	0	16WP	G15_048	FROM->TO	CIMARRON - DRAPER LAKE 345KV CKT 1	717	717	0.10333	103.8044	WOODRING (WOODRNG2) 345/138/13.8KV TRANSFORMER CKT 1
FDNS	00NR	0	16WP	G15_048	FROM->TO	CIMARRON - DRAPER LAKE 345KV CKT 1	717	717	0.11851	103.7918	CRINER - PAYNE 138.00 138KV CKT 1
FDNS	00NR	0	16WP	G15_048	FROM->TO	CIMARRON - DRAPER LAKE 345KV CKT 1	717	717	0.11909	103.7817	OSAGE - WEBB CITY TAP 138KV CKT 1
FDNS	00NR	0	16WP	G15_048	FROM->TO	CIMARRON - DRAPER LAKE 345KV CKT 1	717	717	0.11807	103.7768	COMANCHE - EMPIRE 138KV CKT 1
FDNS	00NR	0	16WP	G15_048	FROM->TO	CIMARRON - DRAPER LAKE 345KV CKT 1	717	717	0.11783	103.7748	FRONTIER - GRIMES 345KV CKT 1
FDNS	00NR	0	16WP	G15_048	FROM->TO	CIMARRON - DRAPER LAKE 345KV CKT 1	717	717	0.11783	103.7716	GEN334433 1-SABINE UNIT 3
FDNS	00NR	0	16WP	G15_048	FROM->TO	CIMARRON - DRAPER LAKE 345KV CKT 1	717	717	0.11785	103.7693	P12:069:OKGE:3TERM4
FDNS	00NR	0	16WP	G15_048	FROM->TO	CIMARRON - DRAPER LAKE 345KV CKT 1	717	717	0.11783	103.7671	GEN334030 1-FRONTIER UNIT 1
FDNS	00NR	0	16WP	G15_048	FROM->TO	CIMARRON - DRAPER LAKE 345KV CKT 1	717	717	0.11783	103.7661	GEN334031 1-FRONTIER UNIT 2
FDNS	00NR	0	16WP	G15_048	FROM->TO	CIMARRON - DRAPER LAKE 345KV CKT 1	717	717	0.11783	103.764	GEN303007 1-1BC2 U2
FDNS	00NR	0	16WP	G15_048	FROM->TO	CIMARRON - DRAPER LAKE 345KV CKT 1	717	717	0.11887	103.7619	SPVALLY4 138.00 - STILLWATER 138KV CKT 1
FDNS	00NR	0	16WP	G15_048	FROM->TO	CIMARRON - DRAPER LAKE 345KV CKT 1	717	717	0.11783	103.7587	GEN303006 1-1BC2 U1
FDNS	00NR	0	16WP	G15_048	FROM->TO	CIMARRON - DRAPER LAKE 345KV CKT 1	717	717	0.11783	103.7582	GEN337041 1-GERALD ANDRUS
FDNS	00NR	0	16WP	G15_048	FROM->TO	CIMARRON - DRAPER LAKE 345KV CKT 1	717	717	0.11783	103.7551	P12:161:AEPW:DYESS 5:HYLAND 5
FDNS	00NR	0	16WP	G15_048	FROM->TO	CIMARRON - DRAPER LAKE 345KV CKT 1	717	717	0.11783	103.7415	GEN336191 1-LITTLE GYPSY UNIT#3
FDNS	00NR	0	16WP	G15_048	FROM->TO	CIMARRON - DRAPER LAKE 345KV CKT 1	717	717	0.11785	103.7374	8DANIEL8 500.00 - MCKNIGHT 500KV CKT 1
FDNS	00NR	0	16WP	G15_048	FROM->TO	CIMARRON - DRAPER LAKE 345KV CKT 1	717	717	0.11783	103.7345	GEN509393 S1-ARSENAL HILL GENS #4 (STALL)
FDNS	00NR	0	16WP	G15_048	FROM->TO	CIMARRON - DRAPER LAKE 345KV CKT 1	717	717	0.11791	103.7342	CLEAVELAND - CLEVLND 4 138.00 138KV CKT Z1
FDNS	00NR	0	16WP	G15_048	FROM->TO	CIMARRON - DRAPER LAKE 345KV CKT 1	717	717	0.11791	103.7339	CLEVELAND (CLVAUTO1) 345/138/13.8KV TRANSFORMER CKT 1
FDNS	00NR	0	16WP	G15_048	FROM->TO	CIMARRON - DRAPER LAKE 345KV CKT 1	717	717	0.11791	103.7339	CLEVELAND (CLVAUTO1) 345/138/13.8KV TRANSFORMER CKT 1
FDNS	00NR	0	16WP	G15_048	FROM->TO	CIMARRON - DRAPER LAKE 345KV CKT 1	717	717	0.11887	103.7325	PAYNESB4 138.00 - SPVALLY4 138.00 138KV CKT 1
FDNS	00NR	0	16WP	G15_048	FROM->TO	CIMARRON - DRAPER LAKE 345KV CKT 1	717	717	0.11796	103.7308	P12:138:OKGE:3TERM13
FDNS	00NR	0	16WP	G15_048	FROM->TO	CIMARRON - DRAPER LAKE 345KV CKT 1	717	717	0.11867	103.7266	ARKANSAS NUCLEAR ONE - FT SMITH 500KV CKT 1
FDNS	00NR	0	16WP	G15_048	FROM->TO	CIMARRON - DRAPER LAKE 345KV CKT 1	717	717	0.11867	103.7266	ARKANSAS NUCLEAR ONE - FT SMITH 500KV CKT 1
FDNS	00NR	0	16WP	G15_048	FROM->TO	CIMARRON - DRAPER LAKE 345KV CKT 1	717	717	0.11783	103.7179	GEN509392 G2-ARSENAL HILL GENS #3 (STALL)
FDNS	00NR	0	16WP	G15_048	FROM->TO	CIMARRON - DRAPER LAKE 345KV CKT 1	717	717	0.11783	103.7178	GEN509391 G1-ARSENAL HILL GENS #2 (STALL)
FDNS	00NR	0	16WP	G15_048	FROM->TO	CIMARRON - DRAPER LAKE 345KV CKT 1	717	717	0.11887	103.7169	CUSHING - PAYNESB4 138.00 138KV CKT 1
FDNS	00NR	0	16WP	G15_048	FROM->TO	CIMARRON - DRAPER LAKE 345KV CKT 1	717	717	0.11783	103.711	GEN335614 1-WILLOW GLENN UNIT#4
FDNS	00NR	0	16WP	G15_048	FROM->TO	CIMARRON - DRAPER LAKE 345KV CKT 1	717	717	0.11832	103.7087	DAYTON - MUSTANG 138KV CKT 1
FDNS	00NR	0	16WP	G15_048	FROM->TO	CIMARRON - DRAPER LAKE 345KV CKT 1	717	717	0.11832	103.7038	DAYTON - HOBBY LOBBY 138KV CKT 1
FDNS	00NR	0	16WP	G15_048	FROM->TO	CIMARRON - DRAPER LAKE 345KV CKT 1	717	717	0.11783	103.6985	GEN303008 1-1BC2 U3
FDNS	00NR	0	16WP	G15_048	FROM->TO	CIMARRON - DRAPER LAKE 345KV CKT 1	717	717	0.11581	103.6895	CANADIAN RIVER - PITTSBURG 345KV CKT 1
FDNS	00NR	0	16WP	G15_048	FROM->TO	CIMARRON - DRAPER LAKE 345KV CKT 1	717	717	0.11581	103.6895	CANADIAN RIVER - PITTSBURG 345KV CKT 1
FDNS	00NR	0	16WP	G15_048	FROM->TO	CIMARRON - DRAPER LAKE 345KV CKT 1	717	717	0.11826	103.6882	MUSTANG - SW 5TH 138KV CKT 1
FDNS	00NR	0	16WP	G15_048	FROM->TO	CIMARRON - DRAPER LAKE 345KV CKT 1	717	717	0.11783	103.6855	GEN338143 1-INDEPENDENCE UNIT #1
FDNS	00NR	0	16WP	G15_048	FROM->TO	CIMARRON - DRAPER LAKE 345KV CKT 1	717	717	0.11782	103.6766	ELDORADO EHV - MOUNT OLIVE 500KV CKT 1
FDNS	00NR	0	16WP	G15_048	FROM->TO	CIMARRON - DRAPER LAKE 345KV CKT 1	717	717	0.11783	103.6764	GEN336170 1-GULF OXY U4
FDNS	00NR	0	16WP	G15_048	FROM->TO	CIMARRON - DRAPER LAKE 345KV CKT 1	717	717	0.11783	103.6751	GEN336464 1-MICHOUD UNIT #3
FDNS	00NR	0	16WP	G15_048	FROM->TO	CIMARRON - DRAPER LAKE 345KV CKT 1	717	717	0.11851	103.6693	COLE - CRINER 138KV CKT 1
FDNS	00NR	0	16WP	G15_048	FROM->TO	CIMARRON - DRAPER LAKE 345KV CKT 1	717	717	0.1179	103.6516	P12:069:OKGE:3TERM19
FDNS	00NR	0	16WP	G15_048	FROM->TO	CIMARRON - DRAPER LAKE 345KV CKT 1	717	717	0.11783	103.6516	ESSEX UNIT 2 500/18.0KV TRANSFORMER CKT 1
FDNS	00NR	0	16WP	G15_048	FROM->TO	CIMARRON - DRAPER LAKE 345KV CKT 1	717	717	0.11792	103.6427	7LUTESVIL 345.00 - 7ST FRANC 345.00 345KV CKT 1
FDNS	00NR	0	16WP	G15_048	FROM->TO	CIMARRON - DRAPER LAKE 345KV CKT 1	717	717	0.11839	103.6334	OUMED 4 - STONEWALL 138KV CKT 1
FDNS	00NR	0	16WP	G15_048	FROM->TO	CIMARRON - DRAPER LAKE 345KV CKT 1	717	717	0.11783	103.6302	GEN336801 1-BAXTER WILSON UNIT #1
FDNS	00NR	0	16WP	G15_048	FROM->TO	CIMARRON - DRAPER LAKE 345KV CKT 1	717	717	0.11879	103.6262	LIGHTNING CREEK - ROBINSON 138KV CKT 1
FDNS	00NR	0	16WP	G15_048	FROM->TO	CIMARRON - DRAPER LAKE 345KV CKT 1	717	717	0.11762	103.6225	ARCADIA - LGARBER4 138.00 138KV CKT 1
FDNS	00NR	0	16WP	G15_048	FROM->TO	CIMARRON - DRAPER LAKE 345KV CKT 1	717	717	0.11783	103.6136	GEN506752 1-LEBROCK GAS 1
FDNS	00NR	0	16WP	G15_048	FROM->TO	CIMARRON - DRAPER LAKE 345KV CKT 1	717	717	0.11783	103.6135	GEN506753 1-LEBROCK GAS 2
FDNS	00NR	0	16WP	G15_048	FROM->TO	CIMARRON - DRAPER LAKE 345KV CKT 1	717	717	0.11788	103.6057	7JASPER 345.00 - BLACKBERRY 345KV CKT 1
FDNS	00NR	0	16WP	G15_048	FROM->TO	CIMARRON - DRAPER LAKE 345KV CKT 1	717	717	0.11909	103.6018	FAIRFAX TAP - SHIDLER 138KV CKT 1
FDNS	00NR	0	16WP	G15_048	FROM->TO	CIMARRON - DRAPER LAKE 345KV CKT 1	717	717	0.11909	103.6017	FAIRFAX TAP - WEBB CITY TAP 138KV CKT 1
FDNS	00NR	0	16WP	G15_048	FROM->TO	CIMARRON - DRAPER LAKE 345KV CKT 1	717	717	0.11762	103.5927	CHITWOOD - LGARBER4 138.00 138KV CKT 1
FDNS	00NR	0	16WP	G15_048	FROM->TO	CIMARRON - DRAPER LAKE 345KV CKT 1	717	717	0.11783	103.5925	GEN501910 1-ACADIA UNIT ST1
FDNS	00NR	0	16WP	G15_048	FROM->TO	CIMARRON - DRAPER LAKE 345KV CKT 1	717	717	0.11783	103.5817	RODEMACHER 230/22.0KV TRANSFORMER CKT 1
FDNS	00NR	0	16WP	G15_048	FROM->TO	CIMARRON - DRAPER LAKE 345KV CKT 1	717	717	0.11762	103.5804	CHITWOOD - JONES TAP 138KV CKT 1
FDNS	00NR	0	16WP	G15_048	FROM->TO	CIMARRON - DRAPER LAKE 345KV CKT 1	717	717	0.11783	103.5784	GEN511843 1-RIVERSIDE STATION #2
FDNS	00NR	0	16WP	G15_048	FROM->TO	CIMARRON - DRAPER LAKE 345KV CKT 1	717	717	0.1178	103.5772	P12:138:AEPW-OGE:WTH_JCT4:JENSEN4
FDNS	00NR	0	16WP	G15_048	FROM->TO	CIMARRON - DRAPER LAKE 345KV CKT 1	717	717	0.11895	103.571	TULSA NORTH - WEKIWA 345KV CKT 1
FDNS	00NR	0	16WP	G15_048	FROM->TO	CIMARRON - DRAPER LAKE 345KV CKT 1	717	717	0.11895	103.571	TULSA NORTH - WEKIWA 345KV CKT 1
FDNS	00NR	0	16WP	G15_048	FROM->TO	CIMARRON - DRAPER LAKE 345KV CKT 1	717	717	0.11785	103.5684	6LAYFLD 230.00 - CARROLL 230KV CKT 1
FDNS	00NR	0	16WP	G15_048	FROM->TO	CIMARRON - DRAPER LAKE 345KV CKT 1	717	717	0.11794	103.5641	8WNEWMADRID 500.00 - DELL 500 500KV CKT 1
FDNS	00NR	0	16WP	G15_048	FROM->TO	CIMARRON - DRAPER LAKE 345KV CKT 1	717	717	0.11785	103.5615	P12:345:GRDA:CHOUTEAU-SPORTSMANACRES
FDNS	00NR	0	16WP	G15_048	FROM->TO	CIMARRON - DRAPER LAKE 345KV CKT 1	717	717	0.1178	103.5548	ELDORADO EHV - SHERIDAN EHV 500KV CKT 1
FDNS	00NR	0	16WP	G15_048	FROM->TO	CIMARRON - DRAPER LAKE 345KV CKT 1	717	717	0.11683	103.5535	CHISHOLM6 230.00 - ELK CITY 230KV 230KV CKT 1
FDNS	00NR	0	16WP	G15_048	FROM->TO	CIMARRON - DRAPER LAKE 345KV CKT 1	717	717	0.11683	103.5504	ELK CITY 230KV (ELKCTY-6) 230/138/13.8KV TRANSFORMER CKT 1

SOLUTION	GROUP	SCENARIO	SEASON	SOURCE	DIRECTION	MONITORED ELEMENT	RATEA (MVA)	RATEB(MVA)	TDF	TC%LOADING (% MVA)	CONTINGENCY
FDNS	00NR	0	16WP	G15_048	FROM->TO	CIMARRON - DRAPER LAKE 345KV CKT 1	717	717	0.11683	103.5504	ELK CITY 230KV (ELKCTY-6) 230/138/13.8KV TRANSFORMER CKT 1
FDNS	00NR	0	16WP	G15_048	FROM->TO	CIMARRON - DRAPER LAKE 345KV CKT 1	717	717	0.11813	103.5453	G13-010T 345.00 - POST ROCK 345KV CKT 1
FDNS	00NR	0	16WP	G15_048	FROM->TO	CIMARRON - DRAPER LAKE 345KV CKT 1	717	717	0.1179	103.5337	P12:138:AEPW:N.E.S.-4:CATOOSA4
FDNS	00NR	0	16WP	G15_048	FROM->TO	CIMARRON - DRAPER LAKE 345KV CKT 1	717	717	0.11839	103.5322	OUMED 4 - PARK PLACE 138KV CKT 1
FDNS	00NR	0	16WP	G15_048	FROM->TO	CIMARRON - DRAPER LAKE 345KV CKT 1	717	717	0.11785	103.5255	FULTON 115 - HOPE 115KV CKT 1
FDNS	00NR	0	16WP	G15_048	FROM->TO	CIMARRON - DRAPER LAKE 345KV CKT 1	717	717	0.11785	103.5255	FULTON 115 - HOPE 115KV CKT 1
FDNS	00NR	0	16WP	G15_048	FROM->TO	CIMARRON - DRAPER LAKE 345KV CKT 1	717	717	0.11796	103.5186	P13:138-161:WERE:NSES_TX-4OR5::
FDNS	00NR	0	16WP	G15_048	FROM->TO	CIMARRON - DRAPER LAKE 345KV CKT 1	717	717	0.11783	103.5156	8CAJUN2 500/24.0KV TRANSFORMER CKT 1
FDNS	00NR	0	16WP	G15_048	FROM->TO	CIMARRON - DRAPER LAKE 345KV CKT 1	717	717	0.11753	103.5154	MORISNT4 138.00 - SOONER 138KV CKT 1
FDNS	00NR	0	16WP	G15_048	FROM->TO	CIMARRON - DRAPER LAKE 345KV CKT 1	717	717	0.11796	103.5113	P12:138:AEPW:CATOOSA4:T.S.E.-4
FDNS	00NR	0	16WP	G15_048	FROM->TO	CIMARRON - DRAPER LAKE 345KV CKT 1	717	717	0.11783	103.5052	ST FRANCIS - ST FRANCIS 1 161KV CKT Z1
FDNS	00NR	0	16WP	G15_048	FROM->TO	CIMARRON - DRAPER LAKE 345KV CKT 1	717	717	0.11792	103.5015	7JASPER 345.00 - MORGAN 345KV CKT 1
FDNS	00NR	0	16WP	G15_048	FROM->TO	CIMARRON - DRAPER LAKE 345KV CKT 1	717	717	0.11784	103.4974	P12:069:OKGE:3TERM3
FDNS	00NR	0	16WP	G15_048	FROM->TO	CIMARRON - DRAPER LAKE 345KV CKT 1	717	717	0.11799	103.4908	HUGO - VALLIANT 345KV CKT 1
FDNS	00NR	0	16WP	G15_048	FROM->TO	CIMARRON - DRAPER LAKE 345KV CKT 1	717	717	0.11799	103.4908	HUGO - VALLIANT 345KV CKT 1
FDNS	00NR	0	16WP	G15_048	FROM->TO	CIMARRON - DRAPER LAKE 345KV CKT 1	717	717	0.11783	103.4903	GEN509394 1-FLINT CREEK
FDNS	00NR	0	16WP	G15_048	FROM->TO	CIMARRON - DRAPER LAKE 345KV CKT 1	717	717	0.11783	103.4898	GEN300015 1-1SGPDEL 18.000
FDNS	00NR	0	16WP	G15_048	FROM->TO	CIMARRON - DRAPER LAKE 345KV CKT 1	717	717	0.11813	103.4897	G13-010T 345.00 - SPEARVILLE 345KV CKT 1
FDNS	00NR	0	16WP	G15_048	FROM->TO	CIMARRON - DRAPER LAKE 345KV CKT 1	717	717	0.11896	103.4895	DALE - HORSESHOE LAKE 138KV CKT 1
FDNS	00NR	0	16WP	G15_048	FROM->TO	CIMARRON - DRAPER LAKE 345KV CKT 1	717	717	0.11879	103.4888	LIGHTNING CREEK - TROSPER 138KV CKT 1
FDNS	00NR	0	16WP	G15_048	FROM->TO	CIMARRON - DRAPER LAKE 345KV CKT 1	717	717	0.11783	103.4794	GEN337766 1-TRACTEBEL UNIT S1
FDNS	00NR	0	16WP	G15_048	FROM->TO	CIMARRON - DRAPER LAKE 345KV CKT 1	717	717	0.11783	103.4788	P12:138:AEPW:SHERID4:112GORE4
FDNS	00NR	0	16WP	G15_048	FROM->TO	CIMARRON - DRAPER LAKE 345KV CKT 1	717	717	0.11783	103.4762	GEN515564 1-ORIGIN11 0.6900
FDNS	00NR	0	16WP	G15_048	FROM->TO	CIMARRON - DRAPER LAKE 345KV CKT 1	717	717	0.11783	103.4762	GEN515565 1-ORIGIN21 0.6900
FDNS	00NR	0	16WP	G15_048	FROM->TO	CIMARRON - DRAPER LAKE 345KV CKT 1	717	717	0.11832	103.4744	36 & MERIDIAN - HOBBY LOBBY 138KV CKT 1
FDNS	00NR	0	16WP	G15_048	FROM->TO	CIMARRON - DRAPER LAKE 345KV CKT 1	717	717	0.11795	103.474	HAMMETT TAP - HAMMETT2 138KV CKT 1
FDNS	00NR	0	16WP	G15_048	FROM->TO	CIMARRON - DRAPER LAKE 345KV CKT 1	717	717	0.11804	103.4732	ANADARKO - GRACMNT4 138.00 138KV CKT 1
FDNS	00NR	0	16WP	G15_048	FROM->TO	CIMARRON - DRAPER LAKE 345KV CKT 1	717	717	0.11783	103.4731	GEN336222 1-LITTLE GYPSY UNIT#2
FDNS	00NR	0	16WP	G15_048	FROM->TO	CIMARRON - DRAPER LAKE 345KV CKT 1	717	717	0.11948	103.4701	NORTHEAST STATION - ONETA 345KV CKT 1
FDNS	00NR	0	16WP	G15_048	FROM->TO	CIMARRON - DRAPER LAKE 345KV CKT 1	717	717	0.11948	103.4701	NORTHEAST STATION - ONETA 345KV CKT 1
FDNS	00NR	0	16WP	G15_048	FROM->TO	CIMARRON - DRAPER LAKE 345KV CKT 1	717	717	0.1179	103.4701	P12:138:OKGE:3TERM28
FDNS	00NR	0	16WP	G15_048	FROM->TO	CIMARRON - DRAPER LAKE 345KV CKT 1	717	717	0.11791	103.4665	FLETCHER - MARLOW JCT 69KV CKT 1
FDNS	00NR	0	16WP	G15_048	FROM->TO	CIMARRON - DRAPER LAKE 345KV CKT 1	717	717	0.11783	103.4622	GEN501970 1-EVANGELINE UNIT 7
FDNS	00NR	0	16WP	G15_048	FROM->TO	CIMARRON - DRAPER LAKE 345KV CKT 1	717	717	0.11783	103.4621	NELSON 230/20.0KV TRANSFORMER CKT 1
FDNS	00NR	0	16WP	G15_048	FROM->TO	CIMARRON - DRAPER LAKE 345KV CKT 1	717	717	0.11787	103.4586	NW164TH4 138.00 - PIEDMONT 138KV CKT 1
FDNS	00NR	0	16WP	G15_048	FROM->TO	CIMARRON - DRAPER LAKE 345KV CKT 1	717	717	0.11784	103.458	P12:161:AEPW:EROGERS5:ECNTRTN5
FDNS	00NR	0	16WP	G15_048	FROM->TO	CIMARRON - DRAPER LAKE 345KV CKT 1	717	717	0.11774	103.4577	P12:138:OKGE-AEPW:JENSEN4:REDROCKRD4
FDNS	00NR	0	16WP	G15_048	FROM->TO	CIMARRON - DRAPER LAKE 345KV CKT 1	717	717	0.11787	103.4567	NORTHWEST - NW164TH4 138.00 138KV CKT 1
FDNS	00NR	0	16WP	G15_048	FROM->TO	CIMARRON - DRAPER LAKE 345KV CKT 1	717	717	0.11783	103.4555	ESSEX UNIT 2 500/18.0KV TRANSFORMER CKT 1
FDNS	00NR	0	16WP	G15_048	FROM->TO	CIMARRON - DRAPER LAKE 345KV CKT 1	717	717	0.11787	103.4553	P12:161:AEPW-SWPA:BEAVER5:EROGERS5
FDNS	00NR	0	16WP	G15_048	FROM->TO	CIMARRON - DRAPER LAKE 345KV CKT 1	717	717	0.1179	103.4548	COMANCHE TAP - OMPA-DUNCAN 840 138KV CKT 1
FDNS	00NR	0	16WP	G15_048	FROM->TO	CIMARRON - DRAPER LAKE 345KV CKT 1	717	717	0.11803	103.4517	CORN TAP - SEQUOYAHJ4 138.00 138KV CKT 1
FDNS	00NR	0	16WP	G15_048	FROM->TO	CIMARRON - DRAPER LAKE 345KV CKT 1	717	717	0.11797	103.4516	P12:138:AEPW:CORNVIL4:S.W.S.-4
FDNS	00NR	0	16WP	G15_048	FROM->TO	CIMARRON - DRAPER LAKE 345KV CKT 1	717	717	0.11803	103.4513	ANADARKO - SEQUOYAHJ4 138.00 138KV CKT 1
FDNS	00NR	0	16WP	G15_048	FROM->TO	CIMARRON - DRAPER LAKE 345KV CKT 1	717	717	0.11896	103.448	DALE - SQUIRL CREEK 138KV CKT 1
FDNS	00NR	0	16WP	G15_048	FROM->TO	CIMARRON - DRAPER LAKE 345KV CKT 1	717	717	0.11815	103.4464	HEALDTON - LOCO 138KV CKT 1
FDNS	00NR	0	16WP	G15_048	FROM->TO	CIMARRON - DRAPER LAKE 345KV CKT 1	717	717	0.11783	103.4463	P12:161:AEPW:DYESS5:ELMSPRNG:TONTITN5
FDNS	00NR	0	16WP	G15_048	FROM->TO	CIMARRON - DRAPER LAKE 345KV CKT 1	717	717	0.11783	103.4425	GEN336152 1-WATERFORD UNIT#2
FDNS	00NR	0	16WP	G15_048	FROM->TO	CIMARRON - DRAPER LAKE 345KV CKT 1	717	717	0.11783	103.4415	GEN336151 1-WATERFORD UNIT#1
FDNS	00NR	0	16WP	G15_048	FROM->TO	CIMARRON - DRAPER LAKE 345KV CKT 1	717	717	0.11783	103.4407	ST FRANCIS 345/161KV TRANSFORMER CKT 1
FDNS	00NR	0	16WP	G15_048	FROM->TO	CIMARRON - DRAPER LAKE 345KV CKT 1	717	717	0.11801	103.4351	CORN TAP - CORNVILLE 138KV CKT 1
FDNS	00NR	0	16WP	G15_048	FROM->TO	CIMARRON - DRAPER LAKE 345KV CKT 1	717	717	0.12111	103.4322	MARSHALL - WOODRING 138KV CKT 1
FDNS	00NR	0	16WP	G15_048	FROM->TO	CIMARRON - DRAPER LAKE 345KV CKT 1	717	717	0.11783	103.4302	GEN334392 1-EXXON MOBIL IPP 1
FDNS	00NR	0	16WP	G15_048	FROM->TO	CIMARRON - DRAPER LAKE 345KV CKT 1	717	717	0.12111	103.4299	COTTONWOOD CREEK - MARSHALL 138KV CKT 1
FDNS	00NR	0	16WP	G15_048	FROM->TO	CIMARRON - DRAPER LAKE 345KV CKT 1	717	717	0.11797	103.4289	HEFNER - TULSA 138KV CKT 1
FDNS	00NR	0	16WP	G15_048	FROM->TO	CIMARRON - DRAPER LAKE 345KV CKT 1	717	717	0.11851	103.4279	COLE - OUSW4 138KV CKT 1
FDNS	00NR	0	16WP	G15_048	FROM->TO	CIMARRON - DRAPER LAKE 345KV CKT 1	717	717	0.11784	103.426	MC NIEL 500/115KV TRANSFORMER CKT 1
FDNS	00NR	0	16WP	G15_048	FROM->TO	CIMARRON - DRAPER LAKE 345KV CKT 1	717	717	0.11783	103.424	GEN334393 1-EXXON MOBIL IPP 2
FDNS	00NR	0	16WP	G15_048	FROM->TO	CIMARRON - DRAPER LAKE 345KV CKT 1	717	717	0.11783	103.424	GEN334394 1-EXXON MOBIL IPP 3
FDNS	00NR	0	16WP	G15_048	FROM->TO	CIMARRON - DRAPER LAKE 345KV CKT 1	717	717	0.11835	103.4222	P12:138:AEPW:MOUNDRD4:SHIDLER4
FDNS	00NR	0	16WP	G15_048	FROM->TO	CIMARRON - DRAPER LAKE 345KV CKT 1	717	717	0.11784	103.4218	BISMARK - HOT SPRINGS WEST BUS 115KV CKT 1
FDNS	00NR	0	16WP	G15_048	FROM->TO	CIMARRON - DRAPER LAKE 345KV CKT 1	717	717	0.11869	103.4138	EL RENO SW - MUSTANG2 69.000 69KV CKT 1
FDNS	00NR	0	16WP	G15_048	FROM->TO	CIMARRON - DRAPER LAKE 345KV CKT 1	717	717	0.11809	103.4132	BRISTOW - SILVER CITY 138KV CKT 1
FDNS	00NR	0	16WP	G15_048	FROM->TO	CIMARRON - DRAPER LAKE 345KV CKT 1	717	717	0.11796	103.4123	KELLYAV4 138.00 - MEMORIAL 138KV CKT 1
FDNS	00NR	0	16WP	G15_048	FROM->TO	CIMARRON - DRAPER LAKE 345KV CKT 1	717	717	0.11783	103.4084	GEN501972 1-EVANGELINE UNIT 7-2
FDNS	00NR	0	16WP	G15_048	FROM->TO	CIMARRON - DRAPER LAKE 345KV CKT 1	717	717	0.11783	103.4083	GEN501971 1-EVANGELINE UNIT 7-1
FDNS	00NR	0	16WP	G15_048	FROM->TO	CIMARRON - DRAPER LAKE 345KV CKT 1	717	717	0.11835	103.4049	SHIDLER - WEST PAWHUSKA 138KV CKT 1
FDNS	00NR	0	16WP	G15_048	FROM->TO	CIMARRON - DRAPER LAKE 345KV CKT 1	717	717	0.11815	103.4047	HEALDTON - RINGLING 138KV CKT 1
FDNS	00NR	0	16WP	G15_048	FROM->TO	CIMARRON - DRAPER LAKE 345KV CKT 1	717	717	0.11783	103.3987	GEN334431 1-SABINE UNIT 1
FDNS	00NR	0	16WP	G15_048	FROM->TO	CIMARRON - DRAPER LAKE 345KV CKT 1	717	717	0.11783	103.3986	GEN334432 1-SABINE UNIT 2
FDNS	00NR	0	16WP	G15_048	FROM->TO	CIMARRON - DRAPER LAKE 345KV CKT 1	717	717	0.11783	103.3959	GEN336242 1-1NMIL ST1 18.000
FDNS	00NR	0	16WP	G15_048	FROM->TO	CIMARRON - DRAPER LAKE 345KV CKT 1	717	717	0.11783	103.3954	GEN337764 1-TRACTEBEL UNIT C1
FDNS	00NR	0	16WP	G15_048	FROM->TO	CIMARRON - DRAPER LAKE 345KV CKT 1	717	717	0.11783	103.3954	GEN337765 1-TRACTEBEL UNIT C2
FDNS	00NR	0	16WP	G15_048	FROM->TO	CIMARRON - DRAPER LAKE 345KV CKT 1	717	717	0.11793	103.3939	BROOKLINE - MORGAN 345KV CKT 1
FDNS	00NR	0	16WP	G15_048	FROM->TO	CIMARRON - DRAPER LAKE 345KV CKT 1	717	717	0.11793	103.3939	BROOKLINE - MORGAN 345KV CKT 1
FDNS	00NR	0	16WP	G15_048	FROM->TO	CIMARRON - DRAPER LAKE 345KV CKT 1	717	717	0.11783	103.3938	GEN501912 1-ACADIA UNIT CT1B
FDNS	00NR	0	16WP	G15_048	FROM->TO	CIMARRON - DRAPER LAKE 345KV CKT 1	717	717	0.11783	103.3931	GEN501911 1-ACADIA UNIT CT1A
FDNS	00NR	0	16WP	G15_048	FROM->TO	CIMARRON - DRAPER LAKE 345KV CKT 1	717	717	0.11839	103.3919	BODLE - PARK PLACE 138KV CKT 1
FDNS	00NR	0	16WP	G15_048	FROM->TO	CIMARRON - DRAPER LAKE 345KV CKT 1	717	717	0.11802	103.3911	COUNCIL - MUSTANG 138KV CKT 1

SOLUTION	GROUP	SCENARIO	SEASON	SOURCE	DIRECTION	MONITORED ELEMENT	RATEA (MVA)	RATEB(MVA)	TDF	TC%LOADING (% MVA)	CONTINGENCY
FDNS	00NR	0	16WP	G15_048	FROM->TO	CIMARRON - DRAPER LAKE 345KV CKT 1	717	717	0.11946	103.391	BRYANT - MEMORIAL 138KV CKT 1
FDNS	00NR	0	16WP	G15_048	FROM->TO	CIMARRON - DRAPER LAKE 345KV CKT 1	717	717	0.11835	103.3884	PAWHUSKA TAP - WEST PAWHUSKA 138KV CKT 1
FDNS	00NR	0	16WP	G15_048	FROM->TO	CIMARRON - DRAPER LAKE 345KV CKT 1	717	717	0.11784	103.3884	ALPINE AECC - BISMARK 115KV CKT 1
FDNS	00NR	0	16WP	G15_048	FROM->TO	CIMARRON - DRAPER LAKE 345KV CKT 1	717	717	0.11784	103.388	CYPRESS - HARTBURG 500KV CKT 1
FDNS	00NR	0	16WP	G15_048	FROM->TO	CIMARRON - DRAPER LAKE 345KV CKT 1	717	717	0.11787	103.3831	PIEDMONT - RICHRDS 138KV CKT 1
FDNS	00NR	0	16WP	G15_048	FROM->TO	CIMARRON - DRAPER LAKE 345KV CKT 1	717	717	0.11783	103.3827	P12:69:AEPW:L.E.S.-2:LAW WC2
FDNS	00NR	0	16WP	G15_048	FROM->TO	CIMARRON - DRAPER LAKE 345KV CKT 1	717	717	0.11796	103.3809	KELLYAV4 138.00 - REMNGTON PARK 138KV CKT 1
FDNS	00NR	0	16WP	G15_048	FROM->TO	CIMARRON - DRAPER LAKE 345KV CKT 1	717	717	0.11795	103.3808	HAMMETT2 - MEEKER 138KV CKT 1
FDNS	00NR	0	16WP	G15_048	FROM->TO	CIMARRON - DRAPER LAKE 345KV CKT 1	717	717	0.11807	103.375	HAMMETT TAP - HORSESHOE LAKE 138KV CKT 1
FDNS	00NR	0	16WP	G15_048	FROM->TO	CIMARRON - DRAPER LAKE 345KV CKT 1	717	717	0.11782	103.3697	LAYFLD8 500.00 - MOUNT OLIVE 500KV CKT 1
FDNS	00NR	0	16WP	G15_048	FROM->TO	CIMARRON - DRAPER LAKE 345KV CKT 1	717	717	0.11782	103.3697	LAYFLD8 500.00 - MOUNT OLIVE 500KV CKT 1
FDNS	00NR	0	16WP	G15_048	FROM->TO	CIMARRON - DRAPER LAKE 345KV CKT 1	717	717	0.11815	103.3631	RINGLING - SOUTH WILSON 138KV CKT 1
FDNS	00NR	0	16WP	G15_048	FROM->TO	CIMARRON - DRAPER LAKE 345KV CKT 1	717	717	0.11817	103.3457	CIVIT - PAOLI 138KV CKT 1
FDNS	00NR	0	16WP	G15_048	FROM->TO	CIMARRON - DRAPER LAKE 345KV CKT 1	717	717	0.11784	103.3404	LACYGNE - STILWELL 345KV CKT 1
FDNS	00NR	0	16WP	G15_048	FROM->TO	CIMARRON - DRAPER LAKE 345KV CKT 1	717	717	0.1208	103.3399	GRACEMONT - LAWTON EASTSIDE 345KV CKT 1
FDNS	00NR	0	16WP	G15_048	FROM->TO	CIMARRON - DRAPER LAKE 345KV CKT 1	717	717	0.1208	103.3399	GRACEMONT - LAWTON EASTSIDE 345KV CKT 1
FDNS	00NR	0	16WP	G15_048	FROM->TO	CIMARRON - DRAPER LAKE 345KV CKT 1	717	717	0.11802	103.3365	COUNCIL - WESTOAKS 138KV CKT 1
FDNS	00NR	0	16WP	G15_048	FROM->TO	CIMARRON - DRAPER LAKE 345KV CKT 1	717	717	0.11783	102.9113	BASE CASE
FDNS	00NR	0	16WP	G15_048	FROM->TO	CIMARRON - DRAPER LAKE 345KV CKT 1	717	717	0.11781	102.5994	GRAPEVINE INTERCHANGE - NICHOLS STATION 230KV CKT 1
FDNS	00NR	0	16WP	G15_048	FROM->TO	CIMARRON - DRAPER LAKE 345KV CKT 1	717	717	0.11781	102.5994	GRAPEVINE INTERCHANGE - NICHOLS STATION 230KV CKT 1
FDNS	00NR	0	16WP	G15_048	FROM->TO	CIMARRON - DRAPER LAKE 345KV CKT 1	717	717	0.09758	102.5967	G15063_T 345.00 - WOODRING 345KV CKT 1
FDNS	00NR	0	16WP	G15_048	FROM->TO	CIMARRON - DRAPER LAKE 345KV CKT 1	717	717	0.11859	102.5371	BURGETT4 138.00 - RNDBARN4 138.00 138KV CKT 1
FDNS	00NR	0	16WP	G15_048	FROM->TO	CIMARRON - DRAPER LAKE 345KV CKT 1	717	717	0.11859	102.5354	BURGETT4 138.00 - DANFORTH 138KV CKT 1
FDNS	00NR	0	16WP	G15_048	FROM->TO	CIMARRON - DRAPER LAKE 345KV CKT 1	717	717	0.11859	102.5245	ARCADIA - RNDBARN4 138.00 138KV CKT 1
FDNS	00NR	0	16WP	G15_048	FROM->TO	CIMARRON - DRAPER LAKE 345KV CKT 1	717	717	0.11783	102.495	GEN659125 1-COVEY
FDNS	00NR	0	16WP	G15_048	FROM->TO	CIMARRON - DRAPER LAKE 345KV CKT 1	717	717	0.11783	102.4903	GEN515550 1-MNCWND31 0.6900
FDNS	00NR	0	16WP	G15_048	FROM->TO	CIMARRON - DRAPER LAKE 345KV CKT 1	717	717	0.11781	102.482	GRAPEVINE INTERCHANGE - STATELINE INTERCHANGE 230KV CKT 1
FDNS	00NR	0	16WP	G15_048	FROM->TO	CIMARRON - DRAPER LAKE 345KV CKT 1	717	717	0.11781	102.482	GRAPEVINE INTERCHANGE - STATELINE INTERCHANGE 230KV CKT 1
FDNS	00NR	0	16WP	G15_048	FROM->TO	CIMARRON - DRAPER LAKE 345KV CKT 1	717	717	0.11783	102.477	GEN562611 1-G14_064_3 0.6900
FDNS	00NR	0	16WP	G15_048	FROM->TO	CIMARRON - DRAPER LAKE 345KV CKT 1	717	717	0.11783	102.4715	GEN511848 1-SOUTHWESTERN STATION #3
FDNS	00NR	0	16WP	G15_048	FROM->TO	CIMARRON - DRAPER LAKE 345KV CKT 1	717	717	0.11783	102.4453	GEN515601 1-KNGFSR11 0.7000
FDNS	00NR	0	16WP	G15_048	FROM->TO	CIMARRON - DRAPER LAKE 345KV CKT 1	717	717	0.11783	102.4414	GEN600071 10-RIVER SIDE
FDNS	00NR	0	16WP	G15_048	FROM->TO	CIMARRON - DRAPER LAKE 345KV CKT 1	717	717	0.11783	102.4413	GEN600070 9-RIVER SIDE
FDNS	00NR	0	16WP	G15_048	FROM->TO	CIMARRON - DRAPER LAKE 345KV CKT 1	717	717	0.11783	102.4362	GEN672303 3-BOUNDARY DAM GENERATOR 3
FDNS	00NR	0	16WP	G15_048	FROM->TO	CIMARRON - DRAPER LAKE 345KV CKT 1	717	717	0.11783	102.4362	GEN672304 4-BOUNDARY DAM GENERATOR 4
FDNS	00NR	0	16WP	G15_048	FROM->TO	CIMARRON - DRAPER LAKE 345KV CKT 1	717	717	0.11783	102.4362	GEN672305 5-BOUNDARY DAM GENERATOR 5
FDNS	00NR	0	16WP	G15_048	FROM->TO	CIMARRON - DRAPER LAKE 345KV CKT 1	717	717	0.11783	102.4353	GEN600007 7-RIVERSIDE GEN 7
FDNS	00NR	0	16WP	G15_048	FROM->TO	CIMARRON - DRAPER LAKE 345KV CKT 1	717	717	0.11783	102.4347	GEN600067 9-HIGH BRIDGE
FDNS	00NR	0	16WP	G15_048	FROM->TO	CIMARRON - DRAPER LAKE 345KV CKT 1	717	717	0.11783	102.4338	GEN563062 1-G15071_3 0.6900
FDNS	00NR	0	16WP	G15_048	FROM->TO	CIMARRON - DRAPER LAKE 345KV CKT 1	717	717	0.11783	102.4307	GEN615052 1-CAMBRIDGE GENERATING STATION
FDNS	00NR	0	16WP	G15_048	FROM->TO	CIMARRON - DRAPER LAKE 345KV CKT 1	717	717	0.11783	102.4274	GEN541151 3-SIBLEY GENERATING UNIT #3
FDNS	00NR	0	16WP	G15_048	FROM->TO	CIMARRON - DRAPER LAKE 345KV CKT 1	717	717	0.11752	102.4256	CHISNEY - CLARKSVILLE 138KV CKT 1
FDNSLock	00NR	0	16WP	G15_048	FROM->TO	CIMARRON - DRAPER LAKE 345KV CKT 1	717	717	0.11783	102.4224	GEN600014 4-BLACK DOG GEN 4
FDNS	00NR	0	16WP	G15_048	FROM->TO	CIMARRON - DRAPER LAKE 345KV CKT 1	717	717	0.11783	102.4218	GEN563282 1-G15094_3 0.6900
FDNS	00NR	0	16WP	G15_048	FROM->TO	CIMARRON - DRAPER LAKE 345KV CKT 1	717	717	0.11783	102.4212	GEN652353 2-GR PRAIRIEG 0.6900
FDNS	00NR	0	16WP	G15_048	FROM->TO	CIMARRON - DRAPER LAKE 345KV CKT 1	717	717	0.11783	102.4168	GEN629067 1-EMERY GAS TURBINE 1
FDNS	00NR	0	16WP	G15_048	FROM->TO	CIMARRON - DRAPER LAKE 345KV CKT 1	717	717	0.11804	102.4148	7MCCREDIE 345.00 - 7MONTGMRY 345.00 345KV CKT 1
FDNS	00NR	0	16WP	G15_048	FROM->TO	CIMARRON - DRAPER LAKE 345KV CKT 1	717	717	0.11783	102.4032	GEN563102 1-G15075_3 0.5500
FDNS	00NR	0	16WP	G15_048	FROM->TO	CIMARRON - DRAPER LAKE 345KV CKT 1	717	717	0.11783	102.4015	GEN515591 1-PALDRW11 0.6900
FDNS	00NR	0	16WP	G15_048	FROM->TO	CIMARRON - DRAPER LAKE 345KV CKT 1	717	717	0.11783	102.4	GEN300003 1-THOMAS HILL UNIT 3
FDNS	00NR	0	16WP	G15_048	FROM->TO	CIMARRON - DRAPER LAKE 345KV CKT 1	717	717	0.11783	102.4	GEN600011 5-BLACK DOG GEN 1
FDNS	00NR	0	16WP	G15_048	FROM->TO	CIMARRON - DRAPER LAKE 345KV CKT 1	717	717	0.11783	102.4	GEN615032 2-PLEASANT VALLEY
FDNS	00NR	0	16WP	G15_048	FROM->TO	CIMARRON - DRAPER LAKE 345KV CKT 1	717	717	0.11783	102.3966	GEN562602 1-G15_029_3 0.6900
FDNS	00NR	0	16WP	G15_048	FROM->TO	CIMARRON - DRAPER LAKE 345KV CKT 1	717	717	0.11827	102.3868	SEMINOLE - VANOSTP4 138.00 138KV CKT 1
FDNS	00NR	0	16WP	G15_048	FROM->TO	CIMARRON - DRAPER LAKE 345KV CKT 1	717	717	0.11783	102.3864	GEN600017 C-LS POWER CT
FDNS	00NR	0	16WP	G15_048	FROM->TO	CIMARRON - DRAPER LAKE 345KV CKT 1	717	717	0.11783	102.3828	GEN562812 1-G15040_3 0.3570
FDNS	00NR	0	16WP	G15_048	FROM->TO	CIMARRON - DRAPER LAKE 345KV CKT 1	717	717	0.11783	102.3765	GEN563132 1-G15078_3 0.3570
FDNS	00NR	0	16WP	G15_048	FROM->TO	CIMARRON - DRAPER LAKE 345KV CKT 1	717	717	0.11972	102.3681	FOREST HILL - MAUD 138KV CKT 1
FDNS	00NR	0	16WP	G15_048	FROM->TO	CIMARRON - DRAPER LAKE 345KV CKT 1	717	717	0.11783	102.3672	GEN524285 1-WILDORADO WIND GEN
FDNS	00NR	0	16WP	G15_048	FROM->TO	CIMARRON - DRAPER LAKE 345KV CKT 1	717	717	0.118	102.366	P12:138:AEPW:WELETK4:EARLSBORO4
FDNS	00NR	0	16WP	G15_048	FROM->TO	CIMARRON - DRAPER LAKE 345KV CKT 1	717	717	0.118	102.366	P12:138:OKGE:3TERM36
FDNS	00NR	0	16WP	G15_048	FROM->TO	CIMARRON - DRAPER LAKE 345KV CKT 1	717	717	0.11783	102.3624	GEN562074 1-G1149G1504 0.6900
FDNS	00NR	0	16WP	G15_048	FROM->TO	CIMARRON - DRAPER LAKE 345KV CKT 1	717	717	0.11783	102.3559	GEN672392 1-NBECGT1G 18.000
FDNS	00NR	0	16WP	G15_048	FROM->TO	CIMARRON - DRAPER LAKE 345KV CKT 1	717	717	0.11798	102.3552	EARLSBORO 4138.00 - FIXICO TAP 138KV CKT 1
FDNS	00NR	0	16WP	G15_048	FROM->TO	CIMARRON - DRAPER LAKE 345KV CKT 1	717	717	0.11783	102.3552	GEN629070 2-BEAVER CHANNEL GENERATORFOR UNIT NO 2
FDNS	00NR	0	16WP	G15_048	FROM->TO	CIMARRON - DRAPER LAKE 345KV CKT 1	717	717	0.11783	102.3445	GEN526331 1-JONES GEN #1 22 KV
FDNS	00NR	0	16WP	G15_048	FROM->TO	CIMARRON - DRAPER LAKE 345KV CKT 1	717	717	0.11783	102.3445	GEN526332 1-JONES GEN #2 21 KV
FDNS	00NR	0	16WP	G15_048	FROM->TO	CIMARRON - DRAPER LAKE 345KV CKT 1	717	717	0.11801	102.3431	CANADIAN RIVER - MCALESTER SOUTH 138KV CKT 1
FDNS	00NR	0	16WP	G15_048	FROM->TO	CIMARRON - DRAPER LAKE 345KV CKT 1	717	717	0.11801	102.3431	CANADIAN RIVER - MCALESTER SOUTH 138KV CKT 1
FDNS	00NR	0	16WP	G15_048	FROM->TO	CIMARRON - DRAPER LAKE 345KV CKT 1	717	717	0.11783	102.343	GEN562596 1-G14_059_3 0.6900
FDNS	00NR	0	16WP	G15_048	FROM->TO	CIMARRON - DRAPER LAKE 345KV CKT 1	717	717	0.11801	102.3417	CANADIAN RIVER () 345/138/13.8KV TRANSFORMER CKT 1
FDNS	00NR	0	16WP	G15_048	FROM->TO	CIMARRON - DRAPER LAKE 345KV CKT 1	717	717	0.11801	102.3417	CANADIAN RIVER () 345/138/13.8KV TRANSFORMER CKT 1
FDNS	00NR	0	16WP	G15_048	FROM->TO	CIMARRON - DRAPER LAKE 345KV CKT 1	717	717	0.11783	102.336	GEN615010 1-STANTON4
FDNS	00NR	0	16WP	G15_048	FROM->TO	CIMARRON - DRAPER LAKE 345KV CKT 1	717	717	0.11783	102.3359	GEN629071 1-BURLINGTON GENERATOR FOR UNIT NO 1 E
FDNS	00NR	0	16WP	G15_048	FROM->TO	CIMARRON - DRAPER LAKE 345KV CKT 1	717	717	0.11752	102.3342	CHISNEY - HIGHLAND 138KV CKT 1
FDNS	00NR	0	16WP	G15_048	FROM->TO	CIMARRON - DRAPER LAKE 345KV CKT 1	717	717	0.11783	102.3307	GEN515365 1-CENT 21 0.7000
FDNS	00NR	0	16WP	G15_048	FROM->TO	CIMARRON - DRAPER LAKE 345KV CKT 1	717	717	0.11783	102.3205	GEN562983 1-G15061_4 0.6900
FDNS	00NR	0	16WP	G15_048	FROM->TO	CIMARRON - DRAPER LAKE 345KV CKT 1	717	717	0.11783	102.3205	GEN562984 1-G15061_5 0.6900
FDNS	00NR	0	16WP	G15_048	FROM->TO	CIMARRON - DRAPER LAKE 345KV CKT 1	717	717	0.11784	102.3203	P12:138:WFEC:MSL07

SOLUTION	GROUP	SCENARIO	SEASON	SOURCE	DIRECTION	MONITORED ELEMENT	RATEA (MVA)	RATEB(MVA)	TDF	TC%LOADING (% MVA)	CONTINGENCY
FDNS	00NR	0	16WP	G15_048	FROM->TO	CIMARRON - DRAPER LAKE 345KV CKT 1	717	717	0.11784	102.3203	P12:138:WFEC-AEPW:HUGOPP4:ATOKA--4
FDNS	00NR	0	16WP	G15_048	FROM->TO	CIMARRON - DRAPER LAKE 345KV CKT 1	717	717	0.11783	102.3161	GEN562017 1-G11_022_3 0.6900
FDNS	00NR	0	16WP	G15_048	FROM->TO	CIMARRON - DRAPER LAKE 345KV CKT 1	717	717	0.11783	102.3138	GEN615021 1-GRE-ER 14G 16.000
FDNS	00NR	0	16WP	G15_048	FROM->TO	CIMARRON - DRAPER LAKE 345KV CKT 1	717	717	0.11787	102.3122	GRPRAR1-LNX3345.00 - HOLT.CO3 345.00 345KV CKT 1
FDNS	00NR	0	16WP	G15_048	FROM->TO	CIMARRON - DRAPER LAKE 345KV CKT 1	717	717	0.11785	102.3107	P12:138:AEPW:SHAM4WT:CHILD4WT
FDNS	00NR	0	16WP	G15_048	FROM->TO	CIMARRON - DRAPER LAKE 345KV CKT 1	717	717	0.11787	102.3086	GRPRAR1-LNX3345.00 - GRPRAR 345KV CKT Z
FDNS	00NR	0	16WP	G15_048	FROM->TO	CIMARRON - DRAPER LAKE 345KV CKT 1	717	717	0.11783	102.3034	GEN562429 1-G13-029 0.6900
FDNS	00NR	0	16WP	G15_048	FROM->TO	CIMARRON - DRAPER LAKE 345KV CKT 1	717	717	0.11783	102.3021	GEN562432 1-G13-030 0.6900
FDNS	00NR	0	16WP	G15_048	FROM->TO	CIMARRON - DRAPER LAKE 345KV CKT 1	717	717	0.11783	102.3019	GEN560105 1-G08-22 0.6900
FDNS	00NR	0	16WP	G15_048	FROM->TO	CIMARRON - DRAPER LAKE 345KV CKT 1	717	717	0.11783	102.3006	INDEPENDENCE 500/26.0KV TRANSFORMER CKT 1
FDNS	00NR	0	16WP	G15_048	FROM->TO	CIMARRON - DRAPER LAKE 345KV CKT 1	717	717	0.11783	102.2985	GEN532663 1-LAWRENCE ENERGY CENTER UNIT 5
FDNS	00NR	0	16WP	G15_048	FROM->TO	CIMARRON - DRAPER LAKE 345KV CKT 1	717	717	0.11781	102.2985	P12:138:AEPW-SWPA:LONEOAK4:TUPELO4
FDNS	00NR	0	16WP	G15_048	FROM->TO	CIMARRON - DRAPER LAKE 345KV CKT 1	717	717	0.11781	102.2984	P12:138:WFEC:MSL06
FDNS	00NR	0	16WP	G15_048	FROM->TO	CIMARRON - DRAPER LAKE 345KV CKT 1	717	717	0.11806	102.2966	OVEXFRMCCOVE
FDNS	00NR	0	16WP	G15_048	FROM->TO	CIMARRON - DRAPER LAKE 345KV CKT 1	717	717	0.11795	102.2931	DELL 500 - INDEPENDENCE 500KV CKT 1
FDNS	00NR	0	16WP	G15_048	FROM->TO	CIMARRON - DRAPER LAKE 345KV CKT 1	717	717	0.11783	102.2894	BURLINGTON NO1 + NO 2 + NO 3 161/20.0KV TRANSFORMER CKT 1
FDNS	00NR	0	16WP	G15_048	FROM->TO	CIMARRON - DRAPER LAKE 345KV CKT 1	717	717	0.118	102.2839	P12:138:AEPW-OGE:WELETK4:MAUD 4
FDNS	00NR	0	16WP	G15_048	FROM->TO	CIMARRON - DRAPER LAKE 345KV CKT 1	717	717	0.11649	102.2797	P12:230:AEPW:ELKCITY6:SWEETWT6
FDNS	00NR	0	16WP	G15_048	FROM->TO	CIMARRON - DRAPER LAKE 345KV CKT 1	717	717	0.11783	102.2752	GEN527882 1-CUNNINGHAM GEN #2 20 KV
FDNS	00NR	0	16WP	G15_048	FROM->TO	CIMARRON - DRAPER LAKE 345KV CKT 1	717	717	0.11792	102.2741	P12:138:WFEC:MSL16
FDNS	00NR	0	16WP	G15_048	FROM->TO	CIMARRON - DRAPER LAKE 345KV CKT 1	717	717	0.11798	102.2712	EARLSBORO 4138.00 - MAUD 138KV CKT 1
FDNS	00NR	0	16WP	G15_048	FROM->TO	CIMARRON - DRAPER LAKE 345KV CKT 1	717	717	0.11798	102.2712	EARLSBORO 4138.00 - MAUD 138KV CKT 1
FDNS	00NR	0	16WP	G15_048	FROM->TO	CIMARRON - DRAPER LAKE 345KV CKT 1	717	717	0.11783	102.2674	GEN562550 1-G14_040_3 0.6900
FDNS	00NR	0	16WP	G15_048	FROM->TO	CIMARRON - DRAPER LAKE 345KV CKT 1	717	717	0.11783	102.2642	GEN524295 1-SPNSPUR_WND10.6900
FDNS	00NR	0	16WP	G15_048	FROM->TO	CIMARRON - DRAPER LAKE 345KV CKT 1	717	717	0.11783	102.2579	GEN562832 1-G15042_3 0.6900
FDNS	00NR	0	16WP	G15_048	FROM->TO	CIMARRON - DRAPER LAKE 345KV CKT 1	717	717	0.11922	102.2486	MAUD - SEMINOLE 138KV CKT 1
FDNS	00NR	0	16WP	G15_048	FROM->TO	CIMARRON - DRAPER LAKE 345KV CKT 1	717	717	0.11779	102.2397	STLN-DEMARC6 - SWEETWATER 230KV CKT 1
FDNS	00NR	0	16WP	G15_048	FROM->TO	CIMARRON - DRAPER LAKE 345KV CKT 1	717	717	0.11779	102.2392	P12:230:AEPW-SPS:SWEETWT6:WHEELER 6
FDNS	00NR	0	16WP	G15_048	FROM->TO	CIMARRON - DRAPER LAKE 345KV CKT 1	717	717	0.11779	102.2372	STATELINE INTERCHANGE - STLN-DEMARC6 230KV CKT 1
FDNS	00NR	0	16WP	G15_048	FROM->TO	CIMARRON - DRAPER LAKE 345KV CKT 1	717	717	0.11783	102.221	GEN531447 1-HOLCOMB GENERATOR
FDNS	00NR	0	16WP	G15_048	FROM->TO	CIMARRON - DRAPER LAKE 345KV CKT 1	717	717	0.11783	102.2207	P12:230:UMZB:# 112 #: NU IN SD. NU-RCDC & DRY CREEK XFMR
FDNS	00NR	0	16WP	G15_048	FROM->TO	CIMARRON - DRAPER LAKE 345KV CKT 1	717	717	0.11783	102.2195	RCDC EAST 4230.00 - RED CEDAR DC 230KV CKT 1
FDNS	00NR	0	16WP	G15_048	FROM->TO	CIMARRON - DRAPER LAKE 345KV CKT 1	717	717	0.11783	102.2165	GEN645011 1-NEBRASKA CITY 1
FDNS	00NR	0	16WP	G15_048	FROM->TO	CIMARRON - DRAPER LAKE 345KV CKT 1	717	717	0.11783	102.2156	GEN345671 2-1RUSH G2 18.000
FDNS	00NR	0	16WP	G15_048	FROM->TO	CIMARRON - DRAPER LAKE 345KV CKT 1	717	717	0.11783	102.2137	GEN345670 1-1RUSH G1 18.000
FDNS	00NR	0	16WP	G15_048	FROM->TO	CIMARRON - DRAPER LAKE 345KV CKT 1	717	717	0.11783	102.2132	GEN515606 1-CANDN11 0.6900
FDNS	00NR	0	16WP	G15_048	FROM->TO	CIMARRON - DRAPER LAKE 345KV CKT 1	717	717	0.11783	102.2132	GEN515607 1-CANDN12 0.6900
FDNS	00NR	0	16WP	G15_048	FROM->TO	CIMARRON - DRAPER LAKE 345KV CKT 1	717	717	0.11752	102.2079	HIGHLAND - PINK SW 138KV CKT 1
FDNS	00NR	0	16WP	G15_048	FROM->TO	CIMARRON - DRAPER LAKE 345KV CKT 1	717	717	0.11783	102.1858	GEN515443 1-MNCOWND1 0.7000
FDNS	00NR	0	16WP	G15_048	FROM->TO	CIMARRON - DRAPER LAKE 345KV CKT 1	717	717	0.11783	102.1851	GEN562794 1-G15038_5 0.6900
FDNS	00NR	0	16WP	G15_048	FROM->TO	CIMARRON - DRAPER LAKE 345KV CKT 1	717	717	0.11783	102.1851	GEN562795 1-G15038_6 0.6900
FDNS	00NR	0	16WP	G15_048	FROM->TO	CIMARRON - DRAPER LAKE 345KV CKT 1	717	717	0.11783	102.1817	GEN563092 1-G15074_3 0.6900
FDNS	00NR	0	16WP	G15_048	FROM->TO	CIMARRON - DRAPER LAKE 345KV CKT 1	717	717	0.11839	102.1805	FT SMITH - MUSKOGEE 345KV CKT 1
FDNS	00NR	0	16WP	G15_048	FROM->TO	CIMARRON - DRAPER LAKE 345KV CKT 1	717	717	0.11783	102.1774	GEN542951 5-HAWTHORN UNIT #5
FDNS	00NR	0	16WP	G15_048	FROM->TO	CIMARRON - DRAPER LAKE 345KV CKT 1	717	717	0.11783	102.1724	GEN645012 2-NEBRASKA CITY 2
FDNSLock	00NR	0	16WP	G15_048	FROM->TO	CIMARRON - DRAPER LAKE 345KV CKT 1	717	717	0.11783	102.1642	GEN629072 4-LANSING GENERATOR FOR UNITS NO4 EIA CODE 1
FDNS	00NR	0	16WP	G15_048	FROM->TO	CIMARRON - DRAPER LAKE 345KV CKT 1	717	717	0.11783	102.1533	GEN562512 1-G14_020_3 0.6900
FDNS	00NR	0	16WP	G15_048	FROM->TO	CIMARRON - DRAPER LAKE 345KV CKT 1	717	717	0.11801	102.1446	KEO EHV - WEST MEMPHIS 500 500KV CKT 1
FDNS	00NR	0	16WP	G15_048	FROM->TO	CIMARRON - DRAPER LAKE 345KV CKT 1	717	717	0.11779	102.1408	CHISHOLM6 230.00 - SWEETWATER 230KV CKT 1
FDNS	00NR	0	16WP	G15_048	FROM->TO	CIMARRON - DRAPER LAKE 345KV CKT 1	717	717	0.11783	102.134	GEN657749 1-YOUNG 1 GENERATOR
FDNS	00NR	0	16WP	G15_048	FROM->TO	CIMARRON - DRAPER LAKE 345KV CKT 1	717	717	0.11783	102.1262	GEN562699 1-G15_018_3 0.6900
FDNS	00NR	0	16WP	G15_048	FROM->TO	CIMARRON - DRAPER LAKE 345KV CKT 1	717	717	0.11783	102.1114	GEN640009 1-COOPER NUCLEAR STATION
FDNS	00NR	0	16WP	G15_048	FROM->TO	CIMARRON - DRAPER LAKE 345KV CKT 1	717	717	0.11783	102.1042	GEN529201 1-OMCDLEC1 13.800
FDNS	00NR	0	16WP	G15_048	FROM->TO	CIMARRON - DRAPER LAKE 345KV CKT 1	717	717	0.11822	102.1014	FRISCCO4 138.00 - LULA 138KV CKT 1
FDNS	00NR	0	16WP	G15_048	FROM->TO	CIMARRON - DRAPER LAKE 345KV CKT 1	717	717	0.11783	102.0883	GEN563122 1-G15077_3 0.3850
FDNS	00NR	0	16WP	G15_048	FROM->TO	CIMARRON - DRAPER LAKE 345KV CKT 1	717	717	0.11783	102.0793	GEN563182 1-G15083_3 0.6900
FDNSLock	00NR	0	16WP	G15_048	FROM->TO	CIMARRON - DRAPER LAKE 345KV CKT 1	717	717	0.11783	102.0662	GEN681522 3-GENOA 3
FDNS	00NR	0	16WP	G15_048	FROM->TO	CIMARRON - DRAPER LAKE 345KV CKT 1	717	717	0.11783	102.0608	GEN562685 1-G15_013_3 0.3550
FDNS	00NR	0	16WP	G15_048	FROM->TO	CIMARRON - DRAPER LAKE 345KV CKT 1	717	717	0.11965	102.0437	HOLLYWOOD - MIDWEST TAP 138KV CKT 1
FDNS	00NR	0	16WP	G15_048	FROM->TO	CIMARRON - DRAPER LAKE 345KV CKT 1	717	717	0.11783	102.0354	GEN344895 2-1LAB G2 20.000
FDNS	00NR	0	16WP	G15_048	FROM->TO	CIMARRON - DRAPER LAKE 345KV CKT 1	717	717	0.11784	102.0328	TUPELO - TUPELO TAP 138KV CKT 1
FDNS	00NR	0	16WP	G15_048	FROM->TO	CIMARRON - DRAPER LAKE 345KV CKT 1	717	717	0.11658	102.0286	CHISHOLM7 345.00 - GRACEMONT 345KV CKT 1
FDNS	00NR	0	16WP	G15_048	FROM->TO	CIMARRON - DRAPER LAKE 345KV CKT 1	717	717	0.11783	102.0223	GEN563222 1-G15088_3 0.6900
FDNS	00NR	0	16WP	G15_048	FROM->TO	CIMARRON - DRAPER LAKE 345KV CKT 1	717	717	0.11783	102.0212	4SIOUX 1 138.00 138/18.0KV TRANSFORMER CKT 1
FDNS	00NR	0	16WP	G15_048	FROM->TO	CIMARRON - DRAPER LAKE 345KV CKT 1	717	717	0.11801	102.0151	CIMARRON - TUTTLE CONOCO TAP 138KV CKT 1
FDNS	00NR	0	16WP	G15_048	FROM->TO	CIMARRON - DRAPER LAKE 345KV CKT 1	717	717	0.11822	102.0133	FRISCCO4 138.00 - HARDEN 4 138.00 138KV CKT 1
FDNS	00NR	0	16WP	G15_048	FROM->TO	CIMARRON - DRAPER LAKE 345KV CKT 1	717	717	0.11783	102.0083	GEN523461 1-BLACKHAWK GEN #1
FDNS	00NR	0	16WP	G15_048	FROM->TO	CIMARRON - DRAPER LAKE 345KV CKT 1	717	717	0.11783	102.0082	GEN523462 1-BLACKHAWK GEN #2
FDNS	00NR	0	16WP	G15_048	FROM->TO	CIMARRON - DRAPER LAKE 345KV CKT 1	717	717	0.11783	102.0073	GEN344896 3-1LAB G3 20.000
FDNS	00NR	0	16WP	G15_048	FROM->TO	CIMARRON - DRAPER LAKE 345KV CKT 1	717	717	0.11783	102.0058	GEN344894 1-1LAB G1 20.000
FDNS	00NR	0	16WP	G15_048	FROM->TO	CIMARRON - DRAPER LAKE 345KV CKT 1	717	717	0.11783	102.0047	GEN344897 4-1LAB G4 20.000
FDNS	00NR	0	16WP	G15_048	FROM->TO	CIMARRON - DRAPER LAKE 345KV CKT 1	717	717	0.11783	102.0003	GEN562587 1-G14_056_3 0.6900
FDNS	00NR	0	16WP	G15_048	FROM->TO	CIMARRON - DRAPER LAKE 345KV CKT 1	717	717	0.11783	101.9772	GEN515602 1-KNGFSR12 0.7000
FDNS	00NR	0	16WP	G15_048	FROM->TO	CIMARRON - DRAPER LAKE 345KV CKT 1	717	717	0.11783	101.9571	GEN563082 1-G15073_3 0.6900
FDNS	00NR	0	16WP	G15_048	FROM->TO	CIMARRON - DRAPER LAKE 345KV CKT 1	717	717	0.11801	101.9436	TUTTLE - TUTTLE CONOCO TAP 138KV CKT 1
FDNS	00NR	0	16WP	G15_048	FROM->TO	CIMARRON - DRAPER LAKE 345KV CKT 1	717	717	0.11658	101.9367	CHISHOLM7 345.00 (CHISHOLM) 345/230/13.2KV TRANSFORMER CKT 1
FDNS	00NR	0	16WP	G15_048	FROM->TO	CIMARRON - DRAPER LAKE 345KV CKT 1	717	717	0.11783	101.9307	GEN562704 1-G15_020_3 0.3550
FDNS	00NR	0	16WP	G15_048	FROM->TO	CIMARRON - DRAPER LAKE 345KV CKT 1	717	717	0.11783	101.9129	GEN563202 1-G15085_3 0.5500
FDNS	00NR	0	16WP	G15_048	FROM->TO	CIMARRON - DRAPER LAKE 345KV CKT 1	717	717	0.11783	101.9087	CLAY BOSWELL 230/20.9KV TRANSFORMER CKT 1

SOLUTION	GROUP	SCENARIO	SEASON	SOURCE	DIRECTION	MONITORED ELEMENT	RATEA (MVA)	RATEB(MVA)	TDF	TC%LOADING (% MVA)	CONTINGENCY
FDNS	00NR	0	16WP	G15_048	FROM->TO	CIMARRON - DRAPER LAKE 345KV CKT 1	717	717	0.11783	101.8974	GEN640010 1-GERALD GENTLEMAN STATION UNIT 1
FDNS	00NR	0	16WP	G15_048	FROM->TO	CIMARRON - DRAPER LAKE 345KV CKT 1	717	717	0.11783	101.8665	GEN672321 1-SHAND GENERATOR 1
FDNS	00NR	0	16WP	G15_048	FROM->TO	CIMARRON - DRAPER LAKE 345KV CKT 1	717	717	0.11839	101.8497	LULA - TUPELO TAP 138KV CKT 1
FDNS	00NR	0	16WP	G15_048	FROM->TO	CIMARRON - DRAPER LAKE 345KV CKT 1	717	717	0.11787	101.8468	NORTHWEST TEXARKANA - VALLIANT 345KV CKT 1
FDNS	00NR	0	16WP	G15_048	FROM->TO	CIMARRON - DRAPER LAKE 345KV CKT 1	717	717	0.11787	101.8468	NORTHWEST TEXARKANA - VALLIANT 345KV CKT 1
FDNS	00NR	0	16WP	G15_048	FROM->TO	CIMARRON - DRAPER LAKE 345KV CKT 1	717	717	0.11783	101.8436	GEN562710 1-G15_022_3 0.5500
FDNS	00NR	0	16WP	G15_048	FROM->TO	CIMARRON - DRAPER LAKE 345KV CKT 1	717	717	0.11715	101.8429	SEMINOLE (SEMINOL1) 345/138/14.4KV TRANSFORMER CKT 1
FDNS	00NR	0	16WP	G15_048	FROM->TO	CIMARRON - DRAPER LAKE 345KV CKT 1	717	717	0.11783	101.8407	GEN672310 1-POPLAR RIVER GENERATOR 1
FDNS	00NR	0	16WP	G15_048	FROM->TO	CIMARRON - DRAPER LAKE 345KV CKT 1	717	717	0.11783	101.8406	GEN672311 2-POPLAR RIVER GENERATOR 2
FDNS	00NR	0	16WP	G15_048	FROM->TO	CIMARRON - DRAPER LAKE 345KV CKT 1	717	717	0.11783	101.8304	GEN672306 6-BOUNDARY DAM GENERATOR 6
FDNS	00NR	0	16WP	G15_048	FROM->TO	CIMARRON - DRAPER LAKE 345KV CKT 1	717	717	0.11783	101.8297	GEN640011 2-GERALD GENTLEMAN STATION UNIT 2
FDNS	00NR	0	16WP	G15_048	FROM->TO	CIMARRON - DRAPER LAKE 345KV CKT 1	717	717	0.11783	101.8274	GEN542956 2-LACYGNE UNIT #2
FDNS	00NR	0	16WP	G15_048	FROM->TO	CIMARRON - DRAPER LAKE 345KV CKT 1	717	717	0.11783	101.8181	GEN659118 1-LARAMIE RIVER UNIT1
FDNS	00NR	0	16WP	G15_048	FROM->TO	CIMARRON - DRAPER LAKE 345KV CKT 1	717	717	0.11822	101.7929	ETNA - HARDEN 4 138.00 138KV CKT 1
FDNS	00NR	0	16WP	G15_048	FROM->TO	CIMARRON - DRAPER LAKE 345KV CKT 1	717	717	0.12111	101.7872	RENFROW7 345.00 - VIOLA 7 345.00 345KV CKT 1
FDNS	01NR	0	17G	G15_048	FROM->TO	CIMARRON - DRAPER LAKE 345KV CKT 1	717	717	0.1295	101.7747	G14-057T 345.00 - SUNNYSIDE 345KV CKT 1
FDNS	00NR	0	16WP	G15_048	FROM->TO	CIMARRON - DRAPER LAKE 345KV CKT 1	717	717	0.11855	101.7737	P12:138:OKGE:3TERM22
FDNS	00NR	0	16WP	G15_048	FROM->TO	CIMARRON - DRAPER LAKE 345KV CKT 1	717	717	0.11856	101.7718	DRAPER LAKE - SOONER TAP 138KV CKT 1
FDNS	00NR	0	16WP	G15_048	FROM->TO	CIMARRON - DRAPER LAKE 345KV CKT 1	717	717	0.11752	101.7634	P12:138:WFEC:MSL08
FDNS	00NR	0	16WP	G15_048	FROM->TO	CIMARRON - DRAPER LAKE 345KV CKT 1	717	717	0.11752	101.7516	FRANKLIN - PINK SW 138KV CKT 1
FDNS	00NR	0	16WP	G15_048	FROM->TO	CIMARRON - DRAPER LAKE 345KV CKT 1	717	717	0.11795	101.7502	P12:138:WFEC:MSL09
FDNS	00NR	0	16WP	G15_048	FROM->TO	CIMARRON - DRAPER LAKE 345KV CKT 1	717	717	0.12042	101.7466	OAKCREEK - WILD MARY 138KV CKT 1
FDNS	00NR	0	16WP	G15_048	FROM->TO	CIMARRON - DRAPER LAKE 345KV CKT 1	717	717	0.11783	101.7397	GEN542957 1-IATAN UNIT #1
FDNSLock	00NR	0	16WP	G15_048	FROM->TO	CIMARRON - DRAPER LAKE 345KV CKT 1	717	717	0.11783	101.7355	GEN681542 6-JP MADGETT
FDNS	00NR	0	16WP	G15_048	FROM->TO	CIMARRON - DRAPER LAKE 345KV CKT 1	717	717	0.11783	101.7124	GEN530690 1-PRWINDG1 0.6900
FDNS	00NR	0	16WP	G15_048	FROM->TO	CIMARRON - DRAPER LAKE 345KV CKT 1	717	717	0.11822	101.7075	ETNA - PARK LANE 138KV CKT 1
FDNS	00NR	0	16WP	G15_048	FROM->TO	CIMARRON - DRAPER LAKE 345KV CKT 1	717	717	0.11783	101.7	GEN645001 1-FORT CALHOUN 1
FDNS	00NR	0	16WP	G15_048	FROM->TO	CIMARRON - DRAPER LAKE 345KV CKT 1	717	717	0.11641	101.6997	HUNTERS7 345.00 - RENFROW7 345.00 345KV CKT 1
FDNS	00NR	0	16WP	G15_048	FROM->TO	CIMARRON - DRAPER LAKE 345KV CKT 1	717	717	0.11783	101.658	GEN542955 1-LACYGNE UNIT #1
FDNS	00NR	0	16WP	G15_048	FROM->TO	CIMARRON - DRAPER LAKE 345KV CKT 1	717	717	0.11783	101.6477	GEN562754 1-G15031_5 0.6900
FDNS	00NR	0	16WP	G15_048	FROM->TO	CIMARRON - DRAPER LAKE 345KV CKT 1	717	717	0.11783	101.6356	GEN562556 1-G14_046_3 0.3420
FDNS	00NR	0	16WP	G15_048	FROM->TO	CIMARRON - DRAPER LAKE 345KV CKT 1	717	717	0.11702	101.6321	SEMINOLE (SEMINOL2) 345/138/14.4KV TRANSFORMER CKT 1
FDNS	00NR	0	16WP	G15_048	FROM->TO	CIMARRON - DRAPER LAKE 345KV CKT 1	717	717	0.11783	101.6108	GEN661015 1-COYOTE
FDNS	00NR	0	16WP	G15_048	FROM->TO	CIMARRON - DRAPER LAKE 345KV CKT 1	717	717	0.11783	101.6042	GEN562756 1-G15031_7 0.6900
FDNS	00NR	0	16WP	G15_048	FROM->TO	CIMARRON - DRAPER LAKE 345KV CKT 1	717	717	0.11783	101.6013	GEN532653 1-JEFFREY ENERGY CENTER UNIT 3
FDNS	00NR	0	16WP	G15_048	FROM->TO	CIMARRON - DRAPER LAKE 345KV CKT 1	717	717	0.11783	101.6012	GEN532652 1-JEFFREY ENERGY CENTER UNIT 2
FDNS	00NR	0	16WP	G15_048	FROM->TO	CIMARRON - DRAPER LAKE 345KV CKT 1	717	717	0.11783	101.5971	GEN532651 1-JEFFREY ENERGY CENTER UNIT 1
FDNS	00NR	0	16WP	G15_048	FROM->TO	CIMARRON - DRAPER LAKE 345KV CKT 1	717	717	0.11783	101.5894	GEN562974 1-G15060_5 0.6900
FDNS	00NR	0	16WP	G15_048	FROM->TO	CIMARRON - DRAPER LAKE 345KV CKT 1	717	717	0.11783	101.5883	GEN563142 1-G15079_3 0.5500
FDNS	00NR	0	16WP	G15_048	FROM->TO	CIMARRON - DRAPER LAKE 345KV CKT 1	717	717	0.11783	101.5883	GEN563151 1-G15080_2 0.5500
FDNS	00NR	0	16WP	G15_048	FROM->TO	CIMARRON - DRAPER LAKE 345KV CKT 1	717	717	0.11783	101.5778	GEN563042 1-G15068_3 0.6900
FDNS	00NR	0	16WP	G15_048	FROM->TO	CIMARRON - DRAPER LAKE 345KV CKT 1	717	717	0.11783	101.5733	GEN562973 1-G15060_4 0.6900
FDNS	00NR	0	16WP	G15_048	FROM->TO	CIMARRON - DRAPER LAKE 345KV CKT 1	717	717	0.11783	101.5428	GEN562078 1-G11_051_3 0.6900
FDNS	00NR	0	16WP	G15_048	FROM->TO	CIMARRON - DRAPER LAKE 345KV CKT 1	717	717	0.11783	101.531	GEN562691 1-G15_015_3 0.6900
FDNS	00NR	0	16WP	G15_048	FROM->TO	CIMARRON - DRAPER LAKE 345KV CKT 1	717	717	0.12042	101.52	AIRDEPT4 138.00 - WILD MARY 138KV CKT 1
FDNS	00NR	0	16WP	G15_048	FROM->TO	CIMARRON - DRAPER LAKE 345KV CKT 1	717	717	0.11867	101.4938	PARK LANE - SEMINOLE 138KV CKT 1
FDNS	00NR	0	16WP	G15_048	FROM->TO	CIMARRON - DRAPER LAKE 345KV CKT 1	717	717	0.11783	101.4886	GEN562655 1-G14_074_3 0.6900
FDNS	00NR	0	16WP	G15_048	FROM->TO	CIMARRON - DRAPER LAKE 345KV CKT 1	717	717	0.11783	101.4881	GEN562762 1-G15033_3 0.6900
FDNS	00NR	0	16WP	G15_048	FROM->TO	CIMARRON - DRAPER LAKE 345KV CKT 1	717	717	0.11783	101.4826	GEN657748 1-YOUNG 2 GENERATOR
FDNS	00NR	0	16WP	G15_048	FROM->TO	CIMARRON - DRAPER LAKE 345KV CKT 1	717	717	0.11752	101.468	FRANKLIN - FRANKLIN SW 138KV CKT 1
FDNS	00NR	0	16WP	G15_048	FROM->TO	CIMARRON - DRAPER LAKE 345KV CKT 1	717	717	0.11783	101.4312	GEN527901 1-HOBBS PLANT #1 (CT)
FDNS	00NR	0	16WP	G15_048	FROM->TO	CIMARRON - DRAPER LAKE 345KV CKT 1	717	717	0.11783	101.4312	GEN527902 1-HOBBS PLANT #2 (CT)
FDNS	00NR	0	16WP	G15_048	FROM->TO	CIMARRON - DRAPER LAKE 345KV CKT 1	717	717	0.11783	101.405	GEN563273 2-G15093_4 0.6900
FDNS	00NR	0	16WP	G15_048	FROM->TO	CIMARRON - DRAPER LAKE 345KV CKT 1	717	717	0.11783	101.389	GEN563043 1-G15068_4 0.6900
FDNS	00NR	0	16WP	G15_048	FROM->TO	CIMARRON - DRAPER LAKE 345KV CKT 1	717	717	0.11789	101.3853	LYDIA - WELSH 345KV CKT 1
FDNS	00NR	0	16WP	G15_048	FROM->TO	CIMARRON - DRAPER LAKE 345KV CKT 1	717	717	0.11789	101.3853	LYDIA - WELSH 345KV CKT 1
FDNS	00NR	0	16WP	G15_048	FROM->TO	CIMARRON - DRAPER LAKE 345KV CKT 1	717	717	0.11783	101.3678	GEN563052 1-G15069_3 0.6900
FDNS	00NR	0	16WP	G15_048	FROM->TO	CIMARRON - DRAPER LAKE 345KV CKT 1	717	717	0.11783	101.3481	GEN525845 1-ELK_2 1 138.00
FDNS	00NR	0	16WP	G15_048	FROM->TO	CIMARRON - DRAPER LAKE 345KV CKT 1	717	717	0.11783	101.3447	GEN525844 1-ELK_1 118.000
FDNS	00NR	0	16WP	G15_048	FROM->TO	CIMARRON - DRAPER LAKE 345KV CKT 1	717	717	0.11783	101.3169	GEN563242 1-G15090_3 0.6900
FDNS	00NR	0	16WP	G15_048	FROM->TO	CIMARRON - DRAPER LAKE 345KV CKT 1	717	717	0.11783	101.298	GEN526333 1-JONES GEN #3 21 KV
FDNS	00NR	0	16WP	G15_048	FROM->TO	CIMARRON - DRAPER LAKE 345KV CKT 1	717	717	0.11783	101.298	GEN526334 1-JONES_4 116.500
FDNS	00NR	0	16WP	G15_048	FROM->TO	CIMARRON - DRAPER LAKE 345KV CKT 1	717	717	0.11801	101.2942	P12:138:AEPW-OGE:CORNVIL4:CIMARON4
FDNS	00NR	0	16WP	G15_048	FROM->TO	CIMARRON - DRAPER LAKE 345KV CKT 1	717	717	0.11783	101.2934	GEN620315 1-BIG STONE GEN
FDNS	00NR	0	16WP	G15_048	FROM->TO	CIMARRON - DRAPER LAKE 345KV CKT 1	717	717	0.12042	101.2904	AIRDEPT4 138.00 - GM 138KV CKT 1
FDNS	00NR	0	16WP	G15_048	FROM->TO	CIMARRON - DRAPER LAKE 345KV CKT 1	717	717	0.11783	101.2796	GEN562772 1-G15034_3 0.6900
FDNS	00NR	0	16WP	G15_048	FROM->TO	CIMARRON - DRAPER LAKE 345KV CKT 1	717	717	0.11641	101.2661	HUNTERS7 345.00 - WOODRING 345KV CKT 1
FDNS	00NR	0	16WP	G15_048	FROM->TO	CIMARRON - DRAPER LAKE 345KV CKT 1	717	717	0.11783	101.2635	GEN523971 1-HARRINGTON GEN #1 24 KV
FDNS	00NR	0	16WP	G15_048	FROM->TO	CIMARRON - DRAPER LAKE 345KV CKT 1	717	717	0.11783	101.2635	GEN523972 1-HARRINGTON GEN #2 24 KV
FDNS	00NR	0	16WP	G15_048	FROM->TO	CIMARRON - DRAPER LAKE 345KV CKT 1	717	717	0.11783	101.2635	GEN523973 1-HARRINGTON GEN #3 24 KV
FDNS	00NR	0	16WP	G15_048	FROM->TO	CIMARRON - DRAPER LAKE 345KV CKT 1	717	717	0.11739	101.2533	RANCHRD7 345.00 - SOONER 345KV CKT 1
FDNS	00NR	0	16WP	G15_048	FROM->TO	CIMARRON - DRAPER LAKE 345KV CKT 1	717	717	0.11783	101.2384	GEN600004 2-PRAIRIE ISLAND G2
FDNS	00NR	0	16WP	G15_048	FROM->TO	CIMARRON - DRAPER LAKE 345KV CKT 1	717	717	0.11783	101.2354	GEN600003 1-PRAIRIE ISLAND G1
FDNSLock	00NR	0	16WP	G15_048	FROM->TO	CIMARRON - DRAPER LAKE 345KV CKT 1	717	717	0.11783	101.2218	GEN600006 1-AS KING
FDNSLock	00NR	0	16WP	G15_048	FROM->TO	CIMARRON - DRAPER LAKE 345KV CKT 1	717	717	0.11783	101.201	GEN636641 1-LOUISA UNIT 1
FDNS	00NR	0	16WP	G15_048	FROM->TO	CIMARRON - DRAPER LAKE 345KV CKT 1	717	717	0.1139	101.136	MUSKOGEE - SEMINOLE 345KV CKT 1
FDNS	00NR	0	16WP	G15_048	FROM->TO	CIMARRON - DRAPER LAKE 345KV CKT 1	717	717	0.11783	101.1035	GEN563292 1-G15095_3 0.6900
FDNS	00NR	0	16WP	G15_048	FROM->TO	CIMARRON - DRAPER LAKE 345KV CKT 1	717	717	0.11783	101.1	GEN542962 2-IATAN UNIT #2
FDNS	00NR	0	16WP	G15_048	FROM->TO	CIMARRON - DRAPER LAKE 345KV CKT 1	717	717	0.11783	101.1	GEN615002 2-COAL CREEK

SOLUTION	GROUP	SCENARIO	SEASON	SOURCE	DIRECTION	MONITORED ELEMENT	RATEA (MVA)	RATEB(MVA)	TDF	TC%LOADING (% MVA)	CONTINGENCY
FDNS	00NR	0	16WP	G15_048	FROM->TO	CIMARRON - DRAPER LAKE 345KV CKT 1	717	717	0.11548	101.0885	NORTHWEST - SPRING CREEK 345KV CKT 1
FDNS	00NR	0	16WP	G15_048	FROM->TO	CIMARRON - DRAPER LAKE 345KV CKT 1	717	717	0.11783	101.0833	GEN600005 1-MONTICELLO
FDNS	00NR	0	16WP	G15_048	FROM->TO	CIMARRON - DRAPER LAKE 345KV CKT 1	717	717	0.12042	101.082	DRAPER LAKE - GM 138KV CKT 1
FDNS	00NR	0	16WP	G15_048	FROM->TO	CIMARRON - DRAPER LAKE 345KV CKT 1	717	717	0.11783	101.0628	GEN527166 1-MUSTANG_6 118.000
FDNS	00NR	0	16WP	G15_048	FROM->TO	CIMARRON - DRAPER LAKE 345KV CKT 1	717	717	0.11783	101.0553	GEN525562 1-TOLK GEN #2 24 KV
FDNS	00NR	0	16WP	G15_048	FROM->TO	CIMARRON - DRAPER LAKE 345KV CKT 1	717	717	0.11548	101.0485	SOONER - SPRING CREEK 345KV CKT 1
FDNS	00NR	0	16WP	G15_048	FROM->TO	CIMARRON - DRAPER LAKE 345KV CKT 1	717	717	0.12363	101.0368	CLARKSVILLE - MUSKOGEE 345KV CKT 1
FDNS	00NR	0	16WP	G15_048	FROM->TO	CIMARRON - DRAPER LAKE 345KV CKT 1	717	717	0.12363	101.0368	CLARKSVILLE - MUSKOGEE 345KV CKT 1
FDNS	00NR	0	16WP	G15_048	FROM->TO	CIMARRON - DRAPER LAKE 345KV CKT 1	717	717	0.11783	101.0116	GEN562952 1-G15057_3 0.6500
FDNS	00NR	0	16WP	G15_048	FROM->TO	CIMARRON - DRAPER LAKE 345KV CKT 1	717	717	0.11783	101.0001	GEN563272 1-G15093_3 0.6900
FDNS	00NR	0	16WP	G15_048	FROM->TO	CIMARRON - DRAPER LAKE 345KV CKT 1	717	717	0.11783	101	GEN629074 1-ARNOLD LOWSIDE OF GSU XFMR
FDNS	00NR	0	16WP	G15_048	FROM->TO	CIMARRON - DRAPER LAKE 345KV CKT 1	717	717	0.11783	100.9585	GEN635213 3-NEAL UNIT 3
FDNS	00NR	0	16WP	G15_048	FROM->TO	CIMARRON - DRAPER LAKE 345KV CKT 1	717	717	0.1187	100.9479	FRANKLIN SW - MIDWEST TAP 138KV CKT 1
FDNS	00NR	0	16WP	G15_048	FROM->TO	CIMARRON - DRAPER LAKE 345KV CKT 1	717	717	0.11166	100.9426	DRAPER LAKE - SEMINOLE 345KV CKT 3
FDNS	00NR	0	16WP	G15_048	FROM->TO	CIMARRON - DRAPER LAKE 345KV CKT 1	717	717	0.11783	100.9128	GEN562892 1-G15048_3 0.6900
FDNS	00NR	0	16WP	G15_048	FROM->TO	CIMARRON - DRAPER LAKE 345KV CKT 1	717	717	0.11783	100.9011	BIG STONE 230/24.0KV TRANSFORMER CKT 1
FDNS	00NR	0	16WP	G15_048	FROM->TO	CIMARRON - DRAPER LAKE 345KV CKT 1	717	717	0.11783	100.8665	GEN563173 1-G15082_3 0.6900
FDNS	00NR	0	16WP	G15_048	FROM->TO	CIMARRON - DRAPER LAKE 345KV CKT 1	717	717	0.11882	100.8575	CHAMBER SPRINGS - CLARKSVILLE 345KV CKT 1
FDNS	00NR	0	16WP	G15_048	FROM->TO	CIMARRON - DRAPER LAKE 345KV CKT 1	717	717	0.11783	100.8263	GEN562902 1-G15052_3 0.6900
FDNS	00NR	0	16WP	G15_048	FROM->TO	CIMARRON - DRAPER LAKE 345KV CKT 1	717	717	0.1179	100.8149	LYDIA - VALLIANT 345KV CKT 1
FDNS	00NR	0	16WP	G15_048	FROM->TO	CIMARRON - DRAPER LAKE 345KV CKT 1	717	717	0.1179	100.8149	LYDIA - VALLIANT 345KV CKT 1
FDNS	00NR	0	16WP	G15_048	FROM->TO	CIMARRON - DRAPER LAKE 345KV CKT 1	717	717	0.11783	100.81	GEN514805 1-SOONER UNIT 1
FDNS	00NR	0	16WP	G15_048	FROM->TO	CIMARRON - DRAPER LAKE 345KV CKT 1	717	717	0.11783	100.787	GEN527903 1-HOBBS PLANT #3 (ST)
FDNS	00NR	0	16WP	G15_048	FROM->TO	CIMARRON - DRAPER LAKE 345KV CKT 1	717	717	0.11783	100.7504	GEN525561 1-TOLK GEN #1 24 KV
FDNSLock	00NR	0	16WP	G15_048	FROM->TO	CIMARRON - DRAPER LAKE 345KV CKT 1	717	717	0.11783	100.7392	GEN600000 1-SHERBURNECNTY G1
FDNS	00NR	0	16WP	G15_048	FROM->TO	CIMARRON - DRAPER LAKE 345KV CKT 1	717	717	0.1188	100.6808	P12:138:OKGE:3TERM23
FDNS	00NR	0	16WP	G15_048	FROM->TO	CIMARRON - DRAPER LAKE 345KV CKT 1	717	717	0.11783	100.6578	GEN600001 2-SHERBURNE CNTY G2
FDNS	00NR	0	16WP	G15_048	FROM->TO	CIMARRON - DRAPER LAKE 345KV CKT 1	717	717	0.1188	100.6216	BARNES 4 138.00 - DRAPER LAKE 138KV CKT 1
FDNS	00NR	0	16WP	G15_048	FROM->TO	CIMARRON - DRAPER LAKE 345KV CKT 1	717	717	0.11783	100.6	GEN344225 1-1CAL G1 25.000
FDNS	00NR	0	16WP	G15_048	FROM->TO	CIMARRON - DRAPER LAKE 345KV CKT 1	717	717	0.11783	100.5641	GEN514806 1-SOONER UNIT 2
FDNSLock	00NR	0	16WP	G15_048	FROM->TO	CIMARRON - DRAPER LAKE 345KV CKT 1	717	717	0.11783	100.5438	GEN629075 1-OTTUMWA GENERATOR FOR OTTUMWA UNIT NO 1
FDNS	00NR	0	16WP	G15_048	FROM->TO	CIMARRON - DRAPER LAKE 345KV CKT 1	717	717	0.11783	100.5167	GEN563162 1-G15081_3 0.6900
FDNS	00NR	0	16WP	G15_048	FROM->TO	CIMARRON - DRAPER LAKE 345KV CKT 1	717	717	0.12001	100.3768	DRAPER LAKE (DRAPER2) 345/138/13.8KV TRANSFORMER CKT 1
FDNS	00NR	0	16WP	G15_048	FROM->TO	CIMARRON - DRAPER LAKE 345KV CKT 1	717	717	0.11783	100.3192	SHERBURNE CO 345/24.0KV TRANSFORMER CKT 1
FDNS	00NR	0	16WP	G15_048	FROM->TO	CIMARRON - DRAPER LAKE 345KV CKT 1	717	717	0.11457	100.2891	CIMARRON - MATHWSN7 345.00 345KV CKT 1
FDNS	00NR	0	16WP	G15_048	FROM->TO	CIMARRON - DRAPER LAKE 345KV CKT 1	717	717	0.11457	100.2891	CIMARRON - MATHWSN7 345.00 345KV CKT 2
FDNS	00NR	0	16WP	G15_048	FROM->TO	CIMARRON - DRAPER LAKE 345KV CKT 1	717	717	0.12001	100.286	DRAPER LAKE (DRAPER3) 345/138/13.8KV TRANSFORMER CKT 1
FDNS	00NR	0	16WP	G15_048	FROM->TO	CIMARRON - DRAPER LAKE 345KV CKT 1	717	717	0.12001	100.286	DRAPER LAKE (DRAPER4) 345/138/13.8KV TRANSFORMER CKT 1
FDNSLock	00NR	0	16WP	G15_048	FROM->TO	CIMARRON - DRAPER LAKE 345KV CKT 1	717	717	0.11783	100.2812	GEN635214 4-NEAL UNIT 4
FDNS	00NR	0	16WP	G15_048	FROM->TO	CIMARRON - DRAPER LAKE 345KV CKT 1	717	717	0.11783	100.2003	GEN562882 1-G15047_3 0.6900
FDNS	00NR	0	16WP	G15_048	FROM->TO	CIMARRON - DRAPER LAKE 345KV CKT 1	717	717	0.11783	100.1889	GEN600002 3-SHERBURNE CNTY G3
FDNS	00NR	0	16WP	G15_048	FROM->TO	CIMARRON - DRAPER LAKE 345KV CKT 1	717	717	0.11783	99.8	GEN635023 3-WALTER SCOTT UNIT 3
FDNS	00NR	0	16WP	G15_048	FROM->TO	CIMARRON - DRAPER LAKE 345KV CKT 1	717	717	0.11783	99.7	GEN562023 1-G11_020_3 0.6900
FDNS	00NR	0	16WP	G15_048	FROM->TO	CIMARRON - DRAPER LAKE 345KV CKT 1	717	717	0.11783	99.7	GEN562026 1-G11_019_3 0.6900
FDNS	00NR	0	16WP	G15_048	FROM->TO	CIMARRON - DRAPER LAKE 345KV CKT 1	717	717	0.11783	99.6	EASTDC - ERCOT EQUIVALENCE 345KV CKT 1
FDNS	00NR	0	16WP	G15_048	FROM->TO	CIMARRON - DRAPER LAKE 345KV CKT 1	717	717	0.10631	99.5	DRAPER LAKE - SEMINOLE 345KV CKT 1
FDNS	00NR	0	16WP	G15_048	FROM->TO	CIMARRON - DRAPER LAKE 345KV CKT 1	717	717	0.10631	99.5	DRAPER LAKE - SEMINOLE 345KV CKT 2
FDNS	00NR	0	20WP	G15_048	TO->FROM	CIMARRON - MINCO 345KV CKT 1	956	956	0.04334	113.1031	G14-057T 345.00 - SUNNYSIDE 345KV CKT 1
FDNS	00NR	0	16WP	G15_048	TO->FROM	CIMARRON - MINCO 345KV CKT 1	956	956	0.04338	112.6453	G14-057T 345.00 - SUNNYSIDE 345KV CKT 1
FDNS	01ALL	0	17SP	G15_048	FROM->TO	CLEO CORNER - CLEOPLT4 138.00 138KV CKT 1	191	191	0.57309	134.6772	MATHWSN7 345.00 - TATONGA7 345.00 345KV CKT 1
FDNS	01ALL	0	20SP	G15_048	FROM->TO	CLEO CORNER - CLEOPLT4 138.00 138KV CKT 1	191	191	0.57311	131.5424	MATHWSN7 345.00 - TATONGA7 345.00 345KV CKT 1
FDNS	01ALL	0	17SP	G15_048	FROM->TO	CLEO CORNER - CLEOPLT4 138.00 138KV CKT 1	191	191	0.64264	125.5475	CLEO CORNER (CLEOCOR1) 138/69/13.8KV TRANSFORMER CKT 1
FDNS	01ALL	0	20WP	G15_048	FROM->TO	CLEO CORNER - CLEOPLT4 138.00 138KV CKT 1	191	191	0.64251	125.0065	CLEO CORNER (CLEOCOR1) 138/69/13.8KV TRANSFORMER CKT 1
FDNS	01ALL	0	20SP	G15_048	FROM->TO	CLEO CORNER - CLEOPLT4 138.00 138KV CKT 1	191	191	0.64275	124.4067	CLEO CORNER (CLEOCOR1) 138/69/13.8KV TRANSFORMER CKT 1
FDNS	01ALL	0	16WP	G15_048	FROM->TO	CLEO CORNER - CLEOPLT4 138.00 138KV CKT 1	191	191	0.64272	123.0998	CLEO CORNER (CLEOCOR1) 138/69/13.8KV TRANSFORMER CKT 1
FDNS	01ALL	0	17SP	G15_048	FROM->TO	CLEO CORNER - CLEOPLT4 138.00 138KV CKT 1	191	191	0.57685	121.3719	MOORELAND - PIC4 138.00 138KV CKT 1
FDNS	01ALL	0	17SP	G15_048	FROM->TO	CLEO CORNER - CLEOPLT4 138.00 138KV CKT 1	191	191	0.57685	121.3556	P12:138:WFEC:MSL12
FDNS	01ALL	0	17SP	G15_048	FROM->TO	CLEO CORNER - CLEOPLT4 138.00 138KV CKT 1	191	191	0.58087	121.2979	P12:138:WFEC:MSL14
FDNS	01ALL	0	17SP	G15_048	FROM->TO	CLEO CORNER - CLEOPLT4 138.00 138KV CKT 1	191	191	0.57685	121.2761	CEDARDALE - PIC4 138.00 138KV CKT 1
FDNS	01ALL	0	17SP	G15_048	FROM->TO	CLEO CORNER - CLEOPLT4 138.00 138KV CKT 1	191	191	0.58087	121.2697	BEARCAT 138.00 - MOORELAND 138KV CKT 1
FDNS	01ALL	0	17SP	G15_048	FROM->TO	CLEO CORNER - CLEOPLT4 138.00 138KV CKT 1	191	191	0.57685	121.0957	CEDARDALE - OKEENE 138KV CKT 1
FDNS	01ALL	0	17SP	G15_048	FROM->TO	CLEO CORNER - CLEOPLT4 138.00 138KV CKT 1	191	191	0.57746	121.0137	P12:138:WFEC:MSL15
FDNS	01ALL	0	17SP	G15_048	FROM->TO	CLEO CORNER - CLEOPLT4 138.00 138KV CKT 1	191	191	0.59482	120.841	WOODWARD EHV - WWPAR4 138.00 138KV CKT 1
FDNS	01ALL	0	17SP	G15_048	FROM->TO	CLEO CORNER - CLEOPLT4 138.00 138KV CKT 1	191	191	0.59482	120.8409	WOODWARD - WWPAR4 138.00 138KV CKT 1
FDNS	01ALL	0	17SP	G15_048	FROM->TO	CLEO CORNER - CLEOPLT4 138.00 138KV CKT 1	191	191	0.58087	120.7895	BEARCAT 138.00 - NINE MILE 138KV CKT 1
FDNS	01ALL	0	20WP	G15_048	FROM->TO	CLEO CORNER - CLEOPLT4 138.00 138KV CKT 1	191	191	0.5766	120.5631	MOORELAND - PIC4 138.00 138KV CKT 1
FDNS	01ALL	0	20WP	G15_048	FROM->TO	CLEO CORNER - CLEOPLT4 138.00 138KV CKT 1	191	191	0.5766	120.5431	P12:138:WFEC:MSL12
FDNS	01ALL	0	20WP	G15_048	FROM->TO	CLEO CORNER - CLEOPLT4 138.00 138KV CKT 1	191	191	0.5766	120.4669	CEDARDALE - PIC4 138.00 138KV CKT 1
FDNS	01NR	0	20L	G15_048	FROM->TO	CLEO CORNER - CLEOPLT4 138.00 138KV CKT 1	191	191	0.58143	120.3357	MATHWSN7 345.00 - TATONGA7 345.00 345KV CKT 1
FDNS	01ALL	0	20WP	G15_048	FROM->TO	CLEO CORNER - CLEOPLT4 138.00 138KV CKT 1	191	191	0.5766	120.2572	CEDARDALE - OKEENE 138KV CKT 1
FDNS	01ALL	0	17SP	G15_048	FROM->TO	CLEO CORNER - CLEOPLT4 138.00 138KV CKT 1	191	191	0.57603	120.2144	DOVER SW - OKEENE 138KV CKT 1
FDNS	01ALL	0	17SP	G15_048	FROM->TO	CLEO CORNER - CLEOPLT4 138.00 138KV CKT 1	191	191	0.57746	120.1755	NOEL_SW 138.00 - SALT_PLAINS 138.00 138KV CKT 1
FDNS	01ALL	0	20WP	G15_048	FROM->TO	CLEO CORNER - CLEOPLT4 138.00 138KV CKT 1	191	191	0.57728	120.1475	P12:138:WFEC:MSL15
FDNS	01ALL	0	17SP	G15_048	FROM->TO	CLEO CORNER - CLEOPLT4 138.00 138KV CKT 1	191	191	0.58087	120.0002	MOREWOOD SW - NINE MILE 138KV CKT 1
FDNS	01ALL	0	20WP	G15_048	FROM->TO	CLEO CORNER - CLEOPLT4 138.00 138KV CKT 1	191	191	0.58065	119.7458	P12:138:WFEC:MSL14
FDNS	01ALL	0	20WP	G15_048	FROM->TO	CLEO CORNER - CLEOPLT4 138.00 138KV CKT 1	191	191	0.58065	119.7171	BEARCAT 138.00 - MOORELAND 138KV CKT 1
FDNS	01ALL	0	17SP	G15_048	FROM->TO	CLEO CORNER - CLEOPLT4 138.00 138KV CKT 1	191	191	0.60098	119.6706	CLEO CORNER - CLEO JCT 69KV CKT 1
FDNS	01ALL	0	17SP	G15_048	FROM->TO	CLEO CORNER - CLEOPLT4 138.00 138KV CKT 1	191	191	0.60098	119.6688	CLEO JCT - RINGWOOD 69KV CKT 1
FDNS	01ALL	0	16WP	G15_048	FROM->TO	CLEO CORNER - CLEOPLT4 138.00 138KV CKT 1	191	191	0.57694	119.5423	MOORELAND - PIC4 138.00 138KV CKT 1

SOLUTION	GROUP	SCENARIO	SEASON	SOURCE	DIRECTION	MONITORED ELEMENT	RATEA (MVA)	RATEB(MVA)	TDF	TC%LOADING (% MVA)	CONTINGENCY
FDNS	01ALL	0	16WP	G15_048	FROM->TO	CLEO CORNER - CLEOPLT4 138.00 138KV CKT 1	191	191	0.57694	119.5231	P12:138:WFEC:MSL12
FDNS	01ALL	0	16WP	G15_048	FROM->TO	CLEO CORNER - CLEOPLT4 138.00 138KV CKT 1	191	191	0.57694	119.4456	CEDARDALE - PIC4 138.00 138KV CKT 1
FDNS	01ALL	0	20WP	G15_048	FROM->TO	CLEO CORNER - CLEOPLT4 138.00 138KV CKT 1	191	191	0.57728	119.2807	NOEL_SW 138.00 - SALT_PLAINS 138.00 138KV CKT 1
FDNS	01ALL	0	16WP	G15_048	FROM->TO	CLEO CORNER - CLEOPLT4 138.00 138KV CKT 1	191	191	0.58092	119.2691	P12:138:WFEC:MSL14
FDNS	01ALL	0	16WP	G15_048	FROM->TO	CLEO CORNER - CLEOPLT4 138.00 138KV CKT 1	191	191	0.57694	119.2512	CEDARDALE - OKEENE 138KV CKT 1
FDNS	01ALL	0	16WP	G15_048	FROM->TO	CLEO CORNER - CLEOPLT4 138.00 138KV CKT 1	191	191	0.58092	119.2412	BEARCAT 138.00 - MOORELAND 138KV CKT 1
FDNS	01ALL	0	20WP	G15_048	FROM->TO	CLEO CORNER - CLEOPLT4 138.00 138KV CKT 1	191	191	0.58065	119.2308	BEARCAT 138.00 - NINE MILE 138KV CKT 1
FDNS	01ALL	0	17SP	G15_048	FROM->TO	CLEO CORNER - CLEOPLT4 138.00 138KV CKT 1	191	191	0.53996	119.1803	WOODRING (WOODRNG2) 345/138/13.8KV TRANSFORMER CKT 1
FDNS	01ALL	0	16WP	G15_048	FROM->TO	CLEO CORNER - CLEOPLT4 138.00 138KV CKT 1	191	191	0.57756	119.159	P12:138:WFEC:MSL15
FDNS	01ALL	0	20WP	G15_048	FROM->TO	CLEO CORNER - CLEOPLT4 138.00 138KV CKT 1	191	191	0.57577	119.1442	DOVER SW - OKEENE 138KV CKT 1
FDNS	01ALL	0	20WP	G15_048	FROM->TO	CLEO CORNER - CLEOPLT4 138.00 138KV CKT 1	191	191	0.60072	118.9604	CLEO CORNER - CLEO JCT 69KV CKT 1
FDNS	01ALL	0	20WP	G15_048	FROM->TO	CLEO CORNER - CLEOPLT4 138.00 138KV CKT 1	191	191	0.60072	118.9587	CLEO JCT - RINGWOOD 69KV CKT 1
FDNS	01ALL	0	16WP	G15_048	FROM->TO	CLEO CORNER - CLEOPLT4 138.00 138KV CKT 1	191	191	0.58092	118.7588	BEARCAT 138.00 - NINE MILE 138KV CKT 1
FDNSLock	00NR	0	16WP	G15_048	FROM->TO	CLEO CORNER - CLEOPLT4 138.00 138KV CKT 1	191	191	0.58042	118.7587	MATHWSN7 345.00 - TATONGA7 345.00 345KV CKT 1
FDNS	01ALL	0	20SP	G15_048	FROM->TO	CLEO CORNER - CLEOPLT4 138.00 138KV CKT 1	191	191	0.57688	118.6289	MOORELAND - PIC4 138.00 138KV CKT 1
FDNS	01ALL	0	20SP	G15_048	FROM->TO	CLEO CORNER - CLEOPLT4 138.00 138KV CKT 1	191	191	0.57688	118.6073	P12:138:WFEC:MSL12
FDNS	01ALL	0	20SP	G15_048	FROM->TO	CLEO CORNER - CLEOPLT4 138.00 138KV CKT 1	191	191	0.57688	118.5322	CEDARDALE - PIC4 138.00 138KV CKT 1
FDNS	01ALL	0	20SP	G15_048	FROM->TO	CLEO CORNER - CLEOPLT4 138.00 138KV CKT 1	191	191	0.57754	118.5261	P12:138:WFEC:MSL15
FDNS	01ALL	0	16WP	G15_048	FROM->TO	CLEO CORNER - CLEOPLT4 138.00 138KV CKT 1	191	191	0.57615	118.4748	DOVER SW - OKEENE 138KV CKT 1
FDNS	01ALL	0	17SP	G15_048	FROM->TO	CLEO CORNER - CLEOPLT4 138.00 138KV CKT 1	191	191	0.57527	118.4657	DEWEY - SOUTHARD 138KV CKT 1
FDNS	01ALL	0	20WP	G15_048	FROM->TO	CLEO CORNER - CLEOPLT4 138.00 138KV CKT 1	191	191	0.58065	118.4341	MOREWOOD SW - NINE MILE 138KV CKT 1
FDNS	01ALL	0	20SP	G15_048	FROM->TO	CLEO CORNER - CLEOPLT4 138.00 138KV CKT 1	191	191	0.5809	118.4071	P12:138:WFEC:MSL14
FDNS	01ALL	0	20SP	G15_048	FROM->TO	CLEO CORNER - CLEOPLT4 138.00 138KV CKT 1	191	191	0.5809	118.3794	BEARCAT 138.00 - MOORELAND 138KV CKT 1
FDNS	01ALL	0	17SP	G15_048	FROM->TO	CLEO CORNER - CLEOPLT4 138.00 138KV CKT 1	191	191	0.57746	118.3381	C_CITY_138 138.00 - SALT_PLAINS 138.00 138KV CKT 1
FDNS	01ALL	0	20SP	G15_048	FROM->TO	CLEO CORNER - CLEOPLT4 138.00 138KV CKT 1	191	191	0.57688	118.3206	CEDARDALE - OKEENE 138KV CKT 1
FDNS	01ALL	0	16WP	G15_048	FROM->TO	CLEO CORNER - CLEOPLT4 138.00 138KV CKT 1	191	191	0.57756	118.2705	NOEL_SW 138.00 - SALT_PLAINS 138.00 138KV CKT 1
FDNS	01ALL	0	20WP	G15_048	FROM->TO	CLEO CORNER - CLEOPLT4 138.00 138KV CKT 1	191	191	0.57278	118.0061	G11_051T 345.00 - TATONGA7 345.00 345KV CKT 1
FDNS	00NR	0	20WP	G15_048	FROM->TO	CLEO CORNER - CLEOPLT4 138.00 138KV CKT 1	191	191	0.58042	118.0033	MATHWSN7 345.00 - TATONGA7 345.00 345KV CKT 1
FDNS	01ALL	0	16WP	G15_048	FROM->TO	CLEO CORNER - CLEOPLT4 138.00 138KV CKT 1	191	191	0.58092	117.9656	MOREWOOD SW - NINE MILE 138KV CKT 1
FDNS	01ALL	0	20SP	G15_048	FROM->TO	CLEO CORNER - CLEOPLT4 138.00 138KV CKT 1	191	191	0.60097	117.9591	CLEO CORNER - CLEO JCT 69KV CKT 1
FDNS	01ALL	0	20SP	G15_048	FROM->TO	CLEO CORNER - CLEOPLT4 138.00 138KV CKT 1	191	191	0.60097	117.9572	CLEO JCT - RINGWOOD 69KV CKT 1
FDNS	01ALL	0	16WP	G15_048	FROM->TO	CLEO CORNER - CLEOPLT4 138.00 138KV CKT 1	191	191	0.59475	117.9571	WOODWARD EHV - WWPAR4 138.00 138KV CKT 1
FDNS	01ALL	0	16WP	G15_048	FROM->TO	CLEO CORNER - CLEOPLT4 138.00 138KV CKT 1	191	191	0.59475	117.957	WOODWARD - WWPAR4 138.00 138KV CKT 1
FDNS	01ALL	0	17SP	G15_048	FROM->TO	CLEO CORNER - CLEOPLT4 138.00 138KV CKT 1	191	191	0.57279	117.951	G15095_T 138.00 - ROSE_VALLEY 138.00 138KV CKT 1
FDNS	01ALL	0	17SP	G15_048	FROM->TO	CLEO CORNER - CLEOPLT4 138.00 138KV CKT 1	191	191	0.57746	117.9261	BYRON_138 138.00 - C_CITY_138 138.00 138KV CKT 1
FDNS	01ALL	0	17SP	G15_048	FROM->TO	CLEO CORNER - CLEOPLT4 138.00 138KV CKT 1	191	191	0.57348	117.9056	THISTLE7 345.00 - WOODWARD DISTRICT EHV 345KV CKT 1
FDNS	01ALL	0	17SP	G15_048	FROM->TO	CLEO CORNER - CLEOPLT4 138.00 138KV CKT 1	191	191	0.57348	117.9056	THISTLE7 345.00 - WOODWARD DISTRICT EHV 345KV CKT 1
FDNS	01ALL	0	17SP	G15_048	FROM->TO	CLEO CORNER - CLEOPLT4 138.00 138KV CKT 1	191	191	0.57348	117.9056	THISTLE7 345.00 - WOODWARD DISTRICT EHV 345KV CKT 2
FDNS	01ALL	0	17SP	G15_048	FROM->TO	CLEO CORNER - CLEOPLT4 138.00 138KV CKT 1	191	191	0.57348	117.9056	THISTLE7 345.00 - WOODWARD DISTRICT EHV 345KV CKT 2
FDNS	01ALL	0	20SP	G15_048	FROM->TO	CLEO CORNER - CLEOPLT4 138.00 138KV CKT 1	191	191	0.5809	117.8975	BEARCAT 138.00 - NINE MILE 138KV CKT 1
FDNS	01ALL	0	17SP	G15_048	FROM->TO	CLEO CORNER - CLEOPLT4 138.00 138KV CKT 1	191	191	0.57527	117.8475	ROMAN NOSE - SOUTHARD 138KV CKT 1
FDNS	01ALL	0	20WP	G15_048	FROM->TO	CLEO CORNER - CLEOPLT4 138.00 138KV CKT 1	191	191	0.575	117.8129	DEWEY - SOUTHARD 138KV CKT 1
FDNS	01ALL	0	17SP	G15_048	FROM->TO	CLEO CORNER - CLEOPLT4 138.00 138KV CKT 1	191	191	0.57279	117.6266	NOEL_SW 138.00 - ROSE_VALLEY 138.00 138KV CKT 1
FDNS	01ALL	0	20SP	G15_048	FROM->TO	CLEO CORNER - CLEOPLT4 138.00 138KV CKT 1	191	191	0.57754	117.5319	NOEL_SW 138.00 - SALT_PLAINS 138.00 138KV CKT 1
FDNS	01ALL	0	20SP	G15_048	FROM->TO	CLEO CORNER - CLEOPLT4 138.00 138KV CKT 1	191	191	0.59482	117.4753	WOODWARD EHV - WWPAR4 138.00 138KV CKT 1
FDNS	01ALL	0	20SP	G15_048	FROM->TO	CLEO CORNER - CLEOPLT4 138.00 138KV CKT 1	191	191	0.59482	117.4752	WOODWARD - WWPAR4 138.00 138KV CKT 1
FDNS	01ALL	0	16WP	G15_048	FROM->TO	CLEO CORNER - CLEOPLT4 138.00 138KV CKT 1	191	191	0.60107	117.4456	CLEO CORNER - CLEO JCT 69KV CKT 1
FDNS	01ALL	0	16WP	G15_048	FROM->TO	CLEO CORNER - CLEOPLT4 138.00 138KV CKT 1	191	191	0.60107	117.4438	CLEO JCT - RINGWOOD 69KV CKT 1
FDNS	01ALL	0	20WP	G15_048	FROM->TO	CLEO CORNER - CLEOPLT4 138.00 138KV CKT 1	191	191	0.57728	117.413	C_CITY_138 138.00 - SALT_PLAINS 138.00 138KV CKT 1
FDNS	01ALL	0	20WP	G15_048	FROM->TO	CLEO CORNER - CLEOPLT4 138.00 138KV CKT 1	191	191	0.575	117.4057	ROMAN NOSE - SOUTHARD 138KV CKT 1
FDNS	01ALL	0	20WP	G15_048	FROM->TO	CLEO CORNER - CLEOPLT4 138.00 138KV CKT 1	191	191	0.57321	117.3284	THISTLE7 345.00 - WOODWARD DISTRICT EHV 345KV CKT 1
FDNS	01ALL	0	20WP	G15_048	FROM->TO	CLEO CORNER - CLEOPLT4 138.00 138KV CKT 1	191	191	0.57321	117.3284	THISTLE7 345.00 - WOODWARD DISTRICT EHV 345KV CKT 1
FDNS	01ALL	0	20WP	G15_048	FROM->TO	CLEO CORNER - CLEOPLT4 138.00 138KV CKT 1	191	191	0.57321	117.3284	THISTLE7 345.00 - WOODWARD DISTRICT EHV 345KV CKT 2
FDNS	01ALL	0	20WP	G15_048	FROM->TO	CLEO CORNER - CLEOPLT4 138.00 138KV CKT 1	191	191	0.57321	117.3284	THISTLE7 345.00 - WOODWARD DISTRICT EHV 345KV CKT 2
FDNS	01ALL	0	20SP	G15_048	FROM->TO	CLEO CORNER - CLEOPLT4 138.00 138KV CKT 1	191	191	0.5809	117.1052	MOREWOOD SW - NINE MILE 138KV CKT 1
FDNS	01ALL	0	20SP	G15_048	FROM->TO	CLEO CORNER - CLEOPLT4 138.00 138KV CKT 1	191	191	0.57605	117.0115	DOVER SW - OKEENE 138KV CKT 1
FDNS	01ALL	0	20WP	G15_048	FROM->TO	CLEO CORNER - CLEOPLT4 138.00 138KV CKT 1	191	191	0.57728	116.9823	BYRON_138 138.00 - C_CITY_138 138.00 138KV CKT 1
FDNS	01ALL	0	17SP	G15_048	FROM->TO	CLEO CORNER - CLEOPLT4 138.00 138KV CKT 1	191	191	0.60098	116.9477	NSAH - RINGWOOD 69KV CKT 1
FDNS	01ALL	0	16WP	G15_048	FROM->TO	CLEO CORNER - CLEOPLT4 138.00 138KV CKT 1	191	191	0.57535	116.9391	DEWEY - SOUTHARD 138KV CKT 1
FDNS	01ALL	0	20WP	G15_048	FROM->TO	CLEO CORNER - CLEOPLT4 138.00 138KV CKT 1	191	191	0.57254	116.8755	G15095_T 138.00 - ROSE_VALLEY 138.00 138KV CKT 1
FDNS	01ALL	0	20WP	G15_048	FROM->TO	CLEO CORNER - CLEOPLT4 138.00 138KV CKT 1	191	191	0.5946	116.6378	WOODWARD EHV - WWPAR4 138.00 138KV CKT 1
FDNS	01ALL	0	20WP	G15_048	FROM->TO	CLEO CORNER - CLEOPLT4 138.00 138KV CKT 1	191	191	0.5946	116.6376	WOODWARD - WWPAR4 138.00 138KV CKT 1
FDNS	01ALL	0	20WP	G15_048	FROM->TO	CLEO CORNER - CLEOPLT4 138.00 138KV CKT 1	191	191	0.57254	116.6368	NOEL_SW 138.00 - ROSE_VALLEY 138.00 138KV CKT 1
FDNS	01ALL	0	16WP	G15_048	FROM->TO	CLEO CORNER - CLEOPLT4 138.00 138KV CKT 1	191	191	0.57535	116.5357	ROMAN NOSE - SOUTHARD 138KV CKT 1
FDNS	01ALL	0	20SP	G15_048	FROM->TO	CLEO CORNER - CLEOPLT4 138.00 138KV CKT 1	191	191	0.54011	116.5285	WOODRING (WOODRNG2) 345/138/13.8KV TRANSFORMER CKT 1
FDNS	01ALL	0	16WP	G15_048	FROM->TO	CLEO CORNER - CLEOPLT4 138.00 138KV CKT 1	191	191	0.57359	116.4807	THISTLE7 345.00 - WOODWARD DISTRICT EHV 345KV CKT 1
FDNS	01ALL	0	16WP	G15_048	FROM->TO	CLEO CORNER - CLEOPLT4 138.00 138KV CKT 1	191	191	0.57359	116.4807	THISTLE7 345.00 - WOODWARD DISTRICT EHV 345KV CKT 1
FDNS	01ALL	0	16WP	G15_048	FROM->TO	CLEO CORNER - CLEOPLT4 138.00 138KV CKT 1	191	191	0.57359	116.4807	THISTLE7 345.00 - WOODWARD DISTRICT EHV 345KV CKT 2
FDNS	01ALL	0	16WP	G15_048	FROM->TO	CLEO CORNER - CLEOPLT4 138.00 138KV CKT 1	191	191	0.57359	116.4807	THISTLE7 345.00 - WOODWARD DISTRICT EHV 345KV CKT 2
FDNS	01ALL	0	16WP	G15_048	FROM->TO	CLEO CORNER - CLEOPLT4 138.00 138KV CKT 1	191	191	0.57756	116.4349	C_CITY_138 138.00 - SALT_PLAINS 138.00 138KV CKT 1
FDNS	01ALL	0	17SP	G15_048	FROM->TO	CLEO CORNER - CLEOPLT4 138.00 138KV CKT 1	191	191	0.57309	116.4306	G11_051T 345.00 - TATONGA7 345.00 345KV CKT 1
FDNS	01ALL	0	17SP	G15_048	FROM->TO	CLEO CORNER - CLEOPLT4 138.00 138KV CKT 1	191	191	0.60412	116.4165	CLEO CORNER - CLEOTP 2 69.000 69KV CKT 1
FDNS	01ALL	0	17SP	G15_048	FROM->TO	CLEO CORNER - CLEOPLT4 138.00 138KV CKT 1	191	191	0.56957	116.3479	G15063_T 345.00 - WOODRING 345KV CKT 1
FDNS	01ALL	0	16WP	G15_048	FROM->TO	CLEO CORNER - CLEOPLT4 138.00 138KV CKT 1	191	191	0.57326	116.3208	G11_051T 345.00 - TATONGA7 345.00 345KV CKT 1
FDNS	01ALL	0	17SP	G15_048	FROM->TO	CLEO CORNER - CLEOPLT4 138.00 138KV CKT 1	191	191	0.57746	116.1304	BYRON_138 138.00 - SANDY_CN_138138.00 138KV CKT 1
FDNS	01ALL	0	16WP	G15_048	FROM->TO	CLEO CORNER - CLEOPLT4 138.00 138KV CKT 1	191	191	0.57756	116.1273	BYRON_138 138.00 - C_CITY_138 138.00 138KV CKT 1
FDNS	01ALL	0	17SP	G15_048	FROM->TO	CLEO CORNER - CLEOPLT4 138.00 138KV CKT 1	191	191	0.60412	116.0659	ALINETP2 69.000 - CLEOTP 2 69.000 69KV CKT 1
FDNS	01ALL	0	16WP	G15_048	FROM->TO	CLEO CORNER - CLEOPLT4 138.00 138KV CKT 1	191	191	0.57289	116.0543	G15095_T 138.00 - ROSE_VALLEY 138.00 138KV CKT 1
FDNS	01ALL	0	20WP	G15_048	FROM->TO	CLEO CORNER - CLEOPLT4 138.00 138KV CKT 1	191	191	0.60072	116.051	NSAH - RINGWOOD 69KV CKT 1

SOLUTION	GROUP	SCENARIO	SEASON	SOURCE	DIRECTION	MONITORED ELEMENT	RATEA (MVA)	RATEB(MVA)	TDF	TC%LOADING (% MVA)	CONTINGENCY
FDNS	01ALL	0	17SP	G15_048	FROM->TO	CLEO CORNER - CLEOPLT4 138.00 138KV CKT 1	191	191	0.57672	116.04	ELK CITY - RED HILLS WIND 138KV CKT 1
FDNS	01ALL	0	17SP	G15_048	FROM->TO	CLEO CORNER - CLEOPLT4 138.00 138KV CKT 1	191	191	0.57672	116.04	ELK CITY - RED HILLS WIND 138KV CKT 1
FDNS	01ALL	0	20SP	G15_048	FROM->TO	CLEO CORNER - CLEOPLT4 138.00 138KV CKT 1	191	191	0.57278	115.9551	G15095_T 138.00 - ROSE_VALLEY 138.00 138KV CKT 1
FDNS	01ALL	0	17SP	G15_048	FROM->TO	CLEO CORNER - CLEOPLT4 138.00 138KV CKT 1	191	191	0.60412	115.9174	ALINETP2 69.000 - ALVA 69KV CKT 1
FDNS	01ALL	0	17SP	G15_048	FROM->TO	CLEO CORNER - CLEOPLT4 138.00 138KV CKT 1	191	191	0.57243	115.879	CIMARRON - MINCO 345KV CKT 1
FDNS	01ALL	0	20SP	G15_048	FROM->TO	CLEO CORNER - CLEOPLT4 138.00 138KV CKT 1	191	191	0.57754	115.8645	C_CITY_138 138.00 - SALT_PLAINS 138.00 138KV CKT 1
FDNS	01ALL	0	17SP	G15_048	FROM->TO	CLEO CORNER - CLEOPLT4 138.00 138KV CKT 1	191	191	0.57278	115.8294	GEN514805 1-SOONER UNIT 1
FDNS	01ALL	0	17SP	G15_048	FROM->TO	CLEO CORNER - CLEOPLT4 138.00 138KV CKT 1	191	191	0.5752	115.7943	WOODWARD DISTRICT EHV (WWDEHV-T2) 345/138/13.8KV TRANSFORMER CKT 2
FDNS	01ALL	0	16WP	G15_048	FROM->TO	CLEO CORNER - CLEOPLT4 138.00 138KV CKT 1	191	191	0.57289	115.6501	NOEL_SW 138.00 - ROSE_VALLEY 138.00 138KV CKT 1
FDNS	01ALL	0	17SP	G15_048	FROM->TO	CLEO CORNER - CLEOPLT4 138.00 138KV CKT 1	191	191	0.56957	115.6409	G15063_T 345.00 - MATHWSN7 345.00 345KV CKT 1
FDNS	01ALL	0	20SP	G15_048	FROM->TO	CLEO CORNER - CLEOPLT4 138.00 138KV CKT 1	191	191	0.57528	115.6281	DEWEY - SOUTHARD 138KV CKT 1
FDNS	01ALL	0	17SP	G15_048	FROM->TO	CLEO CORNER - CLEOPLT4 138.00 138KV CKT 1	191	191	0.57508	115.6259	WOODWARD DISTRICT EHV (WWDEHV) 345/138/13.8KV TRANSFORMER CKT 1
FDNS	01ALL	0	20WP	G15_048	FROM->TO	CLEO CORNER - CLEOPLT4 138.00 138KV CKT 1	191	191	0.60397	115.4273	CLEO CORNER - CLEOTP 2 69.000 69KV CKT 1
FDNS	01ALL	0	20SP	G15_048	FROM->TO	CLEO CORNER - CLEOPLT4 138.00 138KV CKT 1	191	191	0.57347	115.3495	THISTLE7 345.00 - WOODWARD DISTRICT EHV 345KV CKT 1
FDNS	01ALL	0	20SP	G15_048	FROM->TO	CLEO CORNER - CLEOPLT4 138.00 138KV CKT 1	191	191	0.57347	115.3495	THISTLE7 345.00 - WOODWARD DISTRICT EHV 345KV CKT 1
FDNS	01ALL	0	20SP	G15_048	FROM->TO	CLEO CORNER - CLEOPLT4 138.00 138KV CKT 1	191	191	0.57347	115.3495	THISTLE7 345.00 - WOODWARD DISTRICT EHV 345KV CKT 2
FDNS	01ALL	0	20SP	G15_048	FROM->TO	CLEO CORNER - CLEOPLT4 138.00 138KV CKT 1	191	191	0.57347	115.3495	THISTLE7 345.00 - WOODWARD DISTRICT EHV 345KV CKT 2
FDNS	01ALL	0	16WP	G15_048	FROM->TO	CLEO CORNER - CLEOPLT4 138.00 138KV CKT 1	191	191	0.60107	115.3145	NSAH - RINGWOOD 69KV CKT 1
FDNS	01ALL	0	17SP	G15_048	FROM->TO	CLEO CORNER - CLEOPLT4 138.00 138KV CKT 1	191	191	0.57672	115.3065	ELLIS 4 138.00 - MOREWOOD SW 138KV CKT 1
FDNS	01ALL	0	20SP	G15_048	FROM->TO	CLEO CORNER - CLEOPLT4 138.00 138KV CKT 1	191	191	0.57754	115.277	BYRON_138 138.00 - C_CITY_138 138.00 138KV CKT 1
FDNS	01ALL	0	20WP	G15_048	FROM->TO	CLEO CORNER - CLEOPLT4 138.00 138KV CKT 1	191	191	0.60397	115.2023	ALINETP2 69.000 - CLEOTP 2 69.000 69KV CKT 1
FDNS	01ALL	0	20WP	G15_048	FROM->TO	CLEO CORNER - CLEOPLT4 138.00 138KV CKT 1	191	191	0.57215	115.1867	CIMARRON - MINCO 345KV CKT 1
FDNS	01ALL	0	20WP	G15_048	FROM->TO	CLEO CORNER - CLEOPLT4 138.00 138KV CKT 1	191	191	0.57728	115.1637	BYRON_138 138.00 - SANDY_CN_138138.00 138KV CKT 1
FDNS	01ALL	0	17SP	G15_048	FROM->TO	CLEO CORNER - CLEOPLT4 138.00 138KV CKT 1	191	191	0.57335	115.1096	Hitchland Interchange - WALKTAP7 345.00 345KV CKT 1
FDNS	01ALL	0	17SP	G15_048	FROM->TO	CLEO CORNER - CLEOPLT4 138.00 138KV CKT 1	191	191	0.57335	115.1096	Hitchland Interchange - WALKTAP7 345.00 345KV CKT 1
FDNS	01ALL	0	20WP	G15_048	FROM->TO	CLEO CORNER - CLEOPLT4 138.00 138KV CKT 1	191	191	0.60397	115.1095	ALINETP2 69.000 - ALVA 69KV CKT 1
FDNS	01ALL	0	17SP	G15_048	FROM->TO	CLEO CORNER - CLEOPLT4 138.00 138KV CKT 1	191	191	0.57335	115.1039	P12:345:SPS:J07.1.FINN.HITCH
FDNS	01ALL	0	20SP	G15_048	FROM->TO	CLEO CORNER - CLEOPLT4 138.00 138KV CKT 1	191	191	0.57278	115.0836	NOEL_SW 138.00 - ROSE_VALLEY 138.00 138KV CKT 1
FDNS	01ALL	0	20WP	G15_048	FROM->TO	CLEO CORNER - CLEOPLT4 138.00 138KV CKT 1	191	191	0.53992	115.0626	WOODRING (WOODRNG2) 345/138/13.8KV TRANSFORMER CKT 1
FDNS	01ALL	0	20SP	G15_048	FROM->TO	CLEO CORNER - CLEOPLT4 138.00 138KV CKT 1	191	191	0.57528	114.9922	ROMAN NOSE - SOUTHARD 138KV CKT 1
FDNS	01ALL	0	20WP	G15_048	FROM->TO	CLEO CORNER - CLEOPLT4 138.00 138KV CKT 1	191	191	0.57308	114.9117	Hitchland Interchange - WALKTAP7 345.00 345KV CKT 1
FDNS	01ALL	0	20WP	G15_048	FROM->TO	CLEO CORNER - CLEOPLT4 138.00 138KV CKT 1	191	191	0.57308	114.9117	Hitchland Interchange - WALKTAP7 345.00 345KV CKT 1
FDNS	01ALL	0	20WP	G15_048	FROM->TO	CLEO CORNER - CLEOPLT4 138.00 138KV CKT 1	191	191	0.57308	114.89	P12:345:SPS:J07.1.FINN.HITCH
FDNS	01ALL	0	17SP	G15_048	FROM->TO	CLEO CORNER - CLEOPLT4 138.00 138KV CKT 1	191	191	0.59597	114.8119	RENFROW4 138.00 - WAKITAS4 138.00 138KV CKT 1
FDNS	01ALL	0	17SP	G15_048	FROM->TO	CLEO CORNER - CLEOPLT4 138.00 138KV CKT 1	191	191	0.57314	114.8081	CZYCRVT2 69.000 - KNOBHILL 69KV CKT 1
FDNS	01ALL	0	17SP	G15_048	FROM->TO	CLEO CORNER - CLEOPLT4 138.00 138KV CKT 1	191	191	0.57672	114.7586	CUSTER4 138.00 - ELLIS 4 138.00 138KV CKT 1
FDNS	01ALL	0	17SP	G15_048	FROM->TO	CLEO CORNER - CLEOPLT4 138.00 138KV CKT 1	191	191	0.58636	114.7526	FPL SWITCH - WOODWARD 138KV CKT 1
FDNS	01ALL	0	20WP	G15_048	FROM->TO	CLEO CORNER - CLEOPLT4 138.00 138KV CKT 1	191	191	0.56952	114.7241	G15063_T 345.00 - WOODRING 345KV CKT 1
FDNS	01ALL	0	17SP	G15_048	FROM->TO	CLEO CORNER - CLEOPLT4 138.00 138KV CKT 1	191	191	0.57291	114.6812	G1524G1525 345.00 - THISTLE7 345.00 345KV CKT 1
FDNS	01ALL	0	17SP	G15_048	FROM->TO	CLEO CORNER - CLEOPLT4 138.00 138KV CKT 1	191	191	0.57291	114.6812	G1524G1525 345.00 - THISTLE7 345.00 345KV CKT 2
FDNSLock	00NR	0	16WP	G15_048	FROM->TO	CLEO CORNER - CLEOPLT4 138.00 138KV CKT 1	191	191	0.58042	114.6586	G11_051T 345.00 - TATONGA7 345.00 345KV CKT 1
FDNS	01ALL	0	17SP	G15_048	FROM->TO	CLEO CORNER - CLEOPLT4 138.00 138KV CKT 1	191	191	0.57672	114.6431	CUSTER4 138.00 - RED HILLS WIND 138KV CKT 1
FDNS	01ALL	0	17SP	G15_048	FROM->TO	CLEO CORNER - CLEOPLT4 138.00 138KV CKT 1	191	191	0.60098	114.5946	NSAH - WAKITA 69KV CKT 1
FDNS	01ALL	0	20WP	G15_048	FROM->TO	CLEO CORNER - CLEOPLT4 138.00 138KV CKT 1	191	191	0.5765	114.5623	ELK CITY - RED HILLS WIND 138KV CKT 1
FDNS	01ALL	0	20WP	G15_048	FROM->TO	CLEO CORNER - CLEOPLT4 138.00 138KV CKT 1	191	191	0.5765	114.5623	ELK CITY - RED HILLS WIND 138KV CKT 1
FDNS	01ALL	0	17SP	G15_048	FROM->TO	CLEO CORNER - CLEOPLT4 138.00 138KV CKT 1	191	191	0.57309	114.5597	G14-057T 345.00 - SUNNYSIDE 345KV CKT 1
FDNS	01ALL	0	20WP	G15_048	FROM->TO	CLEO CORNER - CLEOPLT4 138.00 138KV CKT 1	191	191	0.57256	114.5476	GEN514805 1-SOONER UNIT 1
FDNS	01ALL	0	16WP	G15_048	FROM->TO	CLEO CORNER - CLEOPLT4 138.00 138KV CKT 1	191	191	0.60421	114.5055	CLEO CORNER - CLEOTP 2 69.000 69KV CKT 1
FDNS	01ALL	0	17SP	G15_048	FROM->TO	CLEO CORNER - CLEOPLT4 138.00 138KV CKT 1	191	191	0.57278	114.488	GEN514806 1-SOONER UNIT 2
FDNS	01ALL	0	20SP	G15_048	FROM->TO	CLEO CORNER - CLEOPLT4 138.00 138KV CKT 1	191	191	0.56969	114.4259	G15063_T 345.00 - WOODRING 345KV CKT 1
FDNS	01ALL	0	16WP	G15_048	FROM->TO	CLEO CORNER - CLEOPLT4 138.00 138KV CKT 1	191	191	0.57756	114.4256	BYRON_138 138.00 - SANDY_CN_138138.00 138KV CKT 1
FDNS	01ALL	0	17SP	G15_048	FROM->TO	CLEO CORNER - CLEOPLT4 138.00 138KV CKT 1	191	191	0.57313	114.4025	FINNEY SWITCHING STATION - HOLCOMB 345KV CKT 1
FDNS	01ALL	0	17SP	G15_048	FROM->TO	CLEO CORNER - CLEOPLT4 138.00 138KV CKT 1	191	191	0.57313	114.4025	FINNEY SWITCHING STATION - HOLCOMB 345KV CKT 1
FDNS	01ALL	0	16WP	G15_048	FROM->TO	CLEO CORNER - CLEOPLT4 138.00 138KV CKT 1	191	191	0.57343	114.3421	FINNEY SWITCHING STATION - HOLCOMB 345KV CKT 1
FDNS	01ALL	0	16WP	G15_048	FROM->TO	CLEO CORNER - CLEOPLT4 138.00 138KV CKT 1	191	191	0.57343	114.3421	FINNEY SWITCHING STATION - HOLCOMB 345KV CKT 1
FDNS	01ALL	0	16WP	G15_048	FROM->TO	CLEO CORNER - CLEOPLT4 138.00 138KV CKT 1	191	191	0.60421	114.285	ALINETP2 69.000 - CLEOTP 2 69.000 69KV CKT 1
FDNS	01ALL	0	20SP	G15_048	FROM->TO	CLEO CORNER - CLEOPLT4 138.00 138KV CKT 1	191	191	0.60097	114.2552	NSAH - RINGWOOD 69KV CKT 1
FDNS	01ALL	0	20WP	G15_048	FROM->TO	CLEO CORNER - CLEOPLT4 138.00 138KV CKT 1	191	191	0.57498	114.2519	WOODWARD DISTRICT EHV (WWDEHV-T2) 345/138/13.8KV TRANSFORMER CKT 2
FDNS	01ALL	0	16WP	G15_048	FROM->TO	CLEO CORNER - CLEOPLT4 138.00 138KV CKT 1	191	191	0.60421	114.1917	ALINETP2 69.000 - ALVA 69KV CKT 1
FDNS	01ALL	0	20WP	G15_048	FROM->TO	CLEO CORNER - CLEOPLT4 138.00 138KV CKT 1	191	191	0.57285	114.1696	G14-057T 345.00 - SUNNYSIDE 345KV CKT 1
FDNS	01ALL	0	17SP	G15_048	FROM->TO	CLEO CORNER - CLEOPLT4 138.00 138KV CKT 1	191	191	0.57314	114.1335	CZYCRVT2 69.000 - SALINE 69KV CKT 1
FDNS	01ALL	0	16WP	G15_048	FROM->TO	CLEO CORNER - CLEOPLT4 138.00 138KV CKT 1	191	191	0.57253	114.1273	CIMARRON - MINCO 345KV CKT 1
FDNS	01ALL	0	20WP	G15_048	FROM->TO	CLEO CORNER - CLEOPLT4 138.00 138KV CKT 1	191	191	0.59579	114.1147	RENFROW4 138.00 - WAKITAS4 138.00 138KV CKT 1
FDNS	01ALL	0	20WP	G15_048	FROM->TO	CLEO CORNER - CLEOPLT4 138.00 138KV CKT 1	191	191	0.57487	114.1053	WOODWARD DISTRICT EHV (WWDEHV) 345/138/13.8KV TRANSFORMER CKT 1
FDNS	00NR	0	20WP	G15_048	FROM->TO	CLEO CORNER - CLEOPLT4 138.00 138KV CKT 1	191	191	0.58042	114.0655	G11_051T 345.00 - TATONGA7 345.00 345KV CKT 1
FDNS	01ALL	0	20SP	G15_048	FROM->TO	CLEO CORNER - CLEOPLT4 138.00 138KV CKT 1	191	191	0.6042	114.0648	CLEO CORNER - CLEOTP 2 69.000 69KV CKT 1
FDNS	01ALL	0	20WP	G15_048	FROM->TO	CLEO CORNER - CLEOPLT4 138.00 138KV CKT 1	191	191	0.57266	114.0647	G1524G1525 345.00 - THISTLE7 345.00 345KV CKT 1
FDNS	01ALL	0	20WP	G15_048	FROM->TO	CLEO CORNER - CLEOPLT4 138.00 138KV CKT 1	191	191	0.57266	114.0647	G1524G1525 345.00 - THISTLE7 345.00 345KV CKT 2
FDNS	01ALL	0	20WP	G15_048	FROM->TO	CLEO CORNER - CLEOPLT4 138.00 138KV CKT 1	191	191	0.56952	114.0387	G15063_T 345.00 - MATHWSN7 345.00 345KV CKT 1
FDNS	01ALL	0	16WP	G15_048	FROM->TO	CLEO CORNER - CLEOPLT4 138.00 138KV CKT 1	191	191	0.5768	114.0222	ELK CITY - RED HILLS WIND 138KV CKT 1
FDNS	01ALL	0	16WP	G15_048	FROM->TO	CLEO CORNER - CLEOPLT4 138.00 138KV CKT 1	191	191	0.5768	114.0222	ELK CITY - RED HILLS WIND 138KV CKT 1
FDNS	01ALL	0	16WP	G15_048	FROM->TO	CLEO CORNER - CLEOPLT4 138.00 138KV CKT 1	191	191	0.54014	113.9785	WOODRING (WOODRNG2) 345/138/13.8KV TRANSFORMER CKT 1
FDNS	01ALL	0	20WP	G15_048	FROM->TO	CLEO CORNER - CLEOPLT4 138.00 138KV CKT 1	191	191	0.60072	113.9396	NSAH - WAKITA 69KV CKT 1
FDNS	01ALL	0	16WP	G15_048	FROM->TO	CLEO CORNER - CLEOPLT4 138.00 138KV CKT 1	191	191	0.57343	113.9226	FINNEY SWITCHING STATION - Hitchland Interchange 345KV CKT 1
FDNS	01ALL	0	16WP	G15_048	FROM->TO	CLEO CORNER - CLEOPLT4 138.00 138KV CKT 1	191	191	0.57288	113.8585	GEN514805 1-SOONER UNIT 1
FDNS	01ALL	0	20WP	G15_048	FROM->TO	CLEO CORNER - CLEOPLT4 138.00 138KV CKT 1	191	191	0.5765	113.8209	ELLIS 4 138.00 - MOREWOOD SW 138KV CKT 1
FDNS	01ALL	0	16WP	G15_048	FROM->TO	CLEO CORNER - CLEOPLT4 138.00 138KV CKT 1	191	191	0.57528	113.8193	WOODWARD DISTRICT EHV (WWDEHV-T2) 345/138/13.8KV TRANSFORMER CKT 2
FDNS	01ALL	0	16WP	G15_048	FROM->TO	CLEO CORNER - CLEOPLT4 138.00 138KV CKT 1	191	191	0.60107	113.7501	NSAH - WAKITA 69KV CKT 1
FDNS	01ALL	0	16WP	G15_048	FROM->TO	CLEO CORNER - CLEOPLT4 138.00 138KV CKT 1	191	191	0.59605	113.7373	RENFROW4 138.00 - WAKITAS4 138.00 138KV CKT 1

SOLUTION	GROUP	SCENARIO	SEASON	SOURCE	DIRECTION	MONITORED ELEMENT	RATEA (MVA)	RATEB(MVA)	TDF	TC%LOADING (% MVA)	CONTINGENCY
FDNS	01ALL	0	20SP	G15_048	FROM->TO	CLEO CORNER - CLEOPLT4 138.00 138KV CKT 1	191	191	0.56969	113.7297	G15063_T 345.00 - MATHWSN7 345.00 345KV CKT 1
FDNS	01ALL	0	20SP	G15_048	FROM->TO	CLEO CORNER - CLEOPLT4 138.00 138KV CKT 1	191	191	0.6042	113.7089	ALINETP2 69.000 - CLEOTP 2 69.000 69KV CKT 1
FDNS	01ALL	0	20WP	G15_048	FROM->TO	CLEO CORNER - CLEOPLT4 138.00 138KV CKT 1	191	191	0.57285	113.679	G14-057T 345.00 - LAWTON EASTSIDE 345KV CKT 1
FDNS	01ALL	0	16WP	G15_048	FROM->TO	CLEO CORNER - CLEOPLT4 138.00 138KV CKT 1	191	191	0.57516	113.6586	WOODWARD DISTRICT EHV (WWDEHV) 345/138/13.8KV TRANSFORMER CKT 1
FDNS	01ALL	0	16WP	G15_048	FROM->TO	CLEO CORNER - CLEOPLT4 138.00 138KV CKT 1	191	191	0.60107	113.6	WAKITAS4 138.00 (WAKITA_XMER) 138/69/13.8KV TRANSFORMER CKT 1
FDNS	01ALL	0	20SP	G15_048	FROM->TO	CLEO CORNER - CLEOPLT4 138.00 138KV CKT 1	191	191	0.6042	113.5622	ALINETP2 69.000 - ALVA 69KV CKT 1
FDNS	01ALL	0	20WP	G15_048	FROM->TO	CLEO CORNER - CLEOPLT4 138.00 138KV CKT 1	191	191	0.57283	113.5448	CZYCRVT2 69.000 - KNOBHILL 69KV CKT 1
FDNS	01ALL	0	16WP	G15_048	FROM->TO	CLEO CORNER - CLEOPLT4 138.00 138KV CKT 1	191	191	0.56974	113.5349	G15063_T 345.00 - WOODRING 345KV CKT 1
FDNS	01ALL	0	20WP	G15_048	FROM->TO	CLEO CORNER - CLEOPLT4 138.00 138KV CKT 1	191	191	0.59579	113.4091	RENFROW4 138.00 - RENFROW4 138.00 138KV CKT 1
FDNS	01ALL	0	16WP	G15_048	FROM->TO	CLEO CORNER - CLEOPLT4 138.00 138KV CKT 1	191	191	0.57321	113.3852	G14-057T 345.00 - SUNNYSIDE 345KV CKT 1
FDNS	01ALL	0	20WP	G15_048	FROM->TO	CLEO CORNER - CLEOPLT4 138.00 138KV CKT 1	191	191	0.57256	113.3735	GEN514806 1-SOONER UNIT 2
FDNS	01ALL	0	20SP	G15_048	FROM->TO	CLEO CORNER - CLEOPLT4 138.00 138KV CKT 1	191	191	0.57311	113.3359	G11_051T 345.00 - TATONGA7 345.00 345KV CKT 1
FDNS	01ALL	0	20SP	G15_048	FROM->TO	CLEO CORNER - CLEOPLT4 138.00 138KV CKT 1	191	191	0.57754	113.3262	BYRON_138 138.00 - SANDY_CN_138138.00 138KV CKT 1
FDNS	01ALL	0	16WP	G15_048	FROM->TO	CLEO CORNER - CLEOPLT4 138.00 138KV CKT 1	191	191	0.5768	113.2813	ELLIS 4 138.00 - MOREWOOD SW 138KV CKT 1
FDNS	01ALL	0	20WP	G15_048	FROM->TO	CLEO CORNER - CLEOPLT4 138.00 138KV CKT 1	191	191	0.57287	113.27	FINNEY SWITCHING STATION - HOLCOMB 345KV CKT 1
FDNS	01ALL	0	20WP	G15_048	FROM->TO	CLEO CORNER - CLEOPLT4 138.00 138KV CKT 1	191	191	0.57287	113.27	FINNEY SWITCHING STATION - HOLCOMB 345KV CKT 1
FDNS	01ALL	0	20WP	G15_048	FROM->TO	CLEO CORNER - CLEOPLT4 138.00 138KV CKT 1	191	191	0.5765	113.2632	CUSTER4 138.00 - ELLIS 4 138.00 138KV CKT 1
FDNS	01ALL	0	16WP	G15_048	FROM->TO	CLEO CORNER - CLEOPLT4 138.00 138KV CKT 1	191	191	0.573	113.1659	G1524G1525 345.00 - THISTLE7 345.00 345KV CKT 1
FDNS	01ALL	0	16WP	G15_048	FROM->TO	CLEO CORNER - CLEOPLT4 138.00 138KV CKT 1	191	191	0.573	113.1659	G1524G1525 345.00 - THISTLE7 345.00 345KV CKT 2
FDNS	01ALL	0	20SP	G15_048	FROM->TO	CLEO CORNER - CLEOPLT4 138.00 138KV CKT 1	191	191	0.57674	113.159	ELK CITY - RED HILLS WIND 138KV CKT 1
FDNS	01ALL	0	20SP	G15_048	FROM->TO	CLEO CORNER - CLEOPLT4 138.00 138KV CKT 1	191	191	0.57674	113.159	ELK CITY - RED HILLS WIND 138KV CKT 1
FDNS	01ALL	0	20WP	G15_048	FROM->TO	CLEO CORNER - CLEOPLT4 138.00 138KV CKT 1	191	191	0.5765	113.1451	CUSTER4 138.00 - RED HILLS WIND 138KV CKT 1
FDNS	01ALL	0	20SP	G15_048	FROM->TO	CLEO CORNER - CLEOPLT4 138.00 138KV CKT 1	191	191	0.57279	113.1165	GEN514805 1-SOONER UNIT 1
FDNS	01ALL	0	20SP	G15_048	FROM->TO	CLEO CORNER - CLEOPLT4 138.00 138KV CKT 1	191	191	0.57243	113.0985	CIMARRON - MINCO 345KV CKT 1
FDNS	01ALL	0	16WP	G15_048	FROM->TO	CLEO CORNER - CLEOPLT4 138.00 138KV CKT 1	191	191	0.59605	113.0652	RENFROW4 138.00 - RENFROW4 138.00 138KV CKT 1
FDNS	01ALL	0	20SP	G15_048	FROM->TO	CLEO CORNER - CLEOPLT4 138.00 138KV CKT 1	191	191	0.57521	113.054	WOODWARD DISTRICT EHV (WWDEHV-T2) 345/138/13.8KV TRANSFORMER CKT 2
FDNS	01ALL	0	20SP	G15_048	FROM->TO	CLEO CORNER - CLEOPLT4 138.00 138KV CKT 1	191	191	0.57509	112.8892	WOODWARD DISTRICT EHV (WWDEHV) 345/138/13.8KV TRANSFORMER CKT 1
FDNS	01ALL	0	16WP	G15_048	FROM->TO	CLEO CORNER - CLEOPLT4 138.00 138KV CKT 1	191	191	0.57321	112.852	G14-057T 345.00 - LAWTON EASTSIDE 345KV CKT 1
FDNS	01ALL	0	16WP	G15_048	FROM->TO	CLEO CORNER - CLEOPLT4 138.00 138KV CKT 1	191	191	0.56974	112.8377	G15063_T 345.00 - MATHWSN7 345.00 345KV CKT 1
FDNS	01ALL	0	16WP	G15_048	FROM->TO	CLEO CORNER - CLEOPLT4 138.00 138KV CKT 1	191	191	0.57325	112.7384	CZYCRVT2 69.000 - KNOBHILL 69KV CKT 1
FDNS	01ALL	0	16WP	G15_048	FROM->TO	CLEO CORNER - CLEOPLT4 138.00 138KV CKT 1	191	191	0.5768	112.7306	CUSTER4 138.00 - ELLIS 4 138.00 138KV CKT 1
FDNSLock	01ALL	0	20WP	G15_048	FROM->TO	CLEO CORNER - CLEOPLT4 138.00 138KV CKT 1	191	191	0.60072	112.6922	WAKITAS4 138.00 (WAKITA_XMER) 138/69/13.8KV TRANSFORMER CKT 1
FDNS	01ALL	0	16WP	G15_048	FROM->TO	CLEO CORNER - CLEOPLT4 138.00 138KV CKT 1	191	191	0.57288	112.6406	GEN514806 1-SOONER UNIT 2
FDNS	01ALL	0	16WP	G15_048	FROM->TO	CLEO CORNER - CLEOPLT4 138.00 138KV CKT 1	191	191	0.5768	112.6142	CUSTER4 138.00 - RED HILLS WIND 138KV CKT 1
FDNS	01ALL	0	20SP	G15_048	FROM->TO	CLEO CORNER - CLEOPLT4 138.00 138KV CKT 1	191	191	0.57674	112.4307	ELLIS 4 138.00 - MOREWOOD SW 138KV CKT 1
FDNS	01ALL	0	17SP	G15_048	FROM->TO	CLEO CORNER - CLEOPLT4 138.00 138KV CKT 1	191	191	0.57278	112.3589	BASE CASE
FDNS	01ALL	0	20SP	G15_048	FROM->TO	CLEO CORNER - CLEOPLT4 138.00 138KV CKT 1	191	191	0.57334	112.2407	Hitchland Interchange - WALKTAP7 345.00 345KV CKT 1
FDNS	01ALL	0	20SP	G15_048	FROM->TO	CLEO CORNER - CLEOPLT4 138.00 138KV CKT 1	191	191	0.57334	112.2407	Hitchland Interchange - WALKTAP7 345.00 345KV CKT 1
FDNS	01ALL	0	20SP	G15_048	FROM->TO	CLEO CORNER - CLEOPLT4 138.00 138KV CKT 1	191	191	0.57334	112.2243	P12:345:SPS:J07.1.FINN.HITCH
FDNS	01ALL	0	20SP	G15_048	FROM->TO	CLEO CORNER - CLEOPLT4 138.00 138KV CKT 1	191	191	0.57388	112.1685	ALVA - CHEROKEE SW 69KV CKT 1
FDNS	01ALL	0	20SP	G15_048	FROM->TO	CLEO CORNER - CLEOPLT4 138.00 138KV CKT 1	191	191	0.57291	112.0705	G1524G1525 345.00 - THISTLE7 345.00 345KV CKT 1
FDNS	01ALL	0	20SP	G15_048	FROM->TO	CLEO CORNER - CLEOPLT4 138.00 138KV CKT 1	191	191	0.57291	112.0705	G1524G1525 345.00 - THISTLE7 345.00 345KV CKT 2
FDNS	01ALL	0	20SP	G15_048	FROM->TO	CLEO CORNER - CLEOPLT4 138.00 138KV CKT 1	191	191	0.57307	112.0524	CZYCRVT2 69.000 - KNOBHILL 69KV CKT 1
FDNS	01ALL	0	20SP	G15_048	FROM->TO	CLEO CORNER - CLEOPLT4 138.00 138KV CKT 1	191	191	0.57674	111.8782	CUSTER4 138.00 - ELLIS 4 138.00 138KV CKT 1
FDNS	01ALL	0	20SP	G15_048	FROM->TO	CLEO CORNER - CLEOPLT4 138.00 138KV CKT 1	191	191	0.58638	111.8099	FPL SWITCH - WOODWARD 138KV CKT 1
FDNS	01ALL	0	20SP	G15_048	FROM->TO	CLEO CORNER - CLEOPLT4 138.00 138KV CKT 1	191	191	0.57279	111.8093	GEN514806 1-SOONER UNIT 2
FDNS	01ALL	0	20SP	G15_048	FROM->TO	CLEO CORNER - CLEOPLT4 138.00 138KV CKT 1	191	191	0.57674	111.7619	CUSTER4 138.00 - RED HILLS WIND 138KV CKT 1
FDNS	01ALL	0	20L	G15_048	FROM->TO	CLEO CORNER - CLEOPLT4 138.00 138KV CKT 1	191	191	0.64577	111.717	CLEO CORNER (CLEOCOR1) 138/69/13.8KV TRANSFORMER CKT 1
FDNS	01ALL	0	20SP	G15_048	FROM->TO	CLEO CORNER - CLEOPLT4 138.00 138KV CKT 1	191	191	0.57309	111.5789	G14-057T 345.00 - SUNNYSIDE 345KV CKT 1
FDNS	01ALL	0	20WP	G15_048	FROM->TO	CLEO CORNER - CLEOPLT4 138.00 138KV CKT 1	191	191	0.57256	111.2513	BASE CASE
FDNS	01ALL	0	17SP	G15_048	FROM->TO	CLEO CORNER - CLEOPLT4 138.00 138KV CKT 1	191	191	0.5739	110.9875	FAIRVIEW - OKEENE 69KV CKT 1
FDNS	01ALL	0	17SP	G15_048	FROM->TO	CLEO CORNER - CLEOPLT4 138.00 138KV CKT 1	191	191	0.56705	110.7716	BLLNGTP4 138.00 - BUNCH CREEK 138KV CKT 1
FDNS	01ALL	0	17SP	G15_048	FROM->TO	CLEO CORNER - CLEOPLT4 138.00 138KV CKT 1	191	191	0.57205	110.6288	OPENSKY7 345.00 - RANCHRD7 345.00 345KV CKT 1
FDNS	01ALL	0	17SP	G15_048	FROM->TO	CLEO CORNER - CLEOPLT4 138.00 138KV CKT 1	191	191	0.57216	110.5405	CLEVELAND - G15066_T 345.00 345KV CKT 1
FDNS	01ALL	0	16WP	G15_048	FROM->TO	CLEO CORNER - CLEOPLT4 138.00 138KV CKT 1	191	191	0.57288	110.537	BASE CASE
FDNS	01NR	0	20L	G15_048	FROM->TO	CLEO CORNER - CLEOPLT4 138.00 138KV CKT 1	191	191	0.64832	110.5365	CLEO CORNER (CLEOCOR1) 138/69/13.8KV TRANSFORMER CKT 1
FDNS	01ALL	0	17SP	G15_048	FROM->TO	CLEO CORNER - CLEOPLT4 138.00 138KV CKT 1	191	191	0.56705	110.4651	BRECKNR4 138.00 - BUNCH CREEK 138KV CKT 1
FDNS	01ALL	0	17SP	G15_048	FROM->TO	CLEO CORNER - CLEOPLT4 138.00 138KV CKT 1	191	191	0.57278	110.4289	GEN515611 1-NBUFFRG1 0.6900
FDNS	01ALL	0	17SP	G15_048	FROM->TO	CLEO CORNER - CLEOPLT4 138.00 138KV CKT 1	191	191	0.57278	110.4289	GEN560217 1-G07_062_6 0.6900
FDNS	01ALL	0	17SP	G15_048	FROM->TO	CLEO CORNER - CLEOPLT4 138.00 138KV CKT 1	191	191	0.57278	110.4289	GEN560218 1-G07_062_7 0.6900
FDNS	01ALL	0	17SP	G15_048	FROM->TO	CLEO CORNER - CLEOPLT4 138.00 138KV CKT 1	191	191	0.56505	110.414	GLENWOOD - IMO TAP 138KV CKT 1
FDNS	01ALL	0	17SP	G15_048	FROM->TO	CLEO CORNER - CLEOPLT4 138.00 138KV CKT 1	191	191	0.57164	110.2962	HUNTERS7 345.00 - WOODRING 345KV CKT 1
FDNS	01ALL	0	17SP	G15_048	FROM->TO	CLEO CORNER - CLEOPLT4 138.00 138KV CKT 1	191	191	0.57278	110.2913	GEN562974 1-G15060_5 0.6900
FDNS	01ALL	0	17SP	G15_048	FROM->TO	CLEO CORNER - CLEOPLT4 138.00 138KV CKT 1	191	191	0.57205	110.2724	G15052_T 345.00 - OPENSKY7 345.00 345KV CKT 1
FDNS	01ALL	0	17SP	G15_048	FROM->TO	CLEO CORNER - CLEOPLT4 138.00 138KV CKT 1	191	191	0.57278	110.2664	GEN562973 1-G15060_4 0.6900
FDNS	01ALL	0	17SP	G15_048	FROM->TO	CLEO CORNER - CLEOPLT4 138.00 138KV CKT 1	191	191	0.57552	110.2206	KNOBHILL - NOEL_SW 138.00 138KV CKT 1
FDNS	01ALL	0	17SP	G15_048	FROM->TO	CLEO CORNER - CLEOPLT4 138.00 138KV CKT 1	191	191	0.57552	110.2186	KNOBHILL (KNOBHIL4) 138/69/13.2KV TRANSFORMER CKT 1
FDNS	00NR	0	17SP	G15_048	FROM->TO	CLEO CORNER - CLEOPLT4 138.00 138KV CKT 1	191	191	0.58008	110.1289	MATHWSN7 345.00 - TATONGA7 345.00 345KV CKT 1
FDNS	01ALL	0	17SP	G15_048	FROM->TO	CLEO CORNER - CLEOPLT4 138.00 138KV CKT 1	191	191	0.57278	109.977	GEN525561 1-TOLK GEN #1 24 KV
FDNS	01ALL	0	17SP	G15_048	FROM->TO	CLEO CORNER - CLEOPLT4 138.00 138KV CKT 1	191	191	0.57205	109.9159	G15052_T 345.00 - ROSE HILL 345KV CKT 1
FDNS	01ALL	0	17SP	G15_048	FROM->TO	CLEO CORNER - CLEOPLT4 138.00 138KV CKT 1	191	191	0.57473	109.8998	DEWEY - IODINE 138KV CKT 1
FDNS	01ALL	0	17SP	G15_048	FROM->TO	CLEO CORNER - CLEOPLT4 138.00 138KV CKT 1	191	191	0.57278	109.8357	GEN515393 1-OGEWND2G
FDNS	01ALL	0	17SP	G15_048	FROM->TO	CLEO CORNER - CLEOPLT4 138.00 138KV CKT 1	191	191	0.57278	109.8297	GEN525562 1-TOLK GEN #2 24 KV
FDNS	01ALL	0	17SP	G15_048	FROM->TO	CLEO CORNER - CLEOPLT4 138.00 138KV CKT 1	191	191	0.57473	109.7376	IODINE - WOODWARD EHV 138KV CKT 1
FDNS	01ALL	0	20WP	G15_048	FROM->TO	CLEO CORNER - CLEOPLT4 138.00 138KV CKT 1	191	191	0.56681	109.7006	BLLNGTP4 138.00 - BUNCH CREEK 138KV CKT 1
FDNS	01ALL	0	20SP	G15_048	FROM->TO	CLEO CORNER - CLEOPLT4 138.00 138KV CKT 1	191	191	0.57279	109.6891	BASE CASE
FDNS	01ALL	0	20WP	G15_048	FROM->TO	CLEO CORNER - CLEOPLT4 138.00 138KV CKT 1	191	191	0.57195	109.5539	CLEVELAND - G15066_T 345.00 345KV CKT 1
FDNS	01ALL	0	20WP	G15_048	FROM->TO	CLEO CORNER - CLEOPLT4 138.00 138KV CKT 1	191	191	0.57192	109.5343	G15052_T 345.00 - ROSE HILL 345KV CKT 1
FDNS	01ALL	0	17SP	G15_048	FROM->TO	CLEO CORNER - CLEOPLT4 138.00 138KV CKT 1	191	191	0.57278	109.5269	GEN562023 1-G11_020_3 0.6900

SOLUTION	GROUP	SCENARIO	SEASON	SOURCE	DIRECTION	MONITORED ELEMENT	RATEA (MVA)	RATEB(MVA)	TDF	TC%LOADING (% MVA)	CONTINGENCY
FDNS	01ALL	0	17SP	G15_048	FROM->TO	CLEO CORNER - CLEOPLT4 138.00 138KV CKT 1	191	191	0.57278	109.5269	GEN562026 1-G11_019_3 0.6900
FDNS	01ALL	0	20WP	G15_048	FROM->TO	CLEO CORNER - CLEOPLT4 138.00 138KV CKT 1	191	191	0.56681	109.4864	BRECKNR4 138.00 - BUNCH CREEK 138KV CKT 1
FDNS	01ALL	0	20WP	G15_048	FROM->TO	CLEO CORNER - CLEOPLT4 138.00 138KV CKT 1	191	191	0.56483	109.4734	GLENWOOD - IMO TAP 138KV CKT 1
FDNS	01ALL	0	20WP	G15_048	FROM->TO	CLEO CORNER - CLEOPLT4 138.00 138KV CKT 1	191	191	0.57384	109.4554	CHISHOLM6 230.00 - ELK CITY 230KV 230KV CKT 1
FDNS	01ALL	0	20WP	G15_048	FROM->TO	CLEO CORNER - CLEOPLT4 138.00 138KV CKT 1	191	191	0.57384	109.4343	ELK CITY 230KV (ELKCTY-6) 230/138/13.8KV TRANSFORMER CKT 1
FDNS	01ALL	0	20WP	G15_048	FROM->TO	CLEO CORNER - CLEOPLT4 138.00 138KV CKT 1	191	191	0.57384	109.4343	ELK CITY 230KV (ELKCTY-6) 230/138/13.8KV TRANSFORMER CKT 1
FDNS	01ALL	0	20WP	G15_048	FROM->TO	CLEO CORNER - CLEOPLT4 138.00 138KV CKT 1	191	191	0.57365	109.4329	FAIRVIEW - OKEENE 69KV CKT 1
FDNS	01ALL	0	17G	G15_048	FROM->TO	CLEO CORNER - CLEOPLT4 138.00 138KV CKT 1	191	191	0.64466	109.4095	CLEO CORNER (CLEOCOR1) 138/69/13.8KV TRANSFORMER CKT 1
FDNS	01ALL	0	17SP	G15_048	FROM->TO	CLEO CORNER - CLEOPLT4 138.00 138KV CKT 1	191	191	0.57826	109.2949	RENFROW7 345.00 (BANK 1) 345/138/13.8KV TRANSFORMER CKT 1
FDNS	01ALL	0	17SP	G15_048	FROM->TO	CLEO CORNER - CLEOPLT4 138.00 138KV CKT 1	191	191	0.57164	109.292	HUNTERS7 345.00 - RENFROW7 345.00 345KV CKT 1
FDNS	01ALL	0	20WP	G15_048	FROM->TO	CLEO CORNER - CLEOPLT4 138.00 138KV CKT 1	191	191	0.57804	109.274	RENFROW7 345.00 (BANK 1) 345/138/13.8KV TRANSFORMER CKT 1
FDNS	01ALL	0	20WP	G15_048	FROM->TO	CLEO CORNER - CLEOPLT4 138.00 138KV CKT 1	191	191	0.57256	109.2642	GEN515611 1-NBUFFRG1 0.6900
FDNS	01ALL	0	20WP	G15_048	FROM->TO	CLEO CORNER - CLEOPLT4 138.00 138KV CKT 1	191	191	0.57256	109.2642	GEN560217 1-G07_062_6 0.6900
FDNS	01ALL	0	20WP	G15_048	FROM->TO	CLEO CORNER - CLEOPLT4 138.00 138KV CKT 1	191	191	0.57256	109.2642	GEN560218 1-G07_062_7 0.6900
FDNS	01ALL	0	20WP	G15_048	FROM->TO	CLEO CORNER - CLEOPLT4 138.00 138KV CKT 1	191	191	0.57256	109.1641	GEN562974 1-G15060_5 0.6900
FDNS	01ALL	0	20WP	G15_048	FROM->TO	CLEO CORNER - CLEOPLT4 138.00 138KV CKT 1	191	191	0.57256	109.1393	GEN562973 1-G15060_4 0.6900
FDNS	01ALL	0	17SP	G15_048	FROM->TO	CLEO CORNER - CLEOPLT4 138.00 138KV CKT 1	191	191	0.57087	109.121	P12:069:OKGE:3TERM4
FDNS	01ALL	0	17SP	G15_048	FROM->TO	CLEO CORNER - CLEOPLT4 138.00 138KV CKT 1	191	191	0.58304	109.0378	ALVA - KNOBHILL 69KV CKT 1
FDNS	01ALL	0	17SP	G15_048	FROM->TO	CLEO CORNER - CLEOPLT4 138.00 138KV CKT 1	191	191	0.58636	109.0178	FPL SWITCH - MOORELAND 138KV CKT 1
FDNS	01ALL	0	20WP	G15_048	FROM->TO	CLEO CORNER - CLEOPLT4 138.00 138KV CKT 1	191	191	0.57256	109.0033	GEN525561 1-TOLK GEN #1 24 KV
FDNS	01ALL	0	20WP	G15_048	FROM->TO	CLEO CORNER - CLEOPLT4 138.00 138KV CKT 1	191	191	0.57133	108.9841	HUNTERS7 345.00 - WOODRING 345KV CKT 1
FDNS	01ALL	0	20WP	G15_048	FROM->TO	CLEO CORNER - CLEOPLT4 138.00 138KV CKT 1	191	191	0.57064	108.9261	P12:069:OKGE:3TERM4
FDNS	01ALL	0	16WP	G15_048	FROM->TO	CLEO CORNER - CLEOPLT4 138.00 138KV CKT 1	191	191	0.56711	108.8973	BRECKNR4 138.00 - BUNCH CREEK 138KV CKT 1
FDNS	01ALL	0	20WP	G15_048	FROM->TO	CLEO CORNER - CLEOPLT4 138.00 138KV CKT 1	191	191	0.57536	108.8855	KNOBHILL (KNOBHIL4) 138/69/13.2KV TRANSFORMER CKT 1
FDNS	01ALL	0	20WP	G15_048	FROM->TO	CLEO CORNER - CLEOPLT4 138.00 138KV CKT 1	191	191	0.57256	108.8823	GEN525562 1-TOLK GEN #2 24 KV
FDNSLock	00NR	0	16WP	G15_048	FROM->TO	CLEO CORNER - CLEOPLT4 138.00 138KV CKT 1	191	191	0.58042	108.8545	G11_051T 345.00 - WOODWARD DISTRICT EHV 345KV CKT 1
FDNS	01ALL	0	16WP	G15_048	FROM->TO	CLEO CORNER - CLEOPLT4 138.00 138KV CKT 1	191	191	0.57221	108.8525	G15052_T 345.00 - OPENSKY7 345.00 345KV CKT 1
FDNS	01ALL	0	16WP	G15_048	FROM->TO	CLEO CORNER - CLEOPLT4 138.00 138KV CKT 1	191	191	0.57832	108.8308	RENFROW7 345.00 (BANK 1) 345/138/13.8KV TRANSFORMER CKT 1
FDNS	01ALL	0	17SP	G15_048	FROM->TO	CLEO CORNER - CLEOPLT4 138.00 138KV CKT 1	191	191	0.57982	108.8079	DEWEY - TALOGA 138KV CKT 1
FDNS	01ALL	0	16WP	G15_048	FROM->TO	CLEO CORNER - CLEOPLT4 138.00 138KV CKT 1	191	191	0.56515	108.7701	GLENWOOD - IMO TAP 138KV CKT 1
FDNS	01ALL	0	16WP	G15_048	FROM->TO	CLEO CORNER - CLEOPLT4 138.00 138KV CKT 1	191	191	0.574	108.761	FAIRVIEW - OKEENE 69KV CKT 1
FDNS	01ALL	0	20WP	G15_048	FROM->TO	CLEO CORNER - CLEOPLT4 138.00 138KV CKT 1	191	191	0.57256	108.6984	GEN515393 1-OGEWND2G
FDNS	01ALL	0	16WP	G15_048	FROM->TO	CLEO CORNER - CLEOPLT4 138.00 138KV CKT 1	191	191	0.57288	108.6012	GEN515611 1-NBUFFRG1 0.6900
FDNS	01ALL	0	16WP	G15_048	FROM->TO	CLEO CORNER - CLEOPLT4 138.00 138KV CKT 1	191	191	0.57288	108.6012	GEN560217 1-G07_062_6 0.6900
FDNS	01ALL	0	16WP	G15_048	FROM->TO	CLEO CORNER - CLEOPLT4 138.00 138KV CKT 1	191	191	0.57288	108.6012	GEN560218 1-G07_062_7 0.6900
FDNS	00NR	0	20WP	G15_048	FROM->TO	CLEO CORNER - CLEOPLT4 138.00 138KV CKT 1	191	191	0.58042	108.5453	G11_051T 345.00 - WOODWARD DISTRICT EHV 345KV CKT 1
FDNS	00NR	0	20WP	G15_048	FROM->TO	CLEO CORNER - CLEOPLT4 138.00 138KV CKT 1	191	191	0.6473	108.5379	CLEO CORNER (CLEOCOR1) 138/69/13.8KV TRANSFORMER CKT 1
FDNS	01ALL	0	16WP	G15_048	FROM->TO	CLEO CORNER - CLEOPLT4 138.00 138KV CKT 1	191	191	0.57221	108.5325	G15052_T 345.00 - ROSE HILL 345KV CKT 1
FDNS	01ALL	0	16WP	G15_048	FROM->TO	CLEO CORNER - CLEOPLT4 138.00 138KV CKT 1	191	191	0.57288	108.4573	GEN562974 1-G15060_5 0.6900
FDNS	01ALL	0	16WP	G15_048	FROM->TO	CLEO CORNER - CLEOPLT4 138.00 138KV CKT 1	191	191	0.57288	108.4322	GEN562973 1-G15060_4 0.6900
FDNS	01ALL	0	16WP	G15_048	FROM->TO	CLEO CORNER - CLEOPLT4 138.00 138KV CKT 1	191	191	0.57562	108.4233	KNOBHILL - NOEL_SW 138.00 138KV CKT 1
FDNS	01ALL	0	16WP	G15_048	FROM->TO	CLEO CORNER - CLEOPLT4 138.00 138KV CKT 1	191	191	0.57562	108.4212	KNOBHILL (KNOBHIL4) 138/69/13.2KV TRANSFORMER CKT 1
FDNS	01ALL	0	20SP	G15_048	FROM->TO	CLEO CORNER - CLEOPLT4 138.00 138KV CKT 1	191	191	0.57388	108.3954	EAGLE CHIEF - RINGWOOD JCT 69KV CKT 1
FDNS	01ALL	0	17SP	G15_048	FROM->TO	CLEO CORNER - CLEOPLT4 138.00 138KV CKT 1	191	191	0.57278	108.3948	GEN515389 1-TLGWND-WTG1 0.7000
FDNS	01ALL	0	20SP	G15_048	FROM->TO	CLEO CORNER - CLEOPLT4 138.00 138KV CKT 1	191	191	0.57388	108.3946	FAIRVIEW - RINGWOOD JCT 69KV CKT 1
FDNS	01ALL	0	20L	G15_048	FROM->TO	CLEO CORNER - CLEOPLT4 138.00 138KV CKT 1	191	191	0.58087	108.38	P12:138:WFEC:MSL15
FDNS	01ALL	0	20WP	G15_048	FROM->TO	CLEO CORNER - CLEOPLT4 138.00 138KV CKT 1	191	191	0.57256	108.346	GEN562023 1-G11_020_3 0.6900
FDNS	01ALL	0	20WP	G15_048	FROM->TO	CLEO CORNER - CLEOPLT4 138.00 138KV CKT 1	191	191	0.57256	108.346	GEN562026 1-G11_019_3 0.6900
FDNS	01ALL	0	20WP	G15_048	FROM->TO	CLEO CORNER - CLEOPLT4 138.00 138KV CKT 1	191	191	0.57453	108.2935	DEWEY - IODINE 138KV CKT 1
FDNS	01ALL	0	16WP	G15_048	FROM->TO	CLEO CORNER - CLEOPLT4 138.00 138KV CKT 1	191	191	0.57288	108.2346	GEN525561 1-TOLK GEN #1 24 KV
FDNS	01ALL	0	16WP	G15_048	FROM->TO	CLEO CORNER - CLEOPLT4 138.00 138KV CKT 1	191	191	0.57097	108.2032	P12:069:OKGE:3TERM4
FDNS	01ALL	0	16WP	G15_048	FROM->TO	CLEO CORNER - CLEOPLT4 138.00 138KV CKT 1	191	191	0.57288	108.1764	GEN525562 1-TOLK GEN #2 24 KV
FDNS	01ALL	0	20WP	G15_048	FROM->TO	CLEO CORNER - CLEOPLT4 138.00 138KV CKT 1	191	191	0.57453	108.1277	IODINE - WOODWARD EHV 138KV CKT 1
FDNS	01ALL	0	20WP	G15_048	FROM->TO	CLEO CORNER - CLEOPLT4 138.00 138KV CKT 1	191	191	0.57133	108.0745	HUNTERS7 345.00 - RENFROW7 345.00 345KV CKT 1
FDNS	01ALL	0	16WP	G15_048	FROM->TO	CLEO CORNER - CLEOPLT4 138.00 138KV CKT 1	191	191	0.57288	107.9984	GEN515393 1-OGEWND2G
FDNS	01ALL	0	16WP	G15_048	FROM->TO	CLEO CORNER - CLEOPLT4 138.00 138KV CKT 1	191	191	0.57185	107.9811	HUNTERS7 345.00 - RENFROW7 345.00 345KV CKT 1
FDNS	01ALL	0	20SP	G15_048	FROM->TO	CLEO CORNER - CLEOPLT4 138.00 138KV CKT 1	191	191	0.57211	107.927	OPENSKY7 345.00 - RANCHRD7 345.00 345KV CKT 1
FDNS	01ALL	0	20SP	G15_048	FROM->TO	CLEO CORNER - CLEOPLT4 138.00 138KV CKT 1	191	191	0.57219	107.8841	CLEVELAND - G15066_T 345.00 345KV CKT 1
FDNS	01ALL	0	16WP	G15_048	FROM->TO	CLEO CORNER - CLEOPLT4 138.00 138KV CKT 1	191	191	0.57482	107.8784	DEWEY - IODINE 138KV CKT 1
FDNS	01ALL	0	20SP	G15_048	FROM->TO	CLEO CORNER - CLEOPLT4 138.00 138KV CKT 1	191	191	0.56706	107.7955	BRECKNR4 138.00 - BUNCH CREEK 138KV CKT 1
FDNS	01ALL	0	20SP	G15_048	FROM->TO	CLEO CORNER - CLEOPLT4 138.00 138KV CKT 1	191	191	0.56506	107.7934	GLENWOOD - IMO TAP 138KV CKT 1
FDNS	00NR	0	16WP	G15_048	FROM->TO	CLEO CORNER - CLEOPLT4 138.00 138KV CKT 1	191	191	0.6472	107.7863	CLEO CORNER (CLEOCOR1) 138/69/13.8KV TRANSFORMER CKT 1
FDNS	01ALL	0	20SP	G15_048	FROM->TO	CLEO CORNER - CLEOPLT4 138.00 138KV CKT 1	191	191	0.57279	107.7508	GEN515611 1-NBUFFRG1 0.6900
FDNS	01ALL	0	20SP	G15_048	FROM->TO	CLEO CORNER - CLEOPLT4 138.00 138KV CKT 1	191	191	0.57279	107.7508	GEN560217 1-G07_062_6 0.6900
FDNS	01ALL	0	20SP	G15_048	FROM->TO	CLEO CORNER - CLEOPLT4 138.00 138KV CKT 1	191	191	0.57279	107.7508	GEN560218 1-G07_062_7 0.6900
FDNS	01ALL	0	16WP	G15_048	FROM->TO	CLEO CORNER - CLEOPLT4 138.00 138KV CKT 1	191	191	0.57482	107.7189	IODINE - WOODWARD EHV 138KV CKT 1
FDNS	01ALL	0	16WP	G15_048	FROM->TO	CLEO CORNER - CLEOPLT4 138.00 138KV CKT 1	191	191	0.57288	107.69	GEN562023 1-G11_020_3 0.6900
FDNS	01ALL	0	16WP	G15_048	FROM->TO	CLEO CORNER - CLEOPLT4 138.00 138KV CKT 1	191	191	0.57288	107.69	GEN562026 1-G11_019_3 0.6900
FDNS	01NR	0	17G	G15_048	FROM->TO	CLEO CORNER - CLEOPLT4 138.00 138KV CKT 1	191	191	0.64721	107.6463	CLEO CORNER (CLEOCOR1) 138/69/13.8KV TRANSFORMER CKT 1
FDNS	01ALL	0	20SP	G15_048	FROM->TO	CLEO CORNER - CLEOPLT4 138.00 138KV CKT 1	191	191	0.57279	107.6154	GEN562974 1-G15060_5 0.6900
FDNS	01ALL	0	20SP	G15_048	FROM->TO	CLEO CORNER - CLEOPLT4 138.00 138KV CKT 1	191	191	0.57279	107.5904	GEN562973 1-G15060_4 0.6900
FDNS	01ALL	0	20SP	G15_048	FROM->TO	CLEO CORNER - CLEOPLT4 138.00 138KV CKT 1	191	191	0.57211	107.5832	G15052_T 345.00 - OPENSKY7 345.00 345KV CKT 1
FDNS	01ALL	0	20L	G15_048	FROM->TO	CLEO CORNER - CLEOPLT4 138.00 138KV CKT 1	191	191	0.58087	107.4768	NOEL_SW 138.00 - SALT_PLAINS 138.00 138KV CKT 1
FDNS	01ALL	0	20SP	G15_048	FROM->TO	CLEO CORNER - CLEOPLT4 138.00 138KV CKT 1	191	191	0.57279	107.404	GEN525561 1-TOLK GEN #1 24 KV
FDNS	01ALL	0	20SP	G15_048	FROM->TO	CLEO CORNER - CLEOPLT4 138.00 138KV CKT 1	191	191	0.57559	107.3888	KNOBHILL (KNOBHIL4) 138/69/13.2KV TRANSFORMER CKT 1
FDNS	01ALL	0	17SP	G15_048	FROM->TO	CLEO CORNER - CLEOPLT4 138.00 138KV CKT 1	191	191	0.57278	107.3559	GEN515365 1-CENT 21 0.7000
FDNS	01ALL	0	20L	G15_048	FROM->TO	CLEO CORNER - CLEOPLT4 138.00 138KV CKT 1	191	191	0.58034	107.3259	MOORELAND - PIC4 138.00 138KV CKT 1
FDNS	01ALL	0	20L	G15_048	FROM->TO	CLEO CORNER - CLEOPLT4 138.00 138KV CKT 1	191	191	0.58034	107.3177	P12:138:WFEC:MSL12
FDNS	01ALL	0	20L	G15_048	FROM->TO	CLEO CORNER - CLEOPLT4 138.00 138KV CKT 1	191	191	0.57964	107.2593	DOVER SW - OKEENE 138KV CKT 1

SOLUTION	GROUP	SCENARIO	SEASON	SOURCE	DIRECTION	MONITORED ELEMENT	RATEA (MVA)	RATEB(MVA)	TDF	TC%LOADING (% MVA)	CONTINGENCY
FDNS	01ALL	0	20WP	G15_048	FROM->TO	CLEO CORNER - CLEOPLT4 138.00 138KV CKT 1	191	191	0.57256	107.2498	GEN515389 1-TLGWND-WTG1 0.7000
FDNS	01ALL	0	20SP	G15_048	FROM->TO	CLEO CORNER - CLEOPLT4 138.00 138KV CKT 1	191	191	0.57211	107.2428	G15052_T 345.00 - ROSE HILL 345KV CKT 1
FDNS	01ALL	0	20L	G15_048	FROM->TO	CLEO CORNER - CLEOPLT4 138.00 138KV CKT 1	191	191	0.58034	107.2273	CEDARDALE - PIC4 138.00 138KV CKT 1
FDNS	01ALL	0	20SP	G15_048	FROM->TO	CLEO CORNER - CLEOPLT4 138.00 138KV CKT 1	191	191	0.57474	107.1864	DEWEY - IODINE 138KV CKT 1
FDNS	01ALL	0	20SP	G15_048	FROM->TO	CLEO CORNER - CLEOPLT4 138.00 138KV CKT 1	191	191	0.57279	107.1781	GEN525562 1-TOLK GEN #2 24 KV
FDNS	01ALL	0	20SP	G15_048	FROM->TO	CLEO CORNER - CLEOPLT4 138.00 138KV CKT 1	191	191	0.57279	107.1572	GEN515393 1-OGEWND2G
FDNS	01ALL	0	16WP	G15_048	FROM->TO	CLEO CORNER - CLEOPLT4 138.00 138KV CKT 1	191	191	0.58314	107.1465	ALVA - KNOBHILL 69KV CKT 1
FDNS	01NR	0	20L	G15_048	FROM->TO	CLEO CORNER - CLEOPLT4 138.00 138KV CKT 1	191	191	0.58369	107.1442	P12:138:WFEC:MSL15
FDNS	01ALL	0	20L	G15_048	FROM->TO	CLEO CORNER - CLEOPLT4 138.00 138KV CKT 1	191	191	0.58034	107.1184	CEDARDALE - OKEENE 138KV CKT 1
FDNS	01ALL	0	20WP	G15_048	FROM->TO	CLEO CORNER - CLEOPLT4 138.00 138KV CKT 1	191	191	0.58289	107.1055	ALVA - KNOBHILL 69KV CKT 1
FDNS	01ALL	0	20WP	G15_048	FROM->TO	CLEO CORNER - CLEOPLT4 138.00 138KV CKT 1	191	191	0.57956	107.0907	DEWEY - TALOGA 138KV CKT 1
FDNS	01ALL	0	20SP	G15_048	FROM->TO	CLEO CORNER - CLEOPLT4 138.00 138KV CKT 1	191	191	0.57474	107.0183	IODINE - WOODWARD EHV 138KV CKT 1
FDNS	01ALL	0	20SP	G15_048	FROM->TO	CLEO CORNER - CLEOPLT4 138.00 138KV CKT 1	191	191	0.5783	106.9387	RENFROW7 345.00 (BANK 1) 345/138/13.8KV TRANSFORMER CKT 1
FDNS	01ALL	0	20SP	G15_048	FROM->TO	CLEO CORNER - CLEOPLT4 138.00 138KV CKT 1	191	191	0.57279	106.8485	GEN562023 1-G11_020_3 0.6900
FDNS	01ALL	0	20SP	G15_048	FROM->TO	CLEO CORNER - CLEOPLT4 138.00 138KV CKT 1	191	191	0.57279	106.8485	GEN562026 1-G11_019_3 0.6900
FDNS	01ALL	0	20L	G15_048	FROM->TO	CLEO CORNER - CLEOPLT4 138.00 138KV CKT 1	191	191	0.60413	106.8333	CLEO CORNER - CLEO JCT 69KV CKT 1
FDNS	01ALL	0	20L	G15_048	FROM->TO	CLEO CORNER - CLEOPLT4 138.00 138KV CKT 1	191	191	0.60413	106.8315	CLEO JCT - RINGWOOD 69KV CKT 1
FDNS	01ALL	0	16WP	G15_048	FROM->TO	CLEO CORNER - CLEOPLT4 138.00 138KV CKT 1	191	191	0.57986	106.8067	DEWEY - TALOGA 138KV CKT 1
FDNS	01ALL	0	25SP	G15_048	FROM->TO	CLEO CORNER - CLEOPLT4 138.00 138KV CKT 1	191	191	0.64316	106.7167	CLEO CORNER (CLEOCOR1) 138/69/13.8KV TRANSFORMER CKT 1
FDNS	00NR	0	17SP	G15_048	FROM->TO	CLEO CORNER - CLEOPLT4 138.00 138KV CKT 1	191	191	0.58008	106.7029	G11_051T 345.00 - TATONGA7 345.00 345KV CKT 1
FDNS	01ALL	0	17SP	G15_048	FROM->TO	CLEO CORNER - CLEOPLT4 138.00 138KV CKT 1	191	191	0.57278	106.6727	GEN520922 1-SLEEPING BEAR
FDNS	01ALL	0	16WP	G15_048	FROM->TO	CLEO CORNER - CLEOPLT4 138.00 138KV CKT 1	191	191	0.57288	106.5571	GEN515389 1-TLGWND-WTG1 0.7000
FDNS	01ALL	0	20WP	G15_048	FROM->TO	CLEO CORNER - CLEOPLT4 138.00 138KV CKT 1	191	191	0.57256	106.4829	GEN520998 1-MORLND3
FDNS	01ALL	0	20SP	G15_048	FROM->TO	CLEO CORNER - CLEOPLT4 138.00 138KV CKT 1	191	191	0.57087	106.3939	P12:069:OKGE:3TERM4
FDNS	01ALL	0	17SP	G15_048	FROM->TO	CLEO CORNER - CLEOPLT4 138.00 138KV CKT 1	191	191	0.51824	106.3809	IMO TAP - SOUTH 4TH ST 138KV CKT 1
FDNS	01ALL	0	20L	G15_048	FROM->TO	CLEO CORNER - CLEOPLT4 138.00 138KV CKT 1	191	191	0.59819	106.3565	WOODWARD EHV - WWPAR4 138.00 138KV CKT 1
FDNS	01ALL	0	20L	G15_048	FROM->TO	CLEO CORNER - CLEOPLT4 138.00 138KV CKT 1	191	191	0.59819	106.3564	WOODWARD - WWPAR4 138.00 138KV CKT 1
FDNS	01NR	0	20L	G15_048	FROM->TO	CLEO CORNER - CLEOPLT4 138.00 138KV CKT 1	191	191	0.58143	106.302	G11_051T 345.00 - TATONGA7 345.00 345KV CKT 1
FDNS	01ALL	0	20L	G15_048	FROM->TO	CLEO CORNER - CLEOPLT4 138.00 138KV CKT 1	191	191	0.58407	106.2773	P12:138:WFEC:MSL14
FDNS	01ALL	0	20WP	G15_048	FROM->TO	CLEO CORNER - CLEOPLT4 138.00 138KV CKT 1	191	191	0.57256	106.2754	GEN515365 1-CENT 21 0.7000
FDNS	01NR	0	20L	G15_048	FROM->TO	CLEO CORNER - CLEOPLT4 138.00 138KV CKT 1	191	191	0.58366	106.2473	MOORELAND - PIC4 138.00 138KV CKT 1
FDNS	01ALL	0	20L	G15_048	FROM->TO	CLEO CORNER - CLEOPLT4 138.00 138KV CKT 1	191	191	0.58407	106.2425	BEARCAT 138.00 - MOORELAND 138KV CKT 1
FDNS	01NR	0	20L	G15_048	FROM->TO	CLEO CORNER - CLEOPLT4 138.00 138KV CKT 1	191	191	0.58366	106.2372	P12:138:WFEC:MSL12
FDNS	01NR	0	20L	G15_048	FROM->TO	CLEO CORNER - CLEOPLT4 138.00 138KV CKT 1	191	191	0.58366	106.1501	CEDARDALE - PIC4 138.00 138KV CKT 1
FDNS	01ALL	0	20SP	G15_048	FROM->TO	CLEO CORNER - CLEOPLT4 138.00 138KV CKT 1	191	191	0.5715	106.1029	HUNTERS7 345.00 - WOODRING 345KV CKT 1
FDNS	01NR	0	20L	G15_048	FROM->TO	CLEO CORNER - CLEOPLT4 138.00 138KV CKT 1	191	191	0.58369	106.076	NOEL_SW 138.00 - SALT_PLAINS 138.00 138KV CKT 1
FDNS	01NR	0	20L	G15_048	FROM->TO	CLEO CORNER - CLEOPLT4 138.00 138KV CKT 1	191	191	0.58315	106.0522	DOVER SW - OKEENE 138KV CKT 1
FDNS	01NR	0	20L	G15_048	FROM->TO	CLEO CORNER - CLEOPLT4 138.00 138KV CKT 1	191	191	0.58366	106.0416	CEDARDALE - OKEENE 138KV CKT 1
FDNS	01ALL	0	20SP	G15_048	FROM->TO	CLEO CORNER - CLEOPLT4 138.00 138KV CKT 1	191	191	0.58638	106.0286	FPL SWITCH - MOORELAND 138KV CKT 1
FDNS	01ALL	0	16WP	G15_048	FROM->TO	CLEO CORNER - CLEOPLT4 138.00 138KV CKT 1	191	191	0.58636	105.9893	FPL SWITCH - MOORELAND 138KV CKT 1
FDNS	01ALL	0	17SP	G15_048	FROM->TO	CLEO CORNER - CLEOPLT4 138.00 138KV CKT 1	191	191	0.57278	105.989	GEN515787 1-OKLA WIND ENERGY CENTER
FDNS	01ALL	0	20L	G15_048	FROM->TO	CLEO CORNER - CLEOPLT4 138.00 138KV CKT 1	191	191	0.5785	105.969	DEWEY - SOUTHARD 138KV CKT 1
FDNS	01ALL	0	20L	G15_048	FROM->TO	CLEO CORNER - CLEOPLT4 138.00 138KV CKT 1	191	191	0.57661	105.8349	THISTLE7 345.00 - WOODWARD DISTRICT EHV 345KV CKT 1
FDNS	01ALL	0	20L	G15_048	FROM->TO	CLEO CORNER - CLEOPLT4 138.00 138KV CKT 1	191	191	0.57661	105.8349	THISTLE7 345.00 - WOODWARD DISTRICT EHV 345KV CKT 1
FDNS	01ALL	0	20L	G15_048	FROM->TO	CLEO CORNER - CLEOPLT4 138.00 138KV CKT 1	191	191	0.57661	105.8349	THISTLE7 345.00 - WOODWARD DISTRICT EHV 345KV CKT 2
FDNS	01ALL	0	20L	G15_048	FROM->TO	CLEO CORNER - CLEOPLT4 138.00 138KV CKT 1	191	191	0.57661	105.8349	THISTLE7 345.00 - WOODWARD DISTRICT EHV 345KV CKT 2
FDNS	01ALL	0	20SP	G15_048	FROM->TO	CLEO CORNER - CLEOPLT4 138.00 138KV CKT 1	191	191	0.57983	105.8029	DEWEY - TALOGA 138KV CKT 1
FDNS	01ALL	0	20L	G15_048	FROM->TO	CLEO CORNER - CLEOPLT4 138.00 138KV CKT 1	191	191	0.58407	105.7689	BEARCAT 138.00 - NINE MILE 138KV CKT 1
FDNS	01ALL	0	20L	G15_048	FROM->TO	CLEO CORNER - CLEOPLT4 138.00 138KV CKT 1	191	191	0.5785	105.7112	ROMAN NOSE - SOUTHARD 138KV CKT 1
FDNS	01ALL	0	20SP	G15_048	FROM->TO	CLEO CORNER - CLEOPLT4 138.00 138KV CKT 1	191	191	0.57279	105.7091	GEN515389 1-TLGWND-WTG1 0.7000
FDNS	01ALL	0	20L	G15_048	FROM->TO	CLEO CORNER - CLEOPLT4 138.00 138KV CKT 1	191	191	0.58087	105.691	C_CITY_138 138.00 - SALT_PLAINS 138.00 138KV CKT 1
FDNS	01ALL	0	20SP	G15_048	FROM->TO	CLEO CORNER - CLEOPLT4 138.00 138KV CKT 1	191	191	0.58312	105.6279	ALVA - KNOBHILL 69KV CKT 1
FDNS	01NR	0	20L	G15_048	FROM->TO	CLEO CORNER - CLEOPLT4 138.00 138KV CKT 1	191	191	0.60686	105.6019	CLEO CORNER - CLEO JCT 69KV CKT 1
FDNS	01NR	0	20L	G15_048	FROM->TO	CLEO CORNER - CLEOPLT4 138.00 138KV CKT 1	191	191	0.60686	105.5998	CLEO JCT - RINGWOOD 69KV CKT 1
FDNS	01ALL	0	20WP	G15_048	FROM->TO	CLEO CORNER - CLEOPLT4 138.00 138KV CKT 1	191	191	0.58615	105.5619	FPL SWITCH - MOORELAND 138KV CKT 1
FDNS	01ALL	0	16WP	G15_048	FROM->TO	CLEO CORNER - CLEOPLT4 138.00 138KV CKT 1	191	191	0.57288	105.5481	GEN515365 1-CENT 21 0.7000
FDNS	01ALL	0	20L	G15_048	FROM->TO	CLEO CORNER - CLEOPLT4 138.00 138KV CKT 1	191	191	0.58087	105.5433	BYRON_138 138.00 - C_CITY_138 138.00 138KV CKT 1
FDNS	01ALL	0	20WP	G15_048	FROM->TO	CLEO CORNER - CLEOPLT4 138.00 138KV CKT 1	191	191	0.57256	105.5292	GEN520922 1-SLEEPING BEAR
FDNS	01ALL	0	20L	G15_048	FROM->TO	CLEO CORNER - CLEOPLT4 138.00 138KV CKT 1	191	191	0.57658	105.4979	G11_051T 345.00 - TATONGA7 345.00 345KV CKT 1
FDNS	00NR	0	20SP	G15_048	FROM->TO	CLEO CORNER - CLEOPLT4 138.00 138KV CKT 1	191	191	0.58017	105.3449	MATHWSN7 345.00 - TATONGA7 345.00 345KV CKT 1
FDNS	01ALL	0	16WP	G15_048	FROM->TO	CLEO CORNER - CLEOPLT4 138.00 138KV CKT 1	191	191	0.57288	105.3384	GEN520998 1-MORLND3
FDNS	01ALL	0	20L	G15_048	FROM->TO	CLEO CORNER - CLEOPLT4 138.00 138KV CKT 1	191	191	0.57604	105.3268	G15095_T 138.00 - ROSE_VALLEY 138.00 138KV CKT 1
FDNS	01ALL	0	20L	G15_048	FROM->TO	CLEO CORNER - CLEOPLT4 138.00 138KV CKT 1	191	191	0.60413	105.2923	NSAH - RINGWOOD 69KV CKT 1
FDNS	01ALL	0	20SP	G15_048	FROM->TO	CLEO CORNER - CLEOPLT4 138.00 138KV CKT 1	191	191	0.5715	105.157	HUNTERS7 345.00 - RENFROW7 345.00 345KV CKT 1
FDNS	01ALL	0	20L	G15_048	FROM->TO	CLEO CORNER - CLEOPLT4 138.00 138KV CKT 1	191	191	0.5799	105.1555	ELK CITY - RED HILLS WIND 138KV CKT 1
FDNS	01ALL	0	20L	G15_048	FROM->TO	CLEO CORNER - CLEOPLT4 138.00 138KV CKT 1	191	191	0.5799	105.1555	ELK CITY - RED HILLS WIND 138KV CKT 1
FDNS	01ALL	0	20L	G15_048	FROM->TO	CLEO CORNER - CLEOPLT4 138.00 138KV CKT 1	191	191	0.58407	104.9699	MOREWOOD SW - NINE MILE 138KV CKT 1
FDNS	01ALL	0	20L	G15_048	FROM->TO	CLEO CORNER - CLEOPLT4 138.00 138KV CKT 1	191	191	0.57604	104.9386	NOEL_SW 138.00 - ROSE_VALLEY 138.00 138KV CKT 1
FDNS	01NR	0	20L	G15_048	FROM->TO	CLEO CORNER - CLEOPLT4 138.00 138KV CKT 1	191	191	0.58699	104.9017	P12:138:WFEC:MSL14
FDNS	01ALL	0	25SP	G15_048	FROM->TO	CLEO CORNER - CLEOPLT4 138.00 138KV CKT 1	191	191	0.59559	104.8966	WOODWARD EHV - WWPAR4 138.00 138KV CKT 1
FDNS	01ALL	0	25SP	G15_048	FROM->TO	CLEO CORNER - CLEOPLT4 138.00 138KV CKT 1	191	191	0.59559	104.8965	WOODWARD - WWPAR4 138.00 138KV CKT 1
FDNS	01NR	0	20L	G15_048	FROM->TO	CLEO CORNER - CLEOPLT4 138.00 138KV CKT 1	191	191	0.58699	104.8688	BEARCAT 138.00 - MOORELAND 138KV CKT 1
FDNS	01ALL	0	20WP	G15_048	FROM->TO	CLEO CORNER - CLEOPLT4 138.00 138KV CKT 1	191	191	0.57256	104.8514	GEN515787 1-OKLA WIND ENERGY CENTER
FDNS	01ALL	0	16WP	G15_048	FROM->TO	CLEO CORNER - CLEOPLT4 138.00 138KV CKT 1	191	191	0.57288	104.8442	GEN520922 1-SLEEPING BEAR
FDNS	00NR	0	17SP	G15_048	FROM->TO	CLEO CORNER - CLEOPLT4 138.00 138KV CKT 1	191	191	0.64666	104.8243	CLEO CORNER (CLEOCOR1) 138/69/13.8KV TRANSFORMER CKT 1
FDNS	01NR	0	20L	G15_048	FROM->TO	CLEO CORNER - CLEOPLT4 138.00 138KV CKT 1	191	191	0.58186	104.7116	DEWEY - SOUTHARD 138KV CKT 1
FDNS	01ALL	0	20SP	G15_048	FROM->TO	CLEO CORNER - CLEOPLT4 138.00 138KV CKT 1	191	191	0.57279	104.6667	GEN515365 1-CENT 21 0.7000
FDNS	01NR	0	20L	G15_048	FROM->TO	CLEO CORNER - CLEOPLT4 138.00 138KV CKT 1	191	191	0.58369	104.4972	C_CITY_138 138.00 - SALT_PLAINS 138.00 138KV CKT 1
FDNS	01NR	0	20L	G15_048	FROM->TO	CLEO CORNER - CLEOPLT4 138.00 138KV CKT 1	191	191	0.58186	104.4554	ROMAN NOSE - SOUTHARD 138KV CKT 1

SOLUTION	GROUP	SCENARIO	SEASON	SOURCE	DIRECTION	MONITORED ELEMENT	RATEA (MVA)	RATEB(MVA)	TDF	TC%LOADING (% MVA)	CONTINGENCY
FDNS	01NR	0	20L	G15_048	FROM->TO	CLEO CORNER - CLEOPLT4 138.00 138KV CKT 1	191	191	0.58699	104.4004	BEARCAT 138.00 - NINE MILE 138KV CKT 1
FDNS	00NR	0	16WP	G15_048	FROM->TO	CLEO CORNER - CLEOPLT4 138.00 138KV CKT 1	191	191	0.58253	104.376	MOORELAND - PIC4 138.00 138KV CKT 1
FDNS	00NR	0	16WP	G15_048	FROM->TO	CLEO CORNER - CLEOPLT4 138.00 138KV CKT 1	191	191	0.58253	104.3524	P12:138:WFEC:MSL12
FDNS	01NR	0	20L	G15_048	FROM->TO	CLEO CORNER - CLEOPLT4 138.00 138KV CKT 1	191	191	0.58369	104.3502	BYRON_138 138.00 - C_CITY_138 138.00 138KV CKT 1
FDNS	00NR	0	16WP	G15_048	FROM->TO	CLEO CORNER - CLEOPLT4 138.00 138KV CKT 1	191	191	0.58253	104.2784	CEDARDALE - PIC4 138.00 138KV CKT 1
FDNS	01ALL	0	20WP	G15_048	FROM->TO	CLEO CORNER - CLEOPLT4 138.00 138KV CKT 1	191	191	0.51805	104.2051	IMO TAP - SOUTH 4TH ST 138KV CKT 1
FDNS	01ALL	0	16WP	G15_048	FROM->TO	CLEO CORNER - CLEOPLT4 138.00 138KV CKT 1	191	191	0.57288	104.1644	GEN515787 1-OKLA WIND ENERGY CENTER
FDNS	01ALL	0	20SP	G15_048	FROM->TO	CLEO CORNER - CLEOPLT4 138.00 138KV CKT 1	191	191	0.51825	104.1587	IMO TAP - SOUTH 4TH ST 138KV CKT 1
FDNS	01ALL	0	17SP	G15_048	FROM->TO	CLEO CORNER - CLEOPLT4 138.00 138KV CKT 1	191	191	0.57278	104.106	GEN520997 1-MORLND2
FDNS	00NR	0	16WP	G15_048	FROM->TO	CLEO CORNER - CLEOPLT4 138.00 138KV CKT 1	191	191	0.58253	104.0791	CEDARDALE - OKEENE 138KV CKT 1
FDNS	01NR	0	20L	G15_048	FROM->TO	CLEO CORNER - CLEOPLT4 138.00 138KV CKT 1	191	191	0.60686	104.0669	NSAH - RINGWOOD 69KV CKT 1
FDNS	01NR	0	20L	G15_048	FROM->TO	CLEO CORNER - CLEOPLT4 138.00 138KV CKT 1	191	191	0.57939	104.0663	THISTLE7 345.00 - WOODWARD DISTRICT EHV 345KV CKT 1
FDNS	01NR	0	20L	G15_048	FROM->TO	CLEO CORNER - CLEOPLT4 138.00 138KV CKT 1	191	191	0.57939	104.0663	THISTLE7 345.00 - WOODWARD DISTRICT EHV 345KV CKT 1
FDNS	01NR	0	20L	G15_048	FROM->TO	CLEO CORNER - CLEOPLT4 138.00 138KV CKT 1	191	191	0.57939	104.0663	THISTLE7 345.00 - WOODWARD DISTRICT EHV 345KV CKT 2
FDNS	01NR	0	20L	G15_048	FROM->TO	CLEO CORNER - CLEOPLT4 138.00 138KV CKT 1	191	191	0.57939	104.0663	THISTLE7 345.00 - WOODWARD DISTRICT EHV 345KV CKT 2
FDNS	00NR	0	20WP	G15_048	FROM->TO	CLEO CORNER - CLEOPLT4 138.00 138KV CKT 1	191	191	0.58257	104.0561	MOORELAND - PIC4 138.00 138KV CKT 1
FDNS	00NR	0	20WP	G15_048	FROM->TO	CLEO CORNER - CLEOPLT4 138.00 138KV CKT 1	191	191	0.58257	104.031	P12:138:WFEC:MSL12
FDNS	01NR	0	20L	G15_048	FROM->TO	CLEO CORNER - CLEOPLT4 138.00 138KV CKT 1	191	191	0.57903	104.0011	G15095_T 138.00 - ROSE_VALLEY 138.00 138KV CKT 1
FDNS	00NR	0	16WP	G15_048	FROM->TO	CLEO CORNER - CLEOPLT4 138.00 138KV CKT 1	191	191	0.54557	104.0002	WOODRING (WOODRNG2) 345/138/13.8KV TRANSFORMER CKT 1
FDNS	01NR	0	20L	G15_048	FROM->TO	CLEO CORNER - CLEOPLT4 138.00 138KV CKT 1	191	191	0.58285	103.9781	ELK CITY - RED HILLS WIND 138KV CKT 1
FDNS	01NR	0	20L	G15_048	FROM->TO	CLEO CORNER - CLEOPLT4 138.00 138KV CKT 1	191	191	0.58285	103.9781	ELK CITY - RED HILLS WIND 138KV CKT 1
FDNS	01ALL	0	20SP	G15_048	FROM->TO	CLEO CORNER - CLEOPLT4 138.00 138KV CKT 1	191	191	0.57279	103.9748	GEN520922 1-SLEEPING BEAR
FDNS	00NR	0	20WP	G15_048	FROM->TO	CLEO CORNER - CLEOPLT4 138.00 138KV CKT 1	191	191	0.58257	103.9586	CEDARDALE - PIC4 138.00 138KV CKT 1
FDNS	01ALL	0	20L	G15_048	FROM->TO	CLEO CORNER - CLEOPLT4 138.00 138KV CKT 1	191	191	0.57648	103.9251	Hitchland Interchange - WALKTAP7 345.00 345KV CKT 1
FDNS	01ALL	0	20L	G15_048	FROM->TO	CLEO CORNER - CLEOPLT4 138.00 138KV CKT 1	191	191	0.57648	103.9251	Hitchland Interchange - WALKTAP7 345.00 345KV CKT 1
FDNS	01ALL	0	20L	G15_048	FROM->TO	CLEO CORNER - CLEOPLT4 138.00 138KV CKT 1	191	191	0.57648	103.915	P12:345:SPS:J07.1.FINN.HITCH
FDNS	01ALL	0	20L	G15_048	FROM->TO	CLEO CORNER - CLEOPLT4 138.00 138KV CKT 1	191	191	0.58087	103.9045	BYRON_138 138.00 - SANDY_CN_138138.00 138KV CKT 1
FDNS	01ALL	0	20L	G15_048	FROM->TO	CLEO CORNER - CLEOPLT4 138.00 138KV CKT 1	191	191	0.57594	103.8944	GEN514805 1-SOONER UNIT 1
FDNS	00NR	0	20WP	G15_048	FROM->TO	CLEO CORNER - CLEOPLT4 138.00 138KV CKT 1	191	191	0.54576	103.87	WOODRING (WOODRNG2) 345/138/13.8KV TRANSFORMER CKT 1
FDNS	00NR	0	17SP	G15_048	FROM->TO	CLEO CORNER - CLEOPLT4 138.00 138KV CKT 1	191	191	0.54501	103.8203	WOODRING (WOODRNG2) 345/138/13.8KV TRANSFORMER CKT 1
FDNS	01ALL	0	20L	G15_048	FROM->TO	CLEO CORNER - CLEOPLT4 138.00 138KV CKT 1	191	191	0.60723	103.816	CLEO CORNER - CLEOTP 2 69.000 69KV CKT 1
FDNS	00NR	0	20WP	G15_048	FROM->TO	CLEO CORNER - CLEOPLT4 138.00 138KV CKT 1	191	191	0.58257	103.7433	CEDARDALE - OKEENE 138KV CKT 1
FDNS	01ALL	0	20L	G15_048	FROM->TO	CLEO CORNER - CLEOPLT4 138.00 138KV CKT 1	191	191	0.60413	103.7223	NSAH - WAKITA 69KV CKT 1
FDNS	01ALL	0	20L	G15_048	FROM->TO	CLEO CORNER - CLEOPLT4 138.00 138KV CKT 1	191	191	0.60723	103.7204	ALINETP2 69.000 - CLEOTP 2 69.000 69KV CKT 1
FDNS	01ALL	0	20L	G15_048	FROM->TO	CLEO CORNER - CLEOPLT4 138.00 138KV CKT 1	191	191	0.60723	103.6731	ALINETP2 69.000 - ALVA 69KV CKT 1
FDNS	01NR	0	20L	G15_048	FROM->TO	CLEO CORNER - CLEOPLT4 138.00 138KV CKT 1	191	191	0.57903	103.6319	NOEL_SW 138.00 - ROSE_VALLEY 138.00 138KV CKT 1
FDNS	01NR	0	20L	G15_048	FROM->TO	CLEO CORNER - CLEOPLT4 138.00 138KV CKT 1	191	191	0.58699	103.6138	MOREWOOD SW - NINE MILE 138KV CKT 1
FDNS	01ALL	0	20L	G15_048	FROM->TO	CLEO CORNER - CLEOPLT4 138.00 138KV CKT 1	191	191	0.57838	103.6113	WOODWARD DISTRICT EHV (WWDEHV-T2) 345/138/13.8KV TRANSFORMER CKT 2
FDNS	01ALL	0	17SP	G15_048	FROM->TO	CLEO CORNER - CLEOPLT4 138.00 138KV CKT 1	191	191	0.57278	103.5975	GEN520998 1-MORLND3
FDNS	01ALL	0	20L	G15_048	FROM->TO	CLEO CORNER - CLEOPLT4 138.00 138KV CKT 1	191	191	0.57313	103.5388	G15063_T 345.00 - WOODRING 345KV CKT 1
FDNS	01ALL	0	17G	G15_048	FROM->TO	CLEO CORNER - CLEOPLT4 138.00 138KV CKT 1	191	191	0.57967	103.5337	NOEL_SW 138.00 - SALT_PLAINS 138.00 138KV CKT 1
FDNS	01ALL	0	20L	G15_048	FROM->TO	CLEO CORNER - CLEOPLT4 138.00 138KV CKT 1	191	191	0.57585	103.5009	CIMARRON - MINCO 345KV CKT 1
FDNS	01ALL	0	17G	G15_048	FROM->TO	CLEO CORNER - CLEOPLT4 138.00 138KV CKT 1	191	191	0.57921	103.4791	MOORELAND - PIC4 138.00 138KV CKT 1
FDNS	01ALL	0	17G	G15_048	FROM->TO	CLEO CORNER - CLEOPLT4 138.00 138KV CKT 1	191	191	0.60308	103.4725	CLEO CORNER - CLEO JCT 69KV CKT 1
FDNS	01ALL	0	17G	G15_048	FROM->TO	CLEO CORNER - CLEOPLT4 138.00 138KV CKT 1	191	191	0.60308	103.4703	CLEO JCT - RINGWOOD 69KV CKT 1
FDNS	01ALL	0	20L	G15_048	FROM->TO	CLEO CORNER - CLEOPLT4 138.00 138KV CKT 1	191	191	0.57826	103.4561	WOODWARD DISTRICT EHV (WWDEHV) 345/138/13.8KV TRANSFORMER CKT 1
FDNS	01ALL	0	16WP	G15_048	FROM->TO	CLEO CORNER - CLEOPLT4 138.00 138KV CKT 1	191	191	0.51834	103.4145	IMO TAP - SOUTH 4TH ST 138KV CKT 1
FDNS	01ALL	0	17G	G15_048	FROM->TO	CLEO CORNER - CLEOPLT4 138.00 138KV CKT 1	191	191	0.57921	103.3796	CEDARDALE - PIC4 138.00 138KV CKT 1
FDNS	01ALL	0	20SP	G15_048	FROM->TO	CLEO CORNER - CLEOPLT4 138.00 138KV CKT 1	191	191	0.57279	103.2836	GEN515787 1-OKLA WIND ENERGY CENTER
FDNS	01ALL	0	20L	G15_048	FROM->TO	CLEO CORNER - CLEOPLT4 138.00 138KV CKT 1	191	191	0.57621	103.2405	G14-057T 345.00 - SUNNYSIDE 345KV CKT 1
FDNS	01ALL	0	17G	G15_048	FROM->TO	CLEO CORNER - CLEOPLT4 138.00 138KV CKT 1	191	191	0.57921	103.1916	CEDARDALE - OKEENE 138KV CKT 1
FDNS	00NR	0	16WP	G15_048	FROM->TO	CLEO CORNER - CLEOPLT4 138.00 138KV CKT 1	191	191	0.58196	103.1599	DOVER SW - OKEENE 138KV CKT 1
FDNS	00NR	0	16WP	G15_048	FROM->TO	CLEO CORNER - CLEOPLT4 138.00 138KV CKT 1	191	191	0.58249	103.0536	P12:138:WFEC:MSL15
FDNS	01ALL	0	20WP	G15_048	FROM->TO	CLEO CORNER - CLEOPLT4 138.00 138KV CKT 1	191	191	0.57256	102.9325	GEN520997 1-MORLND2
FDNS	01NR	0	20L	G15_048	FROM->TO	CLEO CORNER - CLEOPLT4 138.00 138KV CKT 1	191	191	0.61007	102.9257	CLEO CORNER - CLEOTP 2 69.000 69KV CKT 1
FDNS	01ALL	0	20L	G15_048	FROM->TO	CLEO CORNER - CLEOPLT4 138.00 138KV CKT 1	191	191	0.57606	102.8828	G1524G1525 345.00 - THISTLE7 345.00 345KV CKT 1
FDNS	01ALL	0	20L	G15_048	FROM->TO	CLEO CORNER - CLEOPLT4 138.00 138KV CKT 1	191	191	0.57606	102.8828	G1524G1525 345.00 - THISTLE7 345.00 345KV CKT 2
FDNS	01ALL	0	20L	G15_048	FROM->TO	CLEO CORNER - CLEOPLT4 138.00 138KV CKT 1	191	191	0.57313	102.8704	G15063_T 345.00 - MATHWSN7 345.00 345KV CKT 1
FDNS	01NR	0	20L	G15_048	FROM->TO	CLEO CORNER - CLEOPLT4 138.00 138KV CKT 1	191	191	0.61007	102.83	ALINETP2 69.000 - CLEOTP 2 69.000 69KV CKT 1
FDNS	01NR	0	20L	G15_048	FROM->TO	CLEO CORNER - CLEOPLT4 138.00 138KV CKT 1	191	191	0.57891	102.8157	GEN514805 1-SOONER UNIT 1
FDNS	01NR	0	20L	G15_048	FROM->TO	CLEO CORNER - CLEOPLT4 138.00 138KV CKT 1	191	191	0.61007	102.782	ALINETP2 69.000 - ALVA 69KV CKT 1
FDNS	00NR	0	20WP	G15_048	FROM->TO	CLEO CORNER - CLEOPLT4 138.00 138KV CKT 1	191	191	0.58256	102.7537	P12:138:WFEC:MSL15
FDNS	01ALL	0	20L	G15_048	FROM->TO	CLEO CORNER - CLEOPLT4 138.00 138KV CKT 1	191	191	0.57621	102.746	G14-057T 345.00 - LAWTON EASTSIDE 345KV CKT 1
FDNS	01NR	0	20L	G15_048	FROM->TO	CLEO CORNER - CLEOPLT4 138.00 138KV CKT 1	191	191	0.58369	102.7227	BYRON_138 138.00 - SANDY_CN_138138.00 138KV CKT 1
FDNS	01ALL	0	20L	G15_048	FROM->TO	CLEO CORNER - CLEOPLT4 138.00 138KV CKT 1	191	191	0.59964	102.7178	RENFROW4 138.00 - WAKITAS4 138.00 138KV CKT 1
FDNS	01ALL	0	20L	G15_048	FROM->TO	CLEO CORNER - CLEOPLT4 138.00 138KV CKT 1	191	191	0.57594	102.6968	GEN514806 1-SOONER UNIT 2
FDNS	01ALL	0	17G	G15_048	FROM->TO	CLEO CORNER - CLEOPLT4 138.00 138KV CKT 1	191	191	0.57844	102.6442	DOVER SW - OKEENE 138KV CKT 1
FDNS	01NR	0	20L	G15_048	FROM->TO	CLEO CORNER - CLEOPLT4 138.00 138KV CKT 1	191	191	0.57922	102.6136	CIMARRON - MINCO 345KV CKT 1
FDNS	01NR	0	20L	G15_048	FROM->TO	CLEO CORNER - CLEOPLT4 138.00 138KV CKT 1	191	191	0.57915	102.5673	Hitchland Interchange - WALKTAP7 345.00 345KV CKT 1
FDNS	01NR	0	20L	G15_048	FROM->TO	CLEO CORNER - CLEOPLT4 138.00 138KV CKT 1	191	191	0.57915	102.5673	Hitchland Interchange - WALKTAP7 345.00 345KV CKT 1
FDNS	01NR	0	20L	G15_048	FROM->TO	CLEO CORNER - CLEOPLT4 138.00 138KV CKT 1	191	191	0.57915	102.555	P12:345:SPS:J07.1.FINN.HITCH
FDNS	00NR	0	16WP	G15_048	FROM->TO	CLEO CORNER - CLEOPLT4 138.00 138KV CKT 1	191	191	0.58085	102.5524	DEWEY - SOUTHARD 138KV CKT 1
FDNS	01ALL	0	20L	G15_048	FROM->TO	CLEO CORNER - CLEOPLT4 138.00 138KV CKT 1	191	191	0.57625	102.517	MINGO - RED WILLOW 345KV CKT 1
FDNS	01ALL	0	20L	G15_048	FROM->TO	CLEO CORNER - CLEOPLT4 138.00 138KV CKT 1	191	191	0.57625	102.517	MINGO - RED WILLOW 345KV CKT 1
FDNS	00NR	0	20WP	G15_048	FROM->TO	CLEO CORNER - CLEOPLT4 138.00 138KV CKT 1	191	191	0.58199	102.5062	DOVER SW - OKEENE 138KV CKT 1
FDNS	01NR	0	20L	G15_048	FROM->TO	CLEO CORNER - CLEOPLT4 138.00 138KV CKT 1	191	191	0.60686	102.5034	NSAH - WAKITA 69KV CKT 1
FDNS	01ALL	0	17G	G15_048	FROM->TO	CLEO CORNER - CLEOPLT4 138.00 138KV CKT 1	191	191	0.57554	102.5026	THISTLE7 345.00 - WOODWARD DISTRICT EHV 345KV CKT 1
FDNS	01ALL	0	17G	G15_048	FROM->TO	CLEO CORNER - CLEOPLT4 138.00 138KV CKT 1	191	191	0.57554	102.5026	THISTLE7 345.00 - WOODWARD DISTRICT EHV 345KV CKT 2
FDNS	01NR	0	20L	G15_048	FROM->TO	CLEO CORNER - CLEOPLT4 138.00 138KV CKT 1	191	191	0.60686	102.5	WAKITAS4 138.00 (WAKITA_XMER) 138/69/13.8KV TRANSFORMER CKT 1

SOLUTION	GROUP	SCENARIO	SEASON	SOURCE	DIRECTION	MONITORED ELEMENT	RATEA (MVA)	RATEB(MVA)	TDF	TC%LOADING (% MVA)	CONTINGENCY
FDNS	01NR	0	17G	G15_048	FROM->TO	CLEO CORNER - CLEOPLT4 138.00 138KV CKT 1	191	191	0.58249	102.4945	P12:138:WFEC:MSL15
FDNS	01ALL	0	20L	G15_048	FROM->TO	CLEO CORNER - CLEOPLT4 138.00 138KV CKT 1	191	191	0.57618	102.4328	BORDER 7345.00 - TUCO_2 345.00 345KV CKT 1
FDNSLock	01ALL	0	20L	G15_048	FROM->TO	CLEO CORNER - CLEOPLT4 138.00 138KV CKT 1	191	191	0.60413	102.4055	WAKITAS4 138.00 (WAKITA_XMER) 138/69/13.8KV TRANSFORMER CKT 1
FDNS	01ALL	0	20L	G15_048	FROM->TO	CLEO CORNER - CLEOPLT4 138.00 138KV CKT 1	191	191	0.57594	102.354	GEN532751 1-WOLF CREEK GENERATING STATION UNIT 1
FDNS	01ALL	0	17G	G15_048	FROM->TO	CLEO CORNER - CLEOPLT4 138.00 138KV CKT 1	191	191	0.58318	102.2734	BEARCAT 138.00 - MOORELAND 138KV CKT 1
FDNS	01ALL	0	17SP	G15_048	FROM->TO	CLEO CORNER - CLEOPLT4 138.00 138KV CKT 1	191	191	0.57278	102.2733	GEN563292 1-G15095_3 0.6900
FDNS	01NR	0	20L	G15_048	FROM->TO	CLEO CORNER - CLEOPLT4 138.00 138KV CKT 1	191	191	0.57926	102.2678	G14-057T 345.00 - SUNNYSIDE 345KV CKT 1
FDNS	00NR	0	16WP	G15_048	FROM->TO	CLEO CORNER - CLEOPLT4 138.00 138KV CKT 1	191	191	0.57818	102.2628	G14-074T 345.00 - OKLAUNION 345KV CKT 1
FDNS	01ALL	0	16WP	G15_048	FROM->TO	CLEO CORNER - CLEOPLT4 138.00 138KV CKT 1	191	191	0.57288	102.2609	GEN520997 1-MORLND2
FDNS	01ALL	0	20L	G15_048	FROM->TO	CLEO CORNER - CLEOPLT4 138.00 138KV CKT 1	191	191	0.57639	102.2495	CZYCRVT2 69.000 - KNOBHILL 69KV CKT 1
FDNS	00NR	0	20WP	G15_048	FROM->TO	CLEO CORNER - CLEOPLT4 138.00 138KV CKT 1	191	191	0.6058	102.2039	CLEO CORNER - CLEO JCT 69KV CKT 1
FDNS	00NR	0	20WP	G15_048	FROM->TO	CLEO CORNER - CLEOPLT4 138.00 138KV CKT 1	191	191	0.6058	102.2015	CLEO JCT - RINGWOOD 69KV CKT 1
FDNS	00NR	0	20SP	G15_048	FROM->TO	CLEO CORNER - CLEOPLT4 138.00 138KV CKT 1	191	191	0.64683	102.1709	CLEO CORNER (CLEOCOR1) 138/69/13.8KV TRANSFORMER CKT 1
FDNS	01ALL	0	17G	G15_048	FROM->TO	CLEO CORNER - CLEOPLT4 138.00 138KV CKT 1	191	191	0.57746	102.137	DEWEY - SOUTHARD 138KV CKT 1
FDNS	00NR	0	16WP	G15_048	FROM->TO	CLEO CORNER - CLEOPLT4 138.00 138KV CKT 1	191	191	0.58085	102.125	ROMAN NOSE - SOUTHARD 138KV CKT 1
FDNS	00NR	0	20WP	G15_048	FROM->TO	CLEO CORNER - CLEOPLT4 138.00 138KV CKT 1	191	191	0.58086	102.0673	DEWEY - SOUTHARD 138KV CKT 1
FDNS	00NR	0	20WP	G15_048	FROM->TO	CLEO CORNER - CLEOPLT4 138.00 138KV CKT 1	191	191	0.5782	102.0025	G14-074T 345.00 - OKLAUNION 345KV CKT 1
FDNS	00NR	0	20SP	G15_048	FROM->TO	CLEO CORNER - CLEOPLT4 138.00 138KV CKT 1	191	191	0.58017	101.9636	G11_051T 345.00 - TATONGA7 345.00 345KV CKT 1
FDNS	01NR	0	20L	G15_048	FROM->TO	CLEO CORNER - CLEOPLT4 138.00 138KV CKT 1	191	191	0.58122	101.9219	WOODWARD DISTRICT EHV (WWDEHV-T2) 345/138/13.8KV TRANSFORMER CKT 2
FDNS	00NR	0	16WP	G15_048	FROM->TO	CLEO CORNER - CLEOPLT4 138.00 138KV CKT 1	191	191	0.60581	101.8999	CLEO CORNER - CLEO JCT 69KV CKT 1
FDNS	00NR	0	16WP	G15_048	FROM->TO	CLEO CORNER - CLEOPLT4 138.00 138KV CKT 1	191	191	0.60581	101.8973	CLEO JCT - RINGWOOD 69KV CKT 1
FDNS	00NR	0	16WP	G15_048	FROM->TO	CLEO CORNER - CLEOPLT4 138.00 138KV CKT 1	191	191	0.57809	101.8842	CIMARRON - MINCO 345KV CKT 1
FDNS	00NR	0	16WP	G15_048	FROM->TO	CLEO CORNER - CLEOPLT4 138.00 138KV CKT 1	191	191	0.58249	101.8377	NOEL_SW 138.00 - SALT_PLAINS 138.00 138KV CKT 1
FDNS	01NR	0	20L	G15_048	FROM->TO	CLEO CORNER - CLEOPLT4 138.00 138KV CKT 1	191	191	0.58111	101.8138	WOODWARD DISTRICT EHV (WWDEHV) 345/138/13.8KV TRANSFORMER CKT 1
FDNS	01ALL	0	17G	G15_048	FROM->TO	CLEO CORNER - CLEOPLT4 138.00 138KV CKT 1	191	191	0.58318	101.7987	BEARCAT 138.00 - NINE MILE 138KV CKT 1
FDNS	01ALL	0	17G	G15_048	FROM->TO	CLEO CORNER - CLEOPLT4 138.00 138KV CKT 1	191	191	0.57495	101.7977	G15095_T 138.00 - ROSE_VALLEY 138.00 138KV CKT 1
FDNS	01NR	0	20L	G15_048	FROM->TO	CLEO CORNER - CLEOPLT4 138.00 138KV CKT 1	191	191	0.57909	101.794	G1524G1525 345.00 - THISTLE7 345.00 345KV CKT 1
FDNS	01NR	0	20L	G15_048	FROM->TO	CLEO CORNER - CLEOPLT4 138.00 138KV CKT 1	191	191	0.57909	101.794	G1524G1525 345.00 - THISTLE7 345.00 345KV CKT 2
FDNS	01NR	0	20L	G15_048	FROM->TO	CLEO CORNER - CLEOPLT4 138.00 138KV CKT 1	191	191	0.57548	101.7733	G15063_T 345.00 - WOODRING 345KV CKT 1
FDNS	01NR	0	20L	G15_048	FROM->TO	CLEO CORNER - CLEOPLT4 138.00 138KV CKT 1	191	191	0.57926	101.7672	G14-057T 345.00 - LAWTON EASTSIDE 345KV CKT 1
FDNS	01ALL	0	25SP	G15_048	FROM->TO	CLEO CORNER - CLEOPLT4 138.00 138KV CKT 1	191	191	0.58111	101.7314	P12:138:WFEC:MSL14
FDNS	01ALL	0	17G	G15_048	FROM->TO	CLEO CORNER - CLEOPLT4 138.00 138KV CKT 1	191	191	0.57967	101.7248	C_CITY_138 138.00 - SALT_PLAINS 138.00 138KV CKT 1
FDNS	00NR	0	17SP	G15_048	FROM->TO	CLEO CORNER - CLEOPLT4 138.00 138KV CKT 1	191	191	0.58008	101.7172	G11_051T 345.00 - WOODWARD DISTRICT EHV 345KV CKT 1
FDNS	01ALL	0	25SP	G15_048	FROM->TO	CLEO CORNER - CLEOPLT4 138.00 138KV CKT 1	191	191	0.58111	101.713	BEARCAT 138.00 - MOORELAND 138KV CKT 1
FDNS	01ALL	0	17G	G15_048	FROM->TO	CLEO CORNER - CLEOPLT4 138.00 138KV CKT 1	191	191	0.57746	101.7119	ROMAN NOSE - SOUTHARD 138KV CKT 1
FDNS	01NR	0	20L	G15_048	FROM->TO	CLEO CORNER - CLEOPLT4 138.00 138KV CKT 1	191	191	0.57891	101.6439	GEN514806 1-SOONER UNIT 2
FDNS	01NR	0	17G	G15_048	FROM->TO	CLEO CORNER - CLEOPLT4 138.00 138KV CKT 1	191	191	0.58254	101.6419	MOORELAND - PIC4 138.00 138KV CKT 1
FDNS	00NR	0	20WP	G15_048	FROM->TO	CLEO CORNER - CLEOPLT4 138.00 138KV CKT 1	191	191	0.58086	101.6375	ROMAN NOSE - SOUTHARD 138KV CKT 1
FDNS	01NR	0	17G	G15_048	FROM->TO	CLEO CORNER - CLEOPLT4 138.00 138KV CKT 1	191	191	0.58254	101.6199	P12:138:WFEC:MSL12
FDNS	01NR	0	17G	G15_048	FROM->TO	CLEO CORNER - CLEOPLT4 138.00 138KV CKT 1	191	191	0.60581	101.6036	CLEO CORNER - CLEO JCT 69KV CKT 1
FDNS	01NR	0	17G	G15_048	FROM->TO	CLEO CORNER - CLEOPLT4 138.00 138KV CKT 1	191	191	0.60581	101.6013	CLEO JCT - RINGWOOD 69KV CKT 1
FDNS	01NR	0	17G	G15_048	FROM->TO	CLEO CORNER - CLEOPLT4 138.00 138KV CKT 1	191	191	0.58254	101.5434	CEDARDALE - PIC4 138.00 138KV CKT 1
FDNS	01ALL	0	17G	G15_048	FROM->TO	CLEO CORNER - CLEOPLT4 138.00 138KV CKT 1	191	191	0.57967	101.5115	BYRON_138 138.00 - C_CITY_138 138.00 138KV CKT 1
FDNS	00NR	0	20WP	G15_048	FROM->TO	CLEO CORNER - CLEOPLT4 138.00 138KV CKT 1	191	191	0.58256	101.5026	NOEL_SW 138.00 - SALT_PLAINS 138.00 138KV CKT 1
FDNS	00NR	0	20WP	G15_048	FROM->TO	CLEO CORNER - CLEOPLT4 138.00 138KV CKT 1	191	191	0.57811	101.5004	CIMARRON - MINCO 345KV CKT 1
FDNS	01NR	0	17G	G15_048	FROM->TO	CLEO CORNER - CLEOPLT4 138.00 138KV CKT 1	191	191	0.58249	101.4863	NOEL_SW 138.00 - SALT_PLAINS 138.00 138KV CKT 1
FDNS	00NR	0	16WP	G15_048	FROM->TO	CLEO CORNER - CLEOPLT4 138.00 138KV CKT 1	191	191	0.58602	101.4559	P12:138:WFEC:MSL14
FDNS	00NR	0	16WP	G15_048	FROM->TO	CLEO CORNER - CLEOPLT4 138.00 138KV CKT 1	191	191	0.58602	101.4214	BEARCAT 138.00 - MOORELAND 138KV CKT 1
FDNS	01ALL	0	20SP	G15_048	FROM->TO	CLEO CORNER - CLEOPLT4 138.00 138KV CKT 1	191	191	0.57279	101.4011	GEN520997 1-MORLND2
FDNS	01NR	0	17G	G15_048	FROM->TO	CLEO CORNER - CLEOPLT4 138.00 138KV CKT 1	191	191	0.58254	101.3562	CEDARDALE - OKEENE 138KV CKT 1
FDNS	01ALL	0	17G	G15_048	FROM->TO	CLEO CORNER - CLEOPLT4 138.00 138KV CKT 1	191	191	0.57495	101.3524	NOEL_SW 138.00 - ROSE_VALLEY 138.00 138KV CKT 1
FDNS	01ALL	0	17G	G15_048	FROM->TO	CLEO CORNER - CLEOPLT4 138.00 138KV CKT 1	191	191	0.60308	101.3499	NSAH - RINGWOOD 69KV CKT 1
FDNS	01NR	0	20L	G15_048	FROM->TO	CLEO CORNER - CLEOPLT4 138.00 138KV CKT 1	191	191	0.57902	101.3253	MINGO - RED WILLOW 345KV CKT 1
FDNS	01NR	0	20L	G15_048	FROM->TO	CLEO CORNER - CLEOPLT4 138.00 138KV CKT 1	191	191	0.57902	101.3253	MINGO - RED WILLOW 345KV CKT 1
FDNS	01NR	0	20L	G15_048	FROM->TO	CLEO CORNER - CLEOPLT4 138.00 138KV CKT 1	191	191	0.57987	101.2632	CHISHOLM7 345.00 - GRACEMONT 345KV CKT 1
FDNS	01NR	0	20L	G15_048	FROM->TO	CLEO CORNER - CLEOPLT4 138.00 138KV CKT 1	191	191	0.57955	101.2504	CZYCRVT2 69.000 - KNOBHILL 69KV CKT 1
FDNS	01ALL	0	25SP	G15_048	FROM->TO	CLEO CORNER - CLEOPLT4 138.00 138KV CKT 1	191	191	0.58111	101.2418	BEARCAT 138.00 - NINE MILE 138KV CKT 1
FDNS	00NR	0	16WP	G15_048	FROM->TO	CLEO CORNER - CLEOPLT4 138.00 138KV CKT 1	191	191	0.60898	101.2141	CLEO CORNER - CLEOTP 2 69.000 69KV CKT 1
FDNS	01NR	0	20L	G15_048	FROM->TO	CLEO CORNER - CLEOPLT4 138.00 138KV CKT 1	191	191	0.57548	101.104	G15063_T 345.00 - MATHWSN7 345.00 345KV CKT 1
FDNS	00NR	0	16WP	G15_048	FROM->TO	CLEO CORNER - CLEOPLT4 138.00 138KV CKT 1	191	191	0.57824	101.0972	G14-057T 345.00 - SUNNYSIDE 345KV CKT 1
FDNS	00NR	0	16WP	G15_048	FROM->TO	CLEO CORNER - CLEOPLT4 138.00 138KV CKT 1	191	191	0.57793	101.0846	G15095_T 138.00 - ROSE_VALLEY 138.00 138KV CKT 1
FDNS	01ALL	0	20WP	G15_048	FROM->TO	CLEO CORNER - CLEOPLT4 138.00 138KV CKT 1	191	191	0.57256	101.0686	GEN563292 1-G15095_3 0.6900
FDNS	01ALL	0	17G	G15_048	FROM->TO	CLEO CORNER - CLEOPLT4 138.00 138KV CKT 1	191	191	0.57892	101.0054	ELK CITY - RED HILLS WIND 138KV CKT 1
FDNS	01ALL	0	17G	G15_048	FROM->TO	CLEO CORNER - CLEOPLT4 138.00 138KV CKT 1	191	191	0.58318	100.9978	MOREWOOD SW - NINE MILE 138KV CKT 1
FDNS	00NR	0	16WP	G15_048	FROM->TO	CLEO CORNER - CLEOPLT4 138.00 138KV CKT 1	191	191	0.60898	100.9964	ALINETP2 69.000 - CLEOTP 2 69.000 69KV CKT 1
FDNS	00NR	0	20WP	G15_048	FROM->TO	CLEO CORNER - CLEOPLT4 138.00 138KV CKT 1	191	191	0.60906	100.9831	CLEO CORNER - CLEOTP 2 69.000 69KV CKT 1
FDNS	01ALL	0	17G	G15_048	FROM->TO	CLEO CORNER - CLEOPLT4 138.00 138KV CKT 1	191	191	0.57549	100.9764	G11_051T 345.00 - TATONGA7 345.00 345KV CKT 1
FDNS	01NR	0	17G	G15_048	FROM->TO	CLEO CORNER - CLEOPLT4 138.00 138KV CKT 1	191	191	0.58042	100.9643	G11_051T 345.00 - TATONGA7 345.00 345KV CKT 1
FDNS	01ALL	0	25SP	G15_048	FROM->TO	CLEO CORNER - CLEOPLT4 138.00 138KV CKT 1	191	191	0.54029	100.9587	WOODRING (WOODRNG2) 345/138/13.8KV TRANSFORMER CKT 1
FDNS	00NR	0	16WP	G15_048	FROM->TO	CLEO CORNER - CLEOPLT4 138.00 138KV CKT 1	191	191	0.58602	100.9334	BEARCAT 138.00 - NINE MILE 138KV CKT 1
FDNS	00NR	0	16WP	G15_048	FROM->TO	CLEO CORNER - CLEOPLT4 138.00 138KV CKT 1	191	191	0.57876	100.9002	HUNTERS7 345.00 - WOODRING 345KV CKT 1
FDNS	01ALL	0	17G	G15_048	FROM->TO	CLEO CORNER - CLEOPLT4 138.00 138KV CKT 1	191	191	0.60614	100.8999	CLEO CORNER - CLEOTP 2 69.000 69KV CKT 1
FDNS	00NR	0	16WP	G15_048	FROM->TO	CLEO CORNER - CLEOPLT4 138.00 138KV CKT 1	191	191	0.60898	100.8966	ALINETP2 69.000 - ALVA 69KV CKT 1
FDNS	01ALL	0	20SP	G15_048	FROM->TO	CLEO CORNER - CLEOPLT4 138.00 138KV CKT 1	191	191	0.57279	100.8895	GEN520998 1-MORLND3
FDNS	00NR	0	20WP	G15_048	FROM->TO	CLEO CORNER - CLEOPLT4 138.00 138KV CKT 1	191	191	0.57794	100.8431	G15095_T 138.00 - ROSE_VALLEY 138.00 138KV CKT 1
FDNS	00NR	0	20WP	G15_048	FROM->TO	CLEO CORNER - CLEOPLT4 138.00 138KV CKT 1	191	191	0.58605	100.8109	P12:138:WFEC:MSL14
FDNS	00NR	0	20WP	G15_048	FROM->TO	CLEO CORNER - CLEOPLT4 138.00 138KV CKT 1	191	191	0.58605	100.7788	BEARCAT 138.00 - MOORELAND 138KV CKT 1
FDNS	01ALL	0	17G	G15_048	FROM->TO	CLEO CORNER - CLEOPLT4 138.00 138KV CKT 1	191	191	0.59719	100.7755	WOODWARD - WWPAR4 138.00 138KV CKT 1
FDNS	01ALL	0	17G	G15_048	FROM->TO	CLEO CORNER - CLEOPLT4 138.00 138KV CKT 1	191	191	0.59719	100.7754	WOODWARD EHV - WWPAR4 138.00 138KV CKT 1

SOLUTION	GROUP	SCENARIO	SEASON	SOURCE	DIRECTION	MONITORED ELEMENT	RATEA (MVA)	RATEB(MVA)	TDF	TC%LOADING (% MVA)	CONTINGENCY
FDNS	00NR	0	20WP	G15_048	FROM->TO	CLEO CORNER - CLEOPLT4 138.00 138KV CKT 1	191	191	0.60906	100.7617	ALINETP2 69.000 - CLEOTP 2 69.000 69KV CKT 1
FDNS	00NR	0	16WP	G15_048	FROM->TO	CLEO CORNER - CLEOPLT4 138.00 138KV CKT 1	191	191	0.57793	100.751	NOEL_SW 138.00 - ROSE_VALLEY 138.00 138KV CKT 1
FDNS	01ALL	0	17G	G15_048	FROM->TO	CLEO CORNER - CLEOPLT4 138.00 138KV CKT 1	191	191	0.60614	100.6922	ALINETP2 69.000 - CLEOTP 2 69.000 69KV CKT 1
FDNS	00NR	0	20WP	G15_048	FROM->TO	CLEO CORNER - CLEOPLT4 138.00 138KV CKT 1	191	191	0.60906	100.6638	ALINETP2 69.000 - ALVA 69KV CKT 1
FDNS	01NR	0	17G	G15_048	FROM->TO	CLEO CORNER - CLEOPLT4 138.00 138KV CKT 1	191	191	0.58196	100.656	DOVER SW - OKEENE 138KV CKT 1
FDNS	01ALL	0	17G	G15_048	FROM->TO	CLEO CORNER - CLEOPLT4 138.00 138KV CKT 1	191	191	0.60614	100.6031	ALINETP2 69.000 - ALVA 69KV CKT 1
FDNS	00NR	0	20WP	G15_048	FROM->TO	CLEO CORNER - CLEOPLT4 138.00 138KV CKT 1	191	191	0.57826	100.5563	G14-057T 345.00 - SUNNYSIDE 345KV CKT 1
FDNS	01ALL	0	17G	G15_048	FROM->TO	CLEO CORNER - CLEOPLT4 138.00 138KV CKT 1	191	191	0.54208	100.5447	WOODRING (WOODRNG2) 345/138/13.8KV TRANSFORMER CKT 1
FDNS	00NR	0	16WP	G15_048	FROM->TO	CLEO CORNER - CLEOPLT4 138.00 138KV CKT 1	191	191	0.5783	100.5293	THISTLE7 345.00 - WOODWARD DISTRICT EHV 345KV CKT 1
FDNS	00NR	0	16WP	G15_048	FROM->TO	CLEO CORNER - CLEOPLT4 138.00 138KV CKT 1	191	191	0.5783	100.5293	THISTLE7 345.00 - WOODWARD DISTRICT EHV 345KV CKT 1
FDNS	00NR	0	16WP	G15_048	FROM->TO	CLEO CORNER - CLEOPLT4 138.00 138KV CKT 1	191	191	0.5783	100.5293	THISTLE7 345.00 - WOODWARD DISTRICT EHV 345KV CKT 2
FDNS	00NR	0	16WP	G15_048	FROM->TO	CLEO CORNER - CLEOPLT4 138.00 138KV CKT 1	191	191	0.5783	100.5293	THISTLE7 345.00 - WOODWARD DISTRICT EHV 345KV CKT 2
FDNS	01ALL	0	17G	G15_048	FROM->TO	CLEO CORNER - CLEOPLT4 138.00 138KV CKT 1	191	191	0.57164	100.4944	G15063_T 345.00 - WOODRING 345KV CKT 1
FDNS	00NR	0	20WP	G15_048	FROM->TO	CLEO CORNER - CLEOPLT4 138.00 138KV CKT 1	191	191	0.57794	100.4856	NOEL_SW 138.00 - ROSE_VALLEY 138.00 138KV CKT 1
FDNS	01ALL	0	25SP	G15_048	FROM->TO	CLEO CORNER - CLEOPLT4 138.00 138KV CKT 1	191	191	0.58111	100.4594	MOREWOOD SW - NINE MILE 138KV CKT 1
FDNS	01ALL	0	20L	G15_048	FROM->TO	CLEO CORNER - CLEOPLT4 138.00 138KV CKT 1	191	191	0.57594	100.4438	BASE CASE
FDNS	01ALL	0	16WP	G15_048	FROM->TO	CLEO CORNER - CLEOPLT4 138.00 138KV CKT 1	191	191	0.57288	100.428	GEN563292 1-G15095_3 0.6900
FDNS	00NR	0	20WP	G15_048	FROM->TO	CLEO CORNER - CLEOPLT4 138.00 138KV CKT 1	191	191	0.58605	100.2863	BEARCAT 138.00 - NINE MILE 138KV CKT 1
FDNS	00NR	0	16WP	G15_048	FROM->TO	CLEO CORNER - CLEOPLT4 138.00 138KV CKT 1	191	191	0.57884	100.2513	CHISHOLM7 345.00 - GRACEMONT 345KV CKT 1
FDNS	00NR	0	17SP	G15_048	FROM->TO	CLEO CORNER - CLEOPLT4 138.00 138KV CKT 1	191	191	0.58204	100.2502	MOORELAND - PIC4 138.00 138KV CKT 1
FDNS	00NR	0	20WP	G15_048	FROM->TO	CLEO CORNER - CLEOPLT4 138.00 138KV CKT 1	191	191	0.57832	100.24	THISTLE7 345.00 - WOODWARD DISTRICT EHV 345KV CKT 1
FDNS	00NR	0	20WP	G15_048	FROM->TO	CLEO CORNER - CLEOPLT4 138.00 138KV CKT 1	191	191	0.57832	100.24	THISTLE7 345.00 - WOODWARD DISTRICT EHV 345KV CKT 1
FDNS	00NR	0	20WP	G15_048	FROM->TO	CLEO CORNER - CLEOPLT4 138.00 138KV CKT 1	191	191	0.57832	100.24	THISTLE7 345.00 - WOODWARD DISTRICT EHV 345KV CKT 2
FDNS	00NR	0	20WP	G15_048	FROM->TO	CLEO CORNER - CLEOPLT4 138.00 138KV CKT 1	191	191	0.57832	100.24	THISTLE7 345.00 - WOODWARD DISTRICT EHV 345KV CKT 2
FDNS	00NR	0	17SP	G15_048	FROM->TO	CLEO CORNER - CLEOPLT4 138.00 138KV CKT 1	191	191	0.58204	100.2278	P12:138:WFEC:MSL12
FDNS	00NR	0	16WP	G15_048	FROM->TO	CLEO CORNER - CLEOPLT4 138.00 138KV CKT 1	191	191	0.58249	100.1954	C_CITY_138 138.00 - SALT_PLAINS 138.00 138KV CKT 1
FDNS	01NR	0	17G	G15_048	FROM->TO	CLEO CORNER - CLEOPLT4 138.00 138KV CKT 1	191	191	0.5783	100.1748	THISTLE7 345.00 - WOODWARD DISTRICT EHV 345KV CKT 1
FDNS	01NR	0	17G	G15_048	FROM->TO	CLEO CORNER - CLEOPLT4 138.00 138KV CKT 1	191	191	0.5783	100.1748	THISTLE7 345.00 - WOODWARD DISTRICT EHV 345KV CKT 1
FDNS	01NR	0	17G	G15_048	FROM->TO	CLEO CORNER - CLEOPLT4 138.00 138KV CKT 1	191	191	0.5783	100.1748	THISTLE7 345.00 - WOODWARD DISTRICT EHV 345KV CKT 2
FDNS	01NR	0	17G	G15_048	FROM->TO	CLEO CORNER - CLEOPLT4 138.00 138KV CKT 1	191	191	0.5783	100.1748	THISTLE7 345.00 - WOODWARD DISTRICT EHV 345KV CKT 2
FDNS	01NR	0	17G	G15_048	FROM->TO	CLEO CORNER - CLEOPLT4 138.00 138KV CKT 1	191	191	0.58602	100.1685	P12:138:WFEC:MSL14
FDNS	00NR	0	17SP	G15_048	FROM->TO	CLEO CORNER - CLEOPLT4 138.00 138KV CKT 1	191	191	0.58204	100.1554	CEDARDALE - PIC4 138.00 138KV CKT 1
FDNS	01NR	0	17G	G15_048	FROM->TO	CLEO CORNER - CLEOPLT4 138.00 138KV CKT 1	191	191	0.58602	100.1355	BEARCAT 138.00 - MOORELAND 138KV CKT 1
FDNS	00NR	0	16WP	G15_048	FROM->TO	CLEO CORNER - CLEOPLT4 138.00 138KV CKT 1	191	191	0.58602	100.1341	MOREWOOD SW - NINE MILE 138KV CKT 1
FDNS	01NR	0	17G	G15_048	FROM->TO	CLEO CORNER - CLEOPLT4 138.00 138KV CKT 1	191	191	0.58085	100.1238	DEWEY - SOUTHARD 138KV CKT 1
FDNS	01ALL	0	17G	G15_048	FROM->TO	CLEO CORNER - CLEOPLT4 138.00 138KV CKT 1	191	191	0.57534	100.1149	FINNEY SWITCHING STATION - HOLCOMB 345KV CKT 1
FDNS	01ALL	0	17G	G15_048	FROM->TO	CLEO CORNER - CLEOPLT4 138.00 138KV CKT 1	191	191	0.57456	100	CIMARRON - MINCO 345KV CKT 1
FDNS	00NR	0	17SP	G15_048	FROM->TO	CLEO CORNER - CLEOPLT4 138.00 138KV CKT 1	191	191	0.58204	100	CEDARDALE - OKEENE 138KV CKT 1
FDNS	01ALL	0	25SP	G15_048	FROM->TO	CLEO CORNER - CLEOPLT4 138.00 138KV CKT 1	191	191	0.60134	100	CLEO CORNER - CLEO JCT 69KV CKT 1
FDNS	01ALL	0	25SP	G15_048	FROM->TO	CLEO CORNER - CLEOPLT4 138.00 138KV CKT 1	191	191	0.60134	100	CLEO JCT - RINGWOOD 69KV CKT 1
FDNS	01ALL	0	25SP	G15_048	FROM->TO	CLEO CORNER - CLEOPLT4 138.00 138KV CKT 1	191	191	0.57788	100	P12:138:WFEC:MSL15
FDNS	00NR	0	16WP	G15_048	FROM->TO	CLEO CORNER - CLEOPLT4 138.00 138KV CKT 1	191	191	0.58249	99.9	BYRON_138 138.00 - C_CITY_138 138.00 138KV CKT 1
FDNS	01NR	0	17G	G15_048	FROM->TO	CLEO CORNER - CLEOPLT4 138.00 138KV CKT 1	191	191	0.58249	99.9	C_CITY_138 138.00 - SALT_PLAINS 138.00 138KV CKT 1
FDNS	00NR	0	20WP	G15_048	FROM->TO	CLEO CORNER - CLEOPLT4 138.00 138KV CKT 1	191	191	0.58256	99.9	C_CITY_138 138.00 - SALT_PLAINS 138.00 138KV CKT 1
FDNS	00NR	0	20WP	G15_048	FROM->TO	CLEO CORNER - CLEOPLT4 138.00 138KV CKT 1	191	191	0.57884	99.9	CHISHOLM7 345.00 - GRACEMONT 345KV CKT 1
FDNS	00NR	0	16WP	G15_048	FROM->TO	CLEO CORNER - CLEOPLT4 138.00 138KV CKT 1	191	191	0.60581	99.8	NSAH - RINGWOOD 69KV CKT 1
FDNS	00NR	0	16WP	G15_048	FROM->TO	CLEO CORNER - CLEOPLT4 138.00 138KV CKT 1	191	191	0.57876	99.8	HUNTERS7 345.00 - RENFROW7 345.00 345KV CKT 1
FDNS	00NR	0	16WP	G15_048	FROM->TO	CLEO CORNER - CLEOPLT4 138.00 138KV CKT 1	191	191	0.57809	99.8	GRACEMONT - MINCO 345KV CKT 1
FDNS	01ALL	0	17G	G15_048	FROM->TO	CLEO CORNER - CLEOPLT4 138.00 138KV CKT 1	191	191	0.57967	99.8	BYRON_138 138.00 - SANDY_CN_138138.00 138KV CKT 1
FDNS	01NR	0	17G	G15_048	FROM->TO	CLEO CORNER - CLEOPLT4 138.00 138KV CKT 1	191	191	0.57793	99.8	G15095_T 138.00 - ROSE_VALLEY 138.00 138KV CKT 1
FDNS	01ALL	0	17G	G15_048	FROM->TO	CLEO CORNER - CLEOPLT4 138.00 138KV CKT 1	191	191	0.57164	99.8	G15063_T 345.00 - MATHWSN7 345.00 345KV CKT 1
FDNS	00NR	0	20SP	G15_048	FROM->TO	CLEO CORNER - CLEOPLT4 138.00 138KV CKT 1	191	191	0.5453	99.8	WOODRING (WOODRNG2) 345/138/13.8KV TRANSFORMER CKT 1
FDNS	01NR	0	17G	G15_048	FROM->TO	CLEO CORNER - CLEOPLT4 138.00 138KV CKT 1	191	191	0.58602	99.7	BEARCAT 138.00 - NINE MILE 138KV CKT 1
FDNS	01NR	0	17G	G15_048	FROM->TO	CLEO CORNER - CLEOPLT4 138.00 138KV CKT 1	191	191	0.58249	99.7	BYRON_138 138.00 - C_CITY_138 138.00 138KV CKT 1
FDNS	01NR	0	17G	G15_048	FROM->TO	CLEO CORNER - CLEOPLT4 138.00 138KV CKT 1	191	191	0.58085	99.7	ROMAN NOSE - SOUTHARD 138KV CKT 1
FDNS	01ALL	0	17G	G15_048	FROM->TO	CLEO CORNER - CLEOPLT4 138.00 138KV CKT 1	191	191	0.57731	99.7	WOODWARD DISTRICT EHV (WWDEHV-T2) 345/138/13.8KV TRANSFORMER CKT 2
FDNS	01ALL	0	17G	G15_048	FROM->TO	CLEO CORNER - CLEOPLT4 138.00 138KV CKT 1	191	191	0.57534	99.7	FINNEY SWITCHING STATION - Hitchland Interchange 345KV CKT 1
FDNS	01ALL	0	20SP	G15_048	FROM->TO	CLEO CORNER - CLEOPLT4 138.00 138KV CKT 1	191	191	0.57279	99.6	GEN563292 1-G15095_3 0.6900
FDNS	00NR	0	16WP	G15_048	FROM->TO	CLEO CORNER - CLEOPLT4 138.00 138KV CKT 1	191	191	0.57884	99.5	CHISHOLM7 345.00 (CHISHOLM) 345/230/13.2KV TRANSFORMER CKT 1
FDNS	00NR	0	16WP	G15_048	FROM->TO	CLEO CORNER - CLEOPLT4 138.00 138KV CKT 1	191	191	0.57824	99.5	G14-057T 345.00 - LAWTON EASTSIDE 345KV CKT 1
FDNS	00NR	0	16WP	G15_048	FROM->TO	CLEO CORNER - CLEOPLT4 138.00 138KV CKT 1	191	191	0.578	99.5	G1524G1525 345.00 - THISTLE7 345.00 345KV CKT 1
FDNS	00NR	0	16WP	G15_048	FROM->TO	CLEO CORNER - CLEOPLT4 138.00 138KV CKT 1	191	191	0.578	99.5	G1524G1525 345.00 - THISTLE7 345.00 345KV CKT 2
FDNS	00NR	0	16WP	G15_048	FROM->TO	CLEO CORNER - CLEOPLT4 138.00 138KV CKT 1	191	191	0.57784	99.5	GEN514805 1-SOONER UNIT 1
FDNS	01NR	0	17G	G15_048	FROM->TO	CLEO CORNER - CLEOPLT4 138.00 138KV CKT 1	191	191	0.60581	99.5	NSAH - RINGWOOD 69KV CKT 1
FDNS	01ALL	0	17G	G15_048	FROM->TO	CLEO CORNER - CLEOPLT4 138.00 138KV CKT 1	191	191	0.57719	99.5	WOODWARD DISTRICT EHV (WWDEHV) 345/138/13.8KV TRANSFORMER CKT 1
FDNS	01NR	0	20L	G15_048	FROM->TO	CLEO CORNER - CLEOPLT4 138.00 138KV CKT 1	191	191	0.57891	99.5	BASE CASE
FDNS	00NR	0	20WP	G15_048	FROM->TO	CLEO CORNER - CLEOPLT4 138.00 138KV CKT 1	191	191	0.58605	99.5	MOREWOOD SW - NINE MILE 138KV CKT 1
FDNS	00NR	0	16WP	G15_048	FROM->TO	G14-057T 345.00 - SUNNYSIDE 345KV CKT 1	717	789	0.05544	141.3261	CIMARRON - MINCO 345KV CKT 1
FDNS	00NR	0	20WP	G15_048	FROM->TO	G14-057T 345.00 - SUNNYSIDE 345KV CKT 1	717	789	0.05507	139.8556	CIMARRON - MINCO 345KV CKT 1
FDNS	00NR	0	16WP	G15_048	FROM->TO	G14-057T 345.00 - SUNNYSIDE 345KV CKT 1	717	789	0.05544	130.2319	GRACEMONT - MINCO 345KV CKT 1
FDNS	00NR	0	20WP	G15_048	FROM->TO	G14-057T 345.00 - SUNNYSIDE 345KV CKT 1	717	789	0.05507	128.6283	GRACEMONT - MINCO 345KV CKT 1
FDNS	00NR	0	16WP	G15_048	FROM->TO	G14-057T 345.00 - SUNNYSIDE 345KV CKT 1	717	789	0.04622	125.8516	PITTSBURG - SEMINOLE 345KV CKT 1
FDNS	00NR	0	16WP	G15_048	FROM->TO	G14-057T 345.00 - SUNNYSIDE 345KV CKT 1	717	789	0.04622	125.8516	PITTSBURG - SEMINOLE 345KV CKT 1
FDNS	00NR	0	16WP	G15_048	FROM->TO	G14-057T 345.00 - SUNNYSIDE 345KV CKT 1	717	789	0.04965	125.7317	BASE CASE
FDNS	00NR	0	20WP	G15_048	FROM->TO	G14-057T 345.00 - SUNNYSIDE 345KV CKT 1	717	789	0.04922	123.4961	BASE CASE
FDNS	00NR	0	16WP	G15_048	FROM->TO	G14-057T 345.00 - SUNNYSIDE 345KV CKT 1	717	789	0.06059	123.2027	CIMARRON - DRAPER LAKE 345KV CKT 1
FDNS	00NR	0	20WP	G15_048	FROM->TO	G14-057T 345.00 - SUNNYSIDE 345KV CKT 1	717	789	0.04576	122.942	PITTSBURG - SEMINOLE 345KV CKT 1
FDNS	00NR	0	20WP	G15_048	FROM->TO	G14-057T 345.00 - SUNNYSIDE 345KV CKT 1	717	789	0.04576	122.942	PITTSBURG - SEMINOLE 345KV CKT 1
FDNS	00NR	0	20WP	G15_048	FROM->TO	G14-057T 345.00 - SUNNYSIDE 345KV CKT 1	717	789	0.06001	120.8155	CIMARRON - DRAPER LAKE 345KV CKT 1

SOLUTION	GROUP	SCENARIO	SEASON	SOURCE	DIRECTION	MONITORED ELEMENT	RATEA (MVA)	RATEB(MVA)	TDF	TC%LOADING (% MVA)	CONTINGENCY
FDNS	00NR	0	16WP	G15_048	FROM->TO	G14-057T 345.00 - SUNNYSIDE 345KV CKT 1	717	789	0.0531	120.3338	P12:138:WFEC:MSL03
FDNS	00NR	0	16WP	G15_048	FROM->TO	G14-057T 345.00 - SUNNYSIDE 345KV CKT 1	717	789	0.04877	119.7169	PITTSBURG - VALLIANT 345KV CKT 1
FDNS	00NR	0	16WP	G15_048	FROM->TO	G14-057T 345.00 - SUNNYSIDE 345KV CKT 1	717	789	0.04877	119.7169	PITTSBURG - VALLIANT 345KV CKT 1
FDNSLock	00NR	0	16WP	G15_048	FROM->TO	G14-057T 345.00 - SUNNYSIDE 345KV CKT 1	717	789	0.04965	119.4097	GEN509403 1-PIRKEY GENERATION
FDNS	00NR	0	16WP	G15_048	FROM->TO	G14-057T 345.00 - SUNNYSIDE 345KV CKT 1	717	789	0.04965	119.3291	GEN509416 1-TURK GENERATION
FDNS	00NR	0	16WP	G15_048	FROM->TO	G14-057T 345.00 - SUNNYSIDE 345KV CKT 1	717	789	0.05287	119.038	CLEVELAND - G15066_T 345.00 345KV CKT 1
FDNS	00NR	0	16WP	G15_048	FROM->TO	G14-057T 345.00 - SUNNYSIDE 345KV CKT 1	717	789	0.05287	118.7424	G15066_T 345.00 - SOONER 345KV CKT 1
FDNS	00NR	0	20WP	G15_048	FROM->TO	G14-057T 345.00 - SUNNYSIDE 345KV CKT 1	717	789	0.0527	118.4531	P12:138:WFEC:MSL03
FDNS	00NR	0	16WP	G15_048	FROM->TO	G14-057T 345.00 - SUNNYSIDE 345KV CKT 1	717	789	0.04965	118.4277	GEN501801 1-DOLET HILLS UNIT1
FDNS	00NR	0	16WP	G15_048	FROM->TO	G14-057T 345.00 - SUNNYSIDE 345KV CKT 1	717	789	0.04965	118.0417	GEN509404 1-WELSH #1
FDNS	00NR	0	16WP	G15_048	FROM->TO	G14-057T 345.00 - SUNNYSIDE 345KV CKT 1	717	789	0.04965	118.0417	GEN509406 1-WELSH #3
FDNS	00NR	0	16WP	G15_048	FROM->TO	G14-057T 345.00 - SUNNYSIDE 345KV CKT 1	717	789	0.04788	117.7945	BORDER 7345.00 - WOODWARD DISTRICT EHV 345KV CKT 1
FDNS	00NR	0	16WP	G15_048	FROM->TO	G14-057T 345.00 - SUNNYSIDE 345KV CKT 1	717	789	0.04972	117.3154	7SAREPTA% 345.00 - LONGWOOD 345KV CKT 1
FDNS	00NR	0	16WP	G15_048	FROM->TO	G14-057T 345.00 - SUNNYSIDE 345KV CKT 1	717	789	0.04972	117.3154	7SAREPTA% 345.00 - LONGWOOD 345KV CKT 1
FDNS	00NR	0	20WP	G15_048	FROM->TO	G14-057T 345.00 - SUNNYSIDE 345KV CKT 1	717	789	0.04922	117.2677	GEN509403 1-PIRKEY GENERATION
FDNS	00NR	0	16WP	G15_048	FROM->TO	G14-057T 345.00 - SUNNYSIDE 345KV CKT 1	717	789	0.0508	117.2341	CORN TAP - NAPLESTP 138.00 138KV CKT 1
FDNS	00NR	0	20WP	G15_048	FROM->TO	G14-057T 345.00 - SUNNYSIDE 345KV CKT 1	717	789	0.04922	117.1868	GEN509416 1-TURK GENERATION
FDNS	00NR	0	16WP	G15_048	FROM->TO	G14-057T 345.00 - SUNNYSIDE 345KV CKT 1	717	789	0.0508	117.1497	NAPLESTP 138.00 - PAYNE 138.00 138KV CKT 1
FDNS	00NR	0	16WP	G15_048	FROM->TO	G14-057T 345.00 - SUNNYSIDE 345KV CKT 1	717	789	0.04971	117.1471	DOLET HILLS - SOUTHWEST SHREVEPORT 345KV CKT 1
FDNS	00NR	0	16WP	G15_048	FROM->TO	G14-057T 345.00 - SUNNYSIDE 345KV CKT 1	717	789	0.04971	117.1471	DOLET HILLS - SOUTHWEST SHREVEPORT 345KV CKT 1
FDNS	00NR	0	16WP	G15_048	FROM->TO	G14-057T 345.00 - SUNNYSIDE 345KV CKT 1	717	789	0.05039	117.1448	ANADARKO - POCASSETT 138KV CKT 1
FDNSLock	00NR	0	16WP	G15_048	FROM->TO	G14-057T 345.00 - SUNNYSIDE 345KV CKT 1	717	789	0.04965	117.1301	GEN336821 1-GRAND GULF UNIT
FDNS	00NR	0	16WP	G15_048	FROM->TO	G14-057T 345.00 - SUNNYSIDE 345KV CKT 1	717	789	0.0521	117.0898	CLEVELAND - TULSA NORTH 345KV CKT 1
FDNS	00NR	0	16WP	G15_048	FROM->TO	G14-057T 345.00 - SUNNYSIDE 345KV CKT 1	717	789	0.0521	117.0898	CLEVELAND - TULSA NORTH 345KV CKT 1
FDNS	00NR	0	16WP	G15_048	FROM->TO	G14-057T 345.00 - SUNNYSIDE 345KV CKT 1	717	789	0.05068	117.0742	COMANCHE - LOCO 138KV CKT 1
FDNSLock	00NR	0	16WP	G15_048	FROM->TO	G14-057T 345.00 - SUNNYSIDE 345KV CKT 1	717	789	0.04965	117.0352	GEN336153 1-WATERFORD UNIT#3
FDNS	00NR	0	16WP	G15_048	FROM->TO	G14-057T 345.00 - SUNNYSIDE 345KV CKT 1	717	789	0.04644	117.0161	CANADIAN RIVER - MUSKOGEE 345KV CKT 1
FDNS	00NR	0	16WP	G15_048	FROM->TO	G14-057T 345.00 - SUNNYSIDE 345KV CKT 1	717	789	0.05039	116.9961	POCASSETT - TUTTLE 138KV CKT 1
FDNS	00NR	0	20WP	G15_048	FROM->TO	G14-057T 345.00 - SUNNYSIDE 345KV CKT 1	717	789	0.05234	116.9383	CLEVELAND - G15066_T 345.00 345KV CKT 1
FDNSLock	00NR	0	16WP	G15_048	FROM->TO	G14-057T 345.00 - SUNNYSIDE 345KV CKT 1	717	789	0.0513	116.891	MATHWSN7 345.00 - TATONGA7 345.00 345KV CKT 1
FDNS	00NR	0	16WP	G15_048	FROM->TO	G14-057T 345.00 - SUNNYSIDE 345KV CKT 1	717	789	0.04788	116.8671	BORDER 7345.00 - TUCO_2 345.00 345KV CKT 1
FDNS	00NR	0	20WP	G15_048	FROM->TO	G14-057T 345.00 - SUNNYSIDE 345KV CKT 1	717	789	0.04833	116.8606	PITTSBURG - VALLIANT 345KV CKT 1
FDNS	00NR	0	20WP	G15_048	FROM->TO	G14-057T 345.00 - SUNNYSIDE 345KV CKT 1	717	789	0.04833	116.8606	PITTSBURG - VALLIANT 345KV CKT 1
FDNS	00NR	0	16WP	G15_048	FROM->TO	G14-057T 345.00 - SUNNYSIDE 345KV CKT 1	717	789	0.05826	116.8117	ARCADIA - NORTHWEST 345KV CKT 1
FDNS	00NR	0	16WP	G15_048	FROM->TO	G14-057T 345.00 - SUNNYSIDE 345KV CKT 1	717	789	0.04965	116.7419	GRAND GULF 500/22.0KV TRANSFORMER CKT 1
FDNSLock	00NR	0	16WP	G15_048	FROM->TO	G14-057T 345.00 - SUNNYSIDE 345KV CKT 1	717	789	0.04965	116.7414	GEN335831 1-RIVERBEND UNIT#1
FDNS	00NR	0	16WP	G15_048	FROM->TO	G14-057T 345.00 - SUNNYSIDE 345KV CKT 1	717	789	0.04965	116.7065	GEN515577 1-ARBWND11 0.6900
FDNS	00NR	0	16WP	G15_048	FROM->TO	G14-057T 345.00 - SUNNYSIDE 345KV CKT 1	717	789	0.05159	116.6977	ARCADIA - SEMINOLE 345KV CKT 1
FDNS	00NR	0	16WP	G15_048	FROM->TO	G14-057T 345.00 - SUNNYSIDE 345KV CKT 1	717	789	0.04965	116.6641	GEN509409 1-WILKES #3
FDNS	00NR	0	16WP	G15_048	FROM->TO	G14-057T 345.00 - SUNNYSIDE 345KV CKT 1	717	789	0.04969	116.6569	7SAREPTA% 345.00 - ELDORADO EHV 345KV CKT 1
FDNS	00NR	0	16WP	G15_048	FROM->TO	G14-057T 345.00 - SUNNYSIDE 345KV CKT 1	717	789	0.04969	116.6567	3TR3AR8EL7EL
FDNS	00NR	0	16WP	G15_048	FROM->TO	G14-057T 345.00 - SUNNYSIDE 345KV CKT 1	717	789	0.04969	116.6476	ELDORADO EHV 500/345KV TRANSFORMER CKT 1
FDNS	00NR	0	20WP	G15_048	FROM->TO	G14-057T 345.00 - SUNNYSIDE 345KV CKT 1	717	789	0.05234	116.6463	G15066_T 345.00 - SOONER 345KV CKT 1
FDNS	00NR	0	16WP	G15_048	FROM->TO	G14-057T 345.00 - SUNNYSIDE 345KV CKT 1	717	789	0.04996	116.6347	P12:138:AEPW:DUNCAN-4:L.E.S.-4
FDNS	00NR	0	16WP	G15_048	FROM->TO	G14-057T 345.00 - SUNNYSIDE 345KV CKT 1	717	789	0.05039	116.6144	BRIDGECR 138.00 - TUTTLE 138KV CKT 1
FDNS	00NR	0	16WP	G15_048	FROM->TO	G14-057T 345.00 - SUNNYSIDE 345KV CKT 1	717	789	0.04996	116.5237	COMANCHE TAP - OMPA-DUNCAN 840 138KV CKT 1
FDNS	00NR	0	16WP	G15_048	FROM->TO	G14-057T 345.00 - SUNNYSIDE 345KV CKT 1	717	789	0.05099	116.4781	HEALDTON - LOCO 138KV CKT 1
FDNS	00NR	0	20WP	G15_048	FROM->TO	G14-057T 345.00 - SUNNYSIDE 345KV CKT 1	717	789	0.04922	116.4704	GEN501801 1-DOLET HILLS UNIT1
FDNS	00NR	0	16WP	G15_048	FROM->TO	G14-057T 345.00 - SUNNYSIDE 345KV CKT 1	717	789	0.05072	116.4505	FINNEY SWITCHING STATION - HOLCOMB 345KV CKT 1
FDNS	00NR	0	16WP	G15_048	FROM->TO	G14-057T 345.00 - SUNNYSIDE 345KV CKT 1	717	789	0.05072	116.4505	FINNEY SWITCHING STATION - HOLCOMB 345KV CKT 1
FDNS	00NR	0	16WP	G15_048	FROM->TO	G14-057T 345.00 - SUNNYSIDE 345KV CKT 1	717	789	0.04965	116.4	GEN300006 1-NEW MADRID UNIT 1
FDNS	00NR	0	16WP	G15_048	FROM->TO	G14-057T 345.00 - SUNNYSIDE 345KV CKT 1	717	789	0.04965	116.4	GEN300007 1-NEW MADRID UNIT 2
FDNS	00NR	0	16WP	G15_048	FROM->TO	G14-057T 345.00 - SUNNYSIDE 345KV CKT 1	717	789	0.05004	116.3928	LACYGNE - WAVERLY7 345.00 345KV CKT 1
FDNS	00NR	0	16WP	G15_048	FROM->TO	G14-057T 345.00 - SUNNYSIDE 345KV CKT 1	717	789	0.04965	116.369	GEN501813 1-RODEMACHER UNIT 3
FDNS	00NR	0	16WP	G15_048	FROM->TO	G14-057T 345.00 - SUNNYSIDE 345KV CKT 1	717	789	0.05039	116.3452	P12:138:WFEC:MSL01
FDNS	00NR	0	16WP	G15_048	FROM->TO	G14-057T 345.00 - SUNNYSIDE 345KV CKT 1	717	789	0.05039	116.3403	BRIDGECR 138.00 - SUNSHINE CANYON 138KV CKT 1
FDNS	00NR	0	16WP	G15_048	FROM->TO	G14-057T 345.00 - SUNNYSIDE 345KV CKT 1	717	789	0.05099	116.3386	HEALDTON - RINGLING 138KV CKT 1
FDNS	00NR	0	16WP	G15_048	FROM->TO	G14-057T 345.00 - SUNNYSIDE 345KV CKT 1	717	789	0.05004	116.2527	WAVERLY7 345.00 - WOLF CREEK 345KV CKT 1
FDNS	00NR	0	16WP	G15_048	FROM->TO	G14-057T 345.00 - SUNNYSIDE 345KV CKT 1	717	789	0.04965	116.2503	GEN520947 1-HUGO1
FDNS	00NR	0	16WP	G15_048	FROM->TO	G14-057T 345.00 - SUNNYSIDE 345KV CKT 1	717	789	0.04996	116.2417	DUNCAN - OMPA-DUNCAN 840 138KV CKT 1
FDNS	00NR	0	16WP	G15_048	FROM->TO	G14-057T 345.00 - SUNNYSIDE 345KV CKT 1	717	789	0.04996	116.2417	DUNCAN - OMPA-DUNCAN 840 138KV CKT 1
FDNS	00NR	0	20WP	G15_048	FROM->TO	G14-057T 345.00 - SUNNYSIDE 345KV CKT 1	717	789	0.0475	116.2407	BORDER 7345.00 - WOODWARD DISTRICT EHV 345KV CKT 1
FDNSLock	00NR	0	16WP	G15_048	FROM->TO	G14-057T 345.00 - SUNNYSIDE 345KV CKT 1	717	789	0.0513	116.2034	G11_051T 345.00 - TATONGA7 345.00 345KV CKT 1
FDNS	00NR	0	16WP	G15_048	FROM->TO	G14-057T 345.00 - SUNNYSIDE 345KV CKT 1	717	789	0.05099	116.1742	RINGLING - SOUTH WILSON 138KV CKT 1
FDNS	00NR	0	16WP	G15_048	FROM->TO	G14-057T 345.00 - SUNNYSIDE 345KV CKT 1	717	789	0.04965	116.1685	GEN335206 1-NELSON UNIT 6
FDNS	00NR	0	16WP	G15_048	FROM->TO	G14-057T 345.00 - SUNNYSIDE 345KV CKT 1	717	789	0.05072	116.0651	FINNEY SWITCHING STATION - Hitchland Interchange 345KV CKT 1
FDNS	00NR	0	16WP	G15_048	FROM->TO	G14-057T 345.00 - SUNNYSIDE 345KV CKT 1	717	789	0.04965	116.0517	DOLET HILLS 345/24.0KV TRANSFORMER CKT 1
FDNS	00NR	0	16WP	G15_048	FROM->TO	G14-057T 345.00 - SUNNYSIDE 345KV CKT 1	717	789	0.04961	116.0067	P12:138:AEPW:SHERID4:112GORE4
FDNS	00NR	0	16WP	G15_048	FROM->TO	G14-057T 345.00 - SUNNYSIDE 345KV CKT 1	717	789	0.04865	115.998	PARK LANE - SEMINOLE 138KV CKT 1
FDNSLock	00NR	0	16WP	G15_048	FROM->TO	G14-057T 345.00 - SUNNYSIDE 345KV CKT 1	717	789	0.04965	115.9851	GEN590011 2-ERCOT EQUIVALENCE
FDNS	00NR	0	16WP	G15_048	FROM->TO	G14-057T 345.00 - SUNNYSIDE 345KV CKT 1	717	789	0.04965	115.9826	GEN501812 1-RODEMACHER UNIT 2
FDNS	00NR	0	16WP	G15_048	FROM->TO	G14-057T 345.00 - SUNNYSIDE 345KV CKT 1	717	789	0.05056	115.9522	THISTLE7 345.00 - WOODWARD DISTRICT EHV 345KV CKT 1
FDNS	00NR	0	16WP	G15_048	FROM->TO	G14-057T 345.00 - SUNNYSIDE 345KV CKT 1	717	789	0.05056	115.9522	THISTLE7 345.00 - WOODWARD DISTRICT EHV 345KV CKT 1
FDNS	00NR	0	16WP	G15_048	FROM->TO	G14-057T 345.00 - SUNNYSIDE 345KV CKT 1	717	789	0.05056	115.9522	THISTLE7 345.00 - WOODWARD DISTRICT EHV 345KV CKT 2
FDNS	00NR	0	16WP	G15_048	FROM->TO	G14-057T 345.00 - SUNNYSIDE 345KV CKT 1	717	789	0.05056	115.9522	THISTLE7 345.00 - WOODWARD DISTRICT EHV 345KV CKT 2
FDNS	00NR	0	20WP	G15_048	FROM->TO	G14-057T 345.00 - SUNNYSIDE 345KV CKT 1	717	789	0.04922	115.9478	GEN509406 1-WELSH #3
FDNS	00NR	0	20WP	G15_048	FROM->TO	G14-057T 345.00 - SUNNYSIDE 345KV CKT 1	717	789	0.04922	115.9475	GEN509404 1-WELSH #1
FDNS	00NR	0	16WP	G15_048	FROM->TO	G14-057T 345.00 - SUNNYSIDE 345KV CKT 1	717	789	0.05059	115.9348	CANEYRV7 345.00 - NEOSHO 345KV CKT 1
FDNS	00NR	0	16WP	G15_048	FROM->TO	G14-057T 345.00 - SUNNYSIDE 345KV CKT 1	717	789	0.04965	115.9221	GEN515564 1-ORIGIN11 0.6900

SOLUTION	GROUP	SCENARIO	SEASON	SOURCE	DIRECTION	MONITORED ELEMENT	RATEA (MVA)	RATEB(MVA)	TDF	TC%LOADING (% MVA)	CONTINGENCY
FDNS	00NR	0	16WP	G15_048	FROM->TO	G14-057T 345.00 - SUNNYSIDE 345KV CKT 1	717	789	0.04965	115.9221	GEN515565 1-ORIGIN21 0.6900
FDNSLock	00NR	0	16WP	G15_048	FROM->TO	G14-057T 345.00 - SUNNYSIDE 345KV CKT 1	717	789	0.04965	115.9096	GEN590010 1-ERCOT EQUIVALENCE
FDNS	00NR	0	16WP	G15_048	FROM->TO	G14-057T 345.00 - SUNNYSIDE 345KV CKT 1	717	789	0.05099	115.8986	MARIETTA - SOUTH WILSON 138KV CKT 1
FDNS	00NR	0	16WP	G15_048	FROM->TO	G14-057T 345.00 - SUNNYSIDE 345KV CKT 1	717	789	0.04965	115.8352	GEN509408 1-WILKES #2
FDNS	00NR	0	16WP	G15_048	FROM->TO	G14-057T 345.00 - SUNNYSIDE 345KV CKT 1	717	789	0.05099	115.8012	P12:138:WFEC:MSL17
FDNS	00NR	0	16WP	G15_048	FROM->TO	G14-057T 345.00 - SUNNYSIDE 345KV CKT 1	717	789	0.05059	115.7954	CANEYRV7 345.00 - LATHAMS7 345.00 345KV CKT 1
FDNS	00NR	0	16WP	G15_048	FROM->TO	G14-057T 345.00 - SUNNYSIDE 345KV CKT 1	717	789	0.05004	115.7632	P12:138:WFEC:MSL02
FDNS	00NR	0	16WP	G15_048	FROM->TO	G14-057T 345.00 - SUNNYSIDE 345KV CKT 1	717	789	0.04965	115.7471	P12:161:AEPW:DYESS 5:HYLAND 5
FDNS	00NR	0	16WP	G15_048	FROM->TO	G14-057T 345.00 - SUNNYSIDE 345KV CKT 1	717	789	0.04965	115.7452	GEN506754 1-LEBROCK STEAM 1
FDNS	00NR	0	16WP	G15_048	FROM->TO	G14-057T 345.00 - SUNNYSIDE 345KV CKT 1	717	789	0.04965	115.7417	P12:69:AEPW:L.E.S.-2:LAW WC2
FDNS	00NR	0	16WP	G15_048	FROM->TO	G14-057T 345.00 - SUNNYSIDE 345KV CKT 1	717	789	0.04959	115.7311	REDBUD - RIVERSIDE STATION 345KV CKT 1
FDNS	00NR	0	16WP	G15_048	FROM->TO	G14-057T 345.00 - SUNNYSIDE 345KV CKT 1	717	789	0.04959	115.7311	REDBUD - RIVERSIDE STATION 345KV CKT 1
FDNS	00NR	0	16WP	G15_048	FROM->TO	G14-057T 345.00 - SUNNYSIDE 345KV CKT 1	717	789	0.04962	115.7085	ELDORADO EHV - MOUNT OLIVE 500KV CKT 1
FDNS	00NR	0	16WP	G15_048	FROM->TO	G14-057T 345.00 - SUNNYSIDE 345KV CKT 1	717	789	0.04965	115.6998	GEN334440 1-SABINE UNIT 4
FDNS	00NR	0	16WP	G15_048	FROM->TO	G14-057T 345.00 - SUNNYSIDE 345KV CKT 1	717	789	0.05072	115.6769	CIVIT - PAOLI 138KV CKT 1
FDNS	00NR	0	16WP	G15_048	FROM->TO	G14-057T 345.00 - SUNNYSIDE 345KV CKT 1	717	789	0.04991	115.675	ANADARKO - GEORGIA 138KV CKT 1
FDNS	00NR	0	16WP	G15_048	FROM->TO	G14-057T 345.00 - SUNNYSIDE 345KV CKT 1	717	789	0.05139	115.6471	MATHWSN7 345.00 - NORTHWEST 345KV CKT 1
FDNS	00NR	0	16WP	G15_048	FROM->TO	G14-057T 345.00 - SUNNYSIDE 345KV CKT 1	717	789	0.04961	115.6371	P12:138:AEPW:112GORE4:L.E.S.-4
FDNS	00NR	0	16WP	G15_048	FROM->TO	G14-057T 345.00 - SUNNYSIDE 345KV CKT 1	717	789	0.04955	115.6268	ELDORADO EHV - SHERIDAN EHV 500KV CKT 1
FDNS	00NR	0	16WP	G15_048	FROM->TO	G14-057T 345.00 - SUNNYSIDE 345KV CKT 1	717	789	0.05121	115.6192	P12:138:AEPW-OGE:CORNVIL4:MAUD 4
FDNS	00NR	0	16WP	G15_048	FROM->TO	G14-057T 345.00 - SUNNYSIDE 345KV CKT 1	717	789	0.04965	115.6004	NEW MADRID 161/22.0KV TRANSFORMER CKT 1
FDNS	00NR	0	16WP	G15_048	FROM->TO	G14-057T 345.00 - SUNNYSIDE 345KV CKT 1	717	789	0.04974	115.5963	WEBRE - WELLS 500KV CKT 1
FDNS	00NR	0	16WP	G15_048	FROM->TO	G14-057T 345.00 - SUNNYSIDE 345KV CKT 1	717	789	0.04997	115.5952	PAOLI - PAYNE 138.00 138KV CKT 1
FDNS	00NR	0	16WP	G15_048	FROM->TO	G14-057T 345.00 - SUNNYSIDE 345KV CKT 1	717	789	0.04965	115.5952	GEN503909 1-FULTONU1 1 16.000
FDNS	00NR	0	16WP	G15_048	FROM->TO	G14-057T 345.00 - SUNNYSIDE 345KV CKT 1	717	789	0.04965	115.5865	NEW MADRID 345/22.0KV TRANSFORMER CKT 1
FDNS	00NR	0	16WP	G15_048	FROM->TO	G14-057T 345.00 - SUNNYSIDE 345KV CKT 1	717	789	0.04991	115.5859	FLETCHER - GEORGIA 138KV CKT 1
FDNS	00NR	0	16WP	G15_048	FROM->TO	G14-057T 345.00 - SUNNYSIDE 345KV CKT 1	717	789	0.05059	115.5778	LATHAMS7 345.00 - ROSE HILL 345KV CKT 1
FDNS	00NR	0	16WP	G15_048	FROM->TO	G14-057T 345.00 - SUNNYSIDE 345KV CKT 1	717	789	0.04925	115.5671	LAWTON EASTSIDE (LES 5) 345/138/13.8KV TRANSFORMER CKT 2
FDNS	00NR	0	16WP	G15_048	FROM->TO	G14-057T 345.00 - SUNNYSIDE 345KV CKT 1	717	789	0.04925	115.5671	LAWTON EASTSIDE (LES 5) 345/138/13.8KV TRANSFORMER CKT 2
FDNS	00NR	0	16WP	G15_048	FROM->TO	G14-057T 345.00 - SUNNYSIDE 345KV CKT 1	717	789	0.04965	115.5633	FRONTIER - GRIMES 345KV CKT 1
FDNS	00NR	0	16WP	G15_048	FROM->TO	G14-057T 345.00 - SUNNYSIDE 345KV CKT 1	717	789	0.05002	115.5527	EMPIRE - FLETCHER 138KV CKT 1
FDNS	00NR	0	16WP	G15_048	FROM->TO	G14-057T 345.00 - SUNNYSIDE 345KV CKT 1	717	789	0.05121	115.5491	BLANCHARD - CORNVILLE 138KV CKT 1
FDNS	00NR	0	16WP	G15_048	FROM->TO	G14-057T 345.00 - SUNNYSIDE 345KV CKT 1	717	789	0.05072	115.5364	CIVIT - STRATFORD 138KV CKT 1
FDNS	00NR	0	16WP	G15_048	FROM->TO	G14-057T 345.00 - SUNNYSIDE 345KV CKT 1	717	789	0.04963	115.5229	TUPELO - TUPELO TAP 138KV CKT 1
FDNS	00NR	0	16WP	G15_048	FROM->TO	G14-057T 345.00 - SUNNYSIDE 345KV CKT 1	717	789	0.05002	115.4711	COMANCHE - EMPIRE 138KV CKT 1
FDNS	00NR	0	16WP	G15_048	FROM->TO	G14-057T 345.00 - SUNNYSIDE 345KV CKT 1	717	789	0.04996	115.4691	G1524G1525 345.00 - THISTLE7 345.00 345KV CKT 1
FDNS	00NR	0	16WP	G15_048	FROM->TO	G14-057T 345.00 - SUNNYSIDE 345KV CKT 1	717	789	0.04996	115.4691	G1524G1525 345.00 - THISTLE7 345.00 345KV CKT 2
FDNS	00NR	0	16WP	G15_048	FROM->TO	G14-057T 345.00 - SUNNYSIDE 345KV CKT 1	717	789	0.04965	115.4679	GEN509393 S1-ARSENAL HILL GENS #4 (STALL)
FDNS	00NR	0	16WP	G15_048	FROM->TO	G14-057T 345.00 - SUNNYSIDE 345KV CKT 1	717	789	0.04965	115.4437	GEN509392 G2-ARSENAL HILL GENS #3 (STALL)
FDNS	00NR	0	16WP	G15_048	FROM->TO	G14-057T 345.00 - SUNNYSIDE 345KV CKT 1	717	789	0.04965	115.4436	GEN509391 G1-ARSENAL HILL GENS #2 (STALL)
FDNS	00NR	0	16WP	G15_048	FROM->TO	G14-057T 345.00 - SUNNYSIDE 345KV CKT 1	717	789	0.04965	115.429	GEN336252 1-NINEMILE POINT UNIT#5
FDNS	00NR	0	16WP	G15_048	FROM->TO	G14-057T 345.00 - SUNNYSIDE 345KV CKT 1	717	789	0.05072	115.419	OIL CENTER - STRATFORD 138KV CKT 1
FDNS	00NR	0	16WP	G15_048	FROM->TO	G14-057T 345.00 - SUNNYSIDE 345KV CKT 1	717	789	0.04965	115.4027	DELL 500 - ESSEX UNIT 2 500KV CKT Z1
FDNS	00NR	0	16WP	G15_048	FROM->TO	G14-057T 345.00 - SUNNYSIDE 345KV CKT 1	717	789	0.04965	115.3907	GEN334071 1-LEWIS CREEK 2
FDNS	00NR	0	16WP	G15_048	FROM->TO	G14-057T 345.00 - SUNNYSIDE 345KV CKT 1	717	789	0.04965	115.3817	GEN334070 1-LEWIS CREEK 1
FDNS	00NR	0	16WP	G15_048	FROM->TO	G14-057T 345.00 - SUNNYSIDE 345KV CKT 1	717	789	0.04965	115.3782	GEN335204 1-NELSON UNIT 4
FDNS	00NR	0	20WP	G15_048	FROM->TO	G14-057T 345.00 - SUNNYSIDE 345KV CKT 1	717	789	0.04929	115.3748	7SAREPTA% 345.00 - LONGWOOD 345KV CKT 1
FDNS	00NR	0	20WP	G15_048	FROM->TO	G14-057T 345.00 - SUNNYSIDE 345KV CKT 1	717	789	0.04929	115.3748	7SAREPTA% 345.00 - LONGWOOD 345KV CKT 1
FDNS	00NR	0	20WP	G15_048	FROM->TO	G14-057T 345.00 - SUNNYSIDE 345KV CKT 1	717	789	0.05041	115.3669	CORN TAP - NAPLESTP 138.00 138KV CKT 1
FDNS	00NR	0	16WP	G15_048	FROM->TO	G14-057T 345.00 - SUNNYSIDE 345KV CKT 1	717	789	0.04977	115.3542	DUNCAN (DUNCAN) 138/69/13.8KV TRANSFORMER CKT 1
FDNS	00NR	0	16WP	G15_048	FROM->TO	G14-057T 345.00 - SUNNYSIDE 345KV CKT 1	717	789	0.04977	115.3542	DUNCAN (DUNCAN) 138/69/13.8KV TRANSFORMER CKT 1
FDNS	00NR	0	16WP	G15_048	FROM->TO	G14-057T 345.00 - SUNNYSIDE 345KV CKT 1	717	789	0.05121	115.3522	BLANCHARD - MAUD 138KV CKT 1
FDNS	00NR	0	16WP	G15_048	FROM->TO	G14-057T 345.00 - SUNNYSIDE 345KV CKT 1	717	789	0.04965	115.3434	GEN334441 1-SABINE UNIT 5
FDNS	00NR	0	16WP	G15_048	FROM->TO	G14-057T 345.00 - SUNNYSIDE 345KV CKT 1	717	789	0.04965	115.3149	GEN337653 1-WHITE BLUFF UNIT #2
FDNS	00NR	0	20WP	G15_048	FROM->TO	G14-057T 345.00 - SUNNYSIDE 345KV CKT 1	717	789	0.0475	115.3146	BORDER 7345.00 - TUCO_2 345.00 345KV CKT 1
FDNS	00NR	0	16WP	G15_048	FROM->TO	G14-057T 345.00 - SUNNYSIDE 345KV CKT 1	717	789	0.04969	115.3081	P12:138:AEPW:CATOOSA4:T.S.E.-4
FDNS	00NR	0	16WP	G15_048	FROM->TO	G14-057T 345.00 - SUNNYSIDE 345KV CKT 1	717	789	0.04964	115.3065	P12:161:AEPW-SWPA:BEAVER5:EROGERS5
FDNS	00NR	0	16WP	G15_048	FROM->TO	G14-057T 345.00 - SUNNYSIDE 345KV CKT 1	717	789	0.04965	115.3	GEN300003 1-THOMAS HILL UNIT 3
FDNS	00NR	0	16WP	G15_048	FROM->TO	G14-057T 345.00 - SUNNYSIDE 345KV CKT 1	717	789	0.04969	115.2966	6LAYFLD 230.00 - CARROLL 230KV CKT 1
FDNS	00NR	0	16WP	G15_048	FROM->TO	G14-057T 345.00 - SUNNYSIDE 345KV CKT 1	717	789	0.04965	115.2935	GEN506752 1-LEBROCK GAS 1
FDNS	00NR	0	16WP	G15_048	FROM->TO	G14-057T 345.00 - SUNNYSIDE 345KV CKT 1	717	789	0.04965	115.2933	GEN506753 1-LEBROCK GAS 2
FDNS	00NR	0	16WP	G15_048	FROM->TO	G14-057T 345.00 - SUNNYSIDE 345KV CKT 1	717	789	0.04965	115.2879	GEN334030 1-FRONTIER UNIT 1
FDNS	00NR	0	16WP	G15_048	FROM->TO	G14-057T 345.00 - SUNNYSIDE 345KV CKT 1	717	789	0.04948	115.2871	TUTTLE - TUTTLE CONOCO TAP 138KV CKT 1
FDNS	00NR	0	16WP	G15_048	FROM->TO	G14-057T 345.00 - SUNNYSIDE 345KV CKT 1	717	789	0.04965	115.2864	GEN334031 1-FRONTIER UNIT 2
FDNS	00NR	0	20WP	G15_048	FROM->TO	G14-057T 345.00 - SUNNYSIDE 345KV CKT 1	717	789	0.05041	115.2754	NAPLESTP 138.00 - PAYNE 138.00 138KV CKT 1
FDNS	00NR	0	16WP	G15_048	FROM->TO	G14-057T 345.00 - SUNNYSIDE 345KV CKT 1	717	789	0.05102	115.2707	BAILEY4 138.00 - SUNSHINE CANYON 138KV CKT 1
FDNS	00NR	0	16WP	G15_048	FROM->TO	G14-057T 345.00 - SUNNYSIDE 345KV CKT 1	717	789	0.04965	115.2699	GEN515040 1-SEMINOLE 1G
FDNS	00NR	0	16WP	G15_048	FROM->TO	G14-057T 345.00 - SUNNYSIDE 345KV CKT 1	717	789	0.04187	115.2647	GRACEMONT - LAWTON EASTSIDE 345KV CKT 1
FDNS	00NR	0	16WP	G15_048	FROM->TO	G14-057T 345.00 - SUNNYSIDE 345KV CKT 1	717	789	0.04187	115.2647	GRACEMONT - LAWTON EASTSIDE 345KV CKT 1
FDNS	00NR	0	16WP	G15_048	FROM->TO	G14-057T 345.00 - SUNNYSIDE 345KV CKT 1	717	789	0.04968	115.2642	FULTON 115 - HOPE 115KV CKT 1
FDNS	00NR	0	16WP	G15_048	FROM->TO	G14-057T 345.00 - SUNNYSIDE 345KV CKT 1	717	789	0.04968	115.2642	FULTON 115 - HOPE 115KV CKT 1
FDNS	00NR	0	16WP	G15_048	FROM->TO	G14-057T 345.00 - SUNNYSIDE 345KV CKT 1	717	789	0.04967	115.249	8DANIEL8 500.00 - MCKNIGHT 500KV CKT 1
FDNS	00NR	0	16WP	G15_048	FROM->TO	G14-057T 345.00 - SUNNYSIDE 345KV CKT 1	717	789	0.05072	115.2478	LATTA JCT - OIL CENTER 138KV CKT 1
FDNS	00NR	0	16WP	G15_048	FROM->TO	G14-057T 345.00 - SUNNYSIDE 345KV CKT 1	717	789	0.04965	115.2473	GEN515226 1-MUSKOGEE 6G
FDNS	00NR	0	16WP	G15_048	FROM->TO	G14-057T 345.00 - SUNNYSIDE 345KV CKT 1	717	789	0.05003	115.2426	P12:138:AEPW-OGE:WTH_JCT4:JENSEN4
FDNS	00NR	0	16WP	G15_048	FROM->TO	G14-057T 345.00 - SUNNYSIDE 345KV CKT 1	717	789	0.04965	115.2333	GEN300015 1-1SGPDEL 18.000
FDNSLock	00NR	0	16WP	G15_048	FROM->TO	G14-057T 345.00 - SUNNYSIDE 345KV CKT 1	717	789	0.04965	115.2307	GEN337911 1-ARKANSAS NUCLEAR ONE UNIT #2
FDNS	00NR	0	16WP	G15_048	FROM->TO	G14-057T 345.00 - SUNNYSIDE 345KV CKT 1	717	789	0.04965	115.2299	P12:161:AEPW:DYESS5:ELMSPRNG:TONTITN5
FDNS	00NR	0	16WP	G15_048	FROM->TO	G14-057T 345.00 - SUNNYSIDE 345KV CKT 1	717	789	0.04965	115.2278	GEN337652 1-WHITE BLUFF UNIT #1

SOLUTION	GROUP	SCENARIO	SEASON	SOURCE	DIRECTION	MONITORED ELEMENT	RATEA (MVA)	RATEB(MVA)	TDF	TC%LOADING (% MVA)	CONTINGENCY
FDNS	00NR	0	16WP	G15_048	FROM->TO	G14-057T 345.00 - SUNNYSIDE 345KV CKT 1	717	789	0.04965	115.2235	GEN336251 1-NINEMILE POINT UNIT#4
FDNS	00NR	0	16WP	G15_048	FROM->TO	G14-057T 345.00 - SUNNYSIDE 345KV CKT 1	717	789	0.04989	115.2215	P12:138:AEPW:CORNVIL4:S.W.S.-4
FDNS	00NR	0	16WP	G15_048	FROM->TO	G14-057T 345.00 - SUNNYSIDE 345KV CKT 1	717	789	0.04965	115.2199	GEN501811 1-RODEMACHER UNIT 1
FDNS	00NR	0	16WP	G15_048	FROM->TO	G14-057T 345.00 - SUNNYSIDE 345KV CKT 1	717	789	0.04965	115.2185	GEN336831 1-BAXTER WILSON SES
FDNS	00NR	0	16WP	G15_048	FROM->TO	G14-057T 345.00 - SUNNYSIDE 345KV CKT 1	717	789	0.04975	115.2077	P12:138:AEPW:CORNVIL4:DUNCAN-4
FDNS	00NR	0	16WP	G15_048	FROM->TO	G14-057T 345.00 - SUNNYSIDE 345KV CKT 1	717	789	0.04981	115.2071	G15074_T 345.00 - HOYT 345KV CKT 1
FDNS	00NR	0	16WP	G15_048	FROM->TO	G14-057T 345.00 - SUNNYSIDE 345KV CKT 1	717	789	0.04948	115.206	CIMARRON - TUTTLE CONOCO TAP 138KV CKT 1
FDNS	00NR	0	20WP	G15_048	FROM->TO	G14-057T 345.00 - SUNNYSIDE 345KV CKT 1	717	789	0.04922	115.2011	GEN336821 1-GRAND GULF UNIT
FDNS	00NR	0	16WP	G15_048	FROM->TO	G14-057T 345.00 - SUNNYSIDE 345KV CKT 1	717	789	0.04974	115.2	G15088_T 345.00 - MOORE 345KV CKT 1
FDNS	00NR	0	16WP	G15_048	FROM->TO	G14-057T 345.00 - SUNNYSIDE 345KV CKT 1	717	789	0.04965	115.1975	GEN334433 1-SABINE UNIT 3
FDNS	00NR	0	16WP	G15_048	FROM->TO	G14-057T 345.00 - SUNNYSIDE 345KV CKT 1	717	789	0.04977	115.1706	P12:69:WFEC-AEPW:COMANCH2:DUNCAN-2
FDNS	00NR	0	16WP	G15_048	FROM->TO	G14-057T 345.00 - SUNNYSIDE 345KV CKT 1	717	789	0.04971	115.1663	BUCKNER7 345.00 - SPEARVILLE 345KV CKT 1
FDNS	00NR	0	16WP	G15_048	FROM->TO	G14-057T 345.00 - SUNNYSIDE 345KV CKT 1	717	789	0.04971	115.1663	BUCKNER7 345.00 - SPEARVILLE 345KV CKT 1
FDNS	00NR	0	16WP	G15_048	FROM->TO	G14-057T 345.00 - SUNNYSIDE 345KV CKT 1	717	789	0.04965	115.164	GEN562783 1-G15036_4 0.6900
FDNS	00NR	0	16WP	G15_048	FROM->TO	G14-057T 345.00 - SUNNYSIDE 345KV CKT 1	717	789	0.04965	115.164	GEN562784 1-G15036_5 0.6900
FDNSLock	00NR	0	16WP	G15_048	FROM->TO	G14-057T 345.00 - SUNNYSIDE 345KV CKT 1	717	789	0.04965	115.1601	GEN505432 1-SIKESTON
FDNS	00NR	0	16WP	G15_048	FROM->TO	G14-057T 345.00 - SUNNYSIDE 345KV CKT 1	717	789	0.05003	115.158	CIMARRON - CZECH HALL 138KV CKT 1
FDNS	00NR	0	16WP	G15_048	FROM->TO	G14-057T 345.00 - SUNNYSIDE 345KV CKT 1	717	789	0.04965	115.1483	GEN515223 1-MUSKOGEE 4G
FDNS	00NR	0	16WP	G15_048	FROM->TO	G14-057T 345.00 - SUNNYSIDE 345KV CKT 1	717	789	0.04965	115.1483	GEN515225 1-MUSKOGEE 5G
FDNS	00NR	0	16WP	G15_048	FROM->TO	G14-057T 345.00 - SUNNYSIDE 345KV CKT 1	717	789	0.04984	115.1473	P12:138:AEPW:WTHWF4:CLINTJC4
FDNS	00NR	0	16WP	G15_048	FROM->TO	G14-057T 345.00 - SUNNYSIDE 345KV CKT 1	717	789	0.05015	115.1258	CIMARRON - SARA 138KV CKT 1
FDNS	00NR	0	16WP	G15_048	FROM->TO	G14-057T 345.00 - SUNNYSIDE 345KV CKT 1	717	789	0.04965	115.1244	P12:161:AEPW:EROGERS5:ECNTRTN5
FDNS	00NR	0	16WP	G15_048	FROM->TO	G14-057T 345.00 - SUNNYSIDE 345KV CKT 1	717	789	0.04962	115.1205	LAYFLD8 500.00 - MOUNT OLIVE 500KV CKT 1
FDNS	00NR	0	16WP	G15_048	FROM->TO	G14-057T 345.00 - SUNNYSIDE 345KV CKT 1	717	789	0.04962	115.1205	LAYFLD8 500.00 - MOUNT OLIVE 500KV CKT 1
FDNS	00NR	0	16WP	G15_048	FROM->TO	G14-057T 345.00 - SUNNYSIDE 345KV CKT 1	717	789	0.04977	115.1191	DUNCAN - TOSCO 69KV CKT 1
FDNS	00NR	0	16WP	G15_048	FROM->TO	G14-057T 345.00 - SUNNYSIDE 345KV CKT 1	717	789	0.04965	115.1185	RODEMACHER 230/22.0KV TRANSFORMER CKT 1
FDNS	00NR	0	16WP	G15_048	FROM->TO	G14-057T 345.00 - SUNNYSIDE 345KV CKT 1	717	789	0.04965	115.118	WHITE BLUFF 500/26.0KV TRANSFORMER CKT 1
FDNS	00NR	0	16WP	G15_048	FROM->TO	G14-057T 345.00 - SUNNYSIDE 345KV CKT 1	717	789	0.04984	115.1125	P12:138:AEPW:WTHWF4:WTH_SE4
FDNS	00NR	0	16WP	G15_048	FROM->TO	G14-057T 345.00 - SUNNYSIDE 345KV CKT 1	717	789	0.04965	115.1104	MC NIEL 500/115KV TRANSFORMER CKT 1
FDNS	00NR	0	16WP	G15_048	FROM->TO	G14-057T 345.00 - SUNNYSIDE 345KV CKT 1	717	789	0.04691	115.1076	CANADIAN RIVER - PITTSBURG 345KV CKT 1
FDNS	00NR	0	16WP	G15_048	FROM->TO	G14-057T 345.00 - SUNNYSIDE 345KV CKT 1	717	789	0.04691	115.1076	CANADIAN RIVER - PITTSBURG 345KV CKT 1
FDNS	00NR	0	20WP	G15_048	FROM->TO	G14-057T 345.00 - SUNNYSIDE 345KV CKT 1	717	789	0.04995	115.1068	ANADARKO - POCASSETT 138KV CKT 1
FDNS	00NR	0	16WP	G15_048	FROM->TO	G14-057T 345.00 - SUNNYSIDE 345KV CKT 1	717	789	0.04966	115.1055	BISMARK - HOT SPRINGS WEST BUS 115KV CKT 1
FDNS	00NR	0	16WP	G15_048	FROM->TO	G14-057T 345.00 - SUNNYSIDE 345KV CKT 1	717	789	0.04965	115.1045	GEN303007 1-1BC2 U2
FDNS	00NR	0	16WP	G15_048	FROM->TO	G14-057T 345.00 - SUNNYSIDE 345KV CKT 1	717	789	0.05102	115.1009	BAILEY4 138.00 - WESTMOORE 138KV CKT 1
FDNS	00NR	0	16WP	G15_048	FROM->TO	G14-057T 345.00 - SUNNYSIDE 345KV CKT 1	717	789	0.04963	115.1003	HOT SPRINGS EHV - MAGNET COVE 500KV CKT 1
FDNS	00NR	0	16WP	G15_048	FROM->TO	G14-057T 345.00 - SUNNYSIDE 345KV CKT 1	717	789	0.04965	115.0992	GEN303006 1-1BC2 U1
FDNS	00NR	0	16WP	G15_048	FROM->TO	G14-057T 345.00 - SUNNYSIDE 345KV CKT 1	717	789	0.06677	115.0967	CLEO CORNER - CLEOPLT4 138.00 138KV CKT 1
FDNS	00NR	0	16WP	G15_048	FROM->TO	G14-057T 345.00 - SUNNYSIDE 345KV CKT 1	717	789	0.04914	115.0929	ARBWIND4 138.00 - CARTER 138KV CKT 1
FDNS	00NR	0	16WP	G15_048	FROM->TO	G14-057T 345.00 - SUNNYSIDE 345KV CKT 1	717	789	0.0497	115.0928	G15095_T 138.00 - ROSE_VALLEY 138.00 138KV CKT 1
FDNS	00NR	0	16WP	G15_048	FROM->TO	G14-057T 345.00 - SUNNYSIDE 345KV CKT 1	717	789	0.04964	115.0921	P12:69:AEPW-OMPA:COMANC-2:OMWALTR2
FDNS	00NR	0	20WP	G15_048	FROM->TO	G14-057T 345.00 - SUNNYSIDE 345KV CKT 1	717	789	0.04922	115.0919	GEN336153 1-WATERFORD UNIT#3
FDNS	00NR	0	16WP	G15_048	FROM->TO	G14-057T 345.00 - SUNNYSIDE 345KV CKT 1	717	789	0.04965	115.0853	GEN337910 1-ARKANSAS NUCLEAR ONE UNIT #1
FDNS	00NR	0	16WP	G15_048	FROM->TO	G14-057T 345.00 - SUNNYSIDE 345KV CKT 1	717	789	0.04895	115.0838	SEMINOLE - VANOSTP4 138.00 138KV CKT 1
FDNS	00NR	0	16WP	G15_048	FROM->TO	G14-057T 345.00 - SUNNYSIDE 345KV CKT 1	717	789	0.06677	115.0828	CLEOPLT4 138.00 - MEN TAP 138KV CKT 1
FDNS	00NR	0	16WP	G15_048	FROM->TO	G14-057T 345.00 - SUNNYSIDE 345KV CKT 1	717	789	0.04965	115.0797	GEN300010 1-ST FRANCIS UNIT 1
FDNS	00NR	0	16WP	G15_048	FROM->TO	G14-057T 345.00 - SUNNYSIDE 345KV CKT 1	717	789	0.04965	115.0766	GEN336191 1-LITTLE GYPSY UNIT#3
FDNS	00NR	0	16WP	G15_048	FROM->TO	G14-057T 345.00 - SUNNYSIDE 345KV CKT 1	717	789	0.06677	115.0709	IMO TAP - MEN TAP 138KV CKT 1
FDNS	00NR	0	16WP	G15_048	FROM->TO	G14-057T 345.00 - SUNNYSIDE 345KV CKT 1	717	789	0.05003	115.0701	CZECH HALL - XEROX 138KV CKT 1
FDNS	00NR	0	16WP	G15_048	FROM->TO	G14-057T 345.00 - SUNNYSIDE 345KV CKT 1	717	789	0.05003	115.0657	MORGAN - XEROX 138KV CKT 1
FDNS	00NR	0	16WP	G15_048	FROM->TO	G14-057T 345.00 - SUNNYSIDE 345KV CKT 1	717	789	0.04968	115.057	P12:138:AEPW:N.E.S.-4:CATOOSA4
FDNS	00NR	0	16WP	G15_048	FROM->TO	G14-057T 345.00 - SUNNYSIDE 345KV CKT 1	717	789	0.04965	115.0559	NELSON 230/20.0KV TRANSFORMER CKT 1
FDNS	00NR	0	16WP	G15_048	FROM->TO	G14-057T 345.00 - SUNNYSIDE 345KV CKT 1	717	789	0.04966	115.0529	ALPINE AECC - BISMARK 115KV CKT 1
FDNS	00NR	0	16WP	G15_048	FROM->TO	G14-057T 345.00 - SUNNYSIDE 345KV CKT 1	717	789	0.04965	115.0513	GEN335614 1-WILLOW GLENN UNIT#4
FDNS	00NR	0	16WP	G15_048	FROM->TO	G14-057T 345.00 - SUNNYSIDE 345KV CKT 1	717	789	0.04977	115.0494	COMANCHE TAP - TOSCO 69KV CKT 1
FDNS	00NR	0	16WP	G15_048	FROM->TO	G14-057T 345.00 - SUNNYSIDE 345KV CKT 1	717	789	0.05003	115.0419	MORGAN - MUSTANG 138KV CKT 1
FDNS	00NR	0	16WP	G15_048	FROM->TO	G14-057T 345.00 - SUNNYSIDE 345KV CKT 1	717	789	0.05035	115.0417	BENTON - WICHITA 345KV CKT 1
FDNS	00NR	0	16WP	G15_048	FROM->TO	G14-057T 345.00 - SUNNYSIDE 345KV CKT 1	717	789	0.04965	115.0396	GEN303008 1-1BC2 U3
FDNS	00NR	0	16WP	G15_048	FROM->TO	G14-057T 345.00 - SUNNYSIDE 345KV CKT 1	717	789	0.04965	115.03	GEN300011 1-ST FRANCIS UNIT 2
FDNS	00NR	0	16WP	G15_048	FROM->TO	G14-057T 345.00 - SUNNYSIDE 345KV CKT 1	717	789	0.0497	115.0247	NOEL_SW 138.00 - ROSE_VALLEY 138.00 138KV CKT 1
FDNS	00NR	0	16WP	G15_048	FROM->TO	G14-057T 345.00 - SUNNYSIDE 345KV CKT 1	717	789	0.04965	115.0126	GEN336170 1-GULF OXY U4
FDNS	00NR	0	16WP	G15_048	FROM->TO	G14-057T 345.00 - SUNNYSIDE 345KV CKT 1	717	789	0.04997	115.0103	WEATHERFORD JCT. - WEATHERFORD SOUTHEAST 138KV CKT 1
FDNS	00NR	0	16WP	G15_048	FROM->TO	G14-057T 345.00 - SUNNYSIDE 345KV CKT 1	717	789	0.04997	115.0103	WEATHERFORD JCT. - WEATHERFORD SOUTHEAST 138KV CKT 1
FDNS	00NR	0	16WP	G15_048	FROM->TO	G14-057T 345.00 - SUNNYSIDE 345KV CKT 1	717	789	0.04965	115.0093	CYPRESS - HARTBURG 500KV CKT 1
FDNS	00NR	0	16WP	G15_048	FROM->TO	G14-057T 345.00 - SUNNYSIDE 345KV CKT 1	717	789	0.04966	115.0092	ALPINE AECC - AMITY SS 115KV CKT 1
FDNS	00NR	0	16WP	G15_048	FROM->TO	G14-057T 345.00 - SUNNYSIDE 345KV CKT 1	717	789	0.04965	115.0076	GEN336464 1-MICHOUD UNIT #3
FDNS	00NR	0	20WP	G15_048	FROM->TO	G14-057T 345.00 - SUNNYSIDE 345KV CKT 1	717	789	0.05158	115.0036	CLEVELAND - TULSA NORTH 345KV CKT 1
FDNS	00NR	0	20WP	G15_048	FROM->TO	G14-057T 345.00 - SUNNYSIDE 345KV CKT 1	717	789	0.05158	115.0036	CLEVELAND - TULSA NORTH 345KV CKT 1
FDNS	00NR	0	16WP	G15_048	FROM->TO	G14-057T 345.00 - SUNNYSIDE 345KV CKT 1	717	789	0.04981	114.998	HOYT - STRANGER CREEK 345KV CKT 1
FDNS	00NR	0	16WP	G15_048	FROM->TO	G14-057T 345.00 - SUNNYSIDE 345KV CKT 1	717	789	0.04834	114.9964	CHISHOLM6 230.00 - ELK CITY 230KV 230KV CKT 1
FDNS	00NR	0	20WP	G15_048	FROM->TO	G14-057T 345.00 - SUNNYSIDE 345KV CKT 1	717	789	0.05023	114.9957	COMANCHE - LOCO 138KV CKT 1
FDNS	00NR	0	16WP	G15_048	FROM->TO	G14-057T 345.00 - SUNNYSIDE 345KV CKT 1	717	789	0.04977	114.9952	COMANCHE - COMANCHE TAP 69KV CKT 1
FDNS	00NR	0	16WP	G15_048	FROM->TO	G14-057T 345.00 - SUNNYSIDE 345KV CKT 1	717	789	0.04834	114.9949	ELK CITY 230KV (ELKCTY-6) 230/138/13.8KV TRANSFORMER CKT 1
FDNS	00NR	0	16WP	G15_048	FROM->TO	G14-057T 345.00 - SUNNYSIDE 345KV CKT 1	717	789	0.04834	114.9949	ELK CITY 230KV (ELKCTY-6) 230/138/13.8KV TRANSFORMER CKT 1
FDNS	00NR	0	16WP	G15_048	FROM->TO	G14-057T 345.00 - SUNNYSIDE 345KV CKT 1	717	789	0.04965	114.9914	GEN300016 1-1G1GPDEL 18.000
FDNS	00NR	0	16WP	G15_048	FROM->TO	G14-057T 345.00 - SUNNYSIDE 345KV CKT 1	717	789	0.04965	114.9913	8CAJUN2 500/24.0KV TRANSFORMER CKT 1
FDNS	00NR	0	20WP	G15_048	FROM->TO	G14-057T 345.00 - SUNNYSIDE 345KV CKT 1	717	789	0.0416	114.9873	GRACEMONT - LAWTON EASTSIDE 345KV CKT 1
FDNS	00NR	0	20WP	G15_048	FROM->TO	G14-057T 345.00 - SUNNYSIDE 345KV CKT 1	717	789	0.0416	114.9873	GRACEMONT - LAWTON EASTSIDE 345KV CKT 1
FDNS	00NR	0	16WP	G15_048	FROM->TO	G14-057T 345.00 - SUNNYSIDE 345KV CKT 1	717	789	0.05043	114.9818	P12:138:OKGE-AEPW:JENSEN4:REDROCKRD4

SOLUTION	GROUP	SCENARIO	SEASON	SOURCE	DIRECTION	MONITORED ELEMENT	RATEA (MVA)	RATEB(MVA)	TDF	TC%LOADING (% MVA)	CONTINGENCY
FDNS	00NR	0	16WP	G15_048	FROM->TO	G14-057T 345.00 - SUNNYSIDE 345KV CKT 1	717	789	0.04965	114.9768	GEN337041 1-GERALD ANDRUS
FDNS	00NR	0	16WP	G15_048	FROM->TO	G14-057T 345.00 - SUNNYSIDE 345KV CKT 1	717	789	0.05115	114.9721	CANADIAN - NOBLE 138KV CKT 1
FDNS	00NR	0	16WP	G15_048	FROM->TO	G14-057T 345.00 - SUNNYSIDE 345KV CKT 1	717	789	0.04965	114.9655	GEN501910 1-ACADIA UNIT ST1
FDNS	00NR	0	16WP	G15_048	FROM->TO	G14-057T 345.00 - SUNNYSIDE 345KV CKT 1	717	789	0.04965	114.9604	P12:138:AEPW:R.S.S.-4:S.HUD.-4
FDNS	00NR	0	16WP	G15_048	FROM->TO	G14-057T 345.00 - SUNNYSIDE 345KV CKT 1	717	789	0.05072	114.9568	LASALLE - LATTA JCT 138KV CKT 1
FDNS	00NR	0	16WP	G15_048	FROM->TO	G14-057T 345.00 - SUNNYSIDE 345KV CKT 1	717	789	0.04997	114.9568	P12:138:AEPW:REDROCKRD4:WTH_JCT4
FDNS	00NR	0	16WP	G15_048	FROM->TO	G14-057T 345.00 - SUNNYSIDE 345KV CKT 1	717	789	0.04971	114.9566	7JASPER 345.00 - BLACKBERRY 345KV CKT 1
FDNS	00NR	0	16WP	G15_048	FROM->TO	G14-057T 345.00 - SUNNYSIDE 345KV CKT 1	717	789	0.04981	114.955	WALTERS - WALTERS 69KV CKT 1
FDNS	00NR	0	16WP	G15_048	FROM->TO	G14-057T 345.00 - SUNNYSIDE 345KV CKT 1	717	789	0.05115	114.9539	P12:138:OKGE:3TERM27
FDNS	00NR	0	20WP	G15_048	FROM->TO	G14-057T 345.00 - SUNNYSIDE 345KV CKT 1	717	789	0.04995	114.9532	POCASSETT - TUTTLE 138KV CKT 1
FDNS	00NR	0	16WP	G15_048	FROM->TO	G14-057T 345.00 - SUNNYSIDE 345KV CKT 1	717	789	0.04981	114.9521	G15074_T 345.00 - JEFFREY ENERGY CENTER 345KV CKT 1
FDNS	00NR	0	16WP	G15_048	FROM->TO	G14-057T 345.00 - SUNNYSIDE 345KV CKT 1	717	789	0.04998	114.9482	BLACKBERRY - NEOSHO 345KV CKT 1
FDNS	00NR	0	16WP	G15_048	FROM->TO	G14-057T 345.00 - SUNNYSIDE 345KV CKT 1	717	789	0.04987	114.9468	SWISSVALE - WEST GARDNER 345KV CKT 1
FDNS	00NR	0	16WP	G15_048	FROM->TO	G14-057T 345.00 - SUNNYSIDE 345KV CKT 1	717	789	0.04991	114.9464	NORGE ROAD - SOUTHWESTERN STATION 138KV CKT 1
FDNS	00NR	0	16WP	G15_048	FROM->TO	G14-057T 345.00 - SUNNYSIDE 345KV CKT 1	717	789	0.04991	114.9464	NORGE ROAD - SOUTHWESTERN STATION 138KV CKT 1
FDNS	00NR	0	16WP	G15_048	FROM->TO	G14-057T 345.00 - SUNNYSIDE 345KV CKT 1	717	789	0.05102	114.9431	FRANKLIN SW - WESTMOORE 138KV CKT 1
FDNS	00NR	0	16WP	G15_048	FROM->TO	G14-057T 345.00 - SUNNYSIDE 345KV CKT 1	717	789	0.05205	114.9374	DRAPER LAKE - SEMINOLE 345KV CKT 2
FDNS	00NR	0	16WP	G15_048	FROM->TO	G14-057T 345.00 - SUNNYSIDE 345KV CKT 1	717	789	0.05205	114.9373	DRAPER LAKE - SEMINOLE 345KV CKT 1
FDNS	00NR	0	20WP	G15_048	FROM->TO	G14-057T 345.00 - SUNNYSIDE 345KV CKT 1	717	789	0.04928	114.9356	DOLET HILLS - SOUTHWEST SHREVEPORT 345KV CKT 1
FDNS	00NR	0	20WP	G15_048	FROM->TO	G14-057T 345.00 - SUNNYSIDE 345KV CKT 1	717	789	0.04928	114.9356	DOLET HILLS - SOUTHWEST SHREVEPORT 345KV CKT 1
FDNS	00NR	0	16WP	G15_048	FROM->TO	G14-057T 345.00 - SUNNYSIDE 345KV CKT 1	717	789	0.05015	114.933	SARA - STHLAKE4 138.00 138KV CKT 1
FDNS	00NR	0	16WP	G15_048	FROM->TO	G14-057T 345.00 - SUNNYSIDE 345KV CKT 1	717	789	0.04924	114.9289	G14_038T 345.00 - Hitchland Interchange 345KV CKT 1
FDNS	00NR	0	16WP	G15_048	FROM->TO	G14-057T 345.00 - SUNNYSIDE 345KV CKT 1	717	789	0.04961	114.9274	ETTA (DUKE HOTSPRINGS) - MC NIEL 500KV CKT 1
FDNS	00NR	0	16WP	G15_048	FROM->TO	G14-057T 345.00 - SUNNYSIDE 345KV CKT 1	717	789	0.04965	114.9218	P12:138:AEPW:YARCH-S4:T.S.E.-4
FDNS	00NR	0	16WP	G15_048	FROM->TO	G14-057T 345.00 - SUNNYSIDE 345KV CKT 1	717	789	0.04964	114.9213	LAWTON RELIFT TAP - OMPA-WALTERS 69KV CKT 1
FDNS	00NR	0	16WP	G15_048	FROM->TO	G14-057T 345.00 - SUNNYSIDE 345KV CKT 1	717	789	0.04965	114.9181	SABINE 230/24.0KV TRANSFORMER CKT 1
FDNS	00NR	0	16WP	G15_048	FROM->TO	G14-057T 345.00 - SUNNYSIDE 345KV CKT 1	717	789	0.04965	114.9164	ESSEX UNIT 2 500/18.0KV TRANSFORMER CKT 1
FDNS	00NR	0	16WP	G15_048	FROM->TO	G14-057T 345.00 - SUNNYSIDE 345KV CKT 1	717	789	0.04965	114.9157	P12:69:AEPW:NROGERS2:ECNTRTN2
FDNS	00NR	0	16WP	G15_048	FROM->TO	G14-057T 345.00 - SUNNYSIDE 345KV CKT 1	717	789	0.04965	114.9156	P12:138:AEPW:BA_71ST4:T.S.E.-4
FDNS	00NR	0	16WP	G15_048	FROM->TO	G14-057T 345.00 - SUNNYSIDE 345KV CKT 1	717	789	0.04965	114.9151	GEN336801 1-BAXTER WILSON UNIT #1
FDNS	00NR	0	16WP	G15_048	FROM->TO	G14-057T 345.00 - SUNNYSIDE 345KV CKT 1	717	789	0.05005	114.9126	EMPORIA ENERGY CENTER - G14_001T 345.00 345KV CKT 1
FDNS	00NR	0	16WP	G15_048	FROM->TO	G14-057T 345.00 - SUNNYSIDE 345KV CKT 1	717	789	0.04974	114.9076	7LUTESVIL 345.00 - 7ST FRANC 345.00 345KV CKT 1
FDNS	00NR	0	16WP	G15_048	FROM->TO	G14-057T 345.00 - SUNNYSIDE 345KV CKT 1	717	789	0.05015	114.9039	MCCLAIN - STHLAKE4 138.00 138KV CKT 1
FDNS	00NR	0	16WP	G15_048	FROM->TO	G14-057T 345.00 - SUNNYSIDE 345KV CKT 1	717	789	0.04965	114.8963	FRONTIER 345/18.0KV TRANSFORMER CKT 1
FDNS	00NR	0	16WP	G15_048	FROM->TO	G14-057T 345.00 - SUNNYSIDE 345KV CKT 1	717	789	0.04968	114.8959	HOPE - MCNAB REC 115KV CKT 1
FDNS	00NR	0	16WP	G15_048	FROM->TO	G14-057T 345.00 - SUNNYSIDE 345KV CKT 1	717	789	0.04965	114.8947	FRONTIER 345/18.0KV TRANSFORMER CKT 1
FDNS	00NR	0	16WP	G15_048	FROM->TO	G14-057T 345.00 - SUNNYSIDE 345KV CKT 1	717	789	0.05021	114.888	P12:138:AEPW-OGE:SHIDLER4:OSAGE 4
FDNS	00NR	0	16WP	G15_048	FROM->TO	G14-057T 345.00 - SUNNYSIDE 345KV CKT 1	717	789	0.04968	114.887	P12:115:AEPW:TURK3:HOPE3
FDNS	00NR	0	16WP	G15_048	FROM->TO	G14-057T 345.00 - SUNNYSIDE 345KV CKT 1	717	789	0.04965	114.8839	P12:161:AEPW:CHAMSPR5:FARMING5
FDNS	00NR	0	16WP	G15_048	FROM->TO	G14-057T 345.00 - SUNNYSIDE 345KV CKT 1	717	789	0.04989	114.8809	SOUTHWESTERN STATION - VERDEN 138KV CKT 1
FDNS	00NR	0	16WP	G15_048	FROM->TO	G14-057T 345.00 - SUNNYSIDE 345KV CKT 1	717	789	0.05115	114.8807	NOBLE - PURCELL4 138.00 138KV CKT 1
FDNS	00NR	0	16WP	G15_048	FROM->TO	G14-057T 345.00 - SUNNYSIDE 345KV CKT 1	717	789	0.04997	114.8796	HINTON - WEATHERFORD JCT. 138KV CKT 1
FDNS	00NR	0	16WP	G15_048	FROM->TO	G14-057T 345.00 - SUNNYSIDE 345KV CKT 1	717	789	0.04956	114.8773	ENOWILT - LONE OAK 138KV CKT 1
FDNS	00NR	0	16WP	G15_048	FROM->TO	G14-057T 345.00 - SUNNYSIDE 345KV CKT 1	717	789	0.04992	114.8748	ANADARKO - SEQUOYAHJ4 138.00 138KV CKT 1
FDNS	00NR	0	16WP	G15_048	FROM->TO	G14-057T 345.00 - SUNNYSIDE 345KV CKT 1	717	789	0.04992	114.8744	CORN TAP - SEQUOYAHJ4 138.00 138KV CKT 1
FDNS	00NR	0	16WP	G15_048	FROM->TO	G14-057T 345.00 - SUNNYSIDE 345KV CKT 1	717	789	0.04859	114.8724	ARBUCKLE - VANOSTP4 138.00 138KV CKT 1
FDNS	00NR	0	16WP	G15_048	FROM->TO	G14-057T 345.00 - SUNNYSIDE 345KV CKT 1	717	789	0.04984	114.872	WEATHERFORD TAP - WEATHERFORD WIND FARM 138KV CKT 1
FDNS	00NR	0	16WP	G15_048	FROM->TO	G14-057T 345.00 - SUNNYSIDE 345KV CKT 1	717	789	0.04976	114.8684	8WNEWMADRID 500.00 - DELL 500 500KV CKT 1
FDNS	00NR	0	16WP	G15_048	FROM->TO	G14-057T 345.00 - SUNNYSIDE 345KV CKT 1	717	789	0.04956	114.8684	ENOWILT - SARDIS 138KV CKT 1
FDNS	00NR	0	16WP	G15_048	FROM->TO	G14-057T 345.00 - SUNNYSIDE 345KV CKT 1	717	789	0.04965	114.8662	GEN505616 1-BROKEN BOW
FDNS	00NR	0	16WP	G15_048	FROM->TO	G14-057T 345.00 - SUNNYSIDE 345KV CKT 1	717	789	0.05017	114.8654	CLINTON JUNCTION - ELK CITY 138KV CKT 1
FDNS	00NR	0	16WP	G15_048	FROM->TO	G14-057T 345.00 - SUNNYSIDE 345KV CKT 1	717	789	0.05017	114.8654	CLINTON JUNCTION - ELK CITY 138KV CKT 1
FDNS	00NR	0	16WP	G15_048	FROM->TO	G14-057T 345.00 - SUNNYSIDE 345KV CKT 1	717	789	0.04968	114.8645	MCNAB REC - Turk 115 115KV CKT 1
FDNS	00NR	0	16WP	G15_048	FROM->TO	G14-057T 345.00 - SUNNYSIDE 345KV CKT 1	717	789	0.04968	114.8645	TURK (TURK 1) 138/115/13.2KV TRANSFORMER CKT 1
FDNS	00NR	0	16WP	G15_048	FROM->TO	G14-057T 345.00 - SUNNYSIDE 345KV CKT 1	717	789	0.04968	114.8645	TURK (TURK 1) 138/115/13.2KV TRANSFORMER CKT 1
FDNS	00NR	0	16WP	G15_048	FROM->TO	G14-057T 345.00 - SUNNYSIDE 345KV CKT 1	717	789	0.04989	114.86	NORTH 29TH CHICKASHA - VERDEN 138KV CKT 1
FDNS	00NR	0	16WP	G15_048	FROM->TO	G14-057T 345.00 - SUNNYSIDE 345KV CKT 1	717	789	0.05005	114.8591	G14_001T 345.00 - WICHITA 345KV CKT 1
FDNS	00NR	0	16WP	G15_048	FROM->TO	G14-057T 345.00 - SUNNYSIDE 345KV CKT 1	717	789	0.04965	114.8585	LEWIS CREEK SWITCHYARD 138/22.0KV TRANSFORMER CKT 1
FDNS	00NR	0	16WP	G15_048	FROM->TO	G14-057T 345.00 - SUNNYSIDE 345KV CKT 1	717	789	0.04997	114.8545	G13-010T 345.00 - POST ROCK 345KV CKT 1
FDNS	00NR	0	16WP	G15_048	FROM->TO	G14-057T 345.00 - SUNNYSIDE 345KV CKT 1	717	789	0.04964	114.8545	OMPA-WALTERS - WALTERS 69KV CKT 1
FDNS	00NR	0	16WP	G15_048	FROM->TO	G14-057T 345.00 - SUNNYSIDE 345KV CKT 1	717	789	0.04964	114.8545	OMPA-WALTERS - WALTERS 69KV CKT 1
FDNS	00NR	0	16WP	G15_048	FROM->TO	G14-057T 345.00 - SUNNYSIDE 345KV CKT 1	717	789	0.04967	114.8539	COUCH SES - MC NIEL 115KV CKT 1
FDNS	00NR	0	16WP	G15_048	FROM->TO	G14-057T 345.00 - SUNNYSIDE 345KV CKT 1	717	789	0.04965	114.8536	LEWIS CREEK SWITCHYARD 138/22.0KV TRANSFORMER CKT 1
FDNS	00NR	0	16WP	G15_048	FROM->TO	G14-057T 345.00 - SUNNYSIDE 345KV CKT 1	717	789	0.04984	114.8433	EMPORIA ENERGY CENTER - SWISSVALE 345KV CKT 1
FDNS	00NR	0	16WP	G15_048	FROM->TO	G14-057T 345.00 - SUNNYSIDE 345KV CKT 1	717	789	0.04981	114.8397	P12:69:WFEC-AEPW:COMANCH2:WALTRS-2
FDNS	00NR	0	16WP	G15_048	FROM->TO	G14-057T 345.00 - SUNNYSIDE 345KV CKT 1	717	789	0.04965	114.8396	GEN501970 1-EVANGELINE UNIT 7
FDNS	00NR	0	16WP	G15_048	FROM->TO	G14-057T 345.00 - SUNNYSIDE 345KV CKT 1	717	789	0.05013	114.835	MORISNT4 138.00 - STILLWATER 138KV CKT 1
FDNS	00NR	0	16WP	G15_048	FROM->TO	G14-057T 345.00 - SUNNYSIDE 345KV CKT 1	717	789	0.04956	114.8336	CLAYTON - SARDIS 138KV CKT 1
FDNS	00NR	0	16WP	G15_048	FROM->TO	G14-057T 345.00 - SUNNYSIDE 345KV CKT 1	717	789	0.05021	114.8296	P12:138:OKGE:3TERM2
FDNS	00NR	0	16WP	G15_048	FROM->TO	G14-057T 345.00 - SUNNYSIDE 345KV CKT 1	717	789	0.04997	114.8285	HINTON - REDROCKRD4 138.00 138KV CKT 1
FDNS	00NR	0	16WP	G15_048	FROM->TO	G14-057T 345.00 - SUNNYSIDE 345KV CKT 1	717	789	0.04965	114.8271	GEN334392 1-EXXON MOBIL IPP 1
FDNS	00NR	0	16WP	G15_048	FROM->TO	G14-057T 345.00 - SUNNYSIDE 345KV CKT 1	717	789	0.04991	114.826	CORNVILLE - NORGE ROAD 138KV CKT 1
FDNS	00NR	0	16WP	G15_048	FROM->TO	G14-057T 345.00 - SUNNYSIDE 345KV CKT 1	717	789	0.04991	114.826	CORNVILLE - NORGE ROAD 138KV CKT 1
FDNS	00NR	0	16WP	G15_048	FROM->TO	G14-057T 345.00 - SUNNYSIDE 345KV CKT 1	717	789	0.05072	114.822	LASALLE - STONEWAL LH138.00 138KV CKT 1
FDNS	00NR	0	16WP	G15_048	FROM->TO	G14-057T 345.00 - SUNNYSIDE 345KV CKT 1	717	789	0.04965	114.8203	GEN334393 1-EXXON MOBIL IPP 2
FDNS	00NR	0	16WP	G15_048	FROM->TO	G14-057T 345.00 - SUNNYSIDE 345KV CKT 1	717	789	0.04965	114.8203	GEN334394 1-EXXON MOBIL IPP 3
FDNS	00NR	0	16WP	G15_048	FROM->TO	G14-057T 345.00 - SUNNYSIDE 345KV CKT 1	717	789	0.04967	114.8155	P12:138:OKGE:3TERM12
FDNS	00NR	0	16WP	G15_048	FROM->TO	G14-057T 345.00 - SUNNYSIDE 345KV CKT 1	717	789	0.04965	114.812	GEN336222 1-LITTLE GYPSY UNIT#2
FDNS	00NR	0	16WP	G15_048	FROM->TO	G14-057T 345.00 - SUNNYSIDE 345KV CKT 1	717	789	0.05072	114.807	STONEWAL LH138.00 - TUPELO TAP 138KV CKT 1

SOLUTION	GROUP	SCENARIO	SEASON	SOURCE	DIRECTION	MONITORED ELEMENT	RATEA (MVA)	RATEB(MVA)	TDF	TC%LOADING (% MVA)	CONTINGENCY
FDNS	00NR	0	16WP	G15_048	FROM->TO	G14-057T 345.00 - SUNNYSIDE 345KV CKT 1	717	789	0.04956	114.8059	P12:138:AEPW-SWPA:LONEOAK4:BRKNBW4
FDNS	00NR	0	16WP	G15_048	FROM->TO	G14-057T 345.00 - SUNNYSIDE 345KV CKT 1	717	789	0.04973	114.803	FLETCHER - MARLOW JCT 69KV CKT 1
FDNS	00NR	0	20WP	G15_048	FROM->TO	G14-057T 345.00 - SUNNYSIDE 345KV CKT 1	717	789	0.04922	114.7966	GEN335831 1-RIVERBEND UNIT#1
FDNS	00NR	0	16WP	G15_048	FROM->TO	G14-057T 345.00 - SUNNYSIDE 345KV CKT 1	717	789	0.04974	114.7955	7JASPER 345.00 - MORGAN 345KV CKT 1
FDNS	00NR	0	16WP	G15_048	FROM->TO	G14-057T 345.00 - SUNNYSIDE 345KV CKT 1	717	789	0.04966	114.7941	P12:138:AEPW:R.S.S-4:T.P.S.-4
FDNS	00NR	0	16WP	G15_048	FROM->TO	G14-057T 345.00 - SUNNYSIDE 345KV CKT 1	717	789	0.04965	114.7937	GEN506749 1-EASTMAN GENERATION A
FDNS	00NR	0	16WP	G15_048	FROM->TO	G14-057T 345.00 - SUNNYSIDE 345KV CKT 1	717	789	0.04956	114.792	CLAYTON - NASHOBA 138KV CKT 1
FDNS	00NR	0	16WP	G15_048	FROM->TO	G14-057T 345.00 - SUNNYSIDE 345KV CKT 1	717	789	0.05106	114.7904	CLARKSVILLE - ONETA 345KV CKT 1
FDNS	00NR	0	16WP	G15_048	FROM->TO	G14-057T 345.00 - SUNNYSIDE 345KV CKT 1	717	789	0.05106	114.7904	CLARKSVILLE - ONETA 345KV CKT 1
FDNS	00NR	0	16WP	G15_048	FROM->TO	G14-057T 345.00 - SUNNYSIDE 345KV CKT 1	717	789	0.04989	114.7904	CORNVILLE - NORTH 29TH CHICKASHA 138KV CKT 1
FDNS	00NR	0	16WP	G15_048	FROM->TO	G14-057T 345.00 - SUNNYSIDE 345KV CKT 1	717	789	0.04965	114.7901	GEN334431 1-SABINE UNIT 1
FDNS	00NR	0	16WP	G15_048	FROM->TO	G14-057T 345.00 - SUNNYSIDE 345KV CKT 1	717	789	0.04965	114.79	GEN334432 1-SABINE UNIT 2
FDNS	00NR	0	16WP	G15_048	FROM->TO	G14-057T 345.00 - SUNNYSIDE 345KV CKT 1	717	789	0.04975	114.785	FRANKLIN - FRANKLIN SW 138KV CKT 1
FDNS	00NR	0	16WP	G15_048	FROM->TO	G14-057T 345.00 - SUNNYSIDE 345KV CKT 1	717	789	0.04984	114.7845	WEATHERFORD SOUTHEAST - WEATHERFORD TAP 138KV CKT 1
FDNS	00NR	0	16WP	G15_048	FROM->TO	G14-057T 345.00 - SUNNYSIDE 345KV CKT 1	717	789	0.04965	114.7829	GEN501972 1-EVANGELINE UNIT 7-2
FDNS	00NR	0	16WP	G15_048	FROM->TO	G14-057T 345.00 - SUNNYSIDE 345KV CKT 1	717	789	0.04965	114.7828	GEN501971 1-EVANGELINE UNIT 7-1
FDNS	00NR	0	16WP	G15_048	FROM->TO	G14-057T 345.00 - SUNNYSIDE 345KV CKT 1	717	789	0.04965	114.7826	GEN336152 1-WATERFORD UNIT#2
FDNS	00NR	0	16WP	G15_048	FROM->TO	G14-057T 345.00 - SUNNYSIDE 345KV CKT 1	717	789	0.04965	114.7815	GEN336151 1-WATERFORD UNIT#1
FDNS	00NR	0	16WP	G15_048	FROM->TO	G14-057T 345.00 - SUNNYSIDE 345KV CKT 1	717	789	0.04956	114.779	BETHEL - NASHOBA 138KV CKT 1
FDNS	00NR	0	16WP	G15_048	FROM->TO	G14-057T 345.00 - SUNNYSIDE 345KV CKT 1	717	789	0.04965	114.7698	P12:138:AEPW:R.S.S.-4:R:96YALE-4
FDNS	00NR	0	20WP	G15_048	FROM->TO	G14-057T 345.00 - SUNNYSIDE 345KV CKT 1	717	789	0.0578	114.7697	ARCADIA - NORTHWEST 345KV CKT 1
FDNS	00NR	0	20WP	G15_048	FROM->TO	G14-057T 345.00 - SUNNYSIDE 345KV CKT 1	717	789	0.04922	114.7537	GRAND GULF 500/22.0KV TRANSFORMER CKT 1
FDNS	00NR	0	16WP	G15_048	FROM->TO	G14-057T 345.00 - SUNNYSIDE 345KV CKT 1	717	789	0.05099	114.7505	MARIETTA - MARIETTA4 138.00 138KV CKT 1
FDNS	00NR	0	16WP	G15_048	FROM->TO	G14-057T 345.00 - SUNNYSIDE 345KV CKT 1	717	789	0.05043	114.7347	Canadian Pump Station - REDROCKRD4 138.00 138KV CKT 1
FDNS	00NR	0	16WP	G15_048	FROM->TO	G14-057T 345.00 - SUNNYSIDE 345KV CKT 1	717	789	0.04984	114.73	CLINTON JUNCTION - CLINTON NATURAL GAS TAP 138KV CKT 1
FDNS	00NR	0	16WP	G15_048	FROM->TO	G14-057T 345.00 - SUNNYSIDE 345KV CKT 1	717	789	0.05016	114.7223	P12:138:OKGE:3TERM47
FDNS	00NR	0	16WP	G15_048	FROM->TO	G14-057T 345.00 - SUNNYSIDE 345KV CKT 1	717	789	0.05015	114.7209	CIMARRON - NORTHWEST 345KV CKT 1
FDNS	00NR	0	16WP	G15_048	FROM->TO	G14-057T 345.00 - SUNNYSIDE 345KV CKT 1	717	789	0.04986	114.7076	HAMMETT TAP - HORSESHOE LAKE 138KV CKT 1
FDNS	00NR	0	20WP	G15_048	FROM->TO	G14-057T 345.00 - SUNNYSIDE 345KV CKT 1	717	789	0.04926	114.7044	7SAREPTA% 345.00 - ELDORADO EHV 345KV CKT 1
FDNS	00NR	0	20WP	G15_048	FROM->TO	G14-057T 345.00 - SUNNYSIDE 345KV CKT 1	717	789	0.04926	114.7042	3TR3AR8EL7EL
FDNS	00NR	0	20WP	G15_048	FROM->TO	G14-057T 345.00 - SUNNYSIDE 345KV CKT 1	717	789	0.04926	114.6934	ELDORADO EHV 500/345KV TRANSFORMER CKT 1
FDNS	00NR	0	20WP	G15_048	FROM->TO	G14-057T 345.00 - SUNNYSIDE 345KV CKT 1	717	789	0.04951	114.6786	P12:138:AEPW:DUNCAN-4:L.E.S.-4
FDNS	00NR	0	16WP	G15_048	FROM->TO	G14-057T 345.00 - SUNNYSIDE 345KV CKT 1	717	789	0.04981	114.6677	COMANCHE - WALTERS 69KV CKT 1
FDNS	00NR	0	20WP	G15_048	FROM->TO	G14-057T 345.00 - SUNNYSIDE 345KV CKT 1	717	789	0.04922	114.608	GEN515577 1-ARBWND11 0.6900
FDNS	00NR	0	20WP	G15_048	FROM->TO	G14-057T 345.00 - SUNNYSIDE 345KV CKT 1	717	789	0.05083	114.5615	MATHWSN7 345.00 - TATONGA7 345.00 345KV CKT 1
FDNS	00NR	0	20WP	G15_048	FROM->TO	G14-057T 345.00 - SUNNYSIDE 345KV CKT 1	717	789	0.04952	114.5571	COMANCHE TAP - OMPA-DUNCAN 840 138KV CKT 1
FDNS	00NR	0	20WP	G15_048	FROM->TO	G14-057T 345.00 - SUNNYSIDE 345KV CKT 1	717	789	0.04995	114.5549	BRIDGECR 138.00 - TUTTLE 138KV CKT 1
FDNS	00NR	0	20WP	G15_048	FROM->TO	G14-057T 345.00 - SUNNYSIDE 345KV CKT 1	717	789	0.04601	114.5467	CANADIAN RIVER - MUSKOGEE 345KV CKT 1
FDNS	00NR	0	20WP	G15_048	FROM->TO	G14-057T 345.00 - SUNNYSIDE 345KV CKT 1	717	789	0.04922	114.4684	GEN509409 1-WILKES #3
FDNS	00NR	0	20WP	G15_048	FROM->TO	G14-057T 345.00 - SUNNYSIDE 345KV CKT 1	717	789	0.05034	114.4388	Hitchland Interchange - WALKTAP7 345.00 345KV CKT 1
FDNS	00NR	0	20WP	G15_048	FROM->TO	G14-057T 345.00 - SUNNYSIDE 345KV CKT 1	717	789	0.05034	114.4388	Hitchland Interchange - WALKTAP7 345.00 345KV CKT 1
FDNS	00NR	0	20WP	G15_048	FROM->TO	G14-057T 345.00 - SUNNYSIDE 345KV CKT 1	717	789	0.05056	114.4317	HEALDTON - LOCO 138KV CKT 1
FDNS	00NR	0	20WP	G15_048	FROM->TO	G14-057T 345.00 - SUNNYSIDE 345KV CKT 1	717	789	0.0511	114.4268	ARCADIA - SEMINOLE 345KV CKT 1
FDNS	00NR	0	20WP	G15_048	FROM->TO	G14-057T 345.00 - SUNNYSIDE 345KV CKT 1	717	789	0.05034	114.4189	P12:345:SPS:J07.1.FINN.HITCH
FDNS	00NR	0	20WP	G15_048	FROM->TO	G14-057T 345.00 - SUNNYSIDE 345KV CKT 1	717	789	0.04922	114.4089	GEN501813 1-RODEMACHER UNIT 3
FDNS	00NR	0	20WP	G15_048	FROM->TO	G14-057T 345.00 - SUNNYSIDE 345KV CKT 1	717	789	0.04922	114.3121	GEN300006 1-NEW MADRID UNIT 1
FDNS	00NR	0	20WP	G15_048	FROM->TO	G14-057T 345.00 - SUNNYSIDE 345KV CKT 1	717	789	0.04922	114.2922	GEN300007 1-NEW MADRID UNIT 2
FDNS	00NR	0	20WP	G15_048	FROM->TO	G14-057T 345.00 - SUNNYSIDE 345KV CKT 1	717	789	0.05056	114.2876	HEALDTON - RINGLING 138KV CKT 1
FDNS	00NR	0	20WP	G15_048	FROM->TO	G14-057T 345.00 - SUNNYSIDE 345KV CKT 1	717	789	0.04962	114.2757	LACYGNE - WAVERLY7 345.00 345KV CKT 1
FDNS	00NR	0	20WP	G15_048	FROM->TO	G14-057T 345.00 - SUNNYSIDE 345KV CKT 1	717	789	0.04952	114.2686	DUNCAN - OMPA-DUNCAN 840 138KV CKT 1
FDNS	00NR	0	20WP	G15_048	FROM->TO	G14-057T 345.00 - SUNNYSIDE 345KV CKT 1	717	789	0.04952	114.2686	DUNCAN - OMPA-DUNCAN 840 138KV CKT 1
FDNS	00NR	0	20WP	G15_048	FROM->TO	G14-057T 345.00 - SUNNYSIDE 345KV CKT 1	717	789	0.04995	114.2678	P12:138:WFEC:MSL01
FDNS	00NR	0	16WP	G15_048	FROM->TO	G14-057T 345.00 - SUNNYSIDE 345KV CKT 1	717	789	0.04965	114.2581	803-OKLAUNION
FDNS	00NR	0	20WP	G15_048	FROM->TO	G14-057T 345.00 - SUNNYSIDE 345KV CKT 1	717	789	0.04995	114.2563	BRIDGECR 138.00 - SUNSHINE CANYON 138KV CKT 1
FDNS	00NR	0	20WP	G15_048	FROM->TO	G14-057T 345.00 - SUNNYSIDE 345KV CKT 1	717	789	0.04922	114.1972	GEN335206 1-NELSON UNIT 6
FDNS	00NR	0	20WP	G15_048	FROM->TO	G14-057T 345.00 - SUNNYSIDE 345KV CKT 1	717	789	0.04962	114.1543	WAVERLY7 345.00 - WOLF CREEK 345KV CKT 1
FDNS	00NR	0	20WP	G15_048	FROM->TO	G14-057T 345.00 - SUNNYSIDE 345KV CKT 1	717	789	0.04922	114.1257	GEN520947 1-HUGO1
FDNS	00NR	0	20WP	G15_048	FROM->TO	G14-057T 345.00 - SUNNYSIDE 345KV CKT 1	717	789	0.05056	114.1171	RINGLING - SOUTH WILSON 138KV CKT 1
FDNS	00NR	0	16WP	G15_048	FROM->TO	G14-057T 345.00 - SUNNYSIDE 345KV CKT 1	717	789	0.04878	114.0994	P12:138:OKGE:3TERM39
FDNS	00NR	0	20WP	G15_048	FROM->TO	G14-057T 345.00 - SUNNYSIDE 345KV CKT 1	717	789	0.05083	114.0411	G11_051T 345.00 - TATONGA7 345.00 345KV CKT 1
FDNS	00NR	0	20WP	G15_048	FROM->TO	G14-057T 345.00 - SUNNYSIDE 345KV CKT 1	717	789	0.04919	114.0258	ELDORADO EHV - MOUNT OLIVE 500KV CKT 1
FDNS	00NR	0	20WP	G15_048	FROM->TO	G14-057T 345.00 - SUNNYSIDE 345KV CKT 1	717	789	0.04922	114.0121	GEN501812 1-RODEMACHER UNIT 2
FDNS	00NR	0	20WP	G15_048	FROM->TO	G14-057T 345.00 - SUNNYSIDE 345KV CKT 1	717	789	0.04918	114.0071	P12:138:AEPW:SHERID4:112GORE4
FDNS	00NR	0	20WP	G15_048	FROM->TO	G14-057T 345.00 - SUNNYSIDE 345KV CKT 1	717	789	0.04922	114.0013	DOLET HILLS 345/24.0KV TRANSFORMER CKT 1
FDNS	00NR	0	20WP	G15_048	FROM->TO	G14-057T 345.00 - SUNNYSIDE 345KV CKT 1	717	789	0.05011	113.9961	THISTLE7 345.00 - WOODWARD DISTRICT EHV 345KV CKT 1
FDNS	00NR	0	20WP	G15_048	FROM->TO	G14-057T 345.00 - SUNNYSIDE 345KV CKT 1	717	789	0.05011	113.9961	THISTLE7 345.00 - WOODWARD DISTRICT EHV 345KV CKT 1
FDNS	00NR	0	20WP	G15_048	FROM->TO	G14-057T 345.00 - SUNNYSIDE 345KV CKT 1	717	789	0.05011	113.9961	THISTLE7 345.00 - WOODWARD DISTRICT EHV 345KV CKT 2
FDNS	00NR	0	20WP	G15_048	FROM->TO	G14-057T 345.00 - SUNNYSIDE 345KV CKT 1	717	789	0.05011	113.9961	THISTLE7 345.00 - WOODWARD DISTRICT EHV 345KV CKT 2
FDNS	00NR	0	20WP	G15_048	FROM->TO	G14-057T 345.00 - SUNNYSIDE 345KV CKT 1	717	789	0.04822	113.9283	PARK LANE - SEMINOLE 138KV CKT 1
FDNS	00NR	0	20WP	G15_048	FROM->TO	G14-057T 345.00 - SUNNYSIDE 345KV CKT 1	717	789	0.04931	113.8762	WEBRE - WELLS 500KV CKT 1
FDNS	00NR	0	20WP	G15_048	FROM->TO	G14-057T 345.00 - SUNNYSIDE 345KV CKT 1	717	789	0.04922	113.875	GEN515564 1-ORIGIN11 0.6900
FDNS	00NR	0	20WP	G15_048	FROM->TO	G14-057T 345.00 - SUNNYSIDE 345KV CKT 1	717	789	0.04922	113.875	GEN515565 1-ORIGIN21 0.6900
FDNS	00NR	0	16WP	G15_048	FROM->TO	G14-057T 345.00 - SUNNYSIDE 345KV CKT 1	717	789	0.04918	113.8718	MAYSVILLE - MAYSVLT4 138.00 138KV CKT 1
FDNS	00NR	0	16WP	G15_048	FROM->TO	G14-057T 345.00 - SUNNYSIDE 345KV CKT 1	717	789	0.05004	113.8663	DRAPER LAKE - MIDWEST TAP 138KV CKT 1
FDNS	00NR	0	16WP	G15_048	FROM->TO	G14-057T 345.00 - SUNNYSIDE 345KV CKT 1	717	789	0.04972	113.8628	GLASSES - MADILL INDUSTRIAL TAP 138KV CKT 1
FDNS	00NR	0	20WP	G15_048	FROM->TO	G14-057T 345.00 - SUNNYSIDE 345KV CKT 1	717	789	0.04922	113.8527	GEN334440 1-SABINE UNIT 4
FDNS	00NR	0	16WP	G15_048	FROM->TO	G14-057T 345.00 - SUNNYSIDE 345KV CKT 1	717	789	0.04913	113.8517	CIMARRON - MATHWSN7 345.00 345KV CKT 1
FDNS	00NR	0	16WP	G15_048	FROM->TO	G14-057T 345.00 - SUNNYSIDE 345KV CKT 1	717	789	0.04913	113.8517	CIMARRON - MATHWSN7 345.00 345KV CKT 2
FDNS	00NR	0	16WP	G15_048	FROM->TO	G14-057T 345.00 - SUNNYSIDE 345KV CKT 1	717	789	0.04965	113.8451	GEN562691 1-G15_015_3 0.6900

SOLUTION	GROUP	SCENARIO	SEASON	SOURCE	DIRECTION	MONITORED ELEMENT	RATEA (MVA)	RATEB(MVA)	TDF	TC%LOADING (% MVA)	CONTINGENCY
FDNS	00NR	0	16WP	G15_048	FROM->TO	G14-057T 345.00 - SUNNYSIDE 345KV CKT 1	717	789	0.04965	113.8449	GEN562772 1-G15034_3 0.6900
FDNS	00NR	0	16WP	G15_048	FROM->TO	G14-057T 345.00 - SUNNYSIDE 345KV CKT 1	717	789	0.05004	113.8438	P12:138:OKGE:3TERM21
FDNS	00NR	0	16WP	G15_048	FROM->TO	G14-057T 345.00 - SUNNYSIDE 345KV CKT 1	717	789	0.04961	113.8375	HUGO (HUGO 1) 345/138/13.8KV TRANSFORMER CKT 1
FDNS	00NR	0	20WP	G15_048	FROM->TO	G14-057T 345.00 - SUNNYSIDE 345KV CKT 1	717	789	0.05016	113.8344	CANEYRV7 345.00 - NEOSHO 345KV CKT 1
FDNS	00NR	0	20WP	G15_048	FROM->TO	G14-057T 345.00 - SUNNYSIDE 345KV CKT 1	717	789	0.05056	113.8289	MARIETTA - SOUTH WILSON 138KV CKT 1
FDNS	00NR	0	20WP	G15_048	FROM->TO	G14-057T 345.00 - SUNNYSIDE 345KV CKT 1	717	789	0.04922	113.8232	GEN590011 2-ERCOT EQUIVALENCE
FDNS	00NR	0	16WP	G15_048	FROM->TO	G14-057T 345.00 - SUNNYSIDE 345KV CKT 1	717	789	0.04965	113.8171	GEN521103 1-BLUE CANYON WIND FARM
FDNS	00NR	0	16WP	G15_048	FROM->TO	G14-057T 345.00 - SUNNYSIDE 345KV CKT 1	717	789	0.04965	113.8166	GEN520812 1-ANADRK5
FDNS	00NR	0	16WP	G15_048	FROM->TO	G14-057T 345.00 - SUNNYSIDE 345KV CKT 1	717	789	0.04965	113.8165	GEN520813 1-ANADRK6
FDNS	00NR	0	16WP	G15_048	FROM->TO	G14-057T 345.00 - SUNNYSIDE 345KV CKT 1	717	789	0.04918	113.8102	MAYSVLT4 138.00 - PRAIRIE POINT 138KV CKT 1
FDNS	00NR	0	16WP	G15_048	FROM->TO	G14-057T 345.00 - SUNNYSIDE 345KV CKT 1	717	789	0.04972	113.8033	GLASSES - RUSSETT 138KV CKT 1
FDNS	00NR	0	20WP	G15_048	FROM->TO	G14-057T 345.00 - SUNNYSIDE 345KV CKT 1	717	789	0.04922	113.7939	DELL 500 - ESSEX UNIT 2 500KV CKT Z1
FDNS	00NR	0	20WP	G15_048	FROM->TO	G14-057T 345.00 - SUNNYSIDE 345KV CKT 1	717	789	0.04922	113.7926	P12:161:AEPW:DYESS 5:HYLAND 5
FDNS	00NR	0	16WP	G15_048	FROM->TO	G14-057T 345.00 - SUNNYSIDE 345KV CKT 1	717	789	0.04914	113.785	ARBUCKLE - SULPHR 4 138.00 138KV CKT 1
FDNS	00NR	0	20WP	G15_048	FROM->TO	G14-057T 345.00 - SUNNYSIDE 345KV CKT 1	717	789	0.04921	113.7845	REDBUD - RIVERSIDE STATION 345KV CKT 1
FDNS	00NR	0	20WP	G15_048	FROM->TO	G14-057T 345.00 - SUNNYSIDE 345KV CKT 1	717	789	0.04921	113.7845	REDBUD - RIVERSIDE STATION 345KV CKT 1
FDNS	00NR	0	16WP	G15_048	FROM->TO	G14-057T 345.00 - SUNNYSIDE 345KV CKT 1	717	789	0.04971	113.7802	P12:138:WFEC:MSL11
FDNS	00NR	0	16WP	G15_048	FROM->TO	G14-057T 345.00 - SUNNYSIDE 345KV CKT 1	717	789	0.04971	113.7802	P12:138:WFEC-AEPW:PHAROAH4:LONEOAK4
FDNS	00NR	0	16WP	G15_048	FROM->TO	G14-057T 345.00 - SUNNYSIDE 345KV CKT 1	717	789	0.04972	113.7755	CANEY CREEK - JOHNSON COUNTY 138KV CKT 1
FDNS	00NR	0	16WP	G15_048	FROM->TO	G14-057T 345.00 - SUNNYSIDE 345KV CKT 1	717	789	0.04965	113.7736	GEN511961 1-DEMPSEY-WTG10.7000
FDNS	00NR	0	16WP	G15_048	FROM->TO	G14-057T 345.00 - SUNNYSIDE 345KV CKT 1	717	789	0.04964	113.758	P12:069:OKGE:3TERM42
FDNS	00NR	0	20WP	G15_048	FROM->TO	G14-057T 345.00 - SUNNYSIDE 345KV CKT 1	717	789	0.04922	113.7534	GEN590010 1-ERCOT EQUIVALENCE
FDNS	00NR	0	20WP	G15_048	FROM->TO	G14-057T 345.00 - SUNNYSIDE 345KV CKT 1	717	789	0.04922	113.7453	P12:69:AEPW:L.E.S.-2:LAW WC2
FDNS	00NR	0	20WP	G15_048	FROM->TO	G14-057T 345.00 - SUNNYSIDE 345KV CKT 1	717	789	0.04882	113.7442	LAWTON EASTSIDE (LES 5) 345/138/13.8KV TRANSFORMER CKT 2
FDNS	00NR	0	20WP	G15_048	FROM->TO	G14-057T 345.00 - SUNNYSIDE 345KV CKT 1	717	789	0.04882	113.7442	LAWTON EASTSIDE (LES 5) 345/138/13.8KV TRANSFORMER CKT 2
FDNS	00NR	0	16WP	G15_048	FROM->TO	G14-057T 345.00 - SUNNYSIDE 345KV CKT 1	717	789	0.04965	113.7348	GEN629070 2-BEAVER CHANNEL GENERATORFOR UNIT NO 2
FDNS	00NR	0	16WP	G15_048	FROM->TO	G14-057T 345.00 - SUNNYSIDE 345KV CKT 1	717	789	0.04969	113.7272	GRPRAR1-LNX3345.00 - HOLT.CO3 345.00 345KV CKT 1
FDNS	00NR	0	20WP	G15_048	FROM->TO	G14-057T 345.00 - SUNNYSIDE 345KV CKT 1	717	789	0.05056	113.7272	P12:138:WFEC:MSL17
FDNS	00NR	0	16WP	G15_048	FROM->TO	G14-057T 345.00 - SUNNYSIDE 345KV CKT 1	717	789	0.04965	113.7271	GEN515443 1-MNCOWND1 0.7000
FDNS	00NR	0	16WP	G15_048	FROM->TO	G14-057T 345.00 - SUNNYSIDE 345KV CKT 1	717	789	0.04969	113.7234	GRPRAR1-LNX3345.00 - GRPRAR 345KV CKT Z
FDNS	00NR	0	20WP	G15_048	FROM->TO	G14-057T 345.00 - SUNNYSIDE 345KV CKT 1	717	789	0.0496	113.7227	P12:138:WFEC:MSL02
FDNS	00NR	0	16WP	G15_048	FROM->TO	G14-057T 345.00 - SUNNYSIDE 345KV CKT 1	717	789	0.04975	113.7218	P12:138:WFEC:MSL08
FDNS	00NR	0	16WP	G15_048	FROM->TO	G14-057T 345.00 - SUNNYSIDE 345KV CKT 1	717	789	0.04965	113.7183	GEN615021 1-GRE-ER 14G 16.000
FDNS	00NR	0	16WP	G15_048	FROM->TO	G14-057T 345.00 - SUNNYSIDE 345KV CKT 1	717	789	0.04965	113.7147	GEN562902 1-G15052_3 0.6900
FDNS	00NR	0	16WP	G15_048	FROM->TO	G14-057T 345.00 - SUNNYSIDE 345KV CKT 1	717	789	0.04918	113.7129	PRAIRIE POINT - RATLIFF 138KV CKT 1
FDNS	00NR	0	16WP	G15_048	FROM->TO	G14-057T 345.00 - SUNNYSIDE 345KV CKT 1	717	789	0.04959	113.7093	CARTER - CHICKASAW 138KV CKT 1
FDNS	00NR	0	16WP	G15_048	FROM->TO	G14-057T 345.00 - SUNNYSIDE 345KV CKT 1	717	789	0.04965	113.7078	GEN563242 1-G15090_3 0.6900
FDNS	00NR	0	16WP	G15_048	FROM->TO	G14-057T 345.00 - SUNNYSIDE 345KV CKT 1	717	789	0.04965	113.7066	GEN560183 1-REDHIL-WTG1 12.000
FDNS	00NR	0	16WP	G15_048	FROM->TO	G14-057T 345.00 - SUNNYSIDE 345KV CKT 1	717	789	0.04965	113.7049	GEN629071 1-BURLINGTON GENERATOR FOR UNIT NO 1 E
FDNS	00NR	0	16WP	G15_048	FROM->TO	G14-057T 345.00 - SUNNYSIDE 345KV CKT 1	717	789	0.04984	113.7009	CANADIAN RIVER - MCALESTER SOUTH 138KV CKT 1
FDNS	00NR	0	16WP	G15_048	FROM->TO	G14-057T 345.00 - SUNNYSIDE 345KV CKT 1	717	789	0.04984	113.7009	CANADIAN RIVER - MCALESTER SOUTH 138KV CKT 1
FDNS	00NR	0	16WP	G15_048	FROM->TO	G14-057T 345.00 - SUNNYSIDE 345KV CKT 1	717	789	0.04984	113.6996	CANADIAN RIVER () 345/138/13.8KV TRANSFORMER CKT 1
FDNS	00NR	0	16WP	G15_048	FROM->TO	G14-057T 345.00 - SUNNYSIDE 345KV CKT 1	717	789	0.04984	113.6996	CANADIAN RIVER () 345/138/13.8KV TRANSFORMER CKT 1
FDNS	00NR	0	16WP	G15_048	FROM->TO	G14-057T 345.00 - SUNNYSIDE 345KV CKT 1	717	789	0.04891	113.6995	NORTHWEST - SPRING CREEK 345KV CKT 1
FDNS	00NR	0	16WP	G15_048	FROM->TO	G14-057T 345.00 - SUNNYSIDE 345KV CKT 1	717	789	0.04355	113.6963	MOREWOOD SW - NINE MILE 138KV CKT 1
FDNS	00NR	0	16WP	G15_048	FROM->TO	G14-057T 345.00 - SUNNYSIDE 345KV CKT 1	717	789	0.04946	113.6922	ROCKY POINT - SPRINGDALE 138KV CKT 1
FDNS	00NR	0	16WP	G15_048	FROM->TO	G14-057T 345.00 - SUNNYSIDE 345KV CKT 1	717	789	0.04891	113.6897	SOONER - SPRING CREEK 345KV CKT 1
FDNS	00NR	0	20WP	G15_048	FROM->TO	G14-057T 345.00 - SUNNYSIDE 345KV CKT 1	717	789	0.05016	113.687	CANEYRV7 345.00 - LATHAMS7 345.00 345KV CKT 1
FDNS	00NR	0	16WP	G15_048	FROM->TO	G14-057T 345.00 - SUNNYSIDE 345KV CKT 1	717	789	0.04965	113.679	INDEPENDENCE 500/26.0KV TRANSFORMER CKT 1
FDNS	00NR	0	16WP	G15_048	FROM->TO	G14-057T 345.00 - SUNNYSIDE 345KV CKT 1	717	789	0.04965	113.6766	BURLINGTON NO1 + NO 2 + NO 3 161/20.0KV TRANSFORMER CKT 1
FDNS	00NR	0	20WP	G15_048	FROM->TO	G14-057T 345.00 - SUNNYSIDE 345KV CKT 1	717	789	0.04922	113.676	GEN509408 1-WILKES #2
FDNS	00NR	0	16WP	G15_048	FROM->TO	G14-057T 345.00 - SUNNYSIDE 345KV CKT 1	717	789	0.04958	113.6747	ALTUS JUNCTION - RUSSELL 138KV CKT 1
FDNS	00NR	0	16WP	G15_048	FROM->TO	G14-057T 345.00 - SUNNYSIDE 345KV CKT 1	717	789	0.04958	113.6747	ALTUS JUNCTION - RUSSELL 138KV CKT 1
FDNS	00NR	0	16WP	G15_048	FROM->TO	G14-057T 345.00 - SUNNYSIDE 345KV CKT 1	717	789	0.04967	113.6724	NORTHWEST TEXARKANA - WELSH 345KV CKT 1
FDNS	00NR	0	16WP	G15_048	FROM->TO	G14-057T 345.00 - SUNNYSIDE 345KV CKT 1	717	789	0.04967	113.6724	NORTHWEST TEXARKANA - WELSH 345KV CKT 1
FDNS	00NR	0	16WP	G15_048	FROM->TO	G14-057T 345.00 - SUNNYSIDE 345KV CKT 1	717	789	0.04965	113.6705	GEN514805 1-SOONER UNIT 1
FDNS	00NR	0	16WP	G15_048	FROM->TO	G14-057T 345.00 - SUNNYSIDE 345KV CKT 1	717	789	0.04965	113.6637	GEN514806 1-SOONER UNIT 2
FDNS	00NR	0	20WP	G15_048	FROM->TO	G14-057T 345.00 - SUNNYSIDE 345KV CKT 1	717	789	0.04955	113.6598	PAOLI - PAYNE 138.00 138KV CKT 1
FDNS	00NR	0	20WP	G15_048	FROM->TO	G14-057T 345.00 - SUNNYSIDE 345KV CKT 1	717	789	0.04912	113.6598	ELDORADO EHV - SHERIDAN EHV 500KV CKT 1
FDNS	00NR	0	16WP	G15_048	FROM->TO	G14-057T 345.00 - SUNNYSIDE 345KV CKT 1	717	789	0.0498	113.6579	KEO EHV - WEST MEMPHIS 500 500KV CKT 1
FDNS	00NR	0	16WP	G15_048	FROM->TO	G14-057T 345.00 - SUNNYSIDE 345KV CKT 1	717	789	0.04996	113.6508	CHAMBER SPRINGS - CLARKSVILLE 345KV CKT 1
FDNS	00NR	0	20WP	G15_048	FROM->TO	G14-057T 345.00 - SUNNYSIDE 345KV CKT 1	717	789	0.04922	113.6501	GEN506754 1-LEBROCK STEAM 1
FDNS	00NR	0	16WP	G15_048	FROM->TO	G14-057T 345.00 - SUNNYSIDE 345KV CKT 1	717	789	0.04965	113.6474	GEN562078 1-G11_051_3 0.6900
FDNS	00NR	0	20WP	G15_048	FROM->TO	G14-057T 345.00 - SUNNYSIDE 345KV CKT 1	717	789	0.04947	113.6428	ANADARKO - GEORGIA 138KV CKT 1
FDNS	00NR	0	16WP	G15_048	FROM->TO	G14-057T 345.00 - SUNNYSIDE 345KV CKT 1	717	789	0.04965	113.6379	P12:230:UMZB:# 112 #: NU IN SD. NU-RCDC & DRY CREEK XFMR
FDNS	00NR	0	16WP	G15_048	FROM->TO	G14-057T 345.00 - SUNNYSIDE 345KV CKT 1	717	789	0.04965	113.6365	RCDC EAST 4230.00 - RED CEDAR DC 230KV CKT 1
FDNS	00NR	0	16WP	G15_048	FROM->TO	G14-057T 345.00 - SUNNYSIDE 345KV CKT 1	717	789	0.04914	113.6334	JOLLYVILLE - SULPHR 4 138.00 138KV CKT 1
FDNS	00NR	0	16WP	G15_048	FROM->TO	G14-057T 345.00 - SUNNYSIDE 345KV CKT 1	717	789	0.04965	113.6189	GEN562802 1-G15039_3 0.3570
FDNS	00NR	0	20WP	G15_048	FROM->TO	G14-057T 345.00 - SUNNYSIDE 345KV CKT 1	717	789	0.04918	113.6137	P12:138:AEPW:112GORE4:L.E.S.-4
FDNS	00NR	0	16WP	G15_048	FROM->TO	G14-057T 345.00 - SUNNYSIDE 345KV CKT 1	717	789	0.04965	113.6124	GEN524285 1-WILDORADO WIND GEN
FDNS	00NR	0	20WP	G15_048	FROM->TO	G14-057T 345.00 - SUNNYSIDE 345KV CKT 1	717	789	0.05029	113.6016	CIVIT - PAOLI 138KV CKT 1
FDNS	00NR	0	20WP	G15_048	FROM->TO	G14-057T 345.00 - SUNNYSIDE 345KV CKT 1	717	789	0.05094	113.5945	MATHWSN7 345.00 - NORTHWEST 345KV CKT 1
FDNS	00NR	0	16WP	G15_048	FROM->TO	G14-057T 345.00 - SUNNYSIDE 345KV CKT 1	717	789	0.04965	113.5926	GEN524295 1-SPNSPUR_WND10.6900
FDNS	00NR	0	16WP	G15_048	FROM->TO	G14-057T 345.00 - SUNNYSIDE 345KV CKT 1	717	789	0.04965	113.5923	GEN562587 1-G14_056_3 0.6900
FDNS	00NR	0	16WP	G15_048	FROM->TO	G14-057T 345.00 - SUNNYSIDE 345KV CKT 1	717	789	0.04965	113.5856	GEN560331 1-G10-46 13.800
FDNS	00NR	0	16WP	G15_048	FROM->TO	G14-057T 345.00 - SUNNYSIDE 345KV CKT 1	717	789	0.04886	113.5745	ARKANSAS NUCLEAR ONE - FT SMITH 500KV CKT 1
FDNS	00NR	0	16WP	G15_048	FROM->TO	G14-057T 345.00 - SUNNYSIDE 345KV CKT 1	717	789	0.04886	113.5745	ARKANSAS NUCLEAR ONE - FT SMITH 500KV CKT 1
FDNSLock	00NR	0	16WP	G15_048	FROM->TO	G14-057T 345.00 - SUNNYSIDE 345KV CKT 1	717	789	0.04965	113.5733	GEN629072 4-LANSING GENERATOR FOR UNITS NO4 EIA CODE 1
FDNS	00NR	0	20WP	G15_048	FROM->TO	G14-057T 345.00 - SUNNYSIDE 345KV CKT 1	717	789	0.04922	113.5691	GEN336252 1-NINEMILE POINT UNIT#5

SOLUTION	GROUP	SCENARIO	SEASON	SOURCE	DIRECTION	MONITORED ELEMENT	RATEA (MVA)	RATEB(MVA)	TDF	TC%LOADING (% MVA)	CONTINGENCY
FDNS	00NR	0	16WP	G15_048	FROM->TO	G14-057T 345.00 - SUNNYSIDE 345KV CKT 1	717	789	0.04914	113.5649	JOLLYVILLE - KERR MCGEE CIMARRON 138KV CKT 1
FDNS	00NR	0	16WP	G15_048	FROM->TO	G14-057T 345.00 - SUNNYSIDE 345KV CKT 1	717	789	0.04965	113.5641	GEN562882 1-G15047_3 0.6900
FDNS	00NR	0	16WP	G15_048	FROM->TO	G14-057T 345.00 - SUNNYSIDE 345KV CKT 1	717	789	0.04355	113.5619	BEARCAT 138.00 - NINE MILE 138KV CKT 1
FDNS	00NR	0	16WP	G15_048	FROM->TO	G14-057T 345.00 - SUNNYSIDE 345KV CKT 1	717	789	0.04965	113.555	GEN562269 1-G12-020-1 0.6900
FDNS	00NR	0	16WP	G15_048	FROM->TO	G14-057T 345.00 - SUNNYSIDE 345KV CKT 1	717	789	0.04965	113.5529	GEN657749 1-YOUNG 1 GENERATOR
FDNS	00NR	0	20WP	G15_048	FROM->TO	G14-057T 345.00 - SUNNYSIDE 345KV CKT 1	717	789	0.04947	113.5467	FLETCHER - GEORGIA 138KV CKT 1
FDNS	00NR	0	20WP	G15_048	FROM->TO	G14-057T 345.00 - SUNNYSIDE 345KV CKT 1	717	789	0.05076	113.5386	P12:138:AEPW-OGE:CORNVIL4:MAUD 4
FDNS	00NR	0	20WP	G15_048	FROM->TO	G14-057T 345.00 - SUNNYSIDE 345KV CKT 1	717	789	0.04922	113.5228	FRONTIER - GRIMES 345KV CKT 1
FDNS	00NR	0	16WP	G15_048	FROM->TO	G14-057T 345.00 - SUNNYSIDE 345KV CKT 1	717	789	0.04914	113.5143	ARBWIND4 138.00 - KERR MCGEE CIMARRON 138KV CKT 1
FDNS	00NR	0	20WP	G15_048	FROM->TO	G14-057T 345.00 - SUNNYSIDE 345KV CKT 1	717	789	0.04922	113.5117	GEN335204 1-NELSON UNIT 4
FDNS	00NR	0	16WP	G15_048	FROM->TO	G14-057T 345.00 - SUNNYSIDE 345KV CKT 1	717	789	0.04965	113.51	GEN562270 1-G12-020-2 0.6900
FDNS	00NR	0	20WP	G15_048	FROM->TO	G14-057T 345.00 - SUNNYSIDE 345KV CKT 1	717	789	0.04922	113.5052	GEN503909 1-FULTONU1 1 16.000
FDNS	00NR	0	20WP	G15_048	FROM->TO	G14-057T 345.00 - SUNNYSIDE 345KV CKT 1	717	789	0.04922	113.5045	GEN334441 1-SABINE UNIT 5
FDNS	00NR	0	16WP	G15_048	FROM->TO	G14-057T 345.00 - SUNNYSIDE 345KV CKT 1	717	789	0.04965	113.5044	GEN562812 1-G15040_3 0.3570
FDNS	00NR	0	20WP	G15_048	FROM->TO	G14-057T 345.00 - SUNNYSIDE 345KV CKT 1	717	789	0.04958	113.5041	EMPIRE - FLETCHER 138KV CKT 1
FDNS	00NR	0	16WP	G15_048	FROM->TO	G14-057T 345.00 - SUNNYSIDE 345KV CKT 1	717	789	0.04884	113.503	P12:138:AEPW:112GORE4:SNYDER-4
FDNS	00NR	0	16WP	G15_048	FROM->TO	G14-057T 345.00 - SUNNYSIDE 345KV CKT 1	717	789	0.05221	113.5027	CLARKSVILLE - MUSKOGEE 345KV CKT 1
FDNS	00NR	0	16WP	G15_048	FROM->TO	G14-057T 345.00 - SUNNYSIDE 345KV CKT 1	717	789	0.05221	113.5027	CLARKSVILLE - MUSKOGEE 345KV CKT 1
FDNS	00NR	0	16WP	G15_048	FROM->TO	G14-057T 345.00 - SUNNYSIDE 345KV CKT 1	717	789	0.04965	113.5015	GEN563102 1-G15075_3 0.5500
FDNS	00NR	0	16WP	G15_048	FROM->TO	G14-057T 345.00 - SUNNYSIDE 345KV CKT 1	717	789	0.04965	113.4982	GEN562974 1-G15060_5 0.6900
FDNS	00NR	0	16WP	G15_048	FROM->TO	G14-057T 345.00 - SUNNYSIDE 345KV CKT 1	717	789	0.04965	113.4946	GEN563062 1-G15071_3 0.6900
FDNS	00NR	0	16WP	G15_048	FROM->TO	G14-057T 345.00 - SUNNYSIDE 345KV CKT 1	717	789	0.04965	113.4938	GEN563132 1-G15078_3 0.3570
FDNS	00NR	0	16WP	G15_048	FROM->TO	G14-057T 345.00 - SUNNYSIDE 345KV CKT 1	717	789	0.04965	113.4887	GEN562973 1-G15060_4 0.6900
FDNS	00NR	0	20WP	G15_048	FROM->TO	G14-057T 345.00 - SUNNYSIDE 345KV CKT 1	717	789	0.0492	113.4836	TUPELO - TUPELO TAP 138KV CKT 1
FDNSLock	00NR	0	16WP	G15_048	FROM->TO	G14-057T 345.00 - SUNNYSIDE 345KV CKT 1	717	789	0.04965	113.4834	GEN681522 3-GENOA 3
FDNS	00NR	0	16WP	G15_048	FROM->TO	G14-057T 345.00 - SUNNYSIDE 345KV CKT 1	717	789	0.04355	113.4794	P12:138:WFEC:MSL14
FDNS	00NR	0	20WP	G15_048	FROM->TO	G14-057T 345.00 - SUNNYSIDE 345KV CKT 1	717	789	0.05016	113.4741	LATHAMS7 345.00 - ROSE HILL 345KV CKT 1
FDNS	00NR	0	16WP	G15_048	FROM->TO	G14-057T 345.00 - SUNNYSIDE 345KV CKT 1	717	789	0.04355	113.4666	BEARCAT 138.00 - MOORELAND 138KV CKT 1
FDNS	00NR	0	20WP	G15_048	FROM->TO	G14-057T 345.00 - SUNNYSIDE 345KV CKT 1	717	789	0.05076	113.4632	BLANCHARD - CORNVILLE 138KV CKT 1
FDNS	00NR	0	20WP	G15_048	FROM->TO	G14-057T 345.00 - SUNNYSIDE 345KV CKT 1	717	789	0.05029	113.4605	CIVIT - STRATFORD 138KV CKT 1
FDNS	00NR	0	16WP	G15_048	FROM->TO	G14-057T 345.00 - SUNNYSIDE 345KV CKT 1	717	789	0.04961	113.4561	BROWN - RUSSETT 138KV CKT 1
FDNS	00NR	0	16WP	G15_048	FROM->TO	G14-057T 345.00 - SUNNYSIDE 345KV CKT 1	717	789	0.0492	113.4351	CHICKASAW - TOTAL 138KV CKT 1
FDNS	00NR	0	16WP	G15_048	FROM->TO	G14-057T 345.00 - SUNNYSIDE 345KV CKT 1	717	789	0.04959	113.4301	RUSSETT - SPRINGDALE 138KV CKT 1
FDNS	00NR	0	16WP	G15_048	FROM->TO	G14-057T 345.00 - SUNNYSIDE 345KV CKT 1	717	789	0.04965	113.4267	GEN345671 2-1RUSH G2 18.000
FDNS	00NR	0	16WP	G15_048	FROM->TO	G14-057T 345.00 - SUNNYSIDE 345KV CKT 1	717	789	0.04965	113.4248	GEN345670 1-1RUSH G1 18.000
FDNS	00NR	0	20WP	G15_048	FROM->TO	G14-057T 345.00 - SUNNYSIDE 345KV CKT 1	717	789	0.04958	113.4227	COMANCHE - EMPIRE 138KV CKT 1
FDNS	00NR	0	20WP	G15_048	FROM->TO	G14-057T 345.00 - SUNNYSIDE 345KV CKT 1	717	789	0.04919	113.4172	LAYFLD8 500.00 - MOUNT OLIVE 500KV CKT 1
FDNS	00NR	0	20WP	G15_048	FROM->TO	G14-057T 345.00 - SUNNYSIDE 345KV CKT 1	717	789	0.04919	113.4172	LAYFLD8 500.00 - MOUNT OLIVE 500KV CKT 1
FDNS	00NR	0	16WP	G15_048	FROM->TO	G14-057T 345.00 - SUNNYSIDE 345KV CKT 1	717	789	0.04965	113.4132	GEN526331 1-JONES GEN #1 22 KV
FDNS	00NR	0	16WP	G15_048	FROM->TO	G14-057T 345.00 - SUNNYSIDE 345KV CKT 1	717	789	0.04965	113.4131	GEN526332 1-JONES GEN #2 21 KV
FDNS	00NR	0	16WP	G15_048	FROM->TO	G14-057T 345.00 - SUNNYSIDE 345KV CKT 1	717	789	0.04965	113.4028	GEN560105 1-G08-22 0.6900
FDNS	00NR	0	16WP	G15_048	FROM->TO	G14-057T 345.00 - SUNNYSIDE 345KV CKT 1	717	789	0.04965	113.3993	GEN562550 1-G14_040_3 0.6900
FDNS	00NR	0	16WP	G15_048	FROM->TO	G14-057T 345.00 - SUNNYSIDE 345KV CKT 1	717	789	0.04938	113.3982	ROCKY POINT - SUNNYSIDE 138KV CKT 1
FDNS	00NR	0	20WP	G15_048	FROM->TO	G14-057T 345.00 - SUNNYSIDE 345KV CKT 1	717	789	0.04922	113.3982	GEN336251 1-NINEMILE POINT UNIT#4
FDNS	00NR	0	20WP	G15_048	FROM->TO	G14-057T 345.00 - SUNNYSIDE 345KV CKT 1	717	789	0.04954	113.393	G1524G1525 345.00 - THISTLE7 345.00 345KV CKT 1
FDNS	00NR	0	20WP	G15_048	FROM->TO	G14-057T 345.00 - SUNNYSIDE 345KV CKT 1	717	789	0.04954	113.393	G1524G1525 345.00 - THISTLE7 345.00 345KV CKT 2
FDNS	00NR	0	20WP	G15_048	FROM->TO	G14-057T 345.00 - SUNNYSIDE 345KV CKT 1	717	789	0.0499	113.3929	FINNEY SWITCHING STATION - HOLCOMB 345KV CKT 1
FDNS	00NR	0	20WP	G15_048	FROM->TO	G14-057T 345.00 - SUNNYSIDE 345KV CKT 1	717	789	0.0499	113.3929	FINNEY SWITCHING STATION - HOLCOMB 345KV CKT 1
FDNS	00NR	0	20WP	G15_048	FROM->TO	G14-057T 345.00 - SUNNYSIDE 345KV CKT 1	717	789	0.04922	113.3927	GEN334071 1-LEWIS CREEK 2
FDNS	00NR	0	16WP	G15_048	FROM->TO	G14-057T 345.00 - SUNNYSIDE 345KV CKT 1	717	789	0.04961	113.3879	RUSSETT - RUSSETT 138KV CKT 1
FDNS	00NR	0	20WP	G15_048	FROM->TO	G14-057T 345.00 - SUNNYSIDE 345KV CKT 1	717	789	0.04922	113.3843	GEN334070 1-LEWIS CREEK 1
FDNS	00NR	0	16WP	G15_048	FROM->TO	G14-057T 345.00 - SUNNYSIDE 345KV CKT 1	717	789	0.04965	113.3775	4SIOUX 1 138.00 138/18.0KV TRANSFORMER CKT 1
FDNS	00NR	0	16WP	G15_048	FROM->TO	G14-057T 345.00 - SUNNYSIDE 345KV CKT 1	717	789	0.04961	113.3694	P12:138:WFEC:MSL07
FDNS	00NR	0	16WP	G15_048	FROM->TO	G14-057T 345.00 - SUNNYSIDE 345KV CKT 1	717	789	0.04961	113.3694	P12:138:WFEC-AEPW:HUGOPP4:ATOKA--4
FDNS	00NR	0	20WP	G15_048	FROM->TO	G14-057T 345.00 - SUNNYSIDE 345KV CKT 1	717	789	0.04921	113.3642	P12:161:AEPW-SWPA:BEAVERS:EROGERS5
FDNS	00NR	0	20WP	G15_048	FROM->TO	G14-057T 345.00 - SUNNYSIDE 345KV CKT 1	717	789	0.04922	113.3603	GEN509392 G2-ARSENAL HILL GENS #3 (STALL)
FDNS	00NR	0	20WP	G15_048	FROM->TO	G14-057T 345.00 - SUNNYSIDE 345KV CKT 1	717	789	0.04922	113.3602	GEN509391 G1-ARSENAL HILL GENS #2 (STALL)
FDNS	00NR	0	16WP	G15_048	FROM->TO	G14-057T 345.00 - SUNNYSIDE 345KV CKT 1	717	789	0.04965	113.3591	GEN511962 2-RKYRDGW2-1 0.7000
FDNS	00NR	0	20WP	G15_048	FROM->TO	G14-057T 345.00 - SUNNYSIDE 345KV CKT 1	717	789	0.04922	113.3581	GEN509393 S1-ARSENAL HILL GENS #4 (STALL)
FDNS	00NR	0	16WP	G15_048	FROM->TO	G14-057T 345.00 - SUNNYSIDE 345KV CKT 1	717	789	0.04965	113.3577	GEN521112 1-ORME3 13.800
FDNS	00NR	0	16WP	G15_048	FROM->TO	G14-057T 345.00 - SUNNYSIDE 345KV CKT 1	717	789	0.04965	113.3553	CLAY BOSWELL 230/20.9KV TRANSFORMER CKT 1
FDNS	00NR	0	16WP	G15_048	FROM->TO	G14-057T 345.00 - SUNNYSIDE 345KV CKT 1	717	789	0.04965	113.3532	GEN527882 1-CUNNINGHAM GEN #2 20 KV
FDNS	00NR	0	20WP	G15_048	FROM->TO	G14-057T 345.00 - SUNNYSIDE 345KV CKT 1	717	789	0.04922	113.3465	GEN334433 1-SABINE UNIT 3
FDNS	00NR	0	20WP	G15_048	FROM->TO	G14-057T 345.00 - SUNNYSIDE 345KV CKT 1	717	789	0.05029	113.3428	OIL CENTER - STRATFORD 138KV CKT 1
FDNS	00NR	0	16WP	G15_048	FROM->TO	G14-057T 345.00 - SUNNYSIDE 345KV CKT 1	717	789	0.04965	113.3369	GEN562892 1-G15048_3 0.6900
FDNS	00NR	0	20WP	G15_048	FROM->TO	G14-057T 345.00 - SUNNYSIDE 345KV CKT 1	717	789	0.04922	113.3339	GEN337653 1-WHITE BLUFF UNIT #2
FDNS	00NR	0	16WP	G15_048	FROM->TO	G14-057T 345.00 - SUNNYSIDE 345KV CKT 1	717	789	0.04903	113.3312	ARDMORE WEST - CARTER 138KV CKT 1
FDNS	00NR	0	16WP	G15_048	FROM->TO	G14-057T 345.00 - SUNNYSIDE 345KV CKT 1	717	789	0.04965	113.3247	GEN562512 1-G14_020_3 0.6900
FDNS	00NR	0	20WP	G15_048	FROM->TO	G14-057T 345.00 - SUNNYSIDE 345KV CKT 1	717	789	0.04922	113.323	GEN336831 1-BAXTER WILSON SES
FDNS	00NR	0	16WP	G15_048	FROM->TO	G14-057T 345.00 - SUNNYSIDE 345KV CKT 1	717	789	0.04965	113.3179	GEN672321 1-SHAND GENERATOR 1
FDNS	00NR	0	16WP	G15_048	FROM->TO	G14-057T 345.00 - SUNNYSIDE 345KV CKT 1	717	789	0.04965	113.3158	GEN563192 1-G15084_3 0.5500
FDNS	00NR	0	20WP	G15_048	FROM->TO	G14-057T 345.00 - SUNNYSIDE 345KV CKT 1	717	789	0.04903	113.3115	P12:138:AEPW:S.W.S.-4:L.E.S.-4
FDNS	00NR	0	16WP	G15_048	FROM->TO	G14-057T 345.00 - SUNNYSIDE 345KV CKT 1	717	789	0.04965	113.3067	GEN511853 1-COMANCHE #3
FDNS	00NR	0	20WP	G15_048	FROM->TO	G14-057T 345.00 - SUNNYSIDE 345KV CKT 1	717	789	0.04922	113.3019	P12:161:AEPW:DYESS5:ELMSPRNG:TONTITN5
FDNS	00NR	0	20WP	G15_048	FROM->TO	G14-057T 345.00 - SUNNYSIDE 345KV CKT 1	717	789	0.04934	113.2967	DUNCAN (DUNCAN) 138/69/13.8KV TRANSFORMER CKT 1
FDNS	00NR	0	20WP	G15_048	FROM->TO	G14-057T 345.00 - SUNNYSIDE 345KV CKT 1	717	789	0.04934	113.2967	DUNCAN (DUNCAN) 138/69/13.8KV TRANSFORMER CKT 1
FDNS	00NR	0	16WP	G15_048	FROM->TO	G14-057T 345.00 - SUNNYSIDE 345KV CKT 1	717	789	0.04965	113.2937	GEN672310 1-POPLAR RIVER GENERATOR 1
FDNS	00NR	0	16WP	G15_048	FROM->TO	G14-057T 345.00 - SUNNYSIDE 345KV CKT 1	717	789	0.04965	113.2937	GEN672311 2-POPLAR RIVER GENERATOR 2
FDNS	00NR	0	16WP	G15_048	FROM->TO	G14-057T 345.00 - SUNNYSIDE 345KV CKT 1	717	789	0.0497	113.2933	P12:138:WFEC:MSL16

SOLUTION	GROUP	SCENARIO	SEASON	SOURCE	DIRECTION	MONITORED ELEMENT	RATEA (MVA)	RATEB(MVA)	TDF	TC%LOADING (% MVA)	CONTINGENCY
FDNS	00NR	0	16WP	G15_048	FROM->TO	G14-057T 345.00 - SUNNYSIDE 345KV CKT 1	717	789	0.04963	113.2886	P12:138:WFEC-AEPW:GOLDENSW4:CRAIGJT4
FDNS	00NR	0	16WP	G15_048	FROM->TO	G14-057T 345.00 - SUNNYSIDE 345KV CKT 1	717	789	0.04965	113.2851	GEN672306 6-BOUNDARY DAM GENERATOR 6
FDNS	00NR	0	16WP	G15_048	FROM->TO	G14-057T 345.00 - SUNNYSIDE 345KV CKT 1	717	789	0.04911	113.2851	SUNNYSIDE (SUNNYSD5) 345/138/13.8KV TRANSFORMER CKT 1
FDNS	00NR	0	20WP	G15_048	FROM->TO	G14-057T 345.00 - SUNNYSIDE 345KV CKT 1	717	789	0.04922	113.2821	GEN337911 1-ARKANSAS NUCLEAR ONE UNIT #2
FDNS	00NR	0	20WP	G15_048	FROM->TO	G14-057T 345.00 - SUNNYSIDE 345KV CKT 1	717	789	0.04922	113.2788	GEN515040 1-SEMINOLE 1G
FDNS	00NR	0	20WP	G15_048	FROM->TO	G14-057T 345.00 - SUNNYSIDE 345KV CKT 1	717	789	0.04881	113.2722	G14_038T 345.00 - Hitchland Interchange 345KV CKT 1
FDNS	00NR	0	20WP	G15_048	FROM->TO	G14-057T 345.00 - SUNNYSIDE 345KV CKT 1	717	789	0.04922	113.2716	GEN334030 1-FRONTIER UNIT 1
FDNS	00NR	0	16WP	G15_048	FROM->TO	G14-057T 345.00 - SUNNYSIDE 345KV CKT 1	717	789	0.04965	113.271	GEN344895 2-1LAB G2 20.000
FDNS	00NR	0	20WP	G15_048	FROM->TO	G14-057T 345.00 - SUNNYSIDE 345KV CKT 1	717	789	0.04922	113.2693	GEN334031 1-FRONTIER UNIT 2
FDNS	00NR	0	16WP	G15_048	FROM->TO	G14-057T 345.00 - SUNNYSIDE 345KV CKT 1	717	789	0.04965	113.2581	GEN523461 1-BLACKHAWK GEN #1
FDNS	00NR	0	16WP	G15_048	FROM->TO	G14-057T 345.00 - SUNNYSIDE 345KV CKT 1	717	789	0.04965	113.258	GEN523462 1-BLACKHAWK GEN #2
FDNS	00NR	0	20WP	G15_048	FROM->TO	G14-057T 345.00 - SUNNYSIDE 345KV CKT 1	717	789	0.04906	113.2548	TUTTLE - TUTTLE CONOCO TAP 138KV CKT 1
FDNS	00NR	0	16WP	G15_048	FROM->TO	G14-057T 345.00 - SUNNYSIDE 345KV CKT 1	717	789	0.04965	113.2537	GEN511852 1-COMANCHE #2
FDNS	00NR	0	20WP	G15_048	FROM->TO	G14-057T 345.00 - SUNNYSIDE 345KV CKT 1	717	789	0.04926	113.2501	P12:138:AEPW:CATOOSA4:T.S.E.-4
FDNS	00NR	0	20WP	G15_048	FROM->TO	G14-057T 345.00 - SUNNYSIDE 345KV CKT 1	717	789	0.05076	113.2433	BLANCHARD - MAUD 138KV CKT 1
FDNS	00NR	0	16WP	G15_048	FROM->TO	G14-057T 345.00 - SUNNYSIDE 345KV CKT 1	717	789	0.04965	113.2389	GEN344896 3-1LAB G3 20.000
FDNS	00NR	0	16WP	G15_048	FROM->TO	G14-057T 345.00 - SUNNYSIDE 345KV CKT 1	717	789	0.04965	113.2375	GEN344894 1-1LAB G1 20.000
FDNS	00NR	0	16WP	G15_048	FROM->TO	G14-057T 345.00 - SUNNYSIDE 345KV CKT 1	717	789	0.04965	113.2361	GEN344897 4-1LAB G4 20.000
FDNS	00NR	0	20WP	G15_048	FROM->TO	G14-057T 345.00 - SUNNYSIDE 345KV CKT 1	717	789	0.04925	113.2345	FULTON 115 - HOPE 115KV CKT 1
FDNS	00NR	0	20WP	G15_048	FROM->TO	G14-057T 345.00 - SUNNYSIDE 345KV CKT 1	717	789	0.04925	113.2345	FULTON 115 - HOPE 115KV CKT 1
FDNS	00NR	0	20WP	G15_048	FROM->TO	G14-057T 345.00 - SUNNYSIDE 345KV CKT 1	717	789	0.04959	113.2314	P12:138:AEPW-OGE:WTH_JCT4:JENSEN4
FDNS	00NR	0	20WP	G15_048	FROM->TO	G14-057T 345.00 - SUNNYSIDE 345KV CKT 1	717	789	0.04922	113.2306	GEN337652 1-WHITE BLUFF UNIT #1
FDNS	00NR	0	20WP	G15_048	FROM->TO	G14-057T 345.00 - SUNNYSIDE 345KV CKT 1	717	789	0.04922	113.2297	GEN501811 1-RODEMACHER UNIT 1
FDNS	00NR	0	20WP	G15_048	FROM->TO	G14-057T 345.00 - SUNNYSIDE 345KV CKT 1	717	789	0.04931	113.2296	P12:138:AEPW:CORNVIL4:DUNCAN-4
FDNS	00NR	0	20WP	G15_048	FROM->TO	G14-057T 345.00 - SUNNYSIDE 345KV CKT 1	717	789	0.04922	113.2154	GEN506752 1-LEBROCK GAS 1
FDNS	00NR	0	16WP	G15_048	FROM->TO	G14-057T 345.00 - SUNNYSIDE 345KV CKT 1	717	789	0.04903	113.2152	ARDMORE WEST - UNIROYAL 138KV CKT 1
FDNS	00NR	0	20WP	G15_048	FROM->TO	G14-057T 345.00 - SUNNYSIDE 345KV CKT 1	717	789	0.04922	113.2151	GEN506753 1-LEBROCK GAS 2
FDNS	00NR	0	20WP	G15_048	FROM->TO	G14-057T 345.00 - SUNNYSIDE 345KV CKT 1	717	789	0.04922	113.212	GEN300015 1-1SGPDEL 18.000
FDNS	00NR	0	20WP	G15_048	FROM->TO	G14-057T 345.00 - SUNNYSIDE 345KV CKT 1	717	789	0.04922	113.2097	GEN515226 1-MUSKOGEE 6G
FDNS	00NR	0	20WP	G15_048	FROM->TO	G14-057T 345.00 - SUNNYSIDE 345KV CKT 1	717	789	0.04922	113.2086	GEN300003 1-THOMAS HILL UNIT 3
FDNS	00NR	0	16WP	G15_048	FROM->TO	G14-057T 345.00 - SUNNYSIDE 345KV CKT 1	717	789	0.04963	113.2023	P12:138:AEPW-SWPA:LONEOAK4:TUPELO4
FDNS	00NR	0	16WP	G15_048	FROM->TO	G14-057T 345.00 - SUNNYSIDE 345KV CKT 1	717	789	0.04963	113.2023	P12:138:WFEC:MSL06
FDNS	00NR	0	16WP	G15_048	FROM->TO	G14-057T 345.00 - SUNNYSIDE 345KV CKT 1	717	789	0.04946	113.2022	P12:138:OKGE:3TERM40
FDNS	00NR	0	20WP	G15_048	FROM->TO	G14-057T 345.00 - SUNNYSIDE 345KV CKT 1	717	789	0.04922	113.197	GEN336191 1-LITTLE GYPSY UNIT#3
FDNS	00NR	0	16WP	G15_048	FROM->TO	G14-057T 345.00 - SUNNYSIDE 345KV CKT 1	717	789	0.04965	113.1818	GEN563162 1-G15081_3 0.6900
FDNSLock	00NR	0	16WP	G15_048	FROM->TO	G14-057T 345.00 - SUNNYSIDE 345KV CKT 1	717	789	0.04965	113.1814	GEN681542 6-JP MADGETT
FDNS	00NR	0	16WP	G15_048	FROM->TO	G14-057T 345.00 - SUNNYSIDE 345KV CKT 1	717	789	0.04965	113.1784	GEN521110 1-ORME1 13.800
FDNS	00NR	0	16WP	G15_048	FROM->TO	G14-057T 345.00 - SUNNYSIDE 345KV CKT 1	717	789	0.04965	113.1784	GEN521111 1-ORME2 13.800
FDNS	00NR	0	20WP	G15_048	FROM->TO	G14-057T 345.00 - SUNNYSIDE 345KV CKT 1	717	789	0.04946	113.1781	P12:138:AEPW:CORNVIL4:S.W.S.-4
FDNS	00NR	0	20WP	G15_048	FROM->TO	G14-057T 345.00 - SUNNYSIDE 345KV CKT 1	717	789	0.04926	113.1775	6LAYFLD 230.00 - CARROLL 230KV CKT 1
FDNS	00NR	0	16WP	G15_048	FROM->TO	G14-057T 345.00 - SUNNYSIDE 345KV CKT 1	717	789	0.04965	113.1714	GEN562699 1-G15_018_3 0.6900
FDNS	00NR	0	16WP	G15_048	FROM->TO	G14-057T 345.00 - SUNNYSIDE 345KV CKT 1	717	789	0.04959	113.1706	G15085_T 138.00 - RUSSELL 138KV CKT 1
FDNS	00NR	0	16WP	G15_048	FROM->TO	G14-057T 345.00 - SUNNYSIDE 345KV CKT 1	717	789	0.04933	113.1705	CARTRCO4 138.00 - RATLIFF 138KV CKT 1
FDNS	00NR	0	20WP	G15_048	FROM->TO	G14-057T 345.00 - SUNNYSIDE 345KV CKT 1	717	789	0.05029	113.1702	LATTA JCT - OIL CENTER 138KV CKT 1
FDNS	00NR	0	20WP	G15_048	FROM->TO	G14-057T 345.00 - SUNNYSIDE 345KV CKT 1	717	789	0.04922	113.1681	GEN335614 1-WILLOW GLENN UNIT#4
FDNS	00NR	0	20WP	G15_048	FROM->TO	G14-057T 345.00 - SUNNYSIDE 345KV CKT 1	717	789	0.04906	113.162	CIMARRON - TUTTLE CONOCO TAP 138KV CKT 1
FDNS	00NR	0	16WP	G15_048	FROM->TO	G14-057T 345.00 - SUNNYSIDE 345KV CKT 1	717	789	0.04965	113.159	GEN563292 1-G15095_3 0.6900
FDNS	00NR	0	20WP	G15_048	FROM->TO	G14-057T 345.00 - SUNNYSIDE 345KV CKT 1	717	789	0.04925	113.1529	8DANIEL8 500.00 - MCKNIGHT 500KV CKT 1
FDNS	00NR	0	20WP	G15_048	FROM->TO	G14-057T 345.00 - SUNNYSIDE 345KV CKT 1	717	789	0.05057	113.1398	BAILEY4 138.00 - SUNSHINE CANYON 138KV CKT 1
FDNS	00NR	0	20WP	G15_048	FROM->TO	G14-057T 345.00 - SUNNYSIDE 345KV CKT 1	717	789	0.04927	113.1297	G15095_T 138.00 - ROSE_VALLEY 138.00 138KV CKT 1
FDNS	00NR	0	16WP	G15_048	FROM->TO	G14-057T 345.00 - SUNNYSIDE 345KV CKT 1	717	789	0.04494	113.1295	G15063_T 345.00 - MATHWSN7 345.00 345KV CKT 1
FDNS	00NR	0	20WP	G15_048	FROM->TO	G14-057T 345.00 - SUNNYSIDE 345KV CKT 1	717	789	0.04922	113.1261	GEN337910 1-ARKANSAS NUCLEAR ONE UNIT #1
FDNS	00NR	0	20WP	G15_048	FROM->TO	G14-057T 345.00 - SUNNYSIDE 345KV CKT 1	717	789	0.04922	113.1241	P12:161:AEPW:EROGERS5:ECNTRTN5
FDNS	00NR	0	20WP	G15_048	FROM->TO	G14-057T 345.00 - SUNNYSIDE 345KV CKT 1	717	789	0.04926	113.1228	BUCKNER7 345.00 - SPEARVILLE 345KV CKT 1
FDNS	00NR	0	20WP	G15_048	FROM->TO	G14-057T 345.00 - SUNNYSIDE 345KV CKT 1	717	789	0.04926	113.1228	BUCKNER7 345.00 - SPEARVILLE 345KV CKT 1
FDNS	00NR	0	20WP	G15_048	FROM->TO	G14-057T 345.00 - SUNNYSIDE 345KV CKT 1	717	789	0.04922	113.122	GEN303007 1-1BC2 U2
FDNS	00NR	0	20WP	G15_048	FROM->TO	G14-057T 345.00 - SUNNYSIDE 345KV CKT 1	717	789	0.0499	113.1199	FINNEY SWITCHING STATION - WALKTAP7 345.00 345KV CKT 1
FDNS	00NR	0	20WP	G15_048	FROM->TO	G14-057T 345.00 - SUNNYSIDE 345KV CKT 1	717	789	0.0499	113.1199	FINNEY SWITCHING STATION - WALKTAP7 345.00 345KV CKT 1
FDNS	00NR	0	16WP	G15_048	FROM->TO	G14-057T 345.00 - SUNNYSIDE 345KV CKT 1	717	789	0.04884	113.1195	CACHE - SNYDER 138KV CKT 1
FDNS	00NR	0	20WP	G15_048	FROM->TO	G14-057T 345.00 - SUNNYSIDE 345KV CKT 1	717	789	0.04922	113.1171	GEN336464 1-MICHOUD UNIT #3
FDNS	00NR	0	20WP	G15_048	FROM->TO	G14-057T 345.00 - SUNNYSIDE 345KV CKT 1	717	789	0.04922	113.116	GEN303006 1-1BC2 U1
FDNS	00NR	0	20WP	G15_048	FROM->TO	G14-057T 345.00 - SUNNYSIDE 345KV CKT 1	717	789	0.0494	113.1158	P12:138:AEPW:WTHWF4:CLINTJC4
FDNS	00NR	0	20WP	G15_048	FROM->TO	G14-057T 345.00 - SUNNYSIDE 345KV CKT 1	717	789	0.04922	113.1142	WHITE BLUFF 500/26.0KV TRANSFORMER CKT 1
FDNS	00NR	0	20WP	G15_048	FROM->TO	G14-057T 345.00 - SUNNYSIDE 345KV CKT 1	717	789	0.04934	113.1123	P12:69:WFEC-AEPW:COMANCH2:DUNCAN-2
FDNS	00NR	0	20WP	G15_048	FROM->TO	G14-057T 345.00 - SUNNYSIDE 345KV CKT 1	717	789	0.04922	113.1123	GEN515223 1-MUSKOGEE 4G
FDNS	00NR	0	20WP	G15_048	FROM->TO	G14-057T 345.00 - SUNNYSIDE 345KV CKT 1	717	789	0.04922	113.1123	GEN515225 1-MUSKOGEE 5G
FDNS	00NR	0	20WP	G15_048	FROM->TO	G14-057T 345.00 - SUNNYSIDE 345KV CKT 1	717	789	0.04922	113.1096	GEN562783 1-G15036_4 0.6900
FDNS	00NR	0	20WP	G15_048	FROM->TO	G14-057T 345.00 - SUNNYSIDE 345KV CKT 1	717	789	0.04922	113.1096	GEN562784 1-G15036_5 0.6900
FDNS	00NR	0	20WP	G15_048	FROM->TO	G14-057T 345.00 - SUNNYSIDE 345KV CKT 1	717	789	0.04931	113.1077	G15088_T 345.00 - MOORE 345KV CKT 1
FDNS	00NR	0	20WP	G15_048	FROM->TO	G14-057T 345.00 - SUNNYSIDE 345KV CKT 1	717	789	0.04921	113.1046	P12:69:AEPW-OMPA:COMANC-2:OMWALTR2
FDNS	00NR	0	20WP	G15_048	FROM->TO	G14-057T 345.00 - SUNNYSIDE 345KV CKT 1	717	789	0.04923	113.0985	BISMARK - HOT SPRINGS WEST BUS 115KV CKT 1
FDNS	00NR	0	20WP	G15_048	FROM->TO	G14-057T 345.00 - SUNNYSIDE 345KV CKT 1	717	789	0.04958	113.0959	CIMARRON - CZECH HALL 138KV CKT 1
FDNS	00NR	0	20WP	G15_048	FROM->TO	G14-057T 345.00 - SUNNYSIDE 345KV CKT 1	717	789	0.04938	113.0936	G15074_T 345.00 - HOYT 345KV CKT 1
FDNS	00NR	0	20WP	G15_048	FROM->TO	G14-057T 345.00 - SUNNYSIDE 345KV CKT 1	717	789	0.04923	113.0914	MC NIEL 500/115KV TRANSFORMER CKT 1
FDNS	00NR	0	20WP	G15_048	FROM->TO	G14-057T 345.00 - SUNNYSIDE 345KV CKT 1	717	789	0.04922	113.0857	GEN300010 1-ST FRANCIS UNIT 1
FDNS	00NR	0	20WP	G15_048	FROM->TO	G14-057T 345.00 - SUNNYSIDE 345KV CKT 1	717	789	0.04934	113.0853	DUNCAN - TOSCO 69KV CKT 1
FDNS	00NR	0	20WP	G15_048	FROM->TO	G14-057T 345.00 - SUNNYSIDE 345KV CKT 1	717	789	0.0494	113.0823	P12:138:AEPW:WTHWF4:WTH_SE4
FDNS	00NR	0	16WP	G15_048	FROM->TO	G14-057T 345.00 - SUNNYSIDE 345KV CKT 1	717	789	0.04965	113.0731	GEN563122 1-G15077_3 0.3850
FDNS	00NR	0	16WP	G15_048	FROM->TO	G14-057T 345.00 - SUNNYSIDE 345KV CKT 1	717	789	0.04965	113.0722	GEN661015 1-COYOTE

SOLUTION	GROUP	SCENARIO	SEASON	SOURCE	DIRECTION	MONITORED ELEMENT	RATEA (MVA)	RATEB(MVA)	TDF	TC%LOADING (% MVA)	CONTINGENCY
FDNS	00NR	0	20WP	G15_048	FROM->TO	G14-057T 345.00 - SUNNYSIDE 345KV CKT 1	717	789	0.0492	113.0703	HOT SPRINGS EHV - MAGNET COVE 500KV CKT 1
FDNS	00NR	0	20WP	G15_048	FROM->TO	G14-057T 345.00 - SUNNYSIDE 345KV CKT 1	717	789	0.06629	113.0696	CLEO CORNER - CLEOPLT4 138.00 138KV CKT 1
FDNS	00NR	0	20WP	G15_048	FROM->TO	G14-057T 345.00 - SUNNYSIDE 345KV CKT 1	717	789	0.04922	113.0607	GEN337041 1-GERALD ANDRUS
FDNS	00NR	0	20WP	G15_048	FROM->TO	G14-057T 345.00 - SUNNYSIDE 345KV CKT 1	717	789	0.04922	113.059	GEN505432 1-SIKESTON
FDNS	00NR	0	16WP	G15_048	FROM->TO	G14-057T 345.00 - SUNNYSIDE 345KV CKT 1	717	789	0.04965	113.0554	GEN562861 1-G15045_2 0.4800
FDNS	00NR	0	20WP	G15_048	FROM->TO	G14-057T 345.00 - SUNNYSIDE 345KV CKT 1	717	789	0.04922	113.0543	GEN303008 1-1BC2 U3
FDNS	00NR	0	20WP	G15_048	FROM->TO	G14-057T 345.00 - SUNNYSIDE 345KV CKT 1	717	789	0.04793	113.0517	CHISHOLM6 230.00 - ELK CITY 230KV 230KV CKT 1
FDNS	00NR	0	20WP	G15_048	FROM->TO	G14-057T 345.00 - SUNNYSIDE 345KV CKT 1	717	789	0.04927	113.0491	NOEL_SW 138.00 - ROSE_VALLEY 138.00 138KV CKT 1
FDNS	00NR	0	20WP	G15_048	FROM->TO	G14-057T 345.00 - SUNNYSIDE 345KV CKT 1	717	789	0.06629	113.0487	CLEOPLT4 138.00 - MEN TAP 138KV CKT 1
FDNS	00NR	0	20WP	G15_048	FROM->TO	G14-057T 345.00 - SUNNYSIDE 345KV CKT 1	717	789	0.04793	113.0487	ELK CITY 230KV (ELKCTY-6) 230/138/13.8KV TRANSFORMER CKT 1
FDNS	00NR	0	20WP	G15_048	FROM->TO	G14-057T 345.00 - SUNNYSIDE 345KV CKT 1	717	789	0.04793	113.0487	ELK CITY 230KV (ELKCTY-6) 230/138/13.8KV TRANSFORMER CKT 1
FDNS	00NR	0	20WP	G15_048	FROM->TO	G14-057T 345.00 - SUNNYSIDE 345KV CKT 1	717	789	0.04923	113.047	ALPINE AECC - BISMARK 115KV CKT 1
FDNS	00NR	0	16WP	G15_048	FROM->TO	G14-057T 345.00 - SUNNYSIDE 345KV CKT 1	717	789	0.04965	113.0454	GEN520811 1-ANADRK4
FDNS	00NR	0	20WP	G15_048	FROM->TO	G14-057T 345.00 - SUNNYSIDE 345KV CKT 1	717	789	0.04972	113.0419	CIMARRON - SARA 138KV CKT 1
FDNS	00NR	0	20WP	G15_048	FROM->TO	G14-057T 345.00 - SUNNYSIDE 345KV CKT 1	717	789	0.06629	113.0367	IMO TAP - MEN TAP 138KV CKT 1
FDNS	00NR	0	20WP	G15_048	FROM->TO	G14-057T 345.00 - SUNNYSIDE 345KV CKT 1	717	789	0.04922	113.0282	GEN300011 1-ST FRANCIS UNIT 2
FDNS	00NR	0	20WP	G15_048	FROM->TO	G14-057T 345.00 - SUNNYSIDE 345KV CKT 1	717	789	0.04922	113.0251	GEN336170 1-GULF OXY U4
FDNS	00NR	0	20WP	G15_048	FROM->TO	G14-057T 345.00 - SUNNYSIDE 345KV CKT 1	717	789	0.04925	113.0227	P12:138:AEPW:N.E.S.-4:CATOOSA4
FDNSLock	00NR	0	16WP	G15_048	FROM->TO	G14-057T 345.00 - SUNNYSIDE 345KV CKT 1	717	789	0.04965	113.0211	GEN532751 1-WOLF CREEK GENERATING STATION UNIT 1
FDNS	00NR	0	20WP	G15_048	FROM->TO	G14-057T 345.00 - SUNNYSIDE 345KV CKT 1	717	789	0.04852	113.0209	SEMINOLE - VANOSTP4 138.00 138KV CKT 1
FDNS	00NR	0	20WP	G15_048	FROM->TO	G14-057T 345.00 - SUNNYSIDE 345KV CKT 1	717	789	0.04958	113.0172	CZECH HALL - XEROX 138KV CKT 1
FDNS	00NR	0	20WP	G15_048	FROM->TO	G14-057T 345.00 - SUNNYSIDE 345KV CKT 1	717	789	0.04934	113.0167	COMANCHE TAP - TOSCO 69KV CKT 1
FDNS	00NR	0	20WP	G15_048	FROM->TO	G14-057T 345.00 - SUNNYSIDE 345KV CKT 1	717	789	0.04922	113.0167	NELSON 230/20.0KV TRANSFORMER CKT 1
FDNS	00NR	0	16WP	G15_048	FROM->TO	G14-057T 345.00 - SUNNYSIDE 345KV CKT 1	717	789	0.05094	113.0164	P12:138:WFEC:MSL15
FDNS	00NR	0	20WP	G15_048	FROM->TO	G14-057T 345.00 - SUNNYSIDE 345KV CKT 1	717	789	0.04958	113.0131	MORGAN - XEROX 138KV CKT 1
FDNS	00NR	0	20WP	G15_048	FROM->TO	G14-057T 345.00 - SUNNYSIDE 345KV CKT 1	717	789	0.04922	113.0062	GEN336801 1-BAXTER WILSON UNIT #1
FDNS	00NR	0	20WP	G15_048	FROM->TO	G14-057T 345.00 - SUNNYSIDE 345KV CKT 1	717	789	0.04923	112.9982	ALPINE AECC - AMITY SS 115KV CKT 1
FDNS	00NR	0	20WP	G15_048	FROM->TO	G14-057T 345.00 - SUNNYSIDE 345KV CKT 1	717	789	0.04872	112.9962	ARBWIND4 138.00 - CARTER 138KV CKT 1
FDNS	00NR	0	16WP	G15_048	FROM->TO	G14-057T 345.00 - SUNNYSIDE 345KV CKT 1	717	789	0.04903	112.9937	SUNNYSIDE - UNIROYAL 138KV CKT 1
FDNS	00NR	0	20WP	G15_048	FROM->TO	G14-057T 345.00 - SUNNYSIDE 345KV CKT 1	717	789	0.04958	112.9905	MORGAN - MUSTANG 138KV CKT 1
FDNS	00NR	0	20WP	G15_048	FROM->TO	G14-057T 345.00 - SUNNYSIDE 345KV CKT 1	717	789	0.04954	112.9897	WEATHERFORD JCT. - WEATHERFORD SOUTHEAST 138KV CKT 1
FDNS	00NR	0	20WP	G15_048	FROM->TO	G14-057T 345.00 - SUNNYSIDE 345KV CKT 1	717	789	0.04954	112.9897	WEATHERFORD JCT. - WEATHERFORD SOUTHEAST 138KV CKT 1
FDNS	00NR	0	20WP	G15_048	FROM->TO	G14-057T 345.00 - SUNNYSIDE 345KV CKT 1	717	789	0.04922	112.9775	8CAJUN2 500/24.0KV TRANSFORMER CKT 1
FDNS	00NR	0	20WP	G15_048	FROM->TO	G14-057T 345.00 - SUNNYSIDE 345KV CKT 1	717	789	0.04922	112.9766	GEN501910 1-ACADIA UNIT ST1
FDNS	00NR	0	16WP	G15_048	FROM->TO	G14-057T 345.00 - SUNNYSIDE 345KV CKT 1	717	789	0.04965	112.9741	GEN562992 1-G15063_3 0.6900
FDNS	00NR	0	20WP	G15_048	FROM->TO	G14-057T 345.00 - SUNNYSIDE 345KV CKT 1	717	789	0.04952	112.9676	ANADARKO - SEQUOYAHJ4 138.00 138KV CKT 1
FDNS	00NR	0	20WP	G15_048	FROM->TO	G14-057T 345.00 - SUNNYSIDE 345KV CKT 1	717	789	0.04952	112.9661	CORN TAP - SEQUOYAHJ4 138.00 138KV CKT 1
FDNS	00NR	0	20WP	G15_048	FROM->TO	G14-057T 345.00 - SUNNYSIDE 345KV CKT 1	717	789	0.04934	112.9645	COMANCHE - COMANCHE TAP 69KV CKT 1
FDNS	00NR	0	20WP	G15_048	FROM->TO	G14-057T 345.00 - SUNNYSIDE 345KV CKT 1	717	789	0.05057	112.9615	BAILEY4 138.00 - WESTMOORE 138KV CKT 1
FDNS	00NR	0	16WP	G15_048	FROM->TO	G14-057T 345.00 - SUNNYSIDE 345KV CKT 1	717	789	0.04965	112.9554	GEN657748 1-YOUNG 2 GENERATOR
FDNS	00NR	0	16WP	G15_048	FROM->TO	G14-057T 345.00 - SUNNYSIDE 345KV CKT 1	717	789	0.04957	112.9501	GRAPEVINE INTERCHANGE - STATELINE INTERCHANGE 230KV CKT 1
FDNS	00NR	0	16WP	G15_048	FROM->TO	G14-057T 345.00 - SUNNYSIDE 345KV CKT 1	717	789	0.04957	112.9501	GRAPEVINE INTERCHANGE - STATELINE INTERCHANGE 230KV CKT 1
FDNS	00NR	0	20WP	G15_048	FROM->TO	G14-057T 345.00 - SUNNYSIDE 345KV CKT 1	717	789	0.04999	112.95	P12:138:OKGE-AEPW:JENSEN4:REDROCKRD4
FDNS	00NR	0	20WP	G15_048	FROM->TO	G14-057T 345.00 - SUNNYSIDE 345KV CKT 1	717	789	0.04938	112.94	WALTERS - WALTERS 69KV CKT 1
FDNS	00NR	0	20WP	G15_048	FROM->TO	G14-057T 345.00 - SUNNYSIDE 345KV CKT 1	717	789	0.04954	112.9379	P12:138:AEPW:REDROCKRD4:WTH_JCT4
FDNS	00NR	0	20WP	G15_048	FROM->TO	G14-057T 345.00 - SUNNYSIDE 345KV CKT 1	717	789	0.04922	112.9375	SABINE 230/24.0KV TRANSFORMER CKT 1
FDNS	00NR	0	20WP	G15_048	FROM->TO	G14-057T 345.00 - SUNNYSIDE 345KV CKT 1	717	789	0.04922	112.9335	GEN300016 1-1G1GPDEL 18.000
FDNS	00NR	0	20WP	G15_048	FROM->TO	G14-057T 345.00 - SUNNYSIDE 345KV CKT 1	717	789	0.04972	112.9306	SARA - STHLAKE4 138.00 138KV CKT 1
FDNS	00NR	0	16WP	G15_048	FROM->TO	G14-057T 345.00 - SUNNYSIDE 345KV CKT 1	717	789	0.05099	112.9294	CANEY CREEK - TEXOMA JCT 138KV CKT 1
FDNS	00NR	0	20WP	G15_048	FROM->TO	G14-057T 345.00 - SUNNYSIDE 345KV CKT 1	717	789	0.04922	112.9286	P12:138:AEPW:R.S.S.-4:S.HUD.-4
FDNS	00NR	0	20WP	G15_048	FROM->TO	G14-057T 345.00 - SUNNYSIDE 345KV CKT 1	717	789	0.04918	112.9232	ETTA (DUKE HOTSPRINGS) - MC NIEL 500KV CKT 1
FDNS	00NR	0	20WP	G15_048	FROM->TO	G14-057T 345.00 - SUNNYSIDE 345KV CKT 1	717	789	0.04922	112.9218	GEN336222 1-LITTLE GYPSY UNIT#2
FDNS	00NR	0	16WP	G15_048	FROM->TO	G14-057T 345.00 - SUNNYSIDE 345KV CKT 1	717	789	0.0496	112.9113	P12:138:AEPW:SHAM4WT:CHILD4WT
FDNS	00NR	0	20WP	G15_048	FROM->TO	G14-057T 345.00 - SUNNYSIDE 345KV CKT 1	717	789	0.04921	112.9105	LAWTON RELIFT TAP - OMPA-WALTERS 69KV CKT 1
FDNS	00NR	0	20WP	G15_048	FROM->TO	G14-057T 345.00 - SUNNYSIDE 345KV CKT 1	717	789	0.04972	112.9005	MCCLAIN - STHLAKE4 138.00 138KV CKT 1
FDNS	00NR	0	20WP	G15_048	FROM->TO	G14-057T 345.00 - SUNNYSIDE 345KV CKT 1	717	789	0.04922	112.897	P12:69:AEPW:NROGERS2:ECNTRTN2
FDNS	00NR	0	20WP	G15_048	FROM->TO	G14-057T 345.00 - SUNNYSIDE 345KV CKT 1	717	789	0.04955	112.8964	G13-010T 345.00 - POST ROCK 345KV CKT 1
FDNS	00NR	0	16WP	G15_048	FROM->TO	G14-057T 345.00 - SUNNYSIDE 345KV CKT 1	717	789	0.04965	112.8952	GEN562704 1-G15_020_3 0.3550
FDNS	00NR	0	20WP	G15_048	FROM->TO	G14-057T 345.00 - SUNNYSIDE 345KV CKT 1	717	789	0.05029	112.8932	LASALLE - LATTA JCT 138KV CKT 1
FDNS	00NR	0	20WP	G15_048	FROM->TO	G14-057T 345.00 - SUNNYSIDE 345KV CKT 1	717	789	0.04947	112.8928	NORGE ROAD - SOUTHWESTERN STATION 138KV CKT 1
FDNS	00NR	0	20WP	G15_048	FROM->TO	G14-057T 345.00 - SUNNYSIDE 345KV CKT 1	717	789	0.04947	112.8928	NORGE ROAD - SOUTHWESTERN STATION 138KV CKT 1
FDNS	00NR	0	16WP	G15_048	FROM->TO	G14-057T 345.00 - SUNNYSIDE 345KV CKT 1	717	789	0.04965	112.8914	GEN562952 1-G15057_3 0.6500
FDNS	00NR	0	20WP	G15_048	FROM->TO	G14-057T 345.00 - SUNNYSIDE 345KV CKT 1	717	789	0.04922	112.8872	GEN336152 1-WATERFORD UNIT#2
FDNS	00NR	0	20WP	G15_048	FROM->TO	G14-057T 345.00 - SUNNYSIDE 345KV CKT 1	717	789	0.04922	112.8868	P12:138:AEPW:BA_71ST4:T.S.E.-4
FDNS	00NR	0	20WP	G15_048	FROM->TO	G14-057T 345.00 - SUNNYSIDE 345KV CKT 1	717	789	0.04922	112.8864	GEN336151 1-WATERFORD UNIT#1
FDNS	00NR	0	20WP	G15_048	FROM->TO	G14-057T 345.00 - SUNNYSIDE 345KV CKT 1	717	789	0.04922	112.882	P12:138:AEPW:YARCH-S4:T.S.E.-4
FDNS	00NR	0	20WP	G15_048	FROM->TO	G14-057T 345.00 - SUNNYSIDE 345KV CKT 1	717	789	0.04962	112.8781	EMPORIA ENERGY CENTER - G14_001T 345.00 345KV CKT 1
FDNS	00NR	0	20WP	G15_048	FROM->TO	G14-057T 345.00 - SUNNYSIDE 345KV CKT 1	717	789	0.04939	112.8777	HOYT - STRANGER CREEK 345KV CKT 1
FDNS	00NR	0	20WP	G15_048	FROM->TO	G14-057T 345.00 - SUNNYSIDE 345KV CKT 1	717	789	0.04977	112.8772	P12:138:AEPW-OGE:SHIDLER4:OSAGE 4
FDNS	00NR	0	20WP	G15_048	FROM->TO	G14-057T 345.00 - SUNNYSIDE 345KV CKT 1	717	789	0.04922	112.875	GEN300017 1-1G2GPDEL 18.000
FDNS	00NR	0	20WP	G15_048	FROM->TO	G14-057T 345.00 - SUNNYSIDE 345KV CKT 1	717	789	0.04922	112.8749	FRONTIER 345/18.0KV TRANSFORMER CKT 1
FDNS	00NR	0	20WP	G15_048	FROM->TO	G14-057T 345.00 - SUNNYSIDE 345KV CKT 1	717	789	0.04922	112.8727	FRONTIER 345/18.0KV TRANSFORMER CKT 1
FDNS	00NR	0	20WP	G15_048	FROM->TO	G14-057T 345.00 - SUNNYSIDE 345KV CKT 1	717	789	0.04985	112.8685	P12:138:OKGE:3TERM2
FDNS	00NR	0	20WP	G15_048	FROM->TO	G14-057T 345.00 - SUNNYSIDE 345KV CKT 1	717	789	0.04973	112.8667	CLINTON JUNCTION - ELK CITY 138KV CKT 1
FDNS	00NR	0	20WP	G15_048	FROM->TO	G14-057T 345.00 - SUNNYSIDE 345KV CKT 1	717	789	0.04973	112.8667	CLINTON JUNCTION - ELK CITY 138KV CKT 1
FDNS	00NR	0	20WP	G15_048	FROM->TO	G14-057T 345.00 - SUNNYSIDE 345KV CKT 1	717	789	0.04925	112.8667	HOPE - MCNAB REC 115KV CKT 1
FDNS	00NR	0	20WP	G15_048	FROM->TO	G14-057T 345.00 - SUNNYSIDE 345KV CKT 1	717	789	0.04977	112.8653	MORISNT4 138.00 - STILLWATER 138KV CKT 1
FDNS	00NR	0	20WP	G15_048	FROM->TO	G14-057T 345.00 - SUNNYSIDE 345KV CKT 1	717	789	0.04925	112.856	P12:115:AEPW:TURK3:HOPE3
FDNS	00NR	0	20WP	G15_048	FROM->TO	G14-057T 345.00 - SUNNYSIDE 345KV CKT 1	717	789	0.04982	112.8552	BENTON - WICHITA 345KV CKT 1

SOLUTION	GROUP	SCENARIO	SEASON	SOURCE	DIRECTION	MONITORED ELEMENT	RATEA (MVA)	RATEB(MVA)	TDF	TC%LOADING (% MVA)	CONTINGENCY
FDNS	00NR	0	20WP	G15_048	FROM->TO	G14-057T 345.00 - SUNNYSIDE 345KV CKT 1	717	789	0.04938	112.853	G15074_T 345.00 - JEFFREY ENERGY CENTER 345KV CKT 1
FDNS	00NR	0	16WP	G15_048	FROM->TO	G14-057T 345.00 - SUNNYSIDE 345KV CKT 1	717	789	0.04965	112.8518	GEN563173 1-G15082_3 0.6900
FDNS	00NR	0	20WP	G15_048	FROM->TO	G14-057T 345.00 - SUNNYSIDE 345KV CKT 1	717	789	0.04955	112.8505	G13-010T 345.00 - SPEARVILLE 345KV CKT 1
FDNS	00NR	0	20WP	G15_048	FROM->TO	G14-057T 345.00 - SUNNYSIDE 345KV CKT 1	717	789	0.04924	112.8485	COUCH SES - MC NIEL 115KV CKT 1
FDNS	00NR	0	20WP	G15_048	FROM->TO	G14-057T 345.00 - SUNNYSIDE 345KV CKT 1	717	789	0.0494	112.8447	WEATHERFORD TAP - WEATHERFORD WIND FARM 138KV CKT 1
FDNS	00NR	0	20WP	G15_048	FROM->TO	G14-057T 345.00 - SUNNYSIDE 345KV CKT 1	717	789	0.04954	112.8444	BLACKBERRY - NEOSHO 345KV CKT 1
FDNS	00NR	0	20WP	G15_048	FROM->TO	G14-057T 345.00 - SUNNYSIDE 345KV CKT 1	717	789	0.04922	112.8441	LEWIS CREEK SWITCHYARD 138/22.0KV TRANSFORMER CKT 1
FDNS	00NR	0	20WP	G15_048	FROM->TO	G14-057T 345.00 - SUNNYSIDE 345KV CKT 1	717	789	0.04954	112.8435	HINTON - WEATHERFORD JCT. 138KV CKT 1
FDNS	00NR	0	20WP	G15_048	FROM->TO	G14-057T 345.00 - SUNNYSIDE 345KV CKT 1	717	789	0.04922	112.8396	LEWIS CREEK SWITCHYARD 138/22.0KV TRANSFORMER CKT 1
FDNS	00NR	0	16WP	G15_048	FROM->TO	G14-057T 345.00 - SUNNYSIDE 345KV CKT 1	717	789	0.04955	112.8375	GRAPEVINE INTERCHANGE - NICHOLS STATION 230KV CKT 1
FDNS	00NR	0	16WP	G15_048	FROM->TO	G14-057T 345.00 - SUNNYSIDE 345KV CKT 1	717	789	0.04955	112.8375	GRAPEVINE INTERCHANGE - NICHOLS STATION 230KV CKT 1
FDNS	00NR	0	20WP	G15_048	FROM->TO	G14-057T 345.00 - SUNNYSIDE 345KV CKT 1	717	789	0.04921	112.8369	OMPA-WALTERS - WALTERS 69KV CKT 1
FDNS	00NR	0	20WP	G15_048	FROM->TO	G14-057T 345.00 - SUNNYSIDE 345KV CKT 1	717	789	0.04921	112.8369	OMPA-WALTERS - WALTERS 69KV CKT 1
FDNS	00NR	0	20WP	G15_048	FROM->TO	G14-057T 345.00 - SUNNYSIDE 345KV CKT 1	717	789	0.04922	112.8359	CYPRESS - HARTBURG 500KV CKT 1
FDNS	00NR	0	20WP	G15_048	FROM->TO	G14-057T 345.00 - SUNNYSIDE 345KV CKT 1	717	789	0.04946	112.8325	SOUTHWESTERN STATION - VERDEN 138KV CKT 1
FDNS	00NR	0	20WP	G15_048	FROM->TO	G14-057T 345.00 - SUNNYSIDE 345KV CKT 1	717	789	0.04922	112.8315	GEN334432 1-SABINE UNIT 2
FDNS	00NR	0	20WP	G15_048	FROM->TO	G14-057T 345.00 - SUNNYSIDE 345KV CKT 1	717	789	0.04922	112.831	GEN334431 1-SABINE UNIT 1
FDNS	00NR	0	20WP	G15_048	FROM->TO	G14-057T 345.00 - SUNNYSIDE 345KV CKT 1	717	789	0.04925	112.8308	TURK (TURK 1) 138/115/13.2KV TRANSFORMER CKT 1
FDNS	00NR	0	20WP	G15_048	FROM->TO	G14-057T 345.00 - SUNNYSIDE 345KV CKT 1	717	789	0.04925	112.8308	TURK (TURK 1) 138/115/13.2KV TRANSFORMER CKT 1
FDNS	00NR	0	20WP	G15_048	FROM->TO	G14-057T 345.00 - SUNNYSIDE 345KV CKT 1	717	789	0.04925	112.8307	MCNAB REC - Turk 115 115KV CKT 1
FDNS	00NR	0	20WP	G15_048	FROM->TO	G14-057T 345.00 - SUNNYSIDE 345KV CKT 1	717	789	0.04927	112.8301	7JASPER 345.00 - BLACKBERRY 345KV CKT 1
FDNS	00NR	0	20WP	G15_048	FROM->TO	G14-057T 345.00 - SUNNYSIDE 345KV CKT 1	717	789	0.04922	112.8268	GEN501823 1-TECHE UNIT 3
FDNS	00NR	0	20WP	G15_048	FROM->TO	G14-057T 345.00 - SUNNYSIDE 345KV CKT 1	717	789	0.04922	112.8248	GEN501970 1-EVANGELINE UNIT 7
FDNS	00NR	0	20WP	G15_048	FROM->TO	G14-057T 345.00 - SUNNYSIDE 345KV CKT 1	717	789	0.04922	112.8197	GEN505616 1-BROKEN BOW
FDNS	00NR	0	20WP	G15_048	FROM->TO	G14-057T 345.00 - SUNNYSIDE 345KV CKT 1	717	789	0.04938	112.8185	P12:69:WFEC-AEPW:COMANCH2:WALTRS-2
FDNS	00NR	0	20WP	G15_048	FROM->TO	G14-057T 345.00 - SUNNYSIDE 345KV CKT 1	717	789	0.05071	112.8114	CANADIAN - NOBLE 138KV CKT 1
FDNS	00NR	0	20WP	G15_048	FROM->TO	G14-057T 345.00 - SUNNYSIDE 345KV CKT 1	717	789	0.04946	112.8107	NORTH 29TH CHICKASHA - VERDEN 138KV CKT 1
FDNS	00NR	0	20WP	G15_048	FROM->TO	G14-057T 345.00 - SUNNYSIDE 345KV CKT 1	717	789	0.04922	112.8098	P12:161:AEPW:CHAMSPR5:FARMING5
FDNS	00NR	0	16WP	G15_048	FROM->TO	G14-057T 345.00 - SUNNYSIDE 345KV CKT 1	717	789	0.04965	112.8084	GEN562710 1-G15_022_3 0.5500
FDNS	00NR	0	20WP	G15_048	FROM->TO	G14-057T 345.00 - SUNNYSIDE 345KV CKT 1	717	789	0.04931	112.8043	7LUTESVIL 345.00 - 7ST FRANC 345.00 345KV CKT 1
FDNS	00NR	0	20WP	G15_048	FROM->TO	G14-057T 345.00 - SUNNYSIDE 345KV CKT 1	717	789	0.04922	112.8033	GEN334392 1-EXXON MOBIL IPP 1
FDNS	00NR	0	20WP	G15_048	FROM->TO	G14-057T 345.00 - SUNNYSIDE 345KV CKT 1	717	789	0.04962	112.8	G14_001T 345.00 - WICHITA 345KV CKT 1
FDNS	00NR	0	20WP	G15_048	FROM->TO	G14-057T 345.00 - SUNNYSIDE 345KV CKT 1	717	789	0.04922	112.7969	GEN334393 1-EXXON MOBIL IPP 2
FDNS	00NR	0	20WP	G15_048	FROM->TO	G14-057T 345.00 - SUNNYSIDE 345KV CKT 1	717	789	0.04922	112.7969	GEN334394 1-EXXON MOBIL IPP 3
FDNS	00NR	0	20WP	G15_048	FROM->TO	G14-057T 345.00 - SUNNYSIDE 345KV CKT 1	717	789	0.05057	112.7939	FRANKLIN SW - WESTMOORE 138KV CKT 1
FDNS	00NR	0	20WP	G15_048	FROM->TO	G14-057T 345.00 - SUNNYSIDE 345KV CKT 1	717	789	0.04929	112.7921	LAKEOVER - MCADAMS 500KV CKT 1
FDNS	00NR	0	16WP	G15_048	FROM->TO	G14-057T 345.00 - SUNNYSIDE 345KV CKT 1	717	789	0.04965	112.7898	GEN620315 1-BIG STONE GEN
FDNS	00NR	0	20WP	G15_048	FROM->TO	G14-057T 345.00 - SUNNYSIDE 345KV CKT 1	717	789	0.05072	112.7872	P12:138:OKGE:3TERM27
FDNS	00NR	0	20WP	G15_048	FROM->TO	G14-057T 345.00 - SUNNYSIDE 345KV CKT 1	717	789	0.04941	112.7859	EMPORIA ENERGY CENTER - SWISSVALE 345KV CKT 1
FDNS	00NR	0	20WP	G15_048	FROM->TO	G14-057T 345.00 - SUNNYSIDE 345KV CKT 1	717	789	0.04922	112.7835	ST FRANCIS - ST FRANCIS 1 161KV CKT Z1
FDNS	00NR	0	20WP	G15_048	FROM->TO	G14-057T 345.00 - SUNNYSIDE 345KV CKT 1	717	789	0.04936	112.7809	MCADAMS - WOLF CREEK 500KV CKT 1
FDNS	00NR	0	20WP	G15_048	FROM->TO	G14-057T 345.00 - SUNNYSIDE 345KV CKT 1	717	789	0.04922	112.779	SABINE 230/22.0KV TRANSFORMER CKT 1
FDNS	00NR	0	20WP	G15_048	FROM->TO	G14-057T 345.00 - SUNNYSIDE 345KV CKT 1	717	789	0.0493	112.7787	FLETCHER - MARLOW JCT 69KV CKT 1
FDNS	00NR	0	20WP	G15_048	FROM->TO	G14-057T 345.00 - SUNNYSIDE 345KV CKT 1	717	789	0.04943	112.7734	SWISSVALE - WEST GARDNER 345KV CKT 1
FDNS	00NR	0	20WP	G15_048	FROM->TO	G14-057T 345.00 - SUNNYSIDE 345KV CKT 1	717	789	0.04954	112.7689	HINTON - REDROCKRD4 138.00 138KV CKT 1
FDNS	00NR	0	16WP	G15_048	FROM->TO	G14-057T 345.00 - SUNNYSIDE 345KV CKT 1	717	789	0.04965	112.7677	GEN511851 1-COMANCHE #1
FDNS	00NR	0	20WP	G15_048	FROM->TO	G14-057T 345.00 - SUNNYSIDE 345KV CKT 1	717	789	0.04922	112.7667	GEN501972 1-EVANGELINE UNIT 7-2
FDNS	00NR	0	20WP	G15_048	FROM->TO	G14-057T 345.00 - SUNNYSIDE 345KV CKT 1	717	789	0.04922	112.7666	GEN501971 1-EVANGELINE UNIT 7-1
FDNS	00NR	0	20WP	G15_048	FROM->TO	G14-057T 345.00 - SUNNYSIDE 345KV CKT 1	717	789	0.04923	112.7601	P12:138:AEPW:R.S.S-4:T.P.S.-4
FDNS	00NR	0	20WP	G15_048	FROM->TO	G14-057T 345.00 - SUNNYSIDE 345KV CKT 1	717	789	0.04947	112.7558	CORNVILLE - NORGE ROAD 138KV CKT 1
FDNS	00NR	0	20WP	G15_048	FROM->TO	G14-057T 345.00 - SUNNYSIDE 345KV CKT 1	717	789	0.04947	112.7558	CORNVILLE - NORGE ROAD 138KV CKT 1
FDNS	00NR	0	20WP	G15_048	FROM->TO	G14-057T 345.00 - SUNNYSIDE 345KV CKT 1	717	789	0.04924	112.7544	P12:138:OKGE:3TERM12
FDNS	00NR	0	20WP	G15_048	FROM->TO	G14-057T 345.00 - SUNNYSIDE 345KV CKT 1	717	789	0.04913	112.7529	ENOWILT - LONE OAK 138KV CKT 1
FDNS	00NR	0	20WP	G15_048	FROM->TO	G14-057T 345.00 - SUNNYSIDE 345KV CKT 1	717	789	0.0494	112.7506	WEATHERFORD SOUTHEAST - WEATHERFORD TAP 138KV CKT 1
FDNS	00NR	0	20WP	G15_048	FROM->TO	G14-057T 345.00 - SUNNYSIDE 345KV CKT 1	717	789	0.04913	112.7442	ENOWILT - SARDIS 138KV CKT 1
FDNS	00NR	0	20WP	G15_048	FROM->TO	G14-057T 345.00 - SUNNYSIDE 345KV CKT 1	717	789	0.04922	112.7431	GEN501912 1-ACADIA UNIT CT1B
FDNS	00NR	0	20WP	G15_048	FROM->TO	G14-057T 345.00 - SUNNYSIDE 345KV CKT 1	717	789	0.04931	112.743	FRANKLIN - FRANKLIN SW 138KV CKT 1
FDNS	00NR	0	20WP	G15_048	FROM->TO	G14-057T 345.00 - SUNNYSIDE 345KV CKT 1	717	789	0.04896	112.7424	P12:138:WFEC-AEPW:ELKCTY-4:ERICK4
FDNS	00NR	0	20WP	G15_048	FROM->TO	G14-057T 345.00 - SUNNYSIDE 345KV CKT 1	717	789	0.04922	112.7423	GEN501911 1-ACADIA UNIT CT1A
FDNS	00NR	0	20WP	G15_048	FROM->TO	G14-057T 345.00 - SUNNYSIDE 345KV CKT 1	717	789	0.05029	112.7421	LASALLE - STONEWAL LH138.00 138KV CKT 1
FDNS	00NR	0	20WP	G15_048	FROM->TO	G14-057T 345.00 - SUNNYSIDE 345KV CKT 1	717	789	0.04923	112.7364	AMITY SS - MURFREESBORO EAST (AECC) 115KV CKT 1
FDNS	00NR	0	20WP	G15_048	FROM->TO	G14-057T 345.00 - SUNNYSIDE 345KV CKT 1	717	789	0.04922	112.7343	P12:138:AEPW:R.S.S.-4:R:96YALE-4
FDNS	00NR	0	16WP	G15_048	FROM->TO	G14-057T 345.00 - SUNNYSIDE 345KV CKT 1	717	789	0.04965	112.7303	GEN600004 2-PRAIRIE ISLAND G2
FDNS	00NR	0	16WP	G15_048	FROM->TO	G14-057T 345.00 - SUNNYSIDE 345KV CKT 1	717	789	0.04965	112.7275	GEN600003 1-PRAIRIE ISLAND G1
FDNS	00NR	0	20WP	G15_048	FROM->TO	G14-057T 345.00 - SUNNYSIDE 345KV CKT 1	717	789	0.04946	112.7268	CORNVILLE - NORTH 29TH CHICKASHA 138KV CKT 1
FDNS	00NR	0	20WP	G15_048	FROM->TO	G14-057T 345.00 - SUNNYSIDE 345KV CKT 1	717	789	0.05029	112.724	STONEWAL LH138.00 - TUPELO TAP 138KV CKT 1
FDNS	00NR	0	20WP	G15_048	FROM->TO	G14-057T 345.00 - SUNNYSIDE 345KV CKT 1	717	789	0.05071	112.7182	NOBLE - PURCELL4 138.00 138KV CKT 1
FDNSLock	00NR	0	16WP	G15_048	FROM->TO	G14-057T 345.00 - SUNNYSIDE 345KV CKT 1	717	789	0.04965	112.715	GEN600006 1-AS KING
FDNS	00NR	0	20WP	G15_048	FROM->TO	G14-057T 345.00 - SUNNYSIDE 345KV CKT 1	717	789	0.04973	112.7058	CIMARRON - NORTHWEST 345KV CKT 1
FDNS	00NR	0	20WP	G15_048	FROM->TO	G14-057T 345.00 - SUNNYSIDE 345KV CKT 1	717	789	0.0494	112.7001	CLINTON JUNCTION - CLINTON NATURAL GAS TAP 138KV CKT 1
FDNS	00NR	0	20WP	G15_048	FROM->TO	G14-057T 345.00 - SUNNYSIDE 345KV CKT 1	717	789	0.04999	112.6983	Canadian Pump Station - REDROCKRD4 138.00 138KV CKT 1
FDNS	00NR	0	20WP	G15_048	FROM->TO	G14-057T 345.00 - SUNNYSIDE 345KV CKT 1	717	789	0.04954	112.6767	CRINER - PAYNE 138.00 138KV CKT 1
FDNS	00NR	0	16WP	G15_048	FROM->TO	G14-057T 345.00 - SUNNYSIDE 345KV CKT 1	717	789	0.04972	112.6686	P12:138:WFEC:MSL09
FDNS	00NR	0	16WP	G15_048	FROM->TO	G14-057T 345.00 - SUNNYSIDE 345KV CKT 1	717	789	0.04948	112.6633	P12:138:AEPW-OGE:CORNVIL4:CIMARON4
FDNS	00NR	0	20WP	G15_048	FROM->TO	G14-057T 345.00 - SUNNYSIDE 345KV CKT 1	717	789	0.04938	112.6419	COMANCHE - WALTERS 69KV CKT 1
FDNSLock	00NR	0	16WP	G15_048	FROM->TO	G14-057T 345.00 - SUNNYSIDE 345KV CKT 1	717	789	0.04965	112.6382	GEN636641 1-LOUISA UNIT 1
FDNS	00NR	0	16WP	G15_048	FROM->TO	G14-057T 345.00 - SUNNYSIDE 345KV CKT 1	717	789	0.04965	112.6	GEN615002 2-COAL CREEK
FDNS	00NR	0	16WP	G15_048	FROM->TO	G14-057T 345.00 - SUNNYSIDE 345KV CKT 1	717	789	0.04965	112.5883	GEN600005 1-MONTICELLO
FDNS	00NR	0	16WP	G15_048	FROM->TO	G14-057T 345.00 - SUNNYSIDE 345KV CKT 1	717	789	0.04734	112.5634	CHISHOLM7 345.00 (CHISHOLM) 345/230/13.2KV TRANSFORMER CKT 1

SOLUTION	GROUP	SCENARIO	SEASON	SOURCE	DIRECTION	MONITORED ELEMENT	RATEA (MVA)	RATEB(MVA)	TDF	TC%LOADING (% MVA)	CONTINGENCY
FDNS	00NR	0	16WP	G15_048	FROM->TO	G14-057T 345.00 - SUNNYSIDE 345KV CKT 1	717	789	0.04965	112.5594	GEN562754 1-G15031_5 0.6900
FDNS	00NR	0	16WP	G15_048	FROM->TO	G14-057T 345.00 - SUNNYSIDE 345KV CKT 1	717	789	0.04965	112.5259	GEN635213 3-NEAL UNIT 3
FDNS	00NR	0	16WP	G15_048	FROM->TO	G14-057T 345.00 - SUNNYSIDE 345KV CKT 1	717	789	0.04965	112.5005	GEN562756 1-G15031_7 0.6900
FDNS	00NR	0	16WP	G15_048	FROM->TO	G14-057T 345.00 - SUNNYSIDE 345KV CKT 1	717	789	0.04965	112.5	GEN629074 1-ARNOLD LOWSIDE OF GSU XFMR
FDNS	00NR	0	16WP	G15_048	FROM->TO	G14-057T 345.00 - SUNNYSIDE 345KV CKT 1	717	789	0.04965	112.4623	GEN562023 1-G11_020_3 0.6900
FDNS	00NR	0	16WP	G15_048	FROM->TO	G14-057T 345.00 - SUNNYSIDE 345KV CKT 1	717	789	0.04965	112.4623	GEN562026 1-G11_019_3 0.6900
FDNS	00NR	0	16WP	G15_048	FROM->TO	G14-057T 345.00 - SUNNYSIDE 345KV CKT 1	717	789	0.04965	112.4584	GEN562556 1-G14_046_3 0.3420
FDNS	00NR	0	16WP	G15_048	FROM->TO	G14-057T 345.00 - SUNNYSIDE 345KV CKT 1	717	789	0.04734	112.4526	CHISHOLM7 345.00 - GRACEMONT 345KV CKT 1
FDNS	00NR	0	16WP	G15_048	FROM->TO	G14-057T 345.00 - SUNNYSIDE 345KV CKT 1	717	789	0.04965	112.451	BIG STONE 230/24.0KV TRANSFORMER CKT 1
FDNS	00NR	0	16WP	G15_048	FROM->TO	G14-057T 345.00 - SUNNYSIDE 345KV CKT 1	717	789	0.04965	112.3702	GEN563142 1-G15079_3 0.5500
FDNS	00NR	0	16WP	G15_048	FROM->TO	G14-057T 345.00 - SUNNYSIDE 345KV CKT 1	717	789	0.04965	112.3702	GEN563151 1-G15080_2 0.5500
FDNS	00NR	0	16WP	G15_048	FROM->TO	G14-057T 345.00 - SUNNYSIDE 345KV CKT 1	717	789	0.04965	112.3332	GEN523971 1-HARRINGTON GEN #1 24 KV
FDNS	00NR	0	16WP	G15_048	FROM->TO	G14-057T 345.00 - SUNNYSIDE 345KV CKT 1	717	789	0.04965	112.3331	GEN523973 1-HARRINGTON GEN #3 24 KV
FDNS	00NR	0	16WP	G15_048	FROM->TO	G14-057T 345.00 - SUNNYSIDE 345KV CKT 1	717	789	0.04965	112.333	GEN523972 1-HARRINGTON GEN #2 24 KV
FDNS	00NR	0	16WP	G15_048	FROM->TO	G14-057T 345.00 - SUNNYSIDE 345KV CKT 1	717	789	0.04972	112.293	NORTHWEST TEXARKANA - VALLIANT 345KV CKT 1
FDNS	00NR	0	16WP	G15_048	FROM->TO	G14-057T 345.00 - SUNNYSIDE 345KV CKT 1	717	789	0.04972	112.293	NORTHWEST TEXARKANA - VALLIANT 345KV CKT 1
FDNS	00NR	0	16WP	G15_048	FROM->TO	G14-057T 345.00 - SUNNYSIDE 345KV CKT 1	717	789	0.04951	112.2788	P12:230:AEPW-SPS:SWEETWT6:WHEELER 6
FDNS	00NR	0	16WP	G15_048	FROM->TO	G14-057T 345.00 - SUNNYSIDE 345KV CKT 1	717	789	0.04951	112.2782	STLN-DEMARC6 - SWEETWATER 230KV CKT 1
FDNS	00NR	0	16WP	G15_048	FROM->TO	G14-057T 345.00 - SUNNYSIDE 345KV CKT 1	717	789	0.04951	112.2771	STATELINE INTERCHANGE - STLN-DEMARC6 230KV CKT 1
FDNSLock	00NR	0	16WP	G15_048	FROM->TO	G14-057T 345.00 - SUNNYSIDE 345KV CKT 1	717	789	0.04965	112.2748	GEN600000 1-SHERBURNECNTY G1
FDNS	00NR	0	16WP	G15_048	FROM->TO	G14-057T 345.00 - SUNNYSIDE 345KV CKT 1	717	789	0.04965	112.2359	GEN511848 1-SOUTHWESTERN STATION #3
FDNS	00NR	0	20WP	G15_048	FROM->TO	G14-057T 345.00 - SUNNYSIDE 345KV CKT 1	717	789	0.04922	112.2265	803-OKLAUNION
FDNS	00NR	0	16WP	G15_048	FROM->TO	G14-057T 345.00 - SUNNYSIDE 345KV CKT 1	717	789	0.04965	112.2003	GEN600001 2-SHERBURNE CNTY G2
FDNS	00NR	0	16WP	G15_048	FROM->TO	G14-057T 345.00 - SUNNYSIDE 345KV CKT 1	717	789	0.04965	112.163	GEN563042 1-G15068_3 0.6900
FDNS	00NR	0	16WP	G15_048	FROM->TO	G14-057T 345.00 - SUNNYSIDE 345KV CKT 1	717	789	0.04965	112.1422	GEN527901 1-HOBBS PLANT #1 (CT)
FDNS	00NR	0	16WP	G15_048	FROM->TO	G14-057T 345.00 - SUNNYSIDE 345KV CKT 1	717	789	0.04965	112.1422	GEN527902 1-HOBBS PLANT #2 (CT)
FDNSLock	00NR	0	16WP	G15_048	FROM->TO	G14-057T 345.00 - SUNNYSIDE 345KV CKT 1	717	789	0.04965	112.0855	GEN629075 1-OTTUMWA GENERATOR FOR OTTUMWA UNIT NO 1
FDNS	00NR	0	20WP	G15_048	FROM->TO	G14-057T 345.00 - SUNNYSIDE 345KV CKT 1	717	789	0.04836	111.9515	P12:138:OKGE:3TERM39
FDNSLock	00NR	0	16WP	G15_048	FROM->TO	G14-057T 345.00 - SUNNYSIDE 345KV CKT 1	717	789	0.04965	111.9266	GEN635214 4-NEAL UNIT 4
FDNS	00NR	0	16WP	G15_048	FROM->TO	G14-057T 345.00 - SUNNYSIDE 345KV CKT 1	717	789	0.04965	111.9233	SHERBURNE CO 345/24.0KV TRANSFORMER CKT 1
FDNS	00NR	0	20WP	G15_048	FROM->TO	G14-057T 345.00 - SUNNYSIDE 345KV CKT 1	717	789	0.04914	111.9074	RANCHRD7 345.00 - SOONER 345KV CKT 1
FDNS	00NR	0	20WP	G15_048	FROM->TO	G14-057T 345.00 - SUNNYSIDE 345KV CKT 1	717	789	0.04913	111.8943	CHILDRESS - LAKE PAULINE 138KV CKT 1
FDNS	00NR	0	20WP	G15_048	FROM->TO	G14-057T 345.00 - SUNNYSIDE 345KV CKT 1	717	789	0.04913	111.8943	CHILDRESS - LAKE PAULINE 138KV CKT 1
FDNS	00NR	0	20WP	G15_048	FROM->TO	G14-057T 345.00 - SUNNYSIDE 345KV CKT 1	717	789	0.04917	111.8901	CHILDRESS - HOLLIS TAP 138KV CKT 1
FDNS	00NR	0	20WP	G15_048	FROM->TO	G14-057T 345.00 - SUNNYSIDE 345KV CKT 1	717	789	0.04922	111.8664	GEN562084 1-G11_050_3 0.6900
FDNS	00NR	0	16WP	G15_048	FROM->TO	G14-057T 345.00 - SUNNYSIDE 345KV CKT 1	717	789	0.04965	111.861	GEN563043 1-G15068_4 0.6900
FDNS	00NR	0	16WP	G15_048	FROM->TO	G14-057T 345.00 - SUNNYSIDE 345KV CKT 1	717	789	0.04965	111.8591	GEN563273 2-G15093_4 0.6900
FDNS	00NR	0	20WP	G15_048	FROM->TO	G14-057T 345.00 - SUNNYSIDE 345KV CKT 1	717	789	0.04875	111.847	MAYSVILLE - PAOLI 138KV CKT 1
FDNS	00NR	0	20WP	G15_048	FROM->TO	G14-057T 345.00 - SUNNYSIDE 345KV CKT 1	717	789	0.04922	111.8386	GEN560187 1-WTH WIND 0.5750
FDNS	00NR	0	16WP	G15_048	FROM->TO	G14-057T 345.00 - SUNNYSIDE 345KV CKT 1	717	789	0.04965	111.8362	GEN526333 1-JONES GEN #3 21 KV
FDNS	00NR	0	16WP	G15_048	FROM->TO	G14-057T 345.00 - SUNNYSIDE 345KV CKT 1	717	789	0.04965	111.8361	GEN526334 1-JONES_4 116.500
FDNS	00NR	0	20WP	G15_048	FROM->TO	G14-057T 345.00 - SUNNYSIDE 345KV CKT 1	717	789	0.04871	111.8224	CIMARRON - MATHWSN7 345.00 345KV CKT 1
FDNS	00NR	0	20WP	G15_048	FROM->TO	G14-057T 345.00 - SUNNYSIDE 345KV CKT 1	717	789	0.04871	111.8224	CIMARRON - MATHWSN7 345.00 345KV CKT 2
FDNS	00NR	0	20WP	G15_048	FROM->TO	G14-057T 345.00 - SUNNYSIDE 345KV CKT 1	717	789	0.04922	111.8182	GEN560112 1-G08_037_3 0.6900
FDNS	00NR	0	16WP	G15_048	FROM->TO	G14-057T 345.00 - SUNNYSIDE 345KV CKT 1	717	789	0.04965	111.8	GEN344225 1-1CAL G1 25.000
FDNS	00NR	0	16WP	G15_048	FROM->TO	G14-057T 345.00 - SUNNYSIDE 345KV CKT 1	717	789	0.04749	111.7926	P12:230:AEPW:ELKCITY6:SWEETWT6
FDNS	00NR	0	16WP	G15_048	FROM->TO	G14-057T 345.00 - SUNNYSIDE 345KV CKT 1	717	789	0.04965	111.7857	GEN525844 1-ELK_1 118.000
FDNS	00NR	0	20WP	G15_048	FROM->TO	G14-057T 345.00 - SUNNYSIDE 345KV CKT 1	717	789	0.04922	111.7821	GEN521103 1-BLUE CANYON WIND FARM
FDNS	00NR	0	20WP	G15_048	FROM->TO	G14-057T 345.00 - SUNNYSIDE 345KV CKT 1	717	789	0.04922	111.7799	GEN520812 1-ANADRK5
FDNS	00NR	0	20WP	G15_048	FROM->TO	G14-057T 345.00 - SUNNYSIDE 345KV CKT 1	717	789	0.04922	111.7798	GEN520813 1-ANADRK6
FDNS	00NR	0	20WP	G15_048	FROM->TO	G14-057T 345.00 - SUNNYSIDE 345KV CKT 1	717	789	0.04961	111.7795	DRAPER LAKE - MIDWEST TAP 138KV CKT 1
FDNS	00NR	0	16WP	G15_048	FROM->TO	G14-057T 345.00 - SUNNYSIDE 345KV CKT 1	717	789	0.04965	111.779	GEN525845 1-ELK_2 1 138.00
FDNS	00NR	0	20WP	G15_048	FROM->TO	G14-057T 345.00 - SUNNYSIDE 345KV CKT 1	717	789	0.04922	111.7781	GEN563052 1-G15069_3 0.6900
FDNS	00NR	0	16WP	G15_048	FROM->TO	G14-057T 345.00 - SUNNYSIDE 345KV CKT 1	717	789	0.04965	111.7743	GEN600002 3-SHERBURNE CNTY G3
FDNS	00NR	0	20WP	G15_048	FROM->TO	G14-057T 345.00 - SUNNYSIDE 345KV CKT 1	717	789	0.04875	111.7716	MAYSVILLE - MAYSVLT4 138.00 138KV CKT 1
FDNS	00NR	0	20WP	G15_048	FROM->TO	G14-057T 345.00 - SUNNYSIDE 345KV CKT 1	717	789	0.04961	111.7619	P12:138:OKGE:3TERM21
FDNS	00NR	0	20WP	G15_048	FROM->TO	G14-057T 345.00 - SUNNYSIDE 345KV CKT 1	717	789	0.04922	111.7611	GEN562691 1-G15_015_3 0.6900
FDNS	00NR	0	20WP	G15_048	FROM->TO	G14-057T 345.00 - SUNNYSIDE 345KV CKT 1	717	789	0.04922	111.7556	GEN562772 1-G15034_3 0.6900
FDNS	00NR	0	20WP	G15_048	FROM->TO	G14-057T 345.00 - SUNNYSIDE 345KV CKT 1	717	789	0.04922	111.7408	GEN511961 1-DEMPSEY-WTG10.7000
FDNS	00NR	0	20WP	G15_048	FROM->TO	G14-057T 345.00 - SUNNYSIDE 345KV CKT 1	717	789	0.0485	111.7297	SOONER - SPRING CREEK 345KV CKT 1
FDNS	00NR	0	20WP	G15_048	FROM->TO	G14-057T 345.00 - SUNNYSIDE 345KV CKT 1	717	789	0.04921	111.7267	P12:069:OKGE:3TERM42
FDNS	00NR	0	20WP	G15_048	FROM->TO	G14-057T 345.00 - SUNNYSIDE 345KV CKT 1	717	789	0.0485	111.7265	NORTHWEST - SPRING CREEK 345KV CKT 1
FDNS	00NR	0	20WP	G15_048	FROM->TO	G14-057T 345.00 - SUNNYSIDE 345KV CKT 1	717	789	0.04872	111.7238	ARBUCKLE - SULPHR 4 138.00 138KV CKT 1
FDNS	00NR	0	20WP	G15_048	FROM->TO	G14-057T 345.00 - SUNNYSIDE 345KV CKT 1	717	789	0.04929	111.7062	GLASSES - MADILL INDUSTRIAL TAP 138KV CKT 1
FDNS	00NR	0	20WP	G15_048	FROM->TO	G14-057T 345.00 - SUNNYSIDE 345KV CKT 1	717	789	0.04875	111.7055	MAYSVLT4 138.00 - PRAIRIE POINT 138KV CKT 1
FDNS	00NR	0	20WP	G15_048	FROM->TO	G14-057T 345.00 - SUNNYSIDE 345KV CKT 1	717	789	0.04928	111.7005	P12:138:WFEC:MSL11
FDNS	00NR	0	20WP	G15_048	FROM->TO	G14-057T 345.00 - SUNNYSIDE 345KV CKT 1	717	789	0.04928	111.7005	P12:138:WFEC-AEPW:PHAROAH4:LONEOAK4
FDNS	00NR	0	20WP	G15_048	FROM->TO	G14-057T 345.00 - SUNNYSIDE 345KV CKT 1	717	789	0.0493	111.6941	CANEY CREEK - JOHNSON COUNTY 138KV CKT 1
FDNS	00NR	0	20WP	G15_048	FROM->TO	G14-057T 345.00 - SUNNYSIDE 345KV CKT 1	717	789	0.04922	111.689	GEN515443 1-MNCOWND1 0.7000
FDNS	00NR	0	20WP	G15_048	FROM->TO	G14-057T 345.00 - SUNNYSIDE 345KV CKT 1	717	789	0.04313	111.6853	MOREWOOD SW - NINE MILE 138KV CKT 1
FDNS	00NR	0	20WP	G15_048	FROM->TO	G14-057T 345.00 - SUNNYSIDE 345KV CKT 1	717	789	0.04915	111.6712	ALTUS JUNCTION - RUSSELL 138KV CKT 1
FDNS	00NR	0	20WP	G15_048	FROM->TO	G14-057T 345.00 - SUNNYSIDE 345KV CKT 1	717	789	0.04915	111.6712	ALTUS JUNCTION - RUSSELL 138KV CKT 1
FDNS	00NR	0	20WP	G15_048	FROM->TO	G14-057T 345.00 - SUNNYSIDE 345KV CKT 1	717	789	0.04922	111.6708	GEN560183 1-REDHIL-WTG1 12.000
FDNS	00NR	0	20WP	G15_048	FROM->TO	G14-057T 345.00 - SUNNYSIDE 345KV CKT 1	717	789	0.04922	111.6625	INDEPENDENCE 500/26.0KV TRANSFORMER CKT 1
FDNS	00NR	0	20WP	G15_048	FROM->TO	G14-057T 345.00 - SUNNYSIDE 345KV CKT 1	717	789	0.04929	111.6578	GLASSES - RUSSETT 138KV CKT 1
FDNS	00NR	0	20WP	G15_048	FROM->TO	G14-057T 345.00 - SUNNYSIDE 345KV CKT 1	717	789	0.04922	111.654	GEN600067 9-HIGH BRIDGE
FDNS	00NR	0	20WP	G15_048	FROM->TO	G14-057T 345.00 - SUNNYSIDE 345KV CKT 1	717	789	0.04941	111.6529	OVEXFRMCCOVE
FDNS	00NR	0	20WP	G15_048	FROM->TO	G14-057T 345.00 - SUNNYSIDE 345KV CKT 1	717	789	0.04931	111.6441	P12:138:WFEC:MSL08
FDNS	00NR	0	16WP	G15_048	FROM->TO	G14-057T 345.00 - SUNNYSIDE 345KV CKT 1	717	789	0.04965	111.6433	GEN525562 1-TOLK GEN #2 24 KV

SOLUTION	GROUP	SCENARIO	SEASON	SOURCE	DIRECTION	MONITORED ELEMENT	RATEA (MVA)	RATEB(MVA)	TDF	TC%LOADING (% MVA)	CONTINGENCY
FDNS	00NR	0	20WP	G15_048	FROM->TO	G14-057T 345.00 - SUNNYSIDE 345KV CKT 1	717	789	0.04916	111.6433	CARTER - CHICKASAW 138KV CKT 1
FDNS	00NR	0	16WP	G15_048	FROM->TO	G14-057T 345.00 - SUNNYSIDE 345KV CKT 1	717	789	0.04965	111.6359	GEN563202 1-G15085_3 0.5500
FDNS	00NR	0	20WP	G15_048	FROM->TO	G14-057T 345.00 - SUNNYSIDE 345KV CKT 1	717	789	0.04941	111.6359	CANADIAN RIVER - MCALESTER SOUTH 138KV CKT 1
FDNS	00NR	0	20WP	G15_048	FROM->TO	G14-057T 345.00 - SUNNYSIDE 345KV CKT 1	717	789	0.04941	111.6359	CANADIAN RIVER - MCALESTER SOUTH 138KV CKT 1
FDNS	00NR	0	20WP	G15_048	FROM->TO	G14-057T 345.00 - SUNNYSIDE 345KV CKT 1	717	789	0.05056	111.6344	LEBANON - TEXOMA JCT 138KV CKT 1
FDNS	00NR	0	20WP	G15_048	FROM->TO	G14-057T 345.00 - SUNNYSIDE 345KV CKT 1	717	789	0.04941	111.6341	CANADIAN RIVER () 345/138/13.8KV TRANSFORMER CKT 1
FDNS	00NR	0	20WP	G15_048	FROM->TO	G14-057T 345.00 - SUNNYSIDE 345KV CKT 1	717	789	0.04941	111.6341	CANADIAN RIVER () 345/138/13.8KV TRANSFORMER CKT 1
FDNS	00NR	0	20WP	G15_048	FROM->TO	G14-057T 345.00 - SUNNYSIDE 345KV CKT 1	717	789	0.04922	111.6328	P12:230:UMZB:# 112 #: NU IN SD. NU-RCDC & DRY CREEK XFMR
FDNS	00NR	0	16WP	G15_048	FROM->TO	G14-057T 345.00 - SUNNYSIDE 345KV CKT 1	717	789	0.04975	111.6299	LYDIA - WELSH 345KV CKT 1
FDNS	00NR	0	16WP	G15_048	FROM->TO	G14-057T 345.00 - SUNNYSIDE 345KV CKT 1	717	789	0.04975	111.6299	LYDIA - WELSH 345KV CKT 1
FDNS	00NR	0	20WP	G15_048	FROM->TO	G14-057T 345.00 - SUNNYSIDE 345KV CKT 1	717	789	0.04922	111.627	RCDC EAST 4230.00 - RED CEDAR DC 230KV CKT 1
FDNS	00NR	0	20WP	G15_048	FROM->TO	G14-057T 345.00 - SUNNYSIDE 345KV CKT 1	717	789	0.04903	111.6223	ROCKY POINT - SPRINGDALE 138KV CKT 1
FDNS	00NR	0	20WP	G15_048	FROM->TO	G14-057T 345.00 - SUNNYSIDE 345KV CKT 1	717	789	0.04922	111.6211	GEN562902 1-G15052_3 0.6900
FDNS	00NR	0	20WP	G15_048	FROM->TO	G14-057T 345.00 - SUNNYSIDE 345KV CKT 1	717	789	0.04919	111.621	HUGO (HUGO 1) 345/138/13.8KV TRANSFORMER CKT 1
FDNS	00NR	0	20WP	G15_048	FROM->TO	G14-057T 345.00 - SUNNYSIDE 345KV CKT 1	717	789	0.04922	111.6184	GEN563242 1-G15090_3 0.6900
FDNS	00NR	0	20WP	G15_048	FROM->TO	G14-057T 345.00 - SUNNYSIDE 345KV CKT 1	717	789	0.04875	111.6131	PRAIRIE POINT - RATLIFF 138KV CKT 1
FDNS	00NR	0	20WP	G15_048	FROM->TO	G14-057T 345.00 - SUNNYSIDE 345KV CKT 1	717	789	0.04953	111.6118	CHAMBER SPRINGS - CLARKSVILLE 345KV CKT 1
FDNS	00NR	0	20WP	G15_048	FROM->TO	G14-057T 345.00 - SUNNYSIDE 345KV CKT 1	717	789	0.04928	111.6064	GRPRAR1-LNX3345.00 - GRPRAR 345KV CKT Z
FDNS	00NR	0	20WP	G15_048	FROM->TO	G14-057T 345.00 - SUNNYSIDE 345KV CKT 1	717	789	0.04928	111.606	GRPRAR1-LNX3345.00 - HOLT.CO3 345.00 345KV CKT 1
FDNS	00NR	0	16WP	G15_048	FROM->TO	G14-057T 345.00 - SUNNYSIDE 345KV CKT 1	717	789	0.04965	111.5979	GEN527166 1-MUSTANG_6 118.000
FDNS	00NR	0	20WP	G15_048	FROM->TO	G14-057T 345.00 - SUNNYSIDE 345KV CKT 1	717	789	0.04922	111.5943	GEN629072 4-LANSING GENERATOR FOR UNITS NO4 EIA CODE 1
FDNS	00NR	0	16WP	G15_048	FROM->TO	G14-057T 345.00 - SUNNYSIDE 345KV CKT 1	717	789	0.04951	111.5888	CHISHOLM6 230.00 - SWEETWATER 230KV CKT 1
FDNS	00NR	0	20WP	G15_048	FROM->TO	G14-057T 345.00 - SUNNYSIDE 345KV CKT 1	717	789	0.04922	111.5796	GEN562078 1-G11_051_3 0.6900
FDNS	00NR	0	20WP	G15_048	FROM->TO	G14-057T 345.00 - SUNNYSIDE 345KV CKT 1	717	789	0.04844	111.5767	P12:138:AEPW:112GORE4:SNYDER-4
FDNS	00NR	0	20WP	G15_048	FROM->TO	G14-057T 345.00 - SUNNYSIDE 345KV CKT 1	717	789	0.04922	111.5711	GEN524285 1-WILDORADO WIND GEN
FDNS	00NR	0	20WP	G15_048	FROM->TO	G14-057T 345.00 - SUNNYSIDE 345KV CKT 1	717	789	0.04872	111.5694	JOLLYVILLE - SULPHR 4 138.00 138KV CKT 1
FDNS	00NR	0	20WP	G15_048	FROM->TO	G14-057T 345.00 - SUNNYSIDE 345KV CKT 1	717	789	0.04922	111.5522	GEN562587 1-G14_056_3 0.6900
FDNS	00NR	0	20WP	G15_048	FROM->TO	G14-057T 345.00 - SUNNYSIDE 345KV CKT 1	717	789	0.04922	111.5512	GEN514805 1-SOONER UNIT 1
FDNS	00NR	0	20WP	G15_048	FROM->TO	G14-057T 345.00 - SUNNYSIDE 345KV CKT 1	717	789	0.04313	111.5491	BEARCAT 138.00 - NINE MILE 138KV CKT 1
FDNS	00NR	0	20WP	G15_048	FROM->TO	G14-057T 345.00 - SUNNYSIDE 345KV CKT 1	717	789	0.04922	111.5454	GEN524295 1-SPNSPUR_WND10.6900
FDNS	00NR	0	20WP	G15_048	FROM->TO	G14-057T 345.00 - SUNNYSIDE 345KV CKT 1	717	789	0.04922	111.5399	GEN657749 1-YOUNG 1 GENERATOR
FDNS	00NR	0	16WP	G15_048	FROM->TO	G14-057T 345.00 - SUNNYSIDE 345KV CKT 1	717	789	0.04939	111.5346	JOHNSON COUNTY (JOHNCO) 345/138/13.8KV TRANSFORMER CKT 1
FDNS	00NR	0	16WP	G15_048	FROM->TO	G14-057T 345.00 - SUNNYSIDE 345KV CKT 1	717	789	0.04965	111.5255	GEN635023 3-WALTER SCOTT UNIT 3
FDNS	00NR	0	20WP	G15_048	FROM->TO	G14-057T 345.00 - SUNNYSIDE 345KV CKT 1	717	789	0.04922	111.5198	GEN514806 1-SOONER UNIT 2
FDNS	00NR	0	20WP	G15_048	FROM->TO	G14-057T 345.00 - SUNNYSIDE 345KV CKT 1	717	789	0.04922	111.5196	GEN524023 1-NICHOLS GEN #3 22 KV
FDNS	00NR	0	16WP	G15_048	FROM->TO	G14-057T 345.00 - SUNNYSIDE 345KV CKT 1	717	789	0.04965	111.5165	GEN562590 1-G14_057_3 0.6900
FDNS	00NR	0	20WP	G15_048	FROM->TO	G14-057T 345.00 - SUNNYSIDE 345KV CKT 1	717	789	0.04926	111.5107	CROCKETT - TENASKA RUSK COUNTY 345KV CKT 1
FDNS	00NR	0	20WP	G15_048	FROM->TO	G14-057T 345.00 - SUNNYSIDE 345KV CKT 1	717	789	0.04926	111.5059	LEBROCK - TENASKA RUSK COUNTY 345KV CKT 1
FDNS	00NR	0	20WP	G15_048	FROM->TO	G14-057T 345.00 - SUNNYSIDE 345KV CKT 1	717	789	0.04872	111.4877	JOLLYVILLE - KERR MCGEE CIMARRON 138KV CKT 1
FDNS	00NR	0	20WP	G15_048	FROM->TO	G14-057T 345.00 - SUNNYSIDE 345KV CKT 1	717	789	0.04922	111.4834	GEN562812 1-G15040_3 0.3570
FDNS	00NR	0	20WP	G15_048	FROM->TO	G14-057T 345.00 - SUNNYSIDE 345KV CKT 1	717	789	0.04922	111.4785	GEN562270 1-G12-020-2 0.6900
FDNS	00NR	0	20WP	G15_048	FROM->TO	G14-057T 345.00 - SUNNYSIDE 345KV CKT 1	717	789	0.04922	111.4769	GEN562882 1-G15047_3 0.6900
FDNS	00NR	0	20WP	G15_048	FROM->TO	G14-057T 345.00 - SUNNYSIDE 345KV CKT 1	717	789	0.04922	111.4766	GEN563132 1-G15078_3 0.3570
FDNS	00NR	0	20WP	G15_048	FROM->TO	G14-057T 345.00 - SUNNYSIDE 345KV CKT 1	717	789	0.04922	111.4697	GEN563102 1-G15075_3 0.5500
FDNS	00NR	0	20WP	G15_048	FROM->TO	G14-057T 345.00 - SUNNYSIDE 345KV CKT 1	717	789	0.04922	111.4569	GEN563062 1-G15071_3 0.6900
FDNS	00NR	0	20WP	G15_048	FROM->TO	G14-057T 345.00 - SUNNYSIDE 345KV CKT 1	717	789	0.04313	111.4547	BEARCAT 138.00 - MOORELAND 138KV CKT 1
FDNS	00NR	0	20WP	G15_048	FROM->TO	G14-057T 345.00 - SUNNYSIDE 345KV CKT 1	717	789	0.04313	111.4501	P12:138:WFEC:MSL14
FDNS	00NR	0	20WP	G15_048	FROM->TO	G14-057T 345.00 - SUNNYSIDE 345KV CKT 1	717	789	0.04872	111.4369	ARBWIND4 138.00 - KERR MCGEE CIMARRON 138KV CKT 1
FDNS	00NR	0	20WP	G15_048	FROM->TO	G14-057T 345.00 - SUNNYSIDE 345KV CKT 1	717	789	0.04922	111.4202	GEN562974 1-G15060_5 0.6900
FDNS	00NR	0	20WP	G15_048	FROM->TO	G14-057T 345.00 - SUNNYSIDE 345KV CKT 1	717	789	0.04922	111.4197	GEN521112 1-ORME3 13.800
FDNS	00NR	0	20WP	G15_048	FROM->TO	G14-057T 345.00 - SUNNYSIDE 345KV CKT 1	717	789	0.04918	111.4177	BROWN - RUSSETT 138KV CKT 1
FDNS	00NR	0	16WP	G15_048	FROM->TO	G14-057T 345.00 - SUNNYSIDE 345KV CKT 1	717	789	0.04965	111.4166	GEN562762 1-G15033_3 0.6900
FDNS	00NR	0	20WP	G15_048	FROM->TO	G14-057T 345.00 - SUNNYSIDE 345KV CKT 1	717	789	0.04922	111.4113	GEN345671 2-1RUSH G2 18.000
FDNS	00NR	0	20WP	G15_048	FROM->TO	G14-057T 345.00 - SUNNYSIDE 345KV CKT 1	717	789	0.04922	111.4104	GEN562973 1-G15060_4 0.6900
FDNS	00NR	0	20WP	G15_048	FROM->TO	G14-057T 345.00 - SUNNYSIDE 345KV CKT 1	717	789	0.04922	111.4094	GEN345670 1-1RUSH G1 18.000
FDNS	00NR	0	16WP	G15_048	FROM->TO	G14-057T 345.00 - SUNNYSIDE 345KV CKT 1	717	789	0.04965	111.4055	GEN562655 1-G14_074_3 0.6900
FDNS	00NR	0	20WP	G15_048	FROM->TO	G14-057T 345.00 - SUNNYSIDE 345KV CKT 1	717	789	0.04877	111.3964	CHICKASAW - TOTAL 138KV CKT 1
FDNS	00NR	0	20WP	G15_048	FROM->TO	G14-057T 345.00 - SUNNYSIDE 345KV CKT 1	717	789	0.04922	111.3839	GEN560105 1-G08-22 0.6900
FDNS	00NR	0	20WP	G15_048	FROM->TO	G14-057T 345.00 - SUNNYSIDE 345KV CKT 1	717	789	0.04922	111.3817	4SIOUX 1 138.00 138/18.0KV TRANSFORMER CKT 1
FDNS	00NR	0	20WP	G15_048	FROM->TO	G14-057T 345.00 - SUNNYSIDE 345KV CKT 1	717	789	0.04918	111.372	RUSSETT - RUSSETT 138KV CKT 1
FDNS	00NR	0	20WP	G15_048	FROM->TO	G14-057T 345.00 - SUNNYSIDE 345KV CKT 1	717	789	0.04922	111.3666	GEN562550 1-G14_040_3 0.6900
FDNS	00NR	0	20WP	G15_048	FROM->TO	G14-057T 345.00 - SUNNYSIDE 345KV CKT 1	717	789	0.04922	111.3633	GEN681522 3-GENOA 3
FDNS	00NR	0	16WP	G15_048	FROM->TO	G14-057T 345.00 - SUNNYSIDE 345KV CKT 1	717	789	0.04965	111.3403	GEN562685 1-G15_013_3 0.3550
FDNS	00NR	0	20WP	G15_048	FROM->TO	G14-057T 345.00 - SUNNYSIDE 345KV CKT 1	717	789	0.04922	111.3293	GEN511853 1-COMANCHE #3
FDNS	00NR	0	20WP	G15_048	FROM->TO	G14-057T 345.00 - SUNNYSIDE 345KV CKT 1	717	789	0.04922	111.3226	GEN527161 1-MUSTANG GEN #1
FDNS	00NR	0	20WP	G15_048	FROM->TO	G14-057T 345.00 - SUNNYSIDE 345KV CKT 1	717	789	0.04922	111.3226	GEN527162 1-MUSTANG GEN #2
FDNS	00NR	0	20WP	G15_048	FROM->TO	G14-057T 345.00 - SUNNYSIDE 345KV CKT 1	717	789	0.04896	111.3211	ROCKY POINT - SUNNYSIDE 138KV CKT 1
FDNS	00NR	0	20WP	G15_048	FROM->TO	G14-057T 345.00 - SUNNYSIDE 345KV CKT 1	717	789	0.04922	111.3161	EASTDC - ERCOT EQUIVALENCE 345KV CKT 1
FDNS	00NR	0	20WP	G15_048	FROM->TO	G14-057T 345.00 - SUNNYSIDE 345KV CKT 1	717	789	0.04922	111.3113	GEN511962 2-RKYRDGW2-1 0.7000
FDNS	00NR	0	20WP	G15_048	FROM->TO	G14-057T 345.00 - SUNNYSIDE 345KV CKT 1	717	789	0.04922	111.2988	GEN672321 1-SHAND GENERATOR 1
FDNS	00NR	0	20WP	G15_048	FROM->TO	G14-057T 345.00 - SUNNYSIDE 345KV CKT 1	717	789	0.04916	111.2978	RUSSETT - SPRINGDALE 138KV CKT 1
FDNS	00NR	0	20WP	G15_048	FROM->TO	G14-057T 345.00 - SUNNYSIDE 345KV CKT 1	717	789	0.04922	111.2896	GEN525494 1-PLANT X GEN #4 20 KV
FDNS	00NR	0	20WP	G15_048	FROM->TO	G14-057T 345.00 - SUNNYSIDE 345KV CKT 1	717	789	0.04457	111.2832	G15063_T 345.00 - MATHWSN7 345.00 345KV CKT 1
FDNS	00NR	0	20WP	G15_048	FROM->TO	G14-057T 345.00 - SUNNYSIDE 345KV CKT 1	717	789	0.04922	111.2755	GEN672310 1-POPLAR RIVER GENERATOR 1
FDNS	00NR	0	20WP	G15_048	FROM->TO	G14-057T 345.00 - SUNNYSIDE 345KV CKT 1	717	789	0.04922	111.2755	GEN672311 2-POPLAR RIVER GENERATOR 2
FDNS	00NR	0	20WP	G15_048	FROM->TO	G14-057T 345.00 - SUNNYSIDE 345KV CKT 1	717	789	0.04922	111.2739	GEN527882 1-CUNNINGHAM GEN #2 20 KV
FDNS	00NR	0	20WP	G15_048	FROM->TO	G14-057T 345.00 - SUNNYSIDE 345KV CKT 1	717	789	0.04922	111.266	GEN672306 6-BOUNDARY DAM GENERATOR 6
FDNS	00NR	0	20WP	G15_048	FROM->TO	G14-057T 345.00 - SUNNYSIDE 345KV CKT 1	717	789	0.04922	111.2655	GEN563192 1-G15084_3 0.5500
FDNS	00NR	0	20WP	G15_048	FROM->TO	G14-057T 345.00 - SUNNYSIDE 345KV CKT 1	717	789	0.04922	111.2616	GEN562512 1-G14_020_3 0.6900

SOLUTION	GROUP	SCENARIO	SEASON	SOURCE	DIRECTION	MONITORED ELEMENT	RATEA (MVA)	RATEB(MVA)	TDF	TC%LOADING (% MVA)	CONTINGENCY
FDNS	00NR	0	20WP	G15_048	FROM->TO	G14-057T 345.00 - SUNNYSIDE 345KV CKT 1	717	789	0.04922	111.2595	GEN511852 1-COMANCHE #2
FDNS	00NR	0	20WP	G15_048	FROM->TO	G14-057T 345.00 - SUNNYSIDE 345KV CKT 1	717	789	0.04922	111.2591	GEN344895 2-1LAB G2 20.000
FDNS	00NR	0	20WP	G15_048	FROM->TO	G14-057T 345.00 - SUNNYSIDE 345KV CKT 1	717	789	0.04922	111.258	GEN527163 1-MUSTANG GEN #3 22 KV
FDNS	00NR	0	20WP	G15_048	FROM->TO	G14-057T 345.00 - SUNNYSIDE 345KV CKT 1	717	789	0.0492	111.2526	P12:138:WFEC-AEPW:GOLDENSW4:CRAIGJT4
FDNS	00NR	0	20WP	G15_048	FROM->TO	G14-057T 345.00 - SUNNYSIDE 345KV CKT 1	717	789	0.04922	111.2434	GEN562892 1-G15048_3 0.6900
FDNS	00NR	0	20WP	G15_048	FROM->TO	G14-057T 345.00 - SUNNYSIDE 345KV CKT 1	717	789	0.04922	111.2366	GEN681542 6-JP MADGETT
FDNS	00NR	0	20WP	G15_048	FROM->TO	G14-057T 345.00 - SUNNYSIDE 345KV CKT 1	717	789	0.04843	111.235	ARKANSAS NUCLEAR ONE - FT SMITH 500KV CKT 1
FDNS	00NR	0	20WP	G15_048	FROM->TO	G14-057T 345.00 - SUNNYSIDE 345KV CKT 1	717	789	0.04843	111.235	ARKANSAS NUCLEAR ONE - FT SMITH 500KV CKT 1
FDNS	00NR	0	20WP	G15_048	FROM->TO	G14-057T 345.00 - SUNNYSIDE 345KV CKT 1	717	789	0.04922	111.2295	GEN344896 3-1LAB G3 20.000
FDNS	00NR	0	20WP	G15_048	FROM->TO	G14-057T 345.00 - SUNNYSIDE 345KV CKT 1	717	789	0.04922	111.2284	GEN344897 4-1LAB G4 20.000
FDNS	00NR	0	20WP	G15_048	FROM->TO	G14-057T 345.00 - SUNNYSIDE 345KV CKT 1	717	789	0.04922	111.2281	GEN344894 1-1LAB G1 20.000
FDNS	00NR	0	20WP	G15_048	FROM->TO	G14-057T 345.00 - SUNNYSIDE 345KV CKT 1	717	789	0.04927	111.2223	P12:138:WFEC:MSL16
FDNS	00NR	0	20WP	G15_048	FROM->TO	G14-057T 345.00 - SUNNYSIDE 345KV CKT 1	717	789	0.04861	111.2221	ARDMORE WEST - CARTER 138KV CKT 1
FDNS	00NR	0	16WP	G15_048	FROM->TO	G14-057T 345.00 - SUNNYSIDE 345KV CKT 1	717	789	0.04965	111.2074	GEN525561 1-TOLK GEN #1 24 KV
FDNS	00NR	0	16WP	G15_048	FROM->TO	G14-057T 345.00 - SUNNYSIDE 345KV CKT 1	717	789	0.04965	111.2074	GEN527903 1-HOBBS PLANT #3 (ST)
FDNS	00NR	0	16WP	G15_048	FROM->TO	G14-057T 345.00 - SUNNYSIDE 345KV CKT 1	717	789	0.04965	111.2054	GEN563272 1-G15093_3 0.6900
FDNS	00NR	0	20WP	G15_048	FROM->TO	G14-057T 345.00 - SUNNYSIDE 345KV CKT 1	717	789	0.04922	111.2032	GEN523461 1-BLACKHAWK GEN #1
FDNS	00NR	0	20WP	G15_048	FROM->TO	G14-057T 345.00 - SUNNYSIDE 345KV CKT 1	717	789	0.04922	111.2031	GEN523462 1-BLACKHAWK GEN #2
FDNS	00NR	0	20WP	G15_048	FROM->TO	G14-057T 345.00 - SUNNYSIDE 345KV CKT 1	717	789	0.04844	111.1791	CACHE - SNYDER 138KV CKT 1
FDNS	00NR	0	20WP	G15_048	FROM->TO	G14-057T 345.00 - SUNNYSIDE 345KV CKT 1	717	789	0.04919	111.1605	P12:138:WFEC:MSL07
FDNS	00NR	0	20WP	G15_048	FROM->TO	G14-057T 345.00 - SUNNYSIDE 345KV CKT 1	717	789	0.04919	111.1605	P12:138:WFEC-AEPW:HUGOPP4:ATOKA--4
FDNS	00NR	0	20WP	G15_048	FROM->TO	G14-057T 345.00 - SUNNYSIDE 345KV CKT 1	717	789	0.0492	111.1553	P12:138:AEPW-SWPA:LONEOAK4:TUPELO4
FDNS	00NR	0	20WP	G15_048	FROM->TO	G14-057T 345.00 - SUNNYSIDE 345KV CKT 1	717	789	0.0492	111.1553	P12:138:WFEC:MSL06
FDNS	00NR	0	20WP	G15_048	FROM->TO	G14-057T 345.00 - SUNNYSIDE 345KV CKT 1	717	789	0.04922	111.1514	GEN521111 1-ORME2 13.800
FDNS	00NR	0	20WP	G15_048	FROM->TO	G14-057T 345.00 - SUNNYSIDE 345KV CKT 1	717	789	0.04922	111.1465	GEN562699 1-G15_018_3 0.6900
FDNS	00NR	0	20WP	G15_048	FROM->TO	G14-057T 345.00 - SUNNYSIDE 345KV CKT 1	717	789	0.04868	111.1385	SUNNYSIDE (SUNNYSD5) 345/138/13.8KV TRANSFORMER CKT 1
FDNS	00NR	0	20WP	G15_048	FROM->TO	G14-057T 345.00 - SUNNYSIDE 345KV CKT 1	717	789	0.04922	111.1382	GEN521110 1-ORME1 13.800
FDNS	00NR	0	20WP	G15_048	FROM->TO	G14-057T 345.00 - SUNNYSIDE 345KV CKT 1	717	789	0.05176	111.1308	CLARKSVILLE - MUSKOGEE 345KV CKT 1
FDNS	00NR	0	20WP	G15_048	FROM->TO	G14-057T 345.00 - SUNNYSIDE 345KV CKT 1	717	789	0.05176	111.1308	CLARKSVILLE - MUSKOGEE 345KV CKT 1
FDNS	00NR	0	20WP	G15_048	FROM->TO	G14-057T 345.00 - SUNNYSIDE 345KV CKT 1	717	789	0.04916	111.1294	G15085_T 138.00 - RUSSELL 138KV CKT 1
FDNS	00NR	0	20WP	G15_048	FROM->TO	G14-057T 345.00 - SUNNYSIDE 345KV CKT 1	717	789	0.04861	111.1097	ARDMORE WEST - UNIROYAL 138KV CKT 1
FDNS	00NR	0	16WP	G15_048	FROM->TO	G14-057T 345.00 - SUNNYSIDE 345KV CKT 1	717	789	0.04965	111.1021	GEN635024 4-WALTER SCOTT UNIT 4
FDNS	00NR	0	20WP	G15_048	FROM->TO	G14-057T 345.00 - SUNNYSIDE 345KV CKT 1	717	789	0.04922	111.0967	GEN520811 1-ANADRK4
FDNS	00NR	0	20WP	G15_048	FROM->TO	G14-057T 345.00 - SUNNYSIDE 345KV CKT 1	717	789	0.04922	111.0961	GEN563162 1-G15081_3 0.6900
FDNS	00NR	0	20WP	G15_048	FROM->TO	G14-057T 345.00 - SUNNYSIDE 345KV CKT 1	717	789	0.04922	111.0703	GEN661015 1-COYOTE
FDNS	00NR	0	20WP	G15_048	FROM->TO	G14-057T 345.00 - SUNNYSIDE 345KV CKT 1	717	789	0.04922	111.0659	GEN563292 1-G15095_3 0.6900
FDNS	00NR	0	20WP	G15_048	FROM->TO	G14-057T 345.00 - SUNNYSIDE 345KV CKT 1	717	789	0.04903	111.0612	P12:138:OKGE:3TERM40
FDNS	00NR	0	20WP	G15_048	FROM->TO	G14-057T 345.00 - SUNNYSIDE 345KV CKT 1	717	789	0.04891	111.0535	CARTRCO4 138.00 - RATLIFF 138KV CKT 1
FDNS	00NR	0	20WP	G15_048	FROM->TO	G14-057T 345.00 - SUNNYSIDE 345KV CKT 1	717	789	0.04922	111.0431	GEN563122 1-G15077_3 0.3850
FDNS	00NR	0	20WP	G15_048	FROM->TO	G14-057T 345.00 - SUNNYSIDE 345KV CKT 1	717	789	0.04922	111.0154	GEN562861 1-G15045_2 0.4800
FDNS	00NR	0	20WP	G15_048	FROM->TO	G14-057T 345.00 - SUNNYSIDE 345KV CKT 1	717	789	0.04922	110.9573	GEN657748 1-YOUNG 2 GENERATOR
FDNS	00NR	0	20WP	G15_048	FROM->TO	G14-057T 345.00 - SUNNYSIDE 345KV CKT 1	717	789	0.04922	110.9312	GEN527883 1-CUNNINGHAM GEN #3 22 KV
FDNS	00NR	0	20WP	G15_048	FROM->TO	G14-057T 345.00 - SUNNYSIDE 345KV CKT 1	717	789	0.04922	110.9282	GEN527884 1-CUNNINGHAM GEN #4 22 KV
FDNS	00NR	0	20WP	G15_048	FROM->TO	G14-057T 345.00 - SUNNYSIDE 345KV CKT 1	717	789	0.05052	110.9202	P12:138:WFEC:MSL15
FDNS	00NR	0	20WP	G15_048	FROM->TO	G14-057T 345.00 - SUNNYSIDE 345KV CKT 1	717	789	0.04922	110.8807	GEN562992 1-G15063_3 0.6900
FDNS	00NR	0	20WP	G15_048	FROM->TO	G14-057T 345.00 - SUNNYSIDE 345KV CKT 1	717	789	0.04861	110.8733	SUNNYSIDE - UNIROYAL 138KV CKT 1
FDNS	00NR	0	20WP	G15_048	FROM->TO	G14-057T 345.00 - SUNNYSIDE 345KV CKT 1	717	789	0.04917	110.8647	P12:138:AEPW:SHAM4WT:CHILD4WT
FDNS	00NR	0	20WP	G15_048	FROM->TO	G14-057T 345.00 - SUNNYSIDE 345KV CKT 1	717	789	0.04922	110.8625	GEN562704 1-G15_020_3 0.3550
FDNS	00NR	0	20WP	G15_048	FROM->TO	G14-057T 345.00 - SUNNYSIDE 345KV CKT 1	717	789	0.04922	110.8623	GEN526331 1-JONES GEN #1 22 KV
FDNS	00NR	0	20WP	G15_048	FROM->TO	G14-057T 345.00 - SUNNYSIDE 345KV CKT 1	717	789	0.04922	110.8621	GEN526332 1-JONES GEN #2 21 KV
FDNS	00NR	0	20WP	G15_048	FROM->TO	G14-057T 345.00 - SUNNYSIDE 345KV CKT 1	717	789	0.04922	110.8621	GEN620315 1-BIG STONE GEN
FDNS	00NR	0	20WP	G15_048	FROM->TO	G14-057T 345.00 - SUNNYSIDE 345KV CKT 1	717	789	0.04922	110.8294	GEN562952 1-G15057_3 0.6500
FDNS	00NR	0	20WP	G15_048	FROM->TO	G14-057T 345.00 - SUNNYSIDE 345KV CKT 1	717	789	0.04922	110.7897	GEN511851 1-COMANCHE #1
FDNS	00NR	0	20WP	G15_048	FROM->TO	G14-057T 345.00 - SUNNYSIDE 345KV CKT 1	717	789	0.04922	110.7889	GEN600004 2-PRAIRIE ISLAND G2
FDNS	00NR	0	17SP	G15_048	FROM->TO	G14-057T 345.00 - SUNNYSIDE 345KV CKT 1	717	789	0.04909	110.7884	CIMARRON - MINCO 345KV CKT 1
FDNS	00NR	0	20WP	G15_048	FROM->TO	G14-057T 345.00 - SUNNYSIDE 345KV CKT 1	717	789	0.04922	110.7863	GEN600003 1-PRAIRIE ISLAND G1
FDNS	00NR	0	20WP	G15_048	FROM->TO	G14-057T 345.00 - SUNNYSIDE 345KV CKT 1	717	789	0.04922	110.7686	GEN600006 1-AS KING
FDNS	00NR	0	20WP	G15_048	FROM->TO	G14-057T 345.00 - SUNNYSIDE 345KV CKT 1	717	789	0.04922	110.7635	GEN563173 1-G15082_3 0.6900
FDNS	00NR	0	20WP	G15_048	FROM->TO	G14-057T 345.00 - SUNNYSIDE 345KV CKT 1	717	789	0.04922	110.7507	GEN562710 1-G15_022_3 0.5500
FDNS	00NR	0	20WP	G15_048	FROM->TO	G14-057T 345.00 - SUNNYSIDE 345KV CKT 1	717	789	0.05056	110.7451	CANEY CREEK - TEXOMA JCT 138KV CKT 1
FDNS	00NR	0	20WP	G15_048	FROM->TO	G14-057T 345.00 - SUNNYSIDE 345KV CKT 1	717	789	0.04914	110.7436	GRAPEVINE INTERCHANGE - STATELINE INTERCHANGE 230KV CKT 1
FDNS	00NR	0	20WP	G15_048	FROM->TO	G14-057T 345.00 - SUNNYSIDE 345KV CKT 1	717	789	0.04914	110.7436	GRAPEVINE INTERCHANGE - STATELINE INTERCHANGE 230KV CKT 1
FDNS	00NR	0	20WP	G15_048	FROM->TO	G14-057T 345.00 - SUNNYSIDE 345KV CKT 1	717	789	0.04922	110.7218	GEN532751 1-WOLF CREEK GENERATING STATION UNIT 1
FDNS	00NR	0	20WP	G15_048	FROM->TO	G14-057T 345.00 - SUNNYSIDE 345KV CKT 1	717	789	0.04906	110.6708	P12:138:AEPW-OGE:CORNVIL4:CIMARON4
FDNS	00NR	0	20WP	G15_048	FROM->TO	G14-057T 345.00 - SUNNYSIDE 345KV CKT 1	717	789	0.04913	110.6105	GRAPEVINE INTERCHANGE - NICHOLS STATION 230KV CKT 1
FDNS	00NR	0	20WP	G15_048	FROM->TO	G14-057T 345.00 - SUNNYSIDE 345KV CKT 1	717	789	0.04913	110.6105	GRAPEVINE INTERCHANGE - NICHOLS STATION 230KV CKT 1
FDNS	00NR	0	20WP	G15_048	FROM->TO	G14-057T 345.00 - SUNNYSIDE 345KV CKT 1	717	789	0.04922	110.6	GEN615002 2-COAL CREEK
FDNS	00NR	0	20WP	G15_048	FROM->TO	G14-057T 345.00 - SUNNYSIDE 345KV CKT 1	717	789	0.04922	110.5967	GEN635213 3-NEAL UNIT 3
FDNS	00NR	0	20WP	G15_048	FROM->TO	G14-057T 345.00 - SUNNYSIDE 345KV CKT 1	717	789	0.04922	110.5961	GEN629074 1-ARNOLD LOWSIDE OF GSU XFMR
FDNS	00NR	0	20WP	G15_048	FROM->TO	G14-057T 345.00 - SUNNYSIDE 345KV CKT 1	717	789	0.04929	110.531	NORTHWEST TEXARKANA - VALLIANT 345KV CKT 1
FDNS	00NR	0	20WP	G15_048	FROM->TO	G14-057T 345.00 - SUNNYSIDE 345KV CKT 1	717	789	0.04929	110.531	NORTHWEST TEXARKANA - VALLIANT 345KV CKT 1
FDNS	00NR	0	20WP	G15_048	FROM->TO	G14-057T 345.00 - SUNNYSIDE 345KV CKT 1	717	789	0.04931	110.5277	P12:138:WFEC:MSL09
FDNS	00NR	0	16WP	G15_048	FROM->TO	G14-057T 345.00 - SUNNYSIDE 345KV CKT 1	717	789	0.04979	110.5148	LYDIA - VALLIANT 345KV CKT 1
FDNS	00NR	0	16WP	G15_048	FROM->TO	G14-057T 345.00 - SUNNYSIDE 345KV CKT 1	717	789	0.04979	110.5148	LYDIA - VALLIANT 345KV CKT 1
FDNS	00NR	0	20WP	G15_048	FROM->TO	G14-057T 345.00 - SUNNYSIDE 345KV CKT 1	717	789	0.04922	110.5037	GEN636641 1-LOUISA UNIT 1
FDNS	00NR	0	20WP	G15_048	FROM->TO	G14-057T 345.00 - SUNNYSIDE 345KV CKT 1	717	789	0.04922	110.5028	GEN562754 1-G15031_5 0.6900
FDNS	00NR	0	20WP	G15_048	FROM->TO	G14-057T 345.00 - SUNNYSIDE 345KV CKT 1	717	789	0.04922	110.469	GEN600005 1-MONTICELLO
FDNS	00NR	0	20WP	G15_048	FROM->TO	G14-057T 345.00 - SUNNYSIDE 345KV CKT 1	717	789	0.04695	110.4636	CHISHOLM7 345.00 () 345/230/13.2KV TRANSFORMER CKT 1
FDNS	00NR	0	20WP	G15_048	FROM->TO	G14-057T 345.00 - SUNNYSIDE 345KV CKT 1	717	789	0.04922	110.445	GEN562556 1-G14_046_3 0.3420

SOLUTION	GROUP	SCENARIO	SEASON	SOURCE	DIRECTION	MONITORED ELEMENT	RATEA (MVA)	RATEB(MVA)	TDF	TC%LOADING (% MVA)	CONTINGENCY
FDNS	00NR	0	20WP	G15_048	FROM->TO	G14-057T 345.00 - SUNNYSIDE 345KV CKT 1	717	789	0.04922	110.444	GEN562756 1-G15031_7 0.6900
FDNS	00NR	0	20WP	G15_048	FROM->TO	G14-057T 345.00 - SUNNYSIDE 345KV CKT 1	717	789	0.04695	110.3828	CHISHOLM7 345.00 - GRACEMONT 345KV CKT 1
FDNS	00NR	0	20WP	G15_048	FROM->TO	G14-057T 345.00 - SUNNYSIDE 345KV CKT 1	717	789	0.04922	110.3618	GEN563142 1-G15079_3 0.5500
FDNS	00NR	0	20WP	G15_048	FROM->TO	G14-057T 345.00 - SUNNYSIDE 345KV CKT 1	717	789	0.04922	110.3618	GEN563151 1-G15080_2 0.5500
FDNS	00NR	0	20WP	G15_048	FROM->TO	G14-057T 345.00 - SUNNYSIDE 345KV CKT 1	717	789	0.04922	110.3553	GEN562023 1-G11_020_3 0.6900
FDNS	00NR	0	20WP	G15_048	FROM->TO	G14-057T 345.00 - SUNNYSIDE 345KV CKT 1	717	789	0.04922	110.3553	GEN562026 1-G11_019_3 0.6900
FDNS	00NR	0	20WP	G15_048	FROM->TO	G14-057T 345.00 - SUNNYSIDE 345KV CKT 1	717	789	0.04922	110.3434	GEN600000 1-SHERBURNECNTY G1
FDNS	00NR	0	20WP	G15_048	FROM->TO	G14-057T 345.00 - SUNNYSIDE 345KV CKT 1	717	789	0.04922	110.3082	GEN629075 1-OTTUMWA GENERATOR FOR OTTUMWA UNIT NO 1
FDNS	00NR	0	20WP	G15_048	FROM->TO	G14-057T 345.00 - SUNNYSIDE 345KV CKT 1	717	789	0.04922	110.2904	GEN600001 2-SHERBURNE CNTY G2
FDNS	00NR	0	20WP	G15_048	FROM->TO	G14-057T 345.00 - SUNNYSIDE 345KV CKT 1	717	789	0.04922	110.2626	GEN523971 1-HARRINGTON GEN #1 24 KV
FDNS	00NR	0	20WP	G15_048	FROM->TO	G14-057T 345.00 - SUNNYSIDE 345KV CKT 1	717	789	0.04922	110.2626	GEN523972 1-HARRINGTON GEN #2 24 KV
FDNS	00NR	0	20WP	G15_048	FROM->TO	G14-057T 345.00 - SUNNYSIDE 345KV CKT 1	717	789	0.04922	110.2626	GEN523973 1-HARRINGTON GEN #3 24 KV
FDNS	00NR	0	20WP	G15_048	FROM->TO	G14-057T 345.00 - SUNNYSIDE 345KV CKT 1	717	789	0.04922	110.2331	GEN511848 1-SOUTHWESTERN STATION #3
FDNS	00NR	0	20WP	G15_048	FROM->TO	G14-057T 345.00 - SUNNYSIDE 345KV CKT 1	717	789	0.04933	110.1764	LYDIA - WELSH 345KV CKT 1
FDNS	00NR	0	20WP	G15_048	FROM->TO	G14-057T 345.00 - SUNNYSIDE 345KV CKT 1	717	789	0.04933	110.1764	LYDIA - WELSH 345KV CKT 1
FDNS	00NR	0	20WP	G15_048	FROM->TO	G14-057T 345.00 - SUNNYSIDE 345KV CKT 1	717	789	0.04922	110.163	GEN527901 1-HOBBS PLANT #1 (CT)
FDNS	00NR	0	20WP	G15_048	FROM->TO	G14-057T 345.00 - SUNNYSIDE 345KV CKT 1	717	789	0.04922	110.163	GEN527902 1-HOBBS PLANT #2 (CT)
FDNS	00NR	0	20WP	G15_048	FROM->TO	G14-057T 345.00 - SUNNYSIDE 345KV CKT 1	717	789	0.04922	110.1255	GEN563042 1-G15068_3 0.6900
FDNS	00NR	0	20WP	G15_048	FROM->TO	G14-057T 345.00 - SUNNYSIDE 345KV CKT 1	717	789	0.04922	110.028	GEN635214 4-NEAL UNIT 4
FDNS	00NR	0	20WP	G15_048	FROM->TO	G14-057T 345.00 - SUNNYSIDE 345KV CKT 1	717	789	0.04908	109.9254	STATELINE INTERCHANGE - STLN-DEMARC6 230KV CKT 1
FDNS	00NR	0	20WP	G15_048	FROM->TO	G14-057T 345.00 - SUNNYSIDE 345KV CKT 1	717	789	0.04908	109.9227	STLN-DEMARC6 - SWEETWATER 230KV CKT 1
FDNS	00NR	0	20WP	G15_048	FROM->TO	G14-057T 345.00 - SUNNYSIDE 345KV CKT 1	717	789	0.04908	109.9175	P12:230:AEPW-SPS:SWEETWT6:WHEELER 6
FDNS	00NR	0	20WP	G15_048	FROM->TO	G14-057T 345.00 - SUNNYSIDE 345KV CKT 1	717	789	0.04922	109.8577	GEN600002 3-SHERBURNE CNTY G3
FDNS	00NR	0	20WP	G15_048	FROM->TO	G14-057T 345.00 - SUNNYSIDE 345KV CKT 1	717	789	0.04922	109.827	GEN563043 1-G15068_4 0.6900
FDNS	00NR	0	20WP	G15_048	FROM->TO	G14-057T 345.00 - SUNNYSIDE 345KV CKT 1	717	789	0.04922	109.8013	GEN526333 1-JONES GEN #3 21 KV
FDNS	00NR	0	20WP	G15_048	FROM->TO	G14-057T 345.00 - SUNNYSIDE 345KV CKT 1	717	789	0.04922	109.8012	GEN526334 1-JONES_4 116.500
FDNS	00NR	0	20WP	G15_048	FROM->TO	G14-057T 345.00 - SUNNYSIDE 345KV CKT 1	717	789	0.04922	109.7846	GEN563273 2-G15093_4 0.6900
FDNS	00NR	0	20WP	G15_048	FROM->TO	G14-057T 345.00 - SUNNYSIDE 345KV CKT 1	717	789	0.04922	109.7685	GEN344225 1-1CAL G1 25.000
FDNS	00NR	0	20WP	G15_048	FROM->TO	G14-057T 345.00 - SUNNYSIDE 345KV CKT 1	717	789	0.04922	109.7635	GEN525844 1-ELK_1 118.000
FDNS	00NR	0	20WP	G15_048	FROM->TO	G14-057T 345.00 - SUNNYSIDE 345KV CKT 1	717	789	0.04922	109.7458	GEN525845 1-ELK_2 1 18.000
FDNS	00NR	0	20WP	G15_048	FROM->TO	G14-057T 345.00 - SUNNYSIDE 345KV CKT 1	717	789	0.04922	109.6155	GEN527166 1-MUSTANG_6 118.000
FDNS	00NR	0	20WP	G15_048	FROM->TO	G14-057T 345.00 - SUNNYSIDE 345KV CKT 1	717	789	0.04922	109.5706	GEN635023 3-WALTER SCOTT UNIT 3
FDNS	00NR	0	20WP	G15_048	FROM->TO	G14-057T 345.00 - SUNNYSIDE 345KV CKT 1	717	789	0.04922	109.5526	GEN563202 1-G15085_3 0.5500
FDNS	00NR	0	20WP	G15_048	FROM->TO	G14-057T 345.00 - SUNNYSIDE 345KV CKT 1	717	789	0.04922	109.5515	GEN528501 1-G14_012 24.000
FDNS	00NR	0	20WP	G15_048	FROM->TO	G14-057T 345.00 - SUNNYSIDE 345KV CKT 1	717	789	0.0471	109.4942	P12:230:AEPW:ELKCITY6:SWEETWT6
FDNS	00NR	0	20WP	G15_048	FROM->TO	G14-057T 345.00 - SUNNYSIDE 345KV CKT 1	717	789	0.04922	109.4928	GEN562590 1-G14_057_3 0.6900
FDNS	00NR	0	16WP	G15_048	FROM->TO	G14-057T 345.00 - SUNNYSIDE 345KV CKT 1	717	789	0.04965	109.4478	EASTDC - ERCOT EQUIVALENCE 345KV CKT 1
FDNS	00NR	0	20WP	G15_048	FROM->TO	G14-057T 345.00 - SUNNYSIDE 345KV CKT 1	717	789	0.04922	109.3772	GEN562762 1-G15033_3 0.6900
FDNS	00NR	0	20WP	G15_048	FROM->TO	G14-057T 345.00 - SUNNYSIDE 345KV CKT 1	717	789	0.04922	109.3658	GEN562655 1-G14_074_3 0.6900
FDNS	00NR	0	20WP	G15_048	FROM->TO	G14-057T 345.00 - SUNNYSIDE 345KV CKT 1	717	789	0.04922	109.3638	GEN525562 1-TOLK GEN #2 24 KV
FDNS	00NR	0	20WP	G15_048	FROM->TO	G14-057T 345.00 - SUNNYSIDE 345KV CKT 1	717	789	0.04897	109.2753	JOHNSON COUNTY (JOHNCO) 345/138/13.8KV TRANSFORMER CKT 1
FDNS	00NR	0	20WP	G15_048	FROM->TO	G14-057T 345.00 - SUNNYSIDE 345KV CKT 1	717	789	0.04922	109.27	GEN562685 1-G15_013_3 0.3550
FDNS	00NR	0	20WP	G15_048	FROM->TO	G14-057T 345.00 - SUNNYSIDE 345KV CKT 1	717	789	0.04922	109.2675	GEN527903 1-HOBBS PLANT #3 (ST)
FDNS	00NR	0	20WP	G15_048	FROM->TO	G14-057T 345.00 - SUNNYSIDE 345KV CKT 1	717	789	0.04908	109.2452	CHISHOLM6 230.00 - SWEETWATER 230KV CKT 1
FDNS	00NR	0	20WP	G15_048	FROM->TO	G14-057T 345.00 - SUNNYSIDE 345KV CKT 1	717	789	0.04922	109.1665	GEN635024 4-WALTER SCOTT UNIT 4
FDNS	00NR	0	20WP	G15_048	FROM->TO	G14-057T 345.00 - SUNNYSIDE 345KV CKT 1	717	789	0.04922	109.1256	GEN563272 1-G15093_3 0.6900
FDNS	00NR	0	20WP	G15_048	FROM->TO	G14-057T 345.00 - SUNNYSIDE 345KV CKT 1	717	789	0.04937	109.1187	LYDIA - VALLIANT 345KV CKT 1
FDNS	00NR	0	20WP	G15_048	FROM->TO	G14-057T 345.00 - SUNNYSIDE 345KV CKT 1	717	789	0.04937	109.1187	LYDIA - VALLIANT 345KV CKT 1
FDNS	00NR	0	20WP	G15_048	FROM->TO	G14-057T 345.00 - SUNNYSIDE 345KV CKT 1	717	789	0.04922	108.7846	GEN525561 1-TOLK GEN #1 24 KV
FDNS	00NR	0	16WP	G15_048	FROM->TO	G14-057T 345.00 - SUNNYSIDE 345KV CKT 1	717	789	0.04172	108.4243	JOHNSON COUNTY - PITTSBURG 345KV CKT 1
FDNS	00NR	0	16WP	G15_048	FROM->TO	G14-057T 345.00 - SUNNYSIDE 345KV CKT 1	717	789	0.04172	108.4243	JOHNSON COUNTY - PITTSBURG 345KV CKT 1
FDNS	00NR	0	16WP	G15_048	FROM->TO	G14-057T 345.00 - SUNNYSIDE 345KV CKT 1	717	789	0.04965	108.057	GEN563263 1-G15092_4 0.6900
FDNS	00NR	0	16WP	G15_048	FROM->TO	G14-057T 345.00 - SUNNYSIDE 345KV CKT 1	717	789	0.04848	107.6655	HUGO - VALLIANT 345KV CKT 1
FDNS	00NR	0	16WP	G15_048	FROM->TO	G14-057T 345.00 - SUNNYSIDE 345KV CKT 1	717	789	0.04848	107.6655	HUGO - VALLIANT 345KV CKT 1
FDNS	00NR	0	20WP	G15_048	FROM->TO	G14-057T 345.00 - SUNNYSIDE 345KV CKT 1	717	789	0.04131	106.869	JOHNSON COUNTY - PITTSBURG 345KV CKT 1
FDNS	00NR	0	20WP	G15_048	FROM->TO	G14-057T 345.00 - SUNNYSIDE 345KV CKT 1	717	789	0.04131	106.869	JOHNSON COUNTY - PITTSBURG 345KV CKT 1
FDNS	00NR	0	20WP	G15_048	FROM->TO	G14-057T 345.00 - SUNNYSIDE 345KV CKT 1	717	789	0.04807	106.5939	HUGO - VALLIANT 345KV CKT 1
FDNS	00NR	0	20WP	G15_048	FROM->TO	G14-057T 345.00 - SUNNYSIDE 345KV CKT 1	717	789	0.04807	106.5939	HUGO - VALLIANT 345KV CKT 1
FDNS	00NR	0	16WP	G15_048	FROM->TO	G14-057T 345.00 - SUNNYSIDE 345KV CKT 1	717	789	0.04965	106.381	GEN563262 1-G15092_3 0.6900
FDNS	00NR	0	20WP	G15_048	FROM->TO	G14-057T 345.00 - SUNNYSIDE 345KV CKT 1	717	789	0.04922	105.9962	GEN563263 1-G15092_4 0.6900
FDNS	00NR	0	16WP	G15_048	FROM->TO	G14-057T 345.00 - SUNNYSIDE 345KV CKT 1	717	789	0.04395	104.8432	G14-074T 345.00 - TUCO INTERCHANGE 345KV CKT 1
FDNS	00NR	0	20WP	G15_048	FROM->TO	G14-057T 345.00 - SUNNYSIDE 345KV CKT 1	717	789	0.04922	104.3167	GEN563262 1-G15092_3 0.6900
FDNS	00NR	0	16WP	G15_048	FROM->TO	G14-057T 345.00 - SUNNYSIDE 345KV CKT 1	717	789	0.04015	102.6669	JOHNSON COUNTY - SUNNYSIDE 345KV CKT 1
FDNS	00NR	0	20WP	G15_048	FROM->TO	G14-057T 345.00 - SUNNYSIDE 345KV CKT 1	717	789	0.04354	101.6269	G14-074T 345.00 - TUCO INTERCHANGE 345KV CKT 1
FDNS	00NR	0	20SP	G15_048	FROM->TO	G14-057T 345.00 - SUNNYSIDE 345KV CKT 1	717	789	0.04878	100.8006	CIMARRON - MINCO 345KV CKT 1
FDNS	00NR	0	17SP	G15_048	FROM->TO	G14-057T 345.00 - SUNNYSIDE 345KV CKT 1	717	789	0.04909	100.4284	GRACEMONT - MINCO 345KV CKT 1
FDNS	00NR	0	20WP	G15_048	FROM->TO	G14-057T 345.00 - SUNNYSIDE 345KV CKT 1	717	789	0.03976	100.3152	JOHNSON COUNTY - SUNNYSIDE 345KV CKT 1
FDNS	00NR	0	20WP	G15_048	TO->FROM	MATHWSN7 345.00 - TATONGA7 345.00 345KV CKT 1	1195	1195	0.0783	110.9769	G14-074T 345.00 - OKLAUNION 345KV CKT 1
FDNS	00NR	0	16WP	G15_048	TO->FROM	MATHWSN7 345.00 - TATONGA7 345.00 345KV CKT 1	1195	1195	0.07847	108.6268	G14-074T 345.00 - OKLAUNION 345KV CKT 1
FDNS	01NR	0	20L	G15_048	TO->FROM	MATHWSN7 345.00 - TATONGA7 345.00 345KV CKT 1	1195	1195	0.07707	103.4941	THISTLE7 345.00 - WOODWARD DISTRICT EHV 345KV CKT 1
FDNS	01NR	0	20L	G15_048	TO->FROM	MATHWSN7 345.00 - TATONGA7 345.00 345KV CKT 1	1195	1195	0.07707	103.4941	THISTLE7 345.00 - WOODWARD DISTRICT EHV 345KV CKT 1
FDNS	01NR	0	20L	G15_048	TO->FROM	MATHWSN7 345.00 - TATONGA7 345.00 345KV CKT 1	1195	1195	0.07707	103.4941	THISTLE7 345.00 - WOODWARD DISTRICT EHV 345KV CKT 2
FDNS	01NR	0	20L	G15_048	TO->FROM	MATHWSN7 345.00 - TATONGA7 345.00 345KV CKT 1	1195	1195	0.07707	103.4941	THISTLE7 345.00 - WOODWARD DISTRICT EHV 345KV CKT 2
FDNS	00NR	0	20WP	G15_048	TO->FROM	MATHWSN7 345.00 - TATONGA7 345.00 345KV CKT 1	1195	1195	0.07803	102.7399	THISTLE7 345.00 - WOODWARD DISTRICT EHV 345KV CKT 1
FDNS	00NR	0	20WP	G15_048	TO->FROM	MATHWSN7 345.00 - TATONGA7 345.00 345KV CKT 1	1195	1195	0.07803	102.7399	THISTLE7 345.00 - WOODWARD DISTRICT EHV 345KV CKT 1
FDNS	00NR	0	20WP	G15_048	TO->FROM	MATHWSN7 345.00 - TATONGA7 345.00 345KV CKT 1	1195	1195	0.07803	102.7399	THISTLE7 345.00 - WOODWARD DISTRICT EHV 345KV CKT 2
FDNS	00NR	0	20WP	G15_048	TO->FROM	MATHWSN7 345.00 - TATONGA7 345.00 345KV CKT 1	1195	1195	0.07803	102.7399	THISTLE7 345.00 - WOODWARD DISTRICT EHV 345KV CKT 2
FDNS	00NR	0	20WP	G15_048	TO->FROM	MATHWSN7 345.00 - TATONGA7 345.00 345KV CKT 1	1195	1195	0.07273	102.4191	CHISHOLM6 230.00 - SWEETWATER 230KV CKT 1
FDNS	00NR	0	20WP	G15_048	TO->FROM	MATHWSN7 345.00 - TATONGA7 345.00 345KV CKT 1	1195	1195	0.0783	102.4108	G14-074T 345.00 - TUCO INTERCHANGE 345KV CKT 1

SOLUTION	GROUP	SCENARIO	SEASON	SOURCE	DIRECTION	MONITORED ELEMENT	RATEA (MVA)	RATEB(MVA)	TDF	TC%LOADING (% MVA)	CONTINGENCY
FDNS	00NR	0	20WP	G15_048	TO->FROM	MATHWSN7 345.00 - TATONGA7 345.00 345KV CKT 1	1195	1195	0.07482	102.1811	P12:230:AEPW:ELKCITY6:SWEETWT6
FDNS	00NR	0	16WP	G15_048	TO->FROM	MATHWSN7 345.00 - TATONGA7 345.00 345KV CKT 1	1195	1195	0.07816	101.0086	THISTLE7 345.00 - WOODWARD DISTRICT EHV 345KV CKT 1
FDNS	00NR	0	16WP	G15_048	TO->FROM	MATHWSN7 345.00 - TATONGA7 345.00 345KV CKT 1	1195	1195	0.07816	101.0086	THISTLE7 345.00 - WOODWARD DISTRICT EHV 345KV CKT 1
FDNS	00NR	0	16WP	G15_048	TO->FROM	MATHWSN7 345.00 - TATONGA7 345.00 345KV CKT 1	1195	1195	0.07816	101.0086	THISTLE7 345.00 - WOODWARD DISTRICT EHV 345KV CKT 2
FDNS	00NR	0	16WP	G15_048	TO->FROM	MATHWSN7 345.00 - TATONGA7 345.00 345KV CKT 1	1195	1195	0.07816	101.0086	THISTLE7 345.00 - WOODWARD DISTRICT EHV 345KV CKT 2
FDNS	00NR	0	20WP	G15_048	TO->FROM	MATHWSN7 345.00 - TATONGA7 345.00 345KV CKT 1	1195	1195	0.07427	100.869	CIMARRON - MINCO 345KV CKT 1
FDNS	00NR	0	16WP	G15_048	TO->FROM	MATHWSN7 345.00 - TATONGA7 345.00 345KV CKT 1	1195	1195	0.07847	100.5612	G14-074T 345.00 - TUCO INTERCHANGE 345KV CKT 1
FDNS	00NR	0	16WP	G15_048	TO->FROM	MATHWSN7 345.00 - TATONGA7 345.00 345KV CKT 1	1195	1195	0.07283	100.4392	CHISHOLM6 230.00 - SWEETWATER 230KV CKT 1
FDNS	00NR	0	20WP	G15_048	TO->FROM	MATHWSN7 345.00 - TATONGA7 345.00 345KV CKT 1	1195	1195	0.07273	100.3181	STLN-DEMARC6 - SWEETWATER 230KV CKT 1
FDNS	00NR	0	20WP	G15_048	TO->FROM	MATHWSN7 345.00 - TATONGA7 345.00 345KV CKT 1	1195	1195	0.07273	100.2999	STATELINE INTERCHANGE - STLN-DEMARC6 230KV CKT 1
FDNS	00NR	0	16WP	G15_048	TO->FROM	MATHWSN7 345.00 - TATONGA7 345.00 345KV CKT 1	1195	1195	0.07499	100.2694	P12:230:AEPW:ELKCITY6:SWEETWT6
FDNS	00NR	0	20WP	G15_048	TO->FROM	MATHWSN7 345.00 - TATONGA7 345.00 345KV CKT 1	1195	1195	0.07273	100.26	P12:230:AEPW-SPS:SWEETWT6:WHEELER 6
FDNS	00NR	0	20WP	G15_048	TO->FROM	MATHWSN7 345.00 - TATONGA7 345.00 345KV CKT 1	1195	1195	0.07417	100.09	G1524G1525 345.00 - THISTLE7 345.00 345KV CKT 1
FDNS	00NR	0	20WP	G15_048	TO->FROM	MATHWSN7 345.00 - TATONGA7 345.00 345KV CKT 1	1195	1195	0.07417	100.09	G1524G1525 345.00 - THISTLE7 345.00 345KV CKT 2
FDNS	01NR	0	20L	G15_048	TO->FROM	ROMAN NOSE - SOUTHARD 138KV CKT 1	133	153	0.04279	122.4038	MATHWSN7 345.00 - TATONGA7 345.00 345KV CKT 1
FDNS	00NR	0	17SP	G15_048	TO->FROM	ROMAN NOSE - SOUTHARD 138KV CKT 1	133	153	0.04607	105.4044	MATHWSN7 345.00 - TATONGA7 345.00 345KV CKT 1
FDNSLock	00NR	0	16WP	G15_048	TO->FROM	ROMAN NOSE - SOUTHARD 138KV CKT 1	171	185	0.04369	104.3877	MATHWSN7 345.00 - TATONGA7 345.00 345KV CKT 1
FDNS	00NR	0	20WP	G15_048	TO->FROM	ROMAN NOSE - SOUTHARD 138KV CKT 1	171	185	0.04355	103.7546	MATHWSN7 345.00 - TATONGA7 345.00 345KV CKT 1
FDNS	01ALL	0	17SP	G15_048	TO->FROM	ROMAN NOSE - SOUTHARD 138KV CKT 1	133	153	0.03234	103.6561	BASE CASE
FDNS	01ALL	0	20SP	G15_048	TO->FROM	ROMAN NOSE - SOUTHARD 138KV CKT 1	133	153	0.03233	100.0583	BASE CASE
FDNS	00NR	2	16WP	G15_048	FROM->TO	CIMARRON - DRAPER LAKE 345KV CKT 1	717	717	0.13258	138.5163	G14-057T 345.00 - SUNNYSIDE 345KV CKT 1
FDNS	00NR	2	16WP	G15_048	FROM->TO	CIMARRON - DRAPER LAKE 345KV CKT 1	717	717	0.13258	127.9321	G14-057T 345.00 - LAWTON EASTSIDE 345KV CKT 1
FDNS	00NR	2	16WP	G15_048	FROM->TO	CIMARRON - DRAPER LAKE 345KV CKT 1	717	717	0.13162	123.3108	ARCADIA - SEMINOLE 345KV CKT 1
FDNS	00NR	2	16WP	G15_048	FROM->TO	CIMARRON - DRAPER LAKE 345KV CKT 1	717	717	0.16251	122.7954	ARCADIA - NORTHWEST 345KV CKT 1
FDNS	00NR	2	16WP	G15_048	FROM->TO	CIMARRON - DRAPER LAKE 345KV CKT 1	717	717	0.12912	121.7993	CLEVELAND - G15066_T 345.00 345KV CKT 1
FDNS	00NR	2	16WP	G15_048	FROM->TO	CIMARRON - DRAPER LAKE 345KV CKT 1	717	717	0.12912	121.0311	G15066_T 345.00 - SOONER 345KV CKT 1
FDNS	00NR	2	16WP	G15_048	FROM->TO	CIMARRON - DRAPER LAKE 345KV CKT 1	717	717	0.12975	117.2211	MATHWSN7 345.00 - NORTHWEST 345KV CKT 1
FDNS	00NR	2	16WP	G15_048	FROM->TO	CIMARRON - DRAPER LAKE 345KV CKT 1	717	717	0.127	116.4604	CLEVELAND - TULSA NORTH 345KV CKT 1
FDNS	00NR	2	16WP	G15_048	FROM->TO	CIMARRON - DRAPER LAKE 345KV CKT 1	717	717	0.127	116.4604	CLEVELAND - TULSA NORTH 345KV CKT 1
FDNS	00NR	2	16WP	G15_048	FROM->TO	CIMARRON - DRAPER LAKE 345KV CKT 1	717	717	0.1247	115.4921	CIMARRON - SARA 138KV CKT 1
FDNS	00NR	2	16WP	G15_048	FROM->TO	CIMARRON - DRAPER LAKE 345KV CKT 1	717	717	0.12438	115.0647	P12:138:WFEC:MSL03
FDNS	00NR	2	16WP	G15_048	FROM->TO	CIMARRON - DRAPER LAKE 345KV CKT 1	717	717	0.12088	114.6517	CIMARRON (CIMARON2) 345/138/13.8KV TRANSFORMER CKT 1
FDNS	00NR	2	16WP	G15_048	FROM->TO	CIMARRON - DRAPER LAKE 345KV CKT 1	717	717	0.12089	114.4634	CIMARRON (CIMARON1) 345/138/13.8KV TRANSFORMER CKT 1
FDNS	00NR	2	16WP	G15_048	FROM->TO	CIMARRON - DRAPER LAKE 345KV CKT 1	717	717	0.1247	114.2038	SARA - STHLAKE4 138.00 138KV CKT 1
FDNS	00NR	2	16WP	G15_048	FROM->TO	CIMARRON - DRAPER LAKE 345KV CKT 1	717	717	0.1247	114.0059	MCCLAIN - STHLAKE4 138.00 138KV CKT 1
FDNS	00NR	2	16WP	G15_048	FROM->TO	CIMARRON - DRAPER LAKE 345KV CKT 1	717	717	0.12301	113.6497	CIMARRON - CZECH HALL 138KV CKT 1
FDNS	00NR	2	16WP	G15_048	FROM->TO	CIMARRON - DRAPER LAKE 345KV CKT 1	717	717	0.12301	113.2982	CZECH HALL - XEROX 138KV CKT 1
FDNS	00NR	2	16WP	G15_048	FROM->TO	CIMARRON - DRAPER LAKE 345KV CKT 1	717	717	0.12301	113.2785	MORGAN - XEROX 138KV CKT 1
FDNS	00NR	2	16WP	G15_048	FROM->TO	CIMARRON - DRAPER LAKE 345KV CKT 1	717	717	0.12301	113.1619	MORGAN - MUSTANG 138KV CKT 1
FDNS	00NR	2	16WP	G15_048	FROM->TO	CIMARRON - DRAPER LAKE 345KV CKT 1	717	717	0.12205	112.9719	ANADARKO - POCASSETT 138KV CKT 1
FDNS	00NR	2	16WP	G15_048	FROM->TO	CIMARRON - DRAPER LAKE 345KV CKT 1	717	717	0.12171	112.8432	LACYGNE - WAVERLY7 345.00 345KV CKT 1
FDNS	00NR	2	16WP	G15_048	FROM->TO	CIMARRON - DRAPER LAKE 345KV CKT 1	717	717	0.12205	112.7767	POCASSETT - TUTTLE 138KV CKT 1
FDNS	00NR	2	16WP	G15_048	FROM->TO	CIMARRON - DRAPER LAKE 345KV CKT 1	717	717	0.12237	112.7323	CORN TAP - NAPLESTP 138.00 138KV CKT 1
FDNS	00NR	2	16WP	G15_048	FROM->TO	CIMARRON - DRAPER LAKE 345KV CKT 1	717	717	0.12108	112.7075	GEN509403 1-PIRKEY GENERATION
FDNS	00NR	2	16WP	G15_048	FROM->TO	CIMARRON - DRAPER LAKE 345KV CKT 1	717	717	0.12361	112.653	JOHNSON COUNTY - SUNNYSIDE 345KV CKT 1
FDNS	00NR	2	16WP	G15_048	FROM->TO	CIMARRON - DRAPER LAKE 345KV CKT 1	717	717	0.12171	112.6524	WAVERLY7 345.00 - WOLF CREEK 345KV CKT 1
FDNS	00NR	2	16WP	G15_048	FROM->TO	CIMARRON - DRAPER LAKE 345KV CKT 1	717	717	0.12108	112.646	GEN515040 1-SEMINOLE 1G
FDNS	00NR	2	16WP	G15_048	FROM->TO	CIMARRON - DRAPER LAKE 345KV CKT 1	717	717	0.12237	112.6379	NAPLESTP 138.00 - PAYNE 138.00 138KV CKT 1
FDNS	00NR	2	16WP	G15_048	FROM->TO	CIMARRON - DRAPER LAKE 345KV CKT 1	717	717	0.12108	112.6335	GEN509416 1-TURK GENERATION
FDNS	00NR	2	16WP	G15_048	FROM->TO	CIMARRON - DRAPER LAKE 345KV CKT 1	717	717	0.12108	112.6294	GEN501801 1-DOLET HILLS UNIT1
FDNS	00NR	2	16WP	G15_048	FROM->TO	CIMARRON - DRAPER LAKE 345KV CKT 1	717	717	0.12275	112.3918	CANEYRV7 345.00 - NEOSHO 345KV CKT 1
FDNSLock	00NR	2	16WP	G15_048	FROM->TO	CIMARRON - DRAPER LAKE 345KV CKT 1	717	717	0.12108	112.3144	GEN336821 1-GRAND GULF UNIT
FDNS	00NR	2	16WP	G15_048	FROM->TO	CIMARRON - DRAPER LAKE 345KV CKT 1	717	717	0.12108	112.2754	GEN515042 1-SEMINOLE 3G
FDNS	00NR	2	16WP	G15_048	FROM->TO	CIMARRON - DRAPER LAKE 345KV CKT 1	717	717	0.12205	112.2707	BRIDGECR 138.00 - TUTTLE 138KV CKT 1
FDNS	00NR	2	16WP	G15_048	FROM->TO	CIMARRON - DRAPER LAKE 345KV CKT 1	717	717	0.12275	112.1307	CANEYRV7 345.00 - LATHAMS7 345.00 345KV CKT 1
FDNS	00NR	2	16WP	G15_048	FROM->TO	CIMARRON - DRAPER LAKE 345KV CKT 1	717	717	0.12108	112.0314	GEN515041 1-SEMINOLE 2G
FDNSLock	00NR	2	16WP	G15_048	FROM->TO	CIMARRON - DRAPER LAKE 345KV CKT 1	717	717	0.12108	111.9956	GEN336153 1-WATERFORD UNIT#3
FDNS	00NR	2	16WP	G15_048	FROM->TO	CIMARRON - DRAPER LAKE 345KV CKT 1	717	717	0.12205	111.9022	BRIDGECR 138.00 - SUNSHINE CANYON 138KV CKT 1
FDNS	00NR	2	16WP	G15_048	FROM->TO	CIMARRON - DRAPER LAKE 345KV CKT 1	717	717	0.12205	111.8969	P12:138:WFEC:MSL01
FDNS	00NR	2	16WP	G15_048	FROM->TO	CIMARRON - DRAPER LAKE 345KV CKT 1	717	717	0.12108	111.7618	GEN509406 1-WELSH #3
FDNS	00NR	2	16WP	G15_048	FROM->TO	CIMARRON - DRAPER LAKE 345KV CKT 1	717	717	0.12108	111.7616	GEN509404 1-WELSH #1
FDNS	00NR	2	16WP	G15_048	FROM->TO	CIMARRON - DRAPER LAKE 345KV CKT 1	717	717	0.12393	111.74	CIMARRON - NORTHWEST 345KV CKT 1
FDNS	00NR	2	16WP	G15_048	FROM->TO	CIMARRON - DRAPER LAKE 345KV CKT 1	717	717	0.12108	111.7115	GEN337911 1-ARKANSAS NUCLEAR ONE UNIT #2
FDNS	00NR	2	16WP	G15_048	FROM->TO	CIMARRON - DRAPER LAKE 345KV CKT 1	717	717	0.12108	111.7	GEN335831 1-RIVERBEND UNIT#1
FDNS	00NR	2	16WP	G15_048	FROM->TO	CIMARRON - DRAPER LAKE 345KV CKT 1	717	717	0.12275	111.6632	LATHAMS7 345.00 - ROSE HILL 345KV CKT 1
FDNS	00NR	2	16WP	G15_048	FROM->TO	CIMARRON - DRAPER LAKE 345KV CKT 1	717	717	0.12194	111.6284	G14-074T 345.00 - OKLAUNION 345KV CKT 1
FDNS	00NR	2	16WP	G15_048	FROM->TO	CIMARRON - DRAPER LAKE 345KV CKT 1	717	717	0.12108	111.3146	GEN337910 1-ARKANSAS NUCLEAR ONE UNIT #1
FDNS	00NR	2	16WP	G15_048	FROM->TO	CIMARRON - DRAPER LAKE 345KV CKT 1	717	717	0.12145	111.2653	HUGO - SUNNYSIDE 345KV CKT 1
FDNS	00NR	2	16WP	G15_048	FROM->TO	CIMARRON - DRAPER LAKE 345KV CKT 1	717	717	0.12108	111.2482	GRAND GULF 500/22.0KV TRANSFORMER CKT 1
FDNS	00NR	2	16WP	G15_048	FROM->TO	CIMARRON - DRAPER LAKE 345KV CKT 1	717	717	0.12124	111.2407	P12:138:OKGE:3TERM14
FDNS	00NR	2	16WP	G15_048	FROM->TO	CIMARRON - DRAPER LAKE 345KV CKT 1	717	717	0.12262	111.239	HORSESHOE LAKE - JONES TAP 138KV CKT 1
FDNS	00NR	2	16WP	G15_048	FROM->TO	CIMARRON - DRAPER LAKE 345KV CKT 1	717	717	0.11873	111.1952	CANADIAN RIVER - MUSKOGEE 345KV CKT 1
FDNS	00NR	2	16WP	G15_048	FROM->TO	CIMARRON - DRAPER LAKE 345KV CKT 1	717	717	0.12112	111.1914	REDBUD - RIVERSIDE STATION 345KV CKT 1
FDNS	00NR	2	16WP	G15_048	FROM->TO	CIMARRON - DRAPER LAKE 345KV CKT 1	717	717	0.12112	111.1914	REDBUD - RIVERSIDE STATION 345KV CKT 1
FDNS	00NR	2	16WP	G15_048	FROM->TO	CIMARRON - DRAPER LAKE 345KV CKT 1	717	717	0.12108	111.1598	GEN515226 1-MUSKOGEE 6G
FDNS	00NR	2	17SP	G15_048	FROM->TO	CIMARRON - DRAPER LAKE 345KV CKT 1	717	717	0.12195	111.1228	G14-057T 345.00 - SUNNYSIDE 345KV CKT 1
FDNS	00NR	2	16WP	G15_048	FROM->TO	CIMARRON - DRAPER LAKE 345KV CKT 1	717	717	0.12351	111.1158	JOHNSON COUNTY - PITTSBURG 345KV CKT 1
FDNS	00NR	2	16WP	G15_048	FROM->TO	CIMARRON - DRAPER LAKE 345KV CKT 1	717	717	0.12351	111.1158	JOHNSON COUNTY - PITTSBURG 345KV CKT 1
FDNS	00NR	2	16WP	G15_048	FROM->TO	CIMARRON - DRAPER LAKE 345KV CKT 1	717	717	0.12108	111.1049	GEN501813 1-RODEMACHER UNIT 3

SOLUTION	GROUP	SCENARIO	SEASON	SOURCE	DIRECTION	MONITORED ELEMENT	RATEA (MVA)	RATEB(MVA)	TDF	TC%LOADING (% MVA)	CONTINGENCY
FDNS	00NR	2	16WP	G15_048	FROM->TO	CIMARRON - DRAPER LAKE 345KV CKT 1	717	717	0.12265	111.0937	MORISNT4 138.00 - STILLWATER 138KV CKT 1
FDNS	00NR	2	16WP	G15_048	FROM->TO	CIMARRON - DRAPER LAKE 345KV CKT 1	717	717	0.12274	111.0878	P12:138:OKGE:3TERM2
FDNS	00NR	2	16WP	G15_048	FROM->TO	CIMARRON - DRAPER LAKE 345KV CKT 1	717	717	0.12121	111.0381	NORTHWEST (NORTWST2) 345/138/13.8KV TRANSFORMER CKT 1
FDNS	00NR	2	16WP	G15_048	FROM->TO	CIMARRON - DRAPER LAKE 345KV CKT 1	717	717	0.12108	110.9515	GEN515225 1-MUSKOGEE 5G
FDNS	00NR	2	16WP	G15_048	FROM->TO	CIMARRON - DRAPER LAKE 345KV CKT 1	717	717	0.12108	110.9513	GEN515223 1-MUSKOGEE 4G
FDNS	00NR	2	16WP	G15_048	FROM->TO	CIMARRON - DRAPER LAKE 345KV CKT 1	717	717	0.12089	110.9487	ARCADIA - KAMO MEMORIAL 138KV CKT 1
FDNS	00NR	2	16WP	G15_048	FROM->TO	CIMARRON - DRAPER LAKE 345KV CKT 1	717	717	0.1211	110.9474	7SAREPTA% 345.00 - LONGWOOD 345KV CKT 1
FDNS	00NR	2	16WP	G15_048	FROM->TO	CIMARRON - DRAPER LAKE 345KV CKT 1	717	717	0.1211	110.9474	7SAREPTA% 345.00 - LONGWOOD 345KV CKT 1
FDNS	00NR	2	16WP	G15_048	FROM->TO	CIMARRON - DRAPER LAKE 345KV CKT 1	717	717	0.12104	110.9451	GRACEMONT (BANK 1) 345/138/13.8KV TRANSFORMER CKT 1
FDNS	00NR	2	16WP	G15_048	FROM->TO	CIMARRON - DRAPER LAKE 345KV CKT 1	717	717	0.12114	110.9352	P12:138:OKGE:3TERM12
FDNS	00NR	2	16WP	G15_048	FROM->TO	CIMARRON - DRAPER LAKE 345KV CKT 1	717	717	0.12111	110.9233	DOLET HILLS - SOUTHWEST SHREVEPORT 345KV CKT 1
FDNS	00NR	2	16WP	G15_048	FROM->TO	CIMARRON - DRAPER LAKE 345KV CKT 1	717	717	0.12111	110.9233	DOLET HILLS - SOUTHWEST SHREVEPORT 345KV CKT 1
FDNS	00NR	2	16WP	G15_048	FROM->TO	CIMARRON - DRAPER LAKE 345KV CKT 1	717	717	0.12108	110.9111	GEN335206 1-NELSON UNIT 6
FDNS	00NR	2	16WP	G15_048	FROM->TO	CIMARRON - DRAPER LAKE 345KV CKT 1	717	717	0.12219	110.9033	MEMORIAL - SKYLINE 138KV CKT 1
FDNS	00NR	2	16WP	G15_048	FROM->TO	CIMARRON - DRAPER LAKE 345KV CKT 1	717	717	0.12167	110.8183	QUAIL CREEK - SKYLINE 138KV CKT 1
FDNS	00NR	2	16WP	G15_048	FROM->TO	CIMARRON - DRAPER LAKE 345KV CKT 1	717	717	0.1234	110.8028	BAILEY4 138.00 - SUNSHINE CANYON 138KV CKT 1
FDNS	00NR	2	16WP	G15_048	FROM->TO	CIMARRON - DRAPER LAKE 345KV CKT 1	717	717	0.12108	110.794	GEN337653 1-WHITE BLUFF UNIT #2
FDNS	00NR	2	16WP	G15_048	FROM->TO	CIMARRON - DRAPER LAKE 345KV CKT 1	717	717	0.12272	110.7684	P12:138:OKGE:3TERM18
FDNS	00NR	2	16WP	G15_048	FROM->TO	CIMARRON - DRAPER LAKE 345KV CKT 1	717	717	0.12108	110.7493	GEN509409 1-WILKES #3
FDNS	00NR	2	16WP	G15_048	FROM->TO	CIMARRON - DRAPER LAKE 345KV CKT 1	717	717	0.1212	110.7439	NORTHWEST (NORTWST4) 345/138/13.8KV TRANSFORMER CKT 1
FDNS	00NR	2	16WP	G15_048	FROM->TO	CIMARRON - DRAPER LAKE 345KV CKT 1	717	717	0.12108	110.7352	GEN501812 1-RODEMACHER UNIT 2
FDNS	00NR	2	16WP	G15_048	FROM->TO	CIMARRON - DRAPER LAKE 345KV CKT 1	717	717	0.10319	110.717	G15063_T 345.00 - WOODRING 345KV CKT 1
FDNS	00NR	2	16WP	G15_048	FROM->TO	CIMARRON - DRAPER LAKE 345KV CKT 1	717	717	0.12267	110.686	36 & MERIDIAN - CHEMTRON 138KV CKT 1
FDNS	00NR	2	16WP	G15_048	FROM->TO	CIMARRON - DRAPER LAKE 345KV CKT 1	717	717	0.12108	110.6806	NEW MADRID 161/22.0KV TRANSFORMER CKT 1
FDNS	00NR	2	16WP	G15_048	FROM->TO	CIMARRON - DRAPER LAKE 345KV CKT 1	717	717	0.12185	110.6721	THISTLE7 345.00 - WOODWARD DISTRICT EHV 345KV CKT 1
FDNS	00NR	2	16WP	G15_048	FROM->TO	CIMARRON - DRAPER LAKE 345KV CKT 1	717	717	0.12185	110.6721	THISTLE7 345.00 - WOODWARD DISTRICT EHV 345KV CKT 1
FDNS	00NR	2	16WP	G15_048	FROM->TO	CIMARRON - DRAPER LAKE 345KV CKT 1	717	717	0.12185	110.6721	THISTLE7 345.00 - WOODWARD DISTRICT EHV 345KV CKT 2
FDNS	00NR	2	16WP	G15_048	FROM->TO	CIMARRON - DRAPER LAKE 345KV CKT 1	717	717	0.12185	110.6721	THISTLE7 345.00 - WOODWARD DISTRICT EHV 345KV CKT 2
FDNS	00NR	2	16WP	G15_048	FROM->TO	CIMARRON - DRAPER LAKE 345KV CKT 1	717	717	0.12108	110.6721	NEW MADRID 345/22.0KV TRANSFORMER CKT 1
FDNS	00NR	2	16WP	G15_048	FROM->TO	CIMARRON - DRAPER LAKE 345KV CKT 1	717	717	0.12108	110.6423	GEN337652 1-WHITE BLUFF UNIT #1
FDNS	00NR	2	16WP	G15_048	FROM->TO	CIMARRON - DRAPER LAKE 345KV CKT 1	717	717	0.1212	110.6326	NORTHWEST (NORTWST3) 345/138/13.8KV TRANSFORMER CKT 1
FDNS	00NR	2	16WP	G15_048	FROM->TO	CIMARRON - DRAPER LAKE 345KV CKT 1	717	717	0.12108	110.6075	GEN520947 1-HUGO1
FDNS	00NR	2	16WP	G15_048	FROM->TO	CIMARRON - DRAPER LAKE 345KV CKT 1	717	717	0.12267	110.5989	CHEMTRON - PENNSYLVANIA 138KV CKT 1
FDNS	00NR	2	16WP	G15_048	FROM->TO	CIMARRON - DRAPER LAKE 345KV CKT 1	717	717	0.1213	110.559	G15074_T 345.00 - HOYT 345KV CKT 1
FDNS	00NR	2	16WP	G15_048	FROM->TO	CIMARRON - DRAPER LAKE 345KV CKT 1	717	717	0.12109	110.542	7SAREPTA% 345.00 - ELDORADO EHV 345KV CKT 1
FDNS	00NR	2	16WP	G15_048	FROM->TO	CIMARRON - DRAPER LAKE 345KV CKT 1	717	717	0.12109	110.5419	3TR3AR8EL7EL
FDNS	00NR	2	16WP	G15_048	FROM->TO	CIMARRON - DRAPER LAKE 345KV CKT 1	717	717	0.12109	110.5352	ELDORADO EHV 500/345KV TRANSFORMER CKT 1
FDNS	00NR	2	16WP	G15_048	FROM->TO	CIMARRON - DRAPER LAKE 345KV CKT 1	717	717	0.1234	110.5003	BAILEY4 138.00 - WESTMOORE 138KV CKT 1
FDNS	00NR	2	16WP	G15_048	FROM->TO	CIMARRON - DRAPER LAKE 345KV CKT 1	717	717	0.12138	110.4913	P12:138:OKGE:3TERM11
FDNS	00NR	2	16WP	G15_048	FROM->TO	CIMARRON - DRAPER LAKE 345KV CKT 1	717	717	0.12166	110.4789	P12:138:OKGE:3TERM17
FDNS	00NR	2	16WP	G15_048	FROM->TO	CIMARRON - DRAPER LAKE 345KV CKT 1	717	717	0.12086	110.4645	KETCH TAP - NORTHWEST 138KV CKT 1
FDNS	00NR	2	16WP	G15_048	FROM->TO	CIMARRON - DRAPER LAKE 345KV CKT 1	717	717	0.12084	110.4544	G15052_T 345.00 - ROSE HILL 345KV CKT 1
FDNS	00NR	2	16WP	G15_048	FROM->TO	CIMARRON - DRAPER LAKE 345KV CKT 1	717	717	0.12108	110.4503	GEN515577 1-ARBWND11 0.6900
FDNS	00NR	2	16WP	G15_048	FROM->TO	CIMARRON - DRAPER LAKE 345KV CKT 1	717	717	0.12267	110.4459	BLANCHARD - CORNVILLE 138KV CKT 1
FDNS	00NR	2	16WP	G15_048	FROM->TO	CIMARRON - DRAPER LAKE 345KV CKT 1	717	717	0.12154	110.4322	COMANCHE - LOCO 138KV CKT 1
FDNS	00NR	2	16WP	G15_048	FROM->TO	CIMARRON - DRAPER LAKE 345KV CKT 1	717	717	0.12108	110.4298	GEN334440 1-SABINE UNIT 4
FDNS	00NR	2	16WP	G15_048	FROM->TO	CIMARRON - DRAPER LAKE 345KV CKT 1	717	717	0.1213	110.4213	LONEOAK - NORTHWEST 138KV CKT 1
FDNS	00NR	2	16WP	G15_048	FROM->TO	CIMARRON - DRAPER LAKE 345KV CKT 1	717	717	0.12108	110.4198	DELL 500 - ESSEX UNIT 2 500KV CKT Z1
FDNS	00NR	2	16WP	G15_048	FROM->TO	CIMARRON - DRAPER LAKE 345KV CKT 1	717	717	0.12153	110.3933	DIVISION AVE - LAKESIDE 138KV CKT 1
FDNS	00NR	2	16WP	G15_048	FROM->TO	CIMARRON - DRAPER LAKE 345KV CKT 1	717	717	0.12267	110.3524	P12:138:AEPW-OGE:CORNVIL4:MAUD 4
FDNS	00NR	2	16WP	G15_048	FROM->TO	CIMARRON - DRAPER LAKE 345KV CKT 1	717	717	0.12114	110.3418	HORSESHOE LAKE - KAMO MEMORIAL 138KV CKT 1
FDNS	00NR	2	16WP	G15_048	FROM->TO	CIMARRON - DRAPER LAKE 345KV CKT 1	717	717	0.12125	110.34	NORTHWEST - PANTHER 138KV CKT 1
FDNS	00NR	2	16WP	G15_048	FROM->TO	CIMARRON - DRAPER LAKE 345KV CKT 1	717	717	0.12224	110.3362	P12:138:OKGE:3TERM20
FDNS	00NR	2	16WP	G15_048	FROM->TO	CIMARRON - DRAPER LAKE 345KV CKT 1	717	717	0.12125	110.2907	PANTHER - SILVER LAKE 138KV CKT 1
FDNS	00NR	2	16WP	G15_048	FROM->TO	CIMARRON - DRAPER LAKE 345KV CKT 1	717	717	0.12398	110.2891	CLARKSVILLE - ONETA 345KV CKT 1
FDNS	00NR	2	16WP	G15_048	FROM->TO	CIMARRON - DRAPER LAKE 345KV CKT 1	717	717	0.12398	110.2891	CLARKSVILLE - ONETA 345KV CKT 1
FDNS	00NR	2	16WP	G15_048	FROM->TO	CIMARRON - DRAPER LAKE 345KV CKT 1	717	717	0.12108	110.2863	GEN336252 1-NINEMILE POINT UNIT#5
FDNS	00NR	2	16WP	G15_048	FROM->TO	CIMARRON - DRAPER LAKE 345KV CKT 1	717	717	0.12194	110.281	P12:138:OKGE:3TERM47
FDNS	00NR	2	16WP	G15_048	FROM->TO	CIMARRON - DRAPER LAKE 345KV CKT 1	717	717	0.12153	110.2734	HEFNER - LAKESIDE 138KV CKT 1
FDNS	00NR	2	16WP	G15_048	FROM->TO	CIMARRON - DRAPER LAKE 345KV CKT 1	717	717	0.12161	110.2624	FINNEY SWITCHING STATION - HOLCOMB 345KV CKT 1
FDNS	00NR	2	16WP	G15_048	FROM->TO	CIMARRON - DRAPER LAKE 345KV CKT 1	717	717	0.12161	110.2624	FINNEY SWITCHING STATION - HOLCOMB 345KV CKT 1
FDNSLock	00NR	2	16WP	G15_048	FROM->TO	CIMARRON - DRAPER LAKE 345KV CKT 1	717	717	0.12108	110.2617	GEN300006 1-NEW MADRID UNIT 1
FDNS	00NR	2	16WP	G15_048	FROM->TO	CIMARRON - DRAPER LAKE 345KV CKT 1	717	717	0.12108	110.2574	DOLET HILLS 345/24.0KV TRANSFORMER CKT 1
FDNS	00NR	2	16WP	G15_048	FROM->TO	CIMARRON - DRAPER LAKE 345KV CKT 1	717	717	0.12172	110.2573	CIMARRON - HAYMAKER 138KV CKT 1
FDNS	00NR	2	16WP	G15_048	FROM->TO	CIMARRON - DRAPER LAKE 345KV CKT 1	717	717	0.12108	110.2508	WHITE BLUFF 500/26.0KV TRANSFORMER CKT 1
FDNS	00NR	2	16WP	G15_048	FROM->TO	CIMARRON - DRAPER LAKE 345KV CKT 1	717	717	0.12267	110.2504	BLANCHARD - MAUD 138KV CKT 1
FDNSLock	00NR	2	16WP	G15_048	FROM->TO	CIMARRON - DRAPER LAKE 345KV CKT 1	717	717	0.12108	110.2483	GEN300007 1-NEW MADRID UNIT 2
FDNS	00NR	2	16WP	G15_048	FROM->TO	CIMARRON - DRAPER LAKE 345KV CKT 1	717	717	0.1213	110.2273	HOYT - STRANGER CREEK 345KV CKT 1
FDNS	00NR	2	16WP	G15_048	FROM->TO	CIMARRON - DRAPER LAKE 345KV CKT 1	717	717	0.12137	110.2187	DIVISION AVE - MUSTANG 138KV CKT 1
FDNS	00NR	2	16WP	G15_048	FROM->TO	CIMARRON - DRAPER LAKE 345KV CKT 1	717	717	0.1234	110.2176	FRANKLIN SW - WESTMOORE 138KV CKT 1
FDNS	00NR	2	16WP	G15_048	FROM->TO	CIMARRON - DRAPER LAKE 345KV CKT 1	717	717	0.12156	110.2117	BLACKBERRY - NEOSHO 345KV CKT 1
FDNS	00NR	2	16WP	G15_048	FROM->TO	CIMARRON - DRAPER LAKE 345KV CKT 1	717	717	0.12156	110.2117	BLACKBERRY - NEOSHO 345KV CKT 1
FDNSLock	00NR	2	16WP	G15_048	FROM->TO	CIMARRON - DRAPER LAKE 345KV CKT 1	717	717	0.12118	110.2049	G15088_T 345.00 - MOORE 345KV CKT 1
FDNS	00NR	2	16WP	G15_048	FROM->TO	CIMARRON - DRAPER LAKE 345KV CKT 1	717	717	0.12308	110.198	KETCH - KETCH TAP 138KV CKT 1
FDNS	00NR	2	16WP	G15_048	FROM->TO	CIMARRON - DRAPER LAKE 345KV CKT 1	717	717	0.12228	110.1926	MCCLAIN - PLEASANT VALLEY 138KV CKT 1
FDNS	00NR	2	16WP	G15_048	FROM->TO	CIMARRON - DRAPER LAKE 345KV CKT 1	717	717	0.12168	110.1894	EMPORIA ENERGY CENTER - G14_001T 345.00 345KV CKT 1
FDNS	00NR	2	16WP	G15_048	FROM->TO	CIMARRON - DRAPER LAKE 345KV CKT 1	717	717	0.1214	110.1765	SWISSVALE - WEST GARDNER 345KV CKT 1
FDNS	00NR	2	16WP	G15_048	FROM->TO	CIMARRON - DRAPER LAKE 345KV CKT 1	717	717	0.1213	110.1722	G15074_T 345.00 - JEFFREY ENERGY CENTER 345KV CKT 1
FDNS	00NR	2	16WP	G15_048	FROM->TO	CIMARRON - DRAPER LAKE 345KV CKT 1	717	717	0.12108	110.1532	GEN335204 1-NELSON UNIT 4

SOLUTION	GROUP	SCENARIO	SEASON	SOURCE	DIRECTION	MONITORED ELEMENT	RATEA (MVA)	RATEB(MVA)	TDF	TC%LOADING (% MVA)	CONTINGENCY
FDNS	00NR	2	16WP	G15_048	FROM->TO	CIMARRON - DRAPER LAKE 345KV CKT 1	717	717	0.12172	110.1501	DIVISION AVE - HAYMAKER 138KV CKT 1
FDNS	00NR	2	16WP	G15_048	FROM->TO	CIMARRON - DRAPER LAKE 345KV CKT 1	717	717	0.12108	110.1465	GEN336831 1-BAXTER WILSON SES
FDNS	00NR	2	16WP	G15_048	FROM->TO	CIMARRON - DRAPER LAKE 345KV CKT 1	717	717	0.12234	110.142	P12:138:AEPW-OGE:SHIDLER4:OSAGE 4
FDNS	00NR	2	16WP	G15_048	FROM->TO	CIMARRON - DRAPER LAKE 345KV CKT 1	717	717	0.12128	110.1408	G1524G1525 345.00 - THISTLE7 345.00 345KV CKT 1
FDNS	00NR	2	16WP	G15_048	FROM->TO	CIMARRON - DRAPER LAKE 345KV CKT 1	717	717	0.12128	110.1408	G1524G1525 345.00 - THISTLE7 345.00 345KV CKT 2
FDNS	00NR	2	16WP	G15_048	FROM->TO	CIMARRON - DRAPER LAKE 345KV CKT 1	717	717	0.12206	110.1313	CLASSEN - ROBINSON 138KV CKT 1
FDNS	00NR	2	16WP	G15_048	FROM->TO	CIMARRON - DRAPER LAKE 345KV CKT 1	717	717	0.12108	110.1229	GEN509408 1-WILKES #2
FDNS	00NR	2	16WP	G15_048	FROM->TO	CIMARRON - DRAPER LAKE 345KV CKT 1	717	717	0.10716	110.1196	WOODRING (WOODRNG2) 345/138/13.8KV TRANSFORMER CKT 1
FDNS	00NR	2	16WP	G15_048	FROM->TO	CIMARRON - DRAPER LAKE 345KV CKT 1	717	717	0.12133	110.1103	P12:138:WFEC:MSL02
FDNS	00NR	2	16WP	G15_048	FROM->TO	CIMARRON - DRAPER LAKE 345KV CKT 1	717	717	0.12442	110.1089	GRACEMONT - LAWTON EASTSIDE 345KV CKT 1
FDNS	00NR	2	16WP	G15_048	FROM->TO	CIMARRON - DRAPER LAKE 345KV CKT 1	717	717	0.12442	110.1089	GRACEMONT - LAWTON EASTSIDE 345KV CKT 1
FDNS	00NR	2	16WP	G15_048	FROM->TO	CIMARRON - DRAPER LAKE 345KV CKT 1	717	717	0.12108	110.1058	GEN506754 1-LEBROCK STEAM 1
FDNS	00NR	2	16WP	G15_048	FROM->TO	CIMARRON - DRAPER LAKE 345KV CKT 1	717	717	0.12108	110.0993	GEN334441 1-SABINE UNIT 5
FDNS	00NR	2	16WP	G15_048	FROM->TO	CIMARRON - DRAPER LAKE 345KV CKT 1	717	717	0.12111	110.0911	P12:138:AEPW:OKMULGE4:R.S.S-4
FDNS	00NR	2	16WP	G15_048	FROM->TO	CIMARRON - DRAPER LAKE 345KV CKT 1	717	717	0.12108	110.0893	GEN334071 1-LEWIS CREEK 2
FDNS	00NR	2	16WP	G15_048	FROM->TO	CIMARRON - DRAPER LAKE 345KV CKT 1	717	717	0.12194	110.0837	G14-074T 345.00 - TUCO INTERCHANGE 345KV CKT 1
FDNS	00NR	2	16WP	G15_048	FROM->TO	CIMARRON - DRAPER LAKE 345KV CKT 1	717	717	0.12108	110.0813	GEN334070 1-LEWIS CREEK 1
FDNS	00NR	2	16WP	G15_048	FROM->TO	CIMARRON - DRAPER LAKE 345KV CKT 1	717	717	0.12125	110.077	ANADARKO - GEORGIA 138KV CKT 1
FDNS	00NR	2	16WP	G15_048	FROM->TO	CIMARRON - DRAPER LAKE 345KV CKT 1	717	717	0.12108	110.0764	GEN590011 2-ERCOT EQUIVALENCE
FDNS	00NR	2	16WP	G15_048	FROM->TO	CIMARRON - DRAPER LAKE 345KV CKT 1	717	717	0.12108	110.076	GEN336251 1-NINEMILE POINT UNIT#4
FDNS	00NR	2	16WP	G15_048	FROM->TO	CIMARRON - DRAPER LAKE 345KV CKT 1	717	717	0.12135	110.0627	EMPORIA ENERGY CENTER - SWISSVALE 345KV CKT 1
FDNS	00NR	2	16WP	G15_048	FROM->TO	CIMARRON - DRAPER LAKE 345KV CKT 1	717	717	0.12168	110.0613	G14_001T 345.00 - WICHITA 345KV CKT 1
FDNS	00NR	2	16WP	G15_048	FROM->TO	CIMARRON - DRAPER LAKE 345KV CKT 1	717	717	0.12193	110.0605	BENTON - WICHITA 345KV CKT 1
FDNS	00NR	2	16WP	G15_048	FROM->TO	CIMARRON - DRAPER LAKE 345KV CKT 1	717	717	0.12113	110.0582	WEBRE - WELLS 500KV CKT 1
FDNS	00NR	2	16WP	G15_048	FROM->TO	CIMARRON - DRAPER LAKE 345KV CKT 1	717	717	0.12108	110.0407	GEN338146 1-INDEPENDENCE UNIT #2
FDNS	00NR	2	16WP	G15_048	FROM->TO	CIMARRON - DRAPER LAKE 345KV CKT 1	717	717	0.12159	110.0387	LACYGNE - NEOSHO 345KV CKT 1
FDNS	00NR	2	16WP	G15_048	FROM->TO	CIMARRON - DRAPER LAKE 345KV CKT 1	717	717	0.12108	110.0326	GEN590010 1-ERCOT EQUIVALENCE
FDNS	00NR	2	16WP	G15_048	FROM->TO	CIMARRON - DRAPER LAKE 345KV CKT 1	717	717	0.1213	110.0242	LONEOAK - QUAIL CREEK 138KV CKT 1
FDNS	00NR	2	16WP	G15_048	FROM->TO	CIMARRON - DRAPER LAKE 345KV CKT 1	717	717	0.12125	110.0153	FLETCHER - GEORGIA 138KV CKT 1
FDNS	00NR	2	16WP	G15_048	FROM->TO	CIMARRON - DRAPER LAKE 345KV CKT 1	717	717	0.12108	110.0076	GEN501811 1-RODEMACHER UNIT 1
FDNS	00NR	2	16WP	G15_048	FROM->TO	CIMARRON - DRAPER LAKE 345KV CKT 1	717	717	0.12108	110.0014	GEN503909 1-FULTONU1 1 16.000
FDNS	00NR	2	16WP	G15_048	FROM->TO	CIMARRON - DRAPER LAKE 345KV CKT 1	717	717	0.12108	109.9689	GEN334433 1-SABINE UNIT 3
FDNS	00NR	2	16WP	G15_048	FROM->TO	CIMARRON - DRAPER LAKE 345KV CKT 1	717	717	0.12108	109.9657	GEN303007 1-1BC2 U2
FDNS	00NR	2	16WP	G15_048	FROM->TO	CIMARRON - DRAPER LAKE 345KV CKT 1	717	717	0.12175	109.9604	CRINER - PAYNE 138.00 138KV CKT 1
FDNS	00NR	2	16WP	G15_048	FROM->TO	CIMARRON - DRAPER LAKE 345KV CKT 1	717	717	0.12108	109.9604	GEN303006 1-1BC2 U1
FDNS	00NR	2	16WP	G15_048	FROM->TO	CIMARRON - DRAPER LAKE 345KV CKT 1	717	717	0.12131	109.9588	EMPIRE - FLETCHER 138KV CKT 1
FDNS	00NR	2	16WP	G15_048	FROM->TO	CIMARRON - DRAPER LAKE 345KV CKT 1	717	717	0.12108	109.9579	GEN334030 1-FRONTIER UNIT 1
FDNS	00NR	2	16WP	G15_048	FROM->TO	CIMARRON - DRAPER LAKE 345KV CKT 1	717	717	0.12108	109.9568	GEN334031 1-FRONTIER UNIT 2
FDNS	00NR	2	16WP	G15_048	FROM->TO	CIMARRON - DRAPER LAKE 345KV CKT 1	717	717	0.12108	109.9538	FRONTIER - GRIMES 345KV CKT 1
FDNS	00NR	2	16WP	G15_048	FROM->TO	CIMARRON - DRAPER LAKE 345KV CKT 1	717	717	0.12108	109.9498	GEN337041 1-GERALD ANDRUS
FDNS	00NR	2	16WP	G15_048	FROM->TO	CIMARRON - DRAPER LAKE 345KV CKT 1	717	717	0.12116	109.9445	CLEAVELAND - CLEVLND 4 138.00 138KV CKT Z1
FDNS	00NR	2	16WP	G15_048	FROM->TO	CIMARRON - DRAPER LAKE 345KV CKT 1	717	717	0.12116	109.9445	CLEAVELAND - CLEVLND 4 138.00 138KV CKT Z1
FDNS	00NR	2	16WP	G15_048	FROM->TO	CIMARRON - DRAPER LAKE 345KV CKT 1	717	717	0.12116	109.9443	CLEVELAND (CLVAUTO1) 345/138/13.8KV TRANSFORMER CKT 1
FDNS	00NR	2	16WP	G15_048	FROM->TO	CIMARRON - DRAPER LAKE 345KV CKT 1	717	717	0.12116	109.9443	CLEVELAND (CLVAUTO1) 345/138/13.8KV TRANSFORMER CKT 1
FDNS	00NR	2	16WP	G15_048	FROM->TO	CIMARRON - DRAPER LAKE 345KV CKT 1	717	717	0.12108	109.9431	GEN336191 1-LITTLE GYPSY UNIT#3
FDNS	00NR	2	16WP	G15_048	FROM->TO	CIMARRON - DRAPER LAKE 345KV CKT 1	717	717	0.12108	109.9391	P12:069:OKGE:3TERM4
FDNS	00NR	2	16WP	G15_048	FROM->TO	CIMARRON - DRAPER LAKE 345KV CKT 1	717	717	0.12212	109.9328	SPVALLY4 138.00 - STILLWATER 138KV CKT 1
FDNS	00NR	2	16WP	G15_048	FROM->TO	CIMARRON - DRAPER LAKE 345KV CKT 1	717	717	0.12195	109.9301	ARKANSAS NUCLEAR ONE - FT SMITH 500KV CKT 1
FDNS	00NR	2	16WP	G15_048	FROM->TO	CIMARRON - DRAPER LAKE 345KV CKT 1	717	717	0.12195	109.9301	ARKANSAS NUCLEAR ONE - FT SMITH 500KV CKT 1
FDNS	00NR	2	16WP	G15_048	FROM->TO	CIMARRON - DRAPER LAKE 345KV CKT 1	717	717	0.1211	109.9269	8DANIEL8 500.00 - MCKNIGHT 500KV CKT 1
FDNS	00NR	2	16WP	G15_048	FROM->TO	CIMARRON - DRAPER LAKE 345KV CKT 1	717	717	0.12234	109.924	OSAGE - WEBB CITY TAP 138KV CKT 1
FDNS	00NR	2	16WP	G15_048	FROM->TO	CIMARRON - DRAPER LAKE 345KV CKT 1	717	717	0.12122	109.9207	P12:138:OKGE:3TERM13
FDNS	00NR	2	16WP	G15_048	FROM->TO	CIMARRON - DRAPER LAKE 345KV CKT 1	717	717	0.12161	109.9176	FINNEY SWITCHING STATION - Hitchland Interchange 345KV CKT 1
FDNS	00NR	2	16WP	G15_048	FROM->TO	CIMARRON - DRAPER LAKE 345KV CKT 1	717	717	0.12108	109.917	GEN509393 S1-ARSENAL HILL GENS #4 (STALL)
FDNS	00NR	2	16WP	G15_048	FROM->TO	CIMARRON - DRAPER LAKE 345KV CKT 1	717	717	0.12108	109.9111	GEN335614 1-WILLOW GLENN UNIT#4
FDNS	00NR	2	16WP	G15_048	FROM->TO	CIMARRON - DRAPER LAKE 345KV CKT 1	717	717	0.12108	109.91	GEN338143 1-INDEPENDENCE UNIT #1
FDNS	00NR	2	16WP	G15_048	FROM->TO	CIMARRON - DRAPER LAKE 345KV CKT 1	717	717	0.12212	109.9037	PAYNESB4 138.00 - SPVALLY4 138.00 138KV CKT 1
FDNS	00NR	2	16WP	G15_048	FROM->TO	CIMARRON - DRAPER LAKE 345KV CKT 1	717	717	0.12158	109.9028	DAYTON - MUSTANG 138KV CKT 1
FDNS	00NR	2	16WP	G15_048	FROM->TO	CIMARRON - DRAPER LAKE 345KV CKT 1	717	717	0.12108	109.9018	P12:161:AEPW:DYESS 5:HYLAND 5
FDNS	00NR	2	16WP	G15_048	FROM->TO	CIMARRON - DRAPER LAKE 345KV CKT 1	717	717	0.12131	109.9004	COMANCHE - EMPIRE 138KV CKT 1
FDNS	00NR	2	16WP	G15_048	FROM->TO	CIMARRON - DRAPER LAKE 345KV CKT 1	717	717	0.12108	109.9001	GEN509392 G2-ARSENAL HILL GENS #3 (STALL)
FDNS	00NR	2	16WP	G15_048	FROM->TO	CIMARRON - DRAPER LAKE 345KV CKT 1	717	717	0.12108	109.9	GEN509391 G1-ARSENAL HILL GENS #2 (STALL)
FDNS	00NR	2	16WP	G15_048	FROM->TO	CIMARRON - DRAPER LAKE 345KV CKT 1	717	717	0.12108	109.8983	GEN303008 1-1BC2 U3
FDNS	00NR	2	16WP	G15_048	FROM->TO	CIMARRON - DRAPER LAKE 345KV CKT 1	717	717	0.12158	109.8979	DAYTON - HOBBY LOBBY 138KV CKT 1
FDNS	00NR	2	16WP	G15_048	FROM->TO	CIMARRON - DRAPER LAKE 345KV CKT 1	717	717	0.12212	109.8881	CUSHING - PAYNESB4 138.00 138KV CKT 1
FDNS	00NR	2	16WP	G15_048	FROM->TO	CIMARRON - DRAPER LAKE 345KV CKT 1	717	717	0.12152	109.8766	MUSTANG - SW 5TH 138KV CKT 1
FDNS	00NR	2	16WP	G15_048	FROM->TO	CIMARRON - DRAPER LAKE 345KV CKT 1	717	717	0.12108	109.8758	GEN336170 1-GULF OXY U4
FDNS	00NR	2	16WP	G15_048	FROM->TO	CIMARRON - DRAPER LAKE 345KV CKT 1	717	717	0.12108	109.8747	GEN336464 1-MICHOUD UNIT #3
FDNS	00NR	2	16WP	G15_048	FROM->TO	CIMARRON - DRAPER LAKE 345KV CKT 1	717	717	0.12175	109.8558	COLE - CRINER 138KV CKT 1
FDNS	00NR	2	16WP	G15_048	FROM->TO	CIMARRON - DRAPER LAKE 345KV CKT 1	717	717	0.1211	109.853	P12:345:GRDA:CHOUTEAU-SPORTSMANACRES
FDNS	00NR	2	16WP	G15_048	FROM->TO	CIMARRON - DRAPER LAKE 345KV CKT 1	717	717	0.12107	109.8424	ELDORADO EHV - MOUNT OLIVE 500KV CKT 1
FDNS	00NR	2	16WP	G15_048	FROM->TO	CIMARRON - DRAPER LAKE 345KV CKT 1	717	717	0.12206	109.8373	LIGHTNING CREEK - ROBINSON 138KV CKT 1
FDNS	00NR	2	16WP	G15_048	FROM->TO	CIMARRON - DRAPER LAKE 345KV CKT 1	717	717	0.12108	109.837	GEN511843 1-RIVERSIDE STATION #2
FDNS	00NR	2	16WP	G15_048	FROM->TO	CIMARRON - DRAPER LAKE 345KV CKT 1	717	717	0.12108	109.8363	ESSEX UNIT 2 500/18.0KV TRANSFORMER CKT 1
FDNS	00NR	2	16WP	G15_048	FROM->TO	CIMARRON - DRAPER LAKE 345KV CKT 1	717	717	0.12115	109.8338	P12:069:OKGE:3TERM19
FDNS	00NR	2	16WP	G15_048	FROM->TO	CIMARRON - DRAPER LAKE 345KV CKT 1	717	717	0.12165	109.8329	OUMED 4 - STONEWALL 138KV CKT 1
FDNS	00NR	2	16WP	G15_048	FROM->TO	CIMARRON - DRAPER LAKE 345KV CKT 1	717	717	0.12108	109.8308	GEN336801 1-BAXTER WILSON UNIT #1
FDNS	00NR	2	16WP	G15_048	FROM->TO	CIMARRON - DRAPER LAKE 345KV CKT 1	717	717	0.12117	109.8302	7LUTESVIL 345.00 - 7ST FRANC 345.00 345KV CKT 1
FDNS	00NR	2	16WP	G15_048	FROM->TO	CIMARRON - DRAPER LAKE 345KV CKT 1	717	717	0.12108	109.7953	GEN506752 1-LEBROCK GAS 1

SOLUTION	GROUP	SCENARIO	SEASON	SOURCE	DIRECTION	MONITORED ELEMENT	RATEA (MVA)	RATEB(MVA)	TDF	TC%LOADING (% MVA)	CONTINGENCY
FDNS	00NR	2	16WP	G15_048	FROM->TO	CIMARRON - DRAPER LAKE 345KV CKT 1	717	717	0.12108	109.7952	GEN506753 1-LEBROCK GAS 2
FDNS	00NR	2	16WP	G15_048	FROM->TO	CIMARRON - DRAPER LAKE 345KV CKT 1	717	717	0.12108	109.7868	GEN501910 1-ACADIA UNIT ST1
FDNS	00NR	2	16WP	G15_048	FROM->TO	CIMARRON - DRAPER LAKE 345KV CKT 1	717	717	0.12087	109.786	ARCADIA - LGARBER4 138.00 138KV CKT 1
FDNS	00NR	2	16WP	G15_048	FROM->TO	CIMARRON - DRAPER LAKE 345KV CKT 1	717	717	0.12108	109.7675	RODEMACHER 230/22.0KV TRANSFORMER CKT 1
FDNS	00NR	2	16WP	G15_048	FROM->TO	CIMARRON - DRAPER LAKE 345KV CKT 1	717	717	0.12046	109.7661	IODINE - WOODWARD EHV 138KV CKT 1
FDNS	00NR	2	16WP	G15_048	FROM->TO	CIMARRON - DRAPER LAKE 345KV CKT 1	717	717	0.12113	109.765	7JASPER 345.00 - BLACKBERRY 345KV CKT 1
FDNS	00NR	2	16WP	G15_048	FROM->TO	CIMARRON - DRAPER LAKE 345KV CKT 1	717	717	0.12087	109.7562	CHITWOOD - LGARBER4 138.00 138KV CKT 1
FDNS	00NR	2	16WP	G15_048	FROM->TO	CIMARRON - DRAPER LAKE 345KV CKT 1	717	717	0.12112	109.7538	P12:138:AEPW-OGE:WTH_JCT4:JENSEN4
FDNS	00NR	2	16WP	G15_048	FROM->TO	CIMARRON - DRAPER LAKE 345KV CKT 1	717	717	0.12108	109.7511	GEN509394 1-FLINT CREEK
FDNS	00NR	2	16WP	G15_048	FROM->TO	CIMARRON - DRAPER LAKE 345KV CKT 1	717	717	0.12234	109.75	FAIRFAX TAP - SHIDLER 138KV CKT 1
FDNS	00NR	2	16WP	G15_048	FROM->TO	CIMARRON - DRAPER LAKE 345KV CKT 1	717	717	0.12234	109.75	FAIRFAX TAP - WEBB CITY TAP 138KV CKT 1
FDNS	00NR	2	16WP	G15_048	FROM->TO	CIMARRON - DRAPER LAKE 345KV CKT 1	717	717	0.11899	109.7486	CANADIAN RIVER - PITTSBURG 345KV CKT 1
FDNS	00NR	2	16WP	G15_048	FROM->TO	CIMARRON - DRAPER LAKE 345KV CKT 1	717	717	0.11899	109.7486	CANADIAN RIVER - PITTSBURG 345KV CKT 1
FDNS	00NR	2	16WP	G15_048	FROM->TO	CIMARRON - DRAPER LAKE 345KV CKT 1	717	717	0.12119	109.7457	8WNEWMADRID 500.00 - DELL 500 500KV CKT 1
FDNS	00NR	2	16WP	G15_048	FROM->TO	CIMARRON - DRAPER LAKE 345KV CKT 1	717	717	0.12087	109.7446	CHITWOOD - JONES TAP 138KV CKT 1
FDNS	00NR	2	16WP	G15_048	FROM->TO	CIMARRON - DRAPER LAKE 345KV CKT 1	717	717	0.1211	109.7367	6LAYFLD 230.00 - CARROLL 230KV CKT 1
FDNS	00NR	2	16WP	G15_048	FROM->TO	CIMARRON - DRAPER LAKE 345KV CKT 1	717	717	0.12005	109.7359	CHISHOLM6 230.00 - ELK CITY 230KV 230KV CKT 1
FDNS	00NR	2	16WP	G15_048	FROM->TO	CIMARRON - DRAPER LAKE 345KV CKT 1	717	717	0.12005	109.7329	ELK CITY 230KV (ELKCTY-6) 230/138/13.8KV TRANSFORMER CKT 1
FDNS	00NR	2	16WP	G15_048	FROM->TO	CIMARRON - DRAPER LAKE 345KV CKT 1	717	717	0.12005	109.7329	ELK CITY 230KV (ELKCTY-6) 230/138/13.8KV TRANSFORMER CKT 1
FDNS	00NR	2	16WP	G15_048	FROM->TO	CIMARRON - DRAPER LAKE 345KV CKT 1	717	717	0.12165	109.7324	OUMED 4 - PARK PLACE 138KV CKT 1
FDNS	00NR	2	16WP	G15_048	FROM->TO	CIMARRON - DRAPER LAKE 345KV CKT 1	717	717	0.12921	109.7312	SOONER - WOODRING 345KV CKT 1
FDNS	00NR	2	16WP	G15_048	FROM->TO	CIMARRON - DRAPER LAKE 345KV CKT 1	717	717	0.12046	109.7232	DEWEY - IODINE 138KV CKT 1
FDNS	00NR	2	16WP	G15_048	FROM->TO	CIMARRON - DRAPER LAKE 345KV CKT 1	717	717	0.12219	109.7216	TULSA NORTH - WEKIWA 345KV CKT 1
FDNS	00NR	2	16WP	G15_048	FROM->TO	CIMARRON - DRAPER LAKE 345KV CKT 1	717	717	0.12219	109.7216	TULSA NORTH - WEKIWA 345KV CKT 1
FDNS	00NR	2	16WP	G15_048	FROM->TO	CIMARRON - DRAPER LAKE 345KV CKT 1	717	717	0.12222	109.7214	DALE - HORSESHOE LAKE 138KV CKT 1
FDNS	00NR	2	16WP	G15_048	FROM->TO	CIMARRON - DRAPER LAKE 345KV CKT 1	717	717	0.12104	109.7203	ELDORADO EHV - SHERIDAN EHV 500KV CKT 1
FDNS	00NR	2	16WP	G15_048	FROM->TO	CIMARRON - DRAPER LAKE 345KV CKT 1	717	717	0.12138	109.7082	G13-010T 345.00 - POST ROCK 345KV CKT 1
FDNS	00NR	2	16WP	G15_048	FROM->TO	CIMARRON - DRAPER LAKE 345KV CKT 1	717	717	0.1213	109.7051	ANADARKO - SEQUOYAHJ4 138.00 138KV CKT 1
FDNS	00NR	2	16WP	G15_048	FROM->TO	CIMARRON - DRAPER LAKE 345KV CKT 1	717	717	0.1213	109.7037	CORN TAP - SEQUOYAHJ4 138.00 138KV CKT 1
FDNS	00NR	2	16WP	G15_048	FROM->TO	CIMARRON - DRAPER LAKE 345KV CKT 1	717	717	0.12115	109.7031	P12:138:AEPW:N.E.S.-4:CATOOSA4
FDNS	00NR	2	16WP	G15_048	FROM->TO	CIMARRON - DRAPER LAKE 345KV CKT 1	717	717	0.12121	109.7019	P13:138-161:WERE:NSES_TX-4OR5::
FDNS	00NR	2	16WP	G15_048	FROM->TO	CIMARRON - DRAPER LAKE 345KV CKT 1	717	717	0.12206	109.6999	LIGHTNING CREEK - TROSPER 138KV CKT 1
FDNS	00NR	2	16WP	G15_048	FROM->TO	CIMARRON - DRAPER LAKE 345KV CKT 1	717	717	0.12108	109.6988	ST FRANCIS 161/16.0KV TRANSFORMER CKT 1
FDNS	00NR	2	16WP	G15_048	FROM->TO	CIMARRON - DRAPER LAKE 345KV CKT 1	717	717	0.12108	109.6987	ST FRANCIS - ST FRANCIS 1 161KV CKT Z1
FDNS	00NR	2	16WP	G15_048	FROM->TO	CIMARRON - DRAPER LAKE 345KV CKT 1	717	717	0.12109	109.6925	FULTON 115 - HOPE 115KV CKT 1
FDNS	00NR	2	16WP	G15_048	FROM->TO	CIMARRON - DRAPER LAKE 345KV CKT 1	717	717	0.12109	109.6925	FULTON 115 - HOPE 115KV CKT 1
FDNS	00NR	2	16WP	G15_048	FROM->TO	CIMARRON - DRAPER LAKE 345KV CKT 1	717	717	0.12108	109.6904	8CAJUN2 500/24.0KV TRANSFORMER CKT 1
FDNS	00NR	2	16WP	G15_048	FROM->TO	CIMARRON - DRAPER LAKE 345KV CKT 1	717	717	0.12108	109.6805	GEN300015 1-1SGPDEL 18.000
FDNS	00NR	2	16WP	G15_048	FROM->TO	CIMARRON - DRAPER LAKE 345KV CKT 1	717	717	0.12222	109.6804	DALE - SQUIRL CREEK 138KV CKT 1
FDNS	00NR	2	16WP	G15_048	FROM->TO	CIMARRON - DRAPER LAKE 345KV CKT 1	717	717	0.12124	109.6801	HUGO - VALLIANT 345KV CKT 1
FDNS	00NR	2	16WP	G15_048	FROM->TO	CIMARRON - DRAPER LAKE 345KV CKT 1	717	717	0.12124	109.6801	HUGO - VALLIANT 345KV CKT 1
FDNS	00NR	2	16WP	G15_048	FROM->TO	CIMARRON - DRAPER LAKE 345KV CKT 1	717	717	0.12108	109.679	GEN337766 1-TRACTEBEL UNIT S1
FDNS	00NR	2	16WP	G15_048	FROM->TO	CIMARRON - DRAPER LAKE 345KV CKT 1	717	717	0.1213	109.6776	ANADARKO - GRACMNT4 138.00 138KV CKT 1
FDNS	00NR	2	16WP	G15_048	FROM->TO	CIMARRON - DRAPER LAKE 345KV CKT 1	717	717	0.12117	109.6741	7JASPER 345.00 - MORGAN 345KV CKT 1
FDNS	00NR	2	16WP	G15_048	FROM->TO	CIMARRON - DRAPER LAKE 345KV CKT 1	717	717	0.12111	109.6734	P12:069:OKGE:3TERM3
FDNS	00NR	2	16WP	G15_048	FROM->TO	CIMARRON - DRAPER LAKE 345KV CKT 1	717	717	0.12108	109.6712	GEN515564 1-ORIGIN11 0.6900
FDNS	00NR	2	16WP	G15_048	FROM->TO	CIMARRON - DRAPER LAKE 345KV CKT 1	717	717	0.12108	109.6712	GEN515565 1-ORIGIN21 0.6900
FDNS	00NR	2	16WP	G15_048	FROM->TO	CIMARRON - DRAPER LAKE 345KV CKT 1	717	717	0.12077	109.6681	MORISNT4 138.00 - SOONER 138KV CKT 1
FDNS	00NR	2	16WP	G15_048	FROM->TO	CIMARRON - DRAPER LAKE 345KV CKT 1	717	717	0.12158	109.6678	36 & MERIDIAN - HOBBY LOBBY 138KV CKT 1
FDNS	00NR	2	16WP	G15_048	FROM->TO	CIMARRON - DRAPER LAKE 345KV CKT 1	717	717	0.12108	109.6659	GEN336222 1-LITTLE GYPSY UNIT#2
FDNS	00NR	2	16WP	G15_048	FROM->TO	CIMARRON - DRAPER LAKE 345KV CKT 1	717	717	0.12105	109.6617	P12:138:OKGE-AEPW:JENSEN4:REDROCKRD4
FDNS	00NR	2	16WP	G15_048	FROM->TO	CIMARRON - DRAPER LAKE 345KV CKT 1	717	717	0.12121	109.6528	P12:138:AEPW:CATOOSA4:T.S.E.-4
FDNS	00NR	2	16WP	G15_048	FROM->TO	CIMARRON - DRAPER LAKE 345KV CKT 1	717	717	0.12108	109.6521	GEN501970 1-EVANGELINE UNIT 7
FDNS	00NR	2	16WP	G15_048	FROM->TO	CIMARRON - DRAPER LAKE 345KV CKT 1	717	717	0.12108	109.6519	GEN511842 1-RIVERSIDE STATION #1
FDNS	00NR	2	16WP	G15_048	FROM->TO	CIMARRON - DRAPER LAKE 345KV CKT 1	717	717	0.12115	109.6503	P12:138:OKGE:3TERM28
FDNS	00NR	2	16WP	G15_048	FROM->TO	CIMARRON - DRAPER LAKE 345KV CKT 1	717	717	0.12113	109.6488	NW164TH4 138.00 - PIEDMONT 138KV CKT 1
FDNS	00NR	2	16WP	G15_048	FROM->TO	CIMARRON - DRAPER LAKE 345KV CKT 1	717	717	0.1212	109.648	HAMMETT TAP - HAMMETT2 138KV CKT 1
FDNS	00NR	2	16WP	G15_048	FROM->TO	CIMARRON - DRAPER LAKE 345KV CKT 1	717	717	0.12113	109.647	NORTHWEST - NW164TH4 138.00 138KV CKT 1
FDNS	00NR	2	16WP	G15_048	FROM->TO	CIMARRON - DRAPER LAKE 345KV CKT 1	717	717	0.12108	109.647	ESSEX UNIT 2 500/18.0KV TRANSFORMER CKT 1
FDNS	00NR	2	16WP	G15_048	FROM->TO	CIMARRON - DRAPER LAKE 345KV CKT 1	717	717	0.12138	109.6454	G13-010T 345.00 - SPEARVILLE 345KV CKT 1
FDNS	00NR	2	16WP	G15_048	FROM->TO	CIMARRON - DRAPER LAKE 345KV CKT 1	717	717	0.12108	109.6402	NELSON 230/20.0KV TRANSFORMER CKT 1
FDNS	00NR	2	16WP	G15_048	FROM->TO	CIMARRON - DRAPER LAKE 345KV CKT 1	717	717	0.1211	109.637	AS KING - EAU CLAIRE 345KV CKT 1
FDNS	00NR	2	16WP	G15_048	FROM->TO	CIMARRON - DRAPER LAKE 345KV CKT 1	717	717	0.12108	109.6345	GEN336152 1-WATERFORD UNIT#2
FDNS	00NR	2	16WP	G15_048	FROM->TO	CIMARRON - DRAPER LAKE 345KV CKT 1	717	717	0.12108	109.6339	ST FRANCIS 2 161/16.0KV TRANSFORMER CKT 2
FDNS	00NR	2	16WP	G15_048	FROM->TO	CIMARRON - DRAPER LAKE 345KV CKT 1	717	717	0.12108	109.6338	ST FRANCIS 345/161KV TRANSFORMER CKT 1
FDNS	00NR	2	16WP	G15_048	FROM->TO	CIMARRON - DRAPER LAKE 345KV CKT 1	717	717	0.12108	109.6334	GEN336151 1-WATERFORD UNIT#1
FDNS	00NR	2	16WP	G15_048	FROM->TO	CIMARRON - DRAPER LAKE 345KV CKT 1	717	717	0.12273	109.6324	BRYANT - MEMORIAL 138KV CKT 1
FDNS	00NR	2	16WP	G15_048	FROM->TO	CIMARRON - DRAPER LAKE 345KV CKT 1	717	717	0.12109	109.6287	P12:161:AEPW:EROGERS5:ECNTRTN5
FDNS	00NR	2	16WP	G15_048	FROM->TO	CIMARRON - DRAPER LAKE 345KV CKT 1	717	717	0.12108	109.6274	P12:138:AEPW:SHERID4:112GORE4
FDNS	00NR	2	16WP	G15_048	FROM->TO	CIMARRON - DRAPER LAKE 345KV CKT 1	717	717	0.12141	109.6258	HEALDTON - LOCO 138KV CKT 1
FDNS	00NR	2	16WP	G15_048	FROM->TO	CIMARRON - DRAPER LAKE 345KV CKT 1	717	717	0.12108	109.6228	P12:161:AEPW:DYESS5:ELMSPRNG:TONTITN5
FDNS	00NR	2	16WP	G15_048	FROM->TO	CIMARRON - DRAPER LAKE 345KV CKT 1	717	717	0.12121	109.6205	P12:138:AEPW:CORNVIL4:S.W.S.-4
FDNS	00NR	2	16WP	G15_048	FROM->TO	CIMARRON - DRAPER LAKE 345KV CKT 1	717	717	0.12111	109.6186	GRAND ISLAND - MCCOOL 345KV CKT 1
FDNS	00NR	2	16WP	G15_048	FROM->TO	CIMARRON - DRAPER LAKE 345KV CKT 1	717	717	0.12108	109.618	GEN334392 1-EXXON MOBIL IPP 1
FDNS	00NR	2	16WP	G15_048	FROM->TO	CIMARRON - DRAPER LAKE 345KV CKT 1	717	717	0.12123	109.6153	HEFNER - TULSA 138KV CKT 1
FDNS	00NR	2	16WP	G15_048	FROM->TO	CIMARRON - DRAPER LAKE 345KV CKT 1	717	717	0.12112	109.6133	P12:161:AEPW-SWPA:BEAVER5:EROGERS5
FDNS	00NR	2	16WP	G15_048	FROM->TO	CIMARRON - DRAPER LAKE 345KV CKT 1	717	717	0.12114	109.6125	COMANCHE TAP - OMPA-DUNCAN 840 138KV CKT 1
FDNS	00NR	2	16WP	G15_048	FROM->TO	CIMARRON - DRAPER LAKE 345KV CKT 1	717	717	0.12108	109.6118	GEN334393 1-EXXON MOBIL IPP 2
FDNS	00NR	2	16WP	G15_048	FROM->TO	CIMARRON - DRAPER LAKE 345KV CKT 1	717	717	0.12108	109.6118	GEN334394 1-EXXON MOBIL IPP 3

SOLUTION	GROUP	SCENARIO	SEASON	SOURCE	DIRECTION	MONITORED ELEMENT	RATEA (MVA)	RATEB(MVA)	TDF	TC%LOADING (% MVA)	CONTINGENCY
FDNS	00NR	2	16WP	G15_048	FROM->TO	CIMARRON - DRAPER LAKE 345KV CKT 1	717	717	0.12115	109.6101	FLETCHER - MARLOW JCT 69KV CKT 1
FDNS	00NR	2	16WP	G15_048	FROM->TO	CIMARRON - DRAPER LAKE 345KV CKT 1	717	717	0.12118	109.6034	G15088_T 345.00 - PAULINE 345KV CKT 1
FDNS	00NR	2	16WP	G15_048	FROM->TO	CIMARRON - DRAPER LAKE 345KV CKT 1	717	717	0.12108	109.5977	MC NIEL 500/115KV TRANSFORMER CKT 1
FDNS	00NR	2	16WP	G15_048	FROM->TO	CIMARRON - DRAPER LAKE 345KV CKT 1	717	717	0.12108	109.5972	GEN501972 1-EVANGELINE UNIT 7-2
FDNS	00NR	2	16WP	G15_048	FROM->TO	CIMARRON - DRAPER LAKE 345KV CKT 1	717	717	0.12108	109.5971	GEN501971 1-EVANGELINE UNIT 7-1
FDNS	00NR	2	16WP	G15_048	FROM->TO	CIMARRON - DRAPER LAKE 345KV CKT 1	717	717	0.12121	109.5939	KELLYAV4 138.00 - MEMORIAL 138KV CKT 1
FDNS	00NR	2	16WP	G15_048	FROM->TO	CIMARRON - DRAPER LAKE 345KV CKT 1	717	717	0.12118	109.5932	BROOKLINE - MORGAN 345KV CKT 1
FDNS	00NR	2	16WP	G15_048	FROM->TO	CIMARRON - DRAPER LAKE 345KV CKT 1	717	717	0.12118	109.5932	BROOKLINE - MORGAN 345KV CKT 1
FDNS	00NR	2	16WP	G15_048	FROM->TO	CIMARRON - DRAPER LAKE 345KV CKT 1	717	717	0.1216	109.593	P12:138:AEPW:MOUNDRD4:SHIDLER4
FDNS	00NR	2	16WP	G15_048	FROM->TO	CIMARRON - DRAPER LAKE 345KV CKT 1	717	717	0.12108	109.5926	BISMARK - HOT SPRINGS WEST BUS 115KV CKT 1
FDNS	00NR	2	16WP	G15_048	FROM->TO	CIMARRON - DRAPER LAKE 345KV CKT 1	717	717	0.12165	109.5925	BODLE - PARK PLACE 138KV CKT 1
FDNS	00NR	2	16WP	G15_048	FROM->TO	CIMARRON - DRAPER LAKE 345KV CKT 1	717	717	0.12108	109.5919	GEN337764 1-TRACTEBEL UNIT C1
FDNS	00NR	2	16WP	G15_048	FROM->TO	CIMARRON - DRAPER LAKE 345KV CKT 1	717	717	0.12108	109.5919	GEN337765 1-TRACTEBEL UNIT C2
FDNS	00NR	2	16WP	G15_048	FROM->TO	CIMARRON - DRAPER LAKE 345KV CKT 1	717	717	0.12111	109.5882	MCCOOL - MOORE 345KV CKT 1
FDNS	00NR	2	16WP	G15_048	FROM->TO	CIMARRON - DRAPER LAKE 345KV CKT 1	717	717	0.12272	109.5879	NORTHEAST STATION - ONETA 345KV CKT 1
FDNS	00NR	2	16WP	G15_048	FROM->TO	CIMARRON - DRAPER LAKE 345KV CKT 1	717	717	0.12272	109.5879	NORTHEAST STATION - ONETA 345KV CKT 1
FDNS	00NR	2	16WP	G15_048	FROM->TO	CIMARRON - DRAPER LAKE 345KV CKT 1	717	717	0.12124	109.5873	P12:138:WFEC:MSL15
FDNS	00NR	2	16WP	G15_048	FROM->TO	CIMARRON - DRAPER LAKE 345KV CKT 1	717	717	0.12108	109.5868	GEN336242 1-1NMIL ST1 18.000
FDNS	00NR	2	16WP	G15_048	FROM->TO	CIMARRON - DRAPER LAKE 345KV CKT 1	717	717	0.12108	109.5861	GEN334431 1-SABINE UNIT 1
FDNS	00NR	2	16WP	G15_048	FROM->TO	CIMARRON - DRAPER LAKE 345KV CKT 1	717	717	0.12108	109.5861	GEN334432 1-SABINE UNIT 2
FDNS	00NR	2	16WP	G15_048	FROM->TO	CIMARRON - DRAPER LAKE 345KV CKT 1	717	717	0.12141	109.5851	HEALDTON - RINGLING 138KV CKT 1
FDNS	00NR	2	16WP	G15_048	FROM->TO	CIMARRON - DRAPER LAKE 345KV CKT 1	717	717	0.12134	109.5847	BRISTOW - SILVER CITY 138KV CKT 1
FDNS	00NR	2	16WP	G15_048	FROM->TO	CIMARRON - DRAPER LAKE 345KV CKT 1	717	717	0.12108	109.5828	GEN501912 1-ACADIA UNIT CT1B
FDNS	00NR	2	16WP	G15_048	FROM->TO	CIMARRON - DRAPER LAKE 345KV CKT 1	717	717	0.12108	109.5821	GEN501911 1-ACADIA UNIT CT1A
FDNS	00NR	2	16WP	G15_048	FROM->TO	CIMARRON - DRAPER LAKE 345KV CKT 1	717	717	0.12175	109.5808	COLE - OUSW4 138KV CKT 1
FDNS	00NR	2	16WP	G15_048	FROM->TO	CIMARRON - DRAPER LAKE 345KV CKT 1	717	717	0.12444	109.5802	COTTONWOOD CREEK - MARSHALL 138KV CKT 1
FDNS	00NR	2	16WP	G15_048	FROM->TO	CIMARRON - DRAPER LAKE 345KV CKT 1	717	717	0.12132	109.5794	HAMMETT TAP - HORSESHOE LAKE 138KV CKT 1
FDNS	00NR	2	16WP	G15_048	FROM->TO	CIMARRON - DRAPER LAKE 345KV CKT 1	717	717	0.12444	109.576	MARSHALL - WOODRING 138KV CKT 1
FDNS	00NR	2	16WP	G15_048	FROM->TO	CIMARRON - DRAPER LAKE 345KV CKT 1	717	717	0.1216	109.5759	SHIDLER - WEST PAWHUSKA 138KV CKT 1
FDNS	00NR	2	16WP	G15_048	FROM->TO	CIMARRON - DRAPER LAKE 345KV CKT 1	717	717	0.12113	109.5747	PIEDMONT - RICHRDS 138KV CKT 1
FDNS	00NR	2	16WP	G15_048	FROM->TO	CIMARRON - DRAPER LAKE 345KV CKT 1	717	717	0.12127	109.5712	COUNCIL - MUSTANG 138KV CKT 1
FDNS	00NR	2	16WP	G15_048	FROM->TO	CIMARRON - DRAPER LAKE 345KV CKT 1	717	717	0.12111	109.5683	ARPIN B4 345.00 - EAU CLAIRE 345KV CKT 1
FDNS	00NR	2	16WP	G15_048	FROM->TO	CIMARRON - DRAPER LAKE 345KV CKT 1	717	717	0.12108	109.565	CYPRESS - HARTBURG 500KV CKT 1
FDNS	00NR	2	16WP	G15_048	FROM->TO	CIMARRON - DRAPER LAKE 345KV CKT 1	717	717	0.12121	109.5628	KELLYAV4 138.00 - REMNGTON PARK 138KV CKT 1
FDNS	00NR	2	16WP	G15_048	FROM->TO	CIMARRON - DRAPER LAKE 345KV CKT 1	717	717	0.1216	109.5601	PAWHUSKA TAP - WEST PAWHUSKA 138KV CKT 1
FDNS	00NR	2	16WP	G15_048	FROM->TO	CIMARRON - DRAPER LAKE 345KV CKT 1	717	717	0.12108	109.5595	ALPINE AECC - BISMARK 115KV CKT 1
FDNS	00NR	2	16WP	G15_048	FROM->TO	CIMARRON - DRAPER LAKE 345KV CKT 1	717	717	0.12108	109.5594	GEN515266 1-AES 1G
FDNS	00NR	2	16WP	G15_048	FROM->TO	CIMARRON - DRAPER LAKE 345KV CKT 1	717	717	0.12108	109.5594	GEN515267 1-AES 2G
FDNS	00NR	2	16WP	G15_048	FROM->TO	CIMARRON - DRAPER LAKE 345KV CKT 1	717	717	0.1212	109.5584	HAMMETT2 - MEEKER 138KV CKT 1
FDNS	00NR	2	16WP	G15_048	FROM->TO	CIMARRON - DRAPER LAKE 345KV CKT 1	717	717	0.12143	109.557	CIVIT - PAOLI 138KV CKT 1
FDNS	00NR	2	16WP	G15_048	FROM->TO	CIMARRON - DRAPER LAKE 345KV CKT 1	717	717	0.12124	109.5559	CORN TAP - CORNVILLE 138KV CKT 1
FDNS	00NR	2	16WP	G15_048	FROM->TO	CIMARRON - DRAPER LAKE 345KV CKT 1	717	717	0.12273	109.5546	ACORN 4 138.00 - BRYANT 138KV CKT 1
FDNS	00NR	2	16WP	G15_048	FROM->TO	CIMARRON - DRAPER LAKE 345KV CKT 1	717	717	0.12108	109.544	GEN337430 1-PERYVILLE UNIT #3
FDNS	00NR	2	16WP	G15_048	FROM->TO	CIMARRON - DRAPER LAKE 345KV CKT 1	717	717	0.12141	109.5437	RINGLING - SOUTH WILSON 138KV CKT 1
FDNS	00NR	2	16WP	G15_048	FROM->TO	CIMARRON - DRAPER LAKE 345KV CKT 1	717	717	0.12108	109.5431	GEN337428 1-PERYVILLE UNIT #1
FDNS	00NR	2	16WP	G15_048	FROM->TO	CIMARRON - DRAPER LAKE 345KV CKT 1	717	717	0.12108	109.5426	P12:69:AEPW:L.E.S.-2:LAW WC2
FDNS	00NR	2	16WP	G15_048	FROM->TO	CIMARRON - DRAPER LAKE 345KV CKT 1	717	717	0.12108	109.5408	SABINE 230/24.0KV TRANSFORMER CKT 1
FDNS	00NR	2	16WP	G15_048	FROM->TO	CIMARRON - DRAPER LAKE 345KV CKT 1	717	717	0.12107	109.5391	LAYFLD8 500.00 - MOUNT OLIVE 500KV CKT 1
FDNS	00NR	2	16WP	G15_048	FROM->TO	CIMARRON - DRAPER LAKE 345KV CKT 1	717	717	0.12107	109.5391	LAYFLD8 500.00 - MOUNT OLIVE 500KV CKT 1
FDNS	00NR	2	16WP	G15_048	FROM->TO	CIMARRON - DRAPER LAKE 345KV CKT 1	717	717	0.12121	109.5293	REMNGTON PARK - STONEWALL 138KV CKT 1
FDNS	00NR	2	16WP	G15_048	FROM->TO	CIMARRON - DRAPER LAKE 345KV CKT 1	717	717	0.12127	109.5182	COUNCIL - WESTOAKS 138KV CKT 1
FDNS	00NR	2	16WP	G15_048	FROM->TO	CIMARRON - DRAPER LAKE 345KV CKT 1	717	717	0.12149	109.5129	CHERRY CREEK - PLEASANT VALLEY 138KV CKT 1
FDNS	00NR	2	16WP	G15_048	FROM->TO	CIMARRON - DRAPER LAKE 345KV CKT 1	717	717	0.12108	109.0896	BASE CASE
FDNS	00NR	2	16WP	G15_048	FROM->TO	CIMARRON - DRAPER LAKE 345KV CKT 1	717	717	0.12108	108.8045	CHISHOLM6 230.00 - SWEETWATER 230KV CKT 1
FDNS	00NR	2	16WP	G15_048	FROM->TO	CIMARRON - DRAPER LAKE 345KV CKT 1	717	717	0.12185	108.713	BURGETT4 138.00 - DANFORTH 138KV CKT 1
FDNS	00NR	2	16WP	G15_048	FROM->TO	CIMARRON - DRAPER LAKE 345KV CKT 1	717	717	0.12185	108.7122	BURGETT4 138.00 - RNDBARN4 138.00 138KV CKT 1
FDNS	00NR	2	16WP	G15_048	FROM->TO	CIMARRON - DRAPER LAKE 345KV CKT 1	717	717	0.12185	108.6996	ARCADIA - RNDBARN4 138.00 138KV CKT 1
FDNS	00NR	2	16WP	G15_048	FROM->TO	CIMARRON - DRAPER LAKE 345KV CKT 1	717	717	0.12108	108.6816	GEN511848 1-SOUTHWESTERN STATION #3
FDNS	00NR	2	16WP	G15_048	FROM->TO	CIMARRON - DRAPER LAKE 345KV CKT 1	717	717	0.12108	108.6812	GEN515550 1-MNCWND31 0.6900
FDNS	00NR	2	16WP	G15_048	FROM->TO	CIMARRON - DRAPER LAKE 345KV CKT 1	717	717	0.12108	108.6699	GEN562611 1-G14_064_3 0.6900
FDNS	00NR	2	16WP	G15_048	FROM->TO	CIMARRON - DRAPER LAKE 345KV CKT 1	717	717	0.1214	108.6635	BORDER 7345.00 - TUCO_2 345.00 345KV CKT 1
FDNS	00NR	2	16WP	G15_048	FROM->TO	CIMARRON - DRAPER LAKE 345KV CKT 1	717	717	0.12121	108.6493	G11-14T 345.00 - WOODWARD DISTRICT EHV 345KV CKT 1
FDNS	00NR	2	16WP	G15_048	FROM->TO	CIMARRON - DRAPER LAKE 345KV CKT 1	717	717	0.12121	108.6493	G11-14T 345.00 - WOODWARD DISTRICT EHV 345KV CKT 2
FDNS	00NR	2	16WP	G15_048	FROM->TO	CIMARRON - DRAPER LAKE 345KV CKT 1	717	717	0.12299	108.6383	FOREST HILL - MAUD 138KV CKT 1
FDNS	00NR	2	16WP	G15_048	FROM->TO	CIMARRON - DRAPER LAKE 345KV CKT 1	717	717	0.12108	108.633	GEN515601 1-KNGFSR11 0.7000
FDNS	00NR	2	16WP	G15_048	FROM->TO	CIMARRON - DRAPER LAKE 345KV CKT 1	717	717	0.12108	108.6311	GEN629066 4-PRAIRIE CREEK GENERATORFOR UNIT NO4
FDNS	00NR	2	16WP	G15_048	FROM->TO	CIMARRON - DRAPER LAKE 345KV CKT 1	717	717	0.12108	108.6302	GEN641089 2-ENERGY CENTER 2
FDNS	00NR	2	16WP	G15_048	FROM->TO	CIMARRON - DRAPER LAKE 345KV CKT 1	717	717	0.12108	108.6252	GEN659125 1-COVEY
FDNS	00NR	2	16WP	G15_048	FROM->TO	CIMARRON - DRAPER LAKE 345KV CKT 1	717	717	0.12108	108.6245	GEN563062 1-G15071_3 0.6900
FDNS	00NR	2	16WP	G15_048	FROM->TO	CIMARRON - DRAPER LAKE 345KV CKT 1	717	717	0.12108	108.6224	GEN600050 1-FEP
FDNS	00NR	2	16WP	G15_048	FROM->TO	CIMARRON - DRAPER LAKE 345KV CKT 1	717	717	0.12122	108.6174	7MCCREDIE 345.00 - 7OVERTON 345.00 345KV CKT 1
FDNS	00NR	2	16WP	G15_048	FROM->TO	CIMARRON - DRAPER LAKE 345KV CKT 1	717	717	0.12013	108.6162	HUNTERS7 345.00 - RENFROW7 345.00 345KV CKT 1
FDNS	00NR	2	16WP	G15_048	FROM->TO	CIMARRON - DRAPER LAKE 345KV CKT 1	717	717	0.12108	108.615	GEN562042 1-G11_014_3 0.6900
FDNS	00NR	2	16WP	G15_048	FROM->TO	CIMARRON - DRAPER LAKE 345KV CKT 1	717	717	0.12081	108.6121	P12:138:WFEC:MSL10
FDNS	00NR	2	16WP	G15_048	FROM->TO	CIMARRON - DRAPER LAKE 345KV CKT 1	717	717	0.12108	108.6068	GEN539670 4-JUDSON LARGE GENERATOR
FDNS	00NR	2	16WP	G15_048	FROM->TO	CIMARRON - DRAPER LAKE 345KV CKT 1	717	717	0.12108	108.6008	GEN600071 10-RIVER SIDE
FDNS	00NR	2	16WP	G15_048	FROM->TO	CIMARRON - DRAPER LAKE 345KV CKT 1	717	717	0.12108	108.6007	GEN600070 9-RIVER SIDE
FDNS	00NR	2	16WP	G15_048	FROM->TO	CIMARRON - DRAPER LAKE 345KV CKT 1	717	717	0.12108	108.5955	GEN672303 3-BOUNDARY DAM GENERATOR 3
FDNS	00NR	2	16WP	G15_048	FROM->TO	CIMARRON - DRAPER LAKE 345KV CKT 1	717	717	0.12108	108.5955	GEN672304 4-BOUNDARY DAM GENERATOR 4

SOLUTION	GROUP	SCENARIO	SEASON	SOURCE	DIRECTION	MONITORED ELEMENT	RATEA (MVA)	RATEB(MVA)	TDF	TC%LOADING (% MVA)	CONTINGENCY
FDNS	00NR	2	16WP	G15_048	FROM->TO	CIMARRON - DRAPER LAKE 345KV CKT 1	717	717	0.12108	108.5955	GEN672305 5-BOUNDARY DAM GENERATOR 5
FDNS	00NR	2	16WP	G15_048	FROM->TO	CIMARRON - DRAPER LAKE 345KV CKT 1	717	717	0.12108	108.5944	GEN600007 7-RIVERSIDE GEN 7
FDNS	00NR	2	16WP	G15_048	FROM->TO	CIMARRON - DRAPER LAKE 345KV CKT 1	717	717	0.12108	108.5939	GEN600067 9-HIGH BRIDGE
FDNS	00NR	2	16WP	G15_048	FROM->TO	CIMARRON - DRAPER LAKE 345KV CKT 1	717	717	0.12108	108.5938	GEN562270 1-G12-020-2 0.6900
FDNS	00NR	2	16WP	G15_048	FROM->TO	CIMARRON - DRAPER LAKE 345KV CKT 1	717	717	0.12108	108.5905	GEN615052 1-CAMBRIDGE GENERATING STATION
FDNS	00NR	2	16WP	G15_048	FROM->TO	CIMARRON - DRAPER LAKE 345KV CKT 1	717	717	0.12414	108.5895	RENFROW7 345.00 - VIOLA 7 345.00 345KV CKT 1
FDNS	00NR	2	16WP	G15_048	FROM->TO	CIMARRON - DRAPER LAKE 345KV CKT 1	717	717	0.12108	108.5879	GEN600011 5-BLACK DOG GEN 1
FDNS	00NR	2	16WP	G15_048	FROM->TO	CIMARRON - DRAPER LAKE 345KV CKT 1	717	717	0.12108	108.5835	GEN541151 3-SIBLEY GENERATING UNIT #3
FDNS	00NR	2	16WP	G15_048	FROM->TO	CIMARRON - DRAPER LAKE 345KV CKT 1	717	717	0.12108	108.5825	GEN600014 4-BLACK DOG GEN 4
FDNS	00NR	2	16WP	G15_048	FROM->TO	CIMARRON - DRAPER LAKE 345KV CKT 1	717	717	0.12108	108.576	GEN629067 1-EMERY GAS TURBINE 1
FDNS	00NR	2	16WP	G15_048	FROM->TO	CIMARRON - DRAPER LAKE 345KV CKT 1	717	717	0.12108	108.5756	GEN562802 1-G15039_3 0.3570
FDNS	00NR	2	16WP	G15_048	FROM->TO	CIMARRON - DRAPER LAKE 345KV CKT 1	717	717	0.12108	108.5753	GEN615032 2-PLEASANT VALLEY
FDNS	00NR	2	16WP	G15_048	FROM->TO	CIMARRON - DRAPER LAKE 345KV CKT 1	717	717	0.12108	108.5747	GEN563102 1-G15075_3 0.5500
FDNS	00NR	2	16WP	G15_048	FROM->TO	CIMARRON - DRAPER LAKE 345KV CKT 1	717	717	0.12195	108.5713	DELAWARE - NORTHEAST STATION 345KV CKT 1
FDNS	00NR	2	16WP	G15_048	FROM->TO	CIMARRON - DRAPER LAKE 345KV CKT 1	717	717	0.12195	108.5713	DELAWARE - NORTHEAST STATION 345KV CKT 1
FDNS	00NR	2	16WP	G15_048	FROM->TO	CIMARRON - DRAPER LAKE 345KV CKT 1	717	717	0.12108	108.5713	GEN562602 1-G15_029_3 0.6900
FDNS	00NR	2	16WP	G15_048	FROM->TO	CIMARRON - DRAPER LAKE 345KV CKT 1	717	717	0.12108	108.5709	GEN515611 1-NBUFFRG1 0.6900
FDNS	00NR	2	16WP	G15_048	FROM->TO	CIMARRON - DRAPER LAKE 345KV CKT 1	717	717	0.12108	108.5709	GEN560217 1-G07_062_6 0.6900
FDNS	00NR	2	16WP	G15_048	FROM->TO	CIMARRON - DRAPER LAKE 345KV CKT 1	717	717	0.12108	108.5709	GEN560218 1-G07_062_7 0.6900
FDNS	00NR	2	16WP	G15_048	FROM->TO	CIMARRON - DRAPER LAKE 345KV CKT 1	717	717	0.1214	108.5669	BORDER 7345.00 - WOODWARD DISTRICT EHV 345KV CKT 1
FDNS	00NR	2	16WP	G15_048	FROM->TO	CIMARRON - DRAPER LAKE 345KV CKT 1	717	717	0.12075	108.5629	CHISNEY - CLARKSVILLE 138KV CKT 1
FDNS	00NR	2	16WP	G15_048	FROM->TO	CIMARRON - DRAPER LAKE 345KV CKT 1	717	717	0.12128	108.5624	7MCCREDIE 345.00 - 7MONTGMRY 345.00 345KV CKT 1
FDNS	00NR	2	16WP	G15_048	FROM->TO	CIMARRON - DRAPER LAKE 345KV CKT 1	717	717	0.12108	108.554	GEN652353 2-GR PRAIRIEG 0.6900
FDNS	00NR	2	16WP	G15_048	FROM->TO	CIMARRON - DRAPER LAKE 345KV CKT 1	717	717	0.12108	108.5534	GEN563282 1-G15094_3 0.6900
FDNS	00NR	2	16WP	G15_048	FROM->TO	CIMARRON - DRAPER LAKE 345KV CKT 1	717	717	0.12108	108.5504	GEN562812 1-G15040_3 0.3570
FDNS	00NR	2	16WP	G15_048	FROM->TO	CIMARRON - DRAPER LAKE 345KV CKT 1	717	717	0.12108	108.5441	GEN563132 1-G15078_3 0.3570
FDNS	00NR	2	16WP	G15_048	FROM->TO	CIMARRON - DRAPER LAKE 345KV CKT 1	717	717	0.12108	108.5439	GEN600017 C-LS POWER CT
FDNS	00NR	2	16WP	G15_048	FROM->TO	CIMARRON - DRAPER LAKE 345KV CKT 1	717	717	0.12152	108.5308	SEMINOLE - VANOSTP4 138.00 138KV CKT 1
FDNS	00NR	2	16WP	G15_048	FROM->TO	CIMARRON - DRAPER LAKE 345KV CKT 1	717	717	0.12013	108.5283	CHISHOLM7 345.00 - GRACEMONT 345KV CKT 1
FDNS	00NR	2	16WP	G15_048	FROM->TO	CIMARRON - DRAPER LAKE 345KV CKT 1	717	717	0.12108	108.5225	GEN515591 1-PALDRW11 0.6900
FDNS	00NR	2	16WP	G15_048	FROM->TO	CIMARRON - DRAPER LAKE 345KV CKT 1	717	717	0.12108	108.5225	GEN524285 1-WILDORADO WIND GEN
FDNS	00NR	2	16WP	G15_048	FROM->TO	CIMARRON - DRAPER LAKE 345KV CKT 1	717	717	0.1211	108.5199	P12:138:AEPW:SHAM4WT:CHILD4WT
FDNS	00NR	2	16WP	G15_048	FROM->TO	CIMARRON - DRAPER LAKE 345KV CKT 1	717	717	0.12123	108.5167	P12:138:OKGE:3TERM36
FDNS	00NR	2	16WP	G15_048	FROM->TO	CIMARRON - DRAPER LAKE 345KV CKT 1	717	717	0.12108	108.516	GEN629070 2-BEAVER CHANNEL GENERATORFOR UNIT NO 2
FDNS	00NR	2	16WP	G15_048	FROM->TO	CIMARRON - DRAPER LAKE 345KV CKT 1	717	717	0.12108	108.515	GEN526331 1-JONES GEN #1 22 KV
FDNS	00NR	2	16WP	G15_048	FROM->TO	CIMARRON - DRAPER LAKE 345KV CKT 1	717	717	0.12108	108.515	GEN526332 1-JONES GEN #2 21 KV
FDNS	00NR	2	16WP	G15_048	FROM->TO	CIMARRON - DRAPER LAKE 345KV CKT 1	717	717	0.12108	108.5128	GEN672392 1-NBECGT1G 18.000
FDNS	00NR	2	16WP	G15_048	FROM->TO	CIMARRON - DRAPER LAKE 345KV CKT 1	717	717	0.12109	108.5107	P12:138:WFEC:MSL07
FDNS	00NR	2	16WP	G15_048	FROM->TO	CIMARRON - DRAPER LAKE 345KV CKT 1	717	717	0.12109	108.5107	P12:138:WFEC-AEPW:HUGOPP4:ATOKA--4
FDNS	00NR	2	16WP	G15_048	FROM->TO	CIMARRON - DRAPER LAKE 345KV CKT 1	717	717	0.12126	108.5101	CANADIAN RIVER - MCALESTER SOUTH 138KV CKT 1
FDNS	00NR	2	16WP	G15_048	FROM->TO	CIMARRON - DRAPER LAKE 345KV CKT 1	717	717	0.12126	108.5101	CANADIAN RIVER - MCALESTER SOUTH 138KV CKT 1
FDNS	00NR	2	16WP	G15_048	FROM->TO	CIMARRON - DRAPER LAKE 345KV CKT 1	717	717	0.12126	108.5091	CANADIAN RIVER () 345/138/13.8KV TRANSFORMER CKT 1
FDNS	00NR	2	16WP	G15_048	FROM->TO	CIMARRON - DRAPER LAKE 345KV CKT 1	717	717	0.12126	108.5091	CANADIAN RIVER () 345/138/13.8KV TRANSFORMER CKT 1
FDNS	00NR	2	16WP	G15_048	FROM->TO	CIMARRON - DRAPER LAKE 345KV CKT 1	717	717	0.12123	108.5058	P12:138:AEPW:WELETK4:EARLSBORO4
FDNS	00NR	2	16WP	G15_048	FROM->TO	CIMARRON - DRAPER LAKE 345KV CKT 1	717	717	0.12108	108.5051	GEN629071 1-BURLINGTON GENERATOR FOR UNIT NO 1 E
FDNS	00NR	2	16WP	G15_048	FROM->TO	CIMARRON - DRAPER LAKE 345KV CKT 1	717	717	0.12122	108.5042	EARLSBORO 4138.00 - FIXICO TAP 138KV CKT 1
FDNS	00NR	2	16WP	G15_048	FROM->TO	CIMARRON - DRAPER LAKE 345KV CKT 1	717	717	0.12108	108.5	GEN300003 1-THOMAS HILL UNIT 3
FDNS	00NR	2	16WP	G15_048	FROM->TO	CIMARRON - DRAPER LAKE 345KV CKT 1	717	717	0.12105	108.4969	P12:138:AEPW-SWPA:LONEOAK4:TUPELO4
FDNS	00NR	2	16WP	G15_048	FROM->TO	CIMARRON - DRAPER LAKE 345KV CKT 1	717	717	0.12105	108.4969	P12:138:WFEC:MSL06
FDNS	00NR	2	16WP	G15_048	FROM->TO	CIMARRON - DRAPER LAKE 345KV CKT 1	717	717	0.12108	108.4909	GEN615010 1-STANTON4
FDNS	00NR	2	16WP	G15_048	FROM->TO	CIMARRON - DRAPER LAKE 345KV CKT 1	717	717	0.12108	108.4902	GEN562429 1-G13-029 0.6900
FDNS	00NR	2	16WP	G15_048	FROM->TO	CIMARRON - DRAPER LAKE 345KV CKT 1	717	717	0.12117	108.485	P12:138:WFEC:MSL16
FDNS	00NR	2	16WP	G15_048	FROM->TO	CIMARRON - DRAPER LAKE 345KV CKT 1	717	717	0.12108	108.4837	GEN562074 1-G1149G1504 0.6900
FDNS	00NR	2	16WP	G15_048	FROM->TO	CIMARRON - DRAPER LAKE 345KV CKT 1	717	717	0.12108	108.4787	GEN532663 1-LAWRENCE ENERGY CENTER UNIT 5
FDNS	00NR	2	16WP	G15_048	FROM->TO	CIMARRON - DRAPER LAKE 345KV CKT 1	717	717	0.12108	108.4699	GEN615021 1-GRE-ER 14G 16.000
FDNS	00NR	2	16WP	G15_048	FROM->TO	CIMARRON - DRAPER LAKE 345KV CKT 1	717	717	0.12075	108.469	CHISNEY - HIGHLAND 138KV CKT 1
FDNS	00NR	2	16WP	G15_048	FROM->TO	CIMARRON - DRAPER LAKE 345KV CKT 1	717	717	0.12108	108.4688	GEN562596 1-G14_059_3 0.6900
FDNS	00NR	2	16WP	G15_048	FROM->TO	CIMARRON - DRAPER LAKE 345KV CKT 1	717	717	0.12108	108.4672	INDEPENDENCE 500/26.0KV TRANSFORMER CKT 1
FDNS	00NR	2	16WP	G15_048	FROM->TO	CIMARRON - DRAPER LAKE 345KV CKT 1	717	717	0.12108	108.4663	GEN560105 1-G08-22 0.6900
FDNS	00NR	2	16WP	G15_048	FROM->TO	CIMARRON - DRAPER LAKE 345KV CKT 1	717	717	0.12108	108.4561	GEN515365 1-CENT 21 0.7000
FDNS	00NR	2	16WP	G15_048	FROM->TO	CIMARRON - DRAPER LAKE 345KV CKT 1	717	717	0.12013	108.4546	CHISHOLM7 345.00 (CHISHOLM) 345/230/13.2KV TRANSFORMER CKT 1
FDNS	00NR	2	16WP	G15_048	FROM->TO	CIMARRON - DRAPER LAKE 345KV CKT 1	717	717	0.12108	108.4545	BURLINGTON NO1 + NO 2 + NO 3 161/20.0KV TRANSFORMER CKT 1
FDNS	00NR	2	16WP	G15_048	FROM->TO	CIMARRON - DRAPER LAKE 345KV CKT 1	717	717	0.12246	108.4532	MAUD - SEMINOLE 138KV CKT 1
FDNS	00NR	2	16WP	G15_048	FROM->TO	CIMARRON - DRAPER LAKE 345KV CKT 1	717	717	0.12108	108.4471	GEN562983 1-G15061_4 0.6900
FDNS	00NR	2	16WP	G15_048	FROM->TO	CIMARRON - DRAPER LAKE 345KV CKT 1	717	717	0.12108	108.4471	GEN562984 1-G15061_5 0.6900
FDNS	00NR	2	16WP	G15_048	FROM->TO	CIMARRON - DRAPER LAKE 345KV CKT 1	717	717	0.12112	108.4465	GRPRAR1-LNX3345.00 - HOLT.CO3 345.00 345KV CKT 1
FDNS	00NR	2	16WP	G15_048	FROM->TO	CIMARRON - DRAPER LAKE 345KV CKT 1	717	717	0.12108	108.4398	GEN527882 1-CUNNINGHAM GEN #2 20 KV
FDNS	00NR	2	16WP	G15_048	FROM->TO	CIMARRON - DRAPER LAKE 345KV CKT 1	717	717	0.12131	108.4394	OVEXFRMCCOVE
FDNS	00NR	2	16WP	G15_048	FROM->TO	CIMARRON - DRAPER LAKE 345KV CKT 1	717	717	0.12112	108.4385	GRPRAR1-LNX3345.00 - GRPRAR 345KV CKT Z
FDNS	00NR	2	16WP	G15_048	FROM->TO	CIMARRON - DRAPER LAKE 345KV CKT 1	717	717	0.12142	108.436	MINGO - SETAB 345KV CKT 1
FDNS	00NR	2	16WP	G15_048	FROM->TO	CIMARRON - DRAPER LAKE 345KV CKT 1	717	717	0.12142	108.436	MINGO - SETAB 345KV CKT 1
FDNS	00NR	2	16WP	G15_048	FROM->TO	CIMARRON - DRAPER LAKE 345KV CKT 1	717	717	0.12108	108.4327	GEN562017 1-G11_022_3 0.6900
FDNS	00NR	2	16WP	G15_048	FROM->TO	CIMARRON - DRAPER LAKE 345KV CKT 1	717	717	0.1212	108.4316	DELL 500 - INDEPENDENCE 500KV CKT 1
FDNS	00NR	2	16WP	G15_048	FROM->TO	CIMARRON - DRAPER LAKE 345KV CKT 1	717	717	0.12108	108.427	GEN562550 1-G14_040_3 0.6900
FDNS	00NR	2	16WP	G15_048	FROM->TO	CIMARRON - DRAPER LAKE 345KV CKT 1	717	717	0.12123	108.4219	P12:138:AEPW-OGE:WELETK4:MAUD 4
FDNS	00NR	2	16WP	G15_048	FROM->TO	CIMARRON - DRAPER LAKE 345KV CKT 1	717	717	0.12122	108.4183	EARLSBORO 4138.00 - MAUD 138KV CKT 1
FDNS	00NR	2	16WP	G15_048	FROM->TO	CIMARRON - DRAPER LAKE 345KV CKT 1	717	717	0.12122	108.4183	EARLSBORO 4138.00 - MAUD 138KV CKT 1
FDNS	00NR	2	16WP	G15_048	FROM->TO	CIMARRON - DRAPER LAKE 345KV CKT 1	717	717	0.12108	108.4115	GEN562432 1-G13-030 0.6900
FDNS	00NR	2	16WP	G15_048	FROM->TO	CIMARRON - DRAPER LAKE 345KV CKT 1	717	717	0.12108	108.4055	GEN515606 1-CANDN11 0.6900

SOLUTION	GROUP	SCENARIO	SEASON	SOURCE	DIRECTION	MONITORED ELEMENT	RATEA (MVA)	RATEB(MVA)	TDF	TC%LOADING (% MVA)	CONTINGENCY
FDNS	00NR	2	16WP	G15_048	FROM->TO	CIMARRON - DRAPER LAKE 345KV CKT 1	717	717	0.12108	108.4055	GEN515607 1-CANDN12 0.6900
FDNS	00NR	2	16WP	G15_048	FROM->TO	CIMARRON - DRAPER LAKE 345KV CKT 1	717	717	0.12108	108.4016	GEN524295 1-SPNSPUR_WND10.6900
FDNS	00NR	2	16WP	G15_048	FROM->TO	CIMARRON - DRAPER LAKE 345KV CKT 1	717	717	0.12108	108.3952	GEN345671 2-1RUSH G2 18.000
FDNS	00NR	2	16WP	G15_048	FROM->TO	CIMARRON - DRAPER LAKE 345KV CKT 1	717	717	0.12108	108.3932	GEN345670 1-1RUSH G1 18.000
FDNS	00NR	2	16WP	G15_048	FROM->TO	CIMARRON - DRAPER LAKE 345KV CKT 1	717	717	0.12108	108.3903	GEN562832 1-G15042_3 0.6900
FDNS	00NR	2	16WP	G15_048	FROM->TO	CIMARRON - DRAPER LAKE 345KV CKT 1	717	717	0.12108	108.384	GEN515443 1-MNCOWND1 0.7000
FDNS	00NR	2	16WP	G15_048	FROM->TO	CIMARRON - DRAPER LAKE 345KV CKT 1	717	717	0.12108	108.3788	GEN562794 1-G15038_5 0.6900
FDNS	00NR	2	16WP	G15_048	FROM->TO	CIMARRON - DRAPER LAKE 345KV CKT 1	717	717	0.12108	108.3788	GEN562795 1-G15038_6 0.6900
FDNS	00NR	2	16WP	G15_048	FROM->TO	CIMARRON - DRAPER LAKE 345KV CKT 1	717	717	0.12108	108.3752	THOMAS HILL 161/22.0KV TRANSFORMER CKT 1
FDNS	00NR	2	16WP	G15_048	FROM->TO	CIMARRON - DRAPER LAKE 345KV CKT 1	717	717	0.12108	108.3714	GEN562512 1-G14_020_3 0.6900
FDNS	00NR	2	16WP	G15_048	FROM->TO	CIMARRON - DRAPER LAKE 345KV CKT 1	717	717	0.12108	108.3713	P12:230:UMZB:# 112 #: NU IN SD. NU-RCDC & DRY CREEK XFMR
FDNS	00NR	2	16WP	G15_048	FROM->TO	CIMARRON - DRAPER LAKE 345KV CKT 1	717	717	0.12108	108.3706	RCDC EAST 4230.00 - RED CEDAR DC 230KV CKT 1
FDNS	00NR	2	16WP	G15_048	FROM->TO	CIMARRON - DRAPER LAKE 345KV CKT 1	717	717	0.12108	108.347	GEN645011 1-NEBRASKA CITY 1
FDNS	00NR	2	16WP	G15_048	FROM->TO	CIMARRON - DRAPER LAKE 345KV CKT 1	717	717	0.12075	108.3418	HIGHLAND - PINK SW 138KV CKT 1
FDNS	00NR	2	16WP	G15_048	FROM->TO	CIMARRON - DRAPER LAKE 345KV CKT 1	717	717	0.12108	108.3311	GEN531447 1-HOLCOMB GENERATOR
FDNS	00NR	2	16WP	G15_048	FROM->TO	CIMARRON - DRAPER LAKE 345KV CKT 1	717	717	0.12108	108.329	GEN542951 5-HAWTHORN UNIT #5
FDNS	00NR	2	16WP	G15_048	FROM->TO	CIMARRON - DRAPER LAKE 345KV CKT 1	717	717	0.12108	108.3281	GEN563092 1-G15074_3 0.6900
FDNS	00NR	2	16WP	G15_048	FROM->TO	CIMARRON - DRAPER LAKE 345KV CKT 1	717	717	0.12108	108.3203	GEN529201 1-OMCDLEC1 13.800
FDNS	00NR	2	16WP	G15_048	FROM->TO	CIMARRON - DRAPER LAKE 345KV CKT 1	717	717	0.12108	108.3182	GEN562685 1-G15_013_3 0.3550
FDNSLock	00NR	2	16WP	G15_048	FROM->TO	CIMARRON - DRAPER LAKE 345KV CKT 1	717	717	0.12108	108.3178	GEN629072 4-LANSING GENERATOR FOR UNITS NO4 EIA CODE 1
FDNS	00NR	2	16WP	G15_048	FROM->TO	CIMARRON - DRAPER LAKE 345KV CKT 1	717	717	0.12108	108.3005	GEN645012 2-NEBRASKA CITY 2
FDNS	00NR	2	16WP	G15_048	FROM->TO	CIMARRON - DRAPER LAKE 345KV CKT 1	717	717	0.12293	108.2934	HOLLYWOOD - MIDWEST TAP 138KV CKT 1
FDNS	00NR	2	16WP	G15_048	FROM->TO	CIMARRON - DRAPER LAKE 345KV CKT 1	717	717	0.12131	108.2885	CIMARRON - TUTTLE CONOCO TAP 138KV CKT 1
FDNS	00NR	2	16WP	G15_048	FROM->TO	CIMARRON - DRAPER LAKE 345KV CKT 1	717	717	0.12108	108.2841	GEN562699 1-G15_018_3 0.6900
FDNS	00NR	2	16WP	G15_048	FROM->TO	CIMARRON - DRAPER LAKE 345KV CKT 1	717	717	0.12108	108.2825	GEN657749 1-YOUNG 1 GENERATOR
FDNS	00NR	2	16WP	G15_048	FROM->TO	CIMARRON - DRAPER LAKE 345KV CKT 1	717	717	0.12125	108.2738	KEO EHV - WEST MEMPHIS 500 500KV CKT 1
FDNS	00NR	2	16WP	G15_048	FROM->TO	CIMARRON - DRAPER LAKE 345KV CKT 1	717	717	0.12163	108.2486	FT SMITH - MUSKOGEE 345KV CKT 1
FDNS	00NR	2	16WP	G15_048	FROM->TO	CIMARRON - DRAPER LAKE 345KV CKT 1	717	717	0.12108	108.2486	GEN563182 1-G15083_3 0.6900
FDNS	00NR	2	16WP	G15_048	FROM->TO	CIMARRON - DRAPER LAKE 345KV CKT 1	717	717	0.12108	108.2473	GEN563122 1-G15077_3 0.3850
FDNS	00NR	2	16WP	G15_048	FROM->TO	CIMARRON - DRAPER LAKE 345KV CKT 1	717	717	0.12108	108.2419	GEN640009 1-COOPER NUCLEAR STATION
FDNS	00NR	2	16WP	G15_048	FROM->TO	CIMARRON - DRAPER LAKE 345KV CKT 1	717	717	0.12146	108.2386	FRISCCO4 138.00 - LULA 138KV CKT 1
FDNS	00NR	2	16WP	G15_048	FROM->TO	CIMARRON - DRAPER LAKE 345KV CKT 1	717	717	0.12013	108.2233	HUNTERS7 345.00 - WOODRING 345KV CKT 1
FDNSLock	00NR	2	16WP	G15_048	FROM->TO	CIMARRON - DRAPER LAKE 345KV CKT 1	717	717	0.12108	108.2169	GEN681522 3-GENOA 3
FDNS	00NR	2	16WP	G15_048	FROM->TO	CIMARRON - DRAPER LAKE 345KV CKT 1	717	717	0.12131	108.2164	TUTTLE - TUTTLE CONOCO TAP 138KV CKT 1
FDNS	00NR	2	16WP	G15_048	FROM->TO	CIMARRON - DRAPER LAKE 345KV CKT 1	717	717	0.12108	108.2054	GEN562587 1-G14_056_3 0.6900
FDNS	00NR	2	16WP	G15_048	FROM->TO	CIMARRON - DRAPER LAKE 345KV CKT 1	717	717	0.12108	108.2007	GEN344895 2-1LAB G2 20.000
FDNS	00NR	2	16WP	G15_048	FROM->TO	CIMARRON - DRAPER LAKE 345KV CKT 1	717	717	0.12108	108.1869	4SIOUX 1 138.00 138/18.0KV TRANSFORMER CKT 1
FDNS	00NR	2	16WP	G15_048	FROM->TO	CIMARRON - DRAPER LAKE 345KV CKT 1	717	717	0.12108	108.1865	GEN563202 1-G15085_3 0.5500
FDNS	00NR	2	16WP	G15_048	FROM->TO	CIMARRON - DRAPER LAKE 345KV CKT 1	717	717	0.12108	108.1748	GEN515602 1-KNGFSR12 0.7000
FDNS	00NR	2	16WP	G15_048	FROM->TO	CIMARRON - DRAPER LAKE 345KV CKT 1	717	717	0.12108	108.1722	GEN344896 3-1LAB G3 20.000
FDNS	00NR	2	16WP	G15_048	FROM->TO	CIMARRON - DRAPER LAKE 345KV CKT 1	717	717	0.12108	108.1708	GEN344894 1-1LAB G1 20.000
FDNS	00NR	2	16WP	G15_048	FROM->TO	CIMARRON - DRAPER LAKE 345KV CKT 1	717	717	0.12108	108.1696	GEN344897 4-1LAB G4 20.000
FDNS	00NR	2	16WP	G15_048	FROM->TO	CIMARRON - DRAPER LAKE 345KV CKT 1	717	717	0.12107	108.1656	TUPELO - TUPELO TAP 138KV CKT 1
FDNS	00NR	2	16WP	G15_048	FROM->TO	CIMARRON - DRAPER LAKE 345KV CKT 1	717	717	0.12146	108.1525	FRISCCO4 138.00 - HARDEN 4 138.00 138KV CKT 1
FDNS	00NR	2	16WP	G15_048	FROM->TO	CIMARRON - DRAPER LAKE 345KV CKT 1	717	717	0.12108	108.1417	GEN563222 1-G15088_3 0.6900
FDNS	00NR	2	16WP	G15_048	FROM->TO	CIMARRON - DRAPER LAKE 345KV CKT 1	717	717	0.12108	108.1412	GEN523461 1-BLACKHAWK GEN #1
FDNS	00NR	2	16WP	G15_048	FROM->TO	CIMARRON - DRAPER LAKE 345KV CKT 1	717	717	0.12108	108.1411	GEN523462 1-BLACKHAWK GEN #2
FDNS	00NR	2	16WP	G15_048	FROM->TO	CIMARRON - DRAPER LAKE 345KV CKT 1	717	717	0.12108	108.0959	GEN563082 1-G15073_3 0.6900
FDNS	00NR	2	16WP	G15_048	FROM->TO	CIMARRON - DRAPER LAKE 345KV CKT 1	717	717	0.12108	108.0725	GEN562704 1-G15_020_3 0.3550
FDNS	00NR	2	16WP	G15_048	FROM->TO	CIMARRON - DRAPER LAKE 345KV CKT 1	717	717	0.12108	108.0523	CLAY BOSWELL 230/20.9KV TRANSFORMER CKT 1
FDNS	00NR	2	16WP	G15_048	FROM->TO	CIMARRON - DRAPER LAKE 345KV CKT 1	717	717	0.12108	108.0073	GEN672321 1-SHAND GENERATOR 1
FDNS	00NR	2	16WP	G15_048	FROM->TO	CIMARRON - DRAPER LAKE 345KV CKT 1	717	717	0.11919	108.0009	NORTHWEST - SPRING CREEK 345KV CKT 1
FDNS	00NR	2	16WP	G15_048	FROM->TO	CIMARRON - DRAPER LAKE 345KV CKT 1	717	717	0.12084	108	RANCHRD7 345.00 - SOONER 345KV CKT 1
FDNS	00NR	2	16WP	G15_048	FROM->TO	CIMARRON - DRAPER LAKE 345KV CKT 1	717	717	0.12108	107.9873	GEN640010 1-GERALD GENTLEMAN STATION UNIT 1
FDNS	00NR	2	16WP	G15_048	FROM->TO	CIMARRON - DRAPER LAKE 345KV CKT 1	717	717	0.12162	107.9823	LULA - TUPELO TAP 138KV CKT 1
FDNS	00NR	2	16WP	G15_048	FROM->TO	CIMARRON - DRAPER LAKE 345KV CKT 1	717	717	0.12111	107.9815	NORTHWEST TEXARKANA - VALLIANT 345KV CKT 1
FDNS	00NR	2	16WP	G15_048	FROM->TO	CIMARRON - DRAPER LAKE 345KV CKT 1	717	717	0.12111	107.9815	NORTHWEST TEXARKANA - VALLIANT 345KV CKT 1
FDNS	00NR	2	16WP	G15_048	FROM->TO	CIMARRON - DRAPER LAKE 345KV CKT 1	717	717	0.12108	107.9807	GEN672310 1-POPLAR RIVER GENERATOR 1
FDNS	00NR	2	16WP	G15_048	FROM->TO	CIMARRON - DRAPER LAKE 345KV CKT 1	717	717	0.12108	107.9807	GEN672311 2-POPLAR RIVER GENERATOR 2
FDNS	00NR	2	16WP	G15_048	FROM->TO	CIMARRON - DRAPER LAKE 345KV CKT 1	717	717	0.12108	107.976	GEN542956 2-LACYGNE UNIT #2
FDNS	00NR	2	16WP	G15_048	FROM->TO	CIMARRON - DRAPER LAKE 345KV CKT 1	717	717	0.12108	107.9705	GEN672306 6-BOUNDARY DAM GENERATOR 6
FDNS	00NR	2	16WP	G15_048	FROM->TO	CIMARRON - DRAPER LAKE 345KV CKT 1	717	717	0.11919	107.9705	SOONER - SPRING CREEK 345KV CKT 1
FDNS	00NR	2	16WP	G15_048	FROM->TO	CIMARRON - DRAPER LAKE 345KV CKT 1	717	717	0.12108	107.9622	GEN562710 1-G15_022_3 0.5500
FDNS	00NR	2	16WP	G15_048	FROM->TO	CIMARRON - DRAPER LAKE 345KV CKT 1	717	717	0.12369	107.9541	OAKCREEK - WILD MARY 138KV CKT 1
FDNS	00NR	2	16WP	G15_048	FROM->TO	CIMARRON - DRAPER LAKE 345KV CKT 1	717	717	0.1212	107.9537	P12:138:WFEC:MSL09
FDNS	00NR	2	16WP	G15_048	FROM->TO	CIMARRON - DRAPER LAKE 345KV CKT 1	717	717	0.12038	107.9467	SEMINOLE (SEMINOL1) 345/138/14.4KV TRANSFORMER CKT 1
FDNS	00NR	2	16WP	G15_048	FROM->TO	CIMARRON - DRAPER LAKE 345KV CKT 1	717	717	0.12146	107.9339	ETNA - HARDEN 4 138.00 138KV CKT 1
FDNS	00NR	2	16WP	G15_048	FROM->TO	CIMARRON - DRAPER LAKE 345KV CKT 1	717	717	0.12179	107.9148	P12:138:OKGE:3TERM22
FDNS	00NR	2	16WP	G15_048	FROM->TO	CIMARRON - DRAPER LAKE 345KV CKT 1	717	717	0.1218	107.9142	DRAPER LAKE - SOONER TAP 138KV CKT 1
FDNS	00NR	2	16WP	G15_048	FROM->TO	CIMARRON - DRAPER LAKE 345KV CKT 1	717	717	0.12108	107.9138	GEN640011 2-GERALD GENTLEMAN STATION UNIT 2
FDNS	00NR	2	16WP	G15_048	FROM->TO	CIMARRON - DRAPER LAKE 345KV CKT 1	717	717	0.12075	107.9092	P12:138:WFEC:MSL08
FDNS	00NR	2	16WP	G15_048	FROM->TO	CIMARRON - DRAPER LAKE 345KV CKT 1	717	717	0.12108	107.8986	GEN659118 1-LARAMIE RIVER UNIT1
FDNSLock	00NR	2	16WP	G15_048	FROM->TO	CIMARRON - DRAPER LAKE 345KV CKT 1	717	717	0.12108	107.8768	GEN681542 6-JP MADGETT
FDNS	00NR	2	16WP	G15_048	FROM->TO	CIMARRON - DRAPER LAKE 345KV CKT 1	717	717	0.12075	107.8758	FRANKLIN - PINK SW 138KV CKT 1
FDNS	00NR	2	16WP	G15_048	FROM->TO	CIMARRON - DRAPER LAKE 345KV CKT 1	717	717	0.12108	107.8683	GEN542957 1-IATAN UNIT #1
FDNS	00NR	2	16WP	G15_048	FROM->TO	CIMARRON - DRAPER LAKE 345KV CKT 1	717	717	0.12146	107.8349	ETNA - PARK LANE 138KV CKT 1
FDNS	00NR	2	16WP	G15_048	FROM->TO	CIMARRON - DRAPER LAKE 345KV CKT 1	717	717	0.12108	107.8275	GEN530690 1-PRWINDG1 0.6900
FDNS	00NR	2	16WP	G15_048	FROM->TO	CIMARRON - DRAPER LAKE 345KV CKT 1	717	717	0.12108	107.8063	GEN542955 1-LACYGNE UNIT #1
FDNS	00NR	2	16WP	G15_048	FROM->TO	CIMARRON - DRAPER LAKE 345KV CKT 1	717	717	0.12108	107.7768	GEN645001 1-FORT CALHOUN 1

SOLUTION	GROUP	SCENARIO	SEASON	SOURCE	DIRECTION	MONITORED ELEMENT	RATEA (MVA)	RATEB(MVA)	TDF	TC%LOADING (% MVA)	CONTINGENCY
FDNS	00NR	2	16WP	G15_048	FROM->TO	CIMARRON - DRAPER LAKE 345KV CKT 1	717	717	0.12108	107.7573	GEN562754 1-G15031_5 0.6900
FDNS	00NR	2	16WP	G15_048	FROM->TO	CIMARRON - DRAPER LAKE 345KV CKT 1	717	717	0.12108	107.7458	GEN562556 1-G14_046_3 0.3420
FDNS	00NR	2	16WP	G15_048	FROM->TO	CIMARRON - DRAPER LAKE 345KV CKT 1	717	717	0.12108	107.7425	GEN562691 1-G15_015_3 0.6900
FDNS	00NR	2	16WP	G15_048	FROM->TO	CIMARRON - DRAPER LAKE 345KV CKT 1	717	717	0.12108	107.7411	GEN661015 1-COYOTE
FDNS	00NR	2	16WP	G15_048	FROM->TO	CIMARRON - DRAPER LAKE 345KV CKT 1	717	717	0.12108	107.7264	GEN532653 1-JEFFREY ENERGY CENTER UNIT 3
FDNS	00NR	2	16WP	G15_048	FROM->TO	CIMARRON - DRAPER LAKE 345KV CKT 1	717	717	0.12108	107.7262	GEN532652 1-JEFFREY ENERGY CENTER UNIT 2
FDNS	00NR	2	16WP	G15_048	FROM->TO	CIMARRON - DRAPER LAKE 345KV CKT 1	717	717	0.12369	107.7256	AIRDEPT4 138.00 - WILD MARY 138KV CKT 1
FDNS	00NR	2	16WP	G15_048	FROM->TO	CIMARRON - DRAPER LAKE 345KV CKT 1	717	717	0.12108	107.7216	GEN532651 1-JEFFREY ENERGY CENTER UNIT 1
FDNS	00NR	2	16WP	G15_048	FROM->TO	CIMARRON - DRAPER LAKE 345KV CKT 1	717	717	0.12024	107.7211	SEMINOLE (SEMINOL2) 345/138/14.4KV TRANSFORMER CKT 1
FDNS	00NR	2	16WP	G15_048	FROM->TO	CIMARRON - DRAPER LAKE 345KV CKT 1	717	717	0.12108	107.7115	GEN562756 1-G15031_7 0.6900
FDNS	00NR	2	16WP	G15_048	FROM->TO	CIMARRON - DRAPER LAKE 345KV CKT 1	717	717	0.12108	107.7021	GEN563042 1-G15068_3 0.6900
FDNS	00NR	2	16WP	G15_048	FROM->TO	CIMARRON - DRAPER LAKE 345KV CKT 1	717	717	0.12108	107.6997	GEN563142 1-G15079_3 0.5500
FDNS	00NR	2	16WP	G15_048	FROM->TO	CIMARRON - DRAPER LAKE 345KV CKT 1	717	717	0.12108	107.6997	GEN563151 1-G15080_2 0.5500
FDNS	00NR	2	16WP	G15_048	FROM->TO	CIMARRON - DRAPER LAKE 345KV CKT 1	717	717	0.12108	107.6683	GEN563273 2-G15093_4 0.6900
FDNS	00NR	2	16WP	G15_048	FROM->TO	CIMARRON - DRAPER LAKE 345KV CKT 1	717	717	0.12108	107.6462	GEN562655 1-G14_074_3 0.6900
FDNS	00NR	2	16WP	G15_048	FROM->TO	CIMARRON - DRAPER LAKE 345KV CKT 1	717	717	0.12108	107.646	GEN562762 1-G15033_3 0.6900
FDNS	00NR	2	16WP	G15_048	FROM->TO	CIMARRON - DRAPER LAKE 345KV CKT 1	717	717	0.12108	107.6179	GEN562078 1-G11_051_3 0.6900
FDNS	00NR	2	16WP	G15_048	FROM->TO	CIMARRON - DRAPER LAKE 345KV CKT 1	717	717	0.12131	107.6099	P12:138:AEPW-OGE:CORNVIL4:CIMARON4
FDNS	00NR	2	16WP	G15_048	FROM->TO	CIMARRON - DRAPER LAKE 345KV CKT 1	717	717	0.12108	107.609	GEN657748 1-YOUNG 2 GENERATOR
FDNS	00NR	2	16WP	G15_048	FROM->TO	CIMARRON - DRAPER LAKE 345KV CKT 1	717	717	0.12191	107.601	PARK LANE - SEMINOLE 138KV CKT 1
FDNS	00NR	2	16WP	G15_048	FROM->TO	CIMARRON - DRAPER LAKE 345KV CKT 1	717	717	0.12009	107.5956	G11_051T 345.00 - WOODWARD DISTRICT EHV 345KV CKT 1
FDNS	00NR	2	16WP	G15_048	FROM->TO	CIMARRON - DRAPER LAKE 345KV CKT 1	717	717	0.12009	107.5956	G11_051T 345.00 - WOODWARD DISTRICT EHV 345KV CKT 2
FDNS	00NR	2	16WP	G15_048	FROM->TO	CIMARRON - DRAPER LAKE 345KV CKT 1	717	717	0.12108	107.5871	GEN562974 1-G15060_5 0.6900
FDNS	00NR	2	16WP	G15_048	FROM->TO	CIMARRON - DRAPER LAKE 345KV CKT 1	717	717	0.12075	107.5849	FRANKLIN - FRANKLIN SW 138KV CKT 1
FDNS	00NR	2	16WP	G15_048	FROM->TO	CIMARRON - DRAPER LAKE 345KV CKT 1	717	717	0.12108	107.5688	GEN562973 1-G15060_4 0.6900
FDNS	00NR	2	16WP	G15_048	FROM->TO	CIMARRON - DRAPER LAKE 345KV CKT 1	717	717	0.12108	107.5514	GEN562772 1-G15034_3 0.6900
FDNS	00NR	2	16WP	G15_048	FROM->TO	CIMARRON - DRAPER LAKE 345KV CKT 1	717	717	0.12108	107.5344	GEN527901 1-HOBBS PLANT #1 (CT)
FDNS	00NR	2	16WP	G15_048	FROM->TO	CIMARRON - DRAPER LAKE 345KV CKT 1	717	717	0.12108	107.5344	GEN527902 1-HOBBS PLANT #2 (CT)
FDNS	00NR	2	16WP	G15_048	FROM->TO	CIMARRON - DRAPER LAKE 345KV CKT 1	717	717	0.12113	107.5056	LYDIA - WELSH 345KV CKT 1
FDNS	00NR	2	16WP	G15_048	FROM->TO	CIMARRON - DRAPER LAKE 345KV CKT 1	717	717	0.12113	107.5056	LYDIA - WELSH 345KV CKT 1
FDNS	00NR	2	16WP	G15_048	FROM->TO	CIMARRON - DRAPER LAKE 345KV CKT 1	717	717	0.12108	107.5055	GEN563043 1-G15068_4 0.6900
FDNS	00NR	2	16WP	G15_048	FROM->TO	CIMARRON - DRAPER LAKE 345KV CKT 1	717	717	0.12369	107.4951	AIRDEPT4 138.00 - GM 138KV CKT 1
FDNS	00NR	2	16WP	G15_048	FROM->TO	CIMARRON - DRAPER LAKE 345KV CKT 1	717	717	0.12108	107.4769	GEN563052 1-G15069_3 0.6900
FDNS	00NR	2	16WP	G15_048	FROM->TO	CIMARRON - DRAPER LAKE 345KV CKT 1	717	717	0.12108	107.4625	GEN525845 1-ELK_2 1 138.00
FDNS	00NR	2	16WP	G15_048	FROM->TO	CIMARRON - DRAPER LAKE 345KV CKT 1	717	717	0.12108	107.4591	GEN525844 1-ELK_1 118.000
FDNS	00NR	2	16WP	G15_048	FROM->TO	CIMARRON - DRAPER LAKE 345KV CKT 1	717	717	0.12108	107.4207	GEN563242 1-G15090_3 0.6900
FDNS	00NR	2	16WP	G15_048	FROM->TO	CIMARRON - DRAPER LAKE 345KV CKT 1	717	717	0.12108	107.4155	GEN620315 1-BIG STONE GEN
FDNS	00NR	2	16WP	G15_048	FROM->TO	CIMARRON - DRAPER LAKE 345KV CKT 1	717	717	0.12108	107.4027	GEN526333 1-JONES GEN #3 21 KV
FDNS	00NR	2	16WP	G15_048	FROM->TO	CIMARRON - DRAPER LAKE 345KV CKT 1	717	717	0.12108	107.4027	GEN526334 1-JONES_4 116.500
FDNS	00NR	2	16WP	G15_048	FROM->TO	CIMARRON - DRAPER LAKE 345KV CKT 1	717	717	0.12108	107.4	GEN600006 1-AS KING
FDNS	00NR	2	16WP	G15_048	FROM->TO	CIMARRON - DRAPER LAKE 345KV CKT 1	717	717	0.12108	107.4	GEN636641 1-LOUISA UNIT 1
FDNSLock	00NR	2	16WP	G15_048	FROM->TO	CIMARRON - DRAPER LAKE 345KV CKT 1	717	717	0.12108	107.357	GEN600004 2-PRAIRIE ISLAND G2
FDNS	00NR	2	16WP	G15_048	FROM->TO	CIMARRON - DRAPER LAKE 345KV CKT 1	717	717	0.12108	107.3545	GEN523971 1-HARRINGTON GEN #1 24 KV
FDNS	00NR	2	16WP	G15_048	FROM->TO	CIMARRON - DRAPER LAKE 345KV CKT 1	717	717	0.12108	107.3545	GEN523972 1-HARRINGTON GEN #2 24 KV
FDNS	00NR	2	16WP	G15_048	FROM->TO	CIMARRON - DRAPER LAKE 345KV CKT 1	717	717	0.12108	107.3545	GEN523973 1-HARRINGTON GEN #3 24 KV
FDNSLock	00NR	2	16WP	G15_048	FROM->TO	CIMARRON - DRAPER LAKE 345KV CKT 1	717	717	0.12108	107.3539	GEN600003 1-PRAIRIE ISLAND G1
FDNS	00NR	2	16WP	G15_048	FROM->TO	CIMARRON - DRAPER LAKE 345KV CKT 1	717	717	0.12369	107.2843	DRAPER LAKE - GM 138KV CKT 1
FDNS	00NR	2	16WP	G15_048	FROM->TO	CIMARRON - DRAPER LAKE 345KV CKT 1	717	717	0.12108	107.2839	GEN563272 1-G15093_3 0.6900
FDNS	00NR	2	16WP	G15_048	FROM->TO	CIMARRON - DRAPER LAKE 345KV CKT 1	717	717	0.12108	107.247	GEN562952 1-G15057_3 0.6500
FDNS	00NR	2	16WP	G15_048	FROM->TO	CIMARRON - DRAPER LAKE 345KV CKT 1	717	717	0.12108	107.2441	GEN563292 1-G15095_3 0.6900
FDNS	00NR	2	16WP	G15_048	FROM->TO	CIMARRON - DRAPER LAKE 345KV CKT 1	717	717	0.12108	107.2439	GEN542962 2-IATAN UNIT #2
FDNS	00NR	2	16WP	G15_048	FROM->TO	CIMARRON - DRAPER LAKE 345KV CKT 1	717	717	0.12108	107.2	GEN629074 1-ARNOLD LOWSIDE OF GSU XFMR
FDNS	00NR	2	16WP	G15_048	FROM->TO	CIMARRON - DRAPER LAKE 345KV CKT 1	717	717	0.12108	107.1988	GEN600005 1-MONTICELLO
FDNS	00NR	2	16WP	G15_048	FROM->TO	CIMARRON - DRAPER LAKE 345KV CKT 1	717	717	0.12009	107.1887	G11_051T 345.00 - TATONGA7 345.00 345KV CKT 1
FDNS	00NR	2	16WP	G15_048	FROM->TO	CIMARRON - DRAPER LAKE 345KV CKT 1	717	717	0.12009	107.1887	G11_051T 345.00 - TATONGA7 345.00 345KV CKT 2
FDNS	00NR	2	16WP	G15_048	FROM->TO	CIMARRON - DRAPER LAKE 345KV CKT 1	717	717	0.12108	107.1487	GEN562892 1-G15048_3 0.6900
FDNS	00NR	2	16WP	G15_048	FROM->TO	CIMARRON - DRAPER LAKE 345KV CKT 1	717	717	0.12108	107.1476	GEN527166 1-MUSTANG_6 118.000
FDNS	00NR	2	16WP	G15_048	FROM->TO	CIMARRON - DRAPER LAKE 345KV CKT 1	717	717	0.12108	107.1361	GEN525562 1-TOLK GEN #2 24 KV
FDNS	00NR	2	16WP	G15_048	FROM->TO	CIMARRON - DRAPER LAKE 345KV CKT 1	717	717	0.12687	107.1046	CLARKSVILLE - MUSKOGEE 345KV CKT 1
FDNS	00NR	2	16WP	G15_048	FROM->TO	CIMARRON - DRAPER LAKE 345KV CKT 1	717	717	0.12687	107.1046	CLARKSVILLE - MUSKOGEE 345KV CKT 1
FDNS	00NR	2	16WP	G15_048	FROM->TO	CIMARRON - DRAPER LAKE 345KV CKT 1	717	717	0.12108	107.0693	GEN635213 3-NEAL UNIT 3
FDNS	00NR	2	16WP	G15_048	FROM->TO	CIMARRON - DRAPER LAKE 345KV CKT 1	717	717	0.12108	107.0624	GEN514805 1-SOONER UNIT 1
FDNS	00NR	2	16WP	G15_048	FROM->TO	CIMARRON - DRAPER LAKE 345KV CKT 1	717	717	0.12108	107.0421	GEN562902 1-G15052_3 0.6900
FDNS	00NR	2	16WP	G15_048	FROM->TO	CIMARRON - DRAPER LAKE 345KV CKT 1	717	717	0.12108	107.0031	BIG STONE 230/24.0KV TRANSFORMER CKT 1
FDNS	00NR	2	16WP	G15_048	FROM->TO	CIMARRON - DRAPER LAKE 345KV CKT 1	717	717	0.11478	106.9595	DRAPER LAKE - SEMINOLE 345KV CKT 3
FDNS	00NR	2	16WP	G15_048	FROM->TO	CIMARRON - DRAPER LAKE 345KV CKT 1	717	717	0.12189	106.9437	FRANKLIN SW - MIDWEST TAP 138KV CKT 1
FDNS	00NR	2	16WP	G15_048	FROM->TO	CIMARRON - DRAPER LAKE 345KV CKT 1	717	717	0.12207	106.9247	CHAMBER SPRINGS - CLARKSVILLE 345KV CKT 1
FDNS	00NR	2	16WP	G15_048	FROM->TO	CIMARRON - DRAPER LAKE 345KV CKT 1	717	717	0.12114	106.9076	LYDIA - VALLIANT 345KV CKT 1
FDNS	00NR	2	16WP	G15_048	FROM->TO	CIMARRON - DRAPER LAKE 345KV CKT 1	717	717	0.12114	106.9076	LYDIA - VALLIANT 345KV CKT 1
FDNS	00NR	2	16WP	G15_048	FROM->TO	CIMARRON - DRAPER LAKE 345KV CKT 1	717	717	0.12108	106.9058	GEN525561 1-TOLK GEN #1 24 KV
FDNS	00NR	2	16WP	G15_048	FROM->TO	CIMARRON - DRAPER LAKE 345KV CKT 1	717	717	0.12108	106.8562	GEN527903 1-HOBBS PLANT #3 (ST)
FDNS	00NR	2	16WP	G15_048	FROM->TO	CIMARRON - DRAPER LAKE 345KV CKT 1	717	717	0.12108	106.8462	GEN600000 1-SHERBURNECNTY G1
FDNS	00NR	2	16WP	G15_048	FROM->TO	CIMARRON - DRAPER LAKE 345KV CKT 1	717	717	0.12108	106.8417	GEN514806 1-SOONER UNIT 2
FDNS	00NR	2	16WP	G15_048	FROM->TO	CIMARRON - DRAPER LAKE 345KV CKT 1	717	717	0.12204	106.8165	P12:138:OKGE:3TERM23
FDNS	00NR	2	16WP	G15_048	FROM->TO	CIMARRON - DRAPER LAKE 345KV CKT 1	717	717	0.12108	106.8	GEN344225 1-1CAL G1 25.000
FDNS	00NR	2	16WP	G15_048	FROM->TO	CIMARRON - DRAPER LAKE 345KV CKT 1	717	717	0.12108	106.7888	GEN563173 1-G15082_3 0.6900
FDNS	00NR	2	16WP	G15_048	FROM->TO	CIMARRON - DRAPER LAKE 345KV CKT 1	717	717	0.12204	106.7574	BARNES 4 138.00 - DRAPER LAKE 138KV CKT 1
FDNS	00NR	2	16WP	G15_048	FROM->TO	CIMARRON - DRAPER LAKE 345KV CKT 1	717	717	0.12108	106.7559	GEN600001 2-SHERBURNE CNTY G2
FDNS	00NR	2	16WP	G15_048	FROM->TO	CIMARRON - DRAPER LAKE 345KV CKT 1	717	717	0.11682	106.751	MUSKOGEE - SEMINOLE 345KV CKT 1

SOLUTION	GROUP	SCENARIO	SEASON	SOURCE	DIRECTION	MONITORED ELEMENT	RATEA (MVA)	RATEB(MVA)	TDF	TC%LOADING (% MVA)	CONTINGENCY
FDNS	00NR	2	16WP	G15_048	FROM->TO	CIMARRON - DRAPER LAKE 345KV CKT 1	717	717	0.12108	106.638	GEN629075 1-OTTUMWA GENERATOR FOR OTTUMWA UNIT NO 1
FDNS	00NR	2	16WP	G15_048	FROM->TO	CIMARRON - DRAPER LAKE 345KV CKT 1	717	717	0.12108	106.5347	GEN562882 1-G15047_3 0.6900
FDNS	00NR	2	16WP	G15_048	FROM->TO	CIMARRON - DRAPER LAKE 345KV CKT 1	717	717	0.12108	106.5286	GEN563162 1-G15081_3 0.6900
FDNS	00NR	2	16WP	G15_048	FROM->TO	CIMARRON - DRAPER LAKE 345KV CKT 1	717	717	0.12325	106.489	DRAPER LAKE (DRAPER2) 345/138/13.8KV TRANSFORMER CKT 1
FDNS	00NR	2	16WP	G15_048	FROM->TO	CIMARRON - DRAPER LAKE 345KV CKT 1	717	717	0.12108	106.4011	SHERBURNE CO 345/24.0KV TRANSFORMER CKT 1
FDNS	00NR	2	16WP	G15_048	FROM->TO	CIMARRON - DRAPER LAKE 345KV CKT 1	717	717	0.12324	106.3847	DRAPER LAKE (DRAPER3) 345/138/13.8KV TRANSFORMER CKT 1
FDNS	00NR	2	16WP	G15_048	FROM->TO	CIMARRON - DRAPER LAKE 345KV CKT 1	717	717	0.12324	106.3847	DRAPER LAKE (DRAPER4) 345/138/13.8KV TRANSFORMER CKT 1
FDNS	00NR	2	16WP	G15_048	FROM->TO	CIMARRON - DRAPER LAKE 345KV CKT 1	717	717	0.12108	106.3589	GEN635214 4-NEAL UNIT 4
FDNS	00NR	2	16WP	G15_048	FROM->TO	CIMARRON - DRAPER LAKE 345KV CKT 1	717	717	0.12108	106.2661	GEN600002 3-SHERBURNE CNTY G3
FDNS	00NR	2	16WP	G15_048	FROM->TO	CIMARRON - DRAPER LAKE 345KV CKT 1	717	717	0.10319	106.0669	G15063_T 345.00 - MATHWSN7 345.00 345KV CKT 1
FDNS	00NR	2	16WP	G15_048	FROM->TO	CIMARRON - DRAPER LAKE 345KV CKT 1	717	717	0.12108	105.8567	GEN635023 3-WALTER SCOTT UNIT 3
FDNS	00NR	2	16WP	G15_048	FROM->TO	CIMARRON - DRAPER LAKE 345KV CKT 1	717	717	0.12108	105.7208	EASTDC - ERCOT EQUIVALENCE 345KV CKT 1
FDNS	00NR	2	16WP	G15_048	FROM->TO	CIMARRON - DRAPER LAKE 345KV CKT 1	717	717	0.11741	105.7036	CIMARRON - MATHWSN7 345.00 345KV CKT 1
FDNS	00NR	2	16WP	G15_048	FROM->TO	CIMARRON - DRAPER LAKE 345KV CKT 1	717	717	0.11741	105.7036	CIMARRON - MATHWSN7 345.00 345KV CKT 2
FDNS	00NR	2	16WP	G15_048	FROM->TO	CIMARRON - DRAPER LAKE 345KV CKT 1	717	717	0.12108	105.4117	GEN562023 1-G11_020_3 0.6900
FDNS	00NR	2	16WP	G15_048	FROM->TO	CIMARRON - DRAPER LAKE 345KV CKT 1	717	717	0.12108	105.4117	GEN562026 1-G11_019_3 0.6900
FDNS	00NR	2	16WP	G15_048	FROM->TO	CIMARRON - DRAPER LAKE 345KV CKT 1	717	717	0.12108	105.3526	GEN635024 4-WALTER SCOTT UNIT 4
FDNS	00NR	2	16WP	G15_048	FROM->TO	CIMARRON - DRAPER LAKE 345KV CKT 1	717	717	0.10932	105.3449	DRAPER LAKE - SEMINOLE 345KV CKT 1
FDNS	00NR	2	16WP	G15_048	FROM->TO	CIMARRON - DRAPER LAKE 345KV CKT 1	717	717	0.10932	105.3447	DRAPER LAKE - SEMINOLE 345KV CKT 2
FDNS	00NR	2	16WP	G15_048	FROM->TO	CIMARRON - DRAPER LAKE 345KV CKT 1	717	717	0.11898	104.7258	MATHWSN7 345.00 - TATONGA7 345.00 345KV CKT 1
FDNS	00NR	2	16WP	G15_048	FROM->TO	CIMARRON - DRAPER LAKE 345KV CKT 1	717	717	0.11898	104.7258	MATHWSN7 345.00 - TATONGA7 345.00 345KV CKT 2
FDNS	00NR	2	16WP	G15_048	FROM->TO	CIMARRON - DRAPER LAKE 345KV CKT 1	717	717	0.12108	104.4173	GEN562992 1-G15063_3 0.6900
FDNS	01ALL	2	16WP	G15_048	FROM->TO	CIMARRON - DRAPER LAKE 345KV CKT 1	717	717	0.06918	103.9899	BASE CASE
FDNS	00NR	2	16WP	G15_048	FROM->TO	CIMARRON - DRAPER LAKE 345KV CKT 1	717	717	0.12578	103.5167	DRAPER LAKE - MIDWEST TAP 138KV CKT 1
FDNS	00NR	2	16WP	G15_048	FROM->TO	CIMARRON - DRAPER LAKE 345KV CKT 1	717	717	0.12578	103.4591	P12:138:OKGE:3TERM21
FDNSLock	00NR	2	16WP	G15_048	FROM->TO	CIMARRON - DRAPER LAKE 345KV CKT 1	717	717	0.12108	103.1655	GEN532751 1-WOLF CREEK GENERATING STATION UNIT 1
FDNS	00NR	2	16WP	G15_048	FROM->TO	CIMARRON - DRAPER LAKE 345KV CKT 1	717	717	0.12227	101.6899	PITTSBURG - VALLIANT 345KV CKT 1
FDNS	00NR	2	16WP	G15_048	FROM->TO	CIMARRON - DRAPER LAKE 345KV CKT 1	717	717	0.12227	101.6899	PITTSBURG - VALLIANT 345KV CKT 1
FDNS	00NR	2	17SP	G15_048	FROM->TO	CIMARRON - DRAPER LAKE 345KV CKT 1	717	717	0.12195	100.752	G14-057T 345.00 - LAWTON EASTSIDE 345KV CKT 1
FDNS	00NR	2	16WP	G15_048	FROM->TO	CIMARRON - DRAPER LAKE 345KV CKT 1	717	717	0.1183	100.6008	GRACEMONT - MINCO 345KV CKT 1
FDNS	00NR	2	17SP	G15_048	FROM->TO	CIMARRON - DRAPER LAKE 345KV CKT 1	717	717	0.11964	100.3183	CLEVELAND - G15066_T 345.00 345KV CKT 1
FDNS	00NR	2	17SP	G15_048	FROM->TO	CIMARRON - DRAPER LAKE 345KV CKT 1	717	717	0.11964	99.6	G15066_T 345.00 - SOONER 345KV CKT 1
FDNS	00NR	2	20WP	G15_048	TO->FROM	CIMARRON - MINCO 345KV CKT 1	956	956	0.03732	103.5354	G14-057T 345.00 - SUNNYSIDE 345KV CKT 1
FDNS	00NR	2	16WP	G15_048	TO->FROM	CIMARRON - MINCO 345KV CKT 1	956	956	0.03717	102.4479	G14-057T 345.00 - SUNNYSIDE 345KV CKT 1
FDNS	01ALL	2	17SP	G15_048	FROM->TO	CLEO CORNER - CLEOPLT4 138.00 138KV CKT 1	191	191	0.64254	120.0675	CLEO CORNER (CLEOCOR1) 138/69/13.8KV TRANSFORMER CKT 1
FDNS	01ALL	2	20SP	G15_048	FROM->TO	CLEO CORNER - CLEOPLT4 138.00 138KV CKT 1	191	191	0.64264	119.1184	CLEO CORNER (CLEOCOR1) 138/69/13.8KV TRANSFORMER CKT 1
FDNS	01ALL	2	17SP	G15_048	FROM->TO	CLEO CORNER - CLEOPLT4 138.00 138KV CKT 1	191	191	0.59502	118.3583	WOODWARD EHV - WWPAR4 138.00 138KV CKT 1
FDNS	01ALL	2	17SP	G15_048	FROM->TO	CLEO CORNER - CLEOPLT4 138.00 138KV CKT 1	191	191	0.59502	118.3581	WOODWARD - WWPAR4 138.00 138KV CKT 1
FDNS	01ALL	2	20WP	G15_048	FROM->TO	CLEO CORNER - CLEOPLT4 138.00 138KV CKT 1	191	191	0.64244	118.2017	CLEO CORNER (CLEOCOR1) 138/69/13.8KV TRANSFORMER CKT 1
FDNS	01ALL	2	16WP	G15_048	FROM->TO	CLEO CORNER - CLEOPLT4 138.00 138KV CKT 1	191	191	0.64259	116.7926	CLEO CORNER (CLEOCOR1) 138/69/13.8KV TRANSFORMER CKT 1
FDNS	01ALL	2	20SP	G15_048	FROM->TO	CLEO CORNER - CLEOPLT4 138.00 138KV CKT 1	191	191	0.59503	115.0765	WOODWARD - WWPAR4 138.00 138KV CKT 1
FDNS	01ALL	2	20SP	G15_048	FROM->TO	CLEO CORNER - CLEOPLT4 138.00 138KV CKT 1	191	191	0.59503	115.0765	WOODWARD EHV - WWPAR4 138.00 138KV CKT 1
FDNS	01ALL	2	16WP	G15_048	FROM->TO	CLEO CORNER - CLEOPLT4 138.00 138KV CKT 1	191	191	0.59494	115.0584	WOODWARD EHV - WWPAR4 138.00 138KV CKT 1
FDNS	01ALL	2	16WP	G15_048	FROM->TO	CLEO CORNER - CLEOPLT4 138.00 138KV CKT 1	191	191	0.59494	115.0582	WOODWARD - WWPAR4 138.00 138KV CKT 1
FDNS	01ALL	2	17SP	G15_048	FROM->TO	CLEO CORNER - CLEOPLT4 138.00 138KV CKT 1	191	191	0.57664	114.9583	MOORELAND - PIC4 138.00 138KV CKT 1
FDNS	01ALL	2	17SP	G15_048	FROM->TO	CLEO CORNER - CLEOPLT4 138.00 138KV CKT 1	191	191	0.57664	114.9401	P12:138:WFEC:MSL12
FDNS	01ALL	2	17SP	G15_048	FROM->TO	CLEO CORNER - CLEOPLT4 138.00 138KV CKT 1	191	191	0.57725	114.9344	P12:138:WFEC:MSL15
FDNS	01ALL	2	17SP	G15_048	FROM->TO	CLEO CORNER - CLEOPLT4 138.00 138KV CKT 1	191	191	0.57664	114.8641	CEDARDALE - PIC4 138.00 138KV CKT 1
FDNS	01ALL	2	17SP	G15_048	FROM->TO	CLEO CORNER - CLEOPLT4 138.00 138KV CKT 1	191	191	0.58059	114.8519	P12:138:WFEC:MSL14
FDNS	01ALL	2	17SP	G15_048	FROM->TO	CLEO CORNER - CLEOPLT4 138.00 138KV CKT 1	191	191	0.58059	114.8281	BEARCAT 138.00 - MOORELAND 138KV CKT 1
FDNS	01ALL	2	17SP	G15_048	FROM->TO	CLEO CORNER - CLEOPLT4 138.00 138KV CKT 1	191	191	0.57664	114.6862	CEDARDALE - OKEENE 138KV CKT 1
FDNS	01ALL	2	17SP	G15_048	FROM->TO	CLEO CORNER - CLEOPLT4 138.00 138KV CKT 1	191	191	0.58059	114.3613	BEARCAT 138.00 - NINE MILE 138KV CKT 1
FDNS	01ALL	2	17SP	G15_048	FROM->TO	CLEO CORNER - CLEOPLT4 138.00 138KV CKT 1	191	191	0.53968	114.3134	WOODRING (WOODRNG2) 345/138/13.8KV TRANSFORMER CKT 1
FDNS	01ALL	2	17SP	G15_048	FROM->TO	CLEO CORNER - CLEOPLT4 138.00 138KV CKT 1	191	191	0.57725	114.1043	NOEL_SW 138.00 - SALT_PLAINS 138.00 138KV CKT 1
FDNS	01ALL	2	17SP	G15_048	FROM->TO	CLEO CORNER - CLEOPLT4 138.00 138KV CKT 1	191	191	0.60084	114.013	CLEO CORNER - CLEO JCT 69KV CKT 1
FDNS	01ALL	2	17SP	G15_048	FROM->TO	CLEO CORNER - CLEOPLT4 138.00 138KV CKT 1	191	191	0.60084	114.011	CLEO JCT - RINGWOOD 69KV CKT 1
FDNS	01ALL	2	17SP	G15_048	FROM->TO	CLEO CORNER - CLEOPLT4 138.00 138KV CKT 1	191	191	0.57583	113.6545	DOVER SW - OKEENE 138KV CKT 1
FDNS	01ALL	2	17SP	G15_048	FROM->TO	CLEO CORNER - CLEOPLT4 138.00 138KV CKT 1	191	191	0.58059	113.5911	MOREWOOD SW - NINE MILE 138KV CKT 1
FDNS	01ALL	2	20WP	G15_048	FROM->TO	CLEO CORNER - CLEOPLT4 138.00 138KV CKT 1	191	191	0.59482	113.4767	WOODWARD EHV - WWPAR4 138.00 138KV CKT 1
FDNS	01ALL	2	20WP	G15_048	FROM->TO	CLEO CORNER - CLEOPLT4 138.00 138KV CKT 1	191	191	0.59482	113.4766	WOODWARD - WWPAR4 138.00 138KV CKT 1
FDNS	01ALL	2	20SP	G15_048	FROM->TO	CLEO CORNER - CLEOPLT4 138.00 138KV CKT 1	191	191	0.57733	112.6596	P12:138:WFEC:MSL15
FDNS	01ALL	2	20WP	G15_048	FROM->TO	CLEO CORNER - CLEOPLT4 138.00 138KV CKT 1	191	191	0.57712	112.6215	P12:138:WFEC:MSL15
FDNS	01ALL	2	20WP	G15_048	FROM->TO	CLEO CORNER - CLEOPLT4 138.00 138KV CKT 1	191	191	0.57643	112.6061	MOORELAND - PIC4 138.00 138KV CKT 1
FDNS	01ALL	2	20WP	G15_048	FROM->TO	CLEO CORNER - CLEOPLT4 138.00 138KV CKT 1	191	191	0.57643	112.5838	P12:138:WFEC:MSL12
FDNS	01ALL	2	20WP	G15_048	FROM->TO	CLEO CORNER - CLEOPLT4 138.00 138KV CKT 1	191	191	0.57643	112.5118	CEDARDALE - PIC4 138.00 138KV CKT 1
FDNS	01ALL	2	20SP	G15_048	FROM->TO	CLEO CORNER - CLEOPLT4 138.00 138KV CKT 1	191	191	0.60082	112.4971	CLEO JCT - RINGWOOD 69KV CKT 1
FDNS	01ALL	2	20SP	G15_048	FROM->TO	CLEO CORNER - CLEOPLT4 138.00 138KV CKT 1	191	191	0.60082	112.4951	CLEO CORNER - CLEO JCT 69KV CKT 1
FDNS	01ALL	2	20SP	G15_048	FROM->TO	CLEO CORNER - CLEOPLT4 138.00 138KV CKT 1	191	191	0.57666	112.4321	MOORELAND - PIC4 138.00 138KV CKT 1
FDNS	01ALL	2	20SP	G15_048	FROM->TO	CLEO CORNER - CLEOPLT4 138.00 138KV CKT 1	191	191	0.57666	112.4085	P12:138:WFEC:MSL12
FDNS	01ALL	2	20SP	G15_048	FROM->TO	CLEO CORNER - CLEOPLT4 138.00 138KV CKT 1	191	191	0.57666	112.3371	CEDARDALE - PIC4 138.00 138KV CKT 1
FDNS	01ALL	2	17SP	G15_048	FROM->TO	CLEO CORNER - CLEOPLT4 138.00 138KV CKT 1	191	191	0.57725	112.3194	C_CITY_138 138.00 - SALT_PLAINS 138.00 138KV CKT 1
FDNS	01ALL	2	20WP	G15_048	FROM->TO	CLEO CORNER - CLEOPLT4 138.00 138KV CKT 1	191	191	0.57643	112.3062	CEDARDALE - OKEENE 138KV CKT 1
FDNS	01ALL	2	20SP	G15_048	FROM->TO	CLEO CORNER - CLEOPLT4 138.00 138KV CKT 1	191	191	0.58061	112.1966	P12:138:WFEC:MSL14
FDNS	01ALL	2	20SP	G15_048	FROM->TO	CLEO CORNER - CLEOPLT4 138.00 138KV CKT 1	191	191	0.58061	112.1722	BEARCAT 138.00 - MOORELAND 138KV CKT 1
FDNS	01ALL	2	17SP	G15_048	FROM->TO	CLEO CORNER - CLEOPLT4 138.00 138KV CKT 1	191	191	0.57265	112.1508	G15095_T 138.00 - ROSE_VALLEY 138.00 138KV CKT 1
FDNS	01ALL	2	16WP	G15_048	FROM->TO	CLEO CORNER - CLEOPLT4 138.00 138KV CKT 1	191	191	0.57732	112.1495	P12:138:WFEC:MSL15
FDNS	01ALL	2	16WP	G15_048	FROM->TO	CLEO CORNER - CLEOPLT4 138.00 138KV CKT 1	191	191	0.5767	112.1365	MOORELAND - PIC4 138.00 138KV CKT 1
FDNS	01ALL	2	20SP	G15_048	FROM->TO	CLEO CORNER - CLEOPLT4 138.00 138KV CKT 1	191	191	0.57666	112.1288	CEDARDALE - OKEENE 138KV CKT 1
FDNS	01ALL	2	17SP	G15_048	FROM->TO	CLEO CORNER - CLEOPLT4 138.00 138KV CKT 1	191	191	0.56923	112.1236	G15063_T 345.00 - WOODRING 345KV CKT 1

SOLUTION	GROUP	SCENARIO	SEASON	SOURCE	DIRECTION	MONITORED ELEMENT	RATEA (MVA)	RATEB(MVA)	TDF	TC%LOADING (% MVA)	CONTINGENCY
FDNS	01ALL	2	16WP	G15_048	FROM->TO	CLEO CORNER - CLEOPLT4 138.00 138KV CKT 1	191	191	0.5767	112.1149	P12:138:WFEC:MSL12
FDNS	01ALL	2	16WP	G15_048	FROM->TO	CLEO CORNER - CLEOPLT4 138.00 138KV CKT 1	191	191	0.5767	112.0415	CEDARDALE - PIC4 138.00 138KV CKT 1
FDNS	01ALL	2	17SP	G15_048	FROM->TO	CLEO CORNER - CLEOPLT4 138.00 138KV CKT 1	191	191	0.57273	112.0364	MATHWSN7 345.00 - TATONGA7 345.00 345KV CKT 1
FDNS	01ALL	2	17SP	G15_048	FROM->TO	CLEO CORNER - CLEOPLT4 138.00 138KV CKT 1	191	191	0.57273	112.0364	MATHWSN7 345.00 - TATONGA7 345.00 345KV CKT 2
FDNS	01ALL	2	20WP	G15_048	FROM->TO	CLEO CORNER - CLEOPLT4 138.00 138KV CKT 1	191	191	0.60062	111.939	CLEO CORNER - CLEO JCT 69KV CKT 1
FDNS	01ALL	2	20WP	G15_048	FROM->TO	CLEO CORNER - CLEOPLT4 138.00 138KV CKT 1	191	191	0.60062	111.9371	CLEO JCT - RINGWOOD 69KV CKT 1
FDNS	01ALL	2	17SP	G15_048	FROM->TO	CLEO CORNER - CLEOPLT4 138.00 138KV CKT 1	191	191	0.57725	111.9133	BYRON_138 138.00 - C_CITY_138 138.00 138KV CKT 1
FDNS	01ALL	2	17SP	G15_048	FROM->TO	CLEO CORNER - CLEOPLT4 138.00 138KV CKT 1	191	191	0.57498	111.8801	DEWEY - SOUTHARD 138KV CKT 1
FDNS	01ALL	2	16WP	G15_048	FROM->TO	CLEO CORNER - CLEOPLT4 138.00 138KV CKT 1	191	191	0.58061	111.8591	P12:138:WFEC:MSL14
FDNS	01ALL	2	16WP	G15_048	FROM->TO	CLEO CORNER - CLEOPLT4 138.00 138KV CKT 1	191	191	0.5767	111.8485	CEDARDALE - OKEENE 138KV CKT 1
FDNS	01ALL	2	16WP	G15_048	FROM->TO	CLEO CORNER - CLEOPLT4 138.00 138KV CKT 1	191	191	0.58061	111.835	BEARCAT 138.00 - MOORELAND 138KV CKT 1
FDNS	01ALL	2	20SP	G15_048	FROM->TO	CLEO CORNER - CLEOPLT4 138.00 138KV CKT 1	191	191	0.53983	111.8345	WOODRING (WOODRNG2) 345/138/13.8KV TRANSFORMER CKT 1
FDNS	01ALL	2	20WP	G15_048	FROM->TO	CLEO CORNER - CLEOPLT4 138.00 138KV CKT 1	191	191	0.58041	111.7783	P12:138:WFEC:MSL14
FDNS	01ALL	2	20WP	G15_048	FROM->TO	CLEO CORNER - CLEOPLT4 138.00 138KV CKT 1	191	191	0.58041	111.753	BEARCAT 138.00 - MOORELAND 138KV CKT 1
FDNS	01ALL	2	20WP	G15_048	FROM->TO	CLEO CORNER - CLEOPLT4 138.00 138KV CKT 1	191	191	0.57712	111.7402	NOEL_SW 138.00 - SALT_PLAINS 138.00 138KV CKT 1
FDNS	01ALL	2	20SP	G15_048	FROM->TO	CLEO CORNER - CLEOPLT4 138.00 138KV CKT 1	191	191	0.58061	111.7035	BEARCAT 138.00 - NINE MILE 138KV CKT 1
FDNS	01ALL	2	20SP	G15_048	FROM->TO	CLEO CORNER - CLEOPLT4 138.00 138KV CKT 1	191	191	0.57733	111.6713	NOEL_SW 138.00 - SALT_PLAINS 138.00 138KV CKT 1
FDNS	01ALL	2	17SP	G15_048	FROM->TO	CLEO CORNER - CLEOPLT4 138.00 138KV CKT 1	191	191	0.57265	111.6514	NOEL_SW 138.00 - ROSE_VALLEY 138.00 138KV CKT 1
FDNS	01ALL	2	16WP	G15_048	FROM->TO	CLEO CORNER - CLEOPLT4 138.00 138KV CKT 1	191	191	0.58061	111.3672	BEARCAT 138.00 - NINE MILE 138KV CKT 1
FDNS	01ALL	2	17SP	G15_048	FROM->TO	CLEO CORNER - CLEOPLT4 138.00 138KV CKT 1	191	191	0.56923	111.3588	G15063_T 345.00 - MATHWSN7 345.00 345KV CKT 1
FDNS	01ALL	2	17SP	G15_048	FROM->TO	CLEO CORNER - CLEOPLT4 138.00 138KV CKT 1	191	191	0.60084	111.3192	NSAH - RINGWOOD 69KV CKT 1
FDNS	01ALL	2	17SP	G15_048	FROM->TO	CLEO CORNER - CLEOPLT4 138.00 138KV CKT 1	191	191	0.57498	111.3056	ROMAN NOSE - SOUTHARD 138KV CKT 1
FDNS	01ALL	2	20WP	G15_048	FROM->TO	CLEO CORNER - CLEOPLT4 138.00 138KV CKT 1	191	191	0.58041	111.2834	BEARCAT 138.00 - NINE MILE 138KV CKT 1
FDNS	01ALL	2	16WP	G15_048	FROM->TO	CLEO CORNER - CLEOPLT4 138.00 138KV CKT 1	191	191	0.57732	111.2606	NOEL_SW 138.00 - SALT_PLAINS 138.00 138KV CKT 1
FDNS	01ALL	2	17SP	G15_048	FROM->TO	CLEO CORNER - CLEOPLT4 138.00 138KV CKT 1	191	191	0.60402	111.0179	CLEO CORNER - CLEOTP 2 69.000 69KV CKT 1
FDNS	01ALL	2	20WP	G15_048	FROM->TO	CLEO CORNER - CLEOPLT4 138.00 138KV CKT 1	191	191	0.57561	111.0098	DOVER SW - OKEENE 138KV CKT 1
FDNS	01ALL	2	17SP	G15_048	FROM->TO	CLEO CORNER - CLEOPLT4 138.00 138KV CKT 1	191	191	0.5865	110.9851	FPL SWITCH - WOODWARD 138KV CKT 1
FDNS	01ALL	2	20SP	G15_048	FROM->TO	CLEO CORNER - CLEOPLT4 138.00 138KV CKT 1	191	191	0.58061	110.9305	MOREWOOD SW - NINE MILE 138KV CKT 1
FDNS	01ALL	2	16WP	G15_048	FROM->TO	CLEO CORNER - CLEOPLT4 138.00 138KV CKT 1	191	191	0.6009	110.9205	CLEO CORNER - CLEO JCT 69KV CKT 1
FDNS	01ALL	2	16WP	G15_048	FROM->TO	CLEO CORNER - CLEOPLT4 138.00 138KV CKT 1	191	191	0.6009	110.9185	CLEO JCT - RINGWOOD 69KV CKT 1
FDNS	01ALL	2	16WP	G15_048	FROM->TO	CLEO CORNER - CLEOPLT4 138.00 138KV CKT 1	191	191	0.57591	110.8967	DOVER SW - OKEENE 138KV CKT 1
FDNS	01ALL	2	17SP	G15_048	FROM->TO	CLEO CORNER - CLEOPLT4 138.00 138KV CKT 1	191	191	0.57515	110.7759	WOODWARD DISTRICT EHV (WWDEHV-T2) 345/138/13.8KV TRANSFORMER CKT 2
FDNS	01ALL	2	20SP	G15_048	FROM->TO	CLEO CORNER - CLEOPLT4 138.00 138KV CKT 1	191	191	0.57584	110.6875	DOVER SW - OKEENE 138KV CKT 1
FDNS	01ALL	2	17SP	G15_048	FROM->TO	CLEO CORNER - CLEOPLT4 138.00 138KV CKT 1	191	191	0.60402	110.6703	ALINETP2 69.000 - CLEOTP 2 69.000 69KV CKT 1
FDNS	01ALL	2	17SP	G15_048	FROM->TO	CLEO CORNER - CLEOPLT4 138.00 138KV CKT 1	191	191	0.57318	110.6097	THISTLE7 345.00 - WOODWARD DISTRICT EHV 345KV CKT 1
FDNS	01ALL	2	17SP	G15_048	FROM->TO	CLEO CORNER - CLEOPLT4 138.00 138KV CKT 1	191	191	0.57318	110.6097	THISTLE7 345.00 - WOODWARD DISTRICT EHV 345KV CKT 1
FDNS	01ALL	2	17SP	G15_048	FROM->TO	CLEO CORNER - CLEOPLT4 138.00 138KV CKT 1	191	191	0.57318	110.6097	THISTLE7 345.00 - WOODWARD DISTRICT EHV 345KV CKT 2
FDNS	01ALL	2	17SP	G15_048	FROM->TO	CLEO CORNER - CLEOPLT4 138.00 138KV CKT 1	191	191	0.57318	110.6097	THISTLE7 345.00 - WOODWARD DISTRICT EHV 345KV CKT 2
FDNS	01ALL	2	16WP	G15_048	FROM->TO	CLEO CORNER - CLEOPLT4 138.00 138KV CKT 1	191	191	0.58061	110.5951	MOREWOOD SW - NINE MILE 138KV CKT 1
FDNS	01ALL	2	17SP	G15_048	FROM->TO	CLEO CORNER - CLEOPLT4 138.00 138KV CKT 1	191	191	0.57503	110.581	WOODWARD DISTRICT EHV (WWDEHV) 345/138/13.8KV TRANSFORMER CKT 1
FDNS	01ALL	2	17SP	G15_048	FROM->TO	CLEO CORNER - CLEOPLT4 138.00 138KV CKT 1	191	191	0.60402	110.5168	ALINETP2 69.000 - ALVA 69KV CKT 1
FDNS	01ALL	2	20WP	G15_048	FROM->TO	CLEO CORNER - CLEOPLT4 138.00 138KV CKT 1	191	191	0.57253	110.5155	MATHWSN7 345.00 - TATONGA7 345.00 345KV CKT 1
FDNS	01ALL	2	20WP	G15_048	FROM->TO	CLEO CORNER - CLEOPLT4 138.00 138KV CKT 1	191	191	0.57253	110.5155	MATHWSN7 345.00 - TATONGA7 345.00 345KV CKT 2
FDNS	01ALL	2	20WP	G15_048	FROM->TO	CLEO CORNER - CLEOPLT4 138.00 138KV CKT 1	191	191	0.58041	110.5049	MOREWOOD SW - NINE MILE 138KV CKT 1
FDNS	01ALL	2	20SP	G15_048	FROM->TO	CLEO CORNER - CLEOPLT4 138.00 138KV CKT 1	191	191	0.56935	110.4084	G15063_T 345.00 - WOODRING 345KV CKT 1
FDNS	01ALL	2	17SP	G15_048	FROM->TO	CLEO CORNER - CLEOPLT4 138.00 138KV CKT 1	191	191	0.57725	110.1729	BYRON_138 138.00 - SANDY_CN_138138.00 138KV CKT 1
FDNS	01ALL	2	17SP	G15_048	FROM->TO	CLEO CORNER - CLEOPLT4 138.00 138KV CKT 1	191	191	0.57265	110.081	GEN514805 1-SOONER UNIT 1
FDNS	01ALL	2	17SP	G15_048	FROM->TO	CLEO CORNER - CLEOPLT4 138.00 138KV CKT 1	191	191	0.57652	110.0722	ELK CITY - RED HILLS WIND 138KV CKT 1
FDNS	01ALL	2	17SP	G15_048	FROM->TO	CLEO CORNER - CLEOPLT4 138.00 138KV CKT 1	191	191	0.57652	110.0722	ELK CITY - RED HILLS WIND 138KV CKT 1
FDNS	01ALL	2	20SP	G15_048	FROM->TO	CLEO CORNER - CLEOPLT4 138.00 138KV CKT 1	191	191	0.57733	110.0518	C_CITY_138 138.00 - SALT_PLAINS 138.00 138KV CKT 1
FDNS	01ALL	2	16WP	G15_048	FROM->TO	CLEO CORNER - CLEOPLT4 138.00 138KV CKT 1	191	191	0.57283	109.9562	MATHWSN7 345.00 - TATONGA7 345.00 345KV CKT 1
FDNS	01ALL	2	16WP	G15_048	FROM->TO	CLEO CORNER - CLEOPLT4 138.00 138KV CKT 1	191	191	0.57283	109.9562	MATHWSN7 345.00 - TATONGA7 345.00 345KV CKT 2
FDNS	01ALL	2	20WP	G15_048	FROM->TO	CLEO CORNER - CLEOPLT4 138.00 138KV CKT 1	191	191	0.57712	109.9441	C_CITY_138 138.00 - SALT_PLAINS 138.00 138KV CKT 1
FDNS	01ALL	2	20SP	G15_048	FROM->TO	CLEO CORNER - CLEOPLT4 138.00 138KV CKT 1	191	191	0.57264	109.8883	G15095_T 138.00 - ROSE_VALLEY 138.00 138KV CKT 1
FDNS	01ALL	2	20WP	G15_048	FROM->TO	CLEO CORNER - CLEOPLT4 138.00 138KV CKT 1	191	191	0.57476	109.6761	DEWEY - SOUTHARD 138KV CKT 1
FDNS	01ALL	2	20SP	G15_048	FROM->TO	CLEO CORNER - CLEOPLT4 138.00 138KV CKT 1	191	191	0.56935	109.6562	G15063_T 345.00 - MATHWSN7 345.00 345KV CKT 1
FDNS	01ALL	2	20WP	G15_048	FROM->TO	CLEO CORNER - CLEOPLT4 138.00 138KV CKT 1	191	191	0.57244	109.621	G15095_T 138.00 - ROSE_VALLEY 138.00 138KV CKT 1
FDNS	01ALL	2	20WP	G15_048	FROM->TO	CLEO CORNER - CLEOPLT4 138.00 138KV CKT 1	191	191	0.57712	109.5287	BYRON_138 138.00 - C_CITY_138 138.00 138KV CKT 1
FDNS	01ALL	2	16WP	G15_048	FROM->TO	CLEO CORNER - CLEOPLT4 138.00 138KV CKT 1	191	191	0.57732	109.4918	C_CITY_138 138.00 - SALT_PLAINS 138.00 138KV CKT 1
FDNS	01ALL	2	20SP	G15_048	FROM->TO	CLEO CORNER - CLEOPLT4 138.00 138KV CKT 1	191	191	0.57733	109.4801	BYRON_138 138.00 - C_CITY_138 138.00 138KV CKT 1
FDNS	01ALL	2	20SP	G15_048	FROM->TO	CLEO CORNER - CLEOPLT4 138.00 138KV CKT 1	191	191	0.57274	109.4314	MATHWSN7 345.00 - TATONGA7 345.00 345KV CKT 1
FDNS	01ALL	2	20SP	G15_048	FROM->TO	CLEO CORNER - CLEOPLT4 138.00 138KV CKT 1	191	191	0.57274	109.4314	MATHWSN7 345.00 - TATONGA7 345.00 345KV CKT 2
FDNS	01ALL	2	17SP	G15_048	FROM->TO	CLEO CORNER - CLEOPLT4 138.00 138KV CKT 1	191	191	0.57233	109.4191	CIMARRON - MINCO 345KV CKT 1
FDNS	01ALL	2	16WP	G15_048	FROM->TO	CLEO CORNER - CLEOPLT4 138.00 138KV CKT 1	191	191	0.57504	109.3645	DEWEY - SOUTHARD 138KV CKT 1
FDNS	01ALL	2	17SP	G15_048	FROM->TO	CLEO CORNER - CLEOPLT4 138.00 138KV CKT 1	191	191	0.57652	109.348	ELLIS 4 138.00 - MOREWOOD SW 138KV CKT 1
FDNS	01ALL	2	20WP	G15_048	FROM->TO	CLEO CORNER - CLEOPLT4 138.00 138KV CKT 1	191	191	0.56921	109.3292	G15063_T 345.00 - WOODRING 345KV CKT 1
FDNS	01ALL	2	20WP	G15_048	FROM->TO	CLEO CORNER - CLEOPLT4 138.00 138KV CKT 1	191	191	0.57476	109.2997	ROMAN NOSE - SOUTHARD 138KV CKT 1
FDNS	01ALL	2	20SP	G15_048	FROM->TO	CLEO CORNER - CLEOPLT4 138.00 138KV CKT 1	191	191	0.57264	109.2834	NOEL_SW 138.00 - ROSE_VALLEY 138.00 138KV CKT 1
FDNS	01ALL	2	20SP	G15_048	FROM->TO	CLEO CORNER - CLEOPLT4 138.00 138KV CKT 1	191	191	0.57499	109.2728	DEWEY - SOUTHARD 138KV CKT 1
FDNS	01ALL	2	20WP	G15_048	FROM->TO	CLEO CORNER - CLEOPLT4 138.00 138KV CKT 1	191	191	0.57244	109.1995	NOEL_SW 138.00 - ROSE_VALLEY 138.00 138KV CKT 1
FDNS	01ALL	2	16WP	G15_048	FROM->TO	CLEO CORNER - CLEOPLT4 138.00 138KV CKT 1	191	191	0.57732	109.1935	BYRON_138 138.00 - C_CITY_138 138.00 138KV CKT 1
FDNS	01ALL	2	16WP	G15_048	FROM->TO	CLEO CORNER - CLEOPLT4 138.00 138KV CKT 1	191	191	0.57272	109.1481	G15095_T 138.00 - ROSE_VALLEY 138.00 138KV CKT 1
FDNS	01ALL	2	20WP	G15_048	FROM->TO	CLEO CORNER - CLEOPLT4 138.00 138KV CKT 1	191	191	0.60062	109.0728	NSAH - RINGWOOD 69KV CKT 1
FDNS	01ALL	2	17SP	G15_048	FROM->TO	CLEO CORNER - CLEOPLT4 138.00 138KV CKT 1	191	191	0.57299	109.0061	CZYCRVT2 69.000 - KNOBHILL 69KV CKT 1
FDNS	01ALL	2	17SP	G15_048	FROM->TO	CLEO CORNER - CLEOPLT4 138.00 138KV CKT 1	191	191	0.60084	108.9926	NSAH - WAKITA 69KV CKT 1
FDNS	01ALL	2	16WP	G15_048	FROM->TO	CLEO CORNER - CLEOPLT4 138.00 138KV CKT 1	191	191	0.57504	108.9898	ROMAN NOSE - SOUTHARD 138KV CKT 1
FDNS	01ALL	2	20WP	G15_048	FROM->TO	CLEO CORNER - CLEOPLT4 138.00 138KV CKT 1	191	191	0.53968	108.975	WOODRING (WOODRNG2) 345/138/13.8KV TRANSFORMER CKT 1
FDNS	01ALL	2	16WP	G15_048	FROM->TO	CLEO CORNER - CLEOPLT4 138.00 138KV CKT 1	191	191	0.57272	108.9696	NOEL_SW 138.00 - ROSE_VALLEY 138.00 138KV CKT 1
FDNS	01ALL	2	20SP	G15_048	FROM->TO	CLEO CORNER - CLEOPLT4 138.00 138KV CKT 1	191	191	0.60409	108.8609	CLEO CORNER - CLEOTP 2 69.000 69KV CKT 1

SOLUTION	GROUP	SCENARIO	SEASON	SOURCE	DIRECTION	MONITORED ELEMENT	RATEA (MVA)	RATEB(MVA)	TDF	TC%LOADING (% MVA)	CONTINGENCY
FDNS	01ALL	2	17SP	G15_048	FROM->TO	CLEO CORNER - CLEOPLT4 138.00 138KV CKT 1	191	191	0.57294	108.8366	G14-057T 345.00 - SUNNYSIDE 345KV CKT 1
FDNS	01ALL	2	20SP	G15_048	FROM->TO	CLEO CORNER - CLEOPLT4 138.00 138KV CKT 1	191	191	0.60082	108.8342	NSAH - RINGWOOD 69KV CKT 1
FDNS	01ALL	2	16WP	G15_048	FROM->TO	CLEO CORNER - CLEOPLT4 138.00 138KV CKT 1	191	191	0.6009	108.8159	NSAH - RINGWOOD 69KV CKT 1
FDNS	01ALL	2	17SP	G15_048	FROM->TO	CLEO CORNER - CLEOPLT4 138.00 138KV CKT 1	191	191	0.57652	108.8132	CUSTER4 138.00 - ELLIS 4 138.00 138KV CKT 1
FDNS	01ALL	2	17SP	G15_048	FROM->TO	CLEO CORNER - CLEOPLT4 138.00 138KV CKT 1	191	191	0.57311	108.7955	Hitchland Interchange - WALKTAP7 345.00 345KV CKT 1
FDNS	01ALL	2	17SP	G15_048	FROM->TO	CLEO CORNER - CLEOPLT4 138.00 138KV CKT 1	191	191	0.57311	108.7955	Hitchland Interchange - WALKTAP7 345.00 345KV CKT 1
FDNS	01ALL	2	17SP	G15_048	FROM->TO	CLEO CORNER - CLEOPLT4 138.00 138KV CKT 1	191	191	0.57311	108.7915	P12:345:SPS:J07.1.FINN.HITCH
FDNS	01ALL	2	20WP	G15_048	FROM->TO	CLEO CORNER - CLEOPLT4 138.00 138KV CKT 1	191	191	0.60391	108.7245	CLEO CORNER - CLEOTP 2 69.000 69KV CKT 1
FDNS	01ALL	2	17SP	G15_048	FROM->TO	CLEO CORNER - CLEOPLT4 138.00 138KV CKT 1	191	191	0.57265	108.7164	GEN514806 1-SOONER UNIT 2
FDNS	01ALL	2	17SP	G15_048	FROM->TO	CLEO CORNER - CLEOPLT4 138.00 138KV CKT 1	191	191	0.57652	108.7001	CUSTER4 138.00 - RED HILLS WIND 138KV CKT 1
FDNS	01ALL	2	20SP	G15_048	FROM->TO	CLEO CORNER - CLEOPLT4 138.00 138KV CKT 1	191	191	0.57499	108.6797	ROMAN NOSE - SOUTHARD 138KV CKT 1
FDNS	01ALL	2	20WP	G15_048	FROM->TO	CLEO CORNER - CLEOPLT4 138.00 138KV CKT 1	191	191	0.56921	108.586	G15063_T 345.00 - MATHWSN7 345.00 345KV CKT 1
FDNS	01ALL	2	16WP	G15_048	FROM->TO	CLEO CORNER - CLEOPLT4 138.00 138KV CKT 1	191	191	0.56938	108.5203	G15063_T 345.00 - WOODRING 345KV CKT 1
FDNS	01ALL	2	20SP	G15_048	FROM->TO	CLEO CORNER - CLEOPLT4 138.00 138KV CKT 1	191	191	0.60409	108.508	ALINETP2 69.000 - CLEOTP 2 69.000 69KV CKT 1
FDNS	01ALL	2	20WP	G15_048	FROM->TO	CLEO CORNER - CLEOPLT4 138.00 138KV CKT 1	191	191	0.60391	108.5021	ALINETP2 69.000 - CLEOTP 2 69.000 69KV CKT 1
FDNS	01ALL	2	20WP	G15_048	FROM->TO	CLEO CORNER - CLEOPLT4 138.00 138KV CKT 1	191	191	0.60391	108.4044	ALINETP2 69.000 - ALVA 69KV CKT 1
FDNS	01ALL	2	20WP	G15_048	FROM->TO	CLEO CORNER - CLEOPLT4 138.00 138KV CKT 1	191	191	0.57297	108.391	THISTLE7 345.00 - WOODWARD DISTRICT EHV 345KV CKT 1
FDNS	01ALL	2	20WP	G15_048	FROM->TO	CLEO CORNER - CLEOPLT4 138.00 138KV CKT 1	191	191	0.57297	108.391	THISTLE7 345.00 - WOODWARD DISTRICT EHV 345KV CKT 1
FDNS	01ALL	2	20WP	G15_048	FROM->TO	CLEO CORNER - CLEOPLT4 138.00 138KV CKT 1	191	191	0.57297	108.391	THISTLE7 345.00 - WOODWARD DISTRICT EHV 345KV CKT 2
FDNS	01ALL	2	20WP	G15_048	FROM->TO	CLEO CORNER - CLEOPLT4 138.00 138KV CKT 1	191	191	0.57297	108.391	THISTLE7 345.00 - WOODWARD DISTRICT EHV 345KV CKT 2
FDNS	01ALL	2	20SP	G15_048	FROM->TO	CLEO CORNER - CLEOPLT4 138.00 138KV CKT 1	191	191	0.60409	108.3573	ALINETP2 69.000 - ALVA 69KV CKT 1
FDNS	01ALL	2	16WP	G15_048	FROM->TO	CLEO CORNER - CLEOPLT4 138.00 138KV CKT 1	191	191	0.53984	108.3146	WOODRING (WOODRNG2) 345/138/13.8KV TRANSFORMER CKT 1
FDNS	01ALL	2	16WP	G15_048	FROM->TO	CLEO CORNER - CLEOPLT4 138.00 138KV CKT 1	191	191	0.60409	108.2743	CLEO CORNER - CLEOTP 2 69.000 69KV CKT 1
FDNS	01ALL	2	20SP	G15_048	FROM->TO	CLEO CORNER - CLEOPLT4 138.00 138KV CKT 1	191	191	0.57317	108.235	THISTLE7 345.00 - WOODWARD DISTRICT EHV 345KV CKT 1
FDNS	01ALL	2	20SP	G15_048	FROM->TO	CLEO CORNER - CLEOPLT4 138.00 138KV CKT 1	191	191	0.57317	108.235	THISTLE7 345.00 - WOODWARD DISTRICT EHV 345KV CKT 1
FDNS	01ALL	2	20SP	G15_048	FROM->TO	CLEO CORNER - CLEOPLT4 138.00 138KV CKT 1	191	191	0.57317	108.235	THISTLE7 345.00 - WOODWARD DISTRICT EHV 345KV CKT 2
FDNS	01ALL	2	20SP	G15_048	FROM->TO	CLEO CORNER - CLEOPLT4 138.00 138KV CKT 1	191	191	0.57317	108.235	THISTLE7 345.00 - WOODWARD DISTRICT EHV 345KV CKT 2
FDNS	01ALL	2	20SP	G15_048	FROM->TO	CLEO CORNER - CLEOPLT4 138.00 138KV CKT 1	191	191	0.57516	108.2113	WOODWARD DISTRICT EHV (WWDEHV-T2) 345/138/13.8KV TRANSFORMER CKT 2
FDNS	01ALL	2	16WP	G15_048	FROM->TO	CLEO CORNER - CLEOPLT4 138.00 138KV CKT 1	191	191	0.57326	108.1858	THISTLE7 345.00 - WOODWARD DISTRICT EHV 345KV CKT 1
FDNS	01ALL	2	16WP	G15_048	FROM->TO	CLEO CORNER - CLEOPLT4 138.00 138KV CKT 1	191	191	0.57326	108.1858	THISTLE7 345.00 - WOODWARD DISTRICT EHV 345KV CKT 1
FDNS	01ALL	2	16WP	G15_048	FROM->TO	CLEO CORNER - CLEOPLT4 138.00 138KV CKT 1	191	191	0.57326	108.1858	THISTLE7 345.00 - WOODWARD DISTRICT EHV 345KV CKT 2
FDNS	01ALL	2	16WP	G15_048	FROM->TO	CLEO CORNER - CLEOPLT4 138.00 138KV CKT 1	191	191	0.57326	108.1858	THISTLE7 345.00 - WOODWARD DISTRICT EHV 345KV CKT 2
FDNS	01ALL	2	20SP	G15_048	FROM->TO	CLEO CORNER - CLEOPLT4 138.00 138KV CKT 1	191	191	0.58651	108.1785	FPL SWITCH - WOODWARD 138KV CKT 1
FDNS	01ALL	2	16WP	G15_048	FROM->TO	CLEO CORNER - CLEOPLT4 138.00 138KV CKT 1	191	191	0.60409	108.056	ALINETP2 69.000 - CLEOTP 2 69.000 69KV CKT 1
FDNS	01ALL	2	16WP	G15_048	FROM->TO	CLEO CORNER - CLEOPLT4 138.00 138KV CKT 1	191	191	0.57521	108.0266	WOODWARD DISTRICT EHV (WWDEHV-T2) 345/138/13.8KV TRANSFORMER CKT 2
FDNS	01ALL	2	20SP	G15_048	FROM->TO	CLEO CORNER - CLEOPLT4 138.00 138KV CKT 1	191	191	0.57504	108.0211	WOODWARD DISTRICT EHV (WWDEHV) 345/138/13.8KV TRANSFORMER CKT 1
FDNS	01ALL	2	20WP	G15_048	FROM->TO	CLEO CORNER - CLEOPLT4 138.00 138KV CKT 1	191	191	0.57498	107.9815	WOODWARD DISTRICT EHV (WWDEHV-T2) 345/138/13.8KV TRANSFORMER CKT 2
FDNS	01ALL	2	16WP	G15_048	FROM->TO	CLEO CORNER - CLEOPLT4 138.00 138KV CKT 1	191	191	0.60409	107.9566	ALINETP2 69.000 - ALVA 69KV CKT 1
FDNS	01ALL	2	16WP	G15_048	FROM->TO	CLEO CORNER - CLEOPLT4 138.00 138KV CKT 1	191	191	0.57509	107.8357	WOODWARD DISTRICT EHV (WWDEHV) 345/138/13.8KV TRANSFORMER CKT 1
FDNS	01ALL	2	20WP	G15_048	FROM->TO	CLEO CORNER - CLEOPLT4 138.00 138KV CKT 1	191	191	0.57485	107.8024	WOODWARD DISTRICT EHV (WWDEHV) 345/138/13.8KV TRANSFORMER CKT 1
FDNS	01ALL	2	20WP	G15_048	FROM->TO	CLEO CORNER - CLEOPLT4 138.00 138KV CKT 1	191	191	0.57712	107.7773	BYRON_138 138.00 - SANDY_CN_138138.00 138KV CKT 1
FDNS	01ALL	2	16WP	G15_048	FROM->TO	CLEO CORNER - CLEOPLT4 138.00 138KV CKT 1	191	191	0.56938	107.7505	G15063_T 345.00 - MATHWSN7 345.00 345KV CKT 1
FDNS	01ALL	2	20SP	G15_048	FROM->TO	CLEO CORNER - CLEOPLT4 138.00 138KV CKT 1	191	191	0.57733	107.5846	BYRON_138 138.00 - SANDY_CN_138138.00 138KV CKT 1
FDNS	01ALL	2	20SP	G15_048	FROM->TO	CLEO CORNER - CLEOPLT4 138.00 138KV CKT 1	191	191	0.57265	107.5615	GEN514805 1-SOONER UNIT 1
FDNS	01ALL	2	16WP	G15_048	FROM->TO	CLEO CORNER - CLEOPLT4 138.00 138KV CKT 1	191	191	0.57732	107.5468	BYRON_138 138.00 - SANDY_CN_138138.00 138KV CKT 1
FDNS	01ALL	2	20WP	G15_048	FROM->TO	CLEO CORNER - CLEOPLT4 138.00 138KV CKT 1	191	191	0.57247	107.4493	GEN514805 1-SOONER UNIT 1
FDNS	01ALL	2	20SP	G15_048	FROM->TO	CLEO CORNER - CLEOPLT4 138.00 138KV CKT 1	191	191	0.57653	107.4114	ELK CITY - RED HILLS WIND 138KV CKT 1
FDNS	01ALL	2	20SP	G15_048	FROM->TO	CLEO CORNER - CLEOPLT4 138.00 138KV CKT 1	191	191	0.57653	107.4114	ELK CITY - RED HILLS WIND 138KV CKT 1
FDNS	01ALL	2	16WP	G15_048	FROM->TO	CLEO CORNER - CLEOPLT4 138.00 138KV CKT 1	191	191	0.58648	107.3892	FPL SWITCH - WOODWARD 138KV CKT 1
FDNS	01ALL	2	16WP	G15_048	FROM->TO	CLEO CORNER - CLEOPLT4 138.00 138KV CKT 1	191	191	0.6009	107.2664	NSAH - WAKITA 69KV CKT 1
FDNS	01ALL	2	16WP	G15_048	FROM->TO	CLEO CORNER - CLEOPLT4 138.00 138KV CKT 1	191	191	0.57272	107.2417	GEN514805 1-SOONER UNIT 1
FDNS	01ALL	2	16WP	G15_048	FROM->TO	CLEO CORNER - CLEOPLT4 138.00 138KV CKT 1	191	191	0.6009	107.2	WAKITAS4 138.00 (WAKITA_XMER) 138/69/13.8KV TRANSFORMER CKT 1
FDNS	01ALL	2	20WP	G15_048	FROM->TO	CLEO CORNER - CLEOPLT4 138.00 138KV CKT 1	191	191	0.57634	107.1825	ELK CITY - RED HILLS WIND 138KV CKT 1
FDNS	01ALL	2	20WP	G15_048	FROM->TO	CLEO CORNER - CLEOPLT4 138.00 138KV CKT 1	191	191	0.57634	107.1825	ELK CITY - RED HILLS WIND 138KV CKT 1
FDNS	01ALL	2	20WP	G15_048	FROM->TO	CLEO CORNER - CLEOPLT4 138.00 138KV CKT 1	191	191	0.57211	107.1814	CIMARRON - MINCO 345KV CKT 1
FDNS	01ALL	2	16WP	G15_048	FROM->TO	CLEO CORNER - CLEOPLT4 138.00 138KV CKT 1	191	191	0.57657	107.1551	ELK CITY - RED HILLS WIND 138KV CKT 1
FDNS	01ALL	2	16WP	G15_048	FROM->TO	CLEO CORNER - CLEOPLT4 138.00 138KV CKT 1	191	191	0.57657	107.1551	ELK CITY - RED HILLS WIND 138KV CKT 1
FDNS	01ALL	2	20WP	G15_048	FROM->TO	CLEO CORNER - CLEOPLT4 138.00 138KV CKT 1	191	191	0.57275	107.0122	G14-057T 345.00 - SUNNYSIDE 345KV CKT 1
FDNS	01ALL	2	20WP	G15_048	FROM->TO	CLEO CORNER - CLEOPLT4 138.00 138KV CKT 1	191	191	0.60062	106.9842	NSAH - WAKITA 69KV CKT 1
FDNS	01ALL	2	20WP	G15_048	FROM->TO	CLEO CORNER - CLEOPLT4 138.00 138KV CKT 1	191	191	0.57289	106.9452	Hitchland Interchange - WALKTAP7 345.00 345KV CKT 1
FDNS	01ALL	2	20WP	G15_048	FROM->TO	CLEO CORNER - CLEOPLT4 138.00 138KV CKT 1	191	191	0.57289	106.9452	Hitchland Interchange - WALKTAP7 345.00 345KV CKT 1
FDNS	01ALL	2	20WP	G15_048	FROM->TO	CLEO CORNER - CLEOPLT4 138.00 138KV CKT 1	191	191	0.57289	106.9303	P12:345:SPS:J07.1.FINN.HITCH
FDNS	01ALL	2	20SP	G15_048	FROM->TO	CLEO CORNER - CLEOPLT4 138.00 138KV CKT 1	191	191	0.57233	106.8684	CIMARRON - MINCO 345KV CKT 1
FDNS	01ALL	2	16WP	G15_048	FROM->TO	CLEO CORNER - CLEOPLT4 138.00 138KV CKT 1	191	191	0.57317	106.8544	FINNEY SWITCHING STATION - HOLCOMB 345KV CKT 1
FDNS	01ALL	2	16WP	G15_048	FROM->TO	CLEO CORNER - CLEOPLT4 138.00 138KV CKT 1	191	191	0.57317	106.8544	FINNEY SWITCHING STATION - HOLCOMB 345KV CKT 1
FDNS	01ALL	2	17SP	G15_048	FROM->TO	CLEO CORNER - CLEOPLT4 138.00 138KV CKT 1	191	191	0.57265	106.7996	BASE CASE
FDNS	01ALL	2	16WP	G15_048	FROM->TO	CLEO CORNER - CLEOPLT4 138.00 138KV CKT 1	191	191	0.57241	106.7384	CIMARRON - MINCO 345KV CKT 1
FDNS	01ALL	2	25SP	G15_048	FROM->TO	CLEO CORNER - CLEOPLT4 138.00 138KV CKT 1	191	191	0.64316	106.7161	CLEO CORNER (CLEOCOR1) 138/69/13.8KV TRANSFORMER CKT 1
FDNS	01ALL	2	20SP	G15_048	FROM->TO	CLEO CORNER - CLEOPLT4 138.00 138KV CKT 1	191	191	0.57653	106.6916	ELLIS 4 138.00 - MOREWOOD SW 138KV CKT 1
FDNS	01ALL	2	16WP	G15_048	FROM->TO	CLEO CORNER - CLEOPLT4 138.00 138KV CKT 1	191	191	0.57304	106.6823	G14-057T 345.00 - SUNNYSIDE 345KV CKT 1
FDNS	01ALL	2	20SP	G15_048	FROM->TO	CLEO CORNER - CLEOPLT4 138.00 138KV CKT 1	191	191	0.57374	106.6803	ALVA - CHEROKEE SW 69KV CKT 1
FDNS	01ALL	2	20WP	G15_048	FROM->TO	CLEO CORNER - CLEOPLT4 138.00 138KV CKT 1	191	191	0.58631	106.6501	FPL SWITCH - WOODWARD 138KV CKT 1
FDNS	01ALL	2	20WP	G15_048	FROM->TO	CLEO CORNER - CLEOPLT4 138.00 138KV CKT 1	191	191	0.57275	106.5506	G14-057T 345.00 - LAWTON EASTSIDE 345KV CKT 1
FDNS	01ALL	2	16WP	G15_048	FROM->TO	CLEO CORNER - CLEOPLT4 138.00 138KV CKT 1	191	191	0.57317	106.5312	FINNEY SWITCHING STATION - Hitchland Interchange 345KV CKT 1
FDNS	01ALL	2	20SP	G15_048	FROM->TO	CLEO CORNER - CLEOPLT4 138.00 138KV CKT 1	191	191	0.57292	106.4558	CZYCRVT2 69.000 - KNOBHILL 69KV CKT 1
FDNS	01ALL	2	20WP	G15_048	FROM->TO	CLEO CORNER - CLEOPLT4 138.00 138KV CKT 1	191	191	0.57634	106.4516	ELLIS 4 138.00 - MOREWOOD SW 138KV CKT 1
FDNS	01ALL	2	16WP	G15_048	FROM->TO	CLEO CORNER - CLEOPLT4 138.00 138KV CKT 1	191	191	0.57657	106.4253	ELLIS 4 138.00 - MOREWOOD SW 138KV CKT 1
FDNS	01ALL	2	16WP	G15_048	FROM->TO	CLEO CORNER - CLEOPLT4 138.00 138KV CKT 1	191	191	0.59572	106.4049	RENFROW4 138.00 - WAKITAS4 138.00 138KV CKT 1
FDNS	01ALL	2	20WP	G15_048	FROM->TO	CLEO CORNER - CLEOPLT4 138.00 138KV CKT 1	191	191	0.57273	106.348	CZYCRVT2 69.000 - KNOBHILL 69KV CKT 1

SOLUTION	GROUP	SCENARIO	SEASON	SOURCE	DIRECTION	MONITORED ELEMENT	RATEA (MVA)	RATEB(MVA)	TDF	TC%LOADING (% MVA)	CONTINGENCY
FDNS	01ALL	2	20WP	G15_048	FROM->TO	CLEO CORNER - CLEOPLT4 138.00 138KV CKT 1	191	191	0.57254	106.2661	G1524G1525 345.00 - THISTLE7 345.00 345KV CKT 1
FDNS	01ALL	2	20WP	G15_048	FROM->TO	CLEO CORNER - CLEOPLT4 138.00 138KV CKT 1	191	191	0.57254	106.2661	G1524G1525 345.00 - THISTLE7 345.00 345KV CKT 2
FDNS	01ALL	2	20WP	G15_048	FROM->TO	CLEO CORNER - CLEOPLT4 138.00 138KV CKT 1	191	191	0.57247	106.2429	GEN514806 1-SOONER UNIT 2
FDNS	01ALL	2	16WP	G15_048	FROM->TO	CLEO CORNER - CLEOPLT4 138.00 138KV CKT 1	191	191	0.57304	106.2361	G14-057T 345.00 - LAWTON EASTSIDE 345KV CKT 1
FDNS	01ALL	2	20SP	G15_048	FROM->TO	CLEO CORNER - CLEOPLT4 138.00 138KV CKT 1	191	191	0.57265	106.2325	GEN514806 1-SOONER UNIT 2
FDNS	01ALL	2	20SP	G15_048	FROM->TO	CLEO CORNER - CLEOPLT4 138.00 138KV CKT 1	191	191	0.57653	106.152	CUSTER4 138.00 - ELLIS 4 138.00 138KV CKT 1
FDNS	01ALL	2	16WP	G15_048	FROM->TO	CLEO CORNER - CLEOPLT4 138.00 138KV CKT 1	191	191	0.57308	106.0334	CZYCRVT2 69.000 - KNOBHILL 69KV CKT 1
FDNS	01ALL	2	16WP	G15_048	FROM->TO	CLEO CORNER - CLEOPLT4 138.00 138KV CKT 1	191	191	0.57272	105.9988	GEN514806 1-SOONER UNIT 2
FDNS	01ALL	2	20L	G15_048	FROM->TO	CLEO CORNER - CLEOPLT4 138.00 138KV CKT 1	191	191	0.64554	105.7994	CLEO CORNER (CLEOCOR1) 138/69/13.8KV TRANSFORMER CKT 1
FDNSLock	01ALL	2	20WP	G15_048	FROM->TO	CLEO CORNER - CLEOPLT4 138.00 138KV CKT 1	191	191	0.60062	105.7303	WAKITAS4 138.00 (WAKITA_XMER) 138/69/13.8KV TRANSFORMER CKT 1
FDNS	01ALL	2	17SP	G15_048	FROM->TO	CLEO CORNER - CLEOPLT4 138.00 138KV CKT 1	191	191	0.57376	105.3777	FAIRVIEW - OKEENE 69KV CKT 1
FDNS	01ALL	2	17SP	G15_048	FROM->TO	CLEO CORNER - CLEOPLT4 138.00 138KV CKT 1	191	191	0.56692	105.1685	BLLNGTP4 138.00 - BUNCH CREEK 138KV CKT 1
FDNS	01ALL	2	17SP	G15_048	FROM->TO	CLEO CORNER - CLEOPLT4 138.00 138KV CKT 1	191	191	0.57201	105.1131	OPENSKY7 345.00 - RANCHRD7 345.00 345KV CKT 1
FDNS	01ALL	2	17SP	G15_048	FROM->TO	CLEO CORNER - CLEOPLT4 138.00 138KV CKT 1	191	191	0.57205	105.0372	CLEVELAND - G15066_T 345.00 345KV CKT 1
FDNS	01ALL	2	17SP	G15_048	FROM->TO	CLEO CORNER - CLEOPLT4 138.00 138KV CKT 1	191	191	0.57265	104.9555	GEN562973 1-G15060_4 0.6900
FDNS	01ALL	2	17SP	G15_048	FROM->TO	CLEO CORNER - CLEOPLT4 138.00 138KV CKT 1	191	191	0.5649	104.9126	GLENWOOD - IMO TAP 138KV CKT 1
FDNS	01ALL	2	25SP	G15_048	FROM->TO	CLEO CORNER - CLEOPLT4 138.00 138KV CKT 1	191	191	0.59559	104.8996	WOODWARD - WWPAR4 138.00 138KV CKT 1
FDNS	01ALL	2	25SP	G15_048	FROM->TO	CLEO CORNER - CLEOPLT4 138.00 138KV CKT 1	191	191	0.59559	104.8952	WOODWARD EHV - WWPAR4 138.00 138KV CKT 1
FDNS	01ALL	2	17SP	G15_048	FROM->TO	CLEO CORNER - CLEOPLT4 138.00 138KV CKT 1	191	191	0.56692	104.8592	BRECKNR4 138.00 - BUNCH CREEK 138KV CKT 1
FDNS	01ALL	2	17SP	G15_048	FROM->TO	CLEO CORNER - CLEOPLT4 138.00 138KV CKT 1	191	191	0.57265	104.8235	GEN525561 1-TOLK GEN #1 24 KV
FDNS	01ALL	2	17SP	G15_048	FROM->TO	CLEO CORNER - CLEOPLT4 138.00 138KV CKT 1	191	191	0.57201	104.8092	G15052_T 345.00 - OPENSKY7 345.00 345KV CKT 1
FDNS	01ALL	2	17SP	G15_048	FROM->TO	CLEO CORNER - CLEOPLT4 138.00 138KV CKT 1	191	191	0.57474	104.7718	DEWEY - IODINE 138KV CKT 1
FDNS	01ALL	2	17SP	G15_048	FROM->TO	CLEO CORNER - CLEOPLT4 138.00 138KV CKT 1	191	191	0.57541	104.7163	KNOBHILL - NOEL_SW 138.00 138KV CKT 1
FDNS	01ALL	2	17SP	G15_048	FROM->TO	CLEO CORNER - CLEOPLT4 138.00 138KV CKT 1	191	191	0.57541	104.7144	KNOBHILL (KNOBHIL4) 138/69/13.2KV TRANSFORMER CKT 1
FDNS	01ALL	2	17SP	G15_048	FROM->TO	CLEO CORNER - CLEOPLT4 138.00 138KV CKT 1	191	191	0.57265	104.6741	GEN525562 1-TOLK GEN #2 24 KV
FDNS	01ALL	2	17SP	G15_048	FROM->TO	CLEO CORNER - CLEOPLT4 138.00 138KV CKT 1	191	191	0.57265	104.6155	GEN562023 1-G11_020_3 0.6900
FDNS	01ALL	2	17SP	G15_048	FROM->TO	CLEO CORNER - CLEOPLT4 138.00 138KV CKT 1	191	191	0.57265	104.6155	GEN562026 1-G11_019_3 0.6900
FDNS	01ALL	2	17SP	G15_048	FROM->TO	CLEO CORNER - CLEOPLT4 138.00 138KV CKT 1	191	191	0.57474	104.5965	IODINE - WOODWARD EHV 138KV CKT 1
FDNS	01ALL	2	17SP	G15_048	FROM->TO	CLEO CORNER - CLEOPLT4 138.00 138KV CKT 1	191	191	0.57265	104.5807	GEN515393 1-OGEWND2G
FDNS	01ALL	2	17SP	G15_048	FROM->TO	CLEO CORNER - CLEOPLT4 138.00 138KV CKT 1	191	191	0.57201	104.5024	G15052_T 345.00 - ROSE HILL 345KV CKT 1
FDNS	01ALL	2	20WP	G15_048	FROM->TO	CLEO CORNER - CLEOPLT4 138.00 138KV CKT 1	191	191	0.57247	104.3509	BASE CASE
FDNS	01ALL	2	20SP	G15_048	FROM->TO	CLEO CORNER - CLEOPLT4 138.00 138KV CKT 1	191	191	0.57265	104.3298	BASE CASE
FDNS	01ALL	2	16WP	G15_048	FROM->TO	CLEO CORNER - CLEOPLT4 138.00 138KV CKT 1	191	191	0.57272	104.1173	BASE CASE
FDNS	01ALL	2	17SP	G15_048	FROM->TO	CLEO CORNER - CLEOPLT4 138.00 138KV CKT 1	191	191	0.57157	103.9906	HUNTERS7 345.00 - WOODRING 345KV CKT 1
FDNS	01ALL	2	17G	G15_048	FROM->TO	CLEO CORNER - CLEOPLT4 138.00 138KV CKT 1	191	191	0.64443	103.8834	CLEO CORNER (CLEOCOR1) 138/69/13.8KV TRANSFORMER CKT 1
FDNS	01ALL	2	17SP	G15_048	FROM->TO	CLEO CORNER - CLEOPLT4 138.00 138KV CKT 1	191	191	0.57809	103.6124	RENFROW7 345.00 (BANK 1) 345/138/13.8KV TRANSFORMER CKT 1
FDNS	01ALL	2	20L	G15_048	FROM->TO	CLEO CORNER - CLEOPLT4 138.00 138KV CKT 1	191	191	0.59834	103.5736	WOODWARD - WWPAR4 138.00 138KV CKT 1
FDNS	01ALL	2	20L	G15_048	FROM->TO	CLEO CORNER - CLEOPLT4 138.00 138KV CKT 1	191	191	0.59834	103.5727	WOODWARD EHV - WWPAR4 138.00 138KV CKT 1
FDNS	01ALL	2	17SP	G15_048	FROM->TO	CLEO CORNER - CLEOPLT4 138.00 138KV CKT 1	191	191	0.57975	103.5115	DEWEY - TALOGA 138KV CKT 1
FDNS	01ALL	2	17SP	G15_048	FROM->TO	CLEO CORNER - CLEOPLT4 138.00 138KV CKT 1	191	191	0.57074	103.5112	P12:069:OKGE:3TERM4
FDNS	01ALL	2	17SP	G15_048	FROM->TO	CLEO CORNER - CLEOPLT4 138.00 138KV CKT 1	191	191	0.5829	103.5003	ALVA - KNOBHILL 69KV CKT 1
FDNS	01ALL	2	17SP	G15_048	FROM->TO	CLEO CORNER - CLEOPLT4 138.00 138KV CKT 1	191	191	0.57157	103.063	HUNTERS7 345.00 - RENFROW7 345.00 345KV CKT 1
FDNS	01ALL	2	20SP	G15_048	FROM->TO	CLEO CORNER - CLEOPLT4 138.00 138KV CKT 1	191	191	0.57374	103.0031	EAGLE CHIEF - RINGWOOD JCT 69KV CKT 1
FDNS	01ALL	2	20SP	G15_048	FROM->TO	CLEO CORNER - CLEOPLT4 138.00 138KV CKT 1	191	191	0.57374	103.0022	FAIRVIEW - RINGWOOD JCT 69KV CKT 1
FDNS	01ALL	2	17SP	G15_048	FROM->TO	CLEO CORNER - CLEOPLT4 138.00 138KV CKT 1	191	191	0.57265	102.974	GEN515389 1-TLGWND-WTG1 0.7000
FDNS	01ALL	2	20WP	G15_048	FROM->TO	CLEO CORNER - CLEOPLT4 138.00 138KV CKT 1	191	191	0.56672	102.7537	BLLNGTP4 138.00 - BUNCH CREEK 138KV CKT 1
FDNS	01ALL	2	20SP	G15_048	FROM->TO	CLEO CORNER - CLEOPLT4 138.00 138KV CKT 1	191	191	0.56693	102.7323	BLLNGTP4 138.00 - BUNCH CREEK 138KV CKT 1
FDNS	01ALL	2	20WP	G15_048	FROM->TO	CLEO CORNER - CLEOPLT4 138.00 138KV CKT 1	191	191	0.57189	102.6884	CLEVELAND - G15066_T 345.00 345KV CKT 1
FDNS	01ALL	2	20WP	G15_048	FROM->TO	CLEO CORNER - CLEOPLT4 138.00 138KV CKT 1	191	191	0.56472	102.646	GLENWOOD - IMO TAP 138KV CKT 1
FDNS	01ALL	2	20WP	G15_048	FROM->TO	CLEO CORNER - CLEOPLT4 138.00 138KV CKT 1	191	191	0.57191	102.6331	G15052_T 345.00 - ROSE HILL 345KV CKT 1
FDNS	01ALL	2	20SP	G15_048	FROM->TO	CLEO CORNER - CLEOPLT4 138.00 138KV CKT 1	191	191	0.57207	102.6214	OPENSKY7 345.00 - RANCHRD7 345.00 345KV CKT 1
FDNS	01ALL	2	20SP	G15_048	FROM->TO	CLEO CORNER - CLEOPLT4 138.00 138KV CKT 1	191	191	0.57208	102.5815	CLEVELAND - G15066_T 345.00 345KV CKT 1
FDNS	01ALL	2	20WP	G15_048	FROM->TO	CLEO CORNER - CLEOPLT4 138.00 138KV CKT 1	191	191	0.57375	102.5655	CHISHOLM6 230.00 - ELK CITY 230KV 230KV CKT 1
FDNS	01ALL	2	20WP	G15_048	FROM->TO	CLEO CORNER - CLEOPLT4 138.00 138KV CKT 1	191	191	0.57375	102.549	ELK CITY 230KV (ELKCTY-6) 230/138/13.8KV TRANSFORMER CKT 1
FDNS	01ALL	2	20WP	G15_048	FROM->TO	CLEO CORNER - CLEOPLT4 138.00 138KV CKT 1	191	191	0.57375	102.549	ELK CITY 230KV (ELKCTY-6) 230/138/13.8KV TRANSFORMER CKT 1
FDNS	01ALL	2	20WP	G15_048	FROM->TO	CLEO CORNER - CLEOPLT4 138.00 138KV CKT 1	191	191	0.56672	102.5395	BRECKNR4 138.00 - BUNCH CREEK 138KV CKT 1
FDNS	01ALL	2	20WP	G15_048	FROM->TO	CLEO CORNER - CLEOPLT4 138.00 138KV CKT 1	191	191	0.57247	102.5128	GEN562973 1-G15060_4 0.6900
FDNS	01ALL	2	20SP	G15_048	FROM->TO	CLEO CORNER - CLEOPLT4 138.00 138KV CKT 1	191	191	0.56491	102.489	GLENWOOD - IMO TAP 138KV CKT 1
FDNS	01ALL	2	20SP	G15_048	FROM->TO	CLEO CORNER - CLEOPLT4 138.00 138KV CKT 1	191	191	0.57265	102.485	GEN562973 1-G15060_4 0.6900
FDNS	01ALL	2	16WP	G15_048	FROM->TO	CLEO CORNER - CLEOPLT4 138.00 138KV CKT 1	191	191	0.56695	102.4399	BRECKNR4 138.00 - BUNCH CREEK 138KV CKT 1
FDNS	01ALL	2	16WP	G15_048	FROM->TO	CLEO CORNER - CLEOPLT4 138.00 138KV CKT 1	191	191	0.57214	102.4345	G15052_T 345.00 - OPENSKY7 345.00 345KV CKT 1
FDNS	01ALL	2	20SP	G15_048	FROM->TO	CLEO CORNER - CLEOPLT4 138.00 138KV CKT 1	191	191	0.57265	102.4303	GEN525561 1-TOLK GEN #1 24 KV
FDNS	01ALL	2	20WP	G15_048	FROM->TO	CLEO CORNER - CLEOPLT4 138.00 138KV CKT 1	191	191	0.57247	102.4237	GEN525562 1-TOLK GEN #2 24 KV
FDNS	01ALL	2	16WP	G15_048	FROM->TO	CLEO CORNER - CLEOPLT4 138.00 138KV CKT 1	191	191	0.56498	102.4196	GLENWOOD - IMO TAP 138KV CKT 1
FDNS	01ALL	2	16WP	G15_048	FROM->TO	CLEO CORNER - CLEOPLT4 138.00 138KV CKT 1	191	191	0.57813	102.4126	RENFROW7 345.00 (BANK 1) 345/138/13.8KV TRANSFORMER CKT 1
FDNS	01ALL	2	20WP	G15_048	FROM->TO	CLEO CORNER - CLEOPLT4 138.00 138KV CKT 1	191	191	0.57355	102.4126	FAIRVIEW - OKEENE 69KV CKT 1
FDNS	01ALL	2	20SP	G15_048	FROM->TO	CLEO CORNER - CLEOPLT4 138.00 138KV CKT 1	191	191	0.56693	102.3933	BRECKNR4 138.00 - BUNCH CREEK 138KV CKT 1
FDNS	01ALL	2	16WP	G15_048	FROM->TO	CLEO CORNER - CLEOPLT4 138.00 138KV CKT 1	191	191	0.57241	102.3409	GRACEMONT - MINCO 345KV CKT 1
FDNS	01ALL	2	20SP	G15_048	FROM->TO	CLEO CORNER - CLEOPLT4 138.00 138KV CKT 1	191	191	0.58651	102.3366	FPL SWITCH - MOORELAND 138KV CKT 1
FDNS	01ALL	2	20SP	G15_048	FROM->TO	CLEO CORNER - CLEOPLT4 138.00 138KV CKT 1	191	191	0.57207	102.3265	G15052_T 345.00 - OPENSKY7 345.00 345KV CKT 1
FDNS	01ALL	2	16WP	G15_048	FROM->TO	CLEO CORNER - CLEOPLT4 138.00 138KV CKT 1	191	191	0.57384	102.3054	FAIRVIEW - OKEENE 69KV CKT 1
FDNS	01ALL	2	16WP	G15_048	FROM->TO	CLEO CORNER - CLEOPLT4 138.00 138KV CKT 1	191	191	0.57272	102.2965	GEN562974 1-G15060_5 0.6900
FDNS	01ALL	2	16WP	G15_048	FROM->TO	CLEO CORNER - CLEOPLT4 138.00 138KV CKT 1	191	191	0.57272	102.2745	GEN562973 1-G15060_4 0.6900
FDNS	01ALL	2	20WP	G15_048	FROM->TO	CLEO CORNER - CLEOPLT4 138.00 138KV CKT 1	191	191	0.57792	102.2586	RENFROW7 345.00 (BANK 1) 345/138/13.8KV TRANSFORMER CKT 1
FDNS	01ALL	2	16WP	G15_048	FROM->TO	CLEO CORNER - CLEOPLT4 138.00 138KV CKT 1	191	191	0.57272	102.2514	GEN525561 1-TOLK GEN #1 24 KV
FDNS	01ALL	2	20SP	G15_048	FROM->TO	CLEO CORNER - CLEOPLT4 138.00 138KV CKT 1	191	191	0.57475	102.228	DEWEY - IODINE 138KV CKT 1
FDNS	01ALL	2	20SP	G15_048	FROM->TO	CLEO CORNER - CLEOPLT4 138.00 138KV CKT 1	191	191	0.57265	102.216	GEN525562 1-TOLK GEN #2 24 KV
FDNS	01ALL	2	16WP	G15_048	FROM->TO	CLEO CORNER - CLEOPLT4 138.00 138KV CKT 1	191	191	0.57272	102.1682	GEN525562 1-TOLK GEN #2 24 KV
FDNS	01ALL	2	20WP	G15_048	FROM->TO	CLEO CORNER - CLEOPLT4 138.00 138KV CKT 1	191	191	0.57247	102.1681	GEN562023 1-G11_020_3 0.6900

SOLUTION	GROUP	SCENARIO	SEASON	SOURCE	DIRECTION	MONITORED ELEMENT	RATEA (MVA)	RATEB(MVA)	TDF	TC%LOADING (% MVA)	CONTINGENCY
FDNS	01ALL	2	20WP	G15_048	FROM->TO	CLEO CORNER - CLEOPLT4 138.00 138KV CKT 1	191	191	0.57247	102.1681	GEN562026 1-G11_019_3 0.6900
FDNS	01ALL	2	16WP	G15_048	FROM->TO	CLEO CORNER - CLEOPLT4 138.00 138KV CKT 1	191	191	0.57214	102.1565	G15052_T 345.00 - ROSE HILL 345KV CKT 1
FDNS	01ALL	2	20SP	G15_048	FROM->TO	CLEO CORNER - CLEOPLT4 138.00 138KV CKT 1	191	191	0.57265	102.136	GEN562023 1-G11_020_3 0.6900
FDNS	01ALL	2	20SP	G15_048	FROM->TO	CLEO CORNER - CLEOPLT4 138.00 138KV CKT 1	191	191	0.57265	102.136	GEN562026 1-G11_019_3 0.6900
FDNS	01ALL	2	20WP	G15_048	FROM->TO	CLEO CORNER - CLEOPLT4 138.00 138KV CKT 1	191	191	0.57247	102.135	GEN515393 1-OGEWND2G
FDNS	01ALL	2	20SP	G15_048	FROM->TO	CLEO CORNER - CLEOPLT4 138.00 138KV CKT 1	191	191	0.57265	102.1077	GEN515393 1-OGEWND2G
FDNS	01ALL	2	20SP	G15_048	FROM->TO	CLEO CORNER - CLEOPLT4 138.00 138KV CKT 1	191	191	0.57548	102.0851	KNOBHILL (KNOBHIL4) 138/69/13.2KV TRANSFORMER CKT 1
FDNS	01ALL	2	16WP	G15_048	FROM->TO	CLEO CORNER - CLEOPLT4 138.00 138KV CKT 1	191	191	0.57549	102.0705	KNOBHILL - NOEL_SW 138.00 138KV CKT 1
FDNS	01ALL	2	16WP	G15_048	FROM->TO	CLEO CORNER - CLEOPLT4 138.00 138KV CKT 1	191	191	0.57549	102.0685	KNOBHILL (KNOBHIL4) 138/69/13.2KV TRANSFORMER CKT 1
FDNS	01ALL	2	20WP	G15_048	FROM->TO	CLEO CORNER - CLEOPLT4 138.00 138KV CKT 1	191	191	0.57529	102.0504	KNOBHILL (KNOBHIL4) 138/69/13.2KV TRANSFORMER CKT 1
FDNS	01ALL	2	20SP	G15_048	FROM->TO	CLEO CORNER - CLEOPLT4 138.00 138KV CKT 1	191	191	0.57475	102.0451	IODINE - WOODWARD EHV 138KV CKT 1
FDNS	01ALL	2	20SP	G15_048	FROM->TO	CLEO CORNER - CLEOPLT4 138.00 138KV CKT 1	191	191	0.57207	102.0384	G15052_T 345.00 - ROSE HILL 345KV CKT 1
FDNS	01ALL	2	20WP	G15_048	FROM->TO	CLEO CORNER - CLEOPLT4 138.00 138KV CKT 1	191	191	0.57055	101.9738	P12:069:OKGE:3TERM4
FDNS	01ALL	2	16WP	G15_048	FROM->TO	CLEO CORNER - CLEOPLT4 138.00 138KV CKT 1	191	191	0.57481	101.9568	DEWEY - IODINE 138KV CKT 1
FDNS	01ALL	2	16WP	G15_048	FROM->TO	CLEO CORNER - CLEOPLT4 138.00 138KV CKT 1	191	191	0.57272	101.9476	GEN562023 1-G11_020_3 0.6900
FDNS	01ALL	2	16WP	G15_048	FROM->TO	CLEO CORNER - CLEOPLT4 138.00 138KV CKT 1	191	191	0.57272	101.9476	GEN562026 1-G11_019_3 0.6900
FDNS	01ALL	2	17SP	G15_048	FROM->TO	CLEO CORNER - CLEOPLT4 138.00 138KV CKT 1	191	191	0.57265	101.9271	GEN515365 1-CENT 21 0.7000
FDNS	01ALL	2	20WP	G15_048	FROM->TO	CLEO CORNER - CLEOPLT4 138.00 138KV CKT 1	191	191	0.57458	101.9174	DEWEY - IODINE 138KV CKT 1
FDNS	01ALL	2	16WP	G15_048	FROM->TO	CLEO CORNER - CLEOPLT4 138.00 138KV CKT 1	191	191	0.57272	101.9007	GEN515393 1-OGEWND2G
FDNS	01ALL	2	16WP	G15_048	FROM->TO	CLEO CORNER - CLEOPLT4 138.00 138KV CKT 1	191	191	0.57481	101.7824	IODINE - WOODWARD EHV 138KV CKT 1
FDNS	01ALL	2	20L	G15_048	FROM->TO	CLEO CORNER - CLEOPLT4 138.00 138KV CKT 1	191	191	0.58051	101.7806	P12:138:WFEC:MSL15
FDNS	01ALL	2	20WP	G15_048	FROM->TO	CLEO CORNER - CLEOPLT4 138.00 138KV CKT 1	191	191	0.57458	101.7362	IODINE - WOODWARD EHV 138KV CKT 1
FDNS	01ALL	2	16WP	G15_048	FROM->TO	CLEO CORNER - CLEOPLT4 138.00 138KV CKT 1	191	191	0.57082	101.7361	P12:069:OKGE:3TERM4
FDNS	01ALL	2	25SP	G15_048	FROM->TO	CLEO CORNER - CLEOPLT4 138.00 138KV CKT 1	191	191	0.58111	101.7306	P12:138:WFEC:MSL14
FDNS	01ALL	2	25SP	G15_048	FROM->TO	CLEO CORNER - CLEOPLT4 138.00 138KV CKT 1	191	191	0.58111	101.7121	BEARCAT 138.00 - MOORELAND 138KV CKT 1
FDNS	01ALL	2	16WP	G15_048	FROM->TO	CLEO CORNER - CLEOPLT4 138.00 138KV CKT 1	191	191	0.57173	101.6561	HUNTERS7 345.00 - WOODRING 345KV CKT 1
FDNS	01ALL	2	16WP	G15_048	FROM->TO	CLEO CORNER - CLEOPLT4 138.00 138KV CKT 1	191	191	0.58648	101.5583	FPL SWITCH - MOORELAND 138KV CKT 1
FDNS	01ALL	2	20SP	G15_048	FROM->TO	CLEO CORNER - CLEOPLT4 138.00 138KV CKT 1	191	191	0.57813	101.4553	RENFROW7 345.00 (BANK 1) 345/138/13.8KV TRANSFORMER CKT 1
FDNS	01ALL	2	17SP	G15_048	FROM->TO	CLEO CORNER - CLEOPLT4 138.00 138KV CKT 1	191	191	0.51799	101.3369	IMO TAP - SOUTH 4TH ST 138KV CKT 1
FDNS	01ALL	2	25SP	G15_048	FROM->TO	CLEO CORNER - CLEOPLT4 138.00 138KV CKT 1	191	191	0.58111	101.2409	BEARCAT 138.00 - NINE MILE 138KV CKT 1
FDNS	01ALL	2	17SP	G15_048	FROM->TO	CLEO CORNER - CLEOPLT4 138.00 138KV CKT 1	191	191	0.57265	101.2184	GEN520922 1-SLEEPING BEAR
FDNS	01ALL	2	20WP	G15_048	FROM->TO	CLEO CORNER - CLEOPLT4 138.00 138KV CKT 1	191	191	0.57131	101.1747	HUNTERS7 345.00 - WOODRING 345KV CKT 1
FDNS	01ALL	2	20SP	G15_048	FROM->TO	CLEO CORNER - CLEOPLT4 138.00 138KV CKT 1	191	191	0.57073	100.9816	P12:069:OKGE:3TERM4
FDNS	01ALL	2	25SP	G15_048	FROM->TO	CLEO CORNER - CLEOPLT4 138.00 138KV CKT 1	191	191	0.54029	100.9607	WOODRING (WOODRNG2) 345/138/13.8KV TRANSFORMER CKT 1
FDNS	01ALL	2	20L	G15_048	FROM->TO	CLEO CORNER - CLEOPLT4 138.00 138KV CKT 1	191	191	0.58051	100.8822	NOEL_SW 138.00 - SALT_PLAINS 138.00 138KV CKT 1
FDNS	01ALL	2	20WP	G15_048	FROM->TO	CLEO CORNER - CLEOPLT4 138.00 138KV CKT 1	191	191	0.58631	100.7952	FPL SWITCH - MOORELAND 138KV CKT 1
FDNS	01ALL	2	16WP	G15_048	FROM->TO	CLEO CORNER - CLEOPLT4 138.00 138KV CKT 1	191	191	0.58298	100.745	ALVA - KNOBHILL 69KV CKT 1
FDNS	01ALL	2	16WP	G15_048	FROM->TO	CLEO CORNER - CLEOPLT4 138.00 138KV CKT 1	191	191	0.57173	100.7279	HUNTERS7 345.00 - RENFROW7 345.00 345KV CKT 1
FDNS	01ALL	2	16WP	G15_048	FROM->TO	CLEO CORNER - CLEOPLT4 138.00 138KV CKT 1	191	191	0.57978	100.6971	DEWEY - TALOGA 138KV CKT 1
FDNS	01ALL	2	20L	G15_048	FROM->TO	CLEO CORNER - CLEOPLT4 138.00 138KV CKT 1	191	191	0.60385	100.6943	CLEO CORNER - CLEO JCT 69KV CKT 1
FDNS	01ALL	2	20L	G15_048	FROM->TO	CLEO CORNER - CLEOPLT4 138.00 138KV CKT 1	191	191	0.60385	100.6923	CLEO JCT - RINGWOOD 69KV CKT 1
FDNS	01ALL	2	20SP	G15_048	FROM->TO	CLEO CORNER - CLEOPLT4 138.00 138KV CKT 1	191	191	0.57976	100.6867	DEWEY - TALOGA 138KV CKT 1
FDNS	01ALL	2	17SP	G15_048	FROM->TO	CLEO CORNER - CLEOPLT4 138.00 138KV CKT 1	191	191	0.57265	100.5343	GEN515787 1-OKLA WIND ENERGY CENTER
FDNS	01ALL	2	20WP	G15_048	FROM->TO	CLEO CORNER - CLEOPLT4 138.00 138KV CKT 1	191	191	0.57247	100.5176	GEN515389 1-TLGWND-WTG1 0.7000
FDNS	01ALL	2	20WP	G15_048	FROM->TO	CLEO CORNER - CLEOPLT4 138.00 138KV CKT 1	191	191	0.57954	100.515	DEWEY - TALOGA 138KV CKT 1
FDNS	01ALL	2	20SP	G15_048	FROM->TO	CLEO CORNER - CLEOPLT4 138.00 138KV CKT 1	191	191	0.57265	100.4961	GEN515389 1-TLGWND-WTG1 0.7000
FDNS	01ALL	2	25SP	G15_048	FROM->TO	CLEO CORNER - CLEOPLT4 138.00 138KV CKT 1	191	191	0.58111	100.4586	MOREWOOD SW - NINE MILE 138KV CKT 1
FDNS	01ALL	2	20L	G15_048	FROM->TO	CLEO CORNER - CLEOPLT4 138.00 138KV CKT 1	191	191	0.57997	100.3851	MOORELAND - PIC4 138.00 138KV CKT 1
FDNS	01ALL	2	20L	G15_048	FROM->TO	CLEO CORNER - CLEOPLT4 138.00 138KV CKT 1	191	191	0.57997	100.3783	P12:138:WFEC:MSL12
FDNS	01ALL	2	20SP	G15_048	FROM->TO	CLEO CORNER - CLEOPLT4 138.00 138KV CKT 1	191	191	0.58298	100.3172	ALVA - KNOBHILL 69KV CKT 1
FDNS	01ALL	2	20WP	G15_048	FROM->TO	CLEO CORNER - CLEOPLT4 138.00 138KV CKT 1	191	191	0.57131	100.2952	HUNTERS7 345.00 - RENFROW7 345.00 345KV CKT 1
FDNS	01ALL	2	16WP	G15_048	FROM->TO	CLEO CORNER - CLEOPLT4 138.00 138KV CKT 1	191	191	0.57272	100.2919	GEN515389 1-TLGWND-WTG1 0.7000
FDNS	01ALL	2	20L	G15_048	FROM->TO	CLEO CORNER - CLEOPLT4 138.00 138KV CKT 1	191	191	0.57997	100.288	CEDARDALE - PIC4 138.00 138KV CKT 1
FDNS	01ALL	2	20WP	G15_048	FROM->TO	CLEO CORNER - CLEOPLT4 138.00 138KV CKT 1	191	191	0.58279	100.2512	ALVA - KNOBHILL 69KV CKT 1
FDNS	01ALL	2	20L	G15_048	FROM->TO	CLEO CORNER - CLEOPLT4 138.00 138KV CKT 1	191	191	0.57997	100.1835	CEDARDALE - OKEENE 138KV CKT 1
FDNS	01ALL	2	20SP	G15_048	FROM->TO	CLEO CORNER - CLEOPLT4 138.00 138KV CKT 1	191	191	0.57143	100.1802	HUNTERS7 345.00 - WOODRING 345KV CKT 1
FDNS	01ALL	2	20L	G15_048	FROM->TO	CLEO CORNER - CLEOPLT4 138.00 138KV CKT 1	191	191	0.57927	100.1117	DOVER SW - OKEENE 138KV CKT 1
FDNS	01ALL	2	20L	G15_048	FROM->TO	CLEO CORNER - CLEOPLT4 138.00 138KV CKT 1	191	191	0.57585	100	MATHWSN7 345.00 - TATONGA7 345.00 345KV CKT 1
FDNS	01ALL	2	20L	G15_048	FROM->TO	CLEO CORNER - CLEOPLT4 138.00 138KV CKT 1	191	191	0.57585	100	MATHWSN7 345.00 - TATONGA7 345.00 345KV CKT 2
FDNS	01ALL	2	25SP	G15_048	FROM->TO	CLEO CORNER - CLEOPLT4 138.00 138KV CKT 1	191	191	0.60134	100	CLEO CORNER - CLEO JCT 69KV CKT 1
FDNS	01ALL	2	25SP	G15_048	FROM->TO	CLEO CORNER - CLEOPLT4 138.00 138KV CKT 1	191	191	0.60134	100	CLEO JCT - RINGWOOD 69KV CKT 1
FDNS	01ALL	2	25SP	G15_048	FROM->TO	CLEO CORNER - CLEOPLT4 138.00 138KV CKT 1	191	191	0.57788	100	P12:138:WFEC:MSL15
FDNS	01ALL	2	20WP	G15_048	FROM->TO	CLEO CORNER - CLEOPLT4 138.00 138KV CKT 1	191	191	0.57247	99.7	GEN520998 1-MORLND3
FDNS	01ALL	2	20WP	G15_048	FROM->TO	CLEO CORNER - CLEOPLT4 138.00 138KV CKT 1	191	191	0.57247	99.5	GEN515365 1-CENT 21 0.7000
FDNS	00NR	2	16WP	G15_048	FROM->TO	G14-057T 345.00 - SUNNYSIDE 345KV CKT 1	717	789	0.05275	135.2178	CIMARRON - MINCO 345KV CKT 1
FDNS	00NR	2	20WP	G15_048	FROM->TO	G14-057T 345.00 - SUNNYSIDE 345KV CKT 1	717	789	0.0525	134.0451	CIMARRON - MINCO 345KV CKT 1
FDNS	00NR	2	16WP	G15_048	FROM->TO	G14-057T 345.00 - SUNNYSIDE 345KV CKT 1	717	789	0.04583	125.0762	PITTSBURG - SEMINOLE 345KV CKT 1
FDNS	00NR	2	16WP	G15_048	FROM->TO	G14-057T 345.00 - SUNNYSIDE 345KV CKT 1	717	789	0.04583	125.0762	PITTSBURG - SEMINOLE 345KV CKT 1
FDNS	00NR	2	16WP	G15_048	FROM->TO	G14-057T 345.00 - SUNNYSIDE 345KV CKT 1	717	789	0.05275	124.4981	GRACEMONT - MINCO 345KV CKT 1
FDNS	00NR	2	16WP	G15_048	FROM->TO	G14-057T 345.00 - SUNNYSIDE 345KV CKT 1	717	789	0.04891	124.2437	BASE CASE
FDNS	00NR	2	20WP	G15_048	FROM->TO	G14-057T 345.00 - SUNNYSIDE 345KV CKT 1	717	789	0.0525	123.3431	GRACEMONT - MINCO 345KV CKT 1
FDNS	00NR	2	20WP	G15_048	FROM->TO	G14-057T 345.00 - SUNNYSIDE 345KV CKT 1	717	789	0.04542	122.3486	PITTSBURG - SEMINOLE 345KV CKT 1
FDNS	00NR	2	20WP	G15_048	FROM->TO	G14-057T 345.00 - SUNNYSIDE 345KV CKT 1	717	789	0.04542	122.3486	PITTSBURG - SEMINOLE 345KV CKT 1
FDNS	00NR	2	16WP	G15_048	FROM->TO	G14-057T 345.00 - SUNNYSIDE 345KV CKT 1	717	789	0.06017	122.2739	CIMARRON - DRAPER LAKE 345KV CKT 1
FDNS	00NR	2	20WP	G15_048	FROM->TO	G14-057T 345.00 - SUNNYSIDE 345KV CKT 1	717	789	0.04854	122.1851	BASE CASE
FDNS	00NR	2	20WP	G15_048	FROM->TO	G14-057T 345.00 - SUNNYSIDE 345KV CKT 1	717	789	0.05967	120.16	CIMARRON - DRAPER LAKE 345KV CKT 1
FDNS	00NR	2	16WP	G15_048	FROM->TO	G14-057T 345.00 - SUNNYSIDE 345KV CKT 1	717	789	0.05227	118.87	P12:138:WFEC:MSL03
FDNS	00NR	2	16WP	G15_048	FROM->TO	G14-057T 345.00 - SUNNYSIDE 345KV CKT 1	717	789	0.04808	118.2698	PITTSBURG - VALLIANT 345KV CKT 1
FDNS	00NR	2	16WP	G15_048	FROM->TO	G14-057T 345.00 - SUNNYSIDE 345KV CKT 1	717	789	0.04808	118.2698	PITTSBURG - VALLIANT 345KV CKT 1

SOLUTION	GROUP	SCENARIO	SEASON	SOURCE	DIRECTION	MONITORED ELEMENT	RATEA (MVA)	RATEB(MVA)	TDF	TC%LOADING (% MVA)	CONTINGENCY
FDNS	00NR	2	16WP	G15_048	FROM->TO	G14-057T 345.00 - SUNNYSIDE 345KV CKT 1	717	789	0.04891	118.0541	GEN509403 1-PIRKEY GENERATION
FDNS	00NR	2	16WP	G15_048	FROM->TO	G14-057T 345.00 - SUNNYSIDE 345KV CKT 1	717	789	0.04891	117.9575	GEN509416 1-TURK GENERATION
FDNS	00NR	2	16WP	G15_048	FROM->TO	G14-057T 345.00 - SUNNYSIDE 345KV CKT 1	717	789	0.05219	117.7208	CLEVELAND - G15066_T 345.00 345KV CKT 1
FDNS	00NR	2	16WP	G15_048	FROM->TO	G14-057T 345.00 - SUNNYSIDE 345KV CKT 1	717	789	0.05219	117.425	G15066_T 345.00 - SOONER 345KV CKT 1
FDNS	00NR	2	16WP	G15_048	FROM->TO	G14-057T 345.00 - SUNNYSIDE 345KV CKT 1	717	789	0.04891	117.0415	GEN501801 1-DOLET HILLS UNIT1
FDNS	00NR	2	16WP	G15_048	FROM->TO	G14-057T 345.00 - SUNNYSIDE 345KV CKT 1	717	789	0.04756	116.9648	BORDER 7345.00 - WOODWARD DISTRICT EHV 345KV CKT 1
FDNS	00NR	2	20WP	G15_048	FROM->TO	G14-057T 345.00 - SUNNYSIDE 345KV CKT 1	717	789	0.05188	116.9352	P12:138:WFEC:MSL03
FDNS	00NR	2	16WP	G15_048	FROM->TO	G14-057T 345.00 - SUNNYSIDE 345KV CKT 1	717	789	0.04891	116.6536	GEN509406 1-WELSH #3
FDNS	00NR	2	16WP	G15_048	FROM->TO	G14-057T 345.00 - SUNNYSIDE 345KV CKT 1	717	789	0.04891	116.6535	GEN509404 1-WELSH #1
FDNS	00NR	2	20WP	G15_048	FROM->TO	G14-057T 345.00 - SUNNYSIDE 345KV CKT 1	717	789	0.04854	116.1036	GEN509403 1-PIRKEY GENERATION
FDNS	00NR	2	16WP	G15_048	FROM->TO	G14-057T 345.00 - SUNNYSIDE 345KV CKT 1	717	789	0.04756	116.0315	BORDER 7345.00 - TUCO_2 345.00 345KV CKT 1
FDNS	00NR	2	20WP	G15_048	FROM->TO	G14-057T 345.00 - SUNNYSIDE 345KV CKT 1	717	789	0.04854	116.0219	GEN509416 1-TURK GENERATION
FDNS	00NR	2	16WP	G15_048	FROM->TO	G14-057T 345.00 - SUNNYSIDE 345KV CKT 1	717	789	0.05008	115.9962	CORN TAP - NAPLESTP 138.00 138KV CKT 1
FDNS	00NR	2	16WP	G15_048	FROM->TO	G14-057T 345.00 - SUNNYSIDE 345KV CKT 1	717	789	0.05008	115.9136	NAPLESTP 138.00 - PAYNE 138.00 138KV CKT 1
FDNS	00NR	2	16WP	G15_048	FROM->TO	G14-057T 345.00 - SUNNYSIDE 345KV CKT 1	717	789	0.04895	115.9008	7SAREPTA% 345.00 - LONGWOOD 345KV CKT 1
FDNS	00NR	2	16WP	G15_048	FROM->TO	G14-057T 345.00 - SUNNYSIDE 345KV CKT 1	717	789	0.04895	115.9008	7SAREPTA% 345.00 - LONGWOOD 345KV CKT 1
FDNS	00NR	2	20WP	G15_048	FROM->TO	G14-057T 345.00 - SUNNYSIDE 345KV CKT 1	717	789	0.05172	115.8348	CLEVELAND - G15066_T 345.00 345KV CKT 1
FDNS	00NR	2	20WP	G15_048	FROM->TO	G14-057T 345.00 - SUNNYSIDE 345KV CKT 1	717	789	0.0477	115.7887	PITTSBURG - VALLIANT 345KV CKT 1
FDNS	00NR	2	20WP	G15_048	FROM->TO	G14-057T 345.00 - SUNNYSIDE 345KV CKT 1	717	789	0.0477	115.7887	PITTSBURG - VALLIANT 345KV CKT 1
FDNS	00NR	2	16WP	G15_048	FROM->TO	G14-057T 345.00 - SUNNYSIDE 345KV CKT 1	717	789	0.04896	115.7458	DOLET HILLS - SOUTHWEST SHREVEPORT 345KV CKT 1
FDNS	00NR	2	16WP	G15_048	FROM->TO	G14-057T 345.00 - SUNNYSIDE 345KV CKT 1	717	789	0.04896	115.7458	DOLET HILLS - SOUTHWEST SHREVEPORT 345KV CKT 1
FDNSLock	00NR	2	16WP	G15_048	FROM->TO	G14-057T 345.00 - SUNNYSIDE 345KV CKT 1	717	789	0.04891	115.743	GEN336821 1-GRAND GULF UNIT
FDNS	00NR	2	16WP	G15_048	FROM->TO	G14-057T 345.00 - SUNNYSIDE 345KV CKT 1	717	789	0.05141	115.7334	CLEVELAND - TULSA NORTH 345KV CKT 1
FDNS	00NR	2	16WP	G15_048	FROM->TO	G14-057T 345.00 - SUNNYSIDE 345KV CKT 1	717	789	0.05141	115.7334	CLEVELAND - TULSA NORTH 345KV CKT 1
FDNS	00NR	2	16WP	G15_048	FROM->TO	G14-057T 345.00 - SUNNYSIDE 345KV CKT 1	717	789	0.05776	115.6897	ARCADIA - NORTHWEST 345KV CKT 1
FDNSLock	00NR	2	16WP	G15_048	FROM->TO	G14-057T 345.00 - SUNNYSIDE 345KV CKT 1	717	789	0.04891	115.6496	GEN336153 1-WATERFORD UNIT#3
FDNS	00NR	2	16WP	G15_048	FROM->TO	G14-057T 345.00 - SUNNYSIDE 345KV CKT 1	717	789	0.04992	115.6286	COMANCHE - LOCO 138KV CKT 1
FDNS	00NR	2	20WP	G15_048	FROM->TO	G14-057T 345.00 - SUNNYSIDE 345KV CKT 1	717	789	0.04722	115.5939	BORDER 7345.00 - WOODWARD DISTRICT EHV 345KV CKT 1
FDNS	00NR	2	16WP	G15_048	FROM->TO	G14-057T 345.00 - SUNNYSIDE 345KV CKT 1	717	789	0.04961	115.5766	ANADARKO - POCASSETT 138KV CKT 1
FDNS	00NR	2	20WP	G15_048	FROM->TO	G14-057T 345.00 - SUNNYSIDE 345KV CKT 1	717	789	0.05172	115.5419	G15066_T 345.00 - SOONER 345KV CKT 1
FDNS	00NR	2	16WP	G15_048	FROM->TO	G14-057T 345.00 - SUNNYSIDE 345KV CKT 1	717	789	0.04565	115.526	CANADIAN RIVER - MUSKOGEE 345KV CKT 1
FDNS	00NR	2	16WP	G15_048	FROM->TO	G14-057T 345.00 - SUNNYSIDE 345KV CKT 1	717	789	0.04961	115.4359	POCASSETT - TUTTLE 138KV CKT 1
FDNS	00NR	2	16WP	G15_048	FROM->TO	G14-057T 345.00 - SUNNYSIDE 345KV CKT 1	717	789	0.05091	115.4251	ARCADIA - SEMINOLE 345KV CKT 1
FDNS	00NR	2	16WP	G15_048	FROM->TO	G14-057T 345.00 - SUNNYSIDE 345KV CKT 1	717	789	0.04891	115.4	GEN335831 1-RIVERBEND UNIT#1
FDNS	00NR	2	16WP	G15_048	FROM->TO	G14-057T 345.00 - SUNNYSIDE 345KV CKT 1	717	789	0.04891	115.3409	GRAND GULF 500/22.0KV TRANSFORMER CKT 1
FDNS	00NR	2	16WP	G15_048	FROM->TO	G14-057T 345.00 - SUNNYSIDE 345KV CKT 1	717	789	0.04891	115.3112	GEN515577 1-ARBWND11 0.6900
FDNS	00NR	2	16WP	G15_048	FROM->TO	G14-057T 345.00 - SUNNYSIDE 345KV CKT 1	717	789	0.04891	115.2739	GEN509409 1-WILKES #3
FDNS	00NR	2	20WP	G15_048	FROM->TO	G14-057T 345.00 - SUNNYSIDE 345KV CKT 1	717	789	0.04854	115.2633	GEN501801 1-DOLET HILLS UNIT1
FDNS	00NR	2	16WP	G15_048	FROM->TO	G14-057T 345.00 - SUNNYSIDE 345KV CKT 1	717	789	0.04893	115.2476	7SAREPTA% 345.00 - ELDORADO EHV 345KV CKT 1
FDNS	00NR	2	16WP	G15_048	FROM->TO	G14-057T 345.00 - SUNNYSIDE 345KV CKT 1	717	789	0.04893	115.2474	3TR3AR8EL7EL
FDNS	00NR	2	16WP	G15_048	FROM->TO	G14-057T 345.00 - SUNNYSIDE 345KV CKT 1	717	789	0.04893	115.2364	ELDORADO EHV 500/345KV TRANSFORMER CKT 1
FDNS	00NR	2	16WP	G15_048	FROM->TO	G14-057T 345.00 - SUNNYSIDE 345KV CKT 1	717	789	0.04918	115.1782	P12:138:AEPW:DUNCAN-4:L.E.S.-4
FDNS	00NR	2	16WP	G15_048	FROM->TO	G14-057T 345.00 - SUNNYSIDE 345KV CKT 1	717	789	0.05027	115.1393	HEALDTON - LOCO 138KV CKT 1
FDNS	00NR	2	16WP	G15_048	FROM->TO	G14-057T 345.00 - SUNNYSIDE 345KV CKT 1	717	789	0.04961	115.0715	BRIDGECR 138.00 - TUTTLE 138KV CKT 1
FDNS	00NR	2	16WP	G15_048	FROM->TO	G14-057T 345.00 - SUNNYSIDE 345KV CKT 1	717	789	0.04918	115.0688	COMANCHE TAP - OMPA-DUNCAN 840 138KV CKT 1
FDNS	00NR	2	16WP	G15_048	FROM->TO	G14-057T 345.00 - SUNNYSIDE 345KV CKT 1	717	789	0.05027	114.9991	HEALDTON - RINGLING 138KV CKT 1
FDNSLock	00NR	2	16WP	G15_048	FROM->TO	G14-057T 345.00 - SUNNYSIDE 345KV CKT 1	717	789	0.04891	114.9985	GEN300006 1-NEW MADRID UNIT 1
FDNSLock	00NR	2	16WP	G15_048	FROM->TO	G14-057T 345.00 - SUNNYSIDE 345KV CKT 1	717	789	0.04891	114.9861	GEN300007 1-NEW MADRID UNIT 2
FDNS	00NR	2	16WP	G15_048	FROM->TO	G14-057T 345.00 - SUNNYSIDE 345KV CKT 1	717	789	0.04891	114.9823	GEN501813 1-RODEMACHER UNIT 3
FDNS	00NR	2	16WP	G15_048	FROM->TO	G14-057T 345.00 - SUNNYSIDE 345KV CKT 1	717	789	0.04929	114.9332	LACYGNE - WAVERLY7 345.00 345KV CKT 1
FDNS	00NR	2	16WP	G15_048	FROM->TO	G14-057T 345.00 - SUNNYSIDE 345KV CKT 1	717	789	0.04891	114.8741	GEN520947 1-HUGO1
FDNS	00NR	2	16WP	G15_048	FROM->TO	G14-057T 345.00 - SUNNYSIDE 345KV CKT 1	717	789	0.05027	114.8347	RINGLING - SOUTH WILSON 138KV CKT 1
FDNS	00NR	2	16WP	G15_048	FROM->TO	G14-057T 345.00 - SUNNYSIDE 345KV CKT 1	717	789	0.04929	114.8211	WAVERLY7 345.00 - WOLF CREEK 345KV CKT 1
FDNS	00NR	2	16WP	G15_048	FROM->TO	G14-057T 345.00 - SUNNYSIDE 345KV CKT 1	717	789	0.04961	114.8175	P12:138:WFEC:MSL01
FDNS	00NR	2	16WP	G15_048	FROM->TO	G14-057T 345.00 - SUNNYSIDE 345KV CKT 1	717	789	0.04961	114.8094	BRIDGECR 138.00 - SUNSHINE CANYON 138KV CKT 1
FDNS	00NR	2	16WP	G15_048	FROM->TO	G14-057T 345.00 - SUNNYSIDE 345KV CKT 1	717	789	0.04918	114.7912	DUNCAN - OMPA-DUNCAN 840 138KV CKT 1
FDNS	00NR	2	16WP	G15_048	FROM->TO	G14-057T 345.00 - SUNNYSIDE 345KV CKT 1	717	789	0.04918	114.7912	DUNCAN - OMPA-DUNCAN 840 138KV CKT 1
FDNS	00NR	2	16WP	G15_048	FROM->TO	G14-057T 345.00 - SUNNYSIDE 345KV CKT 1	717	789	0.04891	114.7842	GEN335206 1-NELSON UNIT 6
FDNS	00NR	2	20WP	G15_048	FROM->TO	G14-057T 345.00 - SUNNYSIDE 345KV CKT 1	717	789	0.04854	114.743	GEN509406 1-WELSH #3
FDNS	00NR	2	20WP	G15_048	FROM->TO	G14-057T 345.00 - SUNNYSIDE 345KV CKT 1	717	789	0.04854	114.7427	GEN509404 1-WELSH #1
FDNS	00NR	2	16WP	G15_048	FROM->TO	G14-057T 345.00 - SUNNYSIDE 345KV CKT 1	717	789	0.04891	114.657	DOLET HILLS 345/24.0KV TRANSFORMER CKT 1
FDNS	00NR	2	20WP	G15_048	FROM->TO	G14-057T 345.00 - SUNNYSIDE 345KV CKT 1	717	789	0.04722	114.6473	BORDER 7345.00 - TUCO_2 345.00 345KV CKT 1
FDNS	00NR	2	16WP	G15_048	FROM->TO	G14-057T 345.00 - SUNNYSIDE 345KV CKT 1	717	789	0.04794	114.629	PARK LANE - SEMINOLE 138KV CKT 1
FDNS	00NR	2	16WP	G15_048	FROM->TO	G14-057T 345.00 - SUNNYSIDE 345KV CKT 1	717	789	0.04887	114.6276	P12:138:AEPW:SHERID4:112GORE4
FDNS	00NR	2	16WP	G15_048	FROM->TO	G14-057T 345.00 - SUNNYSIDE 345KV CKT 1	717	789	0.04974	114.6104	FINNEY SWITCHING STATION - HOLCOMB 345KV CKT 1
FDNS	00NR	2	16WP	G15_048	FROM->TO	G14-057T 345.00 - SUNNYSIDE 345KV CKT 1	717	789	0.04974	114.6104	FINNEY SWITCHING STATION - HOLCOMB 345KV CKT 1
FDNS	00NR	2	16WP	G15_048	FROM->TO	G14-057T 345.00 - SUNNYSIDE 345KV CKT 1	717	789	0.04891	114.6005	GEN501812 1-RODEMACHER UNIT 2
FDNS	00NR	2	16WP	G15_048	FROM->TO	G14-057T 345.00 - SUNNYSIDE 345KV CKT 1	717	789	0.04891	114.5989	GEN590011 2-ERCOT EQUIVALENCE
FDNS	00NR	2	16WP	G15_048	FROM->TO	G14-057T 345.00 - SUNNYSIDE 345KV CKT 1	717	789	0.04891	114.5597	GEN515564 1-ORIGIN11 0.6900
FDNS	00NR	2	16WP	G15_048	FROM->TO	G14-057T 345.00 - SUNNYSIDE 345KV CKT 1	717	789	0.04891	114.5597	GEN515565 1-ORIGIN21 0.6900
FDNS	00NR	2	16WP	G15_048	FROM->TO	G14-057T 345.00 - SUNNYSIDE 345KV CKT 1	717	789	0.05027	114.5596	MARIETTA - SOUTH WILSON 138KV CKT 1
FDNS	00NR	2	16WP	G15_048	FROM->TO	G14-057T 345.00 - SUNNYSIDE 345KV CKT 1	717	789	0.04894	114.5304	REDBUD - RIVERSIDE STATION 345KV CKT 1
FDNS	00NR	2	16WP	G15_048	FROM->TO	G14-057T 345.00 - SUNNYSIDE 345KV CKT 1	717	789	0.04894	114.5304	REDBUD - RIVERSIDE STATION 345KV CKT 1
FDNS	00NR	2	16WP	G15_048	FROM->TO	G14-057T 345.00 - SUNNYSIDE 345KV CKT 1	717	789	0.04891	114.5242	GEN590010 1-ERCOT EQUIVALENCE
FDNS	00NR	2	16WP	G15_048	FROM->TO	G14-057T 345.00 - SUNNYSIDE 345KV CKT 1	717	789	0.05084	114.5241	MATHWSN7 345.00 - NORTHWEST 345KV CKT 1
FDNS	00NR	2	16WP	G15_048	FROM->TO	G14-057T 345.00 - SUNNYSIDE 345KV CKT 1	717	789	0.05027	114.4751	P12:138:WFEC:MSL17
FDNS	00NR	2	16WP	G15_048	FROM->TO	G14-057T 345.00 - SUNNYSIDE 345KV CKT 1	717	789	0.0498	114.4675	CANEYRV7 345.00 - NEOSHO 345KV CKT 1
FDNS	00NR	2	16WP	G15_048	FROM->TO	G14-057T 345.00 - SUNNYSIDE 345KV CKT 1	717	789	0.05001	114.396	CIVIT - PAOLI 138KV CKT 1
FDNS	00NR	2	16WP	G15_048	FROM->TO	G14-057T 345.00 - SUNNYSIDE 345KV CKT 1	717	789	0.04891	114.3764	GEN509408 1-WILKES #2

SOLUTION	GROUP	SCENARIO	SEASON	SOURCE	DIRECTION	MONITORED ELEMENT	RATEA (MVA)	RATEB(MVA)	TDF	TC%LOADING (% MVA)	CONTINGENCY
FDNS	00NR	2	16WP	G15_048	FROM->TO	G14-057T 345.00 - SUNNYSIDE 345KV CKT 1	717	789	0.04891	114.3715	P12:69:AEPW:L.E.S.-2:LAW WC2
FDNS	00NR	2	16WP	G15_048	FROM->TO	G14-057T 345.00 - SUNNYSIDE 345KV CKT 1	717	789	0.04891	114.3599	GEN506754 1-LEBROCK STEAM 1
FDNS	00NR	2	16WP	G15_048	FROM->TO	G14-057T 345.00 - SUNNYSIDE 345KV CKT 1	717	789	0.04891	114.3488	P12:161:AEPW:DYESS 5:HYLAND 5
FDNS	00NR	2	16WP	G15_048	FROM->TO	G14-057T 345.00 - SUNNYSIDE 345KV CKT 1	717	789	0.04926	114.3421	PAOLI - PAYNE 138.00 138KV CKT 1
FDNS	00NR	2	16WP	G15_048	FROM->TO	G14-057T 345.00 - SUNNYSIDE 345KV CKT 1	717	789	0.0498	114.3411	CANEYRV7 345.00 - LATHAMS7 345.00 345KV CKT 1
FDNS	00NR	2	16WP	G15_048	FROM->TO	G14-057T 345.00 - SUNNYSIDE 345KV CKT 1	717	789	0.04888	114.3229	ELDORADO EHV - MOUNT OLIVE 500KV CKT 1
FDNS	00NR	2	16WP	G15_048	FROM->TO	G14-057T 345.00 - SUNNYSIDE 345KV CKT 1	717	789	0.04891	114.321	GEN334440 1-SABINE UNIT 4
FDNS	00NR	2	16WP	G15_048	FROM->TO	G14-057T 345.00 - SUNNYSIDE 345KV CKT 1	717	789	0.04929	114.3189	P12:138:WFEC:MSL02
FDNS	00NR	2	16WP	G15_048	FROM->TO	G14-057T 345.00 - SUNNYSIDE 345KV CKT 1	717	789	0.04888	114.2825	P12:138:AEPW:112GORE4:L.E.S.-4
FDNS	00NR	2	16WP	G15_048	FROM->TO	G14-057T 345.00 - SUNNYSIDE 345KV CKT 1	717	789	0.05001	114.2537	CIVIT - STRATFORD 138KV CKT 1
FDNS	00NR	2	16WP	G15_048	FROM->TO	G14-057T 345.00 - SUNNYSIDE 345KV CKT 1	717	789	0.04881	114.2476	ELDORADO EHV - SHERIDAN EHV 500KV CKT 1
FDNS	00NR	2	16WP	G15_048	FROM->TO	G14-057T 345.00 - SUNNYSIDE 345KV CKT 1	717	789	0.04916	114.2287	ANADARKO - GEORGIA 138KV CKT 1
FDNS	00NR	2	16WP	G15_048	FROM->TO	G14-057T 345.00 - SUNNYSIDE 345KV CKT 1	717	789	0.04892	114.2272	TUPELO - TUPELO TAP 138KV CKT 1
FDNS	00NR	2	16WP	G15_048	FROM->TO	G14-057T 345.00 - SUNNYSIDE 345KV CKT 1	717	789	0.04891	114.2205	NEW MADRID 161/22.0KV TRANSFORMER CKT 1
FDNS	00NR	2	16WP	G15_048	FROM->TO	G14-057T 345.00 - SUNNYSIDE 345KV CKT 1	717	789	0.05046	114.2147	P12:138:AEPW-OGE:CORNVIL4:MAUD 4
FDNS	00NR	2	16WP	G15_048	FROM->TO	G14-057T 345.00 - SUNNYSIDE 345KV CKT 1	717	789	0.04891	114.2114	GEN503909 1-FULTONU1 1 16.000
FDNS	00NR	2	16WP	G15_048	FROM->TO	G14-057T 345.00 - SUNNYSIDE 345KV CKT 1	717	789	0.04891	114.2089	NEW MADRID 345/22.0KV TRANSFORMER CKT 1
FDNS	00NR	2	16WP	G15_048	FROM->TO	G14-057T 345.00 - SUNNYSIDE 345KV CKT 1	717	789	0.04899	114.2028	WEBRE - WELLS 500KV CKT 1
FDNS	00NR	2	16WP	G15_048	FROM->TO	G14-057T 345.00 - SUNNYSIDE 345KV CKT 1	717	789	0.04891	114.1815	FRONTIER - GRIMES 345KV CKT 1
FDNS	00NR	2	16WP	G15_048	FROM->TO	G14-057T 345.00 - SUNNYSIDE 345KV CKT 1	717	789	0.04848	114.1592	LAWTON EASTSIDE (LES 5) 345/138/13.8KV TRANSFORMER CKT 2
FDNS	00NR	2	16WP	G15_048	FROM->TO	G14-057T 345.00 - SUNNYSIDE 345KV CKT 1	717	789	0.04848	114.1592	LAWTON EASTSIDE (LES 5) 345/138/13.8KV TRANSFORMER CKT 2
FDNS	00NR	2	16WP	G15_048	FROM->TO	G14-057T 345.00 - SUNNYSIDE 345KV CKT 1	717	789	0.04916	114.1507	FLETCHER - GEORGIA 138KV CKT 1
FDNS	00NR	2	20WP	G15_048	FROM->TO	G14-057T 345.00 - SUNNYSIDE 345KV CKT 1	717	789	0.0497	114.1488	CORN TAP - NAPLESTP 138.00 138KV CKT 1
FDNS	00NR	2	16WP	G15_048	FROM->TO	G14-057T 345.00 - SUNNYSIDE 345KV CKT 1	717	789	0.05046	114.1415	BLANCHARD - CORNVILLE 138KV CKT 1
FDNS	00NR	2	16WP	G15_048	FROM->TO	G14-057T 345.00 - SUNNYSIDE 345KV CKT 1	717	789	0.05001	114.1345	OIL CENTER - STRATFORD 138KV CKT 1
FDNS	00NR	2	16WP	G15_048	FROM->TO	G14-057T 345.00 - SUNNYSIDE 345KV CKT 1	717	789	0.04927	114.1208	EMPIRE - FLETCHER 138KV CKT 1
FDNS	00NR	2	16WP	G15_048	FROM->TO	G14-057T 345.00 - SUNNYSIDE 345KV CKT 1	717	789	0.0498	114.1115	LATHAMS7 345.00 - ROSE HILL 345KV CKT 1
FDNS	00NR	2	20WP	G15_048	FROM->TO	G14-057T 345.00 - SUNNYSIDE 345KV CKT 1	717	789	0.04859	114.0928	7SAREPTA% 345.00 - LONGWOOD 345KV CKT 1
FDNS	00NR	2	20WP	G15_048	FROM->TO	G14-057T 345.00 - SUNNYSIDE 345KV CKT 1	717	789	0.04859	114.0928	7SAREPTA% 345.00 - LONGWOOD 345KV CKT 1
FDNS	00NR	2	16WP	G15_048	FROM->TO	G14-057T 345.00 - SUNNYSIDE 345KV CKT 1	717	789	0.04974	114.0879	FINNEY SWITCHING STATION - Hitchland Interchange 345KV CKT 1
FDNS	00NR	2	16WP	G15_048	FROM->TO	G14-057T 345.00 - SUNNYSIDE 345KV CKT 1	717	789	0.04891	114.086	GEN509393 S1-ARSENAL HILL GENS #4 (STALL)
FDNS	00NR	2	20WP	G15_048	FROM->TO	G14-057T 345.00 - SUNNYSIDE 345KV CKT 1	717	789	0.0497	114.0652	NAPLESTP 138.00 - PAYNE 138.00 138KV CKT 1
FDNS	00NR	2	16WP	G15_048	FROM->TO	G14-057T 345.00 - SUNNYSIDE 345KV CKT 1	717	789	0.04891	114.0621	GEN509392 G2-ARSENAL HILL GENS #3 (STALL)
FDNS	00NR	2	16WP	G15_048	FROM->TO	G14-057T 345.00 - SUNNYSIDE 345KV CKT 1	717	789	0.04891	114.062	GEN509391 G1-ARSENAL HILL GENS #2 (STALL)
FDNS	00NR	2	16WP	G15_048	FROM->TO	G14-057T 345.00 - SUNNYSIDE 345KV CKT 1	717	789	0.04927	114.0424	COMANCHE - EMPIRE 138KV CKT 1
FDNS	00NR	2	16WP	G15_048	FROM->TO	G14-057T 345.00 - SUNNYSIDE 345KV CKT 1	717	789	0.04951	114.0392	THISTLE7 345.00 - WOODWARD DISTRICT EHV 345KV CKT 1
FDNS	00NR	2	16WP	G15_048	FROM->TO	G14-057T 345.00 - SUNNYSIDE 345KV CKT 1	717	789	0.04951	114.0392	THISTLE7 345.00 - WOODWARD DISTRICT EHV 345KV CKT 1
FDNS	00NR	2	16WP	G15_048	FROM->TO	G14-057T 345.00 - SUNNYSIDE 345KV CKT 1	717	789	0.04951	114.0392	THISTLE7 345.00 - WOODWARD DISTRICT EHV 345KV CKT 2
FDNS	00NR	2	16WP	G15_048	FROM->TO	G14-057T 345.00 - SUNNYSIDE 345KV CKT 1	717	789	0.04951	114.0392	THISTLE7 345.00 - WOODWARD DISTRICT EHV 345KV CKT 2
FDNS	00NR	2	16WP	G15_048	FROM->TO	G14-057T 345.00 - SUNNYSIDE 345KV CKT 1	717	789	0.04891	114.0312	GEN336252 1-NINEMILE POINT UNIT#5
FDNS	00NR	2	16WP	G15_048	FROM->TO	G14-057T 345.00 - SUNNYSIDE 345KV CKT 1	717	789	0.04891	114.0181	DELL 500 - ESSEX UNIT 2 500KV CKT Z1
FDNS	00NR	2	16WP	G15_048	FROM->TO	G14-057T 345.00 - SUNNYSIDE 345KV CKT 1	717	789	0.04891	114.0141	GEN334071 1-LEWIS CREEK 2
FDNS	00NR	2	16WP	G15_048	FROM->TO	G14-057T 345.00 - SUNNYSIDE 345KV CKT 1	717	789	0.04891	114.0052	GEN334070 1-LEWIS CREEK 1
FDNS	00NR	2	16WP	G15_048	FROM->TO	G14-057T 345.00 - SUNNYSIDE 345KV CKT 1	717	789	0.04891	114.0035	GEN335204 1-NELSON UNIT 4
FDNS	00NR	2	16WP	G15_048	FROM->TO	G14-057T 345.00 - SUNNYSIDE 345KV CKT 1	717	789	0.04891	114	GEN300003 1-THOMAS HILL UNIT 3
FDNS	00NR	2	20WP	G15_048	FROM->TO	G14-057T 345.00 - SUNNYSIDE 345KV CKT 1	717	789	0.04854	113.9826	GEN336821 1-GRAND GULF UNIT
FDNS	00NR	2	16WP	G15_048	FROM->TO	G14-057T 345.00 - SUNNYSIDE 345KV CKT 1	717	789	0.04903	113.9738	DUNCAN (DUNCAN) 138/69/13.8KV TRANSFORMER CKT 1
FDNS	00NR	2	16WP	G15_048	FROM->TO	G14-057T 345.00 - SUNNYSIDE 345KV CKT 1	717	789	0.04903	113.9738	DUNCAN (DUNCAN) 138/69/13.8KV TRANSFORMER CKT 1
FDNS	00NR	2	16WP	G15_048	FROM->TO	G14-057T 345.00 - SUNNYSIDE 345KV CKT 1	717	789	0.04891	113.9691	GEN334441 1-SABINE UNIT 5
FDNS	00NR	2	16WP	G15_048	FROM->TO	G14-057T 345.00 - SUNNYSIDE 345KV CKT 1	717	789	0.05046	113.9592	BLANCHARD - MAUD 138KV CKT 1
FDNS	00NR	2	16WP	G15_048	FROM->TO	G14-057T 345.00 - SUNNYSIDE 345KV CKT 1	717	789	0.05001	113.9558	LATTA JCT - OIL CENTER 138KV CKT 1
FDNS	00NR	2	16WP	G15_048	FROM->TO	G14-057T 345.00 - SUNNYSIDE 345KV CKT 1	717	789	0.0489	113.9424	P12:161:AEPW-SWPA:BEAVER5:EROGERS5
FDNS	00NR	2	16WP	G15_048	FROM->TO	G14-057T 345.00 - SUNNYSIDE 345KV CKT 1	717	789	0.04891	113.932	GEN337653 1-WHITE BLUFF UNIT #2
FDNS	00NR	2	16WP	G15_048	FROM->TO	G14-057T 345.00 - SUNNYSIDE 345KV CKT 1	717	789	0.04895	113.9237	P12:138:AEPW:CATOOSA4:T.S.E.-4
FDNS	00NR	2	16WP	G15_048	FROM->TO	G14-057T 345.00 - SUNNYSIDE 345KV CKT 1	717	789	0.04891	113.9184	GEN334030 1-FRONTIER UNIT 1
FDNS	00NR	2	16WP	G15_048	FROM->TO	G14-057T 345.00 - SUNNYSIDE 345KV CKT 1	717	789	0.04891	113.9183	GEN506752 1-LEBROCK GAS 1
FDNS	00NR	2	16WP	G15_048	FROM->TO	G14-057T 345.00 - SUNNYSIDE 345KV CKT 1	717	789	0.04891	113.9182	GEN506753 1-LEBROCK GAS 2
FDNS	00NR	2	16WP	G15_048	FROM->TO	G14-057T 345.00 - SUNNYSIDE 345KV CKT 1	717	789	0.04891	113.9168	GEN334031 1-FRONTIER UNIT 2
FDNS	00NR	2	16WP	G15_048	FROM->TO	G14-057T 345.00 - SUNNYSIDE 345KV CKT 1	717	789	0.04894	113.9117	6LAYFLD 230.00 - CARROLL 230KV CKT 1
FDNS	00NR	2	16WP	G15_048	FROM->TO	G14-057T 345.00 - SUNNYSIDE 345KV CKT 1	717	789	0.04893	113.8781	FULTON 115 - HOPE 115KV CKT 1
FDNS	00NR	2	16WP	G15_048	FROM->TO	G14-057T 345.00 - SUNNYSIDE 345KV CKT 1	717	789	0.04893	113.8781	FULTON 115 - HOPE 115KV CKT 1
FDNS	00NR	2	16WP	G15_048	FROM->TO	G14-057T 345.00 - SUNNYSIDE 345KV CKT 1	717	789	0.04894	113.8739	8DANIEL8 500.00 - MCKNIGHT 500KV CKT 1
FDNS	00NR	2	20WP	G15_048	FROM->TO	G14-057T 345.00 - SUNNYSIDE 345KV CKT 1	717	789	0.04854	113.8734	GEN336153 1-WATERFORD UNIT#3
FDNS	00NR	2	16WP	G15_048	FROM->TO	G14-057T 345.00 - SUNNYSIDE 345KV CKT 1	717	789	0.04891	113.8724	P12:161:AEPW:DYESS5:ELMSPRNG:TONTITN5
FDNS	00NR	2	16WP	G15_048	FROM->TO	G14-057T 345.00 - SUNNYSIDE 345KV CKT 1	717	789	0.04891	113.8662	GEN515226 1-MUSKOGEE 6G
FDNS	00NR	2	16WP	G15_048	FROM->TO	G14-057T 345.00 - SUNNYSIDE 345KV CKT 1	717	789	0.04891	113.8563	GEN300015 1-1SGPDEL 18.000
FDNS	00NR	2	16WP	G15_048	FROM->TO	G14-057T 345.00 - SUNNYSIDE 345KV CKT 1	717	789	0.04891	113.8512	GEN501811 1-RODEMACHER UNIT 1
FDNS	00NR	2	16WP	G15_048	FROM->TO	G14-057T 345.00 - SUNNYSIDE 345KV CKT 1	717	789	0.04891	113.8475	GEN337911 1-ARKANSAS NUCLEAR ONE UNIT #2
FDNS	00NR	2	20WP	G15_048	FROM->TO	G14-057T 345.00 - SUNNYSIDE 345KV CKT 1	717	789	0.05095	113.8412	CLEVELAND - TULSA NORTH 345KV CKT 1
FDNS	00NR	2	20WP	G15_048	FROM->TO	G14-057T 345.00 - SUNNYSIDE 345KV CKT 1	717	789	0.05095	113.8412	CLEVELAND - TULSA NORTH 345KV CKT 1
FDNS	00NR	2	16WP	G15_048	FROM->TO	G14-057T 345.00 - SUNNYSIDE 345KV CKT 1	717	789	0.04914	113.8378	P12:138:AEPW:CORNVIL4:S.W.S.-4
FDNS	00NR	2	16WP	G15_048	FROM->TO	G14-057T 345.00 - SUNNYSIDE 345KV CKT 1	717	789	0.04891	113.8339	GEN337652 1-WHITE BLUFF UNIT #1
FDNS	00NR	2	16WP	G15_048	FROM->TO	G14-057T 345.00 - SUNNYSIDE 345KV CKT 1	717	789	0.04891	113.8336	GEN336251 1-NINEMILE POINT UNIT#4
FDNS	00NR	2	16WP	G15_048	FROM->TO	G14-057T 345.00 - SUNNYSIDE 345KV CKT 1	717	789	0.04891	113.8297	GEN334433 1-SABINE UNIT 3
FDNS	00NR	2	16WP	G15_048	FROM->TO	G14-057T 345.00 - SUNNYSIDE 345KV CKT 1	717	789	0.04891	113.8278	GEN336831 1-BAXTER WILSON SES
FDNS	00NR	2	20WP	G15_048	FROM->TO	G14-057T 345.00 - SUNNYSIDE 345KV CKT 1	717	789	0.05736	113.8271	ARCADIA - NORTHWEST 345KV CKT 1
FDNS	00NR	2	16WP	G15_048	FROM->TO	G14-057T 345.00 - SUNNYSIDE 345KV CKT 1	717	789	0.04906	113.8082	G15074_T 345.00 - HOYT 345KV CKT 1
FDNS	00NR	2	16WP	G15_048	FROM->TO	G14-057T 345.00 - SUNNYSIDE 345KV CKT 1	717	789	0.04891	113.8061	GEN515040 1-SEMINOLE 1G
FDNS	00NR	2	16WP	G15_048	FROM->TO	G14-057T 345.00 - SUNNYSIDE 345KV CKT 1	717	789	0.04899	113.8049	P12:138:AEPW:CORNVIL4:DUNCAN-4

SOLUTION	GROUP	SCENARIO	SEASON	SOURCE	DIRECTION	MONITORED ELEMENT	RATEA (MVA)	RATEB(MVA)	TDF	TC%LOADING (% MVA)	CONTINGENCY
FDNS	00NR	2	16WP	G15_048	FROM->TO	G14-057T 345.00 - SUNNYSIDE 345KV CKT 1	717	789	0.04869	113.8024	TUTTLE - TUTTLE CONOCO TAP 138KV CKT 1
FDNS	00NR	2	16WP	G15_048	FROM->TO	G14-057T 345.00 - SUNNYSIDE 345KV CKT 1	717	789	0.04903	113.8023	P12:69:WFEC-AEPW:COMANCH2:DUNCAN-2
FDNS	00NR	2	16WP	G15_048	FROM->TO	G14-057T 345.00 - SUNNYSIDE 345KV CKT 1	717	789	0.04891	113.798	GEN562783 1-G15036_4 0.6900
FDNS	00NR	2	16WP	G15_048	FROM->TO	G14-057T 345.00 - SUNNYSIDE 345KV CKT 1	717	789	0.04891	113.798	GEN562784 1-G15036_5 0.6900
FDNS	00NR	2	16WP	G15_048	FROM->TO	G14-057T 345.00 - SUNNYSIDE 345KV CKT 1	717	789	0.05023	113.7868	BAILEY4 138.00 - SUNSHINE CANYON 138KV CKT 1
FDNS	00NR	2	16WP	G15_048	FROM->TO	G14-057T 345.00 - SUNNYSIDE 345KV CKT 1	717	789	0.04891	113.784	GEN505432 1-SIKESTON
FDNSLock	00NR	2	16WP	G15_048	FROM->TO	G14-057T 345.00 - SUNNYSIDE 345KV CKT 1	717	789	0.04899	113.7822	G15088_T 345.00 - MOORE 345KV CKT 1
FDNS	00NR	2	16WP	G15_048	FROM->TO	G14-057T 345.00 - SUNNYSIDE 345KV CKT 1	717	789	0.0491	113.7817	G1524G1525 345.00 - THISTLE7 345.00 345KV CKT 1
FDNS	00NR	2	16WP	G15_048	FROM->TO	G14-057T 345.00 - SUNNYSIDE 345KV CKT 1	717	789	0.0491	113.7817	G1524G1525 345.00 - THISTLE7 345.00 345KV CKT 2
FDNS	00NR	2	20WP	G15_048	FROM->TO	G14-057T 345.00 - SUNNYSIDE 345KV CKT 1	717	789	0.04924	113.781	ANADARKO - POCASSETT 138KV CKT 1
FDNS	00NR	2	16WP	G15_048	FROM->TO	G14-057T 345.00 - SUNNYSIDE 345KV CKT 1	717	789	0.0493	113.7807	CIMARRON - CZECH HALL 138KV CKT 1
FDNS	00NR	2	16WP	G15_048	FROM->TO	G14-057T 345.00 - SUNNYSIDE 345KV CKT 1	717	789	0.04925	113.7798	P12:138:AEPW-OGE:WTH_JCT4:JENSEN4
FDNS	00NR	2	16WP	G15_048	FROM->TO	G14-057T 345.00 - SUNNYSIDE 345KV CKT 1	717	789	0.04891	113.7691	GEN515223 1-MUSKOGEE 4G
FDNS	00NR	2	16WP	G15_048	FROM->TO	G14-057T 345.00 - SUNNYSIDE 345KV CKT 1	717	789	0.04891	113.7691	GEN515225 1-MUSKOGEE 5G
FDNS	00NR	2	16WP	G15_048	FROM->TO	G14-057T 345.00 - SUNNYSIDE 345KV CKT 1	717	789	0.04942	113.7635	CIMARRON - SARA 138KV CKT 1
FDNS	00NR	2	16WP	G15_048	FROM->TO	G14-057T 345.00 - SUNNYSIDE 345KV CKT 1	717	789	0.04891	113.7588	P12:161:AEPW:EROGERS5:ECNTRTN5
FDNS	00NR	2	16WP	G15_048	FROM->TO	G14-057T 345.00 - SUNNYSIDE 345KV CKT 1	717	789	0.04842	113.7564	ARBWIND4 138.00 - CARTER 138KV CKT 1
FDNS	00NR	2	16WP	G15_048	FROM->TO	G14-057T 345.00 - SUNNYSIDE 345KV CKT 1	717	789	0.04888	113.7486	LAYFLD8 500.00 - MOUNT OLIVE 500KV CKT 1
FDNS	00NR	2	16WP	G15_048	FROM->TO	G14-057T 345.00 - SUNNYSIDE 345KV CKT 1	717	789	0.04888	113.7486	LAYFLD8 500.00 - MOUNT OLIVE 500KV CKT 1
FDNS	00NR	2	16WP	G15_048	FROM->TO	G14-057T 345.00 - SUNNYSIDE 345KV CKT 1	717	789	0.04891	113.7485	RODEMACHER 230/22.0KV TRANSFORMER CKT 1
FDNS	00NR	2	16WP	G15_048	FROM->TO	G14-057T 345.00 - SUNNYSIDE 345KV CKT 1	717	789	0.04903	113.7479	DUNCAN - TOSCO 69KV CKT 1
FDNS	00NR	2	20WP	G15_048	FROM->TO	G14-057T 345.00 - SUNNYSIDE 345KV CKT 1	717	789	0.04954	113.7421	COMANCHE - LOCO 138KV CKT 1
FDNS	00NR	2	16WP	G15_048	FROM->TO	G14-057T 345.00 - SUNNYSIDE 345KV CKT 1	717	789	0.04891	113.7391	WHITE BLUFF 500/26.0KV TRANSFORMER CKT 1
FDNS	00NR	2	16WP	G15_048	FROM->TO	G14-057T 345.00 - SUNNYSIDE 345KV CKT 1	717	789	0.04909	113.7384	P12:138:AEPW:WTHWF4:CLINTJC4
FDNS	00NR	2	16WP	G15_048	FROM->TO	G14-057T 345.00 - SUNNYSIDE 345KV CKT 1	717	789	0.04891	113.737	GEN303007 1-1BC2 U2
FDNS	00NR	2	16WP	G15_048	FROM->TO	G14-057T 345.00 - SUNNYSIDE 345KV CKT 1	717	789	0.04891	113.7358	MC NIEL 500/115KV TRANSFORMER CKT 1
FDNS	00NR	2	16WP	G15_048	FROM->TO	G14-057T 345.00 - SUNNYSIDE 345KV CKT 1	717	789	0.04863	113.7357	G14_038T 345.00 - Hitchland Interchange 345KV CKT 1
FDNS	00NR	2	16WP	G15_048	FROM->TO	G14-057T 345.00 - SUNNYSIDE 345KV CKT 1	717	789	0.04823	113.7333	SEMINOLE - VANOSTP4 138.00 138KV CKT 1
FDNS	00NR	2	16WP	G15_048	FROM->TO	G14-057T 345.00 - SUNNYSIDE 345KV CKT 1	717	789	0.04891	113.732	GEN303006 1-1BC2 U1
FDNS	00NR	2	16WP	G15_048	FROM->TO	G14-057T 345.00 - SUNNYSIDE 345KV CKT 1	717	789	0.04889	113.7307	HOT SPRINGS EHV - MAGNET COVE 500KV CKT 1
FDNS	00NR	2	16WP	G15_048	FROM->TO	G14-057T 345.00 - SUNNYSIDE 345KV CKT 1	717	789	0.04892	113.7275	BISMARK - HOT SPRINGS WEST BUS 115KV CKT 1
FDNS	00NR	2	16WP	G15_048	FROM->TO	G14-057T 345.00 - SUNNYSIDE 345KV CKT 1	717	789	0.0489	113.7242	P12:69:AEPW-OMPA:COMANC-2:OMWALTR2
FDNS	00NR	2	16WP	G15_048	FROM->TO	G14-057T 345.00 - SUNNYSIDE 345KV CKT 1	717	789	0.04869	113.723	CIMARRON - TUTTLE CONOCO TAP 138KV CKT 1
FDNS	00NR	2	16WP	G15_048	FROM->TO	G14-057T 345.00 - SUNNYSIDE 345KV CKT 1	717	789	0.04894	113.7165	BUCKNER7 345.00 - SPEARVILLE 345KV CKT 1
FDNS	00NR	2	16WP	G15_048	FROM->TO	G14-057T 345.00 - SUNNYSIDE 345KV CKT 1	717	789	0.04894	113.7165	BUCKNER7 345.00 - SPEARVILLE 345KV CKT 1
FDNS	00NR	2	16WP	G15_048	FROM->TO	G14-057T 345.00 - SUNNYSIDE 345KV CKT 1	717	789	0.04891	113.7097	GEN336191 1-LITTLE GYPSY UNIT#3
FDNS	00NR	2	16WP	G15_048	FROM->TO	G14-057T 345.00 - SUNNYSIDE 345KV CKT 1	717	789	0.04891	113.7061	GEN337910 1-ARKANSAS NUCLEAR ONE UNIT #1
FDNS	00NR	2	16WP	G15_048	FROM->TO	G14-057T 345.00 - SUNNYSIDE 345KV CKT 1	717	789	0.04903	113.7056	COMANCHE TAP - TOSCO 69KV CKT 1
FDNS	00NR	2	16WP	G15_048	FROM->TO	G14-057T 345.00 - SUNNYSIDE 345KV CKT 1	717	789	0.05046	113.7048	CANADIAN - NOBLE 138KV CKT 1
FDNS	00NR	2	16WP	G15_048	FROM->TO	G14-057T 345.00 - SUNNYSIDE 345KV CKT 1	717	789	0.04891	113.7042	GEN300010 1-ST FRANCIS UNIT 1
FDNS	00NR	2	16WP	G15_048	FROM->TO	G14-057T 345.00 - SUNNYSIDE 345KV CKT 1	717	789	0.0493	113.7033	CZECH HALL - XEROX 138KV CKT 1
FDNS	00NR	2	16WP	G15_048	FROM->TO	G14-057T 345.00 - SUNNYSIDE 345KV CKT 1	717	789	0.0493	113.699	MORGAN - XEROX 138KV CKT 1
FDNS	00NR	2	16WP	G15_048	FROM->TO	G14-057T 345.00 - SUNNYSIDE 345KV CKT 1	717	789	0.04909	113.6923	P12:138:AEPW:WTHWF4:WTH_SE4
FDNS	00NR	2	16WP	G15_048	FROM->TO	G14-057T 345.00 - SUNNYSIDE 345KV CKT 1	717	789	0.04894	113.6922	P12:138:AEPW:N.E.S.-4:CATOOSA4
FDNS	00NR	2	16WP	G15_048	FROM->TO	G14-057T 345.00 - SUNNYSIDE 345KV CKT 1	717	789	0.04891	113.6847	GEN335614 1-WILLOW GLENN UNIT#4
FDNS	00NR	2	16WP	G15_048	FROM->TO	G14-057T 345.00 - SUNNYSIDE 345KV CKT 1	717	789	0.05001	113.6829	LASALLE - LATTA JCT 138KV CKT 1
FDNS	00NR	2	20WP	G15_048	FROM->TO	G14-057T 345.00 - SUNNYSIDE 345KV CKT 1	717	789	0.04859	113.6826	DOLET HILLS - SOUTHWEST SHREVEPORT 345KV CKT 1
FDNS	00NR	2	20WP	G15_048	FROM->TO	G14-057T 345.00 - SUNNYSIDE 345KV CKT 1	717	789	0.04859	113.6826	DOLET HILLS - SOUTHWEST SHREVEPORT 345KV CKT 1
FDNS	00NR	2	16WP	G15_048	FROM->TO	G14-057T 345.00 - SUNNYSIDE 345KV CKT 1	717	789	0.04891	113.6815	NELSON 230/20.0KV TRANSFORMER CKT 1
FDNS	00NR	2	16WP	G15_048	FROM->TO	G14-057T 345.00 - SUNNYSIDE 345KV CKT 1	717	789	0.0493	113.676	MORGAN - MUSTANG 138KV CKT 1
FDNS	00NR	2	16WP	G15_048	FROM->TO	G14-057T 345.00 - SUNNYSIDE 345KV CKT 1	717	789	0.04892	113.6759	ALPINE AECC - BISMARK 115KV CKT 1
FDNS	00NR	2	16WP	G15_048	FROM->TO	G14-057T 345.00 - SUNNYSIDE 345KV CKT 1	717	789	0.05046	113.6755	P12:138:OKGE:3TERM27
FDNS	00NR	2	16WP	G15_048	FROM->TO	G14-057T 345.00 - SUNNYSIDE 345KV CKT 1	717	789	0.04891	113.6731	GEN303008 1-1BC2 U3
FDNS	00NR	2	16WP	G15_048	FROM->TO	G14-057T 345.00 - SUNNYSIDE 345KV CKT 1	717	789	0.04891	113.6551	GEN300011 1-ST FRANCIS UNIT 2
FDNS	00NR	2	16WP	G15_048	FROM->TO	G14-057T 345.00 - SUNNYSIDE 345KV CKT 1	717	789	0.04891	113.6464	GEN336170 1-GULF OXY U4
FDNS	00NR	2	16WP	G15_048	FROM->TO	G14-057T 345.00 - SUNNYSIDE 345KV CKT 1	717	789	0.04903	113.6428	COMANCHE - COMANCHE TAP 69KV CKT 1
FDNS	00NR	2	16WP	G15_048	FROM->TO	G14-057T 345.00 - SUNNYSIDE 345KV CKT 1	717	789	0.04891	113.6415	GEN336464 1-MICHOUD UNIT #3
FDNS	00NR	2	16WP	G15_048	FROM->TO	G14-057T 345.00 - SUNNYSIDE 345KV CKT 1	717	789	0.04891	113.64	CYPRESS - HARTBURG 500KV CKT 1
FDNS	00NR	2	16WP	G15_048	FROM->TO	G14-057T 345.00 - SUNNYSIDE 345KV CKT 1	717	789	0.04758	113.6349	CHISHOLM6 230.00 - ELK CITY 230KV 230KV CKT 1
FDNS	00NR	2	16WP	G15_048	FROM->TO	G14-057T 345.00 - SUNNYSIDE 345KV CKT 1	717	789	0.04758	113.6346	ELK CITY 230KV (ELKCTY-6) 230/138/13.8KV TRANSFORMER CKT 1
FDNS	00NR	2	16WP	G15_048	FROM->TO	G14-057T 345.00 - SUNNYSIDE 345KV CKT 1	717	789	0.04758	113.6346	ELK CITY 230KV (ELKCTY-6) 230/138/13.8KV TRANSFORMER CKT 1
FDNS	00NR	2	16WP	G15_048	FROM->TO	G14-057T 345.00 - SUNNYSIDE 345KV CKT 1	717	789	0.04892	113.6333	ALPINE AECC - AMITY SS 115KV CKT 1
FDNS	00NR	2	16WP	G15_048	FROM->TO	G14-057T 345.00 - SUNNYSIDE 345KV CKT 1	717	789	0.05136	113.6314	DRAPER LAKE - SEMINOLE 345KV CKT 2
FDNS	00NR	2	16WP	G15_048	FROM->TO	G14-057T 345.00 - SUNNYSIDE 345KV CKT 1	717	789	0.05136	113.6313	DRAPER LAKE - SEMINOLE 345KV CKT 1
FDNS	00NR	2	20WP	G15_048	FROM->TO	G14-057T 345.00 - SUNNYSIDE 345KV CKT 1	717	789	0.04924	113.6285	POCASSETT - TUTTLE 138KV CKT 1
FDNS	00NR	2	16WP	G15_048	FROM->TO	G14-057T 345.00 - SUNNYSIDE 345KV CKT 1	717	789	0.04891	113.6232	8CAJUN2 500/24.0KV TRANSFORMER CKT 1
FDNS	00NR	2	16WP	G15_048	FROM->TO	G14-057T 345.00 - SUNNYSIDE 345KV CKT 1	717	789	0.0461	113.6224	CANADIAN RIVER - PITTSBURG 345KV CKT 1
FDNS	00NR	2	16WP	G15_048	FROM->TO	G14-057T 345.00 - SUNNYSIDE 345KV CKT 1	717	789	0.0461	113.6224	CANADIAN RIVER - PITTSBURG 345KV CKT 1
FDNS	00NR	2	16WP	G15_048	FROM->TO	G14-057T 345.00 - SUNNYSIDE 345KV CKT 1	717	789	0.05023	113.6206	BAILEY4 138.00 - WESTMOORE 138KV CKT 1
FDNS	00NR	2	16WP	G15_048	FROM->TO	G14-057T 345.00 - SUNNYSIDE 345KV CKT 1	717	789	0.04889	113.62	GRACEMONT (BANK 1) 345/138/13.8KV TRANSFORMER CKT 1
FDNS	00NR	2	16WP	G15_048	FROM->TO	G14-057T 345.00 - SUNNYSIDE 345KV CKT 1	717	789	0.04891	113.6184	GEN300016 1-1G1GPDEL 18.000
FDNS	00NR	2	16WP	G15_048	FROM->TO	G14-057T 345.00 - SUNNYSIDE 345KV CKT 1	717	789	0.05046	113.6133	NOBLE - PURCELL4 138.00 138KV CKT 1
FDNS	00NR	2	16WP	G15_048	FROM->TO	G14-057T 345.00 - SUNNYSIDE 345KV CKT 1	717	789	0.04897	113.609	7JASPER 345.00 - BLACKBERRY 345KV CKT 1
FDNS	00NR	2	16WP	G15_048	FROM->TO	G14-057T 345.00 - SUNNYSIDE 345KV CKT 1	717	789	0.04906	113.6043	HOYT - STRANGER CREEK 345KV CKT 1
FDNS	00NR	2	16WP	G15_048	FROM->TO	G14-057T 345.00 - SUNNYSIDE 345KV CKT 1	717	789	0.04891	113.6	GEN501910 1-ACADIA UNIT ST1
FDNS	00NR	2	16WP	G15_048	FROM->TO	G14-057T 345.00 - SUNNYSIDE 345KV CKT 1	717	789	0.04891	113.5983	P12:138:AEPW:R.S.S.-4:S.HUD.-4
FDNS	00NR	2	16WP	G15_048	FROM->TO	G14-057T 345.00 - SUNNYSIDE 345KV CKT 1	717	789	0.04891	113.5886	GEN337041 1-GERALD ANDRUS
FDNS	00NR	2	16WP	G15_048	FROM->TO	G14-057T 345.00 - SUNNYSIDE 345KV CKT 1	717	789	0.0492	113.5842	ANADARKO - SEQUOYAHJ4 138.00 138KV CKT 1
FDNS	00NR	2	16WP	G15_048	FROM->TO	G14-057T 345.00 - SUNNYSIDE 345KV CKT 1	717	789	0.0492	113.5819	CORN TAP - SEQUOYAHJ4 138.00 138KV CKT 1

SOLUTION	GROUP	SCENARIO	SEASON	SOURCE	DIRECTION	MONITORED ELEMENT	RATEA (MVA)	RATEB(MVA)	TDF	TC%LOADING (% MVA)	CONTINGENCY
FDNS	00NR	2	16WP	G15_048	FROM->TO	G14-057T 345.00 - SUNNYSIDE 345KV CKT 1	717	789	0.04942	113.5774	SARA - STHLAKE4 138.00 138KV CKT 1
FDNS	00NR	2	20WP	G15_048	FROM->TO	G14-057T 345.00 - SUNNYSIDE 345KV CKT 1	717	789	0.04854	113.5747	GEN335831 1-RIVERBEND UNIT#1
FDNS	00NR	2	16WP	G15_048	FROM->TO	G14-057T 345.00 - SUNNYSIDE 345KV CKT 1	717	789	0.04906	113.5699	G15074_T 345.00 - JEFFREY ENERGY CENTER 345KV CKT 1
FDNS	00NR	2	16WP	G15_048	FROM->TO	G14-057T 345.00 - SUNNYSIDE 345KV CKT 1	717	789	0.04907	113.5662	WALTERS - WALTERS 69KV CKT 1
FDNS	00NR	2	16WP	G15_048	FROM->TO	G14-057T 345.00 - SUNNYSIDE 345KV CKT 1	717	789	0.04891	113.5636	GEN512688 2-GRDA1 GSU2 22
FDNS	00NR	2	16WP	G15_048	FROM->TO	G14-057T 345.00 - SUNNYSIDE 345KV CKT 1	717	789	0.04888	113.5627	ETTA (DUKE HOTSPRINGS) - MC NIEL 500KV CKT 1
FDNS	00NR	2	16WP	G15_048	FROM->TO	G14-057T 345.00 - SUNNYSIDE 345KV CKT 1	717	789	0.04891	113.5603	P12:138:AEPW:YARCH-S4:T.S.E.-4
FDNS	00NR	2	16WP	G15_048	FROM->TO	G14-057T 345.00 - SUNNYSIDE 345KV CKT 1	717	789	0.04896	113.5583	G15095_T 138.00 - ROSE_VALLEY 138.00 138KV CKT 1
FDNS	00NR	2	16WP	G15_048	FROM->TO	G14-057T 345.00 - SUNNYSIDE 345KV CKT 1	717	789	0.04921	113.5565	WEATHERFORD JCT. - WEATHERFORD SOUTHEAST 138KV CKT 1
FDNS	00NR	2	16WP	G15_048	FROM->TO	G14-057T 345.00 - SUNNYSIDE 345KV CKT 1	717	789	0.04921	113.5565	WEATHERFORD JCT. - WEATHERFORD SOUTHEAST 138KV CKT 1
FDNS	00NR	2	16WP	G15_048	FROM->TO	G14-057T 345.00 - SUNNYSIDE 345KV CKT 1	717	789	0.06524	113.5549	CLEO CORNER - CLEOPLT4 138.00 138KV CKT 1
FDNS	00NR	2	16WP	G15_048	FROM->TO	G14-057T 345.00 - SUNNYSIDE 345KV CKT 1	717	789	0.04891	113.5542	P12:138:AEPW:BA_71ST4:T.S.E.-4
FDNS	00NR	2	16WP	G15_048	FROM->TO	G14-057T 345.00 - SUNNYSIDE 345KV CKT 1	717	789	0.04891	113.5534	P12:69:AEPW:NROGERS2:ECNTRTN2
FDNS	00NR	2	16WP	G15_048	FROM->TO	G14-057T 345.00 - SUNNYSIDE 345KV CKT 1	717	789	0.0489	113.5532	LAWTON RELIFT TAP - OMPA-WALTERS 69KV CKT 1
FDNS	00NR	2	16WP	G15_048	FROM->TO	G14-057T 345.00 - SUNNYSIDE 345KV CKT 1	717	789	0.04891	113.55	GEN336801 1-BAXTER WILSON UNIT #1
FDNS	00NR	2	16WP	G15_048	FROM->TO	G14-057T 345.00 - SUNNYSIDE 345KV CKT 1	717	789	0.04942	113.5496	MCCLAIN - STHLAKE4 138.00 138KV CKT 1
FDNS	00NR	2	16WP	G15_048	FROM->TO	G14-057T 345.00 - SUNNYSIDE 345KV CKT 1	717	789	0.04891	113.5458	SABINE 230/24.0KV TRANSFORMER CKT 1
FDNS	00NR	2	16WP	G15_048	FROM->TO	G14-057T 345.00 - SUNNYSIDE 345KV CKT 1	717	789	0.04922	113.5397	BLACKBERRY - NEOSHO 345KV CKT 1
FDNS	00NR	2	16WP	G15_048	FROM->TO	G14-057T 345.00 - SUNNYSIDE 345KV CKT 1	717	789	0.04922	113.5397	BLACKBERRY - NEOSHO 345KV CKT 1
FDNS	00NR	2	16WP	G15_048	FROM->TO	G14-057T 345.00 - SUNNYSIDE 345KV CKT 1	717	789	0.04787	113.5347	ARBUCKLE - VANOSTP4 138.00 138KV CKT 1
FDNS	00NR	2	16WP	G15_048	FROM->TO	G14-057T 345.00 - SUNNYSIDE 345KV CKT 1	717	789	0.04899	113.5342	7LUTESVIL 345.00 - 7ST FRANC 345.00 345KV CKT 1
FDNS	00NR	2	16WP	G15_048	FROM->TO	G14-057T 345.00 - SUNNYSIDE 345KV CKT 1	717	789	0.04912	113.5317	SWISSVALE - WEST GARDNER 345KV CKT 1
FDNS	00NR	2	16WP	G15_048	FROM->TO	G14-057T 345.00 - SUNNYSIDE 345KV CKT 1	717	789	0.04891	113.5301	FRONTIER 345/18.0KV TRANSFORMER CKT 1
FDNS	00NR	2	20WP	G15_048	FROM->TO	G14-057T 345.00 - SUNNYSIDE 345KV CKT 1	717	789	0.04854	113.53	GRAND GULF 500/22.0KV TRANSFORMER CKT 1
FDNS	00NR	2	16WP	G15_048	FROM->TO	G14-057T 345.00 - SUNNYSIDE 345KV CKT 1	717	789	0.04891	113.5285	FRONTIER 345/18.0KV TRANSFORMER CKT 1
FDNS	00NR	2	16WP	G15_048	FROM->TO	G14-057T 345.00 - SUNNYSIDE 345KV CKT 1	717	789	0.04882	113.5283	ENOWILT - LONE OAK 138KV CKT 1
FDNS	00NR	2	16WP	G15_048	FROM->TO	G14-057T 345.00 - SUNNYSIDE 345KV CKT 1	717	789	0.05001	113.5266	LASALLE - STONEWAL LH138.00 138KV CKT 1
FDNS	00NR	2	16WP	G15_048	FROM->TO	G14-057T 345.00 - SUNNYSIDE 345KV CKT 1	717	789	0.06524	113.5225	CLEOPLT4 138.00 - MEN TAP 138KV CKT 1
FDNS	00NR	2	16WP	G15_048	FROM->TO	G14-057T 345.00 - SUNNYSIDE 345KV CKT 1	717	789	0.04891	113.5223	P12:161:AEPW:CHAMSPR5:FARMING5
FDNS	00NR	2	16WP	G15_048	FROM->TO	G14-057T 345.00 - SUNNYSIDE 345KV CKT 1	717	789	0.04964	113.5201	P12:138:OKGE-AEPW:JENSEN4:REDROCKRD4
FDNS	00NR	2	16WP	G15_048	FROM->TO	G14-057T 345.00 - SUNNYSIDE 345KV CKT 1	717	789	0.04891	113.52	ESSEX UNIT 2 500/18.0KV TRANSFORMER CKT 1
FDNS	00NR	2	16WP	G15_048	FROM->TO	G14-057T 345.00 - SUNNYSIDE 345KV CKT 1	717	789	0.04882	113.5194	ENOWILT - SARDIS 138KV CKT 1
FDNS	00NR	2	16WP	G15_048	FROM->TO	G14-057T 345.00 - SUNNYSIDE 345KV CKT 1	717	789	0.04929	113.5189	EMPORIA ENERGY CENTER - G14_001T 345.00 345KV CKT 1
FDNS	00NR	2	16WP	G15_048	FROM->TO	G14-057T 345.00 - SUNNYSIDE 345KV CKT 1	717	789	0.04947	113.5188	P12:138:AEPW-OGE:SHIDLER4:OSAGE 4
FDNS	00NR	2	16WP	G15_048	FROM->TO	G14-057T 345.00 - SUNNYSIDE 345KV CKT 1	717	789	0.04862	113.5178	TUCO INTERCHANGE - TUCO_2 345.00 345KV CKT 1
FDNS	00NR	2	16WP	G15_048	FROM->TO	G14-057T 345.00 - SUNNYSIDE 345KV CKT 1	717	789	0.04893	113.5157	HOPE - MCNAB REC 115KV CKT 1
FDNS	00NR	2	16WP	G15_048	FROM->TO	G14-057T 345.00 - SUNNYSIDE 345KV CKT 1	717	789	0.04916	113.5131	NORGE ROAD - SOUTHWESTERN STATION 138KV CKT 1
FDNS	00NR	2	16WP	G15_048	FROM->TO	G14-057T 345.00 - SUNNYSIDE 345KV CKT 1	717	789	0.04916	113.5131	NORGE ROAD - SOUTHWESTERN STATION 138KV CKT 1
FDNS	00NR	2	16WP	G15_048	FROM->TO	G14-057T 345.00 - SUNNYSIDE 345KV CKT 1	717	789	0.06524	113.5126	IMO TAP - MEN TAP 138KV CKT 1
FDNS	00NR	2	16WP	G15_048	FROM->TO	G14-057T 345.00 - SUNNYSIDE 345KV CKT 1	717	789	0.05001	113.5119	STONEWAL LH138.00 - TUPELO TAP 138KV CKT 1
FDNS	00NR	2	16WP	G15_048	FROM->TO	G14-057T 345.00 - SUNNYSIDE 345KV CKT 1	717	789	0.04893	113.5071	P12:115:AEPW:TURK3:HOPE3
FDNS	00NR	2	16WP	G15_048	FROM->TO	G14-057T 345.00 - SUNNYSIDE 345KV CKT 1	717	789	0.04921	113.5062	P12:138:AEPW:REDROCKRD4:WTH_JCT4
FDNS	00NR	2	16WP	G15_048	FROM->TO	G14-057T 345.00 - SUNNYSIDE 345KV CKT 1	717	789	0.04891	113.5011	GEN505616 1-BROKEN BOW
FDNS	00NR	2	16WP	G15_048	FROM->TO	G14-057T 345.00 - SUNNYSIDE 345KV CKT 1	717	789	0.04896	113.5002	NOEL_SW 138.00 - ROSE_VALLEY 138.00 138KV CKT 1
FDNS	00NR	2	16WP	G15_048	FROM->TO	G14-057T 345.00 - SUNNYSIDE 345KV CKT 1	717	789	0.04914	113.4988	SOUTHWESTERN STATION - VERDEN 138KV CKT 1
FDNS	00NR	2	16WP	G15_048	FROM->TO	G14-057T 345.00 - SUNNYSIDE 345KV CKT 1	717	789	0.04951	113.4972	BENTON - WICHITA 345KV CKT 1
FDNS	00NR	2	16WP	G15_048	FROM->TO	G14-057T 345.00 - SUNNYSIDE 345KV CKT 1	717	789	0.04902	113.4943	8WNEWMADRID 500.00 - DELL 500 500KV CKT 1
FDNS	00NR	2	16WP	G15_048	FROM->TO	G14-057T 345.00 - SUNNYSIDE 345KV CKT 1	717	789	0.04891	113.4932	LEWIS CREEK SWITCHYARD 138/22.0KV TRANSFORMER CKT 1
FDNS	00NR	2	16WP	G15_048	FROM->TO	G14-057T 345.00 - SUNNYSIDE 345KV CKT 1	717	789	0.04891	113.4884	LEWIS CREEK SWITCHYARD 138/22.0KV TRANSFORMER CKT 1
FDNS	00NR	2	16WP	G15_048	FROM->TO	G14-057T 345.00 - SUNNYSIDE 345KV CKT 1	717	789	0.0489	113.4861	OMPA-WALTERS - WALTERS 69KV CKT 1
FDNS	00NR	2	16WP	G15_048	FROM->TO	G14-057T 345.00 - SUNNYSIDE 345KV CKT 1	717	789	0.0489	113.4861	OMPA-WALTERS - WALTERS 69KV CKT 1
FDNS	00NR	2	16WP	G15_048	FROM->TO	G14-057T 345.00 - SUNNYSIDE 345KV CKT 1	717	789	0.04893	113.4853	MCNAB REC - Turk 115 115KV CKT 1
FDNS	00NR	2	16WP	G15_048	FROM->TO	G14-057T 345.00 - SUNNYSIDE 345KV CKT 1	717	789	0.04893	113.4852	TURK (TURK 1) 138/115/13.2KV TRANSFORMER CKT 1
FDNS	00NR	2	16WP	G15_048	FROM->TO	G14-057T 345.00 - SUNNYSIDE 345KV CKT 1	717	789	0.04893	113.4852	TURK (TURK 1) 138/115/13.2KV TRANSFORMER CKT 1
FDNS	00NR	2	16WP	G15_048	FROM->TO	G14-057T 345.00 - SUNNYSIDE 345KV CKT 1	717	789	0.04882	113.4852	CLAYTON - SARDIS 138KV CKT 1
FDNS	00NR	2	16WP	G15_048	FROM->TO	G14-057T 345.00 - SUNNYSIDE 345KV CKT 1	717	789	0.04892	113.4831	COUCH SES - MC NIEL 115KV CKT 1
FDNS	00NR	2	16WP	G15_048	FROM->TO	G14-057T 345.00 - SUNNYSIDE 345KV CKT 1	717	789	0.04914	113.4785	NORTH 29TH CHICKASHA - VERDEN 138KV CKT 1
FDNS	00NR	2	16WP	G15_048	FROM->TO	G14-057T 345.00 - SUNNYSIDE 345KV CKT 1	717	789	0.04891	113.476	GEN501970 1-EVANGELINE UNIT 7
FDNS	00NR	2	16WP	G15_048	FROM->TO	G14-057T 345.00 - SUNNYSIDE 345KV CKT 1	717	789	0.04891	113.4704	GEN659125 1-COVEY
FDNS	00NR	2	16WP	G15_048	FROM->TO	G14-057T 345.00 - SUNNYSIDE 345KV CKT 1	717	789	0.04891	113.4674	GEN509394 1-FLINT CREEK
FDNS	00NR	2	16WP	G15_048	FROM->TO	G14-057T 345.00 - SUNNYSIDE 345KV CKT 1	717	789	0.05023	113.4668	FRANKLIN SW - WESTMOORE 138KV CKT 1
FDNS	00NR	2	16WP	G15_048	FROM->TO	G14-057T 345.00 - SUNNYSIDE 345KV CKT 1	717	789	0.04893	113.4667	P12:138:OKGE:3TERM12
FDNS	00NR	2	16WP	G15_048	FROM->TO	G14-057T 345.00 - SUNNYSIDE 345KV CKT 1	717	789	0.04891	113.4638	GEN334392 1-EXXON MOBIL IPP 1
FDNS	00NR	2	16WP	G15_048	FROM->TO	G14-057T 345.00 - SUNNYSIDE 345KV CKT 1	717	789	0.04907	113.4631	P12:69:WFEC-AEPW:COMANCH2:WALTRS-2
FDNS	00NR	2	16WP	G15_048	FROM->TO	G14-057T 345.00 - SUNNYSIDE 345KV CKT 1	717	789	0.04909	113.4612	EMPORIA ENERGY CENTER - SWISSVALE 345KV CKT 1
FDNS	00NR	2	16WP	G15_048	FROM->TO	G14-057T 345.00 - SUNNYSIDE 345KV CKT 1	717	789	0.04882	113.4581	P12:138:AEPW-SWPA:LONEOAK4:BRKNBW4
FDNS	00NR	2	16WP	G15_048	FROM->TO	G14-057T 345.00 - SUNNYSIDE 345KV CKT 1	717	789	0.04891	113.4572	GEN334393 1-EXXON MOBIL IPP 2
FDNS	00NR	2	16WP	G15_048	FROM->TO	G14-057T 345.00 - SUNNYSIDE 345KV CKT 1	717	789	0.04891	113.4572	GEN334394 1-EXXON MOBIL IPP 3
FDNS	00NR	2	16WP	G15_048	FROM->TO	G14-057T 345.00 - SUNNYSIDE 345KV CKT 1	717	789	0.04863	113.4566	G14_038T 345.00 - POTTER COUNTY INTERCHANGE 345KV CKT 1
FDNS	00NR	2	16WP	G15_048	FROM->TO	G14-057T 345.00 - SUNNYSIDE 345KV CKT 1	717	789	0.04929	113.4552	G14_001T 345.00 - WICHITA 345KV CKT 1
FDNS	00NR	2	16WP	G15_048	FROM->TO	G14-057T 345.00 - SUNNYSIDE 345KV CKT 1	717	789	0.04909	113.4545	WEATHERFORD TAP - WEATHERFORD WIND FARM 138KV CKT 1
FDNS	00NR	2	16WP	G15_048	FROM->TO	G14-057T 345.00 - SUNNYSIDE 345KV CKT 1	717	789	0.04938	113.4538	MORISNT4 138.00 - STILLWATER 138KV CKT 1
FDNS	00NR	2	20WP	G15_048	FROM->TO	G14-057T 345.00 - SUNNYSIDE 345KV CKT 1	717	789	0.04857	113.452	7SAREPTA% 345.00 - ELDORADO EHV 345KV CKT 1
FDNS	00NR	2	20WP	G15_048	FROM->TO	G14-057T 345.00 - SUNNYSIDE 345KV CKT 1	717	789	0.04857	113.4518	3TR3AR8EL7EL
FDNS	00NR	2	16WP	G15_048	FROM->TO	G14-057T 345.00 - SUNNYSIDE 345KV CKT 1	717	789	0.04891	113.4485	GEN336222 1-LITTLE GYPSY UNIT#2
FDNS	00NR	2	16WP	G15_048	FROM->TO	G14-057T 345.00 - SUNNYSIDE 345KV CKT 1	717	789	0.04947	113.4484	P12:138:OKGE:3TERM2
FDNS	00NR	2	16WP	G15_048	FROM->TO	G14-057T 345.00 - SUNNYSIDE 345KV CKT 1	717	789	0.04882	113.4456	CLAYTON - NASHOBA 138KV CKT 1
FDNS	00NR	2	16WP	G15_048	FROM->TO	G14-057T 345.00 - SUNNYSIDE 345KV CKT 1	717	789	0.04902	113.4445	FRANKLIN - FRANKLIN SW 138KV CKT 1
FDNS	00NR	2	20WP	G15_048	FROM->TO	G14-057T 345.00 - SUNNYSIDE 345KV CKT 1	717	789	0.04857	113.4413	ELDORADO EHV 500/345KV TRANSFORMER CKT 1

SOLUTION	GROUP	SCENARIO	SEASON	SOURCE	DIRECTION	MONITORED ELEMENT	RATEA (MVA)	RATEB(MVA)	TDF	TC%LOADING (% MVA)	CONTINGENCY
FDNS	00NR	2	16WP	G15_048	FROM->TO	G14-057T 345.00 - SUNNYSIDE 345KV CKT 1	717	789	0.049	113.4391	7JASPER 345.00 - MORGAN 345KV CKT 1
FDNS	00NR	2	16WP	G15_048	FROM->TO	G14-057T 345.00 - SUNNYSIDE 345KV CKT 1	717	789	0.04894	113.4377	BUCKNER7 345.00 - HOLCOMB 345KV CKT 1
FDNS	00NR	2	16WP	G15_048	FROM->TO	G14-057T 345.00 - SUNNYSIDE 345KV CKT 1	717	789	0.04894	113.4377	BUCKNER7 345.00 - HOLCOMB 345KV CKT 1
FDNS	00NR	2	16WP	G15_048	FROM->TO	G14-057T 345.00 - SUNNYSIDE 345KV CKT 1	717	789	0.05027	113.4365	MARIETTA - MARIETTA4 138.00 138KV CKT 1
FDNS	00NR	2	16WP	G15_048	FROM->TO	G14-057T 345.00 - SUNNYSIDE 345KV CKT 1	717	789	0.04892	113.434	P12:138:AEPW:R.S.S-4:T.P.S.-4
FDNS	00NR	2	16WP	G15_048	FROM->TO	G14-057T 345.00 - SUNNYSIDE 345KV CKT 1	717	789	0.04882	113.4327	BETHEL - NASHOBA 138KV CKT 1
FDNS	00NR	2	16WP	G15_048	FROM->TO	G14-057T 345.00 - SUNNYSIDE 345KV CKT 1	717	789	0.04891	113.4307	GEN506749 1-EASTMAN GENERATION A
FDNS	00NR	2	16WP	G15_048	FROM->TO	G14-057T 345.00 - SUNNYSIDE 345KV CKT 1	717	789	0.04941	113.4303	CLINTON JUNCTION - ELK CITY 138KV CKT 1
FDNS	00NR	2	16WP	G15_048	FROM->TO	G14-057T 345.00 - SUNNYSIDE 345KV CKT 1	717	789	0.04941	113.4303	CLINTON JUNCTION - ELK CITY 138KV CKT 1
FDNS	00NR	2	16WP	G15_048	FROM->TO	G14-057T 345.00 - SUNNYSIDE 345KV CKT 1	717	789	0.05031	113.4299	CLARKSVILLE - ONETA 345KV CKT 1
FDNS	00NR	2	16WP	G15_048	FROM->TO	G14-057T 345.00 - SUNNYSIDE 345KV CKT 1	717	789	0.05031	113.4299	CLARKSVILLE - ONETA 345KV CKT 1
FDNS	00NR	2	16WP	G15_048	FROM->TO	G14-057T 345.00 - SUNNYSIDE 345KV CKT 1	717	789	0.04921	113.4299	HINTON - WEATHERFORD JCT. 138KV CKT 1
FDNS	00NR	2	16WP	G15_048	FROM->TO	G14-057T 345.00 - SUNNYSIDE 345KV CKT 1	717	789	0.04891	113.4276	GEN334432 1-SABINE UNIT 2
FDNS	00NR	2	16WP	G15_048	FROM->TO	G14-057T 345.00 - SUNNYSIDE 345KV CKT 1	717	789	0.04891	113.4275	GEN334431 1-SABINE UNIT 1
FDNS	00NR	2	16WP	G15_048	FROM->TO	G14-057T 345.00 - SUNNYSIDE 345KV CKT 1	717	789	0.04891	113.4204	GEN501972 1-EVANGELINE UNIT 7-2
FDNS	00NR	2	16WP	G15_048	FROM->TO	G14-057T 345.00 - SUNNYSIDE 345KV CKT 1	717	789	0.04891	113.4203	GEN501971 1-EVANGELINE UNIT 7-1
FDNS	00NR	2	16WP	G15_048	FROM->TO	G14-057T 345.00 - SUNNYSIDE 345KV CKT 1	717	789	0.04891	113.4197	GEN336152 1-WATERFORD UNIT#2
FDNS	00NR	2	16WP	G15_048	FROM->TO	G14-057T 345.00 - SUNNYSIDE 345KV CKT 1	717	789	0.04891	113.4187	GEN336151 1-WATERFORD UNIT#1
FDNS	00NR	2	20WP	G15_048	FROM->TO	G14-057T 345.00 - SUNNYSIDE 345KV CKT 1	717	789	0.04854	113.4186	GEN515577 1-ARBWND11 0.6900
FDNS	00NR	2	20WP	G15_048	FROM->TO	G14-057T 345.00 - SUNNYSIDE 345KV CKT 1	717	789	0.0488	113.4146	P12:138:AEPW:DUNCAN-4:L.E.S.-4
FDNS	00NR	2	16WP	G15_048	FROM->TO	G14-057T 345.00 - SUNNYSIDE 345KV CKT 1	717	789	0.04914	113.4111	CORNVILLE - NORTH 29TH CHICKASHA 138KV CKT 1
FDNS	00NR	2	16WP	G15_048	FROM->TO	G14-057T 345.00 - SUNNYSIDE 345KV CKT 1	717	789	0.04891	113.4106	P12:138:AEPW:R.S.S.-4:R:96YALE-4
FDNS	00NR	2	16WP	G15_048	FROM->TO	G14-057T 345.00 - SUNNYSIDE 345KV CKT 1	717	789	0.05046	113.4047	PURCELL4 138.00 - WALNUT CREEK 138KV CKT 1
FDNS	00NR	2	16WP	G15_048	FROM->TO	G14-057T 345.00 - SUNNYSIDE 345KV CKT 1	717	789	0.04899	113.4022	FLETCHER - MARLOW JCT 69KV CKT 1
FDNS	00NR	2	16WP	G15_048	FROM->TO	G14-057T 345.00 - SUNNYSIDE 345KV CKT 1	717	789	0.04891	113.397	GEN501912 1-ACADIA UNIT CT1B
FDNS	00NR	2	16WP	G15_048	FROM->TO	G14-057T 345.00 - SUNNYSIDE 345KV CKT 1	717	789	0.04891	113.3963	GEN501911 1-ACADIA UNIT CT1A
FDNS	00NR	2	16WP	G15_048	FROM->TO	G14-057T 345.00 - SUNNYSIDE 345KV CKT 1	717	789	0.04916	113.3952	CORNVILLE - NORGE ROAD 138KV CKT 1
FDNS	00NR	2	16WP	G15_048	FROM->TO	G14-057T 345.00 - SUNNYSIDE 345KV CKT 1	717	789	0.04916	113.3952	CORNVILLE - NORGE ROAD 138KV CKT 1
FDNS	00NR	2	16WP	G15_048	FROM->TO	G14-057T 345.00 - SUNNYSIDE 345KV CKT 1	717	789	0.04891	113.3951	P12:138:AEPW:MOHAWK4:T.NO--4
FDNS	00NR	2	16WP	G15_048	FROM->TO	G14-057T 345.00 - SUNNYSIDE 345KV CKT 1	717	789	0.04914	113.3896	HAMMETT TAP - HORSESHOE LAKE 138KV CKT 1
FDNS	00NR	2	16WP	G15_048	FROM->TO	G14-057T 345.00 - SUNNYSIDE 345KV CKT 1	717	789	0.04891	113.3891	ST FRANCIS 161/16.0KV TRANSFORMER CKT 1
FDNS	00NR	2	16WP	G15_048	FROM->TO	G14-057T 345.00 - SUNNYSIDE 345KV CKT 1	717	789	0.04845	113.3891	ARBUCKLE - MILLCREEK 138KV CKT 1
FDNS	00NR	2	16WP	G15_048	FROM->TO	G14-057T 345.00 - SUNNYSIDE 345KV CKT 1	717	789	0.04891	113.389	ST FRANCIS - ST FRANCIS 1 161KV CKT Z1
FDNS	00NR	2	16WP	G15_048	FROM->TO	G14-057T 345.00 - SUNNYSIDE 345KV CKT 1	717	789	0.04892	113.3855	P12:138:AEPW:OKMULGE4:R.S.S-4
FDNS	00NR	2	16WP	G15_048	FROM->TO	G14-057T 345.00 - SUNNYSIDE 345KV CKT 1	717	789	0.04892	113.385	LAYFLD8 500.00 (LAYFLD AUTO) 500/230/13.8KV TRANSFORMER CKT 1
FDNS	00NR	2	16WP	G15_048	FROM->TO	G14-057T 345.00 - SUNNYSIDE 345KV CKT 1	717	789	0.04892	113.385	LAYFLD8 500.00 (LAYFLD AUTO) 500/230/13.8KV TRANSFORMER CKT 1
FDNS	00NR	2	16WP	G15_048	FROM->TO	G14-057T 345.00 - SUNNYSIDE 345KV CKT 1	717	789	0.04891	113.3786	SABINE 230/22.0KV TRANSFORMER CKT 1
FDNS	00NR	2	16WP	G15_048	FROM->TO	G14-057T 345.00 - SUNNYSIDE 345KV CKT 1	717	789	0.04882	113.378	BETHEL - BROKEN BOW 138KV CKT 1
FDNS	00NR	2	16WP	G15_048	FROM->TO	G14-057T 345.00 - SUNNYSIDE 345KV CKT 1	717	789	0.04921	113.3774	HINTON - REDROCKRD4 138.00 138KV CKT 1
FDNS	00NR	2	16WP	G15_048	FROM->TO	G14-057T 345.00 - SUNNYSIDE 345KV CKT 1	717	789	0.04892	113.3764	AMITY SS - MURFREESBORO EAST (AECC) 115KV CKT 1
FDNS	00NR	2	16WP	G15_048	FROM->TO	G14-057T 345.00 - SUNNYSIDE 345KV CKT 1	717	789	0.04865	113.3747	P12:138:WFEC-AEPW:ELKCTY-4:ERICK4
FDNS	00NR	2	16WP	G15_048	FROM->TO	G14-057T 345.00 - SUNNYSIDE 345KV CKT 1	717	789	0.04943	113.3729	P12:138:OKGE:3TERM47
FDNS	00NR	2	16WP	G15_048	FROM->TO	G14-057T 345.00 - SUNNYSIDE 345KV CKT 1	717	789	0.04891	113.3726	GEN336242 1-1NMIL ST1 18.000
FDNS	00NR	2	16WP	G15_048	FROM->TO	G14-057T 345.00 - SUNNYSIDE 345KV CKT 1	717	789	0.04909	113.3672	WEATHERFORD SOUTHEAST - WEATHERFORD TAP 138KV CKT 1
FDNS	00NR	2	16WP	G15_048	FROM->TO	G14-057T 345.00 - SUNNYSIDE 345KV CKT 1	717	789	0.0492	113.342	SEMINOLE (SEMINOL2) 345/138/14.4KV TRANSFORMER CKT 1
FDNS	00NR	2	20WP	G15_048	FROM->TO	G14-057T 345.00 - SUNNYSIDE 345KV CKT 1	717	789	0.05049	113.3415	ARCADIA - SEMINOLE 345KV CKT 1
FDNS	00NR	2	16WP	G15_048	FROM->TO	G14-057T 345.00 - SUNNYSIDE 345KV CKT 1	717	789	0.04942	113.3359	CIMARRON - NORTHWEST 345KV CKT 1
FDNS	00NR	2	20WP	G15_048	FROM->TO	G14-057T 345.00 - SUNNYSIDE 345KV CKT 1	717	789	0.0488	113.2973	COMANCHE TAP - OMPA-DUNCAN 840 138KV CKT 1
FDNS	00NR	2	20WP	G15_048	FROM->TO	G14-057T 345.00 - SUNNYSIDE 345KV CKT 1	717	789	0.04854	113.2559	GEN509409 1-WILKES #3
FDNS	00NR	2	20WP	G15_048	FROM->TO	G14-057T 345.00 - SUNNYSIDE 345KV CKT 1	717	789	0.04989	113.2462	HEALDTON - LOCO 138KV CKT 1
FDNS	00NR	2	20WP	G15_048	FROM->TO	G14-057T 345.00 - SUNNYSIDE 345KV CKT 1	717	789	0.04924	113.2368	BRIDGECR 138.00 - TUTTLE 138KV CKT 1
FDNS	00NR	2	20WP	G15_048	FROM->TO	G14-057T 345.00 - SUNNYSIDE 345KV CKT 1	717	789	0.04527	113.2314	CANADIAN RIVER - MUSKOGEE 345KV CKT 1
FDNS	00NR	2	20WP	G15_048	FROM->TO	G14-057T 345.00 - SUNNYSIDE 345KV CKT 1	717	789	0.04854	113.1925	GEN501813 1-RODEMACHER UNIT 3
FDNS	00NR	2	20WP	G15_048	FROM->TO	G14-057T 345.00 - SUNNYSIDE 345KV CKT 1	717	789	0.04854	113.1225	GEN300006 1-NEW MADRID UNIT 1
FDNS	00NR	2	20WP	G15_048	FROM->TO	G14-057T 345.00 - SUNNYSIDE 345KV CKT 1	717	789	0.04854	113.1022	GEN300007 1-NEW MADRID UNIT 2
FDNS	00NR	2	20WP	G15_048	FROM->TO	G14-057T 345.00 - SUNNYSIDE 345KV CKT 1	717	789	0.04989	113.102	HEALDTON - RINGLING 138KV CKT 1
FDNS	00NR	2	20WP	G15_048	FROM->TO	G14-057T 345.00 - SUNNYSIDE 345KV CKT 1	717	789	0.04893	113.0313	LACYGNE - WAVERLY7 345.00 345KV CKT 1
FDNS	00NR	2	20WP	G15_048	FROM->TO	G14-057T 345.00 - SUNNYSIDE 345KV CKT 1	717	789	0.0488	113.0115	DUNCAN - OMPA-DUNCAN 840 138KV CKT 1
FDNS	00NR	2	20WP	G15_048	FROM->TO	G14-057T 345.00 - SUNNYSIDE 345KV CKT 1	717	789	0.0488	113.0115	DUNCAN - OMPA-DUNCAN 840 138KV CKT 1
FDNS	00NR	2	20WP	G15_048	FROM->TO	G14-057T 345.00 - SUNNYSIDE 345KV CKT 1	717	789	0.04854	112.9819	GEN335206 1-NELSON UNIT 6
FDNS	00NR	2	20WP	G15_048	FROM->TO	G14-057T 345.00 - SUNNYSIDE 345KV CKT 1	717	789	0.04924	112.9602	P12:138:WFEC:MSL01
FDNS	00NR	2	20WP	G15_048	FROM->TO	G14-057T 345.00 - SUNNYSIDE 345KV CKT 1	717	789	0.04854	112.9576	GEN520947 1-HUGO1
FDNS	00NR	2	20WP	G15_048	FROM->TO	G14-057T 345.00 - SUNNYSIDE 345KV CKT 1	717	789	0.04924	112.9545	BRIDGECR 138.00 - SUNSHINE CANYON 138KV CKT 1
FDNS	00NR	2	20WP	G15_048	FROM->TO	G14-057T 345.00 - SUNNYSIDE 345KV CKT 1	717	789	0.04989	112.9309	RINGLING - SOUTH WILSON 138KV CKT 1
FDNS	00NR	2	20WP	G15_048	FROM->TO	G14-057T 345.00 - SUNNYSIDE 345KV CKT 1	717	789	0.04893	112.9199	WAVERLY7 345.00 - WOLF CREEK 345KV CKT 1
FDNS	00NR	2	16WP	G15_048	FROM->TO	G14-057T 345.00 - SUNNYSIDE 345KV CKT 1	717	789	0.04891	112.9058	803-OKLAUNION
FDNS	00NR	2	20WP	G15_048	FROM->TO	G14-057T 345.00 - SUNNYSIDE 345KV CKT 1	717	789	0.04851	112.8133	ELDORADO EHV - MOUNT OLIVE 500KV CKT 1
FDNS	00NR	2	20WP	G15_048	FROM->TO	G14-057T 345.00 - SUNNYSIDE 345KV CKT 1	717	789	0.0485	112.8085	P12:138:AEPW:SHERID4:112GORE4
FDNS	00NR	2	20WP	G15_048	FROM->TO	G14-057T 345.00 - SUNNYSIDE 345KV CKT 1	717	789	0.04854	112.7988	GEN501812 1-RODEMACHER UNIT 2
FDNS	00NR	2	20WP	G15_048	FROM->TO	G14-057T 345.00 - SUNNYSIDE 345KV CKT 1	717	789	0.04854	112.7873	DOLET HILLS 345/24.0KV TRANSFORMER CKT 1
FDNS	00NR	2	20WP	G15_048	FROM->TO	G14-057T 345.00 - SUNNYSIDE 345KV CKT 1	717	789	0.04941	112.7668	Hitchland Interchange - WALKTAP7 345.00 345KV CKT 1
FDNS	00NR	2	20WP	G15_048	FROM->TO	G14-057T 345.00 - SUNNYSIDE 345KV CKT 1	717	789	0.04941	112.7668	Hitchland Interchange - WALKTAP7 345.00 345KV CKT 1
FDNS	00NR	2	20WP	G15_048	FROM->TO	G14-057T 345.00 - SUNNYSIDE 345KV CKT 1	717	789	0.04941	112.7573	P12:345:SPS:J07.1.FINN.HITCH
FDNS	00NR	2	20WP	G15_048	FROM->TO	G14-057T 345.00 - SUNNYSIDE 345KV CKT 1	717	789	0.04862	112.7566	REDBUD - RIVERSIDE STATION 345KV CKT 1
FDNS	00NR	2	20WP	G15_048	FROM->TO	G14-057T 345.00 - SUNNYSIDE 345KV CKT 1	717	789	0.04862	112.7566	REDBUD - RIVERSIDE STATION 345KV CKT 1
FDNS	00NR	2	20WP	G15_048	FROM->TO	G14-057T 345.00 - SUNNYSIDE 345KV CKT 1	717	789	0.04757	112.7566	PARK LANE - SEMINOLE 138KV CKT 1
FDNS	00NR	2	20WP	G15_048	FROM->TO	G14-057T 345.00 - SUNNYSIDE 345KV CKT 1	717	789	0.04854	112.6762	GEN515564 1-ORIGIN11 0.6900
FDNS	00NR	2	20WP	G15_048	FROM->TO	G14-057T 345.00 - SUNNYSIDE 345KV CKT 1	717	789	0.04854	112.6762	GEN515565 1-ORIGIN21 0.6900
FDNS	00NR	2	20WP	G15_048	FROM->TO	G14-057T 345.00 - SUNNYSIDE 345KV CKT 1	717	789	0.05045	112.6549	MATHWSN7 345.00 - NORTHWEST 345KV CKT 1

SOLUTION	GROUP	SCENARIO	SEASON	SOURCE	DIRECTION	MONITORED ELEMENT	RATEA (MVA)	RATEB(MVA)	TDF	TC%LOADING (% MVA)	CONTINGENCY
FDNS	00NR	2	20WP	G15_048	FROM->TO	G14-057T 345.00 - SUNNYSIDE 345KV CKT 1	717	789	0.04862	112.653	WEBRE - WELLS 500KV CKT 1
FDNS	00NR	2	20WP	G15_048	FROM->TO	G14-057T 345.00 - SUNNYSIDE 345KV CKT 1	717	789	0.04989	112.6447	MARIETTA - SOUTH WILSON 138KV CKT 1
FDNS	00NR	2	20WP	G15_048	FROM->TO	G14-057T 345.00 - SUNNYSIDE 345KV CKT 1	717	789	0.04854	112.6408	GEN334440 1-SABINE UNIT 4
FDNS	00NR	2	20WP	G15_048	FROM->TO	G14-057T 345.00 - SUNNYSIDE 345KV CKT 1	717	789	0.04854	112.6136	P12:161:AEPW:DYESS 5:HYLAND 5
FDNS	00NR	2	20WP	G15_048	FROM->TO	G14-057T 345.00 - SUNNYSIDE 345KV CKT 1	717	789	0.04854	112.6129	GEN590011 2-ERCOT EQUIVALENCE
FDNS	00NR	2	20WP	G15_048	FROM->TO	G14-057T 345.00 - SUNNYSIDE 345KV CKT 1	717	789	0.04943	112.5805	CANEYRV7 345.00 - NEOSHO 345KV CKT 1
FDNS	00NR	2	20WP	G15_048	FROM->TO	G14-057T 345.00 - SUNNYSIDE 345KV CKT 1	717	789	0.04854	112.5779	DELL 500 - ESSEX UNIT 2 500KV CKT Z1
FDNS	00NR	2	20WP	G15_048	FROM->TO	G14-057T 345.00 - SUNNYSIDE 345KV CKT 1	717	789	0.04854	112.5497	P12:69:AEPW:L.E.S.-2:LAW WC2
FDNS	00NR	2	20WP	G15_048	FROM->TO	G14-057T 345.00 - SUNNYSIDE 345KV CKT 1	717	789	0.04989	112.5491	P12:138:WFEC:MSL17
FDNS	00NR	2	20WP	G15_048	FROM->TO	G14-057T 345.00 - SUNNYSIDE 345KV CKT 1	717	789	0.04854	112.5438	GEN590010 1-ERCOT EQUIVALENCE
FDNS	00NR	2	16WP	G15_048	FROM->TO	G14-057T 345.00 - SUNNYSIDE 345KV CKT 1	717	789	0.04827	112.5339	NORTHWEST - SPRING CREEK 345KV CKT 1
FDNS	00NR	2	16WP	G15_048	FROM->TO	G14-057T 345.00 - SUNNYSIDE 345KV CKT 1	717	789	0.04827	112.5258	SOONER - SPRING CREEK 345KV CKT 1
FDNS	00NR	2	16WP	G15_048	FROM->TO	G14-057T 345.00 - SUNNYSIDE 345KV CKT 1	717	789	0.04848	112.5199	MAYSVLT4 138.00 - PRAIRIE POINT 138KV CKT 1
FDNS	00NR	2	16WP	G15_048	FROM->TO	G14-057T 345.00 - SUNNYSIDE 345KV CKT 1	717	789	0.04895	112.5177	JOHNSON COUNTY - RUSSETT 138KV CKT 1
FDNS	00NR	2	16WP	G15_048	FROM->TO	G14-057T 345.00 - SUNNYSIDE 345KV CKT 1	717	789	0.04898	112.505	GLASSES - MADILL INDUSTRIAL TAP 138KV CKT 1
FDNS	00NR	2	16WP	G15_048	FROM->TO	G14-057T 345.00 - SUNNYSIDE 345KV CKT 1	717	789	0.04891	112.4983	GEN562772 1-G15034_3 0.6900
FDNS	00NR	2	16WP	G15_048	FROM->TO	G14-057T 345.00 - SUNNYSIDE 345KV CKT 1	717	789	0.04891	112.4879	GEN562691 1-G15_015_3 0.6900
FDNS	00NR	2	16WP	G15_048	FROM->TO	G14-057T 345.00 - SUNNYSIDE 345KV CKT 1	717	789	0.04891	112.481	GEN521103 1-BLUE CANYON WIND FARM
FDNS	00NR	2	20WP	G15_048	FROM->TO	G14-057T 345.00 - SUNNYSIDE 345KV CKT 1	717	789	0.04892	112.4804	P12:138:WFEC:MSL02
FDNS	00NR	2	16WP	G15_048	FROM->TO	G14-057T 345.00 - SUNNYSIDE 345KV CKT 1	717	789	0.0493	112.4799	DRAPER LAKE - MIDWEST TAP 138KV CKT 1
FDNS	00NR	2	16WP	G15_048	FROM->TO	G14-057T 345.00 - SUNNYSIDE 345KV CKT 1	717	789	0.04888	112.4775	HUGO (HUGO 1) 345/138/13.8KV TRANSFORMER CKT 1
FDNS	00NR	2	20WP	G15_048	FROM->TO	G14-057T 345.00 - SUNNYSIDE 345KV CKT 1	717	789	0.04888	112.4712	PAOLI - PAYNE 138.00 138KV CKT 1
FDNS	00NR	2	16WP	G15_048	FROM->TO	G14-057T 345.00 - SUNNYSIDE 345KV CKT 1	717	789	0.04275	112.4704	BEARCAT 138.00 - NINE MILE 138KV CKT 1
FDNS	00NR	2	20WP	G15_048	FROM->TO	G14-057T 345.00 - SUNNYSIDE 345KV CKT 1	717	789	0.04811	112.4648	LAWTON EASTSIDE (LES 5) 345/138/13.8KV TRANSFORMER CKT 2
FDNS	00NR	2	20WP	G15_048	FROM->TO	G14-057T 345.00 - SUNNYSIDE 345KV CKT 1	717	789	0.04811	112.4648	LAWTON EASTSIDE (LES 5) 345/138/13.8KV TRANSFORMER CKT 2
FDNS	00NR	2	16WP	G15_048	FROM->TO	G14-057T 345.00 - SUNNYSIDE 345KV CKT 1	717	789	0.04891	112.4615	GEN520812 1-ANADRK5
FDNS	00NR	2	16WP	G15_048	FROM->TO	G14-057T 345.00 - SUNNYSIDE 345KV CKT 1	717	789	0.04891	112.4614	GEN520813 1-ANADRK6
FDNS	00NR	2	20WP	G15_048	FROM->TO	G14-057T 345.00 - SUNNYSIDE 345KV CKT 1	717	789	0.04854	112.4609	GEN506754 1-LEBROCK STEAM 1
FDNS	00NR	2	16WP	G15_048	FROM->TO	G14-057T 345.00 - SUNNYSIDE 345KV CKT 1	717	789	0.04842	112.4585	ARBUCKLE - SULPHR 4 138.00 138KV CKT 1
FDNS	00NR	2	20WP	G15_048	FROM->TO	G14-057T 345.00 - SUNNYSIDE 345KV CKT 1	717	789	0.04844	112.4575	ELDORADO EHV - SHERIDAN EHV 500KV CKT 1
FDNS	00NR	2	16WP	G15_048	FROM->TO	G14-057T 345.00 - SUNNYSIDE 345KV CKT 1	717	789	0.04929	112.4486	P12:138:OKGE:3TERM21
FDNS	00NR	2	16WP	G15_048	FROM->TO	G14-057T 345.00 - SUNNYSIDE 345KV CKT 1	717	789	0.04898	112.4442	GLASSES - RUSSETT 138KV CKT 1
FDNS	00NR	2	16WP	G15_048	FROM->TO	G14-057T 345.00 - SUNNYSIDE 345KV CKT 1	717	789	0.04891	112.4418	GEN511961 1-DEMPSEY-WTG10.7000
FDNS	00NR	2	16WP	G15_048	FROM->TO	G14-057T 345.00 - SUNNYSIDE 345KV CKT 1	717	789	0.04897	112.4396	P12:138:WFEC:MSL11
FDNS	00NR	2	16WP	G15_048	FROM->TO	G14-057T 345.00 - SUNNYSIDE 345KV CKT 1	717	789	0.04897	112.4396	P12:138:WFEC-AEPW:PHAROAH4:LONEOAK4
FDNS	00NR	2	20WP	G15_048	FROM->TO	G14-057T 345.00 - SUNNYSIDE 345KV CKT 1	717	789	0.04943	112.4393	CANEYRV7 345.00 - LATHAMS7 345.00 345KV CKT 1
FDNS	00NR	2	20WP	G15_048	FROM->TO	G14-057T 345.00 - SUNNYSIDE 345KV CKT 1	717	789	0.04963	112.4313	CIVIT - PAOLI 138KV CKT 1
FDNS	00NR	2	20WP	G15_048	FROM->TO	G14-057T 345.00 - SUNNYSIDE 345KV CKT 1	717	789	0.0485	112.4267	P12:138:AEPW:112GORE4:L.E.S.-4
FDNS	00NR	2	16WP	G15_048	FROM->TO	G14-057T 345.00 - SUNNYSIDE 345KV CKT 1	717	789	0.04848	112.4229	PRAIRIE POINT - RATLIFF 138KV CKT 1
FDNS	00NR	2	16WP	G15_048	FROM->TO	G14-057T 345.00 - SUNNYSIDE 345KV CKT 1	717	789	0.04891	112.4178	P12:069:OKGE:3TERM42
FDNS	00NR	2	16WP	G15_048	FROM->TO	G14-057T 345.00 - SUNNYSIDE 345KV CKT 1	717	789	0.04902	112.4163	P12:138:WFEC:MSL08
FDNS	00NR	2	16WP	G15_048	FROM->TO	G14-057T 345.00 - SUNNYSIDE 345KV CKT 1	717	789	0.04891	112.4142	GEN672392 1-NBECGT1G 18.000
FDNS	00NR	2	16WP	G15_048	FROM->TO	G14-057T 345.00 - SUNNYSIDE 345KV CKT 1	717	789	0.04901	112.411	DELL 500 - INDEPENDENCE 500KV CKT 1
FDNS	00NR	2	20WP	G15_048	FROM->TO	G14-057T 345.00 - SUNNYSIDE 345KV CKT 1	717	789	0.04854	112.4103	GEN509408 1-WILKES #2
FDNS	00NR	2	20WP	G15_048	FROM->TO	G14-057T 345.00 - SUNNYSIDE 345KV CKT 1	717	789	0.04879	112.4096	ANADARKO - GEORGIA 138KV CKT 1
FDNS	00NR	2	16WP	G15_048	FROM->TO	G14-057T 345.00 - SUNNYSIDE 345KV CKT 1	717	789	0.04911	112.4067	OVEXFRMCCOVE
FDNS	00NR	2	16WP	G15_048	FROM->TO	G14-057T 345.00 - SUNNYSIDE 345KV CKT 1	717	789	0.04837	112.4049	CIMARRON - MATHWSN7 345.00 345KV CKT 1
FDNS	00NR	2	16WP	G15_048	FROM->TO	G14-057T 345.00 - SUNNYSIDE 345KV CKT 1	717	789	0.04837	112.4049	CIMARRON - MATHWSN7 345.00 345KV CKT 2
FDNS	00NR	2	16WP	G15_048	FROM->TO	G14-057T 345.00 - SUNNYSIDE 345KV CKT 1	717	789	0.04894	112.397	GRPRAR1-LNX3345.00 - HOLT.CO3 345.00 345KV CKT 1
FDNS	00NR	2	16WP	G15_048	FROM->TO	G14-057T 345.00 - SUNNYSIDE 345KV CKT 1	717	789	0.04891	112.3943	GEN615010 1-STANTON4
FDNS	00NR	2	16WP	G15_048	FROM->TO	G14-057T 345.00 - SUNNYSIDE 345KV CKT 1	717	789	0.04891	112.3886	GEN528361 1-MADDOX GEN #1
FDNS	00NR	2	16WP	G15_048	FROM->TO	G14-057T 345.00 - SUNNYSIDE 345KV CKT 1	717	789	0.04891	112.3881	GEN629070 2-BEAVER CHANNEL GENERATORFOR UNIT NO 2
FDNS	00NR	2	16WP	G15_048	FROM->TO	G14-057T 345.00 - SUNNYSIDE 345KV CKT 1	717	789	0.04894	112.3876	GRPRAR1-LNX3345.00 - GRPRAR 345KV CKT Z
FDNS	00NR	2	16WP	G15_048	FROM->TO	G14-057T 345.00 - SUNNYSIDE 345KV CKT 1	717	789	0.04275	112.3839	P12:138:WFEC:MSL14
FDNS	00NR	2	16WP	G15_048	FROM->TO	G14-057T 345.00 - SUNNYSIDE 345KV CKT 1	717	789	0.04899	112.378	CANEY CREEK - JOHNSON COUNTY 138KV CKT 1
FDNS	00NR	2	16WP	G15_048	FROM->TO	G14-057T 345.00 - SUNNYSIDE 345KV CKT 1	717	789	0.04891	112.374	GEN615021 1-GRE-ER 14G 16.000
FDNS	00NR	2	16WP	G15_048	FROM->TO	G14-057T 345.00 - SUNNYSIDE 345KV CKT 1	717	789	0.04891	112.3682	GEN515443 1-MNCOWND1 0.7000
FDNS	00NR	2	16WP	G15_048	FROM->TO	G14-057T 345.00 - SUNNYSIDE 345KV CKT 1	717	789	0.04891	112.3675	GEN560183 1-REDHIL-WTG1 12.000
FDNS	00NR	2	16WP	G15_048	FROM->TO	G14-057T 345.00 - SUNNYSIDE 345KV CKT 1	717	789	0.04891	112.366	GEN629071 1-BURLINGTON GENERATOR FOR UNIT NO 1 E
FDNS	00NR	2	20WP	G15_048	FROM->TO	G14-057T 345.00 - SUNNYSIDE 345KV CKT 1	717	789	0.04854	112.3608	GEN336252 1-NINEMILE POINT UNIT#5
FDNS	00NR	2	16WP	G15_048	FROM->TO	G14-057T 345.00 - SUNNYSIDE 345KV CKT 1	717	789	0.04891	112.3598	GEN563242 1-G15090_3 0.6900
FDNS	00NR	2	16WP	G15_048	FROM->TO	G14-057T 345.00 - SUNNYSIDE 345KV CKT 1	717	789	0.04886	112.3591	CARTER - CHICKASAW 138KV CKT 1
FDNS	00NR	2	16WP	G15_048	FROM->TO	G14-057T 345.00 - SUNNYSIDE 345KV CKT 1	717	789	0.04891	112.3585	GEN562902 1-G15052_3 0.6900
FDNS	00NR	2	16WP	G15_048	FROM->TO	G14-057T 345.00 - SUNNYSIDE 345KV CKT 1	717	789	0.04275	112.349	BEARCAT 138.00 - MOORELAND 138KV CKT 1
FDNS	00NR	2	16WP	G15_048	FROM->TO	G14-057T 345.00 - SUNNYSIDE 345KV CKT 1	717	789	0.04872	112.3483	ROCKY POINT - SPRINGDALE 138KV CKT 1
FDNS	00NR	2	16WP	G15_048	FROM->TO	G14-057T 345.00 - SUNNYSIDE 345KV CKT 1	717	789	0.04891	112.3439	BURLINGTON NO1 + NO 2 + NO 3 161/20.0KV TRANSFORMER CKT 1
FDNS	00NR	2	16WP	G15_048	FROM->TO	G14-057T 345.00 - SUNNYSIDE 345KV CKT 1	717	789	0.04891	112.3431	INDEPENDENCE 500/26.0KV TRANSFORMER CKT 1
FDNS	00NR	2	16WP	G15_048	FROM->TO	G14-057T 345.00 - SUNNYSIDE 345KV CKT 1	717	789	0.0491	112.3389	CANADIAN RIVER - MCALESTER SOUTH 138KV CKT 1
FDNS	00NR	2	16WP	G15_048	FROM->TO	G14-057T 345.00 - SUNNYSIDE 345KV CKT 1	717	789	0.0491	112.3389	CANADIAN RIVER - MCALESTER SOUTH 138KV CKT 1
FDNS	00NR	2	16WP	G15_048	FROM->TO	G14-057T 345.00 - SUNNYSIDE 345KV CKT 1	717	789	0.0491	112.3377	CANADIAN RIVER () 345/138/13.8KV TRANSFORMER CKT 1
FDNS	00NR	2	16WP	G15_048	FROM->TO	G14-057T 345.00 - SUNNYSIDE 345KV CKT 1	717	789	0.0491	112.3377	CANADIAN RIVER () 345/138/13.8KV TRANSFORMER CKT 1
FDNS	00NR	2	16WP	G15_048	FROM->TO	G14-057T 345.00 - SUNNYSIDE 345KV CKT 1	717	789	0.04885	112.3253	ALTUS JUNCTION - RUSSELL 138KV CKT 1
FDNS	00NR	2	16WP	G15_048	FROM->TO	G14-057T 345.00 - SUNNYSIDE 345KV CKT 1	717	789	0.04885	112.3253	ALTUS JUNCTION - RUSSELL 138KV CKT 1
FDNS	00NR	2	20WP	G15_048	FROM->TO	G14-057T 345.00 - SUNNYSIDE 345KV CKT 1	717	789	0.04879	112.3233	FLETCHER - GEORGIA 138KV CKT 1
FDNS	00NR	2	20WP	G15_048	FROM->TO	G14-057T 345.00 - SUNNYSIDE 345KV CKT 1	717	789	0.04854	112.3175	FRONTIER - GRIMES 345KV CKT 1
FDNS	00NR	2	16WP	G15_048	FROM->TO	G14-057T 345.00 - SUNNYSIDE 345KV CKT 1	717	789	0.04893	112.3173	NORTHWEST TEXARKANA - WELSH 345KV CKT 1
FDNS	00NR	2	16WP	G15_048	FROM->TO	G14-057T 345.00 - SUNNYSIDE 345KV CKT 1	717	789	0.04893	112.3173	NORTHWEST TEXARKANA - WELSH 345KV CKT 1
FDNS	00NR	2	20WP	G15_048	FROM->TO	G14-057T 345.00 - SUNNYSIDE 345KV CKT 1	717	789	0.04854	112.3172	GEN503909 1-FULTONU1 1 16.000
FDNS	00NR	2	16WP	G15_048	FROM->TO	G14-057T 345.00 - SUNNYSIDE 345KV CKT 1	717	789	0.04926	112.315	MINGO - SETAB 345KV CKT 1

SOLUTION	GROUP	SCENARIO	SEASON	SOURCE	DIRECTION	MONITORED ELEMENT	RATEA (MVA)	RATEB(MVA)	TDF	TC%LOADING (% MVA)	CONTINGENCY
FDNS	00NR	2	16WP	G15_048	FROM->TO	G14-057T 345.00 - SUNNYSIDE 345KV CKT 1	717	789	0.04926	112.315	MINGO - SETAB 345KV CKT 1
FDNS	00NR	2	20WP	G15_048	FROM->TO	G14-057T 345.00 - SUNNYSIDE 345KV CKT 1	717	789	0.05007	112.3124	P12:138:AEPW-OGE:CORNVIL4:MAUD 4
FDNS	00NR	2	16WP	G15_048	FROM->TO	G14-057T 345.00 - SUNNYSIDE 345KV CKT 1	717	789	0.04891	112.3119	GEN562078 1-G11_051_3 0.6900
FDNS	00NR	2	16WP	G15_048	FROM->TO	G14-057T 345.00 - SUNNYSIDE 345KV CKT 1	717	789	0.04891	112.3074	P12:230:UMZB:# 112 #: NU IN SD. NU-RCDC & DRY CREEK XFMR
FDNS	00NR	2	20WP	G15_048	FROM->TO	G14-057T 345.00 - SUNNYSIDE 345KV CKT 1	717	789	0.04855	112.307	TUPELO - TUPELO TAP 138KV CKT 1
FDNS	00NR	2	16WP	G15_048	FROM->TO	G14-057T 345.00 - SUNNYSIDE 345KV CKT 1	717	789	0.04891	112.3068	RCDC EAST 4230.00 - RED CEDAR DC 230KV CKT 1
FDNS	00NR	2	16WP	G15_048	FROM->TO	G14-057T 345.00 - SUNNYSIDE 345KV CKT 1	717	789	0.04842	112.3067	JOLLYVILLE - SULPHR 4 138.00 138KV CKT 1
FDNS	00NR	2	20WP	G15_048	FROM->TO	G14-057T 345.00 - SUNNYSIDE 345KV CKT 1	717	789	0.04854	112.3039	GEN335204 1-NELSON UNIT 4
FDNS	00NR	2	16WP	G15_048	FROM->TO	G14-057T 345.00 - SUNNYSIDE 345KV CKT 1	717	789	0.04921	112.3017	CHAMBER SPRINGS - CLARKSVILLE 345KV CKT 1
FDNS	00NR	2	20WP	G15_048	FROM->TO	G14-057T 345.00 - SUNNYSIDE 345KV CKT 1	717	789	0.04854	112.2968	GEN334441 1-SABINE UNIT 5
FDNS	00NR	2	20WP	G15_048	FROM->TO	G14-057T 345.00 - SUNNYSIDE 345KV CKT 1	717	789	0.04963	112.2911	CIVIT - STRATFORD 138KV CKT 1
FDNS	00NR	2	16WP	G15_048	FROM->TO	G14-057T 345.00 - SUNNYSIDE 345KV CKT 1	717	789	0.04891	112.291	GEN514805 1-SOONER UNIT 1
FDNS	00NR	2	16WP	G15_048	FROM->TO	G14-057T 345.00 - SUNNYSIDE 345KV CKT 1	717	789	0.04906	112.2896	KEO EHV - WEST MEMPHIS 500 500KV CKT 1
FDNS	00NR	2	16WP	G15_048	FROM->TO	G14-057T 345.00 - SUNNYSIDE 345KV CKT 1	717	789	0.04891	112.2892	GEN562802 1-G15039_3 0.3570
FDNS	00NR	2	16WP	G15_048	FROM->TO	G14-057T 345.00 - SUNNYSIDE 345KV CKT 1	717	789	0.04891	112.2841	GEN514806 1-SOONER UNIT 2
FDNS	00NR	2	16WP	G15_048	FROM->TO	G14-057T 345.00 - SUNNYSIDE 345KV CKT 1	717	789	0.04891	112.2833	GEN524285 1-WILDORADO WIND GEN
FDNS	00NR	2	16WP	G15_048	FROM->TO	G14-057T 345.00 - SUNNYSIDE 345KV CKT 1	717	789	0.04891	112.2707	THOMAS HILL 161/22.0KV TRANSFORMER CKT 1
FDNS	00NR	2	20WP	G15_048	FROM->TO	G14-057T 345.00 - SUNNYSIDE 345KV CKT 1	717	789	0.0489	112.2673	EMPIRE - FLETCHER 138KV CKT 1
FDNS	00NR	2	16WP	G15_048	FROM->TO	G14-057T 345.00 - SUNNYSIDE 345KV CKT 1	717	789	0.04891	112.2659	GEN524295 1-SPNSPUR_WND10.6900
FDNS	00NR	2	16WP	G15_048	FROM->TO	G14-057T 345.00 - SUNNYSIDE 345KV CKT 1	717	789	0.04891	112.257	GEN560331 1-G10-46 13.800
FDNS	00NR	2	16WP	G15_048	FROM->TO	G14-057T 345.00 - SUNNYSIDE 345KV CKT 1	717	789	0.04813	112.257	ARKANSAS NUCLEAR ONE - FT SMITH 500KV CKT 1
FDNS	00NR	2	16WP	G15_048	FROM->TO	G14-057T 345.00 - SUNNYSIDE 345KV CKT 1	717	789	0.04813	112.257	ARKANSAS NUCLEAR ONE - FT SMITH 500KV CKT 1
FDNS	00NR	2	20WP	G15_048	FROM->TO	G14-057T 345.00 - SUNNYSIDE 345KV CKT 1	717	789	0.04826	112.2493	G14_038T 345.00 - Hitchland Interchange 345KV CKT 1
FDNS	00NR	2	16WP	G15_048	FROM->TO	G14-057T 345.00 - SUNNYSIDE 345KV CKT 1	717	789	0.04842	112.2394	JOLLYVILLE - KERR MCGEE CIMARRON 138KV CKT 1
FDNS	00NR	2	20WP	G15_048	FROM->TO	G14-057T 345.00 - SUNNYSIDE 345KV CKT 1	717	789	0.05007	112.2354	BLANCHARD - CORNVILLE 138KV CKT 1
FDNS	00NR	2	16WP	G15_048	FROM->TO	G14-057T 345.00 - SUNNYSIDE 345KV CKT 1	717	789	0.04891	112.2337	GEN562587 1-G14_056_3 0.6900
FDNSLock	00NR	2	16WP	G15_048	FROM->TO	G14-057T 345.00 - SUNNYSIDE 345KV CKT 1	717	789	0.04891	112.2316	GEN629072 4-LANSING GENERATOR FOR UNITS NO4 EIA CODE 1
FDNS	00NR	2	16WP	G15_048	FROM->TO	G14-057T 345.00 - SUNNYSIDE 345KV CKT 1	717	789	0.04891	112.2277	GEN562269 1-G12-020-1 0.6900
FDNS	00NR	2	20WP	G15_048	FROM->TO	G14-057T 345.00 - SUNNYSIDE 345KV CKT 1	717	789	0.04851	112.2143	LAYFLD8 500.00 - MOUNT OLIVE 500KV CKT 1
FDNS	00NR	2	20WP	G15_048	FROM->TO	G14-057T 345.00 - SUNNYSIDE 345KV CKT 1	717	789	0.04851	112.2143	LAYFLD8 500.00 - MOUNT OLIVE 500KV CKT 1
FDNS	00NR	2	20WP	G15_048	FROM->TO	G14-057T 345.00 - SUNNYSIDE 345KV CKT 1	717	789	0.04943	112.2139	LATHAMS7 345.00 - ROSE HILL 345KV CKT 1
FDNS	00NR	2	16WP	G15_048	FROM->TO	G14-057T 345.00 - SUNNYSIDE 345KV CKT 1	717	789	0.04891	112.2134	GEN657749 1-YOUNG 1 GENERATOR
FDNS	00NR	2	16WP	G15_048	FROM->TO	G14-057T 345.00 - SUNNYSIDE 345KV CKT 1	717	789	0.04891	112.2085	GEN562882 1-G15047_3 0.6900
FDNS	00NR	2	20WP	G15_048	FROM->TO	G14-057T 345.00 - SUNNYSIDE 345KV CKT 1	717	789	0.04854	112.2063	GEN334071 1-LEWIS CREEK 2
FDNS	00NR	2	20WP	G15_048	FROM->TO	G14-057T 345.00 - SUNNYSIDE 345KV CKT 1	717	789	0.04913	112.2058	THISTLE7 345.00 - WOODWARD DISTRICT EHV 345KV CKT 1
FDNS	00NR	2	20WP	G15_048	FROM->TO	G14-057T 345.00 - SUNNYSIDE 345KV CKT 1	717	789	0.04913	112.2058	THISTLE7 345.00 - WOODWARD DISTRICT EHV 345KV CKT 1
FDNS	00NR	2	20WP	G15_048	FROM->TO	G14-057T 345.00 - SUNNYSIDE 345KV CKT 1	717	789	0.04913	112.2058	THISTLE7 345.00 - WOODWARD DISTRICT EHV 345KV CKT 2
FDNS	00NR	2	20WP	G15_048	FROM->TO	G14-057T 345.00 - SUNNYSIDE 345KV CKT 1	717	789	0.04913	112.2058	THISTLE7 345.00 - WOODWARD DISTRICT EHV 345KV CKT 2
FDNS	00NR	2	20WP	G15_048	FROM->TO	G14-057T 345.00 - SUNNYSIDE 345KV CKT 1	717	789	0.04854	112.1979	GEN334070 1-LEWIS CREEK 1
FDNS	00NR	2	16WP	G15_048	FROM->TO	G14-057T 345.00 - SUNNYSIDE 345KV CKT 1	717	789	0.04428	112.1939	G15063_T 345.00 - MATHWSN7 345.00 345KV CKT 1
FDNS	00NR	2	20WP	G15_048	FROM->TO	G14-057T 345.00 - SUNNYSIDE 345KV CKT 1	717	789	0.04854	112.191	GEN336251 1-NINEMILE POINT UNIT#4
FDNS	00NR	2	16WP	G15_048	FROM->TO	G14-057T 345.00 - SUNNYSIDE 345KV CKT 1	717	789	0.04842	112.1888	ARBWIND4 138.00 - KERR MCGEE CIMARRON 138KV CKT 1
FDNS	00NR	2	20WP	G15_048	FROM->TO	G14-057T 345.00 - SUNNYSIDE 345KV CKT 1	717	789	0.0489	112.1884	COMANCHE - EMPIRE 138KV CKT 1
FDNS	00NR	2	16WP	G15_048	FROM->TO	G14-057T 345.00 - SUNNYSIDE 345KV CKT 1	717	789	0.04891	112.1842	GEN562270 1-G12-020-2 0.6900
FDNS	00NR	2	16WP	G15_048	FROM->TO	G14-057T 345.00 - SUNNYSIDE 345KV CKT 1	717	789	0.04891	112.1799	GEN562974 1-G15060_5 0.6900
FDNS	00NR	2	16WP	G15_048	FROM->TO	G14-057T 345.00 - SUNNYSIDE 345KV CKT 1	717	789	0.04891	112.178	GEN562812 1-G15040_3 0.3570
FDNS	00NR	2	16WP	G15_048	FROM->TO	G14-057T 345.00 - SUNNYSIDE 345KV CKT 1	717	789	0.04891	112.1758	GEN563102 1-G15075_3 0.5500
FDNS	00NR	2	20WP	G15_048	FROM->TO	G14-057T 345.00 - SUNNYSIDE 345KV CKT 1	717	789	0.04854	112.1745	GEN509392 G2-ARSENAL HILL GENS #3 (STALL)
FDNS	00NR	2	20WP	G15_048	FROM->TO	G14-057T 345.00 - SUNNYSIDE 345KV CKT 1	717	789	0.04854	112.1744	GEN509391 G1-ARSENAL HILL GENS #2 (STALL)
FDNS	00NR	2	20WP	G15_048	FROM->TO	G14-057T 345.00 - SUNNYSIDE 345KV CKT 1	717	789	0.04963	112.1739	OIL CENTER - STRATFORD 138KV CKT 1
FDNS	00NR	2	20WP	G15_048	FROM->TO	G14-057T 345.00 - SUNNYSIDE 345KV CKT 1	717	789	0.04854	112.1724	GEN509393 S1-ARSENAL HILL GENS #4 (STALL)
FDNS	00NR	2	20WP	G15_048	FROM->TO	G14-057T 345.00 - SUNNYSIDE 345KV CKT 1	717	789	0.04853	112.1722	P12:161:AEPW-SWPA:BEAVER5:EROGERS5
FDNS	00NR	2	16WP	G15_048	FROM->TO	G14-057T 345.00 - SUNNYSIDE 345KV CKT 1	717	789	0.04891	112.1709	GEN562973 1-G15060_4 0.6900
FDNS	00NR	2	16WP	G15_048	FROM->TO	G14-057T 345.00 - SUNNYSIDE 345KV CKT 1	717	789	0.04891	112.1678	GEN563132 1-G15078_3 0.3570
FDNS	00NR	2	16WP	G15_048	FROM->TO	G14-057T 345.00 - SUNNYSIDE 345KV CKT 1	717	789	0.04812	112.1653	P12:138:AEPW:112GORE4:SNYDER-4
FDNS	00NR	2	20WP	G15_048	FROM->TO	G14-057T 345.00 - SUNNYSIDE 345KV CKT 1	717	789	0.04865	112.1515	DUNCAN (DUNCAN) 138/69/13.8KV TRANSFORMER CKT 1
FDNS	00NR	2	20WP	G15_048	FROM->TO	G14-057T 345.00 - SUNNYSIDE 345KV CKT 1	717	789	0.04865	112.1515	DUNCAN (DUNCAN) 138/69/13.8KV TRANSFORMER CKT 1
FDNS	00NR	2	16WP	G15_048	FROM->TO	G14-057T 345.00 - SUNNYSIDE 345KV CKT 1	717	789	0.04891	112.1501	GEN563062 1-G15071_3 0.6900
FDNSLock	00NR	2	16WP	G15_048	FROM->TO	G14-057T 345.00 - SUNNYSIDE 345KV CKT 1	717	789	0.04891	112.1439	GEN681522 3-GENOA 3
FDNS	00NR	2	20WP	G15_048	FROM->TO	G14-057T 345.00 - SUNNYSIDE 345KV CKT 1	717	789	0.04854	112.1404	GEN334433 1-SABINE UNIT 3
FDNS	00NR	2	20WP	G15_048	FROM->TO	G14-057T 345.00 - SUNNYSIDE 345KV CKT 1	717	789	0.04854	112.1323	P12:161:AEPW:DYESS5:ELMSPRNG:TONTITN5
FDNS	00NR	2	20WP	G15_048	FROM->TO	G14-057T 345.00 - SUNNYSIDE 345KV CKT 1	717	789	0.04854	112.1266	GEN337653 1-WHITE BLUFF UNIT #2
FDNS	00NR	2	16WP	G15_048	FROM->TO	G14-057T 345.00 - SUNNYSIDE 345KV CKT 1	717	789	0.05143	112.1239	CLARKSVILLE - MUSKOGEE 345KV CKT 1
FDNS	00NR	2	16WP	G15_048	FROM->TO	G14-057T 345.00 - SUNNYSIDE 345KV CKT 1	717	789	0.05143	112.1239	CLARKSVILLE - MUSKOGEE 345KV CKT 1
FDNS	00NR	2	20WP	G15_048	FROM->TO	G14-057T 345.00 - SUNNYSIDE 345KV CKT 1	717	789	0.04854	112.1172	GEN336831 1-BAXTER WILSON SES
FDNS	00NR	2	16WP	G15_048	FROM->TO	G14-057T 345.00 - SUNNYSIDE 345KV CKT 1	717	789	0.04848	112.1102	CHICKASAW - TOTAL 138KV CKT 1
FDNS	00NR	2	16WP	G15_048	FROM->TO	G14-057T 345.00 - SUNNYSIDE 345KV CKT 1	717	789	0.04887	112.0932	BROWN - RUSSETT 138KV CKT 1
FDNS	00NR	2	16WP	G15_048	FROM->TO	G14-057T 345.00 - SUNNYSIDE 345KV CKT 1	717	789	0.04891	112.0903	GEN526331 1-JONES GEN #1 22 KV
FDNS	00NR	2	16WP	G15_048	FROM->TO	G14-057T 345.00 - SUNNYSIDE 345KV CKT 1	717	789	0.04891	112.0902	GEN526332 1-JONES GEN #2 21 KV
FDNS	00NR	2	20WP	G15_048	FROM->TO	G14-057T 345.00 - SUNNYSIDE 345KV CKT 1	717	789	0.04854	112.086	GEN334030 1-FRONTIER UNIT 1
FDNS	00NR	2	20WP	G15_048	FROM->TO	G14-057T 345.00 - SUNNYSIDE 345KV CKT 1	717	789	0.04854	112.0837	GEN334031 1-FRONTIER UNIT 2
FDNS	00NR	2	16WP	G15_048	FROM->TO	G14-057T 345.00 - SUNNYSIDE 345KV CKT 1	717	789	0.04891	112.0806	GEN345671 2-1RUSH_G2 18.000
FDNS	00NR	2	16WP	G15_048	FROM->TO	G14-057T 345.00 - SUNNYSIDE 345KV CKT 1	717	789	0.04891	112.0797	GEN560105 1-G08-22 0.6900
FDNS	00NR	2	16WP	G15_048	FROM->TO	G14-057T 345.00 - SUNNYSIDE 345KV CKT 1	717	789	0.04891	112.0788	GEN345670 1-1RUSH_G1 18.000
FDNS	00NR	2	16WP	G15_048	FROM->TO	G14-057T 345.00 - SUNNYSIDE 345KV CKT 1	717	789	0.04891	112.0767	GEN562550 1-G14_040_3 0.6900
FDNS	00NR	2	16WP	G15_048	FROM->TO	G14-057T 345.00 - SUNNYSIDE 345KV CKT 1	717	789	0.04885	112.0755	RUSSETT - SPRINGDALE 138KV CKT 1
FDNS	00NR	2	20WP	G15_048	FROM->TO	G14-057T 345.00 - SUNNYSIDE 345KV CKT 1	717	789	0.04854	112.0717	GEN337911 1-ARKANSAS NUCLEAR ONE UNIT #2
FDNS	00NR	2	16WP	G15_048	FROM->TO	G14-057T 345.00 - SUNNYSIDE 345KV CKT 1	717	789	0.04866	112.0581	ROCKY POINT - SUNNYSIDE 138KV CKT 1
FDNS	00NR	2	20WP	G15_048	FROM->TO	G14-057T 345.00 - SUNNYSIDE 345KV CKT 1	717	789	0.04857	112.054	P12:138:AEPW:CATOOSA4:T.S.E.-4

SOLUTION	GROUP	SCENARIO	SEASON	SOURCE	DIRECTION	MONITORED ELEMENT	RATEA (MVA)	RATEB(MVA)	TDF	TC%LOADING (% MVA)	CONTINGENCY
FDNS	00NR	2	16WP	G15_048	FROM->TO	G14-057T 345.00 - SUNNYSIDE 345KV CKT 1	717	789	0.04891	112.0482	4SIOUX 1 138.00 138/18.0KV TRANSFORMER CKT 1
FDNS	00NR	2	16WP	G15_048	FROM->TO	G14-057T 345.00 - SUNNYSIDE 345KV CKT 1	717	789	0.04888	112.0471	P12:138:WFEC:MSL07
FDNS	00NR	2	16WP	G15_048	FROM->TO	G14-057T 345.00 - SUNNYSIDE 345KV CKT 1	717	789	0.04888	112.0471	P12:138:WFEC-AEPW:HUGOPP4:ATOKA--4
FDNS	00NR	2	16WP	G15_048	FROM->TO	G14-057T 345.00 - SUNNYSIDE 345KV CKT 1	717	789	0.04891	112.0367	GEN511962 2-RKYRDGW2-1 0.7000
FDNS	00NR	2	16WP	G15_048	FROM->TO	G14-057T 345.00 - SUNNYSIDE 345KV CKT 1	717	789	0.04891	112.0336	CLAY BOSWELL 230/20.9KV TRANSFORMER CKT 1
FDNS	00NR	2	16WP	G15_048	FROM->TO	G14-057T 345.00 - SUNNYSIDE 345KV CKT 1	717	789	0.04891	112.0317	GEN527882 1-CUNNINGHAM GEN #2 20 KV
FDNS	00NR	2	20WP	G15_048	FROM->TO	G14-057T 345.00 - SUNNYSIDE 345KV CKT 1	717	789	0.04854	112.0308	GEN506752 1-LEBROCK GAS 1
FDNS	00NR	2	20WP	G15_048	FROM->TO	G14-057T 345.00 - SUNNYSIDE 345KV CKT 1	717	789	0.04854	112.0305	GEN506753 1-LEBROCK GAS 2
FDNS	00NR	2	20WP	G15_048	FROM->TO	G14-057T 345.00 - SUNNYSIDE 345KV CKT 1	717	789	0.05007	112.0301	BLANCHARD - MAUD 138KV CKT 1
FDNS	00NR	2	16WP	G15_048	FROM->TO	G14-057T 345.00 - SUNNYSIDE 345KV CKT 1	717	789	0.04887	112.025	RUSSETT - RUSSETT 138KV CKT 1
FDNS	00NR	2	20WP	G15_048	FROM->TO	G14-057T 345.00 - SUNNYSIDE 345KV CKT 1	717	789	0.04854	112.0248	GEN501811 1-RODEMACHER UNIT 1
FDNS	00NR	2	20WP	G15_048	FROM->TO	G14-057T 345.00 - SUNNYSIDE 345KV CKT 1	717	789	0.04854	112.0241	GEN337652 1-WHITE BLUFF UNIT #1
FDNS	00NR	2	20WP	G15_048	FROM->TO	G14-057T 345.00 - SUNNYSIDE 345KV CKT 1	717	789	0.04856	112.0214	FULTON 115 - HOPE 115KV CKT 1
FDNS	00NR	2	20WP	G15_048	FROM->TO	G14-057T 345.00 - SUNNYSIDE 345KV CKT 1	717	789	0.04856	112.0214	FULTON 115 - HOPE 115KV CKT 1
FDNS	00NR	2	20WP	G15_048	FROM->TO	G14-057T 345.00 - SUNNYSIDE 345KV CKT 1	717	789	0.04854	112.021	GEN300003 1-THOMAS HILL UNIT 3
FDNS	00NR	2	16WP	G15_048	FROM->TO	G14-057T 345.00 - SUNNYSIDE 345KV CKT 1	717	789	0.04891	112.0207	GEN562892 1-G15048_3 0.6900
FDNS	00NR	2	16WP	G15_048	FROM->TO	G14-057T 345.00 - SUNNYSIDE 345KV CKT 1	717	789	0.04891	112.0142	GEN521112 1-ORME3 13.800
FDNS	00NR	2	20WP	G15_048	FROM->TO	G14-057T 345.00 - SUNNYSIDE 345KV CKT 1	717	789	0.04827	112.008	P12:138:AEPW:S.W.S.-4:L.E.S.-4
FDNS	00NR	2	20WP	G15_048	FROM->TO	G14-057T 345.00 - SUNNYSIDE 345KV CKT 1	717	789	0.04854	112.0065	GEN300015 1-1SGPDEL 18.000
FDNS	00NR	2	16WP	G15_048	FROM->TO	G14-057T 345.00 - SUNNYSIDE 345KV CKT 1	717	789	0.04891	112.0058	GEN563192 1-G15084_3 0.5500
FDNS	00NR	2	16WP	G15_048	FROM->TO	G14-057T 345.00 - SUNNYSIDE 345KV CKT 1	717	789	0.04832	112.0039	ARDMORE WEST - CARTER 138KV CKT 1
FDNS	00NR	2	20WP	G15_048	FROM->TO	G14-057T 345.00 - SUNNYSIDE 345KV CKT 1	717	789	0.04854	112.0015	GEN515226 1-MUSKOGEE 6G
FDNS	00NR	2	20WP	G15_048	FROM->TO	G14-057T 345.00 - SUNNYSIDE 345KV CKT 1	717	789	0.04963	112.001	LATTA JCT - OIL CENTER 138KV CKT 1
FDNS	00NR	2	16WP	G15_048	FROM->TO	G14-057T 345.00 - SUNNYSIDE 345KV CKT 1	717	789	0.04896	111.997	P12:138:WFEC:MSL16
FDNS	00NR	2	20WP	G15_048	FROM->TO	G14-057T 345.00 - SUNNYSIDE 345KV CKT 1	717	789	0.04861	111.993	P12:138:AEPW:CORNVIL4:DUNCAN-4
FDNS	00NR	2	20WP	G15_048	FROM->TO	G14-057T 345.00 - SUNNYSIDE 345KV CKT 1	717	789	0.04854	111.9922	GEN336191 1-LITTLE GYPSY UNIT#3
FDNS	00NR	2	16WP	G15_048	FROM->TO	G14-057T 345.00 - SUNNYSIDE 345KV CKT 1	717	789	0.04891	111.9843	GEN672321 1-SHAND GENERATOR 1
FDNS	00NR	2	20WP	G15_048	FROM->TO	G14-057T 345.00 - SUNNYSIDE 345KV CKT 1	717	789	0.04854	111.9714	GEN515040 1-SEMINOLE 1G
FDNS	00NR	2	16WP	G15_048	FROM->TO	G14-057T 345.00 - SUNNYSIDE 345KV CKT 1	717	789	0.04839	111.9656	SUNNYSIDE (SUNNYSD5) 345/138/13.8KV TRANSFORMER CKT 1
FDNS	00NR	2	20WP	G15_048	FROM->TO	G14-057T 345.00 - SUNNYSIDE 345KV CKT 1	717	789	0.04857	111.9655	6LAYFLD 230.00 - CARROLL 230KV CKT 1
FDNS	00NR	2	20WP	G15_048	FROM->TO	G14-057T 345.00 - SUNNYSIDE 345KV CKT 1	717	789	0.04873	111.9645	G1524G1525 345.00 - THISTLE7 345.00 345KV CKT 1
FDNS	00NR	2	20WP	G15_048	FROM->TO	G14-057T 345.00 - SUNNYSIDE 345KV CKT 1	717	789	0.04873	111.9645	G1524G1525 345.00 - THISTLE7 345.00 345KV CKT 2
FDNS	00NR	2	20WP	G15_048	FROM->TO	G14-057T 345.00 - SUNNYSIDE 345KV CKT 1	717	789	0.04854	111.9636	GEN335614 1-WILLOW GLENN UNIT#4
FDNS	00NR	2	16WP	G15_048	FROM->TO	G14-057T 345.00 - SUNNYSIDE 345KV CKT 1	717	789	0.04891	111.9608	GEN672310 1-POPLAR RIVER GENERATOR 1
FDNS	00NR	2	16WP	G15_048	FROM->TO	G14-057T 345.00 - SUNNYSIDE 345KV CKT 1	717	789	0.04891	111.9608	GEN672311 2-POPLAR RIVER GENERATOR 2
FDNS	00NR	2	20WP	G15_048	FROM->TO	G14-057T 345.00 - SUNNYSIDE 345KV CKT 1	717	789	0.04865	111.9597	P12:69:WFEC-AEPW:COMANCH2:DUNCAN-2
FDNS	00NR	2	16WP	G15_048	FROM->TO	G14-057T 345.00 - SUNNYSIDE 345KV CKT 1	717	789	0.04891	111.9557	GEN562512 1-G14_020_3 0.6900
FDNS	00NR	2	16WP	G15_048	FROM->TO	G14-057T 345.00 - SUNNYSIDE 345KV CKT 1	717	789	0.04891	111.9527	GEN672306 6-BOUNDARY DAM GENERATOR 6
FDNS	00NR	2	20WP	G15_048	FROM->TO	G14-057T 345.00 - SUNNYSIDE 345KV CKT 1	717	789	0.04857	111.9504	8DANIEL8 500.00 - MCKNIGHT 500KV CKT 1
FDNS	00NR	2	20WP	G15_048	FROM->TO	G14-057T 345.00 - SUNNYSIDE 345KV CKT 1	717	789	0.04877	111.9499	P12:138:AEPW:CORNVIL4:S.W.S.-4
FDNS	00NR	2	16WP	G15_048	FROM->TO	G14-057T 345.00 - SUNNYSIDE 345KV CKT 1	717	789	0.04889	111.9491	P12:138:WFEC-AEPW:GOLDENSW4:CRAIGJT4
FDNS	00NR	2	20WP	G15_048	FROM->TO	G14-057T 345.00 - SUNNYSIDE 345KV CKT 1	717	789	0.04887	111.9426	P12:138:AEPW-OGE:WTH_JCT4:JENSEN4
FDNS	00NR	2	16WP	G15_048	FROM->TO	G14-057T 345.00 - SUNNYSIDE 345KV CKT 1	717	789	0.04891	111.9419	GEN523461 1-BLACKHAWK GEN #1
FDNS	00NR	2	16WP	G15_048	FROM->TO	G14-057T 345.00 - SUNNYSIDE 345KV CKT 1	717	789	0.04891	111.9418	GEN523462 1-BLACKHAWK GEN #2
FDNS	00NR	2	20WP	G15_048	FROM->TO	G14-057T 345.00 - SUNNYSIDE 345KV CKT 1	717	789	0.04826	111.9409	G14_038T 345.00 - POTTER COUNTY INTERCHANGE 345KV CKT 1
FDNS	00NR	2	20WP	G15_048	FROM->TO	G14-057T 345.00 - SUNNYSIDE 345KV CKT 1	717	789	0.04854	111.9316	P12:161:AEPW:EROGERS5:ECNTRTN5
FDNS	00NR	2	20WP	G15_048	FROM->TO	G14-057T 345.00 - SUNNYSIDE 345KV CKT 1	717	789	0.04833	111.9298	TUTTLE - TUTTLE CONOCO TAP 138KV CKT 1
FDNS	00NR	2	16WP	G15_048	FROM->TO	G14-057T 345.00 - SUNNYSIDE 345KV CKT 1	717	789	0.04891	111.9188	GEN520811 1-ANADRK4
FDNS	00NR	2	20WP	G15_048	FROM->TO	G14-057T 345.00 - SUNNYSIDE 345KV CKT 1	717	789	0.04854	111.918	GEN337910 1-ARKANSAS NUCLEAR ONE UNIT #1
FDNS	00NR	2	20WP	G15_048	FROM->TO	G14-057T 345.00 - SUNNYSIDE 345KV CKT 1	717	789	0.04854	111.9179	GEN303007 1-1BC2 U2
FDNS	00NR	2	20WP	G15_048	FROM->TO	G14-057T 345.00 - SUNNYSIDE 345KV CKT 1	717	789	0.04907	111.9134	FINNEY SWITCHING STATION - HOLCOMB 345KV CKT 1
FDNS	00NR	2	20WP	G15_048	FROM->TO	G14-057T 345.00 - SUNNYSIDE 345KV CKT 1	717	789	0.04907	111.9134	FINNEY SWITCHING STATION - HOLCOMB 345KV CKT 1
FDNS	00NR	2	16WP	G15_048	FROM->TO	G14-057T 345.00 - SUNNYSIDE 345KV CKT 1	717	789	0.04891	111.9132	GEN344895 2-1LAB G2 20.000
FDNS	00NR	2	20WP	G15_048	FROM->TO	G14-057T 345.00 - SUNNYSIDE 345KV CKT 1	717	789	0.04854	111.9131	GEN336464 1-MICHOUD UNIT #3
FDNS	00NR	2	20WP	G15_048	FROM->TO	G14-057T 345.00 - SUNNYSIDE 345KV CKT 1	717	789	0.04854	111.9121	GEN303006 1-1BC2 U1
FDNS	00NR	2	20WP	G15_048	FROM->TO	G14-057T 345.00 - SUNNYSIDE 345KV CKT 1	717	789	0.04854	111.9095	WHITE BLUFF 500/26.0KV TRANSFORMER CKT 1
FDNS	00NR	2	20WP	G15_048	FROM->TO	G14-057T 345.00 - SUNNYSIDE 345KV CKT 1	717	789	0.04865	111.909	DUNCAN - TOSCO 69KV CKT 1
FDNS	00NR	2	20WP	G15_048	FROM->TO	G14-057T 345.00 - SUNNYSIDE 345KV CKT 1	717	789	0.04854	111.9088	GEN562783 1-G15036_4 0.6900
FDNS	00NR	2	20WP	G15_048	FROM->TO	G14-057T 345.00 - SUNNYSIDE 345KV CKT 1	717	789	0.04854	111.9088	GEN562784 1-G15036_5 0.6900
FDNS	00NR	2	20WP	G15_048	FROM->TO	G14-057T 345.00 - SUNNYSIDE 345KV CKT 1	717	789	0.04854	111.9047	GEN515223 1-MUSKOGEE 4G
FDNS	00NR	2	20WP	G15_048	FROM->TO	G14-057T 345.00 - SUNNYSIDE 345KV CKT 1	717	789	0.04854	111.9047	GEN515225 1-MUSKOGEE 5G
FDNS	00NR	2	20WP	G15_048	FROM->TO	G14-057T 345.00 - SUNNYSIDE 345KV CKT 1	717	789	0.0489	111.8994	CIMARRON - CZECH HALL 138KV CKT 1
FDNS	00NR	2	16WP	G15_048	FROM->TO	G14-057T 345.00 - SUNNYSIDE 345KV CKT 1	717	789	0.04891	111.8991	GEN511853 1-COMANCHE #3
FDNS	00NR	2	20WP	G15_048	FROM->TO	G14-057T 345.00 - SUNNYSIDE 345KV CKT 1	717	789	0.04855	111.8936	BISMARK - HOT SPRINGS WEST BUS 115KV CKT 1
FDNS	00NR	2	20WP	G15_048	FROM->TO	G14-057T 345.00 - SUNNYSIDE 345KV CKT 1	717	789	0.04853	111.8896	P12:69:AEPW-OMPA:COMANC-2:OMWALTR2
FDNS	00NR	2	20WP	G15_048	FROM->TO	G14-057T 345.00 - SUNNYSIDE 345KV CKT 1	717	789	0.04854	111.8895	MC NIEL 500/115KV TRANSFORMER CKT 1
FDNS	00NR	2	20WP	G15_048	FROM->TO	G14-057T 345.00 - SUNNYSIDE 345KV CKT 1	717	789	0.04854	111.8895	RODEMACHER 230/22.0KV TRANSFORMER CKT 1
FDNS	00NR	2	16WP	G15_048	FROM->TO	G14-057T 345.00 - SUNNYSIDE 345KV CKT 1	717	789	0.04832	111.889	ARDMORE WEST - UNIROYAL 138KV CKT 1
FDNS	00NR	2	16WP	G15_048	FROM->TO	G14-057T 345.00 - SUNNYSIDE 345KV CKT 1	717	789	0.04891	111.8812	GEN344896 3-1LAB G3 20.000
FDNS	00NR	2	20WP	G15_048	FROM->TO	G14-057T 345.00 - SUNNYSIDE 345KV CKT 1	717	789	0.04854	111.8805	GEN300010 1-ST FRANCIS UNIT 1
FDNS	00NR	2	16WP	G15_048	FROM->TO	G14-057T 345.00 - SUNNYSIDE 345KV CKT 1	717	789	0.04891	111.8799	GEN344894 1-1LAB G1 20.000
FDNS	00NR	2	20WP	G15_048	FROM->TO	G14-057T 345.00 - SUNNYSIDE 345KV CKT 1	717	789	0.04862	111.8795	G15088_T 345.00 - MOORE 345KV CKT 1
FDNS	00NR	2	16WP	G15_048	FROM->TO	G14-057T 345.00 - SUNNYSIDE 345KV CKT 1	717	789	0.04891	111.8788	GEN563162 1-G15081_3 0.6900
FDNS	00NR	2	16WP	G15_048	FROM->TO	G14-057T 345.00 - SUNNYSIDE 345KV CKT 1	717	789	0.04891	111.8784	GEN344897 4-1LAB G4 20.000
FDNS	00NR	2	20WP	G15_048	FROM->TO	G14-057T 345.00 - SUNNYSIDE 345KV CKT 1	717	789	0.04871	111.8774	P12:138:AEPW:WTHWF4:CLINTJC4
FDNS	00NR	2	20WP	G15_048	FROM->TO	G14-057T 345.00 - SUNNYSIDE 345KV CKT 1	717	789	0.04852	111.8739	HOT SPRINGS EHV - MAGNET COVE 500KV CKT 1
FDNS	00NR	2	16WP	G15_048	FROM->TO	G14-057T 345.00 - SUNNYSIDE 345KV CKT 1	717	789	0.04889	111.8719	P12:138:AEPW-SWPA:LONEOAK4:TUPELO4
FDNS	00NR	2	16WP	G15_048	FROM->TO	G14-057T 345.00 - SUNNYSIDE 345KV CKT 1	717	789	0.04889	111.8719	P12:138:WFEC:MSL06
FDNS	00NR	2	20WP	G15_048	FROM->TO	G14-057T 345.00 - SUNNYSIDE 345KV CKT 1	717	789	0.04722	111.8666	CHISHOLM6 230.00 - ELK CITY 230KV 230KV CKT 1

SOLUTION	GROUP	SCENARIO	SEASON	SOURCE	DIRECTION	MONITORED ELEMENT	RATEA (MVA)	RATEB(MVA)	TDF	TC%LOADING (% MVA)	CONTINGENCY
FDNS	00NR	2	20WP	G15_048	FROM->TO	G14-057T 345.00 - SUNNYSIDE 345KV CKT 1	717	789	0.04722	111.866	ELK CITY 230KV (ELKCTY-6) 230/138/13.8KV TRANSFORMER CKT 1
FDNS	00NR	2	20WP	G15_048	FROM->TO	G14-057T 345.00 - SUNNYSIDE 345KV CKT 1	717	789	0.04722	111.866	ELK CITY 230KV (ELKCTY-6) 230/138/13.8KV TRANSFORMER CKT 1
FDNS	00NR	2	20WP	G15_048	FROM->TO	G14-057T 345.00 - SUNNYSIDE 345KV CKT 1	717	789	0.04985	111.8649	BAILEY4 138.00 - SUNSHINE CANYON 138KV CKT 1
FDNS	00NR	2	20WP	G15_048	FROM->TO	G14-057T 345.00 - SUNNYSIDE 345KV CKT 1	717	789	0.04905	111.8648	CIMARRON - SARA 138KV CKT 1
FDNS	00NR	2	20WP	G15_048	FROM->TO	G14-057T 345.00 - SUNNYSIDE 345KV CKT 1	717	789	0.04865	111.8635	COMANCHE TAP - TOSCO 69KV CKT 1
FDNS	00NR	2	16WP	G15_048	FROM->TO	G14-057T 345.00 - SUNNYSIDE 345KV CKT 1	717	789	0.04862	111.8634	CARTRCO4 138.00 - RATLIFF 138KV CKT 1
FDNS	00NR	2	16WP	G15_048	FROM->TO	G14-057T 345.00 - SUNNYSIDE 345KV CKT 1	717	789	0.04891	111.8631	GEN511852 1-COMANCHE #2
FDNS	00NR	2	20WP	G15_048	FROM->TO	G14-057T 345.00 - SUNNYSIDE 345KV CKT 1	717	789	0.04856	111.8593	BUCKNER7 345.00 - SPEARVILLE 345KV CKT 1
FDNS	00NR	2	20WP	G15_048	FROM->TO	G14-057T 345.00 - SUNNYSIDE 345KV CKT 1	717	789	0.04856	111.8593	BUCKNER7 345.00 - SPEARVILLE 345KV CKT 1
FDNS	00NR	2	20WP	G15_048	FROM->TO	G14-057T 345.00 - SUNNYSIDE 345KV CKT 1	717	789	0.04854	111.8568	GEN337041 1-GERALD ANDRUS
FDNS	00NR	2	20WP	G15_048	FROM->TO	G14-057T 345.00 - SUNNYSIDE 345KV CKT 1	717	789	0.04785	111.8554	SEMINOLE - VANOSTP4 138.00 138KV CKT 1
FDNS	00NR	2	16WP	G15_048	FROM->TO	G14-057T 345.00 - SUNNYSIDE 345KV CKT 1	717	789	0.04891	111.8549	GEN562699 1-G15_018_3 0.6900
FDNS	00NR	2	20WP	G15_048	FROM->TO	G14-057T 345.00 - SUNNYSIDE 345KV CKT 1	717	789	0.04854	111.8548	GEN505432 1-SIKESTON
FDNS	00NR	2	16WP	G15_048	FROM->TO	G14-057T 345.00 - SUNNYSIDE 345KV CKT 1	717	789	0.04872	111.8539	P12:138:OKGE:3TERM40
FDNS	00NR	2	20WP	G15_048	FROM->TO	G14-057T 345.00 - SUNNYSIDE 345KV CKT 1	717	789	0.04869	111.8536	G15074_T 345.00 - HOYT 345KV CKT 1
FDNS	00NR	2	20WP	G15_048	FROM->TO	G14-057T 345.00 - SUNNYSIDE 345KV CKT 1	717	789	0.04854	111.8511	GEN303008 1-1BC2 U3
FDNSLock	00NR	2	16WP	G15_048	FROM->TO	G14-057T 345.00 - SUNNYSIDE 345KV CKT 1	717	789	0.04891	111.8504	GEN681542 6-JP MADGETT
FDNS	00NR	2	20WP	G15_048	FROM->TO	G14-057T 345.00 - SUNNYSIDE 345KV CKT 1	717	789	0.04833	111.8503	CIMARRON - TUTTLE CONOCO TAP 138KV CKT 1
FDNS	00NR	2	20WP	G15_048	FROM->TO	G14-057T 345.00 - SUNNYSIDE 345KV CKT 1	717	789	0.04805	111.8445	ARBWIND4 138.00 - CARTER 138KV CKT 1
FDNS	00NR	2	20WP	G15_048	FROM->TO	G14-057T 345.00 - SUNNYSIDE 345KV CKT 1	717	789	0.04855	111.8396	ALPINE AECC - BISMARK 115KV CKT 1
FDNS	00NR	2	20WP	G15_048	FROM->TO	G14-057T 345.00 - SUNNYSIDE 345KV CKT 1	717	789	0.04871	111.8391	P12:138:AEPW:WTHWF4:WTH_SE4
FDNS	00NR	2	16WP	G15_048	FROM->TO	G14-057T 345.00 - SUNNYSIDE 345KV CKT 1	717	789	0.04891	111.8387	GEN521110 1-ORME1 13.800
FDNS	00NR	2	16WP	G15_048	FROM->TO	G14-057T 345.00 - SUNNYSIDE 345KV CKT 1	717	789	0.04891	111.8387	GEN521111 1-ORME2 13.800
FDNS	00NR	2	20WP	G15_048	FROM->TO	G14-057T 345.00 - SUNNYSIDE 345KV CKT 1	717	789	0.04857	111.8307	P12:138:AEPW:N.E.S.-4:CATOOSA4
FDNS	00NR	2	16WP	G15_048	FROM->TO	G14-057T 345.00 - SUNNYSIDE 345KV CKT 1	717	789	0.04886	111.8306	G15085_T 138.00 - RUSSELL 138KV CKT 1
FDNS	00NR	2	16WP	G15_048	FROM->TO	G14-057T 345.00 - SUNNYSIDE 345KV CKT 1	717	789	0.04891	111.8297	GEN563292 1-G15095_3 0.6900
FDNS	00NR	2	20WP	G15_048	FROM->TO	G14-057T 345.00 - SUNNYSIDE 345KV CKT 1	717	789	0.0489	111.8291	CZECH HALL - XEROX 138KV CKT 1
FDNS	00NR	2	20WP	G15_048	FROM->TO	G14-057T 345.00 - SUNNYSIDE 345KV CKT 1	717	789	0.0489	111.825	MORGAN - XEROX 138KV CKT 1
FDNS	00NR	2	20WP	G15_048	FROM->TO	G14-057T 345.00 - SUNNYSIDE 345KV CKT 1	717	789	0.04854	111.824	GEN300011 1-ST FRANCIS UNIT 2
FDNS	00NR	2	20WP	G15_048	FROM->TO	G14-057T 345.00 - SUNNYSIDE 345KV CKT 1	717	789	0.04854	111.8222	GEN336170 1-GULF OXY U4
FDNS	00NR	2	20WP	G15_048	FROM->TO	G14-057T 345.00 - SUNNYSIDE 345KV CKT 1	717	789	0.04854	111.8199	NELSON 230/20.0KV TRANSFORMER CKT 1
FDNS	00NR	2	16WP	G15_048	FROM->TO	G14-057T 345.00 - SUNNYSIDE 345KV CKT 1	717	789	0.04001	111.8167	GRACEMONT - LAWTON EASTSIDE 345KV CKT 1
FDNS	00NR	2	16WP	G15_048	FROM->TO	G14-057T 345.00 - SUNNYSIDE 345KV CKT 1	717	789	0.04001	111.8167	GRACEMONT - LAWTON EASTSIDE 345KV CKT 1
FDNS	00NR	2	20WP	G15_048	FROM->TO	G14-057T 345.00 - SUNNYSIDE 345KV CKT 1	717	789	0.0485	111.8066	GRACEMONT (BANK 1) 345/138/13.8KV TRANSFORMER CKT 1
FDNS	00NR	2	20WP	G15_048	FROM->TO	G14-057T 345.00 - SUNNYSIDE 345KV CKT 1	717	789	0.04854	111.803	GEN336801 1-BAXTER WILSON UNIT #1
FDNS	00NR	2	20WP	G15_048	FROM->TO	G14-057T 345.00 - SUNNYSIDE 345KV CKT 1	717	789	0.0489	111.8028	MORGAN - MUSTANG 138KV CKT 1
FDNS	00NR	2	20WP	G15_048	FROM->TO	G14-057T 345.00 - SUNNYSIDE 345KV CKT 1	717	789	0.04855	111.7914	ALPINE AECC - AMITY SS 115KV CKT 1
FDNS	00NR	2	20WP	G15_048	FROM->TO	G14-057T 345.00 - SUNNYSIDE 345KV CKT 1	717	789	0.04865	111.786	COMANCHE - COMANCHE TAP 69KV CKT 1
FDNS	00NR	2	16WP	G15_048	FROM->TO	G14-057T 345.00 - SUNNYSIDE 345KV CKT 1	717	789	0.04891	111.7803	GRAPEVINE INTERCHANGE - STATELINE INTERCHANGE 230KV CKT 1
FDNS	00NR	2	16WP	G15_048	FROM->TO	G14-057T 345.00 - SUNNYSIDE 345KV CKT 1	717	789	0.04891	111.7803	GRAPEVINE INTERCHANGE - STATELINE INTERCHANGE 230KV CKT 1
FDNS	00NR	2	20WP	G15_048	FROM->TO	G14-057T 345.00 - SUNNYSIDE 345KV CKT 1	717	789	0.04854	111.7746	GEN501910 1-ACADIA UNIT ST1
FDNS	00NR	2	20WP	G15_048	FROM->TO	G14-057T 345.00 - SUNNYSIDE 345KV CKT 1	717	789	0.04854	111.7693	8CAJUN2 500/24.0KV TRANSFORMER CKT 1
FDNS	00NR	2	20WP	G15_048	FROM->TO	G14-057T 345.00 - SUNNYSIDE 345KV CKT 1	717	789	0.04858	111.7656	G15095_T 138.00 - ROSE_VALLEY 138.00 138KV CKT 1
FDNS	00NR	2	16WP	G15_048	FROM->TO	G14-057T 345.00 - SUNNYSIDE 345KV CKT 1	717	789	0.04812	111.7608	CACHE - SNYDER 138KV CKT 1
FDNS	00NR	2	16WP	G15_048	FROM->TO	G14-057T 345.00 - SUNNYSIDE 345KV CKT 1	717	789	0.04891	111.7565	GEN563122 1-G15077_3 0.3850
FDNS	00NR	2	20WP	G15_048	FROM->TO	G14-057T 345.00 - SUNNYSIDE 345KV CKT 1	717	789	0.04905	111.7558	SARA - STHLAKE4 138.00 138KV CKT 1
FDNS	00NR	2	16WP	G15_048	FROM->TO	G14-057T 345.00 - SUNNYSIDE 345KV CKT 1	717	789	0.04891	111.7464	GEN562861 1-G15045_2 0.4800
FDNS	00NR	2	16WP	G15_048	FROM->TO	G14-057T 345.00 - SUNNYSIDE 345KV CKT 1	717	789	0.04891	111.7454	GEN661015 1-COYOTE
FDNS	00NR	2	20WP	G15_048	FROM->TO	G14-057T 345.00 - SUNNYSIDE 345KV CKT 1	717	789	0.04854	111.7376	P12:138:AEPW:R.S.S.-4:S.HUD.-4
FDNS	00NR	2	20WP	G15_048	FROM->TO	G14-057T 345.00 - SUNNYSIDE 345KV CKT 1	717	789	0.04854	111.7312	SABINE 230/24.0KV TRANSFORMER CKT 1
FDNS	00NR	2	20WP	G15_048	FROM->TO	G14-057T 345.00 - SUNNYSIDE 345KV CKT 1	717	789	0.04854	111.7308	GEN300016 1-1G1GPDEL 18.000
FDNS	00NR	2	20WP	G15_048	FROM->TO	G14-057T 345.00 - SUNNYSIDE 345KV CKT 1	717	789	0.0485	111.7295	ETTA (DUKE HOTSPRINGS) - MC NIEL 500KV CKT 1
FDNS	00NR	2	20WP	G15_048	FROM->TO	G14-057T 345.00 - SUNNYSIDE 345KV CKT 1	717	789	0.04833	111.727	LAWTON EASTSIDE (LES 4) 345/138/13.8KV TRANSFORMER CKT 1
FDNS	00NR	2	20WP	G15_048	FROM->TO	G14-057T 345.00 - SUNNYSIDE 345KV CKT 1	717	789	0.04833	111.727	LAWTON EASTSIDE (LES 4) 345/138/13.8KV TRANSFORMER CKT 1
FDNS	00NR	2	20WP	G15_048	FROM->TO	G14-057T 345.00 - SUNNYSIDE 345KV CKT 1	717	789	0.04905	111.7264	MCCLAIN - STHLAKE4 138.00 138KV CKT 1
FDNS	00NR	2	20WP	G15_048	FROM->TO	G14-057T 345.00 - SUNNYSIDE 345KV CKT 1	717	789	0.04869	111.7253	WALTERS - WALTERS 69KV CKT 1
FDNS	00NR	2	20WP	G15_048	FROM->TO	G14-057T 345.00 - SUNNYSIDE 345KV CKT 1	717	789	0.04963	111.7232	LASALLE - LATTA JCT 138KV CKT 1
FDNS	00NR	2	20WP	G15_048	FROM->TO	G14-057T 345.00 - SUNNYSIDE 345KV CKT 1	717	789	0.04854	111.7202	GEN336222 1-LITTLE GYPSY UNIT#2
FDNS	00NR	2	20WP	G15_048	FROM->TO	G14-057T 345.00 - SUNNYSIDE 345KV CKT 1	717	789	0.04853	111.7108	LAWTON RELIFT TAP - OMPA-WALTERS 69KV CKT 1
FDNS	00NR	2	20WP	G15_048	FROM->TO	G14-057T 345.00 - SUNNYSIDE 345KV CKT 1	717	789	0.04883	111.7078	ANADARKO - SEQUOYAHJ4 138.00 138KV CKT 1
FDNS	00NR	2	20WP	G15_048	FROM->TO	G14-057T 345.00 - SUNNYSIDE 345KV CKT 1	717	789	0.04854	111.7065	P12:69:AEPW:NROGERS2:ECNTRTN2
FDNS	00NR	2	20WP	G15_048	FROM->TO	G14-057T 345.00 - SUNNYSIDE 345KV CKT 1	717	789	0.04883	111.7049	CORN TAP - SEQUOYAHJ4 138.00 138KV CKT 1
FDNS	00NR	2	20WP	G15_048	FROM->TO	G14-057T 345.00 - SUNNYSIDE 345KV CKT 1	717	789	0.04883	111.6987	WEATHERFORD JCT. - WEATHERFORD SOUTHEAST 138KV CKT 1
FDNS	00NR	2	20WP	G15_048	FROM->TO	G14-057T 345.00 - SUNNYSIDE 345KV CKT 1	717	789	0.04883	111.6987	WEATHERFORD JCT. - WEATHERFORD SOUTHEAST 138KV CKT 1
FDNS	00NR	2	20WP	G15_048	FROM->TO	G14-057T 345.00 - SUNNYSIDE 345KV CKT 1	717	789	0.04858	111.6977	NOEL_SW 138.00 - ROSE_VALLEY 138.00 138KV CKT 1
FDNS	00NR	2	20WP	G15_048	FROM->TO	G14-057T 345.00 - SUNNYSIDE 345KV CKT 1	717	789	0.04854	111.6968	P12:138:AEPW:BA_71ST4:T.S.E.-4
FDNS	00NR	2	20WP	G15_048	FROM->TO	G14-057T 345.00 - SUNNYSIDE 345KV CKT 1	717	789	0.06486	111.6943	CLEO CORNER - CLEOPLT4 138.00 138KV CKT 1
FDNS	00NR	2	20WP	G15_048	FROM->TO	G14-057T 345.00 - SUNNYSIDE 345KV CKT 1	717	789	0.05007	111.6932	CANADIAN - NOBLE 138KV CKT 1
FDNS	00NR	2	20WP	G15_048	FROM->TO	G14-057T 345.00 - SUNNYSIDE 345KV CKT 1	717	789	0.04854	111.6915	P12:138:AEPW:YARCH-S4:T.S.E.-4
FDNS	00NR	2	20WP	G15_048	FROM->TO	G14-057T 345.00 - SUNNYSIDE 345KV CKT 1	717	789	0.04985	111.6898	BAILEY4 138.00 - WESTMOORE 138KV CKT 1
FDNS	00NR	2	20WP	G15_048	FROM->TO	G14-057T 345.00 - SUNNYSIDE 345KV CKT 1	717	789	0.04854	111.686	GEN336152 1-WATERFORD UNIT#2
FDNS	00NR	2	20WP	G15_048	FROM->TO	G14-057T 345.00 - SUNNYSIDE 345KV CKT 1	717	789	0.04854	111.6852	GEN336151 1-WATERFORD UNIT#1
FDNS	00NR	2	20WP	G15_048	FROM->TO	G14-057T 345.00 - SUNNYSIDE 345KV CKT 1	717	789	0.04909	111.6801	P12:138:AEPW-OGE:SHIDLER4:OSAGE 4
FDNS	00NR	2	20WP	G15_048	FROM->TO	G14-057T 345.00 - SUNNYSIDE 345KV CKT 1	717	789	0.0486	111.6786	7JASPER 345.00 - BLACKBERRY 345KV CKT 1
FDNS	00NR	2	20WP	G15_048	FROM->TO	G14-057T 345.00 - SUNNYSIDE 345KV CKT 1	717	789	0.04854	111.673	GEN300017 1-1G2GPDEL 18.000
FDNS	00NR	2	16WP	G15_048	FROM->TO	G14-057T 345.00 - SUNNYSIDE 345KV CKT 1	717	789	0.04832	111.6709	SUNNYSIDE - UNIROYAL 138KV CKT 1
FDNS	00NR	2	20WP	G15_048	FROM->TO	G14-057T 345.00 - SUNNYSIDE 345KV CKT 1	717	789	0.04878	111.6681	NORGE ROAD - SOUTHWESTERN STATION 138KV CKT 1
FDNS	00NR	2	20WP	G15_048	FROM->TO	G14-057T 345.00 - SUNNYSIDE 345KV CKT 1	717	789	0.04878	111.6681	NORGE ROAD - SOUTHWESTERN STATION 138KV CKT 1
FDNS	00NR	2	20WP	G15_048	FROM->TO	G14-057T 345.00 - SUNNYSIDE 345KV CKT 1	717	789	0.04854	111.6665	FRONTIER 345/18.0KV TRANSFORMER CKT 1

SOLUTION	GROUP	SCENARIO	SEASON	SOURCE	DIRECTION	MONITORED ELEMENT	RATEA (MVA)	RATEB(MVA)	TDF	TC%LOADING (% MVA)	CONTINGENCY
FDNS	00NR	2	20WP	G15_048	FROM->TO	G14-057T 345.00 - SUNNYSIDE 345KV CKT 1	717	789	0.04854	111.6643	FRONTIER 345/18.0KV TRANSFORMER CKT 1
FDNS	00NR	2	20WP	G15_048	FROM->TO	G14-057T 345.00 - SUNNYSIDE 345KV CKT 1	717	789	0.05007	111.6636	P12:138:OKGE:3TERM27
FDNS	00NR	2	20WP	G15_048	FROM->TO	G14-057T 345.00 - SUNNYSIDE 345KV CKT 1	717	789	0.04883	111.6636	P12:138:AEPW:REDROCKRD4:WTH_JCT4
FDNS	00NR	2	20WP	G15_048	FROM->TO	G14-057T 345.00 - SUNNYSIDE 345KV CKT 1	717	789	0.04926	111.6606	P12:138:OKGE-AEPW:JENSEN4:REDROCKRD4
FDNS	00NR	2	20WP	G15_048	FROM->TO	G14-057T 345.00 - SUNNYSIDE 345KV CKT 1	717	789	0.06486	111.6593	CLEOPLT4 138.00 - MEN TAP 138KV CKT 1
FDNS	00NR	2	20WP	G15_048	FROM->TO	G14-057T 345.00 - SUNNYSIDE 345KV CKT 1	717	789	0.04856	111.6576	HOPE - MCNAB REC 115KV CKT 1
FDNS	00NR	2	20WP	G15_048	FROM->TO	G14-057T 345.00 - SUNNYSIDE 345KV CKT 1	717	789	0.04907	111.6573	FINNEY SWITCHING STATION - WALKTAP7 345.00 345KV CKT 1
FDNS	00NR	2	20WP	G15_048	FROM->TO	G14-057T 345.00 - SUNNYSIDE 345KV CKT 1	717	789	0.04907	111.6573	FINNEY SWITCHING STATION - WALKTAP7 345.00 345KV CKT 1
FDNS	00NR	2	20WP	G15_048	FROM->TO	G14-057T 345.00 - SUNNYSIDE 345KV CKT 1	717	789	0.04908	111.6519	MORISNT4 138.00 - STILLWATER 138KV CKT 1
FDNS	00NR	2	20WP	G15_048	FROM->TO	G14-057T 345.00 - SUNNYSIDE 345KV CKT 1	717	789	0.04854	111.6512	GEN334432 1-SABINE UNIT 2
FDNS	00NR	2	20WP	G15_048	FROM->TO	G14-057T 345.00 - SUNNYSIDE 345KV CKT 1	717	789	0.04854	111.651	GEN334431 1-SABINE UNIT 1
FDNS	00NR	2	20WP	G15_048	FROM->TO	G14-057T 345.00 - SUNNYSIDE 345KV CKT 1	717	789	0.0475	111.65	ARBUCKLE - VANOSTP4 138.00 138KV CKT 1
FDNS	00NR	2	20WP	G15_048	FROM->TO	G14-057T 345.00 - SUNNYSIDE 345KV CKT 1	717	789	0.06486	111.6496	IMO TAP - MEN TAP 138KV CKT 1
FDNS	00NR	2	20WP	G15_048	FROM->TO	G14-057T 345.00 - SUNNYSIDE 345KV CKT 1	717	789	0.05098	111.6485	DRAPER LAKE - SEMINOLE 345KV CKT 2
FDNS	00NR	2	20WP	G15_048	FROM->TO	G14-057T 345.00 - SUNNYSIDE 345KV CKT 1	717	789	0.05098	111.6484	DRAPER LAKE - SEMINOLE 345KV CKT 1
FDNS	00NR	2	20WP	G15_048	FROM->TO	G14-057T 345.00 - SUNNYSIDE 345KV CKT 1	717	789	0.04856	111.6478	P12:115:AEPW:TURK3:HOPE3
FDNS	00NR	2	16WP	G15_048	FROM->TO	G14-057T 345.00 - SUNNYSIDE 345KV CKT 1	717	789	0.04889	111.6468	GRAPEVINE INTERCHANGE - NICHOLS STATION 230KV CKT 1
FDNS	00NR	2	16WP	G15_048	FROM->TO	G14-057T 345.00 - SUNNYSIDE 345KV CKT 1	717	789	0.04889	111.6468	GRAPEVINE INTERCHANGE - NICHOLS STATION 230KV CKT 1
FDNS	00NR	2	20WP	G15_048	FROM->TO	G14-057T 345.00 - SUNNYSIDE 345KV CKT 1	717	789	0.04854	111.6467	GEN501823 1-TECHE UNIT 3
FDNS	00NR	2	20WP	G15_048	FROM->TO	G14-057T 345.00 - SUNNYSIDE 345KV CKT 1	717	789	0.04916	111.6463	P12:138:OKGE:3TERM2
FDNS	00NR	2	20WP	G15_048	FROM->TO	G14-057T 345.00 - SUNNYSIDE 345KV CKT 1	717	789	0.04855	111.646	COUCH SES - MC NIEL 115KV CKT 1
FDNS	00NR	2	20WP	G15_048	FROM->TO	G14-057T 345.00 - SUNNYSIDE 345KV CKT 1	717	789	0.04869	111.6459	HOYT - STRANGER CREEK 345KV CKT 1
FDNS	00NR	2	20WP	G15_048	FROM->TO	G14-057T 345.00 - SUNNYSIDE 345KV CKT 1	717	789	0.04854	111.6448	GEN501970 1-EVANGELINE UNIT 7
FDNS	00NR	2	20WP	G15_048	FROM->TO	G14-057T 345.00 - SUNNYSIDE 345KV CKT 1	717	789	0.04853	111.6439	OMPA-WALTERS - WALTERS 69KV CKT 1
FDNS	00NR	2	20WP	G15_048	FROM->TO	G14-057T 345.00 - SUNNYSIDE 345KV CKT 1	717	789	0.04853	111.6439	OMPA-WALTERS - WALTERS 69KV CKT 1
FDNS	00NR	2	20WP	G15_048	FROM->TO	G14-057T 345.00 - SUNNYSIDE 345KV CKT 1	717	789	0.04854	111.6428	CYPRESS - HARTBURG 500KV CKT 1
FDNS	00NR	2	20WP	G15_048	FROM->TO	G14-057T 345.00 - SUNNYSIDE 345KV CKT 1	717	789	0.04398	111.6385	G15063_T 345.00 - WOODRING 345KV CKT 1
FDNS	00NR	2	20WP	G15_048	FROM->TO	G14-057T 345.00 - SUNNYSIDE 345KV CKT 1	717	789	0.04854	111.6362	LEWIS CREEK SWITCHYARD 138/22.0KV TRANSFORMER CKT 1
FDNS	00NR	2	20WP	G15_048	FROM->TO	G14-057T 345.00 - SUNNYSIDE 345KV CKT 1	717	789	0.04892	111.6356	EMPORIA ENERGY CENTER - G14_001T 345.00 345KV CKT 1
FDNS	00NR	2	20WP	G15_048	FROM->TO	G14-057T 345.00 - SUNNYSIDE 345KV CKT 1	717	789	0.04885	111.6328	BLACKBERRY - NEOSHO 345KV CKT 1
FDNS	00NR	2	20WP	G15_048	FROM->TO	G14-057T 345.00 - SUNNYSIDE 345KV CKT 1	717	789	0.04854	111.6318	LEWIS CREEK SWITCHYARD 138/22.0KV TRANSFORMER CKT 1
FDNS	00NR	2	16WP	G15_048	FROM->TO	G14-057T 345.00 - SUNNYSIDE 345KV CKT 1	717	789	0.04891	111.6317	GEN657748 1-YOUNG 2 GENERATOR
FDNS	00NR	2	20WP	G15_048	FROM->TO	G14-057T 345.00 - SUNNYSIDE 345KV CKT 1	717	789	0.04854	111.6236	GEN334392 1-EXXON MOBIL IPP 1
FDNS	00NR	2	20WP	G15_048	FROM->TO	G14-057T 345.00 - SUNNYSIDE 345KV CKT 1	717	789	0.04856	111.6221	MCNAB REC - Turk 115 115KV CKT 1
FDNS	00NR	2	20WP	G15_048	FROM->TO	G14-057T 345.00 - SUNNYSIDE 345KV CKT 1	717	789	0.04856	111.6221	TURK (TURK 1) 138/115/13.2KV TRANSFORMER CKT 1
FDNS	00NR	2	20WP	G15_048	FROM->TO	G14-057T 345.00 - SUNNYSIDE 345KV CKT 1	717	789	0.04856	111.6221	TURK (TURK 1) 138/115/13.2KV TRANSFORMER CKT 1
FDNS	00NR	2	20WP	G15_048	FROM->TO	G14-057T 345.00 - SUNNYSIDE 345KV CKT 1	717	789	0.04869	111.6216	G15074_T 345.00 - JEFFREY ENERGY CENTER 345KV CKT 1
FDNS	00NR	2	16WP	G15_048	FROM->TO	G14-057T 345.00 - SUNNYSIDE 345KV CKT 1	717	789	0.04887	111.6209	P12:138:AEPW:SHAM4WT:CHILD4WT
FDNS	00NR	2	20WP	G15_048	FROM->TO	G14-057T 345.00 - SUNNYSIDE 345KV CKT 1	717	789	0.04854	111.6208	GEN505616 1-BROKEN BOW
FDNS	00NR	2	20WP	G15_048	FROM->TO	G14-057T 345.00 - SUNNYSIDE 345KV CKT 1	717	789	0.04854	111.6197	P12:161:AEPW:CHAMSPR5:FARMING5
FDNS	00NR	2	20WP	G15_048	FROM->TO	G14-057T 345.00 - SUNNYSIDE 345KV CKT 1	717	789	0.04854	111.6175	GEN515042 1-SEMINOLE 3G
FDNSLock	00NR	2	16WP	G15_048	FROM->TO	G14-057T 345.00 - SUNNYSIDE 345KV CKT 1	717	789	0.04891	111.6174	GEN532751 1-WOLF CREEK GENERATING STATION UNIT 1
FDNS	00NR	2	20WP	G15_048	FROM->TO	G14-057T 345.00 - SUNNYSIDE 345KV CKT 1	717	789	0.04854	111.6173	GEN334393 1-EXXON MOBIL IPP 2
FDNS	00NR	2	20WP	G15_048	FROM->TO	G14-057T 345.00 - SUNNYSIDE 345KV CKT 1	717	789	0.04854	111.6173	GEN334394 1-EXXON MOBIL IPP 3
FDNS	00NR	2	16WP	G15_048	FROM->TO	G14-057T 345.00 - SUNNYSIDE 345KV CKT 1	717	789	0.05016	111.6149	P12:138:WFEC:MSL15
FDNS	00NR	2	20WP	G15_048	FROM->TO	G14-057T 345.00 - SUNNYSIDE 345KV CKT 1	717	789	0.04869	111.6141	P12:69:WFEC-AEPW:COMANCH2:WALTRS-2
FDNS	00NR	2	16WP	G15_048	FROM->TO	G14-057T 345.00 - SUNNYSIDE 345KV CKT 1	717	789	0.04671	111.6052	CHISHOLM7 345.00 (CHISHOLM) 345/230/13.2KV TRANSFORMER CKT 1
FDNS	00NR	2	20WP	G15_048	FROM->TO	G14-057T 345.00 - SUNNYSIDE 345KV CKT 1	717	789	0.04877	111.6041	SOUTHWESTERN STATION - VERDEN 138KV CKT 1
FDNS	00NR	2	20WP	G15_048	FROM->TO	G14-057T 345.00 - SUNNYSIDE 345KV CKT 1	717	789	0.04871	111.6029	WEATHERFORD TAP - WEATHERFORD WIND FARM 138KV CKT 1
FDNS	00NR	2	16WP	G15_048	FROM->TO	G14-057T 345.00 - SUNNYSIDE 345KV CKT 1	717	789	0.04891	111.6005	GEN562992 1-G15063_3 0.6900
FDNS	00NR	2	20WP	G15_048	FROM->TO	G14-057T 345.00 - SUNNYSIDE 345KV CKT 1	717	789	0.04862	111.6003	7LUTESVIL 345.00 - 7ST FRANC 345.00 345KV CKT 1
FDNS	00NR	2	20WP	G15_048	FROM->TO	G14-057T 345.00 - SUNNYSIDE 345KV CKT 1	717	789	0.05007	111.6002	NOBLE - PURCELL4 138.00 138KV CKT 1
FDNS	00NR	2	20WP	G15_048	FROM->TO	G14-057T 345.00 - SUNNYSIDE 345KV CKT 1	717	789	0.04881	111.5967	G13-010T 345.00 - POST ROCK 345KV CKT 1
FDNS	00NR	2	20WP	G15_048	FROM->TO	G14-057T 345.00 - SUNNYSIDE 345KV CKT 1	717	789	0.04902	111.5953	CLINTON JUNCTION - ELK CITY 138KV CKT 1
FDNS	00NR	2	20WP	G15_048	FROM->TO	G14-057T 345.00 - SUNNYSIDE 345KV CKT 1	717	789	0.04902	111.5953	CLINTON JUNCTION - ELK CITY 138KV CKT 1
FDNS	00NR	2	20WP	G15_048	FROM->TO	G14-057T 345.00 - SUNNYSIDE 345KV CKT 1	717	789	0.04854	111.587	GEN501971 1-EVANGELINE UNIT 7-1
FDNS	00NR	2	20WP	G15_048	FROM->TO	G14-057T 345.00 - SUNNYSIDE 345KV CKT 1	717	789	0.04854	111.587	GEN501972 1-EVANGELINE UNIT 7-2
FDNS	00NR	2	20WP	G15_048	FROM->TO	G14-057T 345.00 - SUNNYSIDE 345KV CKT 1	717	789	0.04854	111.5867	ST FRANCIS - ST FRANCIS 1 161KV CKT Z1
FDNS	00NR	2	20WP	G15_048	FROM->TO	G14-057T 345.00 - SUNNYSIDE 345KV CKT 1	717	789	0.04856	111.5864	BUCKNER7 345.00 - HOLCOMB 345KV CKT 1
FDNS	00NR	2	20WP	G15_048	FROM->TO	G14-057T 345.00 - SUNNYSIDE 345KV CKT 1	717	789	0.04856	111.5864	BUCKNER7 345.00 - HOLCOMB 345KV CKT 1
FDNS	00NR	2	20WP	G15_048	FROM->TO	G14-057T 345.00 - SUNNYSIDE 345KV CKT 1	717	789	0.04877	111.5844	NORTH 29TH CHICKASHA - VERDEN 138KV CKT 1
FDNS	00NR	2	20WP	G15_048	FROM->TO	G14-057T 345.00 - SUNNYSIDE 345KV CKT 1	717	789	0.04963	111.5833	LASALLE - STONEWAL LH138.00 138KV CKT 1
FDNS	00NR	2	20WP	G15_048	FROM->TO	G14-057T 345.00 - SUNNYSIDE 345KV CKT 1	717	789	0.04892	111.5813	G14_001T 345.00 - WICHITA 345KV CKT 1
FDNS	00NR	2	20WP	G15_048	FROM->TO	G14-057T 345.00 - SUNNYSIDE 345KV CKT 1	717	789	0.04864	111.5793	FRANKLIN - FRANKLIN SW 138KV CKT 1
FDNS	00NR	2	20WP	G15_048	FROM->TO	G14-057T 345.00 - SUNNYSIDE 345KV CKT 1	717	789	0.0486	111.5758	LAKEOVER - MCADAMS 500KV CKT 1
FDNS	00NR	2	20WP	G15_048	FROM->TO	G14-057T 345.00 - SUNNYSIDE 345KV CKT 1	717	789	0.04883	111.5743	HINTON - WEATHERFORD JCT. 138KV CKT 1
FDNS	00NR	2	20WP	G15_048	FROM->TO	G14-057T 345.00 - SUNNYSIDE 345KV CKT 1	717	789	0.04854	111.5739	SABINE 230/22.0KV TRANSFORMER CKT 1
FDNS	00NR	2	20WP	G15_048	FROM->TO	G14-057T 345.00 - SUNNYSIDE 345KV CKT 1	717	789	0.04871	111.5736	EMPORIA ENERGY CENTER - SWISSVALE 345KV CKT 1
FDNS	00NR	2	20WP	G15_048	FROM->TO	G14-057T 345.00 - SUNNYSIDE 345KV CKT 1	717	789	0.04861	111.5732	FLETCHER - MARLOW JCT 69KV CKT 1
FDNS	00NR	2	20WP	G15_048	FROM->TO	G14-057T 345.00 - SUNNYSIDE 345KV CKT 1	717	789	0.04845	111.573	ENOWILT - LONE OAK 138KV CKT 1
FDNS	00NR	2	20WP	G15_048	FROM->TO	G14-057T 345.00 - SUNNYSIDE 345KV CKT 1	717	789	0.04856	111.5724	P12:138:OKGE:3TERM12
FDNS	00NR	2	16WP	G15_048	FROM->TO	G14-057T 345.00 - SUNNYSIDE 345KV CKT 1	717	789	0.05027	111.5718	CANEY CREEK - TEXOMA JCT 138KV CKT 1
FDNS	00NR	2	20WP	G15_048	FROM->TO	G14-057T 345.00 - SUNNYSIDE 345KV CKT 1	717	789	0.04855	111.5703	P12:138:AEPW:R.S.S-4:T.P.S.-4
FDNS	00NR	2	16WP	G15_048	FROM->TO	G14-057T 345.00 - SUNNYSIDE 345KV CKT 1	717	789	0.04891	111.5699	GEN562704 1-G15_020_3 0.3550
FDNS	00NR	2	20WP	G15_048	FROM->TO	G14-057T 345.00 - SUNNYSIDE 345KV CKT 1	717	789	0.04963	111.5681	STONEWAL LH138.00 - TUPELO TAP 138KV CKT 1
FDNS	00NR	2	20WP	G15_048	FROM->TO	G14-057T 345.00 - SUNNYSIDE 345KV CKT 1	717	789	0.04845	111.5643	ENOWILT - SARDIS 138KV CKT 1
FDNS	00NR	2	20WP	G15_048	FROM->TO	G14-057T 345.00 - SUNNYSIDE 345KV CKT 1	717	789	0.04854	111.564	GEN501912 1-ACADIA UNIT CT1B
FDNS	00NR	2	20WP	G15_048	FROM->TO	G14-057T 345.00 - SUNNYSIDE 345KV CKT 1	717	789	0.04854	111.5632	GEN501911 1-ACADIA UNIT CT1A
FDNS	00NR	2	16WP	G15_048	FROM->TO	G14-057T 345.00 - SUNNYSIDE 345KV CKT 1	717	789	0.04891	111.5628	GEN563173 1-G15082_3 0.6900

SOLUTION	GROUP	SCENARIO	SEASON	SOURCE	DIRECTION	MONITORED ELEMENT	RATEA (MVA)	RATEB(MVA)	TDF	TC%LOADING (% MVA)	CONTINGENCY
FDNS	00NR	2	20WP	G15_048	FROM->TO	G14-057T 345.00 - SUNNYSIDE 345KV CKT 1	717	789	0.04867	111.5586	MCADAMS - WOLF CREEK 500KV CKT 1
FDNS	00NR	2	20WP	G15_048	FROM->TO	G14-057T 345.00 - SUNNYSIDE 345KV CKT 1	717	789	0.04827	111.5573	P12:138:WFEC-AEPW:ELKCTY-4:ERICK4
FDNS	00NR	2	20WP	G15_048	FROM->TO	G14-057T 345.00 - SUNNYSIDE 345KV CKT 1	717	789	0.04881	111.5499	G13-010T 345.00 - SPEARVILLE 345KV CKT 1
FDNS	00NR	2	20WP	G15_048	FROM->TO	G14-057T 345.00 - SUNNYSIDE 345KV CKT 1	717	789	0.04854	111.5478	GEN506749 1-EASTMAN GENERATION A
FDNS	00NR	2	20WP	G15_048	FROM->TO	G14-057T 345.00 - SUNNYSIDE 345KV CKT 1	717	789	0.04874	111.5472	SWISSVALE - WEST GARDNER 345KV CKT 1
FDNS	00NR	2	20WP	G15_048	FROM->TO	G14-057T 345.00 - SUNNYSIDE 345KV CKT 1	717	789	0.04854	111.5451	P12:138:AEPW:R.S.S.-4:R:96YALE-4
FDNS	00NR	2	20WP	G15_048	FROM->TO	G14-057T 345.00 - SUNNYSIDE 345KV CKT 1	717	789	0.04854	111.5385	GEN336242 1-1NMIL ST1 18.000
FDNS	00NR	2	20WP	G15_048	FROM->TO	G14-057T 345.00 - SUNNYSIDE 345KV CKT 1	717	789	0.04855	111.5353	AMITY SS - MURFREESBORO EAST (AECC) 115KV CKT 1
FDNS	00NR	2	20WP	G15_048	FROM->TO	G14-057T 345.00 - SUNNYSIDE 345KV CKT 1	717	789	0.04854	111.5338	NELSON 230/24.0KV TRANSFORMER CKT 1
FDNS	00NR	2	16WP	G15_048	FROM->TO	G14-057T 345.00 - SUNNYSIDE 345KV CKT 1	717	789	0.04891	111.5291	GEN562952 1-G15057_3 0.6500
FDNS	00NR	2	20WP	G15_048	FROM->TO	G14-057T 345.00 - SUNNYSIDE 345KV CKT 1	717	789	0.04865	111.5289	8WNEWMADRID 500.00 - DELL 500 500KV CKT 1
FDNS	00NR	2	20WP	G15_048	FROM->TO	G14-057T 345.00 - SUNNYSIDE 345KV CKT 1	717	789	0.04985	111.5268	FRANKLIN SW - WESTMOORE 138KV CKT 1
FDNS	00NR	2	20WP	G15_048	FROM->TO	G14-057T 345.00 - SUNNYSIDE 345KV CKT 1	717	789	0.04845	111.5257	CLAYTON - SARDIS 138KV CKT 1
FDNS	00NR	2	20WP	G15_048	FROM->TO	G14-057T 345.00 - SUNNYSIDE 345KV CKT 1	717	789	0.04854	111.5241	ST FRANCIS 345/161KV TRANSFORMER CKT 1
FDNS	00NR	2	20WP	G15_048	FROM->TO	G14-057T 345.00 - SUNNYSIDE 345KV CKT 1	717	789	0.04854	111.5229	P12:138:AEPW:MOHAWK4:T.NO--4
FDNS	00NR	2	20WP	G15_048	FROM->TO	G14-057T 345.00 - SUNNYSIDE 345KV CKT 1	717	789	0.04906	111.5217	CIMARRON - NORTHWEST 345KV CKT 1
FDNS	00NR	2	20WP	G15_048	FROM->TO	G14-057T 345.00 - SUNNYSIDE 345KV CKT 1	717	789	0.04878	111.521	CORNVILLE - NORGE ROAD 138KV CKT 1
FDNS	00NR	2	20WP	G15_048	FROM->TO	G14-057T 345.00 - SUNNYSIDE 345KV CKT 1	717	789	0.04878	111.521	CORNVILLE - NORGE ROAD 138KV CKT 1
FDNS	00NR	2	20WP	G15_048	FROM->TO	G14-057T 345.00 - SUNNYSIDE 345KV CKT 1	717	789	0.04877	111.5184	CORNVILLE - NORTH 29TH CHICKASHA 138KV CKT 1
FDNS	00NR	2	20WP	G15_048	FROM->TO	G14-057T 345.00 - SUNNYSIDE 345KV CKT 1	717	789	0.04854	111.5172	LAYFLD8 500.00 (LAYFLD AUTO) 500/230/13.8KV TRANSFORMER CKT 1
FDNS	00NR	2	20WP	G15_048	FROM->TO	G14-057T 345.00 - SUNNYSIDE 345KV CKT 1	717	789	0.04854	111.5172	LAYFLD8 500.00 (LAYFLD AUTO) 500/230/13.8KV TRANSFORMER CKT 1
FDNS	00NR	2	20WP	G15_048	FROM->TO	G14-057T 345.00 - SUNNYSIDE 345KV CKT 1	717	789	0.04871	111.5162	WEATHERFORD SOUTHEAST - WEATHERFORD TAP 138KV CKT 1
FDNS	00NR	2	20WP	G15_048	FROM->TO	G14-057T 345.00 - SUNNYSIDE 345KV CKT 1	717	789	0.04808	111.5142	ARBUCKLE - MILLCREEK 138KV CKT 1
FDNS	00NR	2	20WP	G15_048	FROM->TO	G14-057T 345.00 - SUNNYSIDE 345KV CKT 1	717	789	0.04845	111.5029	P12:138:AEPW-SWPA:LONEOAK4:BRKNBW4
FDNS	00NR	2	20WP	G15_048	FROM->TO	G14-057T 345.00 - SUNNYSIDE 345KV CKT 1	717	789	0.04883	111.5013	HINTON - REDROCKRD4 138.00 138KV CKT 1
FDNS	00NR	2	16WP	G15_048	FROM->TO	G14-057T 345.00 - SUNNYSIDE 345KV CKT 1	717	789	0.04891	111.4986	GEN562710 1-G15_022_3 0.5500
FDNS	00NR	2	20WP	G15_048	FROM->TO	G14-057T 345.00 - SUNNYSIDE 345KV CKT 1	717	789	0.04854	111.4928	GEN338146 1-INDEPENDENCE UNIT #2
FDNS	00NR	2	20WP	G15_048	FROM->TO	G14-057T 345.00 - SUNNYSIDE 345KV CKT 1	717	789	0.04863	111.4903	7JASPER 345.00 - MORGAN 345KV CKT 1
FDNS	00NR	2	20WP	G15_048	FROM->TO	G14-057T 345.00 - SUNNYSIDE 345KV CKT 1	717	789	0.04882	111.4829	SEMINOLE (SEMINOL2) 345/138/14.4KV TRANSFORMER CKT 1
FDNS	00NR	2	16WP	G15_048	FROM->TO	G14-057T 345.00 - SUNNYSIDE 345KV CKT 1	717	789	0.04891	111.4703	GEN620315 1-BIG STONE GEN
FDNS	00NR	2	20WP	G15_048	FROM->TO	G14-057T 345.00 - SUNNYSIDE 345KV CKT 1	717	789	0.04871	111.4623	CLINTON JUNCTION - CLINTON NATURAL GAS TAP 138KV CKT 1
FDNS	00NR	2	20WP	G15_048	FROM->TO	G14-057T 345.00 - SUNNYSIDE 345KV CKT 1	717	789	0.04866	111.4562	P12:138:OKGE:3TERM20
FDNS	00NR	2	20WP	G15_048	FROM->TO	G14-057T 345.00 - SUNNYSIDE 345KV CKT 1	717	789	0.03979	111.4559	GRACEMONT - LAWTON EASTSIDE 345KV CKT 1
FDNS	00NR	2	20WP	G15_048	FROM->TO	G14-057T 345.00 - SUNNYSIDE 345KV CKT 1	717	789	0.03979	111.4559	GRACEMONT - LAWTON EASTSIDE 345KV CKT 1
FDNS	00NR	2	20WP	G15_048	FROM->TO	G14-057T 345.00 - SUNNYSIDE 345KV CKT 1	717	789	0.04869	111.4392	COMANCHE - WALTERS 69KV CKT 1
FDNSLock	00NR	2	16WP	G15_048	FROM->TO	G14-057T 345.00 - SUNNYSIDE 345KV CKT 1	717	789	0.04891	111.4052	GEN600004 2-PRAIRIE ISLAND G2
FDNSLock	00NR	2	16WP	G15_048	FROM->TO	G14-057T 345.00 - SUNNYSIDE 345KV CKT 1	717	789	0.04891	111.4025	GEN600003 1-PRAIRIE ISLAND G1
FDNS	00NR	2	16WP	G15_048	FROM->TO	G14-057T 345.00 - SUNNYSIDE 345KV CKT 1	717	789	0.04671	111.4012	CHISHOLM7 345.00 - GRACEMONT 345KV CKT 1
FDNS	00NR	2	16WP	G15_048	FROM->TO	G14-057T 345.00 - SUNNYSIDE 345KV CKT 1	717	789	0.04891	111.4	GEN600006 1-AS KING
FDNS	00NR	2	16WP	G15_048	FROM->TO	G14-057T 345.00 - SUNNYSIDE 345KV CKT 1	717	789	0.04891	111.4	GEN636641 1-LOUISA UNIT 1
FDNS	00NR	2	16WP	G15_048	FROM->TO	G14-057T 345.00 - SUNNYSIDE 345KV CKT 1	717	789	0.04899	111.3775	P12:138:WFEC:MSL09
FDNS	00NR	2	16WP	G15_048	FROM->TO	G14-057T 345.00 - SUNNYSIDE 345KV CKT 1	717	789	0.04891	111.3644	GEN511851 1-COMANCHE #1
FDNS	00NR	2	16WP	G15_048	FROM->TO	G14-057T 345.00 - SUNNYSIDE 345KV CKT 1	717	789	0.04891	111.2692	GEN600005 1-MONTICELLO
FDNS	00NR	2	16WP	G15_048	FROM->TO	G14-057T 345.00 - SUNNYSIDE 345KV CKT 1	717	789	0.04891	111.2563	GEN562754 1-G15031_5 0.6900
FDNS	00NR	2	16WP	G15_048	FROM->TO	G14-057T 345.00 - SUNNYSIDE 345KV CKT 1	717	789	0.04891	111.219	P12:230:AEPW-SPS:SWEETWT6:WHEELER 6
FDNS	00NR	2	16WP	G15_048	FROM->TO	G14-057T 345.00 - SUNNYSIDE 345KV CKT 1	717	789	0.04891	111.218	STATELINE INTERCHANGE - STLN-DEMARC6 230KV CKT 1
FDNS	00NR	2	16WP	G15_048	FROM->TO	G14-057T 345.00 - SUNNYSIDE 345KV CKT 1	717	789	0.04891	111.2168	STLN-DEMARC6 - SWEETWATER 230KV CKT 1
FDNS	00NR	2	16WP	G15_048	FROM->TO	G14-057T 345.00 - SUNNYSIDE 345KV CKT 1	717	789	0.04869	111.2158	P12:138:AEPW-OGE:CORNVIL4:CIMARON4
FDNS	00NR	2	16WP	G15_048	FROM->TO	G14-057T 345.00 - SUNNYSIDE 345KV CKT 1	717	789	0.04891	111.2103	GEN635213 3-NEAL UNIT 3
FDNS	00NR	2	16WP	G15_048	FROM->TO	G14-057T 345.00 - SUNNYSIDE 345KV CKT 1	717	789	0.04891	111.2	GEN629074 1-ARNOLD LOWSIDE OF GSU XFMR
FDNS	00NR	2	16WP	G15_048	FROM->TO	G14-057T 345.00 - SUNNYSIDE 345KV CKT 1	717	789	0.04891	111.1975	GEN562023 1-G11_020_3 0.6900
FDNS	00NR	2	16WP	G15_048	FROM->TO	G14-057T 345.00 - SUNNYSIDE 345KV CKT 1	717	789	0.04891	111.1975	GEN562026 1-G11_019_3 0.6900
FDNS	00NR	2	16WP	G15_048	FROM->TO	G14-057T 345.00 - SUNNYSIDE 345KV CKT 1	717	789	0.04891	111.1975	GEN562756 1-G15031_7 0.6900
FDNS	00NR	2	16WP	G15_048	FROM->TO	G14-057T 345.00 - SUNNYSIDE 345KV CKT 1	717	789	0.04891	111.1543	BIG STONE 230/24.0KV TRANSFORMER CKT 1
FDNS	00NR	2	16WP	G15_048	FROM->TO	G14-057T 345.00 - SUNNYSIDE 345KV CKT 1	717	789	0.04891	111.1481	GEN562556 1-G14_046_3 0.3420
FDNS	00NR	2	16WP	G15_048	FROM->TO	G14-057T 345.00 - SUNNYSIDE 345KV CKT 1	717	789	0.04891	111.0641	GEN563142 1-G15079_3 0.5500
FDNS	00NR	2	16WP	G15_048	FROM->TO	G14-057T 345.00 - SUNNYSIDE 345KV CKT 1	717	789	0.04891	111.0641	GEN563151 1-G15080_2 0.5500
FDNS	00NR	2	20WP	G15_048	FROM->TO	G14-057T 345.00 - SUNNYSIDE 345KV CKT 1	717	789	0.04854	111.0351	803-OKLAUNION
FDNS	00NR	2	16WP	G15_048	FROM->TO	G14-057T 345.00 - SUNNYSIDE 345KV CKT 1	717	789	0.04891	111.0276	GEN523971 1-HARRINGTON GEN #1 24 KV
FDNS	00NR	2	16WP	G15_048	FROM->TO	G14-057T 345.00 - SUNNYSIDE 345KV CKT 1	717	789	0.04891	111.0275	GEN523972 1-HARRINGTON GEN #2 24 KV
FDNS	00NR	2	16WP	G15_048	FROM->TO	G14-057T 345.00 - SUNNYSIDE 345KV CKT 1	717	789	0.04891	111.0275	GEN523973 1-HARRINGTON GEN #3 24 KV
FDNS	00NR	2	16WP	G15_048	FROM->TO	G14-057T 345.00 - SUNNYSIDE 345KV CKT 1	717	789	0.04891	110.9615	GEN600000 1-SHERBURNECNTY G1
FDNS	00NR	2	16WP	G15_048	FROM->TO	G14-057T 345.00 - SUNNYSIDE 345KV CKT 1	717	789	0.04896	110.9204	NORTHWEST TEXARKANA - VALLIANT 345KV CKT 1
FDNS	00NR	2	16WP	G15_048	FROM->TO	G14-057T 345.00 - SUNNYSIDE 345KV CKT 1	717	789	0.04896	110.9204	NORTHWEST TEXARKANA - VALLIANT 345KV CKT 1
FDNS	00NR	2	16WP	G15_048	FROM->TO	G14-057T 345.00 - SUNNYSIDE 345KV CKT 1	717	789	0.04891	110.8828	GEN600001 2-SHERBURNE CNTY G2
FDNS	00NR	2	16WP	G15_048	FROM->TO	G14-057T 345.00 - SUNNYSIDE 345KV CKT 1	717	789	0.0469	110.8617	P12:230:AEPW:ELKCITY6:SWEETWT6
FDNS	00NR	2	16WP	G15_048	FROM->TO	G14-057T 345.00 - SUNNYSIDE 345KV CKT 1	717	789	0.04891	110.8539	GEN563042 1-G15068_3 0.6900
FDNS	00NR	2	16WP	G15_048	FROM->TO	G14-057T 345.00 - SUNNYSIDE 345KV CKT 1	717	789	0.04891	110.8476	GEN511848 1-SOUTHWESTERN STATION #3
FDNS	00NR	2	16WP	G15_048	FROM->TO	G14-057T 345.00 - SUNNYSIDE 345KV CKT 1	717	789	0.04891	110.8364	GEN527901 1-HOBBS PLANT #1 (CT)
FDNS	00NR	2	16WP	G15_048	FROM->TO	G14-057T 345.00 - SUNNYSIDE 345KV CKT 1	717	789	0.04891	110.8364	GEN527902 1-HOBBS PLANT #2 (CT)
FDNS	00NR	2	20WP	G15_048	FROM->TO	G14-057T 345.00 - SUNNYSIDE 345KV CKT 1	717	789	0.0477	110.81	P12:138:OKGE:3TERM39
FDNS	00NR	2	16WP	G15_048	FROM->TO	G14-057T 345.00 - SUNNYSIDE 345KV CKT 1	717	789	0.04891	110.7558	GEN629075 1-OTTUMWA GENERATOR FOR OTTUMWA UNIT NO 1
FDNS	00NR	2	16WP	G15_048	FROM->TO	G14-057T 345.00 - SUNNYSIDE 345KV CKT 1	717	789	0.04891	110.6383	SHERBURNE CO 345/24.0KV TRANSFORMER CKT 1
FDNS	00NR	2	20WP	G15_048	FROM->TO	G14-057T 345.00 - SUNNYSIDE 345KV CKT 1	717	789	0.04811	110.6374	MAYSVILLE - MAYSVLT4 138.00 138KV CKT 1
FDNS	00NR	2	20WP	G15_048	FROM->TO	G14-057T 345.00 - SUNNYSIDE 345KV CKT 1	717	789	0.04856	110.6101	NORTHWEST TEXARKANA - WELSH 345KV CKT 1
FDNS	00NR	2	20WP	G15_048	FROM->TO	G14-057T 345.00 - SUNNYSIDE 345KV CKT 1	717	789	0.04856	110.6101	NORTHWEST TEXARKANA - WELSH 345KV CKT 1
FDNS	00NR	2	16WP	G15_048	FROM->TO	G14-057T 345.00 - SUNNYSIDE 345KV CKT 1	717	789	0.04891	110.61	GEN635214 4-NEAL UNIT 4
FDNS	00NR	2	20WP	G15_048	FROM->TO	G14-057T 345.00 - SUNNYSIDE 345KV CKT 1	717	789	0.04854	110.5991	GEN521103 1-BLUE CANYON WIND FARM
FDNS	00NR	2	20WP	G15_048	FROM->TO	G14-057T 345.00 - SUNNYSIDE 345KV CKT 1	717	789	0.04854	110.5928	GEN562691 1-G15_015_3 0.6900

SOLUTION	GROUP	SCENARIO	SEASON	SOURCE	DIRECTION	MONITORED ELEMENT	RATEA (MVA)	RATEB(MVA)	TDF	TC%LOADING (% MVA)	CONTINGENCY
FDNS	00NR	2	20WP	G15_048	FROM->TO	G14-057T 345.00 - SUNNYSIDE 345KV CKT 1	717	789	0.04854	110.5884	GEN520812 1-ANADRK5
FDNS	00NR	2	20WP	G15_048	FROM->TO	G14-057T 345.00 - SUNNYSIDE 345KV CKT 1	717	789	0.04854	110.5883	GEN520813 1-ANADRK6
FDNS	00NR	2	20WP	G15_048	FROM->TO	G14-057T 345.00 - SUNNYSIDE 345KV CKT 1	717	789	0.04854	110.586	GEN563052 1-G15069_3 0.6900
FDNS	00NR	2	20WP	G15_048	FROM->TO	G14-057T 345.00 - SUNNYSIDE 345KV CKT 1	717	789	0.04854	110.5804	GEN562772 1-G15034_3 0.6900
FDNS	00NR	2	20WP	G15_048	FROM->TO	G14-057T 345.00 - SUNNYSIDE 345KV CKT 1	717	789	0.04854	110.5721	GEN600046 1-MECST
FDNS	00NR	2	20WP	G15_048	FROM->TO	G14-057T 345.00 - SUNNYSIDE 345KV CKT 1	717	789	0.04893	110.5716	DRAPER LAKE - MIDWEST TAP 138KV CKT 1
FDNS	00NR	2	20WP	G15_048	FROM->TO	G14-057T 345.00 - SUNNYSIDE 345KV CKT 1	717	789	0.04811	110.5716	MAYSVLT4 138.00 - PRAIRIE POINT 138KV CKT 1
FDNS	00NR	2	20WP	G15_048	FROM->TO	G14-057T 345.00 - SUNNYSIDE 345KV CKT 1	717	789	0.04854	110.5614	GEN629070 2-BEAVER CHANNEL GENERATORFOR UNIT NO 2
FDNS	00NR	2	20WP	G15_048	FROM->TO	G14-057T 345.00 - SUNNYSIDE 345KV CKT 1	717	789	0.04854	110.5591	GEN511961 1-DEMPSEY-WTG10.7000
FDNS	00NR	2	20WP	G15_048	FROM->TO	G14-057T 345.00 - SUNNYSIDE 345KV CKT 1	717	789	0.04854	110.5581	GEN600047 1-MECCT1
FDNS	00NR	2	20WP	G15_048	FROM->TO	G14-057T 345.00 - SUNNYSIDE 345KV CKT 1	717	789	0.04805	110.5565	ARBUCKLE - SULPHR 4 138.00 138KV CKT 1
FDNS	00NR	2	20WP	G15_048	FROM->TO	G14-057T 345.00 - SUNNYSIDE 345KV CKT 1	717	789	0.04854	110.5533	GEN629071 1-BURLINGTON GENERATOR FOR UNIT NO 1 E
FDNS	00NR	2	16WP	G15_048	FROM->TO	G14-057T 345.00 - SUNNYSIDE 345KV CKT 1	717	789	0.04891	110.5521	GEN563043 1-G15068_4 0.6900
FDNS	00NR	2	20WP	G15_048	FROM->TO	G14-057T 345.00 - SUNNYSIDE 345KV CKT 1	717	789	0.04853	110.549	P12:069:OKGE:3TERM42
FDNS	00NR	2	16WP	G15_048	FROM->TO	G14-057T 345.00 - SUNNYSIDE 345KV CKT 1	717	789	0.04891	110.5485	GEN563273 2-G15093_4 0.6900
FDNS	00NR	2	20WP	G15_048	FROM->TO	G14-057T 345.00 - SUNNYSIDE 345KV CKT 1	717	789	0.04237	110.5478	P12:138:WFEC:MSL14
FDNS	00NR	2	20WP	G15_048	FROM->TO	G14-057T 345.00 - SUNNYSIDE 345KV CKT 1	717	789	0.048	110.5476	CIMARRON - MATHWSN7 345.00 345KV CKT 1
FDNS	00NR	2	20WP	G15_048	FROM->TO	G14-057T 345.00 - SUNNYSIDE 345KV CKT 1	717	789	0.048	110.5476	CIMARRON - MATHWSN7 345.00 345KV CKT 2
FDNS	00NR	2	20WP	G15_048	FROM->TO	G14-057T 345.00 - SUNNYSIDE 345KV CKT 1	717	789	0.04854	110.5385	BURLINGTON NO1 + NO 2 + NO 3 161/20.0KV TRANSFORMER CKT 1
FDNS	00NR	2	20WP	G15_048	FROM->TO	G14-057T 345.00 - SUNNYSIDE 345KV CKT 1	717	789	0.04892	110.536	P12:138:OKGE:3TERM21
FDNS	00NR	2	20WP	G15_048	FROM->TO	G14-057T 345.00 - SUNNYSIDE 345KV CKT 1	717	789	0.04854	110.5349	GEN615010 1-STANTON4
FDNS	00NR	2	20WP	G15_048	FROM->TO	G14-057T 345.00 - SUNNYSIDE 345KV CKT 1	717	789	0.0486	110.5303	P12:138:WFEC:MSL11
FDNS	00NR	2	20WP	G15_048	FROM->TO	G14-057T 345.00 - SUNNYSIDE 345KV CKT 1	717	789	0.0486	110.5303	P12:138:WFEC-AEPW:PHAROAH4:LONEOAK4
FDNS	00NR	2	16WP	G15_048	FROM->TO	G14-057T 345.00 - SUNNYSIDE 345KV CKT 1	717	789	0.04891	110.5301	GEN526333 1-JONES GEN #3 21 KV
FDNS	00NR	2	16WP	G15_048	FROM->TO	G14-057T 345.00 - SUNNYSIDE 345KV CKT 1	717	789	0.04891	110.5301	GEN526334 1-JONES_4 116.500
FDNS	00NR	2	20WP	G15_048	FROM->TO	G14-057T 345.00 - SUNNYSIDE 345KV CKT 1	717	789	0.04854	110.5291	GEN615021 1-GRE-ER 14G 16.000
FDNS	00NR	2	20WP	G15_048	FROM->TO	G14-057T 345.00 - SUNNYSIDE 345KV CKT 1	717	789	0.04398	110.526	G15063_T 345.00 - MATHWSN7 345.00 345KV CKT 1
FDNS	00NR	2	20WP	G15_048	FROM->TO	G14-057T 345.00 - SUNNYSIDE 345KV CKT 1	717	789	0.04861	110.5157	GLASSES - MADILL INDUSTRIAL TAP 138KV CKT 1
FDNS	00NR	2	16WP	G15_048	FROM->TO	G14-057T 345.00 - SUNNYSIDE 345KV CKT 1	717	789	0.04891	110.513	CHISHOLM6 230.00 - SWEETWATER 230KV CKT 1
FDNS	00NR	2	20WP	G15_048	FROM->TO	G14-057T 345.00 - SUNNYSIDE 345KV CKT 1	717	789	0.04237	110.5103	BEARCAT 138.00 - MOORELAND 138KV CKT 1
FDNS	00NR	2	20WP	G15_048	FROM->TO	G14-057T 345.00 - SUNNYSIDE 345KV CKT 1	717	789	0.04862	110.5026	CANEY CREEK - JOHNSON COUNTY 138KV CKT 1
FDNS	00NR	2	20WP	G15_048	FROM->TO	G14-057T 345.00 - SUNNYSIDE 345KV CKT 1	717	789	0.04864	110.4954	P12:138:WFEC:MSL08
FDNS	00NR	2	20WP	G15_048	FROM->TO	G14-057T 345.00 - SUNNYSIDE 345KV CKT 1	717	789	0.04854	110.4951	GEN531447 1-HOLCOMB GENERATOR
FDNS	00NR	2	20WP	G15_048	FROM->TO	G14-057T 345.00 - SUNNYSIDE 345KV CKT 1	717	789	0.04854	110.4945	GEN515443 1-MNCOWND1 0.7000
FDNS	00NR	2	20WP	G15_048	FROM->TO	G14-057T 345.00 - SUNNYSIDE 345KV CKT 1	717	789	0.04854	110.4869	INDEPENDENCE 500/26.0KV TRANSFORMER CKT 1
FDNS	00NR	2	20WP	G15_048	FROM->TO	G14-057T 345.00 - SUNNYSIDE 345KV CKT 1	717	789	0.04854	110.4854	GEN560183 1-REDHIL-WTG1 12.000
FDNS	00NR	2	20WP	G15_048	FROM->TO	G14-057T 345.00 - SUNNYSIDE 345KV CKT 1	717	789	0.04989	110.4852	LEBANON - TEXOMA JCT 138KV CKT 1
FDNS	00NR	2	20WP	G15_048	FROM->TO	G14-057T 345.00 - SUNNYSIDE 345KV CKT 1	717	789	0.04811	110.4796	PRAIRIE POINT - RATLIFF 138KV CKT 1
FDNS	00NR	2	16WP	G15_048	FROM->TO	G14-057T 345.00 - SUNNYSIDE 345KV CKT 1	717	789	0.04891	110.4775	GEN525844 1-ELK_1 118.000
FDNS	00NR	2	16WP	G15_048	FROM->TO	G14-057T 345.00 - SUNNYSIDE 345KV CKT 1	717	789	0.04891	110.4721	GEN525845 1-ELK_2 1 138.00
FDNS	00NR	2	20WP	G15_048	FROM->TO	G14-057T 345.00 - SUNNYSIDE 345KV CKT 1	717	789	0.04854	110.4691	GEN600067 9-HIGH BRIDGE
FDNS	00NR	2	20WP	G15_048	FROM->TO	G14-057T 345.00 - SUNNYSIDE 345KV CKT 1	717	789	0.04849	110.4611	CARTER - CHICKASAW 138KV CKT 1
FDNS	00NR	2	20WP	G15_048	FROM->TO	G14-057T 345.00 - SUNNYSIDE 345KV CKT 1	717	789	0.04872	110.461	OVEXFRMCCOVE
FDNS	00NR	2	20WP	G15_048	FROM->TO	G14-057T 345.00 - SUNNYSIDE 345KV CKT 1	717	789	0.04854	110.4606	P12:230:UMZB:# 112 #: NU IN SD. NU-RCDC & DRY CREEK XFMR
FDNS	00NR	2	20WP	G15_048	FROM->TO	G14-057T 345.00 - SUNNYSIDE 345KV CKT 1	717	789	0.04854	110.4602	RCDC EAST 4230.00 - RED CEDAR DC 230KV CKT 1
FDNS	00NR	2	16WP	G15_048	FROM->TO	G14-057T 345.00 - SUNNYSIDE 345KV CKT 1	717	789	0.04891	110.4577	GEN600002 3-SHERBURNE CNTY G3
FDNS	00NR	2	20WP	G15_048	FROM->TO	G14-057T 345.00 - SUNNYSIDE 345KV CKT 1	717	789	0.04848	110.4558	ALTUS JUNCTION - RUSSELL 138KV CKT 1
FDNS	00NR	2	20WP	G15_048	FROM->TO	G14-057T 345.00 - SUNNYSIDE 345KV CKT 1	717	789	0.04848	110.4558	ALTUS JUNCTION - RUSSELL 138KV CKT 1
FDNS	00NR	2	20WP	G15_048	FROM->TO	G14-057T 345.00 - SUNNYSIDE 345KV CKT 1	717	789	0.04861	110.4553	GLASSES - RUSSETT 138KV CKT 1
FDNS	00NR	2	20WP	G15_048	FROM->TO	G14-057T 345.00 - SUNNYSIDE 345KV CKT 1	717	789	0.04873	110.4489	CANADIAN RIVER - MCALESTER SOUTH 138KV CKT 1
FDNS	00NR	2	20WP	G15_048	FROM->TO	G14-057T 345.00 - SUNNYSIDE 345KV CKT 1	717	789	0.04873	110.4489	CANADIAN RIVER - MCALESTER SOUTH 138KV CKT 1
FDNS	00NR	2	20WP	G15_048	FROM->TO	G14-057T 345.00 - SUNNYSIDE 345KV CKT 1	717	789	0.04873	110.4471	CANADIAN RIVER () 345/138/13.8KV TRANSFORMER CKT 1
FDNS	00NR	2	20WP	G15_048	FROM->TO	G14-057T 345.00 - SUNNYSIDE 345KV CKT 1	717	789	0.04873	110.4471	CANADIAN RIVER () 345/138/13.8KV TRANSFORMER CKT 1
FDNS	00NR	2	20WP	G15_048	FROM->TO	G14-057T 345.00 - SUNNYSIDE 345KV CKT 1	717	789	0.04854	110.4464	GEN563242 1-G15090_3 0.6900
FDNS	00NR	2	20WP	G15_048	FROM->TO	G14-057T 345.00 - SUNNYSIDE 345KV CKT 1	717	789	0.04859	110.4435	GRPRAR1-LNX3345.00 - HOLT.CO3 345.00 345KV CKT 1
FDNS	00NR	2	20WP	G15_048	FROM->TO	G14-057T 345.00 - SUNNYSIDE 345KV CKT 1	717	789	0.04859	110.4413	GRPRAR1-LNX3345.00 - GRPRAR 345KV CKT Z
FDNS	00NR	2	20WP	G15_048	FROM->TO	G14-057T 345.00 - SUNNYSIDE 345KV CKT 1	717	789	0.04835	110.4393	ROCKY POINT - SPRINGDALE 138KV CKT 1
FDNS	00NR	2	20WP	G15_048	FROM->TO	G14-057T 345.00 - SUNNYSIDE 345KV CKT 1	717	789	0.04851	110.4338	HUGO (HUGO 1) 345/138/13.8KV TRANSFORMER CKT 1
FDNS	00NR	2	20WP	G15_048	FROM->TO	G14-057T 345.00 - SUNNYSIDE 345KV CKT 1	717	789	0.04854	110.4271	GEN562902 1-G15052_3 0.6900
FDNS	00NR	2	20WP	G15_048	FROM->TO	G14-057T 345.00 - SUNNYSIDE 345KV CKT 1	717	789	0.04883	110.4235	CHAMBER SPRINGS - CLARKSVILLE 345KV CKT 1
FDNS	00NR	2	20WP	G15_048	FROM->TO	G14-057T 345.00 - SUNNYSIDE 345KV CKT 1	717	789	0.04854	110.4118	GEN562078 1-G11_051_3 0.6900
FDNS	00NR	2	20WP	G15_048	FROM->TO	G14-057T 345.00 - SUNNYSIDE 345KV CKT 1	717	789	0.04805	110.4108	JOLLYVILLE - SULPHR 4 138.00 138KV CKT 1
FDNS	00NR	2	20WP	G15_048	FROM->TO	G14-057T 345.00 - SUNNYSIDE 345KV CKT 1	717	789	0.04778	110.4101	P12:138:AEPW:112GORE4:SNYDER-4
FDNS	00NR	2	20WP	G15_048	FROM->TO	G14-057T 345.00 - SUNNYSIDE 345KV CKT 1	717	789	0.04854	110.4096	GEN629072 4-LANSING GENERATOR FOR UNITS NO4 EIA CODE 1
FDNS	00NR	2	20WP	G15_048	FROM->TO	G14-057T 345.00 - SUNNYSIDE 345KV CKT 1	717	789	0.04854	110.4069	GEN562802 1-G15039_3 0.3570
FDNS	00NR	2	16WP	G15_048	FROM->TO	G14-057T 345.00 - SUNNYSIDE 345KV CKT 1	717	789	0.04891	110.4	GEN344225 1-1CAL G1 25.000
FDNS	00NR	2	20WP	G15_048	FROM->TO	G14-057T 345.00 - SUNNYSIDE 345KV CKT 1	717	789	0.04854	110.3954	GEN524285 1-WILDORADO WIND GEN
FDNS	00NR	2	20WP	G15_048	FROM->TO	G14-057T 345.00 - SUNNYSIDE 345KV CKT 1	717	789	0.04854	110.3778	GEN560331 1-G10-46 13.800
FDNS	00NR	2	20WP	G15_048	FROM->TO	G14-057T 345.00 - SUNNYSIDE 345KV CKT 1	717	789	0.04854	110.3726	GEN524295 1-SPNSPUR_WND10.6900
FDNS	00NR	2	16WP	G15_048	FROM->TO	G14-057T 345.00 - SUNNYSIDE 345KV CKT 1	717	789	0.04891	110.3722	GEN563202 1-G15085_3 0.5500
FDNS	00NR	2	20WP	G15_048	FROM->TO	G14-057T 345.00 - SUNNYSIDE 345KV CKT 1	717	789	0.04854	110.358	GEN514805 1-SOONER UNIT 1
FDNS	00NR	2	20WP	G15_048	FROM->TO	G14-057T 345.00 - SUNNYSIDE 345KV CKT 1	717	789	0.04854	110.358	GEN562587 1-G14_056_3 0.6900
FDNS	00NR	2	20WP	G15_048	FROM->TO	G14-057T 345.00 - SUNNYSIDE 345KV CKT 1	717	789	0.04854	110.3577	GEN657749 1-YOUNG 1 GENERATOR
FDNS	00NR	2	20WP	G15_048	FROM->TO	G14-057T 345.00 - SUNNYSIDE 345KV CKT 1	717	789	0.04854	110.3469	GEN562269 1-G12-020-1 0.6900
FDNS	00NR	2	20WP	G15_048	FROM->TO	G14-057T 345.00 - SUNNYSIDE 345KV CKT 1	717	789	0.04805	110.3469	JOLLYVILLE - KERR MCGEE CIMARRON 138KV CKT 1
FDNS	00NR	2	20WP	G15_048	FROM->TO	G14-057T 345.00 - SUNNYSIDE 345KV CKT 1	717	789	0.04854	110.3464	GEN524023 1-NICHOLS GEN #3 22 KV
FDNS	00NR	2	16WP	G15_048	FROM->TO	G14-057T 345.00 - SUNNYSIDE 345KV CKT 1	717	789	0.04891	110.3389	GEN525562 1-TOLK GEN #2 24 KV
FDNS	00NR	2	20WP	G15_048	FROM->TO	G14-057T 345.00 - SUNNYSIDE 345KV CKT 1	717	789	0.04854	110.3349	GEN514806 1-SOONER UNIT 2
FDNS	00NR	2	20WP	G15_048	FROM->TO	G14-057T 345.00 - SUNNYSIDE 345KV CKT 1	717	789	0.04857	110.3257	CROCKETT - TENASKA RUSK COUNTY 345KV CKT 1

SOLUTION	GROUP	SCENARIO	SEASON	SOURCE	DIRECTION	MONITORED ELEMENT	RATEA (MVA)	RATEB(MVA)	TDF	TC%LOADING (% MVA)	CONTINGENCY
FDNS	00NR	2	20WP	G15_048	FROM->TO	G14-057T 345.00 - SUNNYSIDE 345KV CKT 1	717	789	0.04857	110.321	LEBROCK - TENASKA RUSK COUNTY 345KV CKT 1
FDNS	00NR	2	20WP	G15_048	FROM->TO	G14-057T 345.00 - SUNNYSIDE 345KV CKT 1	717	789	0.04854	110.3077	GEN562812 1-G15040_3 0.3570
FDNS	00NR	2	20WP	G15_048	FROM->TO	G14-057T 345.00 - SUNNYSIDE 345KV CKT 1	717	789	0.04854	110.3034	GEN562270 1-G12-020-2 0.6900
FDNS	00NR	2	20WP	G15_048	FROM->TO	G14-057T 345.00 - SUNNYSIDE 345KV CKT 1	717	789	0.04854	110.3011	GEN563132 1-G15078_3 0.3570
FDNS	00NR	2	20WP	G15_048	FROM->TO	G14-057T 345.00 - SUNNYSIDE 345KV CKT 1	717	789	0.04805	110.2986	ARBWIND4 138.00 - KERR MCGEE CIMARRON 138KV CKT 1
FDNS	00NR	2	20WP	G15_048	FROM->TO	G14-057T 345.00 - SUNNYSIDE 345KV CKT 1	717	789	0.04854	110.2944	GEN563102 1-G15075_3 0.5500
FDNS	00NR	2	16WP	G15_048	FROM->TO	G14-057T 345.00 - SUNNYSIDE 345KV CKT 1	717	789	0.04891	110.2932	GEN527166 1-MUSTANG_6 118.000
FDNS	00NR	2	20WP	G15_048	FROM->TO	G14-057T 345.00 - SUNNYSIDE 345KV CKT 1	717	789	0.04854	110.2798	GEN562882 1-G15047_3 0.6900
FDNS	00NR	2	20WP	G15_048	FROM->TO	G14-057T 345.00 - SUNNYSIDE 345KV CKT 1	717	789	0.04854	110.2726	GEN562974 1-G15060_5 0.6900
FDNS	00NR	2	20WP	G15_048	FROM->TO	G14-057T 345.00 - SUNNYSIDE 345KV CKT 1	717	789	0.04854	110.2701	GEN563062 1-G15071_3 0.6900
FDNS	00NR	2	20WP	G15_048	FROM->TO	G14-057T 345.00 - SUNNYSIDE 345KV CKT 1	717	789	0.04854	110.2631	GEN562973 1-G15060_4 0.6900
FDNS	00NR	2	20WP	G15_048	FROM->TO	G14-057T 345.00 - SUNNYSIDE 345KV CKT 1	717	789	0.04854	110.2468	GEN345671 2-1RUSH G2 18.000
FDNS	00NR	2	20WP	G15_048	FROM->TO	G14-057T 345.00 - SUNNYSIDE 345KV CKT 1	717	789	0.04854	110.245	GEN345670 1-1RUSH G1 18.000
FDNS	00NR	2	20WP	G15_048	FROM->TO	G14-057T 345.00 - SUNNYSIDE 345KV CKT 1	717	789	0.04811	110.239	CHICKASAW - TOTAL 138KV CKT 1
FDNS	00NR	2	20WP	G15_048	FROM->TO	G14-057T 345.00 - SUNNYSIDE 345KV CKT 1	717	789	0.04854	110.2345	GEN521112 1-ORME3 13.800
FDNS	00NR	2	16WP	G15_048	FROM->TO	G14-057T 345.00 - SUNNYSIDE 345KV CKT 1	717	789	0.04899	110.2331	LYDIA - WELSH 345KV CKT 1
FDNS	00NR	2	16WP	G15_048	FROM->TO	G14-057T 345.00 - SUNNYSIDE 345KV CKT 1	717	789	0.04899	110.2331	LYDIA - WELSH 345KV CKT 1
FDNS	00NR	2	20WP	G15_048	FROM->TO	G14-057T 345.00 - SUNNYSIDE 345KV CKT 1	717	789	0.0485	110.232	BROWN - RUSSETT 138KV CKT 1
FDNS	00NR	2	16WP	G15_048	FROM->TO	G14-057T 345.00 - SUNNYSIDE 345KV CKT 1	717	789	0.04868	110.2125	JOHNSON COUNTY (JOHNCO) 345/138/13.8KV TRANSFORMER CKT 1
FDNS	00NR	2	20WP	G15_048	FROM->TO	G14-057T 345.00 - SUNNYSIDE 345KV CKT 1	717	789	0.04854	110.2105	GEN560105 1-G08-22 0.6900
FDNS	00NR	2	20WP	G15_048	FROM->TO	G14-057T 345.00 - SUNNYSIDE 345KV CKT 1	717	789	0.04854	110.2097	4SIOUX 1 138.00 138/18.0KV TRANSFORMER CKT 1
FDNS	00NR	2	16WP	G15_048	FROM->TO	G14-057T 345.00 - SUNNYSIDE 345KV CKT 1	717	789	0.04891	110.2069	GEN635023 3-WALTER SCOTT UNIT 3
FDNS	00NR	2	20WP	G15_048	FROM->TO	G14-057T 345.00 - SUNNYSIDE 345KV CKT 1	717	789	0.04854	110.1941	GEN562550 1-G14_040_3 0.6900
FDNS	00NR	2	20WP	G15_048	FROM->TO	G14-057T 345.00 - SUNNYSIDE 345KV CKT 1	717	789	0.04854	110.1821	GEN681522 3-GENOA 3
FDNS	00NR	2	20WP	G15_048	FROM->TO	G14-057T 345.00 - SUNNYSIDE 345KV CKT 1	717	789	0.0485	110.1633	RUSSETT - RUSSETT 138KV CKT 1
FDNS	00NR	2	20WP	G15_048	FROM->TO	G14-057T 345.00 - SUNNYSIDE 345KV CKT 1	717	789	0.04854	110.1507	GEN527161 1-MUSTANG GEN #1
FDNS	00NR	2	20WP	G15_048	FROM->TO	G14-057T 345.00 - SUNNYSIDE 345KV CKT 1	717	789	0.04854	110.1507	GEN527162 1-MUSTANG GEN #2
FDNS	00NR	2	20WP	G15_048	FROM->TO	G14-057T 345.00 - SUNNYSIDE 345KV CKT 1	717	789	0.04854	110.1455	EASTDC - ERCOT EQUIVALENCE 345KV CKT 1
FDNS	00NR	2	20WP	G15_048	FROM->TO	G14-057T 345.00 - SUNNYSIDE 345KV CKT 1	717	789	0.04828	110.1424	ROCKY POINT - SUNNYSIDE 138KV CKT 1
FDNS	00NR	2	20WP	G15_048	FROM->TO	G14-057T 345.00 - SUNNYSIDE 345KV CKT 1	717	789	0.04854	110.1404	GEN511962 2-RKYRDGW2-1 0.7000
FDNS	00NR	2	16WP	G15_048	FROM->TO	G14-057T 345.00 - SUNNYSIDE 345KV CKT 1	717	789	0.04891	110.1372	GEN562590 1-G14_057_3 0.6900
FDNS	00NR	2	16WP	G15_048	FROM->TO	G14-057T 345.00 - SUNNYSIDE 345KV CKT 1	717	789	0.04891	110.1203	GEN562762 1-G15033_3 0.6900
FDNS	00NR	2	20WP	G15_048	FROM->TO	G14-057T 345.00 - SUNNYSIDE 345KV CKT 1	717	789	0.04854	110.1199	GEN672321 1-SHAND GENERATOR 1
FDNS	00NR	2	20WP	G15_048	FROM->TO	G14-057T 345.00 - SUNNYSIDE 345KV CKT 1	717	789	0.04854	110.1185	GEN525494 1-PLANT X GEN #4 20 KV
FDNS	00NR	2	20WP	G15_048	FROM->TO	G14-057T 345.00 - SUNNYSIDE 345KV CKT 1	717	789	0.04848	110.1126	RUSSETT - SPRINGDALE 138KV CKT 1
FDNS	00NR	2	16WP	G15_048	FROM->TO	G14-057T 345.00 - SUNNYSIDE 345KV CKT 1	717	789	0.04891	110.1103	GEN562655 1-G14_074_3 0.6900
FDNS	00NR	2	20WP	G15_048	FROM->TO	G14-057T 345.00 - SUNNYSIDE 345KV CKT 1	717	789	0.04854	110.1031	GEN527882 1-CUNNINGHAM GEN #2 20 KV
FDNS	00NR	2	20WP	G15_048	FROM->TO	G14-057T 345.00 - SUNNYSIDE 345KV CKT 1	717	789	0.04854	110.1028	GEN563192 1-G15084_3 0.5500
FDNS	00NR	2	20WP	G15_048	FROM->TO	G14-057T 345.00 - SUNNYSIDE 345KV CKT 1	717	789	0.04854	110.1026	GEN562892 1-G15048_3 0.6900
FDNS	00NR	2	20WP	G15_048	FROM->TO	G14-057T 345.00 - SUNNYSIDE 345KV CKT 1	717	789	0.04854	110.097	GEN672310 1-POPLAR RIVER GENERATOR 1
FDNS	00NR	2	20WP	G15_048	FROM->TO	G14-057T 345.00 - SUNNYSIDE 345KV CKT 1	717	789	0.04854	110.097	GEN672311 2-POPLAR RIVER GENERATOR 2
FDNS	00NR	2	20WP	G15_048	FROM->TO	G14-057T 345.00 - SUNNYSIDE 345KV CKT 1	717	789	0.04854	110.0951	GEN344895 2-1LAB G2 20.000
FDNS	00NR	2	20WP	G15_048	FROM->TO	G14-057T 345.00 - SUNNYSIDE 345KV CKT 1	717	789	0.04854	110.0878	GEN672306 6-BOUNDARY DAM GENERATOR 6
FDNS	00NR	2	20WP	G15_048	FROM->TO	G14-057T 345.00 - SUNNYSIDE 345KV CKT 1	717	789	0.04854	110.0877	GEN527163 1-MUSTANG GEN #3 22 KV
FDNS	00NR	2	20WP	G15_048	FROM->TO	G14-057T 345.00 - SUNNYSIDE 345KV CKT 1	717	789	0.04852	110.0798	P12:138:WFEC-AEPW:GOLDENSW4:CRAIGJT4
FDNS	00NR	2	20WP	G15_048	FROM->TO	G14-057T 345.00 - SUNNYSIDE 345KV CKT 1	717	789	0.04854	110.0788	GEN520811 1-ANADRK4
FDNS	00NR	2	20WP	G15_048	FROM->TO	G14-057T 345.00 - SUNNYSIDE 345KV CKT 1	717	789	0.04854	110.0787	GEN511853 1-COMANCHE #3
FDNS	00NR	2	20WP	G15_048	FROM->TO	G14-057T 345.00 - SUNNYSIDE 345KV CKT 1	717	789	0.04776	110.0749	ARKANSAS NUCLEAR ONE - FT SMITH 500KV CKT 1
FDNS	00NR	2	20WP	G15_048	FROM->TO	G14-057T 345.00 - SUNNYSIDE 345KV CKT 1	717	789	0.04776	110.0749	ARKANSAS NUCLEAR ONE - FT SMITH 500KV CKT 1
FDNS	00NR	2	20WP	G15_048	FROM->TO	G14-057T 345.00 - SUNNYSIDE 345KV CKT 1	717	789	0.04854	110.0725	CLAY BOSWELL 230/20.9KV TRANSFORMER CKT 1
FDNS	00NR	2	20WP	G15_048	FROM->TO	G14-057T 345.00 - SUNNYSIDE 345KV CKT 1	717	789	0.04854	110.0704	GEN562512 1-G14_020_3 0.6900
FDNS	00NR	2	20WP	G15_048	FROM->TO	G14-057T 345.00 - SUNNYSIDE 345KV CKT 1	717	789	0.04854	110.066	GEN344896 3-1LAB G3 20.000
FDNS	00NR	2	20WP	G15_048	FROM->TO	G14-057T 345.00 - SUNNYSIDE 345KV CKT 1	717	789	0.04854	110.0648	GEN344897 4-1LAB G4 20.000
FDNS	00NR	2	20WP	G15_048	FROM->TO	G14-057T 345.00 - SUNNYSIDE 345KV CKT 1	717	789	0.04854	110.0645	GEN344894 1-1LAB G1 20.000
FDNS	00NR	2	20WP	G15_048	FROM->TO	G14-057T 345.00 - SUNNYSIDE 345KV CKT 1	717	789	0.04858	110.0622	P12:138:WFEC:MSL16
FDNS	00NR	2	20WP	G15_048	FROM->TO	G14-057T 345.00 - SUNNYSIDE 345KV CKT 1	717	789	0.04854	110.058	GEN681542 6-JP MADGETT
FDNS	00NR	2	20WP	G15_048	FROM->TO	G14-057T 345.00 - SUNNYSIDE 345KV CKT 1	717	789	0.04795	110.0555	ARDMORE WEST - CARTER 138KV CKT 1
FDNS	00NR	2	16WP	G15_048	FROM->TO	G14-057T 345.00 - SUNNYSIDE 345KV CKT 1	717	789	0.04891	110.0447	GEN562685 1-G15_013_3 0.3550
FDNS	00NR	2	20WP	G15_048	FROM->TO	G14-057T 345.00 - SUNNYSIDE 345KV CKT 1	717	789	0.04854	110.0381	GEN523461 1-BLACKHAWK GEN #1
FDNS	00NR	2	20WP	G15_048	FROM->TO	G14-057T 345.00 - SUNNYSIDE 345KV CKT 1	717	789	0.04854	110.038	GEN523462 1-BLACKHAWK GEN #2
FDNS	00NR	2	20WP	G15_048	FROM->TO	G14-057T 345.00 - SUNNYSIDE 345KV CKT 1	717	789	0.04854	110.0308	GEN511852 1-COMANCHE #2
FDNS	00NR	2	16WP	G15_048	FROM->TO	G14-057T 345.00 - SUNNYSIDE 345KV CKT 1	717	789	0.04891	110.0271	GEN525561 1-TOLK GEN #1 24 KV
FDNS	00NR	2	20WP	G15_048	FROM->TO	G14-057T 345.00 - SUNNYSIDE 345KV CKT 1	717	789	0.04851	110.0031	P12:138:WFEC:MSL07
FDNS	00NR	2	20WP	G15_048	FROM->TO	G14-057T 345.00 - SUNNYSIDE 345KV CKT 1	717	789	0.04851	110.0031	P12:138:WFEC-AEPW:HUGOPP4:ATOKA--4
FDNS	00NR	2	20WP	G15_048	FROM->TO	G14-057T 345.00 - SUNNYSIDE 345KV CKT 1	717	789	0.04778	110.0021	CACHE - SNYDER 138KV CKT 1
FDNS	00NR	2	20WP	G15_048	FROM->TO	G14-057T 345.00 - SUNNYSIDE 345KV CKT 1	717	789	0.04803	109.9932	SUNNYSIDE (SUNNYSD5) 345/138/13.8KV TRANSFORMER CKT 1
FDNS	00NR	2	20WP	G15_048	FROM->TO	G14-057T 345.00 - SUNNYSIDE 345KV CKT 1	717	789	0.04852	109.9818	P12:138:AEPW-SWPA:LONEOAK4:TUPELO4
FDNS	00NR	2	20WP	G15_048	FROM->TO	G14-057T 345.00 - SUNNYSIDE 345KV CKT 1	717	789	0.04852	109.9818	P12:138:WFEC:MSL06
FDNS	00NR	2	20WP	G15_048	FROM->TO	G14-057T 345.00 - SUNNYSIDE 345KV CKT 1	717	789	0.04854	109.9789	GEN562699 1-G15_018_3 0.6900
FDNS	00NR	2	20WP	G15_048	FROM->TO	G14-057T 345.00 - SUNNYSIDE 345KV CKT 1	717	789	0.04854	109.9718	GEN521111 1-ORME2 13.800
FDNS	00NR	2	20WP	G15_048	FROM->TO	G14-057T 345.00 - SUNNYSIDE 345KV CKT 1	717	789	0.04854	109.9664	GEN563162 1-G15081_3 0.6900
FDNS	00NR	2	20WP	G15_048	FROM->TO	G14-057T 345.00 - SUNNYSIDE 345KV CKT 1	717	789	0.04854	109.9588	GEN521110 1-ORME1 13.800
FDNS	00NR	2	20WP	G15_048	FROM->TO	G14-057T 345.00 - SUNNYSIDE 345KV CKT 1	717	789	0.04849	109.9549	G15085_T 138.00 - RUSSELL 138KV CKT 1
FDNS	00NR	2	20WP	G15_048	FROM->TO	G14-057T 345.00 - SUNNYSIDE 345KV CKT 1	717	789	0.04795	109.9441	ARDMORE WEST - UNIROYAL 138KV CKT 1
FDNS	00NR	2	20WP	G15_048	FROM->TO	G14-057T 345.00 - SUNNYSIDE 345KV CKT 1	717	789	0.05105	109.9188	CLARKSVILLE - MUSKOGEE 345KV CKT 1
FDNS	00NR	2	20WP	G15_048	FROM->TO	G14-057T 345.00 - SUNNYSIDE 345KV CKT 1	717	789	0.05105	109.9188	CLARKSVILLE - MUSKOGEE 345KV CKT 1
FDNS	00NR	2	20WP	G15_048	FROM->TO	G14-057T 345.00 - SUNNYSIDE 345KV CKT 1	717	789	0.04825	109.9096	CARTRCO4 138.00 - RATLIFF 138KV CKT 1
FDNS	00NR	2	20WP	G15_048	FROM->TO	G14-057T 345.00 - SUNNYSIDE 345KV CKT 1	717	789	0.04854	109.9078	GEN563292 1-G15095_3 0.6900
FDNS	00NR	2	16WP	G15_048	FROM->TO	G14-057T 345.00 - SUNNYSIDE 345KV CKT 1	717	789	0.04891	109.9037	GEN563272 1-G15093_3 0.6900

SOLUTION	GROUP	SCENARIO	SEASON	SOURCE	DIRECTION	MONITORED ELEMENT	RATEA (MVA)	RATEB(MVA)	TDF	TC%LOADING (% MVA)	CONTINGENCY
FDNS	00NR	2	16WP	G15_048	FROM->TO	G14-057T 345.00 - SUNNYSIDE 345KV CKT 1	717	789	0.04891	109.9029	GEN527903 1-HOBBS PLANT #3 (ST)
FDNS	00NR	2	20WP	G15_048	FROM->TO	G14-057T 345.00 - SUNNYSIDE 345KV CKT 1	717	789	0.04854	109.8956	GEN661015 1-COYOTE
FDNS	00NR	2	20WP	G15_048	FROM->TO	G14-057T 345.00 - SUNNYSIDE 345KV CKT 1	717	789	0.04835	109.883	P12:138:OKGE:3TERM40
FDNS	00NR	2	20WP	G15_048	FROM->TO	G14-057T 345.00 - SUNNYSIDE 345KV CKT 1	717	789	0.04854	109.8778	GEN563122 1-G15077_3 0.3850
FDNS	00NR	2	20WP	G15_048	FROM->TO	G14-057T 345.00 - SUNNYSIDE 345KV CKT 1	717	789	0.04854	109.8695	GEN562861 1-G15045_2 0.4800
FDNS	00NR	2	20WP	G15_048	FROM->TO	G14-057T 345.00 - SUNNYSIDE 345KV CKT 1	717	789	0.04854	109.7869	GRAPEVINE INTERCHANGE - STATELINE INTERCHANGE 230KV CKT 1
FDNS	00NR	2	20WP	G15_048	FROM->TO	G14-057T 345.00 - SUNNYSIDE 345KV CKT 1	717	789	0.04854	109.7869	GRAPEVINE INTERCHANGE - STATELINE INTERCHANGE 230KV CKT 1
FDNS	00NR	2	20WP	G15_048	FROM->TO	G14-057T 345.00 - SUNNYSIDE 345KV CKT 1	717	789	0.04854	109.7842	GEN657748 1-YOUNG 2 GENERATOR
FDNS	00NR	2	16WP	G15_048	FROM->TO	G14-057T 345.00 - SUNNYSIDE 345KV CKT 1	717	789	0.04891	109.784	GEN635024 4-WALTER SCOTT UNIT 4
FDNS	00NR	2	20WP	G15_048	FROM->TO	G14-057T 345.00 - SUNNYSIDE 345KV CKT 1	717	789	0.04854	109.7672	GEN527883 1-CUNNINGHAM GEN #3 22 KV
FDNS	00NR	2	20WP	G15_048	FROM->TO	G14-057T 345.00 - SUNNYSIDE 345KV CKT 1	717	789	0.04854	109.7641	GEN527884 1-CUNNINGHAM GEN #4 22 KV
FDNS	00NR	2	20WP	G15_048	FROM->TO	G14-057T 345.00 - SUNNYSIDE 345KV CKT 1	717	789	0.04795	109.7313	SUNNYSIDE - UNIROYAL 138KV CKT 1
FDNS	00NR	2	20WP	G15_048	FROM->TO	G14-057T 345.00 - SUNNYSIDE 345KV CKT 1	717	789	0.0485	109.726	P12:138:AEPW:SHAM4WT:CHILD4WT
FDNS	00NR	2	20WP	G15_048	FROM->TO	G14-057T 345.00 - SUNNYSIDE 345KV CKT 1	717	789	0.04638	109.7048	CHISHOLM7 345.00 () 345/230/13.2KV TRANSFORMER CKT 1
FDNS	00NR	2	20WP	G15_048	FROM->TO	G14-057T 345.00 - SUNNYSIDE 345KV CKT 1	717	789	0.04854	109.6975	GEN562704 1-G15_020_3 0.3550
FDNS	00NR	2	20WP	G15_048	FROM->TO	G14-057T 345.00 - SUNNYSIDE 345KV CKT 1	717	789	0.04854	109.6966	GEN526331 1-JONES GEN #1 22 KV
FDNS	00NR	2	20WP	G15_048	FROM->TO	G14-057T 345.00 - SUNNYSIDE 345KV CKT 1	717	789	0.04854	109.6964	GEN526332 1-JONES GEN #2 21 KV
FDNS	00NR	2	20WP	G15_048	FROM->TO	G14-057T 345.00 - SUNNYSIDE 345KV CKT 1	717	789	0.04981	109.6934	P12:138:WFEC:MSL15
FDNS	00NR	2	20WP	G15_048	FROM->TO	G14-057T 345.00 - SUNNYSIDE 345KV CKT 1	717	789	0.04854	109.6908	GEN620315 1-BIG STONE GEN
FDNS	00NR	2	20WP	G15_048	FROM->TO	G14-057T 345.00 - SUNNYSIDE 345KV CKT 1	717	789	0.04854	109.689	GEN562992 1-G15063_3 0.6900
FDNS	00NR	2	20WP	G15_048	FROM->TO	G14-057T 345.00 - SUNNYSIDE 345KV CKT 1	717	789	0.04854	109.6397	GEN562952 1-G15057_3 0.6500
FDNS	00NR	2	20WP	G15_048	FROM->TO	G14-057T 345.00 - SUNNYSIDE 345KV CKT 1	717	789	0.04854	109.6349	GEN563173 1-G15082_3 0.6900
FDNS	00NR	2	20WP	G15_048	FROM->TO	G14-057T 345.00 - SUNNYSIDE 345KV CKT 1	717	789	0.04852	109.6263	GRAPEVINE INTERCHANGE - NICHOLS STATION 230KV CKT 1
FDNS	00NR	2	20WP	G15_048	FROM->TO	G14-057T 345.00 - SUNNYSIDE 345KV CKT 1	717	789	0.04852	109.6263	GRAPEVINE INTERCHANGE - NICHOLS STATION 230KV CKT 1
FDNS	00NR	2	20WP	G15_048	FROM->TO	G14-057T 345.00 - SUNNYSIDE 345KV CKT 1	717	789	0.04854	109.6168	GEN600004 2-PRAIRIE ISLAND G2
FDNS	00NR	2	20WP	G15_048	FROM->TO	G14-057T 345.00 - SUNNYSIDE 345KV CKT 1	717	789	0.04854	109.6142	GEN600003 1-PRAIRIE ISLAND G1
FDNS	00NR	2	20WP	G15_048	FROM->TO	G14-057T 345.00 - SUNNYSIDE 345KV CKT 1	717	789	0.04854	109.597	GEN600006 1-AS KING
FDNS	00NR	2	20WP	G15_048	FROM->TO	G14-057T 345.00 - SUNNYSIDE 345KV CKT 1	717	789	0.04854	109.5964	GEN562710 1-G15_022_3 0.5500
FDNS	00NR	2	20WP	G15_048	FROM->TO	G14-057T 345.00 - SUNNYSIDE 345KV CKT 1	717	789	0.04989	109.5521	CANEY CREEK - TEXOMA JCT 138KV CKT 1
FDNS	00NR	2	20WP	G15_048	FROM->TO	G14-057T 345.00 - SUNNYSIDE 345KV CKT 1	717	789	0.04854	109.5482	GEN511851 1-COMANCHE #1
FDNS	00NR	2	20WP	G15_048	FROM->TO	G14-057T 345.00 - SUNNYSIDE 345KV CKT 1	717	789	0.04638	109.5367	CHISHOLM7 345.00 - GRACEMONT 345KV CKT 1
FDNS	00NR	2	20WP	G15_048	FROM->TO	G14-057T 345.00 - SUNNYSIDE 345KV CKT 1	717	789	0.04854	109.5221	GEN532751 1-WOLF CREEK GENERATING STATION UNIT 1
FDNS	00NR	2	20WP	G15_048	FROM->TO	G14-057T 345.00 - SUNNYSIDE 345KV CKT 1	717	789	0.04854	109.4309	GEN635213 3-NEAL UNIT 3
FDNS	00NR	2	20WP	G15_048	FROM->TO	G14-057T 345.00 - SUNNYSIDE 345KV CKT 1	717	789	0.04854	109.4244	GEN629074 1-ARNOLD LOWSIDE OF GSU XFMR
FDNS	00NR	2	20WP	G15_048	FROM->TO	G14-057T 345.00 - SUNNYSIDE 345KV CKT 1	717	789	0.04854	109.4213	GEN615001 1-COAL CREEK
FDNS	00NR	2	20WP	G15_048	FROM->TO	G14-057T 345.00 - SUNNYSIDE 345KV CKT 1	717	789	0.04854	109.4111	BIG STONE 230/24.0KV TRANSFORMER CKT 1
FDNS	00NR	2	20WP	G15_048	FROM->TO	G14-057T 345.00 - SUNNYSIDE 345KV CKT 1	717	789	0.04854	109.3965	GEN615002 2-COAL CREEK
FDNS	00NR	2	20WP	G15_048	FROM->TO	G14-057T 345.00 - SUNNYSIDE 345KV CKT 1	717	789	0.04863	109.3862	P12:138:WFEC:MSL09
FDNS	00NR	2	20WP	G15_048	FROM->TO	G14-057T 345.00 - SUNNYSIDE 345KV CKT 1	717	789	0.04833	109.3646	P12:138:AEPW-OGE:CORNVIL4:CIMARON4
FDNS	00NR	2	20WP	G15_048	FROM->TO	G14-057T 345.00 - SUNNYSIDE 345KV CKT 1	717	789	0.04854	109.3442	GEN562754 1-G15031_5 0.6900
FDNS	00NR	2	20WP	G15_048	FROM->TO	G14-057T 345.00 - SUNNYSIDE 345KV CKT 1	717	789	0.04854	109.3322	GEN636641 1-LOUISA UNIT 1
FDNS	00NR	2	20WP	G15_048	FROM->TO	G14-057T 345.00 - SUNNYSIDE 345KV CKT 1	717	789	0.04859	109.316	NORTHWEST TEXARKANA - VALLIANT 345KV CKT 1
FDNS	00NR	2	20WP	G15_048	FROM->TO	G14-057T 345.00 - SUNNYSIDE 345KV CKT 1	717	789	0.04859	109.316	NORTHWEST TEXARKANA - VALLIANT 345KV CKT 1
FDNS	00NR	2	20WP	G15_048	FROM->TO	G14-057T 345.00 - SUNNYSIDE 345KV CKT 1	717	789	0.04854	109.3023	GEN600005 1-MONTICELLO
FDNS	00NR	2	20WP	G15_048	FROM->TO	G14-057T 345.00 - SUNNYSIDE 345KV CKT 1	717	789	0.04854	109.2844	GEN562756 1-G15031_7 0.6900
FDNS	00NR	2	20WP	G15_048	FROM->TO	G14-057T 345.00 - SUNNYSIDE 345KV CKT 1	717	789	0.04854	109.2834	GEN562556 1-G14_046_3 0.3420
FDNS	00NR	2	20WP	G15_048	FROM->TO	G14-057T 345.00 - SUNNYSIDE 345KV CKT 1	717	789	0.04854	109.2418	GEN562023 1-G11_020_3 0.6900
FDNS	00NR	2	20WP	G15_048	FROM->TO	G14-057T 345.00 - SUNNYSIDE 345KV CKT 1	717	789	0.04854	109.2418	GEN562026 1-G11_019_3 0.6900
FDNS	00NR	2	20WP	G15_048	FROM->TO	G14-057T 345.00 - SUNNYSIDE 345KV CKT 1	717	789	0.04854	109.1989	GEN563142 1-G15079_3 0.5500
FDNS	00NR	2	20WP	G15_048	FROM->TO	G14-057T 345.00 - SUNNYSIDE 345KV CKT 1	717	789	0.04854	109.1989	GEN563151 1-G15080_2 0.5500
FDNS	00NR	2	20WP	G15_048	FROM->TO	G14-057T 345.00 - SUNNYSIDE 345KV CKT 1	717	789	0.04854	109.1785	GEN600000 1-SHERBURNECNTY G1
FDNS	00NR	2	20WP	G15_048	FROM->TO	G14-057T 345.00 - SUNNYSIDE 345KV CKT 1	717	789	0.04854	109.1392	GEN629075 1-OTTUMWA GENERATOR FOR OTTUMWA UNIT NO 1
FDNS	00NR	2	20WP	G15_048	FROM->TO	G14-057T 345.00 - SUNNYSIDE 345KV CKT 1	717	789	0.04854	109.1368	STLN-DEMARC6 - SWEETWATER 230KV CKT 1
FDNS	00NR	2	20WP	G15_048	FROM->TO	G14-057T 345.00 - SUNNYSIDE 345KV CKT 1	717	789	0.04854	109.1361	P12:230:AEPW-SPS:SWEETWT6:WHEELER 6
FDNS	00NR	2	20WP	G15_048	FROM->TO	G14-057T 345.00 - SUNNYSIDE 345KV CKT 1	717	789	0.04854	109.1345	STATELINE INTERCHANGE - STLN-DEMARC6 230KV CKT 1
FDNS	00NR	2	20WP	G15_048	FROM->TO	G14-057T 345.00 - SUNNYSIDE 345KV CKT 1	717	789	0.04854	109.1293	GEN600001 2-SHERBURNE CNTY G2
FDNS	00NR	2	16WP	G15_048	FROM->TO	G14-057T 345.00 - SUNNYSIDE 345KV CKT 1	717	789	0.04902	109.1144	LYDIA - VALLIANT 345KV CKT 1
FDNS	00NR	2	16WP	G15_048	FROM->TO	G14-057T 345.00 - SUNNYSIDE 345KV CKT 1	717	789	0.04902	109.1144	LYDIA - VALLIANT 345KV CKT 1
FDNS	00NR	2	20WP	G15_048	FROM->TO	G14-057T 345.00 - SUNNYSIDE 345KV CKT 1	717	789	0.04854	109.1057	GEN523971 1-HARRINGTON GEN #1 24 KV
FDNS	00NR	2	20WP	G15_048	FROM->TO	G14-057T 345.00 - SUNNYSIDE 345KV CKT 1	717	789	0.04854	109.1056	GEN523972 1-HARRINGTON GEN #2 24 KV
FDNS	00NR	2	20WP	G15_048	FROM->TO	G14-057T 345.00 - SUNNYSIDE 345KV CKT 1	717	789	0.04854	109.1056	GEN523973 1-HARRINGTON GEN #3 24 KV
FDNS	00NR	2	20WP	G15_048	FROM->TO	G14-057T 345.00 - SUNNYSIDE 345KV CKT 1	717	789	0.04854	109.0232	GEN511848 1-SOUTHWESTERN STATION #3
FDNS	00NR	2	20WP	G15_048	FROM->TO	G14-057T 345.00 - SUNNYSIDE 345KV CKT 1	717	789	0.04854	108.9966	GEN527901 1-HOBBS PLANT #1 (CT)
FDNS	00NR	2	20WP	G15_048	FROM->TO	G14-057T 345.00 - SUNNYSIDE 345KV CKT 1	717	789	0.04854	108.9966	GEN527902 1-HOBBS PLANT #2 (CT)
FDNS	00NR	2	20WP	G15_048	FROM->TO	G14-057T 345.00 - SUNNYSIDE 345KV CKT 1	717	789	0.04854	108.9571	GEN563042 1-G15068_3 0.6900
FDNS	00NR	2	20WP	G15_048	FROM->TO	G14-057T 345.00 - SUNNYSIDE 345KV CKT 1	717	789	0.04863	108.9522	LYDIA - WELSH 345KV CKT 1
FDNS	00NR	2	20WP	G15_048	FROM->TO	G14-057T 345.00 - SUNNYSIDE 345KV CKT 1	717	789	0.04863	108.9522	LYDIA - WELSH 345KV CKT 1
FDNS	00NR	2	20WP	G15_048	FROM->TO	G14-057T 345.00 - SUNNYSIDE 345KV CKT 1	717	789	0.04854	108.9029	SHERBURNE CO 345/24.0KV TRANSFORMER CKT 1
FDNS	00NR	2	20WP	G15_048	FROM->TO	G14-057T 345.00 - SUNNYSIDE 345KV CKT 1	717	789	0.04657	108.8988	P12:230:AEPW:ELKCITY6:SWEETWT6
FDNS	00NR	2	20WP	G15_048	FROM->TO	G14-057T 345.00 - SUNNYSIDE 345KV CKT 1	717	789	0.04854	108.8665	GEN635214 4-NEAL UNIT 4
FDNS	00NR	2	20WP	G15_048	FROM->TO	G14-057T 345.00 - SUNNYSIDE 345KV CKT 1	717	789	0.04854	108.6956	GEN600002 3-SHERBURNE CNTY G3
FDNS	00NR	2	20WP	G15_048	FROM->TO	G14-057T 345.00 - SUNNYSIDE 345KV CKT 1	717	789	0.04854	108.6565	GEN563043 1-G15068_4 0.6900
FDNS	00NR	2	20WP	G15_048	FROM->TO	G14-057T 345.00 - SUNNYSIDE 345KV CKT 1	717	789	0.04854	108.6463	GEN563273 2-G15093_4 0.6900
FDNS	00NR	2	20WP	G15_048	FROM->TO	G14-057T 345.00 - SUNNYSIDE 345KV CKT 1	717	789	0.04854	108.632	GEN526333 1-JONES GEN #3 21 KV
FDNS	00NR	2	20WP	G15_048	FROM->TO	G14-057T 345.00 - SUNNYSIDE 345KV CKT 1	717	789	0.04854	108.6319	GEN526334 1-JONES_4 116.500
FDNS	00NR	2	20WP	G15_048	FROM->TO	G14-057T 345.00 - SUNNYSIDE 345KV CKT 1	717	789	0.04854	108.6194	GEN344225 1-1CAL G1 25.000
FDNS	00NR	2	20WP	G15_048	FROM->TO	G14-057T 345.00 - SUNNYSIDE 345KV CKT 1	717	789	0.04854	108.5931	GEN525844 1-ELK_1 118.000
FDNS	00NR	2	20WP	G15_048	FROM->TO	G14-057T 345.00 - SUNNYSIDE 345KV CKT 1	717	789	0.04854	108.577	GEN525845 1-ELK_2 1 18.000
FDNS	00NR	2	20WP	G15_048	FROM->TO	G14-057T 345.00 - SUNNYSIDE 345KV CKT 1	717	789	0.04854	108.517	CHISHOLM6 230.00 - SWEETWATER 230KV CKT 1

SOLUTION	GROUP	SCENARIO	SEASON	SOURCE	DIRECTION	MONITORED ELEMENT	RATEA (MVA)	RATEB(MVA)	TDF	TC%LOADING (% MVA)	CONTINGENCY
FDNS	00NR	2	20WP	G15_048	FROM->TO	G14-057T 345.00 - SUNNYSIDE 345KV CKT 1	717	789	0.04854	108.4458	GEN527166 1-MUSTANG_6 118.000
FDNS	00NR	2	20WP	G15_048	FROM->TO	G14-057T 345.00 - SUNNYSIDE 345KV CKT 1	717	789	0.04854	108.4373	GEN563202 1-G15085_3 0.5500
FDNS	00NR	2	20WP	G15_048	FROM->TO	G14-057T 345.00 - SUNNYSIDE 345KV CKT 1	717	789	0.04854	108.4027	GEN635023 3-WALTER SCOTT UNIT 3
FDNS	00NR	2	20WP	G15_048	FROM->TO	G14-057T 345.00 - SUNNYSIDE 345KV CKT 1	717	789	0.04854	108.3819	GEN528501 1-G14_012 24.000
FDNS	00NR	2	20WP	G15_048	FROM->TO	G14-057T 345.00 - SUNNYSIDE 345KV CKT 1	717	789	0.04854	108.2764	GEN562590 1-G14_057_3 0.6900
FDNS	00NR	2	20WP	G15_048	FROM->TO	G14-057T 345.00 - SUNNYSIDE 345KV CKT 1	717	789	0.04854	108.223	GEN562762 1-G15033_3 0.6900
FDNS	00NR	2	20WP	G15_048	FROM->TO	G14-057T 345.00 - SUNNYSIDE 345KV CKT 1	717	789	0.04854	108.2129	GEN562655 1-G14_074_3 0.6900
FDNS	00NR	2	20WP	G15_048	FROM->TO	G14-057T 345.00 - SUNNYSIDE 345KV CKT 1	717	789	0.04854	108.1932	GEN525562 1-TOLK GEN #2 24 KV
FDNS	00NR	2	20WP	G15_048	FROM->TO	G14-057T 345.00 - SUNNYSIDE 345KV CKT 1	717	789	0.04854	108.1376	GEN562685 1-G15_013_3 0.3550
FDNS	00NR	2	20WP	G15_048	FROM->TO	G14-057T 345.00 - SUNNYSIDE 345KV CKT 1	717	789	0.04831	108.1347	JOHNSON COUNTY (JOHNCO) 345/138/13.8KV TRANSFORMER CKT 1
FDNS	00NR	2	16WP	G15_048	FROM->TO	G14-057T 345.00 - SUNNYSIDE 345KV CKT 1	717	789	0.04891	108.129	EASTDC - ERCOT EQUIVALENCE 345KV CKT 1
FDNS	00NR	2	20WP	G15_048	FROM->TO	G14-057T 345.00 - SUNNYSIDE 345KV CKT 1	717	789	0.04854	108.0974	GEN527903 1-HOBBS PLANT #3 (ST)
FDNS	00NR	2	20WP	G15_048	FROM->TO	G14-057T 345.00 - SUNNYSIDE 345KV CKT 1	717	789	0.04854	107.9947	GEN635024 4-WALTER SCOTT UNIT 4
FDNS	00NR	2	20WP	G15_048	FROM->TO	G14-057T 345.00 - SUNNYSIDE 345KV CKT 1	717	789	0.04854	107.9936	GEN563272 1-G15093_3 0.6900
FDNS	00NR	2	20WP	G15_048	FROM->TO	G14-057T 345.00 - SUNNYSIDE 345KV CKT 1	717	789	0.04866	107.8976	LYDIA - VALLIANT 345KV CKT 1
FDNS	00NR	2	20WP	G15_048	FROM->TO	G14-057T 345.00 - SUNNYSIDE 345KV CKT 1	717	789	0.04866	107.8976	LYDIA - VALLIANT 345KV CKT 1
FDNS	00NR	2	20WP	G15_048	FROM->TO	G14-057T 345.00 - SUNNYSIDE 345KV CKT 1	717	789	0.04854	107.7517	GEN525561 1-TOLK GEN #1 24 KV
FDNS	00NR	2	16WP	G15_048	FROM->TO	G14-057T 345.00 - SUNNYSIDE 345KV CKT 1	717	789	0.04107	107.1829	JOHNSON COUNTY - PITTSBURG 345KV CKT 1
FDNS	00NR	2	16WP	G15_048	FROM->TO	G14-057T 345.00 - SUNNYSIDE 345KV CKT 1	717	789	0.04107	107.1829	JOHNSON COUNTY - PITTSBURG 345KV CKT 1
FDNS	00NR	2	16WP	G15_048	FROM->TO	G14-057T 345.00 - SUNNYSIDE 345KV CKT 1	717	789	0.04891	106.7015	GEN563263 1-G15092_4 0.6900
FDNS	00NR	2	16WP	G15_048	FROM->TO	G14-057T 345.00 - SUNNYSIDE 345KV CKT 1	717	789	0.04771	106.2395	HUGO - VALLIANT 345KV CKT 1
FDNS	00NR	2	16WP	G15_048	FROM->TO	G14-057T 345.00 - SUNNYSIDE 345KV CKT 1	717	789	0.04771	106.2395	HUGO - VALLIANT 345KV CKT 1
FDNS	00NR	2	17SP	G15_048	FROM->TO	G14-057T 345.00 - SUNNYSIDE 345KV CKT 1	717	789	0.04619	105.974	CIMARRON - MINCO 345KV CKT 1
FDNS	00NR	2	20WP	G15_048	FROM->TO	G14-057T 345.00 - SUNNYSIDE 345KV CKT 1	717	789	0.04072	105.821	JOHNSON COUNTY - PITTSBURG 345KV CKT 1
FDNS	00NR	2	20WP	G15_048	FROM->TO	G14-057T 345.00 - SUNNYSIDE 345KV CKT 1	717	789	0.04072	105.821	JOHNSON COUNTY - PITTSBURG 345KV CKT 1
FDNS	00NR	2	20WP	G15_048	FROM->TO	G14-057T 345.00 - SUNNYSIDE 345KV CKT 1	717	789	0.04735	105.3214	HUGO - VALLIANT 345KV CKT 1
FDNS	00NR	2	20WP	G15_048	FROM->TO	G14-057T 345.00 - SUNNYSIDE 345KV CKT 1	717	789	0.04735	105.3214	HUGO - VALLIANT 345KV CKT 1
FDNS	00NR	2	16WP	G15_048	FROM->TO	G14-057T 345.00 - SUNNYSIDE 345KV CKT 1	717	789	0.04433	105.1927	G14-074T 345.00 - TUCO INTERCHANGE 345KV CKT 1
FDNS	00NR	2	16WP	G15_048	FROM->TO	G14-057T 345.00 - SUNNYSIDE 345KV CKT 1	717	789	0.04891	105.0358	GEN563262 1-G15092_3 0.6900
FDNS	00NR	2	20WP	G15_048	FROM->TO	G14-057T 345.00 - SUNNYSIDE 345KV CKT 1	717	789	0.04854	104.8292	GEN563263 1-G15092_4 0.6900
FDNS	00NR	2	20WP	G15_048	FROM->TO	G14-057T 345.00 - SUNNYSIDE 345KV CKT 1	717	789	0.04854	103.1643	GEN563262 1-G15092_3 0.6900
FDNS	00NR	2	20WP	G15_048	FROM->TO	G14-057T 345.00 - SUNNYSIDE 345KV CKT 1	717	789	0.04397	102.2472	G14-074T 345.00 - TUCO INTERCHANGE 345KV CKT 1
FDNS	00NR	2	16WP	G15_048	FROM->TO	G14-057T 345.00 - SUNNYSIDE 345KV CKT 1	717	789	0.03958	101.5797	JOHNSON COUNTY - SUNNYSIDE 345KV CKT 1
FDNS	00NR	2	17SP	G15_048	FROM->TO	KINZE - STILLWATER KINZIE 138KV CKT 1	287	287	0.03177	100	CLEVELAND - G15066_T 345.00 345KV CKT 1
FDNS	00NR	3	16WP	G15_048	FROM->TO	G14-057T 345.00 - SUNNYSIDE 345KV CKT 1	717	789	0.05362	134.7924	CIMARRON - MINCO 345KV CKT 1
FDNS	00NR	3	20WP	G15_048	FROM->TO	G14-057T 345.00 - SUNNYSIDE 345KV CKT 1	717	789	0.05343	133.9604	CIMARRON - MINCO 345KV CKT 1
FDNS	00NR	3	16WP	G15_048	FROM->TO	G14-057T 345.00 - SUNNYSIDE 345KV CKT 1	717	789	0.04634	124.8136	PITTSBURG - SEMINOLE 345KV CKT 1
FDNS	00NR	3	16WP	G15_048	FROM->TO	G14-057T 345.00 - SUNNYSIDE 345KV CKT 1	717	789	0.04634	124.8136	PITTSBURG - SEMINOLE 345KV CKT 1
FDNS	00NR	3	16WP	G15_048	FROM->TO	G14-057T 345.00 - SUNNYSIDE 345KV CKT 1	717	789	0.05362	124.109	GRACEMONT - MINCO 345KV CKT 1
FDNS	00NR	3	16WP	G15_048	FROM->TO	G14-057T 345.00 - SUNNYSIDE 345KV CKT 1	717	789	0.04941	124.008	BASE CASE
FDNS	00NR	3	20WP	G15_048	FROM->TO	G14-057T 345.00 - SUNNYSIDE 345KV CKT 1	717	789	0.05343	123.2947	GRACEMONT - MINCO 345KV CKT 1
FDNS	00NR	3	20WP	G15_048	FROM->TO	G14-057T 345.00 - SUNNYSIDE 345KV CKT 1	717	789	0.04598	122.341	PITTSBURG - SEMINOLE 345KV CKT 1
FDNS	00NR	3	20WP	G15_048	FROM->TO	G14-057T 345.00 - SUNNYSIDE 345KV CKT 1	717	789	0.04598	122.341	PITTSBURG - SEMINOLE 345KV CKT 1
FDNS	00NR	3	20WP	G15_048	FROM->TO	G14-057T 345.00 - SUNNYSIDE 345KV CKT 1	717	789	0.04908	122.1742	BASE CASE
FDNS	00NR	3	16WP	G15_048	FROM->TO	G14-057T 345.00 - SUNNYSIDE 345KV CKT 1	717	789	0.06066	122.0119	CIMARRON - DRAPER LAKE 345KV CKT 1
FDNS	00NR	3	20WP	G15_048	FROM->TO	G14-057T 345.00 - SUNNYSIDE 345KV CKT 1	717	789	0.06021	120.1547	CIMARRON - DRAPER LAKE 345KV CKT 1
FDNS	00NR	3	16WP	G15_048	FROM->TO	G14-057T 345.00 - SUNNYSIDE 345KV CKT 1	717	789	0.05284	118.6121	P12:138:WFEC:MSL03
FDNS	00NR	3	16WP	G15_048	FROM->TO	G14-057T 345.00 - SUNNYSIDE 345KV CKT 1	717	789	0.04858	118.0416	PITTSBURG - VALLIANT 345KV CKT 1
FDNS	00NR	3	16WP	G15_048	FROM->TO	G14-057T 345.00 - SUNNYSIDE 345KV CKT 1	717	789	0.04858	118.0416	PITTSBURG - VALLIANT 345KV CKT 1
FDNS	00NR	3	16WP	G15_048	FROM->TO	G14-057T 345.00 - SUNNYSIDE 345KV CKT 1	717	789	0.04941	117.8049	GEN509403 1-PIRKEY GENERATION
FDNS	00NR	3	16WP	G15_048	FROM->TO	G14-057T 345.00 - SUNNYSIDE 345KV CKT 1	717	789	0.04941	117.7043	GEN509416 1-TURK GENERATION
FDNS	00NR	3	16WP	G15_048	FROM->TO	G14-057T 345.00 - SUNNYSIDE 345KV CKT 1	717	789	0.05264	117.4601	CLEVELAND - G15066_T 345.00 345KV CKT 1
FDNS	00NR	3	16WP	G15_048	FROM->TO	G14-057T 345.00 - SUNNYSIDE 345KV CKT 1	717	789	0.05264	117.173	G15066_T 345.00 - SOONER 345KV CKT 1
FDNS	00NR	3	20WP	G15_048	FROM->TO	G14-057T 345.00 - SUNNYSIDE 345KV CKT 1	717	789	0.0525	116.9133	P12:138:WFEC:MSL03
FDNS	00NR	3	16WP	G15_048	FROM->TO	G14-057T 345.00 - SUNNYSIDE 345KV CKT 1	717	789	0.04941	116.8021	GEN501801 1-DOLET HILLS UNIT1
FDNS	00NR	3	16WP	G15_048	FROM->TO	G14-057T 345.00 - SUNNYSIDE 345KV CKT 1	717	789	0.04801	116.6882	BORDER 7345.00 - WOODWARD DISTRICT EHV 345KV CKT 1
FDNS	00NR	3	16WP	G15_048	FROM->TO	G14-057T 345.00 - SUNNYSIDE 345KV CKT 1	717	789	0.04941	116.404	GEN509406 1-WELSH #3
FDNS	00NR	3	16WP	G15_048	FROM->TO	G14-057T 345.00 - SUNNYSIDE 345KV CKT 1	717	789	0.04941	116.4039	GEN509404 1-WELSH #1
FDNS	00NR	3	20WP	G15_048	FROM->TO	G14-057T 345.00 - SUNNYSIDE 345KV CKT 1	717	789	0.04908	116.0922	GEN509403 1-PIRKEY GENERATION
FDNS	00NR	3	20WP	G15_048	FROM->TO	G14-057T 345.00 - SUNNYSIDE 345KV CKT 1	717	789	0.04908	116.0108	GEN509416 1-TURK GENERATION
FDNS	00NR	3	20WP	G15_048	FROM->TO	G14-057T 345.00 - SUNNYSIDE 345KV CKT 1	717	789	0.05221	115.8354	CLEVELAND - G15066_T 345.00 345KV CKT 1
FDNS	00NR	3	20WP	G15_048	FROM->TO	G14-057T 345.00 - SUNNYSIDE 345KV CKT 1	717	789	0.04825	115.7845	PITTSBURG - VALLIANT 345KV CKT 1
FDNS	00NR	3	20WP	G15_048	FROM->TO	G14-057T 345.00 - SUNNYSIDE 345KV CKT 1	717	789	0.04825	115.7845	PITTSBURG - VALLIANT 345KV CKT 1
FDNS	00NR	3	16WP	G15_048	FROM->TO	G14-057T 345.00 - SUNNYSIDE 345KV CKT 1	717	789	0.0506	115.7786	CORN TAP - NAPLESTP 138.00 138KV CKT 1
FDNS	00NR	3	16WP	G15_048	FROM->TO	G14-057T 345.00 - SUNNYSIDE 345KV CKT 1	717	789	0.04801	115.7529	BORDER 7345.00 - TUCO_2 345.00 345KV CKT 1
FDNS	00NR	3	16WP	G15_048	FROM->TO	G14-057T 345.00 - SUNNYSIDE 345KV CKT 1	717	789	0.0506	115.6961	NAPLESTP 138.00 - PAYNE 138.00 138KV CKT 1
FDNS	00NR	3	16WP	G15_048	FROM->TO	G14-057T 345.00 - SUNNYSIDE 345KV CKT 1	717	789	0.04945	115.6773	7SAREPTA% 345.00 - LONGWOOD 345KV CKT 1
FDNS	00NR	3	16WP	G15_048	FROM->TO	G14-057T 345.00 - SUNNYSIDE 345KV CKT 1	717	789	0.04945	115.6773	7SAREPTA% 345.00 - LONGWOOD 345KV CKT 1
FDNS	00NR	3	20WP	G15_048	FROM->TO	G14-057T 345.00 - SUNNYSIDE 345KV CKT 1	717	789	0.04772	115.5781	BORDER 7345.00 - WOODWARD DISTRICT EHV 345KV CKT 1
FDNS	00NR	3	20WP	G15_048	FROM->TO	G14-057T 345.00 - SUNNYSIDE 345KV CKT 1	717	789	0.05221	115.5413	G15066_T 345.00 - SOONER 345KV CKT 1
FDNS	00NR	3	16WP	G15_048	FROM->TO	G14-057T 345.00 - SUNNYSIDE 345KV CKT 1	717	789	0.04946	115.5202	DOLET HILLS - SOUTHWEST SHREVEPORT 345KV CKT 1
FDNS	00NR	3	16WP	G15_048	FROM->TO	G14-057T 345.00 - SUNNYSIDE 345KV CKT 1	717	789	0.04946	115.5202	DOLET HILLS - SOUTHWEST SHREVEPORT 345KV CKT 1
FDNS	00NR	3	16WP	G15_048	FROM->TO	G14-057T 345.00 - SUNNYSIDE 345KV CKT 1	717	789	0.05187	115.5069	CLEVELAND - TULSA NORTH 345KV CKT 1
FDNS	00NR	3	16WP	G15_048	FROM->TO	G14-057T 345.00 - SUNNYSIDE 345KV CKT 1	717	789	0.05187	115.5069	CLEVELAND - TULSA NORTH 345KV CKT 1
FDNSLock	00NR	3	16WP	G15_048	FROM->TO	G14-057T 345.00 - SUNNYSIDE 345KV CKT 1	717	789	0.04941	115.4962	GEN336821 1-GRAND GULF UNIT
FDNS	00NR	3	16WP	G15_048	FROM->TO	G14-057T 345.00 - SUNNYSIDE 345KV CKT 1	717	789	0.05825	115.448	ARCADIA - NORTHWEST 345KV CKT 1
FDNSLock	00NR	3	16WP	G15_048	FROM->TO	G14-057T 345.00 - SUNNYSIDE 345KV CKT 1	717	789	0.04941	115.4165	GEN336153 1-WATERFORD UNIT#3
FDNS	00NR	3	16WP	G15_048	FROM->TO	G14-057T 345.00 - SUNNYSIDE 345KV CKT 1	717	789	0.05044	115.4159	COMANCHE - LOCO 138KV CKT 1
FDNS	00NR	3	16WP	G15_048	FROM->TO	G14-057T 345.00 - SUNNYSIDE 345KV CKT 1	717	789	0.05009	115.353	ANADARKO - POCASSETT 138KV CKT 1

SOLUTION	GROUP	SCENARIO	SEASON	SOURCE	DIRECTION	MONITORED ELEMENT	RATEA (MVA)	RATEB(MVA)	TDF	TC%LOADING (% MVA)	CONTINGENCY
FDNS	00NR	3	16WP	G15_048	FROM->TO	G14-057T 345.00 - SUNNYSIDE 345KV CKT 1	717	789	0.04611	115.3212	CANADIAN RIVER - MUSKOGEE 345KV CKT 1
FDNS	00NR	3	20WP	G15_048	FROM->TO	G14-057T 345.00 - SUNNYSIDE 345KV CKT 1	717	789	0.04908	115.253	GEN501801 1-DOLET HILLS UNIT1
FDNS	00NR	3	16WP	G15_048	FROM->TO	G14-057T 345.00 - SUNNYSIDE 345KV CKT 1	717	789	0.0514	115.2138	ARCADIA - SEMINOLE 345KV CKT 1
FDNS	00NR	3	16WP	G15_048	FROM->TO	G14-057T 345.00 - SUNNYSIDE 345KV CKT 1	717	789	0.05009	115.2125	POCASSETT - TUTTLE 138KV CKT 1
FDNSLock	00NR	3	16WP	G15_048	FROM->TO	G14-057T 345.00 - SUNNYSIDE 345KV CKT 1	717	789	0.04941	115.1249	GEN335831 1-RIVERBEND UNIT#1
FDNS	00NR	3	16WP	G15_048	FROM->TO	G14-057T 345.00 - SUNNYSIDE 345KV CKT 1	717	789	0.04941	115.1143	GRAND GULF 500/22.0KV TRANSFORMER CKT 1
FDNS	00NR	3	16WP	G15_048	FROM->TO	G14-057T 345.00 - SUNNYSIDE 345KV CKT 1	717	789	0.04941	115.0932	GEN515577 1-ARBWND11 0.6900
FDNS	00NR	3	16WP	G15_048	FROM->TO	G14-057T 345.00 - SUNNYSIDE 345KV CKT 1	717	789	0.04943	115.0342	7SAREPTA% 345.00 - ELDORADO EHV 345KV CKT 1
FDNS	00NR	3	16WP	G15_048	FROM->TO	G14-057T 345.00 - SUNNYSIDE 345KV CKT 1	717	789	0.04943	115.034	3TR3AR8EL7EL
FDNS	00NR	3	16WP	G15_048	FROM->TO	G14-057T 345.00 - SUNNYSIDE 345KV CKT 1	717	789	0.04941	115.0265	GEN509409 1-WILKES #3
FDNS	00NR	3	16WP	G15_048	FROM->TO	G14-057T 345.00 - SUNNYSIDE 345KV CKT 1	717	789	0.04943	115.0233	ELDORADO EHV 500/345KV TRANSFORMER CKT 1
FDNS	00NR	3	16WP	G15_048	FROM->TO	G14-057T 345.00 - SUNNYSIDE 345KV CKT 1	717	789	0.04967	114.9623	P12:138:AEPW:DUNCAN-4:L.E.S.-4
FDNS	00NR	3	16WP	G15_048	FROM->TO	G14-057T 345.00 - SUNNYSIDE 345KV CKT 1	717	789	0.0508	114.9274	HEALDTON - LOCO 138KV CKT 1
FDNS	00NR	3	16WP	G15_048	FROM->TO	G14-057T 345.00 - SUNNYSIDE 345KV CKT 1	717	789	0.05009	114.8486	BRIDGECR 138.00 - TUTTLE 138KV CKT 1
FDNS	00NR	3	16WP	G15_048	FROM->TO	G14-057T 345.00 - SUNNYSIDE 345KV CKT 1	717	789	0.04968	114.8474	COMANCHE TAP - OMPA-DUNCAN 840 138KV CKT 1
FDNS	00NR	3	16WP	G15_048	FROM->TO	G14-057T 345.00 - SUNNYSIDE 345KV CKT 1	717	789	0.0508	114.7868	HEALDTON - RINGLING 138KV CKT 1
FDNS	00NR	3	16WP	G15_048	FROM->TO	G14-057T 345.00 - SUNNYSIDE 345KV CKT 1	717	789	0.04941	114.7634	GEN501813 1-RODEMACHER UNIT 3
FDNSLock	00NR	3	16WP	G15_048	FROM->TO	G14-057T 345.00 - SUNNYSIDE 345KV CKT 1	717	789	0.04941	114.7487	GEN300006 1-NEW MADRID UNIT 1
FDNSLock	00NR	3	16WP	G15_048	FROM->TO	G14-057T 345.00 - SUNNYSIDE 345KV CKT 1	717	789	0.04941	114.7366	GEN300007 1-NEW MADRID UNIT 2
FDNS	00NR	3	20WP	G15_048	FROM->TO	G14-057T 345.00 - SUNNYSIDE 345KV CKT 1	717	789	0.04908	114.7319	GEN509406 1-WELSH #3
FDNS	00NR	3	20WP	G15_048	FROM->TO	G14-057T 345.00 - SUNNYSIDE 345KV CKT 1	717	789	0.04908	114.7317	GEN509404 1-WELSH #1
FDNS	00NR	3	16WP	G15_048	FROM->TO	G14-057T 345.00 - SUNNYSIDE 345KV CKT 1	717	789	0.04979	114.7109	LACYGNE - WAVERLY7 345.00 345KV CKT 1
FDNS	00NR	3	20WP	G15_048	FROM->TO	G14-057T 345.00 - SUNNYSIDE 345KV CKT 1	717	789	0.04772	114.6379	BORDER 7345.00 - TUCO_2 345.00 345KV CKT 1
FDNS	00NR	3	16WP	G15_048	FROM->TO	G14-057T 345.00 - SUNNYSIDE 345KV CKT 1	717	789	0.04941	114.6254	GEN520947 1-HUGO1
FDNS	00NR	3	16WP	G15_048	FROM->TO	G14-057T 345.00 - SUNNYSIDE 345KV CKT 1	717	789	0.0508	114.6225	RINGLING - SOUTH WILSON 138KV CKT 1
FDNS	00NR	3	16WP	G15_048	FROM->TO	G14-057T 345.00 - SUNNYSIDE 345KV CKT 1	717	789	0.04979	114.5992	WAVERLY7 345.00 - WOLF CREEK 345KV CKT 1
FDNS	00NR	3	16WP	G15_048	FROM->TO	G14-057T 345.00 - SUNNYSIDE 345KV CKT 1	717	789	0.05009	114.5952	P12:138:WFEC:MSL01
FDNS	00NR	3	16WP	G15_048	FROM->TO	G14-057T 345.00 - SUNNYSIDE 345KV CKT 1	717	789	0.05009	114.5868	BRIDGECR 138.00 - SUNSHINE CANYON 138KV CKT 1
FDNS	00NR	3	16WP	G15_048	FROM->TO	G14-057T 345.00 - SUNNYSIDE 345KV CKT 1	717	789	0.04968	114.5765	DUNCAN - OMPA-DUNCAN 840 138KV CKT 1
FDNS	00NR	3	16WP	G15_048	FROM->TO	G14-057T 345.00 - SUNNYSIDE 345KV CKT 1	717	789	0.04968	114.5765	DUNCAN - OMPA-DUNCAN 840 138KV CKT 1
FDNS	00NR	3	16WP	G15_048	FROM->TO	G14-057T 345.00 - SUNNYSIDE 345KV CKT 1	717	789	0.04941	114.566	GEN335206 1-NELSON UNIT 6
FDNS	00NR	3	16WP	G15_048	FROM->TO	G14-057T 345.00 - SUNNYSIDE 345KV CKT 1	717	789	0.04941	114.4229	DOLET HILLS 345/24.0KV TRANSFORMER CKT 1
FDNS	00NR	3	16WP	G15_048	FROM->TO	G14-057T 345.00 - SUNNYSIDE 345KV CKT 1	717	789	0.04937	114.4188	P12:138:AEPW:SHERID4:112GORE4
FDNS	00NR	3	16WP	G15_048	FROM->TO	G14-057T 345.00 - SUNNYSIDE 345KV CKT 1	717	789	0.04843	114.4101	PARK LANE - SEMINOLE 138KV CKT 1
FDNS	00NR	3	16WP	G15_048	FROM->TO	G14-057T 345.00 - SUNNYSIDE 345KV CKT 1	717	789	0.04941	114.3829	GEN501812 1-RODEMACHER UNIT 2
FDNS	00NR	3	16WP	G15_048	FROM->TO	G14-057T 345.00 - SUNNYSIDE 345KV CKT 1	717	789	0.04941	114.3533	GEN590011 2-ERCOT EQUIVALENCE
FDNS	00NR	3	16WP	G15_048	FROM->TO	G14-057T 345.00 - SUNNYSIDE 345KV CKT 1	717	789	0.0508	114.3473	MARIETTA - SOUTH WILSON 138KV CKT 1
FDNS	00NR	3	16WP	G15_048	FROM->TO	G14-057T 345.00 - SUNNYSIDE 345KV CKT 1	717	789	0.04941	114.3456	GEN515564 1-ORIGIN11 0.6900
FDNS	00NR	3	16WP	G15_048	FROM->TO	G14-057T 345.00 - SUNNYSIDE 345KV CKT 1	717	789	0.04941	114.3456	GEN515565 1-ORIGIN21 0.6900
FDNS	00NR	3	16WP	G15_048	FROM->TO	G14-057T 345.00 - SUNNYSIDE 345KV CKT 1	717	789	0.04946	114.3132	REDBUD - RIVERSIDE STATION 345KV CKT 1
FDNS	00NR	3	16WP	G15_048	FROM->TO	G14-057T 345.00 - SUNNYSIDE 345KV CKT 1	717	789	0.04946	114.3132	REDBUD - RIVERSIDE STATION 345KV CKT 1
FDNS	00NR	3	16WP	G15_048	FROM->TO	G14-057T 345.00 - SUNNYSIDE 345KV CKT 1	717	789	0.05034	114.2953	Hitchland Interchange - WALKTAP7 345.00 345KV CKT 1
FDNS	00NR	3	16WP	G15_048	FROM->TO	G14-057T 345.00 - SUNNYSIDE 345KV CKT 1	717	789	0.05034	114.2953	Hitchland Interchange - WALKTAP7 345.00 345KV CKT 1
FDNS	00NR	3	16WP	G15_048	FROM->TO	G14-057T 345.00 - SUNNYSIDE 345KV CKT 1	717	789	0.05134	114.2952	MATHWSN7 345.00 - NORTHWEST 345KV CKT 1
FDNS	00NR	3	16WP	G15_048	FROM->TO	G14-057T 345.00 - SUNNYSIDE 345KV CKT 1	717	789	0.05034	114.2807	P12:345:SPS:J07.1.FINN.HITCH
FDNS	00NR	3	16WP	G15_048	FROM->TO	G14-057T 345.00 - SUNNYSIDE 345KV CKT 1	717	789	0.04941	114.2786	GEN590010 1-ERCOT EQUIVALENCE
FDNS	00NR	3	16WP	G15_048	FROM->TO	G14-057T 345.00 - SUNNYSIDE 345KV CKT 1	717	789	0.0508	114.2632	P12:138:WFEC:MSL17
FDNS	00NR	3	16WP	G15_048	FROM->TO	G14-057T 345.00 - SUNNYSIDE 345KV CKT 1	717	789	0.0503	114.2419	CANEYRV7 345.00 - NEOSHO 345KV CKT 1
FDNS	00NR	3	16WP	G15_048	FROM->TO	G14-057T 345.00 - SUNNYSIDE 345KV CKT 1	717	789	0.05053	114.1859	CIVIT - PAOLI 138KV CKT 1
FDNS	00NR	3	16WP	G15_048	FROM->TO	G14-057T 345.00 - SUNNYSIDE 345KV CKT 1	717	789	0.04941	114.1631	P12:69:AEPW:L.E.S.-2:LAW WC2
FDNS	00NR	3	16WP	G15_048	FROM->TO	G14-057T 345.00 - SUNNYSIDE 345KV CKT 1	717	789	0.04941	114.1449	P12:161:AEPW:DYESS 5:HYLAND 5
FDNS	00NR	3	16WP	G15_048	FROM->TO	G14-057T 345.00 - SUNNYSIDE 345KV CKT 1	717	789	0.04941	114.1444	GEN509408 1-WILKES #2
FDNS	00NR	3	20WP	G15_048	FROM->TO	G14-057T 345.00 - SUNNYSIDE 345KV CKT 1	717	789	0.05027	114.1414	CORN TAP - NAPLESTP 138.00 138KV CKT 1
FDNS	00NR	3	16WP	G15_048	FROM->TO	G14-057T 345.00 - SUNNYSIDE 345KV CKT 1	717	789	0.04941	114.1339	GEN506754 1-LEBROCK STEAM 1
FDNS	00NR	3	16WP	G15_048	FROM->TO	G14-057T 345.00 - SUNNYSIDE 345KV CKT 1	717	789	0.04938	114.1161	ELDORADO EHV - MOUNT OLIVE 500KV CKT 1
FDNS	00NR	3	16WP	G15_048	FROM->TO	G14-057T 345.00 - SUNNYSIDE 345KV CKT 1	717	789	0.0503	114.1082	CANEYRV7 345.00 - LATHAMS7 345.00 345KV CKT 1
FDNS	00NR	3	16WP	G15_048	FROM->TO	G14-057T 345.00 - SUNNYSIDE 345KV CKT 1	717	789	0.0498	114.1072	P12:138:WFEC:MSL02
FDNS	00NR	3	16WP	G15_048	FROM->TO	G14-057T 345.00 - SUNNYSIDE 345KV CKT 1	717	789	0.04976	114.1066	PAOLI - PAYNE 138.00 138KV CKT 1
FDNS	00NR	3	16WP	G15_048	FROM->TO	G14-057T 345.00 - SUNNYSIDE 345KV CKT 1	717	789	0.04941	114.1045	GEN334440 1-SABINE UNIT 4
FDNS	00NR	3	20WP	G15_048	FROM->TO	G14-057T 345.00 - SUNNYSIDE 345KV CKT 1	717	789	0.04913	114.0897	7SAREPTA% 345.00 - LONGWOOD 345KV CKT 1
FDNS	00NR	3	20WP	G15_048	FROM->TO	G14-057T 345.00 - SUNNYSIDE 345KV CKT 1	717	789	0.04913	114.0897	7SAREPTA% 345.00 - LONGWOOD 345KV CKT 1
FDNS	00NR	3	16WP	G15_048	FROM->TO	G14-057T 345.00 - SUNNYSIDE 345KV CKT 1	717	789	0.04938	114.0744	P12:138:AEPW:112GORE4:L.E.S.-4
FDNS	00NR	3	20WP	G15_048	FROM->TO	G14-057T 345.00 - SUNNYSIDE 345KV CKT 1	717	789	0.05027	114.0575	NAPLESTP 138.00 - PAYNE 138.00 138KV CKT 1
FDNS	00NR	3	16WP	G15_048	FROM->TO	G14-057T 345.00 - SUNNYSIDE 345KV CKT 1	717	789	0.05053	114.0436	CIVIT - STRATFORD 138KV CKT 1
FDNS	00NR	3	16WP	G15_048	FROM->TO	G14-057T 345.00 - SUNNYSIDE 345KV CKT 1	717	789	0.04931	114.0419	ELDORADO EHV - SHERIDAN EHV 500KV CKT 1
FDNS	00NR	3	16WP	G15_048	FROM->TO	G14-057T 345.00 - SUNNYSIDE 345KV CKT 1	717	789	0.04966	114.0191	ANADARKO - GEORGIA 138KV CKT 1
FDNS	00NR	3	16WP	G15_048	FROM->TO	G14-057T 345.00 - SUNNYSIDE 345KV CKT 1	717	789	0.04943	114.0156	TUPELO - TUPELO TAP 138KV CKT 1
FDNS	00NR	3	16WP	G15_048	FROM->TO	G14-057T 345.00 - SUNNYSIDE 345KV CKT 1	717	789	0.04949	113.9972	WEBRE - WELLS 500KV CKT 1
FDNS	00NR	3	16WP	G15_048	FROM->TO	G14-057T 345.00 - SUNNYSIDE 345KV CKT 1	717	789	0.05098	113.9928	P12:138:AEPW-OGE:CORNVIL4:MAUD 4
FDNS	00NR	3	16WP	G15_048	FROM->TO	G14-057T 345.00 - SUNNYSIDE 345KV CKT 1	717	789	0.04941	113.9809	GEN503909 1-FULTONU1 1 16.000
FDNS	00NR	3	16WP	G15_048	FROM->TO	G14-057T 345.00 - SUNNYSIDE 345KV CKT 1	717	789	0.04941	113.9741	FRONTIER - GRIMES 345KV CKT 1
FDNS	00NR	3	20WP	G15_048	FROM->TO	G14-057T 345.00 - SUNNYSIDE 345KV CKT 1	717	789	0.04908	113.9718	GEN336821 1-GRAND GULF UNIT
FDNS	00NR	3	16WP	G15_048	FROM->TO	G14-057T 345.00 - SUNNYSIDE 345KV CKT 1	717	789	0.04966	113.9406	FLETCHER - GEORGIA 138KV CKT 1
FDNS	00NR	3	16WP	G15_048	FROM->TO	G14-057T 345.00 - SUNNYSIDE 345KV CKT 1	717	789	0.04896	113.9351	LAWTON EASTSIDE (LES 5) 345/138/13.8KV TRANSFORMER CKT 2
FDNS	00NR	3	16WP	G15_048	FROM->TO	G14-057T 345.00 - SUNNYSIDE 345KV CKT 1	717	789	0.04896	113.9351	LAWTON EASTSIDE (LES 5) 345/138/13.8KV TRANSFORMER CKT 2
FDNS	00NR	3	16WP	G15_048	FROM->TO	G14-057T 345.00 - SUNNYSIDE 345KV CKT 1	717	789	0.05053	113.9244	OIL CENTER - STRATFORD 138KV CKT 1
FDNS	00NR	3	16WP	G15_048	FROM->TO	G14-057T 345.00 - SUNNYSIDE 345KV CKT 1	717	789	0.05098	113.9189	BLANCHARD - CORNVILLE 138KV CKT 1
FDNS	00NR	3	16WP	G15_048	FROM->TO	G14-057T 345.00 - SUNNYSIDE 345KV CKT 1	717	789	0.04979	113.9064	EMPIRE - FLETCHER 138KV CKT 1
FDNS	00NR	3	16WP	G15_048	FROM->TO	G14-057T 345.00 - SUNNYSIDE 345KV CKT 1	717	789	0.0503	113.8979	LATHAMS7 345.00 - ROSE HILL 345KV CKT 1

SOLUTION	GROUP	SCENARIO	SEASON	SOURCE	DIRECTION	MONITORED ELEMENT	RATEA (MVA)	RATEB(MVA)	TDF	TC%LOADING (% MVA)	CONTINGENCY
FDNS	00NR	3	20WP	G15_048	FROM->TO	G14-057T 345.00 - SUNNYSIDE 345KV CKT 1	717	789	0.04908	113.8628	GEN336153 1-WATERFORD UNIT#3
FDNS	00NR	3	16WP	G15_048	FROM->TO	G14-057T 345.00 - SUNNYSIDE 345KV CKT 1	717	789	0.04941	113.855	GEN509393 S1-ARSENAL HILL GENS #4 (STALL)
FDNS	00NR	3	20WP	G15_048	FROM->TO	G14-057T 345.00 - SUNNYSIDE 345KV CKT 1	717	789	0.05146	113.8408	CLEVELAND - TULSA NORTH 345KV CKT 1
FDNS	00NR	3	20WP	G15_048	FROM->TO	G14-057T 345.00 - SUNNYSIDE 345KV CKT 1	717	789	0.05146	113.8408	CLEVELAND - TULSA NORTH 345KV CKT 1
FDNS	00NR	3	16WP	G15_048	FROM->TO	G14-057T 345.00 - SUNNYSIDE 345KV CKT 1	717	789	0.04941	113.8313	GEN509392 G2-ARSENAL HILL GENS #3 (STALL)
FDNS	00NR	3	16WP	G15_048	FROM->TO	G14-057T 345.00 - SUNNYSIDE 345KV CKT 1	717	789	0.04941	113.8312	GEN509391 G1-ARSENAL HILL GENS #2 (STALL)
FDNS	00NR	3	16WP	G15_048	FROM->TO	G14-057T 345.00 - SUNNYSIDE 345KV CKT 1	717	789	0.04979	113.8286	COMANCHE - EMPIRE 138KV CKT 1
FDNS	00NR	3	16WP	G15_048	FROM->TO	G14-057T 345.00 - SUNNYSIDE 345KV CKT 1	717	789	0.04941	113.8154	GEN336252 1-NINEMILE POINT UNIT#5
FDNS	00NR	3	20WP	G15_048	FROM->TO	G14-057T 345.00 - SUNNYSIDE 345KV CKT 1	717	789	0.05791	113.8144	ARCADIA - NORTHWEST 345KV CKT 1
FDNS	00NR	3	16WP	G15_048	FROM->TO	G14-057T 345.00 - SUNNYSIDE 345KV CKT 1	717	789	0.04941	113.7996	GEN334071 1-LEWIS CREEK 2
FDNS	00NR	3	16WP	G15_048	FROM->TO	G14-057T 345.00 - SUNNYSIDE 345KV CKT 1	717	789	0.04941	113.7967	DELL 500 - ESSEX UNIT 2 500KV CKT Z1
FDNS	00NR	3	16WP	G15_048	FROM->TO	G14-057T 345.00 - SUNNYSIDE 345KV CKT 1	717	789	0.04941	113.7907	GEN334070 1-LEWIS CREEK 1
FDNS	00NR	3	16WP	G15_048	FROM->TO	G14-057T 345.00 - SUNNYSIDE 345KV CKT 1	717	789	0.04941	113.7883	GEN335204 1-NELSON UNIT 4
FDNS	00NR	3	16WP	G15_048	FROM->TO	G14-057T 345.00 - SUNNYSIDE 345KV CKT 1	717	789	0.05005	113.7671	THISTLE7 345.00 - WOODWARD DISTRICT EHV 345KV CKT 1
FDNS	00NR	3	16WP	G15_048	FROM->TO	G14-057T 345.00 - SUNNYSIDE 345KV CKT 1	717	789	0.05005	113.7671	THISTLE7 345.00 - WOODWARD DISTRICT EHV 345KV CKT 1
FDNS	00NR	3	16WP	G15_048	FROM->TO	G14-057T 345.00 - SUNNYSIDE 345KV CKT 1	717	789	0.05005	113.7671	THISTLE7 345.00 - WOODWARD DISTRICT EHV 345KV CKT 2
FDNS	00NR	3	16WP	G15_048	FROM->TO	G14-057T 345.00 - SUNNYSIDE 345KV CKT 1	717	789	0.05005	113.7671	THISTLE7 345.00 - WOODWARD DISTRICT EHV 345KV CKT 2
FDNS	00NR	3	20WP	G15_048	FROM->TO	G14-057T 345.00 - SUNNYSIDE 345KV CKT 1	717	789	0.04977	113.7671	ANADARKO - POCASSETT 138KV CKT 1
FDNS	00NR	3	16WP	G15_048	FROM->TO	G14-057T 345.00 - SUNNYSIDE 345KV CKT 1	717	789	0.04953	113.7574	DUNCAN (DUNCAN) 138/69/13.8KV TRANSFORMER CKT 1
FDNS	00NR	3	16WP	G15_048	FROM->TO	G14-057T 345.00 - SUNNYSIDE 345KV CKT 1	717	789	0.04953	113.7574	DUNCAN (DUNCAN) 138/69/13.8KV TRANSFORMER CKT 1
FDNS	00NR	3	16WP	G15_048	FROM->TO	G14-057T 345.00 - SUNNYSIDE 345KV CKT 1	717	789	0.04941	113.7542	GEN334441 1-SABINE UNIT 5
FDNS	00NR	3	16WP	G15_048	FROM->TO	G14-057T 345.00 - SUNNYSIDE 345KV CKT 1	717	789	0.05053	113.7458	LATTA JCT - OIL CENTER 138KV CKT 1
FDNS	00NR	3	20WP	G15_048	FROM->TO	G14-057T 345.00 - SUNNYSIDE 345KV CKT 1	717	789	0.05011	113.7368	COMANCHE - LOCO 138KV CKT 1
FDNS	00NR	3	16WP	G15_048	FROM->TO	G14-057T 345.00 - SUNNYSIDE 345KV CKT 1	717	789	0.0494	113.7361	P12:161:AEPW-SWPA:BEAVER5:EROGERS5
FDNS	00NR	3	16WP	G15_048	FROM->TO	G14-057T 345.00 - SUNNYSIDE 345KV CKT 1	717	789	0.05098	113.7205	BLANCHARD - MAUD 138KV CKT 1
FDNS	00NR	3	16WP	G15_048	FROM->TO	G14-057T 345.00 - SUNNYSIDE 345KV CKT 1	717	789	0.04945	113.7186	P12:138:AEPW:CATOOSA4:T.S.E.-4
FDNS	00NR	3	16WP	G15_048	FROM->TO	G14-057T 345.00 - SUNNYSIDE 345KV CKT 1	717	789	0.04941	113.709	GEN337653 1-WHITE BLUFF UNIT #2
FDNS	00NR	3	16WP	G15_048	FROM->TO	G14-057T 345.00 - SUNNYSIDE 345KV CKT 1	717	789	0.04944	113.708	6LAYFLD 230.00 - CARROLL 230KV CKT 1
FDNS	00NR	3	16WP	G15_048	FROM->TO	G14-057T 345.00 - SUNNYSIDE 345KV CKT 1	717	789	0.04941	113.7044	GEN334030 1-FRONTIER UNIT 1
FDNS	00NR	3	16WP	G15_048	FROM->TO	G14-057T 345.00 - SUNNYSIDE 345KV CKT 1	717	789	0.04941	113.7028	GEN334031 1-FRONTIER UNIT 2
FDNS	00NR	3	16WP	G15_048	FROM->TO	G14-057T 345.00 - SUNNYSIDE 345KV CKT 1	717	789	0.04941	113.7	GEN300003 1-THOMAS HILL UNIT 3
FDNS	00NR	3	16WP	G15_048	FROM->TO	G14-057T 345.00 - SUNNYSIDE 345KV CKT 1	717	789	0.04941	113.6896	GEN506752 1-LEBROCK GAS 1
FDNS	00NR	3	16WP	G15_048	FROM->TO	G14-057T 345.00 - SUNNYSIDE 345KV CKT 1	717	789	0.04941	113.6894	GEN506753 1-LEBROCK GAS 2
FDNS	00NR	3	20WP	G15_048	FROM->TO	G14-057T 345.00 - SUNNYSIDE 345KV CKT 1	717	789	0.04913	113.6795	DOLET HILLS - SOUTHWEST SHREVEPORT 345KV CKT 1
FDNS	00NR	3	20WP	G15_048	FROM->TO	G14-057T 345.00 - SUNNYSIDE 345KV CKT 1	717	789	0.04913	113.6795	DOLET HILLS - SOUTHWEST SHREVEPORT 345KV CKT 1
FDNS	00NR	3	16WP	G15_048	FROM->TO	G14-057T 345.00 - SUNNYSIDE 345KV CKT 1	717	789	0.04943	113.6747	FULTON 115 - HOPE 115KV CKT 1
FDNS	00NR	3	16WP	G15_048	FROM->TO	G14-057T 345.00 - SUNNYSIDE 345KV CKT 1	717	789	0.04943	113.6747	FULTON 115 - HOPE 115KV CKT 1
FDNS	00NR	3	16WP	G15_048	FROM->TO	G14-057T 345.00 - SUNNYSIDE 345KV CKT 1	717	789	0.04944	113.6675	8DANIEL8 500.00 - MCKNIGHT 500KV CKT 1
FDNS	00NR	3	16WP	G15_048	FROM->TO	G14-057T 345.00 - SUNNYSIDE 345KV CKT 1	717	789	0.04941	113.6672	P12:161:AEPW:DYESS5:ELMSPRNG:TONTITN5
FDNS	00NR	3	16WP	G15_048	FROM->TO	G14-057T 345.00 - SUNNYSIDE 345KV CKT 1	717	789	0.04941	113.637	GEN515226 1-MUSKOGEE 6G
FDNS	00NR	3	16WP	G15_048	FROM->TO	G14-057T 345.00 - SUNNYSIDE 345KV CKT 1	717	789	0.04941	113.6367	GEN501811 1-RODEMACHER UNIT 1
FDNS	00NR	3	16WP	G15_048	FROM->TO	G14-057T 345.00 - SUNNYSIDE 345KV CKT 1	717	789	0.04941	113.6288	GEN300015 1-1SGPDEL 18.000
FDNS	00NR	3	16WP	G15_048	FROM->TO	G14-057T 345.00 - SUNNYSIDE 345KV CKT 1	717	789	0.04964	113.6265	P12:138:AEPW:CORNVIL4:S.W.S.-4
FDNS	00NR	3	16WP	G15_048	FROM->TO	G14-057T 345.00 - SUNNYSIDE 345KV CKT 1	717	789	0.04941	113.624	GEN337911 1-ARKANSAS NUCLEAR ONE UNIT #2
FDNS	00NR	3	16WP	G15_048	FROM->TO	G14-057T 345.00 - SUNNYSIDE 345KV CKT 1	717	789	0.04941	113.6187	GEN336251 1-NINEMILE POINT UNIT#4
FDNS	00NR	3	16WP	G15_048	FROM->TO	G14-057T 345.00 - SUNNYSIDE 345KV CKT 1	717	789	0.04941	113.618	GEN337652 1-WHITE BLUFF UNIT #1
FDNS	00NR	3	16WP	G15_048	FROM->TO	G14-057T 345.00 - SUNNYSIDE 345KV CKT 1	717	789	0.04941	113.6154	GEN334433 1-SABINE UNIT 3
FDNS	00NR	3	20WP	G15_048	FROM->TO	G14-057T 345.00 - SUNNYSIDE 345KV CKT 1	717	789	0.04977	113.6148	POCASSETT - TUTTLE 138KV CKT 1
FDNS	00NR	3	16WP	G15_048	FROM->TO	G14-057T 345.00 - SUNNYSIDE 345KV CKT 1	717	789	0.04941	113.6126	GEN336831 1-BAXTER WILSON SES
FDNS	00NR	3	16WP	G15_048	FROM->TO	G14-057T 345.00 - SUNNYSIDE 345KV CKT 1	717	789	0.04956	113.5975	G15074_T 345.00 - HOYT 345KV CKT 1
FDNS	00NR	3	16WP	G15_048	FROM->TO	G14-057T 345.00 - SUNNYSIDE 345KV CKT 1	717	789	0.04949	113.5963	P12:138:AEPW:CORNVIL4:DUNCAN-4
FDNS	00NR	3	16WP	G15_048	FROM->TO	G14-057T 345.00 - SUNNYSIDE 345KV CKT 1	717	789	0.04953	113.5953	P12:69:WFEC-AEPW:COMANCH2:DUNCAN-2
FDNS	00NR	3	16WP	G15_048	FROM->TO	G14-057T 345.00 - SUNNYSIDE 345KV CKT 1	717	789	0.04941	113.5846	GEN562783 1-G15036_4 0.6900
FDNS	00NR	3	16WP	G15_048	FROM->TO	G14-057T 345.00 - SUNNYSIDE 345KV CKT 1	717	789	0.04941	113.5846	GEN562784 1-G15036_5 0.6900
FDNS	00NR	3	16WP	G15_048	FROM->TO	G14-057T 345.00 - SUNNYSIDE 345KV CKT 1	717	789	0.05083	113.5764	BAILEY4 138.00 - SUNSHINE CANYON 138KV CKT 1
FDNS	00NR	3	16WP	G15_048	FROM->TO	G14-057T 345.00 - SUNNYSIDE 345KV CKT 1	717	789	0.04921	113.5753	TUTTLE - TUTTLE CONOCO TAP 138KV CKT 1
FDNSLock	00NR	3	16WP	G15_048	FROM->TO	G14-057T 345.00 - SUNNYSIDE 345KV CKT 1	717	789	0.0495	113.5721	G15088_T 345.00 - MOORE 345KV CKT 1
FDNS	00NR	3	16WP	G15_048	FROM->TO	G14-057T 345.00 - SUNNYSIDE 345KV CKT 1	717	789	0.04981	113.5699	CIMARRON - CZECH HALL 138KV CKT 1
FDNS	00NR	3	16WP	G15_048	FROM->TO	G14-057T 345.00 - SUNNYSIDE 345KV CKT 1	717	789	0.04963	113.565	G1524G1525 345.00 - THISTLE7 345.00 345KV CKT 1
FDNS	00NR	3	16WP	G15_048	FROM->TO	G14-057T 345.00 - SUNNYSIDE 345KV CKT 1	717	789	0.04963	113.565	G1524G1525 345.00 - THISTLE7 345.00 345KV CKT 2
FDNS	00NR	3	20WP	G15_048	FROM->TO	G14-057T 345.00 - SUNNYSIDE 345KV CKT 1	717	789	0.04908	113.5641	GEN335831 1-RIVERBEND UNIT#1
FDNS	00NR	3	16WP	G15_048	FROM->TO	G14-057T 345.00 - SUNNYSIDE 345KV CKT 1	717	789	0.04973	113.5595	P12:138:AEPW-OGE:WTH_JCT4:JENSEN4
FDNS	00NR	3	16WP	G15_048	FROM->TO	G14-057T 345.00 - SUNNYSIDE 345KV CKT 1	717	789	0.04941	113.5563	GEN505432 1-SIKESTON
FDNS	00NR	3	16WP	G15_048	FROM->TO	G14-057T 345.00 - SUNNYSIDE 345KV CKT 1	717	789	0.04942	113.554	P12:161:AEPW:EROGERS5:ECNTRTN5
FDNS	00NR	3	16WP	G15_048	FROM->TO	G14-057T 345.00 - SUNNYSIDE 345KV CKT 1	717	789	0.04993	113.5536	CIMARRON - SARA 138KV CKT 1
FDNS	00NR	3	16WP	G15_048	FROM->TO	G14-057T 345.00 - SUNNYSIDE 345KV CKT 1	717	789	0.04941	113.5512	GEN515040 1-SEMINOLE 1G
FDNS	00NR	3	16WP	G15_048	FROM->TO	G14-057T 345.00 - SUNNYSIDE 345KV CKT 1	717	789	0.04938	113.545	LAYFLD8 500.00 - MOUNT OLIVE 500KV CKT 1
FDNS	00NR	3	16WP	G15_048	FROM->TO	G14-057T 345.00 - SUNNYSIDE 345KV CKT 1	717	789	0.04938	113.545	LAYFLD8 500.00 - MOUNT OLIVE 500KV CKT 1
FDNS	00NR	3	16WP	G15_048	FROM->TO	G14-057T 345.00 - SUNNYSIDE 345KV CKT 1	717	789	0.04892	113.5433	ARBWIND4 138.00 - CARTER 138KV CKT 1
FDNS	00NR	3	16WP	G15_048	FROM->TO	G14-057T 345.00 - SUNNYSIDE 345KV CKT 1	717	789	0.04941	113.5426	RODEMACHER 230/22.0KV TRANSFORMER CKT 1
FDNS	00NR	3	16WP	G15_048	FROM->TO	G14-057T 345.00 - SUNNYSIDE 345KV CKT 1	717	789	0.04953	113.5415	DUNCAN - TOSCO 69KV CKT 1
FDNS	00NR	3	16WP	G15_048	FROM->TO	G14-057T 345.00 - SUNNYSIDE 345KV CKT 1	717	789	0.04941	113.5409	GEN515223 1-MUSKOGEE 4G
FDNS	00NR	3	16WP	G15_048	FROM->TO	G14-057T 345.00 - SUNNYSIDE 345KV CKT 1	717	789	0.04941	113.5409	GEN515225 1-MUSKOGEE 5G
FDNS	00NR	3	16WP	G15_048	FROM->TO	G14-057T 345.00 - SUNNYSIDE 345KV CKT 1	717	789	0.04913	113.5371	G14_038T 345.00 - Hitchland Interchange 345KV CKT 1
FDNS	00NR	3	16WP	G15_048	FROM->TO	G14-057T 345.00 - SUNNYSIDE 345KV CKT 1	717	789	0.04957	113.5328	P12:138:AEPW:WTHWF4:CLINTJC4
FDNS	00NR	3	16WP	G15_048	FROM->TO	G14-057T 345.00 - SUNNYSIDE 345KV CKT 1	717	789	0.04941	113.5321	MC NIEL 500/115KV TRANSFORMER CKT 1
FDNS	00NR	3	20WP	G15_048	FROM->TO	G14-057T 345.00 - SUNNYSIDE 345KV CKT 1	717	789	0.04908	113.527	GRAND GULF 500/22.0KV TRANSFORMER CKT 1
FDNS	00NR	3	16WP	G15_048	FROM->TO	G14-057T 345.00 - SUNNYSIDE 345KV CKT 1	717	789	0.0494	113.5264	HOT SPRINGS EHV - MAGNET COVE 500KV CKT 1
FDNS	00NR	3	16WP	G15_048	FROM->TO	G14-057T 345.00 - SUNNYSIDE 345KV CKT 1	717	789	0.04942	113.5229	BISMARK - HOT SPRINGS WEST BUS 115KV CKT 1

SOLUTION	GROUP	SCENARIO	SEASON	SOURCE	DIRECTION	MONITORED ELEMENT	RATEA (MVA)	RATEB(MVA)	TDF	TC%LOADING (% MVA)	CONTINGENCY
FDNS	00NR	3	16WP	G15_048	FROM->TO	G14-057T 345.00 - SUNNYSIDE 345KV CKT 1	717	789	0.04941	113.5226	GEN303007 1-1BC2 U2
FDNS	00NR	3	16WP	G15_048	FROM->TO	G14-057T 345.00 - SUNNYSIDE 345KV CKT 1	717	789	0.04941	113.5208	WHITE BLUFF 500/26.0KV TRANSFORMER CKT 1
FDNS	00NR	3	16WP	G15_048	FROM->TO	G14-057T 345.00 - SUNNYSIDE 345KV CKT 1	717	789	0.04941	113.5177	GEN303006 1-1BC2 U1
FDNS	00NR	3	16WP	G15_048	FROM->TO	G14-057T 345.00 - SUNNYSIDE 345KV CKT 1	717	789	0.0494	113.5176	P12:69:AEPW-OMPA:COMANC-2:OMWALTR2
FDNS	00NR	3	16WP	G15_048	FROM->TO	G14-057T 345.00 - SUNNYSIDE 345KV CKT 1	717	789	0.04872	113.5174	SEMINOLE - VANOSTP4 138.00 138KV CKT 1
FDNS	00NR	3	16WP	G15_048	FROM->TO	G14-057T 345.00 - SUNNYSIDE 345KV CKT 1	717	789	0.04953	113.4974	COMANCHE TAP - TOSCO 69KV CKT 1
FDNS	00NR	3	16WP	G15_048	FROM->TO	G14-057T 345.00 - SUNNYSIDE 345KV CKT 1	717	789	0.04921	113.4956	CIMARRON - TUTTLE CONOCO TAP 138KV CKT 1
FDNS	00NR	3	16WP	G15_048	FROM->TO	G14-057T 345.00 - SUNNYSIDE 345KV CKT 1	717	789	0.04941	113.4954	GEN336191 1-LITTLE GYPSY UNIT#3
FDNS	00NR	3	16WP	G15_048	FROM->TO	G14-057T 345.00 - SUNNYSIDE 345KV CKT 1	717	789	0.05097	113.4942	CANADIAN - NOBLE 138KV CKT 1
FDNS	00NR	3	16WP	G15_048	FROM->TO	G14-057T 345.00 - SUNNYSIDE 345KV CKT 1	717	789	0.04981	113.4938	CZECH HALL - XEROX 138KV CKT 1
FDNS	00NR	3	16WP	G15_048	FROM->TO	G14-057T 345.00 - SUNNYSIDE 345KV CKT 1	717	789	0.04981	113.4896	MORGAN - XEROX 138KV CKT 1
FDNS	00NR	3	16WP	G15_048	FROM->TO	G14-057T 345.00 - SUNNYSIDE 345KV CKT 1	717	789	0.04944	113.4871	P12:138:AEPW:N.E.S.-4:CATOOSA4
FDNS	00NR	3	16WP	G15_048	FROM->TO	G14-057T 345.00 - SUNNYSIDE 345KV CKT 1	717	789	0.04941	113.4833	GEN337910 1-ARKANSAS NUCLEAR ONE UNIT #1
FDNS	00NR	3	16WP	G15_048	FROM->TO	G14-057T 345.00 - SUNNYSIDE 345KV CKT 1	717	789	0.04945	113.4805	BUCKNER7 345.00 - SPEARVILLE 345KV CKT 1
FDNS	00NR	3	16WP	G15_048	FROM->TO	G14-057T 345.00 - SUNNYSIDE 345KV CKT 1	717	789	0.04945	113.4805	BUCKNER7 345.00 - SPEARVILLE 345KV CKT 1
FDNS	00NR	3	16WP	G15_048	FROM->TO	G14-057T 345.00 - SUNNYSIDE 345KV CKT 1	717	789	0.04941	113.4774	GEN300010 1-ST FRANCIS UNIT 1
FDNS	00NR	3	16WP	G15_048	FROM->TO	G14-057T 345.00 - SUNNYSIDE 345KV CKT 1	717	789	0.04957	113.4769	P12:138:AEPW:WTHWF4:WTH_SE4
FDNS	00NR	3	16WP	G15_048	FROM->TO	G14-057T 345.00 - SUNNYSIDE 345KV CKT 1	717	789	0.05053	113.473	LASALLE - LATTA JCT 138KV CKT 1
FDNS	00NR	3	16WP	G15_048	FROM->TO	G14-057T 345.00 - SUNNYSIDE 345KV CKT 1	717	789	0.04941	113.4723	NELSON 230/20.0KV TRANSFORMER CKT 1
FDNS	00NR	3	16WP	G15_048	FROM->TO	G14-057T 345.00 - SUNNYSIDE 345KV CKT 1	717	789	0.04942	113.4715	ALPINE AECC - BISMARK 115KV CKT 1
FDNS	00NR	3	16WP	G15_048	FROM->TO	G14-057T 345.00 - SUNNYSIDE 345KV CKT 1	717	789	0.04941	113.4706	GEN335614 1-WILLOW GLENN UNIT#4
FDNS	00NR	3	16WP	G15_048	FROM->TO	G14-057T 345.00 - SUNNYSIDE 345KV CKT 1	717	789	0.04981	113.4666	MORGAN - MUSTANG 138KV CKT 1
FDNS	00NR	3	16WP	G15_048	FROM->TO	G14-057T 345.00 - SUNNYSIDE 345KV CKT 1	717	789	0.05097	113.4645	P12:138:OKGE:3TERM27
FDNS	00NR	3	16WP	G15_048	FROM->TO	G14-057T 345.00 - SUNNYSIDE 345KV CKT 1	717	789	0.04941	113.4591	GEN303008 1-1BC2 U3
FDNS	00NR	3	16WP	G15_048	FROM->TO	G14-057T 345.00 - SUNNYSIDE 345KV CKT 1	717	789	0.04997	113.4492	FINNEY SWITCHING STATION - HOLCOMB 345KV CKT 1
FDNS	00NR	3	16WP	G15_048	FROM->TO	G14-057T 345.00 - SUNNYSIDE 345KV CKT 1	717	789	0.04997	113.4492	FINNEY SWITCHING STATION - HOLCOMB 345KV CKT 1
FDNS	00NR	3	20WP	G15_048	FROM->TO	G14-057T 345.00 - SUNNYSIDE 345KV CKT 1	717	789	0.04911	113.4437	7SAREPTA% 345.00 - ELDORADO EHV 345KV CKT 1
FDNS	00NR	3	20WP	G15_048	FROM->TO	G14-057T 345.00 - SUNNYSIDE 345KV CKT 1	717	789	0.04911	113.4435	3TR3AR8EL7EL
FDNS	00NR	3	16WP	G15_048	FROM->TO	G14-057T 345.00 - SUNNYSIDE 345KV CKT 1	717	789	0.04953	113.4348	COMANCHE - COMANCHE TAP 69KV CKT 1
FDNS	00NR	3	16WP	G15_048	FROM->TO	G14-057T 345.00 - SUNNYSIDE 345KV CKT 1	717	789	0.04942	113.4347	CYPRESS - HARTBURG 500KV CKT 1
FDNS	00NR	3	20WP	G15_048	FROM->TO	G14-057T 345.00 - SUNNYSIDE 345KV CKT 1	717	789	0.04911	113.4329	ELDORADO EHV 500/345KV TRANSFORMER CKT 1
FDNS	00NR	3	16WP	G15_048	FROM->TO	G14-057T 345.00 - SUNNYSIDE 345KV CKT 1	717	789	0.04941	113.4325	GEN336170 1-GULF OXY U4
FDNS	00NR	3	16WP	G15_048	FROM->TO	G14-057T 345.00 - SUNNYSIDE 345KV CKT 1	717	789	0.04942	113.4287	ALPINE AECC - AMITY SS 115KV CKT 1
FDNS	00NR	3	16WP	G15_048	FROM->TO	G14-057T 345.00 - SUNNYSIDE 345KV CKT 1	717	789	0.04941	113.4284	GEN300011 1-ST FRANCIS UNIT 2
FDNS	00NR	3	16WP	G15_048	FROM->TO	G14-057T 345.00 - SUNNYSIDE 345KV CKT 1	717	789	0.04941	113.4275	GEN336464 1-MICHOUD UNIT #3
FDNS	00NR	3	16WP	G15_048	FROM->TO	G14-057T 345.00 - SUNNYSIDE 345KV CKT 1	717	789	0.04809	113.4253	CHISHOLM6 230.00 - ELK CITY 230KV 230KV CKT 1
FDNS	00NR	3	16WP	G15_048	FROM->TO	G14-057T 345.00 - SUNNYSIDE 345KV CKT 1	717	789	0.04656	113.4235	CANADIAN RIVER - PITTSBURG 345KV CKT 1
FDNS	00NR	3	16WP	G15_048	FROM->TO	G14-057T 345.00 - SUNNYSIDE 345KV CKT 1	717	789	0.04656	113.4235	CANADIAN RIVER - PITTSBURG 345KV CKT 1
FDNS	00NR	3	16WP	G15_048	FROM->TO	G14-057T 345.00 - SUNNYSIDE 345KV CKT 1	717	789	0.04941	113.4182	8CAJUN2 500/24.0KV TRANSFORMER CKT 1
FDNS	00NR	3	16WP	G15_048	FROM->TO	G14-057T 345.00 - SUNNYSIDE 345KV CKT 1	717	789	0.04809	113.4176	ELK CITY 230KV (ELKCTY-6) 230/138/13.8KV TRANSFORMER CKT 1
FDNS	00NR	3	16WP	G15_048	FROM->TO	G14-057T 345.00 - SUNNYSIDE 345KV CKT 1	717	789	0.04809	113.4176	ELK CITY 230KV (ELKCTY-6) 230/138/13.8KV TRANSFORMER CKT 1
FDNS	00NR	3	16WP	G15_048	FROM->TO	G14-057T 345.00 - SUNNYSIDE 345KV CKT 1	717	789	0.04935	113.4121	GRACEMONT (BANK 1) 345/138/13.8KV TRANSFORMER CKT 1
FDNS	00NR	3	20WP	G15_048	FROM->TO	G14-057T 345.00 - SUNNYSIDE 345KV CKT 1	717	789	0.04934	113.4112	P12:138:AEPW:DUNCAN-4:L.E.S.-4
FDNS	00NR	3	16WP	G15_048	FROM->TO	G14-057T 345.00 - SUNNYSIDE 345KV CKT 1	717	789	0.05083	113.4106	BAILEY4 138.00 - WESTMOORE 138KV CKT 1
FDNS	00NR	3	20WP	G15_048	FROM->TO	G14-057T 345.00 - SUNNYSIDE 345KV CKT 1	717	789	0.04908	113.409	GEN515577 1-ARBWND11 0.6900
FDNS	00NR	3	16WP	G15_048	FROM->TO	G14-057T 345.00 - SUNNYSIDE 345KV CKT 1	717	789	0.05187	113.4036	DRAPER LAKE - SEMINOLE 345KV CKT 1
FDNS	00NR	3	16WP	G15_048	FROM->TO	G14-057T 345.00 - SUNNYSIDE 345KV CKT 1	717	789	0.05187	113.4036	DRAPER LAKE - SEMINOLE 345KV CKT 2
FDNS	00NR	3	16WP	G15_048	FROM->TO	G14-057T 345.00 - SUNNYSIDE 345KV CKT 1	717	789	0.05097	113.4027	NOBLE - PURCELL4 138.00 138KV CKT 1
FDNS	00NR	3	16WP	G15_048	FROM->TO	G14-057T 345.00 - SUNNYSIDE 345KV CKT 1	717	789	0.04956	113.3955	HOYT - STRANGER CREEK 345KV CKT 1
FDNS	00NR	3	16WP	G15_048	FROM->TO	G14-057T 345.00 - SUNNYSIDE 345KV CKT 1	717	789	0.04947	113.3936	7JASPER 345.00 - BLACKBERRY 345KV CKT 1
FDNS	00NR	3	16WP	G15_048	FROM->TO	G14-057T 345.00 - SUNNYSIDE 345KV CKT 1	717	789	0.04941	113.393	GEN300016 1-1G1GPDEL 18.000
FDNS	00NR	3	16WP	G15_048	FROM->TO	G14-057T 345.00 - SUNNYSIDE 345KV CKT 1	717	789	0.04941	113.3926	P12:138:AEPW:R.S.S.-4:S.HUD.-4
FDNS	00NR	3	16WP	G15_048	FROM->TO	G14-057T 345.00 - SUNNYSIDE 345KV CKT 1	717	789	0.04941	113.3866	GEN501910 1-ACADIA UNIT ST1
FDNS	00NR	3	16WP	G15_048	FROM->TO	G14-057T 345.00 - SUNNYSIDE 345KV CKT 1	717	789	0.04925	113.3762	G15095_T 138.00 - ROSE_VALLEY 138.00 138KV CKT 1
FDNS	00NR	3	16WP	G15_048	FROM->TO	G14-057T 345.00 - SUNNYSIDE 345KV CKT 1	717	789	0.04941	113.3742	GEN337041 1-GERALD ANDRUS
FDNS	00NR	3	16WP	G15_048	FROM->TO	G14-057T 345.00 - SUNNYSIDE 345KV CKT 1	717	789	0.04993	113.3698	SARA - STHLAKE4 138.00 138KV CKT 1
FDNS	00NR	3	16WP	G15_048	FROM->TO	G14-057T 345.00 - SUNNYSIDE 345KV CKT 1	717	789	0.04956	113.3592	G15074_T 345.00 - JEFFREY ENERGY CENTER 345KV CKT 1
FDNS	00NR	3	16WP	G15_048	FROM->TO	G14-057T 345.00 - SUNNYSIDE 345KV CKT 1	717	789	0.04938	113.3574	ETTA (DUKE HOTSPRINGS) - MC NIEL 500KV CKT 1
FDNS	00NR	3	16WP	G15_048	FROM->TO	G14-057T 345.00 - SUNNYSIDE 345KV CKT 1	717	789	0.04941	113.3546	P12:138:AEPW:YARCH-S4:T.S.E.-4
FDNS	00NR	3	16WP	G15_048	FROM->TO	G14-057T 345.00 - SUNNYSIDE 345KV CKT 1	717	789	0.04957	113.3531	WALTERS - WALTERS 69KV CKT 1
FDNS	00NR	3	16WP	G15_048	FROM->TO	G14-057T 345.00 - SUNNYSIDE 345KV CKT 1	717	789	0.04971	113.3511	ANADARKO - SEQUOYAHJ4 138.00 138KV CKT 1
FDNS	00NR	3	16WP	G15_048	FROM->TO	G14-057T 345.00 - SUNNYSIDE 345KV CKT 1	717	789	0.04942	113.3484	P12:138:AEPW:BA_71ST4:T.S.E.-4
FDNS	00NR	3	16WP	G15_048	FROM->TO	G14-057T 345.00 - SUNNYSIDE 345KV CKT 1	717	789	0.04941	113.3477	P12:69:AEPW:NROGERS2:ECNTRTN2
FDNS	00NR	3	16WP	G15_048	FROM->TO	G14-057T 345.00 - SUNNYSIDE 345KV CKT 1	717	789	0.04971	113.3455	CORN TAP - SEQUOYAHJ4 138.00 138KV CKT 1
FDNS	00NR	3	20WP	G15_048	FROM->TO	G14-057T 345.00 - SUNNYSIDE 345KV CKT 1	717	789	0.05102	113.3441	ARCADIA - SEMINOLE 345KV CKT 1
FDNS	00NR	3	16WP	G15_048	FROM->TO	G14-057T 345.00 - SUNNYSIDE 345KV CKT 1	717	789	0.04993	113.3421	MCCLAIN - STHLAKE4 138.00 138KV CKT 1
FDNS	00NR	3	16WP	G15_048	FROM->TO	G14-057T 345.00 - SUNNYSIDE 345KV CKT 1	717	789	0.04941	113.3405	SABINE 230/24.0KV TRANSFORMER CKT 1
FDNS	00NR	3	16WP	G15_048	FROM->TO	G14-057T 345.00 - SUNNYSIDE 345KV CKT 1	717	789	0.04941	113.3362	GEN336801 1-BAXTER WILSON UNIT #1
FDNS	00NR	3	16WP	G15_048	FROM->TO	G14-057T 345.00 - SUNNYSIDE 345KV CKT 1	717	789	0.04969	113.3355	WEATHERFORD JCT. - WEATHERFORD SOUTHEAST 138KV CKT 1
FDNS	00NR	3	16WP	G15_048	FROM->TO	G14-057T 345.00 - SUNNYSIDE 345KV CKT 1	717	789	0.04969	113.3355	WEATHERFORD JCT. - WEATHERFORD SOUTHEAST 138KV CKT 1
FDNS	00NR	3	16WP	G15_048	FROM->TO	G14-057T 345.00 - SUNNYSIDE 345KV CKT 1	717	789	0.04973	113.3323	BLACKBERRY - NEOSHO 345KV CKT 1
FDNS	00NR	3	16WP	G15_048	FROM->TO	G14-057T 345.00 - SUNNYSIDE 345KV CKT 1	717	789	0.0494	113.3317	LAWTON RELIFT TAP - OMPA-WALTERS 69KV CKT 1
FDNS	00NR	3	16WP	G15_048	FROM->TO	G14-057T 345.00 - SUNNYSIDE 345KV CKT 1	717	789	0.0495	113.3282	7LUTESVIL 345.00 - 7ST FRANC 345.00 345KV CKT 1
FDNS	00NR	3	16WP	G15_048	FROM->TO	G14-057T 345.00 - SUNNYSIDE 345KV CKT 1	717	789	0.04941	113.3247	FRONTIER 345/18.0KV TRANSFORMER CKT 1
FDNS	00NR	3	16WP	G15_048	FROM->TO	G14-057T 345.00 - SUNNYSIDE 345KV CKT 1	717	789	0.04962	113.3235	SWISSVALE - WEST GARDNER 345KV CKT 1
FDNS	00NR	3	16WP	G15_048	FROM->TO	G14-057T 345.00 - SUNNYSIDE 345KV CKT 1	717	789	0.04941	113.323	FRONTIER 345/18.0KV TRANSFORMER CKT 1
FDNS	00NR	3	16WP	G15_048	FROM->TO	G14-057T 345.00 - SUNNYSIDE 345KV CKT 1	717	789	0.04932	113.3228	ENOWILT - LONE OAK 138KV CKT 1
FDNS	00NR	3	16WP	G15_048	FROM->TO	G14-057T 345.00 - SUNNYSIDE 345KV CKT 1	717	789	0.04925	113.3201	NOEL_SW 138.00 - ROSE_VALLEY 138.00 138KV CKT 1
FDNS	00NR	3	16WP	G15_048	FROM->TO	G14-057T 345.00 - SUNNYSIDE 345KV CKT 1	717	789	0.04966	113.3193	NORGE ROAD - SOUTHWESTERN STATION 138KV CKT 1

SOLUTION	GROUP	SCENARIO	SEASON	SOURCE	DIRECTION	MONITORED ELEMENT	RATEA (MVA)	RATEB(MVA)	TDF	TC%LOADING (% MVA)	CONTINGENCY
FDNS	00NR	3	16WP	G15_048	FROM->TO	G14-057T 345.00 - SUNNYSIDE 345KV CKT 1	717	789	0.04966	113.3193	NORGE ROAD - SOUTHWESTERN STATION 138KV CKT 1
FDNS	00NR	3	16WP	G15_048	FROM->TO	G14-057T 345.00 - SUNNYSIDE 345KV CKT 1	717	789	0.04941	113.3188	GEN512688 2-GRDA1 GSU2 22
FDNS	00NR	3	16WP	G15_048	FROM->TO	G14-057T 345.00 - SUNNYSIDE 345KV CKT 1	717	789	0.04837	113.3185	ARBUCKLE - VANOSTP4 138.00 138KV CKT 1
FDNS	00NR	3	16WP	G15_048	FROM->TO	G14-057T 345.00 - SUNNYSIDE 345KV CKT 1	717	789	0.05053	113.3171	LASALLE - STONEWAL LH138.00 138KV CKT 1
FDNS	00NR	3	16WP	G15_048	FROM->TO	G14-057T 345.00 - SUNNYSIDE 345KV CKT 1	717	789	0.04941	113.3165	P12:161:AEPW:CHAMSPR5:FARMING5
FDNS	00NR	3	16WP	G15_048	FROM->TO	G14-057T 345.00 - SUNNYSIDE 345KV CKT 1	717	789	0.04932	113.3139	ENOWILT - SARDIS 138KV CKT 1
FDNS	00NR	3	16WP	G15_048	FROM->TO	G14-057T 345.00 - SUNNYSIDE 345KV CKT 1	717	789	0.05012	113.3124	P12:138:OKGE-AEPW:JENSEN4:REDROCKRD4
FDNS	00NR	3	16WP	G15_048	FROM->TO	G14-057T 345.00 - SUNNYSIDE 345KV CKT 1	717	789	0.04996	113.312	P12:138:AEPW-OGE:SHIDLER4:OSAGE 4
FDNS	00NR	3	16WP	G15_048	FROM->TO	G14-057T 345.00 - SUNNYSIDE 345KV CKT 1	717	789	0.04943	113.3118	HOPE - MCNAB REC 115KV CKT 1
FDNS	00NR	3	16WP	G15_048	FROM->TO	G14-057T 345.00 - SUNNYSIDE 345KV CKT 1	717	789	0.04979	113.3064	EMPORIA ENERGY CENTER - G14_001T 345.00 345KV CKT 1
FDNS	00NR	3	16WP	G15_048	FROM->TO	G14-057T 345.00 - SUNNYSIDE 345KV CKT 1	717	789	0.04943	113.3033	P12:115:AEPW:TURK3:HOPE3
FDNS	00NR	3	16WP	G15_048	FROM->TO	G14-057T 345.00 - SUNNYSIDE 345KV CKT 1	717	789	0.05053	113.3024	STONEWAL LH138.00 - TUPELO TAP 138KV CKT 1
FDNS	00NR	3	16WP	G15_048	FROM->TO	G14-057T 345.00 - SUNNYSIDE 345KV CKT 1	717	789	0.05002	113.2971	BENTON - WICHITA 345KV CKT 1
FDNS	00NR	3	16WP	G15_048	FROM->TO	G14-057T 345.00 - SUNNYSIDE 345KV CKT 1	717	789	0.06467	113.2951	CLEO CORNER - CLEOPLT4 138.00 138KV CKT 1
FDNS	00NR	3	20WP	G15_048	FROM->TO	G14-057T 345.00 - SUNNYSIDE 345KV CKT 1	717	789	0.04934	113.2941	COMANCHE TAP - OMPA-DUNCAN 840 138KV CKT 1
FDNS	00NR	3	16WP	G15_048	FROM->TO	G14-057T 345.00 - SUNNYSIDE 345KV CKT 1	717	789	0.04952	113.2889	8WNEWMADRID 500.00 - DELL 500 500KV CKT 1
FDNS	00NR	3	16WP	G15_048	FROM->TO	G14-057T 345.00 - SUNNYSIDE 345KV CKT 1	717	789	0.04941	113.2876	LEWIS CREEK SWITCHYARD 138/22.0KV TRANSFORMER CKT 1
FDNS	00NR	3	16WP	G15_048	FROM->TO	G14-057T 345.00 - SUNNYSIDE 345KV CKT 1	717	789	0.04941	113.2872	GEN505616 1-BROKEN BOW
FDNS	00NR	3	16WP	G15_048	FROM->TO	G14-057T 345.00 - SUNNYSIDE 345KV CKT 1	717	789	0.04969	113.2857	P12:138:AEPW:REDROCKRD4:WTH_JCT4
FDNS	00NR	3	16WP	G15_048	FROM->TO	G14-057T 345.00 - SUNNYSIDE 345KV CKT 1	717	789	0.06467	113.2836	CLEOPLT4 138.00 - MEN TAP 138KV CKT 1
FDNS	00NR	3	16WP	G15_048	FROM->TO	G14-057T 345.00 - SUNNYSIDE 345KV CKT 1	717	789	0.04941	113.2828	LEWIS CREEK SWITCHYARD 138/22.0KV TRANSFORMER CKT 1
FDNS	00NR	3	16WP	G15_048	FROM->TO	G14-057T 345.00 - SUNNYSIDE 345KV CKT 1	717	789	0.04943	113.2811	MCNAB REC - Turk 115 115KV CKT 1
FDNS	00NR	3	16WP	G15_048	FROM->TO	G14-057T 345.00 - SUNNYSIDE 345KV CKT 1	717	789	0.04943	113.2811	TURK (TURK 1) 138/115/13.2KV TRANSFORMER CKT 1
FDNS	00NR	3	16WP	G15_048	FROM->TO	G14-057T 345.00 - SUNNYSIDE 345KV CKT 1	717	789	0.04943	113.2811	TURK (TURK 1) 138/115/13.2KV TRANSFORMER CKT 1
FDNS	00NR	3	16WP	G15_048	FROM->TO	G14-057T 345.00 - SUNNYSIDE 345KV CKT 1	717	789	0.04932	113.2796	CLAYTON - SARDIS 138KV CKT 1
FDNS	00NR	3	16WP	G15_048	FROM->TO	G14-057T 345.00 - SUNNYSIDE 345KV CKT 1	717	789	0.04964	113.2795	SOUTHWESTERN STATION - VERDEN 138KV CKT 1
FDNS	00NR	3	16WP	G15_048	FROM->TO	G14-057T 345.00 - SUNNYSIDE 345KV CKT 1	717	789	0.04942	113.2784	COUCH SES - MC NIEL 115KV CKT 1
FDNS	00NR	3	16WP	G15_048	FROM->TO	G14-057T 345.00 - SUNNYSIDE 345KV CKT 1	717	789	0.04913	113.2751	G14_038T 345.00 - POTTER COUNTY INTERCHANGE 345KV CKT 1
FDNS	00NR	3	16WP	G15_048	FROM->TO	G14-057T 345.00 - SUNNYSIDE 345KV CKT 1	717	789	0.06467	113.2735	IMO TAP - MEN TAP 138KV CKT 1
FDNS	00NR	3	16WP	G15_048	FROM->TO	G14-057T 345.00 - SUNNYSIDE 345KV CKT 1	717	789	0.0494	113.2659	OMPA-WALTERS - WALTERS 69KV CKT 1
FDNS	00NR	3	16WP	G15_048	FROM->TO	G14-057T 345.00 - SUNNYSIDE 345KV CKT 1	717	789	0.0494	113.2659	OMPA-WALTERS - WALTERS 69KV CKT 1
FDNS	00NR	3	16WP	G15_048	FROM->TO	G14-057T 345.00 - SUNNYSIDE 345KV CKT 1	717	789	0.04941	113.2631	GEN501970 1-EVANGELINE UNIT 7
FDNS	00NR	3	16WP	G15_048	FROM->TO	G14-057T 345.00 - SUNNYSIDE 345KV CKT 1	717	789	0.04944	113.2597	P12:138:OKGE:3TERM12
FDNS	00NR	3	16WP	G15_048	FROM->TO	G14-057T 345.00 - SUNNYSIDE 345KV CKT 1	717	789	0.04964	113.2593	NORTH 29TH CHICKASHA - VERDEN 138KV CKT 1
FDNS	00NR	3	16WP	G15_048	FROM->TO	G14-057T 345.00 - SUNNYSIDE 345KV CKT 1	717	789	0.05083	113.2549	FRANKLIN SW - WESTMOORE 138KV CKT 1
FDNS	00NR	3	16WP	G15_048	FROM->TO	G14-057T 345.00 - SUNNYSIDE 345KV CKT 1	717	789	0.04957	113.254	P12:69:WFEC-AEPW:COMANCH2:WALTRS-2
FDNS	00NR	3	16WP	G15_048	FROM->TO	G14-057T 345.00 - SUNNYSIDE 345KV CKT 1	717	789	0.04959	113.2526	EMPORIA ENERGY CENTER - SWISSVALE 345KV CKT 1
FDNS	00NR	3	16WP	G15_048	FROM->TO	G14-057T 345.00 - SUNNYSIDE 345KV CKT 1	717	789	0.04932	113.2521	P12:138:AEPW-SWPA:LONEOAK4:BRKNBW4
FDNS	00NR	3	16WP	G15_048	FROM->TO	G14-057T 345.00 - SUNNYSIDE 345KV CKT 1	717	789	0.04941	113.2509	GEN334392 1-EXXON MOBIL IPP 1
FDNS	00NR	3	16WP	G15_048	FROM->TO	G14-057T 345.00 - SUNNYSIDE 345KV CKT 1	717	789	0.04986	113.2458	MORISNT4 138.00 - STILLWATER 138KV CKT 1
FDNS	00NR	3	20WP	G15_048	FROM->TO	G14-057T 345.00 - SUNNYSIDE 345KV CKT 1	717	789	0.04908	113.2451	GEN509409 1-WILKES #3
FDNS	00NR	3	16WP	G15_048	FROM->TO	G14-057T 345.00 - SUNNYSIDE 345KV CKT 1	717	789	0.04941	113.2443	GEN334393 1-EXXON MOBIL IPP 2
FDNS	00NR	3	16WP	G15_048	FROM->TO	G14-057T 345.00 - SUNNYSIDE 345KV CKT 1	717	789	0.04941	113.2443	GEN334394 1-EXXON MOBIL IPP 3
FDNS	00NR	3	16WP	G15_048	FROM->TO	G14-057T 345.00 - SUNNYSIDE 345KV CKT 1	717	789	0.04979	113.242	G14_001T 345.00 - WICHITA 345KV CKT 1
FDNS	00NR	3	16WP	G15_048	FROM->TO	G14-057T 345.00 - SUNNYSIDE 345KV CKT 1	717	789	0.04941	113.2419	GEN659125 1-COVEY
FDNS	00NR	3	20WP	G15_048	FROM->TO	G14-057T 345.00 - SUNNYSIDE 345KV CKT 1	717	789	0.05046	113.2416	HEALDTON - LOCO 138KV CKT 1
FDNS	00NR	3	16WP	G15_048	FROM->TO	G14-057T 345.00 - SUNNYSIDE 345KV CKT 1	717	789	0.04994	113.2403	P12:138:OKGE:3TERM2
FDNS	00NR	3	16WP	G15_048	FROM->TO	G14-057T 345.00 - SUNNYSIDE 345KV CKT 1	717	789	0.04957	113.2392	WEATHERFORD TAP - WEATHERFORD WIND FARM 138KV CKT 1
FDNS	00NR	3	16WP	G15_048	FROM->TO	G14-057T 345.00 - SUNNYSIDE 345KV CKT 1	717	789	0.04932	113.2392	CLAYTON - NASHOBA 138KV CKT 1
FDNS	00NR	3	16WP	G15_048	FROM->TO	G14-057T 345.00 - SUNNYSIDE 345KV CKT 1	717	789	0.04941	113.2373	GEN509394 1-FLINT CREEK
FDNS	00NR	3	20WP	G15_048	FROM->TO	G14-057T 345.00 - SUNNYSIDE 345KV CKT 1	717	789	0.04578	113.2365	CANADIAN RIVER - MUSKOGEE 345KV CKT 1
FDNS	00NR	3	16WP	G15_048	FROM->TO	G14-057T 345.00 - SUNNYSIDE 345KV CKT 1	717	789	0.04941	113.2355	GEN336222 1-LITTLE GYPSY UNIT#2
FDNS	00NR	3	16WP	G15_048	FROM->TO	G14-057T 345.00 - SUNNYSIDE 345KV CKT 1	717	789	0.04953	113.2354	FRANKLIN - FRANKLIN SW 138KV CKT 1
FDNS	00NR	3	16WP	G15_048	FROM->TO	G14-057T 345.00 - SUNNYSIDE 345KV CKT 1	717	789	0.04945	113.2312	BUCKNER7 345.00 - HOLCOMB 345KV CKT 1
FDNS	00NR	3	16WP	G15_048	FROM->TO	G14-057T 345.00 - SUNNYSIDE 345KV CKT 1	717	789	0.04945	113.2312	BUCKNER7 345.00 - HOLCOMB 345KV CKT 1
FDNS	00NR	3	16WP	G15_048	FROM->TO	G14-057T 345.00 - SUNNYSIDE 345KV CKT 1	717	789	0.04942	113.2279	P12:138:AEPW:R.S.S-4:T.P.S.-4
FDNS	00NR	3	16WP	G15_048	FROM->TO	G14-057T 345.00 - SUNNYSIDE 345KV CKT 1	717	789	0.04932	113.2263	BETHEL - NASHOBA 138KV CKT 1
FDNS	00NR	3	16WP	G15_048	FROM->TO	G14-057T 345.00 - SUNNYSIDE 345KV CKT 1	717	789	0.0508	113.2253	MARIETTA - MARIETTA4 138.00 138KV CKT 1
FDNS	00NR	3	16WP	G15_048	FROM->TO	G14-057T 345.00 - SUNNYSIDE 345KV CKT 1	717	789	0.05081	113.2238	CLARKSVILLE - ONETA 345KV CKT 1
FDNS	00NR	3	16WP	G15_048	FROM->TO	G14-057T 345.00 - SUNNYSIDE 345KV CKT 1	717	789	0.05081	113.2238	CLARKSVILLE - ONETA 345KV CKT 1
FDNS	00NR	3	20WP	G15_048	FROM->TO	G14-057T 345.00 - SUNNYSIDE 345KV CKT 1	717	789	0.04977	113.2232	BRIDGECR 138.00 - TUTTLE 138KV CKT 1
FDNS	00NR	3	16WP	G15_048	FROM->TO	G14-057T 345.00 - SUNNYSIDE 345KV CKT 1	717	789	0.04941	113.2174	GEN506749 1-EASTMAN GENERATION A
FDNS	00NR	3	16WP	G15_048	FROM->TO	G14-057T 345.00 - SUNNYSIDE 345KV CKT 1	717	789	0.04941	113.2146	GEN334432 1-SABINE UNIT 2
FDNS	00NR	3	16WP	G15_048	FROM->TO	G14-057T 345.00 - SUNNYSIDE 345KV CKT 1	717	789	0.0495	113.2145	7JASPER 345.00 - MORGAN 345KV CKT 1
FDNS	00NR	3	16WP	G15_048	FROM->TO	G14-057T 345.00 - SUNNYSIDE 345KV CKT 1	717	789	0.04941	113.2145	GEN334431 1-SABINE UNIT 1
FDNS	00NR	3	16WP	G15_048	FROM->TO	G14-057T 345.00 - SUNNYSIDE 345KV CKT 1	717	789	0.04969	113.2094	HINTON - WEATHERFORD JCT. 138KV CKT 1
FDNS	00NR	3	16WP	G15_048	FROM->TO	G14-057T 345.00 - SUNNYSIDE 345KV CKT 1	717	789	0.04941	113.2073	GEN501971 1-EVANGELINE UNIT 7-1
FDNS	00NR	3	16WP	G15_048	FROM->TO	G14-057T 345.00 - SUNNYSIDE 345KV CKT 1	717	789	0.04941	113.2073	GEN501972 1-EVANGELINE UNIT 7-2
FDNS	00NR	3	16WP	G15_048	FROM->TO	G14-057T 345.00 - SUNNYSIDE 345KV CKT 1	717	789	0.04941	113.2066	GEN336152 1-WATERFORD UNIT#2
FDNS	00NR	3	16WP	G15_048	FROM->TO	G14-057T 345.00 - SUNNYSIDE 345KV CKT 1	717	789	0.04941	113.2056	GEN336151 1-WATERFORD UNIT#1
FDNS	00NR	3	16WP	G15_048	FROM->TO	G14-057T 345.00 - SUNNYSIDE 345KV CKT 1	717	789	0.04941	113.2044	P12:138:AEPW:R.S.S.-4:R:96YALE-4
FDNS	00NR	3	16WP	G15_048	FROM->TO	G14-057T 345.00 - SUNNYSIDE 345KV CKT 1	717	789	0.04989	113.2038	CLINTON JUNCTION - ELK CITY 138KV CKT 1
FDNS	00NR	3	16WP	G15_048	FROM->TO	G14-057T 345.00 - SUNNYSIDE 345KV CKT 1	717	789	0.04989	113.2038	CLINTON JUNCTION - ELK CITY 138KV CKT 1
FDNS	00NR	3	16WP	G15_048	FROM->TO	G14-057T 345.00 - SUNNYSIDE 345KV CKT 1	717	789	0.04966	113.2005	CORNVILLE - NORGE ROAD 138KV CKT 1
FDNS	00NR	3	16WP	G15_048	FROM->TO	G14-057T 345.00 - SUNNYSIDE 345KV CKT 1	717	789	0.04966	113.2005	CORNVILLE - NORGE ROAD 138KV CKT 1
FDNS	00NR	3	16WP	G15_048	FROM->TO	G14-057T 345.00 - SUNNYSIDE 345KV CKT 1	717	789	0.05097	113.1938	PURCELL4 138.00 - WALNUT CREEK 138KV CKT 1
FDNS	00NR	3	16WP	G15_048	FROM->TO	G14-057T 345.00 - SUNNYSIDE 345KV CKT 1	717	789	0.04997	113.1938	FINNEY SWITCHING STATION - WALKTAP7 345.00 345KV CKT 1
FDNS	00NR	3	16WP	G15_048	FROM->TO	G14-057T 345.00 - SUNNYSIDE 345KV CKT 1	717	789	0.04997	113.1938	FINNEY SWITCHING STATION - WALKTAP7 345.00 345KV CKT 1
FDNS	00NR	3	16WP	G15_048	FROM->TO	G14-057T 345.00 - SUNNYSIDE 345KV CKT 1	717	789	0.04964	113.1935	CORNVILLE - NORTH 29TH CHICKASHA 138KV CKT 1

SOLUTION	GROUP	SCENARIO	SEASON	SOURCE	DIRECTION	MONITORED ELEMENT	RATEA (MVA)	RATEB(MVA)	TDF	TC%LOADING (% MVA)	CONTINGENCY
FDNS	00NR	3	16WP	G15_048	FROM->TO	G14-057T 345.00 - SUNNYSIDE 345KV CKT 1	717	789	0.04941	113.189	P12:138:AEPW:MOHAWK4:T.NO--4
FDNS	00NR	3	16WP	G15_048	FROM->TO	G14-057T 345.00 - SUNNYSIDE 345KV CKT 1	717	789	0.04941	113.1839	GEN501912 1-ACADIA UNIT CT1B
FDNS	00NR	3	16WP	G15_048	FROM->TO	G14-057T 345.00 - SUNNYSIDE 345KV CKT 1	717	789	0.04969	113.1837	G13-010T 345.00 - POST ROCK 345KV CKT 1
FDNS	00NR	3	16WP	G15_048	FROM->TO	G14-057T 345.00 - SUNNYSIDE 345KV CKT 1	717	789	0.04941	113.1832	GEN501911 1-ACADIA UNIT CT1A
FDNS	00NR	3	16WP	G15_048	FROM->TO	G14-057T 345.00 - SUNNYSIDE 345KV CKT 1	717	789	0.04941	113.1825	ST FRANCIS - ST FRANCIS 1 161KV CKT Z1
FDNS	00NR	3	20WP	G15_048	FROM->TO	G14-057T 345.00 - SUNNYSIDE 345KV CKT 1	717	789	0.04908	113.1822	GEN501813 1-RODEMACHER UNIT 3
FDNS	00NR	3	16WP	G15_048	FROM->TO	G14-057T 345.00 - SUNNYSIDE 345KV CKT 1	717	789	0.04964	113.181	HAMMETT TAP - HORSESHOE LAKE 138KV CKT 1
FDNS	00NR	3	16WP	G15_048	FROM->TO	G14-057T 345.00 - SUNNYSIDE 345KV CKT 1	717	789	0.04942	113.1799	LAYFLD8 500.00 (LAYFLD AUTO) 500/230/13.8KV TRANSFORMER CKT 1
FDNS	00NR	3	16WP	G15_048	FROM->TO	G14-057T 345.00 - SUNNYSIDE 345KV CKT 1	717	789	0.04942	113.1799	LAYFLD8 500.00 (LAYFLD AUTO) 500/230/13.8KV TRANSFORMER CKT 1
FDNS	00NR	3	16WP	G15_048	FROM->TO	G14-057T 345.00 - SUNNYSIDE 345KV CKT 1	717	789	0.04942	113.1784	P12:138:AEPW:OKMULGE4:R.S.S-4
FDNS	00NR	3	16WP	G15_048	FROM->TO	G14-057T 345.00 - SUNNYSIDE 345KV CKT 1	717	789	0.04895	113.1736	ARBUCKLE - MILLCREEK 138KV CKT 1
FDNS	00NR	3	16WP	G15_048	FROM->TO	G14-057T 345.00 - SUNNYSIDE 345KV CKT 1	717	789	0.04941	113.1727	SABINE 230/22.0KV TRANSFORMER CKT 1
FDNS	00NR	3	16WP	G15_048	FROM->TO	G14-057T 345.00 - SUNNYSIDE 345KV CKT 1	717	789	0.04932	113.1722	BETHEL - BROKEN BOW 138KV CKT 1
FDNS	00NR	3	16WP	G15_048	FROM->TO	G14-057T 345.00 - SUNNYSIDE 345KV CKT 1	717	789	0.04942	113.1713	AMITY SS - MURFREESBORO EAST (AECC) 115KV CKT 1
FDNS	00NR	3	16WP	G15_048	FROM->TO	G14-057T 345.00 - SUNNYSIDE 345KV CKT 1	717	789	0.04949	113.1701	FLETCHER - MARLOW JCT 69KV CKT 1
FDNS	00NR	3	16WP	G15_048	FROM->TO	G14-057T 345.00 - SUNNYSIDE 345KV CKT 1	717	789	0.04993	113.1658	P12:138:OKGE:3TERM47
FDNS	00NR	3	16WP	G15_048	FROM->TO	G14-057T 345.00 - SUNNYSIDE 345KV CKT 1	717	789	0.04915	113.1648	P12:138:WFEC-AEPW:ELKCTY-4:ERICK4
FDNS	00NR	3	16WP	G15_048	FROM->TO	G14-057T 345.00 - SUNNYSIDE 345KV CKT 1	717	789	0.04941	113.1593	GEN336242 1-1NMIL ST1 18.000
FDNS	00NR	3	16WP	G15_048	FROM->TO	G14-057T 345.00 - SUNNYSIDE 345KV CKT 1	717	789	0.04969	113.1531	HINTON - REDROCKRD4 138.00 138KV CKT 1
FDNS	00NR	3	16WP	G15_048	FROM->TO	G14-057T 345.00 - SUNNYSIDE 345KV CKT 1	717	789	0.04957	113.1518	WEATHERFORD SOUTHEAST - WEATHERFORD TAP 138KV CKT 1
FDNS	00NR	3	16WP	G15_048	FROM->TO	G14-057T 345.00 - SUNNYSIDE 345KV CKT 1	717	789	0.04995	113.1417	CIMARRON - NORTHWEST 345KV CKT 1
FDNS	00NR	3	16WP	G15_048	FROM->TO	G14-057T 345.00 - SUNNYSIDE 345KV CKT 1	717	789	0.0497	113.1395	SEMINOLE (SEMINOL2) 345/138/14.4KV TRANSFORMER CKT 1
FDNS	00NR	3	20WP	G15_048	FROM->TO	G14-057T 345.00 - SUNNYSIDE 345KV CKT 1	717	789	0.04908	113.11	GEN300006 1-NEW MADRID UNIT 1
FDNS	00NR	3	20WP	G15_048	FROM->TO	G14-057T 345.00 - SUNNYSIDE 345KV CKT 1	717	789	0.05046	113.0974	HEALDTON - RINGLING 138KV CKT 1
FDNS	00NR	3	20WP	G15_048	FROM->TO	G14-057T 345.00 - SUNNYSIDE 345KV CKT 1	717	789	0.04908	113.0898	GEN300007 1-NEW MADRID UNIT 2
FDNS	00NR	3	20WP	G15_048	FROM->TO	G14-057T 345.00 - SUNNYSIDE 345KV CKT 1	717	789	0.04947	113.0279	LACYGNE - WAVERLY7 345.00 345KV CKT 1
FDNS	00NR	3	20WP	G15_048	FROM->TO	G14-057T 345.00 - SUNNYSIDE 345KV CKT 1	717	789	0.04934	113.0084	DUNCAN - OMPA-DUNCAN 840 138KV CKT 1
FDNS	00NR	3	20WP	G15_048	FROM->TO	G14-057T 345.00 - SUNNYSIDE 345KV CKT 1	717	789	0.04934	113.0084	DUNCAN - OMPA-DUNCAN 840 138KV CKT 1
FDNS	00NR	3	20WP	G15_048	FROM->TO	G14-057T 345.00 - SUNNYSIDE 345KV CKT 1	717	789	0.04908	112.9726	GEN335206 1-NELSON UNIT 6
FDNS	00NR	3	20WP	G15_048	FROM->TO	G14-057T 345.00 - SUNNYSIDE 345KV CKT 1	717	789	0.04977	112.9475	P12:138:WFEC:MSL01
FDNS	00NR	3	20WP	G15_048	FROM->TO	G14-057T 345.00 - SUNNYSIDE 345KV CKT 1	717	789	0.04908	112.9471	GEN520947 1-HUGO1
FDNS	00NR	3	20WP	G15_048	FROM->TO	G14-057T 345.00 - SUNNYSIDE 345KV CKT 1	717	789	0.04977	112.9409	BRIDGECR 138.00 - SUNSHINE CANYON 138KV CKT 1
FDNS	00NR	3	20WP	G15_048	FROM->TO	G14-057T 345.00 - SUNNYSIDE 345KV CKT 1	717	789	0.05046	112.9263	RINGLING - SOUTH WILSON 138KV CKT 1
FDNS	00NR	3	20WP	G15_048	FROM->TO	G14-057T 345.00 - SUNNYSIDE 345KV CKT 1	717	789	0.04947	112.9164	WAVERLY7 345.00 - WOLF CREEK 345KV CKT 1
FDNS	00NR	3	20WP	G15_048	FROM->TO	G14-057T 345.00 - SUNNYSIDE 345KV CKT 1	717	789	0.04905	112.8103	ELDORADO EHV - MOUNT OLIVE 500KV CKT 1
FDNS	00NR	3	20WP	G15_048	FROM->TO	G14-057T 345.00 - SUNNYSIDE 345KV CKT 1	717	789	0.04905	112.8048	P12:138:AEPW:SHERID4:112GORE4
FDNS	00NR	3	20WP	G15_048	FROM->TO	G14-057T 345.00 - SUNNYSIDE 345KV CKT 1	717	789	0.04908	112.7894	GEN501812 1-RODEMACHER UNIT 2
FDNS	00NR	3	20WP	G15_048	FROM->TO	G14-057T 345.00 - SUNNYSIDE 345KV CKT 1	717	789	0.04908	112.7848	DOLET HILLS 345/24.0KV TRANSFORMER CKT 1
FDNS	00NR	3	20WP	G15_048	FROM->TO	G14-057T 345.00 - SUNNYSIDE 345KV CKT 1	717	789	0.05001	112.7635	Hitchland Interchange - WALKTAP7 345.00 345KV CKT 1
FDNS	00NR	3	20WP	G15_048	FROM->TO	G14-057T 345.00 - SUNNYSIDE 345KV CKT 1	717	789	0.05001	112.7635	Hitchland Interchange - WALKTAP7 345.00 345KV CKT 1
FDNS	00NR	3	20WP	G15_048	FROM->TO	G14-057T 345.00 - SUNNYSIDE 345KV CKT 1	717	789	0.04918	112.7532	REDBUD - RIVERSIDE STATION 345KV CKT 1
FDNS	00NR	3	20WP	G15_048	FROM->TO	G14-057T 345.00 - SUNNYSIDE 345KV CKT 1	717	789	0.04918	112.7532	REDBUD - RIVERSIDE STATION 345KV CKT 1
FDNS	00NR	3	20WP	G15_048	FROM->TO	G14-057T 345.00 - SUNNYSIDE 345KV CKT 1	717	789	0.04811	112.7515	PARK LANE - SEMINOLE 138KV CKT 1
FDNS	00NR	3	20WP	G15_048	FROM->TO	G14-057T 345.00 - SUNNYSIDE 345KV CKT 1	717	789	0.05001	112.7315	P12:345:SPS:J07.1.FINN.HITCH
FDNS	00NR	3	16WP	G15_048	FROM->TO	G14-057T 345.00 - SUNNYSIDE 345KV CKT 1	717	789	0.04941	112.6917	803-OKLAUNION
FDNS	00NR	3	20WP	G15_048	FROM->TO	G14-057T 345.00 - SUNNYSIDE 345KV CKT 1	717	789	0.04908	112.6663	GEN515564 1-ORIGIN11 0.6900
FDNS	00NR	3	20WP	G15_048	FROM->TO	G14-057T 345.00 - SUNNYSIDE 345KV CKT 1	717	789	0.04908	112.6663	GEN515565 1-ORIGIN21 0.6900
FDNS	00NR	3	20WP	G15_048	FROM->TO	G14-057T 345.00 - SUNNYSIDE 345KV CKT 1	717	789	0.04917	112.6503	WEBRE - WELLS 500KV CKT 1
FDNS	00NR	3	20WP	G15_048	FROM->TO	G14-057T 345.00 - SUNNYSIDE 345KV CKT 1	717	789	0.051	112.6484	MATHWSN7 345.00 - NORTHWEST 345KV CKT 1
FDNS	00NR	3	20WP	G15_048	FROM->TO	G14-057T 345.00 - SUNNYSIDE 345KV CKT 1	717	789	0.05046	112.6402	MARIETTA - SOUTH WILSON 138KV CKT 1
FDNS	00NR	3	20WP	G15_048	FROM->TO	G14-057T 345.00 - SUNNYSIDE 345KV CKT 1	717	789	0.04908	112.6312	GEN334440 1-SABINE UNIT 4
FDNS	00NR	3	20WP	G15_048	FROM->TO	G14-057T 345.00 - SUNNYSIDE 345KV CKT 1	717	789	0.04908	112.6087	P12:161:AEPW:DYESS 5:HYLAND 5
FDNS	00NR	3	20WP	G15_048	FROM->TO	G14-057T 345.00 - SUNNYSIDE 345KV CKT 1	717	789	0.04908	112.6022	GEN590011 2-ERCOT EQUIVALENCE
FDNS	00NR	3	20WP	G15_048	FROM->TO	G14-057T 345.00 - SUNNYSIDE 345KV CKT 1	717	789	0.04997	112.5781	CANEYRV7 345.00 - NEOSHO 345KV CKT 1
FDNS	00NR	3	20WP	G15_048	FROM->TO	G14-057T 345.00 - SUNNYSIDE 345KV CKT 1	717	789	0.04908	112.5754	DELL 500 - ESSEX UNIT 2 500KV CKT Z1
FDNS	00NR	3	20WP	G15_048	FROM->TO	G14-057T 345.00 - SUNNYSIDE 345KV CKT 1	717	789	0.04908	112.5462	P12:69:AEPW:L.E.S.-2:LAW WC2
FDNS	00NR	3	20WP	G15_048	FROM->TO	G14-057T 345.00 - SUNNYSIDE 345KV CKT 1	717	789	0.05046	112.5445	P12:138:WFEC:MSL17
FDNS	00NR	3	20WP	G15_048	FROM->TO	G14-057T 345.00 - SUNNYSIDE 345KV CKT 1	717	789	0.04908	112.5331	GEN590010 1-ERCOT EQUIVALENCE
FDNS	00NR	3	20WP	G15_048	FROM->TO	G14-057T 345.00 - SUNNYSIDE 345KV CKT 1	717	789	0.04948	112.4743	P12:138:WFEC:MSL02
FDNS	00NR	3	20WP	G15_048	FROM->TO	G14-057T 345.00 - SUNNYSIDE 345KV CKT 1	717	789	0.04943	112.4659	PAOLI - PAYNE 138.00 138KV CKT 1
FDNS	00NR	3	20WP	G15_048	FROM->TO	G14-057T 345.00 - SUNNYSIDE 345KV CKT 1	717	789	0.04898	112.457	ELDORADO EHV - SHERIDAN EHV 500KV CKT 1
FDNS	00NR	3	20WP	G15_048	FROM->TO	G14-057T 345.00 - SUNNYSIDE 345KV CKT 1	717	789	0.04864	112.4554	LAWTON EASTSIDE (LES 5) 345/138/13.8KV TRANSFORMER CKT 2
FDNS	00NR	3	20WP	G15_048	FROM->TO	G14-057T 345.00 - SUNNYSIDE 345KV CKT 1	717	789	0.04864	112.4554	LAWTON EASTSIDE (LES 5) 345/138/13.8KV TRANSFORMER CKT 2
FDNS	00NR	3	20WP	G15_048	FROM->TO	G14-057T 345.00 - SUNNYSIDE 345KV CKT 1	717	789	0.04908	112.4511	GEN506754 1-LEBROCK STEAM 1
FDNS	00NR	3	20WP	G15_048	FROM->TO	G14-057T 345.00 - SUNNYSIDE 345KV CKT 1	717	789	0.04997	112.4369	CANEYRV7 345.00 - LATHAMS7 345.00 345KV CKT 1
FDNS	00NR	3	20WP	G15_048	FROM->TO	G14-057T 345.00 - SUNNYSIDE 345KV CKT 1	717	789	0.05019	112.4276	CIVIT - PAOLI 138KV CKT 1
FDNS	00NR	3	20WP	G15_048	FROM->TO	G14-057T 345.00 - SUNNYSIDE 345KV CKT 1	717	789	0.04905	112.4232	P12:138:AEPW:112GORE4:L.E.S.-4
FDNS	00NR	3	20WP	G15_048	FROM->TO	G14-057T 345.00 - SUNNYSIDE 345KV CKT 1	717	789	0.04908	112.4064	GEN509408 1-WILKES #2
FDNS	00NR	3	20WP	G15_048	FROM->TO	G14-057T 345.00 - SUNNYSIDE 345KV CKT 1	717	789	0.04934	112.4035	ANADARKO - GEORGIA 138KV CKT 1
FDNS	00NR	3	20WP	G15_048	FROM->TO	G14-057T 345.00 - SUNNYSIDE 345KV CKT 1	717	789	0.04908	112.3511	GEN336252 1-NINEMILE POINT UNIT#5
FDNS	00NR	3	20WP	G15_048	FROM->TO	G14-057T 345.00 - SUNNYSIDE 345KV CKT 1	717	789	0.04934	112.3173	FLETCHER - GEORGIA 138KV CKT 1
FDNS	00NR	3	20WP	G15_048	FROM->TO	G14-057T 345.00 - SUNNYSIDE 345KV CKT 1	717	789	0.04908	112.3147	FRONTIER - GRIMES 345KV CKT 1
FDNS	00NR	3	16WP	G15_048	FROM->TO	G14-057T 345.00 - SUNNYSIDE 345KV CKT 1	717	789	0.04945	112.3105	JOHNSON COUNTY - RUSSETT 138KV CKT 1
FDNS	00NR	3	20WP	G15_048	FROM->TO	G14-057T 345.00 - SUNNYSIDE 345KV CKT 1	717	789	0.05064	112.3086	P12:138:AEPW-OGE:CORNVIL4:MAUD 4
FDNS	00NR	3	20WP	G15_048	FROM->TO	G14-057T 345.00 - SUNNYSIDE 345KV CKT 1	717	789	0.04908	112.3074	GEN503909 1-FULTONU1 1 16.000
FDNS	00NR	3	16WP	G15_048	FROM->TO	G14-057T 345.00 - SUNNYSIDE 345KV CKT 1	717	789	0.04898	112.305	MAYSVLT4 138.00 - PRAIRIE POINT 138KV CKT 1
FDNS	00NR	3	16WP	G15_048	FROM->TO	G14-057T 345.00 - SUNNYSIDE 345KV CKT 1	717	789	0.04883	112.3037	NORTHWEST - SPRING CREEK 345KV CKT 1
FDNS	00NR	3	20WP	G15_048	FROM->TO	G14-057T 345.00 - SUNNYSIDE 345KV CKT 1	717	789	0.0491	112.3024	TUPELO - TUPELO TAP 138KV CKT 1
FDNS	00NR	3	16WP	G15_048	FROM->TO	G14-057T 345.00 - SUNNYSIDE 345KV CKT 1	717	789	0.04948	112.2986	GLASSES - MADILL INDUSTRIAL TAP 138KV CKT 1

SOLUTION	GROUP	SCENARIO	SEASON	SOURCE	DIRECTION	MONITORED ELEMENT	RATEA (MVA)	RATEB(MVA)	TDF	TC%LOADING (% MVA)	CONTINGENCY
FDNS	00NR	3	16WP	G15_048	FROM->TO	G14-057T 345.00 - SUNNYSIDE 345KV CKT 1	717	789	0.04883	112.2965	SOONER - SPRING CREEK 345KV CKT 1
FDNS	00NR	3	20WP	G15_048	FROM->TO	G14-057T 345.00 - SUNNYSIDE 345KV CKT 1	717	789	0.04908	112.2943	GEN335204 1-NELSON UNIT 4
FDNS	00NR	3	20WP	G15_048	FROM->TO	G14-057T 345.00 - SUNNYSIDE 345KV CKT 1	717	789	0.05019	112.2874	CIVIT - STRATFORD 138KV CKT 1
FDNS	00NR	3	20WP	G15_048	FROM->TO	G14-057T 345.00 - SUNNYSIDE 345KV CKT 1	717	789	0.04908	112.2871	GEN334441 1-SABINE UNIT 5
FDNS	00NR	3	16WP	G15_048	FROM->TO	G14-057T 345.00 - SUNNYSIDE 345KV CKT 1	717	789	0.04941	112.2764	GEN562772 1-G15034_3 0.6900
FDNS	00NR	3	16WP	G15_048	FROM->TO	G14-057T 345.00 - SUNNYSIDE 345KV CKT 1	717	789	0.04938	112.2747	HUGO (HUGO 1) 345/138/13.8KV TRANSFORMER CKT 1
FDNS	00NR	3	16WP	G15_048	FROM->TO	G14-057T 345.00 - SUNNYSIDE 345KV CKT 1	717	789	0.04941	112.2677	GEN521103 1-BLUE CANYON WIND FARM
FDNS	00NR	3	16WP	G15_048	FROM->TO	G14-057T 345.00 - SUNNYSIDE 345KV CKT 1	717	789	0.04941	112.264	GEN562691 1-G15_015_3 0.6900
FDNS	00NR	3	20WP	G15_048	FROM->TO	G14-057T 345.00 - SUNNYSIDE 345KV CKT 1	717	789	0.04946	112.262	EMPIRE - FLETCHER 138KV CKT 1
FDNS	00NR	3	16WP	G15_048	FROM->TO	G14-057T 345.00 - SUNNYSIDE 345KV CKT 1	717	789	0.04981	112.2614	DRAPER LAKE - MIDWEST TAP 138KV CKT 1
FDNS	00NR	3	20WP	G15_048	FROM->TO	G14-057T 345.00 - SUNNYSIDE 345KV CKT 1	717	789	0.04879	112.2457	G14_038T 345.00 - Hitchland Interchange 345KV CKT 1
FDNS	00NR	3	16WP	G15_048	FROM->TO	G14-057T 345.00 - SUNNYSIDE 345KV CKT 1	717	789	0.04892	112.2436	ARBUCKLE - SULPHR 4 138.00 138KV CKT 1
FDNS	00NR	3	16WP	G15_048	FROM->TO	G14-057T 345.00 - SUNNYSIDE 345KV CKT 1	717	789	0.04941	112.2392	GEN520812 1-ANADRK5
FDNS	00NR	3	16WP	G15_048	FROM->TO	G14-057T 345.00 - SUNNYSIDE 345KV CKT 1	717	789	0.04941	112.2391	GEN520813 1-ANADRK6
FDNS	00NR	3	16WP	G15_048	FROM->TO	G14-057T 345.00 - SUNNYSIDE 345KV CKT 1	717	789	0.04948	112.2379	GLASSES - RUSSETT 138KV CKT 1
FDNS	00NR	3	16WP	G15_048	FROM->TO	G14-057T 345.00 - SUNNYSIDE 345KV CKT 1	717	789	0.04947	112.2346	P12:138:WFEC:MSL11
FDNS	00NR	3	16WP	G15_048	FROM->TO	G14-057T 345.00 - SUNNYSIDE 345KV CKT 1	717	789	0.04947	112.2346	P12:138:WFEC-AEPW:PHAROAH4:LONEOAK4
FDNS	00NR	3	16WP	G15_048	FROM->TO	G14-057T 345.00 - SUNNYSIDE 345KV CKT 1	717	789	0.04333	112.2325	BEARCAT 138.00 - NINE MILE 138KV CKT 1
FDNS	00NR	3	20WP	G15_048	FROM->TO	G14-057T 345.00 - SUNNYSIDE 345KV CKT 1	717	789	0.05064	112.2312	BLANCHARD - CORNVILLE 138KV CKT 1
FDNS	00NR	3	16WP	G15_048	FROM->TO	G14-057T 345.00 - SUNNYSIDE 345KV CKT 1	717	789	0.04941	112.2289	GEN511961 1-DEMPSEY-WTG10.7000
FDNS	00NR	3	16WP	G15_048	FROM->TO	G14-057T 345.00 - SUNNYSIDE 345KV CKT 1	717	789	0.04941	112.2149	GEN600017 C-LS POWER CT
FDNS	00NR	3	16WP	G15_048	FROM->TO	G14-057T 345.00 - SUNNYSIDE 345KV CKT 1	717	789	0.04953	112.2118	P12:138:WFEC:MSL08
FDNS	00NR	3	16WP	G15_048	FROM->TO	G14-057T 345.00 - SUNNYSIDE 345KV CKT 1	717	789	0.04941	112.2113	P12:069:OKGE:3TERM42
FDNS	00NR	3	20WP	G15_048	FROM->TO	G14-057T 345.00 - SUNNYSIDE 345KV CKT 1	717	789	0.04905	112.2112	LAYFLD8 500.00 - MOUNT OLIVE 500KV CKT 1
FDNS	00NR	3	20WP	G15_048	FROM->TO	G14-057T 345.00 - SUNNYSIDE 345KV CKT 1	717	789	0.04905	112.2112	LAYFLD8 500.00 - MOUNT OLIVE 500KV CKT 1
FDNS	00NR	3	20WP	G15_048	FROM->TO	G14-057T 345.00 - SUNNYSIDE 345KV CKT 1	717	789	0.04997	112.2105	LATHAMS7 345.00 - ROSE HILL 345KV CKT 1
FDNS	00NR	3	16WP	G15_048	FROM->TO	G14-057T 345.00 - SUNNYSIDE 345KV CKT 1	717	789	0.04981	112.2096	P12:138:OKGE:3TERM21
FDNS	00NR	3	16WP	G15_048	FROM->TO	G14-057T 345.00 - SUNNYSIDE 345KV CKT 1	717	789	0.04898	112.2081	PRAIRIE POINT - RATLIFF 138KV CKT 1
FDNS	00NR	3	16WP	G15_048	FROM->TO	G14-057T 345.00 - SUNNYSIDE 345KV CKT 1	717	789	0.04951	112.2038	DELL 500 - INDEPENDENCE 500KV CKT 1
FDNS	00NR	3	20WP	G15_048	FROM->TO	G14-057T 345.00 - SUNNYSIDE 345KV CKT 1	717	789	0.04972	112.1996	THISTLE7 345.00 - WOODWARD DISTRICT EHV 345KV CKT 1
FDNS	00NR	3	20WP	G15_048	FROM->TO	G14-057T 345.00 - SUNNYSIDE 345KV CKT 1	717	789	0.04972	112.1996	THISTLE7 345.00 - WOODWARD DISTRICT EHV 345KV CKT 1
FDNS	00NR	3	20WP	G15_048	FROM->TO	G14-057T 345.00 - SUNNYSIDE 345KV CKT 1	717	789	0.04972	112.1996	THISTLE7 345.00 - WOODWARD DISTRICT EHV 345KV CKT 2
FDNS	00NR	3	20WP	G15_048	FROM->TO	G14-057T 345.00 - SUNNYSIDE 345KV CKT 1	717	789	0.04972	112.1996	THISTLE7 345.00 - WOODWARD DISTRICT EHV 345KV CKT 2
FDNS	00NR	3	16WP	G15_048	FROM->TO	G14-057T 345.00 - SUNNYSIDE 345KV CKT 1	717	789	0.04887	112.1984	CIMARRON - MATHWSN7 345.00 345KV CKT 1
FDNS	00NR	3	16WP	G15_048	FROM->TO	G14-057T 345.00 - SUNNYSIDE 345KV CKT 1	717	789	0.04887	112.1984	CIMARRON - MATHWSN7 345.00 345KV CKT 2
FDNS	00NR	3	20WP	G15_048	FROM->TO	G14-057T 345.00 - SUNNYSIDE 345KV CKT 1	717	789	0.04908	112.1966	GEN334071 1-LEWIS CREEK 2
FDNS	00NR	3	16WP	G15_048	FROM->TO	G14-057T 345.00 - SUNNYSIDE 345KV CKT 1	717	789	0.04941	112.1901	GEN672392 1-NBECGT1G 18.000
FDNS	00NR	3	20WP	G15_048	FROM->TO	G14-057T 345.00 - SUNNYSIDE 345KV CKT 1	717	789	0.04908	112.1883	GEN334070 1-LEWIS CREEK 1
FDNS	00NR	3	16WP	G15_048	FROM->TO	G14-057T 345.00 - SUNNYSIDE 345KV CKT 1	717	789	0.04961	112.1877	OVEXFRMCCOVE
FDNS	00NR	3	20WP	G15_048	FROM->TO	G14-057T 345.00 - SUNNYSIDE 345KV CKT 1	717	789	0.04946	112.1831	COMANCHE - EMPIRE 138KV CKT 1
FDNS	00NR	3	20WP	G15_048	FROM->TO	G14-057T 345.00 - SUNNYSIDE 345KV CKT 1	717	789	0.04908	112.1813	GEN336251 1-NINEMILE POINT UNIT#4
FDNS	00NR	3	16WP	G15_048	FROM->TO	G14-057T 345.00 - SUNNYSIDE 345KV CKT 1	717	789	0.04941	112.1744	GEN528361 1-MADDOX GEN #1
FDNS	00NR	3	16WP	G15_048	FROM->TO	G14-057T 345.00 - SUNNYSIDE 345KV CKT 1	717	789	0.04945	112.1735	GRPRAR1-LNX3345.00 - HOLT.CO3 345.00 345KV CKT 1
FDNS	00NR	3	16WP	G15_048	FROM->TO	G14-057T 345.00 - SUNNYSIDE 345KV CKT 1	717	789	0.04333	112.1726	P12:138:WFEC:MSL14
FDNS	00NR	3	16WP	G15_048	FROM->TO	G14-057T 345.00 - SUNNYSIDE 345KV CKT 1	717	789	0.04949	112.1714	CANEY CREEK - JOHNSON COUNTY 138KV CKT 1
FDNS	00NR	3	16WP	G15_048	FROM->TO	G14-057T 345.00 - SUNNYSIDE 345KV CKT 1	717	789	0.04941	112.1704	GEN615010 1-STANTON4
FDNS	00NR	3	20WP	G15_048	FROM->TO	G14-057T 345.00 - SUNNYSIDE 345KV CKT 1	717	789	0.05019	112.1703	OIL CENTER - STRATFORD 138KV CKT 1
FDNS	00NR	3	20WP	G15_048	FROM->TO	G14-057T 345.00 - SUNNYSIDE 345KV CKT 1	717	789	0.04908	112.1694	P12:161:AEPW-SWPA:BEAVER5:EROGERS5
FDNS	00NR	3	20WP	G15_048	FROM->TO	G14-057T 345.00 - SUNNYSIDE 345KV CKT 1	717	789	0.04908	112.1647	GEN509392 G2-ARSENAL HILL GENS #3 (STALL)
FDNS	00NR	3	16WP	G15_048	FROM->TO	G14-057T 345.00 - SUNNYSIDE 345KV CKT 1	717	789	0.04941	112.1645	GEN629070 2-BEAVER CHANNEL GENERATORFOR UNIT NO 2
FDNS	00NR	3	20WP	G15_048	FROM->TO	G14-057T 345.00 - SUNNYSIDE 345KV CKT 1	717	789	0.04908	112.1645	GEN509391 G1-ARSENAL HILL GENS #2 (STALL)
FDNS	00NR	3	16WP	G15_048	FROM->TO	G14-057T 345.00 - SUNNYSIDE 345KV CKT 1	717	789	0.04945	112.1628	GRPRAR1-LNX3345.00 - GRPRAR 345KV CKT Z
FDNS	00NR	3	20WP	G15_048	FROM->TO	G14-057T 345.00 - SUNNYSIDE 345KV CKT 1	717	789	0.04908	112.1625	GEN509393 S1-ARSENAL HILL GENS #4 (STALL)
FDNS	00NR	3	16WP	G15_048	FROM->TO	G14-057T 345.00 - SUNNYSIDE 345KV CKT 1	717	789	0.04941	112.155	GEN560183 1-REDHIL-WTG1 12.000
FDNS	00NR	3	16WP	G15_048	FROM->TO	G14-057T 345.00 - SUNNYSIDE 345KV CKT 1	717	789	0.04941	112.1545	GEN515443 1-MNCOWND1 0.7000
FDNS	00NR	3	16WP	G15_048	FROM->TO	G14-057T 345.00 - SUNNYSIDE 345KV CKT 1	717	789	0.04941	112.15	GEN629071 1-BURLINGTON GENERATOR FOR UNIT NO 1 E
FDNS	00NR	3	16WP	G15_048	FROM->TO	G14-057T 345.00 - SUNNYSIDE 345KV CKT 1	717	789	0.04941	112.1499	GEN615021 1-GRE-ER 14G 16.000
FDNS	00NR	3	20WP	G15_048	FROM->TO	G14-057T 345.00 - SUNNYSIDE 345KV CKT 1	717	789	0.0492	112.1481	DUNCAN (DUNCAN) 138/69/13.8KV TRANSFORMER CKT 1
FDNS	00NR	3	20WP	G15_048	FROM->TO	G14-057T 345.00 - SUNNYSIDE 345KV CKT 1	717	789	0.0492	112.1481	DUNCAN (DUNCAN) 138/69/13.8KV TRANSFORMER CKT 1
FDNS	00NR	3	16WP	G15_048	FROM->TO	G14-057T 345.00 - SUNNYSIDE 345KV CKT 1	717	789	0.04936	112.146	CARTER - CHICKASAW 138KV CKT 1
FDNS	00NR	3	16WP	G15_048	FROM->TO	G14-057T 345.00 - SUNNYSIDE 345KV CKT 1	717	789	0.04941	112.1366	INDEPENDENCE 500/26.0KV TRANSFORMER CKT 1
FDNS	00NR	3	16WP	G15_048	FROM->TO	G14-057T 345.00 - SUNNYSIDE 345KV CKT 1	717	789	0.04941	112.1349	GEN562902 1-G15052_3 0.6900
FDNS	00NR	3	16WP	G15_048	FROM->TO	G14-057T 345.00 - SUNNYSIDE 345KV CKT 1	717	789	0.04941	112.1348	GEN563242 1-G15090_3 0.6900
FDNS	00NR	3	16WP	G15_048	FROM->TO	G14-057T 345.00 - SUNNYSIDE 345KV CKT 1	717	789	0.04941	112.1346	BURLINGTON NO1 + NO 2 + NO 3 161/20.0KV TRANSFORMER CKT 1
FDNS	00NR	3	16WP	G15_048	FROM->TO	G14-057T 345.00 - SUNNYSIDE 345KV CKT 1	717	789	0.04923	112.1346	ROCKY POINT - SPRINGDALE 138KV CKT 1
FDNS	00NR	3	16WP	G15_048	FROM->TO	G14-057T 345.00 - SUNNYSIDE 345KV CKT 1	717	789	0.04333	112.134	BEARCAT 138.00 - MOORELAND 138KV CKT 1
FDNS	00NR	3	16WP	G15_048	FROM->TO	G14-057T 345.00 - SUNNYSIDE 345KV CKT 1	717	789	0.0496	112.131	CANADIAN RIVER - MCALESTER SOUTH 138KV CKT 1
FDNS	00NR	3	16WP	G15_048	FROM->TO	G14-057T 345.00 - SUNNYSIDE 345KV CKT 1	717	789	0.0496	112.131	CANADIAN RIVER - MCALESTER SOUTH 138KV CKT 1
FDNS	00NR	3	20WP	G15_048	FROM->TO	G14-057T 345.00 - SUNNYSIDE 345KV CKT 1	717	789	0.04908	112.1307	GEN334433 1-SABINE UNIT 3
FDNS	00NR	3	16WP	G15_048	FROM->TO	G14-057T 345.00 - SUNNYSIDE 345KV CKT 1	717	789	0.0496	112.1297	CANADIAN RIVER () 345/138/13.8KV TRANSFORMER CKT 1
FDNS	00NR	3	16WP	G15_048	FROM->TO	G14-057T 345.00 - SUNNYSIDE 345KV CKT 1	717	789	0.0496	112.1297	CANADIAN RIVER () 345/138/13.8KV TRANSFORMER CKT 1
FDNS	00NR	3	20WP	G15_048	FROM->TO	G14-057T 345.00 - SUNNYSIDE 345KV CKT 1	717	789	0.04908	112.1296	P12:161:AEPW:DYESS5:ELMSPRNG:TONTITN5
FDNS	00NR	3	20WP	G15_048	FROM->TO	G14-057T 345.00 - SUNNYSIDE 345KV CKT 1	717	789	0.04908	112.1167	GEN337653 1-WHITE BLUFF UNIT #2
FDNS	00NR	3	16WP	G15_048	FROM->TO	G14-057T 345.00 - SUNNYSIDE 345KV CKT 1	717	789	0.04935	112.1149	ALTUS JUNCTION - RUSSELL 138KV CKT 1
FDNS	00NR	3	16WP	G15_048	FROM->TO	G14-057T 345.00 - SUNNYSIDE 345KV CKT 1	717	789	0.04935	112.1149	ALTUS JUNCTION - RUSSELL 138KV CKT 1
FDNS	00NR	3	16WP	G15_048	FROM->TO	G14-057T 345.00 - SUNNYSIDE 345KV CKT 1	717	789	0.04943	112.1082	NORTHWEST TEXARKANA - WELSH 345KV CKT 1
FDNS	00NR	3	16WP	G15_048	FROM->TO	G14-057T 345.00 - SUNNYSIDE 345KV CKT 1	717	789	0.04943	112.1082	NORTHWEST TEXARKANA - WELSH 345KV CKT 1
FDNS	00NR	3	20WP	G15_048	FROM->TO	G14-057T 345.00 - SUNNYSIDE 345KV CKT 1	717	789	0.04908	112.1075	GEN336831 1-BAXTER WILSON SES
FDNS	00NR	3	16WP	G15_048	FROM->TO	G14-057T 345.00 - SUNNYSIDE 345KV CKT 1	717	789	0.04941	112.1003	GEN562078 1-G11_051_3 0.6900

SOLUTION	GROUP	SCENARIO	SEASON	SOURCE	DIRECTION	MONITORED ELEMENT	RATEA (MVA)	RATEB(MVA)	TDF	TC%LOADING (% MVA)	CONTINGENCY
FDNS	00NR	3	16WP	G15_048	FROM->TO	G14-057T 345.00 - SUNNYSIDE 345KV CKT 1	717	789	0.04978	112.0975	MINGO - SETAB 345KV CKT 1
FDNS	00NR	3	16WP	G15_048	FROM->TO	G14-057T 345.00 - SUNNYSIDE 345KV CKT 1	717	789	0.04978	112.0975	MINGO - SETAB 345KV CKT 1
FDNS	00NR	3	16WP	G15_048	FROM->TO	G14-057T 345.00 - SUNNYSIDE 345KV CKT 1	717	789	0.04971	112.0928	CHAMBER SPRINGS - CLARKSVILLE 345KV CKT 1
FDNS	00NR	3	16WP	G15_048	FROM->TO	G14-057T 345.00 - SUNNYSIDE 345KV CKT 1	717	789	0.04892	112.0919	JOLLYVILLE - SULPHR 4 138.00 138KV CKT 1
FDNS	00NR	3	16WP	G15_048	FROM->TO	G14-057T 345.00 - SUNNYSIDE 345KV CKT 1	717	789	0.04941	112.0854	P12:230:UMZB:# 112 #: NU IN SD. NU-RCDC & DRY CREEK XFMR
FDNS	00NR	3	16WP	G15_048	FROM->TO	G14-057T 345.00 - SUNNYSIDE 345KV CKT 1	717	789	0.04941	112.0839	RCDC EAST 4230.00 - RED CEDAR DC 230KV CKT 1
FDNS	00NR	3	16WP	G15_048	FROM->TO	G14-057T 345.00 - SUNNYSIDE 345KV CKT 1	717	789	0.04956	112.0816	KEO EHV - WEST MEMPHIS 500 500KV CKT 1
FDNS	00NR	3	20WP	G15_048	FROM->TO	G14-057T 345.00 - SUNNYSIDE 345KV CKT 1	717	789	0.04908	112.0763	GEN334030 1-FRONTIER UNIT 1
FDNS	00NR	3	16WP	G15_048	FROM->TO	G14-057T 345.00 - SUNNYSIDE 345KV CKT 1	717	789	0.04941	112.076	GEN562802 1-G15039_3 0.3570
FDNS	00NR	3	20WP	G15_048	FROM->TO	G14-057T 345.00 - SUNNYSIDE 345KV CKT 1	717	789	0.04908	112.074	GEN334031 1-FRONTIER UNIT 2
FDNS	00NR	3	16WP	G15_048	FROM->TO	G14-057T 345.00 - SUNNYSIDE 345KV CKT 1	717	789	0.04941	112.0707	GEN524285 1-WILDORADO WIND GEN
FDNS	00NR	3	16WP	G15_048	FROM->TO	G14-057T 345.00 - SUNNYSIDE 345KV CKT 1	717	789	0.04941	112.0633	GEN514805 1-SOONER UNIT 1
FDNS	00NR	3	20WP	G15_048	FROM->TO	G14-057T 345.00 - SUNNYSIDE 345KV CKT 1	717	789	0.04908	112.0614	GEN337911 1-ARKANSAS NUCLEAR ONE UNIT #2
FDNS	00NR	3	16WP	G15_048	FROM->TO	G14-057T 345.00 - SUNNYSIDE 345KV CKT 1	717	789	0.04941	112.0546	GEN524295 1-SPNSPUR_WND10.6900
FDNS	00NR	3	16WP	G15_048	FROM->TO	G14-057T 345.00 - SUNNYSIDE 345KV CKT 1	717	789	0.04941	112.0543	GEN514806 1-SOONER UNIT 2
FDNS	00NR	3	20WP	G15_048	FROM->TO	G14-057T 345.00 - SUNNYSIDE 345KV CKT 1	717	789	0.04912	112.0512	P12:138:AEPW:CATOOSA4:T.S.E.-4
FDNS	00NR	3	16WP	G15_048	FROM->TO	G14-057T 345.00 - SUNNYSIDE 345KV CKT 1	717	789	0.04941	112.0426	GEN560331 1-G10-46 13.800
FDNS	00NR	3	16WP	G15_048	FROM->TO	G14-057T 345.00 - SUNNYSIDE 345KV CKT 1	717	789	0.04863	112.0377	ARKANSAS NUCLEAR ONE - FT SMITH 500KV CKT 1
FDNS	00NR	3	16WP	G15_048	FROM->TO	G14-057T 345.00 - SUNNYSIDE 345KV CKT 1	717	789	0.04863	112.0377	ARKANSAS NUCLEAR ONE - FT SMITH 500KV CKT 1
FDNS	00NR	3	20WP	G15_048	FROM->TO	G14-057T 345.00 - SUNNYSIDE 345KV CKT 1	717	789	0.05064	112.026	BLANCHARD - MAUD 138KV CKT 1
FDNS	00NR	3	16WP	G15_048	FROM->TO	G14-057T 345.00 - SUNNYSIDE 345KV CKT 1	717	789	0.04892	112.0245	JOLLYVILLE - KERR MCGEE CIMARRON 138KV CKT 1
FDNS	00NR	3	20WP	G15_048	FROM->TO	G14-057T 345.00 - SUNNYSIDE 345KV CKT 1	717	789	0.04911	112.0213	FULTON 115 - HOPE 115KV CKT 1
FDNS	00NR	3	20WP	G15_048	FROM->TO	G14-057T 345.00 - SUNNYSIDE 345KV CKT 1	717	789	0.04911	112.0213	FULTON 115 - HOPE 115KV CKT 1
FDNS	00NR	3	20WP	G15_048	FROM->TO	G14-057T 345.00 - SUNNYSIDE 345KV CKT 1	717	789	0.04908	112.021	GEN506752 1-LEBROCK GAS 1
FDNS	00NR	3	20WP	G15_048	FROM->TO	G14-057T 345.00 - SUNNYSIDE 345KV CKT 1	717	789	0.04908	112.0206	GEN506753 1-LEBROCK GAS 2
FDNS	00NR	3	16WP	G15_048	FROM->TO	G14-057T 345.00 - SUNNYSIDE 345KV CKT 1	717	789	0.04941	112.0196	GEN562587 1-G14_056_3 0.6900
FDNS	00NR	3	20WP	G15_048	FROM->TO	G14-057T 345.00 - SUNNYSIDE 345KV CKT 1	717	789	0.04908	112.0151	GEN501811 1-RODEMACHER UNIT 1
FDNS	00NR	3	20WP	G15_048	FROM->TO	G14-057T 345.00 - SUNNYSIDE 345KV CKT 1	717	789	0.04908	112.0142	GEN337652 1-WHITE BLUFF UNIT #1
FDNS	00NR	3	16WP	G15_048	FROM->TO	G14-057T 345.00 - SUNNYSIDE 345KV CKT 1	717	789	0.04941	112.0133	GEN562269 1-G12-020-1 0.6900
FDNS	00NR	3	20WP	G15_048	FROM->TO	G14-057T 345.00 - SUNNYSIDE 345KV CKT 1	717	789	0.04878	112.0111	P12:138:AEPW:S.W.S.-4:L.E.S.-4
FDNS	00NR	3	20WP	G15_048	FROM->TO	G14-057T 345.00 - SUNNYSIDE 345KV CKT 1	717	789	0.04908	112.0088	GEN300003 1-THOMAS HILL UNIT 3
FDNS	00NR	3	16WP	G15_048	FROM->TO	G14-057T 345.00 - SUNNYSIDE 345KV CKT 1	717	789	0.04941	112.008	GEN629072 4-LANSING GENERATOR FOR UNITS NO4 EIA CODE 1
FDNS	00NR	3	20WP	G15_048	FROM->TO	G14-057T 345.00 - SUNNYSIDE 345KV CKT 1	717	789	0.05019	111.9975	LATTA JCT - OIL CENTER 138KV CKT 1
FDNS	00NR	3	20WP	G15_048	FROM->TO	G14-057T 345.00 - SUNNYSIDE 345KV CKT 1	717	789	0.04908	111.9962	GEN300015 1-1SGPDEL 18.000
FDNS	00NR	3	20WP	G15_048	FROM->TO	G14-057T 345.00 - SUNNYSIDE 345KV CKT 1	717	789	0.04908	111.9908	GEN515226 1-MUSKOGEE 6G
FDNS	00NR	3	20WP	G15_048	FROM->TO	G14-057T 345.00 - SUNNYSIDE 345KV CKT 1	717	789	0.04915	111.989	P12:138:AEPW:CORNVIL4:DUNCAN-4
FDNS	00NR	3	16WP	G15_048	FROM->TO	G14-057T 345.00 - SUNNYSIDE 345KV CKT 1	717	789	0.04941	111.9885	GEN657749 1-YOUNG 1 GENERATOR
FDNS	00NR	3	16WP	G15_048	FROM->TO	G14-057T 345.00 - SUNNYSIDE 345KV CKT 1	717	789	0.04941	111.9876	GEN562882 1-G15047_3 0.6900
FDNS	00NR	3	20WP	G15_048	FROM->TO	G14-057T 345.00 - SUNNYSIDE 345KV CKT 1	717	789	0.04908	111.9824	GEN336191 1-LITTLE GYPSY UNIT#3
FDNS	00NR	3	16WP	G15_048	FROM->TO	G14-057T 345.00 - SUNNYSIDE 345KV CKT 1	717	789	0.04892	111.9735	ARBWIND4 138.00 - KERR MCGEE CIMARRON 138KV CKT 1
FDNS	00NR	3	16WP	G15_048	FROM->TO	G14-057T 345.00 - SUNNYSIDE 345KV CKT 1	717	789	0.04941	111.9699	GEN562270 1-G12-020-2 0.6900
FDNS	00NR	3	16WP	G15_048	FROM->TO	G14-057T 345.00 - SUNNYSIDE 345KV CKT 1	717	789	0.045	111.9688	G15063_T 345.00 - MATHWSN7 345.00 345KV CKT 1
FDNS	00NR	3	16WP	G15_048	FROM->TO	G14-057T 345.00 - SUNNYSIDE 345KV CKT 1	717	789	0.04941	111.964	GEN562812 1-G15040_3 0.3570
FDNS	00NR	3	20WP	G15_048	FROM->TO	G14-057T 345.00 - SUNNYSIDE 345KV CKT 1	717	789	0.04912	111.9635	6LAYFLD 230.00 - CARROLL 230KV CKT 1
FDNS	00NR	3	16WP	G15_048	FROM->TO	G14-057T 345.00 - SUNNYSIDE 345KV CKT 1	717	789	0.04941	111.9615	GEN563102 1-G15075_3 0.5500
FDNS	00NR	3	20WP	G15_048	FROM->TO	G14-057T 345.00 - SUNNYSIDE 345KV CKT 1	717	789	0.0493	111.9575	G1524G1525 345.00 - THISTLE7 345.00 345KV CKT 1
FDNS	00NR	3	20WP	G15_048	FROM->TO	G14-057T 345.00 - SUNNYSIDE 345KV CKT 1	717	789	0.0493	111.9575	G1524G1525 345.00 - THISTLE7 345.00 345KV CKT 2
FDNS	00NR	3	16WP	G15_048	FROM->TO	G14-057T 345.00 - SUNNYSIDE 345KV CKT 1	717	789	0.04941	111.9565	GEN562974 1-G15060_5 0.6900
FDNS	00NR	3	20WP	G15_048	FROM->TO	G14-057T 345.00 - SUNNYSIDE 345KV CKT 1	717	789	0.0492	111.9564	P12:69:WFEC-AEPW:COMANCH2:DUNCAN-2
FDNS	00NR	3	20WP	G15_048	FROM->TO	G14-057T 345.00 - SUNNYSIDE 345KV CKT 1	717	789	0.04908	111.9539	GEN335614 1-WILLOW GLENN UNIT#4
FDNS	00NR	3	16WP	G15_048	FROM->TO	G14-057T 345.00 - SUNNYSIDE 345KV CKT 1	717	789	0.04941	111.9538	GEN563132 1-G15078_3 0.3570
FDNS	00NR	3	16WP	G15_048	FROM->TO	G14-057T 345.00 - SUNNYSIDE 345KV CKT 1	717	789	0.04941	111.9476	GEN562973 1-G15060_4 0.6900
FDNS	00NR	3	20WP	G15_048	FROM->TO	G14-057T 345.00 - SUNNYSIDE 345KV CKT 1	717	789	0.04911	111.9476	8DANIEL8 500.00 - MCKNIGHT 500KV CKT 1
FDNS	00NR	3	20WP	G15_048	FROM->TO	G14-057T 345.00 - SUNNYSIDE 345KV CKT 1	717	789	0.04908	111.9452	GEN515040 1-SEMINOLE 1G
FDNS	00NR	3	16WP	G15_048	FROM->TO	G14-057T 345.00 - SUNNYSIDE 345KV CKT 1	717	789	0.04861	111.9451	P12:138:AEPW:112GORE4:SNYDER-4
FDNS	00NR	3	20WP	G15_048	FROM->TO	G14-057T 345.00 - SUNNYSIDE 345KV CKT 1	717	789	0.04932	111.9448	P12:138:AEPW:CORNVIL4:S.W.S.-4
FDNS	00NR	3	16WP	G15_048	FROM->TO	G14-057T 345.00 - SUNNYSIDE 345KV CKT 1	717	789	0.04941	111.9371	GEN563062 1-G15071_3 0.6900
FDNS	00NR	3	20WP	G15_048	FROM->TO	G14-057T 345.00 - SUNNYSIDE 345KV CKT 1	717	789	0.04879	111.9367	G14_038T 345.00 - POTTER COUNTY INTERCHANGE 345KV CKT 1
FDNS	00NR	3	20WP	G15_048	FROM->TO	G14-057T 345.00 - SUNNYSIDE 345KV CKT 1	717	789	0.04939	111.9306	P12:138:AEPW-OGE:WTH_JCT4:JENSEN4
FDNS	00NR	3	20WP	G15_048	FROM->TO	G14-057T 345.00 - SUNNYSIDE 345KV CKT 1	717	789	0.04909	111.9287	P12:161:AEPW:EROGERS5:ECNTRTN5
FDNS	00NR	3	16WP	G15_048	FROM->TO	G14-057T 345.00 - SUNNYSIDE 345KV CKT 1	717	789	0.05192	111.9195	CLARKSVILLE - MUSKOGEE 345KV CKT 1
FDNS	00NR	3	16WP	G15_048	FROM->TO	G14-057T 345.00 - SUNNYSIDE 345KV CKT 1	717	789	0.05192	111.9195	CLARKSVILLE - MUSKOGEE 345KV CKT 1
FDNS	00NR	3	20WP	G15_048	FROM->TO	G14-057T 345.00 - SUNNYSIDE 345KV CKT 1	717	789	0.04889	111.919	TUTTLE - TUTTLE CONOCO TAP 138KV CKT 1
FDNS	00NR	3	20WP	G15_048	FROM->TO	G14-057T 345.00 - SUNNYSIDE 345KV CKT 1	717	789	0.04965	111.9104	FINNEY SWITCHING STATION - HOLCOMB 345KV CKT 1
FDNS	00NR	3	20WP	G15_048	FROM->TO	G14-057T 345.00 - SUNNYSIDE 345KV CKT 1	717	789	0.04965	111.9104	FINNEY SWITCHING STATION - HOLCOMB 345KV CKT 1
FDNS	00NR	3	20WP	G15_048	FROM->TO	G14-057T 345.00 - SUNNYSIDE 345KV CKT 1	717	789	0.04908	111.9081	GEN303007 1-1BC2 U2
FDNS	00NR	3	20WP	G15_048	FROM->TO	G14-057T 345.00 - SUNNYSIDE 345KV CKT 1	717	789	0.04908	111.9079	GEN337910 1-ARKANSAS NUCLEAR ONE UNIT #1
FDNS	00NR	3	20WP	G15_048	FROM->TO	G14-057T 345.00 - SUNNYSIDE 345KV CKT 1	717	789	0.04908	111.9067	WHITE BLUFF 500/26.0KV TRANSFORMER CKT 1
FDNS	00NR	3	20WP	G15_048	FROM->TO	G14-057T 345.00 - SUNNYSIDE 345KV CKT 1	717	789	0.0492	111.9057	DUNCAN - TOSCO 69KV CKT 1
FDNS	00NR	3	20WP	G15_048	FROM->TO	G14-057T 345.00 - SUNNYSIDE 345KV CKT 1	717	789	0.04908	111.9033	GEN336464 1-MICHOUD UNIT #3
FDNS	00NR	3	20WP	G15_048	FROM->TO	G14-057T 345.00 - SUNNYSIDE 345KV CKT 1	717	789	0.04908	111.9023	GEN303006 1-1BC2 U1
FDNS	00NR	3	20WP	G15_048	FROM->TO	G14-057T 345.00 - SUNNYSIDE 345KV CKT 1	717	789	0.04946	111.9021	CIMARRON - CZECH HALL 138KV CKT 1
FDNS	00NR	3	16WP	G15_048	FROM->TO	G14-057T 345.00 - SUNNYSIDE 345KV CKT 1	717	789	0.04898	111.9015	CHICKASAW - TOTAL 138KV CKT 1
FDNS	00NR	3	16WP	G15_048	FROM->TO	G14-057T 345.00 - SUNNYSIDE 345KV CKT 1	717	789	0.04941	111.9	GEN681522 3-GENOA 3
FDNS	00NR	3	20WP	G15_048	FROM->TO	G14-057T 345.00 - SUNNYSIDE 345KV CKT 1	717	789	0.04908	111.8989	GEN562783 1-G15036_4 0.6900
FDNS	00NR	3	20WP	G15_048	FROM->TO	G14-057T 345.00 - SUNNYSIDE 345KV CKT 1	717	789	0.04908	111.8989	GEN562784 1-G15036_5 0.6900
FDNS	00NR	3	20WP	G15_048	FROM->TO	G14-057T 345.00 - SUNNYSIDE 345KV CKT 1	717	789	0.04908	111.8941	GEN515223 1-MUSKOGEE 4G
FDNS	00NR	3	20WP	G15_048	FROM->TO	G14-057T 345.00 - SUNNYSIDE 345KV CKT 1	717	789	0.04908	111.8941	GEN515225 1-MUSKOGEE 5G
FDNS	00NR	3	20WP	G15_048	FROM->TO	G14-057T 345.00 - SUNNYSIDE 345KV CKT 1	717	789	0.04909	111.8903	BISMARK - HOT SPRINGS WEST BUS 115KV CKT 1

SOLUTION	GROUP	SCENARIO	SEASON	SOURCE	DIRECTION	MONITORED ELEMENT	RATEA (MVA)	RATEB(MVA)	TDF	TC%LOADING (% MVA)	CONTINGENCY
FDNS	00NR	3	16WP	G15_048	FROM->TO	G14-057T 345.00 - SUNNYSIDE 345KV CKT 1	717	789	0.04937	111.887	BROWN - RUSSETT 138KV CKT 1
FDNS	00NR	3	20WP	G15_048	FROM->TO	G14-057T 345.00 - SUNNYSIDE 345KV CKT 1	717	789	0.04907	111.8865	P12:69:AEPW-OMPA:COMANC-2:OMWALTR2
FDNS	00NR	3	20WP	G15_048	FROM->TO	G14-057T 345.00 - SUNNYSIDE 345KV CKT 1	717	789	0.04909	111.8863	MC NIEL 500/115KV TRANSFORMER CKT 1
FDNS	00NR	3	20WP	G15_048	FROM->TO	G14-057T 345.00 - SUNNYSIDE 345KV CKT 1	717	789	0.04908	111.8863	RODEMACHER 230/22.0KV TRANSFORMER CKT 1
FDNS	00NR	3	16WP	G15_048	FROM->TO	G14-057T 345.00 - SUNNYSIDE 345KV CKT 1	717	789	0.04941	111.876	GEN526331 1-JONES GEN #1 22 KV
FDNS	00NR	3	16WP	G15_048	FROM->TO	G14-057T 345.00 - SUNNYSIDE 345KV CKT 1	717	789	0.04941	111.8759	GEN526332 1-JONES GEN #2 21 KV
FDNS	00NR	3	20WP	G15_048	FROM->TO	G14-057T 345.00 - SUNNYSIDE 345KV CKT 1	717	789	0.04916	111.8745	G15088_T 345.00 - MOORE 345KV CKT 1
FDNS	00NR	3	20WP	G15_048	FROM->TO	G14-057T 345.00 - SUNNYSIDE 345KV CKT 1	717	789	0.04907	111.8706	HOT SPRINGS EHV - MAGNET COVE 500KV CKT 1
FDNS	00NR	3	20WP	G15_048	FROM->TO	G14-057T 345.00 - SUNNYSIDE 345KV CKT 1	717	789	0.04908	111.8701	GEN300010 1-ST FRANCIS UNIT 1
FDNS	00NR	3	16WP	G15_048	FROM->TO	G14-057T 345.00 - SUNNYSIDE 345KV CKT 1	717	789	0.04935	111.87	RUSSETT - SPRINGDALE 138KV CKT 1
FDNS	00NR	3	20WP	G15_048	FROM->TO	G14-057T 345.00 - SUNNYSIDE 345KV CKT 1	717	789	0.04924	111.8695	P12:138:AEPW:WTHWF4:CLINTJC4
FDNS	00NR	3	20WP	G15_048	FROM->TO	G14-057T 345.00 - SUNNYSIDE 345KV CKT 1	717	789	0.04778	111.8682	CHISHOLM6 230.00 - ELK CITY 230KV 230KV CKT 1
FDNS	00NR	3	20WP	G15_048	FROM->TO	G14-057T 345.00 - SUNNYSIDE 345KV CKT 1	717	789	0.04778	111.8675	ELK CITY 230KV (ELKCTY-6) 230/138/13.8KV TRANSFORMER CKT 1
FDNS	00NR	3	20WP	G15_048	FROM->TO	G14-057T 345.00 - SUNNYSIDE 345KV CKT 1	717	789	0.04778	111.8675	ELK CITY 230KV (ELKCTY-6) 230/138/13.8KV TRANSFORMER CKT 1
FDNS	00NR	3	16WP	G15_048	FROM->TO	G14-057T 345.00 - SUNNYSIDE 345KV CKT 1	717	789	0.04941	111.8657	GEN560105 1-G08-22 0.6900
FDNS	00NR	3	16WP	G15_048	FROM->TO	G14-057T 345.00 - SUNNYSIDE 345KV CKT 1	717	789	0.04941	111.8633	GEN562550 1-G14_040_3 0.6900
FDNS	00NR	3	20WP	G15_048	FROM->TO	G14-057T 345.00 - SUNNYSIDE 345KV CKT 1	717	789	0.0496	111.8624	CIMARRON - SARA 138KV CKT 1
FDNS	00NR	3	20WP	G15_048	FROM->TO	G14-057T 345.00 - SUNNYSIDE 345KV CKT 1	717	789	0.0505	111.8621	BAILEY4 138.00 - SUNSHINE CANYON 138KV CKT 1
FDNS	00NR	3	20WP	G15_048	FROM->TO	G14-057T 345.00 - SUNNYSIDE 345KV CKT 1	717	789	0.0492	111.8602	COMANCHE TAP - TOSCO 69KV CKT 1
FDNS	00NR	3	16WP	G15_048	FROM->TO	G14-057T 345.00 - SUNNYSIDE 345KV CKT 1	717	789	0.04941	111.8567	GEN345671 2-1RUSH G2 18.000
FDNS	00NR	3	20WP	G15_048	FROM->TO	G14-057T 345.00 - SUNNYSIDE 345KV CKT 1	717	789	0.04911	111.8552	BUCKNER7 345.00 - SPEARVILLE 345KV CKT 1
FDNS	00NR	3	20WP	G15_048	FROM->TO	G14-057T 345.00 - SUNNYSIDE 345KV CKT 1	717	789	0.04911	111.8552	BUCKNER7 345.00 - SPEARVILLE 345KV CKT 1
FDNS	00NR	3	16WP	G15_048	FROM->TO	G14-057T 345.00 - SUNNYSIDE 345KV CKT 1	717	789	0.04941	111.8549	GEN345670 1-1RUSH G1 18.000
FDNS	00NR	3	20WP	G15_048	FROM->TO	G14-057T 345.00 - SUNNYSIDE 345KV CKT 1	717	789	0.04923	111.85	G15074_T 345.00 - HOYT 345KV CKT 1
FDNS	00NR	3	20WP	G15_048	FROM->TO	G14-057T 345.00 - SUNNYSIDE 345KV CKT 1	717	789	0.04908	111.847	GEN337041 1-GERALD ANDRUS
FDNS	00NR	3	16WP	G15_048	FROM->TO	G14-057T 345.00 - SUNNYSIDE 345KV CKT 1	717	789	0.04915	111.8445	ROCKY POINT - SUNNYSIDE 138KV CKT 1
FDNS	00NR	3	20WP	G15_048	FROM->TO	G14-057T 345.00 - SUNNYSIDE 345KV CKT 1	717	789	0.04908	111.8445	GEN505432 1-SIKESTON
FDNS	00NR	3	20WP	G15_048	FROM->TO	G14-057T 345.00 - SUNNYSIDE 345KV CKT 1	717	789	0.0484	111.8443	SEMINOLE - VANOSTP4 138.00 138KV CKT 1
FDNS	00NR	3	16WP	G15_048	FROM->TO	G14-057T 345.00 - SUNNYSIDE 345KV CKT 1	717	789	0.04939	111.8418	P12:138:WFEC:MSL07
FDNS	00NR	3	16WP	G15_048	FROM->TO	G14-057T 345.00 - SUNNYSIDE 345KV CKT 1	717	789	0.04939	111.8418	P12:138:WFEC-AEPW:HUGOPP4:ATOKA--4
FDNS	00NR	3	20WP	G15_048	FROM->TO	G14-057T 345.00 - SUNNYSIDE 345KV CKT 1	717	789	0.04908	111.8414	GEN303008 1-1BC2 U3
FDNS	00NR	3	20WP	G15_048	FROM->TO	G14-057T 345.00 - SUNNYSIDE 345KV CKT 1	717	789	0.04889	111.8396	CIMARRON - TUTTLE CONOCO TAP 138KV CKT 1
FDNS	00NR	3	16WP	G15_048	FROM->TO	G14-057T 345.00 - SUNNYSIDE 345KV CKT 1	717	789	0.04941	111.8382	4SIOUX 1 138.00 138/18.0KV TRANSFORMER CKT 1
FDNS	00NR	3	20WP	G15_048	FROM->TO	G14-057T 345.00 - SUNNYSIDE 345KV CKT 1	717	789	0.04909	111.8363	ALPINE AECC - BISMARK 115KV CKT 1
FDNS	00NR	3	20WP	G15_048	FROM->TO	G14-057T 345.00 - SUNNYSIDE 345KV CKT 1	717	789	0.0486	111.834	ARBWIND4 138.00 - CARTER 138KV CKT 1
FDNS	00NR	3	20WP	G15_048	FROM->TO	G14-057T 345.00 - SUNNYSIDE 345KV CKT 1	717	789	0.04924	111.8304	P12:138:AEPW:WTHWF4:WTH_SE4
FDNS	00NR	3	20WP	G15_048	FROM->TO	G14-057T 345.00 - SUNNYSIDE 345KV CKT 1	717	789	0.04911	111.8279	P12:138:AEPW:N.E.S.-4:CATOOSA4
FDNS	00NR	3	20WP	G15_048	FROM->TO	G14-057T 345.00 - SUNNYSIDE 345KV CKT 1	717	789	0.04946	111.8273	CZECH HALL - XEROX 138KV CKT 1
FDNS	00NR	3	16WP	G15_048	FROM->TO	G14-057T 345.00 - SUNNYSIDE 345KV CKT 1	717	789	0.04941	111.8246	GEN511962 2-RKYRDGW2-1 0.7000
FDNS	00NR	3	20WP	G15_048	FROM->TO	G14-057T 345.00 - SUNNYSIDE 345KV CKT 1	717	789	0.04946	111.8232	MORGAN - XEROX 138KV CKT 1
FDNS	00NR	3	16WP	G15_048	FROM->TO	G14-057T 345.00 - SUNNYSIDE 345KV CKT 1	717	789	0.04937	111.8183	RUSSETT - RUSSETT 138KV CKT 1
FDNS	00NR	3	16WP	G15_048	FROM->TO	G14-057T 345.00 - SUNNYSIDE 345KV CKT 1	717	789	0.04941	111.8177	GEN527882 1-CUNNINGHAM GEN #2 20 KV
FDNS	00NR	3	20WP	G15_048	FROM->TO	G14-057T 345.00 - SUNNYSIDE 345KV CKT 1	717	789	0.04908	111.8171	NELSON 230/20.0KV TRANSFORMER CKT 1
FDNS	00NR	3	20WP	G15_048	FROM->TO	G14-057T 345.00 - SUNNYSIDE 345KV CKT 1	717	789	0.04908	111.8136	GEN300011 1-ST FRANCIS UNIT 2
FDNS	00NR	3	20WP	G15_048	FROM->TO	G14-057T 345.00 - SUNNYSIDE 345KV CKT 1	717	789	0.04908	111.8124	GEN336170 1-GULF OXY U4
FDNS	00NR	3	20WP	G15_048	FROM->TO	G14-057T 345.00 - SUNNYSIDE 345KV CKT 1	717	789	0.049	111.8108	GRACEMONT (BANK 1) 345/138/13.8KV TRANSFORMER CKT 1
FDNS	00NR	3	16WP	G15_048	FROM->TO	G14-057T 345.00 - SUNNYSIDE 345KV CKT 1	717	789	0.04941	111.8089	CLAY BOSWELL 230/20.9KV TRANSFORMER CKT 1
FDNS	00NR	3	20WP	G15_048	FROM->TO	G14-057T 345.00 - SUNNYSIDE 345KV CKT 1	717	789	0.04892	111.8014	G15095_T 138.00 - ROSE_VALLEY 138.00 138KV CKT 1
FDNS	00NR	3	20WP	G15_048	FROM->TO	G14-057T 345.00 - SUNNYSIDE 345KV CKT 1	717	789	0.04946	111.801	MORGAN - MUSTANG 138KV CKT 1
FDNS	00NR	3	16WP	G15_048	FROM->TO	G14-057T 345.00 - SUNNYSIDE 345KV CKT 1	717	789	0.04941	111.7989	GEN521112 1-ORME3 13.800
FDNS	00NR	3	16WP	G15_048	FROM->TO	G14-057T 345.00 - SUNNYSIDE 345KV CKT 1	717	789	0.04941	111.7937	GEN563192 1-G15084_3 0.5500
FDNS	00NR	3	20WP	G15_048	FROM->TO	G14-057T 345.00 - SUNNYSIDE 345KV CKT 1	717	789	0.04908	111.7932	GEN336801 1-BAXTER WILSON UNIT #1
FDNS	00NR	3	16WP	G15_048	FROM->TO	G14-057T 345.00 - SUNNYSIDE 345KV CKT 1	717	789	0.04946	111.7906	P12:138:WFEC:MSL16
FDNS	00NR	3	16WP	G15_048	FROM->TO	G14-057T 345.00 - SUNNYSIDE 345KV CKT 1	717	789	0.04882	111.7903	ARDMORE WEST - CARTER 138KV CKT 1
FDNS	00NR	3	20WP	G15_048	FROM->TO	G14-057T 345.00 - SUNNYSIDE 345KV CKT 1	717	789	0.04909	111.7887	ALPINE AECC - AMITY SS 115KV CKT 1
FDNS	00NR	3	20WP	G15_048	FROM->TO	G14-057T 345.00 - SUNNYSIDE 345KV CKT 1	717	789	0.0492	111.7828	COMANCHE - COMANCHE TAP 69KV CKT 1
FDNS	00NR	3	16WP	G15_048	FROM->TO	G14-057T 345.00 - SUNNYSIDE 345KV CKT 1	717	789	0.04941	111.7721	GEN562892 1-G15048_3 0.6900
FDNS	00NR	3	16WP	G15_048	FROM->TO	G14-057T 345.00 - SUNNYSIDE 345KV CKT 1	717	789	0.04941	111.7673	GEN520811 1-ANADRK4
FDNS	00NR	3	20WP	G15_048	FROM->TO	G14-057T 345.00 - SUNNYSIDE 345KV CKT 1	717	789	0.04908	111.7665	8CAJUN2 500/24.0KV TRANSFORMER CKT 1
FDNS	00NR	3	20WP	G15_048	FROM->TO	G14-057T 345.00 - SUNNYSIDE 345KV CKT 1	717	789	0.04908	111.7649	GEN501910 1-ACADIA UNIT ST1
FDNS	00NR	3	16WP	G15_048	FROM->TO	G14-057T 345.00 - SUNNYSIDE 345KV CKT 1	717	789	0.04941	111.7579	GEN672321 1-SHAND GENERATOR 1
FDNS	00NR	3	20WP	G15_048	FROM->TO	G14-057T 345.00 - SUNNYSIDE 345KV CKT 1	717	789	0.0496	111.7535	SARA - STHLAKE4 138.00 138KV CKT 1
FDNS	00NR	3	16WP	G15_048	FROM->TO	G14-057T 345.00 - SUNNYSIDE 345KV CKT 1	717	789	0.04889	111.7506	SUNNYSIDE (SUNNYSD5) 345/138/13.8KV TRANSFORMER CKT 1
FDNS	00NR	3	16WP	G15_048	FROM->TO	G14-057T 345.00 - SUNNYSIDE 345KV CKT 1	717	789	0.04939	111.7436	P12:138:WFEC-AEPW:GOLDENSW4:CRAIGJT4
FDNS	00NR	3	16WP	G15_048	FROM->TO	G14-057T 345.00 - SUNNYSIDE 345KV CKT 1	717	789	0.04941	111.7409	GEN562512 1-G14_020_3 0.6900
FDNS	00NR	3	20WP	G15_048	FROM->TO	G14-057T 345.00 - SUNNYSIDE 345KV CKT 1	717	789	0.04909	111.7346	P12:138:AEPW:R.S.S.-4:S.HUD.-4
FDNS	00NR	3	16WP	G15_048	FROM->TO	G14-057T 345.00 - SUNNYSIDE 345KV CKT 1	717	789	0.04941	111.7343	GEN672310 1-POPLAR RIVER GENERATOR 1
FDNS	00NR	3	20WP	G15_048	FROM->TO	G14-057T 345.00 - SUNNYSIDE 345KV CKT 1	717	789	0.04892	111.7343	NOEL_SW 138.00 - ROSE_VALLEY 138.00 138KV CKT 1
FDNS	00NR	3	16WP	G15_048	FROM->TO	G14-057T 345.00 - SUNNYSIDE 345KV CKT 1	717	789	0.04941	111.7342	GEN672311 2-POPLAR RIVER GENERATOR 2
FDNS	00NR	3	16WP	G15_048	FROM->TO	G14-057T 345.00 - SUNNYSIDE 345KV CKT 1	717	789	0.04941	111.7315	GEN523461 1-BLACKHAWK GEN #1
FDNS	00NR	3	16WP	G15_048	FROM->TO	G14-057T 345.00 - SUNNYSIDE 345KV CKT 1	717	789	0.04941	111.7314	GEN523462 1-BLACKHAWK GEN #2
FDNS	00NR	3	20WP	G15_048	FROM->TO	G14-057T 345.00 - SUNNYSIDE 345KV CKT 1	717	789	0.04908	111.7283	SABINE 230/24.0KV TRANSFORMER CKT 1
FDNS	00NR	3	20WP	G15_048	FROM->TO	G14-057T 345.00 - SUNNYSIDE 345KV CKT 1	717	789	0.04905	111.7263	ETTA (DUKE HOTSPRINGS) - MC NIEL 500KV CKT 1
FDNS	00NR	3	16WP	G15_048	FROM->TO	G14-057T 345.00 - SUNNYSIDE 345KV CKT 1	717	789	0.04941	111.7262	GEN672306 6-BOUNDARY DAM GENERATOR 6
FDNS	00NR	3	20WP	G15_048	FROM->TO	G14-057T 345.00 - SUNNYSIDE 345KV CKT 1	717	789	0.0496	111.7241	MCCLAIN - STHLAKE4 138.00 138KV CKT 1
FDNS	00NR	3	20WP	G15_048	FROM->TO	G14-057T 345.00 - SUNNYSIDE 345KV CKT 1	717	789	0.04924	111.7215	WALTERS - WALTERS 69KV CKT 1
FDNS	00NR	3	20WP	G15_048	FROM->TO	G14-057T 345.00 - SUNNYSIDE 345KV CKT 1	717	789	0.04908	111.7206	GEN300016 1-1G1GPDEL 18.000
FDNS	00NR	3	20WP	G15_048	FROM->TO	G14-057T 345.00 - SUNNYSIDE 345KV CKT 1	717	789	0.05019	111.7186	LASALLE - LATTA JCT 138KV CKT 1
FDNS	00NR	3	20WP	G15_048	FROM->TO	G14-057T 345.00 - SUNNYSIDE 345KV CKT 1	717	789	0.04886	111.7178	LAWTON EASTSIDE (LES 4) 345/138/13.8KV TRANSFORMER CKT 1

SOLUTION	GROUP	SCENARIO	SEASON	SOURCE	DIRECTION	MONITORED ELEMENT	RATEA (MVA)	RATEB(MVA)	TDF	TC%LOADING (% MVA)	CONTINGENCY
FDNS	00NR	3	20WP	G15_048	FROM->TO	G14-057T 345.00 - SUNNYSIDE 345KV CKT 1	717	789	0.04886	111.7178	LAWTON EASTSIDE (LES 4) 345/138/13.8KV TRANSFORMER CKT 1
FDNS	00NR	3	20WP	G15_048	FROM->TO	G14-057T 345.00 - SUNNYSIDE 345KV CKT 1	717	789	0.04908	111.7104	GEN336222 1-LITTLE GYPSY UNIT#2
FDNS	00NR	3	20WP	G15_048	FROM->TO	G14-057T 345.00 - SUNNYSIDE 345KV CKT 1	717	789	0.04908	111.7036	P12:69:AEPW:NROGERS2:ECNTRTN2
FDNS	00NR	3	20WP	G15_048	FROM->TO	G14-057T 345.00 - SUNNYSIDE 345KV CKT 1	717	789	0.04939	111.7013	ANADARKO - SEQUOYAHJ4 138.00 138KV CKT 1
FDNS	00NR	3	20WP	G15_048	FROM->TO	G14-057T 345.00 - SUNNYSIDE 345KV CKT 1	717	789	0.04907	111.7011	LAWTON RELIFT TAP - OMPA-WALTERS 69KV CKT 1
FDNS	00NR	3	20WP	G15_048	FROM->TO	G14-057T 345.00 - SUNNYSIDE 345KV CKT 1	717	789	0.04939	111.6985	CORN TAP - SEQUOYAHJ4 138.00 138KV CKT 1
FDNS	00NR	3	16WP	G15_048	FROM->TO	G14-057T 345.00 - SUNNYSIDE 345KV CKT 1	717	789	0.04941	111.6964	GEN344895 2-1LAB G2 20.000
FDNS	00NR	3	20WP	G15_048	FROM->TO	G14-057T 345.00 - SUNNYSIDE 345KV CKT 1	717	789	0.04909	111.6938	P12:138:AEPW:BA_71ST4:T.S.E.-4
FDNS	00NR	3	20WP	G15_048	FROM->TO	G14-057T 345.00 - SUNNYSIDE 345KV CKT 1	717	789	0.04908	111.6885	P12:138:AEPW:YARCH-S4:T.S.E.-4
FDNS	00NR	3	20WP	G15_048	FROM->TO	G14-057T 345.00 - SUNNYSIDE 345KV CKT 1	717	789	0.0505	111.6873	BAILEY4 138.00 - WESTMOORE 138KV CKT 1
FDNS	00NR	3	20WP	G15_048	FROM->TO	G14-057T 345.00 - SUNNYSIDE 345KV CKT 1	717	789	0.05063	111.6872	CANADIAN - NOBLE 138KV CKT 1
FDNS	00NR	3	20WP	G15_048	FROM->TO	G14-057T 345.00 - SUNNYSIDE 345KV CKT 1	717	789	0.04935	111.6867	WEATHERFORD JCT. - WEATHERFORD SOUTHEAST 138KV CKT 1
FDNS	00NR	3	20WP	G15_048	FROM->TO	G14-057T 345.00 - SUNNYSIDE 345KV CKT 1	717	789	0.04935	111.6867	WEATHERFORD JCT. - WEATHERFORD SOUTHEAST 138KV CKT 1
FDNS	00NR	3	20WP	G15_048	FROM->TO	G14-057T 345.00 - SUNNYSIDE 345KV CKT 1	717	789	0.04962	111.6785	P12:138:AEPW-OGE:SHIDLER4:OSAGE 4
FDNS	00NR	3	20WP	G15_048	FROM->TO	G14-057T 345.00 - SUNNYSIDE 345KV CKT 1	717	789	0.04914	111.6766	7JASPER 345.00 - BLACKBERRY 345KV CKT 1
FDNS	00NR	3	20WP	G15_048	FROM->TO	G14-057T 345.00 - SUNNYSIDE 345KV CKT 1	717	789	0.04908	111.6762	GEN336152 1-WATERFORD UNIT#2
FDNS	00NR	3	16WP	G15_048	FROM->TO	G14-057T 345.00 - SUNNYSIDE 345KV CKT 1	717	789	0.04882	111.6754	ARDMORE WEST - UNIROYAL 138KV CKT 1
FDNS	00NR	3	20WP	G15_048	FROM->TO	G14-057T 345.00 - SUNNYSIDE 345KV CKT 1	717	789	0.04908	111.6754	GEN336151 1-WATERFORD UNIT#1
FDNS	00NR	3	16WP	G15_048	FROM->TO	G14-057T 345.00 - SUNNYSIDE 345KV CKT 1	717	789	0.04941	111.6717	GEN511853 1-COMANCHE #3
FDNS	00NR	3	16WP	G15_048	FROM->TO	G14-057T 345.00 - SUNNYSIDE 345KV CKT 1	717	789	0.04939	111.6662	P12:138:AEPW-SWPA:LONEOAK4:TUPELO4
FDNS	00NR	3	16WP	G15_048	FROM->TO	G14-057T 345.00 - SUNNYSIDE 345KV CKT 1	717	789	0.04939	111.6662	P12:138:WFEC:MSL06
FDNS	00NR	3	16WP	G15_048	FROM->TO	G14-057T 345.00 - SUNNYSIDE 345KV CKT 1	717	789	0.04941	111.6643	GEN344896 3-1LAB G3 20.000
FDNS	00NR	3	20WP	G15_048	FROM->TO	G14-057T 345.00 - SUNNYSIDE 345KV CKT 1	717	789	0.04908	111.6636	FRONTIER 345/18.0KV TRANSFORMER CKT 1
FDNS	00NR	3	20WP	G15_048	FROM->TO	G14-057T 345.00 - SUNNYSIDE 345KV CKT 1	717	789	0.04934	111.6632	NORGE ROAD - SOUTHWESTERN STATION 138KV CKT 1
FDNS	00NR	3	20WP	G15_048	FROM->TO	G14-057T 345.00 - SUNNYSIDE 345KV CKT 1	717	789	0.04934	111.6632	NORGE ROAD - SOUTHWESTERN STATION 138KV CKT 1
FDNS	00NR	3	16WP	G15_048	FROM->TO	G14-057T 345.00 - SUNNYSIDE 345KV CKT 1	717	789	0.04941	111.663	GEN344894 1-1LAB G1 20.000
FDNS	00NR	3	20WP	G15_048	FROM->TO	G14-057T 345.00 - SUNNYSIDE 345KV CKT 1	717	789	0.04908	111.6629	GEN300017 1-1G2GPDEL 18.000
FDNS	00NR	3	16WP	G15_048	FROM->TO	G14-057T 345.00 - SUNNYSIDE 345KV CKT 1	717	789	0.04941	111.6622	GEN563162 1-G15081_3 0.6900
FDNS	00NR	3	16WP	G15_048	FROM->TO	G14-057T 345.00 - SUNNYSIDE 345KV CKT 1	717	789	0.04941	111.6615	GEN344897 4-1LAB G4 20.000
FDNS	00NR	3	20WP	G15_048	FROM->TO	G14-057T 345.00 - SUNNYSIDE 345KV CKT 1	717	789	0.04908	111.6613	FRONTIER 345/18.0KV TRANSFORMER CKT 1
FDNS	00NR	3	20WP	G15_048	FROM->TO	G14-057T 345.00 - SUNNYSIDE 345KV CKT 1	717	789	0.04979	111.6592	P12:138:OKGE-AEPW:JENSEN4:REDROCKRD4
FDNS	00NR	3	20WP	G15_048	FROM->TO	G14-057T 345.00 - SUNNYSIDE 345KV CKT 1	717	789	0.05063	111.6575	P12:138:OKGE:3TERM27
FDNS	00NR	3	16WP	G15_048	FROM->TO	G14-057T 345.00 - SUNNYSIDE 345KV CKT 1	717	789	0.04912	111.656	CARTRCO4 138.00 - RATLIFF 138KV CKT 1
FDNS	00NR	3	20WP	G15_048	FROM->TO	G14-057T 345.00 - SUNNYSIDE 345KV CKT 1	717	789	0.04965	111.6547	FINNEY SWITCHING STATION - WALKTAP7 345.00 345KV CKT 1
FDNS	00NR	3	20WP	G15_048	FROM->TO	G14-057T 345.00 - SUNNYSIDE 345KV CKT 1	717	789	0.04965	111.6547	FINNEY SWITCHING STATION - WALKTAP7 345.00 345KV CKT 1
FDNS	00NR	3	20WP	G15_048	FROM->TO	G14-057T 345.00 - SUNNYSIDE 345KV CKT 1	717	789	0.04911	111.6543	HOPE - MCNAB REC 115KV CKT 1
FDNS	00NR	3	20WP	G15_048	FROM->TO	G14-057T 345.00 - SUNNYSIDE 345KV CKT 1	717	789	0.04935	111.6513	P12:138:AEPW:REDROCKRD4:WTH_JCT4
FDNS	00NR	3	20WP	G15_048	FROM->TO	G14-057T 345.00 - SUNNYSIDE 345KV CKT 1	717	789	0.0496	111.6507	MORISNT4 138.00 - STILLWATER 138KV CKT 1
FDNS	00NR	3	16WP	G15_048	FROM->TO	G14-057T 345.00 - SUNNYSIDE 345KV CKT 1	717	789	0.04922	111.6475	P12:138:OKGE:3TERM40
FDNS	00NR	3	20WP	G15_048	FROM->TO	G14-057T 345.00 - SUNNYSIDE 345KV CKT 1	717	789	0.04968	111.6449	P12:138:OKGE:3TERM2
FDNS	00NR	3	20WP	G15_048	FROM->TO	G14-057T 345.00 - SUNNYSIDE 345KV CKT 1	717	789	0.0644	111.6448	CLEO CORNER - CLEOPLT4 138.00 138KV CKT 1
FDNS	00NR	3	20WP	G15_048	FROM->TO	G14-057T 345.00 - SUNNYSIDE 345KV CKT 1	717	789	0.04911	111.6444	P12:115:AEPW:TURK3:HOPE3
FDNS	00NR	3	20WP	G15_048	FROM->TO	G14-057T 345.00 - SUNNYSIDE 345KV CKT 1	717	789	0.0491	111.6427	COUCH SES - MC NIEL 115KV CKT 1
FDNS	00NR	3	20WP	G15_048	FROM->TO	G14-057T 345.00 - SUNNYSIDE 345KV CKT 1	717	789	0.04924	111.6425	HOYT - STRANGER CREEK 345KV CKT 1
FDNS	00NR	3	20WP	G15_048	FROM->TO	G14-057T 345.00 - SUNNYSIDE 345KV CKT 1	717	789	0.04908	111.6414	GEN334432 1-SABINE UNIT 2
FDNS	00NR	3	16WP	G15_048	FROM->TO	G14-057T 345.00 - SUNNYSIDE 345KV CKT 1	717	789	0.04941	111.6412	GEN562699 1-G15_018_3 0.6900
FDNS	00NR	3	20WP	G15_048	FROM->TO	G14-057T 345.00 - SUNNYSIDE 345KV CKT 1	717	789	0.04908	111.6412	GEN334431 1-SABINE UNIT 1
FDNS	00NR	3	20WP	G15_048	FROM->TO	G14-057T 345.00 - SUNNYSIDE 345KV CKT 1	717	789	0.04909	111.6399	CYPRESS - HARTBURG 500KV CKT 1
FDNS	00NR	3	20WP	G15_048	FROM->TO	G14-057T 345.00 - SUNNYSIDE 345KV CKT 1	717	789	0.05153	111.6398	DRAPER LAKE - SEMINOLE 345KV CKT 1
FDNS	00NR	3	20WP	G15_048	FROM->TO	G14-057T 345.00 - SUNNYSIDE 345KV CKT 1	717	789	0.05153	111.6398	DRAPER LAKE - SEMINOLE 345KV CKT 2
FDNS	00NR	3	16WP	G15_048	FROM->TO	G14-057T 345.00 - SUNNYSIDE 345KV CKT 1	717	789	0.04941	111.6389	GEN511852 1-COMANCHE #2
FDNS	00NR	3	20WP	G15_048	FROM->TO	G14-057T 345.00 - SUNNYSIDE 345KV CKT 1	717	789	0.04805	111.6383	ARBUCKLE - VANOSTP4 138.00 138KV CKT 1
FDNS	00NR	3	20WP	G15_048	FROM->TO	G14-057T 345.00 - SUNNYSIDE 345KV CKT 1	717	789	0.04908	111.6369	GEN501823 1-TECHE UNIT 3
FDNS	00NR	3	20WP	G15_048	FROM->TO	G14-057T 345.00 - SUNNYSIDE 345KV CKT 1	717	789	0.04908	111.635	GEN501970 1-EVANGELINE UNIT 7
FDNS	00NR	3	20WP	G15_048	FROM->TO	G14-057T 345.00 - SUNNYSIDE 345KV CKT 1	717	789	0.04907	111.6342	OMPA-WALTERS - WALTERS 69KV CKT 1
FDNS	00NR	3	20WP	G15_048	FROM->TO	G14-057T 345.00 - SUNNYSIDE 345KV CKT 1	717	789	0.04907	111.6342	OMPA-WALTERS - WALTERS 69KV CKT 1
FDNS	00NR	3	20WP	G15_048	FROM->TO	G14-057T 345.00 - SUNNYSIDE 345KV CKT 1	717	789	0.04908	111.6333	LEWIS CREEK SWITCHYARD 138/22.0KV TRANSFORMER CKT 1
FDNS	00NR	3	20WP	G15_048	FROM->TO	G14-057T 345.00 - SUNNYSIDE 345KV CKT 1	717	789	0.04946	111.6323	EMPORIA ENERGY CENTER - G14_001T 345.00 345KV CKT 1
FDNS	00NR	3	20WP	G15_048	FROM->TO	G14-057T 345.00 - SUNNYSIDE 345KV CKT 1	717	789	0.04939	111.6296	BLACKBERRY - NEOSHO 345KV CKT 1
FDNS	00NR	3	20WP	G15_048	FROM->TO	G14-057T 345.00 - SUNNYSIDE 345KV CKT 1	717	789	0.04908	111.6288	LEWIS CREEK SWITCHYARD 138/22.0KV TRANSFORMER CKT 1
FDNS	00NR	3	20WP	G15_048	FROM->TO	G14-057T 345.00 - SUNNYSIDE 345KV CKT 1	717	789	0.04472	111.6282	G15063_T 345.00 - WOODRING 345KV CKT 1
FDNS	00NR	3	20WP	G15_048	FROM->TO	G14-057T 345.00 - SUNNYSIDE 345KV CKT 1	717	789	0.0644	111.6279	CLEOPLT4 138.00 - MEN TAP 138KV CKT 1
FDNS	00NR	3	16WP	G15_048	FROM->TO	G14-057T 345.00 - SUNNYSIDE 345KV CKT 1	717	789	0.04941	111.6238	GEN521110 1-ORME1 13.800
FDNS	00NR	3	16WP	G15_048	FROM->TO	G14-057T 345.00 - SUNNYSIDE 345KV CKT 1	717	789	0.04941	111.6238	GEN521111 1-ORME2 13.800
FDNS	00NR	3	16WP	G15_048	FROM->TO	G14-057T 345.00 - SUNNYSIDE 345KV CKT 1	717	789	0.04941	111.6195	GEN563292 1-G15095_3 0.6900
FDNS	00NR	3	20WP	G15_048	FROM->TO	G14-057T 345.00 - SUNNYSIDE 345KV CKT 1	717	789	0.04911	111.6188	TURK (TURK 1) 138/115/13.2KV TRANSFORMER CKT 1
FDNS	00NR	3	20WP	G15_048	FROM->TO	G14-057T 345.00 - SUNNYSIDE 345KV CKT 1	717	789	0.04911	111.6188	TURK (TURK 1) 138/115/13.2KV TRANSFORMER CKT 1
FDNS	00NR	3	20WP	G15_048	FROM->TO	G14-057T 345.00 - SUNNYSIDE 345KV CKT 1	717	789	0.04911	111.6187	MCNAB REC - Turk 115 115KV CKT 1
FDNS	00NR	3	20WP	G15_048	FROM->TO	G14-057T 345.00 - SUNNYSIDE 345KV CKT 1	717	789	0.04923	111.6181	G15074_T 345.00 - JEFFREY ENERGY CENTER 345KV CKT 1
FDNS	00NR	3	20WP	G15_048	FROM->TO	G14-057T 345.00 - SUNNYSIDE 345KV CKT 1	717	789	0.0644	111.618	IMO TAP - MEN TAP 138KV CKT 1
FDNS	00NR	3	20WP	G15_048	FROM->TO	G14-057T 345.00 - SUNNYSIDE 345KV CKT 1	717	789	0.04908	111.6167	P12:161:AEPW:CHAMSPR5:FARMING5
FDNS	00NR	3	20WP	G15_048	FROM->TO	G14-057T 345.00 - SUNNYSIDE 345KV CKT 1	717	789	0.04908	111.6138	GEN334392 1-EXXON MOBIL IPP 1
FDNS	00NR	3	20WP	G15_048	FROM->TO	G14-057T 345.00 - SUNNYSIDE 345KV CKT 1	717	789	0.04908	111.6109	GEN505616 1-BROKEN BOW
FDNS	00NR	3	20WP	G15_048	FROM->TO	G14-057T 345.00 - SUNNYSIDE 345KV CKT 1	717	789	0.04924	111.6104	P12:69:WFEC-AEPW:COMANCH2:WALTRS-2
FDNS	00NR	3	20WP	G15_048	FROM->TO	G14-057T 345.00 - SUNNYSIDE 345KV CKT 1	717	789	0.04908	111.6075	GEN334393 1-EXXON MOBIL IPP 2
FDNS	00NR	3	20WP	G15_048	FROM->TO	G14-057T 345.00 - SUNNYSIDE 345KV CKT 1	717	789	0.04908	111.6075	GEN334394 1-EXXON MOBIL IPP 3
FDNS	00NR	3	20WP	G15_048	FROM->TO	G14-057T 345.00 - SUNNYSIDE 345KV CKT 1	717	789	0.04908	111.606	GEN515042 1-SEMINOLE 3G
FDNS	00NR	3	16WP	G15_048	FROM->TO	G14-057T 345.00 - SUNNYSIDE 345KV CKT 1	717	789	0.04936	111.6031	G15085_T 138.00 - RUSSELL 138KV CKT 1
FDNS	00NR	3	20WP	G15_048	FROM->TO	G14-057T 345.00 - SUNNYSIDE 345KV CKT 1	717	789	0.04917	111.5974	7LUTESVIL 345.00 - 7ST FRANC 345.00 345KV CKT 1

SOLUTION	GROUP	SCENARIO	SEASON	SOURCE	DIRECTION	MONITORED ELEMENT	RATEA (MVA)	RATEB(MVA)	TDF	TC%LOADING (% MVA)	CONTINGENCY
FDNS	00NR	3	20WP	G15_048	FROM->TO	G14-057T 345.00 - SUNNYSIDE 345KV CKT 1	717	789	0.04924	111.5949	WEATHERFORD TAP - WEATHERFORD WIND FARM 138KV CKT 1
FDNS	00NR	3	20WP	G15_048	FROM->TO	G14-057T 345.00 - SUNNYSIDE 345KV CKT 1	717	789	0.05063	111.5943	NOBLE - PURCELL4 138.00 138KV CKT 1
FDNS	00NR	3	20WP	G15_048	FROM->TO	G14-057T 345.00 - SUNNYSIDE 345KV CKT 1	717	789	0.04932	111.5935	SOUTHWESTERN STATION - VERDEN 138KV CKT 1
FDNS	00NR	3	20WP	G15_048	FROM->TO	G14-057T 345.00 - SUNNYSIDE 345KV CKT 1	717	789	0.04937	111.592	G13-010T 345.00 - POST ROCK 345KV CKT 1
FDNS	00NR	3	20WP	G15_048	FROM->TO	G14-057T 345.00 - SUNNYSIDE 345KV CKT 1	717	789	0.04956	111.5879	CLINTON JUNCTION - ELK CITY 138KV CKT 1
FDNS	00NR	3	20WP	G15_048	FROM->TO	G14-057T 345.00 - SUNNYSIDE 345KV CKT 1	717	789	0.04956	111.5879	CLINTON JUNCTION - ELK CITY 138KV CKT 1
FDNS	00NR	3	20WP	G15_048	FROM->TO	G14-057T 345.00 - SUNNYSIDE 345KV CKT 1	717	789	0.04908	111.5838	ST FRANCIS - ST FRANCIS 1 161KV CKT Z1
FDNS	00NR	3	20WP	G15_048	FROM->TO	G14-057T 345.00 - SUNNYSIDE 345KV CKT 1	717	789	0.04911	111.5828	BUCKNER7 345.00 - HOLCOMB 345KV CKT 1
FDNS	00NR	3	20WP	G15_048	FROM->TO	G14-057T 345.00 - SUNNYSIDE 345KV CKT 1	717	789	0.04911	111.5828	BUCKNER7 345.00 - HOLCOMB 345KV CKT 1
FDNS	00NR	3	20WP	G15_048	FROM->TO	G14-057T 345.00 - SUNNYSIDE 345KV CKT 1	717	789	0.05019	111.5788	LASALLE - STONEWAL LH138.00 138KV CKT 1
FDNS	00NR	3	16WP	G15_048	FROM->TO	G14-057T 345.00 - SUNNYSIDE 345KV CKT 1	717	789	0.04941	111.5774	GRAPEVINE INTERCHANGE - STATELINE INTERCHANGE 230KV CKT 1
FDNS	00NR	3	16WP	G15_048	FROM->TO	G14-057T 345.00 - SUNNYSIDE 345KV CKT 1	717	789	0.04941	111.5774	GRAPEVINE INTERCHANGE - STATELINE INTERCHANGE 230KV CKT 1
FDNS	00NR	3	20WP	G15_048	FROM->TO	G14-057T 345.00 - SUNNYSIDE 345KV CKT 1	717	789	0.04908	111.5772	GEN501971 1-EVANGELINE UNIT 7-1
FDNS	00NR	3	20WP	G15_048	FROM->TO	G14-057T 345.00 - SUNNYSIDE 345KV CKT 1	717	789	0.04908	111.5772	GEN501972 1-EVANGELINE UNIT 7-2
FDNS	00NR	3	20WP	G15_048	FROM->TO	G14-057T 345.00 - SUNNYSIDE 345KV CKT 1	717	789	0.04946	111.5767	G14_001T 345.00 - WICHITA 345KV CKT 1
FDNS	00NR	3	20WP	G15_048	FROM->TO	G14-057T 345.00 - SUNNYSIDE 345KV CKT 1	717	789	0.04919	111.5754	FRANKLIN - FRANKLIN SW 138KV CKT 1
FDNS	00NR	3	20WP	G15_048	FROM->TO	G14-057T 345.00 - SUNNYSIDE 345KV CKT 1	717	789	0.04915	111.5725	LAKEOVER - MCADAMS 500KV CKT 1
FDNS	00NR	3	20WP	G15_048	FROM->TO	G14-057T 345.00 - SUNNYSIDE 345KV CKT 1	717	789	0.04932	111.5724	NORTH 29TH CHICKASHA - VERDEN 138KV CKT 1
FDNS	00NR	3	20WP	G15_048	FROM->TO	G14-057T 345.00 - SUNNYSIDE 345KV CKT 1	717	789	0.04908	111.5709	SABINE 230/22.0KV TRANSFORMER CKT 1
FDNS	00NR	3	20WP	G15_048	FROM->TO	G14-057T 345.00 - SUNNYSIDE 345KV CKT 1	717	789	0.04926	111.5705	EMPORIA ENERGY CENTER - SWISSVALE 345KV CKT 1
FDNS	00NR	3	20WP	G15_048	FROM->TO	G14-057T 345.00 - SUNNYSIDE 345KV CKT 1	717	789	0.049	111.5696	ENOWILT - LONE OAK 138KV CKT 1
FDNS	00NR	3	20WP	G15_048	FROM->TO	G14-057T 345.00 - SUNNYSIDE 345KV CKT 1	717	789	0.04911	111.5693	P12:138:OKGE:3TERM12
FDNS	00NR	3	20WP	G15_048	FROM->TO	G14-057T 345.00 - SUNNYSIDE 345KV CKT 1	717	789	0.04916	111.5689	FLETCHER - MARLOW JCT 69KV CKT 1
FDNS	00NR	3	20WP	G15_048	FROM->TO	G14-057T 345.00 - SUNNYSIDE 345KV CKT 1	717	789	0.04909	111.5672	P12:138:AEPW:R.S.S-4:T.P.S.-4
FDNS	00NR	3	20WP	G15_048	FROM->TO	G14-057T 345.00 - SUNNYSIDE 345KV CKT 1	717	789	0.05019	111.5636	STONEWAL LH138.00 - TUPELO TAP 138KV CKT 1
FDNS	00NR	3	20WP	G15_048	FROM->TO	G14-057T 345.00 - SUNNYSIDE 345KV CKT 1	717	789	0.049	111.5609	ENOWILT - SARDIS 138KV CKT 1
FDNS	00NR	3	16WP	G15_048	FROM->TO	G14-057T 345.00 - SUNNYSIDE 345KV CKT 1	717	789	0.04861	111.5593	CACHE - SNYDER 138KV CKT 1
FDNS	00NR	3	20WP	G15_048	FROM->TO	G14-057T 345.00 - SUNNYSIDE 345KV CKT 1	717	789	0.04935	111.5564	HINTON - WEATHERFORD JCT. 138KV CKT 1
FDNS	00NR	3	20WP	G15_048	FROM->TO	G14-057T 345.00 - SUNNYSIDE 345KV CKT 1	717	789	0.04921	111.5553	MCADAMS - WOLF CREEK 500KV CKT 1
FDNS	00NR	3	20WP	G15_048	FROM->TO	G14-057T 345.00 - SUNNYSIDE 345KV CKT 1	717	789	0.04908	111.5542	GEN501912 1-ACADIA UNIT CT1B
FDNS	00NR	3	20WP	G15_048	FROM->TO	G14-057T 345.00 - SUNNYSIDE 345KV CKT 1	717	789	0.04908	111.5534	GEN501911 1-ACADIA UNIT CT1A
FDNS	00NR	3	20WP	G15_048	FROM->TO	G14-057T 345.00 - SUNNYSIDE 345KV CKT 1	717	789	0.04882	111.5533	P12:138:WFEC-AEPW:ELKCTY-4:ERICK4
FDNS	00NR	3	20WP	G15_048	FROM->TO	G14-057T 345.00 - SUNNYSIDE 345KV CKT 1	717	789	0.04937	111.5453	G13-010T 345.00 - SPEARVILLE 345KV CKT 1
FDNS	00NR	3	20WP	G15_048	FROM->TO	G14-057T 345.00 - SUNNYSIDE 345KV CKT 1	717	789	0.04928	111.5441	SWISSVALE - WEST GARDNER 345KV CKT 1
FDNS	00NR	3	16WP	G15_048	FROM->TO	G14-057T 345.00 - SUNNYSIDE 345KV CKT 1	717	789	0.04941	111.5424	GEN563122 1-G15077_3 0.3850
FDNS	00NR	3	20WP	G15_048	FROM->TO	G14-057T 345.00 - SUNNYSIDE 345KV CKT 1	717	789	0.04909	111.5421	P12:138:AEPW:R.S.S.-4:R:96YALE-4
FDNS	00NR	3	20WP	G15_048	FROM->TO	G14-057T 345.00 - SUNNYSIDE 345KV CKT 1	717	789	0.04908	111.5379	GEN506749 1-EASTMAN GENERATION A
FDNS	00NR	3	16WP	G15_048	FROM->TO	G14-057T 345.00 - SUNNYSIDE 345KV CKT 1	717	789	0.04941	111.5346	GEN562861 1-G15045_2 0.4800
FDNS	00NR	3	20WP	G15_048	FROM->TO	G14-057T 345.00 - SUNNYSIDE 345KV CKT 1	717	789	0.04934	111.5342	CORNVILLE - NORGE ROAD 138KV CKT 1
FDNS	00NR	3	20WP	G15_048	FROM->TO	G14-057T 345.00 - SUNNYSIDE 345KV CKT 1	717	789	0.04934	111.5342	CORNVILLE - NORGE ROAD 138KV CKT 1
FDNS	00NR	3	20WP	G15_048	FROM->TO	G14-057T 345.00 - SUNNYSIDE 345KV CKT 1	717	789	0.04909	111.5319	AMITY SS - MURFREESBORO EAST (AECC) 115KV CKT 1
FDNS	00NR	3	20WP	G15_048	FROM->TO	G14-057T 345.00 - SUNNYSIDE 345KV CKT 1	717	789	0.04908	111.5307	NELSON 230/24.0KV TRANSFORMER CKT 1
FDNS	00NR	3	20WP	G15_048	FROM->TO	G14-057T 345.00 - SUNNYSIDE 345KV CKT 1	717	789	0.04908	111.5287	GEN336242 1-1NMIL ST1 18.000
FDNS	00NR	3	16WP	G15_048	FROM->TO	G14-057T 345.00 - SUNNYSIDE 345KV CKT 1	717	789	0.04059	111.5277	GRACEMONT - LAWTON EASTSIDE 345KV CKT 1
FDNS	00NR	3	16WP	G15_048	FROM->TO	G14-057T 345.00 - SUNNYSIDE 345KV CKT 1	717	789	0.04059	111.5277	GRACEMONT - LAWTON EASTSIDE 345KV CKT 1
FDNS	00NR	3	20WP	G15_048	FROM->TO	G14-057T 345.00 - SUNNYSIDE 345KV CKT 1	717	789	0.04919	111.5271	8WNEWMADRID 500.00 - DELL 500 500KV CKT 1
FDNS	00NR	3	20WP	G15_048	FROM->TO	G14-057T 345.00 - SUNNYSIDE 345KV CKT 1	717	789	0.04959	111.5252	BENTON - WICHITA 345KV CKT 1
FDNS	00NR	3	20WP	G15_048	FROM->TO	G14-057T 345.00 - SUNNYSIDE 345KV CKT 1	717	789	0.0505	111.5246	FRANKLIN SW - WESTMOORE 138KV CKT 1
FDNS	00NR	3	20WP	G15_048	FROM->TO	G14-057T 345.00 - SUNNYSIDE 345KV CKT 1	717	789	0.049	111.5223	CLAYTON - SARDIS 138KV CKT 1
FDNS	00NR	3	20WP	G15_048	FROM->TO	G14-057T 345.00 - SUNNYSIDE 345KV CKT 1	717	789	0.04908	111.5212	ST FRANCIS 345/161KV TRANSFORMER CKT 1
FDNS	00NR	3	20WP	G15_048	FROM->TO	G14-057T 345.00 - SUNNYSIDE 345KV CKT 1	717	789	0.04909	111.5199	P12:138:AEPW:MOHAWK4:T.NO--4
FDNS	00NR	3	16WP	G15_048	FROM->TO	G14-057T 345.00 - SUNNYSIDE 345KV CKT 1	717	789	0.04941	111.5178	GEN661015 1-COYOTE
FDNS	00NR	3	20WP	G15_048	FROM->TO	G14-057T 345.00 - SUNNYSIDE 345KV CKT 1	717	789	0.04909	111.5138	LAYFLD8 500.00 (LAYFLD AUTO) 500/230/13.8KV TRANSFORMER CKT 1
FDNS	00NR	3	20WP	G15_048	FROM->TO	G14-057T 345.00 - SUNNYSIDE 345KV CKT 1	717	789	0.04909	111.5138	LAYFLD8 500.00 (LAYFLD AUTO) 500/230/13.8KV TRANSFORMER CKT 1
FDNS	00NR	3	20WP	G15_048	FROM->TO	G14-057T 345.00 - SUNNYSIDE 345KV CKT 1	717	789	0.04963	111.5114	CIMARRON - NORTHWEST 345KV CKT 1
FDNS	00NR	3	20WP	G15_048	FROM->TO	G14-057T 345.00 - SUNNYSIDE 345KV CKT 1	717	789	0.04932	111.5059	CORNVILLE - NORTH 29TH CHICKASHA 138KV CKT 1
FDNS	00NR	3	20WP	G15_048	FROM->TO	G14-057T 345.00 - SUNNYSIDE 345KV CKT 1	717	789	0.04862	111.5036	ARBUCKLE - MILLCREEK 138KV CKT 1
FDNS	00NR	3	20WP	G15_048	FROM->TO	G14-057T 345.00 - SUNNYSIDE 345KV CKT 1	717	789	0.04924	111.5033	WEATHERFORD SOUTHEAST - WEATHERFORD TAP 138KV CKT 1
FDNS	00NR	3	20WP	G15_048	FROM->TO	G14-057T 345.00 - SUNNYSIDE 345KV CKT 1	717	789	0.049	111.5001	P12:138:AEPW-SWPA:LONEOAK4:BRKNBW4
FDNS	00NR	3	20WP	G15_048	FROM->TO	G14-057T 345.00 - SUNNYSIDE 345KV CKT 1	717	789	0.04908	111.4992	SABINE 138/22.0KV TRANSFORMER CKT 1
FDNS	00NR	3	20WP	G15_048	FROM->TO	G14-057T 345.00 - SUNNYSIDE 345KV CKT 1	717	789	0.049	111.489	CLAYTON - NASHOBA 138KV CKT 1
FDNS	00NR	3	20WP	G15_048	FROM->TO	G14-057T 345.00 - SUNNYSIDE 345KV CKT 1	717	789	0.04917	111.4879	7JASPER 345.00 - MORGAN 345KV CKT 1
FDNS	00NR	3	20WP	G15_048	FROM->TO	G14-057T 345.00 - SUNNYSIDE 345KV CKT 1	717	789	0.04935	111.4844	HINTON - REDROCKRD4 138.00 138KV CKT 1
FDNS	00NR	3	20WP	G15_048	FROM->TO	G14-057T 345.00 - SUNNYSIDE 345KV CKT 1	717	789	0.04936	111.4828	SEMINOLE (SEMINOL2) 345/138/14.4KV TRANSFORMER CKT 1
FDNS	00NR	3	20WP	G15_048	FROM->TO	G14-057T 345.00 - SUNNYSIDE 345KV CKT 1	717	789	0.04908	111.4828	GEN338146 1-INDEPENDENCE UNIT #2
FDNS	00NR	3	16WP	G15_048	FROM->TO	G14-057T 345.00 - SUNNYSIDE 345KV CKT 1	717	789	0.04882	111.4571	SUNNYSIDE - UNIROYAL 138KV CKT 1
FDNS	00NR	3	20WP	G15_048	FROM->TO	G14-057T 345.00 - SUNNYSIDE 345KV CKT 1	717	789	0.04921	111.4536	P12:138:OKGE:3TERM20
FDNS	00NR	3	20WP	G15_048	FROM->TO	G14-057T 345.00 - SUNNYSIDE 345KV CKT 1	717	789	0.04924	111.4533	CLINTON JUNCTION - CLINTON NATURAL GAS TAP 138KV CKT 1
FDNS	00NR	3	20WP	G15_048	FROM->TO	G14-057T 345.00 - SUNNYSIDE 345KV CKT 1	717	789	0.04042	111.4488	GRACEMONT - LAWTON EASTSIDE 345KV CKT 1
FDNS	00NR	3	20WP	G15_048	FROM->TO	G14-057T 345.00 - SUNNYSIDE 345KV CKT 1	717	789	0.04042	111.4488	GRACEMONT - LAWTON EASTSIDE 345KV CKT 1
FDNS	00NR	3	20WP	G15_048	FROM->TO	G14-057T 345.00 - SUNNYSIDE 345KV CKT 1	717	789	0.05046	111.4413	MARIETTA - MARIETTA4 138.00 138KV CKT 1
FDNS	00NR	3	16WP	G15_048	FROM->TO	G14-057T 345.00 - SUNNYSIDE 345KV CKT 1	717	789	0.04939	111.44	GRAPEVINE INTERCHANGE - NICHOLS STATION 230KV CKT 1
FDNS	00NR	3	16WP	G15_048	FROM->TO	G14-057T 345.00 - SUNNYSIDE 345KV CKT 1	717	789	0.04939	111.44	GRAPEVINE INTERCHANGE - NICHOLS STATION 230KV CKT 1
FDNS	00NR	3	20WP	G15_048	FROM->TO	G14-057T 345.00 - SUNNYSIDE 345KV CKT 1	717	789	0.04924	111.4355	COMANCHE - WALTERS 69KV CKT 1
FDNS	00NR	3	16WP	G15_048	FROM->TO	G14-057T 345.00 - SUNNYSIDE 345KV CKT 1	717	789	0.04937	111.4174	P12:138:AEPW:SHAM4WT:CHILD4WT
FDNS	00NR	3	16WP	G15_048	FROM->TO	G14-057T 345.00 - SUNNYSIDE 345KV CKT 1	717	789	0.05096	111.4115	P12:138:WFEC:MSL15
FDNS	00NR	3	16WP	G15_048	FROM->TO	G14-057T 345.00 - SUNNYSIDE 345KV CKT 1	717	789	0.0472	111.4067	CHISHOLM7 345.00 (CHISHOLM) 345/230/13.2KV TRANSFORMER CKT 1
FDNS	00NR	3	16WP	G15_048	FROM->TO	G14-057T 345.00 - SUNNYSIDE 345KV CKT 1	717	789	0.04941	111.4034	GEN657748 1-YOUNG 2 GENERATOR
FDNS	00NR	3	16WP	G15_048	FROM->TO	G14-057T 345.00 - SUNNYSIDE 345KV CKT 1	717	789	0.04941	111.4	GEN532751 1-WOLF CREEK GENERATING STATION UNIT 1

SOLUTION	GROUP	SCENARIO	SEASON	SOURCE	DIRECTION	MONITORED ELEMENT	RATEA (MVA)	RATEB(MVA)	TDF	TC%LOADING (% MVA)	CONTINGENCY
FDNS	00NR	3	16WP	G15_048	FROM->TO	G14-057T 345.00 - SUNNYSIDE 345KV CKT 1	717	789	0.04941	111.3811	GEN562992 1-G15063_3 0.6900
FDNS	00NR	3	16WP	G15_048	FROM->TO	G14-057T 345.00 - SUNNYSIDE 345KV CKT 1	717	789	0.04941	111.3562	GEN562704 1-G15_020_3 0.3550
FDNS	00NR	3	16WP	G15_048	FROM->TO	G14-057T 345.00 - SUNNYSIDE 345KV CKT 1	717	789	0.04941	111.3542	GEN563173 1-G15082_3 0.6900
FDNS	00NR	3	16WP	G15_048	FROM->TO	G14-057T 345.00 - SUNNYSIDE 345KV CKT 1	717	789	0.0508	111.3478	CANEY CREEK - TEXOMA JCT 138KV CKT 1
FDNS	00NR	3	16WP	G15_048	FROM->TO	G14-057T 345.00 - SUNNYSIDE 345KV CKT 1	717	789	0.04941	111.3165	GEN562952 1-G15057_3 0.6500
FDNS	00NR	3	16WP	G15_048	FROM->TO	G14-057T 345.00 - SUNNYSIDE 345KV CKT 1	717	789	0.04941	111.2724	GEN562710 1-G15_022_3 0.5500
FDNS	00NR	3	16WP	G15_048	FROM->TO	G14-057T 345.00 - SUNNYSIDE 345KV CKT 1	717	789	0.04941	111.2411	GEN620315 1-BIG STONE GEN
FDNS	00NR	3	16WP	G15_048	FROM->TO	G14-057T 345.00 - SUNNYSIDE 345KV CKT 1	717	789	0.0472	111.1801	CHISHOLM7 345.00 - GRACEMONT 345KV CKT 1
FDNSLock	00NR	3	16WP	G15_048	FROM->TO	G14-057T 345.00 - SUNNYSIDE 345KV CKT 1	717	789	0.04941	111.1763	GEN600004 2-PRAIRIE ISLAND G2
FDNSLock	00NR	3	16WP	G15_048	FROM->TO	G14-057T 345.00 - SUNNYSIDE 345KV CKT 1	717	789	0.04941	111.1736	GEN600003 1-PRAIRIE ISLAND G1
FDNS	00NR	3	16WP	G15_048	FROM->TO	G14-057T 345.00 - SUNNYSIDE 345KV CKT 1	717	789	0.04949	111.1734	P12:138:WFEC:MSL09
FDNSLock	00NR	3	16WP	G15_048	FROM->TO	G14-057T 345.00 - SUNNYSIDE 345KV CKT 1	717	789	0.04941	111.1659	GEN600006 1-AS KING
FDNS	00NR	3	16WP	G15_048	FROM->TO	G14-057T 345.00 - SUNNYSIDE 345KV CKT 1	717	789	0.04941	111.1295	GEN511851 1-COMANCHE #1
FDNS	00NR	3	16WP	G15_048	FROM->TO	G14-057T 345.00 - SUNNYSIDE 345KV CKT 1	717	789	0.04941	111.1	GEN636641 1-LOUISA UNIT 1
FDNS	00NR	3	16WP	G15_048	FROM->TO	G14-057T 345.00 - SUNNYSIDE 345KV CKT 1	717	789	0.04941	111.0396	GEN600005 1-MONTICELLO
FDNS	00NR	3	16WP	G15_048	FROM->TO	G14-057T 345.00 - SUNNYSIDE 345KV CKT 1	717	789	0.0494	111.0304	P12:230:AEPW-SPS:SWEETWT6:WHEELER 6
FDNS	00NR	3	16WP	G15_048	FROM->TO	G14-057T 345.00 - SUNNYSIDE 345KV CKT 1	717	789	0.0494	111.0294	STATELINE INTERCHANGE - STLN-DEMARC6 230KV CKT 1
FDNS	00NR	3	16WP	G15_048	FROM->TO	G14-057T 345.00 - SUNNYSIDE 345KV CKT 1	717	789	0.0494	111.0283	STLN-DEMARC6 - SWEETWATER 230KV CKT 1
FDNS	00NR	3	16WP	G15_048	FROM->TO	G14-057T 345.00 - SUNNYSIDE 345KV CKT 1	717	789	0.04941	111.0266	GEN562754 1-G15031_5 0.6900
FDNS	00NR	3	20WP	G15_048	FROM->TO	G14-057T 345.00 - SUNNYSIDE 345KV CKT 1	717	789	0.04908	111.0252	803-OKLAUNION
FDNS	00NR	3	16WP	G15_048	FROM->TO	G14-057T 345.00 - SUNNYSIDE 345KV CKT 1	717	789	0.04941	111.0089	GEN615002 2-COAL CREEK
FDNS	00NR	3	16WP	G15_048	FROM->TO	G14-057T 345.00 - SUNNYSIDE 345KV CKT 1	717	789	0.04941	111	GEN629074 1-ARNOLD LOWSIDE OF GSU XFMR
FDNS	00NR	3	16WP	G15_048	FROM->TO	G14-057T 345.00 - SUNNYSIDE 345KV CKT 1	717	789	0.04921	110.9877	P12:138:AEPW-OGE:CORNVIL4:CIMARON4
FDNS	00NR	3	16WP	G15_048	FROM->TO	G14-057T 345.00 - SUNNYSIDE 345KV CKT 1	717	789	0.04941	110.9862	GEN562023 1-G11_020_3 0.6900
FDNS	00NR	3	16WP	G15_048	FROM->TO	G14-057T 345.00 - SUNNYSIDE 345KV CKT 1	717	789	0.04941	110.9862	GEN562026 1-G11_019_3 0.6900
FDNS	00NR	3	16WP	G15_048	FROM->TO	G14-057T 345.00 - SUNNYSIDE 345KV CKT 1	717	789	0.04941	110.9797	GEN635213 3-NEAL UNIT 3
FDNS	00NR	3	16WP	G15_048	FROM->TO	G14-057T 345.00 - SUNNYSIDE 345KV CKT 1	717	789	0.04941	110.9682	GEN562756 1-G15031_7 0.6900
FDNS	00NR	3	16WP	G15_048	FROM->TO	G14-057T 345.00 - SUNNYSIDE 345KV CKT 1	717	789	0.04941	110.9258	BIG STONE 230/24.0KV TRANSFORMER CKT 1
FDNS	00NR	3	16WP	G15_048	FROM->TO	G14-057T 345.00 - SUNNYSIDE 345KV CKT 1	717	789	0.04941	110.9216	GEN562556 1-G14_046_3 0.3420
FDNS	00NR	3	16WP	G15_048	FROM->TO	G14-057T 345.00 - SUNNYSIDE 345KV CKT 1	717	789	0.04941	110.8335	GEN563142 1-G15079_3 0.5500
FDNS	00NR	3	16WP	G15_048	FROM->TO	G14-057T 345.00 - SUNNYSIDE 345KV CKT 1	717	789	0.04941	110.8335	GEN563151 1-G15080_2 0.5500
FDNS	00NR	3	16WP	G15_048	FROM->TO	G14-057T 345.00 - SUNNYSIDE 345KV CKT 1	717	789	0.04941	110.8185	GEN523971 1-HARRINGTON GEN #1 24 KV
FDNS	00NR	3	16WP	G15_048	FROM->TO	G14-057T 345.00 - SUNNYSIDE 345KV CKT 1	717	789	0.04941	110.8185	GEN523973 1-HARRINGTON GEN #3 24 KV
FDNS	00NR	3	16WP	G15_048	FROM->TO	G14-057T 345.00 - SUNNYSIDE 345KV CKT 1	717	789	0.04941	110.8184	GEN523972 1-HARRINGTON GEN #2 24 KV
FDNS	00NR	3	20WP	G15_048	FROM->TO	G14-057T 345.00 - SUNNYSIDE 345KV CKT 1	717	789	0.04824	110.8058	P12:138:OKGE:3TERM39
FDNS	00NR	3	16WP	G15_048	FROM->TO	G14-057T 345.00 - SUNNYSIDE 345KV CKT 1	717	789	0.04941	110.7304	GEN600000 1-SHERBURNECNTY G1
FDNS	00NR	3	16WP	G15_048	FROM->TO	G14-057T 345.00 - SUNNYSIDE 345KV CKT 1	717	789	0.04946	110.7146	NORTHWEST TEXARKANA - VALLIANT 345KV CKT 1
FDNS	00NR	3	16WP	G15_048	FROM->TO	G14-057T 345.00 - SUNNYSIDE 345KV CKT 1	717	789	0.04946	110.7146	NORTHWEST TEXARKANA - VALLIANT 345KV CKT 1
FDNS	00NR	3	16WP	G15_048	FROM->TO	G14-057T 345.00 - SUNNYSIDE 345KV CKT 1	717	789	0.0474	110.6535	P12:230:AEPW:ELKCITY6:SWEETWT6
FDNS	00NR	3	16WP	G15_048	FROM->TO	G14-057T 345.00 - SUNNYSIDE 345KV CKT 1	717	789	0.04941	110.6508	GEN600001 2-SHERBURNE CNTY G2
FDNS	00NR	3	20WP	G15_048	FROM->TO	G14-057T 345.00 - SUNNYSIDE 345KV CKT 1	717	789	0.04866	110.6277	MAYSVILLE - MAYSVLT4 138.00 138KV CKT 1
FDNS	00NR	3	16WP	G15_048	FROM->TO	G14-057T 345.00 - SUNNYSIDE 345KV CKT 1	717	789	0.04941	110.6206	GEN563042 1-G15068_3 0.6900
FDNS	00NR	3	16WP	G15_048	FROM->TO	G14-057T 345.00 - SUNNYSIDE 345KV CKT 1	717	789	0.04941	110.6069	GEN527901 1-HOBBS PLANT #1 (CT)
FDNS	00NR	3	16WP	G15_048	FROM->TO	G14-057T 345.00 - SUNNYSIDE 345KV CKT 1	717	789	0.04941	110.6069	GEN527902 1-HOBBS PLANT #2 (CT)
FDNS	00NR	3	16WP	G15_048	FROM->TO	G14-057T 345.00 - SUNNYSIDE 345KV CKT 1	717	789	0.04941	110.6027	GEN511848 1-SOUTHWESTERN STATION #3
FDNS	00NR	3	20WP	G15_048	FROM->TO	G14-057T 345.00 - SUNNYSIDE 345KV CKT 1	717	789	0.04299	110.5975	BEARCAT 138.00 - NINE MILE 138KV CKT 1
FDNS	00NR	3	20WP	G15_048	FROM->TO	G14-057T 345.00 - SUNNYSIDE 345KV CKT 1	717	789	0.04908	110.5893	GEN521103 1-BLUE CANYON WIND FARM
FDNS	00NR	3	20WP	G15_048	FROM->TO	G14-057T 345.00 - SUNNYSIDE 345KV CKT 1	717	789	0.04908	110.5787	GEN562691 1-G15_015_3 0.6900
FDNS	00NR	3	20WP	G15_048	FROM->TO	G14-057T 345.00 - SUNNYSIDE 345KV CKT 1	717	789	0.04908	110.5785	GEN520812 1-ANADRK5
FDNS	00NR	3	20WP	G15_048	FROM->TO	G14-057T 345.00 - SUNNYSIDE 345KV CKT 1	717	789	0.04908	110.5784	GEN520813 1-ANADRK6
FDNS	00NR	3	20WP	G15_048	FROM->TO	G14-057T 345.00 - SUNNYSIDE 345KV CKT 1	717	789	0.04908	110.5753	GEN563052 1-G15069_3 0.6900
FDNS	00NR	3	20WP	G15_048	FROM->TO	G14-057T 345.00 - SUNNYSIDE 345KV CKT 1	717	789	0.04908	110.5696	GEN562772 1-G15034_3 0.6900
FDNS	00NR	3	20WP	G15_048	FROM->TO	G14-057T 345.00 - SUNNYSIDE 345KV CKT 1	717	789	0.04948	110.5695	DRAPER LAKE - MIDWEST TAP 138KV CKT 1
FDNS	00NR	3	20WP	G15_048	FROM->TO	G14-057T 345.00 - SUNNYSIDE 345KV CKT 1	717	789	0.04908	110.5621	GEN600046 1-MECST
FDNS	00NR	3	20WP	G15_048	FROM->TO	G14-057T 345.00 - SUNNYSIDE 345KV CKT 1	717	789	0.04866	110.5618	MAYSVLT4 138.00 - PRAIRIE POINT 138KV CKT 1
FDNS	00NR	3	20WP	G15_048	FROM->TO	G14-057T 345.00 - SUNNYSIDE 345KV CKT 1	717	789	0.04908	110.5514	GEN629070 2-BEAVER CHANNEL GENERATORFOR UNIT NO 2
FDNS	00NR	3	20WP	G15_048	FROM->TO	G14-057T 345.00 - SUNNYSIDE 345KV CKT 1	717	789	0.04908	110.5496	GEN511961 1-DEMPSEY-WTG10.7000
FDNS	00NR	3	20WP	G15_048	FROM->TO	G14-057T 345.00 - SUNNYSIDE 345KV CKT 1	717	789	0.04908	110.5482	GEN600047 1-MECCT1
FDNS	00NR	3	20WP	G15_048	FROM->TO	G14-057T 345.00 - SUNNYSIDE 345KV CKT 1	717	789	0.04908	110.5464	P12:069:OKGE:3TERM42
FDNS	00NR	3	20WP	G15_048	FROM->TO	G14-057T 345.00 - SUNNYSIDE 345KV CKT 1	717	789	0.0486	110.546	ARBUCKLE - SULPHR 4 138.00 138KV CKT 1
FDNS	00NR	3	20WP	G15_048	FROM->TO	G14-057T 345.00 - SUNNYSIDE 345KV CKT 1	717	789	0.04908	110.5432	GEN629071 1-BURLINGTON GENERATOR FOR UNIT NO 1 E
FDNS	00NR	3	20WP	G15_048	FROM->TO	G14-057T 345.00 - SUNNYSIDE 345KV CKT 1	717	789	0.04855	110.5428	CIMARRON - MATHWSN7 345.00 345KV CKT 1
FDNS	00NR	3	20WP	G15_048	FROM->TO	G14-057T 345.00 - SUNNYSIDE 345KV CKT 1	717	789	0.04855	110.5428	CIMARRON - MATHWSN7 345.00 345KV CKT 2
FDNS	00NR	3	20WP	G15_048	FROM->TO	G14-057T 345.00 - SUNNYSIDE 345KV CKT 1	717	789	0.04299	110.5403	P12:138:WFEC:MSL14
FDNS	00NR	3	20WP	G15_048	FROM->TO	G14-057T 345.00 - SUNNYSIDE 345KV CKT 1	717	789	0.04948	110.5392	P12:138:OKGE:3TERM21
FDNS	00NR	3	20WP	G15_048	FROM->TO	G14-057T 345.00 - SUNNYSIDE 345KV CKT 1	717	789	0.04472	110.5365	G15063_T 345.00 - MATHWSN7 345.00 345KV CKT 1
FDNS	00NR	3	20WP	G15_048	FROM->TO	G14-057T 345.00 - SUNNYSIDE 345KV CKT 1	717	789	0.04908	110.5362	BURLINGTON NO1 + NO 2 + NO 3 161/20.0KV TRANSFORMER CKT 1
FDNSLock	00NR	3	16WP	G15_048	FROM->TO	G14-057T 345.00 - SUNNYSIDE 345KV CKT 1	717	789	0.04941	110.5323	GEN629075 1-OTTUMWA GENERATOR FOR OTTUMWA UNIT NO 1
FDNS	00NR	3	20WP	G15_048	FROM->TO	G14-057T 345.00 - SUNNYSIDE 345KV CKT 1	717	789	0.04915	110.5286	P12:138:WFEC:MSL11
FDNS	00NR	3	20WP	G15_048	FROM->TO	G14-057T 345.00 - SUNNYSIDE 345KV CKT 1	717	789	0.04915	110.5286	P12:138:WFEC-AEPW:PHAROAH4:LONEOAK4
FDNS	00NR	3	20WP	G15_048	FROM->TO	G14-057T 345.00 - SUNNYSIDE 345KV CKT 1	717	789	0.04908	110.525	GEN615010 1-STANTON4
FDNS	00NR	3	20WP	G15_048	FROM->TO	G14-057T 345.00 - SUNNYSIDE 345KV CKT 1	717	789	0.04908	110.5192	GEN615021 1-GRE-ER 14G 16.000
FDNS	00NR	3	20WP	G15_048	FROM->TO	G14-057T 345.00 - SUNNYSIDE 345KV CKT 1	717	789	0.04916	110.5122	GLASSES - MADILL INDUSTRIAL TAP 138KV CKT 1
FDNS	00NR	3	20WP	G15_048	FROM->TO	G14-057T 345.00 - SUNNYSIDE 345KV CKT 1	717	789	0.04916	110.4994	CANEY CREEK - JOHNSON COUNTY 138KV CKT 1
FDNS	00NR	3	20WP	G15_048	FROM->TO	G14-057T 345.00 - SUNNYSIDE 345KV CKT 1	717	789	0.04299	110.4961	BEARCAT 138.00 - MOORELAND 138KV CKT 1
FDNS	00NR	3	20WP	G15_048	FROM->TO	G14-057T 345.00 - SUNNYSIDE 345KV CKT 1	717	789	0.04919	110.4941	P12:138:WFEC:MSL08
FDNS	00NR	3	20WP	G15_048	FROM->TO	G14-057T 345.00 - SUNNYSIDE 345KV CKT 1	717	789	0.04908	110.4852	GEN531447 1-HOLCOMB GENERATOR
FDNS	00NR	3	20WP	G15_048	FROM->TO	G14-057T 345.00 - SUNNYSIDE 345KV CKT 1	717	789	0.04908	110.4848	GEN515443 1-MNCOWND1 0.7000
FDNS	00NR	3	20WP	G15_048	FROM->TO	G14-057T 345.00 - SUNNYSIDE 345KV CKT 1	717	789	0.04908	110.4842	INDEPENDENCE 500/26.0KV TRANSFORMER CKT 1

SOLUTION	GROUP	SCENARIO	SEASON	SOURCE	DIRECTION	MONITORED ELEMENT	RATEA (MVA)	RATEB(MVA)	TDF	TC%LOADING (% MVA)	CONTINGENCY
FDNS	00NR	3	20WP	G15_048	FROM->TO	G14-057T 345.00 - SUNNYSIDE 345KV CKT 1	717	789	0.05046	110.4812	LEBANON - TEXOMA JCT 138KV CKT 1
FDNS	00NR	3	20WP	G15_048	FROM->TO	G14-057T 345.00 - SUNNYSIDE 345KV CKT 1	717	789	0.04908	110.4761	GEN560183 1-REDHIL-WTG1 12.000
FDNS	00NR	3	20WP	G15_048	FROM->TO	G14-057T 345.00 - SUNNYSIDE 345KV CKT 1	717	789	0.04866	110.4698	PRAIRIE POINT - RATLIFF 138KV CKT 1
FDNS	00NR	3	20WP	G15_048	FROM->TO	G14-057T 345.00 - SUNNYSIDE 345KV CKT 1	717	789	0.04908	110.4591	GEN600067 9-HIGH BRIDGE
FDNS	00NR	3	20WP	G15_048	FROM->TO	G14-057T 345.00 - SUNNYSIDE 345KV CKT 1	717	789	0.04908	110.4575	P12:230:UMZB:# 112 #: NU IN SD. NU-RCDC & DRY CREEK XFMR
FDNS	00NR	3	20WP	G15_048	FROM->TO	G14-057T 345.00 - SUNNYSIDE 345KV CKT 1	717	789	0.04908	110.4571	RCDC EAST 4230.00 - RED CEDAR DC 230KV CKT 1
FDNS	00NR	3	20WP	G15_048	FROM->TO	G14-057T 345.00 - SUNNYSIDE 345KV CKT 1	717	789	0.04926	110.4567	OVEXFRMCCOVE
FDNS	00NR	3	20WP	G15_048	FROM->TO	G14-057T 345.00 - SUNNYSIDE 345KV CKT 1	717	789	0.04903	110.4537	CARTER - CHICKASAW 138KV CKT 1
FDNS	00NR	3	20WP	G15_048	FROM->TO	G14-057T 345.00 - SUNNYSIDE 345KV CKT 1	717	789	0.04902	110.4531	ALTUS JUNCTION - RUSSELL 138KV CKT 1
FDNS	00NR	3	20WP	G15_048	FROM->TO	G14-057T 345.00 - SUNNYSIDE 345KV CKT 1	717	789	0.04902	110.4531	ALTUS JUNCTION - RUSSELL 138KV CKT 1
FDNS	00NR	3	20WP	G15_048	FROM->TO	G14-057T 345.00 - SUNNYSIDE 345KV CKT 1	717	789	0.04916	110.4518	GLASSES - RUSSETT 138KV CKT 1
FDNS	00NR	3	20WP	G15_048	FROM->TO	G14-057T 345.00 - SUNNYSIDE 345KV CKT 1	717	789	0.04928	110.4453	CANADIAN RIVER - MCALESTER SOUTH 138KV CKT 1
FDNS	00NR	3	20WP	G15_048	FROM->TO	G14-057T 345.00 - SUNNYSIDE 345KV CKT 1	717	789	0.04928	110.4453	CANADIAN RIVER - MCALESTER SOUTH 138KV CKT 1
FDNS	00NR	3	20WP	G15_048	FROM->TO	G14-057T 345.00 - SUNNYSIDE 345KV CKT 1	717	789	0.04928	110.4435	CANADIAN RIVER () 345/138/13.8KV TRANSFORMER CKT 1
FDNS	00NR	3	20WP	G15_048	FROM->TO	G14-057T 345.00 - SUNNYSIDE 345KV CKT 1	717	789	0.04928	110.4435	CANADIAN RIVER () 345/138/13.8KV TRANSFORMER CKT 1
FDNS	00NR	3	20WP	G15_048	FROM->TO	G14-057T 345.00 - SUNNYSIDE 345KV CKT 1	717	789	0.04914	110.4405	GRPRAR1-LNX3345.00 - HOLT.CO3 345.00 345KV CKT 1
FDNS	00NR	3	20WP	G15_048	FROM->TO	G14-057T 345.00 - SUNNYSIDE 345KV CKT 1	717	789	0.04914	110.4383	GRPRAR1-LNX3345.00 - GRPRAR 345KV CKT Z
FDNS	00NR	3	20WP	G15_048	FROM->TO	G14-057T 345.00 - SUNNYSIDE 345KV CKT 1	717	789	0.04908	110.4359	GEN563242 1-G15090_3 0.6900
FDNS	00NR	3	20WP	G15_048	FROM->TO	G14-057T 345.00 - SUNNYSIDE 345KV CKT 1	717	789	0.04905	110.4311	HUGO (HUGO 1) 345/138/13.8KV TRANSFORMER CKT 1
FDNS	00NR	3	20WP	G15_048	FROM->TO	G14-057T 345.00 - SUNNYSIDE 345KV CKT 1	717	789	0.0489	110.4292	ROCKY POINT - SPRINGDALE 138KV CKT 1
FDNS	00NR	3	20WP	G15_048	FROM->TO	G14-057T 345.00 - SUNNYSIDE 345KV CKT 1	717	789	0.04938	110.419	CHAMBER SPRINGS - CLARKSVILLE 345KV CKT 1
FDNS	00NR	3	20WP	G15_048	FROM->TO	G14-057T 345.00 - SUNNYSIDE 345KV CKT 1	717	789	0.04908	110.4157	GEN562902 1-G15052_3 0.6900
FDNS	00NR	3	20WP	G15_048	FROM->TO	G14-057T 345.00 - SUNNYSIDE 345KV CKT 1	717	789	0.04831	110.4053	P12:138:AEPW:112GORE4:SNYDER-4
FDNS	00NR	3	16WP	G15_048	FROM->TO	G14-057T 345.00 - SUNNYSIDE 345KV CKT 1	717	789	0.04941	110.405	SHERBURNE CO 345/24.0KV TRANSFORMER CKT 1
FDNS	00NR	3	20WP	G15_048	FROM->TO	G14-057T 345.00 - SUNNYSIDE 345KV CKT 1	717	789	0.04908	110.4025	GEN562078 1-G11_051_3 0.6900
FDNS	00NR	3	20WP	G15_048	FROM->TO	G14-057T 345.00 - SUNNYSIDE 345KV CKT 1	717	789	0.0486	110.4003	JOLLYVILLE - SULPHR 4 138.00 138KV CKT 1
FDNS	00NR	3	16WP	G15_048	FROM->TO	G14-057T 345.00 - SUNNYSIDE 345KV CKT 1	717	789	0.04941	110.4	GEN635214 4-NEAL UNIT 4
FDNS	00NR	3	20WP	G15_048	FROM->TO	G14-057T 345.00 - SUNNYSIDE 345KV CKT 1	717	789	0.04908	110.3996	GEN629072 4-LANSING GENERATOR FOR UNITS NO4 EIA CODE 1
FDNS	00NR	3	20WP	G15_048	FROM->TO	G14-057T 345.00 - SUNNYSIDE 345KV CKT 1	717	789	0.04908	110.397	GEN562802 1-G15039_3 0.3570
FDNS	00NR	3	20WP	G15_048	FROM->TO	G14-057T 345.00 - SUNNYSIDE 345KV CKT 1	717	789	0.04908	110.3855	GEN524285 1-WILDORADO WIND GEN
FDNS	00NR	3	20WP	G15_048	FROM->TO	G14-057T 345.00 - SUNNYSIDE 345KV CKT 1	717	789	0.04908	110.368	GEN560331 1-G10-46 13.800
FDNS	00NR	3	20WP	G15_048	FROM->TO	G14-057T 345.00 - SUNNYSIDE 345KV CKT 1	717	789	0.04908	110.3627	GEN524295 1-SPNSPUR_WND10.6900
FDNS	00NR	3	20WP	G15_048	FROM->TO	G14-057T 345.00 - SUNNYSIDE 345KV CKT 1	717	789	0.04908	110.3483	GEN562587 1-G14_056_3 0.6900
FDNS	00NR	3	20WP	G15_048	FROM->TO	G14-057T 345.00 - SUNNYSIDE 345KV CKT 1	717	789	0.04908	110.3477	GEN657749 1-YOUNG 1 GENERATOR
FDNS	00NR	3	20WP	G15_048	FROM->TO	G14-057T 345.00 - SUNNYSIDE 345KV CKT 1	717	789	0.04908	110.342	GEN514805 1-SOONER UNIT 1
FDNS	00NR	3	20WP	G15_048	FROM->TO	G14-057T 345.00 - SUNNYSIDE 345KV CKT 1	717	789	0.04908	110.337	GEN562269 1-G12-020-1 0.6900
FDNS	00NR	3	20WP	G15_048	FROM->TO	G14-057T 345.00 - SUNNYSIDE 345KV CKT 1	717	789	0.04908	110.3367	GEN524023 1-NICHOLS GEN #3 22 KV
FDNS	00NR	3	20WP	G15_048	FROM->TO	G14-057T 345.00 - SUNNYSIDE 345KV CKT 1	717	789	0.0486	110.3364	JOLLYVILLE - KERR MCGEE CIMARRON 138KV CKT 1
FDNS	00NR	3	16WP	G15_048	FROM->TO	G14-057T 345.00 - SUNNYSIDE 345KV CKT 1	717	789	0.04941	110.328	GEN563273 2-G15093_4 0.6900
FDNS	00NR	3	20WP	G15_048	FROM->TO	G14-057T 345.00 - SUNNYSIDE 345KV CKT 1	717	789	0.04908	110.3222	GEN514806 1-SOONER UNIT 2
FDNS	00NR	3	20WP	G15_048	FROM->TO	G14-057T 345.00 - SUNNYSIDE 345KV CKT 1	717	789	0.04912	110.3219	CROCKETT - TENASKA RUSK COUNTY 345KV CKT 1
FDNS	00NR	3	16WP	G15_048	FROM->TO	G14-057T 345.00 - SUNNYSIDE 345KV CKT 1	717	789	0.04941	110.3185	GEN563043 1-G15068_4 0.6900
FDNS	00NR	3	20WP	G15_048	FROM->TO	G14-057T 345.00 - SUNNYSIDE 345KV CKT 1	717	789	0.04912	110.3172	LEBROCK - TENASKA RUSK COUNTY 345KV CKT 1
FDNS	00NR	3	16WP	G15_048	FROM->TO	G14-057T 345.00 - SUNNYSIDE 345KV CKT 1	717	789	0.0494	110.3023	CHISHOLM6 230.00 - SWEETWATER 230KV CKT 1
FDNS	00NR	3	16WP	G15_048	FROM->TO	G14-057T 345.00 - SUNNYSIDE 345KV CKT 1	717	789	0.04941	110.2979	GEN526333 1-JONES GEN #3 21 KV
FDNS	00NR	3	16WP	G15_048	FROM->TO	G14-057T 345.00 - SUNNYSIDE 345KV CKT 1	717	789	0.04941	110.2979	GEN526334 1-JONES_4 116.500
FDNS	00NR	3	20WP	G15_048	FROM->TO	G14-057T 345.00 - SUNNYSIDE 345KV CKT 1	717	789	0.04908	110.2978	GEN562812 1-G15040_3 0.3570
FDNS	00NR	3	20WP	G15_048	FROM->TO	G14-057T 345.00 - SUNNYSIDE 345KV CKT 1	717	789	0.04908	110.2935	GEN562270 1-G12-020-2 0.6900
FDNS	00NR	3	20WP	G15_048	FROM->TO	G14-057T 345.00 - SUNNYSIDE 345KV CKT 1	717	789	0.0486	110.2924	ARBWIND4 138.00 - KERR MCGEE CIMARRON 138KV CKT 1
FDNS	00NR	3	20WP	G15_048	FROM->TO	G14-057T 345.00 - SUNNYSIDE 345KV CKT 1	717	789	0.04908	110.2912	GEN563132 1-G15078_3 0.3570
FDNS	00NR	3	20WP	G15_048	FROM->TO	G14-057T 345.00 - SUNNYSIDE 345KV CKT 1	717	789	0.04908	110.2846	GEN563102 1-G15075_3 0.5500
FDNS	00NR	3	20WP	G15_048	FROM->TO	G14-057T 345.00 - SUNNYSIDE 345KV CKT 1	717	789	0.04908	110.2683	GEN562882 1-G15047_3 0.6900
FDNS	00NR	3	20WP	G15_048	FROM->TO	G14-057T 345.00 - SUNNYSIDE 345KV CKT 1	717	789	0.04908	110.2606	GEN562974 1-G15060_5 0.6900
FDNS	00NR	3	20WP	G15_048	FROM->TO	G14-057T 345.00 - SUNNYSIDE 345KV CKT 1	717	789	0.04908	110.2605	GEN563062 1-G15071_3 0.6900
FDNS	00NR	3	20WP	G15_048	FROM->TO	G14-057T 345.00 - SUNNYSIDE 345KV CKT 1	717	789	0.04908	110.251	GEN562973 1-G15060_4 0.6900
FDNS	00NR	3	16WP	G15_048	FROM->TO	G14-057T 345.00 - SUNNYSIDE 345KV CKT 1	717	789	0.04941	110.2441	GEN525844 1-ELK_1 118.000
FDNS	00NR	3	16WP	G15_048	FROM->TO	G14-057T 345.00 - SUNNYSIDE 345KV CKT 1	717	789	0.04941	110.2387	GEN525845 1-ELK_2 1 138.00
FDNS	00NR	3	20WP	G15_048	FROM->TO	G14-057T 345.00 - SUNNYSIDE 345KV CKT 1	717	789	0.04908	110.2364	GEN345671 2-1RUSH G2 18.000
FDNS	00NR	3	20WP	G15_048	FROM->TO	G14-057T 345.00 - SUNNYSIDE 345KV CKT 1	717	789	0.04865	110.235	CHICKASAW - TOTAL 138KV CKT 1
FDNS	00NR	3	20WP	G15_048	FROM->TO	G14-057T 345.00 - SUNNYSIDE 345KV CKT 1	717	789	0.04908	110.2345	GEN345670 1-1RUSH G1 18.000
FDNS	00NR	3	20WP	G15_048	FROM->TO	G14-057T 345.00 - SUNNYSIDE 345KV CKT 1	717	789	0.04905	110.229	BROWN - RUSSETT 138KV CKT 1
FDNS	00NR	3	20WP	G15_048	FROM->TO	G14-057T 345.00 - SUNNYSIDE 345KV CKT 1	717	789	0.04908	110.2248	GEN521112 1-ORME3 13.800
FDNS	00NR	3	16WP	G15_048	FROM->TO	G14-057T 345.00 - SUNNYSIDE 345KV CKT 1	717	789	0.04941	110.2242	GEN600002 3-SHERBURNE CNTY G3
FDNS	00NR	3	20WP	G15_048	FROM->TO	G14-057T 345.00 - SUNNYSIDE 345KV CKT 1	717	789	0.04908	110.2069	4SIOUX 1 138.00 138/18.0KV TRANSFORMER CKT 1
FDNS	00NR	3	20WP	G15_048	FROM->TO	G14-057T 345.00 - SUNNYSIDE 345KV CKT 1	717	789	0.04908	110.2006	GEN560105 1-G08-22 0.6900
FDNS	00NR	3	16WP	G15_048	FROM->TO	G14-057T 345.00 - SUNNYSIDE 345KV CKT 1	717	789	0.04941	110.2	GEN344225 1-1CAL G1 25.000
FDNS	00NR	3	20WP	G15_048	FROM->TO	G14-057T 345.00 - SUNNYSIDE 345KV CKT 1	717	789	0.04908	110.1843	GEN562550 1-G14_040_3 0.6900
FDNS	00NR	3	20WP	G15_048	FROM->TO	G14-057T 345.00 - SUNNYSIDE 345KV CKT 1	717	789	0.04908	110.1721	GEN681522 3-GENOA 3
FDNS	00NR	3	20WP	G15_048	FROM->TO	G14-057T 345.00 - SUNNYSIDE 345KV CKT 1	717	789	0.04905	110.1597	RUSSETT - RUSSETT 138KV CKT 1
FDNS	00NR	3	20WP	G15_048	FROM->TO	G14-057T 345.00 - SUNNYSIDE 345KV CKT 1	717	789	0.04908	110.1569	GEN520811 1-ANADRK4
FDNS	00NR	3	16WP	G15_048	FROM->TO	G14-057T 345.00 - SUNNYSIDE 345KV CKT 1	717	789	0.04941	110.1546	GEN563202 1-G15085_3 0.5500
FDNS	00NR	3	20WP	G15_048	FROM->TO	G14-057T 345.00 - SUNNYSIDE 345KV CKT 1	717	789	0.04908	110.1419	EASTDC - ERCOT EQUIVALENCE 345KV CKT 1
FDNS	00NR	3	20WP	G15_048	FROM->TO	G14-057T 345.00 - SUNNYSIDE 345KV CKT 1	717	789	0.04908	110.1409	GEN527161 1-MUSTANG GEN #1
FDNS	00NR	3	20WP	G15_048	FROM->TO	G14-057T 345.00 - SUNNYSIDE 345KV CKT 1	717	789	0.04908	110.1409	GEN527162 1-MUSTANG GEN #2
FDNS	00NR	3	20WP	G15_048	FROM->TO	G14-057T 345.00 - SUNNYSIDE 345KV CKT 1	717	789	0.04883	110.1322	ROCKY POINT - SUNNYSIDE 138KV CKT 1
FDNS	00NR	3	20WP	G15_048	FROM->TO	G14-057T 345.00 - SUNNYSIDE 345KV CKT 1	717	789	0.04908	110.1314	GEN511962 2-RKYRDGW2-1 0.7000
FDNS	00NR	3	20WP	G15_048	FROM->TO	G14-057T 345.00 - SUNNYSIDE 345KV CKT 1	717	789	0.04908	110.1099	GEN672321 1-SHAND GENERATOR 1
FDNS	00NR	3	20WP	G15_048	FROM->TO	G14-057T 345.00 - SUNNYSIDE 345KV CKT 1	717	789	0.04903	110.1098	RUSSETT - SPRINGDALE 138KV CKT 1
FDNS	00NR	3	20WP	G15_048	FROM->TO	G14-057T 345.00 - SUNNYSIDE 345KV CKT 1	717	789	0.04908	110.1087	GEN525494 1-PLANT X GEN #4 20 KV

SOLUTION	GROUP	SCENARIO	SEASON	SOURCE	DIRECTION	MONITORED ELEMENT	RATEA (MVA)	RATEB(MVA)	TDF	TC%LOADING (% MVA)	CONTINGENCY
FDNS	00NR	3	16WP	G15_048	FROM->TO	G14-057T 345.00 - SUNNYSIDE 345KV CKT 1	717	789	0.04941	110.1083	GEN525562 1-TOLK GEN #2 24 KV
FDNS	00NR	3	20WP	G15_048	FROM->TO	G14-057T 345.00 - SUNNYSIDE 345KV CKT 1	717	789	0.04908	110.0936	GEN563192 1-G15084_3 0.5500
FDNS	00NR	3	20WP	G15_048	FROM->TO	G14-057T 345.00 - SUNNYSIDE 345KV CKT 1	717	789	0.04908	110.0933	GEN527882 1-CUNNINGHAM GEN #2 20 KV
FDNS	00NR	3	20WP	G15_048	FROM->TO	G14-057T 345.00 - SUNNYSIDE 345KV CKT 1	717	789	0.04908	110.087	GEN672310 1-POPLAR RIVER GENERATOR 1
FDNS	00NR	3	20WP	G15_048	FROM->TO	G14-057T 345.00 - SUNNYSIDE 345KV CKT 1	717	789	0.04908	110.087	GEN672311 2-POPLAR RIVER GENERATOR 2
FDNS	00NR	3	20WP	G15_048	FROM->TO	G14-057T 345.00 - SUNNYSIDE 345KV CKT 1	717	789	0.04908	110.0849	GEN344895 2-1LAB G2 20.000
FDNS	00NR	3	20WP	G15_048	FROM->TO	G14-057T 345.00 - SUNNYSIDE 345KV CKT 1	717	789	0.04907	110.0781	P12:138:WFEC-AEPW:GOLDENSW4:CRAIGJT4
FDNS	00NR	3	20WP	G15_048	FROM->TO	G14-057T 345.00 - SUNNYSIDE 345KV CKT 1	717	789	0.04908	110.0779	GEN527163 1-MUSTANG GEN #3 22 KV
FDNS	00NR	3	20WP	G15_048	FROM->TO	G14-057T 345.00 - SUNNYSIDE 345KV CKT 1	717	789	0.04908	110.0777	GEN672306 6-BOUNDARY DAM GENERATOR 6
FDNS	00NR	3	20WP	G15_048	FROM->TO	G14-057T 345.00 - SUNNYSIDE 345KV CKT 1	717	789	0.04831	110.0767	ARKANSAS NUCLEAR ONE - FT SMITH 500KV CKT 1
FDNS	00NR	3	20WP	G15_048	FROM->TO	G14-057T 345.00 - SUNNYSIDE 345KV CKT 1	717	789	0.04831	110.0767	ARKANSAS NUCLEAR ONE - FT SMITH 500KV CKT 1
FDNS	00NR	3	20WP	G15_048	FROM->TO	G14-057T 345.00 - SUNNYSIDE 345KV CKT 1	717	789	0.04908	110.0692	CLAY BOSWELL 230/20.9KV TRANSFORMER CKT 1
FDNS	00NR	3	20WP	G15_048	FROM->TO	G14-057T 345.00 - SUNNYSIDE 345KV CKT 1	717	789	0.04908	110.0685	GEN511853 1-COMANCHE #3
FDNS	00NR	3	16WP	G15_048	FROM->TO	G14-057T 345.00 - SUNNYSIDE 345KV CKT 1	717	789	0.04941	110.0622	GEN527166 1-MUSTANG_6 118.000
FDNS	00NR	3	20WP	G15_048	FROM->TO	G14-057T 345.00 - SUNNYSIDE 345KV CKT 1	717	789	0.04908	110.0608	GEN562512 1-G14_020_3 0.6900
FDNS	00NR	3	20WP	G15_048	FROM->TO	G14-057T 345.00 - SUNNYSIDE 345KV CKT 1	717	789	0.04908	110.0598	GEN562892 1-G15048_3 0.6900
FDNS	00NR	3	20WP	G15_048	FROM->TO	G14-057T 345.00 - SUNNYSIDE 345KV CKT 1	717	789	0.04908	110.0557	GEN344896 3-1LAB G3 20.000
FDNS	00NR	3	20WP	G15_048	FROM->TO	G14-057T 345.00 - SUNNYSIDE 345KV CKT 1	717	789	0.04908	110.0546	GEN344897 4-1LAB G4 20.000
FDNS	00NR	3	20WP	G15_048	FROM->TO	G14-057T 345.00 - SUNNYSIDE 345KV CKT 1	717	789	0.04908	110.0543	GEN344894 1-1LAB G1 20.000
FDNS	00NR	3	20WP	G15_048	FROM->TO	G14-057T 345.00 - SUNNYSIDE 345KV CKT 1	717	789	0.04913	110.052	P12:138:WFEC:MSL16
FDNS	00NR	3	20WP	G15_048	FROM->TO	G14-057T 345.00 - SUNNYSIDE 345KV CKT 1	717	789	0.04908	110.048	GEN681542 6-JP MADGETT
FDNS	00NR	3	20WP	G15_048	FROM->TO	G14-057T 345.00 - SUNNYSIDE 345KV CKT 1	717	789	0.04849	110.045	ARDMORE WEST - CARTER 138KV CKT 1
FDNS	00NR	3	20WP	G15_048	FROM->TO	G14-057T 345.00 - SUNNYSIDE 345KV CKT 1	717	789	0.04908	110.0283	GEN523461 1-BLACKHAWK GEN #1
FDNS	00NR	3	20WP	G15_048	FROM->TO	G14-057T 345.00 - SUNNYSIDE 345KV CKT 1	717	789	0.04908	110.0282	GEN523462 1-BLACKHAWK GEN #2
FDNS	00NR	3	16WP	G15_048	FROM->TO	G14-057T 345.00 - SUNNYSIDE 345KV CKT 1	717	789	0.04949	110.0259	LYDIA - WELSH 345KV CKT 1
FDNS	00NR	3	16WP	G15_048	FROM->TO	G14-057T 345.00 - SUNNYSIDE 345KV CKT 1	717	789	0.04949	110.0259	LYDIA - WELSH 345KV CKT 1
FDNS	00NR	3	20WP	G15_048	FROM->TO	G14-057T 345.00 - SUNNYSIDE 345KV CKT 1	717	789	0.04908	110.0211	GEN511852 1-COMANCHE #2
FDNS	00NR	3	20WP	G15_048	FROM->TO	G14-057T 345.00 - SUNNYSIDE 345KV CKT 1	717	789	0.04906	110.0017	P12:138:WFEC:MSL07
FDNS	00NR	3	20WP	G15_048	FROM->TO	G14-057T 345.00 - SUNNYSIDE 345KV CKT 1	717	789	0.04906	110.0017	P12:138:WFEC-AEPW:HUGOPP4:ATOKA--4
FDNS	00NR	3	20WP	G15_048	FROM->TO	G14-057T 345.00 - SUNNYSIDE 345KV CKT 1	717	789	0.04831	109.9974	CACHE - SNYDER 138KV CKT 1
FDNS	00NR	3	16WP	G15_048	FROM->TO	G14-057T 345.00 - SUNNYSIDE 345KV CKT 1	717	789	0.04919	109.9851	JOHNSON COUNTY (JOHNCO) 345/138/13.8KV TRANSFORMER CKT 1
FDNS	00NR	3	20WP	G15_048	FROM->TO	G14-057T 345.00 - SUNNYSIDE 345KV CKT 1	717	789	0.04906	109.9835	P12:138:WFEC:MSL06
FDNS	00NR	3	20WP	G15_048	FROM->TO	G14-057T 345.00 - SUNNYSIDE 345KV CKT 1	717	789	0.04906	109.9834	P12:138:AEPW-SWPA:LONEOAK4:TUPELO4
FDNS	00NR	3	20WP	G15_048	FROM->TO	G14-057T 345.00 - SUNNYSIDE 345KV CKT 1	717	789	0.04857	109.9829	SUNNYSIDE (SUNNYSD5) 345/138/13.8KV TRANSFORMER CKT 1
FDNS	00NR	3	16WP	G15_048	FROM->TO	G14-057T 345.00 - SUNNYSIDE 345KV CKT 1	717	789	0.04941	109.9726	GEN635023 3-WALTER SCOTT UNIT 3
FDNS	00NR	3	20WP	G15_048	FROM->TO	G14-057T 345.00 - SUNNYSIDE 345KV CKT 1	717	789	0.04908	109.9691	GEN562699 1-G15_018_3 0.6900
FDNS	00NR	3	20WP	G15_048	FROM->TO	G14-057T 345.00 - SUNNYSIDE 345KV CKT 1	717	789	0.04908	109.9656	GEN521111 1-ORME2 13.800
FDNS	00NR	3	20WP	G15_048	FROM->TO	G14-057T 345.00 - SUNNYSIDE 345KV CKT 1	717	789	0.04908	109.9576	GEN563162 1-G15081_3 0.6900
FDNS	00NR	3	20WP	G15_048	FROM->TO	G14-057T 345.00 - SUNNYSIDE 345KV CKT 1	717	789	0.04903	109.9548	G15085_T 138.00 - RUSSELL 138KV CKT 1
FDNS	00NR	3	20WP	G15_048	FROM->TO	G14-057T 345.00 - SUNNYSIDE 345KV CKT 1	717	789	0.04908	109.9527	GEN521110 1-ORME1 13.800
FDNS	00NR	3	20WP	G15_048	FROM->TO	G14-057T 345.00 - SUNNYSIDE 345KV CKT 1	717	789	0.04849	109.9336	ARDMORE WEST - UNIROYAL 138KV CKT 1
FDNS	00NR	3	16WP	G15_048	FROM->TO	G14-057T 345.00 - SUNNYSIDE 345KV CKT 1	717	789	0.04941	109.9237	GEN562590 1-G14_057_3 0.6900
FDNS	00NR	3	20WP	G15_048	FROM->TO	G14-057T 345.00 - SUNNYSIDE 345KV CKT 1	717	789	0.05158	109.9147	CLARKSVILLE - MUSKOGEE 345KV CKT 1
FDNS	00NR	3	20WP	G15_048	FROM->TO	G14-057T 345.00 - SUNNYSIDE 345KV CKT 1	717	789	0.05158	109.9147	CLARKSVILLE - MUSKOGEE 345KV CKT 1
FDNS	00NR	3	20WP	G15_048	FROM->TO	G14-057T 345.00 - SUNNYSIDE 345KV CKT 1	717	789	0.04908	109.9067	GEN563292 1-G15095_3 0.6900
FDNS	00NR	3	20WP	G15_048	FROM->TO	G14-057T 345.00 - SUNNYSIDE 345KV CKT 1	717	789	0.0488	109.9062	CARTRCO4 138.00 - RATLIFF 138KV CKT 1
FDNS	00NR	3	16WP	G15_048	FROM->TO	G14-057T 345.00 - SUNNYSIDE 345KV CKT 1	717	789	0.04941	109.8862	GEN562762 1-G15033_3 0.6900
FDNS	00NR	3	20WP	G15_048	FROM->TO	G14-057T 345.00 - SUNNYSIDE 345KV CKT 1	717	789	0.04908	109.8853	GEN661015 1-COYOTE
FDNS	00NR	3	20WP	G15_048	FROM->TO	G14-057T 345.00 - SUNNYSIDE 345KV CKT 1	717	789	0.0489	109.8801	P12:138:OKGE:3TERM40
FDNS	00NR	3	16WP	G15_048	FROM->TO	G14-057T 345.00 - SUNNYSIDE 345KV CKT 1	717	789	0.04941	109.8763	GEN562655 1-G14_074_3 0.6900
FDNS	00NR	3	20WP	G15_048	FROM->TO	G14-057T 345.00 - SUNNYSIDE 345KV CKT 1	717	789	0.04908	109.868	GEN563122 1-G15077_3 0.3850
FDNS	00NR	3	20WP	G15_048	FROM->TO	G14-057T 345.00 - SUNNYSIDE 345KV CKT 1	717	789	0.04908	109.8597	GEN562861 1-G15045_2 0.4800
FDNS	00NR	3	16WP	G15_048	FROM->TO	G14-057T 345.00 - SUNNYSIDE 345KV CKT 1	717	789	0.04941	109.827	GEN562685 1-G15_013_3 0.3550
FDNS	00NR	3	16WP	G15_048	FROM->TO	G14-057T 345.00 - SUNNYSIDE 345KV CKT 1	717	789	0.04941	109.8155	GEN525561 1-TOLK GEN #1 24 KV
FDNS	00NR	3	20WP	G15_048	FROM->TO	G14-057T 345.00 - SUNNYSIDE 345KV CKT 1	717	789	0.04908	109.7898	GRAPEVINE INTERCHANGE - STATELINE INTERCHANGE 230KV CKT 1
FDNS	00NR	3	20WP	G15_048	FROM->TO	G14-057T 345.00 - SUNNYSIDE 345KV CKT 1	717	789	0.04908	109.7898	GRAPEVINE INTERCHANGE - STATELINE INTERCHANGE 230KV CKT 1
FDNS	00NR	3	20WP	G15_048	FROM->TO	G14-057T 345.00 - SUNNYSIDE 345KV CKT 1	717	789	0.04908	109.7741	GEN657748 1-YOUNG 2 GENERATOR
FDNS	00NR	3	20WP	G15_048	FROM->TO	G14-057T 345.00 - SUNNYSIDE 345KV CKT 1	717	789	0.04908	109.7573	GEN527883 1-CUNNINGHAM GEN #3 22 KV
FDNS	00NR	3	20WP	G15_048	FROM->TO	G14-057T 345.00 - SUNNYSIDE 345KV CKT 1	717	789	0.04908	109.7543	GEN527884 1-CUNNINGHAM GEN #4 22 KV
FDNS	00NR	3	20WP	G15_048	FROM->TO	G14-057T 345.00 - SUNNYSIDE 345KV CKT 1	717	789	0.04905	109.724	P12:138:AEPW:SHAM4WT:CHILD4WT
FDNS	00NR	3	20WP	G15_048	FROM->TO	G14-057T 345.00 - SUNNYSIDE 345KV CKT 1	717	789	0.04849	109.7208	SUNNYSIDE - UNIROYAL 138KV CKT 1
FDNS	00NR	3	20WP	G15_048	FROM->TO	G14-057T 345.00 - SUNNYSIDE 345KV CKT 1	717	789	0.05066	109.6964	P12:138:WFEC:MSL15
FDNS	00NR	3	20WP	G15_048	FROM->TO	G14-057T 345.00 - SUNNYSIDE 345KV CKT 1	717	789	0.04692	109.6947	CHISHOLM7 345.00 () 345/230/13.2KV TRANSFORMER CKT 1
FDNS	00NR	3	20WP	G15_048	FROM->TO	G14-057T 345.00 - SUNNYSIDE 345KV CKT 1	717	789	0.04908	109.6877	GEN562704 1-G15_020_3 0.3550
FDNS	00NR	3	16WP	G15_048	FROM->TO	G14-057T 345.00 - SUNNYSIDE 345KV CKT 1	717	789	0.04941	109.6872	GEN563272 1-G15093_3 0.6900
FDNS	00NR	3	20WP	G15_048	FROM->TO	G14-057T 345.00 - SUNNYSIDE 345KV CKT 1	717	789	0.04908	109.6868	GEN526331 1-JONES GEN #1 22 KV
FDNS	00NR	3	20WP	G15_048	FROM->TO	G14-057T 345.00 - SUNNYSIDE 345KV CKT 1	717	789	0.04908	109.6866	GEN526332 1-JONES GEN #2 21 KV
FDNS	00NR	3	20WP	G15_048	FROM->TO	G14-057T 345.00 - SUNNYSIDE 345KV CKT 1	717	789	0.04908	109.6806	GEN620315 1-BIG STONE GEN
FDNS	00NR	3	20WP	G15_048	FROM->TO	G14-057T 345.00 - SUNNYSIDE 345KV CKT 1	717	789	0.04908	109.6773	GEN562992 1-G15063_3 0.6900
FDNS	00NR	3	16WP	G15_048	FROM->TO	G14-057T 345.00 - SUNNYSIDE 345KV CKT 1	717	789	0.04941	109.6728	GEN527903 1-HOBBS PLANT #3 (ST)
FDNS	00NR	3	20WP	G15_048	FROM->TO	G14-057T 345.00 - SUNNYSIDE 345KV CKT 1	717	789	0.04908	109.6301	GEN562952 1-G15057_3 0.6500
FDNS	00NR	3	20WP	G15_048	FROM->TO	G14-057T 345.00 - SUNNYSIDE 345KV CKT 1	717	789	0.04906	109.6281	GRAPEVINE INTERCHANGE - NICHOLS STATION 230KV CKT 1
FDNS	00NR	3	20WP	G15_048	FROM->TO	G14-057T 345.00 - SUNNYSIDE 345KV CKT 1	717	789	0.04906	109.6281	GRAPEVINE INTERCHANGE - NICHOLS STATION 230KV CKT 1
FDNS	00NR	3	20WP	G15_048	FROM->TO	G14-057T 345.00 - SUNNYSIDE 345KV CKT 1	717	789	0.04908	109.6258	GEN563173 1-G15082_3 0.6900
FDNS	00NR	3	20WP	G15_048	FROM->TO	G14-057T 345.00 - SUNNYSIDE 345KV CKT 1	717	789	0.04908	109.6067	GEN600004 2-PRAIRIE ISLAND G2
FDNS	00NR	3	20WP	G15_048	FROM->TO	G14-057T 345.00 - SUNNYSIDE 345KV CKT 1	717	789	0.04908	109.6041	GEN600003 1-PRAIRIE ISLAND G1
FDNS	00NR	3	20WP	G15_048	FROM->TO	G14-057T 345.00 - SUNNYSIDE 345KV CKT 1	717	789	0.04908	109.5869	GEN600006 1-AS KING
FDNS	00NR	3	20WP	G15_048	FROM->TO	G14-057T 345.00 - SUNNYSIDE 345KV CKT 1	717	789	0.04908	109.5867	GEN562710 1-G15_022_3 0.5500
FDNS	00NR	3	16WP	G15_048	FROM->TO	G14-057T 345.00 - SUNNYSIDE 345KV CKT 1	717	789	0.04941	109.5478	GEN635024 4-WALTER SCOTT UNIT 4

SOLUTION	GROUP	SCENARIO	SEASON	SOURCE	DIRECTION	MONITORED ELEMENT	RATEA (MVA)	RATEB(MVA)	TDF	TC%LOADING (% MVA)	CONTINGENCY
FDNS	00NR	3	20WP	G15_048	FROM->TO	G14-057T 345.00 - SUNNYSIDE 345KV CKT 1	717	789	0.05046	109.5472	CANEY CREEK - TEXOMA JCT 138KV CKT 1
FDNS	00NR	3	20WP	G15_048	FROM->TO	G14-057T 345.00 - SUNNYSIDE 345KV CKT 1	717	789	0.04908	109.5368	GEN511851 1-COMANCHE #1
FDNS	00NR	3	20WP	G15_048	FROM->TO	G14-057T 345.00 - SUNNYSIDE 345KV CKT 1	717	789	0.04692	109.5187	CHISHOLM7 345.00 - GRACEMONT 345KV CKT 1
FDNS	00NR	3	20WP	G15_048	FROM->TO	G14-057T 345.00 - SUNNYSIDE 345KV CKT 1	717	789	0.04908	109.509	GEN532751 1-WOLF CREEK GENERATING STATION UNIT 1
FDNS	00NR	3	20WP	G15_048	FROM->TO	G14-057T 345.00 - SUNNYSIDE 345KV CKT 1	717	789	0.04908	109.421	GEN635213 3-NEAL UNIT 3
FDNS	00NR	3	20WP	G15_048	FROM->TO	G14-057T 345.00 - SUNNYSIDE 345KV CKT 1	717	789	0.04908	109.4142	GEN629074 1-ARNOLD LOWSIDE OF GSU XFMR
FDNS	00NR	3	20WP	G15_048	FROM->TO	G14-057T 345.00 - SUNNYSIDE 345KV CKT 1	717	789	0.04908	109.4059	BIG STONE 230/24.0KV TRANSFORMER CKT 1
FDNSLock	00NR	3	20WP	G15_048	FROM->TO	G14-057T 345.00 - SUNNYSIDE 345KV CKT 1	717	789	0.04908	109.3781	GEN615002 2-COAL CREEK
FDNS	00NR	3	20WP	G15_048	FROM->TO	G14-057T 345.00 - SUNNYSIDE 345KV CKT 1	717	789	0.04918	109.3754	P12:138:WFEC:MSL09
FDNS	00NR	3	20WP	G15_048	FROM->TO	G14-057T 345.00 - SUNNYSIDE 345KV CKT 1	717	789	0.04889	109.354	P12:138:AEPW-OGE:CORNVIL4:CIMARON4
FDNS	00NR	3	20WP	G15_048	FROM->TO	G14-057T 345.00 - SUNNYSIDE 345KV CKT 1	717	789	0.04908	109.3349	GEN562754 1-G15031_5 0.6900
FDNS	00NR	3	20WP	G15_048	FROM->TO	G14-057T 345.00 - SUNNYSIDE 345KV CKT 1	717	789	0.04908	109.322	GEN636641 1-LOUISA UNIT 1
FDNS	00NR	3	20WP	G15_048	FROM->TO	G14-057T 345.00 - SUNNYSIDE 345KV CKT 1	717	789	0.04914	109.312	NORTHWEST TEXARKANA - VALLIANT 345KV CKT 1
FDNS	00NR	3	20WP	G15_048	FROM->TO	G14-057T 345.00 - SUNNYSIDE 345KV CKT 1	717	789	0.04914	109.312	NORTHWEST TEXARKANA - VALLIANT 345KV CKT 1
FDNS	00NR	3	20WP	G15_048	FROM->TO	G14-057T 345.00 - SUNNYSIDE 345KV CKT 1	717	789	0.04908	109.2925	GEN600005 1-MONTICELLO
FDNS	00NR	3	20WP	G15_048	FROM->TO	G14-057T 345.00 - SUNNYSIDE 345KV CKT 1	717	789	0.04908	109.2751	GEN562756 1-G15031_7 0.6900
FDNS	00NR	3	20WP	G15_048	FROM->TO	G14-057T 345.00 - SUNNYSIDE 345KV CKT 1	717	789	0.04908	109.274	GEN562556 1-G14_046_3 0.3420
FDNS	00NR	3	20WP	G15_048	FROM->TO	G14-057T 345.00 - SUNNYSIDE 345KV CKT 1	717	789	0.04908	109.2337	GEN562023 1-G11_020_3 0.6900
FDNS	00NR	3	20WP	G15_048	FROM->TO	G14-057T 345.00 - SUNNYSIDE 345KV CKT 1	717	789	0.04908	109.2337	GEN562026 1-G11_019_3 0.6900
FDNS	00NR	3	20WP	G15_048	FROM->TO	G14-057T 345.00 - SUNNYSIDE 345KV CKT 1	717	789	0.04908	109.1895	GEN563142 1-G15079_3 0.5500
FDNS	00NR	3	20WP	G15_048	FROM->TO	G14-057T 345.00 - SUNNYSIDE 345KV CKT 1	717	789	0.04908	109.1895	GEN563151 1-G15080_2 0.5500
FDNS	00NR	3	20WP	G15_048	FROM->TO	G14-057T 345.00 - SUNNYSIDE 345KV CKT 1	717	789	0.04908	109.1688	GEN600000 1-SHERBURNECNTY G1
FDNS	00NR	3	20WP	G15_048	FROM->TO	G14-057T 345.00 - SUNNYSIDE 345KV CKT 1	717	789	0.04908	109.1401	STLN-DEMARC6 - SWEETWATER 230KV CKT 1
FDNS	00NR	3	20WP	G15_048	FROM->TO	G14-057T 345.00 - SUNNYSIDE 345KV CKT 1	717	789	0.04908	109.1394	P12:230:AEPW-SPS:SWEETWT6:WHEELER 6
FDNS	00NR	3	20WP	G15_048	FROM->TO	G14-057T 345.00 - SUNNYSIDE 345KV CKT 1	717	789	0.04908	109.1378	STATELINE INTERCHANGE - STLN-DEMARC6 230KV CKT 1
FDNS	00NR	3	20WP	G15_048	FROM->TO	G14-057T 345.00 - SUNNYSIDE 345KV CKT 1	717	789	0.04908	109.1289	GEN629075 1-OTTUMWA GENERATOR FOR OTTUMWA UNIT NO 1
FDNS	00NR	3	20WP	G15_048	FROM->TO	G14-057T 345.00 - SUNNYSIDE 345KV CKT 1	717	789	0.04908	109.1195	GEN600001 2-SHERBURNE CNTY G2
FDNS	00NR	3	20WP	G15_048	FROM->TO	G14-057T 345.00 - SUNNYSIDE 345KV CKT 1	717	789	0.04908	109.097	GEN523971 1-HARRINGTON GEN #1 24 KV
FDNS	00NR	3	20WP	G15_048	FROM->TO	G14-057T 345.00 - SUNNYSIDE 345KV CKT 1	717	789	0.04908	109.0969	GEN523972 1-HARRINGTON GEN #2 24 KV
FDNS	00NR	3	20WP	G15_048	FROM->TO	G14-057T 345.00 - SUNNYSIDE 345KV CKT 1	717	789	0.04908	109.0969	GEN523973 1-HARRINGTON GEN #3 24 KV
FDNS	00NR	3	20WP	G15_048	FROM->TO	G14-057T 345.00 - SUNNYSIDE 345KV CKT 1	717	789	0.04908	109.0143	GEN511848 1-SOUTHWESTERN STATION #3
FDNS	00NR	3	20WP	G15_048	FROM->TO	G14-057T 345.00 - SUNNYSIDE 345KV CKT 1	717	789	0.04908	108.9872	GEN527901 1-HOBBS PLANT #1 (CT)
FDNS	00NR	3	20WP	G15_048	FROM->TO	G14-057T 345.00 - SUNNYSIDE 345KV CKT 1	717	789	0.04908	108.9872	GEN527902 1-HOBBS PLANT #2 (CT)
FDNS	00NR	3	20WP	G15_048	FROM->TO	G14-057T 345.00 - SUNNYSIDE 345KV CKT 1	717	789	0.04917	108.9494	LYDIA - WELSH 345KV CKT 1
FDNS	00NR	3	20WP	G15_048	FROM->TO	G14-057T 345.00 - SUNNYSIDE 345KV CKT 1	717	789	0.04917	108.9494	LYDIA - WELSH 345KV CKT 1
FDNS	00NR	3	20WP	G15_048	FROM->TO	G14-057T 345.00 - SUNNYSIDE 345KV CKT 1	717	789	0.04908	108.9486	GEN563042 1-G15068_3 0.6900
FDNS	00NR	3	20WP	G15_048	FROM->TO	G14-057T 345.00 - SUNNYSIDE 345KV CKT 1	717	789	0.0471	108.9039	P12:230:AEPW:ELKCITY6:SWEETWT6
FDNS	00NR	3	20WP	G15_048	FROM->TO	G14-057T 345.00 - SUNNYSIDE 345KV CKT 1	717	789	0.04908	108.8995	SHERBURNE CO 345/24.0KV TRANSFORMER CKT 1
FDNS	00NR	3	16WP	G15_048	FROM->TO	G14-057T 345.00 - SUNNYSIDE 345KV CKT 1	717	789	0.04951	108.8865	LYDIA - VALLIANT 345KV CKT 1
FDNS	00NR	3	16WP	G15_048	FROM->TO	G14-057T 345.00 - SUNNYSIDE 345KV CKT 1	717	789	0.04951	108.8865	LYDIA - VALLIANT 345KV CKT 1
FDNS	00NR	3	20WP	G15_048	FROM->TO	G14-057T 345.00 - SUNNYSIDE 345KV CKT 1	717	789	0.04908	108.8563	GEN635214 4-NEAL UNIT 4
FDNS	00NR	3	20WP	G15_048	FROM->TO	G14-057T 345.00 - SUNNYSIDE 345KV CKT 1	717	789	0.04908	108.6853	GEN600002 3-SHERBURNE CNTY G3
FDNS	00NR	3	20WP	G15_048	FROM->TO	G14-057T 345.00 - SUNNYSIDE 345KV CKT 1	717	789	0.04908	108.6493	GEN563043 1-G15068_4 0.6900
FDNS	00NR	3	20WP	G15_048	FROM->TO	G14-057T 345.00 - SUNNYSIDE 345KV CKT 1	717	789	0.04908	108.6374	GEN563273 2-G15093_4 0.6900
FDNS	00NR	3	20WP	G15_048	FROM->TO	G14-057T 345.00 - SUNNYSIDE 345KV CKT 1	717	789	0.04908	108.6252	GEN526333 1-JONES GEN #3 21 KV
FDNS	00NR	3	20WP	G15_048	FROM->TO	G14-057T 345.00 - SUNNYSIDE 345KV CKT 1	717	789	0.04908	108.6251	GEN526334 1-JONES_4 116.500
FDNS	00NR	3	20WP	G15_048	FROM->TO	G14-057T 345.00 - SUNNYSIDE 345KV CKT 1	717	789	0.04908	108.6086	GEN344225 1-1CAL G1 25.000
FDNS	00NR	3	20WP	G15_048	FROM->TO	G14-057T 345.00 - SUNNYSIDE 345KV CKT 1	717	789	0.04908	108.5859	GEN525844 1-ELK_1 118.000
FDNS	00NR	3	20WP	G15_048	FROM->TO	G14-057T 345.00 - SUNNYSIDE 345KV CKT 1	717	789	0.04908	108.5697	GEN525845 1-ELK_2 1 118.000
FDNS	00NR	3	20WP	G15_048	FROM->TO	G14-057T 345.00 - SUNNYSIDE 345KV CKT 1	717	789	0.04908	108.5198	CHISHOLM6 230.00 - SWEETWATER 230KV CKT 1
FDNS	00NR	3	20WP	G15_048	FROM->TO	G14-057T 345.00 - SUNNYSIDE 345KV CKT 1	717	789	0.04908	108.4391	GEN527166 1-MUSTANG_6 118.000
FDNS	00NR	3	20WP	G15_048	FROM->TO	G14-057T 345.00 - SUNNYSIDE 345KV CKT 1	717	789	0.04908	108.4294	GEN563202 1-G15085_3 0.5500
FDNS	00NR	3	20WP	G15_048	FROM->TO	G14-057T 345.00 - SUNNYSIDE 345KV CKT 1	717	789	0.04908	108.3924	GEN635023 3-WALTER SCOTT UNIT 3
FDNS	00NR	3	20WP	G15_048	FROM->TO	G14-057T 345.00 - SUNNYSIDE 345KV CKT 1	717	789	0.04908	108.3748	GEN528501 1-G14_012 24.000
FDNS	00NR	3	20WP	G15_048	FROM->TO	G14-057T 345.00 - SUNNYSIDE 345KV CKT 1	717	789	0.04908	108.2669	GEN562590 1-G14_057_3 0.6900
FDNS	00NR	3	20WP	G15_048	FROM->TO	G14-057T 345.00 - SUNNYSIDE 345KV CKT 1	717	789	0.04908	108.2159	GEN562762 1-G15033_3 0.6900
FDNS	00NR	3	20WP	G15_048	FROM->TO	G14-057T 345.00 - SUNNYSIDE 345KV CKT 1	717	789	0.04908	108.2058	GEN562655 1-G14_074_3 0.6900
FDNS	00NR	3	20WP	G15_048	FROM->TO	G14-057T 345.00 - SUNNYSIDE 345KV CKT 1	717	789	0.04908	108.1862	GEN525562 1-TOLK GEN #2 24 KV
FDNS	00NR	3	20WP	G15_048	FROM->TO	G14-057T 345.00 - SUNNYSIDE 345KV CKT 1	717	789	0.04886	108.1302	JOHNSON COUNTY (JOHNCO) 345/138/13.8KV TRANSFORMER CKT 1
FDNS	00NR	3	20WP	G15_048	FROM->TO	G14-057T 345.00 - SUNNYSIDE 345KV CKT 1	717	789	0.04908	108.1293	GEN562685 1-G15_013_3 0.3550
FDNS	00NR	3	20WP	G15_048	FROM->TO	G14-057T 345.00 - SUNNYSIDE 345KV CKT 1	717	789	0.04908	108.0904	GEN527903 1-HOBBS PLANT #3 (ST)
FDNS	00NR	3	20WP	G15_048	FROM->TO	G14-057T 345.00 - SUNNYSIDE 345KV CKT 1	717	789	0.04908	107.9849	GEN563272 1-G15093_3 0.6900
FDNS	00NR	3	20WP	G15_048	FROM->TO	G14-057T 345.00 - SUNNYSIDE 345KV CKT 1	717	789	0.04908	107.9844	GEN635024 4-WALTER SCOTT UNIT 4
FDNS	00NR	3	16WP	G15_048	FROM->TO	G14-057T 345.00 - SUNNYSIDE 345KV CKT 1	717	789	0.04941	107.8948	EASTDC - ERCOT EQUIVALENCE 345KV CKT 1
FDNS	00NR	3	20WP	G15_048	FROM->TO	G14-057T 345.00 - SUNNYSIDE 345KV CKT 1	717	789	0.04919	107.8931	LYDIA - VALLIANT 345KV CKT 1
FDNS	00NR	3	20WP	G15_048	FROM->TO	G14-057T 345.00 - SUNNYSIDE 345KV CKT 1	717	789	0.04919	107.8931	LYDIA - VALLIANT 345KV CKT 1
FDNS	00NR	3	20WP	G15_048	FROM->TO	G14-057T 345.00 - SUNNYSIDE 345KV CKT 1	717	789	0.04908	107.7483	GEN525561 1-TOLK GEN #1 24 KV
FDNS	00NR	3	16WP	G15_048	FROM->TO	G14-057T 345.00 - SUNNYSIDE 345KV CKT 1	717	789	0.04148	106.9904	JOHNSON COUNTY - PITTSBURG 345KV CKT 1
FDNS	00NR	3	16WP	G15_048	FROM->TO	G14-057T 345.00 - SUNNYSIDE 345KV CKT 1	717	789	0.04148	106.9904	JOHNSON COUNTY - PITTSBURG 345KV CKT 1
FDNS	00NR	3	16WP	G15_048	FROM->TO	G14-057T 345.00 - SUNNYSIDE 345KV CKT 1	717	789	0.04941	106.4713	GEN563263 1-G15092_4 0.6900
FDNS	00NR	3	16WP	G15_048	FROM->TO	G14-057T 345.00 - SUNNYSIDE 345KV CKT 1	717	789	0.04818	106.0336	HUGO - VALLIANT 345KV CKT 1
FDNS	00NR	3	16WP	G15_048	FROM->TO	G14-057T 345.00 - SUNNYSIDE 345KV CKT 1	717	789	0.04818	106.0336	HUGO - VALLIANT 345KV CKT 1
FDNS	00NR	3	17SP	G15_048	FROM->TO	G14-057T 345.00 - SUNNYSIDE 345KV CKT 1	717	789	0.04712	105.9521	CIMARRON - MINCO 345KV CKT 1
FDNS	00NR	3	20WP	G15_048	FROM->TO	G14-057T 345.00 - SUNNYSIDE 345KV CKT 1	717	789	0.04117	105.8204	JOHNSON COUNTY - PITTSBURG 345KV CKT 1
FDNS	00NR	3	20WP	G15_048	FROM->TO	G14-057T 345.00 - SUNNYSIDE 345KV CKT 1	717	789	0.04117	105.8204	JOHNSON COUNTY - PITTSBURG 345KV CKT 1
FDNS	00NR	3	20WP	G15_048	FROM->TO	G14-057T 345.00 - SUNNYSIDE 345KV CKT 1	717	789	0.04787	105.3179	HUGO - VALLIANT 345KV CKT 1
FDNS	00NR	3	20WP	G15_048	FROM->TO	G14-057T 345.00 - SUNNYSIDE 345KV CKT 1	717	789	0.04787	105.3179	HUGO - VALLIANT 345KV CKT 1
FDNS	00NR	3	16WP	G15_048	FROM->TO	G14-057T 345.00 - SUNNYSIDE 345KV CKT 1	717	789	0.04474	105.0413	G14-074T 345.00 - TUCO INTERCHANGE 345KV CKT 1
FDNS	00NR	3	20WP	G15_048	FROM->TO	G14-057T 345.00 - SUNNYSIDE 345KV CKT 1	717	789	0.04908	104.8195	GEN563263 1-G15092_4 0.6900

SOLUTION	GROUP	SCENARIO	SEASON	SOURCE	DIRECTION	MONITORED ELEMENT	RATEA (MVA)	RATEB(MVA)	TDF	TC%LOADING (% MVA)	CONTINGENCY
FDNS	00NR	3	16WP	G15_048	FROM->TO	G14-057T 345.00 - SUNNYSIDE 345KV CKT 1	717	789	0.04941	104.7958	GEN563262 1-G15092_3 0.6900
FDNS	00NR	3	20WP	G15_048	FROM->TO	G14-057T 345.00 - SUNNYSIDE 345KV CKT 1	717	789	0.04908	103.1549	GEN563262 1-G15092_3 0.6900
FDNS	00NR	3	20WP	G15_048	FROM->TO	G14-057T 345.00 - SUNNYSIDE 345KV CKT 1	717	789	0.04442	102.2467	G14-074T 345.00 - TUCO INTERCHANGE 345KV CKT 1
FDNS	00NR	3	16WP	G15_048	FROM->TO	G14-057T 345.00 - SUNNYSIDE 345KV CKT 1	717	789	0.03999	101.3793	JOHNSON COUNTY - SUNNYSIDE 345KV CKT 1
FDNS	00NR	3	17SP	G15_048	FROM->TO	KINZE - STILLWATER KINZIE 138KV CKT 1	287	287	0.03133	100.1398	CLEVELAND - G15066_T 345.00 345KV CKT 1
FDNS	00NR	0	16WP	G15_052	FROM->TO	CIMARRON - DRAPER LAKE 345KV CKT 1	717	717	0.02982	117.4511	CLEVELAND - G15066_T 345.00 345KV CKT 1
FDNS	00NR	0	16WP	G15_052	FROM->TO	CIMARRON - DRAPER LAKE 345KV CKT 1	717	717	0.02982	116.6742	G15066_T 345.00 - SOONER 345KV CKT 1
FDNS	00NR	0	16WP	G15_052	FROM->TO	CIMARRON - DRAPER LAKE 345KV CKT 1	717	717	0.04032	105.8801	G15052_T 345.00 - ROSE HILL 345KV CKT 1
FDNS	08NR	0	20L	G15_052	TO->FROM	CLEAVELAND - CLEVLND 4 138.00 138KV CKT Z1	305	371	0.04288	114.5295	CLEVELAND - TULSA NORTH 345KV CKT 1
FDNS	08NR	0	20L	G15_052	TO->FROM	CLEAVELAND - CLEVLND 4 138.00 138KV CKT Z1	305	371	0.04288	114.5295	CLEVELAND - TULSA NORTH 345KV CKT 1
FDNS	00NR	0	17SP	G15_052	TO->FROM	CLEAVELAND - CLEVLND 4 138.00 138KV CKT Z1	305	371	0.0383	110.9479	CLEVELAND - TULSA NORTH 345KV CKT 1
FDNS	00NR	0	17SP	G15_052	TO->FROM	CLEAVELAND - CLEVLND 4 138.00 138KV CKT Z1	305	371	0.0383	110.9479	CLEVELAND - TULSA NORTH 345KV CKT 1
FDNS	00NR	0	20SP	G15_052	TO->FROM	CLEAVELAND - CLEVLND 4 138.00 138KV CKT Z1	305	371	0.03894	110.0566	CLEVELAND - TULSA NORTH 345KV CKT 1
FDNS	00NR	0	20SP	G15_052	TO->FROM	CLEAVELAND - CLEVLND 4 138.00 138KV CKT Z1	305	371	0.03894	110.0566	CLEVELAND - TULSA NORTH 345KV CKT 1
FDNS	08NR	0	20L	G15_052	FROM->TO	G15063_T 345.00 - MATHWSN7 345.00 345KV CKT 1	956	956	0.06705	101.6468	SOONER - SPRING CREEK 345KV CKT 1
FDNS	08NR	0	20L	G15_052	FROM->TO	G15063_T 345.00 - MATHWSN7 345.00 345KV CKT 1	956	956	0.06705	101.6199	NORTHWEST - SPRING CREEK 345KV CKT 1
FDNS	00NR	2	16WP	G15_052	FROM->TO	CIMARRON - DRAPER LAKE 345KV CKT 1	717	717	0.02982	117.4388	CLEVELAND - G15066_T 345.00 345KV CKT 1
FDNS	00NR	2	16WP	G15_052	FROM->TO	CIMARRON - DRAPER LAKE 345KV CKT 1	717	717	0.02982	116.6621	G15066_T 345.00 - SOONER 345KV CKT 1
FDNS	00NR	2	16WP	G15_052	FROM->TO	CIMARRON - DRAPER LAKE 345KV CKT 1	717	717	0.0403	105.869	G15052_T 345.00 - ROSE HILL 345KV CKT 1
FDNS	08NR	2	20L	G15_052	TO->FROM	CLEAVELAND - CLEVLND 4 138.00 138KV CKT Z1	305	371	0.04288	114.5277	CLEVELAND - TULSA NORTH 345KV CKT 1
FDNS	08NR	2	20L	G15_052	TO->FROM	CLEAVELAND - CLEVLND 4 138.00 138KV CKT Z1	305	371	0.04288	114.5277	CLEVELAND - TULSA NORTH 345KV CKT 1
FDNS	00NR	2	17SP	G15_052	TO->FROM	CLEAVELAND - CLEVLND 4 138.00 138KV CKT Z1	305	371	0.0383	110.9467	CLEVELAND - TULSA NORTH 345KV CKT 1
FDNS	00NR	2	17SP	G15_052	TO->FROM	CLEAVELAND - CLEVLND 4 138.00 138KV CKT Z1	305	371	0.0383	110.9467	CLEVELAND - TULSA NORTH 345KV CKT 1
FDNS	00NR	2	20SP	G15_052	TO->FROM	CLEAVELAND - CLEVLND 4 138.00 138KV CKT Z1	305	371	0.03894	110.0555	CLEVELAND - TULSA NORTH 345KV CKT 1
FDNS	00NR	2	20SP	G15_052	TO->FROM	CLEAVELAND - CLEVLND 4 138.00 138KV CKT Z1	305	371	0.03894	110.0555	CLEVELAND - TULSA NORTH 345KV CKT 1
FDNS	08NR	3	20L	G15_052	TO->FROM	CLEAVELAND - CLEVLND 4 138.00 138KV CKT Z1	305	371	0.04319	115.3548	CLEVELAND - TULSA NORTH 345KV CKT 1
FDNS	08NR	3	20L	G15_052	TO->FROM	CLEAVELAND - CLEVLND 4 138.00 138KV CKT Z1	305	371	0.04319	115.3548	CLEVELAND - TULSA NORTH 345KV CKT 1
FDNS	00NR	3	17SP	G15_052	TO->FROM	CLEAVELAND - CLEVLND 4 138.00 138KV CKT Z1	305	371	0.03846	110.6964	CLEVELAND - TULSA NORTH 345KV CKT 1
FDNS	00NR	3	17SP	G15_052	TO->FROM	CLEAVELAND - CLEVLND 4 138.00 138KV CKT Z1	305	371	0.03846	110.6964	CLEVELAND - TULSA NORTH 345KV CKT 1
FDNS	00NR	3	20SP	G15_052	TO->FROM	CLEAVELAND - CLEVLND 4 138.00 138KV CKT Z1	305	371	0.03921	110.6119	CLEVELAND - TULSA NORTH 345KV CKT 1
FDNS	00NR	3	20SP	G15_052	TO->FROM	CLEAVELAND - CLEVLND 4 138.00 138KV CKT Z1	305	371	0.03921	110.6119	CLEVELAND - TULSA NORTH 345KV CKT 1
FDNSLock-Blown up	00NR	0	16WP	G15_053		Non-Converged Contingency	720	720	0.05538	-	GR ISLD-LNX3345.00 - GRAND ISLAND 345KV CKT Z
FDNSLock-Blown up	00NR	0	16WP	G15_053		Non-Converged Contingency	720	720	0.05538	-	GR ISLD-LNX3345.00 - HOLT.CO3 345.00 345KV CKT 1
FDNSLock-Blown up	09NR	0	17G	G15_053		Non-Converged Contingency	720	720	0.05517	-	GR ISLD-LNX3345.00 - GRAND ISLAND 345KV CKT Z
FDNSLock-Blown up	09NR	0	17G	G15_053		Non-Converged Contingency	720	720	0.05517	-	GR ISLD-LNX3345.00 - HOLT.CO3 345.00 345KV CKT 1
FDNSLock-Blown up	00NR	0	17SP	G15_053		Non-Converged Contingency	720	720	0.0568	-	GR ISLD-LNX3345.00 - GRAND ISLAND 345KV CKT Z
FDNSLock-Blown up	00NR	0	17SP	G15_053		Non-Converged Contingency	720	720	0.0568	-	GR ISLD-LNX3345.00 - HOLT.CO3 345.00 345KV CKT 1
FDNSLock-Blown up	00NR	2	17SP	G15_053		Non-Converged Contingency	720	720	0.07636	-	GRPRAR1-LNX3345.00 - GRPRAR 345KV CKT Z
FDNSLock-Blown up	00NR	2	17SP	G15_053		Non-Converged Contingency	720	720	0.07636	-	GRPRAR1-LNX3345.00 - HOLT.CO3 345.00 345KV CKT 1
FDNS	09ALL	0	17SP	G15_053	TO->FROM	ALBION - PETERSBURG 115KV CKT 1	137	137	0.22055	108.5258	ANTELOPE 3345.00 - HOSKINS 345KV CKT 1
FDNS	09ALL	0	17SP	G15_053	TO->FROM	ALBION - PETERSBURG 115KV CKT 1	137	137	0.22055	108.4461	ANTELOPE 3345.00 (ANTELOPE T1) 345/115/13.8KV TRANSFORMER CKT 1
FDNS	09ALL	0	17G	G15_053	TO->FROM	ALBION - PETERSBURG 115KV CKT 1	137	137	0.22023	106.2621	ANTELOPE 3345.00 (ANTELOPE T1) 345/115/13.8KV TRANSFORMER CKT 1
FDNS	09ALL	0	17G	G15_053	TO->FROM	ALBION - PETERSBURG 115KV CKT 1	137	137	0.22023	106.2496	ANTELOPE 3345.00 - HOSKINS 345KV CKT 1
FDNS	09ALL	0	16WP	G15_053	TO->FROM	ALBION - PETERSBURG 115KV CKT 1	137	137	0.21991	105.4944	ANTELOPE 3345.00 - HOSKINS 345KV CKT 1
FDNS	09ALL	0	16WP	G15_053	TO->FROM	ALBION - PETERSBURG 115KV CKT 1	137	137	0.21991	105.4362	ANTELOPE 3345.00 (ANTELOPE T1) 345/115/13.8KV TRANSFORMER CKT 1
FDNS	09ALL	0	17G	G15_053	FROM->TO	ANTELOPE 7115.00 - COUNTY LINE 115KV CKT 1	193	193	0.41449	103.8746	ANTELOPE 3345.00 (ANTELOPE T1) 345/115/13.8KV TRANSFORMER CKT 1
FDNS	09ALL	0	17G	G15_053	FROM->TO	ANTELOPE 7115.00 - COUNTY LINE 115KV CKT 1	193	193	0.41449	103.837	ANTELOPE 3345.00 - HOSKINS 345KV CKT 1
FDNS	09ALL	0	16WP	G15_053	FROM->TO	ANTELOPE 7115.00 - COUNTY LINE 115KV CKT 1	193	193	0.41413	99.5	ANTELOPE 3345.00 (ANTELOPE T1) 345/115/13.8KV TRANSFORMER CKT 1
FDNS	09ALL	0	17G	G15_053	TO->FROM	BATTLE CREEK - COUNTY LINE 115KV CKT 1	193	193	0.41449	103.4934	ANTELOPE 3345.00 (ANTELOPE T1) 345/115/13.8KV TRANSFORMER CKT 1
FDNS	09ALL	0	17G	G15_053	TO->FROM	BATTLE CREEK - COUNTY LINE 115KV CKT 1	193	193	0.41449	103.455	ANTELOPE 3345.00 - HOSKINS 345KV CKT 1
FDNS	09ALL	0	17G	G15_053	FROM->TO	BATTLE CREEK - NORTH NORFOLK 115KV CKT 1	193	193	0.41449	100.099	ANTELOPE 3345.00 (ANTELOPE T1) 345/115/13.8KV TRANSFORMER CKT 1
FDNS	09ALL	0	17G	G15_053	FROM->TO	BATTLE CREEK - NORTH NORFOLK 115KV CKT 1	193	193	0.41449	100.0635	ANTELOPE 3345.00 - HOSKINS 345KV CKT 1
FDNS	09ALL	0	20L	G15_053	FROM->TO	BLOOMFIELD - GAVINS POINT 115KV CKT 1	120	120	0.19616	116.2896	ANTELOPE 3345.00 - HOSKINS 345KV CKT 1
FDNS	09ALL	0	20L	G15_053	FROM->TO	BLOOMFIELD - GAVINS POINT 115KV CKT 1	120	120	0.19616	116.2699	ANTELOPE 3345.00 (ANTELOPE T1) 345/115/13.8KV TRANSFORMER CKT 1
FDNS	09ALL	0	17G	G15_053	FROM->TO	BLOOMFIELD - GAVINS POINT 115KV CKT 1	120	120	0.19654	110.631	ANTELOPE 3345.00 - HOSKINS 345KV CKT 1
FDNS	09ALL	0	17G	G15_053	FROM->TO	BLOOMFIELD - GAVINS POINT 115KV CKT 1	120	120	0.19654	110.6183	ANTELOPE 3345.00 (ANTELOPE T1) 345/115/13.8KV TRANSFORMER CKT 1
FDNS	09ALL	0	16WP	G15_053	FROM->TO	BLOOMFIELD - GAVINS POINT 115KV CKT 1	120	120	0.19675	106.1402	ANTELOPE 3345.00 (ANTELOPE T1) 345/115/13.8KV TRANSFORMER CKT 1
FDNS	09ALL	0	16WP	G15_053	FROM->TO	BLOOMFIELD - GAVINS POINT 115KV CKT 1	120	120	0.19675	106.126	ANTELOPE 3345.00 - HOSKINS 345KV CKT 1
FDNS	09NR	0	20L	G15_053	FROM->TO	DIXONCO 230.00 - TWIN CHURCH 230KV CKT 1	320	320	0.06397	132.2426	P13:230-345:NPPD:NUCOR-1
FDNS	09NR	0	17G	G15_053	FROM->TO	DIXONCO 230.00 - TWIN CHURCH 230KV CKT 1	320	320	0.06321	131.612	P13:230-345:NPPD:NUCOR-1
FDNS	09NR	0	17G	G15_053	FROM->TO	DIXONCO 230.00 - TWIN CHURCH 230KV CKT 1	320	320	0.12145	129.9787	HOSKINS - RAUN 345KV CKT 1
FDNS	09NR	0	20L	G15_053	FROM->TO	DIXONCO 230.00 - TWIN CHURCH 230KV CKT 1	320	320	0.12238	128.8605	HOSKINS - RAUN 345KV CKT 1
FDNS	09NR	0	20L	G15_053	FROM->TO	DIXONCO 230.00 - TWIN CHURCH 230KV CKT 1	320	320	0.12238	128.8605	HOSKINS - RAUN 345KV CKT 1
FDNS	09NR	0	20L	G15_053	FROM->TO	DIXONCO 230.00 - TWIN CHURCH 230KV CKT 1	320	320	0.05448	123.6321	HOSKINS (HOSKINS T2) 345/230/13.8KV TRANSFORMER CKT 1
FDNS	09NR	0	20L	G15_053	FROM->TO	DIXONCO 230.00 - TWIN CHURCH 230KV CKT 1	320	320	0.05448	123.6321	HOSKINS (HOSKINS T2) 345/230/13.8KV TRANSFORMER CKT 1
FDNS	09NR	0	17G	G15_053	FROM->TO	DIXONCO 230.00 - TWIN CHURCH 230KV CKT 1	320	320	0.0541	123.0432	HOSKINS (HOSKINS T2) 345/230/13.8KV TRANSFORMER CKT 1
FDNS	09NR	0	17G	G15_053	FROM->TO	DIXONCO 230.00 - TWIN CHURCH 230KV CKT 1	320	320	0.0541	123.0432	HOSKINS (HOSKINS T2) 345/230/13.8KV TRANSFORMER CKT 1
FDNS	09ALL	0	20L	G15_053	FROM->TO	DIXONCO 230.00 - TWIN CHURCH 230KV CKT 1	320	320	0.07413	118.9903	BASE CASE
FDNS	09NR	0	17G	G15_053	FROM->TO	DIXONCO 230.00 - TWIN CHURCH 230KV CKT 1	320	320	0.06321	118.372	P13:115-230:NPPD:NUCOR-3
FDNS	09ALL	0	17G	G15_053	FROM->TO	DIXONCO 230.00 - TWIN CHURCH 230KV CKT 1	320	320	0.0733	118.2459	BASE CASE
FDNS	09NR	0	20L	G15_053	FROM->TO	DIXONCO 230.00 - TWIN CHURCH 230KV CKT 1	320	320	0.06397	117.4109	P13:115-230:NPPD:NUCOR-3
FDNS	09ALL	0	16WP	G15_053	FROM->TO	DIXONCO 230.00 - TWIN CHURCH 230KV CKT 1	320	320	0.07384	116.9772	BASE CASE
FDNS	09ALL	0	20WP	G15_053	FROM->TO	DIXONCO 230.00 - TWIN CHURCH 230KV CKT 1	320	320	0.07395	116.4755	BASE CASE
FDNS	09NR	0	17G	G15_053	FROM->TO	DIXONCO 230.00 - TWIN CHURCH 230KV CKT 1	320	320	0.10313	115.9264	HOSKINS - SHELL CREEK 345KV CKT 1
FDNS	09NR	0	20L	G15_053	FROM->TO	DIXONCO 230.00 - TWIN CHURCH 230KV CKT 1	320	320	0.10306	115.6839	HOSKINS - SHELL CREEK 345KV CKT 1
FDNS	09NR	0	17G	G15_053	FROM->TO	DIXONCO 230.00 - TWIN CHURCH 230KV CKT 1	320	320	0.07971	115.5532	COLUMEAST - NW68TH & HOLDREGE 345KV CKT 1
FDNS	09NR	0	17G	G15_053	FROM->TO	DIXONCO 230.00 - TWIN CHURCH 230KV CKT 1	320	320	0.07971	115.5532	COLUMEAST - NW68TH & HOLDREGE 345KV CKT 1
FDNS	09NR	0	17G	G15_053	FROM->TO	DIXONCO 230.00 - TWIN CHURCH 230KV CKT 1	320	320	0.06975	115.541	BELDEN - TWIN CHURCH 115KV CKT 1
FDNS	09NR	0	17G	G15_053	FROM->TO	DIXONCO 230.00 - TWIN CHURCH 230KV CKT 1	320	320	0.07842	114.9073	COLUMEAST - SHELL CREEK 345KV CKT 1

SOLUTION	GROUP	SCENARIO	SEASON	SOURCE	DIRECTION	MONITORED ELEMENT	RATEA (MVA)	RATEB(MVA)	TDF	TC%LOADING (% MVA)	CONTINGENCY
FDNS	09NR	0	20L	G15_053	FROM->TO	DIXONCO 230.00 - TWIN CHURCH 230KV CKT 1	320	320	0.07055	114.3537	BELDEN - TWIN CHURCH 115KV CKT 1
FDNS	09NR	0	20L	G15_053	FROM->TO	DIXONCO 230.00 - TWIN CHURCH 230KV CKT 1	320	320	0.06367	114.2723	RAUN - SIOUX CITY 345KV CKT 1
FDNS	09NR	0	20L	G15_053	FROM->TO	DIXONCO 230.00 - TWIN CHURCH 230KV CKT 1	320	320	0.06367	114.2723	RAUN - SIOUX CITY 345KV CKT 1
FDNS	09NR	0	20L	G15_053	FROM->TO	DIXONCO 230.00 - TWIN CHURCH 230KV CKT 1	320	320	0.07997	114.1827	COLUMEAST - NW68TH & HOLDREGE 345KV CKT 1
FDNS	09NR	0	20L	G15_053	FROM->TO	DIXONCO 230.00 - TWIN CHURCH 230KV CKT 1	320	320	0.07997	114.1827	COLUMEAST - NW68TH & HOLDREGE 345KV CKT 1
FDNS	09NR	0	17G	G15_053	FROM->TO	DIXONCO 230.00 - TWIN CHURCH 230KV CKT 1	320	320	0.06321	114.0009	P13:115-345:NPPD:NUCOR-2
FDNS	09NR	0	20L	G15_053	FROM->TO	DIXONCO 230.00 - TWIN CHURCH 230KV CKT 1	320	320	0.07908	113.9208	COLUMEAST - SHELL CREEK 345KV CKT 1
FDNS	09NR	0	17G	G15_053	FROM->TO	DIXONCO 230.00 - TWIN CHURCH 230KV CKT 1	320	320	0.05583	113.4676	HOSKINS (HOSKINS T1) 230/115/13.8KV TRANSFORMER CKT 1
FDNS	09NR	0	17G	G15_053	FROM->TO	DIXONCO 230.00 - TWIN CHURCH 230KV CKT 1	320	320	0.05583	113.4676	HOSKINS (HOSKINS T1) 230/115/13.8KV TRANSFORMER CKT 1
FDNS	09NR	0	17G	G15_053	FROM->TO	DIXONCO 230.00 - TWIN CHURCH 230KV CKT 1	320	320	0.06285	113.3837	RAUN - SIOUX CITY 345KV CKT 1
FDNS	09NR	0	20L	G15_053	FROM->TO	DIXONCO 230.00 - TWIN CHURCH 230KV CKT 1	320	320	0.06397	113.3558	P13:115-345:NPPD:NUCOR-2
FDNS	09NR	0	17G	G15_053	FROM->TO	DIXONCO 230.00 - TWIN CHURCH 230KV CKT 1	320	320	0.06101	112.7714	FTTHOM2-LNX3345.00 - GRPRAR2-LNX3345.00 345KV CKT 1
FDNS	09NR	0	17G	G15_053	FROM->TO	DIXONCO 230.00 - TWIN CHURCH 230KV CKT 1	320	320	0.06101	112.74	GRPRAR2-LNX3345.00 - YANKTON 345KV CKT Z
FDNS	09NR	0	17G	G15_053	FROM->TO	DIXONCO 230.00 - TWIN CHURCH 230KV CKT 1	320	320	0.06101	112.7195	FT THOMPSON - FTTHOM2-LNX3345.00 345KV CKT Z
FDNS	09NR	0	20L	G15_053	FROM->TO	DIXONCO 230.00 - TWIN CHURCH 230KV CKT 1	320	320	0.05662	112.4963	HOSKINS (HOSKINS T1) 230/115/13.8KV TRANSFORMER CKT 1
FDNS	09NR	0	20L	G15_053	FROM->TO	DIXONCO 230.00 - TWIN CHURCH 230KV CKT 1	320	320	0.05662	112.4963	HOSKINS (HOSKINS T1) 230/115/13.8KV TRANSFORMER CKT 1
FDNS	09NR	0	17G	G15_053	FROM->TO	DIXONCO 230.00 - TWIN CHURCH 230KV CKT 1	320	320	0.06812	112.4305	HOSKINS - STANTON NORTH 115KV CKT 1
FDNS	09NR	0	20L	G15_053	FROM->TO	DIXONCO 230.00 - TWIN CHURCH 230KV CKT 1	320	320	0.06164	112.4273	FT THOMPSON - FTTHOM2-LNX3345.00 345KV CKT Z
FDNS	09NR	0	20L	G15_053	FROM->TO	DIXONCO 230.00 - TWIN CHURCH 230KV CKT 1	320	320	0.06164	112.4268	FTTHOM2-LNX3345.00 - GRPRAR2-LNX3345.00 345KV CKT 1
FDNS	09NR	0	20L	G15_053	FROM->TO	DIXONCO 230.00 - TWIN CHURCH 230KV CKT 1	320	320	0.06164	112.4209	GRPRAR2-LNX3345.00 - YANKTON 345KV CKT Z
FDNS	09NR	0	17G	G15_053	FROM->TO	DIXONCO 230.00 - TWIN CHURCH 230KV CKT 1	320	320	0.06335	112.3496	FT RANDAL - SIOUX CITY 230KV CKT 1
FDNS	09NR	0	17G	G15_053	FROM->TO	DIXONCO 230.00 - TWIN CHURCH 230KV CKT 1	320	320	0.0728	112.3161	BLOOMFIELD - GAVINS POINT 115KV CKT 1
FDNS	09NR	0	17G	G15_053	FROM->TO	DIXONCO 230.00 - TWIN CHURCH 230KV CKT 1	320	320	0.06321	112.3103	GEN600002 3-SHERBURNE CNTY G3
FDNS	09NR	0	17G	G15_053	FROM->TO	DIXONCO 230.00 - TWIN CHURCH 230KV CKT 1	320	320	0.06812	112.1245	STANTON - STANTON NORTH 115KV CKT 1
FDNS	09NR	0	20L	G15_053	FROM->TO	DIXONCO 230.00 - TWIN CHURCH 230KV CKT 1	320	320	0.07351	112.0982	BLOOMFIELD - GAVINS POINT 115KV CKT 1
FDNS	09NR	0	17G	G15_053	FROM->TO	DIXONCO 230.00 - TWIN CHURCH 230KV CKT 1	320	320	0.06812	112.0781	P12:115:NPPD:1166:STNTN.N7:BEEMER 7:BTB
FDNS	09NR	0	17G	G15_053	FROM->TO	DIXONCO 230.00 - TWIN CHURCH 230KV CKT 1	320	320	0.06812	112.0117	BEEMER - STANTON 115KV CKT 1
FDNSLock	09NR	0	17G	G15_053	FROM->TO	DIXONCO 230.00 - TWIN CHURCH 230KV CKT 1	320	320	0.06321	111.7835	GEN600000 1-SHERBURNECNTY G1
FDNS	09NR	0	17G	G15_053	FROM->TO	DIXONCO 230.00 - TWIN CHURCH 230KV CKT 1	320	320	0.06321	111.7	GEN600001 2-SHERBURNE CNTY G2
FDNS	09NR	0	17G	G15_053	FROM->TO	DIXONCO 230.00 - TWIN CHURCH 230KV CKT 1	320	320	0.06812	111.6026	BEEMER - WEST POINT 115KV CKT 1
FDNS	09NR	0	17G	G15_053	FROM->TO	DIXONCO 230.00 - TWIN CHURCH 230KV CKT 1	320	320	0.06321	111.5027	GEN659103 1-ANTELOPE VALLEY UNIT1
FDNS	09NR	0	17G	G15_053	FROM->TO	DIXONCO 230.00 - TWIN CHURCH 230KV CKT 1	320	320	0.06321	111.5027	GEN659107 2-ANTELOPE VALLEY UNIT2
FDNS	09NR	0	17G	G15_053	FROM->TO	DIXONCO 230.00 - TWIN CHURCH 230KV CKT 1	320	320	0.06321	111.4995	GEN600005 1-MONTICELLO
FDNS	09NR	0	17G	G15_053	FROM->TO	DIXONCO 230.00 - TWIN CHURCH 230KV CKT 1	320	320	0.06321	111.4623	GEN615001 1-COAL CREEK
FDNS	09NR	0	17G	G15_053	FROM->TO	DIXONCO 230.00 - TWIN CHURCH 230KV CKT 1	320	320	0.06376	111.4277	RASMUSN - UTICA JCT 230KV CKT 1
FDNS	09NR	0	17G	G15_053	FROM->TO	DIXONCO 230.00 - TWIN CHURCH 230KV CKT 1	320	320	0.06295	111.4125	FT RANDAL - UTICA JCT 230KV CKT 1
FDNS	09NR	0	17G	G15_053	FROM->TO	DIXONCO 230.00 - TWIN CHURCH 230KV CKT 1	320	320	0.06789	111.4071	P12:115:NPPD:1161:OAKLAND7:BEEMER 7:BTB
FDNS	09NR	0	17G	G15_053	FROM->TO	DIXONCO 230.00 - TWIN CHURCH 230KV CKT 1	320	320	0.06321	111.3604	GEN659111 2-LELAND OLDS UNIT2
FDNS	09NR	0	17G	G15_053	FROM->TO	DIXONCO 230.00 - TWIN CHURCH 230KV CKT 1	320	320	0.06236	111.3512	SUB 3454 - WAGENER 345KV CKT 1
FDNS	09NR	0	17G	G15_053	FROM->TO	DIXONCO 230.00 - TWIN CHURCH 230KV CKT 1	320	320	0.06236	111.3512	SUB 3454 - WAGENER 345KV CKT 1
FDNSLock	09NR	0	17G	G15_053	FROM->TO	DIXONCO 230.00 - TWIN CHURCH 230KV CKT 1	320	320	0.06321	111.3246	GEN620315 1-BIG STONE GEN
FDNS	09NR	0	17G	G15_053	FROM->TO	DIXONCO 230.00 - TWIN CHURCH 230KV CKT 1	320	320	0.06321	111.2968	GEN600003 1-PRAIRIE ISLAND G1
FDNS	09NR	0	17G	G15_053	FROM->TO	DIXONCO 230.00 - TWIN CHURCH 230KV CKT 1	320	320	0.06321	111.2946	GEN600004 2-PRAIRIE ISLAND G2
FDNS	09NR	0	17G	G15_053	FROM->TO	DIXONCO 230.00 - TWIN CHURCH 230KV CKT 1	320	320	0.06321	111.2869	GEN600006 1-AS KING
FDNS	09NR	0	20L	G15_053	FROM->TO	DIXONCO 230.00 - TWIN CHURCH 230KV CKT 1	320	320	0.06397	111.2838	SHERBURNE CO 345/24.0KV TRANSFORMER CKT 1
FDNS	09NR	0	20L	G15_053	FROM->TO	DIXONCO 230.00 - TWIN CHURCH 230KV CKT 1	320	320	0.06397	111.2765	GEN600002 3-SHERBURNE CNTY G3
FDNS	09NR	0	17G	G15_053	FROM->TO	DIXONCO 230.00 - TWIN CHURCH 230KV CKT 1	320	320	0.0642	111.2487	COOPER - MOORE 345KV CKT 1
FDNS	09NR	0	20L	G15_053	FROM->TO	DIXONCO 230.00 - TWIN CHURCH 230KV CKT 1	320	320	0.06902	111.2182	HOSKINS - STANTON NORTH 115KV CKT 1
FDNS	09NR	0	17G	G15_053	FROM->TO	DIXONCO 230.00 - TWIN CHURCH 230KV CKT 1	320	320	0.06376	111.1757	RASMUSN - SIOUX CITY 230KV CKT 1
FDNS	09NR	0	17G	G15_053	FROM->TO	DIXONCO 230.00 - TWIN CHURCH 230KV CKT 1	320	320	0.06789	111.1272	OAKLAND - WEST POINT 115KV CKT 1
FDNS	09NR	0	17G	G15_053	FROM->TO	DIXONCO 230.00 - TWIN CHURCH 230KV CKT 1	320	320	0.06347	111.1005	COLUMBUS - SCHUYLER 115KV CKT 1
FDNS	09NR	0	20L	G15_053	FROM->TO	DIXONCO 230.00 - TWIN CHURCH 230KV CKT 1	320	320	0.06375	111.0941	FT RANDAL - MEADOWGROVE4230.00 230KV CKT 1
FDNS	09NR	0	20L	G15_053	FROM->TO	DIXONCO 230.00 - TWIN CHURCH 230KV CKT 1	320	320	0.06397	111.0694	BIG STONE 230/24.0KV TRANSFORMER CKT 1
FDNS	09NR	0	17G	G15_053	FROM->TO	DIXONCO 230.00 - TWIN CHURCH 230KV CKT 1	320	320	0.06758	111.0617	P12:115:NPPD:1168B:ALBION 7:PETERSBRG.N7:BTB
FDNS	09NR	0	17G	G15_053	FROM->TO	DIXONCO 230.00 - TWIN CHURCH 230KV CKT 1	320	320	0.06758	111.0497	PETERSBRG.N7115.00 - PETERSBURG 115KV CKT Z1
FDNS	09NR	0	17G	G15_053	FROM->TO	DIXONCO 230.00 - TWIN CHURCH 230KV CKT 1	320	320	0.06758	111.0377	ALBION - PETERSBURG 115KV CKT 1
FDNS	09NR	0	20L	G15_053	FROM->TO	DIXONCO 230.00 - TWIN CHURCH 230KV CKT 1	320	320	0.06397	111.0056	GEN600001 2-SHERBURNE CNTY G2
FDNS	09NR	0	20L	G15_053	FROM->TO	DIXONCO 230.00 - TWIN CHURCH 230KV CKT 1	320	320	0.06397	110.9891	GEN600005 1-MONTICELLO
FDNS	09NR	0	17G	G15_053	FROM->TO	DIXONCO 230.00 - TWIN CHURCH 230KV CKT 1	320	320	0.06321	110.9699	GEN657748 1-YOUNG 2 GENERATOR
FDNS	09NR	0	20L	G15_053	FROM->TO	DIXONCO 230.00 - TWIN CHURCH 230KV CKT 1	320	320	0.06902	110.9627	STANTON - STANTON NORTH 115KV CKT 1
FDNS	09NR	0	17G	G15_053	FROM->TO	DIXONCO 230.00 - TWIN CHURCH 230KV CKT 1	320	320	0.06321	110.9571	GEN635214 4-NEAL UNIT 4
FDNS	09NR	0	20L	G15_053	FROM->TO	DIXONCO 230.00 - TWIN CHURCH 230KV CKT 1	320	320	0.06902	110.9296	P12:115:NPPD:1166:STNTN.N7:BEEMER 7:BTB
FDNS	09NR	0	20L	G15_053	FROM->TO	DIXONCO 230.00 - TWIN CHURCH 230KV CKT 1	320	320	0.06397	110.9274	GEN615002 2-COAL CREEK
FDNS	09NR	0	20L	G15_053	FROM->TO	DIXONCO 230.00 - TWIN CHURCH 230KV CKT 1	320	320	0.06902	110.8822	BEEMER - STANTON 115KV CKT 1
FDNS	09NR	0	17G	G15_053	FROM->TO	DIXONCO 230.00 - TWIN CHURCH 230KV CKT 1	320	320	0.06321	110.8801	GEN661015 1-COYOTE
FDNS	09NR	0	20L	G15_053	FROM->TO	DIXONCO 230.00 - TWIN CHURCH 230KV CKT 1	320	320	0.06397	110.8758	GEN600000 1-SHERBURNECNTY G1
FDNS	09NR	0	20L	G15_053	FROM->TO	DIXONCO 230.00 - TWIN CHURCH 230KV CKT 1	320	320	0.06397	110.8661	GEN620315 1-BIG STONE GEN
FDNS	09NR	0	17G	G15_053	FROM->TO	DIXONCO 230.00 - TWIN CHURCH 230KV CKT 1	320	320	0.06222	110.8148	ATCHSNT3 345.00 - BOONEVILLE 345KV CKT 1
FDNS	09NR	0	17G	G15_053	FROM->TO	DIXONCO 230.00 - TWIN CHURCH 230KV CKT 1	320	320	0.06303	110.797	AXTELL - POST ROCK 345KV CKT 1
FDNS	09NR	0	20L	G15_053	FROM->TO	DIXONCO 230.00 - TWIN CHURCH 230KV CKT 1	320	320	0.06413	110.7643	FT RANDAL - SIOUX CITY 230KV CKT 1
FDNS	09NR	0	20L	G15_053	FROM->TO	DIXONCO 230.00 - TWIN CHURCH 230KV CKT 1	320	320	0.06902	110.6608	BEEMER - WEST POINT 115KV CKT 1
FDNS	09NR	0	20L	G15_053	FROM->TO	DIXONCO 230.00 - TWIN CHURCH 230KV CKT 1	320	320	0.06558	110.6469	COOPER - MOORE 345KV CKT 1
FDNS	09NR	0	20L	G15_053	FROM->TO	DIXONCO 230.00 - TWIN CHURCH 230KV CKT 1	320	320	0.0607	110.6394	P13:345:UMZW:# 260 #: SC2 IN IA. LOSS OF TRANSFORMER (KU1A
FDNS	09NR	0	20L	G15_053	FROM->TO	DIXONCO 230.00 - TWIN CHURCH 230KV CKT 1	320	320	0.06397	110.5927	GEN600003 1-PRAIRIE ISLAND G1
FDNS	09NR	0	20L	G15_053	FROM->TO	DIXONCO 230.00 - TWIN CHURCH 230KV CKT 1	320	320	0.06397	110.5906	GEN600004 2-PRAIRIE ISLAND G2
FDNS	09NR	0	20L	G15_053	FROM->TO	DIXONCO 230.00 - TWIN CHURCH 230KV CKT 1	320	320	0.06868	110.4827	P12:115:NPPD:1161:OAKLAND7:BEEMER 7:BTB
FDNS	09NR	0	20L	G15_053	FROM->TO	DIXONCO 230.00 - TWIN CHURCH 230KV CKT 1	320	320	0.06629	110.3822	GAVINS POINT - YANKON JCT 115KV CKT 1
FDNS	09NR	0	20L	G15_053	FROM->TO	DIXONCO 230.00 - TWIN CHURCH 230KV CKT 1	320	320	0.06629	110.3822	GAVINS POINT - YANKON JCT 115KV CKT 1
FDNS	09NR	0	20L	G15_053	FROM->TO	DIXONCO 230.00 - TWIN CHURCH 230KV CKT 1	320	320	0.06397	110.3713	GEN659103 1-ANTELOPE VALLEY UNIT1

SOLUTION	GROUP	SCENARIO	SEASON	SOURCE	DIRECTION	MONITORED ELEMENT	RATEA (MVA)	RATEB(MVA)	TDF	TC%LOADING (% MVA)	CONTINGENCY
FDNS	09NR	0	20L	G15_053	FROM->TO	DIXONCO 230.00 - TWIN CHURCH 230KV CKT 1	320	320	0.06397	110.3713	GEN659107 2-ANTELOPE VALLEY UNIT2
FDNS	09NR	0	20L	G15_053	FROM->TO	DIXONCO 230.00 - TWIN CHURCH 230KV CKT 1	320	320	0.06397	110.3242	GEN600006 1-AS KING
FDNS	09NR	0	20L	G15_053	FROM->TO	DIXONCO 230.00 - TWIN CHURCH 230KV CKT 1	320	320	0.06391	110.2715	FALLOW 3 345.00 - GRIMES 345KV CKT 1
FDNS	09NR	0	20L	G15_053	FROM->TO	DIXONCO 230.00 - TWIN CHURCH 230KV CKT 1	320	320	0.06372	110.2698	FT RANDAL - UTICA JCT 230KV CKT 1
FDNS	09NR	0	20L	G15_053	FROM->TO	DIXONCO 230.00 - TWIN CHURCH 230KV CKT 1	320	320	0.06853	110.2546	P12:115:NPPD:1168B:ALBION 7:PETERSBRG.N7:BTB
FDNS	09NR	0	20L	G15_053	FROM->TO	DIXONCO 230.00 - TWIN CHURCH 230KV CKT 1	320	320	0.06853	110.249	PETERSBRG.N7115.00 - PETERSBURG 115KV CKT Z1
FDNS	09NR	0	20L	G15_053	FROM->TO	DIXONCO 230.00 - TWIN CHURCH 230KV CKT 1	320	320	0.06853	110.2387	ALBION - PETERSBURG 115KV CKT 1
FDNS	09NR	0	20L	G15_053	FROM->TO	DIXONCO 230.00 - TWIN CHURCH 230KV CKT 1	320	320	0.06868	110.2185	OAKLAND - WEST POINT 115KV CKT 1
FDNS	09NR	0	20L	G15_053	FROM->TO	DIXONCO 230.00 - TWIN CHURCH 230KV CKT 1	320	320	0.06432	110.1839	HIGHLND 3 345.00 - OBRIEN 3 345.00 345KV CKT 1
FDNS	09NR	0	17G	G15_053	FROM->TO	DIXONCO 230.00 - TWIN CHURCH 230KV CKT 1	320	320	0.06321	109.7857	BASE CASE
FDNS	09NR	0	20L	G15_053	FROM->TO	DIXONCO 230.00 - TWIN CHURCH 230KV CKT 1	320	320	0.06397	109.1828	BASE CASE
FDNS	09NR	0	17G	G15_053	FROM->TO	DIXONCO 230.00 - TWIN CHURCH 230KV CKT 1	320	320	0.06321	108.8492	GEN337652 1-WHITE BLUFF UNIT #1
FDNS	09NR	0	17G	G15_053	FROM->TO	DIXONCO 230.00 - TWIN CHURCH 230KV CKT 1	320	320	0.05683	108.8466	BATTLE CREEK - COUNTY LINE 115KV CKT 1
FDNS	09NR	0	17G	G15_053	FROM->TO	DIXONCO 230.00 - TWIN CHURCH 230KV CKT 1	320	320	0.06321	108.8347	GEN501801 1-DOLET HILLS UNIT1
FDNS	09NR	0	17G	G15_053	FROM->TO	DIXONCO 230.00 - TWIN CHURCH 230KV CKT 1	320	320	0.05683	108.8331	ANTELOPE 7115.00 - COUNTY LINE 115KV CKT 1
FDNS	09NR	0	17G	G15_053	FROM->TO	DIXONCO 230.00 - TWIN CHURCH 230KV CKT 1	320	320	0.06266	108.8195	SIOUXCY-LNX3345.00 - SPLIT ROCK 345KV CKT 1
FDNS	09NR	0	17G	G15_053	FROM->TO	DIXONCO 230.00 - TWIN CHURCH 230KV CKT 1	320	320	0.06321	108.7943	GEN337653 1-WHITE BLUFF UNIT #2
FDNS	09NR	0	17G	G15_053	FROM->TO	DIXONCO 230.00 - TWIN CHURCH 230KV CKT 1	320	320	0.06321	108.7199	GEN563222 1-G15088_3 0.6900
FDNS	09NR	0	17G	G15_053	FROM->TO	DIXONCO 230.00 - TWIN CHURCH 230KV CKT 1	320	320	0.0628	108.7026	SIOUX CITY (SC KV1A) 230/161/13.8KV TRANSFORMER CKT 1
FDNS	09NR	0	17G	G15_053	FROM->TO	DIXONCO 230.00 - TWIN CHURCH 230KV CKT 1	320	320	0.06279	108.6951	SIOUX CITY (SC KV5A) 230/161/13.8KV TRANSFORMER CKT 1
FDNS	09NR	0	17G	G15_053	FROM->TO	DIXONCO 230.00 - TWIN CHURCH 230KV CKT 1	320	320	0.06321	108.6645	GEN640431 1-LAREDO.GEN1W0.6900
FDNS	09NR	0	17G	G15_053	FROM->TO	DIXONCO 230.00 - TWIN CHURCH 230KV CKT 1	320	320	0.0624	108.6403	GRIMES - LEHIGH 345KV CKT 1
FDNS	09NR	0	17G	G15_053	FROM->TO	DIXONCO 230.00 - TWIN CHURCH 230KV CKT 1	320	320	0.06321	108.6218	GEN562912 1-G15053_3 0.6900
FDNS	09NR	0	17G	G15_053	FROM->TO	DIXONCO 230.00 - TWIN CHURCH 230KV CKT 1	320	320	0.06249	108.6095	ANITA TAP POINT TO CRESTON AND DENISON - EXIRA 161KV CKT 1
FDNS	09NR	0	17G	G15_053	FROM->TO	DIXONCO 230.00 - TWIN CHURCH 230KV CKT 1	320	320	0.06249	108.5821	DENISON - EXIRA 161KV CKT 1
FDNS	09NR	0	17G	G15_053	FROM->TO	DIXONCO 230.00 - TWIN CHURCH 230KV CKT 1	320	320	0.06249	108.5812	DENISON (DN KV1A) 230/161/13.8KV TRANSFORMER CKT 1
FDNS	09NR	0	17G	G15_053	FROM->TO	DIXONCO 230.00 - TWIN CHURCH 230KV CKT 1	320	320	0.06321	108.5564	GEN337910 1-ARKANSAS NUCLEAR ONE UNIT #1
FDNS	09NR	0	17G	G15_053	FROM->TO	DIXONCO 230.00 - TWIN CHURCH 230KV CKT 1	320	320	0.06321	108.5527	GEN335831 1-RIVERBEND UNIT#1
FDNS	09NR	0	17G	G15_053	FROM->TO	DIXONCO 230.00 - TWIN CHURCH 230KV CKT 1	320	320	0.06612	108.5415	KELLY - SHELL CREEK 230KV CKT 1
FDNS	09NR	0	17G	G15_053	FROM->TO	DIXONCO 230.00 - TWIN CHURCH 230KV CKT 1	320	320	0.06612	108.5389	SHELL CREEK (SHELLCREEKT1) 345/230/13.8KV TRANSFORMER CKT 1
FDNS	09NR	0	17G	G15_053	FROM->TO	DIXONCO 230.00 - TWIN CHURCH 230KV CKT 1	320	320	0.06612	108.5389	SHELL CREEK (SHELLCREEKT1) 345/230/13.8KV TRANSFORMER CKT 1
FDNS	09NR	0	17G	G15_053	FROM->TO	DIXONCO 230.00 - TWIN CHURCH 230KV CKT 1	320	320	0.06388	108.4671	TWIN CHURCH (TWNCHURCH T4) 230/115/13.8KV TRANSFORMER CKT 1
FDNS	09NR	0	17G	G15_053	FROM->TO	DIXONCO 230.00 - TWIN CHURCH 230KV CKT 1	320	320	0.06388	108.4671	TWIN CHURCH (TWNCHURCH T4) 230/115/13.8KV TRANSFORMER CKT 1
FDNS	09NR	0	17G	G15_053	FROM->TO	DIXONCO 230.00 - TWIN CHURCH 230KV CKT 1	320	320	0.06321	108.4481	GEN635023 3-WALTER SCOTT UNIT 3
FDNS	09NR	0	17G	G15_053	FROM->TO	DIXONCO 230.00 - TWIN CHURCH 230KV CKT 1	320	320	0.06321	108.396	GEN336153 1-WATERFORD UNIT#3
FDNS	09NR	0	17G	G15_053	FROM->TO	DIXONCO 230.00 - TWIN CHURCH 230KV CKT 1	320	320	0.06321	108.3372	GEN337911 1-ARKANSAS NUCLEAR ONE UNIT #2
FDNS	09NR	0	20L	G15_053	FROM->TO	DIXONCO 230.00 - TWIN CHURCH 230KV CKT 1	320	320	0.06397	108.3059	GEN337652 1-WHITE BLUFF UNIT #1
FDNS	09NR	0	17G	G15_053	FROM->TO	DIXONCO 230.00 - TWIN CHURCH 230KV CKT 1	320	320	0.06321	108.239	GEN635024 4-WALTER SCOTT UNIT 4
FDNS	09NR	0	17G	G15_053	FROM->TO	DIXONCO 230.00 - TWIN CHURCH 230KV CKT 1	320	320	0.06276	108.237	EAGLE 4 230.00 - SIOUX CITY 230KV CKT 1
FDNS	09NR	0	20L	G15_053	FROM->TO	DIXONCO 230.00 - TWIN CHURCH 230KV CKT 1	320	320	0.06315	108.2347	GRIMES - LEHIGH 345KV CKT 1
FDNS	09NR	0	17G	G15_053	FROM->TO	DIXONCO 230.00 - TWIN CHURCH 230KV CKT 1	320	320	0.06014	108.1552	RAUN - SUB 3451 FT CAL 345KV CKT 1
FDNS	09NR	0	17G	G15_053	FROM->TO	DIXONCO 230.00 - TWIN CHURCH 230KV CKT 1	320	320	0.06014	108.1552	RAUN - SUB 3451 FT CAL 345KV CKT 1
FDNS	09NR	0	20L	G15_053	FROM->TO	DIXONCO 230.00 - TWIN CHURCH 230KV CKT 1	320	320	0.06356	108.1414	SIOUX CITY (SC KV1A) 230/161/13.8KV TRANSFORMER CKT 1
FDNS	09NR	0	20L	G15_053	FROM->TO	DIXONCO 230.00 - TWIN CHURCH 230KV CKT 1	320	320	0.06336	108.1397	SIOUXCY-LNX3345.00 - SPLIT ROCK 345KV CKT 1
FDNS	09NR	0	20L	G15_053	FROM->TO	DIXONCO 230.00 - TWIN CHURCH 230KV CKT 1	320	320	0.06336	108.1397	SIOUXCY-LNX3345.00 - SPLIT ROCK 345KV CKT 1
FDNS	09NR	0	20L	G15_053	FROM->TO	DIXONCO 230.00 - TWIN CHURCH 230KV CKT 1	320	320	0.06397	108.1379	GEN335831 1-RIVERBEND UNIT#1
FDNS	09NR	0	20L	G15_053	FROM->TO	DIXONCO 230.00 - TWIN CHURCH 230KV CKT 1	320	320	0.06356	108.1341	SIOUX CITY (SC KV5A) 230/161/13.8KV TRANSFORMER CKT 1
FDNS	09NR	0	17G	G15_053	FROM->TO	DIXONCO 230.00 - TWIN CHURCH 230KV CKT 1	320	320	0.06321	108.1098	GEN336821 1-GRAND GULF UNIT
FDNS	09NR	0	20L	G15_053	FROM->TO	DIXONCO 230.00 - TWIN CHURCH 230KV CKT 1	320	320	0.06397	108.1035	GEN337910 1-ARKANSAS NUCLEAR ONE UNIT #1
FDNS	09NR	0	20L	G15_053	FROM->TO	DIXONCO 230.00 - TWIN CHURCH 230KV CKT 1	320	320	0.06397	108.087	GEN640431 1-LAREDO.GEN1W0.6900
FDNS	09NR	0	20L	G15_053	FROM->TO	DIXONCO 230.00 - TWIN CHURCH 230KV CKT 1	320	320	0.06397	108.0791	GEN563222 1-G15088_3 0.6900
FDNS	09NR	0	17G	G15_053	FROM->TO	DIXONCO 230.00 - TWIN CHURCH 230KV CKT 1	320	320	0.06321	108.0673	GEN562921 1-G15054_2 0.6900
FDNS	09NR	0	20L	G15_053	FROM->TO	DIXONCO 230.00 - TWIN CHURCH 230KV CKT 1	320	320	0.06397	108.0498	GEN344225 1-1CAL G1 25.000
FDNS	09NR	0	20L	G15_053	FROM->TO	DIXONCO 230.00 - TWIN CHURCH 230KV CKT 1	320	320	0.06323	108.048	ANITA TAP POINT TO CRESTON AND DENISON - EXIRA 161KV CKT 1
FDNS	09NR	0	20L	G15_053	FROM->TO	DIXONCO 230.00 - TWIN CHURCH 230KV CKT 1	320	320	0.06397	108.0223	GEN562912 1-G15053_3 0.6900
FDNS	09NR	0	20L	G15_053	FROM->TO	DIXONCO 230.00 - TWIN CHURCH 230KV CKT 1	320	320	0.06323	108.0218	DENISON - EXIRA 161KV CKT 1
FDNS	09NR	0	20L	G15_053	FROM->TO	DIXONCO 230.00 - TWIN CHURCH 230KV CKT 1	320	320	0.06323	108.0216	DENISON (DN KV1A) 230/161/13.8KV TRANSFORMER CKT 1
FDNS	09NR	0	20L	G15_053	FROM->TO	DIXONCO 230.00 - TWIN CHURCH 230KV CKT 1	320	320	0.06397	108.0077	GEN336153 1-WATERFORD UNIT#3
FDNS	09NR	0	20L	G15_053	FROM->TO	DIXONCO 230.00 - TWIN CHURCH 230KV CKT 1	320	320	0.06397	107.9139	GEN337911 1-ARKANSAS NUCLEAR ONE UNIT #2
FDNS	09NR	0	20L	G15_053	FROM->TO	DIXONCO 230.00 - TWIN CHURCH 230KV CKT 1	320	320	0.06164	107.858	GRPRAR1-LNX3345.00 - GRPRAR 345KV CKT Z
FDNS	09NR	0	20L	G15_053	FROM->TO	DIXONCO 230.00 - TWIN CHURCH 230KV CKT 1	320	320	0.06164	107.8562	GRPRAR1-LNX3345.00 - HOLT.CO3 345.00 345KV CKT 1
FDNS	09NR	0	20L	G15_053	FROM->TO	DIXONCO 230.00 - TWIN CHURCH 230KV CKT 1	320	320	0.06397	107.7817	GEN336821 1-GRAND GULF UNIT
FDNS	09NR	0	17G	G15_053	FROM->TO	DIXONCO 230.00 - TWIN CHURCH 230KV CKT 1	320	320	0.06101	107.7484	GRPRAR1-LNX3345.00 - HOLT.CO3 345.00 345KV CKT 1
FDNS	09NR	0	17G	G15_053	FROM->TO	DIXONCO 230.00 - TWIN CHURCH 230KV CKT 1	320	320	0.06101	107.7476	GRPRAR1-LNX3345.00 - GRPRAR 345KV CKT Z
FDNS	09NR	0	20L	G15_053	FROM->TO	DIXONCO 230.00 - TWIN CHURCH 230KV CKT 1	320	320	0.06397	107.7364	GEN635023 3-WALTER SCOTT UNIT 3
FDNS	09NR	0	17G	G15_053	FROM->TO	DIXONCO 230.00 - TWIN CHURCH 230KV CKT 1	320	320	0.06097	107.7032	BANCROFT - OAKLAND 115KV CKT 1
FDNS	09NR	0	17G	G15_053	FROM->TO	DIXONCO 230.00 - TWIN CHURCH 230KV CKT 1	320	320	0.06235	107.6458	PLYMOUTH - SIOUX CITY 161KV CKT 1
FDNS	09NR	0	20L	G15_053	FROM->TO	DIXONCO 230.00 - TWIN CHURCH 230KV CKT 1	320	320	0.06154	107.6066	BANCROFT - OAKLAND 115KV CKT 1
FDNS	09NR	0	20L	G15_053	FROM->TO	DIXONCO 230.00 - TWIN CHURCH 230KV CKT 1	320	320	0.06397	107.521	GEN635024 4-WALTER SCOTT UNIT 4
FDNS	09NR	0	20L	G15_053	FROM->TO	DIXONCO 230.00 - TWIN CHURCH 230KV CKT 1	320	320	0.06397	107.47	GEN562921 1-G15054_2 0.6900
FDNS	09NR	0	20L	G15_053	FROM->TO	DIXONCO 230.00 - TWIN CHURCH 230KV CKT 1	320	320	0.06351	107.4622	EAGLE 4 230.00 - SIOUX CITY 230KV CKT 1
FDNS	09ALL	0	20SP	G15_053	FROM->TO	DIXONCO 230.00 - TWIN CHURCH 230KV CKT 1	320	320	0.0733	107.3901	BASE CASE
FDNS	09ALL	0	17SP	G15_053	FROM->TO	DIXONCO 230.00 - TWIN CHURCH 230KV CKT 1	320	320	0.07304	107.3838	BASE CASE
FDNS	09NR	0	20L	G15_053	FROM->TO	DIXONCO 230.00 - TWIN CHURCH 230KV CKT 1	320	320	0.06154	107.1979	P12:115:NPPD:1193:OAKLAND7:EMERSON7:BTB
FDNS	09NR	0	20L	G15_053	FROM->TO	DIXONCO 230.00 - TWIN CHURCH 230KV CKT 1	320	320	0.06154	107.1761	BANCROFT - EMERSON 115KV CKT 1
FDNS	09NR	0	20L	G15_053	FROM->TO	DIXONCO 230.00 - TWIN CHURCH 230KV CKT 1	320	320	0.06311	107.1722	PLYMOUTH - SIOUX CITY 161KV CKT 1
FDNS	09NR	0	20L	G15_053	FROM->TO	DIXONCO 230.00 - TWIN CHURCH 230KV CKT 1	320	320	0.06311	107.1722	PLYMOUTH - SIOUX CITY 161KV CKT 1
FDNS	09NR	0	17G	G15_053	FROM->TO	DIXONCO 230.00 - TWIN CHURCH 230KV CKT 1	320	320	0.06097	107.0402	P12:115:NPPD:1193:OAKLAND7:EMERSON7:BTB
FDNS	09NR	0	17G	G15_053	FROM->TO	DIXONCO 230.00 - TWIN CHURCH 230KV CKT 1	320	320	0.06097	107.0053	BANCROFT - EMERSON 115KV CKT 1

SOLUTION	GROUP	SCENARIO	SEASON	SOURCE	DIRECTION	MONITORED ELEMENT	RATEA (MVA)	RATEB(MVA)	TDF	TC%LOADING (% MVA)	CONTINGENCY
FDNS	09NR	0	20L	G15_053	FROM->TO	DIXONCO 230.00 - TWIN CHURCH 230KV CKT 1	320	320	0.06382	106.9499	GR ISLD-LNX3345.00 - HOLT.CO3 345.00 345KV CKT 1
FDNS	09NR	0	20L	G15_053	FROM->TO	DIXONCO 230.00 - TWIN CHURCH 230KV CKT 1	320	320	0.06382	106.8967	GR ISLD-LNX3345.00 - GRAND ISLAND 345KV CKT Z
FDNS	09NR	0	17G	G15_053	FROM->TO	DIXONCO 230.00 - TWIN CHURCH 230KV CKT 1	320	320	0.06178	106.7979	DENISON - SIOUX CITY 230KV CKT 1
FDNS	09NR	0	17G	G15_053	FROM->TO	DIXONCO 230.00 - TWIN CHURCH 230KV CKT 1	320	320	0.03532	106.7337	ANTELOPE 3345.00 - HOSKINS 345KV CKT 1
FDNS	09ALL	0	25SP	G15_053	FROM->TO	DIXONCO 230.00 - TWIN CHURCH 230KV CKT 1	320	320	0.07318	106.5843	BASE CASE
FDNS	09NR	0	20L	G15_053	FROM->TO	DIXONCO 230.00 - TWIN CHURCH 230KV CKT 1	320	320	0.06251	106.4977	DENISON - SIOUX CITY 230KV CKT 1
FDNS	09NR	0	17G	G15_053	FROM->TO	DIXONCO 230.00 - TWIN CHURCH 230KV CKT 1	320	320	0.03532	106.4212	ANTELOPE 3345.00 (ANTELOPE T1) 345/115/13.8KV TRANSFORMER CKT 1
FDNS	09NR	0	20L	G15_053	FROM->TO	DIXONCO 230.00 - TWIN CHURCH 230KV CKT 1	320	320	0.03584	106.378	ANTELOPE 3345.00 - HOSKINS 345KV CKT 1
FDNS	09NR	0	17G	G15_053	FROM->TO	DIXONCO 230.00 - TWIN CHURCH 230KV CKT 1	320	320	0.06321	106.3467	GEN562673 1-G15_007_3 0.6900
FDNS	09NR	0	20L	G15_053	FROM->TO	DIXONCO 230.00 - TWIN CHURCH 230KV CKT 1	320	320	0.03584	106.0743	ANTELOPE 3345.00 (ANTELOPE T1) 345/115/13.8KV TRANSFORMER CKT 1
FDNS	09NR	0	17G	G15_053	FROM->TO	DIXONCO 230.00 - TWIN CHURCH 230KV CKT 1	320	320	0.06321	105.9471	GEN562438 1-G13-032 0.6900
FDNS	09NR	0	20L	G15_053	FROM->TO	DIXONCO 230.00 - TWIN CHURCH 230KV CKT 1	320	320	0.06397	105.7183	GEN562673 1-G15_007_3 0.6900
FDNS	09NR	0	20L	G15_053	FROM->TO	DIXONCO 230.00 - TWIN CHURCH 230KV CKT 1	320	320	0.06154	105.5368	EMERSON - TWIN CHURCH 115KV CKT 1
FDNS	09NR	0	17G	G15_053	FROM->TO	DIXONCO 230.00 - TWIN CHURCH 230KV CKT 1	320	320	0.06097	105.4558	EMERSON - TWIN CHURCH 115KV CKT 1
FDNS	09NR	0	20L	G15_053	FROM->TO	DIXONCO 230.00 - TWIN CHURCH 230KV CKT 1	320	320	0.06397	105.3499	GEN562438 1-G13-032 0.6900
FDNS	09NR	0	17G	G15_053	FROM->TO	DIXONCO 230.00 - TWIN CHURCH 230KV CKT 1	320	320	0.06671	105.3016	BELDEN - HOSKINS 115KV CKT 1
FDNS	09NR	0	20L	G15_053	FROM->TO	DIXONCO 230.00 - TWIN CHURCH 230KV CKT 1	320	320	0.06751	104.8954	BELDEN - HOSKINS 115KV CKT 1
FDNS	09NR	0	20L	G15_053	FROM->TO	DIXONCO 230.00 - TWIN CHURCH 230KV CKT 1	320	320	0.06375	104.6362	KELLY - MEADOWGROVE4230.00 230KV CKT 1
FDNS	09NR	0	17G	G15_053	FROM->TO	DIXONCO 230.00 - TWIN CHURCH 230KV CKT 1	320	320	0.06288	104.3023	KELLY - MEADOWGROVE4230.00 230KV CKT 1
FDNS	00NR	0	17SP	G15_053	FROM->TO	G14-059T 230.00 - OGALLALA 230KV CKT 1	320	320	0.03217	169.5112	SIDNEY - SIDNEY1-LNX3345.00 345KV CKT Z
FDNS	00NR	0	17SP	G15_053	FROM->TO	G14-059T 230.00 - OGALLALA 230KV CKT 1	320	320	0.03217	169.4494	KEYSTONE - SIDNEY1-LNX3345.00 345KV CKT 1
FDNS	09NR	0	17G	G15_053	FROM->TO	G14-059T 230.00 - OGALLALA 230KV CKT 1	320	320	0.03168	148.0014	KEYSTONE - SIDNEY1-LNX3345.00 345KV CKT 1
FDNS	09NR	0	17G	G15_053	FROM->TO	G14-059T 230.00 - OGALLALA 230KV CKT 1	320	320	0.03168	147.9713	SIDNEY - SIDNEY1-LNX3345.00 345KV CKT Z
FDNSLock	00NR	0	16WP	G15_053	FROM->TO	G14-059T 230.00 - OGALLALA 230KV CKT 1	320	320	0.03124	141.3538	KEYSTONE - SIDNEY1-LNX3345.00 345KV CKT 1
FDNSLock	00NR	0	16WP	G15_053	FROM->TO	G14-059T 230.00 - OGALLALA 230KV CKT 1	320	320	0.03124	141.3219	SIDNEY - SIDNEY1-LNX3345.00 345KV CKT Z
FDNS	00NR	0	17SP	G15_053	TO->FROM	G14-059T 230.00 - SIDNEY 230KV CKT 1	320	320	0.03217	118.5049	SIDNEY - SIDNEY1-LNX3345.00 345KV CKT Z
FDNS	00NR	0	17SP	G15_053	TO->FROM	G14-059T 230.00 - SIDNEY 230KV CKT 1	320	320	0.03217	118.4199	KEYSTONE - SIDNEY1-LNX3345.00 345KV CKT 1
FDNS	09NR	0	20L	G15_053	FROM->TO	GAVINS POINT - YANKON JCT 115KV CKT 1	120	120	0.07197	107.6807	GAVINS POINT - SPIRIT MOUND 115KV CKT 1
FDNS	09NR	0	17G	G15_053	FROM->TO	GAVINS POINT - YANKON JCT 115KV CKT 1	120	120	0.07204	105.2073	GAVINS POINT - SPIRIT MOUND 115KV CKT 1
FDNS	09NR	0	20L	G15_053	FROM->TO	GAVINS POINT - YANKON JCT 115KV CKT 1	120	120	0.0688	101.7605	SIOUX CITY - TWIN CHURCH 230KV CKT 1
FDNS	09NR	0	20L	G15_053	FROM->TO	GAVINS POINT - YANKON JCT 115KV CKT 1	120	120	0.07197	100.412	MANNING - SPIRIT MOUND 115KV CKT 1
FDNS	09NR	0	17G	G15_053	TO->FROM	GERALD GENTLEMAN STATION - OGALLALA 230KV CKT 1	320	320	0.04519	119.5022	GERALD GENTLEMAN STATION - KEYSTONE 345KV CKT 1
FDNSLock	00NR	0	16WP	G15_053	TO->FROM	GERALD GENTLEMAN STATION - OGALLALA 230KV CKT 1	320	320	0.04429	113.6765	GERALD GENTLEMAN STATION - KEYSTONE 345KV CKT 1
FDNS	00NR	0	17SP	G15_053	TO->FROM	GERALD GENTLEMAN STATION - OGALLALA 230KV CKT 1	320	320	0.03486	112.452	GERALD GENTLEMAN STATION - KEYSTONE 345KV CKT 1
FDNS	00NR	0	20WP	G15_053	TO->FROM	GERALD GENTLEMAN STATION - OGALLALA 230KV CKT 1	320	320	0.03807	107.125	GERALD GENTLEMAN STATION - KEYSTONE 345KV CKT 1
FDNS	00NR	0	17SP	G15_053	FROM->TO	GR ISLD-LNX3345.00 - GRAND ISLAND 345KV CKT Z	720	720	0.05656	139.3799	G09_001IST 345.00 - WATERTOWN 345KV CKT 1
FDNS	00NR	0	17SP	G15_053	FROM->TO	GR ISLD-LNX3345.00 - GRAND ISLAND 345KV CKT Z	720	720	0.05757	139.0637	KELLY - MEADOWGROVE4230.00 230KV CKT 1
FDNS	00NR	0	17SP	G15_053	FROM->TO	GR ISLD-LNX3345.00 - GRAND ISLAND 345KV CKT Z	720	720	0.05528	138.6319	P12:230:UMZB:# 116 #: ST IN SD. WSG-ST-VH
FDNS	00NR	0	17SP	G15_053	FROM->TO	GR ISLD-LNX3345.00 - GRAND ISLAND 345KV CKT Z	720	720	0.05613	137.8128	WATERTN-LNX3345.00 - WATERTOWN 345KV CKT Z
FDNS	00NR	0	17SP	G15_053	FROM->TO	GR ISLD-LNX3345.00 - GRAND ISLAND 345KV CKT Z	720	720	0.05613	137.7489	P12:345:UMZW:# 1747 #: WT2 IN SD. WT2-WHT LINE FAULT
FDNS	00NR	0	17SP	G15_053	FROM->TO	GR ISLD-LNX3345.00 - GRAND ISLAND 345KV CKT Z	720	720	0.0553	137.7133	STORLA - WESSINGTON 230KV CKT 1
FDNS	00NR	0	17SP	G15_053	FROM->TO	GR ISLD-LNX3345.00 - GRAND ISLAND 345KV CKT Z	720	720	0.05613	137.6553	WATERTN-LNX3345.00 - WHITE 345KV CKT 1
FDNS	00NR	0	17SP	G15_053	FROM->TO	GR ISLD-LNX3345.00 - GRAND ISLAND 345KV CKT Z	720	720	0.05585	136.3519	HANLON - STORLA 230KV CKT 1
FDNS	00NR	0	17SP	G15_053	FROM->TO	GR ISLD-LNX3345.00 - GRAND ISLAND 345KV CKT Z	720	720	0.0552	136.0759	FT THOMPSON - LETCHER 230KV CKT 1
FDNS	00NR	0	17SP	G15_053	FROM->TO	GR ISLD-LNX3345.00 - GRAND ISLAND 345KV CKT Z	720	720	0.0552	136.0759	FT THOMPSON - LETCHER 230KV CKT 1
FDNS	00NR	0	17SP	G15_053	FROM->TO	GR ISLD-LNX3345.00 - GRAND ISLAND 345KV CKT Z	720	720	0.05354	134.743	FT RANDAL - FT THOMPSON 230KV CKT 1
FDNS	00NR	0	17SP	G15_053	FROM->TO	GR ISLD-LNX3345.00 - GRAND ISLAND 345KV CKT Z	720	720	0.05354	134.743	FT RANDAL - FT THOMPSON 230KV CKT 1
FDNS	00NR	0	17SP	G15_053	FROM->TO	GR ISLD-LNX3345.00 - GRAND ISLAND 345KV CKT Z	720	720	0.05362	134.7138	FT RANDAL - G12_009IST 230.00 230KV CKT 1
FDNS	00NR	0	17SP	G15_053	FROM->TO	GR ISLD-LNX3345.00 - GRAND ISLAND 345KV CKT Z	720	720	0.05362	134.6259	FT THOMPSON - LAKE PLATT 230KV CKT 1
FDNS	00NR	0	17SP	G15_053	FROM->TO	GR ISLD-LNX3345.00 - GRAND ISLAND 345KV CKT Z	720	720	0.05362	134.6259	FT THOMPSON - LAKE PLATT 230KV CKT 1
FDNS	00NR	0	17SP	G15_053	FROM->TO	GR ISLD-LNX3345.00 - GRAND ISLAND 345KV CKT Z	720	720	0.05853	134.543	KEYSTONE - SIDNEY1-LNX3345.00 345KV CKT 1
FDNS	00NR	0	17SP	G15_053	FROM->TO	GR ISLD-LNX3345.00 - GRAND ISLAND 345KV CKT Z	720	720	0.05853	134.5216	SIDNEY - SIDNEY1-LNX3345.00 345KV CKT Z
FDNS	00NR	0	17SP	G15_053	FROM->TO	GR ISLD-LNX3345.00 - GRAND ISLAND 345KV CKT Z	720	720	0.06491	134.4768	NUNDRWD - WAYSIDE 230KV CKT 1
FDNS	00NR	0	17SP	G15_053	FROM->TO	GR ISLD-LNX3345.00 - GRAND ISLAND 345KV CKT Z	720	720	0.05656	134.3905	G09_001IST 345.00 - GROTON 345KV CKT 1
FDNS	00NR	0	17SP	G15_053	FROM->TO	GR ISLD-LNX3345.00 - GRAND ISLAND 345KV CKT Z	720	720	0.05362	134.2326	G12_009IST 230.00 - LAKE PLATT 230KV CKT 1
FDNS	00NR	0	17SP	G15_053	FROM->TO	GR ISLD-LNX3345.00 - GRAND ISLAND 345KV CKT Z	720	720	0.05677	134.2197	CHISAGO COUNTY - FORBES 500KV CKT 1
FDNS	00NR	0	17SP	G15_053	FROM->TO	GR ISLD-LNX3345.00 - GRAND ISLAND 345KV CKT Z	720	720	0.0568	134.1473	GEN336821 1-GRAND GULF UNIT
FDNS	00NR	0	17SP	G15_053	FROM->TO	GR ISLD-LNX3345.00 - GRAND ISLAND 345KV CKT Z	720	720	0.05757	134.0228	FT RANDAL - MEADOWGROVE4230.00 230KV CKT 1
FDNS	00NR	0	17SP	G15_053	FROM->TO	GR ISLD-LNX3345.00 - GRAND ISLAND 345KV CKT Z	720	720	0.06449	133.952	RAUN - SUB 3451 FT CAL 345KV CKT 1
FDNS	00NR	0	17SP	G15_053	FROM->TO	GR ISLD-LNX3345.00 - GRAND ISLAND 345KV CKT Z	720	720	0.06449	133.952	RAUN - SUB 3451 FT CAL 345KV CKT 1
FDNS	00NR	0	17SP	G15_053	FROM->TO	GR ISLD-LNX3345.00 - GRAND ISLAND 345KV CKT Z	720	720	0.05676	133.8744	CENTER - JAMESTOWN 345KV CKT 1
FDNS	00NR	0	17SP	G15_053	FROM->TO	GR ISLD-LNX3345.00 - GRAND ISLAND 345KV CKT Z	720	720	0.05608	133.7167	LETCHER - SIOUX FALLS 230KV CKT 1
FDNS	00NR	0	17SP	G15_053	FROM->TO	GR ISLD-LNX3345.00 - GRAND ISLAND 345KV CKT Z	720	720	0.0568	133.6199	GEN344225 1-1CAL G1 25.000
FDNS	00NR	0	17SP	G15_053	FROM->TO	GR ISLD-LNX3345.00 - GRAND ISLAND 345KV CKT Z	720	720	0.0568	133.5098	GEN635024 4-WALTER SCOTT UNIT 4
FDNS	00NR	0	17SP	G15_053	FROM->TO	GR ISLD-LNX3345.00 - GRAND ISLAND 345KV CKT Z	720	720	0.0568	133.4039	GEN337911 1-ARKANSAS NUCLEAR ONE UNIT #2
FDNS	00NR	0	17SP	G15_053	FROM->TO	GR ISLD-LNX3345.00 - GRAND ISLAND 345KV CKT Z	720	720	0.04289	133.3888	GRAND ISLAND - SWEETWATER 345KV CKT 1
FDNS	00NR	0	17SP	G15_053	FROM->TO	GR ISLD-LNX3345.00 - GRAND ISLAND 345KV CKT Z	720	720	0.0568	133.3552	GEN336153 1-WATERFORD UNIT#3
FDNS	00NR	0	17SP	G15_053	FROM->TO	GR ISLD-LNX3345.00 - GRAND ISLAND 345KV CKT Z	720	720	0.05678	133.3286	BISON 3 345.00 - BUFFALO 345KV CKT 1
FDNS	00NR	0	17SP	G15_053	FROM->TO	GR ISLD-LNX3345.00 - GRAND ISLAND 345KV CKT Z	720	720	0.0568	132.9715	GEN635023 3-WALTER SCOTT UNIT 3
FDNS	00NR	0	17SP	G15_053	FROM->TO	GR ISLD-LNX3345.00 - GRAND ISLAND 345KV CKT Z	720	720	0.0568	132.9227	GEN335831 1-RIVERBEND UNIT#1
FDNS	00NR	0	17SP	G15_053	FROM->TO	GR ISLD-LNX3345.00 - GRAND ISLAND 345KV CKT Z	720	720	0.05589	132.9171	SPLIT ROCK - WHITE 345KV CKT 1
FDNS	00NR	0	17SP	G15_053	FROM->TO	GR ISLD-LNX3345.00 - GRAND ISLAND 345KV CKT Z	720	720	0.05589	132.9171	SPLIT ROCK - WHITE 345KV CKT 1
FDNS	00NR	0	17SP	G15_053	FROM->TO	GR ISLD-LNX3345.00 - GRAND ISLAND 345KV CKT Z	720	720	0.0568	132.8237	GEN337910 1-ARKANSAS NUCLEAR ONE UNIT #1
FDNS	00NR	0	17SP	G15_053	FROM->TO	GR ISLD-LNX3345.00 - GRAND ISLAND 345KV CKT Z	720	720	0.05703	132.7285	ARROWHEAD - ARROWHEAD 230 230KV CKT 1
FDNS	00NR	0	17SP	G15_053	FROM->TO	GR ISLD-LNX3345.00 - GRAND ISLAND 345KV CKT Z	720	720	0.05692	132.6142	FT RANDAL - SIOUX CITY 230KV CKT 1
FDNS	00NR	0	17SP	G15_053	FROM->TO	GR ISLD-LNX3345.00 - GRAND ISLAND 345KV CKT Z	720	720	0.05658	132.6078	GROTON-LNX3 345.00 - LELAND1-LNX3345.00 345KV CKT 1
FDNS	00NR	0	17SP	G15_053	FROM->TO	GR ISLD-LNX3345.00 - GRAND ISLAND 345KV CKT Z	720	720	0.05658	132.5676	GROTON - GROTON-LNX3 345.00 345KV CKT Z
FDNS	00NR	0	17SP	G15_053	FROM->TO	GR ISLD-LNX3345.00 - GRAND ISLAND 345KV CKT Z	720	720	0.05658	132.5669	P12:345:UMZB:# 109 #: LOS GRT IN ND. LOS GRT
FDNS	00NR	0	17SP	G15_053	FROM->TO	GR ISLD-LNX3345.00 - GRAND ISLAND 345KV CKT Z	720	720	0.05658	132.551	LELAND OLDS - LELAND1-LNX3345.00 345KV CKT Z

SOLUTION	GROUP	SCENARIO	SEASON	SOURCE	DIRECTION	MONITORED ELEMENT	RATEA (MVA)	RATEB(MVA)	TDF	TC%LOADING (% MVA)	CONTINGENCY
FDNS	00NR	0	17SP	G15_053	FROM->TO	GR ISLD-LNX3345.00 - GRAND ISLAND 345KV CKT Z	720	720	0.0568	132.5069	GEN640010 1-GERALD GENTLEMAN STATION UNIT 1
FDNS	00NR	0	17SP	G15_053	FROM->TO	GR ISLD-LNX3345.00 - GRAND ISLAND 345KV CKT Z	720	720	0.05639	132.4993	HANLON - SIOUX FALLS 230KV CKT 1
FDNSLock	00NR	0	17SP	G15_053	FROM->TO	GR ISLD-LNX3345.00 - GRAND ISLAND 345KV CKT Z	720	720	0.05629	132.4756	P12:115:NPPD:1091:VALENTN7:MISSION7:BTB
FDNS	00NR	0	17SP	G15_053	FROM->TO	GR ISLD-LNX3345.00 - GRAND ISLAND 345KV CKT Z	720	720	0.05747	132.4608	HAZLETON - MITCHLCO3 345.00 345KV CKT 1
FDNS	00NR	0	17SP	G15_053	FROM->TO	GR ISLD-LNX3345.00 - GRAND ISLAND 345KV CKT Z	720	720	0.05764	132.4529	GERALD GENTLEMAN STATION - KEYSTONE 345KV CKT 1
FDNS	00NR	0	17SP	G15_053	FROM->TO	GR ISLD-LNX3345.00 - GRAND ISLAND 345KV CKT Z	720	720	0.0568	132.3179	ALEXMRES3 345.00 - BISON 3 345.00 345KV CKT 1
FDNS	00NR	0	17SP	G15_053	FROM->TO	GR ISLD-LNX3345.00 - GRAND ISLAND 345KV CKT Z	720	720	0.0568	132.2633	GEN337653 1-WHITE BLUFF UNIT #2
FDNS	00NR	0	17SP	G15_053	FROM->TO	GR ISLD-LNX3345.00 - GRAND ISLAND 345KV CKT Z	720	720	0.0568	132.2476	GEN337652 1-WHITE BLUFF UNIT #1
FDNS	00NR	0	17SP	G15_053	FROM->TO	GR ISLD-LNX3345.00 - GRAND ISLAND 345KV CKT Z	720	720	0.0568	132.1956	GEN640011 2-GERALD GENTLEMAN STATION UNIT 2
FDNS	00NR	0	17SP	G15_053	FROM->TO	GR ISLD-LNX3345.00 - GRAND ISLAND 345KV CKT Z	720	720	0.05629	132.1757	MISSION - ST FRANCIS 115KV CKT 1
FDNS	00NR	0	17SP	G15_053	FROM->TO	GR ISLD-LNX3345.00 - GRAND ISLAND 345KV CKT Z	720	720	0.0568	132.1606	GEN338146 1-INDEPENDENCE UNIT #2
FDNS	00NR	0	17SP	G15_053	FROM->TO	GR ISLD-LNX3345.00 - GRAND ISLAND 345KV CKT Z	720	720	0.0568	132.159	GEN338143 1-INDEPENDENCE UNIT #1
FDNS	00NR	0	17SP	G15_053	FROM->TO	GR ISLD-LNX3345.00 - GRAND ISLAND 345KV CKT Z	720	720	0.05554	132.159	SIOUXCY-LNX3345.00 - SPLIT ROCK 345KV CKT 1
FDNS	00NR	0	17SP	G15_053	FROM->TO	GR ISLD-LNX3345.00 - GRAND ISLAND 345KV CKT Z	720	720	0.05554	132.159	SIOUXCY-LNX3345.00 - SPLIT ROCK 345KV CKT 1
FDNS	00NR	0	17SP	G15_053	FROM->TO	GR ISLD-LNX3345.00 - GRAND ISLAND 345KV CKT Z	720	720	0.05678	132.1475	ELLENDALE - OAKES 230KV CKT 1
FDNS	00NR	0	17SP	G15_053	FROM->TO	GR ISLD-LNX3345.00 - GRAND ISLAND 345KV CKT Z	720	720	0.05678	132.1475	ELLENDALE - OAKES 230KV CKT 1
FDNS	00NR	0	17SP	G15_053	FROM->TO	GR ISLD-LNX3345.00 - GRAND ISLAND 345KV CKT Z	720	720	0.05708	132.1414	AS KING - EAU CLAIRE 345KV CKT 1
FDNS	00NR	0	17SP	G15_053	FROM->TO	GR ISLD-LNX3345.00 - GRAND ISLAND 345KV CKT Z	720	720	0.0568	132.1185	GEN501801 1-DOLET HILLS UNIT1
FDNS	00NR	0	17SP	G15_053	FROM->TO	GR ISLD-LNX3345.00 - GRAND ISLAND 345KV CKT Z	720	720	0.05554	132.104	P12:345:UMZW:# 907 #: SC2-SR IN IA. SC2-SR 345 KV LINE
FDNS	00NR	0	17SP	G15_053	FROM->TO	GR ISLD-LNX3345.00 - GRAND ISLAND 345KV CKT Z	720	720	0.05554	132.065	SIOUX CITY - SIOUXCY-LNX3345.00 345KV CKT Z
FDNS	00NR	0	17SP	G15_053	FROM->TO	GR ISLD-LNX3345.00 - GRAND ISLAND 345KV CKT Z	720	720	0.05678	132.0539	FORMAN - OAKES 230KV CKT 1
FDNSLock	00NR	0	17SP	G15_053	FROM->TO	GR ISLD-LNX3345.00 - GRAND ISLAND 345KV CKT Z	720	720	0.05629	132.0406	HARMONY - VALENTINE 115KV CKT 1
FDNS	00NR	0	17SP	G15_053	FROM->TO	GR ISLD-LNX3345.00 - GRAND ISLAND 345KV CKT Z	720	720	0.05826	132.0395	SIDNEY - STEGALL 345KV CKT 1
FDNS	00NR	0	17SP	G15_053	FROM->TO	GR ISLD-LNX3345.00 - GRAND ISLAND 345KV CKT Z	720	720	0.05629	132.0391	HARMONY - ST FRANCIS 115KV CKT 1
FDNS	00NR	0	17SP	G15_053	FROM->TO	GR ISLD-LNX3345.00 - GRAND ISLAND 345KV CKT Z	720	720	0.05634	132.0318	FT RANDAL - UTICA JCT 230KV CKT 1
FDNS	00NR	0	17SP	G15_053	FROM->TO	GR ISLD-LNX3345.00 - GRAND ISLAND 345KV CKT Z	720	720	0.05672	132.0241	CARPENTER - HURON 230KV CKT 1
FDNS	00NR	0	17SP	G15_053	FROM->TO	GR ISLD-LNX3345.00 - GRAND ISLAND 345KV CKT Z	720	720	0.05672	131.9553	HURON - WATERTOWN 230KV CKT 2
FDNS	00NR	0	17SP	G15_053	FROM->TO	GR ISLD-LNX3345.00 - GRAND ISLAND 345KV CKT Z	720	720	0.05672	131.9553	HURON - WATERTOWN 230KV CKT 2
FDNS	00NR	0	17SP	G15_053	FROM->TO	GR ISLD-LNX3345.00 - GRAND ISLAND 345KV CKT Z	720	720	0.05721	131.95	ARPIN B4 345.00 - EAU CLAIRE 345KV CKT 1
FDNS	00NR	0	17SP	G15_053	FROM->TO	GR ISLD-LNX3345.00 - GRAND ISLAND 345KV CKT Z	720	720	0.05672	131.8923	CARPENTER - WATERTOWN 230KV CKT 1
FDNS	00NR	0	17SP	G15_053	FROM->TO	GR ISLD-LNX3345.00 - GRAND ISLAND 345KV CKT Z	720	720	0.05672	131.8923	CARPENTER - WATERTOWN 230KV CKT 1
FDNS	00NR	0	17SP	G15_053	FROM->TO	GR ISLD-LNX3345.00 - GRAND ISLAND 345KV CKT Z	720	720	0.0553	131.8395	FT THOMPSON - WESSINGTON 230KV CKT 1
FDNS	00NR	0	17SP	G15_053	FROM->TO	GR ISLD-LNX3345.00 - GRAND ISLAND 345KV CKT Z	720	720	0.0553	131.8395	FT THOMPSON - WESSINGTON 230KV CKT 1
FDNS	00NR	0	17SP	G15_053	FROM->TO	GR ISLD-LNX3345.00 - GRAND ISLAND 345KV CKT Z	720	720	0.0568	131.7723	GEN336252 1-NINEMILE POINT UNIT#5
FDNS	00NR	0	17SP	G15_053	FROM->TO	GR ISLD-LNX3345.00 - GRAND ISLAND 345KV CKT Z	720	720	0.05645	131.7334	PAHOJA - SIOUX FALLS 230KV CKT 1
FDNS	00NR	0	17SP	G15_053	FROM->TO	GR ISLD-LNX3345.00 - GRAND ISLAND 345KV CKT Z	720	720	0.0568	131.7305	GEN501813 1-RODEMACHER UNIT 3
FDNS	00NR	0	17SP	G15_053	FROM->TO	GR ISLD-LNX3345.00 - GRAND ISLAND 345KV CKT Z	720	720	0.0521	131.7068	P12:115:NPPD:WAPA6:FTRANDL7:ONEILL 7:BTB
FDNS	00NR	0	17SP	G15_053	FROM->TO	GR ISLD-LNX3345.00 - GRAND ISLAND 345KV CKT Z	720	720	0.0521	131.7068	P12:115:UMZB:# 115 #: SE IN NE. FR-SE-ON
FDNS	00NR	0	17SP	G15_053	FROM->TO	GR ISLD-LNX3345.00 - GRAND ISLAND 345KV CKT Z	720	720	0.05301	131.7007	GERALD GENTLEMAN STATION - SWEETWATER 345KV CKT 1
FDNS	00NR	0	17SP	G15_053	FROM->TO	GR ISLD-LNX3345.00 - GRAND ISLAND 345KV CKT Z	720	720	0.05747	131.6728	ADAMS - MITCHLCO3 345.00 345KV CKT 1
FDNS	00NR	0	17SP	G15_053	FROM->TO	GR ISLD-LNX3345.00 - GRAND ISLAND 345KV CKT Z	720	720	0.0521	131.6656	FT RANDAL - SPENCER 115KV CKT 1
FDNS	00NR	0	17SP	G15_053	FROM->TO	GR ISLD-LNX3345.00 - GRAND ISLAND 345KV CKT Z	720	720	0.0568	131.6347	GEN336831 1-BAXTER WILSON SES
FDNS	00NR	0	17SP	G15_053	FROM->TO	GR ISLD-LNX3345.00 - GRAND ISLAND 345KV CKT Z	720	720	0.0568	131.622	GEN336251 1-NINEMILE POINT UNIT#4
FDNSLock	00NR	0	17SP	G15_053	FROM->TO	GR ISLD-LNX3345.00 - GRAND ISLAND 345KV CKT Z	720	720	0.05629	131.6073	AINSWORTH - VALENTINE 115KV CKT 1
FDNS	00NR	0	17SP	G15_053	FROM->TO	GR ISLD-LNX3345.00 - GRAND ISLAND 345KV CKT Z	720	720	0.0521	131.5743	ONEILL - SPENCER 115KV CKT 1
FDNS	00NR	0	17SP	G15_053	FROM->TO	GR ISLD-LNX3345.00 - GRAND ISLAND 345KV CKT Z	720	720	0.0568	131.5582	CNTSHNT3 345.00 - PRAIRIE3 345.00 345KV CKT 1
FDNS	00NR	0	17SP	G15_053	FROM->TO	GR ISLD-LNX3345.00 - GRAND ISLAND 345KV CKT Z	720	720	0.0568	131.5472	GEN337041 1-GERALD ANDRUS
FDNS	00NR	0	17SP	G15_053	FROM->TO	GR ISLD-LNX3345.00 - GRAND ISLAND 345KV CKT Z	720	720	0.0568	131.5304	GEN335206 1-NELSON UNIT 6
FDNS	00NR	0	17SP	G15_053	FROM->TO	GR ISLD-LNX3345.00 - GRAND ISLAND 345KV CKT Z	720	720	0.07691	131.5123	HOSKINS - SHELL CREEK 345KV CKT 1
FDNS	00NR	0	17SP	G15_053	FROM->TO	GR ISLD-LNX3345.00 - GRAND ISLAND 345KV CKT Z	720	720	0.0568	131.5063	GEN344897 4-1LAB G4 20.000
FDNS	00NR	0	17SP	G15_053	FROM->TO	GR ISLD-LNX3345.00 - GRAND ISLAND 345KV CKT Z	720	720	0.0568	131.503	GEN344894 1-1LAB G1 20.000
FDNS	00NR	0	17SP	G15_053	FROM->TO	GR ISLD-LNX3345.00 - GRAND ISLAND 345KV CKT Z	720	720	0.0568	131.5029	GEN344896 3-1LAB G3 20.000
FDNS	00NR	0	17SP	G15_053	FROM->TO	GR ISLD-LNX3345.00 - GRAND ISLAND 345KV CKT Z	720	720	0.05708	131.4564	G15094_T 345.00 - SIDNEY2-LNX3345.00 345KV CKT 1
FDNS	00NR	0	17SP	G15_053	FROM->TO	GR ISLD-LNX3345.00 - GRAND ISLAND 345KV CKT Z	720	720	0.05708	131.4525	SIDNEY - SIDNEY2-LNX3345.00 345KV CKT Z
FDNS	00NR	0	17SP	G15_053	FROM->TO	GR ISLD-LNX3345.00 - GRAND ISLAND 345KV CKT Z	720	720	0.0568	131.4521	FORMAN - HANKINSON 230KV CKT 1
FDNS	00NR	0	17SP	G15_053	FROM->TO	GR ISLD-LNX3345.00 - GRAND ISLAND 345KV CKT Z	720	720	0.0568	131.4478	GEN344895 2-1LAB G2 20.000
FDNS	00NR	0	17SP	G15_053	FROM->TO	GR ISLD-LNX3345.00 - GRAND ISLAND 345KV CKT Z	720	720	0.05725	131.4449	ADAMS - PLEASANT VALLEY 345KV CKT 1
FDNS	00NR	0	17SP	G15_053	FROM->TO	GR ISLD-LNX3345.00 - GRAND ISLAND 345KV CKT Z	720	720	0.0568	131.4361	GEN345670 1-1RUSH G1 18.000
FDNS	00NR	0	17SP	G15_053	FROM->TO	GR ISLD-LNX3345.00 - GRAND ISLAND 345KV CKT Z	720	720	0.0568	131.4357	GEN345671 2-1RUSH G2 18.000
FDNS	00NR	0	17SP	G15_053	FROM->TO	GR ISLD-LNX3345.00 - GRAND ISLAND 345KV CKT Z	720	720	0.05729	131.409	RASMUSN - UTICA JCT 230KV CKT 1
FDNS	00NR	0	17SP	G15_053	FROM->TO	GR ISLD-LNX3345.00 - GRAND ISLAND 345KV CKT Z	720	720	0.05882	131.3849	GRIMES - LEHIGH 345KV CKT 1
FDNS	00NR	0	17SP	G15_053	FROM->TO	GR ISLD-LNX3345.00 - GRAND ISLAND 345KV CKT Z	720	720	0.0568	131.3743	GEN501812 1-RODEMACHER UNIT 2
FDNS	00NR	0	17SP	G15_053	FROM->TO	GR ISLD-LNX3345.00 - GRAND ISLAND 345KV CKT Z	720	720	0.05645	131.3737	EAGLE 4 230.00 - PAHOJA 230KV CKT 1
FDNS	00NR	0	17SP	G15_053	FROM->TO	GR ISLD-LNX3345.00 - GRAND ISLAND 345KV CKT Z	720	720	0.0568	131.3518	GEN334440 1-SABINE UNIT 4
FDNS	00NR	0	17SP	G15_053	FROM->TO	GR ISLD-LNX3345.00 - GRAND ISLAND 345KV CKT Z	720	720	0.0568	131.3209	GEN563222 1-G15088_3 0.6900
FDNS	00NR	0	17SP	G15_053	FROM->TO	GR ISLD-LNX3345.00 - GRAND ISLAND 345KV CKT Z	720	720	0.05729	131.2572	RASMUSN - SIOUX CITY 230KV CKT 1
FDNS	00NR	0	17SP	G15_053	FROM->TO	GR ISLD-LNX3345.00 - GRAND ISLAND 345KV CKT Z	720	720	0.0568	131.1949	GEN336191 1-LITTLE GYPSY UNIT#3
FDNS	00NR	0	17SP	G15_053	FROM->TO	GR ISLD-LNX3345.00 - GRAND ISLAND 345KV CKT Z	720	720	0.05724	131.1823	LAKEFIELD 3 - NOBLES 345KV CKT 1
FDNS	00NR	0	17SP	G15_053	FROM->TO	GR ISLD-LNX3345.00 - GRAND ISLAND 345KV CKT Z	720	720	0.05478	131.1645	DIXONCO 230.00 - HOSKINS 230KV CKT 1
FDNS	00NR	0	17SP	G15_053	FROM->TO	GR ISLD-LNX3345.00 - GRAND ISLAND 345KV CKT Z	720	720	0.05399	131.1533	GERALD GENTLEMAN STATION - SWEETWATER 345KV CKT 2
FDNS	00NR	0	17SP	G15_053	FROM->TO	GR ISLD-LNX3345.00 - GRAND ISLAND 345KV CKT Z	720	720	0.05692	131.1447	RAUN - SIOUX CITY 345KV CKT 1
FDNS	00NR	0	17SP	G15_053	FROM->TO	GR ISLD-LNX3345.00 - GRAND ISLAND 345KV CKT Z	720	720	0.05692	131.1447	RAUN - SIOUX CITY 345KV CKT 1
FDNS	00NR	0	17SP	G15_053	FROM->TO	GR ISLD-LNX3345.00 - GRAND ISLAND 345KV CKT Z	720	720	0.0568	131.1356	GEN641089 2-ENERGY CENTER 2
FDNS	00NR	0	17SP	G15_053	FROM->TO	GR ISLD-LNX3345.00 - GRAND ISLAND 345KV CKT Z	720	720	0.0568	131.1315	GEN338388 1-1PLUM PT U1 23.000
FDNS	00NR	0	17SP	G15_053	FROM->TO	GR ISLD-LNX3345.00 - GRAND ISLAND 345KV CKT Z	720	720	0.0568	131.115	GEN336801 1-BAXTER WILSON UNIT #1
FDNS	00NR	0	17SP	G15_053	FROM->TO	GR ISLD-LNX3345.00 - GRAND ISLAND 345KV CKT Z	720	720	0.0568	131.089	GEN335614 1-WILLOW GLENN UNIT#4
FDNS	00NR	0	17SP	G15_053	FROM->TO	GR ISLD-LNX3345.00 - GRAND ISLAND 345KV CKT Z	720	720	0.0568	131.0813	GEN334441 1-SABINE UNIT 5
FDNS	00NR	0	17SP	G15_053	FROM->TO	GR ISLD-LNX3345.00 - GRAND ISLAND 345KV CKT Z	720	720	0.0568	131.0738	GEN336464 1-MICHOUD UNIT #3
FDNS	00NR	0	17SP	G15_053	FROM->TO	GR ISLD-LNX3345.00 - GRAND ISLAND 345KV CKT Z	720	720	0.05741	131.068	KOSSUTH 3 345.00 - OBRIEN 3 345.00 345KV CKT 1

SOLUTION	GROUP	SCENARIO	SEASON	SOURCE	DIRECTION	MONITORED ELEMENT	RATEA (MVA)	RATEB(MVA)	TDF	TC%LOADING (% MVA)	CONTINGENCY
FDNS	00NR	0	17SP	G15_053	FROM->TO	GR ISLD-LNX3345.00 - GRAND ISLAND 345KV CKT Z	720	720	0.05683	131.0671	ALEXMRES3 345.00 - WAITE PARK 345KV CKT 1
FDNS	00NR	0	17SP	G15_053	FROM->TO	GR ISLD-LNX3345.00 - GRAND ISLAND 345KV CKT Z	720	720	0.0568	131.0606	GEN335204 1-NELSON UNIT 4
FDNS	00NR	0	17SP	G15_053	FROM->TO	GR ISLD-LNX3345.00 - GRAND ISLAND 345KV CKT Z	720	720	0.06424	131.0579	COLUMEAST - SHELL CREEK 345KV CKT 1
FDNS	00NR	0	17SP	G15_053	FROM->TO	GR ISLD-LNX3345.00 - GRAND ISLAND 345KV CKT Z	720	720	0.05706	131.0518	BROOKING COUNTY - LYON COUNTY 345KV CKT 1
FDNS	00NR	0	17SP	G15_053	FROM->TO	GR ISLD-LNX3345.00 - GRAND ISLAND 345KV CKT Z	720	720	0.05741	131.0399	KOSSUTH 3 345.00 - WEBSTER 345KV CKT 1
FDNS	00NR	0	17SP	G15_053	FROM->TO	GR ISLD-LNX3345.00 - GRAND ISLAND 345KV CKT Z	720	720	0.05681	131.0392	GLENBORO SOUTH - RUGBY 230KV CKT 1
FDNS	00NR	0	17SP	G15_053	FROM->TO	GR ISLD-LNX3345.00 - GRAND ISLAND 345KV CKT Z	720	720	0.05679	131.0135	CENTER - COYOTE 345KV CKT 1
FDNS	00NR	0	17SP	G15_053	FROM->TO	GR ISLD-LNX3345.00 - GRAND ISLAND 345KV CKT Z	720	720	0.05682	131.0096	BLAIR - GRANITE FALLS 230KV CKT 1
FDNS	00NR	0	17SP	G15_053	FROM->TO	GR ISLD-LNX3345.00 - GRAND ISLAND 345KV CKT Z	720	720	0.05682	131.0096	BLAIR - GRANITE FALLS 230KV CKT 1
FDNS	00NR	0	17SP	G15_053	FROM->TO	GR ISLD-LNX3345.00 - GRAND ISLAND 345KV CKT Z	720	720	0.06435	130.9663	COLUMEAST - NW68TH & HOLDREGE 345KV CKT 1
FDNS	00NR	0	17SP	G15_053	FROM->TO	GR ISLD-LNX3345.00 - GRAND ISLAND 345KV CKT Z	720	720	0.06435	130.9663	COLUMEAST - NW68TH & HOLDREGE 345KV CKT 1
FDNS	00NR	0	17SP	G15_053	FROM->TO	GR ISLD-LNX3345.00 - GRAND ISLAND 345KV CKT Z	720	720	0.05973	130.9429	STEGALL - STEGALL TRANSFORMER 230KV CKT 1
FDNS	00NR	0	17SP	G15_053	FROM->TO	GR ISLD-LNX3345.00 - GRAND ISLAND 345KV CKT Z	720	720	0.05973	130.9211	P13:230-345:NPPD:STEGALL3:KV3A
FDNS	00NR	0	17SP	G15_053	FROM->TO	GR ISLD-LNX3345.00 - GRAND ISLAND 345KV CKT Z	720	720	0.05973	130.9098	STEGALL (SGQ KV3A) 345/230/13.8KV TRANSFORMER CKT 1
FDNS	00NR	0	17SP	G15_053	FROM->TO	GR ISLD-LNX3345.00 - GRAND ISLAND 345KV CKT Z	720	720	0.0568	130.9025	GEN334433 1-SABINE UNIT 3
FDNS	00NR	0	17SP	G15_053	FROM->TO	GR ISLD-LNX3345.00 - GRAND ISLAND 345KV CKT Z	720	720	0.05711	130.9021	BYRON - NORTH ROCHESTER 345KV CKT 1
FDNS	00NR	0	17SP	G15_053	FROM->TO	GR ISLD-LNX3345.00 - GRAND ISLAND 345KV CKT Z	720	720	0.05711	130.8661	G14-059T 230.00 - OGALLALA 230KV CKT 1
FDNS	00NR	0	17SP	G15_053	FROM->TO	GR ISLD-LNX3345.00 - GRAND ISLAND 345KV CKT Z	720	720	0.0616	130.8533	STEGALL-LNX3230.00 - WAYSIDE 230KV CKT 1
FDNS	00NR	0	17SP	G15_053	FROM->TO	GR ISLD-LNX3345.00 - GRAND ISLAND 345KV CKT Z	720	720	0.0562	130.8524	MENNO JCT - TRIPP JCT 115KV CKT 1
FDNS	00NR	0	17SP	G15_053	FROM->TO	GR ISLD-LNX3345.00 - GRAND ISLAND 345KV CKT Z	720	720	0.0568	130.8515	GEN629075 1-OTTUMWA GENERATOR FOR OTTUMWA UNIT NO 1
FDNS	00NR	0	17SP	G15_053	FROM->TO	GR ISLD-LNX3345.00 - GRAND ISLAND 345KV CKT Z	720	720	0.0568	130.847	GEN336222 1-LITTLE GYPSY UNIT#2
FDNS	00NR	0	17SP	G15_053	FROM->TO	GR ISLD-LNX3345.00 - GRAND ISLAND 345KV CKT Z	720	720	0.0568	130.8418	P13:230-345:NPPD:NUCOR-1
FDNS	00NR	0	17SP	G15_053	FROM->TO	GR ISLD-LNX3345.00 - GRAND ISLAND 345KV CKT Z	720	720	0.0616	130.8411	STEGALL - STEGALL-LNX3230.00 230KV CKT Z
FDNS	00NR	0	17SP	G15_053	FROM->TO	GR ISLD-LNX3345.00 - GRAND ISLAND 345KV CKT Z	720	720	0.0568	130.841	P12:115:UMZW:# 162 #: NEL IN ND. FAULT ON ML-NEL-MX-GA 115 KV
FDNS	00NR	0	17SP	G15_053	FROM->TO	GR ISLD-LNX3345.00 - GRAND ISLAND 345KV CKT Z	720	720	0.0568	130.8288	GEN303007 1-1BC2 U2
FDNS	00NR	0	17SP	G15_053	FROM->TO	GR ISLD-LNX3345.00 - GRAND ISLAND 345KV CKT Z	720	720	0.0568	130.8224	GEN303006 1-1BC2 U1
FDNS	00NR	0	17SP	G15_053	FROM->TO	GR ISLD-LNX3345.00 - GRAND ISLAND 345KV CKT Z	720	720	0.05657	130.7801	FT THOMPSON - HURON 230KV CKT 1
FDNS	00NR	0	17SP	G15_053	FROM->TO	GR ISLD-LNX3345.00 - GRAND ISLAND 345KV CKT Z	720	720	0.05657	130.7801	FT THOMPSON - HURON 230KV CKT 1
FDNS	00NR	0	17SP	G15_053	FROM->TO	GR ISLD-LNX3345.00 - GRAND ISLAND 345KV CKT Z	720	720	0.05657	130.7801	FT THOMPSON - HURON 230KV CKT 2
FDNS	00NR	0	17SP	G15_053	FROM->TO	GR ISLD-LNX3345.00 - GRAND ISLAND 345KV CKT Z	720	720	0.05657	130.7801	FT THOMPSON - HURON 230KV CKT 2
FDNS	00NR	0	17SP	G15_053	FROM->TO	GR ISLD-LNX3345.00 - GRAND ISLAND 345KV CKT Z	720	720	0.0568	130.7598	GEN336152 1-WATERFORD UNIT#2
FDNS	00NR	0	17SP	G15_053	FROM->TO	GR ISLD-LNX3345.00 - GRAND ISLAND 345KV CKT Z	720	720	0.0568	130.7593	GEN336151 1-WATERFORD UNIT#1
FDNS	00NR	0	17SP	G15_053	FROM->TO	GR ISLD-LNX3345.00 - GRAND ISLAND 345KV CKT Z	720	720	0.0568	130.7462	GEN303008 1-1BC2 U3
FDNS	00NR	0	17SP	G15_053	FROM->TO	GR ISLD-LNX3345.00 - GRAND ISLAND 345KV CKT Z	720	720	0.05679	130.7358	GARRISON - JAMES TOWN 230KV CKT 1
FDNS	00NR	0	17SP	G15_053	FROM->TO	GR ISLD-LNX3345.00 - GRAND ISLAND 345KV CKT Z	720	720	0.0568	130.7309	GEN336170 1-GULF OXY U4
FDNS	00NR	0	17SP	G15_053	FROM->TO	GR ISLD-LNX3345.00 - GRAND ISLAND 345KV CKT Z	720	720	0.0562	130.7232	MENNO JCT - UTICA 115KV CKT 1
FDNS	00NR	0	17SP	G15_053	FROM->TO	GR ISLD-LNX3345.00 - GRAND ISLAND 345KV CKT Z	720	720	0.05684	130.7184	HANKINSON - WAHPETON 230KV CKT 1
FDNS	00NR	0	17SP	G15_053	FROM->TO	GR ISLD-LNX3345.00 - GRAND ISLAND 345KV CKT Z	720	720	0.06352	130.6984	PETERSBRG.N7115.00 - PETERSBURG 115KV CKT Z1
FDNS	00NR	0	17SP	G15_053	FROM->TO	GR ISLD-LNX3345.00 - GRAND ISLAND 345KV CKT Z	720	720	0.05691	130.6981	NORTH ROCHESTER - PRAIRIE ISLAND 345KV CKT 1
FDNS	00NR	0	17SP	G15_053	FROM->TO	GR ISLD-LNX3345.00 - GRAND ISLAND 345KV CKT Z	720	720	0.05685	130.6902	APPLEDORN 4 230.00 - WATERTOWN 230KV CKT 1
FDNS	00NR	0	17SP	G15_053	FROM->TO	GR ISLD-LNX3345.00 - GRAND ISLAND 345KV CKT Z	720	720	0.05685	130.6902	APPLEDORN 4 230.00 - WATERTOWN 230KV CKT 1
FDNS	00NR	0	17SP	G15_053	FROM->TO	GR ISLD-LNX3345.00 - GRAND ISLAND 345KV CKT Z	720	720	0.0562	130.6816	P12:115:UMZZ:# 237 #: MEN IN SD. MENNO JUNCTION IS A TAP (UJ-MEN-TP).
FDNS	00NR	0	17SP	G15_053	FROM->TO	GR ISLD-LNX3345.00 - GRAND ISLAND 345KV CKT Z	720	720	0.06352	130.6743	P12:115:NPPD:1168B:ALBION 7:PETERSBRG.N7:BTB
FDNS	00NR	0	17SP	G15_053	FROM->TO	GR ISLD-LNX3345.00 - GRAND ISLAND 345KV CKT Z	720	720	0.05682	130.6654	FERGSFL4 230.00 - WAHPETON 230KV CKT 1
FDNS	00NR	0	17SP	G15_053	FROM->TO	GR ISLD-LNX3345.00 - GRAND ISLAND 345KV CKT Z	720	720	0.05387	130.6641	FT THOMPSON (FT2 KU1B) 345/230/13.8KV TRANSFORMER CKT 1
FDNS	00NR	0	17SP	G15_053	FROM->TO	GR ISLD-LNX3345.00 - GRAND ISLAND 345KV CKT Z	720	720	0.05388	130.6623	FT THOMPSON (FT2 KU1A) 345/230/13.8KV TRANSFORMER CKT 1
FDNS	00NR	0	17SP	G15_053	FROM->TO	GR ISLD-LNX3345.00 - GRAND ISLAND 345KV CKT Z	720	720	0.05679	130.6495	FARGO - JAMES TOWN 230KV CKT 1
FDNS	00NR	0	17SP	G15_053	FROM->TO	GR ISLD-LNX3345.00 - GRAND ISLAND 345KV CKT Z	720	720	0.0568	130.6446	GEN501811 1-RODEMACHER UNIT 1
FDNS	00NR	0	17SP	G15_053	FROM->TO	GR ISLD-LNX3345.00 - GRAND ISLAND 345KV CKT Z	720	720	0.05708	130.6428	G15094_T 345.00 - LARAMIE RIVER 345KV CKT 1
FDNS	00NR	0	17SP	G15_053	FROM->TO	GR ISLD-LNX3345.00 - GRAND ISLAND 345KV CKT Z	720	720	0.05693	130.6372	ARKANSAS NUCLEAR ONE - FT SMITH 500KV CKT 1
FDNS	00NR	0	17SP	G15_053	FROM->TO	GR ISLD-LNX3345.00 - GRAND ISLAND 345KV CKT Z	720	720	0.05693	130.6372	ARKANSAS NUCLEAR ONE - FT SMITH 500KV CKT 1
FDNS	00NR	0	17SP	G15_053	FROM->TO	GR ISLD-LNX3345.00 - GRAND ISLAND 345KV CKT Z	720	720	0.05685	130.634	APPLEDORN 4 230.00 - GRANITE FALLS 230KV CKT 1
FDNS	00NR	0	17SP	G15_053	FROM->TO	GR ISLD-LNX3345.00 - GRAND ISLAND 345KV CKT Z	720	720	0.05685	130.634	APPLEDORN 4 230.00 - GRANITE FALLS 230KV CKT 1
FDNS	00NR	0	17SP	G15_053	FROM->TO	GR ISLD-LNX3345.00 - GRAND ISLAND 345KV CKT Z	720	720	0.05711	130.6325	BYRON - PLEASANT VALLEY 345KV CKT 1
FDNS	00NR	0	17SP	G15_053	FROM->TO	GR ISLD-LNX3345.00 - GRAND ISLAND 345KV CKT Z	720	720	0.06352	130.6282	ALBION - PETERSBURG 115KV CKT 1
FDNS	00NR	0	17SP	G15_053	FROM->TO	GR ISLD-LNX3345.00 - GRAND ISLAND 345KV CKT Z	720	720	0.0568	130.6122	P13:115-230:NPPD:NUCOR-3
FDNS	00NR	0	17SP	G15_053	FROM->TO	GR ISLD-LNX3345.00 - GRAND ISLAND 345KV CKT Z	720	720	0.05679	130.6056	FARGO - JAMES TOWN 230KV CKT 2
FDNS	00NR	0	17SP	G15_053	FROM->TO	GR ISLD-LNX3345.00 - GRAND ISLAND 345KV CKT Z	720	720	0.05749	130.6004	DENISON - SIOUX CITY 230KV CKT 1
FDNS	00NR	0	17SP	G15_053	FROM->TO	GR ISLD-LNX3345.00 - GRAND ISLAND 345KV CKT Z	720	720	0.0568	130.5697	P13:230:UMZW:# 2218 #: FP IN MT. LOSS OF TRANSFORMER (AT2).
FDNS	00NR	0	17SP	G15_053	FROM->TO	GR ISLD-LNX3345.00 - GRAND ISLAND 345KV CKT Z	720	720	0.05703	130.5585	ARPIN B3 345.00 - ROCKY RN B8 345.00 345KV CKT 1
FDNS	00NR	0	17SP	G15_053	FROM->TO	GR ISLD-LNX3345.00 - GRAND ISLAND 345KV CKT Z	720	720	0.05076	130.5401	P12:115:NPPD:1164:ONEILL 7:JEFFREY9:BTB
FDNS	00NR	0	17SP	G15_053	FROM->TO	GR ISLD-LNX3345.00 - GRAND ISLAND 345KV CKT Z	720	720	0.05679	130.5333	BISMARK - WEBER 230KV CKT 1
FDNS	00NR	0	17SP	G15_053	FROM->TO	GR ISLD-LNX3345.00 - GRAND ISLAND 345KV CKT Z	720	720	0.05623	130.528	LAKEFIELD 3 - LKFLDXL3 345KV CKT 1
FDNS	00NR	0	17SP	G15_053	FROM->TO	GR ISLD-LNX3345.00 - GRAND ISLAND 345KV CKT Z	720	720	0.05679	130.5229	BISMARK - JAMES TOWN 230KV CKT 1
FDNS	00NR	0	17SP	G15_053	FROM->TO	GR ISLD-LNX3345.00 - GRAND ISLAND 345KV CKT Z	720	720	0.0568	130.5208	GEN334071 1-LEWIS CREEK 2
FDNS	00NR	0	17SP	G15_053	FROM->TO	GR ISLD-LNX3345.00 - GRAND ISLAND 345KV CKT Z	720	720	0.0568	130.5152	GEN334070 1-LEWIS CREEK 1
FDNS	00NR	0	17SP	G15_053	FROM->TO	GR ISLD-LNX3345.00 - GRAND ISLAND 345KV CKT Z	720	720	0.0568	130.5119	GEN337766 1-TRACTEBEL UNIT S1
FDNS	00NR	0	17SP	G15_053	FROM->TO	GR ISLD-LNX3345.00 - GRAND ISLAND 345KV CKT Z	720	720	0.05679	130.4965	JAMES TOWN - WEBER 230KV CKT 1
FDNS	00NR	0	17SP	G15_053	FROM->TO	GR ISLD-LNX3345.00 - GRAND ISLAND 345KV CKT Z	720	720	0.0568	130.4889	P13:115-345:NPPD:NUCOR-2
FDNS	00NR	0	17SP	G15_053	FROM->TO	GR ISLD-LNX3345.00 - GRAND ISLAND 345KV CKT Z	720	720	0.05681	130.488	AUDUBON - SHEYNNE 230KV CKT 1
FDNS	00NR	0	17SP	G15_053	FROM->TO	GR ISLD-LNX3345.00 - GRAND ISLAND 345KV CKT Z	720	720	0.05722	130.4834	7PALM TAP 345.00 - SUB T 345KV CKT 1
FDNS	00NR	0	17SP	G15_053	FROM->TO	GR ISLD-LNX3345.00 - GRAND ISLAND 345KV CKT Z	720	720	0.05722	130.4831	PALXFRASBTHI
FDNS	00NR	0	17SP	G15_053	FROM->TO	GR ISLD-LNX3345.00 - GRAND ISLAND 345KV CKT Z	720	720	0.05076	130.476	CLEARWATER - ONEILL 115KV CKT 1
FDNS	00NR	0	17SP	G15_053	FROM->TO	GR ISLD-LNX3345.00 - GRAND ISLAND 345KV CKT Z	720	720	0.0568	130.4719	BALTA - RAMSEY 230KV CKT 1
FDNS	00NR	0	17SP	G15_053	FROM->TO	GR ISLD-LNX3345.00 - GRAND ISLAND 345KV CKT Z	720	720	0.05682	130.4695	FERGSFL4 230.00 - GRE-SILVRLK4230.00 230KV CKT 1
FDNS	00NR	0	17SP	G15_053	FROM->TO	GR ISLD-LNX3345.00 - GRAND ISLAND 345KV CKT Z	720	720	0.0568	130.4666	GEN501910 1-ACADIA UNIT ST1
FDNS	00NR	0	17SP	G15_053	FROM->TO	GR ISLD-LNX3345.00 - GRAND ISLAND 345KV CKT Z	720	720	0.05719	130.458	NOBLES - SPLIT ROCK 345KV CKT 1
FDNS	00NR	0	17SP	G15_053	FROM->TO	GR ISLD-LNX3345.00 - GRAND ISLAND 345KV CKT Z	720	720	0.05679	130.4485	ELM CREEK - MONTICELLO 345KV CKT 1
FDNS	00NR	0	17SP	G15_053	FROM->TO	GR ISLD-LNX3345.00 - GRAND ISLAND 345KV CKT Z	720	720	0.05737	130.4452	P12:115:NPPD:WAPA1:CHADRON7:BOXBUTE7:BTB

SOLUTION	GROUP	SCENARIO	SEASON	SOURCE	DIRECTION	MONITORED ELEMENT	RATEA (MVA)	RATEB(MVA)	TDF	TC%LOADING (% MVA)	CONTINGENCY
FDNS	00NR	0	17SP	G15_053	FROM->TO	GR ISLD-LNX3345.00 - GRAND ISLAND 345KV CKT Z	720	720	0.0568	130.4429	PRAIRIE ISLAND 345/20.0KV TRANSFORMER CKT 1
FDNS	00NR	0	17SP	G15_053	FROM->TO	GR ISLD-LNX3345.00 - GRAND ISLAND 345KV CKT Z	720	720	0.05628	130.4422	MT VERN - STORLA 115KV CKT 1
FDNS	00NR	0	17SP	G15_053	FROM->TO	GR ISLD-LNX3345.00 - GRAND ISLAND 345KV CKT Z	720	720	0.0568	130.4383	PRAIRIE ISLAND 345/20.0KV TRANSFORMER CKT 2
FDNS	00NR	0	17SP	G15_053	FROM->TO	GR ISLD-LNX3345.00 - GRAND ISLAND 345KV CKT Z	720	720	0.0568	130.4343	GEN562596 1-G14_059_3 0.6900
FDNS	00NR	0	17SP	G15_053	FROM->TO	GR ISLD-LNX3345.00 - GRAND ISLAND 345KV CKT Z	720	720	0.0568	130.4332	GEN345765 H-1SIOUX 2 18.000
FDNS	00NR	0	17SP	G15_053	FROM->TO	GR ISLD-LNX3345.00 - GRAND ISLAND 345KV CKT Z	720	720	0.05293	130.4255	GAVINS POINT - YANKON JCT 115KV CKT 1
FDNS	00NR	0	17SP	G15_053	FROM->TO	GR ISLD-LNX3345.00 - GRAND ISLAND 345KV CKT Z	720	720	0.05293	130.4255	GAVINS POINT - YANKON JCT 115KV CKT 1
FDNS	00NR	0	17SP	G15_053	FROM->TO	GR ISLD-LNX3345.00 - GRAND ISLAND 345KV CKT Z	720	720	0.05712	130.4241	P13:230-345:NPPD:SIDNEY 3:KV2A
FDNS	00NR	0	17SP	G15_053	FROM->TO	GR ISLD-LNX3345.00 - GRAND ISLAND 345KV CKT Z	720	720	0.05712	130.424	SIDNEY (SDQ KV2A) 345/230/13.8KV TRANSFORMER CKT 1
FDNS	00NR	0	17SP	G15_053	FROM->TO	GR ISLD-LNX3345.00 - GRAND ISLAND 345KV CKT Z	720	720	0.05682	130.424	GRE-SILVRLK4230.00 - HENNING 230KV CKT 1
FDNS	00NR	0	17SP	G15_053	FROM->TO	GR ISLD-LNX3345.00 - GRAND ISLAND 345KV CKT Z	720	720	0.05712	130.4236	SIDNEY - SIDNEY TRANSFORMER 230KV CKT 1
FDNS	00NR	0	17SP	G15_053	FROM->TO	GR ISLD-LNX3345.00 - GRAND ISLAND 345KV CKT Z	720	720	0.05702	130.4099	CHADRON - WAYSIDE 115KV CKT 1
FDNS	00NR	0	17SP	G15_053	FROM->TO	GR ISLD-LNX3345.00 - GRAND ISLAND 345KV CKT Z	720	720	0.05702	130.4099	P13:115-230:NPPD:WAYSIDE4:T1
FDNS	00NR	0	17SP	G15_053	FROM->TO	GR ISLD-LNX3345.00 - GRAND ISLAND 345KV CKT Z	720	720	0.05678	130.4085	DKSN_CO5 161.00 - TRIBOJI NO1 + NO2 161KV CKT 1
FDNS	00NR	0	17SP	G15_053	FROM->TO	GR ISLD-LNX3345.00 - GRAND ISLAND 345KV CKT Z	720	720	0.05702	130.4072	WAYSIDE (WAYSIDE T1) 230/115/13.8KV TRANSFORMER CKT 1
FDNS	00NR	0	17SP	G15_053	FROM->TO	GR ISLD-LNX3345.00 - GRAND ISLAND 345KV CKT Z	720	720	0.05714	130.407	P13:115-230:TSGT:SIDNEY-KV1A
FDNS	00NR	0	17SP	G15_053	FROM->TO	GR ISLD-LNX3345.00 - GRAND ISLAND 345KV CKT Z	720	720	0.06352	130.4021	NELIGH - PETERSBRG.N7115.00 115KV CKT 1
FDNS	00NR	0	17SP	G15_053	FROM->TO	GR ISLD-LNX3345.00 - GRAND ISLAND 345KV CKT Z	720	720	0.0568	130.3993	GEN345756 H-1SIOUX 1 18.000
FDNS	00NR	0	17SP	G15_053	FROM->TO	GR ISLD-LNX3345.00 - GRAND ISLAND 345KV CKT Z	720	720	0.0568	130.399	GEN337764 1-TRACTEBEL UNIT C1
FDNS	00NR	0	17SP	G15_053	FROM->TO	GR ISLD-LNX3345.00 - GRAND ISLAND 345KV CKT Z	720	720	0.0568	130.399	GEN337765 1-TRACTEBEL UNIT C2
FDNS	00NR	0	17SP	G15_053	FROM->TO	GR ISLD-LNX3345.00 - GRAND ISLAND 345KV CKT Z	720	720	0.0568	130.3913	LELAND OLDS - STANTON 230KV CKT 1
FDNS	00NR	0	17SP	G15_053	FROM->TO	GR ISLD-LNX3345.00 - GRAND ISLAND 345KV CKT Z	720	720	0.0568	130.3913	LELAND OLDS - STANTON 230KV CKT 1
FDNS	00NR	0	17SP	G15_053	FROM->TO	GR ISLD-LNX3345.00 - GRAND ISLAND 345KV CKT Z	720	720	0.0568	130.386	GRAND GULF 500/22.0KV TRANSFORMER CKT 1
FDNS	00NR	0	17SP	G15_053	FROM->TO	GR ISLD-LNX3345.00 - GRAND ISLAND 345KV CKT Z	720	720	0.0568	130.3716	PRAIRIE - WINGER 230KV CKT 1
FDNS	00NR	0	17SP	G15_053	FROM->TO	GR ISLD-LNX3345.00 - GRAND ISLAND 345KV CKT Z	720	720	0.05692	130.3698	FRANKS - HUBEN 345KV CKT 1
FDNS	00NR	0	17SP	G15_053	FROM->TO	GR ISLD-LNX3345.00 - GRAND ISLAND 345KV CKT Z	720	720	0.05682	130.3677	HENNING - INMANN 230KV CKT 1
FDNS	00NR	0	17SP	G15_053	FROM->TO	GR ISLD-LNX3345.00 - GRAND ISLAND 345KV CKT Z	720	720	0.0568	130.3564	GEN336221 1-LITTLE GYPSY UNIT#1
FDNS	00NR	0	17SP	G15_053	FROM->TO	GR ISLD-LNX3345.00 - GRAND ISLAND 345KV CKT Z	720	720	0.05679	130.3552	EAGLE - PHILIP 115KV CKT 1
FDNS	00NR	0	17SP	G15_053	FROM->TO	GR ISLD-LNX3345.00 - GRAND ISLAND 345KV CKT Z	720	720	0.0568	130.3524	BIG STONE (230/115) 230/115/13.8KV TRANSFORMER CKT 1
FDNS	00NR	0	17SP	G15_053	FROM->TO	GR ISLD-LNX3345.00 - GRAND ISLAND 345KV CKT Z	720	720	0.05688	130.3512	GENOA 161 - SENECA 161 161KV CKT 1
FDNS	00NR	0	17SP	G15_053	FROM->TO	GR ISLD-LNX3345.00 - GRAND ISLAND 345KV CKT Z	720	720	0.05737	130.3498	CHADRON - DUNLAP 115KV CKT 1
FDNS	00NR	0	17SP	G15_053	FROM->TO	GR ISLD-LNX3345.00 - GRAND ISLAND 345KV CKT Z	720	720	0.05679	130.3485	GROTON (GROTON KU2A) 345/115/13.8KV TRANSFORMER CKT 1
FDNS	00NR	0	17SP	G15_053	FROM->TO	GR ISLD-LNX3345.00 - GRAND ISLAND 345KV CKT Z	720	720	0.0568	130.3483	GEN337757 1-DUKE HOTSPRINGS STG1
FDNS	00NR	0	17SP	G15_053	FROM->TO	GR ISLD-LNX3345.00 - GRAND ISLAND 345KV CKT Z	720	720	0.0568	130.3481	GEN336242 1-1NMIL ST1 18.000
FDNS	00NR	0	17SP	G15_053	FROM->TO	GR ISLD-LNX3345.00 - GRAND ISLAND 345KV CKT Z	720	720	0.0568	130.3436	GEN334431 1-SABINE UNIT 1
FDNS	00NR	0	17SP	G15_053	FROM->TO	GR ISLD-LNX3345.00 - GRAND ISLAND 345KV CKT Z	720	720	0.0568	130.3436	GEN334432 1-SABINE UNIT 2
FDNS	00NR	0	17SP	G15_053	FROM->TO	GR ISLD-LNX3345.00 - GRAND ISLAND 345KV CKT Z	720	720	0.0568	130.3223	GEN334030 1-FRONTIER UNIT 1
FDNS	00NR	0	17SP	G15_053	FROM->TO	GR ISLD-LNX3345.00 - GRAND ISLAND 345KV CKT Z	720	720	0.0568	130.3218	GEN334031 1-FRONTIER UNIT 2
FDNS	00NR	0	17SP	G15_053	FROM->TO	GR ISLD-LNX3345.00 - GRAND ISLAND 345KV CKT Z	720	720	0.05686	130.3196	NORTH LA CROSSE - NORTH ROCHESTER 345KV CKT 1
FDNS	00NR	0	17SP	G15_053	FROM->TO	GR ISLD-LNX3345.00 - GRAND ISLAND 345KV CKT Z	720	720	0.0568	130.318	GEN336446 1-MICHOUD UNIT #2
FDNS	00NR	0	17SP	G15_053	FROM->TO	GR ISLD-LNX3345.00 - GRAND ISLAND 345KV CKT Z	720	720	0.05681	130.313	KARLSTAD - WINGER 230KV CKT 1
FDNS	00NR	0	17SP	G15_053	FROM->TO	GR ISLD-LNX3345.00 - GRAND ISLAND 345KV CKT Z	720	720	0.0568	130.3064	GEN345832 1-1TS G1 13.800
FDNS	00NR	0	17SP	G15_053	FROM->TO	GR ISLD-LNX3345.00 - GRAND ISLAND 345KV CKT Z	720	720	0.0568	130.3061	GEN345841 2-1TS G2 13.800
FDNS	00NR	0	17SP	G15_053	FROM->TO	GR ISLD-LNX3345.00 - GRAND ISLAND 345KV CKT Z	720	720	0.05693	130.3053	HAMPTON CORNER - NORTH ROCHESTER 345KV CKT 1
FDNS	00NR	0	17SP	G15_053	FROM->TO	GR ISLD-LNX3345.00 - GRAND ISLAND 345KV CKT Z	720	720	0.05681	130.3047	AUDUBON - HUBBARD 230KV CKT 1
FDNS	00NR	0	17SP	G15_053	FROM->TO	GR ISLD-LNX3345.00 - GRAND ISLAND 345KV CKT Z	720	720	0.0568	130.3033	GEN501970 1-EVANGELINE UNIT 7
FDNS	00NR	0	17SP	G15_053	FROM->TO	GR ISLD-LNX3345.00 - GRAND ISLAND 345KV CKT Z	720	720	0.05679	130.2956	EAGLE - MARTIN 115KV CKT 1
FDNS	00NR	0	17SP	G15_053	FROM->TO	GR ISLD-LNX3345.00 - GRAND ISLAND 345KV CKT Z	720	720	0.05185	130.2955	BLOOMFIELD - CREIGHTON 115KV CKT 1
FDNS	00NR	0	17SP	G15_053	FROM->TO	GR ISLD-LNX3345.00 - GRAND ISLAND 345KV CKT Z	720	720	0.05498	130.2935	P13:230:UMZW:# 253 #: FR IN SD. LOSS OF TRANSFORMER (E
FDNS	00NR	0	17SP	G15_053	FROM->TO	GR ISLD-LNX3345.00 - GRAND ISLAND 345KV CKT Z	720	720	0.05683	130.2911	GRANT - MITCHELL 115KV CKT 1
FDNS	00NR	0	17SP	G15_053	FROM->TO	GR ISLD-LNX3345.00 - GRAND ISLAND 345KV CKT Z	720	720	0.05683	130.2911	GRANT - MITCHELL 115KV CKT 1
FDNS	00NR	0	17SP	G15_053	FROM->TO	GR ISLD-LNX3345.00 - GRAND ISLAND 345KV CKT Z	720	720	0.05486	130.2902	NAPA JCT7 115.00 - UTICA 115KV CKT 1
FDNS	00NR	0	17SP	G15_053	FROM->TO	GR ISLD-LNX3345.00 - GRAND ISLAND 345KV CKT Z	720	720	0.05486	130.2902	NAPA JCT7 115.00 - UTICA 115KV CKT 1
FDNS	00NR	0	17SP	G15_053	FROM->TO	GR ISLD-LNX3345.00 - GRAND ISLAND 345KV CKT Z	720	720	0.05486	130.2893	P12:115:UMZW:# 1910 #: YJ IN SD. YJ-UJ LINE FAULT
FDNS	00NR	0	17SP	G15_053	FROM->TO	GR ISLD-LNX3345.00 - GRAND ISLAND 345KV CKT Z	720	720	0.05486	130.2868	NAPA JCT7 115.00 - YANKON JCT 115KV CKT 1
FDNS	00NR	0	17SP	G15_053	FROM->TO	GR ISLD-LNX3345.00 - GRAND ISLAND 345KV CKT Z	720	720	0.05486	130.2868	NAPA JCT7 115.00 - YANKON JCT 115KV CKT 1
FDNS	00NR	0	17SP	G15_053	FROM->TO	GR ISLD-LNX3345.00 - GRAND ISLAND 345KV CKT Z	720	720	0.0568	130.2841	P12:345:GRDA:CHOUTEAU-SPORTSMANACRES
FDNS	00NR	0	17SP	G15_053	FROM->TO	GR ISLD-LNX3345.00 - GRAND ISLAND 345KV CKT Z	720	720	0.0568	130.2838	GEN337430 1-PERYVILLE UNIT #3
FDNS	00NR	0	17SP	G15_053	FROM->TO	GR ISLD-LNX3345.00 - GRAND ISLAND 345KV CKT Z	720	720	0.0568	130.2835	GEN337428 1-PERYVILLE UNIT #1
FDNS	00NR	0	17SP	G15_053	FROM->TO	GR ISLD-LNX3345.00 - GRAND ISLAND 345KV CKT Z	720	720	0.0568	130.281	GEN531447 1-HOLCOMB GENERATOR
FDNS	00NR	0	17SP	G15_053	FROM->TO	GR ISLD-LNX3345.00 - GRAND ISLAND 345KV CKT Z	720	720	0.0568	130.2564	GEN336240 1-1NMIL CT1 18.000
FDNS	00NR	0	17SP	G15_053	FROM->TO	GR ISLD-LNX3345.00 - GRAND ISLAND 345KV CKT Z	720	720	0.0568	130.2564	GEN336241 1-1NMIL CT2 18.000
FDNS	00NR	0	17SP	G15_053	FROM->TO	GR ISLD-LNX3345.00 - GRAND ISLAND 345KV CKT Z	720	720	0.0568	130.2562	GEN501912 1-ACADIA UNIT CT1B
FDNS	00NR	0	17SP	G15_053	FROM->TO	GR ISLD-LNX3345.00 - GRAND ISLAND 345KV CKT Z	720	720	0.0568	130.256	GEN501911 1-ACADIA UNIT CT1A
FDNS	00NR	0	17SP	G15_053	FROM->TO	GR ISLD-LNX3345.00 - GRAND ISLAND 345KV CKT Z	720	720	0.05737	130.2556	BOXBUTE7 115.00 - DUNLAP 115KV CKT 1
FDNS	00NR	0	17SP	G15_053	FROM->TO	GR ISLD-LNX3345.00 - GRAND ISLAND 345KV CKT Z	720	720	0.0568	130.249	WHITE BLUFF 500/26.0KV TRANSFORMER CKT 1
FDNS	00NR	0	17SP	G15_053	FROM->TO	GR ISLD-LNX3345.00 - GRAND ISLAND 345KV CKT Z	720	720	0.0568	130.2482	GEN501971 1-EVANGELINE UNIT 7-1
FDNS	00NR	0	17SP	G15_053	FROM->TO	GR ISLD-LNX3345.00 - GRAND ISLAND 345KV CKT Z	720	720	0.0568	130.2482	GEN501972 1-EVANGELINE UNIT 7-2
FDNS	00NR	0	17SP	G15_053	FROM->TO	GR ISLD-LNX3345.00 - GRAND ISLAND 345KV CKT Z	720	720	0.0568	130.2442	FINNEY SWITCHING STATION - PSCO LAMAR DC TIE 345KV CKT 1
FDNS	00NR	0	17SP	G15_053	FROM->TO	GR ISLD-LNX3345.00 - GRAND ISLAND 345KV CKT Z	720	720	0.0568	130.2442	FINNEY SWITCHING STATION - PSCO LAMAR DC TIE 345KV CKT 1
FDNS	00NR	0	17SP	G15_053	FROM->TO	GR ISLD-LNX3345.00 - GRAND ISLAND 345KV CKT Z	720	720	0.0571	130.2048	MAURINE - NUNDRWD-LNX3230.00 230KV CKT 1
FDNS	00NR	0	17SP	G15_053	FROM->TO	GR ISLD-LNX3345.00 - GRAND ISLAND 345KV CKT Z	720	720	0.05783	130.2037	MARTIN - SHANNON 115KV CKT 1
FDNS	00NR	0	17SP	G15_053	FROM->TO	GR ISLD-LNX3345.00 - GRAND ISLAND 345KV CKT Z	720	720	0.0568	130.1693	GEN562983 1-G15061_4 0.6900
FDNS	00NR	0	17SP	G15_053	FROM->TO	GR ISLD-LNX3345.00 - GRAND ISLAND 345KV CKT Z	720	720	0.0568	130.1693	GEN562984 1-G15061_5 0.6900
FDNS	00NR	0	17SP	G15_053	FROM->TO	GR ISLD-LNX3345.00 - GRAND ISLAND 345KV CKT Z	720	720	0.0568	130.0907	GEN659118 1-LARAMIE RIVER UNIT1
FDNS	00NR	0	17SP	G15_053	FROM->TO	GR ISLD-LNX3345.00 - GRAND ISLAND 345KV CKT Z	720	720	0.0568	129.9632	GEN563282 1-G15094_3 0.6900
FDNS	00NR	0	17SP	G15_053	FROM->TO	GR ISLD-LNX3345.00 - GRAND ISLAND 345KV CKT Z	720	720	0.05837	129.8288	KELLY - SHELL CREEK 230KV CKT 1
FDNS	00NR	0	17SP	G15_053	FROM->TO	GR ISLD-LNX3345.00 - GRAND ISLAND 345KV CKT Z	720	720	0.05625	129.8279	103RD & ROKEBY - SUB 3458 NEB CTY 345KV CKT 1
FDNS	00NR	0	17SP	G15_053	FROM->TO	GR ISLD-LNX3345.00 - GRAND ISLAND 345KV CKT Z	720	720	0.05625	129.8279	103RD & ROKEBY - SUB 3458 NEB CTY 345KV CKT 1

SOLUTION	GROUP	SCENARIO	SEASON	SOURCE	DIRECTION	MONITORED ELEMENT	RATEA (MVA)	RATEB(MVA)	TDF	TC%LOADING (% MVA)	CONTINGENCY
FDNS	00NR	0	17SP	G15_053	FROM->TO	GR ISLD-LNX3345.00 - GRAND ISLAND 345KV CKT Z	720	720	0.05837	129.8127	SHELL CREEK (SHELLCREEKT1) 345/230/13.8KV TRANSFORMER CKT 1
FDNS	00NR	0	17SP	G15_053	FROM->TO	GR ISLD-LNX3345.00 - GRAND ISLAND 345KV CKT Z	720	720	0.05837	129.8127	SHELL CREEK (SHELLCREEKT1) 345/230/13.8KV TRANSFORMER CKT 1
FDNS	00NR	0	17SP	G15_053	FROM->TO	GR ISLD-LNX3345.00 - GRAND ISLAND 345KV CKT Z	720	720	0.0568	129.748	BASE CASE
FDNS	00NR	0	17SP	G15_053	FROM->TO	GR ISLD-LNX3345.00 - GRAND ISLAND 345KV CKT Z	720	720	0.06992	129.7147	COLUMWEST - KELLY 230KV CKT 1
FDNS	00NR	0	17SP	G15_053	FROM->TO	GR ISLD-LNX3345.00 - GRAND ISLAND 345KV CKT Z	720	720	0.05463	129.6918	GRAND ISLAND - RIVERDALE 230KV CKT 1
FDNS	00NR	0	17SP	G15_053	FROM->TO	GR ISLD-LNX3345.00 - GRAND ISLAND 345KV CKT Z	720	720	0.05698	129.6347	BUCKNER7 345.00 - SPEARVILLE 345KV CKT 1
FDNS	00NR	0	17SP	G15_053	FROM->TO	GR ISLD-LNX3345.00 - GRAND ISLAND 345KV CKT Z	720	720	0.05698	129.6347	BUCKNER7 345.00 - SPEARVILLE 345KV CKT 1
FDNS	00NR	0	17SP	G15_053	FROM->TO	GR ISLD-LNX3345.00 - GRAND ISLAND 345KV CKT Z	720	720	0.05694	129.5842	MINGO (MINGO) 345/115/13.8KV TRANSFORMER CKT 1
FDNS	00NR	0	17SP	G15_053	FROM->TO	GR ISLD-LNX3345.00 - GRAND ISLAND 345KV CKT Z	720	720	0.05694	129.5842	MINGO (MINGO) 345/115/13.8KV TRANSFORMER CKT 1
FDNS	00NR	0	17SP	G15_053	FROM->TO	GR ISLD-LNX3345.00 - GRAND ISLAND 345KV CKT Z	720	720	0.0568	129.5465	GEN645001 1-FORT CALHOUN 1
FDNS	00NR	0	17SP	G15_053	FROM->TO	GR ISLD-LNX3345.00 - GRAND ISLAND 345KV CKT Z	720	720	0.05806	129.4815	HOLCOMB - SETAB 345KV CKT 1
FDNS	00NR	0	17SP	G15_053	FROM->TO	GR ISLD-LNX3345.00 - GRAND ISLAND 345KV CKT Z	720	720	0.05806	129.4815	HOLCOMB - SETAB 345KV CKT 1
FDNS	00NR	0	17SP	G15_053	FROM->TO	GR ISLD-LNX3345.00 - GRAND ISLAND 345KV CKT Z	720	720	0.05684	129.4092	G15074_T 345.00 - HOYT 345KV CKT 1
FDNS	00NR	0	17SP	G15_053	FROM->TO	GR ISLD-LNX3345.00 - GRAND ISLAND 345KV CKT Z	720	720	0.05833	129.3905	AXTELL - PAULINE 345KV CKT 1
FDNS	00NR	0	17SP	G15_053	FROM->TO	GR ISLD-LNX3345.00 - GRAND ISLAND 345KV CKT Z	720	720	0.05713	129.3553	AURORA - GRAND ISLAND 115KV CKT 1
FDNS	00NR	0	17SP	G15_053	FROM->TO	GR ISLD-LNX3345.00 - GRAND ISLAND 345KV CKT Z	720	720	0.05961	129.3454	MOORE - NW68TH & HOLDREGE 345KV CKT 1
FDNS	00NR	0	17SP	G15_053	FROM->TO	GR ISLD-LNX3345.00 - GRAND ISLAND 345KV CKT Z	720	720	0.05961	129.3454	MOORE - NW68TH & HOLDREGE 345KV CKT 1
FDNS	00NR	0	17SP	G15_053	FROM->TO	GR ISLD-LNX3345.00 - GRAND ISLAND 345KV CKT Z	720	720	0.05669	129.3302	GRAND ISLAND (GRAND.ISD T5) 230/115/13.8KV TRANSFORMER CKT 2
FDNS	00NR	0	17SP	G15_053	FROM->TO	GR ISLD-LNX3345.00 - GRAND ISLAND 345KV CKT Z	720	720	0.05669	129.3302	GRAND ISLAND (GRAND.ISD T5) 230/115/13.8KV TRANSFORMER CKT 2
FDNS	00NR	0	17SP	G15_053	FROM->TO	GR ISLD-LNX3345.00 - GRAND ISLAND 345KV CKT Z	720	720	0.05669	129.3278	GRAND ISLAND (GRAND.ISD T2) 230/115/13.8KV TRANSFORMER CKT 1
FDNS	00NR	0	17SP	G15_053	FROM->TO	GR ISLD-LNX3345.00 - GRAND ISLAND 345KV CKT Z	720	720	0.05669	129.3278	GRAND ISLAND (GRAND.ISD T2) 230/115/13.8KV TRANSFORMER CKT 1
FDNS	00NR	0	17SP	G15_053	FROM->TO	GR ISLD-LNX3345.00 - GRAND ISLAND 345KV CKT Z	720	720	0.05701	129.3116	MISSION - WITTEN 115KV CKT 1
FDNS	00NR	0	17SP	G15_053	FROM->TO	GR ISLD-LNX3345.00 - GRAND ISLAND 345KV CKT Z	720	720	0.05701	129.3003	P12:115:UMZW:# 173 #: WI-WE-MS IN SD. WITTEN IS A TAP
FDNS	00NR	0	17SP	G15_053	FROM->TO	GR ISLD-LNX3345.00 - GRAND ISLAND 345KV CKT Z	720	720	0.05685	129.2893	G14-074T 345.00 - OKLAUNION 345KV CKT 1
FDNS	00NR	0	17SP	G15_053	FROM->TO	GR ISLD-LNX3345.00 - GRAND ISLAND 345KV CKT Z	720	720	0.05684	129.2879	G15066_T 345.00 - SOONER 345KV CKT 1
FDNS	00NR	0	17SP	G15_053	FROM->TO	GR ISLD-LNX3345.00 - GRAND ISLAND 345KV CKT Z	720	720	0.05836	129.2729	MAXWELL - NORTH PLATTE 115KV CKT 1
FDNS	00NR	0	17SP	G15_053	FROM->TO	GR ISLD-LNX3345.00 - GRAND ISLAND 345KV CKT Z	720	720	0.05684	129.2555	CLEVELAND - G15066_T 345.00 345KV CKT 1
FDNS	00NR	0	17SP	G15_053	FROM->TO	GR ISLD-LNX3345.00 - GRAND ISLAND 345KV CKT Z	720	720	0.05692	129.2453	GRAND ISLAND (GI KU1B) 345/230/13.8KV TRANSFORMER CKT 2
FDNS	00NR	0	17SP	G15_053	FROM->TO	GR ISLD-LNX3345.00 - GRAND ISLAND 345KV CKT Z	720	720	0.05692	129.2453	GRAND ISLAND (GI KU1B) 345/230/13.8KV TRANSFORMER CKT 2
FDNS	00NR	0	17SP	G15_053	FROM->TO	GR ISLD-LNX3345.00 - GRAND ISLAND 345KV CKT Z	720	720	0.05692	129.2443	GRAND ISLAND (GI KU1A) 345/230/13.8KV TRANSFORMER CKT 1
FDNS	00NR	0	17SP	G15_053	FROM->TO	GR ISLD-LNX3345.00 - GRAND ISLAND 345KV CKT Z	720	720	0.05692	129.2443	GRAND ISLAND (GI KU1A) 345/230/13.8KV TRANSFORMER CKT 1
FDNS	00NR	0	17SP	G15_053	FROM->TO	GR ISLD-LNX3345.00 - GRAND ISLAND 345KV CKT Z	720	720	0.05701	129.2437	SMOKYHL6 230.00 - SUMMIT 230KV CKT 1
FDNS	00NR	0	17SP	G15_053	FROM->TO	GR ISLD-LNX3345.00 - GRAND ISLAND 345KV CKT Z	720	720	0.0568	129.2296	GEN562003 1-G11_027_3 0.6900
FDNS	00NR	0	17SP	G15_053	FROM->TO	GR ISLD-LNX3345.00 - GRAND ISLAND 345KV CKT Z	720	720	0.05687	129.2276	ANTELOP-LNX3345.00 - BRDLAND-LNX3345.00 345KV CKT 1
FDNS	00NR	0	17SP	G15_053	FROM->TO	GR ISLD-LNX3345.00 - GRAND ISLAND 345KV CKT Z	720	720	0.05684	129.224	G14-057T 345.00 - SUNNYSIDE 345KV CKT 1
FDNS	00NR	0	17SP	G15_053	FROM->TO	GR ISLD-LNX3345.00 - GRAND ISLAND 345KV CKT Z	720	720	0.05836	129.2202	SUB 3454 - WAGENER 345KV CKT 1
FDNS	00NR	0	17SP	G15_053	FROM->TO	GR ISLD-LNX3345.00 - GRAND ISLAND 345KV CKT Z	720	720	0.05836	129.2202	SUB 3454 - WAGENER 345KV CKT 1
FDNS	00NR	0	17SP	G15_053	FROM->TO	GR ISLD-LNX3345.00 - GRAND ISLAND 345KV CKT Z	720	720	0.06038	129.2154	MAXWELL - STAPLETON 115KV CKT 1
FDNS	00NR	0	17SP	G15_053	FROM->TO	GR ISLD-LNX3345.00 - GRAND ISLAND 345KV CKT Z	720	720	0.0568	129.2072	GEN652546 1-FT RANDAL
FDNS	00NR	0	17SP	G15_053	FROM->TO	GR ISLD-LNX3345.00 - GRAND ISLAND 345KV CKT Z	720	720	0.0568	129.2036	GEN600125 2-FEP ST G 13.800
FDNS	00NR	0	17SP	G15_053	FROM->TO	GR ISLD-LNX3345.00 - GRAND ISLAND 345KV CKT Z	720	720	0.0568	129.1924	GEN615031 1-PLEASANT VALLEY
FDNS	00NR	0	17SP	G15_053	FROM->TO	GR ISLD-LNX3345.00 - GRAND ISLAND 345KV CKT Z	720	720	0.0568	129.1874	GEN615032 2-PLEASANT VALLEY
FDNS	00NR	0	17SP	G15_053	FROM->TO	GR ISLD-LNX3345.00 - GRAND ISLAND 345KV CKT Z	720	720	0.0568	129.1856	GEN659158 2-PIONEER G213.800
FDNS	00NR	0	17SP	G15_053	FROM->TO	GR ISLD-LNX3345.00 - GRAND ISLAND 345KV CKT Z	720	720	0.0568	129.1856	GEN659159 3-PIONEER G313.800
FDNS	00NR	0	17SP	G15_053	FROM->TO	GR ISLD-LNX3345.00 - GRAND ISLAND 345KV CKT Z	720	720	0.05708	129.1851	LARAMIE RIVER - STEGALL 345KV CKT 1
FDNS	00NR	0	17SP	G15_053	FROM->TO	GR ISLD-LNX3345.00 - GRAND ISLAND 345KV CKT Z	720	720	0.0568	129.1782	GEN659156 2-LONESMCRK 2G13.800
FDNS	00NR	0	17SP	G15_053	FROM->TO	GR ISLD-LNX3345.00 - GRAND ISLAND 345KV CKT Z	720	720	0.0568	129.1782	GEN659157 3-LONESMCRK 3G13.800
FDNS	00NR	0	17SP	G15_053	FROM->TO	GR ISLD-LNX3345.00 - GRAND ISLAND 345KV CKT Z	720	720	0.0568	129.1728	GEN600018 S-LS POWER STEAM
FDNS	00NR	0	17SP	G15_053	FROM->TO	GR ISLD-LNX3345.00 - GRAND ISLAND 345KV CKT Z	720	720	0.0568	129.1726	MITCHLCO3 345.00 345/34.5KV TRANSFORMER CKT 1
FDNS	00NR	0	17SP	G15_053	FROM->TO	GR ISLD-LNX3345.00 - GRAND ISLAND 345KV CKT Z	720	720	0.0568	129.1672	GEN672367 1-MERIDIAN GENERATOR 1 GT1
FDNS	00NR	0	17SP	G15_053	FROM->TO	GR ISLD-LNX3345.00 - GRAND ISLAND 345KV CKT Z	720	720	0.0568	129.1672	GEN672368 2-MERIDIAN GENERATOR 2 GT2
FDNS	00NR	0	17SP	G15_053	FROM->TO	GR ISLD-LNX3345.00 - GRAND ISLAND 345KV CKT Z	720	720	0.0568	129.1607	GEN657964 1-ASH2GEN9 0.5750
FDNS	00NR	0	17SP	G15_053	FROM->TO	GR ISLD-LNX3345.00 - GRAND ISLAND 345KV CKT Z	720	720	0.05861	129.1599	GERALD GENTLEMAN STATION - RED WILLOW 345KV CKT 1
FDNS	00NR	0	17SP	G15_053	FROM->TO	GR ISLD-LNX3345.00 - GRAND ISLAND 345KV CKT Z	720	720	0.0568	129.1561	GEN652548 5-FT RANDAL
FDNS	00NR	0	17SP	G15_053	FROM->TO	GR ISLD-LNX3345.00 - GRAND ISLAND 345KV CKT Z	720	720	0.0568	129.1561	GEN652549 7-FT RANDAL
FDNS	00NR	0	17SP	G15_053	FROM->TO	GR ISLD-LNX3345.00 - GRAND ISLAND 345KV CKT Z	720	720	0.0568	129.1535	GEN672350 1-NIPAWIN GENERATOR 1
FDNS	00NR	0	17SP	G15_053	FROM->TO	GR ISLD-LNX3345.00 - GRAND ISLAND 345KV CKT Z	720	720	0.0568	129.1535	GEN672351 2-NIPAWIN GENERATOR 2
FDNS	00NR	0	17SP	G15_053	FROM->TO	GR ISLD-LNX3345.00 - GRAND ISLAND 345KV CKT Z	720	720	0.0568	129.1534	GEN672352 3-NIPAWIN GENERATOR 3
FDNS	00NR	0	17SP	G15_053	FROM->TO	GR ISLD-LNX3345.00 - GRAND ISLAND 345KV CKT Z	720	720	0.0568	129.1517	GEN620324 3-HOOT LAKE 3 GEN
FDNS	00NR	0	17SP	G15_053	FROM->TO	GR ISLD-LNX3345.00 - GRAND ISLAND 345KV CKT Z	720	720	0.05676	129.1512	BISMARK - L3 HAWDON 230KV CKT 1
FDNS	00NR	0	17SP	G15_053	FROM->TO	GR ISLD-LNX3345.00 - GRAND ISLAND 345KV CKT Z	720	720	0.05701	129.1479	P12:115:UMZW:# 172 #: WI IN SD.
FDNS	00NR	0	17SP	G15_053	FROM->TO	GR ISLD-LNX3345.00 - GRAND ISLAND 345KV CKT Z	720	720	0.06032	129.1465	MINGO - RED WILLOW 345KV CKT 1
FDNS	00NR	0	17SP	G15_053	FROM->TO	GR ISLD-LNX3345.00 - GRAND ISLAND 345KV CKT Z	720	720	0.06032	129.1465	MINGO - RED WILLOW 345KV CKT 1
FDNS	00NR	0	17SP	G15_053	FROM->TO	GR ISLD-LNX3345.00 - GRAND ISLAND 345KV CKT Z	720	720	0.0568	129.1434	GEN652547 3-FT RANDAL
FDNS	00NR	0	17SP	G15_053	FROM->TO	GR ISLD-LNX3345.00 - GRAND ISLAND 345KV CKT Z	720	720	0.0568	129.1383	GEN672349 3-CORY COGEN GENERATOR 3 ST
FDNS	00NR	0	17SP	G15_053	FROM->TO	GR ISLD-LNX3345.00 - GRAND ISLAND 345KV CKT Z	720	720	0.0568	129.1345	GEN660003 3-HURON WEST PARK
FDNS	00NR	0	17SP	G15_053	FROM->TO	GR ISLD-LNX3345.00 - GRAND ISLAND 345KV CKT Z	720	720	0.05695	129.129	G11_051T 345.00 - WOODWARD DISTRICT EHV 345KV CKT 1
FDNS	00NR	0	17SP	G15_053	FROM->TO	GR ISLD-LNX3345.00 - GRAND ISLAND 345KV CKT Z	720	720	0.0568	129.1057	GEN600020 2-ANGUS ANSON1
FDNS	00NR	0	17SP	G15_053	FROM->TO	GR ISLD-LNX3345.00 - GRAND ISLAND 345KV CKT Z	720	720	0.06115	129.1049	LOUP CITY - NORTH LOUP 115KV CKT 1
FDNS	00NR	0	17SP	G15_053	FROM->TO	GR ISLD-LNX3345.00 - GRAND ISLAND 345KV CKT Z	720	720	0.0568	129.0989	GEN600021 3-ANGUS ANSON2
FDNS	00NR	0	17SP	G15_053	FROM->TO	GR ISLD-LNX3345.00 - GRAND ISLAND 345KV CKT Z	720	720	0.0568	129.0698	GEN600012 2-BLACK DOG GEN 2
FDNS	00NR	0	17SP	G15_053	FROM->TO	GR ISLD-LNX3345.00 - GRAND ISLAND 345KV CKT Z	720	720	0.0568	129.0667	GEN590010 1-ERCOT EQUIVALENCE
FDNS	00NR	0	17SP	G15_053	FROM->TO	GR ISLD-LNX3345.00 - GRAND ISLAND 345KV CKT Z	720	720	0.05883	129.0563	MINGO - SETAB 345KV CKT 1
FDNS	00NR	0	17SP	G15_053	FROM->TO	GR ISLD-LNX3345.00 - GRAND ISLAND 345KV CKT Z	720	720	0.05883	129.0563	MINGO - SETAB 345KV CKT 1
FDNS	00NR	0	17SP	G15_053	FROM->TO	GR ISLD-LNX3345.00 - GRAND ISLAND 345KV CKT Z	720	720	0.0568	129.0557	GEN672339 16-QE 16G 13.800
FDNS	00NR	0	17SP	G15_053	FROM->TO	GR ISLD-LNX3345.00 - GRAND ISLAND 345KV CKT Z	720	720	0.0568	129.0557	GEN672342 3-QUEEN ELIZABETH GENERATOR 3
FDNS	00NR	0	17SP	G15_053	FROM->TO	GR ISLD-LNX3345.00 - GRAND ISLAND 345KV CKT Z	720	720	0.0568	129.0517	GEN652410 3-FT PECK
FDNS	00NR	0	17SP	G15_053	FROM->TO	GR ISLD-LNX3345.00 - GRAND ISLAND 345KV CKT Z	720	720	0.0568	129.0503	GEN659290 1-EDGECOL
FDNS	00NR	0	17SP	G15_053	FROM->TO	GR ISLD-LNX3345.00 - GRAND ISLAND 345KV CKT Z	720	720	0.0568	129.0414	GEN672393 2-NBECST2G 13.800

SOLUTION	GROUP	SCENARIO	SEASON	SOURCE	DIRECTION	MONITORED ELEMENT	RATEA (MVA)	RATEB(MVA)	TDF	TC%LOADING (% MVA)	CONTINGENCY
FDNS	00NR	0	17SP	G15_053	FROM->TO	GR ISLD-LNX3345.00 - GRAND ISLAND 345KV CKT Z	720	720	0.0568	129.0367	GEN300003 1-THOMAS HILL UNIT 3
FDNS	00NR	0	17SP	G15_053	FROM->TO	GR ISLD-LNX3345.00 - GRAND ISLAND 345KV CKT Z	720	720	0.0568	129.0351	EASTDC - ERCOT EQUIVALENCE 345KV CKT 1
FDNS	00NR	0	17SP	G15_053	FROM->TO	GR ISLD-LNX3345.00 - GRAND ISLAND 345KV CKT Z	720	720	0.0568	129.0346	GEN590011 2-ERCOT EQUIVALENCE
FDNS	00NR	0	17SP	G15_053	FROM->TO	GR ISLD-LNX3345.00 - GRAND ISLAND 345KV CKT Z	720	720	0.0568	129.034	GEN629072 4-LANSING GENERATOR FOR UNITS NO4 EIA CODE 1
FDNS	00NR	0	17SP	G15_053	FROM->TO	GR ISLD-LNX3345.00 - GRAND ISLAND 345KV CKT Z	720	720	0.05698	129.0019	GRAND ISLAND (GI KU3A) 345/230/13.8KV TRANSFORMER CKT 3
FDNS	00NR	0	17SP	G15_053	FROM->TO	GR ISLD-LNX3345.00 - GRAND ISLAND 345KV CKT Z	720	720	0.05698	129.0019	GRAND ISLAND (GI KU3A) 345/230/13.8KV TRANSFORMER CKT 3
FDNS	00NR	0	17SP	G15_053	FROM->TO	GR ISLD-LNX3345.00 - GRAND ISLAND 345KV CKT Z	720	720	0.0568	128.9842	GEN652414 4-FT PECK
FDNS	00NR	0	17SP	G15_053	FROM->TO	GR ISLD-LNX3345.00 - GRAND ISLAND 345KV CKT Z	720	720	0.0568	128.9842	GEN652415 5-FT PECK
FDNS	00NR	0	17SP	G15_053	FROM->TO	GR ISLD-LNX3345.00 - GRAND ISLAND 345KV CKT Z	720	720	0.0568	128.9829	LADISH 115/13.2KV TRANSFORMER CKT 1
FDNS	00NR	0	17SP	G15_053	FROM->TO	GR ISLD-LNX3345.00 - GRAND ISLAND 345KV CKT Z	720	720	0.0568	128.9733	GEN660001 2-ABERDEEN SIEBRECHT
FDNS	00NR	0	17SP	G15_053	FROM->TO	GR ISLD-LNX3345.00 - GRAND ISLAND 345KV CKT Z	720	720	0.05478	128.9595	DIXONCO 230.00 - TWIN CHURCH 230KV CKT 1
FDNSLock	00NR	0	17SP	G15_053	FROM->TO	GR ISLD-LNX3345.00 - GRAND ISLAND 345KV CKT Z	720	720	0.0591	128.9476	CENTRAL CITY - GRAND ISLAND 115KV CKT 1
FDNS	00NR	0	17SP	G15_053	FROM->TO	GR ISLD-LNX3345.00 - GRAND ISLAND 345KV CKT Z	720	720	0.0568	128.9469	EMERY 161/18.0KV TRANSFORMER CKT 1
FDNS	00NR	0	17SP	G15_053	FROM->TO	GR ISLD-LNX3345.00 - GRAND ISLAND 345KV CKT Z	720	720	0.0568	128.9278	GEN600050 1-FEP
FDNS	00NR	0	17SP	G15_053	FROM->TO	GR ISLD-LNX3345.00 - GRAND ISLAND 345KV CKT Z	720	720	0.0568	128.9271	GEN652345 W-G07_023IS_2 0.6900
FDNS	00NR	0	17SP	G15_053	FROM->TO	GR ISLD-LNX3345.00 - GRAND ISLAND 345KV CKT Z	720	720	0.06058	128.9218	G15088_T 345.00 - PAULINE 345KV CKT 1
FDNS	00NR	0	17SP	G15_053	FROM->TO	GR ISLD-LNX3345.00 - GRAND ISLAND 345KV CKT Z	720	720	0.0568	128.9081	GEN 11104 1-J262_GEN 0.6000
FDNS	00NR	0	17SP	G15_053	FROM->TO	GR ISLD-LNX3345.00 - GRAND ISLAND 345KV CKT Z	720	720	0.0568	128.9081	GEN 11108 1-J263_GEN 0.6000
FDNS	00NR	0	17SP	G15_053	FROM->TO	GR ISLD-LNX3345.00 - GRAND ISLAND 345KV CKT Z	720	720	0.0568	128.8843	GEN600046 1-MECST
FDNS	00NR	0	17SP	G15_053	FROM->TO	GR ISLD-LNX3345.00 - GRAND ISLAND 345KV CKT Z	720	720	0.0568	128.8832	GEN300007 1-NEW MADRID UNIT 2
FDNS	00NR	0	17SP	G15_053	FROM->TO	GR ISLD-LNX3345.00 - GRAND ISLAND 345KV CKT Z	720	720	0.0568	128.8827	G830_SUB 115.00 - GRE-MCHENRY7115.00 115KV CKT 1
FDNS	00NR	0	17SP	G15_053	FROM->TO	GR ISLD-LNX3345.00 - GRAND ISLAND 345KV CKT Z	720	720	0.0568	128.8809	G830_SUB 115.00 115/34.5KV TRANSFORMER CKT 1
FDNS	00NR	0	17SP	G15_053	FROM->TO	GR ISLD-LNX3345.00 - GRAND ISLAND 345KV CKT Z	720	720	0.0568	128.8766	GEN300006 1-NEW MADRID UNIT 1
FDNS	00NR	0	17SP	G15_053	FROM->TO	GR ISLD-LNX3345.00 - GRAND ISLAND 345KV CKT Z	720	720	0.05687	128.8681	P12:345:UMZB:# 102 #: AVS BD IN ND. AVS BRD LR
FDNS	00NR	0	17SP	G15_053	FROM->TO	GR ISLD-LNX3345.00 - GRAND ISLAND 345KV CKT Z	720	720	0.05687	128.8667	BRDLAND-LNX3345.00 - HURON 345KV CKT Z
FDNS	00NR	0	17SP	G15_053	FROM->TO	GR ISLD-LNX3345.00 - GRAND ISLAND 345KV CKT Z	720	720	0.05687	128.8664	P12:345:UMZB:# 103 #: BD IN SD. LOSS OF LINE
FDNS	00NR	0	17SP	G15_053	FROM->TO	GR ISLD-LNX3345.00 - GRAND ISLAND 345KV CKT Z	720	720	0.05687	128.8652	BROADLAND - HURON 230KV CKT 1
FDNS	00NR	0	17SP	G15_053	FROM->TO	GR ISLD-LNX3345.00 - GRAND ISLAND 345KV CKT Z	720	720	0.05687	128.8651	HURON (BD KU2A) 345/230/13.8KV TRANSFORMER CKT 1
FDNS	00NR	0	17SP	G15_053	FROM->TO	GR ISLD-LNX3345.00 - GRAND ISLAND 345KV CKT Z	720	720	0.05687	128.8651	HURON (BD KU2A) 345/230/13.8KV TRANSFORMER CKT 1
FDNS	00NR	0	17SP	G15_053	FROM->TO	GR ISLD-LNX3345.00 - GRAND ISLAND 345KV CKT Z	720	720	0.05706	128.8644	POST ROCK (POSTROCK T1) 345/230/13.8KV TRANSFORMER CKT 1
FDNS	00NR	0	17SP	G15_053	FROM->TO	GR ISLD-LNX3345.00 - GRAND ISLAND 345KV CKT Z	720	720	0.05682	128.863	DRAYTON - LETELLIER 230KV CKT 1
FDNS	00NR	0	17SP	G15_053	FROM->TO	GR ISLD-LNX3345.00 - GRAND ISLAND 345KV CKT Z	720	720	0.0568	128.8584	GEN600047 1-MECCT1
FDNS	00NR	0	17SP	G15_053	FROM->TO	GR ISLD-LNX3345.00 - GRAND ISLAND 345KV CKT Z	720	720	0.0568	128.8437	GEN600063 1-COLVILLE GEN 1
FDNS	00NR	0	17SP	G15_053	FROM->TO	GR ISLD-LNX3345.00 - GRAND ISLAND 345KV CKT Z	720	720	0.0568	128.8437	GEN600064 2-COLVILLE GEN 2
FDNS	00NR	0	17SP	G15_053	FROM->TO	GR ISLD-LNX3345.00 - GRAND ISLAND 345KV CKT Z	720	720	0.0568	128.8401	GEN600043 7-BLUE LAKE5
FDNS	00NR	0	17SP	G15_053	FROM->TO	GR ISLD-LNX3345.00 - GRAND ISLAND 345KV CKT Z	720	720	0.0568	128.8401	GEN600044 8-BLUE LAKE6
FDNS	00NR	0	17SP	G15_053	FROM->TO	GR ISLD-LNX3345.00 - GRAND ISLAND 345KV CKT Z	720	720	0.0548	128.8215	COOPER - MOORE 345KV CKT 1
FDNS	00NR	0	17SP	G15_053	FROM->TO	GR ISLD-LNX3345.00 - GRAND ISLAND 345KV CKT Z	720	720	0.0568	128.8013	GEN600065 7-HIGH BRIDGE
FDNS	00NR	0	17SP	G15_053	FROM->TO	GR ISLD-LNX3345.00 - GRAND ISLAND 345KV CKT Z	720	720	0.0568	128.8013	GEN600066 8-HIGH BRIDGE
FDNS	00NR	0	17SP	G15_053	FROM->TO	GR ISLD-LNX3345.00 - GRAND ISLAND 345KV CKT Z	720	720	0.0568	128.7991	GEN600014 4-BLACK DOG GEN 4
FDNS	00NR	0	17SP	G15_053	FROM->TO	GR ISLD-LNX3345.00 - GRAND ISLAND 345KV CKT Z	720	720	0.0568	128.7947	GEN600011 5-BLACK DOG GEN 1
FDNS	00NR	0	17SP	G15_053	FROM->TO	GR ISLD-LNX3345.00 - GRAND ISLAND 345KV CKT Z	720	720	0.0568	128.7871	GEN600071 10-RIVER SIDE
FDNS	00NR	0	17SP	G15_053	FROM->TO	GR ISLD-LNX3345.00 - GRAND ISLAND 345KV CKT Z	720	720	0.0568	128.787	GEN600070 9-RIVER SIDE
FDNS	00NR	0	17SP	G15_053	FROM->TO	GR ISLD-LNX3345.00 - GRAND ISLAND 345KV CKT Z	720	720	0.05843	128.783	103RD & ROKEBY - MOORE 345KV CKT 1
FDNS	00NR	0	17SP	G15_053	FROM->TO	GR ISLD-LNX3345.00 - GRAND ISLAND 345KV CKT Z	720	720	0.05843	128.783	103RD & ROKEBY - MOORE 345KV CKT 1
FDNS	00NR	0	17SP	G15_053	FROM->TO	GR ISLD-LNX3345.00 - GRAND ISLAND 345KV CKT Z	720	720	0.0568	128.7773	GEN659273 2-GROTON SYNC COND
FDNS	00NR	0	17SP	G15_053	FROM->TO	GR ISLD-LNX3345.00 - GRAND ISLAND 345KV CKT Z	720	720	0.0568	128.7773	GEN659294 1-WILTONCOL9
FDNS	00NR	0	17SP	G15_053	FROM->TO	GR ISLD-LNX3345.00 - GRAND ISLAND 345KV CKT Z	720	720	0.06992	128.775	COLUMWEST - GRAND ISLAND 230KV CKT 1
FDNS	00NR	0	17SP	G15_053	FROM->TO	GR ISLD-LNX3345.00 - GRAND ISLAND 345KV CKT Z	720	720	0.0568	128.7731	GEN600007 7-RIVERSIDE GEN 7
FDNS	00NR	0	17SP	G15_053	FROM->TO	GR ISLD-LNX3345.00 - GRAND ISLAND 345KV CKT Z	720	720	0.0568	128.7645	GEN600045 4-ANSON
FDNS	00NR	0	17SP	G15_053	FROM->TO	GR ISLD-LNX3345.00 - GRAND ISLAND 345KV CKT Z	720	720	0.0568	128.744	GEN600017 C-LS POWER CT
FDNS	00NR	0	17SP	G15_053	FROM->TO	GR ISLD-LNX3345.00 - GRAND ISLAND 345KV CKT Z	720	720	0.0568	128.7425	GEN659192 6-LYNN
FDNS	00NR	0	17SP	G15_053	FROM->TO	GR ISLD-LNX3345.00 - GRAND ISLAND 345KV CKT Z	720	720	0.0568	128.7422	LANSING WEST 161/22.0KV TRANSFORMER CKT 1
FDNS	00NR	0	17SP	G15_053	FROM->TO	GR ISLD-LNX3345.00 - GRAND ISLAND 345KV CKT Z	720	720	0.0568	128.7417	GEN659162 4-RED WLCK
FDNS	00NR	0	17SP	G15_053	FROM->TO	GR ISLD-LNX3345.00 - GRAND ISLAND 345KV CKT Z	720	720	0.0568	128.7417	GEN659163 5-BLACK WDCK
FDNS	00NR	0	17SP	G15_053	FROM->TO	GR ISLD-LNX3345.00 - GRAND ISLAND 345KV CKT Z	720	720	0.05695	128.7337	G11_051T 345.00 - TATONGA7 345.00 345KV CKT 1
FDNS	00NR	0	17SP	G15_053	FROM->TO	GR ISLD-LNX3345.00 - GRAND ISLAND 345KV CKT Z	720	720	0.0568	128.7217	GEN 10648 1-G830_GEN 0.6900
FDNS	00NR	0	17SP	G15_053	FROM->TO	GR ISLD-LNX3345.00 - GRAND ISLAND 345KV CKT Z	720	720	0.0568	128.715	CENTER 230/22.0KV TRANSFORMER CKT 1
FDNS	00NR	0	17SP	G15_053	FROM->TO	GR ISLD-LNX3345.00 - GRAND ISLAND 345KV CKT Z	720	720	0.0568	128.6917	GEN615021 1-GRE-ER 14G 16.000
FDNS	00NR	0	17SP	G15_053	FROM->TO	GR ISLD-LNX3345.00 - GRAND ISLAND 345KV CKT Z	720	720	0.05676	128.6902	OAHE - SULLEY BUTTE 230KV CKT 1
FDNS	00NR	0	17SP	G15_053	FROM->TO	GR ISLD-LNX3345.00 - GRAND ISLAND 345KV CKT Z	720	720	0.0568	128.6878	GEN659031 1-G12_014IS_4 0.6900
FDNS	00NR	0	17SP	G15_053	FROM->TO	GR ISLD-LNX3345.00 - GRAND ISLAND 345KV CKT Z	720	720	0.0568	128.6746	GEN615052 1-CAMBRIDGE GENERATING STATION
FDNS	00NR	0	17SP	G15_053	FROM->TO	GR ISLD-LNX3345.00 - GRAND ISLAND 345KV CKT Z	720	720	0.0568	128.6403	GEN615015 1-GRE-SPRITWDG13.200
FDNS	00NR	0	17SP	G15_053	FROM->TO	GR ISLD-LNX3345.00 - GRAND ISLAND 345KV CKT Z	720	720	0.0568	128.6366	GEN681522 3-GENOA 3
FDNS	00NR	0	17SP	G15_053	FROM->TO	GR ISLD-LNX3345.00 - GRAND ISLAND 345KV CKT Z	720	720	0.05794	128.5948	AXTELL - POST ROCK 345KV CKT 1
FDNS	00NR	0	17SP	G15_053	FROM->TO	GR ISLD-LNX3345.00 - GRAND ISLAND 345KV CKT Z	720	720	0.05687	128.5499	ANTELOP-LNX3345.00 - ANTELOPE VALLEY 345KV CKT Z
FDNS	00NR	0	17SP	G15_053	FROM->TO	GR ISLD-LNX3345.00 - GRAND ISLAND 345KV CKT Z	720	720	0.05676	128.5499	SULLYBT-LNX3230.00 - WHITLOK 230KV CKT 1
FDNS	00NR	0	17SP	G15_053	FROM->TO	GR ISLD-LNX3345.00 - GRAND ISLAND 345KV CKT Z	720	720	0.05676	128.5447	SULLEY BUTTE - SULLYBT-LNX3230.00 230KV CKT Z
FDNS	00NR	0	17SP	G15_053	FROM->TO	GR ISLD-LNX3345.00 - GRAND ISLAND 345KV CKT Z	720	720	0.0568	128.5334	GEN660016 1-B_H WIND 0.7000
FDNS	00NR	0	17SP	G15_053	FROM->TO	GR ISLD-LNX3345.00 - GRAND ISLAND 345KV CKT Z	720	720	0.0568	128.5203	GEN659353 1-DEERCREK CTG18.000
FDNS	00NR	0	17SP	G15_053	FROM->TO	GR ISLD-LNX3345.00 - GRAND ISLAND 345KV CKT Z	720	720	0.0568	128.5161	GEN659354 1-DEERCREK STG18.000
FDNS	00NR	0	17SP	G15_053	FROM->TO	GR ISLD-LNX3345.00 - GRAND ISLAND 345KV CKT Z	720	720	0.05695	128.4847	MATHWSN7 345.00 - TATONGA7 345.00 345KV CKT 1
FDNS	00NR	0	17SP	G15_053	FROM->TO	GR ISLD-LNX3345.00 - GRAND ISLAND 345KV CKT Z	720	720	0.05676	128.484	P12:230:UMZB:# 114 #: SB IN SD. SB-WK-GH
FDNS	00NR	0	17SP	G15_053	FROM->TO	GR ISLD-LNX3345.00 - GRAND ISLAND 345KV CKT Z	720	720	0.05676	128.484	P12:230:UMZB:# 117 #: WK IN SD. SB-WK-GH
FDNS	00NR	0	17SP	G15_053	FROM->TO	GR ISLD-LNX3345.00 - GRAND ISLAND 345KV CKT Z	720	720	0.0568	128.4601	GEN672303 3-BOUNDARY DAM GENERATOR 3
FDNS	00NR	0	17SP	G15_053	FROM->TO	GR ISLD-LNX3345.00 - GRAND ISLAND 345KV CKT Z	720	720	0.0568	128.46	GEN672305 5-BOUNDARY DAM GENERATOR 5
FDNS	00NR	0	17SP	G15_053	FROM->TO	GR ISLD-LNX3345.00 - GRAND ISLAND 345KV CKT Z	720	720	0.05676	128.4518	GLENHAM - WHITLOK 230KV CKT 1
FDNS	00NR	0	17SP	G15_053	FROM->TO	GR ISLD-LNX3345.00 - GRAND ISLAND 345KV CKT Z	720	720	0.0568	128.4513	GEN652906 1-G09_006IS_3 0.6900
FDNS	00NR	0	17SP	G15_053	FROM->TO	GR ISLD-LNX3345.00 - GRAND ISLAND 345KV CKT Z	720	720	0.0568	128.4355	GEN672392 1-NBECGT1G 18.000

SOLUTION	GROUP	SCENARIO	SEASON	SOURCE	DIRECTION	MONITORED ELEMENT	RATEA (MVA)	RATEB(MVA)	TDF	TC%LOADING (% MVA)	CONTINGENCY
FDNS	00NR	0	17SP	G15_053	FROM->TO	GR ISLD-LNX3345.00 - GRAND ISLAND 345KV CKT Z	720	720	0.0568	128.4103	GEN600067 9-HIGH BRIDGE
FDNS	00NR	0	17SP	G15_053	FROM->TO	GR ISLD-LNX3345.00 - GRAND ISLAND 345KV CKT Z	720	720	0.0568	128.4061	GEN562832 1-G15042_3 0.6900
FDNS	00NR	0	17SP	G15_053	FROM->TO	GR ISLD-LNX3345.00 - GRAND ISLAND 345KV CKT Z	720	720	0.0568	128.3967	BISONMP4 230.00 - SQUARE BUTTE 230KV CKT 1
FDNS	00NR	0	17SP	G15_053	FROM->TO	GR ISLD-LNX3345.00 - GRAND ISLAND 345KV CKT Z	720	720	0.0568	128.3626	GEN910006 1-G12_012IS_3 0.6900
FDNS	00NR	0	17SP	G15_053	FROM->TO	GR ISLD-LNX3345.00 - GRAND ISLAND 345KV CKT Z	720	720	0.0568	128.3497	GEN662101 1-WESSINGTON190.5750
FDNS	00NR	0	17SP	G15_053	FROM->TO	GR ISLD-LNX3345.00 - GRAND ISLAND 345KV CKT Z	720	720	0.0568	128.3177	COYOTE 345/24.0KV TRANSFORMER CKT 1
FDNS	00NR	0	17SP	G15_053	FROM->TO	GR ISLD-LNX3345.00 - GRAND ISLAND 345KV CKT Z	720	720	0.0568	128.3029	GEN652907 1-G09_007IS_3 0.6900
FDNS	00NR	0	17SP	G15_053	FROM->TO	GR ISLD-LNX3345.00 - GRAND ISLAND 345KV CKT Z	720	720	0.0568	128.1346	GEN652543 3-BIG BEND
FDNS	00NR	0	17SP	G15_053	FROM->TO	GR ISLD-LNX3345.00 - GRAND ISLAND 345KV CKT Z	720	720	0.0568	128.1149	SQUARE BUTTE - YNG2 4 230.00 230KV CKT 1
FDNS	00NR	0	17SP	G15_053	FROM->TO	GR ISLD-LNX3345.00 - GRAND ISLAND 345KV CKT Z	720	720	0.0568	128.1139	YNG2 4 230.00 230/20.0KV TRANSFORMER CKT 1
FDNS	00NR	0	17SP	G15_053	FROM->TO	GR ISLD-LNX3345.00 - GRAND ISLAND 345KV CKT Z	720	720	0.0568	128.0003	GEN659018 1-G14_003IS_3 0.6900
FDNS	00NR	0	17SP	G15_053	FROM->TO	GR ISLD-LNX3345.00 - GRAND ISLAND 345KV CKT Z	720	720	0.0568	127.9985	GEN659289 1-DAYCNTYWND W0.6900
FDNS	00NR	0	17SP	G15_053	FROM->TO	GR ISLD-LNX3345.00 - GRAND ISLAND 345KV CKT Z	720	720	0.0568	127.9636	GEN681542 6-JP MADGETT
FDNS	00NR	0	17SP	G15_053	FROM->TO	GR ISLD-LNX3345.00 - GRAND ISLAND 345KV CKT Z	720	720	0.0568	127.9625	GEN563312 1-G15097_3 0.6900
FDNS	00NR	0	17SP	G15_053	FROM->TO	GR ISLD-LNX3345.00 - GRAND ISLAND 345KV CKT Z	720	720	0.05676	127.9036	GLENHAM - L3 HAWDON 230KV CKT 1
FDNS	00NR	0	17SP	G15_053	FROM->TO	GR ISLD-LNX3345.00 - GRAND ISLAND 345KV CKT Z	720	720	0.0568	127.8236	GEN659194 1-NDPRAIRWND1W0.6900
FDNS	00NR	0	17SP	G15_053	FROM->TO	GR ISLD-LNX3345.00 - GRAND ISLAND 345KV CKT Z	720	720	0.0568	127.8095	GEN659010 4-G07_027IS_2 0.6900
FDNS	00NR	0	17SP	G15_053	FROM->TO	GR ISLD-LNX3345.00 - GRAND ISLAND 345KV CKT Z	720	720	0.0568	127.7982	GEN652460 4-GARRISON
FDNS	00NR	0	17SP	G15_053	FROM->TO	GR ISLD-LNX3345.00 - GRAND ISLAND 345KV CKT Z	720	720	0.0568	127.7982	GEN652461 5-GARRISON
FDNS	00NR	0	17SP	G15_053	FROM->TO	GR ISLD-LNX3345.00 - GRAND ISLAND 345KV CKT Z	720	720	0.0568	127.7958	GEN652542 1-BIG BEND
FDNS	00NR	0	17SP	G15_053	FROM->TO	GR ISLD-LNX3345.00 - GRAND ISLAND 345KV CKT Z	720	720	0.0568	127.7569	GEN563342 1-G15098_3 0.6900
FDNS	00NR	0	17SP	G15_053	FROM->TO	GR ISLD-LNX3345.00 - GRAND ISLAND 345KV CKT Z	720	720	0.0568	127.7395	GEN652458 2-GARRISON
FDNS	00NR	0	17SP	G15_053	FROM->TO	GR ISLD-LNX3345.00 - GRAND ISLAND 345KV CKT Z	720	720	0.0568	127.7395	GEN652459 3-GARRISON
FDNS	00NR	0	17SP	G15_053	FROM->TO	GR ISLD-LNX3345.00 - GRAND ISLAND 345KV CKT Z	720	720	0.0568	127.7394	GEN652457 1-GARRISON
FDNS	00NR	0	17SP	G15_053	FROM->TO	GR ISLD-LNX3345.00 - GRAND ISLAND 345KV CKT Z	720	720	0.0568	127.6794	GEN659403 1-NDSUNFLWR W0.6900
FDNS	00NR	0	17SP	G15_053	FROM->TO	GR ISLD-LNX3345.00 - GRAND ISLAND 345KV CKT Z	720	720	0.06032	127.6104	AXTELL - SWEETWATER 345KV CKT 1
FDNS	00NR	0	17SP	G15_053	FROM->TO	GR ISLD-LNX3345.00 - GRAND ISLAND 345KV CKT Z	720	720	0.0568	127.5812	STANTON 230/18.0KV TRANSFORMER CKT 1
FDNS	00NR	0	17SP	G15_053	FROM->TO	GR ISLD-LNX3345.00 - GRAND ISLAND 345KV CKT Z	720	720	0.0568	127.5081	GR ISLD-LNX3345.00 345KV SWITCHED SHUNT
FDNS	00NR	0	17SP	G15_053	FROM->TO	GR ISLD-LNX3345.00 - GRAND ISLAND 345KV CKT Z	720	720	0.0568	127.4175	CLAY BOSWELL 230/20.9KV TRANSFORMER CKT 1
FDNS	00NR	0	17SP	G15_053	FROM->TO	GR ISLD-LNX3345.00 - GRAND ISLAND 345KV CKT Z	720	720	0.0568	127.3162	GEN659411 1-CAMPBLCNTY W0.6900
FDNS	00NR	0	17SP	G15_053	FROM->TO	GR ISLD-LNX3345.00 - GRAND ISLAND 345KV CKT Z	720	720	0.0568	127.1606	GEN652559 1-OAHE
FDNS	00NR	0	17SP	G15_053	FROM->TO	GR ISLD-LNX3345.00 - GRAND ISLAND 345KV CKT Z	720	720	0.0568	127.1593	ALMA 161 161/24.0KV TRANSFORMER CKT 1
FDNS	00NR	0	17SP	G15_053	FROM->TO	GR ISLD-LNX3345.00 - GRAND ISLAND 345KV CKT Z	720	720	0.0568	127.112	GEN659296 2-SDPRAIRWND1W0.6900
FDNS	00NR	0	17SP	G15_053	FROM->TO	GR ISLD-LNX3345.00 - GRAND ISLAND 345KV CKT Z	720	720	0.0568	126.9705	RCDC EAST 4230.00 - RED CEDAR DC 230KV CKT 1
FDNS	00NR	0	17SP	G15_053	FROM->TO	GR ISLD-LNX3345.00 - GRAND ISLAND 345KV CKT Z	720	720	0.06058	126.9658	G15088_T 345.00 - MOORE 345KV CKT 1
FDNS	00NR	0	17SP	G15_053	FROM->TO	GR ISLD-LNX3345.00 - GRAND ISLAND 345KV CKT Z	720	720	0.0568	126.9519	GEN672321 1-SHAND GENERATOR 1
FDNS	00NR	0	17SP	G15_053	FROM->TO	GR ISLD-LNX3345.00 - GRAND ISLAND 345KV CKT Z	720	720	0.0568	126.9491	P12:230:UMZB:# 112 #: NU IN SD. NU-RCDC & DRY CREEK XFMR
FDNS	00NR	0	17SP	G15_053	FROM->TO	GR ISLD-LNX3345.00 - GRAND ISLAND 345KV CKT Z	720	720	0.0568	126.9338	GEN615010 1-STANTON4
FDNS	00NR	0	17SP	G15_053	FROM->TO	GR ISLD-LNX3345.00 - GRAND ISLAND 345KV CKT Z	720	720	0.0568	126.9296	GEN672310 1-POPLAR RIVER GENERATOR 1
FDNS	00NR	0	17SP	G15_053	FROM->TO	GR ISLD-LNX3345.00 - GRAND ISLAND 345KV CKT Z	720	720	0.0568	126.9296	GEN672311 2-POPLAR RIVER GENERATOR 2
FDNS	00NR	0	17SP	G15_053	FROM->TO	GR ISLD-LNX3345.00 - GRAND ISLAND 345KV CKT Z	720	720	0.0568	126.8554	GEN672306 6-BOUNDARY DAM GENERATOR 6
FDNS	00NR	0	17SP	G15_053	FROM->TO	GR ISLD-LNX3345.00 - GRAND ISLAND 345KV CKT Z	720	720	0.0568	126.8183	GEN659453 1-GI1414GEN W0.6900
FDNS	00NR	0	17SP	G15_053	FROM->TO	GR ISLD-LNX3345.00 - GRAND ISLAND 345KV CKT Z	720	720	0.0568	126.8171	GEN563302 1-G15096_3 0.6900
FDNS	00NR	0	17SP	G15_053	FROM->TO	GR ISLD-LNX3345.00 - GRAND ISLAND 345KV CKT Z	720	720	0.0568	126.7913	GEN652556 2-OAHE
FDNS	00NR	0	17SP	G15_053	FROM->TO	GR ISLD-LNX3345.00 - GRAND ISLAND 345KV CKT Z	720	720	0.0568	126.7913	GEN652557 4-OAHE
FDNS	00NR	0	17SP	G15_053	FROM->TO	GR ISLD-LNX3345.00 - GRAND ISLAND 345KV CKT Z	720	720	0.0568	126.7913	GEN652558 6-OAHE
FDNS	00NR	0	17SP	G15_053	FROM->TO	GR ISLD-LNX3345.00 - GRAND ISLAND 345KV CKT Z	720	720	0.0568	126.7785	GEN600004 2-PRAIRIE ISLAND G2
FDNS	00NR	0	17SP	G15_053	FROM->TO	GR ISLD-LNX3345.00 - GRAND ISLAND 345KV CKT Z	720	720	0.0568	126.774	GEN600003 1-PRAIRIE ISLAND G1
FDNS	00NR	0	17SP	G15_053	FROM->TO	GR ISLD-LNX3345.00 - GRAND ISLAND 345KV CKT Z	720	720	0.0568	126.7102	GEN659141 1-K10215A
FDNS	00NR	0	17SP	G15_053	FROM->TO	GR ISLD-LNX3345.00 - GRAND ISLAND 345KV CKT Z	720	720	0.0568	126.6583	GEN659110 1-LELAND OLDS UNIT1
FDNS	00NR	0	17SP	G15_053	FROM->TO	GR ISLD-LNX3345.00 - GRAND ISLAND 345KV CKT Z	720	720	0.0568	126.6517	GEN657749 1-YOUNG 1 GENERATOR
FDNS	00NR	0	17SP	G15_053	FROM->TO	GR ISLD-LNX3345.00 - GRAND ISLAND 345KV CKT Z	720	720	0.0568	126.4545	GEN652173 1-G09_001IS_2 0.6900
FDNS	00NR	0	17SP	G15_053	FROM->TO	GR ISLD-LNX3345.00 - GRAND ISLAND 345KV CKT Z	720	720	0.0568	126.4491	GEN600006 1-AS KING
FDNS	00NR	0	17SP	G15_053	FROM->TO	GR ISLD-LNX3345.00 - GRAND ISLAND 345KV CKT Z	720	720	0.0568	126.1483	GEN659407 1-ANTELPHILLSW0.6900
FDNS	00NR	0	17SP	G15_053	FROM->TO	GR ISLD-LNX3345.00 - GRAND ISLAND 345KV CKT Z	720	720	0.0568	125.8488	GEN600005 1-MONTICELLO
FDNS	00NR	0	17SP	G15_053	FROM->TO	GR ISLD-LNX3345.00 - GRAND ISLAND 345KV CKT Z	720	720	0.0568	125.1533	GEN600000 1-SHERBURNECNTY G1
FDNS	00NR	0	17SP	G15_053	FROM->TO	GR ISLD-LNX3345.00 - GRAND ISLAND 345KV CKT Z	720	720	0.0568	124.7391	GEN600001 2-SHERBURNE CNTY G2
FDNS	00NR	0	17SP	G15_053	FROM->TO	GR ISLD-LNX3345.00 - GRAND ISLAND 345KV CKT Z	720	720	0.0568	124.5328	GEN620315 1-BIG STONE GEN
FDNS	00NR	0	17SP	G15_053	FROM->TO	GR ISLD-LNX3345.00 - GRAND ISLAND 345KV CKT Z	720	720	0.0568	124.4986	GEN661015 1-COYOTE
FDNS	00NR	0	17SP	G15_053	FROM->TO	GR ISLD-LNX3345.00 - GRAND ISLAND 345KV CKT Z	720	720	0.0568	124.0797	GEN657748 1-YOUNG 2 GENERATOR
FDNS	00NR	0	17SP	G15_053	FROM->TO	GR ISLD-LNX3345.00 - GRAND ISLAND 345KV CKT Z	720	720	0.0568	123.9345	GEN600002 3-SHERBURNE CNTY G3
FDNS	00NR	0	17SP	G15_053	FROM->TO	GR ISLD-LNX3345.00 - GRAND ISLAND 345KV CKT Z	720	720	0.0568	123.6949	GEN562872 1-G15046_3 0.6900
FDNS	00NR	0	17SP	G15_053	FROM->TO	GR ISLD-LNX3345.00 - GRAND ISLAND 345KV CKT Z	720	720	0.06504	123.5972	MCCOOL - MOORE 345KV CKT 1
FDNS	00NR	0	17SP	G15_053	FROM->TO	GR ISLD-LNX3345.00 - GRAND ISLAND 345KV CKT Z	720	720	0.0568	123.3944	GEN659111 2-LELAND OLDS UNIT2
FDNS	00NR	0	17SP	G15_053	FROM->TO	GR ISLD-LNX3345.00 - GRAND ISLAND 345KV CKT Z	720	720	0.0568	122.9194	GEN659103 1-ANTELOPE VALLEY UNIT1
FDNS	00NR	0	17SP	G15_053	FROM->TO	GR ISLD-LNX3345.00 - GRAND ISLAND 345KV CKT Z	720	720	0.0568	122.9194	GEN659107 2-ANTELOPE VALLEY UNIT2
FDNS	00NR	0	17SP	G15_053	FROM->TO	GR ISLD-LNX3345.00 - GRAND ISLAND 345KV CKT Z	720	720	0.0568	121.9558	GEN659125 1-COVEY
FDNS	00NR	0	17SP	G15_053	FROM->TO	GR ISLD-LNX3345.00 - GRAND ISLAND 345KV CKT Z	720	720	0.05645	121.922	FTTHOM1-LNX3345.00 - LELAND2-LNX3345.00 345KV CKT 1
FDNS	00NR	0	20SP	G15_053	FROM->TO	GR ISLD-LNX3345.00 - GRAND ISLAND 345KV CKT Z	720	720	0.05321	121.6983	HOLT.CO3 345.00 - THEDFRD3 345.00 345KV CKT 1
FDNS	00NR	0	17SP	G15_053	FROM->TO	GR ISLD-LNX3345.00 - GRAND ISLAND 345KV CKT Z	720	720	0.05645	121.67	P12:345:UMZB:# 108 #: LOS FT IN ND. LOS FT
FDNS	00NR	0	17SP	G15_053	FROM->TO	GR ISLD-LNX3345.00 - GRAND ISLAND 345KV CKT Z	720	720	0.05645	121.6593	FT THOMPSON - FTTHOM1-LNX3345.00 345KV CKT Z
FDNS	00NR	0	25SP	G15_053	FROM->TO	GR ISLD-LNX3345.00 - GRAND ISLAND 345KV CKT Z	720	720	0.05411	121.5104	HOLT.CO3 345.00 - THEDFRD3 345.00 345KV CKT 1
FDNS	00NR	0	17SP	G15_053	FROM->TO	GR ISLD-LNX3345.00 - GRAND ISLAND 345KV CKT Z	720	720	0.05645	121.4254	LELAND OLDS - LELAND2-LNX3345.00 345KV CKT Z
FDNS	00NR	0	17SP	G15_053	FROM->TO	GR ISLD-LNX3345.00 - GRAND ISLAND 345KV CKT Z	720	720	0.0568	121.232	GEN615001 1-COAL CREEK
FDNS	00NR	0	17SP	G15_053	FROM->TO	GR ISLD-LNX3345.00 - GRAND ISLAND 345KV CKT Z	720	720	0.0568	121.1067	GEN615002 2-COAL CREEK
FDNS	00NR	0	17SP	G15_053	FROM->TO	GR ISLD-LNX3345.00 - GRAND ISLAND 345KV CKT Z	720	720	0.06577	120.1904	GRAND ISLAND - MCCOOL 345KV CKT 1
FDNS	00NR	0	17SP	G15_053	FROM->TO	GR ISLD-LNX3345.00 - GRAND ISLAND 345KV CKT Z	720	720	0.0568	114.2696	GEN562714 1-G15_023_4 0.6900
FDNS	00NR	0	17SP	G15_053	FROM->TO	GR ISLD-LNX3345.00 - GRAND ISLAND 345KV CKT Z	720	720	0.0568	114.2696	GEN562715 1-G15_023_5 0.6900
FDNS	00NR	0	20SP	G15_053	FROM->TO	GR ISLD-LNX3345.00 - GRAND ISLAND 345KV CKT Z	720	720	0.05543	111.9689	GERALD GENTLEMAN STATION - THEDFRD3 345.00 345KV CKT 1

SOLUTION	GROUP	SCENARIO	SEASON	SOURCE	DIRECTION	MONITORED ELEMENT	RATEA (MVA)	RATEB(MVA)	TDF	TC%LOADING (% MVA)	CONTINGENCY
FDNS	00NR	0	25SP	G15_053	FROM->TO	GR ISLD-LNX3345.00 - GRAND ISLAND 345KV CKT Z	720	720	0.05659	111.3329	GERALD GENTLEMAN STATION - THEDFRD3 345.00 345KV CKT 1
FDNS	00NR	0	17SP	G15_053	FROM->TO	GR ISLD-LNX3345.00 - GRAND ISLAND 345KV CKT Z	720	720	0.0568	108.1649	GEN652353 2-GR PRAIRIEG 0.6900
FDNS	00NR	0	16WP	G15_053	FROM->TO	GR ISLD-LNX3345.00 - GRAND ISLAND 345KV CKT Z	720	720	0.05613	102.4932	KELLY - MEADOWGROVE4230.00 230KV CKT 1
FDNS	00NR	0	16WP	G15_053	FROM->TO	GR ISLD-LNX3345.00 - GRAND ISLAND 345KV CKT Z	720	720	0.0539	101.8942	P12:230:UMZB:# 116 #: ST IN SD. WSG-ST-VH
FDNS	00NR	0	16WP	G15_053	FROM->TO	GR ISLD-LNX3345.00 - GRAND ISLAND 345KV CKT Z	720	720	0.05392	101.2943	STORLA - WESSINGTON 230KV CKT 1
FDNS	00NR	0	16WP	G15_053	FROM->TO	GR ISLD-LNX3345.00 - GRAND ISLAND 345KV CKT Z	720	720	0.05542	100.8674	ROSEAU - ROSEAUM 2 500.00 500KV CKT 1
FDNS	00NR	0	16WP	G15_053	FROM->TO	GR ISLD-LNX3345.00 - GRAND ISLAND 345KV CKT Z	720	720	0.05446	100.313	HANLON - STORLA 230KV CKT 1
FDNS	00NR	0	16WP	G15_053	FROM->TO	GR ISLD-LNX3345.00 - GRAND ISLAND 345KV CKT Z	720	720	0.0413	100	GRAND ISLAND - SWEETWATER 345KV CKT 1
FDNS	00NR	0	16WP	G15_053	FROM->TO	GR ISLD-LNX3345.00 - GRAND ISLAND 345KV CKT Z	720	720	0.05474	99.9	P12:345:UMZW:# 1747 #: WT2 IN SD. WT2-WHT LINE FAULT
FDNS	00NR	0	16WP	G15_053	FROM->TO	GR ISLD-LNX3345.00 - GRAND ISLAND 345KV CKT Z	720	720	0.05474	99.9	WATERTN-LNX3345.00 - WATERTOWN 345KV CKT Z
FDNS	00NR	0	16WP	G15_053	FROM->TO	GR ISLD-LNX3345.00 - GRAND ISLAND 345KV CKT Z	720	720	0.05474	99.9	WATERTN-LNX3345.00 - WHITE 345KV CKT 1
FDNS	00NR	0	16WP	G15_053	FROM->TO	GR ISLD-LNX3345.00 - GRAND ISLAND 345KV CKT Z	720	720	0.05382	99.8	FT THOMPSON - LETCHER 230KV CKT 1
FDNS	00NR	0	16WP	G15_053	FROM->TO	GR ISLD-LNX3345.00 - GRAND ISLAND 345KV CKT Z	720	720	0.05382	99.8	FT THOMPSON - LETCHER 230KV CKT 1
FDNSLock	00NR	0	16WP	G15_053	FROM->TO	GR ISLD-LNX3345.00 - GRAND ISLAND 345KV CKT Z	720	720	0.05704	99.5	KEYSTONE - SIDNEY1-LNX3345.00 345KV CKT 1
FDNSLock	00NR	0	16WP	G15_053	FROM->TO	GR ISLD-LNX3345.00 - GRAND ISLAND 345KV CKT Z	720	720	0.05704	99.5	SIDNEY - SIDNEY1-LNX3345.00 345KV CKT Z
FDNS	00NR	0	17SP	G15_053	TO->FROM	GR ISLD-LNX3345.00 - HOLT.CO3 345.00 345KV CKT 1	720	720	0.05656	138.4828	G09_001IST 345.00 - WATERTOWN 345KV CKT 1
FDNS	00NR	0	17SP	G15_053	TO->FROM	GR ISLD-LNX3345.00 - HOLT.CO3 345.00 345KV CKT 1	720	720	0.05757	138.0694	KELLY - MEADOWGROVE4230.00 230KV CKT 1
FDNS	00NR	0	17SP	G15_053	TO->FROM	GR ISLD-LNX3345.00 - HOLT.CO3 345.00 345KV CKT 1	720	720	0.05528	137.65	P12:230:UMZB:# 116 #: ST IN SD. WSG-ST-VH
FDNS	00NR	0	17SP	G15_053	TO->FROM	GR ISLD-LNX3345.00 - HOLT.CO3 345.00 345KV CKT 1	720	720	0.05613	136.8472	WATERTN-LNX3345.00 - WATERTOWN 345KV CKT Z
FDNS	00NR	0	17SP	G15_053	TO->FROM	GR ISLD-LNX3345.00 - HOLT.CO3 345.00 345KV CKT 1	720	720	0.05613	136.7798	P12:345:UMZW:# 1747 #: WT2 IN SD. WT2-WHT LINE FAULT
FDNS	00NR	0	17SP	G15_053	TO->FROM	GR ISLD-LNX3345.00 - HOLT.CO3 345.00 345KV CKT 1	720	720	0.0553	136.7283	STORLA - WESSINGTON 230KV CKT 1
FDNS	00NR	0	17SP	G15_053	TO->FROM	GR ISLD-LNX3345.00 - HOLT.CO3 345.00 345KV CKT 1	720	720	0.05613	136.676	WATERTN-LNX3345.00 - WHITE 345KV CKT 1
FDNS	00NR	0	17SP	G15_053	TO->FROM	GR ISLD-LNX3345.00 - HOLT.CO3 345.00 345KV CKT 1	720	720	0.05585	135.3597	HANLON - STORLA 230KV CKT 1
FDNS	00NR	0	17SP	G15_053	TO->FROM	GR ISLD-LNX3345.00 - HOLT.CO3 345.00 345KV CKT 1	720	720	0.0552	135.0789	FT THOMPSON - LETCHER 230KV CKT 1
FDNS	00NR	0	17SP	G15_053	TO->FROM	GR ISLD-LNX3345.00 - HOLT.CO3 345.00 345KV CKT 1	720	720	0.0552	135.0789	FT THOMPSON - LETCHER 230KV CKT 1
FDNS	00NR	0	17SP	G15_053	TO->FROM	GR ISLD-LNX3345.00 - HOLT.CO3 345.00 345KV CKT 1	720	720	0.05354	133.7629	FT RANDAL - FT THOMPSON 230KV CKT 1
FDNS	00NR	0	17SP	G15_053	TO->FROM	GR ISLD-LNX3345.00 - HOLT.CO3 345.00 345KV CKT 1	720	720	0.05354	133.7629	FT RANDAL - FT THOMPSON 230KV CKT 1
FDNS	00NR	0	17SP	G15_053	TO->FROM	GR ISLD-LNX3345.00 - HOLT.CO3 345.00 345KV CKT 1	720	720	0.05362	133.7265	FT RANDAL - G12_009IST 230.00 230KV CKT 1
FDNS	00NR	0	17SP	G15_053	TO->FROM	GR ISLD-LNX3345.00 - HOLT.CO3 345.00 345KV CKT 1	720	720	0.05362	133.6464	FT THOMPSON - LAKE PLATT 230KV CKT 1
FDNS	00NR	0	17SP	G15_053	TO->FROM	GR ISLD-LNX3345.00 - HOLT.CO3 345.00 345KV CKT 1	720	720	0.05362	133.6464	FT THOMPSON - LAKE PLATT 230KV CKT 1
FDNS	00NR	0	17SP	G15_053	TO->FROM	GR ISLD-LNX3345.00 - HOLT.CO3 345.00 345KV CKT 1	720	720	0.05853	133.5696	KEYSTONE - SIDNEY1-LNX3345.00 345KV CKT 1
FDNS	00NR	0	17SP	G15_053	TO->FROM	GR ISLD-LNX3345.00 - HOLT.CO3 345.00 345KV CKT 1	720	720	0.05853	133.5488	SIDNEY - SIDNEY1-LNX3345.00 345KV CKT Z
FDNS	00NR	0	17SP	G15_053	TO->FROM	GR ISLD-LNX3345.00 - HOLT.CO3 345.00 345KV CKT 1	720	720	0.06491	133.5085	NUNDRWD - WAYSIDE 230KV CKT 1
FDNS	00NR	0	17SP	G15_053	TO->FROM	GR ISLD-LNX3345.00 - HOLT.CO3 345.00 345KV CKT 1	720	720	0.05656	133.4449	G09_001IST 345.00 - GROTON 345KV CKT 1
FDNS	00NR	0	17SP	G15_053	TO->FROM	GR ISLD-LNX3345.00 - HOLT.CO3 345.00 345KV CKT 1	720	720	0.05677	133.2589	CHISAGO COUNTY - FORBES 500KV CKT 1
FDNS	00NR	0	17SP	G15_053	TO->FROM	GR ISLD-LNX3345.00 - HOLT.CO3 345.00 345KV CKT 1	720	720	0.05362	133.2456	G12_009IST 230.00 - LAKE PLATT 230KV CKT 1
FDNS	00NR	0	17SP	G15_053	TO->FROM	GR ISLD-LNX3345.00 - HOLT.CO3 345.00 345KV CKT 1	720	720	0.0568	133.1666	GEN336821 1-GRAND GULF UNIT
FDNS	00NR	0	17SP	G15_053	TO->FROM	GR ISLD-LNX3345.00 - HOLT.CO3 345.00 345KV CKT 1	720	720	0.05757	133.0352	FT RANDAL - MEADOWGROVE4230.00 230KV CKT 1
FDNS	00NR	0	17SP	G15_053	TO->FROM	GR ISLD-LNX3345.00 - HOLT.CO3 345.00 345KV CKT 1	720	720	0.06449	132.9558	RAUN - SUB 3451 FT CAL 345KV CKT 1
FDNS	00NR	0	17SP	G15_053	TO->FROM	GR ISLD-LNX3345.00 - HOLT.CO3 345.00 345KV CKT 1	720	720	0.06449	132.9558	RAUN - SUB 3451 FT CAL 345KV CKT 1
FDNS	00NR	0	17SP	G15_053	TO->FROM	GR ISLD-LNX3345.00 - HOLT.CO3 345.00 345KV CKT 1	720	720	0.05676	132.9142	CENTER - JAMESTOWN 345KV CKT 1
FDNS	00NR	0	17SP	G15_053	TO->FROM	GR ISLD-LNX3345.00 - HOLT.CO3 345.00 345KV CKT 1	720	720	0.05608	132.7255	LETCHER - SIOUX FALLS 230KV CKT 1
FDNS	00NR	0	17SP	G15_053	TO->FROM	GR ISLD-LNX3345.00 - HOLT.CO3 345.00 345KV CKT 1	720	720	0.0568	132.6387	GEN344225 1-1CAL G1 25.000
FDNS	00NR	0	17SP	G15_053	TO->FROM	GR ISLD-LNX3345.00 - HOLT.CO3 345.00 345KV CKT 1	720	720	0.0568	132.5268	GEN635024 4-WALTER SCOTT UNIT 4
FDNS	00NR	0	17SP	G15_053	TO->FROM	GR ISLD-LNX3345.00 - HOLT.CO3 345.00 345KV CKT 1	720	720	0.0568	132.4226	GEN337911 1-ARKANSAS NUCLEAR ONE UNIT #2
FDNS	00NR	0	17SP	G15_053	TO->FROM	GR ISLD-LNX3345.00 - HOLT.CO3 345.00 345KV CKT 1	720	720	0.0568	132.3742	GEN336153 1-WATERFORD UNIT#3
FDNS	00NR	0	17SP	G15_053	TO->FROM	GR ISLD-LNX3345.00 - HOLT.CO3 345.00 345KV CKT 1	720	720	0.05678	132.3654	BISON 3 345.00 - BUFFALO 345KV CKT 1
FDNS	00NR	0	17SP	G15_053	TO->FROM	GR ISLD-LNX3345.00 - HOLT.CO3 345.00 345KV CKT 1	720	720	0.04289	132.3519	GRAND ISLAND - SWEETWATER 345KV CKT 1
FDNS	00NR	0	17SP	G15_053	TO->FROM	GR ISLD-LNX3345.00 - HOLT.CO3 345.00 345KV CKT 1	720	720	0.0568	131.9888	GEN635023 3-WALTER SCOTT UNIT 3
FDNS	00NR	0	17SP	G15_053	TO->FROM	GR ISLD-LNX3345.00 - HOLT.CO3 345.00 345KV CKT 1	720	720	0.05589	131.9463	SPLIT ROCK - WHITE 345KV CKT 1
FDNS	00NR	0	17SP	G15_053	TO->FROM	GR ISLD-LNX3345.00 - HOLT.CO3 345.00 345KV CKT 1	720	720	0.05589	131.9463	SPLIT ROCK - WHITE 345KV CKT 1
FDNS	00NR	0	17SP	G15_053	TO->FROM	GR ISLD-LNX3345.00 - HOLT.CO3 345.00 345KV CKT 1	720	720	0.0568	131.9415	GEN335831 1-RIVERBEND UNIT#1
FDNS	00NR	0	17SP	G15_053	TO->FROM	GR ISLD-LNX3345.00 - HOLT.CO3 345.00 345KV CKT 1	720	720	0.0568	131.8426	GEN337910 1-ARKANSAS NUCLEAR ONE UNIT #1
FDNS	00NR	0	17SP	G15_053	TO->FROM	GR ISLD-LNX3345.00 - HOLT.CO3 345.00 345KV CKT 1	720	720	0.05703	131.7508	ARROWHEAD - ARROWHEAD 230 230KV CKT 1
FDNS	00NR	0	17SP	G15_053	TO->FROM	GR ISLD-LNX3345.00 - HOLT.CO3 345.00 345KV CKT 1	720	720	0.05658	131.6562	GROTON-LNX3 345.00 - LELAND1-LNX3345.00 345KV CKT 1
FDNS	00NR	0	17SP	G15_053	TO->FROM	GR ISLD-LNX3345.00 - HOLT.CO3 345.00 345KV CKT 1	720	720	0.05692	131.6275	FT RANDAL - SIOUX CITY 230KV CKT 1
FDNS	00NR	0	17SP	G15_053	TO->FROM	GR ISLD-LNX3345.00 - HOLT.CO3 345.00 345KV CKT 1	720	720	0.05658	131.6129	GROTON - GROTON-LNX3 345.00 345KV CKT Z
FDNS	00NR	0	17SP	G15_053	TO->FROM	GR ISLD-LNX3345.00 - HOLT.CO3 345.00 345KV CKT 1	720	720	0.05658	131.612	P12:345:UMZB:# 109 #: LOS GRT IN ND. LOS GRT
FDNS	00NR	0	17SP	G15_053	TO->FROM	GR ISLD-LNX3345.00 - HOLT.CO3 345.00 345KV CKT 1	720	720	0.05658	131.5963	LELAND OLDS - LELAND1-LNX3345.00 345KV CKT Z
FDNS	00NR	0	17SP	G15_053	TO->FROM	GR ISLD-LNX3345.00 - HOLT.CO3 345.00 345KV CKT 1	720	720	0.0568	131.5476	GEN640010 1-GERALD GENTLEMAN STATION UNIT 1
FDNS	00NR	0	17SP	G15_053	TO->FROM	GR ISLD-LNX3345.00 - HOLT.CO3 345.00 345KV CKT 1	720	720	0.05639	131.5162	HANLON - SIOUX FALLS 230KV CKT 1
FDNSLock	00NR	0	17SP	G15_053	TO->FROM	GR ISLD-LNX3345.00 - HOLT.CO3 345.00 345KV CKT 1	720	720	0.05629	131.5045	P12:115:NPPD:1091:VALENTN7:MISSION7:BTB
FDNS	00NR	0	17SP	G15_053	TO->FROM	GR ISLD-LNX3345.00 - HOLT.CO3 345.00 345KV CKT 1	720	720	0.05764	131.4818	GERALD GENTLEMAN STATION - KEYSTONE 345KV CKT 1
FDNS	00NR	0	17SP	G15_053	TO->FROM	GR ISLD-LNX3345.00 - HOLT.CO3 345.00 345KV CKT 1	720	720	0.05747	131.4797	HAZLETON - MITCHLCO3 345.00 345KV CKT 1
FDNS	00NR	0	17SP	G15_053	TO->FROM	GR ISLD-LNX3345.00 - HOLT.CO3 345.00 345KV CKT 1	720	720	0.0568	131.3441	ALEXMRES3 345.00 - BISON 3 345.00 345KV CKT 1
FDNS	00NR	0	17SP	G15_053	TO->FROM	GR ISLD-LNX3345.00 - HOLT.CO3 345.00 345KV CKT 1	720	720	0.0568	131.2848	GEN337653 1-WHITE BLUFF UNIT #2
FDNS	00NR	0	17SP	G15_053	TO->FROM	GR ISLD-LNX3345.00 - HOLT.CO3 345.00 345KV CKT 1	720	720	0.0568	131.2692	GEN337652 1-WHITE BLUFF UNIT #1
FDNS	00NR	0	17SP	G15_053	TO->FROM	GR ISLD-LNX3345.00 - HOLT.CO3 345.00 345KV CKT 1	720	720	0.0568	131.2327	GEN640011 2-GERALD GENTLEMAN STATION UNIT 2
FDNS	00NR	0	17SP	G15_053	TO->FROM	GR ISLD-LNX3345.00 - HOLT.CO3 345.00 345KV CKT 1	720	720	0.05629	131.2016	MISSION - ST FRANCIS 115KV CKT 1
FDNS	00NR	0	17SP	G15_053	TO->FROM	GR ISLD-LNX3345.00 - HOLT.CO3 345.00 345KV CKT 1	720	720	0.0568	131.1837	GEN338146 1-INDEPENDENCE UNIT #2
FDNS	00NR	0	17SP	G15_053	TO->FROM	GR ISLD-LNX3345.00 - HOLT.CO3 345.00 345KV CKT 1	720	720	0.0568	131.181	GEN338143 1-INDEPENDENCE UNIT #1
FDNS	00NR	0	17SP	G15_053	TO->FROM	GR ISLD-LNX3345.00 - HOLT.CO3 345.00 345KV CKT 1	720	720	0.05678	131.1786	ELLENDALE - OAKES 230KV CKT 1
FDNS	00NR	0	17SP	G15_053	TO->FROM	GR ISLD-LNX3345.00 - HOLT.CO3 345.00 345KV CKT 1	720	720	0.05678	131.1786	ELLENDALE - OAKES 230KV CKT 1
FDNS	00NR	0	17SP	G15_053	TO->FROM	GR ISLD-LNX3345.00 - HOLT.CO3 345.00 345KV CKT 1	720	720	0.05554	131.1785	SIOUXCY-LNX3345.00 - SPLIT ROCK 345KV CKT 1
FDNS	00NR	0	17SP	G15_053	TO->FROM	GR ISLD-LNX3345.00 - HOLT.CO3 345.00 345KV CKT 1	720	720	0.05554	131.1785	SIOUXCY-LNX3345.00 - SPLIT ROCK 345KV CKT 1
FDNS	00NR	0	17SP	G15_053	TO->FROM	GR ISLD-LNX3345.00 - HOLT.CO3 345.00 345KV CKT 1	720	720	0.05708	131.1626	AS KING - EAU CLAIRE 345KV CKT 1
FDNS	00NR	0	17SP	G15_053	TO->FROM	GR ISLD-LNX3345.00 - HOLT.CO3 345.00 345KV CKT 1	720	720	0.0568	131.1409	GEN501801 1-DOLET HILLS UNIT1
FDNS	00NR	0	17SP	G15_053	TO->FROM	GR ISLD-LNX3345.00 - HOLT.CO3 345.00 345KV CKT 1	720	720	0.05554	131.1238	P12:345:UMZW:# 907 #: SC2-SR IN IA. SC2-SR 345 KV LINE
FDNS	00NR	0	17SP	G15_053	TO->FROM	GR ISLD-LNX3345.00 - HOLT.CO3 345.00 345KV CKT 1	720	720	0.05678	131.087	FORMAN - OAKES 230KV CKT 1

SOLUTION	GROUP	SCENARIO	SEASON	SOURCE	DIRECTION	MONITORED ELEMENT	RATEA (MVA)	RATEB(MVA)	TDF	TC%LOADING (% MVA)	CONTINGENCY
FDNS	00NR	0	17SP	G15_053	TO->FROM	GR ISLD-LNX3345.00 - HOLT.CO3 345.00 345KV CKT 1	720	720	0.05554	131.0841	SIOUX CITY - SIOUXCY-LNX3345.00 345KV CKT Z
FDNSLock	00NR	0	17SP	G15_053	TO->FROM	GR ISLD-LNX3345.00 - HOLT.CO3 345.00 345KV CKT 1	720	720	0.05629	131.0689	HARMONY - VALENTINE 115KV CKT 1
FDNS	00NR	0	17SP	G15_053	TO->FROM	GR ISLD-LNX3345.00 - HOLT.CO3 345.00 345KV CKT 1	720	720	0.05826	131.0686	SIDNEY - STEGALL 345KV CKT 1
FDNS	00NR	0	17SP	G15_053	TO->FROM	GR ISLD-LNX3345.00 - HOLT.CO3 345.00 345KV CKT 1	720	720	0.05629	131.0664	HARMONY - ST FRANCIS 115KV CKT 1
FDNS	00NR	0	17SP	G15_053	TO->FROM	GR ISLD-LNX3345.00 - HOLT.CO3 345.00 345KV CKT 1	720	720	0.05634	131.0516	FT RANDAL - UTICA JCT 230KV CKT 1
FDNS	00NR	0	17SP	G15_053	TO->FROM	GR ISLD-LNX3345.00 - HOLT.CO3 345.00 345KV CKT 1	720	720	0.05672	131.0475	CARPENTER - HURON 230KV CKT 1
FDNS	00NR	0	17SP	G15_053	TO->FROM	GR ISLD-LNX3345.00 - HOLT.CO3 345.00 345KV CKT 1	720	720	0.05672	130.9793	HURON - WATERTOWN 230KV CKT 2
FDNS	00NR	0	17SP	G15_053	TO->FROM	GR ISLD-LNX3345.00 - HOLT.CO3 345.00 345KV CKT 1	720	720	0.05672	130.9793	HURON - WATERTOWN 230KV CKT 2
FDNS	00NR	0	17SP	G15_053	TO->FROM	GR ISLD-LNX3345.00 - HOLT.CO3 345.00 345KV CKT 1	720	720	0.05721	130.9716	ARPIN B4 345.00 - EAU CLAIRE 345KV CKT 1
FDNS	00NR	0	17SP	G15_053	TO->FROM	GR ISLD-LNX3345.00 - HOLT.CO3 345.00 345KV CKT 1	720	720	0.05672	130.9164	CARPENTER - WATERTOWN 230KV CKT 1
FDNS	00NR	0	17SP	G15_053	TO->FROM	GR ISLD-LNX3345.00 - HOLT.CO3 345.00 345KV CKT 1	720	720	0.05672	130.9164	CARPENTER - WATERTOWN 230KV CKT 1
FDNS	00NR	0	17SP	G15_053	TO->FROM	GR ISLD-LNX3345.00 - HOLT.CO3 345.00 345KV CKT 1	720	720	0.0553	130.86	FT THOMPSON - WESSINGTON 230KV CKT 1
FDNS	00NR	0	17SP	G15_053	TO->FROM	GR ISLD-LNX3345.00 - HOLT.CO3 345.00 345KV CKT 1	720	720	0.0553	130.86	FT THOMPSON - WESSINGTON 230KV CKT 1
FDNS	00NR	0	17SP	G15_053	TO->FROM	GR ISLD-LNX3345.00 - HOLT.CO3 345.00 345KV CKT 1	720	720	0.0568	130.7962	GEN336252 1-NINEMILE POINT UNIT#5
FDNS	00NR	0	17SP	G15_053	TO->FROM	GR ISLD-LNX3345.00 - HOLT.CO3 345.00 345KV CKT 1	720	720	0.0568	130.7546	GEN501813 1-RODEMACHER UNIT 3
FDNS	00NR	0	17SP	G15_053	TO->FROM	GR ISLD-LNX3345.00 - HOLT.CO3 345.00 345KV CKT 1	720	720	0.05645	130.7522	PAHOJA - SIOUX FALLS 230KV CKT 1
FDNS	00NR	0	17SP	G15_053	TO->FROM	GR ISLD-LNX3345.00 - HOLT.CO3 345.00 345KV CKT 1	720	720	0.0521	130.7281	P12:115:NPPD:WAPA6:FTRANDL7:ONEILL 7:BTB
FDNS	00NR	0	17SP	G15_053	TO->FROM	GR ISLD-LNX3345.00 - HOLT.CO3 345.00 345KV CKT 1	720	720	0.0521	130.7281	P12:115:UMZB:# 115 #: SE IN NE. FR-SE-ON
FDNS	00NR	0	17SP	G15_053	TO->FROM	GR ISLD-LNX3345.00 - HOLT.CO3 345.00 345KV CKT 1	720	720	0.05301	130.7061	GERALD GENTLEMAN STATION - SWEETWATER 345KV CKT 1
FDNS	00NR	0	17SP	G15_053	TO->FROM	GR ISLD-LNX3345.00 - HOLT.CO3 345.00 345KV CKT 1	720	720	0.05747	130.696	ADAMS - MITCHLCO3 345.00 345KV CKT 1
FDNS	00NR	0	17SP	G15_053	TO->FROM	GR ISLD-LNX3345.00 - HOLT.CO3 345.00 345KV CKT 1	720	720	0.0521	130.6873	FT RANDAL - SPENCER 115KV CKT 1
FDNS	00NR	0	17SP	G15_053	TO->FROM	GR ISLD-LNX3345.00 - HOLT.CO3 345.00 345KV CKT 1	720	720	0.0568	130.6593	GEN336831 1-BAXTER WILSON SES
FDNS	00NR	0	17SP	G15_053	TO->FROM	GR ISLD-LNX3345.00 - HOLT.CO3 345.00 345KV CKT 1	720	720	0.0568	130.6466	GEN336251 1-NINEMILE POINT UNIT#4
FDNSLock	00NR	0	17SP	G15_053	TO->FROM	GR ISLD-LNX3345.00 - HOLT.CO3 345.00 345KV CKT 1	720	720	0.05629	130.6365	AINSWORTH - VALENTINE 115KV CKT 1
FDNS	00NR	0	17SP	G15_053	TO->FROM	GR ISLD-LNX3345.00 - HOLT.CO3 345.00 345KV CKT 1	720	720	0.0521	130.5966	ONEILL - SPENCER 115KV CKT 1
FDNS	00NR	0	17SP	G15_053	TO->FROM	GR ISLD-LNX3345.00 - HOLT.CO3 345.00 345KV CKT 1	720	720	0.0568	130.5874	CNTSHNT3 345.00 - PRAIRIE3 345.00 345KV CKT 1
FDNS	00NR	0	17SP	G15_053	TO->FROM	GR ISLD-LNX3345.00 - HOLT.CO3 345.00 345KV CKT 1	720	720	0.0568	130.5722	GEN337041 1-GERALD ANDRUS
FDNS	00NR	0	17SP	G15_053	TO->FROM	GR ISLD-LNX3345.00 - HOLT.CO3 345.00 345KV CKT 1	720	720	0.0568	130.5555	GEN335206 1-NELSON UNIT 6
FDNS	00NR	0	17SP	G15_053	TO->FROM	GR ISLD-LNX3345.00 - HOLT.CO3 345.00 345KV CKT 1	720	720	0.0568	130.5309	GEN344897 4-1LAB G4 20.000
FDNS	00NR	0	17SP	G15_053	TO->FROM	GR ISLD-LNX3345.00 - HOLT.CO3 345.00 345KV CKT 1	720	720	0.0568	130.5275	GEN344894 1-1LAB G1 20.000
FDNS	00NR	0	17SP	G15_053	TO->FROM	GR ISLD-LNX3345.00 - HOLT.CO3 345.00 345KV CKT 1	720	720	0.0568	130.5274	GEN344896 3-1LAB G3 20.000
FDNS	00NR	0	17SP	G15_053	TO->FROM	GR ISLD-LNX3345.00 - HOLT.CO3 345.00 345KV CKT 1	720	720	0.07691	130.5252	HOSKINS - SHELL CREEK 345KV CKT 1
FDNS	00NR	0	17SP	G15_053	TO->FROM	GR ISLD-LNX3345.00 - HOLT.CO3 345.00 345KV CKT 1	720	720	0.05708	130.4853	SIDNEY - SIDNEY2-LNX3345.00 345KV CKT Z
FDNS	00NR	0	17SP	G15_053	TO->FROM	GR ISLD-LNX3345.00 - HOLT.CO3 345.00 345KV CKT 1	720	720	0.05708	130.4839	G15094_T 345.00 - SIDNEY2-LNX3345.00 345KV CKT 1
FDNS	00NR	0	17SP	G15_053	TO->FROM	GR ISLD-LNX3345.00 - HOLT.CO3 345.00 345KV CKT 1	720	720	0.0568	130.4809	FORMAN - HANKINSON 230KV CKT 1
FDNS	00NR	0	17SP	G15_053	TO->FROM	GR ISLD-LNX3345.00 - HOLT.CO3 345.00 345KV CKT 1	720	720	0.05725	130.4733	ADAMS - PLEASANT VALLEY 345KV CKT 1
FDNS	00NR	0	17SP	G15_053	TO->FROM	GR ISLD-LNX3345.00 - HOLT.CO3 345.00 345KV CKT 1	720	720	0.0568	130.4727	GEN344895 2-1LAB G2 20.000
FDNS	00NR	0	17SP	G15_053	TO->FROM	GR ISLD-LNX3345.00 - HOLT.CO3 345.00 345KV CKT 1	720	720	0.0568	130.461	GEN345670 1-1RUSH G1 18.000
FDNS	00NR	0	17SP	G15_053	TO->FROM	GR ISLD-LNX3345.00 - HOLT.CO3 345.00 345KV CKT 1	720	720	0.0568	130.4607	GEN345671 2-1RUSH G2 18.000
FDNS	00NR	0	17SP	G15_053	TO->FROM	GR ISLD-LNX3345.00 - HOLT.CO3 345.00 345KV CKT 1	720	720	0.05729	130.431	RASMUSN - UTICA JCT 230KV CKT 1
FDNS	00NR	0	17SP	G15_053	TO->FROM	GR ISLD-LNX3345.00 - HOLT.CO3 345.00 345KV CKT 1	720	720	0.05882	130.4055	GRIMES - LEHIGH 345KV CKT 1
FDNS	00NR	0	17SP	G15_053	TO->FROM	GR ISLD-LNX3345.00 - HOLT.CO3 345.00 345KV CKT 1	720	720	0.0568	130.4001	GEN501812 1-RODEMACHER UNIT 2
FDNS	00NR	0	17SP	G15_053	TO->FROM	GR ISLD-LNX3345.00 - HOLT.CO3 345.00 345KV CKT 1	720	720	0.05645	130.3955	EAGLE 4 230.00 - PAHOJA 230KV CKT 1
FDNS	00NR	0	17SP	G15_053	TO->FROM	GR ISLD-LNX3345.00 - HOLT.CO3 345.00 345KV CKT 1	720	720	0.0568	130.3774	GEN334440 1-SABINE UNIT 4
FDNS	00NR	0	17SP	G15_053	TO->FROM	GR ISLD-LNX3345.00 - HOLT.CO3 345.00 345KV CKT 1	720	720	0.0568	130.3431	GEN563222 1-G15088_3 0.6900
FDNS	00NR	0	17SP	G15_053	TO->FROM	GR ISLD-LNX3345.00 - HOLT.CO3 345.00 345KV CKT 1	720	720	0.05729	130.2798	RASMUSN - SIOUX CITY 230KV CKT 1
FDNS	00NR	0	17SP	G15_053	TO->FROM	GR ISLD-LNX3345.00 - HOLT.CO3 345.00 345KV CKT 1	720	720	0.0568	130.2216	GEN336191 1-LITTLE GYPSY UNIT#3
FDNS	00NR	0	17SP	G15_053	TO->FROM	GR ISLD-LNX3345.00 - HOLT.CO3 345.00 345KV CKT 1	720	720	0.05724	130.2052	LAKEFIELD 3 - NOBLES 345KV CKT 1
FDNS	00NR	0	17SP	G15_053	TO->FROM	GR ISLD-LNX3345.00 - HOLT.CO3 345.00 345KV CKT 1	720	720	0.05478	130.1874	DIXONCO 230.00 - HOSKINS 230KV CKT 1
FDNS	00NR	0	17SP	G15_053	TO->FROM	GR ISLD-LNX3345.00 - HOLT.CO3 345.00 345KV CKT 1	720	720	0.05692	130.1689	RAUN - SIOUX CITY 345KV CKT 1
FDNS	00NR	0	17SP	G15_053	TO->FROM	GR ISLD-LNX3345.00 - HOLT.CO3 345.00 345KV CKT 1	720	720	0.05692	130.1689	RAUN - SIOUX CITY 345KV CKT 1
FDNS	00NR	0	17SP	G15_053	TO->FROM	GR ISLD-LNX3345.00 - HOLT.CO3 345.00 345KV CKT 1	720	720	0.05399	130.1686	GERALD GENTLEMAN STATION - SWEETWATER 345KV CKT 2
FDNS	00NR	0	17SP	G15_053	TO->FROM	GR ISLD-LNX3345.00 - HOLT.CO3 345.00 345KV CKT 1	720	720	0.0568	130.1584	GEN641089 2-ENERGY CENTER 2
FDNS	00NR	0	17SP	G15_053	TO->FROM	GR ISLD-LNX3345.00 - HOLT.CO3 345.00 345KV CKT 1	720	720	0.0568	130.1576	GEN338388 1-1PLUM PT U1 23.000
FDNS	00NR	0	17SP	G15_053	TO->FROM	GR ISLD-LNX3345.00 - HOLT.CO3 345.00 345KV CKT 1	720	720	0.0568	130.1417	GEN336801 1-BAXTER WILSON UNIT #1
FDNS	00NR	0	17SP	G15_053	TO->FROM	GR ISLD-LNX3345.00 - HOLT.CO3 345.00 345KV CKT 1	720	720	0.0568	130.1167	GEN335614 1-WILLOW GLENN UNIT#4
FDNS	00NR	0	17SP	G15_053	TO->FROM	GR ISLD-LNX3345.00 - HOLT.CO3 345.00 345KV CKT 1	720	720	0.0568	130.109	GEN334441 1-SABINE UNIT 5
FDNS	00NR	0	17SP	G15_053	TO->FROM	GR ISLD-LNX3345.00 - HOLT.CO3 345.00 345KV CKT 1	720	720	0.0568	130.1016	GEN336464 1-MICHOUD UNIT #3
FDNS	00NR	0	17SP	G15_053	TO->FROM	GR ISLD-LNX3345.00 - HOLT.CO3 345.00 345KV CKT 1	720	720	0.05683	130.0948	ALEXMRES3 345.00 - WAITE PARK 345KV CKT 1
FDNS	00NR	0	17SP	G15_053	TO->FROM	GR ISLD-LNX3345.00 - HOLT.CO3 345.00 345KV CKT 1	720	720	0.05741	130.0928	KOSSUTH 3 345.00 - OBRIEN 3 345.00 345KV CKT 1
FDNS	00NR	0	17SP	G15_053	TO->FROM	GR ISLD-LNX3345.00 - HOLT.CO3 345.00 345KV CKT 1	720	720	0.0568	130.0884	GEN335204 1-NELSON UNIT 4
FDNS	00NR	0	17SP	G15_053	TO->FROM	GR ISLD-LNX3345.00 - HOLT.CO3 345.00 345KV CKT 1	720	720	0.06424	130.0811	COLUMEAST - SHELL CREEK 345KV CKT 1
FDNS	00NR	0	17SP	G15_053	TO->FROM	GR ISLD-LNX3345.00 - HOLT.CO3 345.00 345KV CKT 1	720	720	0.05706	130.0756	BROOKING COUNTY - LYON COUNTY 345KV CKT 1
FDNS	00NR	0	17SP	G15_053	TO->FROM	GR ISLD-LNX3345.00 - HOLT.CO3 345.00 345KV CKT 1	720	720	0.05681	130.0688	GLENBORO SOUTH - RUGBY 230KV CKT 1
FDNS	00NR	0	17SP	G15_053	TO->FROM	GR ISLD-LNX3345.00 - HOLT.CO3 345.00 345KV CKT 1	720	720	0.05741	130.0591	KOSSUTH 3 345.00 - WEBSTER 345KV CKT 1
FDNS	00NR	0	17SP	G15_053	TO->FROM	GR ISLD-LNX3345.00 - HOLT.CO3 345.00 345KV CKT 1	720	720	0.05679	130.0431	CENTER - COYOTE 345KV CKT 1
FDNS	00NR	0	17SP	G15_053	TO->FROM	GR ISLD-LNX3345.00 - HOLT.CO3 345.00 345KV CKT 1	720	720	0.05682	130.0358	BLAIR - GRANITE FALLS 230KV CKT 1
FDNS	00NR	0	17SP	G15_053	TO->FROM	GR ISLD-LNX3345.00 - HOLT.CO3 345.00 345KV CKT 1	720	720	0.05682	130.0358	BLAIR - GRANITE FALLS 230KV CKT 1
FDNS	00NR	0	17SP	G15_053	TO->FROM	GR ISLD-LNX3345.00 - HOLT.CO3 345.00 345KV CKT 1	720	720	0.06435	129.9869	COLUMEAST - NW68TH & HOLDREGE 345KV CKT 1
FDNS	00NR	0	17SP	G15_053	TO->FROM	GR ISLD-LNX3345.00 - HOLT.CO3 345.00 345KV CKT 1	720	720	0.06435	129.9869	COLUMEAST - NW68TH & HOLDREGE 345KV CKT 1
FDNS	00NR	0	17SP	G15_053	TO->FROM	GR ISLD-LNX3345.00 - HOLT.CO3 345.00 345KV CKT 1	720	720	0.05973	129.9757	STEGALL - STEGALL TRANSFORMER 230KV CKT 1
FDNS	00NR	0	17SP	G15_053	TO->FROM	GR ISLD-LNX3345.00 - HOLT.CO3 345.00 345KV CKT 1	720	720	0.05973	129.954	P13:230-345:NPPD:STEGALL3:KV3A
FDNS	00NR	0	17SP	G15_053	TO->FROM	GR ISLD-LNX3345.00 - HOLT.CO3 345.00 345KV CKT 1	720	720	0.05973	129.9444	STEGALL (SGQ KV3A) 345/230/13.8KV TRANSFORMER CKT 1
FDNS	00NR	0	17SP	G15_053	TO->FROM	GR ISLD-LNX3345.00 - HOLT.CO3 345.00 345KV CKT 1	720	720	0.0568	129.932	GEN334433 1-SABINE UNIT 3
FDNS	00NR	0	17SP	G15_053	TO->FROM	GR ISLD-LNX3345.00 - HOLT.CO3 345.00 345KV CKT 1	720	720	0.05711	129.9294	BYRON - NORTH ROCHESTER 345KV CKT 1
FDNS	00NR	0	17SP	G15_053	TO->FROM	GR ISLD-LNX3345.00 - HOLT.CO3 345.00 345KV CKT 1	720	720	0.05711	129.8959	G14-059T 230.00 - OGALLALA 230KV CKT 1
FDNS	00NR	0	17SP	G15_053	TO->FROM	GR ISLD-LNX3345.00 - HOLT.CO3 345.00 345KV CKT 1	720	720	0.0616	129.8863	STEGALL-LNX3230.00 - WAYSIDE 230KV CKT 1
FDNS	00NR	0	17SP	G15_053	TO->FROM	GR ISLD-LNX3345.00 - HOLT.CO3 345.00 345KV CKT 1	720	720	0.0562	129.8852	MENNO JCT - TRIPP JCT 115KV CKT 1
FDNS	00NR	0	17SP	G15_053	TO->FROM	GR ISLD-LNX3345.00 - HOLT.CO3 345.00 345KV CKT 1	720	720	0.0568	129.879	GEN629075 1-OTTUMWA GENERATOR FOR OTTUMWA UNIT NO 1

SOLUTION	GROUP	SCENARIO	SEASON	SOURCE	DIRECTION	MONITORED ELEMENT	RATEA (MVA)	RATEB(MVA)	TDF	TC%LOADING (% MVA)	CONTINGENCY
FDNS	00NR	0	17SP	G15_053	TO->FROM	GR ISLD-LNX3345.00 - HOLT.CO3 345.00 345KV CKT 1	720	720	0.0568	129.8763	GEN336222 1-LITTLE GYPSY UNIT#2
FDNS	00NR	0	17SP	G15_053	TO->FROM	GR ISLD-LNX3345.00 - HOLT.CO3 345.00 345KV CKT 1	720	720	0.0616	129.8744	STEGALL - STEGALL-LNX3230.00 230KV CKT Z
FDNS	00NR	0	17SP	G15_053	TO->FROM	GR ISLD-LNX3345.00 - HOLT.CO3 345.00 345KV CKT 1	720	720	0.0568	129.8681	P13:230-345:NPPD:NUCOR-1
FDNS	00NR	0	17SP	G15_053	TO->FROM	GR ISLD-LNX3345.00 - HOLT.CO3 345.00 345KV CKT 1	720	720	0.0568	129.8656	P12:115:UMZW:# 162 #: NEL IN ND. FAULT ON ML-NEL-MX-GA 115 KV
FDNS	00NR	0	17SP	G15_053	TO->FROM	GR ISLD-LNX3345.00 - HOLT.CO3 345.00 345KV CKT 1	720	720	0.0568	129.8586	GEN303007 1-1BC2 U2
FDNS	00NR	0	17SP	G15_053	TO->FROM	GR ISLD-LNX3345.00 - HOLT.CO3 345.00 345KV CKT 1	720	720	0.0568	129.8521	GEN303006 1-1BC2 U1
FDNS	00NR	0	17SP	G15_053	TO->FROM	GR ISLD-LNX3345.00 - HOLT.CO3 345.00 345KV CKT 1	720	720	0.05657	129.8079	FT THOMPSON - HURON 230KV CKT 1
FDNS	00NR	0	17SP	G15_053	TO->FROM	GR ISLD-LNX3345.00 - HOLT.CO3 345.00 345KV CKT 1	720	720	0.05657	129.8079	FT THOMPSON - HURON 230KV CKT 1
FDNS	00NR	0	17SP	G15_053	TO->FROM	GR ISLD-LNX3345.00 - HOLT.CO3 345.00 345KV CKT 1	720	720	0.05657	129.8079	FT THOMPSON - HURON 230KV CKT 2
FDNS	00NR	0	17SP	G15_053	TO->FROM	GR ISLD-LNX3345.00 - HOLT.CO3 345.00 345KV CKT 1	720	720	0.05657	129.8079	FT THOMPSON - HURON 230KV CKT 2
FDNS	00NR	0	17SP	G15_053	TO->FROM	GR ISLD-LNX3345.00 - HOLT.CO3 345.00 345KV CKT 1	720	720	0.0568	129.7903	GEN336152 1-WATERFORD UNIT#2
FDNS	00NR	0	17SP	G15_053	TO->FROM	GR ISLD-LNX3345.00 - HOLT.CO3 345.00 345KV CKT 1	720	720	0.0568	129.7898	GEN336151 1-WATERFORD UNIT#1
FDNS	00NR	0	17SP	G15_053	TO->FROM	GR ISLD-LNX3345.00 - HOLT.CO3 345.00 345KV CKT 1	720	720	0.0568	129.7763	GEN303008 1-1BC2 U3
FDNS	00NR	0	17SP	G15_053	TO->FROM	GR ISLD-LNX3345.00 - HOLT.CO3 345.00 345KV CKT 1	720	720	0.05679	129.768	GARRISON - JAMES TOWN 230KV CKT 1
FDNS	00NR	0	17SP	G15_053	TO->FROM	GR ISLD-LNX3345.00 - HOLT.CO3 345.00 345KV CKT 1	720	720	0.0568	129.7616	GEN336170 1-GULF OXY U4
FDNS	00NR	0	17SP	G15_053	TO->FROM	GR ISLD-LNX3345.00 - HOLT.CO3 345.00 345KV CKT 1	720	720	0.0562	129.7547	MENNO JCT - UTICA 115KV CKT 1
FDNS	00NR	0	17SP	G15_053	TO->FROM	GR ISLD-LNX3345.00 - HOLT.CO3 345.00 345KV CKT 1	720	720	0.05684	129.7464	HANKINSON - WAHPETON 230KV CKT 1
FDNS	00NR	0	17SP	G15_053	TO->FROM	GR ISLD-LNX3345.00 - HOLT.CO3 345.00 345KV CKT 1	720	720	0.05691	129.7276	NORTH ROCHESTER - PRAIRIE ISLAND 345KV CKT 1
FDNS	00NR	0	17SP	G15_053	TO->FROM	GR ISLD-LNX3345.00 - HOLT.CO3 345.00 345KV CKT 1	720	720	0.06352	129.7224	PETERSBRG.N7115.00 - PETERSBURG 115KV CKT Z1
FDNS	00NR	0	17SP	G15_053	TO->FROM	GR ISLD-LNX3345.00 - HOLT.CO3 345.00 345KV CKT 1	720	720	0.05685	129.7193	APPLEDORN 4 230.00 - WATERTOWN 230KV CKT 1
FDNS	00NR	0	17SP	G15_053	TO->FROM	GR ISLD-LNX3345.00 - HOLT.CO3 345.00 345KV CKT 1	720	720	0.05685	129.7193	APPLEDORN 4 230.00 - WATERTOWN 230KV CKT 1
FDNS	00NR	0	17SP	G15_053	TO->FROM	GR ISLD-LNX3345.00 - HOLT.CO3 345.00 345KV CKT 1	720	720	0.0562	129.713	P12:115:UMZZ:# 237 #: MEN IN SD. MENNO JUNCTION IS A TAP (UJ-MEN-TP).
FDNS	00NR	0	17SP	G15_053	TO->FROM	GR ISLD-LNX3345.00 - HOLT.CO3 345.00 345KV CKT 1	720	720	0.06352	129.6992	P12:115:NPPD:1168B:ALBION 7:PETERSBRG.N7:BTB
FDNS	00NR	0	17SP	G15_053	TO->FROM	GR ISLD-LNX3345.00 - HOLT.CO3 345.00 345KV CKT 1	720	720	0.05682	129.6955	FERGSFL4 230.00 - WAHPETON 230KV CKT 1
FDNS	00NR	0	17SP	G15_053	TO->FROM	GR ISLD-LNX3345.00 - HOLT.CO3 345.00 345KV CKT 1	720	720	0.05679	129.681	FARGO - JAMES TOWN 230KV CKT 1
FDNS	00NR	0	17SP	G15_053	TO->FROM	GR ISLD-LNX3345.00 - HOLT.CO3 345.00 345KV CKT 1	720	720	0.05708	129.6758	G15094_T 345.00 - LARAMIE RIVER 345KV CKT 1
FDNS	00NR	0	17SP	G15_053	TO->FROM	GR ISLD-LNX3345.00 - HOLT.CO3 345.00 345KV CKT 1	720	720	0.0568	129.6756	GEN501811 1-RODEMACHER UNIT 1
FDNS	00NR	0	17SP	G15_053	TO->FROM	GR ISLD-LNX3345.00 - HOLT.CO3 345.00 345KV CKT 1	720	720	0.05693	129.6691	ARKANSAS NUCLEAR ONE - FT SMITH 500KV CKT 1
FDNS	00NR	0	17SP	G15_053	TO->FROM	GR ISLD-LNX3345.00 - HOLT.CO3 345.00 345KV CKT 1	720	720	0.05693	129.6691	ARKANSAS NUCLEAR ONE - FT SMITH 500KV CKT 1
FDNS	00NR	0	17SP	G15_053	TO->FROM	GR ISLD-LNX3345.00 - HOLT.CO3 345.00 345KV CKT 1	720	720	0.05685	129.6632	APPLEDORN 4 230.00 - GRANITE FALLS 230KV CKT 1
FDNS	00NR	0	17SP	G15_053	TO->FROM	GR ISLD-LNX3345.00 - HOLT.CO3 345.00 345KV CKT 1	720	720	0.05685	129.6632	APPLEDORN 4 230.00 - GRANITE FALLS 230KV CKT 1
FDNS	00NR	0	17SP	G15_053	TO->FROM	GR ISLD-LNX3345.00 - HOLT.CO3 345.00 345KV CKT 1	720	720	0.05711	129.6631	BYRON - PLEASANT VALLEY 345KV CKT 1
FDNS	00NR	0	17SP	G15_053	TO->FROM	GR ISLD-LNX3345.00 - HOLT.CO3 345.00 345KV CKT 1	720	720	0.06352	129.653	ALBION - PETERSBURG 115KV CKT 1
FDNS	00NR	0	17SP	G15_053	TO->FROM	GR ISLD-LNX3345.00 - HOLT.CO3 345.00 345KV CKT 1	720	720	0.0568	129.6381	P13:115-230:NPPD:NUCOR-3
FDNS	00NR	0	17SP	G15_053	TO->FROM	GR ISLD-LNX3345.00 - HOLT.CO3 345.00 345KV CKT 1	720	720	0.05679	129.6381	FARGO - JAMES TOWN 230KV CKT 2
FDNS	00NR	0	17SP	G15_053	TO->FROM	GR ISLD-LNX3345.00 - HOLT.CO3 345.00 345KV CKT 1	720	720	0.05749	129.6266	DENISON - SIOUX CITY 230KV CKT 1
FDNS	00NR	0	17SP	G15_053	TO->FROM	GR ISLD-LNX3345.00 - HOLT.CO3 345.00 345KV CKT 1	720	720	0.0568	129.5995	P13:230:UMZW:# 2218 #: FP IN MT. LOSS OF TRANSFORMER (AT2).
FDNS	00NR	0	17SP	G15_053	TO->FROM	GR ISLD-LNX3345.00 - HOLT.CO3 345.00 345KV CKT 1	720	720	0.05703	129.5894	ARPIN B3 345.00 - ROCKY RN B8 345.00 345KV CKT 1
FDNS	00NR	0	17SP	G15_053	TO->FROM	GR ISLD-LNX3345.00 - HOLT.CO3 345.00 345KV CKT 1	720	720	0.05076	129.5716	P12:115:NPPD:1164:ONEILL 7:JEFFREY9:BTB
FDNS	00NR	0	17SP	G15_053	TO->FROM	GR ISLD-LNX3345.00 - HOLT.CO3 345.00 345KV CKT 1	720	720	0.0568	129.5522	GEN334071 1-LEWIS CREEK 2
FDNS	00NR	0	17SP	G15_053	TO->FROM	GR ISLD-LNX3345.00 - HOLT.CO3 345.00 345KV CKT 1	720	720	0.0568	129.5466	GEN334070 1-LEWIS CREEK 1
FDNS	00NR	0	17SP	G15_053	TO->FROM	GR ISLD-LNX3345.00 - HOLT.CO3 345.00 345KV CKT 1	720	720	0.0568	129.5428	GEN337766 1-TRACTEBEL UNIT S1
FDNS	00NR	0	17SP	G15_053	TO->FROM	GR ISLD-LNX3345.00 - HOLT.CO3 345.00 345KV CKT 1	720	720	0.0568	129.5165	P13:115-345:NPPD:NUCOR-2
FDNS	00NR	0	17SP	G15_053	TO->FROM	GR ISLD-LNX3345.00 - HOLT.CO3 345.00 345KV CKT 1	720	720	0.05722	129.5142	PALXFRASBTHI
FDNS	00NR	0	17SP	G15_053	TO->FROM	GR ISLD-LNX3345.00 - HOLT.CO3 345.00 345KV CKT 1	720	720	0.05722	129.514	7PALM TAP 345.00 - SUB T 345KV CKT 1
FDNS	00NR	0	17SP	G15_053	TO->FROM	GR ISLD-LNX3345.00 - HOLT.CO3 345.00 345KV CKT 1	720	720	0.05076	129.5074	CLEARWATER - ONEILL 115KV CKT 1
FDNS	00NR	0	17SP	G15_053	TO->FROM	GR ISLD-LNX3345.00 - HOLT.CO3 345.00 345KV CKT 1	720	720	0.0568	129.4982	GEN501910 1-ACADIA UNIT ST1
FDNS	00NR	0	17SP	G15_053	TO->FROM	GR ISLD-LNX3345.00 - HOLT.CO3 345.00 345KV CKT 1	720	720	0.05719	129.4883	NOBLES - SPLIT ROCK 345KV CKT 1
FDNS	00NR	0	17SP	G15_053	TO->FROM	GR ISLD-LNX3345.00 - HOLT.CO3 345.00 345KV CKT 1	720	720	0.05737	129.4778	P12:115:NPPD:WAPA1:CHADRON7:BOXBUTE7:BTB
FDNS	00NR	0	17SP	G15_053	TO->FROM	GR ISLD-LNX3345.00 - HOLT.CO3 345.00 345KV CKT 1	720	720	0.0568	129.4766	GEN562596 1-G14_059_3 0.6900
FDNS	00NR	0	17SP	G15_053	TO->FROM	GR ISLD-LNX3345.00 - HOLT.CO3 345.00 345KV CKT 1	720	720	0.05628	129.476	MT VERN - STORLA 115KV CKT 1
FDNS	00NR	0	17SP	G15_053	TO->FROM	GR ISLD-LNX3345.00 - HOLT.CO3 345.00 345KV CKT 1	720	720	0.0568	129.465	GEN345765 H-1SIOUX 2 18.000
FDNS	00NR	0	17SP	G15_053	TO->FROM	GR ISLD-LNX3345.00 - HOLT.CO3 345.00 345KV CKT 1	720	720	0.05702	129.4437	CHADRON - WAYSIDE 115KV CKT 1
FDNS	00NR	0	17SP	G15_053	TO->FROM	GR ISLD-LNX3345.00 - HOLT.CO3 345.00 345KV CKT 1	720	720	0.05702	129.4437	P13:115-230:NPPD:WAYSIDE4:T1
FDNS	00NR	0	17SP	G15_053	TO->FROM	GR ISLD-LNX3345.00 - HOLT.CO3 345.00 345KV CKT 1	720	720	0.05702	129.4411	WAYSIDE (WAYSIDE T1) 230/115/13.8KV TRANSFORMER CKT 1
FDNS	00NR	0	17SP	G15_053	TO->FROM	GR ISLD-LNX3345.00 - HOLT.CO3 345.00 345KV CKT 1	720	720	0.06352	129.4326	NELIGH - PETERSBRG.N7115.00 115KV CKT 1
FDNS	00NR	0	17SP	G15_053	TO->FROM	GR ISLD-LNX3345.00 - HOLT.CO3 345.00 345KV CKT 1	720	720	0.0568	129.4305	GEN337764 1-TRACTEBEL UNIT C1
FDNS	00NR	0	17SP	G15_053	TO->FROM	GR ISLD-LNX3345.00 - HOLT.CO3 345.00 345KV CKT 1	720	720	0.0568	129.4305	GEN337765 1-TRACTEBEL UNIT C2
FDNS	00NR	0	17SP	G15_053	TO->FROM	GR ISLD-LNX3345.00 - HOLT.CO3 345.00 345KV CKT 1	720	720	0.0568	129.4182	GRAND GULF 500/22.0KV TRANSFORMER CKT 1
FDNS	00NR	0	17SP	G15_053	TO->FROM	GR ISLD-LNX3345.00 - HOLT.CO3 345.00 345KV CKT 1	720	720	0.05692	129.4022	FRANKS - HUBEN 345KV CKT 1
FDNS	00NR	0	17SP	G15_053	TO->FROM	GR ISLD-LNX3345.00 - HOLT.CO3 345.00 345KV CKT 1	720	720	0.05737	129.3835	CHADRON - DUNLAP 115KV CKT 1
FDNS	00NR	0	17SP	G15_053	TO->FROM	GR ISLD-LNX3345.00 - HOLT.CO3 345.00 345KV CKT 1	720	720	0.0568	129.1445	GEN659118 1-LARAMIE RIVER UNIT1
FDNS	00NR	0	17SP	G15_053	TO->FROM	GR ISLD-LNX3345.00 - HOLT.CO3 345.00 345KV CKT 1	720	720	0.0568	129.0069	GEN563282 1-G15094_3 0.6900
FDNS	00NR	0	17SP	G15_053	TO->FROM	GR ISLD-LNX3345.00 - HOLT.CO3 345.00 345KV CKT 1	720	720	0.0568	128.7833	BASE CASE
FDNS	00NR	0	17SP	G15_053	TO->FROM	GR ISLD-LNX3345.00 - HOLT.CO3 345.00 345KV CKT 1	720	720	0.06992	128.7328	COLUMWEST - KELLY 230KV CKT 1
FDNS	00NR	0	17SP	G15_053	TO->FROM	GR ISLD-LNX3345.00 - HOLT.CO3 345.00 345KV CKT 1	720	720	0.0568	128.6085	GR ISLD-LNX3345.00 345KV SWITCHED SHUNT
FDNS	00NR	0	17SP	G15_053	TO->FROM	GR ISLD-LNX3345.00 - HOLT.CO3 345.00 345KV CKT 1	720	720	0.0568	128.5741	GEN645001 1-FORT CALHOUN 1
FDNS	00NR	0	17SP	G15_053	TO->FROM	GR ISLD-LNX3345.00 - HOLT.CO3 345.00 345KV CKT 1	720	720	0.05694	128.523	FT THOMPSON - OAHE 230KV CKT 1
FDNS	00NR	0	17SP	G15_053	TO->FROM	GR ISLD-LNX3345.00 - HOLT.CO3 345.00 345KV CKT 1	720	720	0.05694	128.523	FT THOMPSON - OAHE 230KV CKT 1
FDNS	00NR	0	17SP	G15_053	TO->FROM	GR ISLD-LNX3345.00 - HOLT.CO3 345.00 345KV CKT 1	720	720	0.05694	128.523	FT THOMPSON - OAHE 230KV CKT 2
FDNS	00NR	0	17SP	G15_053	TO->FROM	GR ISLD-LNX3345.00 - HOLT.CO3 345.00 345KV CKT 1	720	720	0.05694	128.523	FT THOMPSON - OAHE 230KV CKT 2
FDNS	00NR	0	17SP	G15_053	TO->FROM	GR ISLD-LNX3345.00 - HOLT.CO3 345.00 345KV CKT 1	720	720	0.05695	128.4833	FT THOMPSON - OAHE 230KV CKT 3
FDNS	00NR	0	17SP	G15_053	TO->FROM	GR ISLD-LNX3345.00 - HOLT.CO3 345.00 345KV CKT 1	720	720	0.05695	128.4833	FT THOMPSON - OAHE 230KV CKT 3
FDNS	00NR	0	17SP	G15_053	TO->FROM	GR ISLD-LNX3345.00 - HOLT.CO3 345.00 345KV CKT 1	720	720	0.05695	128.4833	FT THOMPSON - OAHE 230KV CKT 4
FDNS	00NR	0	17SP	G15_053	TO->FROM	GR ISLD-LNX3345.00 - HOLT.CO3 345.00 345KV CKT 1	720	720	0.05695	128.4833	FT THOMPSON - OAHE 230KV CKT 4
FDNS	00NR	0	17SP	G15_053	TO->FROM	GR ISLD-LNX3345.00 - HOLT.CO3 345.00 345KV CKT 1	720	720	0.0568	128.4448	FTTHOM2-LNX3345.00 345KV SWITCHED SHUNT
FDNS	00NR	0	17SP	G15_053	TO->FROM	GR ISLD-LNX3345.00 - HOLT.CO3 345.00 345KV CKT 1	720	720	0.05833	128.4156	AXTELL - PAULINE 345KV CKT 1
FDNS	00NR	0	17SP	G15_053	TO->FROM	GR ISLD-LNX3345.00 - HOLT.CO3 345.00 345KV CKT 1	720	720	0.05669	128.3602	GRAND ISLAND (GRAND.ISD T5) 230/115/13.8KV TRANSFORMER CKT 2
FDNS	00NR	0	17SP	G15_053	TO->FROM	GR ISLD-LNX3345.00 - HOLT.CO3 345.00 345KV CKT 1	720	720	0.05669	128.3602	GRAND ISLAND (GRAND.ISD T5) 230/115/13.8KV TRANSFORMER CKT 2

SOLUTION	GROUP	SCENARIO	SEASON	SOURCE	DIRECTION	MONITORED ELEMENT	RATEA (MVA)	RATEB(MVA)	TDF	TC%LOADING (% MVA)	CONTINGENCY
FDNS	00NR	0	17SP	G15_053	TO->FROM	GR ISLD-LNX3345.00 - HOLT.CO3 345.00 345KV CKT 1	720	720	0.05669	128.3578	GRAND ISLAND (GRAND.ISD T2) 230/115/13.8KV TRANSFORMER CKT 1
FDNS	00NR	0	17SP	G15_053	TO->FROM	GR ISLD-LNX3345.00 - HOLT.CO3 345.00 345KV CKT 1	720	720	0.05669	128.3578	GRAND ISLAND (GRAND.ISD T2) 230/115/13.8KV TRANSFORMER CKT 1
FDNS	00NR	0	17SP	G15_053	TO->FROM	GR ISLD-LNX3345.00 - HOLT.CO3 345.00 345KV CKT 1	720	720	0.05836	128.3033	MAXWELL - NORTH PLATTE 115KV CKT 1
FDNS	00NR	0	17SP	G15_053	TO->FROM	GR ISLD-LNX3345.00 - HOLT.CO3 345.00 345KV CKT 1	720	720	0.05687	128.2897	ANTELOP-LNX3345.00 - BRDLAND-LNX3345.00 345KV CKT 1
FDNS	00NR	0	17SP	G15_053	TO->FROM	GR ISLD-LNX3345.00 - HOLT.CO3 345.00 345KV CKT 1	720	720	0.05692	128.28	GRAND ISLAND (GI KU1B) 345/230/13.8KV TRANSFORMER CKT 2
FDNS	00NR	0	17SP	G15_053	TO->FROM	GR ISLD-LNX3345.00 - HOLT.CO3 345.00 345KV CKT 1	720	720	0.05692	128.28	GRAND ISLAND (GI KU1B) 345/230/13.8KV TRANSFORMER CKT 2
FDNS	00NR	0	17SP	G15_053	TO->FROM	GR ISLD-LNX3345.00 - HOLT.CO3 345.00 345KV CKT 1	720	720	0.05692	128.279	GRAND ISLAND (GI KU1A) 345/230/13.8KV TRANSFORMER CKT 1
FDNS	00NR	0	17SP	G15_053	TO->FROM	GR ISLD-LNX3345.00 - HOLT.CO3 345.00 345KV CKT 1	720	720	0.05692	128.279	GRAND ISLAND (GI KU1A) 345/230/13.8KV TRANSFORMER CKT 1
FDNS	00NR	0	17SP	G15_053	TO->FROM	GR ISLD-LNX3345.00 - HOLT.CO3 345.00 345KV CKT 1	720	720	0.05836	128.2493	SUB 3454 - WAGENER 345KV CKT 1
FDNS	00NR	0	17SP	G15_053	TO->FROM	GR ISLD-LNX3345.00 - HOLT.CO3 345.00 345KV CKT 1	720	720	0.05836	128.2493	SUB 3454 - WAGENER 345KV CKT 1
FDNS	00NR	0	17SP	G15_053	TO->FROM	GR ISLD-LNX3345.00 - HOLT.CO3 345.00 345KV CKT 1	720	720	0.0568	128.1978	GEN652548 5-FT RANDAL
FDNS	00NR	0	17SP	G15_053	TO->FROM	GR ISLD-LNX3345.00 - HOLT.CO3 345.00 345KV CKT 1	720	720	0.0568	128.1978	GEN652549 7-FT RANDAL
FDNS	00NR	0	17SP	G15_053	TO->FROM	GR ISLD-LNX3345.00 - HOLT.CO3 345.00 345KV CKT 1	720	720	0.0568	128.1853	GEN652547 3-FT RANDAL
FDNS	00NR	0	17SP	G15_053	TO->FROM	GR ISLD-LNX3345.00 - HOLT.CO3 345.00 345KV CKT 1	720	720	0.05701	128.1852	P12:115:UMZW:# 172 #: WI IN SD.
FDNS	00NR	0	17SP	G15_053	TO->FROM	GR ISLD-LNX3345.00 - HOLT.CO3 345.00 345KV CKT 1	720	720	0.05861	128.1808	GERALD GENTLEMAN STATION - RED WILLOW 345KV CKT 1
FDNS	00NR	0	17SP	G15_053	TO->FROM	GR ISLD-LNX3345.00 - HOLT.CO3 345.00 345KV CKT 1	720	720	0.0568	128.1766	GEN660003 3-HURON WEST PARK
FDNS	00NR	0	17SP	G15_053	TO->FROM	GR ISLD-LNX3345.00 - HOLT.CO3 345.00 345KV CKT 1	720	720	0.06032	128.1703	MINGO - RED WILLOW 345KV CKT 1
FDNS	00NR	0	17SP	G15_053	TO->FROM	GR ISLD-LNX3345.00 - HOLT.CO3 345.00 345KV CKT 1	720	720	0.06032	128.1703	MINGO - RED WILLOW 345KV CKT 1
FDNS	00NR	0	17SP	G15_053	TO->FROM	GR ISLD-LNX3345.00 - HOLT.CO3 345.00 345KV CKT 1	720	720	0.05695	128.1617	G11_051T 345.00 - WOODWARD DISTRICT EHV 345KV CKT 1
FDNS	00NR	0	17SP	G15_053	TO->FROM	GR ISLD-LNX3345.00 - HOLT.CO3 345.00 345KV CKT 1	720	720	0.0568	128.1458	GEN600020 2-ANGUS ANSON1
FDNS	00NR	0	17SP	G15_053	TO->FROM	GR ISLD-LNX3345.00 - HOLT.CO3 345.00 345KV CKT 1	720	720	0.06115	128.1417	LOUP CITY - NORTH LOUP 115KV CKT 1
FDNS	00NR	0	17SP	G15_053	TO->FROM	GR ISLD-LNX3345.00 - HOLT.CO3 345.00 345KV CKT 1	720	720	0.0568	128.1392	GEN600021 3-ANGUS ANSON2
FDNS	00NR	0	17SP	G15_053	TO->FROM	GR ISLD-LNX3345.00 - HOLT.CO3 345.00 345KV CKT 1	720	720	0.0568	128.1088	GEN600012 2-BLACK DOG GEN 2
FDNS	00NR	0	17SP	G15_053	TO->FROM	GR ISLD-LNX3345.00 - HOLT.CO3 345.00 345KV CKT 1	720	720	0.0568	128.1041	GEN590010 1-ERCOT EQUIVALENCE
FDNS	00NR	0	17SP	G15_053	TO->FROM	GR ISLD-LNX3345.00 - HOLT.CO3 345.00 345KV CKT 1	720	720	0.0568	128.0882	GEN659290 1-EDGECOL
FDNS	00NR	0	17SP	G15_053	TO->FROM	GR ISLD-LNX3345.00 - HOLT.CO3 345.00 345KV CKT 1	720	720	0.05883	128.0814	MINGO - SETAB 345KV CKT 1
FDNS	00NR	0	17SP	G15_053	TO->FROM	GR ISLD-LNX3345.00 - HOLT.CO3 345.00 345KV CKT 1	720	720	0.05883	128.0814	MINGO - SETAB 345KV CKT 1
FDNS	00NR	0	17SP	G15_053	TO->FROM	GR ISLD-LNX3345.00 - HOLT.CO3 345.00 345KV CKT 1	720	720	0.0568	128.0735	EASTDC - ERCOT EQUIVALENCE 345KV CKT 1
FDNS	00NR	0	17SP	G15_053	TO->FROM	GR ISLD-LNX3345.00 - HOLT.CO3 345.00 345KV CKT 1	720	720	0.0568	128.0735	GEN629072 4-LANSING GENERATOR FOR UNITS NO4 EIA CODE 1
FDNS	00NR	0	17SP	G15_053	TO->FROM	GR ISLD-LNX3345.00 - HOLT.CO3 345.00 345KV CKT 1	720	720	0.0568	128.0722	GEN590011 2-ERCOT EQUIVALENCE
FDNS	00NR	0	17SP	G15_053	TO->FROM	GR ISLD-LNX3345.00 - HOLT.CO3 345.00 345KV CKT 1	720	720	0.0568	128.0699	GEN300003 1-THOMAS HILL UNIT 3
FDNS	00NR	0	17SP	G15_053	TO->FROM	GR ISLD-LNX3345.00 - HOLT.CO3 345.00 345KV CKT 1	720	720	0.05698	128.0352	GRAND ISLAND (GI KU3A) 345/230/13.8KV TRANSFORMER CKT 3
FDNS	00NR	0	17SP	G15_053	TO->FROM	GR ISLD-LNX3345.00 - HOLT.CO3 345.00 345KV CKT 1	720	720	0.05698	128.0352	GRAND ISLAND (GI KU3A) 345/230/13.8KV TRANSFORMER CKT 3
FDNS	00NR	0	17SP	G15_053	TO->FROM	GR ISLD-LNX3345.00 - HOLT.CO3 345.00 345KV CKT 1	720	720	0.0568	128.0217	GEN652414 4-FT PECK
FDNS	00NR	0	17SP	G15_053	TO->FROM	GR ISLD-LNX3345.00 - HOLT.CO3 345.00 345KV CKT 1	720	720	0.0568	128.0217	GEN652415 5-FT PECK
FDNS	00NR	0	17SP	G15_053	TO->FROM	GR ISLD-LNX3345.00 - HOLT.CO3 345.00 345KV CKT 1	720	720	0.0568	128.0199	LADISH 115/13.2KV TRANSFORMER CKT 1
FDNS	00NR	0	17SP	G15_053	TO->FROM	GR ISLD-LNX3345.00 - HOLT.CO3 345.00 345KV CKT 1	720	720	0.0568	128.0124	GEN660001 2-ABERDEEN SIEBRECHT
FDNS	00NR	0	17SP	G15_053	TO->FROM	GR ISLD-LNX3345.00 - HOLT.CO3 345.00 345KV CKT 1	720	720	0.05478	127.9985	DIXONCO 230.00 - TWIN CHURCH 230KV CKT 1
FDNSLock	00NR	0	17SP	G15_053	TO->FROM	GR ISLD-LNX3345.00 - HOLT.CO3 345.00 345KV CKT 1	720	720	0.0591	127.9874	CENTRAL CITY - GRAND ISLAND 115KV CKT 1
FDNS	00NR	0	17SP	G15_053	TO->FROM	GR ISLD-LNX3345.00 - HOLT.CO3 345.00 345KV CKT 1	720	720	0.0568	127.9869	EMERY 161/18.0KV TRANSFORMER CKT 1
FDNS	00NR	0	17SP	G15_053	TO->FROM	GR ISLD-LNX3345.00 - HOLT.CO3 345.00 345KV CKT 1	720	720	0.0568	127.9678	GEN600050 1-FEP
FDNS	00NR	0	17SP	G15_053	TO->FROM	GR ISLD-LNX3345.00 - HOLT.CO3 345.00 345KV CKT 1	720	720	0.0568	127.9662	GEN652345 W-G07_023IS_2 0.6900
FDNS	00NR	0	17SP	G15_053	TO->FROM	GR ISLD-LNX3345.00 - HOLT.CO3 345.00 345KV CKT 1	720	720	0.06058	127.9535	G15088_T 345.00 - PAULINE 345KV CKT 1
FDNS	00NR	0	17SP	G15_053	TO->FROM	GR ISLD-LNX3345.00 - HOLT.CO3 345.00 345KV CKT 1	720	720	0.0568	127.9461	GEN 11104 1-J262_GEN 0.6000
FDNS	00NR	0	17SP	G15_053	TO->FROM	GR ISLD-LNX3345.00 - HOLT.CO3 345.00 345KV CKT 1	720	720	0.0568	127.9461	GEN 11108 1-J263_GEN 0.6000
FDNS	00NR	0	17SP	G15_053	TO->FROM	GR ISLD-LNX3345.00 - HOLT.CO3 345.00 345KV CKT 1	720	720	0.0568	127.925	GEN600046 1-MECST
FDNS	00NR	0	17SP	G15_053	TO->FROM	GR ISLD-LNX3345.00 - HOLT.CO3 345.00 345KV CKT 1	720	720	0.05687	127.9234	P12:345:UMZB:# 102 #: AVS BD IN ND. AVS BRD LR
FDNS	00NR	0	17SP	G15_053	TO->FROM	GR ISLD-LNX3345.00 - HOLT.CO3 345.00 345KV CKT 1	720	720	0.05687	127.9218	P12:345:UMZB:# 103 #: BD IN SD. LOSS OF LINE
FDNS	00NR	0	17SP	G15_053	TO->FROM	GR ISLD-LNX3345.00 - HOLT.CO3 345.00 345KV CKT 1	720	720	0.05687	127.9214	BRDLAND-LNX3345.00 - HURON 345KV CKT Z
FDNS	00NR	0	17SP	G15_053	TO->FROM	GR ISLD-LNX3345.00 - HOLT.CO3 345.00 345KV CKT 1	720	720	0.0568	127.9202	GEN300007 1-NEW MADRID UNIT 2
FDNS	00NR	0	17SP	G15_053	TO->FROM	GR ISLD-LNX3345.00 - HOLT.CO3 345.00 345KV CKT 1	720	720	0.05687	127.9198	BROADLAND - HURON 230KV CKT 1
FDNS	00NR	0	17SP	G15_053	TO->FROM	GR ISLD-LNX3345.00 - HOLT.CO3 345.00 345KV CKT 1	720	720	0.05687	127.9197	HURON (BD KU2A) 345/230/13.8KV TRANSFORMER CKT 1
FDNS	00NR	0	17SP	G15_053	TO->FROM	GR ISLD-LNX3345.00 - HOLT.CO3 345.00 345KV CKT 1	720	720	0.05687	127.9197	HURON (BD KU2A) 345/230/13.8KV TRANSFORMER CKT 1
FDNS	00NR	0	17SP	G15_053	TO->FROM	GR ISLD-LNX3345.00 - HOLT.CO3 345.00 345KV CKT 1	720	720	0.0568	127.9196	G830_SUB 115.00 - GRE-MCHENRY7115.00 115KV CKT 1
FDNS	00NR	0	17SP	G15_053	TO->FROM	GR ISLD-LNX3345.00 - HOLT.CO3 345.00 345KV CKT 1	720	720	0.0568	127.9178	G830_SUB 115.00 115/34.5KV TRANSFORMER CKT 1
FDNS	00NR	0	17SP	G15_053	TO->FROM	GR ISLD-LNX3345.00 - HOLT.CO3 345.00 345KV CKT 1	720	720	0.0568	127.9136	GEN300006 1-NEW MADRID UNIT 1
FDNS	00NR	0	17SP	G15_053	TO->FROM	GR ISLD-LNX3345.00 - HOLT.CO3 345.00 345KV CKT 1	720	720	0.05706	127.9045	POST ROCK (POSTROCK T1) 345/230/13.8KV TRANSFORMER CKT 1
FDNS	00NR	0	17SP	G15_053	TO->FROM	GR ISLD-LNX3345.00 - HOLT.CO3 345.00 345KV CKT 1	720	720	0.05682	127.8995	DRAYTON - LETELLIER 230KV CKT 1
FDNS	00NR	0	17SP	G15_053	TO->FROM	GR ISLD-LNX3345.00 - HOLT.CO3 345.00 345KV CKT 1	720	720	0.0568	127.8994	GEN600047 1-MECCT1
FDNS	00NR	0	17SP	G15_053	TO->FROM	GR ISLD-LNX3345.00 - HOLT.CO3 345.00 345KV CKT 1	720	720	0.0568	127.8839	GEN600063 1-COLVILLE GEN 1
FDNS	00NR	0	17SP	G15_053	TO->FROM	GR ISLD-LNX3345.00 - HOLT.CO3 345.00 345KV CKT 1	720	720	0.0568	127.8839	GEN600064 2-COLVILLE GEN 2
FDNS	00NR	0	17SP	G15_053	TO->FROM	GR ISLD-LNX3345.00 - HOLT.CO3 345.00 345KV CKT 1	720	720	0.0568	127.8805	GEN600043 7-BLUE LAKE5
FDNS	00NR	0	17SP	G15_053	TO->FROM	GR ISLD-LNX3345.00 - HOLT.CO3 345.00 345KV CKT 1	720	720	0.0568	127.8805	GEN600044 8-BLUE LAKE6
FDNS	00NR	0	17SP	G15_053	TO->FROM	GR ISLD-LNX3345.00 - HOLT.CO3 345.00 345KV CKT 1	720	720	0.0548	127.8493	COOPER - MOORE 345KV CKT 1
FDNS	00NR	0	17SP	G15_053	TO->FROM	GR ISLD-LNX3345.00 - HOLT.CO3 345.00 345KV CKT 1	720	720	0.0568	127.8416	GEN600065 7-HIGH BRIDGE
FDNS	00NR	0	17SP	G15_053	TO->FROM	GR ISLD-LNX3345.00 - HOLT.CO3 345.00 345KV CKT 1	720	720	0.0568	127.8416	GEN600066 8-HIGH BRIDGE
FDNS	00NR	0	17SP	G15_053	TO->FROM	GR ISLD-LNX3345.00 - HOLT.CO3 345.00 345KV CKT 1	720	720	0.0568	127.8396	GEN600014 4-BLACK DOG GEN 4
FDNS	00NR	0	17SP	G15_053	TO->FROM	GR ISLD-LNX3345.00 - HOLT.CO3 345.00 345KV CKT 1	720	720	0.0568	127.8352	GEN600011 5-BLACK DOG GEN 1
FDNS	00NR	0	17SP	G15_053	TO->FROM	GR ISLD-LNX3345.00 - HOLT.CO3 345.00 345KV CKT 1	720	720	0.0568	127.8275	GEN600071 10-RIVER SIDE
FDNS	00NR	0	17SP	G15_053	TO->FROM	GR ISLD-LNX3345.00 - HOLT.CO3 345.00 345KV CKT 1	720	720	0.0568	127.8274	GEN600070 9-RIVER SIDE
FDNS	00NR	0	17SP	G15_053	TO->FROM	GR ISLD-LNX3345.00 - HOLT.CO3 345.00 345KV CKT 1	720	720	0.0568	127.8156	GEN659273 2-GROTON SYNC COND
FDNS	00NR	0	17SP	G15_053	TO->FROM	GR ISLD-LNX3345.00 - HOLT.CO3 345.00 345KV CKT 1	720	720	0.0568	127.8156	GEN659294 1-WILTONCOL9
FDNS	00NR	0	17SP	G15_053	TO->FROM	GR ISLD-LNX3345.00 - HOLT.CO3 345.00 345KV CKT 1	720	720	0.0568	127.8136	GEN600007 7-RIVERSIDE GEN 7
FDNS	00NR	0	17SP	G15_053	TO->FROM	GR ISLD-LNX3345.00 - HOLT.CO3 345.00 345KV CKT 1	720	720	0.05843	127.8127	103RD & ROKEBY - MOORE 345KV CKT 1
FDNS	00NR	0	17SP	G15_053	TO->FROM	GR ISLD-LNX3345.00 - HOLT.CO3 345.00 345KV CKT 1	720	720	0.05843	127.8127	103RD & ROKEBY - MOORE 345KV CKT 1
FDNS	00NR	0	17SP	G15_053	TO->FROM	GR ISLD-LNX3345.00 - HOLT.CO3 345.00 345KV CKT 1	720	720	0.0568	127.8082	GEN600045 4-ANSON
FDNS	00NR	0	17SP	G15_053	TO->FROM	GR ISLD-LNX3345.00 - HOLT.CO3 345.00 345KV CKT 1	720	720	0.06992	127.8005	COLUMWEST - GRAND ISLAND 230KV CKT 1
FDNS	00NR	0	17SP	G15_053	TO->FROM	GR ISLD-LNX3345.00 - HOLT.CO3 345.00 345KV CKT 1	720	720	0.0568	127.7847	GEN600017 C-LS POWER CT
FDNS	00NR	0	17SP	G15_053	TO->FROM	GR ISLD-LNX3345.00 - HOLT.CO3 345.00 345KV CKT 1	720	720	0.0568	127.783	LANSING WEST 161/22.0KV TRANSFORMER CKT 1

SOLUTION	GROUP	SCENARIO	SEASON	SOURCE	DIRECTION	MONITORED ELEMENT	RATEA (MVA)	RATEB(MVA)	TDF	TC%LOADING (% MVA)	CONTINGENCY
FDNS	00NR	0	17SP	G15_053	TO->FROM	GR ISLD-LNX3345.00 - HOLT.CO3 345.00 345KV CKT 1	720	720	0.0568	127.7806	GEN659192 6-LYNN
FDNS	00NR	0	17SP	G15_053	TO->FROM	GR ISLD-LNX3345.00 - HOLT.CO3 345.00 345KV CKT 1	720	720	0.0568	127.7798	GEN659162 4-RED WLCK
FDNS	00NR	0	17SP	G15_053	TO->FROM	GR ISLD-LNX3345.00 - HOLT.CO3 345.00 345KV CKT 1	720	720	0.0568	127.7798	GEN659163 5-BLACK WDCK
FDNS	00NR	0	17SP	G15_053	TO->FROM	GR ISLD-LNX3345.00 - HOLT.CO3 345.00 345KV CKT 1	720	720	0.05695	127.7672	G11_051T 345.00 - TATONGA7 345.00 345KV CKT 1
FDNS	00NR	0	17SP	G15_053	TO->FROM	GR ISLD-LNX3345.00 - HOLT.CO3 345.00 345KV CKT 1	720	720	0.0568	127.7597	GEN 10648 1-G830_GEN 0.6900
FDNS	00NR	0	17SP	G15_053	TO->FROM	GR ISLD-LNX3345.00 - HOLT.CO3 345.00 345KV CKT 1	720	720	0.0568	127.7506	CENTER 230/22.0KV TRANSFORMER CKT 1
FDNS	00NR	0	17SP	G15_053	TO->FROM	GR ISLD-LNX3345.00 - HOLT.CO3 345.00 345KV CKT 1	720	720	0.0568	127.7325	GEN615021 1-GRE-ER 14G 16.000
FDNS	00NR	0	17SP	G15_053	TO->FROM	GR ISLD-LNX3345.00 - HOLT.CO3 345.00 345KV CKT 1	720	720	0.05676	127.7317	OAHE - SULLEY BUTTE 230KV CKT 1
FDNS	00NR	0	17SP	G15_053	TO->FROM	GR ISLD-LNX3345.00 - HOLT.CO3 345.00 345KV CKT 1	720	720	0.0568	127.7276	GEN659031 1-G12_014IS_4 0.6900
FDNS	00NR	0	17SP	G15_053	TO->FROM	GR ISLD-LNX3345.00 - HOLT.CO3 345.00 345KV CKT 1	720	720	0.0568	127.7153	GEN615052 1-CAMBRIDGE GENERATING STATION
FDNS	00NR	0	17SP	G15_053	TO->FROM	GR ISLD-LNX3345.00 - HOLT.CO3 345.00 345KV CKT 1	720	720	0.0568	127.6794	GEN615015 1-GRE-SPRITWDG13.200
FDNS	00NR	0	17SP	G15_053	TO->FROM	GR ISLD-LNX3345.00 - HOLT.CO3 345.00 345KV CKT 1	720	720	0.0568	127.6783	GEN681522 3-GENOA 3
FDNS	00NR	0	17SP	G15_053	TO->FROM	GR ISLD-LNX3345.00 - HOLT.CO3 345.00 345KV CKT 1	720	720	0.05794	127.6289	AXTELL - POST ROCK 345KV CKT 1
FDNS	00NR	0	17SP	G15_053	TO->FROM	GR ISLD-LNX3345.00 - HOLT.CO3 345.00 345KV CKT 1	720	720	0.05687	127.6025	ANTELOP-LNX3345.00 - ANTELOPE VALLEY 345KV CKT Z
FDNS	00NR	0	17SP	G15_053	TO->FROM	GR ISLD-LNX3345.00 - HOLT.CO3 345.00 345KV CKT 1	720	720	0.05676	127.592	SULLYBT-LNX3230.00 - WHITLOK 230KV CKT 1
FDNS	00NR	0	17SP	G15_053	TO->FROM	GR ISLD-LNX3345.00 - HOLT.CO3 345.00 345KV CKT 1	720	720	0.05676	127.5874	SULLEY BUTTE - SULLYBT-LNX3230.00 230KV CKT Z
FDNS	00NR	0	17SP	G15_053	TO->FROM	GR ISLD-LNX3345.00 - HOLT.CO3 345.00 345KV CKT 1	720	720	0.0568	127.5764	GEN660016 1-B_H WIND 0.7000
FDNS	00NR	0	17SP	G15_053	TO->FROM	GR ISLD-LNX3345.00 - HOLT.CO3 345.00 345KV CKT 1	720	720	0.0568	127.5654	GEN659353 1-DEERCREK CTG18.000
FDNS	00NR	0	17SP	G15_053	TO->FROM	GR ISLD-LNX3345.00 - HOLT.CO3 345.00 345KV CKT 1	720	720	0.0568	127.5612	GEN659354 1-DEERCREK STG18.000
FDNS	00NR	0	17SP	G15_053	TO->FROM	GR ISLD-LNX3345.00 - HOLT.CO3 345.00 345KV CKT 1	720	720	0.05676	127.5282	P12:230:UMZB:# 114 #: SB IN SD. SB-WK-GH
FDNS	00NR	0	17SP	G15_053	TO->FROM	GR ISLD-LNX3345.00 - HOLT.CO3 345.00 345KV CKT 1	720	720	0.05676	127.5282	P12:230:UMZB:# 117 #: WK IN SD. SB-WK-GH
FDNS	00NR	0	17SP	G15_053	TO->FROM	GR ISLD-LNX3345.00 - HOLT.CO3 345.00 345KV CKT 1	720	720	0.05695	127.5177	MATHWSN7 345.00 - TATONGA7 345.00 345KV CKT 1
FDNS	00NR	0	17SP	G15_053	TO->FROM	GR ISLD-LNX3345.00 - HOLT.CO3 345.00 345KV CKT 1	720	720	0.0568	127.5002	GEN672303 3-BOUNDARY DAM GENERATOR 3
FDNS	00NR	0	17SP	G15_053	TO->FROM	GR ISLD-LNX3345.00 - HOLT.CO3 345.00 345KV CKT 1	720	720	0.0568	127.5002	GEN672305 5-BOUNDARY DAM GENERATOR 5
FDNS	00NR	0	17SP	G15_053	TO->FROM	GR ISLD-LNX3345.00 - HOLT.CO3 345.00 345KV CKT 1	720	720	0.05676	127.4951	GLENHAM - WHITLOK 230KV CKT 1
FDNS	00NR	0	17SP	G15_053	TO->FROM	GR ISLD-LNX3345.00 - HOLT.CO3 345.00 345KV CKT 1	720	720	0.0568	127.4941	GEN652906 1-G09_006IS_3 0.6900
FDNS	00NR	0	17SP	G15_053	TO->FROM	GR ISLD-LNX3345.00 - HOLT.CO3 345.00 345KV CKT 1	720	720	0.0568	127.4759	GEN672392 1-NBECGT1G 18.000
FDNS	00NR	0	17SP	G15_053	TO->FROM	GR ISLD-LNX3345.00 - HOLT.CO3 345.00 345KV CKT 1	720	720	0.0568	127.4527	GEN600067 9-HIGH BRIDGE
FDNS	00NR	0	17SP	G15_053	TO->FROM	GR ISLD-LNX3345.00 - HOLT.CO3 345.00 345KV CKT 1	720	720	0.0568	127.4505	GEN562832 1-G15042_3 0.6900
FDNS	00NR	0	17SP	G15_053	TO->FROM	GR ISLD-LNX3345.00 - HOLT.CO3 345.00 345KV CKT 1	720	720	0.0568	127.435	BISONMP4 230.00 - SQUARE BUTTE 230KV CKT 1
FDNS	00NR	0	17SP	G15_053	TO->FROM	GR ISLD-LNX3345.00 - HOLT.CO3 345.00 345KV CKT 1	720	720	0.0568	127.402	GEN910006 1-G12_012IS_3 0.6900
FDNS	00NR	0	17SP	G15_053	TO->FROM	GR ISLD-LNX3345.00 - HOLT.CO3 345.00 345KV CKT 1	720	720	0.0568	127.3922	GEN662101 1-WESSINGTON190.5750
FDNS	00NR	0	17SP	G15_053	TO->FROM	GR ISLD-LNX3345.00 - HOLT.CO3 345.00 345KV CKT 1	720	720	0.0568	127.3534	COYOTE 345/24.0KV TRANSFORMER CKT 1
FDNS	00NR	0	17SP	G15_053	TO->FROM	GR ISLD-LNX3345.00 - HOLT.CO3 345.00 345KV CKT 1	720	720	0.0568	127.3465	GEN652907 1-G09_007IS_3 0.6900
FDNS	00NR	0	17SP	G15_053	TO->FROM	GR ISLD-LNX3345.00 - HOLT.CO3 345.00 345KV CKT 1	720	720	0.0568	127.1817	GEN652543 3-BIG BEND
FDNS	00NR	0	17SP	G15_053	TO->FROM	GR ISLD-LNX3345.00 - HOLT.CO3 345.00 345KV CKT 1	720	720	0.0568	127.1499	SQUARE BUTTE - YNG2 4 230.00 230KV CKT 1
FDNS	00NR	0	17SP	G15_053	TO->FROM	GR ISLD-LNX3345.00 - HOLT.CO3 345.00 345KV CKT 1	720	720	0.0568	127.149	YNG2 4 230.00 230/20.0KV TRANSFORMER CKT 1
FDNS	00NR	0	17SP	G15_053	TO->FROM	GR ISLD-LNX3345.00 - HOLT.CO3 345.00 345KV CKT 1	720	720	0.0568	127.041	GEN659289 1-DAYCNTYWND W0.6900
FDNS	00NR	0	17SP	G15_053	TO->FROM	GR ISLD-LNX3345.00 - HOLT.CO3 345.00 345KV CKT 1	720	720	0.0568	127.0406	GEN659018 1-G14_003IS_3 0.6900
FDNS	00NR	0	17SP	G15_053	TO->FROM	GR ISLD-LNX3345.00 - HOLT.CO3 345.00 345KV CKT 1	720	720	0.0568	127.0088	GEN681542 6-JP MADGETT
FDNS	00NR	0	17SP	G15_053	TO->FROM	GR ISLD-LNX3345.00 - HOLT.CO3 345.00 345KV CKT 1	720	720	0.0568	127.0055	GEN563312 1-G15097_3 0.6900
FDNS	00NR	0	17SP	G15_053	TO->FROM	GR ISLD-LNX3345.00 - HOLT.CO3 345.00 345KV CKT 1	720	720	0.05676	126.9505	GLENHAM - L3 HAWDON 230KV CKT 1
FDNS	00NR	0	17SP	G15_053	TO->FROM	GR ISLD-LNX3345.00 - HOLT.CO3 345.00 345KV CKT 1	720	720	0.0568	126.8646	GEN659194 1-NDPRAIRWND1W0.6900
FDNS	00NR	0	17SP	G15_053	TO->FROM	GR ISLD-LNX3345.00 - HOLT.CO3 345.00 345KV CKT 1	720	720	0.0568	126.8507	GEN659010 4-G07_027IS_2 0.6900
FDNS	00NR	0	17SP	G15_053	TO->FROM	GR ISLD-LNX3345.00 - HOLT.CO3 345.00 345KV CKT 1	720	720	0.0568	126.8433	GEN652542 1-BIG BEND
FDNS	00NR	0	17SP	G15_053	TO->FROM	GR ISLD-LNX3345.00 - HOLT.CO3 345.00 345KV CKT 1	720	720	0.0568	126.8393	GEN652461 5-GARRISON
FDNS	00NR	0	17SP	G15_053	TO->FROM	GR ISLD-LNX3345.00 - HOLT.CO3 345.00 345KV CKT 1	720	720	0.0568	126.8392	GEN652460 4-GARRISON
FDNS	00NR	0	17SP	G15_053	TO->FROM	GR ISLD-LNX3345.00 - HOLT.CO3 345.00 345KV CKT 1	720	720	0.0568	126.7982	GEN563342 1-G15098_3 0.6900
FDNS	00NR	0	17SP	G15_053	TO->FROM	GR ISLD-LNX3345.00 - HOLT.CO3 345.00 345KV CKT 1	720	720	0.0568	126.7806	GEN652457 1-GARRISON
FDNS	00NR	0	17SP	G15_053	TO->FROM	GR ISLD-LNX3345.00 - HOLT.CO3 345.00 345KV CKT 1	720	720	0.0568	126.7806	GEN652458 2-GARRISON
FDNS	00NR	0	17SP	G15_053	TO->FROM	GR ISLD-LNX3345.00 - HOLT.CO3 345.00 345KV CKT 1	720	720	0.0568	126.7806	GEN652459 3-GARRISON
FDNS	00NR	0	17SP	G15_053	TO->FROM	GR ISLD-LNX3345.00 - HOLT.CO3 345.00 345KV CKT 1	720	720	0.0568	126.721	GEN659403 1-NDSUNFLWR W0.6900
FDNS	00NR	0	17SP	G15_053	TO->FROM	GR ISLD-LNX3345.00 - HOLT.CO3 345.00 345KV CKT 1	720	720	0.0568	126.6214	STANTON 230/18.0KV TRANSFORMER CKT 1
FDNS	00NR	0	17SP	G15_053	TO->FROM	GR ISLD-LNX3345.00 - HOLT.CO3 345.00 345KV CKT 1	720	720	0.06032	126.6156	AXTELL - SWEETWATER 345KV CKT 1
FDNS	00NR	0	17SP	G15_053	TO->FROM	GR ISLD-LNX3345.00 - HOLT.CO3 345.00 345KV CKT 1	720	720	0.0568	126.4632	CLAY BOSWELL 230/20.9KV TRANSFORMER CKT 1
FDNS	00NR	0	17SP	G15_053	TO->FROM	GR ISLD-LNX3345.00 - HOLT.CO3 345.00 345KV CKT 1	720	720	0.0568	126.3605	GEN659411 1-CAMPBLCNTY W0.6900
FDNS	00NR	0	17SP	G15_053	TO->FROM	GR ISLD-LNX3345.00 - HOLT.CO3 345.00 345KV CKT 1	720	720	0.0568	126.2074	ALMA 161 161/24.0KV TRANSFORMER CKT 1
FDNS	00NR	0	17SP	G15_053	TO->FROM	GR ISLD-LNX3345.00 - HOLT.CO3 345.00 345KV CKT 1	720	720	0.0568	126.2066	GEN652559 1-OAHE
FDNS	00NR	0	17SP	G15_053	TO->FROM	GR ISLD-LNX3345.00 - HOLT.CO3 345.00 345KV CKT 1	720	720	0.0568	126.1625	GEN659296 2-SDPRAIRWND1W0.6900
FDNS	00NR	0	17SP	G15_053	TO->FROM	GR ISLD-LNX3345.00 - HOLT.CO3 345.00 345KV CKT 1	720	720	0.0568	126.0189	RCDC EAST 4230.00 - RED CEDAR DC 230KV CKT 1
FDNS	00NR	0	17SP	G15_053	TO->FROM	GR ISLD-LNX3345.00 - HOLT.CO3 345.00 345KV CKT 1	720	720	0.0568	125.9988	P12:230:UMZB:# 112 #: NU IN SD. NU-RCDC & DRY CREEK XFMR
FDNS	00NR	0	17SP	G15_053	TO->FROM	GR ISLD-LNX3345.00 - HOLT.CO3 345.00 345KV CKT 1	720	720	0.0568	125.9981	GEN672321 1-SHAND GENERATOR 1
FDNS	00NR	0	17SP	G15_053	TO->FROM	GR ISLD-LNX3345.00 - HOLT.CO3 345.00 345KV CKT 1	720	720	0.06058	125.9869	G15088_T 345.00 - MOORE 345KV CKT 1
FDNS	00NR	0	17SP	G15_053	TO->FROM	GR ISLD-LNX3345.00 - HOLT.CO3 345.00 345KV CKT 1	720	720	0.0568	125.9773	GEN615010 1-STANTON4
FDNS	00NR	0	17SP	G15_053	TO->FROM	GR ISLD-LNX3345.00 - HOLT.CO3 345.00 345KV CKT 1	720	720	0.0568	125.9758	GEN672310 1-POPLAR RIVER GENERATOR 1
FDNS	00NR	0	17SP	G15_053	TO->FROM	GR ISLD-LNX3345.00 - HOLT.CO3 345.00 345KV CKT 1	720	720	0.0568	125.9758	GEN672311 2-POPLAR RIVER GENERATOR 2
FDNS	00NR	0	17SP	G15_053	TO->FROM	GR ISLD-LNX3345.00 - HOLT.CO3 345.00 345KV CKT 1	720	720	0.0568	125.902	GEN672306 6-BOUNDARY DAM GENERATOR 6
FDNS	00NR	0	17SP	G15_053	TO->FROM	GR ISLD-LNX3345.00 - HOLT.CO3 345.00 345KV CKT 1	720	720	0.0568	125.8623	GEN659453 1-GI1414GEN W0.6900
FDNS	00NR	0	17SP	G15_053	TO->FROM	GR ISLD-LNX3345.00 - HOLT.CO3 345.00 345KV CKT 1	720	720	0.0568	125.8611	GEN563302 1-G15096_3 0.6900
FDNS	00NR	0	17SP	G15_053	TO->FROM	GR ISLD-LNX3345.00 - HOLT.CO3 345.00 345KV CKT 1	720	720	0.0568	125.8387	GEN652557 4-OAHE
FDNS	00NR	0	17SP	G15_053	TO->FROM	GR ISLD-LNX3345.00 - HOLT.CO3 345.00 345KV CKT 1	720	720	0.0568	125.8386	GEN652556 2-OAHE
FDNS	00NR	0	17SP	G15_053	TO->FROM	GR ISLD-LNX3345.00 - HOLT.CO3 345.00 345KV CKT 1	720	720	0.0568	125.8386	GEN652558 6-OAHE
FDNS	00NR	0	17SP	G15_053	TO->FROM	GR ISLD-LNX3345.00 - HOLT.CO3 345.00 345KV CKT 1	720	720	0.0568	125.8302	GEN600004 2-PRAIRIE ISLAND G2
FDNS	00NR	0	17SP	G15_053	TO->FROM	GR ISLD-LNX3345.00 - HOLT.CO3 345.00 345KV CKT 1	720	720	0.0568	125.8258	GEN600003 1-PRAIRIE ISLAND G1
FDNS	00NR	0	17SP	G15_053	TO->FROM	GR ISLD-LNX3345.00 - HOLT.CO3 345.00 345KV CKT 1	720	720	0.0568	125.7543	GEN659141 1-K10215A
FDNS	00NR	0	17SP	G15_053	TO->FROM	GR ISLD-LNX3345.00 - HOLT.CO3 345.00 345KV CKT 1	720	720	0.0568	125.7028	GEN659110 1-LELAND OLDS UNIT1
FDNS	00NR	0	17SP	G15_053	TO->FROM	GR ISLD-LNX3345.00 - HOLT.CO3 345.00 345KV CKT 1	720	720	0.0568	125.6962	GEN657749 1-YOUNG 1 GENERATOR
FDNS	00NR	0	17SP	G15_053	TO->FROM	GR ISLD-LNX3345.00 - HOLT.CO3 345.00 345KV CKT 1	720	720	0.0568	125.5053	GEN652173 1-G09_001IS_2 0.6900
FDNS	00NR	0	17SP	G15_053	TO->FROM	GR ISLD-LNX3345.00 - HOLT.CO3 345.00 345KV CKT 1	720	720	0.0568	125.5016	GEN600006 1-AS KING

SOLUTION	GROUP	SCENARIO	SEASON	SOURCE	DIRECTION	MONITORED ELEMENT	RATEA (MVA)	RATEB(MVA)	TDF	TC%LOADING (% MVA)	CONTINGENCY
FDNS	00NR	0	17SP	G15_053	TO->FROM	GR ISLD-LNX3345.00 - HOLT.CO3 345.00 345KV CKT 1	720	720	0.0568	125.1933	GEN659407 1-ANTELPHILLSW0.6900
FDNS	00NR	0	17SP	G15_053	TO->FROM	GR ISLD-LNX3345.00 - HOLT.CO3 345.00 345KV CKT 1	720	720	0.0568	124.9041	GEN600005 1-MONTICELLO
FDNS	00NR	0	17SP	G15_053	TO->FROM	GR ISLD-LNX3345.00 - HOLT.CO3 345.00 345KV CKT 1	720	720	0.0568	124.2121	GEN600000 1-SHERBURNECNTY G1
FDNS	00NR	0	17SP	G15_053	TO->FROM	GR ISLD-LNX3345.00 - HOLT.CO3 345.00 345KV CKT 1	720	720	0.0568	123.8	GEN600001 2-SHERBURNE CNTY G2
FDNS	00NR	0	17SP	G15_053	TO->FROM	GR ISLD-LNX3345.00 - HOLT.CO3 345.00 345KV CKT 1	720	720	0.0568	123.5969	GEN620315 1-BIG STONE GEN
FDNS	00NR	0	17SP	G15_053	TO->FROM	GR ISLD-LNX3345.00 - HOLT.CO3 345.00 345KV CKT 1	720	720	0.0568	123.5494	GEN661015 1-COYOTE
FDNS	00NR	0	17SP	G15_053	TO->FROM	GR ISLD-LNX3345.00 - HOLT.CO3 345.00 345KV CKT 1	720	720	0.0568	123.1323	GEN657748 1-YOUNG 2 GENERATOR
FDNS	00NR	0	17SP	G15_053	TO->FROM	GR ISLD-LNX3345.00 - HOLT.CO3 345.00 345KV CKT 1	720	720	0.0568	122.9992	GEN600002 3-SHERBURNE CNTY G3
FDNS	00NR	0	17SP	G15_053	TO->FROM	GR ISLD-LNX3345.00 - HOLT.CO3 345.00 345KV CKT 1	720	720	0.0568	122.7475	GEN562872 1-G15046_3 0.6900
FDNS	00NR	0	17SP	G15_053	TO->FROM	GR ISLD-LNX3345.00 - HOLT.CO3 345.00 345KV CKT 1	720	720	0.06504	122.5669	MCCOOL - MOORE 345KV CKT 1
FDNS	00NR	0	17SP	G15_053	TO->FROM	GR ISLD-LNX3345.00 - HOLT.CO3 345.00 345KV CKT 1	720	720	0.0568	122.4481	GEN659111 2-LELAND OLDS UNIT2
FDNS	00NR	0	17SP	G15_053	TO->FROM	GR ISLD-LNX3345.00 - HOLT.CO3 345.00 345KV CKT 1	720	720	0.0568	121.9741	GEN659103 1-ANTELOPE VALLEY UNIT1
FDNS	00NR	0	17SP	G15_053	TO->FROM	GR ISLD-LNX3345.00 - HOLT.CO3 345.00 345KV CKT 1	720	720	0.0568	121.9741	GEN659107 2-ANTELOPE VALLEY UNIT2
FDNS	00NR	0	17SP	G15_053	TO->FROM	GR ISLD-LNX3345.00 - HOLT.CO3 345.00 345KV CKT 1	720	720	0.0568	121.0129	GEN659125 1-COVEY
FDNS	00NR	0	17SP	G15_053	TO->FROM	GR ISLD-LNX3345.00 - HOLT.CO3 345.00 345KV CKT 1	720	720	0.05645	121.0104	FTTHOM1-LNX3345.00 - LELAND2-LNX3345.00 345KV CKT 1
FDNS	00NR	0	20SP	G15_053	TO->FROM	GR ISLD-LNX3345.00 - HOLT.CO3 345.00 345KV CKT 1	720	720	0.05321	120.7555	HOLT.CO3 345.00 - THEDFRD3 345.00 345KV CKT 1
FDNS	00NR	0	17SP	G15_053	TO->FROM	GR ISLD-LNX3345.00 - HOLT.CO3 345.00 345KV CKT 1	720	720	0.05645	120.734	P12:345:UMZB:# 108 #: LOS FT IN ND. LOS FT
FDNS	00NR	0	17SP	G15_053	TO->FROM	GR ISLD-LNX3345.00 - HOLT.CO3 345.00 345KV CKT 1	720	720	0.05645	120.7228	FT THOMPSON - FTTHOM1-LNX3345.00 345KV CKT Z
FDNS	00NR	0	25SP	G15_053	TO->FROM	GR ISLD-LNX3345.00 - HOLT.CO3 345.00 345KV CKT 1	720	720	0.05411	120.5692	HOLT.CO3 345.00 - THEDFRD3 345.00 345KV CKT 1
FDNS	00NR	0	17SP	G15_053	TO->FROM	GR ISLD-LNX3345.00 - HOLT.CO3 345.00 345KV CKT 1	720	720	0.05645	120.4702	LELAND OLDS - LELAND2-LNX3345.00 345KV CKT Z
FDNS	00NR	0	17SP	G15_053	TO->FROM	GR ISLD-LNX3345.00 - HOLT.CO3 345.00 345KV CKT 1	720	720	0.0568	120.2926	GEN615001 1-COAL CREEK
FDNS	00NR	0	17SP	G15_053	TO->FROM	GR ISLD-LNX3345.00 - HOLT.CO3 345.00 345KV CKT 1	720	720	0.0568	120.1676	GEN615002 2-COAL CREEK
FDNS	00NR	0	17SP	G15_053	TO->FROM	GR ISLD-LNX3345.00 - HOLT.CO3 345.00 345KV CKT 1	720	720	0.06577	119.171	GRAND ISLAND - MCCOOL 345KV CKT 1
FDNS	00NR	0	17SP	G15_053	TO->FROM	GR ISLD-LNX3345.00 - HOLT.CO3 345.00 345KV CKT 1	720	720	0.0568	113.5207	GEN562714 1-G15_023_4 0.6900
FDNS	00NR	0	17SP	G15_053	TO->FROM	GR ISLD-LNX3345.00 - HOLT.CO3 345.00 345KV CKT 1	720	720	0.0568	113.5207	GEN562715 1-G15_023_5 0.6900
FDNS	00NR	0	20SP	G15_053	TO->FROM	GR ISLD-LNX3345.00 - HOLT.CO3 345.00 345KV CKT 1	720	720	0.05543	111.0854	GERALD GENTLEMAN STATION - THEDFRD3 345.00 345KV CKT 1
FDNS	00NR	0	25SP	G15_053	TO->FROM	GR ISLD-LNX3345.00 - HOLT.CO3 345.00 345KV CKT 1	720	720	0.05659	110.4541	GERALD GENTLEMAN STATION - THEDFRD3 345.00 345KV CKT 1
FDNS	00NR	0	17SP	G15_053	TO->FROM	GR ISLD-LNX3345.00 - HOLT.CO3 345.00 345KV CKT 1	720	720	0.0568	107.2839	GEN652353 2-GR PRAIRIEG 0.6900
FDNS	00NR	0	16WP	G15_053	TO->FROM	GR ISLD-LNX3345.00 - HOLT.CO3 345.00 345KV CKT 1	720	720	0.05613	101.7905	KELLY - MEADOWGROVE4230.00 230KV CKT 1
FDNS	00NR	0	16WP	G15_053	TO->FROM	GR ISLD-LNX3345.00 - HOLT.CO3 345.00 345KV CKT 1	720	720	0.0539	101.2023	P12:230:UMZB:# 116 #: ST IN SD. WSG-ST-VH
FDNS	00NR	0	16WP	G15_053	TO->FROM	GR ISLD-LNX3345.00 - HOLT.CO3 345.00 345KV CKT 1	720	720	0.05392	100.6073	STORLA - WESSINGTON 230KV CKT 1
FDNS	00NR	0	16WP	G15_053	TO->FROM	GR ISLD-LNX3345.00 - HOLT.CO3 345.00 345KV CKT 1	720	720	0.05542	100.1903	ROSEAU - ROSEAUM 2 500.00 500KV CKT 1
FDNS	00NR	0	16WP	G15_053	TO->FROM	GR ISLD-LNX3345.00 - HOLT.CO3 345.00 345KV CKT 1	720	720	0.05446	99.6	HANLON - STORLA 230KV CKT 1
FDNS	09ALL	0	17SP	G15_053	FROM->TO	PETERSBRG.N7115.00 - PETERSBURG 115KV CKT Z1	137	137	0.22055	112.6372	ANTELOPE 3345.00 - HOSKINS 345KV CKT 1
FDNS	09ALL	0	17SP	G15_053	FROM->TO	PETERSBRG.N7115.00 - PETERSBURG 115KV CKT Z1	137	137	0.22055	112.5538	ANTELOPE 3345.00 (ANTELOPE T1) 345/115/13.8KV TRANSFORMER CKT 1
FDNS	09ALL	0	17G	G15_053	FROM->TO	PETERSBRG.N7115.00 - PETERSBURG 115KV CKT Z1	137	137	0.22023	107.0639	ANTELOPE 3345.00 (ANTELOPE T1) 345/115/13.8KV TRANSFORMER CKT 1
FDNS	09ALL	0	17G	G15_053	FROM->TO	PETERSBRG.N7115.00 - PETERSBURG 115KV CKT Z1	137	137	0.22023	107.0523	ANTELOPE 3345.00 - HOSKINS 345KV CKT 1
FDNS	09ALL	0	16WP	G15_053	FROM->TO	PETERSBRG.N7115.00 - PETERSBURG 115KV CKT Z1	137	137	0.21991	106.9034	ANTELOPE 3345.00 - HOSKINS 345KV CKT 1
FDNS	09ALL	0	16WP	G15_053	FROM->TO	PETERSBRG.N7115.00 - PETERSBURG 115KV CKT Z1	137	137	0.21991	106.8471	ANTELOPE 3345.00 (ANTELOPE T1) 345/115/13.8KV TRANSFORMER CKT 1
FDNS	09ALL	0	20SP	G15_053	FROM->TO	PETERSBRG.N7115.00 - PETERSBURG 115KV CKT Z1	137	137	0.22347	103.1009	ANTELOPE 3345.00 (ANTELOPE T1) 345/115/13.8KV TRANSFORMER CKT 1
FDNS	09ALL	0	20SP	G15_053	FROM->TO	PETERSBRG.N7115.00 - PETERSBURG 115KV CKT Z1	137	137	0.22347	103.0971	ANTELOPE 3345.00 - HOSKINS 345KV CKT 1
FDNS	09ALL	0	25SP	G15_053	FROM->TO	PETERSBRG.N7115.00 - PETERSBURG 115KV CKT Z1	137	137	0.22361	103.0257	ANTELOPE 3345.00 - HOSKINS 345KV CKT 1
FDNS	09ALL	0	25SP	G15_053	FROM->TO	PETERSBRG.N7115.00 - PETERSBURG 115KV CKT Z1	137	137	0.22361	102.9604	ANTELOPE 3345.00 (ANTELOPE T1) 345/115/13.8KV TRANSFORMER CKT 1
FDNS	00NR	0	17SP	G15_053	TO->FROM	SIDNEY - SIDNEY TRANSFORMER 230KV CKT 1	400	400	0.03657	120.8827	KEYSTONE - SIDNEY1-LNX3345.00 345KV CKT 1
FDNS	00NR	0	17SP	G15_053	TO->FROM	SIDNEY - SIDNEY TRANSFORMER 230KV CKT 1	400	400	0.03657	120.2355	SIDNEY - SIDNEY1-LNX3345.00 345KV CKT Z
FDNSLock	00NR	0	20SP	G15_053	TO->FROM	SIDNEY - SIDNEY TRANSFORMER 230KV CKT 1	400	400	0.03075	111.0053	KEYSTONE - SIDNEY1-LNX3345.00 345KV CKT 1
FDNS	00NR	0	20SP	G15_053	TO->FROM	SIDNEY - SIDNEY TRANSFORMER 230KV CKT 1	400	400	0.03075	109.8896	SIDNEY - SIDNEY1-LNX3345.00 345KV CKT Z
FDNS	00NR	0	25SP	G15_053	TO->FROM	SIDNEY - SIDNEY TRANSFORMER 230KV CKT 1	400	400	0.03052	109.6285	KEYSTONE - SIDNEY1-LNX3345.00 345KV CKT 1
FDNS	00NR	0	25SP	G15_053	TO->FROM	SIDNEY - SIDNEY TRANSFORMER 230KV CKT 1	400	400	0.03052	109.1934	SIDNEY - SIDNEY1-LNX3345.00 345KV CKT Z
FDNS	00NR	0	17SP	G15_053	FROM->TO	SIDNEY (SDQ KV2A) 345/230/13.8KV TRANSFORMER CKT 1	400	480	0.03657	102.6537	KEYSTONE - SIDNEY1-LNX3345.00 345KV CKT 1
FDNS	00NR	0	17SP	G15_053	FROM->TO	SIDNEY (SDQ KV2A) 345/230/13.8KV TRANSFORMER CKT 1	400	480	0.03657	102.2384	SIDNEY - SIDNEY1-LNX3345.00 345KV CKT Z
FDNS	00NR	0	17SP	G15_053	FROM->TO	SIDNEY (SDQ KV2A) 345/230/13.8KV TRANSFORMER CKT 1	400	480	0.03657	102.023	KEYSTONE - SIDNEY1-LNX3345.00 345KV CKT 1
FDNS	00NR	0	17SP	G15_053	FROM->TO	SIDNEY (SDQ KV2A) 345/230/13.8KV TRANSFORMER CKT 1	400	480	0.03657	101.9841	SIDNEY - SIDNEY1-LNX3345.00 345KV CKT Z
FDNS	09NR	0	20L	G15_053	TO->FROM	SIOUX CITY - TWIN CHURCH 230KV CKT 1	320	320	0.1418	118.8338	HOSKINS - RAUN 345KV CKT 1
FDNS	09NR	0	20L	G15_053	TO->FROM	SIOUX CITY - TWIN CHURCH 230KV CKT 1	320	320	0.1418	118.8338	HOSKINS - RAUN 345KV CKT 1
FDNS	09NR	0	20L	G15_053	TO->FROM	SIOUX CITY - TWIN CHURCH 230KV CKT 1	320	320	0.07564	116.7538	P13:230-345:NPPD:NUCOR-1
FDNS	09NR	0	20L	G15_053	TO->FROM	SIOUX CITY - TWIN CHURCH 230KV CKT 1	320	320	0.06752	109.1989	HOSKINS (HOSKINS T2) 345/230/13.8KV TRANSFORMER CKT 1
FDNS	09NR	0	20L	G15_053	TO->FROM	SIOUX CITY - TWIN CHURCH 230KV CKT 1	320	320	0.06752	109.1989	HOSKINS (HOSKINS T2) 345/230/13.8KV TRANSFORMER CKT 1
FDNS	09NR	0	17G	G15_053	TO->FROM	SIOUX CITY - TWIN CHURCH 230KV CKT 1	320	320	0.14182	107.634	HOSKINS - RAUN 345KV CKT 1
FDNS	09ALL	0	20L	G15_053	TO->FROM	SIOUX CITY - TWIN CHURCH 230KV CKT 1	320	320	0.08846	106.9	BASE CASE
FDNS	09NR	0	20L	G15_053	TO->FROM	SIOUX CITY - TWIN CHURCH 230KV CKT 1	320	320	0.08082	104.5829	EMERSON - TWIN CHURCH 115KV CKT 1
FDNS	09NR	0	20L	G15_053	TO->FROM	SIOUX CITY - TWIN CHURCH 230KV CKT 1	320	320	0.07522	103.9487	RAUN - SIOUX CITY 345KV CKT 1
FDNS	09NR	0	20L	G15_053	TO->FROM	SIOUX CITY - TWIN CHURCH 230KV CKT 1	320	320	0.07522	103.9487	RAUN - SIOUX CITY 345KV CKT 1
FDNS	09NR	0	17G	G15_053	TO->FROM	SIOUX CITY - TWIN CHURCH 230KV CKT 1	320	320	0.07547	103.8597	P13:230-345:NPPD:NUCOR-1
FDNS	09NR	0	20L	G15_053	TO->FROM	SIOUX CITY - TWIN CHURCH 230KV CKT 1	320	320	0.08847	103.2762	GAVINS POINT - YANKON JCT 115KV CKT 1
FDNS	09NR	0	20L	G15_053	TO->FROM	SIOUX CITY - TWIN CHURCH 230KV CKT 1	320	320	0.08847	103.2762	GAVINS POINT - YANKON JCT 115KV CKT 1
FDNS	09NR	0	20L	G15_053	TO->FROM	SIOUX CITY - TWIN CHURCH 230KV CKT 1	320	320	0.11196	102.8531	HOSKINS - SHELL CREEK 345KV CKT 1
FDNS	09NR	0	20L	G15_053	TO->FROM	SIOUX CITY - TWIN CHURCH 230KV CKT 1	320	320	0.07564	102.8276	P13:115-230:NPPD:NUCOR-3
FDNS	09NR	0	20L	G15_053	TO->FROM	SIOUX CITY - TWIN CHURCH 230KV CKT 1	320	320	0.09242	102.0204	COLUMEAST - NW68TH & HOLDREGE 345KV CKT 1
FDNS	09NR	0	20L	G15_053	TO->FROM	SIOUX CITY - TWIN CHURCH 230KV CKT 1	320	320	0.09242	102.0204	COLUMEAST - NW68TH & HOLDREGE 345KV CKT 1
FDNS	09NR	0	20L	G15_053	TO->FROM	SIOUX CITY - TWIN CHURCH 230KV CKT 1	320	320	0.08985	101.2752	COLUMEAST - SHELL CREEK 345KV CKT 1
FDNS	09NR	0	20L	G15_053	TO->FROM	SIOUX CITY - TWIN CHURCH 230KV CKT 1	320	320	0.08082	101.1718	P12:115:NPPD:1193:OAKLAND7:EMERSON7:BTB
FDNS	09NR	0	20L	G15_053	TO->FROM	SIOUX CITY - TWIN CHURCH 230KV CKT 1	320	320	0.08082	101.1409	BANCROFT - EMERSON 115KV CKT 1
FDNS	09NR	0	20L	G15_053	TO->FROM	SIOUX CITY - TWIN CHURCH 230KV CKT 1	320	320	0.07351	101.055	BELDEN - HARTINGTON 115KV CKT 1
FDNS	09NR	0	20L	G15_053	TO->FROM	SIOUX CITY - TWIN CHURCH 230KV CKT 1	320	320	0.07268	100.9543	FT THOMPSON - FTTHOM2-LNX3345.00 345KV CKT Z
FDNS	09NR	0	20L	G15_053	TO->FROM	SIOUX CITY - TWIN CHURCH 230KV CKT 1	320	320	0.07268	100.9451	GRPRAR2-LNX3345.00 - YANKTON 345KV CKT Z
FDNS	09NR	0	20L	G15_053	TO->FROM	SIOUX CITY - TWIN CHURCH 230KV CKT 1	320	320	0.07268	100.9421	FTTHOM2-LNX3345.00 - GRPRAR2-LNX3345.00 345KV CKT 1
FDNS	09NR	0	20L	G15_053	TO->FROM	SIOUX CITY - TWIN CHURCH 230KV CKT 1	320	320	0.07564	100.655	P13:115-345:NPPD:NUCOR-2
FDNS	09NR	0	20L	G15_053	TO->FROM	SIOUX CITY - TWIN CHURCH 230KV CKT 1	320	320	0.08363	100.3978	NAPA JCT7 115.00 - YANKON JCT 115KV CKT 1

SOLUTION	GROUP	SCENARIO	SEASON	SOURCE	DIRECTION	MONITORED ELEMENT	RATEA (MVA)	RATEB(MVA)	TDF	TC%LOADING (% MVA)	CONTINGENCY
FDNS	09NR	0	20L	G15_053	TO->FROM	SIOUX CITY - TWIN CHURCH 230KV CKT 1	320	320	0.08363	100.3978	NAPA JCT7 115.00 - YANKON JCT 115KV CKT 1
FDNS	09NR	0	20L	G15_053	TO->FROM	SIOUX CITY - TWIN CHURCH 230KV CKT 1	320	320	0.08363	100.3953	P12:115:UMZW:# 1910 #: YJ IN SD. YJ-UJ LINE FAULT
FDNS	09NR	0	20L	G15_053	TO->FROM	SIOUX CITY - TWIN CHURCH 230KV CKT 1	320	320	0.08363	100.3952	NAPA JCT7 115.00 - UTICA 115KV CKT 1
FDNS	09NR	0	20L	G15_053	TO->FROM	SIOUX CITY - TWIN CHURCH 230KV CKT 1	320	320	0.08363	100.3952	NAPA JCT7 115.00 - UTICA 115KV CKT 1
FDNS	09NR	0	20L	G15_053	TO->FROM	SIOUX CITY - TWIN CHURCH 230KV CKT 1	320	320	0.08082	100.2298	BANCROFT - OAKLAND 115KV CKT 1
FDNS	09NR	0	20L	G15_053	TO->FROM	SIOUX CITY - TWIN CHURCH 230KV CKT 1	320	320	0.07564	99.9	SHERBURNE CO 345/24.0KV TRANSFORMER CKT 1
FDNS	09NR	0	20L	G15_053	TO->FROM	SIOUX CITY - TWIN CHURCH 230KV CKT 1	320	320	0.07564	99.8	GEN600002 3-SHERBURNE CNTY G3
FDNS	09NR	0	20L	G15_053	TO->FROM	SIOUX CITY - TWIN CHURCH 230KV CKT 1	320	320	0.07321	99.8	BELDEN - HOSKINS 115KV CKT 1
FDNS	09NR	0	20L	G15_053	TO->FROM	SIOUX CITY - TWIN CHURCH 230KV CKT 1	320	320	0.07564	99.5	BIG STONE 230/24.0KV TRANSFORMER CKT 1
FDNS	09ALL	2	17SP	G15_053	TO->FROM	ALBION - PETERSBURG 115KV CKT 1	137	137	0.21792	109.1085	ANTELOPE 3345.00 (ANTELOPE T1) 345/115/13.8KV TRANSFORMER CKT 1
FDNS	09ALL	2	17SP	G15_053	TO->FROM	ALBION - PETERSBURG 115KV CKT 1	137	137	0.21792	109.1016	ANTELOPE 3345.00 - HOSKINS 345KV CKT 1
FDNS	09ALL	2	17G	G15_053	TO->FROM	ALBION - PETERSBURG 115KV CKT 1	137	137	0.21763	105.3726	ANTELOPE 3345.00 - HOSKINS 345KV CKT 1
FDNS	09ALL	2	17G	G15_053	TO->FROM	ALBION - PETERSBURG 115KV CKT 1	137	137	0.21763	105.323	ANTELOPE 3345.00 (ANTELOPE T1) 345/115/13.8KV TRANSFORMER CKT 1
FDNS	09ALL	2	16WP	G15_053	TO->FROM	ALBION - PETERSBURG 115KV CKT 1	137	137	0.21733	105.2663	ANTELOPE 3345.00 - HOSKINS 345KV CKT 1
FDNS	09ALL	2	16WP	G15_053	TO->FROM	ALBION - PETERSBURG 115KV CKT 1	137	137	0.21733	105.2189	ANTELOPE 3345.00 (ANTELOPE T1) 345/115/13.8KV TRANSFORMER CKT 1
FDNS	09ALL	2	17G	G15_053	FROM->TO	ANTELOPE 7115.00 - COUNTY LINE 115KV CKT 1	193	193	0.41234	105.3379	ANTELOPE 3345.00 (ANTELOPE T1) 345/115/13.8KV TRANSFORMER CKT 1
FDNS	09ALL	2	17G	G15_053	FROM->TO	ANTELOPE 7115.00 - COUNTY LINE 115KV CKT 1	193	193	0.41234	105.2834	ANTELOPE 3345.00 - HOSKINS 345KV CKT 1
FDNS	09ALL	2	16WP	G15_053	FROM->TO	ANTELOPE 7115.00 - COUNTY LINE 115KV CKT 1	193	193	0.41201	101.4254	ANTELOPE 3345.00 (ANTELOPE T1) 345/115/13.8KV TRANSFORMER CKT 1
FDNS	09ALL	2	16WP	G15_053	FROM->TO	ANTELOPE 7115.00 - COUNTY LINE 115KV CKT 1	193	193	0.41201	101.3914	ANTELOPE 3345.00 - HOSKINS 345KV CKT 1
FDNS	09ALL	2	17G	G15_053	TO->FROM	BATTLE CREEK - COUNTY LINE 115KV CKT 1	193	193	0.41234	104.9576	ANTELOPE 3345.00 (ANTELOPE T1) 345/115/13.8KV TRANSFORMER CKT 1
FDNS	09ALL	2	17G	G15_053	TO->FROM	BATTLE CREEK - COUNTY LINE 115KV CKT 1	193	193	0.41234	104.9026	ANTELOPE 3345.00 - HOSKINS 345KV CKT 1
FDNS	09ALL	2	16WP	G15_053	TO->FROM	BATTLE CREEK - COUNTY LINE 115KV CKT 1	193	193	0.41201	101.1019	ANTELOPE 3345.00 (ANTELOPE T1) 345/115/13.8KV TRANSFORMER CKT 1
FDNS	09ALL	2	16WP	G15_053	TO->FROM	BATTLE CREEK - COUNTY LINE 115KV CKT 1	193	193	0.41201	101.0669	ANTELOPE 3345.00 - HOSKINS 345KV CKT 1
FDNS	09ALL	2	17G	G15_053	FROM->TO	BATTLE CREEK - NORTH NORFOLK 115KV CKT 1	193	193	0.41234	101.5599	ANTELOPE 3345.00 (ANTELOPE T1) 345/115/13.8KV TRANSFORMER CKT 1
FDNS	09ALL	2	17G	G15_053	FROM->TO	BATTLE CREEK - NORTH NORFOLK 115KV CKT 1	193	193	0.41234	101.5079	ANTELOPE 3345.00 - HOSKINS 345KV CKT 1
FDNS	09ALL	2	20L	G15_053	FROM->TO	BLOOMFIELD - GAVINS POINT 115KV CKT 1	120	120	0.19838	116.0575	ANTELOPE 3345.00 - HOSKINS 345KV CKT 1
FDNS	09ALL	2	20L	G15_053	FROM->TO	BLOOMFIELD - GAVINS POINT 115KV CKT 1	120	120	0.19838	116.0486	ANTELOPE 3345.00 (ANTELOPE T1) 345/115/13.8KV TRANSFORMER CKT 1
FDNS	09ALL	2	17G	G15_053	FROM->TO	BLOOMFIELD - GAVINS POINT 115KV CKT 1	120	120	0.19811	110.3787	ANTELOPE 3345.00 (ANTELOPE T1) 345/115/13.8KV TRANSFORMER CKT 1
FDNS	09ALL	2	17G	G15_053	FROM->TO	BLOOMFIELD - GAVINS POINT 115KV CKT 1	120	120	0.19811	110.3553	ANTELOPE 3345.00 - HOSKINS 345KV CKT 1
FDNS	09ALL	2	16WP	G15_053	FROM->TO	BLOOMFIELD - GAVINS POINT 115KV CKT 1	120	120	0.19831	105.8679	ANTELOPE 3345.00 (ANTELOPE T1) 345/115/13.8KV TRANSFORMER CKT 1
FDNS	09ALL	2	16WP	G15_053	FROM->TO	BLOOMFIELD - GAVINS POINT 115KV CKT 1	120	120	0.19831	105.8441	ANTELOPE 3345.00 - HOSKINS 345KV CKT 1
FDNS	09ALL	2	20WP	G15_053	FROM->TO	BLOOMFIELD - GAVINS POINT 115KV CKT 1	120	120	0.19709	103.7213	ANTELOPE 3345.00 (ANTELOPE T1) 345/115/13.8KV TRANSFORMER CKT 1
FDNS	09ALL	2	20WP	G15_053	FROM->TO	BLOOMFIELD - GAVINS POINT 115KV CKT 1	120	120	0.19709	103.7167	ANTELOPE 3345.00 - HOSKINS 345KV CKT 1
FDNS	00NR	2	17SP	G15_053	FROM->TO	GR ISLD-LNX3345.00 - GRAND ISLAND 345KV CKT Z	720	720	0.05595	130.1603	CHERRYC3 345.00 - HOLT.CO3 345.00 345KV CKT 1
FDNS	00NR	2	17SP	G15_053	FROM->TO	GR ISLD-LNX3345.00 - GRAND ISLAND 345KV CKT Z	720	720	0.0576	120.1656	CHERRYC3 345.00 - GERALD GENTLEMAN STATION 345KV CKT 1
FDNS	00NR	2	17SP	G15_053	TO->FROM	GR ISLD-LNX3345.00 - HOLT.CO3 345.00 345KV CKT 1	720	720	0.05595	129.1944	CHERRYC3 345.00 - HOLT.CO3 345.00 345KV CKT 1
FDNS	00NR	2	17SP	G15_053	TO->FROM	GR ISLD-LNX3345.00 - HOLT.CO3 345.00 345KV CKT 1	720	720	0.0576	119.2756	CHERRYC3 345.00 - GERALD GENTLEMAN STATION 345KV CKT 1
FDNS	09ALL	2	17SP	G15_053	FROM->TO	PETERSBRG.N7115.00 - PETERSBURG 115KV CKT Z1	137	137	0.21792	113.2153	ANTELOPE 3345.00 (ANTELOPE T1) 345/115/13.8KV TRANSFORMER CKT 1
FDNS	09ALL	2	17SP	G15_053	FROM->TO	PETERSBRG.N7115.00 - PETERSBURG 115KV CKT Z1	137	137	0.21792	113.2152	ANTELOPE 3345.00 - HOSKINS 345KV CKT 1
FDNS	09ALL	2	16WP	G15_053	FROM->TO	PETERSBRG.N7115.00 - PETERSBURG 115KV CKT Z1	137	137	0.21733	106.675	ANTELOPE 3345.00 - HOSKINS 345KV CKT 1
FDNS	09ALL	2	16WP	G15_053	FROM->TO	PETERSBRG.N7115.00 - PETERSBURG 115KV CKT Z1	137	137	0.21733	106.6293	ANTELOPE 3345.00 (ANTELOPE T1) 345/115/13.8KV TRANSFORMER CKT 1
FDNS	09ALL	2	17G	G15_053	FROM->TO	PETERSBRG.N7115.00 - PETERSBURG 115KV CKT Z1	137	137	0.21763	106.1739	ANTELOPE 3345.00 - HOSKINS 345KV CKT 1
FDNS	09ALL	2	17G	G15_053	FROM->TO	PETERSBRG.N7115.00 - PETERSBURG 115KV CKT Z1	137	137	0.21763	106.1253	ANTELOPE 3345.00 (ANTELOPE T1) 345/115/13.8KV TRANSFORMER CKT 1
FDNS	09ALL	2	20SP	G15_053	FROM->TO	PETERSBRG.N7115.00 - PETERSBURG 115KV CKT Z1	137	137	0.22222	102.8833	ANTELOPE 3345.00 - HOSKINS 345KV CKT 1
FDNS	09ALL	2	25SP	G15_053	FROM->TO	PETERSBRG.N7115.00 - PETERSBURG 115KV CKT Z1	137	137	0.22236	102.7995	ANTELOPE 3345.00 - HOSKINS 345KV CKT 1
FDNS	09ALL	2	25SP	G15_053	FROM->TO	PETERSBRG.N7115.00 - PETERSBURG 115KV CKT Z1	137	137	0.22236	102.7756	ANTELOPE 3345.00 (ANTELOPE T1) 345/115/13.8KV TRANSFORMER CKT 1
FDNS	09ALL	2	20SP	G15_053	FROM->TO	PETERSBRG.N7115.00 - PETERSBURG 115KV CKT Z1	137	137	0.22222	102.7653	ANTELOPE 3345.00 (ANTELOPE T1) 345/115/13.8KV TRANSFORMER CKT 1
FDNS	00NR	2	17SP	G15_053	TO->FROM	SIDNEY - SIDNEY TRANSFORMER 230KV CKT 1	400	400	0.03143	118.7101	KEYSTONE - SIDNEY1-LNX3345.00 345KV CKT 1
FDNS	00NR	2	17SP	G15_053	TO->FROM	SIDNEY - SIDNEY TRANSFORMER 230KV CKT 1	400	400	0.03143	118.2146	SIDNEY - SIDNEY1-LNX3345.00 345KV CKT Z
FDNS	00NR	2	17SP	G15_053	FROM->TO	SIDNEY (SDQ KV2A) 345/230/13.8KV TRANSFORMER CKT 1	400	480	0.03143	100.8156	KEYSTONE - SIDNEY1-LNX3345.00 345KV CKT 1
FDNS	00NR	2	17SP	G15_053	FROM->TO	SIDNEY (SDQ KV2A) 345/230/13.8KV TRANSFORMER CKT 1	400	480	0.03143	100.5215	SIDNEY - SIDNEY1-LNX3345.00 345KV CKT Z
FDNS	00NR	2	17SP	G15_053	FROM->TO	SIDNEY (SDQ KV2A) 345/230/13.8KV TRANSFORMER CKT 1	400	480	0.03143	100.2736	SIDNEY - SIDNEY1-LNX3345.00 345KV CKT Z
FDNS	00NR	2	17SP	G15_053	FROM->TO	SIDNEY (SDQ KV2A) 345/230/13.8KV TRANSFORMER CKT 1	400	480	0.03143	100.213	KEYSTONE - SIDNEY1-LNX3345.00 345KV CKT 1
FDNS	09ALL	3	20L	G15_053	FROM->TO	BLOOMFIELD - GAVINS POINT 115KV CKT 1	120	120	0.19795	116.7987	ANTELOPE 3345.00 (ANTELOPE T1) 345/115/13.8KV TRANSFORMER CKT 1
FDNS	09ALL	3	17G	G15_053	FROM->TO	BLOOMFIELD - GAVINS POINT 115KV CKT 1	120	120	0.19763	111.6641	ANTELOPE 3345.00 (ANTELOPE T1) 345/115/13.8KV TRANSFORMER CKT 1
FDNS	09ALL	3	16WP	G15_053	FROM->TO	BLOOMFIELD - GAVINS POINT 115KV CKT 1	120	120	0.19782	107.4016	ANTELOPE 3345.00 (ANTELOPE T1) 345/115/13.8KV TRANSFORMER CKT 1
FDNS	09ALL	3	20WP	G15_053	FROM->TO	BLOOMFIELD - GAVINS POINT 115KV CKT 1	120	120	0.19666	105.1367	ANTELOPE 3345.00 (ANTELOPE T1) 345/115/13.8KV TRANSFORMER CKT 1
FDNS	00NR	3	17SP	G15_053	FROM->TO	COLUMEAST (COL.EAST T3) 230/115/13.8KV TRANSFORMER CKT 1	187	187	0.03499	109.6271	COLUMEAST - SHELL CREEK 345KV CKT 1
FDNS	00NR	3	17SP	G15_053	FROM->TO	COLUMEAST (COL.EAST T3) 230/115/13.8KV TRANSFORMER CKT 1	187	187	0.03499	108.958	COLUMEAST - SHELL CREEK 345KV CKT 1
FDNS	00NR	3	20SP	G15_053	FROM->TO	COLUMEAST (COL.EAST T3) 230/115/13.8KV TRANSFORMER CKT 1	187	187	0.03564	106.2219	COLUMEAST - SHELL CREEK 345KV CKT 1
FDNS	00NR	3	20SP	G15_053	FROM->TO	COLUMEAST (COL.EAST T3) 230/115/13.8KV TRANSFORMER CKT 1	187	187	0.03564	105.4771	COLUMEAST - SHELL CREEK 345KV CKT 1
FDNS	00NR	3	25SP	G15_053	FROM->TO	COLUMEAST (COL.EAST T3) 230/115/13.8KV TRANSFORMER CKT 1	187	187	0.03523	102.789	COLUMEAST - SHELL CREEK 345KV CKT 1
FDNS	00NR	3	16WP	G15_053	FROM->TO	COLUMEAST (COL.EAST T3) 230/115/13.8KV TRANSFORMER CKT 1	187	187	0.03599	102.2317	COLUMEAST - SHELL CREEK 345KV CKT 1
FDNS	00NR	3	25SP	G15_053	FROM->TO	COLUMEAST (COL.EAST T3) 230/115/13.8KV TRANSFORMER CKT 1	187	187	0.03523	102.1579	COLUMEAST - SHELL CREEK 345KV CKT 1
FDNS	00NR	3	16WP	G15_053	FROM->TO	COLUMEAST (COL.EAST T3) 230/115/13.8KV TRANSFORMER CKT 1	187	187	0.03599	100.6408	COLUMEAST - SHELL CREEK 345KV CKT 1
FDNS	09NR	3	17G	G15_053	FROM->TO	DIXONCO 230.00 - TWIN CHURCH 230KV CKT 1	320	320	0.03285	113.1281	BELDEN 4 230.00 - DIXONCO 230.00 230KV CKT 1
FDNS	09NR	3	17G	G15_053	FROM->TO	DIXONCO 230.00 - TWIN CHURCH 230KV CKT 1	320	320	0.05473	112.169	HOSKINS - RAUN 345KV CKT 1
FDNS	09NR	3	17G	G15_053	FROM->TO	DIXONCO 230.00 - TWIN CHURCH 230KV CKT 1	320	320	0.04123	110.7771	BELDEN 4 230.00 - RASMUSN 230KV CKT 1
FDNS	09NR	3	20L	G15_053	FROM->TO	DIXONCO 230.00 - TWIN CHURCH 230KV CKT 1	320	320	0.03504	109.5223	BELDEN 4 230.00 - DIXONCO 230.00 230KV CKT 1
FDNS	09NR	3	17G	G15_053	FROM->TO	DIXONCO 230.00 - TWIN CHURCH 230KV CKT 1	320	320	0.04062	108.3686	RASMUSN - SIOUX CITY 230KV CKT 1
FDNS	09NR	3	20L	G15_053	FROM->TO	DIXONCO 230.00 - TWIN CHURCH 230KV CKT 1	320	320	0.04353	107.0534	BELDEN 4 230.00 - RASMUSN 230KV CKT 1
FDNS	09NR	3	17G	G15_053	FROM->TO	DIXONCO 230.00 - TWIN CHURCH 230KV CKT 1	320	320	0.03405	106.1555	P13:230-345:NPPD:NUCOR-1
FDNS	09NR	3	20L	G15_053	FROM->TO	DIXONCO 230.00 - TWIN CHURCH 230KV CKT 1	320	320	0.05823	105.1297	HOSKINS - RAUN 345KV CKT 1
FDNS	09NR	3	20L	G15_053	FROM->TO	DIXONCO 230.00 - TWIN CHURCH 230KV CKT 1	320	320	0.05823	105.1297	HOSKINS - RAUN 345KV CKT 1
FDNS	09NR	3	17G	G15_053	FROM->TO	DIXONCO 230.00 - TWIN CHURCH 230KV CKT 1	320	320	0.0384	104.3736	BELDEN - TWIN CHURCH 115KV CKT 1
FDNS	09ALL	3	16WP	G15_053	FROM->TO	DIXONCO 230.00 - TWIN CHURCH 230KV CKT 1	320	320	0.04499	102.408	BASE CASE
FDNS	09NR	3	20L	G15_053	FROM->TO	DIXONCO 230.00 - TWIN CHURCH 230KV CKT 1	320	320	0.03612	102.3299	P13:230-345:NPPD:NUCOR-1
FDNS	09ALL	3	17G	G15_053	FROM->TO	DIXONCO 230.00 - TWIN CHURCH 230KV CKT 1	320	320	0.04492	101.8514	BASE CASE
FDNS	09NR	3	20L	G15_053	FROM->TO	DIXONCO 230.00 - TWIN CHURCH 230KV CKT 1	320	320	0.04312	101.8276	RASMUSN - SIOUX CITY 230KV CKT 1

SOLUTION	GROUP	SCENARIO	SEASON	SOURCE	DIRECTION	MONITORED ELEMENT	RATEA (MVA)	RATEB(MVA)	TDF	TC%LOADING (% MVA)	CONTINGENCY
FDNS	09NR	3	17G	G15_053	FROM->TO	DIXONCO 230.00 - TWIN CHURCH 230KV CKT 1	320	320	0.03405	101.647	P13:115-230:NPPD:NUCOR-3
FDNS	09NR	3	17G	G15_053	FROM->TO	DIXONCO 230.00 - TWIN CHURCH 230KV CKT 1	320	320	0.04543	101.5943	HOSKINS - SHELL CREEK 345KV CKT 1
FDNS	09ALL	3	20WP	G15_053	FROM->TO	DIXONCO 230.00 - TWIN CHURCH 230KV CKT 1	320	320	0.04534	101.541	BASE CASE
FDNS	09NR	3	17G	G15_053	FROM->TO	DIXONCO 230.00 - TWIN CHURCH 230KV CKT 1	320	320	0.04066	100.857	COLUMEAST - NW68TH & HOLDREGE 345KV CKT 1
FDNS	09NR	3	17G	G15_053	FROM->TO	DIXONCO 230.00 - TWIN CHURCH 230KV CKT 1	320	320	0.04066	100.857	COLUMEAST - NW68TH & HOLDREGE 345KV CKT 1
FDNS	09NR	3	17G	G15_053	FROM->TO	DIXONCO 230.00 - TWIN CHURCH 230KV CKT 1	320	320	0.03453	100.4443	HOSKINS (HOSKINS T2) 345/230/13.8KV TRANSFORMER CKT 1
FDNS	09NR	3	17G	G15_053	FROM->TO	DIXONCO 230.00 - TWIN CHURCH 230KV CKT 1	320	320	0.03453	100.4443	HOSKINS (HOSKINS T2) 345/230/13.8KV TRANSFORMER CKT 1
FDNS	09NR	3	17G	G15_053	FROM->TO	DIXONCO 230.00 - TWIN CHURCH 230KV CKT 1	320	320	0.03958	100.3584	COLUMEAST - SHELL CREEK 345KV CKT 1
FDNS	09NR	3	17G	G15_053	FROM->TO	DIXONCO 230.00 - TWIN CHURCH 230KV CKT 1	320	320	0.03482	99.7	FT RANDAL - SIOUX CITY 230KV CKT 1
FDNS	09NR	3	17G	G15_053	FROM->TO	DIXONCO 230.00 - TWIN CHURCH 230KV CKT 1	320	320	0.03203	99.5	RAUN - SIOUX CITY 345KV CKT 1
FDNS	09NR	3	17G	G15_053	FROM->TO	GAVINS POINT - YANKON JCT 115KV CKT 1	120	120	0.04641	100.9065	GAVINS POINT - SPIRIT MOUND 115KV CKT 1
FDNS	09NR	3	17G	G15_053	TO->FROM	GERALD GENTLEMAN STATION - OGALLALA 230KV CKT 1	320	320	0.03448	124.6748	GERALD GENTLEMAN STATION - KEYSTONE 345KV CKT 1
FDNS	00NR	3	16WP	G15_053	TO->FROM	GERALD GENTLEMAN STATION - OGALLALA 230KV CKT 1	320	320	0.03376	119.0451	GERALD GENTLEMAN STATION - KEYSTONE 345KV CKT 1
FDNS	00NR	3	20WP	G15_053	TO->FROM	GERALD GENTLEMAN STATION - OGALLALA 230KV CKT 1	320	320	0.03426	113.4992	GERALD GENTLEMAN STATION - KEYSTONE 345KV CKT 1
FDNS	00NR	3	17SP	G15_053	TO->FROM	GRPRAR1-LNX3345.00 - GRPRAR 345KV CKT Z	720	720	0.0393	110.3176	ANTELOPE 3345.00 (ANTELOPE T1) 345/115/13.8KV TRANSFORMER CKT 1
FDNS	00NR	3	20SP	G15_053	TO->FROM	GRPRAR1-LNX3345.00 - GRPRAR 345KV CKT Z	720	720	0.0395	102.4887	ANTELOPE 3345.00 (ANTELOPE T1) 345/115/13.8KV TRANSFORMER CKT 1
FDNS	00NR	3	25SP	G15_053	TO->FROM	GRPRAR1-LNX3345.00 - GRPRAR 345KV CKT Z	720	720	0.03984	101.5839	ANTELOPE 3345.00 (ANTELOPE T1) 345/115/13.8KV TRANSFORMER CKT 1
FDNS	00NR	3	17SP	G15_053	FROM->TO	GRPRAR1-LNX3345.00 - HOLT.CO3 345.00 345KV CKT 1	720	720	0.0393	110.3178	ANTELOPE 3345.00 (ANTELOPE T1) 345/115/13.8KV TRANSFORMER CKT 1
FDNS	00NR	3	20SP	G15_053	FROM->TO	GRPRAR1-LNX3345.00 - HOLT.CO3 345.00 345KV CKT 1	720	720	0.0395	102.942	ANTELOPE 3345.00 (ANTELOPE T1) 345/115/13.8KV TRANSFORMER CKT 1
FDNS	00NR	3	25SP	G15_053	FROM->TO	GRPRAR1-LNX3345.00 - HOLT.CO3 345.00 345KV CKT 1	720	720	0.03984	102.0297	ANTELOPE 3345.00 (ANTELOPE T1) 345/115/13.8KV TRANSFORMER CKT 1
FDNS	00NR	4	17SP	G15_053	FROM->TO	COLUMEAST (COL.EAST T3) 230/115/13.8KV TRANSFORMER CKT 1	187	187	0.03882	109.4328	COLUMEAST - SHELL CREEK 345KV CKT 1
FDNS	00NR	4	17SP	G15_053	FROM->TO	COLUMEAST (COL.EAST T3) 230/115/13.8KV TRANSFORMER CKT 1	187	187	0.03882	108.7373	COLUMEAST - SHELL CREEK 345KV CKT 1
FDNS	00NR	4	20SP	G15_053	FROM->TO	COLUMEAST (COL.EAST T3) 230/115/13.8KV TRANSFORMER CKT 1	187	187	0.03938	105.9831	COLUMEAST - SHELL CREEK 345KV CKT 1
FDNS	00NR	4	20SP	G15_053	FROM->TO	COLUMEAST (COL.EAST T3) 230/115/13.8KV TRANSFORMER CKT 1	187	187	0.03938	105.2227	COLUMEAST - SHELL CREEK 345KV CKT 1
FDNS	00NR	4	25SP	G15_053	FROM->TO	COLUMEAST (COL.EAST T3) 230/115/13.8KV TRANSFORMER CKT 1	187	187	0.03896	102.5369	COLUMEAST - SHELL CREEK 345KV CKT 1
FDNS	00NR	4	16WP	G15_053	FROM->TO	COLUMEAST (COL.EAST T3) 230/115/13.8KV TRANSFORMER CKT 1	187	187	0.03981	102.2883	COLUMEAST - SHELL CREEK 345KV CKT 1
FDNS	00NR	4	25SP	G15_053	FROM->TO	COLUMEAST (COL.EAST T3) 230/115/13.8KV TRANSFORMER CKT 1	187	187	0.03896	101.8868	COLUMEAST - SHELL CREEK 345KV CKT 1
FDNS	00NR	4	16WP	G15_053	FROM->TO	COLUMEAST (COL.EAST T3) 230/115/13.8KV TRANSFORMER CKT 1	187	187	0.03981	100.7006	COLUMEAST - SHELL CREEK 345KV CKT 1
FDNS	09NR	4	17G	G15_053	FROM->TO	DIXONCO 230.00 - TWIN CHURCH 230KV CKT 1	320	320	0.03461	113.2554	BELDEN 4 230.00 - DIXONCO 230.00 230KV CKT 1
FDNS	09NR	4	17G	G15_053	FROM->TO	DIXONCO 230.00 - TWIN CHURCH 230KV CKT 1	320	320	0.05552	112.2247	HOSKINS - RAUN 345KV CKT 1
FDNS	09NR	4	17G	G15_053	FROM->TO	DIXONCO 230.00 - TWIN CHURCH 230KV CKT 1	320	320	0.04024	110.701	BELDEN 4 230.00 - RASMUSN 230KV CKT 1
FDNS	09NR	4	20L	G15_053	FROM->TO	DIXONCO 230.00 - TWIN CHURCH 230KV CKT 1	320	320	0.03682	109.6474	BELDEN 4 230.00 - DIXONCO 230.00 230KV CKT 1
FDNS	09NR	4	17G	G15_053	FROM->TO	DIXONCO 230.00 - TWIN CHURCH 230KV CKT 1	320	320	0.03911	108.2497	RASMUSN - SIOUX CITY 230KV CKT 1
FDNS	09NR	4	20L	G15_053	FROM->TO	DIXONCO 230.00 - TWIN CHURCH 230KV CKT 1	320	320	0.04259	106.9756	BELDEN 4 230.00 - RASMUSN 230KV CKT 1
FDNS	09NR	4	17G	G15_053	FROM->TO	DIXONCO 230.00 - TWIN CHURCH 230KV CKT 1	320	320	0.03347	105.7984	P13:230-345:NPPD:NUCOR-1
FDNS	09NR	4	20L	G15_053	FROM->TO	DIXONCO 230.00 - TWIN CHURCH 230KV CKT 1	320	320	0.05906	105.1851	HOSKINS - RAUN 345KV CKT 1
FDNS	09NR	4	20L	G15_053	FROM->TO	DIXONCO 230.00 - TWIN CHURCH 230KV CKT 1	320	320	0.05906	105.1851	HOSKINS - RAUN 345KV CKT 1
FDNS	09NR	4	17G	G15_053	FROM->TO	DIXONCO 230.00 - TWIN CHURCH 230KV CKT 1	320	320	0.03714	104.2743	BELDEN - TWIN CHURCH 115KV CKT 1
FDNS	09ALL	4	16WP	G15_053	FROM->TO	DIXONCO 230.00 - TWIN CHURCH 230KV CKT 1	320	320	0.04442	102.3663	BASE CASE
FDNS	09NR	4	20L	G15_053	FROM->TO	DIXONCO 230.00 - TWIN CHURCH 230KV CKT 1	320	320	0.03557	101.968	P13:230-345:NPPD:NUCOR-1
FDNS	09ALL	4	17G	G15_053	FROM->TO	DIXONCO 230.00 - TWIN CHURCH 230KV CKT 1	320	320	0.04434	101.7781	BASE CASE
FDNS	09NR	4	20L	G15_053	FROM->TO	DIXONCO 230.00 - TWIN CHURCH 230KV CKT 1	320	320	0.04166	101.711	RASMUSN - SIOUX CITY 230KV CKT 1
FDNS	09NR	4	17G	G15_053	FROM->TO	DIXONCO 230.00 - TWIN CHURCH 230KV CKT 1	320	320	0.03347	101.6959	P13:115-230:NPPD:NUCOR-3
FDNS	09NR	4	17G	G15_053	FROM->TO	DIXONCO 230.00 - TWIN CHURCH 230KV CKT 1	320	320	0.0456	101.6058	HOSKINS - SHELL CREEK 345KV CKT 1
FDNS	09ALL	4	20WP	G15_053	FROM->TO	DIXONCO 230.00 - TWIN CHURCH 230KV CKT 1	320	320	0.0448	101.5031	BASE CASE
FDNS	09NR	4	17G	G15_053	FROM->TO	DIXONCO 230.00 - TWIN CHURCH 230KV CKT 1	320	320	0.04004	100.8084	COLUMEAST - NW68TH & HOLDREGE 345KV CKT 1
FDNS	09NR	4	17G	G15_053	FROM->TO	DIXONCO 230.00 - TWIN CHURCH 230KV CKT 1	320	320	0.04004	100.8084	COLUMEAST - NW68TH & HOLDREGE 345KV CKT 1
FDNS	09NR	4	17G	G15_053	FROM->TO	DIXONCO 230.00 - TWIN CHURCH 230KV CKT 1	320	320	0.03924	100.3324	COLUMEAST - SHELL CREEK 345KV CKT 1
FDNS	09NR	4	17G	G15_053	FROM->TO	DIXONCO 230.00 - TWIN CHURCH 230KV CKT 1	320	320	0.03013	100.0983	HOSKINS (HOSKINS T2) 345/230/13.8KV TRANSFORMER CKT 1
FDNS	09NR	4	17G	G15_053	FROM->TO	DIXONCO 230.00 - TWIN CHURCH 230KV CKT 1	320	320	0.03013	100.0983	HOSKINS (HOSKINS T2) 345/230/13.8KV TRANSFORMER CKT 1
FDNS	09NR	4	17G	G15_053	FROM->TO	DIXONCO 230.00 - TWIN CHURCH 230KV CKT 1	320	320	0.03407	99.7	FT RANDAL - SIOUX CITY 230KV CKT 1
FDNS	09NR	4	17G	G15_053	FROM->TO	DIXONCO 230.00 - TWIN CHURCH 230KV CKT 1	320	320	0.0319	99.5	RAUN - SIOUX CITY 345KV CKT 1
FDNS	00NR	5	17SP	G15_053	FROM->TO	COLUMEAST (COL.EAST T3) 230/115/13.8KV TRANSFORMER CKT 1	187	187	0.03856	109.3787	COLUMEAST - SHELL CREEK 345KV CKT 1
FDNS	00NR	5	17SP	G15_053	FROM->TO	COLUMEAST (COL.EAST T3) 230/115/13.8KV TRANSFORMER CKT 1	187	187	0.03856	108.6827	COLUMEAST - SHELL CREEK 345KV CKT 1
FDNS	00NR	5	20SP	G15_053	FROM->TO	COLUMEAST (COL.EAST T3) 230/115/13.8KV TRANSFORMER CKT 1	187	187	0.03911	105.8952	COLUMEAST - SHELL CREEK 345KV CKT 1
FDNS	00NR	5	20SP	G15_053	FROM->TO	COLUMEAST (COL.EAST T3) 230/115/13.8KV TRANSFORMER CKT 1	187	187	0.03911	105.1342	COLUMEAST - SHELL CREEK 345KV CKT 1
FDNS	00NR	5	25SP	G15_053	FROM->TO	COLUMEAST (COL.EAST T3) 230/115/13.8KV TRANSFORMER CKT 1	187	187	0.0387	102.482	COLUMEAST - SHELL CREEK 345KV CKT 1
FDNS	00NR	5	16WP	G15_053	FROM->TO	COLUMEAST (COL.EAST T3) 230/115/13.8KV TRANSFORMER CKT 1	187	187	0.03955	102.0346	COLUMEAST - SHELL CREEK 345KV CKT 1
FDNS	00NR	5	25SP	G15_053	FROM->TO	COLUMEAST (COL.EAST T3) 230/115/13.8KV TRANSFORMER CKT 1	187	187	0.0387	101.8314	COLUMEAST - SHELL CREEK 345KV CKT 1
FDNS	00NR	5	16WP	G15_053	FROM->TO	COLUMEAST (COL.EAST T3) 230/115/13.8KV TRANSFORMER CKT 1	187	187	0.03955	100.4516	COLUMEAST - SHELL CREEK 345KV CKT 1
FDNS	09ALL	5	17G	G15_053	FROM->TO	DIXONCO 3 345.00 (DIXON1) 345/230/13.8KV TRANSFORMER CKT 1	336	420	0.05731	114.6377	BASE CASE
FDNS	09ALL	5	17G	G15_053	FROM->TO	DIXONCO 3 345.00 (DIXON1) 345/230/13.8KV TRANSFORMER CKT 1	336	420	0.05731	114.3071	BASE CASE
FDNS	09ALL	5	16WP	G15_053	FROM->TO	DIXONCO 3 345.00 (DIXON1) 345/230/13.8KV TRANSFORMER CKT 1	336	420	0.05732	112.2161	BASE CASE
FDNS	09ALL	5	16WP	G15_053	FROM->TO	DIXONCO 3 345.00 (DIXON1) 345/230/13.8KV TRANSFORMER CKT 1	336	420	0.05732	112.0272	BASE CASE
FDNS	09ALL	5	20L	G15_053	FROM->TO	DIXONCO 3 345.00 (DIXON1) 345/230/13.8KV TRANSFORMER CKT 1	336	420	0.05626	112.0004	BASE CASE
FDNS	09ALL	5	20L	G15_053	FROM->TO	DIXONCO 3 345.00 (DIXON1) 345/230/13.8KV TRANSFORMER CKT 1	336	420	0.05626	111.7535	BASE CASE
FDNS	09ALL	5	20WP	G15_053	FROM->TO	DIXONCO 3 345.00 (DIXON1) 345/230/13.8KV TRANSFORMER CKT 1	336	420	0.05783	111.2556	BASE CASE
FDNS	09ALL	5	20WP	G15_053	FROM->TO	DIXONCO 3 345.00 (DIXON1) 345/230/13.8KV TRANSFORMER CKT 1	336	420	0.05783	110.9944	BASE CASE
FDNS	09NR	5	17G	G15_053	FROM->TO	DIXONCO 3 345.00 (DIXON1) 345/230/13.8KV TRANSFORMER CKT 1	336	420	0.04322	108.2757	BASE CASE
FDNS	09NR	5	17G	G15_053	FROM->TO	DIXONCO 3 345.00 (DIXON1) 345/230/13.8KV TRANSFORMER CKT 1	336	420	0.04322	107.917	BASE CASE
FDNS	09NR	5	20L	G15_053	FROM->TO	DIXONCO 3 345.00 (DIXON1) 345/230/13.8KV TRANSFORMER CKT 1	336	420	0.04592	103.7279	BASE CASE
FDNS	09NR	5	20L	G15_053	FROM->TO	DIXONCO 3 345.00 (DIXON1) 345/230/13.8KV TRANSFORMER CKT 1	336	420	0.04592	103.475	BASE CASE
FDNS	09ALL	5	20SP	G15_053	FROM->TO	DIXONCO 3 345.00 (DIXON1) 345/230/13.8KV TRANSFORMER CKT 1	336	420	0.05745	102.2126	BASE CASE
FDNS	09ALL	5	20SP	G15_053	FROM->TO	DIXONCO 3 345.00 (DIXON1) 345/230/13.8KV TRANSFORMER CKT 1	336	420	0.05745	102.1467	BASE CASE
FDNS	09ALL	5	17SP	G15_053	FROM->TO	DIXONCO 3 345.00 (DIXON1) 345/230/13.8KV TRANSFORMER CKT 1	336	420	0.05694	102.0451	BASE CASE
FDNS	09ALL	5	17SP	G15_053	FROM->TO	DIXONCO 3 345.00 (DIXON1) 345/230/13.8KV TRANSFORMER CKT 1	336	420	0.05694	101.9875	BASE CASE
FDNS	09NR	5	17G	G15_053	FROM->TO	DIXONCO 3 345.00 (DIXON1) 345/230/13.8KV TRANSFORMER CKT 1	336	420	0.0719	101.5656	HOSKINS - RAUN 345KV CKT 1
FDNS	09NR	5	17G	G15_053	FROM->TO	DIXONCO 3 345.00 (DIXON1) 345/230/13.8KV TRANSFORMER CKT 1	336	420	0.0719	101.3922	HOSKINS - RAUN 345KV CKT 1
FDNS	09ALL	5	25SP	G15_053	FROM->TO	DIXONCO 3 345.00 (DIXON1) 345/230/13.8KV TRANSFORMER CKT 1	336	420	0.05737	99.9	BASE CASE

SOLUTION	GROUP	SCENARIO	SEASON	SOURCE	DIRECTION	MONITORED ELEMENT	RATEA (MVA)	RATEB(MVA)	TDF	TC%LOADING (% MVA)	CONTINGENCY
FDNS	09ALL	5	25SP	G15_053	FROM->TO	DIXONCO 3 345.00 (DIXON1) 345/230/13.8KV TRANSFORMER CKT 1	336	420	0.05737	99.9	BASE CASE
FDNS	09NR	6	17G	G15_053	FROM->TO	DIXONCO 3 345.00 (DIXON1) 345/230/13.8KV TRANSFORMER CKT 1	336	420	0.04239	108.3463	BASE CASE
FDNS	09NR	6	17G	G15_053	FROM->TO	DIXONCO 3 345.00 (DIXON1) 345/230/13.8KV TRANSFORMER CKT 1	336	420	0.04239	107.9901	BASE CASE
FDNS	09NR	6	20L	G15_053	FROM->TO	DIXONCO 3 345.00 (DIXON1) 345/230/13.8KV TRANSFORMER CKT 1	336	420	0.04511	103.7394	BASE CASE
FDNS	09NR	6	20L	G15_053	FROM->TO	DIXONCO 3 345.00 (DIXON1) 345/230/13.8KV TRANSFORMER CKT 1	336	420	0.04511	103.488	BASE CASE
FDNS	09NR	6	17G	G15_053	FROM->TO	DIXONCO 3 345.00 (DIXON1) 345/230/13.8KV TRANSFORMER CKT 1	336	420	0.07045	101.625	HOSKINS - RAUN 345KV CKT 1
FDNS	09NR	6	17G	G15_053	FROM->TO	DIXONCO 3 345.00 (DIXON1) 345/230/13.8KV TRANSFORMER CKT 1	336	420	0.07045	101.454	HOSKINS - RAUN 345KV CKT 1
FDNS	00NR	6	17SP	G15_053	FROM->TO	PETERSBRG.N7115.00 - PETERSBURG 115KV CKT Z1	193	193	0.05773	100.4936	KELLY - MEADOWGROVE4230.00 230KV CKT 1
FDNS	00NR	6	17SP	G15_053	TO->FROM	SIDNEY - SIDNEY TRANSFORMER 230KV CKT 1	496	496	0.02972	108.2092	KEYSTONE - SIDNEY1-LNX3345.00 345KV CKT 1
FDNS	00NR	6	17SP	G15_053	TO->FROM	SIDNEY - SIDNEY TRANSFORMER 230KV CKT 1	496	496	0.02972	107.559	SIDNEY - SIDNEY1-LNX3345.00 345KV CKT Z
FDNS	00NR	6	20SP	G15_053	TO->FROM	SIDNEY - SIDNEY TRANSFORMER 230KV CKT 1	496	496	0.02962	100.7153	KEYSTONE - SIDNEY1-LNX3345.00 345KV CKT 1
FDNS	00NR	6	20SP	G15_053	TO->FROM	SIDNEY - SIDNEY TRANSFORMER 230KV CKT 1	496	496	0.02962	100.1554	SIDNEY - SIDNEY1-LNX3345.00 345KV CKT Z
FDNSLock-Blown up	00NR	0	16WP	G15_054		Non-Converged Contingency	720	720	0.05538	-	GR ISLD-LNX3345.00 - GRAND ISLAND 345KV CKT Z
FDNSLock-Blown up	00NR	0	16WP	G15_054		Non-Converged Contingency	720	720	0.05538	-	GR ISLD-LNX3345.00 - HOLT.CO3 345.00 345KV CKT 1
FDNSLock-Blown up	09NR	0	17G	G15_054		Non-Converged Contingency	720	720	0.05517	-	GR ISLD-LNX3345.00 - GRAND ISLAND 345KV CKT Z
FDNSLock-Blown up	09NR	0	17G	G15_054		Non-Converged Contingency	720	720	0.05517	-	GR ISLD-LNX3345.00 - HOLT.CO3 345.00 345KV CKT 1
FDNSLock-Blown up	00NR	0	17SP	G15_054		Non-Converged Contingency	720	720	0.0568	-	GR ISLD-LNX3345.00 - GRAND ISLAND 345KV CKT Z
FDNSLock-Blown up	00NR	0	17SP	G15_054		Non-Converged Contingency	720	720	0.0568	-	GR ISLD-LNX3345.00 - HOLT.CO3 345.00 345KV CKT 1
FDNSLock-Blown up	00NR	2	17SP	G15_054		Non-Converged Contingency	720	720	0.07636	-	GRPRAR1-LNX3345.00 - GRPRAR 345KV CKT Z
FDNSLock-Blown up	00NR	2	17SP	G15_054		Non-Converged Contingency	720	720	0.07636	-	GRPRAR1-LNX3345.00 - HOLT.CO3 345.00 345KV CKT 1
FDNS	09ALL	0	17SP	G15_054	TO->FROM	ALBION - PETERSBURG 115KV CKT 1	137	137	0.22055	108.5258	ANTELOPE 3345.00 - HOSKINS 345KV CKT 1
FDNS	09ALL	0	17SP	G15_054	TO->FROM	ALBION - PETERSBURG 115KV CKT 1	137	137	0.22055	108.4461	ANTELOPE 3345.00 (ANTELOPE T1) 345/115/13.8KV TRANSFORMER CKT 1
FDNS	09ALL	0	17G	G15_054	TO->FROM	ALBION - PETERSBURG 115KV CKT 1	137	137	0.22023	106.2621	ANTELOPE 3345.00 (ANTELOPE T1) 345/115/13.8KV TRANSFORMER CKT 1
FDNS	09ALL	0	17G	G15_054	TO->FROM	ALBION - PETERSBURG 115KV CKT 1	137	137	0.22023	106.2496	ANTELOPE 3345.00 - HOSKINS 345KV CKT 1
FDNS	09ALL	0	16WP	G15_054	TO->FROM	ALBION - PETERSBURG 115KV CKT 1	137	137	0.21991	105.4944	ANTELOPE 3345.00 - HOSKINS 345KV CKT 1
FDNS	09ALL	0	16WP	G15_054	TO->FROM	ALBION - PETERSBURG 115KV CKT 1	137	137	0.21991	105.4362	ANTELOPE 3345.00 (ANTELOPE T1) 345/115/13.8KV TRANSFORMER CKT 1
FDNS	09ALL	0	17G	G15_054	FROM->TO	ANTELOPE 7115.00 - COUNTY LINE 115KV CKT 1	193	193	0.41449	103.8746	ANTELOPE 3345.00 (ANTELOPE T1) 345/115/13.8KV TRANSFORMER CKT 1
FDNS	09ALL	0	17G	G15_054	FROM->TO	ANTELOPE 7115.00 - COUNTY LINE 115KV CKT 1	193	193	0.41449	103.837	ANTELOPE 3345.00 - HOSKINS 345KV CKT 1
FDNS	09ALL	0	16WP	G15_054	FROM->TO	ANTELOPE 7115.00 - COUNTY LINE 115KV CKT 1	193	193	0.41413	99.5	ANTELOPE 3345.00 (ANTELOPE T1) 345/115/13.8KV TRANSFORMER CKT 1
FDNS	09ALL	0	17G	G15_054	TO->FROM	BATTLE CREEK - COUNTY LINE 115KV CKT 1	193	193	0.41449	103.4934	ANTELOPE 3345.00 (ANTELOPE T1) 345/115/13.8KV TRANSFORMER CKT 1
FDNS	09ALL	0	17G	G15_054	TO->FROM	BATTLE CREEK - COUNTY LINE 115KV CKT 1	193	193	0.41449	103.455	ANTELOPE 3345.00 - HOSKINS 345KV CKT 1
FDNS	09ALL	0	17G	G15_054	FROM->TO	BATTLE CREEK - NORTH NORFOLK 115KV CKT 1	193	193	0.41449	100.099	ANTELOPE 3345.00 (ANTELOPE T1) 345/115/13.8KV TRANSFORMER CKT 1
FDNS	09ALL	0	17G	G15_054	FROM->TO	BATTLE CREEK - NORTH NORFOLK 115KV CKT 1	193	193	0.41449	100.0635	ANTELOPE 3345.00 - HOSKINS 345KV CKT 1
FDNS	09ALL	0	20L	G15_054	FROM->TO	BLOOMFIELD - GAVINS POINT 115KV CKT 1	120	120	0.19616	116.2896	ANTELOPE 3345.00 - HOSKINS 345KV CKT 1
FDNS	09ALL	0	20L	G15_054	FROM->TO	BLOOMFIELD - GAVINS POINT 115KV CKT 1	120	120	0.19616	116.2699	ANTELOPE 3345.00 (ANTELOPE T1) 345/115/13.8KV TRANSFORMER CKT 1
FDNS	09ALL	0	17G	G15_054	FROM->TO	BLOOMFIELD - GAVINS POINT 115KV CKT 1	120	120	0.19654	110.631	ANTELOPE 3345.00 - HOSKINS 345KV CKT 1
FDNS	09ALL	0	17G	G15_054	FROM->TO	BLOOMFIELD - GAVINS POINT 115KV CKT 1	120	120	0.19654	110.6183	ANTELOPE 3345.00 (ANTELOPE T1) 345/115/13.8KV TRANSFORMER CKT 1
FDNS	09ALL	0	16WP	G15_054	FROM->TO	BLOOMFIELD - GAVINS POINT 115KV CKT 1	120	120	0.19675	106.1402	ANTELOPE 3345.00 (ANTELOPE T1) 345/115/13.8KV TRANSFORMER CKT 1
FDNS	09ALL	0	16WP	G15_054	FROM->TO	BLOOMFIELD - GAVINS POINT 115KV CKT 1	120	120	0.19675	106.126	ANTELOPE 3345.00 - HOSKINS 345KV CKT 1
FDNS	09NR	0	20L	G15_054	FROM->TO	DIXONCO 230.00 - TWIN CHURCH 230KV CKT 1	320	320	0.06397	132.2426	P13:230-345:NPPD:NUCOR-1
FDNS	09NR	0	17G	G15_054	FROM->TO	DIXONCO 230.00 - TWIN CHURCH 230KV CKT 1	320	320	0.06321	131.612	P13:230-345:NPPD:NUCOR-1
FDNS	09NR	0	17G	G15_054	FROM->TO	DIXONCO 230.00 - TWIN CHURCH 230KV CKT 1	320	320	0.12145	129.9787	HOSKINS - RAUN 345KV CKT 1
FDNS	09NR	0	20L	G15_054	FROM->TO	DIXONCO 230.00 - TWIN CHURCH 230KV CKT 1	320	320	0.12238	128.8605	HOSKINS - RAUN 345KV CKT 1
FDNS	09NR	0	20L	G15_054	FROM->TO	DIXONCO 230.00 - TWIN CHURCH 230KV CKT 1	320	320	0.12238	128.8605	HOSKINS - RAUN 345KV CKT 1
FDNS	09NR	0	20L	G15_054	FROM->TO	DIXONCO 230.00 - TWIN CHURCH 230KV CKT 1	320	320	0.05448	123.6321	HOSKINS (HOSKINS T2) 345/230/13.8KV TRANSFORMER CKT 1
FDNS	09NR	0	20L	G15_054	FROM->TO	DIXONCO 230.00 - TWIN CHURCH 230KV CKT 1	320	320	0.05448	123.6321	HOSKINS (HOSKINS T2) 345/230/13.8KV TRANSFORMER CKT 1
FDNS	09NR	0	17G	G15_054	FROM->TO	DIXONCO 230.00 - TWIN CHURCH 230KV CKT 1	320	320	0.0541	123.0432	HOSKINS (HOSKINS T2) 345/230/13.8KV TRANSFORMER CKT 1
FDNS	09NR	0	17G	G15_054	FROM->TO	DIXONCO 230.00 - TWIN CHURCH 230KV CKT 1	320	320	0.0541	123.0432	HOSKINS (HOSKINS T2) 345/230/13.8KV TRANSFORMER CKT 1
FDNS	09ALL	0	20L	G15_054	FROM->TO	DIXONCO 230.00 - TWIN CHURCH 230KV CKT 1	320	320	0.07413	118.9903	BASE CASE
FDNS	09NR	0	17G	G15_054	FROM->TO	DIXONCO 230.00 - TWIN CHURCH 230KV CKT 1	320	320	0.06321	118.372	P13:115-230:NPPD:NUCOR-3
FDNS	09ALL	0	17G	G15_054	FROM->TO	DIXONCO 230.00 - TWIN CHURCH 230KV CKT 1	320	320	0.0733	118.2459	BASE CASE
FDNS	09NR	0	20L	G15_054	FROM->TO	DIXONCO 230.00 - TWIN CHURCH 230KV CKT 1	320	320	0.06397	117.4109	P13:115-230:NPPD:NUCOR-3
FDNS	09ALL	0	16WP	G15_054	FROM->TO	DIXONCO 230.00 - TWIN CHURCH 230KV CKT 1	320	320	0.07384	116.9772	BASE CASE
FDNS	09ALL	0	20WP	G15_054	FROM->TO	DIXONCO 230.00 - TWIN CHURCH 230KV CKT 1	320	320	0.07395	116.4755	BASE CASE
FDNS	09NR	0	17G	G15_054	FROM->TO	DIXONCO 230.00 - TWIN CHURCH 230KV CKT 1	320	320	0.10313	115.9264	HOSKINS - SHELL CREEK 345KV CKT 1
FDNS	09NR	0	20L	G15_054	FROM->TO	DIXONCO 230.00 - TWIN CHURCH 230KV CKT 1	320	320	0.10306	115.6839	HOSKINS - SHELL CREEK 345KV CKT 1
FDNS	09NR	0	17G	G15_054	FROM->TO	DIXONCO 230.00 - TWIN CHURCH 230KV CKT 1	320	320	0.07971	115.5532	COLUMEAST - NW68TH & HOLDREGE 345KV CKT 1
FDNS	09NR	0	17G	G15_054	FROM->TO	DIXONCO 230.00 - TWIN CHURCH 230KV CKT 1	320	320	0.07971	115.5532	COLUMEAST - NW68TH & HOLDREGE 345KV CKT 1
FDNS	09NR	0	17G	G15_054	FROM->TO	DIXONCO 230.00 - TWIN CHURCH 230KV CKT 1	320	320	0.06975	115.541	BELDEN - TWIN CHURCH 115KV CKT 1
FDNS	09NR	0	17G	G15_054	FROM->TO	DIXONCO 230.00 - TWIN CHURCH 230KV CKT 1	320	320	0.07842	114.9073	COLUMEAST - SHELL CREEK 345KV CKT 1
FDNS	09NR	0	20L	G15_054	FROM->TO	DIXONCO 230.00 - TWIN CHURCH 230KV CKT 1	320	320	0.07055	114.3537	BELDEN - TWIN CHURCH 115KV CKT 1
FDNS	09NR	0	20L	G15_054	FROM->TO	DIXONCO 230.00 - TWIN CHURCH 230KV CKT 1	320	320	0.06367	114.2723	RAUN - SIOUX CITY 345KV CKT 1
FDNS	09NR	0	20L	G15_054	FROM->TO	DIXONCO 230.00 - TWIN CHURCH 230KV CKT 1	320	320	0.06367	114.2723	RAUN - SIOUX CITY 345KV CKT 1
FDNS	09NR	0	20L	G15_054	FROM->TO	DIXONCO 230.00 - TWIN CHURCH 230KV CKT 1	320	320	0.07997	114.1827	COLUMEAST - NW68TH & HOLDREGE 345KV CKT 1
FDNS	09NR	0	20L	G15_054	FROM->TO	DIXONCO 230.00 - TWIN CHURCH 230KV CKT 1	320	320	0.07997	114.1827	COLUMEAST - NW68TH & HOLDREGE 345KV CKT 1
FDNS	09NR	0	17G	G15_054	FROM->TO	DIXONCO 230.00 - TWIN CHURCH 230KV CKT 1	320	320	0.06321	114.0009	P13:115-345:NPPD:NUCOR-2
FDNS	09NR	0	20L	G15_054	FROM->TO	DIXONCO 230.00 - TWIN CHURCH 230KV CKT 1	320	320	0.07908	113.9208	COLUMEAST - SHELL CREEK 345KV CKT 1
FDNS	09NR	0	17G	G15_054	FROM->TO	DIXONCO 230.00 - TWIN CHURCH 230KV CKT 1	320	320	0.05583	113.4676	HOSKINS (HOSKINS T1) 230/115/13.8KV TRANSFORMER CKT 1
FDNS	09NR	0	17G	G15_054	FROM->TO	DIXONCO 230.00 - TWIN CHURCH 230KV CKT 1	320	320	0.05583	113.4676	HOSKINS (HOSKINS T1) 230/115/13.8KV TRANSFORMER CKT 1
FDNS	09NR	0	17G	G15_054	FROM->TO	DIXONCO 230.00 - TWIN CHURCH 230KV CKT 1	320	320	0.06285	113.3837	RAUN - SIOUX CITY 345KV CKT 1
FDNS	09NR	0	20L	G15_054	FROM->TO	DIXONCO 230.00 - TWIN CHURCH 230KV CKT 1	320	320	0.06397	113.3558	P13:115-345:NPPD:NUCOR-2
FDNS	09NR	0	17G	G15_054	FROM->TO	DIXONCO 230.00 - TWIN CHURCH 230KV CKT 1	320	320	0.06101	112.7714	FTTHOM2-LNX3345.00 - GRPRAR2-LNX3345.00 345KV CKT 1
FDNS	09NR	0	17G	G15_054	FROM->TO	DIXONCO 230.00 - TWIN CHURCH 230KV CKT 1	320	320	0.06101	112.74	GRPRAR2-LNX3345.00 - YANKTON 345KV CKT Z
FDNS	09NR	0	17G	G15_054	FROM->TO	DIXONCO 230.00 - TWIN CHURCH 230KV CKT 1	320	320	0.06101	112.7195	FT THOMPSON - FTTHOM2-LNX3345.00 345KV CKT Z
FDNS	09NR	0	20L	G15_054	FROM->TO	DIXONCO 230.00 - TWIN CHURCH 230KV CKT 1	320	320	0.05662	112.4963	HOSKINS (HOSKINS T1) 230/115/13.8KV TRANSFORMER CKT 1
FDNS	09NR	0	20L	G15_054	FROM->TO	DIXONCO 230.00 - TWIN CHURCH 230KV CKT 1	320	320	0.05662	112.4963	HOSKINS (HOSKINS T1) 230/115/13.8KV TRANSFORMER CKT 1
FDNS	09NR	0	17G	G15_054	FROM->TO	DIXONCO 230.00 - TWIN CHURCH 230KV CKT 1	320	320	0.06812	112.4305	HOSKINS - STANTON NORTH 115KV CKT 1
FDNS	09NR	0	20L	G15_054	FROM->TO	DIXONCO 230.00 - TWIN CHURCH 230KV CKT 1	320	320	0.06164	112.4273	FT THOMPSON - FTTHOM2-LNX3345.00 345KV CKT Z
FDNS	09NR	0	20L	G15_054	FROM->TO	DIXONCO 230.00 - TWIN CHURCH 230KV CKT 1	320	320	0.06164	112.4268	FTTHOM2-LNX3345.00 - GRPRAR2-LNX3345.00 345KV CKT 1

SOLUTION	GROUP	SCENARIO	SEASON	SOURCE	DIRECTION	MONITORED ELEMENT	RATEA (MVA)	RATEB(MVA)	TDF	TC%LOADING (% MVA)	CONTINGENCY
FDNS	09NR	0	20L	G15_054	FROM->TO	DIXONCO 230.00 - TWIN CHURCH 230KV CKT 1	320	320	0.06164	112.4209	GRPRAR2-LNX3345.00 - YANKTON 345KV CKT Z
FDNS	09NR	0	17G	G15_054	FROM->TO	DIXONCO 230.00 - TWIN CHURCH 230KV CKT 1	320	320	0.06335	112.3496	FT RANDAL - SIOUX CITY 230KV CKT 1
FDNS	09NR	0	17G	G15_054	FROM->TO	DIXONCO 230.00 - TWIN CHURCH 230KV CKT 1	320	320	0.0728	112.3161	BLOOMFIELD - GAVINS POINT 115KV CKT 1
FDNS	09NR	0	17G	G15_054	FROM->TO	DIXONCO 230.00 - TWIN CHURCH 230KV CKT 1	320	320	0.06321	112.3103	GEN600002 3-SHERBURNE CNTY G3
FDNS	09NR	0	17G	G15_054	FROM->TO	DIXONCO 230.00 - TWIN CHURCH 230KV CKT 1	320	320	0.06812	112.1245	STANTON - STANTON NORTH 115KV CKT 1
FDNS	09NR	0	20L	G15_054	FROM->TO	DIXONCO 230.00 - TWIN CHURCH 230KV CKT 1	320	320	0.07351	112.0982	BLOOMFIELD - GAVINS POINT 115KV CKT 1
FDNS	09NR	0	17G	G15_054	FROM->TO	DIXONCO 230.00 - TWIN CHURCH 230KV CKT 1	320	320	0.06812	112.0781	P12:115:NPPD:1166:STNTN.N7:BEEMER 7:BTB
FDNS	09NR	0	17G	G15_054	FROM->TO	DIXONCO 230.00 - TWIN CHURCH 230KV CKT 1	320	320	0.06812	112.0117	BEEMER - STANTON 115KV CKT 1
FDNSLock	09NR	0	17G	G15_054	FROM->TO	DIXONCO 230.00 - TWIN CHURCH 230KV CKT 1	320	320	0.06321	111.7835	GEN600000 1-SHERBURNECNTY G1
FDNS	09NR	0	17G	G15_054	FROM->TO	DIXONCO 230.00 - TWIN CHURCH 230KV CKT 1	320	320	0.06321	111.7	GEN600001 2-SHERBURNE CNTY G2
FDNS	09NR	0	17G	G15_054	FROM->TO	DIXONCO 230.00 - TWIN CHURCH 230KV CKT 1	320	320	0.06812	111.6026	BEEMER - WEST POINT 115KV CKT 1
FDNS	09NR	0	17G	G15_054	FROM->TO	DIXONCO 230.00 - TWIN CHURCH 230KV CKT 1	320	320	0.06321	111.5027	GEN659103 1-ANTELOPE VALLEY UNIT1
FDNS	09NR	0	17G	G15_054	FROM->TO	DIXONCO 230.00 - TWIN CHURCH 230KV CKT 1	320	320	0.06321	111.5027	GEN659107 2-ANTELOPE VALLEY UNIT2
FDNS	09NR	0	17G	G15_054	FROM->TO	DIXONCO 230.00 - TWIN CHURCH 230KV CKT 1	320	320	0.06321	111.4995	GEN600005 1-MONTICELLO
FDNS	09NR	0	17G	G15_054	FROM->TO	DIXONCO 230.00 - TWIN CHURCH 230KV CKT 1	320	320	0.06321	111.4623	GEN615001 1-COAL CREEK
FDNS	09NR	0	17G	G15_054	FROM->TO	DIXONCO 230.00 - TWIN CHURCH 230KV CKT 1	320	320	0.06376	111.4277	RASMUSN - UTICA JCT 230KV CKT 1
FDNS	09NR	0	17G	G15_054	FROM->TO	DIXONCO 230.00 - TWIN CHURCH 230KV CKT 1	320	320	0.06295	111.4125	FT RANDAL - UTICA JCT 230KV CKT 1
FDNS	09NR	0	17G	G15_054	FROM->TO	DIXONCO 230.00 - TWIN CHURCH 230KV CKT 1	320	320	0.06789	111.4071	P12:115:NPPD:1161:OAKLAND7:BEEMER 7:BTB
FDNS	09NR	0	17G	G15_054	FROM->TO	DIXONCO 230.00 - TWIN CHURCH 230KV CKT 1	320	320	0.06321	111.3604	GEN659111 2-LELAND OLDS UNIT2
FDNS	09NR	0	17G	G15_054	FROM->TO	DIXONCO 230.00 - TWIN CHURCH 230KV CKT 1	320	320	0.06236	111.3512	SUB 3454 - WAGENER 345KV CKT 1
FDNS	09NR	0	17G	G15_054	FROM->TO	DIXONCO 230.00 - TWIN CHURCH 230KV CKT 1	320	320	0.06236	111.3512	SUB 3454 - WAGENER 345KV CKT 1
FDNSLock	09NR	0	17G	G15_054	FROM->TO	DIXONCO 230.00 - TWIN CHURCH 230KV CKT 1	320	320	0.06321	111.3246	GEN620315 1-BIG STONE GEN
FDNS	09NR	0	17G	G15_054	FROM->TO	DIXONCO 230.00 - TWIN CHURCH 230KV CKT 1	320	320	0.06321	111.2968	GEN600003 1-PRAIRIE ISLAND G1
FDNS	09NR	0	17G	G15_054	FROM->TO	DIXONCO 230.00 - TWIN CHURCH 230KV CKT 1	320	320	0.06321	111.2946	GEN600004 2-PRAIRIE ISLAND G2
FDNS	09NR	0	17G	G15_054	FROM->TO	DIXONCO 230.00 - TWIN CHURCH 230KV CKT 1	320	320	0.06321	111.2869	GEN600006 1-AS KING
FDNS	09NR	0	20L	G15_054	FROM->TO	DIXONCO 230.00 - TWIN CHURCH 230KV CKT 1	320	320	0.06397	111.2838	SHERBURNE CO 345/24.0KV TRANSFORMER CKT 1
FDNS	09NR	0	20L	G15_054	FROM->TO	DIXONCO 230.00 - TWIN CHURCH 230KV CKT 1	320	320	0.06397	111.2765	GEN600002 3-SHERBURNE CNTY G3
FDNS	09NR	0	17G	G15_054	FROM->TO	DIXONCO 230.00 - TWIN CHURCH 230KV CKT 1	320	320	0.0642	111.2487	COOPER - MOORE 345KV CKT 1
FDNS	09NR	0	20L	G15_054	FROM->TO	DIXONCO 230.00 - TWIN CHURCH 230KV CKT 1	320	320	0.06902	111.2182	HOSKINS - STANTON NORTH 115KV CKT 1
FDNS	09NR	0	17G	G15_054	FROM->TO	DIXONCO 230.00 - TWIN CHURCH 230KV CKT 1	320	320	0.06376	111.1757	RASMUSN - SIOUX CITY 230KV CKT 1
FDNS	09NR	0	17G	G15_054	FROM->TO	DIXONCO 230.00 - TWIN CHURCH 230KV CKT 1	320	320	0.06789	111.1272	OAKLAND - WEST POINT 115KV CKT 1
FDNS	09NR	0	17G	G15_054	FROM->TO	DIXONCO 230.00 - TWIN CHURCH 230KV CKT 1	320	320	0.06347	111.1005	COLUMBUS - SCHUYLER 115KV CKT 1
FDNS	09NR	0	20L	G15_054	FROM->TO	DIXONCO 230.00 - TWIN CHURCH 230KV CKT 1	320	320	0.06375	111.0941	FT RANDAL - MEADOWGROVE4230.00 230KV CKT 1
FDNS	09NR	0	20L	G15_054	FROM->TO	DIXONCO 230.00 - TWIN CHURCH 230KV CKT 1	320	320	0.06397	111.0694	BIG STONE 230/24.0KV TRANSFORMER CKT 1
FDNS	09NR	0	17G	G15_054	FROM->TO	DIXONCO 230.00 - TWIN CHURCH 230KV CKT 1	320	320	0.06758	111.0617	P12:115:NPPD:1168B:ALBION 7:PETERSBRG.N7:BTB
FDNS	09NR	0	17G	G15_054	FROM->TO	DIXONCO 230.00 - TWIN CHURCH 230KV CKT 1	320	320	0.06758	111.0497	PETERSBRG.N7115.00 - PETERSBURG 115KV CKT Z1
FDNS	09NR	0	17G	G15_054	FROM->TO	DIXONCO 230.00 - TWIN CHURCH 230KV CKT 1	320	320	0.06758	111.0377	ALBION - PETERSBURG 115KV CKT 1
FDNS	09NR	0	20L	G15_054	FROM->TO	DIXONCO 230.00 - TWIN CHURCH 230KV CKT 1	320	320	0.06397	111.0056	GEN600001 2-SHERBURNE CNTY G2
FDNS	09NR	0	20L	G15_054	FROM->TO	DIXONCO 230.00 - TWIN CHURCH 230KV CKT 1	320	320	0.06397	110.9891	GEN600005 1-MONTICELLO
FDNS	09NR	0	17G	G15_054	FROM->TO	DIXONCO 230.00 - TWIN CHURCH 230KV CKT 1	320	320	0.06321	110.9699	GEN657748 1-YOUNG 2 GENERATOR
FDNS	09NR	0	20L	G15_054	FROM->TO	DIXONCO 230.00 - TWIN CHURCH 230KV CKT 1	320	320	0.06902	110.9627	STANTON - STANTON NORTH 115KV CKT 1
FDNS	09NR	0	17G	G15_054	FROM->TO	DIXONCO 230.00 - TWIN CHURCH 230KV CKT 1	320	320	0.06321	110.9571	GEN635214 4-NEAL UNIT 4
FDNS	09NR	0	20L	G15_054	FROM->TO	DIXONCO 230.00 - TWIN CHURCH 230KV CKT 1	320	320	0.06902	110.9296	P12:115:NPPD:1166:STNTN.N7:BEEMER 7:BTB
FDNS	09NR	0	20L	G15_054	FROM->TO	DIXONCO 230.00 - TWIN CHURCH 230KV CKT 1	320	320	0.06397	110.9274	GEN615002 2-COAL CREEK
FDNS	09NR	0	20L	G15_054	FROM->TO	DIXONCO 230.00 - TWIN CHURCH 230KV CKT 1	320	320	0.06902	110.8822	BEEMER - STANTON 115KV CKT 1
FDNS	09NR	0	17G	G15_054	FROM->TO	DIXONCO 230.00 - TWIN CHURCH 230KV CKT 1	320	320	0.06321	110.8801	GEN661015 1-COYOTE
FDNS	09NR	0	20L	G15_054	FROM->TO	DIXONCO 230.00 - TWIN CHURCH 230KV CKT 1	320	320	0.06397	110.8758	GEN600000 1-SHERBURNECNTY G1
FDNS	09NR	0	20L	G15_054	FROM->TO	DIXONCO 230.00 - TWIN CHURCH 230KV CKT 1	320	320	0.06397	110.8661	GEN620315 1-BIG STONE GEN
FDNS	09NR	0	17G	G15_054	FROM->TO	DIXONCO 230.00 - TWIN CHURCH 230KV CKT 1	320	320	0.06222	110.8148	ATCHSNT3 345.00 - BOONEVILLE 345KV CKT 1
FDNS	09NR	0	17G	G15_054	FROM->TO	DIXONCO 230.00 - TWIN CHURCH 230KV CKT 1	320	320	0.06303	110.797	AXTELL - POST ROCK 345KV CKT 1
FDNS	09NR	0	20L	G15_054	FROM->TO	DIXONCO 230.00 - TWIN CHURCH 230KV CKT 1	320	320	0.06413	110.7643	FT RANDAL - SIOUX CITY 230KV CKT 1
FDNS	09NR	0	20L	G15_054	FROM->TO	DIXONCO 230.00 - TWIN CHURCH 230KV CKT 1	320	320	0.06902	110.6608	BEEMER - WEST POINT 115KV CKT 1
FDNS	09NR	0	20L	G15_054	FROM->TO	DIXONCO 230.00 - TWIN CHURCH 230KV CKT 1	320	320	0.06558	110.6469	COOPER - MOORE 345KV CKT 1
FDNS	09NR	0	20L	G15_054	FROM->TO	DIXONCO 230.00 - TWIN CHURCH 230KV CKT 1	320	320	0.0607	110.6394	P13:345:UMZW:# 260 #: SC2 IN IA. LOSS OF TRANSFORMER (KU1A
FDNS	09NR	0	20L	G15_054	FROM->TO	DIXONCO 230.00 - TWIN CHURCH 230KV CKT 1	320	320	0.06397	110.5927	GEN600003 1-PRAIRIE ISLAND G1
FDNS	09NR	0	20L	G15_054	FROM->TO	DIXONCO 230.00 - TWIN CHURCH 230KV CKT 1	320	320	0.06397	110.5906	GEN600004 2-PRAIRIE ISLAND G2
FDNS	09NR	0	20L	G15_054	FROM->TO	DIXONCO 230.00 - TWIN CHURCH 230KV CKT 1	320	320	0.06868	110.4827	P12:115:NPPD:1161:OAKLAND7:BEEMER 7:BTB
FDNS	09NR	0	20L	G15_054	FROM->TO	DIXONCO 230.00 - TWIN CHURCH 230KV CKT 1	320	320	0.06629	110.3822	GAVINS POINT - YANKON JCT 115KV CKT 1
FDNS	09NR	0	20L	G15_054	FROM->TO	DIXONCO 230.00 - TWIN CHURCH 230KV CKT 1	320	320	0.06629	110.3822	GAVINS POINT - YANKON JCT 115KV CKT 1
FDNS	09NR	0	20L	G15_054	FROM->TO	DIXONCO 230.00 - TWIN CHURCH 230KV CKT 1	320	320	0.06397	110.3713	GEN659103 1-ANTELOPE VALLEY UNIT1
FDNS	09NR	0	20L	G15_054	FROM->TO	DIXONCO 230.00 - TWIN CHURCH 230KV CKT 1	320	320	0.06397	110.3713	GEN659107 2-ANTELOPE VALLEY UNIT2
FDNS	09NR	0	20L	G15_054	FROM->TO	DIXONCO 230.00 - TWIN CHURCH 230KV CKT 1	320	320	0.06397	110.3242	GEN600006 1-AS KING
FDNS	09NR	0	20L	G15_054	FROM->TO	DIXONCO 230.00 - TWIN CHURCH 230KV CKT 1	320	320	0.06391	110.2715	FALLOW 3 345.00 - GRIMES 345KV CKT 1
FDNS	09NR	0	20L	G15_054	FROM->TO	DIXONCO 230.00 - TWIN CHURCH 230KV CKT 1	320	320	0.06372	110.2698	FT RANDAL - UTICA JCT 230KV CKT 1
FDNS	09NR	0	20L	G15_054	FROM->TO	DIXONCO 230.00 - TWIN CHURCH 230KV CKT 1	320	320	0.06853	110.2546	P12:115:NPPD:1168B:ALBION 7:PETERSBRG.N7:BTB
FDNS	09NR	0	20L	G15_054	FROM->TO	DIXONCO 230.00 - TWIN CHURCH 230KV CKT 1	320	320	0.06853	110.249	PETERSBRG.N7115.00 - PETERSBURG 115KV CKT Z1
FDNS	09NR	0	20L	G15_054	FROM->TO	DIXONCO 230.00 - TWIN CHURCH 230KV CKT 1	320	320	0.06853	110.2387	ALBION - PETERSBURG 115KV CKT 1
FDNS	09NR	0	20L	G15_054	FROM->TO	DIXONCO 230.00 - TWIN CHURCH 230KV CKT 1	320	320	0.06868	110.2185	OAKLAND - WEST POINT 115KV CKT 1
FDNS	09NR	0	20L	G15_054	FROM->TO	DIXONCO 230.00 - TWIN CHURCH 230KV CKT 1	320	320	0.06432	110.1839	HIGHLND 3 345.00 - OBRIEN 3 345.00 345KV CKT 1
FDNS	09NR	0	17G	G15_054	FROM->TO	DIXONCO 230.00 - TWIN CHURCH 230KV CKT 1	320	320	0.06321	109.7857	BASE CASE
FDNS	09NR	0	20L	G15_054	FROM->TO	DIXONCO 230.00 - TWIN CHURCH 230KV CKT 1	320	320	0.06397	109.1828	BASE CASE
FDNS	09NR	0	17G	G15_054	FROM->TO	DIXONCO 230.00 - TWIN CHURCH 230KV CKT 1	320	320	0.06321	108.8492	GEN337652 1-WHITE BLUFF UNIT #1
FDNS	09NR	0	17G	G15_054	FROM->TO	DIXONCO 230.00 - TWIN CHURCH 230KV CKT 1	320	320	0.05683	108.8466	BATTLE CREEK - COUNTY LINE 115KV CKT 1
FDNS	09NR	0	17G	G15_054	FROM->TO	DIXONCO 230.00 - TWIN CHURCH 230KV CKT 1	320	320	0.06321	108.8347	GEN501801 1-DOLET HILLS UNIT1
FDNS	09NR	0	17G	G15_054	FROM->TO	DIXONCO 230.00 - TWIN CHURCH 230KV CKT 1	320	320	0.05683	108.8331	ANTELOPE 7115.00 - COUNTY LINE 115KV CKT 1
FDNS	09NR	0	17G	G15_054	FROM->TO	DIXONCO 230.00 - TWIN CHURCH 230KV CKT 1	320	320	0.06266	108.8195	SIOUXCY-LNX3345.00 - SPLIT ROCK 345KV CKT 1
FDNS	09NR	0	17G	G15_054	FROM->TO	DIXONCO 230.00 - TWIN CHURCH 230KV CKT 1	320	320	0.06321	108.7943	GEN337653 1-WHITE BLUFF UNIT #2
FDNS	09NR	0	17G	G15_054	FROM->TO	DIXONCO 230.00 - TWIN CHURCH 230KV CKT 1	320	320	0.06321	108.7199	GEN563222 1-G15088_3 0.6900
FDNS	09NR	0	17G	G15_054	FROM->TO	DIXONCO 230.00 - TWIN CHURCH 230KV CKT 1	320	320	0.0628	108.7026	SIOUX CITY (SC KV1A) 230/161/13.8KV TRANSFORMER CKT 1

SOLUTION	GROUP	SCENARIO	SEASON	SOURCE	DIRECTION	MONITORED ELEMENT	RATEA (MVA)	RATEB(MVA)	TDF	TC%LOADING (% MVA)	CONTINGENCY
FDNS	09NR	0	17G	G15_054	FROM->TO	DIXONCO 230.00 - TWIN CHURCH 230KV CKT 1	320	320	0.06279	108.6951	SIOUX CITY (SC KV5A) 230/161/13.8KV TRANSFORMER CKT 1
FDNS	09NR	0	17G	G15_054	FROM->TO	DIXONCO 230.00 - TWIN CHURCH 230KV CKT 1	320	320	0.06321	108.6645	GEN640431 1-LAREDO.GEN1W0.6900
FDNS	09NR	0	17G	G15_054	FROM->TO	DIXONCO 230.00 - TWIN CHURCH 230KV CKT 1	320	320	0.0624	108.6403	GRIMES - LEHIGH 345KV CKT 1
FDNS	09NR	0	17G	G15_054	FROM->TO	DIXONCO 230.00 - TWIN CHURCH 230KV CKT 1	320	320	0.06321	108.6218	GEN562912 1-G15053_3 0.6900
FDNS	09NR	0	17G	G15_054	FROM->TO	DIXONCO 230.00 - TWIN CHURCH 230KV CKT 1	320	320	0.06249	108.6095	ANITA TAP POINT TO CRESTON AND DENISON - EXIRA 161KV CKT 1
FDNS	09NR	0	17G	G15_054	FROM->TO	DIXONCO 230.00 - TWIN CHURCH 230KV CKT 1	320	320	0.06249	108.5821	DENISON - EXIRA 161KV CKT 1
FDNS	09NR	0	17G	G15_054	FROM->TO	DIXONCO 230.00 - TWIN CHURCH 230KV CKT 1	320	320	0.06249	108.5812	DENISON (DN KV1A) 230/161/13.8KV TRANSFORMER CKT 1
FDNS	09NR	0	17G	G15_054	FROM->TO	DIXONCO 230.00 - TWIN CHURCH 230KV CKT 1	320	320	0.06321	108.5564	GEN337910 1-ARKANSAS NUCLEAR ONE UNIT #1
FDNS	09NR	0	17G	G15_054	FROM->TO	DIXONCO 230.00 - TWIN CHURCH 230KV CKT 1	320	320	0.06321	108.5527	GEN335831 1-RIVERBEND UNIT#1
FDNS	09NR	0	17G	G15_054	FROM->TO	DIXONCO 230.00 - TWIN CHURCH 230KV CKT 1	320	320	0.06612	108.5415	KELLY - SHELL CREEK 230KV CKT 1
FDNS	09NR	0	17G	G15_054	FROM->TO	DIXONCO 230.00 - TWIN CHURCH 230KV CKT 1	320	320	0.06612	108.5389	SHELL CREEK (SHELLCREEKT1) 345/230/13.8KV TRANSFORMER CKT 1
FDNS	09NR	0	17G	G15_054	FROM->TO	DIXONCO 230.00 - TWIN CHURCH 230KV CKT 1	320	320	0.06612	108.5389	SHELL CREEK (SHELLCREEKT1) 345/230/13.8KV TRANSFORMER CKT 1
FDNS	09NR	0	17G	G15_054	FROM->TO	DIXONCO 230.00 - TWIN CHURCH 230KV CKT 1	320	320	0.06388	108.4671	TWIN CHURCH (TWNCHURCH T4) 230/115/13.8KV TRANSFORMER CKT 1
FDNS	09NR	0	17G	G15_054	FROM->TO	DIXONCO 230.00 - TWIN CHURCH 230KV CKT 1	320	320	0.06388	108.4671	TWIN CHURCH (TWNCHURCH T4) 230/115/13.8KV TRANSFORMER CKT 1
FDNS	09NR	0	17G	G15_054	FROM->TO	DIXONCO 230.00 - TWIN CHURCH 230KV CKT 1	320	320	0.06321	108.4481	GEN635023 3-WALTER SCOTT UNIT 3
FDNS	09NR	0	17G	G15_054	FROM->TO	DIXONCO 230.00 - TWIN CHURCH 230KV CKT 1	320	320	0.06321	108.396	GEN336153 1-WATERFORD UNIT#3
FDNS	09NR	0	17G	G15_054	FROM->TO	DIXONCO 230.00 - TWIN CHURCH 230KV CKT 1	320	320	0.06321	108.3372	GEN337911 1-ARKANSAS NUCLEAR ONE UNIT #2
FDNS	09NR	0	20L	G15_054	FROM->TO	DIXONCO 230.00 - TWIN CHURCH 230KV CKT 1	320	320	0.06397	108.3059	GEN337652 1-WHITE BLUFF UNIT #1
FDNS	09NR	0	17G	G15_054	FROM->TO	DIXONCO 230.00 - TWIN CHURCH 230KV CKT 1	320	320	0.06321	108.239	GEN635024 4-WALTER SCOTT UNIT 4
FDNS	09NR	0	17G	G15_054	FROM->TO	DIXONCO 230.00 - TWIN CHURCH 230KV CKT 1	320	320	0.06276	108.237	EAGLE 4 230.00 - SIOUX CITY 230KV CKT 1
FDNS	09NR	0	20L	G15_054	FROM->TO	DIXONCO 230.00 - TWIN CHURCH 230KV CKT 1	320	320	0.06315	108.2347	GRIMES - LEHIGH 345KV CKT 1
FDNS	09NR	0	17G	G15_054	FROM->TO	DIXONCO 230.00 - TWIN CHURCH 230KV CKT 1	320	320	0.06014	108.1552	RAUN - SUB 3451 FT CAL 345KV CKT 1
FDNS	09NR	0	17G	G15_054	FROM->TO	DIXONCO 230.00 - TWIN CHURCH 230KV CKT 1	320	320	0.06014	108.1552	RAUN - SUB 3451 FT CAL 345KV CKT 1
FDNS	09NR	0	20L	G15_054	FROM->TO	DIXONCO 230.00 - TWIN CHURCH 230KV CKT 1	320	320	0.06356	108.1414	SIOUX CITY (SC KV1A) 230/161/13.8KV TRANSFORMER CKT 1
FDNS	09NR	0	20L	G15_054	FROM->TO	DIXONCO 230.00 - TWIN CHURCH 230KV CKT 1	320	320	0.06336	108.1397	SIOUXCY-LNX3345.00 - SPLIT ROCK 345KV CKT 1
FDNS	09NR	0	20L	G15_054	FROM->TO	DIXONCO 230.00 - TWIN CHURCH 230KV CKT 1	320	320	0.06336	108.1397	SIOUXCY-LNX3345.00 - SPLIT ROCK 345KV CKT 1
FDNS	09NR	0	20L	G15_054	FROM->TO	DIXONCO 230.00 - TWIN CHURCH 230KV CKT 1	320	320	0.06397	108.1379	GEN335831 1-RIVERBEND UNIT#1
FDNS	09NR	0	20L	G15_054	FROM->TO	DIXONCO 230.00 - TWIN CHURCH 230KV CKT 1	320	320	0.06356	108.1341	SIOUX CITY (SC KV5A) 230/161/13.8KV TRANSFORMER CKT 1
FDNS	09NR	0	17G	G15_054	FROM->TO	DIXONCO 230.00 - TWIN CHURCH 230KV CKT 1	320	320	0.06321	108.1098	GEN336821 1-GRAND GULF UNIT
FDNS	09NR	0	20L	G15_054	FROM->TO	DIXONCO 230.00 - TWIN CHURCH 230KV CKT 1	320	320	0.06397	108.1035	GEN337910 1-ARKANSAS NUCLEAR ONE UNIT #1
FDNS	09NR	0	20L	G15_054	FROM->TO	DIXONCO 230.00 - TWIN CHURCH 230KV CKT 1	320	320	0.06397	108.087	GEN640431 1-LAREDO.GEN1W0.6900
FDNS	09NR	0	20L	G15_054	FROM->TO	DIXONCO 230.00 - TWIN CHURCH 230KV CKT 1	320	320	0.06397	108.0791	GEN563222 1-G15088_3 0.6900
FDNS	09NR	0	17G	G15_054	FROM->TO	DIXONCO 230.00 - TWIN CHURCH 230KV CKT 1	320	320	0.06321	108.0673	GEN562921 1-G15054_2 0.6900
FDNS	09NR	0	20L	G15_054	FROM->TO	DIXONCO 230.00 - TWIN CHURCH 230KV CKT 1	320	320	0.06397	108.0498	GEN344225 1-1CAL G1 25.000
FDNS	09NR	0	20L	G15_054	FROM->TO	DIXONCO 230.00 - TWIN CHURCH 230KV CKT 1	320	320	0.06323	108.048	ANITA TAP POINT TO CRESTON AND DENISON - EXIRA 161KV CKT 1
FDNS	09NR	0	20L	G15_054	FROM->TO	DIXONCO 230.00 - TWIN CHURCH 230KV CKT 1	320	320	0.06397	108.0223	GEN562912 1-G15053_3 0.6900
FDNS	09NR	0	20L	G15_054	FROM->TO	DIXONCO 230.00 - TWIN CHURCH 230KV CKT 1	320	320	0.06323	108.0218	DENISON - EXIRA 161KV CKT 1
FDNS	09NR	0	20L	G15_054	FROM->TO	DIXONCO 230.00 - TWIN CHURCH 230KV CKT 1	320	320	0.06323	108.0216	DENISON (DN KV1A) 230/161/13.8KV TRANSFORMER CKT 1
FDNS	09NR	0	20L	G15_054	FROM->TO	DIXONCO 230.00 - TWIN CHURCH 230KV CKT 1	320	320	0.06397	108.0077	GEN336153 1-WATERFORD UNIT#3
FDNS	09NR	0	20L	G15_054	FROM->TO	DIXONCO 230.00 - TWIN CHURCH 230KV CKT 1	320	320	0.06397	107.9139	GEN337911 1-ARKANSAS NUCLEAR ONE UNIT #2
FDNS	09NR	0	20L	G15_054	FROM->TO	DIXONCO 230.00 - TWIN CHURCH 230KV CKT 1	320	320	0.06164	107.858	GRPRAR1-LNX3345.00 - GRPRAR 345KV CKT Z
FDNS	09NR	0	20L	G15_054	FROM->TO	DIXONCO 230.00 - TWIN CHURCH 230KV CKT 1	320	320	0.06164	107.8562	GRPRAR1-LNX3345.00 - HOLT.CO3 345.00 345KV CKT 1
FDNS	09NR	0	20L	G15_054	FROM->TO	DIXONCO 230.00 - TWIN CHURCH 230KV CKT 1	320	320	0.06397	107.7817	GEN336821 1-GRAND GULF UNIT
FDNS	09NR	0	17G	G15_054	FROM->TO	DIXONCO 230.00 - TWIN CHURCH 230KV CKT 1	320	320	0.06101	107.7484	GRPRAR1-LNX3345.00 - HOLT.CO3 345.00 345KV CKT 1
FDNS	09NR	0	17G	G15_054	FROM->TO	DIXONCO 230.00 - TWIN CHURCH 230KV CKT 1	320	320	0.06101	107.7476	GRPRAR1-LNX3345.00 - GRPRAR 345KV CKT Z
FDNS	09NR	0	20L	G15_054	FROM->TO	DIXONCO 230.00 - TWIN CHURCH 230KV CKT 1	320	320	0.06397	107.7364	GEN635023 3-WALTER SCOTT UNIT 3
FDNS	09NR	0	17G	G15_054	FROM->TO	DIXONCO 230.00 - TWIN CHURCH 230KV CKT 1	320	320	0.06097	107.7032	BANCROFT - OAKLAND 115KV CKT 1
FDNS	09NR	0	17G	G15_054	FROM->TO	DIXONCO 230.00 - TWIN CHURCH 230KV CKT 1	320	320	0.06235	107.6458	PLYMOUTH - SIOUX CITY 161KV CKT 1
FDNS	09NR	0	20L	G15_054	FROM->TO	DIXONCO 230.00 - TWIN CHURCH 230KV CKT 1	320	320	0.06154	107.6066	BANCROFT - OAKLAND 115KV CKT 1
FDNS	09NR	0	20L	G15_054	FROM->TO	DIXONCO 230.00 - TWIN CHURCH 230KV CKT 1	320	320	0.06397	107.521	GEN635024 4-WALTER SCOTT UNIT 4
FDNS	09NR	0	20L	G15_054	FROM->TO	DIXONCO 230.00 - TWIN CHURCH 230KV CKT 1	320	320	0.06397	107.47	GEN562921 1-G15054_2 0.6900
FDNS	09NR	0	20L	G15_054	FROM->TO	DIXONCO 230.00 - TWIN CHURCH 230KV CKT 1	320	320	0.06351	107.4622	EAGLE 4 230.00 - SIOUX CITY 230KV CKT 1
FDNS	09ALL	0	20SP	G15_054	FROM->TO	DIXONCO 230.00 - TWIN CHURCH 230KV CKT 1	320	320	0.0733	107.3901	BASE CASE
FDNS	09ALL	0	17SP	G15_054	FROM->TO	DIXONCO 230.00 - TWIN CHURCH 230KV CKT 1	320	320	0.07304	107.3838	BASE CASE
FDNS	09NR	0	20L	G15_054	FROM->TO	DIXONCO 230.00 - TWIN CHURCH 230KV CKT 1	320	320	0.06154	107.1979	P12:115:NPPD:1193:OAKLAND7:EMERSON7:BTB
FDNS	09NR	0	20L	G15_054	FROM->TO	DIXONCO 230.00 - TWIN CHURCH 230KV CKT 1	320	320	0.06154	107.1761	BANCROFT - EMERSON 115KV CKT 1
FDNS	09NR	0	20L	G15_054	FROM->TO	DIXONCO 230.00 - TWIN CHURCH 230KV CKT 1	320	320	0.06311	107.1722	PLYMOUTH - SIOUX CITY 161KV CKT 1
FDNS	09NR	0	20L	G15_054	FROM->TO	DIXONCO 230.00 - TWIN CHURCH 230KV CKT 1	320	320	0.06311	107.1722	PLYMOUTH - SIOUX CITY 161KV CKT 1
FDNS	09NR	0	17G	G15_054	FROM->TO	DIXONCO 230.00 - TWIN CHURCH 230KV CKT 1	320	320	0.06097	107.0402	P12:115:NPPD:1193:OAKLAND7:EMERSON7:BTB
FDNS	09NR	0	17G	G15_054	FROM->TO	DIXONCO 230.00 - TWIN CHURCH 230KV CKT 1	320	320	0.06097	107.0053	BANCROFT - EMERSON 115KV CKT 1
FDNS	09NR	0	20L	G15_054	FROM->TO	DIXONCO 230.00 - TWIN CHURCH 230KV CKT 1	320	320	0.06382	106.9499	GR ISLD-LNX3345.00 - HOLT.CO3 345.00 345KV CKT 1
FDNS	09NR	0	20L	G15_054	FROM->TO	DIXONCO 230.00 - TWIN CHURCH 230KV CKT 1	320	320	0.06382	106.8967	GR ISLD-LNX3345.00 - GRAND ISLAND 345KV CKT Z
FDNS	09NR	0	17G	G15_054	FROM->TO	DIXONCO 230.00 - TWIN CHURCH 230KV CKT 1	320	320	0.06178	106.7979	DENISON - SIOUX CITY 230KV CKT 1
FDNS	09NR	0	17G	G15_054	FROM->TO	DIXONCO 230.00 - TWIN CHURCH 230KV CKT 1	320	320	0.03532	106.7337	ANTELOPE 3345.00 - HOSKINS 345KV CKT 1
FDNS	09ALL	0	25SP	G15_054	FROM->TO	DIXONCO 230.00 - TWIN CHURCH 230KV CKT 1	320	320	0.07318	106.5843	BASE CASE
FDNS	09NR	0	20L	G15_054	FROM->TO	DIXONCO 230.00 - TWIN CHURCH 230KV CKT 1	320	320	0.06251	106.4977	DENISON - SIOUX CITY 230KV CKT 1
FDNS	09NR	0	17G	G15_054	FROM->TO	DIXONCO 230.00 - TWIN CHURCH 230KV CKT 1	320	320	0.03532	106.4212	ANTELOPE 3345.00 (ANTELOPE T1) 345/115/13.8KV TRANSFORMER CKT 1
FDNS	09NR	0	20L	G15_054	FROM->TO	DIXONCO 230.00 - TWIN CHURCH 230KV CKT 1	320	320	0.03584	106.378	ANTELOPE 3345.00 - HOSKINS 345KV CKT 1
FDNS	09NR	0	17G	G15_054	FROM->TO	DIXONCO 230.00 - TWIN CHURCH 230KV CKT 1	320	320	0.06321	106.3467	GEN562673 1-G15_007_3 0.6900
FDNS	09NR	0	20L	G15_054	FROM->TO	DIXONCO 230.00 - TWIN CHURCH 230KV CKT 1	320	320	0.03584	106.0743	ANTELOPE 3345.00 (ANTELOPE T1) 345/115/13.8KV TRANSFORMER CKT 1
FDNS	09NR	0	17G	G15_054	FROM->TO	DIXONCO 230.00 - TWIN CHURCH 230KV CKT 1	320	320	0.06321	105.9471	GEN562438 1-G13-032 0.6900
FDNS	09NR	0	20L	G15_054	FROM->TO	DIXONCO 230.00 - TWIN CHURCH 230KV CKT 1	320	320	0.06397	105.7183	GEN562673 1-G15_007_3 0.6900
FDNS	09NR	0	20L	G15_054	FROM->TO	DIXONCO 230.00 - TWIN CHURCH 230KV CKT 1	320	320	0.06154	105.5368	EMERSON - TWIN CHURCH 115KV CKT 1
FDNS	09NR	0	17G	G15_054	FROM->TO	DIXONCO 230.00 - TWIN CHURCH 230KV CKT 1	320	320	0.06097	105.4558	EMERSON - TWIN CHURCH 115KV CKT 1
FDNS	09NR	0	20L	G15_054	FROM->TO	DIXONCO 230.00 - TWIN CHURCH 230KV CKT 1	320	320	0.06397	105.3499	GEN562438 1-G13-032 0.6900
FDNS	09NR	0	17G	G15_054	FROM->TO	DIXONCO 230.00 - TWIN CHURCH 230KV CKT 1	320	320	0.06671	105.3016	BELDEN - HOSKINS 115KV CKT 1
FDNS	09NR	0	20L	G15_054	FROM->TO	DIXONCO 230.00 - TWIN CHURCH 230KV CKT 1	320	320	0.06751	104.8954	BELDEN - HOSKINS 115KV CKT 1
FDNS	09NR	0	20L	G15_054	FROM->TO	DIXONCO 230.00 - TWIN CHURCH 230KV CKT 1	320	320	0.06375	104.6362	KELLY - MEADOWGROVE4230.00 230KV CKT 1
FDNS	09NR	0	17G	G15_054	FROM->TO	DIXONCO 230.00 - TWIN CHURCH 230KV CKT 1	320	320	0.06288	104.3023	KELLY - MEADOWGROVE4230.00 230KV CKT 1

SOLUTION	GROUP	SCENARIO	SEASON	SOURCE	DIRECTION	MONITORED ELEMENT	RATEA (MVA)	RATEB(MVA)	TDF	TC%LOADING (% MVA)	CONTINGENCY
FDNS	00NR	0	17SP	G15_054	FROM->TO	G14-059T 230.00 - OGALLALA 230KV CKT 1	320	320	0.03217	169.5112	SIDNEY - SIDNEY1-LNX3345.00 345KV CKT Z
FDNS	00NR	0	17SP	G15_054	FROM->TO	G14-059T 230.00 - OGALLALA 230KV CKT 1	320	320	0.03217	169.4494	KEYSTONE - SIDNEY1-LNX3345.00 345KV CKT 1
FDNS	09NR	0	17G	G15_054	FROM->TO	G14-059T 230.00 - OGALLALA 230KV CKT 1	320	320	0.03168	148.0014	KEYSTONE - SIDNEY1-LNX3345.00 345KV CKT 1
FDNS	09NR	0	17G	G15_054	FROM->TO	G14-059T 230.00 - OGALLALA 230KV CKT 1	320	320	0.03168	147.9713	SIDNEY - SIDNEY1-LNX3345.00 345KV CKT Z
FDNSLock	00NR	0	16WP	G15_054	FROM->TO	G14-059T 230.00 - OGALLALA 230KV CKT 1	320	320	0.03124	141.3538	KEYSTONE - SIDNEY1-LNX3345.00 345KV CKT 1
FDNSLock	00NR	0	16WP	G15_054	FROM->TO	G14-059T 230.00 - OGALLALA 230KV CKT 1	320	320	0.03124	141.3219	SIDNEY - SIDNEY1-LNX3345.00 345KV CKT Z
FDNS	00NR	0	17SP	G15_054	TO->FROM	G14-059T 230.00 - SIDNEY 230KV CKT 1	320	320	0.03217	118.5049	SIDNEY - SIDNEY1-LNX3345.00 345KV CKT Z
FDNS	00NR	0	17SP	G15_054	TO->FROM	G14-059T 230.00 - SIDNEY 230KV CKT 1	320	320	0.03217	118.4199	KEYSTONE - SIDNEY1-LNX3345.00 345KV CKT 1
FDNS	09NR	0	20L	G15_054	FROM->TO	GAVINS POINT - YANKON JCT 115KV CKT 1	120	120	0.07197	107.6807	GAVINS POINT - SPIRIT MOUND 115KV CKT 1
FDNS	09NR	0	17G	G15_054	FROM->TO	GAVINS POINT - YANKON JCT 115KV CKT 1	120	120	0.07204	105.2073	GAVINS POINT - SPIRIT MOUND 115KV CKT 1
FDNS	09NR	0	20L	G15_054	FROM->TO	GAVINS POINT - YANKON JCT 115KV CKT 1	120	120	0.0688	101.7605	SIOUX CITY - TWIN CHURCH 230KV CKT 1
FDNS	09NR	0	20L	G15_054	FROM->TO	GAVINS POINT - YANKON JCT 115KV CKT 1	120	120	0.07197	100.412	MANNING - SPIRIT MOUND 115KV CKT 1
FDNS	09NR	0	17G	G15_054	TO->FROM	GERALD GENTLEMAN STATION - OGALLALA 230KV CKT 1	320	320	0.04519	119.5022	GERALD GENTLEMAN STATION - KEYSTONE 345KV CKT 1
FDNSLock	00NR	0	16WP	G15_054	TO->FROM	GERALD GENTLEMAN STATION - OGALLALA 230KV CKT 1	320	320	0.04429	113.6765	GERALD GENTLEMAN STATION - KEYSTONE 345KV CKT 1
FDNS	00NR	0	17SP	G15_054	TO->FROM	GERALD GENTLEMAN STATION - OGALLALA 230KV CKT 1	320	320	0.03486	112.452	GERALD GENTLEMAN STATION - KEYSTONE 345KV CKT 1
FDNS	00NR	0	20WP	G15_054	TO->FROM	GERALD GENTLEMAN STATION - OGALLALA 230KV CKT 1	320	320	0.03807	107.125	GERALD GENTLEMAN STATION - KEYSTONE 345KV CKT 1
FDNS	00NR	0	17SP	G15_054	FROM->TO	GR ISLD-LNX3345.00 - GRAND ISLAND 345KV CKT Z	720	720	0.05656	139.3799	G09_001IST 345.00 - WATERTOWN 345KV CKT 1
FDNS	00NR	0	17SP	G15_054	FROM->TO	GR ISLD-LNX3345.00 - GRAND ISLAND 345KV CKT Z	720	720	0.05757	139.0637	KELLY - MEADOWGROVE4230.00 230KV CKT 1
FDNS	00NR	0	17SP	G15_054	FROM->TO	GR ISLD-LNX3345.00 - GRAND ISLAND 345KV CKT Z	720	720	0.05528	138.6319	P12:230:UMZB:# 116 #: ST IN SD. WSG-ST-VH
FDNS	00NR	0	17SP	G15_054	FROM->TO	GR ISLD-LNX3345.00 - GRAND ISLAND 345KV CKT Z	720	720	0.05613	137.8128	WATERTN-LNX3345.00 - WATERTOWN 345KV CKT Z
FDNS	00NR	0	17SP	G15_054	FROM->TO	GR ISLD-LNX3345.00 - GRAND ISLAND 345KV CKT Z	720	720	0.05613	137.7489	P12:345:UMZW:# 1747 #: WT2 IN SD. WT2-WHT LINE FAULT
FDNS	00NR	0	17SP	G15_054	FROM->TO	GR ISLD-LNX3345.00 - GRAND ISLAND 345KV CKT Z	720	720	0.0553	137.7133	STORLA - WESSINGTON 230KV CKT 1
FDNS	00NR	0	17SP	G15_054	FROM->TO	GR ISLD-LNX3345.00 - GRAND ISLAND 345KV CKT Z	720	720	0.05613	137.6553	WATERTN-LNX3345.00 - WHITE 345KV CKT 1
FDNS	00NR	0	17SP	G15_054	FROM->TO	GR ISLD-LNX3345.00 - GRAND ISLAND 345KV CKT Z	720	720	0.05585	136.3519	HANLON - STORLA 230KV CKT 1
FDNS	00NR	0	17SP	G15_054	FROM->TO	GR ISLD-LNX3345.00 - GRAND ISLAND 345KV CKT Z	720	720	0.0552	136.0759	FT THOMPSON - LETCHER 230KV CKT 1
FDNS	00NR	0	17SP	G15_054	FROM->TO	GR ISLD-LNX3345.00 - GRAND ISLAND 345KV CKT Z	720	720	0.0552	136.0759	FT THOMPSON - LETCHER 230KV CKT 1
FDNS	00NR	0	17SP	G15_054	FROM->TO	GR ISLD-LNX3345.00 - GRAND ISLAND 345KV CKT Z	720	720	0.05354	134.743	FT RANDAL - FT THOMPSON 230KV CKT 1
FDNS	00NR	0	17SP	G15_054	FROM->TO	GR ISLD-LNX3345.00 - GRAND ISLAND 345KV CKT Z	720	720	0.05354	134.743	FT RANDAL - FT THOMPSON 230KV CKT 1
FDNS	00NR	0	17SP	G15_054	FROM->TO	GR ISLD-LNX3345.00 - GRAND ISLAND 345KV CKT Z	720	720	0.05362	134.7138	FT RANDAL - G12_009IST 230.00 230KV CKT 1
FDNS	00NR	0	17SP	G15_054	FROM->TO	GR ISLD-LNX3345.00 - GRAND ISLAND 345KV CKT Z	720	720	0.05362	134.6259	FT THOMPSON - LAKE PLATT 230KV CKT 1
FDNS	00NR	0	17SP	G15_054	FROM->TO	GR ISLD-LNX3345.00 - GRAND ISLAND 345KV CKT Z	720	720	0.05362	134.6259	FT THOMPSON - LAKE PLATT 230KV CKT 1
FDNS	00NR	0	17SP	G15_054	FROM->TO	GR ISLD-LNX3345.00 - GRAND ISLAND 345KV CKT Z	720	720	0.05853	134.543	KEYSTONE - SIDNEY1-LNX3345.00 345KV CKT 1
FDNS	00NR	0	17SP	G15_054	FROM->TO	GR ISLD-LNX3345.00 - GRAND ISLAND 345KV CKT Z	720	720	0.05853	134.5216	SIDNEY - SIDNEY1-LNX3345.00 345KV CKT Z
FDNS	00NR	0	17SP	G15_054	FROM->TO	GR ISLD-LNX3345.00 - GRAND ISLAND 345KV CKT Z	720	720	0.06491	134.4768	NUNDRWD - WAYSIDE 230KV CKT 1
FDNS	00NR	0	17SP	G15_054	FROM->TO	GR ISLD-LNX3345.00 - GRAND ISLAND 345KV CKT Z	720	720	0.05656	134.3905	G09_001IST 345.00 - GROTON 345KV CKT 1
FDNS	00NR	0	17SP	G15_054	FROM->TO	GR ISLD-LNX3345.00 - GRAND ISLAND 345KV CKT Z	720	720	0.05362	134.2326	G12_009IST 230.00 - LAKE PLATT 230KV CKT 1
FDNS	00NR	0	17SP	G15_054	FROM->TO	GR ISLD-LNX3345.00 - GRAND ISLAND 345KV CKT Z	720	720	0.05677	134.2197	CHISAGO COUNTY - FORBES 500KV CKT 1
FDNS	00NR	0	17SP	G15_054	FROM->TO	GR ISLD-LNX3345.00 - GRAND ISLAND 345KV CKT Z	720	720	0.0568	134.1473	GEN336821 1-GRAND GULF UNIT
FDNS	00NR	0	17SP	G15_054	FROM->TO	GR ISLD-LNX3345.00 - GRAND ISLAND 345KV CKT Z	720	720	0.05757	134.0228	FT RANDAL - MEADOWGROVE4230.00 230KV CKT 1
FDNS	00NR	0	17SP	G15_054	FROM->TO	GR ISLD-LNX3345.00 - GRAND ISLAND 345KV CKT Z	720	720	0.06449	133.952	RAUN - SUB 3451 FT CAL 345KV CKT 1
FDNS	00NR	0	17SP	G15_054	FROM->TO	GR ISLD-LNX3345.00 - GRAND ISLAND 345KV CKT Z	720	720	0.06449	133.952	RAUN - SUB 3451 FT CAL 345KV CKT 1
FDNS	00NR	0	17SP	G15_054	FROM->TO	GR ISLD-LNX3345.00 - GRAND ISLAND 345KV CKT Z	720	720	0.05676	133.8744	CENTER - JAMESTOWN 345KV CKT 1
FDNS	00NR	0	17SP	G15_054	FROM->TO	GR ISLD-LNX3345.00 - GRAND ISLAND 345KV CKT Z	720	720	0.05608	133.7167	LETCHER - SIOUX FALLS 230KV CKT 1
FDNS	00NR	0	17SP	G15_054	FROM->TO	GR ISLD-LNX3345.00 - GRAND ISLAND 345KV CKT Z	720	720	0.0568	133.6199	GEN344225 1-1CAL G1 25.000
FDNS	00NR	0	17SP	G15_054	FROM->TO	GR ISLD-LNX3345.00 - GRAND ISLAND 345KV CKT Z	720	720	0.0568	133.5098	GEN635024 4-WALTER SCOTT UNIT 4
FDNS	00NR	0	17SP	G15_054	FROM->TO	GR ISLD-LNX3345.00 - GRAND ISLAND 345KV CKT Z	720	720	0.0568	133.4039	GEN337911 1-ARKANSAS NUCLEAR ONE UNIT #2
FDNS	00NR	0	17SP	G15_054	FROM->TO	GR ISLD-LNX3345.00 - GRAND ISLAND 345KV CKT Z	720	720	0.04289	133.3888	GRAND ISLAND - SWEETWATER 345KV CKT 1
FDNS	00NR	0	17SP	G15_054	FROM->TO	GR ISLD-LNX3345.00 - GRAND ISLAND 345KV CKT Z	720	720	0.0568	133.3552	GEN336153 1-WATERFORD UNIT#3
FDNS	00NR	0	17SP	G15_054	FROM->TO	GR ISLD-LNX3345.00 - GRAND ISLAND 345KV CKT Z	720	720	0.05678	133.3286	BISON 3 345.00 - BUFFALO 345KV CKT 1
FDNS	00NR	0	17SP	G15_054	FROM->TO	GR ISLD-LNX3345.00 - GRAND ISLAND 345KV CKT Z	720	720	0.0568	132.9715	GEN635023 3-WALTER SCOTT UNIT 3
FDNS	00NR	0	17SP	G15_054	FROM->TO	GR ISLD-LNX3345.00 - GRAND ISLAND 345KV CKT Z	720	720	0.0568	132.9227	GEN335831 1-RIVERBEND UNIT#1
FDNS	00NR	0	17SP	G15_054	FROM->TO	GR ISLD-LNX3345.00 - GRAND ISLAND 345KV CKT Z	720	720	0.05589	132.9171	SPLIT ROCK - WHITE 345KV CKT 1
FDNS	00NR	0	17SP	G15_054	FROM->TO	GR ISLD-LNX3345.00 - GRAND ISLAND 345KV CKT Z	720	720	0.05589	132.9171	SPLIT ROCK - WHITE 345KV CKT 1
FDNS	00NR	0	17SP	G15_054	FROM->TO	GR ISLD-LNX3345.00 - GRAND ISLAND 345KV CKT Z	720	720	0.0568	132.8237	GEN337910 1-ARKANSAS NUCLEAR ONE UNIT #1
FDNS	00NR	0	17SP	G15_054	FROM->TO	GR ISLD-LNX3345.00 - GRAND ISLAND 345KV CKT Z	720	720	0.05703	132.7285	ARROWHEAD - ARROWHEAD 230 230KV CKT 1
FDNS	00NR	0	17SP	G15_054	FROM->TO	GR ISLD-LNX3345.00 - GRAND ISLAND 345KV CKT Z	720	720	0.05692	132.6142	FT RANDAL - SIOUX CITY 230KV CKT 1
FDNS	00NR	0	17SP	G15_054	FROM->TO	GR ISLD-LNX3345.00 - GRAND ISLAND 345KV CKT Z	720	720	0.05658	132.6078	GROTON-LNX3 345.00 - LELAND1-LNX3345.00 345KV CKT 1
FDNS	00NR	0	17SP	G15_054	FROM->TO	GR ISLD-LNX3345.00 - GRAND ISLAND 345KV CKT Z	720	720	0.05658	132.5676	GROTON - GROTON-LNX3 345.00 345KV CKT Z
FDNS	00NR	0	17SP	G15_054	FROM->TO	GR ISLD-LNX3345.00 - GRAND ISLAND 345KV CKT Z	720	720	0.05658	132.5669	P12:345:UMZB:# 109 #: LOS GRT IN ND. LOS GRT
FDNS	00NR	0	17SP	G15_054	FROM->TO	GR ISLD-LNX3345.00 - GRAND ISLAND 345KV CKT Z	720	720	0.05658	132.551	LELAND OLDS - LELAND1-LNX3345.00 345KV CKT Z
FDNS	00NR	0	17SP	G15_054	FROM->TO	GR ISLD-LNX3345.00 - GRAND ISLAND 345KV CKT Z	720	720	0.0568	132.5069	GEN640010 1-GERALD GENTLEMAN STATION UNIT 1
FDNS	00NR	0	17SP	G15_054	FROM->TO	GR ISLD-LNX3345.00 - GRAND ISLAND 345KV CKT Z	720	720	0.05639	132.4993	HANLON - SIOUX FALLS 230KV CKT 1
FDNSLock	00NR	0	17SP	G15_054	FROM->TO	GR ISLD-LNX3345.00 - GRAND ISLAND 345KV CKT Z	720	720	0.05629	132.4756	P12:115:NPPD:1091:VALENTN7:MISSION7:BTB
FDNS	00NR	0	17SP	G15_054	FROM->TO	GR ISLD-LNX3345.00 - GRAND ISLAND 345KV CKT Z	720	720	0.05747	132.4608	HAZLETON - MITCHLCO3 345.00 345KV CKT 1
FDNS	00NR	0	17SP	G15_054	FROM->TO	GR ISLD-LNX3345.00 - GRAND ISLAND 345KV CKT Z	720	720	0.05764	132.4529	GERALD GENTLEMAN STATION - KEYSTONE 345KV CKT 1
FDNS	00NR	0	17SP	G15_054	FROM->TO	GR ISLD-LNX3345.00 - GRAND ISLAND 345KV CKT Z	720	720	0.0568	132.3179	ALEXMRES3 345.00 - BISON 3 345.00 345KV CKT 1
FDNS	00NR	0	17SP	G15_054	FROM->TO	GR ISLD-LNX3345.00 - GRAND ISLAND 345KV CKT Z	720	720	0.0568	132.2633	GEN337653 1-WHITE BLUFF UNIT #2
FDNS	00NR	0	17SP	G15_054	FROM->TO	GR ISLD-LNX3345.00 - GRAND ISLAND 345KV CKT Z	720	720	0.0568	132.2476	GEN337652 1-WHITE BLUFF UNIT #1
FDNS	00NR	0	17SP	G15_054	FROM->TO	GR ISLD-LNX3345.00 - GRAND ISLAND 345KV CKT Z	720	720	0.0568	132.1956	GEN640011 2-GERALD GENTLEMAN STATION UNIT 2
FDNS	00NR	0	17SP	G15_054	FROM->TO	GR ISLD-LNX3345.00 - GRAND ISLAND 345KV CKT Z	720	720	0.05629	132.1757	MISSION - ST FRANCIS 115KV CKT 1
FDNS	00NR	0	17SP	G15_054	FROM->TO	GR ISLD-LNX3345.00 - GRAND ISLAND 345KV CKT Z	720	720	0.0568	132.1606	GEN338146 1-INDEPENDENCE UNIT #2
FDNS	00NR	0	17SP	G15_054	FROM->TO	GR ISLD-LNX3345.00 - GRAND ISLAND 345KV CKT Z	720	720	0.0568	132.159	GEN338143 1-INDEPENDENCE UNIT #1
FDNS	00NR	0	17SP	G15_054	FROM->TO	GR ISLD-LNX3345.00 - GRAND ISLAND 345KV CKT Z	720	720	0.05554	132.159	SIOUXCY-LNX3345.00 - SPLIT ROCK 345KV CKT 1
FDNS	00NR	0	17SP	G15_054	FROM->TO	GR ISLD-LNX3345.00 - GRAND ISLAND 345KV CKT Z	720	720	0.05554	132.159	SIOUXCY-LNX3345.00 - SPLIT ROCK 345KV CKT 1
FDNS	00NR	0	17SP	G15_054	FROM->TO	GR ISLD-LNX3345.00 - GRAND ISLAND 345KV CKT Z	720	720	0.05678	132.1475	ELLENDALE - OAKES 230KV CKT 1
FDNS	00NR	0	17SP	G15_054	FROM->TO	GR ISLD-LNX3345.00 - GRAND ISLAND 345KV CKT Z	720	720	0.05678	132.1475	ELLENDALE - OAKES 230KV CKT 1
FDNS	00NR	0	17SP	G15_054	FROM->TO	GR ISLD-LNX3345.00 - GRAND ISLAND 345KV CKT Z	720	720	0.05708	132.1414	AS KING - EAU CLAIRE 345KV CKT 1
FDNS	00NR	0	17SP	G15_054	FROM->TO	GR ISLD-LNX3345.00 - GRAND ISLAND 345KV CKT Z	720	720	0.0568	132.1185	GEN501801 1-DOLET HILLS UNIT1
FDNS	00NR	0	17SP	G15_054	FROM->TO	GR ISLD-LNX3345.00 - GRAND ISLAND 345KV CKT Z	720	720	0.05554	132.104	P12:345:UMZW:# 907 #: SC2-SR IN IA. SC2-SR 345 KV LINE

SOLUTION	GROUP	SCENARIO	SEASON	SOURCE	DIRECTION	MONITORED ELEMENT	RATEA (MVA)	RATEB(MVA)	TDF	TC%LOADING (% MVA)	CONTINGENCY
FDNS	00NR	0	17SP	G15_054	FROM->TO	GR ISLD-LNX3345.00 - GRAND ISLAND 345KV CKT Z	720	720	0.05554	132.065	SIOUX CITY - SIOUXCY-LNX3345.00 345KV CKT Z
FDNS	00NR	0	17SP	G15_054	FROM->TO	GR ISLD-LNX3345.00 - GRAND ISLAND 345KV CKT Z	720	720	0.05678	132.0539	FORMAN - OAKES 230KV CKT 1
FDNSLock	00NR	0	17SP	G15_054	FROM->TO	GR ISLD-LNX3345.00 - GRAND ISLAND 345KV CKT Z	720	720	0.05629	132.0406	HARMONY - VALENTINE 115KV CKT 1
FDNS	00NR	0	17SP	G15_054	FROM->TO	GR ISLD-LNX3345.00 - GRAND ISLAND 345KV CKT Z	720	720	0.05826	132.0395	SIDNEY - STEGALL 345KV CKT 1
FDNS	00NR	0	17SP	G15_054	FROM->TO	GR ISLD-LNX3345.00 - GRAND ISLAND 345KV CKT Z	720	720	0.05629	132.0391	HARMONY - ST FRANCIS 115KV CKT 1
FDNS	00NR	0	17SP	G15_054	FROM->TO	GR ISLD-LNX3345.00 - GRAND ISLAND 345KV CKT Z	720	720	0.05634	132.0318	FT RANDAL - UTICA JCT 230KV CKT 1
FDNS	00NR	0	17SP	G15_054	FROM->TO	GR ISLD-LNX3345.00 - GRAND ISLAND 345KV CKT Z	720	720	0.05672	132.0241	CARPENTER - HURON 230KV CKT 1
FDNS	00NR	0	17SP	G15_054	FROM->TO	GR ISLD-LNX3345.00 - GRAND ISLAND 345KV CKT Z	720	720	0.05672	131.9553	HURON - WATERTOWN 230KV CKT 2
FDNS	00NR	0	17SP	G15_054	FROM->TO	GR ISLD-LNX3345.00 - GRAND ISLAND 345KV CKT Z	720	720	0.05672	131.9553	HURON - WATERTOWN 230KV CKT 2
FDNS	00NR	0	17SP	G15_054	FROM->TO	GR ISLD-LNX3345.00 - GRAND ISLAND 345KV CKT Z	720	720	0.05721	131.95	ARPIN B4 345.00 - EAU CLAIRE 345KV CKT 1
FDNS	00NR	0	17SP	G15_054	FROM->TO	GR ISLD-LNX3345.00 - GRAND ISLAND 345KV CKT Z	720	720	0.05672	131.8923	CARPENTER - WATERTOWN 230KV CKT 1
FDNS	00NR	0	17SP	G15_054	FROM->TO	GR ISLD-LNX3345.00 - GRAND ISLAND 345KV CKT Z	720	720	0.05672	131.8923	CARPENTER - WATERTOWN 230KV CKT 1
FDNS	00NR	0	17SP	G15_054	FROM->TO	GR ISLD-LNX3345.00 - GRAND ISLAND 345KV CKT Z	720	720	0.0553	131.8395	FT THOMPSON - WESSINGTON 230KV CKT 1
FDNS	00NR	0	17SP	G15_054	FROM->TO	GR ISLD-LNX3345.00 - GRAND ISLAND 345KV CKT Z	720	720	0.0553	131.8395	FT THOMPSON - WESSINGTON 230KV CKT 1
FDNS	00NR	0	17SP	G15_054	FROM->TO	GR ISLD-LNX3345.00 - GRAND ISLAND 345KV CKT Z	720	720	0.0568	131.7723	GEN336252 1-NINEMILE POINT UNIT#5
FDNS	00NR	0	17SP	G15_054	FROM->TO	GR ISLD-LNX3345.00 - GRAND ISLAND 345KV CKT Z	720	720	0.05645	131.7334	PAHOJA - SIOUX FALLS 230KV CKT 1
FDNS	00NR	0	17SP	G15_054	FROM->TO	GR ISLD-LNX3345.00 - GRAND ISLAND 345KV CKT Z	720	720	0.0568	131.7305	GEN501813 1-RODEMACHER UNIT 3
FDNS	00NR	0	17SP	G15_054	FROM->TO	GR ISLD-LNX3345.00 - GRAND ISLAND 345KV CKT Z	720	720	0.0521	131.7068	P12:115:NPPD:WAPA6:FTRANDL7:ONEILL 7:BTB
FDNS	00NR	0	17SP	G15_054	FROM->TO	GR ISLD-LNX3345.00 - GRAND ISLAND 345KV CKT Z	720	720	0.0521	131.7068	P12:115:UMZB:# 115 #: SE IN NE. FR-SE-ON
FDNS	00NR	0	17SP	G15_054	FROM->TO	GR ISLD-LNX3345.00 - GRAND ISLAND 345KV CKT Z	720	720	0.05301	131.7007	GERALD GENTLEMAN STATION - SWEETWATER 345KV CKT 1
FDNS	00NR	0	17SP	G15_054	FROM->TO	GR ISLD-LNX3345.00 - GRAND ISLAND 345KV CKT Z	720	720	0.05747	131.6728	ADAMS - MITCHLCO3 345.00 345KV CKT 1
FDNS	00NR	0	17SP	G15_054	FROM->TO	GR ISLD-LNX3345.00 - GRAND ISLAND 345KV CKT Z	720	720	0.0521	131.6656	FT RANDAL - SPENCER 115KV CKT 1
FDNS	00NR	0	17SP	G15_054	FROM->TO	GR ISLD-LNX3345.00 - GRAND ISLAND 345KV CKT Z	720	720	0.0568	131.6347	GEN336831 1-BAXTER WILSON SES
FDNS	00NR	0	17SP	G15_054	FROM->TO	GR ISLD-LNX3345.00 - GRAND ISLAND 345KV CKT Z	720	720	0.0568	131.622	GEN336251 1-NINEMILE POINT UNIT#4
FDNSLock	00NR	0	17SP	G15_054	FROM->TO	GR ISLD-LNX3345.00 - GRAND ISLAND 345KV CKT Z	720	720	0.05629	131.6073	AINSWORTH - VALENTINE 115KV CKT 1
FDNS	00NR	0	17SP	G15_054	FROM->TO	GR ISLD-LNX3345.00 - GRAND ISLAND 345KV CKT Z	720	720	0.0521	131.5743	ONEILL - SPENCER 115KV CKT 1
FDNS	00NR	0	17SP	G15_054	FROM->TO	GR ISLD-LNX3345.00 - GRAND ISLAND 345KV CKT Z	720	720	0.0568	131.5582	CNTSHNT3 345.00 - PRAIRIE3 345.00 345KV CKT 1
FDNS	00NR	0	17SP	G15_054	FROM->TO	GR ISLD-LNX3345.00 - GRAND ISLAND 345KV CKT Z	720	720	0.0568	131.5472	GEN337041 1-GERALD ANDRUS
FDNS	00NR	0	17SP	G15_054	FROM->TO	GR ISLD-LNX3345.00 - GRAND ISLAND 345KV CKT Z	720	720	0.0568	131.5304	GEN335206 1-NELSON UNIT 6
FDNS	00NR	0	17SP	G15_054	FROM->TO	GR ISLD-LNX3345.00 - GRAND ISLAND 345KV CKT Z	720	720	0.07691	131.5123	HOSKINS - SHELL CREEK 345KV CKT 1
FDNS	00NR	0	17SP	G15_054	FROM->TO	GR ISLD-LNX3345.00 - GRAND ISLAND 345KV CKT Z	720	720	0.0568	131.5063	GEN344897 4-1LAB G4 20.000
FDNS	00NR	0	17SP	G15_054	FROM->TO	GR ISLD-LNX3345.00 - GRAND ISLAND 345KV CKT Z	720	720	0.0568	131.503	GEN344894 1-1LAB G1 20.000
FDNS	00NR	0	17SP	G15_054	FROM->TO	GR ISLD-LNX3345.00 - GRAND ISLAND 345KV CKT Z	720	720	0.0568	131.5029	GEN344896 3-1LAB G3 20.000
FDNS	00NR	0	17SP	G15_054	FROM->TO	GR ISLD-LNX3345.00 - GRAND ISLAND 345KV CKT Z	720	720	0.05708	131.4564	G15094_T 345.00 - SIDNEY2-LNX3345.00 345KV CKT 1
FDNS	00NR	0	17SP	G15_054	FROM->TO	GR ISLD-LNX3345.00 - GRAND ISLAND 345KV CKT Z	720	720	0.05708	131.4525	SIDNEY - SIDNEY2-LNX3345.00 345KV CKT Z
FDNS	00NR	0	17SP	G15_054	FROM->TO	GR ISLD-LNX3345.00 - GRAND ISLAND 345KV CKT Z	720	720	0.0568	131.4521	FORMAN - HANKINSON 230KV CKT 1
FDNS	00NR	0	17SP	G15_054	FROM->TO	GR ISLD-LNX3345.00 - GRAND ISLAND 345KV CKT Z	720	720	0.0568	131.4478	GEN344895 2-1LAB G2 20.000
FDNS	00NR	0	17SP	G15_054	FROM->TO	GR ISLD-LNX3345.00 - GRAND ISLAND 345KV CKT Z	720	720	0.05725	131.4449	ADAMS - PLEASANT VALLEY 345KV CKT 1
FDNS	00NR	0	17SP	G15_054	FROM->TO	GR ISLD-LNX3345.00 - GRAND ISLAND 345KV CKT Z	720	720	0.0568	131.4361	GEN345670 1-1RUSH G1 18.000
FDNS	00NR	0	17SP	G15_054	FROM->TO	GR ISLD-LNX3345.00 - GRAND ISLAND 345KV CKT Z	720	720	0.0568	131.4357	GEN345671 2-1RUSH G2 18.000
FDNS	00NR	0	17SP	G15_054	FROM->TO	GR ISLD-LNX3345.00 - GRAND ISLAND 345KV CKT Z	720	720	0.05729	131.409	RASMUSN - UTICA JCT 230KV CKT 1
FDNS	00NR	0	17SP	G15_054	FROM->TO	GR ISLD-LNX3345.00 - GRAND ISLAND 345KV CKT Z	720	720	0.05882	131.3849	GRIMES - LEHIGH 345KV CKT 1
FDNS	00NR	0	17SP	G15_054	FROM->TO	GR ISLD-LNX3345.00 - GRAND ISLAND 345KV CKT Z	720	720	0.0568	131.3743	GEN501812 1-RODEMACHER UNIT 2
FDNS	00NR	0	17SP	G15_054	FROM->TO	GR ISLD-LNX3345.00 - GRAND ISLAND 345KV CKT Z	720	720	0.05645	131.3737	EAGLE 4 230.00 - PAHOJA 230KV CKT 1
FDNS	00NR	0	17SP	G15_054	FROM->TO	GR ISLD-LNX3345.00 - GRAND ISLAND 345KV CKT Z	720	720	0.0568	131.3518	GEN334440 1-SABINE UNIT 4
FDNS	00NR	0	17SP	G15_054	FROM->TO	GR ISLD-LNX3345.00 - GRAND ISLAND 345KV CKT Z	720	720	0.0568	131.3209	GEN563222 1-G15088_3 0.6900
FDNS	00NR	0	17SP	G15_054	FROM->TO	GR ISLD-LNX3345.00 - GRAND ISLAND 345KV CKT Z	720	720	0.05729	131.2572	RASMUSN - SIOUX CITY 230KV CKT 1
FDNS	00NR	0	17SP	G15_054	FROM->TO	GR ISLD-LNX3345.00 - GRAND ISLAND 345KV CKT Z	720	720	0.0568	131.1949	GEN336191 1-LITTLE GYPSY UNIT#3
FDNS	00NR	0	17SP	G15_054	FROM->TO	GR ISLD-LNX3345.00 - GRAND ISLAND 345KV CKT Z	720	720	0.05724	131.1823	LAKEFIELD 3 - NOBLES 345KV CKT 1
FDNS	00NR	0	17SP	G15_054	FROM->TO	GR ISLD-LNX3345.00 - GRAND ISLAND 345KV CKT Z	720	720	0.05478	131.1645	DIXONCO 230.00 - HOSKINS 230KV CKT 1
FDNS	00NR	0	17SP	G15_054	FROM->TO	GR ISLD-LNX3345.00 - GRAND ISLAND 345KV CKT Z	720	720	0.05399	131.1533	GERALD GENTLEMAN STATION - SWEETWATER 345KV CKT 2
FDNS	00NR	0	17SP	G15_054	FROM->TO	GR ISLD-LNX3345.00 - GRAND ISLAND 345KV CKT Z	720	720	0.05692	131.1447	RAUN - SIOUX CITY 345KV CKT 1
FDNS	00NR	0	17SP	G15_054	FROM->TO	GR ISLD-LNX3345.00 - GRAND ISLAND 345KV CKT Z	720	720	0.05692	131.1447	RAUN - SIOUX CITY 345KV CKT 1
FDNS	00NR	0	17SP	G15_054	FROM->TO	GR ISLD-LNX3345.00 - GRAND ISLAND 345KV CKT Z	720	720	0.0568	131.1356	GEN641089 2-ENERGY CENTER 2
FDNS	00NR	0	17SP	G15_054	FROM->TO	GR ISLD-LNX3345.00 - GRAND ISLAND 345KV CKT Z	720	720	0.0568	131.1315	GEN338388 1-1PLUM PT U1 23.000
FDNS	00NR	0	17SP	G15_054	FROM->TO	GR ISLD-LNX3345.00 - GRAND ISLAND 345KV CKT Z	720	720	0.0568	131.115	GEN336801 1-BAXTER WILSON UNIT #1
FDNS	00NR	0	17SP	G15_054	FROM->TO	GR ISLD-LNX3345.00 - GRAND ISLAND 345KV CKT Z	720	720	0.0568	131.089	GEN335614 1-WILLOW GLENN UNIT#4
FDNS	00NR	0	17SP	G15_054	FROM->TO	GR ISLD-LNX3345.00 - GRAND ISLAND 345KV CKT Z	720	720	0.0568	131.0813	GEN334441 1-SABINE UNIT 5
FDNS	00NR	0	17SP	G15_054	FROM->TO	GR ISLD-LNX3345.00 - GRAND ISLAND 345KV CKT Z	720	720	0.0568	131.0738	GEN336464 1-MICHOUD UNIT #3
FDNS	00NR	0	17SP	G15_054	FROM->TO	GR ISLD-LNX3345.00 - GRAND ISLAND 345KV CKT Z	720	720	0.05741	131.068	KOSSUTH 3 345.00 - OBRIEN 3 345.00 345KV CKT 1
FDNS	00NR	0	17SP	G15_054	FROM->TO	GR ISLD-LNX3345.00 - GRAND ISLAND 345KV CKT Z	720	720	0.05683	131.0671	ALEXMRES3 345.00 - WAITE PARK 345KV CKT 1
FDNS	00NR	0	17SP	G15_054	FROM->TO	GR ISLD-LNX3345.00 - GRAND ISLAND 345KV CKT Z	720	720	0.0568	131.0606	GEN335204 1-NELSON UNIT 4
FDNS	00NR	0	17SP	G15_054	FROM->TO	GR ISLD-LNX3345.00 - GRAND ISLAND 345KV CKT Z	720	720	0.06424	131.0579	COLUMEAST - SHELL CREEK 345KV CKT 1
FDNS	00NR	0	17SP	G15_054	FROM->TO	GR ISLD-LNX3345.00 - GRAND ISLAND 345KV CKT Z	720	720	0.05706	131.0518	BROOKING COUNTY - LYON COUNTY 345KV CKT 1
FDNS	00NR	0	17SP	G15_054	FROM->TO	GR ISLD-LNX3345.00 - GRAND ISLAND 345KV CKT Z	720	720	0.05741	131.0399	KOSSUTH 3 345.00 - WEBSTER 345KV CKT 1
FDNS	00NR	0	17SP	G15_054	FROM->TO	GR ISLD-LNX3345.00 - GRAND ISLAND 345KV CKT Z	720	720	0.05681	131.0392	GLENBORO SOUTH - RUGBY 230KV CKT 1
FDNS	00NR	0	17SP	G15_054	FROM->TO	GR ISLD-LNX3345.00 - GRAND ISLAND 345KV CKT Z	720	720	0.05679	131.0135	CENTER - COYOTE 345KV CKT 1
FDNS	00NR	0	17SP	G15_054	FROM->TO	GR ISLD-LNX3345.00 - GRAND ISLAND 345KV CKT Z	720	720	0.05682	131.0096	BLAIR - GRANITE FALLS 230KV CKT 1
FDNS	00NR	0	17SP	G15_054	FROM->TO	GR ISLD-LNX3345.00 - GRAND ISLAND 345KV CKT Z	720	720	0.05682	131.0096	BLAIR - GRANITE FALLS 230KV CKT 1
FDNS	00NR	0	17SP	G15_054	FROM->TO	GR ISLD-LNX3345.00 - GRAND ISLAND 345KV CKT Z	720	720	0.06435	130.9663	COLUMEAST - NW68TH & HOLDREGE 345KV CKT 1
FDNS	00NR	0	17SP	G15_054	FROM->TO	GR ISLD-LNX3345.00 - GRAND ISLAND 345KV CKT Z	720	720	0.06435	130.9663	COLUMEAST - NW68TH & HOLDREGE 345KV CKT 1
FDNS	00NR	0	17SP	G15_054	FROM->TO	GR ISLD-LNX3345.00 - GRAND ISLAND 345KV CKT Z	720	720	0.05973	130.9429	STEGALL - STEGALL TRANSFORMER 230KV CKT 1
FDNS	00NR	0	17SP	G15_054	FROM->TO	GR ISLD-LNX3345.00 - GRAND ISLAND 345KV CKT Z	720	720	0.05973	130.9211	P13:230-345:NPPD:STEGALL3:KV3A
FDNS	00NR	0	17SP	G15_054	FROM->TO	GR ISLD-LNX3345.00 - GRAND ISLAND 345KV CKT Z	720	720	0.05973	130.9098	STEGALL (SGQ KV3A) 345/230/13.8KV TRANSFORMER CKT 1
FDNS	00NR	0	17SP	G15_054	FROM->TO	GR ISLD-LNX3345.00 - GRAND ISLAND 345KV CKT Z	720	720	0.0568	130.9025	GEN334433 1-SABINE UNIT 3
FDNS	00NR	0	17SP	G15_054	FROM->TO	GR ISLD-LNX3345.00 - GRAND ISLAND 345KV CKT Z	720	720	0.05711	130.9021	BYRON - NORTH ROCHESTER 345KV CKT 1
FDNS	00NR	0	17SP	G15_054	FROM->TO	GR ISLD-LNX3345.00 - GRAND ISLAND 345KV CKT Z	720	720	0.05711	130.8661	G14-059T 230.00 - OGALLALA 230KV CKT 1
FDNS	00NR	0	17SP	G15_054	FROM->TO	GR ISLD-LNX3345.00 - GRAND ISLAND 345KV CKT Z	720	720	0.0616	130.8533	STEGALL-LNX3230.00 - WAYSIDE 230KV CKT 1
FDNS	00NR	0	17SP	G15_054	FROM->TO	GR ISLD-LNX3345.00 - GRAND ISLAND 345KV CKT Z	720	720	0.0562	130.8524	MENNO JCT - TRIPP JCT 115KV CKT 1

SOLUTION	GROUP	SCENARIO	SEASON	SOURCE	DIRECTION	MONITORED ELEMENT	RATEA (MVA)	RATEB(MVA)	TDF	TC%LOADING (% MVA)	CONTINGENCY
FDNS	00NR	0	17SP	G15_054	FROM->TO	GR ISLD-LNX3345.00 - GRAND ISLAND 345KV CKT Z	720	720	0.0568	130.8515	GEN629075 1-OTTUMWA GENERATOR FOR OTTUMWA UNIT NO 1
FDNS	00NR	0	17SP	G15_054	FROM->TO	GR ISLD-LNX3345.00 - GRAND ISLAND 345KV CKT Z	720	720	0.0568	130.847	GEN336222 1-LITTLE GYPSY UNIT#2
FDNS	00NR	0	17SP	G15_054	FROM->TO	GR ISLD-LNX3345.00 - GRAND ISLAND 345KV CKT Z	720	720	0.0568	130.8418	P13:230-345:NPPD:NUCOR-1
FDNS	00NR	0	17SP	G15_054	FROM->TO	GR ISLD-LNX3345.00 - GRAND ISLAND 345KV CKT Z	720	720	0.0616	130.8411	STEGALL - STEGALL-LNX3230.00 230KV CKT Z
FDNS	00NR	0	17SP	G15_054	FROM->TO	GR ISLD-LNX3345.00 - GRAND ISLAND 345KV CKT Z	720	720	0.0568	130.841	P12:115:UMZW:# 162 #: NEL IN ND. FAULT ON ML-NEL-MX-GA 115 KV
FDNS	00NR	0	17SP	G15_054	FROM->TO	GR ISLD-LNX3345.00 - GRAND ISLAND 345KV CKT Z	720	720	0.0568	130.8288	GEN303007 1-1BC2 U2
FDNS	00NR	0	17SP	G15_054	FROM->TO	GR ISLD-LNX3345.00 - GRAND ISLAND 345KV CKT Z	720	720	0.0568	130.8224	GEN303006 1-1BC2 U1
FDNS	00NR	0	17SP	G15_054	FROM->TO	GR ISLD-LNX3345.00 - GRAND ISLAND 345KV CKT Z	720	720	0.05657	130.7801	FT THOMPSON - HURON 230KV CKT 1
FDNS	00NR	0	17SP	G15_054	FROM->TO	GR ISLD-LNX3345.00 - GRAND ISLAND 345KV CKT Z	720	720	0.05657	130.7801	FT THOMPSON - HURON 230KV CKT 1
FDNS	00NR	0	17SP	G15_054	FROM->TO	GR ISLD-LNX3345.00 - GRAND ISLAND 345KV CKT Z	720	720	0.05657	130.7801	FT THOMPSON - HURON 230KV CKT 2
FDNS	00NR	0	17SP	G15_054	FROM->TO	GR ISLD-LNX3345.00 - GRAND ISLAND 345KV CKT Z	720	720	0.05657	130.7801	FT THOMPSON - HURON 230KV CKT 2
FDNS	00NR	0	17SP	G15_054	FROM->TO	GR ISLD-LNX3345.00 - GRAND ISLAND 345KV CKT Z	720	720	0.0568	130.7598	GEN336152 1-WATERFORD UNIT#2
FDNS	00NR	0	17SP	G15_054	FROM->TO	GR ISLD-LNX3345.00 - GRAND ISLAND 345KV CKT Z	720	720	0.0568	130.7593	GEN336151 1-WATERFORD UNIT#1
FDNS	00NR	0	17SP	G15_054	FROM->TO	GR ISLD-LNX3345.00 - GRAND ISLAND 345KV CKT Z	720	720	0.0568	130.7462	GEN303008 1-1BC2 U3
FDNS	00NR	0	17SP	G15_054	FROM->TO	GR ISLD-LNX3345.00 - GRAND ISLAND 345KV CKT Z	720	720	0.05679	130.7358	GARRISON - JAMES TOWN 230KV CKT 1
FDNS	00NR	0	17SP	G15_054	FROM->TO	GR ISLD-LNX3345.00 - GRAND ISLAND 345KV CKT Z	720	720	0.0568	130.7309	GEN336170 1-GULF OXY U4
FDNS	00NR	0	17SP	G15_054	FROM->TO	GR ISLD-LNX3345.00 - GRAND ISLAND 345KV CKT Z	720	720	0.0562	130.7232	MENNO JCT - UTICA 115KV CKT 1
FDNS	00NR	0	17SP	G15_054	FROM->TO	GR ISLD-LNX3345.00 - GRAND ISLAND 345KV CKT Z	720	720	0.05684	130.7184	HANKINSON - WAHPETON 230KV CKT 1
FDNS	00NR	0	17SP	G15_054	FROM->TO	GR ISLD-LNX3345.00 - GRAND ISLAND 345KV CKT Z	720	720	0.06352	130.6984	PETERSBRG.N7115.00 - PETERSBURG 115KV CKT Z1
FDNS	00NR	0	17SP	G15_054	FROM->TO	GR ISLD-LNX3345.00 - GRAND ISLAND 345KV CKT Z	720	720	0.05691	130.6981	NORTH ROCHESTER - PRAIRIE ISLAND 345KV CKT 1
FDNS	00NR	0	17SP	G15_054	FROM->TO	GR ISLD-LNX3345.00 - GRAND ISLAND 345KV CKT Z	720	720	0.05685	130.6902	APPLEDORN 4 230.00 - WATERTOWN 230KV CKT 1
FDNS	00NR	0	17SP	G15_054	FROM->TO	GR ISLD-LNX3345.00 - GRAND ISLAND 345KV CKT Z	720	720	0.05685	130.6902	APPLEDORN 4 230.00 - WATERTOWN 230KV CKT 1
FDNS	00NR	0	17SP	G15_054	FROM->TO	GR ISLD-LNX3345.00 - GRAND ISLAND 345KV CKT Z	720	720	0.0562	130.6816	P12:115:UMZZ:# 237 #: MEN IN SD. MENNO JUNCTION IS A TAP (UJ-MEN-TP).
FDNS	00NR	0	17SP	G15_054	FROM->TO	GR ISLD-LNX3345.00 - GRAND ISLAND 345KV CKT Z	720	720	0.06352	130.6743	P12:115:NPPD:1168B:ALBION 7:PETERSBRG.N7:BTB
FDNS	00NR	0	17SP	G15_054	FROM->TO	GR ISLD-LNX3345.00 - GRAND ISLAND 345KV CKT Z	720	720	0.05682	130.6654	FERGSFL4 230.00 - WAHPETON 230KV CKT 1
FDNS	00NR	0	17SP	G15_054	FROM->TO	GR ISLD-LNX3345.00 - GRAND ISLAND 345KV CKT Z	720	720	0.05387	130.6641	FT THOMPSON (FT2 KU1B) 345/230/13.8KV TRANSFORMER CKT 1
FDNS	00NR	0	17SP	G15_054	FROM->TO	GR ISLD-LNX3345.00 - GRAND ISLAND 345KV CKT Z	720	720	0.05388	130.6623	FT THOMPSON (FT2 KU1A) 345/230/13.8KV TRANSFORMER CKT 1
FDNS	00NR	0	17SP	G15_054	FROM->TO	GR ISLD-LNX3345.00 - GRAND ISLAND 345KV CKT Z	720	720	0.05679	130.6495	FARGO - JAMES TOWN 230KV CKT 1
FDNS	00NR	0	17SP	G15_054	FROM->TO	GR ISLD-LNX3345.00 - GRAND ISLAND 345KV CKT Z	720	720	0.0568	130.6446	GEN501811 1-RODEMACHER UNIT 1
FDNS	00NR	0	17SP	G15_054	FROM->TO	GR ISLD-LNX3345.00 - GRAND ISLAND 345KV CKT Z	720	720	0.05708	130.6428	G15094_T 345.00 - LARAMIE RIVER 345KV CKT 1
FDNS	00NR	0	17SP	G15_054	FROM->TO	GR ISLD-LNX3345.00 - GRAND ISLAND 345KV CKT Z	720	720	0.05693	130.6372	ARKANSAS NUCLEAR ONE - FT SMITH 500KV CKT 1
FDNS	00NR	0	17SP	G15_054	FROM->TO	GR ISLD-LNX3345.00 - GRAND ISLAND 345KV CKT Z	720	720	0.05693	130.6372	ARKANSAS NUCLEAR ONE - FT SMITH 500KV CKT 1
FDNS	00NR	0	17SP	G15_054	FROM->TO	GR ISLD-LNX3345.00 - GRAND ISLAND 345KV CKT Z	720	720	0.05685	130.634	APPLEDORN 4 230.00 - GRANITE FALLS 230KV CKT 1
FDNS	00NR	0	17SP	G15_054	FROM->TO	GR ISLD-LNX3345.00 - GRAND ISLAND 345KV CKT Z	720	720	0.05685	130.634	APPLEDORN 4 230.00 - GRANITE FALLS 230KV CKT 1
FDNS	00NR	0	17SP	G15_054	FROM->TO	GR ISLD-LNX3345.00 - GRAND ISLAND 345KV CKT Z	720	720	0.05711	130.6325	BYRON - PLEASANT VALLEY 345KV CKT 1
FDNS	00NR	0	17SP	G15_054	FROM->TO	GR ISLD-LNX3345.00 - GRAND ISLAND 345KV CKT Z	720	720	0.06352	130.6282	ALBION - PETERSBURG 115KV CKT 1
FDNS	00NR	0	17SP	G15_054	FROM->TO	GR ISLD-LNX3345.00 - GRAND ISLAND 345KV CKT Z	720	720	0.0568	130.6122	P13:115-230:NPPD:NUCOR-3
FDNS	00NR	0	17SP	G15_054	FROM->TO	GR ISLD-LNX3345.00 - GRAND ISLAND 345KV CKT Z	720	720	0.05679	130.6056	FARGO - JAMES TOWN 230KV CKT 2
FDNS	00NR	0	17SP	G15_054	FROM->TO	GR ISLD-LNX3345.00 - GRAND ISLAND 345KV CKT Z	720	720	0.05749	130.6004	DENISON - SIOUX CITY 230KV CKT 1
FDNS	00NR	0	17SP	G15_054	FROM->TO	GR ISLD-LNX3345.00 - GRAND ISLAND 345KV CKT Z	720	720	0.0568	130.5697	P13:230:UMZW:# 2218 #: FP IN MT. LOSS OF TRANSFORMER (AT2).
FDNS	00NR	0	17SP	G15_054	FROM->TO	GR ISLD-LNX3345.00 - GRAND ISLAND 345KV CKT Z	720	720	0.05703	130.5585	ARPIN B3 345.00 - ROCKY RN B8 345.00 345KV CKT 1
FDNS	00NR	0	17SP	G15_054	FROM->TO	GR ISLD-LNX3345.00 - GRAND ISLAND 345KV CKT Z	720	720	0.05076	130.5401	P12:115:NPPD:1164:ONEILL 7:JEFFREY9:BTB
FDNS	00NR	0	17SP	G15_054	FROM->TO	GR ISLD-LNX3345.00 - GRAND ISLAND 345KV CKT Z	720	720	0.05679	130.5333	BISMARK - WEBER 230KV CKT 1
FDNS	00NR	0	17SP	G15_054	FROM->TO	GR ISLD-LNX3345.00 - GRAND ISLAND 345KV CKT Z	720	720	0.05623	130.528	LAKEFIELD 3 - LKFLDXL3 345KV CKT 1
FDNS	00NR	0	17SP	G15_054	FROM->TO	GR ISLD-LNX3345.00 - GRAND ISLAND 345KV CKT Z	720	720	0.05679	130.5229	BISMARK - JAMES TOWN 230KV CKT 1
FDNS	00NR	0	17SP	G15_054	FROM->TO	GR ISLD-LNX3345.00 - GRAND ISLAND 345KV CKT Z	720	720	0.0568	130.5208	GEN334071 1-LEWIS CREEK 2
FDNS	00NR	0	17SP	G15_054	FROM->TO	GR ISLD-LNX3345.00 - GRAND ISLAND 345KV CKT Z	720	720	0.0568	130.5152	GEN334070 1-LEWIS CREEK 1
FDNS	00NR	0	17SP	G15_054	FROM->TO	GR ISLD-LNX3345.00 - GRAND ISLAND 345KV CKT Z	720	720	0.0568	130.5119	GEN337766 1-TRACTEBEL UNIT S1
FDNS	00NR	0	17SP	G15_054	FROM->TO	GR ISLD-LNX3345.00 - GRAND ISLAND 345KV CKT Z	720	720	0.05679	130.4965	JAMES TOWN - WEBER 230KV CKT 1
FDNS	00NR	0	17SP	G15_054	FROM->TO	GR ISLD-LNX3345.00 - GRAND ISLAND 345KV CKT Z	720	720	0.0568	130.4889	P13:115-345:NPPD:NUCOR-2
FDNS	00NR	0	17SP	G15_054	FROM->TO	GR ISLD-LNX3345.00 - GRAND ISLAND 345KV CKT Z	720	720	0.05681	130.488	AUDUBON - SHEYNNE 230KV CKT 1
FDNS	00NR	0	17SP	G15_054	FROM->TO	GR ISLD-LNX3345.00 - GRAND ISLAND 345KV CKT Z	720	720	0.05722	130.4834	7PALM TAP 345.00 - SUB T 345KV CKT 1
FDNS	00NR	0	17SP	G15_054	FROM->TO	GR ISLD-LNX3345.00 - GRAND ISLAND 345KV CKT Z	720	720	0.05722	130.4831	PALXFRASBTHI
FDNS	00NR	0	17SP	G15_054	FROM->TO	GR ISLD-LNX3345.00 - GRAND ISLAND 345KV CKT Z	720	720	0.05076	130.476	CLEARWATER - ONEILL 115KV CKT 1
FDNS	00NR	0	17SP	G15_054	FROM->TO	GR ISLD-LNX3345.00 - GRAND ISLAND 345KV CKT Z	720	720	0.0568	130.4719	BALTA - RAMSEY 230KV CKT 1
FDNS	00NR	0	17SP	G15_054	FROM->TO	GR ISLD-LNX3345.00 - GRAND ISLAND 345KV CKT Z	720	720	0.05682	130.4695	FERGSFL4 230.00 - GRE-SILVRLK4230.00 230KV CKT 1
FDNS	00NR	0	17SP	G15_054	FROM->TO	GR ISLD-LNX3345.00 - GRAND ISLAND 345KV CKT Z	720	720	0.0568	130.4666	GEN501910 1-ACADIA UNIT ST1
FDNS	00NR	0	17SP	G15_054	FROM->TO	GR ISLD-LNX3345.00 - GRAND ISLAND 345KV CKT Z	720	720	0.05719	130.458	NOBLES - SPLIT ROCK 345KV CKT 1
FDNS	00NR	0	17SP	G15_054	FROM->TO	GR ISLD-LNX3345.00 - GRAND ISLAND 345KV CKT Z	720	720	0.05679	130.4485	ELM CREEK - MONTICELLO 345KV CKT 1
FDNS	00NR	0	17SP	G15_054	FROM->TO	GR ISLD-LNX3345.00 - GRAND ISLAND 345KV CKT Z	720	720	0.05737	130.4452	P12:115:NPPD:WAPA1:CHADRON7:BOXBUTE7:BTB
FDNS	00NR	0	17SP	G15_054	FROM->TO	GR ISLD-LNX3345.00 - GRAND ISLAND 345KV CKT Z	720	720	0.0568	130.4429	PRAIRIE ISLAND 345/20.0KV TRANSFORMER CKT 1
FDNS	00NR	0	17SP	G15_054	FROM->TO	GR ISLD-LNX3345.00 - GRAND ISLAND 345KV CKT Z	720	720	0.05628	130.4422	MT VERN - STORLA 115KV CKT 1
FDNS	00NR	0	17SP	G15_054	FROM->TO	GR ISLD-LNX3345.00 - GRAND ISLAND 345KV CKT Z	720	720	0.0568	130.4383	PRAIRIE ISLAND 345/20.0KV TRANSFORMER CKT 2
FDNS	00NR	0	17SP	G15_054	FROM->TO	GR ISLD-LNX3345.00 - GRAND ISLAND 345KV CKT Z	720	720	0.0568	130.4343	GEN562596 1-G14_059_3 0.6900
FDNS	00NR	0	17SP	G15_054	FROM->TO	GR ISLD-LNX3345.00 - GRAND ISLAND 345KV CKT Z	720	720	0.0568	130.4332	GEN345765 H-1SIOUX 2 18.000
FDNS	00NR	0	17SP	G15_054	FROM->TO	GR ISLD-LNX3345.00 - GRAND ISLAND 345KV CKT Z	720	720	0.05293	130.4255	GAVINS POINT - YANKON JCT 115KV CKT 1
FDNS	00NR	0	17SP	G15_054	FROM->TO	GR ISLD-LNX3345.00 - GRAND ISLAND 345KV CKT Z	720	720	0.05293	130.4255	GAVINS POINT - YANKON JCT 115KV CKT 1
FDNS	00NR	0	17SP	G15_054	FROM->TO	GR ISLD-LNX3345.00 - GRAND ISLAND 345KV CKT Z	720	720	0.05712	130.4241	P13:230-345:NPPD:SIDNEY 3:KV2A
FDNS	00NR	0	17SP	G15_054	FROM->TO	GR ISLD-LNX3345.00 - GRAND ISLAND 345KV CKT Z	720	720	0.05712	130.424	SIDNEY (SDQ KV2A) 345/230/13.8KV TRANSFORMER CKT 1
FDNS	00NR	0	17SP	G15_054	FROM->TO	GR ISLD-LNX3345.00 - GRAND ISLAND 345KV CKT Z	720	720	0.05682	130.424	GRE-SILVRLK4230.00 - HENNING 230KV CKT 1
FDNS	00NR	0	17SP	G15_054	FROM->TO	GR ISLD-LNX3345.00 - GRAND ISLAND 345KV CKT Z	720	720	0.05712	130.4236	SIDNEY - SIDNEY TRANSFORMER 230KV CKT 1
FDNS	00NR	0	17SP	G15_054	FROM->TO	GR ISLD-LNX3345.00 - GRAND ISLAND 345KV CKT Z	720	720	0.05702	130.4099	CHADRON - WAYSIDE 115KV CKT 1
FDNS	00NR	0	17SP	G15_054	FROM->TO	GR ISLD-LNX3345.00 - GRAND ISLAND 345KV CKT Z	720	720	0.05702	130.4099	P13:115-230:NPPD:WAYSIDE4:T1
FDNS	00NR	0	17SP	G15_054	FROM->TO	GR ISLD-LNX3345.00 - GRAND ISLAND 345KV CKT Z	720	720	0.05678	130.4085	DKSN_CO5 161.00 - TRIBOJI NO1 + NO2 161KV CKT 1
FDNS	00NR	0	17SP	G15_054	FROM->TO	GR ISLD-LNX3345.00 - GRAND ISLAND 345KV CKT Z	720	720	0.05702	130.4072	WAYSIDE (WAYSIDE T1) 230/115/13.8KV TRANSFORMER CKT 1
FDNS	00NR	0	17SP	G15_054	FROM->TO	GR ISLD-LNX3345.00 - GRAND ISLAND 345KV CKT Z	720	720	0.05714	130.407	P13:115-230:TSGT:SIDNEY-KV1A
FDNS	00NR	0	17SP	G15_054	FROM->TO	GR ISLD-LNX3345.00 - GRAND ISLAND 345KV CKT Z	720	720	0.06352	130.4021	NELIGH - PETERSBRG.N7115.00 115KV CKT 1
FDNS	00NR	0	17SP	G15_054	FROM->TO	GR ISLD-LNX3345.00 - GRAND ISLAND 345KV CKT Z	720	720	0.0568	130.3993	GEN345756 H-1SIOUX 1 18.000
FDNS	00NR	0	17SP	G15_054	FROM->TO	GR ISLD-LNX3345.00 - GRAND ISLAND 345KV CKT Z	720	720	0.0568	130.399	GEN337764 1-TRACTEBEL UNIT C1

SOLUTION	GROUP	SCENARIO	SEASON	SOURCE	DIRECTION	MONITORED ELEMENT	RATEA (MVA)	RATEB(MVA)	TDF	TC%LOADING (% MVA)	CONTINGENCY
FDNS	00NR	0	17SP	G15_054	FROM->TO	GR ISLD-LNX3345.00 - GRAND ISLAND 345KV CKT Z	720	720	0.0568	130.399	GEN337765 1-TRACTEBEL UNIT C2
FDNS	00NR	0	17SP	G15_054	FROM->TO	GR ISLD-LNX3345.00 - GRAND ISLAND 345KV CKT Z	720	720	0.0568	130.3913	LELAND OLDS - STANTON 230KV CKT 1
FDNS	00NR	0	17SP	G15_054	FROM->TO	GR ISLD-LNX3345.00 - GRAND ISLAND 345KV CKT Z	720	720	0.0568	130.3913	LELAND OLDS - STANTON 230KV CKT 1
FDNS	00NR	0	17SP	G15_054	FROM->TO	GR ISLD-LNX3345.00 - GRAND ISLAND 345KV CKT Z	720	720	0.0568	130.386	GRAND GULF 500/22.0KV TRANSFORMER CKT 1
FDNS	00NR	0	17SP	G15_054	FROM->TO	GR ISLD-LNX3345.00 - GRAND ISLAND 345KV CKT Z	720	720	0.0568	130.3716	PRAIRIE - WINGER 230KV CKT 1
FDNS	00NR	0	17SP	G15_054	FROM->TO	GR ISLD-LNX3345.00 - GRAND ISLAND 345KV CKT Z	720	720	0.05692	130.3698	FRANKS - HUBEN 345KV CKT 1
FDNS	00NR	0	17SP	G15_054	FROM->TO	GR ISLD-LNX3345.00 - GRAND ISLAND 345KV CKT Z	720	720	0.05682	130.3677	HENNING - INMANN 230KV CKT 1
FDNS	00NR	0	17SP	G15_054	FROM->TO	GR ISLD-LNX3345.00 - GRAND ISLAND 345KV CKT Z	720	720	0.0568	130.3564	GEN336221 1-LITTLE GYPSY UNIT#1
FDNS	00NR	0	17SP	G15_054	FROM->TO	GR ISLD-LNX3345.00 - GRAND ISLAND 345KV CKT Z	720	720	0.05679	130.3552	EAGLE - PHILIP 115KV CKT 1
FDNS	00NR	0	17SP	G15_054	FROM->TO	GR ISLD-LNX3345.00 - GRAND ISLAND 345KV CKT Z	720	720	0.0568	130.3524	BIG STONE (230/115) 230/115/13.8KV TRANSFORMER CKT 1
FDNS	00NR	0	17SP	G15_054	FROM->TO	GR ISLD-LNX3345.00 - GRAND ISLAND 345KV CKT Z	720	720	0.05688	130.3512	GENOA 161 - SENECA 161 161KV CKT 1
FDNS	00NR	0	17SP	G15_054	FROM->TO	GR ISLD-LNX3345.00 - GRAND ISLAND 345KV CKT Z	720	720	0.05737	130.3498	CHADRON - DUNLAP 115KV CKT 1
FDNS	00NR	0	17SP	G15_054	FROM->TO	GR ISLD-LNX3345.00 - GRAND ISLAND 345KV CKT Z	720	720	0.05679	130.3485	GROTON (GROTON KU2A) 345/115/13.8KV TRANSFORMER CKT 1
FDNS	00NR	0	17SP	G15_054	FROM->TO	GR ISLD-LNX3345.00 - GRAND ISLAND 345KV CKT Z	720	720	0.0568	130.3483	GEN337757 1-DUKE HOTSPRINGS STG1
FDNS	00NR	0	17SP	G15_054	FROM->TO	GR ISLD-LNX3345.00 - GRAND ISLAND 345KV CKT Z	720	720	0.0568	130.3481	GEN336242 1-1NMIL ST1 18.000
FDNS	00NR	0	17SP	G15_054	FROM->TO	GR ISLD-LNX3345.00 - GRAND ISLAND 345KV CKT Z	720	720	0.0568	130.3436	GEN334431 1-SABINE UNIT 1
FDNS	00NR	0	17SP	G15_054	FROM->TO	GR ISLD-LNX3345.00 - GRAND ISLAND 345KV CKT Z	720	720	0.0568	130.3436	GEN334432 1-SABINE UNIT 2
FDNS	00NR	0	17SP	G15_054	FROM->TO	GR ISLD-LNX3345.00 - GRAND ISLAND 345KV CKT Z	720	720	0.0568	130.3223	GEN334030 1-FRONTIER UNIT 1
FDNS	00NR	0	17SP	G15_054	FROM->TO	GR ISLD-LNX3345.00 - GRAND ISLAND 345KV CKT Z	720	720	0.0568	130.3218	GEN334031 1-FRONTIER UNIT 2
FDNS	00NR	0	17SP	G15_054	FROM->TO	GR ISLD-LNX3345.00 - GRAND ISLAND 345KV CKT Z	720	720	0.05686	130.3196	NORTH LA CROSSE - NORTH ROCHESTER 345KV CKT 1
FDNS	00NR	0	17SP	G15_054	FROM->TO	GR ISLD-LNX3345.00 - GRAND ISLAND 345KV CKT Z	720	720	0.0568	130.318	GEN336446 1-MICHOUD UNIT #2
FDNS	00NR	0	17SP	G15_054	FROM->TO	GR ISLD-LNX3345.00 - GRAND ISLAND 345KV CKT Z	720	720	0.05681	130.313	KARLSTAD - WINGER 230KV CKT 1
FDNS	00NR	0	17SP	G15_054	FROM->TO	GR ISLD-LNX3345.00 - GRAND ISLAND 345KV CKT Z	720	720	0.0568	130.3064	GEN345832 1-1TS G1 13.800
FDNS	00NR	0	17SP	G15_054	FROM->TO	GR ISLD-LNX3345.00 - GRAND ISLAND 345KV CKT Z	720	720	0.0568	130.3061	GEN345841 2-1TS G2 13.800
FDNS	00NR	0	17SP	G15_054	FROM->TO	GR ISLD-LNX3345.00 - GRAND ISLAND 345KV CKT Z	720	720	0.05693	130.3053	HAMPTON CORNER - NORTH ROCHESTER 345KV CKT 1
FDNS	00NR	0	17SP	G15_054	FROM->TO	GR ISLD-LNX3345.00 - GRAND ISLAND 345KV CKT Z	720	720	0.05681	130.3047	AUDUBON - HUBBARD 230KV CKT 1
FDNS	00NR	0	17SP	G15_054	FROM->TO	GR ISLD-LNX3345.00 - GRAND ISLAND 345KV CKT Z	720	720	0.0568	130.3033	GEN501970 1-EVANGELINE UNIT 7
FDNS	00NR	0	17SP	G15_054	FROM->TO	GR ISLD-LNX3345.00 - GRAND ISLAND 345KV CKT Z	720	720	0.05679	130.2956	EAGLE - MARTIN 115KV CKT 1
FDNS	00NR	0	17SP	G15_054	FROM->TO	GR ISLD-LNX3345.00 - GRAND ISLAND 345KV CKT Z	720	720	0.05185	130.2955	BLOOMFIELD - CREIGHTON 115KV CKT 1
FDNS	00NR	0	17SP	G15_054	FROM->TO	GR ISLD-LNX3345.00 - GRAND ISLAND 345KV CKT Z	720	720	0.05498	130.2935	P13:230:UMZW:# 253 #: FR IN SD. LOSS OF TRANSFORMER (E
FDNS	00NR	0	17SP	G15_054	FROM->TO	GR ISLD-LNX3345.00 - GRAND ISLAND 345KV CKT Z	720	720	0.05683	130.2911	GRANT - MITCHELL 115KV CKT 1
FDNS	00NR	0	17SP	G15_054	FROM->TO	GR ISLD-LNX3345.00 - GRAND ISLAND 345KV CKT Z	720	720	0.05683	130.2911	GRANT - MITCHELL 115KV CKT 1
FDNS	00NR	0	17SP	G15_054	FROM->TO	GR ISLD-LNX3345.00 - GRAND ISLAND 345KV CKT Z	720	720	0.05486	130.2902	NAPA JCT7 115.00 - UTICA 115KV CKT 1
FDNS	00NR	0	17SP	G15_054	FROM->TO	GR ISLD-LNX3345.00 - GRAND ISLAND 345KV CKT Z	720	720	0.05486	130.2902	NAPA JCT7 115.00 - UTICA 115KV CKT 1
FDNS	00NR	0	17SP	G15_054	FROM->TO	GR ISLD-LNX3345.00 - GRAND ISLAND 345KV CKT Z	720	720	0.05486	130.2893	P12:115:UMZW:# 1910 #: YJ IN SD. YJ-UJ LINE FAULT
FDNS	00NR	0	17SP	G15_054	FROM->TO	GR ISLD-LNX3345.00 - GRAND ISLAND 345KV CKT Z	720	720	0.05486	130.2868	NAPA JCT7 115.00 - YANKON JCT 115KV CKT 1
FDNS	00NR	0	17SP	G15_054	FROM->TO	GR ISLD-LNX3345.00 - GRAND ISLAND 345KV CKT Z	720	720	0.05486	130.2868	NAPA JCT7 115.00 - YANKON JCT 115KV CKT 1
FDNS	00NR	0	17SP	G15_054	FROM->TO	GR ISLD-LNX3345.00 - GRAND ISLAND 345KV CKT Z	720	720	0.0568	130.2841	P12:345:GRDA:CHOUTEAU-SPORTSMANACRES
FDNS	00NR	0	17SP	G15_054	FROM->TO	GR ISLD-LNX3345.00 - GRAND ISLAND 345KV CKT Z	720	720	0.0568	130.2838	GEN337430 1-PERYVILLE UNIT #3
FDNS	00NR	0	17SP	G15_054	FROM->TO	GR ISLD-LNX3345.00 - GRAND ISLAND 345KV CKT Z	720	720	0.0568	130.2835	GEN337428 1-PERYVILLE UNIT #1
FDNS	00NR	0	17SP	G15_054	FROM->TO	GR ISLD-LNX3345.00 - GRAND ISLAND 345KV CKT Z	720	720	0.0568	130.281	GEN531447 1-HOLCOMB GENERATOR
FDNS	00NR	0	17SP	G15_054	FROM->TO	GR ISLD-LNX3345.00 - GRAND ISLAND 345KV CKT Z	720	720	0.0568	130.2564	GEN336240 1-1NMIL CT1 18.000
FDNS	00NR	0	17SP	G15_054	FROM->TO	GR ISLD-LNX3345.00 - GRAND ISLAND 345KV CKT Z	720	720	0.0568	130.2564	GEN336241 1-1NMIL CT2 18.000
FDNS	00NR	0	17SP	G15_054	FROM->TO	GR ISLD-LNX3345.00 - GRAND ISLAND 345KV CKT Z	720	720	0.0568	130.2562	GEN501912 1-ACADIA UNIT CT1B
FDNS	00NR	0	17SP	G15_054	FROM->TO	GR ISLD-LNX3345.00 - GRAND ISLAND 345KV CKT Z	720	720	0.0568	130.256	GEN501911 1-ACADIA UNIT CT1A
FDNS	00NR	0	17SP	G15_054	FROM->TO	GR ISLD-LNX3345.00 - GRAND ISLAND 345KV CKT Z	720	720	0.05737	130.2556	BOXBUTE7 115.00 - DUNLAP 115KV CKT 1
FDNS	00NR	0	17SP	G15_054	FROM->TO	GR ISLD-LNX3345.00 - GRAND ISLAND 345KV CKT Z	720	720	0.0568	130.249	WHITE BLUFF 500/26.0KV TRANSFORMER CKT 1
FDNS	00NR	0	17SP	G15_054	FROM->TO	GR ISLD-LNX3345.00 - GRAND ISLAND 345KV CKT Z	720	720	0.0568	130.2482	GEN501971 1-EVANGELINE UNIT 7-1
FDNS	00NR	0	17SP	G15_054	FROM->TO	GR ISLD-LNX3345.00 - GRAND ISLAND 345KV CKT Z	720	720	0.0568	130.2482	GEN501972 1-EVANGELINE UNIT 7-2
FDNS	00NR	0	17SP	G15_054	FROM->TO	GR ISLD-LNX3345.00 - GRAND ISLAND 345KV CKT Z	720	720	0.0568	130.2442	FINNEY SWITCHING STATION - PSCO LAMAR DC TIE 345KV CKT 1
FDNS	00NR	0	17SP	G15_054	FROM->TO	GR ISLD-LNX3345.00 - GRAND ISLAND 345KV CKT Z	720	720	0.0568	130.2442	FINNEY SWITCHING STATION - PSCO LAMAR DC TIE 345KV CKT 1
FDNS	00NR	0	17SP	G15_054	FROM->TO	GR ISLD-LNX3345.00 - GRAND ISLAND 345KV CKT Z	720	720	0.0571	130.2048	MAURINE - NUNDRWD-LNX3230.00 230KV CKT 1
FDNS	00NR	0	17SP	G15_054	FROM->TO	GR ISLD-LNX3345.00 - GRAND ISLAND 345KV CKT Z	720	720	0.05783	130.2037	MARTIN - SHANNON 115KV CKT 1
FDNS	00NR	0	17SP	G15_054	FROM->TO	GR ISLD-LNX3345.00 - GRAND ISLAND 345KV CKT Z	720	720	0.0568	130.1693	GEN562983 1-G15061_4 0.6900
FDNS	00NR	0	17SP	G15_054	FROM->TO	GR ISLD-LNX3345.00 - GRAND ISLAND 345KV CKT Z	720	720	0.0568	130.1693	GEN562984 1-G15061_5 0.6900
FDNS	00NR	0	17SP	G15_054	FROM->TO	GR ISLD-LNX3345.00 - GRAND ISLAND 345KV CKT Z	720	720	0.0568	130.0907	GEN659118 1-LARAMIE RIVER UNIT1
FDNS	00NR	0	17SP	G15_054	FROM->TO	GR ISLD-LNX3345.00 - GRAND ISLAND 345KV CKT Z	720	720	0.0568	129.9632	GEN563282 1-G15094_3 0.6900
FDNS	00NR	0	17SP	G15_054	FROM->TO	GR ISLD-LNX3345.00 - GRAND ISLAND 345KV CKT Z	720	720	0.05837	129.8288	KELLY - SHELL CREEK 230KV CKT 1
FDNS	00NR	0	17SP	G15_054	FROM->TO	GR ISLD-LNX3345.00 - GRAND ISLAND 345KV CKT Z	720	720	0.05625	129.8279	103RD & ROKEBY - SUB 3458 NEB CTY 345KV CKT 1
FDNS	00NR	0	17SP	G15_054	FROM->TO	GR ISLD-LNX3345.00 - GRAND ISLAND 345KV CKT Z	720	720	0.05625	129.8279	103RD & ROKEBY - SUB 3458 NEB CTY 345KV CKT 1
FDNS	00NR	0	17SP	G15_054	FROM->TO	GR ISLD-LNX3345.00 - GRAND ISLAND 345KV CKT Z	720	720	0.05837	129.8127	SHELL CREEK (SHELLCREEKT1) 345/230/13.8KV TRANSFORMER CKT 1
FDNS	00NR	0	17SP	G15_054	FROM->TO	GR ISLD-LNX3345.00 - GRAND ISLAND 345KV CKT Z	720	720	0.05837	129.8127	SHELL CREEK (SHELLCREEKT1) 345/230/13.8KV TRANSFORMER CKT 1
FDNS	00NR	0	17SP	G15_054	FROM->TO	GR ISLD-LNX3345.00 - GRAND ISLAND 345KV CKT Z	720	720	0.0568	129.748	BASE CASE
FDNS	00NR	0	17SP	G15_054	FROM->TO	GR ISLD-LNX3345.00 - GRAND ISLAND 345KV CKT Z	720	720	0.06992	129.7147	COLUMWEST - KELLY 230KV CKT 1
FDNS	00NR	0	17SP	G15_054	FROM->TO	GR ISLD-LNX3345.00 - GRAND ISLAND 345KV CKT Z	720	720	0.05463	129.6918	GRAND ISLAND - RIVERDALE 230KV CKT 1
FDNS	00NR	0	17SP	G15_054	FROM->TO	GR ISLD-LNX3345.00 - GRAND ISLAND 345KV CKT Z	720	720	0.05698	129.6347	BUCKNER7 345.00 - SPEARVILLE 345KV CKT 1
FDNS	00NR	0	17SP	G15_054	FROM->TO	GR ISLD-LNX3345.00 - GRAND ISLAND 345KV CKT Z	720	720	0.05698	129.6347	BUCKNER7 345.00 - SPEARVILLE 345KV CKT 1
FDNS	00NR	0	17SP	G15_054	FROM->TO	GR ISLD-LNX3345.00 - GRAND ISLAND 345KV CKT Z	720	720	0.05694	129.5842	MINGO (MINGO) 345/115/13.8KV TRANSFORMER CKT 1
FDNS	00NR	0	17SP	G15_054	FROM->TO	GR ISLD-LNX3345.00 - GRAND ISLAND 345KV CKT Z	720	720	0.05694	129.5842	MINGO (MINGO) 345/115/13.8KV TRANSFORMER CKT 1
FDNS	00NR	0	17SP	G15_054	FROM->TO	GR ISLD-LNX3345.00 - GRAND ISLAND 345KV CKT Z	720	720	0.0568	129.5465	GEN645001 1-FORT CALHOUN 1
FDNS	00NR	0	17SP	G15_054	FROM->TO	GR ISLD-LNX3345.00 - GRAND ISLAND 345KV CKT Z	720	720	0.05806	129.4815	HOLCOMB - SETAB 345KV CKT 1
FDNS	00NR	0	17SP	G15_054	FROM->TO	GR ISLD-LNX3345.00 - GRAND ISLAND 345KV CKT Z	720	720	0.05806	129.4815	HOLCOMB - SETAB 345KV CKT 1
FDNS	00NR	0	17SP	G15_054	FROM->TO	GR ISLD-LNX3345.00 - GRAND ISLAND 345KV CKT Z	720	720	0.05684	129.4092	G15074_T 345.00 - HOYT 345KV CKT 1
FDNS	00NR	0	17SP	G15_054	FROM->TO	GR ISLD-LNX3345.00 - GRAND ISLAND 345KV CKT Z	720	720	0.05833	129.3905	AXTELL - PAULINE 345KV CKT 1
FDNS	00NR	0	17SP	G15_054	FROM->TO	GR ISLD-LNX3345.00 - GRAND ISLAND 345KV CKT Z	720	720	0.05713	129.3553	AURORA - GRAND ISLAND 115KV CKT 1
FDNS	00NR	0	17SP	G15_054	FROM->TO	GR ISLD-LNX3345.00 - GRAND ISLAND 345KV CKT Z	720	720	0.05961	129.3454	MOORE - NW68TH & HOLDREGE 345KV CKT 1
FDNS	00NR	0	17SP	G15_054	FROM->TO	GR ISLD-LNX3345.00 - GRAND ISLAND 345KV CKT Z	720	720	0.05961	129.3454	MOORE - NW68TH & HOLDREGE 345KV CKT 1
FDNS	00NR	0	17SP	G15_054	FROM->TO	GR ISLD-LNX3345.00 - GRAND ISLAND 345KV CKT Z	720	720	0.05669	129.3302	GRAND ISLAND (GRAND.ISD T5) 230/115/13.8KV TRANSFORMER CKT 2
FDNS	00NR	0	17SP	G15_054	FROM->TO	GR ISLD-LNX3345.00 - GRAND ISLAND 345KV CKT Z	720	720	0.05669	129.3302	GRAND ISLAND (GRAND.ISD T5) 230/115/13.8KV TRANSFORMER CKT 2

SOLUTION	GROUP	SCENARIO	SEASON	SOURCE	DIRECTION	MONITORED ELEMENT	RATEA (MVA)	RATEB(MVA)	TDF	TC%LOADING (% MVA)	CONTINGENCY
FDNS	00NR	0	17SP	G15_054	FROM->TO	GR ISLD-LNX3345.00 - GRAND ISLAND 345KV CKT Z	720	720	0.05669	129.3278	GRAND ISLAND (GRAND.ISD T2) 230/115/13.8KV TRANSFORMER CKT 1
FDNS	00NR	0	17SP	G15_054	FROM->TO	GR ISLD-LNX3345.00 - GRAND ISLAND 345KV CKT Z	720	720	0.05669	129.3278	GRAND ISLAND (GRAND.ISD T2) 230/115/13.8KV TRANSFORMER CKT 1
FDNS	00NR	0	17SP	G15_054	FROM->TO	GR ISLD-LNX3345.00 - GRAND ISLAND 345KV CKT Z	720	720	0.05701	129.3116	MISSION - WITTEN 115KV CKT 1
FDNS	00NR	0	17SP	G15_054	FROM->TO	GR ISLD-LNX3345.00 - GRAND ISLAND 345KV CKT Z	720	720	0.05701	129.3003	P12:115:UMZW:# 173 #: WI-WE-MS IN SD. WITTEN IS A TAP
FDNS	00NR	0	17SP	G15_054	FROM->TO	GR ISLD-LNX3345.00 - GRAND ISLAND 345KV CKT Z	720	720	0.05685	129.2893	G14-074T 345.00 - OKLAUNION 345KV CKT 1
FDNS	00NR	0	17SP	G15_054	FROM->TO	GR ISLD-LNX3345.00 - GRAND ISLAND 345KV CKT Z	720	720	0.05684	129.2879	G15066_T 345.00 - SOONER 345KV CKT 1
FDNS	00NR	0	17SP	G15_054	FROM->TO	GR ISLD-LNX3345.00 - GRAND ISLAND 345KV CKT Z	720	720	0.05836	129.2729	MAXWELL - NORTH PLATTE 115KV CKT 1
FDNS	00NR	0	17SP	G15_054	FROM->TO	GR ISLD-LNX3345.00 - GRAND ISLAND 345KV CKT Z	720	720	0.05684	129.2555	CLEVELAND - G15066_T 345.00 345KV CKT 1
FDNS	00NR	0	17SP	G15_054	FROM->TO	GR ISLD-LNX3345.00 - GRAND ISLAND 345KV CKT Z	720	720	0.05692	129.2453	GRAND ISLAND (GI KU1B) 345/230/13.8KV TRANSFORMER CKT 2
FDNS	00NR	0	17SP	G15_054	FROM->TO	GR ISLD-LNX3345.00 - GRAND ISLAND 345KV CKT Z	720	720	0.05692	129.2453	GRAND ISLAND (GI KU1B) 345/230/13.8KV TRANSFORMER CKT 2
FDNS	00NR	0	17SP	G15_054	FROM->TO	GR ISLD-LNX3345.00 - GRAND ISLAND 345KV CKT Z	720	720	0.05692	129.2443	GRAND ISLAND (GI KU1A) 345/230/13.8KV TRANSFORMER CKT 1
FDNS	00NR	0	17SP	G15_054	FROM->TO	GR ISLD-LNX3345.00 - GRAND ISLAND 345KV CKT Z	720	720	0.05692	129.2443	GRAND ISLAND (GI KU1A) 345/230/13.8KV TRANSFORMER CKT 1
FDNS	00NR	0	17SP	G15_054	FROM->TO	GR ISLD-LNX3345.00 - GRAND ISLAND 345KV CKT Z	720	720	0.05701	129.2437	SMOKYHL6 230.00 - SUMMIT 230KV CKT 1
FDNS	00NR	0	17SP	G15_054	FROM->TO	GR ISLD-LNX3345.00 - GRAND ISLAND 345KV CKT Z	720	720	0.0568	129.2296	GEN562003 1-G11_027_3 0.6900
FDNS	00NR	0	17SP	G15_054	FROM->TO	GR ISLD-LNX3345.00 - GRAND ISLAND 345KV CKT Z	720	720	0.05687	129.2276	ANTELOP-LNX3345.00 - BRDLAND-LNX3345.00 345KV CKT 1
FDNS	00NR	0	17SP	G15_054	FROM->TO	GR ISLD-LNX3345.00 - GRAND ISLAND 345KV CKT Z	720	720	0.05684	129.224	G14-057T 345.00 - SUNNYSIDE 345KV CKT 1
FDNS	00NR	0	17SP	G15_054	FROM->TO	GR ISLD-LNX3345.00 - GRAND ISLAND 345KV CKT Z	720	720	0.05836	129.2202	SUB 3454 - WAGENER 345KV CKT 1
FDNS	00NR	0	17SP	G15_054	FROM->TO	GR ISLD-LNX3345.00 - GRAND ISLAND 345KV CKT Z	720	720	0.05836	129.2202	SUB 3454 - WAGENER 345KV CKT 1
FDNS	00NR	0	17SP	G15_054	FROM->TO	GR ISLD-LNX3345.00 - GRAND ISLAND 345KV CKT Z	720	720	0.06038	129.2154	MAXWELL - STAPLETON 115KV CKT 1
FDNS	00NR	0	17SP	G15_054	FROM->TO	GR ISLD-LNX3345.00 - GRAND ISLAND 345KV CKT Z	720	720	0.0568	129.2072	GEN652546 1-FT RANDAL
FDNS	00NR	0	17SP	G15_054	FROM->TO	GR ISLD-LNX3345.00 - GRAND ISLAND 345KV CKT Z	720	720	0.0568	129.2036	GEN600125 2-FEP ST G 13.800
FDNS	00NR	0	17SP	G15_054	FROM->TO	GR ISLD-LNX3345.00 - GRAND ISLAND 345KV CKT Z	720	720	0.0568	129.1924	GEN615031 1-PLEASANT VALLEY
FDNS	00NR	0	17SP	G15_054	FROM->TO	GR ISLD-LNX3345.00 - GRAND ISLAND 345KV CKT Z	720	720	0.0568	129.1874	GEN615032 2-PLEASANT VALLEY
FDNS	00NR	0	17SP	G15_054	FROM->TO	GR ISLD-LNX3345.00 - GRAND ISLAND 345KV CKT Z	720	720	0.0568	129.1856	GEN659158 2-PIONEER G213.800
FDNS	00NR	0	17SP	G15_054	FROM->TO	GR ISLD-LNX3345.00 - GRAND ISLAND 345KV CKT Z	720	720	0.0568	129.1856	GEN659159 3-PIONEER G313.800
FDNS	00NR	0	17SP	G15_054	FROM->TO	GR ISLD-LNX3345.00 - GRAND ISLAND 345KV CKT Z	720	720	0.05708	129.1851	LARAMIE RIVER - STEGALL 345KV CKT 1
FDNS	00NR	0	17SP	G15_054	FROM->TO	GR ISLD-LNX3345.00 - GRAND ISLAND 345KV CKT Z	720	720	0.0568	129.1782	GEN659156 2-LONESMCRK 2G13.800
FDNS	00NR	0	17SP	G15_054	FROM->TO	GR ISLD-LNX3345.00 - GRAND ISLAND 345KV CKT Z	720	720	0.0568	129.1782	GEN659157 3-LONESMCRK 3G13.800
FDNS	00NR	0	17SP	G15_054	FROM->TO	GR ISLD-LNX3345.00 - GRAND ISLAND 345KV CKT Z	720	720	0.0568	129.1728	GEN600018 S-LS POWER STEAM
FDNS	00NR	0	17SP	G15_054	FROM->TO	GR ISLD-LNX3345.00 - GRAND ISLAND 345KV CKT Z	720	720	0.0568	129.1726	MITCHLCO3 345.00 345/34.5KV TRANSFORMER CKT 1
FDNS	00NR	0	17SP	G15_054	FROM->TO	GR ISLD-LNX3345.00 - GRAND ISLAND 345KV CKT Z	720	720	0.0568	129.1672	GEN672367 1-MERIDIAN GENERATOR 1 GT1
FDNS	00NR	0	17SP	G15_054	FROM->TO	GR ISLD-LNX3345.00 - GRAND ISLAND 345KV CKT Z	720	720	0.0568	129.1672	GEN672368 2-MERIDIAN GENERATOR 2 GT2
FDNS	00NR	0	17SP	G15_054	FROM->TO	GR ISLD-LNX3345.00 - GRAND ISLAND 345KV CKT Z	720	720	0.0568	129.1607	GEN657964 1-ASH2GEN9 0.5750
FDNS	00NR	0	17SP	G15_054	FROM->TO	GR ISLD-LNX3345.00 - GRAND ISLAND 345KV CKT Z	720	720	0.05861	129.1599	GERALD GENTLEMAN STATION - RED WILLOW 345KV CKT 1
FDNS	00NR	0	17SP	G15_054	FROM->TO	GR ISLD-LNX3345.00 - GRAND ISLAND 345KV CKT Z	720	720	0.0568	129.1561	GEN652548 5-FT RANDAL
FDNS	00NR	0	17SP	G15_054	FROM->TO	GR ISLD-LNX3345.00 - GRAND ISLAND 345KV CKT Z	720	720	0.0568	129.1561	GEN652549 7-FT RANDAL
FDNS	00NR	0	17SP	G15_054	FROM->TO	GR ISLD-LNX3345.00 - GRAND ISLAND 345KV CKT Z	720	720	0.0568	129.1535	GEN672350 1-NIPAWIN GENERATOR 1
FDNS	00NR	0	17SP	G15_054	FROM->TO	GR ISLD-LNX3345.00 - GRAND ISLAND 345KV CKT Z	720	720	0.0568	129.1535	GEN672351 2-NIPAWIN GENERATOR 2
FDNS	00NR	0	17SP	G15_054	FROM->TO	GR ISLD-LNX3345.00 - GRAND ISLAND 345KV CKT Z	720	720	0.0568	129.1534	GEN672352 3-NIPAWIN GENERATOR 3
FDNS	00NR	0	17SP	G15_054	FROM->TO	GR ISLD-LNX3345.00 - GRAND ISLAND 345KV CKT Z	720	720	0.0568	129.1517	GEN620324 3-HOOT LAKE 3 GEN
FDNS	00NR	0	17SP	G15_054	FROM->TO	GR ISLD-LNX3345.00 - GRAND ISLAND 345KV CKT Z	720	720	0.05676	129.1512	BISMARK - L3 HAWDON 230KV CKT 1
FDNS	00NR	0	17SP	G15_054	FROM->TO	GR ISLD-LNX3345.00 - GRAND ISLAND 345KV CKT Z	720	720	0.05701	129.1479	P12:115:UMZW:# 172 #: WI IN SD.
FDNS	00NR	0	17SP	G15_054	FROM->TO	GR ISLD-LNX3345.00 - GRAND ISLAND 345KV CKT Z	720	720	0.06032	129.1465	MINGO - RED WILLOW 345KV CKT 1
FDNS	00NR	0	17SP	G15_054	FROM->TO	GR ISLD-LNX3345.00 - GRAND ISLAND 345KV CKT Z	720	720	0.06032	129.1465	MINGO - RED WILLOW 345KV CKT 1
FDNS	00NR	0	17SP	G15_054	FROM->TO	GR ISLD-LNX3345.00 - GRAND ISLAND 345KV CKT Z	720	720	0.0568	129.1434	GEN652547 3-FT RANDAL
FDNS	00NR	0	17SP	G15_054	FROM->TO	GR ISLD-LNX3345.00 - GRAND ISLAND 345KV CKT Z	720	720	0.0568	129.1383	GEN672349 3-CORY COGEN GENERATOR 3 ST
FDNS	00NR	0	17SP	G15_054	FROM->TO	GR ISLD-LNX3345.00 - GRAND ISLAND 345KV CKT Z	720	720	0.0568	129.1345	GEN660003 3-HURON WEST PARK
FDNS	00NR	0	17SP	G15_054	FROM->TO	GR ISLD-LNX3345.00 - GRAND ISLAND 345KV CKT Z	720	720	0.05695	129.129	G11_051T 345.00 - WOODWARD DISTRICT EHV 345KV CKT 1
FDNS	00NR	0	17SP	G15_054	FROM->TO	GR ISLD-LNX3345.00 - GRAND ISLAND 345KV CKT Z	720	720	0.0568	129.1057	GEN600020 2-ANGUS ANSON1
FDNS	00NR	0	17SP	G15_054	FROM->TO	GR ISLD-LNX3345.00 - GRAND ISLAND 345KV CKT Z	720	720	0.06115	129.1049	LOUP CITY - NORTH LOUP 115KV CKT 1
FDNS	00NR	0	17SP	G15_054	FROM->TO	GR ISLD-LNX3345.00 - GRAND ISLAND 345KV CKT Z	720	720	0.0568	129.0989	GEN600021 3-ANGUS ANSON2
FDNS	00NR	0	17SP	G15_054	FROM->TO	GR ISLD-LNX3345.00 - GRAND ISLAND 345KV CKT Z	720	720	0.0568	129.0698	GEN600012 2-BLACK DOG GEN 2
FDNS	00NR	0	17SP	G15_054	FROM->TO	GR ISLD-LNX3345.00 - GRAND ISLAND 345KV CKT Z	720	720	0.0568	129.0667	GEN590010 1-ERCOT EQUIVALENCE
FDNS	00NR	0	17SP	G15_054	FROM->TO	GR ISLD-LNX3345.00 - GRAND ISLAND 345KV CKT Z	720	720	0.05883	129.0563	MINGO - SETAB 345KV CKT 1
FDNS	00NR	0	17SP	G15_054	FROM->TO	GR ISLD-LNX3345.00 - GRAND ISLAND 345KV CKT Z	720	720	0.05883	129.0563	MINGO - SETAB 345KV CKT 1
FDNS	00NR	0	17SP	G15_054	FROM->TO	GR ISLD-LNX3345.00 - GRAND ISLAND 345KV CKT Z	720	720	0.0568	129.0557	GEN672339 16-QE 16G 13.800
FDNS	00NR	0	17SP	G15_054	FROM->TO	GR ISLD-LNX3345.00 - GRAND ISLAND 345KV CKT Z	720	720	0.0568	129.0557	GEN672342 3-QUEEN ELIZABETH GENERATOR 3
FDNS	00NR	0	17SP	G15_054	FROM->TO	GR ISLD-LNX3345.00 - GRAND ISLAND 345KV CKT Z	720	720	0.0568	129.0517	GEN652410 3-FT PECK
FDNS	00NR	0	17SP	G15_054	FROM->TO	GR ISLD-LNX3345.00 - GRAND ISLAND 345KV CKT Z	720	720	0.0568	129.0503	GEN659290 1-EDGECOL
FDNS	00NR	0	17SP	G15_054	FROM->TO	GR ISLD-LNX3345.00 - GRAND ISLAND 345KV CKT Z	720	720	0.0568	129.0414	GEN672393 2-NBECST2G 13.800
FDNS	00NR	0	17SP	G15_054	FROM->TO	GR ISLD-LNX3345.00 - GRAND ISLAND 345KV CKT Z	720	720	0.0568	129.0367	GEN300003 1-THOMAS HILL UNIT 3
FDNS	00NR	0	17SP	G15_054	FROM->TO	GR ISLD-LNX3345.00 - GRAND ISLAND 345KV CKT Z	720	720	0.0568	129.0351	EASTDC - ERCOT EQUIVALENCE 345KV CKT 1
FDNS	00NR	0	17SP	G15_054	FROM->TO	GR ISLD-LNX3345.00 - GRAND ISLAND 345KV CKT Z	720	720	0.0568	129.0346	GEN590011 2-ERCOT EQUIVALENCE
FDNS	00NR	0	17SP	G15_054	FROM->TO	GR ISLD-LNX3345.00 - GRAND ISLAND 345KV CKT Z	720	720	0.0568	129.034	GEN629072 4-LANSING GENERATOR FOR UNITS NO4 EIA CODE 1
FDNS	00NR	0	17SP	G15_054	FROM->TO	GR ISLD-LNX3345.00 - GRAND ISLAND 345KV CKT Z	720	720	0.05698	129.0019	GRAND ISLAND (GI KU3A) 345/230/13.8KV TRANSFORMER CKT 3
FDNS	00NR	0	17SP	G15_054	FROM->TO	GR ISLD-LNX3345.00 - GRAND ISLAND 345KV CKT Z	720	720	0.05698	129.0019	GRAND ISLAND (GI KU3A) 345/230/13.8KV TRANSFORMER CKT 3
FDNS	00NR	0	17SP	G15_054	FROM->TO	GR ISLD-LNX3345.00 - GRAND ISLAND 345KV CKT Z	720	720	0.0568	128.9842	GEN652414 4-FT PECK
FDNS	00NR	0	17SP	G15_054	FROM->TO	GR ISLD-LNX3345.00 - GRAND ISLAND 345KV CKT Z	720	720	0.0568	128.9842	GEN652415 5-FT PECK
FDNS	00NR	0	17SP	G15_054	FROM->TO	GR ISLD-LNX3345.00 - GRAND ISLAND 345KV CKT Z	720	720	0.0568	128.9829	LADISH 115/13.2KV TRANSFORMER CKT 1
FDNS	00NR	0	17SP	G15_054	FROM->TO	GR ISLD-LNX3345.00 - GRAND ISLAND 345KV CKT Z	720	720	0.0568	128.9733	GEN660001 2-ABERDEEN SIEBRECHT
FDNS	00NR	0	17SP	G15_054	FROM->TO	GR ISLD-LNX3345.00 - GRAND ISLAND 345KV CKT Z	720	720	0.05478	128.9595	DIXONCO 230.00 - TWIN CHURCH 230KV CKT 1
FDNSLock	00NR	0	17SP	G15_054	FROM->TO	GR ISLD-LNX3345.00 - GRAND ISLAND 345KV CKT Z	720	720	0.0591	128.9476	CENTRAL CITY - GRAND ISLAND 115KV CKT 1
FDNS	00NR	0	17SP	G15_054	FROM->TO	GR ISLD-LNX3345.00 - GRAND ISLAND 345KV CKT Z	720	720	0.0568	128.9469	EMERY 161/18.0KV TRANSFORMER CKT 1
FDNS	00NR	0	17SP	G15_054	FROM->TO	GR ISLD-LNX3345.00 - GRAND ISLAND 345KV CKT Z	720	720	0.0568	128.9278	GEN600050 1-FEP
FDNS	00NR	0	17SP	G15_054	FROM->TO	GR ISLD-LNX3345.00 - GRAND ISLAND 345KV CKT Z	720	720	0.0568	128.9271	GEN652345 W-G07_023IS_2 0.6900
FDNS	00NR	0	17SP	G15_054	FROM->TO	GR ISLD-LNX3345.00 - GRAND ISLAND 345KV CKT Z	720	720	0.06058	128.9218	G15088_T 345.00 - PAULINE 345KV CKT 1
FDNS	00NR	0	17SP	G15_054	FROM->TO	GR ISLD-LNX3345.00 - GRAND ISLAND 345KV CKT Z	720	720	0.0568	128.9081	GEN 11104 1-J262_GEN 0.6000
FDNS	00NR	0	17SP	G15_054	FROM->TO	GR ISLD-LNX3345.00 - GRAND ISLAND 345KV CKT Z	720	720	0.0568	128.9081	GEN 11108 1-J263_GEN 0.6000
FDNS	00NR	0	17SP	G15_054	FROM->TO	GR ISLD-LNX3345.00 - GRAND ISLAND 345KV CKT Z	720	720	0.0568	128.8843	GEN600046 1-MECST

SOLUTION	GROUP	SCENARIO	SEASON	SOURCE	DIRECTION	MONITORED ELEMENT	RATEA (MVA)	RATEB(MVA)	TDF	TC%LOADING (% MVA)	CONTINGENCY
FDNS	00NR	0	17SP	G15_054	FROM->TO	GR ISLD-LNX3345.00 - GRAND ISLAND 345KV CKT Z	720	720	0.0568	128.8832	GEN300007 1-NEW MADRID UNIT 2
FDNS	00NR	0	17SP	G15_054	FROM->TO	GR ISLD-LNX3345.00 - GRAND ISLAND 345KV CKT Z	720	720	0.0568	128.8827	G830_SUB 115.00 - GRE-MCHENRY7115.00 115KV CKT 1
FDNS	00NR	0	17SP	G15_054	FROM->TO	GR ISLD-LNX3345.00 - GRAND ISLAND 345KV CKT Z	720	720	0.0568	128.8809	G830_SUB 115.00 115/34.5KV TRANSFORMER CKT 1
FDNS	00NR	0	17SP	G15_054	FROM->TO	GR ISLD-LNX3345.00 - GRAND ISLAND 345KV CKT Z	720	720	0.0568	128.8766	GEN300006 1-NEW MADRID UNIT 1
FDNS	00NR	0	17SP	G15_054	FROM->TO	GR ISLD-LNX3345.00 - GRAND ISLAND 345KV CKT Z	720	720	0.05687	128.8681	P12:345:UMZB:# 102 #: AVS BD IN ND. AVS BRD LR
FDNS	00NR	0	17SP	G15_054	FROM->TO	GR ISLD-LNX3345.00 - GRAND ISLAND 345KV CKT Z	720	720	0.05687	128.8667	BRDLAND-LNX3345.00 - HURON 345KV CKT Z
FDNS	00NR	0	17SP	G15_054	FROM->TO	GR ISLD-LNX3345.00 - GRAND ISLAND 345KV CKT Z	720	720	0.05687	128.8664	P12:345:UMZB:# 103 #: BD IN SD. LOSS OF LINE
FDNS	00NR	0	17SP	G15_054	FROM->TO	GR ISLD-LNX3345.00 - GRAND ISLAND 345KV CKT Z	720	720	0.05687	128.8652	BROADLAND - HURON 230KV CKT 1
FDNS	00NR	0	17SP	G15_054	FROM->TO	GR ISLD-LNX3345.00 - GRAND ISLAND 345KV CKT Z	720	720	0.05687	128.8651	HURON (BD KU2A) 345/230/13.8KV TRANSFORMER CKT 1
FDNS	00NR	0	17SP	G15_054	FROM->TO	GR ISLD-LNX3345.00 - GRAND ISLAND 345KV CKT Z	720	720	0.05687	128.8651	HURON (BD KU2A) 345/230/13.8KV TRANSFORMER CKT 1
FDNS	00NR	0	17SP	G15_054	FROM->TO	GR ISLD-LNX3345.00 - GRAND ISLAND 345KV CKT Z	720	720	0.05706	128.8644	POST ROCK (POSTROCK T1) 345/230/13.8KV TRANSFORMER CKT 1
FDNS	00NR	0	17SP	G15_054	FROM->TO	GR ISLD-LNX3345.00 - GRAND ISLAND 345KV CKT Z	720	720	0.05682	128.863	DRAYTON - LETELLIER 230KV CKT 1
FDNS	00NR	0	17SP	G15_054	FROM->TO	GR ISLD-LNX3345.00 - GRAND ISLAND 345KV CKT Z	720	720	0.0568	128.8584	GEN600047 1-MECCT1
FDNS	00NR	0	17SP	G15_054	FROM->TO	GR ISLD-LNX3345.00 - GRAND ISLAND 345KV CKT Z	720	720	0.0568	128.8437	GEN600063 1-COLVILLE GEN 1
FDNS	00NR	0	17SP	G15_054	FROM->TO	GR ISLD-LNX3345.00 - GRAND ISLAND 345KV CKT Z	720	720	0.0568	128.8437	GEN600064 2-COLVILLE GEN 2
FDNS	00NR	0	17SP	G15_054	FROM->TO	GR ISLD-LNX3345.00 - GRAND ISLAND 345KV CKT Z	720	720	0.0568	128.8401	GEN600043 7-BLUE LAKE5
FDNS	00NR	0	17SP	G15_054	FROM->TO	GR ISLD-LNX3345.00 - GRAND ISLAND 345KV CKT Z	720	720	0.0568	128.8401	GEN600044 8-BLUE LAKE6
FDNS	00NR	0	17SP	G15_054	FROM->TO	GR ISLD-LNX3345.00 - GRAND ISLAND 345KV CKT Z	720	720	0.0548	128.8215	COOPER - MOORE 345KV CKT 1
FDNS	00NR	0	17SP	G15_054	FROM->TO	GR ISLD-LNX3345.00 - GRAND ISLAND 345KV CKT Z	720	720	0.0568	128.8013	GEN600065 7-HIGH BRIDGE
FDNS	00NR	0	17SP	G15_054	FROM->TO	GR ISLD-LNX3345.00 - GRAND ISLAND 345KV CKT Z	720	720	0.0568	128.8013	GEN600066 8-HIGH BRIDGE
FDNS	00NR	0	17SP	G15_054	FROM->TO	GR ISLD-LNX3345.00 - GRAND ISLAND 345KV CKT Z	720	720	0.0568	128.7991	GEN600014 4-BLACK DOG GEN 4
FDNS	00NR	0	17SP	G15_054	FROM->TO	GR ISLD-LNX3345.00 - GRAND ISLAND 345KV CKT Z	720	720	0.0568	128.7947	GEN600011 5-BLACK DOG GEN 1
FDNS	00NR	0	17SP	G15_054	FROM->TO	GR ISLD-LNX3345.00 - GRAND ISLAND 345KV CKT Z	720	720	0.0568	128.7871	GEN600071 10-RIVER SIDE
FDNS	00NR	0	17SP	G15_054	FROM->TO	GR ISLD-LNX3345.00 - GRAND ISLAND 345KV CKT Z	720	720	0.0568	128.787	GEN600070 9-RIVER SIDE
FDNS	00NR	0	17SP	G15_054	FROM->TO	GR ISLD-LNX3345.00 - GRAND ISLAND 345KV CKT Z	720	720	0.05843	128.783	103RD & ROKEBY - MOORE 345KV CKT 1
FDNS	00NR	0	17SP	G15_054	FROM->TO	GR ISLD-LNX3345.00 - GRAND ISLAND 345KV CKT Z	720	720	0.05843	128.783	103RD & ROKEBY - MOORE 345KV CKT 1
FDNS	00NR	0	17SP	G15_054	FROM->TO	GR ISLD-LNX3345.00 - GRAND ISLAND 345KV CKT Z	720	720	0.0568	128.7773	GEN659273 2-GROTON SYNC COND
FDNS	00NR	0	17SP	G15_054	FROM->TO	GR ISLD-LNX3345.00 - GRAND ISLAND 345KV CKT Z	720	720	0.0568	128.7773	GEN659294 1-WILTONCOL9
FDNS	00NR	0	17SP	G15_054	FROM->TO	GR ISLD-LNX3345.00 - GRAND ISLAND 345KV CKT Z	720	720	0.06992	128.775	COLUMWEST - GRAND ISLAND 230KV CKT 1
FDNS	00NR	0	17SP	G15_054	FROM->TO	GR ISLD-LNX3345.00 - GRAND ISLAND 345KV CKT Z	720	720	0.0568	128.7731	GEN600007 7-RIVERSIDE GEN 7
FDNS	00NR	0	17SP	G15_054	FROM->TO	GR ISLD-LNX3345.00 - GRAND ISLAND 345KV CKT Z	720	720	0.0568	128.7645	GEN600045 4-ANSON
FDNS	00NR	0	17SP	G15_054	FROM->TO	GR ISLD-LNX3345.00 - GRAND ISLAND 345KV CKT Z	720	720	0.0568	128.744	GEN600017 C-LS POWER CT
FDNS	00NR	0	17SP	G15_054	FROM->TO	GR ISLD-LNX3345.00 - GRAND ISLAND 345KV CKT Z	720	720	0.0568	128.7425	GEN659192 6-LYNN
FDNS	00NR	0	17SP	G15_054	FROM->TO	GR ISLD-LNX3345.00 - GRAND ISLAND 345KV CKT Z	720	720	0.0568	128.7422	LANSING WEST 161/22.0KV TRANSFORMER CKT 1
FDNS	00NR	0	17SP	G15_054	FROM->TO	GR ISLD-LNX3345.00 - GRAND ISLAND 345KV CKT Z	720	720	0.0568	128.7417	GEN659162 4-RED WLCK
FDNS	00NR	0	17SP	G15_054	FROM->TO	GR ISLD-LNX3345.00 - GRAND ISLAND 345KV CKT Z	720	720	0.0568	128.7417	GEN659163 5-BLACK WDCK
FDNS	00NR	0	17SP	G15_054	FROM->TO	GR ISLD-LNX3345.00 - GRAND ISLAND 345KV CKT Z	720	720	0.05695	128.7337	G11_051T 345.00 - TATONGA7 345.00 345KV CKT 1
FDNS	00NR	0	17SP	G15_054	FROM->TO	GR ISLD-LNX3345.00 - GRAND ISLAND 345KV CKT Z	720	720	0.0568	128.7217	GEN 10648 1-G830_GEN 0.6900
FDNS	00NR	0	17SP	G15_054	FROM->TO	GR ISLD-LNX3345.00 - GRAND ISLAND 345KV CKT Z	720	720	0.0568	128.715	CENTER 230/22.0KV TRANSFORMER CKT 1
FDNS	00NR	0	17SP	G15_054	FROM->TO	GR ISLD-LNX3345.00 - GRAND ISLAND 345KV CKT Z	720	720	0.0568	128.6917	GEN615021 1-GRE-ER 14G 16.000
FDNS	00NR	0	17SP	G15_054	FROM->TO	GR ISLD-LNX3345.00 - GRAND ISLAND 345KV CKT Z	720	720	0.05676	128.6902	OAHE - SULLEY BUTTE 230KV CKT 1
FDNS	00NR	0	17SP	G15_054	FROM->TO	GR ISLD-LNX3345.00 - GRAND ISLAND 345KV CKT Z	720	720	0.0568	128.6878	GEN659031 1-G12_014IS_4 0.6900
FDNS	00NR	0	17SP	G15_054	FROM->TO	GR ISLD-LNX3345.00 - GRAND ISLAND 345KV CKT Z	720	720	0.0568	128.6746	GEN615052 1-CAMBRIDGE GENERATING STATION
FDNS	00NR	0	17SP	G15_054	FROM->TO	GR ISLD-LNX3345.00 - GRAND ISLAND 345KV CKT Z	720	720	0.0568	128.6403	GEN615015 1-GRE-SPRITWDG13.200
FDNS	00NR	0	17SP	G15_054	FROM->TO	GR ISLD-LNX3345.00 - GRAND ISLAND 345KV CKT Z	720	720	0.0568	128.6366	GEN681522 3-GENOA 3
FDNS	00NR	0	17SP	G15_054	FROM->TO	GR ISLD-LNX3345.00 - GRAND ISLAND 345KV CKT Z	720	720	0.05794	128.5948	AXTELL - POST ROCK 345KV CKT 1
FDNS	00NR	0	17SP	G15_054	FROM->TO	GR ISLD-LNX3345.00 - GRAND ISLAND 345KV CKT Z	720	720	0.05687	128.5499	ANTELOP-LNX3345.00 - ANTELOPE VALLEY 345KV CKT Z
FDNS	00NR	0	17SP	G15_054	FROM->TO	GR ISLD-LNX3345.00 - GRAND ISLAND 345KV CKT Z	720	720	0.05676	128.5499	SULLYBT-LNX3230.00 - WHITLOK 230KV CKT 1
FDNS	00NR	0	17SP	G15_054	FROM->TO	GR ISLD-LNX3345.00 - GRAND ISLAND 345KV CKT Z	720	720	0.05676	128.5447	SULLEY BUTTE - SULLYBT-LNX3230.00 230KV CKT Z
FDNS	00NR	0	17SP	G15_054	FROM->TO	GR ISLD-LNX3345.00 - GRAND ISLAND 345KV CKT Z	720	720	0.0568	128.5334	GEN660016 1-B_H WIND 0.7000
FDNS	00NR	0	17SP	G15_054	FROM->TO	GR ISLD-LNX3345.00 - GRAND ISLAND 345KV CKT Z	720	720	0.0568	128.5203	GEN659353 1-DEERCREK CTG18.000
FDNS	00NR	0	17SP	G15_054	FROM->TO	GR ISLD-LNX3345.00 - GRAND ISLAND 345KV CKT Z	720	720	0.0568	128.5161	GEN659354 1-DEERCREK STG18.000
FDNS	00NR	0	17SP	G15_054	FROM->TO	GR ISLD-LNX3345.00 - GRAND ISLAND 345KV CKT Z	720	720	0.05695	128.4847	MATHWSN7 345.00 - TATONGA7 345.00 345KV CKT 1
FDNS	00NR	0	17SP	G15_054	FROM->TO	GR ISLD-LNX3345.00 - GRAND ISLAND 345KV CKT Z	720	720	0.05676	128.484	P12:230:UMZB:# 114 #: SB IN SD. SB-WK-GH
FDNS	00NR	0	17SP	G15_054	FROM->TO	GR ISLD-LNX3345.00 - GRAND ISLAND 345KV CKT Z	720	720	0.05676	128.484	P12:230:UMZB:# 117 #: WK IN SD. SB-WK-GH
FDNS	00NR	0	17SP	G15_054	FROM->TO	GR ISLD-LNX3345.00 - GRAND ISLAND 345KV CKT Z	720	720	0.0568	128.4601	GEN672303 3-BOUNDARY DAM GENERATOR 3
FDNS	00NR	0	17SP	G15_054	FROM->TO	GR ISLD-LNX3345.00 - GRAND ISLAND 345KV CKT Z	720	720	0.0568	128.46	GEN672305 5-BOUNDARY DAM GENERATOR 5
FDNS	00NR	0	17SP	G15_054	FROM->TO	GR ISLD-LNX3345.00 - GRAND ISLAND 345KV CKT Z	720	720	0.05676	128.4518	GLENHAM - WHITLOK 230KV CKT 1
FDNS	00NR	0	17SP	G15_054	FROM->TO	GR ISLD-LNX3345.00 - GRAND ISLAND 345KV CKT Z	720	720	0.0568	128.4513	GEN652906 1-G09_006IS_3 0.6900
FDNS	00NR	0	17SP	G15_054	FROM->TO	GR ISLD-LNX3345.00 - GRAND ISLAND 345KV CKT Z	720	720	0.0568	128.4355	GEN672392 1-NBECGT1G 18.000
FDNS	00NR	0	17SP	G15_054	FROM->TO	GR ISLD-LNX3345.00 - GRAND ISLAND 345KV CKT Z	720	720	0.0568	128.4103	GEN600067 9-HIGH BRIDGE
FDNS	00NR	0	17SP	G15_054	FROM->TO	GR ISLD-LNX3345.00 - GRAND ISLAND 345KV CKT Z	720	720	0.0568	128.4061	GEN562832 1-G15042_3 0.6900
FDNS	00NR	0	17SP	G15_054	FROM->TO	GR ISLD-LNX3345.00 - GRAND ISLAND 345KV CKT Z	720	720	0.0568	128.3967	BISONMP4 230.00 - SQUARE BUTTE 230KV CKT 1
FDNS	00NR	0	17SP	G15_054	FROM->TO	GR ISLD-LNX3345.00 - GRAND ISLAND 345KV CKT Z	720	720	0.0568	128.3626	GEN910006 1-G12_012IS_3 0.6900
FDNS	00NR	0	17SP	G15_054	FROM->TO	GR ISLD-LNX3345.00 - GRAND ISLAND 345KV CKT Z	720	720	0.0568	128.3497	GEN662101 1-WESSINGTON190.5750
FDNS	00NR	0	17SP	G15_054	FROM->TO	GR ISLD-LNX3345.00 - GRAND ISLAND 345KV CKT Z	720	720	0.0568	128.3177	COYOTE 345/24.0KV TRANSFORMER CKT 1
FDNS	00NR	0	17SP	G15_054	FROM->TO	GR ISLD-LNX3345.00 - GRAND ISLAND 345KV CKT Z	720	720	0.0568	128.3029	GEN652907 1-G09_007IS_3 0.6900
FDNS	00NR	0	17SP	G15_054	FROM->TO	GR ISLD-LNX3345.00 - GRAND ISLAND 345KV CKT Z	720	720	0.0568	128.1346	GEN652543 3-BIG BEND
FDNS	00NR	0	17SP	G15_054	FROM->TO	GR ISLD-LNX3345.00 - GRAND ISLAND 345KV CKT Z	720	720	0.0568	128.1149	SQUARE BUTTE - YNG2 4 230.00 230KV CKT 1
FDNS	00NR	0	17SP	G15_054	FROM->TO	GR ISLD-LNX3345.00 - GRAND ISLAND 345KV CKT Z	720	720	0.0568	128.1139	YNG2 4 230.00 230/20.0KV TRANSFORMER CKT 1
FDNS	00NR	0	17SP	G15_054	FROM->TO	GR ISLD-LNX3345.00 - GRAND ISLAND 345KV CKT Z	720	720	0.0568	128.0003	GEN659018 1-G14_003IS_3 0.6900
FDNS	00NR	0	17SP	G15_054	FROM->TO	GR ISLD-LNX3345.00 - GRAND ISLAND 345KV CKT Z	720	720	0.0568	127.9985	GEN659289 1-DAYCNTYWND W0.6900
FDNS	00NR	0	17SP	G15_054	FROM->TO	GR ISLD-LNX3345.00 - GRAND ISLAND 345KV CKT Z	720	720	0.0568	127.9636	GEN681542 6-JP MADGETT
FDNS	00NR	0	17SP	G15_054	FROM->TO	GR ISLD-LNX3345.00 - GRAND ISLAND 345KV CKT Z	720	720	0.0568	127.9625	GEN563312 1-G15097_3 0.6900
FDNS	00NR	0	17SP	G15_054	FROM->TO	GR ISLD-LNX3345.00 - GRAND ISLAND 345KV CKT Z	720	720	0.05676	127.9036	GLENHAM - L3 HAWDON 230KV CKT 1
FDNS	00NR	0	17SP	G15_054	FROM->TO	GR ISLD-LNX3345.00 - GRAND ISLAND 345KV CKT Z	720	720	0.0568	127.8236	GEN659194 1-NDPRAIRWND1W0.6900
FDNS	00NR	0	17SP	G15_054	FROM->TO	GR ISLD-LNX3345.00 - GRAND ISLAND 345KV CKT Z	720	720	0.0568	127.8095	GEN659010 4-G07_027IS_2 0.6900
FDNS	00NR	0	17SP	G15_054	FROM->TO	GR ISLD-LNX3345.00 - GRAND ISLAND 345KV CKT Z	720	720	0.0568	127.7982	GEN652460 4-GARRISON
FDNS	00NR	0	17SP	G15_054	FROM->TO	GR ISLD-LNX3345.00 - GRAND ISLAND 345KV CKT Z	720	720	0.0568	127.7982	GEN652461 5-GARRISON

SOLUTION	GROUP	SCENARIO	SEASON	SOURCE	DIRECTION	MONITORED ELEMENT	RATEA (MVA)	RATEB(MVA)	TDF	TC%LOADING (% MVA)	CONTINGENCY
FDNS	00NR	0	17SP	G15_054	FROM->TO	GR ISLD-LNX3345.00 - GRAND ISLAND 345KV CKT Z	720	720	0.0568	127.7958	GEN652542 1-BIG BEND
FDNS	00NR	0	17SP	G15_054	FROM->TO	GR ISLD-LNX3345.00 - GRAND ISLAND 345KV CKT Z	720	720	0.0568	127.7569	GEN563342 1-G15098_3 0.6900
FDNS	00NR	0	17SP	G15_054	FROM->TO	GR ISLD-LNX3345.00 - GRAND ISLAND 345KV CKT Z	720	720	0.0568	127.7395	GEN652458 2-GARRISON
FDNS	00NR	0	17SP	G15_054	FROM->TO	GR ISLD-LNX3345.00 - GRAND ISLAND 345KV CKT Z	720	720	0.0568	127.7395	GEN652459 3-GARRISON
FDNS	00NR	0	17SP	G15_054	FROM->TO	GR ISLD-LNX3345.00 - GRAND ISLAND 345KV CKT Z	720	720	0.0568	127.7394	GEN652457 1-GARRISON
FDNS	00NR	0	17SP	G15_054	FROM->TO	GR ISLD-LNX3345.00 - GRAND ISLAND 345KV CKT Z	720	720	0.0568	127.6794	GEN659403 1-NDSUNFLWR W0.6900
FDNS	00NR	0	17SP	G15_054	FROM->TO	GR ISLD-LNX3345.00 - GRAND ISLAND 345KV CKT Z	720	720	0.06032	127.6104	AXTELL - SWEETWATER 345KV CKT 1
FDNS	00NR	0	17SP	G15_054	FROM->TO	GR ISLD-LNX3345.00 - GRAND ISLAND 345KV CKT Z	720	720	0.0568	127.5812	STANTON 230/18.0KV TRANSFORMER CKT 1
FDNS	00NR	0	17SP	G15_054	FROM->TO	GR ISLD-LNX3345.00 - GRAND ISLAND 345KV CKT Z	720	720	0.0568	127.5081	GR ISLD-LNX3345.00 345KV SWITCHED SHUNT
FDNS	00NR	0	17SP	G15_054	FROM->TO	GR ISLD-LNX3345.00 - GRAND ISLAND 345KV CKT Z	720	720	0.0568	127.4175	CLAY BOSWELL 230/20.9KV TRANSFORMER CKT 1
FDNS	00NR	0	17SP	G15_054	FROM->TO	GR ISLD-LNX3345.00 - GRAND ISLAND 345KV CKT Z	720	720	0.0568	127.3162	GEN659411 1-CAMPBLCNTY W0.6900
FDNS	00NR	0	17SP	G15_054	FROM->TO	GR ISLD-LNX3345.00 - GRAND ISLAND 345KV CKT Z	720	720	0.0568	127.1606	GEN652559 1-OAHE
FDNS	00NR	0	17SP	G15_054	FROM->TO	GR ISLD-LNX3345.00 - GRAND ISLAND 345KV CKT Z	720	720	0.0568	127.1593	ALMA 161 161/24.0KV TRANSFORMER CKT 1
FDNS	00NR	0	17SP	G15_054	FROM->TO	GR ISLD-LNX3345.00 - GRAND ISLAND 345KV CKT Z	720	720	0.0568	127.112	GEN659296 2-SDPRAIRWND1W0.6900
FDNS	00NR	0	17SP	G15_054	FROM->TO	GR ISLD-LNX3345.00 - GRAND ISLAND 345KV CKT Z	720	720	0.0568	126.9705	RCDC EAST 4230.00 - RED CEDAR DC 230KV CKT 1
FDNS	00NR	0	17SP	G15_054	FROM->TO	GR ISLD-LNX3345.00 - GRAND ISLAND 345KV CKT Z	720	720	0.06058	126.9658	G15088_T 345.00 - MOORE 345KV CKT 1
FDNS	00NR	0	17SP	G15_054	FROM->TO	GR ISLD-LNX3345.00 - GRAND ISLAND 345KV CKT Z	720	720	0.0568	126.9519	GEN672321 1-SHAND GENERATOR 1
FDNS	00NR	0	17SP	G15_054	FROM->TO	GR ISLD-LNX3345.00 - GRAND ISLAND 345KV CKT Z	720	720	0.0568	126.9491	P12:230:UMZB:# 112 #: NU IN SD. NU-RCDC & DRY CREEK XFMR
FDNS	00NR	0	17SP	G15_054	FROM->TO	GR ISLD-LNX3345.00 - GRAND ISLAND 345KV CKT Z	720	720	0.0568	126.9338	GEN615010 1-STANTON4
FDNS	00NR	0	17SP	G15_054	FROM->TO	GR ISLD-LNX3345.00 - GRAND ISLAND 345KV CKT Z	720	720	0.0568	126.9296	GEN672310 1-POPLAR RIVER GENERATOR 1
FDNS	00NR	0	17SP	G15_054	FROM->TO	GR ISLD-LNX3345.00 - GRAND ISLAND 345KV CKT Z	720	720	0.0568	126.9296	GEN672311 2-POPLAR RIVER GENERATOR 2
FDNS	00NR	0	17SP	G15_054	FROM->TO	GR ISLD-LNX3345.00 - GRAND ISLAND 345KV CKT Z	720	720	0.0568	126.8554	GEN672306 6-BOUNDARY DAM GENERATOR 6
FDNS	00NR	0	17SP	G15_054	FROM->TO	GR ISLD-LNX3345.00 - GRAND ISLAND 345KV CKT Z	720	720	0.0568	126.8183	GEN659453 1-GI1414GEN W0.6900
FDNS	00NR	0	17SP	G15_054	FROM->TO	GR ISLD-LNX3345.00 - GRAND ISLAND 345KV CKT Z	720	720	0.0568	126.8171	GEN563302 1-G15096_3 0.6900
FDNS	00NR	0	17SP	G15_054	FROM->TO	GR ISLD-LNX3345.00 - GRAND ISLAND 345KV CKT Z	720	720	0.0568	126.7913	GEN652556 2-OAHE
FDNS	00NR	0	17SP	G15_054	FROM->TO	GR ISLD-LNX3345.00 - GRAND ISLAND 345KV CKT Z	720	720	0.0568	126.7913	GEN652557 4-OAHE
FDNS	00NR	0	17SP	G15_054	FROM->TO	GR ISLD-LNX3345.00 - GRAND ISLAND 345KV CKT Z	720	720	0.0568	126.7913	GEN652558 6-OAHE
FDNS	00NR	0	17SP	G15_054	FROM->TO	GR ISLD-LNX3345.00 - GRAND ISLAND 345KV CKT Z	720	720	0.0568	126.7785	GEN600004 2-PRAIRIE ISLAND G2
FDNS	00NR	0	17SP	G15_054	FROM->TO	GR ISLD-LNX3345.00 - GRAND ISLAND 345KV CKT Z	720	720	0.0568	126.774	GEN600003 1-PRAIRIE ISLAND G1
FDNS	00NR	0	17SP	G15_054	FROM->TO	GR ISLD-LNX3345.00 - GRAND ISLAND 345KV CKT Z	720	720	0.0568	126.7102	GEN659141 1-K10215A
FDNS	00NR	0	17SP	G15_054	FROM->TO	GR ISLD-LNX3345.00 - GRAND ISLAND 345KV CKT Z	720	720	0.0568	126.6583	GEN659110 1-LELAND OLDS UNIT1
FDNS	00NR	0	17SP	G15_054	FROM->TO	GR ISLD-LNX3345.00 - GRAND ISLAND 345KV CKT Z	720	720	0.0568	126.6517	GEN657749 1-YOUNG 1 GENERATOR
FDNS	00NR	0	17SP	G15_054	FROM->TO	GR ISLD-LNX3345.00 - GRAND ISLAND 345KV CKT Z	720	720	0.0568	126.4545	GEN652173 1-G09_001IS_2 0.6900
FDNS	00NR	0	17SP	G15_054	FROM->TO	GR ISLD-LNX3345.00 - GRAND ISLAND 345KV CKT Z	720	720	0.0568	126.4491	GEN600006 1-AS KING
FDNS	00NR	0	17SP	G15_054	FROM->TO	GR ISLD-LNX3345.00 - GRAND ISLAND 345KV CKT Z	720	720	0.0568	126.1483	GEN659407 1-ANTELPHILLSW0.6900
FDNS	00NR	0	17SP	G15_054	FROM->TO	GR ISLD-LNX3345.00 - GRAND ISLAND 345KV CKT Z	720	720	0.0568	125.8488	GEN600005 1-MONTICELLO
FDNS	00NR	0	17SP	G15_054	FROM->TO	GR ISLD-LNX3345.00 - GRAND ISLAND 345KV CKT Z	720	720	0.0568	125.1533	GEN600000 1-SHERBURNECNTY G1
FDNS	00NR	0	17SP	G15_054	FROM->TO	GR ISLD-LNX3345.00 - GRAND ISLAND 345KV CKT Z	720	720	0.0568	124.7391	GEN600001 2-SHERBURNE CNTY G2
FDNS	00NR	0	17SP	G15_054	FROM->TO	GR ISLD-LNX3345.00 - GRAND ISLAND 345KV CKT Z	720	720	0.0568	124.5328	GEN620315 1-BIG STONE GEN
FDNS	00NR	0	17SP	G15_054	FROM->TO	GR ISLD-LNX3345.00 - GRAND ISLAND 345KV CKT Z	720	720	0.0568	124.4986	GEN661015 1-COYOTE
FDNS	00NR	0	17SP	G15_054	FROM->TO	GR ISLD-LNX3345.00 - GRAND ISLAND 345KV CKT Z	720	720	0.0568	124.0797	GEN657748 1-YOUNG 2 GENERATOR
FDNS	00NR	0	17SP	G15_054	FROM->TO	GR ISLD-LNX3345.00 - GRAND ISLAND 345KV CKT Z	720	720	0.0568	123.9345	GEN600002 3-SHERBURNE CNTY G3
FDNS	00NR	0	17SP	G15_054	FROM->TO	GR ISLD-LNX3345.00 - GRAND ISLAND 345KV CKT Z	720	720	0.0568	123.6949	GEN562872 1-G15046_3 0.6900
FDNS	00NR	0	17SP	G15_054	FROM->TO	GR ISLD-LNX3345.00 - GRAND ISLAND 345KV CKT Z	720	720	0.06504	123.5972	MCCOOL - MOORE 345KV CKT 1
FDNS	00NR	0	17SP	G15_054	FROM->TO	GR ISLD-LNX3345.00 - GRAND ISLAND 345KV CKT Z	720	720	0.0568	123.3944	GEN659111 2-LELAND OLDS UNIT2
FDNS	00NR	0	17SP	G15_054	FROM->TO	GR ISLD-LNX3345.00 - GRAND ISLAND 345KV CKT Z	720	720	0.0568	122.9194	GEN659103 1-ANTELOPE VALLEY UNIT1
FDNS	00NR	0	17SP	G15_054	FROM->TO	GR ISLD-LNX3345.00 - GRAND ISLAND 345KV CKT Z	720	720	0.0568	122.9194	GEN659107 2-ANTELOPE VALLEY UNIT2
FDNS	00NR	0	17SP	G15_054	FROM->TO	GR ISLD-LNX3345.00 - GRAND ISLAND 345KV CKT Z	720	720	0.0568	121.9558	GEN659125 1-COVEY
FDNS	00NR	0	17SP	G15_054	FROM->TO	GR ISLD-LNX3345.00 - GRAND ISLAND 345KV CKT Z	720	720	0.05645	121.922	FTTHOM1-LNX3345.00 - LELAND2-LNX3345.00 345KV CKT 1
FDNS	00NR	0	20SP	G15_054	FROM->TO	GR ISLD-LNX3345.00 - GRAND ISLAND 345KV CKT Z	720	720	0.05321	121.6983	HOLT.CO3 345.00 - THEDFRD3 345.00 345KV CKT 1
FDNS	00NR	0	17SP	G15_054	FROM->TO	GR ISLD-LNX3345.00 - GRAND ISLAND 345KV CKT Z	720	720	0.05645	121.67	P12:345:UMZB:# 108 #: LOS FT IN ND. LOS FT
FDNS	00NR	0	17SP	G15_054	FROM->TO	GR ISLD-LNX3345.00 - GRAND ISLAND 345KV CKT Z	720	720	0.05645	121.6593	FT THOMPSON - FTTHOM1-LNX3345.00 345KV CKT Z
FDNS	00NR	0	25SP	G15_054	FROM->TO	GR ISLD-LNX3345.00 - GRAND ISLAND 345KV CKT Z	720	720	0.05411	121.5104	HOLT.CO3 345.00 - THEDFRD3 345.00 345KV CKT 1
FDNS	00NR	0	17SP	G15_054	FROM->TO	GR ISLD-LNX3345.00 - GRAND ISLAND 345KV CKT Z	720	720	0.05645	121.4254	LELAND OLDS - LELAND2-LNX3345.00 345KV CKT Z
FDNS	00NR	0	17SP	G15_054	FROM->TO	GR ISLD-LNX3345.00 - GRAND ISLAND 345KV CKT Z	720	720	0.0568	121.232	GEN615001 1-COAL CREEK
FDNS	00NR	0	17SP	G15_054	FROM->TO	GR ISLD-LNX3345.00 - GRAND ISLAND 345KV CKT Z	720	720	0.0568	121.1067	GEN615002 2-COAL CREEK
FDNS	00NR	0	17SP	G15_054	FROM->TO	GR ISLD-LNX3345.00 - GRAND ISLAND 345KV CKT Z	720	720	0.06577	120.1904	GRAND ISLAND - MCCOOL 345KV CKT 1
FDNS	00NR	0	17SP	G15_054	FROM->TO	GR ISLD-LNX3345.00 - GRAND ISLAND 345KV CKT Z	720	720	0.0568	114.2696	GEN562714 1-G15_023_4 0.6900
FDNS	00NR	0	17SP	G15_054	FROM->TO	GR ISLD-LNX3345.00 - GRAND ISLAND 345KV CKT Z	720	720	0.0568	114.2696	GEN562715 1-G15_023_5 0.6900
FDNS	00NR	0	20SP	G15_054	FROM->TO	GR ISLD-LNX3345.00 - GRAND ISLAND 345KV CKT Z	720	720	0.05543	111.9689	GERALD GENTLEMAN STATION - THEDFRD3 345.00 345KV CKT 1
FDNS	00NR	0	25SP	G15_054	FROM->TO	GR ISLD-LNX3345.00 - GRAND ISLAND 345KV CKT Z	720	720	0.05659	111.3329	GERALD GENTLEMAN STATION - THEDFRD3 345.00 345KV CKT 1
FDNS	00NR	0	17SP	G15_054	FROM->TO	GR ISLD-LNX3345.00 - GRAND ISLAND 345KV CKT Z	720	720	0.0568	108.1649	GEN652353 2-GR PRAIRIEG 0.6900
FDNS	00NR	0	16WP	G15_054	FROM->TO	GR ISLD-LNX3345.00 - GRAND ISLAND 345KV CKT Z	720	720	0.05613	102.4932	KELLY - MEADOWGROVE4230.00 230KV CKT 1
FDNS	00NR	0	16WP	G15_054	FROM->TO	GR ISLD-LNX3345.00 - GRAND ISLAND 345KV CKT Z	720	720	0.0539	101.8942	P12:230:UMZB:# 116 #: ST IN SD. WSG-ST-VH
FDNS	00NR	0	16WP	G15_054	FROM->TO	GR ISLD-LNX3345.00 - GRAND ISLAND 345KV CKT Z	720	720	0.05392	101.2943	STORLA - WESSINGTON 230KV CKT 1
FDNS	00NR	0	16WP	G15_054	FROM->TO	GR ISLD-LNX3345.00 - GRAND ISLAND 345KV CKT Z	720	720	0.05542	100.8674	ROSEAU - ROSEAUM 2 500.00 500KV CKT 1
FDNS	00NR	0	16WP	G15_054	FROM->TO	GR ISLD-LNX3345.00 - GRAND ISLAND 345KV CKT Z	720	720	0.05446	100.313	HANLON - STORLA 230KV CKT 1
FDNS	00NR	0	16WP	G15_054	FROM->TO	GR ISLD-LNX3345.00 - GRAND ISLAND 345KV CKT Z	720	720	0.0413	100	GRAND ISLAND - SWEETWATER 345KV CKT 1
FDNS	00NR	0	16WP	G15_054	FROM->TO	GR ISLD-LNX3345.00 - GRAND ISLAND 345KV CKT Z	720	720	0.05474	99.9	P12:345:UMZW:# 1747 #: WT2 IN SD. WT2-WHT LINE FAULT
FDNS	00NR	0	16WP	G15_054	FROM->TO	GR ISLD-LNX3345.00 - GRAND ISLAND 345KV CKT Z	720	720	0.05474	99.9	WATERTN-LNX3345.00 - WATERTOWN 345KV CKT Z
FDNS	00NR	0	16WP	G15_054	FROM->TO	GR ISLD-LNX3345.00 - GRAND ISLAND 345KV CKT Z	720	720	0.05474	99.9	WATERTN-LNX3345.00 - WHITE 345KV CKT 1
FDNS	00NR	0	16WP	G15_054	FROM->TO	GR ISLD-LNX3345.00 - GRAND ISLAND 345KV CKT Z	720	720	0.05382	99.8	FT THOMPSON - LETCHER 230KV CKT 1
FDNS	00NR	0	16WP	G15_054	FROM->TO	GR ISLD-LNX3345.00 - GRAND ISLAND 345KV CKT Z	720	720	0.05382	99.8	FT THOMPSON - LETCHER 230KV CKT 1
FDNSLock	00NR	0	16WP	G15_054	FROM->TO	GR ISLD-LNX3345.00 - GRAND ISLAND 345KV CKT Z	720	720	0.05704	99.5	KEYSTONE - SIDNEY1-LNX3345.00 345KV CKT 1
FDNSLock	00NR	0	16WP	G15_054	FROM->TO	GR ISLD-LNX3345.00 - GRAND ISLAND 345KV CKT Z	720	720	0.05704	99.5	SIDNEY - SIDNEY1-LNX3345.00 345KV CKT Z
FDNS	00NR	0	17SP	G15_054	TO->FROM	GR ISLD-LNX3345.00 - HOLT.CO3 345.00 345KV CKT 1	720	720	0.05656	138.4828	G09_001IST 345.00 - WATERTOWN 345KV CKT 1
FDNS	00NR	0	17SP	G15_054	TO->FROM	GR ISLD-LNX3345.00 - HOLT.CO3 345.00 345KV CKT 1	720	720	0.05757	138.0694	KELLY - MEADOWGROVE4230.00 230KV CKT 1
FDNS	00NR	0	17SP	G15_054	TO->FROM	GR ISLD-LNX3345.00 - HOLT.CO3 345.00 345KV CKT 1	720	720	0.05528	137.65	P12:230:UMZB:# 116 #: ST IN SD. WSG-ST-VH
FDNS	00NR	0	17SP	G15_054	TO->FROM	GR ISLD-LNX3345.00 - HOLT.CO3 345.00 345KV CKT 1	720	720	0.05613	136.8472	WATERTN-LNX3345.00 - WATERTOWN 345KV CKT Z

SOLUTION	GROUP	SCENARIO	SEASON	SOURCE	DIRECTION	MONITORED ELEMENT	RATEA (MVA)	RATEB(MVA)	TDF	TC%LOADING (% MVA)	CONTINGENCY
FDNS	00NR	0	17SP	G15_054	TO->FROM	GR ISLD-LNX3345.00 - HOLT.CO3 345.00 345KV CKT 1	720	720	0.05613	136.7798	P12:345:UMZW:# 1747 #: WT2 IN SD. WT2-WHT LINE FAULT
FDNS	00NR	0	17SP	G15_054	TO->FROM	GR ISLD-LNX3345.00 - HOLT.CO3 345.00 345KV CKT 1	720	720	0.0553	136.7283	STORLA - WESSINGTON 230KV CKT 1
FDNS	00NR	0	17SP	G15_054	TO->FROM	GR ISLD-LNX3345.00 - HOLT.CO3 345.00 345KV CKT 1	720	720	0.05613	136.676	WATERTN-LNX3345.00 - WHITE 345KV CKT 1
FDNS	00NR	0	17SP	G15_054	TO->FROM	GR ISLD-LNX3345.00 - HOLT.CO3 345.00 345KV CKT 1	720	720	0.05585	135.3597	HANLON - STORLA 230KV CKT 1
FDNS	00NR	0	17SP	G15_054	TO->FROM	GR ISLD-LNX3345.00 - HOLT.CO3 345.00 345KV CKT 1	720	720	0.0552	135.0789	FT THOMPSON - LETCHER 230KV CKT 1
FDNS	00NR	0	17SP	G15_054	TO->FROM	GR ISLD-LNX3345.00 - HOLT.CO3 345.00 345KV CKT 1	720	720	0.0552	135.0789	FT THOMPSON - LETCHER 230KV CKT 1
FDNS	00NR	0	17SP	G15_054	TO->FROM	GR ISLD-LNX3345.00 - HOLT.CO3 345.00 345KV CKT 1	720	720	0.05354	133.7629	FT RANDAL - FT THOMPSON 230KV CKT 1
FDNS	00NR	0	17SP	G15_054	TO->FROM	GR ISLD-LNX3345.00 - HOLT.CO3 345.00 345KV CKT 1	720	720	0.05354	133.7629	FT RANDAL - FT THOMPSON 230KV CKT 1
FDNS	00NR	0	17SP	G15_054	TO->FROM	GR ISLD-LNX3345.00 - HOLT.CO3 345.00 345KV CKT 1	720	720	0.05362	133.7265	FT RANDAL - G12_009IST 230.00 230KV CKT 1
FDNS	00NR	0	17SP	G15_054	TO->FROM	GR ISLD-LNX3345.00 - HOLT.CO3 345.00 345KV CKT 1	720	720	0.05362	133.6464	FT THOMPSON - LAKE PLATT 230KV CKT 1
FDNS	00NR	0	17SP	G15_054	TO->FROM	GR ISLD-LNX3345.00 - HOLT.CO3 345.00 345KV CKT 1	720	720	0.05362	133.6464	FT THOMPSON - LAKE PLATT 230KV CKT 1
FDNS	00NR	0	17SP	G15_054	TO->FROM	GR ISLD-LNX3345.00 - HOLT.CO3 345.00 345KV CKT 1	720	720	0.05853	133.5696	KEYSTONE - SIDNEY1-LNX3345.00 345KV CKT 1
FDNS	00NR	0	17SP	G15_054	TO->FROM	GR ISLD-LNX3345.00 - HOLT.CO3 345.00 345KV CKT 1	720	720	0.05853	133.5488	SIDNEY - SIDNEY1-LNX3345.00 345KV CKT Z
FDNS	00NR	0	17SP	G15_054	TO->FROM	GR ISLD-LNX3345.00 - HOLT.CO3 345.00 345KV CKT 1	720	720	0.06491	133.5085	NUNDRWD - WAYSIDE 230KV CKT 1
FDNS	00NR	0	17SP	G15_054	TO->FROM	GR ISLD-LNX3345.00 - HOLT.CO3 345.00 345KV CKT 1	720	720	0.05656	133.4449	G09_001IST 345.00 - GROTON 345KV CKT 1
FDNS	00NR	0	17SP	G15_054	TO->FROM	GR ISLD-LNX3345.00 - HOLT.CO3 345.00 345KV CKT 1	720	720	0.05677	133.2589	CHISAGO COUNTY - FORBES 500KV CKT 1
FDNS	00NR	0	17SP	G15_054	TO->FROM	GR ISLD-LNX3345.00 - HOLT.CO3 345.00 345KV CKT 1	720	720	0.05362	133.2456	G12_009IST 230.00 - LAKE PLATT 230KV CKT 1
FDNS	00NR	0	17SP	G15_054	TO->FROM	GR ISLD-LNX3345.00 - HOLT.CO3 345.00 345KV CKT 1	720	720	0.0568	133.1666	GEN336821 1-GRAND GULF UNIT
FDNS	00NR	0	17SP	G15_054	TO->FROM	GR ISLD-LNX3345.00 - HOLT.CO3 345.00 345KV CKT 1	720	720	0.05757	133.0352	FT RANDAL - MEADOWGROVE4230.00 230KV CKT 1
FDNS	00NR	0	17SP	G15_054	TO->FROM	GR ISLD-LNX3345.00 - HOLT.CO3 345.00 345KV CKT 1	720	720	0.06449	132.9558	RAUN - SUB 3451 FT CAL 345KV CKT 1
FDNS	00NR	0	17SP	G15_054	TO->FROM	GR ISLD-LNX3345.00 - HOLT.CO3 345.00 345KV CKT 1	720	720	0.06449	132.9558	RAUN - SUB 3451 FT CAL 345KV CKT 1
FDNS	00NR	0	17SP	G15_054	TO->FROM	GR ISLD-LNX3345.00 - HOLT.CO3 345.00 345KV CKT 1	720	720	0.05676	132.9142	CENTER - JAMESTOWN 345KV CKT 1
FDNS	00NR	0	17SP	G15_054	TO->FROM	GR ISLD-LNX3345.00 - HOLT.CO3 345.00 345KV CKT 1	720	720	0.05608	132.7255	LETCHER - SIOUX FALLS 230KV CKT 1
FDNS	00NR	0	17SP	G15_054	TO->FROM	GR ISLD-LNX3345.00 - HOLT.CO3 345.00 345KV CKT 1	720	720	0.0568	132.6387	GEN344225 1-1CAL G1 25.000
FDNS	00NR	0	17SP	G15_054	TO->FROM	GR ISLD-LNX3345.00 - HOLT.CO3 345.00 345KV CKT 1	720	720	0.0568	132.5268	GEN635024 4-WALTER SCOTT UNIT 4
FDNS	00NR	0	17SP	G15_054	TO->FROM	GR ISLD-LNX3345.00 - HOLT.CO3 345.00 345KV CKT 1	720	720	0.0568	132.4226	GEN337911 1-ARKANSAS NUCLEAR ONE UNIT #2
FDNS	00NR	0	17SP	G15_054	TO->FROM	GR ISLD-LNX3345.00 - HOLT.CO3 345.00 345KV CKT 1	720	720	0.0568	132.3742	GEN336153 1-WATERFORD UNIT#3
FDNS	00NR	0	17SP	G15_054	TO->FROM	GR ISLD-LNX3345.00 - HOLT.CO3 345.00 345KV CKT 1	720	720	0.05678	132.3654	BISON 3 345.00 - BUFFALO 345KV CKT 1
FDNS	00NR	0	17SP	G15_054	TO->FROM	GR ISLD-LNX3345.00 - HOLT.CO3 345.00 345KV CKT 1	720	720	0.04289	132.3519	GRAND ISLAND - SWEETWATER 345KV CKT 1
FDNS	00NR	0	17SP	G15_054	TO->FROM	GR ISLD-LNX3345.00 - HOLT.CO3 345.00 345KV CKT 1	720	720	0.0568	131.9888	GEN635023 3-WALTER SCOTT UNIT 3
FDNS	00NR	0	17SP	G15_054	TO->FROM	GR ISLD-LNX3345.00 - HOLT.CO3 345.00 345KV CKT 1	720	720	0.05589	131.9463	SPLIT ROCK - WHITE 345KV CKT 1
FDNS	00NR	0	17SP	G15_054	TO->FROM	GR ISLD-LNX3345.00 - HOLT.CO3 345.00 345KV CKT 1	720	720	0.05589	131.9463	SPLIT ROCK - WHITE 345KV CKT 1
FDNS	00NR	0	17SP	G15_054	TO->FROM	GR ISLD-LNX3345.00 - HOLT.CO3 345.00 345KV CKT 1	720	720	0.0568	131.9415	GEN335831 1-RIVERBEND UNIT#1
FDNS	00NR	0	17SP	G15_054	TO->FROM	GR ISLD-LNX3345.00 - HOLT.CO3 345.00 345KV CKT 1	720	720	0.0568	131.8426	GEN337910 1-ARKANSAS NUCLEAR ONE UNIT #1
FDNS	00NR	0	17SP	G15_054	TO->FROM	GR ISLD-LNX3345.00 - HOLT.CO3 345.00 345KV CKT 1	720	720	0.05703	131.7508	ARROWHEAD - ARROWHEAD 230 230KV CKT 1
FDNS	00NR	0	17SP	G15_054	TO->FROM	GR ISLD-LNX3345.00 - HOLT.CO3 345.00 345KV CKT 1	720	720	0.05658	131.6562	GROTON-LNX3 345.00 - LELAND1-LNX3345.00 345KV CKT 1
FDNS	00NR	0	17SP	G15_054	TO->FROM	GR ISLD-LNX3345.00 - HOLT.CO3 345.00 345KV CKT 1	720	720	0.05692	131.6275	FT RANDAL - SIOUX CITY 230KV CKT 1
FDNS	00NR	0	17SP	G15_054	TO->FROM	GR ISLD-LNX3345.00 - HOLT.CO3 345.00 345KV CKT 1	720	720	0.05658	131.6129	GROTON - GROTON-LNX3 345.00 345KV CKT Z
FDNS	00NR	0	17SP	G15_054	TO->FROM	GR ISLD-LNX3345.00 - HOLT.CO3 345.00 345KV CKT 1	720	720	0.05658	131.612	P12:345:UMZB:# 109 #: LOS GRT IN ND. LOS GRT
FDNS	00NR	0	17SP	G15_054	TO->FROM	GR ISLD-LNX3345.00 - HOLT.CO3 345.00 345KV CKT 1	720	720	0.05658	131.5963	LELAND OLDS - LELAND1-LNX3345.00 345KV CKT Z
FDNS	00NR	0	17SP	G15_054	TO->FROM	GR ISLD-LNX3345.00 - HOLT.CO3 345.00 345KV CKT 1	720	720	0.0568	131.5476	GEN640010 1-GERALD GENTLEMAN STATION UNIT 1
FDNS	00NR	0	17SP	G15_054	TO->FROM	GR ISLD-LNX3345.00 - HOLT.CO3 345.00 345KV CKT 1	720	720	0.05639	131.5162	HANLON - SIOUX FALLS 230KV CKT 1
FDNSLock	00NR	0	17SP	G15_054	TO->FROM	GR ISLD-LNX3345.00 - HOLT.CO3 345.00 345KV CKT 1	720	720	0.05629	131.5045	P12:115:NPPD:1091:VALENTN7:MISSION7:BTB
FDNS	00NR	0	17SP	G15_054	TO->FROM	GR ISLD-LNX3345.00 - HOLT.CO3 345.00 345KV CKT 1	720	720	0.05764	131.4818	GERALD GENTLEMAN STATION - KEYSTONE 345KV CKT 1
FDNS	00NR	0	17SP	G15_054	TO->FROM	GR ISLD-LNX3345.00 - HOLT.CO3 345.00 345KV CKT 1	720	720	0.05747	131.4797	HAZLETON - MITCHLCO3 345.00 345KV CKT 1
FDNS	00NR	0	17SP	G15_054	TO->FROM	GR ISLD-LNX3345.00 - HOLT.CO3 345.00 345KV CKT 1	720	720	0.0568	131.3441	ALEXMRES3 345.00 - BISON 3 345.00 345KV CKT 1
FDNS	00NR	0	17SP	G15_054	TO->FROM	GR ISLD-LNX3345.00 - HOLT.CO3 345.00 345KV CKT 1	720	720	0.0568	131.2848	GEN337653 1-WHITE BLUFF UNIT #2
FDNS	00NR	0	17SP	G15_054	TO->FROM	GR ISLD-LNX3345.00 - HOLT.CO3 345.00 345KV CKT 1	720	720	0.0568	131.2692	GEN337652 1-WHITE BLUFF UNIT #1
FDNS	00NR	0	17SP	G15_054	TO->FROM	GR ISLD-LNX3345.00 - HOLT.CO3 345.00 345KV CKT 1	720	720	0.0568	131.2327	GEN640011 2-GERALD GENTLEMAN STATION UNIT 2
FDNS	00NR	0	17SP	G15_054	TO->FROM	GR ISLD-LNX3345.00 - HOLT.CO3 345.00 345KV CKT 1	720	720	0.05629	131.2016	MISSION - ST FRANCIS 115KV CKT 1
FDNS	00NR	0	17SP	G15_054	TO->FROM	GR ISLD-LNX3345.00 - HOLT.CO3 345.00 345KV CKT 1	720	720	0.0568	131.1837	GEN338146 1-INDEPENDENCE UNIT #2
FDNS	00NR	0	17SP	G15_054	TO->FROM	GR ISLD-LNX3345.00 - HOLT.CO3 345.00 345KV CKT 1	720	720	0.0568	131.181	GEN338143 1-INDEPENDENCE UNIT #1
FDNS	00NR	0	17SP	G15_054	TO->FROM	GR ISLD-LNX3345.00 - HOLT.CO3 345.00 345KV CKT 1	720	720	0.05678	131.1786	ELLENDALE - OAKES 230KV CKT 1
FDNS	00NR	0	17SP	G15_054	TO->FROM	GR ISLD-LNX3345.00 - HOLT.CO3 345.00 345KV CKT 1	720	720	0.05678	131.1786	ELLENDALE - OAKES 230KV CKT 1
FDNS	00NR	0	17SP	G15_054	TO->FROM	GR ISLD-LNX3345.00 - HOLT.CO3 345.00 345KV CKT 1	720	720	0.05554	131.1785	SIOUXCY-LNX3345.00 - SPLIT ROCK 345KV CKT 1
FDNS	00NR	0	17SP	G15_054	TO->FROM	GR ISLD-LNX3345.00 - HOLT.CO3 345.00 345KV CKT 1	720	720	0.05554	131.1785	SIOUXCY-LNX3345.00 - SPLIT ROCK 345KV CKT 1
FDNS	00NR	0	17SP	G15_054	TO->FROM	GR ISLD-LNX3345.00 - HOLT.CO3 345.00 345KV CKT 1	720	720	0.05708	131.1626	AS KING - EAU CLAIRE 345KV CKT 1
FDNS	00NR	0	17SP	G15_054	TO->FROM	GR ISLD-LNX3345.00 - HOLT.CO3 345.00 345KV CKT 1	720	720	0.0568	131.1409	GEN501801 1-DOLET HILLS UNIT1
FDNS	00NR	0	17SP	G15_054	TO->FROM	GR ISLD-LNX3345.00 - HOLT.CO3 345.00 345KV CKT 1	720	720	0.05554	131.1238	P12:345:UMZW:# 907 #: SC2-SR IN IA. SC2-SR 345 KV LINE
FDNS	00NR	0	17SP	G15_054	TO->FROM	GR ISLD-LNX3345.00 - HOLT.CO3 345.00 345KV CKT 1	720	720	0.05678	131.087	FORMAN - OAKES 230KV CKT 1
FDNS	00NR	0	17SP	G15_054	TO->FROM	GR ISLD-LNX3345.00 - HOLT.CO3 345.00 345KV CKT 1	720	720	0.05554	131.0841	SIOUX CITY - SIOUXCY-LNX3345.00 345KV CKT Z
FDNSLock	00NR	0	17SP	G15_054	TO->FROM	GR ISLD-LNX3345.00 - HOLT.CO3 345.00 345KV CKT 1	720	720	0.05629	131.0689	HARMONY - VALENTINE 115KV CKT 1
FDNS	00NR	0	17SP	G15_054	TO->FROM	GR ISLD-LNX3345.00 - HOLT.CO3 345.00 345KV CKT 1	720	720	0.05826	131.0686	SIDNEY - STEGALL 345KV CKT 1
FDNS	00NR	0	17SP	G15_054	TO->FROM	GR ISLD-LNX3345.00 - HOLT.CO3 345.00 345KV CKT 1	720	720	0.05629	131.0664	HARMONY - ST FRANCIS 115KV CKT 1
FDNS	00NR	0	17SP	G15_054	TO->FROM	GR ISLD-LNX3345.00 - HOLT.CO3 345.00 345KV CKT 1	720	720	0.05634	131.0516	FT RANDAL - UTICA JCT 230KV CKT 1
FDNS	00NR	0	17SP	G15_054	TO->FROM	GR ISLD-LNX3345.00 - HOLT.CO3 345.00 345KV CKT 1	720	720	0.05672	131.0475	CARPENTER - HURON 230KV CKT 1
FDNS	00NR	0	17SP	G15_054	TO->FROM	GR ISLD-LNX3345.00 - HOLT.CO3 345.00 345KV CKT 1	720	720	0.05672	130.9793	HURON - WATERTOWN 230KV CKT 2
FDNS	00NR	0	17SP	G15_054	TO->FROM	GR ISLD-LNX3345.00 - HOLT.CO3 345.00 345KV CKT 1	720	720	0.05672	130.9793	HURON - WATERTOWN 230KV CKT 2
FDNS	00NR	0	17SP	G15_054	TO->FROM	GR ISLD-LNX3345.00 - HOLT.CO3 345.00 345KV CKT 1	720	720	0.05721	130.9716	ARPIN B4 345.00 - EAU CLAIRE 345KV CKT 1
FDNS	00NR	0	17SP	G15_054	TO->FROM	GR ISLD-LNX3345.00 - HOLT.CO3 345.00 345KV CKT 1	720	720	0.05672	130.9164	CARPENTER - WATERTOWN 230KV CKT 1
FDNS	00NR	0	17SP	G15_054	TO->FROM	GR ISLD-LNX3345.00 - HOLT.CO3 345.00 345KV CKT 1	720	720	0.05672	130.9164	CARPENTER - WATERTOWN 230KV CKT 1
FDNS	00NR	0	17SP	G15_054	TO->FROM	GR ISLD-LNX3345.00 - HOLT.CO3 345.00 345KV CKT 1	720	720	0.0553	130.86	FT THOMPSON - WESSINGTON 230KV CKT 1
FDNS	00NR	0	17SP	G15_054	TO->FROM	GR ISLD-LNX3345.00 - HOLT.CO3 345.00 345KV CKT 1	720	720	0.0553	130.86	FT THOMPSON - WESSINGTON 230KV CKT 1
FDNS	00NR	0	17SP	G15_054	TO->FROM	GR ISLD-LNX3345.00 - HOLT.CO3 345.00 345KV CKT 1	720	720	0.0568	130.7962	GEN336252 1-NINEMILE POINT UNIT#5
FDNS	00NR	0	17SP	G15_054	TO->FROM	GR ISLD-LNX3345.00 - HOLT.CO3 345.00 345KV CKT 1	720	720	0.0568	130.7546	GEN501813 1-RODEMACHER UNIT 3
FDNS	00NR	0	17SP	G15_054	TO->FROM	GR ISLD-LNX3345.00 - HOLT.CO3 345.00 345KV CKT 1	720	720	0.05645	130.7522	PAHOJA - SIOUX FALLS 230KV CKT 1
FDNS	00NR	0	17SP	G15_054	TO->FROM	GR ISLD-LNX3345.00 - HOLT.CO3 345.00 345KV CKT 1	720	720	0.0521	130.7281	P12:115:NPPD:WAPA6:FTRANDL7:ONEILL 7:BTB
FDNS	00NR	0	17SP	G15_054	TO->FROM	GR ISLD-LNX3345.00 - HOLT.CO3 345.00 345KV CKT 1	720	720	0.0521	130.7281	P12:115:UMZB:# 115 #: SE IN NE. FR-SE-ON
FDNS	00NR	0	17SP	G15_054	TO->FROM	GR ISLD-LNX3345.00 - HOLT.CO3 345.00 345KV CKT 1	720	720	0.05301	130.7061	GERALD GENTLEMAN STATION - SWEETWATER 345KV CKT 1

SOLUTION	GROUP	SCENARIO	SEASON	SOURCE	DIRECTION	MONITORED ELEMENT	RATEA (MVA)	RATEB(MVA)	TDF	TC%LOADING (% MVA)	CONTINGENCY
FDNS	00NR	0	17SP	G15_054	TO->FROM	GR ISLD-LNX3345.00 - HOLT.CO3 345.00 345KV CKT 1	720	720	0.05747	130.696	ADAMS - MITCHLCO3 345.00 345KV CKT 1
FDNS	00NR	0	17SP	G15_054	TO->FROM	GR ISLD-LNX3345.00 - HOLT.CO3 345.00 345KV CKT 1	720	720	0.0521	130.6873	FT RANDAL - SPENCER 115KV CKT 1
FDNS	00NR	0	17SP	G15_054	TO->FROM	GR ISLD-LNX3345.00 - HOLT.CO3 345.00 345KV CKT 1	720	720	0.0568	130.6593	GEN336831 1-BAXTER WILSON SES
FDNS	00NR	0	17SP	G15_054	TO->FROM	GR ISLD-LNX3345.00 - HOLT.CO3 345.00 345KV CKT 1	720	720	0.0568	130.6466	GEN336251 1-NINEMILE POINT UNIT#4
FDNSLock	00NR	0	17SP	G15_054	TO->FROM	GR ISLD-LNX3345.00 - HOLT.CO3 345.00 345KV CKT 1	720	720	0.05629	130.6365	AINSWORTH - VALENTINE 115KV CKT 1
FDNS	00NR	0	17SP	G15_054	TO->FROM	GR ISLD-LNX3345.00 - HOLT.CO3 345.00 345KV CKT 1	720	720	0.0521	130.5966	ONEILL - SPENCER 115KV CKT 1
FDNS	00NR	0	17SP	G15_054	TO->FROM	GR ISLD-LNX3345.00 - HOLT.CO3 345.00 345KV CKT 1	720	720	0.0568	130.5874	CNTSHNT3 345.00 - PRAIRIE3 345.00 345KV CKT 1
FDNS	00NR	0	17SP	G15_054	TO->FROM	GR ISLD-LNX3345.00 - HOLT.CO3 345.00 345KV CKT 1	720	720	0.0568	130.5722	GEN337041 1-GERALD ANDRUS
FDNS	00NR	0	17SP	G15_054	TO->FROM	GR ISLD-LNX3345.00 - HOLT.CO3 345.00 345KV CKT 1	720	720	0.0568	130.5555	GEN335206 1-NELSON UNIT 6
FDNS	00NR	0	17SP	G15_054	TO->FROM	GR ISLD-LNX3345.00 - HOLT.CO3 345.00 345KV CKT 1	720	720	0.0568	130.5309	GEN344897 4-1LAB G4 20.000
FDNS	00NR	0	17SP	G15_054	TO->FROM	GR ISLD-LNX3345.00 - HOLT.CO3 345.00 345KV CKT 1	720	720	0.0568	130.5275	GEN344894 1-1LAB G1 20.000
FDNS	00NR	0	17SP	G15_054	TO->FROM	GR ISLD-LNX3345.00 - HOLT.CO3 345.00 345KV CKT 1	720	720	0.0568	130.5274	GEN344896 3-1LAB G3 20.000
FDNS	00NR	0	17SP	G15_054	TO->FROM	GR ISLD-LNX3345.00 - HOLT.CO3 345.00 345KV CKT 1	720	720	0.07691	130.5252	HOSKINS - SHELL CREEK 345KV CKT 1
FDNS	00NR	0	17SP	G15_054	TO->FROM	GR ISLD-LNX3345.00 - HOLT.CO3 345.00 345KV CKT 1	720	720	0.05708	130.4853	SIDNEY - SIDNEY2-LNX3345.00 345KV CKT Z
FDNS	00NR	0	17SP	G15_054	TO->FROM	GR ISLD-LNX3345.00 - HOLT.CO3 345.00 345KV CKT 1	720	720	0.05708	130.4839	G15094_T 345.00 - SIDNEY2-LNX3345.00 345KV CKT 1
FDNS	00NR	0	17SP	G15_054	TO->FROM	GR ISLD-LNX3345.00 - HOLT.CO3 345.00 345KV CKT 1	720	720	0.0568	130.4809	FORMAN - HANKINSON 230KV CKT 1
FDNS	00NR	0	17SP	G15_054	TO->FROM	GR ISLD-LNX3345.00 - HOLT.CO3 345.00 345KV CKT 1	720	720	0.05725	130.4733	ADAMS - PLEASANT VALLEY 345KV CKT 1
FDNS	00NR	0	17SP	G15_054	TO->FROM	GR ISLD-LNX3345.00 - HOLT.CO3 345.00 345KV CKT 1	720	720	0.0568	130.4727	GEN344895 2-1LAB G2 20.000
FDNS	00NR	0	17SP	G15_054	TO->FROM	GR ISLD-LNX3345.00 - HOLT.CO3 345.00 345KV CKT 1	720	720	0.0568	130.461	GEN345670 1-1RUSH G1 18.000
FDNS	00NR	0	17SP	G15_054	TO->FROM	GR ISLD-LNX3345.00 - HOLT.CO3 345.00 345KV CKT 1	720	720	0.0568	130.4607	GEN345671 2-1RUSH G2 18.000
FDNS	00NR	0	17SP	G15_054	TO->FROM	GR ISLD-LNX3345.00 - HOLT.CO3 345.00 345KV CKT 1	720	720	0.05729	130.431	RASMUSN - UTICA JCT 230KV CKT 1
FDNS	00NR	0	17SP	G15_054	TO->FROM	GR ISLD-LNX3345.00 - HOLT.CO3 345.00 345KV CKT 1	720	720	0.05882	130.4055	GRIMES - LEHIGH 345KV CKT 1
FDNS	00NR	0	17SP	G15_054	TO->FROM	GR ISLD-LNX3345.00 - HOLT.CO3 345.00 345KV CKT 1	720	720	0.0568	130.4001	GEN501812 1-RODEMACHER UNIT 2
FDNS	00NR	0	17SP	G15_054	TO->FROM	GR ISLD-LNX3345.00 - HOLT.CO3 345.00 345KV CKT 1	720	720	0.05645	130.3955	EAGLE 4 230.00 - PAHOJA 230KV CKT 1
FDNS	00NR	0	17SP	G15_054	TO->FROM	GR ISLD-LNX3345.00 - HOLT.CO3 345.00 345KV CKT 1	720	720	0.0568	130.3774	GEN334440 1-SABINE UNIT 4
FDNS	00NR	0	17SP	G15_054	TO->FROM	GR ISLD-LNX3345.00 - HOLT.CO3 345.00 345KV CKT 1	720	720	0.0568	130.3431	GEN563222 1-G15088_3 0.6900
FDNS	00NR	0	17SP	G15_054	TO->FROM	GR ISLD-LNX3345.00 - HOLT.CO3 345.00 345KV CKT 1	720	720	0.05729	130.2798	RASMUSN - SIOUX CITY 230KV CKT 1
FDNS	00NR	0	17SP	G15_054	TO->FROM	GR ISLD-LNX3345.00 - HOLT.CO3 345.00 345KV CKT 1	720	720	0.0568	130.2216	GEN336191 1-LITTLE GYPSY UNIT#3
FDNS	00NR	0	17SP	G15_054	TO->FROM	GR ISLD-LNX3345.00 - HOLT.CO3 345.00 345KV CKT 1	720	720	0.05724	130.2052	LAKEFIELD 3 - NOBLES 345KV CKT 1
FDNS	00NR	0	17SP	G15_054	TO->FROM	GR ISLD-LNX3345.00 - HOLT.CO3 345.00 345KV CKT 1	720	720	0.05478	130.1874	DIXONCO 230.00 - HOSKINS 230KV CKT 1
FDNS	00NR	0	17SP	G15_054	TO->FROM	GR ISLD-LNX3345.00 - HOLT.CO3 345.00 345KV CKT 1	720	720	0.05692	130.1689	RAUN - SIOUX CITY 345KV CKT 1
FDNS	00NR	0	17SP	G15_054	TO->FROM	GR ISLD-LNX3345.00 - HOLT.CO3 345.00 345KV CKT 1	720	720	0.05692	130.1689	RAUN - SIOUX CITY 345KV CKT 1
FDNS	00NR	0	17SP	G15_054	TO->FROM	GR ISLD-LNX3345.00 - HOLT.CO3 345.00 345KV CKT 1	720	720	0.05399	130.1686	GERALD GENTLEMAN STATION - SWEETWATER 345KV CKT 2
FDNS	00NR	0	17SP	G15_054	TO->FROM	GR ISLD-LNX3345.00 - HOLT.CO3 345.00 345KV CKT 1	720	720	0.0568	130.1584	GEN641089 2-ENERGY CENTER 2
FDNS	00NR	0	17SP	G15_054	TO->FROM	GR ISLD-LNX3345.00 - HOLT.CO3 345.00 345KV CKT 1	720	720	0.0568	130.1576	GEN338388 1-1PLUM PT U1 23.000
FDNS	00NR	0	17SP	G15_054	TO->FROM	GR ISLD-LNX3345.00 - HOLT.CO3 345.00 345KV CKT 1	720	720	0.0568	130.1417	GEN336801 1-BAXTER WILSON UNIT #1
FDNS	00NR	0	17SP	G15_054	TO->FROM	GR ISLD-LNX3345.00 - HOLT.CO3 345.00 345KV CKT 1	720	720	0.0568	130.1167	GEN335614 1-WILLOW GLENN UNIT#4
FDNS	00NR	0	17SP	G15_054	TO->FROM	GR ISLD-LNX3345.00 - HOLT.CO3 345.00 345KV CKT 1	720	720	0.0568	130.109	GEN334441 1-SABINE UNIT 5
FDNS	00NR	0	17SP	G15_054	TO->FROM	GR ISLD-LNX3345.00 - HOLT.CO3 345.00 345KV CKT 1	720	720	0.0568	130.1016	GEN336464 1-MICHOUD UNIT #3
FDNS	00NR	0	17SP	G15_054	TO->FROM	GR ISLD-LNX3345.00 - HOLT.CO3 345.00 345KV CKT 1	720	720	0.05683	130.0948	ALEXMRES3 345.00 - WAITE PARK 345KV CKT 1
FDNS	00NR	0	17SP	G15_054	TO->FROM	GR ISLD-LNX3345.00 - HOLT.CO3 345.00 345KV CKT 1	720	720	0.05741	130.0928	KOSSUTH 3 345.00 - OBRIEN 3 345.00 345KV CKT 1
FDNS	00NR	0	17SP	G15_054	TO->FROM	GR ISLD-LNX3345.00 - HOLT.CO3 345.00 345KV CKT 1	720	720	0.0568	130.0884	GEN335204 1-NELSON UNIT 4
FDNS	00NR	0	17SP	G15_054	TO->FROM	GR ISLD-LNX3345.00 - HOLT.CO3 345.00 345KV CKT 1	720	720	0.06424	130.0811	COLUMEAST - SHELL CREEK 345KV CKT 1
FDNS	00NR	0	17SP	G15_054	TO->FROM	GR ISLD-LNX3345.00 - HOLT.CO3 345.00 345KV CKT 1	720	720	0.05706	130.0756	BROOKING COUNTY - LYON COUNTY 345KV CKT 1
FDNS	00NR	0	17SP	G15_054	TO->FROM	GR ISLD-LNX3345.00 - HOLT.CO3 345.00 345KV CKT 1	720	720	0.05681	130.0688	GLENBORO SOUTH - RUGBY 230KV CKT 1
FDNS	00NR	0	17SP	G15_054	TO->FROM	GR ISLD-LNX3345.00 - HOLT.CO3 345.00 345KV CKT 1	720	720	0.05741	130.0591	KOSSUTH 3 345.00 - WEBSTER 345KV CKT 1
FDNS	00NR	0	17SP	G15_054	TO->FROM	GR ISLD-LNX3345.00 - HOLT.CO3 345.00 345KV CKT 1	720	720	0.05679	130.0431	CENTER - COYOTE 345KV CKT 1
FDNS	00NR	0	17SP	G15_054	TO->FROM	GR ISLD-LNX3345.00 - HOLT.CO3 345.00 345KV CKT 1	720	720	0.05682	130.0358	BLAIR - GRANITE FALLS 230KV CKT 1
FDNS	00NR	0	17SP	G15_054	TO->FROM	GR ISLD-LNX3345.00 - HOLT.CO3 345.00 345KV CKT 1	720	720	0.05682	130.0358	BLAIR - GRANITE FALLS 230KV CKT 1
FDNS	00NR	0	17SP	G15_054	TO->FROM	GR ISLD-LNX3345.00 - HOLT.CO3 345.00 345KV CKT 1	720	720	0.06435	129.9869	COLUMEAST - NW68TH & HOLDREGE 345KV CKT 1
FDNS	00NR	0	17SP	G15_054	TO->FROM	GR ISLD-LNX3345.00 - HOLT.CO3 345.00 345KV CKT 1	720	720	0.06435	129.9869	COLUMEAST - NW68TH & HOLDREGE 345KV CKT 1
FDNS	00NR	0	17SP	G15_054	TO->FROM	GR ISLD-LNX3345.00 - HOLT.CO3 345.00 345KV CKT 1	720	720	0.05973	129.9757	STEGALL - STEGALL TRANSFORMER 230KV CKT 1
FDNS	00NR	0	17SP	G15_054	TO->FROM	GR ISLD-LNX3345.00 - HOLT.CO3 345.00 345KV CKT 1	720	720	0.05973	129.954	P13:230-345:NPPD:STEGALL3:KV3A
FDNS	00NR	0	17SP	G15_054	TO->FROM	GR ISLD-LNX3345.00 - HOLT.CO3 345.00 345KV CKT 1	720	720	0.05973	129.9444	STEGALL (SGQ KV3A) 345/230/13.8KV TRANSFORMER CKT 1
FDNS	00NR	0	17SP	G15_054	TO->FROM	GR ISLD-LNX3345.00 - HOLT.CO3 345.00 345KV CKT 1	720	720	0.0568	129.932	GEN334433 1-SABINE UNIT 3
FDNS	00NR	0	17SP	G15_054	TO->FROM	GR ISLD-LNX3345.00 - HOLT.CO3 345.00 345KV CKT 1	720	720	0.05711	129.9294	BYRON - NORTH ROCHESTER 345KV CKT 1
FDNS	00NR	0	17SP	G15_054	TO->FROM	GR ISLD-LNX3345.00 - HOLT.CO3 345.00 345KV CKT 1	720	720	0.05711	129.8959	G14-059T 230.00 - OGALLALA 230KV CKT 1
FDNS	00NR	0	17SP	G15_054	TO->FROM	GR ISLD-LNX3345.00 - HOLT.CO3 345.00 345KV CKT 1	720	720	0.0616	129.8863	STEGALL-LNX3230.00 - WAYSIDE 230KV CKT 1
FDNS	00NR	0	17SP	G15_054	TO->FROM	GR ISLD-LNX3345.00 - HOLT.CO3 345.00 345KV CKT 1	720	720	0.0562	129.8852	MENNO JCT - TRIPP JCT 115KV CKT 1
FDNS	00NR	0	17SP	G15_054	TO->FROM	GR ISLD-LNX3345.00 - HOLT.CO3 345.00 345KV CKT 1	720	720	0.0568	129.879	GEN629075 1-OTTUMWA GENERATOR FOR OTTUMWA UNIT NO 1
FDNS	00NR	0	17SP	G15_054	TO->FROM	GR ISLD-LNX3345.00 - HOLT.CO3 345.00 345KV CKT 1	720	720	0.0568	129.8763	GEN336222 1-LITTLE GYPSY UNIT#2
FDNS	00NR	0	17SP	G15_054	TO->FROM	GR ISLD-LNX3345.00 - HOLT.CO3 345.00 345KV CKT 1	720	720	0.0616	129.8744	STEGALL - STEGALL-LNX3230.00 230KV CKT Z
FDNS	00NR	0	17SP	G15_054	TO->FROM	GR ISLD-LNX3345.00 - HOLT.CO3 345.00 345KV CKT 1	720	720	0.0568	129.8681	P13:230-345:NPPD:NUCOR-1
FDNS	00NR	0	17SP	G15_054	TO->FROM	GR ISLD-LNX3345.00 - HOLT.CO3 345.00 345KV CKT 1	720	720	0.0568	129.8656	P12:115:UMZW:# 162 #: NEL IN ND. FAULT ON ML-NEL-MX-GA 115 KV
FDNS	00NR	0	17SP	G15_054	TO->FROM	GR ISLD-LNX3345.00 - HOLT.CO3 345.00 345KV CKT 1	720	720	0.0568	129.8586	GEN303007 1-1BC2 U2
FDNS	00NR	0	17SP	G15_054	TO->FROM	GR ISLD-LNX3345.00 - HOLT.CO3 345.00 345KV CKT 1	720	720	0.0568	129.8521	GEN303006 1-1BC2 U1
FDNS	00NR	0	17SP	G15_054	TO->FROM	GR ISLD-LNX3345.00 - HOLT.CO3 345.00 345KV CKT 1	720	720	0.05657	129.8079	FT THOMPSON - HURON 230KV CKT 1
FDNS	00NR	0	17SP	G15_054	TO->FROM	GR ISLD-LNX3345.00 - HOLT.CO3 345.00 345KV CKT 1	720	720	0.05657	129.8079	FT THOMPSON - HURON 230KV CKT 1
FDNS	00NR	0	17SP	G15_054	TO->FROM	GR ISLD-LNX3345.00 - HOLT.CO3 345.00 345KV CKT 1	720	720	0.05657	129.8079	FT THOMPSON - HURON 230KV CKT 2
FDNS	00NR	0	17SP	G15_054	TO->FROM	GR ISLD-LNX3345.00 - HOLT.CO3 345.00 345KV CKT 1	720	720	0.05657	129.8079	FT THOMPSON - HURON 230KV CKT 2
FDNS	00NR	0	17SP	G15_054	TO->FROM	GR ISLD-LNX3345.00 - HOLT.CO3 345.00 345KV CKT 1	720	720	0.0568	129.7903	GEN336152 1-WATERFORD UNIT#2
FDNS	00NR	0	17SP	G15_054	TO->FROM	GR ISLD-LNX3345.00 - HOLT.CO3 345.00 345KV CKT 1	720	720	0.0568	129.7898	GEN336151 1-WATERFORD UNIT#1
FDNS	00NR	0	17SP	G15_054	TO->FROM	GR ISLD-LNX3345.00 - HOLT.CO3 345.00 345KV CKT 1	720	720	0.0568	129.7763	GEN303008 1-1BC2 U3
FDNS	00NR	0	17SP	G15_054	TO->FROM	GR ISLD-LNX3345.00 - HOLT.CO3 345.00 345KV CKT 1	720	720	0.05679	129.768	GARRISON - JAMES TOWN 230KV CKT 1
FDNS	00NR	0	17SP	G15_054	TO->FROM	GR ISLD-LNX3345.00 - HOLT.CO3 345.00 345KV CKT 1	720	720	0.0568	129.7616	GEN336170 1-GULF OXY U4
FDNS	00NR	0	17SP	G15_054	TO->FROM	GR ISLD-LNX3345.00 - HOLT.CO3 345.00 345KV CKT 1	720	720	0.0562	129.7547	MENNO JCT - UTICA 115KV CKT 1
FDNS	00NR	0	17SP	G15_054	TO->FROM	GR ISLD-LNX3345.00 - HOLT.CO3 345.00 345KV CKT 1	720	720	0.05684	129.7464	HANKINSON - WAHPETON 230KV CKT 1
FDNS	00NR	0	17SP	G15_054	TO->FROM	GR ISLD-LNX3345.00 - HOLT.CO3 345.00 345KV CKT 1	720	720	0.05691	129.7276	NORTH ROCHESTER - PRAIRIE ISLAND 345KV CKT 1
FDNS	00NR	0	17SP	G15_054	TO->FROM	GR ISLD-LNX3345.00 - HOLT.CO3 345.00 345KV CKT 1	720	720	0.06352	129.7224	PETERSBRG.N7115.00 - PETERSBURG 115KV CKT Z1

SOLUTION	GROUP	SCENARIO	SEASON	SOURCE	DIRECTION	MONITORED ELEMENT	RATEA (MVA)	RATEB(MVA)	TDF	TC%LOADING (% MVA)	CONTINGENCY
FDNS	00NR	0	17SP	G15_054	TO->FROM	GR ISLD-LNX3345.00 - HOLT.CO3 345.00 345KV CKT 1	720	720	0.05685	129.7193	APPLEDORN 4 230.00 - WATERTOWN 230KV CKT 1
FDNS	00NR	0	17SP	G15_054	TO->FROM	GR ISLD-LNX3345.00 - HOLT.CO3 345.00 345KV CKT 1	720	720	0.05685	129.7193	APPLEDORN 4 230.00 - WATERTOWN 230KV CKT 1
FDNS	00NR	0	17SP	G15_054	TO->FROM	GR ISLD-LNX3345.00 - HOLT.CO3 345.00 345KV CKT 1	720	720	0.0562	129.713	P12:115:UMZZ:# 237 #: MEN IN SD. MENNO JUNCTION IS A TAP (UJ-MEN-TP).
FDNS	00NR	0	17SP	G15_054	TO->FROM	GR ISLD-LNX3345.00 - HOLT.CO3 345.00 345KV CKT 1	720	720	0.06352	129.6992	P12:115:NPPD:1168B:ALBION 7:PETERSBRG.N7:BTB
FDNS	00NR	0	17SP	G15_054	TO->FROM	GR ISLD-LNX3345.00 - HOLT.CO3 345.00 345KV CKT 1	720	720	0.05682	129.6955	FERGSFL4 230.00 - WAHPETON 230KV CKT 1
FDNS	00NR	0	17SP	G15_054	TO->FROM	GR ISLD-LNX3345.00 - HOLT.CO3 345.00 345KV CKT 1	720	720	0.05679	129.681	FARGO - JAMES TOWN 230KV CKT 1
FDNS	00NR	0	17SP	G15_054	TO->FROM	GR ISLD-LNX3345.00 - HOLT.CO3 345.00 345KV CKT 1	720	720	0.05708	129.6758	G15094_T 345.00 - LARAMIE RIVER 345KV CKT 1
FDNS	00NR	0	17SP	G15_054	TO->FROM	GR ISLD-LNX3345.00 - HOLT.CO3 345.00 345KV CKT 1	720	720	0.0568	129.6756	GEN501811 1-RODEMACHER UNIT 1
FDNS	00NR	0	17SP	G15_054	TO->FROM	GR ISLD-LNX3345.00 - HOLT.CO3 345.00 345KV CKT 1	720	720	0.05693	129.6691	ARKANSAS NUCLEAR ONE - FT SMITH 500KV CKT 1
FDNS	00NR	0	17SP	G15_054	TO->FROM	GR ISLD-LNX3345.00 - HOLT.CO3 345.00 345KV CKT 1	720	720	0.05693	129.6691	ARKANSAS NUCLEAR ONE - FT SMITH 500KV CKT 1
FDNS	00NR	0	17SP	G15_054	TO->FROM	GR ISLD-LNX3345.00 - HOLT.CO3 345.00 345KV CKT 1	720	720	0.05685	129.6632	APPLEDORN 4 230.00 - GRANITE FALLS 230KV CKT 1
FDNS	00NR	0	17SP	G15_054	TO->FROM	GR ISLD-LNX3345.00 - HOLT.CO3 345.00 345KV CKT 1	720	720	0.05685	129.6632	APPLEDORN 4 230.00 - GRANITE FALLS 230KV CKT 1
FDNS	00NR	0	17SP	G15_054	TO->FROM	GR ISLD-LNX3345.00 - HOLT.CO3 345.00 345KV CKT 1	720	720	0.05711	129.6631	BYRON - PLEASANT VALLEY 345KV CKT 1
FDNS	00NR	0	17SP	G15_054	TO->FROM	GR ISLD-LNX3345.00 - HOLT.CO3 345.00 345KV CKT 1	720	720	0.06352	129.653	ALBION - PETERSBURG 115KV CKT 1
FDNS	00NR	0	17SP	G15_054	TO->FROM	GR ISLD-LNX3345.00 - HOLT.CO3 345.00 345KV CKT 1	720	720	0.0568	129.6381	P13:115-230:NPPD:NUCOR-3
FDNS	00NR	0	17SP	G15_054	TO->FROM	GR ISLD-LNX3345.00 - HOLT.CO3 345.00 345KV CKT 1	720	720	0.05679	129.6381	FARGO - JAMES TOWN 230KV CKT 2
FDNS	00NR	0	17SP	G15_054	TO->FROM	GR ISLD-LNX3345.00 - HOLT.CO3 345.00 345KV CKT 1	720	720	0.05749	129.6266	DENISON - SIOUX CITY 230KV CKT 1
FDNS	00NR	0	17SP	G15_054	TO->FROM	GR ISLD-LNX3345.00 - HOLT.CO3 345.00 345KV CKT 1	720	720	0.0568	129.5995	P13:230:UMZW:# 2218 #: FP IN MT. LOSS OF TRANSFORMER (AT2).
FDNS	00NR	0	17SP	G15_054	TO->FROM	GR ISLD-LNX3345.00 - HOLT.CO3 345.00 345KV CKT 1	720	720	0.05703	129.5894	ARPIN B3 345.00 - ROCKY RN B8 345.00 345KV CKT 1
FDNS	00NR	0	17SP	G15_054	TO->FROM	GR ISLD-LNX3345.00 - HOLT.CO3 345.00 345KV CKT 1	720	720	0.05076	129.5716	P12:115:NPPD:1164:ONEILL 7:JEFFREY9:BTB
FDNS	00NR	0	17SP	G15_054	TO->FROM	GR ISLD-LNX3345.00 - HOLT.CO3 345.00 345KV CKT 1	720	720	0.0568	129.5522	GEN334071 1-LEWIS CREEK 2
FDNS	00NR	0	17SP	G15_054	TO->FROM	GR ISLD-LNX3345.00 - HOLT.CO3 345.00 345KV CKT 1	720	720	0.0568	129.5466	GEN334070 1-LEWIS CREEK 1
FDNS	00NR	0	17SP	G15_054	TO->FROM	GR ISLD-LNX3345.00 - HOLT.CO3 345.00 345KV CKT 1	720	720	0.0568	129.5428	GEN337766 1-TRACTEBEL UNIT S1
FDNS	00NR	0	17SP	G15_054	TO->FROM	GR ISLD-LNX3345.00 - HOLT.CO3 345.00 345KV CKT 1	720	720	0.0568	129.5165	P13:115-345:NPPD:NUCOR-2
FDNS	00NR	0	17SP	G15_054	TO->FROM	GR ISLD-LNX3345.00 - HOLT.CO3 345.00 345KV CKT 1	720	720	0.05722	129.5142	PALXFRASBTHI
FDNS	00NR	0	17SP	G15_054	TO->FROM	GR ISLD-LNX3345.00 - HOLT.CO3 345.00 345KV CKT 1	720	720	0.05722	129.514	7PALM TAP 345.00 - SUB T 345KV CKT 1
FDNS	00NR	0	17SP	G15_054	TO->FROM	GR ISLD-LNX3345.00 - HOLT.CO3 345.00 345KV CKT 1	720	720	0.05076	129.5074	CLEARWATER - ONEILL 115KV CKT 1
FDNS	00NR	0	17SP	G15_054	TO->FROM	GR ISLD-LNX3345.00 - HOLT.CO3 345.00 345KV CKT 1	720	720	0.0568	129.4982	GEN501910 1-ACADIA UNIT ST1
FDNS	00NR	0	17SP	G15_054	TO->FROM	GR ISLD-LNX3345.00 - HOLT.CO3 345.00 345KV CKT 1	720	720	0.05719	129.4883	NOBLES - SPLIT ROCK 345KV CKT 1
FDNS	00NR	0	17SP	G15_054	TO->FROM	GR ISLD-LNX3345.00 - HOLT.CO3 345.00 345KV CKT 1	720	720	0.05737	129.4778	P12:115:NPPD:WAPA1:CHADRON7:BOXBUTE7:BTB
FDNS	00NR	0	17SP	G15_054	TO->FROM	GR ISLD-LNX3345.00 - HOLT.CO3 345.00 345KV CKT 1	720	720	0.0568	129.4766	GEN562596 1-G14_059_3 0.6900
FDNS	00NR	0	17SP	G15_054	TO->FROM	GR ISLD-LNX3345.00 - HOLT.CO3 345.00 345KV CKT 1	720	720	0.05628	129.476	MT VERN - STORLA 115KV CKT 1
FDNS	00NR	0	17SP	G15_054	TO->FROM	GR ISLD-LNX3345.00 - HOLT.CO3 345.00 345KV CKT 1	720	720	0.0568	129.465	GEN345765 H-1SIOUX 2 18.000
FDNS	00NR	0	17SP	G15_054	TO->FROM	GR ISLD-LNX3345.00 - HOLT.CO3 345.00 345KV CKT 1	720	720	0.05702	129.4437	CHADRON - WAYSIDE 115KV CKT 1
FDNS	00NR	0	17SP	G15_054	TO->FROM	GR ISLD-LNX3345.00 - HOLT.CO3 345.00 345KV CKT 1	720	720	0.05702	129.4437	P13:115-230:NPPD:WAYSIDE4:T1
FDNS	00NR	0	17SP	G15_054	TO->FROM	GR ISLD-LNX3345.00 - HOLT.CO3 345.00 345KV CKT 1	720	720	0.05702	129.4411	WAYSIDE (WAYSIDE T1) 230/115/13.8KV TRANSFORMER CKT 1
FDNS	00NR	0	17SP	G15_054	TO->FROM	GR ISLD-LNX3345.00 - HOLT.CO3 345.00 345KV CKT 1	720	720	0.06352	129.4326	NELIGH - PETERSBRG.N7115.00 115KV CKT 1
FDNS	00NR	0	17SP	G15_054	TO->FROM	GR ISLD-LNX3345.00 - HOLT.CO3 345.00 345KV CKT 1	720	720	0.0568	129.4305	GEN337764 1-TRACTEBEL UNIT C1
FDNS	00NR	0	17SP	G15_054	TO->FROM	GR ISLD-LNX3345.00 - HOLT.CO3 345.00 345KV CKT 1	720	720	0.0568	129.4305	GEN337765 1-TRACTEBEL UNIT C2
FDNS	00NR	0	17SP	G15_054	TO->FROM	GR ISLD-LNX3345.00 - HOLT.CO3 345.00 345KV CKT 1	720	720	0.0568	129.4182	GRAND GULF 500/22.0KV TRANSFORMER CKT 1
FDNS	00NR	0	17SP	G15_054	TO->FROM	GR ISLD-LNX3345.00 - HOLT.CO3 345.00 345KV CKT 1	720	720	0.05692	129.4022	FRANKS - HUBEN 345KV CKT 1
FDNS	00NR	0	17SP	G15_054	TO->FROM	GR ISLD-LNX3345.00 - HOLT.CO3 345.00 345KV CKT 1	720	720	0.05737	129.3835	CHADRON - DUNLAP 115KV CKT 1
FDNS	00NR	0	17SP	G15_054	TO->FROM	GR ISLD-LNX3345.00 - HOLT.CO3 345.00 345KV CKT 1	720	720	0.0568	129.1445	GEN659118 1-LARAMIE RIVER UNIT1
FDNS	00NR	0	17SP	G15_054	TO->FROM	GR ISLD-LNX3345.00 - HOLT.CO3 345.00 345KV CKT 1	720	720	0.0568	129.0069	GEN563282 1-G15094_3 0.6900
FDNS	00NR	0	17SP	G15_054	TO->FROM	GR ISLD-LNX3345.00 - HOLT.CO3 345.00 345KV CKT 1	720	720	0.0568	128.7833	BASE CASE
FDNS	00NR	0	17SP	G15_054	TO->FROM	GR ISLD-LNX3345.00 - HOLT.CO3 345.00 345KV CKT 1	720	720	0.06992	128.7328	COLUMWEST - KELLY 230KV CKT 1
FDNS	00NR	0	17SP	G15_054	TO->FROM	GR ISLD-LNX3345.00 - HOLT.CO3 345.00 345KV CKT 1	720	720	0.0568	128.6085	GR ISLD-LNX3345.00 345KV SWITCHED SHUNT
FDNS	00NR	0	17SP	G15_054	TO->FROM	GR ISLD-LNX3345.00 - HOLT.CO3 345.00 345KV CKT 1	720	720	0.0568	128.5741	GEN645001 1-FORT CALHOUN 1
FDNS	00NR	0	17SP	G15_054	TO->FROM	GR ISLD-LNX3345.00 - HOLT.CO3 345.00 345KV CKT 1	720	720	0.05694	128.523	FT THOMPSON - OAHE 230KV CKT 1
FDNS	00NR	0	17SP	G15_054	TO->FROM	GR ISLD-LNX3345.00 - HOLT.CO3 345.00 345KV CKT 1	720	720	0.05694	128.523	FT THOMPSON - OAHE 230KV CKT 1
FDNS	00NR	0	17SP	G15_054	TO->FROM	GR ISLD-LNX3345.00 - HOLT.CO3 345.00 345KV CKT 1	720	720	0.05694	128.523	FT THOMPSON - OAHE 230KV CKT 2
FDNS	00NR	0	17SP	G15_054	TO->FROM	GR ISLD-LNX3345.00 - HOLT.CO3 345.00 345KV CKT 1	720	720	0.05694	128.523	FT THOMPSON - OAHE 230KV CKT 2
FDNS	00NR	0	17SP	G15_054	TO->FROM	GR ISLD-LNX3345.00 - HOLT.CO3 345.00 345KV CKT 1	720	720	0.05695	128.4833	FT THOMPSON - OAHE 230KV CKT 3
FDNS	00NR	0	17SP	G15_054	TO->FROM	GR ISLD-LNX3345.00 - HOLT.CO3 345.00 345KV CKT 1	720	720	0.05695	128.4833	FT THOMPSON - OAHE 230KV CKT 3
FDNS	00NR	0	17SP	G15_054	TO->FROM	GR ISLD-LNX3345.00 - HOLT.CO3 345.00 345KV CKT 1	720	720	0.05695	128.4833	FT THOMPSON - OAHE 230KV CKT 4
FDNS	00NR	0	17SP	G15_054	TO->FROM	GR ISLD-LNX3345.00 - HOLT.CO3 345.00 345KV CKT 1	720	720	0.05695	128.4833	FT THOMPSON - OAHE 230KV CKT 4
FDNS	00NR	0	17SP	G15_054	TO->FROM	GR ISLD-LNX3345.00 - HOLT.CO3 345.00 345KV CKT 1	720	720	0.0568	128.4448	FTTHOM2-LNX3345.00 345KV SWITCHED SHUNT
FDNS	00NR	0	17SP	G15_054	TO->FROM	GR ISLD-LNX3345.00 - HOLT.CO3 345.00 345KV CKT 1	720	720	0.05833	128.4156	AXTELL - PAULINE 345KV CKT 1
FDNS	00NR	0	17SP	G15_054	TO->FROM	GR ISLD-LNX3345.00 - HOLT.CO3 345.00 345KV CKT 1	720	720	0.05669	128.3602	GRAND ISLAND (GRAND.ISD T5) 230/115/13.8KV TRANSFORMER CKT 2
FDNS	00NR	0	17SP	G15_054	TO->FROM	GR ISLD-LNX3345.00 - HOLT.CO3 345.00 345KV CKT 1	720	720	0.05669	128.3602	GRAND ISLAND (GRAND.ISD T5) 230/115/13.8KV TRANSFORMER CKT 2
FDNS	00NR	0	17SP	G15_054	TO->FROM	GR ISLD-LNX3345.00 - HOLT.CO3 345.00 345KV CKT 1	720	720	0.05669	128.3578	GRAND ISLAND (GRAND.ISD T2) 230/115/13.8KV TRANSFORMER CKT 1
FDNS	00NR	0	17SP	G15_054	TO->FROM	GR ISLD-LNX3345.00 - HOLT.CO3 345.00 345KV CKT 1	720	720	0.05669	128.3578	GRAND ISLAND (GRAND.ISD T2) 230/115/13.8KV TRANSFORMER CKT 1
FDNS	00NR	0	17SP	G15_054	TO->FROM	GR ISLD-LNX3345.00 - HOLT.CO3 345.00 345KV CKT 1	720	720	0.05836	128.3033	MAXWELL - NORTH PLATTE 115KV CKT 1
FDNS	00NR	0	17SP	G15_054	TO->FROM	GR ISLD-LNX3345.00 - HOLT.CO3 345.00 345KV CKT 1	720	720	0.05687	128.2897	ANTELOP-LNX3345.00 - BRDLAND-LNX3345.00 345KV CKT 1
FDNS	00NR	0	17SP	G15_054	TO->FROM	GR ISLD-LNX3345.00 - HOLT.CO3 345.00 345KV CKT 1	720	720	0.05692	128.28	GRAND ISLAND (GI KU1B) 345/230/13.8KV TRANSFORMER CKT 2
FDNS	00NR	0	17SP	G15_054	TO->FROM	GR ISLD-LNX3345.00 - HOLT.CO3 345.00 345KV CKT 1	720	720	0.05692	128.28	GRAND ISLAND (GI KU1B) 345/230/13.8KV TRANSFORMER CKT 2
FDNS	00NR	0	17SP	G15_054	TO->FROM	GR ISLD-LNX3345.00 - HOLT.CO3 345.00 345KV CKT 1	720	720	0.05692	128.279	GRAND ISLAND (GI KU1A) 345/230/13.8KV TRANSFORMER CKT 1
FDNS	00NR	0	17SP	G15_054	TO->FROM	GR ISLD-LNX3345.00 - HOLT.CO3 345.00 345KV CKT 1	720	720	0.05692	128.279	GRAND ISLAND (GI KU1A) 345/230/13.8KV TRANSFORMER CKT 1
FDNS	00NR	0	17SP	G15_054	TO->FROM	GR ISLD-LNX3345.00 - HOLT.CO3 345.00 345KV CKT 1	720	720	0.05836	128.2493	SUB 3454 - WAGENER 345KV CKT 1
FDNS	00NR	0	17SP	G15_054	TO->FROM	GR ISLD-LNX3345.00 - HOLT.CO3 345.00 345KV CKT 1	720	720	0.05836	128.2493	SUB 3454 - WAGENER 345KV CKT 1
FDNS	00NR	0	17SP	G15_054	TO->FROM	GR ISLD-LNX3345.00 - HOLT.CO3 345.00 345KV CKT 1	720	720	0.0568	128.1978	GEN652548 5-FT RANDAL
FDNS	00NR	0	17SP	G15_054	TO->FROM	GR ISLD-LNX3345.00 - HOLT.CO3 345.00 345KV CKT 1	720	720	0.0568	128.1978	GEN652549 7-FT RANDAL
FDNS	00NR	0	17SP	G15_054	TO->FROM	GR ISLD-LNX3345.00 - HOLT.CO3 345.00 345KV CKT 1	720	720	0.0568	128.1853	GEN652547 3-FT RANDAL
FDNS	00NR	0	17SP	G15_054	TO->FROM	GR ISLD-LNX3345.00 - HOLT.CO3 345.00 345KV CKT 1	720	720	0.05701	128.1852	P12:115:UMZW:# 172 #: WI IN SD.
FDNS	00NR	0	17SP	G15_054	TO->FROM	GR ISLD-LNX3345.00 - HOLT.CO3 345.00 345KV CKT 1	720	720	0.05861	128.1808	GERALD GENTLEMAN STATION - RED WILLOW 345KV CKT 1
FDNS	00NR	0	17SP	G15_054	TO->FROM	GR ISLD-LNX3345.00 - HOLT.CO3 345.00 345KV CKT 1	720	720	0.0568	128.1766	GEN660003 3-HURON WEST PARK
FDNS	00NR	0	17SP	G15_054	TO->FROM	GR ISLD-LNX3345.00 - HOLT.CO3 345.00 345KV CKT 1	720	720	0.06032	128.1703	MINGO - RED WILLOW 345KV CKT 1
FDNS	00NR	0	17SP	G15_054	TO->FROM	GR ISLD-LNX3345.00 - HOLT.CO3 345.00 345KV CKT 1	720	720	0.06032	128.1703	MINGO - RED WILLOW 345KV CKT 1
FDNS	00NR	0	17SP	G15_054	TO->FROM	GR ISLD-LNX3345.00 - HOLT.CO3 345.00 345KV CKT 1	720	720	0.05695	128.1617	G11_051T 345.00 - WOODWARD DISTRICT EHV 345KV CKT 1

SOLUTION	GROUP	SCENARIO	SEASON	SOURCE	DIRECTION	MONITORED ELEMENT	RATEA (MVA)	RATEB(MVA)	TDF	TC%LOADING (% MVA)	CONTINGENCY
FDNS	00NR	0	17SP	G15_054	TO->FROM	GR ISLD-LNX3345.00 - HOLT.CO3 345.00 345KV CKT 1	720	720	0.0568	128.1458	GEN600020 2-ANGUS ANSON1
FDNS	00NR	0	17SP	G15_054	TO->FROM	GR ISLD-LNX3345.00 - HOLT.CO3 345.00 345KV CKT 1	720	720	0.06115	128.1417	LOUP CITY - NORTH LOUP 115KV CKT 1
FDNS	00NR	0	17SP	G15_054	TO->FROM	GR ISLD-LNX3345.00 - HOLT.CO3 345.00 345KV CKT 1	720	720	0.0568	128.1392	GEN600021 3-ANGUS ANSON2
FDNS	00NR	0	17SP	G15_054	TO->FROM	GR ISLD-LNX3345.00 - HOLT.CO3 345.00 345KV CKT 1	720	720	0.0568	128.1088	GEN600012 2-BLACK DOG GEN 2
FDNS	00NR	0	17SP	G15_054	TO->FROM	GR ISLD-LNX3345.00 - HOLT.CO3 345.00 345KV CKT 1	720	720	0.0568	128.1041	GEN590010 1-ERCOT EQUIVALENCE
FDNS	00NR	0	17SP	G15_054	TO->FROM	GR ISLD-LNX3345.00 - HOLT.CO3 345.00 345KV CKT 1	720	720	0.0568	128.0882	GEN659290 1-EDGECOL
FDNS	00NR	0	17SP	G15_054	TO->FROM	GR ISLD-LNX3345.00 - HOLT.CO3 345.00 345KV CKT 1	720	720	0.05883	128.0814	MINGO - SETAB 345KV CKT 1
FDNS	00NR	0	17SP	G15_054	TO->FROM	GR ISLD-LNX3345.00 - HOLT.CO3 345.00 345KV CKT 1	720	720	0.05883	128.0814	MINGO - SETAB 345KV CKT 1
FDNS	00NR	0	17SP	G15_054	TO->FROM	GR ISLD-LNX3345.00 - HOLT.CO3 345.00 345KV CKT 1	720	720	0.0568	128.0735	EASTDC - ERCOT EQUIVALENCE 345KV CKT 1
FDNS	00NR	0	17SP	G15_054	TO->FROM	GR ISLD-LNX3345.00 - HOLT.CO3 345.00 345KV CKT 1	720	720	0.0568	128.0735	GEN629072 4-LANSING GENERATOR FOR UNITS NO4 EIA CODE 1
FDNS	00NR	0	17SP	G15_054	TO->FROM	GR ISLD-LNX3345.00 - HOLT.CO3 345.00 345KV CKT 1	720	720	0.0568	128.0722	GEN590011 2-ERCOT EQUIVALENCE
FDNS	00NR	0	17SP	G15_054	TO->FROM	GR ISLD-LNX3345.00 - HOLT.CO3 345.00 345KV CKT 1	720	720	0.0568	128.0699	GEN300003 1-THOMAS HILL UNIT 3
FDNS	00NR	0	17SP	G15_054	TO->FROM	GR ISLD-LNX3345.00 - HOLT.CO3 345.00 345KV CKT 1	720	720	0.05698	128.0352	GRAND ISLAND (GI KU3A) 345/230/13.8KV TRANSFORMER CKT 3
FDNS	00NR	0	17SP	G15_054	TO->FROM	GR ISLD-LNX3345.00 - HOLT.CO3 345.00 345KV CKT 1	720	720	0.05698	128.0352	GRAND ISLAND (GI KU3A) 345/230/13.8KV TRANSFORMER CKT 3
FDNS	00NR	0	17SP	G15_054	TO->FROM	GR ISLD-LNX3345.00 - HOLT.CO3 345.00 345KV CKT 1	720	720	0.0568	128.0217	GEN652414 4-FT PECK
FDNS	00NR	0	17SP	G15_054	TO->FROM	GR ISLD-LNX3345.00 - HOLT.CO3 345.00 345KV CKT 1	720	720	0.0568	128.0217	GEN652415 5-FT PECK
FDNS	00NR	0	17SP	G15_054	TO->FROM	GR ISLD-LNX3345.00 - HOLT.CO3 345.00 345KV CKT 1	720	720	0.0568	128.0199	LADISH 115/13.2KV TRANSFORMER CKT 1
FDNS	00NR	0	17SP	G15_054	TO->FROM	GR ISLD-LNX3345.00 - HOLT.CO3 345.00 345KV CKT 1	720	720	0.0568	128.0124	GEN660001 2-ABERDEEN SIEBRECHT
FDNS	00NR	0	17SP	G15_054	TO->FROM	GR ISLD-LNX3345.00 - HOLT.CO3 345.00 345KV CKT 1	720	720	0.05478	127.9985	DIXONCO 230.00 - TWIN CHURCH 230KV CKT 1
FDNSLock	00NR	0	17SP	G15_054	TO->FROM	GR ISLD-LNX3345.00 - HOLT.CO3 345.00 345KV CKT 1	720	720	0.0591	127.9874	CENTRAL CITY - GRAND ISLAND 115KV CKT 1
FDNS	00NR	0	17SP	G15_054	TO->FROM	GR ISLD-LNX3345.00 - HOLT.CO3 345.00 345KV CKT 1	720	720	0.0568	127.9869	EMERY 161/18.0KV TRANSFORMER CKT 1
FDNS	00NR	0	17SP	G15_054	TO->FROM	GR ISLD-LNX3345.00 - HOLT.CO3 345.00 345KV CKT 1	720	720	0.0568	127.9678	GEN600050 1-FEP
FDNS	00NR	0	17SP	G15_054	TO->FROM	GR ISLD-LNX3345.00 - HOLT.CO3 345.00 345KV CKT 1	720	720	0.0568	127.9662	GEN652345 W-G07_023IS_2 0.6900
FDNS	00NR	0	17SP	G15_054	TO->FROM	GR ISLD-LNX3345.00 - HOLT.CO3 345.00 345KV CKT 1	720	720	0.06058	127.9535	G15088_T 345.00 - PAULINE 345KV CKT 1
FDNS	00NR	0	17SP	G15_054	TO->FROM	GR ISLD-LNX3345.00 - HOLT.CO3 345.00 345KV CKT 1	720	720	0.0568	127.9461	GEN 11104 1-J262_GEN 0.6000
FDNS	00NR	0	17SP	G15_054	TO->FROM	GR ISLD-LNX3345.00 - HOLT.CO3 345.00 345KV CKT 1	720	720	0.0568	127.9461	GEN 11108 1-J263_GEN 0.6000
FDNS	00NR	0	17SP	G15_054	TO->FROM	GR ISLD-LNX3345.00 - HOLT.CO3 345.00 345KV CKT 1	720	720	0.0568	127.925	GEN600046 1-MECST
FDNS	00NR	0	17SP	G15_054	TO->FROM	GR ISLD-LNX3345.00 - HOLT.CO3 345.00 345KV CKT 1	720	720	0.05687	127.9234	P12:345:UMZB:# 102 #: AVS BD IN ND. AVS BRD LR
FDNS	00NR	0	17SP	G15_054	TO->FROM	GR ISLD-LNX3345.00 - HOLT.CO3 345.00 345KV CKT 1	720	720	0.05687	127.9218	P12:345:UMZB:# 103 #: BD IN SD. LOSS OF LINE
FDNS	00NR	0	17SP	G15_054	TO->FROM	GR ISLD-LNX3345.00 - HOLT.CO3 345.00 345KV CKT 1	720	720	0.05687	127.9214	BRDLAND-LNX3345.00 - HURON 345KV CKT Z
FDNS	00NR	0	17SP	G15_054	TO->FROM	GR ISLD-LNX3345.00 - HOLT.CO3 345.00 345KV CKT 1	720	720	0.0568	127.9202	GEN300007 1-NEW MADRID UNIT 2
FDNS	00NR	0	17SP	G15_054	TO->FROM	GR ISLD-LNX3345.00 - HOLT.CO3 345.00 345KV CKT 1	720	720	0.05687	127.9198	BROADLAND - HURON 230KV CKT 1
FDNS	00NR	0	17SP	G15_054	TO->FROM	GR ISLD-LNX3345.00 - HOLT.CO3 345.00 345KV CKT 1	720	720	0.05687	127.9197	HURON (BD KU2A) 345/230/13.8KV TRANSFORMER CKT 1
FDNS	00NR	0	17SP	G15_054	TO->FROM	GR ISLD-LNX3345.00 - HOLT.CO3 345.00 345KV CKT 1	720	720	0.05687	127.9197	HURON (BD KU2A) 345/230/13.8KV TRANSFORMER CKT 1
FDNS	00NR	0	17SP	G15_054	TO->FROM	GR ISLD-LNX3345.00 - HOLT.CO3 345.00 345KV CKT 1	720	720	0.0568	127.9196	G830_SUB 115.00 - GRE-MCHENRY7115.00 115KV CKT 1
FDNS	00NR	0	17SP	G15_054	TO->FROM	GR ISLD-LNX3345.00 - HOLT.CO3 345.00 345KV CKT 1	720	720	0.0568	127.9178	G830_SUB 115.00 115/34.5KV TRANSFORMER CKT 1
FDNS	00NR	0	17SP	G15_054	TO->FROM	GR ISLD-LNX3345.00 - HOLT.CO3 345.00 345KV CKT 1	720	720	0.0568	127.9136	GEN300006 1-NEW MADRID UNIT 1
FDNS	00NR	0	17SP	G15_054	TO->FROM	GR ISLD-LNX3345.00 - HOLT.CO3 345.00 345KV CKT 1	720	720	0.05706	127.9045	POST ROCK (POSTROCK T1) 345/230/13.8KV TRANSFORMER CKT 1
FDNS	00NR	0	17SP	G15_054	TO->FROM	GR ISLD-LNX3345.00 - HOLT.CO3 345.00 345KV CKT 1	720	720	0.05682	127.8995	DRAYTON - LETELLIER 230KV CKT 1
FDNS	00NR	0	17SP	G15_054	TO->FROM	GR ISLD-LNX3345.00 - HOLT.CO3 345.00 345KV CKT 1	720	720	0.0568	127.8994	GEN600047 1-MECCT1
FDNS	00NR	0	17SP	G15_054	TO->FROM	GR ISLD-LNX3345.00 - HOLT.CO3 345.00 345KV CKT 1	720	720	0.0568	127.8839	GEN600063 1-COLVILLE GEN 1
FDNS	00NR	0	17SP	G15_054	TO->FROM	GR ISLD-LNX3345.00 - HOLT.CO3 345.00 345KV CKT 1	720	720	0.0568	127.8839	GEN600064 2-COLVILLE GEN 2
FDNS	00NR	0	17SP	G15_054	TO->FROM	GR ISLD-LNX3345.00 - HOLT.CO3 345.00 345KV CKT 1	720	720	0.0568	127.8805	GEN600043 7-BLUE LAKE5
FDNS	00NR	0	17SP	G15_054	TO->FROM	GR ISLD-LNX3345.00 - HOLT.CO3 345.00 345KV CKT 1	720	720	0.0568	127.8805	GEN600044 8-BLUE LAKE6
FDNS	00NR	0	17SP	G15_054	TO->FROM	GR ISLD-LNX3345.00 - HOLT.CO3 345.00 345KV CKT 1	720	720	0.0548	127.8493	COOPER - MOORE 345KV CKT 1
FDNS	00NR	0	17SP	G15_054	TO->FROM	GR ISLD-LNX3345.00 - HOLT.CO3 345.00 345KV CKT 1	720	720	0.0568	127.8416	GEN600065 7-HIGH BRIDGE
FDNS	00NR	0	17SP	G15_054	TO->FROM	GR ISLD-LNX3345.00 - HOLT.CO3 345.00 345KV CKT 1	720	720	0.0568	127.8416	GEN600066 8-HIGH BRIDGE
FDNS	00NR	0	17SP	G15_054	TO->FROM	GR ISLD-LNX3345.00 - HOLT.CO3 345.00 345KV CKT 1	720	720	0.0568	127.8396	GEN600014 4-BLACK DOG GEN 4
FDNS	00NR	0	17SP	G15_054	TO->FROM	GR ISLD-LNX3345.00 - HOLT.CO3 345.00 345KV CKT 1	720	720	0.0568	127.8352	GEN600011 5-BLACK DOG GEN 1
FDNS	00NR	0	17SP	G15_054	TO->FROM	GR ISLD-LNX3345.00 - HOLT.CO3 345.00 345KV CKT 1	720	720	0.0568	127.8275	GEN600071 10-RIVER SIDE
FDNS	00NR	0	17SP	G15_054	TO->FROM	GR ISLD-LNX3345.00 - HOLT.CO3 345.00 345KV CKT 1	720	720	0.0568	127.8274	GEN600070 9-RIVER SIDE
FDNS	00NR	0	17SP	G15_054	TO->FROM	GR ISLD-LNX3345.00 - HOLT.CO3 345.00 345KV CKT 1	720	720	0.0568	127.8156	GEN659273 2-GROTON SYNC COND
FDNS	00NR	0	17SP	G15_054	TO->FROM	GR ISLD-LNX3345.00 - HOLT.CO3 345.00 345KV CKT 1	720	720	0.0568	127.8156	GEN659294 1-WILTONCOL9
FDNS	00NR	0	17SP	G15_054	TO->FROM	GR ISLD-LNX3345.00 - HOLT.CO3 345.00 345KV CKT 1	720	720	0.0568	127.8136	GEN600007 7-RIVERSIDE GEN 7
FDNS	00NR	0	17SP	G15_054	TO->FROM	GR ISLD-LNX3345.00 - HOLT.CO3 345.00 345KV CKT 1	720	720	0.05843	127.8127	103RD & ROKEBY - MOORE 345KV CKT 1
FDNS	00NR	0	17SP	G15_054	TO->FROM	GR ISLD-LNX3345.00 - HOLT.CO3 345.00 345KV CKT 1	720	720	0.05843	127.8127	103RD & ROKEBY - MOORE 345KV CKT 1
FDNS	00NR	0	17SP	G15_054	TO->FROM	GR ISLD-LNX3345.00 - HOLT.CO3 345.00 345KV CKT 1	720	720	0.0568	127.8082	GEN600045 4-ANSON
FDNS	00NR	0	17SP	G15_054	TO->FROM	GR ISLD-LNX3345.00 - HOLT.CO3 345.00 345KV CKT 1	720	720	0.06992	127.8005	COLUMWEST - GRAND ISLAND 230KV CKT 1
FDNS	00NR	0	17SP	G15_054	TO->FROM	GR ISLD-LNX3345.00 - HOLT.CO3 345.00 345KV CKT 1	720	720	0.0568	127.7847	GEN600017 C-LS POWER CT
FDNS	00NR	0	17SP	G15_054	TO->FROM	GR ISLD-LNX3345.00 - HOLT.CO3 345.00 345KV CKT 1	720	720	0.0568	127.783	LANSING WEST 161/22.0KV TRANSFORMER CKT 1
FDNS	00NR	0	17SP	G15_054	TO->FROM	GR ISLD-LNX3345.00 - HOLT.CO3 345.00 345KV CKT 1	720	720	0.0568	127.7806	GEN659192 6-LYNN
FDNS	00NR	0	17SP	G15_054	TO->FROM	GR ISLD-LNX3345.00 - HOLT.CO3 345.00 345KV CKT 1	720	720	0.0568	127.7798	GEN659162 4-RED WLCK
FDNS	00NR	0	17SP	G15_054	TO->FROM	GR ISLD-LNX3345.00 - HOLT.CO3 345.00 345KV CKT 1	720	720	0.0568	127.7798	GEN659163 5-BLACK WDCK
FDNS	00NR	0	17SP	G15_054	TO->FROM	GR ISLD-LNX3345.00 - HOLT.CO3 345.00 345KV CKT 1	720	720	0.05695	127.7672	G11_051T 345.00 - TATONGA7 345.00 345KV CKT 1
FDNS	00NR	0	17SP	G15_054	TO->FROM	GR ISLD-LNX3345.00 - HOLT.CO3 345.00 345KV CKT 1	720	720	0.0568	127.7597	GEN 10648 1-G830_GEN 0.6900
FDNS	00NR	0	17SP	G15_054	TO->FROM	GR ISLD-LNX3345.00 - HOLT.CO3 345.00 345KV CKT 1	720	720	0.0568	127.7506	CENTER 230/22.0KV TRANSFORMER CKT 1
FDNS	00NR	0	17SP	G15_054	TO->FROM	GR ISLD-LNX3345.00 - HOLT.CO3 345.00 345KV CKT 1	720	720	0.0568	127.7325	GEN615021 1-GRE-ER 14G 16.000
FDNS	00NR	0	17SP	G15_054	TO->FROM	GR ISLD-LNX3345.00 - HOLT.CO3 345.00 345KV CKT 1	720	720	0.05676	127.7317	OAHE - SULLEY BUTTE 230KV CKT 1
FDNS	00NR	0	17SP	G15_054	TO->FROM	GR ISLD-LNX3345.00 - HOLT.CO3 345.00 345KV CKT 1	720	720	0.0568	127.7276	GEN659031 1-G12_014IS_4 0.6900
FDNS	00NR	0	17SP	G15_054	TO->FROM	GR ISLD-LNX3345.00 - HOLT.CO3 345.00 345KV CKT 1	720	720	0.0568	127.7153	GEN615052 1-CAMBRIDGE GENERATING STATION
FDNS	00NR	0	17SP	G15_054	TO->FROM	GR ISLD-LNX3345.00 - HOLT.CO3 345.00 345KV CKT 1	720	720	0.0568	127.6794	GEN615015 1-GRE-SPRITWDG13.200
FDNS	00NR	0	17SP	G15_054	TO->FROM	GR ISLD-LNX3345.00 - HOLT.CO3 345.00 345KV CKT 1	720	720	0.0568	127.6783	GEN681522 3-GENOA 3
FDNS	00NR	0	17SP	G15_054	TO->FROM	GR ISLD-LNX3345.00 - HOLT.CO3 345.00 345KV CKT 1	720	720	0.05794	127.6289	AXTELL - POST ROCK 345KV CKT 1
FDNS	00NR	0	17SP	G15_054	TO->FROM	GR ISLD-LNX3345.00 - HOLT.CO3 345.00 345KV CKT 1	720	720	0.05687	127.6025	ANTELOP-LNX3345.00 - ANTELOPE VALLEY 345KV CKT Z
FDNS	00NR	0	17SP	G15_054	TO->FROM	GR ISLD-LNX3345.00 - HOLT.CO3 345.00 345KV CKT 1	720	720	0.05676	127.592	SULLYBT-LNX3230.00 - WHITLOK 230KV CKT 1
FDNS	00NR	0	17SP	G15_054	TO->FROM	GR ISLD-LNX3345.00 - HOLT.CO3 345.00 345KV CKT 1	720	720	0.05676	127.5874	SULLEY BUTTE - SULLYBT-LNX3230.00 230KV CKT Z
FDNS	00NR	0	17SP	G15_054	TO->FROM	GR ISLD-LNX3345.00 - HOLT.CO3 345.00 345KV CKT 1	720	720	0.0568	127.5764	GEN660016 1-B_H WIND 0.7000
FDNS	00NR	0	17SP	G15_054	TO->FROM	GR ISLD-LNX3345.00 - HOLT.CO3 345.00 345KV CKT 1	720	720	0.0568	127.5654	GEN659353 1-DEERCREK CTG18.000
FDNS	00NR	0	17SP	G15_054	TO->FROM	GR ISLD-LNX3345.00 - HOLT.CO3 345.00 345KV CKT 1	720	720	0.0568	127.5612	GEN659354 1-DEERCREK STG18.000

SOLUTION	GROUP	SCENARIO	SEASON	SOURCE	DIRECTION	MONITORED ELEMENT	RATEA (MVA)	RATEB(MVA)	TDF	TC%LOADING (% MVA)	CONTINGENCY
FDNS	00NR	0	17SP	G15_054	TO->FROM	GR ISLD-LNX3345.00 - HOLT.CO3 345.00 345KV CKT 1	720	720	0.05676	127.5282	P12:230:UMZB:# 114 #: SB IN SD. SB-WK-GH
FDNS	00NR	0	17SP	G15_054	TO->FROM	GR ISLD-LNX3345.00 - HOLT.CO3 345.00 345KV CKT 1	720	720	0.05676	127.5282	P12:230:UMZB:# 117 #: WK IN SD. SB-WK-GH
FDNS	00NR	0	17SP	G15_054	TO->FROM	GR ISLD-LNX3345.00 - HOLT.CO3 345.00 345KV CKT 1	720	720	0.05695	127.5177	MATHWSN7 345.00 - TATONGA7 345.00 345KV CKT 1
FDNS	00NR	0	17SP	G15_054	TO->FROM	GR ISLD-LNX3345.00 - HOLT.CO3 345.00 345KV CKT 1	720	720	0.0568	127.5002	GEN672303 3-BOUNDARY DAM GENERATOR 3
FDNS	00NR	0	17SP	G15_054	TO->FROM	GR ISLD-LNX3345.00 - HOLT.CO3 345.00 345KV CKT 1	720	720	0.0568	127.5002	GEN672305 5-BOUNDARY DAM GENERATOR 5
FDNS	00NR	0	17SP	G15_054	TO->FROM	GR ISLD-LNX3345.00 - HOLT.CO3 345.00 345KV CKT 1	720	720	0.05676	127.4951	GLENHAM - WHITLOK 230KV CKT 1
FDNS	00NR	0	17SP	G15_054	TO->FROM	GR ISLD-LNX3345.00 - HOLT.CO3 345.00 345KV CKT 1	720	720	0.0568	127.4941	GEN652906 1-G09_006IS_3 0.6900
FDNS	00NR	0	17SP	G15_054	TO->FROM	GR ISLD-LNX3345.00 - HOLT.CO3 345.00 345KV CKT 1	720	720	0.0568	127.4759	GEN672392 1-NBECGT1G 18.000
FDNS	00NR	0	17SP	G15_054	TO->FROM	GR ISLD-LNX3345.00 - HOLT.CO3 345.00 345KV CKT 1	720	720	0.0568	127.4527	GEN600067 9-HIGH BRIDGE
FDNS	00NR	0	17SP	G15_054	TO->FROM	GR ISLD-LNX3345.00 - HOLT.CO3 345.00 345KV CKT 1	720	720	0.0568	127.4505	GEN562832 1-G15042_3 0.6900
FDNS	00NR	0	17SP	G15_054	TO->FROM	GR ISLD-LNX3345.00 - HOLT.CO3 345.00 345KV CKT 1	720	720	0.0568	127.435	BISONMP4 230.00 - SQUARE BUTTE 230KV CKT 1
FDNS	00NR	0	17SP	G15_054	TO->FROM	GR ISLD-LNX3345.00 - HOLT.CO3 345.00 345KV CKT 1	720	720	0.0568	127.402	GEN910006 1-G12_012IS_3 0.6900
FDNS	00NR	0	17SP	G15_054	TO->FROM	GR ISLD-LNX3345.00 - HOLT.CO3 345.00 345KV CKT 1	720	720	0.0568	127.3922	GEN662101 1-WESSINGTON190.5750
FDNS	00NR	0	17SP	G15_054	TO->FROM	GR ISLD-LNX3345.00 - HOLT.CO3 345.00 345KV CKT 1	720	720	0.0568	127.3534	COYOTE 345/24.0KV TRANSFORMER CKT 1
FDNS	00NR	0	17SP	G15_054	TO->FROM	GR ISLD-LNX3345.00 - HOLT.CO3 345.00 345KV CKT 1	720	720	0.0568	127.3465	GEN652907 1-G09_007IS_3 0.6900
FDNS	00NR	0	17SP	G15_054	TO->FROM	GR ISLD-LNX3345.00 - HOLT.CO3 345.00 345KV CKT 1	720	720	0.0568	127.1817	GEN652543 3-BIG BEND
FDNS	00NR	0	17SP	G15_054	TO->FROM	GR ISLD-LNX3345.00 - HOLT.CO3 345.00 345KV CKT 1	720	720	0.0568	127.1499	SQUARE BUTTE - YNG2 4 230.00 230KV CKT 1
FDNS	00NR	0	17SP	G15_054	TO->FROM	GR ISLD-LNX3345.00 - HOLT.CO3 345.00 345KV CKT 1	720	720	0.0568	127.149	YNG2 4 230.00 230/20.0KV TRANSFORMER CKT 1
FDNS	00NR	0	17SP	G15_054	TO->FROM	GR ISLD-LNX3345.00 - HOLT.CO3 345.00 345KV CKT 1	720	720	0.0568	127.041	GEN659289 1-DAYCNTYWND W0.6900
FDNS	00NR	0	17SP	G15_054	TO->FROM	GR ISLD-LNX3345.00 - HOLT.CO3 345.00 345KV CKT 1	720	720	0.0568	127.0406	GEN659018 1-G14_003IS_3 0.6900
FDNS	00NR	0	17SP	G15_054	TO->FROM	GR ISLD-LNX3345.00 - HOLT.CO3 345.00 345KV CKT 1	720	720	0.0568	127.0088	GEN681542 6-JP MADGETT
FDNS	00NR	0	17SP	G15_054	TO->FROM	GR ISLD-LNX3345.00 - HOLT.CO3 345.00 345KV CKT 1	720	720	0.0568	127.0055	GEN563312 1-G15097_3 0.6900
FDNS	00NR	0	17SP	G15_054	TO->FROM	GR ISLD-LNX3345.00 - HOLT.CO3 345.00 345KV CKT 1	720	720	0.05676	126.9505	GLENHAM - L3 HAWDON 230KV CKT 1
FDNS	00NR	0	17SP	G15_054	TO->FROM	GR ISLD-LNX3345.00 - HOLT.CO3 345.00 345KV CKT 1	720	720	0.0568	126.8646	GEN659194 1-NDPRAIRWND1W0.6900
FDNS	00NR	0	17SP	G15_054	TO->FROM	GR ISLD-LNX3345.00 - HOLT.CO3 345.00 345KV CKT 1	720	720	0.0568	126.8507	GEN659010 4-G07_027IS_2 0.6900
FDNS	00NR	0	17SP	G15_054	TO->FROM	GR ISLD-LNX3345.00 - HOLT.CO3 345.00 345KV CKT 1	720	720	0.0568	126.8433	GEN652542 1-BIG BEND
FDNS	00NR	0	17SP	G15_054	TO->FROM	GR ISLD-LNX3345.00 - HOLT.CO3 345.00 345KV CKT 1	720	720	0.0568	126.8393	GEN652461 5-GARRISON
FDNS	00NR	0	17SP	G15_054	TO->FROM	GR ISLD-LNX3345.00 - HOLT.CO3 345.00 345KV CKT 1	720	720	0.0568	126.8392	GEN652460 4-GARRISON
FDNS	00NR	0	17SP	G15_054	TO->FROM	GR ISLD-LNX3345.00 - HOLT.CO3 345.00 345KV CKT 1	720	720	0.0568	126.7982	GEN563342 1-G15098_3 0.6900
FDNS	00NR	0	17SP	G15_054	TO->FROM	GR ISLD-LNX3345.00 - HOLT.CO3 345.00 345KV CKT 1	720	720	0.0568	126.7806	GEN652457 1-GARRISON
FDNS	00NR	0	17SP	G15_054	TO->FROM	GR ISLD-LNX3345.00 - HOLT.CO3 345.00 345KV CKT 1	720	720	0.0568	126.7806	GEN652458 2-GARRISON
FDNS	00NR	0	17SP	G15_054	TO->FROM	GR ISLD-LNX3345.00 - HOLT.CO3 345.00 345KV CKT 1	720	720	0.0568	126.7806	GEN652459 3-GARRISON
FDNS	00NR	0	17SP	G15_054	TO->FROM	GR ISLD-LNX3345.00 - HOLT.CO3 345.00 345KV CKT 1	720	720	0.0568	126.721	GEN659403 1-NDSUNFLWR W0.6900
FDNS	00NR	0	17SP	G15_054	TO->FROM	GR ISLD-LNX3345.00 - HOLT.CO3 345.00 345KV CKT 1	720	720	0.0568	126.6214	STANTON 230/18.0KV TRANSFORMER CKT 1
FDNS	00NR	0	17SP	G15_054	TO->FROM	GR ISLD-LNX3345.00 - HOLT.CO3 345.00 345KV CKT 1	720	720	0.06032	126.6156	AXTELL - SWEETWATER 345KV CKT 1
FDNS	00NR	0	17SP	G15_054	TO->FROM	GR ISLD-LNX3345.00 - HOLT.CO3 345.00 345KV CKT 1	720	720	0.0568	126.4632	CLAY BOSWELL 230/20.9KV TRANSFORMER CKT 1
FDNS	00NR	0	17SP	G15_054	TO->FROM	GR ISLD-LNX3345.00 - HOLT.CO3 345.00 345KV CKT 1	720	720	0.0568	126.3605	GEN659411 1-CAMPBLCNTY W0.6900
FDNS	00NR	0	17SP	G15_054	TO->FROM	GR ISLD-LNX3345.00 - HOLT.CO3 345.00 345KV CKT 1	720	720	0.0568	126.2074	ALMA 161 161/24.0KV TRANSFORMER CKT 1
FDNS	00NR	0	17SP	G15_054	TO->FROM	GR ISLD-LNX3345.00 - HOLT.CO3 345.00 345KV CKT 1	720	720	0.0568	126.2066	GEN652559 1-OAHE
FDNS	00NR	0	17SP	G15_054	TO->FROM	GR ISLD-LNX3345.00 - HOLT.CO3 345.00 345KV CKT 1	720	720	0.0568	126.1625	GEN659296 2-SDPRAIRWND1W0.6900
FDNS	00NR	0	17SP	G15_054	TO->FROM	GR ISLD-LNX3345.00 - HOLT.CO3 345.00 345KV CKT 1	720	720	0.0568	126.0189	RCDC EAST 4230.00 - RED CEDAR DC 230KV CKT 1
FDNS	00NR	0	17SP	G15_054	TO->FROM	GR ISLD-LNX3345.00 - HOLT.CO3 345.00 345KV CKT 1	720	720	0.0568	125.9988	P12:230:UMZB:# 112 #: NU IN SD. NU-RCDC & DRY CREEK XFMR
FDNS	00NR	0	17SP	G15_054	TO->FROM	GR ISLD-LNX3345.00 - HOLT.CO3 345.00 345KV CKT 1	720	720	0.0568	125.9981	GEN672321 1-SHAND GENERATOR 1
FDNS	00NR	0	17SP	G15_054	TO->FROM	GR ISLD-LNX3345.00 - HOLT.CO3 345.00 345KV CKT 1	720	720	0.06058	125.9869	G15088_T 345.00 - MOORE 345KV CKT 1
FDNS	00NR	0	17SP	G15_054	TO->FROM	GR ISLD-LNX3345.00 - HOLT.CO3 345.00 345KV CKT 1	720	720	0.0568	125.9773	GEN615010 1-STANTON4
FDNS	00NR	0	17SP	G15_054	TO->FROM	GR ISLD-LNX3345.00 - HOLT.CO3 345.00 345KV CKT 1	720	720	0.0568	125.9758	GEN672310 1-POPLAR RIVER GENERATOR 1
FDNS	00NR	0	17SP	G15_054	TO->FROM	GR ISLD-LNX3345.00 - HOLT.CO3 345.00 345KV CKT 1	720	720	0.0568	125.9758	GEN672311 2-POPLAR RIVER GENERATOR 2
FDNS	00NR	0	17SP	G15_054	TO->FROM	GR ISLD-LNX3345.00 - HOLT.CO3 345.00 345KV CKT 1	720	720	0.0568	125.902	GEN672306 6-BOUNDARY DAM GENERATOR 6
FDNS	00NR	0	17SP	G15_054	TO->FROM	GR ISLD-LNX3345.00 - HOLT.CO3 345.00 345KV CKT 1	720	720	0.0568	125.8623	GEN659453 1-GI1414GEN W0.6900
FDNS	00NR	0	17SP	G15_054	TO->FROM	GR ISLD-LNX3345.00 - HOLT.CO3 345.00 345KV CKT 1	720	720	0.0568	125.8611	GEN563302 1-G15096_3 0.6900
FDNS	00NR	0	17SP	G15_054	TO->FROM	GR ISLD-LNX3345.00 - HOLT.CO3 345.00 345KV CKT 1	720	720	0.0568	125.8387	GEN652557 4-OAHE
FDNS	00NR	0	17SP	G15_054	TO->FROM	GR ISLD-LNX3345.00 - HOLT.CO3 345.00 345KV CKT 1	720	720	0.0568	125.8386	GEN652556 2-OAHE
FDNS	00NR	0	17SP	G15_054	TO->FROM	GR ISLD-LNX3345.00 - HOLT.CO3 345.00 345KV CKT 1	720	720	0.0568	125.8386	GEN652558 6-OAHE
FDNS	00NR	0	17SP	G15_054	TO->FROM	GR ISLD-LNX3345.00 - HOLT.CO3 345.00 345KV CKT 1	720	720	0.0568	125.8302	GEN600004 2-PRAIRIE ISLAND G2
FDNS	00NR	0	17SP	G15_054	TO->FROM	GR ISLD-LNX3345.00 - HOLT.CO3 345.00 345KV CKT 1	720	720	0.0568	125.8258	GEN600003 1-PRAIRIE ISLAND G1
FDNS	00NR	0	17SP	G15_054	TO->FROM	GR ISLD-LNX3345.00 - HOLT.CO3 345.00 345KV CKT 1	720	720	0.0568	125.7543	GEN659141 1-K10215A
FDNS	00NR	0	17SP	G15_054	TO->FROM	GR ISLD-LNX3345.00 - HOLT.CO3 345.00 345KV CKT 1	720	720	0.0568	125.7028	GEN659110 1-LELAND OLDS UNIT1
FDNS	00NR	0	17SP	G15_054	TO->FROM	GR ISLD-LNX3345.00 - HOLT.CO3 345.00 345KV CKT 1	720	720	0.0568	125.6962	GEN657749 1-YOUNG 1 GENERATOR
FDNS	00NR	0	17SP	G15_054	TO->FROM	GR ISLD-LNX3345.00 - HOLT.CO3 345.00 345KV CKT 1	720	720	0.0568	125.5053	GEN652173 1-G09_001IS_2 0.6900
FDNS	00NR	0	17SP	G15_054	TO->FROM	GR ISLD-LNX3345.00 - HOLT.CO3 345.00 345KV CKT 1	720	720	0.0568	125.5016	GEN600006 1-AS KING
FDNS	00NR	0	17SP	G15_054	TO->FROM	GR ISLD-LNX3345.00 - HOLT.CO3 345.00 345KV CKT 1	720	720	0.0568	125.1933	GEN659407 1-ANTELPHILLSW0.6900
FDNS	00NR	0	17SP	G15_054	TO->FROM	GR ISLD-LNX3345.00 - HOLT.CO3 345.00 345KV CKT 1	720	720	0.0568	124.9041	GEN600005 1-MONTICELLO
FDNS	00NR	0	17SP	G15_054	TO->FROM	GR ISLD-LNX3345.00 - HOLT.CO3 345.00 345KV CKT 1	720	720	0.0568	124.2121	GEN600000 1-SHERBURNECNTY G1
FDNS	00NR	0	17SP	G15_054	TO->FROM	GR ISLD-LNX3345.00 - HOLT.CO3 345.00 345KV CKT 1	720	720	0.0568	123.8	GEN600001 2-SHERBURNE CNTY G2
FDNS	00NR	0	17SP	G15_054	TO->FROM	GR ISLD-LNX3345.00 - HOLT.CO3 345.00 345KV CKT 1	720	720	0.0568	123.5969	GEN620315 1-BIG STONE GEN
FDNS	00NR	0	17SP	G15_054	TO->FROM	GR ISLD-LNX3345.00 - HOLT.CO3 345.00 345KV CKT 1	720	720	0.0568	123.5494	GEN661015 1-COYOTE
FDNS	00NR	0	17SP	G15_054	TO->FROM	GR ISLD-LNX3345.00 - HOLT.CO3 345.00 345KV CKT 1	720	720	0.0568	123.1323	GEN657748 1-YOUNG 2 GENERATOR
FDNS	00NR	0	17SP	G15_054	TO->FROM	GR ISLD-LNX3345.00 - HOLT.CO3 345.00 345KV CKT 1	720	720	0.0568	122.9992	GEN600002 3-SHERBURNE CNTY G3
FDNS	00NR	0	17SP	G15_054	TO->FROM	GR ISLD-LNX3345.00 - HOLT.CO3 345.00 345KV CKT 1	720	720	0.0568	122.7475	GEN562872 1-G15046_3 0.6900
FDNS	00NR	0	17SP	G15_054	TO->FROM	GR ISLD-LNX3345.00 - HOLT.CO3 345.00 345KV CKT 1	720	720	0.06504	122.5669	MCCOOL - MOORE 345KV CKT 1
FDNS	00NR	0	17SP	G15_054	TO->FROM	GR ISLD-LNX3345.00 - HOLT.CO3 345.00 345KV CKT 1	720	720	0.0568	122.4481	GEN659111 2-LELAND OLDS UNIT2
FDNS	00NR	0	17SP	G15_054	TO->FROM	GR ISLD-LNX3345.00 - HOLT.CO3 345.00 345KV CKT 1	720	720	0.0568	121.9741	GEN659103 1-ANTELOPE VALLEY UNIT1
FDNS	00NR	0	17SP	G15_054	TO->FROM	GR ISLD-LNX3345.00 - HOLT.CO3 345.00 345KV CKT 1	720	720	0.0568	121.9741	GEN659107 2-ANTELOPE VALLEY UNIT2
FDNS	00NR	0	17SP	G15_054	TO->FROM	GR ISLD-LNX3345.00 - HOLT.CO3 345.00 345KV CKT 1	720	720	0.0568	121.0129	GEN659125 1-COVEY
FDNS	00NR	0	17SP	G15_054	TO->FROM	GR ISLD-LNX3345.00 - HOLT.CO3 345.00 345KV CKT 1	720	720	0.05645	121.0104	FTTHOM1-LNX3345.00 - LELAND2-LNX3345.00 345KV CKT 1
FDNS	00NR	0	20SP	G15_054	TO->FROM	GR ISLD-LNX3345.00 - HOLT.CO3 345.00 345KV CKT 1	720	720	0.05321	120.7555	HOLT.CO3 345.00 - THEDFRD3 345.00 345KV CKT 1
FDNS	00NR	0	17SP	G15_054	TO->FROM	GR ISLD-LNX3345.00 - HOLT.CO3 345.00 345KV CKT 1	720	720	0.05645	120.734	P12:345:UMZB:# 108 #: LOS FT IN ND. LOS FT
FDNS	00NR	0	17SP	G15_054	TO->FROM	GR ISLD-LNX3345.00 - HOLT.CO3 345.00 345KV CKT 1	720	720	0.05645	120.7228	FT THOMPSON - FTTHOM1-LNX3345.00 345KV CKT Z
FDNS	00NR	0	25SP	G15_054	TO->FROM	GR ISLD-LNX3345.00 - HOLT.CO3 345.00 345KV CKT 1	720	720	0.05411	120.5692	HOLT.CO3 345.00 - THEDFRD3 345.00 345KV CKT 1

SOLUTION	GROUP	SCENARIO	SEASON	SOURCE	DIRECTION	MONITORED ELEMENT	RATEA (MVA)	RATEB(MVA)	TDF	TC%LOADING (% MVA)	CONTINGENCY
FDNS	00NR	0	17SP	G15_054	TO->FROM	GR ISLD-LNX3345.00 - HOLT.CO3 345.00 345KV CKT 1	720	720	0.05645	120.4702	LELAND OLDS - LELAND2-LNX3345.00 345KV CKT Z
FDNS	00NR	0	17SP	G15_054	TO->FROM	GR ISLD-LNX3345.00 - HOLT.CO3 345.00 345KV CKT 1	720	720	0.0568	120.2926	GEN615001 1-COAL CREEK
FDNS	00NR	0	17SP	G15_054	TO->FROM	GR ISLD-LNX3345.00 - HOLT.CO3 345.00 345KV CKT 1	720	720	0.0568	120.1676	GEN615002 2-COAL CREEK
FDNS	00NR	0	17SP	G15_054	TO->FROM	GR ISLD-LNX3345.00 - HOLT.CO3 345.00 345KV CKT 1	720	720	0.06577	119.171	GRAND ISLAND - MCCOOL 345KV CKT 1
FDNS	00NR	0	17SP	G15_054	TO->FROM	GR ISLD-LNX3345.00 - HOLT.CO3 345.00 345KV CKT 1	720	720	0.0568	113.5207	GEN562714 1-G15_023_4 0.6900
FDNS	00NR	0	17SP	G15_054	TO->FROM	GR ISLD-LNX3345.00 - HOLT.CO3 345.00 345KV CKT 1	720	720	0.0568	113.5207	GEN562715 1-G15_023_5 0.6900
FDNS	00NR	0	20SP	G15_054	TO->FROM	GR ISLD-LNX3345.00 - HOLT.CO3 345.00 345KV CKT 1	720	720	0.05543	111.0854	GERALD GENTLEMAN STATION - THEDFRD3 345.00 345KV CKT 1
FDNS	00NR	0	25SP	G15_054	TO->FROM	GR ISLD-LNX3345.00 - HOLT.CO3 345.00 345KV CKT 1	720	720	0.05659	110.4541	GERALD GENTLEMAN STATION - THEDFRD3 345.00 345KV CKT 1
FDNS	00NR	0	17SP	G15_054	TO->FROM	GR ISLD-LNX3345.00 - HOLT.CO3 345.00 345KV CKT 1	720	720	0.0568	107.2839	GEN652353 2-GR PRAIRIEG 0.6900
FDNS	00NR	0	16WP	G15_054	TO->FROM	GR ISLD-LNX3345.00 - HOLT.CO3 345.00 345KV CKT 1	720	720	0.05613	101.7905	KELLY - MEADOWGROVE4230.00 230KV CKT 1
FDNS	00NR	0	16WP	G15_054	TO->FROM	GR ISLD-LNX3345.00 - HOLT.CO3 345.00 345KV CKT 1	720	720	0.0539	101.2023	P12:230:UMZB:# 116 #: ST IN SD. WSG-ST-VH
FDNS	00NR	0	16WP	G15_054	TO->FROM	GR ISLD-LNX3345.00 - HOLT.CO3 345.00 345KV CKT 1	720	720	0.05392	100.6073	STORLA - WESSINGTON 230KV CKT 1
FDNS	00NR	0	16WP	G15_054	TO->FROM	GR ISLD-LNX3345.00 - HOLT.CO3 345.00 345KV CKT 1	720	720	0.05542	100.1903	ROSEAU - ROSEAUM 2 500.00 500KV CKT 1
FDNS	00NR	0	16WP	G15_054	TO->FROM	GR ISLD-LNX3345.00 - HOLT.CO3 345.00 345KV CKT 1	720	720	0.05446	99.6	HANLON - STORLA 230KV CKT 1
FDNS	09ALL	0	17SP	G15_054	FROM->TO	PETERSBRG.N7115.00 - PETERSBURG 115KV CKT Z1	137	137	0.22055	112.6372	ANTELOPE 3345.00 - HOSKINS 345KV CKT 1
FDNS	09ALL	0	17SP	G15_054	FROM->TO	PETERSBRG.N7115.00 - PETERSBURG 115KV CKT Z1	137	137	0.22055	112.5538	ANTELOPE 3345.00 (ANTELOPE T1) 345/115/13.8KV TRANSFORMER CKT 1
FDNS	09ALL	0	17G	G15_054	FROM->TO	PETERSBRG.N7115.00 - PETERSBURG 115KV CKT Z1	137	137	0.22023	107.0639	ANTELOPE 3345.00 (ANTELOPE T1) 345/115/13.8KV TRANSFORMER CKT 1
FDNS	09ALL	0	17G	G15_054	FROM->TO	PETERSBRG.N7115.00 - PETERSBURG 115KV CKT Z1	137	137	0.22023	107.0523	ANTELOPE 3345.00 - HOSKINS 345KV CKT 1
FDNS	09ALL	0	16WP	G15_054	FROM->TO	PETERSBRG.N7115.00 - PETERSBURG 115KV CKT Z1	137	137	0.21991	106.9034	ANTELOPE 3345.00 - HOSKINS 345KV CKT 1
FDNS	09ALL	0	16WP	G15_054	FROM->TO	PETERSBRG.N7115.00 - PETERSBURG 115KV CKT Z1	137	137	0.21991	106.8471	ANTELOPE 3345.00 (ANTELOPE T1) 345/115/13.8KV TRANSFORMER CKT 1
FDNS	09ALL	0	20SP	G15_054	FROM->TO	PETERSBRG.N7115.00 - PETERSBURG 115KV CKT Z1	137	137	0.22347	103.1009	ANTELOPE 3345.00 (ANTELOPE T1) 345/115/13.8KV TRANSFORMER CKT 1
FDNS	09ALL	0	20SP	G15_054	FROM->TO	PETERSBRG.N7115.00 - PETERSBURG 115KV CKT Z1	137	137	0.22347	103.0971	ANTELOPE 3345.00 - HOSKINS 345KV CKT 1
FDNS	09ALL	0	25SP	G15_054	FROM->TO	PETERSBRG.N7115.00 - PETERSBURG 115KV CKT Z1	137	137	0.22361	103.0257	ANTELOPE 3345.00 - HOSKINS 345KV CKT 1
FDNS	09ALL	0	25SP	G15_054	FROM->TO	PETERSBRG.N7115.00 - PETERSBURG 115KV CKT Z1	137	137	0.22361	102.9604	ANTELOPE 3345.00 (ANTELOPE T1) 345/115/13.8KV TRANSFORMER CKT 1
FDNS	00NR	0	17SP	G15_054	TO->FROM	SIDNEY - SIDNEY TRANSFORMER 230KV CKT 1	400	400	0.03657	120.8827	KEYSTONE - SIDNEY1-LNX3345.00 345KV CKT 1
FDNS	00NR	0	17SP	G15_054	TO->FROM	SIDNEY - SIDNEY TRANSFORMER 230KV CKT 1	400	400	0.03657	120.2355	SIDNEY - SIDNEY1-LNX3345.00 345KV CKT Z
FDNSLock	00NR	0	20SP	G15_054	TO->FROM	SIDNEY - SIDNEY TRANSFORMER 230KV CKT 1	400	400	0.03075	111.0053	KEYSTONE - SIDNEY1-LNX3345.00 345KV CKT 1
FDNS	00NR	0	20SP	G15_054	TO->FROM	SIDNEY - SIDNEY TRANSFORMER 230KV CKT 1	400	400	0.03075	109.8896	SIDNEY - SIDNEY1-LNX3345.00 345KV CKT Z
FDNS	00NR	0	25SP	G15_054	TO->FROM	SIDNEY - SIDNEY TRANSFORMER 230KV CKT 1	400	400	0.03052	109.6285	KEYSTONE - SIDNEY1-LNX3345.00 345KV CKT 1
FDNS	00NR	0	25SP	G15_054	TO->FROM	SIDNEY - SIDNEY TRANSFORMER 230KV CKT 1	400	400	0.03052	109.1934	SIDNEY - SIDNEY1-LNX3345.00 345KV CKT Z
FDNS	00NR	0	17SP	G15_054	FROM->TO	SIDNEY (SDQ KV2A) 345/230/13.8KV TRANSFORMER CKT 1	400	480	0.03657	102.6537	KEYSTONE - SIDNEY1-LNX3345.00 345KV CKT 1
FDNS	00NR	0	17SP	G15_054	FROM->TO	SIDNEY (SDQ KV2A) 345/230/13.8KV TRANSFORMER CKT 1	400	480	0.03657	102.2384	SIDNEY - SIDNEY1-LNX3345.00 345KV CKT Z
FDNS	00NR	0	17SP	G15_054	FROM->TO	SIDNEY (SDQ KV2A) 345/230/13.8KV TRANSFORMER CKT 1	400	480	0.03657	102.023	KEYSTONE - SIDNEY1-LNX3345.00 345KV CKT 1
FDNS	00NR	0	17SP	G15_054	FROM->TO	SIDNEY (SDQ KV2A) 345/230/13.8KV TRANSFORMER CKT 1	400	480	0.03657	101.9841	SIDNEY - SIDNEY1-LNX3345.00 345KV CKT Z
FDNS	09NR	0	20L	G15_054	TO->FROM	SIOUX CITY - TWIN CHURCH 230KV CKT 1	320	320	0.1418	118.8338	HOSKINS - RAUN 345KV CKT 1
FDNS	09NR	0	20L	G15_054	TO->FROM	SIOUX CITY - TWIN CHURCH 230KV CKT 1	320	320	0.1418	118.8338	HOSKINS - RAUN 345KV CKT 1
FDNS	09NR	0	20L	G15_054	TO->FROM	SIOUX CITY - TWIN CHURCH 230KV CKT 1	320	320	0.07564	116.7538	P13:230-345:NPPD:NUCOR-1
FDNS	09NR	0	20L	G15_054	TO->FROM	SIOUX CITY - TWIN CHURCH 230KV CKT 1	320	320	0.06752	109.1989	HOSKINS (HOSKINS T2) 345/230/13.8KV TRANSFORMER CKT 1
FDNS	09NR	0	20L	G15_054	TO->FROM	SIOUX CITY - TWIN CHURCH 230KV CKT 1	320	320	0.06752	109.1989	HOSKINS (HOSKINS T2) 345/230/13.8KV TRANSFORMER CKT 1
FDNS	09NR	0	17G	G15_054	TO->FROM	SIOUX CITY - TWIN CHURCH 230KV CKT 1	320	320	0.14182	107.634	HOSKINS - RAUN 345KV CKT 1
FDNS	09ALL	0	20L	G15_054	TO->FROM	SIOUX CITY - TWIN CHURCH 230KV CKT 1	320	320	0.08846	106.9	BASE CASE
FDNS	09NR	0	20L	G15_054	TO->FROM	SIOUX CITY - TWIN CHURCH 230KV CKT 1	320	320	0.08082	104.5829	EMERSON - TWIN CHURCH 115KV CKT 1
FDNS	09NR	0	20L	G15_054	TO->FROM	SIOUX CITY - TWIN CHURCH 230KV CKT 1	320	320	0.07522	103.9487	RAUN - SIOUX CITY 345KV CKT 1
FDNS	09NR	0	20L	G15_054	TO->FROM	SIOUX CITY - TWIN CHURCH 230KV CKT 1	320	320	0.07522	103.9487	RAUN - SIOUX CITY 345KV CKT 1
FDNS	09NR	0	17G	G15_054	TO->FROM	SIOUX CITY - TWIN CHURCH 230KV CKT 1	320	320	0.07547	103.8597	P13:230-345:NPPD:NUCOR-1
FDNS	09NR	0	20L	G15_054	TO->FROM	SIOUX CITY - TWIN CHURCH 230KV CKT 1	320	320	0.08847	103.2762	GAVINS POINT - YANKON JCT 115KV CKT 1
FDNS	09NR	0	20L	G15_054	TO->FROM	SIOUX CITY - TWIN CHURCH 230KV CKT 1	320	320	0.08847	103.2762	GAVINS POINT - YANKON JCT 115KV CKT 1
FDNS	09NR	0	20L	G15_054	TO->FROM	SIOUX CITY - TWIN CHURCH 230KV CKT 1	320	320	0.11196	102.8531	HOSKINS - SHELL CREEK 345KV CKT 1
FDNS	09NR	0	20L	G15_054	TO->FROM	SIOUX CITY - TWIN CHURCH 230KV CKT 1	320	320	0.07564	102.8276	P13:115-230:NPPD:NUCOR-3
FDNS	09NR	0	20L	G15_054	TO->FROM	SIOUX CITY - TWIN CHURCH 230KV CKT 1	320	320	0.09242	102.0204	COLUMEAST - NW68TH & HOLDREGE 345KV CKT 1
FDNS	09NR	0	20L	G15_054	TO->FROM	SIOUX CITY - TWIN CHURCH 230KV CKT 1	320	320	0.09242	102.0204	COLUMEAST - NW68TH & HOLDREGE 345KV CKT 1
FDNS	09NR	0	20L	G15_054	TO->FROM	SIOUX CITY - TWIN CHURCH 230KV CKT 1	320	320	0.08985	101.2752	COLUMEAST - SHELL CREEK 345KV CKT 1
FDNS	09NR	0	20L	G15_054	TO->FROM	SIOUX CITY - TWIN CHURCH 230KV CKT 1	320	320	0.08082	101.1718	P12:115:NPPD:1193:OAKLAND7:EMERSON7:BTB
FDNS	09NR	0	20L	G15_054	TO->FROM	SIOUX CITY - TWIN CHURCH 230KV CKT 1	320	320	0.08082	101.1409	BANCROFT - EMERSON 115KV CKT 1
FDNS	09NR	0	20L	G15_054	TO->FROM	SIOUX CITY - TWIN CHURCH 230KV CKT 1	320	320	0.07351	101.055	BELDEN - HARTINGTON 115KV CKT 1
FDNS	09NR	0	20L	G15_054	TO->FROM	SIOUX CITY - TWIN CHURCH 230KV CKT 1	320	320	0.07268	100.9543	FT THOMPSON - FTTHOM2-LNX3345.00 345KV CKT Z
FDNS	09NR	0	20L	G15_054	TO->FROM	SIOUX CITY - TWIN CHURCH 230KV CKT 1	320	320	0.07268	100.9451	GRPRAR2-LNX3345.00 - YANKTON 345KV CKT Z
FDNS	09NR	0	20L	G15_054	TO->FROM	SIOUX CITY - TWIN CHURCH 230KV CKT 1	320	320	0.07268	100.9421	FTTHOM2-LNX3345.00 - GRPRAR2-LNX3345.00 345KV CKT 1
FDNS	09NR	0	20L	G15_054	TO->FROM	SIOUX CITY - TWIN CHURCH 230KV CKT 1	320	320	0.07564	100.655	P13:115-345:NPPD:NUCOR-2
FDNS	09NR	0	20L	G15_054	TO->FROM	SIOUX CITY - TWIN CHURCH 230KV CKT 1	320	320	0.08363	100.3978	NAPA JCT7 115.00 - YANKON JCT 115KV CKT 1
FDNS	09NR	0	20L	G15_054	TO->FROM	SIOUX CITY - TWIN CHURCH 230KV CKT 1	320	320	0.08363	100.3978	NAPA JCT7 115.00 - YANKON JCT 115KV CKT 1
FDNS	09NR	0	20L	G15_054	TO->FROM	SIOUX CITY - TWIN CHURCH 230KV CKT 1	320	320	0.08363	100.3953	P12:115:UMZW:# 1910 #: YJ IN SD. YJ-UJ LINE FAULT
FDNS	09NR	0	20L	G15_054	TO->FROM	SIOUX CITY - TWIN CHURCH 230KV CKT 1	320	320	0.08363	100.3952	NAPA JCT7 115.00 - UTICA 115KV CKT 1
FDNS	09NR	0	20L	G15_054	TO->FROM	SIOUX CITY - TWIN CHURCH 230KV CKT 1	320	320	0.08363	100.3952	NAPA JCT7 115.00 - UTICA 115KV CKT 1
FDNS	09NR	0	20L	G15_054	TO->FROM	SIOUX CITY - TWIN CHURCH 230KV CKT 1	320	320	0.08082	100.2298	BANCROFT - OAKLAND 115KV CKT 1
FDNS	09NR	0	20L	G15_054	TO->FROM	SIOUX CITY - TWIN CHURCH 230KV CKT 1	320	320	0.07564	99.9	SHERBURNE CO 345/24.0KV TRANSFORMER CKT 1
FDNS	09NR	0	20L	G15_054	TO->FROM	SIOUX CITY - TWIN CHURCH 230KV CKT 1	320	320	0.07564	99.8	GEN600002 3-SHERBURNE CNTY G3
FDNS	09NR	0	20L	G15_054	TO->FROM	SIOUX CITY - TWIN CHURCH 230KV CKT 1	320	320	0.07321	99.8	BELDEN - HOSKINS 115KV CKT 1
FDNS	09NR	0	20L	G15_054	TO->FROM	SIOUX CITY - TWIN CHURCH 230KV CKT 1	320	320	0.07564	99.5	BIG STONE 230/24.0KV TRANSFORMER CKT 1
FDNS	09ALL	2	17SP	G15_054	TO->FROM	ALBION - PETERSBURG 115KV CKT 1	137	137	0.21792	109.1085	ANTELOPE 3345.00 (ANTELOPE T1) 345/115/13.8KV TRANSFORMER CKT 1
FDNS	09ALL	2	17SP	G15_054	TO->FROM	ALBION - PETERSBURG 115KV CKT 1	137	137	0.21792	109.1016	ANTELOPE 3345.00 - HOSKINS 345KV CKT 1
FDNS	09ALL	2	17G	G15_054	TO->FROM	ALBION - PETERSBURG 115KV CKT 1	137	137	0.21763	105.3726	ANTELOPE 3345.00 - HOSKINS 345KV CKT 1
FDNS	09ALL	2	17G	G15_054	TO->FROM	ALBION - PETERSBURG 115KV CKT 1	137	137	0.21763	105.323	ANTELOPE 3345.00 (ANTELOPE T1) 345/115/13.8KV TRANSFORMER CKT 1
FDNS	09ALL	2	16WP	G15_054	TO->FROM	ALBION - PETERSBURG 115KV CKT 1	137	137	0.21733	105.2663	ANTELOPE 3345.00 - HOSKINS 345KV CKT 1
FDNS	09ALL	2	16WP	G15_054	TO->FROM	ALBION - PETERSBURG 115KV CKT 1	137	137	0.21733	105.2189	ANTELOPE 3345.00 (ANTELOPE T1) 345/115/13.8KV TRANSFORMER CKT 1
FDNS	09ALL	2	17G	G15_054	FROM->TO	ANTELOPE 7115.00 - COUNTY LINE 115KV CKT 1	193	193	0.41234	105.3379	ANTELOPE 3345.00 (ANTELOPE T1) 345/115/13.8KV TRANSFORMER CKT 1
FDNS	09ALL	2	17G	G15_054	FROM->TO	ANTELOPE 7115.00 - COUNTY LINE 115KV CKT 1	193	193	0.41234	105.2834	ANTELOPE 3345.00 - HOSKINS 345KV CKT 1
FDNS	09ALL	2	16WP	G15_054	FROM->TO	ANTELOPE 7115.00 - COUNTY LINE 115KV CKT 1	193	193	0.41201	101.4254	ANTELOPE 3345.00 (ANTELOPE T1) 345/115/13.8KV TRANSFORMER CKT 1
FDNS	09ALL	2	16WP	G15_054	FROM->TO	ANTELOPE 7115.00 - COUNTY LINE 115KV CKT 1	193	193	0.41201	101.3914	ANTELOPE 3345.00 - HOSKINS 345KV CKT 1

SOLUTION	GROUP	SCENARIO	SEASON	SOURCE	DIRECTION	MONITORED ELEMENT	RATEA (MVA)	RATEB(MVA)	TDF	TC%LOADING (% MVA)	CONTINGENCY
FDNS	09ALL	2	17G	G15_054	TO->FROM	BATTLE CREEK - COUNTY LINE 115KV CKT 1	193	193	0.41234	104.9576	ANTELOPE 3345.00 (ANTELOPE T1) 345/115/13.8KV TRANSFORMER CKT 1
FDNS	09ALL	2	17G	G15_054	TO->FROM	BATTLE CREEK - COUNTY LINE 115KV CKT 1	193	193	0.41234	104.9026	ANTELOPE 3345.00 - HOSKINS 345KV CKT 1
FDNS	09ALL	2	16WP	G15_054	TO->FROM	BATTLE CREEK - COUNTY LINE 115KV CKT 1	193	193	0.41201	101.1019	ANTELOPE 3345.00 (ANTELOPE T1) 345/115/13.8KV TRANSFORMER CKT 1
FDNS	09ALL	2	16WP	G15_054	TO->FROM	BATTLE CREEK - COUNTY LINE 115KV CKT 1	193	193	0.41201	101.0669	ANTELOPE 3345.00 - HOSKINS 345KV CKT 1
FDNS	09ALL	2	17G	G15_054	FROM->TO	BATTLE CREEK - NORTH NORFOLK 115KV CKT 1	193	193	0.41234	101.5599	ANTELOPE 3345.00 (ANTELOPE T1) 345/115/13.8KV TRANSFORMER CKT 1
FDNS	09ALL	2	17G	G15_054	FROM->TO	BATTLE CREEK - NORTH NORFOLK 115KV CKT 1	193	193	0.41234	101.5079	ANTELOPE 3345.00 - HOSKINS 345KV CKT 1
FDNS	09ALL	2	20L	G15_054	FROM->TO	BLOOMFIELD - GAVINS POINT 115KV CKT 1	120	120	0.19838	116.0575	ANTELOPE 3345.00 - HOSKINS 345KV CKT 1
FDNS	09ALL	2	20L	G15_054	FROM->TO	BLOOMFIELD - GAVINS POINT 115KV CKT 1	120	120	0.19838	116.0486	ANTELOPE 3345.00 (ANTELOPE T1) 345/115/13.8KV TRANSFORMER CKT 1
FDNS	09ALL	2	17G	G15_054	FROM->TO	BLOOMFIELD - GAVINS POINT 115KV CKT 1	120	120	0.19811	110.3787	ANTELOPE 3345.00 (ANTELOPE T1) 345/115/13.8KV TRANSFORMER CKT 1
FDNS	09ALL	2	17G	G15_054	FROM->TO	BLOOMFIELD - GAVINS POINT 115KV CKT 1	120	120	0.19811	110.3553	ANTELOPE 3345.00 - HOSKINS 345KV CKT 1
FDNS	09ALL	2	16WP	G15_054	FROM->TO	BLOOMFIELD - GAVINS POINT 115KV CKT 1	120	120	0.19831	105.8679	ANTELOPE 3345.00 (ANTELOPE T1) 345/115/13.8KV TRANSFORMER CKT 1
FDNS	09ALL	2	16WP	G15_054	FROM->TO	BLOOMFIELD - GAVINS POINT 115KV CKT 1	120	120	0.19831	105.8441	ANTELOPE 3345.00 - HOSKINS 345KV CKT 1
FDNS	09ALL	2	20WP	G15_054	FROM->TO	BLOOMFIELD - GAVINS POINT 115KV CKT 1	120	120	0.19709	103.7213	ANTELOPE 3345.00 (ANTELOPE T1) 345/115/13.8KV TRANSFORMER CKT 1
FDNS	09ALL	2	20WP	G15_054	FROM->TO	BLOOMFIELD - GAVINS POINT 115KV CKT 1	120	120	0.19709	103.7167	ANTELOPE 3345.00 - HOSKINS 345KV CKT 1
FDNS	00NR	2	17SP	G15_054	FROM->TO	GR ISLD-LNX3345.00 - GRAND ISLAND 345KV CKT Z	720	720	0.05595	130.1603	CHERRYC3 345.00 - HOLT.CO3 345.00 345KV CKT 1
FDNS	00NR	2	17SP	G15_054	FROM->TO	GR ISLD-LNX3345.00 - GRAND ISLAND 345KV CKT Z	720	720	0.0576	120.1656	CHERRYC3 345.00 - GERALD GENTLEMAN STATION 345KV CKT 1
FDNS	00NR	2	17SP	G15_054	TO->FROM	GR ISLD-LNX3345.00 - HOLT.CO3 345.00 345KV CKT 1	720	720	0.05595	129.1944	CHERRYC3 345.00 - HOLT.CO3 345.00 345KV CKT 1
FDNS	00NR	2	17SP	G15_054	TO->FROM	GR ISLD-LNX3345.00 - HOLT.CO3 345.00 345KV CKT 1	720	720	0.0576	119.2756	CHERRYC3 345.00 - GERALD GENTLEMAN STATION 345KV CKT 1
FDNS	09ALL	2	17SP	G15_054	FROM->TO	PETERSBRG.N7115.00 - PETERSBURG 115KV CKT Z1	137	137	0.21792	113.2153	ANTELOPE 3345.00 (ANTELOPE T1) 345/115/13.8KV TRANSFORMER CKT 1
FDNS	09ALL	2	17SP	G15_054	FROM->TO	PETERSBRG.N7115.00 - PETERSBURG 115KV CKT Z1	137	137	0.21792	113.2152	ANTELOPE 3345.00 - HOSKINS 345KV CKT 1
FDNS	09ALL	2	16WP	G15_054	FROM->TO	PETERSBRG.N7115.00 - PETERSBURG 115KV CKT Z1	137	137	0.21733	106.675	ANTELOPE 3345.00 - HOSKINS 345KV CKT 1
FDNS	09ALL	2	16WP	G15_054	FROM->TO	PETERSBRG.N7115.00 - PETERSBURG 115KV CKT Z1	137	137	0.21733	106.6293	ANTELOPE 3345.00 (ANTELOPE T1) 345/115/13.8KV TRANSFORMER CKT 1
FDNS	09ALL	2	17G	G15_054	FROM->TO	PETERSBRG.N7115.00 - PETERSBURG 115KV CKT Z1	137	137	0.21763	106.1739	ANTELOPE 3345.00 - HOSKINS 345KV CKT 1
FDNS	09ALL	2	17G	G15_054	FROM->TO	PETERSBRG.N7115.00 - PETERSBURG 115KV CKT Z1	137	137	0.21763	106.1253	ANTELOPE 3345.00 (ANTELOPE T1) 345/115/13.8KV TRANSFORMER CKT 1
FDNS	09ALL	2	20SP	G15_054	FROM->TO	PETERSBRG.N7115.00 - PETERSBURG 115KV CKT Z1	137	137	0.22222	102.8833	ANTELOPE 3345.00 - HOSKINS 345KV CKT 1
FDNS	09ALL	2	25SP	G15_054	FROM->TO	PETERSBRG.N7115.00 - PETERSBURG 115KV CKT Z1	137	137	0.22236	102.7995	ANTELOPE 3345.00 - HOSKINS 345KV CKT 1
FDNS	09ALL	2	25SP	G15_054	FROM->TO	PETERSBRG.N7115.00 - PETERSBURG 115KV CKT Z1	137	137	0.22236	102.7756	ANTELOPE 3345.00 (ANTELOPE T1) 345/115/13.8KV TRANSFORMER CKT 1
FDNS	09ALL	2	20SP	G15_054	FROM->TO	PETERSBRG.N7115.00 - PETERSBURG 115KV CKT Z1	137	137	0.22222	102.7653	ANTELOPE 3345.00 (ANTELOPE T1) 345/115/13.8KV TRANSFORMER CKT 1
FDNS	00NR	2	17SP	G15_054	TO->FROM	SIDNEY - SIDNEY TRANSFORMER 230KV CKT 1	400	400	0.03143	118.7101	KEYSTONE - SIDNEY1-LNX3345.00 345KV CKT 1
FDNS	00NR	2	17SP	G15_054	TO->FROM	SIDNEY - SIDNEY TRANSFORMER 230KV CKT 1	400	400	0.03143	118.2146	SIDNEY - SIDNEY1-LNX3345.00 345KV CKT Z
FDNS	00NR	2	17SP	G15_054	FROM->TO	SIDNEY (SDQ KV2A) 345/230/13.8KV TRANSFORMER CKT 1	400	480	0.03143	100.8156	KEYSTONE - SIDNEY1-LNX3345.00 345KV CKT 1
FDNS	00NR	2	17SP	G15_054	FROM->TO	SIDNEY (SDQ KV2A) 345/230/13.8KV TRANSFORMER CKT 1	400	480	0.03143	100.5215	SIDNEY - SIDNEY1-LNX3345.00 345KV CKT Z
FDNS	00NR	2	17SP	G15_054	FROM->TO	SIDNEY (SDQ KV2A) 345/230/13.8KV TRANSFORMER CKT 1	400	480	0.03143	100.2736	SIDNEY - SIDNEY1-LNX3345.00 345KV CKT Z
FDNS	00NR	2	17SP	G15_054	FROM->TO	SIDNEY (SDQ KV2A) 345/230/13.8KV TRANSFORMER CKT 1	400	480	0.03143	100.213	KEYSTONE - SIDNEY1-LNX3345.00 345KV CKT 1
FDNS	09ALL	3	20L	G15_054	FROM->TO	BLOOMFIELD - GAVINS POINT 115KV CKT 1	120	120	0.19795	116.7987	ANTELOPE 3345.00 (ANTELOPE T1) 345/115/13.8KV TRANSFORMER CKT 1
FDNS	09ALL	3	17G	G15_054	FROM->TO	BLOOMFIELD - GAVINS POINT 115KV CKT 1	120	120	0.19763	111.6641	ANTELOPE 3345.00 (ANTELOPE T1) 345/115/13.8KV TRANSFORMER CKT 1
FDNS	09ALL	3	16WP	G15_054	FROM->TO	BLOOMFIELD - GAVINS POINT 115KV CKT 1	120	120	0.19782	107.4016	ANTELOPE 3345.00 (ANTELOPE T1) 345/115/13.8KV TRANSFORMER CKT 1
FDNS	09ALL	3	20WP	G15_054	FROM->TO	BLOOMFIELD - GAVINS POINT 115KV CKT 1	120	120	0.19666	105.1367	ANTELOPE 3345.00 (ANTELOPE T1) 345/115/13.8KV TRANSFORMER CKT 1
FDNS	00NR	3	17SP	G15_054	FROM->TO	COLUMEAST (COL.EAST T3) 230/115/13.8KV TRANSFORMER CKT 1	187	187	0.03499	109.6271	COLUMEAST - SHELL CREEK 345KV CKT 1
FDNS	00NR	3	17SP	G15_054	FROM->TO	COLUMEAST (COL.EAST T3) 230/115/13.8KV TRANSFORMER CKT 1	187	187	0.03499	108.958	COLUMEAST - SHELL CREEK 345KV CKT 1
FDNS	00NR	3	20SP	G15_054	FROM->TO	COLUMEAST (COL.EAST T3) 230/115/13.8KV TRANSFORMER CKT 1	187	187	0.03564	106.2219	COLUMEAST - SHELL CREEK 345KV CKT 1
FDNS	00NR	3	20SP	G15_054	FROM->TO	COLUMEAST (COL.EAST T3) 230/115/13.8KV TRANSFORMER CKT 1	187	187	0.03564	105.4771	COLUMEAST - SHELL CREEK 345KV CKT 1
FDNS	00NR	3	25SP	G15_054	FROM->TO	COLUMEAST (COL.EAST T3) 230/115/13.8KV TRANSFORMER CKT 1	187	187	0.03523	102.789	COLUMEAST - SHELL CREEK 345KV CKT 1
FDNS	00NR	3	16WP	G15_054	FROM->TO	COLUMEAST (COL.EAST T3) 230/115/13.8KV TRANSFORMER CKT 1	187	187	0.03599	102.2317	COLUMEAST - SHELL CREEK 345KV CKT 1
FDNS	00NR	3	25SP	G15_054	FROM->TO	COLUMEAST (COL.EAST T3) 230/115/13.8KV TRANSFORMER CKT 1	187	187	0.03523	102.1579	COLUMEAST - SHELL CREEK 345KV CKT 1
FDNS	00NR	3	16WP	G15_054	FROM->TO	COLUMEAST (COL.EAST T3) 230/115/13.8KV TRANSFORMER CKT 1	187	187	0.03599	100.6408	COLUMEAST - SHELL CREEK 345KV CKT 1
FDNS	09NR	3	17G	G15_054	FROM->TO	DIXONCO 230.00 - TWIN CHURCH 230KV CKT 1	320	320	0.03285	113.1281	BELDEN 4 230.00 - DIXONCO 230.00 230KV CKT 1
FDNS	09NR	3	17G	G15_054	FROM->TO	DIXONCO 230.00 - TWIN CHURCH 230KV CKT 1	320	320	0.05473	112.169	HOSKINS - RAUN 345KV CKT 1
FDNS	09NR	3	17G	G15_054	FROM->TO	DIXONCO 230.00 - TWIN CHURCH 230KV CKT 1	320	320	0.04123	110.7771	BELDEN 4 230.00 - RASMUSN 230KV CKT 1
FDNS	09NR	3	20L	G15_054	FROM->TO	DIXONCO 230.00 - TWIN CHURCH 230KV CKT 1	320	320	0.03504	109.5223	BELDEN 4 230.00 - DIXONCO 230.00 230KV CKT 1
FDNS	09NR	3	17G	G15_054	FROM->TO	DIXONCO 230.00 - TWIN CHURCH 230KV CKT 1	320	320	0.04062	108.3686	RASMUSN - SIOUX CITY 230KV CKT 1
FDNS	09NR	3	20L	G15_054	FROM->TO	DIXONCO 230.00 - TWIN CHURCH 230KV CKT 1	320	320	0.04353	107.0534	BELDEN 4 230.00 - RASMUSN 230KV CKT 1
FDNS	09NR	3	17G	G15_054	FROM->TO	DIXONCO 230.00 - TWIN CHURCH 230KV CKT 1	320	320	0.03405	106.1555	P13:230-345:NPPD:NUCOR-1
FDNS	09NR	3	20L	G15_054	FROM->TO	DIXONCO 230.00 - TWIN CHURCH 230KV CKT 1	320	320	0.05823	105.1297	HOSKINS - RAUN 345KV CKT 1
FDNS	09NR	3	20L	G15_054	FROM->TO	DIXONCO 230.00 - TWIN CHURCH 230KV CKT 1	320	320	0.05823	105.1297	HOSKINS - RAUN 345KV CKT 1
FDNS	09NR	3	17G	G15_054	FROM->TO	DIXONCO 230.00 - TWIN CHURCH 230KV CKT 1	320	320	0.0384	104.3736	BELDEN - TWIN CHURCH 115KV CKT 1
FDNS	09ALL	3	16WP	G15_054	FROM->TO	DIXONCO 230.00 - TWIN CHURCH 230KV CKT 1	320	320	0.04499	102.408	BASE CASE
FDNS	09NR	3	20L	G15_054	FROM->TO	DIXONCO 230.00 - TWIN CHURCH 230KV CKT 1	320	320	0.03612	102.3299	P13:230-345:NPPD:NUCOR-1
FDNS	09ALL	3	17G	G15_054	FROM->TO	DIXONCO 230.00 - TWIN CHURCH 230KV CKT 1	320	320	0.04492	101.8514	BASE CASE
FDNS	09NR	3	20L	G15_054	FROM->TO	DIXONCO 230.00 - TWIN CHURCH 230KV CKT 1	320	320	0.04312	101.8276	RASMUSN - SIOUX CITY 230KV CKT 1
FDNS	09NR	3	17G	G15_054	FROM->TO	DIXONCO 230.00 - TWIN CHURCH 230KV CKT 1	320	320	0.03405	101.647	P13:115-230:NPPD:NUCOR-3
FDNS	09NR	3	17G	G15_054	FROM->TO	DIXONCO 230.00 - TWIN CHURCH 230KV CKT 1	320	320	0.04543	101.5943	HOSKINS - SHELL CREEK 345KV CKT 1
FDNS	09ALL	3	20WP	G15_054	FROM->TO	DIXONCO 230.00 - TWIN CHURCH 230KV CKT 1	320	320	0.04534	101.541	BASE CASE
FDNS	09NR	3	17G	G15_054	FROM->TO	DIXONCO 230.00 - TWIN CHURCH 230KV CKT 1	320	320	0.04066	100.857	COLUMEAST - NW68TH & HOLDREGE 345KV CKT 1
FDNS	09NR	3	17G	G15_054	FROM->TO	DIXONCO 230.00 - TWIN CHURCH 230KV CKT 1	320	320	0.04066	100.857	COLUMEAST - NW68TH & HOLDREGE 345KV CKT 1
FDNS	09NR	3	17G	G15_054	FROM->TO	DIXONCO 230.00 - TWIN CHURCH 230KV CKT 1	320	320	0.03453	100.4443	HOSKINS (HOSKINS T2) 345/230/13.8KV TRANSFORMER CKT 1
FDNS	09NR	3	17G	G15_054	FROM->TO	DIXONCO 230.00 - TWIN CHURCH 230KV CKT 1	320	320	0.03453	100.4443	HOSKINS (HOSKINS T2) 345/230/13.8KV TRANSFORMER CKT 1
FDNS	09NR	3	17G	G15_054	FROM->TO	DIXONCO 230.00 - TWIN CHURCH 230KV CKT 1	320	320	0.03958	100.3584	COLUMEAST - SHELL CREEK 345KV CKT 1
FDNS	09NR	3	17G	G15_054	FROM->TO	DIXONCO 230.00 - TWIN CHURCH 230KV CKT 1	320	320	0.03482	99.7	FT RANDAL - SIOUX CITY 230KV CKT 1
FDNS	09NR	3	17G	G15_054	FROM->TO	DIXONCO 230.00 - TWIN CHURCH 230KV CKT 1	320	320	0.03203	99.5	RAUN - SIOUX CITY 345KV CKT 1
FDNS	09NR	3	17G	G15_054	FROM->TO	GAVINS POINT - YANKON JCT 115KV CKT 1	120	120	0.04641	100.9065	GAVINS POINT - SPIRIT MOUND 115KV CKT 1
FDNS	09NR	3	17G	G15_054	TO->FROM	GERALD GENTLEMAN STATION - OGALLALA 230KV CKT 1	320	320	0.03448	124.6748	GERALD GENTLEMAN STATION - KEYSTONE 345KV CKT 1
FDNS	00NR	3	16WP	G15_054	TO->FROM	GERALD GENTLEMAN STATION - OGALLALA 230KV CKT 1	320	320	0.03376	119.0451	GERALD GENTLEMAN STATION - KEYSTONE 345KV CKT 1
FDNS	00NR	3	20WP	G15_054	TO->FROM	GERALD GENTLEMAN STATION - OGALLALA 230KV CKT 1	320	320	0.03426	113.4992	GERALD GENTLEMAN STATION - KEYSTONE 345KV CKT 1
FDNS	00NR	3	17SP	G15_054	TO->FROM	GRPRAR1-LNX3345.00 - GRPRAR 345KV CKT Z	720	720	0.0393	110.3176	ANTELOPE 3345.00 (ANTELOPE T1) 345/115/13.8KV TRANSFORMER CKT 1
FDNS	00NR	3	20SP	G15_054	TO->FROM	GRPRAR1-LNX3345.00 - GRPRAR 345KV CKT Z	720	720	0.0395	102.4887	ANTELOPE 3345.00 (ANTELOPE T1) 345/115/13.8KV TRANSFORMER CKT 1
FDNS	00NR	3	25SP	G15_054	TO->FROM	GRPRAR1-LNX3345.00 - GRPRAR 345KV CKT Z	720	720	0.03984	101.5839	ANTELOPE 3345.00 (ANTELOPE T1) 345/115/13.8KV TRANSFORMER CKT 1
FDNS	00NR	3	17SP	G15_054	FROM->TO	GRPRAR1-LNX3345.00 - HOLT.CO3 345.00 345KV CKT 1	720	720	0.0393	110.3178	ANTELOPE 3345.00 (ANTELOPE T1) 345/115/13.8KV TRANSFORMER CKT 1
FDNS	00NR	3	20SP	G15_054	FROM->TO	GRPRAR1-LNX3345.00 - HOLT.CO3 345.00 345KV CKT 1	720	720	0.0395	102.942	ANTELOPE 3345.00 (ANTELOPE T1) 345/115/13.8KV TRANSFORMER CKT 1

SOLUTION	GROUP	SCENARIO	SEASON	SOURCE	DIRECTION	MONITORED ELEMENT	RATEA (MVA)	RATEB(MVA)	TDF	TC%LOADING (% MVA)	CONTINGENCY
FDNS	00NR	3	25SP	G15_054	FROM->TO	GRPRAR1-LNX3345.00 - HOLT.CO3 345.00 345KV CKT 1	720	720	0.03984	102.0297	ANTELOPE 3345.00 (ANTELOPE T1) 345/115/13.8KV TRANSFORMER CKT 1
FDNS	00NR	4	17SP	G15_054	FROM->TO	COLUMEAST (COL.EAST T3) 230/115/13.8KV TRANSFORMER CKT 1	187	187	0.03882	109.4328	COLUMEAST - SHELL CREEK 345KV CKT 1
FDNS	00NR	4	17SP	G15_054	FROM->TO	COLUMEAST (COL.EAST T3) 230/115/13.8KV TRANSFORMER CKT 1	187	187	0.03882	108.7373	COLUMEAST - SHELL CREEK 345KV CKT 1
FDNS	00NR	4	20SP	G15_054	FROM->TO	COLUMEAST (COL.EAST T3) 230/115/13.8KV TRANSFORMER CKT 1	187	187	0.03938	105.9831	COLUMEAST - SHELL CREEK 345KV CKT 1
FDNS	00NR	4	20SP	G15_054	FROM->TO	COLUMEAST (COL.EAST T3) 230/115/13.8KV TRANSFORMER CKT 1	187	187	0.03938	105.2227	COLUMEAST - SHELL CREEK 345KV CKT 1
FDNS	00NR	4	25SP	G15_054	FROM->TO	COLUMEAST (COL.EAST T3) 230/115/13.8KV TRANSFORMER CKT 1	187	187	0.03896	102.5369	COLUMEAST - SHELL CREEK 345KV CKT 1
FDNS	00NR	4	16WP	G15_054	FROM->TO	COLUMEAST (COL.EAST T3) 230/115/13.8KV TRANSFORMER CKT 1	187	187	0.03981	102.2883	COLUMEAST - SHELL CREEK 345KV CKT 1
FDNS	00NR	4	25SP	G15_054	FROM->TO	COLUMEAST (COL.EAST T3) 230/115/13.8KV TRANSFORMER CKT 1	187	187	0.03896	101.8868	COLUMEAST - SHELL CREEK 345KV CKT 1
FDNS	00NR	4	16WP	G15_054	FROM->TO	COLUMEAST (COL.EAST T3) 230/115/13.8KV TRANSFORMER CKT 1	187	187	0.03981	100.7006	COLUMEAST - SHELL CREEK 345KV CKT 1
FDNS	09NR	4	17G	G15_054	FROM->TO	DIXONCO 230.00 - TWIN CHURCH 230KV CKT 1	320	320	0.03461	113.2554	BELDEN 4 230.00 - DIXONCO 230.00 230KV CKT 1
FDNS	09NR	4	17G	G15_054	FROM->TO	DIXONCO 230.00 - TWIN CHURCH 230KV CKT 1	320	320	0.05552	112.2247	HOSKINS - RAUN 345KV CKT 1
FDNS	09NR	4	17G	G15_054	FROM->TO	DIXONCO 230.00 - TWIN CHURCH 230KV CKT 1	320	320	0.04024	110.701	BELDEN 4 230.00 - RASMUSN 230KV CKT 1
FDNS	09NR	4	20L	G15_054	FROM->TO	DIXONCO 230.00 - TWIN CHURCH 230KV CKT 1	320	320	0.03682	109.6474	BELDEN 4 230.00 - DIXONCO 230.00 230KV CKT 1
FDNS	09NR	4	17G	G15_054	FROM->TO	DIXONCO 230.00 - TWIN CHURCH 230KV CKT 1	320	320	0.03911	108.2497	RASMUSN - SIOUX CITY 230KV CKT 1
FDNS	09NR	4	20L	G15_054	FROM->TO	DIXONCO 230.00 - TWIN CHURCH 230KV CKT 1	320	320	0.04259	106.9756	BELDEN 4 230.00 - RASMUSN 230KV CKT 1
FDNS	09NR	4	17G	G15_054	FROM->TO	DIXONCO 230.00 - TWIN CHURCH 230KV CKT 1	320	320	0.03347	105.7984	P13:230-345:NPPD:NUCOR-1
FDNS	09NR	4	20L	G15_054	FROM->TO	DIXONCO 230.00 - TWIN CHURCH 230KV CKT 1	320	320	0.05906	105.1851	HOSKINS - RAUN 345KV CKT 1
FDNS	09NR	4	20L	G15_054	FROM->TO	DIXONCO 230.00 - TWIN CHURCH 230KV CKT 1	320	320	0.05906	105.1851	HOSKINS - RAUN 345KV CKT 1
FDNS	09NR	4	17G	G15_054	FROM->TO	DIXONCO 230.00 - TWIN CHURCH 230KV CKT 1	320	320	0.03714	104.2743	BELDEN - TWIN CHURCH 115KV CKT 1
FDNS	09ALL	4	16WP	G15_054	FROM->TO	DIXONCO 230.00 - TWIN CHURCH 230KV CKT 1	320	320	0.04442	102.3663	BASE CASE
FDNS	09NR	4	20L	G15_054	FROM->TO	DIXONCO 230.00 - TWIN CHURCH 230KV CKT 1	320	320	0.03557	101.968	P13:230-345:NPPD:NUCOR-1
FDNS	09ALL	4	17G	G15_054	FROM->TO	DIXONCO 230.00 - TWIN CHURCH 230KV CKT 1	320	320	0.04434	101.7781	BASE CASE
FDNS	09NR	4	20L	G15_054	FROM->TO	DIXONCO 230.00 - TWIN CHURCH 230KV CKT 1	320	320	0.04166	101.711	RASMUSN - SIOUX CITY 230KV CKT 1
FDNS	09NR	4	17G	G15_054	FROM->TO	DIXONCO 230.00 - TWIN CHURCH 230KV CKT 1	320	320	0.03347	101.6959	P13:115-230:NPPD:NUCOR-3
FDNS	09NR	4	17G	G15_054	FROM->TO	DIXONCO 230.00 - TWIN CHURCH 230KV CKT 1	320	320	0.0456	101.6058	HOSKINS - SHELL CREEK 345KV CKT 1
FDNS	09ALL	4	20WP	G15_054	FROM->TO	DIXONCO 230.00 - TWIN CHURCH 230KV CKT 1	320	320	0.0448	101.5031	BASE CASE
FDNS	09NR	4	17G	G15_054	FROM->TO	DIXONCO 230.00 - TWIN CHURCH 230KV CKT 1	320	320	0.04004	100.8084	COLUMEAST - NW68TH & HOLDREGE 345KV CKT 1
FDNS	09NR	4	17G	G15_054	FROM->TO	DIXONCO 230.00 - TWIN CHURCH 230KV CKT 1	320	320	0.04004	100.8084	COLUMEAST - NW68TH & HOLDREGE 345KV CKT 1
FDNS	09NR	4	17G	G15_054	FROM->TO	DIXONCO 230.00 - TWIN CHURCH 230KV CKT 1	320	320	0.03924	100.3324	COLUMEAST - SHELL CREEK 345KV CKT 1
FDNS	09NR	4	17G	G15_054	FROM->TO	DIXONCO 230.00 - TWIN CHURCH 230KV CKT 1	320	320	0.03013	100.0983	HOSKINS (HOSKINS T2) 345/230/13.8KV TRANSFORMER CKT 1
FDNS	09NR	4	17G	G15_054	FROM->TO	DIXONCO 230.00 - TWIN CHURCH 230KV CKT 1	320	320	0.03013	100.0983	HOSKINS (HOSKINS T2) 345/230/13.8KV TRANSFORMER CKT 1
FDNS	09NR	4	17G	G15_054	FROM->TO	DIXONCO 230.00 - TWIN CHURCH 230KV CKT 1	320	320	0.03407	99.7	FT RANDAL - SIOUX CITY 230KV CKT 1
FDNS	09NR	4	17G	G15_054	FROM->TO	DIXONCO 230.00 - TWIN CHURCH 230KV CKT 1	320	320	0.0319	99.5	RAUN - SIOUX CITY 345KV CKT 1
FDNS	00NR	5	17SP	G15_054	FROM->TO	COLUMEAST (COL.EAST T3) 230/115/13.8KV TRANSFORMER CKT 1	187	187	0.03856	109.3787	COLUMEAST - SHELL CREEK 345KV CKT 1
FDNS	00NR	5	17SP	G15_054	FROM->TO	COLUMEAST (COL.EAST T3) 230/115/13.8KV TRANSFORMER CKT 1	187	187	0.03856	108.6827	COLUMEAST - SHELL CREEK 345KV CKT 1
FDNS	00NR	5	20SP	G15_054	FROM->TO	COLUMEAST (COL.EAST T3) 230/115/13.8KV TRANSFORMER CKT 1	187	187	0.03911	105.8952	COLUMEAST - SHELL CREEK 345KV CKT 1
FDNS	00NR	5	20SP	G15_054	FROM->TO	COLUMEAST (COL.EAST T3) 230/115/13.8KV TRANSFORMER CKT 1	187	187	0.03911	105.1342	COLUMEAST - SHELL CREEK 345KV CKT 1
FDNS	00NR	5	25SP	G15_054	FROM->TO	COLUMEAST (COL.EAST T3) 230/115/13.8KV TRANSFORMER CKT 1	187	187	0.0387	102.482	COLUMEAST - SHELL CREEK 345KV CKT 1
FDNS	00NR	5	16WP	G15_054	FROM->TO	COLUMEAST (COL.EAST T3) 230/115/13.8KV TRANSFORMER CKT 1	187	187	0.03955	102.0346	COLUMEAST - SHELL CREEK 345KV CKT 1
FDNS	00NR	5	25SP	G15_054	FROM->TO	COLUMEAST (COL.EAST T3) 230/115/13.8KV TRANSFORMER CKT 1	187	187	0.0387	101.8314	COLUMEAST - SHELL CREEK 345KV CKT 1
FDNS	00NR	5	16WP	G15_054	FROM->TO	COLUMEAST (COL.EAST T3) 230/115/13.8KV TRANSFORMER CKT 1	187	187	0.03955	100.4516	COLUMEAST - SHELL CREEK 345KV CKT 1
FDNS	09ALL	5	17G	G15_054	FROM->TO	DIXONCO 3 345.00 (DIXON1) 345/230/13.8KV TRANSFORMER CKT 1	336	420	0.05731	114.6377	BASE CASE
FDNS	09ALL	5	17G	G15_054	FROM->TO	DIXONCO 3 345.00 (DIXON1) 345/230/13.8KV TRANSFORMER CKT 1	336	420	0.05731	114.3071	BASE CASE
FDNS	09ALL	5	16WP	G15_054	FROM->TO	DIXONCO 3 345.00 (DIXON1) 345/230/13.8KV TRANSFORMER CKT 1	336	420	0.05732	112.2161	BASE CASE
FDNS	09ALL	5	16WP	G15_054	FROM->TO	DIXONCO 3 345.00 (DIXON1) 345/230/13.8KV TRANSFORMER CKT 1	336	420	0.05732	112.0272	BASE CASE
FDNS	09ALL	5	20L	G15_054	FROM->TO	DIXONCO 3 345.00 (DIXON1) 345/230/13.8KV TRANSFORMER CKT 1	336	420	0.05626	112.0004	BASE CASE
FDNS	09ALL	5	20L	G15_054	FROM->TO	DIXONCO 3 345.00 (DIXON1) 345/230/13.8KV TRANSFORMER CKT 1	336	420	0.05626	111.7535	BASE CASE
FDNS	09ALL	5	20WP	G15_054	FROM->TO	DIXONCO 3 345.00 (DIXON1) 345/230/13.8KV TRANSFORMER CKT 1	336	420	0.05783	111.2556	BASE CASE
FDNS	09ALL	5	20WP	G15_054	FROM->TO	DIXONCO 3 345.00 (DIXON1) 345/230/13.8KV TRANSFORMER CKT 1	336	420	0.05783	110.9944	BASE CASE
FDNS	09NR	5	17G	G15_054	FROM->TO	DIXONCO 3 345.00 (DIXON1) 345/230/13.8KV TRANSFORMER CKT 1	336	420	0.04322	108.2757	BASE CASE
FDNS	09NR	5	17G	G15_054	FROM->TO	DIXONCO 3 345.00 (DIXON1) 345/230/13.8KV TRANSFORMER CKT 1	336	420	0.04322	107.917	BASE CASE
FDNS	09NR	5	20L	G15_054	FROM->TO	DIXONCO 3 345.00 (DIXON1) 345/230/13.8KV TRANSFORMER CKT 1	336	420	0.04592	103.7279	BASE CASE
FDNS	09NR	5	20L	G15_054	FROM->TO	DIXONCO 3 345.00 (DIXON1) 345/230/13.8KV TRANSFORMER CKT 1	336	420	0.04592	103.475	BASE CASE
FDNS	09ALL	5	20SP	G15_054	FROM->TO	DIXONCO 3 345.00 (DIXON1) 345/230/13.8KV TRANSFORMER CKT 1	336	420	0.05745	102.2126	BASE CASE
FDNS	09ALL	5	20SP	G15_054	FROM->TO	DIXONCO 3 345.00 (DIXON1) 345/230/13.8KV TRANSFORMER CKT 1	336	420	0.05745	102.1467	BASE CASE
FDNS	09ALL	5	17SP	G15_054	FROM->TO	DIXONCO 3 345.00 (DIXON1) 345/230/13.8KV TRANSFORMER CKT 1	336	420	0.05694	102.0451	BASE CASE
FDNS	09ALL	5	17SP	G15_054	FROM->TO	DIXONCO 3 345.00 (DIXON1) 345/230/13.8KV TRANSFORMER CKT 1	336	420	0.05694	101.9875	BASE CASE
FDNS	09NR	5	17G	G15_054	FROM->TO	DIXONCO 3 345.00 (DIXON1) 345/230/13.8KV TRANSFORMER CKT 1	336	420	0.0719	101.5656	HOSKINS - RAUN 345KV CKT 1
FDNS	09NR	5	17G	G15_054	FROM->TO	DIXONCO 3 345.00 (DIXON1) 345/230/13.8KV TRANSFORMER CKT 1	336	420	0.0719	101.3922	HOSKINS - RAUN 345KV CKT 1
FDNS	09ALL	5	25SP	G15_054	FROM->TO	DIXONCO 3 345.00 (DIXON1) 345/230/13.8KV TRANSFORMER CKT 1	336	420	0.05737	99.9	BASE CASE
FDNS	09ALL	5	25SP	G15_054	FROM->TO	DIXONCO 3 345.00 (DIXON1) 345/230/13.8KV TRANSFORMER CKT 1	336	420	0.05737	99.9	BASE CASE
FDNS	09NR	6	17G	G15_054	FROM->TO	DIXONCO 3 345.00 (DIXON1) 345/230/13.8KV TRANSFORMER CKT 1	336	420	0.04239	108.3463	BASE CASE
FDNS	09NR	6	17G	G15_054	FROM->TO	DIXONCO 3 345.00 (DIXON1) 345/230/13.8KV TRANSFORMER CKT 1	336	420	0.04239	107.9901	BASE CASE
FDNS	09NR	6	20L	G15_054	FROM->TO	DIXONCO 3 345.00 (DIXON1) 345/230/13.8KV TRANSFORMER CKT 1	336	420	0.04511	103.7394	BASE CASE
FDNS	09NR	6	20L	G15_054	FROM->TO	DIXONCO 3 345.00 (DIXON1) 345/230/13.8KV TRANSFORMER CKT 1	336	420	0.04511	103.488	BASE CASE
FDNS	09NR	6	17G	G15_054	FROM->TO	DIXONCO 3 345.00 (DIXON1) 345/230/13.8KV TRANSFORMER CKT 1	336	420	0.07045	101.625	HOSKINS - RAUN 345KV CKT 1
FDNS	09NR	6	17G	G15_054	FROM->TO	DIXONCO 3 345.00 (DIXON1) 345/230/13.8KV TRANSFORMER CKT 1	336	420	0.07045	101.454	HOSKINS - RAUN 345KV CKT 1
FDNS	00NR	6	17SP	G15_054	FROM->TO	PETERSBRG.N7115.00 - PETERSBURG 115KV CKT Z1	193	193	0.05773	100.4936	KELLY - MEADOWGROVE4230.00 230KV CKT 1
FDNS	00NR	6	17SP	G15_054	TO->FROM	SIDNEY - SIDNEY TRANSFORMER 230KV CKT 1	496	496	0.02972	108.2092	KEYSTONE - SIDNEY1-LNX3345.00 345KV CKT 1
FDNS	00NR	6	17SP	G15_054	TO->FROM	SIDNEY - SIDNEY TRANSFORMER 230KV CKT 1	496	496	0.02972	107.559	SIDNEY - SIDNEY1-LNX3345.00 345KV CKT Z
FDNS	00NR	6	20SP	G15_054	TO->FROM	SIDNEY - SIDNEY TRANSFORMER 230KV CKT 1	496	496	0.02962	100.7153	KEYSTONE - SIDNEY1-LNX3345.00 345KV CKT 1
FDNS	00NR	6	20SP	G15_054	TO->FROM	SIDNEY - SIDNEY TRANSFORMER 230KV CKT 1	496	496	0.02962	100.1554	SIDNEY - SIDNEY1-LNX3345.00 345KV CKT Z
FDNS	07ALL	0	25SP	G15_055	TO->FROM	STATELINE INTERCHANGE - STLN-DEMARC6 230KV CKT 1	348.58	381.24	0.2522	121.575	CHISHOLM7 345.00 - GRACEMONT 345KV CKT 1
FDNS	07ALL	0	25SP	G15_055	TO->FROM	STATELINE INTERCHANGE - STLN-DEMARC6 230KV CKT 1	348.58	381.24	0.13187	112.3299	BASE CASE
FDNS	07ALL	0	25SP	G15_055	TO->FROM	STATELINE INTERCHANGE - STLN-DEMARC6 230KV CKT 1	348.58	381.24	0.2522	100.1215	CHISHOLM7 345.00 () 345/230/13.2KV TRANSFORMER CKT 1
FDNS	07ALL	0	25SP	G15_055	TO->FROM	STLN-DEMARC6 - SWEETWATER 230KV CKT 1	353	353	0.2522	131.3015	CHISHOLM7 345.00 - GRACEMONT 345KV CKT 1
FDNS	07ALL	0	25SP	G15_055	TO->FROM	STLN-DEMARC6 - SWEETWATER 230KV CKT 1	353	353	0.13187	110.9234	BASE CASE
FDNS	07ALL	0	25SP	G15_055	TO->FROM	STLN-DEMARC6 - SWEETWATER 230KV CKT 1	353	353	0.2522	108.1328	CHISHOLM7 345.00 () 345/230/13.2KV TRANSFORMER CKT 1
FDNS	07ALL	2	25SP	G15_055	TO->FROM	STATELINE INTERCHANGE - STLN-DEMARC6 230KV CKT 1	348.58	381.24	0.25222	121.7774	CHISHOLM7 345.00 - GRACEMONT 345KV CKT 1

SOLUTION	GROUP	SCENARIO	SEASON	SOURCE	DIRECTION	MONITORED ELEMENT	RATEA (MVA)	RATEB(MVA)	TDF	TC%LOADING (% MVA)	CONTINGENCY
FDNS	07ALL	2	25SP	G15_055	TO->FROM	STATELINE INTERCHANGE - STLN-DEMARC6 230KV CKT 1	348.58	381.24	0.13179	112.6111	BASE CASE
FDNS	07ALL	2	25SP	G15_055	TO->FROM	STATELINE INTERCHANGE - STLN-DEMARC6 230KV CKT 1	348.58	381.24	0.25222	100.318	CHISHOLM7 345.00 () 345/230/13.2KV TRANSFORMER CKT 1
FDNS	07ALL	2	25SP	G15_055	TO->FROM	STLN-DEMARC6 - SWEETWATER 230KV CKT 1	353	353	0.25222	131.5213	CHISHOLM7 345.00 - GRACEMONT 345KV CKT 1
FDNS	07ALL	2	25SP	G15_055	TO->FROM	STLN-DEMARC6 - SWEETWATER 230KV CKT 1	353	353	0.13179	111.2011	BASE CASE
FDNS	07ALL	2	25SP	G15_055	TO->FROM	STLN-DEMARC6 - SWEETWATER 230KV CKT 1	353	353	0.25222	108.3451	CHISHOLM7 345.00 () 345/230/13.2KV TRANSFORMER CKT 1
FDNSLock-Blown up	06ALL	0	16WP	G15_056		Non-Converged Contingency	552.14	607.52	0.2463	-	TOLK STATION EAST - TUCO INTERCHANGE 230KV CKT 1
FDNSLock-Blown up	06ALL	0	16WP	G15_056		Non-Converged Contingency	442	752	0.22283	-	PLANT X STATION - TOLK STATION WEST 230KV CKT 1
FDNSLock-Blown up	06ALL	0	16WP	G15_056		Non-Converged Contingency	442	752	0.22176	-	PLANT X STATION - TOLK STATION EAST 230KV CKT 2
FDNSLock-Blown up	06ALL	0	16WP	G15_056		Non-Converged Contingency	556.53	611.5	0.19975	-	NEWHART 230 - PLANT X STATION 230KV CKT 1
FDNSLock-Blown up	06ALL	0	16WP	G15_056		Non-Converged Contingency	1022	1124	0.1967	-	G14-074T 345.00 - OKLAUNION 345KV CKT 1
FDNSLock-Blown up	06ALL	0	16WP	G15_056		Non-Converged Contingency	1022	1124	0.1967	-	G14-074T 345.00 - TUCO INTERCHANGE 345KV CKT 1
FDNSLock-Blown up	06ALL	0	16WP	G15_056		Non-Converged Contingency	1022	1124	0.1967	-	GEN509403 1-PIRKEY GENERATION
FDNSLock-Blown up	06ALL	0	16WP	G15_056		Non-Converged Contingency	1022	1124	0.1967	-	GEN509404 1-WELSH #1
FDNSLock-Blown up	06ALL	0	16WP	G15_056		Non-Converged Contingency	1022	1124	0.1967	-	GEN509406 1-WELSH #3
FDNSLock-Blown up	06ALL	0	16WP	G15_056		Non-Converged Contingency	1022	1124	0.1967	-	GEN509416 1-TURK GENERATION
FDNSLock-Blown up	06ALL	0	16WP	G15_056		Non-Converged Contingency	1022	1124	0.1967	-	GEN511848 1-SOUTHWESTERN STATION #3
FDNSLock-Blown up	06ALL	0	16WP	G15_056		Non-Converged Contingency	560	560	0.18258	-	TUCO INTERCHANGE (GE M1022338) 345/230/13.2KV TRANSFORMER CKT 1
FDNSLock-Blown up	06ALL	0	16WP	G15_056		Non-Converged Contingency	956	956	0.1753	-	CIMARRON - MINCO 345KV CKT 1
FDNSLock-Blown up	06ALL	0	16WP	G15_056		Non-Converged Contingency	1195	1195	0.1753	-	GRACEMONT - MINCO 345KV CKT 1
FDNSLock-Blown up	06ALL	0	16WP	G15_056		Non-Converged Contingency	987.16	1082.8	0.17255	-	G14_038T 345.00 - Hitchland Interchange 345KV CKT 1
FDNSLock-Blown up	06ALL	0	16WP	G15_056		Non-Converged Contingency	987.16	1082.8	0.17255	-	G14_038T 345.00 - POTTER COUNTY INTERCHANGE 345KV CKT 1
FDNSLock-Blown up	06ALL	0	16WP	G15_056		Non-Converged Contingency	560	560	0.17255	-	POTTER COUNTY INTERCHANGE (WAUK 90343-A) 345/230/13.2KV TRANSFORMER CKT 1
FDNSLock-Blown up	06ALL	0	16WP	G15_056		Non-Converged Contingency	557	557	0.16931	-	BUSHLAND INTERCHANGE - DEAF SMITH COUNTY INTERCHANGE 230KV CKT 1
FDNSLock-Blown up	06ALL	0	16WP	G15_056		Non-Converged Contingency	560	560	0.16023	-	TUCO_2 345.00 (TUCO_2 XFMR) 345/230/13.2KV TRANSFORMER CKT 1
FDNSLock-Blown up	06ALL	0	16WP	G15_056		Non-Converged Contingency	1330	1940	0.16004	-	CHISHOLM7 345.00 - GRACEMONT 345KV CKT 1
FDNSLock-Blown up	06ALL	0	16WP	G15_056		Non-Converged Contingency	616	700	0.15911	-	TUCO INTERCHANGE (SIEM 8743066) 345/230/13.2KV TRANSFORMER CKT 2
FDNSLock-Blown up	06ALL	0	16WP	G15_056		Non-Converged Contingency	1792	1792	0.15561	-	CHISHOLM7 345.00 - WOODWARD DISTRICT EHV 345KV CKT 1
FDNSLock-Blown up	06ALL	0	16WP	G15_056		Non-Converged Contingency	329.05	360.92	0.15537	-	DEAF SMITH COUNTY INTERCHANGE - G15039_T 230.00 230KV CKT 1
FDNSLock-Blown up	06ALL	0	16WP	G15_056		Non-Converged Contingency	329.05	360.92	0.15537	-	G15039_T 230.00 - PLANT X STATION 230KV CKT 1
FDNSLock-Blown up	06ALL	0	16WP	G15_056		Non-Converged Contingency	1792	1792	0.15261	-	BORDER 7345.00 - CHISHOLM7 345.00 345KV CKT 1
FDNSLock-Blown up	06ALL	0	16WP	G15_056		Non-Converged Contingency	1792	1792	0.15261	-	BORDER 7345.00 - CHISHOLM7 345.00 345KV CKT 2
FDNSLock-Blown up	06ALL	0	16WP	G15_056		Non-Converged Contingency	1792	1972	0.15261	-	BORDER 7345.00 - TUCO_2 345.00 345KV CKT 1
FDNSLock-Blown up	06ALL	0	16WP	G15_056		Non-Converged Contingency	1420	1775	0.15261	-	BORDER 7345.00 - TUCO_2 345.00 345KV CKT 2
FDNSLock-Blown up	06ALL	0	16WP	G15_056		Non-Converged Contingency	329.05	360.92	0.14898	-	BUSHLAND INTERCHANGE - POTTER COUNTY INTERCHANGE 230KV CKT 1
FDNSLock-Blown up	06ALL	0	16WP	G15_056		Non-Converged Contingency	1792	1972	0.14499	-	TUCO INTERCHANGE - TUCO_2 345.00 345KV CKT 1
FDNSLock-Blown up	06ALL	0	16WP	G15_056		Non-Converged Contingency	987.16	1082.8	0.14045	-	FINNEY SWITCHING STATION - Hitchland Interchange 345KV CKT 1
FDNSLock-Blown up	06ALL	0	16WP	G15_056		Non-Converged Contingency	956.09	1051.7	0.14045	-	FINNEY SWITCHING STATION - HOLCOMB 345KV CKT 1
FDNSLock-Blown up	06ALL	0	16WP	G15_056		Non-Converged Contingency	717	789	0.12658	-	G14-057T 345.00 - LAWTON EASTSIDE 345KV CKT 1
FDNSLock-Blown up	06ALL	0	16WP	G15_056		Non-Converged Contingency	717	789	0.12658	-	G14-057T 345.00 - SUNNYSIDE 345KV CKT 1
FDNSLock-Blown up	06ALL	0	16WP	G15_056		Non-Converged Contingency	552	608	0.12632	-	TUCO INTERCHANGE - TUCO_2 230.00 230KV CKT 1
FDNSLock-Blown up	06ALL	0	16WP	G15_056		Non-Converged Contingency	557	557	0.11979	-	NEWHART 230 - POTTER COUNTY INTERCHANGE 230KV CKT 1
FDNSLock-Blown up	06ALL	0	16WP	G15_056		Non-Converged Contingency	427.05	427.05	0.10469	-	JONES STATION - TUCO INTERCHANGE 230KV CKT 1
FDNSLock-Blown up	06ALL	0	16WP	G15_056		Non-Converged Contingency	1420	1775	0.10154	-	G11_051T 345.00 - TATONGA7 345.00 345KV CKT 1
FDNSLock-Blown up	06ALL	0	16WP	G15_056		Non-Converged Contingency	1420	1775	0.10154	-	G11_051T 345.00 - WOODWARD DISTRICT EHV 345KV CKT 1
FDNSLock-Blown up	06ALL	0	16WP	G15_056		Non-Converged Contingency	1195	1195	0.10154	-	MATHWSN7 345.00 - TATONGA7 345.00 345KV CKT 1
FDNSLock-Blown up	06ALL	0	16WP	G15_056		Non-Converged Contingency	1561	1793	0.09433	-	THISTLE7 345.00 - WOODWARD DISTRICT EHV 345KV CKT 1
FDNSLock-Blown up	06ALL	0	16WP	G15_056		Non-Converged Contingency	1561	1793	0.09433	-	THISTLE7 345.00 - WOODWARD DISTRICT EHV 345KV CKT 2
FDNSLock-Blown up	06ALL	0	16WP	G15_056		Non-Converged Contingency	483	483	0.09381	-	AMOCO SWITCHING STATION - YOAKUM COUNTY INTERCHANGE 230KV CKT 1
FDNSLock-Blown up	06ALL	0	16WP	G15_056		Non-Converged Contingency	329.05	360.92	0.08437	-	AMARILLO SOUTH INTERCHANGE - G15031_T 230.00 230KV CKT 1
FDNSLock-Blown up	06ALL	0	16WP	G15_056		Non-Converged Contingency	1793	1793	0.08322	-	BVRCNTY7 345.00 - G11-14T 345.00 345KV CKT 1
FDNSLock-Blown up	06ALL	0	16WP	G15_056		Non-Converged Contingency	1716	1793	0.08322	-	BVRCNTY7 345.00 - G11-14T 345.00 345KV CKT 2
FDNSLock-Blown up	06ALL	0	16WP	G15_056		Non-Converged Contingency	1792	1792	0.08322	-	BVRCNTY7 345.00 - OPTIMA 345.00 345KV CKT 1
FDNSLock-Blown up	06ALL	0	16WP	G15_056		Non-Converged Contingency	1792	1792	0.08322	-	BVRCNTY7 345.00 - OPTIMA 345.00 345KV CKT 2
FDNSLock-Blown up	06ALL	0	16WP	G15_056		Non-Converged Contingency	1793	1793	0.08322	-	G11-14T 345.00 - WOODWARD DISTRICT EHV 345KV CKT 1
FDNSLock-Blown up	06ALL	0	16WP	G15_056		Non-Converged Contingency	1716	1793	0.08322	-	G11-14T 345.00 - WOODWARD DISTRICT EHV 345KV CKT 2
FDNSLock-Blown up	06ALL	0	16WP	G15_056		Non-Converged Contingency	1532	1793	0.07622	-	G1524G1525 345.00 - THISTLE7 345.00 345KV CKT 1
FDNSLock-Blown up	06ALL	0	16WP	G15_056		Non-Converged Contingency	1532	1793	0.07622	-	G1524G1525 345.00 - THISTLE7 345.00 345KV CKT 2
FDNSLock-Blown up	06ALL	0	16WP	G15_056		Non-Converged Contingency	1532	1793	0.07622	-	GEN532751 1-WOLF CREEK GENERATING STATION UNIT 1
FDNSLock-Blown up	06ALL	0	16WP	G15_056		Non-Converged Contingency	439	439	0.07416	-	CHISHOLM6 230.00 - SWEETWATER 230KV CKT 1
FDNSLock-Blown up	06ALL	0	16WP	G15_056		Non-Converged Contingency	435.02	457.73	0.07416	-	STATELINE INTERCHANGE - STLN-DEMARC6 230KV CKT 1
FDNSLock-Blown up	06ALL	0	16WP	G15_056		Non-Converged Contingency	439	439	0.07416	-	STLN-DEMARC6 - SWEETWATER 230KV CKT 1
FDNSLock-Blown up	06ALL	0	16WP	G15_056		Non-Converged Contingency	556.92	556.92	0.07321	-	HITCHLAND INTERCHANGE - MOORE COUNTY INTERCHANGE 230KV CKT 1
FDNSLock-Blown up	06ALL	0	16WP	G15_056		Non-Converged Contingency	717.1	717.1	0.06723	-	HOLCOMB - SETAB 345KV CKT 1
FDNSLock-Blown up	06ALL	0	16WP	G15_056		Non-Converged Contingency	785	785	0.0661	-	MINGO - RED WILLOW 345KV CKT 1
FDNSLock-Blown up	06ALL	0	16WP	G15_056		Non-Converged Contingency	762.5	762.5	0.06608	-	MINGO - SETAB 345KV CKT 1
FDNSLock-Blown up	06ALL	0	16WP	G15_056		Non-Converged Contingency	439	439	0.06373	-	CHISHOLM6 230.00 - ELK CITY 230KV 230KV CKT 1
FDNSLock-Blown up	06ALL	0	16WP	G15_056		Non-Converged Contingency	450	450	0.06373	-	ELK CITY 230KV (ELKCTY-6) 230/138/13.8KV TRANSFORMER CKT 1
FDNSLock-Blown up	06ALL	0	16WP	G15_056		Non-Converged Contingency	717	717	0.06358	-	CIMARRON - DRAPER LAKE 345KV CKT 1
FDNSLock-Blown up	06ALL	0	16WP	G15_056		Non-Converged Contingency	557	557	0.06301	-	GRAPEVINE INTERCHANGE - STATELINE INTERCHANGE 230KV CKT 1
FDNSLock-Blown up	06ALL	0	16WP	G15_056		Non-Converged Contingency	557	557	0.06274	-	GRAPEVINE INTERCHANGE - NICHOLS STATION 230KV CKT 1
FDNSLock-Blown up	06ALL	0	16WP	G15_056		Non-Converged Contingency	329.05	360.92	0.06256	-	MOORE COUNTY INTERCHANGE - POTTER COUNTY INTERCHANGE 230KV CKT 1
FDNSLock-Blown up	06ALL	0	16WP	G15_056		Non-Converged Contingency	143.02	173.09	0.06096	-	WOLFFORTH INTERCHANGE - YUMA INTERCHANGE 115KV CKT 1
FDNSLock-Blown up	06ALL	0	16WP	G15_056		Non-Converged Contingency	726.6	726.6	0.05744	-	BUCKNER7 345.00 - HOLCOMB 345KV CKT 1
FDNSLock-Blown up	06ALL	0	16WP	G15_056		Non-Converged Contingency	1413	1517	0.05744	-	BUCKNER7 345.00 - SPEARVILLE 345KV CKT 1
FDNSLock-Blown up	06ALL	0	16WP	G15_056		Non-Converged Contingency	1793	1793	0.05705	-	G13-010T 345.00 - POST ROCK 345KV CKT 1
FDNSLock-Blown up	06ALL	0	16WP	G15_056		Non-Converged Contingency	1793	1793	0.05705	-	G13-010T 345.00 - SPEARVILLE 345KV CKT 1
FDNSLock-Blown up	06ALL	0	16WP	G15_056		Non-Converged Contingency	1195	1195	0.05692	-	GEN520947 1-HUGO1
FDNSLock-Blown up	06ALL	0	16WP	G15_056		Non-Converged Contingency	717	789	0.04042	-	GRACEMONT - LAWTON EASTSIDE 345KV CKT 1
FDNSLock-Blown up	06ALL	0	16WP	G15_056		Non-Converged Contingency	286	315	0.03554	-	CANYON E_TP3115.00 - CANYON WEST SUB 115KV CKT 1

SOLUTION	GROUP	SCENARIO	SEASON	SOURCE	DIRECTION	MONITORED ELEMENT	RATEA (MVA)	RATEB(MVA)	TDF	TC%LOADING (% MVA)	CONTINGENCY
FDNSLock-Blown up	06ALL	0	16WP	G15_056		Non-Converged Contingency	106	106	0.03554	-	CANYON WEST SUB - DAWN SUB 115KV CKT 1
FDNSLock-Blown up	06ALL	0	16WP	G15_056		Non-Converged Contingency	106	106	0.03554	-	DAWN SUB - Panda Energy Substation Hereford 115KV CKT 1
FDNSLock-Blown up	06ALL	0	16WP	G15_056		Non-Converged Contingency	106	106	0.03554	-	DEAF SMITH COUNTY INTERCHANGE - Panda Energy Substation Hereford 115KV CKT 1
FDNSLock-Blown up	06ALL	0	16WP	G15_056		Non-Converged Contingency	164.53	177.08	0.03101	-	Hansford County Switch Station - SPEARMAN INTERCHANGE 115KV CKT 1
FDNSLock-Blown up	06ALL	0	16WP	G15_056		Non-Converged Contingency	177.08	177.08	0.03101	-	HITCHLAND INTERCHANGE - Hansford County Switch Station 115KV CKT 1
FDNSLock-Blown up	06ALL	0	17SP	G15_056		Non-Converged Contingency	956	1042	0.19564	-	G14-074T 345.00 - OKLAUNION 345KV CKT 1
FDNSLock-Blown up	06ALL	0	17SP	G15_056		Non-Converged Contingency	956	1042	0.19564	-	G14-074T 345.00 - TUCO INTERCHANGE 345KV CKT 1
FDNSLock-Blown up	06ALL	0	17SP	G15_056		Non-Converged Contingency	956.09	1051.7	0.17123	-	G14_038T 345.00 - Hitchland Interchange 345KV CKT 1
FDNSLock-Blown up	06ALL	0	17SP	G15_056		Non-Converged Contingency	956.09	1051.7	0.17123	-	G14_038T 345.00 - POTTER COUNTY INTERCHANGE 345KV CKT 1
FDNSLock-Blown up	06ALL	0	17SP	G15_056		Non-Converged Contingency	560	560	0.17123	-	POTTER COUNTY INTERCHANGE (WAUK 90343-A) 345/230/13.2KV TRANSFORMER CKT 1
FDNSLock-Blown up	06ALL	0	17SP	G15_056		Non-Converged Contingency	1792	1972	0.15274	-	BORDER 7345.00 - TUCO_2 345.00 345KV CKT 1
FDNSLock-Blown up	06ALL	0	17SP	G15_056		Non-Converged Contingency	1420	1775	0.15274	-	BORDER 7345.00 - TUCO_2 345.00 345KV CKT 2
FDNSLock-Blown up	06ALL	0	20L	G15_056		Non-Converged Contingency	0	0	1.85074	-	P12:345:SPS:J02.1.TOLK.EDDY
FDNSLock-Blown up	06ALL	0	20L	G15_056		Non-Converged Contingency	0	0	1.22681	-	P12:345:SPS:J15.1.XRDS.TOLK
FDNSLock-Blown up	06ALL	0	20L	G15_056		Non-Converged Contingency	717	926	0.68804	-	CROSSROADS 7345.00 - TOLK STATION 345KV CKT 1
FDNSLock-Blown up	06ALL	0	20L	G15_056		Non-Converged Contingency	560	560	0.68804	-	TOLK STATION (ABBXNL844501) 345/230/13.2KV TRANSFORMER CKT 1
FDNSLock-Blown up	06ALL	0	20L	G15_056		Non-Converged Contingency	560	560	0.68804	-	TOLK STATION (ABBXNL844501) 345/230/13.2KV TRANSFORMER CKT 1
FDNSLock-Blown up	06ALL	0	20L	G15_056		Non-Converged Contingency	0	0	0.62393	-	P12:345:SPS:J14.1.EDDY.XRDS
FDNSLock-Blown up	06ALL	0	20L	G15_056		Non-Converged Contingency	717	926	0.31196	-	CROSSROADS 7345.00 - EDDY COUNTY INTERCHANGE 345KV CKT 1
FDNSLock-Blown up	06ALL	0	20L	G15_056		Non-Converged Contingency	560	560	0.31196	-	EDDY COUNTY INTERCHANGE (ABB AEM30711) 345/230/13.2KV TRANSFORMER CKT 1
FDNSLock-Blown up	06ALL	0	20L	G15_056		Non-Converged Contingency	560	560	0.31196	-	EDDY COUNTY INTERCHANGE (ABB AEM30711) 345/230/13.2KV TRANSFORMER CKT 1
FDNSLock-Blown up	06ALL	0	20L	G15_056		Non-Converged Contingency	478	610	0.26939	-	TOLK STATION TAP - TOLK STATION WEST 230KV CKT @1
FDNSLock-Blown up	06ALL	0	20L	G15_056		Non-Converged Contingency	478	478	0.24362	-	EDDY COUNTY INTERCHANGE - EDDY_NORTH 6230.00 230KV CKT @1
FDNSLock-Blown up	06ALL	0	20L	G15_056		Non-Converged Contingency	0	0	0.21263	-	P12:345:SPS:J07.1.FINN.HITCH
FDNSLock-Blown up	06ALL	0	20L	G15_056		Non-Converged Contingency	442	752	0.19108	-	PLANT X STATION - TOLK STATION WEST 230KV CKT 1
FDNSLock-Blown up	06ALL	0	20L	G15_056		Non-Converged Contingency	442	752	0.19108	-	PLANT X STATION - TOLK STATION WEST 230KV CKT 1
FDNSLock-Blown up	06ALL	0	20L	G15_056		Non-Converged Contingency	442	752	0.19029	-	PLANT X STATION - TOLK STATION EAST 230KV CKT 2
FDNSLock-Blown up	06ALL	0	20L	G15_056		Non-Converged Contingency	442	752	0.19029	-	PLANT X STATION - TOLK STATION EAST 230KV CKT 2
FDNSLock-Blown up	06ALL	0	20L	G15_056		Non-Converged Contingency	1792	1972	0.18188	-	TUCO INTERCHANGE - TUCO_2 345.00 345KV CKT 1
FDNSLock-Blown up	06ALL	0	20L	G15_056		Non-Converged Contingency	478.05	546.96	0.16994	-	TOLK STATION EAST - TUCO INTERCHANGE 230KV CKT 1
FDNSLock-Blown up	06ALL	0	20L	G15_056		Non-Converged Contingency	478.05	546.96	0.16994	-	TOLK STATION EAST - TUCO INTERCHANGE 230KV CKT 1
FDNSLock-Blown up	06ALL	0	20L	G15_056		Non-Converged Contingency	1022	1124	0.16842	-	G14-074T 345.00 - OKLAUNION 345KV CKT 1
FDNSLock-Blown up	06ALL	0	20L	G15_056		Non-Converged Contingency	1022	1124	0.16842	-	G14-074T 345.00 - TUCO INTERCHANGE 345KV CKT 1
FDNSLock-Blown up	06ALL	0	20L	G15_056		Non-Converged Contingency	1022	1124	0.16842	-	GEN506754 1-LEBROCK STEAM 1
FDNSLock-Blown up	06ALL	0	20L	G15_056		Non-Converged Contingency	1022	1124	0.16842	-	GEN509394 1-FLINT CREEK
FDNSLock-Blown up	06ALL	0	20L	G15_056		Non-Converged Contingency	1022	1124	0.16842	-	GEN509403 1-PIRKEY GENERATION
FDNSLock-Blown up	06ALL	0	20L	G15_056		Non-Converged Contingency	1022	1124	0.16842	-	GEN509404 1-WELSH #1
FDNSLock-Blown up	06ALL	0	20L	G15_056		Non-Converged Contingency	1022	1124	0.16842	-	GEN509406 1-WELSH #3
FDNSLock-Blown up	06ALL	0	20L	G15_056		Non-Converged Contingency	1022	1124	0.16842	-	GEN509408 1-WILKES #2
FDNSLock-Blown up	06ALL	0	20L	G15_056		Non-Converged Contingency	1022	1124	0.16842	-	GEN509416 1-TURK GENERATION
FDNSLock-Blown up	06ALL	0	20L	G15_056		Non-Converged Contingency	1022	1124	0.16842	-	GEN511840 1-NORTHEASTERN STATION #3
FDNSLock-Blown up	06ALL	0	20L	G15_056		Non-Converged Contingency	1022	1124	0.16842	-	GEN511960 1-ROARK1 0.7000
FDNSLock-Blown up	06ALL	0	20L	G15_056		Non-Converged Contingency	1022	1124	0.16842	-	GEN562590 1-G14_057_3 0.6900
FDNSLock-Blown up	06ALL	0	20L	G15_056		Non-Converged Contingency	1022	1124	0.16842	-	OKLAUNION 345KV SWITCHED SHUNT
FDNSLock-Blown up	06ALL	0	20L	G15_056		Non-Converged Contingency	1792	1792	0.15912	-	TUCO INTERCHANGE - YOAKUM_345 345.00 345KV CKT 1
FDNSLock-Blown up	06ALL	0	20L	G15_056		Non-Converged Contingency	956	956	0.15616	-	CIMARRON - MINCO 345KV CKT 1
FDNSLock-Blown up	06ALL	0	20L	G15_056		Non-Converged Contingency	1195	1195	0.15616	-	GRACEMONT - MINCO 345KV CKT 1
FDNSLock-Blown up	06ALL	0	20L	G15_056		Non-Converged Contingency	478.05	547.36	0.15371	-	NEWHART 230 - PLANT X STATION 230KV CKT 1
FDNSLock-Blown up	06ALL	0	20L	G15_056		Non-Converged Contingency	1792	1792	0.14029	-	CHISHOLM7 345.00 - WOODWARD DISTRICT EHV 345KV CKT 1
FDNSLock-Blown up	06ALL	0	20L	G15_056		Non-Converged Contingency	478	502	0.13792	-	BUSHLAND INTERCHANGE - DEAF SMITH COUNTY INTERCHANGE 230KV CKT 1
FDNSLock-Blown up	06ALL	0	20L	G15_056		Non-Converged Contingency	478	502	0.13792	-	BUSHLAND INTERCHANGE - DEAF SMITH COUNTY INTERCHANGE 230KV CKT 1
FDNSLock-Blown up	06ALL	0	20L	G15_056		Non-Converged Contingency	478	502	0.13792	-	BUSHLAND INTERCHANGE 230KV SWITCHED SHUNT
FDNSLock-Blown up	06ALL	0	20L	G15_056		Non-Converged Contingency	1792	1792	0.13578	-	BORDER 7345.00 - CHISHOLM7 345.00 345KV CKT 1
FDNSLock-Blown up	06ALL	0	20L	G15_056		Non-Converged Contingency	1792	1792	0.13578	-	BORDER 7345.00 - CHISHOLM7 345.00 345KV CKT 2
FDNSLock-Blown up	06ALL	0	20L	G15_056		Non-Converged Contingency	1792	1972	0.13578	-	BORDER 7345.00 - TUCO_2 345.00 345KV CKT 1
FDNSLock-Blown up	06ALL	0	20L	G15_056		Non-Converged Contingency	1420	1775	0.13578	-	BORDER 7345.00 - TUCO_2 345.00 345KV CKT 2
FDNSLock-Blown up	06ALL	0	20L	G15_056		Non-Converged Contingency	1792	1972	0.13578	-	BORDER 7345.00 345KV SWITCHED SHUNT
FDNSLock-Blown up	06ALL	0	20L	G15_056		Non-Converged Contingency	318.7	350.57	0.12822	-	DEAF SMITH COUNTY INTERCHANGE - G15039_T 230.00 230KV CKT 1
FDNSLock-Blown up	06ALL	0	20L	G15_056		Non-Converged Contingency	318.7	350.57	0.12822	-	G15039_T 230.00 - PLANT X STATION 230KV CKT 1
FDNSLock-Blown up	06ALL	0	20L	G15_056		Non-Converged Contingency	1584	2098	0.12754	-	CHISHOLM7 345.00 - GRACEMONT 345KV CKT 1
FDNSLock-Blown up	06ALL	0	20L	G15_056		Non-Converged Contingency	1584	2098	0.12754	-	GEN514805 1-SOONER UNIT 1
FDNSLock-Blown up	06ALL	0	20L	G15_056		Non-Converged Contingency	1584	2098	0.12754	-	GEN514806 1-SOONER UNIT 2
FDNSLock-Blown up	06ALL	0	20L	G15_056		Non-Converged Contingency	1584	2098	0.12754	-	GEN515040 1-SEMINOLE 1G
FDNSLock-Blown up	06ALL	0	20L	G15_056		Non-Converged Contingency	1584	2098	0.12754	-	GEN515223 1-MUSKOGEE 4G
FDNSLock-Blown up	06ALL	0	20L	G15_056		Non-Converged Contingency	956.09	1051.7	0.12611	-	G14_038T 345.00 - Hitchland Interchange 345KV CKT 1
FDNSLock-Blown up	06ALL	0	20L	G15_056		Non-Converged Contingency	956.09	1051.7	0.12611	-	G14_038T 345.00 - POTTER COUNTY INTERCHANGE 345KV CKT 1
FDNSLock-Blown up	06ALL	0	20L	G15_056		Non-Converged Contingency	560	560	0.12611	-	POTTER COUNTY INTERCHANGE (WAUK 90343-A) 345/230/13.2KV TRANSFORMER CKT 1
FDNSLock-Blown up	06ALL	0	20L	G15_056		Non-Converged Contingency	560	560	0.12611	-	POTTER COUNTY INTERCHANGE (WAUK 90343-A) 345/230/13.2KV TRANSFORMER CKT 1
FDNSLock-Blown up	06ALL	0	20L	G15_056		Non-Converged Contingency	1792	1792	0.12556	-	HOBBS - YOAKUM_345 345.00 345KV CKT 1
FDNSLock-Blown up	06ALL	0	20L	G15_056		Non-Converged Contingency	318.7	350.57	0.12128	-	BUSHLAND INTERCHANGE - POTTER COUNTY INTERCHANGE 230KV CKT 1
FDNSLock-Blown up	06ALL	0	20L	G15_056		Non-Converged Contingency	318.7	350.57	0.12128	-	BUSHLAND INTERCHANGE - POTTER COUNTY INTERCHANGE 230KV CKT 1
FDNSLock-Blown up	06ALL	0	20L	G15_056		Non-Converged Contingency	318.7	350.57	0.12119	-	CUNNINGHAM STATION - EDDY COUNTY INTERCHANGE 230KV CKT 1
FDNSLock-Blown up	06ALL	0	20L	G15_056		Non-Converged Contingency	318.7	350.57	0.12119	-	CUNNINGHAM STATION - EDDY COUNTY INTERCHANGE 230KV CKT 1
FDNSLock-Blown up	06ALL	0	20L	G15_056		Non-Converged Contingency	0	0	0.11784	-	P12:115:SPS:T59.1.CARGIL.CURRY
FDNSLock-Blown up	06ALL	0	20L	G15_056		Non-Converged Contingency	956.09	1051.7	0.11353	-	Hitchland Interchange - WALKTAP7 345.00 345KV CKT 1
FDNSLock-Blown up	06ALL	0	20L	G15_056		Non-Converged Contingency	956.09	1051.7	0.11353	-	Hitchland Interchange - WALKTAP7 345.00 345KV CKT 1
FDNSLock-Blown up	06ALL	0	20L	G15_056		Non-Converged Contingency	478	502	0.10404	-	NEWHART 230 - POTTER COUNTY INTERCHANGE 230KV CKT 1
FDNSLock-Blown up	06ALL	0	20L	G15_056		Non-Converged Contingency	560	560	0.10216	-	TUCO INTERCHANGE (GE M1022338) 345/230/13.2KV TRANSFORMER CKT 1
FDNSLock-Blown up	06ALL	0	20L	G15_056		Non-Converged Contingency	560	560	0.10216	-	TUCO INTERCHANGE (GE M1022338) 345/230/13.2KV TRANSFORMER CKT 1

SOLUTION	GROUP	SCENARIO	SEASON	SOURCE	DIRECTION	MONITORED ELEMENT	RATEA (MVA)	RATEB(MVA)	TDF	TC%LOADING (% MVA)	CONTINGENCY
FDNSLock-Blown up	06ALL	0	20L	G15_056		Non-Converged Contingency	717	789	0.10032	-	G14-057T 345.00 - LAWTON EASTSIDE 345KV CKT 1
FDNSLock-Blown up	06ALL	0	20L	G15_056		Non-Converged Contingency	717	789	0.10032	-	G14-057T 345.00 - SUNNYSIDE 345KV CKT 1
FDNSLock-Blown up	06ALL	0	20L	G15_056		Non-Converged Contingency	0	0	0.09924	-	P12:115:SPS:W40.1.WCANYON.DFSMTH
FDNSLock-Blown up	06ALL	0	20L	G15_056		Non-Converged Contingency	956.09	1051.7	0.0991	-	FINNEY SWITCHING STATION - HOLCOMB 345KV CKT 1
FDNSLock-Blown up	06ALL	0	20L	G15_056		Non-Converged Contingency	956.09	1051.7	0.0991	-	FINNEY SWITCHING STATION - HOLCOMB 345KV CKT 1
FDNSLock-Blown up	06ALL	0	20L	G15_056		Non-Converged Contingency	956.09	1051.7	0.0991	-	FINNEY SWITCHING STATION - WALKTAP7 345.00 345KV CKT 1
FDNSLock-Blown up	06ALL	0	20L	G15_056		Non-Converged Contingency	956.09	1051.7	0.0991	-	FINNEY SWITCHING STATION - WALKTAP7 345.00 345KV CKT 1
FDNSLock-Blown up	06ALL	0	20L	G15_056		Non-Converged Contingency	0	0	0.09598	-	P12:230:AEPW:ELKCITY6:SWEETWT6
FDNSLock-Blown up	06ALL	0	20L	G15_056		Non-Converged Contingency	497	547	0.09322	-	TUCO INTERCHANGE - TUCO_2 230.00 230KV CKT 1
FDNSLock-Blown up	06ALL	0	20L	G15_056		Non-Converged Contingency	0	0	0.09224	-	P12:230:AEPW-SPS:SWEETWT6:WHEELER 6
FDNSLock-Blown up	06ALL	0	20L	G15_056		Non-Converged Contingency	478.05	501.55	0.0906	-	EDDY COUNTY INTERCHANGE - SEVEN RIVERS INTERCHANGE 230KV CKT 1
FDNSLock-Blown up	06ALL	0	20L	G15_056		Non-Converged Contingency	478.05	501.55	0.0906	-	EDDY COUNTY INTERCHANGE - SEVEN RIVERS INTERCHANGE 230KV CKT 1
FDNSLock-Blown up	06ALL	0	20L	G15_056		Non-Converged Contingency	560	560	0.08968	-	TUCO_2 345.00 (TUCO_2 XFMR) 345/230/13.2KV TRANSFORMER CKT 1
FDNSLock-Blown up	06ALL	0	20L	G15_056		Non-Converged Contingency	560	644	0.08902	-	TUCO INTERCHANGE (SIEM 8743066) 345/230/13.2KV TRANSFORMER CKT 2
FDNSLock-Blown up	06ALL	0	20L	G15_056		Non-Converged Contingency	560	644	0.08902	-	TUCO INTERCHANGE (SIEM 8743066) 345/230/13.2KV TRANSFORMER CKT 2
FDNSLock-Blown up	06ALL	0	20L	G15_056		Non-Converged Contingency	0	0	0.08838	-	P12:115:SPS:T58.1.HERFRD.CARGIL
FDNSLock-Blown up	06ALL	0	20L	G15_056		Non-Converged Contingency	478.05	501.55	0.08512	-	PECOS INTERCHANGE - SEVEN RIVERS INTERCHANGE 230KV CKT 1
FDNSLock-Blown up	06ALL	0	20L	G15_056		Non-Converged Contingency	478.05	501.55	0.08512	-	PECOS INTERCHANGE - SEVEN RIVERS INTERCHANGE 230KV CKT 1
FDNSLock-Blown up	06ALL	0	20L	G15_056		Non-Converged Contingency	0	0	0.08458	-	P12:115:SPS:T28.1.LAMTON.PLANTX
FDNSLock-Blown up	06ALL	0	20L	G15_056		Non-Converged Contingency	478	502	0.08148	-	AMARILLO SOUTH INTERCHANGE - G15031_T 230.00 230KV CKT 1
FDNSLock-Blown up	06ALL	0	20L	G15_056		Non-Converged Contingency	1420	1775	0.07831	-	G11_051T 345.00 - TATONGA7 345.00 345KV CKT 1
FDNSLock-Blown up	06ALL	0	20L	G15_056		Non-Converged Contingency	1420	1775	0.07831	-	G11_051T 345.00 - WOODWARD DISTRICT EHV 345KV CKT 1
FDNSLock-Blown up	06ALL	0	20L	G15_056		Non-Converged Contingency	1195	1195	0.07831	-	MATHWSN7 345.00 - TATONGA7 345.00 345KV CKT 1
FDNSLock-Blown up	06ALL	0	20L	G15_056		Non-Converged Contingency	1561	1793	0.07579	-	THISTLE7 345.00 - WOODWARD DISTRICT EHV 345KV CKT 1
FDNSLock-Blown up	06ALL	0	20L	G15_056		Non-Converged Contingency	1561	1793	0.07579	-	THISTLE7 345.00 - WOODWARD DISTRICT EHV 345KV CKT 1
FDNSLock-Blown up	06ALL	0	20L	G15_056		Non-Converged Contingency	1561	1793	0.07579	-	THISTLE7 345.00 - WOODWARD DISTRICT EHV 345KV CKT 2
FDNSLock-Blown up	06ALL	0	20L	G15_056		Non-Converged Contingency	1561	1793	0.07579	-	THISTLE7 345.00 - WOODWARD DISTRICT EHV 345KV CKT 2
FDNSLock-Blown up	06ALL	0	20L	G15_056		Non-Converged Contingency	1195	1195	0.07186	-	ARCADIA - NORTHWEST 345KV CKT 1
FDNSLock-Blown up	06ALL	0	20L	G15_056		Non-Converged Contingency	956	956	0.06797	-	CIMARRON - NORTHWEST 345KV CKT 1
FDNSLock-Blown up	06ALL	0	20L	G15_056		Non-Converged Contingency	0	0	0.06796	-	P12:230:SPS:K37.1.TOLK.LAMB
FDNSLock-Blown up	06ALL	0	20L	G15_056		Non-Converged Contingency	0	0	0.06616	-	P12:115:SPS:V05.1.OSAGE.WCANYON
FDNSLock-Blown up	06ALL	0	20L	G15_056		Non-Converged Contingency	1195	1195	0.06468	-	MATHWSN7 345.00 - NORTHWEST 345KV CKT 1
FDNSLock-Blown up	06ALL	0	20L	G15_056		Non-Converged Contingency	0	0	0.05987	-	P12:138:AEPW-OGE:WTH_JCT4:JENSEN4
FDNSLock-Blown up	06ALL	0	20L	G15_056		Non-Converged Contingency	0	0	0.05854	-	P12:115:SPS:T71.1.CRLSLE.YUMA
FDNSLock-Blown up	06ALL	0	20L	G15_056		Non-Converged Contingency	435.82	501.55	0.05843	-	Harrington Station Mid Bus - RANDALL COUNTY INTERCHANGE 230KV CKT 1
FDNSLock-Blown up	06ALL	0	20L	G15_056		Non-Converged Contingency	435.82	501.55	0.05843	-	Harrington Station Mid Bus - RANDALL COUNTY INTERCHANGE 230KV CKT 1
FDNSLock-Blown up	06ALL	0	20L	G15_056		Non-Converged Contingency	0	0	0.05833	-	P12:115:SPS:T43.1.SEVEN.EDDY_S
FDNSLock-Blown up	06ALL	0	20L	G15_056		Non-Converged Contingency	1532	1793	0.05828	-	G1524G1525 345.00 - THISTLE7 345.00 345KV CKT 1
FDNSLock-Blown up	06ALL	0	20L	G15_056		Non-Converged Contingency	1532	1793	0.05828	-	G1524G1525 345.00 - THISTLE7 345.00 345KV CKT 2
FDNSLock-Blown up	06ALL	0	20L	G15_056		Non-Converged Contingency	1532	1793	0.05828	-	G1524G1525 345.00 - WICHITA 345KV CKT 1
FDNSLock-Blown up	06ALL	0	20L	G15_056		Non-Converged Contingency	1532	1793	0.05828	-	G1524G1525 345.00 - WICHITA 345KV CKT 2
FDNSLock-Blown up	06ALL	0	20L	G15_056		Non-Converged Contingency	1532	1793	0.05828	-	GEN532653 1-JEFFREY ENERGY CENTER UNIT 3
FDNSLock-Blown up	06ALL	0	20L	G15_056		Non-Converged Contingency	1532	1793	0.05828	-	GEN532663 1-LAWRENCE ENERGY CENTER UNIT 5
FDNSLock-Blown up	06ALL	0	20L	G15_056		Non-Converged Contingency	1532	1793	0.05828	-	GEN532751 1-WOLF CREEK GENERATING STATION UNIT 1
FDNSLock-Blown up	06ALL	0	20L	G15_056		Non-Converged Contingency	560	644	0.05726	-	HOBBS (UPDATE DATA) 345/230/13.2KV TRANSFORMER CKT 1
FDNSLock-Blown up	06ALL	0	20L	G15_056		Non-Converged Contingency	956	956	0.05694	-	G15063_T 345.00 - MATHWSN7 345.00 345KV CKT 1
FDNSLock-Blown up	06ALL	0	20L	G15_056		Non-Converged Contingency	956	956	0.05694	-	G15063_T 345.00 - WOODRING 345KV CKT 1
FDNSLock-Blown up	06ALL	0	20L	G15_056		Non-Converged Contingency	1039	1195	0.05541	-	NORTHWEST - SPRING CREEK 345KV CKT 1
FDNSLock-Blown up	06ALL	0	20L	G15_056		Non-Converged Contingency	1039	1195	0.05541	-	SOONER - SPRING CREEK 345KV CKT 1
FDNSLock-Blown up	06ALL	0	20L	G15_056		Non-Converged Contingency	1793	1793	0.05487	-	BVRCNTY7 345.00 - G11-14T 345.00 345KV CKT 1
FDNSLock-Blown up	06ALL	0	20L	G15_056		Non-Converged Contingency	1716	1793	0.05487	-	BVRCNTY7 345.00 - G11-14T 345.00 345KV CKT 2
FDNSLock-Blown up	06ALL	0	20L	G15_056		Non-Converged Contingency	1792	1792	0.05487	-	BVRCNTY7 345.00 - OPTIMA 345.00 345KV CKT 1
FDNSLock-Blown up	06ALL	0	20L	G15_056		Non-Converged Contingency	1792	1792	0.05487	-	BVRCNTY7 345.00 - OPTIMA 345.00 345KV CKT 2
FDNSLock-Blown up	06ALL	0	20L	G15_056		Non-Converged Contingency	1793	1793	0.05487	-	G11-14T 345.00 - WOODWARD DISTRICT EHV 345KV CKT 1
FDNSLock-Blown up	06ALL	0	20L	G15_056		Non-Converged Contingency	1716	1793	0.05487	-	G11-14T 345.00 - WOODWARD DISTRICT EHV 345KV CKT 2
FDNSLock-Blown up	06ALL	0	20L	G15_056		Non-Converged Contingency	1792	1792	0.05487	-	Hitchland Interchange - OPTIMA 345.00 345KV CKT 1
FDNSLock-Blown up	06ALL	0	20L	G15_056		Non-Converged Contingency	1792	1792	0.05487	-	Hitchland Interchange - OPTIMA 345.00 345KV CKT 2
FDNSLock-Blown up	06ALL	0	20L	G15_056		Non-Converged Contingency	478.05	501.95	0.05425	-	PLANT X STATION - SUNDOWN INTERCHANGE 230KV CKT 1
FDNSLock-Blown up	06ALL	0	20L	G15_056		Non-Converged Contingency	478.05	501.95	0.05425	-	PLANT X STATION - SUNDOWN INTERCHANGE 230KV CKT 1
FDNSLock-Blown up	06ALL	0	20L	G15_056		Non-Converged Contingency	785	785	0.05416	-	GEN640009 1-COOPER NUCLEAR STATION
FDNSLock-Blown up	06ALL	0	20L	G15_056		Non-Converged Contingency	785	785	0.05416	-	MINGO - RED WILLOW 345KV CKT 1
FDNSLock-Blown up	06ALL	0	20L	G15_056		Non-Converged Contingency	785	785	0.05416	-	MINGO - RED WILLOW 345KV CKT 1
FDNSLock-Blown up	06ALL	0	20L	G15_056		Non-Converged Contingency	501.95	501.95	0.05332	-	HITCHLAND INTERCHANGE - MOORE COUNTY INTERCHANGE 230KV CKT 1
FDNSLock-Blown up	06ALL	0	20L	G15_056		Non-Converged Contingency	501.95	501.95	0.05332	-	HITCHLAND INTERCHANGE - MOORE COUNTY INTERCHANGE 230KV CKT 1
FDNSLock-Blown up	06ALL	0	20L	G15_056		Non-Converged Contingency	0	0	0.05296	-	P12:115:SPS:T62.1.SEVEN.PECOS
FDNSLock-Blown up	06ALL	0	20L	G15_056		Non-Converged Contingency	762.5	762.5	0.05292	-	MINGO - SETAB 345KV CKT 1
FDNSLock-Blown up	06ALL	0	20L	G15_056		Non-Converged Contingency	762.5	762.5	0.05292	-	MINGO - SETAB 345KV CKT 1
FDNSLock-Blown up	06ALL	0	20L	G15_056		Non-Converged Contingency	318.7	350.57	0.05274	-	LUBBOCK SOUTH INTERCHANGE - WOLFFORTH INTERCHANGE 230KV CKT 1
FDNSLock-Blown up	06ALL	0	20L	G15_056		Non-Converged Contingency	318.7	350.57	0.05274	-	LUBBOCK SOUTH INTERCHANGE - WOLFFORTH INTERCHANGE 230KV CKT 1
FDNSLock-Blown up	06ALL	0	20L	G15_056		Non-Converged Contingency	318.7	350.57	0.05274	-	LUBBOCK SOUTH INTERCHANGE 230KV SWITCHED SHUNT
FDNSLock-Blown up	06ALL	0	20L	G15_056		Non-Converged Contingency	717.1	717.1	0.05246	-	HOLCOMB - SETAB 345KV CKT 1
FDNSLock-Blown up	06ALL	0	20L	G15_056		Non-Converged Contingency	717.1	717.1	0.05246	-	HOLCOMB - SETAB 345KV CKT 1
FDNSLock-Blown up	06ALL	0	20L	G15_056		Non-Converged Contingency	560	644	0.05196	-	Hitchland Interchange (SIEM 8743067) 345/230/13.2KV TRANSFORMER CKT 2
FDNSLock-Blown up	06ALL	0	20L	G15_056		Non-Converged Contingency	560	644	0.05196	-	Hitchland Interchange (SIEM 8743067) 345/230/13.2KV TRANSFORMER CKT 2
FDNSLock-Blown up	06ALL	0	20L	G15_056		Non-Converged Contingency	0	0	0.0508	-	P12:138:AEPW:S.W.S.-4:L.E.S.-4
FDNSLock-Blown up	06ALL	0	20L	G15_056		Non-Converged Contingency	1195	1195	0.05053	-	SOONER - WOODRING 345KV CKT 1
FDNSLock-Blown up	06ALL	0	20L	G15_056		Non-Converged Contingency	439	439	0.04986	-	CHISHOLM6 230.00 - ELK CITY 230KV 230KV CKT 1
FDNSLock-Blown up	06ALL	0	20L	G15_056		Non-Converged Contingency	450	450	0.04986	-	ELK CITY 230KV (ELKCTY-6) 230/138/13.8KV TRANSFORMER CKT 1
FDNSLock-Blown up	06ALL	0	20L	G15_056		Non-Converged Contingency	450	450	0.04986	-	ELK CITY 230KV (ELKCTY-6) 230/138/13.8KV TRANSFORMER CKT 1

SOLUTION	GROUP	SCENARIO	SEASON	SOURCE	DIRECTION	MONITORED ELEMENT	RATEA (MVA)	RATEB(MVA)	TDF	TC%LOADING (% MVA)	CONTINGENCY
FDNSLock-Blown up	06ALL	0	20L	G15_056		Non-Converged Contingency	0	0	0.04971	-	P12:115:SPS:T66.1.RNDALL.HAPPY
FDNSLock-Blown up	06ALL	0	20L	G15_056		Non-Converged Contingency	0	0	0.04971	-	P12:115:SPS:T67.1.HAPPY.KRESS
FDNSLock-Blown up	06ALL	0	20L	G15_056		Non-Converged Contingency	318.7	350.57	0.04966	-	G15079_T 230.00 - YOAKUM COUNTY INTERCHANGE 230KV CKT 1
FDNSLock-Blown up	06ALL	0	20L	G15_056		Non-Converged Contingency	478.05	501.55	0.04835	-	AMARILLO SOUTH INTERCHANGE - NICHOLS STATION 230KV CKT 1
FDNSLock-Blown up	06ALL	0	20L	G15_056		Non-Converged Contingency	478.05	501.55	0.04835	-	AMARILLO SOUTH INTERCHANGE - NICHOLS STATION 230KV CKT 1
FDNSLock-Blown up	06ALL	0	20L	G15_056		Non-Converged Contingency	478	502	0.04805	-	CARLISLE INTERCHANGE - TUCO INTERCHANGE 230KV CKT 1
FDNSLock-Blown up	06ALL	0	20L	G15_056		Non-Converged Contingency	478	502	0.04805	-	CARLISLE INTERCHANGE - TUCO INTERCHANGE 230KV CKT 1
FDNSLock-Blown up	06ALL	0	20L	G15_056		Non-Converged Contingency	0	0	0.04737	-	P12:138:WFEC-AEPW:WASHITA4:CLINTJC4
FDNSLock-Blown up	06ALL	0	20L	G15_056		Non-Converged Contingency	878	956	0.04628	-	BENTON - WICHITA 345KV CKT 1
FDNSLock-Blown up	06ALL	0	20L	G15_056		Non-Converged Contingency	421	439	0.04612	-	CHISHOLM6 230.00 - SWEETWATER 230KV CKT 1
FDNSLock-Blown up	06ALL	0	20L	G15_056		Non-Converged Contingency	348.58	381.24	0.04612	-	STATELINE INTERCHANGE - STLN-DEMARC6 230KV CKT 1
FDNSLock-Blown up	06ALL	0	20L	G15_056		Non-Converged Contingency	353	353	0.04612	-	STLN-DEMARC6 - SWEETWATER 230KV CKT 1
FDNSLock-Blown up	06ALL	0	20L	G15_056		Non-Converged Contingency	318.7	350.57	0.04611	-	MOORE COUNTY INTERCHANGE - POTTER COUNTY INTERCHANGE 230KV CKT 1
FDNSLock-Blown up	06ALL	0	20L	G15_056		Non-Converged Contingency	318.7	350.57	0.04611	-	MOORE COUNTY INTERCHANGE - POTTER COUNTY INTERCHANGE 230KV CKT 1
FDNSLock-Blown up	06ALL	0	20L	G15_056		Non-Converged Contingency	1195	1195	0.04594	-	JOHNSON COUNTY - SUNNYSIDE 345KV CKT 1
FDNSLock-Blown up	06ALL	0	20L	G15_056		Non-Converged Contingency	1504	1792	0.04576	-	AXTELL - POST ROCK 345KV CKT 1
FDNSLock-Blown up	06ALL	0	20L	G15_056		Non-Converged Contingency	0	0	0.04554	-	P12:115:SPS:V03.1.NICHLS.EPLANT
FDNSLock-Blown up	06ALL	0	20L	G15_056		Non-Converged Contingency	1505	1793	0.04525	-	G13-010T 345.00 - POST ROCK 345KV CKT 1
FDNSLock-Blown up	06ALL	0	20L	G15_056		Non-Converged Contingency	1505	1793	0.04525	-	G13-010T 345.00 - SPEARVILLE 345KV CKT 1
FDNSLock-Blown up	06ALL	0	20L	G15_056		Non-Converged Contingency	560	644	0.0452	-	Hitchland Interchange (H TB80155502) 345/230/13.2KV TRANSFORMER CKT 1
FDNSLock-Blown up	06ALL	0	20L	G15_056		Non-Converged Contingency	560	644	0.0452	-	Hitchland Interchange (H TB80155502) 345/230/13.2KV TRANSFORMER CKT 1
FDNSLock-Blown up	06ALL	0	20L	G15_056		Non-Converged Contingency	717	789	0.04482	-	GRACEMONT - LAWTON EASTSIDE 345KV CKT 1
FDNSLock-Blown up	06ALL	0	20L	G15_056		Non-Converged Contingency	717	789	0.04482	-	GRACEMONT - LAWTON EASTSIDE 345KV CKT 1
FDNSLock-Blown up	06ALL	0	20L	G15_056		Non-Converged Contingency	478	478	0.0445	-	CARLISLE INTERCHANGE - WOLFFORTH INTERCHANGE 230KV CKT 1
FDNSLock-Blown up	06ALL	0	20L	G15_056		Non-Converged Contingency	1195	1195	0.0442	-	CIMARRON - DRAPER LAKE 345KV CKT 1
FDNSLock-Blown up	06ALL	0	20L	G15_056		Non-Converged Contingency	318.7	350.57	0.04378	-	G13_027T 230.00 - YOAKUM COUNTY INTERCHANGE 230KV CKT 1
FDNSLock-Blown up	06ALL	0	20L	G15_056		Non-Converged Contingency	956	956	0.04247	-	GERALD GENTLEMAN STATION - RED WILLOW 345KV CKT 1
FDNSLock-Blown up	06ALL	0	20L	G15_056		Non-Converged Contingency	1151	1195	0.0424	-	JOHNSON COUNTY - PITTSBURG 345KV CKT 1
FDNSLock-Blown up	06ALL	0	20L	G15_056		Non-Converged Contingency	1151	1195	0.0424	-	JOHNSON COUNTY - PITTSBURG 345KV CKT 1
FDNSLock-Blown up	06ALL	0	20L	G15_056		Non-Converged Contingency	1035	1035	0.04064	-	EMPORIA ENERGY CENTER - G14_001T 345.00 345KV CKT 1
FDNSLock-Blown up	06ALL	0	20L	G15_056		Non-Converged Contingency	1035	1035	0.04064	-	G14_001T 345.00 - WICHITA 345KV CKT 1
FDNSLock-Blown up	06ALL	0	20L	G15_056		Non-Converged Contingency	502	502	0.03932	-	GRAPEVINE INTERCHANGE - NICHOLS STATION 230KV CKT 1
FDNSLock-Blown up	06ALL	0	20L	G15_056		Non-Converged Contingency	502	502	0.03932	-	GRAPEVINE INTERCHANGE - NICHOLS STATION 230KV CKT 1
FDNSLock-Blown up	06ALL	0	20L	G15_056		Non-Converged Contingency	502	502	0.03923	-	GRAPEVINE INTERCHANGE - STATELINE INTERCHANGE 230KV CKT 1
FDNSLock-Blown up	06ALL	0	20L	G15_056		Non-Converged Contingency	502	502	0.03923	-	GRAPEVINE INTERCHANGE - STATELINE INTERCHANGE 230KV CKT 1
FDNSLock-Blown up	06ALL	0	20L	G15_056		Non-Converged Contingency	0	0	0.03873	-	P12:138:AEPW-OGE:CORNVIL4:CIMARON4
FDNSLock-Blown up	06ALL	0	20L	G15_056		Non-Converged Contingency	726.6	726.6	0.03857	-	BUCKNER7 345.00 - HOLCOMB 345KV CKT 1
FDNSLock-Blown up	06ALL	0	20L	G15_056		Non-Converged Contingency	726.6	726.6	0.03857	-	BUCKNER7 345.00 - HOLCOMB 345KV CKT 1
FDNSLock-Blown up	06ALL	0	20L	G15_056		Non-Converged Contingency	1413	1517	0.03857	-	BUCKNER7 345.00 - SPEARVILLE 345KV CKT 1
FDNSLock-Blown up	06ALL	0	20L	G15_056		Non-Converged Contingency	1413	1517	0.03857	-	BUCKNER7 345.00 - SPEARVILLE 345KV CKT 1
FDNSLock-Blown up	06ALL	0	20L	G15_056		Non-Converged Contingency	1195	1195	0.03848	-	GEN520811 1-ANADRK4
FDNSLock-Blown up	06ALL	0	20L	G15_056		Non-Converged Contingency	1195	1195	0.03848	-	HUGO - SUNNYSIDE 345KV CKT 1
FDNSLock-Blown up	06ALL	0	20L	G15_056		Non-Converged Contingency	0	0	0.03839	-	P12:115:SPS:T38.1.POTJCT.WIPP
FDNSLock-Blown up	06ALL	0	20L	G15_056		Non-Converged Contingency	1141	1195	0.03791	-	GEN542951 5-HAWTHORN UNIT #5
FDNSLock-Blown up	06ALL	0	20L	G15_056		Non-Converged Contingency	1141	1195	0.03791	-	LACYGNE - WAVERLY7 345.00 345KV CKT 1
FDNSLock-Blown up	06ALL	0	20L	G15_056		Non-Converged Contingency	1141	1195	0.03791	-	WAVERLY7 345.00 - WOLF CREEK 345KV CKT 1
FDNSLock-Blown up	06ALL	0	20L	G15_056		Non-Converged Contingency	0	0	0.03624	-	P12:230:SPS:K51.1.OASIS.RSVLT
FDNSLock-Blown up	06ALL	0	20L	G15_056		Non-Converged Contingency	1076	1076	0.03571	-	G15074_T 345.00 - HOYT 345KV CKT 1
FDNSLock-Blown up	06ALL	0	20L	G15_056		Non-Converged Contingency	1076	1076	0.03571	-	G15074_T 345.00 - JEFFREY ENERGY CENTER 345KV CKT 1
FDNSLock-Blown up	06ALL	0	20L	G15_056		Non-Converged Contingency	1036	1195	0.03554	-	HOYT - STRANGER CREEK 345KV CKT 1
FDNSLock-Blown up	06ALL	0	20L	G15_056		Non-Converged Contingency	343.79	343.79	0.03549	-	JONES STATION - TUCO INTERCHANGE 230KV CKT 1
FDNSLock-Blown up	06ALL	0	20L	G15_056		Non-Converged Contingency	343.79	343.79	0.03549	-	JONES STATION - TUCO INTERCHANGE 230KV CKT 1
FDNSLock-Blown up	06ALL	0	20L	G15_056		Non-Converged Contingency	1195	1195	0.03536	-	MUSKOGEE - SEMINOLE 345KV CKT 1
FDNSLock-Blown up	06ALL	0	20L	G15_056		Non-Converged Contingency	0	0	0.03503	-	P12:115:SPS:W29.1.OCLTRE.SPRMN
FDNSLock-Blown up	06ALL	0	20L	G15_056		Non-Converged Contingency	0	0	0.03464	-	P12:115:SPS:W08.1.HITCH.LASLEY
FDNSLock-Blown up	06ALL	0	20L	G15_056		Non-Converged Contingency	318.7	319.1	0.03398	-	LAMB COUNTY INTERCHANGE - TOLK STATION WEST 230KV CKT 1
FDNSLock-Blown up	06ALL	0	20L	G15_056		Non-Converged Contingency	0	0	0.03322	-	P12:230:SPS:K43.1.PRNGLE.HARR_E
FDNSLock-Blown up	06ALL	0	20L	G15_056		Non-Converged Contingency	276	304	0.03308	-	CANYON E_TP3115.00 - CANYON WEST SUB 115KV CKT 1
FDNSLock-Blown up	06ALL	0	20L	G15_056		Non-Converged Contingency	160	160	0.03308	-	CANYON E_TP3115.00 - RANDALL COUNTY INTERCHANGE 115KV CKT 1
FDNSLock-Blown up	06ALL	0	20L	G15_056		Non-Converged Contingency	276	304	0.03308	-	CANYON WEST SUB - DAWN SUB 115KV CKT 1
FDNSLock-Blown up	06ALL	0	20L	G15_056		Non-Converged Contingency	276	304	0.03308	-	DAWN SUB - Panda Energy Substation Hereford 115KV CKT 1
FDNSLock-Blown up	06ALL	0	20L	G15_056		Non-Converged Contingency	276	304	0.03308	-	DEAF SMITH COUNTY INTERCHANGE - Panda Energy Substation Hereford 115KV CKT 1
FDNSLock-Blown up	06ALL	0	20L	G15_056		Non-Converged Contingency	0	0	0.03254	-	P12:138:OKGE:3TERM10
FDNSLock-Blown up	06ALL	0	20L	G15_056		Non-Converged Contingency	497.17	546.96	0.03225	-	AMARILLO SOUTH INTERCHANGE - RANDALL COUNTY INTERCHANGE 230KV CKT 1
FDNSLock-Blown up	06ALL	0	20L	G15_056		Non-Converged Contingency	497.17	546.96	0.03225	-	AMARILLO SOUTH INTERCHANGE - RANDALL COUNTY INTERCHANGE 230KV CKT 1
FDNSLock-Blown up	06ALL	0	20L	G15_056		Non-Converged Contingency	717	717	0.03201	-	EMPORIA ENERGY CENTER - SWISSVALE 345KV CKT 1
FDNSLock-Blown up	06ALL	0	20L	G15_056		Non-Converged Contingency	717	717	0.03022	-	SWISSVALE - WEST GARDNER 345KV CKT 1
FDNSLock-Blown up	06ALL	0	20L	G15_056		Non-Converged Contingency	0	0	0.03018	-	P12:138:AEPW:REDROCKRD4:WTH_JCT4
FDNSLock-Blown up	06ALL	0	20L	G15_056		Non-Converged Contingency	0	0	0.0297	-	P12:138:OKGE-AEPW:JENSEN4:REDROCKRD4
FDNSLock-Blown up	06ALL	0	20SP	G15_056		Non-Converged Contingency	956	1042	0.20321	-	G14-074T 345.00 - OKLAUNION 345KV CKT 1
FDNSLock-Blown up	06ALL	0	20SP	G15_056		Non-Converged Contingency	1792	1972	0.16064	-	BORDER 7345.00 - TUCO_2 345.00 345KV CKT 1
FDNSLock-Blown up	06ALL	0	20SP	G15_056		Non-Converged Contingency	1420	1775	0.16064	-	BORDER 7345.00 - TUCO_2 345.00 345KV CKT 2
FDNSLock-Blown up	06ALL	0	20SP	G15_056		Non-Converged Contingency	956.09	1051.7	0.16037	-	G14_038T 345.00 - Hitchland Interchange 345KV CKT 1
FDNSLock-Blown up	06ALL	0	20SP	G15_056		Non-Converged Contingency	956.09	1051.7	0.16037	-	G14_038T 345.00 - POTTER COUNTY INTERCHANGE 345KV CKT 1
FDNSLock-Blown up	06ALL	0	20WP	G15_056		Non-Converged Contingency	0	0	0.25453	-	P12:345:SPS:J07.1.FINN.HITCH
FDNSLock-Blown up	06ALL	0	20WP	G15_056		Non-Converged Contingency	1792	1972	0.21012	-	TUCO INTERCHANGE - TUCO_2 345.00 345KV CKT 1
FDNSLock-Blown up	06ALL	0	20WP	G15_056		Non-Converged Contingency	1022	1124	0.19835	-	G14-074T 345.00 - OKLAUNION 345KV CKT 1
FDNSLock-Blown up	06ALL	0	20WP	G15_056		Non-Converged Contingency	1022	1124	0.19835	-	G14-074T 345.00 - TUCO INTERCHANGE 345KV CKT 1
FDNSLock-Blown up	06ALL	0	20WP	G15_056		Non-Converged Contingency	1022	1124	0.19835	-	OKLAUNION 345KV SWITCHED SHUNT

SOLUTION	GROUP	SCENARIO	SEASON	SOURCE	DIRECTION	MONITORED ELEMENT	RATEA (MVA)	RATEB(MVA)	TDF	TC%LOADING (% MVA)	CONTINGENCY
FDNSLock-Blown up	06ALL	0	20WP	G15_056		Non-Converged Contingency	1792	1792	0.18948	-	TUCO INTERCHANGE - YOAKUM_345 345.00 345KV CKT 1
FDNSLock-Blown up	06ALL	0	20WP	G15_056		Non-Converged Contingency	956	956	0.17289	-	CIMARRON - MINCO 345KV CKT 1
FDNSLock-Blown up	06ALL	0	20WP	G15_056		Non-Converged Contingency	1195	1195	0.17289	-	GRACEMONT - MINCO 345KV CKT 1
FDNSLock-Blown up	06ALL	0	20WP	G15_056		Non-Converged Contingency	1792	1792	0.16042	-	CHISHOLM7 345.00 - WOODWARD DISTRICT EHV 345KV CKT 1
FDNSLock-Blown up	06ALL	0	20WP	G15_056		Non-Converged Contingency	1792	1972	0.15697	-	BORDER 7345.00 - TUCO_2 345.00 345KV CKT 1
FDNSLock-Blown up	06ALL	0	20WP	G15_056		Non-Converged Contingency	1420	1775	0.15697	-	BORDER 7345.00 - TUCO_2 345.00 345KV CKT 2
FDNSLock-Blown up	06ALL	0	20WP	G15_056		Non-Converged Contingency	1792	1972	0.15697	-	BORDER 7345.00 345KV SWITCHED SHUNT
FDNSLock-Blown up	06ALL	0	20WP	G15_056		Non-Converged Contingency	987.16	1082.8	0.1553	-	G14_038T 345.00 - Hitchland Interchange 345KV CKT 1
FDNSLock-Blown up	06ALL	0	20WP	G15_056		Non-Converged Contingency	987.16	1082.8	0.1553	-	G14_038T 345.00 - POTTER COUNTY INTERCHANGE 345KV CKT 1
FDNSLock-Blown up	06ALL	0	20WP	G15_056		Non-Converged Contingency	560	560	0.1553	-	POTTER COUNTY INTERCHANGE (WAUK 90343-A) 345/230/13.2KV TRANSFORMER CKT 1
FDNSLock-Blown up	06ALL	0	20WP	G15_056		Non-Converged Contingency	560	560	0.1553	-	POTTER COUNTY INTERCHANGE (WAUK 90343-A) 345/230/13.2KV TRANSFORMER CKT 1
FDNSLock-Blown up	06ALL	0	20WP	G15_056		Non-Converged Contingency	1584	2098	0.15365	-	CHISHOLM7 345.00 - GRACEMONT 345KV CKT 1
FDNSLock-Blown up	06ALL	0	20WP	G15_056		Non-Converged Contingency	557	557	0.14635	-	BUSHLAND INTERCHANGE - DEAF SMITH COUNTY INTERCHANGE 230KV CKT 1
FDNSLock-Blown up	06ALL	0	20WP	G15_056		Non-Converged Contingency	557	557	0.14635	-	BUSHLAND INTERCHANGE - DEAF SMITH COUNTY INTERCHANGE 230KV CKT 1
FDNSLock-Blown up	06ALL	0	20WP	G15_056		Non-Converged Contingency	329.05	360.92	0.13599	-	DEAF SMITH COUNTY INTERCHANGE - G15039_T 230.00 230KV CKT 1
FDNSLock-Blown up	06ALL	0	20WP	G15_056		Non-Converged Contingency	329.05	360.92	0.13599	-	G15039_T 230.00 - PLANT X STATION 230KV CKT 1
FDNSLock-Blown up	06ALL	0	20WP	G15_056		Non-Converged Contingency	987.16	1082.8	0.13566	-	Hitchland Interchange - WALKTAP7 345.00 345KV CKT 1
FDNSLock-Blown up	06ALL	0	20WP	G15_056		Non-Converged Contingency	987.16	1082.8	0.13566	-	Hitchland Interchange - WALKTAP7 345.00 345KV CKT 1
FDNSLock-Blown up	06ALL	0	20WP	G15_056		Non-Converged Contingency	329.05	360.92	0.12942	-	BUSHLAND INTERCHANGE - POTTER COUNTY INTERCHANGE 230KV CKT 1
FDNSLock-Blown up	06ALL	0	20WP	G15_056		Non-Converged Contingency	329.05	360.92	0.12942	-	BUSHLAND INTERCHANGE - POTTER COUNTY INTERCHANGE 230KV CKT 1
FDNSLock-Blown up	06ALL	0	20WP	G15_056		Non-Converged Contingency	717	789	0.12407	-	G14-057T 345.00 - LAWTON EASTSIDE 345KV CKT 1
FDNSLock-Blown up	06ALL	0	20WP	G15_056		Non-Converged Contingency	717	789	0.12407	-	G14-057T 345.00 - SUNNYSIDE 345KV CKT 1
FDNSLock-Blown up	06ALL	0	20WP	G15_056		Non-Converged Contingency	0	0	0.12321	-	P12:230:AEPW-SPS:SWEETWT6:WHEELER 6
FDNSLock-Blown up	06ALL	0	20WP	G15_056		Non-Converged Contingency	0	0	0.1231	-	P12:230:AEPW:ELKCITY6:SWEETWT6
FDNSLock-Blown up	06ALL	0	20WP	G15_056		Non-Converged Contingency	956.09	1051.7	0.11887	-	FINNEY SWITCHING STATION - HOLCOMB 345KV CKT 1
FDNSLock-Blown up	06ALL	0	20WP	G15_056		Non-Converged Contingency	956.09	1051.7	0.11887	-	FINNEY SWITCHING STATION - HOLCOMB 345KV CKT 1
FDNSLock-Blown up	06ALL	0	20WP	G15_056		Non-Converged Contingency	987.16	1082.8	0.11887	-	FINNEY SWITCHING STATION - WALKTAP7 345.00 345KV CKT 1
FDNSLock-Blown up	06ALL	0	20WP	G15_056		Non-Converged Contingency	987.16	1082.8	0.11887	-	FINNEY SWITCHING STATION - WALKTAP7 345.00 345KV CKT 1
FDNSLock-Blown up	06ALL	0	20WP	G15_056		Non-Converged Contingency	557	557	0.10985	-	NEWHART 230 - POTTER COUNTY INTERCHANGE 230KV CKT 1
FDNSLock-Blown up	06ALL	0	20WP	G15_056		Non-Converged Contingency	1420	1775	0.09274	-	G11_051T 345.00 - TATONGA7 345.00 345KV CKT 1
FDNSLock-Blown up	06ALL	0	20WP	G15_056		Non-Converged Contingency	1420	1775	0.09274	-	G11_051T 345.00 - WOODWARD DISTRICT EHV 345KV CKT 1
FDNSLock-Blown up	06ALL	0	20WP	G15_056		Non-Converged Contingency	1195	1195	0.09274	-	MATHWSN7 345.00 - TATONGA7 345.00 345KV CKT 1
FDNSLock-Blown up	06ALL	0	20WP	G15_056		Non-Converged Contingency	1561	1793	0.08965	-	THISTLE7 345.00 - WOODWARD DISTRICT EHV 345KV CKT 1
FDNSLock-Blown up	06ALL	0	20WP	G15_056		Non-Converged Contingency	1561	1793	0.08965	-	THISTLE7 345.00 - WOODWARD DISTRICT EHV 345KV CKT 1
FDNSLock-Blown up	06ALL	0	20WP	G15_056		Non-Converged Contingency	1561	1793	0.08965	-	THISTLE7 345.00 - WOODWARD DISTRICT EHV 345KV CKT 2
FDNSLock-Blown up	06ALL	0	20WP	G15_056		Non-Converged Contingency	1561	1793	0.08965	-	THISTLE7 345.00 - WOODWARD DISTRICT EHV 345KV CKT 2
FDNSLock-Blown up	06ALL	0	20WP	G15_056		Non-Converged Contingency	478	502	0.08331	-	AMARILLO SOUTH INTERCHANGE - G15031_T 230.00 230KV CKT 1
FDNSLock-Blown up	06ALL	0	20WP	G15_056		Non-Converged Contingency	1793	1793	0.07029	-	G11-14T 345.00 - WOODWARD DISTRICT EHV 345KV CKT 1
FDNSLock-Blown up	06ALL	0	20WP	G15_056		Non-Converged Contingency	1716	1793	0.07029	-	G11-14T 345.00 - WOODWARD DISTRICT EHV 345KV CKT 2
FDNSLock-Blown up	06ALL	0	20WP	G15_056		Non-Converged Contingency	556.92	556.92	0.06587	-	HITCHLAND INTERCHANGE - MOORE COUNTY INTERCHANGE 230KV CKT 1
FDNSLock-Blown up	06ALL	0	20WP	G15_056		Non-Converged Contingency	556.92	556.92	0.06587	-	HITCHLAND INTERCHANGE - MOORE COUNTY INTERCHANGE 230KV CKT 1
FDNSLock-Blown up	06ALL	0	20WP	G15_056		Non-Converged Contingency	421	439	0.06161	-	CHISHOLM6 230.00 - SWEETWATER 230KV CKT 1
FDNSLock-Blown up	06ALL	0	20WP	G15_056		Non-Converged Contingency	435.02	457.73	0.06161	-	STATELINE INTERCHANGE - STLN-DEMARC6 230KV CKT 1
FDNSLock-Blown up	06ALL	0	20WP	G15_056		Non-Converged Contingency	439	439	0.06161	-	STLN-DEMARC6 - SWEETWATER 230KV CKT 1
FDNSLock-Blown up	06ALL	0	20WP	G15_056		Non-Converged Contingency	329.05	360.92	0.05632	-	MOORE COUNTY INTERCHANGE - POTTER COUNTY INTERCHANGE 230KV CKT 1
FDNSLock-Blown up	06ALL	0	20WP	G15_056		Non-Converged Contingency	329.05	360.92	0.05632	-	MOORE COUNTY INTERCHANGE - POTTER COUNTY INTERCHANGE 230KV CKT 1
FDNSLock-Blown up	06ALL	0	20WP	G15_056		Non-Converged Contingency	557	557	0.05267	-	GRAPEVINE INTERCHANGE - NICHOLS STATION 230KV CKT 1
FDNSLock-Blown up	06ALL	0	20WP	G15_056		Non-Converged Contingency	557	557	0.05267	-	GRAPEVINE INTERCHANGE - NICHOLS STATION 230KV CKT 1
FDNSLock-Blown up	06ALL	0	20WP	G15_056		Non-Converged Contingency	557	557	0.05242	-	GRAPEVINE INTERCHANGE - STATELINE INTERCHANGE 230KV CKT 1
FDNSLock-Blown up	06ALL	0	20WP	G15_056		Non-Converged Contingency	557	557	0.05242	-	GRAPEVINE INTERCHANGE - STATELINE INTERCHANGE 230KV CKT 1
FDNSLock-Blown up	06ALL	2	16WP	G15_056		Non-Converged Contingency	1022	1124	0.19705	-	G14-074T 345.00 - OKLAUNION 345KV CKT 1
FDNSLock-Blown up	06ALL	2	16WP	G15_056		Non-Converged Contingency	1022	1124	0.19705	-	G14-074T 345.00 - TUCO INTERCHANGE 345KV CKT 1
FDNSLock-Blown up	06ALL	2	16WP	G15_056		Non-Converged Contingency	987.16	1082.8	0.17288	-	G14_038T 345.00 - Hitchland Interchange 345KV CKT 1
FDNSLock-Blown up	06ALL	2	16WP	G15_056		Non-Converged Contingency	987.16	1082.8	0.17288	-	G14_038T 345.00 - POTTER COUNTY INTERCHANGE 345KV CKT 1
FDNSLock-Blown up	06ALL	2	16WP	G15_056		Non-Converged Contingency	560	560	0.17288	-	POTTER COUNTY INTERCHANGE (WAUK 90343-A) 345/230/13.2KV TRANSFORMER CKT 1
FDNSLock-Blown up	06ALL	2	16WP	G15_056		Non-Converged Contingency	1792	1972	0.15289	-	BORDER 7345.00 - TUCO_2 345.00 345KV CKT 1
FDNSLock-Blown up	06ALL	2	16WP	G15_056		Non-Converged Contingency	1420	1775	0.15289	-	BORDER 7345.00 - TUCO_2 345.00 345KV CKT 2
FDNSLock-Blown up	06ALL	2	17G	G15_056		Non-Converged Contingency	1022	1124	0.1905	-	G14-074T 345.00 - OKLAUNION 345KV CKT 1
FDNSLock-Blown up	06ALL	2	17G	G15_056		Non-Converged Contingency	1022	1124	0.1905	-	G14-074T 345.00 - TUCO INTERCHANGE 345KV CKT 1
FDNSLock-Blown up	06ALL	2	17G	G15_056		Non-Converged Contingency	956.09	1051.7	0.16366	-	G14_038T 345.00 - Hitchland Interchange 345KV CKT 1
FDNSLock-Blown up	06ALL	2	17G	G15_056		Non-Converged Contingency	956.09	1051.7	0.16366	-	G14_038T 345.00 - POTTER COUNTY INTERCHANGE 345KV CKT 1
FDNSLock-Blown up	06ALL	2	17G	G15_056		Non-Converged Contingency	560	560	0.16366	-	POTTER COUNTY INTERCHANGE (WAUK 90343-A) 345/230/13.2KV TRANSFORMER CKT 1
FDNSLock-Blown up	06ALL	2	17G	G15_056		Non-Converged Contingency	1792	1972	0.14715	-	BORDER 7345.00 - TUCO_2 345.00 345KV CKT 1
FDNSLock-Blown up	06ALL	2	17G	G15_056		Non-Converged Contingency	1420	1775	0.14715	-	BORDER 7345.00 - TUCO_2 345.00 345KV CKT 2
FDNSLock-Blown up	06ALL	2	17SP	G15_056		Non-Converged Contingency	956	1042	0.19574	-	G14-074T 345.00 - OKLAUNION 345KV CKT 1
FDNSLock-Blown up	06ALL	2	20L	G15_056		Non-Converged Contingency	0	0	0.21394	-	P12:345:SPS:J07.1.FINN.HITCH
FDNSLock-Blown up	06ALL	2	20L	G15_056		Non-Converged Contingency	1022	1124	0.16915	-	G14-074T 345.00 - OKLAUNION 345KV CKT 1
FDNSLock-Blown up	06ALL	2	20L	G15_056		Non-Converged Contingency	1022	1124	0.16915	-	G14-074T 345.00 - TUCO INTERCHANGE 345KV CKT 1
FDNSLock-Blown up	06ALL	2	20L	G15_056		Non-Converged Contingency	1022	1124	0.16915	-	OKLAUNION 345KV SWITCHED SHUNT
FDNSLock-Blown up	06ALL	2	20L	G15_056		Non-Converged Contingency	1792	1972	0.13645	-	BORDER 7345.00 - TUCO_2 345.00 345KV CKT 1
FDNSLock-Blown up	06ALL	2	20L	G15_056		Non-Converged Contingency	1420	1775	0.13645	-	BORDER 7345.00 - TUCO_2 345.00 345KV CKT 2
FDNSLock-Blown up	06ALL	2	20L	G15_056		Non-Converged Contingency	1584	2098	0.12799	-	CHISHOLM7 345.00 - GRACEMONT 345KV CKT 1
FDNSLock-Blown up	06ALL	2	20L	G15_056		Non-Converged Contingency	956.09	1051.7	0.12676	-	G14_038T 345.00 - Hitchland Interchange 345KV CKT 1
FDNSLock-Blown up	06ALL	2	20L	G15_056		Non-Converged Contingency	956.09	1051.7	0.12676	-	G14_038T 345.00 - POTTER COUNTY INTERCHANGE 345KV CKT 1
FDNSLock-Blown up	06ALL	2	20L	G15_056		Non-Converged Contingency	560	560	0.12676	-	POTTER COUNTY INTERCHANGE (WAUK 90343-A) 345/230/13.2KV TRANSFORMER CKT 1
FDNSLock-Blown up	06ALL	2	20L	G15_056		Non-Converged Contingency	560	560	0.12676	-	POTTER COUNTY INTERCHANGE (WAUK 90343-A) 345/230/13.2KV TRANSFORMER CKT 1
FDNSLock-Blown up	06ALL	2	20L	G15_056		Non-Converged Contingency	956.09	1051.7	0.11422	-	Hitchland Interchange - WALKTAP7 345.00 345KV CKT 1
FDNSLock-Blown up	06ALL	2	20L	G15_056		Non-Converged Contingency	956.09	1051.7	0.11422	-	Hitchland Interchange - WALKTAP7 345.00 345KV CKT 1
FDNSLock-Blown up	06ALL	2	20L	G15_056		Non-Converged Contingency	0	0	0.09634	-	P12:230:AEPW:ELKCITY6:SWEETWT6

SOLUTION	GROUP	SCENARIO	SEASON	SOURCE	DIRECTION	MONITORED ELEMENT	RATEA (MVA)	RATEB(MVA)	TDF	TC%LOADING (% MVA)	CONTINGENCY
FDNSLock-Blown up	06ALL	2	20L	G15_056		Non-Converged Contingency	1195	1195	0.07857	-	MATHWSN7 345.00 - TATONGA7 345.00 345KV CKT 1
FDNSLock-Blown up	06ALL	2	20L	G15_056		Non-Converged Contingency	421	439	0.04629	-	CHISHOLM6 230.00 - SWEETWATER 230KV CKT 1
FDNSLock-Blown up	06ALL	2	20SP	G15_056		Non-Converged Contingency	956	1042	0.2033	-	G14-074T 345.00 - OKLAUNION 345KV CKT 1
FDNSLock-Blown up	06ALL	2	20WP	G15_056		Non-Converged Contingency	1022	1124	0.19859	-	G14-074T 345.00 - OKLAUNION 345KV CKT 1
FDNSLock-Blown up	06ALL	2	20WP	G15_056		Non-Converged Contingency	1022	1124	0.19859	-	G14-074T 345.00 - TUCO INTERCHANGE 345KV CKT 1
FDNSLock-Blown up	06ALL	2	20WP	G15_056		Non-Converged Contingency	1792	1972	0.15718	-	BORDER 7345.00 - TUCO_2 345.00 345KV CKT 1
FDNSLock-Blown up	06ALL	2	20WP	G15_056		Non-Converged Contingency	1420	1775	0.15718	-	BORDER 7345.00 - TUCO_2 345.00 345KV CKT 2
FDNSLock-Blown up	06ALL	2	20WP	G15_056		Non-Converged Contingency	987.16	1082.8	0.15552	-	G14_038T 345.00 - Hitchland Interchange 345KV CKT 1
FDNSLock-Blown up	06ALL	2	20WP	G15_056		Non-Converged Contingency	987.16	1082.8	0.15552	-	G14_038T 345.00 - POTTER COUNTY INTERCHANGE 345KV CKT 1
FDNSLock-Blown up	06ALL	2	20WP	G15_056		Non-Converged Contingency	560	560	0.15552	-	POTTER COUNTY INTERCHANGE (WAUK 90343-A) 345/230/13.2KV TRANSFORMER CKT 1
FDNSLock-Blown up	06ALL	2	20WP	G15_056		Non-Converged Contingency	560	560	0.15552	-	POTTER COUNTY INTERCHANGE (WAUK 90343-A) 345/230/13.2KV TRANSFORMER CKT 1
FDNSLock-Blown up	06ALL	3	16WP	G15_056		Non-Converged Contingency	1022	1124	0.22063	-	G14-074T 345.00 - OKLAUNION 345KV CKT 1
FDNSLock-Blown up	06ALL	3	16WP	G15_056		Non-Converged Contingency	1022	1124	0.22063	-	G14-074T 345.00 - TUCO INTERCHANGE 345KV CKT 1
FDNSLock-Blown up	06ALL	3	17SP	G15_056		Non-Converged Contingency	956	1042	0.21801	-	G14-074T 345.00 - OKLAUNION 345KV CKT 1
FDNSLock-Blown up	06ALL	3	20L	G15_056		Non-Converged Contingency	1022	1124	0.1852	-	G14-074T 345.00 - OKLAUNION 345KV CKT 1
FDNSLock-Blown up	06ALL	3	20L	G15_056		Non-Converged Contingency	1022	1124	0.1852	-	G14-074T 345.00 - TUCO INTERCHANGE 345KV CKT 1
FDNSLock-Blown up	06ALL	3	20L	G15_056		Non-Converged Contingency	1792	1972	0.15565	-	BORDER 7345.00 - TUCO_2 345.00 345KV CKT 1
FDNSLock-Blown up	06ALL	3	20L	G15_056		Non-Converged Contingency	1420	1775	0.15565	-	BORDER 7345.00 - TUCO_2 345.00 345KV CKT 2
FDNSLock-Blown up	06ALL	3	20L	G15_056		Non-Converged Contingency	1584	2098	0.13191	-	CHISHOLM7 345.00 - GRACEMONT 345KV CKT 1
FDNSLock-Blown up	06ALL	3	20L	G15_056		Non-Converged Contingency	956.09	1051.7	0.10823	-	G14_038T 345.00 - Hitchland Interchange 345KV CKT 1
FDNSLock-Blown up	06ALL	3	20L	G15_056		Non-Converged Contingency	956.09	1051.7	0.10823	-	G14_038T 345.00 - POTTER COUNTY INTERCHANGE 345KV CKT 1
FDNSLock-Blown up	06ALL	3	20L	G15_056		Non-Converged Contingency	560	560	0.10823	-	POTTER COUNTY INTERCHANGE (WAUK 90343-A) 345/230/13.2KV TRANSFORMER CKT 1
FDNSLock-Blown up	06ALL	3	20L	G15_056		Non-Converged Contingency	956.09	1051.7	0.10625	-	Hitchland Interchange - WALKTAP7 345.00 345KV CKT 1
FDNSLock-Blown up	06ALL	3	20L	G15_056		Non-Converged Contingency	1195	1195	0.07417	-	MATHWSN7 345.00 - TATONGA7 345.00 345KV CKT 1
FDNSLock-Blown up	06ALL	3	20L	G15_056		Non-Converged Contingency	421	439	0.03137	-	CHISHOLM6 230.00 - SWEETWATER 230KV CKT 1
FDNSLock-Blown up	06ALL	3	20SP	G15_056		Non-Converged Contingency	956	1042	0.21946	-	G14-074T 345.00 - OKLAUNION 345KV CKT 1
FDNSLock-Blown up	06ALL	3	20WP	G15_056		Non-Converged Contingency	1022	1124	0.21487	-	G14-074T 345.00 - OKLAUNION 345KV CKT 1
FDNSLock-Blown up	06ALL	3	20WP	G15_056		Non-Converged Contingency	1022	1124	0.21487	-	G14-074T 345.00 - TUCO INTERCHANGE 345KV CKT 1
FDNSLock-Blown up	06ALL	3	20WP	G15_056		Non-Converged Contingency	1792	1972	0.17686	-	BORDER 7345.00 - TUCO_2 345.00 345KV CKT 1
FDNSLock-Blown up	06ALL	3	20WP	G15_056		Non-Converged Contingency	1420	1775	0.17686	-	BORDER 7345.00 - TUCO_2 345.00 345KV CKT 2
FDNSLock-Blown up	06ALL	3	20WP	G15_056		Non-Converged Contingency	987.16	1082.8	0.13567	-	G14_038T 345.00 - Hitchland Interchange 345KV CKT 1
FDNSLock-Blown up	06ALL	3	20WP	G15_056		Non-Converged Contingency	987.16	1082.8	0.13567	-	G14_038T 345.00 - POTTER COUNTY INTERCHANGE 345KV CKT 1
FDNSLock-Blown up	06ALL	4	16WP	G15_056		Non-Converged Contingency	1022	1124	0.19032	-	G14-074T 345.00 - OKLAUNION 345KV CKT 1
FDNSLock-Blown up	06ALL	4	17G	G15_056		Non-Converged Contingency	956.09	1051.7	0.21419	-	G14_038T 345.00 - Hitchland Interchange 345KV CKT 1
FDNSLock-Blown up	06ALL	4	17G	G15_056		Non-Converged Contingency	956.09	1051.7	0.21419	-	G14_038T 345.00 - POTTER COUNTY INTERCHANGE 345KV CKT 1
FDNSLock-Blown up	06ALL	4	17G	G15_056		Non-Converged Contingency	1022	1124	0.1838	-	G14-074T 345.00 - OKLAUNION 345KV CKT 1
FDNSLock-Blown up	06ALL	4	17G	G15_056		Non-Converged Contingency	1022	1124	0.1838	-	G14-074T 345.00 - TUCO INTERCHANGE 345KV CKT 1
FDNSLock-Blown up	06ALL	4	20L	G15_056		Non-Converged Contingency	0	0	0.23445	-	P12:345:SPS:J07.1.FINN.HITCH
FDNSLock-Blown up	06ALL	4	20L	G15_056		Non-Converged Contingency	956.09	1051.7	0.18247	-	G14_038T 345.00 - Hitchland Interchange 345KV CKT 1
FDNSLock-Blown up	06ALL	4	20L	G15_056		Non-Converged Contingency	956.09	1051.7	0.18247	-	G14_038T 345.00 - POTTER COUNTY INTERCHANGE 345KV CKT 1
FDNSLock-Blown up	06ALL	4	20L	G15_056		Non-Converged Contingency	1022	1124	0.15728	-	G14-074T 345.00 - OKLAUNION 345KV CKT 1
FDNSLock-Blown up	06ALL	4	20L	G15_056		Non-Converged Contingency	1022	1124	0.15728	-	G14-074T 345.00 - TUCO INTERCHANGE 345KV CKT 1
FDNSLock-Blown up	06ALL	4	20L	G15_056		Non-Converged Contingency	1584	2098	0.12582	-	CHISHOLM7 345.00 - GRACEMONT 345KV CKT 1
FDNSLock-Blown up	06ALL	4	20L	G15_056		Non-Converged Contingency	1792	1972	0.12564	-	BORDER 7345.00 - TUCO_2 345.00 345KV CKT 1
FDNSLock-Blown up	06ALL	4	20L	G15_056		Non-Converged Contingency	1420	1775	0.12564	-	BORDER 7345.00 - TUCO_2 345.00 345KV CKT 2
FDNSLock-Blown up	06ALL	4	20L	G15_056		Non-Converged Contingency	956.09	1051.7	0.12516	-	Hitchland Interchange - WALKTAP7 345.00 345KV CKT 1
FDNSLock-Blown up	06ALL	4	20L	G15_056		Non-Converged Contingency	956.09	1051.7	0.12516	-	Hitchland Interchange - WALKTAP7 345.00 345KV CKT 1
FDNSLock-Blown up	06ALL	4	20L	G15_056		Non-Converged Contingency	0	0	0.09439	-	P12:230:AEPW:ELKCITY6:SWEETWT6
FDNSLock-Blown up	06ALL	4	20WP	G15_056		Non-Converged Contingency	987.16	1082.8	0.21299	-	G14_038T 345.00 - Hitchland Interchange 345KV CKT 1
FDNSLock-Blown up	06ALL	4	20WP	G15_056		Non-Converged Contingency	1022	1124	0.18521	-	G14-074T 345.00 - OKLAUNION 345KV CKT 1
FDNSLock-Blown up	06ALL	4	20WP	G15_056		Non-Converged Contingency	1022	1124	0.18521	-	G14-074T 345.00 - TUCO INTERCHANGE 345KV CKT 1
FDNSLock-Blown up	06ALL	5	16WP	G15_056		Non-Converged Contingency	1022	1124	0.18184	-	G14-074T 345.00 - OKLAUNION 345KV CKT 1
FDNSLock-Blown up	06ALL	5	17G	G15_056		Non-Converged Contingency	1022	1124	0.17581	-	G14-074T 345.00 - OKLAUNION 345KV CKT 1
FDNSLock-Blown up	06ALL	5	20L	G15_056		Non-Converged Contingency	1022	1124	0.15179	-	G14-074T 345.00 - OKLAUNION 345KV CKT 1
FDNSLock-Blown up	06ALL	5	20WP	G15_056		Non-Converged Contingency	1022	1124	0.17691	-	G14-074T 345.00 - OKLAUNION 345KV CKT 1
FDNSLock-Blown up	06ALL	6	17G	G15_056		Non-Converged Contingency	1022	1124	0.16857	-	G14-074T 345.00 - OKLAUNION 345KV CKT 1
FDNSLock-Blown up	06ALL	6	20L	G15_056		Non-Converged Contingency	1022	1124	0.1455	-	G14-074T 345.00 - OKLAUNION 345KV CKT 1
FDNSLock-Blown up	06ALL	6	20WP	G15_056		Non-Converged Contingency	1022	1124	0.1698	-	G14-074T 345.00 - OKLAUNION 345KV CKT 1
FDNS	06ALL	0	16WP	G15_056	FROM->TO	BUSHLAND INTERCHANGE - POTTER COUNTY INTERCHANGE 230KV CKT 1	329.05	360.92	0.14898	103.4995	BASE CASE
FDNS	06ALL	0	20SP	G15_056	FROM->TO	CHISHOLM6 230.00 - ELK CITY 230KV 230KV CKT 1	353	353	0.06319	106.4803	BASE CASE
FDNS	06ALL	0	17SP	G15_056	FROM->TO	CHISHOLM6 230.00 - ELK CITY 230KV 230KV CKT 1	353	353	0.06329	104.7427	BASE CASE
FDNS	06ALL	0	17SP	G15_056	TO->FROM	CIMARRON - MINCO 345KV CKT 1	956	956	0.23529	123.2446	G14-057T 345.00 - SUNNYSIDE 345KV CKT 1
FDNS	06ALL	0	20SP	G15_056	TO->FROM	CIMARRON - MINCO 345KV CKT 1	956	956	0.23966	120.5642	G14-057T 345.00 - SUNNYSIDE 345KV CKT 1
FDNS	06ALL	0	17SP	G15_056	TO->FROM	CIMARRON - MINCO 345KV CKT 1	956	956	0.23529	117.8925	G14-057T 345.00 - LAWTON EASTSIDE 345KV CKT 1
FDNS	06ALL	0	20SP	G15_056	TO->FROM	CIMARRON - MINCO 345KV CKT 1	956	956	0.23966	115.1699	G14-057T 345.00 - LAWTON EASTSIDE 345KV CKT 1
FDNS	06ALL	0	17SP	G15_056	TO->FROM	CIMARRON - MINCO 345KV CKT 1	956	956	0.20203	105.5731	MATHWSN7 345.00 - TATONGA7 345.00 345KV CKT 1
FDNS	06ALL	0	20SP	G15_056	TO->FROM	CIMARRON - MINCO 345KV CKT 1	956	956	0.20476	104.5241	MATHWSN7 345.00 - TATONGA7 345.00 345KV CKT 1
FDNS	06ALL	0	20SP	G15_056	TO->FROM	CIMARRON - MINCO 345KV CKT 1	956	956	0.23841	102.9387	CHISHOLM7 345.00 - WOODWARD DISTRICT EHV 345KV CKT 1
FDNS	06ALL	0	17SP	G15_056	TO->FROM	CIMARRON - MINCO 345KV CKT 1	956	956	0.23233	102.0892	CHISHOLM7 345.00 - WOODWARD DISTRICT EHV 345KV CKT 1
FDNS	06ALL	0	17SP	G15_056	TO->FROM	CIMARRON - MINCO 345KV CKT 1	956	956	0.20203	100.3376	G11_051T 345.00 - TATONGA7 345.00 345KV CKT 1
FDNS	06ALL	0	17SP	G15_056	TO->FROM	DEAF SMITH COUNTY INTERCHANGE - G15039_T 230.00 230KV CKT 1	318.7	350.57	0.20216	121.2492	NEWHART 230 - PLANT X STATION 230KV CKT 1
FDNS	06ALL	0	20SP	G15_056	TO->FROM	DEAF SMITH COUNTY INTERCHANGE - G15039_T 230.00 230KV CKT 1	318.7	350.57	0.13728	110.3343	BASE CASE
FDNS	06ALL	0	17SP	G15_056	TO->FROM	DEAF SMITH COUNTY INTERCHANGE - G15039_T 230.00 230KV CKT 1	318.7	350.57	0.15254	108.4885	BASE CASE
FDNSLock	06ALL	0	20WP	G15_056		ELK CITY 230KV (ELKCTY-6) 230/138/13.8KV TRANSFORMER CKT 1	450	450	0.06149	87.66341	BASE CASE
FDNSLock	06ALL	0	20WP	G15_056		ELK CITY 230KV (ELKCTY-6) 230/138/13.8KV TRANSFORMER CKT 1	450	450	0.06149	87.66341	BASE CASE
FDNS	06ALL	0	20L	G15_056	TO->FROM	G14-057T 345.00 - LAWTON EASTSIDE 345KV CKT 1	717	789	0.10032	108.0268	BASE CASE
FDNS	06ALL	0	20L	G15_056	FROM->TO	G14-057T 345.00 - SUNNYSIDE 345KV CKT 1	717	789	0.10032	120.8788	BASE CASE
FDNS	06ALL	0	20WP	G15_056	FROM->TO	G14-057T 345.00 - SUNNYSIDE 345KV CKT 1	717	789	0.12407	107.5634	BASE CASE
FDNS	06ALL	0	17G	G15_056	FROM->TO	G14-057T 345.00 - SUNNYSIDE 345KV CKT 1	717	789	0.1233	106.9763	BASE CASE

SOLUTION	GROUP	SCENARIO	SEASON	SOURCE	DIRECTION	MONITORED ELEMENT	RATEA (MVA)	RATEB(MVA)	TDF	TC%LOADING (% MVA)	CONTINGENCY
FDNS	06ALL	0	16WP	G15_056	FROM->TO	G14-057T 345.00 - SUNNYSIDE 345KV CKT 1	717	789	0.12658	105.0999	BASE CASE
FDNS	06ALL	0	17SP	G15_056	TO->FROM	G15039_T 230.00 - PLANT X STATION 230KV CKT 1	318.7	350.57	0.20216	105.7964	NEWHART 230 - PLANT X STATION 230KV CKT 1
FDNSLock	06ALL	0	20WP	G15_056		Non-Converged Contingency	1792	1792	0.15698	-	BORDER 7345.00 - CHISHOLM7 345.00 345KV CKT 2
FDNSLock	06ALL	0	20WP	G15_056		Non-Converged Contingency	1792	1792	0.15697	-	BORDER 7345.00 - CHISHOLM7 345.00 345KV CKT 1
FDNSLock	06ALL	0	20WP	G15_056		Non-Converged Contingency	439	439	0.06149	-	CHISHOLM6 230.00 - ELK CITY 230KV 230KV CKT 1
FDNS	06ALL	0	20WP	G15_056	FROM->TO	POTTER COUNTY INTERCHANGE (WAUK 90343-A) 345/230/13.2KV TRANSFORMER CKT 1	560	560	0.1553	101.9937	BASE CASE
FDNS	06ALL	0	20WP	G15_056	FROM->TO	POTTER COUNTY INTERCHANGE (WAUK 90343-A) 345/230/13.2KV TRANSFORMER CKT 1	560	560	0.1553	100.9471	BASE CASE
FDNS	06ALL	0	17SP	G15_056	FROM->TO	SUNDOWN INTERCHANGE - WOLFFORTH INTERCHANGE 230KV CKT 1	318.7	350.57	0.24227	100	TOLK STATION EAST - TUCO INTERCHANGE 230KV CKT 1
FDNS	06ALL	0	17SP	G15_056	FROM->TO	SUNDOWN INTERCHANGE - WOLFFORTH INTERCHANGE 230KV CKT 1	318.7	350.57	0.24227	100	TOLK STATION EAST - TUCO INTERCHANGE 230KV CKT 1
FDNS	06ALL	0	20SP	G15_056	FROM->TO	TUCO INTERCHANGE - TUCO_2 230.00 230KV CKT 1	497	547	0.28061	176.1131	TUCO INTERCHANGE - TUCO_2 345.00 345KV CKT 1
FDNS	06ALL	0	17SP	G15_056	FROM->TO	TUCO INTERCHANGE - TUCO_2 230.00 230KV CKT 1	497	547	0.25328	172.1789	TUCO INTERCHANGE - TUCO_2 345.00 345KV CKT 1
FDNS	06ALL	0	25SP	G15_056	FROM->TO	TUCO INTERCHANGE - TUCO_2 230.00 230KV CKT 1	497	547	0.29126	101.2227615	TUCO INTERCHANGE - TUCO_2 345.00 345KV CKT 1
FDNS	06ALL	0	20SP	G15_056	FROM->TO	TUCO_2 345.00 (TUCO_2 XFMR) 345/230/13.2KV TRANSFORMER CKT 1	560	560	0.28524	168.9327	TUCO INTERCHANGE - TUCO_2 345.00 345KV CKT 1
FDNS	06ALL	0	17SP	G15_056	FROM->TO	TUCO_2 345.00 (TUCO_2 XFMR) 345/230/13.2KV TRANSFORMER CKT 1	560	560	0.28128	168.0719	TUCO INTERCHANGE - TUCO_2 345.00 345KV CKT 1
FDNS	06ALL	0	20SP	G15_056	FROM->TO	TUCO_2 345.00 (TUCO_2 XFMR) 345/230/13.2KV TRANSFORMER CKT 1	560	560	0.28524	162.4281	TUCO INTERCHANGE - TUCO_2 345.00 345KV CKT 1
FDNS	06ALL	0	17SP	G15_056	FROM->TO	TUCO_2 345.00 (TUCO_2 XFMR) 345/230/13.2KV TRANSFORMER CKT 1	560	560	0.28128	161.5424	TUCO INTERCHANGE - TUCO_2 345.00 345KV CKT 1
FDNS	06ALL	2	20SP	G15_056	FROM->TO	CHISHOLM6 230.00 - ELK CITY 230KV 230KV CKT 1	353	353	0.06321	103.9805	BASE CASE
FDNS	06ALL	2	17SP	G15_056	FROM->TO	CHISHOLM6 230.00 - ELK CITY 230KV 230KV CKT 1	353	353	0.06332	101.7938	BASE CASE
FDNS	06ALL	2	20L	G15_056	TO->FROM	CIMARRON - MINCO 345KV CKT 1	956	956	0.20611	140.1322	G14-057T 345.00 - SUNNYSIDE 345KV CKT 1
FDNS	06ALL	2	20L	G15_056	TO->FROM	CIMARRON - MINCO 345KV CKT 1	956	956	0.20611	133.5433	G14-057T 345.00 - LAWTON EASTSIDE 345KV CKT 1
FDNS	06ALL	2	17G	G15_056	TO->FROM	CIMARRON - MINCO 345KV CKT 1	956	956	0.2309	131.7687	G14-057T 345.00 - SUNNYSIDE 345KV CKT 1
FDNS	06ALL	2	20WP	G15_056	TO->FROM	CIMARRON - MINCO 345KV CKT 1	956	956	0.23358	130.9595	G14-057T 345.00 - SUNNYSIDE 345KV CKT 1
FDNS	06ALL	2	17G	G15_056	TO->FROM	CIMARRON - MINCO 345KV CKT 1	956	956	0.2309	126.2954	G14-057T 345.00 - LAWTON EASTSIDE 345KV CKT 1
FDNS	06ALL	2	20WP	G15_056	TO->FROM	CIMARRON - MINCO 345KV CKT 1	956	956	0.23358	125.3296	G14-057T 345.00 - LAWTON EASTSIDE 345KV CKT 1
FDNS	06ALL	2	16WP	G15_056	TO->FROM	CIMARRON - MINCO 345KV CKT 1	956	956	0.23745	123.9324	G14-057T 345.00 - SUNNYSIDE 345KV CKT 1
FDNS	06ALL	2	17SP	G15_056	TO->FROM	CIMARRON - MINCO 345KV CKT 1	956	956	0.23542	123.0412	G14-057T 345.00 - SUNNYSIDE 345KV CKT 1
FDNS	06ALL	2	20SP	G15_056	TO->FROM	CIMARRON - MINCO 345KV CKT 1	956	956	0.23978	120.4683	G14-057T 345.00 - SUNNYSIDE 345KV CKT 1
FDNS	06ALL	2	16WP	G15_056	TO->FROM	CIMARRON - MINCO 345KV CKT 1	956	956	0.23745	118.3934	G14-057T 345.00 - LAWTON EASTSIDE 345KV CKT 1
FDNS	06ALL	2	17SP	G15_056	TO->FROM	CIMARRON - MINCO 345KV CKT 1	956	956	0.23542	117.7499	G14-057T 345.00 - LAWTON EASTSIDE 345KV CKT 1
FDNS	06ALL	2	20SP	G15_056	TO->FROM	CIMARRON - MINCO 345KV CKT 1	956	956	0.23978	115.0256	G14-057T 345.00 - LAWTON EASTSIDE 345KV CKT 1
FDNS	06ALL	2	17G	G15_056	TO->FROM	CIMARRON - MINCO 345KV CKT 1	956	956	0.19817	111.0722	MATHWSN7 345.00 - TATONGA7 345.00 345KV CKT 1
FDNS	06ALL	2	20WP	G15_056	TO->FROM	CIMARRON - MINCO 345KV CKT 1	956	956	0.19815	110.8109	MATHWSN7 345.00 - TATONGA7 345.00 345KV CKT 1
FDNS	06ALL	2	20L	G15_056	TO->FROM	CIMARRON - MINCO 345KV CKT 1	956	956	0.20852	107.6011	CHISHOLM7 345.00 - WOODWARD DISTRICT EHV 345KV CKT 1
FDNS	06ALL	2	17G	G15_056	TO->FROM	CIMARRON - MINCO 345KV CKT 1	956	956	0.22455	107.4004	CHISHOLM7 345.00 - WOODWARD DISTRICT EHV 345KV CKT 1
FDNS	06ALL	2	20WP	G15_056	TO->FROM	CIMARRON - MINCO 345KV CKT 1	956	956	0.19815	105.5266	G11_051T 345.00 - TATONGA7 345.00 345KV CKT 1
FDNSLock	06ALL	2	17G	G15_056	TO->FROM	CIMARRON - MINCO 345KV CKT 1	956	956	0.19817	105.1772	G11_051T 345.00 - TATONGA7 345.00 345KV CKT 1
FDNS	06ALL	2	17SP	G15_056	TO->FROM	CIMARRON - MINCO 345KV CKT 1	956	956	0.20215	104.7953	MATHWSN7 345.00 - TATONGA7 345.00 345KV CKT 1
FDNS	06ALL	2	20SP	G15_056	TO->FROM	CIMARRON - MINCO 345KV CKT 1	956	956	0.20487	104.2231	MATHWSN7 345.00 - TATONGA7 345.00 345KV CKT 1
FDNS	06ALL	2	16WP	G15_056	TO->FROM	CIMARRON - MINCO 345KV CKT 1	956	956	0.20317	104.0692	MATHWSN7 345.00 - TATONGA7 345.00 345KV CKT 1
FDNS	06ALL	2	20WP	G15_056	TO->FROM	CIMARRON - MINCO 345KV CKT 1	956	956	0.19815	103.9402	G11_051T 345.00 - WOODWARD DISTRICT EHV 345KV CKT 1
FDNS	06ALL	2	20WP	G15_056	TO->FROM	CIMARRON - MINCO 345KV CKT 1	956	956	0.2316	103.712	CHISHOLM7 345.00 - WOODWARD DISTRICT EHV 345KV CKT 1
FDNSLock	06ALL	2	17G	G15_056	TO->FROM	CIMARRON - MINCO 345KV CKT 1	956	956	0.19817	103.655	G11_051T 345.00 - WOODWARD DISTRICT EHV 345KV CKT 1
FDNS	06ALL	2	20SP	G15_056	TO->FROM	CIMARRON - MINCO 345KV CKT 1	956	956	0.23854	102.1101	CHISHOLM7 345.00 - WOODWARD DISTRICT EHV 345KV CKT 1
FDNS	06ALL	2	17SP	G15_056	TO->FROM	CIMARRON - MINCO 345KV CKT 1	956	956	0.23247	100.969	CHISHOLM7 345.00 - WOODWARD DISTRICT EHV 345KV CKT 1
FDNS	06ALL	2	17SP	G15_056	TO->FROM	CIMARRON - MINCO 345KV CKT 1	956	956	0.20215	99.6	G11_051T 345.00 - TATONGA7 345.00 345KV CKT 1
FDNS	06ALL	2	17SP	G15_056	TO->FROM	DEAF SMITH COUNTY INTERCHANGE - G15039_T 230.00 230KV CKT 1	318.7	350.57	0.20228	115.5525	NEWHART 230 - PLANT X STATION 230KV CKT 1
FDNS	06ALL	2	20SP	G15_056	TO->FROM	DEAF SMITH COUNTY INTERCHANGE - G15039_T 230.00 230KV CKT 1	318.7	350.57	0.13736	106.1518	BASE CASE
FDNS	06ALL	2	17SP	G15_056	TO->FROM	DEAF SMITH COUNTY INTERCHANGE - G15039_T 230.00 230KV CKT 1	318.7	350.57	0.15263	104.2255	BASE CASE
FDNS	06ALL	2	16WP	G15_056	TO->FROM	DEAF SMITH COUNTY INTERCHANGE - G15039_T 230.00 230KV CKT 1	329.05	360.92	0.20752	103.6371	NEWHART 230 - PLANT X STATION 230KV CKT 1
FDNS	06ALL	2	20L	G15_056	TO->FROM	EDDY COUNTY INTERCHANGE - EDDY_NORTH 6230.00 230KV CKT @1	478	478	0.70243	103.965	P12:345:SPS:J15.1.XRDS.TOLK
FDNS	06ALL	2	20L	G15_056	TO->FROM	EDDY COUNTY INTERCHANGE - EDDY_NORTH 6230.00 230KV CKT @1	478	478	0.70273	103.6323	CROSSROADS 7345.00 - TOLK STATION 345KV CKT 1
FDNS	06ALL	2	20L	G15_056	TO->FROM	EDDY COUNTY INTERCHANGE - EDDY_NORTH 6230.00 230KV CKT @1	478	478	0.70273	103.5624	TOLK STATION (ABBXNL844501) 345/230/13.2KV TRANSFORMER CKT 1
FDNS	06ALL	2	20L	G15_056	TO->FROM	EDDY COUNTY INTERCHANGE - EDDY_NORTH 6230.00 230KV CKT @1	478	478	0.70273	103.5624	TOLK STATION (ABBXNL844501) 345/230/13.2KV TRANSFORMER CKT 1
FDNS	06ALL	2	20L	G15_056	TO->FROM	G14-057T 345.00 - LAWTON EASTSIDE 345KV CKT 1	717	789	0.1006	105.4406	BASE CASE
FDNS	06ALL	2	20L	G15_056	FROM->TO	G14-057T 345.00 - SUNNYSIDE 345KV CKT 1	717	789	0.1006	118.6576	BASE CASE
FDNS	06ALL	2	20WP	G15_056	FROM->TO	G14-057T 345.00 - SUNNYSIDE 345KV CKT 1	717	789	0.1242	106.4822	BASE CASE
FDNS	06ALL	2	17G	G15_056	FROM->TO	G14-057T 345.00 - SUNNYSIDE 345KV CKT 1	717	789	0.12347	105.8626	BASE CASE
FDNS	06ALL	2	16WP	G15_056	FROM->TO	G14-057T 345.00 - SUNNYSIDE 345KV CKT 1	717	789	0.12677	104.4384	BASE CASE
FDNS	06ALL	2	17SP	G15_056	TO->FROM	G15039_T 230.00 - PLANT X STATION 230KV CKT 1	318.7	350.57	0.20228	100.2117	NEWHART 230 - PLANT X STATION 230KV CKT 1
FDNS	06ALL	2	20L	G15_056	FROM->TO	GRACEMONT - MINCO 345KV CKT 1	1195	1195	0.20611	101.0673	G14-057T 345.00 - SUNNYSIDE 345KV CKT 1
FDNSLock	06ALL	2	20WP	G15_056		P12:230:AEPW:ELKCITY6:SWEETWT6	0	0	0.12324	9999	BASE CASE
FDNS	06ALL	2	16WP	G15_056	FROM->TO	POTTER COUNTY INTERCHANGE (WAUK 90343-A) 345/230/13.2KV TRANSFORMER CKT 1	560	560	0.20155	102.0618	HITCHLAND INTERCHANGE - MOORE COUNTY INTERCHANGE 230KV CKT 1
FDNS	06ALL	2	16WP	G15_056	FROM->TO	POTTER COUNTY INTERCHANGE (WAUK 90343-A) 345/230/13.2KV TRANSFORMER CKT 1	560	560	0.20155	102.0618	HITCHLAND INTERCHANGE - MOORE COUNTY INTERCHANGE 230KV CKT 1
FDNS	06ALL	2	16WP	G15_056	FROM->TO	POTTER COUNTY INTERCHANGE (WAUK 90343-A) 345/230/13.2KV TRANSFORMER CKT 1	560	560	0.20155	101.6956	HITCHLAND INTERCHANGE - MOORE COUNTY INTERCHANGE 230KV CKT 1
FDNS	06ALL	2	16WP	G15_056	FROM->TO	POTTER COUNTY INTERCHANGE (WAUK 90343-A) 345/230/13.2KV TRANSFORMER CKT 1	560	560	0.20155	101.6956	HITCHLAND INTERCHANGE - MOORE COUNTY INTERCHANGE 230KV CKT 1
FDNS	06ALL	2	17SP	G15_056	FROM->TO	SUNDOWN INTERCHANGE - WOLFFORTH INTERCHANGE 230KV CKT 1	318.7	350.57	0.24239	101.6908	TOLK STATION EAST - TUCO INTERCHANGE 230KV CKT 1
FDNS	06ALL	2	17SP	G15_056	FROM->TO	SUNDOWN INTERCHANGE - WOLFFORTH INTERCHANGE 230KV CKT 1	318.7	350.57	0.24239	101.6908	TOLK STATION EAST - TUCO INTERCHANGE 230KV CKT 1
FDNS	06ALL	2	20L	G15_056	FROM->TO	TUCO INTERCHANGE - TUCO_2 230.00 230KV CKT 1	497	547	0.24356	181.2199	TUCO INTERCHANGE - TUCO_2 345.00 345KV CKT 1
FDNS	06ALL	2	17G	G15_056	FROM->TO	TUCO INTERCHANGE - TUCO_2 230.00 230KV CKT 1	497	547	0.23793	176.0864	TUCO INTERCHANGE - TUCO_2 345.00 345KV CKT 1
FDNS	06ALL	2	20SP	G15_056	FROM->TO	TUCO INTERCHANGE - TUCO_2 230.00 230KV CKT 1	497	547	0.28074	166.2483	TUCO INTERCHANGE - TUCO_2 345.00 345KV CKT 1
FDNS	06ALL	2	17SP	G15_056	FROM->TO	TUCO INTERCHANGE - TUCO_2 230.00 230KV CKT 1	497	547	0.25341	159.9768	TUCO INTERCHANGE - TUCO_2 345.00 345KV CKT 1
FDNS	06ALL	2	20WP	G15_056	FROM->TO	TUCO INTERCHANGE - TUCO_2 230.00 230KV CKT 1	552	608	0.27525	155.2742	TUCO INTERCHANGE - TUCO_2 345.00 345KV CKT 1
FDNS	06ALL	2	16WP	G15_056	FROM->TO	TUCO INTERCHANGE - TUCO_2 230.00 230KV CKT 1	552	608	0.24756	142.7524	TUCO INTERCHANGE - TUCO_2 345.00 345KV CKT 1
FDNS	06ALL	2	25SP	G15_056	FROM->TO	TUCO INTERCHANGE - TUCO_2 230.00 230KV CKT 1	497	547	0.29127	102.0482993	TUCO INTERCHANGE - TUCO_2 345.00 345KV CKT 1
FDNS	06ALL	2	16WP	G15_056	FROM->TO	TUCO INTERCHANGE (GE M1022338) 345/230/13.2KV TRANSFORMER CKT 1	560	560	0.26808	120.5418	TUCO INTERCHANGE (SIEM 8743066) 345/230/13.2KV TRANSFORMER CKT 2
FDNS	06ALL	2	16WP	G15_056	FROM->TO	TUCO INTERCHANGE (GE M1022338) 345/230/13.2KV TRANSFORMER CKT 1	560	560	0.26808	120.5418	TUCO INTERCHANGE (SIEM 8743066) 345/230/13.2KV TRANSFORMER CKT 2
FDNS	06ALL	2	16WP	G15_056	FROM->TO	TUCO INTERCHANGE (GE M1022338) 345/230/13.2KV TRANSFORMER CKT 1	560	560	0.26236	120.3223	TUCO_2 345.00 (TUCO_2 XFMR) 345/230/13.2KV TRANSFORMER CKT 1
FDNS	06ALL	2	16WP	G15_056	FROM->TO	TUCO INTERCHANGE (GE M1022338) 345/230/13.2KV TRANSFORMER CKT 1	560	560	0.26808	118.6764	TUCO INTERCHANGE (SIEM 8743066) 345/230/13.2KV TRANSFORMER CKT 2
FDNS	06ALL	2	16WP	G15_056	FROM->TO	TUCO INTERCHANGE (GE M1022338) 345/230/13.2KV TRANSFORMER CKT 1	560	560	0.26808	118.6764	TUCO INTERCHANGE (SIEM 8743066) 345/230/13.2KV TRANSFORMER CKT 2

SOLUTION	GROUP	SCENARIO	SEASON	SOURCE	DIRECTION	MONITORED ELEMENT	RATEA (MVA)	RATEB(MVA)	TDF	TC%LOADING (% MVA)	CONTINGENCY
FDNS	06ALL	2	16WP	G15_056	FROM->TO	TUCO INTERCHANGE (GE M1022338) 345/230/13.2KV TRANSFORMER CKT 1	560	560	0.26236	118.6764	TUCO_2 345.00 (TUCO_2 XFMR) 345/230/13.2KV TRANSFORMER CKT 1
FDNS	06ALL	2	17G	G15_056	FROM->TO	TUCO INTERCHANGE (GE M1022338) 345/230/13.2KV TRANSFORMER CKT 1	560	560	0.25845	114.4569	TUCO INTERCHANGE (SIEM 8743066) 345/230/13.2KV TRANSFORMER CKT 2
FDNS	06ALL	2	17G	G15_056	FROM->TO	TUCO INTERCHANGE (GE M1022338) 345/230/13.2KV TRANSFORMER CKT 1	560	560	0.25295	114.4414	TUCO_2 345.00 (TUCO_2 XFMR) 345/230/13.2KV TRANSFORMER CKT 1
FDNS	06ALL	2	17G	G15_056	FROM->TO	TUCO INTERCHANGE (GE M1022338) 345/230/13.2KV TRANSFORMER CKT 1	560	560	0.25295	112.333	TUCO_2 345.00 (TUCO_2 XFMR) 345/230/13.2KV TRANSFORMER CKT 1
FDNS	06ALL	2	17G	G15_056	FROM->TO	TUCO INTERCHANGE (GE M1022338) 345/230/13.2KV TRANSFORMER CKT 1	560	560	0.25845	112.1874	TUCO INTERCHANGE (SIEM 8743066) 345/230/13.2KV TRANSFORMER CKT 2
FDNS	06ALL	2	16WP	G15_056	FROM->TO	TUCO INTERCHANGE (GE M1022338) 345/230/13.2KV TRANSFORMER CKT 1	560	560	0.2393	103.9349	TUCO INTERCHANGE - TUCO_2 230.00 230KV CKT 1
FDNS	06ALL	2	16WP	G15_056	FROM->TO	TUCO INTERCHANGE (GE M1022338) 345/230/13.2KV TRANSFORMER CKT 1	560	560	0.2393	102.2603	TUCO INTERCHANGE - TUCO_2 230.00 230KV CKT 1
FDNS	06ALL	2	17G	G15_056	FROM->TO	TUCO INTERCHANGE (GE M1022338) 345/230/13.2KV TRANSFORMER CKT 1	560	560	0.23057	100.6861	TUCO INTERCHANGE - TUCO_2 230.00 230KV CKT 1
FDNS	06ALL	2	20L	G15_056	FROM->TO	TUCO_2 345.00 (TUCO_2 XFMR) 345/230/13.2KV TRANSFORMER CKT 1	560	560	0.24226	190.1451	TUCO INTERCHANGE - TUCO_2 345.00 345KV CKT 1
FDNS	06ALL	2	20WP	G15_056	FROM->TO	TUCO_2 345.00 (TUCO_2 XFMR) 345/230/13.2KV TRANSFORMER CKT 1	560	560	0.27906	189.4604	TUCO INTERCHANGE - TUCO_2 345.00 345KV CKT 1
FDNS	06ALL	2	17G	G15_056	FROM->TO	TUCO_2 345.00 (TUCO_2 XFMR) 345/230/13.2KV TRANSFORMER CKT 1	560	560	0.27127	187.4581	TUCO INTERCHANGE - TUCO_2 345.00 345KV CKT 1
FDNS	06ALL	2	20WP	G15_056	FROM->TO	TUCO_2 345.00 (TUCO_2 XFMR) 345/230/13.2KV TRANSFORMER CKT 1	560	560	0.27906	184.0471	TUCO INTERCHANGE - TUCO_2 345.00 345KV CKT 1
FDNS	06ALL	2	20L	G15_056	FROM->TO	TUCO_2 345.00 (TUCO_2 XFMR) 345/230/13.2KV TRANSFORMER CKT 1	560	560	0.24226	184.0031	TUCO INTERCHANGE - TUCO_2 345.00 345KV CKT 1
FDNS	06ALL	2	17G	G15_056	FROM->TO	TUCO_2 345.00 (TUCO_2 XFMR) 345/230/13.2KV TRANSFORMER CKT 1	560	560	0.27127	182.4703	TUCO INTERCHANGE - TUCO_2 345.00 345KV CKT 1
FDNS	06ALL	2	16WP	G15_056	FROM->TO	TUCO_2 345.00 (TUCO_2 XFMR) 345/230/13.2KV TRANSFORMER CKT 1	560	560	0.28179	175.5009	TUCO INTERCHANGE - TUCO_2 345.00 345KV CKT 1
FDNS	06ALL	2	16WP	G15_056	FROM->TO	TUCO_2 345.00 (TUCO_2 XFMR) 345/230/13.2KV TRANSFORMER CKT 1	560	560	0.28179	172.6087	TUCO INTERCHANGE - TUCO_2 345.00 345KV CKT 1
FDNS	06ALL	2	20SP	G15_056	FROM->TO	TUCO_2 345.00 (TUCO_2 XFMR) 345/230/13.2KV TRANSFORMER CKT 1	560	560	0.28538	166.4217	TUCO INTERCHANGE - TUCO_2 345.00 345KV CKT 1
FDNS	06ALL	2	17SP	G15_056	FROM->TO	TUCO_2 345.00 (TUCO_2 XFMR) 345/230/13.2KV TRANSFORMER CKT 1	560	560	0.28142	164.6979	TUCO INTERCHANGE - TUCO_2 345.00 345KV CKT 1
FDNS	06ALL	2	20SP	G15_056	FROM->TO	TUCO_2 345.00 (TUCO_2 XFMR) 345/230/13.2KV TRANSFORMER CKT 1	560	560	0.28538	163.5805	TUCO INTERCHANGE - TUCO_2 345.00 345KV CKT 1
FDNS	06ALL	2	17SP	G15_056	FROM->TO	TUCO_2 345.00 (TUCO_2 XFMR) 345/230/13.2KV TRANSFORMER CKT 1	560	560	0.28142	162.1713	TUCO INTERCHANGE - TUCO_2 345.00 345KV CKT 1
FDNS	06ALL	2	16WP	G15_056	FROM->TO	TUCO_2 345.00 (TUCO_2 XFMR) 345/230/13.2KV TRANSFORMER CKT 1	560	560	0.24104	112.6263	TUCO INTERCHANGE (GE M1022338) 345/230/13.2KV TRANSFORMER CKT 1
FDNS	06ALL	2	16WP	G15_056	FROM->TO	TUCO_2 345.00 (TUCO_2 XFMR) 345/230/13.2KV TRANSFORMER CKT 1	560	560	0.24104	112.6263	TUCO INTERCHANGE (GE M1022338) 345/230/13.2KV TRANSFORMER CKT 1
FDNS	06ALL	2	16WP	G15_056	FROM->TO	TUCO_2 345.00 (TUCO_2 XFMR) 345/230/13.2KV TRANSFORMER CKT 1	560	560	0.24104	111.4972	TUCO INTERCHANGE (GE M1022338) 345/230/13.2KV TRANSFORMER CKT 1
FDNS	06ALL	2	16WP	G15_056	FROM->TO	TUCO_2 345.00 (TUCO_2 XFMR) 345/230/13.2KV TRANSFORMER CKT 1	560	560	0.24104	111.4972	TUCO INTERCHANGE (GE M1022338) 345/230/13.2KV TRANSFORMER CKT 1
FDNS	06ALL	2	17G	G15_056	FROM->TO	TUCO_2 345.00 (TUCO_2 XFMR) 345/230/13.2KV TRANSFORMER CKT 1	560	560	0.23243	107.1719	TUCO INTERCHANGE (GE M1022338) 345/230/13.2KV TRANSFORMER CKT 1
FDNS	06ALL	2	16WP	G15_056	FROM->TO	TUCO_2 345.00 (TUCO_2 XFMR) 345/230/13.2KV TRANSFORMER CKT 1	560	560	0.22588	105.8242	TUCO INTERCHANGE (SIEM 8743066) 345/230/13.2KV TRANSFORMER CKT 2
FDNS	06ALL	2	16WP	G15_056	FROM->TO	TUCO_2 345.00 (TUCO_2 XFMR) 345/230/13.2KV TRANSFORMER CKT 1	560	560	0.22588	105.8242	TUCO INTERCHANGE (SIEM 8743066) 345/230/13.2KV TRANSFORMER CKT 2
FDNS	06ALL	2	17G	G15_056	FROM->TO	TUCO_2 345.00 (TUCO_2 XFMR) 345/230/13.2KV TRANSFORMER CKT 1	560	560	0.23243	105.6097	TUCO INTERCHANGE (GE M1022338) 345/230/13.2KV TRANSFORMER CKT 1
FDNS	06ALL	2	16WP	G15_056	FROM->TO	TUCO_2 345.00 (TUCO_2 XFMR) 345/230/13.2KV TRANSFORMER CKT 1	560	560	0.22588	104.8168	TUCO INTERCHANGE (SIEM 8743066) 345/230/13.2KV TRANSFORMER CKT 2
FDNS	06ALL	2	16WP	G15_056	FROM->TO	TUCO_2 345.00 (TUCO_2 XFMR) 345/230/13.2KV TRANSFORMER CKT 1	560	560	0.22588	104.8168	TUCO INTERCHANGE (SIEM 8743066) 345/230/13.2KV TRANSFORMER CKT 2
FDNS	06ALL	2	17G	G15_056	FROM->TO	TUCO_2 345.00 (TUCO_2 XFMR) 345/230/13.2KV TRANSFORMER CKT 1	560	560	0.2178	100.7205	TUCO INTERCHANGE (SIEM 8743066) 345/230/13.2KV TRANSFORMER CKT 2
FDNS	06ALL	3	20SP	G15_056	FROM->TO	CHISHOLM6 230.00 - ELK CITY 230KV 230KV CKT 1	353	353	0.06378	104.1963	BASE CASE
FDNS	06ALL	3	17SP	G15_056	FROM->TO	CHISHOLM6 230.00 - ELK CITY 230KV 230KV CKT 1	353	353	0.06402	101.9728	BASE CASE
FDNS	06ALL	3	20L	G15_056	TO->FROM	CIMARRON - MINCO 345KV CKT 1	956	956	0.21806	140.6921	G14-057T 345.00 - SUNNYSIDE 345KV CKT 1
FDNS	06ALL	3	20L	G15_056	TO->FROM	CIMARRON - MINCO 345KV CKT 1	956	956	0.21806	134.2883	G14-057T 345.00 - LAWTON EASTSIDE 345KV CKT 1
FDNS	06ALL	3	17G	G15_056	TO->FROM	CIMARRON - MINCO 345KV CKT 1	956	956	0.24732	132.797	G14-057T 345.00 - SUNNYSIDE 345KV CKT 1
FDNS	06ALL	3	20WP	G15_056	TO->FROM	CIMARRON - MINCO 345KV CKT 1	956	956	0.24537	131.9094	G14-057T 345.00 - SUNNYSIDE 345KV CKT 1
FDNS	06ALL	3	17G	G15_056	TO->FROM	CIMARRON - MINCO 345KV CKT 1	956	956	0.24732	127.3481	G14-057T 345.00 - LAWTON EASTSIDE 345KV CKT 1
FDNS	06ALL	3	20WP	G15_056	TO->FROM	CIMARRON - MINCO 345KV CKT 1	956	956	0.24537	126.3057	G14-057T 345.00 - LAWTON EASTSIDE 345KV CKT 1
FDNS	06ALL	3	16WP	G15_056	TO->FROM	CIMARRON - MINCO 345KV CKT 1	956	956	0.25423	125.3645	G14-057T 345.00 - SUNNYSIDE 345KV CKT 1
FDNS	06ALL	3	17SP	G15_056	TO->FROM	CIMARRON - MINCO 345KV CKT 1	956	956	0.25117	124.3731	G14-057T 345.00 - SUNNYSIDE 345KV CKT 1
FDNS	06ALL	3	20SP	G15_056	TO->FROM	CIMARRON - MINCO 345KV CKT 1	956	956	0.25138	121.3286	G14-057T 345.00 - SUNNYSIDE 345KV CKT 1
FDNS	06ALL	3	16WP	G15_056	TO->FROM	CIMARRON - MINCO 345KV CKT 1	956	956	0.25423	119.9255	G14-057T 345.00 - LAWTON EASTSIDE 345KV CKT 1
FDNS	06ALL	3	17SP	G15_056	TO->FROM	CIMARRON - MINCO 345KV CKT 1	956	956	0.25117	118.8978	G14-057T 345.00 - LAWTON EASTSIDE 345KV CKT 1
FDNS	06ALL	3	20SP	G15_056	TO->FROM	CIMARRON - MINCO 345KV CKT 1	956	956	0.25138	116.0894	G14-057T 345.00 - LAWTON EASTSIDE 345KV CKT 1
FDNS	06ALL	3	20WP	G15_056	TO->FROM	CIMARRON - MINCO 345KV CKT 1	956	956	0.20607	111.5734	MATHWSN7 345.00 - TATONGA7 345.00 345KV CKT 1
FDNS	06ALL	3	20L	G15_056	TO->FROM	CIMARRON - MINCO 345KV CKT 1	956	956	0.2244	109.488	CHISHOLM7 345.00 - WOODWARD DISTRICT EHV 345KV CKT 1
FDNS	06ALL	3	17G	G15_056	TO->FROM	CIMARRON - MINCO 345KV CKT 1	956	956	0.24665	109.1031	CHISHOLM7 345.00 - WOODWARD DISTRICT EHV 345KV CKT 1
FDNS	06ALL	3	20WP	G15_056	TO->FROM	CIMARRON - MINCO 345KV CKT 1	956	956	0.20607	106.2571	G11_051T 345.00 - TATONGA7 345.00 345KV CKT 1
FDNS	06ALL	3	17G	G15_056	TO->FROM	CIMARRON - MINCO 345KV CKT 1	956	956	0.2091	106.016	G11_051T 345.00 - TATONGA7 345.00 345KV CKT 1
FDNS	06ALL	3	17SP	G15_056	TO->FROM	CIMARRON - MINCO 345KV CKT 1	956	956	0.21263	105.6361	MATHWSN7 345.00 - TATONGA7 345.00 345KV CKT 1
FDNS	06ALL	3	20WP	G15_056	TO->FROM	CIMARRON - MINCO 345KV CKT 1	956	956	0.2475	105.2058	CHISHOLM7 345.00 - WOODWARD DISTRICT EHV 345KV CKT 1
FDNS	06ALL	3	16WP	G15_056	TO->FROM	CIMARRON - MINCO 345KV CKT 1	956	956	0.21437	105.1594	MATHWSN7 345.00 - TATONGA7 345.00 345KV CKT 1
FDNS	06ALL	3	20SP	G15_056	TO->FROM	CIMARRON - MINCO 345KV CKT 1	956	956	0.21262	104.8651	MATHWSN7 345.00 - TATONGA7 345.00 345KV CKT 1
FDNS	06ALL	3	20WP	G15_056	TO->FROM	CIMARRON - MINCO 345KV CKT 1	956	956	0.20607	104.6601	G11_051T 345.00 - WOODWARD DISTRICT EHV 345KV CKT 1
FDNS	06ALL	3	17G	G15_056	TO->FROM	CIMARRON - MINCO 345KV CKT 1	956	956	0.2091	104.4511	G11_051T 345.00 - WOODWARD DISTRICT EHV 345KV CKT 1
FDNS	06ALL	3	20SP	G15_056	TO->FROM	CIMARRON - MINCO 345KV CKT 1	956	956	0.25428	103.3967	CHISHOLM7 345.00 - WOODWARD DISTRICT EHV 345KV CKT 1
FDNS	06ALL	3	17SP	G15_056	TO->FROM	CIMARRON - MINCO 345KV CKT 1	956	956	0.25371	102.6701	CHISHOLM7 345.00 - WOODWARD DISTRICT EHV 345KV CKT 1
FDNS	06ALL	3	17SP	G15_056	TO->FROM	CIMARRON - MINCO 345KV CKT 1	956	956	0.21263	100.4546	G11_051T 345.00 - TATONGA7 345.00 345KV CKT 1
FDNS	06ALL	3	20WP	G15_056	TO->FROM	CIMARRON - MINCO 345KV CKT 1	956	956	0.19751	100.2954	P12:138:WFEC:MSL03
FDNS	06ALL	3	16WP	G15_056	TO->FROM	CIMARRON - MINCO 345KV CKT 1	956	956	0.21437	99.8	G11_051T 345.00 - TATONGA7 345.00 345KV CKT 1
FDNS	06ALL	3	20SP	G15_056	TO->FROM	CIMARRON - MINCO 345KV CKT 1	956	956	0.21262	99.7	G11_051T 345.00 - TATONGA7 345.00 345KV CKT 1
FDNS	06ALL	3	17SP	G15_056	TO->FROM	CIMARRON - MINCO 345KV CKT 1	956	956	0.2034	99.6	P12:138:WFEC:MSL03
FDNS	06ALL	3	20SP	G15_056	TO->FROM	CIMARRON - MINCO 345KV CKT 1	956	956	0.20372	99.6	P12:138:WFEC:MSL03
FDNS	06ALL	3	20L	G15_056	TO->FROM	EDDY COUNTY INTERCHANGE - EDDY_NORTH 6230.00 230KV CKT @1	478	478	0.70264	103.9635	P12:345:SPS:J15.1.XRDS.TOLK
FDNS	06ALL	3	20L	G15_056	TO->FROM	EDDY COUNTY INTERCHANGE - EDDY_NORTH 6230.00 230KV CKT @1	478	478	0.69986	101.1384	CROSSROADS 7345.00 - TOLK STATION 345KV CKT 1
FDNS	06ALL	3	20L	G15_056	TO->FROM	G14-057T 345.00 - LAWTON EASTSIDE 345KV CKT 1	717	789	0.10608	106.0801	BASE CASE
FDNS	06ALL	3	20L	G15_056	FROM->TO	G14-057T 345.00 - SUNNYSIDE 345KV CKT 1	717	789	0.10608	119.3111	BASE CASE
FDNS	06ALL	3	20WP	G15_056	FROM->TO	G14-057T 345.00 - SUNNYSIDE 345KV CKT 1	717	789	0.12961	107.198	BASE CASE
FDNS	06ALL	3	17G	G15_056	FROM->TO	G14-057T 345.00 - SUNNYSIDE 345KV CKT 1	717	789	0.13104	106.7167	BASE CASE
FDNS	06ALL	3	16WP	G15_056	FROM->TO	G14-057T 345.00 - SUNNYSIDE 345KV CKT 1	717	789	0.13451	105.3992	BASE CASE
FDNS	06ALL	3	20L	G15_056	FROM->TO	GRACEMONT - MINCO 345KV CKT 1	1195	1195	0.21806	101.53	G14-057T 345.00 - SUNNYSIDE 345KV CKT 1
FDNS	06ALL	4	20SP	G15_056	FROM->TO	CHISHOLM6 230.00 - ELK CITY 230KV 230KV CKT 1	353	353	0.06117	103.152	BASE CASE
FDNS	06ALL	4	17SP	G15_056	FROM->TO	CHISHOLM6 230.00 - ELK CITY 230KV 230KV CKT 1	353	353	0.06134	100.7007	BASE CASE
FDNS	06ALL	4	20L	G15_056	TO->FROM	CIMARRON - MINCO 345KV CKT 1	956	956	0.19648	136.9659	G14-057T 345.00 - SUNNYSIDE 345KV CKT 1
FDNS	06ALL	4	20L	G15_056	TO->FROM	CIMARRON - MINCO 345KV CKT 1	956	956	0.19648	130.9905	G14-057T 345.00 - LAWTON EASTSIDE 345KV CKT 1
FDNS	06ALL	4	17G	G15_056	TO->FROM	CIMARRON - MINCO 345KV CKT 1	956	956	0.22402	129.7974	G14-057T 345.00 - SUNNYSIDE 345KV CKT 1
FDNS	06ALL	4	20WP	G15_056	TO->FROM	CIMARRON - MINCO 345KV CKT 1	956	956	0.22219	128.511	G14-057T 345.00 - SUNNYSIDE 345KV CKT 1
FDNS	06ALL	4	17G	G15_056	TO->FROM	CIMARRON - MINCO 345KV CKT 1	956	956	0.22402	124.286	G14-057T 345.00 - LAWTON EASTSIDE 345KV CKT 1

SOLUTION	GROUP	SCENARIO	SEASON	SOURCE	DIRECTION	MONITORED ELEMENT	RATEA (MVA)	RATEB(MVA)	TDF	TC%LOADING (% MVA)	CONTINGENCY
FDNS	06ALL	4	20WP	G15_056	TO->FROM	CIMARRON - MINCO 345KV CKT 1	956	956	0.22219	123.0537	G14-057T 345.00 - LAWTON EASTSIDE 345KV CKT 1
FDNS	06ALL	4	16WP	G15_056	TO->FROM	CIMARRON - MINCO 345KV CKT 1	956	956	0.23059	122.1275	G14-057T 345.00 - SUNNYSIDE 345KV CKT 1
FDNS	06ALL	4	17SP	G15_056	TO->FROM	CIMARRON - MINCO 345KV CKT 1	956	956	0.22729	121.005	G14-057T 345.00 - SUNNYSIDE 345KV CKT 1
FDNS	06ALL	4	20SP	G15_056	TO->FROM	CIMARRON - MINCO 345KV CKT 1	956	956	0.22793	117.7968	G14-057T 345.00 - SUNNYSIDE 345KV CKT 1
FDNS	06ALL	4	16WP	G15_056	TO->FROM	CIMARRON - MINCO 345KV CKT 1	956	956	0.23059	116.5578	G14-057T 345.00 - LAWTON EASTSIDE 345KV CKT 1
FDNS	06ALL	4	17SP	G15_056	TO->FROM	CIMARRON - MINCO 345KV CKT 1	956	956	0.22729	115.6625	G14-057T 345.00 - LAWTON EASTSIDE 345KV CKT 1
FDNS	06ALL	4	20SP	G15_056	TO->FROM	CIMARRON - MINCO 345KV CKT 1	956	956	0.22793	112.5931	G14-057T 345.00 - LAWTON EASTSIDE 345KV CKT 1
FDNS	06ALL	4	17G	G15_056	TO->FROM	CIMARRON - MINCO 345KV CKT 1	956	956	0.21241	104.4362	CHISHOLM7 345.00 - WOODWARD DISTRICT EHV 345KV CKT 1
FDNS	06ALL	4	17SP	G15_056	TO->FROM	CIMARRON - MINCO 345KV CKT 1	956	956	0.19743	103.6969	MATHWSN7 345.00 - TATONGA7 345.00 345KV CKT 1
FDNS	06ALL	4	16WP	G15_056	TO->FROM	CIMARRON - MINCO 345KV CKT 1	956	956	0.19943	103.3746	MATHWSN7 345.00 - TATONGA7 345.00 345KV CKT 1
FDNS	06ALL	4	20SP	G15_056	TO->FROM	CIMARRON - MINCO 345KV CKT 1	956	956	0.19769	102.8303	MATHWSN7 345.00 - TATONGA7 345.00 345KV CKT 1
FDNS	06ALL	4	20WP	G15_056	TO->FROM	CIMARRON - MINCO 345KV CKT 1	956	956	0.21345	100.3052	CHISHOLM7 345.00 - WOODWARD DISTRICT EHV 345KV CKT 1
FDNS	06ALL	4	20L	G15_056	TO->FROM	EDDY COUNTY INTERCHANGE - EDDY_NORTH 6230.00 230KV CKT @1	478	478	0.7028	103.9614	P12:345:SPS:J15.1.XRDS.TOLK
FDNS	06ALL	4	20L	G15_056	TO->FROM	EDDY COUNTY INTERCHANGE - EDDY_NORTH 6230.00 230KV CKT @1	478	478	0.69937	101.0312	CROSSROADS 7345.00 - TOLK STATION 345KV CKT 1
FDNSLock	06ALL	4	16WP	G15_056		G14_001T 345.00 - WICHITA 345KV CKT 1	1035	1035	0.05403	25.24282	BASE CASE
FDNS	06ALL	4	20L	G15_056	TO->FROM	G14-057T 345.00 - LAWTON EASTSIDE 345KV CKT 1	717	789	0.09657	104.3251	BASE CASE
FDNS	06ALL	4	20L	G15_056	FROM->TO	G14-057T 345.00 - SUNNYSIDE 345KV CKT 1	717	789	0.09657	117.5276	BASE CASE
FDNS	06ALL	4	20WP	G15_056	FROM->TO	G14-057T 345.00 - SUNNYSIDE 345KV CKT 1	717	789	0.11946	105.3579	BASE CASE
FDNS	06ALL	4	17G	G15_056	FROM->TO	G14-057T 345.00 - SUNNYSIDE 345KV CKT 1	717	789	0.12087	105.0325	BASE CASE
FDNS	06ALL	4	16WP	G15_056	FROM->TO	G14-057T 345.00 - SUNNYSIDE 345KV CKT 1	717	789	0.12419	103.6585	BASE CASE
FDNSLock	06ALL	4	20L	G15_056		OKLAUNION 345KV SWITCHED SHUNT	1022	1124	0.15728	86.37846	BASE CASE
FDNS	06ALL	4	16WP	G15_056	FROM->TO	TOLK STATION (ABBXNL844501) 345/230/13.2KV TRANSFORMER CKT 1	560	560	0.28979	113.0515	CROSSROADS 7345.00 - TOLK STATION 345KV CKT 1
FDNS	06ALL	4	16WP	G15_056	FROM->TO	TOLK STATION (ABBXNL844501) 345/230/13.2KV TRANSFORMER CKT 1	560	560	0.28979	110.3257	CROSSROADS 7345.00 - TOLK STATION 345KV CKT 1
FDNS	06ALL	5	20SP	G15_056	FROM->TO	CHISHOLM6 230.00 - ELK CITY 230KV 230KV CKT 1	353	353	0.06623	107.7212	BASE CASE
FDNS	06ALL	5	17SP	G15_056	FROM->TO	CHISHOLM6 230.00 - ELK CITY 230KV 230KV CKT 1	353	353	0.0666	105.7594	BASE CASE
FDNS	06ALL	5	20L	G15_056	TO->FROM	CIMARRON - MINCO 345KV CKT 1	956	956	0.2053	139.1694	G14-057T 345.00 - SUNNYSIDE 345KV CKT 1
FDNS	06ALL	5	20L	G15_056	TO->FROM	CIMARRON - MINCO 345KV CKT 1	956	956	0.2053	133.4583	G14-057T 345.00 - LAWTON EASTSIDE 345KV CKT 1
FDNS	06ALL	5	17G	G15_056	TO->FROM	CIMARRON - MINCO 345KV CKT 1	956	956	0.23342	132.5137	G14-057T 345.00 - SUNNYSIDE 345KV CKT 1
FDNS	06ALL	5	20WP	G15_056	TO->FROM	CIMARRON - MINCO 345KV CKT 1	956	956	0.23045	131.4126	G14-057T 345.00 - SUNNYSIDE 345KV CKT 1
FDNS	06ALL	5	17G	G15_056	TO->FROM	CIMARRON - MINCO 345KV CKT 1	956	956	0.23342	127.0859	G14-057T 345.00 - LAWTON EASTSIDE 345KV CKT 1
FDNS	06ALL	5	20WP	G15_056	TO->FROM	CIMARRON - MINCO 345KV CKT 1	956	956	0.23045	126.0182	G14-057T 345.00 - LAWTON EASTSIDE 345KV CKT 1
FDNS	06ALL	5	16WP	G15_056	TO->FROM	CIMARRON - MINCO 345KV CKT 1	956	956	0.24017	125.0103	G14-057T 345.00 - SUNNYSIDE 345KV CKT 1
FDNS	06ALL	5	17SP	G15_056	TO->FROM	CIMARRON - MINCO 345KV CKT 1	956	956	0.23646	123.5221	G14-057T 345.00 - SUNNYSIDE 345KV CKT 1
FDNS	06ALL	5	20SP	G15_056	TO->FROM	CIMARRON - MINCO 345KV CKT 1	956	956	0.23665	120.476	G14-057T 345.00 - SUNNYSIDE 345KV CKT 1
FDNS	06ALL	5	16WP	G15_056	TO->FROM	CIMARRON - MINCO 345KV CKT 1	956	956	0.24017	119.6144	G14-057T 345.00 - LAWTON EASTSIDE 345KV CKT 1
FDNS	06ALL	5	17SP	G15_056	TO->FROM	CIMARRON - MINCO 345KV CKT 1	956	956	0.23646	118.2604	G14-057T 345.00 - LAWTON EASTSIDE 345KV CKT 1
FDNS	06ALL	5	20SP	G15_056	TO->FROM	CIMARRON - MINCO 345KV CKT 1	956	956	0.23665	115.0864	G14-057T 345.00 - LAWTON EASTSIDE 345KV CKT 1
FDNS	06ALL	5	17G	G15_056	TO->FROM	CIMARRON - MINCO 345KV CKT 1	956	956	0.20261	113.1247	MATHWSN7 345.00 - TATONGA7 345.00 345KV CKT 1
FDNS	06ALL	5	20WP	G15_056	TO->FROM	CIMARRON - MINCO 345KV CKT 1	956	956	0.19861	112.7231	MATHWSN7 345.00 - TATONGA7 345.00 345KV CKT 1
FDNS	06ALL	5	20L	G15_056	TO->FROM	CIMARRON - MINCO 345KV CKT 1	956	956	0.20489	110.4804	CHISHOLM7 345.00 - WOODWARD DISTRICT EHV 345KV CKT 1
FDNS	06ALL	5	17G	G15_056	TO->FROM	CIMARRON - MINCO 345KV CKT 1	956	956	0.22702	110.4087	CHISHOLM7 345.00 - WOODWARD DISTRICT EHV 345KV CKT 1
FDNS	06ALL	5	20WP	G15_056	TO->FROM	CIMARRON - MINCO 345KV CKT 1	956	956	0.19861	107.3503	G11_051T 345.00 - TATONGA7 345.00 345KV CKT 1
FDNS	06ALL	5	17G	G15_056	TO->FROM	CIMARRON - MINCO 345KV CKT 1	956	956	0.20261	107.1655	G11_051T 345.00 - TATONGA7 345.00 345KV CKT 1
FDNS	06ALL	5	20WP	G15_056	TO->FROM	CIMARRON - MINCO 345KV CKT 1	956	956	0.22627	106.6912	CHISHOLM7 345.00 - WOODWARD DISTRICT EHV 345KV CKT 1
FDNS	06ALL	5	16WP	G15_056	TO->FROM	CIMARRON - MINCO 345KV CKT 1	956	956	0.20783	106.1194	MATHWSN7 345.00 - TATONGA7 345.00 345KV CKT 1
FDNS	06ALL	5	17SP	G15_056	TO->FROM	CIMARRON - MINCO 345KV CKT 1	956	956	0.2055	106.0588	MATHWSN7 345.00 - TATONGA7 345.00 345KV CKT 1
FDNS	06ALL	5	20WP	G15_056	TO->FROM	CIMARRON - MINCO 345KV CKT 1	956	956	0.19861	105.6974	G11_051T 345.00 - WOODWARD DISTRICT EHV 345KV CKT 1
FDNS	06ALL	5	17G	G15_056	TO->FROM	CIMARRON - MINCO 345KV CKT 1	956	956	0.20261	105.5499	G11_051T 345.00 - WOODWARD DISTRICT EHV 345KV CKT 1
FDNS	06ALL	5	20SP	G15_056	TO->FROM	CIMARRON - MINCO 345KV CKT 1	956	956	0.20538	105.1459	MATHWSN7 345.00 - TATONGA7 345.00 345KV CKT 1
FDNS	06ALL	5	20SP	G15_056	TO->FROM	CIMARRON - MINCO 345KV CKT 1	956	956	0.23331	102.6282	CHISHOLM7 345.00 - WOODWARD DISTRICT EHV 345KV CKT 1
FDNS	06ALL	5	17SP	G15_056	TO->FROM	CIMARRON - MINCO 345KV CKT 1	956	956	0.233	102.3712	CHISHOLM7 345.00 - WOODWARD DISTRICT EHV 345KV CKT 1
FDNS	06ALL	5	17SP	G15_056	TO->FROM	CIMARRON - MINCO 345KV CKT 1	956	956	0.2055	100.8538	G11_051T 345.00 - TATONGA7 345.00 345KV CKT 1
FDNS	06ALL	5	16WP	G15_056	TO->FROM	CIMARRON - MINCO 345KV CKT 1	956	956	0.20783	100.7286	G11_051T 345.00 - TATONGA7 345.00 345KV CKT 1
FDNS	06ALL	5	20SP	G15_056	TO->FROM	CIMARRON - MINCO 345KV CKT 1	956	956	0.20538	100	G11_051T 345.00 - TATONGA7 345.00 345KV CKT 1
FDNS	06ALL	5	16WP	G15_056	TO->FROM	CIMARRON - MINCO 345KV CKT 1	956	956	0.23518	99.9	CHISHOLM7 345.00 - WOODWARD DISTRICT EHV 345KV CKT 1
FDNS	06ALL	5	20L	G15_056	TO->FROM	EDDY COUNTY INTERCHANGE - EDDY_NORTH 6230.00 230KV CKT @1	478	478	0.70286	103.026	P12:345:SPS:J15.1.XRDS.TOLK
FDNS	06ALL	5	20L	G15_056	TO->FROM	EDDY COUNTY INTERCHANGE - EDDY_NORTH 6230.00 230KV CKT @1	478	478	0.69913	100.0838	CROSSROADS 7345.00 - TOLK STATION 345KV CKT 1
FDNS	06ALL	5	20L	G15_056	TO->FROM	G14-057T 345.00 - LAWTON EASTSIDE 345KV CKT 1	717	789	0.09843	104.5834	BASE CASE
FDNS	06ALL	5	20L	G15_056	FROM->TO	G14-057T 345.00 - SUNNYSIDE 345KV CKT 1	717	789	0.09843	117.7866	BASE CASE
FDNS	06ALL	5	20WP	G15_056	FROM->TO	G14-057T 345.00 - SUNNYSIDE 345KV CKT 1	717	789	0.12041	105.6059	BASE CASE
FDNS	06ALL	5	17G	G15_056	FROM->TO	G14-057T 345.00 - SUNNYSIDE 345KV CKT 1	717	789	0.12226	105.2883	BASE CASE
FDNS	06ALL	5	16WP	G15_056	FROM->TO	G14-057T 345.00 - SUNNYSIDE 345KV CKT 1	717	789	0.12552	103.9305	BASE CASE
FDNS	06ALL	5	20L	G15_056	FROM->TO	GRACEMONT - MINCO 345KV CKT 1	1195	1195	0.2053	100.3039	G14-057T 345.00 - SUNNYSIDE 345KV CKT 1
FDNS	06ALL	5	17G	G15_056	FROM->TO	POTTER COUNTY INTERCHANGE (WAUK 90343-A) 345/230/13.2KV TRANSFORMER CKT 1	560	560	0.20028	131.4477	P12:345:SPS:J15.1.XRDS.TOLK
FDNS	06ALL	5	17G	G15_056	FROM->TO	POTTER COUNTY INTERCHANGE (WAUK 90343-A) 345/230/13.2KV TRANSFORMER CKT 1	560	560	0.20028	130.9697	P12:345:SPS:J15.1.XRDS.TOLK
FDNS	06ALL	5	16WP	G15_056	FROM->TO	POTTER COUNTY INTERCHANGE (WAUK 90343-A) 345/230/13.2KV TRANSFORMER CKT 1	560	560	0.21154	123.3278	P12:345:SPS:J15.1.XRDS.TOLK
FDNS	06ALL	5	16WP	G15_056	FROM->TO	POTTER COUNTY INTERCHANGE (WAUK 90343-A) 345/230/13.2KV TRANSFORMER CKT 1	560	560	0.21154	122.0001	P12:345:SPS:J15.1.XRDS.TOLK
FDNS	06ALL	5	17SP	G15_056	FROM->TO	POTTER COUNTY INTERCHANGE (WAUK 90343-A) 345/230/13.2KV TRANSFORMER CKT 1	560	560	0.20598	108.8592	P12:345:SPS:J15.1.XRDS.TOLK
FDNS	06ALL	5	17SP	G15_056	FROM->TO	POTTER COUNTY INTERCHANGE (WAUK 90343-A) 345/230/13.2KV TRANSFORMER CKT 1	560	560	0.20598	107.3735	P12:345:SPS:J15.1.XRDS.TOLK
FDNS	06ALL	5	16WP	G15_056	FROM->TO	TOLK STATION (ABBXNL844501) 345/230/13.2KV TRANSFORMER CKT 1	560	560	0.29505	113.0248	CROSSROADS 7345.00 - TOLK STATION 345KV CKT 1
FDNS	06ALL	5	16WP	G15_056	FROM->TO	TOLK STATION (ABBXNL844501) 345/230/13.2KV TRANSFORMER CKT 1	560	560	0.29505	110.571	CROSSROADS 7345.00 - TOLK STATION 345KV CKT 1
FDNS	06ALL	6	20SP	G15_056	FROM->TO	CHISHOLM6 230.00 - ELK CITY 230KV 230KV CKT 1	353	353	0.0591	102.8848	BASE CASE
FDNS	06ALL	6	17SP	G15_056	FROM->TO	CHISHOLM6 230.00 - ELK CITY 230KV 230KV CKT 1	353	353	0.05938	100.6562	BASE CASE
FDNS	06ALL	6	17G	G15_056	TO->FROM	CIMARRON - MINCO 345KV CKT 1	956	956	0.20623	121.6178	G14-057T 345.00 - SUNNYSIDE 345KV CKT 1
FDNS	06ALL	6	20WP	G15_056	TO->FROM	CIMARRON - MINCO 345KV CKT 1	956	956	0.20404	119.7395	G14-057T 345.00 - SUNNYSIDE 345KV CKT 1
FDNS	06ALL	6	17G	G15_056	TO->FROM	CIMARRON - MINCO 345KV CKT 1	956	956	0.20623	116.437	G14-057T 345.00 - LAWTON EASTSIDE 345KV CKT 1
FDNS	06ALL	6	20WP	G15_056	TO->FROM	CIMARRON - MINCO 345KV CKT 1	956	956	0.20404	114.5016	G14-057T 345.00 - LAWTON EASTSIDE 345KV CKT 1
FDNS	06ALL	6	17SP	G15_056	TO->FROM	CIMARRON - MINCO 345KV CKT 1	956	956	0.20897	114.4047	G14-057T 345.00 - SUNNYSIDE 345KV CKT 1
FDNS	06ALL	6	16WP	G15_056	TO->FROM	CIMARRON - MINCO 345KV CKT 1	956	956	0.21237	114.352	G14-057T 345.00 - SUNNYSIDE 345KV CKT 1

SOLUTION	GROUP	SCENARIO	SEASON	SOURCE	DIRECTION	MONITORED ELEMENT	RATEA (MVA)	RATEB(MVA)	TDF	TC%LOADING (% MVA)	CONTINGENCY
FDNS	06ALL	6	20SP	G15_056	TO->FROM	CIMARRON - MINCO 345KV CKT 1	956	956	0.20946	111.5632	G14-057T 345.00 - SUNNYSIDE 345KV CKT 1
FDNS	06ALL	6	17SP	G15_056	TO->FROM	CIMARRON - MINCO 345KV CKT 1	956	956	0.20897	109.1774	G14-057T 345.00 - LAWTON EASTSIDE 345KV CKT 1
FDNS	06ALL	6	16WP	G15_056	TO->FROM	CIMARRON - MINCO 345KV CKT 1	956	956	0.21237	108.975	G14-057T 345.00 - LAWTON EASTSIDE 345KV CKT 1
FDNS	06ALL	6	20SP	G15_056	TO->FROM	CIMARRON - MINCO 345KV CKT 1	956	956	0.20946	106.5254	G14-057T 345.00 - LAWTON EASTSIDE 345KV CKT 1
FDNS	06ALL	6	17G	G15_056	TO->FROM	CIMARRON - MINCO 345KV CKT 1	956	956	0.19545	105.9404	CHISHOLM7 345.00 - WOODWARD DISTRICT EHV 345KV CKT 1
FDNS	06ALL	6	20L	G15_056	TO->FROM	EDDY COUNTY INTERCHANGE - EDDY_NORTH 6230.00 230KV CKT @1	478	478	0.7029	102.9135	P12:345:SPS:J15.1.XRDS.TOLK
FDNS	06ALL	6	20L	G15_056	TO->FROM	EDDY COUNTY INTERCHANGE - EDDY_NORTH 6230.00 230KV CKT @1	478	478	0.69915	100	CROSSROADS 7345.00 - TOLK STATION 345KV CKT 1
FDNS	06ALL	6	20L	G15_056	TO->FROM	G14-057T 345.00 - LAWTON EASTSIDE 345KV CKT 1	717	789	0.09358	102.0743	BASE CASE
FDNS	06ALL	6	20L	G15_056	FROM->TO	G14-057T 345.00 - SUNNYSIDE 345KV CKT 1	717	789	0.09358	115.279	BASE CASE
FDNS	06ALL	6	20WP	G15_056	FROM->TO	G14-057T 345.00 - SUNNYSIDE 345KV CKT 1	717	789	0.11508	103.5944	BASE CASE
FDNS	06ALL	6	17G	G15_056	FROM->TO	G14-057T 345.00 - SUNNYSIDE 345KV CKT 1	717	789	0.11687	103.4014	BASE CASE
FDNS	06ALL	6	16WP	G15_056	FROM->TO	G14-057T 345.00 - SUNNYSIDE 345KV CKT 1	717	789	0.11999	102.0868	BASE CASE
FDNS	06ALL	6	16WP	G15_056	FROM->TO	POTTER COUNTY INTERCHANGE (WAUK 90343-A) 345/230/13.2KV TRANSFORMER CKT 1	560	560	0.22571	124.5835	P12:345:SPS:J15.1.XRDS.TOLK
FDNS	06ALL	6	16WP	G15_056	FROM->TO	POTTER COUNTY INTERCHANGE (WAUK 90343-A) 345/230/13.2KV TRANSFORMER CKT 1	560	560	0.22571	123.2053	P12:345:SPS:J15.1.XRDS.TOLK
FDNS	06ALL	6	17SP	G15_056	FROM->TO	POTTER COUNTY INTERCHANGE (WAUK 90343-A) 345/230/13.2KV TRANSFORMER CKT 1	560	560	0.22012	109.9868	P12:345:SPS:J15.1.XRDS.TOLK
FDNS	06ALL	6	17SP	G15_056	FROM->TO	POTTER COUNTY INTERCHANGE (WAUK 90343-A) 345/230/13.2KV TRANSFORMER CKT 1	560	560	0.22012	108.4833	P12:345:SPS:J15.1.XRDS.TOLK
FDNS	06ALL	6	16WP	G15_056	FROM->TO	TOLK STATION (ABBXNL844501) 345/230/13.2KV TRANSFORMER CKT 1	560	560	0.2967	112.8509	CROSSROADS 7345.00 - TOLK STATION 345KV CKT 1
FDNS	06ALL	6	16WP	G15_056	FROM->TO	TOLK STATION (ABBXNL844501) 345/230/13.2KV TRANSFORMER CKT 1	560	560	0.2967	110.425	CROSSROADS 7345.00 - TOLK STATION 345KV CKT 1
FDNS	06ALL	7	20SP	G15_056	FROM->TO	CHISHOLM6 230.00 - ELK CITY 230KV 230KV CKT 1	353	353	0.0591	100.158	BASE CASE
FDNS	06ALL	7	17G	G15_056	TO->FROM	CIMARRON - MINCO 345KV CKT 1	956	956	0.20626	117.9395	G14-057T 345.00 - SUNNYSIDE 345KV CKT 1
FDNS	06ALL	7	20WP	G15_056	TO->FROM	CIMARRON - MINCO 345KV CKT 1	956	956	0.20404	116.4002	G14-057T 345.00 - SUNNYSIDE 345KV CKT 1
FDNS	06ALL	7	17G	G15_056	TO->FROM	CIMARRON - MINCO 345KV CKT 1	956	956	0.20626	112.8925	G14-057T 345.00 - LAWTON EASTSIDE 345KV CKT 1
FDNS	06ALL	7	16WP	G15_056	TO->FROM	CIMARRON - MINCO 345KV CKT 1	956	956	0.21239	111.0593	G14-057T 345.00 - SUNNYSIDE 345KV CKT 1
FDNS	06ALL	7	20WP	G15_056	TO->FROM	CIMARRON - MINCO 345KV CKT 1	956	956	0.20404	111.0342	G14-057T 345.00 - LAWTON EASTSIDE 345KV CKT 1
FDNS	06ALL	7	17SP	G15_056	TO->FROM	CIMARRON - MINCO 345KV CKT 1	956	956	0.20898	111.0288	G14-057T 345.00 - SUNNYSIDE 345KV CKT 1
FDNS	06ALL	7	20SP	G15_056	TO->FROM	CIMARRON - MINCO 345KV CKT 1	956	956	0.20947	108.4281	G14-057T 345.00 - SUNNYSIDE 345KV CKT 1
FDNS	06ALL	7	17SP	G15_056	TO->FROM	CIMARRON - MINCO 345KV CKT 1	956	956	0.20898	106.172	G14-057T 345.00 - LAWTON EASTSIDE 345KV CKT 1
FDNS	06ALL	7	16WP	G15_056	TO->FROM	CIMARRON - MINCO 345KV CKT 1	956	956	0.21239	105.9627	G14-057T 345.00 - LAWTON EASTSIDE 345KV CKT 1
FDNS	06ALL	7	20SP	G15_056	TO->FROM	CIMARRON - MINCO 345KV CKT 1	956	956	0.20947	103.5061	G14-057T 345.00 - LAWTON EASTSIDE 345KV CKT 1
FDNS	06ALL	7	20L	G15_056	TO->FROM	EDDY COUNTY INTERCHANGE - EDDY_NORTH 6230.00 230KV CKT @1	478	478	0.70292	102.8092	P12:345:SPS:J15.1.XRDS.TOLK
FDNS	06ALL	7	20L	G15_056	TO->FROM	EDDY COUNTY INTERCHANGE - EDDY_NORTH 6230.00 230KV CKT @1	478	478	0.69917	99.7	CROSSROADS 7345.00 - TOLK STATION 345KV CKT 1
FDNS	06ALL	7	20L	G15_056	TO->FROM	G14-057T 345.00 - LAWTON EASTSIDE 345KV CKT 1	717	789	0.09359	100.7791	BASE CASE
FDNS	06ALL	7	20L	G15_056	FROM->TO	G14-057T 345.00 - SUNNYSIDE 345KV CKT 1	717	789	0.09359	114.0012	BASE CASE
FDNS	06ALL	7	20WP	G15_056	FROM->TO	G14-057T 345.00 - SUNNYSIDE 345KV CKT 1	717	789	0.11507	102.5888	BASE CASE
FDNS	06ALL	7	17G	G15_056	FROM->TO	G14-057T 345.00 - SUNNYSIDE 345KV CKT 1	717	789	0.11688	102.2119	BASE CASE
FDNS	06ALL	7	16WP	G15_056	FROM->TO	G14-057T 345.00 - SUNNYSIDE 345KV CKT 1	717	789	0.11999	101.1576	BASE CASE
FDNS	06ALL	7	16WP	G15_056	FROM->TO	POTTER COUNTY INTERCHANGE (WAUK 90343-A) 345/230/13.2KV TRANSFORMER CKT 1	560	560	0.22573	133.795	P12:345:SPS:J15.1.XRDS.TOLK
FDNS	06ALL	7	16WP	G15_056	FROM->TO	POTTER COUNTY INTERCHANGE (WAUK 90343-A) 345/230/13.2KV TRANSFORMER CKT 1	560	560	0.22573	130.8152	P12:345:SPS:J15.1.XRDS.TOLK
FDNS	06ALL	7	17SP	G15_056	FROM->TO	POTTER COUNTY INTERCHANGE (WAUK 90343-A) 345/230/13.2KV TRANSFORMER CKT 1	560	560	0.22014	118.7065	P12:345:SPS:J15.1.XRDS.TOLK
FDNS	06ALL	7	17SP	G15_056	FROM->TO	POTTER COUNTY INTERCHANGE (WAUK 90343-A) 345/230/13.2KV TRANSFORMER CKT 1	560	560	0.22014	115.9022	P12:345:SPS:J15.1.XRDS.TOLK
FDNS	06ALL	7	16WP	G15_056	FROM->TO	TOLK STATION (ABBXNL844501) 345/230/13.2KV TRANSFORMER CKT 1	560	560	0.29674	112.9883	CROSSROADS 7345.00 - TOLK STATION 345KV CKT 1
FDNS	06ALL	7	16WP	G15_056	FROM->TO	TOLK STATION (ABBXNL844501) 345/230/13.2KV TRANSFORMER CKT 1	560	560	0.29674	110.8952	CROSSROADS 7345.00 - TOLK STATION 345KV CKT 1
FDNS	06ALL	8	20L	G15_056	TO->FROM	EDDY COUNTY INTERCHANGE - EDDY_NORTH 6230.00 230KV CKT @1	478	478	0.70138	101.5505	P12:345:SPS:J15.1.XRDS.TOLK
FDNS	00NR	0	16WP	G15_057	FROM->TO	CIMARRON - DRAPER LAKE 345KV CKT 1	717	717	0.20974	132.6508	G14-057T 345.00 - SUNNYSIDE 345KV CKT 1
FDNS	00NR	0	16WP	G15_057	FROM->TO	CIMARRON - DRAPER LAKE 345KV CKT 1	717	717	0.20974	122.0003	G14-057T 345.00 - LAWTON EASTSIDE 345KV CKT 1
FDNS	00NR	0	16WP	G15_057	FROM->TO	CIMARRON - DRAPER LAKE 345KV CKT 1	717	717	0.18563	116.5817	ARCADIA - SEMINOLE 345KV CKT 1
FDNS	00NR	0	16WP	G15_057	FROM->TO	CIMARRON - DRAPER LAKE 345KV CKT 1	717	717	0.1865	115.588	CLEVELAND - G15066_T 345.00 345KV CKT 1
FDNS	00NR	0	16WP	G15_057	FROM->TO	CIMARRON - DRAPER LAKE 345KV CKT 1	717	717	0.2369	115.2993	ARCADIA - NORTHWEST 345KV CKT 1
FDNS	00NR	0	16WP	G15_057	FROM->TO	CIMARRON - DRAPER LAKE 345KV CKT 1	717	717	0.1865	114.8063	G15066_T 345.00 - SOONER 345KV CKT 1
FDNS	00NR	0	16WP	G15_057	FROM->TO	CIMARRON - DRAPER LAKE 345KV CKT 1	717	717	0.18519	110.2756	CLEVELAND - TULSA NORTH 345KV CKT 1
FDNS	00NR	0	16WP	G15_057	FROM->TO	CIMARRON - DRAPER LAKE 345KV CKT 1	717	717	0.18519	110.2756	CLEVELAND - TULSA NORTH 345KV CKT 1
FDNS	00NR	0	16WP	G15_057	FROM->TO	CIMARRON - DRAPER LAKE 345KV CKT 1	717	717	0.19108	110.1142	MATHWSN7 345.00 - NORTHWEST 345KV CKT 1
FDNS	00NR	0	16WP	G15_057	FROM->TO	CIMARRON - DRAPER LAKE 345KV CKT 1	717	717	0.18676	109.2409	CIMARRON - SARA 138KV CKT 1
FDNS	00NR	0	16WP	G15_057	FROM->TO	CIMARRON - DRAPER LAKE 345KV CKT 1	717	717	0.1881	108.713	P12:138:WFEC:MSL03
FDNS	00NR	0	16WP	G15_057	FROM->TO	CIMARRON - DRAPER LAKE 345KV CKT 1	717	717	0.1872	108.0689	CIMARRON (CIMARON2) 345/138/13.8KV TRANSFORMER CKT 1
FDNS	00NR	0	16WP	G15_057	FROM->TO	CIMARRON - DRAPER LAKE 345KV CKT 1	717	717	0.18676	107.9446	SARA - STHLAKE4 138.00 138KV CKT 1
FDNS	00NR	0	16WP	G15_057	FROM->TO	CIMARRON - DRAPER LAKE 345KV CKT 1	717	717	0.18702	107.899	CIMARRON (CIMARON1) 345/138/13.8KV TRANSFORMER CKT 1
FDNS	00NR	0	16WP	G15_057	FROM->TO	CIMARRON - DRAPER LAKE 345KV CKT 1	717	717	0.18676	107.745	MCCLAIN - STHLAKE4 138.00 138KV CKT 1
FDNS	00NR	0	16WP	G15_057	FROM->TO	CIMARRON - DRAPER LAKE 345KV CKT 1	717	717	0.18613	107.4685	CIMARRON - CZECH HALL 138KV CKT 1
FDNS	00NR	0	16WP	G15_057	FROM->TO	CIMARRON - DRAPER LAKE 345KV CKT 1	717	717	0.18613	107.112	CZECH HALL - XEROX 138KV CKT 1
FDNS	00NR	0	16WP	G15_057	FROM->TO	CIMARRON - DRAPER LAKE 345KV CKT 1	717	717	0.18613	107.0924	MORGAN - XEROX 138KV CKT 1
FDNS	00NR	0	16WP	G15_057	FROM->TO	CIMARRON - DRAPER LAKE 345KV CKT 1	717	717	0.18573	106.9919	ANADARKO - POCASSETT 138KV CKT 1
FDNS	00NR	0	16WP	G15_057	FROM->TO	CIMARRON - DRAPER LAKE 345KV CKT 1	717	717	0.18613	106.9752	MORGAN - MUSTANG 138KV CKT 1
FDNS	00NR	0	16WP	G15_057	FROM->TO	CIMARRON - DRAPER LAKE 345KV CKT 1	717	717	0.18573	106.7926	POCASSETT - TUTTLE 138KV CKT 1
FDNS	00NR	0	16WP	G15_057	FROM->TO	CIMARRON - DRAPER LAKE 345KV CKT 1	717	717	0.18231	106.703	GEN515040 1-SEMINOLE 1G
FDNS	00NR	0	16WP	G15_057	FROM->TO	CIMARRON - DRAPER LAKE 345KV CKT 1	717	717	0.18258	106.6763	LACYGNE - WAVERLY7 345.00 345KV CKT 1
FDNS	00NR	0	16WP	G15_057	FROM->TO	CIMARRON - DRAPER LAKE 345KV CKT 1	717	717	0.1878	106.5853	JOHNSON COUNTY - SUNNYSIDE 345KV CKT 1
FDNS	01ALL	0	16WP	G15_057	FROM->TO	CIMARRON - DRAPER LAKE 345KV CKT 1	717	717	0.20948	106.5755	GRACEMONT - MINCO 345KV CKT 1
FDNS	00NR	0	16WP	G15_057	FROM->TO	CIMARRON - DRAPER LAKE 345KV CKT 1	717	717	0.18258	106.4587	WAVERLY7 345.00 - WOLF CREEK 345KV CKT 1
FDNSLock	00NR	0	16WP	G15_057	FROM->TO	CIMARRON - DRAPER LAKE 345KV CKT 1	717	717	0.18231	106.456	GEN509403 1-PIRKEY GENERATION
FDNS	00NR	0	16WP	G15_057	FROM->TO	CIMARRON - DRAPER LAKE 345KV CKT 1	717	717	0.18512	106.4058	CORN TAP - NAPLESTP 138.00 138KV CKT 1
FDNS	00NR	0	16WP	G15_057	FROM->TO	CIMARRON - DRAPER LAKE 345KV CKT 1	717	717	0.18231	106.3792	GEN509416 1-TURK GENERATION
FDNS	00NR	0	16WP	G15_057	FROM->TO	CIMARRON - DRAPER LAKE 345KV CKT 1	717	717	0.18231	106.3605	GEN501801 1-DOLET HILLS UNIT1
FDNS	00NR	0	16WP	G15_057	FROM->TO	CIMARRON - DRAPER LAKE 345KV CKT 1	717	717	0.18512	106.3121	NAPLESTP 138.00 - PAYNE 138.00 138KV CKT 1
FDNS	00NR	0	16WP	G15_057	FROM->TO	CIMARRON - DRAPER LAKE 345KV CKT 1	717	717	0.18573	106.2787	BRIDGECR 138.00 - TUTTLE 138KV CKT 1
FDNS	00NR	0	16WP	G15_057	FROM->TO	CIMARRON - DRAPER LAKE 345KV CKT 1	717	717	0.18314	106.2342	CANEYRV7 345.00 - NEOSHO 345KV CKT 1
FDNS	00NR	0	17SP	G15_057	FROM->TO	CIMARRON - DRAPER LAKE 345KV CKT 1	717	717	0.19886	106.1697	G14-057T 345.00 - SUNNYSIDE 345KV CKT 1
FDNSLock	00NR	0	16WP	G15_057	FROM->TO	CIMARRON - DRAPER LAKE 345KV CKT 1	717	717	0.18231	106.0246	GEN336821 1-GRAND GULF UNIT
FDNS	00NR	0	16WP	G15_057	FROM->TO	CIMARRON - DRAPER LAKE 345KV CKT 1	717	717	0.18231	105.9922	GEN515042 1-SEMINOLE 3G

SOLUTION	GROUP	SCENARIO	SEASON	SOURCE	DIRECTION	MONITORED ELEMENT	RATEA (MVA)	RATEB(MVA)	TDF	TC%LOADING (% MVA)	CONTINGENCY
FDNS	00NR	0	16WP	G15_057	FROM->TO	CIMARRON - DRAPER LAKE 345KV CKT 1	717	717	0.18314	105.9562	CANEYRV7 345.00 - LATHAMS7 345.00 345KV CKT 1
FDNS	00NR	0	16WP	G15_057	FROM->TO	CIMARRON - DRAPER LAKE 345KV CKT 1	717	717	0.18573	105.9048	BRIDGECR 138.00 - SUNSHINE CANYON 138KV CKT 1
FDNS	00NR	0	16WP	G15_057	FROM->TO	CIMARRON - DRAPER LAKE 345KV CKT 1	717	717	0.18573	105.894	P12:138:WFEC:MSL01
FDNS	00NR	0	16WP	G15_057	FROM->TO	CIMARRON - DRAPER LAKE 345KV CKT 1	717	717	0.18231	105.7583	GEN515041 1-SEMINOLE 2G
FDNSLock	00NR	0	16WP	G15_057	FROM->TO	CIMARRON - DRAPER LAKE 345KV CKT 1	717	717	0.18231	105.7266	GEN336153 1-WATERFORD UNIT#3
FDNS	00NR	0	16WP	G15_057	FROM->TO	CIMARRON - DRAPER LAKE 345KV CKT 1	717	717	0.20785	105.5516	CIMARRON - NORTHWEST 345KV CKT 1
FDNS	00NR	0	16WP	G15_057	FROM->TO	CIMARRON - DRAPER LAKE 345KV CKT 1	717	717	0.18231	105.5263	GEN509406 1-WELSH #3
FDNS	00NR	0	16WP	G15_057	FROM->TO	CIMARRON - DRAPER LAKE 345KV CKT 1	717	717	0.18231	105.5261	GEN509404 1-WELSH #1
FDNS	00NR	0	16WP	G15_057	FROM->TO	CIMARRON - DRAPER LAKE 345KV CKT 1	717	717	0.18314	105.5155	LATHAMS7 345.00 - ROSE HILL 345KV CKT 1
FDNSLock	00NR	0	16WP	G15_057	FROM->TO	CIMARRON - DRAPER LAKE 345KV CKT 1	717	717	0.18231	105.4219	GEN335831 1-RIVERBEND UNIT#1
FDNSLock	00NR	0	16WP	G15_057	FROM->TO	CIMARRON - DRAPER LAKE 345KV CKT 1	717	717	0.18231	105.406	GEN337911 1-ARKANSAS NUCLEAR ONE UNIT #2
FDNS	00NR	0	16WP	G15_057	FROM->TO	CIMARRON - DRAPER LAKE 345KV CKT 1	717	717	0.18351	105.1336	HUGO - SUNNYSIDE 345KV CKT 1
FDNS	00NR	0	16WP	G15_057	FROM->TO	CIMARRON - DRAPER LAKE 345KV CKT 1	717	717	0.17781	105.1183	CANADIAN RIVER - MUSKOGEE 345KV CKT 1
FDNS	00NR	0	16WP	G15_057	FROM->TO	CIMARRON - DRAPER LAKE 345KV CKT 1	717	717	0.18238	105.0337	P12:138:OKGE:3TERM14
FDNS	00NR	0	16WP	G15_057	FROM->TO	CIMARRON - DRAPER LAKE 345KV CKT 1	717	717	0.18231	105.0296	GRAND GULF 500/22.0KV TRANSFORMER CKT 1
FDNS	00NR	0	16WP	G15_057	FROM->TO	CIMARRON - DRAPER LAKE 345KV CKT 1	717	717	0.18231	105.0273	GEN337910 1-ARKANSAS NUCLEAR ONE UNIT #1
FDNS	00NR	0	16WP	G15_057	FROM->TO	CIMARRON - DRAPER LAKE 345KV CKT 1	717	717	0.18756	105.0144	JOHNSON COUNTY - PITTSBURG 345KV CKT 1
FDNS	00NR	0	16WP	G15_057	FROM->TO	CIMARRON - DRAPER LAKE 345KV CKT 1	717	717	0.18756	105.0144	JOHNSON COUNTY - PITTSBURG 345KV CKT 1
FDNS	00NR	0	16WP	G15_057	FROM->TO	CIMARRON - DRAPER LAKE 345KV CKT 1	717	717	0.18326	104.9951	HORSESHOE LAKE - JONES TAP 138KV CKT 1
FDNS	00NR	0	16WP	G15_057	FROM->TO	CIMARRON - DRAPER LAKE 345KV CKT 1	717	717	0.18198	104.9687	MORISNT4 138.00 - STILLWATER 138KV CKT 1
FDNS	00NR	0	16WP	G15_057	FROM->TO	CIMARRON - DRAPER LAKE 345KV CKT 1	717	717	0.182	104.9641	P12:138:OKGE:3TERM2
FDNS	00NR	0	16WP	G15_057	FROM->TO	CIMARRON - DRAPER LAKE 345KV CKT 1	717	717	0.18367	104.9439	REDBUD - RIVERSIDE STATION 345KV CKT 1
FDNS	00NR	0	16WP	G15_057	FROM->TO	CIMARRON - DRAPER LAKE 345KV CKT 1	717	717	0.18367	104.9439	REDBUD - RIVERSIDE STATION 345KV CKT 1
FDNS	00NR	0	16WP	G15_057	FROM->TO	CIMARRON - DRAPER LAKE 345KV CKT 1	717	717	0.18231	104.8928	GEN515226 1-MUSKOGEE 6G
FDNS	00NR	0	16WP	G15_057	FROM->TO	CIMARRON - DRAPER LAKE 345KV CKT 1	717	717	0.18231	104.879	GEN501813 1-RODEMACHER UNIT 3
FDNS	00NR	0	16WP	G15_057	FROM->TO	CIMARRON - DRAPER LAKE 345KV CKT 1	717	717	0.18657	104.8291	BAILEY4 138.00 - SUNSHINE CANYON 138KV CKT 1
FDNS	00NR	0	16WP	G15_057	FROM->TO	CIMARRON - DRAPER LAKE 345KV CKT 1	717	717	0.1829	104.7782	NORTHWEST (NORTWST2) 345/138/13.8KV TRANSFORMER CKT 1
FDNS	00NR	0	16WP	G15_057	FROM->TO	CIMARRON - DRAPER LAKE 345KV CKT 1	717	717	0.18206	104.7766	7SAREPTA% 345.00 - LONGWOOD 345KV CKT 1
FDNS	00NR	0	16WP	G15_057	FROM->TO	CIMARRON - DRAPER LAKE 345KV CKT 1	717	717	0.18206	104.7766	7SAREPTA% 345.00 - LONGWOOD 345KV CKT 1
FDNS	00NR	0	16WP	G15_057	FROM->TO	CIMARRON - DRAPER LAKE 345KV CKT 1	717	717	0.18176	104.7749	ARCADIA - KAMO MEMORIAL 138KV CKT 1
FDNS	00NR	0	16WP	G15_057	FROM->TO	CIMARRON - DRAPER LAKE 345KV CKT 1	717	717	0.18239	104.7555	P12:138:OKGE:3TERM12
FDNS	00NR	0	16WP	G15_057	FROM->TO	CIMARRON - DRAPER LAKE 345KV CKT 1	717	717	0.18221	104.7399	DOLET HILLS - SOUTHWEST SHREVEPORT 345KV CKT 1
FDNS	00NR	0	16WP	G15_057	FROM->TO	CIMARRON - DRAPER LAKE 345KV CKT 1	717	717	0.18221	104.7399	DOLET HILLS - SOUTHWEST SHREVEPORT 345KV CKT 1
FDNS	00NR	0	16WP	G15_057	FROM->TO	CIMARRON - DRAPER LAKE 345KV CKT 1	717	717	0.18231	104.6942	GEN515225 1-MUSKOGEE 5G
FDNS	00NR	0	16WP	G15_057	FROM->TO	CIMARRON - DRAPER LAKE 345KV CKT 1	717	717	0.18231	104.694	GEN515223 1-MUSKOGEE 4G
FDNS	00NR	0	16WP	G15_057	FROM->TO	CIMARRON - DRAPER LAKE 345KV CKT 1	717	717	0.18231	104.6904	GEN335206 1-NELSON UNIT 6
FDNS	00NR	0	16WP	G15_057	FROM->TO	CIMARRON - DRAPER LAKE 345KV CKT 1	717	717	0.1832	104.68	MEMORIAL - SKYLINE 138KV CKT 1
FDNS	00NR	0	16WP	G15_057	FROM->TO	CIMARRON - DRAPER LAKE 345KV CKT 1	717	717	0.19048	104.583	GRACEMONT (BANK 1) 345/138/13.8KV TRANSFORMER CKT 1
FDNS	00NR	0	16WP	G15_057	FROM->TO	CIMARRON - DRAPER LAKE 345KV CKT 1	717	717	0.18381	104.5721	QUAIL CREEK - SKYLINE 138KV CKT 1
FDNS	00NR	0	16WP	G15_057	FROM->TO	CIMARRON - DRAPER LAKE 345KV CKT 1	717	717	0.18231	104.5492	GEN509409 1-WILKES #3
FDNS	00NR	0	16WP	G15_057	FROM->TO	CIMARRON - DRAPER LAKE 345KV CKT 1	717	717	0.18231	104.5474	GEN337653 1-WHITE BLUFF UNIT #2
FDNS	00NR	0	16WP	G15_057	FROM->TO	CIMARRON - DRAPER LAKE 345KV CKT 1	717	717	0.18338	104.5355	P12:138:OKGE:3TERM18
FDNS	00NR	0	16WP	G15_057	FROM->TO	CIMARRON - DRAPER LAKE 345KV CKT 1	717	717	0.18657	104.5271	BAILEY4 138.00 - WESTMOORE 138KV CKT 1
FDNS	00NR	0	16WP	G15_057	FROM->TO	CIMARRON - DRAPER LAKE 345KV CKT 1	717	717	0.18231	104.519	GEN501812 1-RODEMACHER UNIT 2
FDNS	00NR	0	16WP	G15_057	FROM->TO	CIMARRON - DRAPER LAKE 345KV CKT 1	717	717	0.18285	104.5145	NORTHWEST (NORTWST4) 345/138/13.8KV TRANSFORMER CKT 1
FDNS	00NR	0	16WP	G15_057	FROM->TO	CIMARRON - DRAPER LAKE 345KV CKT 1	717	717	0.18231	104.4548	NEW MADRID 161/22.0KV TRANSFORMER CKT 1
FDNS	00NR	0	16WP	G15_057	FROM->TO	CIMARRON - DRAPER LAKE 345KV CKT 1	717	717	0.1833	104.4542	36 & MERIDIAN - CHEMTRON 138KV CKT 1
FDNS	00NR	0	16WP	G15_057	FROM->TO	CIMARRON - DRAPER LAKE 345KV CKT 1	717	717	0.18295	104.4515	THISTLE7 345.00 - WOODWARD DISTRICT EHV 345KV CKT 1
FDNS	00NR	0	16WP	G15_057	FROM->TO	CIMARRON - DRAPER LAKE 345KV CKT 1	717	717	0.18295	104.4515	THISTLE7 345.00 - WOODWARD DISTRICT EHV 345KV CKT 1
FDNS	00NR	0	16WP	G15_057	FROM->TO	CIMARRON - DRAPER LAKE 345KV CKT 1	717	717	0.18295	104.4515	THISTLE7 345.00 - WOODWARD DISTRICT EHV 345KV CKT 2
FDNS	00NR	0	16WP	G15_057	FROM->TO	CIMARRON - DRAPER LAKE 345KV CKT 1	717	717	0.18295	104.4515	THISTLE7 345.00 - WOODWARD DISTRICT EHV 345KV CKT 2
FDNS	00NR	0	16WP	G15_057	FROM->TO	CIMARRON - DRAPER LAKE 345KV CKT 1	717	717	0.18231	104.4411	NEW MADRID 345/22.0KV TRANSFORMER CKT 1
FDNS	00NR	0	16WP	G15_057	FROM->TO	CIMARRON - DRAPER LAKE 345KV CKT 1	717	717	0.18231	104.4225	GEN520947 1-HUGO1
FDNS	00NR	0	16WP	G15_057	FROM->TO	CIMARRON - DRAPER LAKE 345KV CKT 1	717	717	0.18231	104.4148	GEN337652 1-WHITE BLUFF UNIT #1
FDNS	00NR	0	16WP	G15_057	FROM->TO	CIMARRON - DRAPER LAKE 345KV CKT 1	717	717	0.18285	104.3894	NORTHWEST (NORTWST3) 345/138/13.8KV TRANSFORMER CKT 1
FDNS	00NR	0	16WP	G15_057	FROM->TO	CIMARRON - DRAPER LAKE 345KV CKT 1	717	717	0.18217	104.376	3TR3AR8EL7EL
FDNS	00NR	0	16WP	G15_057	FROM->TO	CIMARRON - DRAPER LAKE 345KV CKT 1	717	717	0.18217	104.376	7SAREPTA% 345.00 - ELDORADO EHV 345KV CKT 1
FDNS	00NR	0	16WP	G15_057	FROM->TO	CIMARRON - DRAPER LAKE 345KV CKT 1	717	717	0.18217	104.3682	ELDORADO EHV 500/345KV TRANSFORMER CKT 1
FDNS	00NR	0	16WP	G15_057	FROM->TO	CIMARRON - DRAPER LAKE 345KV CKT 1	717	717	0.1833	104.3672	CHEMTRON - PENNSYLVANIA 138KV CKT 1
FDNS	00NR	0	16WP	G15_057	FROM->TO	CIMARRON - DRAPER LAKE 345KV CKT 1	717	717	0.18208	104.3371	G15052_T 345.00 - ROSE HILL 345KV CKT 1
FDNS	00NR	0	16WP	G15_057	FROM->TO	CIMARRON - DRAPER LAKE 345KV CKT 1	717	717	0.18242	104.3332	G15074_T 345.00 - HOYT 345KV CKT 1
FDNS	00NR	0	16WP	G15_057	FROM->TO	CIMARRON - DRAPER LAKE 345KV CKT 1	717	717	0.18515	104.3021	BLANCHARD - CORNVILLE 138KV CKT 1
FDNS	00NR	0	16WP	G15_057	FROM->TO	CIMARRON - DRAPER LAKE 345KV CKT 1	717	717	0.18327	104.3015	COMANCHE - LOCO 138KV CKT 1
FDNS	00NR	0	16WP	G15_057	FROM->TO	CIMARRON - DRAPER LAKE 345KV CKT 1	717	717	0.18265	104.2791	P12:138:OKGE:3TERM17
FDNS	00NR	0	16WP	G15_057	FROM->TO	CIMARRON - DRAPER LAKE 345KV CKT 1	717	717	0.18231	104.2625	GEN515577 1-ARBWND11 0.6900
FDNS	00NR	0	16WP	G15_057	FROM->TO	CIMARRON - DRAPER LAKE 345KV CKT 1	717	717	0.18657	104.2438	FRANKLIN SW - WESTMOORE 138KV CKT 1
FDNS	00NR	0	16WP	G15_057	FROM->TO	CIMARRON - DRAPER LAKE 345KV CKT 1	717	717	0.18375	104.2374	P12:138:OKGE:3TERM11
FDNS	00NR	0	16WP	G15_057	FROM->TO	CIMARRON - DRAPER LAKE 345KV CKT 1	717	717	0.18231	104.2237	GEN334440 1-SABINE UNIT 4
FDNS	00NR	0	16WP	G15_057	FROM->TO	CIMARRON - DRAPER LAKE 345KV CKT 1	717	717	0.18272	104.2165	LONEOAK - NORTHWEST 138KV CKT 1
FDNS	00NR	0	16WP	G15_057	FROM->TO	CIMARRON - DRAPER LAKE 345KV CKT 1	717	717	0.18515	104.211	P12:138:AEPW-OGE:CORNVIL4:MAUD 4
FDNS	00NR	0	16WP	G15_057	FROM->TO	CIMARRON - DRAPER LAKE 345KV CKT 1	717	717	0.18386	104.2024	KETCH TAP - NORTHWEST 138KV CKT 1
FDNS	00NR	0	16WP	G15_057	FROM->TO	CIMARRON - DRAPER LAKE 345KV CKT 1	717	717	0.18231	104.2023	DELL 500 - ESSEX UNIT 2 500KV CKT Z1
FDNS	00NR	0	16WP	G15_057	FROM->TO	CIMARRON - DRAPER LAKE 345KV CKT 1	717	717	0.18321	104.1938	DIVISION AVE - LAKESIDE 138KV CKT 1
FDNS	00NR	0	16WP	G15_057	FROM->TO	CIMARRON - DRAPER LAKE 345KV CKT 1	717	717	0.18135	104.1729	HORSESHOE LAKE - KAMO MEMORIAL 138KV CKT 1
FDNS	00NR	0	16WP	G15_057	FROM->TO	CIMARRON - DRAPER LAKE 345KV CKT 1	717	717	0.18241	104.1303	NORTHWEST - PANTHER 138KV CKT 1
FDNS	00NR	0	16WP	G15_057	FROM->TO	CIMARRON - DRAPER LAKE 345KV CKT 1	717	717	0.18158	104.1253	G14-074T 345.00 - OKLAUNION 345KV CKT 1
FDNS	00NR	0	16WP	G15_057	FROM->TO	CIMARRON - DRAPER LAKE 345KV CKT 1	717	717	0.18439	104.1217	CLARKSVILLE - ONETA 345KV CKT 1
FDNS	00NR	0	16WP	G15_057	FROM->TO	CIMARRON - DRAPER LAKE 345KV CKT 1	717	717	0.18439	104.1217	CLARKSVILLE - ONETA 345KV CKT 1
FDNS	00NR	0	16WP	G15_057	FROM->TO	CIMARRON - DRAPER LAKE 345KV CKT 1	717	717	0.18215	104.1144	P12:138:OKGE:3TERM20

SOLUTION	GROUP	SCENARIO	SEASON	SOURCE	DIRECTION	MONITORED ELEMENT	RATEA (MVA)	RATEB(MVA)	TDF	TC%LOADING (% MVA)	CONTINGENCY
FDNS	00NR	0	16WP	G15_057	FROM->TO	CIMARRON - DRAPER LAKE 345KV CKT 1	717	717	0.18515	104.1089	BLANCHARD - MAUD 138KV CKT 1
FDNS	00NR	0	16WP	G15_057	FROM->TO	CIMARRON - DRAPER LAKE 345KV CKT 1	717	717	0.18397	104.1015	CIMARRON - HAYMAKER 138KV CKT 1
FDNS	00NR	0	16WP	G15_057	FROM->TO	CIMARRON - DRAPER LAKE 345KV CKT 1	717	717	0.18242	104.0977	P12:138:OKGE:3TERM47
FDNS	00NR	0	16WP	G15_057	FROM->TO	CIMARRON - DRAPER LAKE 345KV CKT 1	717	717	0.18231	104.0931	GEN336252 1-NINEMILE POINT UNIT#5
FDNS	00NR	0	16WP	G15_057	FROM->TO	CIMARRON - DRAPER LAKE 345KV CKT 1	717	717	0.18301	104.0857	FINNEY SWITCHING STATION - HOLCOMB 345KV CKT 1
FDNS	00NR	0	16WP	G15_057	FROM->TO	CIMARRON - DRAPER LAKE 345KV CKT 1	717	717	0.18301	104.0857	FINNEY SWITCHING STATION - HOLCOMB 345KV CKT 1
FDNS	00NR	0	16WP	G15_057	FROM->TO	CIMARRON - DRAPER LAKE 345KV CKT 1	717	717	0.18231	104.0808	DOLET HILLS 345/24.0KV TRANSFORMER CKT 1
FDNS	00NR	0	16WP	G15_057	FROM->TO	CIMARRON - DRAPER LAKE 345KV CKT 1	717	717	0.18241	104.08	PANTHER - SILVER LAKE 138KV CKT 1
FDNS	00NR	0	16WP	G15_057	FROM->TO	CIMARRON - DRAPER LAKE 345KV CKT 1	717	717	0.18321	104.0723	HEFNER - LAKESIDE 138KV CKT 1
FDNS	00NR	0	16WP	G15_057	FROM->TO	CIMARRON - DRAPER LAKE 345KV CKT 1	717	717	0.18254	104.041	BLACKBERRY - NEOSHO 345KV CKT 1
FDNS	00NR	0	16WP	G15_057	FROM->TO	CIMARRON - DRAPER LAKE 345KV CKT 1	717	717	0.18231	104.0356	WHITE BLUFF 500/26.0KV TRANSFORMER CKT 1
FDNS	00NR	0	16WP	G15_057	FROM->TO	CIMARRON - DRAPER LAKE 345KV CKT 1	717	717	0.18279	104.0273	KETCH - KETCH TAP 138KV CKT 1
FDNS	00NR	0	16WP	G15_057	FROM->TO	CIMARRON - DRAPER LAKE 345KV CKT 1	717	717	0.18257	104.02	EMPORIA ENERGY CENTER - G14_001T 345.00 345KV CKT 1
FDNS	00NR	0	16WP	G15_057	FROM->TO	CIMARRON - DRAPER LAKE 345KV CKT 1	717	717	0.18242	104.0189	HOYT - STRANGER CREEK 345KV CKT 1
FDNS	00NR	0	16WP	G15_057	FROM->TO	CIMARRON - DRAPER LAKE 345KV CKT 1	717	717	0.18235	104.0086	DIVISION AVE - MUSTANG 138KV CKT 1
FDNS	00NR	0	16WP	G15_057	FROM->TO	CIMARRON - DRAPER LAKE 345KV CKT 1	717	717	0.18237	104	G15088_T 345.00 - MOORE 345KV CKT 1
FDNS	00NR	0	16WP	G15_057	FROM->TO	CIMARRON - DRAPER LAKE 345KV CKT 1	717	717	0.18231	104	GEN300006 1-NEW MADRID UNIT 1
FDNS	00NR	0	16WP	G15_057	FROM->TO	CIMARRON - DRAPER LAKE 345KV CKT 1	717	717	0.18231	104	GEN300007 1-NEW MADRID UNIT 2
FDNS	00NR	0	16WP	G15_057	FROM->TO	CIMARRON - DRAPER LAKE 345KV CKT 1	717	717	0.18287	103.999	P12:138:WFEC:MSL02
FDNS	00NR	0	16WP	G15_057	FROM->TO	CIMARRON - DRAPER LAKE 345KV CKT 1	717	717	0.18397	103.998	DIVISION AVE - HAYMAKER 138KV CKT 1
FDNS	00NR	0	16WP	G15_057	FROM->TO	CIMARRON - DRAPER LAKE 345KV CKT 1	717	717	0.18231	103.9886	GEN509408 1-WILKES #2
FDNS	00NR	0	16WP	G15_057	FROM->TO	CIMARRON - DRAPER LAKE 345KV CKT 1	717	717	0.18241	103.9879	P12:138:AEPW-OGE:SHIDLER4:OSAGE 4
FDNS	00NR	0	16WP	G15_057	FROM->TO	CIMARRON - DRAPER LAKE 345KV CKT 1	717	717	0.18347	103.975	MCCLAIN - PLEASANT VALLEY 138KV CKT 1
FDNS	00NR	0	16WP	G15_057	FROM->TO	CIMARRON - DRAPER LAKE 345KV CKT 1	717	717	0.18247	103.9746	SWISSVALE - WEST GARDNER 345KV CKT 1
FDNS	00NR	0	16WP	G15_057	FROM->TO	CIMARRON - DRAPER LAKE 345KV CKT 1	717	717	0.18242	103.9659	G15074_T 345.00 - JEFFREY ENERGY CENTER 345KV CKT 1
FDNS	00NR	0	16WP	G15_057	FROM->TO	CIMARRON - DRAPER LAKE 345KV CKT 1	717	717	0.18275	103.962	ANADARKO - GEORGIA 138KV CKT 1
FDNS	00NR	0	16WP	G15_057	FROM->TO	CIMARRON - DRAPER LAKE 345KV CKT 1	717	717	0.18231	103.9525	GEN335204 1-NELSON UNIT 4
FDNS	00NR	0	16WP	G15_057	FROM->TO	CIMARRON - DRAPER LAKE 345KV CKT 1	717	717	0.18231	103.9519	GEN336831 1-BAXTER WILSON SES
FDNS	00NR	0	16WP	G15_057	FROM->TO	CIMARRON - DRAPER LAKE 345KV CKT 1	717	717	0.18182	103.9391	P12:138:AEPW:OKMULGE4:R.S.S-4
FDNS	00NR	0	16WP	G15_057	FROM->TO	CIMARRON - DRAPER LAKE 345KV CKT 1	717	717	0.18231	103.9208	GEN506754 1-LEBROCK STEAM 1
FDNS	00NR	0	16WP	G15_057	FROM->TO	CIMARRON - DRAPER LAKE 345KV CKT 1	717	717	0.18327	103.919	CLASSEN - ROBINSON 138KV CKT 1
FDNS	00NR	0	16WP	G15_057	FROM->TO	CIMARRON - DRAPER LAKE 345KV CKT 1	717	717	0.18231	103.9013	GEN334441 1-SABINE UNIT 5
FDNS	00NR	0	16WP	G15_057	FROM->TO	CIMARRON - DRAPER LAKE 345KV CKT 1	717	717	0.18231	103.8962	GEN334071 1-LEWIS CREEK 2
FDNS	00NR	0	16WP	G15_057	FROM->TO	CIMARRON - DRAPER LAKE 345KV CKT 1	717	717	0.18275	103.8953	FLETCHER - GEORGIA 138KV CKT 1
FDNS	00NR	0	16WP	G15_057	FROM->TO	CIMARRON - DRAPER LAKE 345KV CKT 1	717	717	0.18257	103.8915	G14_001T 345.00 - WICHITA 345KV CKT 1
FDNS	00NR	0	16WP	G15_057	FROM->TO	CIMARRON - DRAPER LAKE 345KV CKT 1	717	717	0.18231	103.8883	GEN334070 1-LEWIS CREEK 1
FDNS	00NR	0	16WP	G15_057	FROM->TO	CIMARRON - DRAPER LAKE 345KV CKT 1	717	717	0.18276	103.8865	BENTON - WICHITA 345KV CKT 1
FDNS	00NR	0	16WP	G15_057	FROM->TO	CIMARRON - DRAPER LAKE 345KV CKT 1	717	717	0.18301	103.8864	FINNEY SWITCHING STATION - Hitchland Interchange 345KV CKT 1
FDNS	00NR	0	16WP	G15_057	FROM->TO	CIMARRON - DRAPER LAKE 345KV CKT 1	717	717	0.18231	103.8862	GEN336251 1-NINEMILE POINT UNIT#4
FDNS	00NR	0	16WP	G15_057	FROM->TO	CIMARRON - DRAPER LAKE 345KV CKT 1	717	717	0.18228	103.8786	WEBRE - WELLS 500KV CKT 1
FDNS	00NR	0	16WP	G15_057	FROM->TO	CIMARRON - DRAPER LAKE 345KV CKT 1	717	717	0.18261	103.8775	LACYGNE - NEOSHO 345KV CKT 1
FDNSLock	00NR	0	16WP	G15_057	FROM->TO	CIMARRON - DRAPER LAKE 345KV CKT 1	717	717	0.18231	103.8742	GEN590011 2-ERCOT EQUIVALENCE
FDNS	00NR	0	16WP	G15_057	FROM->TO	CIMARRON - DRAPER LAKE 345KV CKT 1	717	717	0.18244	103.862	EMPORIA ENERGY CENTER - SWISSVALE 345KV CKT 1
FDNS	00NR	0	16WP	G15_057	FROM->TO	CIMARRON - DRAPER LAKE 345KV CKT 1	717	717	0.18278	103.8385	EMPIRE - FLETCHER 138KV CKT 1
FDNSLock	00NR	0	16WP	G15_057	FROM->TO	CIMARRON - DRAPER LAKE 345KV CKT 1	717	717	0.18231	103.8317	GEN590010 1-ERCOT EQUIVALENCE
FDNS	00NR	0	16WP	G15_057	FROM->TO	CIMARRON - DRAPER LAKE 345KV CKT 1	717	717	0.18252	103.8223	G1524G1525 345.00 - THISTLE7 345.00 345KV CKT 1
FDNS	00NR	0	16WP	G15_057	FROM->TO	CIMARRON - DRAPER LAKE 345KV CKT 1	717	717	0.18252	103.8223	G1524G1525 345.00 - THISTLE7 345.00 345KV CKT 2
FDNS	00NR	0	16WP	G15_057	FROM->TO	CIMARRON - DRAPER LAKE 345KV CKT 1	717	717	0.18231	103.8186	GEN503909 1-FULTONU1 1 16.000
FDNSLock	00NR	0	16WP	G15_057	FROM->TO	CIMARRON - DRAPER LAKE 345KV CKT 1	717	717	0.18231	103.8129	GEN338146 1-INDEPENDENCE UNIT #2
FDNS	00NR	0	16WP	G15_057	FROM->TO	CIMARRON - DRAPER LAKE 345KV CKT 1	717	717	0.18272	103.8126	LONEOAK - QUAIL CREEK 138KV CKT 1
FDNS	00NR	0	16WP	G15_057	FROM->TO	CIMARRON - DRAPER LAKE 345KV CKT 1	717	717	0.18231	103.809	GEN501811 1-RODEMACHER UNIT 1
FDNS	00NR	0	16WP	G15_057	FROM->TO	CIMARRON - DRAPER LAKE 345KV CKT 1	717	717	0.18296	103.8044	WOODRING (WOODRNG2) 345/138/13.8KV TRANSFORMER CKT 1
FDNS	00NR	0	16WP	G15_057	FROM->TO	CIMARRON - DRAPER LAKE 345KV CKT 1	717	717	0.18426	103.7918	CRINER - PAYNE 138.00 138KV CKT 1
FDNS	00NR	0	16WP	G15_057	FROM->TO	CIMARRON - DRAPER LAKE 345KV CKT 1	717	717	0.18241	103.7817	OSAGE - WEBB CITY TAP 138KV CKT 1
FDNS	00NR	0	16WP	G15_057	FROM->TO	CIMARRON - DRAPER LAKE 345KV CKT 1	717	717	0.18278	103.7768	COMANCHE - EMPIRE 138KV CKT 1
FDNS	00NR	0	16WP	G15_057	FROM->TO	CIMARRON - DRAPER LAKE 345KV CKT 1	717	717	0.18231	103.7748	FRONTIER - GRIMES 345KV CKT 1
FDNS	00NR	0	16WP	G15_057	FROM->TO	CIMARRON - DRAPER LAKE 345KV CKT 1	717	717	0.18231	103.7716	GEN334433 1-SABINE UNIT 3
FDNS	00NR	0	16WP	G15_057	FROM->TO	CIMARRON - DRAPER LAKE 345KV CKT 1	717	717	0.18231	103.7693	P12:069:OKGE:3TERM4
FDNS	00NR	0	16WP	G15_057	FROM->TO	CIMARRON - DRAPER LAKE 345KV CKT 1	717	717	0.18231	103.7671	GEN334030 1-FRONTIER UNIT 1
FDNS	00NR	0	16WP	G15_057	FROM->TO	CIMARRON - DRAPER LAKE 345KV CKT 1	717	717	0.18231	103.7661	GEN334031 1-FRONTIER UNIT 2
FDNS	00NR	0	16WP	G15_057	FROM->TO	CIMARRON - DRAPER LAKE 345KV CKT 1	717	717	0.18231	103.764	GEN303007 1-1BC2 U2
FDNS	00NR	0	16WP	G15_057	FROM->TO	CIMARRON - DRAPER LAKE 345KV CKT 1	717	717	0.18251	103.7619	SPVALLY4 138.00 - STILLWATER 138KV CKT 1
FDNS	00NR	0	16WP	G15_057	FROM->TO	CIMARRON - DRAPER LAKE 345KV CKT 1	717	717	0.18231	103.7587	GEN303006 1-1BC2 U1
FDNS	00NR	0	16WP	G15_057	FROM->TO	CIMARRON - DRAPER LAKE 345KV CKT 1	717	717	0.18231	103.7582	GEN337041 1-GERALD ANDRUS
FDNS	00NR	0	16WP	G15_057	FROM->TO	CIMARRON - DRAPER LAKE 345KV CKT 1	717	717	0.18231	103.7551	P12:161:AEPW:DYESS 5:HYLAND 5
FDNS	00NR	0	16WP	G15_057	FROM->TO	CIMARRON - DRAPER LAKE 345KV CKT 1	717	717	0.18231	103.7415	GEN336191 1-LITTLE GYPSY UNIT#3
FDNS	00NR	0	16WP	G15_057	FROM->TO	CIMARRON - DRAPER LAKE 345KV CKT 1	717	717	0.18231	103.7374	8DANIEL8 500.00 - MCKNIGHT 500KV CKT 1
FDNS	00NR	0	16WP	G15_057	FROM->TO	CIMARRON - DRAPER LAKE 345KV CKT 1	717	717	0.18231	103.7345	GEN509393 S1-ARSENAL HILL GENS #4 (STALL)
FDNS	00NR	0	16WP	G15_057	FROM->TO	CIMARRON - DRAPER LAKE 345KV CKT 1	717	717	0.18243	103.7342	CLEAVELAND - CLEVLND 4 138.00 138KV CKT Z1
FDNS	00NR	0	16WP	G15_057	FROM->TO	CIMARRON - DRAPER LAKE 345KV CKT 1	717	717	0.18243	103.7339	CLEVELAND (CLVAUTO1) 345/138/13.8KV TRANSFORMER CKT 1
FDNS	00NR	0	16WP	G15_057	FROM->TO	CIMARRON - DRAPER LAKE 345KV CKT 1	717	717	0.18243	103.7339	CLEVELAND (CLVAUTO1) 345/138/13.8KV TRANSFORMER CKT 1
FDNS	00NR	0	16WP	G15_057	FROM->TO	CIMARRON - DRAPER LAKE 345KV CKT 1	717	717	0.18251	103.7325	PAYNESB4 138.00 - SPVALLY4 138.00 138KV CKT 1
FDNS	00NR	0	16WP	G15_057	FROM->TO	CIMARRON - DRAPER LAKE 345KV CKT 1	717	717	0.18248	103.7308	P12:138:OKGE:3TERM13
FDNS	00NR	0	16WP	G15_057	FROM->TO	CIMARRON - DRAPER LAKE 345KV CKT 1	717	717	0.18307	103.7266	ARKANSAS NUCLEAR ONE - FT SMITH 500KV CKT 1
FDNS	00NR	0	16WP	G15_057	FROM->TO	CIMARRON - DRAPER LAKE 345KV CKT 1	717	717	0.18307	103.7266	ARKANSAS NUCLEAR ONE - FT SMITH 500KV CKT 1
FDNS	00NR	0	16WP	G15_057	FROM->TO	CIMARRON - DRAPER LAKE 345KV CKT 1	717	717	0.18231	103.7179	GEN509392 G2-ARSENAL HILL GENS #3 (STALL)
FDNS	00NR	0	16WP	G15_057	FROM->TO	CIMARRON - DRAPER LAKE 345KV CKT 1	717	717	0.18231	103.7178	GEN509391 G1-ARSENAL HILL GENS #2 (STALL)
FDNS	00NR	0	16WP	G15_057	FROM->TO	CIMARRON - DRAPER LAKE 345KV CKT 1	717	717	0.18251	103.7169	CUSHING - PAYNESB4 138.00 138KV CKT 1
FDNS	00NR	0	16WP	G15_057	FROM->TO	CIMARRON - DRAPER LAKE 345KV CKT 1	717	717	0.18231	103.711	GEN335614 1-WILLOW GLENN UNIT#4

SOLUTION	GROUP	SCENARIO	SEASON	SOURCE	DIRECTION	MONITORED ELEMENT	RATEA (MVA)	RATEB(MVA)	TDF	TC%LOADING (% MVA)	CONTINGENCY
FDNS	00NR	0	16WP	G15_057	FROM->TO	CIMARRON - DRAPER LAKE 345KV CKT 1	717	717	0.18278	103.7087	DAYTON - MUSTANG 138KV CKT 1
FDNS	00NR	0	16WP	G15_057	FROM->TO	CIMARRON - DRAPER LAKE 345KV CKT 1	717	717	0.18278	103.7038	DAYTON - HOBBY LOBBY 138KV CKT 1
FDNS	00NR	0	16WP	G15_057	FROM->TO	CIMARRON - DRAPER LAKE 345KV CKT 1	717	717	0.18231	103.6985	GEN303008 1-1BC2 U3
FDNS	00NR	0	16WP	G15_057	FROM->TO	CIMARRON - DRAPER LAKE 345KV CKT 1	717	717	0.1777	103.6895	CANADIAN RIVER - PITTSBURG 345KV CKT 1
FDNS	00NR	0	16WP	G15_057	FROM->TO	CIMARRON - DRAPER LAKE 345KV CKT 1	717	717	0.1777	103.6895	CANADIAN RIVER - PITTSBURG 345KV CKT 1
FDNS	00NR	0	16WP	G15_057	FROM->TO	CIMARRON - DRAPER LAKE 345KV CKT 1	717	717	0.1829	103.6882	MUSTANG - SW 5TH 138KV CKT 1
FDNS	00NR	0	16WP	G15_057	FROM->TO	CIMARRON - DRAPER LAKE 345KV CKT 1	717	717	0.18231	103.6855	GEN338143 1-INDEPENDENCE UNIT #1
FDNS	00NR	0	16WP	G15_057	FROM->TO	CIMARRON - DRAPER LAKE 345KV CKT 1	717	717	0.18226	103.6766	ELDORADO EHV - MOUNT OLIVE 500KV CKT 1
FDNS	00NR	0	16WP	G15_057	FROM->TO	CIMARRON - DRAPER LAKE 345KV CKT 1	717	717	0.18231	103.6764	GEN336170 1-GULF OXY U4
FDNS	00NR	0	16WP	G15_057	FROM->TO	CIMARRON - DRAPER LAKE 345KV CKT 1	717	717	0.18231	103.6751	GEN336464 1-MICHOUD UNIT #3
FDNS	00NR	0	16WP	G15_057	FROM->TO	CIMARRON - DRAPER LAKE 345KV CKT 1	717	717	0.18426	103.6693	COLE - CRINER 138KV CKT 1
FDNS	00NR	0	16WP	G15_057	FROM->TO	CIMARRON - DRAPER LAKE 345KV CKT 1	717	717	0.18237	103.6516	P12:069:OKGE:3TERM19
FDNS	00NR	0	16WP	G15_057	FROM->TO	CIMARRON - DRAPER LAKE 345KV CKT 1	717	717	0.18231	103.6516	ESSEX UNIT 2 500/18.0KV TRANSFORMER CKT 1
FDNS	00NR	0	16WP	G15_057	FROM->TO	CIMARRON - DRAPER LAKE 345KV CKT 1	717	717	0.18235	103.6427	7LUTESVIL 345.00 - 7ST FRANC 345.00 345KV CKT 1
FDNS	00NR	0	16WP	G15_057	FROM->TO	CIMARRON - DRAPER LAKE 345KV CKT 1	717	717	0.18277	103.6334	OUMED 4 - STONEWALL 138KV CKT 1
FDNS	00NR	0	16WP	G15_057	FROM->TO	CIMARRON - DRAPER LAKE 345KV CKT 1	717	717	0.18231	103.6302	GEN336801 1-BAXTER WILSON UNIT #1
FDNS	00NR	0	16WP	G15_057	FROM->TO	CIMARRON - DRAPER LAKE 345KV CKT 1	717	717	0.18327	103.6262	LIGHTNING CREEK - ROBINSON 138KV CKT 1
FDNS	00NR	0	16WP	G15_057	FROM->TO	CIMARRON - DRAPER LAKE 345KV CKT 1	717	717	0.18175	103.6225	ARCADIA - LGARBER4 138.00 138KV CKT 1
FDNS	00NR	0	16WP	G15_057	FROM->TO	CIMARRON - DRAPER LAKE 345KV CKT 1	717	717	0.18231	103.6136	GEN506752 1-LEBROCK GAS 1
FDNS	00NR	0	16WP	G15_057	FROM->TO	CIMARRON - DRAPER LAKE 345KV CKT 1	717	717	0.18231	103.6135	GEN506753 1-LEBROCK GAS 2
FDNS	00NR	0	16WP	G15_057	FROM->TO	CIMARRON - DRAPER LAKE 345KV CKT 1	717	717	0.18232	103.6057	7JASPER 345.00 - BLACKBERRY 345KV CKT 1
FDNS	00NR	0	16WP	G15_057	FROM->TO	CIMARRON - DRAPER LAKE 345KV CKT 1	717	717	0.18241	103.6018	FAIRFAX TAP - SHIDLER 138KV CKT 1
FDNS	00NR	0	16WP	G15_057	FROM->TO	CIMARRON - DRAPER LAKE 345KV CKT 1	717	717	0.18241	103.6017	FAIRFAX TAP - WEBB CITY TAP 138KV CKT 1
FDNS	00NR	0	16WP	G15_057	FROM->TO	CIMARRON - DRAPER LAKE 345KV CKT 1	717	717	0.18175	103.5927	CHITWOOD - LGARBER4 138.00 138KV CKT 1
FDNS	00NR	0	16WP	G15_057	FROM->TO	CIMARRON - DRAPER LAKE 345KV CKT 1	717	717	0.18231	103.5925	GEN501910 1-ACADIA UNIT ST1
FDNS	00NR	0	16WP	G15_057	FROM->TO	CIMARRON - DRAPER LAKE 345KV CKT 1	717	717	0.18231	103.5817	RODEMACHER 230/22.0KV TRANSFORMER CKT 1
FDNS	00NR	0	16WP	G15_057	FROM->TO	CIMARRON - DRAPER LAKE 345KV CKT 1	717	717	0.18175	103.5804	CHITWOOD - JONES TAP 138KV CKT 1
FDNS	00NR	0	16WP	G15_057	FROM->TO	CIMARRON - DRAPER LAKE 345KV CKT 1	717	717	0.18231	103.5784	GEN511843 1-RIVERSIDE STATION #2
FDNS	00NR	0	16WP	G15_057	FROM->TO	CIMARRON - DRAPER LAKE 345KV CKT 1	717	717	0.18218	103.5772	P12:138:AEPW-OGE:WTH_JCT4:JENSEN4
FDNS	00NR	0	16WP	G15_057	FROM->TO	CIMARRON - DRAPER LAKE 345KV CKT 1	717	717	0.18279	103.571	TULSA NORTH - WEKIWA 345KV CKT 1
FDNS	00NR	0	16WP	G15_057	FROM->TO	CIMARRON - DRAPER LAKE 345KV CKT 1	717	717	0.18279	103.571	TULSA NORTH - WEKIWA 345KV CKT 1
FDNS	00NR	0	16WP	G15_057	FROM->TO	CIMARRON - DRAPER LAKE 345KV CKT 1	717	717	0.18224	103.5684	6LAYFLD 230.00 - CARROLL 230KV CKT 1
FDNS	00NR	0	16WP	G15_057	FROM->TO	CIMARRON - DRAPER LAKE 345KV CKT 1	717	717	0.18236	103.5641	8WNEWMADRID 500.00 - DELL 500 500KV CKT 1
FDNS	00NR	0	16WP	G15_057	FROM->TO	CIMARRON - DRAPER LAKE 345KV CKT 1	717	717	0.18232	103.5615	P12:345:GRDA:CHOUTEAU-SPORTSMANACRES
FDNS	00NR	0	16WP	G15_057	FROM->TO	CIMARRON - DRAPER LAKE 345KV CKT 1	717	717	0.18222	103.5548	ELDORADO EHV - SHERIDAN EHV 500KV CKT 1
FDNS	00NR	0	16WP	G15_057	FROM->TO	CIMARRON - DRAPER LAKE 345KV CKT 1	717	717	0.18286	103.5535	CHISHOLM6 230.00 - ELK CITY 230KV 230KV CKT 1
FDNS	00NR	0	16WP	G15_057	FROM->TO	CIMARRON - DRAPER LAKE 345KV CKT 1	717	717	0.18286	103.5504	ELK CITY 230KV (ELKCTY-6) 230/138/13.8KV TRANSFORMER CKT 1
FDNS	00NR	0	16WP	G15_057	FROM->TO	CIMARRON - DRAPER LAKE 345KV CKT 1	717	717	0.18286	103.5504	ELK CITY 230KV (ELKCTY-6) 230/138/13.8KV TRANSFORMER CKT 1
FDNS	00NR	0	16WP	G15_057	FROM->TO	CIMARRON - DRAPER LAKE 345KV CKT 1	717	717	0.18252	103.5453	G13-010T 345.00 - POST ROCK 345KV CKT 1
FDNS	00NR	0	16WP	G15_057	FROM->TO	CIMARRON - DRAPER LAKE 345KV CKT 1	717	717	0.18234	103.5337	P12:138:AEPW:N.E.S.-4:CATOOSA4
FDNS	00NR	0	16WP	G15_057	FROM->TO	CIMARRON - DRAPER LAKE 345KV CKT 1	717	717	0.18277	103.5322	OUMED 4 - PARK PLACE 138KV CKT 1
FDNS	00NR	0	16WP	G15_057	FROM->TO	CIMARRON - DRAPER LAKE 345KV CKT 1	717	717	0.18221	103.5255	FULTON 115 - HOPE 115KV CKT 1
FDNS	00NR	0	16WP	G15_057	FROM->TO	CIMARRON - DRAPER LAKE 345KV CKT 1	717	717	0.18221	103.5255	FULTON 115 - HOPE 115KV CKT 1
FDNS	00NR	0	16WP	G15_057	FROM->TO	CIMARRON - DRAPER LAKE 345KV CKT 1	717	717	0.18238	103.5186	P13:138-161:WERE:NSES_TX-4OR5::
FDNS	00NR	0	16WP	G15_057	FROM->TO	CIMARRON - DRAPER LAKE 345KV CKT 1	717	717	0.18231	103.5156	8CAJUN2 500/24.0KV TRANSFORMER CKT 1
FDNS	00NR	0	16WP	G15_057	FROM->TO	CIMARRON - DRAPER LAKE 345KV CKT 1	717	717	0.18208	103.5154	MORISNT4 138.00 - SOONER 138KV CKT 1
FDNS	00NR	0	16WP	G15_057	FROM->TO	CIMARRON - DRAPER LAKE 345KV CKT 1	717	717	0.18236	103.5113	P12:138:AEPW:CATOOSA4:T.S.E.-4
FDNS	00NR	0	16WP	G15_057	FROM->TO	CIMARRON - DRAPER LAKE 345KV CKT 1	717	717	0.18231	103.5052	ST FRANCIS - ST FRANCIS 1 161KV CKT Z1
FDNS	00NR	0	16WP	G15_057	FROM->TO	CIMARRON - DRAPER LAKE 345KV CKT 1	717	717	0.18234	103.5015	7JASPER 345.00 - MORGAN 345KV CKT 1
FDNS	00NR	0	16WP	G15_057	FROM->TO	CIMARRON - DRAPER LAKE 345KV CKT 1	717	717	0.18231	103.4974	P12:069:OKGE:3TERM3
FDNS	00NR	0	16WP	G15_057	FROM->TO	CIMARRON - DRAPER LAKE 345KV CKT 1	717	717	0.18283	103.4908	HUGO - VALLIANT 345KV CKT 1
FDNS	00NR	0	16WP	G15_057	FROM->TO	CIMARRON - DRAPER LAKE 345KV CKT 1	717	717	0.18283	103.4908	HUGO - VALLIANT 345KV CKT 1
FDNS	00NR	0	16WP	G15_057	FROM->TO	CIMARRON - DRAPER LAKE 345KV CKT 1	717	717	0.18231	103.4903	GEN509394 1-FLINT CREEK
FDNS	00NR	0	16WP	G15_057	FROM->TO	CIMARRON - DRAPER LAKE 345KV CKT 1	717	717	0.18231	103.4898	GEN300015 1-1SGPDEL 18.000
FDNS	00NR	0	16WP	G15_057	FROM->TO	CIMARRON - DRAPER LAKE 345KV CKT 1	717	717	0.18252	103.4897	G13-010T 345.00 - SPEARVILLE 345KV CKT 1
FDNS	00NR	0	16WP	G15_057	FROM->TO	CIMARRON - DRAPER LAKE 345KV CKT 1	717	717	0.1832	103.4895	DALE - HORSESHOE LAKE 138KV CKT 1
FDNS	00NR	0	16WP	G15_057	FROM->TO	CIMARRON - DRAPER LAKE 345KV CKT 1	717	717	0.18327	103.4888	LIGHTNING CREEK - TROSPER 138KV CKT 1
FDNS	00NR	0	16WP	G15_057	FROM->TO	CIMARRON - DRAPER LAKE 345KV CKT 1	717	717	0.18231	103.4794	GEN337766 1-TRACTEBEL UNIT S1
FDNS	00NR	0	16WP	G15_057	FROM->TO	CIMARRON - DRAPER LAKE 345KV CKT 1	717	717	0.18231	103.4788	P12:138:AEPW:SHERID4:112GORE4
FDNS	00NR	0	16WP	G15_057	FROM->TO	CIMARRON - DRAPER LAKE 345KV CKT 1	717	717	0.18231	103.4762	GEN515564 1-ORIGIN11 0.6900
FDNS	00NR	0	16WP	G15_057	FROM->TO	CIMARRON - DRAPER LAKE 345KV CKT 1	717	717	0.18231	103.4762	GEN515565 1-ORIGIN21 0.6900
FDNS	00NR	0	16WP	G15_057	FROM->TO	CIMARRON - DRAPER LAKE 345KV CKT 1	717	717	0.18278	103.4744	36 & MERIDIAN - HOBBY LOBBY 138KV CKT 1
FDNS	00NR	0	16WP	G15_057	FROM->TO	CIMARRON - DRAPER LAKE 345KV CKT 1	717	717	0.18245	103.474	HAMMETT TAP - HAMMETT2 138KV CKT 1
FDNS	00NR	0	16WP	G15_057	FROM->TO	CIMARRON - DRAPER LAKE 345KV CKT 1	717	717	0.18438	103.4732	ANADARKO - GRACMNT4 138.00 138KV CKT 1
FDNS	00NR	0	16WP	G15_057	FROM->TO	CIMARRON - DRAPER LAKE 345KV CKT 1	717	717	0.18231	103.4731	GEN336222 1-LITTLE GYPSY UNIT#2
FDNS	00NR	0	16WP	G15_057	FROM->TO	CIMARRON - DRAPER LAKE 345KV CKT 1	717	717	0.1832	103.4701	NORTHEAST STATION - ONETA 345KV CKT 1
FDNS	00NR	0	16WP	G15_057	FROM->TO	CIMARRON - DRAPER LAKE 345KV CKT 1	717	717	0.1832	103.4701	NORTHEAST STATION - ONETA 345KV CKT 1
FDNS	00NR	0	16WP	G15_057	FROM->TO	CIMARRON - DRAPER LAKE 345KV CKT 1	717	717	0.18243	103.4701	P12:138:OKGE:3TERM28
FDNS	00NR	0	16WP	G15_057	FROM->TO	CIMARRON - DRAPER LAKE 345KV CKT 1	717	717	0.18246	103.4665	FLETCHER - MARLOW JCT 69KV CKT 1
FDNS	00NR	0	16WP	G15_057	FROM->TO	CIMARRON - DRAPER LAKE 345KV CKT 1	717	717	0.18231	103.4622	GEN501970 1-EVANGELINE UNIT 7
FDNS	00NR	0	16WP	G15_057	FROM->TO	CIMARRON - DRAPER LAKE 345KV CKT 1	717	717	0.18231	103.4621	NELSON 230/20.0KV TRANSFORMER CKT 1
FDNS	00NR	0	16WP	G15_057	FROM->TO	CIMARRON - DRAPER LAKE 345KV CKT 1	717	717	0.18227	103.4586	NW164TH4 138.00 - PIEDMONT 138KV CKT 1
FDNS	00NR	0	16WP	G15_057	FROM->TO	CIMARRON - DRAPER LAKE 345KV CKT 1	717	717	0.18232	103.458	P12:161:AEPW:EROGERS5:ECNTRTN5
FDNS	00NR	0	16WP	G15_057	FROM->TO	CIMARRON - DRAPER LAKE 345KV CKT 1	717	717	0.18229	103.4577	P12:138:OKGE-AEPW:JENSEN4:REDROCKRD4
FDNS	00NR	0	16WP	G15_057	FROM->TO	CIMARRON - DRAPER LAKE 345KV CKT 1	717	717	0.18227	103.4567	NORTHWEST - NW164TH4 138.00 138KV CKT 1
FDNS	00NR	0	16WP	G15_057	FROM->TO	CIMARRON - DRAPER LAKE 345KV CKT 1	717	717	0.18231	103.4555	ESSEX UNIT 2 500/18.0KV TRANSFORMER CKT 1
FDNS	00NR	0	16WP	G15_057	FROM->TO	CIMARRON - DRAPER LAKE 345KV CKT 1	717	717	0.18234	103.4553	P12:161:AEPW-SWPA:BEAVER5:EROGERS5
FDNS	00NR	0	16WP	G15_057	FROM->TO	CIMARRON - DRAPER LAKE 345KV CKT 1	717	717	0.18259	103.4548	COMANCHE TAP - OMPA-DUNCAN 840 138KV CKT 1
FDNS	00NR	0	16WP	G15_057	FROM->TO	CIMARRON - DRAPER LAKE 345KV CKT 1	717	717	0.18284	103.4517	CORN TAP - SEQUOYAHJ4 138.00 138KV CKT 1

SOLUTION	GROUP	SCENARIO	SEASON	SOURCE	DIRECTION	MONITORED ELEMENT	RATEA (MVA)	RATEB(MVA)	TDF	TC%LOADING (% MVA)	CONTINGENCY
FDNS	00NR	0	16WP	G15_057	FROM->TO	CIMARRON - DRAPER LAKE 345KV CKT 1	717	717	0.18266	103.4516	P12:138:AEPW:CORNVIL4:S.W.S.-4
FDNS	00NR	0	16WP	G15_057	FROM->TO	CIMARRON - DRAPER LAKE 345KV CKT 1	717	717	0.18284	103.4513	ANADARKO - SEQUOYAHJ4 138.00 138KV CKT 1
FDNS	00NR	0	16WP	G15_057	FROM->TO	CIMARRON - DRAPER LAKE 345KV CKT 1	717	717	0.1832	103.448	DALE - SQUIRL CREEK 138KV CKT 1
FDNS	00NR	0	16WP	G15_057	FROM->TO	CIMARRON - DRAPER LAKE 345KV CKT 1	717	717	0.18289	103.4464	HEALDTON - LOCO 138KV CKT 1
FDNS	00NR	0	16WP	G15_057	FROM->TO	CIMARRON - DRAPER LAKE 345KV CKT 1	717	717	0.18231	103.4463	P12:161:AEPW:DYESS5:ELMSPRNG:TONTITN5
FDNS	00NR	0	16WP	G15_057	FROM->TO	CIMARRON - DRAPER LAKE 345KV CKT 1	717	717	0.18231	103.4425	GEN336152 1-WATERFORD UNIT#2
FDNS	00NR	0	16WP	G15_057	FROM->TO	CIMARRON - DRAPER LAKE 345KV CKT 1	717	717	0.18231	103.4415	GEN336151 1-WATERFORD UNIT#1
FDNS	00NR	0	16WP	G15_057	FROM->TO	CIMARRON - DRAPER LAKE 345KV CKT 1	717	717	0.18231	103.4407	ST FRANCIS 345/161KV TRANSFORMER CKT 1
FDNS	00NR	0	16WP	G15_057	FROM->TO	CIMARRON - DRAPER LAKE 345KV CKT 1	717	717	0.18256	103.4351	CORN TAP - CORNVILLE 138KV CKT 1
FDNS	00NR	0	16WP	G15_057	FROM->TO	CIMARRON - DRAPER LAKE 345KV CKT 1	717	717	0.18235	103.4322	MARSHALL - WOODRING 138KV CKT 1
FDNS	00NR	0	16WP	G15_057	FROM->TO	CIMARRON - DRAPER LAKE 345KV CKT 1	717	717	0.18231	103.4302	GEN334392 1-EXXON MOBIL IPP 1
FDNS	00NR	0	16WP	G15_057	FROM->TO	CIMARRON - DRAPER LAKE 345KV CKT 1	717	717	0.18235	103.4299	COTTONWOOD CREEK - MARSHALL 138KV CKT 1
FDNS	00NR	0	16WP	G15_057	FROM->TO	CIMARRON - DRAPER LAKE 345KV CKT 1	717	717	0.18251	103.4289	HEFNER - TULSA 138KV CKT 1
FDNS	00NR	0	16WP	G15_057	FROM->TO	CIMARRON - DRAPER LAKE 345KV CKT 1	717	717	0.18426	103.4279	COLE - OUSW4 138KV CKT 1
FDNS	00NR	0	16WP	G15_057	FROM->TO	CIMARRON - DRAPER LAKE 345KV CKT 1	717	717	0.18227	103.426	MC NIEL 500/115KV TRANSFORMER CKT 1
FDNS	00NR	0	16WP	G15_057	FROM->TO	CIMARRON - DRAPER LAKE 345KV CKT 1	717	717	0.18231	103.424	GEN334393 1-EXXON MOBIL IPP 2
FDNS	00NR	0	16WP	G15_057	FROM->TO	CIMARRON - DRAPER LAKE 345KV CKT 1	717	717	0.18231	103.424	GEN334394 1-EXXON MOBIL IPP 3
FDNS	00NR	0	16WP	G15_057	FROM->TO	CIMARRON - DRAPER LAKE 345KV CKT 1	717	717	0.18239	103.4222	P12:138:AEPW:MOUNDRD4:SHIDLER4
FDNS	00NR	0	16WP	G15_057	FROM->TO	CIMARRON - DRAPER LAKE 345KV CKT 1	717	717	0.18223	103.4218	BISMARK - HOT SPRINGS WEST BUS 115KV CKT 1
FDNS	00NR	0	16WP	G15_057	FROM->TO	CIMARRON - DRAPER LAKE 345KV CKT 1	717	717	0.18245	103.4138	EL RENO SW - MUSTANG2 69.000 69KV CKT 1
FDNS	00NR	0	16WP	G15_057	FROM->TO	CIMARRON - DRAPER LAKE 345KV CKT 1	717	717	0.18224	103.4132	BRISTOW - SILVER CITY 138KV CKT 1
FDNS	00NR	0	16WP	G15_057	FROM->TO	CIMARRON - DRAPER LAKE 345KV CKT 1	717	717	0.18217	103.4123	KELLYAV4 138.00 - MEMORIAL 138KV CKT 1
FDNS	00NR	0	16WP	G15_057	FROM->TO	CIMARRON - DRAPER LAKE 345KV CKT 1	717	717	0.18231	103.4084	GEN501972 1-EVANGELINE UNIT 7-2
FDNS	00NR	0	16WP	G15_057	FROM->TO	CIMARRON - DRAPER LAKE 345KV CKT 1	717	717	0.18231	103.4083	GEN501971 1-EVANGELINE UNIT 7-1
FDNS	00NR	0	16WP	G15_057	FROM->TO	CIMARRON - DRAPER LAKE 345KV CKT 1	717	717	0.18239	103.4049	SHIDLER - WEST PAWHUSKA 138KV CKT 1
FDNS	00NR	0	16WP	G15_057	FROM->TO	CIMARRON - DRAPER LAKE 345KV CKT 1	717	717	0.18289	103.4047	HEALDTON - RINGLING 138KV CKT 1
FDNS	00NR	0	16WP	G15_057	FROM->TO	CIMARRON - DRAPER LAKE 345KV CKT 1	717	717	0.18231	103.3987	GEN334431 1-SABINE UNIT 1
FDNS	00NR	0	16WP	G15_057	FROM->TO	CIMARRON - DRAPER LAKE 345KV CKT 1	717	717	0.18231	103.3986	GEN334432 1-SABINE UNIT 2
FDNS	00NR	0	16WP	G15_057	FROM->TO	CIMARRON - DRAPER LAKE 345KV CKT 1	717	717	0.18231	103.3959	GEN336242 1-1NMIL ST1 18.000
FDNS	00NR	0	16WP	G15_057	FROM->TO	CIMARRON - DRAPER LAKE 345KV CKT 1	717	717	0.18231	103.3954	GEN337764 1-TRACTEBEL UNIT C1
FDNS	00NR	0	16WP	G15_057	FROM->TO	CIMARRON - DRAPER LAKE 345KV CKT 1	717	717	0.18231	103.3954	GEN337765 1-TRACTEBEL UNIT C2
FDNS	00NR	0	16WP	G15_057	FROM->TO	CIMARRON - DRAPER LAKE 345KV CKT 1	717	717	0.18237	103.3939	BROOKLINE - MORGAN 345KV CKT 1
FDNS	00NR	0	16WP	G15_057	FROM->TO	CIMARRON - DRAPER LAKE 345KV CKT 1	717	717	0.18237	103.3939	BROOKLINE - MORGAN 345KV CKT 1
FDNS	00NR	0	16WP	G15_057	FROM->TO	CIMARRON - DRAPER LAKE 345KV CKT 1	717	717	0.18231	103.3938	GEN501912 1-ACADIA UNIT CT1B
FDNS	00NR	0	16WP	G15_057	FROM->TO	CIMARRON - DRAPER LAKE 345KV CKT 1	717	717	0.18231	103.3931	GEN501911 1-ACADIA UNIT CT1A
FDNS	00NR	0	16WP	G15_057	FROM->TO	CIMARRON - DRAPER LAKE 345KV CKT 1	717	717	0.18277	103.3919	BODLE - PARK PLACE 138KV CKT 1
FDNS	00NR	0	16WP	G15_057	FROM->TO	CIMARRON - DRAPER LAKE 345KV CKT 1	717	717	0.18266	103.3911	COUNCIL - MUSTANG 138KV CKT 1
FDNS	00NR	0	16WP	G15_057	FROM->TO	CIMARRON - DRAPER LAKE 345KV CKT 1	717	717	0.18424	103.391	BRYANT - MEMORIAL 138KV CKT 1
FDNS	00NR	0	16WP	G15_057	FROM->TO	CIMARRON - DRAPER LAKE 345KV CKT 1	717	717	0.18239	103.3884	PAWHUSKA TAP - WEST PAWHUSKA 138KV CKT 1
FDNS	00NR	0	16WP	G15_057	FROM->TO	CIMARRON - DRAPER LAKE 345KV CKT 1	717	717	0.18223	103.3884	ALPINE AECC - BISMARK 115KV CKT 1
FDNS	00NR	0	16WP	G15_057	FROM->TO	CIMARRON - DRAPER LAKE 345KV CKT 1	717	717	0.1823	103.388	CYPRESS - HARTBURG 500KV CKT 1
FDNS	00NR	0	16WP	G15_057	FROM->TO	CIMARRON - DRAPER LAKE 345KV CKT 1	717	717	0.18227	103.3831	PIEDMONT - RICHRDS 138KV CKT 1
FDNS	00NR	0	16WP	G15_057	FROM->TO	CIMARRON - DRAPER LAKE 345KV CKT 1	717	717	0.18231	103.3827	P12:69:AEPW:L.E.S.-2:LAW WC2
FDNS	00NR	0	16WP	G15_057	FROM->TO	CIMARRON - DRAPER LAKE 345KV CKT 1	717	717	0.18217	103.3809	KELLYAV4 138.00 - REMNGTON PARK 138KV CKT 1
FDNS	00NR	0	16WP	G15_057	FROM->TO	CIMARRON - DRAPER LAKE 345KV CKT 1	717	717	0.18245	103.3808	HAMMETT2 - MEEKER 138KV CKT 1
FDNS	00NR	0	16WP	G15_057	FROM->TO	CIMARRON - DRAPER LAKE 345KV CKT 1	717	717	0.1827	103.375	HAMMETT TAP - HORSESHOE LAKE 138KV CKT 1
FDNS	00NR	0	16WP	G15_057	FROM->TO	CIMARRON - DRAPER LAKE 345KV CKT 1	717	717	0.18227	103.3697	LAYFLD8 500.00 - MOUNT OLIVE 500KV CKT 1
FDNS	00NR	0	16WP	G15_057	FROM->TO	CIMARRON - DRAPER LAKE 345KV CKT 1	717	717	0.18227	103.3697	LAYFLD8 500.00 - MOUNT OLIVE 500KV CKT 1
FDNS	00NR	0	16WP	G15_057	FROM->TO	CIMARRON - DRAPER LAKE 345KV CKT 1	717	717	0.18289	103.3631	RINGLING - SOUTH WILSON 138KV CKT 1
FDNS	00NR	0	16WP	G15_057	FROM->TO	CIMARRON - DRAPER LAKE 345KV CKT 1	717	717	0.18293	103.3457	CIVIT - PAOLI 138KV CKT 1
FDNS	00NR	0	16WP	G15_057	FROM->TO	CIMARRON - DRAPER LAKE 345KV CKT 1	717	717	0.18231	103.3404	LACYGNE - STILWELL 345KV CKT 1
FDNS	00NR	0	16WP	G15_057	FROM->TO	CIMARRON - DRAPER LAKE 345KV CKT 1	717	717	0.20509	103.3399	GRACEMONT - LAWTON EASTSIDE 345KV CKT 1
FDNS	00NR	0	16WP	G15_057	FROM->TO	CIMARRON - DRAPER LAKE 345KV CKT 1	717	717	0.20509	103.3399	GRACEMONT - LAWTON EASTSIDE 345KV CKT 1
FDNS	00NR	0	16WP	G15_057	FROM->TO	CIMARRON - DRAPER LAKE 345KV CKT 1	717	717	0.18266	103.3365	COUNCIL - WESTOAKS 138KV CKT 1
FDNS	00NR	0	16WP	G15_057	FROM->TO	CIMARRON - DRAPER LAKE 345KV CKT 1	717	717	0.18231	102.9113	BASE CASE
FDNS	00NR	0	16WP	G15_057	FROM->TO	CIMARRON - DRAPER LAKE 345KV CKT 1	717	717	0.18242	102.5994	GRAPEVINE INTERCHANGE - NICHOLS STATION 230KV CKT 1
FDNS	00NR	0	16WP	G15_057	FROM->TO	CIMARRON - DRAPER LAKE 345KV CKT 1	717	717	0.18242	102.5994	GRAPEVINE INTERCHANGE - NICHOLS STATION 230KV CKT 1
FDNS	00NR	0	16WP	G15_057	FROM->TO	CIMARRON - DRAPER LAKE 345KV CKT 1	717	717	0.19497	102.5967	G15063_T 345.00 - WOODRING 345KV CKT 1
FDNS	00NR	0	16WP	G15_057	FROM->TO	CIMARRON - DRAPER LAKE 345KV CKT 1	717	717	0.18322	102.5371	BURGETT4 138.00 - RNDBARN4 138.00 138KV CKT 1
FDNS	00NR	0	16WP	G15_057	FROM->TO	CIMARRON - DRAPER LAKE 345KV CKT 1	717	717	0.18322	102.5354	BURGETT4 138.00 - DANFORTH 138KV CKT 1
FDNS	00NR	0	16WP	G15_057	FROM->TO	CIMARRON - DRAPER LAKE 345KV CKT 1	717	717	0.18322	102.5245	ARCADIA - RNDBARN4 138.00 138KV CKT 1
FDNS	00NR	0	16WP	G15_057	FROM->TO	CIMARRON - DRAPER LAKE 345KV CKT 1	717	717	0.18231	102.495	GEN659125 1-COVEY
FDNS	00NR	0	16WP	G15_057	FROM->TO	CIMARRON - DRAPER LAKE 345KV CKT 1	717	717	0.18231	102.4903	GEN515550 1-MNCWND31 0.6900
FDNS	00NR	0	16WP	G15_057	FROM->TO	CIMARRON - DRAPER LAKE 345KV CKT 1	717	717	0.18248	102.482	GRAPEVINE INTERCHANGE - STATELINE INTERCHANGE 230KV CKT 1
FDNS	00NR	0	16WP	G15_057	FROM->TO	CIMARRON - DRAPER LAKE 345KV CKT 1	717	717	0.18248	102.482	GRAPEVINE INTERCHANGE - STATELINE INTERCHANGE 230KV CKT 1
FDNS	00NR	0	16WP	G15_057	FROM->TO	CIMARRON - DRAPER LAKE 345KV CKT 1	717	717	0.18231	102.477	GEN562611 1-G14_064_3 0.6900
FDNS	00NR	0	16WP	G15_057	FROM->TO	CIMARRON - DRAPER LAKE 345KV CKT 1	717	717	0.18231	102.4715	GEN511848 1-SOUTHWESTERN STATION #3
FDNS	00NR	0	16WP	G15_057	FROM->TO	CIMARRON - DRAPER LAKE 345KV CKT 1	717	717	0.18231	102.4453	GEN515601 1-KNGFSR11 0.7000
FDNS	00NR	0	16WP	G15_057	FROM->TO	CIMARRON - DRAPER LAKE 345KV CKT 1	717	717	0.18231	102.4414	GEN600071 10-RIVER SIDE
FDNS	00NR	0	16WP	G15_057	FROM->TO	CIMARRON - DRAPER LAKE 345KV CKT 1	717	717	0.18231	102.4413	GEN600070 9-RIVER SIDE
FDNS	00NR	0	16WP	G15_057	FROM->TO	CIMARRON - DRAPER LAKE 345KV CKT 1	717	717	0.18231	102.4362	GEN672303 3-BOUNDARY DAM GENERATOR 3
FDNS	00NR	0	16WP	G15_057	FROM->TO	CIMARRON - DRAPER LAKE 345KV CKT 1	717	717	0.18231	102.4362	GEN672304 4-BOUNDARY DAM GENERATOR 4
FDNS	00NR	0	16WP	G15_057	FROM->TO	CIMARRON - DRAPER LAKE 345KV CKT 1	717	717	0.18231	102.4362	GEN672305 5-BOUNDARY DAM GENERATOR 5
FDNS	00NR	0	16WP	G15_057	FROM->TO	CIMARRON - DRAPER LAKE 345KV CKT 1	717	717	0.18231	102.4353	GEN600007 7-RIVERSIDE GEN 7
FDNS	00NR	0	16WP	G15_057	FROM->TO	CIMARRON - DRAPER LAKE 345KV CKT 1	717	717	0.18231	102.4347	GEN600067 9-HIGH BRIDGE
FDNS	00NR	0	16WP	G15_057	FROM->TO	CIMARRON - DRAPER LAKE 345KV CKT 1	717	717	0.18231	102.4338	GEN563062 1-G15071_3 0.6900
FDNS	00NR	0	16WP	G15_057	FROM->TO	CIMARRON - DRAPER LAKE 345KV CKT 1	717	717	0.18231	102.4307	GEN615052 1-CAMBRIDGE GENERATING STATION
FDNS	00NR	0	16WP	G15_057	FROM->TO	CIMARRON - DRAPER LAKE 345KV CKT 1	717	717	0.18231	102.4274	GEN541151 3-SIBLEY GENERATING UNIT #3
FDNS	00NR	0	16WP	G15_057	FROM->TO	CIMARRON - DRAPER LAKE 345KV CKT 1	717	717	0.18147	102.4256	CHISNEY - CLARKSVILLE 138KV CKT 1

SOLUTION	GROUP	SCENARIO	SEASON	SOURCE	DIRECTION	MONITORED ELEMENT	RATEA (MVA)	RATEB(MVA)	TDF	TC%LOADING (% MVA)	CONTINGENCY
FDNSLock	00NR	0	16WP	G15_057	FROM->TO	CIMARRON - DRAPER LAKE 345KV CKT 1	717	717	0.18231	102.4224	GEN600014 4-BLACK DOG GEN 4
FDNS	00NR	0	16WP	G15_057	FROM->TO	CIMARRON - DRAPER LAKE 345KV CKT 1	717	717	0.18231	102.4218	GEN563282 1-G15094_3 0.6900
FDNS	00NR	0	16WP	G15_057	FROM->TO	CIMARRON - DRAPER LAKE 345KV CKT 1	717	717	0.18231	102.4212	GEN652353 2-GR PRAIRIEG 0.6900
FDNS	00NR	0	16WP	G15_057	FROM->TO	CIMARRON - DRAPER LAKE 345KV CKT 1	717	717	0.18231	102.4168	GEN629067 1-EMERY GAS TURBINE 1
FDNS	00NR	0	16WP	G15_057	FROM->TO	CIMARRON - DRAPER LAKE 345KV CKT 1	717	717	0.1824	102.4148	7MCCREDIE 345.00 - 7MONTGMRY 345.00 345KV CKT 1
FDNS	00NR	0	16WP	G15_057	FROM->TO	CIMARRON - DRAPER LAKE 345KV CKT 1	717	717	0.18231	102.4032	GEN563102 1-G15075_3 0.5500
FDNS	00NR	0	16WP	G15_057	FROM->TO	CIMARRON - DRAPER LAKE 345KV CKT 1	717	717	0.18231	102.4015	GEN515591 1-PALDRW11 0.6900
FDNS	00NR	0	16WP	G15_057	FROM->TO	CIMARRON - DRAPER LAKE 345KV CKT 1	717	717	0.18231	102.4	GEN300003 1-THOMAS HILL UNIT 3
FDNS	00NR	0	16WP	G15_057	FROM->TO	CIMARRON - DRAPER LAKE 345KV CKT 1	717	717	0.18231	102.4	GEN600011 5-BLACK DOG GEN 1
FDNS	00NR	0	16WP	G15_057	FROM->TO	CIMARRON - DRAPER LAKE 345KV CKT 1	717	717	0.18231	102.4	GEN615032 2-PLEASANT VALLEY
FDNS	00NR	0	16WP	G15_057	FROM->TO	CIMARRON - DRAPER LAKE 345KV CKT 1	717	717	0.18231	102.3966	GEN562602 1-G15_029_3 0.6900
FDNS	00NR	0	16WP	G15_057	FROM->TO	CIMARRON - DRAPER LAKE 345KV CKT 1	717	717	0.18291	102.3868	SEMINOLE - VANOSTP4 138.00 138KV CKT 1
FDNS	00NR	0	16WP	G15_057	FROM->TO	CIMARRON - DRAPER LAKE 345KV CKT 1	717	717	0.18231	102.3864	GEN600017 C-LS POWER CT
FDNS	00NR	0	16WP	G15_057	FROM->TO	CIMARRON - DRAPER LAKE 345KV CKT 1	717	717	0.18231	102.3828	GEN562812 1-G15040_3 0.3570
FDNS	00NR	0	16WP	G15_057	FROM->TO	CIMARRON - DRAPER LAKE 345KV CKT 1	717	717	0.18231	102.3765	GEN563132 1-G15078_3 0.3570
FDNS	00NR	0	16WP	G15_057	FROM->TO	CIMARRON - DRAPER LAKE 345KV CKT 1	717	717	0.18354	102.3681	FOREST HILL - MAUD 138KV CKT 1
FDNS	00NR	0	16WP	G15_057	FROM->TO	CIMARRON - DRAPER LAKE 345KV CKT 1	717	717	0.18231	102.3672	GEN524285 1-WILDORADO WIND GEN
FDNS	00NR	0	16WP	G15_057	FROM->TO	CIMARRON - DRAPER LAKE 345KV CKT 1	717	717	0.18203	102.366	P12:138:AEPW:WELETK4:EARLSBORO4
FDNS	00NR	0	16WP	G15_057	FROM->TO	CIMARRON - DRAPER LAKE 345KV CKT 1	717	717	0.18203	102.366	P12:138:OKGE:3TERM36
FDNS	00NR	0	16WP	G15_057	FROM->TO	CIMARRON - DRAPER LAKE 345KV CKT 1	717	717	0.18231	102.3624	GEN562074 1-G1149G1504 0.6900
FDNS	00NR	0	16WP	G15_057	FROM->TO	CIMARRON - DRAPER LAKE 345KV CKT 1	717	717	0.18231	102.3559	GEN672392 1-NBECGT1G 18.000
FDNS	00NR	0	16WP	G15_057	FROM->TO	CIMARRON - DRAPER LAKE 345KV CKT 1	717	717	0.18231	102.3552	GEN629070 2-BEAVER CHANNEL GENERATORFOR UNIT NO 2
FDNS	00NR	0	16WP	G15_057	FROM->TO	CIMARRON - DRAPER LAKE 345KV CKT 1	717	717	0.18212	102.3552	EARLSBORO 4138.00 - FIXICO TAP 138KV CKT 1
FDNS	00NR	0	16WP	G15_057	FROM->TO	CIMARRON - DRAPER LAKE 345KV CKT 1	717	717	0.18231	102.3445	GEN526331 1-JONES GEN #1 22 KV
FDNS	00NR	0	16WP	G15_057	FROM->TO	CIMARRON - DRAPER LAKE 345KV CKT 1	717	717	0.18231	102.3445	GEN526332 1-JONES GEN #2 21 KV
FDNS	00NR	0	16WP	G15_057	FROM->TO	CIMARRON - DRAPER LAKE 345KV CKT 1	717	717	0.18243	102.3431	CANADIAN RIVER - MCALESTER SOUTH 138KV CKT 1
FDNS	00NR	0	16WP	G15_057	FROM->TO	CIMARRON - DRAPER LAKE 345KV CKT 1	717	717	0.18243	102.3431	CANADIAN RIVER - MCALESTER SOUTH 138KV CKT 1
FDNS	00NR	0	16WP	G15_057	FROM->TO	CIMARRON - DRAPER LAKE 345KV CKT 1	717	717	0.18231	102.343	GEN562596 1-G14_059_3 0.6900
FDNS	00NR	0	16WP	G15_057	FROM->TO	CIMARRON - DRAPER LAKE 345KV CKT 1	717	717	0.18243	102.3417	CANADIAN RIVER () 345/138/13.8KV TRANSFORMER CKT 1
FDNS	00NR	0	16WP	G15_057	FROM->TO	CIMARRON - DRAPER LAKE 345KV CKT 1	717	717	0.18243	102.3417	CANADIAN RIVER () 345/138/13.8KV TRANSFORMER CKT 1
FDNS	00NR	0	16WP	G15_057	FROM->TO	CIMARRON - DRAPER LAKE 345KV CKT 1	717	717	0.18231	102.336	GEN615010 1-STANTON4
FDNS	00NR	0	16WP	G15_057	FROM->TO	CIMARRON - DRAPER LAKE 345KV CKT 1	717	717	0.18231	102.3359	GEN629071 1-BURLINGTON GENERATOR FOR UNIT NO 1 E
FDNS	00NR	0	16WP	G15_057	FROM->TO	CIMARRON - DRAPER LAKE 345KV CKT 1	717	717	0.18147	102.3342	CHISNEY - HIGHLAND 138KV CKT 1
FDNS	00NR	0	16WP	G15_057	FROM->TO	CIMARRON - DRAPER LAKE 345KV CKT 1	717	717	0.18231	102.3307	GEN515365 1-CENT 21 0.7000
FDNS	00NR	0	16WP	G15_057	FROM->TO	CIMARRON - DRAPER LAKE 345KV CKT 1	717	717	0.18231	102.3205	GEN562983 1-G15061_4 0.6900
FDNS	00NR	0	16WP	G15_057	FROM->TO	CIMARRON - DRAPER LAKE 345KV CKT 1	717	717	0.18231	102.3205	GEN562984 1-G15061_5 0.6900
FDNS	00NR	0	16WP	G15_057	FROM->TO	CIMARRON - DRAPER LAKE 345KV CKT 1	717	717	0.18231	102.3203	P12:138:WFEC:MSL07
FDNS	00NR	0	16WP	G15_057	FROM->TO	CIMARRON - DRAPER LAKE 345KV CKT 1	717	717	0.18231	102.3203	P12:138:WFEC-AEPW:HUGOPP4:ATOKA--4
FDNS	00NR	0	16WP	G15_057	FROM->TO	CIMARRON - DRAPER LAKE 345KV CKT 1	717	717	0.18231	102.3161	GEN562017 1-G11_022_3 0.6900
FDNS	00NR	0	16WP	G15_057	FROM->TO	CIMARRON - DRAPER LAKE 345KV CKT 1	717	717	0.18231	102.3138	GEN615021 1-GRE-ER 14G 16.000
FDNS	00NR	0	16WP	G15_057	FROM->TO	CIMARRON - DRAPER LAKE 345KV CKT 1	717	717	0.18233	102.3122	GRPRAR1-LNX3345.00 - HOLT.CO3 345.00 345KV CKT 1
FDNS	00NR	0	16WP	G15_057	FROM->TO	CIMARRON - DRAPER LAKE 345KV CKT 1	717	717	0.18229	102.3107	P12:138:AEPW:SHAM4WT:CHILD4WT
FDNS	00NR	0	16WP	G15_057	FROM->TO	CIMARRON - DRAPER LAKE 345KV CKT 1	717	717	0.18233	102.3086	GRPRAR1-LNX3345.00 - GRPRAR 345KV CKT Z
FDNS	00NR	0	16WP	G15_057	FROM->TO	CIMARRON - DRAPER LAKE 345KV CKT 1	717	717	0.18231	102.3034	GEN562429 1-G13-029 0.6900
FDNS	00NR	0	16WP	G15_057	FROM->TO	CIMARRON - DRAPER LAKE 345KV CKT 1	717	717	0.18231	102.3021	GEN562432 1-G13-030 0.6900
FDNS	00NR	0	16WP	G15_057	FROM->TO	CIMARRON - DRAPER LAKE 345KV CKT 1	717	717	0.18231	102.3019	GEN560105 1-G08-22 0.6900
FDNS	00NR	0	16WP	G15_057	FROM->TO	CIMARRON - DRAPER LAKE 345KV CKT 1	717	717	0.18231	102.3006	INDEPENDENCE 500/26.0KV TRANSFORMER CKT 1
FDNS	00NR	0	16WP	G15_057	FROM->TO	CIMARRON - DRAPER LAKE 345KV CKT 1	717	717	0.18231	102.2985	GEN532663 1-LAWRENCE ENERGY CENTER UNIT 5
FDNS	00NR	0	16WP	G15_057	FROM->TO	CIMARRON - DRAPER LAKE 345KV CKT 1	717	717	0.18223	102.2985	P12:138:AEPW-SWPA:LONEOAK4:TUPELO4
FDNS	00NR	0	16WP	G15_057	FROM->TO	CIMARRON - DRAPER LAKE 345KV CKT 1	717	717	0.18223	102.2984	P12:138:WFEC:MSL06
FDNS	00NR	0	16WP	G15_057	FROM->TO	CIMARRON - DRAPER LAKE 345KV CKT 1	717	717	0.18241	102.2966	OVEXFRMCCOVE
FDNS	00NR	0	16WP	G15_057	FROM->TO	CIMARRON - DRAPER LAKE 345KV CKT 1	717	717	0.18237	102.2931	DELL 500 - INDEPENDENCE 500KV CKT 1
FDNS	00NR	0	16WP	G15_057	FROM->TO	CIMARRON - DRAPER LAKE 345KV CKT 1	717	717	0.18231	102.2894	BURLINGTON NO1 + NO 2 + NO 3 161/20.0KV TRANSFORMER CKT 1
FDNS	00NR	0	16WP	G15_057	FROM->TO	CIMARRON - DRAPER LAKE 345KV CKT 1	717	717	0.18203	102.2839	P12:138:AEPW-OGE:WELETK4:MAUD 4
FDNS	00NR	0	16WP	G15_057	FROM->TO	CIMARRON - DRAPER LAKE 345KV CKT 1	717	717	0.1836	102.2797	P12:230:AEPW:ELKCITY6:SWEETWT6
FDNS	00NR	0	16WP	G15_057	FROM->TO	CIMARRON - DRAPER LAKE 345KV CKT 1	717	717	0.18231	102.2752	GEN527882 1-CUNNINGHAM GEN #2 20 KV
FDNS	00NR	0	16WP	G15_057	FROM->TO	CIMARRON - DRAPER LAKE 345KV CKT 1	717	717	0.18256	102.2741	P12:138:WFEC:MSL16
FDNS	00NR	0	16WP	G15_057	FROM->TO	CIMARRON - DRAPER LAKE 345KV CKT 1	717	717	0.18212	102.2712	EARLSBORO 4138.00 - MAUD 138KV CKT 1
FDNS	00NR	0	16WP	G15_057	FROM->TO	CIMARRON - DRAPER LAKE 345KV CKT 1	717	717	0.18212	102.2712	EARLSBORO 4138.00 - MAUD 138KV CKT 1
FDNS	00NR	0	16WP	G15_057	FROM->TO	CIMARRON - DRAPER LAKE 345KV CKT 1	717	717	0.18231	102.2674	GEN562550 1-G14_040_3 0.6900
FDNS	00NR	0	16WP	G15_057	FROM->TO	CIMARRON - DRAPER LAKE 345KV CKT 1	717	717	0.18231	102.2642	GEN524295 1-SPNSPUR_WND10.6900
FDNS	00NR	0	16WP	G15_057	FROM->TO	CIMARRON - DRAPER LAKE 345KV CKT 1	717	717	0.18231	102.2579	GEN562832 1-G15042_3 0.6900
FDNS	00NR	0	16WP	G15_057	FROM->TO	CIMARRON - DRAPER LAKE 345KV CKT 1	717	717	0.18346	102.2486	MAUD - SEMINOLE 138KV CKT 1
FDNS	00NR	0	16WP	G15_057	FROM->TO	CIMARRON - DRAPER LAKE 345KV CKT 1	717	717	0.18263	102.2397	STLN-DEMARC6 - SWEETWATER 230KV CKT 1
FDNS	00NR	0	16WP	G15_057	FROM->TO	CIMARRON - DRAPER LAKE 345KV CKT 1	717	717	0.18263	102.2392	P12:230:AEPW-SPS:SWEETWT6:WHEELER 6
FDNS	00NR	0	16WP	G15_057	FROM->TO	CIMARRON - DRAPER LAKE 345KV CKT 1	717	717	0.18263	102.2372	STATELINE INTERCHANGE - STLN-DEMARC6 230KV CKT 1
FDNS	00NR	0	16WP	G15_057	FROM->TO	CIMARRON - DRAPER LAKE 345KV CKT 1	717	717	0.18231	102.221	GEN531447 1-HOLCOMB GENERATOR
FDNS	00NR	0	16WP	G15_057	FROM->TO	CIMARRON - DRAPER LAKE 345KV CKT 1	717	717	0.18231	102.2207	P12:230:UMZB:# 112 #: NU IN SD. NU-RCDC & DRY CREEK XFMR
FDNS	00NR	0	16WP	G15_057	FROM->TO	CIMARRON - DRAPER LAKE 345KV CKT 1	717	717	0.18231	102.2195	RCDC EAST 4230.00 - RED CEDAR DC 230KV CKT 1
FDNS	00NR	0	16WP	G15_057	FROM->TO	CIMARRON - DRAPER LAKE 345KV CKT 1	717	717	0.18231	102.2165	GEN645011 1-NEBRASKA CITY 1
FDNS	00NR	0	16WP	G15_057	FROM->TO	CIMARRON - DRAPER LAKE 345KV CKT 1	717	717	0.18231	102.2156	GEN345671 2-1RUSH G2 18.000
FDNS	00NR	0	16WP	G15_057	FROM->TO	CIMARRON - DRAPER LAKE 345KV CKT 1	717	717	0.18231	102.2137	GEN345670 1-1RUSH G1 18.000
FDNS	00NR	0	16WP	G15_057	FROM->TO	CIMARRON - DRAPER LAKE 345KV CKT 1	717	717	0.18231	102.2132	GEN515606 1-CANDN11 0.6900
FDNS	00NR	0	16WP	G15_057	FROM->TO	CIMARRON - DRAPER LAKE 345KV CKT 1	717	717	0.18231	102.2132	GEN515607 1-CANDN12 0.6900
FDNS	00NR	0	16WP	G15_057	FROM->TO	CIMARRON - DRAPER LAKE 345KV CKT 1	717	717	0.18147	102.2079	HIGHLAND - PINK SW 138KV CKT 1
FDNS	00NR	0	16WP	G15_057	FROM->TO	CIMARRON - DRAPER LAKE 345KV CKT 1	717	717	0.18231	102.1858	GEN515443 1-MNCOWND1 0.7000
FDNS	00NR	0	16WP	G15_057	FROM->TO	CIMARRON - DRAPER LAKE 345KV CKT 1	717	717	0.18231	102.1851	GEN562794 1-G15038_5 0.6900
FDNS	00NR	0	16WP	G15_057	FROM->TO	CIMARRON - DRAPER LAKE 345KV CKT 1	717	717	0.18231	102.1851	GEN562795 1-G15038_6 0.6900
FDNS	00NR	0	16WP	G15_057	FROM->TO	CIMARRON - DRAPER LAKE 345KV CKT 1	717	717	0.18231	102.1817	GEN563092 1-G15074_3 0.6900

SOLUTION	GROUP	SCENARIO	SEASON	SOURCE	DIRECTION	MONITORED ELEMENT	RATEA (MVA)	RATEB(MVA)	TDF	TC%LOADING (% MVA)	CONTINGENCY
FDNS	00NR	0	16WP	G15_057	FROM->TO	CIMARRON - DRAPER LAKE 345KV CKT 1	717	717	0.18272	102.1805	FT SMITH - MUSKOGEE 345KV CKT 1
FDNS	00NR	0	16WP	G15_057	FROM->TO	CIMARRON - DRAPER LAKE 345KV CKT 1	717	717	0.18231	102.1774	GEN542951 5-HAWTHORN UNIT #5
FDNS	00NR	0	16WP	G15_057	FROM->TO	CIMARRON - DRAPER LAKE 345KV CKT 1	717	717	0.18231	102.1724	GEN645012 2-NEBRASKA CITY 2
FDNSLock	00NR	0	16WP	G15_057	FROM->TO	CIMARRON - DRAPER LAKE 345KV CKT 1	717	717	0.18231	102.1642	GEN629072 4-LANSING GENERATOR FOR UNITS NO4 EIA CODE 1
FDNS	00NR	0	16WP	G15_057	FROM->TO	CIMARRON - DRAPER LAKE 345KV CKT 1	717	717	0.18231	102.1533	GEN562512 1-G14_020_3 0.6900
FDNS	00NR	0	16WP	G15_057	FROM->TO	CIMARRON - DRAPER LAKE 345KV CKT 1	717	717	0.1824	102.1446	KEO EHV - WEST MEMPHIS 500 500KV CKT 1
FDNS	00NR	0	16WP	G15_057	FROM->TO	CIMARRON - DRAPER LAKE 345KV CKT 1	717	717	0.18263	102.1408	CHISHOLM6 230.00 - SWEETWATER 230KV CKT 1
FDNS	00NR	0	16WP	G15_057	FROM->TO	CIMARRON - DRAPER LAKE 345KV CKT 1	717	717	0.18231	102.134	GEN657749 1-YOUNG 1 GENERATOR
FDNS	00NR	0	16WP	G15_057	FROM->TO	CIMARRON - DRAPER LAKE 345KV CKT 1	717	717	0.18231	102.1262	GEN562699 1-G15_018_3 0.6900
FDNS	00NR	0	16WP	G15_057	FROM->TO	CIMARRON - DRAPER LAKE 345KV CKT 1	717	717	0.18231	102.1114	GEN640009 1-COOPER NUCLEAR STATION
FDNS	00NR	0	16WP	G15_057	FROM->TO	CIMARRON - DRAPER LAKE 345KV CKT 1	717	717	0.18231	102.1042	GEN529201 1-OMCDLEC1 13.800
FDNS	00NR	0	16WP	G15_057	FROM->TO	CIMARRON - DRAPER LAKE 345KV CKT 1	717	717	0.18263	102.1014	FRISCCO4 138.00 - LULA 138KV CKT 1
FDNS	00NR	0	16WP	G15_057	FROM->TO	CIMARRON - DRAPER LAKE 345KV CKT 1	717	717	0.18231	102.0883	GEN563122 1-G15077_3 0.3850
FDNS	00NR	0	16WP	G15_057	FROM->TO	CIMARRON - DRAPER LAKE 345KV CKT 1	717	717	0.18231	102.0793	GEN563182 1-G15083_3 0.6900
FDNSLock	00NR	0	16WP	G15_057	FROM->TO	CIMARRON - DRAPER LAKE 345KV CKT 1	717	717	0.18231	102.0662	GEN681522 3-GENOA 3
FDNS	00NR	0	16WP	G15_057	FROM->TO	CIMARRON - DRAPER LAKE 345KV CKT 1	717	717	0.18231	102.0608	GEN562685 1-G15_013_3 0.3550
FDNS	00NR	0	16WP	G15_057	FROM->TO	CIMARRON - DRAPER LAKE 345KV CKT 1	717	717	0.18343	102.0437	HOLLYWOOD - MIDWEST TAP 138KV CKT 1
FDNS	00NR	0	16WP	G15_057	FROM->TO	CIMARRON - DRAPER LAKE 345KV CKT 1	717	717	0.18231	102.0354	GEN344895 2-1LAB G2 20.000
FDNS	00NR	0	16WP	G15_057	FROM->TO	CIMARRON - DRAPER LAKE 345KV CKT 1	717	717	0.18201	102.0328	TUPELO - TUPELO TAP 138KV CKT 1
FDNS	00NR	0	16WP	G15_057	FROM->TO	CIMARRON - DRAPER LAKE 345KV CKT 1	717	717	0.18365	102.0286	CHISHOLM7 345.00 - GRACEMONT 345KV CKT 1
FDNS	00NR	0	16WP	G15_057	FROM->TO	CIMARRON - DRAPER LAKE 345KV CKT 1	717	717	0.18231	102.0223	GEN563222 1-G15088_3 0.6900
FDNS	00NR	0	16WP	G15_057	FROM->TO	CIMARRON - DRAPER LAKE 345KV CKT 1	717	717	0.18231	102.0212	4SIOUX 1 138.00 138/18.0KV TRANSFORMER CKT 1
FDNS	00NR	0	16WP	G15_057	FROM->TO	CIMARRON - DRAPER LAKE 345KV CKT 1	717	717	0.18133	102.0151	CIMARRON - TUTTLE CONOCO TAP 138KV CKT 1
FDNS	00NR	0	16WP	G15_057	FROM->TO	CIMARRON - DRAPER LAKE 345KV CKT 1	717	717	0.18263	102.0133	FRISCCO4 138.00 - HARDEN 4 138.00 138KV CKT 1
FDNS	00NR	0	16WP	G15_057	FROM->TO	CIMARRON - DRAPER LAKE 345KV CKT 1	717	717	0.18231	102.0083	GEN523461 1-BLACKHAWK GEN #1
FDNS	00NR	0	16WP	G15_057	FROM->TO	CIMARRON - DRAPER LAKE 345KV CKT 1	717	717	0.18231	102.0082	GEN523462 1-BLACKHAWK GEN #2
FDNS	00NR	0	16WP	G15_057	FROM->TO	CIMARRON - DRAPER LAKE 345KV CKT 1	717	717	0.18231	102.0073	GEN344896 3-1LAB G3 20.000
FDNS	00NR	0	16WP	G15_057	FROM->TO	CIMARRON - DRAPER LAKE 345KV CKT 1	717	717	0.18231	102.0058	GEN344894 1-1LAB G1 20.000
FDNS	00NR	0	16WP	G15_057	FROM->TO	CIMARRON - DRAPER LAKE 345KV CKT 1	717	717	0.18231	102.0047	GEN344897 4-1LAB G4 20.000
FDNS	00NR	0	16WP	G15_057	FROM->TO	CIMARRON - DRAPER LAKE 345KV CKT 1	717	717	0.18231	102.0003	GEN562587 1-G14_056_3 0.6900
FDNS	00NR	0	16WP	G15_057	FROM->TO	CIMARRON - DRAPER LAKE 345KV CKT 1	717	717	0.18231	101.9772	GEN515602 1-KNGFSR12 0.7000
FDNS	00NR	0	16WP	G15_057	FROM->TO	CIMARRON - DRAPER LAKE 345KV CKT 1	717	717	0.18231	101.9571	GEN563082 1-G15073_3 0.6900
FDNS	00NR	0	16WP	G15_057	FROM->TO	CIMARRON - DRAPER LAKE 345KV CKT 1	717	717	0.18133	101.9436	TUTTLE - TUTTLE CONOCO TAP 138KV CKT 1
FDNS	00NR	0	16WP	G15_057	FROM->TO	CIMARRON - DRAPER LAKE 345KV CKT 1	717	717	0.18365	101.9367	CHISHOLM7 345.00 (CHISHOLM) 345/230/13.2KV TRANSFORMER CKT 1
FDNS	00NR	0	16WP	G15_057	FROM->TO	CIMARRON - DRAPER LAKE 345KV CKT 1	717	717	0.18231	101.9307	GEN562704 1-G15_020_3 0.3550
FDNS	00NR	0	16WP	G15_057	FROM->TO	CIMARRON - DRAPER LAKE 345KV CKT 1	717	717	0.18231	101.9129	GEN563202 1-G15085_3 0.5500
FDNS	00NR	0	16WP	G15_057	FROM->TO	CIMARRON - DRAPER LAKE 345KV CKT 1	717	717	0.18231	101.9087	CLAY BOSWELL 230/20.9KV TRANSFORMER CKT 1
FDNS	00NR	0	16WP	G15_057	FROM->TO	CIMARRON - DRAPER LAKE 345KV CKT 1	717	717	0.18231	101.8974	GEN640010 1-GERALD GENTLEMAN STATION UNIT 1
FDNS	00NR	0	16WP	G15_057	FROM->TO	CIMARRON - DRAPER LAKE 345KV CKT 1	717	717	0.18231	101.8665	GEN672321 1-SHAND GENERATOR 1
FDNS	00NR	0	16WP	G15_057	FROM->TO	CIMARRON - DRAPER LAKE 345KV CKT 1	717	717	0.18277	101.8497	LULA - TUPELO TAP 138KV CKT 1
FDNS	00NR	0	16WP	G15_057	FROM->TO	CIMARRON - DRAPER LAKE 345KV CKT 1	717	717	0.18214	101.8468	NORTHWEST TEXARKANA - VALLIANT 345KV CKT 1
FDNS	00NR	0	16WP	G15_057	FROM->TO	CIMARRON - DRAPER LAKE 345KV CKT 1	717	717	0.18214	101.8468	NORTHWEST TEXARKANA - VALLIANT 345KV CKT 1
FDNS	00NR	0	16WP	G15_057	FROM->TO	CIMARRON - DRAPER LAKE 345KV CKT 1	717	717	0.18231	101.8436	GEN562710 1-G15_022_3 0.5500
FDNS	00NR	0	16WP	G15_057	FROM->TO	CIMARRON - DRAPER LAKE 345KV CKT 1	717	717	0.18175	101.8429	SEMINOLE (SEMINOL1) 345/138/14.4KV TRANSFORMER CKT 1
FDNS	00NR	0	16WP	G15_057	FROM->TO	CIMARRON - DRAPER LAKE 345KV CKT 1	717	717	0.18231	101.8407	GEN672310 1-POPLAR RIVER GENERATOR 1
FDNS	00NR	0	16WP	G15_057	FROM->TO	CIMARRON - DRAPER LAKE 345KV CKT 1	717	717	0.18231	101.8406	GEN672311 2-POPLAR RIVER GENERATOR 2
FDNS	00NR	0	16WP	G15_057	FROM->TO	CIMARRON - DRAPER LAKE 345KV CKT 1	717	717	0.18231	101.8304	GEN672306 6-BOUNDARY DAM GENERATOR 6
FDNS	00NR	0	16WP	G15_057	FROM->TO	CIMARRON - DRAPER LAKE 345KV CKT 1	717	717	0.18231	101.8297	GEN640011 2-GERALD GENTLEMAN STATION UNIT 2
FDNS	00NR	0	16WP	G15_057	FROM->TO	CIMARRON - DRAPER LAKE 345KV CKT 1	717	717	0.18231	101.8274	GEN542956 2-LACYGNE UNIT #2
FDNS	00NR	0	16WP	G15_057	FROM->TO	CIMARRON - DRAPER LAKE 345KV CKT 1	717	717	0.18231	101.8181	GEN659118 1-LARAMIE RIVER UNIT1
FDNS	00NR	0	16WP	G15_057	FROM->TO	CIMARRON - DRAPER LAKE 345KV CKT 1	717	717	0.18263	101.7929	ETNA - HARDEN 4 138.00 138KV CKT 1
FDNS	00NR	0	16WP	G15_057	FROM->TO	CIMARRON - DRAPER LAKE 345KV CKT 1	717	717	0.18298	101.7872	RENFROW7 345.00 - VIOLA 7 345.00 345KV CKT 1
FDNS	01NR	0	17G	G15_057	FROM->TO	CIMARRON - DRAPER LAKE 345KV CKT 1	717	717	0.20976	101.7747	G14-057T 345.00 - SUNNYSIDE 345KV CKT 1
FDNS	00NR	0	16WP	G15_057	FROM->TO	CIMARRON - DRAPER LAKE 345KV CKT 1	717	717	0.18312	101.7737	P12:138:OKGE:3TERM22
FDNS	00NR	0	16WP	G15_057	FROM->TO	CIMARRON - DRAPER LAKE 345KV CKT 1	717	717	0.18311	101.7718	DRAPER LAKE - SOONER TAP 138KV CKT 1
FDNS	00NR	0	16WP	G15_057	FROM->TO	CIMARRON - DRAPER LAKE 345KV CKT 1	717	717	0.18147	101.7634	P12:138:WFEC:MSL08
FDNS	00NR	0	16WP	G15_057	FROM->TO	CIMARRON - DRAPER LAKE 345KV CKT 1	717	717	0.18147	101.7516	FRANKLIN - PINK SW 138KV CKT 1
FDNS	00NR	0	16WP	G15_057	FROM->TO	CIMARRON - DRAPER LAKE 345KV CKT 1	717	717	0.18245	101.7502	P12:138:WFEC:MSL09
FDNS	00NR	0	16WP	G15_057	FROM->TO	CIMARRON - DRAPER LAKE 345KV CKT 1	717	717	0.1839	101.7466	OAKCREEK - WILD MARY 138KV CKT 1
FDNS	00NR	0	16WP	G15_057	FROM->TO	CIMARRON - DRAPER LAKE 345KV CKT 1	717	717	0.18231	101.7397	GEN542957 1-IATAN UNIT #1
FDNSLock	00NR	0	16WP	G15_057	FROM->TO	CIMARRON - DRAPER LAKE 345KV CKT 1	717	717	0.18231	101.7355	GEN681542 6-JP MADGETT
FDNS	00NR	0	16WP	G15_057	FROM->TO	CIMARRON - DRAPER LAKE 345KV CKT 1	717	717	0.18231	101.7124	GEN530690 1-PRWINDG1 0.6900
FDNS	00NR	0	16WP	G15_057	FROM->TO	CIMARRON - DRAPER LAKE 345KV CKT 1	717	717	0.18263	101.7075	ETNA - PARK LANE 138KV CKT 1
FDNS	00NR	0	16WP	G15_057	FROM->TO	CIMARRON - DRAPER LAKE 345KV CKT 1	717	717	0.18231	101.7	GEN645001 1-FORT CALHOUN 1
FDNS	00NR	0	16WP	G15_057	FROM->TO	CIMARRON - DRAPER LAKE 345KV CKT 1	717	717	0.18332	101.6997	HUNTERS7 345.00 - RENFROW7 345.00 345KV CKT 1
FDNS	00NR	0	16WP	G15_057	FROM->TO	CIMARRON - DRAPER LAKE 345KV CKT 1	717	717	0.18231	101.658	GEN542955 1-LACYGNE UNIT #1
FDNS	00NR	0	16WP	G15_057	FROM->TO	CIMARRON - DRAPER LAKE 345KV CKT 1	717	717	0.18231	101.6477	GEN562754 1-G15031_5 0.6900
FDNS	00NR	0	16WP	G15_057	FROM->TO	CIMARRON - DRAPER LAKE 345KV CKT 1	717	717	0.18231	101.6356	GEN562556 1-G14_046_3 0.3420
FDNS	00NR	0	16WP	G15_057	FROM->TO	CIMARRON - DRAPER LAKE 345KV CKT 1	717	717	0.18164	101.6321	SEMINOLE (SEMINOL2) 345/138/14.4KV TRANSFORMER CKT 1
FDNS	00NR	0	16WP	G15_057	FROM->TO	CIMARRON - DRAPER LAKE 345KV CKT 1	717	717	0.18231	101.6108	GEN661015 1-COYOTE
FDNS	00NR	0	16WP	G15_057	FROM->TO	CIMARRON - DRAPER LAKE 345KV CKT 1	717	717	0.18231	101.6042	GEN562756 1-G15031_7 0.6900
FDNS	00NR	0	16WP	G15_057	FROM->TO	CIMARRON - DRAPER LAKE 345KV CKT 1	717	717	0.18231	101.6013	GEN532653 1-JEFFREY ENERGY CENTER UNIT 3
FDNS	00NR	0	16WP	G15_057	FROM->TO	CIMARRON - DRAPER LAKE 345KV CKT 1	717	717	0.18231	101.6012	GEN532652 1-JEFFREY ENERGY CENTER UNIT 2
FDNS	00NR	0	16WP	G15_057	FROM->TO	CIMARRON - DRAPER LAKE 345KV CKT 1	717	717	0.18231	101.5971	GEN532651 1-JEFFREY ENERGY CENTER UNIT 1
FDNS	00NR	0	16WP	G15_057	FROM->TO	CIMARRON - DRAPER LAKE 345KV CKT 1	717	717	0.18231	101.5894	GEN562974 1-G15060_5 0.6900
FDNS	00NR	0	16WP	G15_057	FROM->TO	CIMARRON - DRAPER LAKE 345KV CKT 1	717	717	0.18231	101.5883	GEN563142 1-G15079_3 0.5500
FDNS	00NR	0	16WP	G15_057	FROM->TO	CIMARRON - DRAPER LAKE 345KV CKT 1	717	717	0.18231	101.5883	GEN563151 1-G15080_2 0.5500
FDNS	00NR	0	16WP	G15_057	FROM->TO	CIMARRON - DRAPER LAKE 345KV CKT 1	717	717	0.18231	101.5778	GEN563042 1-G15068_3 0.6900
FDNS	00NR	0	16WP	G15_057	FROM->TO	CIMARRON - DRAPER LAKE 345KV CKT 1	717	717	0.18231	101.5733	GEN562973 1-G15060_4 0.6900

SOLUTION	GROUP	SCENARIO	SEASON	SOURCE	DIRECTION	MONITORED ELEMENT	RATEA (MVA)	RATEB(MVA)	TDF	TC%LOADING (% MVA)	CONTINGENCY
FDNS	00NR	0	16WP	G15_057	FROM->TO	CIMARRON - DRAPER LAKE 345KV CKT 1	717	717	0.18231	101.5428	GEN562078 1-G11_051_3 0.6900
FDNS	00NR	0	16WP	G15_057	FROM->TO	CIMARRON - DRAPER LAKE 345KV CKT 1	717	717	0.18231	101.531	GEN562691 1-G15_015_3 0.6900
FDNS	00NR	0	16WP	G15_057	FROM->TO	CIMARRON - DRAPER LAKE 345KV CKT 1	717	717	0.1839	101.52	AIRDEPT4 138.00 - WILD MARY 138KV CKT 1
FDNS	00NR	0	16WP	G15_057	FROM->TO	CIMARRON - DRAPER LAKE 345KV CKT 1	717	717	0.18335	101.4938	PARK LANE - SEMINOLE 138KV CKT 1
FDNS	00NR	0	16WP	G15_057	FROM->TO	CIMARRON - DRAPER LAKE 345KV CKT 1	717	717	0.18231	101.4886	GEN562655 1-G14_074_3 0.6900
FDNS	00NR	0	16WP	G15_057	FROM->TO	CIMARRON - DRAPER LAKE 345KV CKT 1	717	717	0.18231	101.4881	GEN562762 1-G15033_3 0.6900
FDNS	00NR	0	16WP	G15_057	FROM->TO	CIMARRON - DRAPER LAKE 345KV CKT 1	717	717	0.18231	101.4826	GEN657748 1-YOUNG 2 GENERATOR
FDNS	00NR	0	16WP	G15_057	FROM->TO	CIMARRON - DRAPER LAKE 345KV CKT 1	717	717	0.18147	101.468	FRANKLIN - FRANKLIN SW 138KV CKT 1
FDNS	00NR	0	16WP	G15_057	FROM->TO	CIMARRON - DRAPER LAKE 345KV CKT 1	717	717	0.18231	101.4312	GEN527901 1-HOBBS PLANT #1 (CT)
FDNS	00NR	0	16WP	G15_057	FROM->TO	CIMARRON - DRAPER LAKE 345KV CKT 1	717	717	0.18231	101.4312	GEN527902 1-HOBBS PLANT #2 (CT)
FDNS	00NR	0	16WP	G15_057	FROM->TO	CIMARRON - DRAPER LAKE 345KV CKT 1	717	717	0.18231	101.405	GEN563273 2-G15093_4 0.6900
FDNS	00NR	0	16WP	G15_057	FROM->TO	CIMARRON - DRAPER LAKE 345KV CKT 1	717	717	0.18231	101.389	GEN563043 1-G15068_4 0.6900
FDNS	00NR	0	16WP	G15_057	FROM->TO	CIMARRON - DRAPER LAKE 345KV CKT 1	717	717	0.18207	101.3853	LYDIA - WELSH 345KV CKT 1
FDNS	00NR	0	16WP	G15_057	FROM->TO	CIMARRON - DRAPER LAKE 345KV CKT 1	717	717	0.18207	101.3853	LYDIA - WELSH 345KV CKT 1
FDNS	00NR	0	16WP	G15_057	FROM->TO	CIMARRON - DRAPER LAKE 345KV CKT 1	717	717	0.18231	101.3678	GEN563052 1-G15069_3 0.6900
FDNS	00NR	0	16WP	G15_057	FROM->TO	CIMARRON - DRAPER LAKE 345KV CKT 1	717	717	0.18231	101.3481	GEN525845 1-ELK_2 1 138.00
FDNS	00NR	0	16WP	G15_057	FROM->TO	CIMARRON - DRAPER LAKE 345KV CKT 1	717	717	0.18231	101.3447	GEN525844 1-ELK_1 118.000
FDNS	00NR	0	16WP	G15_057	FROM->TO	CIMARRON - DRAPER LAKE 345KV CKT 1	717	717	0.18231	101.3169	GEN563242 1-G15090_3 0.6900
FDNS	00NR	0	16WP	G15_057	FROM->TO	CIMARRON - DRAPER LAKE 345KV CKT 1	717	717	0.18231	101.298	GEN526333 1-JONES GEN #3 21 KV
FDNS	00NR	0	16WP	G15_057	FROM->TO	CIMARRON - DRAPER LAKE 345KV CKT 1	717	717	0.18231	101.298	GEN526334 1-JONES_4 116.500
FDNS	00NR	0	16WP	G15_057	FROM->TO	CIMARRON - DRAPER LAKE 345KV CKT 1	717	717	0.18133	101.2942	P12:138:AEPW-OGE:CORNVIL4:CIMARON4
FDNS	00NR	0	16WP	G15_057	FROM->TO	CIMARRON - DRAPER LAKE 345KV CKT 1	717	717	0.18231	101.2934	GEN620315 1-BIG STONE GEN
FDNS	00NR	0	16WP	G15_057	FROM->TO	CIMARRON - DRAPER LAKE 345KV CKT 1	717	717	0.1839	101.2904	AIRDEPT4 138.00 - GM 138KV CKT 1
FDNS	00NR	0	16WP	G15_057	FROM->TO	CIMARRON - DRAPER LAKE 345KV CKT 1	717	717	0.18231	101.2796	GEN562772 1-G15034_3 0.6900
FDNS	00NR	0	16WP	G15_057	FROM->TO	CIMARRON - DRAPER LAKE 345KV CKT 1	717	717	0.18332	101.2661	HUNTERS7 345.00 - WOODRING 345KV CKT 1
FDNS	00NR	0	16WP	G15_057	FROM->TO	CIMARRON - DRAPER LAKE 345KV CKT 1	717	717	0.18231	101.2635	GEN523971 1-HARRINGTON GEN #1 24 KV
FDNS	00NR	0	16WP	G15_057	FROM->TO	CIMARRON - DRAPER LAKE 345KV CKT 1	717	717	0.18231	101.2635	GEN523972 1-HARRINGTON GEN #2 24 KV
FDNS	00NR	0	16WP	G15_057	FROM->TO	CIMARRON - DRAPER LAKE 345KV CKT 1	717	717	0.18231	101.2635	GEN523973 1-HARRINGTON GEN #3 24 KV
FDNS	00NR	0	16WP	G15_057	FROM->TO	CIMARRON - DRAPER LAKE 345KV CKT 1	717	717	0.18208	101.2533	RANCHRD7 345.00 - SOONER 345KV CKT 1
FDNS	00NR	0	16WP	G15_057	FROM->TO	CIMARRON - DRAPER LAKE 345KV CKT 1	717	717	0.18231	101.2384	GEN600004 2-PRAIRIE ISLAND G2
FDNS	00NR	0	16WP	G15_057	FROM->TO	CIMARRON - DRAPER LAKE 345KV CKT 1	717	717	0.18231	101.2354	GEN600003 1-PRAIRIE ISLAND G1
FDNSLock	00NR	0	16WP	G15_057	FROM->TO	CIMARRON - DRAPER LAKE 345KV CKT 1	717	717	0.18231	101.2218	GEN600006 1-AS KING
FDNSLock	00NR	0	16WP	G15_057	FROM->TO	CIMARRON - DRAPER LAKE 345KV CKT 1	717	717	0.18231	101.201	GEN636641 1-LOUISA UNIT 1
FDNS	00NR	0	16WP	G15_057	FROM->TO	CIMARRON - DRAPER LAKE 345KV CKT 1	717	717	0.17198	101.136	MUSKOGEE - SEMINOLE 345KV CKT 1
FDNS	00NR	0	16WP	G15_057	FROM->TO	CIMARRON - DRAPER LAKE 345KV CKT 1	717	717	0.18231	101.1035	GEN563292 1-G15095_3 0.6900
FDNS	00NR	0	16WP	G15_057	FROM->TO	CIMARRON - DRAPER LAKE 345KV CKT 1	717	717	0.18231	101.1	GEN542962 2-IATAN UNIT #2
FDNS	00NR	0	16WP	G15_057	FROM->TO	CIMARRON - DRAPER LAKE 345KV CKT 1	717	717	0.18231	101.1	GEN615002 2-COAL CREEK
FDNS	00NR	0	16WP	G15_057	FROM->TO	CIMARRON - DRAPER LAKE 345KV CKT 1	717	717	0.1896	101.0885	NORTHWEST - SPRING CREEK 345KV CKT 1
FDNS	00NR	0	16WP	G15_057	FROM->TO	CIMARRON - DRAPER LAKE 345KV CKT 1	717	717	0.18231	101.0833	GEN600005 1-MONTICELLO
FDNS	00NR	0	16WP	G15_057	FROM->TO	CIMARRON - DRAPER LAKE 345KV CKT 1	717	717	0.1839	101.082	DRAPER LAKE - GM 138KV CKT 1
FDNS	00NR	0	16WP	G15_057	FROM->TO	CIMARRON - DRAPER LAKE 345KV CKT 1	717	717	0.18231	101.0628	GEN527166 1-MUSTANG_6 118.000
FDNS	00NR	0	16WP	G15_057	FROM->TO	CIMARRON - DRAPER LAKE 345KV CKT 1	717	717	0.18231	101.0553	GEN525562 1-TOLK GEN #2 24 KV
FDNS	00NR	0	16WP	G15_057	FROM->TO	CIMARRON - DRAPER LAKE 345KV CKT 1	717	717	0.1896	101.0485	SOONER - SPRING CREEK 345KV CKT 1
FDNS	00NR	0	16WP	G15_057	FROM->TO	CIMARRON - DRAPER LAKE 345KV CKT 1	717	717	0.18632	101.0368	CLARKSVILLE - MUSKOGEE 345KV CKT 1
FDNS	00NR	0	16WP	G15_057	FROM->TO	CIMARRON - DRAPER LAKE 345KV CKT 1	717	717	0.18632	101.0368	CLARKSVILLE - MUSKOGEE 345KV CKT 1
FDNS	00NR	0	16WP	G15_057	FROM->TO	CIMARRON - DRAPER LAKE 345KV CKT 1	717	717	0.18231	101.0116	GEN562952 1-G15057_3 0.6500
FDNS	00NR	0	16WP	G15_057	FROM->TO	CIMARRON - DRAPER LAKE 345KV CKT 1	717	717	0.18231	101.0001	GEN563272 1-G15093_3 0.6900
FDNS	00NR	0	16WP	G15_057	FROM->TO	CIMARRON - DRAPER LAKE 345KV CKT 1	717	717	0.18231	101	GEN629074 1-ARNOLD LOWSIDE OF GSU XFMR
FDNS	00NR	0	16WP	G15_057	FROM->TO	CIMARRON - DRAPER LAKE 345KV CKT 1	717	717	0.18231	100.9585	GEN635213 3-NEAL UNIT 3
FDNS	00NR	0	16WP	G15_057	FROM->TO	CIMARRON - DRAPER LAKE 345KV CKT 1	717	717	0.18403	100.9479	FRANKLIN SW - MIDWEST TAP 138KV CKT 1
FDNS	00NR	0	16WP	G15_057	FROM->TO	CIMARRON - DRAPER LAKE 345KV CKT 1	717	717	0.17417	100.9426	DRAPER LAKE - SEMINOLE 345KV CKT 3
FDNS	00NR	0	16WP	G15_057	FROM->TO	CIMARRON - DRAPER LAKE 345KV CKT 1	717	717	0.18231	100.9128	GEN562892 1-G15048_3 0.6900
FDNS	00NR	0	16WP	G15_057	FROM->TO	CIMARRON - DRAPER LAKE 345KV CKT 1	717	717	0.18231	100.9011	BIG STONE 230/24.0KV TRANSFORMER CKT 1
FDNS	00NR	0	16WP	G15_057	FROM->TO	CIMARRON - DRAPER LAKE 345KV CKT 1	717	717	0.18231	100.8665	GEN563173 1-G15082_3 0.6900
FDNS	00NR	0	16WP	G15_057	FROM->TO	CIMARRON - DRAPER LAKE 345KV CKT 1	717	717	0.18293	100.8575	CHAMBER SPRINGS - CLARKSVILLE 345KV CKT 1
FDNS	00NR	0	16WP	G15_057	FROM->TO	CIMARRON - DRAPER LAKE 345KV CKT 1	717	717	0.18231	100.8263	GEN562902 1-G15052_3 0.6900
FDNS	00NR	0	16WP	G15_057	FROM->TO	CIMARRON - DRAPER LAKE 345KV CKT 1	717	717	0.18198	100.8149	LYDIA - VALLIANT 345KV CKT 1
FDNS	00NR	0	16WP	G15_057	FROM->TO	CIMARRON - DRAPER LAKE 345KV CKT 1	717	717	0.18198	100.8149	LYDIA - VALLIANT 345KV CKT 1
FDNS	00NR	0	16WP	G15_057	FROM->TO	CIMARRON - DRAPER LAKE 345KV CKT 1	717	717	0.18231	100.81	GEN514805 1-SOONER UNIT 1
FDNS	00NR	0	16WP	G15_057	FROM->TO	CIMARRON - DRAPER LAKE 345KV CKT 1	717	717	0.18231	100.787	GEN527903 1-HOBBS PLANT #3 (ST)
FDNS	00NR	0	16WP	G15_057	FROM->TO	CIMARRON - DRAPER LAKE 345KV CKT 1	717	717	0.18231	100.7504	GEN525561 1-TOLK GEN #1 24 KV
FDNSLock	00NR	0	16WP	G15_057	FROM->TO	CIMARRON - DRAPER LAKE 345KV CKT 1	717	717	0.18231	100.7392	GEN600000 1-SHERBURNECNTY G1
FDNS	00NR	0	16WP	G15_057	FROM->TO	CIMARRON - DRAPER LAKE 345KV CKT 1	717	717	0.1809	100.6808	P12:138:OKGE:3TERM23
FDNS	00NR	0	16WP	G15_057	FROM->TO	CIMARRON - DRAPER LAKE 345KV CKT 1	717	717	0.18231	100.6578	GEN600001 2-SHERBURNE CNTY G2
FDNS	00NR	0	16WP	G15_057	FROM->TO	CIMARRON - DRAPER LAKE 345KV CKT 1	717	717	0.1809	100.6216	BARNES 4 138.00 - DRAPER LAKE 138KV CKT 1
FDNS	00NR	0	16WP	G15_057	FROM->TO	CIMARRON - DRAPER LAKE 345KV CKT 1	717	717	0.18231	100.6	GEN344225 1-1CAL G1 25.000
FDNS	00NR	0	16WP	G15_057	FROM->TO	CIMARRON - DRAPER LAKE 345KV CKT 1	717	717	0.18231	100.5641	GEN514806 1-SOONER UNIT 2
FDNSLock	00NR	0	16WP	G15_057	FROM->TO	CIMARRON - DRAPER LAKE 345KV CKT 1	717	717	0.18231	100.5438	GEN629075 1-OTTUMWA GENERATOR FOR OTTUMWA UNIT NO 1
FDNS	00NR	0	16WP	G15_057	FROM->TO	CIMARRON - DRAPER LAKE 345KV CKT 1	717	717	0.18231	100.5167	GEN563162 1-G15081_3 0.6900
FDNS	00NR	0	16WP	G15_057	FROM->TO	CIMARRON - DRAPER LAKE 345KV CKT 1	717	717	0.18391	100.3768	DRAPER LAKE (DRAPER2) 345/138/13.8KV TRANSFORMER CKT 1
FDNS	00NR	0	16WP	G15_057	FROM->TO	CIMARRON - DRAPER LAKE 345KV CKT 1	717	717	0.18231	100.3192	SHERBURNE CO 345/24.0KV TRANSFORMER CKT 1
FDNS	00NR	0	16WP	G15_057	FROM->TO	CIMARRON - DRAPER LAKE 345KV CKT 1	717	717	0.18928	100.2891	CIMARRON - MATHWSN7 345.00 345KV CKT 1
FDNS	00NR	0	16WP	G15_057	FROM->TO	CIMARRON - DRAPER LAKE 345KV CKT 1	717	717	0.18928	100.2891	CIMARRON - MATHWSN7 345.00 345KV CKT 2
FDNS	00NR	0	16WP	G15_057	FROM->TO	CIMARRON - DRAPER LAKE 345KV CKT 1	717	717	0.18391	100.286	DRAPER LAKE (DRAPER3) 345/138/13.8KV TRANSFORMER CKT 1
FDNS	00NR	0	16WP	G15_057	FROM->TO	CIMARRON - DRAPER LAKE 345KV CKT 1	717	717	0.18391	100.286	DRAPER LAKE (DRAPER4) 345/138/13.8KV TRANSFORMER CKT 1
FDNSLock	00NR	0	16WP	G15_057	FROM->TO	CIMARRON - DRAPER LAKE 345KV CKT 1	717	717	0.18231	100.2812	GEN635214 4-NEAL UNIT 4
FDNS	00NR	0	16WP	G15_057	FROM->TO	CIMARRON - DRAPER LAKE 345KV CKT 1	717	717	0.18231	100.2003	GEN562882 1-G15047_3 0.6900
FDNS	00NR	0	16WP	G15_057	FROM->TO	CIMARRON - DRAPER LAKE 345KV CKT 1	717	717	0.18231	100.1889	GEN600002 3-SHERBURNE CNTY G3
FDNS	00NR	0	16WP	G15_057	FROM->TO	CIMARRON - DRAPER LAKE 345KV CKT 1	717	717	0.18231	99.8	GEN635023 3-WALTER SCOTT UNIT 3

SOLUTION	GROUP	SCENARIO	SEASON	SOURCE	DIRECTION	MONITORED ELEMENT	RATEA (MVA)	RATEB(MVA)	TDF	TC%LOADING (% MVA)	CONTINGENCY
FDNS	00NR	0	16WP	G15_057	FROM->TO	CIMARRON - DRAPER LAKE 345KV CKT 1	717	717	0.18231	99.7	GEN562023 1-G11_020_3 0.6900
FDNS	00NR	0	16WP	G15_057	FROM->TO	CIMARRON - DRAPER LAKE 345KV CKT 1	717	717	0.18231	99.7	GEN562026 1-G11_019_3 0.6900
FDNS	00NR	0	16WP	G15_057	FROM->TO	CIMARRON - DRAPER LAKE 345KV CKT 1	717	717	0.18231	99.6	EASTDC - ERCOT EQUIVALENCE 345KV CKT 1
FDNS	00NR	0	16WP	G15_057	FROM->TO	CIMARRON - DRAPER LAKE 345KV CKT 1	717	717	0.16711	99.5	DRAPER LAKE - SEMINOLE 345KV CKT 1
FDNS	00NR	0	16WP	G15_057	FROM->TO	CIMARRON - DRAPER LAKE 345KV CKT 1	717	717	0.16711	99.5	DRAPER LAKE - SEMINOLE 345KV CKT 2
FDNS	00NR	0	20WP	G15_057	TO->FROM	CIMARRON - MINCO 345KV CKT 1	956	956	0.79195	113.1031	G14-057T 345.00 - SUNNYSIDE 345KV CKT 1
FDNS	00NR	0	16WP	G15_057	TO->FROM	CIMARRON - MINCO 345KV CKT 1	956	956	0.79269	112.6453	G14-057T 345.00 - SUNNYSIDE 345KV CKT 1
FDNS	00NR	0	16WP	G15_057	FROM->TO	G14-057T 345.00 - SUNNYSIDE 345KV CKT 1	717	789	0.36019	141.3261	CIMARRON - MINCO 345KV CKT 1
FDNS	00NR	0	20WP	G15_057	FROM->TO	G14-057T 345.00 - SUNNYSIDE 345KV CKT 1	717	789	0.35881	139.8556	CIMARRON - MINCO 345KV CKT 1
FDNS	00NR	0	16WP	G15_057	FROM->TO	G14-057T 345.00 - SUNNYSIDE 345KV CKT 1	717	789	0.11447	125.8516	PITTSBURG - SEMINOLE 345KV CKT 1
FDNS	00NR	0	16WP	G15_057	FROM->TO	G14-057T 345.00 - SUNNYSIDE 345KV CKT 1	717	789	0.11447	125.8516	PITTSBURG - SEMINOLE 345KV CKT 1
FDNS	00NR	0	16WP	G15_057	FROM->TO	G14-057T 345.00 - SUNNYSIDE 345KV CKT 1	717	789	0.11699	125.7317	BASE CASE
FDNS	00NR	0	20WP	G15_057	FROM->TO	G14-057T 345.00 - SUNNYSIDE 345KV CKT 1	717	789	0.11665	123.4961	BASE CASE
FDNS	00NR	0	16WP	G15_057	FROM->TO	G14-057T 345.00 - SUNNYSIDE 345KV CKT 1	717	789	0.13392	123.2027	CIMARRON - DRAPER LAKE 345KV CKT 1
FDNS	00NR	0	20WP	G15_057	FROM->TO	G14-057T 345.00 - SUNNYSIDE 345KV CKT 1	717	789	0.11402	122.942	PITTSBURG - SEMINOLE 345KV CKT 1
FDNS	00NR	0	20WP	G15_057	FROM->TO	G14-057T 345.00 - SUNNYSIDE 345KV CKT 1	717	789	0.11402	122.942	PITTSBURG - SEMINOLE 345KV CKT 1
FDNS	00NR	0	20WP	G15_057	FROM->TO	G14-057T 345.00 - SUNNYSIDE 345KV CKT 1	717	789	0.13354	120.8155	CIMARRON - DRAPER LAKE 345KV CKT 1
FDNS	00NR	0	16WP	G15_057	FROM->TO	G14-057T 345.00 - SUNNYSIDE 345KV CKT 1	717	789	0.126	120.3338	P12:138:WFEC:MSL03
FDNS	00NR	0	16WP	G15_057	FROM->TO	G14-057T 345.00 - SUNNYSIDE 345KV CKT 1	717	789	0.11642	119.7169	PITTSBURG - VALLIANT 345KV CKT 1
FDNS	00NR	0	16WP	G15_057	FROM->TO	G14-057T 345.00 - SUNNYSIDE 345KV CKT 1	717	789	0.11642	119.7169	PITTSBURG - VALLIANT 345KV CKT 1
FDNSLock	00NR	0	16WP	G15_057	FROM->TO	G14-057T 345.00 - SUNNYSIDE 345KV CKT 1	717	789	0.11699	119.4097	GEN509403 1-PIRKEY GENERATION
FDNS	00NR	0	16WP	G15_057	FROM->TO	G14-057T 345.00 - SUNNYSIDE 345KV CKT 1	717	789	0.11699	119.3291	GEN509416 1-TURK GENERATION
FDNS	00NR	0	16WP	G15_057	FROM->TO	G14-057T 345.00 - SUNNYSIDE 345KV CKT 1	717	789	0.11868	119.038	CLEVELAND - G15066_T 345.00 345KV CKT 1
FDNS	00NR	0	16WP	G15_057	FROM->TO	G14-057T 345.00 - SUNNYSIDE 345KV CKT 1	717	789	0.11868	118.7424	G15066_T 345.00 - SOONER 345KV CKT 1
FDNS	00NR	0	20WP	G15_057	FROM->TO	G14-057T 345.00 - SUNNYSIDE 345KV CKT 1	717	789	0.12577	118.4531	P12:138:WFEC:MSL03
FDNS	00NR	0	16WP	G15_057	FROM->TO	G14-057T 345.00 - SUNNYSIDE 345KV CKT 1	717	789	0.11699	118.4277	GEN501801 1-DOLET HILLS UNIT1
FDNS	00NR	0	16WP	G15_057	FROM->TO	G14-057T 345.00 - SUNNYSIDE 345KV CKT 1	717	789	0.11699	118.0417	GEN509404 1-WELSH #1
FDNS	00NR	0	16WP	G15_057	FROM->TO	G14-057T 345.00 - SUNNYSIDE 345KV CKT 1	717	789	0.11699	118.0417	GEN509406 1-WELSH #3
FDNS	00NR	0	16WP	G15_057	FROM->TO	G14-057T 345.00 - SUNNYSIDE 345KV CKT 1	717	789	0.11875	117.7945	BORDER 7345.00 - WOODWARD DISTRICT EHV 345KV CKT 1
FDNS	00NR	0	16WP	G15_057	FROM->TO	G14-057T 345.00 - SUNNYSIDE 345KV CKT 1	717	789	0.11649	117.3154	7SAREPTA% 345.00 - LONGWOOD 345KV CKT 1
FDNS	00NR	0	16WP	G15_057	FROM->TO	G14-057T 345.00 - SUNNYSIDE 345KV CKT 1	717	789	0.11649	117.3154	7SAREPTA% 345.00 - LONGWOOD 345KV CKT 1
FDNS	00NR	0	20WP	G15_057	FROM->TO	G14-057T 345.00 - SUNNYSIDE 345KV CKT 1	717	789	0.11665	117.2677	GEN509403 1-PIRKEY GENERATION
FDNS	00NR	0	16WP	G15_057	FROM->TO	G14-057T 345.00 - SUNNYSIDE 345KV CKT 1	717	789	0.11954	117.2341	CORN TAP - NAPLESTP 138.00 138KV CKT 1
FDNS	00NR	0	20WP	G15_057	FROM->TO	G14-057T 345.00 - SUNNYSIDE 345KV CKT 1	717	789	0.11665	117.1868	GEN509416 1-TURK GENERATION
FDNS	00NR	0	16WP	G15_057	FROM->TO	G14-057T 345.00 - SUNNYSIDE 345KV CKT 1	717	789	0.11954	117.1497	NAPLESTP 138.00 - PAYNE 138.00 138KV CKT 1
FDNS	00NR	0	16WP	G15_057	FROM->TO	G14-057T 345.00 - SUNNYSIDE 345KV CKT 1	717	789	0.1168	117.1471	DOLET HILLS - SOUTHWEST SHREVEPORT 345KV CKT 1
FDNS	00NR	0	16WP	G15_057	FROM->TO	G14-057T 345.00 - SUNNYSIDE 345KV CKT 1	717	789	0.1168	117.1471	DOLET HILLS - SOUTHWEST SHREVEPORT 345KV CKT 1
FDNS	00NR	0	16WP	G15_057	FROM->TO	G14-057T 345.00 - SUNNYSIDE 345KV CKT 1	717	789	0.1195	117.1448	ANADARKO - POCASSETT 138KV CKT 1
FDNSLock	00NR	0	16WP	G15_057	FROM->TO	G14-057T 345.00 - SUNNYSIDE 345KV CKT 1	717	789	0.11699	117.1301	GEN336821 1-GRAND GULF UNIT
FDNS	00NR	0	16WP	G15_057	FROM->TO	G14-057T 345.00 - SUNNYSIDE 345KV CKT 1	717	789	0.11819	117.0898	CLEVELAND - TULSA NORTH 345KV CKT 1
FDNS	00NR	0	16WP	G15_057	FROM->TO	G14-057T 345.00 - SUNNYSIDE 345KV CKT 1	717	789	0.11819	117.0898	CLEVELAND - TULSA NORTH 345KV CKT 1
FDNS	00NR	0	16WP	G15_057	FROM->TO	G14-057T 345.00 - SUNNYSIDE 345KV CKT 1	717	789	0.11912	117.0742	COMANCHE - LOCO 138KV CKT 1
FDNSLock	00NR	0	16WP	G15_057	FROM->TO	G14-057T 345.00 - SUNNYSIDE 345KV CKT 1	717	789	0.11699	117.0352	GEN336153 1-WATERFORD UNIT#3
FDNS	00NR	0	16WP	G15_057	FROM->TO	G14-057T 345.00 - SUNNYSIDE 345KV CKT 1	717	789	0.11067	117.0161	CANADIAN RIVER - MUSKOGEE 345KV CKT 1
FDNS	00NR	0	16WP	G15_057	FROM->TO	G14-057T 345.00 - SUNNYSIDE 345KV CKT 1	717	789	0.1195	116.9961	POCASSETT - TUTTLE 138KV CKT 1
FDNS	00NR	0	20WP	G15_057	FROM->TO	G14-057T 345.00 - SUNNYSIDE 345KV CKT 1	717	789	0.11828	116.9383	CLEVELAND - G15066_T 345.00 345KV CKT 1
FDNSLock	00NR	0	16WP	G15_057	FROM->TO	G14-057T 345.00 - SUNNYSIDE 345KV CKT 1	717	789	0.11653	116.891	MATHWSN7 345.00 - TATONGA7 345.00 345KV CKT 1
FDNS	00NR	0	16WP	G15_057	FROM->TO	G14-057T 345.00 - SUNNYSIDE 345KV CKT 1	717	789	0.11875	116.8671	BORDER 7345.00 - TUCO_2 345.00 345KV CKT 1
FDNS	00NR	0	20WP	G15_057	FROM->TO	G14-057T 345.00 - SUNNYSIDE 345KV CKT 1	717	789	0.11607	116.8606	PITTSBURG - VALLIANT 345KV CKT 1
FDNS	00NR	0	20WP	G15_057	FROM->TO	G14-057T 345.00 - SUNNYSIDE 345KV CKT 1	717	789	0.11607	116.8606	PITTSBURG - VALLIANT 345KV CKT 1
FDNS	00NR	0	16WP	G15_057	FROM->TO	G14-057T 345.00 - SUNNYSIDE 345KV CKT 1	717	789	0.12846	116.8117	ARCADIA - NORTHWEST 345KV CKT 1
FDNS	00NR	0	16WP	G15_057	FROM->TO	G14-057T 345.00 - SUNNYSIDE 345KV CKT 1	717	789	0.11699	116.7419	GRAND GULF 500/22.0KV TRANSFORMER CKT 1
FDNSLock	00NR	0	16WP	G15_057	FROM->TO	G14-057T 345.00 - SUNNYSIDE 345KV CKT 1	717	789	0.11699	116.7414	GEN335831 1-RIVERBEND UNIT#1
FDNS	00NR	0	16WP	G15_057	FROM->TO	G14-057T 345.00 - SUNNYSIDE 345KV CKT 1	717	789	0.11699	116.7065	GEN515577 1-ARBWND11 0.6900
FDNS	00NR	0	16WP	G15_057	FROM->TO	G14-057T 345.00 - SUNNYSIDE 345KV CKT 1	717	789	0.11762	116.6977	ARCADIA - SEMINOLE 345KV CKT 1
FDNS	00NR	0	16WP	G15_057	FROM->TO	G14-057T 345.00 - SUNNYSIDE 345KV CKT 1	717	789	0.11699	116.6641	GEN509409 1-WILKES #3
FDNS	00NR	0	16WP	G15_057	FROM->TO	G14-057T 345.00 - SUNNYSIDE 345KV CKT 1	717	789	0.11671	116.6569	7SAREPTA% 345.00 - ELDORADO EHV 345KV CKT 1
FDNS	00NR	0	16WP	G15_057	FROM->TO	G14-057T 345.00 - SUNNYSIDE 345KV CKT 1	717	789	0.11671	116.6567	3TR3AR8EL7EL
FDNS	00NR	0	16WP	G15_057	FROM->TO	G14-057T 345.00 - SUNNYSIDE 345KV CKT 1	717	789	0.11671	116.6476	ELDORADO EHV 500/345KV TRANSFORMER CKT 1
FDNS	00NR	0	20WP	G15_057	FROM->TO	G14-057T 345.00 - SUNNYSIDE 345KV CKT 1	717	789	0.11828	116.6463	G15066_T 345.00 - SOONER 345KV CKT 1
FDNS	00NR	0	16WP	G15_057	FROM->TO	G14-057T 345.00 - SUNNYSIDE 345KV CKT 1	717	789	0.11834	116.6347	P12:138:AEPW:DUNCAN-4:L.E.S.-4
FDNS	00NR	0	16WP	G15_057	FROM->TO	G14-057T 345.00 - SUNNYSIDE 345KV CKT 1	717	789	0.1195	116.6144	BRIDGECR 138.00 - TUTTLE 138KV CKT 1
FDNS	00NR	0	16WP	G15_057	FROM->TO	G14-057T 345.00 - SUNNYSIDE 345KV CKT 1	717	789	0.11834	116.5237	COMANCHE TAP - OMPA-DUNCAN 840 138KV CKT 1
FDNS	00NR	0	16WP	G15_057	FROM->TO	G14-057T 345.00 - SUNNYSIDE 345KV CKT 1	717	789	0.1194	116.4781	HEALDTON - LOCO 138KV CKT 1
FDNS	00NR	0	20WP	G15_057	FROM->TO	G14-057T 345.00 - SUNNYSIDE 345KV CKT 1	717	789	0.11665	116.4704	GEN501801 1-DOLET HILLS UNIT1
FDNS	00NR	0	16WP	G15_057	FROM->TO	G14-057T 345.00 - SUNNYSIDE 345KV CKT 1	717	789	0.11833	116.4505	FINNEY SWITCHING STATION - HOLCOMB 345KV CKT 1
FDNS	00NR	0	16WP	G15_057	FROM->TO	G14-057T 345.00 - SUNNYSIDE 345KV CKT 1	717	789	0.11833	116.4505	FINNEY SWITCHING STATION - HOLCOMB 345KV CKT 1
FDNS	00NR	0	16WP	G15_057	FROM->TO	G14-057T 345.00 - SUNNYSIDE 345KV CKT 1	717	789	0.11699	116.4	GEN300006 1-NEW MADRID UNIT 1
FDNS	00NR	0	16WP	G15_057	FROM->TO	G14-057T 345.00 - SUNNYSIDE 345KV CKT 1	717	789	0.11699	116.4	GEN300007 1-NEW MADRID UNIT 2
FDNS	00NR	0	16WP	G15_057	FROM->TO	G14-057T 345.00 - SUNNYSIDE 345KV CKT 1	717	789	0.11716	116.3928	LACYGNE - WAVERLY7 345.00 345KV CKT 1
FDNS	00NR	0	16WP	G15_057	FROM->TO	G14-057T 345.00 - SUNNYSIDE 345KV CKT 1	717	789	0.11699	116.369	GEN501813 1-RODEMACHER UNIT 3
FDNS	00NR	0	16WP	G15_057	FROM->TO	G14-057T 345.00 - SUNNYSIDE 345KV CKT 1	717	789	0.1195	116.3452	P12:138:WFEC:MSL01
FDNS	00NR	0	16WP	G15_057	FROM->TO	G14-057T 345.00 - SUNNYSIDE 345KV CKT 1	717	789	0.1195	116.3403	BRIDGECR 138.00 - SUNSHINE CANYON 138KV CKT 1
FDNS	00NR	0	16WP	G15_057	FROM->TO	G14-057T 345.00 - SUNNYSIDE 345KV CKT 1	717	789	0.1194	116.3386	HEALDTON - RINGLING 138KV CKT 1
FDNS	00NR	0	16WP	G15_057	FROM->TO	G14-057T 345.00 - SUNNYSIDE 345KV CKT 1	717	789	0.11716	116.2527	WAVERLY7 345.00 - WOLF CREEK 345KV CKT 1
FDNS	00NR	0	16WP	G15_057	FROM->TO	G14-057T 345.00 - SUNNYSIDE 345KV CKT 1	717	789	0.11699	116.2503	GEN520947 1-HUGO1
FDNS	00NR	0	16WP	G15_057	FROM->TO	G14-057T 345.00 - SUNNYSIDE 345KV CKT 1	717	789	0.11834	116.2417	DUNCAN - OMPA-DUNCAN 840 138KV CKT 1
FDNS	00NR	0	16WP	G15_057	FROM->TO	G14-057T 345.00 - SUNNYSIDE 345KV CKT 1	717	789	0.11834	116.2417	DUNCAN - OMPA-DUNCAN 840 138KV CKT 1
FDNS	00NR	0	20WP	G15_057	FROM->TO	G14-057T 345.00 - SUNNYSIDE 345KV CKT 1	717	789	0.11836	116.2407	BORDER 7345.00 - WOODWARD DISTRICT EHV 345KV CKT 1

SOLUTION	GROUP	SCENARIO	SEASON	SOURCE	DIRECTION	MONITORED ELEMENT	RATEA (MVA)	RATEB(MVA)	TDF	TC%LOADING (% MVA)	CONTINGENCY
FDNSLock	00NR	0	16WP	G15_057	FROM->TO	G14-057T 345.00 - SUNNYSIDE 345KV CKT 1	717	789	0.11653	116.2034	G11_051T 345.00 - TATONGA7 345.00 345KV CKT 1
FDNS	00NR	0	16WP	G15_057	FROM->TO	G14-057T 345.00 - SUNNYSIDE 345KV CKT 1	717	789	0.1194	116.1742	RINGLING - SOUTH WILSON 138KV CKT 1
FDNS	00NR	0	16WP	G15_057	FROM->TO	G14-057T 345.00 - SUNNYSIDE 345KV CKT 1	717	789	0.11699	116.1685	GEN335206 1-NELSON UNIT 6
FDNS	00NR	0	16WP	G15_057	FROM->TO	G14-057T 345.00 - SUNNYSIDE 345KV CKT 1	717	789	0.11833	116.0651	FINNEY SWITCHING STATION - Hitchland Interchange 345KV CKT 1
FDNS	00NR	0	16WP	G15_057	FROM->TO	G14-057T 345.00 - SUNNYSIDE 345KV CKT 1	717	789	0.11699	116.0517	DOLET HILLS 345/24.0KV TRANSFORMER CKT 1
FDNS	00NR	0	16WP	G15_057	FROM->TO	G14-057T 345.00 - SUNNYSIDE 345KV CKT 1	717	789	0.117	116.0067	P12:138:AEPW:SHERID4:112GORE4
FDNS	00NR	0	16WP	G15_057	FROM->TO	G14-057T 345.00 - SUNNYSIDE 345KV CKT 1	717	789	0.11576	115.998	PARK LANE - SEMINOLE 138KV CKT 1
FDNSLock	00NR	0	16WP	G15_057	FROM->TO	G14-057T 345.00 - SUNNYSIDE 345KV CKT 1	717	789	0.11699	115.9851	GEN590011 2-ERCOT EQUIVALENCE
FDNS	00NR	0	16WP	G15_057	FROM->TO	G14-057T 345.00 - SUNNYSIDE 345KV CKT 1	717	789	0.11699	115.9826	GEN501812 1-RODEMACHER UNIT 2
FDNS	00NR	0	16WP	G15_057	FROM->TO	G14-057T 345.00 - SUNNYSIDE 345KV CKT 1	717	789	0.11771	115.9522	THISTLE7 345.00 - WOODWARD DISTRICT EHV 345KV CKT 1
FDNS	00NR	0	16WP	G15_057	FROM->TO	G14-057T 345.00 - SUNNYSIDE 345KV CKT 1	717	789	0.11771	115.9522	THISTLE7 345.00 - WOODWARD DISTRICT EHV 345KV CKT 1
FDNS	00NR	0	16WP	G15_057	FROM->TO	G14-057T 345.00 - SUNNYSIDE 345KV CKT 1	717	789	0.11771	115.9522	THISTLE7 345.00 - WOODWARD DISTRICT EHV 345KV CKT 2
FDNS	00NR	0	16WP	G15_057	FROM->TO	G14-057T 345.00 - SUNNYSIDE 345KV CKT 1	717	789	0.11771	115.9522	THISTLE7 345.00 - WOODWARD DISTRICT EHV 345KV CKT 2
FDNS	00NR	0	20WP	G15_057	FROM->TO	G14-057T 345.00 - SUNNYSIDE 345KV CKT 1	717	789	0.11665	115.9478	GEN509406 1-WELSH #3
FDNS	00NR	0	20WP	G15_057	FROM->TO	G14-057T 345.00 - SUNNYSIDE 345KV CKT 1	717	789	0.11665	115.9475	GEN509404 1-WELSH #1
FDNS	00NR	0	16WP	G15_057	FROM->TO	G14-057T 345.00 - SUNNYSIDE 345KV CKT 1	717	789	0.11746	115.9348	CANEYRV7 345.00 - NEOSHO 345KV CKT 1
FDNS	00NR	0	16WP	G15_057	FROM->TO	G14-057T 345.00 - SUNNYSIDE 345KV CKT 1	717	789	0.11699	115.9221	GEN515564 1-ORIGIN11 0.6900
FDNS	00NR	0	16WP	G15_057	FROM->TO	G14-057T 345.00 - SUNNYSIDE 345KV CKT 1	717	789	0.11699	115.9221	GEN515565 1-ORIGIN21 0.6900
FDNSLock	00NR	0	16WP	G15_057	FROM->TO	G14-057T 345.00 - SUNNYSIDE 345KV CKT 1	717	789	0.11699	115.9096	GEN590010 1-ERCOT EQUIVALENCE
FDNS	00NR	0	16WP	G15_057	FROM->TO	G14-057T 345.00 - SUNNYSIDE 345KV CKT 1	717	789	0.1194	115.8986	MARIETTA - SOUTH WILSON 138KV CKT 1
FDNS	00NR	0	16WP	G15_057	FROM->TO	G14-057T 345.00 - SUNNYSIDE 345KV CKT 1	717	789	0.11699	115.8352	GEN509408 1-WILKES #2
FDNS	00NR	0	16WP	G15_057	FROM->TO	G14-057T 345.00 - SUNNYSIDE 345KV CKT 1	717	789	0.1194	115.8012	P12:138:WFEC:MSL17
FDNS	00NR	0	16WP	G15_057	FROM->TO	G14-057T 345.00 - SUNNYSIDE 345KV CKT 1	717	789	0.11746	115.7954	CANEYRV7 345.00 - LATHAMS7 345.00 345KV CKT 1
FDNS	00NR	0	16WP	G15_057	FROM->TO	G14-057T 345.00 - SUNNYSIDE 345KV CKT 1	717	789	0.11785	115.7632	P12:138:WFEC:MSL02
FDNS	00NR	0	16WP	G15_057	FROM->TO	G14-057T 345.00 - SUNNYSIDE 345KV CKT 1	717	789	0.11699	115.7471	P12:161:AEPW:DYESS 5:HYLAND 5
FDNS	00NR	0	16WP	G15_057	FROM->TO	G14-057T 345.00 - SUNNYSIDE 345KV CKT 1	717	789	0.11699	115.7452	GEN506754 1-LEBROCK STEAM 1
FDNS	00NR	0	16WP	G15_057	FROM->TO	G14-057T 345.00 - SUNNYSIDE 345KV CKT 1	717	789	0.11699	115.7417	P12:69:AEPW:L.E.S.-2:LAW WC2
FDNS	00NR	0	16WP	G15_057	FROM->TO	G14-057T 345.00 - SUNNYSIDE 345KV CKT 1	717	789	0.11806	115.7311	REDBUD - RIVERSIDE STATION 345KV CKT 1
FDNS	00NR	0	16WP	G15_057	FROM->TO	G14-057T 345.00 - SUNNYSIDE 345KV CKT 1	717	789	0.11806	115.7311	REDBUD - RIVERSIDE STATION 345KV CKT 1
FDNS	00NR	0	16WP	G15_057	FROM->TO	G14-057T 345.00 - SUNNYSIDE 345KV CKT 1	717	789	0.11687	115.7085	ELDORADO EHV - MOUNT OLIVE 500KV CKT 1
FDNS	00NR	0	16WP	G15_057	FROM->TO	G14-057T 345.00 - SUNNYSIDE 345KV CKT 1	717	789	0.11699	115.6998	GEN334440 1-SABINE UNIT 4
FDNS	00NR	0	16WP	G15_057	FROM->TO	G14-057T 345.00 - SUNNYSIDE 345KV CKT 1	717	789	0.11896	115.6769	CIVIT - PAOLI 138KV CKT 1
FDNS	00NR	0	16WP	G15_057	FROM->TO	G14-057T 345.00 - SUNNYSIDE 345KV CKT 1	717	789	0.11766	115.675	ANADARKO - GEORGIA 138KV CKT 1
FDNS	00NR	0	16WP	G15_057	FROM->TO	G14-057T 345.00 - SUNNYSIDE 345KV CKT 1	717	789	0.11882	115.6471	MATHWSN7 345.00 - NORTHWEST 345KV CKT 1
FDNS	00NR	0	16WP	G15_057	FROM->TO	G14-057T 345.00 - SUNNYSIDE 345KV CKT 1	717	789	0.117	115.6371	P12:138:AEPW:112GORE4:L.E.S.-4
FDNS	00NR	0	16WP	G15_057	FROM->TO	G14-057T 345.00 - SUNNYSIDE 345KV CKT 1	717	789	0.11675	115.6268	ELDORADO EHV - SHERIDAN EHV 500KV CKT 1
FDNS	00NR	0	16WP	G15_057	FROM->TO	G14-057T 345.00 - SUNNYSIDE 345KV CKT 1	717	789	0.11976	115.6192	P12:138:AEPW-OGE:CORNVIL4:MAUD 4
FDNS	00NR	0	16WP	G15_057	FROM->TO	G14-057T 345.00 - SUNNYSIDE 345KV CKT 1	717	789	0.11699	115.6004	NEW MADRID 161/22.0KV TRANSFORMER CKT 1
FDNS	00NR	0	16WP	G15_057	FROM->TO	G14-057T 345.00 - SUNNYSIDE 345KV CKT 1	717	789	0.11694	115.5963	WEBRE - WELLS 500KV CKT 1
FDNS	00NR	0	16WP	G15_057	FROM->TO	G14-057T 345.00 - SUNNYSIDE 345KV CKT 1	717	789	0.11747	115.5952	PAOLI - PAYNE 138.00 138KV CKT 1
FDNS	00NR	0	16WP	G15_057	FROM->TO	G14-057T 345.00 - SUNNYSIDE 345KV CKT 1	717	789	0.11699	115.5952	GEN503909 1-FULTONU1 1 16.000
FDNS	00NR	0	16WP	G15_057	FROM->TO	G14-057T 345.00 - SUNNYSIDE 345KV CKT 1	717	789	0.11699	115.5865	NEW MADRID 345/22.0KV TRANSFORMER CKT 1
FDNS	00NR	0	16WP	G15_057	FROM->TO	G14-057T 345.00 - SUNNYSIDE 345KV CKT 1	717	789	0.11766	115.5859	FLETCHER - GEORGIA 138KV CKT 1
FDNS	00NR	0	16WP	G15_057	FROM->TO	G14-057T 345.00 - SUNNYSIDE 345KV CKT 1	717	789	0.11746	115.5778	LATHAMS7 345.00 - ROSE HILL 345KV CKT 1
FDNS	00NR	0	16WP	G15_057	FROM->TO	G14-057T 345.00 - SUNNYSIDE 345KV CKT 1	717	789	0.11766	115.5671	LAWTON EASTSIDE (LES 5) 345/138/13.8KV TRANSFORMER CKT 2
FDNS	00NR	0	16WP	G15_057	FROM->TO	G14-057T 345.00 - SUNNYSIDE 345KV CKT 1	717	789	0.11766	115.5671	LAWTON EASTSIDE (LES 5) 345/138/13.8KV TRANSFORMER CKT 2
FDNS	00NR	0	16WP	G15_057	FROM->TO	G14-057T 345.00 - SUNNYSIDE 345KV CKT 1	717	789	0.11699	115.5633	FRONTIER - GRIMES 345KV CKT 1
FDNS	00NR	0	16WP	G15_057	FROM->TO	G14-057T 345.00 - SUNNYSIDE 345KV CKT 1	717	789	0.11773	115.5527	EMPIRE - FLETCHER 138KV CKT 1
FDNS	00NR	0	16WP	G15_057	FROM->TO	G14-057T 345.00 - SUNNYSIDE 345KV CKT 1	717	789	0.11976	115.5491	BLANCHARD - CORNVILLE 138KV CKT 1
FDNS	00NR	0	16WP	G15_057	FROM->TO	G14-057T 345.00 - SUNNYSIDE 345KV CKT 1	717	789	0.11896	115.5364	CIVIT - STRATFORD 138KV CKT 1
FDNS	00NR	0	16WP	G15_057	FROM->TO	G14-057T 345.00 - SUNNYSIDE 345KV CKT 1	717	789	0.11751	115.5229	TUPELO - TUPELO TAP 138KV CKT 1
FDNS	00NR	0	16WP	G15_057	FROM->TO	G14-057T 345.00 - SUNNYSIDE 345KV CKT 1	717	789	0.11773	115.4711	COMANCHE - EMPIRE 138KV CKT 1
FDNS	00NR	0	16WP	G15_057	FROM->TO	G14-057T 345.00 - SUNNYSIDE 345KV CKT 1	717	789	0.11731	115.4691	G1524G1525 345.00 - THISTLE7 345.00 345KV CKT 1
FDNS	00NR	0	16WP	G15_057	FROM->TO	G14-057T 345.00 - SUNNYSIDE 345KV CKT 1	717	789	0.11731	115.4691	G1524G1525 345.00 - THISTLE7 345.00 345KV CKT 2
FDNS	00NR	0	16WP	G15_057	FROM->TO	G14-057T 345.00 - SUNNYSIDE 345KV CKT 1	717	789	0.11699	115.4679	GEN509393 S1-ARSENAL HILL GENS #4 (STALL)
FDNS	00NR	0	16WP	G15_057	FROM->TO	G14-057T 345.00 - SUNNYSIDE 345KV CKT 1	717	789	0.11699	115.4437	GEN509392 G2-ARSENAL HILL GENS #3 (STALL)
FDNS	00NR	0	16WP	G15_057	FROM->TO	G14-057T 345.00 - SUNNYSIDE 345KV CKT 1	717	789	0.11699	115.4436	GEN509391 G1-ARSENAL HILL GENS #2 (STALL)
FDNS	00NR	0	16WP	G15_057	FROM->TO	G14-057T 345.00 - SUNNYSIDE 345KV CKT 1	717	789	0.11699	115.429	GEN336252 1-NINEMILE POINT UNIT#5
FDNS	00NR	0	16WP	G15_057	FROM->TO	G14-057T 345.00 - SUNNYSIDE 345KV CKT 1	717	789	0.11896	115.419	OIL CENTER - STRATFORD 138KV CKT 1
FDNS	00NR	0	16WP	G15_057	FROM->TO	G14-057T 345.00 - SUNNYSIDE 345KV CKT 1	717	789	0.11699	115.4027	DELL 500 - ESSEX UNIT 2 500KV CKT Z1
FDNS	00NR	0	16WP	G15_057	FROM->TO	G14-057T 345.00 - SUNNYSIDE 345KV CKT 1	717	789	0.11699	115.3907	GEN334071 1-LEWIS CREEK 2
FDNS	00NR	0	16WP	G15_057	FROM->TO	G14-057T 345.00 - SUNNYSIDE 345KV CKT 1	717	789	0.11699	115.3817	GEN334070 1-LEWIS CREEK 1
FDNS	00NR	0	16WP	G15_057	FROM->TO	G14-057T 345.00 - SUNNYSIDE 345KV CKT 1	717	789	0.11699	115.3782	GEN335204 1-NELSON UNIT 4
FDNS	00NR	0	20WP	G15_057	FROM->TO	G14-057T 345.00 - SUNNYSIDE 345KV CKT 1	717	789	0.11616	115.3748	7SAREPTA% 345.00 - LONGWOOD 345KV CKT 1
FDNS	00NR	0	20WP	G15_057	FROM->TO	G14-057T 345.00 - SUNNYSIDE 345KV CKT 1	717	789	0.11616	115.3748	7SAREPTA% 345.00 - LONGWOOD 345KV CKT 1
FDNS	00NR	0	20WP	G15_057	FROM->TO	G14-057T 345.00 - SUNNYSIDE 345KV CKT 1	717	789	0.11929	115.3669	CORN TAP - NAPLESTP 138.00 138KV CKT 1
FDNS	00NR	0	16WP	G15_057	FROM->TO	G14-057T 345.00 - SUNNYSIDE 345KV CKT 1	717	789	0.11733	115.3542	DUNCAN (DUNCAN) 138/69/13.8KV TRANSFORMER CKT 1
FDNS	00NR	0	16WP	G15_057	FROM->TO	G14-057T 345.00 - SUNNYSIDE 345KV CKT 1	717	789	0.11733	115.3542	DUNCAN (DUNCAN) 138/69/13.8KV TRANSFORMER CKT 1
FDNS	00NR	0	16WP	G15_057	FROM->TO	G14-057T 345.00 - SUNNYSIDE 345KV CKT 1	717	789	0.11976	115.3522	BLANCHARD - MAUD 138KV CKT 1
FDNS	00NR	0	16WP	G15_057	FROM->TO	G14-057T 345.00 - SUNNYSIDE 345KV CKT 1	717	789	0.11699	115.3434	GEN334441 1-SABINE UNIT 5
FDNS	00NR	0	16WP	G15_057	FROM->TO	G14-057T 345.00 - SUNNYSIDE 345KV CKT 1	717	789	0.11699	115.3149	GEN337653 1-WHITE BLUFF UNIT #2
FDNS	00NR	0	20WP	G15_057	FROM->TO	G14-057T 345.00 - SUNNYSIDE 345KV CKT 1	717	789	0.11836	115.3146	BORDER 7345.00 - TUCO_2 345.00 345KV CKT 1
FDNS	00NR	0	16WP	G15_057	FROM->TO	G14-057T 345.00 - SUNNYSIDE 345KV CKT 1	717	789	0.11701	115.3081	P12:138:AEPW:CATOOSA4:T.S.E.-4
FDNS	00NR	0	16WP	G15_057	FROM->TO	G14-057T 345.00 - SUNNYSIDE 345KV CKT 1	717	789	0.11699	115.3065	P12:161:AEPW-SWPA:BEAVER5:EROGERS5
FDNS	00NR	0	16WP	G15_057	FROM->TO	G14-057T 345.00 - SUNNYSIDE 345KV CKT 1	717	789	0.11699	115.3	GEN300003 1-THOMAS HILL UNIT 3
FDNS	00NR	0	16WP	G15_057	FROM->TO	G14-057T 345.00 - SUNNYSIDE 345KV CKT 1	717	789	0.11685	115.2966	6LAYFLD 230.00 - CARROLL 230KV CKT 1
FDNS	00NR	0	16WP	G15_057	FROM->TO	G14-057T 345.00 - SUNNYSIDE 345KV CKT 1	717	789	0.11699	115.2935	GEN506752 1-LEBROCK GAS 1
FDNS	00NR	0	16WP	G15_057	FROM->TO	G14-057T 345.00 - SUNNYSIDE 345KV CKT 1	717	789	0.11699	115.2933	GEN506753 1-LEBROCK GAS 2
FDNS	00NR	0	16WP	G15_057	FROM->TO	G14-057T 345.00 - SUNNYSIDE 345KV CKT 1	717	789	0.11699	115.2879	GEN334030 1-FRONTIER UNIT 1

SOLUTION	GROUP	SCENARIO	SEASON	SOURCE	DIRECTION	MONITORED ELEMENT	RATEA (MVA)	RATEB(MVA)	TDF	TC%LOADING (% MVA)	CONTINGENCY
FDNS	00NR	0	16WP	G15_057	FROM->TO	G14-057T 345.00 - SUNNYSIDE 345KV CKT 1	717	789	0.11792	115.2871	TUTTLE - TUTTLE CONOCO TAP 138KV CKT 1
FDNS	00NR	0	16WP	G15_057	FROM->TO	G14-057T 345.00 - SUNNYSIDE 345KV CKT 1	717	789	0.11699	115.2864	GEN334031 1-FRONTIER UNIT 2
FDNS	00NR	0	20WP	G15_057	FROM->TO	G14-057T 345.00 - SUNNYSIDE 345KV CKT 1	717	789	0.11929	115.2754	NAPLESTP 138.00 - PAYNE 138.00 138KV CKT 1
FDNS	00NR	0	16WP	G15_057	FROM->TO	G14-057T 345.00 - SUNNYSIDE 345KV CKT 1	717	789	0.11944	115.2707	BAILEY4 138.00 - SUNSHINE CANYON 138KV CKT 1
FDNS	00NR	0	16WP	G15_057	FROM->TO	G14-057T 345.00 - SUNNYSIDE 345KV CKT 1	717	789	0.11699	115.2699	GEN515040 1-SEMINOLE 1G
FDNS	00NR	0	16WP	G15_057	FROM->TO	G14-057T 345.00 - SUNNYSIDE 345KV CKT 1	717	789	0.05732	115.2647	GRACEMONT - LAWTON EASTSIDE 345KV CKT 1
FDNS	00NR	0	16WP	G15_057	FROM->TO	G14-057T 345.00 - SUNNYSIDE 345KV CKT 1	717	789	0.05732	115.2647	GRACEMONT - LAWTON EASTSIDE 345KV CKT 1
FDNS	00NR	0	16WP	G15_057	FROM->TO	G14-057T 345.00 - SUNNYSIDE 345KV CKT 1	717	789	0.11679	115.2642	FULTON 115 - HOPE 115KV CKT 1
FDNS	00NR	0	16WP	G15_057	FROM->TO	G14-057T 345.00 - SUNNYSIDE 345KV CKT 1	717	789	0.11679	115.2642	FULTON 115 - HOPE 115KV CKT 1
FDNS	00NR	0	16WP	G15_057	FROM->TO	G14-057T 345.00 - SUNNYSIDE 345KV CKT 1	717	789	0.11699	115.249	8DANIEL8 500.00 - MCKNIGHT 500KV CKT 1
FDNS	00NR	0	16WP	G15_057	FROM->TO	G14-057T 345.00 - SUNNYSIDE 345KV CKT 1	717	789	0.11896	115.2478	LATTA JCT - OIL CENTER 138KV CKT 1
FDNS	00NR	0	16WP	G15_057	FROM->TO	G14-057T 345.00 - SUNNYSIDE 345KV CKT 1	717	789	0.11699	115.2473	GEN515226 1-MUSKOGEE 6G
FDNS	00NR	0	16WP	G15_057	FROM->TO	G14-057T 345.00 - SUNNYSIDE 345KV CKT 1	717	789	0.11785	115.2426	P12:138:AEPW-OGE:WTH_JCT4:JENSEN4
FDNS	00NR	0	16WP	G15_057	FROM->TO	G14-057T 345.00 - SUNNYSIDE 345KV CKT 1	717	789	0.11699	115.2333	GEN300015 1-1SGPDEL 18.000
FDNSLock	00NR	0	16WP	G15_057	FROM->TO	G14-057T 345.00 - SUNNYSIDE 345KV CKT 1	717	789	0.11699	115.2307	GEN337911 1-ARKANSAS NUCLEAR ONE UNIT #2
FDNS	00NR	0	16WP	G15_057	FROM->TO	G14-057T 345.00 - SUNNYSIDE 345KV CKT 1	717	789	0.11699	115.2299	P12:161:AEPW:DYESS5:ELMSPRNG:TONTITN5
FDNS	00NR	0	16WP	G15_057	FROM->TO	G14-057T 345.00 - SUNNYSIDE 345KV CKT 1	717	789	0.11699	115.2278	GEN337652 1-WHITE BLUFF UNIT #1
FDNS	00NR	0	16WP	G15_057	FROM->TO	G14-057T 345.00 - SUNNYSIDE 345KV CKT 1	717	789	0.11699	115.2235	GEN336251 1-NINEMILE POINT UNIT#4
FDNS	00NR	0	16WP	G15_057	FROM->TO	G14-057T 345.00 - SUNNYSIDE 345KV CKT 1	717	789	0.11763	115.2215	P12:138:AEPW:CORNVIL4:S.W.S.-4
FDNS	00NR	0	16WP	G15_057	FROM->TO	G14-057T 345.00 - SUNNYSIDE 345KV CKT 1	717	789	0.11699	115.2199	GEN501811 1-RODEMACHER UNIT 1
FDNS	00NR	0	16WP	G15_057	FROM->TO	G14-057T 345.00 - SUNNYSIDE 345KV CKT 1	717	789	0.11699	115.2185	GEN336831 1-BAXTER WILSON SES
FDNS	00NR	0	16WP	G15_057	FROM->TO	G14-057T 345.00 - SUNNYSIDE 345KV CKT 1	717	789	0.11762	115.2077	P12:138:AEPW:CORNVIL4:DUNCAN-4
FDNS	00NR	0	16WP	G15_057	FROM->TO	G14-057T 345.00 - SUNNYSIDE 345KV CKT 1	717	789	0.11707	115.2071	G15074_T 345.00 - HOYT 345KV CKT 1
FDNS	00NR	0	16WP	G15_057	FROM->TO	G14-057T 345.00 - SUNNYSIDE 345KV CKT 1	717	789	0.11792	115.206	CIMARRON - TUTTLE CONOCO TAP 138KV CKT 1
FDNS	00NR	0	20WP	G15_057	FROM->TO	G14-057T 345.00 - SUNNYSIDE 345KV CKT 1	717	789	0.11665	115.2011	GEN336821 1-GRAND GULF UNIT
FDNS	00NR	0	16WP	G15_057	FROM->TO	G14-057T 345.00 - SUNNYSIDE 345KV CKT 1	717	789	0.11706	115.2	G15088_T 345.00 - MOORE 345KV CKT 1
FDNS	00NR	0	16WP	G15_057	FROM->TO	G14-057T 345.00 - SUNNYSIDE 345KV CKT 1	717	789	0.11699	115.1975	GEN334433 1-SABINE UNIT 3
FDNS	00NR	0	16WP	G15_057	FROM->TO	G14-057T 345.00 - SUNNYSIDE 345KV CKT 1	717	789	0.11733	115.1706	P12:69:WFEC-AEPW:COMANCH2:DUNCAN-2
FDNS	00NR	0	16WP	G15_057	FROM->TO	G14-057T 345.00 - SUNNYSIDE 345KV CKT 1	717	789	0.11719	115.1663	BUCKNER7 345.00 - SPEARVILLE 345KV CKT 1
FDNS	00NR	0	16WP	G15_057	FROM->TO	G14-057T 345.00 - SUNNYSIDE 345KV CKT 1	717	789	0.11719	115.1663	BUCKNER7 345.00 - SPEARVILLE 345KV CKT 1
FDNS	00NR	0	16WP	G15_057	FROM->TO	G14-057T 345.00 - SUNNYSIDE 345KV CKT 1	717	789	0.11699	115.164	GEN562783 1-G15036_4 0.6900
FDNS	00NR	0	16WP	G15_057	FROM->TO	G14-057T 345.00 - SUNNYSIDE 345KV CKT 1	717	789	0.11699	115.164	GEN562784 1-G15036_5 0.6900
FDNSLock	00NR	0	16WP	G15_057	FROM->TO	G14-057T 345.00 - SUNNYSIDE 345KV CKT 1	717	789	0.11699	115.1601	GEN505432 1-SIKESTON
FDNS	00NR	0	16WP	G15_057	FROM->TO	G14-057T 345.00 - SUNNYSIDE 345KV CKT 1	717	789	0.11775	115.158	CIMARRON - CZECH HALL 138KV CKT 1
FDNS	00NR	0	16WP	G15_057	FROM->TO	G14-057T 345.00 - SUNNYSIDE 345KV CKT 1	717	789	0.11699	115.1483	GEN515223 1-MUSKOGEE 4G
FDNS	00NR	0	16WP	G15_057	FROM->TO	G14-057T 345.00 - SUNNYSIDE 345KV CKT 1	717	789	0.11699	115.1483	GEN515225 1-MUSKOGEE 5G
FDNS	00NR	0	16WP	G15_057	FROM->TO	G14-057T 345.00 - SUNNYSIDE 345KV CKT 1	717	789	0.1175	115.1473	P12:138:AEPW:WTHWF4:CLINTJC4
FDNS	00NR	0	16WP	G15_057	FROM->TO	G14-057T 345.00 - SUNNYSIDE 345KV CKT 1	717	789	0.11762	115.1258	CIMARRON - SARA 138KV CKT 1
FDNS	00NR	0	16WP	G15_057	FROM->TO	G14-057T 345.00 - SUNNYSIDE 345KV CKT 1	717	789	0.11699	115.1244	P12:161:AEPW:EROGERS5:ECNTRTN5
FDNS	00NR	0	16WP	G15_057	FROM->TO	G14-057T 345.00 - SUNNYSIDE 345KV CKT 1	717	789	0.11689	115.1205	LAYFLD8 500.00 - MOUNT OLIVE 500KV CKT 1
FDNS	00NR	0	16WP	G15_057	FROM->TO	G14-057T 345.00 - SUNNYSIDE 345KV CKT 1	717	789	0.11689	115.1205	LAYFLD8 500.00 - MOUNT OLIVE 500KV CKT 1
FDNS	00NR	0	16WP	G15_057	FROM->TO	G14-057T 345.00 - SUNNYSIDE 345KV CKT 1	717	789	0.11733	115.1191	DUNCAN - TOSCO 69KV CKT 1
FDNS	00NR	0	16WP	G15_057	FROM->TO	G14-057T 345.00 - SUNNYSIDE 345KV CKT 1	717	789	0.11699	115.1185	RODEMACHER 230/22.0KV TRANSFORMER CKT 1
FDNS	00NR	0	16WP	G15_057	FROM->TO	G14-057T 345.00 - SUNNYSIDE 345KV CKT 1	717	789	0.11699	115.118	WHITE BLUFF 500/26.0KV TRANSFORMER CKT 1
FDNS	00NR	0	16WP	G15_057	FROM->TO	G14-057T 345.00 - SUNNYSIDE 345KV CKT 1	717	789	0.1175	115.1125	P12:138:AEPW:WTHWF4:WTH_SE4
FDNS	00NR	0	16WP	G15_057	FROM->TO	G14-057T 345.00 - SUNNYSIDE 345KV CKT 1	717	789	0.11691	115.1104	MC NIEL 500/115KV TRANSFORMER CKT 1
FDNS	00NR	0	16WP	G15_057	FROM->TO	G14-057T 345.00 - SUNNYSIDE 345KV CKT 1	717	789	0.11073	115.1076	CANADIAN RIVER - PITTSBURG 345KV CKT 1
FDNS	00NR	0	16WP	G15_057	FROM->TO	G14-057T 345.00 - SUNNYSIDE 345KV CKT 1	717	789	0.11073	115.1076	CANADIAN RIVER - PITTSBURG 345KV CKT 1
FDNS	00NR	0	20WP	G15_057	FROM->TO	G14-057T 345.00 - SUNNYSIDE 345KV CKT 1	717	789	0.11914	115.1068	ANADARKO - POCASSETT 138KV CKT 1
FDNS	00NR	0	16WP	G15_057	FROM->TO	G14-057T 345.00 - SUNNYSIDE 345KV CKT 1	717	789	0.11684	115.1055	BISMARK - HOT SPRINGS WEST BUS 115KV CKT 1
FDNS	00NR	0	16WP	G15_057	FROM->TO	G14-057T 345.00 - SUNNYSIDE 345KV CKT 1	717	789	0.11699	115.1045	GEN303007 1-1BC2 U2
FDNS	00NR	0	16WP	G15_057	FROM->TO	G14-057T 345.00 - SUNNYSIDE 345KV CKT 1	717	789	0.11944	115.1009	BAILEY4 138.00 - WESTMOORE 138KV CKT 1
FDNS	00NR	0	16WP	G15_057	FROM->TO	G14-057T 345.00 - SUNNYSIDE 345KV CKT 1	717	789	0.11691	115.1003	HOT SPRINGS EHV - MAGNET COVE 500KV CKT 1
FDNS	00NR	0	16WP	G15_057	FROM->TO	G14-057T 345.00 - SUNNYSIDE 345KV CKT 1	717	789	0.11699	115.0992	GEN303006 1-1BC2 U1
FDNS	00NR	0	16WP	G15_057	FROM->TO	G14-057T 345.00 - SUNNYSIDE 345KV CKT 1	717	789	0.11715	115.0967	CLEO CORNER - CLEOPLT4 138.00 138KV CKT 1
FDNS	00NR	0	16WP	G15_057	FROM->TO	G14-057T 345.00 - SUNNYSIDE 345KV CKT 1	717	789	0.1161	115.0929	ARBWIND4 138.00 - CARTER 138KV CKT 1
FDNS	00NR	0	16WP	G15_057	FROM->TO	G14-057T 345.00 - SUNNYSIDE 345KV CKT 1	717	789	0.11713	115.0928	G15095_T 138.00 - ROSE_VALLEY 138.00 138KV CKT 1
FDNS	00NR	0	16WP	G15_057	FROM->TO	G14-057T 345.00 - SUNNYSIDE 345KV CKT 1	717	789	0.11722	115.0921	P12:69:AEPW-OMPA:COMANC-2:OMWALTR2
FDNS	00NR	0	20WP	G15_057	FROM->TO	G14-057T 345.00 - SUNNYSIDE 345KV CKT 1	717	789	0.11665	115.0919	GEN336153 1-WATERFORD UNIT#3
FDNS	00NR	0	16WP	G15_057	FROM->TO	G14-057T 345.00 - SUNNYSIDE 345KV CKT 1	717	789	0.11699	115.0853	GEN337910 1-ARKANSAS NUCLEAR ONE UNIT #1
FDNS	00NR	0	16WP	G15_057	FROM->TO	G14-057T 345.00 - SUNNYSIDE 345KV CKT 1	717	789	0.11605	115.0838	SEMINOLE - VANOSTP4 138.00 138KV CKT 1
FDNS	00NR	0	16WP	G15_057	FROM->TO	G14-057T 345.00 - SUNNYSIDE 345KV CKT 1	717	789	0.11715	115.0828	CLEOPLT4 138.00 - MEN TAP 138KV CKT 1
FDNS	00NR	0	16WP	G15_057	FROM->TO	G14-057T 345.00 - SUNNYSIDE 345KV CKT 1	717	789	0.11699	115.0797	GEN300010 1-ST FRANCIS UNIT 1
FDNS	00NR	0	16WP	G15_057	FROM->TO	G14-057T 345.00 - SUNNYSIDE 345KV CKT 1	717	789	0.11699	115.0766	GEN336191 1-LITTLE GYPSY UNIT#3
FDNS	00NR	0	16WP	G15_057	FROM->TO	G14-057T 345.00 - SUNNYSIDE 345KV CKT 1	717	789	0.11715	115.0709	IMO TAP - MEN TAP 138KV CKT 1
FDNS	00NR	0	16WP	G15_057	FROM->TO	G14-057T 345.00 - SUNNYSIDE 345KV CKT 1	717	789	0.11775	115.0701	CZECH HALL - XEROX 138KV CKT 1
FDNS	00NR	0	16WP	G15_057	FROM->TO	G14-057T 345.00 - SUNNYSIDE 345KV CKT 1	717	789	0.11775	115.0657	MORGAN - XEROX 138KV CKT 1
FDNS	00NR	0	16WP	G15_057	FROM->TO	G14-057T 345.00 - SUNNYSIDE 345KV CKT 1	717	789	0.117	115.057	P12:138:AEPW:N.E.S.-4:CATOOSA4
FDNS	00NR	0	16WP	G15_057	FROM->TO	G14-057T 345.00 - SUNNYSIDE 345KV CKT 1	717	789	0.11699	115.0559	NELSON 230/20.0KV TRANSFORMER CKT 1
FDNS	00NR	0	16WP	G15_057	FROM->TO	G14-057T 345.00 - SUNNYSIDE 345KV CKT 1	717	789	0.11684	115.0529	ALPINE AECC - BISMARK 115KV CKT 1
FDNS	00NR	0	16WP	G15_057	FROM->TO	G14-057T 345.00 - SUNNYSIDE 345KV CKT 1	717	789	0.11699	115.0513	GEN335614 1-WILLOW GLENN UNIT#4
FDNS	00NR	0	16WP	G15_057	FROM->TO	G14-057T 345.00 - SUNNYSIDE 345KV CKT 1	717	789	0.11733	115.0494	COMANCHE TAP - TOSCO 69KV CKT 1
FDNS	00NR	0	16WP	G15_057	FROM->TO	G14-057T 345.00 - SUNNYSIDE 345KV CKT 1	717	789	0.11775	115.0419	MORGAN - MUSTANG 138KV CKT 1
FDNS	00NR	0	16WP	G15_057	FROM->TO	G14-057T 345.00 - SUNNYSIDE 345KV CKT 1	717	789	0.11739	115.0417	BENTON - WICHITA 345KV CKT 1
FDNS	00NR	0	16WP	G15_057	FROM->TO	G14-057T 345.00 - SUNNYSIDE 345KV CKT 1	717	789	0.11699	115.0396	GEN303008 1-1BC2 U3
FDNS	00NR	0	16WP	G15_057	FROM->TO	G14-057T 345.00 - SUNNYSIDE 345KV CKT 1	717	789	0.11699	115.03	GEN300011 1-ST FRANCIS UNIT 2
FDNS	00NR	0	16WP	G15_057	FROM->TO	G14-057T 345.00 - SUNNYSIDE 345KV CKT 1	717	789	0.11713	115.0247	NOEL_SW 138.00 - ROSE_VALLEY 138.00 138KV CKT 1
FDNS	00NR	0	16WP	G15_057	FROM->TO	G14-057T 345.00 - SUNNYSIDE 345KV CKT 1	717	789	0.11699	115.0126	GEN336170 1-GULF OXY U4
FDNS	00NR	0	16WP	G15_057	FROM->TO	G14-057T 345.00 - SUNNYSIDE 345KV CKT 1	717	789	0.11786	115.0103	WEATHERFORD JCT. - WEATHERFORD SOUTHEAST 138KV CKT 1

SOLUTION	GROUP	SCENARIO	SEASON	SOURCE	DIRECTION	MONITORED ELEMENT	RATEA (MVA)	RATEB(MVA)	TDF	TC%LOADING (% MVA)	CONTINGENCY
FDNS	00NR	0	16WP	G15_057	FROM->TO	G14-057T 345.00 - SUNNYSIDE 345KV CKT 1	717	789	0.11786	115.0103	WEATHERFORD JCT. - WEATHERFORD SOUTHEAST 138KV CKT 1
FDNS	00NR	0	16WP	G15_057	FROM->TO	G14-057T 345.00 - SUNNYSIDE 345KV CKT 1	717	789	0.11698	115.0093	CYPRESS - HARTBURG 500KV CKT 1
FDNS	00NR	0	16WP	G15_057	FROM->TO	G14-057T 345.00 - SUNNYSIDE 345KV CKT 1	717	789	0.11684	115.0092	ALPINE AECC - AMITY SS 115KV CKT 1
FDNS	00NR	0	16WP	G15_057	FROM->TO	G14-057T 345.00 - SUNNYSIDE 345KV CKT 1	717	789	0.11699	115.0076	GEN336464 1-MICHOUD UNIT #3
FDNS	00NR	0	20WP	G15_057	FROM->TO	G14-057T 345.00 - SUNNYSIDE 345KV CKT 1	717	789	0.11782	115.0036	CLEVELAND - TULSA NORTH 345KV CKT 1
FDNS	00NR	0	20WP	G15_057	FROM->TO	G14-057T 345.00 - SUNNYSIDE 345KV CKT 1	717	789	0.11782	115.0036	CLEVELAND - TULSA NORTH 345KV CKT 1
FDNS	00NR	0	16WP	G15_057	FROM->TO	G14-057T 345.00 - SUNNYSIDE 345KV CKT 1	717	789	0.11707	114.998	HOYT - STRANGER CREEK 345KV CKT 1
FDNS	00NR	0	16WP	G15_057	FROM->TO	G14-057T 345.00 - SUNNYSIDE 345KV CKT 1	717	789	0.1177	114.9964	CHISHOLM6 230.00 - ELK CITY 230KV 230KV CKT 1
FDNS	00NR	0	20WP	G15_057	FROM->TO	G14-057T 345.00 - SUNNYSIDE 345KV CKT 1	717	789	0.11875	114.9957	COMANCHE - LOCO 138KV CKT 1
FDNS	00NR	0	16WP	G15_057	FROM->TO	G14-057T 345.00 - SUNNYSIDE 345KV CKT 1	717	789	0.11733	114.9952	COMANCHE - COMANCHE TAP 69KV CKT 1
FDNS	00NR	0	16WP	G15_057	FROM->TO	G14-057T 345.00 - SUNNYSIDE 345KV CKT 1	717	789	0.1177	114.9949	ELK CITY 230KV (ELKCTY-6) 230/138/13.8KV TRANSFORMER CKT 1
FDNS	00NR	0	16WP	G15_057	FROM->TO	G14-057T 345.00 - SUNNYSIDE 345KV CKT 1	717	789	0.1177	114.9949	ELK CITY 230KV (ELKCTY-6) 230/138/13.8KV TRANSFORMER CKT 1
FDNS	00NR	0	16WP	G15_057	FROM->TO	G14-057T 345.00 - SUNNYSIDE 345KV CKT 1	717	789	0.11699	114.9914	GEN300016 1-1G1GPDEL 18.000
FDNS	00NR	0	16WP	G15_057	FROM->TO	G14-057T 345.00 - SUNNYSIDE 345KV CKT 1	717	789	0.11699	114.9913	8CAJUN2 500/24.0KV TRANSFORMER CKT 1
FDNS	00NR	0	20WP	G15_057	FROM->TO	G14-057T 345.00 - SUNNYSIDE 345KV CKT 1	717	789	0.05715	114.9873	GRACEMONT - LAWTON EASTSIDE 345KV CKT 1
FDNS	00NR	0	20WP	G15_057	FROM->TO	G14-057T 345.00 - SUNNYSIDE 345KV CKT 1	717	789	0.05715	114.9873	GRACEMONT - LAWTON EASTSIDE 345KV CKT 1
FDNS	00NR	0	16WP	G15_057	FROM->TO	G14-057T 345.00 - SUNNYSIDE 345KV CKT 1	717	789	0.11721	114.9818	P12:138:OKGE-AEPW:JENSEN4:REDROCKRD4
FDNS	00NR	0	16WP	G15_057	FROM->TO	G14-057T 345.00 - SUNNYSIDE 345KV CKT 1	717	789	0.11699	114.9768	GEN337041 1-GERALD ANDRUS
FDNS	00NR	0	16WP	G15_057	FROM->TO	G14-057T 345.00 - SUNNYSIDE 345KV CKT 1	717	789	0.11852	114.9721	CANADIAN - NOBLE 138KV CKT 1
FDNS	00NR	0	16WP	G15_057	FROM->TO	G14-057T 345.00 - SUNNYSIDE 345KV CKT 1	717	789	0.11699	114.9655	GEN501910 1-ACADIA UNIT ST1
FDNS	00NR	0	16WP	G15_057	FROM->TO	G14-057T 345.00 - SUNNYSIDE 345KV CKT 1	717	789	0.11699	114.9604	P12:138:AEPW:R.S.S.-4:S.HUD.-4
FDNS	00NR	0	16WP	G15_057	FROM->TO	G14-057T 345.00 - SUNNYSIDE 345KV CKT 1	717	789	0.11896	114.9568	LASALLE - LATTA JCT 138KV CKT 1
FDNS	00NR	0	16WP	G15_057	FROM->TO	G14-057T 345.00 - SUNNYSIDE 345KV CKT 1	717	789	0.11786	114.9568	P12:138:AEPW:REDROCKRD4:WTH_JCT4
FDNS	00NR	0	16WP	G15_057	FROM->TO	G14-057T 345.00 - SUNNYSIDE 345KV CKT 1	717	789	0.117	114.9566	7JASPER 345.00 - BLACKBERRY 345KV CKT 1
FDNS	00NR	0	16WP	G15_057	FROM->TO	G14-057T 345.00 - SUNNYSIDE 345KV CKT 1	717	789	0.11733	114.955	WALTERS - WALTERS 69KV CKT 1
FDNS	00NR	0	16WP	G15_057	FROM->TO	G14-057T 345.00 - SUNNYSIDE 345KV CKT 1	717	789	0.11856	114.9539	P12:138:OKGE:3TERM27
FDNS	00NR	0	20WP	G15_057	FROM->TO	G14-057T 345.00 - SUNNYSIDE 345KV CKT 1	717	789	0.11914	114.9532	POCASSETT - TUTTLE 138KV CKT 1
FDNS	00NR	0	16WP	G15_057	FROM->TO	G14-057T 345.00 - SUNNYSIDE 345KV CKT 1	717	789	0.11707	114.9521	G15074_T 345.00 - JEFFREY ENERGY CENTER 345KV CKT 1
FDNS	00NR	0	16WP	G15_057	FROM->TO	G14-057T 345.00 - SUNNYSIDE 345KV CKT 1	717	789	0.11715	114.9482	BLACKBERRY - NEOSHO 345KV CKT 1
FDNS	00NR	0	16WP	G15_057	FROM->TO	G14-057T 345.00 - SUNNYSIDE 345KV CKT 1	717	789	0.11711	114.9468	SWISSVALE - WEST GARDNER 345KV CKT 1
FDNS	00NR	0	16WP	G15_057	FROM->TO	G14-057T 345.00 - SUNNYSIDE 345KV CKT 1	717	789	0.11768	114.9464	NORGE ROAD - SOUTHWESTERN STATION 138KV CKT 1
FDNS	00NR	0	16WP	G15_057	FROM->TO	G14-057T 345.00 - SUNNYSIDE 345KV CKT 1	717	789	0.11768	114.9464	NORGE ROAD - SOUTHWESTERN STATION 138KV CKT 1
FDNS	00NR	0	16WP	G15_057	FROM->TO	G14-057T 345.00 - SUNNYSIDE 345KV CKT 1	717	789	0.11944	114.9431	FRANKLIN SW - WESTMOORE 138KV CKT 1
FDNS	00NR	0	16WP	G15_057	FROM->TO	G14-057T 345.00 - SUNNYSIDE 345KV CKT 1	717	789	0.12016	114.9374	DRAPER LAKE - SEMINOLE 345KV CKT 2
FDNS	00NR	0	16WP	G15_057	FROM->TO	G14-057T 345.00 - SUNNYSIDE 345KV CKT 1	717	789	0.12016	114.9373	DRAPER LAKE - SEMINOLE 345KV CKT 1
FDNS	00NR	0	20WP	G15_057	FROM->TO	G14-057T 345.00 - SUNNYSIDE 345KV CKT 1	717	789	0.11647	114.9356	DOLET HILLS - SOUTHWEST SHREVEPORT 345KV CKT 1
FDNS	00NR	0	20WP	G15_057	FROM->TO	G14-057T 345.00 - SUNNYSIDE 345KV CKT 1	717	789	0.11647	114.9356	DOLET HILLS - SOUTHWEST SHREVEPORT 345KV CKT 1
FDNS	00NR	0	16WP	G15_057	FROM->TO	G14-057T 345.00 - SUNNYSIDE 345KV CKT 1	717	789	0.11762	114.933	SARA - STHLAKE4 138.00 138KV CKT 1
FDNS	00NR	0	16WP	G15_057	FROM->TO	G14-057T 345.00 - SUNNYSIDE 345KV CKT 1	717	789	0.11791	114.9289	G14_038T 345.00 - Hitchland Interchange 345KV CKT 1
FDNS	00NR	0	16WP	G15_057	FROM->TO	G14-057T 345.00 - SUNNYSIDE 345KV CKT 1	717	789	0.1169	114.9274	ETTA (DUKE HOTSPRINGS) - MC NIEL 500KV CKT 1
FDNS	00NR	0	16WP	G15_057	FROM->TO	G14-057T 345.00 - SUNNYSIDE 345KV CKT 1	717	789	0.11699	114.9218	P12:138:AEPW:YARCH-S4:T.S.E.-4
FDNS	00NR	0	16WP	G15_057	FROM->TO	G14-057T 345.00 - SUNNYSIDE 345KV CKT 1	717	789	0.11722	114.9213	LAWTON RELIFT TAP - OMPA-WALTERS 69KV CKT 1
FDNS	00NR	0	16WP	G15_057	FROM->TO	G14-057T 345.00 - SUNNYSIDE 345KV CKT 1	717	789	0.11699	114.9181	SABINE 230/24.0KV TRANSFORMER CKT 1
FDNS	00NR	0	16WP	G15_057	FROM->TO	G14-057T 345.00 - SUNNYSIDE 345KV CKT 1	717	789	0.11699	114.9164	ESSEX UNIT 2 500/18.0KV TRANSFORMER CKT 1
FDNS	00NR	0	16WP	G15_057	FROM->TO	G14-057T 345.00 - SUNNYSIDE 345KV CKT 1	717	789	0.11699	114.9157	P12:69:AEPW:NROGERS2:ECNTRTN2
FDNS	00NR	0	16WP	G15_057	FROM->TO	G14-057T 345.00 - SUNNYSIDE 345KV CKT 1	717	789	0.117	114.9156	P12:138:AEPW:BA_71ST4:T.S.E.-4
FDNS	00NR	0	16WP	G15_057	FROM->TO	G14-057T 345.00 - SUNNYSIDE 345KV CKT 1	717	789	0.11699	114.9151	GEN336801 1-BAXTER WILSON UNIT #1
FDNS	00NR	0	16WP	G15_057	FROM->TO	G14-057T 345.00 - SUNNYSIDE 345KV CKT 1	717	789	0.11717	114.9126	EMPORIA ENERGY CENTER - G14_001T 345.00 345KV CKT 1
FDNS	00NR	0	16WP	G15_057	FROM->TO	G14-057T 345.00 - SUNNYSIDE 345KV CKT 1	717	789	0.11703	114.9076	7LUTESVIL 345.00 - 7ST FRANC 345.00 345KV CKT 1
FDNS	00NR	0	16WP	G15_057	FROM->TO	G14-057T 345.00 - SUNNYSIDE 345KV CKT 1	717	789	0.11762	114.9039	MCCLAIN - STHLAKE4 138.00 138KV CKT 1
FDNS	00NR	0	16WP	G15_057	FROM->TO	G14-057T 345.00 - SUNNYSIDE 345KV CKT 1	717	789	0.11699	114.8963	FRONTIER 345/18.0KV TRANSFORMER CKT 1
FDNS	00NR	0	16WP	G15_057	FROM->TO	G14-057T 345.00 - SUNNYSIDE 345KV CKT 1	717	789	0.11679	114.8959	HOPE - MCNAB REC 115KV CKT 1
FDNS	00NR	0	16WP	G15_057	FROM->TO	G14-057T 345.00 - SUNNYSIDE 345KV CKT 1	717	789	0.11699	114.8947	FRONTIER 345/18.0KV TRANSFORMER CKT 1
FDNS	00NR	0	16WP	G15_057	FROM->TO	G14-057T 345.00 - SUNNYSIDE 345KV CKT 1	717	789	0.11703	114.888	P12:138:AEPW-OGE:SHIDLER4:OSAGE 4
FDNS	00NR	0	16WP	G15_057	FROM->TO	G14-057T 345.00 - SUNNYSIDE 345KV CKT 1	717	789	0.11679	114.887	P12:115:AEPW:TURK3:HOPE3
FDNS	00NR	0	16WP	G15_057	FROM->TO	G14-057T 345.00 - SUNNYSIDE 345KV CKT 1	717	789	0.11699	114.8839	P12:161:AEPW:CHAMSPR5:FARMING5
FDNS	00NR	0	16WP	G15_057	FROM->TO	G14-057T 345.00 - SUNNYSIDE 345KV CKT 1	717	789	0.11763	114.8809	SOUTHWESTERN STATION - VERDEN 138KV CKT 1
FDNS	00NR	0	16WP	G15_057	FROM->TO	G14-057T 345.00 - SUNNYSIDE 345KV CKT 1	717	789	0.11852	114.8807	NOBLE - PURCELL4 138.00 138KV CKT 1
FDNS	00NR	0	16WP	G15_057	FROM->TO	G14-057T 345.00 - SUNNYSIDE 345KV CKT 1	717	789	0.11786	114.8796	HINTON - WEATHERFORD JCT. 138KV CKT 1
FDNS	00NR	0	16WP	G15_057	FROM->TO	G14-057T 345.00 - SUNNYSIDE 345KV CKT 1	717	789	0.11683	114.8773	ENOWILT - LONE OAK 138KV CKT 1
FDNS	00NR	0	16WP	G15_057	FROM->TO	G14-057T 345.00 - SUNNYSIDE 345KV CKT 1	717	789	0.11772	114.8748	ANADARKO - SEQUOYAHJ4 138.00 138KV CKT 1
FDNS	00NR	0	16WP	G15_057	FROM->TO	G14-057T 345.00 - SUNNYSIDE 345KV CKT 1	717	789	0.11772	114.8744	CORN TAP - SEQUOYAHJ4 138.00 138KV CKT 1
FDNS	00NR	0	16WP	G15_057	FROM->TO	G14-057T 345.00 - SUNNYSIDE 345KV CKT 1	717	789	0.11542	114.8724	ARBUCKLE - VANOSTP4 138.00 138KV CKT 1
FDNS	00NR	0	16WP	G15_057	FROM->TO	G14-057T 345.00 - SUNNYSIDE 345KV CKT 1	717	789	0.1175	114.872	WEATHERFORD TAP - WEATHERFORD WIND FARM 138KV CKT 1
FDNS	00NR	0	16WP	G15_057	FROM->TO	G14-057T 345.00 - SUNNYSIDE 345KV CKT 1	717	789	0.11704	114.8684	8WNEWMADRID 500.00 - DELL 500 500KV CKT 1
FDNS	00NR	0	16WP	G15_057	FROM->TO	G14-057T 345.00 - SUNNYSIDE 345KV CKT 1	717	789	0.11683	114.8684	ENOWILT - SARDIS 138KV CKT 1
FDNS	00NR	0	16WP	G15_057	FROM->TO	G14-057T 345.00 - SUNNYSIDE 345KV CKT 1	717	789	0.11699	114.8662	GEN505616 1-BROKEN BOW
FDNS	00NR	0	16WP	G15_057	FROM->TO	G14-057T 345.00 - SUNNYSIDE 345KV CKT 1	717	789	0.11721	114.8654	CLINTON JUNCTION - ELK CITY 138KV CKT 1
FDNS	00NR	0	16WP	G15_057	FROM->TO	G14-057T 345.00 - SUNNYSIDE 345KV CKT 1	717	789	0.11721	114.8654	CLINTON JUNCTION - ELK CITY 138KV CKT 1
FDNS	00NR	0	16WP	G15_057	FROM->TO	G14-057T 345.00 - SUNNYSIDE 345KV CKT 1	717	789	0.11679	114.8645	MCNAB REC - Turk 115 115KV CKT 1
FDNS	00NR	0	16WP	G15_057	FROM->TO	G14-057T 345.00 - SUNNYSIDE 345KV CKT 1	717	789	0.11679	114.8645	TURK (TURK 1) 138/115/13.2KV TRANSFORMER CKT 1
FDNS	00NR	0	16WP	G15_057	FROM->TO	G14-057T 345.00 - SUNNYSIDE 345KV CKT 1	717	789	0.11679	114.8645	TURK (TURK 1) 138/115/13.2KV TRANSFORMER CKT 1
FDNS	00NR	0	16WP	G15_057	FROM->TO	G14-057T 345.00 - SUNNYSIDE 345KV CKT 1	717	789	0.11763	114.86	NORTH 29TH CHICKASHA - VERDEN 138KV CKT 1
FDNS	00NR	0	16WP	G15_057	FROM->TO	G14-057T 345.00 - SUNNYSIDE 345KV CKT 1	717	789	0.11717	114.8591	G14_001T 345.00 - WICHITA 345KV CKT 1
FDNS	00NR	0	16WP	G15_057	FROM->TO	G14-057T 345.00 - SUNNYSIDE 345KV CKT 1	717	789	0.11699	114.8585	LEWIS CREEK SWITCHYARD 138/22.0KV TRANSFORMER CKT 1
FDNS	00NR	0	16WP	G15_057	FROM->TO	G14-057T 345.00 - SUNNYSIDE 345KV CKT 1	717	789	0.11722	114.8545	OMPA-WALTERS - WALTERS 69KV CKT 1
FDNS	00NR	0	16WP	G15_057	FROM->TO	G14-057T 345.00 - SUNNYSIDE 345KV CKT 1	717	789	0.11722	114.8545	OMPA-WALTERS - WALTERS 69KV CKT 1
FDNS	00NR	0	16WP	G15_057	FROM->TO	G14-057T 345.00 - SUNNYSIDE 345KV CKT 1	717	789	0.11721	114.8545	G13-010T 345.00 - POST ROCK 345KV CKT 1
FDNS	00NR	0	16WP	G15_057	FROM->TO	G14-057T 345.00 - SUNNYSIDE 345KV CKT 1	717	789	0.11688	114.8539	COUCH SES - MC NIEL 115KV CKT 1

SOLUTION	GROUP	SCENARIO	SEASON	SOURCE	DIRECTION	MONITORED ELEMENT	RATEA (MVA)	RATEB(MVA)	TDF	TC%LOADING (% MVA)	CONTINGENCY
FDNS	00NR	0	16WP	G15_057	FROM->TO	G14-057T 345.00 - SUNNYSIDE 345KV CKT 1	717	789	0.11699	114.8536	LEWIS CREEK SWITCHYARD 138/22.0KV TRANSFORMER CKT 1
FDNS	00NR	0	16WP	G15_057	FROM->TO	G14-057T 345.00 - SUNNYSIDE 345KV CKT 1	717	789	0.11708	114.8433	EMPORIA ENERGY CENTER - SWISSVALE 345KV CKT 1
FDNS	00NR	0	16WP	G15_057	FROM->TO	G14-057T 345.00 - SUNNYSIDE 345KV CKT 1	717	789	0.11733	114.8397	P12:69:WFEC-AEPW:COMANCH2:WALTRS-2
FDNS	00NR	0	16WP	G15_057	FROM->TO	G14-057T 345.00 - SUNNYSIDE 345KV CKT 1	717	789	0.11699	114.8396	GEN501970 1-EVANGELINE UNIT 7
FDNS	00NR	0	16WP	G15_057	FROM->TO	G14-057T 345.00 - SUNNYSIDE 345KV CKT 1	717	789	0.11689	114.835	MORISNT4 138.00 - STILLWATER 138KV CKT 1
FDNS	00NR	0	16WP	G15_057	FROM->TO	G14-057T 345.00 - SUNNYSIDE 345KV CKT 1	717	789	0.11683	114.8336	CLAYTON - SARDIS 138KV CKT 1
FDNS	00NR	0	16WP	G15_057	FROM->TO	G14-057T 345.00 - SUNNYSIDE 345KV CKT 1	717	789	0.11691	114.8296	P12:138:OKGE:3TERM2
FDNS	00NR	0	16WP	G15_057	FROM->TO	G14-057T 345.00 - SUNNYSIDE 345KV CKT 1	717	789	0.11786	114.8285	HINTON - REDROCKRD4 138.00 138KV CKT 1
FDNS	00NR	0	16WP	G15_057	FROM->TO	G14-057T 345.00 - SUNNYSIDE 345KV CKT 1	717	789	0.11699	114.8271	GEN334392 1-EXXON MOBIL IPP 1
FDNS	00NR	0	16WP	G15_057	FROM->TO	G14-057T 345.00 - SUNNYSIDE 345KV CKT 1	717	789	0.11768	114.826	CORNVILLE - NORGE ROAD 138KV CKT 1
FDNS	00NR	0	16WP	G15_057	FROM->TO	G14-057T 345.00 - SUNNYSIDE 345KV CKT 1	717	789	0.11768	114.826	CORNVILLE - NORGE ROAD 138KV CKT 1
FDNS	00NR	0	16WP	G15_057	FROM->TO	G14-057T 345.00 - SUNNYSIDE 345KV CKT 1	717	789	0.11896	114.822	LASALLE - STONEWAL LH138.00 138KV CKT 1
FDNS	00NR	0	16WP	G15_057	FROM->TO	G14-057T 345.00 - SUNNYSIDE 345KV CKT 1	717	789	0.11699	114.8203	GEN334393 1-EXXON MOBIL IPP 2
FDNS	00NR	0	16WP	G15_057	FROM->TO	G14-057T 345.00 - SUNNYSIDE 345KV CKT 1	717	789	0.11699	114.8203	GEN334394 1-EXXON MOBIL IPP 3
FDNS	00NR	0	16WP	G15_057	FROM->TO	G14-057T 345.00 - SUNNYSIDE 345KV CKT 1	717	789	0.11709	114.8155	P12:138:OKGE:3TERM12
FDNS	00NR	0	16WP	G15_057	FROM->TO	G14-057T 345.00 - SUNNYSIDE 345KV CKT 1	717	789	0.11699	114.812	GEN336222 1-LITTLE GYPSY UNIT#2
FDNS	00NR	0	16WP	G15_057	FROM->TO	G14-057T 345.00 - SUNNYSIDE 345KV CKT 1	717	789	0.11896	114.807	STONEWAL LH138.00 - TUPELO TAP 138KV CKT 1
FDNS	00NR	0	16WP	G15_057	FROM->TO	G14-057T 345.00 - SUNNYSIDE 345KV CKT 1	717	789	0.11683	114.8059	P12:138:AEPW-SWPA:LONEOAK4:BRKNBW4
FDNS	00NR	0	16WP	G15_057	FROM->TO	G14-057T 345.00 - SUNNYSIDE 345KV CKT 1	717	789	0.11714	114.803	FLETCHER - MARLOW JCT 69KV CKT 1
FDNS	00NR	0	20WP	G15_057	FROM->TO	G14-057T 345.00 - SUNNYSIDE 345KV CKT 1	717	789	0.11665	114.7966	GEN335831 1-RIVERBEND UNIT#1
FDNS	00NR	0	16WP	G15_057	FROM->TO	G14-057T 345.00 - SUNNYSIDE 345KV CKT 1	717	789	0.11702	114.7955	7JASPER 345.00 - MORGAN 345KV CKT 1
FDNS	00NR	0	16WP	G15_057	FROM->TO	G14-057T 345.00 - SUNNYSIDE 345KV CKT 1	717	789	0.117	114.7941	P12:138:AEPW:R.S.S-4:T.P.S.-4
FDNS	00NR	0	16WP	G15_057	FROM->TO	G14-057T 345.00 - SUNNYSIDE 345KV CKT 1	717	789	0.11699	114.7937	GEN506749 1-EASTMAN GENERATION A
FDNS	00NR	0	16WP	G15_057	FROM->TO	G14-057T 345.00 - SUNNYSIDE 345KV CKT 1	717	789	0.11683	114.792	CLAYTON - NASHOBA 138KV CKT 1
FDNS	00NR	0	16WP	G15_057	FROM->TO	G14-057T 345.00 - SUNNYSIDE 345KV CKT 1	717	789	0.118	114.7904	CLARKSVILLE - ONETA 345KV CKT 1
FDNS	00NR	0	16WP	G15_057	FROM->TO	G14-057T 345.00 - SUNNYSIDE 345KV CKT 1	717	789	0.118	114.7904	CLARKSVILLE - ONETA 345KV CKT 1
FDNS	00NR	0	16WP	G15_057	FROM->TO	G14-057T 345.00 - SUNNYSIDE 345KV CKT 1	717	789	0.11763	114.7904	CORNVILLE - NORTH 29TH CHICKASHA 138KV CKT 1
FDNS	00NR	0	16WP	G15_057	FROM->TO	G14-057T 345.00 - SUNNYSIDE 345KV CKT 1	717	789	0.11699	114.7901	GEN334431 1-SABINE UNIT 1
FDNS	00NR	0	16WP	G15_057	FROM->TO	G14-057T 345.00 - SUNNYSIDE 345KV CKT 1	717	789	0.11699	114.79	GEN334432 1-SABINE UNIT 2
FDNS	00NR	0	16WP	G15_057	FROM->TO	G14-057T 345.00 - SUNNYSIDE 345KV CKT 1	717	789	0.11728	114.785	FRANKLIN - FRANKLIN SW 138KV CKT 1
FDNS	00NR	0	16WP	G15_057	FROM->TO	G14-057T 345.00 - SUNNYSIDE 345KV CKT 1	717	789	0.1175	114.7845	WEATHERFORD SOUTHEAST - WEATHERFORD TAP 138KV CKT 1
FDNS	00NR	0	16WP	G15_057	FROM->TO	G14-057T 345.00 - SUNNYSIDE 345KV CKT 1	717	789	0.11699	114.7829	GEN501972 1-EVANGELINE UNIT 7-2
FDNS	00NR	0	16WP	G15_057	FROM->TO	G14-057T 345.00 - SUNNYSIDE 345KV CKT 1	717	789	0.11699	114.7828	GEN501971 1-EVANGELINE UNIT 7-1
FDNS	00NR	0	16WP	G15_057	FROM->TO	G14-057T 345.00 - SUNNYSIDE 345KV CKT 1	717	789	0.11699	114.7826	GEN336152 1-WATERFORD UNIT#2
FDNS	00NR	0	16WP	G15_057	FROM->TO	G14-057T 345.00 - SUNNYSIDE 345KV CKT 1	717	789	0.11699	114.7815	GEN336151 1-WATERFORD UNIT#1
FDNS	00NR	0	16WP	G15_057	FROM->TO	G14-057T 345.00 - SUNNYSIDE 345KV CKT 1	717	789	0.11683	114.779	BETHEL - NASHOBA 138KV CKT 1
FDNS	00NR	0	16WP	G15_057	FROM->TO	G14-057T 345.00 - SUNNYSIDE 345KV CKT 1	717	789	0.11699	114.7698	P12:138:AEPW:R.S.S.-4:R:96YALE-4
FDNS	00NR	0	20WP	G15_057	FROM->TO	G14-057T 345.00 - SUNNYSIDE 345KV CKT 1	717	789	0.12813	114.7697	ARCADIA - NORTHWEST 345KV CKT 1
FDNS	00NR	0	20WP	G15_057	FROM->TO	G14-057T 345.00 - SUNNYSIDE 345KV CKT 1	717	789	0.11665	114.7537	GRAND GULF 500/22.0KV TRANSFORMER CKT 1
FDNS	00NR	0	16WP	G15_057	FROM->TO	G14-057T 345.00 - SUNNYSIDE 345KV CKT 1	717	789	0.1194	114.7505	MARIETTA - MARIETTA4 138.00 138KV CKT 1
FDNS	00NR	0	16WP	G15_057	FROM->TO	G14-057T 345.00 - SUNNYSIDE 345KV CKT 1	717	789	0.11721	114.7347	Canadian Pump Station - REDROCKRD4 138.00 138KV CKT 1
FDNS	00NR	0	16WP	G15_057	FROM->TO	G14-057T 345.00 - SUNNYSIDE 345KV CKT 1	717	789	0.1175	114.73	CLINTON JUNCTION - CLINTON NATURAL GAS TAP 138KV CKT 1
FDNS	00NR	0	16WP	G15_057	FROM->TO	G14-057T 345.00 - SUNNYSIDE 345KV CKT 1	717	789	0.11719	114.7223	P12:138:OKGE:3TERM47
FDNS	00NR	0	16WP	G15_057	FROM->TO	G14-057T 345.00 - SUNNYSIDE 345KV CKT 1	717	789	0.12157	114.7209	CIMARRON - NORTHWEST 345KV CKT 1
FDNS	00NR	0	16WP	G15_057	FROM->TO	G14-057T 345.00 - SUNNYSIDE 345KV CKT 1	717	789	0.11734	114.7076	HAMMETT TAP - HORSESHOE LAKE 138KV CKT 1
FDNS	00NR	0	20WP	G15_057	FROM->TO	G14-057T 345.00 - SUNNYSIDE 345KV CKT 1	717	789	0.11638	114.7044	7SAREPTA% 345.00 - ELDORADO EHV 345KV CKT 1
FDNS	00NR	0	20WP	G15_057	FROM->TO	G14-057T 345.00 - SUNNYSIDE 345KV CKT 1	717	789	0.11638	114.7042	3TR3AR8EL7EL
FDNS	00NR	0	20WP	G15_057	FROM->TO	G14-057T 345.00 - SUNNYSIDE 345KV CKT 1	717	789	0.11638	114.6934	ELDORADO EHV 500/345KV TRANSFORMER CKT 1
FDNS	00NR	0	20WP	G15_057	FROM->TO	G14-057T 345.00 - SUNNYSIDE 345KV CKT 1	717	789	0.11798	114.6786	P12:138:AEPW:DUNCAN-4:L.E.S.-4
FDNS	00NR	0	16WP	G15_057	FROM->TO	G14-057T 345.00 - SUNNYSIDE 345KV CKT 1	717	789	0.11733	114.6677	COMANCHE - WALTERS 69KV CKT 1
FDNS	00NR	0	20WP	G15_057	FROM->TO	G14-057T 345.00 - SUNNYSIDE 345KV CKT 1	717	789	0.11665	114.608	GEN515577 1-ARBWND11 0.6900
FDNS	00NR	0	20WP	G15_057	FROM->TO	G14-057T 345.00 - SUNNYSIDE 345KV CKT 1	717	789	0.1162	114.5615	MATHWSN7 345.00 - TATONGA7 345.00 345KV CKT 1
FDNS	00NR	0	20WP	G15_057	FROM->TO	G14-057T 345.00 - SUNNYSIDE 345KV CKT 1	717	789	0.11798	114.5571	COMANCHE TAP - OMPA-DUNCAN 840 138KV CKT 1
FDNS	00NR	0	20WP	G15_057	FROM->TO	G14-057T 345.00 - SUNNYSIDE 345KV CKT 1	717	789	0.11914	114.5549	BRIDGECR 138.00 - TUTTLE 138KV CKT 1
FDNS	00NR	0	20WP	G15_057	FROM->TO	G14-057T 345.00 - SUNNYSIDE 345KV CKT 1	717	789	0.11039	114.5467	CANADIAN RIVER - MUSKOGEE 345KV CKT 1
FDNS	00NR	0	20WP	G15_057	FROM->TO	G14-057T 345.00 - SUNNYSIDE 345KV CKT 1	717	789	0.11665	114.4684	GEN509409 1-WILKES #3
FDNS	00NR	0	20WP	G15_057	FROM->TO	G14-057T 345.00 - SUNNYSIDE 345KV CKT 1	717	789	0.11805	114.4388	Hitchland Interchange - WALKTAP7 345.00 345KV CKT 1
FDNS	00NR	0	20WP	G15_057	FROM->TO	G14-057T 345.00 - SUNNYSIDE 345KV CKT 1	717	789	0.11805	114.4388	Hitchland Interchange - WALKTAP7 345.00 345KV CKT 1
FDNS	00NR	0	20WP	G15_057	FROM->TO	G14-057T 345.00 - SUNNYSIDE 345KV CKT 1	717	789	0.11905	114.4317	HEALDTON - LOCO 138KV CKT 1
FDNS	00NR	0	20WP	G15_057	FROM->TO	G14-057T 345.00 - SUNNYSIDE 345KV CKT 1	717	789	0.11726	114.4268	ARCADIA - SEMINOLE 345KV CKT 1
FDNS	00NR	0	20WP	G15_057	FROM->TO	G14-057T 345.00 - SUNNYSIDE 345KV CKT 1	717	789	0.11805	114.4189	P12:345:SPS:J07.1.FINN.HITCH
FDNS	00NR	0	20WP	G15_057	FROM->TO	G14-057T 345.00 - SUNNYSIDE 345KV CKT 1	717	789	0.11665	114.4089	GEN501813 1-RODEMACHER UNIT 3
FDNS	00NR	0	20WP	G15_057	FROM->TO	G14-057T 345.00 - SUNNYSIDE 345KV CKT 1	717	789	0.11665	114.3121	GEN300006 1-NEW MADRID UNIT 1
FDNS	00NR	0	20WP	G15_057	FROM->TO	G14-057T 345.00 - SUNNYSIDE 345KV CKT 1	717	789	0.11665	114.2922	GEN300007 1-NEW MADRID UNIT 2
FDNS	00NR	0	20WP	G15_057	FROM->TO	G14-057T 345.00 - SUNNYSIDE 345KV CKT 1	717	789	0.11905	114.2876	HEALDTON - RINGLING 138KV CKT 1
FDNS	00NR	0	20WP	G15_057	FROM->TO	G14-057T 345.00 - SUNNYSIDE 345KV CKT 1	717	789	0.11682	114.2757	LACYGNE - WAVERLY7 345.00 345KV CKT 1
FDNS	00NR	0	20WP	G15_057	FROM->TO	G14-057T 345.00 - SUNNYSIDE 345KV CKT 1	717	789	0.11798	114.2686	DUNCAN - OMPA-DUNCAN 840 138KV CKT 1
FDNS	00NR	0	20WP	G15_057	FROM->TO	G14-057T 345.00 - SUNNYSIDE 345KV CKT 1	717	789	0.11798	114.2686	DUNCAN - OMPA-DUNCAN 840 138KV CKT 1
FDNS	00NR	0	20WP	G15_057	FROM->TO	G14-057T 345.00 - SUNNYSIDE 345KV CKT 1	717	789	0.11914	114.2678	P12:138:WFEC:MSL01
FDNS	00NR	0	16WP	G15_057	FROM->TO	G14-057T 345.00 - SUNNYSIDE 345KV CKT 1	717	789	0.11699	114.2581	803-OKLAUNION
FDNS	00NR	0	20WP	G15_057	FROM->TO	G14-057T 345.00 - SUNNYSIDE 345KV CKT 1	717	789	0.11914	114.2563	BRIDGECR 138.00 - SUNSHINE CANYON 138KV CKT 1
FDNS	00NR	0	20WP	G15_057	FROM->TO	G14-057T 345.00 - SUNNYSIDE 345KV CKT 1	717	789	0.11665	114.1972	GEN335206 1-NELSON UNIT 6
FDNS	00NR	0	20WP	G15_057	FROM->TO	G14-057T 345.00 - SUNNYSIDE 345KV CKT 1	717	789	0.11682	114.1543	WAVERLY7 345.00 - WOLF CREEK 345KV CKT 1
FDNS	00NR	0	20WP	G15_057	FROM->TO	G14-057T 345.00 - SUNNYSIDE 345KV CKT 1	717	789	0.11665	114.1257	GEN520947 1-HUGO1
FDNS	00NR	0	20WP	G15_057	FROM->TO	G14-057T 345.00 - SUNNYSIDE 345KV CKT 1	717	789	0.11905	114.1171	RINGLING - SOUTH WILSON 138KV CKT 1
FDNS	00NR	0	16WP	G15_057	FROM->TO	G14-057T 345.00 - SUNNYSIDE 345KV CKT 1	717	789	0.11538	114.0994	P12:138:OKGE:3TERM39
FDNS	00NR	0	20WP	G15_057	FROM->TO	G14-057T 345.00 - SUNNYSIDE 345KV CKT 1	717	789	0.1162	114.0411	G11_051T 345.00 - TATONGA7 345.00 345KV CKT 1
FDNS	00NR	0	20WP	G15_057	FROM->TO	G14-057T 345.00 - SUNNYSIDE 345KV CKT 1	717	789	0.11653	114.0258	ELDORADO EHV - MOUNT OLIVE 500KV CKT 1
FDNS	00NR	0	20WP	G15_057	FROM->TO	G14-057T 345.00 - SUNNYSIDE 345KV CKT 1	717	789	0.11665	114.0121	GEN501812 1-RODEMACHER UNIT 2

SOLUTION	GROUP	SCENARIO	SEASON	SOURCE	DIRECTION	MONITORED ELEMENT	RATEA (MVA)	RATEB(MVA)	TDF	TC%LOADING (% MVA)	CONTINGENCY
FDNS	00NR	0	20WP	G15_057	FROM->TO	G14-057T 345.00 - SUNNYSIDE 345KV CKT 1	717	789	0.11666	114.0071	P12:138:AEPW:SHERID4:112GORE4
FDNS	00NR	0	20WP	G15_057	FROM->TO	G14-057T 345.00 - SUNNYSIDE 345KV CKT 1	717	789	0.11665	114.0013	DOLET HILLS 345/24.0KV TRANSFORMER CKT 1
FDNS	00NR	0	20WP	G15_057	FROM->TO	G14-057T 345.00 - SUNNYSIDE 345KV CKT 1	717	789	0.11735	113.9961	THISTLE7 345.00 - WOODWARD DISTRICT EHV 345KV CKT 1
FDNS	00NR	0	20WP	G15_057	FROM->TO	G14-057T 345.00 - SUNNYSIDE 345KV CKT 1	717	789	0.11735	113.9961	THISTLE7 345.00 - WOODWARD DISTRICT EHV 345KV CKT 1
FDNS	00NR	0	20WP	G15_057	FROM->TO	G14-057T 345.00 - SUNNYSIDE 345KV CKT 1	717	789	0.11735	113.9961	THISTLE7 345.00 - WOODWARD DISTRICT EHV 345KV CKT 2
FDNS	00NR	0	20WP	G15_057	FROM->TO	G14-057T 345.00 - SUNNYSIDE 345KV CKT 1	717	789	0.11735	113.9961	THISTLE7 345.00 - WOODWARD DISTRICT EHV 345KV CKT 2
FDNS	00NR	0	20WP	G15_057	FROM->TO	G14-057T 345.00 - SUNNYSIDE 345KV CKT 1	717	789	0.11541	113.9283	PARK LANE - SEMINOLE 138KV CKT 1
FDNS	00NR	0	20WP	G15_057	FROM->TO	G14-057T 345.00 - SUNNYSIDE 345KV CKT 1	717	789	0.1166	113.8762	WEBRE - WELLS 500KV CKT 1
FDNS	00NR	0	20WP	G15_057	FROM->TO	G14-057T 345.00 - SUNNYSIDE 345KV CKT 1	717	789	0.11665	113.875	GEN515564 1-ORIGIN11 0.6900
FDNS	00NR	0	20WP	G15_057	FROM->TO	G14-057T 345.00 - SUNNYSIDE 345KV CKT 1	717	789	0.11665	113.875	GEN515565 1-ORIGIN21 0.6900
FDNS	00NR	0	16WP	G15_057	FROM->TO	G14-057T 345.00 - SUNNYSIDE 345KV CKT 1	717	789	0.11586	113.8718	MAYSVILLE - MAYSVLT4 138.00 138KV CKT 1
FDNS	00NR	0	16WP	G15_057	FROM->TO	G14-057T 345.00 - SUNNYSIDE 345KV CKT 1	717	789	0.11743	113.8663	DRAPER LAKE - MIDWEST TAP 138KV CKT 1
FDNS	00NR	0	16WP	G15_057	FROM->TO	G14-057T 345.00 - SUNNYSIDE 345KV CKT 1	717	789	0.11708	113.8628	GLASSES - MADILL INDUSTRIAL TAP 138KV CKT 1
FDNS	00NR	0	20WP	G15_057	FROM->TO	G14-057T 345.00 - SUNNYSIDE 345KV CKT 1	717	789	0.11665	113.8527	GEN334440 1-SABINE UNIT 4
FDNS	00NR	0	16WP	G15_057	FROM->TO	G14-057T 345.00 - SUNNYSIDE 345KV CKT 1	717	789	0.11809	113.8517	CIMARRON - MATHWSN7 345.00 345KV CKT 1
FDNS	00NR	0	16WP	G15_057	FROM->TO	G14-057T 345.00 - SUNNYSIDE 345KV CKT 1	717	789	0.11809	113.8517	CIMARRON - MATHWSN7 345.00 345KV CKT 2
FDNS	00NR	0	16WP	G15_057	FROM->TO	G14-057T 345.00 - SUNNYSIDE 345KV CKT 1	717	789	0.11699	113.8451	GEN562691 1-G15_015_3 0.6900
FDNS	00NR	0	16WP	G15_057	FROM->TO	G14-057T 345.00 - SUNNYSIDE 345KV CKT 1	717	789	0.11699	113.8449	GEN562772 1-G15034_3 0.6900
FDNS	00NR	0	16WP	G15_057	FROM->TO	G14-057T 345.00 - SUNNYSIDE 345KV CKT 1	717	789	0.11747	113.8438	P12:138:OKGE:3TERM21
FDNS	00NR	0	16WP	G15_057	FROM->TO	G14-057T 345.00 - SUNNYSIDE 345KV CKT 1	717	789	0.11692	113.8375	HUGO (HUGO 1) 345/138/13.8KV TRANSFORMER CKT 1
FDNS	00NR	0	20WP	G15_057	FROM->TO	G14-057T 345.00 - SUNNYSIDE 345KV CKT 1	717	789	0.11711	113.8344	CANEYRV7 345.00 - NEOSHO 345KV CKT 1
FDNS	00NR	0	20WP	G15_057	FROM->TO	G14-057T 345.00 - SUNNYSIDE 345KV CKT 1	717	789	0.11905	113.8289	MARIETTA - SOUTH WILSON 138KV CKT 1
FDNS	00NR	0	20WP	G15_057	FROM->TO	G14-057T 345.00 - SUNNYSIDE 345KV CKT 1	717	789	0.11665	113.8232	GEN590011 2-ERCOT EQUIVALENCE
FDNS	00NR	0	16WP	G15_057	FROM->TO	G14-057T 345.00 - SUNNYSIDE 345KV CKT 1	717	789	0.11699	113.8171	GEN521103 1-BLUE CANYON WIND FARM
FDNS	00NR	0	16WP	G15_057	FROM->TO	G14-057T 345.00 - SUNNYSIDE 345KV CKT 1	717	789	0.11699	113.8166	GEN520812 1-ANADRK5
FDNS	00NR	0	16WP	G15_057	FROM->TO	G14-057T 345.00 - SUNNYSIDE 345KV CKT 1	717	789	0.11699	113.8165	GEN520813 1-ANADRK6
FDNS	00NR	0	16WP	G15_057	FROM->TO	G14-057T 345.00 - SUNNYSIDE 345KV CKT 1	717	789	0.11586	113.8102	MAYSVLT4 138.00 - PRAIRIE POINT 138KV CKT 1
FDNS	00NR	0	16WP	G15_057	FROM->TO	G14-057T 345.00 - SUNNYSIDE 345KV CKT 1	717	789	0.11708	113.8033	GLASSES - RUSSETT 138KV CKT 1
FDNS	00NR	0	20WP	G15_057	FROM->TO	G14-057T 345.00 - SUNNYSIDE 345KV CKT 1	717	789	0.11665	113.7939	DELL 500 - ESSEX UNIT 2 500KV CKT Z1
FDNS	00NR	0	20WP	G15_057	FROM->TO	G14-057T 345.00 - SUNNYSIDE 345KV CKT 1	717	789	0.11665	113.7926	P12:161:AEPW:DYESS 5:HYLAND 5
FDNS	00NR	0	16WP	G15_057	FROM->TO	G14-057T 345.00 - SUNNYSIDE 345KV CKT 1	717	789	0.1161	113.785	ARBUCKLE - SULPHR 4 138.00 138KV CKT 1
FDNS	00NR	0	20WP	G15_057	FROM->TO	G14-057T 345.00 - SUNNYSIDE 345KV CKT 1	717	789	0.11773	113.7845	REDBUD - RIVERSIDE STATION 345KV CKT 1
FDNS	00NR	0	20WP	G15_057	FROM->TO	G14-057T 345.00 - SUNNYSIDE 345KV CKT 1	717	789	0.11773	113.7845	REDBUD - RIVERSIDE STATION 345KV CKT 1
FDNS	00NR	0	16WP	G15_057	FROM->TO	G14-057T 345.00 - SUNNYSIDE 345KV CKT 1	717	789	0.11697	113.7802	P12:138:WFEC:MSL11
FDNS	00NR	0	16WP	G15_057	FROM->TO	G14-057T 345.00 - SUNNYSIDE 345KV CKT 1	717	789	0.11697	113.7802	P12:138:WFEC-AEPW:PHAROAH4:LONEOAK4
FDNS	00NR	0	16WP	G15_057	FROM->TO	G14-057T 345.00 - SUNNYSIDE 345KV CKT 1	717	789	0.11708	113.7755	CANEY CREEK - JOHNSON COUNTY 138KV CKT 1
FDNS	00NR	0	16WP	G15_057	FROM->TO	G14-057T 345.00 - SUNNYSIDE 345KV CKT 1	717	789	0.11699	113.7736	GEN511961 1-DEMPSEY-WTG10.7000
FDNS	00NR	0	16WP	G15_057	FROM->TO	G14-057T 345.00 - SUNNYSIDE 345KV CKT 1	717	789	0.11699	113.758	P12:069:OKGE:3TERM42
FDNS	00NR	0	20WP	G15_057	FROM->TO	G14-057T 345.00 - SUNNYSIDE 345KV CKT 1	717	789	0.11665	113.7534	GEN590010 1-ERCOT EQUIVALENCE
FDNS	00NR	0	20WP	G15_057	FROM->TO	G14-057T 345.00 - SUNNYSIDE 345KV CKT 1	717	789	0.11665	113.7453	P12:69:AEPW:L.E.S.-2:LAW WC2
FDNS	00NR	0	20WP	G15_057	FROM->TO	G14-057T 345.00 - SUNNYSIDE 345KV CKT 1	717	789	0.11731	113.7442	LAWTON EASTSIDE (LES 5) 345/138/13.8KV TRANSFORMER CKT 2
FDNS	00NR	0	20WP	G15_057	FROM->TO	G14-057T 345.00 - SUNNYSIDE 345KV CKT 1	717	789	0.11731	113.7442	LAWTON EASTSIDE (LES 5) 345/138/13.8KV TRANSFORMER CKT 2
FDNS	00NR	0	16WP	G15_057	FROM->TO	G14-057T 345.00 - SUNNYSIDE 345KV CKT 1	717	789	0.11699	113.7348	GEN629070 2-BEAVER CHANNEL GENERATORFOR UNIT NO 2
FDNS	00NR	0	16WP	G15_057	FROM->TO	G14-057T 345.00 - SUNNYSIDE 345KV CKT 1	717	789	0.11701	113.7272	GRPRAR1-LNX3345.00 - HOLT.CO3 345.00 345KV CKT 1
FDNS	00NR	0	20WP	G15_057	FROM->TO	G14-057T 345.00 - SUNNYSIDE 345KV CKT 1	717	789	0.11905	113.7272	P12:138:WFEC:MSL17
FDNS	00NR	0	16WP	G15_057	FROM->TO	G14-057T 345.00 - SUNNYSIDE 345KV CKT 1	717	789	0.11699	113.7271	GEN515443 1-MNCOWND1 0.7000
FDNS	00NR	0	16WP	G15_057	FROM->TO	G14-057T 345.00 - SUNNYSIDE 345KV CKT 1	717	789	0.11701	113.7234	GRPRAR1-LNX3345.00 - GRPRAR 345KV CKT Z
FDNS	00NR	0	20WP	G15_057	FROM->TO	G14-057T 345.00 - SUNNYSIDE 345KV CKT 1	717	789	0.1175	113.7227	P12:138:WFEC:MSL02
FDNS	00NR	0	16WP	G15_057	FROM->TO	G14-057T 345.00 - SUNNYSIDE 345KV CKT 1	717	789	0.11728	113.7218	P12:138:WFEC:MSL08
FDNS	00NR	0	16WP	G15_057	FROM->TO	G14-057T 345.00 - SUNNYSIDE 345KV CKT 1	717	789	0.11699	113.7183	GEN615021 1-GRE-ER 14G 16.000
FDNS	00NR	0	16WP	G15_057	FROM->TO	G14-057T 345.00 - SUNNYSIDE 345KV CKT 1	717	789	0.11699	113.7147	GEN562902 1-G15052_3 0.6900
FDNS	00NR	0	16WP	G15_057	FROM->TO	G14-057T 345.00 - SUNNYSIDE 345KV CKT 1	717	789	0.11586	113.7129	PRAIRIE POINT - RATLIFF 138KV CKT 1
FDNS	00NR	0	16WP	G15_057	FROM->TO	G14-057T 345.00 - SUNNYSIDE 345KV CKT 1	717	789	0.11687	113.7093	CARTER - CHICKASAW 138KV CKT 1
FDNS	00NR	0	16WP	G15_057	FROM->TO	G14-057T 345.00 - SUNNYSIDE 345KV CKT 1	717	789	0.11699	113.7078	GEN563242 1-G15090_3 0.6900
FDNS	00NR	0	16WP	G15_057	FROM->TO	G14-057T 345.00 - SUNNYSIDE 345KV CKT 1	717	789	0.11699	113.7066	GEN560183 1-REDHIL-WTG1 12.000
FDNS	00NR	0	16WP	G15_057	FROM->TO	G14-057T 345.00 - SUNNYSIDE 345KV CKT 1	717	789	0.11699	113.7049	GEN629071 1-BURLINGTON GENERATOR FOR UNIT NO 1 E
FDNS	00NR	0	16WP	G15_057	FROM->TO	G14-057T 345.00 - SUNNYSIDE 345KV CKT 1	717	789	0.11712	113.7009	CANADIAN RIVER - MCALESTER SOUTH 138KV CKT 1
FDNS	00NR	0	16WP	G15_057	FROM->TO	G14-057T 345.00 - SUNNYSIDE 345KV CKT 1	717	789	0.11712	113.7009	CANADIAN RIVER - MCALESTER SOUTH 138KV CKT 1
FDNS	00NR	0	16WP	G15_057	FROM->TO	G14-057T 345.00 - SUNNYSIDE 345KV CKT 1	717	789	0.11712	113.6996	CANADIAN RIVER () 345/138/13.8KV TRANSFORMER CKT 1
FDNS	00NR	0	16WP	G15_057	FROM->TO	G14-057T 345.00 - SUNNYSIDE 345KV CKT 1	717	789	0.11712	113.6996	CANADIAN RIVER () 345/138/13.8KV TRANSFORMER CKT 1
FDNS	00NR	0	16WP	G15_057	FROM->TO	G14-057T 345.00 - SUNNYSIDE 345KV CKT 1	717	789	0.11928	113.6995	NORTHWEST - SPRING CREEK 345KV CKT 1
FDNS	00NR	0	16WP	G15_057	FROM->TO	G14-057T 345.00 - SUNNYSIDE 345KV CKT 1	717	789	0.11824	113.6963	MOREWOOD SW - NINE MILE 138KV CKT 1
FDNS	00NR	0	16WP	G15_057	FROM->TO	G14-057T 345.00 - SUNNYSIDE 345KV CKT 1	717	789	0.1166	113.6922	ROCKY POINT - SPRINGDALE 138KV CKT 1
FDNS	00NR	0	16WP	G15_057	FROM->TO	G14-057T 345.00 - SUNNYSIDE 345KV CKT 1	717	789	0.11928	113.6897	SOONER - SPRING CREEK 345KV CKT 1
FDNS	00NR	0	20WP	G15_057	FROM->TO	G14-057T 345.00 - SUNNYSIDE 345KV CKT 1	717	789	0.11711	113.687	CANEYRV7 345.00 - LATHAMS7 345.00 345KV CKT 1
FDNS	00NR	0	16WP	G15_057	FROM->TO	G14-057T 345.00 - SUNNYSIDE 345KV CKT 1	717	789	0.11699	113.679	INDEPENDENCE 500/26.0KV TRANSFORMER CKT 1
FDNS	00NR	0	16WP	G15_057	FROM->TO	G14-057T 345.00 - SUNNYSIDE 345KV CKT 1	717	789	0.11699	113.6766	BURLINGTON NO1 + NO 2 + NO 3 161/20.0KV TRANSFORMER CKT 1
FDNS	00NR	0	20WP	G15_057	FROM->TO	G14-057T 345.00 - SUNNYSIDE 345KV CKT 1	717	789	0.11665	113.676	GEN509408 1-WILKES #2
FDNS	00NR	0	16WP	G15_057	FROM->TO	G14-057T 345.00 - SUNNYSIDE 345KV CKT 1	717	789	0.11704	113.6747	ALTUS JUNCTION - RUSSELL 138KV CKT 1
FDNS	00NR	0	16WP	G15_057	FROM->TO	G14-057T 345.00 - SUNNYSIDE 345KV CKT 1	717	789	0.11704	113.6747	ALTUS JUNCTION - RUSSELL 138KV CKT 1
FDNS	00NR	0	16WP	G15_057	FROM->TO	G14-057T 345.00 - SUNNYSIDE 345KV CKT 1	717	789	0.1169	113.6724	NORTHWEST TEXARKANA - WELSH 345KV CKT 1
FDNS	00NR	0	16WP	G15_057	FROM->TO	G14-057T 345.00 - SUNNYSIDE 345KV CKT 1	717	789	0.1169	113.6724	NORTHWEST TEXARKANA - WELSH 345KV CKT 1
FDNS	00NR	0	16WP	G15_057	FROM->TO	G14-057T 345.00 - SUNNYSIDE 345KV CKT 1	717	789	0.11699	113.6705	GEN514805 1-SOONER UNIT 1
FDNS	00NR	0	16WP	G15_057	FROM->TO	G14-057T 345.00 - SUNNYSIDE 345KV CKT 1	717	789	0.11699	113.6637	GEN514806 1-SOONER UNIT 2
FDNS	00NR	0	20WP	G15_057	FROM->TO	G14-057T 345.00 - SUNNYSIDE 345KV CKT 1	717	789	0.11716	113.6598	PAOLI - PAYNE 138.00 138KV CKT 1
FDNS	00NR	0	20WP	G15_057	FROM->TO	G14-057T 345.00 - SUNNYSIDE 345KV CKT 1	717	789	0.11641	113.6598	ELDORADO EHV - SHERIDAN EHV 500KV CKT 1
FDNS	00NR	0	16WP	G15_057	FROM->TO	G14-057T 345.00 - SUNNYSIDE 345KV CKT 1	717	789	0.11707	113.6579	KEO EHV - WEST MEMPHIS 500 500KV CKT 1
FDNS	00NR	0	16WP	G15_057	FROM->TO	G14-057T 345.00 - SUNNYSIDE 345KV CKT 1	717	789	0.11719	113.6508	CHAMBER SPRINGS - CLARKSVILLE 345KV CKT 1
FDNS	00NR	0	20WP	G15_057	FROM->TO	G14-057T 345.00 - SUNNYSIDE 345KV CKT 1	717	789	0.11665	113.6501	GEN506754 1-LEBROCK STEAM 1

SOLUTION	GROUP	SCENARIO	SEASON	SOURCE	DIRECTION	MONITORED ELEMENT	RATEA (MVA)	RATEB(MVA)	TDF	TC%LOADING (% MVA)	CONTINGENCY
FDNS	00NR	0	16WP	G15_057	FROM->TO	G14-057T 345.00 - SUNNYSIDE 345KV CKT 1	717	789	0.11699	113.6474	GEN562078 1-G11_051_3 0.6900
FDNS	00NR	0	20WP	G15_057	FROM->TO	G14-057T 345.00 - SUNNYSIDE 345KV CKT 1	717	789	0.11731	113.6428	ANADARKO - GEORGIA 138KV CKT 1
FDNS	00NR	0	16WP	G15_057	FROM->TO	G14-057T 345.00 - SUNNYSIDE 345KV CKT 1	717	789	0.11699	113.6379	P12:230:UMZB:# 112 #: NU IN SD. NU-RCDC & DRY CREEK XFMR
FDNS	00NR	0	16WP	G15_057	FROM->TO	G14-057T 345.00 - SUNNYSIDE 345KV CKT 1	717	789	0.11699	113.6365	RCDC EAST 4230.00 - RED CEDAR DC 230KV CKT 1
FDNS	00NR	0	16WP	G15_057	FROM->TO	G14-057T 345.00 - SUNNYSIDE 345KV CKT 1	717	789	0.1161	113.6334	JOLLYVILLE - SULPHR 4 138.00 138KV CKT 1
FDNS	00NR	0	16WP	G15_057	FROM->TO	G14-057T 345.00 - SUNNYSIDE 345KV CKT 1	717	789	0.11699	113.6189	GEN562802 1-G15039_3 0.3570
FDNS	00NR	0	20WP	G15_057	FROM->TO	G14-057T 345.00 - SUNNYSIDE 345KV CKT 1	717	789	0.11666	113.6137	P12:138:AEPW:112GORE4:L.E.S.-4
FDNS	00NR	0	16WP	G15_057	FROM->TO	G14-057T 345.00 - SUNNYSIDE 345KV CKT 1	717	789	0.11699	113.6124	GEN524285 1-WILDORADO WIND GEN
FDNS	00NR	0	20WP	G15_057	FROM->TO	G14-057T 345.00 - SUNNYSIDE 345KV CKT 1	717	789	0.11863	113.6016	CIVIT - PAOLI 138KV CKT 1
FDNS	00NR	0	20WP	G15_057	FROM->TO	G14-057T 345.00 - SUNNYSIDE 345KV CKT 1	717	789	0.11847	113.5945	MATHWSN7 345.00 - NORTHWEST 345KV CKT 1
FDNS	00NR	0	16WP	G15_057	FROM->TO	G14-057T 345.00 - SUNNYSIDE 345KV CKT 1	717	789	0.11699	113.5926	GEN524295 1-SPNSPUR_WND10.6900
FDNS	00NR	0	16WP	G15_057	FROM->TO	G14-057T 345.00 - SUNNYSIDE 345KV CKT 1	717	789	0.11699	113.5923	GEN562587 1-G14_056_3 0.6900
FDNS	00NR	0	16WP	G15_057	FROM->TO	G14-057T 345.00 - SUNNYSIDE 345KV CKT 1	717	789	0.11699	113.5856	GEN560331 1-G10-46 13.800
FDNS	00NR	0	16WP	G15_057	FROM->TO	G14-057T 345.00 - SUNNYSIDE 345KV CKT 1	717	789	0.11627	113.5745	ARKANSAS NUCLEAR ONE - FT SMITH 500KV CKT 1
FDNS	00NR	0	16WP	G15_057	FROM->TO	G14-057T 345.00 - SUNNYSIDE 345KV CKT 1	717	789	0.11627	113.5745	ARKANSAS NUCLEAR ONE - FT SMITH 500KV CKT 1
FDNSLock	00NR	0	16WP	G15_057	FROM->TO	G14-057T 345.00 - SUNNYSIDE 345KV CKT 1	717	789	0.11699	113.5733	GEN629072 4-LANSING GENERATOR FOR UNITS NO4 EIA CODE 1
FDNS	00NR	0	20WP	G15_057	FROM->TO	G14-057T 345.00 - SUNNYSIDE 345KV CKT 1	717	789	0.11665	113.5691	GEN336252 1-NINEMILE POINT UNIT#5
FDNS	00NR	0	16WP	G15_057	FROM->TO	G14-057T 345.00 - SUNNYSIDE 345KV CKT 1	717	789	0.1161	113.5649	JOLLYVILLE - KERR MCGEE CIMARRON 138KV CKT 1
FDNS	00NR	0	16WP	G15_057	FROM->TO	G14-057T 345.00 - SUNNYSIDE 345KV CKT 1	717	789	0.11699	113.5641	GEN562882 1-G15047_3 0.6900
FDNS	00NR	0	16WP	G15_057	FROM->TO	G14-057T 345.00 - SUNNYSIDE 345KV CKT 1	717	789	0.11824	113.5619	BEARCAT 138.00 - NINE MILE 138KV CKT 1
FDNS	00NR	0	16WP	G15_057	FROM->TO	G14-057T 345.00 - SUNNYSIDE 345KV CKT 1	717	789	0.11699	113.555	GEN562269 1-G12-020-1 0.6900
FDNS	00NR	0	16WP	G15_057	FROM->TO	G14-057T 345.00 - SUNNYSIDE 345KV CKT 1	717	789	0.11699	113.5529	GEN657749 1-YOUNG 1 GENERATOR
FDNS	00NR	0	20WP	G15_057	FROM->TO	G14-057T 345.00 - SUNNYSIDE 345KV CKT 1	717	789	0.11731	113.5467	FLETCHER - GEORGIA 138KV CKT 1
FDNS	00NR	0	20WP	G15_057	FROM->TO	G14-057T 345.00 - SUNNYSIDE 345KV CKT 1	717	789	0.11944	113.5386	P12:138:AEPW-OGE:CORNVIL4:MAUD 4
FDNS	00NR	0	20WP	G15_057	FROM->TO	G14-057T 345.00 - SUNNYSIDE 345KV CKT 1	717	789	0.11665	113.5228	FRONTIER - GRIMES 345KV CKT 1
FDNS	00NR	0	16WP	G15_057	FROM->TO	G14-057T 345.00 - SUNNYSIDE 345KV CKT 1	717	789	0.1161	113.5143	ARBWIND4 138.00 - KERR MCGEE CIMARRON 138KV CKT 1
FDNS	00NR	0	20WP	G15_057	FROM->TO	G14-057T 345.00 - SUNNYSIDE 345KV CKT 1	717	789	0.11665	113.5117	GEN335204 1-NELSON UNIT 4
FDNS	00NR	0	16WP	G15_057	FROM->TO	G14-057T 345.00 - SUNNYSIDE 345KV CKT 1	717	789	0.11699	113.51	GEN562270 1-G12-020-2 0.6900
FDNS	00NR	0	20WP	G15_057	FROM->TO	G14-057T 345.00 - SUNNYSIDE 345KV CKT 1	717	789	0.11665	113.5052	GEN503909 1-FULTONU1 1 16.000
FDNS	00NR	0	20WP	G15_057	FROM->TO	G14-057T 345.00 - SUNNYSIDE 345KV CKT 1	717	789	0.11665	113.5045	GEN334441 1-SABINE UNIT 5
FDNS	00NR	0	16WP	G15_057	FROM->TO	G14-057T 345.00 - SUNNYSIDE 345KV CKT 1	717	789	0.11699	113.5044	GEN562812 1-G15040_3 0.3570
FDNS	00NR	0	20WP	G15_057	FROM->TO	G14-057T 345.00 - SUNNYSIDE 345KV CKT 1	717	789	0.11737	113.5041	EMPIRE - FLETCHER 138KV CKT 1
FDNS	00NR	0	16WP	G15_057	FROM->TO	G14-057T 345.00 - SUNNYSIDE 345KV CKT 1	717	789	0.11718	113.503	P12:138:AEPW:112GORE4:SNYDER-4
FDNS	00NR	0	16WP	G15_057	FROM->TO	G14-057T 345.00 - SUNNYSIDE 345KV CKT 1	717	789	0.11876	113.5027	CLARKSVILLE - MUSKOGEE 345KV CKT 1
FDNS	00NR	0	16WP	G15_057	FROM->TO	G14-057T 345.00 - SUNNYSIDE 345KV CKT 1	717	789	0.11876	113.5027	CLARKSVILLE - MUSKOGEE 345KV CKT 1
FDNS	00NR	0	16WP	G15_057	FROM->TO	G14-057T 345.00 - SUNNYSIDE 345KV CKT 1	717	789	0.11699	113.5015	GEN563102 1-G15075_3 0.5500
FDNS	00NR	0	16WP	G15_057	FROM->TO	G14-057T 345.00 - SUNNYSIDE 345KV CKT 1	717	789	0.11699	113.4982	GEN562974 1-G15060_5 0.6900
FDNS	00NR	0	16WP	G15_057	FROM->TO	G14-057T 345.00 - SUNNYSIDE 345KV CKT 1	717	789	0.11699	113.4946	GEN563062 1-G15071_3 0.6900
FDNS	00NR	0	16WP	G15_057	FROM->TO	G14-057T 345.00 - SUNNYSIDE 345KV CKT 1	717	789	0.11699	113.4938	GEN563132 1-G15078_3 0.3570
FDNS	00NR	0	16WP	G15_057	FROM->TO	G14-057T 345.00 - SUNNYSIDE 345KV CKT 1	717	789	0.11699	113.4887	GEN562973 1-G15060_4 0.6900
FDNS	00NR	0	20WP	G15_057	FROM->TO	G14-057T 345.00 - SUNNYSIDE 345KV CKT 1	717	789	0.11716	113.4836	TUPELO - TUPELO TAP 138KV CKT 1
FDNSLock	00NR	0	16WP	G15_057	FROM->TO	G14-057T 345.00 - SUNNYSIDE 345KV CKT 1	717	789	0.11699	113.4834	GEN681522 3-GENOA 3
FDNS	00NR	0	16WP	G15_057	FROM->TO	G14-057T 345.00 - SUNNYSIDE 345KV CKT 1	717	789	0.11824	113.4794	P12:138:WFEC:MSL14
FDNS	00NR	0	20WP	G15_057	FROM->TO	G14-057T 345.00 - SUNNYSIDE 345KV CKT 1	717	789	0.11711	113.4741	LATHAMS7 345.00 - ROSE HILL 345KV CKT 1
FDNS	00NR	0	16WP	G15_057	FROM->TO	G14-057T 345.00 - SUNNYSIDE 345KV CKT 1	717	789	0.11824	113.4666	BEARCAT 138.00 - MOORELAND 138KV CKT 1
FDNS	00NR	0	20WP	G15_057	FROM->TO	G14-057T 345.00 - SUNNYSIDE 345KV CKT 1	717	789	0.11944	113.4632	BLANCHARD - CORNVILLE 138KV CKT 1
FDNS	00NR	0	20WP	G15_057	FROM->TO	G14-057T 345.00 - SUNNYSIDE 345KV CKT 1	717	789	0.11863	113.4605	CIVIT - STRATFORD 138KV CKT 1
FDNS	00NR	0	16WP	G15_057	FROM->TO	G14-057T 345.00 - SUNNYSIDE 345KV CKT 1	717	789	0.11679	113.4561	BROWN - RUSSETT 138KV CKT 1
FDNS	00NR	0	16WP	G15_057	FROM->TO	G14-057T 345.00 - SUNNYSIDE 345KV CKT 1	717	789	0.1162	113.4351	CHICKASAW - TOTAL 138KV CKT 1
FDNS	00NR	0	16WP	G15_057	FROM->TO	G14-057T 345.00 - SUNNYSIDE 345KV CKT 1	717	789	0.11675	113.4301	RUSSETT - SPRINGDALE 138KV CKT 1
FDNS	00NR	0	16WP	G15_057	FROM->TO	G14-057T 345.00 - SUNNYSIDE 345KV CKT 1	717	789	0.11699	113.4267	GEN345671 2-1RUSH G2 18.000
FDNS	00NR	0	16WP	G15_057	FROM->TO	G14-057T 345.00 - SUNNYSIDE 345KV CKT 1	717	789	0.11699	113.4248	GEN345670 1-1RUSH G1 18.000
FDNS	00NR	0	20WP	G15_057	FROM->TO	G14-057T 345.00 - SUNNYSIDE 345KV CKT 1	717	789	0.11737	113.4227	COMANCHE - EMPIRE 138KV CKT 1
FDNS	00NR	0	20WP	G15_057	FROM->TO	G14-057T 345.00 - SUNNYSIDE 345KV CKT 1	717	789	0.11655	113.4172	LAYFLD8 500.00 - MOUNT OLIVE 500KV CKT 1
FDNS	00NR	0	20WP	G15_057	FROM->TO	G14-057T 345.00 - SUNNYSIDE 345KV CKT 1	717	789	0.11655	113.4172	LAYFLD8 500.00 - MOUNT OLIVE 500KV CKT 1
FDNS	00NR	0	16WP	G15_057	FROM->TO	G14-057T 345.00 - SUNNYSIDE 345KV CKT 1	717	789	0.11699	113.4132	GEN526331 1-JONES GEN #1 22 KV
FDNS	00NR	0	16WP	G15_057	FROM->TO	G14-057T 345.00 - SUNNYSIDE 345KV CKT 1	717	789	0.11699	113.4131	GEN526332 1-JONES GEN #2 21 KV
FDNS	00NR	0	16WP	G15_057	FROM->TO	G14-057T 345.00 - SUNNYSIDE 345KV CKT 1	717	789	0.11699	113.4028	GEN560105 1-G08-22 0.6900
FDNS	00NR	0	16WP	G15_057	FROM->TO	G14-057T 345.00 - SUNNYSIDE 345KV CKT 1	717	789	0.11699	113.3993	GEN562550 1-G14_040_3 0.6900
FDNS	00NR	0	16WP	G15_057	FROM->TO	G14-057T 345.00 - SUNNYSIDE 345KV CKT 1	717	789	0.11645	113.3982	ROCKY POINT - SUNNYSIDE 138KV CKT 1
FDNS	00NR	0	20WP	G15_057	FROM->TO	G14-057T 345.00 - SUNNYSIDE 345KV CKT 1	717	789	0.11665	113.3982	GEN336251 1-NINEMILE POINT UNIT#4
FDNS	00NR	0	20WP	G15_057	FROM->TO	G14-057T 345.00 - SUNNYSIDE 345KV CKT 1	717	789	0.11696	113.393	G1524G1525 345.00 - THISTLE7 345.00 345KV CKT 1
FDNS	00NR	0	20WP	G15_057	FROM->TO	G14-057T 345.00 - SUNNYSIDE 345KV CKT 1	717	789	0.11696	113.393	G1524G1525 345.00 - THISTLE7 345.00 345KV CKT 2
FDNS	00NR	0	20WP	G15_057	FROM->TO	G14-057T 345.00 - SUNNYSIDE 345KV CKT 1	717	789	0.11749	113.3929	FINNEY SWITCHING STATION - HOLCOMB 345KV CKT 1
FDNS	00NR	0	20WP	G15_057	FROM->TO	G14-057T 345.00 - SUNNYSIDE 345KV CKT 1	717	789	0.11749	113.3929	FINNEY SWITCHING STATION - HOLCOMB 345KV CKT 1
FDNS	00NR	0	20WP	G15_057	FROM->TO	G14-057T 345.00 - SUNNYSIDE 345KV CKT 1	717	789	0.11665	113.3927	GEN334071 1-LEWIS CREEK 2
FDNS	00NR	0	16WP	G15_057	FROM->TO	G14-057T 345.00 - SUNNYSIDE 345KV CKT 1	717	789	0.11679	113.3879	RUSSETT - RUSSETT 138KV CKT 1
FDNS	00NR	0	20WP	G15_057	FROM->TO	G14-057T 345.00 - SUNNYSIDE 345KV CKT 1	717	789	0.11665	113.3843	GEN334070 1-LEWIS CREEK 1
FDNS	00NR	0	16WP	G15_057	FROM->TO	G14-057T 345.00 - SUNNYSIDE 345KV CKT 1	717	789	0.11699	113.3775	4SIOUX 1 138.00 138/18.0KV TRANSFORMER CKT 1
FDNS	00NR	0	16WP	G15_057	FROM->TO	G14-057T 345.00 - SUNNYSIDE 345KV CKT 1	717	789	0.11699	113.3694	P12:138:WFEC:MSL07
FDNS	00NR	0	16WP	G15_057	FROM->TO	G14-057T 345.00 - SUNNYSIDE 345KV CKT 1	717	789	0.11699	113.3694	P12:138:WFEC-AEPW:HUGOPP4:ATOKA--4
FDNS	00NR	0	20WP	G15_057	FROM->TO	G14-057T 345.00 - SUNNYSIDE 345KV CKT 1	717	789	0.11665	113.3642	P12:161:AEPW-SWPA:BEAVERS:EROGERS5
FDNS	00NR	0	20WP	G15_057	FROM->TO	G14-057T 345.00 - SUNNYSIDE 345KV CKT 1	717	789	0.11665	113.3603	GEN509392 G2-ARSENAL HILL GENS #3 (STALL)
FDNS	00NR	0	20WP	G15_057	FROM->TO	G14-057T 345.00 - SUNNYSIDE 345KV CKT 1	717	789	0.11665	113.3602	GEN509391 G1-ARSENAL HILL GENS #2 (STALL)
FDNS	00NR	0	16WP	G15_057	FROM->TO	G14-057T 345.00 - SUNNYSIDE 345KV CKT 1	717	789	0.11699	113.3591	GEN511962 2-RKYRDGW2-1 0.7000
FDNS	00NR	0	20WP	G15_057	FROM->TO	G14-057T 345.00 - SUNNYSIDE 345KV CKT 1	717	789	0.11665	113.3581	GEN509393 S1-ARSENAL HILL GENS #4 (STALL)
FDNS	00NR	0	16WP	G15_057	FROM->TO	G14-057T 345.00 - SUNNYSIDE 345KV CKT 1	717	789	0.11699	113.3577	GEN521112 1-ORME3 13.800
FDNS	00NR	0	16WP	G15_057	FROM->TO	G14-057T 345.00 - SUNNYSIDE 345KV CKT 1	717	789	0.11699	113.3553	CLAY BOSWELL 230/20.9KV TRANSFORMER CKT 1
FDNS	00NR	0	16WP	G15_057	FROM->TO	G14-057T 345.00 - SUNNYSIDE 345KV CKT 1	717	789	0.11699	113.3532	GEN527882 1-CUNNINGHAM GEN #2 20 KV

SOLUTION	GROUP	SCENARIO	SEASON	SOURCE	DIRECTION	MONITORED ELEMENT	RATEA (MVA)	RATEB(MVA)	TDF	TC%LOADING (% MVA)	CONTINGENCY
FDNS	00NR	0	20WP	G15_057	FROM->TO	G14-057T 345.00 - SUNNYSIDE 345KV CKT 1	717	789	0.11665	113.3465	GEN334433 1-SABINE UNIT 3
FDNS	00NR	0	20WP	G15_057	FROM->TO	G14-057T 345.00 - SUNNYSIDE 345KV CKT 1	717	789	0.11863	113.3428	OIL CENTER - STRATFORD 138KV CKT 1
FDNS	00NR	0	16WP	G15_057	FROM->TO	G14-057T 345.00 - SUNNYSIDE 345KV CKT 1	717	789	0.11699	113.3369	GEN562892 1-G15048_3 0.6900
FDNS	00NR	0	20WP	G15_057	FROM->TO	G14-057T 345.00 - SUNNYSIDE 345KV CKT 1	717	789	0.11665	113.3339	GEN337653 1-WHITE BLUFF UNIT #2
FDNS	00NR	0	16WP	G15_057	FROM->TO	G14-057T 345.00 - SUNNYSIDE 345KV CKT 1	717	789	0.11582	113.3312	ARDMORE WEST - CARTER 138KV CKT 1
FDNS	00NR	0	16WP	G15_057	FROM->TO	G14-057T 345.00 - SUNNYSIDE 345KV CKT 1	717	789	0.11699	113.3247	GEN562512 1-G14_020_3 0.6900
FDNS	00NR	0	20WP	G15_057	FROM->TO	G14-057T 345.00 - SUNNYSIDE 345KV CKT 1	717	789	0.11665	113.323	GEN336831 1-BAXTER WILSON SES
FDNS	00NR	0	16WP	G15_057	FROM->TO	G14-057T 345.00 - SUNNYSIDE 345KV CKT 1	717	789	0.11699	113.3179	GEN672321 1-SHAND GENERATOR 1
FDNS	00NR	0	16WP	G15_057	FROM->TO	G14-057T 345.00 - SUNNYSIDE 345KV CKT 1	717	789	0.11699	113.3158	GEN563192 1-G15084_3 0.5500
FDNS	00NR	0	20WP	G15_057	FROM->TO	G14-057T 345.00 - SUNNYSIDE 345KV CKT 1	717	789	0.11681	113.3115	P12:138:AEPW:S.W.S.-4:L.E.S.-4
FDNS	00NR	0	16WP	G15_057	FROM->TO	G14-057T 345.00 - SUNNYSIDE 345KV CKT 1	717	789	0.11699	113.3067	GEN511853 1-COMANCHE #3
FDNS	00NR	0	20WP	G15_057	FROM->TO	G14-057T 345.00 - SUNNYSIDE 345KV CKT 1	717	789	0.11665	113.3019	P12:161:AEPW:DYESS5:ELMSPRNG:TONTITN5
FDNS	00NR	0	20WP	G15_057	FROM->TO	G14-057T 345.00 - SUNNYSIDE 345KV CKT 1	717	789	0.11699	113.2967	DUNCAN (DUNCAN) 138/69/13.8KV TRANSFORMER CKT 1
FDNS	00NR	0	20WP	G15_057	FROM->TO	G14-057T 345.00 - SUNNYSIDE 345KV CKT 1	717	789	0.11699	113.2967	DUNCAN (DUNCAN) 138/69/13.8KV TRANSFORMER CKT 1
FDNS	00NR	0	16WP	G15_057	FROM->TO	G14-057T 345.00 - SUNNYSIDE 345KV CKT 1	717	789	0.11699	113.2937	GEN672310 1-POPLAR RIVER GENERATOR 1
FDNS	00NR	0	16WP	G15_057	FROM->TO	G14-057T 345.00 - SUNNYSIDE 345KV CKT 1	717	789	0.11699	113.2937	GEN672311 2-POPLAR RIVER GENERATOR 2
FDNS	00NR	0	16WP	G15_057	FROM->TO	G14-057T 345.00 - SUNNYSIDE 345KV CKT 1	717	789	0.1171	113.2933	P12:138:WFEC:MSL16
FDNS	00NR	0	16WP	G15_057	FROM->TO	G14-057T 345.00 - SUNNYSIDE 345KV CKT 1	717	789	0.1169	113.2886	P12:138:WFEC-AEPW:GOLDENSW4:CRAIGJT4
FDNS	00NR	0	16WP	G15_057	FROM->TO	G14-057T 345.00 - SUNNYSIDE 345KV CKT 1	717	789	0.11699	113.2851	GEN672306 6-BOUNDARY DAM GENERATOR 6
FDNS	00NR	0	16WP	G15_057	FROM->TO	G14-057T 345.00 - SUNNYSIDE 345KV CKT 1	717	789	0.11589	113.2851	SUNNYSIDE (SUNNYSD5) 345/138/13.8KV TRANSFORMER CKT 1
FDNS	00NR	0	20WP	G15_057	FROM->TO	G14-057T 345.00 - SUNNYSIDE 345KV CKT 1	717	789	0.11665	113.2821	GEN337911 1-ARKANSAS NUCLEAR ONE UNIT #2
FDNS	00NR	0	20WP	G15_057	FROM->TO	G14-057T 345.00 - SUNNYSIDE 345KV CKT 1	717	789	0.11665	113.2788	GEN515040 1-SEMINOLE 1G
FDNS	00NR	0	20WP	G15_057	FROM->TO	G14-057T 345.00 - SUNNYSIDE 345KV CKT 1	717	789	0.11759	113.2722	G14_038T 345.00 - Hitchland Interchange 345KV CKT 1
FDNS	00NR	0	20WP	G15_057	FROM->TO	G14-057T 345.00 - SUNNYSIDE 345KV CKT 1	717	789	0.11665	113.2716	GEN334030 1-FRONTIER UNIT 1
FDNS	00NR	0	16WP	G15_057	FROM->TO	G14-057T 345.00 - SUNNYSIDE 345KV CKT 1	717	789	0.11699	113.271	GEN344895 2-1LAB G2 20.000
FDNS	00NR	0	20WP	G15_057	FROM->TO	G14-057T 345.00 - SUNNYSIDE 345KV CKT 1	717	789	0.11665	113.2693	GEN334031 1-FRONTIER UNIT 2
FDNS	00NR	0	16WP	G15_057	FROM->TO	G14-057T 345.00 - SUNNYSIDE 345KV CKT 1	717	789	0.11699	113.2581	GEN523461 1-BLACKHAWK GEN #1
FDNS	00NR	0	16WP	G15_057	FROM->TO	G14-057T 345.00 - SUNNYSIDE 345KV CKT 1	717	789	0.11699	113.258	GEN523462 1-BLACKHAWK GEN #2
FDNS	00NR	0	20WP	G15_057	FROM->TO	G14-057T 345.00 - SUNNYSIDE 345KV CKT 1	717	789	0.11759	113.2548	TUTTLE - TUTTLE CONOCO TAP 138KV CKT 1
FDNS	00NR	0	16WP	G15_057	FROM->TO	G14-057T 345.00 - SUNNYSIDE 345KV CKT 1	717	789	0.11699	113.2537	GEN511852 1-COMANCHE #2
FDNS	00NR	0	20WP	G15_057	FROM->TO	G14-057T 345.00 - SUNNYSIDE 345KV CKT 1	717	789	0.11667	113.2501	P12:138:AEPW:CATOOSA4:T.S.E.-4
FDNS	00NR	0	20WP	G15_057	FROM->TO	G14-057T 345.00 - SUNNYSIDE 345KV CKT 1	717	789	0.11944	113.2433	BLANCHARD - MAUD 138KV CKT 1
FDNS	00NR	0	16WP	G15_057	FROM->TO	G14-057T 345.00 - SUNNYSIDE 345KV CKT 1	717	789	0.11699	113.2389	GEN344896 3-1LAB G3 20.000
FDNS	00NR	0	16WP	G15_057	FROM->TO	G14-057T 345.00 - SUNNYSIDE 345KV CKT 1	717	789	0.11699	113.2375	GEN344894 1-1LAB G1 20.000
FDNS	00NR	0	16WP	G15_057	FROM->TO	G14-057T 345.00 - SUNNYSIDE 345KV CKT 1	717	789	0.11699	113.2361	GEN344897 4-1LAB G4 20.000
FDNS	00NR	0	20WP	G15_057	FROM->TO	G14-057T 345.00 - SUNNYSIDE 345KV CKT 1	717	789	0.11646	113.2345	FULTON 115 - HOPE 115KV CKT 1
FDNS	00NR	0	20WP	G15_057	FROM->TO	G14-057T 345.00 - SUNNYSIDE 345KV CKT 1	717	789	0.11646	113.2345	FULTON 115 - HOPE 115KV CKT 1
FDNS	00NR	0	20WP	G15_057	FROM->TO	G14-057T 345.00 - SUNNYSIDE 345KV CKT 1	717	789	0.11751	113.2314	P12:138:AEPW-OGE:WTH_JCT4:JENSEN4
FDNS	00NR	0	20WP	G15_057	FROM->TO	G14-057T 345.00 - SUNNYSIDE 345KV CKT 1	717	789	0.11665	113.2306	GEN337652 1-WHITE BLUFF UNIT #1
FDNS	00NR	0	20WP	G15_057	FROM->TO	G14-057T 345.00 - SUNNYSIDE 345KV CKT 1	717	789	0.11665	113.2297	GEN501811 1-RODEMACHER UNIT 1
FDNS	00NR	0	20WP	G15_057	FROM->TO	G14-057T 345.00 - SUNNYSIDE 345KV CKT 1	717	789	0.11727	113.2296	P12:138:AEPW:CORNVIL4:DUNCAN-4
FDNS	00NR	0	20WP	G15_057	FROM->TO	G14-057T 345.00 - SUNNYSIDE 345KV CKT 1	717	789	0.11665	113.2154	GEN506752 1-LEBROCK GAS 1
FDNS	00NR	0	16WP	G15_057	FROM->TO	G14-057T 345.00 - SUNNYSIDE 345KV CKT 1	717	789	0.11582	113.2152	ARDMORE WEST - UNIROYAL 138KV CKT 1
FDNS	00NR	0	20WP	G15_057	FROM->TO	G14-057T 345.00 - SUNNYSIDE 345KV CKT 1	717	789	0.11665	113.2151	GEN506753 1-LEBROCK GAS 2
FDNS	00NR	0	20WP	G15_057	FROM->TO	G14-057T 345.00 - SUNNYSIDE 345KV CKT 1	717	789	0.11665	113.212	GEN300015 1-1SGPDEL 18.000
FDNS	00NR	0	20WP	G15_057	FROM->TO	G14-057T 345.00 - SUNNYSIDE 345KV CKT 1	717	789	0.11665	113.2097	GEN515226 1-MUSKOGEE 6G
FDNS	00NR	0	20WP	G15_057	FROM->TO	G14-057T 345.00 - SUNNYSIDE 345KV CKT 1	717	789	0.11665	113.2086	GEN300003 1-THOMAS HILL UNIT 3
FDNS	00NR	0	16WP	G15_057	FROM->TO	G14-057T 345.00 - SUNNYSIDE 345KV CKT 1	717	789	0.11693	113.2023	P12:138:AEPW-SWPA:LONEOAK4:TUPELO4
FDNS	00NR	0	16WP	G15_057	FROM->TO	G14-057T 345.00 - SUNNYSIDE 345KV CKT 1	717	789	0.11693	113.2023	P12:138:WFEC:MSL06
FDNS	00NR	0	16WP	G15_057	FROM->TO	G14-057T 345.00 - SUNNYSIDE 345KV CKT 1	717	789	0.1165	113.2022	P12:138:OKGE:3TERM40
FDNS	00NR	0	20WP	G15_057	FROM->TO	G14-057T 345.00 - SUNNYSIDE 345KV CKT 1	717	789	0.11665	113.197	GEN336191 1-LITTLE GYPSY UNIT#3
FDNS	00NR	0	16WP	G15_057	FROM->TO	G14-057T 345.00 - SUNNYSIDE 345KV CKT 1	717	789	0.11699	113.1818	GEN563162 1-G15081_3 0.6900
FDNSLock	00NR	0	16WP	G15_057	FROM->TO	G14-057T 345.00 - SUNNYSIDE 345KV CKT 1	717	789	0.11699	113.1814	GEN681542 6-JP MADGETT
FDNS	00NR	0	16WP	G15_057	FROM->TO	G14-057T 345.00 - SUNNYSIDE 345KV CKT 1	717	789	0.11699	113.1784	GEN521110 1-ORME1 13.800
FDNS	00NR	0	16WP	G15_057	FROM->TO	G14-057T 345.00 - SUNNYSIDE 345KV CKT 1	717	789	0.11699	113.1784	GEN521111 1-ORME2 13.800
FDNS	00NR	0	20WP	G15_057	FROM->TO	G14-057T 345.00 - SUNNYSIDE 345KV CKT 1	717	789	0.11727	113.1781	P12:138:AEPW:CORNVIL4:S.W.S.-4
FDNS	00NR	0	20WP	G15_057	FROM->TO	G14-057T 345.00 - SUNNYSIDE 345KV CKT 1	717	789	0.11652	113.1775	6LAYFLD 230.00 - CARROLL 230KV CKT 1
FDNS	00NR	0	16WP	G15_057	FROM->TO	G14-057T 345.00 - SUNNYSIDE 345KV CKT 1	717	789	0.11699	113.1714	GEN562699 1-G15_018_3 0.6900
FDNS	00NR	0	16WP	G15_057	FROM->TO	G14-057T 345.00 - SUNNYSIDE 345KV CKT 1	717	789	0.11704	113.1706	G15085_T 138.00 - RUSSELL 138KV CKT 1
FDNS	00NR	0	16WP	G15_057	FROM->TO	G14-057T 345.00 - SUNNYSIDE 345KV CKT 1	717	789	0.11624	113.1705	CARTRCO4 138.00 - RATLIFF 138KV CKT 1
FDNS	00NR	0	20WP	G15_057	FROM->TO	G14-057T 345.00 - SUNNYSIDE 345KV CKT 1	717	789	0.11863	113.1702	LATTA JCT - OIL CENTER 138KV CKT 1
FDNS	00NR	0	20WP	G15_057	FROM->TO	G14-057T 345.00 - SUNNYSIDE 345KV CKT 1	717	789	0.11665	113.1681	GEN335614 1-WILLOW GLENN UNIT#4
FDNS	00NR	0	20WP	G15_057	FROM->TO	G14-057T 345.00 - SUNNYSIDE 345KV CKT 1	717	789	0.11759	113.162	CIMARRON - TUTTLE CONOCO TAP 138KV CKT 1
FDNS	00NR	0	16WP	G15_057	FROM->TO	G14-057T 345.00 - SUNNYSIDE 345KV CKT 1	717	789	0.11699	113.159	GEN563292 1-G15095_3 0.6900
FDNS	00NR	0	20WP	G15_057	FROM->TO	G14-057T 345.00 - SUNNYSIDE 345KV CKT 1	717	789	0.11665	113.1529	8DANIEL8 500.00 - MCKNIGHT 500KV CKT 1
FDNS	00NR	0	20WP	G15_057	FROM->TO	G14-057T 345.00 - SUNNYSIDE 345KV CKT 1	717	789	0.11908	113.1398	BAILEY4 138.00 - SUNSHINE CANYON 138KV CKT 1
FDNS	00NR	0	20WP	G15_057	FROM->TO	G14-057T 345.00 - SUNNYSIDE 345KV CKT 1	717	789	0.11678	113.1297	G15095_T 138.00 - ROSE_VALLEY 138.00 138KV CKT 1
FDNS	00NR	0	16WP	G15_057	FROM->TO	G14-057T 345.00 - SUNNYSIDE 345KV CKT 1	717	789	0.11993	113.1295	G15063_T 345.00 - MATHWSN7 345.00 345KV CKT 1
FDNS	00NR	0	20WP	G15_057	FROM->TO	G14-057T 345.00 - SUNNYSIDE 345KV CKT 1	717	789	0.11665	113.1261	GEN337910 1-ARKANSAS NUCLEAR ONE UNIT #1
FDNS	00NR	0	20WP	G15_057	FROM->TO	G14-057T 345.00 - SUNNYSIDE 345KV CKT 1	717	789	0.11665	113.1241	P12:161:AEPW:EROGERS5:ECNTRTN5
FDNS	00NR	0	20WP	G15_057	FROM->TO	G14-057T 345.00 - SUNNYSIDE 345KV CKT 1	717	789	0.11683	113.1228	BUCKNER7 345.00 - SPEARVILLE 345KV CKT 1
FDNS	00NR	0	20WP	G15_057	FROM->TO	G14-057T 345.00 - SUNNYSIDE 345KV CKT 1	717	789	0.11683	113.1228	BUCKNER7 345.00 - SPEARVILLE 345KV CKT 1
FDNS	00NR	0	20WP	G15_057	FROM->TO	G14-057T 345.00 - SUNNYSIDE 345KV CKT 1	717	789	0.11665	113.122	GEN303007 1-1BC2 U2
FDNS	00NR	0	20WP	G15_057	FROM->TO	G14-057T 345.00 - SUNNYSIDE 345KV CKT 1	717	789	0.11749	113.1199	FINNEY SWITCHING STATION - WALKTAP7 345.00 345KV CKT 1
FDNS	00NR	0	20WP	G15_057	FROM->TO	G14-057T 345.00 - SUNNYSIDE 345KV CKT 1	717	789	0.11749	113.1199	FINNEY SWITCHING STATION - WALKTAP7 345.00 345KV CKT 1
FDNS	00NR	0	16WP	G15_057	FROM->TO	G14-057T 345.00 - SUNNYSIDE 345KV CKT 1	717	789	0.11718	113.1195	CACHE - SNYDER 138KV CKT 1
FDNS	00NR	0	20WP	G15_057	FROM->TO	G14-057T 345.00 - SUNNYSIDE 345KV CKT 1	717	789	0.11665	113.1171	GEN336464 1-MICHOUD UNIT #3
FDNS	00NR	0	20WP	G15_057	FROM->TO	G14-057T 345.00 - SUNNYSIDE 345KV CKT 1	717	789	0.11665	113.116	GEN303006 1-1BC2 U1
FDNS	00NR	0	20WP	G15_057	FROM->TO	G14-057T 345.00 - SUNNYSIDE 345KV CKT 1	717	789	0.11716	113.1158	P12:138:AEPW:WTHWF4:CLINTJC4

SOLUTION	GROUP	SCENARIO	SEASON	SOURCE	DIRECTION	MONITORED ELEMENT	RATEA (MVA)	RATEB(MVA)	TDF	TC%LOADING (% MVA)	CONTINGENCY
FDNS	00NR	0	20WP	G15_057	FROM->TO	G14-057T 345.00 - SUNNYSIDE 345KV CKT 1	717	789	0.11665	113.1142	WHITE BLUFF 500/26.0KV TRANSFORMER CKT 1
FDNS	00NR	0	20WP	G15_057	FROM->TO	G14-057T 345.00 - SUNNYSIDE 345KV CKT 1	717	789	0.11699	113.1123	P12:69:WFEC-AEPW:COMANCH2:DUNCAN-2
FDNS	00NR	0	20WP	G15_057	FROM->TO	G14-057T 345.00 - SUNNYSIDE 345KV CKT 1	717	789	0.11665	113.1123	GEN515223 1-MUSKOGEE 4G
FDNS	00NR	0	20WP	G15_057	FROM->TO	G14-057T 345.00 - SUNNYSIDE 345KV CKT 1	717	789	0.11665	113.1123	GEN515225 1-MUSKOGEE 5G
FDNS	00NR	0	20WP	G15_057	FROM->TO	G14-057T 345.00 - SUNNYSIDE 345KV CKT 1	717	789	0.11665	113.1096	GEN562783 1-G15036_4 0.6900
FDNS	00NR	0	20WP	G15_057	FROM->TO	G14-057T 345.00 - SUNNYSIDE 345KV CKT 1	717	789	0.11665	113.1096	GEN562784 1-G15036_5 0.6900
FDNS	00NR	0	20WP	G15_057	FROM->TO	G14-057T 345.00 - SUNNYSIDE 345KV CKT 1	717	789	0.11671	113.1077	G15088_T 345.00 - MOORE 345KV CKT 1
FDNS	00NR	0	20WP	G15_057	FROM->TO	G14-057T 345.00 - SUNNYSIDE 345KV CKT 1	717	789	0.11687	113.1046	P12:69:AEPW-OMPA:COMANC-2:OMWALTR2
FDNS	00NR	0	20WP	G15_057	FROM->TO	G14-057T 345.00 - SUNNYSIDE 345KV CKT 1	717	789	0.1165	113.0985	BISMARK - HOT SPRINGS WEST BUS 115KV CKT 1
FDNS	00NR	0	20WP	G15_057	FROM->TO	G14-057T 345.00 - SUNNYSIDE 345KV CKT 1	717	789	0.11739	113.0959	CIMARRON - CZECH HALL 138KV CKT 1
FDNS	00NR	0	20WP	G15_057	FROM->TO	G14-057T 345.00 - SUNNYSIDE 345KV CKT 1	717	789	0.11673	113.0936	G15074_T 345.00 - HOYT 345KV CKT 1
FDNS	00NR	0	20WP	G15_057	FROM->TO	G14-057T 345.00 - SUNNYSIDE 345KV CKT 1	717	789	0.11657	113.0914	MC NIEL 500/115KV TRANSFORMER CKT 1
FDNS	00NR	0	20WP	G15_057	FROM->TO	G14-057T 345.00 - SUNNYSIDE 345KV CKT 1	717	789	0.11665	113.0857	GEN300010 1-ST FRANCIS UNIT 1
FDNS	00NR	0	20WP	G15_057	FROM->TO	G14-057T 345.00 - SUNNYSIDE 345KV CKT 1	717	789	0.11699	113.0853	DUNCAN - TOSCO 69KV CKT 1
FDNS	00NR	0	20WP	G15_057	FROM->TO	G14-057T 345.00 - SUNNYSIDE 345KV CKT 1	717	789	0.11716	113.0823	P12:138:AEPW:WTHWF4:WTH_SE4
FDNS	00NR	0	16WP	G15_057	FROM->TO	G14-057T 345.00 - SUNNYSIDE 345KV CKT 1	717	789	0.11699	113.0731	GEN563122 1-G15077_3 0.3850
FDNS	00NR	0	16WP	G15_057	FROM->TO	G14-057T 345.00 - SUNNYSIDE 345KV CKT 1	717	789	0.11699	113.0722	GEN661015 1-COYOTE
FDNS	00NR	0	20WP	G15_057	FROM->TO	G14-057T 345.00 - SUNNYSIDE 345KV CKT 1	717	789	0.11657	113.0703	HOT SPRINGS EHV - MAGNET COVE 500KV CKT 1
FDNS	00NR	0	20WP	G15_057	FROM->TO	G14-057T 345.00 - SUNNYSIDE 345KV CKT 1	717	789	0.1168	113.0696	CLEO CORNER - CLEOPLT4 138.00 138KV CKT 1
FDNS	00NR	0	20WP	G15_057	FROM->TO	G14-057T 345.00 - SUNNYSIDE 345KV CKT 1	717	789	0.11665	113.0607	GEN337041 1-GERALD ANDRUS
FDNS	00NR	0	20WP	G15_057	FROM->TO	G14-057T 345.00 - SUNNYSIDE 345KV CKT 1	717	789	0.11665	113.059	GEN505432 1-SIKESTON
FDNS	00NR	0	16WP	G15_057	FROM->TO	G14-057T 345.00 - SUNNYSIDE 345KV CKT 1	717	789	0.11699	113.0554	GEN562861 1-G15045_2 0.4800
FDNS	00NR	0	20WP	G15_057	FROM->TO	G14-057T 345.00 - SUNNYSIDE 345KV CKT 1	717	789	0.11665	113.0543	GEN303008 1-1BC2 U3
FDNS	00NR	0	20WP	G15_057	FROM->TO	G14-057T 345.00 - SUNNYSIDE 345KV CKT 1	717	789	0.11736	113.0517	CHISHOLM6 230.00 - ELK CITY 230KV 230KV CKT 1
FDNS	00NR	0	20WP	G15_057	FROM->TO	G14-057T 345.00 - SUNNYSIDE 345KV CKT 1	717	789	0.11678	113.0491	NOEL_SW 138.00 - ROSE_VALLEY 138.00 138KV CKT 1
FDNS	00NR	0	20WP	G15_057	FROM->TO	G14-057T 345.00 - SUNNYSIDE 345KV CKT 1	717	789	0.11736	113.0487	ELK CITY 230KV (ELKCTY-6) 230/138/13.8KV TRANSFORMER CKT 1
FDNS	00NR	0	20WP	G15_057	FROM->TO	G14-057T 345.00 - SUNNYSIDE 345KV CKT 1	717	789	0.11736	113.0487	ELK CITY 230KV (ELKCTY-6) 230/138/13.8KV TRANSFORMER CKT 1
FDNS	00NR	0	20WP	G15_057	FROM->TO	G14-057T 345.00 - SUNNYSIDE 345KV CKT 1	717	789	0.1168	113.0487	CLEOPLT4 138.00 - MEN TAP 138KV CKT 1
FDNS	00NR	0	20WP	G15_057	FROM->TO	G14-057T 345.00 - SUNNYSIDE 345KV CKT 1	717	789	0.1165	113.047	ALPINE AECC - BISMARK 115KV CKT 1
FDNS	00NR	0	16WP	G15_057	FROM->TO	G14-057T 345.00 - SUNNYSIDE 345KV CKT 1	717	789	0.11699	113.0454	GEN520811 1-ANADRK4
FDNS	00NR	0	20WP	G15_057	FROM->TO	G14-057T 345.00 - SUNNYSIDE 345KV CKT 1	717	789	0.11729	113.0419	CIMARRON - SARA 138KV CKT 1
FDNS	00NR	0	20WP	G15_057	FROM->TO	G14-057T 345.00 - SUNNYSIDE 345KV CKT 1	717	789	0.1168	113.0367	IMO TAP - MEN TAP 138KV CKT 1
FDNS	00NR	0	20WP	G15_057	FROM->TO	G14-057T 345.00 - SUNNYSIDE 345KV CKT 1	717	789	0.11665	113.0282	GEN300011 1-ST FRANCIS UNIT 2
FDNS	00NR	0	20WP	G15_057	FROM->TO	G14-057T 345.00 - SUNNYSIDE 345KV CKT 1	717	789	0.11665	113.0251	GEN336170 1-GULF OXY U4
FDNS	00NR	0	20WP	G15_057	FROM->TO	G14-057T 345.00 - SUNNYSIDE 345KV CKT 1	717	789	0.11666	113.0227	P12:138:AEPW:N.E.S.-4:CATOOSA4
FDNSLock	00NR	0	16WP	G15_057	FROM->TO	G14-057T 345.00 - SUNNYSIDE 345KV CKT 1	717	789	0.11699	113.0211	GEN532751 1-WOLF CREEK GENERATING STATION UNIT 1
FDNS	00NR	0	20WP	G15_057	FROM->TO	G14-057T 345.00 - SUNNYSIDE 345KV CKT 1	717	789	0.1157	113.0209	SEMINOLE - VANOSTP4 138.00 138KV CKT 1
FDNS	00NR	0	20WP	G15_057	FROM->TO	G14-057T 345.00 - SUNNYSIDE 345KV CKT 1	717	789	0.11739	113.0172	CZECH HALL - XEROX 138KV CKT 1
FDNS	00NR	0	20WP	G15_057	FROM->TO	G14-057T 345.00 - SUNNYSIDE 345KV CKT 1	717	789	0.11699	113.0167	COMANCHE TAP - TOSCO 69KV CKT 1
FDNS	00NR	0	20WP	G15_057	FROM->TO	G14-057T 345.00 - SUNNYSIDE 345KV CKT 1	717	789	0.11665	113.0167	NELSON 230/20.0KV TRANSFORMER CKT 1
FDNS	00NR	0	16WP	G15_057	FROM->TO	G14-057T 345.00 - SUNNYSIDE 345KV CKT 1	717	789	0.11712	113.0164	P12:138:WFEC:MSL15
FDNS	00NR	0	20WP	G15_057	FROM->TO	G14-057T 345.00 - SUNNYSIDE 345KV CKT 1	717	789	0.11739	113.0131	MORGAN - XEROX 138KV CKT 1
FDNS	00NR	0	20WP	G15_057	FROM->TO	G14-057T 345.00 - SUNNYSIDE 345KV CKT 1	717	789	0.11665	113.0062	GEN336801 1-BAXTER WILSON UNIT #1
FDNS	00NR	0	20WP	G15_057	FROM->TO	G14-057T 345.00 - SUNNYSIDE 345KV CKT 1	717	789	0.1165	112.9982	ALPINE AECC - AMITY SS 115KV CKT 1
FDNS	00NR	0	20WP	G15_057	FROM->TO	G14-057T 345.00 - SUNNYSIDE 345KV CKT 1	717	789	0.11575	112.9962	ARBWIND4 138.00 - CARTER 138KV CKT 1
FDNS	00NR	0	16WP	G15_057	FROM->TO	G14-057T 345.00 - SUNNYSIDE 345KV CKT 1	717	789	0.11582	112.9937	SUNNYSIDE - UNIROYAL 138KV CKT 1
FDNS	00NR	0	20WP	G15_057	FROM->TO	G14-057T 345.00 - SUNNYSIDE 345KV CKT 1	717	789	0.11739	112.9905	MORGAN - MUSTANG 138KV CKT 1
FDNS	00NR	0	20WP	G15_057	FROM->TO	G14-057T 345.00 - SUNNYSIDE 345KV CKT 1	717	789	0.11751	112.9897	WEATHERFORD JCT. - WEATHERFORD SOUTHEAST 138KV CKT 1
FDNS	00NR	0	20WP	G15_057	FROM->TO	G14-057T 345.00 - SUNNYSIDE 345KV CKT 1	717	789	0.11751	112.9897	WEATHERFORD JCT. - WEATHERFORD SOUTHEAST 138KV CKT 1
FDNS	00NR	0	20WP	G15_057	FROM->TO	G14-057T 345.00 - SUNNYSIDE 345KV CKT 1	717	789	0.11665	112.9775	8CAJUN2 500/24.0KV TRANSFORMER CKT 1
FDNS	00NR	0	20WP	G15_057	FROM->TO	G14-057T 345.00 - SUNNYSIDE 345KV CKT 1	717	789	0.11665	112.9766	GEN501910 1-ACADIA UNIT ST1
FDNS	00NR	0	16WP	G15_057	FROM->TO	G14-057T 345.00 - SUNNYSIDE 345KV CKT 1	717	789	0.11699	112.9741	GEN562992 1-G15063_3 0.6900
FDNS	00NR	0	20WP	G15_057	FROM->TO	G14-057T 345.00 - SUNNYSIDE 345KV CKT 1	717	789	0.11746	112.9676	ANADARKO - SEQUOYAHJ4 138.00 138KV CKT 1
FDNS	00NR	0	20WP	G15_057	FROM->TO	G14-057T 345.00 - SUNNYSIDE 345KV CKT 1	717	789	0.11746	112.9661	CORN TAP - SEQUOYAHJ4 138.00 138KV CKT 1
FDNS	00NR	0	20WP	G15_057	FROM->TO	G14-057T 345.00 - SUNNYSIDE 345KV CKT 1	717	789	0.11699	112.9645	COMANCHE - COMANCHE TAP 69KV CKT 1
FDNS	00NR	0	20WP	G15_057	FROM->TO	G14-057T 345.00 - SUNNYSIDE 345KV CKT 1	717	789	0.11908	112.9615	BAILEY4 138.00 - WESTMOORE 138KV CKT 1
FDNS	00NR	0	16WP	G15_057	FROM->TO	G14-057T 345.00 - SUNNYSIDE 345KV CKT 1	717	789	0.11699	112.9554	GEN657748 1-YOUNG 2 GENERATOR
FDNS	00NR	0	16WP	G15_057	FROM->TO	G14-057T 345.00 - SUNNYSIDE 345KV CKT 1	717	789	0.11757	112.9501	GRAPEVINE INTERCHANGE - STATELINE INTERCHANGE 230KV CKT 1
FDNS	00NR	0	16WP	G15_057	FROM->TO	G14-057T 345.00 - SUNNYSIDE 345KV CKT 1	717	789	0.11757	112.9501	GRAPEVINE INTERCHANGE - STATELINE INTERCHANGE 230KV CKT 1
FDNS	00NR	0	20WP	G15_057	FROM->TO	G14-057T 345.00 - SUNNYSIDE 345KV CKT 1	717	789	0.11687	112.95	P12:138:OKGE-AEPW:JENSEN4:REDROCKRD4
FDNS	00NR	0	20WP	G15_057	FROM->TO	G14-057T 345.00 - SUNNYSIDE 345KV CKT 1	717	789	0.11698	112.94	WALTERS - WALTERS 69KV CKT 1
FDNS	00NR	0	20WP	G15_057	FROM->TO	G14-057T 345.00 - SUNNYSIDE 345KV CKT 1	717	789	0.11751	112.9379	P12:138:AEPW:REDROCKRD4:WTH_JCT4
FDNS	00NR	0	20WP	G15_057	FROM->TO	G14-057T 345.00 - SUNNYSIDE 345KV CKT 1	717	789	0.11665	112.9375	SABINE 230/24.0KV TRANSFORMER CKT 1
FDNS	00NR	0	20WP	G15_057	FROM->TO	G14-057T 345.00 - SUNNYSIDE 345KV CKT 1	717	789	0.11665	112.9335	GEN300016 1-1G1GPDEL 18.000
FDNS	00NR	0	20WP	G15_057	FROM->TO	G14-057T 345.00 - SUNNYSIDE 345KV CKT 1	717	789	0.11729	112.9306	SARA - STHLAKE4 138.00 138KV CKT 1
FDNS	00NR	0	16WP	G15_057	FROM->TO	G14-057T 345.00 - SUNNYSIDE 345KV CKT 1	717	789	0.1194	112.9294	CANEY CREEK - TEXOMA JCT 138KV CKT 1
FDNS	00NR	0	20WP	G15_057	FROM->TO	G14-057T 345.00 - SUNNYSIDE 345KV CKT 1	717	789	0.11665	112.9286	P12:138:AEPW:R.S.S.-4:S.HUD.-4
FDNS	00NR	0	20WP	G15_057	FROM->TO	G14-057T 345.00 - SUNNYSIDE 345KV CKT 1	717	789	0.11656	112.9232	ETTA (DUKE HOTSPRINGS) - MC NIEL 500KV CKT 1
FDNS	00NR	0	20WP	G15_057	FROM->TO	G14-057T 345.00 - SUNNYSIDE 345KV CKT 1	717	789	0.11665	112.9218	GEN336222 1-LITTLE GYPSY UNIT#2
FDNS	00NR	0	16WP	G15_057	FROM->TO	G14-057T 345.00 - SUNNYSIDE 345KV CKT 1	717	789	0.11704	112.9113	P12:138:AEPW:SHAM4WT:CHILD4WT
FDNS	00NR	0	20WP	G15_057	FROM->TO	G14-057T 345.00 - SUNNYSIDE 345KV CKT 1	717	789	0.11687	112.9105	LAWTON RELIFT TAP - OMPA-WALTERS 69KV CKT 1
FDNS	00NR	0	20WP	G15_057	FROM->TO	G14-057T 345.00 - SUNNYSIDE 345KV CKT 1	717	789	0.11729	112.9005	MCCLAIN - STHLAKE4 138.00 138KV CKT 1
FDNS	00NR	0	20WP	G15_057	FROM->TO	G14-057T 345.00 - SUNNYSIDE 345KV CKT 1	717	789	0.11665	112.897	P12:69:AEPW:NROGERS2:ECNTRTN2
FDNS	00NR	0	20WP	G15_057	FROM->TO	G14-057T 345.00 - SUNNYSIDE 345KV CKT 1	717	789	0.11687	112.8964	G13-010T 345.00 - POST ROCK 345KV CKT 1
FDNS	00NR	0	16WP	G15_057	FROM->TO	G14-057T 345.00 - SUNNYSIDE 345KV CKT 1	717	789	0.11699	112.8952	GEN562704 1-G15_020_3 0.3550
FDNS	00NR	0	20WP	G15_057	FROM->TO	G14-057T 345.00 - SUNNYSIDE 345KV CKT 1	717	789	0.11863	112.8932	LASALLE - LATTA JCT 138KV CKT 1
FDNS	00NR	0	20WP	G15_057	FROM->TO	G14-057T 345.00 - SUNNYSIDE 345KV CKT 1	717	789	0.11731	112.8928	NORGE ROAD - SOUTHWESTERN STATION 138KV CKT 1
FDNS	00NR	0	20WP	G15_057	FROM->TO	G14-057T 345.00 - SUNNYSIDE 345KV CKT 1	717	789	0.11731	112.8928	NORGE ROAD - SOUTHWESTERN STATION 138KV CKT 1
FDNS	00NR	0	16WP	G15_057	FROM->TO	G14-057T 345.00 - SUNNYSIDE 345KV CKT 1	717	789	0.11699	112.8914	GEN562952 1-G15057_3 0.6500

SOLUTION	GROUP	SCENARIO	SEASON	SOURCE	DIRECTION	MONITORED ELEMENT	RATEA (MVA)	RATEB(MVA)	TDF	TC%LOADING (% MVA)	CONTINGENCY
FDNS	00NR	0	20WP	G15_057	FROM->TO	G14-057T 345.00 - SUNNYSIDE 345KV CKT 1	717	789	0.11665	112.8872	GEN336152 1-WATERFORD UNIT#2
FDNS	00NR	0	20WP	G15_057	FROM->TO	G14-057T 345.00 - SUNNYSIDE 345KV CKT 1	717	789	0.11665	112.8868	P12:138:AEPW:BA_71ST4:T.S.E.-4
FDNS	00NR	0	20WP	G15_057	FROM->TO	G14-057T 345.00 - SUNNYSIDE 345KV CKT 1	717	789	0.11665	112.8864	GEN336151 1-WATERFORD UNIT#1
FDNS	00NR	0	20WP	G15_057	FROM->TO	G14-057T 345.00 - SUNNYSIDE 345KV CKT 1	717	789	0.11665	112.882	P12:138:AEPW:YARCH-S4:T.S.E.-4
FDNS	00NR	0	20WP	G15_057	FROM->TO	G14-057T 345.00 - SUNNYSIDE 345KV CKT 1	717	789	0.11682	112.8781	EMPORIA ENERGY CENTER - G14_001T 345.00 345KV CKT 1
FDNS	00NR	0	20WP	G15_057	FROM->TO	G14-057T 345.00 - SUNNYSIDE 345KV CKT 1	717	789	0.11673	112.8777	HOYT - STRANGER CREEK 345KV CKT 1
FDNS	00NR	0	20WP	G15_057	FROM->TO	G14-057T 345.00 - SUNNYSIDE 345KV CKT 1	717	789	0.11669	112.8772	P12:138:AEPW-OGE:SHIDLER4:OSAGE 4
FDNS	00NR	0	20WP	G15_057	FROM->TO	G14-057T 345.00 - SUNNYSIDE 345KV CKT 1	717	789	0.11665	112.875	GEN300017 1-1G2GPDEL 18.000
FDNS	00NR	0	20WP	G15_057	FROM->TO	G14-057T 345.00 - SUNNYSIDE 345KV CKT 1	717	789	0.11665	112.8749	FRONTIER 345/18.0KV TRANSFORMER CKT 1
FDNS	00NR	0	20WP	G15_057	FROM->TO	G14-057T 345.00 - SUNNYSIDE 345KV CKT 1	717	789	0.11665	112.8727	FRONTIER 345/18.0KV TRANSFORMER CKT 1
FDNS	00NR	0	20WP	G15_057	FROM->TO	G14-057T 345.00 - SUNNYSIDE 345KV CKT 1	717	789	0.11654	112.8685	P12:138:OKGE:3TERM2
FDNS	00NR	0	20WP	G15_057	FROM->TO	G14-057T 345.00 - SUNNYSIDE 345KV CKT 1	717	789	0.11687	112.8667	CLINTON JUNCTION - ELK CITY 138KV CKT 1
FDNS	00NR	0	20WP	G15_057	FROM->TO	G14-057T 345.00 - SUNNYSIDE 345KV CKT 1	717	789	0.11687	112.8667	CLINTON JUNCTION - ELK CITY 138KV CKT 1
FDNS	00NR	0	20WP	G15_057	FROM->TO	G14-057T 345.00 - SUNNYSIDE 345KV CKT 1	717	789	0.11646	112.8667	HOPE - MCNAB REC 115KV CKT 1
FDNS	00NR	0	20WP	G15_057	FROM->TO	G14-057T 345.00 - SUNNYSIDE 345KV CKT 1	717	789	0.11652	112.8653	MORISNT4 138.00 - STILLWATER 138KV CKT 1
FDNS	00NR	0	20WP	G15_057	FROM->TO	G14-057T 345.00 - SUNNYSIDE 345KV CKT 1	717	789	0.11646	112.856	P12:115:AEPW:TURK3:HOPE3
FDNS	00NR	0	20WP	G15_057	FROM->TO	G14-057T 345.00 - SUNNYSIDE 345KV CKT 1	717	789	0.11699	112.8552	BENTON - WICHITA 345KV CKT 1
FDNS	00NR	0	20WP	G15_057	FROM->TO	G14-057T 345.00 - SUNNYSIDE 345KV CKT 1	717	789	0.11673	112.853	G15074_T 345.00 - JEFFREY ENERGY CENTER 345KV CKT 1
FDNS	00NR	0	16WP	G15_057	FROM->TO	G14-057T 345.00 - SUNNYSIDE 345KV CKT 1	717	789	0.11699	112.8518	GEN563173 1-G15082_3 0.6900
FDNS	00NR	0	20WP	G15_057	FROM->TO	G14-057T 345.00 - SUNNYSIDE 345KV CKT 1	717	789	0.11687	112.8505	G13-010T 345.00 - SPEARVILLE 345KV CKT 1
FDNS	00NR	0	20WP	G15_057	FROM->TO	G14-057T 345.00 - SUNNYSIDE 345KV CKT 1	717	789	0.11654	112.8485	COUCH SES - MC NIEL 115KV CKT 1
FDNS	00NR	0	20WP	G15_057	FROM->TO	G14-057T 345.00 - SUNNYSIDE 345KV CKT 1	717	789	0.11716	112.8447	WEATHERFORD TAP - WEATHERFORD WIND FARM 138KV CKT 1
FDNS	00NR	0	20WP	G15_057	FROM->TO	G14-057T 345.00 - SUNNYSIDE 345KV CKT 1	717	789	0.1168	112.8444	BLACKBERRY - NEOSHO 345KV CKT 1
FDNS	00NR	0	20WP	G15_057	FROM->TO	G14-057T 345.00 - SUNNYSIDE 345KV CKT 1	717	789	0.11665	112.8441	LEWIS CREEK SWITCHYARD 138/22.0KV TRANSFORMER CKT 1
FDNS	00NR	0	20WP	G15_057	FROM->TO	G14-057T 345.00 - SUNNYSIDE 345KV CKT 1	717	789	0.11751	112.8435	HINTON - WEATHERFORD JCT. 138KV CKT 1
FDNS	00NR	0	20WP	G15_057	FROM->TO	G14-057T 345.00 - SUNNYSIDE 345KV CKT 1	717	789	0.11665	112.8396	LEWIS CREEK SWITCHYARD 138/22.0KV TRANSFORMER CKT 1
FDNS	00NR	0	16WP	G15_057	FROM->TO	G14-057T 345.00 - SUNNYSIDE 345KV CKT 1	717	789	0.11754	112.8375	GRAPEVINE INTERCHANGE - NICHOLS STATION 230KV CKT 1
FDNS	00NR	0	16WP	G15_057	FROM->TO	G14-057T 345.00 - SUNNYSIDE 345KV CKT 1	717	789	0.11754	112.8375	GRAPEVINE INTERCHANGE - NICHOLS STATION 230KV CKT 1
FDNS	00NR	0	20WP	G15_057	FROM->TO	G14-057T 345.00 - SUNNYSIDE 345KV CKT 1	717	789	0.11687	112.8369	OMPA-WALTERS - WALTERS 69KV CKT 1
FDNS	00NR	0	20WP	G15_057	FROM->TO	G14-057T 345.00 - SUNNYSIDE 345KV CKT 1	717	789	0.11687	112.8369	OMPA-WALTERS - WALTERS 69KV CKT 1
FDNS	00NR	0	20WP	G15_057	FROM->TO	G14-057T 345.00 - SUNNYSIDE 345KV CKT 1	717	789	0.11664	112.8359	CYPRESS - HARTBURG 500KV CKT 1
FDNS	00NR	0	20WP	G15_057	FROM->TO	G14-057T 345.00 - SUNNYSIDE 345KV CKT 1	717	789	0.11727	112.8325	SOUTHWESTERN STATION - VERDEN 138KV CKT 1
FDNS	00NR	0	20WP	G15_057	FROM->TO	G14-057T 345.00 - SUNNYSIDE 345KV CKT 1	717	789	0.11665	112.8315	GEN334432 1-SABINE UNIT 2
FDNS	00NR	0	20WP	G15_057	FROM->TO	G14-057T 345.00 - SUNNYSIDE 345KV CKT 1	717	789	0.11665	112.831	GEN334431 1-SABINE UNIT 1
FDNS	00NR	0	20WP	G15_057	FROM->TO	G14-057T 345.00 - SUNNYSIDE 345KV CKT 1	717	789	0.11646	112.8308	TURK (TURK 1) 138/115/13.2KV TRANSFORMER CKT 1
FDNS	00NR	0	20WP	G15_057	FROM->TO	G14-057T 345.00 - SUNNYSIDE 345KV CKT 1	717	789	0.11646	112.8308	TURK (TURK 1) 138/115/13.2KV TRANSFORMER CKT 1
FDNS	00NR	0	20WP	G15_057	FROM->TO	G14-057T 345.00 - SUNNYSIDE 345KV CKT 1	717	789	0.11646	112.8307	MCNAB REC - Turk 115 115KV CKT 1
FDNS	00NR	0	20WP	G15_057	FROM->TO	G14-057T 345.00 - SUNNYSIDE 345KV CKT 1	717	789	0.11666	112.8301	7JASPER 345.00 - BLACKBERRY 345KV CKT 1
FDNS	00NR	0	20WP	G15_057	FROM->TO	G14-057T 345.00 - SUNNYSIDE 345KV CKT 1	717	789	0.11665	112.8268	GEN501823 1-TECHE UNIT 3
FDNS	00NR	0	20WP	G15_057	FROM->TO	G14-057T 345.00 - SUNNYSIDE 345KV CKT 1	717	789	0.11665	112.8248	GEN501970 1-EVANGELINE UNIT 7
FDNS	00NR	0	20WP	G15_057	FROM->TO	G14-057T 345.00 - SUNNYSIDE 345KV CKT 1	717	789	0.11665	112.8197	GEN505616 1-BROKEN BOW
FDNS	00NR	0	20WP	G15_057	FROM->TO	G14-057T 345.00 - SUNNYSIDE 345KV CKT 1	717	789	0.11698	112.8185	P12:69:WFEC-AEPW:COMANCH2:WALTRS-2
FDNS	00NR	0	20WP	G15_057	FROM->TO	G14-057T 345.00 - SUNNYSIDE 345KV CKT 1	717	789	0.11817	112.8114	CANADIAN - NOBLE 138KV CKT 1
FDNS	00NR	0	20WP	G15_057	FROM->TO	G14-057T 345.00 - SUNNYSIDE 345KV CKT 1	717	789	0.11727	112.8107	NORTH 29TH CHICKASHA - VERDEN 138KV CKT 1
FDNS	00NR	0	20WP	G15_057	FROM->TO	G14-057T 345.00 - SUNNYSIDE 345KV CKT 1	717	789	0.11665	112.8098	P12:161:AEPW:CHAMSPR5:FARMING5
FDNS	00NR	0	16WP	G15_057	FROM->TO	G14-057T 345.00 - SUNNYSIDE 345KV CKT 1	717	789	0.11699	112.8084	GEN562710 1-G15_022_3 0.5500
FDNS	00NR	0	20WP	G15_057	FROM->TO	G14-057T 345.00 - SUNNYSIDE 345KV CKT 1	717	789	0.11669	112.8043	7LUTESVIL 345.00 - 7ST FRANC 345.00 345KV CKT 1
FDNS	00NR	0	20WP	G15_057	FROM->TO	G14-057T 345.00 - SUNNYSIDE 345KV CKT 1	717	789	0.11665	112.8033	GEN334392 1-EXXON MOBIL IPP 1
FDNS	00NR	0	20WP	G15_057	FROM->TO	G14-057T 345.00 - SUNNYSIDE 345KV CKT 1	717	789	0.11682	112.8	G14_001T 345.00 - WICHITA 345KV CKT 1
FDNS	00NR	0	20WP	G15_057	FROM->TO	G14-057T 345.00 - SUNNYSIDE 345KV CKT 1	717	789	0.11665	112.7969	GEN334393 1-EXXON MOBIL IPP 2
FDNS	00NR	0	20WP	G15_057	FROM->TO	G14-057T 345.00 - SUNNYSIDE 345KV CKT 1	717	789	0.11665	112.7969	GEN334394 1-EXXON MOBIL IPP 3
FDNS	00NR	0	20WP	G15_057	FROM->TO	G14-057T 345.00 - SUNNYSIDE 345KV CKT 1	717	789	0.11908	112.7939	FRANKLIN SW - WESTMOORE 138KV CKT 1
FDNS	00NR	0	20WP	G15_057	FROM->TO	G14-057T 345.00 - SUNNYSIDE 345KV CKT 1	717	789	0.11666	112.7921	LAKEOVER - MCADAMS 500KV CKT 1
FDNS	00NR	0	16WP	G15_057	FROM->TO	G14-057T 345.00 - SUNNYSIDE 345KV CKT 1	717	789	0.11699	112.7898	GEN620315 1-BIG STONE GEN
FDNS	00NR	0	20WP	G15_057	FROM->TO	G14-057T 345.00 - SUNNYSIDE 345KV CKT 1	717	789	0.11822	112.7872	P12:138:OKGE:3TERM27
FDNS	00NR	0	20WP	G15_057	FROM->TO	G14-057T 345.00 - SUNNYSIDE 345KV CKT 1	717	789	0.11674	112.7859	EMPORIA ENERGY CENTER - SWISSVALE 345KV CKT 1
FDNS	00NR	0	20WP	G15_057	FROM->TO	G14-057T 345.00 - SUNNYSIDE 345KV CKT 1	717	789	0.11665	112.7835	ST FRANCIS - ST FRANCIS 1 161KV CKT Z1
FDNS	00NR	0	20WP	G15_057	FROM->TO	G14-057T 345.00 - SUNNYSIDE 345KV CKT 1	717	789	0.11667	112.7809	MCADAMS - WOLF CREEK 500KV CKT 1
FDNS	00NR	0	20WP	G15_057	FROM->TO	G14-057T 345.00 - SUNNYSIDE 345KV CKT 1	717	789	0.11665	112.779	SABINE 230/22.0KV TRANSFORMER CKT 1
FDNS	00NR	0	20WP	G15_057	FROM->TO	G14-057T 345.00 - SUNNYSIDE 345KV CKT 1	717	789	0.1168	112.7787	FLETCHER - MARLOW JCT 69KV CKT 1
FDNS	00NR	0	20WP	G15_057	FROM->TO	G14-057T 345.00 - SUNNYSIDE 345KV CKT 1	717	789	0.11676	112.7734	SWISSVALE - WEST GARDNER 345KV CKT 1
FDNS	00NR	0	20WP	G15_057	FROM->TO	G14-057T 345.00 - SUNNYSIDE 345KV CKT 1	717	789	0.11751	112.7689	HINTON - REDROCKRD4 138.00 138KV CKT 1
FDNS	00NR	0	16WP	G15_057	FROM->TO	G14-057T 345.00 - SUNNYSIDE 345KV CKT 1	717	789	0.11699	112.7677	GEN511851 1-COMANCHE #1
FDNS	00NR	0	20WP	G15_057	FROM->TO	G14-057T 345.00 - SUNNYSIDE 345KV CKT 1	717	789	0.11665	112.7667	GEN501972 1-EVANGELINE UNIT 7-2
FDNS	00NR	0	20WP	G15_057	FROM->TO	G14-057T 345.00 - SUNNYSIDE 345KV CKT 1	717	789	0.11665	112.7666	GEN501971 1-EVANGELINE UNIT 7-1
FDNS	00NR	0	20WP	G15_057	FROM->TO	G14-057T 345.00 - SUNNYSIDE 345KV CKT 1	717	789	0.11665	112.7601	P12:138:AEPW:R.S.S-4:T.P.S.-4
FDNS	00NR	0	20WP	G15_057	FROM->TO	G14-057T 345.00 - SUNNYSIDE 345KV CKT 1	717	789	0.11731	112.7558	CORNVILLE - NORGE ROAD 138KV CKT 1
FDNS	00NR	0	20WP	G15_057	FROM->TO	G14-057T 345.00 - SUNNYSIDE 345KV CKT 1	717	789	0.11731	112.7558	CORNVILLE - NORGE ROAD 138KV CKT 1
FDNS	00NR	0	20WP	G15_057	FROM->TO	G14-057T 345.00 - SUNNYSIDE 345KV CKT 1	717	789	0.11675	112.7544	P12:138:OKGE:3TERM12
FDNS	00NR	0	20WP	G15_057	FROM->TO	G14-057T 345.00 - SUNNYSIDE 345KV CKT 1	717	789	0.11649	112.7529	ENOWILT - LONE OAK 138KV CKT 1
FDNS	00NR	0	20WP	G15_057	FROM->TO	G14-057T 345.00 - SUNNYSIDE 345KV CKT 1	717	789	0.11716	112.7506	WEATHERFORD SOUTHEAST - WEATHERFORD TAP 138KV CKT 1
FDNS	00NR	0	20WP	G15_057	FROM->TO	G14-057T 345.00 - SUNNYSIDE 345KV CKT 1	717	789	0.11649	112.7442	ENOWILT - SARDIS 138KV CKT 1
FDNS	00NR	0	20WP	G15_057	FROM->TO	G14-057T 345.00 - SUNNYSIDE 345KV CKT 1	717	789	0.11665	112.7431	GEN501912 1-ACADIA UNIT CT1B
FDNS	00NR	0	20WP	G15_057	FROM->TO	G14-057T 345.00 - SUNNYSIDE 345KV CKT 1	717	789	0.11694	112.743	FRANKLIN - FRANKLIN SW 138KV CKT 1
FDNS	00NR	0	20WP	G15_057	FROM->TO	G14-057T 345.00 - SUNNYSIDE 345KV CKT 1	717	789	0.1167	112.7424	P12:138:WFEC-AEPW:ELKCTY-4:ERICK4
FDNS	00NR	0	20WP	G15_057	FROM->TO	G14-057T 345.00 - SUNNYSIDE 345KV CKT 1	717	789	0.11665	112.7423	GEN501911 1-ACADIA UNIT CT1A
FDNS	00NR	0	20WP	G15_057	FROM->TO	G14-057T 345.00 - SUNNYSIDE 345KV CKT 1	717	789	0.11863	112.7421	LASALLE - STONEWAL LH138.00 138KV CKT 1
FDNS	00NR	0	20WP	G15_057	FROM->TO	G14-057T 345.00 - SUNNYSIDE 345KV CKT 1	717	789	0.1165	112.7364	AMITY SS - MURFREESBORO EAST (AECC) 115KV CKT 1
FDNS	00NR	0	20WP	G15_057	FROM->TO	G14-057T 345.00 - SUNNYSIDE 345KV CKT 1	717	789	0.11665	112.7343	P12:138:AEPW:R.S.S.-4:R:96YALE-4

SOLUTION	GROUP	SCENARIO	SEASON	SOURCE	DIRECTION	MONITORED ELEMENT	RATEA (MVA)	RATEB(MVA)	TDF	TC%LOADING (% MVA)	CONTINGENCY
FDNS	00NR	0	16WP	G15_057	FROM->TO	G14-057T 345.00 - SUNNYSIDE 345KV CKT 1	717	789	0.11699	112.7303	GEN600004 2-PRAIRIE ISLAND G2
FDNS	00NR	0	16WP	G15_057	FROM->TO	G14-057T 345.00 - SUNNYSIDE 345KV CKT 1	717	789	0.11699	112.7275	GEN600003 1-PRAIRIE ISLAND G1
FDNS	00NR	0	20WP	G15_057	FROM->TO	G14-057T 345.00 - SUNNYSIDE 345KV CKT 1	717	789	0.11727	112.7268	CORNVILLE - NORTH 29TH CHICKASHA 138KV CKT 1
FDNS	00NR	0	20WP	G15_057	FROM->TO	G14-057T 345.00 - SUNNYSIDE 345KV CKT 1	717	789	0.11863	112.724	STONEWAL LH138.00 - TUPELO TAP 138KV CKT 1
FDNS	00NR	0	20WP	G15_057	FROM->TO	G14-057T 345.00 - SUNNYSIDE 345KV CKT 1	717	789	0.11817	112.7182	NOBLE - PURCELL4 138.00 138KV CKT 1
FDNSLock	00NR	0	16WP	G15_057	FROM->TO	G14-057T 345.00 - SUNNYSIDE 345KV CKT 1	717	789	0.11699	112.715	GEN600006 1-AS KING
FDNS	00NR	0	20WP	G15_057	FROM->TO	G14-057T 345.00 - SUNNYSIDE 345KV CKT 1	717	789	0.12123	112.7058	CIMARRON - NORTHWEST 345KV CKT 1
FDNS	00NR	0	20WP	G15_057	FROM->TO	G14-057T 345.00 - SUNNYSIDE 345KV CKT 1	717	789	0.11716	112.7001	CLINTON JUNCTION - CLINTON NATURAL GAS TAP 138KV CKT 1
FDNS	00NR	0	20WP	G15_057	FROM->TO	G14-057T 345.00 - SUNNYSIDE 345KV CKT 1	717	789	0.11687	112.6983	Canadian Pump Station - REDROCKRD4 138.00 138KV CKT 1
FDNS	00NR	0	20WP	G15_057	FROM->TO	G14-057T 345.00 - SUNNYSIDE 345KV CKT 1	717	789	0.11758	112.6767	CRINER - PAYNE 138.00 138KV CKT 1
FDNS	00NR	0	16WP	G15_057	FROM->TO	G14-057T 345.00 - SUNNYSIDE 345KV CKT 1	717	789	0.11708	112.6686	P12:138:WFEC:MSL09
FDNS	00NR	0	16WP	G15_057	FROM->TO	G14-057T 345.00 - SUNNYSIDE 345KV CKT 1	717	789	0.11792	112.6633	P12:138:AEPW-OGE:CORNVIL4:CIMARON4
FDNS	00NR	0	20WP	G15_057	FROM->TO	G14-057T 345.00 - SUNNYSIDE 345KV CKT 1	717	789	0.11698	112.6419	COMANCHE - WALTERS 69KV CKT 1
FDNSLock	00NR	0	16WP	G15_057	FROM->TO	G14-057T 345.00 - SUNNYSIDE 345KV CKT 1	717	789	0.11699	112.6382	GEN636641 1-LOUISA UNIT 1
FDNS	00NR	0	16WP	G15_057	FROM->TO	G14-057T 345.00 - SUNNYSIDE 345KV CKT 1	717	789	0.11699	112.6	GEN615002 2-COAL CREEK
FDNS	00NR	0	16WP	G15_057	FROM->TO	G14-057T 345.00 - SUNNYSIDE 345KV CKT 1	717	789	0.11699	112.5883	GEN600005 1-MONTICELLO
FDNS	00NR	0	16WP	G15_057	FROM->TO	G14-057T 345.00 - SUNNYSIDE 345KV CKT 1	717	789	0.11946	112.5634	CHISHOLM7 345.00 (CHISHOLM) 345/230/13.2KV TRANSFORMER CKT 1
FDNS	00NR	0	16WP	G15_057	FROM->TO	G14-057T 345.00 - SUNNYSIDE 345KV CKT 1	717	789	0.11699	112.5594	GEN562754 1-G15031_5 0.6900
FDNS	00NR	0	16WP	G15_057	FROM->TO	G14-057T 345.00 - SUNNYSIDE 345KV CKT 1	717	789	0.11699	112.5259	GEN635213 3-NEAL UNIT 3
FDNS	00NR	0	16WP	G15_057	FROM->TO	G14-057T 345.00 - SUNNYSIDE 345KV CKT 1	717	789	0.11699	112.5005	GEN562756 1-G15031_7 0.6900
FDNS	00NR	0	16WP	G15_057	FROM->TO	G14-057T 345.00 - SUNNYSIDE 345KV CKT 1	717	789	0.11699	112.5	GEN629074 1-ARNOLD LOWSIDE OF GSU XFMR
FDNS	00NR	0	16WP	G15_057	FROM->TO	G14-057T 345.00 - SUNNYSIDE 345KV CKT 1	717	789	0.11699	112.4623	GEN562023 1-G11_020_3 0.6900
FDNS	00NR	0	16WP	G15_057	FROM->TO	G14-057T 345.00 - SUNNYSIDE 345KV CKT 1	717	789	0.11699	112.4623	GEN562026 1-G11_019_3 0.6900
FDNS	00NR	0	16WP	G15_057	FROM->TO	G14-057T 345.00 - SUNNYSIDE 345KV CKT 1	717	789	0.11699	112.4584	GEN562556 1-G14_046_3 0.3420
FDNS	00NR	0	16WP	G15_057	FROM->TO	G14-057T 345.00 - SUNNYSIDE 345KV CKT 1	717	789	0.11946	112.4526	CHISHOLM7 345.00 - GRACEMONT 345KV CKT 1
FDNS	00NR	0	16WP	G15_057	FROM->TO	G14-057T 345.00 - SUNNYSIDE 345KV CKT 1	717	789	0.11699	112.451	BIG STONE 230/24.0KV TRANSFORMER CKT 1
FDNS	00NR	0	16WP	G15_057	FROM->TO	G14-057T 345.00 - SUNNYSIDE 345KV CKT 1	717	789	0.11699	112.3702	GEN563142 1-G15079_3 0.5500
FDNS	00NR	0	16WP	G15_057	FROM->TO	G14-057T 345.00 - SUNNYSIDE 345KV CKT 1	717	789	0.11699	112.3702	GEN563151 1-G15080_2 0.5500
FDNS	00NR	0	16WP	G15_057	FROM->TO	G14-057T 345.00 - SUNNYSIDE 345KV CKT 1	717	789	0.11699	112.3332	GEN523971 1-HARRINGTON GEN #1 24 KV
FDNS	00NR	0	16WP	G15_057	FROM->TO	G14-057T 345.00 - SUNNYSIDE 345KV CKT 1	717	789	0.11699	112.3331	GEN523973 1-HARRINGTON GEN #3 24 KV
FDNS	00NR	0	16WP	G15_057	FROM->TO	G14-057T 345.00 - SUNNYSIDE 345KV CKT 1	717	789	0.11699	112.333	GEN523972 1-HARRINGTON GEN #2 24 KV
FDNS	00NR	0	16WP	G15_057	FROM->TO	G14-057T 345.00 - SUNNYSIDE 345KV CKT 1	717	789	0.11665	112.293	NORTHWEST TEXARKANA - VALLIANT 345KV CKT 1
FDNS	00NR	0	16WP	G15_057	FROM->TO	G14-057T 345.00 - SUNNYSIDE 345KV CKT 1	717	789	0.11665	112.293	NORTHWEST TEXARKANA - VALLIANT 345KV CKT 1
FDNS	00NR	0	16WP	G15_057	FROM->TO	G14-057T 345.00 - SUNNYSIDE 345KV CKT 1	717	789	0.11803	112.2788	P12:230:AEPW-SPS:SWEETWT6:WHEELER 6
FDNS	00NR	0	16WP	G15_057	FROM->TO	G14-057T 345.00 - SUNNYSIDE 345KV CKT 1	717	789	0.11803	112.2782	STLN-DEMARC6 - SWEETWATER 230KV CKT 1
FDNS	00NR	0	16WP	G15_057	FROM->TO	G14-057T 345.00 - SUNNYSIDE 345KV CKT 1	717	789	0.11803	112.2771	STATELINE INTERCHANGE - STLN-DEMARC6 230KV CKT 1
FDNSLock	00NR	0	16WP	G15_057	FROM->TO	G14-057T 345.00 - SUNNYSIDE 345KV CKT 1	717	789	0.11699	112.2748	GEN600000 1-SHERBURNECNTY G1
FDNS	00NR	0	16WP	G15_057	FROM->TO	G14-057T 345.00 - SUNNYSIDE 345KV CKT 1	717	789	0.11699	112.2359	GEN511848 1-SOUTHWESTERN STATION #3
FDNS	00NR	0	20WP	G15_057	FROM->TO	G14-057T 345.00 - SUNNYSIDE 345KV CKT 1	717	789	0.11665	112.2265	803-OKLAUNION
FDNS	00NR	0	16WP	G15_057	FROM->TO	G14-057T 345.00 - SUNNYSIDE 345KV CKT 1	717	789	0.11699	112.2003	GEN600001 2-SHERBURNE CNTY G2
FDNS	00NR	0	16WP	G15_057	FROM->TO	G14-057T 345.00 - SUNNYSIDE 345KV CKT 1	717	789	0.11699	112.163	GEN563042 1-G15068_3 0.6900
FDNS	00NR	0	16WP	G15_057	FROM->TO	G14-057T 345.00 - SUNNYSIDE 345KV CKT 1	717	789	0.11699	112.1422	GEN527901 1-HOBBS PLANT #1 (CT)
FDNS	00NR	0	16WP	G15_057	FROM->TO	G14-057T 345.00 - SUNNYSIDE 345KV CKT 1	717	789	0.11699	112.1422	GEN527902 1-HOBBS PLANT #2 (CT)
FDNSLock	00NR	0	16WP	G15_057	FROM->TO	G14-057T 345.00 - SUNNYSIDE 345KV CKT 1	717	789	0.11699	112.0855	GEN629075 1-OTTUMWA GENERATOR FOR OTTUMWA UNIT NO 1
FDNS	00NR	0	20WP	G15_057	FROM->TO	G14-057T 345.00 - SUNNYSIDE 345KV CKT 1	717	789	0.11503	111.9515	P12:138:OKGE:3TERM39
FDNSLock	00NR	0	16WP	G15_057	FROM->TO	G14-057T 345.00 - SUNNYSIDE 345KV CKT 1	717	789	0.11699	111.9266	GEN635214 4-NEAL UNIT 4
FDNS	00NR	0	16WP	G15_057	FROM->TO	G14-057T 345.00 - SUNNYSIDE 345KV CKT 1	717	789	0.11699	111.9233	SHERBURNE CO 345/24.0KV TRANSFORMER CKT 1
FDNS	00NR	0	20WP	G15_057	FROM->TO	G14-057T 345.00 - SUNNYSIDE 345KV CKT 1	717	789	0.11661	111.9074	RANCHRD7 345.00 - SOONER 345KV CKT 1
FDNS	00NR	0	20WP	G15_057	FROM->TO	G14-057T 345.00 - SUNNYSIDE 345KV CKT 1	717	789	0.11674	111.8943	CHILDRESS - LAKE PAULINE 138KV CKT 1
FDNS	00NR	0	20WP	G15_057	FROM->TO	G14-057T 345.00 - SUNNYSIDE 345KV CKT 1	717	789	0.11674	111.8943	CHILDRESS - LAKE PAULINE 138KV CKT 1
FDNS	00NR	0	20WP	G15_057	FROM->TO	G14-057T 345.00 - SUNNYSIDE 345KV CKT 1	717	789	0.1167	111.8901	CHILDRESS - HOLLIS TAP 138KV CKT 1
FDNS	00NR	0	20WP	G15_057	FROM->TO	G14-057T 345.00 - SUNNYSIDE 345KV CKT 1	717	789	0.11665	111.8664	GEN562084 1-G11_050_3 0.6900
FDNS	00NR	0	16WP	G15_057	FROM->TO	G14-057T 345.00 - SUNNYSIDE 345KV CKT 1	717	789	0.11699	111.861	GEN563043 1-G15068_4 0.6900
FDNS	00NR	0	16WP	G15_057	FROM->TO	G14-057T 345.00 - SUNNYSIDE 345KV CKT 1	717	789	0.11699	111.8591	GEN563273 2-G15093_4 0.6900
FDNS	00NR	0	20WP	G15_057	FROM->TO	G14-057T 345.00 - SUNNYSIDE 345KV CKT 1	717	789	0.11551	111.847	MAYSVILLE - PAOLI 138KV CKT 1
FDNS	00NR	0	20WP	G15_057	FROM->TO	G14-057T 345.00 - SUNNYSIDE 345KV CKT 1	717	789	0.11665	111.8386	GEN560187 1-WTH WIND 0.5750
FDNS	00NR	0	16WP	G15_057	FROM->TO	G14-057T 345.00 - SUNNYSIDE 345KV CKT 1	717	789	0.11699	111.8362	GEN526333 1-JONES GEN #3 21 KV
FDNS	00NR	0	16WP	G15_057	FROM->TO	G14-057T 345.00 - SUNNYSIDE 345KV CKT 1	717	789	0.11699	111.8361	GEN526334 1-JONES_4 116.500
FDNS	00NR	0	20WP	G15_057	FROM->TO	G14-057T 345.00 - SUNNYSIDE 345KV CKT 1	717	789	0.11775	111.8224	CIMARRON - MATHWSN7 345.00 345KV CKT 1
FDNS	00NR	0	20WP	G15_057	FROM->TO	G14-057T 345.00 - SUNNYSIDE 345KV CKT 1	717	789	0.11775	111.8224	CIMARRON - MATHWSN7 345.00 345KV CKT 2
FDNS	00NR	0	20WP	G15_057	FROM->TO	G14-057T 345.00 - SUNNYSIDE 345KV CKT 1	717	789	0.11665	111.8182	GEN560112 1-G08_037_3 0.6900
FDNS	00NR	0	16WP	G15_057	FROM->TO	G14-057T 345.00 - SUNNYSIDE 345KV CKT 1	717	789	0.11699	111.8	GEN344225 1-1CAL G1 25.000
FDNS	00NR	0	16WP	G15_057	FROM->TO	G14-057T 345.00 - SUNNYSIDE 345KV CKT 1	717	789	0.11953	111.7926	P12:230:AEPW:ELKCITY6:SWEETWT6
FDNS	00NR	0	16WP	G15_057	FROM->TO	G14-057T 345.00 - SUNNYSIDE 345KV CKT 1	717	789	0.11699	111.7857	GEN525844 1-ELK_1 118.000
FDNS	00NR	0	20WP	G15_057	FROM->TO	G14-057T 345.00 - SUNNYSIDE 345KV CKT 1	717	789	0.11665	111.7821	GEN521103 1-BLUE CANYON WIND FARM
FDNS	00NR	0	20WP	G15_057	FROM->TO	G14-057T 345.00 - SUNNYSIDE 345KV CKT 1	717	789	0.11665	111.7799	GEN520812 1-ANADRK5
FDNS	00NR	0	20WP	G15_057	FROM->TO	G14-057T 345.00 - SUNNYSIDE 345KV CKT 1	717	789	0.11665	111.7798	GEN520813 1-ANADRK6
FDNS	00NR	0	20WP	G15_057	FROM->TO	G14-057T 345.00 - SUNNYSIDE 345KV CKT 1	717	789	0.11709	111.7795	DRAPER LAKE - MIDWEST TAP 138KV CKT 1
FDNS	00NR	0	16WP	G15_057	FROM->TO	G14-057T 345.00 - SUNNYSIDE 345KV CKT 1	717	789	0.11699	111.779	GEN525845 1-ELK_2 1 138.00
FDNS	00NR	0	20WP	G15_057	FROM->TO	G14-057T 345.00 - SUNNYSIDE 345KV CKT 1	717	789	0.11665	111.7781	GEN563052 1-G15069_3 0.6900
FDNS	00NR	0	16WP	G15_057	FROM->TO	G14-057T 345.00 - SUNNYSIDE 345KV CKT 1	717	789	0.11699	111.7743	GEN600002 3-SHERBURNE CNTY G3
FDNS	00NR	0	20WP	G15_057	FROM->TO	G14-057T 345.00 - SUNNYSIDE 345KV CKT 1	717	789	0.11551	111.7716	MAYSVILLE - MAYSVLT4 138.00 138KV CKT 1
FDNS	00NR	0	20WP	G15_057	FROM->TO	G14-057T 345.00 - SUNNYSIDE 345KV CKT 1	717	789	0.11714	111.7619	P12:138:OKGE:3TERM21
FDNS	00NR	0	20WP	G15_057	FROM->TO	G14-057T 345.00 - SUNNYSIDE 345KV CKT 1	717	789	0.11665	111.7611	GEN562691 1-G15_015_3 0.6900
FDNS	00NR	0	20WP	G15_057	FROM->TO	G14-057T 345.00 - SUNNYSIDE 345KV CKT 1	717	789	0.11665	111.7556	GEN562772 1-G15034_3 0.6900
FDNS	00NR	0	20WP	G15_057	FROM->TO	G14-057T 345.00 - SUNNYSIDE 345KV CKT 1	717	789	0.11665	111.7408	GEN511961 1-DEMPSEY-WTG10.7000
FDNS	00NR	0	20WP	G15_057	FROM->TO	G14-057T 345.00 - SUNNYSIDE 345KV CKT 1	717	789	0.1189	111.7297	SOONER - SPRING CREEK 345KV CKT 1
FDNS	00NR	0	20WP	G15_057	FROM->TO	G14-057T 345.00 - SUNNYSIDE 345KV CKT 1	717	789	0.11665	111.7267	P12:069:OKGE:3TERM42
FDNS	00NR	0	20WP	G15_057	FROM->TO	G14-057T 345.00 - SUNNYSIDE 345KV CKT 1	717	789	0.1189	111.7265	NORTHWEST - SPRING CREEK 345KV CKT 1

SOLUTION	GROUP	SCENARIO	SEASON	SOURCE	DIRECTION	MONITORED ELEMENT	RATEA (MVA)	RATEB(MVA)	TDF	TC%LOADING (% MVA)	CONTINGENCY
FDNS	00NR	0	20WP	G15_057	FROM->TO	G14-057T 345.00 - SUNNYSIDE 345KV CKT 1	717	789	0.11575	111.7238	ARBUCKLE - SULPHR 4 138.00 138KV CKT 1
FDNS	00NR	0	20WP	G15_057	FROM->TO	G14-057T 345.00 - SUNNYSIDE 345KV CKT 1	717	789	0.11674	111.7062	GLASSES - MADILL INDUSTRIAL TAP 138KV CKT 1
FDNS	00NR	0	20WP	G15_057	FROM->TO	G14-057T 345.00 - SUNNYSIDE 345KV CKT 1	717	789	0.11551	111.7055	MAYSVLT4 138.00 - PRAIRIE POINT 138KV CKT 1
FDNS	00NR	0	20WP	G15_057	FROM->TO	G14-057T 345.00 - SUNNYSIDE 345KV CKT 1	717	789	0.11663	111.7005	P12:138:WFEC:MSL11
FDNS	00NR	0	20WP	G15_057	FROM->TO	G14-057T 345.00 - SUNNYSIDE 345KV CKT 1	717	789	0.11663	111.7005	P12:138:WFEC-AEPW:PHAROAH4:LONEOAK4
FDNS	00NR	0	20WP	G15_057	FROM->TO	G14-057T 345.00 - SUNNYSIDE 345KV CKT 1	717	789	0.11674	111.6941	CANEY CREEK - JOHNSON COUNTY 138KV CKT 1
FDNS	00NR	0	20WP	G15_057	FROM->TO	G14-057T 345.00 - SUNNYSIDE 345KV CKT 1	717	789	0.11665	111.689	GEN515443 1-MNCOWND1 0.7000
FDNS	00NR	0	20WP	G15_057	FROM->TO	G14-057T 345.00 - SUNNYSIDE 345KV CKT 1	717	789	0.1179	111.6853	MOREWOOD SW - NINE MILE 138KV CKT 1
FDNS	00NR	0	20WP	G15_057	FROM->TO	G14-057T 345.00 - SUNNYSIDE 345KV CKT 1	717	789	0.1167	111.6712	ALTUS JUNCTION - RUSSELL 138KV CKT 1
FDNS	00NR	0	20WP	G15_057	FROM->TO	G14-057T 345.00 - SUNNYSIDE 345KV CKT 1	717	789	0.1167	111.6712	ALTUS JUNCTION - RUSSELL 138KV CKT 1
FDNS	00NR	0	20WP	G15_057	FROM->TO	G14-057T 345.00 - SUNNYSIDE 345KV CKT 1	717	789	0.11665	111.6708	GEN560183 1-REDHIL-WTG1 12.000
FDNS	00NR	0	20WP	G15_057	FROM->TO	G14-057T 345.00 - SUNNYSIDE 345KV CKT 1	717	789	0.11665	111.6625	INDEPENDENCE 500/26.0KV TRANSFORMER CKT 1
FDNS	00NR	0	20WP	G15_057	FROM->TO	G14-057T 345.00 - SUNNYSIDE 345KV CKT 1	717	789	0.11674	111.6578	GLASSES - RUSSETT 138KV CKT 1
FDNS	00NR	0	20WP	G15_057	FROM->TO	G14-057T 345.00 - SUNNYSIDE 345KV CKT 1	717	789	0.11665	111.654	GEN600067 9-HIGH BRIDGE
FDNS	00NR	0	20WP	G15_057	FROM->TO	G14-057T 345.00 - SUNNYSIDE 345KV CKT 1	717	789	0.11673	111.6529	OVEXFRMCCOVE
FDNS	00NR	0	20WP	G15_057	FROM->TO	G14-057T 345.00 - SUNNYSIDE 345KV CKT 1	717	789	0.11694	111.6441	P12:138:WFEC:MSL08
FDNS	00NR	0	16WP	G15_057	FROM->TO	G14-057T 345.00 - SUNNYSIDE 345KV CKT 1	717	789	0.11699	111.6433	GEN525562 1-TOLK GEN #2 24 KV
FDNS	00NR	0	20WP	G15_057	FROM->TO	G14-057T 345.00 - SUNNYSIDE 345KV CKT 1	717	789	0.11652	111.6433	CARTER - CHICKASAW 138KV CKT 1
FDNS	00NR	0	16WP	G15_057	FROM->TO	G14-057T 345.00 - SUNNYSIDE 345KV CKT 1	717	789	0.11699	111.6359	GEN563202 1-G15085_3 0.5500
FDNS	00NR	0	20WP	G15_057	FROM->TO	G14-057T 345.00 - SUNNYSIDE 345KV CKT 1	717	789	0.11678	111.6359	CANADIAN RIVER - MCALESTER SOUTH 138KV CKT 1
FDNS	00NR	0	20WP	G15_057	FROM->TO	G14-057T 345.00 - SUNNYSIDE 345KV CKT 1	717	789	0.11678	111.6359	CANADIAN RIVER - MCALESTER SOUTH 138KV CKT 1
FDNS	00NR	0	20WP	G15_057	FROM->TO	G14-057T 345.00 - SUNNYSIDE 345KV CKT 1	717	789	0.11905	111.6344	LEBANON - TEXOMA JCT 138KV CKT 1
FDNS	00NR	0	20WP	G15_057	FROM->TO	G14-057T 345.00 - SUNNYSIDE 345KV CKT 1	717	789	0.11678	111.6341	CANADIAN RIVER () 345/138/13.8KV TRANSFORMER CKT 1
FDNS	00NR	0	20WP	G15_057	FROM->TO	G14-057T 345.00 - SUNNYSIDE 345KV CKT 1	717	789	0.11678	111.6341	CANADIAN RIVER () 345/138/13.8KV TRANSFORMER CKT 1
FDNS	00NR	0	20WP	G15_057	FROM->TO	G14-057T 345.00 - SUNNYSIDE 345KV CKT 1	717	789	0.11665	111.6328	P12:230:UMZB:# 112 #: NU IN SD. NU-RCDC & DRY CREEK XFMR
FDNS	00NR	0	16WP	G15_057	FROM->TO	G14-057T 345.00 - SUNNYSIDE 345KV CKT 1	717	789	0.11653	111.6299	LYDIA - WELSH 345KV CKT 1
FDNS	00NR	0	16WP	G15_057	FROM->TO	G14-057T 345.00 - SUNNYSIDE 345KV CKT 1	717	789	0.11653	111.6299	LYDIA - WELSH 345KV CKT 1
FDNS	00NR	0	20WP	G15_057	FROM->TO	G14-057T 345.00 - SUNNYSIDE 345KV CKT 1	717	789	0.11665	111.627	RCDC EAST 4230.00 - RED CEDAR DC 230KV CKT 1
FDNS	00NR	0	20WP	G15_057	FROM->TO	G14-057T 345.00 - SUNNYSIDE 345KV CKT 1	717	789	0.11626	111.6223	ROCKY POINT - SPRINGDALE 138KV CKT 1
FDNS	00NR	0	20WP	G15_057	FROM->TO	G14-057T 345.00 - SUNNYSIDE 345KV CKT 1	717	789	0.11665	111.6211	GEN562902 1-G15052_3 0.6900
FDNS	00NR	0	20WP	G15_057	FROM->TO	G14-057T 345.00 - SUNNYSIDE 345KV CKT 1	717	789	0.11658	111.621	HUGO (HUGO 1) 345/138/13.8KV TRANSFORMER CKT 1
FDNS	00NR	0	20WP	G15_057	FROM->TO	G14-057T 345.00 - SUNNYSIDE 345KV CKT 1	717	789	0.11665	111.6184	GEN563242 1-G15090_3 0.6900
FDNS	00NR	0	20WP	G15_057	FROM->TO	G14-057T 345.00 - SUNNYSIDE 345KV CKT 1	717	789	0.11551	111.6131	PRAIRIE POINT - RATLIFF 138KV CKT 1
FDNS	00NR	0	20WP	G15_057	FROM->TO	G14-057T 345.00 - SUNNYSIDE 345KV CKT 1	717	789	0.11685	111.6118	CHAMBER SPRINGS - CLARKSVILLE 345KV CKT 1
FDNS	00NR	0	20WP	G15_057	FROM->TO	G14-057T 345.00 - SUNNYSIDE 345KV CKT 1	717	789	0.11668	111.6064	GRPRAR1-LNX3345.00 - GRPRAR 345KV CKT Z
FDNS	00NR	0	20WP	G15_057	FROM->TO	G14-057T 345.00 - SUNNYSIDE 345KV CKT 1	717	789	0.11668	111.606	GRPRAR1-LNX3345.00 - HOLT.CO3 345.00 345KV CKT 1
FDNS	00NR	0	16WP	G15_057	FROM->TO	G14-057T 345.00 - SUNNYSIDE 345KV CKT 1	717	789	0.11699	111.5979	GEN527166 1-MUSTANG_6 118.000
FDNS	00NR	0	20WP	G15_057	FROM->TO	G14-057T 345.00 - SUNNYSIDE 345KV CKT 1	717	789	0.11665	111.5943	GEN629072 4-LANSING GENERATOR FOR UNITS NO4 EIA CODE 1
FDNS	00NR	0	16WP	G15_057	FROM->TO	G14-057T 345.00 - SUNNYSIDE 345KV CKT 1	717	789	0.11803	111.5888	CHISHOLM6 230.00 - SWEETWATER 230KV CKT 1
FDNS	00NR	0	20WP	G15_057	FROM->TO	G14-057T 345.00 - SUNNYSIDE 345KV CKT 1	717	789	0.11665	111.5796	GEN562078 1-G11_051_3 0.6900
FDNS	00NR	0	20WP	G15_057	FROM->TO	G14-057T 345.00 - SUNNYSIDE 345KV CKT 1	717	789	0.11684	111.5767	P12:138:AEPW:112GORE4:SNYDER-4
FDNS	00NR	0	20WP	G15_057	FROM->TO	G14-057T 345.00 - SUNNYSIDE 345KV CKT 1	717	789	0.11665	111.5711	GEN524285 1-WILDORADO WIND GEN
FDNS	00NR	0	20WP	G15_057	FROM->TO	G14-057T 345.00 - SUNNYSIDE 345KV CKT 1	717	789	0.11575	111.5694	JOLLYVILLE - SULPHR 4 138.00 138KV CKT 1
FDNS	00NR	0	20WP	G15_057	FROM->TO	G14-057T 345.00 - SUNNYSIDE 345KV CKT 1	717	789	0.11665	111.5522	GEN562587 1-G14_056_3 0.6900
FDNS	00NR	0	20WP	G15_057	FROM->TO	G14-057T 345.00 - SUNNYSIDE 345KV CKT 1	717	789	0.11665	111.5512	GEN514805 1-SOONER UNIT 1
FDNS	00NR	0	20WP	G15_057	FROM->TO	G14-057T 345.00 - SUNNYSIDE 345KV CKT 1	717	789	0.1179	111.5491	BEARCAT 138.00 - NINE MILE 138KV CKT 1
FDNS	00NR	0	20WP	G15_057	FROM->TO	G14-057T 345.00 - SUNNYSIDE 345KV CKT 1	717	789	0.11665	111.5454	GEN524295 1-SPNSPUR_WND10.6900
FDNS	00NR	0	20WP	G15_057	FROM->TO	G14-057T 345.00 - SUNNYSIDE 345KV CKT 1	717	789	0.11665	111.5399	GEN657749 1-YOUNG 1 GENERATOR
FDNS	00NR	0	16WP	G15_057	FROM->TO	G14-057T 345.00 - SUNNYSIDE 345KV CKT 1	717	789	0.11644	111.5346	JOHNSON COUNTY (JOHNCO) 345/138/13.8KV TRANSFORMER CKT 1
FDNS	00NR	0	16WP	G15_057	FROM->TO	G14-057T 345.00 - SUNNYSIDE 345KV CKT 1	717	789	0.11699	111.5255	GEN635023 3-WALTER SCOTT UNIT 3
FDNS	00NR	0	20WP	G15_057	FROM->TO	G14-057T 345.00 - SUNNYSIDE 345KV CKT 1	717	789	0.11665	111.5198	GEN514806 1-SOONER UNIT 2
FDNS	00NR	0	20WP	G15_057	FROM->TO	G14-057T 345.00 - SUNNYSIDE 345KV CKT 1	717	789	0.11665	111.5196	GEN524023 1-NICHOLS GEN #3 22 KV
FDNS	00NR	0	16WP	G15_057	FROM->TO	G14-057T 345.00 - SUNNYSIDE 345KV CKT 1	717	789	0.11699	111.5165	GEN562590 1-G14_057_3 0.6900
FDNS	00NR	0	20WP	G15_057	FROM->TO	G14-057T 345.00 - SUNNYSIDE 345KV CKT 1	717	789	0.11655	111.5107	CROCKETT - TENASKA RUSK COUNTY 345KV CKT 1
FDNS	00NR	0	20WP	G15_057	FROM->TO	G14-057T 345.00 - SUNNYSIDE 345KV CKT 1	717	789	0.11655	111.5059	LEBROCK - TENASKA RUSK COUNTY 345KV CKT 1
FDNS	00NR	0	20WP	G15_057	FROM->TO	G14-057T 345.00 - SUNNYSIDE 345KV CKT 1	717	789	0.11575	111.4877	JOLLYVILLE - KERR MCGEE CIMARRON 138KV CKT 1
FDNS	00NR	0	20WP	G15_057	FROM->TO	G14-057T 345.00 - SUNNYSIDE 345KV CKT 1	717	789	0.11665	111.4834	GEN562812 1-G15040_3 0.3570
FDNS	00NR	0	20WP	G15_057	FROM->TO	G14-057T 345.00 - SUNNYSIDE 345KV CKT 1	717	789	0.11665	111.4785	GEN562270 1-G12-020-2 0.6900
FDNS	00NR	0	20WP	G15_057	FROM->TO	G14-057T 345.00 - SUNNYSIDE 345KV CKT 1	717	789	0.11665	111.4769	GEN562882 1-G15047_3 0.6900
FDNS	00NR	0	20WP	G15_057	FROM->TO	G14-057T 345.00 - SUNNYSIDE 345KV CKT 1	717	789	0.11665	111.4766	GEN563132 1-G15078_3 0.3570
FDNS	00NR	0	20WP	G15_057	FROM->TO	G14-057T 345.00 - SUNNYSIDE 345KV CKT 1	717	789	0.11665	111.4697	GEN563102 1-G15075_3 0.5500
FDNS	00NR	0	20WP	G15_057	FROM->TO	G14-057T 345.00 - SUNNYSIDE 345KV CKT 1	717	789	0.11665	111.4569	GEN563062 1-G15071_3 0.6900
FDNS	00NR	0	20WP	G15_057	FROM->TO	G14-057T 345.00 - SUNNYSIDE 345KV CKT 1	717	789	0.1179	111.4547	BEARCAT 138.00 - MOORELAND 138KV CKT 1
FDNS	00NR	0	20WP	G15_057	FROM->TO	G14-057T 345.00 - SUNNYSIDE 345KV CKT 1	717	789	0.1179	111.4501	P12:138:WFEC:MSL14
FDNS	00NR	0	20WP	G15_057	FROM->TO	G14-057T 345.00 - SUNNYSIDE 345KV CKT 1	717	789	0.11575	111.4369	ARBWIND4 138.00 - KERR MCGEE CIMARRON 138KV CKT 1
FDNS	00NR	0	20WP	G15_057	FROM->TO	G14-057T 345.00 - SUNNYSIDE 345KV CKT 1	717	789	0.11665	111.4202	GEN562974 1-G15060_5 0.6900
FDNS	00NR	0	20WP	G15_057	FROM->TO	G14-057T 345.00 - SUNNYSIDE 345KV CKT 1	717	789	0.11665	111.4197	GEN521112 1-ORME3 13.800
FDNS	00NR	0	20WP	G15_057	FROM->TO	G14-057T 345.00 - SUNNYSIDE 345KV CKT 1	717	789	0.11645	111.4177	BROWN - RUSSETT 138KV CKT 1
FDNS	00NR	0	16WP	G15_057	FROM->TO	G14-057T 345.00 - SUNNYSIDE 345KV CKT 1	717	789	0.11699	111.4166	GEN562762 1-G15033_3 0.6900
FDNS	00NR	0	20WP	G15_057	FROM->TO	G14-057T 345.00 - SUNNYSIDE 345KV CKT 1	717	789	0.11665	111.4113	GEN345671 2-1RUSH G2 18.000
FDNS	00NR	0	20WP	G15_057	FROM->TO	G14-057T 345.00 - SUNNYSIDE 345KV CKT 1	717	789	0.11665	111.4104	GEN562973 1-G15060_4 0.6900
FDNS	00NR	0	20WP	G15_057	FROM->TO	G14-057T 345.00 - SUNNYSIDE 345KV CKT 1	717	789	0.11665	111.4094	GEN345670 1-1RUSH G1 18.000
FDNS	00NR	0	16WP	G15_057	FROM->TO	G14-057T 345.00 - SUNNYSIDE 345KV CKT 1	717	789	0.11699	111.4055	GEN562655 1-G14_074_3 0.6900
FDNS	00NR	0	20WP	G15_057	FROM->TO	G14-057T 345.00 - SUNNYSIDE 345KV CKT 1	717	789	0.11586	111.3964	CHICKASAW - TOTAL 138KV CKT 1
FDNS	00NR	0	20WP	G15_057	FROM->TO	G14-057T 345.00 - SUNNYSIDE 345KV CKT 1	717	789	0.11665	111.3839	GEN560105 1-G08-22 0.6900
FDNS	00NR	0	20WP	G15_057	FROM->TO	G14-057T 345.00 - SUNNYSIDE 345KV CKT 1	717	789	0.11665	111.3817	4SIOUX 1 138.00 138/18.0KV TRANSFORMER CKT 1
FDNS	00NR	0	20WP	G15_057	FROM->TO	G14-057T 345.00 - SUNNYSIDE 345KV CKT 1	717	789	0.11645	111.372	RUSSETT - RUSSETT 138KV CKT 1
FDNS	00NR	0	20WP	G15_057	FROM->TO	G14-057T 345.00 - SUNNYSIDE 345KV CKT 1	717	789	0.11665	111.3666	GEN562550 1-G14_040_3 0.6900
FDNS	00NR	0	20WP	G15_057	FROM->TO	G14-057T 345.00 - SUNNYSIDE 345KV CKT 1	717	789	0.11665	111.3633	GEN681522 3-GENOA 3

SOLUTION	GROUP	SCENARIO	SEASON	SOURCE	DIRECTION	MONITORED ELEMENT	RATEA (MVA)	RATEB(MVA)	TDF	TC%LOADING (% MVA)	CONTINGENCY
FDNS	00NR	0	16WP	G15_057	FROM->TO	G14-057T 345.00 - SUNNYSIDE 345KV CKT 1	717	789	0.11699	111.3403	GEN562685 1-G15_013_3 0.3550
FDNS	00NR	0	20WP	G15_057	FROM->TO	G14-057T 345.00 - SUNNYSIDE 345KV CKT 1	717	789	0.11665	111.3293	GEN511853 1-COMANCHE #3
FDNS	00NR	0	20WP	G15_057	FROM->TO	G14-057T 345.00 - SUNNYSIDE 345KV CKT 1	717	789	0.11665	111.3226	GEN527161 1-MUSTANG GEN #1
FDNS	00NR	0	20WP	G15_057	FROM->TO	G14-057T 345.00 - SUNNYSIDE 345KV CKT 1	717	789	0.11665	111.3226	GEN527162 1-MUSTANG GEN #2
FDNS	00NR	0	20WP	G15_057	FROM->TO	G14-057T 345.00 - SUNNYSIDE 345KV CKT 1	717	789	0.11611	111.3211	ROCKY POINT - SUNNYSIDE 138KV CKT 1
FDNS	00NR	0	20WP	G15_057	FROM->TO	G14-057T 345.00 - SUNNYSIDE 345KV CKT 1	717	789	0.11665	111.3161	EASTDC - ERCOT EQUIVALENCE 345KV CKT 1
FDNS	00NR	0	20WP	G15_057	FROM->TO	G14-057T 345.00 - SUNNYSIDE 345KV CKT 1	717	789	0.11665	111.3113	GEN511962 2-RKYRDGW2-1 0.7000
FDNS	00NR	0	20WP	G15_057	FROM->TO	G14-057T 345.00 - SUNNYSIDE 345KV CKT 1	717	789	0.11665	111.2988	GEN672321 1-SHAND GENERATOR 1
FDNS	00NR	0	20WP	G15_057	FROM->TO	G14-057T 345.00 - SUNNYSIDE 345KV CKT 1	717	789	0.11641	111.2978	RUSSETT - SPRINGDALE 138KV CKT 1
FDNS	00NR	0	20WP	G15_057	FROM->TO	G14-057T 345.00 - SUNNYSIDE 345KV CKT 1	717	789	0.11665	111.2896	GEN525494 1-PLANT X GEN #4 20 KV
FDNS	00NR	0	20WP	G15_057	FROM->TO	G14-057T 345.00 - SUNNYSIDE 345KV CKT 1	717	789	0.11959	111.2832	G15063_T 345.00 - MATHWSN7 345.00 345KV CKT 1
FDNS	00NR	0	20WP	G15_057	FROM->TO	G14-057T 345.00 - SUNNYSIDE 345KV CKT 1	717	789	0.11665	111.2755	GEN672310 1-POPLAR RIVER GENERATOR 1
FDNS	00NR	0	20WP	G15_057	FROM->TO	G14-057T 345.00 - SUNNYSIDE 345KV CKT 1	717	789	0.11665	111.2755	GEN672311 2-POPLAR RIVER GENERATOR 2
FDNS	00NR	0	20WP	G15_057	FROM->TO	G14-057T 345.00 - SUNNYSIDE 345KV CKT 1	717	789	0.11665	111.2739	GEN527882 1-CUNNINGHAM GEN #2 20 KV
FDNS	00NR	0	20WP	G15_057	FROM->TO	G14-057T 345.00 - SUNNYSIDE 345KV CKT 1	717	789	0.11665	111.266	GEN672306 6-BOUNDARY DAM GENERATOR 6
FDNS	00NR	0	20WP	G15_057	FROM->TO	G14-057T 345.00 - SUNNYSIDE 345KV CKT 1	717	789	0.11665	111.2655	GEN563192 1-G15084_3 0.5500
FDNS	00NR	0	20WP	G15_057	FROM->TO	G14-057T 345.00 - SUNNYSIDE 345KV CKT 1	717	789	0.11665	111.2616	GEN562512 1-G14_020_3 0.6900
FDNS	00NR	0	20WP	G15_057	FROM->TO	G14-057T 345.00 - SUNNYSIDE 345KV CKT 1	717	789	0.11665	111.2595	GEN511852 1-COMANCHE #2
FDNS	00NR	0	20WP	G15_057	FROM->TO	G14-057T 345.00 - SUNNYSIDE 345KV CKT 1	717	789	0.11665	111.2591	GEN344895 2-1LAB G2 20.000
FDNS	00NR	0	20WP	G15_057	FROM->TO	G14-057T 345.00 - SUNNYSIDE 345KV CKT 1	717	789	0.11665	111.258	GEN527163 1-MUSTANG GEN #3 22 KV
FDNS	00NR	0	20WP	G15_057	FROM->TO	G14-057T 345.00 - SUNNYSIDE 345KV CKT 1	717	789	0.11656	111.2526	P12:138:WFEC-AEPW:GOLDENSW4:CRAIGJT4
FDNS	00NR	0	20WP	G15_057	FROM->TO	G14-057T 345.00 - SUNNYSIDE 345KV CKT 1	717	789	0.11665	111.2434	GEN562892 1-G15048_3 0.6900
FDNS	00NR	0	20WP	G15_057	FROM->TO	G14-057T 345.00 - SUNNYSIDE 345KV CKT 1	717	789	0.11665	111.2366	GEN681542 6-JP MADGETT
FDNS	00NR	0	20WP	G15_057	FROM->TO	G14-057T 345.00 - SUNNYSIDE 345KV CKT 1	717	789	0.11594	111.235	ARKANSAS NUCLEAR ONE - FT SMITH 500KV CKT 1
FDNS	00NR	0	20WP	G15_057	FROM->TO	G14-057T 345.00 - SUNNYSIDE 345KV CKT 1	717	789	0.11594	111.235	ARKANSAS NUCLEAR ONE - FT SMITH 500KV CKT 1
FDNS	00NR	0	20WP	G15_057	FROM->TO	G14-057T 345.00 - SUNNYSIDE 345KV CKT 1	717	789	0.11665	111.2295	GEN344896 3-1LAB G3 20.000
FDNS	00NR	0	20WP	G15_057	FROM->TO	G14-057T 345.00 - SUNNYSIDE 345KV CKT 1	717	789	0.11665	111.2284	GEN344897 4-1LAB G4 20.000
FDNS	00NR	0	20WP	G15_057	FROM->TO	G14-057T 345.00 - SUNNYSIDE 345KV CKT 1	717	789	0.11665	111.2281	GEN344894 1-1LAB G1 20.000
FDNS	00NR	0	20WP	G15_057	FROM->TO	G14-057T 345.00 - SUNNYSIDE 345KV CKT 1	717	789	0.11675	111.2223	P12:138:WFEC:MSL16
FDNS	00NR	0	20WP	G15_057	FROM->TO	G14-057T 345.00 - SUNNYSIDE 345KV CKT 1	717	789	0.11547	111.2221	ARDMORE WEST - CARTER 138KV CKT 1
FDNS	00NR	0	16WP	G15_057	FROM->TO	G14-057T 345.00 - SUNNYSIDE 345KV CKT 1	717	789	0.11699	111.2074	GEN525561 1-TOLK GEN #1 24 KV
FDNS	00NR	0	16WP	G15_057	FROM->TO	G14-057T 345.00 - SUNNYSIDE 345KV CKT 1	717	789	0.11699	111.2074	GEN527903 1-HOBBS PLANT #3 (ST)
FDNS	00NR	0	16WP	G15_057	FROM->TO	G14-057T 345.00 - SUNNYSIDE 345KV CKT 1	717	789	0.11699	111.2054	GEN563272 1-G15093_3 0.6900
FDNS	00NR	0	20WP	G15_057	FROM->TO	G14-057T 345.00 - SUNNYSIDE 345KV CKT 1	717	789	0.11665	111.2032	GEN523461 1-BLACKHAWK GEN #1
FDNS	00NR	0	20WP	G15_057	FROM->TO	G14-057T 345.00 - SUNNYSIDE 345KV CKT 1	717	789	0.11665	111.2031	GEN523462 1-BLACKHAWK GEN #2
FDNS	00NR	0	20WP	G15_057	FROM->TO	G14-057T 345.00 - SUNNYSIDE 345KV CKT 1	717	789	0.11684	111.1791	CACHE - SNYDER 138KV CKT 1
FDNS	00NR	0	20WP	G15_057	FROM->TO	G14-057T 345.00 - SUNNYSIDE 345KV CKT 1	717	789	0.11665	111.1605	P12:138:WFEC:MSL07
FDNS	00NR	0	20WP	G15_057	FROM->TO	G14-057T 345.00 - SUNNYSIDE 345KV CKT 1	717	789	0.11665	111.1605	P12:138:WFEC-AEPW:HUGOPP4:ATOKA--4
FDNS	00NR	0	20WP	G15_057	FROM->TO	G14-057T 345.00 - SUNNYSIDE 345KV CKT 1	717	789	0.11659	111.1553	P12:138:AEPW-SWPA:LONEOAK4:TUPELO4
FDNS	00NR	0	20WP	G15_057	FROM->TO	G14-057T 345.00 - SUNNYSIDE 345KV CKT 1	717	789	0.11659	111.1553	P12:138:WFEC:MSL06
FDNS	00NR	0	20WP	G15_057	FROM->TO	G14-057T 345.00 - SUNNYSIDE 345KV CKT 1	717	789	0.11665	111.1514	GEN521111 1-ORME2 13.800
FDNS	00NR	0	20WP	G15_057	FROM->TO	G14-057T 345.00 - SUNNYSIDE 345KV CKT 1	717	789	0.11665	111.1465	GEN562699 1-G15_018_3 0.6900
FDNS	00NR	0	20WP	G15_057	FROM->TO	G14-057T 345.00 - SUNNYSIDE 345KV CKT 1	717	789	0.11555	111.1385	SUNNYSIDE (SUNNYSD5) 345/138/13.8KV TRANSFORMER CKT 1
FDNS	00NR	0	20WP	G15_057	FROM->TO	G14-057T 345.00 - SUNNYSIDE 345KV CKT 1	717	789	0.11665	111.1382	GEN521110 1-ORME1 13.800
FDNS	00NR	0	20WP	G15_057	FROM->TO	G14-057T 345.00 - SUNNYSIDE 345KV CKT 1	717	789	0.11843	111.1308	CLARKSVILLE - MUSKOGEE 345KV CKT 1
FDNS	00NR	0	20WP	G15_057	FROM->TO	G14-057T 345.00 - SUNNYSIDE 345KV CKT 1	717	789	0.11843	111.1308	CLARKSVILLE - MUSKOGEE 345KV CKT 1
FDNS	00NR	0	20WP	G15_057	FROM->TO	G14-057T 345.00 - SUNNYSIDE 345KV CKT 1	717	789	0.1167	111.1294	G15085_T 138.00 - RUSSELL 138KV CKT 1
FDNS	00NR	0	20WP	G15_057	FROM->TO	G14-057T 345.00 - SUNNYSIDE 345KV CKT 1	717	789	0.11547	111.1097	ARDMORE WEST - UNIROYAL 138KV CKT 1
FDNS	00NR	0	16WP	G15_057	FROM->TO	G14-057T 345.00 - SUNNYSIDE 345KV CKT 1	717	789	0.11699	111.1021	GEN635024 4-WALTER SCOTT UNIT 4
FDNS	00NR	0	20WP	G15_057	FROM->TO	G14-057T 345.00 - SUNNYSIDE 345KV CKT 1	717	789	0.11665	111.0967	GEN520811 1-ANADRK4
FDNS	00NR	0	20WP	G15_057	FROM->TO	G14-057T 345.00 - SUNNYSIDE 345KV CKT 1	717	789	0.11665	111.0961	GEN563162 1-G15081_3 0.6900
FDNS	00NR	0	20WP	G15_057	FROM->TO	G14-057T 345.00 - SUNNYSIDE 345KV CKT 1	717	789	0.11665	111.0703	GEN661015 1-COYOTE
FDNS	00NR	0	20WP	G15_057	FROM->TO	G14-057T 345.00 - SUNNYSIDE 345KV CKT 1	717	789	0.11665	111.0659	GEN563292 1-G15095_3 0.6900
FDNS	00NR	0	20WP	G15_057	FROM->TO	G14-057T 345.00 - SUNNYSIDE 345KV CKT 1	717	789	0.11616	111.0612	P12:138:OKGE:3TERM40
FDNS	00NR	0	20WP	G15_057	FROM->TO	G14-057T 345.00 - SUNNYSIDE 345KV CKT 1	717	789	0.11589	111.0535	CARTRCO4 138.00 - RATLIFF 138KV CKT 1
FDNS	00NR	0	20WP	G15_057	FROM->TO	G14-057T 345.00 - SUNNYSIDE 345KV CKT 1	717	789	0.11665	111.0431	GEN563122 1-G15077_3 0.3850
FDNS	00NR	0	20WP	G15_057	FROM->TO	G14-057T 345.00 - SUNNYSIDE 345KV CKT 1	717	789	0.11665	111.0154	GEN562861 1-G15045_2 0.4800
FDNS	00NR	0	20WP	G15_057	FROM->TO	G14-057T 345.00 - SUNNYSIDE 345KV CKT 1	717	789	0.11665	110.9573	GEN657748 1-YOUNG 2 GENERATOR
FDNS	00NR	0	20WP	G15_057	FROM->TO	G14-057T 345.00 - SUNNYSIDE 345KV CKT 1	717	789	0.11665	110.9312	GEN527883 1-CUNNINGHAM GEN #3 22 KV
FDNS	00NR	0	20WP	G15_057	FROM->TO	G14-057T 345.00 - SUNNYSIDE 345KV CKT 1	717	789	0.11665	110.9282	GEN527884 1-CUNNINGHAM GEN #4 22 KV
FDNS	00NR	0	20WP	G15_057	FROM->TO	G14-057T 345.00 - SUNNYSIDE 345KV CKT 1	717	789	0.11677	110.9202	P12:138:WFEC:MSL15
FDNS	00NR	0	20WP	G15_057	FROM->TO	G14-057T 345.00 - SUNNYSIDE 345KV CKT 1	717	789	0.11665	110.8807	GEN562992 1-G15063_3 0.6900
FDNS	00NR	0	20WP	G15_057	FROM->TO	G14-057T 345.00 - SUNNYSIDE 345KV CKT 1	717	789	0.11547	110.8733	SUNNYSIDE - UNIROYAL 138KV CKT 1
FDNS	00NR	0	20WP	G15_057	FROM->TO	G14-057T 345.00 - SUNNYSIDE 345KV CKT 1	717	789	0.1167	110.8647	P12:138:AEPW:SHAM4WT:CHILD4WT
FDNS	00NR	0	20WP	G15_057	FROM->TO	G14-057T 345.00 - SUNNYSIDE 345KV CKT 1	717	789	0.11665	110.8625	GEN562704 1-G15_020_3 0.3550
FDNS	00NR	0	20WP	G15_057	FROM->TO	G14-057T 345.00 - SUNNYSIDE 345KV CKT 1	717	789	0.11665	110.8623	GEN526331 1-JONES GEN #1 22 KV
FDNS	00NR	0	20WP	G15_057	FROM->TO	G14-057T 345.00 - SUNNYSIDE 345KV CKT 1	717	789	0.11665	110.8621	GEN526332 1-JONES GEN #2 21 KV
FDNS	00NR	0	20WP	G15_057	FROM->TO	G14-057T 345.00 - SUNNYSIDE 345KV CKT 1	717	789	0.11665	110.8621	GEN620315 1-BIG STONE GEN
FDNS	00NR	0	20WP	G15_057	FROM->TO	G14-057T 345.00 - SUNNYSIDE 345KV CKT 1	717	789	0.11665	110.8294	GEN562952 1-G15057_3 0.6500
FDNS	00NR	0	20WP	G15_057	FROM->TO	G14-057T 345.00 - SUNNYSIDE 345KV CKT 1	717	789	0.11665	110.7897	GEN511851 1-COMANCHE #1
FDNS	00NR	0	20WP	G15_057	FROM->TO	G14-057T 345.00 - SUNNYSIDE 345KV CKT 1	717	789	0.11665	110.7889	GEN600004 2-PRAIRIE ISLAND G2
FDNS	00NR	0	17SP	G15_057	FROM->TO	G14-057T 345.00 - SUNNYSIDE 345KV CKT 1	717	789	0.35365	110.7884	CIMARRON - MINCO 345KV CKT 1
FDNS	00NR	0	20WP	G15_057	FROM->TO	G14-057T 345.00 - SUNNYSIDE 345KV CKT 1	717	789	0.11665	110.7863	GEN600003 1-PRAIRIE ISLAND G1
FDNS	00NR	0	20WP	G15_057	FROM->TO	G14-057T 345.00 - SUNNYSIDE 345KV CKT 1	717	789	0.11665	110.7686	GEN600006 1-AS KING
FDNS	00NR	0	20WP	G15_057	FROM->TO	G14-057T 345.00 - SUNNYSIDE 345KV CKT 1	717	789	0.11665	110.7635	GEN563173 1-G15082_3 0.6900
FDNS	00NR	0	20WP	G15_057	FROM->TO	G14-057T 345.00 - SUNNYSIDE 345KV CKT 1	717	789	0.11665	110.7507	GEN562710 1-G15_022_3 0.5500
FDNS	00NR	0	20WP	G15_057	FROM->TO	G14-057T 345.00 - SUNNYSIDE 345KV CKT 1	717	789	0.11905	110.7451	CANEY CREEK - TEXOMA JCT 138KV CKT 1
FDNS	00NR	0	20WP	G15_057	FROM->TO	G14-057T 345.00 - SUNNYSIDE 345KV CKT 1	717	789	0.11723	110.7436	GRAPEVINE INTERCHANGE - STATELINE INTERCHANGE 230KV CKT 1
FDNS	00NR	0	20WP	G15_057	FROM->TO	G14-057T 345.00 - SUNNYSIDE 345KV CKT 1	717	789	0.11723	110.7436	GRAPEVINE INTERCHANGE - STATELINE INTERCHANGE 230KV CKT 1

SOLUTION	GROUP	SCENARIO	SEASON	SOURCE	DIRECTION	MONITORED ELEMENT	RATEA (MVA)	RATEB(MVA)	TDF	TC%LOADING (% MVA)	CONTINGENCY
FDNS	00NR	0	20WP	G15_057	FROM->TO	G14-057T 345.00 - SUNNYSIDE 345KV CKT 1	717	789	0.11665	110.7218	GEN532751 1-WOLF CREEK GENERATING STATION UNIT 1
FDNS	00NR	0	20WP	G15_057	FROM->TO	G14-057T 345.00 - SUNNYSIDE 345KV CKT 1	717	789	0.11759	110.6708	P12:138:AEPW-OGE:CORNVIL4:CIMARON4
FDNS	00NR	0	20WP	G15_057	FROM->TO	G14-057T 345.00 - SUNNYSIDE 345KV CKT 1	717	789	0.11719	110.6105	GRAPEVINE INTERCHANGE - NICHOLS STATION 230KV CKT 1
FDNS	00NR	0	20WP	G15_057	FROM->TO	G14-057T 345.00 - SUNNYSIDE 345KV CKT 1	717	789	0.11719	110.6105	GRAPEVINE INTERCHANGE - NICHOLS STATION 230KV CKT 1
FDNS	00NR	0	20WP	G15_057	FROM->TO	G14-057T 345.00 - SUNNYSIDE 345KV CKT 1	717	789	0.11665	110.6	GEN615002 2-COAL CREEK
FDNS	00NR	0	20WP	G15_057	FROM->TO	G14-057T 345.00 - SUNNYSIDE 345KV CKT 1	717	789	0.11665	110.5967	GEN635213 3-NEAL UNIT 3
FDNS	00NR	0	20WP	G15_057	FROM->TO	G14-057T 345.00 - SUNNYSIDE 345KV CKT 1	717	789	0.11665	110.5961	GEN629074 1-ARNOLD LOWSIDE OF GSU XFMR
FDNS	00NR	0	20WP	G15_057	FROM->TO	G14-057T 345.00 - SUNNYSIDE 345KV CKT 1	717	789	0.11631	110.531	NORTHWEST TEXARKANA - VALLIANT 345KV CKT 1
FDNS	00NR	0	20WP	G15_057	FROM->TO	G14-057T 345.00 - SUNNYSIDE 345KV CKT 1	717	789	0.11631	110.531	NORTHWEST TEXARKANA - VALLIANT 345KV CKT 1
FDNS	00NR	0	20WP	G15_057	FROM->TO	G14-057T 345.00 - SUNNYSIDE 345KV CKT 1	717	789	0.11672	110.5277	P12:138:WFEC:MSL09
FDNS	00NR	0	16WP	G15_057	FROM->TO	G14-057T 345.00 - SUNNYSIDE 345KV CKT 1	717	789	0.11633	110.5148	LYDIA - VALLIANT 345KV CKT 1
FDNS	00NR	0	16WP	G15_057	FROM->TO	G14-057T 345.00 - SUNNYSIDE 345KV CKT 1	717	789	0.11633	110.5148	LYDIA - VALLIANT 345KV CKT 1
FDNS	00NR	0	20WP	G15_057	FROM->TO	G14-057T 345.00 - SUNNYSIDE 345KV CKT 1	717	789	0.11665	110.5037	GEN636641 1-LOUISA UNIT 1
FDNS	00NR	0	20WP	G15_057	FROM->TO	G14-057T 345.00 - SUNNYSIDE 345KV CKT 1	717	789	0.11665	110.5028	GEN562754 1-G15031_5 0.6900
FDNS	00NR	0	20WP	G15_057	FROM->TO	G14-057T 345.00 - SUNNYSIDE 345KV CKT 1	717	789	0.11665	110.469	GEN600005 1-MONTICELLO
FDNS	00NR	0	20WP	G15_057	FROM->TO	G14-057T 345.00 - SUNNYSIDE 345KV CKT 1	717	789	0.1191	110.4636	CHISHOLM7 345.00 () 345/230/13.2KV TRANSFORMER CKT 1
FDNS	00NR	0	20WP	G15_057	FROM->TO	G14-057T 345.00 - SUNNYSIDE 345KV CKT 1	717	789	0.11665	110.445	GEN562556 1-G14_046_3 0.3420
FDNS	00NR	0	20WP	G15_057	FROM->TO	G14-057T 345.00 - SUNNYSIDE 345KV CKT 1	717	789	0.11665	110.444	GEN562756 1-G15031_7 0.6900
FDNS	00NR	0	20WP	G15_057	FROM->TO	G14-057T 345.00 - SUNNYSIDE 345KV CKT 1	717	789	0.1191	110.3828	CHISHOLM7 345.00 - GRACEMONT 345KV CKT 1
FDNS	00NR	0	20WP	G15_057	FROM->TO	G14-057T 345.00 - SUNNYSIDE 345KV CKT 1	717	789	0.11665	110.3618	GEN563142 1-G15079_3 0.5500
FDNS	00NR	0	20WP	G15_057	FROM->TO	G14-057T 345.00 - SUNNYSIDE 345KV CKT 1	717	789	0.11665	110.3618	GEN563151 1-G15080_2 0.5500
FDNS	00NR	0	20WP	G15_057	FROM->TO	G14-057T 345.00 - SUNNYSIDE 345KV CKT 1	717	789	0.11665	110.3553	GEN562023 1-G11_020_3 0.6900
FDNS	00NR	0	20WP	G15_057	FROM->TO	G14-057T 345.00 - SUNNYSIDE 345KV CKT 1	717	789	0.11665	110.3553	GEN562026 1-G11_019_3 0.6900
FDNS	00NR	0	20WP	G15_057	FROM->TO	G14-057T 345.00 - SUNNYSIDE 345KV CKT 1	717	789	0.11665	110.3434	GEN600000 1-SHERBURNECNTY G1
FDNS	00NR	0	20WP	G15_057	FROM->TO	G14-057T 345.00 - SUNNYSIDE 345KV CKT 1	717	789	0.11665	110.3082	GEN629075 1-OTTUMWA GENERATOR FOR OTTUMWA UNIT NO 1
FDNS	00NR	0	20WP	G15_057	FROM->TO	G14-057T 345.00 - SUNNYSIDE 345KV CKT 1	717	789	0.11665	110.2904	GEN600001 2-SHERBURNE CNTY G2
FDNS	00NR	0	20WP	G15_057	FROM->TO	G14-057T 345.00 - SUNNYSIDE 345KV CKT 1	717	789	0.11665	110.2626	GEN523971 1-HARRINGTON GEN #1 24 KV
FDNS	00NR	0	20WP	G15_057	FROM->TO	G14-057T 345.00 - SUNNYSIDE 345KV CKT 1	717	789	0.11665	110.2626	GEN523972 1-HARRINGTON GEN #2 24 KV
FDNS	00NR	0	20WP	G15_057	FROM->TO	G14-057T 345.00 - SUNNYSIDE 345KV CKT 1	717	789	0.11665	110.2626	GEN523973 1-HARRINGTON GEN #3 24 KV
FDNS	00NR	0	20WP	G15_057	FROM->TO	G14-057T 345.00 - SUNNYSIDE 345KV CKT 1	717	789	0.11665	110.2331	GEN511848 1-SOUTHWESTERN STATION #3
FDNS	00NR	0	20WP	G15_057	FROM->TO	G14-057T 345.00 - SUNNYSIDE 345KV CKT 1	717	789	0.11619	110.1764	LYDIA - WELSH 345KV CKT 1
FDNS	00NR	0	20WP	G15_057	FROM->TO	G14-057T 345.00 - SUNNYSIDE 345KV CKT 1	717	789	0.11619	110.1764	LYDIA - WELSH 345KV CKT 1
FDNS	00NR	0	20WP	G15_057	FROM->TO	G14-057T 345.00 - SUNNYSIDE 345KV CKT 1	717	789	0.11665	110.163	GEN527901 1-HOBBS PLANT #1 (CT)
FDNS	00NR	0	20WP	G15_057	FROM->TO	G14-057T 345.00 - SUNNYSIDE 345KV CKT 1	717	789	0.11665	110.163	GEN527902 1-HOBBS PLANT #2 (CT)
FDNS	00NR	0	20WP	G15_057	FROM->TO	G14-057T 345.00 - SUNNYSIDE 345KV CKT 1	717	789	0.11665	110.1255	GEN563042 1-G15068_3 0.6900
FDNS	00NR	0	20WP	G15_057	FROM->TO	G14-057T 345.00 - SUNNYSIDE 345KV CKT 1	717	789	0.11665	110.028	GEN635214 4-NEAL UNIT 4
FDNS	00NR	0	20WP	G15_057	FROM->TO	G14-057T 345.00 - SUNNYSIDE 345KV CKT 1	717	789	0.11768	109.9254	STATELINE INTERCHANGE - STLN-DEMARC6 230KV CKT 1
FDNS	00NR	0	20WP	G15_057	FROM->TO	G14-057T 345.00 - SUNNYSIDE 345KV CKT 1	717	789	0.11768	109.9227	STLN-DEMARC6 - SWEETWATER 230KV CKT 1
FDNS	00NR	0	20WP	G15_057	FROM->TO	G14-057T 345.00 - SUNNYSIDE 345KV CKT 1	717	789	0.11768	109.9175	P12:230:AEPW-SPS:SWEETWT6:WHEELER 6
FDNS	00NR	0	20WP	G15_057	FROM->TO	G14-057T 345.00 - SUNNYSIDE 345KV CKT 1	717	789	0.11665	109.8577	GEN600002 3-SHERBURNE CNTY G3
FDNS	00NR	0	20WP	G15_057	FROM->TO	G14-057T 345.00 - SUNNYSIDE 345KV CKT 1	717	789	0.11665	109.827	GEN563043 1-G15068_4 0.6900
FDNS	00NR	0	20WP	G15_057	FROM->TO	G14-057T 345.00 - SUNNYSIDE 345KV CKT 1	717	789	0.11665	109.8013	GEN526333 1-JONES GEN #3 21 KV
FDNS	00NR	0	20WP	G15_057	FROM->TO	G14-057T 345.00 - SUNNYSIDE 345KV CKT 1	717	789	0.11665	109.8012	GEN526334 1-JONES_4 116.500
FDNS	00NR	0	20WP	G15_057	FROM->TO	G14-057T 345.00 - SUNNYSIDE 345KV CKT 1	717	789	0.11665	109.7846	GEN563273 2-G15093_4 0.6900
FDNS	00NR	0	20WP	G15_057	FROM->TO	G14-057T 345.00 - SUNNYSIDE 345KV CKT 1	717	789	0.11665	109.7685	GEN344225 1-1CAL G1 25.000
FDNS	00NR	0	20WP	G15_057	FROM->TO	G14-057T 345.00 - SUNNYSIDE 345KV CKT 1	717	789	0.11665	109.7635	GEN525844 1-ELK_1 118.000
FDNS	00NR	0	20WP	G15_057	FROM->TO	G14-057T 345.00 - SUNNYSIDE 345KV CKT 1	717	789	0.11665	109.7458	GEN525845 1-ELK_2 1 18.000
FDNS	00NR	0	20WP	G15_057	FROM->TO	G14-057T 345.00 - SUNNYSIDE 345KV CKT 1	717	789	0.11665	109.6155	GEN527166 1-MUSTANG_6 118.000
FDNS	00NR	0	20WP	G15_057	FROM->TO	G14-057T 345.00 - SUNNYSIDE 345KV CKT 1	717	789	0.11665	109.5706	GEN635023 3-WALTER SCOTT UNIT 3
FDNS	00NR	0	20WP	G15_057	FROM->TO	G14-057T 345.00 - SUNNYSIDE 345KV CKT 1	717	789	0.11665	109.5526	GEN563202 1-G15085_3 0.5500
FDNS	00NR	0	20WP	G15_057	FROM->TO	G14-057T 345.00 - SUNNYSIDE 345KV CKT 1	717	789	0.11665	109.5515	GEN528501 1-G14_012 24.000
FDNS	00NR	0	20WP	G15_057	FROM->TO	G14-057T 345.00 - SUNNYSIDE 345KV CKT 1	717	789	0.11917	109.4942	P12:230:AEPW:ELKCITY6:SWEETWT6
FDNS	00NR	0	20WP	G15_057	FROM->TO	G14-057T 345.00 - SUNNYSIDE 345KV CKT 1	717	789	0.11665	109.4928	GEN562590 1-G14_057_3 0.6900
FDNS	00NR	0	16WP	G15_057	FROM->TO	G14-057T 345.00 - SUNNYSIDE 345KV CKT 1	717	789	0.11699	109.4478	EASTDC - ERCOT EQUIVALENCE 345KV CKT 1
FDNS	00NR	0	20WP	G15_057	FROM->TO	G14-057T 345.00 - SUNNYSIDE 345KV CKT 1	717	789	0.11665	109.3772	GEN562762 1-G15033_3 0.6900
FDNS	00NR	0	20WP	G15_057	FROM->TO	G14-057T 345.00 - SUNNYSIDE 345KV CKT 1	717	789	0.11665	109.3658	GEN562655 1-G14_074_3 0.6900
FDNS	00NR	0	20WP	G15_057	FROM->TO	G14-057T 345.00 - SUNNYSIDE 345KV CKT 1	717	789	0.11665	109.3638	GEN525562 1-TOLK GEN #2 24 KV
FDNS	00NR	0	20WP	G15_057	FROM->TO	G14-057T 345.00 - SUNNYSIDE 345KV CKT 1	717	789	0.1161	109.2753	JOHNSON COUNTY (JOHNCO) 345/138/13.8KV TRANSFORMER CKT 1
FDNS	00NR	0	20WP	G15_057	FROM->TO	G14-057T 345.00 - SUNNYSIDE 345KV CKT 1	717	789	0.11665	109.27	GEN562685 1-G15_013_3 0.3550
FDNS	00NR	0	20WP	G15_057	FROM->TO	G14-057T 345.00 - SUNNYSIDE 345KV CKT 1	717	789	0.11665	109.2675	GEN527903 1-HOBBS PLANT #3 (ST)
FDNS	00NR	0	20WP	G15_057	FROM->TO	G14-057T 345.00 - SUNNYSIDE 345KV CKT 1	717	789	0.11768	109.2452	CHISHOLM6 230.00 - SWEETWATER 230KV CKT 1
FDNS	00NR	0	20WP	G15_057	FROM->TO	G14-057T 345.00 - SUNNYSIDE 345KV CKT 1	717	789	0.11665	109.1665	GEN635024 4-WALTER SCOTT UNIT 4
FDNS	00NR	0	20WP	G15_057	FROM->TO	G14-057T 345.00 - SUNNYSIDE 345KV CKT 1	717	789	0.11665	109.1256	GEN563272 1-G15093_3 0.6900
FDNS	00NR	0	20WP	G15_057	FROM->TO	G14-057T 345.00 - SUNNYSIDE 345KV CKT 1	717	789	0.116	109.1187	LYDIA - VALLIANT 345KV CKT 1
FDNS	00NR	0	20WP	G15_057	FROM->TO	G14-057T 345.00 - SUNNYSIDE 345KV CKT 1	717	789	0.116	109.1187	LYDIA - VALLIANT 345KV CKT 1
FDNS	00NR	0	20WP	G15_057	FROM->TO	G14-057T 345.00 - SUNNYSIDE 345KV CKT 1	717	789	0.11665	108.7846	GEN525561 1-TOLK GEN #1 24 KV
FDNS	00NR	0	16WP	G15_057	FROM->TO	G14-057T 345.00 - SUNNYSIDE 345KV CKT 1	717	789	0.1	108.4243	JOHNSON COUNTY - PITTSBURG 345KV CKT 1
FDNS	00NR	0	16WP	G15_057	FROM->TO	G14-057T 345.00 - SUNNYSIDE 345KV CKT 1	717	789	0.1	108.4243	JOHNSON COUNTY - PITTSBURG 345KV CKT 1
FDNS	00NR	0	16WP	G15_057	FROM->TO	G14-057T 345.00 - SUNNYSIDE 345KV CKT 1	717	789	0.11699	108.057	GEN563263 1-G15092_4 0.6900
FDNS	00NR	0	16WP	G15_057	FROM->TO	G14-057T 345.00 - SUNNYSIDE 345KV CKT 1	717	789	0.11307	107.6655	HUGO - VALLIANT 345KV CKT 1
FDNS	00NR	0	16WP	G15_057	FROM->TO	G14-057T 345.00 - SUNNYSIDE 345KV CKT 1	717	789	0.11307	107.6655	HUGO - VALLIANT 345KV CKT 1
FDNS	00NR	0	20WP	G15_057	FROM->TO	G14-057T 345.00 - SUNNYSIDE 345KV CKT 1	717	789	0.09971	106.869	JOHNSON COUNTY - PITTSBURG 345KV CKT 1
FDNS	00NR	0	20WP	G15_057	FROM->TO	G14-057T 345.00 - SUNNYSIDE 345KV CKT 1	717	789	0.09971	106.869	JOHNSON COUNTY - PITTSBURG 345KV CKT 1
FDNS	00NR	0	20WP	G15_057	FROM->TO	G14-057T 345.00 - SUNNYSIDE 345KV CKT 1	717	789	0.11275	106.5939	HUGO - VALLIANT 345KV CKT 1
FDNS	00NR	0	20WP	G15_057	FROM->TO	G14-057T 345.00 - SUNNYSIDE 345KV CKT 1	717	789	0.11275	106.5939	HUGO - VALLIANT 345KV CKT 1
FDNS	00NR	0	16WP	G15_057	FROM->TO	G14-057T 345.00 - SUNNYSIDE 345KV CKT 1	717	789	0.11699	106.381	GEN563262 1-G15092_3 0.6900
FDNS	00NR	0	20WP	G15_057	FROM->TO	G14-057T 345.00 - SUNNYSIDE 345KV CKT 1	717	789	0.11665	105.9962	GEN563263 1-G15092_4 0.6900
FDNS	00NR	0	16WP	G15_057	FROM->TO	G14-057T 345.00 - SUNNYSIDE 345KV CKT 1	717	789	0.12233	104.8432	G14-074T 345.00 - TUCO INTERCHANGE 345KV CKT 1
FDNS	00NR	0	20WP	G15_057	FROM->TO	G14-057T 345.00 - SUNNYSIDE 345KV CKT 1	717	789	0.11665	104.3167	GEN563262 1-G15092_3 0.6900

SOLUTION	GROUP	SCENARIO	SEASON	SOURCE	DIRECTION	MONITORED ELEMENT	RATEA (MVA)	RATEB(MVA)	TDF	TC%LOADING (% MVA)	CONTINGENCY
FDNS	00NR	0	16WP	G15_057	FROM->TO	G14-057T 345.00 - SUNNYSIDE 345KV CKT 1	717	789	0.09662	102.6669	JOHNSON COUNTY - SUNNYSIDE 345KV CKT 1
FDNS	00NR	0	20WP	G15_057	FROM->TO	G14-057T 345.00 - SUNNYSIDE 345KV CKT 1	717	789	0.12202	101.6269	G14-074T 345.00 - TUCO INTERCHANGE 345KV CKT 1
FDNS	00NR	0	20SP	G15_057	FROM->TO	G14-057T 345.00 - SUNNYSIDE 345KV CKT 1	717	789	0.35252	100.8006	CIMARRON - MINCO 345KV CKT 1
FDNS	00NR	0	20WP	G15_057	FROM->TO	G14-057T 345.00 - SUNNYSIDE 345KV CKT 1	717	789	0.09632	100.3152	JOHNSON COUNTY - SUNNYSIDE 345KV CKT 1
FDNS	00NR	0	20WP	G15_057	TO->FROM	MATHWSN7 345.00 - TATONGA7 345.00 345KV CKT 1	1195	1195	0.06734	100.869	CIMARRON - MINCO 345KV CKT 1
FDNS	00NR	0	17SP	G15_057	TO->FROM	NORGE ROAD - SOUTHWESTERN STATION 138KV CKT 1	136	136	0.05595	101.3795	CIMARRON - MINCO 345KV CKT 1
FDNS	00NR	2	16WP	G15_057	FROM->TO	CIMARRON - DRAPER LAKE 345KV CKT 1	717	717	0.2088	138.5163	G14-057T 345.00 - SUNNYSIDE 345KV CKT 1
FDNS	00NR	2	16WP	G15_057	FROM->TO	CIMARRON - DRAPER LAKE 345KV CKT 1	717	717	0.2088	127.9321	G14-057T 345.00 - LAWTON EASTSIDE 345KV CKT 1
FDNS	00NR	2	16WP	G15_057	FROM->TO	CIMARRON - DRAPER LAKE 345KV CKT 1	717	717	0.18448	123.3108	ARCADIA - SEMINOLE 345KV CKT 1
FDNS	00NR	2	16WP	G15_057	FROM->TO	CIMARRON - DRAPER LAKE 345KV CKT 1	717	717	0.235	122.7954	ARCADIA - NORTHWEST 345KV CKT 1
FDNS	00NR	2	16WP	G15_057	FROM->TO	CIMARRON - DRAPER LAKE 345KV CKT 1	717	717	0.18539	121.7993	CLEVELAND - G15066_T 345.00 345KV CKT 1
FDNS	00NR	2	16WP	G15_057	FROM->TO	CIMARRON - DRAPER LAKE 345KV CKT 1	717	717	0.18539	121.0311	G15066_T 345.00 - SOONER 345KV CKT 1
FDNS	00NR	2	16WP	G15_057	FROM->TO	CIMARRON - DRAPER LAKE 345KV CKT 1	717	717	0.18948	117.2211	MATHWSN7 345.00 - NORTHWEST 345KV CKT 1
FDNS	00NR	2	16WP	G15_057	FROM->TO	CIMARRON - DRAPER LAKE 345KV CKT 1	717	717	0.18409	116.4604	CLEVELAND - TULSA NORTH 345KV CKT 1
FDNS	00NR	2	16WP	G15_057	FROM->TO	CIMARRON - DRAPER LAKE 345KV CKT 1	717	717	0.18409	116.4604	CLEVELAND - TULSA NORTH 345KV CKT 1
FDNS	00NR	2	16WP	G15_057	FROM->TO	CIMARRON - DRAPER LAKE 345KV CKT 1	717	717	0.18568	115.4921	CIMARRON - SARA 138KV CKT 1
FDNS	00NR	2	16WP	G15_057	FROM->TO	CIMARRON - DRAPER LAKE 345KV CKT 1	717	717	0.18721	115.0647	P12:138:WFEC:MSL03
FDNS	00NR	2	16WP	G15_057	FROM->TO	CIMARRON - DRAPER LAKE 345KV CKT 1	717	717	0.18604	114.6517	CIMARRON (CIMARON2) 345/138/13.8KV TRANSFORMER CKT 1
FDNS	00NR	2	16WP	G15_057	FROM->TO	CIMARRON - DRAPER LAKE 345KV CKT 1	717	717	0.18586	114.4634	CIMARRON (CIMARON1) 345/138/13.8KV TRANSFORMER CKT 1
FDNS	00NR	2	16WP	G15_057	FROM->TO	CIMARRON - DRAPER LAKE 345KV CKT 1	717	717	0.18568	114.2038	SARA - STHLAKE4 138.00 138KV CKT 1
FDNS	00NR	2	16WP	G15_057	FROM->TO	CIMARRON - DRAPER LAKE 345KV CKT 1	717	717	0.18568	114.0059	MCCLAIN - STHLAKE4 138.00 138KV CKT 1
FDNS	00NR	2	16WP	G15_057	FROM->TO	CIMARRON - DRAPER LAKE 345KV CKT 1	717	717	0.18507	113.6497	CIMARRON - CZECH HALL 138KV CKT 1
FDNS	01ALL	2	16WP	G15_057	FROM->TO	CIMARRON - DRAPER LAKE 345KV CKT 1	717	717	0.20155	113.3296	GRACEMONT - MINCO 345KV CKT 1
FDNS	00NR	2	16WP	G15_057	FROM->TO	CIMARRON - DRAPER LAKE 345KV CKT 1	717	717	0.18507	113.2982	CZECH HALL - XEROX 138KV CKT 1
FDNS	00NR	2	16WP	G15_057	FROM->TO	CIMARRON - DRAPER LAKE 345KV CKT 1	717	717	0.18507	113.2785	MORGAN - XEROX 138KV CKT 1
FDNS	00NR	2	16WP	G15_057	FROM->TO	CIMARRON - DRAPER LAKE 345KV CKT 1	717	717	0.18507	113.1619	MORGAN - MUSTANG 138KV CKT 1
FDNS	00NR	2	16WP	G15_057	FROM->TO	CIMARRON - DRAPER LAKE 345KV CKT 1	717	717	0.18468	112.9719	ANADARKO - POCASSETT 138KV CKT 1
FDNS	00NR	2	16WP	G15_057	FROM->TO	CIMARRON - DRAPER LAKE 345KV CKT 1	717	717	0.18154	112.8432	LACYGNE - WAVERLY7 345.00 345KV CKT 1
FDNS	00NR	2	16WP	G15_057	FROM->TO	CIMARRON - DRAPER LAKE 345KV CKT 1	717	717	0.18468	112.7767	POCASSETT - TUTTLE 138KV CKT 1
FDNS	00NR	2	16WP	G15_057	FROM->TO	CIMARRON - DRAPER LAKE 345KV CKT 1	717	717	0.18418	112.7323	CORN TAP - NAPLESTP 138.00 138KV CKT 1
FDNS	00NR	2	16WP	G15_057	FROM->TO	CIMARRON - DRAPER LAKE 345KV CKT 1	717	717	0.18126	112.7075	GEN509403 1-PIRKEY GENERATION
FDNS	00NR	2	16WP	G15_057	FROM->TO	CIMARRON - DRAPER LAKE 345KV CKT 1	717	717	0.18679	112.653	JOHNSON COUNTY - SUNNYSIDE 345KV CKT 1
FDNS	00NR	2	16WP	G15_057	FROM->TO	CIMARRON - DRAPER LAKE 345KV CKT 1	717	717	0.18154	112.6524	WAVERLY7 345.00 - WOLF CREEK 345KV CKT 1
FDNS	00NR	2	16WP	G15_057	FROM->TO	CIMARRON - DRAPER LAKE 345KV CKT 1	717	717	0.18126	112.646	GEN515040 1-SEMINOLE 1G
FDNS	00NR	2	16WP	G15_057	FROM->TO	CIMARRON - DRAPER LAKE 345KV CKT 1	717	717	0.18418	112.6379	NAPLESTP 138.00 - PAYNE 138.00 138KV CKT 1
FDNS	00NR	2	16WP	G15_057	FROM->TO	CIMARRON - DRAPER LAKE 345KV CKT 1	717	717	0.18126	112.6335	GEN509416 1-TURK GENERATION
FDNS	00NR	2	16WP	G15_057	FROM->TO	CIMARRON - DRAPER LAKE 345KV CKT 1	717	717	0.18126	112.6294	GEN501801 1-DOLET HILLS UNIT1
FDNS	00NR	2	16WP	G15_057	FROM->TO	CIMARRON - DRAPER LAKE 345KV CKT 1	717	717	0.18214	112.3918	CANEYRV7 345.00 - NEOSHO 345KV CKT 1
FDNSLock	00NR	2	16WP	G15_057	FROM->TO	CIMARRON - DRAPER LAKE 345KV CKT 1	717	717	0.18126	112.3144	GEN336821 1-GRAND GULF UNIT
FDNS	00NR	2	16WP	G15_057	FROM->TO	CIMARRON - DRAPER LAKE 345KV CKT 1	717	717	0.18126	112.2754	GEN515042 1-SEMINOLE 3G
FDNS	00NR	2	16WP	G15_057	FROM->TO	CIMARRON - DRAPER LAKE 345KV CKT 1	717	717	0.18468	112.2707	BRIDGECR 138.00 - TUTTLE 138KV CKT 1
FDNS	00NR	2	16WP	G15_057	FROM->TO	CIMARRON - DRAPER LAKE 345KV CKT 1	717	717	0.18214	112.1307	CANEYRV7 345.00 - LATHAMS7 345.00 345KV CKT 1
FDNS	00NR	2	16WP	G15_057	FROM->TO	CIMARRON - DRAPER LAKE 345KV CKT 1	717	717	0.18126	112.0314	GEN515041 1-SEMINOLE 2G
FDNSLock	00NR	2	16WP	G15_057	FROM->TO	CIMARRON - DRAPER LAKE 345KV CKT 1	717	717	0.18126	111.9956	GEN336153 1-WATERFORD UNIT#3
FDNS	00NR	2	16WP	G15_057	FROM->TO	CIMARRON - DRAPER LAKE 345KV CKT 1	717	717	0.18468	111.9022	BRIDGECR 138.00 - SUNSHINE CANYON 138KV CKT 1
FDNS	00NR	2	16WP	G15_057	FROM->TO	CIMARRON - DRAPER LAKE 345KV CKT 1	717	717	0.18468	111.8969	P12:138:WFEC:MSL01
FDNS	00NR	2	16WP	G15_057	FROM->TO	CIMARRON - DRAPER LAKE 345KV CKT 1	717	717	0.18126	111.7618	GEN509406 1-WELSH #3
FDNS	00NR	2	16WP	G15_057	FROM->TO	CIMARRON - DRAPER LAKE 345KV CKT 1	717	717	0.18126	111.7616	GEN509404 1-WELSH #1
FDNS	00NR	2	16WP	G15_057	FROM->TO	CIMARRON - DRAPER LAKE 345KV CKT 1	717	717	0.20676	111.74	CIMARRON - NORTHWEST 345KV CKT 1
FDNS	00NR	2	16WP	G15_057	FROM->TO	CIMARRON - DRAPER LAKE 345KV CKT 1	717	717	0.18126	111.7115	GEN337911 1-ARKANSAS NUCLEAR ONE UNIT #2
FDNS	00NR	2	16WP	G15_057	FROM->TO	CIMARRON - DRAPER LAKE 345KV CKT 1	717	717	0.18126	111.7	GEN335831 1-RIVERBEND UNIT#1
FDNS	00NR	2	16WP	G15_057	FROM->TO	CIMARRON - DRAPER LAKE 345KV CKT 1	717	717	0.18214	111.6632	LATHAMS7 345.00 - ROSE HILL 345KV CKT 1
FDNS	00NR	2	16WP	G15_057	FROM->TO	CIMARRON - DRAPER LAKE 345KV CKT 1	717	717	0.18032	111.6284	G14-074T 345.00 - OKLAUNION 345KV CKT 1
FDNS	00NR	2	16WP	G15_057	FROM->TO	CIMARRON - DRAPER LAKE 345KV CKT 1	717	717	0.18126	111.3146	GEN337910 1-ARKANSAS NUCLEAR ONE UNIT #1
FDNS	00NR	2	16WP	G15_057	FROM->TO	CIMARRON - DRAPER LAKE 345KV CKT 1	717	717	0.18245	111.2653	HUGO - SUNNYSIDE 345KV CKT 1
FDNS	00NR	2	16WP	G15_057	FROM->TO	CIMARRON - DRAPER LAKE 345KV CKT 1	717	717	0.18126	111.2482	GRAND GULF 500/22.0KV TRANSFORMER CKT 1
FDNS	00NR	2	16WP	G15_057	FROM->TO	CIMARRON - DRAPER LAKE 345KV CKT 1	717	717	0.18133	111.2407	P12:138:OKGE:3TERM14
FDNS	00NR	2	16WP	G15_057	FROM->TO	CIMARRON - DRAPER LAKE 345KV CKT 1	717	717	0.18219	111.239	HORSESHOE LAKE - JONES TAP 138KV CKT 1
FDNS	00NR	2	16WP	G15_057	FROM->TO	CIMARRON - DRAPER LAKE 345KV CKT 1	717	717	0.17673	111.1952	CANADIAN RIVER - MUSKOGEE 345KV CKT 1
FDNS	00NR	2	16WP	G15_057	FROM->TO	CIMARRON - DRAPER LAKE 345KV CKT 1	717	717	0.18252	111.1914	REDBUD - RIVERSIDE STATION 345KV CKT 1
FDNS	00NR	2	16WP	G15_057	FROM->TO	CIMARRON - DRAPER LAKE 345KV CKT 1	717	717	0.18252	111.1914	REDBUD - RIVERSIDE STATION 345KV CKT 1
FDNS	00NR	2	16WP	G15_057	FROM->TO	CIMARRON - DRAPER LAKE 345KV CKT 1	717	717	0.18126	111.1598	GEN515226 1-MUSKOGEE 6G
FDNS	00NR	2	17SP	G15_057	FROM->TO	CIMARRON - DRAPER LAKE 345KV CKT 1	717	717	0.19815	111.1228	G14-057T 345.00 - SUNNYSIDE 345KV CKT 1
FDNS	00NR	2	16WP	G15_057	FROM->TO	CIMARRON - DRAPER LAKE 345KV CKT 1	717	717	0.18653	111.1158	JOHNSON COUNTY - PITTSBURG 345KV CKT 1
FDNS	00NR	2	16WP	G15_057	FROM->TO	CIMARRON - DRAPER LAKE 345KV CKT 1	717	717	0.18653	111.1158	JOHNSON COUNTY - PITTSBURG 345KV CKT 1
FDNS	00NR	2	16WP	G15_057	FROM->TO	CIMARRON - DRAPER LAKE 345KV CKT 1	717	717	0.18126	111.1049	GEN501813 1-RODEMACHER UNIT 3
FDNS	00NR	2	16WP	G15_057	FROM->TO	CIMARRON - DRAPER LAKE 345KV CKT 1	717	717	0.18094	111.0937	MORISNT4 138.00 - STILLWATER 138KV CKT 1
FDNS	00NR	2	16WP	G15_057	FROM->TO	CIMARRON - DRAPER LAKE 345KV CKT 1	717	717	0.18096	111.0878	P12:138:OKGE:3TERM2
FDNS	00NR	2	16WP	G15_057	FROM->TO	CIMARRON - DRAPER LAKE 345KV CKT 1	717	717	0.18183	111.0381	NORTHWEST (NORTWST2) 345/138/13.8KV TRANSFORMER CKT 1
FDNS	00NR	2	16WP	G15_057	FROM->TO	CIMARRON - DRAPER LAKE 345KV CKT 1	717	717	0.18126	110.9515	GEN515225 1-MUSKOGEE 5G
FDNS	00NR	2	16WP	G15_057	FROM->TO	CIMARRON - DRAPER LAKE 345KV CKT 1	717	717	0.18126	110.9513	GEN515223 1-MUSKOGEE 4G
FDNS	00NR	2	16WP	G15_057	FROM->TO	CIMARRON - DRAPER LAKE 345KV CKT 1	717	717	0.18071	110.9487	ARCADIA - KAMO MEMORIAL 138KV CKT 1
FDNS	00NR	2	16WP	G15_057	FROM->TO	CIMARRON - DRAPER LAKE 345KV CKT 1	717	717	0.18101	110.9474	7SAREPTA% 345.00 - LONGWOOD 345KV CKT 1
FDNS	00NR	2	16WP	G15_057	FROM->TO	CIMARRON - DRAPER LAKE 345KV CKT 1	717	717	0.18101	110.9474	7SAREPTA% 345.00 - LONGWOOD 345KV CKT 1
FDNS	00NR	2	16WP	G15_057	FROM->TO	CIMARRON - DRAPER LAKE 345KV CKT 1	717	717	0.18942	110.9451	GRACEMONT (BANK 1) 345/138/13.8KV TRANSFORMER CKT 1
FDNS	00NR	2	16WP	G15_057	FROM->TO	CIMARRON - DRAPER LAKE 345KV CKT 1	717	717	0.18134	110.9352	P12:138:OKGE:3TERM12
FDNS	00NR	2	16WP	G15_057	FROM->TO	CIMARRON - DRAPER LAKE 345KV CKT 1	717	717	0.18116	110.9233	DOLET HILLS - SOUTHWEST SHREVEPORT 345KV CKT 1
FDNS	00NR	2	16WP	G15_057	FROM->TO	CIMARRON - DRAPER LAKE 345KV CKT 1	717	717	0.18116	110.9233	DOLET HILLS - SOUTHWEST SHREVEPORT 345KV CKT 1
FDNS	00NR	2	16WP	G15_057	FROM->TO	CIMARRON - DRAPER LAKE 345KV CKT 1	717	717	0.18126	110.9111	GEN335206 1-NELSON UNIT 6

SOLUTION	GROUP	SCENARIO	SEASON	SOURCE	DIRECTION	MONITORED ELEMENT	RATEA (MVA)	RATEB(MVA)	TDF	TC%LOADING (% MVA)	CONTINGENCY
FDNS	00NR	2	16WP	G15_057	FROM->TO	CIMARRON - DRAPER LAKE 345KV CKT 1	717	717	0.18213	110.9033	MEMORIAL - SKYLINE 138KV CKT 1
FDNS	00NR	2	16WP	G15_057	FROM->TO	CIMARRON - DRAPER LAKE 345KV CKT 1	717	717	0.18274	110.8183	QUAIL CREEK - SKYLINE 138KV CKT 1
FDNS	00NR	2	16WP	G15_057	FROM->TO	CIMARRON - DRAPER LAKE 345KV CKT 1	717	717	0.18552	110.8028	BAILEY4 138.00 - SUNSHINE CANYON 138KV CKT 1
FDNS	00NR	2	16WP	G15_057	FROM->TO	CIMARRON - DRAPER LAKE 345KV CKT 1	717	717	0.18126	110.794	GEN337653 1-WHITE BLUFF UNIT #2
FDNS	00NR	2	16WP	G15_057	FROM->TO	CIMARRON - DRAPER LAKE 345KV CKT 1	717	717	0.18232	110.7684	P12:138:OKGE:3TERM18
FDNS	00NR	2	16WP	G15_057	FROM->TO	CIMARRON - DRAPER LAKE 345KV CKT 1	717	717	0.18126	110.7493	GEN509409 1-WILKES #3
FDNS	00NR	2	16WP	G15_057	FROM->TO	CIMARRON - DRAPER LAKE 345KV CKT 1	717	717	0.18179	110.7439	NORTHWEST (NORTWST4) 345/138/13.8KV TRANSFORMER CKT 1
FDNS	00NR	2	16WP	G15_057	FROM->TO	CIMARRON - DRAPER LAKE 345KV CKT 1	717	717	0.18126	110.7352	GEN501812 1-RODEMACHER UNIT 2
FDNS	00NR	2	16WP	G15_057	FROM->TO	CIMARRON - DRAPER LAKE 345KV CKT 1	717	717	0.19274	110.717	G15063_T 345.00 - WOODRING 345KV CKT 1
FDNS	00NR	2	16WP	G15_057	FROM->TO	CIMARRON - DRAPER LAKE 345KV CKT 1	717	717	0.18224	110.686	36 & MERIDIAN - CHEMTRON 138KV CKT 1
FDNS	00NR	2	16WP	G15_057	FROM->TO	CIMARRON - DRAPER LAKE 345KV CKT 1	717	717	0.18126	110.6806	NEW MADRID 161/22.0KV TRANSFORMER CKT 1
FDNS	00NR	2	16WP	G15_057	FROM->TO	CIMARRON - DRAPER LAKE 345KV CKT 1	717	717	0.18218	110.6721	THISTLE7 345.00 - WOODWARD DISTRICT EHV 345KV CKT 1
FDNS	00NR	2	16WP	G15_057	FROM->TO	CIMARRON - DRAPER LAKE 345KV CKT 1	717	717	0.18218	110.6721	THISTLE7 345.00 - WOODWARD DISTRICT EHV 345KV CKT 1
FDNS	00NR	2	16WP	G15_057	FROM->TO	CIMARRON - DRAPER LAKE 345KV CKT 1	717	717	0.18218	110.6721	THISTLE7 345.00 - WOODWARD DISTRICT EHV 345KV CKT 2
FDNS	00NR	2	16WP	G15_057	FROM->TO	CIMARRON - DRAPER LAKE 345KV CKT 1	717	717	0.18218	110.6721	THISTLE7 345.00 - WOODWARD DISTRICT EHV 345KV CKT 2
FDNS	00NR	2	16WP	G15_057	FROM->TO	CIMARRON - DRAPER LAKE 345KV CKT 1	717	717	0.18126	110.6721	NEW MADRID 345/22.0KV TRANSFORMER CKT 1
FDNS	00NR	2	16WP	G15_057	FROM->TO	CIMARRON - DRAPER LAKE 345KV CKT 1	717	717	0.18126	110.6423	GEN337652 1-WHITE BLUFF UNIT #1
FDNS	00NR	2	16WP	G15_057	FROM->TO	CIMARRON - DRAPER LAKE 345KV CKT 1	717	717	0.18179	110.6326	NORTHWEST (NORTWST3) 345/138/13.8KV TRANSFORMER CKT 1
FDNS	00NR	2	16WP	G15_057	FROM->TO	CIMARRON - DRAPER LAKE 345KV CKT 1	717	717	0.18126	110.6075	GEN520947 1-HUGO1
FDNS	00NR	2	16WP	G15_057	FROM->TO	CIMARRON - DRAPER LAKE 345KV CKT 1	717	717	0.18224	110.5989	CHEMTRON - PENNSYLVANIA 138KV CKT 1
FDNS	00NR	2	16WP	G15_057	FROM->TO	CIMARRON - DRAPER LAKE 345KV CKT 1	717	717	0.18138	110.559	G15074_T 345.00 - HOYT 345KV CKT 1
FDNS	00NR	2	16WP	G15_057	FROM->TO	CIMARRON - DRAPER LAKE 345KV CKT 1	717	717	0.18112	110.542	7SAREPTA% 345.00 - ELDORADO EHV 345KV CKT 1
FDNS	00NR	2	16WP	G15_057	FROM->TO	CIMARRON - DRAPER LAKE 345KV CKT 1	717	717	0.18112	110.5419	3TR3AR8EL7EL
FDNS	00NR	2	16WP	G15_057	FROM->TO	CIMARRON - DRAPER LAKE 345KV CKT 1	717	717	0.18112	110.5352	ELDORADO EHV 500/345KV TRANSFORMER CKT 1
FDNS	00NR	2	16WP	G15_057	FROM->TO	CIMARRON - DRAPER LAKE 345KV CKT 1	717	717	0.18552	110.5003	BAILEY4 138.00 - WESTMOORE 138KV CKT 1
FDNS	00NR	2	16WP	G15_057	FROM->TO	CIMARRON - DRAPER LAKE 345KV CKT 1	717	717	0.18265	110.4913	P12:138:OKGE:3TERM11
FDNS	00NR	2	16WP	G15_057	FROM->TO	CIMARRON - DRAPER LAKE 345KV CKT 1	717	717	0.18159	110.4789	P12:138:OKGE:3TERM17
FDNS	00NR	2	16WP	G15_057	FROM->TO	CIMARRON - DRAPER LAKE 345KV CKT 1	717	717	0.18278	110.4645	KETCH TAP - NORTHWEST 138KV CKT 1
FDNS	00NR	2	16WP	G15_057	FROM->TO	CIMARRON - DRAPER LAKE 345KV CKT 1	717	717	0.18104	110.4544	G15052_T 345.00 - ROSE HILL 345KV CKT 1
FDNS	00NR	2	16WP	G15_057	FROM->TO	CIMARRON - DRAPER LAKE 345KV CKT 1	717	717	0.18126	110.4503	GEN515577 1-ARBWND11 0.6900
FDNS	00NR	2	16WP	G15_057	FROM->TO	CIMARRON - DRAPER LAKE 345KV CKT 1	717	717	0.18412	110.4459	BLANCHARD - CORNVILLE 138KV CKT 1
FDNS	00NR	2	16WP	G15_057	FROM->TO	CIMARRON - DRAPER LAKE 345KV CKT 1	717	717	0.18221	110.4322	COMANCHE - LOCO 138KV CKT 1
FDNS	00NR	2	16WP	G15_057	FROM->TO	CIMARRON - DRAPER LAKE 345KV CKT 1	717	717	0.18126	110.4298	GEN334440 1-SABINE UNIT 4
FDNS	00NR	2	16WP	G15_057	FROM->TO	CIMARRON - DRAPER LAKE 345KV CKT 1	717	717	0.18166	110.4213	LONEOAK - NORTHWEST 138KV CKT 1
FDNS	00NR	2	16WP	G15_057	FROM->TO	CIMARRON - DRAPER LAKE 345KV CKT 1	717	717	0.18126	110.4198	DELL 500 - ESSEX UNIT 2 500KV CKT Z1
FDNS	00NR	2	16WP	G15_057	FROM->TO	CIMARRON - DRAPER LAKE 345KV CKT 1	717	717	0.18215	110.3933	DIVISION AVE - LAKESIDE 138KV CKT 1
FDNS	00NR	2	16WP	G15_057	FROM->TO	CIMARRON - DRAPER LAKE 345KV CKT 1	717	717	0.18412	110.3524	P12:138:AEPW-OGE:CORNVIL4:MAUD 4
FDNS	00NR	2	16WP	G15_057	FROM->TO	CIMARRON - DRAPER LAKE 345KV CKT 1	717	717	0.1803	110.3418	HORSESHOE LAKE - KAMO MEMORIAL 138KV CKT 1
FDNS	00NR	2	16WP	G15_057	FROM->TO	CIMARRON - DRAPER LAKE 345KV CKT 1	717	717	0.18135	110.34	NORTHWEST - PANTHER 138KV CKT 1
FDNS	00NR	2	16WP	G15_057	FROM->TO	CIMARRON - DRAPER LAKE 345KV CKT 1	717	717	0.18109	110.3362	P12:138:OKGE:3TERM20
FDNS	00NR	2	16WP	G15_057	FROM->TO	CIMARRON - DRAPER LAKE 345KV CKT 1	717	717	0.18135	110.2907	PANTHER - SILVER LAKE 138KV CKT 1
FDNS	00NR	2	16WP	G15_057	FROM->TO	CIMARRON - DRAPER LAKE 345KV CKT 1	717	717	0.18335	110.2891	CLARKSVILLE - ONETA 345KV CKT 1
FDNS	00NR	2	16WP	G15_057	FROM->TO	CIMARRON - DRAPER LAKE 345KV CKT 1	717	717	0.18335	110.2891	CLARKSVILLE - ONETA 345KV CKT 1
FDNS	00NR	2	16WP	G15_057	FROM->TO	CIMARRON - DRAPER LAKE 345KV CKT 1	717	717	0.18126	110.2863	GEN336252 1-NINEMILE POINT UNIT#5
FDNS	00NR	2	16WP	G15_057	FROM->TO	CIMARRON - DRAPER LAKE 345KV CKT 1	717	717	0.18136	110.281	P12:138:OKGE:3TERM47
FDNS	00NR	2	16WP	G15_057	FROM->TO	CIMARRON - DRAPER LAKE 345KV CKT 1	717	717	0.18215	110.2734	HEFNER - LAKESIDE 138KV CKT 1
FDNS	00NR	2	16WP	G15_057	FROM->TO	CIMARRON - DRAPER LAKE 345KV CKT 1	717	717	0.18213	110.2624	FINNEY SWITCHING STATION - HOLCOMB 345KV CKT 1
FDNS	00NR	2	16WP	G15_057	FROM->TO	CIMARRON - DRAPER LAKE 345KV CKT 1	717	717	0.18213	110.2624	FINNEY SWITCHING STATION - HOLCOMB 345KV CKT 1
FDNSLock	00NR	2	16WP	G15_057	FROM->TO	CIMARRON - DRAPER LAKE 345KV CKT 1	717	717	0.18126	110.2617	GEN300006 1-NEW MADRID UNIT 1
FDNS	00NR	2	16WP	G15_057	FROM->TO	CIMARRON - DRAPER LAKE 345KV CKT 1	717	717	0.18126	110.2574	DOLET HILLS 345/24.0KV TRANSFORMER CKT 1
FDNS	00NR	2	16WP	G15_057	FROM->TO	CIMARRON - DRAPER LAKE 345KV CKT 1	717	717	0.18293	110.2573	CIMARRON - HAYMAKER 138KV CKT 1
FDNS	00NR	2	16WP	G15_057	FROM->TO	CIMARRON - DRAPER LAKE 345KV CKT 1	717	717	0.18126	110.2508	WHITE BLUFF 500/26.0KV TRANSFORMER CKT 1
FDNS	00NR	2	16WP	G15_057	FROM->TO	CIMARRON - DRAPER LAKE 345KV CKT 1	717	717	0.18412	110.2504	BLANCHARD - MAUD 138KV CKT 1
FDNSLock	00NR	2	16WP	G15_057	FROM->TO	CIMARRON - DRAPER LAKE 345KV CKT 1	717	717	0.18126	110.2483	GEN300007 1-NEW MADRID UNIT 2
FDNS	00NR	2	16WP	G15_057	FROM->TO	CIMARRON - DRAPER LAKE 345KV CKT 1	717	717	0.18138	110.2273	HOYT - STRANGER CREEK 345KV CKT 1
FDNS	00NR	2	16WP	G15_057	FROM->TO	CIMARRON - DRAPER LAKE 345KV CKT 1	717	717	0.1813	110.2187	DIVISION AVE - MUSTANG 138KV CKT 1
FDNS	00NR	2	16WP	G15_057	FROM->TO	CIMARRON - DRAPER LAKE 345KV CKT 1	717	717	0.18552	110.2176	FRANKLIN SW - WESTMOORE 138KV CKT 1
FDNS	00NR	2	16WP	G15_057	FROM->TO	CIMARRON - DRAPER LAKE 345KV CKT 1	717	717	0.18151	110.2117	BLACKBERRY - NEOSHO 345KV CKT 1
FDNS	00NR	2	16WP	G15_057	FROM->TO	CIMARRON - DRAPER LAKE 345KV CKT 1	717	717	0.18151	110.2117	BLACKBERRY - NEOSHO 345KV CKT 1
FDNSLock	00NR	2	16WP	G15_057	FROM->TO	CIMARRON - DRAPER LAKE 345KV CKT 1	717	717	0.18134	110.2049	G15088_T 345.00 - MOORE 345KV CKT 1
FDNS	00NR	2	16WP	G15_057	FROM->TO	CIMARRON - DRAPER LAKE 345KV CKT 1	717	717	0.18174	110.198	KETCH - KETCH TAP 138KV CKT 1
FDNS	00NR	2	16WP	G15_057	FROM->TO	CIMARRON - DRAPER LAKE 345KV CKT 1	717	717	0.18241	110.1926	MCCLAIN - PLEASANT VALLEY 138KV CKT 1
FDNS	00NR	2	16WP	G15_057	FROM->TO	CIMARRON - DRAPER LAKE 345KV CKT 1	717	717	0.18154	110.1894	EMPORIA ENERGY CENTER - G14_001T 345.00 345KV CKT 1
FDNS	00NR	2	16WP	G15_057	FROM->TO	CIMARRON - DRAPER LAKE 345KV CKT 1	717	717	0.18144	110.1765	SWISSVALE - WEST GARDNER 345KV CKT 1
FDNS	00NR	2	16WP	G15_057	FROM->TO	CIMARRON - DRAPER LAKE 345KV CKT 1	717	717	0.18138	110.1722	G15074_T 345.00 - JEFFREY ENERGY CENTER 345KV CKT 1
FDNS	00NR	2	16WP	G15_057	FROM->TO	CIMARRON - DRAPER LAKE 345KV CKT 1	717	717	0.18126	110.1532	GEN335204 1-NELSON UNIT 4
FDNS	00NR	2	16WP	G15_057	FROM->TO	CIMARRON - DRAPER LAKE 345KV CKT 1	717	717	0.18293	110.1501	DIVISION AVE - HAYMAKER 138KV CKT 1
FDNS	00NR	2	16WP	G15_057	FROM->TO	CIMARRON - DRAPER LAKE 345KV CKT 1	717	717	0.18126	110.1465	GEN336831 1-BAXTER WILSON SES
FDNS	00NR	2	16WP	G15_057	FROM->TO	CIMARRON - DRAPER LAKE 345KV CKT 1	717	717	0.18136	110.142	P12:138:AEPW-OGE:SHIDLER4:OSAGE 4
FDNS	00NR	2	16WP	G15_057	FROM->TO	CIMARRON - DRAPER LAKE 345KV CKT 1	717	717	0.18159	110.1408	G1524G1525 345.00 - THISTLE7 345.00 345KV CKT 1
FDNS	00NR	2	16WP	G15_057	FROM->TO	CIMARRON - DRAPER LAKE 345KV CKT 1	717	717	0.18159	110.1408	G1524G1525 345.00 - THISTLE7 345.00 345KV CKT 2
FDNS	00NR	2	16WP	G15_057	FROM->TO	CIMARRON - DRAPER LAKE 345KV CKT 1	717	717	0.18221	110.1313	CLASSEN - ROBINSON 138KV CKT 1
FDNS	00NR	2	16WP	G15_057	FROM->TO	CIMARRON - DRAPER LAKE 345KV CKT 1	717	717	0.18126	110.1229	GEN509408 1-WILKES #2
FDNS	00NR	2	16WP	G15_057	FROM->TO	CIMARRON - DRAPER LAKE 345KV CKT 1	717	717	0.18187	110.1196	WOODRING (WOODRNG2) 345/138/13.8KV TRANSFORMER CKT 1
FDNS	00NR	2	16WP	G15_057	FROM->TO	CIMARRON - DRAPER LAKE 345KV CKT 1	717	717	0.1818	110.1103	P12:138:WFEC:MSL02
FDNS	00NR	2	16WP	G15_057	FROM->TO	CIMARRON - DRAPER LAKE 345KV CKT 1	717	717	0.20343	110.1089	GRACEMONT - LAWTON EASTSIDE 345KV CKT 1
FDNS	00NR	2	16WP	G15_057	FROM->TO	CIMARRON - DRAPER LAKE 345KV CKT 1	717	717	0.20343	110.1089	GRACEMONT - LAWTON EASTSIDE 345KV CKT 1
FDNS	00NR	2	16WP	G15_057	FROM->TO	CIMARRON - DRAPER LAKE 345KV CKT 1	717	717	0.18126	110.1058	GEN506754 1-LEBROCK STEAM 1
FDNS	00NR	2	16WP	G15_057	FROM->TO	CIMARRON - DRAPER LAKE 345KV CKT 1	717	717	0.18126	110.0993	GEN334441 1-SABINE UNIT 5

SOLUTION	GROUP	SCENARIO	SEASON	SOURCE	DIRECTION	MONITORED ELEMENT	RATEA (MVA)	RATEB(MVA)	TDF	TC%LOADING (% MVA)	CONTINGENCY
FDNS	00NR	2	16WP	G15_057	FROM->TO	CIMARRON - DRAPER LAKE 345KV CKT 1	717	717	0.18077	110.0911	P12:138:AEPW:OKMULGE4:R.S.S-4
FDNS	00NR	2	16WP	G15_057	FROM->TO	CIMARRON - DRAPER LAKE 345KV CKT 1	717	717	0.18126	110.0893	GEN334071 1-LEWIS CREEK 2
FDNS	00NR	2	16WP	G15_057	FROM->TO	CIMARRON - DRAPER LAKE 345KV CKT 1	717	717	0.18032	110.0837	G14-074T 345.00 - TUCO INTERCHANGE 345KV CKT 1
FDNS	00NR	2	16WP	G15_057	FROM->TO	CIMARRON - DRAPER LAKE 345KV CKT 1	717	717	0.18126	110.0813	GEN334070 1-LEWIS CREEK 1
FDNS	00NR	2	16WP	G15_057	FROM->TO	CIMARRON - DRAPER LAKE 345KV CKT 1	717	717	0.18169	110.077	ANADARKO - GEORGIA 138KV CKT 1
FDNS	00NR	2	16WP	G15_057	FROM->TO	CIMARRON - DRAPER LAKE 345KV CKT 1	717	717	0.18126	110.0764	GEN590011 2-ERCOT EQUIVALENCE
FDNS	00NR	2	16WP	G15_057	FROM->TO	CIMARRON - DRAPER LAKE 345KV CKT 1	717	717	0.18126	110.076	GEN336251 1-NINEMILE POINT UNIT#4
FDNS	00NR	2	16WP	G15_057	FROM->TO	CIMARRON - DRAPER LAKE 345KV CKT 1	717	717	0.1814	110.0627	EMPORIA ENERGY CENTER - SWISSVALE 345KV CKT 1
FDNS	00NR	2	16WP	G15_057	FROM->TO	CIMARRON - DRAPER LAKE 345KV CKT 1	717	717	0.18154	110.0613	G14_001T 345.00 - WICHITA 345KV CKT 1
FDNS	00NR	2	16WP	G15_057	FROM->TO	CIMARRON - DRAPER LAKE 345KV CKT 1	717	717	0.18183	110.0605	BENTON - WICHITA 345KV CKT 1
FDNS	00NR	2	16WP	G15_057	FROM->TO	CIMARRON - DRAPER LAKE 345KV CKT 1	717	717	0.18123	110.0582	WEBRE - WELLS 500KV CKT 1
FDNS	00NR	2	16WP	G15_057	FROM->TO	CIMARRON - DRAPER LAKE 345KV CKT 1	717	717	0.18126	110.0407	GEN338146 1-INDEPENDENCE UNIT #2
FDNS	00NR	2	16WP	G15_057	FROM->TO	CIMARRON - DRAPER LAKE 345KV CKT 1	717	717	0.1816	110.0387	LACYGNE - NEOSHO 345KV CKT 1
FDNS	00NR	2	16WP	G15_057	FROM->TO	CIMARRON - DRAPER LAKE 345KV CKT 1	717	717	0.18126	110.0326	GEN590010 1-ERCOT EQUIVALENCE
FDNS	00NR	2	16WP	G15_057	FROM->TO	CIMARRON - DRAPER LAKE 345KV CKT 1	717	717	0.18166	110.0242	LONEOAK - QUAIL CREEK 138KV CKT 1
FDNS	00NR	2	16WP	G15_057	FROM->TO	CIMARRON - DRAPER LAKE 345KV CKT 1	717	717	0.18169	110.0153	FLETCHER - GEORGIA 138KV CKT 1
FDNS	00NR	2	16WP	G15_057	FROM->TO	CIMARRON - DRAPER LAKE 345KV CKT 1	717	717	0.18126	110.0076	GEN501811 1-RODEMACHER UNIT 1
FDNS	00NR	2	16WP	G15_057	FROM->TO	CIMARRON - DRAPER LAKE 345KV CKT 1	717	717	0.18126	110.0014	GEN503909 1-FULTONU1 1 16.000
FDNS	00NR	2	16WP	G15_057	FROM->TO	CIMARRON - DRAPER LAKE 345KV CKT 1	717	717	0.18126	109.9689	GEN334433 1-SABINE UNIT 3
FDNS	00NR	2	16WP	G15_057	FROM->TO	CIMARRON - DRAPER LAKE 345KV CKT 1	717	717	0.18126	109.9657	GEN303007 1-1BC2 U2
FDNS	00NR	2	16WP	G15_057	FROM->TO	CIMARRON - DRAPER LAKE 345KV CKT 1	717	717	0.1833	109.9604	CRINER - PAYNE 138.00 138KV CKT 1
FDNS	00NR	2	16WP	G15_057	FROM->TO	CIMARRON - DRAPER LAKE 345KV CKT 1	717	717	0.18126	109.9604	GEN303006 1-1BC2 U1
FDNS	00NR	2	16WP	G15_057	FROM->TO	CIMARRON - DRAPER LAKE 345KV CKT 1	717	717	0.18172	109.9588	EMPIRE - FLETCHER 138KV CKT 1
FDNS	00NR	2	16WP	G15_057	FROM->TO	CIMARRON - DRAPER LAKE 345KV CKT 1	717	717	0.18126	109.9579	GEN334030 1-FRONTIER UNIT 1
FDNS	00NR	2	16WP	G15_057	FROM->TO	CIMARRON - DRAPER LAKE 345KV CKT 1	717	717	0.18126	109.9568	GEN334031 1-FRONTIER UNIT 2
FDNS	00NR	2	16WP	G15_057	FROM->TO	CIMARRON - DRAPER LAKE 345KV CKT 1	717	717	0.18126	109.9538	FRONTIER - GRIMES 345KV CKT 1
FDNS	00NR	2	16WP	G15_057	FROM->TO	CIMARRON - DRAPER LAKE 345KV CKT 1	717	717	0.18126	109.9498	GEN337041 1-GERALD ANDRUS
FDNS	00NR	2	16WP	G15_057	FROM->TO	CIMARRON - DRAPER LAKE 345KV CKT 1	717	717	0.18138	109.9445	CLEAVELAND - CLEVLND 4 138.00 138KV CKT Z1
FDNS	00NR	2	16WP	G15_057	FROM->TO	CIMARRON - DRAPER LAKE 345KV CKT 1	717	717	0.18138	109.9445	CLEAVELAND - CLEVLND 4 138.00 138KV CKT Z1
FDNS	00NR	2	16WP	G15_057	FROM->TO	CIMARRON - DRAPER LAKE 345KV CKT 1	717	717	0.18138	109.9443	CLEVELAND (CLVAUTO1) 345/138/13.8KV TRANSFORMER CKT 1
FDNS	00NR	2	16WP	G15_057	FROM->TO	CIMARRON - DRAPER LAKE 345KV CKT 1	717	717	0.18138	109.9443	CLEVELAND (CLVAUTO1) 345/138/13.8KV TRANSFORMER CKT 1
FDNS	00NR	2	16WP	G15_057	FROM->TO	CIMARRON - DRAPER LAKE 345KV CKT 1	717	717	0.18126	109.9431	GEN336191 1-LITTLE GYPSY UNIT#3
FDNS	00NR	2	16WP	G15_057	FROM->TO	CIMARRON - DRAPER LAKE 345KV CKT 1	717	717	0.18126	109.9391	P12:069:OKGE:3TERM4
FDNS	00NR	2	16WP	G15_057	FROM->TO	CIMARRON - DRAPER LAKE 345KV CKT 1	717	717	0.18146	109.9328	SPVALLY4 138.00 - STILLWATER 138KV CKT 1
FDNS	00NR	2	16WP	G15_057	FROM->TO	CIMARRON - DRAPER LAKE 345KV CKT 1	717	717	0.18208	109.9301	ARKANSAS NUCLEAR ONE - FT SMITH 500KV CKT 1
FDNS	00NR	2	16WP	G15_057	FROM->TO	CIMARRON - DRAPER LAKE 345KV CKT 1	717	717	0.18208	109.9301	ARKANSAS NUCLEAR ONE - FT SMITH 500KV CKT 1
FDNS	00NR	2	16WP	G15_057	FROM->TO	CIMARRON - DRAPER LAKE 345KV CKT 1	717	717	0.18127	109.9269	8DANIEL8 500.00 - MCKNIGHT 500KV CKT 1
FDNS	00NR	2	16WP	G15_057	FROM->TO	CIMARRON - DRAPER LAKE 345KV CKT 1	717	717	0.18136	109.924	OSAGE - WEBB CITY TAP 138KV CKT 1
FDNS	00NR	2	16WP	G15_057	FROM->TO	CIMARRON - DRAPER LAKE 345KV CKT 1	717	717	0.18143	109.9207	P12:138:OKGE:3TERM13
FDNS	00NR	2	16WP	G15_057	FROM->TO	CIMARRON - DRAPER LAKE 345KV CKT 1	717	717	0.18213	109.9176	FINNEY SWITCHING STATION - Hitchland Interchange 345KV CKT 1
FDNS	00NR	2	16WP	G15_057	FROM->TO	CIMARRON - DRAPER LAKE 345KV CKT 1	717	717	0.18126	109.917	GEN509393 S1-ARSENAL HILL GENS #4 (STALL)
FDNS	00NR	2	16WP	G15_057	FROM->TO	CIMARRON - DRAPER LAKE 345KV CKT 1	717	717	0.18126	109.9111	GEN335614 1-WILLOW GLENN UNIT#4
FDNS	00NR	2	16WP	G15_057	FROM->TO	CIMARRON - DRAPER LAKE 345KV CKT 1	717	717	0.18126	109.91	GEN338143 1-INDEPENDENCE UNIT #1
FDNS	00NR	2	16WP	G15_057	FROM->TO	CIMARRON - DRAPER LAKE 345KV CKT 1	717	717	0.18146	109.9037	PAYNESB4 138.00 - SPVALLY4 138.00 138KV CKT 1
FDNS	00NR	2	16WP	G15_057	FROM->TO	CIMARRON - DRAPER LAKE 345KV CKT 1	717	717	0.18172	109.9028	DAYTON - MUSTANG 138KV CKT 1
FDNS	00NR	2	16WP	G15_057	FROM->TO	CIMARRON - DRAPER LAKE 345KV CKT 1	717	717	0.18126	109.9018	P12:161:AEPW:DYESS 5:HYLAND 5
FDNS	00NR	2	16WP	G15_057	FROM->TO	CIMARRON - DRAPER LAKE 345KV CKT 1	717	717	0.18172	109.9004	COMANCHE - EMPIRE 138KV CKT 1
FDNS	00NR	2	16WP	G15_057	FROM->TO	CIMARRON - DRAPER LAKE 345KV CKT 1	717	717	0.18126	109.9001	GEN509392 G2-ARSENAL HILL GENS #3 (STALL)
FDNS	00NR	2	16WP	G15_057	FROM->TO	CIMARRON - DRAPER LAKE 345KV CKT 1	717	717	0.18126	109.9	GEN509391 G1-ARSENAL HILL GENS #2 (STALL)
FDNS	00NR	2	16WP	G15_057	FROM->TO	CIMARRON - DRAPER LAKE 345KV CKT 1	717	717	0.18126	109.8983	GEN303008 1-1BC2 U3
FDNS	00NR	2	16WP	G15_057	FROM->TO	CIMARRON - DRAPER LAKE 345KV CKT 1	717	717	0.18172	109.8979	DAYTON - HOBBY LOBBY 138KV CKT 1
FDNS	00NR	2	16WP	G15_057	FROM->TO	CIMARRON - DRAPER LAKE 345KV CKT 1	717	717	0.18146	109.8881	CUSHING - PAYNESB4 138.00 138KV CKT 1
FDNS	00NR	2	16WP	G15_057	FROM->TO	CIMARRON - DRAPER LAKE 345KV CKT 1	717	717	0.18185	109.8766	MUSTANG - SW 5TH 138KV CKT 1
FDNS	00NR	2	16WP	G15_057	FROM->TO	CIMARRON - DRAPER LAKE 345KV CKT 1	717	717	0.18126	109.8758	GEN336170 1-GULF OXY U4
FDNS	00NR	2	16WP	G15_057	FROM->TO	CIMARRON - DRAPER LAKE 345KV CKT 1	717	717	0.18126	109.8747	GEN336464 1-MICHOUD UNIT #3
FDNS	00NR	2	16WP	G15_057	FROM->TO	CIMARRON - DRAPER LAKE 345KV CKT 1	717	717	0.1833	109.8558	COLE - CRINER 138KV CKT 1
FDNS	00NR	2	16WP	G15_057	FROM->TO	CIMARRON - DRAPER LAKE 345KV CKT 1	717	717	0.18128	109.853	P12:345:GRDA:CHOUTEAU-SPORTSMANACRES
FDNS	00NR	2	16WP	G15_057	FROM->TO	CIMARRON - DRAPER LAKE 345KV CKT 1	717	717	0.18121	109.8424	ELDORADO EHV - MOUNT OLIVE 500KV CKT 1
FDNS	00NR	2	16WP	G15_057	FROM->TO	CIMARRON - DRAPER LAKE 345KV CKT 1	717	717	0.18221	109.8373	LIGHTNING CREEK - ROBINSON 138KV CKT 1
FDNS	00NR	2	16WP	G15_057	FROM->TO	CIMARRON - DRAPER LAKE 345KV CKT 1	717	717	0.18126	109.837	GEN511843 1-RIVERSIDE STATION #2
FDNS	00NR	2	16WP	G15_057	FROM->TO	CIMARRON - DRAPER LAKE 345KV CKT 1	717	717	0.18126	109.8363	ESSEX UNIT 2 500/18.0KV TRANSFORMER CKT 1
FDNS	00NR	2	16WP	G15_057	FROM->TO	CIMARRON - DRAPER LAKE 345KV CKT 1	717	717	0.18133	109.8338	P12:069:OKGE:3TERM19
FDNS	00NR	2	16WP	G15_057	FROM->TO	CIMARRON - DRAPER LAKE 345KV CKT 1	717	717	0.18172	109.8329	OUMED 4 - STONEWALL 138KV CKT 1
FDNS	00NR	2	16WP	G15_057	FROM->TO	CIMARRON - DRAPER LAKE 345KV CKT 1	717	717	0.18126	109.8308	GEN336801 1-BAXTER WILSON UNIT #1
FDNS	00NR	2	16WP	G15_057	FROM->TO	CIMARRON - DRAPER LAKE 345KV CKT 1	717	717	0.1813	109.8302	7LUTESVIL 345.00 - 7ST FRANC 345.00 345KV CKT 1
FDNS	00NR	2	16WP	G15_057	FROM->TO	CIMARRON - DRAPER LAKE 345KV CKT 1	717	717	0.18126	109.7953	GEN506752 1-LEBROCK GAS 1
FDNS	00NR	2	16WP	G15_057	FROM->TO	CIMARRON - DRAPER LAKE 345KV CKT 1	717	717	0.18126	109.7952	GEN506753 1-LEBROCK GAS 2
FDNS	00NR	2	16WP	G15_057	FROM->TO	CIMARRON - DRAPER LAKE 345KV CKT 1	717	717	0.18126	109.7868	GEN501910 1-ACADIA UNIT ST1
FDNS	00NR	2	16WP	G15_057	FROM->TO	CIMARRON - DRAPER LAKE 345KV CKT 1	717	717	0.1807	109.786	ARCADIA - LGARBER4 138.00 138KV CKT 1
FDNS	00NR	2	16WP	G15_057	FROM->TO	CIMARRON - DRAPER LAKE 345KV CKT 1	717	717	0.18126	109.7675	RODEMACHER 230/22.0KV TRANSFORMER CKT 1
FDNS	00NR	2	16WP	G15_057	FROM->TO	CIMARRON - DRAPER LAKE 345KV CKT 1	717	717	0.18123	109.7661	IODINE - WOODWARD EHV 138KV CKT 1
FDNS	00NR	2	16WP	G15_057	FROM->TO	CIMARRON - DRAPER LAKE 345KV CKT 1	717	717	0.18127	109.765	7JASPER 345.00 - BLACKBERRY 345KV CKT 1
FDNS	00NR	2	16WP	G15_057	FROM->TO	CIMARRON - DRAPER LAKE 345KV CKT 1	717	717	0.1807	109.7562	CHITWOOD - LGARBER4 138.00 138KV CKT 1
FDNS	00NR	2	16WP	G15_057	FROM->TO	CIMARRON - DRAPER LAKE 345KV CKT 1	717	717	0.18114	109.7538	P12:138:AEPW-OGE:WTH_JCT4:JENSEN4
FDNS	00NR	2	16WP	G15_057	FROM->TO	CIMARRON - DRAPER LAKE 345KV CKT 1	717	717	0.18126	109.7511	GEN509394 1-FLINT CREEK
FDNS	00NR	2	16WP	G15_057	FROM->TO	CIMARRON - DRAPER LAKE 345KV CKT 1	717	717	0.18136	109.75	FAIRFAX TAP - SHIDLER 138KV CKT 1
FDNS	00NR	2	16WP	G15_057	FROM->TO	CIMARRON - DRAPER LAKE 345KV CKT 1	717	717	0.18136	109.75	FAIRFAX TAP - WEBB CITY TAP 138KV CKT 1
FDNS	00NR	2	16WP	G15_057	FROM->TO	CIMARRON - DRAPER LAKE 345KV CKT 1	717	717	0.17662	109.7486	CANADIAN RIVER - PITTSBURG 345KV CKT 1
FDNS	00NR	2	16WP	G15_057	FROM->TO	CIMARRON - DRAPER LAKE 345KV CKT 1	717	717	0.17662	109.7486	CANADIAN RIVER - PITTSBURG 345KV CKT 1

SOLUTION	GROUP	SCENARIO	SEASON	SOURCE	DIRECTION	MONITORED ELEMENT	RATEA (MVA)	RATEB(MVA)	TDF	TC%LOADING (% MVA)	CONTINGENCY
FDNS	00NR	2	16WP	G15_057	FROM->TO	CIMARRON - DRAPER LAKE 345KV CKT 1	717	717	0.18131	109.7457	8WNEWMADRID 500.00 - DELL 500 500KV CKT 1
FDNS	00NR	2	16WP	G15_057	FROM->TO	CIMARRON - DRAPER LAKE 345KV CKT 1	717	717	0.1807	109.7446	CHITWOOD - JONES TAP 138KV CKT 1
FDNS	00NR	2	16WP	G15_057	FROM->TO	CIMARRON - DRAPER LAKE 345KV CKT 1	717	717	0.18119	109.7367	6LAYFLD 230.00 - CARROLL 230KV CKT 1
FDNS	00NR	2	16WP	G15_057	FROM->TO	CIMARRON - DRAPER LAKE 345KV CKT 1	717	717	0.18181	109.7359	CHISHOLM6 230.00 - ELK CITY 230KV 230KV CKT 1
FDNS	00NR	2	16WP	G15_057	FROM->TO	CIMARRON - DRAPER LAKE 345KV CKT 1	717	717	0.18181	109.7329	ELK CITY 230KV (ELKCTY-6) 230/138/13.8KV TRANSFORMER CKT 1
FDNS	00NR	2	16WP	G15_057	FROM->TO	CIMARRON - DRAPER LAKE 345KV CKT 1	717	717	0.18181	109.7329	ELK CITY 230KV (ELKCTY-6) 230/138/13.8KV TRANSFORMER CKT 1
FDNS	00NR	2	16WP	G15_057	FROM->TO	CIMARRON - DRAPER LAKE 345KV CKT 1	717	717	0.18172	109.7324	OUMED 4 - PARK PLACE 138KV CKT 1
FDNS	00NR	2	16WP	G15_057	FROM->TO	CIMARRON - DRAPER LAKE 345KV CKT 1	717	717	0.18542	109.7312	SOONER - WOODRING 345KV CKT 1
FDNS	00NR	2	16WP	G15_057	FROM->TO	CIMARRON - DRAPER LAKE 345KV CKT 1	717	717	0.18123	109.7232	DEWEY - IODINE 138KV CKT 1
FDNS	00NR	2	16WP	G15_057	FROM->TO	CIMARRON - DRAPER LAKE 345KV CKT 1	717	717	0.18176	109.7216	TULSA NORTH - WEKIWA 345KV CKT 1
FDNS	00NR	2	16WP	G15_057	FROM->TO	CIMARRON - DRAPER LAKE 345KV CKT 1	717	717	0.18176	109.7216	TULSA NORTH - WEKIWA 345KV CKT 1
FDNS	00NR	2	16WP	G15_057	FROM->TO	CIMARRON - DRAPER LAKE 345KV CKT 1	717	717	0.18214	109.7214	DALE - HORSESHOE LAKE 138KV CKT 1
FDNS	00NR	2	16WP	G15_057	FROM->TO	CIMARRON - DRAPER LAKE 345KV CKT 1	717	717	0.18117	109.7203	ELDORADO EHV - SHERIDAN EHV 500KV CKT 1
FDNS	00NR	2	16WP	G15_057	FROM->TO	CIMARRON - DRAPER LAKE 345KV CKT 1	717	717	0.18151	109.7082	G13-010T 345.00 - POST ROCK 345KV CKT 1
FDNS	00NR	2	16WP	G15_057	FROM->TO	CIMARRON - DRAPER LAKE 345KV CKT 1	717	717	0.18186	109.7051	ANADARKO - SEQUOYAHJ4 138.00 138KV CKT 1
FDNS	00NR	2	16WP	G15_057	FROM->TO	CIMARRON - DRAPER LAKE 345KV CKT 1	717	717	0.18186	109.7037	CORN TAP - SEQUOYAHJ4 138.00 138KV CKT 1
FDNS	00NR	2	16WP	G15_057	FROM->TO	CIMARRON - DRAPER LAKE 345KV CKT 1	717	717	0.18129	109.7031	P12:138:AEPW:N.E.S.-4:CATOOSA4
FDNS	00NR	2	16WP	G15_057	FROM->TO	CIMARRON - DRAPER LAKE 345KV CKT 1	717	717	0.18133	109.7019	P13:138-161:WERE:NSES_TX-4OR5::
FDNS	00NR	2	16WP	G15_057	FROM->TO	CIMARRON - DRAPER LAKE 345KV CKT 1	717	717	0.18221	109.6999	LIGHTNING CREEK - TROSPER 138KV CKT 1
FDNS	00NR	2	16WP	G15_057	FROM->TO	CIMARRON - DRAPER LAKE 345KV CKT 1	717	717	0.18126	109.6988	ST FRANCIS 161/16.0KV TRANSFORMER CKT 1
FDNS	00NR	2	16WP	G15_057	FROM->TO	CIMARRON - DRAPER LAKE 345KV CKT 1	717	717	0.18126	109.6987	ST FRANCIS - ST FRANCIS 1 161KV CKT Z1
FDNS	00NR	2	16WP	G15_057	FROM->TO	CIMARRON - DRAPER LAKE 345KV CKT 1	717	717	0.18116	109.6925	FULTON 115 - HOPE 115KV CKT 1
FDNS	00NR	2	16WP	G15_057	FROM->TO	CIMARRON - DRAPER LAKE 345KV CKT 1	717	717	0.18116	109.6925	FULTON 115 - HOPE 115KV CKT 1
FDNS	00NR	2	16WP	G15_057	FROM->TO	CIMARRON - DRAPER LAKE 345KV CKT 1	717	717	0.18126	109.6904	8CAJUN2 500/24.0KV TRANSFORMER CKT 1
FDNS	00NR	2	16WP	G15_057	FROM->TO	CIMARRON - DRAPER LAKE 345KV CKT 1	717	717	0.18126	109.6805	GEN300015 1-1SGPDEL 18.000
FDNS	00NR	2	16WP	G15_057	FROM->TO	CIMARRON - DRAPER LAKE 345KV CKT 1	717	717	0.18214	109.6804	DALE - SQUIRL CREEK 138KV CKT 1
FDNS	00NR	2	16WP	G15_057	FROM->TO	CIMARRON - DRAPER LAKE 345KV CKT 1	717	717	0.18177	109.6801	HUGO - VALLIANT 345KV CKT 1
FDNS	00NR	2	16WP	G15_057	FROM->TO	CIMARRON - DRAPER LAKE 345KV CKT 1	717	717	0.18177	109.6801	HUGO - VALLIANT 345KV CKT 1
FDNS	00NR	2	16WP	G15_057	FROM->TO	CIMARRON - DRAPER LAKE 345KV CKT 1	717	717	0.18126	109.679	GEN337766 1-TRACTEBEL UNIT S1
FDNS	00NR	2	16WP	G15_057	FROM->TO	CIMARRON - DRAPER LAKE 345KV CKT 1	717	717	0.18336	109.6776	ANADARKO - GRACMNT4 138.00 138KV CKT 1
FDNS	00NR	2	16WP	G15_057	FROM->TO	CIMARRON - DRAPER LAKE 345KV CKT 1	717	717	0.18129	109.6741	7JASPER 345.00 - MORGAN 345KV CKT 1
FDNS	00NR	2	16WP	G15_057	FROM->TO	CIMARRON - DRAPER LAKE 345KV CKT 1	717	717	0.18127	109.6734	P12:069:OKGE:3TERM3
FDNS	00NR	2	16WP	G15_057	FROM->TO	CIMARRON - DRAPER LAKE 345KV CKT 1	717	717	0.18126	109.6712	GEN515564 1-ORIGIN11 0.6900
FDNS	00NR	2	16WP	G15_057	FROM->TO	CIMARRON - DRAPER LAKE 345KV CKT 1	717	717	0.18126	109.6712	GEN515565 1-ORIGIN21 0.6900
FDNS	00NR	2	16WP	G15_057	FROM->TO	CIMARRON - DRAPER LAKE 345KV CKT 1	717	717	0.18103	109.6681	MORISNT4 138.00 - SOONER 138KV CKT 1
FDNS	00NR	2	16WP	G15_057	FROM->TO	CIMARRON - DRAPER LAKE 345KV CKT 1	717	717	0.18172	109.6678	36 & MERIDIAN - HOBBY LOBBY 138KV CKT 1
FDNS	00NR	2	16WP	G15_057	FROM->TO	CIMARRON - DRAPER LAKE 345KV CKT 1	717	717	0.18126	109.6659	GEN336222 1-LITTLE GYPSY UNIT#2
FDNS	00NR	2	16WP	G15_057	FROM->TO	CIMARRON - DRAPER LAKE 345KV CKT 1	717	717	0.18125	109.6617	P12:138:OKGE-AEPW:JENSEN4:REDROCKRD4
FDNS	00NR	2	16WP	G15_057	FROM->TO	CIMARRON - DRAPER LAKE 345KV CKT 1	717	717	0.18132	109.6528	P12:138:AEPW:CATOOSA4:T.S.E.-4
FDNS	00NR	2	16WP	G15_057	FROM->TO	CIMARRON - DRAPER LAKE 345KV CKT 1	717	717	0.18126	109.6521	GEN501970 1-EVANGELINE UNIT 7
FDNS	00NR	2	16WP	G15_057	FROM->TO	CIMARRON - DRAPER LAKE 345KV CKT 1	717	717	0.18126	109.6519	GEN511842 1-RIVERSIDE STATION #1
FDNS	00NR	2	16WP	G15_057	FROM->TO	CIMARRON - DRAPER LAKE 345KV CKT 1	717	717	0.18138	109.6503	P12:138:OKGE:3TERM28
FDNS	00NR	2	16WP	G15_057	FROM->TO	CIMARRON - DRAPER LAKE 345KV CKT 1	717	717	0.18121	109.6488	NW164TH4 138.00 - PIEDMONT 138KV CKT 1
FDNS	00NR	2	16WP	G15_057	FROM->TO	CIMARRON - DRAPER LAKE 345KV CKT 1	717	717	0.1814	109.648	HAMMETT TAP - HAMMETT2 138KV CKT 1
FDNS	00NR	2	16WP	G15_057	FROM->TO	CIMARRON - DRAPER LAKE 345KV CKT 1	717	717	0.18126	109.647	ESSEX UNIT 2 500/18.0KV TRANSFORMER CKT 1
FDNS	00NR	2	16WP	G15_057	FROM->TO	CIMARRON - DRAPER LAKE 345KV CKT 1	717	717	0.18121	109.647	NORTHWEST - NW164TH4 138.00 138KV CKT 1
FDNS	00NR	2	16WP	G15_057	FROM->TO	CIMARRON - DRAPER LAKE 345KV CKT 1	717	717	0.18151	109.6454	G13-010T 345.00 - SPEARVILLE 345KV CKT 1
FDNS	00NR	2	16WP	G15_057	FROM->TO	CIMARRON - DRAPER LAKE 345KV CKT 1	717	717	0.18126	109.6402	NELSON 230/20.0KV TRANSFORMER CKT 1
FDNS	00NR	2	16WP	G15_057	FROM->TO	CIMARRON - DRAPER LAKE 345KV CKT 1	717	717	0.18127	109.637	AS KING - EAU CLAIRE 345KV CKT 1
FDNS	00NR	2	16WP	G15_057	FROM->TO	CIMARRON - DRAPER LAKE 345KV CKT 1	717	717	0.18126	109.6345	GEN336152 1-WATERFORD UNIT#2
FDNS	00NR	2	16WP	G15_057	FROM->TO	CIMARRON - DRAPER LAKE 345KV CKT 1	717	717	0.18126	109.6339	ST FRANCIS 2 161/16.0KV TRANSFORMER CKT 2
FDNS	00NR	2	16WP	G15_057	FROM->TO	CIMARRON - DRAPER LAKE 345KV CKT 1	717	717	0.18126	109.6338	ST FRANCIS 345/161KV TRANSFORMER CKT 1
FDNS	00NR	2	16WP	G15_057	FROM->TO	CIMARRON - DRAPER LAKE 345KV CKT 1	717	717	0.18126	109.6334	GEN336151 1-WATERFORD UNIT#1
FDNS	00NR	2	16WP	G15_057	FROM->TO	CIMARRON - DRAPER LAKE 345KV CKT 1	717	717	0.18317	109.6324	BRYANT - MEMORIAL 138KV CKT 1
FDNS	00NR	2	16WP	G15_057	FROM->TO	CIMARRON - DRAPER LAKE 345KV CKT 1	717	717	0.18127	109.6287	P12:161:AEPW:EROGERS5:ECNTRTN5
FDNS	00NR	2	16WP	G15_057	FROM->TO	CIMARRON - DRAPER LAKE 345KV CKT 1	717	717	0.18126	109.6274	P12:138:AEPW:SHERID4:112GORE4
FDNS	00NR	2	16WP	G15_057	FROM->TO	CIMARRON - DRAPER LAKE 345KV CKT 1	717	717	0.18184	109.6258	HEALDTON - LOCO 138KV CKT 1
FDNS	00NR	2	16WP	G15_057	FROM->TO	CIMARRON - DRAPER LAKE 345KV CKT 1	717	717	0.18127	109.6228	P12:161:AEPW:DYESS5:ELMSPRNG:TONTITN5
FDNS	00NR	2	16WP	G15_057	FROM->TO	CIMARRON - DRAPER LAKE 345KV CKT 1	717	717	0.18161	109.6205	P12:138:AEPW:CORNVIL4:S.W.S.-4
FDNS	00NR	2	16WP	G15_057	FROM->TO	CIMARRON - DRAPER LAKE 345KV CKT 1	717	717	0.18129	109.6186	GRAND ISLAND - MCCOOL 345KV CKT 1
FDNS	00NR	2	16WP	G15_057	FROM->TO	CIMARRON - DRAPER LAKE 345KV CKT 1	717	717	0.18126	109.618	GEN334392 1-EXXON MOBIL IPP 1
FDNS	00NR	2	16WP	G15_057	FROM->TO	CIMARRON - DRAPER LAKE 345KV CKT 1	717	717	0.18146	109.6153	HEFNER - TULSA 138KV CKT 1
FDNS	00NR	2	16WP	G15_057	FROM->TO	CIMARRON - DRAPER LAKE 345KV CKT 1	717	717	0.18129	109.6133	P12:161:AEPW-SWPA:BEAVER5:EROGERS5
FDNS	00NR	2	16WP	G15_057	FROM->TO	CIMARRON - DRAPER LAKE 345KV CKT 1	717	717	0.18154	109.6125	COMANCHE TAP - OMPA-DUNCAN 840 138KV CKT 1
FDNS	00NR	2	16WP	G15_057	FROM->TO	CIMARRON - DRAPER LAKE 345KV CKT 1	717	717	0.18126	109.6118	GEN334393 1-EXXON MOBIL IPP 2
FDNS	00NR	2	16WP	G15_057	FROM->TO	CIMARRON - DRAPER LAKE 345KV CKT 1	717	717	0.18126	109.6118	GEN334394 1-EXXON MOBIL IPP 3
FDNS	00NR	2	16WP	G15_057	FROM->TO	CIMARRON - DRAPER LAKE 345KV CKT 1	717	717	0.1814	109.6101	FLETCHER - MARLOW JCT 69KV CKT 1
FDNS	00NR	2	16WP	G15_057	FROM->TO	CIMARRON - DRAPER LAKE 345KV CKT 1	717	717	0.18134	109.6034	G15088_T 345.00 - PAULINE 345KV CKT 1
FDNS	00NR	2	16WP	G15_057	FROM->TO	CIMARRON - DRAPER LAKE 345KV CKT 1	717	717	0.18123	109.5977	MC NIEL 500/115KV TRANSFORMER CKT 1
FDNS	00NR	2	16WP	G15_057	FROM->TO	CIMARRON - DRAPER LAKE 345KV CKT 1	717	717	0.18126	109.5972	GEN501972 1-EVANGELINE UNIT 7-2
FDNS	00NR	2	16WP	G15_057	FROM->TO	CIMARRON - DRAPER LAKE 345KV CKT 1	717	717	0.18126	109.5971	GEN501971 1-EVANGELINE UNIT 7-1
FDNS	00NR	2	16WP	G15_057	FROM->TO	CIMARRON - DRAPER LAKE 345KV CKT 1	717	717	0.18112	109.5939	KELLYAV4 138.00 - MEMORIAL 138KV CKT 1
FDNS	00NR	2	16WP	G15_057	FROM->TO	CIMARRON - DRAPER LAKE 345KV CKT 1	717	717	0.18133	109.5932	BROOKLINE - MORGAN 345KV CKT 1
FDNS	00NR	2	16WP	G15_057	FROM->TO	CIMARRON - DRAPER LAKE 345KV CKT 1	717	717	0.18133	109.5932	BROOKLINE - MORGAN 345KV CKT 1
FDNS	00NR	2	16WP	G15_057	FROM->TO	CIMARRON - DRAPER LAKE 345KV CKT 1	717	717	0.18134	109.593	P12:138:AEPW:MOUNDRD4:SHIDLER4
FDNS	00NR	2	16WP	G15_057	FROM->TO	CIMARRON - DRAPER LAKE 345KV CKT 1	717	717	0.18119	109.5926	BISMARK - HOT SPRINGS WEST BUS 115KV CKT 1
FDNS	00NR	2	16WP	G15_057	FROM->TO	CIMARRON - DRAPER LAKE 345KV CKT 1	717	717	0.18172	109.5925	BODLE - PARK PLACE 138KV CKT 1
FDNS	00NR	2	16WP	G15_057	FROM->TO	CIMARRON - DRAPER LAKE 345KV CKT 1	717	717	0.18126	109.5919	GEN337764 1-TRACTEBEL UNIT C1
FDNS	00NR	2	16WP	G15_057	FROM->TO	CIMARRON - DRAPER LAKE 345KV CKT 1	717	717	0.18126	109.5919	GEN337765 1-TRACTEBEL UNIT C2

SOLUTION	GROUP	SCENARIO	SEASON	SOURCE	DIRECTION	MONITORED ELEMENT	RATEA (MVA)	RATEB(MVA)	TDF	TC%LOADING (% MVA)	CONTINGENCY
FDNS	00NR	2	16WP	G15_057	FROM->TO	CIMARRON - DRAPER LAKE 345KV CKT 1	717	717	0.18129	109.5882	MCCOOL - MOORE 345KV CKT 1
FDNS	00NR	2	16WP	G15_057	FROM->TO	CIMARRON - DRAPER LAKE 345KV CKT 1	717	717	0.18218	109.5879	NORTHEAST STATION - ONETA 345KV CKT 1
FDNS	00NR	2	16WP	G15_057	FROM->TO	CIMARRON - DRAPER LAKE 345KV CKT 1	717	717	0.18218	109.5879	NORTHEAST STATION - ONETA 345KV CKT 1
FDNS	00NR	2	16WP	G15_057	FROM->TO	CIMARRON - DRAPER LAKE 345KV CKT 1	717	717	0.18128	109.5873	P12:138:WFEC:MSL15
FDNS	00NR	2	16WP	G15_057	FROM->TO	CIMARRON - DRAPER LAKE 345KV CKT 1	717	717	0.18126	109.5868	GEN336242 1-1NMIL ST1 18.000
FDNS	00NR	2	16WP	G15_057	FROM->TO	CIMARRON - DRAPER LAKE 345KV CKT 1	717	717	0.18126	109.5861	GEN334431 1-SABINE UNIT 1
FDNS	00NR	2	16WP	G15_057	FROM->TO	CIMARRON - DRAPER LAKE 345KV CKT 1	717	717	0.18126	109.5861	GEN334432 1-SABINE UNIT 2
FDNS	00NR	2	16WP	G15_057	FROM->TO	CIMARRON - DRAPER LAKE 345KV CKT 1	717	717	0.18184	109.5851	HEALDTON - RINGLING 138KV CKT 1
FDNS	00NR	2	16WP	G15_057	FROM->TO	CIMARRON - DRAPER LAKE 345KV CKT 1	717	717	0.18119	109.5847	BRISTOW - SILVER CITY 138KV CKT 1
FDNS	00NR	2	16WP	G15_057	FROM->TO	CIMARRON - DRAPER LAKE 345KV CKT 1	717	717	0.18126	109.5828	GEN501912 1-ACADIA UNIT CT1B
FDNS	00NR	2	16WP	G15_057	FROM->TO	CIMARRON - DRAPER LAKE 345KV CKT 1	717	717	0.18126	109.5821	GEN501911 1-ACADIA UNIT CT1A
FDNS	00NR	2	16WP	G15_057	FROM->TO	CIMARRON - DRAPER LAKE 345KV CKT 1	717	717	0.1833	109.5808	COLE - OUSW4 138KV CKT 1
FDNS	00NR	2	16WP	G15_057	FROM->TO	CIMARRON - DRAPER LAKE 345KV CKT 1	717	717	0.18131	109.5802	COTTONWOOD CREEK - MARSHALL 138KV CKT 1
FDNS	00NR	2	16WP	G15_057	FROM->TO	CIMARRON - DRAPER LAKE 345KV CKT 1	717	717	0.18164	109.5794	HAMMETT TAP - HORSESHOE LAKE 138KV CKT 1
FDNS	00NR	2	16WP	G15_057	FROM->TO	CIMARRON - DRAPER LAKE 345KV CKT 1	717	717	0.18131	109.576	MARSHALL - WOODRING 138KV CKT 1
FDNS	00NR	2	16WP	G15_057	FROM->TO	CIMARRON - DRAPER LAKE 345KV CKT 1	717	717	0.18134	109.5759	SHIDLER - WEST PAWHUSKA 138KV CKT 1
FDNS	00NR	2	16WP	G15_057	FROM->TO	CIMARRON - DRAPER LAKE 345KV CKT 1	717	717	0.18121	109.5747	PIEDMONT - RICHRDS 138KV CKT 1
FDNS	00NR	2	16WP	G15_057	FROM->TO	CIMARRON - DRAPER LAKE 345KV CKT 1	717	717	0.18161	109.5712	COUNCIL - MUSTANG 138KV CKT 1
FDNS	00NR	2	16WP	G15_057	FROM->TO	CIMARRON - DRAPER LAKE 345KV CKT 1	717	717	0.18128	109.5683	ARPIN B4 345.00 - EAU CLAIRE 345KV CKT 1
FDNS	00NR	2	16WP	G15_057	FROM->TO	CIMARRON - DRAPER LAKE 345KV CKT 1	717	717	0.18126	109.565	CYPRESS - HARTBURG 500KV CKT 1
FDNS	00NR	2	16WP	G15_057	FROM->TO	CIMARRON - DRAPER LAKE 345KV CKT 1	717	717	0.18112	109.5628	KELLYAV4 138.00 - REMNGTON PARK 138KV CKT 1
FDNS	00NR	2	16WP	G15_057	FROM->TO	CIMARRON - DRAPER LAKE 345KV CKT 1	717	717	0.18134	109.5601	PAWHUSKA TAP - WEST PAWHUSKA 138KV CKT 1
FDNS	00NR	2	16WP	G15_057	FROM->TO	CIMARRON - DRAPER LAKE 345KV CKT 1	717	717	0.18119	109.5595	ALPINE AECC - BISMARK 115KV CKT 1
FDNS	00NR	2	16WP	G15_057	FROM->TO	CIMARRON - DRAPER LAKE 345KV CKT 1	717	717	0.18126	109.5594	GEN515266 1-AES 1G
FDNS	00NR	2	16WP	G15_057	FROM->TO	CIMARRON - DRAPER LAKE 345KV CKT 1	717	717	0.18126	109.5594	GEN515267 1-AES 2G
FDNS	00NR	2	16WP	G15_057	FROM->TO	CIMARRON - DRAPER LAKE 345KV CKT 1	717	717	0.1814	109.5584	HAMMETT2 - MEEKER 138KV CKT 1
FDNS	00NR	2	16WP	G15_057	FROM->TO	CIMARRON - DRAPER LAKE 345KV CKT 1	717	717	0.18189	109.557	CIVIT - PAOLI 138KV CKT 1
FDNS	00NR	2	16WP	G15_057	FROM->TO	CIMARRON - DRAPER LAKE 345KV CKT 1	717	717	0.18146	109.5559	CORN TAP - CORNVILLE 138KV CKT 1
FDNS	00NR	2	16WP	G15_057	FROM->TO	CIMARRON - DRAPER LAKE 345KV CKT 1	717	717	0.18317	109.5546	ACORN 4 138.00 - BRYANT 138KV CKT 1
FDNS	00NR	2	16WP	G15_057	FROM->TO	CIMARRON - DRAPER LAKE 345KV CKT 1	717	717	0.18126	109.544	GEN337430 1-PERYVILLE UNIT #3
FDNS	00NR	2	16WP	G15_057	FROM->TO	CIMARRON - DRAPER LAKE 345KV CKT 1	717	717	0.18184	109.5437	RINGLING - SOUTH WILSON 138KV CKT 1
FDNS	00NR	2	16WP	G15_057	FROM->TO	CIMARRON - DRAPER LAKE 345KV CKT 1	717	717	0.18126	109.5431	GEN337428 1-PERYVILLE UNIT #1
FDNS	00NR	2	16WP	G15_057	FROM->TO	CIMARRON - DRAPER LAKE 345KV CKT 1	717	717	0.18126	109.5426	P12:69:AEPW:L.E.S.-2:LAW WC2
FDNS	00NR	2	16WP	G15_057	FROM->TO	CIMARRON - DRAPER LAKE 345KV CKT 1	717	717	0.18126	109.5408	SABINE 230/24.0KV TRANSFORMER CKT 1
FDNS	00NR	2	16WP	G15_057	FROM->TO	CIMARRON - DRAPER LAKE 345KV CKT 1	717	717	0.18122	109.5391	LAYFLD8 500.00 - MOUNT OLIVE 500KV CKT 1
FDNS	00NR	2	16WP	G15_057	FROM->TO	CIMARRON - DRAPER LAKE 345KV CKT 1	717	717	0.18122	109.5391	LAYFLD8 500.00 - MOUNT OLIVE 500KV CKT 1
FDNS	00NR	2	16WP	G15_057	FROM->TO	CIMARRON - DRAPER LAKE 345KV CKT 1	717	717	0.18112	109.5293	REMNGTON PARK - STONEWALL 138KV CKT 1
FDNS	00NR	2	16WP	G15_057	FROM->TO	CIMARRON - DRAPER LAKE 345KV CKT 1	717	717	0.18161	109.5182	COUNCIL - WESTOAKS 138KV CKT 1
FDNS	00NR	2	16WP	G15_057	FROM->TO	CIMARRON - DRAPER LAKE 345KV CKT 1	717	717	0.18151	109.5129	CHERRY CREEK - PLEASANT VALLEY 138KV CKT 1
FDNS	00NR	2	16WP	G15_057	FROM->TO	CIMARRON - DRAPER LAKE 345KV CKT 1	717	717	0.18126	109.0896	BASE CASE
FDNS	00NR	2	16WP	G15_057	FROM->TO	CIMARRON - DRAPER LAKE 345KV CKT 1	717	717	0.18136	108.8045	CHISHOLM6 230.00 - SWEETWATER 230KV CKT 1
FDNS	00NR	2	16WP	G15_057	FROM->TO	CIMARRON - DRAPER LAKE 345KV CKT 1	717	717	0.18216	108.713	BURGETT4 138.00 - DANFORTH 138KV CKT 1
FDNS	00NR	2	16WP	G15_057	FROM->TO	CIMARRON - DRAPER LAKE 345KV CKT 1	717	717	0.18216	108.7122	BURGETT4 138.00 - RNDBARN4 138.00 138KV CKT 1
FDNS	00NR	2	16WP	G15_057	FROM->TO	CIMARRON - DRAPER LAKE 345KV CKT 1	717	717	0.18216	108.6996	ARCADIA - RNDBARN4 138.00 138KV CKT 1
FDNS	00NR	2	16WP	G15_057	FROM->TO	CIMARRON - DRAPER LAKE 345KV CKT 1	717	717	0.18126	108.6816	GEN511848 1-SOUTHWESTERN STATION #3
FDNS	00NR	2	16WP	G15_057	FROM->TO	CIMARRON - DRAPER LAKE 345KV CKT 1	717	717	0.18126	108.6812	GEN515550 1-MNCWND31 0.6900
FDNS	00NR	2	16WP	G15_057	FROM->TO	CIMARRON - DRAPER LAKE 345KV CKT 1	717	717	0.18126	108.6699	GEN562611 1-G14_064_3 0.6900
FDNS	00NR	2	16WP	G15_057	FROM->TO	CIMARRON - DRAPER LAKE 345KV CKT 1	717	717	0.18087	108.6635	BORDER 7345.00 - TUCO_2 345.00 345KV CKT 1
FDNS	00NR	2	16WP	G15_057	FROM->TO	CIMARRON - DRAPER LAKE 345KV CKT 1	717	717	0.18122	108.6493	G11-14T 345.00 - WOODWARD DISTRICT EHV 345KV CKT 1
FDNS	00NR	2	16WP	G15_057	FROM->TO	CIMARRON - DRAPER LAKE 345KV CKT 1	717	717	0.18122	108.6493	G11-14T 345.00 - WOODWARD DISTRICT EHV 345KV CKT 2
FDNS	00NR	2	16WP	G15_057	FROM->TO	CIMARRON - DRAPER LAKE 345KV CKT 1	717	717	0.18248	108.6383	FOREST HILL - MAUD 138KV CKT 1
FDNS	00NR	2	16WP	G15_057	FROM->TO	CIMARRON - DRAPER LAKE 345KV CKT 1	717	717	0.18126	108.633	GEN515601 1-KNGFSR11 0.7000
FDNS	00NR	2	16WP	G15_057	FROM->TO	CIMARRON - DRAPER LAKE 345KV CKT 1	717	717	0.18126	108.6311	GEN629066 4-PRAIRIE CREEK GENERATORFOR UNIT NO4
FDNS	00NR	2	16WP	G15_057	FROM->TO	CIMARRON - DRAPER LAKE 345KV CKT 1	717	717	0.18126	108.6302	GEN641089 2-ENERGY CENTER 2
FDNS	00NR	2	16WP	G15_057	FROM->TO	CIMARRON - DRAPER LAKE 345KV CKT 1	717	717	0.18126	108.6252	GEN659125 1-COVEY
FDNS	00NR	2	16WP	G15_057	FROM->TO	CIMARRON - DRAPER LAKE 345KV CKT 1	717	717	0.18126	108.6245	GEN563062 1-G15071_3 0.6900
FDNS	00NR	2	16WP	G15_057	FROM->TO	CIMARRON - DRAPER LAKE 345KV CKT 1	717	717	0.18126	108.6224	GEN600050 1-FEP
FDNS	00NR	2	16WP	G15_057	FROM->TO	CIMARRON - DRAPER LAKE 345KV CKT 1	717	717	0.18133	108.6174	7MCCREDIE 345.00 - 7OVERTON 345.00 345KV CKT 1
FDNS	00NR	2	16WP	G15_057	FROM->TO	CIMARRON - DRAPER LAKE 345KV CKT 1	717	717	0.18206	108.6162	HUNTERS7 345.00 - RENFROW7 345.00 345KV CKT 1
FDNS	00NR	2	16WP	G15_057	FROM->TO	CIMARRON - DRAPER LAKE 345KV CKT 1	717	717	0.18126	108.615	GEN562042 1-G11_014_3 0.6900
FDNS	00NR	2	16WP	G15_057	FROM->TO	CIMARRON - DRAPER LAKE 345KV CKT 1	717	717	0.18076	108.6121	P12:138:WFEC:MSL10
FDNS	00NR	2	16WP	G15_057	FROM->TO	CIMARRON - DRAPER LAKE 345KV CKT 1	717	717	0.18126	108.6068	GEN539670 4-JUDSON LARGE GENERATOR
FDNS	00NR	2	16WP	G15_057	FROM->TO	CIMARRON - DRAPER LAKE 345KV CKT 1	717	717	0.18126	108.6008	GEN600071 10-RIVER SIDE
FDNS	00NR	2	16WP	G15_057	FROM->TO	CIMARRON - DRAPER LAKE 345KV CKT 1	717	717	0.18126	108.6007	GEN600070 9-RIVER SIDE
FDNS	00NR	2	16WP	G15_057	FROM->TO	CIMARRON - DRAPER LAKE 345KV CKT 1	717	717	0.18126	108.5955	GEN672303 3-BOUNDARY DAM GENERATOR 3
FDNS	00NR	2	16WP	G15_057	FROM->TO	CIMARRON - DRAPER LAKE 345KV CKT 1	717	717	0.18126	108.5955	GEN672304 4-BOUNDARY DAM GENERATOR 4
FDNS	00NR	2	16WP	G15_057	FROM->TO	CIMARRON - DRAPER LAKE 345KV CKT 1	717	717	0.18126	108.5955	GEN672305 5-BOUNDARY DAM GENERATOR 5
FDNS	00NR	2	16WP	G15_057	FROM->TO	CIMARRON - DRAPER LAKE 345KV CKT 1	717	717	0.18126	108.5944	GEN600007 7-RIVERSIDE GEN 7
FDNS	00NR	2	16WP	G15_057	FROM->TO	CIMARRON - DRAPER LAKE 345KV CKT 1	717	717	0.18126	108.5939	GEN600067 9-HIGH BRIDGE
FDNS	00NR	2	16WP	G15_057	FROM->TO	CIMARRON - DRAPER LAKE 345KV CKT 1	717	717	0.18126	108.5938	GEN562270 1-G12-020-2 0.6900
FDNS	00NR	2	16WP	G15_057	FROM->TO	CIMARRON - DRAPER LAKE 345KV CKT 1	717	717	0.18126	108.5905	GEN615052 1-CAMBRIDGE GENERATING STATION
FDNS	00NR	2	16WP	G15_057	FROM->TO	CIMARRON - DRAPER LAKE 345KV CKT 1	717	717	0.18177	108.5895	RENFROW7 345.00 - VIOLA 7 345.00 345KV CKT 1
FDNS	00NR	2	16WP	G15_057	FROM->TO	CIMARRON - DRAPER LAKE 345KV CKT 1	717	717	0.18126	108.5879	GEN600011 5-BLACK DOG GEN 1
FDNS	00NR	2	16WP	G15_057	FROM->TO	CIMARRON - DRAPER LAKE 345KV CKT 1	717	717	0.18126	108.5835	GEN541151 3-SIBLEY GENERATING UNIT #3
FDNS	00NR	2	16WP	G15_057	FROM->TO	CIMARRON - DRAPER LAKE 345KV CKT 1	717	717	0.18126	108.5825	GEN600014 4-BLACK DOG GEN 4
FDNS	00NR	2	16WP	G15_057	FROM->TO	CIMARRON - DRAPER LAKE 345KV CKT 1	717	717	0.18126	108.576	GEN629067 1-EMERY GAS TURBINE 1
FDNS	00NR	2	16WP	G15_057	FROM->TO	CIMARRON - DRAPER LAKE 345KV CKT 1	717	717	0.18126	108.5756	GEN562802 1-G15039_3 0.3570
FDNS	00NR	2	16WP	G15_057	FROM->TO	CIMARRON - DRAPER LAKE 345KV CKT 1	717	717	0.18126	108.5753	GEN615032 2-PLEASANT VALLEY
FDNS	00NR	2	16WP	G15_057	FROM->TO	CIMARRON - DRAPER LAKE 345KV CKT 1	717	717	0.18126	108.5747	GEN563102 1-G15075_3 0.5500

SOLUTION	GROUP	SCENARIO	SEASON	SOURCE	DIRECTION	MONITORED ELEMENT	RATEA (MVA)	RATEB(MVA)	TDF	TC%LOADING (% MVA)	CONTINGENCY
FDNS	00NR	2	16WP	G15_057	FROM->TO	CIMARRON - DRAPER LAKE 345KV CKT 1	717	717	0.18178	108.5713	DELAWARE - NORTHEAST STATION 345KV CKT 1
FDNS	00NR	2	16WP	G15_057	FROM->TO	CIMARRON - DRAPER LAKE 345KV CKT 1	717	717	0.18178	108.5713	DELAWARE - NORTHEAST STATION 345KV CKT 1
FDNS	00NR	2	16WP	G15_057	FROM->TO	CIMARRON - DRAPER LAKE 345KV CKT 1	717	717	0.18126	108.5713	GEN562602 1-G15_029_3 0.6900
FDNS	00NR	2	16WP	G15_057	FROM->TO	CIMARRON - DRAPER LAKE 345KV CKT 1	717	717	0.18126	108.5709	GEN515611 1-NBUFFRG1 0.6900
FDNS	00NR	2	16WP	G15_057	FROM->TO	CIMARRON - DRAPER LAKE 345KV CKT 1	717	717	0.18126	108.5709	GEN560217 1-G07_062_6 0.6900
FDNS	00NR	2	16WP	G15_057	FROM->TO	CIMARRON - DRAPER LAKE 345KV CKT 1	717	717	0.18126	108.5709	GEN560218 1-G07_062_7 0.6900
FDNS	00NR	2	16WP	G15_057	FROM->TO	CIMARRON - DRAPER LAKE 345KV CKT 1	717	717	0.18087	108.5669	BORDER 7345.00 - WOODWARD DISTRICT EHV 345KV CKT 1
FDNS	00NR	2	16WP	G15_057	FROM->TO	CIMARRON - DRAPER LAKE 345KV CKT 1	717	717	0.18042	108.5629	CHISNEY - CLARKSVILLE 138KV CKT 1
FDNS	00NR	2	16WP	G15_057	FROM->TO	CIMARRON - DRAPER LAKE 345KV CKT 1	717	717	0.18136	108.5624	7MCCREDIE 345.00 - 7MONTGMRY 345.00 345KV CKT 1
FDNS	00NR	2	16WP	G15_057	FROM->TO	CIMARRON - DRAPER LAKE 345KV CKT 1	717	717	0.18126	108.554	GEN652353 2-GR PRAIRIEG 0.6900
FDNS	00NR	2	16WP	G15_057	FROM->TO	CIMARRON - DRAPER LAKE 345KV CKT 1	717	717	0.18126	108.5534	GEN563282 1-G15094_3 0.6900
FDNS	00NR	2	16WP	G15_057	FROM->TO	CIMARRON - DRAPER LAKE 345KV CKT 1	717	717	0.18126	108.5504	GEN562812 1-G15040_3 0.3570
FDNS	00NR	2	16WP	G15_057	FROM->TO	CIMARRON - DRAPER LAKE 345KV CKT 1	717	717	0.18126	108.5441	GEN563132 1-G15078_3 0.3570
FDNS	00NR	2	16WP	G15_057	FROM->TO	CIMARRON - DRAPER LAKE 345KV CKT 1	717	717	0.18126	108.5439	GEN600017 C-LS POWER CT
FDNS	00NR	2	16WP	G15_057	FROM->TO	CIMARRON - DRAPER LAKE 345KV CKT 1	717	717	0.18187	108.5308	SEMINOLE - VANOSTP4 138.00 138KV CKT 1
FDNS	00NR	2	16WP	G15_057	FROM->TO	CIMARRON - DRAPER LAKE 345KV CKT 1	717	717	0.18233	108.5283	CHISHOLM7 345.00 - GRACEMONT 345KV CKT 1
FDNS	00NR	2	16WP	G15_057	FROM->TO	CIMARRON - DRAPER LAKE 345KV CKT 1	717	717	0.18126	108.5225	GEN515591 1-PALDRW11 0.6900
FDNS	00NR	2	16WP	G15_057	FROM->TO	CIMARRON - DRAPER LAKE 345KV CKT 1	717	717	0.18126	108.5225	GEN524285 1-WILDORADO WIND GEN
FDNS	00NR	2	16WP	G15_057	FROM->TO	CIMARRON - DRAPER LAKE 345KV CKT 1	717	717	0.18124	108.5199	P12:138:AEPW:SHAM4WT:CHILD4WT
FDNS	00NR	2	16WP	G15_057	FROM->TO	CIMARRON - DRAPER LAKE 345KV CKT 1	717	717	0.18098	108.5167	P12:138:OKGE:3TERM36
FDNS	00NR	2	16WP	G15_057	FROM->TO	CIMARRON - DRAPER LAKE 345KV CKT 1	717	717	0.18126	108.516	GEN629070 2-BEAVER CHANNEL GENERATORFOR UNIT NO 2
FDNS	00NR	2	16WP	G15_057	FROM->TO	CIMARRON - DRAPER LAKE 345KV CKT 1	717	717	0.18126	108.515	GEN526331 1-JONES GEN #1 22 KV
FDNS	00NR	2	16WP	G15_057	FROM->TO	CIMARRON - DRAPER LAKE 345KV CKT 1	717	717	0.18126	108.515	GEN526332 1-JONES GEN #2 21 KV
FDNS	00NR	2	16WP	G15_057	FROM->TO	CIMARRON - DRAPER LAKE 345KV CKT 1	717	717	0.18126	108.5128	GEN672392 1-NBECGT1G 18.000
FDNS	00NR	2	16WP	G15_057	FROM->TO	CIMARRON - DRAPER LAKE 345KV CKT 1	717	717	0.18126	108.5107	P12:138:WFEC:MSL07
FDNS	00NR	2	16WP	G15_057	FROM->TO	CIMARRON - DRAPER LAKE 345KV CKT 1	717	717	0.18126	108.5107	P12:138:WFEC-AEPW:HUGOPP4:ATOKA--4
FDNS	00NR	2	16WP	G15_057	FROM->TO	CIMARRON - DRAPER LAKE 345KV CKT 1	717	717	0.18138	108.5101	CANADIAN RIVER - MCALESTER SOUTH 138KV CKT 1
FDNS	00NR	2	16WP	G15_057	FROM->TO	CIMARRON - DRAPER LAKE 345KV CKT 1	717	717	0.18138	108.5101	CANADIAN RIVER - MCALESTER SOUTH 138KV CKT 1
FDNS	00NR	2	16WP	G15_057	FROM->TO	CIMARRON - DRAPER LAKE 345KV CKT 1	717	717	0.18138	108.5091	CANADIAN RIVER () 345/138/13.8KV TRANSFORMER CKT 1
FDNS	00NR	2	16WP	G15_057	FROM->TO	CIMARRON - DRAPER LAKE 345KV CKT 1	717	717	0.18138	108.5091	CANADIAN RIVER () 345/138/13.8KV TRANSFORMER CKT 1
FDNS	00NR	2	16WP	G15_057	FROM->TO	CIMARRON - DRAPER LAKE 345KV CKT 1	717	717	0.18098	108.5058	P12:138:AEPW:WELETK4:EARLSBORO4
FDNS	00NR	2	16WP	G15_057	FROM->TO	CIMARRON - DRAPER LAKE 345KV CKT 1	717	717	0.18126	108.5051	GEN629071 1-BURLINGTON GENERATOR FOR UNIT NO 1 E
FDNS	00NR	2	16WP	G15_057	FROM->TO	CIMARRON - DRAPER LAKE 345KV CKT 1	717	717	0.18107	108.5042	EARLSBORO 4138.00 - FIXICO TAP 138KV CKT 1
FDNS	00NR	2	16WP	G15_057	FROM->TO	CIMARRON - DRAPER LAKE 345KV CKT 1	717	717	0.18126	108.5	GEN300003 1-THOMAS HILL UNIT 3
FDNS	00NR	2	16WP	G15_057	FROM->TO	CIMARRON - DRAPER LAKE 345KV CKT 1	717	717	0.18118	108.4969	P12:138:AEPW-SWPA:LONEOAK4:TUPELO4
FDNS	00NR	2	16WP	G15_057	FROM->TO	CIMARRON - DRAPER LAKE 345KV CKT 1	717	717	0.18118	108.4969	P12:138:WFEC:MSL06
FDNS	00NR	2	16WP	G15_057	FROM->TO	CIMARRON - DRAPER LAKE 345KV CKT 1	717	717	0.18126	108.4909	GEN615010 1-STANTON4
FDNS	00NR	2	16WP	G15_057	FROM->TO	CIMARRON - DRAPER LAKE 345KV CKT 1	717	717	0.18126	108.4902	GEN562429 1-G13-029 0.6900
FDNS	00NR	2	16WP	G15_057	FROM->TO	CIMARRON - DRAPER LAKE 345KV CKT 1	717	717	0.18151	108.485	P12:138:WFEC:MSL16
FDNS	00NR	2	16WP	G15_057	FROM->TO	CIMARRON - DRAPER LAKE 345KV CKT 1	717	717	0.18126	108.4837	GEN562074 1-G1149G1504 0.6900
FDNS	00NR	2	16WP	G15_057	FROM->TO	CIMARRON - DRAPER LAKE 345KV CKT 1	717	717	0.18126	108.4787	GEN532663 1-LAWRENCE ENERGY CENTER UNIT 5
FDNS	00NR	2	16WP	G15_057	FROM->TO	CIMARRON - DRAPER LAKE 345KV CKT 1	717	717	0.18126	108.4699	GEN615021 1-GRE-ER 14G 16.000
FDNS	00NR	2	16WP	G15_057	FROM->TO	CIMARRON - DRAPER LAKE 345KV CKT 1	717	717	0.18042	108.469	CHISNEY - HIGHLAND 138KV CKT 1
FDNS	00NR	2	16WP	G15_057	FROM->TO	CIMARRON - DRAPER LAKE 345KV CKT 1	717	717	0.18126	108.4688	GEN562596 1-G14_059_3 0.6900
FDNS	00NR	2	16WP	G15_057	FROM->TO	CIMARRON - DRAPER LAKE 345KV CKT 1	717	717	0.18126	108.4672	INDEPENDENCE 500/26.0KV TRANSFORMER CKT 1
FDNS	00NR	2	16WP	G15_057	FROM->TO	CIMARRON - DRAPER LAKE 345KV CKT 1	717	717	0.18126	108.4663	GEN560105 1-G08-22 0.6900
FDNS	00NR	2	16WP	G15_057	FROM->TO	CIMARRON - DRAPER LAKE 345KV CKT 1	717	717	0.18126	108.4561	GEN515365 1-CENT 21 0.7000
FDNS	00NR	2	16WP	G15_057	FROM->TO	CIMARRON - DRAPER LAKE 345KV CKT 1	717	717	0.18233	108.4546	CHISHOLM7 345.00 (CHISHOLM) 345/230/13.2KV TRANSFORMER CKT 1
FDNS	00NR	2	16WP	G15_057	FROM->TO	CIMARRON - DRAPER LAKE 345KV CKT 1	717	717	0.18126	108.4545	BURLINGTON NO1 + NO 2 + NO 3 161/20.0KV TRANSFORMER CKT 1
FDNS	00NR	2	16WP	G15_057	FROM->TO	CIMARRON - DRAPER LAKE 345KV CKT 1	717	717	0.18241	108.4532	MAUD - SEMINOLE 138KV CKT 1
FDNS	00NR	2	16WP	G15_057	FROM->TO	CIMARRON - DRAPER LAKE 345KV CKT 1	717	717	0.18126	108.4471	GEN562983 1-G15061_4 0.6900
FDNS	00NR	2	16WP	G15_057	FROM->TO	CIMARRON - DRAPER LAKE 345KV CKT 1	717	717	0.18126	108.4471	GEN562984 1-G15061_5 0.6900
FDNS	00NR	2	16WP	G15_057	FROM->TO	CIMARRON - DRAPER LAKE 345KV CKT 1	717	717	0.18129	108.4465	GRPRAR1-LNX3345.00 - HOLT.CO3 345.00 345KV CKT 1
FDNS	00NR	2	16WP	G15_057	FROM->TO	CIMARRON - DRAPER LAKE 345KV CKT 1	717	717	0.18126	108.4398	GEN527882 1-CUNNINGHAM GEN #2 20 KV
FDNS	00NR	2	16WP	G15_057	FROM->TO	CIMARRON - DRAPER LAKE 345KV CKT 1	717	717	0.18137	108.4394	OVEXFRMCCOVE
FDNS	00NR	2	16WP	G15_057	FROM->TO	CIMARRON - DRAPER LAKE 345KV CKT 1	717	717	0.18129	108.4385	GRPRAR1-LNX3345.00 - GRPRAR 345KV CKT Z
FDNS	00NR	2	16WP	G15_057	FROM->TO	CIMARRON - DRAPER LAKE 345KV CKT 1	717	717	0.18158	108.436	MINGO - SETAB 345KV CKT 1
FDNS	00NR	2	16WP	G15_057	FROM->TO	CIMARRON - DRAPER LAKE 345KV CKT 1	717	717	0.18158	108.436	MINGO - SETAB 345KV CKT 1
FDNS	00NR	2	16WP	G15_057	FROM->TO	CIMARRON - DRAPER LAKE 345KV CKT 1	717	717	0.18126	108.4327	GEN562017 1-G11_022_3 0.6900
FDNS	00NR	2	16WP	G15_057	FROM->TO	CIMARRON - DRAPER LAKE 345KV CKT 1	717	717	0.18133	108.4316	DELL 500 - INDEPENDENCE 500KV CKT 1
FDNS	00NR	2	16WP	G15_057	FROM->TO	CIMARRON - DRAPER LAKE 345KV CKT 1	717	717	0.18126	108.427	GEN562550 1-G14_040_3 0.6900
FDNS	00NR	2	16WP	G15_057	FROM->TO	CIMARRON - DRAPER LAKE 345KV CKT 1	717	717	0.18098	108.4219	P12:138:AEPW-OGE:WELETK4:MAUD 4
FDNS	00NR	2	16WP	G15_057	FROM->TO	CIMARRON - DRAPER LAKE 345KV CKT 1	717	717	0.18107	108.4183	EARLSBORO 4138.00 - MAUD 138KV CKT 1
FDNS	00NR	2	16WP	G15_057	FROM->TO	CIMARRON - DRAPER LAKE 345KV CKT 1	717	717	0.18107	108.4183	EARLSBORO 4138.00 - MAUD 138KV CKT 1
FDNS	00NR	2	16WP	G15_057	FROM->TO	CIMARRON - DRAPER LAKE 345KV CKT 1	717	717	0.18126	108.4115	GEN562432 1-G13-030 0.6900
FDNS	00NR	2	16WP	G15_057	FROM->TO	CIMARRON - DRAPER LAKE 345KV CKT 1	717	717	0.18126	108.4055	GEN515606 1-CANDN11 0.6900
FDNS	00NR	2	16WP	G15_057	FROM->TO	CIMARRON - DRAPER LAKE 345KV CKT 1	717	717	0.18126	108.4055	GEN515607 1-CANDN12 0.6900
FDNS	00NR	2	16WP	G15_057	FROM->TO	CIMARRON - DRAPER LAKE 345KV CKT 1	717	717	0.18126	108.4016	GEN524295 1-SPNSPUR_WND10.6900
FDNS	00NR	2	16WP	G15_057	FROM->TO	CIMARRON - DRAPER LAKE 345KV CKT 1	717	717	0.18126	108.3952	GEN345671 2-1RUSH G2 18.000
FDNS	00NR	2	16WP	G15_057	FROM->TO	CIMARRON - DRAPER LAKE 345KV CKT 1	717	717	0.18126	108.3932	GEN345670 1-1RUSH G1 18.000
FDNS	00NR	2	16WP	G15_057	FROM->TO	CIMARRON - DRAPER LAKE 345KV CKT 1	717	717	0.18126	108.3903	GEN562832 1-G15042_3 0.6900
FDNS	00NR	2	16WP	G15_057	FROM->TO	CIMARRON - DRAPER LAKE 345KV CKT 1	717	717	0.18126	108.384	GEN515443 1-MNCOWND1 0.7000
FDNS	00NR	2	16WP	G15_057	FROM->TO	CIMARRON - DRAPER LAKE 345KV CKT 1	717	717	0.18126	108.3788	GEN562794 1-G15038_5 0.6900
FDNS	00NR	2	16WP	G15_057	FROM->TO	CIMARRON - DRAPER LAKE 345KV CKT 1	717	717	0.18126	108.3788	GEN562795 1-G15038_6 0.6900
FDNS	00NR	2	16WP	G15_057	FROM->TO	CIMARRON - DRAPER LAKE 345KV CKT 1	717	717	0.18126	108.3752	THOMAS HILL 161/22.0KV TRANSFORMER CKT 1
FDNS	00NR	2	16WP	G15_057	FROM->TO	CIMARRON - DRAPER LAKE 345KV CKT 1	717	717	0.18126	108.3714	GEN562512 1-G14_020_3 0.6900
FDNS	00NR	2	16WP	G15_057	FROM->TO	CIMARRON - DRAPER LAKE 345KV CKT 1	717	717	0.18126	108.3713	P12:230:UMZB:# 112 #: NU IN SD. NU-RCDC & DRY CREEK XFMR
FDNS	00NR	2	16WP	G15_057	FROM->TO	CIMARRON - DRAPER LAKE 345KV CKT 1	717	717	0.18126	108.3706	RCDC EAST 4230.00 - RED CEDAR DC 230KV CKT 1
FDNS	00NR	2	16WP	G15_057	FROM->TO	CIMARRON - DRAPER LAKE 345KV CKT 1	717	717	0.18126	108.347	GEN645011 1-NEBRASKA CITY 1

SOLUTION	GROUP	SCENARIO	SEASON	SOURCE	DIRECTION	MONITORED ELEMENT	RATEA (MVA)	RATEB(MVA)	TDF	TC%LOADING (% MVA)	CONTINGENCY
FDNS	00NR	2	16WP	G15_057	FROM->TO	CIMARRON - DRAPER LAKE 345KV CKT 1	717	717	0.18042	108.3418	HIGHLAND - PINK SW 138KV CKT 1
FDNS	00NR	2	16WP	G15_057	FROM->TO	CIMARRON - DRAPER LAKE 345KV CKT 1	717	717	0.18126	108.3311	GEN531447 1-HOLCOMB GENERATOR
FDNS	00NR	2	16WP	G15_057	FROM->TO	CIMARRON - DRAPER LAKE 345KV CKT 1	717	717	0.18126	108.329	GEN542951 5-HAWTHORN UNIT #5
FDNS	00NR	2	16WP	G15_057	FROM->TO	CIMARRON - DRAPER LAKE 345KV CKT 1	717	717	0.18126	108.3281	GEN563092 1-G15074_3 0.6900
FDNS	00NR	2	16WP	G15_057	FROM->TO	CIMARRON - DRAPER LAKE 345KV CKT 1	717	717	0.18126	108.3203	GEN529201 1-OMCDLEC1 13.800
FDNS	00NR	2	16WP	G15_057	FROM->TO	CIMARRON - DRAPER LAKE 345KV CKT 1	717	717	0.18126	108.3182	GEN562685 1-G15_013_3 0.3550
FDNSLock	00NR	2	16WP	G15_057	FROM->TO	CIMARRON - DRAPER LAKE 345KV CKT 1	717	717	0.18126	108.3178	GEN629072 4-LANSING GENERATOR FOR UNITS NO4 EIA CODE 1
FDNS	00NR	2	16WP	G15_057	FROM->TO	CIMARRON - DRAPER LAKE 345KV CKT 1	717	717	0.18126	108.3005	GEN645012 2-NEBRASKA CITY 2
FDNS	00NR	2	16WP	G15_057	FROM->TO	CIMARRON - DRAPER LAKE 345KV CKT 1	717	717	0.18237	108.2934	HOLLYWOOD - MIDWEST TAP 138KV CKT 1
FDNS	00NR	2	16WP	G15_057	FROM->TO	CIMARRON - DRAPER LAKE 345KV CKT 1	717	717	0.18028	108.2885	CIMARRON - TUTTLE CONOCO TAP 138KV CKT 1
FDNS	00NR	2	16WP	G15_057	FROM->TO	CIMARRON - DRAPER LAKE 345KV CKT 1	717	717	0.18126	108.2841	GEN562699 1-G15_018_3 0.6900
FDNS	00NR	2	16WP	G15_057	FROM->TO	CIMARRON - DRAPER LAKE 345KV CKT 1	717	717	0.18126	108.2825	GEN657749 1-YOUNG 1 GENERATOR
FDNS	00NR	2	16WP	G15_057	FROM->TO	CIMARRON - DRAPER LAKE 345KV CKT 1	717	717	0.18136	108.2738	KEO EHV - WEST MEMPHIS 500 500KV CKT 1
FDNS	00NR	2	16WP	G15_057	FROM->TO	CIMARRON - DRAPER LAKE 345KV CKT 1	717	717	0.1817	108.2486	FT SMITH - MUSKOGEE 345KV CKT 1
FDNS	00NR	2	16WP	G15_057	FROM->TO	CIMARRON - DRAPER LAKE 345KV CKT 1	717	717	0.18126	108.2486	GEN563182 1-G15083_3 0.6900
FDNS	00NR	2	16WP	G15_057	FROM->TO	CIMARRON - DRAPER LAKE 345KV CKT 1	717	717	0.18126	108.2473	GEN563122 1-G15077_3 0.3850
FDNS	00NR	2	16WP	G15_057	FROM->TO	CIMARRON - DRAPER LAKE 345KV CKT 1	717	717	0.18126	108.2419	GEN640009 1-COOPER NUCLEAR STATION
FDNS	00NR	2	16WP	G15_057	FROM->TO	CIMARRON - DRAPER LAKE 345KV CKT 1	717	717	0.18159	108.2386	FRISCCO4 138.00 - LULA 138KV CKT 1
FDNS	00NR	2	16WP	G15_057	FROM->TO	CIMARRON - DRAPER LAKE 345KV CKT 1	717	717	0.18206	108.2233	HUNTERS7 345.00 - WOODRING 345KV CKT 1
FDNSLock	00NR	2	16WP	G15_057	FROM->TO	CIMARRON - DRAPER LAKE 345KV CKT 1	717	717	0.18126	108.2169	GEN681522 3-GENOA 3
FDNS	00NR	2	16WP	G15_057	FROM->TO	CIMARRON - DRAPER LAKE 345KV CKT 1	717	717	0.18028	108.2164	TUTTLE - TUTTLE CONOCO TAP 138KV CKT 1
FDNS	00NR	2	16WP	G15_057	FROM->TO	CIMARRON - DRAPER LAKE 345KV CKT 1	717	717	0.18126	108.2054	GEN562587 1-G14_056_3 0.6900
FDNS	00NR	2	16WP	G15_057	FROM->TO	CIMARRON - DRAPER LAKE 345KV CKT 1	717	717	0.18126	108.2007	GEN344895 2-1LAB G2 20.000
FDNS	00NR	2	16WP	G15_057	FROM->TO	CIMARRON - DRAPER LAKE 345KV CKT 1	717	717	0.18126	108.1869	4SIOUX 1 138.00 138/18.0KV TRANSFORMER CKT 1
FDNS	00NR	2	16WP	G15_057	FROM->TO	CIMARRON - DRAPER LAKE 345KV CKT 1	717	717	0.18126	108.1865	GEN563202 1-G15085_3 0.5500
FDNS	00NR	2	16WP	G15_057	FROM->TO	CIMARRON - DRAPER LAKE 345KV CKT 1	717	717	0.18126	108.1748	GEN515602 1-KNGFSR12 0.7000
FDNS	00NR	2	16WP	G15_057	FROM->TO	CIMARRON - DRAPER LAKE 345KV CKT 1	717	717	0.18126	108.1722	GEN344896 3-1LAB G3 20.000
FDNS	00NR	2	16WP	G15_057	FROM->TO	CIMARRON - DRAPER LAKE 345KV CKT 1	717	717	0.18126	108.1708	GEN344894 1-1LAB G1 20.000
FDNS	00NR	2	16WP	G15_057	FROM->TO	CIMARRON - DRAPER LAKE 345KV CKT 1	717	717	0.18126	108.1696	GEN344897 4-1LAB G4 20.000
FDNS	00NR	2	16WP	G15_057	FROM->TO	CIMARRON - DRAPER LAKE 345KV CKT 1	717	717	0.18096	108.1656	TUPELO - TUPELO TAP 138KV CKT 1
FDNS	00NR	2	16WP	G15_057	FROM->TO	CIMARRON - DRAPER LAKE 345KV CKT 1	717	717	0.18159	108.1525	FRISCCO4 138.00 - HARDEN 4 138.00 138KV CKT 1
FDNS	00NR	2	16WP	G15_057	FROM->TO	CIMARRON - DRAPER LAKE 345KV CKT 1	717	717	0.18126	108.1417	GEN563222 1-G15088_3 0.6900
FDNS	00NR	2	16WP	G15_057	FROM->TO	CIMARRON - DRAPER LAKE 345KV CKT 1	717	717	0.18126	108.1412	GEN523461 1-BLACKHAWK GEN #1
FDNS	00NR	2	16WP	G15_057	FROM->TO	CIMARRON - DRAPER LAKE 345KV CKT 1	717	717	0.18126	108.1411	GEN523462 1-BLACKHAWK GEN #2
FDNS	00NR	2	16WP	G15_057	FROM->TO	CIMARRON - DRAPER LAKE 345KV CKT 1	717	717	0.18126	108.0959	GEN563082 1-G15073_3 0.6900
FDNS	00NR	2	16WP	G15_057	FROM->TO	CIMARRON - DRAPER LAKE 345KV CKT 1	717	717	0.18126	108.0725	GEN562704 1-G15_020_3 0.3550
FDNS	00NR	2	16WP	G15_057	FROM->TO	CIMARRON - DRAPER LAKE 345KV CKT 1	717	717	0.18126	108.0523	CLAY BOSWELL 230/20.9KV TRANSFORMER CKT 1
FDNS	00NR	2	16WP	G15_057	FROM->TO	CIMARRON - DRAPER LAKE 345KV CKT 1	717	717	0.18126	108.0073	GEN672321 1-SHAND GENERATOR 1
FDNS	00NR	2	16WP	G15_057	FROM->TO	CIMARRON - DRAPER LAKE 345KV CKT 1	717	717	0.18807	108.0009	NORTHWEST - SPRING CREEK 345KV CKT 1
FDNS	00NR	2	16WP	G15_057	FROM->TO	CIMARRON - DRAPER LAKE 345KV CKT 1	717	717	0.18104	108	RANCHRD7 345.00 - SOONER 345KV CKT 1
FDNS	00NR	2	16WP	G15_057	FROM->TO	CIMARRON - DRAPER LAKE 345KV CKT 1	717	717	0.18126	107.9873	GEN640010 1-GERALD GENTLEMAN STATION UNIT 1
FDNS	00NR	2	16WP	G15_057	FROM->TO	CIMARRON - DRAPER LAKE 345KV CKT 1	717	717	0.18174	107.9823	LULA - TUPELO TAP 138KV CKT 1
FDNS	00NR	2	16WP	G15_057	FROM->TO	CIMARRON - DRAPER LAKE 345KV CKT 1	717	717	0.18109	107.9815	NORTHWEST TEXARKANA - VALLIANT 345KV CKT 1
FDNS	00NR	2	16WP	G15_057	FROM->TO	CIMARRON - DRAPER LAKE 345KV CKT 1	717	717	0.18109	107.9815	NORTHWEST TEXARKANA - VALLIANT 345KV CKT 1
FDNS	00NR	2	16WP	G15_057	FROM->TO	CIMARRON - DRAPER LAKE 345KV CKT 1	717	717	0.18126	107.9807	GEN672310 1-POPLAR RIVER GENERATOR 1
FDNS	00NR	2	16WP	G15_057	FROM->TO	CIMARRON - DRAPER LAKE 345KV CKT 1	717	717	0.18126	107.9807	GEN672311 2-POPLAR RIVER GENERATOR 2
FDNS	00NR	2	16WP	G15_057	FROM->TO	CIMARRON - DRAPER LAKE 345KV CKT 1	717	717	0.18126	107.976	GEN542956 2-LACYGNE UNIT #2
FDNS	00NR	2	16WP	G15_057	FROM->TO	CIMARRON - DRAPER LAKE 345KV CKT 1	717	717	0.18807	107.9705	SOONER - SPRING CREEK 345KV CKT 1
FDNS	00NR	2	16WP	G15_057	FROM->TO	CIMARRON - DRAPER LAKE 345KV CKT 1	717	717	0.18126	107.9705	GEN672306 6-BOUNDARY DAM GENERATOR 6
FDNS	00NR	2	16WP	G15_057	FROM->TO	CIMARRON - DRAPER LAKE 345KV CKT 1	717	717	0.18126	107.9622	GEN562710 1-G15_022_3 0.5500
FDNS	00NR	2	16WP	G15_057	FROM->TO	CIMARRON - DRAPER LAKE 345KV CKT 1	717	717	0.18284	107.9541	OAKCREEK - WILD MARY 138KV CKT 1
FDNS	00NR	2	16WP	G15_057	FROM->TO	CIMARRON - DRAPER LAKE 345KV CKT 1	717	717	0.1814	107.9537	P12:138:WFEC:MSL09
FDNS	00NR	2	16WP	G15_057	FROM->TO	CIMARRON - DRAPER LAKE 345KV CKT 1	717	717	0.18071	107.9467	SEMINOLE (SEMINOL1) 345/138/14.4KV TRANSFORMER CKT 1
FDNS	00NR	2	16WP	G15_057	FROM->TO	CIMARRON - DRAPER LAKE 345KV CKT 1	717	717	0.18159	107.9339	ETNA - HARDEN 4 138.00 138KV CKT 1
FDNS	00NR	2	16WP	G15_057	FROM->TO	CIMARRON - DRAPER LAKE 345KV CKT 1	717	717	0.18208	107.9148	P12:138:OKGE:3TERM22
FDNS	00NR	2	16WP	G15_057	FROM->TO	CIMARRON - DRAPER LAKE 345KV CKT 1	717	717	0.18207	107.9142	DRAPER LAKE - SOONER TAP 138KV CKT 1
FDNS	00NR	2	16WP	G15_057	FROM->TO	CIMARRON - DRAPER LAKE 345KV CKT 1	717	717	0.18126	107.9138	GEN640011 2-GERALD GENTLEMAN STATION UNIT 2
FDNS	00NR	2	16WP	G15_057	FROM->TO	CIMARRON - DRAPER LAKE 345KV CKT 1	717	717	0.18042	107.9092	P12:138:WFEC:MSL08
FDNS	00NR	2	16WP	G15_057	FROM->TO	CIMARRON - DRAPER LAKE 345KV CKT 1	717	717	0.18126	107.8986	GEN659118 1-LARAMIE RIVER UNIT1
FDNSLock	00NR	2	16WP	G15_057	FROM->TO	CIMARRON - DRAPER LAKE 345KV CKT 1	717	717	0.18126	107.8768	GEN681542 6-JP MADGETT
FDNS	00NR	2	16WP	G15_057	FROM->TO	CIMARRON - DRAPER LAKE 345KV CKT 1	717	717	0.18042	107.8758	FRANKLIN - PINK SW 138KV CKT 1
FDNS	00NR	2	16WP	G15_057	FROM->TO	CIMARRON - DRAPER LAKE 345KV CKT 1	717	717	0.18126	107.8683	GEN542957 1-IATAN UNIT #1
FDNS	00NR	2	16WP	G15_057	FROM->TO	CIMARRON - DRAPER LAKE 345KV CKT 1	717	717	0.18159	107.8349	ETNA - PARK LANE 138KV CKT 1
FDNS	00NR	2	16WP	G15_057	FROM->TO	CIMARRON - DRAPER LAKE 345KV CKT 1	717	717	0.18126	107.8275	GEN530690 1-PRWINDG1 0.6900
FDNS	00NR	2	16WP	G15_057	FROM->TO	CIMARRON - DRAPER LAKE 345KV CKT 1	717	717	0.18126	107.8063	GEN542955 1-LACYGNE UNIT #1
FDNS	00NR	2	16WP	G15_057	FROM->TO	CIMARRON - DRAPER LAKE 345KV CKT 1	717	717	0.18126	107.7768	GEN645001 1-FORT CALHOUN 1
FDNS	00NR	2	16WP	G15_057	FROM->TO	CIMARRON - DRAPER LAKE 345KV CKT 1	717	717	0.18126	107.7573	GEN562754 1-G15031_5 0.6900
FDNS	00NR	2	16WP	G15_057	FROM->TO	CIMARRON - DRAPER LAKE 345KV CKT 1	717	717	0.18126	107.7458	GEN562556 1-G14_046_3 0.3420
FDNS	00NR	2	16WP	G15_057	FROM->TO	CIMARRON - DRAPER LAKE 345KV CKT 1	717	717	0.18126	107.7425	GEN562691 1-G15_015_3 0.6900
FDNS	00NR	2	16WP	G15_057	FROM->TO	CIMARRON - DRAPER LAKE 345KV CKT 1	717	717	0.18126	107.7411	GEN661015 1-COYOTE
FDNS	00NR	2	16WP	G15_057	FROM->TO	CIMARRON - DRAPER LAKE 345KV CKT 1	717	717	0.18126	107.7264	GEN532653 1-JEFFREY ENERGY CENTER UNIT 3
FDNS	00NR	2	16WP	G15_057	FROM->TO	CIMARRON - DRAPER LAKE 345KV CKT 1	717	717	0.18126	107.7262	GEN532652 1-JEFFREY ENERGY CENTER UNIT 2
FDNS	00NR	2	16WP	G15_057	FROM->TO	CIMARRON - DRAPER LAKE 345KV CKT 1	717	717	0.18284	107.7256	AIRDEPT4 138.00 - WILD MARY 138KV CKT 1
FDNS	00NR	2	16WP	G15_057	FROM->TO	CIMARRON - DRAPER LAKE 345KV CKT 1	717	717	0.18126	107.7216	GEN532651 1-JEFFREY ENERGY CENTER UNIT 1
FDNS	00NR	2	16WP	G15_057	FROM->TO	CIMARRON - DRAPER LAKE 345KV CKT 1	717	717	0.18059	107.7211	SEMINOLE (SEMINOL2) 345/138/14.4KV TRANSFORMER CKT 1
FDNS	00NR	2	16WP	G15_057	FROM->TO	CIMARRON - DRAPER LAKE 345KV CKT 1	717	717	0.18126	107.7115	GEN562756 1-G15031_7 0.6900
FDNS	00NR	2	16WP	G15_057	FROM->TO	CIMARRON - DRAPER LAKE 345KV CKT 1	717	717	0.18126	107.7021	GEN563042 1-G15068_3 0.6900
FDNS	00NR	2	16WP	G15_057	FROM->TO	CIMARRON - DRAPER LAKE 345KV CKT 1	717	717	0.18126	107.6997	GEN563142 1-G15079_3 0.5500
FDNS	00NR	2	16WP	G15_057	FROM->TO	CIMARRON - DRAPER LAKE 345KV CKT 1	717	717	0.18126	107.6997	GEN563151 1-G15080_2 0.5500

SOLUTION	GROUP	SCENARIO	SEASON	SOURCE	DIRECTION	MONITORED ELEMENT	RATEA (MVA)	RATEB(MVA)	TDF	TC%LOADING (% MVA)	CONTINGENCY
FDNS	00NR	2	16WP	G15_057	FROM->TO	CIMARRON - DRAPER LAKE 345KV CKT 1	717	717	0.18126	107.6683	GEN563273 2-G15093_4 0.6900
FDNS	00NR	2	16WP	G15_057	FROM->TO	CIMARRON - DRAPER LAKE 345KV CKT 1	717	717	0.18126	107.6462	GEN562655 1-G14_074_3 0.6900
FDNS	00NR	2	16WP	G15_057	FROM->TO	CIMARRON - DRAPER LAKE 345KV CKT 1	717	717	0.18126	107.646	GEN562762 1-G15033_3 0.6900
FDNS	00NR	2	16WP	G15_057	FROM->TO	CIMARRON - DRAPER LAKE 345KV CKT 1	717	717	0.18126	107.6179	GEN562078 1-G11_051_3 0.6900
FDNS	00NR	2	16WP	G15_057	FROM->TO	CIMARRON - DRAPER LAKE 345KV CKT 1	717	717	0.18028	107.6099	P12:138:AEPW-OGE:CORNVIL4:CIMARON4
FDNS	00NR	2	16WP	G15_057	FROM->TO	CIMARRON - DRAPER LAKE 345KV CKT 1	717	717	0.18126	107.609	GEN657748 1-YOUNG 2 GENERATOR
FDNS	00NR	2	16WP	G15_057	FROM->TO	CIMARRON - DRAPER LAKE 345KV CKT 1	717	717	0.18232	107.601	PARK LANE - SEMINOLE 138KV CKT 1
FDNS	00NR	2	16WP	G15_057	FROM->TO	CIMARRON - DRAPER LAKE 345KV CKT 1	717	717	0.18155	107.5956	G11_051T 345.00 - WOODWARD DISTRICT EHV 345KV CKT 1
FDNS	00NR	2	16WP	G15_057	FROM->TO	CIMARRON - DRAPER LAKE 345KV CKT 1	717	717	0.18155	107.5956	G11_051T 345.00 - WOODWARD DISTRICT EHV 345KV CKT 2
FDNS	00NR	2	16WP	G15_057	FROM->TO	CIMARRON - DRAPER LAKE 345KV CKT 1	717	717	0.18126	107.5871	GEN562974 1-G15060_5 0.6900
FDNS	00NR	2	16WP	G15_057	FROM->TO	CIMARRON - DRAPER LAKE 345KV CKT 1	717	717	0.18042	107.5849	FRANKLIN - FRANKLIN SW 138KV CKT 1
FDNS	00NR	2	16WP	G15_057	FROM->TO	CIMARRON - DRAPER LAKE 345KV CKT 1	717	717	0.18126	107.5688	GEN562973 1-G15060_4 0.6900
FDNS	00NR	2	16WP	G15_057	FROM->TO	CIMARRON - DRAPER LAKE 345KV CKT 1	717	717	0.18126	107.5514	GEN562772 1-G15034_3 0.6900
FDNS	00NR	2	16WP	G15_057	FROM->TO	CIMARRON - DRAPER LAKE 345KV CKT 1	717	717	0.18126	107.5344	GEN527901 1-HOBBS PLANT #1 (CT)
FDNS	00NR	2	16WP	G15_057	FROM->TO	CIMARRON - DRAPER LAKE 345KV CKT 1	717	717	0.18126	107.5344	GEN527902 1-HOBBS PLANT #2 (CT)
FDNS	00NR	2	16WP	G15_057	FROM->TO	CIMARRON - DRAPER LAKE 345KV CKT 1	717	717	0.18102	107.5056	LYDIA - WELSH 345KV CKT 1
FDNS	00NR	2	16WP	G15_057	FROM->TO	CIMARRON - DRAPER LAKE 345KV CKT 1	717	717	0.18102	107.5056	LYDIA - WELSH 345KV CKT 1
FDNS	00NR	2	16WP	G15_057	FROM->TO	CIMARRON - DRAPER LAKE 345KV CKT 1	717	717	0.18126	107.5055	GEN563043 1-G15068_4 0.6900
FDNS	00NR	2	16WP	G15_057	FROM->TO	CIMARRON - DRAPER LAKE 345KV CKT 1	717	717	0.18284	107.4951	AIRDEPT4 138.00 - GM 138KV CKT 1
FDNS	00NR	2	16WP	G15_057	FROM->TO	CIMARRON - DRAPER LAKE 345KV CKT 1	717	717	0.18126	107.4769	GEN563052 1-G15069_3 0.6900
FDNS	00NR	2	16WP	G15_057	FROM->TO	CIMARRON - DRAPER LAKE 345KV CKT 1	717	717	0.18126	107.4625	GEN525845 1-ELK_2 1 138.00
FDNS	00NR	2	16WP	G15_057	FROM->TO	CIMARRON - DRAPER LAKE 345KV CKT 1	717	717	0.18126	107.4591	GEN525844 1-ELK_1 118.000
FDNS	00NR	2	16WP	G15_057	FROM->TO	CIMARRON - DRAPER LAKE 345KV CKT 1	717	717	0.18126	107.4207	GEN563242 1-G15090_3 0.6900
FDNS	00NR	2	16WP	G15_057	FROM->TO	CIMARRON - DRAPER LAKE 345KV CKT 1	717	717	0.18126	107.4155	GEN620315 1-BIG STONE GEN
FDNS	00NR	2	16WP	G15_057	FROM->TO	CIMARRON - DRAPER LAKE 345KV CKT 1	717	717	0.18126	107.4027	GEN526333 1-JONES GEN #3 21 KV
FDNS	00NR	2	16WP	G15_057	FROM->TO	CIMARRON - DRAPER LAKE 345KV CKT 1	717	717	0.18126	107.4027	GEN526334 1-JONES_4 116.500
FDNS	00NR	2	16WP	G15_057	FROM->TO	CIMARRON - DRAPER LAKE 345KV CKT 1	717	717	0.18126	107.4	GEN600006 1-AS KING
FDNS	00NR	2	16WP	G15_057	FROM->TO	CIMARRON - DRAPER LAKE 345KV CKT 1	717	717	0.18126	107.4	GEN636641 1-LOUISA UNIT 1
FDNSLock	00NR	2	16WP	G15_057	FROM->TO	CIMARRON - DRAPER LAKE 345KV CKT 1	717	717	0.18126	107.357	GEN600004 2-PRAIRIE ISLAND G2
FDNS	00NR	2	16WP	G15_057	FROM->TO	CIMARRON - DRAPER LAKE 345KV CKT 1	717	717	0.18126	107.3545	GEN523971 1-HARRINGTON GEN #1 24 KV
FDNS	00NR	2	16WP	G15_057	FROM->TO	CIMARRON - DRAPER LAKE 345KV CKT 1	717	717	0.18126	107.3545	GEN523972 1-HARRINGTON GEN #2 24 KV
FDNS	00NR	2	16WP	G15_057	FROM->TO	CIMARRON - DRAPER LAKE 345KV CKT 1	717	717	0.18126	107.3545	GEN523973 1-HARRINGTON GEN #3 24 KV
FDNSLock	00NR	2	16WP	G15_057	FROM->TO	CIMARRON - DRAPER LAKE 345KV CKT 1	717	717	0.18126	107.3539	GEN600003 1-PRAIRIE ISLAND G1
FDNS	00NR	2	16WP	G15_057	FROM->TO	CIMARRON - DRAPER LAKE 345KV CKT 1	717	717	0.18284	107.2843	DRAPER LAKE - GM 138KV CKT 1
FDNS	00NR	2	16WP	G15_057	FROM->TO	CIMARRON - DRAPER LAKE 345KV CKT 1	717	717	0.18126	107.2839	GEN563272 1-G15093_3 0.6900
FDNS	00NR	2	16WP	G15_057	FROM->TO	CIMARRON - DRAPER LAKE 345KV CKT 1	717	717	0.18126	107.247	GEN562952 1-G15057_3 0.6500
FDNS	00NR	2	16WP	G15_057	FROM->TO	CIMARRON - DRAPER LAKE 345KV CKT 1	717	717	0.18126	107.2441	GEN563292 1-G15095_3 0.6900
FDNS	00NR	2	16WP	G15_057	FROM->TO	CIMARRON - DRAPER LAKE 345KV CKT 1	717	717	0.18126	107.2439	GEN542962 2-IATAN UNIT #2
FDNS	00NR	2	16WP	G15_057	FROM->TO	CIMARRON - DRAPER LAKE 345KV CKT 1	717	717	0.18126	107.2	GEN629074 1-ARNOLD LOWSIDE OF GSU XFMR
FDNS	00NR	2	16WP	G15_057	FROM->TO	CIMARRON - DRAPER LAKE 345KV CKT 1	717	717	0.18126	107.1988	GEN600005 1-MONTICELLO
FDNS	00NR	2	16WP	G15_057	FROM->TO	CIMARRON - DRAPER LAKE 345KV CKT 1	717	717	0.18155	107.1887	G11_051T 345.00 - TATONGA7 345.00 345KV CKT 1
FDNS	00NR	2	16WP	G15_057	FROM->TO	CIMARRON - DRAPER LAKE 345KV CKT 1	717	717	0.18155	107.1887	G11_051T 345.00 - TATONGA7 345.00 345KV CKT 2
FDNS	00NR	2	16WP	G15_057	FROM->TO	CIMARRON - DRAPER LAKE 345KV CKT 1	717	717	0.18126	107.1487	GEN562892 1-G15048_3 0.6900
FDNS	00NR	2	16WP	G15_057	FROM->TO	CIMARRON - DRAPER LAKE 345KV CKT 1	717	717	0.18126	107.1476	GEN527166 1-MUSTANG_6 118.000
FDNS	00NR	2	16WP	G15_057	FROM->TO	CIMARRON - DRAPER LAKE 345KV CKT 1	717	717	0.18126	107.1361	GEN525562 1-TOLK GEN #2 24 KV
FDNS	00NR	2	16WP	G15_057	FROM->TO	CIMARRON - DRAPER LAKE 345KV CKT 1	717	717	0.18532	107.1046	CLARKSVILLE - MUSKOGEE 345KV CKT 1
FDNS	00NR	2	16WP	G15_057	FROM->TO	CIMARRON - DRAPER LAKE 345KV CKT 1	717	717	0.18532	107.1046	CLARKSVILLE - MUSKOGEE 345KV CKT 1
FDNS	00NR	2	16WP	G15_057	FROM->TO	CIMARRON - DRAPER LAKE 345KV CKT 1	717	717	0.18126	107.0693	GEN635213 3-NEAL UNIT 3
FDNS	00NR	2	16WP	G15_057	FROM->TO	CIMARRON - DRAPER LAKE 345KV CKT 1	717	717	0.18126	107.0624	GEN514805 1-SOONER UNIT 1
FDNS	00NR	2	16WP	G15_057	FROM->TO	CIMARRON - DRAPER LAKE 345KV CKT 1	717	717	0.18126	107.0421	GEN562902 1-G15052_3 0.6900
FDNS	00NR	2	16WP	G15_057	FROM->TO	CIMARRON - DRAPER LAKE 345KV CKT 1	717	717	0.18126	107.0031	BIG STONE 230/24.0KV TRANSFORMER CKT 1
FDNS	00NR	2	16WP	G15_057	FROM->TO	CIMARRON - DRAPER LAKE 345KV CKT 1	717	717	0.17313	106.9595	DRAPER LAKE - SEMINOLE 345KV CKT 3
FDNS	00NR	2	16WP	G15_057	FROM->TO	CIMARRON - DRAPER LAKE 345KV CKT 1	717	717	0.18302	106.9437	FRANKLIN SW - MIDWEST TAP 138KV CKT 1
FDNS	00NR	2	16WP	G15_057	FROM->TO	CIMARRON - DRAPER LAKE 345KV CKT 1	717	717	0.1819	106.9247	CHAMBER SPRINGS - CLARKSVILLE 345KV CKT 1
FDNS	00NR	2	16WP	G15_057	FROM->TO	CIMARRON - DRAPER LAKE 345KV CKT 1	717	717	0.18092	106.9076	LYDIA - VALLIANT 345KV CKT 1
FDNS	00NR	2	16WP	G15_057	FROM->TO	CIMARRON - DRAPER LAKE 345KV CKT 1	717	717	0.18092	106.9076	LYDIA - VALLIANT 345KV CKT 1
FDNS	00NR	2	16WP	G15_057	FROM->TO	CIMARRON - DRAPER LAKE 345KV CKT 1	717	717	0.18126	106.9058	GEN525561 1-TOLK GEN #1 24 KV
FDNS	00NR	2	16WP	G15_057	FROM->TO	CIMARRON - DRAPER LAKE 345KV CKT 1	717	717	0.18126	106.8562	GEN527903 1-HOBBS PLANT #3 (ST)
FDNS	00NR	2	16WP	G15_057	FROM->TO	CIMARRON - DRAPER LAKE 345KV CKT 1	717	717	0.18126	106.8462	GEN600000 1-SHERBURNECNTY G1
FDNS	00NR	2	16WP	G15_057	FROM->TO	CIMARRON - DRAPER LAKE 345KV CKT 1	717	717	0.18126	106.8417	GEN514806 1-SOONER UNIT 2
FDNS	00NR	2	16WP	G15_057	FROM->TO	CIMARRON - DRAPER LAKE 345KV CKT 1	717	717	0.17986	106.8165	P12:138:OKGE:3TERM23
FDNS	00NR	2	16WP	G15_057	FROM->TO	CIMARRON - DRAPER LAKE 345KV CKT 1	717	717	0.18126	106.8	GEN344225 1-1CAL G1 25.000
FDNS	00NR	2	16WP	G15_057	FROM->TO	CIMARRON - DRAPER LAKE 345KV CKT 1	717	717	0.18126	106.7888	GEN563173 1-G15082_3 0.6900
FDNS	00NR	2	16WP	G15_057	FROM->TO	CIMARRON - DRAPER LAKE 345KV CKT 1	717	717	0.17986	106.7574	BARNES 4 138.00 - DRAPER LAKE 138KV CKT 1
FDNS	00NR	2	16WP	G15_057	FROM->TO	CIMARRON - DRAPER LAKE 345KV CKT 1	717	717	0.18126	106.7559	GEN600001 2-SHERBURNE CNTY G2
FDNS	00NR	2	16WP	G15_057	FROM->TO	CIMARRON - DRAPER LAKE 345KV CKT 1	717	717	0.17092	106.751	MUSKOGEE - SEMINOLE 345KV CKT 1
FDNS	00NR	2	16WP	G15_057	FROM->TO	CIMARRON - DRAPER LAKE 345KV CKT 1	717	717	0.18126	106.638	GEN629075 1-OTTUMWA GENERATOR FOR OTTUMWA UNIT NO 1
FDNS	00NR	2	16WP	G15_057	FROM->TO	CIMARRON - DRAPER LAKE 345KV CKT 1	717	717	0.18126	106.5347	GEN562882 1-G15047_3 0.6900
FDNS	00NR	2	16WP	G15_057	FROM->TO	CIMARRON - DRAPER LAKE 345KV CKT 1	717	717	0.18126	106.5286	GEN563162 1-G15081_3 0.6900
FDNS	00NR	2	16WP	G15_057	FROM->TO	CIMARRON - DRAPER LAKE 345KV CKT 1	717	717	0.18287	106.489	DRAPER LAKE (DRAPER2) 345/138/13.8KV TRANSFORMER CKT 1
FDNS	00NR	2	16WP	G15_057	FROM->TO	CIMARRON - DRAPER LAKE 345KV CKT 1	717	717	0.18126	106.4011	SHERBURNE CO 345/24.0KV TRANSFORMER CKT 1
FDNS	00NR	2	16WP	G15_057	FROM->TO	CIMARRON - DRAPER LAKE 345KV CKT 1	717	717	0.18287	106.3847	DRAPER LAKE (DRAPER3) 345/138/13.8KV TRANSFORMER CKT 1
FDNS	00NR	2	16WP	G15_057	FROM->TO	CIMARRON - DRAPER LAKE 345KV CKT 1	717	717	0.18287	106.3847	DRAPER LAKE (DRAPER4) 345/138/13.8KV TRANSFORMER CKT 1
FDNS	00NR	2	16WP	G15_057	FROM->TO	CIMARRON - DRAPER LAKE 345KV CKT 1	717	717	0.18126	106.3589	GEN635214 4-NEAL UNIT 4
FDNS	00NR	2	16WP	G15_057	FROM->TO	CIMARRON - DRAPER LAKE 345KV CKT 1	717	717	0.18126	106.2661	GEN600002 3-SHERBURNE CNTY G3
FDNS	00NR	2	16WP	G15_057	FROM->TO	CIMARRON - DRAPER LAKE 345KV CKT 1	717	717	0.19274	106.0669	G15063_T 345.00 - MATHWSN7 345.00 345KV CKT 1
FDNS	00NR	2	16WP	G15_057	FROM->TO	CIMARRON - DRAPER LAKE 345KV CKT 1	717	717	0.18126	105.8567	GEN635023 3-WALTER SCOTT UNIT 3
FDNS	00NR	2	16WP	G15_057	FROM->TO	CIMARRON - DRAPER LAKE 345KV CKT 1	717	717	0.18126	105.7208	EASTDC - ERCOT EQUIVALENCE 345KV CKT 1
FDNS	00NR	2	16WP	G15_057	FROM->TO	CIMARRON - DRAPER LAKE 345KV CKT 1	717	717	0.18849	105.7036	CIMARRON - MATHWSN7 345.00 345KV CKT 1

SOLUTION	GROUP	SCENARIO	SEASON	SOURCE	DIRECTION	MONITORED ELEMENT	RATEA (MVA)	RATEB(MVA)	TDF	TC%LOADING (% MVA)	CONTINGENCY
FDNS	00NR	2	16WP	G15_057	FROM->TO	CIMARRON - DRAPER LAKE 345KV CKT 1	717	717	0.18849	105.7036	CIMARRON - MATHWSN7 345.00 345KV CKT 2
FDNS	00NR	2	16WP	G15_057	FROM->TO	CIMARRON - DRAPER LAKE 345KV CKT 1	717	717	0.18126	105.4117	GEN562023 1-G11_020_3 0.6900
FDNS	00NR	2	16WP	G15_057	FROM->TO	CIMARRON - DRAPER LAKE 345KV CKT 1	717	717	0.18126	105.4117	GEN562026 1-G11_019_3 0.6900
FDNS	00NR	2	16WP	G15_057	FROM->TO	CIMARRON - DRAPER LAKE 345KV CKT 1	717	717	0.18126	105.3526	GEN635024 4-WALTER SCOTT UNIT 4
FDNS	00NR	2	16WP	G15_057	FROM->TO	CIMARRON - DRAPER LAKE 345KV CKT 1	717	717	0.16608	105.3449	DRAPER LAKE - SEMINOLE 345KV CKT 1
FDNS	00NR	2	16WP	G15_057	FROM->TO	CIMARRON - DRAPER LAKE 345KV CKT 1	717	717	0.16608	105.3447	DRAPER LAKE - SEMINOLE 345KV CKT 2
FDNS	01ALL	2	17G	G15_057	FROM->TO	CIMARRON - DRAPER LAKE 345KV CKT 1	717	717	0.20458	105.307	GRACEMONT - MINCO 345KV CKT 1
FDNS	00NR	2	16WP	G15_057	FROM->TO	CIMARRON - DRAPER LAKE 345KV CKT 1	717	717	0.18186	104.7258	MATHWSN7 345.00 - TATONGA7 345.00 345KV CKT 1
FDNS	00NR	2	16WP	G15_057	FROM->TO	CIMARRON - DRAPER LAKE 345KV CKT 1	717	717	0.18186	104.7258	MATHWSN7 345.00 - TATONGA7 345.00 345KV CKT 2
FDNS	00NR	2	16WP	G15_057	FROM->TO	CIMARRON - DRAPER LAKE 345KV CKT 1	717	717	0.18126	104.4173	GEN562992 1-G15063_3 0.6900
FDNS	01ALL	2	16WP	G15_057	FROM->TO	CIMARRON - DRAPER LAKE 345KV CKT 1	717	717	0.12936	103.9899	BASE CASE
FDNS	00NR	2	16WP	G15_057	FROM->TO	CIMARRON - DRAPER LAKE 345KV CKT 1	717	717	0.18656	103.5167	DRAPER LAKE - MIDWEST TAP 138KV CKT 1
FDNS	00NR	2	16WP	G15_057	FROM->TO	CIMARRON - DRAPER LAKE 345KV CKT 1	717	717	0.1866	103.4591	P12:138:OKGE:3TERM21
FDNSLock	00NR	2	16WP	G15_057	FROM->TO	CIMARRON - DRAPER LAKE 345KV CKT 1	717	717	0.18126	103.1655	GEN532751 1-WOLF CREEK GENERATING STATION UNIT 1
FDNS	00NR	2	16WP	G15_057	FROM->TO	CIMARRON - DRAPER LAKE 345KV CKT 1	717	717	0.18211	101.6899	PITTSBURG - VALLIANT 345KV CKT 1
FDNS	00NR	2	16WP	G15_057	FROM->TO	CIMARRON - DRAPER LAKE 345KV CKT 1	717	717	0.18211	101.6899	PITTSBURG - VALLIANT 345KV CKT 1
FDNS	00NR	2	17SP	G15_057	FROM->TO	CIMARRON - DRAPER LAKE 345KV CKT 1	717	717	0.19815	100.752	G14-057T 345.00 - LAWTON EASTSIDE 345KV CKT 1
FDNS	00NR	2	16WP	G15_057	FROM->TO	CIMARRON - DRAPER LAKE 345KV CKT 1	717	717	0.24458	100.6008	GRACEMONT - MINCO 345KV CKT 1
FDNS	00NR	2	17SP	G15_057	FROM->TO	CIMARRON - DRAPER LAKE 345KV CKT 1	717	717	0.17591	100.3183	CLEVELAND - G15066_T 345.00 345KV CKT 1
FDNS	01ALL	2	17SP	G15_057	FROM->TO	CIMARRON - DRAPER LAKE 345KV CKT 1	717	717	0.19995	99.8	GRACEMONT - MINCO 345KV CKT 1
FDNS	00NR	2	17SP	G15_057	FROM->TO	CIMARRON - DRAPER LAKE 345KV CKT 1	717	717	0.17591	99.6	G15066_T 345.00 - SOONER 345KV CKT 1
FDNS	00NR	2	16WP	G15_057	TO->FROM	CIMARRON - MINCO 345KV CKT 1	956	956	0.79379	102.4479	G14-057T 345.00 - SUNNYSIDE 345KV CKT 1
FDNS	00NR	2	16WP	G15_057	FROM->TO	G14-057T 345.00 - SUNNYSIDE 345KV CKT 1	717	789	0.35696	135.2178	CIMARRON - MINCO 345KV CKT 1
FDNS	00NR	2	16WP	G15_057	FROM->TO	G14-057T 345.00 - SUNNYSIDE 345KV CKT 1	717	789	0.11447	125.0762	PITTSBURG - SEMINOLE 345KV CKT 1
FDNS	00NR	2	16WP	G15_057	FROM->TO	G14-057T 345.00 - SUNNYSIDE 345KV CKT 1	717	789	0.11447	125.0762	PITTSBURG - SEMINOLE 345KV CKT 1
FDNS	00NR	2	16WP	G15_057	FROM->TO	G14-057T 345.00 - SUNNYSIDE 345KV CKT 1	717	789	0.02968	124.4981	GRACEMONT - MINCO 345KV CKT 1
FDNS	00NR	2	16WP	G15_057	FROM->TO	G14-057T 345.00 - SUNNYSIDE 345KV CKT 1	717	789	0.11709	124.2437	BASE CASE
FDNS	00NR	2	20WP	G15_057	FROM->TO	G14-057T 345.00 - SUNNYSIDE 345KV CKT 1	717	789	0.11413	122.3486	PITTSBURG - SEMINOLE 345KV CKT 1
FDNS	00NR	2	16WP	G15_057	FROM->TO	G14-057T 345.00 - SUNNYSIDE 345KV CKT 1	717	789	0.13395	122.2739	CIMARRON - DRAPER LAKE 345KV CKT 1
FDNS	00NR	2	20WP	G15_057	FROM->TO	G14-057T 345.00 - SUNNYSIDE 345KV CKT 1	717	789	0.11685	122.1851	BASE CASE
FDNS	00NR	2	16WP	G15_057	FROM->TO	G14-057T 345.00 - SUNNYSIDE 345KV CKT 1	717	789	0.12623	118.87	P12:138:WFEC:MSL03
FDNS	00NR	2	16WP	G15_057	FROM->TO	G14-057T 345.00 - SUNNYSIDE 345KV CKT 1	717	789	0.1165	118.2698	PITTSBURG - VALLIANT 345KV CKT 1
FDNS	00NR	2	16WP	G15_057	FROM->TO	G14-057T 345.00 - SUNNYSIDE 345KV CKT 1	717	789	0.1165	118.2698	PITTSBURG - VALLIANT 345KV CKT 1
FDNS	00NR	2	16WP	G15_057	FROM->TO	G14-057T 345.00 - SUNNYSIDE 345KV CKT 1	717	789	0.11709	118.0541	GEN509403 1-PIRKEY GENERATION
FDNS	00NR	2	16WP	G15_057	FROM->TO	G14-057T 345.00 - SUNNYSIDE 345KV CKT 1	717	789	0.11709	117.9575	GEN509416 1-TURK GENERATION
FDNS	00NR	2	16WP	G15_057	FROM->TO	G14-057T 345.00 - SUNNYSIDE 345KV CKT 1	717	789	0.11877	117.7208	CLEVELAND - G15066_T 345.00 345KV CKT 1
FDNS	00NR	2	16WP	G15_057	FROM->TO	G14-057T 345.00 - SUNNYSIDE 345KV CKT 1	717	789	0.11877	117.425	G15066_T 345.00 - SOONER 345KV CKT 1
FDNS	00NR	2	16WP	G15_057	FROM->TO	G14-057T 345.00 - SUNNYSIDE 345KV CKT 1	717	789	0.11709	117.0415	GEN501801 1-DOLET HILLS UNIT1
FDNS	00NR	2	16WP	G15_057	FROM->TO	G14-057T 345.00 - SUNNYSIDE 345KV CKT 1	717	789	0.11875	116.9648	BORDER 7345.00 - WOODWARD DISTRICT EHV 345KV CKT 1
FDNS	00NR	2	20WP	G15_057	FROM->TO	G14-057T 345.00 - SUNNYSIDE 345KV CKT 1	717	789	0.126	116.9352	P12:138:WFEC:MSL03
FDNS	00NR	2	16WP	G15_057	FROM->TO	G14-057T 345.00 - SUNNYSIDE 345KV CKT 1	717	789	0.11709	116.6536	GEN509406 1-WELSH #3
FDNS	00NR	2	16WP	G15_057	FROM->TO	G14-057T 345.00 - SUNNYSIDE 345KV CKT 1	717	789	0.11709	116.6535	GEN509404 1-WELSH #1
FDNS	00NR	2	16WP	G15_057	FROM->TO	G14-057T 345.00 - SUNNYSIDE 345KV CKT 1	717	789	0.11875	116.0315	BORDER 7345.00 - TUCO_2 345.00 345KV CKT 1
FDNS	00NR	2	16WP	G15_057	FROM->TO	G14-057T 345.00 - SUNNYSIDE 345KV CKT 1	717	789	0.11973	115.9962	CORN TAP - NAPLESTP 138.00 138KV CKT 1
FDNS	00NR	2	16WP	G15_057	FROM->TO	G14-057T 345.00 - SUNNYSIDE 345KV CKT 1	717	789	0.11973	115.9136	NAPLESTP 138.00 - PAYNE 138.00 138KV CKT 1
FDNS	00NR	2	16WP	G15_057	FROM->TO	G14-057T 345.00 - SUNNYSIDE 345KV CKT 1	717	789	0.1166	115.9008	7SAREPTA% 345.00 - LONGWOOD 345KV CKT 1
FDNS	00NR	2	16WP	G15_057	FROM->TO	G14-057T 345.00 - SUNNYSIDE 345KV CKT 1	717	789	0.1166	115.9008	7SAREPTA% 345.00 - LONGWOOD 345KV CKT 1
FDNS	00NR	2	20WP	G15_057	FROM->TO	G14-057T 345.00 - SUNNYSIDE 345KV CKT 1	717	789	0.11626	115.7887	PITTSBURG - VALLIANT 345KV CKT 1
FDNS	00NR	2	16WP	G15_057	FROM->TO	G14-057T 345.00 - SUNNYSIDE 345KV CKT 1	717	789	0.11691	115.7458	DOLET HILLS - SOUTHWEST SHREVEPORT 345KV CKT 1
FDNS	00NR	2	16WP	G15_057	FROM->TO	G14-057T 345.00 - SUNNYSIDE 345KV CKT 1	717	789	0.11691	115.7458	DOLET HILLS - SOUTHWEST SHREVEPORT 345KV CKT 1
FDNSLock	00NR	2	16WP	G15_057	FROM->TO	G14-057T 345.00 - SUNNYSIDE 345KV CKT 1	717	789	0.11709	115.743	GEN336821 1-GRAND GULF UNIT
FDNS	00NR	2	16WP	G15_057	FROM->TO	G14-057T 345.00 - SUNNYSIDE 345KV CKT 1	717	789	0.11829	115.7334	CLEVELAND - TULSA NORTH 345KV CKT 1
FDNS	00NR	2	16WP	G15_057	FROM->TO	G14-057T 345.00 - SUNNYSIDE 345KV CKT 1	717	789	0.11829	115.7334	CLEVELAND - TULSA NORTH 345KV CKT 1
FDNS	00NR	2	16WP	G15_057	FROM->TO	G14-057T 345.00 - SUNNYSIDE 345KV CKT 1	717	789	0.12857	115.6897	ARCADIA - NORTHWEST 345KV CKT 1
FDNSLock	00NR	2	16WP	G15_057	FROM->TO	G14-057T 345.00 - SUNNYSIDE 345KV CKT 1	717	789	0.11709	115.6496	GEN336153 1-WATERFORD UNIT#3
FDNS	00NR	2	16WP	G15_057	FROM->TO	G14-057T 345.00 - SUNNYSIDE 345KV CKT 1	717	789	0.11919	115.6286	COMANCHE - LOCO 138KV CKT 1
FDNS	00NR	2	16WP	G15_057	FROM->TO	G14-057T 345.00 - SUNNYSIDE 345KV CKT 1	717	789	0.11956	115.5766	ANADARKO - POCASSETT 138KV CKT 1
FDNS	00NR	2	16WP	G15_057	FROM->TO	G14-057T 345.00 - SUNNYSIDE 345KV CKT 1	717	789	0.1108	115.526	CANADIAN RIVER - MUSKOGEE 345KV CKT 1
FDNS	00NR	2	16WP	G15_057	FROM->TO	G14-057T 345.00 - SUNNYSIDE 345KV CKT 1	717	789	0.11956	115.4359	POCASSETT - TUTTLE 138KV CKT 1
FDNS	00NR	2	16WP	G15_057	FROM->TO	G14-057T 345.00 - SUNNYSIDE 345KV CKT 1	717	789	0.1177	115.4251	ARCADIA - SEMINOLE 345KV CKT 1
FDNS	00NR	2	16WP	G15_057	FROM->TO	G14-057T 345.00 - SUNNYSIDE 345KV CKT 1	717	789	0.11709	115.4	GEN335831 1-RIVERBEND UNIT#1
FDNS	00NR	2	16WP	G15_057	FROM->TO	G14-057T 345.00 - SUNNYSIDE 345KV CKT 1	717	789	0.11709	115.3409	GRAND GULF 500/22.0KV TRANSFORMER CKT 1
FDNS	00NR	2	16WP	G15_057	FROM->TO	G14-057T 345.00 - SUNNYSIDE 345KV CKT 1	717	789	0.11709	115.3112	GEN515577 1-ARBWND11 0.6900
FDNS	00NR	2	16WP	G15_057	FROM->TO	G14-057T 345.00 - SUNNYSIDE 345KV CKT 1	717	789	0.11709	115.2739	GEN509409 1-WILKES #3
FDNS	00NR	2	16WP	G15_057	FROM->TO	G14-057T 345.00 - SUNNYSIDE 345KV CKT 1	717	789	0.11682	115.2476	7SAREPTA% 345.00 - ELDORADO EHV 345KV CKT 1
FDNS	00NR	2	16WP	G15_057	FROM->TO	G14-057T 345.00 - SUNNYSIDE 345KV CKT 1	717	789	0.11682	115.2474	3TR3AR8EL7EL
FDNS	00NR	2	16WP	G15_057	FROM->TO	G14-057T 345.00 - SUNNYSIDE 345KV CKT 1	717	789	0.11682	115.2364	ELDORADO EHV 500/345KV TRANSFORMER CKT 1
FDNS	00NR	2	16WP	G15_057	FROM->TO	G14-057T 345.00 - SUNNYSIDE 345KV CKT 1	717	789	0.11843	115.1782	P12:138:AEPW:DUNCAN-4:L.E.S.-4
FDNS	00NR	2	16WP	G15_057	FROM->TO	G14-057T 345.00 - SUNNYSIDE 345KV CKT 1	717	789	0.1195	115.1393	HEALDTON - LOCO 138KV CKT 1
FDNS	00NR	2	16WP	G15_057	FROM->TO	G14-057T 345.00 - SUNNYSIDE 345KV CKT 1	717	789	0.11956	115.0715	BRIDGECR 138.00 - TUTTLE 138KV CKT 1
FDNS	00NR	2	16WP	G15_057	FROM->TO	G14-057T 345.00 - SUNNYSIDE 345KV CKT 1	717	789	0.11843	115.0688	COMANCHE TAP - OMPA-DUNCAN 840 138KV CKT 1
FDNS	00NR	2	16WP	G15_057	FROM->TO	G14-057T 345.00 - SUNNYSIDE 345KV CKT 1	717	789	0.1195	114.9991	HEALDTON - RINGLING 138KV CKT 1
FDNSLock	00NR	2	16WP	G15_057	FROM->TO	G14-057T 345.00 - SUNNYSIDE 345KV CKT 1	717	789	0.11709	114.9985	GEN300006 1-NEW MADRID UNIT 1
FDNSLock	00NR	2	16WP	G15_057	FROM->TO	G14-057T 345.00 - SUNNYSIDE 345KV CKT 1	717	789	0.11709	114.9861	GEN300007 1-NEW MADRID UNIT 2
FDNS	00NR	2	16WP	G15_057	FROM->TO	G14-057T 345.00 - SUNNYSIDE 345KV CKT 1	717	789	0.11709	114.9823	GEN501813 1-RODEMACHER UNIT 3
FDNS	00NR	2	16WP	G15_057	FROM->TO	G14-057T 345.00 - SUNNYSIDE 345KV CKT 1	717	789	0.11726	114.9332	LACYGNE - WAVERLY7 345.00 345KV CKT 1
FDNS	00NR	2	16WP	G15_057	FROM->TO	G14-057T 345.00 - SUNNYSIDE 345KV CKT 1	717	789	0.11709	114.8741	GEN520947 1-HUGO1
FDNS	00NR	2	16WP	G15_057	FROM->TO	G14-057T 345.00 - SUNNYSIDE 345KV CKT 1	717	789	0.1195	114.8347	RINGLING - SOUTH WILSON 138KV CKT 1
FDNS	00NR	2	16WP	G15_057	FROM->TO	G14-057T 345.00 - SUNNYSIDE 345KV CKT 1	717	789	0.11726	114.8211	WAVERLY7 345.00 - WOLF CREEK 345KV CKT 1

SOLUTION	GROUP	SCENARIO	SEASON	SOURCE	DIRECTION	MONITORED ELEMENT	RATEA (MVA)	RATEB(MVA)	TDF	TC%LOADING (% MVA)	CONTINGENCY
FDNS	00NR	2	16WP	G15_057	FROM->TO	G14-057T 345.00 - SUNNYSIDE 345KV CKT 1	717	789	0.11956	114.8175	P12:138:WFEC:MSL01
FDNS	00NR	2	16WP	G15_057	FROM->TO	G14-057T 345.00 - SUNNYSIDE 345KV CKT 1	717	789	0.11956	114.8094	BRIDGECR 138.00 - SUNSHINE CANYON 138KV CKT 1
FDNS	00NR	2	16WP	G15_057	FROM->TO	G14-057T 345.00 - SUNNYSIDE 345KV CKT 1	717	789	0.11843	114.7912	DUNCAN - OMPA-DUNCAN 840 138KV CKT 1
FDNS	00NR	2	16WP	G15_057	FROM->TO	G14-057T 345.00 - SUNNYSIDE 345KV CKT 1	717	789	0.11843	114.7912	DUNCAN - OMPA-DUNCAN 840 138KV CKT 1
FDNS	00NR	2	16WP	G15_057	FROM->TO	G14-057T 345.00 - SUNNYSIDE 345KV CKT 1	717	789	0.11709	114.7842	GEN335206 1-NELSON UNIT 6
FDNS	00NR	2	16WP	G15_057	FROM->TO	G14-057T 345.00 - SUNNYSIDE 345KV CKT 1	717	789	0.11709	114.657	DOLET HILLS 345/24.0KV TRANSFORMER CKT 1
FDNS	00NR	2	16WP	G15_057	FROM->TO	G14-057T 345.00 - SUNNYSIDE 345KV CKT 1	717	789	0.11585	114.629	PARK LANE - SEMINOLE 138KV CKT 1
FDNS	00NR	2	16WP	G15_057	FROM->TO	G14-057T 345.00 - SUNNYSIDE 345KV CKT 1	717	789	0.1171	114.6276	P12:138:AEPW:SHERID4:112GORE4
FDNS	00NR	2	16WP	G15_057	FROM->TO	G14-057T 345.00 - SUNNYSIDE 345KV CKT 1	717	789	0.11844	114.6104	FINNEY SWITCHING STATION - HOLCOMB 345KV CKT 1
FDNS	00NR	2	16WP	G15_057	FROM->TO	G14-057T 345.00 - SUNNYSIDE 345KV CKT 1	717	789	0.11844	114.6104	FINNEY SWITCHING STATION - HOLCOMB 345KV CKT 1
FDNS	00NR	2	16WP	G15_057	FROM->TO	G14-057T 345.00 - SUNNYSIDE 345KV CKT 1	717	789	0.11709	114.6005	GEN501812 1-RODEMACHER UNIT 2
FDNS	00NR	2	16WP	G15_057	FROM->TO	G14-057T 345.00 - SUNNYSIDE 345KV CKT 1	717	789	0.11709	114.5989	GEN590011 2-ERCOT EQUIVALENCE
FDNS	00NR	2	16WP	G15_057	FROM->TO	G14-057T 345.00 - SUNNYSIDE 345KV CKT 1	717	789	0.11709	114.5597	GEN515564 1-ORIGIN11 0.6900
FDNS	00NR	2	16WP	G15_057	FROM->TO	G14-057T 345.00 - SUNNYSIDE 345KV CKT 1	717	789	0.11709	114.5597	GEN515565 1-ORIGIN21 0.6900
FDNS	00NR	2	16WP	G15_057	FROM->TO	G14-057T 345.00 - SUNNYSIDE 345KV CKT 1	717	789	0.1195	114.5596	MARIETTA - SOUTH WILSON 138KV CKT 1
FDNS	00NR	2	16WP	G15_057	FROM->TO	G14-057T 345.00 - SUNNYSIDE 345KV CKT 1	717	789	0.11815	114.5304	REDBUD - RIVERSIDE STATION 345KV CKT 1
FDNS	00NR	2	16WP	G15_057	FROM->TO	G14-057T 345.00 - SUNNYSIDE 345KV CKT 1	717	789	0.11815	114.5304	REDBUD - RIVERSIDE STATION 345KV CKT 1
FDNS	00NR	2	16WP	G15_057	FROM->TO	G14-057T 345.00 - SUNNYSIDE 345KV CKT 1	717	789	0.11709	114.5242	GEN590010 1-ERCOT EQUIVALENCE
FDNS	00NR	2	16WP	G15_057	FROM->TO	G14-057T 345.00 - SUNNYSIDE 345KV CKT 1	717	789	0.11892	114.5241	MATHWSN7 345.00 - NORTHWEST 345KV CKT 1
FDNS	00NR	2	16WP	G15_057	FROM->TO	G14-057T 345.00 - SUNNYSIDE 345KV CKT 1	717	789	0.1195	114.4751	P12:138:WFEC:MSL17
FDNS	00NR	2	16WP	G15_057	FROM->TO	G14-057T 345.00 - SUNNYSIDE 345KV CKT 1	717	789	0.11756	114.4675	CANEYRV7 345.00 - NEOSHO 345KV CKT 1
FDNS	00NR	2	16WP	G15_057	FROM->TO	G14-057T 345.00 - SUNNYSIDE 345KV CKT 1	717	789	0.11908	114.396	CIVIT - PAOLI 138KV CKT 1
FDNS	00NR	2	16WP	G15_057	FROM->TO	G14-057T 345.00 - SUNNYSIDE 345KV CKT 1	717	789	0.11709	114.3764	GEN509408 1-WILKES #2
FDNS	00NR	2	16WP	G15_057	FROM->TO	G14-057T 345.00 - SUNNYSIDE 345KV CKT 1	717	789	0.11709	114.3715	P12:69:AEPW:L.E.S.-2:LAW WC2
FDNS	00NR	2	16WP	G15_057	FROM->TO	G14-057T 345.00 - SUNNYSIDE 345KV CKT 1	717	789	0.11709	114.3599	GEN506754 1-LEBROCK STEAM 1
FDNS	00NR	2	16WP	G15_057	FROM->TO	G14-057T 345.00 - SUNNYSIDE 345KV CKT 1	717	789	0.11709	114.3488	P12:161:AEPW:DYESS 5:HYLAND 5
FDNS	00NR	2	16WP	G15_057	FROM->TO	G14-057T 345.00 - SUNNYSIDE 345KV CKT 1	717	789	0.1176	114.3421	PAOLI - PAYNE 138.00 138KV CKT 1
FDNS	00NR	2	16WP	G15_057	FROM->TO	G14-057T 345.00 - SUNNYSIDE 345KV CKT 1	717	789	0.11756	114.3411	CANEYRV7 345.00 - LATHAMS7 345.00 345KV CKT 1
FDNS	00NR	2	16WP	G15_057	FROM->TO	G14-057T 345.00 - SUNNYSIDE 345KV CKT 1	717	789	0.11697	114.3229	ELDORADO EHV - MOUNT OLIVE 500KV CKT 1
FDNS	00NR	2	16WP	G15_057	FROM->TO	G14-057T 345.00 - SUNNYSIDE 345KV CKT 1	717	789	0.11709	114.321	GEN334440 1-SABINE UNIT 4
FDNS	00NR	2	16WP	G15_057	FROM->TO	G14-057T 345.00 - SUNNYSIDE 345KV CKT 1	717	789	0.11793	114.3189	P12:138:WFEC:MSL02
FDNS	00NR	2	16WP	G15_057	FROM->TO	G14-057T 345.00 - SUNNYSIDE 345KV CKT 1	717	789	0.1171	114.2825	P12:138:AEPW:112GORE4:L.E.S.-4
FDNS	00NR	2	16WP	G15_057	FROM->TO	G14-057T 345.00 - SUNNYSIDE 345KV CKT 1	717	789	0.11908	114.2537	CIVIT - STRATFORD 138KV CKT 1
FDNS	00NR	2	16WP	G15_057	FROM->TO	G14-057T 345.00 - SUNNYSIDE 345KV CKT 1	717	789	0.11685	114.2476	ELDORADO EHV - SHERIDAN EHV 500KV CKT 1
FDNS	00NR	2	16WP	G15_057	FROM->TO	G14-057T 345.00 - SUNNYSIDE 345KV CKT 1	717	789	0.11774	114.2287	ANADARKO - GEORGIA 138KV CKT 1
FDNS	00NR	2	16WP	G15_057	FROM->TO	G14-057T 345.00 - SUNNYSIDE 345KV CKT 1	717	789	0.11761	114.2272	TUPELO - TUPELO TAP 138KV CKT 1
FDNS	00NR	2	16WP	G15_057	FROM->TO	G14-057T 345.00 - SUNNYSIDE 345KV CKT 1	717	789	0.11709	114.2205	NEW MADRID 161/22.0KV TRANSFORMER CKT 1
FDNS	00NR	2	16WP	G15_057	FROM->TO	G14-057T 345.00 - SUNNYSIDE 345KV CKT 1	717	789	0.11987	114.2147	P12:138:AEPW-OGE:CORNVIL4:MAUD 4
FDNS	00NR	2	16WP	G15_057	FROM->TO	G14-057T 345.00 - SUNNYSIDE 345KV CKT 1	717	789	0.11709	114.2114	GEN503909 1-FULTONU1 1 16.000
FDNS	00NR	2	16WP	G15_057	FROM->TO	G14-057T 345.00 - SUNNYSIDE 345KV CKT 1	717	789	0.11709	114.2089	NEW MADRID 345/22.0KV TRANSFORMER CKT 1
FDNS	00NR	2	16WP	G15_057	FROM->TO	G14-057T 345.00 - SUNNYSIDE 345KV CKT 1	717	789	0.11704	114.2028	WEBRE - WELLS 500KV CKT 1
FDNS	00NR	2	16WP	G15_057	FROM->TO	G14-057T 345.00 - SUNNYSIDE 345KV CKT 1	717	789	0.11709	114.1815	FRONTIER - GRIMES 345KV CKT 1
FDNS	00NR	2	16WP	G15_057	FROM->TO	G14-057T 345.00 - SUNNYSIDE 345KV CKT 1	717	789	0.11776	114.1592	LAWTON EASTSIDE (LES 5) 345/138/13.8KV TRANSFORMER CKT 2
FDNS	00NR	2	16WP	G15_057	FROM->TO	G14-057T 345.00 - SUNNYSIDE 345KV CKT 1	717	789	0.11776	114.1592	LAWTON EASTSIDE (LES 5) 345/138/13.8KV TRANSFORMER CKT 2
FDNS	00NR	2	16WP	G15_057	FROM->TO	G14-057T 345.00 - SUNNYSIDE 345KV CKT 1	717	789	0.11774	114.1507	FLETCHER - GEORGIA 138KV CKT 1
FDNS	00NR	2	16WP	G15_057	FROM->TO	G14-057T 345.00 - SUNNYSIDE 345KV CKT 1	717	789	0.11987	114.1415	BLANCHARD - CORNVILLE 138KV CKT 1
FDNS	00NR	2	16WP	G15_057	FROM->TO	G14-057T 345.00 - SUNNYSIDE 345KV CKT 1	717	789	0.11908	114.1345	OIL CENTER - STRATFORD 138KV CKT 1
FDNS	00NR	2	16WP	G15_057	FROM->TO	G14-057T 345.00 - SUNNYSIDE 345KV CKT 1	717	789	0.11781	114.1208	EMPIRE - FLETCHER 138KV CKT 1
FDNS	00NR	2	16WP	G15_057	FROM->TO	G14-057T 345.00 - SUNNYSIDE 345KV CKT 1	717	789	0.11756	114.1115	LATHAMS7 345.00 - ROSE HILL 345KV CKT 1
FDNS	00NR	2	20WP	G15_057	FROM->TO	G14-057T 345.00 - SUNNYSIDE 345KV CKT 1	717	789	0.11637	114.0928	7SAREPTA% 345.00 - LONGWOOD 345KV CKT 1
FDNS	00NR	2	16WP	G15_057	FROM->TO	G14-057T 345.00 - SUNNYSIDE 345KV CKT 1	717	789	0.11844	114.0879	FINNEY SWITCHING STATION - Hitchland Interchange 345KV CKT 1
FDNS	00NR	2	16WP	G15_057	FROM->TO	G14-057T 345.00 - SUNNYSIDE 345KV CKT 1	717	789	0.11709	114.086	GEN509393 S1-ARSENAL HILL GENS #4 (STALL)
FDNS	00NR	2	16WP	G15_057	FROM->TO	G14-057T 345.00 - SUNNYSIDE 345KV CKT 1	717	789	0.11709	114.0621	GEN509392 G2-ARSENAL HILL GENS #3 (STALL)
FDNS	00NR	2	16WP	G15_057	FROM->TO	G14-057T 345.00 - SUNNYSIDE 345KV CKT 1	717	789	0.11709	114.062	GEN509391 G1-ARSENAL HILL GENS #2 (STALL)
FDNS	00NR	2	16WP	G15_057	FROM->TO	G14-057T 345.00 - SUNNYSIDE 345KV CKT 1	717	789	0.11781	114.0424	COMANCHE - EMPIRE 138KV CKT 1
FDNS	00NR	2	16WP	G15_057	FROM->TO	G14-057T 345.00 - SUNNYSIDE 345KV CKT 1	717	789	0.11781	114.0392	THISTLE7 345.00 - WOODWARD DISTRICT EHV 345KV CKT 1
FDNS	00NR	2	16WP	G15_057	FROM->TO	G14-057T 345.00 - SUNNYSIDE 345KV CKT 1	717	789	0.11781	114.0392	THISTLE7 345.00 - WOODWARD DISTRICT EHV 345KV CKT 1
FDNS	00NR	2	16WP	G15_057	FROM->TO	G14-057T 345.00 - SUNNYSIDE 345KV CKT 1	717	789	0.11781	114.0392	THISTLE7 345.00 - WOODWARD DISTRICT EHV 345KV CKT 2
FDNS	00NR	2	16WP	G15_057	FROM->TO	G14-057T 345.00 - SUNNYSIDE 345KV CKT 1	717	789	0.11781	114.0392	THISTLE7 345.00 - WOODWARD DISTRICT EHV 345KV CKT 2
FDNS	00NR	2	16WP	G15_057	FROM->TO	G14-057T 345.00 - SUNNYSIDE 345KV CKT 1	717	789	0.11709	114.0312	GEN336252 1-NINEMILE POINT UNIT#5
FDNS	00NR	2	16WP	G15_057	FROM->TO	G14-057T 345.00 - SUNNYSIDE 345KV CKT 1	717	789	0.11709	114.0181	DELL 500 - ESSEX UNIT 2 500KV CKT Z1
FDNS	00NR	2	16WP	G15_057	FROM->TO	G14-057T 345.00 - SUNNYSIDE 345KV CKT 1	717	789	0.11709	114.0141	GEN334071 1-LEWIS CREEK 2
FDNS	00NR	2	16WP	G15_057	FROM->TO	G14-057T 345.00 - SUNNYSIDE 345KV CKT 1	717	789	0.11709	114.0052	GEN334070 1-LEWIS CREEK 1
FDNS	00NR	2	16WP	G15_057	FROM->TO	G14-057T 345.00 - SUNNYSIDE 345KV CKT 1	717	789	0.11709	114.0035	GEN335204 1-NELSON UNIT 4
FDNS	00NR	2	16WP	G15_057	FROM->TO	G14-057T 345.00 - SUNNYSIDE 345KV CKT 1	717	789	0.11709	114	GEN300003 1-THOMAS HILL UNIT 3
FDNS	00NR	2	16WP	G15_057	FROM->TO	G14-057T 345.00 - SUNNYSIDE 345KV CKT 1	717	789	0.11743	113.9738	DUNCAN (DUNCAN) 138/69/13.8KV TRANSFORMER CKT 1
FDNS	00NR	2	16WP	G15_057	FROM->TO	G14-057T 345.00 - SUNNYSIDE 345KV CKT 1	717	789	0.11743	113.9738	DUNCAN (DUNCAN) 138/69/13.8KV TRANSFORMER CKT 1
FDNS	00NR	2	16WP	G15_057	FROM->TO	G14-057T 345.00 - SUNNYSIDE 345KV CKT 1	717	789	0.11709	113.9691	GEN334441 1-SABINE UNIT 5
FDNS	00NR	2	16WP	G15_057	FROM->TO	G14-057T 345.00 - SUNNYSIDE 345KV CKT 1	717	789	0.11987	113.9592	BLANCHARD - MAUD 138KV CKT 1
FDNS	00NR	2	16WP	G15_057	FROM->TO	G14-057T 345.00 - SUNNYSIDE 345KV CKT 1	717	789	0.11908	113.9558	LATTA JCT - OIL CENTER 138KV CKT 1
FDNS	00NR	2	16WP	G15_057	FROM->TO	G14-057T 345.00 - SUNNYSIDE 345KV CKT 1	717	789	0.11708	113.9424	P12:161:AEPW-SWPA:BEAVER5:EROGERS5
FDNS	00NR	2	16WP	G15_057	FROM->TO	G14-057T 345.00 - SUNNYSIDE 345KV CKT 1	717	789	0.11709	113.932	GEN337653 1-WHITE BLUFF UNIT #2
FDNS	00NR	2	16WP	G15_057	FROM->TO	G14-057T 345.00 - SUNNYSIDE 345KV CKT 1	717	789	0.1171	113.9237	P12:138:AEPW:CATOOSA4:T.S.E.-4
FDNS	00NR	2	16WP	G15_057	FROM->TO	G14-057T 345.00 - SUNNYSIDE 345KV CKT 1	717	789	0.11709	113.9184	GEN334030 1-FRONTIER UNIT 1
FDNS	00NR	2	16WP	G15_057	FROM->TO	G14-057T 345.00 - SUNNYSIDE 345KV CKT 1	717	789	0.11709	113.9183	GEN506752 1-LEBROCK GAS 1
FDNS	00NR	2	16WP	G15_057	FROM->TO	G14-057T 345.00 - SUNNYSIDE 345KV CKT 1	717	789	0.11709	113.9182	GEN506753 1-LEBROCK GAS 2
FDNS	00NR	2	16WP	G15_057	FROM->TO	G14-057T 345.00 - SUNNYSIDE 345KV CKT 1	717	789	0.11709	113.9168	GEN334031 1-FRONTIER UNIT 2
FDNS	00NR	2	16WP	G15_057	FROM->TO	G14-057T 345.00 - SUNNYSIDE 345KV CKT 1	717	789	0.11695	113.9117	6LAYFLD 230.00 - CARROLL 230KV CKT 1
FDNS	00NR	2	16WP	G15_057	FROM->TO	G14-057T 345.00 - SUNNYSIDE 345KV CKT 1	717	789	0.1169	113.8781	FULTON 115 - HOPE 115KV CKT 1

SOLUTION	GROUP	SCENARIO	SEASON	SOURCE	DIRECTION	MONITORED ELEMENT	RATEA (MVA)	RATEB(MVA)	TDF	TC%LOADING (% MVA)	CONTINGENCY
FDNS	00NR	2	16WP	G15_057	FROM->TO	G14-057T 345.00 - SUNNYSIDE 345KV CKT 1	717	789	0.1169	113.8781	FULTON 115 - HOPE 115KV CKT 1
FDNS	00NR	2	16WP	G15_057	FROM->TO	G14-057T 345.00 - SUNNYSIDE 345KV CKT 1	717	789	0.11709	113.8739	8DANIEL8 500.00 - MCKNIGHT 500KV CKT 1
FDNS	00NR	2	16WP	G15_057	FROM->TO	G14-057T 345.00 - SUNNYSIDE 345KV CKT 1	717	789	0.11709	113.8724	P12:161:AEPW:DYESS5:ELMSPRNG:TONTITN5
FDNS	00NR	2	16WP	G15_057	FROM->TO	G14-057T 345.00 - SUNNYSIDE 345KV CKT 1	717	789	0.11709	113.8662	GEN515226 1-MUSKOGEE 6G
FDNS	00NR	2	16WP	G15_057	FROM->TO	G14-057T 345.00 - SUNNYSIDE 345KV CKT 1	717	789	0.11709	113.8563	GEN300015 1-1SGPDEL 18.000
FDNS	00NR	2	16WP	G15_057	FROM->TO	G14-057T 345.00 - SUNNYSIDE 345KV CKT 1	717	789	0.11709	113.8512	GEN501811 1-RODEMACHER UNIT 1
FDNS	00NR	2	16WP	G15_057	FROM->TO	G14-057T 345.00 - SUNNYSIDE 345KV CKT 1	717	789	0.11709	113.8475	GEN337911 1-ARKANSAS NUCLEAR ONE UNIT #2
FDNS	00NR	2	20WP	G15_057	FROM->TO	G14-057T 345.00 - SUNNYSIDE 345KV CKT 1	717	789	0.11802	113.8412	CLEVELAND - TULSA NORTH 345KV CKT 1
FDNS	00NR	2	16WP	G15_057	FROM->TO	G14-057T 345.00 - SUNNYSIDE 345KV CKT 1	717	789	0.11771	113.8378	P12:138:AEPW:CORNVIL4:S.W.S.-4
FDNS	00NR	2	16WP	G15_057	FROM->TO	G14-057T 345.00 - SUNNYSIDE 345KV CKT 1	717	789	0.11709	113.8339	GEN337652 1-WHITE BLUFF UNIT #1
FDNS	00NR	2	16WP	G15_057	FROM->TO	G14-057T 345.00 - SUNNYSIDE 345KV CKT 1	717	789	0.11709	113.8336	GEN336251 1-NINEMILE POINT UNIT#4
FDNS	00NR	2	16WP	G15_057	FROM->TO	G14-057T 345.00 - SUNNYSIDE 345KV CKT 1	717	789	0.11709	113.8297	GEN334433 1-SABINE UNIT 3
FDNS	00NR	2	16WP	G15_057	FROM->TO	G14-057T 345.00 - SUNNYSIDE 345KV CKT 1	717	789	0.11709	113.8278	GEN336831 1-BAXTER WILSON SES
FDNS	00NR	2	16WP	G15_057	FROM->TO	G14-057T 345.00 - SUNNYSIDE 345KV CKT 1	717	789	0.11717	113.8082	G15074_T 345.00 - HOYT 345KV CKT 1
FDNS	00NR	2	16WP	G15_057	FROM->TO	G14-057T 345.00 - SUNNYSIDE 345KV CKT 1	717	789	0.11709	113.8061	GEN515040 1-SEMINOLE 1G
FDNS	00NR	2	16WP	G15_057	FROM->TO	G14-057T 345.00 - SUNNYSIDE 345KV CKT 1	717	789	0.11771	113.8049	P12:138:AEPW:CORNVIL4:DUNCAN-4
FDNS	00NR	2	16WP	G15_057	FROM->TO	G14-057T 345.00 - SUNNYSIDE 345KV CKT 1	717	789	0.11803	113.8024	TUTTLE - TUTTLE CONOCO TAP 138KV CKT 1
FDNS	00NR	2	16WP	G15_057	FROM->TO	G14-057T 345.00 - SUNNYSIDE 345KV CKT 1	717	789	0.11743	113.8023	P12:69:WFEC-AEPW:COMANCH2:DUNCAN-2
FDNS	00NR	2	16WP	G15_057	FROM->TO	G14-057T 345.00 - SUNNYSIDE 345KV CKT 1	717	789	0.11709	113.798	GEN562783 1-G15036_4 0.6900
FDNS	00NR	2	16WP	G15_057	FROM->TO	G14-057T 345.00 - SUNNYSIDE 345KV CKT 1	717	789	0.11709	113.798	GEN562784 1-G15036_5 0.6900
FDNS	00NR	2	16WP	G15_057	FROM->TO	G14-057T 345.00 - SUNNYSIDE 345KV CKT 1	717	789	0.11951	113.7868	BAILEY4 138.00 - SUNSHINE CANYON 138KV CKT 1
FDNS	00NR	2	16WP	G15_057	FROM->TO	G14-057T 345.00 - SUNNYSIDE 345KV CKT 1	717	789	0.11709	113.784	GEN505432 1-SIKESTON
FDNSLock	00NR	2	16WP	G15_057	FROM->TO	G14-057T 345.00 - SUNNYSIDE 345KV CKT 1	717	789	0.11715	113.7822	G15088_T 345.00 - MOORE 345KV CKT 1
FDNS	00NR	2	16WP	G15_057	FROM->TO	G14-057T 345.00 - SUNNYSIDE 345KV CKT 1	717	789	0.11741	113.7817	G1524G1525 345.00 - THISTLE7 345.00 345KV CKT 1
FDNS	00NR	2	16WP	G15_057	FROM->TO	G14-057T 345.00 - SUNNYSIDE 345KV CKT 1	717	789	0.11741	113.7817	G1524G1525 345.00 - THISTLE7 345.00 345KV CKT 2
FDNS	00NR	2	16WP	G15_057	FROM->TO	G14-057T 345.00 - SUNNYSIDE 345KV CKT 1	717	789	0.11785	113.7807	CIMARRON - CZECH HALL 138KV CKT 1
FDNS	00NR	2	16WP	G15_057	FROM->TO	G14-057T 345.00 - SUNNYSIDE 345KV CKT 1	717	789	0.11795	113.7798	P12:138:AEPW-OGE:WTH_JCT4:JENSEN4
FDNS	00NR	2	16WP	G15_057	FROM->TO	G14-057T 345.00 - SUNNYSIDE 345KV CKT 1	717	789	0.11709	113.7691	GEN515223 1-MUSKOGEE 4G
FDNS	00NR	2	16WP	G15_057	FROM->TO	G14-057T 345.00 - SUNNYSIDE 345KV CKT 1	717	789	0.11709	113.7691	GEN515225 1-MUSKOGEE 5G
FDNS	00NR	2	16WP	G15_057	FROM->TO	G14-057T 345.00 - SUNNYSIDE 345KV CKT 1	717	789	0.11771	113.7635	CIMARRON - SARA 138KV CKT 1
FDNS	00NR	2	16WP	G15_057	FROM->TO	G14-057T 345.00 - SUNNYSIDE 345KV CKT 1	717	789	0.11709	113.7588	P12:161:AEPW:EROGERS5:ECNTRTN5
FDNS	00NR	2	16WP	G15_057	FROM->TO	G14-057T 345.00 - SUNNYSIDE 345KV CKT 1	717	789	0.11619	113.7564	ARBWIND4 138.00 - CARTER 138KV CKT 1
FDNS	00NR	2	16WP	G15_057	FROM->TO	G14-057T 345.00 - SUNNYSIDE 345KV CKT 1	717	789	0.11699	113.7486	LAYFLD8 500.00 - MOUNT OLIVE 500KV CKT 1
FDNS	00NR	2	16WP	G15_057	FROM->TO	G14-057T 345.00 - SUNNYSIDE 345KV CKT 1	717	789	0.11699	113.7486	LAYFLD8 500.00 - MOUNT OLIVE 500KV CKT 1
FDNS	00NR	2	16WP	G15_057	FROM->TO	G14-057T 345.00 - SUNNYSIDE 345KV CKT 1	717	789	0.11709	113.7485	RODEMACHER 230/22.0KV TRANSFORMER CKT 1
FDNS	00NR	2	16WP	G15_057	FROM->TO	G14-057T 345.00 - SUNNYSIDE 345KV CKT 1	717	789	0.11743	113.7479	DUNCAN - TOSCO 69KV CKT 1
FDNS	00NR	2	16WP	G15_057	FROM->TO	G14-057T 345.00 - SUNNYSIDE 345KV CKT 1	717	789	0.11709	113.7391	WHITE BLUFF 500/26.0KV TRANSFORMER CKT 1
FDNS	00NR	2	16WP	G15_057	FROM->TO	G14-057T 345.00 - SUNNYSIDE 345KV CKT 1	717	789	0.1176	113.7384	P12:138:AEPW:WTHWF4:CLINTJC4
FDNS	00NR	2	16WP	G15_057	FROM->TO	G14-057T 345.00 - SUNNYSIDE 345KV CKT 1	717	789	0.11709	113.737	GEN303007 1-1BC2 U2
FDNS	00NR	2	16WP	G15_057	FROM->TO	G14-057T 345.00 - SUNNYSIDE 345KV CKT 1	717	789	0.11701	113.7358	MC NIEL 500/115KV TRANSFORMER CKT 1
FDNS	00NR	2	16WP	G15_057	FROM->TO	G14-057T 345.00 - SUNNYSIDE 345KV CKT 1	717	789	0.11799	113.7357	G14_038T 345.00 - Hitchland Interchange 345KV CKT 1
FDNS	00NR	2	16WP	G15_057	FROM->TO	G14-057T 345.00 - SUNNYSIDE 345KV CKT 1	717	789	0.11614	113.7333	SEMINOLE - VANOSTP4 138.00 138KV CKT 1
FDNS	00NR	2	16WP	G15_057	FROM->TO	G14-057T 345.00 - SUNNYSIDE 345KV CKT 1	717	789	0.11709	113.732	GEN303006 1-1BC2 U1
FDNS	00NR	2	16WP	G15_057	FROM->TO	G14-057T 345.00 - SUNNYSIDE 345KV CKT 1	717	789	0.11701	113.7307	HOT SPRINGS EHV - MAGNET COVE 500KV CKT 1
FDNS	00NR	2	16WP	G15_057	FROM->TO	G14-057T 345.00 - SUNNYSIDE 345KV CKT 1	717	789	0.11694	113.7275	BISMARK - HOT SPRINGS WEST BUS 115KV CKT 1
FDNS	00NR	2	16WP	G15_057	FROM->TO	G14-057T 345.00 - SUNNYSIDE 345KV CKT 1	717	789	0.11732	113.7242	P12:69:AEPW-OMPA:COMANC-2:OMWALTR2
FDNS	00NR	2	16WP	G15_057	FROM->TO	G14-057T 345.00 - SUNNYSIDE 345KV CKT 1	717	789	0.11803	113.723	CIMARRON - TUTTLE CONOCO TAP 138KV CKT 1
FDNS	00NR	2	16WP	G15_057	FROM->TO	G14-057T 345.00 - SUNNYSIDE 345KV CKT 1	717	789	0.11729	113.7165	BUCKNER7 345.00 - SPEARVILLE 345KV CKT 1
FDNS	00NR	2	16WP	G15_057	FROM->TO	G14-057T 345.00 - SUNNYSIDE 345KV CKT 1	717	789	0.11729	113.7165	BUCKNER7 345.00 - SPEARVILLE 345KV CKT 1
FDNS	00NR	2	16WP	G15_057	FROM->TO	G14-057T 345.00 - SUNNYSIDE 345KV CKT 1	717	789	0.11709	113.7097	GEN336191 1-LITTLE GYPSY UNIT#3
FDNS	00NR	2	16WP	G15_057	FROM->TO	G14-057T 345.00 - SUNNYSIDE 345KV CKT 1	717	789	0.11709	113.7061	GEN337910 1-ARKANSAS NUCLEAR ONE UNIT #1
FDNS	00NR	2	16WP	G15_057	FROM->TO	G14-057T 345.00 - SUNNYSIDE 345KV CKT 1	717	789	0.11743	113.7056	COMANCHE TAP - TOSCO 69KV CKT 1
FDNS	00NR	2	16WP	G15_057	FROM->TO	G14-057T 345.00 - SUNNYSIDE 345KV CKT 1	717	789	0.11861	113.7048	CANADIAN - NOBLE 138KV CKT 1
FDNS	00NR	2	16WP	G15_057	FROM->TO	G14-057T 345.00 - SUNNYSIDE 345KV CKT 1	717	789	0.11709	113.7042	GEN300010 1-ST FRANCIS UNIT 1
FDNS	00NR	2	16WP	G15_057	FROM->TO	G14-057T 345.00 - SUNNYSIDE 345KV CKT 1	717	789	0.11785	113.7033	CZECH HALL - XEROX 138KV CKT 1
FDNS	00NR	2	16WP	G15_057	FROM->TO	G14-057T 345.00 - SUNNYSIDE 345KV CKT 1	717	789	0.11785	113.699	MORGAN - XEROX 138KV CKT 1
FDNS	00NR	2	16WP	G15_057	FROM->TO	G14-057T 345.00 - SUNNYSIDE 345KV CKT 1	717	789	0.1176	113.6923	P12:138:AEPW:WTHWF4:WTH_SE4
FDNS	00NR	2	16WP	G15_057	FROM->TO	G14-057T 345.00 - SUNNYSIDE 345KV CKT 1	717	789	0.1171	113.6922	P12:138:AEPW:N.E.S.-4:CATOOSA4
FDNS	00NR	2	16WP	G15_057	FROM->TO	G14-057T 345.00 - SUNNYSIDE 345KV CKT 1	717	789	0.11709	113.6847	GEN335614 1-WILLOW GLENN UNIT#4
FDNS	00NR	2	16WP	G15_057	FROM->TO	G14-057T 345.00 - SUNNYSIDE 345KV CKT 1	717	789	0.11908	113.6829	LASALLE - LATTA JCT 138KV CKT 1
FDNS	00NR	2	20WP	G15_057	FROM->TO	G14-057T 345.00 - SUNNYSIDE 345KV CKT 1	717	789	0.11667	113.6826	DOLET HILLS - SOUTHWEST SHREVEPORT 345KV CKT 1
FDNS	00NR	2	16WP	G15_057	FROM->TO	G14-057T 345.00 - SUNNYSIDE 345KV CKT 1	717	789	0.11709	113.6815	NELSON 230/20.0KV TRANSFORMER CKT 1
FDNS	00NR	2	16WP	G15_057	FROM->TO	G14-057T 345.00 - SUNNYSIDE 345KV CKT 1	717	789	0.11785	113.676	MORGAN - MUSTANG 138KV CKT 1
FDNS	00NR	2	16WP	G15_057	FROM->TO	G14-057T 345.00 - SUNNYSIDE 345KV CKT 1	717	789	0.11694	113.6759	ALPINE AECC - BISMARK 115KV CKT 1
FDNS	00NR	2	16WP	G15_057	FROM->TO	G14-057T 345.00 - SUNNYSIDE 345KV CKT 1	717	789	0.11866	113.6755	P12:138:OKGE:3TERM27
FDNS	00NR	2	16WP	G15_057	FROM->TO	G14-057T 345.00 - SUNNYSIDE 345KV CKT 1	717	789	0.11709	113.6731	GEN303008 1-1BC2 U3
FDNS	00NR	2	16WP	G15_057	FROM->TO	G14-057T 345.00 - SUNNYSIDE 345KV CKT 1	717	789	0.11709	113.6551	GEN300011 1-ST FRANCIS UNIT 2
FDNS	00NR	2	16WP	G15_057	FROM->TO	G14-057T 345.00 - SUNNYSIDE 345KV CKT 1	717	789	0.11709	113.6464	GEN336170 1-GULF OXY U4
FDNS	00NR	2	16WP	G15_057	FROM->TO	G14-057T 345.00 - SUNNYSIDE 345KV CKT 1	717	789	0.11743	113.6428	COMANCHE - COMANCHE TAP 69KV CKT 1
FDNS	00NR	2	16WP	G15_057	FROM->TO	G14-057T 345.00 - SUNNYSIDE 345KV CKT 1	717	789	0.11709	113.6415	GEN336464 1-MICHOUD UNIT #3
FDNS	00NR	2	16WP	G15_057	FROM->TO	G14-057T 345.00 - SUNNYSIDE 345KV CKT 1	717	789	0.11707	113.64	CYPRESS - HARTBURG 500KV CKT 1
FDNS	00NR	2	16WP	G15_057	FROM->TO	G14-057T 345.00 - SUNNYSIDE 345KV CKT 1	717	789	0.1178	113.6349	CHISHOLM6 230.00 - ELK CITY 230KV 230KV CKT 1
FDNS	00NR	2	16WP	G15_057	FROM->TO	G14-057T 345.00 - SUNNYSIDE 345KV CKT 1	717	789	0.1178	113.6346	ELK CITY 230KV (ELKCTY-6) 230/138/13.8KV TRANSFORMER CKT 1
FDNS	00NR	2	16WP	G15_057	FROM->TO	G14-057T 345.00 - SUNNYSIDE 345KV CKT 1	717	789	0.1178	113.6346	ELK CITY 230KV (ELKCTY-6) 230/138/13.8KV TRANSFORMER CKT 1
FDNS	00NR	2	16WP	G15_057	FROM->TO	G14-057T 345.00 - SUNNYSIDE 345KV CKT 1	717	789	0.11694	113.6333	ALPINE AECC - AMITY SS 115KV CKT 1
FDNS	00NR	2	16WP	G15_057	FROM->TO	G14-057T 345.00 - SUNNYSIDE 345KV CKT 1	717	789	0.12026	113.6314	DRAPER LAKE - SEMINOLE 345KV CKT 2
FDNS	00NR	2	16WP	G15_057	FROM->TO	G14-057T 345.00 - SUNNYSIDE 345KV CKT 1	717	789	0.12026	113.6313	DRAPER LAKE - SEMINOLE 345KV CKT 1
FDNS	00NR	2	16WP	G15_057	FROM->TO	G14-057T 345.00 - SUNNYSIDE 345KV CKT 1	717	789	0.11709	113.6232	8CAJUN2 500/24.0KV TRANSFORMER CKT 1
FDNS	00NR	2	16WP	G15_057	FROM->TO	G14-057T 345.00 - SUNNYSIDE 345KV CKT 1	717	789	0.11086	113.6224	CANADIAN RIVER - PITTSBURG 345KV CKT 1

SOLUTION	GROUP	SCENARIO	SEASON	SOURCE	DIRECTION	MONITORED ELEMENT	RATEA (MVA)	RATEB(MVA)	TDF	TC%LOADING (% MVA)	CONTINGENCY
FDNS	00NR	2	16WP	G15_057	FROM->TO	G14-057T 345.00 - SUNNYSIDE 345KV CKT 1	717	789	0.11086	113.6224	CANADIAN RIVER - PITTSBURG 345KV CKT 1
FDNS	00NR	2	16WP	G15_057	FROM->TO	G14-057T 345.00 - SUNNYSIDE 345KV CKT 1	717	789	0.11951	113.6206	BAILEY4 138.00 - WESTMOORE 138KV CKT 1
FDNS	00NR	2	16WP	G15_057	FROM->TO	G14-057T 345.00 - SUNNYSIDE 345KV CKT 1	717	789	0.12093	113.62	GRACEMONT (BANK 1) 345/138/13.8KV TRANSFORMER CKT 1
FDNS	00NR	2	16WP	G15_057	FROM->TO	G14-057T 345.00 - SUNNYSIDE 345KV CKT 1	717	789	0.11709	113.6184	GEN300016 1-1G1GPDEL 18.000
FDNS	00NR	2	16WP	G15_057	FROM->TO	G14-057T 345.00 - SUNNYSIDE 345KV CKT 1	717	789	0.11861	113.6133	NOBLE - PURCELL4 138.00 138KV CKT 1
FDNS	00NR	2	16WP	G15_057	FROM->TO	G14-057T 345.00 - SUNNYSIDE 345KV CKT 1	717	789	0.1171	113.609	7JASPER 345.00 - BLACKBERRY 345KV CKT 1
FDNS	00NR	2	16WP	G15_057	FROM->TO	G14-057T 345.00 - SUNNYSIDE 345KV CKT 1	717	789	0.11717	113.6043	HOYT - STRANGER CREEK 345KV CKT 1
FDNS	00NR	2	16WP	G15_057	FROM->TO	G14-057T 345.00 - SUNNYSIDE 345KV CKT 1	717	789	0.11709	113.6	GEN501910 1-ACADIA UNIT ST1
FDNS	00NR	2	16WP	G15_057	FROM->TO	G14-057T 345.00 - SUNNYSIDE 345KV CKT 1	717	789	0.11709	113.5983	P12:138:AEPW:R.S.S.-4:S.HUD.-4
FDNS	00NR	2	16WP	G15_057	FROM->TO	G14-057T 345.00 - SUNNYSIDE 345KV CKT 1	717	789	0.11709	113.5886	GEN337041 1-GERALD ANDRUS
FDNS	00NR	2	16WP	G15_057	FROM->TO	G14-057T 345.00 - SUNNYSIDE 345KV CKT 1	717	789	0.11789	113.5842	ANADARKO - SEQUOYAHJ4 138.00 138KV CKT 1
FDNS	00NR	2	16WP	G15_057	FROM->TO	G14-057T 345.00 - SUNNYSIDE 345KV CKT 1	717	789	0.11789	113.5819	CORN TAP - SEQUOYAHJ4 138.00 138KV CKT 1
FDNS	00NR	2	16WP	G15_057	FROM->TO	G14-057T 345.00 - SUNNYSIDE 345KV CKT 1	717	789	0.11771	113.5774	SARA - STHLAKE4 138.00 138KV CKT 1
FDNS	00NR	2	16WP	G15_057	FROM->TO	G14-057T 345.00 - SUNNYSIDE 345KV CKT 1	717	789	0.11717	113.5699	G15074_T 345.00 - JEFFREY ENERGY CENTER 345KV CKT 1
FDNS	00NR	2	16WP	G15_057	FROM->TO	G14-057T 345.00 - SUNNYSIDE 345KV CKT 1	717	789	0.11742	113.5662	WALTERS - WALTERS 69KV CKT 1
FDNS	00NR	2	16WP	G15_057	FROM->TO	G14-057T 345.00 - SUNNYSIDE 345KV CKT 1	717	789	0.11709	113.5636	GEN512688 2-GRDA1 GSU2 22
FDNS	00NR	2	16WP	G15_057	FROM->TO	G14-057T 345.00 - SUNNYSIDE 345KV CKT 1	717	789	0.117	113.5627	ETTA (DUKE HOTSPRINGS) - MC NIEL 500KV CKT 1
FDNS	00NR	2	16WP	G15_057	FROM->TO	G14-057T 345.00 - SUNNYSIDE 345KV CKT 1	717	789	0.11709	113.5603	P12:138:AEPW:YARCH-S4:T.S.E.-4
FDNS	00NR	2	16WP	G15_057	FROM->TO	G14-057T 345.00 - SUNNYSIDE 345KV CKT 1	717	789	0.11722	113.5583	G15095_T 138.00 - ROSE_VALLEY 138.00 138KV CKT 1
FDNS	00NR	2	16WP	G15_057	FROM->TO	G14-057T 345.00 - SUNNYSIDE 345KV CKT 1	717	789	0.11796	113.5565	WEATHERFORD JCT. - WEATHERFORD SOUTHEAST 138KV CKT 1
FDNS	00NR	2	16WP	G15_057	FROM->TO	G14-057T 345.00 - SUNNYSIDE 345KV CKT 1	717	789	0.11796	113.5565	WEATHERFORD JCT. - WEATHERFORD SOUTHEAST 138KV CKT 1
FDNS	00NR	2	16WP	G15_057	FROM->TO	G14-057T 345.00 - SUNNYSIDE 345KV CKT 1	717	789	0.11725	113.5549	CLEO CORNER - CLEOPLT4 138.00 138KV CKT 1
FDNS	00NR	2	16WP	G15_057	FROM->TO	G14-057T 345.00 - SUNNYSIDE 345KV CKT 1	717	789	0.11709	113.5542	P12:138:AEPW:BA_71ST4:T.S.E.-4
FDNS	00NR	2	16WP	G15_057	FROM->TO	G14-057T 345.00 - SUNNYSIDE 345KV CKT 1	717	789	0.11709	113.5534	P12:69:AEPW:NROGERS2:ECNTRTN2
FDNS	00NR	2	16WP	G15_057	FROM->TO	G14-057T 345.00 - SUNNYSIDE 345KV CKT 1	717	789	0.11732	113.5532	LAWTON RELIFT TAP - OMPA-WALTERS 69KV CKT 1
FDNS	00NR	2	16WP	G15_057	FROM->TO	G14-057T 345.00 - SUNNYSIDE 345KV CKT 1	717	789	0.11709	113.55	GEN336801 1-BAXTER WILSON UNIT #1
FDNS	00NR	2	16WP	G15_057	FROM->TO	G14-057T 345.00 - SUNNYSIDE 345KV CKT 1	717	789	0.11771	113.5496	MCCLAIN - STHLAKE4 138.00 138KV CKT 1
FDNS	00NR	2	16WP	G15_057	FROM->TO	G14-057T 345.00 - SUNNYSIDE 345KV CKT 1	717	789	0.11709	113.5458	SABINE 230/24.0KV TRANSFORMER CKT 1
FDNS	00NR	2	16WP	G15_057	FROM->TO	G14-057T 345.00 - SUNNYSIDE 345KV CKT 1	717	789	0.11725	113.5397	BLACKBERRY - NEOSHO 345KV CKT 1
FDNS	00NR	2	16WP	G15_057	FROM->TO	G14-057T 345.00 - SUNNYSIDE 345KV CKT 1	717	789	0.11725	113.5397	BLACKBERRY - NEOSHO 345KV CKT 1
FDNS	00NR	2	16WP	G15_057	FROM->TO	G14-057T 345.00 - SUNNYSIDE 345KV CKT 1	717	789	0.11551	113.5347	ARBUCKLE - VANOSTP4 138.00 138KV CKT 1
FDNS	00NR	2	16WP	G15_057	FROM->TO	G14-057T 345.00 - SUNNYSIDE 345KV CKT 1	717	789	0.11713	113.5342	7LUTESVIL 345.00 - 7ST FRANC 345.00 345KV CKT 1
FDNS	00NR	2	16WP	G15_057	FROM->TO	G14-057T 345.00 - SUNNYSIDE 345KV CKT 1	717	789	0.11721	113.5317	SWISSVALE - WEST GARDNER 345KV CKT 1
FDNS	00NR	2	16WP	G15_057	FROM->TO	G14-057T 345.00 - SUNNYSIDE 345KV CKT 1	717	789	0.11709	113.5301	FRONTIER 345/18.0KV TRANSFORMER CKT 1
FDNS	00NR	2	20WP	G15_057	FROM->TO	G14-057T 345.00 - SUNNYSIDE 345KV CKT 1	717	789	0.11685	113.53	GRAND GULF 500/22.0KV TRANSFORMER CKT 1
FDNS	00NR	2	16WP	G15_057	FROM->TO	G14-057T 345.00 - SUNNYSIDE 345KV CKT 1	717	789	0.11709	113.5285	FRONTIER 345/18.0KV TRANSFORMER CKT 1
FDNS	00NR	2	16WP	G15_057	FROM->TO	G14-057T 345.00 - SUNNYSIDE 345KV CKT 1	717	789	0.11693	113.5283	ENOWILT - LONE OAK 138KV CKT 1
FDNS	00NR	2	16WP	G15_057	FROM->TO	G14-057T 345.00 - SUNNYSIDE 345KV CKT 1	717	789	0.11908	113.5266	LASALLE - STONEWAL LH138.00 138KV CKT 1
FDNS	00NR	2	16WP	G15_057	FROM->TO	G14-057T 345.00 - SUNNYSIDE 345KV CKT 1	717	789	0.11725	113.5225	CLEOPLT4 138.00 - MEN TAP 138KV CKT 1
FDNS	00NR	2	16WP	G15_057	FROM->TO	G14-057T 345.00 - SUNNYSIDE 345KV CKT 1	717	789	0.11709	113.5223	P12:161:AEPW:CHAMSPR5:FARMING5
FDNS	00NR	2	16WP	G15_057	FROM->TO	G14-057T 345.00 - SUNNYSIDE 345KV CKT 1	717	789	0.11732	113.5201	P12:138:OKGE-AEPW:JENSEN4:REDROCKRD4
FDNS	00NR	2	16WP	G15_057	FROM->TO	G14-057T 345.00 - SUNNYSIDE 345KV CKT 1	717	789	0.11709	113.52	ESSEX UNIT 2 500/18.0KV TRANSFORMER CKT 1
FDNS	00NR	2	16WP	G15_057	FROM->TO	G14-057T 345.00 - SUNNYSIDE 345KV CKT 1	717	789	0.11693	113.5194	ENOWILT - SARDIS 138KV CKT 1
FDNS	00NR	2	16WP	G15_057	FROM->TO	G14-057T 345.00 - SUNNYSIDE 345KV CKT 1	717	789	0.11727	113.5189	EMPORIA ENERGY CENTER - G14_001T 345.00 345KV CKT 1
FDNS	00NR	2	16WP	G15_057	FROM->TO	G14-057T 345.00 - SUNNYSIDE 345KV CKT 1	717	789	0.11713	113.5188	P12:138:AEPW-OGE:SHIDLER4:OSAGE 4
FDNS	00NR	2	16WP	G15_057	FROM->TO	G14-057T 345.00 - SUNNYSIDE 345KV CKT 1	717	789	0.11743	113.5178	TUCO INTERCHANGE - TUCO_2 345.00 345KV CKT 1
FDNS	00NR	2	16WP	G15_057	FROM->TO	G14-057T 345.00 - SUNNYSIDE 345KV CKT 1	717	789	0.1169	113.5157	HOPE - MCNAB REC 115KV CKT 1
FDNS	00NR	2	16WP	G15_057	FROM->TO	G14-057T 345.00 - SUNNYSIDE 345KV CKT 1	717	789	0.11775	113.5131	NORGE ROAD - SOUTHWESTERN STATION 138KV CKT 1
FDNS	00NR	2	16WP	G15_057	FROM->TO	G14-057T 345.00 - SUNNYSIDE 345KV CKT 1	717	789	0.11775	113.5131	NORGE ROAD - SOUTHWESTERN STATION 138KV CKT 1
FDNS	00NR	2	16WP	G15_057	FROM->TO	G14-057T 345.00 - SUNNYSIDE 345KV CKT 1	717	789	0.11725	113.5126	IMO TAP - MEN TAP 138KV CKT 1
FDNS	00NR	2	16WP	G15_057	FROM->TO	G14-057T 345.00 - SUNNYSIDE 345KV CKT 1	717	789	0.11908	113.5119	STONEWAL LH138.00 - TUPELO TAP 138KV CKT 1
FDNS	00NR	2	16WP	G15_057	FROM->TO	G14-057T 345.00 - SUNNYSIDE 345KV CKT 1	717	789	0.1169	113.5071	P12:115:AEPW:TURK3:HOPE3
FDNS	00NR	2	16WP	G15_057	FROM->TO	G14-057T 345.00 - SUNNYSIDE 345KV CKT 1	717	789	0.11796	113.5062	P12:138:AEPW:REDROCKRD4:WTH_JCT4
FDNS	00NR	2	16WP	G15_057	FROM->TO	G14-057T 345.00 - SUNNYSIDE 345KV CKT 1	717	789	0.11709	113.5011	GEN505616 1-BROKEN BOW
FDNS	00NR	2	16WP	G15_057	FROM->TO	G14-057T 345.00 - SUNNYSIDE 345KV CKT 1	717	789	0.11722	113.5002	NOEL_SW 138.00 - ROSE_VALLEY 138.00 138KV CKT 1
FDNS	00NR	2	16WP	G15_057	FROM->TO	G14-057T 345.00 - SUNNYSIDE 345KV CKT 1	717	789	0.11771	113.4988	SOUTHWESTERN STATION - VERDEN 138KV CKT 1
FDNS	00NR	2	16WP	G15_057	FROM->TO	G14-057T 345.00 - SUNNYSIDE 345KV CKT 1	717	789	0.11748	113.4972	BENTON - WICHITA 345KV CKT 1
FDNS	00NR	2	16WP	G15_057	FROM->TO	G14-057T 345.00 - SUNNYSIDE 345KV CKT 1	717	789	0.11714	113.4943	8WNEWMADRID 500.00 - DELL 500 500KV CKT 1
FDNS	00NR	2	16WP	G15_057	FROM->TO	G14-057T 345.00 - SUNNYSIDE 345KV CKT 1	717	789	0.11709	113.4932	LEWIS CREEK SWITCHYARD 138/22.0KV TRANSFORMER CKT 1
FDNS	00NR	2	16WP	G15_057	FROM->TO	G14-057T 345.00 - SUNNYSIDE 345KV CKT 1	717	789	0.11709	113.4884	LEWIS CREEK SWITCHYARD 138/22.0KV TRANSFORMER CKT 1
FDNS	00NR	2	16WP	G15_057	FROM->TO	G14-057T 345.00 - SUNNYSIDE 345KV CKT 1	717	789	0.11732	113.4861	OMPA-WALTERS - WALTERS 69KV CKT 1
FDNS	00NR	2	16WP	G15_057	FROM->TO	G14-057T 345.00 - SUNNYSIDE 345KV CKT 1	717	789	0.11732	113.4861	OMPA-WALTERS - WALTERS 69KV CKT 1
FDNS	00NR	2	16WP	G15_057	FROM->TO	G14-057T 345.00 - SUNNYSIDE 345KV CKT 1	717	789	0.1169	113.4853	MCNAB REC - Turk 115 115KV CKT 1
FDNS	00NR	2	16WP	G15_057	FROM->TO	G14-057T 345.00 - SUNNYSIDE 345KV CKT 1	717	789	0.11693	113.4852	CLAYTON - SARDIS 138KV CKT 1
FDNS	00NR	2	16WP	G15_057	FROM->TO	G14-057T 345.00 - SUNNYSIDE 345KV CKT 1	717	789	0.1169	113.4852	TURK (TURK 1) 138/115/13.2KV TRANSFORMER CKT 1
FDNS	00NR	2	16WP	G15_057	FROM->TO	G14-057T 345.00 - SUNNYSIDE 345KV CKT 1	717	789	0.1169	113.4852	TURK (TURK 1) 138/115/13.2KV TRANSFORMER CKT 1
FDNS	00NR	2	16WP	G15_057	FROM->TO	G14-057T 345.00 - SUNNYSIDE 345KV CKT 1	717	789	0.11698	113.4831	COUCH SES - MC NIEL 115KV CKT 1
FDNS	00NR	2	16WP	G15_057	FROM->TO	G14-057T 345.00 - SUNNYSIDE 345KV CKT 1	717	789	0.11771	113.4785	NORTH 29TH CHICKASHA - VERDEN 138KV CKT 1
FDNS	00NR	2	16WP	G15_057	FROM->TO	G14-057T 345.00 - SUNNYSIDE 345KV CKT 1	717	789	0.11709	113.476	GEN501970 1-EVANGELINE UNIT 7
FDNS	00NR	2	16WP	G15_057	FROM->TO	G14-057T 345.00 - SUNNYSIDE 345KV CKT 1	717	789	0.11709	113.4704	GEN659125 1-COVEY
FDNS	00NR	2	16WP	G15_057	FROM->TO	G14-057T 345.00 - SUNNYSIDE 345KV CKT 1	717	789	0.11709	113.4674	GEN509394 1-FLINT CREEK
FDNS	00NR	2	16WP	G15_057	FROM->TO	G14-057T 345.00 - SUNNYSIDE 345KV CKT 1	717	789	0.11951	113.4668	FRANKLIN SW - WESTMOORE 138KV CKT 1
FDNS	00NR	2	16WP	G15_057	FROM->TO	G14-057T 345.00 - SUNNYSIDE 345KV CKT 1	717	789	0.11718	113.4667	P12:138:OKGE:3TERM12
FDNS	00NR	2	16WP	G15_057	FROM->TO	G14-057T 345.00 - SUNNYSIDE 345KV CKT 1	717	789	0.11709	113.4638	GEN334392 1-EXXON MOBIL IPP 1
FDNS	00NR	2	16WP	G15_057	FROM->TO	G14-057T 345.00 - SUNNYSIDE 345KV CKT 1	717	789	0.11742	113.4631	P12:69:WFEC-AEPW:COMANCH2:WALTRS-2
FDNS	00NR	2	16WP	G15_057	FROM->TO	G14-057T 345.00 - SUNNYSIDE 345KV CKT 1	717	789	0.11718	113.4612	EMPORIA ENERGY CENTER - SWISSVALE 345KV CKT 1
FDNS	00NR	2	16WP	G15_057	FROM->TO	G14-057T 345.00 - SUNNYSIDE 345KV CKT 1	717	789	0.11693	113.4581	P12:138:AEPW-SWPA:LONEOAK4:BRKNBW4
FDNS	00NR	2	16WP	G15_057	FROM->TO	G14-057T 345.00 - SUNNYSIDE 345KV CKT 1	717	789	0.11709	113.4572	GEN334393 1-EXXON MOBIL IPP 2
FDNS	00NR	2	16WP	G15_057	FROM->TO	G14-057T 345.00 - SUNNYSIDE 345KV CKT 1	717	789	0.11709	113.4572	GEN334394 1-EXXON MOBIL IPP 3

SOLUTION	GROUP	SCENARIO	SEASON	SOURCE	DIRECTION	MONITORED ELEMENT	RATEA (MVA)	RATEB(MVA)	TDF	TC%LOADING (% MVA)	CONTINGENCY
FDNS	00NR	2	16WP	G15_057	FROM->TO	G14-057T 345.00 - SUNNYSIDE 345KV CKT 1	717	789	0.11799	113.4566	G14_038T 345.00 - POTTER COUNTY INTERCHANGE 345KV CKT 1
FDNS	00NR	2	16WP	G15_057	FROM->TO	G14-057T 345.00 - SUNNYSIDE 345KV CKT 1	717	789	0.11727	113.4552	G14_001T 345.00 - WICHITA 345KV CKT 1
FDNS	00NR	2	16WP	G15_057	FROM->TO	G14-057T 345.00 - SUNNYSIDE 345KV CKT 1	717	789	0.1176	113.4545	WEATHERFORD TAP - WEATHERFORD WIND FARM 138KV CKT 1
FDNS	00NR	2	16WP	G15_057	FROM->TO	G14-057T 345.00 - SUNNYSIDE 345KV CKT 1	717	789	0.11699	113.4538	MORISNT4 138.00 - STILLWATER 138KV CKT 1
FDNS	00NR	2	20WP	G15_057	FROM->TO	G14-057T 345.00 - SUNNYSIDE 345KV CKT 1	717	789	0.11658	113.452	7SAREPTA% 345.00 - ELDORADO EHV 345KV CKT 1
FDNS	00NR	2	16WP	G15_057	FROM->TO	G14-057T 345.00 - SUNNYSIDE 345KV CKT 1	717	789	0.11709	113.4485	GEN336222 1-LITTLE GYPSY UNIT#2
FDNS	00NR	2	16WP	G15_057	FROM->TO	G14-057T 345.00 - SUNNYSIDE 345KV CKT 1	717	789	0.11701	113.4484	P12:138:OKGE:3TERM2
FDNS	00NR	2	16WP	G15_057	FROM->TO	G14-057T 345.00 - SUNNYSIDE 345KV CKT 1	717	789	0.11693	113.4456	CLAYTON - NASHOBA 138KV CKT 1
FDNS	00NR	2	16WP	G15_057	FROM->TO	G14-057T 345.00 - SUNNYSIDE 345KV CKT 1	717	789	0.11738	113.4445	FRANKLIN - FRANKLIN SW 138KV CKT 1
FDNS	00NR	2	20WP	G15_057	FROM->TO	G14-057T 345.00 - SUNNYSIDE 345KV CKT 1	717	789	0.11658	113.4413	ELDORADO EHV 500/345KV TRANSFORMER CKT 1
FDNS	00NR	2	16WP	G15_057	FROM->TO	G14-057T 345.00 - SUNNYSIDE 345KV CKT 1	717	789	0.11712	113.4391	7JASPER 345.00 - MORGAN 345KV CKT 1
FDNS	00NR	2	16WP	G15_057	FROM->TO	G14-057T 345.00 - SUNNYSIDE 345KV CKT 1	717	789	0.11729	113.4377	BUCKNER7 345.00 - HOLCOMB 345KV CKT 1
FDNS	00NR	2	16WP	G15_057	FROM->TO	G14-057T 345.00 - SUNNYSIDE 345KV CKT 1	717	789	0.11729	113.4377	BUCKNER7 345.00 - HOLCOMB 345KV CKT 1
FDNS	00NR	2	16WP	G15_057	FROM->TO	G14-057T 345.00 - SUNNYSIDE 345KV CKT 1	717	789	0.1195	113.4365	MARIETTA - MARIETTA4 138.00 138KV CKT 1
FDNS	00NR	2	16WP	G15_057	FROM->TO	G14-057T 345.00 - SUNNYSIDE 345KV CKT 1	717	789	0.11709	113.434	P12:138:AEPW:R.S.S-4:T.P.S.-4
FDNS	00NR	2	16WP	G15_057	FROM->TO	G14-057T 345.00 - SUNNYSIDE 345KV CKT 1	717	789	0.11693	113.4327	BETHEL - NASHOBA 138KV CKT 1
FDNS	00NR	2	16WP	G15_057	FROM->TO	G14-057T 345.00 - SUNNYSIDE 345KV CKT 1	717	789	0.11709	113.4307	GEN506749 1-EASTMAN GENERATION A
FDNS	00NR	2	16WP	G15_057	FROM->TO	G14-057T 345.00 - SUNNYSIDE 345KV CKT 1	717	789	0.11731	113.4303	CLINTON JUNCTION - ELK CITY 138KV CKT 1
FDNS	00NR	2	16WP	G15_057	FROM->TO	G14-057T 345.00 - SUNNYSIDE 345KV CKT 1	717	789	0.11731	113.4303	CLINTON JUNCTION - ELK CITY 138KV CKT 1
FDNS	00NR	2	16WP	G15_057	FROM->TO	G14-057T 345.00 - SUNNYSIDE 345KV CKT 1	717	789	0.1181	113.4299	CLARKSVILLE - ONETA 345KV CKT 1
FDNS	00NR	2	16WP	G15_057	FROM->TO	G14-057T 345.00 - SUNNYSIDE 345KV CKT 1	717	789	0.1181	113.4299	CLARKSVILLE - ONETA 345KV CKT 1
FDNS	00NR	2	16WP	G15_057	FROM->TO	G14-057T 345.00 - SUNNYSIDE 345KV CKT 1	717	789	0.11796	113.4299	HINTON - WEATHERFORD JCT. 138KV CKT 1
FDNS	00NR	2	16WP	G15_057	FROM->TO	G14-057T 345.00 - SUNNYSIDE 345KV CKT 1	717	789	0.11709	113.4276	GEN334432 1-SABINE UNIT 2
FDNS	00NR	2	16WP	G15_057	FROM->TO	G14-057T 345.00 - SUNNYSIDE 345KV CKT 1	717	789	0.11709	113.4275	GEN334431 1-SABINE UNIT 1
FDNS	00NR	2	16WP	G15_057	FROM->TO	G14-057T 345.00 - SUNNYSIDE 345KV CKT 1	717	789	0.11709	113.4204	GEN501972 1-EVANGELINE UNIT 7-2
FDNS	00NR	2	16WP	G15_057	FROM->TO	G14-057T 345.00 - SUNNYSIDE 345KV CKT 1	717	789	0.11709	113.4203	GEN501971 1-EVANGELINE UNIT 7-1
FDNS	00NR	2	16WP	G15_057	FROM->TO	G14-057T 345.00 - SUNNYSIDE 345KV CKT 1	717	789	0.11709	113.4197	GEN336152 1-WATERFORD UNIT#2
FDNS	00NR	2	16WP	G15_057	FROM->TO	G14-057T 345.00 - SUNNYSIDE 345KV CKT 1	717	789	0.11709	113.4187	GEN336151 1-WATERFORD UNIT#1
FDNS	00NR	2	20WP	G15_057	FROM->TO	G14-057T 345.00 - SUNNYSIDE 345KV CKT 1	717	789	0.11819	113.4146	P12:138:AEPW:DUNCAN-4:L.E.S.-4
FDNS	00NR	2	16WP	G15_057	FROM->TO	G14-057T 345.00 - SUNNYSIDE 345KV CKT 1	717	789	0.11771	113.4111	CORNVILLE - NORTH 29TH CHICKASHA 138KV CKT 1
FDNS	00NR	2	16WP	G15_057	FROM->TO	G14-057T 345.00 - SUNNYSIDE 345KV CKT 1	717	789	0.11709	113.4106	P12:138:AEPW:R.S.S.-4:R:96YALE-4
FDNS	00NR	2	16WP	G15_057	FROM->TO	G14-057T 345.00 - SUNNYSIDE 345KV CKT 1	717	789	0.11861	113.4047	PURCELL4 138.00 - WALNUT CREEK 138KV CKT 1
FDNS	00NR	2	16WP	G15_057	FROM->TO	G14-057T 345.00 - SUNNYSIDE 345KV CKT 1	717	789	0.11724	113.4022	FLETCHER - MARLOW JCT 69KV CKT 1
FDNS	00NR	2	16WP	G15_057	FROM->TO	G14-057T 345.00 - SUNNYSIDE 345KV CKT 1	717	789	0.11709	113.397	GEN501912 1-ACADIA UNIT CT1B
FDNS	00NR	2	16WP	G15_057	FROM->TO	G14-057T 345.00 - SUNNYSIDE 345KV CKT 1	717	789	0.11709	113.3963	GEN501911 1-ACADIA UNIT CT1A
FDNS	00NR	2	16WP	G15_057	FROM->TO	G14-057T 345.00 - SUNNYSIDE 345KV CKT 1	717	789	0.11775	113.3952	CORNVILLE - NORGE ROAD 138KV CKT 1
FDNS	00NR	2	16WP	G15_057	FROM->TO	G14-057T 345.00 - SUNNYSIDE 345KV CKT 1	717	789	0.11775	113.3952	CORNVILLE - NORGE ROAD 138KV CKT 1
FDNS	00NR	2	16WP	G15_057	FROM->TO	G14-057T 345.00 - SUNNYSIDE 345KV CKT 1	717	789	0.11709	113.3951	P12:138:AEPW:MOHAWK4:T.NO--4
FDNS	00NR	2	16WP	G15_057	FROM->TO	G14-057T 345.00 - SUNNYSIDE 345KV CKT 1	717	789	0.11744	113.3896	HAMMETT TAP - HORSESHOE LAKE 138KV CKT 1
FDNS	00NR	2	16WP	G15_057	FROM->TO	G14-057T 345.00 - SUNNYSIDE 345KV CKT 1	717	789	0.11709	113.3891	ST FRANCIS 161/16.0KV TRANSFORMER CKT 1
FDNS	00NR	2	16WP	G15_057	FROM->TO	G14-057T 345.00 - SUNNYSIDE 345KV CKT 1	717	789	0.11635	113.3891	ARBUCKLE - MILLCREEK 138KV CKT 1
FDNS	00NR	2	16WP	G15_057	FROM->TO	G14-057T 345.00 - SUNNYSIDE 345KV CKT 1	717	789	0.11709	113.389	ST FRANCIS - ST FRANCIS 1 161KV CKT Z1
FDNS	00NR	2	16WP	G15_057	FROM->TO	G14-057T 345.00 - SUNNYSIDE 345KV CKT 1	717	789	0.11686	113.3855	P12:138:AEPW:OKMULGE4:R.S.S-4
FDNS	00NR	2	16WP	G15_057	FROM->TO	G14-057T 345.00 - SUNNYSIDE 345KV CKT 1	717	789	0.11701	113.385	LAYFLD8 500.00 (LAYFLD AUTO) 500/230/13.8KV TRANSFORMER CKT 1
FDNS	00NR	2	16WP	G15_057	FROM->TO	G14-057T 345.00 - SUNNYSIDE 345KV CKT 1	717	789	0.11701	113.385	LAYFLD8 500.00 (LAYFLD AUTO) 500/230/13.8KV TRANSFORMER CKT 1
FDNS	00NR	2	16WP	G15_057	FROM->TO	G14-057T 345.00 - SUNNYSIDE 345KV CKT 1	717	789	0.11709	113.3786	SABINE 230/22.0KV TRANSFORMER CKT 1
FDNS	00NR	2	16WP	G15_057	FROM->TO	G14-057T 345.00 - SUNNYSIDE 345KV CKT 1	717	789	0.11693	113.378	BETHEL - BROKEN BOW 138KV CKT 1
FDNS	00NR	2	16WP	G15_057	FROM->TO	G14-057T 345.00 - SUNNYSIDE 345KV CKT 1	717	789	0.11796	113.3774	HINTON - REDROCKRD4 138.00 138KV CKT 1
FDNS	00NR	2	16WP	G15_057	FROM->TO	G14-057T 345.00 - SUNNYSIDE 345KV CKT 1	717	789	0.11694	113.3764	AMITY SS - MURFREESBORO EAST (AECC) 115KV CKT 1
FDNS	00NR	2	16WP	G15_057	FROM->TO	G14-057T 345.00 - SUNNYSIDE 345KV CKT 1	717	789	0.11714	113.3747	P12:138:WFEC-AEPW:ELKCTY-4:ERICK4
FDNS	00NR	2	16WP	G15_057	FROM->TO	G14-057T 345.00 - SUNNYSIDE 345KV CKT 1	717	789	0.11728	113.3729	P12:138:OKGE:3TERM47
FDNS	00NR	2	16WP	G15_057	FROM->TO	G14-057T 345.00 - SUNNYSIDE 345KV CKT 1	717	789	0.11709	113.3726	GEN336242 1-1NMIL ST1 18.000
FDNS	00NR	2	16WP	G15_057	FROM->TO	G14-057T 345.00 - SUNNYSIDE 345KV CKT 1	717	789	0.1176	113.3672	WEATHERFORD SOUTHEAST - WEATHERFORD TAP 138KV CKT 1
FDNS	00NR	2	16WP	G15_057	FROM->TO	G14-057T 345.00 - SUNNYSIDE 345KV CKT 1	717	789	0.11732	113.342	SEMINOLE (SEMINOL2) 345/138/14.4KV TRANSFORMER CKT 1
FDNS	00NR	2	16WP	G15_057	FROM->TO	G14-057T 345.00 - SUNNYSIDE 345KV CKT 1	717	789	0.12167	113.3359	CIMARRON - NORTHWEST 345KV CKT 1
FDNS	00NR	2	20WP	G15_057	FROM->TO	G14-057T 345.00 - SUNNYSIDE 345KV CKT 1	717	789	0.11819	113.0115	DUNCAN - OMPA-DUNCAN 840 138KV CKT 1
FDNS	00NR	2	20WP	G15_057	FROM->TO	G14-057T 345.00 - SUNNYSIDE 345KV CKT 1	717	789	0.11934	112.9602	P12:138:WFEC:MSL01
FDNS	00NR	2	16WP	G15_057	FROM->TO	G14-057T 345.00 - SUNNYSIDE 345KV CKT 1	717	789	0.11709	112.9058	803-OKLAUNION
FDNS	00NR	2	20WP	G15_057	FROM->TO	G14-057T 345.00 - SUNNYSIDE 345KV CKT 1	717	789	0.11673	112.8133	ELDORADO EHV - MOUNT OLIVE 500KV CKT 1
FDNS	00NR	2	20WP	G15_057	FROM->TO	G14-057T 345.00 - SUNNYSIDE 345KV CKT 1	717	789	0.11686	112.8085	P12:138:AEPW:SHERID4:112GORE4
FDNS	00NR	2	20WP	G15_057	FROM->TO	G14-057T 345.00 - SUNNYSIDE 345KV CKT 1	717	789	0.11685	112.7873	DOLET HILLS 345/24.0KV TRANSFORMER CKT 1
FDNS	00NR	2	20WP	G15_057	FROM->TO	G14-057T 345.00 - SUNNYSIDE 345KV CKT 1	717	789	0.11827	112.7668	Hitchland Interchange - WALKTAP7 345.00 345KV CKT 1
FDNS	00NR	2	20WP	G15_057	FROM->TO	G14-057T 345.00 - SUNNYSIDE 345KV CKT 1	717	789	0.11827	112.7573	P12:345:SPS:J07.1.FINN.HITCH
FDNS	00NR	2	20WP	G15_057	FROM->TO	G14-057T 345.00 - SUNNYSIDE 345KV CKT 1	717	789	0.11792	112.7566	REDBUD - RIVERSIDE STATION 345KV CKT 1
FDNS	00NR	2	20WP	G15_057	FROM->TO	G14-057T 345.00 - SUNNYSIDE 345KV CKT 1	717	789	0.1168	112.653	WEBRE - WELLS 500KV CKT 1
FDNS	00NR	2	20WP	G15_057	FROM->TO	G14-057T 345.00 - SUNNYSIDE 345KV CKT 1	717	789	0.11685	112.6136	P12:161:AEPW:DYESS 5:HYLAND 5
FDNS	00NR	2	20WP	G15_057	FROM->TO	G14-057T 345.00 - SUNNYSIDE 345KV CKT 1	717	789	0.11685	112.5779	DELL 500 - ESSEX UNIT 2 500KV CKT Z1
FDNS	00NR	2	20WP	G15_057	FROM->TO	G14-057T 345.00 - SUNNYSIDE 345KV CKT 1	717	789	0.11685	112.5497	P12:69:AEPW:L.E.S.-2:LAW WC2
FDNS	00NR	2	20WP	G15_057	FROM->TO	G14-057T 345.00 - SUNNYSIDE 345KV CKT 1	717	789	0.11925	112.5491	P12:138:WFEC:MSL17
FDNS	00NR	2	16WP	G15_057	FROM->TO	G14-057T 345.00 - SUNNYSIDE 345KV CKT 1	717	789	0.11941	112.5339	NORTHWEST - SPRING CREEK 345KV CKT 1
FDNS	00NR	2	16WP	G15_057	FROM->TO	G14-057T 345.00 - SUNNYSIDE 345KV CKT 1	717	789	0.11941	112.5258	SOONER - SPRING CREEK 345KV CKT 1
FDNS	00NR	2	16WP	G15_057	FROM->TO	G14-057T 345.00 - SUNNYSIDE 345KV CKT 1	717	789	0.11595	112.5199	MAYSVLT4 138.00 - PRAIRIE POINT 138KV CKT 1
FDNS	00NR	2	16WP	G15_057	FROM->TO	G14-057T 345.00 - SUNNYSIDE 345KV CKT 1	717	789	0.11713	112.5177	JOHNSON COUNTY - RUSSETT 138KV CKT 1
FDNS	00NR	2	16WP	G15_057	FROM->TO	G14-057T 345.00 - SUNNYSIDE 345KV CKT 1	717	789	0.11718	112.505	GLASSES - MADILL INDUSTRIAL TAP 138KV CKT 1
FDNS	00NR	2	16WP	G15_057	FROM->TO	G14-057T 345.00 - SUNNYSIDE 345KV CKT 1	717	789	0.11709	112.4983	GEN562772 1-G15034_3 0.6900
FDNS	00NR	2	16WP	G15_057	FROM->TO	G14-057T 345.00 - SUNNYSIDE 345KV CKT 1	717	789	0.11709	112.4879	GEN562691 1-G15_015_3 0.6900
FDNS	00NR	2	16WP	G15_057	FROM->TO	G14-057T 345.00 - SUNNYSIDE 345KV CKT 1	717	789	0.11709	112.481	GEN521103 1-BLUE CANYON WIND FARM
FDNS	00NR	2	20WP	G15_057	FROM->TO	G14-057T 345.00 - SUNNYSIDE 345KV CKT 1	717	789	0.1177	112.4804	P12:138:WFEC:MSL02
FDNS	00NR	2	16WP	G15_057	FROM->TO	G14-057T 345.00 - SUNNYSIDE 345KV CKT 1	717	789	0.11753	112.4799	DRAPER LAKE - MIDWEST TAP 138KV CKT 1

SOLUTION	GROUP	SCENARIO	SEASON	SOURCE	DIRECTION	MONITORED ELEMENT	RATEA (MVA)	RATEB(MVA)	TDF	TC%LOADING (% MVA)	CONTINGENCY
FDNS	00NR	2	16WP	G15_057	FROM->TO	G14-057T 345.00 - SUNNYSIDE 345KV CKT 1	717	789	0.11702	112.4775	HUGO (HUGO 1) 345/138/13.8KV TRANSFORMER CKT 1
FDNS	00NR	2	16WP	G15_057	FROM->TO	G14-057T 345.00 - SUNNYSIDE 345KV CKT 1	717	789	0.11833	112.4704	BEARCAT 138.00 - NINE MILE 138KV CKT 1
FDNS	00NR	2	20WP	G15_057	FROM->TO	G14-057T 345.00 - SUNNYSIDE 345KV CKT 1	717	789	0.11752	112.4648	LAWTON EASTSIDE (LES 5) 345/138/13.8KV TRANSFORMER CKT 2
FDNS	00NR	2	16WP	G15_057	FROM->TO	G14-057T 345.00 - SUNNYSIDE 345KV CKT 1	717	789	0.11709	112.4615	GEN520812 1-ANADRK5
FDNS	00NR	2	16WP	G15_057	FROM->TO	G14-057T 345.00 - SUNNYSIDE 345KV CKT 1	717	789	0.11709	112.4614	GEN520813 1-ANADRK6
FDNS	00NR	2	16WP	G15_057	FROM->TO	G14-057T 345.00 - SUNNYSIDE 345KV CKT 1	717	789	0.11619	112.4585	ARBUCKLE - SULPHR 4 138.00 138KV CKT 1
FDNS	00NR	2	20WP	G15_057	FROM->TO	G14-057T 345.00 - SUNNYSIDE 345KV CKT 1	717	789	0.11661	112.4575	ELDORADO EHV - SHERIDAN EHV 500KV CKT 1
FDNS	00NR	2	16WP	G15_057	FROM->TO	G14-057T 345.00 - SUNNYSIDE 345KV CKT 1	717	789	0.11758	112.4486	P12:138:OKGE:3TERM21
FDNS	00NR	2	16WP	G15_057	FROM->TO	G14-057T 345.00 - SUNNYSIDE 345KV CKT 1	717	789	0.11718	112.4442	GLASSES - RUSSETT 138KV CKT 1
FDNS	00NR	2	16WP	G15_057	FROM->TO	G14-057T 345.00 - SUNNYSIDE 345KV CKT 1	717	789	0.11709	112.4418	GEN511961 1-DEMPSEY-WTG10.7000
FDNS	00NR	2	16WP	G15_057	FROM->TO	G14-057T 345.00 - SUNNYSIDE 345KV CKT 1	717	789	0.11706	112.4396	P12:138:WFEC:MSL11
FDNS	00NR	2	16WP	G15_057	FROM->TO	G14-057T 345.00 - SUNNYSIDE 345KV CKT 1	717	789	0.11706	112.4396	P12:138:WFEC-AEPW:PHAROAH4:LONEOAK4
FDNS	00NR	2	20WP	G15_057	FROM->TO	G14-057T 345.00 - SUNNYSIDE 345KV CKT 1	717	789	0.11686	112.4267	P12:138:AEPW:112GORE4:L.E.S.-4
FDNS	00NR	2	16WP	G15_057	FROM->TO	G14-057T 345.00 - SUNNYSIDE 345KV CKT 1	717	789	0.11595	112.4229	PRAIRIE POINT - RATLIFF 138KV CKT 1
FDNS	00NR	2	16WP	G15_057	FROM->TO	G14-057T 345.00 - SUNNYSIDE 345KV CKT 1	717	789	0.11709	112.4178	P12:069:OKGE:3TERM42
FDNS	00NR	2	16WP	G15_057	FROM->TO	G14-057T 345.00 - SUNNYSIDE 345KV CKT 1	717	789	0.11738	112.4163	P12:138:WFEC:MSL08
FDNS	00NR	2	16WP	G15_057	FROM->TO	G14-057T 345.00 - SUNNYSIDE 345KV CKT 1	717	789	0.11709	112.4142	GEN672392 1-NBECGT1G 18.000
FDNS	00NR	2	16WP	G15_057	FROM->TO	G14-057T 345.00 - SUNNYSIDE 345KV CKT 1	717	789	0.11714	112.411	DELL 500 - INDEPENDENCE 500KV CKT 1
FDNS	00NR	2	16WP	G15_057	FROM->TO	G14-057T 345.00 - SUNNYSIDE 345KV CKT 1	717	789	0.11718	112.4067	OVEXFRMCCOVE
FDNS	00NR	2	16WP	G15_057	FROM->TO	G14-057T 345.00 - SUNNYSIDE 345KV CKT 1	717	789	0.11816	112.4049	CIMARRON - MATHWSN7 345.00 345KV CKT 1
FDNS	00NR	2	16WP	G15_057	FROM->TO	G14-057T 345.00 - SUNNYSIDE 345KV CKT 1	717	789	0.11816	112.4049	CIMARRON - MATHWSN7 345.00 345KV CKT 2
FDNS	00NR	2	16WP	G15_057	FROM->TO	G14-057T 345.00 - SUNNYSIDE 345KV CKT 1	717	789	0.11711	112.397	GRPRAR1-LNX3345.00 - HOLT.CO3 345.00 345KV CKT 1
FDNS	00NR	2	16WP	G15_057	FROM->TO	G14-057T 345.00 - SUNNYSIDE 345KV CKT 1	717	789	0.11709	112.3943	GEN615010 1-STANTON4
FDNS	00NR	2	16WP	G15_057	FROM->TO	G14-057T 345.00 - SUNNYSIDE 345KV CKT 1	717	789	0.11709	112.3886	GEN528361 1-MADDOX GEN #1
FDNS	00NR	2	16WP	G15_057	FROM->TO	G14-057T 345.00 - SUNNYSIDE 345KV CKT 1	717	789	0.11709	112.3881	GEN629070 2-BEAVER CHANNEL GENERATORFOR UNIT NO 2
FDNS	00NR	2	16WP	G15_057	FROM->TO	G14-057T 345.00 - SUNNYSIDE 345KV CKT 1	717	789	0.11711	112.3876	GRPRAR1-LNX3345.00 - GRPRAR 345KV CKT Z
FDNS	00NR	2	16WP	G15_057	FROM->TO	G14-057T 345.00 - SUNNYSIDE 345KV CKT 1	717	789	0.11833	112.3839	P12:138:WFEC:MSL14
FDNS	00NR	2	16WP	G15_057	FROM->TO	G14-057T 345.00 - SUNNYSIDE 345KV CKT 1	717	789	0.11718	112.378	CANEY CREEK - JOHNSON COUNTY 138KV CKT 1
FDNS	00NR	2	16WP	G15_057	FROM->TO	G14-057T 345.00 - SUNNYSIDE 345KV CKT 1	717	789	0.11709	112.374	GEN615021 1-GRE-ER 14G 16.000
FDNS	00NR	2	16WP	G15_057	FROM->TO	G14-057T 345.00 - SUNNYSIDE 345KV CKT 1	717	789	0.11709	112.3682	GEN515443 1-MNCOWND1 0.7000
FDNS	00NR	2	16WP	G15_057	FROM->TO	G14-057T 345.00 - SUNNYSIDE 345KV CKT 1	717	789	0.11709	112.3675	GEN560183 1-REDHIL-WTG1 12.000
FDNS	00NR	2	16WP	G15_057	FROM->TO	G14-057T 345.00 - SUNNYSIDE 345KV CKT 1	717	789	0.11709	112.366	GEN629071 1-BURLINGTON GENERATOR FOR UNIT NO 1 E
FDNS	00NR	2	16WP	G15_057	FROM->TO	G14-057T 345.00 - SUNNYSIDE 345KV CKT 1	717	789	0.11709	112.3598	GEN563242 1-G15090_3 0.6900
FDNS	00NR	2	16WP	G15_057	FROM->TO	G14-057T 345.00 - SUNNYSIDE 345KV CKT 1	717	789	0.11696	112.3591	CARTER - CHICKASAW 138KV CKT 1
FDNS	00NR	2	16WP	G15_057	FROM->TO	G14-057T 345.00 - SUNNYSIDE 345KV CKT 1	717	789	0.11709	112.3585	GEN562902 1-G15052_3 0.6900
FDNS	00NR	2	16WP	G15_057	FROM->TO	G14-057T 345.00 - SUNNYSIDE 345KV CKT 1	717	789	0.11833	112.349	BEARCAT 138.00 - MOORELAND 138KV CKT 1
FDNS	00NR	2	16WP	G15_057	FROM->TO	G14-057T 345.00 - SUNNYSIDE 345KV CKT 1	717	789	0.11669	112.3483	ROCKY POINT - SPRINGDALE 138KV CKT 1
FDNS	00NR	2	16WP	G15_057	FROM->TO	G14-057T 345.00 - SUNNYSIDE 345KV CKT 1	717	789	0.11709	112.3439	BURLINGTON NO1 + NO 2 + NO 3 161/20.0KV TRANSFORMER CKT 1
FDNS	00NR	2	16WP	G15_057	FROM->TO	G14-057T 345.00 - SUNNYSIDE 345KV CKT 1	717	789	0.11709	112.3431	INDEPENDENCE 500/26.0KV TRANSFORMER CKT 1
FDNS	00NR	2	16WP	G15_057	FROM->TO	G14-057T 345.00 - SUNNYSIDE 345KV CKT 1	717	789	0.11722	112.3389	CANADIAN RIVER - MCALESTER SOUTH 138KV CKT 1
FDNS	00NR	2	16WP	G15_057	FROM->TO	G14-057T 345.00 - SUNNYSIDE 345KV CKT 1	717	789	0.11722	112.3389	CANADIAN RIVER - MCALESTER SOUTH 138KV CKT 1
FDNS	00NR	2	16WP	G15_057	FROM->TO	G14-057T 345.00 - SUNNYSIDE 345KV CKT 1	717	789	0.11722	112.3377	CANADIAN RIVER () 345/138/13.8KV TRANSFORMER CKT 1
FDNS	00NR	2	16WP	G15_057	FROM->TO	G14-057T 345.00 - SUNNYSIDE 345KV CKT 1	717	789	0.11722	112.3377	CANADIAN RIVER () 345/138/13.8KV TRANSFORMER CKT 1
FDNS	00NR	2	16WP	G15_057	FROM->TO	G14-057T 345.00 - SUNNYSIDE 345KV CKT 1	717	789	0.11713	112.3253	ALTUS JUNCTION - RUSSELL 138KV CKT 1
FDNS	00NR	2	16WP	G15_057	FROM->TO	G14-057T 345.00 - SUNNYSIDE 345KV CKT 1	717	789	0.11713	112.3253	ALTUS JUNCTION - RUSSELL 138KV CKT 1
FDNS	00NR	2	20WP	G15_057	FROM->TO	G14-057T 345.00 - SUNNYSIDE 345KV CKT 1	717	789	0.11685	112.3175	FRONTIER - GRIMES 345KV CKT 1
FDNS	00NR	2	16WP	G15_057	FROM->TO	G14-057T 345.00 - SUNNYSIDE 345KV CKT 1	717	789	0.117	112.3173	NORTHWEST TEXARKANA - WELSH 345KV CKT 1
FDNS	00NR	2	16WP	G15_057	FROM->TO	G14-057T 345.00 - SUNNYSIDE 345KV CKT 1	717	789	0.117	112.3173	NORTHWEST TEXARKANA - WELSH 345KV CKT 1
FDNS	00NR	2	16WP	G15_057	FROM->TO	G14-057T 345.00 - SUNNYSIDE 345KV CKT 1	717	789	0.11742	112.315	MINGO - SETAB 345KV CKT 1
FDNS	00NR	2	16WP	G15_057	FROM->TO	G14-057T 345.00 - SUNNYSIDE 345KV CKT 1	717	789	0.11742	112.315	MINGO - SETAB 345KV CKT 1
FDNS	00NR	2	20WP	G15_057	FROM->TO	G14-057T 345.00 - SUNNYSIDE 345KV CKT 1	717	789	0.11964	112.3124	P12:138:AEPW-OGE:CORNVIL4:MAUD 4
FDNS	00NR	2	16WP	G15_057	FROM->TO	G14-057T 345.00 - SUNNYSIDE 345KV CKT 1	717	789	0.11709	112.3119	GEN562078 1-G11_051_3 0.6900
FDNS	00NR	2	16WP	G15_057	FROM->TO	G14-057T 345.00 - SUNNYSIDE 345KV CKT 1	717	789	0.11709	112.3074	P12:230:UMZB:# 112 #: NU IN SD. NU-RCDC & DRY CREEK XFMR
FDNS	00NR	2	16WP	G15_057	FROM->TO	G14-057T 345.00 - SUNNYSIDE 345KV CKT 1	717	789	0.11709	112.3068	RCDC EAST 4230.00 - RED CEDAR DC 230KV CKT 1
FDNS	00NR	2	16WP	G15_057	FROM->TO	G14-057T 345.00 - SUNNYSIDE 345KV CKT 1	717	789	0.11619	112.3067	JOLLYVILLE - SULPHR 4 138.00 138KV CKT 1
FDNS	00NR	2	16WP	G15_057	FROM->TO	G14-057T 345.00 - SUNNYSIDE 345KV CKT 1	717	789	0.11728	112.3017	CHAMBER SPRINGS - CLARKSVILLE 345KV CKT 1
FDNS	00NR	2	16WP	G15_057	FROM->TO	G14-057T 345.00 - SUNNYSIDE 345KV CKT 1	717	789	0.11709	112.291	GEN514805 1-SOONER UNIT 1
FDNS	00NR	2	16WP	G15_057	FROM->TO	G14-057T 345.00 - SUNNYSIDE 345KV CKT 1	717	789	0.11717	112.2896	KEO EHV - WEST MEMPHIS 500 500KV CKT 1
FDNS	00NR	2	16WP	G15_057	FROM->TO	G14-057T 345.00 - SUNNYSIDE 345KV CKT 1	717	789	0.11709	112.2892	GEN562802 1-G15039_3 0.3570
FDNS	00NR	2	16WP	G15_057	FROM->TO	G14-057T 345.00 - SUNNYSIDE 345KV CKT 1	717	789	0.11709	112.2841	GEN514806 1-SOONER UNIT 2
FDNS	00NR	2	16WP	G15_057	FROM->TO	G14-057T 345.00 - SUNNYSIDE 345KV CKT 1	717	789	0.11709	112.2833	GEN524285 1-WILDORADO WIND GEN
FDNS	00NR	2	16WP	G15_057	FROM->TO	G14-057T 345.00 - SUNNYSIDE 345KV CKT 1	717	789	0.11709	112.2707	THOMAS HILL 161/22.0KV TRANSFORMER CKT 1
FDNS	00NR	2	16WP	G15_057	FROM->TO	G14-057T 345.00 - SUNNYSIDE 345KV CKT 1	717	789	0.11709	112.2659	GEN524295 1-SPNSPUR_WND10.6900
FDNS	00NR	2	16WP	G15_057	FROM->TO	G14-057T 345.00 - SUNNYSIDE 345KV CKT 1	717	789	0.11709	112.257	GEN560331 1-G10-46 13.800
FDNS	00NR	2	16WP	G15_057	FROM->TO	G14-057T 345.00 - SUNNYSIDE 345KV CKT 1	717	789	0.11636	112.257	ARKANSAS NUCLEAR ONE - FT SMITH 500KV CKT 1
FDNS	00NR	2	16WP	G15_057	FROM->TO	G14-057T 345.00 - SUNNYSIDE 345KV CKT 1	717	789	0.11636	112.257	ARKANSAS NUCLEAR ONE - FT SMITH 500KV CKT 1
FDNS	00NR	2	16WP	G15_057	FROM->TO	G14-057T 345.00 - SUNNYSIDE 345KV CKT 1	717	789	0.11619	112.2394	JOLLYVILLE - KERR MCGEE CIMARRON 138KV CKT 1
FDNS	00NR	2	16WP	G15_057	FROM->TO	G14-057T 345.00 - SUNNYSIDE 345KV CKT 1	717	789	0.11709	112.2337	GEN562587 1-G14_056_3 0.6900
FDNSLock	00NR	2	16WP	G15_057	FROM->TO	G14-057T 345.00 - SUNNYSIDE 345KV CKT 1	717	789	0.11709	112.2316	GEN629072 4-LANSING GENERATOR FOR UNITS NO4 EIA CODE 1
FDNS	00NR	2	16WP	G15_057	FROM->TO	G14-057T 345.00 - SUNNYSIDE 345KV CKT 1	717	789	0.11709	112.2277	GEN562269 1-G12-020-1 0.6900
FDNS	00NR	2	20WP	G15_057	FROM->TO	G14-057T 345.00 - SUNNYSIDE 345KV CKT 1	717	789	0.11675	112.2143	LAYFLD8 500.00 - MOUNT OLIVE 500KV CKT 1
FDNS	00NR	2	16WP	G15_057	FROM->TO	G14-057T 345.00 - SUNNYSIDE 345KV CKT 1	717	789	0.11709	112.2134	GEN657749 1-YOUNG 1 GENERATOR
FDNS	00NR	2	16WP	G15_057	FROM->TO	G14-057T 345.00 - SUNNYSIDE 345KV CKT 1	717	789	0.11709	112.2085	GEN562882 1-G15047_3 0.6900
FDNS	00NR	2	20WP	G15_057	FROM->TO	G14-057T 345.00 - SUNNYSIDE 345KV CKT 1	717	789	0.11755	112.2058	THISTLE7 345.00 - WOODWARD DISTRICT EHV 345KV CKT 1
FDNS	00NR	2	20WP	G15_057	FROM->TO	G14-057T 345.00 - SUNNYSIDE 345KV CKT 1	717	789	0.11755	112.2058	THISTLE7 345.00 - WOODWARD DISTRICT EHV 345KV CKT 2
FDNS	00NR	2	16WP	G15_057	FROM->TO	G14-057T 345.00 - SUNNYSIDE 345KV CKT 1	717	789	0.12006	112.1939	G15063_T 345.00 - MATHWSN7 345.00 345KV CKT 1
FDNS	00NR	2	16WP	G15_057	FROM->TO	G14-057T 345.00 - SUNNYSIDE 345KV CKT 1	717	789	0.11619	112.1888	ARBWIND4 138.00 - KERR MCGEE CIMARRON 138KV CKT 1
FDNS	00NR	2	16WP	G15_057	FROM->TO	G14-057T 345.00 - SUNNYSIDE 345KV CKT 1	717	789	0.11709	112.1842	GEN562270 1-G12-020-2 0.6900
FDNS	00NR	2	16WP	G15_057	FROM->TO	G14-057T 345.00 - SUNNYSIDE 345KV CKT 1	717	789	0.11709	112.1799	GEN562974 1-G15060_5 0.6900

SOLUTION	GROUP	SCENARIO	SEASON	SOURCE	DIRECTION	MONITORED ELEMENT	RATEA (MVA)	RATEB(MVA)	TDF	TC%LOADING (% MVA)	CONTINGENCY
FDNS	00NR	2	16WP	G15_057	FROM->TO	G14-057T 345.00 - SUNNYSIDE 345KV CKT 1	717	789	0.11709	112.178	GEN562812 1-G15040_3 0.3570
FDNS	00NR	2	16WP	G15_057	FROM->TO	G14-057T 345.00 - SUNNYSIDE 345KV CKT 1	717	789	0.11709	112.1758	GEN563102 1-G15075_3 0.5500
FDNS	00NR	2	20WP	G15_057	FROM->TO	G14-057T 345.00 - SUNNYSIDE 345KV CKT 1	717	789	0.11685	112.1722	P12:161:AEPW-SWPA:BEAVER5:EROGERS5
FDNS	00NR	2	16WP	G15_057	FROM->TO	G14-057T 345.00 - SUNNYSIDE 345KV CKT 1	717	789	0.11709	112.1709	GEN562973 1-G15060_4 0.6900
FDNS	00NR	2	16WP	G15_057	FROM->TO	G14-057T 345.00 - SUNNYSIDE 345KV CKT 1	717	789	0.11709	112.1678	GEN563132 1-G15078_3 0.3570
FDNS	00NR	2	16WP	G15_057	FROM->TO	G14-057T 345.00 - SUNNYSIDE 345KV CKT 1	717	789	0.11728	112.1653	P12:138:AEPW:112GORE4:SNYDER-4
FDNS	00NR	2	20WP	G15_057	FROM->TO	G14-057T 345.00 - SUNNYSIDE 345KV CKT 1	717	789	0.11719	112.1515	DUNCAN (DUNCAN) 138/69/13.8KV TRANSFORMER CKT 1
FDNS	00NR	2	16WP	G15_057	FROM->TO	G14-057T 345.00 - SUNNYSIDE 345KV CKT 1	717	789	0.11709	112.1501	GEN563062 1-G15071_3 0.6900
FDNSLock	00NR	2	16WP	G15_057	FROM->TO	G14-057T 345.00 - SUNNYSIDE 345KV CKT 1	717	789	0.11709	112.1439	GEN681522 3-GENOA 3
FDNS	00NR	2	20WP	G15_057	FROM->TO	G14-057T 345.00 - SUNNYSIDE 345KV CKT 1	717	789	0.11685	112.1323	P12:161:AEPW:DYESS5:ELMSPRNG:TONTITN5
FDNS	00NR	2	16WP	G15_057	FROM->TO	G14-057T 345.00 - SUNNYSIDE 345KV CKT 1	717	789	0.11886	112.1239	CLARKSVILLE - MUSKOGEE 345KV CKT 1
FDNS	00NR	2	16WP	G15_057	FROM->TO	G14-057T 345.00 - SUNNYSIDE 345KV CKT 1	717	789	0.11886	112.1239	CLARKSVILLE - MUSKOGEE 345KV CKT 1
FDNS	00NR	2	16WP	G15_057	FROM->TO	G14-057T 345.00 - SUNNYSIDE 345KV CKT 1	717	789	0.1163	112.1102	CHICKASAW - TOTAL 138KV CKT 1
FDNS	00NR	2	16WP	G15_057	FROM->TO	G14-057T 345.00 - SUNNYSIDE 345KV CKT 1	717	789	0.11689	112.0932	BROWN - RUSSETT 138KV CKT 1
FDNS	00NR	2	16WP	G15_057	FROM->TO	G14-057T 345.00 - SUNNYSIDE 345KV CKT 1	717	789	0.11709	112.0903	GEN526331 1-JONES GEN #1 22 KV
FDNS	00NR	2	16WP	G15_057	FROM->TO	G14-057T 345.00 - SUNNYSIDE 345KV CKT 1	717	789	0.11709	112.0902	GEN526332 1-JONES GEN #2 21 KV
FDNS	00NR	2	16WP	G15_057	FROM->TO	G14-057T 345.00 - SUNNYSIDE 345KV CKT 1	717	789	0.11709	112.0806	GEN345671 2-1RUSH G2 18.000
FDNS	00NR	2	16WP	G15_057	FROM->TO	G14-057T 345.00 - SUNNYSIDE 345KV CKT 1	717	789	0.11709	112.0797	GEN560105 1-G08-22 0.6900
FDNS	00NR	2	16WP	G15_057	FROM->TO	G14-057T 345.00 - SUNNYSIDE 345KV CKT 1	717	789	0.11709	112.0788	GEN345670 1-1RUSH G1 18.000
FDNS	00NR	2	16WP	G15_057	FROM->TO	G14-057T 345.00 - SUNNYSIDE 345KV CKT 1	717	789	0.11709	112.0767	GEN562550 1-G14_040_3 0.6900
FDNS	00NR	2	16WP	G15_057	FROM->TO	G14-057T 345.00 - SUNNYSIDE 345KV CKT 1	717	789	0.11685	112.0755	RUSSETT - SPRINGDALE 138KV CKT 1
FDNS	00NR	2	16WP	G15_057	FROM->TO	G14-057T 345.00 - SUNNYSIDE 345KV CKT 1	717	789	0.11655	112.0581	ROCKY POINT - SUNNYSIDE 138KV CKT 1
FDNS	00NR	2	20WP	G15_057	FROM->TO	G14-057T 345.00 - SUNNYSIDE 345KV CKT 1	717	789	0.11687	112.054	P12:138:AEPW:CATOOSA4:T.S.E.-4
FDNS	00NR	2	16WP	G15_057	FROM->TO	G14-057T 345.00 - SUNNYSIDE 345KV CKT 1	717	789	0.11709	112.0482	4SIOUX 1 138.00 138/18.0KV TRANSFORMER CKT 1
FDNS	00NR	2	16WP	G15_057	FROM->TO	G14-057T 345.00 - SUNNYSIDE 345KV CKT 1	717	789	0.11709	112.0471	P12:138:WFEC:MSL07
FDNS	00NR	2	16WP	G15_057	FROM->TO	G14-057T 345.00 - SUNNYSIDE 345KV CKT 1	717	789	0.11709	112.0471	P12:138:WFEC-AEPW:HUGOPP4:ATOKA--4
FDNS	00NR	2	16WP	G15_057	FROM->TO	G14-057T 345.00 - SUNNYSIDE 345KV CKT 1	717	789	0.11709	112.0367	GEN511962 2-RKYRDGW2-1 0.7000
FDNS	00NR	2	16WP	G15_057	FROM->TO	G14-057T 345.00 - SUNNYSIDE 345KV CKT 1	717	789	0.11709	112.0336	CLAY BOSWELL 230/20.9KV TRANSFORMER CKT 1
FDNS	00NR	2	16WP	G15_057	FROM->TO	G14-057T 345.00 - SUNNYSIDE 345KV CKT 1	717	789	0.11709	112.0317	GEN527882 1-CUNNINGHAM GEN #2 20 KV
FDNS	00NR	2	16WP	G15_057	FROM->TO	G14-057T 345.00 - SUNNYSIDE 345KV CKT 1	717	789	0.11689	112.025	RUSSETT - RUSSETT 138KV CKT 1
FDNS	00NR	2	20WP	G15_057	FROM->TO	G14-057T 345.00 - SUNNYSIDE 345KV CKT 1	717	789	0.11666	112.0214	FULTON 115 - HOPE 115KV CKT 1
FDNS	00NR	2	16WP	G15_057	FROM->TO	G14-057T 345.00 - SUNNYSIDE 345KV CKT 1	717	789	0.11709	112.0207	GEN562892 1-G15048_3 0.6900
FDNS	00NR	2	16WP	G15_057	FROM->TO	G14-057T 345.00 - SUNNYSIDE 345KV CKT 1	717	789	0.11709	112.0142	GEN521112 1-ORME3 13.800
FDNS	00NR	2	20WP	G15_057	FROM->TO	G14-057T 345.00 - SUNNYSIDE 345KV CKT 1	717	789	0.11703	112.008	P12:138:AEPW:S.W.S.-4:L.E.S.-4
FDNS	00NR	2	16WP	G15_057	FROM->TO	G14-057T 345.00 - SUNNYSIDE 345KV CKT 1	717	789	0.11709	112.0058	GEN563192 1-G15084_3 0.5500
FDNS	00NR	2	16WP	G15_057	FROM->TO	G14-057T 345.00 - SUNNYSIDE 345KV CKT 1	717	789	0.11591	112.0039	ARDMORE WEST - CARTER 138KV CKT 1
FDNS	00NR	2	16WP	G15_057	FROM->TO	G14-057T 345.00 - SUNNYSIDE 345KV CKT 1	717	789	0.11719	111.997	P12:138:WFEC:MSL16
FDNS	00NR	2	20WP	G15_057	FROM->TO	G14-057T 345.00 - SUNNYSIDE 345KV CKT 1	717	789	0.11747	111.993	P12:138:AEPW:CORNVIL4:DUNCAN-4
FDNS	00NR	2	16WP	G15_057	FROM->TO	G14-057T 345.00 - SUNNYSIDE 345KV CKT 1	717	789	0.11709	111.9843	GEN672321 1-SHAND GENERATOR 1
FDNS	00NR	2	16WP	G15_057	FROM->TO	G14-057T 345.00 - SUNNYSIDE 345KV CKT 1	717	789	0.11598	111.9656	SUNNYSIDE (SUNNYSD5) 345/138/13.8KV TRANSFORMER CKT 1
FDNS	00NR	2	20WP	G15_057	FROM->TO	G14-057T 345.00 - SUNNYSIDE 345KV CKT 1	717	789	0.11672	111.9655	6LAYFLD 230.00 - CARROLL 230KV CKT 1
FDNS	00NR	2	16WP	G15_057	FROM->TO	G14-057T 345.00 - SUNNYSIDE 345KV CKT 1	717	789	0.11709	111.9608	GEN672310 1-POPLAR RIVER GENERATOR 1
FDNS	00NR	2	16WP	G15_057	FROM->TO	G14-057T 345.00 - SUNNYSIDE 345KV CKT 1	717	789	0.11709	111.9608	GEN672311 2-POPLAR RIVER GENERATOR 2
FDNS	00NR	2	20WP	G15_057	FROM->TO	G14-057T 345.00 - SUNNYSIDE 345KV CKT 1	717	789	0.11719	111.9597	P12:69:WFEC-AEPW:COMANCH2:DUNCAN-2
FDNS	00NR	2	16WP	G15_057	FROM->TO	G14-057T 345.00 - SUNNYSIDE 345KV CKT 1	717	789	0.11709	111.9557	GEN562512 1-G14_020_3 0.6900
FDNS	00NR	2	16WP	G15_057	FROM->TO	G14-057T 345.00 - SUNNYSIDE 345KV CKT 1	717	789	0.11709	111.9527	GEN672306 6-BOUNDARY DAM GENERATOR 6
FDNS	00NR	2	20WP	G15_057	FROM->TO	G14-057T 345.00 - SUNNYSIDE 345KV CKT 1	717	789	0.11685	111.9504	8DANIEL8 500.00 - MCKNIGHT 500KV CKT 1
FDNS	00NR	2	20WP	G15_057	FROM->TO	G14-057T 345.00 - SUNNYSIDE 345KV CKT 1	717	789	0.11747	111.9499	P12:138:AEPW:CORNVIL4:S.W.S.-4
FDNS	00NR	2	16WP	G15_057	FROM->TO	G14-057T 345.00 - SUNNYSIDE 345KV CKT 1	717	789	0.117	111.9491	P12:138:WFEC-AEPW:GOLDENSW4:CRAIGJT4
FDNS	00NR	2	20WP	G15_057	FROM->TO	G14-057T 345.00 - SUNNYSIDE 345KV CKT 1	717	789	0.11771	111.9426	P12:138:AEPW-OGE:WTH_JCT4:JENSEN4
FDNS	00NR	2	16WP	G15_057	FROM->TO	G14-057T 345.00 - SUNNYSIDE 345KV CKT 1	717	789	0.11709	111.9419	GEN523461 1-BLACKHAWK GEN #1
FDNS	00NR	2	16WP	G15_057	FROM->TO	G14-057T 345.00 - SUNNYSIDE 345KV CKT 1	717	789	0.11709	111.9418	GEN523462 1-BLACKHAWK GEN #2
FDNS	00NR	2	20WP	G15_057	FROM->TO	G14-057T 345.00 - SUNNYSIDE 345KV CKT 1	717	789	0.11685	111.9316	P12:161:AEPW:EROGERS5:ECNTRTN5
FDNS	00NR	2	16WP	G15_057	FROM->TO	G14-057T 345.00 - SUNNYSIDE 345KV CKT 1	717	789	0.11709	111.9188	GEN520811 1-ANADRK4
FDNS	00NR	2	20WP	G15_057	FROM->TO	G14-057T 345.00 - SUNNYSIDE 345KV CKT 1	717	789	0.11771	111.9134	FINNEY SWITCHING STATION - HOLCOMB 345KV CKT 1
FDNS	00NR	2	16WP	G15_057	FROM->TO	G14-057T 345.00 - SUNNYSIDE 345KV CKT 1	717	789	0.11709	111.9132	GEN344895 2-1LAB G2 20.000
FDNS	00NR	2	20WP	G15_057	FROM->TO	G14-057T 345.00 - SUNNYSIDE 345KV CKT 1	717	789	0.11685	111.9095	WHITE BLUFF 500/26.0KV TRANSFORMER CKT 1
FDNS	00NR	2	16WP	G15_057	FROM->TO	G14-057T 345.00 - SUNNYSIDE 345KV CKT 1	717	789	0.11709	111.8991	GEN511853 1-COMANCHE #3
FDNS	00NR	2	20WP	G15_057	FROM->TO	G14-057T 345.00 - SUNNYSIDE 345KV CKT 1	717	789	0.1167	111.8936	BISMARK - HOT SPRINGS WEST BUS 115KV CKT 1
FDNS	00NR	2	20WP	G15_057	FROM->TO	G14-057T 345.00 - SUNNYSIDE 345KV CKT 1	717	789	0.11708	111.8896	P12:69:AEPW-OMPA:COMANC-2:OMWALTR2
FDNS	00NR	2	20WP	G15_057	FROM->TO	G14-057T 345.00 - SUNNYSIDE 345KV CKT 1	717	789	0.11685	111.8895	RODEMACHER 230/22.0KV TRANSFORMER CKT 1
FDNS	00NR	2	20WP	G15_057	FROM->TO	G14-057T 345.00 - SUNNYSIDE 345KV CKT 1	717	789	0.11678	111.8895	MC NIEL 500/115KV TRANSFORMER CKT 1
FDNS	00NR	2	16WP	G15_057	FROM->TO	G14-057T 345.00 - SUNNYSIDE 345KV CKT 1	717	789	0.11591	111.889	ARDMORE WEST - UNIROYAL 138KV CKT 1
FDNS	00NR	2	16WP	G15_057	FROM->TO	G14-057T 345.00 - SUNNYSIDE 345KV CKT 1	717	789	0.11709	111.8812	GEN344896 3-1LAB G3 20.000
FDNS	00NR	2	16WP	G15_057	FROM->TO	G14-057T 345.00 - SUNNYSIDE 345KV CKT 1	717	789	0.11709	111.8799	GEN344894 1-1LAB G1 20.000
FDNS	00NR	2	16WP	G15_057	FROM->TO	G14-057T 345.00 - SUNNYSIDE 345KV CKT 1	717	789	0.11709	111.8788	GEN563162 1-G15081_3 0.6900
FDNS	00NR	2	16WP	G15_057	FROM->TO	G14-057T 345.00 - SUNNYSIDE 345KV CKT 1	717	789	0.11709	111.8784	GEN344897 4-1LAB G4 20.000
FDNS	00NR	2	20WP	G15_057	FROM->TO	G14-057T 345.00 - SUNNYSIDE 345KV CKT 1	717	789	0.11736	111.8774	P12:138:AEPW:WTHWF4:CLINTJC4
FDNS	00NR	2	20WP	G15_057	FROM->TO	G14-057T 345.00 - SUNNYSIDE 345KV CKT 1	717	789	0.11677	111.8739	HOT SPRINGS EHV - MAGNET COVE 500KV CKT 1
FDNS	00NR	2	16WP	G15_057	FROM->TO	G14-057T 345.00 - SUNNYSIDE 345KV CKT 1	717	789	0.11702	111.8719	P12:138:AEPW-SWPA:LONEOAK4:TUPELO4
FDNS	00NR	2	16WP	G15_057	FROM->TO	G14-057T 345.00 - SUNNYSIDE 345KV CKT 1	717	789	0.11702	111.8719	P12:138:WFEC:MSL06
FDNS	00NR	2	20WP	G15_057	FROM->TO	G14-057T 345.00 - SUNNYSIDE 345KV CKT 1	717	789	0.11756	111.866	ELK CITY 230KV (ELKCTY-6) 230/138/13.8KV TRANSFORMER CKT 1
FDNS	00NR	2	16WP	G15_057	FROM->TO	G14-057T 345.00 - SUNNYSIDE 345KV CKT 1	717	789	0.11633	111.8634	CARTRCO4 138.00 - RATLIFF 138KV CKT 1
FDNS	00NR	2	16WP	G15_057	FROM->TO	G14-057T 345.00 - SUNNYSIDE 345KV CKT 1	717	789	0.11709	111.8631	GEN511852 1-COMANCHE #2
FDNS	00NR	2	20WP	G15_057	FROM->TO	G14-057T 345.00 - SUNNYSIDE 345KV CKT 1	717	789	0.11703	111.8593	BUCKNER7 345.00 - SPEARVILLE 345KV CKT 1
FDNS	00NR	2	16WP	G15_057	FROM->TO	G14-057T 345.00 - SUNNYSIDE 345KV CKT 1	717	789	0.11709	111.8549	GEN562699 1-G15_018_3 0.6900
FDNS	00NR	2	16WP	G15_057	FROM->TO	G14-057T 345.00 - SUNNYSIDE 345KV CKT 1	717	789	0.1166	111.8539	P12:138:OKGE:3TERM40
FDNSLock	00NR	2	16WP	G15_057	FROM->TO	G14-057T 345.00 - SUNNYSIDE 345KV CKT 1	717	789	0.11709	111.8504	GEN681542 6-JP MADGETT
FDNS	00NR	2	20WP	G15_057	FROM->TO	G14-057T 345.00 - SUNNYSIDE 345KV CKT 1	717	789	0.1167	111.8396	ALPINE AECC - BISMARK 115KV CKT 1

SOLUTION	GROUP	SCENARIO	SEASON	SOURCE	DIRECTION	MONITORED ELEMENT	RATEA (MVA)	RATEB(MVA)	TDF	TC%LOADING (% MVA)	CONTINGENCY
FDNS	00NR	2	20WP	G15_057	FROM->TO	G14-057T 345.00 - SUNNYSIDE 345KV CKT 1	717	789	0.11736	111.8391	P12:138:AEPW:WTHWF4:WTH_SE4
FDNS	00NR	2	16WP	G15_057	FROM->TO	G14-057T 345.00 - SUNNYSIDE 345KV CKT 1	717	789	0.11709	111.8387	GEN521110 1-ORME1 13.800
FDNS	00NR	2	16WP	G15_057	FROM->TO	G14-057T 345.00 - SUNNYSIDE 345KV CKT 1	717	789	0.11709	111.8387	GEN521111 1-ORME2 13.800
FDNS	00NR	2	20WP	G15_057	FROM->TO	G14-057T 345.00 - SUNNYSIDE 345KV CKT 1	717	789	0.11686	111.8307	P12:138:AEPW:N.E.S.-4:CATOOSA4
FDNS	00NR	2	16WP	G15_057	FROM->TO	G14-057T 345.00 - SUNNYSIDE 345KV CKT 1	717	789	0.11714	111.8306	G15085_T 138.00 - RUSSELL 138KV CKT 1
FDNS	00NR	2	16WP	G15_057	FROM->TO	G14-057T 345.00 - SUNNYSIDE 345KV CKT 1	717	789	0.11709	111.8297	GEN563292 1-G15095_3 0.6900
FDNS	00NR	2	20WP	G15_057	FROM->TO	G14-057T 345.00 - SUNNYSIDE 345KV CKT 1	717	789	0.11685	111.8199	NELSON 230/20.0KV TRANSFORMER CKT 1
FDNS	00NR	2	16WP	G15_057	FROM->TO	G14-057T 345.00 - SUNNYSIDE 345KV CKT 1	717	789	0.05798	111.8167	GRACEMONT - LAWTON EASTSIDE 345KV CKT 1
FDNS	00NR	2	16WP	G15_057	FROM->TO	G14-057T 345.00 - SUNNYSIDE 345KV CKT 1	717	789	0.05798	111.8167	GRACEMONT - LAWTON EASTSIDE 345KV CKT 1
FDNS	00NR	2	20WP	G15_057	FROM->TO	G14-057T 345.00 - SUNNYSIDE 345KV CKT 1	717	789	0.1167	111.7914	ALPINE AECC - AMITY SS 115KV CKT 1
FDNS	00NR	2	16WP	G15_057	FROM->TO	G14-057T 345.00 - SUNNYSIDE 345KV CKT 1	717	789	0.11767	111.7803	GRAPEVINE INTERCHANGE - STATELINE INTERCHANGE 230KV CKT 1
FDNS	00NR	2	16WP	G15_057	FROM->TO	G14-057T 345.00 - SUNNYSIDE 345KV CKT 1	717	789	0.11767	111.7803	GRAPEVINE INTERCHANGE - STATELINE INTERCHANGE 230KV CKT 1
FDNS	00NR	2	20WP	G15_057	FROM->TO	G14-057T 345.00 - SUNNYSIDE 345KV CKT 1	717	789	0.11685	111.7693	8CAJUN2 500/24.0KV TRANSFORMER CKT 1
FDNS	00NR	2	16WP	G15_057	FROM->TO	G14-057T 345.00 - SUNNYSIDE 345KV CKT 1	717	789	0.11728	111.7608	CACHE - SNYDER 138KV CKT 1
FDNS	00NR	2	16WP	G15_057	FROM->TO	G14-057T 345.00 - SUNNYSIDE 345KV CKT 1	717	789	0.11709	111.7565	GEN563122 1-G15077_3 0.3850
FDNS	00NR	2	16WP	G15_057	FROM->TO	G14-057T 345.00 - SUNNYSIDE 345KV CKT 1	717	789	0.11709	111.7464	GEN562861 1-G15045_2 0.4800
FDNS	00NR	2	16WP	G15_057	FROM->TO	G14-057T 345.00 - SUNNYSIDE 345KV CKT 1	717	789	0.11709	111.7454	GEN661015 1-COYOTE
FDNS	00NR	2	20WP	G15_057	FROM->TO	G14-057T 345.00 - SUNNYSIDE 345KV CKT 1	717	789	0.11685	111.7376	P12:138:AEPW:R.S.S.-4:S.HUD.-4
FDNS	00NR	2	20WP	G15_057	FROM->TO	G14-057T 345.00 - SUNNYSIDE 345KV CKT 1	717	789	0.11685	111.7312	SABINE 230/24.0KV TRANSFORMER CKT 1
FDNS	00NR	2	20WP	G15_057	FROM->TO	G14-057T 345.00 - SUNNYSIDE 345KV CKT 1	717	789	0.11676	111.7295	ETTA (DUKE HOTSPRINGS) - MC NIEL 500KV CKT 1
FDNS	00NR	2	20WP	G15_057	FROM->TO	G14-057T 345.00 - SUNNYSIDE 345KV CKT 1	717	789	0.11718	111.727	LAWTON EASTSIDE (LES 4) 345/138/13.8KV TRANSFORMER CKT 1
FDNS	00NR	2	20WP	G15_057	FROM->TO	G14-057T 345.00 - SUNNYSIDE 345KV CKT 1	717	789	0.11685	111.7065	P12:69:AEPW:NROGERS2:ECNTRTN2
FDNS	00NR	2	20WP	G15_057	FROM->TO	G14-057T 345.00 - SUNNYSIDE 345KV CKT 1	717	789	0.11772	111.6987	WEATHERFORD JCT. - WEATHERFORD SOUTHEAST 138KV CKT 1
FDNS	00NR	2	20WP	G15_057	FROM->TO	G14-057T 345.00 - SUNNYSIDE 345KV CKT 1	717	789	0.11685	111.6968	P12:138:AEPW:BA_71ST4:T.S.E.-4
FDNS	00NR	2	20WP	G15_057	FROM->TO	G14-057T 345.00 - SUNNYSIDE 345KV CKT 1	717	789	0.11685	111.6915	P12:138:AEPW:YARCH-S4:T.S.E.-4
FDNS	00NR	2	20WP	G15_057	FROM->TO	G14-057T 345.00 - SUNNYSIDE 345KV CKT 1	717	789	0.11689	111.6801	P12:138:AEPW-OGE:SHIDLER4:OSAGE 4
FDNS	00NR	2	20WP	G15_057	FROM->TO	G14-057T 345.00 - SUNNYSIDE 345KV CKT 1	717	789	0.11686	111.6786	7JASPER 345.00 - BLACKBERRY 345KV CKT 1
FDNS	00NR	2	16WP	G15_057	FROM->TO	G14-057T 345.00 - SUNNYSIDE 345KV CKT 1	717	789	0.11591	111.6709	SUNNYSIDE - UNIROYAL 138KV CKT 1
FDNS	00NR	2	20WP	G15_057	FROM->TO	G14-057T 345.00 - SUNNYSIDE 345KV CKT 1	717	789	0.11751	111.6681	NORGE ROAD - SOUTHWESTERN STATION 138KV CKT 1
FDNS	00NR	2	20WP	G15_057	FROM->TO	G14-057T 345.00 - SUNNYSIDE 345KV CKT 1	717	789	0.11685	111.6665	FRONTIER 345/18.0KV TRANSFORMER CKT 1
FDNS	00NR	2	20WP	G15_057	FROM->TO	G14-057T 345.00 - SUNNYSIDE 345KV CKT 1	717	789	0.11685	111.6643	FRONTIER 345/18.0KV TRANSFORMER CKT 1
FDNS	00NR	2	20WP	G15_057	FROM->TO	G14-057T 345.00 - SUNNYSIDE 345KV CKT 1	717	789	0.11841	111.6636	P12:138:OKGE:3TERM27
FDNS	00NR	2	20WP	G15_057	FROM->TO	G14-057T 345.00 - SUNNYSIDE 345KV CKT 1	717	789	0.11772	111.6636	P12:138:AEPW:REDROCKRD4:WTH_JCT4
FDNS	00NR	2	20WP	G15_057	FROM->TO	G14-057T 345.00 - SUNNYSIDE 345KV CKT 1	717	789	0.11708	111.6606	P12:138:OKGE-AEPW:JENSEN4:REDROCKRD4
FDNS	00NR	2	20WP	G15_057	FROM->TO	G14-057T 345.00 - SUNNYSIDE 345KV CKT 1	717	789	0.11771	111.6573	FINNEY SWITCHING STATION - WALKTAP7 345.00 345KV CKT 1
FDNS	00NR	2	20WP	G15_057	FROM->TO	G14-057T 345.00 - SUNNYSIDE 345KV CKT 1	717	789	0.11666	111.6478	P12:115:AEPW:TURK3:HOPE3
FDNS	00NR	2	16WP	G15_057	FROM->TO	G14-057T 345.00 - SUNNYSIDE 345KV CKT 1	717	789	0.11764	111.6468	GRAPEVINE INTERCHANGE - NICHOLS STATION 230KV CKT 1
FDNS	00NR	2	16WP	G15_057	FROM->TO	G14-057T 345.00 - SUNNYSIDE 345KV CKT 1	717	789	0.11764	111.6468	GRAPEVINE INTERCHANGE - NICHOLS STATION 230KV CKT 1
FDNS	00NR	2	20WP	G15_057	FROM->TO	G14-057T 345.00 - SUNNYSIDE 345KV CKT 1	717	789	0.11674	111.6463	P12:138:OKGE:3TERM2
FDNS	00NR	2	20WP	G15_057	FROM->TO	G14-057T 345.00 - SUNNYSIDE 345KV CKT 1	717	789	0.11674	111.646	COUCH SES - MC NIEL 115KV CKT 1
FDNS	00NR	2	20WP	G15_057	FROM->TO	G14-057T 345.00 - SUNNYSIDE 345KV CKT 1	717	789	0.11708	111.6439	OMPA-WALTERS - WALTERS 69KV CKT 1
FDNS	00NR	2	20WP	G15_057	FROM->TO	G14-057T 345.00 - SUNNYSIDE 345KV CKT 1	717	789	0.11684	111.6428	CYPRESS - HARTBURG 500KV CKT 1
FDNS	00NR	2	20WP	G15_057	FROM->TO	G14-057T 345.00 - SUNNYSIDE 345KV CKT 1	717	789	0.11685	111.6362	LEWIS CREEK SWITCHYARD 138/22.0KV TRANSFORMER CKT 1
FDNS	00NR	2	20WP	G15_057	FROM->TO	G14-057T 345.00 - SUNNYSIDE 345KV CKT 1	717	789	0.11685	111.6318	LEWIS CREEK SWITCHYARD 138/22.0KV TRANSFORMER CKT 1
FDNS	00NR	2	16WP	G15_057	FROM->TO	G14-057T 345.00 - SUNNYSIDE 345KV CKT 1	717	789	0.11709	111.6317	GEN657748 1-YOUNG 2 GENERATOR
FDNS	00NR	2	20WP	G15_057	FROM->TO	G14-057T 345.00 - SUNNYSIDE 345KV CKT 1	717	789	0.11666	111.6221	TURK (TURK 1) 138/115/13.2KV TRANSFORMER CKT 1
FDNS	00NR	2	16WP	G15_057	FROM->TO	G14-057T 345.00 - SUNNYSIDE 345KV CKT 1	717	789	0.11714	111.6209	P12:138:AEPW:SHAM4WT:CHILD4WT
FDNS	00NR	2	20WP	G15_057	FROM->TO	G14-057T 345.00 - SUNNYSIDE 345KV CKT 1	717	789	0.11685	111.6197	P12:161:AEPW:CHAMSPR5:FARMING5
FDNSLock	00NR	2	16WP	G15_057	FROM->TO	G14-057T 345.00 - SUNNYSIDE 345KV CKT 1	717	789	0.11709	111.6174	GEN532751 1-WOLF CREEK GENERATING STATION UNIT 1
FDNS	00NR	2	16WP	G15_057	FROM->TO	G14-057T 345.00 - SUNNYSIDE 345KV CKT 1	717	789	0.11721	111.6149	P12:138:WFEC:MSL15
FDNS	00NR	2	20WP	G15_057	FROM->TO	G14-057T 345.00 - SUNNYSIDE 345KV CKT 1	717	789	0.11719	111.6141	P12:69:WFEC-AEPW:COMANCH2:WALTRS-2
FDNS	00NR	2	16WP	G15_057	FROM->TO	G14-057T 345.00 - SUNNYSIDE 345KV CKT 1	717	789	0.11955	111.6052	CHISHOLM7 345.00 (CHISHOLM) 345/230/13.2KV TRANSFORMER CKT 1
FDNS	00NR	2	16WP	G15_057	FROM->TO	G14-057T 345.00 - SUNNYSIDE 345KV CKT 1	717	789	0.11709	111.6005	GEN562992 1-G15063_3 0.6900
FDNS	00NR	2	20WP	G15_057	FROM->TO	G14-057T 345.00 - SUNNYSIDE 345KV CKT 1	717	789	0.11689	111.6003	7LUTESVIL 345.00 - 7ST FRANC 345.00 345KV CKT 1
FDNS	00NR	2	20WP	G15_057	FROM->TO	G14-057T 345.00 - SUNNYSIDE 345KV CKT 1	717	789	0.11707	111.5953	CLINTON JUNCTION - ELK CITY 138KV CKT 1
FDNS	00NR	2	20WP	G15_057	FROM->TO	G14-057T 345.00 - SUNNYSIDE 345KV CKT 1	717	789	0.11685	111.5867	ST FRANCIS - ST FRANCIS 1 161KV CKT Z1
FDNS	00NR	2	20WP	G15_057	FROM->TO	G14-057T 345.00 - SUNNYSIDE 345KV CKT 1	717	789	0.11703	111.5864	BUCKNER7 345.00 - HOLCOMB 345KV CKT 1
FDNS	00NR	2	20WP	G15_057	FROM->TO	G14-057T 345.00 - SUNNYSIDE 345KV CKT 1	717	789	0.11686	111.5758	LAKEOVER - MCADAMS 500KV CKT 1
FDNS	00NR	2	20WP	G15_057	FROM->TO	G14-057T 345.00 - SUNNYSIDE 345KV CKT 1	717	789	0.11685	111.5739	SABINE 230/22.0KV TRANSFORMER CKT 1
FDNS	00NR	2	20WP	G15_057	FROM->TO	G14-057T 345.00 - SUNNYSIDE 345KV CKT 1	717	789	0.11695	111.5724	P12:138:OKGE:3TERM12
FDNS	00NR	2	16WP	G15_057	FROM->TO	G14-057T 345.00 - SUNNYSIDE 345KV CKT 1	717	789	0.1195	111.5718	CANEY CREEK - TEXOMA JCT 138KV CKT 1
FDNS	00NR	2	20WP	G15_057	FROM->TO	G14-057T 345.00 - SUNNYSIDE 345KV CKT 1	717	789	0.11685	111.5703	P12:138:AEPW:R.S.S-4:T.P.S.-4
FDNS	00NR	2	16WP	G15_057	FROM->TO	G14-057T 345.00 - SUNNYSIDE 345KV CKT 1	717	789	0.11709	111.5699	GEN562704 1-G15_020_3 0.3550
FDNS	00NR	2	16WP	G15_057	FROM->TO	G14-057T 345.00 - SUNNYSIDE 345KV CKT 1	717	789	0.11709	111.5628	GEN563173 1-G15082_3 0.6900
FDNS	00NR	2	20WP	G15_057	FROM->TO	G14-057T 345.00 - SUNNYSIDE 345KV CKT 1	717	789	0.11687	111.5586	MCADAMS - WOLF CREEK 500KV CKT 1
FDNS	00NR	2	20WP	G15_057	FROM->TO	G14-057T 345.00 - SUNNYSIDE 345KV CKT 1	717	789	0.1169	111.5573	P12:138:WFEC-AEPW:ELKCTY-4:ERICK4
FDNS	00NR	2	20WP	G15_057	FROM->TO	G14-057T 345.00 - SUNNYSIDE 345KV CKT 1	717	789	0.11685	111.5451	P12:138:AEPW:R.S.S.-4:R:96YALE-4
FDNS	00NR	2	20WP	G15_057	FROM->TO	G14-057T 345.00 - SUNNYSIDE 345KV CKT 1	717	789	0.1167	111.5353	AMITY SS - MURFREESBORO EAST (AECC) 115KV CKT 1
FDNS	00NR	2	20WP	G15_057	FROM->TO	G14-057T 345.00 - SUNNYSIDE 345KV CKT 1	717	789	0.11685	111.5338	NELSON 230/24.0KV TRANSFORMER CKT 1
FDNS	00NR	2	16WP	G15_057	FROM->TO	G14-057T 345.00 - SUNNYSIDE 345KV CKT 1	717	789	0.11709	111.5291	GEN562952 1-G15057_3 0.6500
FDNS	00NR	2	20WP	G15_057	FROM->TO	G14-057T 345.00 - SUNNYSIDE 345KV CKT 1	717	789	0.1169	111.5289	8WNEWMADRID 500.00 - DELL 500 500KV CKT 1
FDNS	00NR	2	20WP	G15_057	FROM->TO	G14-057T 345.00 - SUNNYSIDE 345KV CKT 1	717	789	0.11685	111.5241	ST FRANCIS 345/161KV TRANSFORMER CKT 1
FDNS	00NR	2	20WP	G15_057	FROM->TO	G14-057T 345.00 - SUNNYSIDE 345KV CKT 1	717	789	0.11685	111.5229	P12:138:AEPW:MOHAWK4:T.NO--4
FDNS	00NR	2	20WP	G15_057	FROM->TO	G14-057T 345.00 - SUNNYSIDE 345KV CKT 1	717	789	0.11751	111.521	CORNVILLE - NORGE ROAD 138KV CKT 1
FDNS	00NR	2	20WP	G15_057	FROM->TO	G14-057T 345.00 - SUNNYSIDE 345KV CKT 1	717	789	0.11677	111.5172	LAYFLD8 500.00 (LAYFLD AUTO) 500/230/13.8KV TRANSFORMER CKT 1
FDNS	00NR	2	20WP	G15_057	FROM->TO	G14-057T 345.00 - SUNNYSIDE 345KV CKT 1	717	789	0.11669	111.5029	P12:138:AEPW-SWPA:LONEOAK4:BRKNBW4
FDNS	00NR	2	16WP	G15_057	FROM->TO	G14-057T 345.00 - SUNNYSIDE 345KV CKT 1	717	789	0.11709	111.4986	GEN562710 1-G15_022_3 0.5500
FDNS	00NR	2	20WP	G15_057	FROM->TO	G14-057T 345.00 - SUNNYSIDE 345KV CKT 1	717	789	0.11688	111.4903	7JASPER 345.00 - MORGAN 345KV CKT 1
FDNS	00NR	2	16WP	G15_057	FROM->TO	G14-057T 345.00 - SUNNYSIDE 345KV CKT 1	717	789	0.11709	111.4703	GEN620315 1-BIG STONE GEN

SOLUTION	GROUP	SCENARIO	SEASON	SOURCE	DIRECTION	MONITORED ELEMENT	RATEA (MVA)	RATEB(MVA)	TDF	TC%LOADING (% MVA)	CONTINGENCY
FDNS	00NR	2	20WP	G15_057	FROM->TO	G14-057T 345.00 - SUNNYSIDE 345KV CKT 1	717	789	0.11698	111.4562	P12:138:OKGE:3TERM20
FDNS	00NR	2	20WP	G15_057	FROM->TO	G14-057T 345.00 - SUNNYSIDE 345KV CKT 1	717	789	0.05789	111.4559	GRACEMONT - LAWTON EASTSIDE 345KV CKT 1
FDNSLock	00NR	2	16WP	G15_057	FROM->TO	G14-057T 345.00 - SUNNYSIDE 345KV CKT 1	717	789	0.11709	111.4052	GEN600004 2-PRAIRIE ISLAND G2
FDNSLock	00NR	2	16WP	G15_057	FROM->TO	G14-057T 345.00 - SUNNYSIDE 345KV CKT 1	717	789	0.11709	111.4025	GEN600003 1-PRAIRIE ISLAND G1
FDNS	00NR	2	16WP	G15_057	FROM->TO	G14-057T 345.00 - SUNNYSIDE 345KV CKT 1	717	789	0.11955	111.4012	CHISHOLM7 345.00 - GRACEMONT 345KV CKT 1
FDNS	00NR	2	16WP	G15_057	FROM->TO	G14-057T 345.00 - SUNNYSIDE 345KV CKT 1	717	789	0.11709	111.4	GEN600006 1-AS KING
FDNS	00NR	2	16WP	G15_057	FROM->TO	G14-057T 345.00 - SUNNYSIDE 345KV CKT 1	717	789	0.11709	111.4	GEN636641 1-LOUISA UNIT 1
FDNS	00NR	2	16WP	G15_057	FROM->TO	G14-057T 345.00 - SUNNYSIDE 345KV CKT 1	717	789	0.11718	111.3775	P12:138:WFEC:MSL09
FDNS	00NR	2	16WP	G15_057	FROM->TO	G14-057T 345.00 - SUNNYSIDE 345KV CKT 1	717	789	0.11709	111.3644	GEN511851 1-COMANCHE #1
FDNS	00NR	2	16WP	G15_057	FROM->TO	G14-057T 345.00 - SUNNYSIDE 345KV CKT 1	717	789	0.11709	111.2692	GEN600005 1-MONTICELLO
FDNS	00NR	2	16WP	G15_057	FROM->TO	G14-057T 345.00 - SUNNYSIDE 345KV CKT 1	717	789	0.11709	111.2563	GEN562754 1-G15031_5 0.6900
FDNS	00NR	2	16WP	G15_057	FROM->TO	G14-057T 345.00 - SUNNYSIDE 345KV CKT 1	717	789	0.11812	111.219	P12:230:AEPW-SPS:SWEETWT6:WHEELER 6
FDNS	00NR	2	16WP	G15_057	FROM->TO	G14-057T 345.00 - SUNNYSIDE 345KV CKT 1	717	789	0.11812	111.218	STATELINE INTERCHANGE - STLN-DEMARC6 230KV CKT 1
FDNS	00NR	2	16WP	G15_057	FROM->TO	G14-057T 345.00 - SUNNYSIDE 345KV CKT 1	717	789	0.11812	111.2168	STLN-DEMARC6 - SWEETWATER 230KV CKT 1
FDNS	00NR	2	16WP	G15_057	FROM->TO	G14-057T 345.00 - SUNNYSIDE 345KV CKT 1	717	789	0.11803	111.2158	P12:138:AEPW-OGE:CORNVIL4:CIMARON4
FDNS	00NR	2	16WP	G15_057	FROM->TO	G14-057T 345.00 - SUNNYSIDE 345KV CKT 1	717	789	0.11709	111.2103	GEN635213 3-NEAL UNIT 3
FDNS	00NR	2	16WP	G15_057	FROM->TO	G14-057T 345.00 - SUNNYSIDE 345KV CKT 1	717	789	0.11709	111.2	GEN629074 1-ARNOLD LOWSIDE OF GSU XFMR
FDNS	00NR	2	16WP	G15_057	FROM->TO	G14-057T 345.00 - SUNNYSIDE 345KV CKT 1	717	789	0.11709	111.1975	GEN562023 1-G11_020_3 0.6900
FDNS	00NR	2	16WP	G15_057	FROM->TO	G14-057T 345.00 - SUNNYSIDE 345KV CKT 1	717	789	0.11709	111.1975	GEN562026 1-G11_019_3 0.6900
FDNS	00NR	2	16WP	G15_057	FROM->TO	G14-057T 345.00 - SUNNYSIDE 345KV CKT 1	717	789	0.11709	111.1975	GEN562756 1-G15031_7 0.6900
FDNS	00NR	2	16WP	G15_057	FROM->TO	G14-057T 345.00 - SUNNYSIDE 345KV CKT 1	717	789	0.11709	111.1543	BIG STONE 230/24.0KV TRANSFORMER CKT 1
FDNS	00NR	2	16WP	G15_057	FROM->TO	G14-057T 345.00 - SUNNYSIDE 345KV CKT 1	717	789	0.11709	111.1481	GEN562556 1-G14_046_3 0.3420
FDNS	00NR	2	16WP	G15_057	FROM->TO	G14-057T 345.00 - SUNNYSIDE 345KV CKT 1	717	789	0.11709	111.0641	GEN563142 1-G15079_3 0.5500
FDNS	00NR	2	16WP	G15_057	FROM->TO	G14-057T 345.00 - SUNNYSIDE 345KV CKT 1	717	789	0.11709	111.0641	GEN563151 1-G15080_2 0.5500
FDNS	00NR	2	20WP	G15_057	FROM->TO	G14-057T 345.00 - SUNNYSIDE 345KV CKT 1	717	789	0.11685	111.0351	803-OKLAUNION
FDNS	00NR	2	16WP	G15_057	FROM->TO	G14-057T 345.00 - SUNNYSIDE 345KV CKT 1	717	789	0.11709	111.0276	GEN523971 1-HARRINGTON GEN #1 24 KV
FDNS	00NR	2	16WP	G15_057	FROM->TO	G14-057T 345.00 - SUNNYSIDE 345KV CKT 1	717	789	0.11709	111.0275	GEN523972 1-HARRINGTON GEN #2 24 KV
FDNS	00NR	2	16WP	G15_057	FROM->TO	G14-057T 345.00 - SUNNYSIDE 345KV CKT 1	717	789	0.11709	111.0275	GEN523973 1-HARRINGTON GEN #3 24 KV
FDNS	00NR	2	16WP	G15_057	FROM->TO	G14-057T 345.00 - SUNNYSIDE 345KV CKT 1	717	789	0.11709	110.9615	GEN600000 1-SHERBURNECNTY G1
FDNS	00NR	2	16WP	G15_057	FROM->TO	G14-057T 345.00 - SUNNYSIDE 345KV CKT 1	717	789	0.11675	110.9204	NORTHWEST TEXARKANA - VALLIANT 345KV CKT 1
FDNS	00NR	2	16WP	G15_057	FROM->TO	G14-057T 345.00 - SUNNYSIDE 345KV CKT 1	717	789	0.11675	110.9204	NORTHWEST TEXARKANA - VALLIANT 345KV CKT 1
FDNS	00NR	2	16WP	G15_057	FROM->TO	G14-057T 345.00 - SUNNYSIDE 345KV CKT 1	717	789	0.11709	110.8828	GEN600001 2-SHERBURNE CNTY G2
FDNS	00NR	2	16WP	G15_057	FROM->TO	G14-057T 345.00 - SUNNYSIDE 345KV CKT 1	717	789	0.11962	110.8617	P12:230:AEPW:ELKCITY6:SWEETWT6
FDNS	00NR	2	16WP	G15_057	FROM->TO	G14-057T 345.00 - SUNNYSIDE 345KV CKT 1	717	789	0.11709	110.8539	GEN563042 1-G15068_3 0.6900
FDNS	00NR	2	16WP	G15_057	FROM->TO	G14-057T 345.00 - SUNNYSIDE 345KV CKT 1	717	789	0.11709	110.8476	GEN511848 1-SOUTHWESTERN STATION #3
FDNS	00NR	2	16WP	G15_057	FROM->TO	G14-057T 345.00 - SUNNYSIDE 345KV CKT 1	717	789	0.11709	110.8364	GEN527901 1-HOBBS PLANT #1 (CT)
FDNS	00NR	2	16WP	G15_057	FROM->TO	G14-057T 345.00 - SUNNYSIDE 345KV CKT 1	717	789	0.11709	110.8364	GEN527902 1-HOBBS PLANT #2 (CT)
FDNS	00NR	2	20WP	G15_057	FROM->TO	G14-057T 345.00 - SUNNYSIDE 345KV CKT 1	717	789	0.11522	110.81	P12:138:OKGE:3TERM39
FDNS	00NR	2	16WP	G15_057	FROM->TO	G14-057T 345.00 - SUNNYSIDE 345KV CKT 1	717	789	0.11709	110.7558	GEN629075 1-OTTUMWA GENERATOR FOR OTTUMWA UNIT NO 1
FDNS	00NR	2	16WP	G15_057	FROM->TO	G14-057T 345.00 - SUNNYSIDE 345KV CKT 1	717	789	0.11709	110.6383	SHERBURNE CO 345/24.0KV TRANSFORMER CKT 1
FDNS	00NR	2	20WP	G15_057	FROM->TO	G14-057T 345.00 - SUNNYSIDE 345KV CKT 1	717	789	0.11676	110.6101	NORTHWEST TEXARKANA - WELSH 345KV CKT 1
FDNS	00NR	2	16WP	G15_057	FROM->TO	G14-057T 345.00 - SUNNYSIDE 345KV CKT 1	717	789	0.11709	110.61	GEN635214 4-NEAL UNIT 4
FDNS	00NR	2	16WP	G15_057	FROM->TO	G14-057T 345.00 - SUNNYSIDE 345KV CKT 1	717	789	0.11709	110.5521	GEN563043 1-G15068_4 0.6900
FDNS	00NR	2	20WP	G15_057	FROM->TO	G14-057T 345.00 - SUNNYSIDE 345KV CKT 1	717	789	0.11685	110.549	P12:069:OKGE:3TERM42
FDNS	00NR	2	16WP	G15_057	FROM->TO	G14-057T 345.00 - SUNNYSIDE 345KV CKT 1	717	789	0.11709	110.5485	GEN563273 2-G15093_4 0.6900
FDNS	00NR	2	20WP	G15_057	FROM->TO	G14-057T 345.00 - SUNNYSIDE 345KV CKT 1	717	789	0.11809	110.5478	P12:138:WFEC:MSL14
FDNS	00NR	2	20WP	G15_057	FROM->TO	G14-057T 345.00 - SUNNYSIDE 345KV CKT 1	717	789	0.11685	110.5385	BURLINGTON NO1 + NO 2 + NO 3 161/20.0KV TRANSFORMER CKT 1
FDNS	00NR	2	20WP	G15_057	FROM->TO	G14-057T 345.00 - SUNNYSIDE 345KV CKT 1	717	789	0.11734	110.536	P12:138:OKGE:3TERM21
FDNS	00NR	2	20WP	G15_057	FROM->TO	G14-057T 345.00 - SUNNYSIDE 345KV CKT 1	717	789	0.11683	110.5303	P12:138:WFEC:MSL11
FDNS	00NR	2	20WP	G15_057	FROM->TO	G14-057T 345.00 - SUNNYSIDE 345KV CKT 1	717	789	0.11683	110.5303	P12:138:WFEC-AEPW:PHAROAH4:LONEOAK4
FDNS	00NR	2	16WP	G15_057	FROM->TO	G14-057T 345.00 - SUNNYSIDE 345KV CKT 1	717	789	0.11709	110.5301	GEN526333 1-JONES GEN #3 21 KV
FDNS	00NR	2	16WP	G15_057	FROM->TO	G14-057T 345.00 - SUNNYSIDE 345KV CKT 1	717	789	0.11709	110.5301	GEN526334 1-JONES_4 116.500
FDNS	00NR	2	16WP	G15_057	FROM->TO	G14-057T 345.00 - SUNNYSIDE 345KV CKT 1	717	789	0.11812	110.513	CHISHOLM6 230.00 - SWEETWATER 230KV CKT 1
FDNS	00NR	2	20WP	G15_057	FROM->TO	G14-057T 345.00 - SUNNYSIDE 345KV CKT 1	717	789	0.11714	110.4954	P12:138:WFEC:MSL08
FDNS	00NR	2	20WP	G15_057	FROM->TO	G14-057T 345.00 - SUNNYSIDE 345KV CKT 1	717	789	0.11685	110.4869	INDEPENDENCE 500/26.0KV TRANSFORMER CKT 1
FDNS	00NR	2	16WP	G15_057	FROM->TO	G14-057T 345.00 - SUNNYSIDE 345KV CKT 1	717	789	0.11709	110.4775	GEN525844 1-ELK_1 118.000
FDNS	00NR	2	16WP	G15_057	FROM->TO	G14-057T 345.00 - SUNNYSIDE 345KV CKT 1	717	789	0.11709	110.4721	GEN525845 1-ELK_2 1 138.00
FDNS	00NR	2	20WP	G15_057	FROM->TO	G14-057T 345.00 - SUNNYSIDE 345KV CKT 1	717	789	0.11685	110.4606	P12:230:UMZB:# 112 #: NU IN SD. NU-RCDC & DRY CREEK XFMR
FDNS	00NR	2	16WP	G15_057	FROM->TO	G14-057T 345.00 - SUNNYSIDE 345KV CKT 1	717	789	0.11709	110.4577	GEN600002 3-SHERBURNE CNTY G3
FDNS	00NR	2	20WP	G15_057	FROM->TO	G14-057T 345.00 - SUNNYSIDE 345KV CKT 1	717	789	0.1169	110.4558	ALTUS JUNCTION - RUSSELL 138KV CKT 1
FDNS	00NR	2	20WP	G15_057	FROM->TO	G14-057T 345.00 - SUNNYSIDE 345KV CKT 1	717	789	0.11698	110.4489	CANADIAN RIVER - MCALESTER SOUTH 138KV CKT 1
FDNS	00NR	2	20WP	G15_057	FROM->TO	G14-057T 345.00 - SUNNYSIDE 345KV CKT 1	717	789	0.11698	110.4471	CANADIAN RIVER () 345/138/13.8KV TRANSFORMER CKT 1
FDNS	00NR	2	20WP	G15_057	FROM->TO	G14-057T 345.00 - SUNNYSIDE 345KV CKT 1	717	789	0.11703	110.4101	P12:138:AEPW:112GORE4:SNYDER-4
FDNS	00NR	2	16WP	G15_057	FROM->TO	G14-057T 345.00 - SUNNYSIDE 345KV CKT 1	717	789	0.11709	110.4	GEN344225 1-1CAL G1 25.000
FDNS	00NR	2	16WP	G15_057	FROM->TO	G14-057T 345.00 - SUNNYSIDE 345KV CKT 1	717	789	0.11709	110.3722	GEN563202 1-G15085_3 0.5500
FDNS	00NR	2	16WP	G15_057	FROM->TO	G14-057T 345.00 - SUNNYSIDE 345KV CKT 1	717	789	0.11709	110.3389	GEN525562 1-TOLK GEN #2 24 KV
FDNS	00NR	2	16WP	G15_057	FROM->TO	G14-057T 345.00 - SUNNYSIDE 345KV CKT 1	717	789	0.11709	110.2932	GEN527166 1-MUSTANG_6 118.000
FDNS	00NR	2	16WP	G15_057	FROM->TO	G14-057T 345.00 - SUNNYSIDE 345KV CKT 1	717	789	0.11664	110.2331	LYDIA - WELSH 345KV CKT 1
FDNS	00NR	2	16WP	G15_057	FROM->TO	G14-057T 345.00 - SUNNYSIDE 345KV CKT 1	717	789	0.11664	110.2331	LYDIA - WELSH 345KV CKT 1
FDNS	00NR	2	16WP	G15_057	FROM->TO	G14-057T 345.00 - SUNNYSIDE 345KV CKT 1	717	789	0.11654	110.2125	JOHNSON COUNTY (JOHNCO) 345/138/13.8KV TRANSFORMER CKT 1
FDNS	00NR	2	20WP	G15_057	FROM->TO	G14-057T 345.00 - SUNNYSIDE 345KV CKT 1	717	789	0.11685	110.2097	4SIOUX 1 138.00 138/18.0KV TRANSFORMER CKT 1
FDNS	00NR	2	16WP	G15_057	FROM->TO	G14-057T 345.00 - SUNNYSIDE 345KV CKT 1	717	789	0.11709	110.2069	GEN635023 3-WALTER SCOTT UNIT 3
FDNS	00NR	2	16WP	G15_057	FROM->TO	G14-057T 345.00 - SUNNYSIDE 345KV CKT 1	717	789	0.11709	110.1372	GEN562590 1-G14_057_3 0.6900
FDNS	00NR	2	16WP	G15_057	FROM->TO	G14-057T 345.00 - SUNNYSIDE 345KV CKT 1	717	789	0.11709	110.1203	GEN562762 1-G15033_3 0.6900
FDNS	00NR	2	16WP	G15_057	FROM->TO	G14-057T 345.00 - SUNNYSIDE 345KV CKT 1	717	789	0.11709	110.1103	GEN562655 1-G14_074_3 0.6900
FDNS	00NR	2	20WP	G15_057	FROM->TO	G14-057T 345.00 - SUNNYSIDE 345KV CKT 1	717	789	0.11676	110.0798	P12:138:WFEC-AEPW:GOLDENSW4:CRAIGJT4
FDNS	00NR	2	20WP	G15_057	FROM->TO	G14-057T 345.00 - SUNNYSIDE 345KV CKT 1	717	789	0.11613	110.0749	ARKANSAS NUCLEAR ONE - FT SMITH 500KV CKT 1
FDNS	00NR	2	20WP	G15_057	FROM->TO	G14-057T 345.00 - SUNNYSIDE 345KV CKT 1	717	789	0.11685	110.0725	CLAY BOSWELL 230/20.9KV TRANSFORMER CKT 1
FDNS	00NR	2	20WP	G15_057	FROM->TO	G14-057T 345.00 - SUNNYSIDE 345KV CKT 1	717	789	0.11695	110.0622	P12:138:WFEC:MSL16

SOLUTION	GROUP	SCENARIO	SEASON	SOURCE	DIRECTION	MONITORED ELEMENT	RATEA (MVA)	RATEB(MVA)	TDF	TC%LOADING (% MVA)	CONTINGENCY
FDNS	00NR	2	16WP	G15_057	FROM->TO	G14-057T 345.00 - SUNNYSIDE 345KV CKT 1	717	789	0.11709	110.0447	GEN562685 1-G15_013_3 0.3550
FDNS	00NR	2	16WP	G15_057	FROM->TO	G14-057T 345.00 - SUNNYSIDE 345KV CKT 1	717	789	0.11709	110.0271	GEN525561 1-TOLK GEN #1 24 KV
FDNS	00NR	2	20WP	G15_057	FROM->TO	G14-057T 345.00 - SUNNYSIDE 345KV CKT 1	717	789	0.11685	110.0031	P12:138:WFEC:MSL07
FDNS	00NR	2	20WP	G15_057	FROM->TO	G14-057T 345.00 - SUNNYSIDE 345KV CKT 1	717	789	0.11685	110.0031	P12:138:WFEC-AEPW:HUGOPP4:ATOKA--4
FDNS	00NR	2	20WP	G15_057	FROM->TO	G14-057T 345.00 - SUNNYSIDE 345KV CKT 1	717	789	0.11679	109.9818	P12:138:AEPW-SWPA:LONEOAK4:TUPELO4
FDNS	00NR	2	20WP	G15_057	FROM->TO	G14-057T 345.00 - SUNNYSIDE 345KV CKT 1	717	789	0.11679	109.9818	P12:138:WFEC:MSL06
FDNS	00NR	2	20WP	G15_057	FROM->TO	G14-057T 345.00 - SUNNYSIDE 345KV CKT 1	717	789	0.11863	109.9188	CLARKSVILLE - MUSKOGEE 345KV CKT 1
FDNS	00NR	2	16WP	G15_057	FROM->TO	G14-057T 345.00 - SUNNYSIDE 345KV CKT 1	717	789	0.11709	109.9037	GEN563272 1-G15093_3 0.6900
FDNS	00NR	2	16WP	G15_057	FROM->TO	G14-057T 345.00 - SUNNYSIDE 345KV CKT 1	717	789	0.11709	109.9029	GEN527903 1-HOBBS PLANT #3 (ST)
FDNS	00NR	2	20WP	G15_057	FROM->TO	G14-057T 345.00 - SUNNYSIDE 345KV CKT 1	717	789	0.11636	109.883	P12:138:OKGE:3TERM40
FDNS	00NR	2	20WP	G15_057	FROM->TO	G14-057T 345.00 - SUNNYSIDE 345KV CKT 1	717	789	0.11743	109.7869	GRAPEVINE INTERCHANGE - STATELINE INTERCHANGE 230KV CKT 1
FDNS	00NR	2	16WP	G15_057	FROM->TO	G14-057T 345.00 - SUNNYSIDE 345KV CKT 1	717	789	0.11709	109.784	GEN635024 4-WALTER SCOTT UNIT 4
FDNS	00NR	2	20WP	G15_057	FROM->TO	G14-057T 345.00 - SUNNYSIDE 345KV CKT 1	717	789	0.1169	109.726	P12:138:AEPW:SHAM4WT:CHILD4WT
FDNS	00NR	2	20WP	G15_057	FROM->TO	G14-057T 345.00 - SUNNYSIDE 345KV CKT 1	717	789	0.11698	109.6934	P12:138:WFEC:MSL15
FDNS	00NR	2	20WP	G15_057	FROM->TO	G14-057T 345.00 - SUNNYSIDE 345KV CKT 1	717	789	0.11739	109.6263	GRAPEVINE INTERCHANGE - NICHOLS STATION 230KV CKT 1
FDNS	00NR	2	20WP	G15_057	FROM->TO	G14-057T 345.00 - SUNNYSIDE 345KV CKT 1	717	789	0.11685	109.4111	BIG STONE 230/24.0KV TRANSFORMER CKT 1
FDNS	00NR	2	20WP	G15_057	FROM->TO	G14-057T 345.00 - SUNNYSIDE 345KV CKT 1	717	789	0.11692	109.3862	P12:138:WFEC:MSL09
FDNS	00NR	2	20WP	G15_057	FROM->TO	G14-057T 345.00 - SUNNYSIDE 345KV CKT 1	717	789	0.1178	109.3646	P12:138:AEPW-OGE:CORNVIL4:CIMARON4
FDNS	00NR	2	20WP	G15_057	FROM->TO	G14-057T 345.00 - SUNNYSIDE 345KV CKT 1	717	789	0.11652	109.316	NORTHWEST TEXARKANA - VALLIANT 345KV CKT 1
FDNS	00NR	2	20WP	G15_057	FROM->TO	G14-057T 345.00 - SUNNYSIDE 345KV CKT 1	717	789	0.11787	109.1361	P12:230:AEPW-SPS:SWEETWT6:WHEELER 6
FDNS	00NR	2	16WP	G15_057	FROM->TO	G14-057T 345.00 - SUNNYSIDE 345KV CKT 1	717	789	0.11644	109.1144	LYDIA - VALLIANT 345KV CKT 1
FDNS	00NR	2	16WP	G15_057	FROM->TO	G14-057T 345.00 - SUNNYSIDE 345KV CKT 1	717	789	0.11644	109.1144	LYDIA - VALLIANT 345KV CKT 1
FDNS	00NR	2	20WP	G15_057	FROM->TO	G14-057T 345.00 - SUNNYSIDE 345KV CKT 1	717	789	0.1164	108.9522	LYDIA - WELSH 345KV CKT 1
FDNS	00NR	2	20WP	G15_057	FROM->TO	G14-057T 345.00 - SUNNYSIDE 345KV CKT 1	717	789	0.11685	108.9029	SHERBURNE CO 345/24.0KV TRANSFORMER CKT 1
FDNS	00NR	2	20WP	G15_057	FROM->TO	G14-057T 345.00 - SUNNYSIDE 345KV CKT 1	717	789	0.11936	108.8988	P12:230:AEPW:ELKCITY6:SWEETWT6
FDNS	00NR	2	16WP	G15_057	FROM->TO	G14-057T 345.00 - SUNNYSIDE 345KV CKT 1	717	789	0.11709	108.129	EASTDC - ERCOT EQUIVALENCE 345KV CKT 1
FDNS	00NR	2	20WP	G15_057	FROM->TO	G14-057T 345.00 - SUNNYSIDE 345KV CKT 1	717	789	0.11621	107.8976	LYDIA - VALLIANT 345KV CKT 1
FDNS	00NR	2	16WP	G15_057	FROM->TO	G14-057T 345.00 - SUNNYSIDE 345KV CKT 1	717	789	0.10007	107.1829	JOHNSON COUNTY - PITTSBURG 345KV CKT 1
FDNS	00NR	2	16WP	G15_057	FROM->TO	G14-057T 345.00 - SUNNYSIDE 345KV CKT 1	717	789	0.10007	107.1829	JOHNSON COUNTY - PITTSBURG 345KV CKT 1
FDNS	00NR	2	16WP	G15_057	FROM->TO	G14-057T 345.00 - SUNNYSIDE 345KV CKT 1	717	789	0.11709	106.7015	GEN563263 1-G15092_4 0.6900
FDNS	00NR	2	16WP	G15_057	FROM->TO	G14-057T 345.00 - SUNNYSIDE 345KV CKT 1	717	789	0.11318	106.2395	HUGO - VALLIANT 345KV CKT 1
FDNS	00NR	2	16WP	G15_057	FROM->TO	G14-057T 345.00 - SUNNYSIDE 345KV CKT 1	717	789	0.11318	106.2395	HUGO - VALLIANT 345KV CKT 1
FDNS	00NR	2	17SP	G15_057	FROM->TO	G14-057T 345.00 - SUNNYSIDE 345KV CKT 1	717	789	0.35022	105.974	CIMARRON - MINCO 345KV CKT 1
FDNS	00NR	2	20WP	G15_057	FROM->TO	G14-057T 345.00 - SUNNYSIDE 345KV CKT 1	717	789	0.09988	105.821	JOHNSON COUNTY - PITTSBURG 345KV CKT 1
FDNS	00NR	2	20WP	G15_057	FROM->TO	G14-057T 345.00 - SUNNYSIDE 345KV CKT 1	717	789	0.11296	105.3214	HUGO - VALLIANT 345KV CKT 1
FDNS	00NR	2	16WP	G15_057	FROM->TO	G14-057T 345.00 - SUNNYSIDE 345KV CKT 1	717	789	0.12212	105.1927	G14-074T 345.00 - TUCO INTERCHANGE 345KV CKT 1
FDNS	00NR	2	16WP	G15_057	FROM->TO	G14-057T 345.00 - SUNNYSIDE 345KV CKT 1	717	789	0.11709	105.0358	GEN563262 1-G15092_3 0.6900
FDNS	00NR	2	16WP	G15_057	FROM->TO	G14-057T 345.00 - SUNNYSIDE 345KV CKT 1	717	789	0.09667	101.5797	JOHNSON COUNTY - SUNNYSIDE 345KV CKT 1
FDNS	00NR	3	16WP	G15_057	FROM->TO	G14-057T 345.00 - SUNNYSIDE 345KV CKT 1	717	789	0.35665	134.7924	CIMARRON - MINCO 345KV CKT 1
FDNS	00NR	3	20WP	G15_057	FROM->TO	G14-057T 345.00 - SUNNYSIDE 345KV CKT 1	717	789	0.35628	133.9604	CIMARRON - MINCO 345KV CKT 1
FDNS	00NR	3	16WP	G15_057	FROM->TO	G14-057T 345.00 - SUNNYSIDE 345KV CKT 1	717	789	0.11437	124.8136	PITTSBURG - SEMINOLE 345KV CKT 1
FDNS	00NR	3	16WP	G15_057	FROM->TO	G14-057T 345.00 - SUNNYSIDE 345KV CKT 1	717	789	0.11437	124.8136	PITTSBURG - SEMINOLE 345KV CKT 1
FDNS	00NR	3	16WP	G15_057	FROM->TO	G14-057T 345.00 - SUNNYSIDE 345KV CKT 1	717	789	0.02961	124.109	GRACEMONT - MINCO 345KV CKT 1
FDNS	00NR	3	16WP	G15_057	FROM->TO	G14-057T 345.00 - SUNNYSIDE 345KV CKT 1	717	789	0.117	124.008	BASE CASE
FDNS	00NR	3	20WP	G15_057	FROM->TO	G14-057T 345.00 - SUNNYSIDE 345KV CKT 1	717	789	0.11411	122.341	PITTSBURG - SEMINOLE 345KV CKT 1
FDNS	00NR	3	20WP	G15_057	FROM->TO	G14-057T 345.00 - SUNNYSIDE 345KV CKT 1	717	789	0.11411	122.341	PITTSBURG - SEMINOLE 345KV CKT 1
FDNS	00NR	3	20WP	G15_057	FROM->TO	G14-057T 345.00 - SUNNYSIDE 345KV CKT 1	717	789	0.11683	122.1742	BASE CASE
FDNS	00NR	3	16WP	G15_057	FROM->TO	G14-057T 345.00 - SUNNYSIDE 345KV CKT 1	717	789	0.13385	122.0119	CIMARRON - DRAPER LAKE 345KV CKT 1
FDNS	00NR	3	20WP	G15_057	FROM->TO	G14-057T 345.00 - SUNNYSIDE 345KV CKT 1	717	789	0.13368	120.1547	CIMARRON - DRAPER LAKE 345KV CKT 1
FDNS	00NR	3	16WP	G15_057	FROM->TO	G14-057T 345.00 - SUNNYSIDE 345KV CKT 1	717	789	0.12612	118.6121	P12:138:WFEC:MSL03
FDNS	00NR	3	16WP	G15_057	FROM->TO	G14-057T 345.00 - SUNNYSIDE 345KV CKT 1	717	789	0.11641	118.0416	PITTSBURG - VALLIANT 345KV CKT 1
FDNS	00NR	3	16WP	G15_057	FROM->TO	G14-057T 345.00 - SUNNYSIDE 345KV CKT 1	717	789	0.11641	118.0416	PITTSBURG - VALLIANT 345KV CKT 1
FDNS	00NR	3	16WP	G15_057	FROM->TO	G14-057T 345.00 - SUNNYSIDE 345KV CKT 1	717	789	0.117	117.8049	GEN509403 1-PIRKEY GENERATION
FDNS	00NR	3	16WP	G15_057	FROM->TO	G14-057T 345.00 - SUNNYSIDE 345KV CKT 1	717	789	0.117	117.7043	GEN509416 1-TURK GENERATION
FDNS	00NR	3	16WP	G15_057	FROM->TO	G14-057T 345.00 - SUNNYSIDE 345KV CKT 1	717	789	0.11868	117.4601	CLEVELAND - G15066_T 345.00 345KV CKT 1
FDNS	00NR	3	16WP	G15_057	FROM->TO	G14-057T 345.00 - SUNNYSIDE 345KV CKT 1	717	789	0.11868	117.173	G15066_T 345.00 - SOONER 345KV CKT 1
FDNS	00NR	3	20WP	G15_057	FROM->TO	G14-057T 345.00 - SUNNYSIDE 345KV CKT 1	717	789	0.12598	116.9133	P12:138:WFEC:MSL03
FDNS	00NR	3	16WP	G15_057	FROM->TO	G14-057T 345.00 - SUNNYSIDE 345KV CKT 1	717	789	0.117	116.8021	GEN501801 1-DOLET HILLS UNIT1
FDNS	00NR	3	16WP	G15_057	FROM->TO	G14-057T 345.00 - SUNNYSIDE 345KV CKT 1	717	789	0.11864	116.6882	BORDER 7345.00 - WOODWARD DISTRICT EHV 345KV CKT 1
FDNS	00NR	3	16WP	G15_057	FROM->TO	G14-057T 345.00 - SUNNYSIDE 345KV CKT 1	717	789	0.117	116.404	GEN509406 1-WELSH #3
FDNS	00NR	3	16WP	G15_057	FROM->TO	G14-057T 345.00 - SUNNYSIDE 345KV CKT 1	717	789	0.117	116.4039	GEN509404 1-WELSH #1
FDNS	00NR	3	20WP	G15_057	FROM->TO	G14-057T 345.00 - SUNNYSIDE 345KV CKT 1	717	789	0.11683	116.0922	GEN509403 1-PIRKEY GENERATION
FDNS	00NR	3	20WP	G15_057	FROM->TO	G14-057T 345.00 - SUNNYSIDE 345KV CKT 1	717	789	0.11683	116.0108	GEN509416 1-TURK GENERATION
FDNS	00NR	3	20WP	G15_057	FROM->TO	G14-057T 345.00 - SUNNYSIDE 345KV CKT 1	717	789	0.11846	115.8354	CLEVELAND - G15066_T 345.00 345KV CKT 1
FDNS	00NR	3	20WP	G15_057	FROM->TO	G14-057T 345.00 - SUNNYSIDE 345KV CKT 1	717	789	0.11624	115.7845	PITTSBURG - VALLIANT 345KV CKT 1
FDNS	00NR	3	20WP	G15_057	FROM->TO	G14-057T 345.00 - SUNNYSIDE 345KV CKT 1	717	789	0.11624	115.7845	PITTSBURG - VALLIANT 345KV CKT 1
FDNS	00NR	3	16WP	G15_057	FROM->TO	G14-057T 345.00 - SUNNYSIDE 345KV CKT 1	717	789	0.11963	115.7786	CORN TAP - NAPLESTP 138.00 138KV CKT 1
FDNS	00NR	3	16WP	G15_057	FROM->TO	G14-057T 345.00 - SUNNYSIDE 345KV CKT 1	717	789	0.11864	115.7529	BORDER 7345.00 - TUCO_2 345.00 345KV CKT 1
FDNS	00NR	3	16WP	G15_057	FROM->TO	G14-057T 345.00 - SUNNYSIDE 345KV CKT 1	717	789	0.11963	115.6961	NAPLESTP 138.00 - PAYNE 138.00 138KV CKT 1
FDNS	00NR	3	16WP	G15_057	FROM->TO	G14-057T 345.00 - SUNNYSIDE 345KV CKT 1	717	789	0.11651	115.6773	7SAREPTA% 345.00 - LONGWOOD 345KV CKT 1
FDNS	00NR	3	16WP	G15_057	FROM->TO	G14-057T 345.00 - SUNNYSIDE 345KV CKT 1	717	789	0.11651	115.6773	7SAREPTA% 345.00 - LONGWOOD 345KV CKT 1
FDNS	00NR	3	20WP	G15_057	FROM->TO	G14-057T 345.00 - SUNNYSIDE 345KV CKT 1	717	789	0.11845	115.5781	BORDER 7345.00 - WOODWARD DISTRICT EHV 345KV CKT 1
FDNS	00NR	3	20WP	G15_057	FROM->TO	G14-057T 345.00 - SUNNYSIDE 345KV CKT 1	717	789	0.11846	115.5413	G15066_T 345.00 - SOONER 345KV CKT 1
FDNS	00NR	3	16WP	G15_057	FROM->TO	G14-057T 345.00 - SUNNYSIDE 345KV CKT 1	717	789	0.11681	115.5202	DOLET HILLS - SOUTHWEST SHREVEPORT 345KV CKT 1
FDNS	00NR	3	16WP	G15_057	FROM->TO	G14-057T 345.00 - SUNNYSIDE 345KV CKT 1	717	789	0.11681	115.5202	DOLET HILLS - SOUTHWEST SHREVEPORT 345KV CKT 1
FDNS	00NR	3	16WP	G15_057	FROM->TO	G14-057T 345.00 - SUNNYSIDE 345KV CKT 1	717	789	0.11819	115.5069	CLEVELAND - TULSA NORTH 345KV CKT 1
FDNS	00NR	3	16WP	G15_057	FROM->TO	G14-057T 345.00 - SUNNYSIDE 345KV CKT 1	717	789	0.11819	115.5069	CLEVELAND - TULSA NORTH 345KV CKT 1
FDNSLock	00NR	3	16WP	G15_057	FROM->TO	G14-057T 345.00 - SUNNYSIDE 345KV CKT 1	717	789	0.117	115.4962	GEN336821 1-GRAND GULF UNIT
FDNS	00NR	3	16WP	G15_057	FROM->TO	G14-057T 345.00 - SUNNYSIDE 345KV CKT 1	717	789	0.12846	115.448	ARCADIA - NORTHWEST 345KV CKT 1

SOLUTION	GROUP	SCENARIO	SEASON	SOURCE	DIRECTION	MONITORED ELEMENT	RATEA (MVA)	RATEB(MVA)	TDF	TC%LOADING (% MVA)	CONTINGENCY
FDNSLock	00NR	3	16WP	G15_057	FROM->TO	G14-057T 345.00 - SUNNYSIDE 345KV CKT 1	717	789	0.117	115.4165	GEN336153 1-WATERFORD UNIT#3
FDNS	00NR	3	16WP	G15_057	FROM->TO	G14-057T 345.00 - SUNNYSIDE 345KV CKT 1	717	789	0.11909	115.4159	COMANCHE - LOCO 138KV CKT 1
FDNS	00NR	3	16WP	G15_057	FROM->TO	G14-057T 345.00 - SUNNYSIDE 345KV CKT 1	717	789	0.11947	115.353	ANADARKO - POCASSETT 138KV CKT 1
FDNS	00NR	3	16WP	G15_057	FROM->TO	G14-057T 345.00 - SUNNYSIDE 345KV CKT 1	717	789	0.1107	115.3212	CANADIAN RIVER - MUSKOGEE 345KV CKT 1
FDNS	00NR	3	20WP	G15_057	FROM->TO	G14-057T 345.00 - SUNNYSIDE 345KV CKT 1	717	789	0.11683	115.253	GEN501801 1-DOLET HILLS UNIT1
FDNS	00NR	3	16WP	G15_057	FROM->TO	G14-057T 345.00 - SUNNYSIDE 345KV CKT 1	717	789	0.11761	115.2138	ARCADIA - SEMINOLE 345KV CKT 1
FDNS	00NR	3	16WP	G15_057	FROM->TO	G14-057T 345.00 - SUNNYSIDE 345KV CKT 1	717	789	0.11947	115.2125	POCASSETT - TUTTLE 138KV CKT 1
FDNSLock	00NR	3	16WP	G15_057	FROM->TO	G14-057T 345.00 - SUNNYSIDE 345KV CKT 1	717	789	0.117	115.1249	GEN335831 1-RIVERBEND UNIT#1
FDNS	00NR	3	16WP	G15_057	FROM->TO	G14-057T 345.00 - SUNNYSIDE 345KV CKT 1	717	789	0.117	115.1143	GRAND GULF 500/22.0KV TRANSFORMER CKT 1
FDNS	00NR	3	16WP	G15_057	FROM->TO	G14-057T 345.00 - SUNNYSIDE 345KV CKT 1	717	789	0.117	115.0932	GEN515577 1-ARBWND11 0.6900
FDNS	00NR	3	16WP	G15_057	FROM->TO	G14-057T 345.00 - SUNNYSIDE 345KV CKT 1	717	789	0.11672	115.0342	7SAREPTA% 345.00 - ELDORADO EHV 345KV CKT 1
FDNS	00NR	3	16WP	G15_057	FROM->TO	G14-057T 345.00 - SUNNYSIDE 345KV CKT 1	717	789	0.11672	115.034	3TR3AR8EL7EL
FDNS	00NR	3	16WP	G15_057	FROM->TO	G14-057T 345.00 - SUNNYSIDE 345KV CKT 1	717	789	0.117	115.0265	GEN509409 1-WILKES #3
FDNS	00NR	3	16WP	G15_057	FROM->TO	G14-057T 345.00 - SUNNYSIDE 345KV CKT 1	717	789	0.11672	115.0233	ELDORADO EHV 500/345KV TRANSFORMER CKT 1
FDNS	00NR	3	16WP	G15_057	FROM->TO	G14-057T 345.00 - SUNNYSIDE 345KV CKT 1	717	789	0.11833	114.9623	P12:138:AEPW:DUNCAN-4:L.E.S.-4
FDNS	00NR	3	16WP	G15_057	FROM->TO	G14-057T 345.00 - SUNNYSIDE 345KV CKT 1	717	789	0.1194	114.9274	HEALDTON - LOCO 138KV CKT 1
FDNS	00NR	3	16WP	G15_057	FROM->TO	G14-057T 345.00 - SUNNYSIDE 345KV CKT 1	717	789	0.11947	114.8486	BRIDGECR 138.00 - TUTTLE 138KV CKT 1
FDNS	00NR	3	16WP	G15_057	FROM->TO	G14-057T 345.00 - SUNNYSIDE 345KV CKT 1	717	789	0.11833	114.8474	COMANCHE TAP - OMPA-DUNCAN 840 138KV CKT 1
FDNS	00NR	3	16WP	G15_057	FROM->TO	G14-057T 345.00 - SUNNYSIDE 345KV CKT 1	717	789	0.1194	114.7868	HEALDTON - RINGLING 138KV CKT 1
FDNS	00NR	3	16WP	G15_057	FROM->TO	G14-057T 345.00 - SUNNYSIDE 345KV CKT 1	717	789	0.117	114.7634	GEN501813 1-RODEMACHER UNIT 3
FDNSLock	00NR	3	16WP	G15_057	FROM->TO	G14-057T 345.00 - SUNNYSIDE 345KV CKT 1	717	789	0.117	114.7487	GEN300006 1-NEW MADRID UNIT 1
FDNSLock	00NR	3	16WP	G15_057	FROM->TO	G14-057T 345.00 - SUNNYSIDE 345KV CKT 1	717	789	0.117	114.7366	GEN300007 1-NEW MADRID UNIT 2
FDNS	00NR	3	20WP	G15_057	FROM->TO	G14-057T 345.00 - SUNNYSIDE 345KV CKT 1	717	789	0.11683	114.7319	GEN509406 1-WELSH #3
FDNS	00NR	3	20WP	G15_057	FROM->TO	G14-057T 345.00 - SUNNYSIDE 345KV CKT 1	717	789	0.11683	114.7317	GEN509404 1-WELSH #1
FDNS	00NR	3	16WP	G15_057	FROM->TO	G14-057T 345.00 - SUNNYSIDE 345KV CKT 1	717	789	0.11716	114.7109	LACYGNE - WAVERLY7 345.00 345KV CKT 1
FDNS	00NR	3	20WP	G15_057	FROM->TO	G14-057T 345.00 - SUNNYSIDE 345KV CKT 1	717	789	0.11845	114.6379	BORDER 7345.00 - TUCO_2 345.00 345KV CKT 1
FDNS	00NR	3	16WP	G15_057	FROM->TO	G14-057T 345.00 - SUNNYSIDE 345KV CKT 1	717	789	0.117	114.6254	GEN520947 1-HUGO1
FDNS	00NR	3	16WP	G15_057	FROM->TO	G14-057T 345.00 - SUNNYSIDE 345KV CKT 1	717	789	0.1194	114.6225	RINGLING - SOUTH WILSON 138KV CKT 1
FDNS	00NR	3	16WP	G15_057	FROM->TO	G14-057T 345.00 - SUNNYSIDE 345KV CKT 1	717	789	0.11716	114.5992	WAVERLY7 345.00 - WOLF CREEK 345KV CKT 1
FDNS	00NR	3	16WP	G15_057	FROM->TO	G14-057T 345.00 - SUNNYSIDE 345KV CKT 1	717	789	0.11947	114.5952	P12:138:WFEC:MSL01
FDNS	00NR	3	16WP	G15_057	FROM->TO	G14-057T 345.00 - SUNNYSIDE 345KV CKT 1	717	789	0.11947	114.5868	BRIDGECR 138.00 - SUNSHINE CANYON 138KV CKT 1
FDNS	00NR	3	16WP	G15_057	FROM->TO	G14-057T 345.00 - SUNNYSIDE 345KV CKT 1	717	789	0.11833	114.5765	DUNCAN - OMPA-DUNCAN 840 138KV CKT 1
FDNS	00NR	3	16WP	G15_057	FROM->TO	G14-057T 345.00 - SUNNYSIDE 345KV CKT 1	717	789	0.11833	114.5765	DUNCAN - OMPA-DUNCAN 840 138KV CKT 1
FDNS	00NR	3	16WP	G15_057	FROM->TO	G14-057T 345.00 - SUNNYSIDE 345KV CKT 1	717	789	0.117	114.566	GEN335206 1-NELSON UNIT 6
FDNS	00NR	3	16WP	G15_057	FROM->TO	G14-057T 345.00 - SUNNYSIDE 345KV CKT 1	717	789	0.117	114.4229	DOLET HILLS 345/24.0KV TRANSFORMER CKT 1
FDNS	00NR	3	16WP	G15_057	FROM->TO	G14-057T 345.00 - SUNNYSIDE 345KV CKT 1	717	789	0.11701	114.4188	P12:138:AEPW:SHERID4:112GORE4
FDNS	00NR	3	16WP	G15_057	FROM->TO	G14-057T 345.00 - SUNNYSIDE 345KV CKT 1	717	789	0.11575	114.4101	PARK LANE - SEMINOLE 138KV CKT 1
FDNS	00NR	3	16WP	G15_057	FROM->TO	G14-057T 345.00 - SUNNYSIDE 345KV CKT 1	717	789	0.117	114.3829	GEN501812 1-RODEMACHER UNIT 2
FDNS	00NR	3	16WP	G15_057	FROM->TO	G14-057T 345.00 - SUNNYSIDE 345KV CKT 1	717	789	0.117	114.3533	GEN590011 2-ERCOT EQUIVALENCE
FDNS	00NR	3	16WP	G15_057	FROM->TO	G14-057T 345.00 - SUNNYSIDE 345KV CKT 1	717	789	0.1194	114.3473	MARIETTA - SOUTH WILSON 138KV CKT 1
FDNS	00NR	3	16WP	G15_057	FROM->TO	G14-057T 345.00 - SUNNYSIDE 345KV CKT 1	717	789	0.117	114.3456	GEN515564 1-ORIGIN11 0.6900
FDNS	00NR	3	16WP	G15_057	FROM->TO	G14-057T 345.00 - SUNNYSIDE 345KV CKT 1	717	789	0.117	114.3456	GEN515565 1-ORIGIN21 0.6900
FDNS	00NR	3	16WP	G15_057	FROM->TO	G14-057T 345.00 - SUNNYSIDE 345KV CKT 1	717	789	0.11805	114.3132	REDBUD - RIVERSIDE STATION 345KV CKT 1
FDNS	00NR	3	16WP	G15_057	FROM->TO	G14-057T 345.00 - SUNNYSIDE 345KV CKT 1	717	789	0.11805	114.3132	REDBUD - RIVERSIDE STATION 345KV CKT 1
FDNS	00NR	3	16WP	G15_057	FROM->TO	G14-057T 345.00 - SUNNYSIDE 345KV CKT 1	717	789	0.11842	114.2953	Hitchland Interchange - WALKTAP7 345.00 345KV CKT 1
FDNS	00NR	3	16WP	G15_057	FROM->TO	G14-057T 345.00 - SUNNYSIDE 345KV CKT 1	717	789	0.11842	114.2953	Hitchland Interchange - WALKTAP7 345.00 345KV CKT 1
FDNS	00NR	3	16WP	G15_057	FROM->TO	G14-057T 345.00 - SUNNYSIDE 345KV CKT 1	717	789	0.11882	114.2952	MATHWSN7 345.00 - NORTHWEST 345KV CKT 1
FDNS	00NR	3	16WP	G15_057	FROM->TO	G14-057T 345.00 - SUNNYSIDE 345KV CKT 1	717	789	0.11842	114.2807	P12:345:SPS:J07.1.FINN.HITCH
FDNS	00NR	3	16WP	G15_057	FROM->TO	G14-057T 345.00 - SUNNYSIDE 345KV CKT 1	717	789	0.117	114.2786	GEN590010 1-ERCOT EQUIVALENCE
FDNS	00NR	3	16WP	G15_057	FROM->TO	G14-057T 345.00 - SUNNYSIDE 345KV CKT 1	717	789	0.1194	114.2632	P12:138:WFEC:MSL17
FDNS	00NR	3	16WP	G15_057	FROM->TO	G14-057T 345.00 - SUNNYSIDE 345KV CKT 1	717	789	0.11746	114.2419	CANEYRV7 345.00 - NEOSHO 345KV CKT 1
FDNS	00NR	3	16WP	G15_057	FROM->TO	G14-057T 345.00 - SUNNYSIDE 345KV CKT 1	717	789	0.11898	114.1859	CIVIT - PAOLI 138KV CKT 1
FDNS	00NR	3	16WP	G15_057	FROM->TO	G14-057T 345.00 - SUNNYSIDE 345KV CKT 1	717	789	0.117	114.1631	P12:69:AEPW:L.E.S.-2:LAW WC2
FDNS	00NR	3	16WP	G15_057	FROM->TO	G14-057T 345.00 - SUNNYSIDE 345KV CKT 1	717	789	0.117	114.1449	P12:161:AEPW:DYESS 5:HYLAND 5
FDNS	00NR	3	16WP	G15_057	FROM->TO	G14-057T 345.00 - SUNNYSIDE 345KV CKT 1	717	789	0.117	114.1444	GEN509408 1-WILKES #2
FDNS	00NR	3	20WP	G15_057	FROM->TO	G14-057T 345.00 - SUNNYSIDE 345KV CKT 1	717	789	0.11948	114.1414	CORN TAP - NAPLESTP 138.00 138KV CKT 1
FDNS	00NR	3	16WP	G15_057	FROM->TO	G14-057T 345.00 - SUNNYSIDE 345KV CKT 1	717	789	0.117	114.1339	GEN506754 1-LEBROCK STEAM 1
FDNS	00NR	3	16WP	G15_057	FROM->TO	G14-057T 345.00 - SUNNYSIDE 345KV CKT 1	717	789	0.11688	114.1161	ELDORADO EHV - MOUNT OLIVE 500KV CKT 1
FDNS	00NR	3	16WP	G15_057	FROM->TO	G14-057T 345.00 - SUNNYSIDE 345KV CKT 1	717	789	0.11746	114.1082	CANEYRV7 345.00 - LATHAMS7 345.00 345KV CKT 1
FDNS	00NR	3	16WP	G15_057	FROM->TO	G14-057T 345.00 - SUNNYSIDE 345KV CKT 1	717	789	0.11784	114.1072	P12:138:WFEC:MSL02
FDNS	00NR	3	16WP	G15_057	FROM->TO	G14-057T 345.00 - SUNNYSIDE 345KV CKT 1	717	789	0.11751	114.1066	PAOLI - PAYNE 138.00 138KV CKT 1
FDNS	00NR	3	16WP	G15_057	FROM->TO	G14-057T 345.00 - SUNNYSIDE 345KV CKT 1	717	789	0.117	114.1045	GEN334440 1-SABINE UNIT 4
FDNS	00NR	3	20WP	G15_057	FROM->TO	G14-057T 345.00 - SUNNYSIDE 345KV CKT 1	717	789	0.11635	114.0897	7SAREPTA% 345.00 - LONGWOOD 345KV CKT 1
FDNS	00NR	3	20WP	G15_057	FROM->TO	G14-057T 345.00 - SUNNYSIDE 345KV CKT 1	717	789	0.11635	114.0897	7SAREPTA% 345.00 - LONGWOOD 345KV CKT 1
FDNS	00NR	3	16WP	G15_057	FROM->TO	G14-057T 345.00 - SUNNYSIDE 345KV CKT 1	717	789	0.11701	114.0744	P12:138:AEPW:112GORE4:L.E.S.-4
FDNS	00NR	3	20WP	G15_057	FROM->TO	G14-057T 345.00 - SUNNYSIDE 345KV CKT 1	717	789	0.11948	114.0575	NAPLESTP 138.00 - PAYNE 138.00 138KV CKT 1
FDNS	00NR	3	16WP	G15_057	FROM->TO	G14-057T 345.00 - SUNNYSIDE 345KV CKT 1	717	789	0.11898	114.0436	CIVIT - STRATFORD 138KV CKT 1
FDNS	00NR	3	16WP	G15_057	FROM->TO	G14-057T 345.00 - SUNNYSIDE 345KV CKT 1	717	789	0.11676	114.0419	ELDORADO EHV - SHERIDAN EHV 500KV CKT 1
FDNS	00NR	3	16WP	G15_057	FROM->TO	G14-057T 345.00 - SUNNYSIDE 345KV CKT 1	717	789	0.11765	114.0191	ANADARKO - GEORGIA 138KV CKT 1
FDNS	00NR	3	16WP	G15_057	FROM->TO	G14-057T 345.00 - SUNNYSIDE 345KV CKT 1	717	789	0.11752	114.0156	TUPELO - TUPELO TAP 138KV CKT 1
FDNS	00NR	3	16WP	G15_057	FROM->TO	G14-057T 345.00 - SUNNYSIDE 345KV CKT 1	717	789	0.11695	113.9972	WEBRE - WELLS 500KV CKT 1
FDNS	00NR	3	16WP	G15_057	FROM->TO	G14-057T 345.00 - SUNNYSIDE 345KV CKT 1	717	789	0.11977	113.9928	P12:138:AEPW-OGE:CORNVIL4:MAUD 4
FDNS	00NR	3	16WP	G15_057	FROM->TO	G14-057T 345.00 - SUNNYSIDE 345KV CKT 1	717	789	0.117	113.9809	GEN503909 1-FULTONU1 1 16.000
FDNS	00NR	3	16WP	G15_057	FROM->TO	G14-057T 345.00 - SUNNYSIDE 345KV CKT 1	717	789	0.117	113.9741	FRONTIER - GRIMES 345KV CKT 1
FDNS	00NR	3	20WP	G15_057	FROM->TO	G14-057T 345.00 - SUNNYSIDE 345KV CKT 1	717	789	0.11683	113.9718	GEN336821 1-GRAND GULF UNIT
FDNS	00NR	3	16WP	G15_057	FROM->TO	G14-057T 345.00 - SUNNYSIDE 345KV CKT 1	717	789	0.11765	113.9406	FLETCHER - GEORGIA 138KV CKT 1
FDNS	00NR	3	16WP	G15_057	FROM->TO	G14-057T 345.00 - SUNNYSIDE 345KV CKT 1	717	789	0.11767	113.9351	LAWTON EASTSIDE (LES 5) 345/138/13.8KV TRANSFORMER CKT 2
FDNS	00NR	3	16WP	G15_057	FROM->TO	G14-057T 345.00 - SUNNYSIDE 345KV CKT 1	717	789	0.11767	113.9351	LAWTON EASTSIDE (LES 5) 345/138/13.8KV TRANSFORMER CKT 2
FDNS	00NR	3	16WP	G15_057	FROM->TO	G14-057T 345.00 - SUNNYSIDE 345KV CKT 1	717	789	0.11898	113.9244	OIL CENTER - STRATFORD 138KV CKT 1

SOLUTION	GROUP	SCENARIO	SEASON	SOURCE	DIRECTION	MONITORED ELEMENT	RATEA (MVA)	RATEB(MVA)	TDF	TC%LOADING (% MVA)	CONTINGENCY
FDNS	00NR	3	16WP	G15_057	FROM->TO	G14-057T 345.00 - SUNNYSIDE 345KV CKT 1	717	789	0.11977	113.9189	BLANCHARD - CORNVILLE 138KV CKT 1
FDNS	00NR	3	16WP	G15_057	FROM->TO	G14-057T 345.00 - SUNNYSIDE 345KV CKT 1	717	789	0.11771	113.9064	EMPIRE - FLETCHER 138KV CKT 1
FDNS	00NR	3	16WP	G15_057	FROM->TO	G14-057T 345.00 - SUNNYSIDE 345KV CKT 1	717	789	0.11746	113.8979	LATHAMS7 345.00 - ROSE HILL 345KV CKT 1
FDNS	00NR	3	20WP	G15_057	FROM->TO	G14-057T 345.00 - SUNNYSIDE 345KV CKT 1	717	789	0.11683	113.8628	GEN336153 1-WATERFORD UNIT#3
FDNS	00NR	3	16WP	G15_057	FROM->TO	G14-057T 345.00 - SUNNYSIDE 345KV CKT 1	717	789	0.117	113.855	GEN509393 S1-ARSENAL HILL GENS #4 (STALL)
FDNS	00NR	3	20WP	G15_057	FROM->TO	G14-057T 345.00 - SUNNYSIDE 345KV CKT 1	717	789	0.118	113.8408	CLEVELAND - TULSA NORTH 345KV CKT 1
FDNS	00NR	3	20WP	G15_057	FROM->TO	G14-057T 345.00 - SUNNYSIDE 345KV CKT 1	717	789	0.118	113.8408	CLEVELAND - TULSA NORTH 345KV CKT 1
FDNS	00NR	3	16WP	G15_057	FROM->TO	G14-057T 345.00 - SUNNYSIDE 345KV CKT 1	717	789	0.117	113.8313	GEN509392 G2-ARSENAL HILL GENS #3 (STALL)
FDNS	00NR	3	16WP	G15_057	FROM->TO	G14-057T 345.00 - SUNNYSIDE 345KV CKT 1	717	789	0.117	113.8312	GEN509391 G1-ARSENAL HILL GENS #2 (STALL)
FDNS	00NR	3	16WP	G15_057	FROM->TO	G14-057T 345.00 - SUNNYSIDE 345KV CKT 1	717	789	0.11771	113.8286	COMANCHE - EMPIRE 138KV CKT 1
FDNS	00NR	3	16WP	G15_057	FROM->TO	G14-057T 345.00 - SUNNYSIDE 345KV CKT 1	717	789	0.117	113.8154	GEN336252 1-NINEMILE POINT UNIT#5
FDNS	00NR	3	20WP	G15_057	FROM->TO	G14-057T 345.00 - SUNNYSIDE 345KV CKT 1	717	789	0.12833	113.8144	ARCADIA - NORTHWEST 345KV CKT 1
FDNS	00NR	3	16WP	G15_057	FROM->TO	G14-057T 345.00 - SUNNYSIDE 345KV CKT 1	717	789	0.117	113.7996	GEN334071 1-LEWIS CREEK 2
FDNS	00NR	3	16WP	G15_057	FROM->TO	G14-057T 345.00 - SUNNYSIDE 345KV CKT 1	717	789	0.117	113.7967	DELL 500 - ESSEX UNIT 2 500KV CKT Z1
FDNS	00NR	3	16WP	G15_057	FROM->TO	G14-057T 345.00 - SUNNYSIDE 345KV CKT 1	717	789	0.117	113.7907	GEN334070 1-LEWIS CREEK 1
FDNS	00NR	3	16WP	G15_057	FROM->TO	G14-057T 345.00 - SUNNYSIDE 345KV CKT 1	717	789	0.117	113.7883	GEN335204 1-NELSON UNIT 4
FDNS	00NR	3	16WP	G15_057	FROM->TO	G14-057T 345.00 - SUNNYSIDE 345KV CKT 1	717	789	0.11769	113.7671	THISTLE7 345.00 - WOODWARD DISTRICT EHV 345KV CKT 1
FDNS	00NR	3	16WP	G15_057	FROM->TO	G14-057T 345.00 - SUNNYSIDE 345KV CKT 1	717	789	0.11769	113.7671	THISTLE7 345.00 - WOODWARD DISTRICT EHV 345KV CKT 1
FDNS	00NR	3	16WP	G15_057	FROM->TO	G14-057T 345.00 - SUNNYSIDE 345KV CKT 1	717	789	0.11769	113.7671	THISTLE7 345.00 - WOODWARD DISTRICT EHV 345KV CKT 2
FDNS	00NR	3	16WP	G15_057	FROM->TO	G14-057T 345.00 - SUNNYSIDE 345KV CKT 1	717	789	0.11769	113.7671	THISTLE7 345.00 - WOODWARD DISTRICT EHV 345KV CKT 2
FDNS	00NR	3	20WP	G15_057	FROM->TO	G14-057T 345.00 - SUNNYSIDE 345KV CKT 1	717	789	0.11932	113.7671	ANADARKO - POCASSETT 138KV CKT 1
FDNS	00NR	3	16WP	G15_057	FROM->TO	G14-057T 345.00 - SUNNYSIDE 345KV CKT 1	717	789	0.11734	113.7574	DUNCAN (DUNCAN) 138/69/13.8KV TRANSFORMER CKT 1
FDNS	00NR	3	16WP	G15_057	FROM->TO	G14-057T 345.00 - SUNNYSIDE 345KV CKT 1	717	789	0.11734	113.7574	DUNCAN (DUNCAN) 138/69/13.8KV TRANSFORMER CKT 1
FDNS	00NR	3	16WP	G15_057	FROM->TO	G14-057T 345.00 - SUNNYSIDE 345KV CKT 1	717	789	0.117	113.7542	GEN334441 1-SABINE UNIT 5
FDNS	00NR	3	16WP	G15_057	FROM->TO	G14-057T 345.00 - SUNNYSIDE 345KV CKT 1	717	789	0.11898	113.7458	LATTA JCT - OIL CENTER 138KV CKT 1
FDNS	00NR	3	20WP	G15_057	FROM->TO	G14-057T 345.00 - SUNNYSIDE 345KV CKT 1	717	789	0.11893	113.7368	COMANCHE - LOCO 138KV CKT 1
FDNS	00NR	3	16WP	G15_057	FROM->TO	G14-057T 345.00 - SUNNYSIDE 345KV CKT 1	717	789	0.11699	113.7361	P12:161:AEPW-SWPA:BEAVER5:EROGERS5
FDNS	00NR	3	16WP	G15_057	FROM->TO	G14-057T 345.00 - SUNNYSIDE 345KV CKT 1	717	789	0.11977	113.7205	BLANCHARD - MAUD 138KV CKT 1
FDNS	00NR	3	16WP	G15_057	FROM->TO	G14-057T 345.00 - SUNNYSIDE 345KV CKT 1	717	789	0.11701	113.7186	P12:138:AEPW:CATOOSA4:T.S.E.-4
FDNS	00NR	3	16WP	G15_057	FROM->TO	G14-057T 345.00 - SUNNYSIDE 345KV CKT 1	717	789	0.117	113.709	GEN337653 1-WHITE BLUFF UNIT #2
FDNS	00NR	3	16WP	G15_057	FROM->TO	G14-057T 345.00 - SUNNYSIDE 345KV CKT 1	717	789	0.11686	113.708	6LAYFLD 230.00 - CARROLL 230KV CKT 1
FDNS	00NR	3	16WP	G15_057	FROM->TO	G14-057T 345.00 - SUNNYSIDE 345KV CKT 1	717	789	0.117	113.7044	GEN334030 1-FRONTIER UNIT 1
FDNS	00NR	3	16WP	G15_057	FROM->TO	G14-057T 345.00 - SUNNYSIDE 345KV CKT 1	717	789	0.117	113.7028	GEN334031 1-FRONTIER UNIT 2
FDNS	00NR	3	16WP	G15_057	FROM->TO	G14-057T 345.00 - SUNNYSIDE 345KV CKT 1	717	789	0.117	113.7	GEN300003 1-THOMAS HILL UNIT 3
FDNS	00NR	3	16WP	G15_057	FROM->TO	G14-057T 345.00 - SUNNYSIDE 345KV CKT 1	717	789	0.117	113.6896	GEN506752 1-LEBROCK GAS 1
FDNS	00NR	3	16WP	G15_057	FROM->TO	G14-057T 345.00 - SUNNYSIDE 345KV CKT 1	717	789	0.117	113.6894	GEN506753 1-LEBROCK GAS 2
FDNS	00NR	3	20WP	G15_057	FROM->TO	G14-057T 345.00 - SUNNYSIDE 345KV CKT 1	717	789	0.11665	113.6795	DOLET HILLS - SOUTHWEST SHREVEPORT 345KV CKT 1
FDNS	00NR	3	20WP	G15_057	FROM->TO	G14-057T 345.00 - SUNNYSIDE 345KV CKT 1	717	789	0.11665	113.6795	DOLET HILLS - SOUTHWEST SHREVEPORT 345KV CKT 1
FDNS	00NR	3	16WP	G15_057	FROM->TO	G14-057T 345.00 - SUNNYSIDE 345KV CKT 1	717	789	0.1168	113.6747	FULTON 115 - HOPE 115KV CKT 1
FDNS	00NR	3	16WP	G15_057	FROM->TO	G14-057T 345.00 - SUNNYSIDE 345KV CKT 1	717	789	0.1168	113.6747	FULTON 115 - HOPE 115KV CKT 1
FDNS	00NR	3	16WP	G15_057	FROM->TO	G14-057T 345.00 - SUNNYSIDE 345KV CKT 1	717	789	0.117	113.6675	8DANIEL8 500.00 - MCKNIGHT 500KV CKT 1
FDNS	00NR	3	16WP	G15_057	FROM->TO	G14-057T 345.00 - SUNNYSIDE 345KV CKT 1	717	789	0.117	113.6672	P12:161:AEPW:DYESS5:ELMSPRNG:TONTITN5
FDNS	00NR	3	16WP	G15_057	FROM->TO	G14-057T 345.00 - SUNNYSIDE 345KV CKT 1	717	789	0.117	113.637	GEN515226 1-MUSKOGEE 6G
FDNS	00NR	3	16WP	G15_057	FROM->TO	G14-057T 345.00 - SUNNYSIDE 345KV CKT 1	717	789	0.117	113.6367	GEN501811 1-RODEMACHER UNIT 1
FDNS	00NR	3	16WP	G15_057	FROM->TO	G14-057T 345.00 - SUNNYSIDE 345KV CKT 1	717	789	0.117	113.6288	GEN300015 1-1SGPDEL 18.000
FDNS	00NR	3	16WP	G15_057	FROM->TO	G14-057T 345.00 - SUNNYSIDE 345KV CKT 1	717	789	0.11761	113.6265	P12:138:AEPW:CORNVIL4:S.W.S.-4
FDNS	00NR	3	16WP	G15_057	FROM->TO	G14-057T 345.00 - SUNNYSIDE 345KV CKT 1	717	789	0.117	113.624	GEN337911 1-ARKANSAS NUCLEAR ONE UNIT #2
FDNS	00NR	3	16WP	G15_057	FROM->TO	G14-057T 345.00 - SUNNYSIDE 345KV CKT 1	717	789	0.117	113.6187	GEN336251 1-NINEMILE POINT UNIT#4
FDNS	00NR	3	16WP	G15_057	FROM->TO	G14-057T 345.00 - SUNNYSIDE 345KV CKT 1	717	789	0.117	113.618	GEN337652 1-WHITE BLUFF UNIT #1
FDNS	00NR	3	16WP	G15_057	FROM->TO	G14-057T 345.00 - SUNNYSIDE 345KV CKT 1	717	789	0.117	113.6154	GEN334433 1-SABINE UNIT 3
FDNS	00NR	3	20WP	G15_057	FROM->TO	G14-057T 345.00 - SUNNYSIDE 345KV CKT 1	717	789	0.11932	113.6148	POCASSETT - TUTTLE 138KV CKT 1
FDNS	00NR	3	16WP	G15_057	FROM->TO	G14-057T 345.00 - SUNNYSIDE 345KV CKT 1	717	789	0.117	113.6126	GEN336831 1-BAXTER WILSON SES
FDNS	00NR	3	16WP	G15_057	FROM->TO	G14-057T 345.00 - SUNNYSIDE 345KV CKT 1	717	789	0.11708	113.5975	G15074_T 345.00 - HOYT 345KV CKT 1
FDNS	00NR	3	16WP	G15_057	FROM->TO	G14-057T 345.00 - SUNNYSIDE 345KV CKT 1	717	789	0.11762	113.5963	P12:138:AEPW:CORNVIL4:DUNCAN-4
FDNS	00NR	3	16WP	G15_057	FROM->TO	G14-057T 345.00 - SUNNYSIDE 345KV CKT 1	717	789	0.11734	113.5953	P12:69:WFEC-AEPW:COMANCH2:DUNCAN-2
FDNS	00NR	3	16WP	G15_057	FROM->TO	G14-057T 345.00 - SUNNYSIDE 345KV CKT 1	717	789	0.117	113.5846	GEN562783 1-G15036_4 0.6900
FDNS	00NR	3	16WP	G15_057	FROM->TO	G14-057T 345.00 - SUNNYSIDE 345KV CKT 1	717	789	0.117	113.5846	GEN562784 1-G15036_5 0.6900
FDNS	00NR	3	16WP	G15_057	FROM->TO	G14-057T 345.00 - SUNNYSIDE 345KV CKT 1	717	789	0.11941	113.5764	BAILEY4 138.00 - SUNSHINE CANYON 138KV CKT 1
FDNS	00NR	3	16WP	G15_057	FROM->TO	G14-057T 345.00 - SUNNYSIDE 345KV CKT 1	717	789	0.11794	113.5753	TUTTLE - TUTTLE CONOCO TAP 138KV CKT 1
FDNSLock	00NR	3	16WP	G15_057	FROM->TO	G14-057T 345.00 - SUNNYSIDE 345KV CKT 1	717	789	0.11706	113.5721	G15088_T 345.00 - MOORE 345KV CKT 1
FDNS	00NR	3	16WP	G15_057	FROM->TO	G14-057T 345.00 - SUNNYSIDE 345KV CKT 1	717	789	0.11776	113.5699	CIMARRON - CZECH HALL 138KV CKT 1
FDNS	00NR	3	16WP	G15_057	FROM->TO	G14-057T 345.00 - SUNNYSIDE 345KV CKT 1	717	789	0.11732	113.565	G1524G1525 345.00 - THISTLE7 345.00 345KV CKT 1
FDNS	00NR	3	16WP	G15_057	FROM->TO	G14-057T 345.00 - SUNNYSIDE 345KV CKT 1	717	789	0.11732	113.565	G1524G1525 345.00 - THISTLE7 345.00 345KV CKT 2
FDNS	00NR	3	20WP	G15_057	FROM->TO	G14-057T 345.00 - SUNNYSIDE 345KV CKT 1	717	789	0.11683	113.5641	GEN335831 1-RIVERBEND UNIT#1
FDNS	00NR	3	16WP	G15_057	FROM->TO	G14-057T 345.00 - SUNNYSIDE 345KV CKT 1	717	789	0.11786	113.5595	P12:138:AEPW-OGE:WTH_JCT4:JENSEN4
FDNS	00NR	3	16WP	G15_057	FROM->TO	G14-057T 345.00 - SUNNYSIDE 345KV CKT 1	717	789	0.117	113.5563	GEN505432 1-SIKESTON
FDNS	00NR	3	16WP	G15_057	FROM->TO	G14-057T 345.00 - SUNNYSIDE 345KV CKT 1	717	789	0.117	113.554	P12:161:AEPW:EROGERS5:ECNTRTN5
FDNS	00NR	3	16WP	G15_057	FROM->TO	G14-057T 345.00 - SUNNYSIDE 345KV CKT 1	717	789	0.11762	113.5536	CIMARRON - SARA 138KV CKT 1
FDNS	00NR	3	16WP	G15_057	FROM->TO	G14-057T 345.00 - SUNNYSIDE 345KV CKT 1	717	789	0.117	113.5512	GEN515040 1-SEMINOLE 1G
FDNS	00NR	3	16WP	G15_057	FROM->TO	G14-057T 345.00 - SUNNYSIDE 345KV CKT 1	717	789	0.1169	113.545	LAYFLD8 500.00 - MOUNT OLIVE 500KV CKT 1
FDNS	00NR	3	16WP	G15_057	FROM->TO	G14-057T 345.00 - SUNNYSIDE 345KV CKT 1	717	789	0.1169	113.545	LAYFLD8 500.00 - MOUNT OLIVE 500KV CKT 1
FDNS	00NR	3	16WP	G15_057	FROM->TO	G14-057T 345.00 - SUNNYSIDE 345KV CKT 1	717	789	0.1161	113.5433	ARBWIND4 138.00 - CARTER 138KV CKT 1
FDNS	00NR	3	16WP	G15_057	FROM->TO	G14-057T 345.00 - SUNNYSIDE 345KV CKT 1	717	789	0.117	113.5426	RODEMACHER 230/22.0KV TRANSFORMER CKT 1
FDNS	00NR	3	16WP	G15_057	FROM->TO	G14-057T 345.00 - SUNNYSIDE 345KV CKT 1	717	789	0.11734	113.5415	DUNCAN - TOSCO 69KV CKT 1
FDNS	00NR	3	16WP	G15_057	FROM->TO	G14-057T 345.00 - SUNNYSIDE 345KV CKT 1	717	789	0.117	113.5409	GEN515223 1-MUSKOGEE 4G
FDNS	00NR	3	16WP	G15_057	FROM->TO	G14-057T 345.00 - SUNNYSIDE 345KV CKT 1	717	789	0.117	113.5409	GEN515225 1-MUSKOGEE 5G
FDNS	00NR	3	16WP	G15_057	FROM->TO	G14-057T 345.00 - SUNNYSIDE 345KV CKT 1	717	789	0.11791	113.5371	G14_038T 345.00 - Hitchland Interchange 345KV CKT 1
FDNS	00NR	3	16WP	G15_057	FROM->TO	G14-057T 345.00 - SUNNYSIDE 345KV CKT 1	717	789	0.1175	113.5328	P12:138:AEPW:WTHWF4:CLINTJC4
FDNS	00NR	3	16WP	G15_057	FROM->TO	G14-057T 345.00 - SUNNYSIDE 345KV CKT 1	717	789	0.11692	113.5321	MC NIEL 500/115KV TRANSFORMER CKT 1

SOLUTION	GROUP	SCENARIO	SEASON	SOURCE	DIRECTION	MONITORED ELEMENT	RATEA (MVA)	RATEB(MVA)	TDF	TC%LOADING (% MVA)	CONTINGENCY
FDNS	00NR	3	20WP	G15_057	FROM->TO	G14-057T 345.00 - SUNNYSIDE 345KV CKT 1	717	789	0.11683	113.527	GRAND GULF 500/22.0KV TRANSFORMER CKT 1
FDNS	00NR	3	16WP	G15_057	FROM->TO	G14-057T 345.00 - SUNNYSIDE 345KV CKT 1	717	789	0.11692	113.5264	HOT SPRINGS EHV - MAGNET COVE 500KV CKT 1
FDNS	00NR	3	16WP	G15_057	FROM->TO	G14-057T 345.00 - SUNNYSIDE 345KV CKT 1	717	789	0.11684	113.5229	BISMARK - HOT SPRINGS WEST BUS 115KV CKT 1
FDNS	00NR	3	16WP	G15_057	FROM->TO	G14-057T 345.00 - SUNNYSIDE 345KV CKT 1	717	789	0.117	113.5226	GEN303007 1-1BC2 U2
FDNS	00NR	3	16WP	G15_057	FROM->TO	G14-057T 345.00 - SUNNYSIDE 345KV CKT 1	717	789	0.117	113.5208	WHITE BLUFF 500/26.0KV TRANSFORMER CKT 1
FDNS	00NR	3	16WP	G15_057	FROM->TO	G14-057T 345.00 - SUNNYSIDE 345KV CKT 1	717	789	0.117	113.5177	GEN303006 1-1BC2 U1
FDNS	00NR	3	16WP	G15_057	FROM->TO	G14-057T 345.00 - SUNNYSIDE 345KV CKT 1	717	789	0.11722	113.5176	P12:69:AEPW-OMPA:COMANC-2:OMWALTR2
FDNS	00NR	3	16WP	G15_057	FROM->TO	G14-057T 345.00 - SUNNYSIDE 345KV CKT 1	717	789	0.11604	113.5174	SEMINOLE - VANOSTP4 138.00 138KV CKT 1
FDNS	00NR	3	16WP	G15_057	FROM->TO	G14-057T 345.00 - SUNNYSIDE 345KV CKT 1	717	789	0.11734	113.4974	COMANCHE TAP - TOSCO 69KV CKT 1
FDNS	00NR	3	16WP	G15_057	FROM->TO	G14-057T 345.00 - SUNNYSIDE 345KV CKT 1	717	789	0.11794	113.4956	CIMARRON - TUTTLE CONOCO TAP 138KV CKT 1
FDNS	00NR	3	16WP	G15_057	FROM->TO	G14-057T 345.00 - SUNNYSIDE 345KV CKT 1	717	789	0.117	113.4954	GEN336191 1-LITTLE GYPSY UNIT#3
FDNS	00NR	3	16WP	G15_057	FROM->TO	G14-057T 345.00 - SUNNYSIDE 345KV CKT 1	717	789	0.11852	113.4942	CANADIAN - NOBLE 138KV CKT 1
FDNS	00NR	3	16WP	G15_057	FROM->TO	G14-057T 345.00 - SUNNYSIDE 345KV CKT 1	717	789	0.11776	113.4938	CZECH HALL - XEROX 138KV CKT 1
FDNS	00NR	3	16WP	G15_057	FROM->TO	G14-057T 345.00 - SUNNYSIDE 345KV CKT 1	717	789	0.11776	113.4896	MORGAN - XEROX 138KV CKT 1
FDNS	00NR	3	16WP	G15_057	FROM->TO	G14-057T 345.00 - SUNNYSIDE 345KV CKT 1	717	789	0.11701	113.4871	P12:138:AEPW:N.E.S.-4:CATOOSA4
FDNS	00NR	3	16WP	G15_057	FROM->TO	G14-057T 345.00 - SUNNYSIDE 345KV CKT 1	717	789	0.117	113.4833	GEN337910 1-ARKANSAS NUCLEAR ONE UNIT #1
FDNS	00NR	3	16WP	G15_057	FROM->TO	G14-057T 345.00 - SUNNYSIDE 345KV CKT 1	717	789	0.11719	113.4805	BUCKNER7 345.00 - SPEARVILLE 345KV CKT 1
FDNS	00NR	3	16WP	G15_057	FROM->TO	G14-057T 345.00 - SUNNYSIDE 345KV CKT 1	717	789	0.11719	113.4805	BUCKNER7 345.00 - SPEARVILLE 345KV CKT 1
FDNS	00NR	3	16WP	G15_057	FROM->TO	G14-057T 345.00 - SUNNYSIDE 345KV CKT 1	717	789	0.117	113.4774	GEN300010 1-ST FRANCIS UNIT 1
FDNS	00NR	3	16WP	G15_057	FROM->TO	G14-057T 345.00 - SUNNYSIDE 345KV CKT 1	717	789	0.1175	113.4769	P12:138:AEPW:WTHWF4:WTH_SE4
FDNS	00NR	3	16WP	G15_057	FROM->TO	G14-057T 345.00 - SUNNYSIDE 345KV CKT 1	717	789	0.11898	113.473	LASALLE - LATTA JCT 138KV CKT 1
FDNS	00NR	3	16WP	G15_057	FROM->TO	G14-057T 345.00 - SUNNYSIDE 345KV CKT 1	717	789	0.117	113.4723	NELSON 230/20.0KV TRANSFORMER CKT 1
FDNS	00NR	3	16WP	G15_057	FROM->TO	G14-057T 345.00 - SUNNYSIDE 345KV CKT 1	717	789	0.11684	113.4715	ALPINE AECC - BISMARK 115KV CKT 1
FDNS	00NR	3	16WP	G15_057	FROM->TO	G14-057T 345.00 - SUNNYSIDE 345KV CKT 1	717	789	0.117	113.4706	GEN335614 1-WILLOW GLENN UNIT#4
FDNS	00NR	3	16WP	G15_057	FROM->TO	G14-057T 345.00 - SUNNYSIDE 345KV CKT 1	717	789	0.11776	113.4666	MORGAN - MUSTANG 138KV CKT 1
FDNS	00NR	3	16WP	G15_057	FROM->TO	G14-057T 345.00 - SUNNYSIDE 345KV CKT 1	717	789	0.11857	113.4645	P12:138:OKGE:3TERM27
FDNS	00NR	3	16WP	G15_057	FROM->TO	G14-057T 345.00 - SUNNYSIDE 345KV CKT 1	717	789	0.117	113.4591	GEN303008 1-1BC2 U3
FDNS	00NR	3	16WP	G15_057	FROM->TO	G14-057T 345.00 - SUNNYSIDE 345KV CKT 1	717	789	0.11785	113.4492	FINNEY SWITCHING STATION - HOLCOMB 345KV CKT 1
FDNS	00NR	3	16WP	G15_057	FROM->TO	G14-057T 345.00 - SUNNYSIDE 345KV CKT 1	717	789	0.11785	113.4492	FINNEY SWITCHING STATION - HOLCOMB 345KV CKT 1
FDNS	00NR	3	20WP	G15_057	FROM->TO	G14-057T 345.00 - SUNNYSIDE 345KV CKT 1	717	789	0.11657	113.4437	7SAREPTA% 345.00 - ELDORADO EHV 345KV CKT 1
FDNS	00NR	3	20WP	G15_057	FROM->TO	G14-057T 345.00 - SUNNYSIDE 345KV CKT 1	717	789	0.11657	113.4435	3TR3AR8EL7EL
FDNS	00NR	3	16WP	G15_057	FROM->TO	G14-057T 345.00 - SUNNYSIDE 345KV CKT 1	717	789	0.11734	113.4348	COMANCHE - COMANCHE TAP 69KV CKT 1
FDNS	00NR	3	16WP	G15_057	FROM->TO	G14-057T 345.00 - SUNNYSIDE 345KV CKT 1	717	789	0.11698	113.4347	CYPRESS - HARTBURG 500KV CKT 1
FDNS	00NR	3	20WP	G15_057	FROM->TO	G14-057T 345.00 - SUNNYSIDE 345KV CKT 1	717	789	0.11657	113.4329	ELDORADO EHV 500/345KV TRANSFORMER CKT 1
FDNS	00NR	3	16WP	G15_057	FROM->TO	G14-057T 345.00 - SUNNYSIDE 345KV CKT 1	717	789	0.117	113.4325	GEN336170 1-GULF OXY U4
FDNS	00NR	3	16WP	G15_057	FROM->TO	G14-057T 345.00 - SUNNYSIDE 345KV CKT 1	717	789	0.11684	113.4287	ALPINE AECC - AMITY SS 115KV CKT 1
FDNS	00NR	3	16WP	G15_057	FROM->TO	G14-057T 345.00 - SUNNYSIDE 345KV CKT 1	717	789	0.117	113.4284	GEN300011 1-ST FRANCIS UNIT 2
FDNS	00NR	3	16WP	G15_057	FROM->TO	G14-057T 345.00 - SUNNYSIDE 345KV CKT 1	717	789	0.117	113.4275	GEN336464 1-MICHOUD UNIT #3
FDNS	00NR	3	16WP	G15_057	FROM->TO	G14-057T 345.00 - SUNNYSIDE 345KV CKT 1	717	789	0.11771	113.4253	CHISHOLM6 230.00 - ELK CITY 230KV 230KV CKT 1
FDNS	00NR	3	16WP	G15_057	FROM->TO	G14-057T 345.00 - SUNNYSIDE 345KV CKT 1	717	789	0.11077	113.4235	CANADIAN RIVER - PITTSBURG 345KV CKT 1
FDNS	00NR	3	16WP	G15_057	FROM->TO	G14-057T 345.00 - SUNNYSIDE 345KV CKT 1	717	789	0.11077	113.4235	CANADIAN RIVER - PITTSBURG 345KV CKT 1
FDNS	00NR	3	16WP	G15_057	FROM->TO	G14-057T 345.00 - SUNNYSIDE 345KV CKT 1	717	789	0.117	113.4182	8CAJUN2 500/24.0KV TRANSFORMER CKT 1
FDNS	00NR	3	16WP	G15_057	FROM->TO	G14-057T 345.00 - SUNNYSIDE 345KV CKT 1	717	789	0.11771	113.4176	ELK CITY 230KV (ELKCTY-6) 230/138/13.8KV TRANSFORMER CKT 1
FDNS	00NR	3	16WP	G15_057	FROM->TO	G14-057T 345.00 - SUNNYSIDE 345KV CKT 1	717	789	0.11771	113.4176	ELK CITY 230KV (ELKCTY-6) 230/138/13.8KV TRANSFORMER CKT 1
FDNS	00NR	3	16WP	G15_057	FROM->TO	G14-057T 345.00 - SUNNYSIDE 345KV CKT 1	717	789	0.12084	113.4121	GRACEMONT (BANK 1) 345/138/13.8KV TRANSFORMER CKT 1
FDNS	00NR	3	20WP	G15_057	FROM->TO	G14-057T 345.00 - SUNNYSIDE 345KV CKT 1	717	789	0.11817	113.4112	P12:138:AEPW:DUNCAN-4:L.E.S.-4
FDNS	00NR	3	16WP	G15_057	FROM->TO	G14-057T 345.00 - SUNNYSIDE 345KV CKT 1	717	789	0.11941	113.4106	BAILEY4 138.00 - WESTMOORE 138KV CKT 1
FDNS	00NR	3	20WP	G15_057	FROM->TO	G14-057T 345.00 - SUNNYSIDE 345KV CKT 1	717	789	0.11683	113.409	GEN515577 1-ARBWND11 0.6900
FDNS	00NR	3	16WP	G15_057	FROM->TO	G14-057T 345.00 - SUNNYSIDE 345KV CKT 1	717	789	0.12016	113.4036	DRAPER LAKE - SEMINOLE 345KV CKT 1
FDNS	00NR	3	16WP	G15_057	FROM->TO	G14-057T 345.00 - SUNNYSIDE 345KV CKT 1	717	789	0.12016	113.4036	DRAPER LAKE - SEMINOLE 345KV CKT 2
FDNS	00NR	3	16WP	G15_057	FROM->TO	G14-057T 345.00 - SUNNYSIDE 345KV CKT 1	717	789	0.11852	113.4027	NOBLE - PURCELL4 138.00 138KV CKT 1
FDNS	00NR	3	16WP	G15_057	FROM->TO	G14-057T 345.00 - SUNNYSIDE 345KV CKT 1	717	789	0.11708	113.3955	HOYT - STRANGER CREEK 345KV CKT 1
FDNS	00NR	3	16WP	G15_057	FROM->TO	G14-057T 345.00 - SUNNYSIDE 345KV CKT 1	717	789	0.117	113.3936	7JASPER 345.00 - BLACKBERRY 345KV CKT 1
FDNS	00NR	3	16WP	G15_057	FROM->TO	G14-057T 345.00 - SUNNYSIDE 345KV CKT 1	717	789	0.117	113.393	GEN300016 1-1G1GPDEL 18.000
FDNS	00NR	3	16WP	G15_057	FROM->TO	G14-057T 345.00 - SUNNYSIDE 345KV CKT 1	717	789	0.117	113.3926	P12:138:AEPW:R.S.S.-4:S.HUD.-4
FDNS	00NR	3	16WP	G15_057	FROM->TO	G14-057T 345.00 - SUNNYSIDE 345KV CKT 1	717	789	0.117	113.3866	GEN501910 1-ACADIA UNIT ST1
FDNS	00NR	3	16WP	G15_057	FROM->TO	G14-057T 345.00 - SUNNYSIDE 345KV CKT 1	717	789	0.11713	113.3762	G15095_T 138.00 - ROSE_VALLEY 138.00 138KV CKT 1
FDNS	00NR	3	16WP	G15_057	FROM->TO	G14-057T 345.00 - SUNNYSIDE 345KV CKT 1	717	789	0.117	113.3742	GEN337041 1-GERALD ANDRUS
FDNS	00NR	3	16WP	G15_057	FROM->TO	G14-057T 345.00 - SUNNYSIDE 345KV CKT 1	717	789	0.11762	113.3698	SARA - STHLAKE4 138.00 138KV CKT 1
FDNS	00NR	3	16WP	G15_057	FROM->TO	G14-057T 345.00 - SUNNYSIDE 345KV CKT 1	717	789	0.11708	113.3592	G15074_T 345.00 - JEFFREY ENERGY CENTER 345KV CKT 1
FDNS	00NR	3	16WP	G15_057	FROM->TO	G14-057T 345.00 - SUNNYSIDE 345KV CKT 1	717	789	0.11691	113.3574	ETTA (DUKE HOTSPRINGS) - MC NIEL 500KV CKT 1
FDNS	00NR	3	16WP	G15_057	FROM->TO	G14-057T 345.00 - SUNNYSIDE 345KV CKT 1	717	789	0.117	113.3546	P12:138:AEPW:YARCH-S4:T.S.E.-4
FDNS	00NR	3	16WP	G15_057	FROM->TO	G14-057T 345.00 - SUNNYSIDE 345KV CKT 1	717	789	0.11733	113.3531	WALTERS - WALTERS 69KV CKT 1
FDNS	00NR	3	16WP	G15_057	FROM->TO	G14-057T 345.00 - SUNNYSIDE 345KV CKT 1	717	789	0.1178	113.3511	ANADARKO - SEQUOYAHJ4 138.00 138KV CKT 1
FDNS	00NR	3	16WP	G15_057	FROM->TO	G14-057T 345.00 - SUNNYSIDE 345KV CKT 1	717	789	0.117	113.3484	P12:138:AEPW:BA_71ST4:T.S.E.-4
FDNS	00NR	3	16WP	G15_057	FROM->TO	G14-057T 345.00 - SUNNYSIDE 345KV CKT 1	717	789	0.117	113.3477	P12:69:AEPW:NROGERS2:ECNTRTN2
FDNS	00NR	3	16WP	G15_057	FROM->TO	G14-057T 345.00 - SUNNYSIDE 345KV CKT 1	717	789	0.1178	113.3455	CORN TAP - SEQUOYAHJ4 138.00 138KV CKT 1
FDNS	00NR	3	20WP	G15_057	FROM->TO	G14-057T 345.00 - SUNNYSIDE 345KV CKT 1	717	789	0.11742	113.3441	ARCADIA - SEMINOLE 345KV CKT 1
FDNS	00NR	3	16WP	G15_057	FROM->TO	G14-057T 345.00 - SUNNYSIDE 345KV CKT 1	717	789	0.11762	113.3421	MCCLAIN - STHLAKE4 138.00 138KV CKT 1
FDNS	00NR	3	16WP	G15_057	FROM->TO	G14-057T 345.00 - SUNNYSIDE 345KV CKT 1	717	789	0.117	113.3405	SABINE 230/24.0KV TRANSFORMER CKT 1
FDNS	00NR	3	16WP	G15_057	FROM->TO	G14-057T 345.00 - SUNNYSIDE 345KV CKT 1	717	789	0.117	113.3362	GEN336801 1-BAXTER WILSON UNIT #1
FDNS	00NR	3	16WP	G15_057	FROM->TO	G14-057T 345.00 - SUNNYSIDE 345KV CKT 1	717	789	0.11786	113.3355	WEATHERFORD JCT. - WEATHERFORD SOUTHEAST 138KV CKT 1
FDNS	00NR	3	16WP	G15_057	FROM->TO	G14-057T 345.00 - SUNNYSIDE 345KV CKT 1	717	789	0.11786	113.3355	WEATHERFORD JCT. - WEATHERFORD SOUTHEAST 138KV CKT 1
FDNS	00NR	3	16WP	G15_057	FROM->TO	G14-057T 345.00 - SUNNYSIDE 345KV CKT 1	717	789	0.11716	113.3323	BLACKBERRY - NEOSHO 345KV CKT 1
FDNS	00NR	3	16WP	G15_057	FROM->TO	G14-057T 345.00 - SUNNYSIDE 345KV CKT 1	717	789	0.11722	113.3317	LAWTON RELIFT TAP - OMPA-WALTERS 69KV CKT 1
FDNS	00NR	3	16WP	G15_057	FROM->TO	G14-057T 345.00 - SUNNYSIDE 345KV CKT 1	717	789	0.11703	113.3282	7LUTESVIL 345.00 - 7ST FRANC 345.00 345KV CKT 1
FDNS	00NR	3	16WP	G15_057	FROM->TO	G14-057T 345.00 - SUNNYSIDE 345KV CKT 1	717	789	0.117	113.3247	FRONTIER 345/18.0KV TRANSFORMER CKT 1
FDNS	00NR	3	16WP	G15_057	FROM->TO	G14-057T 345.00 - SUNNYSIDE 345KV CKT 1	717	789	0.11711	113.3235	SWISSVALE - WEST GARDNER 345KV CKT 1
FDNS	00NR	3	16WP	G15_057	FROM->TO	G14-057T 345.00 - SUNNYSIDE 345KV CKT 1	717	789	0.117	113.323	FRONTIER 345/18.0KV TRANSFORMER CKT 1

SOLUTION	GROUP	SCENARIO	SEASON	SOURCE	DIRECTION	MONITORED ELEMENT	RATEA (MVA)	RATEB(MVA)	TDF	TC%LOADING (% MVA)	CONTINGENCY
FDNS	00NR	3	16WP	G15_057	FROM->TO	G14-057T 345.00 - SUNNYSIDE 345KV CKT 1	717	789	0.11684	113.3228	ENOWILT - LONE OAK 138KV CKT 1
FDNS	00NR	3	16WP	G15_057	FROM->TO	G14-057T 345.00 - SUNNYSIDE 345KV CKT 1	717	789	0.11713	113.3201	NOEL_SW 138.00 - ROSE_VALLEY 138.00 138KV CKT 1
FDNS	00NR	3	16WP	G15_057	FROM->TO	G14-057T 345.00 - SUNNYSIDE 345KV CKT 1	717	789	0.11766	113.3193	NORGE ROAD - SOUTHWESTERN STATION 138KV CKT 1
FDNS	00NR	3	16WP	G15_057	FROM->TO	G14-057T 345.00 - SUNNYSIDE 345KV CKT 1	717	789	0.11766	113.3193	NORGE ROAD - SOUTHWESTERN STATION 138KV CKT 1
FDNS	00NR	3	16WP	G15_057	FROM->TO	G14-057T 345.00 - SUNNYSIDE 345KV CKT 1	717	789	0.117	113.3188	GEN512688 2-GRDA1 GSU2 22
FDNS	00NR	3	16WP	G15_057	FROM->TO	G14-057T 345.00 - SUNNYSIDE 345KV CKT 1	717	789	0.11542	113.3185	ARBUCKLE - VANOSTP4 138.00 138KV CKT 1
FDNS	00NR	3	16WP	G15_057	FROM->TO	G14-057T 345.00 - SUNNYSIDE 345KV CKT 1	717	789	0.11898	113.3171	LASALLE - STONEWAL LH138.00 138KV CKT 1
FDNS	00NR	3	16WP	G15_057	FROM->TO	G14-057T 345.00 - SUNNYSIDE 345KV CKT 1	717	789	0.117	113.3165	P12:161:AEPW:CHAMSPR5:FARMING5
FDNS	00NR	3	16WP	G15_057	FROM->TO	G14-057T 345.00 - SUNNYSIDE 345KV CKT 1	717	789	0.11684	113.3139	ENOWILT - SARDIS 138KV CKT 1
FDNS	00NR	3	16WP	G15_057	FROM->TO	G14-057T 345.00 - SUNNYSIDE 345KV CKT 1	717	789	0.11722	113.3124	P12:138:OKGE-AEPW:JENSEN4:REDROCKRD4
FDNS	00NR	3	16WP	G15_057	FROM->TO	G14-057T 345.00 - SUNNYSIDE 345KV CKT 1	717	789	0.11704	113.312	P12:138:AEPW-OGE:SHIDLER4:OSAGE 4
FDNS	00NR	3	16WP	G15_057	FROM->TO	G14-057T 345.00 - SUNNYSIDE 345KV CKT 1	717	789	0.1168	113.3118	HOPE - MCNAB REC 115KV CKT 1
FDNS	00NR	3	16WP	G15_057	FROM->TO	G14-057T 345.00 - SUNNYSIDE 345KV CKT 1	717	789	0.11717	113.3064	EMPORIA ENERGY CENTER - G14_001T 345.00 345KV CKT 1
FDNS	00NR	3	16WP	G15_057	FROM->TO	G14-057T 345.00 - SUNNYSIDE 345KV CKT 1	717	789	0.1168	113.3033	P12:115:AEPW:TURK3:HOPE3
FDNS	00NR	3	16WP	G15_057	FROM->TO	G14-057T 345.00 - SUNNYSIDE 345KV CKT 1	717	789	0.11898	113.3024	STONEWAL LH138.00 - TUPELO TAP 138KV CKT 1
FDNS	00NR	3	16WP	G15_057	FROM->TO	G14-057T 345.00 - SUNNYSIDE 345KV CKT 1	717	789	0.11739	113.2971	BENTON - WICHITA 345KV CKT 1
FDNS	00NR	3	16WP	G15_057	FROM->TO	G14-057T 345.00 - SUNNYSIDE 345KV CKT 1	717	789	0.11716	113.2951	CLEO CORNER - CLEOPLT4 138.00 138KV CKT 1
FDNS	00NR	3	20WP	G15_057	FROM->TO	G14-057T 345.00 - SUNNYSIDE 345KV CKT 1	717	789	0.11817	113.2941	COMANCHE TAP - OMPA-DUNCAN 840 138KV CKT 1
FDNS	00NR	3	16WP	G15_057	FROM->TO	G14-057T 345.00 - SUNNYSIDE 345KV CKT 1	717	789	0.11704	113.2889	8WNEWMADRID 500.00 - DELL 500 500KV CKT 1
FDNS	00NR	3	16WP	G15_057	FROM->TO	G14-057T 345.00 - SUNNYSIDE 345KV CKT 1	717	789	0.117	113.2876	LEWIS CREEK SWITCHYARD 138/22.0KV TRANSFORMER CKT 1
FDNS	00NR	3	16WP	G15_057	FROM->TO	G14-057T 345.00 - SUNNYSIDE 345KV CKT 1	717	789	0.117	113.2872	GEN505616 1-BROKEN BOW
FDNS	00NR	3	16WP	G15_057	FROM->TO	G14-057T 345.00 - SUNNYSIDE 345KV CKT 1	717	789	0.11786	113.2857	P12:138:AEPW:REDROCKRD4:WTH_JCT4
FDNS	00NR	3	16WP	G15_057	FROM->TO	G14-057T 345.00 - SUNNYSIDE 345KV CKT 1	717	789	0.11716	113.2836	CLEOPLT4 138.00 - MEN TAP 138KV CKT 1
FDNS	00NR	3	16WP	G15_057	FROM->TO	G14-057T 345.00 - SUNNYSIDE 345KV CKT 1	717	789	0.117	113.2828	LEWIS CREEK SWITCHYARD 138/22.0KV TRANSFORMER CKT 1
FDNS	00NR	3	16WP	G15_057	FROM->TO	G14-057T 345.00 - SUNNYSIDE 345KV CKT 1	717	789	0.1168	113.2811	MCNAB REC - Turk 115 115KV CKT 1
FDNS	00NR	3	16WP	G15_057	FROM->TO	G14-057T 345.00 - SUNNYSIDE 345KV CKT 1	717	789	0.1168	113.2811	TURK (TURK 1) 138/115/13.2KV TRANSFORMER CKT 1
FDNS	00NR	3	16WP	G15_057	FROM->TO	G14-057T 345.00 - SUNNYSIDE 345KV CKT 1	717	789	0.1168	113.2811	TURK (TURK 1) 138/115/13.2KV TRANSFORMER CKT 1
FDNS	00NR	3	16WP	G15_057	FROM->TO	G14-057T 345.00 - SUNNYSIDE 345KV CKT 1	717	789	0.11684	113.2796	CLAYTON - SARDIS 138KV CKT 1
FDNS	00NR	3	16WP	G15_057	FROM->TO	G14-057T 345.00 - SUNNYSIDE 345KV CKT 1	717	789	0.11761	113.2795	SOUTHWESTERN STATION - VERDEN 138KV CKT 1
FDNS	00NR	3	16WP	G15_057	FROM->TO	G14-057T 345.00 - SUNNYSIDE 345KV CKT 1	717	789	0.11689	113.2784	COUCH SES - MC NIEL 115KV CKT 1
FDNS	00NR	3	16WP	G15_057	FROM->TO	G14-057T 345.00 - SUNNYSIDE 345KV CKT 1	717	789	0.11791	113.2751	G14_038T 345.00 - POTTER COUNTY INTERCHANGE 345KV CKT 1
FDNS	00NR	3	16WP	G15_057	FROM->TO	G14-057T 345.00 - SUNNYSIDE 345KV CKT 1	717	789	0.11716	113.2735	IMO TAP - MEN TAP 138KV CKT 1
FDNS	00NR	3	16WP	G15_057	FROM->TO	G14-057T 345.00 - SUNNYSIDE 345KV CKT 1	717	789	0.11722	113.2659	OMPA-WALTERS - WALTERS 69KV CKT 1
FDNS	00NR	3	16WP	G15_057	FROM->TO	G14-057T 345.00 - SUNNYSIDE 345KV CKT 1	717	789	0.11722	113.2659	OMPA-WALTERS - WALTERS 69KV CKT 1
FDNS	00NR	3	16WP	G15_057	FROM->TO	G14-057T 345.00 - SUNNYSIDE 345KV CKT 1	717	789	0.117	113.2631	GEN501970 1-EVANGELINE UNIT 7
FDNS	00NR	3	16WP	G15_057	FROM->TO	G14-057T 345.00 - SUNNYSIDE 345KV CKT 1	717	789	0.11709	113.2597	P12:138:OKGE:3TERM12
FDNS	00NR	3	16WP	G15_057	FROM->TO	G14-057T 345.00 - SUNNYSIDE 345KV CKT 1	717	789	0.11761	113.2593	NORTH 29TH CHICKASHA - VERDEN 138KV CKT 1
FDNS	00NR	3	16WP	G15_057	FROM->TO	G14-057T 345.00 - SUNNYSIDE 345KV CKT 1	717	789	0.11941	113.2549	FRANKLIN SW - WESTMOORE 138KV CKT 1
FDNS	00NR	3	16WP	G15_057	FROM->TO	G14-057T 345.00 - SUNNYSIDE 345KV CKT 1	717	789	0.11733	113.254	P12:69:WFEC-AEPW:COMANCH2:WALTRS-2
FDNS	00NR	3	16WP	G15_057	FROM->TO	G14-057T 345.00 - SUNNYSIDE 345KV CKT 1	717	789	0.11709	113.2526	EMPORIA ENERGY CENTER - SWISSVALE 345KV CKT 1
FDNS	00NR	3	16WP	G15_057	FROM->TO	G14-057T 345.00 - SUNNYSIDE 345KV CKT 1	717	789	0.11684	113.2521	P12:138:AEPW-SWPA:LONEOAK4:BRKNBW4
FDNS	00NR	3	16WP	G15_057	FROM->TO	G14-057T 345.00 - SUNNYSIDE 345KV CKT 1	717	789	0.117	113.2509	GEN334392 1-EXXON MOBIL IPP 1
FDNS	00NR	3	16WP	G15_057	FROM->TO	G14-057T 345.00 - SUNNYSIDE 345KV CKT 1	717	789	0.1169	113.2458	MORISNT4 138.00 - STILLWATER 138KV CKT 1
FDNS	00NR	3	20WP	G15_057	FROM->TO	G14-057T 345.00 - SUNNYSIDE 345KV CKT 1	717	789	0.11683	113.2451	GEN509409 1-WILKES #3
FDNS	00NR	3	16WP	G15_057	FROM->TO	G14-057T 345.00 - SUNNYSIDE 345KV CKT 1	717	789	0.117	113.2443	GEN334393 1-EXXON MOBIL IPP 2
FDNS	00NR	3	16WP	G15_057	FROM->TO	G14-057T 345.00 - SUNNYSIDE 345KV CKT 1	717	789	0.117	113.2443	GEN334394 1-EXXON MOBIL IPP 3
FDNS	00NR	3	16WP	G15_057	FROM->TO	G14-057T 345.00 - SUNNYSIDE 345KV CKT 1	717	789	0.11717	113.242	G14_001T 345.00 - WICHITA 345KV CKT 1
FDNS	00NR	3	16WP	G15_057	FROM->TO	G14-057T 345.00 - SUNNYSIDE 345KV CKT 1	717	789	0.117	113.2419	GEN659125 1-COVEY
FDNS	00NR	3	20WP	G15_057	FROM->TO	G14-057T 345.00 - SUNNYSIDE 345KV CKT 1	717	789	0.11924	113.2416	HEALDTON - LOCO 138KV CKT 1
FDNS	00NR	3	16WP	G15_057	FROM->TO	G14-057T 345.00 - SUNNYSIDE 345KV CKT 1	717	789	0.11691	113.2403	P12:138:OKGE:3TERM2
FDNS	00NR	3	16WP	G15_057	FROM->TO	G14-057T 345.00 - SUNNYSIDE 345KV CKT 1	717	789	0.1175	113.2392	WEATHERFORD TAP - WEATHERFORD WIND FARM 138KV CKT 1
FDNS	00NR	3	16WP	G15_057	FROM->TO	G14-057T 345.00 - SUNNYSIDE 345KV CKT 1	717	789	0.11684	113.2392	CLAYTON - NASHOBA 138KV CKT 1
FDNS	00NR	3	16WP	G15_057	FROM->TO	G14-057T 345.00 - SUNNYSIDE 345KV CKT 1	717	789	0.117	113.2373	GEN509394 1-FLINT CREEK
FDNS	00NR	3	20WP	G15_057	FROM->TO	G14-057T 345.00 - SUNNYSIDE 345KV CKT 1	717	789	0.1106	113.2365	CANADIAN RIVER - MUSKOGEE 345KV CKT 1
FDNS	00NR	3	16WP	G15_057	FROM->TO	G14-057T 345.00 - SUNNYSIDE 345KV CKT 1	717	789	0.117	113.2355	GEN336222 1-LITTLE GYPSY UNIT#2
FDNS	00NR	3	16WP	G15_057	FROM->TO	G14-057T 345.00 - SUNNYSIDE 345KV CKT 1	717	789	0.11728	113.2354	FRANKLIN - FRANKLIN SW 138KV CKT 1
FDNS	00NR	3	16WP	G15_057	FROM->TO	G14-057T 345.00 - SUNNYSIDE 345KV CKT 1	717	789	0.11719	113.2312	BUCKNER7 345.00 - HOLCOMB 345KV CKT 1
FDNS	00NR	3	16WP	G15_057	FROM->TO	G14-057T 345.00 - SUNNYSIDE 345KV CKT 1	717	789	0.11719	113.2312	BUCKNER7 345.00 - HOLCOMB 345KV CKT 1
FDNS	00NR	3	16WP	G15_057	FROM->TO	G14-057T 345.00 - SUNNYSIDE 345KV CKT 1	717	789	0.117	113.2279	P12:138:AEPW:R.S.S-4:T.P.S.-4
FDNS	00NR	3	16WP	G15_057	FROM->TO	G14-057T 345.00 - SUNNYSIDE 345KV CKT 1	717	789	0.11684	113.2263	BETHEL - NASHOBA 138KV CKT 1
FDNS	00NR	3	16WP	G15_057	FROM->TO	G14-057T 345.00 - SUNNYSIDE 345KV CKT 1	717	789	0.1194	113.2253	MARIETTA - MARIETTA4 138.00 138KV CKT 1
FDNS	00NR	3	16WP	G15_057	FROM->TO	G14-057T 345.00 - SUNNYSIDE 345KV CKT 1	717	789	0.11801	113.2238	CLARKSVILLE - ONETA 345KV CKT 1
FDNS	00NR	3	16WP	G15_057	FROM->TO	G14-057T 345.00 - SUNNYSIDE 345KV CKT 1	717	789	0.11801	113.2238	CLARKSVILLE - ONETA 345KV CKT 1
FDNS	00NR	3	20WP	G15_057	FROM->TO	G14-057T 345.00 - SUNNYSIDE 345KV CKT 1	717	789	0.11932	113.2232	BRIDGECR 138.00 - TUTTLE 138KV CKT 1
FDNS	00NR	3	16WP	G15_057	FROM->TO	G14-057T 345.00 - SUNNYSIDE 345KV CKT 1	717	789	0.117	113.2174	GEN506749 1-EASTMAN GENERATION A
FDNS	00NR	3	16WP	G15_057	FROM->TO	G14-057T 345.00 - SUNNYSIDE 345KV CKT 1	717	789	0.117	113.2146	GEN334432 1-SABINE UNIT 2
FDNS	00NR	3	16WP	G15_057	FROM->TO	G14-057T 345.00 - SUNNYSIDE 345KV CKT 1	717	789	0.11702	113.2145	7JASPER 345.00 - MORGAN 345KV CKT 1
FDNS	00NR	3	16WP	G15_057	FROM->TO	G14-057T 345.00 - SUNNYSIDE 345KV CKT 1	717	789	0.117	113.2145	GEN334431 1-SABINE UNIT 1
FDNS	00NR	3	16WP	G15_057	FROM->TO	G14-057T 345.00 - SUNNYSIDE 345KV CKT 1	717	789	0.11786	113.2094	HINTON - WEATHERFORD JCT. 138KV CKT 1
FDNS	00NR	3	16WP	G15_057	FROM->TO	G14-057T 345.00 - SUNNYSIDE 345KV CKT 1	717	789	0.117	113.2073	GEN501971 1-EVANGELINE UNIT 7-1
FDNS	00NR	3	16WP	G15_057	FROM->TO	G14-057T 345.00 - SUNNYSIDE 345KV CKT 1	717	789	0.117	113.2073	GEN501972 1-EVANGELINE UNIT 7-2
FDNS	00NR	3	16WP	G15_057	FROM->TO	G14-057T 345.00 - SUNNYSIDE 345KV CKT 1	717	789	0.117	113.2066	GEN336152 1-WATERFORD UNIT#2
FDNS	00NR	3	16WP	G15_057	FROM->TO	G14-057T 345.00 - SUNNYSIDE 345KV CKT 1	717	789	0.117	113.2056	GEN336151 1-WATERFORD UNIT#1
FDNS	00NR	3	16WP	G15_057	FROM->TO	G14-057T 345.00 - SUNNYSIDE 345KV CKT 1	717	789	0.117	113.2044	P12:138:AEPW:R.S.S.-4:R:96YALE-4
FDNS	00NR	3	16WP	G15_057	FROM->TO	G14-057T 345.00 - SUNNYSIDE 345KV CKT 1	717	789	0.11721	113.2038	CLINTON JUNCTION - ELK CITY 138KV CKT 1
FDNS	00NR	3	16WP	G15_057	FROM->TO	G14-057T 345.00 - SUNNYSIDE 345KV CKT 1	717	789	0.11721	113.2038	CLINTON JUNCTION - ELK CITY 138KV CKT 1
FDNS	00NR	3	16WP	G15_057	FROM->TO	G14-057T 345.00 - SUNNYSIDE 345KV CKT 1	717	789	0.11766	113.2005	CORNVILLE - NORGE ROAD 138KV CKT 1
FDNS	00NR	3	16WP	G15_057	FROM->TO	G14-057T 345.00 - SUNNYSIDE 345KV CKT 1	717	789	0.11766	113.2005	CORNVILLE - NORGE ROAD 138KV CKT 1
FDNS	00NR	3	16WP	G15_057	FROM->TO	G14-057T 345.00 - SUNNYSIDE 345KV CKT 1	717	789	0.11852	113.1938	PURCELL4 138.00 - WALNUT CREEK 138KV CKT 1

SOLUTION	GROUP	SCENARIO	SEASON	SOURCE	DIRECTION	MONITORED ELEMENT	RATEA (MVA)	RATEB(MVA)	TDF	TC%LOADING (% MVA)	CONTINGENCY
FDNS	00NR	3	16WP	G15_057	FROM->TO	G14-057T 345.00 - SUNNYSIDE 345KV CKT 1	717	789	0.11785	113.1938	FINNEY SWITCHING STATION - WALKTAP7 345.00 345KV CKT 1
FDNS	00NR	3	16WP	G15_057	FROM->TO	G14-057T 345.00 - SUNNYSIDE 345KV CKT 1	717	789	0.11785	113.1938	FINNEY SWITCHING STATION - WALKTAP7 345.00 345KV CKT 1
FDNS	00NR	3	16WP	G15_057	FROM->TO	G14-057T 345.00 - SUNNYSIDE 345KV CKT 1	717	789	0.11761	113.1935	CORNVILLE - NORTH 29TH CHICKASHA 138KV CKT 1
FDNS	00NR	3	16WP	G15_057	FROM->TO	G14-057T 345.00 - SUNNYSIDE 345KV CKT 1	717	789	0.117	113.189	P12:138:AEPW:MOHAWK4:T.NO--4
FDNS	00NR	3	16WP	G15_057	FROM->TO	G14-057T 345.00 - SUNNYSIDE 345KV CKT 1	717	789	0.117	113.1839	GEN501912 1-ACADIA UNIT CT1B
FDNS	00NR	3	16WP	G15_057	FROM->TO	G14-057T 345.00 - SUNNYSIDE 345KV CKT 1	717	789	0.11722	113.1837	G13-010T 345.00 - POST ROCK 345KV CKT 1
FDNS	00NR	3	16WP	G15_057	FROM->TO	G14-057T 345.00 - SUNNYSIDE 345KV CKT 1	717	789	0.117	113.1832	GEN501911 1-ACADIA UNIT CT1A
FDNS	00NR	3	16WP	G15_057	FROM->TO	G14-057T 345.00 - SUNNYSIDE 345KV CKT 1	717	789	0.117	113.1825	ST FRANCIS - ST FRANCIS 1 161KV CKT Z1
FDNS	00NR	3	20WP	G15_057	FROM->TO	G14-057T 345.00 - SUNNYSIDE 345KV CKT 1	717	789	0.11683	113.1822	GEN501813 1-RODEMACHER UNIT 3
FDNS	00NR	3	16WP	G15_057	FROM->TO	G14-057T 345.00 - SUNNYSIDE 345KV CKT 1	717	789	0.11734	113.181	HAMMETT TAP - HORSESHOE LAKE 138KV CKT 1
FDNS	00NR	3	16WP	G15_057	FROM->TO	G14-057T 345.00 - SUNNYSIDE 345KV CKT 1	717	789	0.11692	113.1799	LAYFLD8 500.00 (LAYFLD AUTO) 500/230/13.8KV TRANSFORMER CKT 1
FDNS	00NR	3	16WP	G15_057	FROM->TO	G14-057T 345.00 - SUNNYSIDE 345KV CKT 1	717	789	0.11692	113.1799	LAYFLD8 500.00 (LAYFLD AUTO) 500/230/13.8KV TRANSFORMER CKT 1
FDNS	00NR	3	16WP	G15_057	FROM->TO	G14-057T 345.00 - SUNNYSIDE 345KV CKT 1	717	789	0.11677	113.1784	P12:138:AEPW:OKMULGE4:R.S.S-4
FDNS	00NR	3	16WP	G15_057	FROM->TO	G14-057T 345.00 - SUNNYSIDE 345KV CKT 1	717	789	0.11625	113.1736	ARBUCKLE - MILLCREEK 138KV CKT 1
FDNS	00NR	3	16WP	G15_057	FROM->TO	G14-057T 345.00 - SUNNYSIDE 345KV CKT 1	717	789	0.117	113.1727	SABINE 230/22.0KV TRANSFORMER CKT 1
FDNS	00NR	3	16WP	G15_057	FROM->TO	G14-057T 345.00 - SUNNYSIDE 345KV CKT 1	717	789	0.11684	113.1722	BETHEL - BROKEN BOW 138KV CKT 1
FDNS	00NR	3	16WP	G15_057	FROM->TO	G14-057T 345.00 - SUNNYSIDE 345KV CKT 1	717	789	0.11684	113.1713	AMITY SS - MURFREESBORO EAST (AECC) 115KV CKT 1
FDNS	00NR	3	16WP	G15_057	FROM->TO	G14-057T 345.00 - SUNNYSIDE 345KV CKT 1	717	789	0.11714	113.1701	FLETCHER - MARLOW JCT 69KV CKT 1
FDNS	00NR	3	16WP	G15_057	FROM->TO	G14-057T 345.00 - SUNNYSIDE 345KV CKT 1	717	789	0.11719	113.1658	P12:138:OKGE:3TERM47
FDNS	00NR	3	16WP	G15_057	FROM->TO	G14-057T 345.00 - SUNNYSIDE 345KV CKT 1	717	789	0.11705	113.1648	P12:138:WFEC-AEPW:ELKCTY-4:ERICK4
FDNS	00NR	3	16WP	G15_057	FROM->TO	G14-057T 345.00 - SUNNYSIDE 345KV CKT 1	717	789	0.117	113.1593	GEN336242 1-1NMIL ST1 18.000
FDNS	00NR	3	16WP	G15_057	FROM->TO	G14-057T 345.00 - SUNNYSIDE 345KV CKT 1	717	789	0.11786	113.1531	HINTON - REDROCKRD4 138.00 138KV CKT 1
FDNS	00NR	3	16WP	G15_057	FROM->TO	G14-057T 345.00 - SUNNYSIDE 345KV CKT 1	717	789	0.1175	113.1518	WEATHERFORD SOUTHEAST - WEATHERFORD TAP 138KV CKT 1
FDNS	00NR	3	16WP	G15_057	FROM->TO	G14-057T 345.00 - SUNNYSIDE 345KV CKT 1	717	789	0.12156	113.1417	CIMARRON - NORTHWEST 345KV CKT 1
FDNS	00NR	3	16WP	G15_057	FROM->TO	G14-057T 345.00 - SUNNYSIDE 345KV CKT 1	717	789	0.11723	113.1395	SEMINOLE (SEMINOL2) 345/138/14.4KV TRANSFORMER CKT 1
FDNS	00NR	3	20WP	G15_057	FROM->TO	G14-057T 345.00 - SUNNYSIDE 345KV CKT 1	717	789	0.11683	113.11	GEN300006 1-NEW MADRID UNIT 1
FDNS	00NR	3	20WP	G15_057	FROM->TO	G14-057T 345.00 - SUNNYSIDE 345KV CKT 1	717	789	0.11924	113.0974	HEALDTON - RINGLING 138KV CKT 1
FDNS	00NR	3	20WP	G15_057	FROM->TO	G14-057T 345.00 - SUNNYSIDE 345KV CKT 1	717	789	0.11683	113.0898	GEN300007 1-NEW MADRID UNIT 2
FDNS	00NR	3	20WP	G15_057	FROM->TO	G14-057T 345.00 - SUNNYSIDE 345KV CKT 1	717	789	0.117	113.0279	LACYGNE - WAVERLY7 345.00 345KV CKT 1
FDNS	00NR	3	20WP	G15_057	FROM->TO	G14-057T 345.00 - SUNNYSIDE 345KV CKT 1	717	789	0.11817	113.0084	DUNCAN - OMPA-DUNCAN 840 138KV CKT 1
FDNS	00NR	3	20WP	G15_057	FROM->TO	G14-057T 345.00 - SUNNYSIDE 345KV CKT 1	717	789	0.11817	113.0084	DUNCAN - OMPA-DUNCAN 840 138KV CKT 1
FDNS	00NR	3	20WP	G15_057	FROM->TO	G14-057T 345.00 - SUNNYSIDE 345KV CKT 1	717	789	0.11683	112.9726	GEN335206 1-NELSON UNIT 6
FDNS	00NR	3	20WP	G15_057	FROM->TO	G14-057T 345.00 - SUNNYSIDE 345KV CKT 1	717	789	0.11932	112.9475	P12:138:WFEC:MSL01
FDNS	00NR	3	20WP	G15_057	FROM->TO	G14-057T 345.00 - SUNNYSIDE 345KV CKT 1	717	789	0.11683	112.9471	GEN520947 1-HUGO1
FDNS	00NR	3	20WP	G15_057	FROM->TO	G14-057T 345.00 - SUNNYSIDE 345KV CKT 1	717	789	0.11932	112.9409	BRIDGECR 138.00 - SUNSHINE CANYON 138KV CKT 1
FDNS	00NR	3	20WP	G15_057	FROM->TO	G14-057T 345.00 - SUNNYSIDE 345KV CKT 1	717	789	0.11924	112.9263	RINGLING - SOUTH WILSON 138KV CKT 1
FDNS	00NR	3	20WP	G15_057	FROM->TO	G14-057T 345.00 - SUNNYSIDE 345KV CKT 1	717	789	0.117	112.9164	WAVERLY7 345.00 - WOLF CREEK 345KV CKT 1
FDNS	00NR	3	20WP	G15_057	FROM->TO	G14-057T 345.00 - SUNNYSIDE 345KV CKT 1	717	789	0.11672	112.8103	ELDORADO EHV - MOUNT OLIVE 500KV CKT 1
FDNS	00NR	3	20WP	G15_057	FROM->TO	G14-057T 345.00 - SUNNYSIDE 345KV CKT 1	717	789	0.11684	112.8048	P12:138:AEPW:SHERID4:112GORE4
FDNS	00NR	3	20WP	G15_057	FROM->TO	G14-057T 345.00 - SUNNYSIDE 345KV CKT 1	717	789	0.11683	112.7894	GEN501812 1-RODEMACHER UNIT 2
FDNS	00NR	3	20WP	G15_057	FROM->TO	G14-057T 345.00 - SUNNYSIDE 345KV CKT 1	717	789	0.11683	112.7848	DOLET HILLS 345/24.0KV TRANSFORMER CKT 1
FDNS	00NR	3	20WP	G15_057	FROM->TO	G14-057T 345.00 - SUNNYSIDE 345KV CKT 1	717	789	0.11825	112.7635	Hitchland Interchange - WALKTAP7 345.00 345KV CKT 1
FDNS	00NR	3	20WP	G15_057	FROM->TO	G14-057T 345.00 - SUNNYSIDE 345KV CKT 1	717	789	0.11825	112.7635	Hitchland Interchange - WALKTAP7 345.00 345KV CKT 1
FDNS	00NR	3	20WP	G15_057	FROM->TO	G14-057T 345.00 - SUNNYSIDE 345KV CKT 1	717	789	0.1179	112.7532	REDBUD - RIVERSIDE STATION 345KV CKT 1
FDNS	00NR	3	20WP	G15_057	FROM->TO	G14-057T 345.00 - SUNNYSIDE 345KV CKT 1	717	789	0.1179	112.7532	REDBUD - RIVERSIDE STATION 345KV CKT 1
FDNS	00NR	3	20WP	G15_057	FROM->TO	G14-057T 345.00 - SUNNYSIDE 345KV CKT 1	717	789	0.11558	112.7515	PARK LANE - SEMINOLE 138KV CKT 1
FDNS	00NR	3	20WP	G15_057	FROM->TO	G14-057T 345.00 - SUNNYSIDE 345KV CKT 1	717	789	0.11825	112.7315	P12:345:SPS:J07.1.FINN.HITCH
FDNS	00NR	3	16WP	G15_057	FROM->TO	G14-057T 345.00 - SUNNYSIDE 345KV CKT 1	717	789	0.117	112.6917	803-OKLAUNION
FDNS	00NR	3	20WP	G15_057	FROM->TO	G14-057T 345.00 - SUNNYSIDE 345KV CKT 1	717	789	0.11683	112.6663	GEN515564 1-ORIGIN11 0.6900
FDNS	00NR	3	20WP	G15_057	FROM->TO	G14-057T 345.00 - SUNNYSIDE 345KV CKT 1	717	789	0.11683	112.6663	GEN515565 1-ORIGIN21 0.6900
FDNS	00NR	3	20WP	G15_057	FROM->TO	G14-057T 345.00 - SUNNYSIDE 345KV CKT 1	717	789	0.11679	112.6503	WEBRE - WELLS 500KV CKT 1
FDNS	00NR	3	20WP	G15_057	FROM->TO	G14-057T 345.00 - SUNNYSIDE 345KV CKT 1	717	789	0.11866	112.6484	MATHWSN7 345.00 - NORTHWEST 345KV CKT 1
FDNS	00NR	3	20WP	G15_057	FROM->TO	G14-057T 345.00 - SUNNYSIDE 345KV CKT 1	717	789	0.11924	112.6402	MARIETTA - SOUTH WILSON 138KV CKT 1
FDNS	00NR	3	20WP	G15_057	FROM->TO	G14-057T 345.00 - SUNNYSIDE 345KV CKT 1	717	789	0.11683	112.6312	GEN334440 1-SABINE UNIT 4
FDNS	00NR	3	20WP	G15_057	FROM->TO	G14-057T 345.00 - SUNNYSIDE 345KV CKT 1	717	789	0.11683	112.6087	P12:161:AEPW:DYESS 5:HYLAND 5
FDNS	00NR	3	20WP	G15_057	FROM->TO	G14-057T 345.00 - SUNNYSIDE 345KV CKT 1	717	789	0.11683	112.6022	GEN590011 2-ERCOT EQUIVALENCE
FDNS	00NR	3	20WP	G15_057	FROM->TO	G14-057T 345.00 - SUNNYSIDE 345KV CKT 1	717	789	0.1173	112.5781	CANEYRV7 345.00 - NEOSHO 345KV CKT 1
FDNS	00NR	3	20WP	G15_057	FROM->TO	G14-057T 345.00 - SUNNYSIDE 345KV CKT 1	717	789	0.11683	112.5754	DELL 500 - ESSEX UNIT 2 500KV CKT Z1
FDNS	00NR	3	20WP	G15_057	FROM->TO	G14-057T 345.00 - SUNNYSIDE 345KV CKT 1	717	789	0.11683	112.5462	P12:69:AEPW:L.E.S.-2:LAW WC2
FDNS	00NR	3	20WP	G15_057	FROM->TO	G14-057T 345.00 - SUNNYSIDE 345KV CKT 1	717	789	0.11924	112.5445	P12:138:WFEC:MSL17
FDNS	00NR	3	20WP	G15_057	FROM->TO	G14-057T 345.00 - SUNNYSIDE 345KV CKT 1	717	789	0.11683	112.5331	GEN590010 1-ERCOT EQUIVALENCE
FDNS	00NR	3	20WP	G15_057	FROM->TO	G14-057T 345.00 - SUNNYSIDE 345KV CKT 1	717	789	0.11768	112.4743	P12:138:WFEC:MSL02
FDNS	00NR	3	20WP	G15_057	FROM->TO	G14-057T 345.00 - SUNNYSIDE 345KV CKT 1	717	789	0.11734	112.4659	PAOLI - PAYNE 138.00 138KV CKT 1
FDNS	00NR	3	20WP	G15_057	FROM->TO	G14-057T 345.00 - SUNNYSIDE 345KV CKT 1	717	789	0.1166	112.457	ELDORADO EHV - SHERIDAN EHV 500KV CKT 1
FDNS	00NR	3	20WP	G15_057	FROM->TO	G14-057T 345.00 - SUNNYSIDE 345KV CKT 1	717	789	0.1175	112.4554	LAWTON EASTSIDE (LES 5) 345/138/13.8KV TRANSFORMER CKT 2
FDNS	00NR	3	20WP	G15_057	FROM->TO	G14-057T 345.00 - SUNNYSIDE 345KV CKT 1	717	789	0.1175	112.4554	LAWTON EASTSIDE (LES 5) 345/138/13.8KV TRANSFORMER CKT 2
FDNS	00NR	3	20WP	G15_057	FROM->TO	G14-057T 345.00 - SUNNYSIDE 345KV CKT 1	717	789	0.11683	112.4511	GEN506754 1-LEBROCK STEAM 1
FDNS	00NR	3	20WP	G15_057	FROM->TO	G14-057T 345.00 - SUNNYSIDE 345KV CKT 1	717	789	0.1173	112.4369	CANEYRV7 345.00 - LATHAMS7 345.00 345KV CKT 1
FDNS	00NR	3	20WP	G15_057	FROM->TO	G14-057T 345.00 - SUNNYSIDE 345KV CKT 1	717	789	0.11881	112.4276	CIVIT - PAOLI 138KV CKT 1
FDNS	00NR	3	20WP	G15_057	FROM->TO	G14-057T 345.00 - SUNNYSIDE 345KV CKT 1	717	789	0.11684	112.4232	P12:138:AEPW:112GORE4:L.E.S.-4
FDNS	00NR	3	20WP	G15_057	FROM->TO	G14-057T 345.00 - SUNNYSIDE 345KV CKT 1	717	789	0.11683	112.4064	GEN509408 1-WILKES #2
FDNS	00NR	3	20WP	G15_057	FROM->TO	G14-057T 345.00 - SUNNYSIDE 345KV CKT 1	717	789	0.11749	112.4035	ANADARKO - GEORGIA 138KV CKT 1
FDNS	00NR	3	20WP	G15_057	FROM->TO	G14-057T 345.00 - SUNNYSIDE 345KV CKT 1	717	789	0.11683	112.3511	GEN336252 1-NINEMILE POINT UNIT#5
FDNS	00NR	3	20WP	G15_057	FROM->TO	G14-057T 345.00 - SUNNYSIDE 345KV CKT 1	717	789	0.11749	112.3173	FLETCHER - GEORGIA 138KV CKT 1
FDNS	00NR	3	20WP	G15_057	FROM->TO	G14-057T 345.00 - SUNNYSIDE 345KV CKT 1	717	789	0.11683	112.3147	FRONTIER - GRIMES 345KV CKT 1
FDNS	00NR	3	16WP	G15_057	FROM->TO	G14-057T 345.00 - SUNNYSIDE 345KV CKT 1	717	789	0.11704	112.3105	JOHNSON COUNTY - RUSSETT 138KV CKT 1
FDNS	00NR	3	20WP	G15_057	FROM->TO	G14-057T 345.00 - SUNNYSIDE 345KV CKT 1	717	789	0.11962	112.3086	P12:138:AEPW-OGE:CORNVIL4:MAUD 4
FDNS	00NR	3	20WP	G15_057	FROM->TO	G14-057T 345.00 - SUNNYSIDE 345KV CKT 1	717	789	0.11683	112.3074	GEN503909 1-FULTONU1 1 16.000
FDNS	00NR	3	16WP	G15_057	FROM->TO	G14-057T 345.00 - SUNNYSIDE 345KV CKT 1	717	789	0.11586	112.305	MAYSVLT4 138.00 - PRAIRIE POINT 138KV CKT 1

SOLUTION	GROUP	SCENARIO	SEASON	SOURCE	DIRECTION	MONITORED ELEMENT	RATEA (MVA)	RATEB(MVA)	TDF	TC%LOADING (% MVA)	CONTINGENCY
FDNS	00NR	3	16WP	G15_057	FROM->TO	G14-057T 345.00 - SUNNYSIDE 345KV CKT 1	717	789	0.1193	112.3037	NORTHWEST - SPRING CREEK 345KV CKT 1
FDNS	00NR	3	20WP	G15_057	FROM->TO	G14-057T 345.00 - SUNNYSIDE 345KV CKT 1	717	789	0.11734	112.3024	TUPELO - TUPELO TAP 138KV CKT 1
FDNS	00NR	3	16WP	G15_057	FROM->TO	G14-057T 345.00 - SUNNYSIDE 345KV CKT 1	717	789	0.11708	112.2986	GLASSES - MADILL INDUSTRIAL TAP 138KV CKT 1
FDNS	00NR	3	16WP	G15_057	FROM->TO	G14-057T 345.00 - SUNNYSIDE 345KV CKT 1	717	789	0.1193	112.2965	SOONER - SPRING CREEK 345KV CKT 1
FDNS	00NR	3	20WP	G15_057	FROM->TO	G14-057T 345.00 - SUNNYSIDE 345KV CKT 1	717	789	0.11683	112.2943	GEN335204 1-NELSON UNIT 4
FDNS	00NR	3	20WP	G15_057	FROM->TO	G14-057T 345.00 - SUNNYSIDE 345KV CKT 1	717	789	0.11881	112.2874	CIVIT - STRATFORD 138KV CKT 1
FDNS	00NR	3	20WP	G15_057	FROM->TO	G14-057T 345.00 - SUNNYSIDE 345KV CKT 1	717	789	0.11683	112.2871	GEN334441 1-SABINE UNIT 5
FDNS	00NR	3	16WP	G15_057	FROM->TO	G14-057T 345.00 - SUNNYSIDE 345KV CKT 1	717	789	0.117	112.2764	GEN562772 1-G15034_3 0.6900
FDNS	00NR	3	16WP	G15_057	FROM->TO	G14-057T 345.00 - SUNNYSIDE 345KV CKT 1	717	789	0.11692	112.2747	HUGO (HUGO 1) 345/138/13.8KV TRANSFORMER CKT 1
FDNS	00NR	3	16WP	G15_057	FROM->TO	G14-057T 345.00 - SUNNYSIDE 345KV CKT 1	717	789	0.117	112.2677	GEN521103 1-BLUE CANYON WIND FARM
FDNS	00NR	3	16WP	G15_057	FROM->TO	G14-057T 345.00 - SUNNYSIDE 345KV CKT 1	717	789	0.117	112.264	GEN562691 1-G15_015_3 0.6900
FDNS	00NR	3	20WP	G15_057	FROM->TO	G14-057T 345.00 - SUNNYSIDE 345KV CKT 1	717	789	0.11755	112.262	EMPIRE - FLETCHER 138KV CKT 1
FDNS	00NR	3	16WP	G15_057	FROM->TO	G14-057T 345.00 - SUNNYSIDE 345KV CKT 1	717	789	0.11743	112.2614	DRAPER LAKE - MIDWEST TAP 138KV CKT 1
FDNS	00NR	3	20WP	G15_057	FROM->TO	G14-057T 345.00 - SUNNYSIDE 345KV CKT 1	717	789	0.11775	112.2457	G14_038T 345.00 - Hitchland Interchange 345KV CKT 1
FDNS	00NR	3	16WP	G15_057	FROM->TO	G14-057T 345.00 - SUNNYSIDE 345KV CKT 1	717	789	0.1161	112.2436	ARBUCKLE - SULPHR 4 138.00 138KV CKT 1
FDNS	00NR	3	16WP	G15_057	FROM->TO	G14-057T 345.00 - SUNNYSIDE 345KV CKT 1	717	789	0.117	112.2392	GEN520812 1-ANADRK5
FDNS	00NR	3	16WP	G15_057	FROM->TO	G14-057T 345.00 - SUNNYSIDE 345KV CKT 1	717	789	0.117	112.2391	GEN520813 1-ANADRK6
FDNS	00NR	3	16WP	G15_057	FROM->TO	G14-057T 345.00 - SUNNYSIDE 345KV CKT 1	717	789	0.11708	112.2379	GLASSES - RUSSETT 138KV CKT 1
FDNS	00NR	3	16WP	G15_057	FROM->TO	G14-057T 345.00 - SUNNYSIDE 345KV CKT 1	717	789	0.11697	112.2346	P12:138:WFEC:MSL11
FDNS	00NR	3	16WP	G15_057	FROM->TO	G14-057T 345.00 - SUNNYSIDE 345KV CKT 1	717	789	0.11697	112.2346	P12:138:WFEC-AEPW:PHAROAH4:LONEOAK4
FDNS	00NR	3	16WP	G15_057	FROM->TO	G14-057T 345.00 - SUNNYSIDE 345KV CKT 1	717	789	0.11823	112.2325	BEARCAT 138.00 - NINE MILE 138KV CKT 1
FDNS	00NR	3	20WP	G15_057	FROM->TO	G14-057T 345.00 - SUNNYSIDE 345KV CKT 1	717	789	0.11962	112.2312	BLANCHARD - CORNVILLE 138KV CKT 1
FDNS	00NR	3	16WP	G15_057	FROM->TO	G14-057T 345.00 - SUNNYSIDE 345KV CKT 1	717	789	0.117	112.2289	GEN511961 1-DEMPSEY-WTG10.7000
FDNS	00NR	3	16WP	G15_057	FROM->TO	G14-057T 345.00 - SUNNYSIDE 345KV CKT 1	717	789	0.117	112.2149	GEN600017 C-LS POWER CT
FDNS	00NR	3	16WP	G15_057	FROM->TO	G14-057T 345.00 - SUNNYSIDE 345KV CKT 1	717	789	0.11728	112.2118	P12:138:WFEC:MSL08
FDNS	00NR	3	16WP	G15_057	FROM->TO	G14-057T 345.00 - SUNNYSIDE 345KV CKT 1	717	789	0.11699	112.2113	P12:069:OKGE:3TERM42
FDNS	00NR	3	20WP	G15_057	FROM->TO	G14-057T 345.00 - SUNNYSIDE 345KV CKT 1	717	789	0.11673	112.2112	LAYFLD8 500.00 - MOUNT OLIVE 500KV CKT 1
FDNS	00NR	3	20WP	G15_057	FROM->TO	G14-057T 345.00 - SUNNYSIDE 345KV CKT 1	717	789	0.11673	112.2112	LAYFLD8 500.00 - MOUNT OLIVE 500KV CKT 1
FDNS	00NR	3	20WP	G15_057	FROM->TO	G14-057T 345.00 - SUNNYSIDE 345KV CKT 1	717	789	0.1173	112.2105	LATHAMS7 345.00 - ROSE HILL 345KV CKT 1
FDNS	00NR	3	16WP	G15_057	FROM->TO	G14-057T 345.00 - SUNNYSIDE 345KV CKT 1	717	789	0.11748	112.2096	P12:138:OKGE:3TERM21
FDNS	00NR	3	16WP	G15_057	FROM->TO	G14-057T 345.00 - SUNNYSIDE 345KV CKT 1	717	789	0.11586	112.2081	PRAIRIE POINT - RATLIFF 138KV CKT 1
FDNS	00NR	3	16WP	G15_057	FROM->TO	G14-057T 345.00 - SUNNYSIDE 345KV CKT 1	717	789	0.11705	112.2038	DELL 500 - INDEPENDENCE 500KV CKT 1
FDNS	00NR	3	20WP	G15_057	FROM->TO	G14-057T 345.00 - SUNNYSIDE 345KV CKT 1	717	789	0.11753	112.1996	THISTLE7 345.00 - WOODWARD DISTRICT EHV 345KV CKT 1
FDNS	00NR	3	20WP	G15_057	FROM->TO	G14-057T 345.00 - SUNNYSIDE 345KV CKT 1	717	789	0.11753	112.1996	THISTLE7 345.00 - WOODWARD DISTRICT EHV 345KV CKT 1
FDNS	00NR	3	20WP	G15_057	FROM->TO	G14-057T 345.00 - SUNNYSIDE 345KV CKT 1	717	789	0.11753	112.1996	THISTLE7 345.00 - WOODWARD DISTRICT EHV 345KV CKT 2
FDNS	00NR	3	20WP	G15_057	FROM->TO	G14-057T 345.00 - SUNNYSIDE 345KV CKT 1	717	789	0.11753	112.1996	THISTLE7 345.00 - WOODWARD DISTRICT EHV 345KV CKT 2
FDNS	00NR	3	16WP	G15_057	FROM->TO	G14-057T 345.00 - SUNNYSIDE 345KV CKT 1	717	789	0.11807	112.1984	CIMARRON - MATHWSN7 345.00 345KV CKT 1
FDNS	00NR	3	16WP	G15_057	FROM->TO	G14-057T 345.00 - SUNNYSIDE 345KV CKT 1	717	789	0.11807	112.1984	CIMARRON - MATHWSN7 345.00 345KV CKT 2
FDNS	00NR	3	20WP	G15_057	FROM->TO	G14-057T 345.00 - SUNNYSIDE 345KV CKT 1	717	789	0.11683	112.1966	GEN334071 1-LEWIS CREEK 2
FDNS	00NR	3	16WP	G15_057	FROM->TO	G14-057T 345.00 - SUNNYSIDE 345KV CKT 1	717	789	0.117	112.1901	GEN672392 1-NBECGT1G 18.000
FDNS	00NR	3	20WP	G15_057	FROM->TO	G14-057T 345.00 - SUNNYSIDE 345KV CKT 1	717	789	0.11683	112.1883	GEN334070 1-LEWIS CREEK 1
FDNS	00NR	3	16WP	G15_057	FROM->TO	G14-057T 345.00 - SUNNYSIDE 345KV CKT 1	717	789	0.11709	112.1877	OVEXFRMCCOVE
FDNS	00NR	3	20WP	G15_057	FROM->TO	G14-057T 345.00 - SUNNYSIDE 345KV CKT 1	717	789	0.11755	112.1831	COMANCHE - EMPIRE 138KV CKT 1
FDNS	00NR	3	20WP	G15_057	FROM->TO	G14-057T 345.00 - SUNNYSIDE 345KV CKT 1	717	789	0.11683	112.1813	GEN336251 1-NINEMILE POINT UNIT#4
FDNS	00NR	3	16WP	G15_057	FROM->TO	G14-057T 345.00 - SUNNYSIDE 345KV CKT 1	717	789	0.117	112.1744	GEN528361 1-MADDOX GEN #1
FDNS	00NR	3	16WP	G15_057	FROM->TO	G14-057T 345.00 - SUNNYSIDE 345KV CKT 1	717	789	0.11702	112.1735	GRPRAR1-LNX3345.00 - HOLT.CO3 345.00 345KV CKT 1
FDNS	00NR	3	16WP	G15_057	FROM->TO	G14-057T 345.00 - SUNNYSIDE 345KV CKT 1	717	789	0.11823	112.1726	P12:138:WFEC:MSL14
FDNS	00NR	3	16WP	G15_057	FROM->TO	G14-057T 345.00 - SUNNYSIDE 345KV CKT 1	717	789	0.11709	112.1714	CANEY CREEK - JOHNSON COUNTY 138KV CKT 1
FDNS	00NR	3	16WP	G15_057	FROM->TO	G14-057T 345.00 - SUNNYSIDE 345KV CKT 1	717	789	0.117	112.1704	GEN615010 1-STANTON4
FDNS	00NR	3	20WP	G15_057	FROM->TO	G14-057T 345.00 - SUNNYSIDE 345KV CKT 1	717	789	0.11881	112.1703	OIL CENTER - STRATFORD 138KV CKT 1
FDNS	00NR	3	20WP	G15_057	FROM->TO	G14-057T 345.00 - SUNNYSIDE 345KV CKT 1	717	789	0.11683	112.1694	P12:161:AEPW-SWPA:BEAVER5:EROGERS5
FDNS	00NR	3	20WP	G15_057	FROM->TO	G14-057T 345.00 - SUNNYSIDE 345KV CKT 1	717	789	0.11683	112.1647	GEN509392 G2-ARSENAL HILL GENS #3 (STALL)
FDNS	00NR	3	16WP	G15_057	FROM->TO	G14-057T 345.00 - SUNNYSIDE 345KV CKT 1	717	789	0.117	112.1645	GEN629070 2-BEAVER CHANNEL GENERATORFOR UNIT NO 2
FDNS	00NR	3	20WP	G15_057	FROM->TO	G14-057T 345.00 - SUNNYSIDE 345KV CKT 1	717	789	0.11683	112.1645	GEN509391 G1-ARSENAL HILL GENS #2 (STALL)
FDNS	00NR	3	16WP	G15_057	FROM->TO	G14-057T 345.00 - SUNNYSIDE 345KV CKT 1	717	789	0.11702	112.1628	GRPRAR1-LNX3345.00 - GRPRAR 345KV CKT Z
FDNS	00NR	3	20WP	G15_057	FROM->TO	G14-057T 345.00 - SUNNYSIDE 345KV CKT 1	717	789	0.11683	112.1625	GEN509393 S1-ARSENAL HILL GENS #4 (STALL)
FDNS	00NR	3	16WP	G15_057	FROM->TO	G14-057T 345.00 - SUNNYSIDE 345KV CKT 1	717	789	0.117	112.155	GEN560183 1-REDHIL-WTG1 12.000
FDNS	00NR	3	16WP	G15_057	FROM->TO	G14-057T 345.00 - SUNNYSIDE 345KV CKT 1	717	789	0.117	112.1545	GEN515443 1-MNCOWND1 0.7000
FDNS	00NR	3	16WP	G15_057	FROM->TO	G14-057T 345.00 - SUNNYSIDE 345KV CKT 1	717	789	0.117	112.15	GEN629071 1-BURLINGTON GENERATOR FOR UNIT NO 1 E
FDNS	00NR	3	16WP	G15_057	FROM->TO	G14-057T 345.00 - SUNNYSIDE 345KV CKT 1	717	789	0.117	112.1499	GEN615021 1-GRE-ER 14G 16.000
FDNS	00NR	3	20WP	G15_057	FROM->TO	G14-057T 345.00 - SUNNYSIDE 345KV CKT 1	717	789	0.11718	112.1481	DUNCAN (DUNCAN) 138/69/13.8KV TRANSFORMER CKT 1
FDNS	00NR	3	20WP	G15_057	FROM->TO	G14-057T 345.00 - SUNNYSIDE 345KV CKT 1	717	789	0.11718	112.1481	DUNCAN (DUNCAN) 138/69/13.8KV TRANSFORMER CKT 1
FDNS	00NR	3	16WP	G15_057	FROM->TO	G14-057T 345.00 - SUNNYSIDE 345KV CKT 1	717	789	0.11687	112.146	CARTER - CHICKASAW 138KV CKT 1
FDNS	00NR	3	16WP	G15_057	FROM->TO	G14-057T 345.00 - SUNNYSIDE 345KV CKT 1	717	789	0.117	112.1366	INDEPENDENCE 500/26.0KV TRANSFORMER CKT 1
FDNS	00NR	3	16WP	G15_057	FROM->TO	G14-057T 345.00 - SUNNYSIDE 345KV CKT 1	717	789	0.117	112.1349	GEN562902 1-G15052_3 0.6900
FDNS	00NR	3	16WP	G15_057	FROM->TO	G14-057T 345.00 - SUNNYSIDE 345KV CKT 1	717	789	0.117	112.1348	GEN563242 1-G15090_3 0.6900
FDNS	00NR	3	16WP	G15_057	FROM->TO	G14-057T 345.00 - SUNNYSIDE 345KV CKT 1	717	789	0.117	112.1346	BURLINGTON NO1 + NO 2 + NO 3 161/20.0KV TRANSFORMER CKT 1
FDNS	00NR	3	16WP	G15_057	FROM->TO	G14-057T 345.00 - SUNNYSIDE 345KV CKT 1	717	789	0.1166	112.1346	ROCKY POINT - SPRINGDALE 138KV CKT 1
FDNS	00NR	3	16WP	G15_057	FROM->TO	G14-057T 345.00 - SUNNYSIDE 345KV CKT 1	717	789	0.11823	112.134	BEARCAT 138.00 - MOORELAND 138KV CKT 1
FDNS	00NR	3	16WP	G15_057	FROM->TO	G14-057T 345.00 - SUNNYSIDE 345KV CKT 1	717	789	0.11712	112.131	CANADIAN RIVER - MCALESTER SOUTH 138KV CKT 1
FDNS	00NR	3	16WP	G15_057	FROM->TO	G14-057T 345.00 - SUNNYSIDE 345KV CKT 1	717	789	0.11712	112.131	CANADIAN RIVER - MCALESTER SOUTH 138KV CKT 1
FDNS	00NR	3	20WP	G15_057	FROM->TO	G14-057T 345.00 - SUNNYSIDE 345KV CKT 1	717	789	0.11683	112.1307	GEN334433 1-SABINE UNIT 3
FDNS	00NR	3	16WP	G15_057	FROM->TO	G14-057T 345.00 - SUNNYSIDE 345KV CKT 1	717	789	0.11712	112.1297	CANADIAN RIVER () 345/138/13.8KV TRANSFORMER CKT 1
FDNS	00NR	3	16WP	G15_057	FROM->TO	G14-057T 345.00 - SUNNYSIDE 345KV CKT 1	717	789	0.11712	112.1297	CANADIAN RIVER () 345/138/13.8KV TRANSFORMER CKT 1
FDNS	00NR	3	20WP	G15_057	FROM->TO	G14-057T 345.00 - SUNNYSIDE 345KV CKT 1	717	789	0.11683	112.1296	P12:161:AEPW:DYESS5:ELMSPRNG:TONTITN5
FDNS	00NR	3	20WP	G15_057	FROM->TO	G14-057T 345.00 - SUNNYSIDE 345KV CKT 1	717	789	0.11683	112.1167	GEN337653 1-WHITE BLUFF UNIT #2
FDNS	00NR	3	16WP	G15_057	FROM->TO	G14-057T 345.00 - SUNNYSIDE 345KV CKT 1	717	789	0.11704	112.1149	ALTUS JUNCTION - RUSSELL 138KV CKT 1
FDNS	00NR	3	16WP	G15_057	FROM->TO	G14-057T 345.00 - SUNNYSIDE 345KV CKT 1	717	789	0.11704	112.1149	ALTUS JUNCTION - RUSSELL 138KV CKT 1
FDNS	00NR	3	16WP	G15_057	FROM->TO	G14-057T 345.00 - SUNNYSIDE 345KV CKT 1	717	789	0.1169	112.1082	NORTHWEST TEXARKANA - WELSH 345KV CKT 1

SOLUTION	GROUP	SCENARIO	SEASON	SOURCE	DIRECTION	MONITORED ELEMENT	RATEA (MVA)	RATEB(MVA)	TDF	TC%LOADING (% MVA)	CONTINGENCY
FDNS	00NR	3	16WP	G15_057	FROM->TO	G14-057T 345.00 - SUNNYSIDE 345KV CKT 1	717	789	0.1169	112.1082	NORTHWEST TEXARKANA - WELSH 345KV CKT 1
FDNS	00NR	3	20WP	G15_057	FROM->TO	G14-057T 345.00 - SUNNYSIDE 345KV CKT 1	717	789	0.11683	112.1075	GEN336831 1-BAXTER WILSON SES
FDNS	00NR	3	16WP	G15_057	FROM->TO	G14-057T 345.00 - SUNNYSIDE 345KV CKT 1	717	789	0.117	112.1003	GEN562078 1-G11_051_3 0.6900
FDNS	00NR	3	16WP	G15_057	FROM->TO	G14-057T 345.00 - SUNNYSIDE 345KV CKT 1	717	789	0.11733	112.0975	MINGO - SETAB 345KV CKT 1
FDNS	00NR	3	16WP	G15_057	FROM->TO	G14-057T 345.00 - SUNNYSIDE 345KV CKT 1	717	789	0.11733	112.0975	MINGO - SETAB 345KV CKT 1
FDNS	00NR	3	16WP	G15_057	FROM->TO	G14-057T 345.00 - SUNNYSIDE 345KV CKT 1	717	789	0.11719	112.0928	CHAMBER SPRINGS - CLARKSVILLE 345KV CKT 1
FDNS	00NR	3	16WP	G15_057	FROM->TO	G14-057T 345.00 - SUNNYSIDE 345KV CKT 1	717	789	0.1161	112.0919	JOLLYVILLE - SULPHR 4 138.00 138KV CKT 1
FDNS	00NR	3	16WP	G15_057	FROM->TO	G14-057T 345.00 - SUNNYSIDE 345KV CKT 1	717	789	0.117	112.0854	P12:230:UMZB:# 112 #: NU IN SD. NU-RCDC & DRY CREEK XFMR
FDNS	00NR	3	16WP	G15_057	FROM->TO	G14-057T 345.00 - SUNNYSIDE 345KV CKT 1	717	789	0.117	112.0839	RCDC EAST 4230.00 - RED CEDAR DC 230KV CKT 1
FDNS	00NR	3	16WP	G15_057	FROM->TO	G14-057T 345.00 - SUNNYSIDE 345KV CKT 1	717	789	0.11708	112.0816	KEO EHV - WEST MEMPHIS 500 500KV CKT 1
FDNS	00NR	3	20WP	G15_057	FROM->TO	G14-057T 345.00 - SUNNYSIDE 345KV CKT 1	717	789	0.11683	112.0763	GEN334030 1-FRONTIER UNIT 1
FDNS	00NR	3	16WP	G15_057	FROM->TO	G14-057T 345.00 - SUNNYSIDE 345KV CKT 1	717	789	0.117	112.076	GEN562802 1-G15039_3 0.3570
FDNS	00NR	3	20WP	G15_057	FROM->TO	G14-057T 345.00 - SUNNYSIDE 345KV CKT 1	717	789	0.11683	112.074	GEN334031 1-FRONTIER UNIT 2
FDNS	00NR	3	16WP	G15_057	FROM->TO	G14-057T 345.00 - SUNNYSIDE 345KV CKT 1	717	789	0.117	112.0707	GEN524285 1-WILDORADO WIND GEN
FDNS	00NR	3	16WP	G15_057	FROM->TO	G14-057T 345.00 - SUNNYSIDE 345KV CKT 1	717	789	0.117	112.0633	GEN514805 1-SOONER UNIT 1
FDNS	00NR	3	20WP	G15_057	FROM->TO	G14-057T 345.00 - SUNNYSIDE 345KV CKT 1	717	789	0.11683	112.0614	GEN337911 1-ARKANSAS NUCLEAR ONE UNIT #2
FDNS	00NR	3	16WP	G15_057	FROM->TO	G14-057T 345.00 - SUNNYSIDE 345KV CKT 1	717	789	0.117	112.0546	GEN524295 1-SPNSPUR_WND10.6900
FDNS	00NR	3	16WP	G15_057	FROM->TO	G14-057T 345.00 - SUNNYSIDE 345KV CKT 1	717	789	0.117	112.0543	GEN514806 1-SOONER UNIT 2
FDNS	00NR	3	20WP	G15_057	FROM->TO	G14-057T 345.00 - SUNNYSIDE 345KV CKT 1	717	789	0.11685	112.0512	P12:138:AEPW:CATOOSA4:T.S.E.-4
FDNS	00NR	3	16WP	G15_057	FROM->TO	G14-057T 345.00 - SUNNYSIDE 345KV CKT 1	717	789	0.117	112.0426	GEN560331 1-G10-46 13.800
FDNS	00NR	3	16WP	G15_057	FROM->TO	G14-057T 345.00 - SUNNYSIDE 345KV CKT 1	717	789	0.11627	112.0377	ARKANSAS NUCLEAR ONE - FT SMITH 500KV CKT 1
FDNS	00NR	3	16WP	G15_057	FROM->TO	G14-057T 345.00 - SUNNYSIDE 345KV CKT 1	717	789	0.11627	112.0377	ARKANSAS NUCLEAR ONE - FT SMITH 500KV CKT 1
FDNS	00NR	3	20WP	G15_057	FROM->TO	G14-057T 345.00 - SUNNYSIDE 345KV CKT 1	717	789	0.11962	112.026	BLANCHARD - MAUD 138KV CKT 1
FDNS	00NR	3	16WP	G15_057	FROM->TO	G14-057T 345.00 - SUNNYSIDE 345KV CKT 1	717	789	0.1161	112.0245	JOLLYVILLE - KERR MCGEE CIMARRON 138KV CKT 1
FDNS	00NR	3	20WP	G15_057	FROM->TO	G14-057T 345.00 - SUNNYSIDE 345KV CKT 1	717	789	0.11664	112.0213	FULTON 115 - HOPE 115KV CKT 1
FDNS	00NR	3	20WP	G15_057	FROM->TO	G14-057T 345.00 - SUNNYSIDE 345KV CKT 1	717	789	0.11664	112.0213	FULTON 115 - HOPE 115KV CKT 1
FDNS	00NR	3	20WP	G15_057	FROM->TO	G14-057T 345.00 - SUNNYSIDE 345KV CKT 1	717	789	0.11683	112.021	GEN506752 1-LEBROCK GAS 1
FDNS	00NR	3	20WP	G15_057	FROM->TO	G14-057T 345.00 - SUNNYSIDE 345KV CKT 1	717	789	0.11683	112.0206	GEN506753 1-LEBROCK GAS 2
FDNS	00NR	3	16WP	G15_057	FROM->TO	G14-057T 345.00 - SUNNYSIDE 345KV CKT 1	717	789	0.117	112.0196	GEN562587 1-G14_056_3 0.6900
FDNS	00NR	3	20WP	G15_057	FROM->TO	G14-057T 345.00 - SUNNYSIDE 345KV CKT 1	717	789	0.11683	112.0151	GEN501811 1-RODEMACHER UNIT 1
FDNS	00NR	3	20WP	G15_057	FROM->TO	G14-057T 345.00 - SUNNYSIDE 345KV CKT 1	717	789	0.11683	112.0142	GEN337652 1-WHITE BLUFF UNIT #1
FDNS	00NR	3	16WP	G15_057	FROM->TO	G14-057T 345.00 - SUNNYSIDE 345KV CKT 1	717	789	0.117	112.0133	GEN562269 1-G12-020-1 0.6900
FDNS	00NR	3	20WP	G15_057	FROM->TO	G14-057T 345.00 - SUNNYSIDE 345KV CKT 1	717	789	0.11701	112.0111	P12:138:AEPW:S.W.S.-4:L.E.S.-4
FDNS	00NR	3	20WP	G15_057	FROM->TO	G14-057T 345.00 - SUNNYSIDE 345KV CKT 1	717	789	0.11683	112.0088	GEN300003 1-THOMAS HILL UNIT 3
FDNS	00NR	3	16WP	G15_057	FROM->TO	G14-057T 345.00 - SUNNYSIDE 345KV CKT 1	717	789	0.117	112.008	GEN629072 4-LANSING GENERATOR FOR UNITS NO4 EIA CODE 1
FDNS	00NR	3	20WP	G15_057	FROM->TO	G14-057T 345.00 - SUNNYSIDE 345KV CKT 1	717	789	0.11881	111.9975	LATTA JCT - OIL CENTER 138KV CKT 1
FDNS	00NR	3	20WP	G15_057	FROM->TO	G14-057T 345.00 - SUNNYSIDE 345KV CKT 1	717	789	0.11683	111.9962	GEN300015 1-1SGPDEL 18.000
FDNS	00NR	3	20WP	G15_057	FROM->TO	G14-057T 345.00 - SUNNYSIDE 345KV CKT 1	717	789	0.11683	111.9908	GEN515226 1-MUSKOGEE 6G
FDNS	00NR	3	20WP	G15_057	FROM->TO	G14-057T 345.00 - SUNNYSIDE 345KV CKT 1	717	789	0.11746	111.989	P12:138:AEPW:CORNVIL4:DUNCAN-4
FDNS	00NR	3	16WP	G15_057	FROM->TO	G14-057T 345.00 - SUNNYSIDE 345KV CKT 1	717	789	0.117	111.9885	GEN657749 1-YOUNG 1 GENERATOR
FDNS	00NR	3	16WP	G15_057	FROM->TO	G14-057T 345.00 - SUNNYSIDE 345KV CKT 1	717	789	0.117	111.9876	GEN562882 1-G15047_3 0.6900
FDNS	00NR	3	20WP	G15_057	FROM->TO	G14-057T 345.00 - SUNNYSIDE 345KV CKT 1	717	789	0.11683	111.9824	GEN336191 1-LITTLE GYPSY UNIT#3
FDNS	00NR	3	16WP	G15_057	FROM->TO	G14-057T 345.00 - SUNNYSIDE 345KV CKT 1	717	789	0.1161	111.9735	ARBWIND4 138.00 - KERR MCGEE CIMARRON 138KV CKT 1
FDNS	00NR	3	16WP	G15_057	FROM->TO	G14-057T 345.00 - SUNNYSIDE 345KV CKT 1	717	789	0.117	111.9699	GEN562270 1-G12-020-2 0.6900
FDNS	00NR	3	16WP	G15_057	FROM->TO	G14-057T 345.00 - SUNNYSIDE 345KV CKT 1	717	789	0.11993	111.9688	G15063_T 345.00 - MATHWSN7 345.00 345KV CKT 1
FDNS	00NR	3	16WP	G15_057	FROM->TO	G14-057T 345.00 - SUNNYSIDE 345KV CKT 1	717	789	0.117	111.964	GEN562812 1-G15040_3 0.3570
FDNS	00NR	3	20WP	G15_057	FROM->TO	G14-057T 345.00 - SUNNYSIDE 345KV CKT 1	717	789	0.1167	111.9635	6LAYFLD 230.00 - CARROLL 230KV CKT 1
FDNS	00NR	3	16WP	G15_057	FROM->TO	G14-057T 345.00 - SUNNYSIDE 345KV CKT 1	717	789	0.117	111.9615	GEN563102 1-G15075_3 0.5500
FDNS	00NR	3	20WP	G15_057	FROM->TO	G14-057T 345.00 - SUNNYSIDE 345KV CKT 1	717	789	0.11715	111.9575	G1524G1525 345.00 - THISTLE7 345.00 345KV CKT 1
FDNS	00NR	3	20WP	G15_057	FROM->TO	G14-057T 345.00 - SUNNYSIDE 345KV CKT 1	717	789	0.11715	111.9575	G1524G1525 345.00 - THISTLE7 345.00 345KV CKT 2
FDNS	00NR	3	16WP	G15_057	FROM->TO	G14-057T 345.00 - SUNNYSIDE 345KV CKT 1	717	789	0.117	111.9565	GEN562974 1-G15060_5 0.6900
FDNS	00NR	3	20WP	G15_057	FROM->TO	G14-057T 345.00 - SUNNYSIDE 345KV CKT 1	717	789	0.11718	111.9564	P12:69:WFEC-AEPW:COMANCH2:DUNCAN-2
FDNS	00NR	3	20WP	G15_057	FROM->TO	G14-057T 345.00 - SUNNYSIDE 345KV CKT 1	717	789	0.11683	111.9539	GEN335614 1-WILLOW GLENN UNIT#4
FDNS	00NR	3	16WP	G15_057	FROM->TO	G14-057T 345.00 - SUNNYSIDE 345KV CKT 1	717	789	0.117	111.9538	GEN563132 1-G15078_3 0.3570
FDNS	00NR	3	16WP	G15_057	FROM->TO	G14-057T 345.00 - SUNNYSIDE 345KV CKT 1	717	789	0.117	111.9476	GEN562973 1-G15060_4 0.6900
FDNS	00NR	3	20WP	G15_057	FROM->TO	G14-057T 345.00 - SUNNYSIDE 345KV CKT 1	717	789	0.11684	111.9476	8DANIEL8 500.00 - MCKNIGHT 500KV CKT 1
FDNS	00NR	3	20WP	G15_057	FROM->TO	G14-057T 345.00 - SUNNYSIDE 345KV CKT 1	717	789	0.11683	111.9452	GEN515040 1-SEMINOLE 1G
FDNS	00NR	3	16WP	G15_057	FROM->TO	G14-057T 345.00 - SUNNYSIDE 345KV CKT 1	717	789	0.11719	111.9451	P12:138:AEPW:112GORE4:SNYDER-4
FDNS	00NR	3	20WP	G15_057	FROM->TO	G14-057T 345.00 - SUNNYSIDE 345KV CKT 1	717	789	0.11745	111.9448	P12:138:AEPW:CORNVIL4:S.W.S.-4
FDNS	00NR	3	16WP	G15_057	FROM->TO	G14-057T 345.00 - SUNNYSIDE 345KV CKT 1	717	789	0.117	111.9371	GEN563062 1-G15071_3 0.6900
FDNS	00NR	3	20WP	G15_057	FROM->TO	G14-057T 345.00 - SUNNYSIDE 345KV CKT 1	717	789	0.11775	111.9367	G14_038T 345.00 - POTTER COUNTY INTERCHANGE 345KV CKT 1
FDNS	00NR	3	20WP	G15_057	FROM->TO	G14-057T 345.00 - SUNNYSIDE 345KV CKT 1	717	789	0.1177	111.9306	P12:138:AEPW-OGE:WTH_JCT4:JENSEN4
FDNS	00NR	3	20WP	G15_057	FROM->TO	G14-057T 345.00 - SUNNYSIDE 345KV CKT 1	717	789	0.11684	111.9287	P12:161:AEPW:EROGERS5:ECNTRTN5
FDNS	00NR	3	16WP	G15_057	FROM->TO	G14-057T 345.00 - SUNNYSIDE 345KV CKT 1	717	789	0.11877	111.9195	CLARKSVILLE - MUSKOGEE 345KV CKT 1
FDNS	00NR	3	16WP	G15_057	FROM->TO	G14-057T 345.00 - SUNNYSIDE 345KV CKT 1	717	789	0.11877	111.9195	CLARKSVILLE - MUSKOGEE 345KV CKT 1
FDNS	00NR	3	20WP	G15_057	FROM->TO	G14-057T 345.00 - SUNNYSIDE 345KV CKT 1	717	789	0.11778	111.919	TUTTLE - TUTTLE CONOCO TAP 138KV CKT 1
FDNS	00NR	3	20WP	G15_057	FROM->TO	G14-057T 345.00 - SUNNYSIDE 345KV CKT 1	717	789	0.11769	111.9104	FINNEY SWITCHING STATION - HOLCOMB 345KV CKT 1
FDNS	00NR	3	20WP	G15_057	FROM->TO	G14-057T 345.00 - SUNNYSIDE 345KV CKT 1	717	789	0.11769	111.9104	FINNEY SWITCHING STATION - HOLCOMB 345KV CKT 1
FDNS	00NR	3	20WP	G15_057	FROM->TO	G14-057T 345.00 - SUNNYSIDE 345KV CKT 1	717	789	0.11683	111.9081	GEN303007 1-1BC2 U2
FDNS	00NR	3	20WP	G15_057	FROM->TO	G14-057T 345.00 - SUNNYSIDE 345KV CKT 1	717	789	0.11683	111.9079	GEN337910 1-ARKANSAS NUCLEAR ONE UNIT #1
FDNS	00NR	3	20WP	G15_057	FROM->TO	G14-057T 345.00 - SUNNYSIDE 345KV CKT 1	717	789	0.11683	111.9067	WHITE BLUFF 500/26.0KV TRANSFORMER CKT 1
FDNS	00NR	3	20WP	G15_057	FROM->TO	G14-057T 345.00 - SUNNYSIDE 345KV CKT 1	717	789	0.11718	111.9057	DUNCAN - TOSCO 69KV CKT 1
FDNS	00NR	3	20WP	G15_057	FROM->TO	G14-057T 345.00 - SUNNYSIDE 345KV CKT 1	717	789	0.11683	111.9033	GEN336464 1-MICHOUD UNIT #3
FDNS	00NR	3	20WP	G15_057	FROM->TO	G14-057T 345.00 - SUNNYSIDE 345KV CKT 1	717	789	0.11683	111.9023	GEN303006 1-1BC2 U1
FDNS	00NR	3	20WP	G15_057	FROM->TO	G14-057T 345.00 - SUNNYSIDE 345KV CKT 1	717	789	0.11758	111.9021	CIMARRON - CZECH HALL 138KV CKT 1
FDNS	00NR	3	16WP	G15_057	FROM->TO	G14-057T 345.00 - SUNNYSIDE 345KV CKT 1	717	789	0.1162	111.9015	CHICKASAW - TOTAL 138KV CKT 1
FDNS	00NR	3	16WP	G15_057	FROM->TO	G14-057T 345.00 - SUNNYSIDE 345KV CKT 1	717	789	0.117	111.9	GEN681522 3-GENOA 3
FDNS	00NR	3	20WP	G15_057	FROM->TO	G14-057T 345.00 - SUNNYSIDE 345KV CKT 1	717	789	0.11683	111.8989	GEN562783 1-G15036_4 0.6900
FDNS	00NR	3	20WP	G15_057	FROM->TO	G14-057T 345.00 - SUNNYSIDE 345KV CKT 1	717	789	0.11683	111.8989	GEN562784 1-G15036_5 0.6900

SOLUTION	GROUP	SCENARIO	SEASON	SOURCE	DIRECTION	MONITORED ELEMENT	RATEA (MVA)	RATEB(MVA)	TDF	TC%LOADING (% MVA)	CONTINGENCY
FDNS	00NR	3	20WP	G15_057	FROM->TO	G14-057T 345.00 - SUNNYSIDE 345KV CKT 1	717	789	0.11683	111.8941	GEN515223 1-MUSKOGEE 4G
FDNS	00NR	3	20WP	G15_057	FROM->TO	G14-057T 345.00 - SUNNYSIDE 345KV CKT 1	717	789	0.11683	111.8941	GEN515225 1-MUSKOGEE 5G
FDNS	00NR	3	20WP	G15_057	FROM->TO	G14-057T 345.00 - SUNNYSIDE 345KV CKT 1	717	789	0.11668	111.8903	BISMARK - HOT SPRINGS WEST BUS 115KV CKT 1
FDNS	00NR	3	16WP	G15_057	FROM->TO	G14-057T 345.00 - SUNNYSIDE 345KV CKT 1	717	789	0.1168	111.887	BROWN - RUSSETT 138KV CKT 1
FDNS	00NR	3	20WP	G15_057	FROM->TO	G14-057T 345.00 - SUNNYSIDE 345KV CKT 1	717	789	0.11706	111.8865	P12:69:AEPW-OMPA:COMANC-2:OMWALTR2
FDNS	00NR	3	20WP	G15_057	FROM->TO	G14-057T 345.00 - SUNNYSIDE 345KV CKT 1	717	789	0.11683	111.8863	RODEMACHER 230/22.0KV TRANSFORMER CKT 1
FDNS	00NR	3	20WP	G15_057	FROM->TO	G14-057T 345.00 - SUNNYSIDE 345KV CKT 1	717	789	0.11676	111.8863	MC NIEL 500/115KV TRANSFORMER CKT 1
FDNS	00NR	3	16WP	G15_057	FROM->TO	G14-057T 345.00 - SUNNYSIDE 345KV CKT 1	717	789	0.117	111.876	GEN526331 1-JONES GEN #1 22 KV
FDNS	00NR	3	16WP	G15_057	FROM->TO	G14-057T 345.00 - SUNNYSIDE 345KV CKT 1	717	789	0.117	111.8759	GEN526332 1-JONES GEN #2 21 KV
FDNS	00NR	3	20WP	G15_057	FROM->TO	G14-057T 345.00 - SUNNYSIDE 345KV CKT 1	717	789	0.11689	111.8745	G15088_T 345.00 - MOORE 345KV CKT 1
FDNS	00NR	3	20WP	G15_057	FROM->TO	G14-057T 345.00 - SUNNYSIDE 345KV CKT 1	717	789	0.11676	111.8706	HOT SPRINGS EHV - MAGNET COVE 500KV CKT 1
FDNS	00NR	3	20WP	G15_057	FROM->TO	G14-057T 345.00 - SUNNYSIDE 345KV CKT 1	717	789	0.11683	111.8701	GEN300010 1-ST FRANCIS UNIT 1
FDNS	00NR	3	16WP	G15_057	FROM->TO	G14-057T 345.00 - SUNNYSIDE 345KV CKT 1	717	789	0.11675	111.87	RUSSETT - SPRINGDALE 138KV CKT 1
FDNS	00NR	3	20WP	G15_057	FROM->TO	G14-057T 345.00 - SUNNYSIDE 345KV CKT 1	717	789	0.11734	111.8695	P12:138:AEPW:WTHWF4:CLINTJC4
FDNS	00NR	3	20WP	G15_057	FROM->TO	G14-057T 345.00 - SUNNYSIDE 345KV CKT 1	717	789	0.11754	111.8682	CHISHOLM6 230.00 - ELK CITY 230KV 230KV CKT 1
FDNS	00NR	3	20WP	G15_057	FROM->TO	G14-057T 345.00 - SUNNYSIDE 345KV CKT 1	717	789	0.11754	111.8675	ELK CITY 230KV (ELKCTY-6) 230/138/13.8KV TRANSFORMER CKT 1
FDNS	00NR	3	20WP	G15_057	FROM->TO	G14-057T 345.00 - SUNNYSIDE 345KV CKT 1	717	789	0.11754	111.8675	ELK CITY 230KV (ELKCTY-6) 230/138/13.8KV TRANSFORMER CKT 1
FDNS	00NR	3	16WP	G15_057	FROM->TO	G14-057T 345.00 - SUNNYSIDE 345KV CKT 1	717	789	0.117	111.8657	GEN560105 1-G08-22 0.6900
FDNS	00NR	3	16WP	G15_057	FROM->TO	G14-057T 345.00 - SUNNYSIDE 345KV CKT 1	717	789	0.117	111.8633	GEN562550 1-G14_040_3 0.6900
FDNS	00NR	3	20WP	G15_057	FROM->TO	G14-057T 345.00 - SUNNYSIDE 345KV CKT 1	717	789	0.11747	111.8624	CIMARRON - SARA 138KV CKT 1
FDNS	00NR	3	20WP	G15_057	FROM->TO	G14-057T 345.00 - SUNNYSIDE 345KV CKT 1	717	789	0.11926	111.8621	BAILEY4 138.00 - SUNSHINE CANYON 138KV CKT 1
FDNS	00NR	3	20WP	G15_057	FROM->TO	G14-057T 345.00 - SUNNYSIDE 345KV CKT 1	717	789	0.11718	111.8602	COMANCHE TAP - TOSCO 69KV CKT 1
FDNS	00NR	3	16WP	G15_057	FROM->TO	G14-057T 345.00 - SUNNYSIDE 345KV CKT 1	717	789	0.117	111.8567	GEN345671 2-1RUSH G2 18.000
FDNS	00NR	3	20WP	G15_057	FROM->TO	G14-057T 345.00 - SUNNYSIDE 345KV CKT 1	717	789	0.11701	111.8552	BUCKNER7 345.00 - SPEARVILLE 345KV CKT 1
FDNS	00NR	3	20WP	G15_057	FROM->TO	G14-057T 345.00 - SUNNYSIDE 345KV CKT 1	717	789	0.11701	111.8552	BUCKNER7 345.00 - SPEARVILLE 345KV CKT 1
FDNS	00NR	3	16WP	G15_057	FROM->TO	G14-057T 345.00 - SUNNYSIDE 345KV CKT 1	717	789	0.117	111.8549	GEN345670 1-1RUSH G1 18.000
FDNS	00NR	3	20WP	G15_057	FROM->TO	G14-057T 345.00 - SUNNYSIDE 345KV CKT 1	717	789	0.11691	111.85	G15074_T 345.00 - HOYT 345KV CKT 1
FDNS	00NR	3	20WP	G15_057	FROM->TO	G14-057T 345.00 - SUNNYSIDE 345KV CKT 1	717	789	0.11683	111.847	GEN337041 1-GERALD ANDRUS
FDNS	00NR	3	16WP	G15_057	FROM->TO	G14-057T 345.00 - SUNNYSIDE 345KV CKT 1	717	789	0.11646	111.8445	ROCKY POINT - SUNNYSIDE 138KV CKT 1
FDNS	00NR	3	20WP	G15_057	FROM->TO	G14-057T 345.00 - SUNNYSIDE 345KV CKT 1	717	789	0.11683	111.8445	GEN505432 1-SIKESTON
FDNS	00NR	3	20WP	G15_057	FROM->TO	G14-057T 345.00 - SUNNYSIDE 345KV CKT 1	717	789	0.11588	111.8443	SEMINOLE - VANOSTP4 138.00 138KV CKT 1
FDNS	00NR	3	16WP	G15_057	FROM->TO	G14-057T 345.00 - SUNNYSIDE 345KV CKT 1	717	789	0.117	111.8418	P12:138:WFEC:MSL07
FDNS	00NR	3	16WP	G15_057	FROM->TO	G14-057T 345.00 - SUNNYSIDE 345KV CKT 1	717	789	0.117	111.8418	P12:138:WFEC-AEPW:HUGOPP4:ATOKA--4
FDNS	00NR	3	20WP	G15_057	FROM->TO	G14-057T 345.00 - SUNNYSIDE 345KV CKT 1	717	789	0.11683	111.8414	GEN303008 1-1BC2 U3
FDNS	00NR	3	20WP	G15_057	FROM->TO	G14-057T 345.00 - SUNNYSIDE 345KV CKT 1	717	789	0.11778	111.8396	CIMARRON - TUTTLE CONOCO TAP 138KV CKT 1
FDNS	00NR	3	16WP	G15_057	FROM->TO	G14-057T 345.00 - SUNNYSIDE 345KV CKT 1	717	789	0.117	111.8382	4SIOUX 1 138.00 138/18.0KV TRANSFORMER CKT 1
FDNS	00NR	3	20WP	G15_057	FROM->TO	G14-057T 345.00 - SUNNYSIDE 345KV CKT 1	717	789	0.11668	111.8363	ALPINE AECC - BISMARK 115KV CKT 1
FDNS	00NR	3	20WP	G15_057	FROM->TO	G14-057T 345.00 - SUNNYSIDE 345KV CKT 1	717	789	0.11593	111.834	ARBWIND4 138.00 - CARTER 138KV CKT 1
FDNS	00NR	3	20WP	G15_057	FROM->TO	G14-057T 345.00 - SUNNYSIDE 345KV CKT 1	717	789	0.11734	111.8304	P12:138:AEPW:WTHWF4:WTH_SE4
FDNS	00NR	3	20WP	G15_057	FROM->TO	G14-057T 345.00 - SUNNYSIDE 345KV CKT 1	717	789	0.11685	111.8279	P12:138:AEPW:N.E.S.-4:CATOOSA4
FDNS	00NR	3	20WP	G15_057	FROM->TO	G14-057T 345.00 - SUNNYSIDE 345KV CKT 1	717	789	0.11758	111.8273	CZECH HALL - XEROX 138KV CKT 1
FDNS	00NR	3	16WP	G15_057	FROM->TO	G14-057T 345.00 - SUNNYSIDE 345KV CKT 1	717	789	0.117	111.8246	GEN511962 2-RKYRDGW2-1 0.7000
FDNS	00NR	3	20WP	G15_057	FROM->TO	G14-057T 345.00 - SUNNYSIDE 345KV CKT 1	717	789	0.11758	111.8232	MORGAN - XEROX 138KV CKT 1
FDNS	00NR	3	16WP	G15_057	FROM->TO	G14-057T 345.00 - SUNNYSIDE 345KV CKT 1	717	789	0.1168	111.8183	RUSSETT - RUSSETT 138KV CKT 1
FDNS	00NR	3	16WP	G15_057	FROM->TO	G14-057T 345.00 - SUNNYSIDE 345KV CKT 1	717	789	0.117	111.8177	GEN527882 1-CUNNINGHAM GEN #2 20 KV
FDNS	00NR	3	20WP	G15_057	FROM->TO	G14-057T 345.00 - SUNNYSIDE 345KV CKT 1	717	789	0.11683	111.8171	NELSON 230/20.0KV TRANSFORMER CKT 1
FDNS	00NR	3	20WP	G15_057	FROM->TO	G14-057T 345.00 - SUNNYSIDE 345KV CKT 1	717	789	0.11683	111.8136	GEN300011 1-ST FRANCIS UNIT 2
FDNS	00NR	3	20WP	G15_057	FROM->TO	G14-057T 345.00 - SUNNYSIDE 345KV CKT 1	717	789	0.11683	111.8124	GEN336170 1-GULF OXY U4
FDNS	00NR	3	20WP	G15_057	FROM->TO	G14-057T 345.00 - SUNNYSIDE 345KV CKT 1	717	789	0.12069	111.8108	GRACEMONT (BANK 1) 345/138/13.8KV TRANSFORMER CKT 1
FDNS	00NR	3	16WP	G15_057	FROM->TO	G14-057T 345.00 - SUNNYSIDE 345KV CKT 1	717	789	0.117	111.8089	CLAY BOSWELL 230/20.9KV TRANSFORMER CKT 1
FDNS	00NR	3	20WP	G15_057	FROM->TO	G14-057T 345.00 - SUNNYSIDE 345KV CKT 1	717	789	0.11697	111.8014	G15095_T 138.00 - ROSE_VALLEY 138.00 138KV CKT 1
FDNS	00NR	3	20WP	G15_057	FROM->TO	G14-057T 345.00 - SUNNYSIDE 345KV CKT 1	717	789	0.11758	111.801	MORGAN - MUSTANG 138KV CKT 1
FDNS	00NR	3	16WP	G15_057	FROM->TO	G14-057T 345.00 - SUNNYSIDE 345KV CKT 1	717	789	0.117	111.7989	GEN521112 1-ORME3 13.800
FDNS	00NR	3	16WP	G15_057	FROM->TO	G14-057T 345.00 - SUNNYSIDE 345KV CKT 1	717	789	0.117	111.7937	GEN563192 1-G15084_3 0.5500
FDNS	00NR	3	20WP	G15_057	FROM->TO	G14-057T 345.00 - SUNNYSIDE 345KV CKT 1	717	789	0.11683	111.7932	GEN336801 1-BAXTER WILSON UNIT #1
FDNS	00NR	3	16WP	G15_057	FROM->TO	G14-057T 345.00 - SUNNYSIDE 345KV CKT 1	717	789	0.1171	111.7906	P12:138:WFEC:MSL16
FDNS	00NR	3	16WP	G15_057	FROM->TO	G14-057T 345.00 - SUNNYSIDE 345KV CKT 1	717	789	0.11582	111.7903	ARDMORE WEST - CARTER 138KV CKT 1
FDNS	00NR	3	20WP	G15_057	FROM->TO	G14-057T 345.00 - SUNNYSIDE 345KV CKT 1	717	789	0.11668	111.7887	ALPINE AECC - AMITY SS 115KV CKT 1
FDNS	00NR	3	20WP	G15_057	FROM->TO	G14-057T 345.00 - SUNNYSIDE 345KV CKT 1	717	789	0.11718	111.7828	COMANCHE - COMANCHE TAP 69KV CKT 1
FDNS	00NR	3	16WP	G15_057	FROM->TO	G14-057T 345.00 - SUNNYSIDE 345KV CKT 1	717	789	0.117	111.7721	GEN562892 1-G15048_3 0.6900
FDNS	00NR	3	16WP	G15_057	FROM->TO	G14-057T 345.00 - SUNNYSIDE 345KV CKT 1	717	789	0.117	111.7673	GEN520811 1-ANADRK4
FDNS	00NR	3	20WP	G15_057	FROM->TO	G14-057T 345.00 - SUNNYSIDE 345KV CKT 1	717	789	0.11683	111.7665	8CAJUN2 500/24.0KV TRANSFORMER CKT 1
FDNS	00NR	3	20WP	G15_057	FROM->TO	G14-057T 345.00 - SUNNYSIDE 345KV CKT 1	717	789	0.11683	111.7649	GEN501910 1-ACADIA UNIT ST1
FDNS	00NR	3	16WP	G15_057	FROM->TO	G14-057T 345.00 - SUNNYSIDE 345KV CKT 1	717	789	0.117	111.7579	GEN672321 1-SHAND GENERATOR 1
FDNS	00NR	3	20WP	G15_057	FROM->TO	G14-057T 345.00 - SUNNYSIDE 345KV CKT 1	717	789	0.11747	111.7535	SARA - STHLAKE4 138.00 138KV CKT 1
FDNS	00NR	3	16WP	G15_057	FROM->TO	G14-057T 345.00 - SUNNYSIDE 345KV CKT 1	717	789	0.11589	111.7506	SUNNYSIDE (SUNNYSD5) 345/138/13.8KV TRANSFORMER CKT 1
FDNS	00NR	3	16WP	G15_057	FROM->TO	G14-057T 345.00 - SUNNYSIDE 345KV CKT 1	717	789	0.11691	111.7436	P12:138:WFEC-AEPW:GOLDENSW4:CRAIGJT4
FDNS	00NR	3	16WP	G15_057	FROM->TO	G14-057T 345.00 - SUNNYSIDE 345KV CKT 1	717	789	0.117	111.7409	GEN562512 1-G14_020_3 0.6900
FDNS	00NR	3	20WP	G15_057	FROM->TO	G14-057T 345.00 - SUNNYSIDE 345KV CKT 1	717	789	0.11683	111.7346	P12:138:AEPW:R.S.S.-4:S.HUD.-4
FDNS	00NR	3	16WP	G15_057	FROM->TO	G14-057T 345.00 - SUNNYSIDE 345KV CKT 1	717	789	0.117	111.7343	GEN672310 1-POPLAR RIVER GENERATOR 1
FDNS	00NR	3	20WP	G15_057	FROM->TO	G14-057T 345.00 - SUNNYSIDE 345KV CKT 1	717	789	0.11697	111.7343	NOEL_SW 138.00 - ROSE_VALLEY 138.00 138KV CKT 1
FDNS	00NR	3	16WP	G15_057	FROM->TO	G14-057T 345.00 - SUNNYSIDE 345KV CKT 1	717	789	0.117	111.7342	GEN672311 2-POPLAR RIVER GENERATOR 2
FDNS	00NR	3	16WP	G15_057	FROM->TO	G14-057T 345.00 - SUNNYSIDE 345KV CKT 1	717	789	0.117	111.7315	GEN523461 1-BLACKHAWK GEN #1
FDNS	00NR	3	16WP	G15_057	FROM->TO	G14-057T 345.00 - SUNNYSIDE 345KV CKT 1	717	789	0.117	111.7314	GEN523462 1-BLACKHAWK GEN #2
FDNS	00NR	3	20WP	G15_057	FROM->TO	G14-057T 345.00 - SUNNYSIDE 345KV CKT 1	717	789	0.11683	111.7283	SABINE 230/24.0KV TRANSFORMER CKT 1
FDNS	00NR	3	20WP	G15_057	FROM->TO	G14-057T 345.00 - SUNNYSIDE 345KV CKT 1	717	789	0.11675	111.7263	ETTA (DUKE HOTSPRINGS) - MC NIEL 500KV CKT 1
FDNS	00NR	3	16WP	G15_057	FROM->TO	G14-057T 345.00 - SUNNYSIDE 345KV CKT 1	717	789	0.117	111.7262	GEN672306 6-BOUNDARY DAM GENERATOR 6
FDNS	00NR	3	20WP	G15_057	FROM->TO	G14-057T 345.00 - SUNNYSIDE 345KV CKT 1	717	789	0.11747	111.7241	MCCLAIN - STHLAKE4 138.00 138KV CKT 1
FDNS	00NR	3	20WP	G15_057	FROM->TO	G14-057T 345.00 - SUNNYSIDE 345KV CKT 1	717	789	0.11717	111.7215	WALTERS - WALTERS 69KV CKT 1

SOLUTION	GROUP	SCENARIO	SEASON	SOURCE	DIRECTION	MONITORED ELEMENT	RATEA (MVA)	RATEB(MVA)	TDF	TC%LOADING (% MVA)	CONTINGENCY
FDNS	00NR	3	20WP	G15_057	FROM->TO	G14-057T 345.00 - SUNNYSIDE 345KV CKT 1	717	789	0.11683	111.7206	GEN300016 1-1G1GPDEL 18.000
FDNS	00NR	3	20WP	G15_057	FROM->TO	G14-057T 345.00 - SUNNYSIDE 345KV CKT 1	717	789	0.11881	111.7186	LASALLE - LATTA JCT 138KV CKT 1
FDNS	00NR	3	20WP	G15_057	FROM->TO	G14-057T 345.00 - SUNNYSIDE 345KV CKT 1	717	789	0.11716	111.7178	LAWTON EASTSIDE (LES 4) 345/138/13.8KV TRANSFORMER CKT 1
FDNS	00NR	3	20WP	G15_057	FROM->TO	G14-057T 345.00 - SUNNYSIDE 345KV CKT 1	717	789	0.11716	111.7178	LAWTON EASTSIDE (LES 4) 345/138/13.8KV TRANSFORMER CKT 1
FDNS	00NR	3	20WP	G15_057	FROM->TO	G14-057T 345.00 - SUNNYSIDE 345KV CKT 1	717	789	0.11683	111.7104	GEN336222 1-LITTLE GYPSY UNIT#2
FDNS	00NR	3	20WP	G15_057	FROM->TO	G14-057T 345.00 - SUNNYSIDE 345KV CKT 1	717	789	0.11683	111.7036	P12:69:AEPW:NROGERS2:ECNTRTN2
FDNS	00NR	3	20WP	G15_057	FROM->TO	G14-057T 345.00 - SUNNYSIDE 345KV CKT 1	717	789	0.11764	111.7013	ANADARKO - SEQUOYAHJ4 138.00 138KV CKT 1
FDNS	00NR	3	20WP	G15_057	FROM->TO	G14-057T 345.00 - SUNNYSIDE 345KV CKT 1	717	789	0.11706	111.7011	LAWTON RELIFT TAP - OMPA-WALTERS 69KV CKT 1
FDNS	00NR	3	20WP	G15_057	FROM->TO	G14-057T 345.00 - SUNNYSIDE 345KV CKT 1	717	789	0.11764	111.6985	CORN TAP - SEQUOYAHJ4 138.00 138KV CKT 1
FDNS	00NR	3	16WP	G15_057	FROM->TO	G14-057T 345.00 - SUNNYSIDE 345KV CKT 1	717	789	0.117	111.6964	GEN344895 2-1LAB G2 20.000
FDNS	00NR	3	20WP	G15_057	FROM->TO	G14-057T 345.00 - SUNNYSIDE 345KV CKT 1	717	789	0.11684	111.6938	P12:138:AEPW:BA_71ST4:T.S.E.-4
FDNS	00NR	3	20WP	G15_057	FROM->TO	G14-057T 345.00 - SUNNYSIDE 345KV CKT 1	717	789	0.11683	111.6885	P12:138:AEPW:YARCH-S4:T.S.E.-4
FDNS	00NR	3	20WP	G15_057	FROM->TO	G14-057T 345.00 - SUNNYSIDE 345KV CKT 1	717	789	0.11926	111.6873	BAILEY4 138.00 - WESTMOORE 138KV CKT 1
FDNS	00NR	3	20WP	G15_057	FROM->TO	G14-057T 345.00 - SUNNYSIDE 345KV CKT 1	717	789	0.11835	111.6872	CANADIAN - NOBLE 138KV CKT 1
FDNS	00NR	3	20WP	G15_057	FROM->TO	G14-057T 345.00 - SUNNYSIDE 345KV CKT 1	717	789	0.1177	111.6867	WEATHERFORD JCT. - WEATHERFORD SOUTHEAST 138KV CKT 1
FDNS	00NR	3	20WP	G15_057	FROM->TO	G14-057T 345.00 - SUNNYSIDE 345KV CKT 1	717	789	0.1177	111.6867	WEATHERFORD JCT. - WEATHERFORD SOUTHEAST 138KV CKT 1
FDNS	00NR	3	20WP	G15_057	FROM->TO	G14-057T 345.00 - SUNNYSIDE 345KV CKT 1	717	789	0.11688	111.6785	P12:138:AEPW-OGE:SHIDLER4:OSAGE 4
FDNS	00NR	3	20WP	G15_057	FROM->TO	G14-057T 345.00 - SUNNYSIDE 345KV CKT 1	717	789	0.11684	111.6766	7JASPER 345.00 - BLACKBERRY 345KV CKT 1
FDNS	00NR	3	20WP	G15_057	FROM->TO	G14-057T 345.00 - SUNNYSIDE 345KV CKT 1	717	789	0.11683	111.6762	GEN336152 1-WATERFORD UNIT#2
FDNS	00NR	3	16WP	G15_057	FROM->TO	G14-057T 345.00 - SUNNYSIDE 345KV CKT 1	717	789	0.11582	111.6754	ARDMORE WEST - UNIROYAL 138KV CKT 1
FDNS	00NR	3	20WP	G15_057	FROM->TO	G14-057T 345.00 - SUNNYSIDE 345KV CKT 1	717	789	0.11683	111.6754	GEN336151 1-WATERFORD UNIT#1
FDNS	00NR	3	16WP	G15_057	FROM->TO	G14-057T 345.00 - SUNNYSIDE 345KV CKT 1	717	789	0.117	111.6717	GEN511853 1-COMANCHE #3
FDNS	00NR	3	16WP	G15_057	FROM->TO	G14-057T 345.00 - SUNNYSIDE 345KV CKT 1	717	789	0.11693	111.6662	P12:138:AEPW-SWPA:LONEOAK4:TUPELO4
FDNS	00NR	3	16WP	G15_057	FROM->TO	G14-057T 345.00 - SUNNYSIDE 345KV CKT 1	717	789	0.11693	111.6662	P12:138:WFEC:MSL06
FDNS	00NR	3	16WP	G15_057	FROM->TO	G14-057T 345.00 - SUNNYSIDE 345KV CKT 1	717	789	0.117	111.6643	GEN344896 3-1LAB G3 20.000
FDNS	00NR	3	20WP	G15_057	FROM->TO	G14-057T 345.00 - SUNNYSIDE 345KV CKT 1	717	789	0.11683	111.6636	FRONTIER 345/18.0KV TRANSFORMER CKT 1
FDNS	00NR	3	20WP	G15_057	FROM->TO	G14-057T 345.00 - SUNNYSIDE 345KV CKT 1	717	789	0.1175	111.6632	NORGE ROAD - SOUTHWESTERN STATION 138KV CKT 1
FDNS	00NR	3	20WP	G15_057	FROM->TO	G14-057T 345.00 - SUNNYSIDE 345KV CKT 1	717	789	0.1175	111.6632	NORGE ROAD - SOUTHWESTERN STATION 138KV CKT 1
FDNS	00NR	3	16WP	G15_057	FROM->TO	G14-057T 345.00 - SUNNYSIDE 345KV CKT 1	717	789	0.117	111.663	GEN344894 1-1LAB G1 20.000
FDNS	00NR	3	20WP	G15_057	FROM->TO	G14-057T 345.00 - SUNNYSIDE 345KV CKT 1	717	789	0.11683	111.6629	GEN300017 1-1G2GPDEL 18.000
FDNS	00NR	3	16WP	G15_057	FROM->TO	G14-057T 345.00 - SUNNYSIDE 345KV CKT 1	717	789	0.117	111.6622	GEN563162 1-G15081_3 0.6900
FDNS	00NR	3	16WP	G15_057	FROM->TO	G14-057T 345.00 - SUNNYSIDE 345KV CKT 1	717	789	0.117	111.6615	GEN344897 4-1LAB G4 20.000
FDNS	00NR	3	20WP	G15_057	FROM->TO	G14-057T 345.00 - SUNNYSIDE 345KV CKT 1	717	789	0.11683	111.6613	FRONTIER 345/18.0KV TRANSFORMER CKT 1
FDNS	00NR	3	20WP	G15_057	FROM->TO	G14-057T 345.00 - SUNNYSIDE 345KV CKT 1	717	789	0.11706	111.6592	P12:138:OKGE-AEPW:JENSEN4:REDROCKRD4
FDNS	00NR	3	20WP	G15_057	FROM->TO	G14-057T 345.00 - SUNNYSIDE 345KV CKT 1	717	789	0.1184	111.6575	P12:138:OKGE:3TERM27
FDNS	00NR	3	16WP	G15_057	FROM->TO	G14-057T 345.00 - SUNNYSIDE 345KV CKT 1	717	789	0.11624	111.656	CARTRCO4 138.00 - RATLIFF 138KV CKT 1
FDNS	00NR	3	20WP	G15_057	FROM->TO	G14-057T 345.00 - SUNNYSIDE 345KV CKT 1	717	789	0.11769	111.6547	FINNEY SWITCHING STATION - WALKTAP7 345.00 345KV CKT 1
FDNS	00NR	3	20WP	G15_057	FROM->TO	G14-057T 345.00 - SUNNYSIDE 345KV CKT 1	717	789	0.11769	111.6547	FINNEY SWITCHING STATION - WALKTAP7 345.00 345KV CKT 1
FDNS	00NR	3	20WP	G15_057	FROM->TO	G14-057T 345.00 - SUNNYSIDE 345KV CKT 1	717	789	0.11664	111.6543	HOPE - MCNAB REC 115KV CKT 1
FDNS	00NR	3	20WP	G15_057	FROM->TO	G14-057T 345.00 - SUNNYSIDE 345KV CKT 1	717	789	0.1177	111.6513	P12:138:AEPW:REDROCKRD4:WTH_JCT4
FDNS	00NR	3	20WP	G15_057	FROM->TO	G14-057T 345.00 - SUNNYSIDE 345KV CKT 1	717	789	0.11671	111.6507	MORISNT4 138.00 - STILLWATER 138KV CKT 1
FDNS	00NR	3	16WP	G15_057	FROM->TO	G14-057T 345.00 - SUNNYSIDE 345KV CKT 1	717	789	0.11651	111.6475	P12:138:OKGE:3TERM40
FDNS	00NR	3	20WP	G15_057	FROM->TO	G14-057T 345.00 - SUNNYSIDE 345KV CKT 1	717	789	0.11672	111.6449	P12:138:OKGE:3TERM2
FDNS	00NR	3	20WP	G15_057	FROM->TO	G14-057T 345.00 - SUNNYSIDE 345KV CKT 1	717	789	0.117	111.6448	CLEO CORNER - CLEOPLT4 138.00 138KV CKT 1
FDNS	00NR	3	20WP	G15_057	FROM->TO	G14-057T 345.00 - SUNNYSIDE 345KV CKT 1	717	789	0.11664	111.6444	P12:115:AEPW:TURK3:HOPE3
FDNS	00NR	3	20WP	G15_057	FROM->TO	G14-057T 345.00 - SUNNYSIDE 345KV CKT 1	717	789	0.11673	111.6427	COUCH SES - MC NIEL 115KV CKT 1
FDNS	00NR	3	20WP	G15_057	FROM->TO	G14-057T 345.00 - SUNNYSIDE 345KV CKT 1	717	789	0.11692	111.6425	HOYT - STRANGER CREEK 345KV CKT 1
FDNS	00NR	3	20WP	G15_057	FROM->TO	G14-057T 345.00 - SUNNYSIDE 345KV CKT 1	717	789	0.11683	111.6414	GEN334432 1-SABINE UNIT 2
FDNS	00NR	3	16WP	G15_057	FROM->TO	G14-057T 345.00 - SUNNYSIDE 345KV CKT 1	717	789	0.117	111.6412	GEN562699 1-G15_018_3 0.6900
FDNS	00NR	3	20WP	G15_057	FROM->TO	G14-057T 345.00 - SUNNYSIDE 345KV CKT 1	717	789	0.11683	111.6412	GEN334431 1-SABINE UNIT 1
FDNS	00NR	3	20WP	G15_057	FROM->TO	G14-057T 345.00 - SUNNYSIDE 345KV CKT 1	717	789	0.11682	111.6399	CYPRESS - HARTBURG 500KV CKT 1
FDNS	00NR	3	20WP	G15_057	FROM->TO	G14-057T 345.00 - SUNNYSIDE 345KV CKT 1	717	789	0.11999	111.6398	DRAPER LAKE - SEMINOLE 345KV CKT 1
FDNS	00NR	3	20WP	G15_057	FROM->TO	G14-057T 345.00 - SUNNYSIDE 345KV CKT 1	717	789	0.11999	111.6398	DRAPER LAKE - SEMINOLE 345KV CKT 2
FDNS	00NR	3	16WP	G15_057	FROM->TO	G14-057T 345.00 - SUNNYSIDE 345KV CKT 1	717	789	0.117	111.6389	GEN511852 1-COMANCHE #2
FDNS	00NR	3	20WP	G15_057	FROM->TO	G14-057T 345.00 - SUNNYSIDE 345KV CKT 1	717	789	0.11525	111.6383	ARBUCKLE - VANOSTP4 138.00 138KV CKT 1
FDNS	00NR	3	20WP	G15_057	FROM->TO	G14-057T 345.00 - SUNNYSIDE 345KV CKT 1	717	789	0.11683	111.6369	GEN501823 1-TECHE UNIT 3
FDNS	00NR	3	20WP	G15_057	FROM->TO	G14-057T 345.00 - SUNNYSIDE 345KV CKT 1	717	789	0.11683	111.635	GEN501970 1-EVANGELINE UNIT 7
FDNS	00NR	3	20WP	G15_057	FROM->TO	G14-057T 345.00 - SUNNYSIDE 345KV CKT 1	717	789	0.11706	111.6342	OMPA-WALTERS - WALTERS 69KV CKT 1
FDNS	00NR	3	20WP	G15_057	FROM->TO	G14-057T 345.00 - SUNNYSIDE 345KV CKT 1	717	789	0.11706	111.6342	OMPA-WALTERS - WALTERS 69KV CKT 1
FDNS	00NR	3	20WP	G15_057	FROM->TO	G14-057T 345.00 - SUNNYSIDE 345KV CKT 1	717	789	0.11683	111.6333	LEWIS CREEK SWITCHYARD 138/22.0KV TRANSFORMER CKT 1
FDNS	00NR	3	20WP	G15_057	FROM->TO	G14-057T 345.00 - SUNNYSIDE 345KV CKT 1	717	789	0.11701	111.6323	EMPORIA ENERGY CENTER - G14_001T 345.00 345KV CKT 1
FDNS	00NR	3	20WP	G15_057	FROM->TO	G14-057T 345.00 - SUNNYSIDE 345KV CKT 1	717	789	0.11699	111.6296	BLACKBERRY - NEOSHO 345KV CKT 1
FDNS	00NR	3	20WP	G15_057	FROM->TO	G14-057T 345.00 - SUNNYSIDE 345KV CKT 1	717	789	0.11683	111.6288	LEWIS CREEK SWITCHYARD 138/22.0KV TRANSFORMER CKT 1
FDNS	00NR	3	20WP	G15_057	FROM->TO	G14-057T 345.00 - SUNNYSIDE 345KV CKT 1	717	789	0.11978	111.6282	G15063_T 345.00 - WOODRING 345KV CKT 1
FDNS	00NR	3	20WP	G15_057	FROM->TO	G14-057T 345.00 - SUNNYSIDE 345KV CKT 1	717	789	0.117	111.6279	CLEOPLT4 138.00 - MEN TAP 138KV CKT 1
FDNS	00NR	3	16WP	G15_057	FROM->TO	G14-057T 345.00 - SUNNYSIDE 345KV CKT 1	717	789	0.117	111.6238	GEN521110 1-ORME1 13.800
FDNS	00NR	3	16WP	G15_057	FROM->TO	G14-057T 345.00 - SUNNYSIDE 345KV CKT 1	717	789	0.117	111.6238	GEN521111 1-ORME2 13.800
FDNS	00NR	3	16WP	G15_057	FROM->TO	G14-057T 345.00 - SUNNYSIDE 345KV CKT 1	717	789	0.117	111.6195	GEN563292 1-G15095_3 0.6900
FDNS	00NR	3	20WP	G15_057	FROM->TO	G14-057T 345.00 - SUNNYSIDE 345KV CKT 1	717	789	0.11664	111.6188	TURK (TURK 1) 138/115/13.2KV TRANSFORMER CKT 1
FDNS	00NR	3	20WP	G15_057	FROM->TO	G14-057T 345.00 - SUNNYSIDE 345KV CKT 1	717	789	0.11664	111.6188	TURK (TURK 1) 138/115/13.2KV TRANSFORMER CKT 1
FDNS	00NR	3	20WP	G15_057	FROM->TO	G14-057T 345.00 - SUNNYSIDE 345KV CKT 1	717	789	0.11664	111.6187	MCNAB REC - Turk 115 115KV CKT 1
FDNS	00NR	3	20WP	G15_057	FROM->TO	G14-057T 345.00 - SUNNYSIDE 345KV CKT 1	717	789	0.11691	111.6181	G15074_T 345.00 - JEFFREY ENERGY CENTER 345KV CKT 1
FDNS	00NR	3	20WP	G15_057	FROM->TO	G14-057T 345.00 - SUNNYSIDE 345KV CKT 1	717	789	0.117	111.618	IMO TAP - MEN TAP 138KV CKT 1
FDNS	00NR	3	20WP	G15_057	FROM->TO	G14-057T 345.00 - SUNNYSIDE 345KV CKT 1	717	789	0.11683	111.6167	P12:161:AEPW:CHAMSPR5:FARMING5
FDNS	00NR	3	20WP	G15_057	FROM->TO	G14-057T 345.00 - SUNNYSIDE 345KV CKT 1	717	789	0.11683	111.6138	GEN334392 1-EXXON MOBIL IPP 1
FDNS	00NR	3	20WP	G15_057	FROM->TO	G14-057T 345.00 - SUNNYSIDE 345KV CKT 1	717	789	0.11683	111.6109	GEN505616 1-BROKEN BOW
FDNS	00NR	3	20WP	G15_057	FROM->TO	G14-057T 345.00 - SUNNYSIDE 345KV CKT 1	717	789	0.11717	111.6104	P12:69:WFEC-AEPW:COMANCH2:WALTRS-2
FDNS	00NR	3	20WP	G15_057	FROM->TO	G14-057T 345.00 - SUNNYSIDE 345KV CKT 1	717	789	0.11683	111.6075	GEN334393 1-EXXON MOBIL IPP 2
FDNS	00NR	3	20WP	G15_057	FROM->TO	G14-057T 345.00 - SUNNYSIDE 345KV CKT 1	717	789	0.11683	111.6075	GEN334394 1-EXXON MOBIL IPP 3

SOLUTION	GROUP	SCENARIO	SEASON	SOURCE	DIRECTION	MONITORED ELEMENT	RATEA (MVA)	RATEB(MVA)	TDF	TC%LOADING (% MVA)	CONTINGENCY
FDNS	00NR	3	20WP	G15_057	FROM->TO	G14-057T 345.00 - SUNNYSIDE 345KV CKT 1	717	789	0.11683	111.606	GEN515042 1-SEMINOLE 3G
FDNS	00NR	3	16WP	G15_057	FROM->TO	G14-057T 345.00 - SUNNYSIDE 345KV CKT 1	717	789	0.11705	111.6031	G15085_T 138.00 - RUSSELL 138KV CKT 1
FDNS	00NR	3	20WP	G15_057	FROM->TO	G14-057T 345.00 - SUNNYSIDE 345KV CKT 1	717	789	0.11687	111.5974	7LUTESVIL 345.00 - 7ST FRANC 345.00 345KV CKT 1
FDNS	00NR	3	20WP	G15_057	FROM->TO	G14-057T 345.00 - SUNNYSIDE 345KV CKT 1	717	789	0.11734	111.5949	WEATHERFORD TAP - WEATHERFORD WIND FARM 138KV CKT 1
FDNS	00NR	3	20WP	G15_057	FROM->TO	G14-057T 345.00 - SUNNYSIDE 345KV CKT 1	717	789	0.11835	111.5943	NOBLE - PURCELL4 138.00 138KV CKT 1
FDNS	00NR	3	20WP	G15_057	FROM->TO	G14-057T 345.00 - SUNNYSIDE 345KV CKT 1	717	789	0.11745	111.5935	SOUTHWESTERN STATION - VERDEN 138KV CKT 1
FDNS	00NR	3	20WP	G15_057	FROM->TO	G14-057T 345.00 - SUNNYSIDE 345KV CKT 1	717	789	0.11706	111.592	G13-010T 345.00 - POST ROCK 345KV CKT 1
FDNS	00NR	3	20WP	G15_057	FROM->TO	G14-057T 345.00 - SUNNYSIDE 345KV CKT 1	717	789	0.11705	111.5879	CLINTON JUNCTION - ELK CITY 138KV CKT 1
FDNS	00NR	3	20WP	G15_057	FROM->TO	G14-057T 345.00 - SUNNYSIDE 345KV CKT 1	717	789	0.11705	111.5879	CLINTON JUNCTION - ELK CITY 138KV CKT 1
FDNS	00NR	3	20WP	G15_057	FROM->TO	G14-057T 345.00 - SUNNYSIDE 345KV CKT 1	717	789	0.11683	111.5838	ST FRANCIS - ST FRANCIS 1 161KV CKT Z1
FDNS	00NR	3	20WP	G15_057	FROM->TO	G14-057T 345.00 - SUNNYSIDE 345KV CKT 1	717	789	0.11701	111.5828	BUCKNER7 345.00 - HOLCOMB 345KV CKT 1
FDNS	00NR	3	20WP	G15_057	FROM->TO	G14-057T 345.00 - SUNNYSIDE 345KV CKT 1	717	789	0.11701	111.5828	BUCKNER7 345.00 - HOLCOMB 345KV CKT 1
FDNS	00NR	3	20WP	G15_057	FROM->TO	G14-057T 345.00 - SUNNYSIDE 345KV CKT 1	717	789	0.11881	111.5788	LASALLE - STONEWAL LH138.00 138KV CKT 1
FDNS	00NR	3	16WP	G15_057	FROM->TO	G14-057T 345.00 - SUNNYSIDE 345KV CKT 1	717	789	0.11759	111.5774	GRAPEVINE INTERCHANGE - STATELINE INTERCHANGE 230KV CKT 1
FDNS	00NR	3	16WP	G15_057	FROM->TO	G14-057T 345.00 - SUNNYSIDE 345KV CKT 1	717	789	0.11759	111.5774	GRAPEVINE INTERCHANGE - STATELINE INTERCHANGE 230KV CKT 1
FDNS	00NR	3	20WP	G15_057	FROM->TO	G14-057T 345.00 - SUNNYSIDE 345KV CKT 1	717	789	0.11683	111.5772	GEN501971 1-EVANGELINE UNIT 7-1
FDNS	00NR	3	20WP	G15_057	FROM->TO	G14-057T 345.00 - SUNNYSIDE 345KV CKT 1	717	789	0.11683	111.5772	GEN501972 1-EVANGELINE UNIT 7-2
FDNS	00NR	3	20WP	G15_057	FROM->TO	G14-057T 345.00 - SUNNYSIDE 345KV CKT 1	717	789	0.11701	111.5767	G14_001T 345.00 - WICHITA 345KV CKT 1
FDNS	00NR	3	20WP	G15_057	FROM->TO	G14-057T 345.00 - SUNNYSIDE 345KV CKT 1	717	789	0.11712	111.5754	FRANKLIN - FRANKLIN SW 138KV CKT 1
FDNS	00NR	3	20WP	G15_057	FROM->TO	G14-057T 345.00 - SUNNYSIDE 345KV CKT 1	717	789	0.11684	111.5725	LAKEOVER - MCADAMS 500KV CKT 1
FDNS	00NR	3	20WP	G15_057	FROM->TO	G14-057T 345.00 - SUNNYSIDE 345KV CKT 1	717	789	0.11745	111.5724	NORTH 29TH CHICKASHA - VERDEN 138KV CKT 1
FDNS	00NR	3	20WP	G15_057	FROM->TO	G14-057T 345.00 - SUNNYSIDE 345KV CKT 1	717	789	0.11683	111.5709	SABINE 230/22.0KV TRANSFORMER CKT 1
FDNS	00NR	3	20WP	G15_057	FROM->TO	G14-057T 345.00 - SUNNYSIDE 345KV CKT 1	717	789	0.11692	111.5705	EMPORIA ENERGY CENTER - SWISSVALE 345KV CKT 1
FDNS	00NR	3	20WP	G15_057	FROM->TO	G14-057T 345.00 - SUNNYSIDE 345KV CKT 1	717	789	0.11668	111.5696	ENOWILT - LONE OAK 138KV CKT 1
FDNS	00NR	3	20WP	G15_057	FROM->TO	G14-057T 345.00 - SUNNYSIDE 345KV CKT 1	717	789	0.11693	111.5693	P12:138:OKGE:3TERM12
FDNS	00NR	3	20WP	G15_057	FROM->TO	G14-057T 345.00 - SUNNYSIDE 345KV CKT 1	717	789	0.11698	111.5689	FLETCHER - MARLOW JCT 69KV CKT 1
FDNS	00NR	3	20WP	G15_057	FROM->TO	G14-057T 345.00 - SUNNYSIDE 345KV CKT 1	717	789	0.11684	111.5672	P12:138:AEPW:R.S.S-4:T.P.S.-4
FDNS	00NR	3	20WP	G15_057	FROM->TO	G14-057T 345.00 - SUNNYSIDE 345KV CKT 1	717	789	0.11881	111.5636	STONEWAL LH138.00 - TUPELO TAP 138KV CKT 1
FDNS	00NR	3	20WP	G15_057	FROM->TO	G14-057T 345.00 - SUNNYSIDE 345KV CKT 1	717	789	0.11668	111.5609	ENOWILT - SARDIS 138KV CKT 1
FDNS	00NR	3	16WP	G15_057	FROM->TO	G14-057T 345.00 - SUNNYSIDE 345KV CKT 1	717	789	0.11719	111.5593	CACHE - SNYDER 138KV CKT 1
FDNS	00NR	3	20WP	G15_057	FROM->TO	G14-057T 345.00 - SUNNYSIDE 345KV CKT 1	717	789	0.1177	111.5564	HINTON - WEATHERFORD JCT. 138KV CKT 1
FDNS	00NR	3	20WP	G15_057	FROM->TO	G14-057T 345.00 - SUNNYSIDE 345KV CKT 1	717	789	0.11686	111.5553	MCADAMS - WOLF CREEK 500KV CKT 1
FDNS	00NR	3	20WP	G15_057	FROM->TO	G14-057T 345.00 - SUNNYSIDE 345KV CKT 1	717	789	0.11683	111.5542	GEN501912 1-ACADIA UNIT CT1B
FDNS	00NR	3	20WP	G15_057	FROM->TO	G14-057T 345.00 - SUNNYSIDE 345KV CKT 1	717	789	0.11683	111.5534	GEN501911 1-ACADIA UNIT CT1A
FDNS	00NR	3	20WP	G15_057	FROM->TO	G14-057T 345.00 - SUNNYSIDE 345KV CKT 1	717	789	0.11689	111.5533	P12:138:WFEC-AEPW:ELKCTY-4:ERICK4
FDNS	00NR	3	20WP	G15_057	FROM->TO	G14-057T 345.00 - SUNNYSIDE 345KV CKT 1	717	789	0.11706	111.5453	G13-010T 345.00 - SPEARVILLE 345KV CKT 1
FDNS	00NR	3	20WP	G15_057	FROM->TO	G14-057T 345.00 - SUNNYSIDE 345KV CKT 1	717	789	0.11695	111.5441	SWISSVALE - WEST GARDNER 345KV CKT 1
FDNS	00NR	3	16WP	G15_057	FROM->TO	G14-057T 345.00 - SUNNYSIDE 345KV CKT 1	717	789	0.117	111.5424	GEN563122 1-G15077_3 0.3850
FDNS	00NR	3	20WP	G15_057	FROM->TO	G14-057T 345.00 - SUNNYSIDE 345KV CKT 1	717	789	0.11683	111.5421	P12:138:AEPW:R.S.S.-4:R:96YALE-4
FDNS	00NR	3	20WP	G15_057	FROM->TO	G14-057T 345.00 - SUNNYSIDE 345KV CKT 1	717	789	0.11683	111.5379	GEN506749 1-EASTMAN GENERATION A
FDNS	00NR	3	16WP	G15_057	FROM->TO	G14-057T 345.00 - SUNNYSIDE 345KV CKT 1	717	789	0.117	111.5346	GEN562861 1-G15045_2 0.4800
FDNS	00NR	3	20WP	G15_057	FROM->TO	G14-057T 345.00 - SUNNYSIDE 345KV CKT 1	717	789	0.1175	111.5342	CORNVILLE - NORGE ROAD 138KV CKT 1
FDNS	00NR	3	20WP	G15_057	FROM->TO	G14-057T 345.00 - SUNNYSIDE 345KV CKT 1	717	789	0.1175	111.5342	CORNVILLE - NORGE ROAD 138KV CKT 1
FDNS	00NR	3	20WP	G15_057	FROM->TO	G14-057T 345.00 - SUNNYSIDE 345KV CKT 1	717	789	0.11668	111.5319	AMITY SS - MURFREESBORO EAST (AECC) 115KV CKT 1
FDNS	00NR	3	20WP	G15_057	FROM->TO	G14-057T 345.00 - SUNNYSIDE 345KV CKT 1	717	789	0.11683	111.5307	NELSON 230/24.0KV TRANSFORMER CKT 1
FDNS	00NR	3	20WP	G15_057	FROM->TO	G14-057T 345.00 - SUNNYSIDE 345KV CKT 1	717	789	0.11683	111.5287	GEN336242 1-1NMIL ST1 18.000
FDNS	00NR	3	16WP	G15_057	FROM->TO	G14-057T 345.00 - SUNNYSIDE 345KV CKT 1	717	789	0.05789	111.5277	GRACEMONT - LAWTON EASTSIDE 345KV CKT 1
FDNS	00NR	3	16WP	G15_057	FROM->TO	G14-057T 345.00 - SUNNYSIDE 345KV CKT 1	717	789	0.05789	111.5277	GRACEMONT - LAWTON EASTSIDE 345KV CKT 1
FDNS	00NR	3	20WP	G15_057	FROM->TO	G14-057T 345.00 - SUNNYSIDE 345KV CKT 1	717	789	0.11688	111.5271	8WNEWMADRID 500.00 - DELL 500 500KV CKT 1
FDNS	00NR	3	20WP	G15_057	FROM->TO	G14-057T 345.00 - SUNNYSIDE 345KV CKT 1	717	789	0.11718	111.5252	BENTON - WICHITA 345KV CKT 1
FDNS	00NR	3	20WP	G15_057	FROM->TO	G14-057T 345.00 - SUNNYSIDE 345KV CKT 1	717	789	0.11926	111.5246	FRANKLIN SW - WESTMOORE 138KV CKT 1
FDNS	00NR	3	20WP	G15_057	FROM->TO	G14-057T 345.00 - SUNNYSIDE 345KV CKT 1	717	789	0.11668	111.5223	CLAYTON - SARDIS 138KV CKT 1
FDNS	00NR	3	20WP	G15_057	FROM->TO	G14-057T 345.00 - SUNNYSIDE 345KV CKT 1	717	789	0.11683	111.5212	ST FRANCIS 345/161KV TRANSFORMER CKT 1
FDNS	00NR	3	20WP	G15_057	FROM->TO	G14-057T 345.00 - SUNNYSIDE 345KV CKT 1	717	789	0.11684	111.5199	P12:138:AEPW:MOHAWK4:T.NO--4
FDNS	00NR	3	16WP	G15_057	FROM->TO	G14-057T 345.00 - SUNNYSIDE 345KV CKT 1	717	789	0.117	111.5178	GEN661015 1-COYOTE
FDNS	00NR	3	20WP	G15_057	FROM->TO	G14-057T 345.00 - SUNNYSIDE 345KV CKT 1	717	789	0.11676	111.5138	LAYFLD8 500.00 (LAYFLD AUTO) 500/230/13.8KV TRANSFORMER CKT 1
FDNS	00NR	3	20WP	G15_057	FROM->TO	G14-057T 345.00 - SUNNYSIDE 345KV CKT 1	717	789	0.11676	111.5138	LAYFLD8 500.00 (LAYFLD AUTO) 500/230/13.8KV TRANSFORMER CKT 1
FDNS	00NR	3	20WP	G15_057	FROM->TO	G14-057T 345.00 - SUNNYSIDE 345KV CKT 1	717	789	0.12141	111.5114	CIMARRON - NORTHWEST 345KV CKT 1
FDNS	00NR	3	20WP	G15_057	FROM->TO	G14-057T 345.00 - SUNNYSIDE 345KV CKT 1	717	789	0.11745	111.5059	CORNVILLE - NORTH 29TH CHICKASHA 138KV CKT 1
FDNS	00NR	3	20WP	G15_057	FROM->TO	G14-057T 345.00 - SUNNYSIDE 345KV CKT 1	717	789	0.11608	111.5036	ARBUCKLE - MILLCREEK 138KV CKT 1
FDNS	00NR	3	20WP	G15_057	FROM->TO	G14-057T 345.00 - SUNNYSIDE 345KV CKT 1	717	789	0.11734	111.5033	WEATHERFORD SOUTHEAST - WEATHERFORD TAP 138KV CKT 1
FDNS	00NR	3	20WP	G15_057	FROM->TO	G14-057T 345.00 - SUNNYSIDE 345KV CKT 1	717	789	0.11668	111.5001	P12:138:AEPW-SWPA:LONEOAK4:BRKNBW4
FDNS	00NR	3	20WP	G15_057	FROM->TO	G14-057T 345.00 - SUNNYSIDE 345KV CKT 1	717	789	0.11683	111.4992	SABINE 138/22.0KV TRANSFORMER CKT 1
FDNS	00NR	3	20WP	G15_057	FROM->TO	G14-057T 345.00 - SUNNYSIDE 345KV CKT 1	717	789	0.11668	111.489	CLAYTON - NASHOBA 138KV CKT 1
FDNS	00NR	3	20WP	G15_057	FROM->TO	G14-057T 345.00 - SUNNYSIDE 345KV CKT 1	717	789	0.11686	111.4879	7JASPER 345.00 - MORGAN 345KV CKT 1
FDNS	00NR	3	20WP	G15_057	FROM->TO	G14-057T 345.00 - SUNNYSIDE 345KV CKT 1	717	789	0.1177	111.4844	HINTON - REDROCKRD4 138.00 138KV CKT 1
FDNS	00NR	3	20WP	G15_057	FROM->TO	G14-057T 345.00 - SUNNYSIDE 345KV CKT 1	717	789	0.11707	111.4828	SEMINOLE (SEMINOL2) 345/138/14.4KV TRANSFORMER CKT 1
FDNS	00NR	3	20WP	G15_057	FROM->TO	G14-057T 345.00 - SUNNYSIDE 345KV CKT 1	717	789	0.11683	111.4828	GEN338146 1-INDEPENDENCE UNIT #2
FDNS	00NR	3	16WP	G15_057	FROM->TO	G14-057T 345.00 - SUNNYSIDE 345KV CKT 1	717	789	0.11582	111.4571	SUNNYSIDE - UNIROYAL 138KV CKT 1
FDNS	00NR	3	20WP	G15_057	FROM->TO	G14-057T 345.00 - SUNNYSIDE 345KV CKT 1	717	789	0.11696	111.4536	P12:138:OKGE:3TERM20
FDNS	00NR	3	20WP	G15_057	FROM->TO	G14-057T 345.00 - SUNNYSIDE 345KV CKT 1	717	789	0.11734	111.4533	CLINTON JUNCTION - CLINTON NATURAL GAS TAP 138KV CKT 1
FDNS	00NR	3	20WP	G15_057	FROM->TO	G14-057T 345.00 - SUNNYSIDE 345KV CKT 1	717	789	0.05787	111.4488	GRACEMONT - LAWTON EASTSIDE 345KV CKT 1
FDNS	00NR	3	20WP	G15_057	FROM->TO	G14-057T 345.00 - SUNNYSIDE 345KV CKT 1	717	789	0.05787	111.4488	GRACEMONT - LAWTON EASTSIDE 345KV CKT 1
FDNS	00NR	3	20WP	G15_057	FROM->TO	G14-057T 345.00 - SUNNYSIDE 345KV CKT 1	717	789	0.11924	111.4413	MARIETTA - MARIETTA4 138.00 138KV CKT 1
FDNS	00NR	3	16WP	G15_057	FROM->TO	G14-057T 345.00 - SUNNYSIDE 345KV CKT 1	717	789	0.11755	111.44	GRAPEVINE INTERCHANGE - NICHOLS STATION 230KV CKT 1
FDNS	00NR	3	16WP	G15_057	FROM->TO	G14-057T 345.00 - SUNNYSIDE 345KV CKT 1	717	789	0.11755	111.44	GRAPEVINE INTERCHANGE - NICHOLS STATION 230KV CKT 1
FDNS	00NR	3	20WP	G15_057	FROM->TO	G14-057T 345.00 - SUNNYSIDE 345KV CKT 1	717	789	0.11717	111.4355	COMANCHE - WALTERS 69KV CKT 1
FDNS	00NR	3	16WP	G15_057	FROM->TO	G14-057T 345.00 - SUNNYSIDE 345KV CKT 1	717	789	0.11705	111.4174	P12:138:AEPW:SHAM4WT:CHILD4WT
FDNS	00NR	3	16WP	G15_057	FROM->TO	G14-057T 345.00 - SUNNYSIDE 345KV CKT 1	717	789	0.11711	111.4115	P12:138:WFEC:MSL15

SOLUTION	GROUP	SCENARIO	SEASON	SOURCE	DIRECTION	MONITORED ELEMENT	RATEA (MVA)	RATEB(MVA)	TDF	TC%LOADING (% MVA)	CONTINGENCY
FDNS	00NR	3	16WP	G15_057	FROM->TO	G14-057T 345.00 - SUNNYSIDE 345KV CKT 1	717	789	0.11948	111.4067	CHISHOLM7 345.00 (CHISHOLM) 345/230/13.2KV TRANSFORMER CKT 1
FDNS	00NR	3	16WP	G15_057	FROM->TO	G14-057T 345.00 - SUNNYSIDE 345KV CKT 1	717	789	0.117	111.4034	GEN657748 1-YOUNG 2 GENERATOR
FDNS	00NR	3	16WP	G15_057	FROM->TO	G14-057T 345.00 - SUNNYSIDE 345KV CKT 1	717	789	0.117	111.4	GEN532751 1-WOLF CREEK GENERATING STATION UNIT 1
FDNS	00NR	3	16WP	G15_057	FROM->TO	G14-057T 345.00 - SUNNYSIDE 345KV CKT 1	717	789	0.117	111.3811	GEN562992 1-G15063_3 0.6900
FDNS	00NR	3	16WP	G15_057	FROM->TO	G14-057T 345.00 - SUNNYSIDE 345KV CKT 1	717	789	0.117	111.3562	GEN562704 1-G15_020_3 0.3550
FDNS	00NR	3	16WP	G15_057	FROM->TO	G14-057T 345.00 - SUNNYSIDE 345KV CKT 1	717	789	0.117	111.3542	GEN563173 1-G15082_3 0.6900
FDNS	00NR	3	16WP	G15_057	FROM->TO	G14-057T 345.00 - SUNNYSIDE 345KV CKT 1	717	789	0.1194	111.3478	CANEY CREEK - TEXOMA JCT 138KV CKT 1
FDNS	00NR	3	16WP	G15_057	FROM->TO	G14-057T 345.00 - SUNNYSIDE 345KV CKT 1	717	789	0.117	111.3165	GEN562952 1-G15057_3 0.6500
FDNS	00NR	3	16WP	G15_057	FROM->TO	G14-057T 345.00 - SUNNYSIDE 345KV CKT 1	717	789	0.117	111.2724	GEN562710 1-G15_022_3 0.5500
FDNS	00NR	3	16WP	G15_057	FROM->TO	G14-057T 345.00 - SUNNYSIDE 345KV CKT 1	717	789	0.117	111.2411	GEN620315 1-BIG STONE GEN
FDNS	00NR	3	16WP	G15_057	FROM->TO	G14-057T 345.00 - SUNNYSIDE 345KV CKT 1	717	789	0.11948	111.1801	CHISHOLM7 345.00 - GRACEMONT 345KV CKT 1
FDNSLock	00NR	3	16WP	G15_057	FROM->TO	G14-057T 345.00 - SUNNYSIDE 345KV CKT 1	717	789	0.117	111.1763	GEN600004 2-PRAIRIE ISLAND G2
FDNSLock	00NR	3	16WP	G15_057	FROM->TO	G14-057T 345.00 - SUNNYSIDE 345KV CKT 1	717	789	0.117	111.1736	GEN600003 1-PRAIRIE ISLAND G1
FDNS	00NR	3	16WP	G15_057	FROM->TO	G14-057T 345.00 - SUNNYSIDE 345KV CKT 1	717	789	0.11708	111.1734	P12:138:WFEC:MSL09
FDNSLock	00NR	3	16WP	G15_057	FROM->TO	G14-057T 345.00 - SUNNYSIDE 345KV CKT 1	717	789	0.117	111.1659	GEN600006 1-AS KING
FDNS	00NR	3	16WP	G15_057	FROM->TO	G14-057T 345.00 - SUNNYSIDE 345KV CKT 1	717	789	0.117	111.1295	GEN511851 1-COMANCHE #1
FDNS	00NR	3	16WP	G15_057	FROM->TO	G14-057T 345.00 - SUNNYSIDE 345KV CKT 1	717	789	0.117	111.1	GEN636641 1-LOUISA UNIT 1
FDNS	00NR	3	16WP	G15_057	FROM->TO	G14-057T 345.00 - SUNNYSIDE 345KV CKT 1	717	789	0.117	111.0396	GEN600005 1-MONTICELLO
FDNS	00NR	3	16WP	G15_057	FROM->TO	G14-057T 345.00 - SUNNYSIDE 345KV CKT 1	717	789	0.11804	111.0304	P12:230:AEPW-SPS:SWEETWT6:WHEELER 6
FDNS	00NR	3	16WP	G15_057	FROM->TO	G14-057T 345.00 - SUNNYSIDE 345KV CKT 1	717	789	0.11804	111.0294	STATELINE INTERCHANGE - STLN-DEMARC6 230KV CKT 1
FDNS	00NR	3	16WP	G15_057	FROM->TO	G14-057T 345.00 - SUNNYSIDE 345KV CKT 1	717	789	0.11804	111.0283	STLN-DEMARC6 - SWEETWATER 230KV CKT 1
FDNS	00NR	3	16WP	G15_057	FROM->TO	G14-057T 345.00 - SUNNYSIDE 345KV CKT 1	717	789	0.117	111.0266	GEN562754 1-G15031_5 0.6900
FDNS	00NR	3	20WP	G15_057	FROM->TO	G14-057T 345.00 - SUNNYSIDE 345KV CKT 1	717	789	0.11683	111.0252	803-OKLAUNION
FDNS	00NR	3	16WP	G15_057	FROM->TO	G14-057T 345.00 - SUNNYSIDE 345KV CKT 1	717	789	0.117	111.0089	GEN615002 2-COAL CREEK
FDNS	00NR	3	16WP	G15_057	FROM->TO	G14-057T 345.00 - SUNNYSIDE 345KV CKT 1	717	789	0.117	111	GEN629074 1-ARNOLD LOWSIDE OF GSU XFMR
FDNS	00NR	3	16WP	G15_057	FROM->TO	G14-057T 345.00 - SUNNYSIDE 345KV CKT 1	717	789	0.11794	110.9877	P12:138:AEPW-OGE:CORNVIL4:CIMARON4
FDNS	00NR	3	16WP	G15_057	FROM->TO	G14-057T 345.00 - SUNNYSIDE 345KV CKT 1	717	789	0.117	110.9862	GEN562023 1-G11_020_3 0.6900
FDNS	00NR	3	16WP	G15_057	FROM->TO	G14-057T 345.00 - SUNNYSIDE 345KV CKT 1	717	789	0.117	110.9862	GEN562026 1-G11_019_3 0.6900
FDNS	00NR	3	16WP	G15_057	FROM->TO	G14-057T 345.00 - SUNNYSIDE 345KV CKT 1	717	789	0.117	110.9797	GEN635213 3-NEAL UNIT 3
FDNS	00NR	3	16WP	G15_057	FROM->TO	G14-057T 345.00 - SUNNYSIDE 345KV CKT 1	717	789	0.117	110.9682	GEN562756 1-G15031_7 0.6900
FDNS	00NR	3	16WP	G15_057	FROM->TO	G14-057T 345.00 - SUNNYSIDE 345KV CKT 1	717	789	0.117	110.9258	BIG STONE 230/24.0KV TRANSFORMER CKT 1
FDNS	00NR	3	16WP	G15_057	FROM->TO	G14-057T 345.00 - SUNNYSIDE 345KV CKT 1	717	789	0.117	110.9216	GEN562556 1-G14_046_3 0.3420
FDNS	00NR	3	16WP	G15_057	FROM->TO	G14-057T 345.00 - SUNNYSIDE 345KV CKT 1	717	789	0.117	110.8335	GEN563142 1-G15079_3 0.5500
FDNS	00NR	3	16WP	G15_057	FROM->TO	G14-057T 345.00 - SUNNYSIDE 345KV CKT 1	717	789	0.117	110.8335	GEN563151 1-G15080_2 0.5500
FDNS	00NR	3	16WP	G15_057	FROM->TO	G14-057T 345.00 - SUNNYSIDE 345KV CKT 1	717	789	0.117	110.8185	GEN523971 1-HARRINGTON GEN #1 24 KV
FDNS	00NR	3	16WP	G15_057	FROM->TO	G14-057T 345.00 - SUNNYSIDE 345KV CKT 1	717	789	0.117	110.8185	GEN523973 1-HARRINGTON GEN #3 24 KV
FDNS	00NR	3	16WP	G15_057	FROM->TO	G14-057T 345.00 - SUNNYSIDE 345KV CKT 1	717	789	0.117	110.8184	GEN523972 1-HARRINGTON GEN #2 24 KV
FDNS	00NR	3	20WP	G15_057	FROM->TO	G14-057T 345.00 - SUNNYSIDE 345KV CKT 1	717	789	0.11521	110.8058	P12:138:OKGE:3TERM39
FDNS	00NR	3	16WP	G15_057	FROM->TO	G14-057T 345.00 - SUNNYSIDE 345KV CKT 1	717	789	0.117	110.7304	GEN600000 1-SHERBURNECNTY G1
FDNS	00NR	3	16WP	G15_057	FROM->TO	G14-057T 345.00 - SUNNYSIDE 345KV CKT 1	717	789	0.11666	110.7146	NORTHWEST TEXARKANA - VALLIANT 345KV CKT 1
FDNS	00NR	3	16WP	G15_057	FROM->TO	G14-057T 345.00 - SUNNYSIDE 345KV CKT 1	717	789	0.11666	110.7146	NORTHWEST TEXARKANA - VALLIANT 345KV CKT 1
FDNS	00NR	3	16WP	G15_057	FROM->TO	G14-057T 345.00 - SUNNYSIDE 345KV CKT 1	717	789	0.11955	110.6535	P12:230:AEPW:ELKCITY6:SWEETWT6
FDNS	00NR	3	16WP	G15_057	FROM->TO	G14-057T 345.00 - SUNNYSIDE 345KV CKT 1	717	789	0.117	110.6508	GEN600001 2-SHERBURNE CNTY G2
FDNS	00NR	3	20WP	G15_057	FROM->TO	G14-057T 345.00 - SUNNYSIDE 345KV CKT 1	717	789	0.11568	110.6277	MAYSVILLE - MAYSVLT4 138.00 138KV CKT 1
FDNS	00NR	3	16WP	G15_057	FROM->TO	G14-057T 345.00 - SUNNYSIDE 345KV CKT 1	717	789	0.117	110.6206	GEN563042 1-G15068_3 0.6900
FDNS	00NR	3	16WP	G15_057	FROM->TO	G14-057T 345.00 - SUNNYSIDE 345KV CKT 1	717	789	0.117	110.6069	GEN527901 1-HOBBS PLANT #1 (CT)
FDNS	00NR	3	16WP	G15_057	FROM->TO	G14-057T 345.00 - SUNNYSIDE 345KV CKT 1	717	789	0.117	110.6069	GEN527902 1-HOBBS PLANT #2 (CT)
FDNS	00NR	3	16WP	G15_057	FROM->TO	G14-057T 345.00 - SUNNYSIDE 345KV CKT 1	717	789	0.117	110.6027	GEN511848 1-SOUTHWESTERN STATION #3
FDNS	00NR	3	20WP	G15_057	FROM->TO	G14-057T 345.00 - SUNNYSIDE 345KV CKT 1	717	789	0.11807	110.5975	BEARCAT 138.00 - NINE MILE 138KV CKT 1
FDNS	00NR	3	20WP	G15_057	FROM->TO	G14-057T 345.00 - SUNNYSIDE 345KV CKT 1	717	789	0.11683	110.5893	GEN521103 1-BLUE CANYON WIND FARM
FDNS	00NR	3	20WP	G15_057	FROM->TO	G14-057T 345.00 - SUNNYSIDE 345KV CKT 1	717	789	0.11683	110.5787	GEN562691 1-G15_015_3 0.6900
FDNS	00NR	3	20WP	G15_057	FROM->TO	G14-057T 345.00 - SUNNYSIDE 345KV CKT 1	717	789	0.11683	110.5785	GEN520812 1-ANADRK5
FDNS	00NR	3	20WP	G15_057	FROM->TO	G14-057T 345.00 - SUNNYSIDE 345KV CKT 1	717	789	0.11683	110.5784	GEN520813 1-ANADRK6
FDNS	00NR	3	20WP	G15_057	FROM->TO	G14-057T 345.00 - SUNNYSIDE 345KV CKT 1	717	789	0.11683	110.5753	GEN563052 1-G15069_3 0.6900
FDNS	00NR	3	20WP	G15_057	FROM->TO	G14-057T 345.00 - SUNNYSIDE 345KV CKT 1	717	789	0.11683	110.5696	GEN562772 1-G15034_3 0.6900
FDNS	00NR	3	20WP	G15_057	FROM->TO	G14-057T 345.00 - SUNNYSIDE 345KV CKT 1	717	789	0.11727	110.5695	DRAPER LAKE - MIDWEST TAP 138KV CKT 1
FDNS	00NR	3	20WP	G15_057	FROM->TO	G14-057T 345.00 - SUNNYSIDE 345KV CKT 1	717	789	0.11683	110.5621	GEN600046 1-MECST
FDNS	00NR	3	20WP	G15_057	FROM->TO	G14-057T 345.00 - SUNNYSIDE 345KV CKT 1	717	789	0.11568	110.5618	MAYSVLT4 138.00 - PRAIRIE POINT 138KV CKT 1
FDNS	00NR	3	20WP	G15_057	FROM->TO	G14-057T 345.00 - SUNNYSIDE 345KV CKT 1	717	789	0.11683	110.5514	GEN629070 2-BEAVER CHANNEL GENERATORFOR UNIT NO 2
FDNS	00NR	3	20WP	G15_057	FROM->TO	G14-057T 345.00 - SUNNYSIDE 345KV CKT 1	717	789	0.11683	110.5496	GEN511961 1-DEMPSEY-WTG10.7000
FDNS	00NR	3	20WP	G15_057	FROM->TO	G14-057T 345.00 - SUNNYSIDE 345KV CKT 1	717	789	0.11683	110.5482	GEN600047 1-MECCT1
FDNS	00NR	3	20WP	G15_057	FROM->TO	G14-057T 345.00 - SUNNYSIDE 345KV CKT 1	717	789	0.11683	110.5464	P12:069:OKGE:3TERM42
FDNS	00NR	3	20WP	G15_057	FROM->TO	G14-057T 345.00 - SUNNYSIDE 345KV CKT 1	717	789	0.11593	110.546	ARBUCKLE - SULPHR 4 138.00 138KV CKT 1
FDNS	00NR	3	20WP	G15_057	FROM->TO	G14-057T 345.00 - SUNNYSIDE 345KV CKT 1	717	789	0.11683	110.5432	GEN629071 1-BURLINGTON GENERATOR FOR UNIT NO 1 E
FDNS	00NR	3	20WP	G15_057	FROM->TO	G14-057T 345.00 - SUNNYSIDE 345KV CKT 1	717	789	0.11791	110.5428	CIMARRON - MATHWSN7 345.00 345KV CKT 1
FDNS	00NR	3	20WP	G15_057	FROM->TO	G14-057T 345.00 - SUNNYSIDE 345KV CKT 1	717	789	0.11791	110.5428	CIMARRON - MATHWSN7 345.00 345KV CKT 2
FDNS	00NR	3	20WP	G15_057	FROM->TO	G14-057T 345.00 - SUNNYSIDE 345KV CKT 1	717	789	0.11807	110.5403	P12:138:WFEC:MSL14
FDNS	00NR	3	20WP	G15_057	FROM->TO	G14-057T 345.00 - SUNNYSIDE 345KV CKT 1	717	789	0.11732	110.5392	P12:138:OKGE:3TERM21
FDNS	00NR	3	20WP	G15_057	FROM->TO	G14-057T 345.00 - SUNNYSIDE 345KV CKT 1	717	789	0.11978	110.5365	G15063_T 345.00 - MATHWSN7 345.00 345KV CKT 1
FDNS	00NR	3	20WP	G15_057	FROM->TO	G14-057T 345.00 - SUNNYSIDE 345KV CKT 1	717	789	0.11683	110.5362	BURLINGTON NO1 + NO 2 + NO 3 161/20.0KV TRANSFORMER CKT 1
FDNSLock	00NR	3	16WP	G15_057	FROM->TO	G14-057T 345.00 - SUNNYSIDE 345KV CKT 1	717	789	0.117	110.5323	GEN629075 1-OTTUMWA GENERATOR FOR OTTUMWA UNIT NO 1
FDNS	00NR	3	20WP	G15_057	FROM->TO	G14-057T 345.00 - SUNNYSIDE 345KV CKT 1	717	789	0.11681	110.5286	P12:138:WFEC:MSL11
FDNS	00NR	3	20WP	G15_057	FROM->TO	G14-057T 345.00 - SUNNYSIDE 345KV CKT 1	717	789	0.11681	110.5286	P12:138:WFEC-AEPW:PHAROAH4:LONEOAK4
FDNS	00NR	3	20WP	G15_057	FROM->TO	G14-057T 345.00 - SUNNYSIDE 345KV CKT 1	717	789	0.11683	110.525	GEN615010 1-STANTON4
FDNS	00NR	3	20WP	G15_057	FROM->TO	G14-057T 345.00 - SUNNYSIDE 345KV CKT 1	717	789	0.11683	110.5192	GEN615021 1-GRE-ER 14G 16.000
FDNS	00NR	3	20WP	G15_057	FROM->TO	G14-057T 345.00 - SUNNYSIDE 345KV CKT 1	717	789	0.11692	110.5122	GLASSES - MADILL INDUSTRIAL TAP 138KV CKT 1
FDNS	00NR	3	20WP	G15_057	FROM->TO	G14-057T 345.00 - SUNNYSIDE 345KV CKT 1	717	789	0.11692	110.4994	CANEY CREEK - JOHNSON COUNTY 138KV CKT 1
FDNS	00NR	3	20WP	G15_057	FROM->TO	G14-057T 345.00 - SUNNYSIDE 345KV CKT 1	717	789	0.11807	110.4961	BEARCAT 138.00 - MOORELAND 138KV CKT 1
FDNS	00NR	3	20WP	G15_057	FROM->TO	G14-057T 345.00 - SUNNYSIDE 345KV CKT 1	717	789	0.11712	110.4941	P12:138:WFEC:MSL08

SOLUTION	GROUP	SCENARIO	SEASON	SOURCE	DIRECTION	MONITORED ELEMENT	RATEA (MVA)	RATEB(MVA)	TDF	TC%LOADING (% MVA)	CONTINGENCY
FDNS	00NR	3	20WP	G15_057	FROM->TO	G14-057T 345.00 - SUNNYSIDE 345KV CKT 1	717	789	0.11683	110.4852	GEN531447 1-HOLCOMB GENERATOR
FDNS	00NR	3	20WP	G15_057	FROM->TO	G14-057T 345.00 - SUNNYSIDE 345KV CKT 1	717	789	0.11683	110.4848	GEN515443 1-MNCOWND1 0.7000
FDNS	00NR	3	20WP	G15_057	FROM->TO	G14-057T 345.00 - SUNNYSIDE 345KV CKT 1	717	789	0.11683	110.4842	INDEPENDENCE 500/26.0KV TRANSFORMER CKT 1
FDNS	00NR	3	20WP	G15_057	FROM->TO	G14-057T 345.00 - SUNNYSIDE 345KV CKT 1	717	789	0.11924	110.4812	LEBANON - TEXOMA JCT 138KV CKT 1
FDNS	00NR	3	20WP	G15_057	FROM->TO	G14-057T 345.00 - SUNNYSIDE 345KV CKT 1	717	789	0.11683	110.4761	GEN560183 1-REDHIL-WTG1 12.000
FDNS	00NR	3	20WP	G15_057	FROM->TO	G14-057T 345.00 - SUNNYSIDE 345KV CKT 1	717	789	0.11568	110.4698	PRAIRIE POINT - RATLIFF 138KV CKT 1
FDNS	00NR	3	20WP	G15_057	FROM->TO	G14-057T 345.00 - SUNNYSIDE 345KV CKT 1	717	789	0.11683	110.4591	GEN600067 9-HIGH BRIDGE
FDNS	00NR	3	20WP	G15_057	FROM->TO	G14-057T 345.00 - SUNNYSIDE 345KV CKT 1	717	789	0.11683	110.4575	P12:230:UMZB:# 112 #: NU IN SD. NU-RCDC & DRY CREEK XFMR
FDNS	00NR	3	20WP	G15_057	FROM->TO	G14-057T 345.00 - SUNNYSIDE 345KV CKT 1	717	789	0.11683	110.4571	RCDC EAST 4230.00 - RED CEDAR DC 230KV CKT 1
FDNS	00NR	3	20WP	G15_057	FROM->TO	G14-057T 345.00 - SUNNYSIDE 345KV CKT 1	717	789	0.11692	110.4567	OVEXFRMCCOVE
FDNS	00NR	3	20WP	G15_057	FROM->TO	G14-057T 345.00 - SUNNYSIDE 345KV CKT 1	717	789	0.11671	110.4537	CARTER - CHICKASAW 138KV CKT 1
FDNS	00NR	3	20WP	G15_057	FROM->TO	G14-057T 345.00 - SUNNYSIDE 345KV CKT 1	717	789	0.11688	110.4531	ALTUS JUNCTION - RUSSELL 138KV CKT 1
FDNS	00NR	3	20WP	G15_057	FROM->TO	G14-057T 345.00 - SUNNYSIDE 345KV CKT 1	717	789	0.11688	110.4531	ALTUS JUNCTION - RUSSELL 138KV CKT 1
FDNS	00NR	3	20WP	G15_057	FROM->TO	G14-057T 345.00 - SUNNYSIDE 345KV CKT 1	717	789	0.11692	110.4518	GLASSES - RUSSETT 138KV CKT 1
FDNS	00NR	3	20WP	G15_057	FROM->TO	G14-057T 345.00 - SUNNYSIDE 345KV CKT 1	717	789	0.11696	110.4453	CANADIAN RIVER - MCALESTER SOUTH 138KV CKT 1
FDNS	00NR	3	20WP	G15_057	FROM->TO	G14-057T 345.00 - SUNNYSIDE 345KV CKT 1	717	789	0.11696	110.4453	CANADIAN RIVER - MCALESTER SOUTH 138KV CKT 1
FDNS	00NR	3	20WP	G15_057	FROM->TO	G14-057T 345.00 - SUNNYSIDE 345KV CKT 1	717	789	0.11696	110.4435	CANADIAN RIVER () 345/138/13.8KV TRANSFORMER CKT 1
FDNS	00NR	3	20WP	G15_057	FROM->TO	G14-057T 345.00 - SUNNYSIDE 345KV CKT 1	717	789	0.11696	110.4435	CANADIAN RIVER () 345/138/13.8KV TRANSFORMER CKT 1
FDNS	00NR	3	20WP	G15_057	FROM->TO	G14-057T 345.00 - SUNNYSIDE 345KV CKT 1	717	789	0.11687	110.4405	GRPRAR1-LNX3345.00 - HOLT.CO3 345.00 345KV CKT 1
FDNS	00NR	3	20WP	G15_057	FROM->TO	G14-057T 345.00 - SUNNYSIDE 345KV CKT 1	717	789	0.11687	110.4383	GRPRAR1-LNX3345.00 - GRPRAR 345KV CKT Z
FDNS	00NR	3	20WP	G15_057	FROM->TO	G14-057T 345.00 - SUNNYSIDE 345KV CKT 1	717	789	0.11683	110.4359	GEN563242 1-G15090_3 0.6900
FDNS	00NR	3	20WP	G15_057	FROM->TO	G14-057T 345.00 - SUNNYSIDE 345KV CKT 1	717	789	0.11676	110.4311	HUGO (HUGO 1) 345/138/13.8KV TRANSFORMER CKT 1
FDNS	00NR	3	20WP	G15_057	FROM->TO	G14-057T 345.00 - SUNNYSIDE 345KV CKT 1	717	789	0.11644	110.4292	ROCKY POINT - SPRINGDALE 138KV CKT 1
FDNS	00NR	3	20WP	G15_057	FROM->TO	G14-057T 345.00 - SUNNYSIDE 345KV CKT 1	717	789	0.11703	110.419	CHAMBER SPRINGS - CLARKSVILLE 345KV CKT 1
FDNS	00NR	3	20WP	G15_057	FROM->TO	G14-057T 345.00 - SUNNYSIDE 345KV CKT 1	717	789	0.11683	110.4157	GEN562902 1-G15052_3 0.6900
FDNS	00NR	3	20WP	G15_057	FROM->TO	G14-057T 345.00 - SUNNYSIDE 345KV CKT 1	717	789	0.11702	110.4053	P12:138:AEPW:112GORE4:SNYDER-4
FDNS	00NR	3	16WP	G15_057	FROM->TO	G14-057T 345.00 - SUNNYSIDE 345KV CKT 1	717	789	0.117	110.405	SHERBURNE CO 345/24.0KV TRANSFORMER CKT 1
FDNS	00NR	3	20WP	G15_057	FROM->TO	G14-057T 345.00 - SUNNYSIDE 345KV CKT 1	717	789	0.11683	110.4025	GEN562078 1-G11_051_3 0.6900
FDNS	00NR	3	20WP	G15_057	FROM->TO	G14-057T 345.00 - SUNNYSIDE 345KV CKT 1	717	789	0.11593	110.4003	JOLLYVILLE - SULPHR 4 138.00 138KV CKT 1
FDNS	00NR	3	16WP	G15_057	FROM->TO	G14-057T 345.00 - SUNNYSIDE 345KV CKT 1	717	789	0.117	110.4	GEN635214 4-NEAL UNIT 4
FDNS	00NR	3	20WP	G15_057	FROM->TO	G14-057T 345.00 - SUNNYSIDE 345KV CKT 1	717	789	0.11683	110.3996	GEN629072 4-LANSING GENERATOR FOR UNITS NO4 EIA CODE 1
FDNS	00NR	3	20WP	G15_057	FROM->TO	G14-057T 345.00 - SUNNYSIDE 345KV CKT 1	717	789	0.11683	110.397	GEN562802 1-G15039_3 0.3570
FDNS	00NR	3	20WP	G15_057	FROM->TO	G14-057T 345.00 - SUNNYSIDE 345KV CKT 1	717	789	0.11683	110.3855	GEN524285 1-WILDORADO WIND GEN
FDNS	00NR	3	20WP	G15_057	FROM->TO	G14-057T 345.00 - SUNNYSIDE 345KV CKT 1	717	789	0.11683	110.368	GEN560331 1-G10-46 13.800
FDNS	00NR	3	20WP	G15_057	FROM->TO	G14-057T 345.00 - SUNNYSIDE 345KV CKT 1	717	789	0.11683	110.3627	GEN524295 1-SPNSPUR_WND10.6900
FDNS	00NR	3	20WP	G15_057	FROM->TO	G14-057T 345.00 - SUNNYSIDE 345KV CKT 1	717	789	0.11683	110.3483	GEN562587 1-G14_056_3 0.6900
FDNS	00NR	3	20WP	G15_057	FROM->TO	G14-057T 345.00 - SUNNYSIDE 345KV CKT 1	717	789	0.11683	110.3477	GEN657749 1-YOUNG 1 GENERATOR
FDNS	00NR	3	20WP	G15_057	FROM->TO	G14-057T 345.00 - SUNNYSIDE 345KV CKT 1	717	789	0.11683	110.342	GEN514805 1-SOONER UNIT 1
FDNS	00NR	3	20WP	G15_057	FROM->TO	G14-057T 345.00 - SUNNYSIDE 345KV CKT 1	717	789	0.11683	110.337	GEN562269 1-G12-020-1 0.6900
FDNS	00NR	3	20WP	G15_057	FROM->TO	G14-057T 345.00 - SUNNYSIDE 345KV CKT 1	717	789	0.11683	110.3367	GEN524023 1-NICHOLS GEN #3 22 KV
FDNS	00NR	3	20WP	G15_057	FROM->TO	G14-057T 345.00 - SUNNYSIDE 345KV CKT 1	717	789	0.11593	110.3364	JOLLYVILLE - KERR MCGEE CIMARRON 138KV CKT 1
FDNS	00NR	3	16WP	G15_057	FROM->TO	G14-057T 345.00 - SUNNYSIDE 345KV CKT 1	717	789	0.117	110.328	GEN563273 2-G15093_4 0.6900
FDNS	00NR	3	20WP	G15_057	FROM->TO	G14-057T 345.00 - SUNNYSIDE 345KV CKT 1	717	789	0.11683	110.3222	GEN514806 1-SOONER UNIT 2
FDNS	00NR	3	20WP	G15_057	FROM->TO	G14-057T 345.00 - SUNNYSIDE 345KV CKT 1	717	789	0.11674	110.3219	CROCKETT - TENASKA RUSK COUNTY 345KV CKT 1
FDNS	00NR	3	16WP	G15_057	FROM->TO	G14-057T 345.00 - SUNNYSIDE 345KV CKT 1	717	789	0.117	110.3185	GEN563043 1-G15068_4 0.6900
FDNS	00NR	3	20WP	G15_057	FROM->TO	G14-057T 345.00 - SUNNYSIDE 345KV CKT 1	717	789	0.11674	110.3172	LEBROCK - TENASKA RUSK COUNTY 345KV CKT 1
FDNS	00NR	3	16WP	G15_057	FROM->TO	G14-057T 345.00 - SUNNYSIDE 345KV CKT 1	717	789	0.11804	110.3023	CHISHOLM6 230.00 - SWEETWATER 230KV CKT 1
FDNS	00NR	3	16WP	G15_057	FROM->TO	G14-057T 345.00 - SUNNYSIDE 345KV CKT 1	717	789	0.117	110.2979	GEN526333 1-JONES GEN #3 21 KV
FDNS	00NR	3	16WP	G15_057	FROM->TO	G14-057T 345.00 - SUNNYSIDE 345KV CKT 1	717	789	0.117	110.2979	GEN526334 1-JONES_4 116.500
FDNS	00NR	3	20WP	G15_057	FROM->TO	G14-057T 345.00 - SUNNYSIDE 345KV CKT 1	717	789	0.11683	110.2978	GEN562812 1-G15040_3 0.3570
FDNS	00NR	3	20WP	G15_057	FROM->TO	G14-057T 345.00 - SUNNYSIDE 345KV CKT 1	717	789	0.11683	110.2935	GEN562270 1-G12-020-2 0.6900
FDNS	00NR	3	20WP	G15_057	FROM->TO	G14-057T 345.00 - SUNNYSIDE 345KV CKT 1	717	789	0.11593	110.2924	ARBWIND4 138.00 - KERR MCGEE CIMARRON 138KV CKT 1
FDNS	00NR	3	20WP	G15_057	FROM->TO	G14-057T 345.00 - SUNNYSIDE 345KV CKT 1	717	789	0.11683	110.2912	GEN563132 1-G15078_3 0.3570
FDNS	00NR	3	20WP	G15_057	FROM->TO	G14-057T 345.00 - SUNNYSIDE 345KV CKT 1	717	789	0.11683	110.2846	GEN563102 1-G15075_3 0.5500
FDNS	00NR	3	20WP	G15_057	FROM->TO	G14-057T 345.00 - SUNNYSIDE 345KV CKT 1	717	789	0.11683	110.2683	GEN562882 1-G15047_3 0.6900
FDNS	00NR	3	20WP	G15_057	FROM->TO	G14-057T 345.00 - SUNNYSIDE 345KV CKT 1	717	789	0.11683	110.2606	GEN562974 1-G15060_5 0.6900
FDNS	00NR	3	20WP	G15_057	FROM->TO	G14-057T 345.00 - SUNNYSIDE 345KV CKT 1	717	789	0.11683	110.2605	GEN563062 1-G15071_3 0.6900
FDNS	00NR	3	20WP	G15_057	FROM->TO	G14-057T 345.00 - SUNNYSIDE 345KV CKT 1	717	789	0.11683	110.251	GEN562973 1-G15060_4 0.6900
FDNS	00NR	3	16WP	G15_057	FROM->TO	G14-057T 345.00 - SUNNYSIDE 345KV CKT 1	717	789	0.117	110.2441	GEN525844 1-ELK_1 118.000
FDNS	00NR	3	16WP	G15_057	FROM->TO	G14-057T 345.00 - SUNNYSIDE 345KV CKT 1	717	789	0.117	110.2387	GEN525845 1-ELK_2 1 138.00
FDNS	00NR	3	20WP	G15_057	FROM->TO	G14-057T 345.00 - SUNNYSIDE 345KV CKT 1	717	789	0.11683	110.2364	GEN345671 2-1RUSH G2 18.000
FDNS	00NR	3	20WP	G15_057	FROM->TO	G14-057T 345.00 - SUNNYSIDE 345KV CKT 1	717	789	0.11604	110.235	CHICKASAW - TOTAL 138KV CKT 1
FDNS	00NR	3	20WP	G15_057	FROM->TO	G14-057T 345.00 - SUNNYSIDE 345KV CKT 1	717	789	0.11683	110.2345	GEN345670 1-1RUSH G1 18.000
FDNS	00NR	3	20WP	G15_057	FROM->TO	G14-057T 345.00 - SUNNYSIDE 345KV CKT 1	717	789	0.11664	110.229	BROWN - RUSSETT 138KV CKT 1
FDNS	00NR	3	20WP	G15_057	FROM->TO	G14-057T 345.00 - SUNNYSIDE 345KV CKT 1	717	789	0.11683	110.2248	GEN521112 1-ORME3 13.800
FDNS	00NR	3	16WP	G15_057	FROM->TO	G14-057T 345.00 - SUNNYSIDE 345KV CKT 1	717	789	0.117	110.2242	GEN600002 3-SHERBURNE CNTY G3
FDNS	00NR	3	20WP	G15_057	FROM->TO	G14-057T 345.00 - SUNNYSIDE 345KV CKT 1	717	789	0.11683	110.2069	4SIOUX 1 138.00 138/18.0KV TRANSFORMER CKT 1
FDNS	00NR	3	20WP	G15_057	FROM->TO	G14-057T 345.00 - SUNNYSIDE 345KV CKT 1	717	789	0.11683	110.2006	GEN560105 1-G08-22 0.6900
FDNS	00NR	3	16WP	G15_057	FROM->TO	G14-057T 345.00 - SUNNYSIDE 345KV CKT 1	717	789	0.117	110.2	GEN344225 1-1CAL G1 25.000
FDNS	00NR	3	20WP	G15_057	FROM->TO	G14-057T 345.00 - SUNNYSIDE 345KV CKT 1	717	789	0.11683	110.1843	GEN562550 1-G14_040_3 0.6900
FDNS	00NR	3	20WP	G15_057	FROM->TO	G14-057T 345.00 - SUNNYSIDE 345KV CKT 1	717	789	0.11683	110.1721	GEN681522 3-GENOA 3
FDNS	00NR	3	20WP	G15_057	FROM->TO	G14-057T 345.00 - SUNNYSIDE 345KV CKT 1	717	789	0.11664	110.1597	RUSSETT - RUSSETT 138KV CKT 1
FDNS	00NR	3	20WP	G15_057	FROM->TO	G14-057T 345.00 - SUNNYSIDE 345KV CKT 1	717	789	0.11683	110.1569	GEN520811 1-ANADRK4
FDNS	00NR	3	16WP	G15_057	FROM->TO	G14-057T 345.00 - SUNNYSIDE 345KV CKT 1	717	789	0.117	110.1546	GEN563202 1-G15085_3 0.5500
FDNS	00NR	3	20WP	G15_057	FROM->TO	G14-057T 345.00 - SUNNYSIDE 345KV CKT 1	717	789	0.11683	110.1419	EASTDC - ERCOT EQUIVALENCE 345KV CKT 1
FDNS	00NR	3	20WP	G15_057	FROM->TO	G14-057T 345.00 - SUNNYSIDE 345KV CKT 1	717	789	0.11683	110.1409	GEN527161 1-MUSTANG GEN #1
FDNS	00NR	3	20WP	G15_057	FROM->TO	G14-057T 345.00 - SUNNYSIDE 345KV CKT 1	717	789	0.11683	110.1409	GEN527162 1-MUSTANG GEN #2
FDNS	00NR	3	20WP	G15_057	FROM->TO	G14-057T 345.00 - SUNNYSIDE 345KV CKT 1	717	789	0.11629	110.1322	ROCKY POINT - SUNNYSIDE 138KV CKT 1
FDNS	00NR	3	20WP	G15_057	FROM->TO	G14-057T 345.00 - SUNNYSIDE 345KV CKT 1	717	789	0.11683	110.1314	GEN511962 2-RKYRDGW2-1 0.7000

SOLUTION	GROUP	SCENARIO	SEASON	SOURCE	DIRECTION	MONITORED ELEMENT	RATEA (MVA)	RATEB(MVA)	TDF	TC%LOADING (% MVA)	CONTINGENCY
FDNS	00NR	3	20WP	G15_057	FROM->TO	G14-057T 345.00 - SUNNYSIDE 345KV CKT 1	717	789	0.11683	110.1099	GEN672321 1-SHAND GENERATOR 1
FDNS	00NR	3	20WP	G15_057	FROM->TO	G14-057T 345.00 - SUNNYSIDE 345KV CKT 1	717	789	0.11659	110.1098	RUSSETT - SPRINGDALE 138KV CKT 1
FDNS	00NR	3	20WP	G15_057	FROM->TO	G14-057T 345.00 - SUNNYSIDE 345KV CKT 1	717	789	0.11683	110.1087	GEN525494 1-PLANT X GEN #4 20 KV
FDNS	00NR	3	16WP	G15_057	FROM->TO	G14-057T 345.00 - SUNNYSIDE 345KV CKT 1	717	789	0.117	110.1083	GEN525562 1-TOLK GEN #2 24 KV
FDNS	00NR	3	20WP	G15_057	FROM->TO	G14-057T 345.00 - SUNNYSIDE 345KV CKT 1	717	789	0.11683	110.0936	GEN563192 1-G15084_3 0.5500
FDNS	00NR	3	20WP	G15_057	FROM->TO	G14-057T 345.00 - SUNNYSIDE 345KV CKT 1	717	789	0.11683	110.0933	GEN527882 1-CUNNINGHAM GEN #2 20 KV
FDNS	00NR	3	20WP	G15_057	FROM->TO	G14-057T 345.00 - SUNNYSIDE 345KV CKT 1	717	789	0.11683	110.087	GEN672310 1-POPLAR RIVER GENERATOR 1
FDNS	00NR	3	20WP	G15_057	FROM->TO	G14-057T 345.00 - SUNNYSIDE 345KV CKT 1	717	789	0.11683	110.087	GEN672311 2-POPLAR RIVER GENERATOR 2
FDNS	00NR	3	20WP	G15_057	FROM->TO	G14-057T 345.00 - SUNNYSIDE 345KV CKT 1	717	789	0.11683	110.0849	GEN344895 2-1LAB G2 20.000
FDNS	00NR	3	20WP	G15_057	FROM->TO	G14-057T 345.00 - SUNNYSIDE 345KV CKT 1	717	789	0.11675	110.0781	P12:138:WFEC-AEPW:GOLDENSW4:CRAIGJT4
FDNS	00NR	3	20WP	G15_057	FROM->TO	G14-057T 345.00 - SUNNYSIDE 345KV CKT 1	717	789	0.11683	110.0779	GEN527163 1-MUSTANG GEN #3 22 KV
FDNS	00NR	3	20WP	G15_057	FROM->TO	G14-057T 345.00 - SUNNYSIDE 345KV CKT 1	717	789	0.11683	110.0777	GEN672306 6-BOUNDARY DAM GENERATOR 6
FDNS	00NR	3	20WP	G15_057	FROM->TO	G14-057T 345.00 - SUNNYSIDE 345KV CKT 1	717	789	0.11611	110.0767	ARKANSAS NUCLEAR ONE - FT SMITH 500KV CKT 1
FDNS	00NR	3	20WP	G15_057	FROM->TO	G14-057T 345.00 - SUNNYSIDE 345KV CKT 1	717	789	0.11611	110.0767	ARKANSAS NUCLEAR ONE - FT SMITH 500KV CKT 1
FDNS	00NR	3	20WP	G15_057	FROM->TO	G14-057T 345.00 - SUNNYSIDE 345KV CKT 1	717	789	0.11683	110.0692	CLAY BOSWELL 230/20.9KV TRANSFORMER CKT 1
FDNS	00NR	3	20WP	G15_057	FROM->TO	G14-057T 345.00 - SUNNYSIDE 345KV CKT 1	717	789	0.11683	110.0685	GEN511853 1-COMANCHE #3
FDNS	00NR	3	16WP	G15_057	FROM->TO	G14-057T 345.00 - SUNNYSIDE 345KV CKT 1	717	789	0.117	110.0622	GEN527166 1-MUSTANG_6 118.000
FDNS	00NR	3	20WP	G15_057	FROM->TO	G14-057T 345.00 - SUNNYSIDE 345KV CKT 1	717	789	0.11683	110.0608	GEN562512 1-G14_020_3 0.6900
FDNS	00NR	3	20WP	G15_057	FROM->TO	G14-057T 345.00 - SUNNYSIDE 345KV CKT 1	717	789	0.11683	110.0598	GEN562892 1-G15048_3 0.6900
FDNS	00NR	3	20WP	G15_057	FROM->TO	G14-057T 345.00 - SUNNYSIDE 345KV CKT 1	717	789	0.11683	110.0557	GEN344896 3-1LAB G3 20.000
FDNS	00NR	3	20WP	G15_057	FROM->TO	G14-057T 345.00 - SUNNYSIDE 345KV CKT 1	717	789	0.11683	110.0546	GEN344897 4-1LAB G4 20.000
FDNS	00NR	3	20WP	G15_057	FROM->TO	G14-057T 345.00 - SUNNYSIDE 345KV CKT 1	717	789	0.11683	110.0543	GEN344894 1-1LAB G1 20.000
FDNS	00NR	3	20WP	G15_057	FROM->TO	G14-057T 345.00 - SUNNYSIDE 345KV CKT 1	717	789	0.11694	110.052	P12:138:WFEC:MSL16
FDNS	00NR	3	20WP	G15_057	FROM->TO	G14-057T 345.00 - SUNNYSIDE 345KV CKT 1	717	789	0.11683	110.048	GEN681542 6-JP MADGETT
FDNS	00NR	3	20WP	G15_057	FROM->TO	G14-057T 345.00 - SUNNYSIDE 345KV CKT 1	717	789	0.11565	110.045	ARDMORE WEST - CARTER 138KV CKT 1
FDNS	00NR	3	20WP	G15_057	FROM->TO	G14-057T 345.00 - SUNNYSIDE 345KV CKT 1	717	789	0.11683	110.0283	GEN523461 1-BLACKHAWK GEN #1
FDNS	00NR	3	20WP	G15_057	FROM->TO	G14-057T 345.00 - SUNNYSIDE 345KV CKT 1	717	789	0.11683	110.0282	GEN523462 1-BLACKHAWK GEN #2
FDNS	00NR	3	16WP	G15_057	FROM->TO	G14-057T 345.00 - SUNNYSIDE 345KV CKT 1	717	789	0.11654	110.0259	LYDIA - WELSH 345KV CKT 1
FDNS	00NR	3	16WP	G15_057	FROM->TO	G14-057T 345.00 - SUNNYSIDE 345KV CKT 1	717	789	0.11654	110.0259	LYDIA - WELSH 345KV CKT 1
FDNS	00NR	3	20WP	G15_057	FROM->TO	G14-057T 345.00 - SUNNYSIDE 345KV CKT 1	717	789	0.11683	110.0211	GEN511852 1-COMANCHE #2
FDNS	00NR	3	20WP	G15_057	FROM->TO	G14-057T 345.00 - SUNNYSIDE 345KV CKT 1	717	789	0.11683	110.0017	P12:138:WFEC:MSL07
FDNS	00NR	3	20WP	G15_057	FROM->TO	G14-057T 345.00 - SUNNYSIDE 345KV CKT 1	717	789	0.11683	110.0017	P12:138:WFEC-AEPW:HUGOPP4:ATOKA--4
FDNS	00NR	3	20WP	G15_057	FROM->TO	G14-057T 345.00 - SUNNYSIDE 345KV CKT 1	717	789	0.11702	109.9974	CACHE - SNYDER 138KV CKT 1
FDNS	00NR	3	16WP	G15_057	FROM->TO	G14-057T 345.00 - SUNNYSIDE 345KV CKT 1	717	789	0.11644	109.9851	JOHNSON COUNTY (JOHNCO) 345/138/13.8KV TRANSFORMER CKT 1
FDNS	00NR	3	20WP	G15_057	FROM->TO	G14-057T 345.00 - SUNNYSIDE 345KV CKT 1	717	789	0.11677	109.9835	P12:138:WFEC:MSL06
FDNS	00NR	3	20WP	G15_057	FROM->TO	G14-057T 345.00 - SUNNYSIDE 345KV CKT 1	717	789	0.11677	109.9834	P12:138:AEPW-SWPA:LONEOAK4:TUPELO4
FDNS	00NR	3	20WP	G15_057	FROM->TO	G14-057T 345.00 - SUNNYSIDE 345KV CKT 1	717	789	0.11572	109.9829	SUNNYSIDE (SUNNYSD5) 345/138/13.8KV TRANSFORMER CKT 1
FDNS	00NR	3	16WP	G15_057	FROM->TO	G14-057T 345.00 - SUNNYSIDE 345KV CKT 1	717	789	0.117	109.9726	GEN635023 3-WALTER SCOTT UNIT 3
FDNS	00NR	3	20WP	G15_057	FROM->TO	G14-057T 345.00 - SUNNYSIDE 345KV CKT 1	717	789	0.11683	109.9691	GEN562699 1-G15_018_3 0.6900
FDNS	00NR	3	20WP	G15_057	FROM->TO	G14-057T 345.00 - SUNNYSIDE 345KV CKT 1	717	789	0.11683	109.9656	GEN521111 1-ORME2 13.800
FDNS	00NR	3	20WP	G15_057	FROM->TO	G14-057T 345.00 - SUNNYSIDE 345KV CKT 1	717	789	0.11683	109.9576	GEN563162 1-G15081_3 0.6900
FDNS	00NR	3	20WP	G15_057	FROM->TO	G14-057T 345.00 - SUNNYSIDE 345KV CKT 1	717	789	0.11688	109.9548	G15085_T 138.00 - RUSSELL 138KV CKT 1
FDNS	00NR	3	20WP	G15_057	FROM->TO	G14-057T 345.00 - SUNNYSIDE 345KV CKT 1	717	789	0.11683	109.9527	GEN521110 1-ORME1 13.800
FDNS	00NR	3	20WP	G15_057	FROM->TO	G14-057T 345.00 - SUNNYSIDE 345KV CKT 1	717	789	0.11565	109.9336	ARDMORE WEST - UNIROYAL 138KV CKT 1
FDNS	00NR	3	16WP	G15_057	FROM->TO	G14-057T 345.00 - SUNNYSIDE 345KV CKT 1	717	789	0.117	109.9237	GEN562590 1-G14_057_3 0.6900
FDNS	00NR	3	20WP	G15_057	FROM->TO	G14-057T 345.00 - SUNNYSIDE 345KV CKT 1	717	789	0.11861	109.9147	CLARKSVILLE - MUSKOGEE 345KV CKT 1
FDNS	00NR	3	20WP	G15_057	FROM->TO	G14-057T 345.00 - SUNNYSIDE 345KV CKT 1	717	789	0.11861	109.9147	CLARKSVILLE - MUSKOGEE 345KV CKT 1
FDNS	00NR	3	20WP	G15_057	FROM->TO	G14-057T 345.00 - SUNNYSIDE 345KV CKT 1	717	789	0.11683	109.9067	GEN563292 1-G15095_3 0.6900
FDNS	00NR	3	20WP	G15_057	FROM->TO	G14-057T 345.00 - SUNNYSIDE 345KV CKT 1	717	789	0.11607	109.9062	CARTRCO4 138.00 - RATLIFF 138KV CKT 1
FDNS	00NR	3	16WP	G15_057	FROM->TO	G14-057T 345.00 - SUNNYSIDE 345KV CKT 1	717	789	0.117	109.8862	GEN562762 1-G15033_3 0.6900
FDNS	00NR	3	20WP	G15_057	FROM->TO	G14-057T 345.00 - SUNNYSIDE 345KV CKT 1	717	789	0.11683	109.8853	GEN661015 1-COYOTE
FDNS	00NR	3	20WP	G15_057	FROM->TO	G14-057T 345.00 - SUNNYSIDE 345KV CKT 1	717	789	0.11635	109.8801	P12:138:OKGE:3TERM40
FDNS	00NR	3	16WP	G15_057	FROM->TO	G14-057T 345.00 - SUNNYSIDE 345KV CKT 1	717	789	0.117	109.8763	GEN562655 1-G14_074_3 0.6900
FDNS	00NR	3	20WP	G15_057	FROM->TO	G14-057T 345.00 - SUNNYSIDE 345KV CKT 1	717	789	0.11683	109.868	GEN563122 1-G15077_3 0.3850
FDNS	00NR	3	20WP	G15_057	FROM->TO	G14-057T 345.00 - SUNNYSIDE 345KV CKT 1	717	789	0.11683	109.8597	GEN562861 1-G15045_2 0.4800
FDNS	00NR	3	16WP	G15_057	FROM->TO	G14-057T 345.00 - SUNNYSIDE 345KV CKT 1	717	789	0.117	109.827	GEN562685 1-G15_013_3 0.3550
FDNS	00NR	3	16WP	G15_057	FROM->TO	G14-057T 345.00 - SUNNYSIDE 345KV CKT 1	717	789	0.117	109.8155	GEN525561 1-TOLK GEN #1 24 KV
FDNS	00NR	3	20WP	G15_057	FROM->TO	G14-057T 345.00 - SUNNYSIDE 345KV CKT 1	717	789	0.11741	109.7898	GRAPEVINE INTERCHANGE - STATELINE INTERCHANGE 230KV CKT 1
FDNS	00NR	3	20WP	G15_057	FROM->TO	G14-057T 345.00 - SUNNYSIDE 345KV CKT 1	717	789	0.11741	109.7898	GRAPEVINE INTERCHANGE - STATELINE INTERCHANGE 230KV CKT 1
FDNS	00NR	3	20WP	G15_057	FROM->TO	G14-057T 345.00 - SUNNYSIDE 345KV CKT 1	717	789	0.11683	109.7741	GEN657748 1-YOUNG 2 GENERATOR
FDNS	00NR	3	20WP	G15_057	FROM->TO	G14-057T 345.00 - SUNNYSIDE 345KV CKT 1	717	789	0.11683	109.7573	GEN527883 1-CUNNINGHAM GEN #3 22 KV
FDNS	00NR	3	20WP	G15_057	FROM->TO	G14-057T 345.00 - SUNNYSIDE 345KV CKT 1	717	789	0.11683	109.7543	GEN527884 1-CUNNINGHAM GEN #4 22 KV
FDNS	00NR	3	20WP	G15_057	FROM->TO	G14-057T 345.00 - SUNNYSIDE 345KV CKT 1	717	789	0.11688	109.724	P12:138:AEPW:SHAM4WT:CHILD4WT
FDNS	00NR	3	20WP	G15_057	FROM->TO	G14-057T 345.00 - SUNNYSIDE 345KV CKT 1	717	789	0.11565	109.7208	SUNNYSIDE - UNIROYAL 138KV CKT 1
FDNS	00NR	3	20WP	G15_057	FROM->TO	G14-057T 345.00 - SUNNYSIDE 345KV CKT 1	717	789	0.11695	109.6964	P12:138:WFEC:MSL15
FDNS	00NR	3	20WP	G15_057	FROM->TO	G14-057T 345.00 - SUNNYSIDE 345KV CKT 1	717	789	0.11928	109.6947	CHISHOLM7 345.00 () 345/230/13.2KV TRANSFORMER CKT 1
FDNS	00NR	3	20WP	G15_057	FROM->TO	G14-057T 345.00 - SUNNYSIDE 345KV CKT 1	717	789	0.11683	109.6877	GEN562704 1-G15_020_3 0.3550
FDNS	00NR	3	16WP	G15_057	FROM->TO	G14-057T 345.00 - SUNNYSIDE 345KV CKT 1	717	789	0.117	109.6872	GEN563272 1-G15093_3 0.6900
FDNS	00NR	3	20WP	G15_057	FROM->TO	G14-057T 345.00 - SUNNYSIDE 345KV CKT 1	717	789	0.11683	109.6868	GEN526331 1-JONES GEN #1 22 KV
FDNS	00NR	3	20WP	G15_057	FROM->TO	G14-057T 345.00 - SUNNYSIDE 345KV CKT 1	717	789	0.11683	109.6866	GEN526332 1-JONES GEN #2 21 KV
FDNS	00NR	3	20WP	G15_057	FROM->TO	G14-057T 345.00 - SUNNYSIDE 345KV CKT 1	717	789	0.11683	109.6806	GEN620315 1-BIG STONE GEN
FDNS	00NR	3	20WP	G15_057	FROM->TO	G14-057T 345.00 - SUNNYSIDE 345KV CKT 1	717	789	0.11683	109.6773	GEN562992 1-G15063_3 0.6900
FDNS	00NR	3	16WP	G15_057	FROM->TO	G14-057T 345.00 - SUNNYSIDE 345KV CKT 1	717	789	0.117	109.6728	GEN527903 1-HOBBS PLANT #3 (ST)
FDNS	00NR	3	20WP	G15_057	FROM->TO	G14-057T 345.00 - SUNNYSIDE 345KV CKT 1	717	789	0.11683	109.6301	GEN562952 1-G15057_3 0.6500
FDNS	00NR	3	20WP	G15_057	FROM->TO	G14-057T 345.00 - SUNNYSIDE 345KV CKT 1	717	789	0.11737	109.6281	GRAPEVINE INTERCHANGE - NICHOLS STATION 230KV CKT 1
FDNS	00NR	3	20WP	G15_057	FROM->TO	G14-057T 345.00 - SUNNYSIDE 345KV CKT 1	717	789	0.11737	109.6281	GRAPEVINE INTERCHANGE - NICHOLS STATION 230KV CKT 1
FDNS	00NR	3	20WP	G15_057	FROM->TO	G14-057T 345.00 - SUNNYSIDE 345KV CKT 1	717	789	0.11683	109.6258	GEN563173 1-G15082_3 0.6900
FDNS	00NR	3	20WP	G15_057	FROM->TO	G14-057T 345.00 - SUNNYSIDE 345KV CKT 1	717	789	0.11683	109.6067	GEN600004 2-PRAIRIE ISLAND G2
FDNS	00NR	3	20WP	G15_057	FROM->TO	G14-057T 345.00 - SUNNYSIDE 345KV CKT 1	717	789	0.11683	109.6041	GEN600003 1-PRAIRIE ISLAND G1

SOLUTION	GROUP	SCENARIO	SEASON	SOURCE	DIRECTION	MONITORED ELEMENT	RATEA (MVA)	RATEB(MVA)	TDF	TC%LOADING (% MVA)	CONTINGENCY
FDNS	00NR	3	20WP	G15_057	FROM->TO	G14-057T 345.00 - SUNNYSIDE 345KV CKT 1	717	789	0.11683	109.5869	GEN600006 1-AS KING
FDNS	00NR	3	20WP	G15_057	FROM->TO	G14-057T 345.00 - SUNNYSIDE 345KV CKT 1	717	789	0.11683	109.5867	GEN562710 1-G15_022_3 0.5500
FDNS	00NR	3	16WP	G15_057	FROM->TO	G14-057T 345.00 - SUNNYSIDE 345KV CKT 1	717	789	0.117	109.5478	GEN635024 4-WALTER SCOTT UNIT 4
FDNS	00NR	3	20WP	G15_057	FROM->TO	G14-057T 345.00 - SUNNYSIDE 345KV CKT 1	717	789	0.11924	109.5472	CANEY CREEK - TEXOMA JCT 138KV CKT 1
FDNS	00NR	3	20WP	G15_057	FROM->TO	G14-057T 345.00 - SUNNYSIDE 345KV CKT 1	717	789	0.11683	109.5368	GEN511851 1-COMANCHE #1
FDNS	00NR	3	20WP	G15_057	FROM->TO	G14-057T 345.00 - SUNNYSIDE 345KV CKT 1	717	789	0.11928	109.5187	CHISHOLM7 345.00 - GRACEMONT 345KV CKT 1
FDNS	00NR	3	20WP	G15_057	FROM->TO	G14-057T 345.00 - SUNNYSIDE 345KV CKT 1	717	789	0.11683	109.509	GEN532751 1-WOLF CREEK GENERATING STATION UNIT 1
FDNS	00NR	3	20WP	G15_057	FROM->TO	G14-057T 345.00 - SUNNYSIDE 345KV CKT 1	717	789	0.11683	109.421	GEN635213 3-NEAL UNIT 3
FDNS	00NR	3	20WP	G15_057	FROM->TO	G14-057T 345.00 - SUNNYSIDE 345KV CKT 1	717	789	0.11683	109.4142	GEN629074 1-ARNOLD LOWSIDE OF GSU XFMR
FDNS	00NR	3	20WP	G15_057	FROM->TO	G14-057T 345.00 - SUNNYSIDE 345KV CKT 1	717	789	0.11683	109.4059	BIG STONE 230/24.0KV TRANSFORMER CKT 1
FDNSLock	00NR	3	20WP	G15_057	FROM->TO	G14-057T 345.00 - SUNNYSIDE 345KV CKT 1	717	789	0.11683	109.3781	GEN615002 2-COAL CREEK
FDNS	00NR	3	20WP	G15_057	FROM->TO	G14-057T 345.00 - SUNNYSIDE 345KV CKT 1	717	789	0.1169	109.3754	P12:138:WFEC:MSL09
FDNS	00NR	3	20WP	G15_057	FROM->TO	G14-057T 345.00 - SUNNYSIDE 345KV CKT 1	717	789	0.11778	109.354	P12:138:AEPW-OGE:CORNVIL4:CIMARON4
FDNS	00NR	3	20WP	G15_057	FROM->TO	G14-057T 345.00 - SUNNYSIDE 345KV CKT 1	717	789	0.11683	109.3349	GEN562754 1-G15031_5 0.6900
FDNS	00NR	3	20WP	G15_057	FROM->TO	G14-057T 345.00 - SUNNYSIDE 345KV CKT 1	717	789	0.11683	109.322	GEN636641 1-LOUISA UNIT 1
FDNS	00NR	3	20WP	G15_057	FROM->TO	G14-057T 345.00 - SUNNYSIDE 345KV CKT 1	717	789	0.1165	109.312	NORTHWEST TEXARKANA - VALLIANT 345KV CKT 1
FDNS	00NR	3	20WP	G15_057	FROM->TO	G14-057T 345.00 - SUNNYSIDE 345KV CKT 1	717	789	0.1165	109.312	NORTHWEST TEXARKANA - VALLIANT 345KV CKT 1
FDNS	00NR	3	20WP	G15_057	FROM->TO	G14-057T 345.00 - SUNNYSIDE 345KV CKT 1	717	789	0.11683	109.2925	GEN600005 1-MONTICELLO
FDNS	00NR	3	20WP	G15_057	FROM->TO	G14-057T 345.00 - SUNNYSIDE 345KV CKT 1	717	789	0.11683	109.2751	GEN562756 1-G15031_7 0.6900
FDNS	00NR	3	20WP	G15_057	FROM->TO	G14-057T 345.00 - SUNNYSIDE 345KV CKT 1	717	789	0.11683	109.274	GEN562556 1-G14_046_3 0.3420
FDNS	00NR	3	20WP	G15_057	FROM->TO	G14-057T 345.00 - SUNNYSIDE 345KV CKT 1	717	789	0.11683	109.2337	GEN562023 1-G11_020_3 0.6900
FDNS	00NR	3	20WP	G15_057	FROM->TO	G14-057T 345.00 - SUNNYSIDE 345KV CKT 1	717	789	0.11683	109.2337	GEN562026 1-G11_019_3 0.6900
FDNS	00NR	3	20WP	G15_057	FROM->TO	G14-057T 345.00 - SUNNYSIDE 345KV CKT 1	717	789	0.11683	109.1895	GEN563142 1-G15079_3 0.5500
FDNS	00NR	3	20WP	G15_057	FROM->TO	G14-057T 345.00 - SUNNYSIDE 345KV CKT 1	717	789	0.11683	109.1895	GEN563151 1-G15080_2 0.5500
FDNS	00NR	3	20WP	G15_057	FROM->TO	G14-057T 345.00 - SUNNYSIDE 345KV CKT 1	717	789	0.11683	109.1688	GEN600000 1-SHERBURNECNTY G1
FDNS	00NR	3	20WP	G15_057	FROM->TO	G14-057T 345.00 - SUNNYSIDE 345KV CKT 1	717	789	0.11786	109.1401	STLN-DEMARC6 - SWEETWATER 230KV CKT 1
FDNS	00NR	3	20WP	G15_057	FROM->TO	G14-057T 345.00 - SUNNYSIDE 345KV CKT 1	717	789	0.11786	109.1394	P12:230:AEPW-SPS:SWEETWT6:WHEELER 6
FDNS	00NR	3	20WP	G15_057	FROM->TO	G14-057T 345.00 - SUNNYSIDE 345KV CKT 1	717	789	0.11786	109.1378	STATELINE INTERCHANGE - STLN-DEMARC6 230KV CKT 1
FDNS	00NR	3	20WP	G15_057	FROM->TO	G14-057T 345.00 - SUNNYSIDE 345KV CKT 1	717	789	0.11683	109.1289	GEN629075 1-OTTUMWA GENERATOR FOR OTTUMWA UNIT NO 1
FDNS	00NR	3	20WP	G15_057	FROM->TO	G14-057T 345.00 - SUNNYSIDE 345KV CKT 1	717	789	0.11683	109.1195	GEN600001 2-SHERBURNE CNTY G2
FDNS	00NR	3	20WP	G15_057	FROM->TO	G14-057T 345.00 - SUNNYSIDE 345KV CKT 1	717	789	0.11683	109.097	GEN523971 1-HARRINGTON GEN #1 24 KV
FDNS	00NR	3	20WP	G15_057	FROM->TO	G14-057T 345.00 - SUNNYSIDE 345KV CKT 1	717	789	0.11683	109.0969	GEN523972 1-HARRINGTON GEN #2 24 KV
FDNS	00NR	3	20WP	G15_057	FROM->TO	G14-057T 345.00 - SUNNYSIDE 345KV CKT 1	717	789	0.11683	109.0969	GEN523973 1-HARRINGTON GEN #3 24 KV
FDNS	00NR	3	20WP	G15_057	FROM->TO	G14-057T 345.00 - SUNNYSIDE 345KV CKT 1	717	789	0.11683	109.0143	GEN511848 1-SOUTHWESTERN STATION #3
FDNS	00NR	3	20WP	G15_057	FROM->TO	G14-057T 345.00 - SUNNYSIDE 345KV CKT 1	717	789	0.11683	108.9872	GEN527901 1-HOBBS PLANT #1 (CT)
FDNS	00NR	3	20WP	G15_057	FROM->TO	G14-057T 345.00 - SUNNYSIDE 345KV CKT 1	717	789	0.11683	108.9872	GEN527902 1-HOBBS PLANT #2 (CT)
FDNS	00NR	3	20WP	G15_057	FROM->TO	G14-057T 345.00 - SUNNYSIDE 345KV CKT 1	717	789	0.11639	108.9494	LYDIA - WELSH 345KV CKT 1
FDNS	00NR	3	20WP	G15_057	FROM->TO	G14-057T 345.00 - SUNNYSIDE 345KV CKT 1	717	789	0.11639	108.9494	LYDIA - WELSH 345KV CKT 1
FDNS	00NR	3	20WP	G15_057	FROM->TO	G14-057T 345.00 - SUNNYSIDE 345KV CKT 1	717	789	0.11683	108.9486	GEN563042 1-G15068_3 0.6900
FDNS	00NR	3	20WP	G15_057	FROM->TO	G14-057T 345.00 - SUNNYSIDE 345KV CKT 1	717	789	0.11935	108.9039	P12:230:AEPW:ELKCITY6:SWEETWT6
FDNS	00NR	3	20WP	G15_057	FROM->TO	G14-057T 345.00 - SUNNYSIDE 345KV CKT 1	717	789	0.11683	108.8995	SHERBURNE CO 345/24.0KV TRANSFORMER CKT 1
FDNS	00NR	3	16WP	G15_057	FROM->TO	G14-057T 345.00 - SUNNYSIDE 345KV CKT 1	717	789	0.11635	108.8865	LYDIA - VALLIANT 345KV CKT 1
FDNS	00NR	3	16WP	G15_057	FROM->TO	G14-057T 345.00 - SUNNYSIDE 345KV CKT 1	717	789	0.11635	108.8865	LYDIA - VALLIANT 345KV CKT 1
FDNS	00NR	3	20WP	G15_057	FROM->TO	G14-057T 345.00 - SUNNYSIDE 345KV CKT 1	717	789	0.11683	108.8563	GEN635214 4-NEAL UNIT 4
FDNS	00NR	3	20WP	G15_057	FROM->TO	G14-057T 345.00 - SUNNYSIDE 345KV CKT 1	717	789	0.11683	108.6853	GEN600002 3-SHERBURNE CNTY G3
FDNS	00NR	3	20WP	G15_057	FROM->TO	G14-057T 345.00 - SUNNYSIDE 345KV CKT 1	717	789	0.11683	108.6493	GEN563043 1-G15068_4 0.6900
FDNS	00NR	3	20WP	G15_057	FROM->TO	G14-057T 345.00 - SUNNYSIDE 345KV CKT 1	717	789	0.11683	108.6374	GEN563273 2-G15093_4 0.6900
FDNS	00NR	3	20WP	G15_057	FROM->TO	G14-057T 345.00 - SUNNYSIDE 345KV CKT 1	717	789	0.11683	108.6252	GEN526333 1-JONES GEN #3 21 KV
FDNS	00NR	3	20WP	G15_057	FROM->TO	G14-057T 345.00 - SUNNYSIDE 345KV CKT 1	717	789	0.11683	108.6251	GEN526334 1-JONES_4 116.500
FDNS	00NR	3	20WP	G15_057	FROM->TO	G14-057T 345.00 - SUNNYSIDE 345KV CKT 1	717	789	0.11683	108.6086	GEN344225 1-1CAL G1 25.000
FDNS	00NR	3	20WP	G15_057	FROM->TO	G14-057T 345.00 - SUNNYSIDE 345KV CKT 1	717	789	0.11683	108.5859	GEN525844 1-ELK_1 118.000
FDNS	00NR	3	20WP	G15_057	FROM->TO	G14-057T 345.00 - SUNNYSIDE 345KV CKT 1	717	789	0.11683	108.5697	GEN525845 1-ELK_2 1 18.000
FDNS	00NR	3	20WP	G15_057	FROM->TO	G14-057T 345.00 - SUNNYSIDE 345KV CKT 1	717	789	0.11786	108.5198	CHISHOLM6 230.00 - SWEETWATER 230KV CKT 1
FDNS	00NR	3	20WP	G15_057	FROM->TO	G14-057T 345.00 - SUNNYSIDE 345KV CKT 1	717	789	0.11683	108.4391	GEN527166 1-MUSTANG_6 118.000
FDNS	00NR	3	20WP	G15_057	FROM->TO	G14-057T 345.00 - SUNNYSIDE 345KV CKT 1	717	789	0.11683	108.4294	GEN563202 1-G15085_3 0.5500
FDNS	00NR	3	20WP	G15_057	FROM->TO	G14-057T 345.00 - SUNNYSIDE 345KV CKT 1	717	789	0.11683	108.3924	GEN635023 3-WALTER SCOTT UNIT 3
FDNS	00NR	3	20WP	G15_057	FROM->TO	G14-057T 345.00 - SUNNYSIDE 345KV CKT 1	717	789	0.11683	108.3748	GEN528501 1-G14_012 24.000
FDNS	00NR	3	20WP	G15_057	FROM->TO	G14-057T 345.00 - SUNNYSIDE 345KV CKT 1	717	789	0.11683	108.2669	GEN562590 1-G14_057_3 0.6900
FDNS	00NR	3	20WP	G15_057	FROM->TO	G14-057T 345.00 - SUNNYSIDE 345KV CKT 1	717	789	0.11683	108.2159	GEN562762 1-G15033_3 0.6900
FDNS	00NR	3	20WP	G15_057	FROM->TO	G14-057T 345.00 - SUNNYSIDE 345KV CKT 1	717	789	0.11683	108.2058	GEN562655 1-G14_074_3 0.6900
FDNS	00NR	3	20WP	G15_057	FROM->TO	G14-057T 345.00 - SUNNYSIDE 345KV CKT 1	717	789	0.11683	108.1862	GEN525562 1-TOLK GEN #2 24 KV
FDNS	00NR	3	20WP	G15_057	FROM->TO	G14-057T 345.00 - SUNNYSIDE 345KV CKT 1	717	789	0.11627	108.1302	JOHNSON COUNTY (JOHNCO) 345/138/13.8KV TRANSFORMER CKT 1
FDNS	00NR	3	20WP	G15_057	FROM->TO	G14-057T 345.00 - SUNNYSIDE 345KV CKT 1	717	789	0.11683	108.1293	GEN562685 1-G15_013_3 0.3550
FDNS	00NR	3	20WP	G15_057	FROM->TO	G14-057T 345.00 - SUNNYSIDE 345KV CKT 1	717	789	0.11683	108.0904	GEN527903 1-HOBBS PLANT #3 (ST)
FDNS	00NR	3	20WP	G15_057	FROM->TO	G14-057T 345.00 - SUNNYSIDE 345KV CKT 1	717	789	0.11683	107.9849	GEN563272 1-G15093_3 0.6900
FDNS	00NR	3	20WP	G15_057	FROM->TO	G14-057T 345.00 - SUNNYSIDE 345KV CKT 1	717	789	0.11683	107.9844	GEN635024 4-WALTER SCOTT UNIT 4
FDNS	00NR	3	16WP	G15_057	FROM->TO	G14-057T 345.00 - SUNNYSIDE 345KV CKT 1	717	789	0.117	107.8948	EASTDC - ERCOT EQUIVALENCE 345KV CKT 1
FDNS	00NR	3	20WP	G15_057	FROM->TO	G14-057T 345.00 - SUNNYSIDE 345KV CKT 1	717	789	0.11619	107.8931	LYDIA - VALLIANT 345KV CKT 1
FDNS	00NR	3	20WP	G15_057	FROM->TO	G14-057T 345.00 - SUNNYSIDE 345KV CKT 1	717	789	0.11619	107.8931	LYDIA - VALLIANT 345KV CKT 1
FDNS	00NR	3	20WP	G15_057	FROM->TO	G14-057T 345.00 - SUNNYSIDE 345KV CKT 1	717	789	0.11683	107.7483	GEN525561 1-TOLK GEN #1 24 KV
FDNS	00NR	3	16WP	G15_057	FROM->TO	G14-057T 345.00 - SUNNYSIDE 345KV CKT 1	717	789	0.09999	106.9904	JOHNSON COUNTY - PITTSBURG 345KV CKT 1
FDNS	00NR	3	16WP	G15_057	FROM->TO	G14-057T 345.00 - SUNNYSIDE 345KV CKT 1	717	789	0.09999	106.9904	JOHNSON COUNTY - PITTSBURG 345KV CKT 1
FDNS	00NR	3	16WP	G15_057	FROM->TO	G14-057T 345.00 - SUNNYSIDE 345KV CKT 1	717	789	0.117	106.4713	GEN563263 1-G15092_4 0.6900
FDNS	00NR	3	16WP	G15_057	FROM->TO	G14-057T 345.00 - SUNNYSIDE 345KV CKT 1	717	789	0.11309	106.0336	HUGO - VALLIANT 345KV CKT 1
FDNS	00NR	3	16WP	G15_057	FROM->TO	G14-057T 345.00 - SUNNYSIDE 345KV CKT 1	717	789	0.11309	106.0336	HUGO - VALLIANT 345KV CKT 1
FDNS	00NR	3	17SP	G15_057	FROM->TO	G14-057T 345.00 - SUNNYSIDE 345KV CKT 1	717	789	0.35011	105.9521	CIMARRON - MINCO 345KV CKT 1
FDNS	00NR	3	20WP	G15_057	FROM->TO	G14-057T 345.00 - SUNNYSIDE 345KV CKT 1	717	789	0.09986	105.8204	JOHNSON COUNTY - PITTSBURG 345KV CKT 1
FDNS	00NR	3	20WP	G15_057	FROM->TO	G14-057T 345.00 - SUNNYSIDE 345KV CKT 1	717	789	0.09986	105.8204	JOHNSON COUNTY - PITTSBURG 345KV CKT 1
FDNS	00NR	3	20WP	G15_057	FROM->TO	G14-057T 345.00 - SUNNYSIDE 345KV CKT 1	717	789	0.11295	105.3179	HUGO - VALLIANT 345KV CKT 1

SOLUTION	GROUP	SCENARIO	SEASON	SOURCE	DIRECTION	MONITORED ELEMENT	RATEA (MVA)	RATEB(MVA)	TDF	TC%LOADING (% MVA)	CONTINGENCY
FDNS	00NR	3	20WP	G15_057	FROM->TO	G14-057T 345.00 - SUNNYSIDE 345KV CKT 1	717	789	0.11295	105.3179	HUGO - VALLIANT 345KV CKT 1
FDNS	00NR	3	16WP	G15_057	FROM->TO	G14-057T 345.00 - SUNNYSIDE 345KV CKT 1	717	789	0.12205	105.0413	G14-074T 345.00 - TUCO INTERCHANGE 345KV CKT 1
FDNS	00NR	3	20WP	G15_057	FROM->TO	G14-057T 345.00 - SUNNYSIDE 345KV CKT 1	717	789	0.11683	104.8195	GEN563263 1-G15092_4 0.6900
FDNS	00NR	3	16WP	G15_057	FROM->TO	G14-057T 345.00 - SUNNYSIDE 345KV CKT 1	717	789	0.117	104.7958	GEN563262 1-G15092_3 0.6900
FDNS	00NR	3	20WP	G15_057	FROM->TO	G14-057T 345.00 - SUNNYSIDE 345KV CKT 1	717	789	0.11683	103.1549	GEN563262 1-G15092_3 0.6900
FDNS	00NR	3	20WP	G15_057	FROM->TO	G14-057T 345.00 - SUNNYSIDE 345KV CKT 1	717	789	0.12189	102.2467	G14-074T 345.00 - TUCO INTERCHANGE 345KV CKT 1
FDNS	00NR	3	16WP	G15_057	FROM->TO	G14-057T 345.00 - SUNNYSIDE 345KV CKT 1	717	789	0.09659	101.3793	JOHNSON COUNTY - SUNNYSIDE 345KV CKT 1
FDNSLock-Blown up	06ALL	0	16WP	G15_058		Non-Converged Contingency	552.14	607.52	0.20964	-	TOLK STATION EAST - TUCO INTERCHANGE 230KV CKT 1
FDNSLock-Blown up	06ALL	0	16WP	G15_058		Non-Converged Contingency	1022	1124	0.1991	-	G14-074T 345.00 - OKLAUNION 345KV CKT 1
FDNSLock-Blown up	06ALL	0	16WP	G15_058		Non-Converged Contingency	1022	1124	0.1991	-	G14-074T 345.00 - TUCO INTERCHANGE 345KV CKT 1
FDNSLock-Blown up	06ALL	0	16WP	G15_058		Non-Converged Contingency	1022	1124	0.1991	-	GEN509403 1-PIRKEY GENERATION
FDNSLock-Blown up	06ALL	0	16WP	G15_058		Non-Converged Contingency	1022	1124	0.1991	-	GEN509404 1-WELSH #1
FDNSLock-Blown up	06ALL	0	16WP	G15_058		Non-Converged Contingency	1022	1124	0.1991	-	GEN509406 1-WELSH #3
FDNSLock-Blown up	06ALL	0	16WP	G15_058		Non-Converged Contingency	1022	1124	0.1991	-	GEN509416 1-TURK GENERATION
FDNSLock-Blown up	06ALL	0	16WP	G15_058		Non-Converged Contingency	1022	1124	0.1991	-	GEN511848 1-SOUTHWESTERN STATION #3
FDNSLock-Blown up	06ALL	0	16WP	G15_058		Non-Converged Contingency	483	483	0.18719	-	AMOCO SWITCHING STATION - YOAKUM COUNTY INTERCHANGE 230KV CKT 1
FDNSLock-Blown up	06ALL	0	16WP	G15_058		Non-Converged Contingency	560	560	0.18612	-	TUCO INTERCHANGE (GE M1022338) 345/230/13.2KV TRANSFORMER CKT 1
FDNSLock-Blown up	06ALL	0	16WP	G15_058		Non-Converged Contingency	556.53	611.5	0.184	-	NEWHART 230 - PLANT X STATION 230KV CKT 1
FDNSLock-Blown up	06ALL	0	16WP	G15_058		Non-Converged Contingency	956	956	0.17655	-	CIMARRON - MINCO 345KV CKT 1
FDNSLock-Blown up	06ALL	0	16WP	G15_058		Non-Converged Contingency	1195	1195	0.17655	-	GRACEMONT - MINCO 345KV CKT 1
FDNSLock-Blown up	06ALL	0	16WP	G15_058		Non-Converged Contingency	987.16	1082.8	0.1697	-	G14_038T 345.00 - Hitchland Interchange 345KV CKT 1
FDNSLock-Blown up	06ALL	0	16WP	G15_058		Non-Converged Contingency	987.16	1082.8	0.1697	-	G14_038T 345.00 - POTTER COUNTY INTERCHANGE 345KV CKT 1
FDNSLock-Blown up	06ALL	0	16WP	G15_058		Non-Converged Contingency	560	560	0.1697	-	POTTER COUNTY INTERCHANGE (WAUK 90343-A) 345/230/13.2KV TRANSFORMER CKT 1
FDNSLock-Blown up	06ALL	0	16WP	G15_058		Non-Converged Contingency	442	752	0.16531	-	PLANT X STATION - TOLK STATION WEST 230KV CKT 1
FDNSLock-Blown up	06ALL	0	16WP	G15_058		Non-Converged Contingency	557	557	0.1639	-	BUSHLAND INTERCHANGE - DEAF SMITH COUNTY INTERCHANGE 230KV CKT 1
FDNSLock-Blown up	06ALL	0	16WP	G15_058		Non-Converged Contingency	442	752	0.16384	-	PLANT X STATION - TOLK STATION EAST 230KV CKT 2
FDNSLock-Blown up	06ALL	0	16WP	G15_058		Non-Converged Contingency	616	700	0.1622	-	TUCO INTERCHANGE (SIEM 8743066) 345/230/13.2KV TRANSFORMER CKT 2
FDNSLock-Blown up	06ALL	0	16WP	G15_058		Non-Converged Contingency	560	560	0.16116	-	TUCO_2 345.00 (TUCO_2 XFMR) 345/230/13.2KV TRANSFORMER CKT 1
FDNSLock-Blown up	06ALL	0	16WP	G15_058		Non-Converged Contingency	1330	1940	0.1604	-	CHISHOLM7 345.00 - GRACEMONT 345KV CKT 1
FDNSLock-Blown up	06ALL	0	16WP	G15_058		Non-Converged Contingency	1792	1792	0.15819	-	CHISHOLM7 345.00 - WOODWARD DISTRICT EHV 345KV CKT 1
FDNSLock-Blown up	06ALL	0	16WP	G15_058		Non-Converged Contingency	1792	1792	0.15519	-	BORDER 7345.00 - CHISHOLM7 345.00 345KV CKT 1
FDNSLock-Blown up	06ALL	0	16WP	G15_058		Non-Converged Contingency	1792	1792	0.15519	-	BORDER 7345.00 - CHISHOLM7 345.00 345KV CKT 2
FDNSLock-Blown up	06ALL	0	16WP	G15_058		Non-Converged Contingency	1792	1972	0.15519	-	BORDER 7345.00 - TUCO_2 345.00 345KV CKT 1
FDNSLock-Blown up	06ALL	0	16WP	G15_058		Non-Converged Contingency	1420	1775	0.15519	-	BORDER 7345.00 - TUCO_2 345.00 345KV CKT 2
FDNSLock-Blown up	06ALL	0	16WP	G15_058		Non-Converged Contingency	1792	1972	0.14923	-	TUCO INTERCHANGE - TUCO_2 345.00 345KV CKT 1
FDNSLock-Blown up	06ALL	0	16WP	G15_058		Non-Converged Contingency	329.05	360.92	0.14448	-	BUSHLAND INTERCHANGE - POTTER COUNTY INTERCHANGE 230KV CKT 1
FDNSLock-Blown up	06ALL	0	16WP	G15_058		Non-Converged Contingency	329.05	360.92	0.14444	-	DEAF SMITH COUNTY INTERCHANGE - G15039_T 230.00 230KV CKT 1
FDNSLock-Blown up	06ALL	0	16WP	G15_058		Non-Converged Contingency	329.05	360.92	0.14444	-	G15039_T 230.00 - PLANT X STATION 230KV CKT 1
FDNSLock-Blown up	06ALL	0	16WP	G15_058		Non-Converged Contingency	987.16	1082.8	0.13922	-	FINNEY SWITCHING STATION - Hitchland Interchange 345KV CKT 1
FDNSLock-Blown up	06ALL	0	16WP	G15_058		Non-Converged Contingency	956.09	1051.7	0.13922	-	FINNEY SWITCHING STATION - HOLCOMB 345KV CKT 1
FDNSLock-Blown up	06ALL	0	16WP	G15_058		Non-Converged Contingency	552	608	0.13827	-	TUCO INTERCHANGE - TUCO_2 230.00 230KV CKT 1
FDNSLock-Blown up	06ALL	0	16WP	G15_058		Non-Converged Contingency	427.05	427.05	0.13478	-	JONES STATION - TUCO INTERCHANGE 230KV CKT 1
FDNSLock-Blown up	06ALL	0	16WP	G15_058		Non-Converged Contingency	717	789	0.12733	-	G14-057T 345.00 - LAWTON EASTSIDE 345KV CKT 1
FDNSLock-Blown up	06ALL	0	16WP	G15_058		Non-Converged Contingency	717	789	0.12733	-	G14-057T 345.00 - SUNNYSIDE 345KV CKT 1
FDNSLock-Blown up	06ALL	0	16WP	G15_058		Non-Converged Contingency	557	557	0.11734	-	NEWHART 230 - POTTER COUNTY INTERCHANGE 230KV CKT 1
FDNSLock-Blown up	06ALL	0	16WP	G15_058		Non-Converged Contingency	1420	1775	0.10079	-	G11_051T 345.00 - TATONGA7 345.00 345KV CKT 1
FDNSLock-Blown up	06ALL	0	16WP	G15_058		Non-Converged Contingency	1420	1775	0.10079	-	G11_051T 345.00 - WOODWARD DISTRICT EHV 345KV CKT 1
FDNSLock-Blown up	06ALL	0	16WP	G15_058		Non-Converged Contingency	1195	1195	0.10079	-	MATHWSN7 345.00 - TATONGA7 345.00 345KV CKT 1
FDNSLock-Blown up	06ALL	0	16WP	G15_058		Non-Converged Contingency	1561	1793	0.09425	-	THISTLE7 345.00 - WOODWARD DISTRICT EHV 345KV CKT 1
FDNSLock-Blown up	06ALL	0	16WP	G15_058		Non-Converged Contingency	1561	1793	0.09425	-	THISTLE7 345.00 - WOODWARD DISTRICT EHV 345KV CKT 2
FDNSLock-Blown up	06ALL	0	16WP	G15_058		Non-Converged Contingency	143.02	173.09	0.08546	-	WOLFFORTH INTERCHANGE - YUMA INTERCHANGE 115KV CKT 1
FDNSLock-Blown up	06ALL	0	16WP	G15_058		Non-Converged Contingency	329.05	360.92	0.08512	-	AMARILLO SOUTH INTERCHANGE - G15031_T 230.00 230KV CKT 1
FDNSLock-Blown up	06ALL	0	16WP	G15_058		Non-Converged Contingency	1793	1793	0.08136	-	BVRCNTY7 345.00 - G11-14T 345.00 345KV CKT 1
FDNSLock-Blown up	06ALL	0	16WP	G15_058		Non-Converged Contingency	1716	1793	0.08136	-	BVRCNTY7 345.00 - G11-14T 345.00 345KV CKT 2
FDNSLock-Blown up	06ALL	0	16WP	G15_058		Non-Converged Contingency	1792	1792	0.08136	-	BVRCNTY7 345.00 - OPTIMA 345.00 345KV CKT 1
FDNSLock-Blown up	06ALL	0	16WP	G15_058		Non-Converged Contingency	1792	1792	0.08136	-	BVRCNTY7 345.00 - OPTIMA 345.00 345KV CKT 2
FDNSLock-Blown up	06ALL	0	16WP	G15_058		Non-Converged Contingency	1793	1793	0.08136	-	G11-14T 345.00 - WOODWARD DISTRICT EHV 345KV CKT 1
FDNSLock-Blown up	06ALL	0	16WP	G15_058		Non-Converged Contingency	1716	1793	0.08136	-	G11-14T 345.00 - WOODWARD DISTRICT EHV 345KV CKT 2
FDNSLock-Blown up	06ALL	0	16WP	G15_058		Non-Converged Contingency	1532	1793	0.07589	-	G1524G1525 345.00 - THISTLE7 345.00 345KV CKT 1
FDNSLock-Blown up	06ALL	0	16WP	G15_058		Non-Converged Contingency	1532	1793	0.07589	-	G1524G1525 345.00 - THISTLE7 345.00 345KV CKT 2
FDNSLock-Blown up	06ALL	0	16WP	G15_058		Non-Converged Contingency	1532	1793	0.07589	-	GEN532751 1-WOLF CREEK GENERATING STATION UNIT 1
FDNSLock-Blown up	06ALL	0	16WP	G15_058		Non-Converged Contingency	556.92	556.92	0.07202	-	HITCHLAND INTERCHANGE - MOORE COUNTY INTERCHANGE 230KV CKT 1
FDNSLock-Blown up	06ALL	0	16WP	G15_058		Non-Converged Contingency	439	439	0.07197	-	CHISHOLM6 230.00 - SWEETWATER 230KV CKT 1
FDNSLock-Blown up	06ALL	0	16WP	G15_058		Non-Converged Contingency	435.02	457.73	0.07197	-	STATELINE INTERCHANGE - STLN-DEMARC6 230KV CKT 1
FDNSLock-Blown up	06ALL	0	16WP	G15_058		Non-Converged Contingency	439	439	0.07197	-	STLN-DEMARC6 - SWEETWATER 230KV CKT 1
FDNSLock-Blown up	06ALL	0	16WP	G15_058		Non-Converged Contingency	717.1	717.1	0.06687	-	HOLCOMB - SETAB 345KV CKT 1
FDNSLock-Blown up	06ALL	0	16WP	G15_058		Non-Converged Contingency	785	785	0.0658	-	MINGO - RED WILLOW 345KV CKT 1
FDNSLock-Blown up	06ALL	0	16WP	G15_058		Non-Converged Contingency	762.5	762.5	0.06574	-	MINGO - SETAB 345KV CKT 1
FDNSLock-Blown up	06ALL	0	16WP	G15_058		Non-Converged Contingency	439	439	0.06377	-	CHISHOLM6 230.00 - ELK CITY 230KV 230KV CKT 1
FDNSLock-Blown up	06ALL	0	16WP	G15_058		Non-Converged Contingency	450	450	0.06377	-	ELK CITY 230KV (ELKCTY-6) 230/138/13.8KV TRANSFORMER CKT 1
FDNSLock-Blown up	06ALL	0	16WP	G15_058		Non-Converged Contingency	717	717	0.06354	-	CIMARRON - DRAPER LAKE 345KV CKT 1
FDNSLock-Blown up	06ALL	0	16WP	G15_058		Non-Converged Contingency	329.05	360.92	0.06148	-	MOORE COUNTY INTERCHANGE - POTTER COUNTY INTERCHANGE 230KV CKT 1
FDNSLock-Blown up	06ALL	0	16WP	G15_058		Non-Converged Contingency	557	557	0.06117	-	GRAPEVINE INTERCHANGE - STATELINE INTERCHANGE 230KV CKT 1
FDNSLock-Blown up	06ALL	0	16WP	G15_058		Non-Converged Contingency	557	557	0.06099	-	GRAPEVINE INTERCHANGE - NICHOLS STATION 230KV CKT 1
FDNSLock-Blown up	06ALL	0	16WP	G15_058		Non-Converged Contingency	1195	1195	0.05715	-	GEN520947 1-HUGO1
FDNSLock-Blown up	06ALL	0	16WP	G15_058		Non-Converged Contingency	1793	1793	0.05685	-	G13-010T 345.00 - POST ROCK 345KV CKT 1
FDNSLock-Blown up	06ALL	0	16WP	G15_058		Non-Converged Contingency	1793	1793	0.05685	-	G13-010T 345.00 - SPEARVILLE 345KV CKT 1
FDNSLock-Blown up	06ALL	0	16WP	G15_058		Non-Converged Contingency	726.6	726.6	0.05665	-	BUCKNER7 345.00 - HOLCOMB 345KV CKT 1
FDNSLock-Blown up	06ALL	0	16WP	G15_058		Non-Converged Contingency	1413	1517	0.05665	-	BUCKNER7 345.00 - SPEARVILLE 345KV CKT 1

SOLUTION	GROUP	SCENARIO	SEASON	SOURCE	DIRECTION	MONITORED ELEMENT	RATEA (MVA)	RATEB(MVA)	TDF	TC%LOADING (% MVA)	CONTINGENCY
FDNSLock-Blown up	06ALL	0	16WP	G15_058		Non-Converged Contingency	717	789	0.04149	-	GRACEMONT - LAWTON EASTSIDE 345KV CKT 1
FDNSLock-Blown up	06ALL	0	16WP	G15_058		Non-Converged Contingency	286	315	0.03471	-	CANYON E_TP3115.00 - CANYON WEST SUB 115KV CKT 1
FDNSLock-Blown up	06ALL	0	16WP	G15_058		Non-Converged Contingency	106	106	0.03471	-	CANYON WEST SUB - DAWN SUB 115KV CKT 1
FDNSLock-Blown up	06ALL	0	16WP	G15_058		Non-Converged Contingency	106	106	0.03471	-	DAWN SUB - Panda Energy Substation Hereford 115KV CKT 1
FDNSLock-Blown up	06ALL	0	16WP	G15_058		Non-Converged Contingency	106	106	0.03471	-	DEAF SMITH COUNTY INTERCHANGE - Panda Energy Substation Hereford 115KV CKT 1
FDNSLock-Blown up	06ALL	0	16WP	G15_058		Non-Converged Contingency	164.53	177.08	0.03056	-	Hansford County Switch Station - SPEARMAN INTERCHANGE 115KV CKT 1
FDNSLock-Blown up	06ALL	0	16WP	G15_058		Non-Converged Contingency	177.08	177.08	0.03056	-	HITCHLAND INTERCHANGE - Hansford County Switch Station 115KV CKT 1
FDNSLock-Blown up	06ALL	0	17SP	G15_058		Non-Converged Contingency	956	1042	0.19838	-	G14-074T 345.00 - OKLAUNION 345KV CKT 1
FDNSLock-Blown up	06ALL	0	17SP	G15_058		Non-Converged Contingency	956	1042	0.19838	-	G14-074T 345.00 - TUCO INTERCHANGE 345KV CKT 1
FDNSLock-Blown up	06ALL	0	17SP	G15_058		Non-Converged Contingency	956.09	1051.7	0.16798	-	G14_038T 345.00 - Hitchland Interchange 345KV CKT 1
FDNSLock-Blown up	06ALL	0	17SP	G15_058		Non-Converged Contingency	956.09	1051.7	0.16798	-	G14_038T 345.00 - POTTER COUNTY INTERCHANGE 345KV CKT 1
FDNSLock-Blown up	06ALL	0	17SP	G15_058		Non-Converged Contingency	560	560	0.16798	-	POTTER COUNTY INTERCHANGE (WAUK 90343-A) 345/230/13.2KV TRANSFORMER CKT 1
FDNSLock-Blown up	06ALL	0	17SP	G15_058		Non-Converged Contingency	1792	1972	0.15568	-	BORDER 7345.00 - TUCO_2 345.00 345KV CKT 1
FDNSLock-Blown up	06ALL	0	17SP	G15_058		Non-Converged Contingency	1420	1775	0.15568	-	BORDER 7345.00 - TUCO_2 345.00 345KV CKT 2
FDNSLock-Blown up	06ALL	0	20L	G15_058		Non-Converged Contingency	0	0	0.34012	-	P12:345:SPS:J15.1.XRDS.TOLK
FDNSLock-Blown up	06ALL	0	20L	G15_058		Non-Converged Contingency	0	0	0.31444	-	P12:115:SPS:T62.1.SEVEN.PECOS
FDNSLock-Blown up	06ALL	0	20L	G15_058		Non-Converged Contingency	1792	1792	0.29125	-	HOBBS - YOAKUM_345 345.00 345KV CKT 1
FDNSLock-Blown up	06ALL	0	20L	G15_058		Non-Converged Contingency	1792	1792	0.26968	-	TUCO INTERCHANGE - YOAKUM_345 345.00 345KV CKT 1
FDNSLock-Blown up	06ALL	0	20L	G15_058		Non-Converged Contingency	717	926	0.26338	-	CROSSROADS 7345.00 - TOLK STATION 345KV CKT 1
FDNSLock-Blown up	06ALL	0	20L	G15_058		Non-Converged Contingency	560	560	0.26338	-	TOLK STATION (ABBXNL844501) 345/230/13.2KV TRANSFORMER CKT 1
FDNSLock-Blown up	06ALL	0	20L	G15_058		Non-Converged Contingency	560	560	0.26338	-	TOLK STATION (ABBXNL844501) 345/230/13.2KV TRANSFORMER CKT 1
FDNSLock-Blown up	06ALL	0	20L	G15_058		Non-Converged Contingency	1792	1972	0.22701	-	TUCO INTERCHANGE - TUCO_2 345.00 345KV CKT 1
FDNSLock-Blown up	06ALL	0	20L	G15_058		Non-Converged Contingency	0	0	0.20485	-	P12:345:SPS:J07.1.FINN.HITCH
FDNSLock-Blown up	06ALL	0	20L	G15_058		Non-Converged Contingency	0	0	0.19352	-	P12:230:SPS:K51.1.OASIS.RSVLT
FDNSLock-Blown up	06ALL	0	20L	G15_058		Non-Converged Contingency	1022	1124	0.17639	-	G14-074T 345.00 - OKLAUNION 345KV CKT 1
FDNSLock-Blown up	06ALL	0	20L	G15_058		Non-Converged Contingency	1022	1124	0.17639	-	G14-074T 345.00 - TUCO INTERCHANGE 345KV CKT 1
FDNSLock-Blown up	06ALL	0	20L	G15_058		Non-Converged Contingency	1022	1124	0.17639	-	GEN506754 1-LEBROCK STEAM 1
FDNSLock-Blown up	06ALL	0	20L	G15_058		Non-Converged Contingency	1022	1124	0.17639	-	GEN509394 1-FLINT CREEK
FDNSLock-Blown up	06ALL	0	20L	G15_058		Non-Converged Contingency	1022	1124	0.17639	-	GEN509403 1-PIRKEY GENERATION
FDNSLock-Blown up	06ALL	0	20L	G15_058		Non-Converged Contingency	1022	1124	0.17639	-	GEN509404 1-WELSH #1
FDNSLock-Blown up	06ALL	0	20L	G15_058		Non-Converged Contingency	1022	1124	0.17639	-	GEN509406 1-WELSH #3
FDNSLock-Blown up	06ALL	0	20L	G15_058		Non-Converged Contingency	1022	1124	0.17639	-	GEN509408 1-WILKES #2
FDNSLock-Blown up	06ALL	0	20L	G15_058		Non-Converged Contingency	1022	1124	0.17639	-	GEN509416 1-TURK GENERATION
FDNSLock-Blown up	06ALL	0	20L	G15_058		Non-Converged Contingency	1022	1124	0.17639	-	GEN511840 1-NORTHEASTERN STATION #3
FDNSLock-Blown up	06ALL	0	20L	G15_058		Non-Converged Contingency	1022	1124	0.17639	-	GEN511960 1-ROARK1 0.7000
FDNSLock-Blown up	06ALL	0	20L	G15_058		Non-Converged Contingency	1022	1124	0.17639	-	GEN562590 1-G14_057_3 0.6900
FDNSLock-Blown up	06ALL	0	20L	G15_058		Non-Converged Contingency	1022	1124	0.17639	-	OKLAUNION 345KV SWITCHED SHUNT
FDNSLock-Blown up	06ALL	0	20L	G15_058		Non-Converged Contingency	318.7	350.57	0.17623	-	CUNNINGHAM STATION - EDDY COUNTY INTERCHANGE 230KV CKT 1
FDNSLock-Blown up	06ALL	0	20L	G15_058		Non-Converged Contingency	318.7	350.57	0.17623	-	CUNNINGHAM STATION - EDDY COUNTY INTERCHANGE 230KV CKT 1
FDNSLock-Blown up	06ALL	0	20L	G15_058		Non-Converged Contingency	956	956	0.16026	-	CIMARRON - MINCO 345KV CKT 1
FDNSLock-Blown up	06ALL	0	20L	G15_058		Non-Converged Contingency	1195	1195	0.16026	-	GRACEMONT - MINCO 345KV CKT 1
FDNSLock-Blown up	06ALL	0	20L	G15_058		Non-Converged Contingency	1792	1792	0.14861	-	CHISHOLM7 345.00 - WOODWARD DISTRICT EHV 345KV CKT 1
FDNSLock-Blown up	06ALL	0	20L	G15_058		Non-Converged Contingency	478.05	501.55	0.14732	-	PECOS INTERCHANGE - SEVEN RIVERS INTERCHANGE 230KV CKT 1
FDNSLock-Blown up	06ALL	0	20L	G15_058		Non-Converged Contingency	478.05	501.55	0.14732	-	PECOS INTERCHANGE - SEVEN RIVERS INTERCHANGE 230KV CKT 1
FDNSLock-Blown up	06ALL	0	20L	G15_058		Non-Converged Contingency	1792	1792	0.14416	-	BORDER 7345.00 - CHISHOLM7 345.00 345KV CKT 2
FDNSLock-Blown up	06ALL	0	20L	G15_058		Non-Converged Contingency	1792	1792	0.14415	-	BORDER 7345.00 - CHISHOLM7 345.00 345KV CKT 1
FDNSLock-Blown up	06ALL	0	20L	G15_058		Non-Converged Contingency	1792	1972	0.14415	-	BORDER 7345.00 - TUCO_2 345.00 345KV CKT 1
FDNSLock-Blown up	06ALL	0	20L	G15_058		Non-Converged Contingency	1420	1775	0.14415	-	BORDER 7345.00 - TUCO_2 345.00 345KV CKT 2
FDNSLock-Blown up	06ALL	0	20L	G15_058		Non-Converged Contingency	1792	1972	0.14415	-	BORDER 7345.00 345KV SWITCHED SHUNT
FDNSLock-Blown up	06ALL	0	20L	G15_058		Non-Converged Contingency	318.7	350.57	0.13565	-	G15079_T 230.00 - YOAKUM COUNTY INTERCHANGE 230KV CKT 1
FDNSLock-Blown up	06ALL	0	20L	G15_058		Non-Converged Contingency	1584	2098	0.12866	-	CHISHOLM7 345.00 - GRACEMONT 345KV CKT 1
FDNSLock-Blown up	06ALL	0	20L	G15_058		Non-Converged Contingency	1584	2098	0.12866	-	GEN514805 1-SOONER UNIT 1
FDNSLock-Blown up	06ALL	0	20L	G15_058		Non-Converged Contingency	1584	2098	0.12866	-	GEN514806 1-SOONER UNIT 2
FDNSLock-Blown up	06ALL	0	20L	G15_058		Non-Converged Contingency	1584	2098	0.12866	-	GEN515040 1-SEMINOLE 1G
FDNSLock-Blown up	06ALL	0	20L	G15_058		Non-Converged Contingency	1584	2098	0.12866	-	GEN515223 1-MUSKOGEE 4G
FDNSLock-Blown up	06ALL	0	20L	G15_058		Non-Converged Contingency	0	0	0.12231	-	P12:115:SPS:T59.1.CARGIL.CURRY
FDNSLock-Blown up	06ALL	0	20L	G15_058		Non-Converged Contingency	478	502	0.12213	-	BUSHLAND INTERCHANGE - DEAF SMITH COUNTY INTERCHANGE 230KV CKT 1
FDNSLock-Blown up	06ALL	0	20L	G15_058		Non-Converged Contingency	478	502	0.12213	-	BUSHLAND INTERCHANGE - DEAF SMITH COUNTY INTERCHANGE 230KV CKT 1
FDNSLock-Blown up	06ALL	0	20L	G15_058		Non-Converged Contingency	478	502	0.12213	-	BUSHLAND INTERCHANGE 230KV SWITCHED SHUNT
FDNSLock-Blown up	06ALL	0	20L	G15_058		Non-Converged Contingency	478.05	547.36	0.12009	-	NEWHART 230 - PLANT X STATION 230KV CKT 1
FDNSLock-Blown up	06ALL	0	20L	G15_058		Non-Converged Contingency	442	752	0.11813	-	PLANT X STATION - TOLK STATION WEST 230KV CKT 1
FDNSLock-Blown up	06ALL	0	20L	G15_058		Non-Converged Contingency	442	752	0.11813	-	PLANT X STATION - TOLK STATION WEST 230KV CKT 1
FDNSLock-Blown up	06ALL	0	20L	G15_058		Non-Converged Contingency	442	752	0.11714	-	PLANT X STATION - TOLK STATION EAST 230KV CKT 2
FDNSLock-Blown up	06ALL	0	20L	G15_058		Non-Converged Contingency	442	752	0.11714	-	PLANT X STATION - TOLK STATION EAST 230KV CKT 2
FDNSLock-Blown up	06ALL	0	20L	G15_058		Non-Converged Contingency	956.09	1051.7	0.11689	-	G14_038T 345.00 - Hitchland Interchange 345KV CKT 1
FDNSLock-Blown up	06ALL	0	20L	G15_058		Non-Converged Contingency	956.09	1051.7	0.11689	-	G14_038T 345.00 - POTTER COUNTY INTERCHANGE 345KV CKT 1
FDNSLock-Blown up	06ALL	0	20L	G15_058		Non-Converged Contingency	560	560	0.11689	-	POTTER COUNTY INTERCHANGE (WAUK 90343-A) 345/230/13.2KV TRANSFORMER CKT 1
FDNSLock-Blown up	06ALL	0	20L	G15_058		Non-Converged Contingency	560	560	0.11689	-	POTTER COUNTY INTERCHANGE (WAUK 90343-A) 345/230/13.2KV TRANSFORMER CKT 1
FDNSLock-Blown up	06ALL	0	20L	G15_058		Non-Converged Contingency	956.09	1051.7	0.10938	-	Hitchland Interchange - WALKTAP7 345.00 345KV CKT 1
FDNSLock-Blown up	06ALL	0	20L	G15_058		Non-Converged Contingency	956.09	1051.7	0.10938	-	Hitchland Interchange - WALKTAP7 345.00 345KV CKT 1
FDNSLock-Blown up	06ALL	0	20L	G15_058		Non-Converged Contingency	318.7	350.57	0.10794	-	BUSHLAND INTERCHANGE - POTTER COUNTY INTERCHANGE 230KV CKT 1
FDNSLock-Blown up	06ALL	0	20L	G15_058		Non-Converged Contingency	318.7	350.57	0.10794	-	BUSHLAND INTERCHANGE - POTTER COUNTY INTERCHANGE 230KV CKT 1
FDNSLock-Blown up	06ALL	0	20L	G15_058		Non-Converged Contingency	318.7	350.57	0.10748	-	DEAF SMITH COUNTY INTERCHANGE - G15039_T 230.00 230KV CKT 1
FDNSLock-Blown up	06ALL	0	20L	G15_058		Non-Converged Contingency	318.7	350.57	0.10748	-	G15039_T 230.00 - PLANT X STATION 230KV CKT 1
FDNSLock-Blown up	06ALL	0	20L	G15_058		Non-Converged Contingency	0	0	0.10658	-	P12:115:SPS:T38.1.POTJCT.WIPP
FDNSLock-Blown up	06ALL	0	20L	G15_058		Non-Converged Contingency	717	789	0.1028	-	G14-057T 345.00 - LAWTON EASTSIDE 345KV CKT 1
FDNSLock-Blown up	06ALL	0	20L	G15_058		Non-Converged Contingency	717	789	0.1028	-	G14-057T 345.00 - SUNNYSIDE 345KV CKT 1
FDNSLock-Blown up	06ALL	0	20L	G15_058		Non-Converged Contingency	414	414	0.10174	-	AMOCO SWITCHING STATION - YOAKUM COUNTY INTERCHANGE 230KV CKT 1
FDNSLock-Blown up	06ALL	0	20L	G15_058		Non-Converged Contingency	414	414	0.10174	-	AMOCO SWITCHING STATION - YOAKUM COUNTY INTERCHANGE 230KV CKT 1

SOLUTION	GROUP	SCENARIO	SEASON	SOURCE	DIRECTION	MONITORED ELEMENT	RATEA (MVA)	RATEB(MVA)	TDF	TC%LOADING (% MVA)	CONTINGENCY
FDNSLock-Blown up	06ALL	0	20L	G15_058		Non-Converged Contingency	560	644	0.10154	-	HOBBS (UPDATE DATA) 345/230/13.2KV TRANSFORMER CKT 1
FDNSLock-Blown up	06ALL	0	20L	G15_058		Non-Converged Contingency	478.05	546.96	0.10007	-	TOLK STATION EAST - TUCO INTERCHANGE 230KV CKT 1
FDNSLock-Blown up	06ALL	0	20L	G15_058		Non-Converged Contingency	478.05	546.96	0.10007	-	TOLK STATION EAST - TUCO INTERCHANGE 230KV CKT 1
FDNSLock-Blown up	06ALL	0	20L	G15_058		Non-Converged Contingency	478	502	0.09745	-	NEWHART 230 - POTTER COUNTY INTERCHANGE 230KV CKT 1
FDNSLock-Blown up	06ALL	0	20L	G15_058		Non-Converged Contingency	956.09	1051.7	0.09547	-	FINNEY SWITCHING STATION - HOLCOMB 345KV CKT 1
FDNSLock-Blown up	06ALL	0	20L	G15_058		Non-Converged Contingency	956.09	1051.7	0.09547	-	FINNEY SWITCHING STATION - HOLCOMB 345KV CKT 1
FDNSLock-Blown up	06ALL	0	20L	G15_058		Non-Converged Contingency	956.09	1051.7	0.09547	-	FINNEY SWITCHING STATION - WALKTAP7 345.00 345KV CKT 1
FDNSLock-Blown up	06ALL	0	20L	G15_058		Non-Converged Contingency	956.09	1051.7	0.09547	-	FINNEY SWITCHING STATION - WALKTAP7 345.00 345KV CKT 1
FDNSLock-Blown up	06ALL	0	20L	G15_058		Non-Converged Contingency	497	547	0.09364	-	TUCO INTERCHANGE - TUCO_2 230.00 230KV CKT 1
FDNSLock-Blown up	06ALL	0	20L	G15_058		Non-Converged Contingency	0	0	0.09174	-	P12:115:SPS:T58.1.HERFRD.CARGIL
FDNSLock-Blown up	06ALL	0	20L	G15_058		Non-Converged Contingency	0	0	0.09132	-	P12:115:SPS:T71.1.CRLSLE.YUMA
FDNSLock-Blown up	06ALL	0	20L	G15_058		Non-Converged Contingency	0	0	0.08893	-	P12:230:AEPW:ELKCITY6:SWEETWT6
FDNSLock-Blown up	06ALL	0	20L	G15_058		Non-Converged Contingency	0	0	0.08835	-	P12:115:SPS:W40.1.WCANYON.DFSMTH
FDNSLock-Blown up	06ALL	0	20L	G15_058		Non-Converged Contingency	0	0	0.08525	-	P12:115:SPS:T43.1.SEVEN.EDDY_S
FDNSLock-Blown up	06ALL	0	20L	G15_058		Non-Converged Contingency	478	502	0.08265	-	AMARILLO SOUTH INTERCHANGE - G15031_T 230.00 230KV CKT 1
FDNSLock-Blown up	06ALL	0	20L	G15_058		Non-Converged Contingency	0	0	0.0803	-	P12:115:SPS:T14.1.MADDOX.WBENDR
FDNSLock-Blown up	06ALL	0	20L	G15_058		Non-Converged Contingency	0	0	0.07789	-	P12:230:AEPW-SPS:SWEETWT6:WHEELER 6
FDNSLock-Blown up	06ALL	0	20L	G15_058		Non-Converged Contingency	1420	1775	0.07588	-	G11_051T 345.00 - TATONGA7 345.00 345KV CKT 1
FDNSLock-Blown up	06ALL	0	20L	G15_058		Non-Converged Contingency	1420	1775	0.07588	-	G11_051T 345.00 - WOODWARD DISTRICT EHV 345KV CKT 1
FDNSLock-Blown up	06ALL	0	20L	G15_058		Non-Converged Contingency	1195	1195	0.07588	-	MATHWSN7 345.00 - TATONGA7 345.00 345KV CKT 1
FDNSLock-Blown up	06ALL	0	20L	G15_058		Non-Converged Contingency	1561	1793	0.07554	-	THISTLE7 345.00 - WOODWARD DISTRICT EHV 345KV CKT 1
FDNSLock-Blown up	06ALL	0	20L	G15_058		Non-Converged Contingency	1561	1793	0.07554	-	THISTLE7 345.00 - WOODWARD DISTRICT EHV 345KV CKT 1
FDNSLock-Blown up	06ALL	0	20L	G15_058		Non-Converged Contingency	1561	1793	0.07554	-	THISTLE7 345.00 - WOODWARD DISTRICT EHV 345KV CKT 2
FDNSLock-Blown up	06ALL	0	20L	G15_058		Non-Converged Contingency	1561	1793	0.07554	-	THISTLE7 345.00 - WOODWARD DISTRICT EHV 345KV CKT 2
FDNSLock-Blown up	06ALL	0	20L	G15_058		Non-Converged Contingency	1195	1195	0.07186	-	ARCADIA - NORTHWEST 345KV CKT 1
FDNSLock-Blown up	06ALL	0	20L	G15_058		Non-Converged Contingency	560	560	0.07145	-	TUCO INTERCHANGE (GE M1022338) 345/230/13.2KV TRANSFORMER CKT 1
FDNSLock-Blown up	06ALL	0	20L	G15_058		Non-Converged Contingency	560	560	0.07145	-	TUCO INTERCHANGE (GE M1022338) 345/230/13.2KV TRANSFORMER CKT 1
FDNSLock-Blown up	06ALL	0	20L	G15_058		Non-Converged Contingency	956	956	0.06915	-	CIMARRON - NORTHWEST 345KV CKT 1
FDNSLock-Blown up	06ALL	0	20L	G15_058		Non-Converged Contingency	0	0	0.0646	-	P12:115:SPS:T28.1.LAMTON.PLANTX
FDNSLock-Blown up	06ALL	0	20L	G15_058		Non-Converged Contingency	1195	1195	0.06411	-	MATHWSN7 345.00 - NORTHWEST 345KV CKT 1
FDNSLock-Blown up	06ALL	0	20L	G15_058		Non-Converged Contingency	318.7	350.57	0.06333	-	LUBBOCK SOUTH INTERCHANGE - WOLFFORTH INTERCHANGE 230KV CKT 1
FDNSLock-Blown up	06ALL	0	20L	G15_058		Non-Converged Contingency	318.7	350.57	0.06333	-	LUBBOCK SOUTH INTERCHANGE - WOLFFORTH INTERCHANGE 230KV CKT 1
FDNSLock-Blown up	06ALL	0	20L	G15_058		Non-Converged Contingency	318.7	350.57	0.06333	-	LUBBOCK SOUTH INTERCHANGE 230KV SWITCHED SHUNT
FDNSLock-Blown up	06ALL	0	20L	G15_058		Non-Converged Contingency	0	0	0.06243	-	P12:115:SPS:W35.1.GAINES.JNSDRW
FDNSLock-Blown up	06ALL	0	20L	G15_058		Non-Converged Contingency	560	644	0.06227	-	TUCO INTERCHANGE (SIEM 8743066) 345/230/13.2KV TRANSFORMER CKT 2
FDNSLock-Blown up	06ALL	0	20L	G15_058		Non-Converged Contingency	560	644	0.06227	-	TUCO INTERCHANGE (SIEM 8743066) 345/230/13.2KV TRANSFORMER CKT 2
FDNSLock-Blown up	06ALL	0	20L	G15_058		Non-Converged Contingency	560	560	0.0613	-	TUCO_2 345.00 (TUCO_2 XFMR) 345/230/13.2KV TRANSFORMER CKT 1
FDNSLock-Blown up	06ALL	0	20L	G15_058		Non-Converged Contingency	0	0	0.05995	-	P12:138:AEPW-OGE:WTH_JCT4:JENSEN4
FDNSLock-Blown up	06ALL	0	20L	G15_058		Non-Converged Contingency	0	0	0.0589	-	P12:115:SPS:V05.1.OSAGE.WCANYON
FDNSLock-Blown up	06ALL	0	20L	G15_058		Non-Converged Contingency	478	502	0.05856	-	CARLISLE INTERCHANGE - TUCO INTERCHANGE 230KV CKT 1
FDNSLock-Blown up	06ALL	0	20L	G15_058		Non-Converged Contingency	478	502	0.05856	-	CARLISLE INTERCHANGE - TUCO INTERCHANGE 230KV CKT 1
FDNSLock-Blown up	06ALL	0	20L	G15_058		Non-Converged Contingency	956	956	0.05812	-	G15063_T 345.00 - MATHWSN7 345.00 345KV CKT 1
FDNSLock-Blown up	06ALL	0	20L	G15_058		Non-Converged Contingency	956	956	0.05812	-	G15063_T 345.00 - WOODRING 345KV CKT 1
FDNSLock-Blown up	06ALL	0	20L	G15_058		Non-Converged Contingency	1532	1793	0.05723	-	G1524G1525 345.00 - THISTLE7 345.00 345KV CKT 1
FDNSLock-Blown up	06ALL	0	20L	G15_058		Non-Converged Contingency	1532	1793	0.05723	-	G1524G1525 345.00 - THISTLE7 345.00 345KV CKT 2
FDNSLock-Blown up	06ALL	0	20L	G15_058		Non-Converged Contingency	1532	1793	0.05723	-	G1524G1525 345.00 - WICHITA 345KV CKT 1
FDNSLock-Blown up	06ALL	0	20L	G15_058		Non-Converged Contingency	1532	1793	0.05723	-	G1524G1525 345.00 - WICHITA 345KV CKT 2
FDNSLock-Blown up	06ALL	0	20L	G15_058		Non-Converged Contingency	1532	1793	0.05723	-	GEN532653 1-JEFFREY ENERGY CENTER UNIT 3
FDNSLock-Blown up	06ALL	0	20L	G15_058		Non-Converged Contingency	1532	1793	0.05723	-	GEN532663 1-LAWRENCE ENERGY CENTER UNIT 5
FDNSLock-Blown up	06ALL	0	20L	G15_058		Non-Converged Contingency	1532	1793	0.05723	-	GEN532751 1-WOLF CREEK GENERATING STATION UNIT 1
FDNSLock-Blown up	06ALL	0	20L	G15_058		Non-Converged Contingency	0	0	0.05719	-	P12:115:SPS:T98.1.HIGG.HOBBG
FDNSLock-Blown up	06ALL	0	20L	G15_058		Non-Converged Contingency	435.82	501.55	0.0571	-	Harrington Station Mid Bus - RANDALL COUNTY INTERCHANGE 230KV CKT 1
FDNSLock-Blown up	06ALL	0	20L	G15_058		Non-Converged Contingency	435.82	501.55	0.0571	-	Harrington Station Mid Bus - RANDALL COUNTY INTERCHANGE 230KV CKT 1
FDNSLock-Blown up	06ALL	0	20L	G15_058		Non-Converged Contingency	0	0	0.05687	-	P12:115:LCEC:W56.1.HOBBG.LE-LVN
FDNSLock-Blown up	06ALL	0	20L	G15_058		Non-Converged Contingency	1039	1195	0.05621	-	NORTHWEST - SPRING CREEK 345KV CKT 1
FDNSLock-Blown up	06ALL	0	20L	G15_058		Non-Converged Contingency	1039	1195	0.05621	-	SOONER - SPRING CREEK 345KV CKT 1
FDNSLock-Blown up	06ALL	0	20L	G15_058		Non-Converged Contingency	785	785	0.05313	-	GEN640009 1-COOPER NUCLEAR STATION
FDNSLock-Blown up	06ALL	0	20L	G15_058		Non-Converged Contingency	785	785	0.05313	-	MINGO - RED WILLOW 345KV CKT 1
FDNSLock-Blown up	06ALL	0	20L	G15_058		Non-Converged Contingency	785	785	0.05313	-	MINGO - RED WILLOW 345KV CKT 1
FDNSLock-Blown up	06ALL	0	20L	G15_058		Non-Converged Contingency	478	478	0.05252	-	CARLISLE INTERCHANGE - WOLFFORTH INTERCHANGE 230KV CKT 1
FDNSLock-Blown up	06ALL	0	20L	G15_058		Non-Converged Contingency	0	0	0.05184	-	P12:138:AEPW:S.W.S.-4:L.E.S.-4
FDNSLock-Blown up	06ALL	0	20L	G15_058		Non-Converged Contingency	762.5	762.5	0.05177	-	MINGO - SETAB 345KV CKT 1
FDNSLock-Blown up	06ALL	0	20L	G15_058		Non-Converged Contingency	762.5	762.5	0.05177	-	MINGO - SETAB 345KV CKT 1
FDNSLock-Blown up	06ALL	0	20L	G15_058		Non-Converged Contingency	717.1	717.1	0.0513	-	HOLCOMB - SETAB 345KV CKT 1
FDNSLock-Blown up	06ALL	0	20L	G15_058		Non-Converged Contingency	717.1	717.1	0.0513	-	HOLCOMB - SETAB 345KV CKT 1
FDNSLock-Blown up	06ALL	0	20L	G15_058		Non-Converged Contingency	1195	1195	0.05054	-	SOONER - WOODRING 345KV CKT 1
FDNSLock-Blown up	06ALL	0	20L	G15_058		Non-Converged Contingency	478.05	478.05	0.05034	-	Roosevelt County Interchange SOUTH - TOLK STATION EAST 230KV CKT 1
FDNSLock-Blown up	06ALL	0	20L	G15_058		Non-Converged Contingency	478.05	478.05	0.05034	-	Roosevelt County Interchange SOUTH - TOLK STATION EAST 230KV CKT 1
FDNSLock-Blown up	06ALL	0	20L	G15_058		Non-Converged Contingency	439	439	0.04998	-	CHISHOLM6 230.00 - ELK CITY 230KV 230KV CKT 1
FDNSLock-Blown up	06ALL	0	20L	G15_058		Non-Converged Contingency	450	450	0.04998	-	ELK CITY 230KV (ELKCTY-6) 230/138/13.8KV TRANSFORMER CKT 1
FDNSLock-Blown up	06ALL	0	20L	G15_058		Non-Converged Contingency	450	450	0.04998	-	ELK CITY 230KV (ELKCTY-6) 230/138/13.8KV TRANSFORMER CKT 1
FDNSLock-Blown up	06ALL	0	20L	G15_058		Non-Converged Contingency	0	0	0.04995	-	P12:115:SPS:T66.1.RNDALL.HAPPY
FDNSLock-Blown up	06ALL	0	20L	G15_058		Non-Converged Contingency	0	0	0.04995	-	P12:115:SPS:T67.1.HAPPY.KRESS
FDNSLock-Blown up	06ALL	0	20L	G15_058		Non-Converged Contingency	478.05	478.05	0.04947	-	ROOSEVELT COUNTY INTERCHANGE - TOLK STATION WEST 230KV CKT 2
FDNSLock-Blown up	06ALL	0	20L	G15_058		Non-Converged Contingency	478.05	478.05	0.04947	-	ROOSEVELT COUNTY INTERCHANGE - TOLK STATION WEST 230KV CKT 2
FDNSLock-Blown up	06ALL	0	20L	G15_058		Non-Converged Contingency	501.95	501.95	0.04946	-	HITCHLAND INTERCHANGE - MOORE COUNTY INTERCHANGE 230KV CKT 1
FDNSLock-Blown up	06ALL	0	20L	G15_058		Non-Converged Contingency	501.95	501.95	0.04946	-	HITCHLAND INTERCHANGE - MOORE COUNTY INTERCHANGE 230KV CKT 1
FDNSLock-Blown up	06ALL	0	20L	G15_058		Non-Converged Contingency	1793	1793	0.04888	-	BVRCNTY7 345.00 - G11-14T 345.00 345KV CKT 1
FDNSLock-Blown up	06ALL	0	20L	G15_058		Non-Converged Contingency	1716	1793	0.04888	-	BVRCNTY7 345.00 - G11-14T 345.00 345KV CKT 2

SOLUTION	GROUP	SCENARIO	SEASON	SOURCE	DIRECTION	MONITORED ELEMENT	RATEA (MVA)	RATEB(MVA)	TDF	TC%LOADING (% MVA)	CONTINGENCY
FDNSLock-Blown up	06ALL	0	20L	G15_058		Non-Converged Contingency	1792	1792	0.04888	-	BVRCNTY7 345.00 - OPTIMA 345.00 345KV CKT 1
FDNSLock-Blown up	06ALL	0	20L	G15_058		Non-Converged Contingency	1792	1792	0.04888	-	BVRCNTY7 345.00 - OPTIMA 345.00 345KV CKT 2
FDNSLock-Blown up	06ALL	0	20L	G15_058		Non-Converged Contingency	1793	1793	0.04888	-	G11-14T 345.00 - WOODWARD DISTRICT EHV 345KV CKT 1
FDNSLock-Blown up	06ALL	0	20L	G15_058		Non-Converged Contingency	1716	1793	0.04888	-	G11-14T 345.00 - WOODWARD DISTRICT EHV 345KV CKT 2
FDNSLock-Blown up	06ALL	0	20L	G15_058		Non-Converged Contingency	1792	1792	0.04888	-	Hitchland Interchange - OPTIMA 345.00 345KV CKT 1
FDNSLock-Blown up	06ALL	0	20L	G15_058		Non-Converged Contingency	1792	1792	0.04888	-	Hitchland Interchange - OPTIMA 345.00 345KV CKT 2
FDNSLock-Blown up	06ALL	0	20L	G15_058		Non-Converged Contingency	717	789	0.0484	-	GRACEMONT - LAWTON EASTSIDE 345KV CKT 1
FDNSLock-Blown up	06ALL	0	20L	G15_058		Non-Converged Contingency	717	789	0.0484	-	GRACEMONT - LAWTON EASTSIDE 345KV CKT 1
FDNSLock-Blown up	06ALL	0	20L	G15_058		Non-Converged Contingency	560	644	0.04826	-	Hitchland Interchange (SIEM 8743067) 345/230/13.2KV TRANSFORMER CKT 2
FDNSLock-Blown up	06ALL	0	20L	G15_058		Non-Converged Contingency	560	644	0.04826	-	Hitchland Interchange (SIEM 8743067) 345/230/13.2KV TRANSFORMER CKT 2
FDNSLock-Blown up	06ALL	0	20L	G15_058		Non-Converged Contingency	478.05	501.55	0.04774	-	AMARILLO SOUTH INTERCHANGE - NICHOLS STATION 230KV CKT 1
FDNSLock-Blown up	06ALL	0	20L	G15_058		Non-Converged Contingency	478.05	501.55	0.04774	-	AMARILLO SOUTH INTERCHANGE - NICHOLS STATION 230KV CKT 1
FDNSLock-Blown up	06ALL	0	20L	G15_058		Non-Converged Contingency	1195	1195	0.04716	-	JOHNSON COUNTY - SUNNYSIDE 345KV CKT 1
FDNSLock-Blown up	06ALL	0	20L	G15_058		Non-Converged Contingency	159	160	0.04617	-	JOHNSON DRAW - TAYLOR SWITCHING STATION 115KV CKT 1
FDNSLock-Blown up	06ALL	0	20L	G15_058		Non-Converged Contingency	159	160	0.04617	-	JOHNSON DRAW - TAYLOR SWITCHING STATION 115KV CKT 1
FDNSLock-Blown up	06ALL	0	20L	G15_058		Non-Converged Contingency	0	0	0.04583	-	P12:138:WFEC-AEPW:WASHITA4:CLINTJC4
FDNSLock-Blown up	06ALL	0	20L	G15_058		Non-Converged Contingency	1504	1792	0.04535	-	AXTELL - POST ROCK 345KV CKT 1
FDNSLock-Blown up	06ALL	0	20L	G15_058		Non-Converged Contingency	878	956	0.04518	-	BENTON - WICHITA 345KV CKT 1
FDNSLock-Blown up	06ALL	0	20L	G15_058		Non-Converged Contingency	1505	1793	0.04457	-	G13-010T 345.00 - POST ROCK 345KV CKT 1
FDNSLock-Blown up	06ALL	0	20L	G15_058		Non-Converged Contingency	1505	1793	0.04457	-	G13-010T 345.00 - SPEARVILLE 345KV CKT 1
FDNSLock-Blown up	06ALL	0	20L	G15_058		Non-Converged Contingency	1195	1195	0.04408	-	CIMARRON - DRAPER LAKE 345KV CKT 1
FDNSLock-Blown up	06ALL	0	20L	G15_058		Non-Converged Contingency	0	0	0.04383	-	P12:115:SPS:T13.1.TAYLOR.WHOBBS
FDNSLock-Blown up	06ALL	0	20L	G15_058		Non-Converged Contingency	1151	1195	0.04345	-	JOHNSON COUNTY - PITTSBURG 345KV CKT 1
FDNSLock-Blown up	06ALL	0	20L	G15_058		Non-Converged Contingency	1151	1195	0.04345	-	JOHNSON COUNTY - PITTSBURG 345KV CKT 1
FDNSLock-Blown up	06ALL	0	20L	G15_058		Non-Converged Contingency	343.79	343.79	0.04302	-	JONES STATION - TUCO INTERCHANGE 230KV CKT 1
FDNSLock-Blown up	06ALL	0	20L	G15_058		Non-Converged Contingency	343.79	343.79	0.04302	-	JONES STATION - TUCO INTERCHANGE 230KV CKT 1
FDNSLock-Blown up	06ALL	0	20L	G15_058		Non-Converged Contingency	318.7	350.57	0.04265	-	MOORE COUNTY INTERCHANGE - POTTER COUNTY INTERCHANGE 230KV CKT 1
FDNSLock-Blown up	06ALL	0	20L	G15_058		Non-Converged Contingency	318.7	350.57	0.04265	-	MOORE COUNTY INTERCHANGE - POTTER COUNTY INTERCHANGE 230KV CKT 1
FDNSLock-Blown up	06ALL	0	20L	G15_058		Non-Converged Contingency	0	0	0.04254	-	P12:115:SPS:V03.1.NICHLS.EPLANT
FDNSLock-Blown up	06ALL	0	20L	G15_058		Non-Converged Contingency	560	644	0.04199	-	Hitchland Interchange (H TB80155502) 345/230/13.2KV TRANSFORMER CKT 1
FDNSLock-Blown up	06ALL	0	20L	G15_058		Non-Converged Contingency	560	644	0.04199	-	Hitchland Interchange (H TB80155502) 345/230/13.2KV TRANSFORMER CKT 1
FDNSLock-Blown up	06ALL	0	20L	G15_058		Non-Converged Contingency	956	956	0.04165	-	GERALD GENTLEMAN STATION - RED WILLOW 345KV CKT 1
FDNSLock-Blown up	06ALL	0	20L	G15_058		Non-Converged Contingency	1035	1035	0.04056	-	EMPORIA ENERGY CENTER - G14_001T 345.00 345KV CKT 1
FDNSLock-Blown up	06ALL	0	20L	G15_058		Non-Converged Contingency	1035	1035	0.04056	-	G14_001T 345.00 - WICHITA 345KV CKT 1
FDNSLock-Blown up	06ALL	0	20L	G15_058		Non-Converged Contingency	0	0	0.04017	-	P12:115:SPS:T45.1.NORRIS.OASIS
FDNSLock-Blown up	06ALL	0	20L	G15_058		Non-Converged Contingency	0	0	0.03985	-	P12:138:AEPW-OGE:CORNVIL4:CIMARON4
FDNSLock-Blown up	06ALL	0	20L	G15_058		Non-Converged Contingency	1195	1195	0.03924	-	GEN520811 1-ANADRK4
FDNSLock-Blown up	06ALL	0	20L	G15_058		Non-Converged Contingency	1195	1195	0.03924	-	HUGO - SUNNYSIDE 345KV CKT 1
FDNSLock-Blown up	06ALL	0	20L	G15_058		Non-Converged Contingency	421	439	0.03894	-	CHISHOLM6 230.00 - SWEETWATER 230KV CKT 1
FDNSLock-Blown up	06ALL	0	20L	G15_058		Non-Converged Contingency	348.58	381.24	0.03894	-	STATELINE INTERCHANGE - STLN-DEMARC6 230KV CKT 1
FDNSLock-Blown up	06ALL	0	20L	G15_058		Non-Converged Contingency	353	353	0.03894	-	STLN-DEMARC6 - SWEETWATER 230KV CKT 1
FDNSLock-Blown up	06ALL	0	20L	G15_058		Non-Converged Contingency	478	610	0.03837	-	TOLK STATION TAP - TOLK STATION WEST 230KV CKT @1
FDNSLock-Blown up	06ALL	0	20L	G15_058		Non-Converged Contingency	1141	1195	0.03786	-	GEN542951 5-HAWTHORN UNIT #5
FDNSLock-Blown up	06ALL	0	20L	G15_058		Non-Converged Contingency	1141	1195	0.03786	-	LACYGNE - WAVERLY7 345.00 345KV CKT 1
FDNSLock-Blown up	06ALL	0	20L	G15_058		Non-Converged Contingency	1141	1195	0.03786	-	WAVERLY7 345.00 - WOLF CREEK 345KV CKT 1
FDNSLock-Blown up	06ALL	0	20L	G15_058		Non-Converged Contingency	726.6	726.6	0.03607	-	BUCKNER7 345.00 - HOLCOMB 345KV CKT 1
FDNSLock-Blown up	06ALL	0	20L	G15_058		Non-Converged Contingency	726.6	726.6	0.03607	-	BUCKNER7 345.00 - HOLCOMB 345KV CKT 1
FDNSLock-Blown up	06ALL	0	20L	G15_058		Non-Converged Contingency	1413	1517	0.03607	-	BUCKNER7 345.00 - SPEARVILLE 345KV CKT 1
FDNSLock-Blown up	06ALL	0	20L	G15_058		Non-Converged Contingency	1413	1517	0.03607	-	BUCKNER7 345.00 - SPEARVILLE 345KV CKT 1
FDNSLock-Blown up	06ALL	0	20L	G15_058		Non-Converged Contingency	1195	1195	0.03576	-	MUSKOGEE - SEMINOLE 345KV CKT 1
FDNSLock-Blown up	06ALL	0	20L	G15_058		Non-Converged Contingency	1076	1076	0.03549	-	G15074_T 345.00 - HOYT 345KV CKT 1
FDNSLock-Blown up	06ALL	0	20L	G15_058		Non-Converged Contingency	1076	1076	0.03549	-	G15074_T 345.00 - JEFFREY ENERGY CENTER 345KV CKT 1
FDNSLock-Blown up	06ALL	0	20L	G15_058		Non-Converged Contingency	1036	1195	0.03532	-	HOYT - STRANGER CREEK 345KV CKT 1
FDNSLock-Blown up	06ALL	0	20L	G15_058		Non-Converged Contingency	0	0	0.03445	-	P12:115:SPS:T97.1.TAYLOR.HOBBG
FDNSLock-Blown up	06ALL	0	20L	G15_058		Non-Converged Contingency	502	502	0.03358	-	GRAPEVINE INTERCHANGE - NICHOLS STATION 230KV CKT 1
FDNSLock-Blown up	06ALL	0	20L	G15_058		Non-Converged Contingency	502	502	0.03358	-	GRAPEVINE INTERCHANGE - NICHOLS STATION 230KV CKT 1
FDNSLock-Blown up	06ALL	0	20L	G15_058		Non-Converged Contingency	0	0	0.03354	-	P12:115:SPS:V15.1.TUCO.INDANA
FDNSLock-Blown up	06ALL	0	20L	G15_058		Non-Converged Contingency	502	502	0.03317	-	GRAPEVINE INTERCHANGE - STATELINE INTERCHANGE 230KV CKT 1
FDNSLock-Blown up	06ALL	0	20L	G15_058		Non-Converged Contingency	502	502	0.03317	-	GRAPEVINE INTERCHANGE - STATELINE INTERCHANGE 230KV CKT 1
FDNSLock-Blown up	06ALL	0	20L	G15_058		Non-Converged Contingency	497.17	546.96	0.0331	-	AMARILLO SOUTH INTERCHANGE - RANDALL COUNTY INTERCHANGE 230KV CKT 1
FDNSLock-Blown up	06ALL	0	20L	G15_058		Non-Converged Contingency	497.17	546.96	0.0331	-	AMARILLO SOUTH INTERCHANGE - RANDALL COUNTY INTERCHANGE 230KV CKT 1
FDNSLock-Blown up	06ALL	0	20L	G15_058		Non-Converged Contingency	0	0	0.03257	-	P12:115:SPS:W29.1.OCLTRE.SPRMN
FDNSLock-Blown up	06ALL	0	20L	G15_058		Non-Converged Contingency	0	0	0.03251	-	P12:138:OKGE:3TERM10
FDNSLock-Blown up	06ALL	0	20L	G15_058		Non-Converged Contingency	0	0	0.03214	-	P12:115:SPS:W08.1.HITCH.LASLEY
FDNSLock-Blown up	06ALL	0	20L	G15_058		Non-Converged Contingency	717	717	0.03182	-	EMPORIA ENERGY CENTER - SWISSVALE 345KV CKT 1
FDNSLock-Blown up	06ALL	0	20L	G15_058		Non-Converged Contingency	0	0	0.03089	-	P12:230:SPS:K43.1.PRNGLE.HARR_E
FDNSLock-Blown up	06ALL	0	20L	G15_058		Non-Converged Contingency	96	96	0.03058	-	CARGILL SUB - DEAF SMITH REC-#24 115KV CKT 1
FDNSLock-Blown up	06ALL	0	20L	G15_058		Non-Converged Contingency	96	96	0.03058	-	CARGILL SUB - FRIONA SUB 115KV CKT 1
FDNSLock-Blown up	06ALL	0	20L	G15_058		Non-Converged Contingency	96	96	0.03058	-	CURRY COUNTY INTERCHANGE - DEAF SMITH REC-#20 115KV CKT 1
FDNSLock-Blown up	06ALL	0	20L	G15_058		Non-Converged Contingency	96	96	0.03058	-	DEAF SMITH REC-#20 - PARMER COUNTY SUB 115KV CKT 1
FDNSLock-Blown up	06ALL	0	20L	G15_058		Non-Converged Contingency	96	96	0.03058	-	DEAF SMITH REC-#24 - PARMER COUNTY SUB 115KV CKT 1
FDNSLock-Blown up	06ALL	0	20L	G15_058		Non-Converged Contingency	96	96	0.03058	-	DEAF SMITH REC-#6 - FRIONA SUB 115KV CKT 1
FDNSLock-Blown up	06ALL	0	20L	G15_058		Non-Converged Contingency	96	96	0.03058	-	DEAF SMITH REC-#6 - HEREFORD INTERCHANGE 115KV CKT 1
FDNSLock-Blown up	06ALL	0	20L	G15_058		Non-Converged Contingency	96	96	0.03058	-	PARMER COUNTY SUB 115KV SWITCHED SHUNT
FDNSLock-Blown up	06ALL	0	20L	G15_058		Non-Converged Contingency	0	0	0.03037	-	P12:138:AEPW:REDROCKRD4:WTH_JCT4
FDNSLock-Blown up	06ALL	0	20L	G15_058		Non-Converged Contingency	717	717	0.02989	-	SWISSVALE - WEST GARDNER 345KV CKT 1
FDNSLock-Blown up	06ALL	0	20L	G15_058		Non-Converged Contingency	0	0	0.0297	-	P12:115:SPS:W37.1.WIPP.RDBLUFF
FDNSLock-Blown up	06ALL	0	20L	G15_058		Non-Converged Contingency	0	0	0.02957	-	P12:138:OKGE-AEPW:JENSEN4:REDROCKRD4
FDNSLock-Blown up	06ALL	0	20SP	G15_058		Non-Converged Contingency	956	1042	0.21119	-	G14-074T 345.00 - OKLAUNION 345KV CKT 1

SOLUTION	GROUP	SCENARIO	SEASON	SOURCE	DIRECTION	MONITORED ELEMENT	RATEA (MVA)	RATEB(MVA)	TDF	TC%LOADING (% MVA)	CONTINGENCY
FDNSLock-Blown up	06ALL	0	20SP	G15_058		Non-Converged Contingency	1792	1972	0.16902	-	BORDER 7345.00 - TUCO_2 345.00 345KV CKT 1
FDNSLock-Blown up	06ALL	0	20SP	G15_058		Non-Converged Contingency	1420	1775	0.16902	-	BORDER 7345.00 - TUCO_2 345.00 345KV CKT 2
FDNSLock-Blown up	06ALL	0	20SP	G15_058		Non-Converged Contingency	956.09	1051.7	0.15115	-	G14_038T 345.00 - Hitchland Interchange 345KV CKT 1
FDNSLock-Blown up	06ALL	0	20SP	G15_058		Non-Converged Contingency	956.09	1051.7	0.15115	-	G14_038T 345.00 - POTTER COUNTY INTERCHANGE 345KV CKT 1
FDNSLock-Blown up	06ALL	0	20WP	G15_058		Non-Converged Contingency	1792	1792	0.30003	-	TUCO INTERCHANGE - YOAKUM_345 345.00 345KV CKT 1
FDNSLock-Blown up	06ALL	0	20WP	G15_058		Non-Converged Contingency	1792	1972	0.25525	-	TUCO INTERCHANGE - TUCO_2 345.00 345KV CKT 1
FDNSLock-Blown up	06ALL	0	20WP	G15_058		Non-Converged Contingency	0	0	0.24674	-	P12:345:SPS:J07.1.FINN.HITCH
FDNSLock-Blown up	06ALL	0	20WP	G15_058		Non-Converged Contingency	1022	1124	0.20633	-	G14-074T 345.00 - OKLAUNION 345KV CKT 1
FDNSLock-Blown up	06ALL	0	20WP	G15_058		Non-Converged Contingency	1022	1124	0.20633	-	G14-074T 345.00 - TUCO INTERCHANGE 345KV CKT 1
FDNSLock-Blown up	06ALL	0	20WP	G15_058		Non-Converged Contingency	1022	1124	0.20633	-	OKLAUNION 345KV SWITCHED SHUNT
FDNSLock-Blown up	06ALL	0	20WP	G15_058		Non-Converged Contingency	956	956	0.17699	-	CIMARRON - MINCO 345KV CKT 1
FDNSLock-Blown up	06ALL	0	20WP	G15_058		Non-Converged Contingency	1195	1195	0.17699	-	GRACEMONT - MINCO 345KV CKT 1
FDNSLock-Blown up	06ALL	0	20WP	G15_058		Non-Converged Contingency	1792	1792	0.16874	-	CHISHOLM7 345.00 - WOODWARD DISTRICT EHV 345KV CKT 1
FDNSLock-Blown up	06ALL	0	20WP	G15_058		Non-Converged Contingency	1792	1972	0.16535	-	BORDER 7345.00 - TUCO_2 345.00 345KV CKT 1
FDNSLock-Blown up	06ALL	0	20WP	G15_058		Non-Converged Contingency	1420	1775	0.16535	-	BORDER 7345.00 - TUCO_2 345.00 345KV CKT 2
FDNSLock-Blown up	06ALL	0	20WP	G15_058		Non-Converged Contingency	1792	1972	0.16535	-	BORDER 7345.00 345KV SWITCHED SHUNT
FDNSLock-Blown up	06ALL	0	20WP	G15_058		Non-Converged Contingency	1584	2098	0.15478	-	CHISHOLM7 345.00 - GRACEMONT 345KV CKT 1
FDNSLock-Blown up	06ALL	0	20WP	G15_058		Non-Converged Contingency	987.16	1082.8	0.14608	-	G14_038T 345.00 - Hitchland Interchange 345KV CKT 1
FDNSLock-Blown up	06ALL	0	20WP	G15_058		Non-Converged Contingency	987.16	1082.8	0.14608	-	G14_038T 345.00 - POTTER COUNTY INTERCHANGE 345KV CKT 1
FDNSLock-Blown up	06ALL	0	20WP	G15_058		Non-Converged Contingency	560	560	0.14608	-	POTTER COUNTY INTERCHANGE (WAUK 90343-A) 345/230/13.2KV TRANSFORMER CKT 1
FDNSLock-Blown up	06ALL	0	20WP	G15_058		Non-Converged Contingency	560	560	0.14608	-	POTTER COUNTY INTERCHANGE (WAUK 90343-A) 345/230/13.2KV TRANSFORMER CKT 1
FDNSLock-Blown up	06ALL	0	20WP	G15_058		Non-Converged Contingency	987.16	1082.8	0.13151	-	Hitchland Interchange - WALKTAP7 345.00 345KV CKT 1
FDNSLock-Blown up	06ALL	0	20WP	G15_058		Non-Converged Contingency	987.16	1082.8	0.13151	-	Hitchland Interchange - WALKTAP7 345.00 345KV CKT 1
FDNSLock-Blown up	06ALL	0	20WP	G15_058		Non-Converged Contingency	557	557	0.13056	-	BUSHLAND INTERCHANGE - DEAF SMITH COUNTY INTERCHANGE 230KV CKT 1
FDNSLock-Blown up	06ALL	0	20WP	G15_058		Non-Converged Contingency	557	557	0.13056	-	BUSHLAND INTERCHANGE - DEAF SMITH COUNTY INTERCHANGE 230KV CKT 1
FDNSLock-Blown up	06ALL	0	20WP	G15_058		Non-Converged Contingency	717	789	0.12655	-	G14-057T 345.00 - LAWTON EASTSIDE 345KV CKT 1
FDNSLock-Blown up	06ALL	0	20WP	G15_058		Non-Converged Contingency	717	789	0.12655	-	G14-057T 345.00 - SUNNYSIDE 345KV CKT 1
FDNSLock-Blown up	06ALL	0	20WP	G15_058		Non-Converged Contingency	329.05	360.92	0.11609	-	BUSHLAND INTERCHANGE - POTTER COUNTY INTERCHANGE 230KV CKT 1
FDNSLock-Blown up	06ALL	0	20WP	G15_058		Non-Converged Contingency	329.05	360.92	0.11609	-	BUSHLAND INTERCHANGE - POTTER COUNTY INTERCHANGE 230KV CKT 1
FDNSLock-Blown up	06ALL	0	20WP	G15_058		Non-Converged Contingency	0	0	0.11604	-	P12:230:AEPW:ELKCITY6:SWEETWT6
FDNSLock-Blown up	06ALL	0	20WP	G15_058		Non-Converged Contingency	329.05	360.92	0.11524	-	DEAF SMITH COUNTY INTERCHANGE - G15039_T 230.00 230KV CKT 1
FDNSLock-Blown up	06ALL	0	20WP	G15_058		Non-Converged Contingency	329.05	360.92	0.11524	-	G15039_T 230.00 - PLANT X STATION 230KV CKT 1
FDNSLock-Blown up	06ALL	0	20WP	G15_058		Non-Converged Contingency	956.09	1051.7	0.11523	-	FINNEY SWITCHING STATION - HOLCOMB 345KV CKT 1
FDNSLock-Blown up	06ALL	0	20WP	G15_058		Non-Converged Contingency	956.09	1051.7	0.11523	-	FINNEY SWITCHING STATION - HOLCOMB 345KV CKT 1
FDNSLock-Blown up	06ALL	0	20WP	G15_058		Non-Converged Contingency	987.16	1082.8	0.11523	-	FINNEY SWITCHING STATION - WALKTAP7 345.00 345KV CKT 1
FDNSLock-Blown up	06ALL	0	20WP	G15_058		Non-Converged Contingency	987.16	1082.8	0.11523	-	FINNEY SWITCHING STATION - WALKTAP7 345.00 345KV CKT 1
FDNSLock-Blown up	06ALL	0	20WP	G15_058		Non-Converged Contingency	0	0	0.10886	-	P12:230:AEPW-SPS:SWEETWT6:WHEELER 6
FDNSLock-Blown up	06ALL	0	20WP	G15_058		Non-Converged Contingency	557	557	0.10326	-	NEWHART 230 - POTTER COUNTY INTERCHANGE 230KV CKT 1
FDNSLock-Blown up	06ALL	0	20WP	G15_058		Non-Converged Contingency	1420	1775	0.09031	-	G11_051T 345.00 - TATONGA7 345.00 345KV CKT 1
FDNSLock-Blown up	06ALL	0	20WP	G15_058		Non-Converged Contingency	1420	1775	0.09031	-	G11_051T 345.00 - WOODWARD DISTRICT EHV 345KV CKT 1
FDNSLock-Blown up	06ALL	0	20WP	G15_058		Non-Converged Contingency	1195	1195	0.09031	-	MATHWSN7 345.00 - TATONGA7 345.00 345KV CKT 1
FDNSLock-Blown up	06ALL	0	20WP	G15_058		Non-Converged Contingency	1561	1793	0.08939	-	THISTLE7 345.00 - WOODWARD DISTRICT EHV 345KV CKT 1
FDNSLock-Blown up	06ALL	0	20WP	G15_058		Non-Converged Contingency	1561	1793	0.08939	-	THISTLE7 345.00 - WOODWARD DISTRICT EHV 345KV CKT 1
FDNSLock-Blown up	06ALL	0	20WP	G15_058		Non-Converged Contingency	1561	1793	0.08939	-	THISTLE7 345.00 - WOODWARD DISTRICT EHV 345KV CKT 2
FDNSLock-Blown up	06ALL	0	20WP	G15_058		Non-Converged Contingency	1561	1793	0.08939	-	THISTLE7 345.00 - WOODWARD DISTRICT EHV 345KV CKT 2
FDNSLock-Blown up	06ALL	0	20WP	G15_058		Non-Converged Contingency	478	502	0.08448	-	AMARILLO SOUTH INTERCHANGE - G15031_T 230.00 230KV CKT 1
FDNSLock-Blown up	06ALL	0	20WP	G15_058		Non-Converged Contingency	1793	1793	0.06431	-	G11-14T 345.00 - WOODWARD DISTRICT EHV 345KV CKT 1
FDNSLock-Blown up	06ALL	0	20WP	G15_058		Non-Converged Contingency	1716	1793	0.06431	-	G11-14T 345.00 - WOODWARD DISTRICT EHV 345KV CKT 2
FDNSLock-Blown up	06ALL	0	20WP	G15_058		Non-Converged Contingency	556.92	556.92	0.06201	-	HITCHLAND INTERCHANGE - MOORE COUNTY INTERCHANGE 230KV CKT 1
FDNSLock-Blown up	06ALL	0	20WP	G15_058		Non-Converged Contingency	556.92	556.92	0.06201	-	HITCHLAND INTERCHANGE - MOORE COUNTY INTERCHANGE 230KV CKT 1
FDNSLock-Blown up	06ALL	0	20WP	G15_058		Non-Converged Contingency	421	439	0.05443	-	CHISHOLM6 230.00 - SWEETWATER 230KV CKT 1
FDNSLock-Blown up	06ALL	0	20WP	G15_058		Non-Converged Contingency	435.02	457.73	0.05443	-	STATELINE INTERCHANGE - STLN-DEMARC6 230KV CKT 1
FDNSLock-Blown up	06ALL	0	20WP	G15_058		Non-Converged Contingency	439	439	0.05443	-	STLN-DEMARC6 - SWEETWATER 230KV CKT 1
FDNSLock-Blown up	06ALL	0	20WP	G15_058		Non-Converged Contingency	329.05	360.92	0.05287	-	MOORE COUNTY INTERCHANGE - POTTER COUNTY INTERCHANGE 230KV CKT 1
FDNSLock-Blown up	06ALL	0	20WP	G15_058		Non-Converged Contingency	329.05	360.92	0.05287	-	MOORE COUNTY INTERCHANGE - POTTER COUNTY INTERCHANGE 230KV CKT 1
FDNSLock-Blown up	06ALL	0	20WP	G15_058		Non-Converged Contingency	557	557	0.04693	-	GRAPEVINE INTERCHANGE - NICHOLS STATION 230KV CKT 1
FDNSLock-Blown up	06ALL	0	20WP	G15_058		Non-Converged Contingency	557	557	0.04693	-	GRAPEVINE INTERCHANGE - NICHOLS STATION 230KV CKT 1
FDNSLock-Blown up	06ALL	0	20WP	G15_058		Non-Converged Contingency	557	557	0.04636	-	GRAPEVINE INTERCHANGE - STATELINE INTERCHANGE 230KV CKT 1
FDNSLock-Blown up	06ALL	0	20WP	G15_058		Non-Converged Contingency	557	557	0.04636	-	GRAPEVINE INTERCHANGE - STATELINE INTERCHANGE 230KV CKT 1
FDNSLock-Blown up	06ALL	2	16WP	G15_058		Non-Converged Contingency	1022	1124	0.19944	-	G14-074T 345.00 - OKLAUNION 345KV CKT 1
FDNSLock-Blown up	06ALL	2	16WP	G15_058		Non-Converged Contingency	1022	1124	0.19944	-	G14-074T 345.00 - TUCO INTERCHANGE 345KV CKT 1
FDNSLock-Blown up	06ALL	2	16WP	G15_058		Non-Converged Contingency	987.16	1082.8	0.17003	-	G14_038T 345.00 - Hitchland Interchange 345KV CKT 1
FDNSLock-Blown up	06ALL	2	16WP	G15_058		Non-Converged Contingency	987.16	1082.8	0.17003	-	G14_038T 345.00 - POTTER COUNTY INTERCHANGE 345KV CKT 1
FDNSLock-Blown up	06ALL	2	16WP	G15_058		Non-Converged Contingency	560	560	0.17003	-	POTTER COUNTY INTERCHANGE (WAUK 90343-A) 345/230/13.2KV TRANSFORMER CKT 1
FDNSLock-Blown up	06ALL	2	16WP	G15_058		Non-Converged Contingency	1792	1972	0.15547	-	BORDER 7345.00 - TUCO_2 345.00 345KV CKT 1
FDNSLock-Blown up	06ALL	2	16WP	G15_058		Non-Converged Contingency	1420	1775	0.15547	-	BORDER 7345.00 - TUCO_2 345.00 345KV CKT 2
FDNSLock-Blown up	06ALL	2	17G	G15_058		Non-Converged Contingency	1022	1124	0.1929	-	G14-074T 345.00 - OKLAUNION 345KV CKT 1
FDNSLock-Blown up	06ALL	2	17G	G15_058		Non-Converged Contingency	1022	1124	0.1929	-	G14-074T 345.00 - TUCO INTERCHANGE 345KV CKT 1
FDNSLock-Blown up	06ALL	2	17G	G15_058		Non-Converged Contingency	956.09	1051.7	0.16081	-	G14_038T 345.00 - Hitchland Interchange 345KV CKT 1
FDNSLock-Blown up	06ALL	2	17G	G15_058		Non-Converged Contingency	956.09	1051.7	0.16081	-	G14_038T 345.00 - POTTER COUNTY INTERCHANGE 345KV CKT 1
FDNSLock-Blown up	06ALL	2	17G	G15_058		Non-Converged Contingency	560	560	0.16081	-	POTTER COUNTY INTERCHANGE (WAUK 90343-A) 345/230/13.2KV TRANSFORMER CKT 1
FDNSLock-Blown up	06ALL	2	17G	G15_058		Non-Converged Contingency	1792	1972	0.14974	-	BORDER 7345.00 - TUCO_2 345.00 345KV CKT 1
FDNSLock-Blown up	06ALL	2	17G	G15_058		Non-Converged Contingency	1420	1775	0.14974	-	BORDER 7345.00 - TUCO_2 345.00 345KV CKT 2
FDNSLock-Blown up	06ALL	2	17SP	G15_058		Non-Converged Contingency	956	1042	0.19847	-	G14-074T 345.00 - OKLAUNION 345KV CKT 1
FDNSLock-Blown up	06ALL	2	20L	G15_058		Non-Converged Contingency	0	0	0.20616	-	P12:345:SPS:J07.1.FINN.HITCH
FDNSLock-Blown up	06ALL	2	20L	G15_058		Non-Converged Contingency	1022	1124	0.17713	-	G14-074T 345.00 - OKLAUNION 345KV CKT 1
FDNSLock-Blown up	06ALL	2	20L	G15_058		Non-Converged Contingency	1022	1124	0.17713	-	G14-074T 345.00 - TUCO INTERCHANGE 345KV CKT 1
FDNSLock-Blown up	06ALL	2	20L	G15_058		Non-Converged Contingency	1022	1124	0.17713	-	OKLAUNION 345KV SWITCHED SHUNT
FDNSLock-Blown up	06ALL	2	20L	G15_058		Non-Converged Contingency	1792	1972	0.14483	-	BORDER 7345.00 - TUCO_2 345.00 345KV CKT 1

SOLUTION	GROUP	SCENARIO	SEASON	SOURCE	DIRECTION	MONITORED ELEMENT	RATEA (MVA)	RATEB(MVA)	TDF	TC%LOADING (% MVA)	CONTINGENCY
FDNSLock-Blown up	06ALL	2	20L	G15_058		Non-Converged Contingency	1420	1775	0.14483	-	BORDER 7345.00 - TUCO_2 345.00 345KV CKT 2
FDNSLock-Blown up	06ALL	2	20L	G15_058		Non-Converged Contingency	1584	2098	0.12911	-	CHISHOLM7 345.00 - GRACEMONT 345KV CKT 1
FDNSLock-Blown up	06ALL	2	20L	G15_058		Non-Converged Contingency	956.09	1051.7	0.11753	-	G14_038T 345.00 - Hitchland Interchange 345KV CKT 1
FDNSLock-Blown up	06ALL	2	20L	G15_058		Non-Converged Contingency	956.09	1051.7	0.11753	-	G14_038T 345.00 - POTTER COUNTY INTERCHANGE 345KV CKT 1
FDNSLock-Blown up	06ALL	2	20L	G15_058		Non-Converged Contingency	560	560	0.11753	-	POTTER COUNTY INTERCHANGE (WAUK 90343-A) 345/230/13.2KV TRANSFORMER CKT 1
FDNSLock-Blown up	06ALL	2	20L	G15_058		Non-Converged Contingency	560	560	0.11753	-	POTTER COUNTY INTERCHANGE (WAUK 90343-A) 345/230/13.2KV TRANSFORMER CKT 1
FDNSLock-Blown up	06ALL	2	20L	G15_058		Non-Converged Contingency	956.09	1051.7	0.11007	-	Hitchland Interchange - WALKTAP7 345.00 345KV CKT 1
FDNSLock-Blown up	06ALL	2	20L	G15_058		Non-Converged Contingency	956.09	1051.7	0.11007	-	Hitchland Interchange - WALKTAP7 345.00 345KV CKT 1
FDNSLock-Blown up	06ALL	2	20L	G15_058		Non-Converged Contingency	0	0	0.08928	-	P12:230:AEPW:ELKCITY6:SWEETWT6
FDNSLock-Blown up	06ALL	2	20L	G15_058		Non-Converged Contingency	1195	1195	0.07614	-	MATHWSN7 345.00 - TATONGA7 345.00 345KV CKT 1
FDNSLock-Blown up	06ALL	2	20L	G15_058		Non-Converged Contingency	421	439	0.03911	-	CHISHOLM6 230.00 - SWEETWATER 230KV CKT 1
FDNSLock-Blown up	06ALL	2	20SP	G15_058		Non-Converged Contingency	956	1042	0.21128	-	G14-074T 345.00 - OKLAUNION 345KV CKT 1
FDNSLock-Blown up	06ALL	2	20WP	G15_058		Non-Converged Contingency	1022	1124	0.20657	-	G14-074T 345.00 - OKLAUNION 345KV CKT 1
FDNSLock-Blown up	06ALL	2	20WP	G15_058		Non-Converged Contingency	1022	1124	0.20657	-	G14-074T 345.00 - TUCO INTERCHANGE 345KV CKT 1
FDNSLock-Blown up	06ALL	2	20WP	G15_058		Non-Converged Contingency	1792	1972	0.16555	-	BORDER 7345.00 - TUCO_2 345.00 345KV CKT 1
FDNSLock-Blown up	06ALL	2	20WP	G15_058		Non-Converged Contingency	1420	1775	0.16555	-	BORDER 7345.00 - TUCO_2 345.00 345KV CKT 2
FDNSLock-Blown up	06ALL	2	20WP	G15_058		Non-Converged Contingency	987.16	1082.8	0.1463	-	G14_038T 345.00 - Hitchland Interchange 345KV CKT 1
FDNSLock-Blown up	06ALL	2	20WP	G15_058		Non-Converged Contingency	987.16	1082.8	0.1463	-	G14_038T 345.00 - POTTER COUNTY INTERCHANGE 345KV CKT 1
FDNSLock-Blown up	06ALL	2	20WP	G15_058		Non-Converged Contingency	560	560	0.1463	-	POTTER COUNTY INTERCHANGE (WAUK 90343-A) 345/230/13.2KV TRANSFORMER CKT 1
FDNSLock-Blown up	06ALL	2	20WP	G15_058		Non-Converged Contingency	560	560	0.1463	-	POTTER COUNTY INTERCHANGE (WAUK 90343-A) 345/230/13.2KV TRANSFORMER CKT 1
FDNSLock-Blown up	06ALL	3	16WP	G15_058		Non-Converged Contingency	1022	1124	0.21652	-	G14-074T 345.00 - OKLAUNION 345KV CKT 1
FDNSLock-Blown up	06ALL	3	16WP	G15_058		Non-Converged Contingency	1022	1124	0.21652	-	G14-074T 345.00 - TUCO INTERCHANGE 345KV CKT 1
FDNSLock-Blown up	06ALL	3	17SP	G15_058		Non-Converged Contingency	956	1042	0.21425	-	G14-074T 345.00 - OKLAUNION 345KV CKT 1
FDNSLock-Blown up	06ALL	3	20L	G15_058		Non-Converged Contingency	1022	1124	0.18566	-	G14-074T 345.00 - OKLAUNION 345KV CKT 1
FDNSLock-Blown up	06ALL	3	20L	G15_058		Non-Converged Contingency	1022	1124	0.18566	-	G14-074T 345.00 - TUCO INTERCHANGE 345KV CKT 1
FDNSLock-Blown up	06ALL	3	20L	G15_058		Non-Converged Contingency	1792	1972	0.15484	-	BORDER 7345.00 - TUCO_2 345.00 345KV CKT 1
FDNSLock-Blown up	06ALL	3	20L	G15_058		Non-Converged Contingency	1420	1775	0.15484	-	BORDER 7345.00 - TUCO_2 345.00 345KV CKT 2
FDNSLock-Blown up	06ALL	3	20L	G15_058		Non-Converged Contingency	1584	2098	0.13145	-	CHISHOLM7 345.00 - GRACEMONT 345KV CKT 1
FDNSLock-Blown up	06ALL	3	20L	G15_058		Non-Converged Contingency	956.09	1051.7	0.10861	-	G14_038T 345.00 - Hitchland Interchange 345KV CKT 1
FDNSLock-Blown up	06ALL	3	20L	G15_058		Non-Converged Contingency	956.09	1051.7	0.10861	-	G14_038T 345.00 - POTTER COUNTY INTERCHANGE 345KV CKT 1
FDNSLock-Blown up	06ALL	3	20L	G15_058		Non-Converged Contingency	560	560	0.10861	-	POTTER COUNTY INTERCHANGE (WAUK 90343-A) 345/230/13.2KV TRANSFORMER CKT 1
FDNSLock-Blown up	06ALL	3	20L	G15_058		Non-Converged Contingency	956.09	1051.7	0.1064	-	Hitchland Interchange - WALKTAP7 345.00 345KV CKT 1
FDNSLock-Blown up	06ALL	3	20L	G15_058		Non-Converged Contingency	1195	1195	0.07416	-	MATHWSN7 345.00 - TATONGA7 345.00 345KV CKT 1
FDNSLock-Blown up	06ALL	3	20L	G15_058		Non-Converged Contingency	421	439	0.03176	-	CHISHOLM6 230.00 - SWEETWATER 230KV CKT 1
FDNSLock-Blown up	06ALL	3	20SP	G15_058		Non-Converged Contingency	956	1042	0.21993	-	G14-074T 345.00 - OKLAUNION 345KV CKT 1
FDNSLock-Blown up	06ALL	3	20WP	G15_058		Non-Converged Contingency	1022	1124	0.21533	-	G14-074T 345.00 - OKLAUNION 345KV CKT 1
FDNSLock-Blown up	06ALL	3	20WP	G15_058		Non-Converged Contingency	1022	1124	0.21533	-	G14-074T 345.00 - TUCO INTERCHANGE 345KV CKT 1
FDNSLock-Blown up	06ALL	3	20WP	G15_058		Non-Converged Contingency	1792	1972	0.17605	-	BORDER 7345.00 - TUCO_2 345.00 345KV CKT 1
FDNSLock-Blown up	06ALL	3	20WP	G15_058		Non-Converged Contingency	1420	1775	0.17605	-	BORDER 7345.00 - TUCO_2 345.00 345KV CKT 2
FDNSLock-Blown up	06ALL	3	20WP	G15_058		Non-Converged Contingency	987.16	1082.8	0.13604	-	G14_038T 345.00 - Hitchland Interchange 345KV CKT 1
FDNSLock-Blown up	06ALL	3	20WP	G15_058		Non-Converged Contingency	987.16	1082.8	0.13604	-	G14_038T 345.00 - POTTER COUNTY INTERCHANGE 345KV CKT 1
FDNSLock-Blown up	06ALL	4	16WP	G15_058		Non-Converged Contingency	1022	1124	0.19191	-	G14-074T 345.00 - OKLAUNION 345KV CKT 1
FDNSLock-Blown up	06ALL	4	17G	G15_058		Non-Converged Contingency	956.09	1051.7	0.20467	-	G14_038T 345.00 - Hitchland Interchange 345KV CKT 1
FDNSLock-Blown up	06ALL	4	17G	G15_058		Non-Converged Contingency	956.09	1051.7	0.20467	-	G14_038T 345.00 - POTTER COUNTY INTERCHANGE 345KV CKT 1
FDNSLock-Blown up	06ALL	4	17G	G15_058		Non-Converged Contingency	1022	1124	0.1854	-	G14-074T 345.00 - OKLAUNION 345KV CKT 1
FDNSLock-Blown up	06ALL	4	17G	G15_058		Non-Converged Contingency	1022	1124	0.1854	-	G14-074T 345.00 - TUCO INTERCHANGE 345KV CKT 1
FDNSLock-Blown up	06ALL	4	20L	G15_058		Non-Converged Contingency	0	0	0.22635	-	P12:345:SPS:J07.1.FINN.HITCH
FDNSLock-Blown up	06ALL	4	20L	G15_058		Non-Converged Contingency	956.09	1051.7	0.16494	-	G14_038T 345.00 - Hitchland Interchange 345KV CKT 1
FDNSLock-Blown up	06ALL	4	20L	G15_058		Non-Converged Contingency	956.09	1051.7	0.16494	-	G14_038T 345.00 - POTTER COUNTY INTERCHANGE 345KV CKT 1
FDNSLock-Blown up	06ALL	4	20L	G15_058		Non-Converged Contingency	1022	1124	0.16469	-	G14-074T 345.00 - OKLAUNION 345KV CKT 1
FDNSLock-Blown up	06ALL	4	20L	G15_058		Non-Converged Contingency	1022	1124	0.16469	-	G14-074T 345.00 - TUCO INTERCHANGE 345KV CKT 1
FDNSLock-Blown up	06ALL	4	20L	G15_058		Non-Converged Contingency	1792	1972	0.13226	-	BORDER 7345.00 - TUCO_2 345.00 345KV CKT 1
FDNSLock-Blown up	06ALL	4	20L	G15_058		Non-Converged Contingency	1420	1775	0.13226	-	BORDER 7345.00 - TUCO_2 345.00 345KV CKT 2
FDNSLock-Blown up	06ALL	4	20L	G15_058		Non-Converged Contingency	1584	2098	0.12696	-	CHISHOLM7 345.00 - GRACEMONT 345KV CKT 1
FDNSLock-Blown up	06ALL	4	20L	G15_058		Non-Converged Contingency	956.09	1051.7	0.12084	-	Hitchland Interchange - WALKTAP7 345.00 345KV CKT 1
FDNSLock-Blown up	06ALL	4	20L	G15_058		Non-Converged Contingency	956.09	1051.7	0.12084	-	Hitchland Interchange - WALKTAP7 345.00 345KV CKT 1
FDNSLock-Blown up	06ALL	4	20L	G15_058		Non-Converged Contingency	0	0	0.0918	-	P12:230:AEPW:ELKCITY6:SWEETWT6
FDNSLock-Blown up	06ALL	4	20WP	G15_058		Non-Converged Contingency	987.16	1082.8	0.19546	-	G14_038T 345.00 - Hitchland Interchange 345KV CKT 1
FDNSLock-Blown up	06ALL	4	20WP	G15_058		Non-Converged Contingency	1022	1124	0.19263	-	G14-074T 345.00 - OKLAUNION 345KV CKT 1
FDNSLock-Blown up	06ALL	4	20WP	G15_058		Non-Converged Contingency	1022	1124	0.19263	-	G14-074T 345.00 - TUCO INTERCHANGE 345KV CKT 1
FDNSLock-Blown up	06ALL	5	16WP	G15_058		Non-Converged Contingency	1022	1124	0.18393	-	G14-074T 345.00 - OKLAUNION 345KV CKT 1
FDNSLock-Blown up	06ALL	5	17G	G15_058		Non-Converged Contingency	1022	1124	0.1779	-	G14-074T 345.00 - OKLAUNION 345KV CKT 1
FDNSLock-Blown up	06ALL	5	20L	G15_058		Non-Converged Contingency	1022	1124	0.16035	-	G14-074T 345.00 - OKLAUNION 345KV CKT 1
FDNSLock-Blown up	06ALL	5	20WP	G15_058		Non-Converged Contingency	1022	1124	0.18547	-	G14-074T 345.00 - OKLAUNION 345KV CKT 1
FDNSLock-Blown up	06ALL	6	17G	G15_058		Non-Converged Contingency	1022	1124	0.17077	-	G14-074T 345.00 - OKLAUNION 345KV CKT 1
FDNSLock-Blown up	06ALL	6	20L	G15_058		Non-Converged Contingency	1022	1124	0.15426	-	G14-074T 345.00 - OKLAUNION 345KV CKT 1
FDNSLock-Blown up	06ALL	6	20WP	G15_058		Non-Converged Contingency	1022	1124	0.17855	-	G14-074T 345.00 - OKLAUNION 345KV CKT 1
FDNS	06ALL	0	16WP	G15_058	FROM->TO	BUSHLAND INTERCHANGE - POTTER COUNTY INTERCHANGE 230KV CKT 1	329.05	360.92	0.14448	103.4995	BASE CASE
FDNS	06ALL	0	20SP	G15_058	FROM->TO	CHISHOLM6 230.00 - ELK CITY 230KV 230KV CKT 1	353	353	0.06331	106.4803	BASE CASE
FDNS	06ALL	0	17SP	G15_058	FROM->TO	CHISHOLM6 230.00 - ELK CITY 230KV 230KV CKT 1	353	353	0.06334	104.7427	BASE CASE
FDNS	06ALL	0	17SP	G15_058	TO->FROM	CIMARRON - MINCO 345KV CKT 1	956	956	0.23714	123.2446	G14-057T 345.00 - SUNNYSIDE 345KV CKT 1
FDNS	06ALL	0	20SP	G15_058	TO->FROM	CIMARRON - MINCO 345KV CKT 1	956	956	0.24497	120.5642	G14-057T 345.00 - SUNNYSIDE 345KV CKT 1
FDNS	06ALL	0	17SP	G15_058	TO->FROM	CIMARRON - MINCO 345KV CKT 1	956	956	0.23714	117.8925	G14-057T 345.00 - LAWTON EASTSIDE 345KV CKT 1
FDNS	06ALL	0	20SP	G15_058	TO->FROM	CIMARRON - MINCO 345KV CKT 1	956	956	0.24497	115.1699	G14-057T 345.00 - LAWTON EASTSIDE 345KV CKT 1
FDNS	06ALL	0	17SP	G15_058	TO->FROM	CIMARRON - MINCO 345KV CKT 1	956	956	0.20324	105.5731	MATHWSN7 345.00 - TATONGA7 345.00 345KV CKT 1
FDNS	06ALL	0	20SP	G15_058	TO->FROM	CIMARRON - MINCO 345KV CKT 1	956	956	0.20821	104.5241	MATHWSN7 345.00 - TATONGA7 345.00 345KV CKT 1
FDNS	06ALL	0	20SP	G15_058	TO->FROM	CIMARRON - MINCO 345KV CKT 1	956	956	0.24553	102.9387	CHISHOLM7 345.00 - WOODWARD DISTRICT EHV 345KV CKT 1
FDNS	06ALL	0	17SP	G15_058	TO->FROM	CIMARRON - MINCO 345KV CKT 1	956	956	0.23483	102.0892	CHISHOLM7 345.00 - WOODWARD DISTRICT EHV 345KV CKT 1
FDNS	06ALL	0	17SP	G15_058	TO->FROM	CIMARRON - MINCO 345KV CKT 1	956	956	0.20324	100.3376	G11_051T 345.00 - TATONGA7 345.00 345KV CKT 1

SOLUTION	GROUP	SCENARIO	SEASON	SOURCE	DIRECTION	MONITORED ELEMENT	RATEA (MVA)	RATEB(MVA)	TDF	TC%LOADING (% MVA)	CONTINGENCY
FDNS	06ALL	0	20SP	G15_058	TO->FROM	DEAF SMITH COUNTY INTERCHANGE - G15039_T 230.00 230KV CKT 1	318.7	350.57	0.11653	110.3343	BASE CASE
FDNS	06ALL	0	17SP	G15_058	TO->FROM	DEAF SMITH COUNTY INTERCHANGE - G15039_T 230.00 230KV CKT 1	318.7	350.57	0.14086	108.4885	BASE CASE
FDNSLock	06ALL	0	20WP	G15_058		ELK CITY 230KV (ELKCTY-6) 230/138/13.8KV TRANSFORMER CKT 1	450	450	0.06161	87.66341	BASE CASE
FDNSLock	06ALL	0	20WP	G15_058		ELK CITY 230KV (ELKCTY-6) 230/138/13.8KV TRANSFORMER CKT 1	450	450	0.06161	87.66341	BASE CASE
FDNS	06ALL	0	20L	G15_058	TO->FROM	G14-057T 345.00 - LAWTON EASTSIDE 345KV CKT 1	717	789	0.1028	108.0268	BASE CASE
FDNS	06ALL	0	20L	G15_058	FROM->TO	G14-057T 345.00 - SUNNYSIDE 345KV CKT 1	717	789	0.1028	120.8788	BASE CASE
FDNS	06ALL	0	20WP	G15_058	FROM->TO	G14-057T 345.00 - SUNNYSIDE 345KV CKT 1	717	789	0.12655	107.5634	BASE CASE
FDNS	06ALL	0	17G	G15_058	FROM->TO	G14-057T 345.00 - SUNNYSIDE 345KV CKT 1	717	789	0.12405	106.9763	BASE CASE
FDNS	06ALL	0	16WP	G15_058	FROM->TO	G14-057T 345.00 - SUNNYSIDE 345KV CKT 1	717	789	0.12733	105.0999	BASE CASE
FDNSLock	06ALL	0	20WP	G15_058		Non-Converged Contingency	1792	1792	0.16535	-	BORDER 7345.00 - CHISHOLM7 345.00 345KV CKT 1
FDNSLock	06ALL	0	20WP	G15_058		Non-Converged Contingency	1792	1792	0.16535	-	BORDER 7345.00 - CHISHOLM7 345.00 345KV CKT 2
FDNSLock	06ALL	0	20WP	G15_058		Non-Converged Contingency	439	439	0.06161	-	CHISHOLM6 230.00 - ELK CITY 230KV 230KV CKT 1
FDNS	06ALL	0	20WP	G15_058	FROM->TO	POTTER COUNTY INTERCHANGE (WAUK 90343-A) 345/230/13.2KV TRANSFORMER CKT 1	560	560	0.14608	101.9937	BASE CASE
FDNS	06ALL	0	20WP	G15_058	FROM->TO	POTTER COUNTY INTERCHANGE (WAUK 90343-A) 345/230/13.2KV TRANSFORMER CKT 1	560	560	0.14608	100.9471	BASE CASE
FDNS	06ALL	0	17SP	G15_058	FROM->TO	SUNDOWN INTERCHANGE - WOLFFORTH INTERCHANGE 230KV CKT 1	318.7	350.57	0.26766	100	TOLK STATION EAST - TUCO INTERCHANGE 230KV CKT 1
FDNS	06ALL	0	17SP	G15_058	FROM->TO	SUNDOWN INTERCHANGE - WOLFFORTH INTERCHANGE 230KV CKT 1	318.7	350.57	0.26766	100	TOLK STATION EAST - TUCO INTERCHANGE 230KV CKT 1
FDNS	06ALL	0	20SP	G15_058	FROM->TO	TUCO INTERCHANGE - TUCO_2 230.00 230KV CKT 1	497	547	0.31804	176.1131	TUCO INTERCHANGE - TUCO_2 345.00 345KV CKT 1
FDNS	06ALL	0	17SP	G15_058	FROM->TO	TUCO INTERCHANGE - TUCO_2 230.00 230KV CKT 1	497	547	0.27095	172.1789	TUCO INTERCHANGE - TUCO_2 345.00 345KV CKT 1
FDNS	06ALL	0	25SP	G15_058	FROM->TO	TUCO INTERCHANGE - TUCO_2 230.00 230KV CKT 1	497	547	0.32863	101.2227615	TUCO INTERCHANGE - TUCO_2 345.00 345KV CKT 1
FDNS	06ALL	0	20SP	G15_058	FROM->TO	TUCO_2 345.00 (TUCO_2 XFMR) 345/230/13.2KV TRANSFORMER CKT 1	560	560	0.29442	168.9327	TUCO INTERCHANGE - TUCO_2 345.00 345KV CKT 1
FDNS	06ALL	0	17SP	G15_058	FROM->TO	TUCO_2 345.00 (TUCO_2 XFMR) 345/230/13.2KV TRANSFORMER CKT 1	560	560	0.28637	168.0719	TUCO INTERCHANGE - TUCO_2 345.00 345KV CKT 1
FDNS	06ALL	0	20SP	G15_058	FROM->TO	TUCO_2 345.00 (TUCO_2 XFMR) 345/230/13.2KV TRANSFORMER CKT 1	560	560	0.29442	162.4281	TUCO INTERCHANGE - TUCO_2 345.00 345KV CKT 1
FDNS	06ALL	0	17SP	G15_058	FROM->TO	TUCO_2 345.00 (TUCO_2 XFMR) 345/230/13.2KV TRANSFORMER CKT 1	560	560	0.28637	161.5424	TUCO INTERCHANGE - TUCO_2 345.00 345KV CKT 1
FDNS	06ALL	2	20SP	G15_058	FROM->TO	CHISHOLM6 230.00 - ELK CITY 230KV 230KV CKT 1	353	353	0.06333	103.9805	BASE CASE
FDNS	06ALL	2	17SP	G15_058	FROM->TO	CHISHOLM6 230.00 - ELK CITY 230KV 230KV CKT 1	353	353	0.06337	101.7938	BASE CASE
FDNS	06ALL	2	20L	G15_058	TO->FROM	CIMARRON - MINCO 345KV CKT 1	956	956	0.21143	140.1322	G14-057T 345.00 - SUNNYSIDE 345KV CKT 1
FDNS	06ALL	2	20L	G15_058	TO->FROM	CIMARRON - MINCO 345KV CKT 1	956	956	0.21143	133.5433	G14-057T 345.00 - LAWTON EASTSIDE 345KV CKT 1
FDNS	06ALL	2	17G	G15_058	TO->FROM	CIMARRON - MINCO 345KV CKT 1	956	956	0.23251	131.7687	G14-057T 345.00 - SUNNYSIDE 345KV CKT 1
FDNS	06ALL	2	20WP	G15_058	TO->FROM	CIMARRON - MINCO 345KV CKT 1	956	956	0.23889	130.9595	G14-057T 345.00 - SUNNYSIDE 345KV CKT 1
FDNS	06ALL	2	17G	G15_058	TO->FROM	CIMARRON - MINCO 345KV CKT 1	956	956	0.23251	126.2954	G14-057T 345.00 - LAWTON EASTSIDE 345KV CKT 1
FDNS	06ALL	2	20WP	G15_058	TO->FROM	CIMARRON - MINCO 345KV CKT 1	956	956	0.23889	125.3296	G14-057T 345.00 - LAWTON EASTSIDE 345KV CKT 1
FDNS	06ALL	2	16WP	G15_058	TO->FROM	CIMARRON - MINCO 345KV CKT 1	956	956	0.23906	123.9324	G14-057T 345.00 - SUNNYSIDE 345KV CKT 1
FDNS	06ALL	2	17SP	G15_058	TO->FROM	CIMARRON - MINCO 345KV CKT 1	956	956	0.23727	123.0412	G14-057T 345.00 - SUNNYSIDE 345KV CKT 1
FDNS	06ALL	2	20SP	G15_058	TO->FROM	CIMARRON - MINCO 345KV CKT 1	956	956	0.24509	120.4683	G14-057T 345.00 - SUNNYSIDE 345KV CKT 1
FDNS	06ALL	2	16WP	G15_058	TO->FROM	CIMARRON - MINCO 345KV CKT 1	956	956	0.23906	118.3934	G14-057T 345.00 - LAWTON EASTSIDE 345KV CKT 1
FDNS	06ALL	2	17SP	G15_058	TO->FROM	CIMARRON - MINCO 345KV CKT 1	956	956	0.23727	117.7499	G14-057T 345.00 - LAWTON EASTSIDE 345KV CKT 1
FDNS	06ALL	2	20SP	G15_058	TO->FROM	CIMARRON - MINCO 345KV CKT 1	956	956	0.24509	115.0256	G14-057T 345.00 - LAWTON EASTSIDE 345KV CKT 1
FDNS	06ALL	2	17G	G15_058	TO->FROM	CIMARRON - MINCO 345KV CKT 1	956	956	0.19922	111.0722	MATHWSN7 345.00 - TATONGA7 345.00 345KV CKT 1
FDNS	06ALL	2	20WP	G15_058	TO->FROM	CIMARRON - MINCO 345KV CKT 1	956	956	0.2016	110.8109	MATHWSN7 345.00 - TATONGA7 345.00 345KV CKT 1
FDNS	06ALL	2	20L	G15_058	TO->FROM	CIMARRON - MINCO 345KV CKT 1	956	956	0.21565	107.6011	CHISHOLM7 345.00 - WOODWARD DISTRICT EHV 345KV CKT 1
FDNS	06ALL	2	17G	G15_058	TO->FROM	CIMARRON - MINCO 345KV CKT 1	956	956	0.22674	107.4004	CHISHOLM7 345.00 - WOODWARD DISTRICT EHV 345KV CKT 1
FDNS	06ALL	2	20WP	G15_058	TO->FROM	CIMARRON - MINCO 345KV CKT 1	956	956	0.2016	105.5266	G11_051T 345.00 - TATONGA7 345.00 345KV CKT 1
FDNSLock	06ALL	2	17G	G15_058	TO->FROM	CIMARRON - MINCO 345KV CKT 1	956	956	0.19922	105.1772	G11_051T 345.00 - TATONGA7 345.00 345KV CKT 1
FDNS	06ALL	2	17SP	G15_058	TO->FROM	CIMARRON - MINCO 345KV CKT 1	956	956	0.20336	104.7953	MATHWSN7 345.00 - TATONGA7 345.00 345KV CKT 1
FDNS	06ALL	2	20SP	G15_058	TO->FROM	CIMARRON - MINCO 345KV CKT 1	956	956	0.20832	104.2231	MATHWSN7 345.00 - TATONGA7 345.00 345KV CKT 1
FDNS	06ALL	2	16WP	G15_058	TO->FROM	CIMARRON - MINCO 345KV CKT 1	956	956	0.20421	104.0692	MATHWSN7 345.00 - TATONGA7 345.00 345KV CKT 1
FDNS	06ALL	2	20WP	G15_058	TO->FROM	CIMARRON - MINCO 345KV CKT 1	956	956	0.2016	103.9402	G11_051T 345.00 - WOODWARD DISTRICT EHV 345KV CKT 1
FDNS	06ALL	2	20WP	G15_058	TO->FROM	CIMARRON - MINCO 345KV CKT 1	956	956	0.23873	103.712	CHISHOLM7 345.00 - WOODWARD DISTRICT EHV 345KV CKT 1
FDNSLock	06ALL	2	17G	G15_058	TO->FROM	CIMARRON - MINCO 345KV CKT 1	956	956	0.19922	103.655	G11_051T 345.00 - WOODWARD DISTRICT EHV 345KV CKT 1
FDNS	06ALL	2	20SP	G15_058	TO->FROM	CIMARRON - MINCO 345KV CKT 1	956	956	0.24567	102.1101	CHISHOLM7 345.00 - WOODWARD DISTRICT EHV 345KV CKT 1
FDNS	06ALL	2	17SP	G15_058	TO->FROM	CIMARRON - MINCO 345KV CKT 1	956	956	0.23497	100.969	CHISHOLM7 345.00 - WOODWARD DISTRICT EHV 345KV CKT 1
FDNS	06ALL	2	17SP	G15_058	TO->FROM	CIMARRON - MINCO 345KV CKT 1	956	956	0.20336	99.6	G11_051T 345.00 - TATONGA7 345.00 345KV CKT 1
FDNS	06ALL	2	20SP	G15_058	TO->FROM	DEAF SMITH COUNTY INTERCHANGE - G15039_T 230.00 230KV CKT 1	318.7	350.57	0.11661	106.1518	BASE CASE
FDNS	06ALL	2	17SP	G15_058	TO->FROM	DEAF SMITH COUNTY INTERCHANGE - G15039_T 230.00 230KV CKT 1	318.7	350.57	0.14094	104.2255	BASE CASE
FDNS	06ALL	2	20L	G15_058	TO->FROM	G14-057T 345.00 - LAWTON EASTSIDE 345KV CKT 1	717	789	0.10308	105.4406	BASE CASE
FDNS	06ALL	2	20L	G15_058	FROM->TO	G14-057T 345.00 - SUNNYSIDE 345KV CKT 1	717	789	0.10308	118.6576	BASE CASE
FDNS	06ALL	2	20WP	G15_058	FROM->TO	G14-057T 345.00 - SUNNYSIDE 345KV CKT 1	717	789	0.12668	106.4822	BASE CASE
FDNS	06ALL	2	17G	G15_058	FROM->TO	G14-057T 345.00 - SUNNYSIDE 345KV CKT 1	717	789	0.12422	105.8626	BASE CASE
FDNS	06ALL	2	16WP	G15_058	FROM->TO	G14-057T 345.00 - SUNNYSIDE 345KV CKT 1	717	789	0.12752	104.4384	BASE CASE
FDNS	06ALL	2	20L	G15_058	FROM->TO	GRACEMONT - MINCO 345KV CKT 1	1195	1195	0.21143	101.0673	G14-057T 345.00 - SUNNYSIDE 345KV CKT 1
FDNSLock	06ALL	2	20WP	G15_058		P12:230:AEPW:ELKCITY6:SWEETWT6	0	0	0.11619	9999	BASE CASE
FDNS	06ALL	2	16WP	G15_058	FROM->TO	POTTER COUNTY INTERCHANGE (WAUK 90343-A) 345/230/13.2KV TRANSFORMER CKT 1	560	560	0.19824	102.0618	HITCHLAND INTERCHANGE - MOORE COUNTY INTERCHANGE 230KV CKT 1
FDNS	06ALL	2	16WP	G15_058	FROM->TO	POTTER COUNTY INTERCHANGE (WAUK 90343-A) 345/230/13.2KV TRANSFORMER CKT 1	560	560	0.19824	102.0618	HITCHLAND INTERCHANGE - MOORE COUNTY INTERCHANGE 230KV CKT 1
FDNS	06ALL	2	16WP	G15_058	FROM->TO	POTTER COUNTY INTERCHANGE (WAUK 90343-A) 345/230/13.2KV TRANSFORMER CKT 1	560	560	0.19824	101.6956	HITCHLAND INTERCHANGE - MOORE COUNTY INTERCHANGE 230KV CKT 1
FDNS	06ALL	2	16WP	G15_058	FROM->TO	POTTER COUNTY INTERCHANGE (WAUK 90343-A) 345/230/13.2KV TRANSFORMER CKT 1	560	560	0.19824	101.6956	HITCHLAND INTERCHANGE - MOORE COUNTY INTERCHANGE 230KV CKT 1
FDNS	06ALL	2	17SP	G15_058	FROM->TO	SUNDOWN INTERCHANGE - WOLFFORTH INTERCHANGE 230KV CKT 1	318.7	350.57	0.26778	101.6908	TOLK STATION EAST - TUCO INTERCHANGE 230KV CKT 1
FDNS	06ALL	2	17SP	G15_058	FROM->TO	SUNDOWN INTERCHANGE - WOLFFORTH INTERCHANGE 230KV CKT 1	318.7	350.57	0.26778	101.6908	TOLK STATION EAST - TUCO INTERCHANGE 230KV CKT 1
FDNS	06ALL	2	20L	G15_058	FROM->TO	TUCO INTERCHANGE - TUCO_2 230.00 230KV CKT 1	497	547	0.28098	181.2199	TUCO INTERCHANGE - TUCO_2 345.00 345KV CKT 1
FDNS	06ALL	2	17G	G15_058	FROM->TO	TUCO INTERCHANGE - TUCO_2 230.00 230KV CKT 1	497	547	0.25342	176.0864	TUCO INTERCHANGE - TUCO_2 345.00 345KV CKT 1
FDNS	06ALL	2	20SP	G15_058	FROM->TO	TUCO INTERCHANGE - TUCO_2 230.00 230KV CKT 1	497	547	0.31817	166.2483	TUCO INTERCHANGE - TUCO_2 345.00 345KV CKT 1
FDNS	06ALL	2	17SP	G15_058	FROM->TO	TUCO INTERCHANGE - TUCO_2 230.00 230KV CKT 1	497	547	0.27108	159.9768	TUCO INTERCHANGE - TUCO_2 345.00 345KV CKT 1
FDNS	06ALL	2	20WP	G15_058	FROM->TO	TUCO INTERCHANGE - TUCO_2 230.00 230KV CKT 1	552	608	0.31268	155.2742	TUCO INTERCHANGE - TUCO_2 345.00 345KV CKT 1
FDNS	06ALL	2	16WP	G15_058	FROM->TO	TUCO INTERCHANGE - TUCO_2 230.00 230KV CKT 1	552	608	0.26304	142.7524	TUCO INTERCHANGE - TUCO_2 345.00 345KV CKT 1
FDNS	06ALL	2	25SP	G15_058	FROM->TO	TUCO INTERCHANGE - TUCO_2 230.00 230KV CKT 1	497	547	0.32864	102.0482993	TUCO INTERCHANGE - TUCO_2 345.00 345KV CKT 1
FDNS	06ALL	2	16WP	G15_058	FROM->TO	TUCO INTERCHANGE (GE M1022338) 345/230/13.2KV TRANSFORMER CKT 1	560	560	0.27328	120.5418	TUCO INTERCHANGE (SIEM 8743066) 345/230/13.2KV TRANSFORMER CKT 2
FDNS	06ALL	2	16WP	G15_058	FROM->TO	TUCO INTERCHANGE (GE M1022338) 345/230/13.2KV TRANSFORMER CKT 1	560	560	0.27328	120.5418	TUCO INTERCHANGE (SIEM 8743066) 345/230/13.2KV TRANSFORMER CKT 2
FDNS	06ALL	2	16WP	G15_058	FROM->TO	TUCO INTERCHANGE (GE M1022338) 345/230/13.2KV TRANSFORMER CKT 1	560	560	0.26636	120.3223	TUCO_2 345.00 (TUCO_2 XFMR) 345/230/13.2KV TRANSFORMER CKT 1
FDNS	06ALL	2	16WP	G15_058	FROM->TO	TUCO INTERCHANGE (GE M1022338) 345/230/13.2KV TRANSFORMER CKT 1	560	560	0.27328	118.6764	TUCO INTERCHANGE (SIEM 8743066) 345/230/13.2KV TRANSFORMER CKT 2
FDNS	06ALL	2	16WP	G15_058	FROM->TO	TUCO INTERCHANGE (GE M1022338) 345/230/13.2KV TRANSFORMER CKT 1	560	560	0.27328	118.6764	TUCO INTERCHANGE (SIEM 8743066) 345/230/13.2KV TRANSFORMER CKT 2

SOLUTION	GROUP	SCENARIO	SEASON	SOURCE	DIRECTION	MONITORED ELEMENT	RATEA (MVA)	RATEB(MVA)	TDF	TC%LOADING (% MVA)	CONTINGENCY
FDNS	06ALL	2	16WP	G15_058	FROM->TO	TUCO INTERCHANGE (GE M1022338) 345/230/13.2KV TRANSFORMER CKT 1	560	560	0.26636	118.6764	TUCO_2 345.00 (TUCO_2 XFMR) 345/230/13.2KV TRANSFORMER CKT 1
FDNS	06ALL	2	17G	G15_058	FROM->TO	TUCO INTERCHANGE (GE M1022338) 345/230/13.2KV TRANSFORMER CKT 1	560	560	0.26365	114.4569	TUCO INTERCHANGE (SIEM 8743066) 345/230/13.2KV TRANSFORMER CKT 2
FDNS	06ALL	2	17G	G15_058	FROM->TO	TUCO INTERCHANGE (GE M1022338) 345/230/13.2KV TRANSFORMER CKT 1	560	560	0.25696	114.4414	TUCO_2 345.00 (TUCO_2 XFMR) 345/230/13.2KV TRANSFORMER CKT 1
FDNS	06ALL	2	17G	G15_058	FROM->TO	TUCO INTERCHANGE (GE M1022338) 345/230/13.2KV TRANSFORMER CKT 1	560	560	0.25696	112.333	TUCO_2 345.00 (TUCO_2 XFMR) 345/230/13.2KV TRANSFORMER CKT 1
FDNS	06ALL	2	17G	G15_058	FROM->TO	TUCO INTERCHANGE (GE M1022338) 345/230/13.2KV TRANSFORMER CKT 1	560	560	0.26365	112.1874	TUCO INTERCHANGE (SIEM 8743066) 345/230/13.2KV TRANSFORMER CKT 2
FDNS	06ALL	2	16WP	G15_058	FROM->TO	TUCO INTERCHANGE (GE M1022338) 345/230/13.2KV TRANSFORMER CKT 1	560	560	0.24817	103.9349	TUCO INTERCHANGE - TUCO_2 230.00 230KV CKT 1
FDNS	06ALL	2	16WP	G15_058	FROM->TO	TUCO INTERCHANGE (GE M1022338) 345/230/13.2KV TRANSFORMER CKT 1	560	560	0.24817	102.2603	TUCO INTERCHANGE - TUCO_2 230.00 230KV CKT 1
FDNS	06ALL	2	17G	G15_058	FROM->TO	TUCO INTERCHANGE (GE M1022338) 345/230/13.2KV TRANSFORMER CKT 1	560	560	0.23944	100.6861	TUCO INTERCHANGE - TUCO_2 230.00 230KV CKT 1
FDNS	06ALL	2	20L	G15_058	FROM->TO	TUCO_2 345.00 (TUCO_2 XFMR) 345/230/13.2KV TRANSFORMER CKT 1	560	560	0.25143	190.1451	TUCO INTERCHANGE - TUCO_2 345.00 345KV CKT 1
FDNS	06ALL	2	20WP	G15_058	FROM->TO	TUCO_2 345.00 (TUCO_2 XFMR) 345/230/13.2KV TRANSFORMER CKT 1	560	560	0.28824	189.4604	TUCO INTERCHANGE - TUCO_2 345.00 345KV CKT 1
FDNS	06ALL	2	17G	G15_058	FROM->TO	TUCO_2 345.00 (TUCO_2 XFMR) 345/230/13.2KV TRANSFORMER CKT 1	560	560	0.27573	187.4581	TUCO INTERCHANGE - TUCO_2 345.00 345KV CKT 1
FDNS	06ALL	2	20WP	G15_058	FROM->TO	TUCO_2 345.00 (TUCO_2 XFMR) 345/230/13.2KV TRANSFORMER CKT 1	560	560	0.28824	184.0471	TUCO INTERCHANGE - TUCO_2 345.00 345KV CKT 1
FDNS	06ALL	2	20L	G15_058	FROM->TO	TUCO_2 345.00 (TUCO_2 XFMR) 345/230/13.2KV TRANSFORMER CKT 1	560	560	0.25143	184.0031	TUCO INTERCHANGE - TUCO_2 345.00 345KV CKT 1
FDNS	06ALL	2	17G	G15_058	FROM->TO	TUCO_2 345.00 (TUCO_2 XFMR) 345/230/13.2KV TRANSFORMER CKT 1	560	560	0.27573	182.4703	TUCO INTERCHANGE - TUCO_2 345.00 345KV CKT 1
FDNS	06ALL	2	16WP	G15_058	FROM->TO	TUCO_2 345.00 (TUCO_2 XFMR) 345/230/13.2KV TRANSFORMER CKT 1	560	560	0.28626	175.5009	TUCO INTERCHANGE - TUCO_2 345.00 345KV CKT 1
FDNS	06ALL	2	16WP	G15_058	FROM->TO	TUCO_2 345.00 (TUCO_2 XFMR) 345/230/13.2KV TRANSFORMER CKT 1	560	560	0.28626	172.6087	TUCO INTERCHANGE - TUCO_2 345.00 345KV CKT 1
FDNS	06ALL	2	20SP	G15_058	FROM->TO	TUCO_2 345.00 (TUCO_2 XFMR) 345/230/13.2KV TRANSFORMER CKT 1	560	560	0.29456	166.4217	TUCO INTERCHANGE - TUCO_2 345.00 345KV CKT 1
FDNS	06ALL	2	17SP	G15_058	FROM->TO	TUCO_2 345.00 (TUCO_2 XFMR) 345/230/13.2KV TRANSFORMER CKT 1	560	560	0.28651	164.6979	TUCO INTERCHANGE - TUCO_2 345.00 345KV CKT 1
FDNS	06ALL	2	20SP	G15_058	FROM->TO	TUCO_2 345.00 (TUCO_2 XFMR) 345/230/13.2KV TRANSFORMER CKT 1	560	560	0.29456	163.5805	TUCO INTERCHANGE - TUCO_2 345.00 345KV CKT 1
FDNS	06ALL	2	17SP	G15_058	FROM->TO	TUCO_2 345.00 (TUCO_2 XFMR) 345/230/13.2KV TRANSFORMER CKT 1	560	560	0.28651	162.1713	TUCO INTERCHANGE - TUCO_2 345.00 345KV CKT 1
FDNS	06ALL	2	16WP	G15_058	FROM->TO	TUCO_2 345.00 (TUCO_2 XFMR) 345/230/13.2KV TRANSFORMER CKT 1	560	560	0.24353	112.6263	TUCO INTERCHANGE (GE M1022338) 345/230/13.2KV TRANSFORMER CKT 1
FDNS	06ALL	2	16WP	G15_058	FROM->TO	TUCO_2 345.00 (TUCO_2 XFMR) 345/230/13.2KV TRANSFORMER CKT 1	560	560	0.24353	112.6263	TUCO INTERCHANGE (GE M1022338) 345/230/13.2KV TRANSFORMER CKT 1
FDNS	06ALL	2	16WP	G15_058	FROM->TO	TUCO_2 345.00 (TUCO_2 XFMR) 345/230/13.2KV TRANSFORMER CKT 1	560	560	0.24353	111.4972	TUCO INTERCHANGE (GE M1022338) 345/230/13.2KV TRANSFORMER CKT 1
FDNS	06ALL	2	16WP	G15_058	FROM->TO	TUCO_2 345.00 (TUCO_2 XFMR) 345/230/13.2KV TRANSFORMER CKT 1	560	560	0.24353	111.4972	TUCO INTERCHANGE (GE M1022338) 345/230/13.2KV TRANSFORMER CKT 1
FDNS	06ALL	2	17G	G15_058	FROM->TO	TUCO_2 345.00 (TUCO_2 XFMR) 345/230/13.2KV TRANSFORMER CKT 1	560	560	0.23491	107.1719	TUCO INTERCHANGE (GE M1022338) 345/230/13.2KV TRANSFORMER CKT 1
FDNS	06ALL	2	16WP	G15_058	FROM->TO	TUCO_2 345.00 (TUCO_2 XFMR) 345/230/13.2KV TRANSFORMER CKT 1	560	560	0.22807	105.8242	TUCO INTERCHANGE (SIEM 8743066) 345/230/13.2KV TRANSFORMER CKT 2
FDNS	06ALL	2	16WP	G15_058	FROM->TO	TUCO_2 345.00 (TUCO_2 XFMR) 345/230/13.2KV TRANSFORMER CKT 1	560	560	0.22807	105.8242	TUCO INTERCHANGE (SIEM 8743066) 345/230/13.2KV TRANSFORMER CKT 2
FDNS	06ALL	2	17G	G15_058	FROM->TO	TUCO_2 345.00 (TUCO_2 XFMR) 345/230/13.2KV TRANSFORMER CKT 1	560	560	0.23491	105.6097	TUCO INTERCHANGE (GE M1022338) 345/230/13.2KV TRANSFORMER CKT 1
FDNS	06ALL	2	16WP	G15_058	FROM->TO	TUCO_2 345.00 (TUCO_2 XFMR) 345/230/13.2KV TRANSFORMER CKT 1	560	560	0.22807	104.8168	TUCO INTERCHANGE (SIEM 8743066) 345/230/13.2KV TRANSFORMER CKT 2
FDNS	06ALL	2	16WP	G15_058	FROM->TO	TUCO_2 345.00 (TUCO_2 XFMR) 345/230/13.2KV TRANSFORMER CKT 1	560	560	0.22807	104.8168	TUCO INTERCHANGE (SIEM 8743066) 345/230/13.2KV TRANSFORMER CKT 2
FDNS	06ALL	2	17G	G15_058	FROM->TO	TUCO_2 345.00 (TUCO_2 XFMR) 345/230/13.2KV TRANSFORMER CKT 1	560	560	0.21999	100.7205	TUCO INTERCHANGE (SIEM 8743066) 345/230/13.2KV TRANSFORMER CKT 2
FDNS	06ALL	3	20SP	G15_058	FROM->TO	CHISHOLM6 230.00 - ELK CITY 230KV 230KV CKT 1	353	353	0.06367	104.1963	BASE CASE
FDNS	06ALL	3	17SP	G15_058	FROM->TO	CHISHOLM6 230.00 - ELK CITY 230KV 230KV CKT 1	353	353	0.06389	101.9728	BASE CASE
FDNS	06ALL	3	20L	G15_058	TO->FROM	CIMARRON - MINCO 345KV CKT 1	956	956	0.218	140.6921	G14-057T 345.00 - SUNNYSIDE 345KV CKT 1
FDNS	06ALL	3	20L	G15_058	TO->FROM	CIMARRON - MINCO 345KV CKT 1	956	956	0.218	134.2883	G14-057T 345.00 - LAWTON EASTSIDE 345KV CKT 1
FDNS	06ALL	3	17G	G15_058	TO->FROM	CIMARRON - MINCO 345KV CKT 1	956	956	0.24438	132.797	G14-057T 345.00 - SUNNYSIDE 345KV CKT 1
FDNS	06ALL	3	20WP	G15_058	TO->FROM	CIMARRON - MINCO 345KV CKT 1	956	956	0.24531	131.9094	G14-057T 345.00 - SUNNYSIDE 345KV CKT 1
FDNS	06ALL	3	17G	G15_058	TO->FROM	CIMARRON - MINCO 345KV CKT 1	956	956	0.24438	127.3481	G14-057T 345.00 - LAWTON EASTSIDE 345KV CKT 1
FDNS	06ALL	3	20WP	G15_058	TO->FROM	CIMARRON - MINCO 345KV CKT 1	956	956	0.24531	126.3057	G14-057T 345.00 - LAWTON EASTSIDE 345KV CKT 1
FDNS	06ALL	3	16WP	G15_058	TO->FROM	CIMARRON - MINCO 345KV CKT 1	956	956	0.25129	125.3645	G14-057T 345.00 - SUNNYSIDE 345KV CKT 1
FDNS	06ALL	3	17SP	G15_058	TO->FROM	CIMARRON - MINCO 345KV CKT 1	956	956	0.24845	124.3731	G14-057T 345.00 - SUNNYSIDE 345KV CKT 1
FDNS	06ALL	3	20SP	G15_058	TO->FROM	CIMARRON - MINCO 345KV CKT 1	956	956	0.25132	121.3286	G14-057T 345.00 - SUNNYSIDE 345KV CKT 1
FDNS	06ALL	3	16WP	G15_058	TO->FROM	CIMARRON - MINCO 345KV CKT 1	956	956	0.25129	119.9255	G14-057T 345.00 - LAWTON EASTSIDE 345KV CKT 1
FDNS	06ALL	3	17SP	G15_058	TO->FROM	CIMARRON - MINCO 345KV CKT 1	956	956	0.24845	118.8978	G14-057T 345.00 - LAWTON EASTSIDE 345KV CKT 1
FDNS	06ALL	3	20SP	G15_058	TO->FROM	CIMARRON - MINCO 345KV CKT 1	956	956	0.25132	116.0894	G14-057T 345.00 - LAWTON EASTSIDE 345KV CKT 1
FDNS	06ALL	3	20WP	G15_058	TO->FROM	CIMARRON - MINCO 345KV CKT 1	956	956	0.20598	111.5734	MATHWSN7 345.00 - TATONGA7 345.00 345KV CKT 1
FDNS	06ALL	3	20L	G15_058	TO->FROM	CIMARRON - MINCO 345KV CKT 1	956	956	0.22408	109.488	CHISHOLM7 345.00 - WOODWARD DISTRICT EHV 345KV CKT 1
FDNS	06ALL	3	17G	G15_058	TO->FROM	CIMARRON - MINCO 345KV CKT 1	956	956	0.24255	109.1031	CHISHOLM7 345.00 - WOODWARD DISTRICT EHV 345KV CKT 1
FDNS	06ALL	3	20WP	G15_058	TO->FROM	CIMARRON - MINCO 345KV CKT 1	956	956	0.20598	106.2571	G11_051T 345.00 - TATONGA7 345.00 345KV CKT 1
FDNS	06ALL	3	17G	G15_058	TO->FROM	CIMARRON - MINCO 345KV CKT 1	956	956	0.20718	106.016	G11_051T 345.00 - TATONGA7 345.00 345KV CKT 1
FDNS	06ALL	3	17SP	G15_058	TO->FROM	CIMARRON - MINCO 345KV CKT 1	956	956	0.21084	105.6361	MATHWSN7 345.00 - TATONGA7 345.00 345KV CKT 1
FDNS	06ALL	3	20WP	G15_058	TO->FROM	CIMARRON - MINCO 345KV CKT 1	956	956	0.24718	105.2058	CHISHOLM7 345.00 - WOODWARD DISTRICT EHV 345KV CKT 1
FDNS	06ALL	3	16WP	G15_058	TO->FROM	CIMARRON - MINCO 345KV CKT 1	956	956	0.21244	105.1594	MATHWSN7 345.00 - TATONGA7 345.00 345KV CKT 1
FDNS	06ALL	3	20SP	G15_058	TO->FROM	CIMARRON - MINCO 345KV CKT 1	956	956	0.21253	104.8651	MATHWSN7 345.00 - TATONGA7 345.00 345KV CKT 1
FDNS	06ALL	3	20WP	G15_058	TO->FROM	CIMARRON - MINCO 345KV CKT 1	956	956	0.20598	104.6601	G11_051T 345.00 - WOODWARD DISTRICT EHV 345KV CKT 1
FDNS	06ALL	3	17G	G15_058	TO->FROM	CIMARRON - MINCO 345KV CKT 1	956	956	0.20718	104.4511	G11_051T 345.00 - WOODWARD DISTRICT EHV 345KV CKT 1
FDNS	06ALL	3	20SP	G15_058	TO->FROM	CIMARRON - MINCO 345KV CKT 1	956	956	0.25397	103.3967	CHISHOLM7 345.00 - WOODWARD DISTRICT EHV 345KV CKT 1
FDNS	06ALL	3	17SP	G15_058	TO->FROM	CIMARRON - MINCO 345KV CKT 1	956	956	0.24992	102.6701	CHISHOLM7 345.00 - WOODWARD DISTRICT EHV 345KV CKT 1
FDNS	06ALL	3	17SP	G15_058	TO->FROM	CIMARRON - MINCO 345KV CKT 1	956	956	0.21084	100.4546	G11_051T 345.00 - TATONGA7 345.00 345KV CKT 1
FDNS	06ALL	3	20WP	G15_058	TO->FROM	CIMARRON - MINCO 345KV CKT 1	956	956	0.19742	100.2954	P12:138:WFEC:MSL03
FDNS	06ALL	3	16WP	G15_058	TO->FROM	CIMARRON - MINCO 345KV CKT 1	956	956	0.21244	99.8	G11_051T 345.00 - TATONGA7 345.00 345KV CKT 1
FDNS	06ALL	3	20SP	G15_058	TO->FROM	CIMARRON - MINCO 345KV CKT 1	956	956	0.21253	99.7	G11_051T 345.00 - TATONGA7 345.00 345KV CKT 1
FDNS	06ALL	3	17SP	G15_058	TO->FROM	CIMARRON - MINCO 345KV CKT 1	956	956	0.20113	99.6	P12:138:WFEC:MSL03
FDNS	06ALL	3	20SP	G15_058	TO->FROM	CIMARRON - MINCO 345KV CKT 1	956	956	0.20363	99.6	P12:138:WFEC:MSL03
FDNS	06ALL	3	20L	G15_058	TO->FROM	G14-057T 345.00 - LAWTON EASTSIDE 345KV CKT 1	717	789	0.10613	106.0801	BASE CASE
FDNS	06ALL	3	20L	G15_058	FROM->TO	G14-057T 345.00 - SUNNYSIDE 345KV CKT 1	717	789	0.10613	119.3111	BASE CASE
FDNS	06ALL	3	20WP	G15_058	FROM->TO	G14-057T 345.00 - SUNNYSIDE 345KV CKT 1	717	789	0.12966	107.198	BASE CASE
FDNS	06ALL	3	17G	G15_058	FROM->TO	G14-057T 345.00 - SUNNYSIDE 345KV CKT 1	717	789	0.12972	106.7167	BASE CASE
FDNS	06ALL	3	16WP	G15_058	FROM->TO	G14-057T 345.00 - SUNNYSIDE 345KV CKT 1	717	789	0.13319	105.3992	BASE CASE
FDNS	06ALL	3	20L	G15_058	FROM->TO	GRACEMONT - MINCO 345KV CKT 1	1195	1195	0.218	101.53	G14-057T 345.00 - SUNNYSIDE 345KV CKT 1
FDNS	06ALL	4	20SP	G15_058	FROM->TO	CHISHOLM6 230.00 - ELK CITY 230KV 230KV CKT 1	353	353	0.06167	103.152	BASE CASE
FDNS	06ALL	4	17SP	G15_058	FROM->TO	CHISHOLM6 230.00 - ELK CITY 230KV 230KV CKT 1	353	353	0.06173	100.7007	BASE CASE
FDNS	06ALL	4	20L	G15_058	TO->FROM	CIMARRON - MINCO 345KV CKT 1	956	956	0.20178	136.9659	G14-057T 345.00 - SUNNYSIDE 345KV CKT 1
FDNS	06ALL	4	20L	G15_058	TO->FROM	CIMARRON - MINCO 345KV CKT 1	956	956	0.20178	130.9905	G14-057T 345.00 - LAWTON EASTSIDE 345KV CKT 1
FDNS	06ALL	4	17G	G15_058	TO->FROM	CIMARRON - MINCO 345KV CKT 1	956	956	0.22548	129.7974	G14-057T 345.00 - SUNNYSIDE 345KV CKT 1
FDNS	06ALL	4	20WP	G15_058	TO->FROM	CIMARRON - MINCO 345KV CKT 1	956	956	0.22749	128.511	G14-057T 345.00 - SUNNYSIDE 345KV CKT 1
FDNS	06ALL	4	17G	G15_058	TO->FROM	CIMARRON - MINCO 345KV CKT 1	956	956	0.22548	124.286	G14-057T 345.00 - LAWTON EASTSIDE 345KV CKT 1
FDNS	06ALL	4	20WP	G15_058	TO->FROM	CIMARRON - MINCO 345KV CKT 1	956	956	0.22749	123.0537	G14-057T 345.00 - LAWTON EASTSIDE 345KV CKT 1
FDNS	06ALL	4	16WP	G15_058	TO->FROM	CIMARRON - MINCO 345KV CKT 1	956	956	0.23205	122.1275	G14-057T 345.00 - SUNNYSIDE 345KV CKT 1

SOLUTION	GROUP	SCENARIO	SEASON	SOURCE	DIRECTION	MONITORED ELEMENT	RATEA (MVA)	RATEB(MVA)	TDF	TC%LOADING (% MVA)	CONTINGENCY
FDNS	06ALL	4	17SP	G15_058	TO->FROM	CIMARRON - MINCO 345KV CKT 1	956	956	0.22903	121.005	G14-057T 345.00 - SUNNYSIDE 345KV CKT 1
FDNS	06ALL	4	20SP	G15_058	TO->FROM	CIMARRON - MINCO 345KV CKT 1	956	956	0.23324	117.7968	G14-057T 345.00 - SUNNYSIDE 345KV CKT 1
FDNS	06ALL	4	16WP	G15_058	TO->FROM	CIMARRON - MINCO 345KV CKT 1	956	956	0.23205	116.5578	G14-057T 345.00 - LAWTON EASTSIDE 345KV CKT 1
FDNS	06ALL	4	17SP	G15_058	TO->FROM	CIMARRON - MINCO 345KV CKT 1	956	956	0.22903	115.6625	G14-057T 345.00 - LAWTON EASTSIDE 345KV CKT 1
FDNS	06ALL	4	20SP	G15_058	TO->FROM	CIMARRON - MINCO 345KV CKT 1	956	956	0.23324	112.5931	G14-057T 345.00 - LAWTON EASTSIDE 345KV CKT 1
FDNSLock	06ALL	4	17G	G15_058	TO->FROM	CIMARRON - MINCO 345KV CKT 1	956	956	0.19533	110.3749	MATHWSN7 345.00 - TATONGA7 345.00 345KV CKT 1
FDNS	06ALL	4	17G	G15_058	TO->FROM	CIMARRON - MINCO 345KV CKT 1	956	956	0.21447	104.4362	CHISHOLM7 345.00 - WOODWARD DISTRICT EHV 345KV CKT 1
FDNS	06ALL	4	17G	G15_058	TO->FROM	CIMARRON - MINCO 345KV CKT 1	956	956	0.19533	104.3067	G11_051T 345.00 - TATONGA7 345.00 345KV CKT 1
FDNS	06ALL	4	20L	G15_058	TO->FROM	CIMARRON - MINCO 345KV CKT 1	956	956	0.19969	103.7687	CHISHOLM7 345.00 - WOODWARD DISTRICT EHV 345KV CKT 1
FDNS	06ALL	4	17SP	G15_058	TO->FROM	CIMARRON - MINCO 345KV CKT 1	956	956	0.19857	103.6969	MATHWSN7 345.00 - TATONGA7 345.00 345KV CKT 1
FDNS	06ALL	4	16WP	G15_058	TO->FROM	CIMARRON - MINCO 345KV CKT 1	956	956	0.20038	103.3746	MATHWSN7 345.00 - TATONGA7 345.00 345KV CKT 1
FDNS	06ALL	4	20SP	G15_058	TO->FROM	CIMARRON - MINCO 345KV CKT 1	956	956	0.20113	102.8303	MATHWSN7 345.00 - TATONGA7 345.00 345KV CKT 1
FDNS	06ALL	4	17G	G15_058	TO->FROM	CIMARRON - MINCO 345KV CKT 1	956	956	0.19533	102.7262	G11_051T 345.00 - WOODWARD DISTRICT EHV 345KV CKT 1
FDNS	06ALL	4	20WP	G15_058	TO->FROM	CIMARRON - MINCO 345KV CKT 1	956	956	0.22054	100.3052	CHISHOLM7 345.00 - WOODWARD DISTRICT EHV 345KV CKT 1
FDNSLock	06ALL	4	16WP	G15_058		G14_001T 345.00 - WICHITA 345KV CKT 1	1035	1035	0.05401	25.24282	BASE CASE
FDNS	06ALL	4	20L	G15_058	TO->FROM	G14-057T 345.00 - LAWTON EASTSIDE 345KV CKT 1	717	789	0.09901	104.3251	BASE CASE
FDNS	06ALL	4	20L	G15_058	FROM->TO	G14-057T 345.00 - SUNNYSIDE 345KV CKT 1	717	789	0.09901	117.5276	BASE CASE
FDNS	06ALL	4	20WP	G15_058	FROM->TO	G14-057T 345.00 - SUNNYSIDE 345KV CKT 1	717	789	0.1219	105.3579	BASE CASE
FDNS	06ALL	4	17G	G15_058	FROM->TO	G14-057T 345.00 - SUNNYSIDE 345KV CKT 1	717	789	0.1215	105.0325	BASE CASE
FDNS	06ALL	4	16WP	G15_058	FROM->TO	G14-057T 345.00 - SUNNYSIDE 345KV CKT 1	717	789	0.12482	103.6585	BASE CASE
FDNSLock	06ALL	4	20L	G15_058		OKLAUNION 345KV SWITCHED SHUNT	1022	1124	0.16469	86.37846	BASE CASE
FDNS	06ALL	4	16WP	G15_058	FROM->TO	TOLK STATION (ABBXNL844501) 345/230/13.2KV TRANSFORMER CKT 1	560	560	0.28862	113.0515	CROSSROADS 7345.00 - TOLK STATION 345KV CKT 1
FDNS	06ALL	4	16WP	G15_058	FROM->TO	TOLK STATION (ABBXNL844501) 345/230/13.2KV TRANSFORMER CKT 1	560	560	0.28862	110.3257	CROSSROADS 7345.00 - TOLK STATION 345KV CKT 1
FDNS	06ALL	5	20SP	G15_058	FROM->TO	CHISHOLM6 230.00 - ELK CITY 230KV 230KV CKT 1	353	353	0.06606	107.7212	BASE CASE
FDNS	06ALL	5	17SP	G15_058	FROM->TO	CHISHOLM6 230.00 - ELK CITY 230KV 230KV CKT 1	353	353	0.06667	105.7594	BASE CASE
FDNS	06ALL	5	20L	G15_058	TO->FROM	CIMARRON - MINCO 345KV CKT 1	956	956	0.20946	139.1694	G14-057T 345.00 - SUNNYSIDE 345KV CKT 1
FDNS	06ALL	5	20L	G15_058	TO->FROM	CIMARRON - MINCO 345KV CKT 1	956	956	0.20946	133.4583	G14-057T 345.00 - LAWTON EASTSIDE 345KV CKT 1
FDNS	06ALL	5	17G	G15_058	TO->FROM	CIMARRON - MINCO 345KV CKT 1	956	956	0.23437	132.5137	G14-057T 345.00 - SUNNYSIDE 345KV CKT 1
FDNS	06ALL	5	20WP	G15_058	TO->FROM	CIMARRON - MINCO 345KV CKT 1	956	956	0.23461	131.4126	G14-057T 345.00 - SUNNYSIDE 345KV CKT 1
FDNS	06ALL	5	17G	G15_058	TO->FROM	CIMARRON - MINCO 345KV CKT 1	956	956	0.23437	127.0859	G14-057T 345.00 - LAWTON EASTSIDE 345KV CKT 1
FDNS	06ALL	5	20WP	G15_058	TO->FROM	CIMARRON - MINCO 345KV CKT 1	956	956	0.23461	126.0182	G14-057T 345.00 - LAWTON EASTSIDE 345KV CKT 1
FDNS	06ALL	5	16WP	G15_058	TO->FROM	CIMARRON - MINCO 345KV CKT 1	956	956	0.24112	125.0103	G14-057T 345.00 - SUNNYSIDE 345KV CKT 1
FDNS	06ALL	5	17SP	G15_058	TO->FROM	CIMARRON - MINCO 345KV CKT 1	956	956	0.23765	123.5221	G14-057T 345.00 - SUNNYSIDE 345KV CKT 1
FDNS	06ALL	5	20SP	G15_058	TO->FROM	CIMARRON - MINCO 345KV CKT 1	956	956	0.24081	120.476	G14-057T 345.00 - SUNNYSIDE 345KV CKT 1
FDNS	06ALL	5	16WP	G15_058	TO->FROM	CIMARRON - MINCO 345KV CKT 1	956	956	0.24112	119.6144	G14-057T 345.00 - LAWTON EASTSIDE 345KV CKT 1
FDNS	06ALL	5	17SP	G15_058	TO->FROM	CIMARRON - MINCO 345KV CKT 1	956	956	0.23765	118.2604	G14-057T 345.00 - LAWTON EASTSIDE 345KV CKT 1
FDNS	06ALL	5	20SP	G15_058	TO->FROM	CIMARRON - MINCO 345KV CKT 1	956	956	0.24081	115.0864	G14-057T 345.00 - LAWTON EASTSIDE 345KV CKT 1
FDNS	06ALL	5	17G	G15_058	TO->FROM	CIMARRON - MINCO 345KV CKT 1	956	956	0.20312	113.1247	MATHWSN7 345.00 - TATONGA7 345.00 345KV CKT 1
FDNS	06ALL	5	20WP	G15_058	TO->FROM	CIMARRON - MINCO 345KV CKT 1	956	956	0.20106	112.7231	MATHWSN7 345.00 - TATONGA7 345.00 345KV CKT 1
FDNS	06ALL	5	20L	G15_058	TO->FROM	CIMARRON - MINCO 345KV CKT 1	956	956	0.20916	110.4804	CHISHOLM7 345.00 - WOODWARD DISTRICT EHV 345KV CKT 1
FDNS	06ALL	5	17G	G15_058	TO->FROM	CIMARRON - MINCO 345KV CKT 1	956	956	0.22788	110.4087	CHISHOLM7 345.00 - WOODWARD DISTRICT EHV 345KV CKT 1
FDNS	06ALL	5	20WP	G15_058	TO->FROM	CIMARRON - MINCO 345KV CKT 1	956	956	0.20106	107.3503	G11_051T 345.00 - TATONGA7 345.00 345KV CKT 1
FDNS	06ALL	5	17G	G15_058	TO->FROM	CIMARRON - MINCO 345KV CKT 1	956	956	0.20312	107.1655	G11_051T 345.00 - TATONGA7 345.00 345KV CKT 1
FDNS	06ALL	5	20WP	G15_058	TO->FROM	CIMARRON - MINCO 345KV CKT 1	956	956	0.23054	106.6912	CHISHOLM7 345.00 - WOODWARD DISTRICT EHV 345KV CKT 1
FDNS	06ALL	5	16WP	G15_058	TO->FROM	CIMARRON - MINCO 345KV CKT 1	956	956	0.20834	106.1194	MATHWSN7 345.00 - TATONGA7 345.00 345KV CKT 1
FDNS	06ALL	5	17SP	G15_058	TO->FROM	CIMARRON - MINCO 345KV CKT 1	956	956	0.20616	106.0588	MATHWSN7 345.00 - TATONGA7 345.00 345KV CKT 1
FDNS	06ALL	5	20WP	G15_058	TO->FROM	CIMARRON - MINCO 345KV CKT 1	956	956	0.20106	105.6974	G11_051T 345.00 - WOODWARD DISTRICT EHV 345KV CKT 1
FDNS	06ALL	5	17G	G15_058	TO->FROM	CIMARRON - MINCO 345KV CKT 1	956	956	0.20312	105.5499	G11_051T 345.00 - WOODWARD DISTRICT EHV 345KV CKT 1
FDNS	06ALL	5	20SP	G15_058	TO->FROM	CIMARRON - MINCO 345KV CKT 1	956	956	0.20783	105.1459	MATHWSN7 345.00 - TATONGA7 345.00 345KV CKT 1
FDNS	06ALL	5	20SP	G15_058	TO->FROM	CIMARRON - MINCO 345KV CKT 1	956	956	0.23759	102.6282	CHISHOLM7 345.00 - WOODWARD DISTRICT EHV 345KV CKT 1
FDNS	06ALL	5	17SP	G15_058	TO->FROM	CIMARRON - MINCO 345KV CKT 1	956	956	0.2341	102.3712	CHISHOLM7 345.00 - WOODWARD DISTRICT EHV 345KV CKT 1
FDNS	06ALL	5	17SP	G15_058	TO->FROM	CIMARRON - MINCO 345KV CKT 1	956	956	0.20616	100.8538	G11_051T 345.00 - TATONGA7 345.00 345KV CKT 1
FDNS	06ALL	5	16WP	G15_058	TO->FROM	CIMARRON - MINCO 345KV CKT 1	956	956	0.20834	100.7286	G11_051T 345.00 - TATONGA7 345.00 345KV CKT 1
FDNS	06ALL	5	20SP	G15_058	TO->FROM	CIMARRON - MINCO 345KV CKT 1	956	956	0.20783	100	G11_051T 345.00 - TATONGA7 345.00 345KV CKT 1
FDNS	06ALL	5	16WP	G15_058	TO->FROM	CIMARRON - MINCO 345KV CKT 1	956	956	0.23603	99.9	CHISHOLM7 345.00 - WOODWARD DISTRICT EHV 345KV CKT 1
FDNS	06ALL	5	20L	G15_058	TO->FROM	G14-057T 345.00 - LAWTON EASTSIDE 345KV CKT 1	717	789	0.10076	104.5834	BASE CASE
FDNS	06ALL	5	20L	G15_058	FROM->TO	G14-057T 345.00 - SUNNYSIDE 345KV CKT 1	717	789	0.10076	117.7866	BASE CASE
FDNS	06ALL	5	20WP	G15_058	FROM->TO	G14-057T 345.00 - SUNNYSIDE 345KV CKT 1	717	789	0.12273	105.6059	BASE CASE
FDNS	06ALL	5	17G	G15_058	FROM->TO	G14-057T 345.00 - SUNNYSIDE 345KV CKT 1	717	789	0.12283	105.2883	BASE CASE
FDNS	06ALL	5	16WP	G15_058	FROM->TO	G14-057T 345.00 - SUNNYSIDE 345KV CKT 1	717	789	0.12609	103.9305	BASE CASE
FDNS	06ALL	5	20L	G15_058	FROM->TO	GRACEMONT - MINCO 345KV CKT 1	1195	1195	0.20946	100.3039	G14-057T 345.00 - SUNNYSIDE 345KV CKT 1
FDNS	06ALL	5	17G	G15_058	FROM->TO	POTTER COUNTY INTERCHANGE (WAUK 90343-A) 345/230/13.2KV TRANSFORMER CKT 1	560	560	0.20003	131.4477	P12:345:SPS:J15.1.XRDS.TOLK
FDNS	06ALL	5	17G	G15_058	FROM->TO	POTTER COUNTY INTERCHANGE (WAUK 90343-A) 345/230/13.2KV TRANSFORMER CKT 1	560	560	0.20003	130.9697	P12:345:SPS:J15.1.XRDS.TOLK
FDNS	06ALL	5	16WP	G15_058	FROM->TO	POTTER COUNTY INTERCHANGE (WAUK 90343-A) 345/230/13.2KV TRANSFORMER CKT 1	560	560	0.21129	123.3278	P12:345:SPS:J15.1.XRDS.TOLK
FDNS	06ALL	5	16WP	G15_058	FROM->TO	POTTER COUNTY INTERCHANGE (WAUK 90343-A) 345/230/13.2KV TRANSFORMER CKT 1	560	560	0.21129	122.0001	P12:345:SPS:J15.1.XRDS.TOLK
FDNS	06ALL	5	17SP	G15_058	FROM->TO	POTTER COUNTY INTERCHANGE (WAUK 90343-A) 345/230/13.2KV TRANSFORMER CKT 1	560	560	0.2057	108.8592	P12:345:SPS:J15.1.XRDS.TOLK
FDNS	06ALL	5	17SP	G15_058	FROM->TO	POTTER COUNTY INTERCHANGE (WAUK 90343-A) 345/230/13.2KV TRANSFORMER CKT 1	560	560	0.2057	107.3735	P12:345:SPS:J15.1.XRDS.TOLK
FDNS	06ALL	5	16WP	G15_058	FROM->TO	TOLK STATION (ABBXNL844501) 345/230/13.2KV TRANSFORMER CKT 1	560	560	0.29388	113.0248	CROSSROADS 7345.00 - TOLK STATION 345KV CKT 1
FDNS	06ALL	5	16WP	G15_058	FROM->TO	TOLK STATION (ABBXNL844501) 345/230/13.2KV TRANSFORMER CKT 1	560	560	0.29388	110.571	CROSSROADS 7345.00 - TOLK STATION 345KV CKT 1
FDNS	06ALL	6	20SP	G15_058	FROM->TO	CHISHOLM6 230.00 - ELK CITY 230KV 230KV CKT 1	353	353	0.05913	102.8848	BASE CASE
FDNS	06ALL	6	17SP	G15_058	FROM->TO	CHISHOLM6 230.00 - ELK CITY 230KV 230KV CKT 1	353	353	0.05957	100.6562	BASE CASE
FDNS	06ALL	6	17G	G15_058	TO->FROM	CIMARRON - MINCO 345KV CKT 1	956	956	0.20755	121.6178	G14-057T 345.00 - SUNNYSIDE 345KV CKT 1
FDNS	06ALL	6	20WP	G15_058	TO->FROM	CIMARRON - MINCO 345KV CKT 1	956	956	0.20886	119.7395	G14-057T 345.00 - SUNNYSIDE 345KV CKT 1
FDNS	06ALL	6	17G	G15_058	TO->FROM	CIMARRON - MINCO 345KV CKT 1	956	956	0.20755	116.437	G14-057T 345.00 - LAWTON EASTSIDE 345KV CKT 1
FDNS	06ALL	6	20WP	G15_058	TO->FROM	CIMARRON - MINCO 345KV CKT 1	956	956	0.20886	114.5016	G14-057T 345.00 - LAWTON EASTSIDE 345KV CKT 1
FDNS	06ALL	6	17SP	G15_058	TO->FROM	CIMARRON - MINCO 345KV CKT 1	956	956	0.21054	114.4047	G14-057T 345.00 - SUNNYSIDE 345KV CKT 1
FDNS	06ALL	6	16WP	G15_058	TO->FROM	CIMARRON - MINCO 345KV CKT 1	956	956	0.21369	114.352	G14-057T 345.00 - SUNNYSIDE 345KV CKT 1
FDNS	06ALL	6	20SP	G15_058	TO->FROM	CIMARRON - MINCO 345KV CKT 1	956	956	0.21429	111.5632	G14-057T 345.00 - SUNNYSIDE 345KV CKT 1
FDNS	06ALL	6	17SP	G15_058	TO->FROM	CIMARRON - MINCO 345KV CKT 1	956	956	0.21054	109.1774	G14-057T 345.00 - LAWTON EASTSIDE 345KV CKT 1

SOLUTION	GROUP	SCENARIO	SEASON	SOURCE	DIRECTION	MONITORED ELEMENT	RATEA (MVA)	RATEB(MVA)	TDF	TC%LOADING (% MVA)	CONTINGENCY
FDNS	06ALL	6	16WP	G15_058	TO->FROM	CIMARRON - MINCO 345KV CKT 1	956	956	0.21369	108.975	G14-057T 345.00 - LAWTON EASTSIDE 345KV CKT 1
FDNS	06ALL	6	20SP	G15_058	TO->FROM	CIMARRON - MINCO 345KV CKT 1	956	956	0.21429	106.5254	G14-057T 345.00 - LAWTON EASTSIDE 345KV CKT 1
FDNS	06ALL	6	17G	G15_058	TO->FROM	CIMARRON - MINCO 345KV CKT 1	956	956	0.1968	105.9404	CHISHOLM7 345.00 - WOODWARD DISTRICT EHV 345KV CKT 1
FDNS	06ALL	6	20WP	G15_058	TO->FROM	CIMARRON - MINCO 345KV CKT 1	956	956	0.1998	101.5954	CHISHOLM7 345.00 - WOODWARD DISTRICT EHV 345KV CKT 1
FDNS	06ALL	6	20L	G15_058	TO->FROM	G14-057T 345.00 - LAWTON EASTSIDE 345KV CKT 1	717	789	0.09606	102.0743	BASE CASE
FDNS	06ALL	6	20L	G15_058	FROM->TO	G14-057T 345.00 - SUNNYSIDE 345KV CKT 1	717	789	0.09606	115.279	BASE CASE
FDNS	06ALL	6	20WP	G15_058	FROM->TO	G14-057T 345.00 - SUNNYSIDE 345KV CKT 1	717	789	0.11755	103.5944	BASE CASE
FDNS	06ALL	6	17G	G15_058	FROM->TO	G14-057T 345.00 - SUNNYSIDE 345KV CKT 1	717	789	0.11755	103.4014	BASE CASE
FDNS	06ALL	6	16WP	G15_058	FROM->TO	G14-057T 345.00 - SUNNYSIDE 345KV CKT 1	717	789	0.12066	102.0868	BASE CASE
FDNS	06ALL	6	16WP	G15_058	FROM->TO	POTTER COUNTY INTERCHANGE (WAUK 90343-A) 345/230/13.2KV TRANSFORMER CKT 1	560	560	0.22546	124.5835	P12:345:SPS:J15.1.XRDS.TOLK
FDNS	06ALL	6	16WP	G15_058	FROM->TO	POTTER COUNTY INTERCHANGE (WAUK 90343-A) 345/230/13.2KV TRANSFORMER CKT 1	560	560	0.22546	123.2053	P12:345:SPS:J15.1.XRDS.TOLK
FDNS	06ALL	6	16WP	G15_058	FROM->TO	POTTER COUNTY INTERCHANGE (WAUK 90343-A) 345/230/13.2KV TRANSFORMER CKT 1	560	560	0.19501	116.5159	POTTER COUNTY INTERCHANGE - TOLK STATION 345KV CKT 1
FDNS	06ALL	6	16WP	G15_058	FROM->TO	POTTER COUNTY INTERCHANGE (WAUK 90343-A) 345/230/13.2KV TRANSFORMER CKT 1	560	560	0.19501	115.3558	POTTER COUNTY INTERCHANGE - TOLK STATION 345KV CKT 1
FDNS	06ALL	6	17SP	G15_058	FROM->TO	POTTER COUNTY INTERCHANGE (WAUK 90343-A) 345/230/13.2KV TRANSFORMER CKT 1	560	560	0.21984	109.9868	P12:345:SPS:J15.1.XRDS.TOLK
FDNS	06ALL	6	17SP	G15_058	FROM->TO	POTTER COUNTY INTERCHANGE (WAUK 90343-A) 345/230/13.2KV TRANSFORMER CKT 1	560	560	0.21984	108.4833	P12:345:SPS:J15.1.XRDS.TOLK
FDNS	06ALL	6	16WP	G15_058	FROM->TO	TOLK STATION (ABBXNL844501) 345/230/13.2KV TRANSFORMER CKT 1	560	560	0.29553	112.8509	CROSSROADS 7345.00 - TOLK STATION 345KV CKT 1
FDNS	06ALL	6	16WP	G15_058	FROM->TO	TOLK STATION (ABBXNL844501) 345/230/13.2KV TRANSFORMER CKT 1	560	560	0.29553	110.425	CROSSROADS 7345.00 - TOLK STATION 345KV CKT 1
FDNS	06ALL	7	20SP	G15_058	FROM->TO	CHISHOLM6 230.00 - ELK CITY 230KV 230KV CKT 1	353	353	0.05913	100.158	BASE CASE
FDNS	06ALL	7	17G	G15_058	TO->FROM	CIMARRON - MINCO 345KV CKT 1	956	956	0.20758	117.9395	G14-057T 345.00 - SUNNYSIDE 345KV CKT 1
FDNS	06ALL	7	20WP	G15_058	TO->FROM	CIMARRON - MINCO 345KV CKT 1	956	956	0.20886	116.4002	G14-057T 345.00 - SUNNYSIDE 345KV CKT 1
FDNS	06ALL	7	17G	G15_058	TO->FROM	CIMARRON - MINCO 345KV CKT 1	956	956	0.20758	112.8925	G14-057T 345.00 - LAWTON EASTSIDE 345KV CKT 1
FDNS	06ALL	7	16WP	G15_058	TO->FROM	CIMARRON - MINCO 345KV CKT 1	956	956	0.21371	111.0593	G14-057T 345.00 - SUNNYSIDE 345KV CKT 1
FDNS	06ALL	7	20WP	G15_058	TO->FROM	CIMARRON - MINCO 345KV CKT 1	956	956	0.20886	111.0342	G14-057T 345.00 - LAWTON EASTSIDE 345KV CKT 1
FDNS	06ALL	7	17SP	G15_058	TO->FROM	CIMARRON - MINCO 345KV CKT 1	956	956	0.21056	111.0288	G14-057T 345.00 - SUNNYSIDE 345KV CKT 1
FDNS	06ALL	7	20SP	G15_058	TO->FROM	CIMARRON - MINCO 345KV CKT 1	956	956	0.21429	108.4281	G14-057T 345.00 - SUNNYSIDE 345KV CKT 1
FDNS	06ALL	7	17SP	G15_058	TO->FROM	CIMARRON - MINCO 345KV CKT 1	956	956	0.21056	106.172	G14-057T 345.00 - LAWTON EASTSIDE 345KV CKT 1
FDNS	06ALL	7	16WP	G15_058	TO->FROM	CIMARRON - MINCO 345KV CKT 1	956	956	0.21371	105.9627	G14-057T 345.00 - LAWTON EASTSIDE 345KV CKT 1
FDNS	06ALL	7	20SP	G15_058	TO->FROM	CIMARRON - MINCO 345KV CKT 1	956	956	0.21429	103.5061	G14-057T 345.00 - LAWTON EASTSIDE 345KV CKT 1
FDNS	06ALL	7	20L	G15_058	TO->FROM	G14-057T 345.00 - LAWTON EASTSIDE 345KV CKT 1	717	789	0.09607	100.7791	BASE CASE
FDNS	06ALL	7	20L	G15_058	FROM->TO	G14-057T 345.00 - SUNNYSIDE 345KV CKT 1	717	789	0.09607	114.0012	BASE CASE
FDNS	06ALL	7	20WP	G15_058	FROM->TO	G14-057T 345.00 - SUNNYSIDE 345KV CKT 1	717	789	0.11755	102.5888	BASE CASE
FDNS	06ALL	7	17G	G15_058	FROM->TO	G14-057T 345.00 - SUNNYSIDE 345KV CKT 1	717	789	0.11755	102.2119	BASE CASE
FDNS	06ALL	7	16WP	G15_058	FROM->TO	G14-057T 345.00 - SUNNYSIDE 345KV CKT 1	717	789	0.12067	101.1576	BASE CASE
FDNS	06ALL	7	16WP	G15_058	FROM->TO	POTTER COUNTY INTERCHANGE (WAUK 90343-A) 345/230/13.2KV TRANSFORMER CKT 1	560	560	0.22548	133.795	P12:345:SPS:J15.1.XRDS.TOLK
FDNS	06ALL	7	16WP	G15_058	FROM->TO	POTTER COUNTY INTERCHANGE (WAUK 90343-A) 345/230/13.2KV TRANSFORMER CKT 1	560	560	0.22548	130.8152	P12:345:SPS:J15.1.XRDS.TOLK
FDNS	06ALL	7	16WP	G15_058	FROM->TO	POTTER COUNTY INTERCHANGE (WAUK 90343-A) 345/230/13.2KV TRANSFORMER CKT 1	560	560	0.19503	125.2874	POTTER COUNTY INTERCHANGE - TOLK STATION 345KV CKT 1
FDNS	06ALL	7	16WP	G15_058	FROM->TO	POTTER COUNTY INTERCHANGE (WAUK 90343-A) 345/230/13.2KV TRANSFORMER CKT 1	560	560	0.19503	122.7478	POTTER COUNTY INTERCHANGE - TOLK STATION 345KV CKT 1
FDNS	06ALL	7	17SP	G15_058	FROM->TO	POTTER COUNTY INTERCHANGE (WAUK 90343-A) 345/230/13.2KV TRANSFORMER CKT 1	560	560	0.21986	118.7065	P12:345:SPS:J15.1.XRDS.TOLK
FDNS	06ALL	7	17SP	G15_058	FROM->TO	POTTER COUNTY INTERCHANGE (WAUK 90343-A) 345/230/13.2KV TRANSFORMER CKT 1	560	560	0.21986	115.9022	P12:345:SPS:J15.1.XRDS.TOLK
FDNS	06ALL	7	16WP	G15_058	FROM->TO	TOLK STATION (ABBXNL844501) 345/230/13.2KV TRANSFORMER CKT 1	560	560	0.29556	112.9883	CROSSROADS 7345.00 - TOLK STATION 345KV CKT 1
FDNS	06ALL	7	16WP	G15_058	FROM->TO	TOLK STATION (ABBXNL844501) 345/230/13.2KV TRANSFORMER CKT 1	560	560	0.29556	110.8952	CROSSROADS 7345.00 - TOLK STATION 345KV CKT 1
FDNS	01ALL	0	16WP	G15_059	FROM->TO	CIMARRON - DRAPER LAKE 345KV CKT 1	717	717	0.20948	106.5755	GRACEMONT - MINCO 345KV CKT 1
FDNS	01ALL	2	16WP	G15_059	FROM->TO	CIMARRON - DRAPER LAKE 345KV CKT 1	717	717	0.20155	113.3296	GRACEMONT - MINCO 345KV CKT 1
FDNS	01ALL	2	17G	G15_059	FROM->TO	CIMARRON - DRAPER LAKE 345KV CKT 1	717	717	0.20458	105.307	GRACEMONT - MINCO 345KV CKT 1
FDNS	01ALL	2	16WP	G15_059	FROM->TO	CIMARRON - DRAPER LAKE 345KV CKT 1	717	717	0.12936	103.9899	BASE CASE
FDNS	01ALL	2	17SP	G15_059	FROM->TO	CIMARRON - DRAPER LAKE 345KV CKT 1	717	717	0.19995	99.8	GRACEMONT - MINCO 345KV CKT 1
FDNSLock-Blown up	01ALL	0	16WP	G15_060		Non-Converged Contingency	1195	1195	0.23704	-	MATHWSN7 345.00 - TATONGA7 345.00 345KV CKT 1
FDNSLock-Blown up	01NR	0	17G	G15_060		Non-Converged Contingency	1195	1195	0.29614	-	MATHWSN7 345.00 - TATONGA7 345.00 345KV CKT 1
FDNSLock-Blown up	01ALL	0	20L	G15_060		Non-Converged Contingency	1195	1195	0.24333	-	MATHWSN7 345.00 - TATONGA7 345.00 345KV CKT 1
FDNSLock-Blown up	01ALL	0	20WP	G15_060		Non-Converged Contingency	1195	1195	0.23138	-	MATHWSN7 345.00 - TATONGA7 345.00 345KV CKT 1
FDNSLock-Blown up	01ALL	0	25SP	G15_060		Non-Converged Contingency	1792	1972	0.0508	-	BORDER 7345.00 - TUCO_2 345.00 345KV CKT 1
FDNS	00NR	0	20WP	G15_060	TO->FROM	CHISHOLM6 230.00 - SWEETWATER 230KV CKT 1	421	439	0.05348	106.0142	G14-074T 345.00 - OKLAUNION 345KV CKT 1
FDNS	00NR	0	20WP	G15_060	TO->FROM	CHISHOLM6 230.00 - SWEETWATER 230KV CKT 1	421	439	0.06206	100.3638	MATHWSN7 345.00 - TATONGA7 345.00 345KV CKT 1
FDNS	00NR	0	16WP	G15_060	FROM->TO	CIMARRON - DRAPER LAKE 345KV CKT 1	717	717	0.14009	132.6508	G14-057T 345.00 - SUNNYSIDE 345KV CKT 1
FDNS	00NR	0	16WP	G15_060	FROM->TO	CIMARRON - DRAPER LAKE 345KV CKT 1	717	717	0.14009	122.0003	G14-057T 345.00 - LAWTON EASTSIDE 345KV CKT 1
FDNS	00NR	0	16WP	G15_060	FROM->TO	CIMARRON - DRAPER LAKE 345KV CKT 1	717	717	0.13078	116.5817	ARCADIA - SEMINOLE 345KV CKT 1
FDNS	00NR	0	16WP	G15_060	FROM->TO	CIMARRON - DRAPER LAKE 345KV CKT 1	717	717	0.12901	115.588	CLEVELAND - G15066_T 345.00 345KV CKT 1
FDNS	00NR	0	16WP	G15_060	FROM->TO	CIMARRON - DRAPER LAKE 345KV CKT 1	717	717	0.17121	115.2993	ARCADIA - NORTHWEST 345KV CKT 1
FDNS	00NR	0	16WP	G15_060	FROM->TO	CIMARRON - DRAPER LAKE 345KV CKT 1	717	717	0.12901	114.8063	G15066_T 345.00 - SOONER 345KV CKT 1
FDNS	00NR	0	16WP	G15_060	FROM->TO	CIMARRON - DRAPER LAKE 345KV CKT 1	717	717	0.12745	110.2756	CLEVELAND - TULSA NORTH 345KV CKT 1
FDNS	00NR	0	16WP	G15_060	FROM->TO	CIMARRON - DRAPER LAKE 345KV CKT 1	717	717	0.12745	110.2756	CLEVELAND - TULSA NORTH 345KV CKT 1
FDNS	00NR	0	16WP	G15_060	FROM->TO	CIMARRON - DRAPER LAKE 345KV CKT 1	717	717	0.13665	110.1142	MATHWSN7 345.00 - NORTHWEST 345KV CKT 1
FDNS	00NR	0	16WP	G15_060	FROM->TO	CIMARRON - DRAPER LAKE 345KV CKT 1	717	717	0.12851	109.2409	CIMARRON - SARA 138KV CKT 1
FDNS	00NR	0	16WP	G15_060	FROM->TO	CIMARRON - DRAPER LAKE 345KV CKT 1	717	717	0.12837	108.713	P12:138:WFEC:MSL03
FDNS	00NR	0	16WP	G15_060	FROM->TO	CIMARRON - DRAPER LAKE 345KV CKT 1	717	717	0.12481	108.0689	CIMARRON (CIMARON2) 345/138/13.8KV TRANSFORMER CKT 1
FDNS	00NR	0	16WP	G15_060	FROM->TO	CIMARRON - DRAPER LAKE 345KV CKT 1	717	717	0.12851	107.9446	SARA - STHLAKE4 138.00 138KV CKT 1
FDNS	00NR	0	16WP	G15_060	FROM->TO	CIMARRON - DRAPER LAKE 345KV CKT 1	717	717	0.1248	107.899	CIMARRON (CIMARON1) 345/138/13.8KV TRANSFORMER CKT 1
FDNS	00NR	0	16WP	G15_060	FROM->TO	CIMARRON - DRAPER LAKE 345KV CKT 1	717	717	0.12851	107.745	MCCLAIN - STHLAKE4 138.00 138KV CKT 1
FDNS	00NR	0	16WP	G15_060	FROM->TO	CIMARRON - DRAPER LAKE 345KV CKT 1	717	717	0.12736	107.4685	CIMARRON - CZECH HALL 138KV CKT 1
FDNS	00NR	0	16WP	G15_060	FROM->TO	CIMARRON - DRAPER LAKE 345KV CKT 1	717	717	0.12736	107.112	CZECH HALL - XEROX 138KV CKT 1
FDNS	00NR	0	16WP	G15_060	FROM->TO	CIMARRON - DRAPER LAKE 345KV CKT 1	717	717	0.12736	107.0924	MORGAN - XEROX 138KV CKT 1
FDNS	00NR	0	16WP	G15_060	FROM->TO	CIMARRON - DRAPER LAKE 345KV CKT 1	717	717	0.12619	106.9919	ANADARKO - POCASSETT 138KV CKT 1
FDNS	00NR	0	16WP	G15_060	FROM->TO	CIMARRON - DRAPER LAKE 345KV CKT 1	717	717	0.12736	106.9752	MORGAN - MUSTANG 138KV CKT 1
FDNS	00NR	0	16WP	G15_060	FROM->TO	CIMARRON - DRAPER LAKE 345KV CKT 1	717	717	0.12619	106.7926	POCASSETT - TUTTLE 138KV CKT 1
FDNS	00NR	0	16WP	G15_060	FROM->TO	CIMARRON - DRAPER LAKE 345KV CKT 1	717	717	0.1246	106.703	GEN515040 1-SEMINOLE 1G
FDNS	00NR	0	16WP	G15_060	FROM->TO	CIMARRON - DRAPER LAKE 345KV CKT 1	717	717	0.12521	106.6763	LACYGNE - WAVERLY7 345.00 345KV CKT 1
FDNS	00NR	0	16WP	G15_060	FROM->TO	CIMARRON - DRAPER LAKE 345KV CKT 1	717	717	0.128	106.5853	JOHNSON COUNTY - SUNNYSIDE 345KV CKT 1
FDNS	00NR	0	16WP	G15_060	FROM->TO	CIMARRON - DRAPER LAKE 345KV CKT 1	717	717	0.12521	106.4587	WAVERLY7 345.00 - WOLF CREEK 345KV CKT 1
FDNSLock	00NR	0	16WP	G15_060	FROM->TO	CIMARRON - DRAPER LAKE 345KV CKT 1	717	717	0.1246	106.456	GEN509403 1-PIRKEY GENERATION

SOLUTION	GROUP	SCENARIO	SEASON	SOURCE	DIRECTION	MONITORED ELEMENT	RATEA (MVA)	RATEB(MVA)	TDF	TC%LOADING (% MVA)	CONTINGENCY
FDNS	00NR	0	16WP	G15_060	FROM->TO	CIMARRON - DRAPER LAKE 345KV CKT 1	717	717	0.1262	106.4058	CORN TAP - NAPLESTP 138.00 138KV CKT 1
FDNS	00NR	0	16WP	G15_060	FROM->TO	CIMARRON - DRAPER LAKE 345KV CKT 1	717	717	0.1246	106.3792	GEN509416 1-TURK GENERATION
FDNS	00NR	0	16WP	G15_060	FROM->TO	CIMARRON - DRAPER LAKE 345KV CKT 1	717	717	0.1246	106.3605	GEN501801 1-DOLET HILLS UNIT1
FDNS	00NR	0	16WP	G15_060	FROM->TO	CIMARRON - DRAPER LAKE 345KV CKT 1	717	717	0.1262	106.3121	NAPLESTP 138.00 - PAYNE 138.00 138KV CKT 1
FDNS	00NR	0	16WP	G15_060	FROM->TO	CIMARRON - DRAPER LAKE 345KV CKT 1	717	717	0.12619	106.2787	BRIDGECR 138.00 - TUTTLE 138KV CKT 1
FDNS	00NR	0	16WP	G15_060	FROM->TO	CIMARRON - DRAPER LAKE 345KV CKT 1	717	717	0.12678	106.2342	CANEYRV7 345.00 - NEOSHO 345KV CKT 1
FDNS	00NR	0	17SP	G15_060	FROM->TO	CIMARRON - DRAPER LAKE 345KV CKT 1	717	717	0.12909	106.1697	G14-057T 345.00 - SUNNYSIDE 345KV CKT 1
FDNSLock	00NR	0	16WP	G15_060	FROM->TO	CIMARRON - DRAPER LAKE 345KV CKT 1	717	717	0.1246	106.0246	GEN336821 1-GRAND GULF UNIT
FDNS	00NR	0	16WP	G15_060	FROM->TO	CIMARRON - DRAPER LAKE 345KV CKT 1	717	717	0.1246	105.9922	GEN515042 1-SEMINOLE 3G
FDNS	00NR	0	16WP	G15_060	FROM->TO	CIMARRON - DRAPER LAKE 345KV CKT 1	717	717	0.12678	105.9562	CANEYRV7 345.00 - LATHAMS7 345.00 345KV CKT 1
FDNS	00NR	0	16WP	G15_060	FROM->TO	CIMARRON - DRAPER LAKE 345KV CKT 1	717	717	0.12619	105.9048	BRIDGECR 138.00 - SUNSHINE CANYON 138KV CKT 1
FDNS	00NR	0	16WP	G15_060	FROM->TO	CIMARRON - DRAPER LAKE 345KV CKT 1	717	717	0.12619	105.894	P12:138:WFEC:MSL01
FDNS	00NR	0	16WP	G15_060	FROM->TO	CIMARRON - DRAPER LAKE 345KV CKT 1	717	717	0.1246	105.7583	GEN515041 1-SEMINOLE 2G
FDNSLock	00NR	0	16WP	G15_060	FROM->TO	CIMARRON - DRAPER LAKE 345KV CKT 1	717	717	0.1246	105.7266	GEN336153 1-WATERFORD UNIT#3
FDNS	00NR	0	16WP	G15_060	FROM->TO	CIMARRON - DRAPER LAKE 345KV CKT 1	717	717	0.13087	105.5516	CIMARRON - NORTHWEST 345KV CKT 1
FDNS	00NR	0	16WP	G15_060	FROM->TO	CIMARRON - DRAPER LAKE 345KV CKT 1	717	717	0.1246	105.5263	GEN509406 1-WELSH #3
FDNS	00NR	0	16WP	G15_060	FROM->TO	CIMARRON - DRAPER LAKE 345KV CKT 1	717	717	0.1246	105.5261	GEN509404 1-WELSH #1
FDNS	00NR	0	16WP	G15_060	FROM->TO	CIMARRON - DRAPER LAKE 345KV CKT 1	717	717	0.12678	105.5155	LATHAMS7 345.00 - ROSE HILL 345KV CKT 1
FDNSLock	00NR	0	16WP	G15_060	FROM->TO	CIMARRON - DRAPER LAKE 345KV CKT 1	717	717	0.1246	105.4219	GEN335831 1-RIVERBEND UNIT#1
FDNSLock	00NR	0	16WP	G15_060	FROM->TO	CIMARRON - DRAPER LAKE 345KV CKT 1	717	717	0.1246	105.406	GEN337911 1-ARKANSAS NUCLEAR ONE UNIT #2
FDNS	00NR	0	16WP	G15_060	FROM->TO	CIMARRON - DRAPER LAKE 345KV CKT 1	717	717	0.12504	105.1336	HUGO - SUNNYSIDE 345KV CKT 1
FDNS	00NR	0	16WP	G15_060	FROM->TO	CIMARRON - DRAPER LAKE 345KV CKT 1	717	717	0.122	105.1183	CANADIAN RIVER - MUSKOGEE 345KV CKT 1
FDNS	00NR	0	16WP	G15_060	FROM->TO	CIMARRON - DRAPER LAKE 345KV CKT 1	717	717	0.12475	105.0337	P12:138:OKGE:3TERM14
FDNS	00NR	0	16WP	G15_060	FROM->TO	CIMARRON - DRAPER LAKE 345KV CKT 1	717	717	0.1246	105.0296	GRAND GULF 500/22.0KV TRANSFORMER CKT 1
FDNS	00NR	0	16WP	G15_060	FROM->TO	CIMARRON - DRAPER LAKE 345KV CKT 1	717	717	0.1246	105.0273	GEN337910 1-ARKANSAS NUCLEAR ONE UNIT #1
FDNS	00NR	0	16WP	G15_060	FROM->TO	CIMARRON - DRAPER LAKE 345KV CKT 1	717	717	0.12773	105.0144	JOHNSON COUNTY - PITTSBURG 345KV CKT 1
FDNS	00NR	0	16WP	G15_060	FROM->TO	CIMARRON - DRAPER LAKE 345KV CKT 1	717	717	0.12773	105.0144	JOHNSON COUNTY - PITTSBURG 345KV CKT 1
FDNS	00NR	0	16WP	G15_060	FROM->TO	CIMARRON - DRAPER LAKE 345KV CKT 1	717	717	0.1256	104.9951	HORSESHOE LAKE - JONES TAP 138KV CKT 1
FDNS	00NR	0	16WP	G15_060	FROM->TO	CIMARRON - DRAPER LAKE 345KV CKT 1	717	717	0.12482	104.9687	MORISNT4 138.00 - STILLWATER 138KV CKT 1
FDNS	00NR	0	16WP	G15_060	FROM->TO	CIMARRON - DRAPER LAKE 345KV CKT 1	717	717	0.12484	104.9641	P12:138:OKGE:3TERM2
FDNS	00NR	0	16WP	G15_060	FROM->TO	CIMARRON - DRAPER LAKE 345KV CKT 1	717	717	0.12433	104.9439	REDBUD - RIVERSIDE STATION 345KV CKT 1
FDNS	00NR	0	16WP	G15_060	FROM->TO	CIMARRON - DRAPER LAKE 345KV CKT 1	717	717	0.12433	104.9439	REDBUD - RIVERSIDE STATION 345KV CKT 1
FDNS	00NR	0	16WP	G15_060	FROM->TO	CIMARRON - DRAPER LAKE 345KV CKT 1	717	717	0.1246	104.8928	GEN515226 1-MUSKOGEE 6G
FDNS	00NR	0	16WP	G15_060	FROM->TO	CIMARRON - DRAPER LAKE 345KV CKT 1	717	717	0.1246	104.879	GEN501813 1-RODEMACHER UNIT 3
FDNS	00NR	0	16WP	G15_060	FROM->TO	CIMARRON - DRAPER LAKE 345KV CKT 1	717	717	0.12743	104.8291	BAILEY4 138.00 - SUNSHINE CANYON 138KV CKT 1
FDNS	00NR	0	16WP	G15_060	FROM->TO	CIMARRON - DRAPER LAKE 345KV CKT 1	717	717	0.12505	104.7782	NORTHWEST (NORTWST2) 345/138/13.8KV TRANSFORMER CKT 1
FDNS	00NR	0	16WP	G15_060	FROM->TO	CIMARRON - DRAPER LAKE 345KV CKT 1	717	717	0.12469	104.7766	7SAREPTA% 345.00 - LONGWOOD 345KV CKT 1
FDNS	00NR	0	16WP	G15_060	FROM->TO	CIMARRON - DRAPER LAKE 345KV CKT 1	717	717	0.12469	104.7766	7SAREPTA% 345.00 - LONGWOOD 345KV CKT 1
FDNS	00NR	0	16WP	G15_060	FROM->TO	CIMARRON - DRAPER LAKE 345KV CKT 1	717	717	0.12411	104.7749	ARCADIA - KAMO MEMORIAL 138KV CKT 1
FDNS	00NR	0	16WP	G15_060	FROM->TO	CIMARRON - DRAPER LAKE 345KV CKT 1	717	717	0.12466	104.7555	P12:138:OKGE:3TERM12
FDNS	00NR	0	16WP	G15_060	FROM->TO	CIMARRON - DRAPER LAKE 345KV CKT 1	717	717	0.12466	104.7399	DOLET HILLS - SOUTHWEST SHREVEPORT 345KV CKT 1
FDNS	00NR	0	16WP	G15_060	FROM->TO	CIMARRON - DRAPER LAKE 345KV CKT 1	717	717	0.12466	104.7399	DOLET HILLS - SOUTHWEST SHREVEPORT 345KV CKT 1
FDNS	00NR	0	16WP	G15_060	FROM->TO	CIMARRON - DRAPER LAKE 345KV CKT 1	717	717	0.1246	104.6942	GEN515225 1-MUSKOGEE 5G
FDNS	00NR	0	16WP	G15_060	FROM->TO	CIMARRON - DRAPER LAKE 345KV CKT 1	717	717	0.1246	104.694	GEN515223 1-MUSKOGEE 4G
FDNS	00NR	0	16WP	G15_060	FROM->TO	CIMARRON - DRAPER LAKE 345KV CKT 1	717	717	0.1246	104.6904	GEN335206 1-NELSON UNIT 6
FDNS	00NR	0	16WP	G15_060	FROM->TO	CIMARRON - DRAPER LAKE 345KV CKT 1	717	717	0.12551	104.68	MEMORIAL - SKYLINE 138KV CKT 1
FDNS	00NR	0	16WP	G15_060	FROM->TO	CIMARRON - DRAPER LAKE 345KV CKT 1	717	717	0.1249	104.583	GRACEMONT (BANK 1) 345/138/13.8KV TRANSFORMER CKT 1
FDNS	00NR	0	16WP	G15_060	FROM->TO	CIMARRON - DRAPER LAKE 345KV CKT 1	717	717	0.12571	104.5721	QUAIL CREEK - SKYLINE 138KV CKT 1
FDNS	00NR	0	16WP	G15_060	FROM->TO	CIMARRON - DRAPER LAKE 345KV CKT 1	717	717	0.1246	104.5492	GEN509409 1-WILKES #3
FDNS	00NR	0	16WP	G15_060	FROM->TO	CIMARRON - DRAPER LAKE 345KV CKT 1	717	717	0.1246	104.5474	GEN337653 1-WHITE BLUFF UNIT #2
FDNS	00NR	0	16WP	G15_060	FROM->TO	CIMARRON - DRAPER LAKE 345KV CKT 1	717	717	0.12593	104.5355	P12:138:OKGE:3TERM18
FDNS	00NR	0	16WP	G15_060	FROM->TO	CIMARRON - DRAPER LAKE 345KV CKT 1	717	717	0.12743	104.5271	BAILEY4 138.00 - WESTMOORE 138KV CKT 1
FDNS	00NR	0	16WP	G15_060	FROM->TO	CIMARRON - DRAPER LAKE 345KV CKT 1	717	717	0.1246	104.519	GEN501812 1-RODEMACHER UNIT 2
FDNS	00NR	0	16WP	G15_060	FROM->TO	CIMARRON - DRAPER LAKE 345KV CKT 1	717	717	0.12502	104.5145	NORTHWEST (NORTWST4) 345/138/13.8KV TRANSFORMER CKT 1
FDNS	00NR	0	16WP	G15_060	FROM->TO	CIMARRON - DRAPER LAKE 345KV CKT 1	717	717	0.1246	104.4548	NEW MADRID 161/22.0KV TRANSFORMER CKT 1
FDNS	00NR	0	16WP	G15_060	FROM->TO	CIMARRON - DRAPER LAKE 345KV CKT 1	717	717	0.12586	104.4542	36 & MERIDIAN - CHEMTRON 138KV CKT 1
FDNS	00NR	0	16WP	G15_060	FROM->TO	CIMARRON - DRAPER LAKE 345KV CKT 1	717	717	0.12876	104.4515	THISTLE7 345.00 - WOODWARD DISTRICT EHV 345KV CKT 1
FDNS	00NR	0	16WP	G15_060	FROM->TO	CIMARRON - DRAPER LAKE 345KV CKT 1	717	717	0.12876	104.4515	THISTLE7 345.00 - WOODWARD DISTRICT EHV 345KV CKT 1
FDNS	00NR	0	16WP	G15_060	FROM->TO	CIMARRON - DRAPER LAKE 345KV CKT 1	717	717	0.12876	104.4515	THISTLE7 345.00 - WOODWARD DISTRICT EHV 345KV CKT 2
FDNS	00NR	0	16WP	G15_060	FROM->TO	CIMARRON - DRAPER LAKE 345KV CKT 1	717	717	0.12876	104.4515	THISTLE7 345.00 - WOODWARD DISTRICT EHV 345KV CKT 2
FDNS	00NR	0	16WP	G15_060	FROM->TO	CIMARRON - DRAPER LAKE 345KV CKT 1	717	717	0.1246	104.4411	NEW MADRID 345/22.0KV TRANSFORMER CKT 1
FDNS	00NR	0	16WP	G15_060	FROM->TO	CIMARRON - DRAPER LAKE 345KV CKT 1	717	717	0.1246	104.4225	GEN520947 1-HUGO1
FDNS	00NR	0	16WP	G15_060	FROM->TO	CIMARRON - DRAPER LAKE 345KV CKT 1	717	717	0.1246	104.4148	GEN337652 1-WHITE BLUFF UNIT #1
FDNS	00NR	0	16WP	G15_060	FROM->TO	CIMARRON - DRAPER LAKE 345KV CKT 1	717	717	0.12502	104.3894	NORTHWEST (NORTWST3) 345/138/13.8KV TRANSFORMER CKT 1
FDNS	00NR	0	16WP	G15_060	FROM->TO	CIMARRON - DRAPER LAKE 345KV CKT 1	717	717	0.12465	104.376	3TR3AR8EL7EL
FDNS	00NR	0	16WP	G15_060	FROM->TO	CIMARRON - DRAPER LAKE 345KV CKT 1	717	717	0.12465	104.376	7SAREPTA% 345.00 - ELDORADO EHV 345KV CKT 1
FDNS	00NR	0	16WP	G15_060	FROM->TO	CIMARRON - DRAPER LAKE 345KV CKT 1	717	717	0.12465	104.3682	ELDORADO EHV 500/345KV TRANSFORMER CKT 1
FDNS	00NR	0	16WP	G15_060	FROM->TO	CIMARRON - DRAPER LAKE 345KV CKT 1	717	717	0.12586	104.3672	CHEMTRON - PENNSYLVANIA 138KV CKT 1
FDNS	00NR	0	16WP	G15_060	FROM->TO	CIMARRON - DRAPER LAKE 345KV CKT 1	717	717	0.1222	104.3371	G15052_T 345.00 - ROSE HILL 345KV CKT 1
FDNS	00NR	0	16WP	G15_060	FROM->TO	CIMARRON - DRAPER LAKE 345KV CKT 1	717	717	0.12493	104.3332	G15074_T 345.00 - HOYT 345KV CKT 1
FDNS	00NR	0	16WP	G15_060	FROM->TO	CIMARRON - DRAPER LAKE 345KV CKT 1	717	717	0.12648	104.3021	BLANCHARD - CORNVILLE 138KV CKT 1
FDNS	00NR	0	16WP	G15_060	FROM->TO	CIMARRON - DRAPER LAKE 345KV CKT 1	717	717	0.12515	104.3015	COMANCHE - LOCO 138KV CKT 1
FDNS	00NR	0	16WP	G15_060	FROM->TO	CIMARRON - DRAPER LAKE 345KV CKT 1	717	717	0.125	104.2791	P12:138:OKGE:3TERM17
FDNS	00NR	0	16WP	G15_060	FROM->TO	CIMARRON - DRAPER LAKE 345KV CKT 1	717	717	0.1246	104.2625	GEN515577 1-ARBWND11 0.6900
FDNS	00NR	0	16WP	G15_060	FROM->TO	CIMARRON - DRAPER LAKE 345KV CKT 1	717	717	0.12743	104.2438	FRANKLIN SW - WESTMOORE 138KV CKT 1
FDNS	00NR	0	16WP	G15_060	FROM->TO	CIMARRON - DRAPER LAKE 345KV CKT 1	717	717	0.12557	104.2374	P12:138:OKGE:3TERM11
FDNS	00NR	0	16WP	G15_060	FROM->TO	CIMARRON - DRAPER LAKE 345KV CKT 1	717	717	0.1246	104.2237	GEN334440 1-SABINE UNIT 4
FDNS	00NR	0	16WP	G15_060	FROM->TO	CIMARRON - DRAPER LAKE 345KV CKT 1	717	717	0.12494	104.2165	LONEOAK - NORTHWEST 138KV CKT 1
FDNS	00NR	0	16WP	G15_060	FROM->TO	CIMARRON - DRAPER LAKE 345KV CKT 1	717	717	0.12648	104.211	P12:138:AEPW-OGE:CORNVIL4:MAUD 4

SOLUTION	GROUP	SCENARIO	SEASON	SOURCE	DIRECTION	MONITORED ELEMENT	RATEA (MVA)	RATEB(MVA)	TDF	TC%LOADING (% MVA)	CONTINGENCY
FDNS	00NR	0	16WP	G15_060	FROM->TO	CIMARRON - DRAPER LAKE 345KV CKT 1	717	717	0.1255	104.2024	KETCH TAP - NORTHWEST 138KV CKT 1
FDNS	00NR	0	16WP	G15_060	FROM->TO	CIMARRON - DRAPER LAKE 345KV CKT 1	717	717	0.1246	104.2023	DELL 500 - ESSEX UNIT 2 500KV CKT Z1
FDNS	00NR	0	16WP	G15_060	FROM->TO	CIMARRON - DRAPER LAKE 345KV CKT 1	717	717	0.12527	104.1938	DIVISION AVE - LAKESIDE 138KV CKT 1
FDNS	00NR	0	16WP	G15_060	FROM->TO	CIMARRON - DRAPER LAKE 345KV CKT 1	717	717	0.12412	104.1729	HORSESHOE LAKE - KAMO MEMORIAL 138KV CKT 1
FDNS	00NR	0	16WP	G15_060	FROM->TO	CIMARRON - DRAPER LAKE 345KV CKT 1	717	717	0.12476	104.1303	NORTHWEST - PANTHER 138KV CKT 1
FDNS	00NR	0	16WP	G15_060	FROM->TO	CIMARRON - DRAPER LAKE 345KV CKT 1	717	717	0.12713	104.1253	G14-074T 345.00 - OKLAUNION 345KV CKT 1
FDNS	00NR	0	16WP	G15_060	FROM->TO	CIMARRON - DRAPER LAKE 345KV CKT 1	717	717	0.12714	104.1217	CLARKSVILLE - ONETA 345KV CKT 1
FDNS	00NR	0	16WP	G15_060	FROM->TO	CIMARRON - DRAPER LAKE 345KV CKT 1	717	717	0.12714	104.1217	CLARKSVILLE - ONETA 345KV CKT 1
FDNS	00NR	0	16WP	G15_060	FROM->TO	CIMARRON - DRAPER LAKE 345KV CKT 1	717	717	0.12512	104.1144	P12:138:OKGE:3TERM20
FDNS	00NR	0	16WP	G15_060	FROM->TO	CIMARRON - DRAPER LAKE 345KV CKT 1	717	717	0.12648	104.1089	BLANCHARD - MAUD 138KV CKT 1
FDNS	00NR	0	16WP	G15_060	FROM->TO	CIMARRON - DRAPER LAKE 345KV CKT 1	717	717	0.12569	104.1015	CIMARRON - HAYMAKER 138KV CKT 1
FDNS	00NR	0	16WP	G15_060	FROM->TO	CIMARRON - DRAPER LAKE 345KV CKT 1	717	717	0.12475	104.0977	P12:138:OKGE:3TERM47
FDNS	00NR	0	16WP	G15_060	FROM->TO	CIMARRON - DRAPER LAKE 345KV CKT 1	717	717	0.1246	104.0931	GEN336252 1-NINEMILE POINT UNIT#5
FDNS	00NR	0	16WP	G15_060	FROM->TO	CIMARRON - DRAPER LAKE 345KV CKT 1	717	717	0.12685	104.0857	FINNEY SWITCHING STATION - HOLCOMB 345KV CKT 1
FDNS	00NR	0	16WP	G15_060	FROM->TO	CIMARRON - DRAPER LAKE 345KV CKT 1	717	717	0.12685	104.0857	FINNEY SWITCHING STATION - HOLCOMB 345KV CKT 1
FDNS	00NR	0	16WP	G15_060	FROM->TO	CIMARRON - DRAPER LAKE 345KV CKT 1	717	717	0.1246	104.0808	DOLET HILLS 345/24.0KV TRANSFORMER CKT 1
FDNS	00NR	0	16WP	G15_060	FROM->TO	CIMARRON - DRAPER LAKE 345KV CKT 1	717	717	0.12476	104.08	PANTHER - SILVER LAKE 138KV CKT 1
FDNS	00NR	0	16WP	G15_060	FROM->TO	CIMARRON - DRAPER LAKE 345KV CKT 1	717	717	0.12527	104.0723	HEFNER - LAKESIDE 138KV CKT 1
FDNS	00NR	0	16WP	G15_060	FROM->TO	CIMARRON - DRAPER LAKE 345KV CKT 1	717	717	0.12521	104.041	BLACKBERRY - NEOSHO 345KV CKT 1
FDNS	00NR	0	16WP	G15_060	FROM->TO	CIMARRON - DRAPER LAKE 345KV CKT 1	717	717	0.1246	104.0356	WHITE BLUFF 500/26.0KV TRANSFORMER CKT 1
FDNS	00NR	0	16WP	G15_060	FROM->TO	CIMARRON - DRAPER LAKE 345KV CKT 1	717	717	0.12552	104.0273	KETCH - KETCH TAP 138KV CKT 1
FDNS	00NR	0	16WP	G15_060	FROM->TO	CIMARRON - DRAPER LAKE 345KV CKT 1	717	717	0.12534	104.02	EMPORIA ENERGY CENTER - G14_001T 345.00 345KV CKT 1
FDNS	00NR	0	16WP	G15_060	FROM->TO	CIMARRON - DRAPER LAKE 345KV CKT 1	717	717	0.12494	104.0189	HOYT - STRANGER CREEK 345KV CKT 1
FDNS	00NR	0	16WP	G15_060	FROM->TO	CIMARRON - DRAPER LAKE 345KV CKT 1	717	717	0.12476	104.0086	DIVISION AVE - MUSTANG 138KV CKT 1
FDNS	00NR	0	16WP	G15_060	FROM->TO	CIMARRON - DRAPER LAKE 345KV CKT 1	717	717	0.12484	104	G15088_T 345.00 - MOORE 345KV CKT 1
FDNS	00NR	0	16WP	G15_060	FROM->TO	CIMARRON - DRAPER LAKE 345KV CKT 1	717	717	0.1246	104	GEN300006 1-NEW MADRID UNIT 1
FDNS	00NR	0	16WP	G15_060	FROM->TO	CIMARRON - DRAPER LAKE 345KV CKT 1	717	717	0.1246	104	GEN300007 1-NEW MADRID UNIT 2
FDNS	00NR	0	16WP	G15_060	FROM->TO	CIMARRON - DRAPER LAKE 345KV CKT 1	717	717	0.12487	103.999	P12:138:WFEC:MSL02
FDNS	00NR	0	16WP	G15_060	FROM->TO	CIMARRON - DRAPER LAKE 345KV CKT 1	717	717	0.12569	103.998	DIVISION AVE - HAYMAKER 138KV CKT 1
FDNS	00NR	0	16WP	G15_060	FROM->TO	CIMARRON - DRAPER LAKE 345KV CKT 1	717	717	0.1246	103.9886	GEN509408 1-WILKES #2
FDNS	00NR	0	16WP	G15_060	FROM->TO	CIMARRON - DRAPER LAKE 345KV CKT 1	717	717	0.12491	103.9879	P12:138:AEPW-OGE:SHIDLER4:OSAGE 4
FDNS	00NR	0	16WP	G15_060	FROM->TO	CIMARRON - DRAPER LAKE 345KV CKT 1	717	717	0.12574	103.975	MCCLAIN - PLEASANT VALLEY 138KV CKT 1
FDNS	00NR	0	16WP	G15_060	FROM->TO	CIMARRON - DRAPER LAKE 345KV CKT 1	717	717	0.12512	103.9746	SWISSVALE - WEST GARDNER 345KV CKT 1
FDNS	00NR	0	16WP	G15_060	FROM->TO	CIMARRON - DRAPER LAKE 345KV CKT 1	717	717	0.12493	103.9659	G15074_T 345.00 - JEFFREY ENERGY CENTER 345KV CKT 1
FDNS	00NR	0	16WP	G15_060	FROM->TO	CIMARRON - DRAPER LAKE 345KV CKT 1	717	717	0.12479	103.962	ANADARKO - GEORGIA 138KV CKT 1
FDNS	00NR	0	16WP	G15_060	FROM->TO	CIMARRON - DRAPER LAKE 345KV CKT 1	717	717	0.1246	103.9525	GEN335204 1-NELSON UNIT 4
FDNS	00NR	0	16WP	G15_060	FROM->TO	CIMARRON - DRAPER LAKE 345KV CKT 1	717	717	0.1246	103.9519	GEN336831 1-BAXTER WILSON SES
FDNS	00NR	0	16WP	G15_060	FROM->TO	CIMARRON - DRAPER LAKE 345KV CKT 1	717	717	0.12456	103.9391	P12:138:AEPW:OKMULGE4:R.S.S-4
FDNS	00NR	0	16WP	G15_060	FROM->TO	CIMARRON - DRAPER LAKE 345KV CKT 1	717	717	0.1246	103.9208	GEN506754 1-LEBROCK STEAM 1
FDNS	00NR	0	16WP	G15_060	FROM->TO	CIMARRON - DRAPER LAKE 345KV CKT 1	717	717	0.12551	103.919	CLASSEN - ROBINSON 138KV CKT 1
FDNS	00NR	0	16WP	G15_060	FROM->TO	CIMARRON - DRAPER LAKE 345KV CKT 1	717	717	0.1246	103.9013	GEN334441 1-SABINE UNIT 5
FDNS	00NR	0	16WP	G15_060	FROM->TO	CIMARRON - DRAPER LAKE 345KV CKT 1	717	717	0.1246	103.8962	GEN334071 1-LEWIS CREEK 2
FDNS	00NR	0	16WP	G15_060	FROM->TO	CIMARRON - DRAPER LAKE 345KV CKT 1	717	717	0.12479	103.8953	FLETCHER - GEORGIA 138KV CKT 1
FDNS	00NR	0	16WP	G15_060	FROM->TO	CIMARRON - DRAPER LAKE 345KV CKT 1	717	717	0.12534	103.8915	G14_001T 345.00 - WICHITA 345KV CKT 1
FDNS	00NR	0	16WP	G15_060	FROM->TO	CIMARRON - DRAPER LAKE 345KV CKT 1	717	717	0.1246	103.8883	GEN334070 1-LEWIS CREEK 1
FDNS	00NR	0	16WP	G15_060	FROM->TO	CIMARRON - DRAPER LAKE 345KV CKT 1	717	717	0.12643	103.8865	BENTON - WICHITA 345KV CKT 1
FDNS	00NR	0	16WP	G15_060	FROM->TO	CIMARRON - DRAPER LAKE 345KV CKT 1	717	717	0.12685	103.8864	FINNEY SWITCHING STATION - Hitchland Interchange 345KV CKT 1
FDNS	00NR	0	16WP	G15_060	FROM->TO	CIMARRON - DRAPER LAKE 345KV CKT 1	717	717	0.1246	103.8862	GEN336251 1-NINEMILE POINT UNIT#4
FDNS	00NR	0	16WP	G15_060	FROM->TO	CIMARRON - DRAPER LAKE 345KV CKT 1	717	717	0.12469	103.8786	WEBRE - WELLS 500KV CKT 1
FDNS	00NR	0	16WP	G15_060	FROM->TO	CIMARRON - DRAPER LAKE 345KV CKT 1	717	717	0.12554	103.8775	LACYGNE - NEOSHO 345KV CKT 1
FDNSLock	00NR	0	16WP	G15_060	FROM->TO	CIMARRON - DRAPER LAKE 345KV CKT 1	717	717	0.1246	103.8742	GEN590011 2-ERCOT EQUIVALENCE
FDNS	00NR	0	16WP	G15_060	FROM->TO	CIMARRON - DRAPER LAKE 345KV CKT 1	717	717	0.125	103.862	EMPORIA ENERGY CENTER - SWISSVALE 345KV CKT 1
FDNS	00NR	0	16WP	G15_060	FROM->TO	CIMARRON - DRAPER LAKE 345KV CKT 1	717	717	0.12485	103.8385	EMPIRE - FLETCHER 138KV CKT 1
FDNSLock	00NR	0	16WP	G15_060	FROM->TO	CIMARRON - DRAPER LAKE 345KV CKT 1	717	717	0.1246	103.8317	GEN590010 1-ERCOT EQUIVALENCE
FDNS	00NR	0	16WP	G15_060	FROM->TO	CIMARRON - DRAPER LAKE 345KV CKT 1	717	717	0.12593	103.8223	G1524G1525 345.00 - THISTLE7 345.00 345KV CKT 1
FDNS	00NR	0	16WP	G15_060	FROM->TO	CIMARRON - DRAPER LAKE 345KV CKT 1	717	717	0.12593	103.8223	G1524G1525 345.00 - THISTLE7 345.00 345KV CKT 2
FDNS	00NR	0	16WP	G15_060	FROM->TO	CIMARRON - DRAPER LAKE 345KV CKT 1	717	717	0.1246	103.8186	GEN503909 1-FULTONU1 1 16.000
FDNSLock	00NR	0	16WP	G15_060	FROM->TO	CIMARRON - DRAPER LAKE 345KV CKT 1	717	717	0.1246	103.8129	GEN338146 1-INDEPENDENCE UNIT #2
FDNS	00NR	0	16WP	G15_060	FROM->TO	CIMARRON - DRAPER LAKE 345KV CKT 1	717	717	0.12494	103.8126	LONEOAK - QUAIL CREEK 138KV CKT 1
FDNS	00NR	0	16WP	G15_060	FROM->TO	CIMARRON - DRAPER LAKE 345KV CKT 1	717	717	0.1246	103.809	GEN501811 1-RODEMACHER UNIT 1
FDNS	00NR	0	16WP	G15_060	FROM->TO	CIMARRON - DRAPER LAKE 345KV CKT 1	717	717	0.1239	103.8044	WOODRING (WOODRNG2) 345/138/13.8KV TRANSFORMER CKT 1
FDNS	00NR	0	16WP	G15_060	FROM->TO	CIMARRON - DRAPER LAKE 345KV CKT 1	717	717	0.12568	103.7918	CRINER - PAYNE 138.00 138KV CKT 1
FDNS	00NR	0	16WP	G15_060	FROM->TO	CIMARRON - DRAPER LAKE 345KV CKT 1	717	717	0.12491	103.7817	OSAGE - WEBB CITY TAP 138KV CKT 1
FDNS	00NR	0	16WP	G15_060	FROM->TO	CIMARRON - DRAPER LAKE 345KV CKT 1	717	717	0.12485	103.7768	COMANCHE - EMPIRE 138KV CKT 1
FDNS	00NR	0	16WP	G15_060	FROM->TO	CIMARRON - DRAPER LAKE 345KV CKT 1	717	717	0.1246	103.7748	FRONTIER - GRIMES 345KV CKT 1
FDNS	00NR	0	16WP	G15_060	FROM->TO	CIMARRON - DRAPER LAKE 345KV CKT 1	717	717	0.1246	103.7716	GEN334433 1-SABINE UNIT 3
FDNS	00NR	0	16WP	G15_060	FROM->TO	CIMARRON - DRAPER LAKE 345KV CKT 1	717	717	0.1246	103.7693	P12:069:OKGE:3TERM4
FDNS	00NR	0	16WP	G15_060	FROM->TO	CIMARRON - DRAPER LAKE 345KV CKT 1	717	717	0.1246	103.7671	GEN334030 1-FRONTIER UNIT 1
FDNS	00NR	0	16WP	G15_060	FROM->TO	CIMARRON - DRAPER LAKE 345KV CKT 1	717	717	0.1246	103.7661	GEN334031 1-FRONTIER UNIT 2
FDNS	00NR	0	16WP	G15_060	FROM->TO	CIMARRON - DRAPER LAKE 345KV CKT 1	717	717	0.1246	103.764	GEN303007 1-1BC2 U2
FDNS	00NR	0	16WP	G15_060	FROM->TO	CIMARRON - DRAPER LAKE 345KV CKT 1	717	717	0.12495	103.7619	SPVALLY4 138.00 - STILLWATER 138KV CKT 1
FDNS	00NR	0	16WP	G15_060	FROM->TO	CIMARRON - DRAPER LAKE 345KV CKT 1	717	717	0.1246	103.7587	GEN303006 1-1BC2 U1
FDNS	00NR	0	16WP	G15_060	FROM->TO	CIMARRON - DRAPER LAKE 345KV CKT 1	717	717	0.1246	103.7582	GEN337041 1-GERALD ANDRUS
FDNS	00NR	0	16WP	G15_060	FROM->TO	CIMARRON - DRAPER LAKE 345KV CKT 1	717	717	0.1246	103.7551	P12:161:AEPW:DYESS 5:HYLAND 5
FDNS	00NR	0	16WP	G15_060	FROM->TO	CIMARRON - DRAPER LAKE 345KV CKT 1	717	717	0.1246	103.7415	GEN336191 1-LITTLE GYPSY UNIT#3
FDNS	00NR	0	16WP	G15_060	FROM->TO	CIMARRON - DRAPER LAKE 345KV CKT 1	717	717	0.12463	103.7374	8DANIEL8 500.00 - MCKNIGHT 500KV CKT 1
FDNS	00NR	0	16WP	G15_060	FROM->TO	CIMARRON - DRAPER LAKE 345KV CKT 1	717	717	0.1246	103.7345	GEN509393 S1-ARSENAL HILL GENS #4 (STALL)
FDNS	00NR	0	16WP	G15_060	FROM->TO	CIMARRON - DRAPER LAKE 345KV CKT 1	717	717	0.12478	103.7342	CLEAVELAND - CLEVLND 4 138.00 138KV CKT Z1
FDNS	00NR	0	16WP	G15_060	FROM->TO	CIMARRON - DRAPER LAKE 345KV CKT 1	717	717	0.12478	103.7339	CLEVELAND (CLVAUTO1) 345/138/13.8KV TRANSFORMER CKT 1

SOLUTION	GROUP	SCENARIO	SEASON	SOURCE	DIRECTION	MONITORED ELEMENT	RATEA (MVA)	RATEB(MVA)	TDF	TC%LOADING (% MVA)	CONTINGENCY
FDNS	00NR	0	16WP	G15_060	FROM->TO	CIMARRON - DRAPER LAKE 345KV CKT 1	717	717	0.12478	103.7339	CLEVELAND (CLVAUTO1) 345/138/13.8KV TRANSFORMER CKT 1
FDNS	00NR	0	16WP	G15_060	FROM->TO	CIMARRON - DRAPER LAKE 345KV CKT 1	717	717	0.12495	103.7325	PAYNESB4 138.00 - SPVALLY4 138.00 138KV CKT 1
FDNS	00NR	0	16WP	G15_060	FROM->TO	CIMARRON - DRAPER LAKE 345KV CKT 1	717	717	0.12475	103.7308	P12:138:OKGE:3TERM13
FDNS	00NR	0	16WP	G15_060	FROM->TO	CIMARRON - DRAPER LAKE 345KV CKT 1	717	717	0.12567	103.7266	ARKANSAS NUCLEAR ONE - FT SMITH 500KV CKT 1
FDNS	00NR	0	16WP	G15_060	FROM->TO	CIMARRON - DRAPER LAKE 345KV CKT 1	717	717	0.12567	103.7266	ARKANSAS NUCLEAR ONE - FT SMITH 500KV CKT 1
FDNS	00NR	0	16WP	G15_060	FROM->TO	CIMARRON - DRAPER LAKE 345KV CKT 1	717	717	0.1246	103.7179	GEN509392 G2-ARSENAL HILL GENS #3 (STALL)
FDNS	00NR	0	16WP	G15_060	FROM->TO	CIMARRON - DRAPER LAKE 345KV CKT 1	717	717	0.1246	103.7178	GEN509391 G1-ARSENAL HILL GENS #2 (STALL)
FDNS	00NR	0	16WP	G15_060	FROM->TO	CIMARRON - DRAPER LAKE 345KV CKT 1	717	717	0.12495	103.7169	CUSHING - PAYNESB4 138.00 138KV CKT 1
FDNS	00NR	0	16WP	G15_060	FROM->TO	CIMARRON - DRAPER LAKE 345KV CKT 1	717	717	0.1246	103.711	GEN335614 1-WILLOW GLENN UNIT#4
FDNS	00NR	0	16WP	G15_060	FROM->TO	CIMARRON - DRAPER LAKE 345KV CKT 1	717	717	0.12507	103.7087	DAYTON - MUSTANG 138KV CKT 1
FDNS	00NR	0	16WP	G15_060	FROM->TO	CIMARRON - DRAPER LAKE 345KV CKT 1	717	717	0.12507	103.7038	DAYTON - HOBBY LOBBY 138KV CKT 1
FDNS	00NR	0	16WP	G15_060	FROM->TO	CIMARRON - DRAPER LAKE 345KV CKT 1	717	717	0.1246	103.6985	GEN303008 1-1BC2 U3
FDNS	00NR	0	16WP	G15_060	FROM->TO	CIMARRON - DRAPER LAKE 345KV CKT 1	717	717	0.12218	103.6895	CANADIAN RIVER - PITTSBURG 345KV CKT 1
FDNS	00NR	0	16WP	G15_060	FROM->TO	CIMARRON - DRAPER LAKE 345KV CKT 1	717	717	0.12218	103.6895	CANADIAN RIVER - PITTSBURG 345KV CKT 1
FDNS	00NR	0	16WP	G15_060	FROM->TO	CIMARRON - DRAPER LAKE 345KV CKT 1	717	717	0.1251	103.6882	MUSTANG - SW 5TH 138KV CKT 1
FDNS	00NR	0	16WP	G15_060	FROM->TO	CIMARRON - DRAPER LAKE 345KV CKT 1	717	717	0.1246	103.6855	GEN338143 1-INDEPENDENCE UNIT #1
FDNS	00NR	0	16WP	G15_060	FROM->TO	CIMARRON - DRAPER LAKE 345KV CKT 1	717	717	0.12459	103.6766	ELDORADO EHV - MOUNT OLIVE 500KV CKT 1
FDNS	00NR	0	16WP	G15_060	FROM->TO	CIMARRON - DRAPER LAKE 345KV CKT 1	717	717	0.1246	103.6764	GEN336170 1-GULF OXY U4
FDNS	00NR	0	16WP	G15_060	FROM->TO	CIMARRON - DRAPER LAKE 345KV CKT 1	717	717	0.1246	103.6751	GEN336464 1-MICHOUD UNIT #3
FDNS	00NR	0	16WP	G15_060	FROM->TO	CIMARRON - DRAPER LAKE 345KV CKT 1	717	717	0.12568	103.6693	COLE - CRINER 138KV CKT 1
FDNS	00NR	0	16WP	G15_060	FROM->TO	CIMARRON - DRAPER LAKE 345KV CKT 1	717	717	0.12466	103.6516	P12:069:OKGE:3TERM19
FDNS	00NR	0	16WP	G15_060	FROM->TO	CIMARRON - DRAPER LAKE 345KV CKT 1	717	717	0.1246	103.6516	ESSEX UNIT 2 500/18.0KV TRANSFORMER CKT 1
FDNS	00NR	0	16WP	G15_060	FROM->TO	CIMARRON - DRAPER LAKE 345KV CKT 1	717	717	0.12472	103.6427	7LUTESVIL 345.00 - 7ST FRANC 345.00 345KV CKT 1
FDNS	00NR	0	16WP	G15_060	FROM->TO	CIMARRON - DRAPER LAKE 345KV CKT 1	717	717	0.12506	103.6334	OUMED 4 - STONEWALL 138KV CKT 1
FDNS	00NR	0	16WP	G15_060	FROM->TO	CIMARRON - DRAPER LAKE 345KV CKT 1	717	717	0.1246	103.6302	GEN336801 1-BAXTER WILSON UNIT #1
FDNS	00NR	0	16WP	G15_060	FROM->TO	CIMARRON - DRAPER LAKE 345KV CKT 1	717	717	0.12551	103.6262	LIGHTNING CREEK - ROBINSON 138KV CKT 1
FDNS	00NR	0	16WP	G15_060	FROM->TO	CIMARRON - DRAPER LAKE 345KV CKT 1	717	717	0.1242	103.6225	ARCADIA - LGARBER4 138.00 138KV CKT 1
FDNS	00NR	0	16WP	G15_060	FROM->TO	CIMARRON - DRAPER LAKE 345KV CKT 1	717	717	0.1246	103.6136	GEN506752 1-LEBROCK GAS 1
FDNS	00NR	0	16WP	G15_060	FROM->TO	CIMARRON - DRAPER LAKE 345KV CKT 1	717	717	0.1246	103.6135	GEN506753 1-LEBROCK GAS 2
FDNS	00NR	0	16WP	G15_060	FROM->TO	CIMARRON - DRAPER LAKE 345KV CKT 1	717	717	0.12459	103.6057	7JASPER 345.00 - BLACKBERRY 345KV CKT 1
FDNS	00NR	0	16WP	G15_060	FROM->TO	CIMARRON - DRAPER LAKE 345KV CKT 1	717	717	0.12491	103.6018	FAIRFAX TAP - SHIDLER 138KV CKT 1
FDNS	00NR	0	16WP	G15_060	FROM->TO	CIMARRON - DRAPER LAKE 345KV CKT 1	717	717	0.12491	103.6017	FAIRFAX TAP - WEBB CITY TAP 138KV CKT 1
FDNS	00NR	0	16WP	G15_060	FROM->TO	CIMARRON - DRAPER LAKE 345KV CKT 1	717	717	0.1242	103.5927	CHITWOOD - LGARBER4 138.00 138KV CKT 1
FDNS	00NR	0	16WP	G15_060	FROM->TO	CIMARRON - DRAPER LAKE 345KV CKT 1	717	717	0.1246	103.5925	GEN501910 1-ACADIA UNIT ST1
FDNS	00NR	0	16WP	G15_060	FROM->TO	CIMARRON - DRAPER LAKE 345KV CKT 1	717	717	0.1246	103.5817	RODEMACHER 230/22.0KV TRANSFORMER CKT 1
FDNS	00NR	0	16WP	G15_060	FROM->TO	CIMARRON - DRAPER LAKE 345KV CKT 1	717	717	0.1242	103.5804	CHITWOOD - JONES TAP 138KV CKT 1
FDNS	00NR	0	16WP	G15_060	FROM->TO	CIMARRON - DRAPER LAKE 345KV CKT 1	717	717	0.1246	103.5784	GEN511843 1-RIVERSIDE STATION #2
FDNS	00NR	0	16WP	G15_060	FROM->TO	CIMARRON - DRAPER LAKE 345KV CKT 1	717	717	0.12458	103.5772	P12:138:AEPW-OGE:WTH_JCT4:JENSEN4
FDNS	00NR	0	16WP	G15_060	FROM->TO	CIMARRON - DRAPER LAKE 345KV CKT 1	717	717	0.12568	103.571	TULSA NORTH - WEKIWA 345KV CKT 1
FDNS	00NR	0	16WP	G15_060	FROM->TO	CIMARRON - DRAPER LAKE 345KV CKT 1	717	717	0.12568	103.571	TULSA NORTH - WEKIWA 345KV CKT 1
FDNS	00NR	0	16WP	G15_060	FROM->TO	CIMARRON - DRAPER LAKE 345KV CKT 1	717	717	0.12464	103.5684	6LAYFLD 230.00 - CARROLL 230KV CKT 1
FDNS	00NR	0	16WP	G15_060	FROM->TO	CIMARRON - DRAPER LAKE 345KV CKT 1	717	717	0.12474	103.5641	8WNEWMADRID 500.00 - DELL 500 500KV CKT 1
FDNS	00NR	0	16WP	G15_060	FROM->TO	CIMARRON - DRAPER LAKE 345KV CKT 1	717	717	0.12462	103.5615	P12:345:GRDA:CHOUTEAU-SPORTSMANACRES
FDNS	00NR	0	16WP	G15_060	FROM->TO	CIMARRON - DRAPER LAKE 345KV CKT 1	717	717	0.12456	103.5548	ELDORADO EHV - SHERIDAN EHV 500KV CKT 1
FDNS	00NR	0	16WP	G15_060	FROM->TO	CIMARRON - DRAPER LAKE 345KV CKT 1	717	717	0.12432	103.5535	CHISHOLM6 230.00 - ELK CITY 230KV 230KV CKT 1
FDNS	00NR	0	16WP	G15_060	FROM->TO	CIMARRON - DRAPER LAKE 345KV CKT 1	717	717	0.12432	103.5504	ELK CITY 230KV (ELKCTY-6) 230/138/13.8KV TRANSFORMER CKT 1
FDNS	00NR	0	16WP	G15_060	FROM->TO	CIMARRON - DRAPER LAKE 345KV CKT 1	717	717	0.12432	103.5504	ELK CITY 230KV (ELKCTY-6) 230/138/13.8KV TRANSFORMER CKT 1
FDNS	00NR	0	16WP	G15_060	FROM->TO	CIMARRON - DRAPER LAKE 345KV CKT 1	717	717	0.1255	103.5453	G13-010T 345.00 - POST ROCK 345KV CKT 1
FDNS	00NR	0	16WP	G15_060	FROM->TO	CIMARRON - DRAPER LAKE 345KV CKT 1	717	717	0.12466	103.5337	P12:138:AEPW:N.E.S.-4:CATOOSA4
FDNS	00NR	0	16WP	G15_060	FROM->TO	CIMARRON - DRAPER LAKE 345KV CKT 1	717	717	0.12506	103.5322	OUMED 4 - PARK PLACE 138KV CKT 1
FDNS	00NR	0	16WP	G15_060	FROM->TO	CIMARRON - DRAPER LAKE 345KV CKT 1	717	717	0.12464	103.5255	FULTON 115 - HOPE 115KV CKT 1
FDNS	00NR	0	16WP	G15_060	FROM->TO	CIMARRON - DRAPER LAKE 345KV CKT 1	717	717	0.12464	103.5255	FULTON 115 - HOPE 115KV CKT 1
FDNS	00NR	0	16WP	G15_060	FROM->TO	CIMARRON - DRAPER LAKE 345KV CKT 1	717	717	0.12476	103.5186	P13:138-161:WERE:NSES_TX-4OR5::
FDNS	00NR	0	16WP	G15_060	FROM->TO	CIMARRON - DRAPER LAKE 345KV CKT 1	717	717	0.1246	103.5156	8CAJUN2 500/24.0KV TRANSFORMER CKT 1
FDNS	00NR	0	16WP	G15_060	FROM->TO	CIMARRON - DRAPER LAKE 345KV CKT 1	717	717	0.12448	103.5154	MORISNT4 138.00 - SOONER 138KV CKT 1
FDNS	00NR	0	16WP	G15_060	FROM->TO	CIMARRON - DRAPER LAKE 345KV CKT 1	717	717	0.12473	103.5113	P12:138:AEPW:CATOOSA4:T.S.E.-4
FDNS	00NR	0	16WP	G15_060	FROM->TO	CIMARRON - DRAPER LAKE 345KV CKT 1	717	717	0.1246	103.5052	ST FRANCIS - ST FRANCIS 1 161KV CKT Z1
FDNS	00NR	0	16WP	G15_060	FROM->TO	CIMARRON - DRAPER LAKE 345KV CKT 1	717	717	0.12465	103.5015	7JASPER 345.00 - MORGAN 345KV CKT 1
FDNS	00NR	0	16WP	G15_060	FROM->TO	CIMARRON - DRAPER LAKE 345KV CKT 1	717	717	0.1246	103.4974	P12:069:OKGE:3TERM3
FDNS	00NR	0	16WP	G15_060	FROM->TO	CIMARRON - DRAPER LAKE 345KV CKT 1	717	717	0.12477	103.4908	HUGO - VALLIANT 345KV CKT 1
FDNS	00NR	0	16WP	G15_060	FROM->TO	CIMARRON - DRAPER LAKE 345KV CKT 1	717	717	0.12477	103.4908	HUGO - VALLIANT 345KV CKT 1
FDNS	00NR	0	16WP	G15_060	FROM->TO	CIMARRON - DRAPER LAKE 345KV CKT 1	717	717	0.1246	103.4903	GEN509394 1-FLINT CREEK
FDNS	00NR	0	16WP	G15_060	FROM->TO	CIMARRON - DRAPER LAKE 345KV CKT 1	717	717	0.1246	103.4898	GEN300015 1-1SGPDEL 18.000
FDNS	00NR	0	16WP	G15_060	FROM->TO	CIMARRON - DRAPER LAKE 345KV CKT 1	717	717	0.1255	103.4897	G13-010T 345.00 - SPEARVILLE 345KV CKT 1
FDNS	00NR	0	16WP	G15_060	FROM->TO	CIMARRON - DRAPER LAKE 345KV CKT 1	717	717	0.12549	103.4895	DALE - HORSESHOE LAKE 138KV CKT 1
FDNS	00NR	0	16WP	G15_060	FROM->TO	CIMARRON - DRAPER LAKE 345KV CKT 1	717	717	0.12551	103.4888	LIGHTNING CREEK - TROSPER 138KV CKT 1
FDNS	00NR	0	16WP	G15_060	FROM->TO	CIMARRON - DRAPER LAKE 345KV CKT 1	717	717	0.1246	103.4794	GEN337766 1-TRACTEBEL UNIT S1
FDNS	00NR	0	16WP	G15_060	FROM->TO	CIMARRON - DRAPER LAKE 345KV CKT 1	717	717	0.1246	103.4788	P12:138:AEPW:SHERID4:112GORE4
FDNS	00NR	0	16WP	G15_060	FROM->TO	CIMARRON - DRAPER LAKE 345KV CKT 1	717	717	0.1246	103.4762	GEN515564 1-ORIGIN11 0.6900
FDNS	00NR	0	16WP	G15_060	FROM->TO	CIMARRON - DRAPER LAKE 345KV CKT 1	717	717	0.1246	103.4762	GEN515565 1-ORIGIN21 0.6900
FDNS	00NR	0	16WP	G15_060	FROM->TO	CIMARRON - DRAPER LAKE 345KV CKT 1	717	717	0.12507	103.4744	36 & MERIDIAN - HOBBY LOBBY 138KV CKT 1
FDNS	00NR	0	16WP	G15_060	FROM->TO	CIMARRON - DRAPER LAKE 345KV CKT 1	717	717	0.12466	103.474	HAMMETT TAP - HAMMETT2 138KV CKT 1
FDNS	00NR	0	16WP	G15_060	FROM->TO	CIMARRON - DRAPER LAKE 345KV CKT 1	717	717	0.12495	103.4732	ANADARKO - GRACMNT4 138.00 138KV CKT 1
FDNS	00NR	0	16WP	G15_060	FROM->TO	CIMARRON - DRAPER LAKE 345KV CKT 1	717	717	0.1246	103.4731	GEN336222 1-LITTLE GYPSY UNIT#2
FDNS	00NR	0	16WP	G15_060	FROM->TO	CIMARRON - DRAPER LAKE 345KV CKT 1	717	717	0.12633	103.4701	NORTHEAST STATION - ONETA 345KV CKT 1
FDNS	00NR	0	16WP	G15_060	FROM->TO	CIMARRON - DRAPER LAKE 345KV CKT 1	717	717	0.12633	103.4701	NORTHEAST STATION - ONETA 345KV CKT 1
FDNS	00NR	0	16WP	G15_060	FROM->TO	CIMARRON - DRAPER LAKE 345KV CKT 1	717	717	0.12468	103.4701	P12:138:OKGE:3TERM28
FDNS	00NR	0	16WP	G15_060	FROM->TO	CIMARRON - DRAPER LAKE 345KV CKT 1	717	717	0.12468	103.4665	FLETCHER - MARLOW JCT 69KV CKT 1
FDNS	00NR	0	16WP	G15_060	FROM->TO	CIMARRON - DRAPER LAKE 345KV CKT 1	717	717	0.1246	103.4622	GEN501970 1-EVANGELINE UNIT 7

SOLUTION	GROUP	SCENARIO	SEASON	SOURCE	DIRECTION	MONITORED ELEMENT	RATEA (MVA)	RATEB(MVA)	TDF	TC%LOADING (% MVA)	CONTINGENCY
FDNS	00NR	0	16WP	G15_060	FROM->TO	CIMARRON - DRAPER LAKE 345KV CKT 1	717	717	0.1246	103.4621	NELSON 230/20.0KV TRANSFORMER CKT 1
FDNS	00NR	0	16WP	G15_060	FROM->TO	CIMARRON - DRAPER LAKE 345KV CKT 1	717	717	0.12461	103.4586	NW164TH4 138.00 - PIEDMONT 138KV CKT 1
FDNS	00NR	0	16WP	G15_060	FROM->TO	CIMARRON - DRAPER LAKE 345KV CKT 1	717	717	0.1246	103.458	P12:161:AEPW:EROGERS5:ECNTRTN5
FDNS	00NR	0	16WP	G15_060	FROM->TO	CIMARRON - DRAPER LAKE 345KV CKT 1	717	717	0.12447	103.4577	P12:138:OKGE-AEPW:JENSEN4:REDROCKRD4
FDNS	00NR	0	16WP	G15_060	FROM->TO	CIMARRON - DRAPER LAKE 345KV CKT 1	717	717	0.12461	103.4567	NORTHWEST - NW164TH4 138.00 138KV CKT 1
FDNS	00NR	0	16WP	G15_060	FROM->TO	CIMARRON - DRAPER LAKE 345KV CKT 1	717	717	0.1246	103.4555	ESSEX UNIT 2 500/18.0KV TRANSFORMER CKT 1
FDNS	00NR	0	16WP	G15_060	FROM->TO	CIMARRON - DRAPER LAKE 345KV CKT 1	717	717	0.12466	103.4553	P12:161:AEPW-SWPA:BEAVERS:EROGERS5
FDNS	00NR	0	16WP	G15_060	FROM->TO	CIMARRON - DRAPER LAKE 345KV CKT 1	717	717	0.12476	103.4548	COMANCHE TAP - OMPA-DUNCAN 840 138KV CKT 1
FDNS	00NR	0	16WP	G15_060	FROM->TO	CIMARRON - DRAPER LAKE 345KV CKT 1	717	717	0.12485	103.4517	CORN TAP - SEQUOYAHJ4 138.00 138KV CKT 1
FDNS	00NR	0	16WP	G15_060	FROM->TO	CIMARRON - DRAPER LAKE 345KV CKT 1	717	717	0.12478	103.4516	P12:138:AEPW:CORNVIL4:S.W.S.-4
FDNS	00NR	0	16WP	G15_060	FROM->TO	CIMARRON - DRAPER LAKE 345KV CKT 1	717	717	0.12485	103.4513	ANADARKO - SEQUOYAHJ4 138.00 138KV CKT 1
FDNS	00NR	0	16WP	G15_060	FROM->TO	CIMARRON - DRAPER LAKE 345KV CKT 1	717	717	0.12549	103.448	DALE - SQUIRL CREEK 138KV CKT 1
FDNS	00NR	0	16WP	G15_060	FROM->TO	CIMARRON - DRAPER LAKE 345KV CKT 1	717	717	0.12494	103.4464	HEALDTON - LOCO 138KV CKT 1
FDNS	00NR	0	16WP	G15_060	FROM->TO	CIMARRON - DRAPER LAKE 345KV CKT 1	717	717	0.1246	103.4463	P12:161:AEPW:DYESS5:ELMSPRNG:TONTITN5
FDNS	00NR	0	16WP	G15_060	FROM->TO	CIMARRON - DRAPER LAKE 345KV CKT 1	717	717	0.1246	103.4425	GEN336152 1-WATERFORD UNIT#2
FDNS	00NR	0	16WP	G15_060	FROM->TO	CIMARRON - DRAPER LAKE 345KV CKT 1	717	717	0.1246	103.4415	GEN336151 1-WATERFORD UNIT#1
FDNS	00NR	0	16WP	G15_060	FROM->TO	CIMARRON - DRAPER LAKE 345KV CKT 1	717	717	0.1246	103.4407	ST FRANCIS 345/161KV TRANSFORMER CKT 1
FDNS	00NR	0	16WP	G15_060	FROM->TO	CIMARRON - DRAPER LAKE 345KV CKT 1	717	717	0.12482	103.4351	CORN TAP - CORNVILLE 138KV CKT 1
FDNS	00NR	0	16WP	G15_060	FROM->TO	CIMARRON - DRAPER LAKE 345KV CKT 1	717	717	0.12521	103.4322	MARSHALL - WOODRING 138KV CKT 1
FDNS	00NR	0	16WP	G15_060	FROM->TO	CIMARRON - DRAPER LAKE 345KV CKT 1	717	717	0.1246	103.4302	GEN334392 1-EXXON MOBIL IPP 1
FDNS	00NR	0	16WP	G15_060	FROM->TO	CIMARRON - DRAPER LAKE 345KV CKT 1	717	717	0.12521	103.4299	COTTONWOOD CREEK - MARSHALL 138KV CKT 1
FDNS	00NR	0	16WP	G15_060	FROM->TO	CIMARRON - DRAPER LAKE 345KV CKT 1	717	717	0.12477	103.4289	HEFNER - TULSA 138KV CKT 1
FDNS	00NR	0	16WP	G15_060	FROM->TO	CIMARRON - DRAPER LAKE 345KV CKT 1	717	717	0.12568	103.4279	COLE - OUSW4 138KV CKT 1
FDNS	00NR	0	16WP	G15_060	FROM->TO	CIMARRON - DRAPER LAKE 345KV CKT 1	717	717	0.12461	103.426	MC NIEL 500/115KV TRANSFORMER CKT 1
FDNS	00NR	0	16WP	G15_060	FROM->TO	CIMARRON - DRAPER LAKE 345KV CKT 1	717	717	0.1246	103.424	GEN334393 1-EXXON MOBIL IPP 2
FDNS	00NR	0	16WP	G15_060	FROM->TO	CIMARRON - DRAPER LAKE 345KV CKT 1	717	717	0.1246	103.424	GEN334394 1-EXXON MOBIL IPP 3
FDNS	00NR	0	16WP	G15_060	FROM->TO	CIMARRON - DRAPER LAKE 345KV CKT 1	717	717	0.12469	103.4222	P12:138:AEPW:MOUNDRD4:SHIDLER4
FDNS	00NR	0	16WP	G15_060	FROM->TO	CIMARRON - DRAPER LAKE 345KV CKT 1	717	717	0.12462	103.4218	BISMARK - HOT SPRINGS WEST BUS 115KV CKT 1
FDNS	00NR	0	16WP	G15_060	FROM->TO	CIMARRON - DRAPER LAKE 345KV CKT 1	717	717	0.12529	103.4138	EL RENO SW - MUSTANG2 69.000 69KV CKT 1
FDNS	00NR	0	16WP	G15_060	FROM->TO	CIMARRON - DRAPER LAKE 345KV CKT 1	717	717	0.12473	103.4132	BRISTOW - SILVER CITY 138KV CKT 1
FDNS	00NR	0	16WP	G15_060	FROM->TO	CIMARRON - DRAPER LAKE 345KV CKT 1	717	717	0.12458	103.4123	KELLYAV4 138.00 - MEMORIAL 138KV CKT 1
FDNS	00NR	0	16WP	G15_060	FROM->TO	CIMARRON - DRAPER LAKE 345KV CKT 1	717	717	0.1246	103.4084	GEN501972 1-EVANGELINE UNIT 7-2
FDNS	00NR	0	16WP	G15_060	FROM->TO	CIMARRON - DRAPER LAKE 345KV CKT 1	717	717	0.1246	103.4083	GEN501971 1-EVANGELINE UNIT 7-1
FDNS	00NR	0	16WP	G15_060	FROM->TO	CIMARRON - DRAPER LAKE 345KV CKT 1	717	717	0.12469	103.4049	SHIDLER - WEST PAWHUSKA 138KV CKT 1
FDNS	00NR	0	16WP	G15_060	FROM->TO	CIMARRON - DRAPER LAKE 345KV CKT 1	717	717	0.12494	103.4047	HEALDTON - RINGLING 138KV CKT 1
FDNS	00NR	0	16WP	G15_060	FROM->TO	CIMARRON - DRAPER LAKE 345KV CKT 1	717	717	0.1246	103.3987	GEN334431 1-SABINE UNIT 1
FDNS	00NR	0	16WP	G15_060	FROM->TO	CIMARRON - DRAPER LAKE 345KV CKT 1	717	717	0.1246	103.3986	GEN334432 1-SABINE UNIT 2
FDNS	00NR	0	16WP	G15_060	FROM->TO	CIMARRON - DRAPER LAKE 345KV CKT 1	717	717	0.1246	103.3959	GEN336242 1-1NMIL ST1 18.000
FDNS	00NR	0	16WP	G15_060	FROM->TO	CIMARRON - DRAPER LAKE 345KV CKT 1	717	717	0.1246	103.3954	GEN337764 1-TRACTEBEL UNIT C1
FDNS	00NR	0	16WP	G15_060	FROM->TO	CIMARRON - DRAPER LAKE 345KV CKT 1	717	717	0.1246	103.3954	GEN337765 1-TRACTEBEL UNIT C2
FDNS	00NR	0	16WP	G15_060	FROM->TO	CIMARRON - DRAPER LAKE 345KV CKT 1	717	717	0.12474	103.3939	BROOKLINE - MORGAN 345KV CKT 1
FDNS	00NR	0	16WP	G15_060	FROM->TO	CIMARRON - DRAPER LAKE 345KV CKT 1	717	717	0.12474	103.3939	BROOKLINE - MORGAN 345KV CKT 1
FDNS	00NR	0	16WP	G15_060	FROM->TO	CIMARRON - DRAPER LAKE 345KV CKT 1	717	717	0.1246	103.3938	GEN501912 1-ACADIA UNIT CT1B
FDNS	00NR	0	16WP	G15_060	FROM->TO	CIMARRON - DRAPER LAKE 345KV CKT 1	717	717	0.1246	103.3931	GEN501911 1-ACADIA UNIT CT1A
FDNS	00NR	0	16WP	G15_060	FROM->TO	CIMARRON - DRAPER LAKE 345KV CKT 1	717	717	0.12506	103.3919	BODLE - PARK PLACE 138KV CKT 1
FDNS	00NR	0	16WP	G15_060	FROM->TO	CIMARRON - DRAPER LAKE 345KV CKT 1	717	717	0.12486	103.3911	COUNCIL - MUSTANG 138KV CKT 1
FDNS	00NR	0	16WP	G15_060	FROM->TO	CIMARRON - DRAPER LAKE 345KV CKT 1	717	717	0.12623	103.391	BRYANT - MEMORIAL 138KV CKT 1
FDNS	00NR	0	16WP	G15_060	FROM->TO	CIMARRON - DRAPER LAKE 345KV CKT 1	717	717	0.12469	103.3884	PAWHUSKA TAP - WEST PAWHUSKA 138KV CKT 1
FDNS	00NR	0	16WP	G15_060	FROM->TO	CIMARRON - DRAPER LAKE 345KV CKT 1	717	717	0.12462	103.3884	ALPINE AECC - BISMARK 115KV CKT 1
FDNS	00NR	0	16WP	G15_060	FROM->TO	CIMARRON - DRAPER LAKE 345KV CKT 1	717	717	0.1246	103.388	CYPRESS - HARTBURG 500KV CKT 1
FDNS	00NR	0	16WP	G15_060	FROM->TO	CIMARRON - DRAPER LAKE 345KV CKT 1	717	717	0.12461	103.3831	PIEDMONT - RICHRDS 138KV CKT 1
FDNS	00NR	0	16WP	G15_060	FROM->TO	CIMARRON - DRAPER LAKE 345KV CKT 1	717	717	0.1246	103.3827	P12:69:AEPW:L.E.S.-2:LAW WC2
FDNS	00NR	0	16WP	G15_060	FROM->TO	CIMARRON - DRAPER LAKE 345KV CKT 1	717	717	0.12458	103.3809	KELLYAV4 138.00 - REMNGTON PARK 138KV CKT 1
FDNS	00NR	0	16WP	G15_060	FROM->TO	CIMARRON - DRAPER LAKE 345KV CKT 1	717	717	0.12466	103.3808	HAMMETT2 - MEEKER 138KV CKT 1
FDNS	00NR	0	16WP	G15_060	FROM->TO	CIMARRON - DRAPER LAKE 345KV CKT 1	717	717	0.1248	103.375	HAMMETT TAP - HORSESHOE LAKE 138KV CKT 1
FDNS	00NR	0	16WP	G15_060	FROM->TO	CIMARRON - DRAPER LAKE 345KV CKT 1	717	717	0.12459	103.3697	LAYFLD8 500.00 - MOUNT OLIVE 500KV CKT 1
FDNS	00NR	0	16WP	G15_060	FROM->TO	CIMARRON - DRAPER LAKE 345KV CKT 1	717	717	0.12459	103.3697	LAYFLD8 500.00 - MOUNT OLIVE 500KV CKT 1
FDNS	00NR	0	16WP	G15_060	FROM->TO	CIMARRON - DRAPER LAKE 345KV CKT 1	717	717	0.12494	103.3631	RINGLING - SOUTH WILSON 138KV CKT 1
FDNS	00NR	0	16WP	G15_060	FROM->TO	CIMARRON - DRAPER LAKE 345KV CKT 1	717	717	0.12496	103.3457	CIVIT - PAOLI 138KV CKT 1
FDNS	00NR	0	16WP	G15_060	FROM->TO	CIMARRON - DRAPER LAKE 345KV CKT 1	717	717	0.12458	103.3404	LACYGNE - STILWELL 345KV CKT 1
FDNS	00NR	0	16WP	G15_060	FROM->TO	CIMARRON - DRAPER LAKE 345KV CKT 1	717	717	0.12414	103.3399	GRACEMONT - LAWTON EASTSIDE 345KV CKT 1
FDNS	00NR	0	16WP	G15_060	FROM->TO	CIMARRON - DRAPER LAKE 345KV CKT 1	717	717	0.12414	103.3399	GRACEMONT - LAWTON EASTSIDE 345KV CKT 1
FDNS	00NR	0	16WP	G15_060	FROM->TO	CIMARRON - DRAPER LAKE 345KV CKT 1	717	717	0.12486	103.3365	COUNCIL - WESTOAKS 138KV CKT 1
FDNS	00NR	0	16WP	G15_060	FROM->TO	CIMARRON - DRAPER LAKE 345KV CKT 1	717	717	0.1246	102.9113	BASE CASE
FDNS	00NR	0	16WP	G15_060	FROM->TO	CIMARRON - DRAPER LAKE 345KV CKT 1	717	717	0.12438	102.5994	GRAPEVINE INTERCHANGE - NICHOLS STATION 230KV CKT 1
FDNS	00NR	0	16WP	G15_060	FROM->TO	CIMARRON - DRAPER LAKE 345KV CKT 1	717	717	0.12438	102.5994	GRAPEVINE INTERCHANGE - NICHOLS STATION 230KV CKT 1
FDNS	00NR	0	16WP	G15_060	FROM->TO	CIMARRON - DRAPER LAKE 345KV CKT 1	717	717	0.12295	102.5967	G15063_T 345.00 - WOODRING 345KV CKT 1
FDNS	00NR	0	16WP	G15_060	FROM->TO	CIMARRON - DRAPER LAKE 345KV CKT 1	717	717	0.12537	102.5371	BURGETT4 138.00 - RNDBARN4 138.00 138KV CKT 1
FDNS	00NR	0	16WP	G15_060	FROM->TO	CIMARRON - DRAPER LAKE 345KV CKT 1	717	717	0.12537	102.5354	BURGETT4 138.00 - DANFORTH 138KV CKT 1
FDNS	00NR	0	16WP	G15_060	FROM->TO	CIMARRON - DRAPER LAKE 345KV CKT 1	717	717	0.12537	102.5245	ARCADIA - RNDBARN4 138.00 138KV CKT 1
FDNS	00NR	0	16WP	G15_060	FROM->TO	CIMARRON - DRAPER LAKE 345KV CKT 1	717	717	0.1246	102.495	GEN659125 1-COVEY
FDNS	00NR	0	16WP	G15_060	FROM->TO	CIMARRON - DRAPER LAKE 345KV CKT 1	717	717	0.1246	102.4903	GEN515550 1-MNCWND31 0.6900
FDNS	00NR	0	16WP	G15_060	FROM->TO	CIMARRON - DRAPER LAKE 345KV CKT 1	717	717	0.12427	102.482	GRAPEVINE INTERCHANGE - STATELINE INTERCHANGE 230KV CKT 1
FDNS	00NR	0	16WP	G15_060	FROM->TO	CIMARRON - DRAPER LAKE 345KV CKT 1	717	717	0.12427	102.482	GRAPEVINE INTERCHANGE - STATELINE INTERCHANGE 230KV CKT 1
FDNS	00NR	0	16WP	G15_060	FROM->TO	CIMARRON - DRAPER LAKE 345KV CKT 1	717	717	0.1246	102.477	GEN562611 1-G14_064_3 0.6900
FDNS	00NR	0	16WP	G15_060	FROM->TO	CIMARRON - DRAPER LAKE 345KV CKT 1	717	717	0.1246	102.4715	GEN511848 1-SOUTHWESTERN STATION #3
FDNS	00NR	0	16WP	G15_060	FROM->TO	CIMARRON - DRAPER LAKE 345KV CKT 1	717	717	0.1246	102.4453	GEN515601 1-KNGFSR11 0.7000
FDNS	00NR	0	16WP	G15_060	FROM->TO	CIMARRON - DRAPER LAKE 345KV CKT 1	717	717	0.1246	102.4414	GEN600071 10-RIVER SIDE
FDNS	00NR	0	16WP	G15_060	FROM->TO	CIMARRON - DRAPER LAKE 345KV CKT 1	717	717	0.1246	102.4413	GEN600070 9-RIVER SIDE

SOLUTION	GROUP	SCENARIO	SEASON	SOURCE	DIRECTION	MONITORED ELEMENT	RATEA (MVA)	RATEB(MVA)	TDF	TC%LOADING (% MVA)	CONTINGENCY
FDNS	00NR	0	16WP	G15_060	FROM->TO	CIMARRON - DRAPER LAKE 345KV CKT 1	717	717	0.1246	102.4362	GEN672303 3-BOUNDARY DAM GENERATOR 3
FDNS	00NR	0	16WP	G15_060	FROM->TO	CIMARRON - DRAPER LAKE 345KV CKT 1	717	717	0.1246	102.4362	GEN672304 4-BOUNDARY DAM GENERATOR 4
FDNS	00NR	0	16WP	G15_060	FROM->TO	CIMARRON - DRAPER LAKE 345KV CKT 1	717	717	0.1246	102.4362	GEN672305 5-BOUNDARY DAM GENERATOR 5
FDNS	00NR	0	16WP	G15_060	FROM->TO	CIMARRON - DRAPER LAKE 345KV CKT 1	717	717	0.1246	102.4353	GEN600007 7-RIVERSIDE GEN 7
FDNS	00NR	0	16WP	G15_060	FROM->TO	CIMARRON - DRAPER LAKE 345KV CKT 1	717	717	0.1246	102.4347	GEN600067 9-HIGH BRIDGE
FDNS	00NR	0	16WP	G15_060	FROM->TO	CIMARRON - DRAPER LAKE 345KV CKT 1	717	717	0.1246	102.4338	GEN563062 1-G15071_3 0.6900
FDNS	00NR	0	16WP	G15_060	FROM->TO	CIMARRON - DRAPER LAKE 345KV CKT 1	717	717	0.1246	102.4307	GEN615052 1-CAMBRIDGE GENERATING STATION
FDNS	00NR	0	16WP	G15_060	FROM->TO	CIMARRON - DRAPER LAKE 345KV CKT 1	717	717	0.1246	102.4274	GEN541151 3-SIBLEY GENERATING UNIT #3
FDNS	00NR	0	16WP	G15_060	FROM->TO	CIMARRON - DRAPER LAKE 345KV CKT 1	717	717	0.12423	102.4256	CHISNEY - CLARKSVILLE 138KV CKT 1
FDNSLock	00NR	0	16WP	G15_060	FROM->TO	CIMARRON - DRAPER LAKE 345KV CKT 1	717	717	0.1246	102.4224	GEN600014 4-BLACK DOG GEN 4
FDNS	00NR	0	16WP	G15_060	FROM->TO	CIMARRON - DRAPER LAKE 345KV CKT 1	717	717	0.1246	102.4218	GEN563282 1-G15094_3 0.6900
FDNS	00NR	0	16WP	G15_060	FROM->TO	CIMARRON - DRAPER LAKE 345KV CKT 1	717	717	0.1246	102.4212	GEN652353 2-GR PRAIRIEG 0.6900
FDNS	00NR	0	16WP	G15_060	FROM->TO	CIMARRON - DRAPER LAKE 345KV CKT 1	717	717	0.1246	102.4168	GEN629067 1-EMERY GAS TURBINE 1
FDNS	00NR	0	16WP	G15_060	FROM->TO	CIMARRON - DRAPER LAKE 345KV CKT 1	717	717	0.12489	102.4148	7MCCREDIE 345.00 - 7MONTGMRY 345.00 345KV CKT 1
FDNS	00NR	0	16WP	G15_060	FROM->TO	CIMARRON - DRAPER LAKE 345KV CKT 1	717	717	0.1246	102.4032	GEN563102 1-G15075_3 0.5500
FDNS	00NR	0	16WP	G15_060	FROM->TO	CIMARRON - DRAPER LAKE 345KV CKT 1	717	717	0.1246	102.4015	GEN515591 1-PALDRW11 0.6900
FDNS	00NR	0	16WP	G15_060	FROM->TO	CIMARRON - DRAPER LAKE 345KV CKT 1	717	717	0.1246	102.4	GEN300003 1-THOMAS HILL UNIT 3
FDNS	00NR	0	16WP	G15_060	FROM->TO	CIMARRON - DRAPER LAKE 345KV CKT 1	717	717	0.1246	102.4	GEN600011 5-BLACK DOG GEN 1
FDNS	00NR	0	16WP	G15_060	FROM->TO	CIMARRON - DRAPER LAKE 345KV CKT 1	717	717	0.1246	102.4	GEN615032 2-PLEASANT VALLEY
FDNS	00NR	0	16WP	G15_060	FROM->TO	CIMARRON - DRAPER LAKE 345KV CKT 1	717	717	0.1246	102.3966	GEN562602 1-G15_029_3 0.6900
FDNS	00NR	0	16WP	G15_060	FROM->TO	CIMARRON - DRAPER LAKE 345KV CKT 1	717	717	0.12513	102.3868	SEMINOLE - VANOSTP4 138.00 138KV CKT 1
FDNS	00NR	0	16WP	G15_060	FROM->TO	CIMARRON - DRAPER LAKE 345KV CKT 1	717	717	0.1246	102.3864	GEN600017 C-LS POWER CT
FDNS	00NR	0	16WP	G15_060	FROM->TO	CIMARRON - DRAPER LAKE 345KV CKT 1	717	717	0.1246	102.3828	GEN562812 1-G15040_3 0.3570
FDNS	00NR	0	16WP	G15_060	FROM->TO	CIMARRON - DRAPER LAKE 345KV CKT 1	717	717	0.1246	102.3765	GEN563132 1-G15078_3 0.3570
FDNS	00NR	0	16WP	G15_060	FROM->TO	CIMARRON - DRAPER LAKE 345KV CKT 1	717	717	0.12606	102.3681	FOREST HILL - MAUD 138KV CKT 1
FDNS	00NR	0	16WP	G15_060	FROM->TO	CIMARRON - DRAPER LAKE 345KV CKT 1	717	717	0.1246	102.3672	GEN524285 1-WILDORADO WIND GEN
FDNS	00NR	0	16WP	G15_060	FROM->TO	CIMARRON - DRAPER LAKE 345KV CKT 1	717	717	0.12474	102.366	P12:138:AEPW:WELETK4:EARLSBORO4
FDNS	00NR	0	16WP	G15_060	FROM->TO	CIMARRON - DRAPER LAKE 345KV CKT 1	717	717	0.12474	102.366	P12:138:OKGE:3TERM36
FDNS	00NR	0	16WP	G15_060	FROM->TO	CIMARRON - DRAPER LAKE 345KV CKT 1	717	717	0.1246	102.3624	GEN562074 1-G1149G1504 0.6900
FDNS	00NR	0	16WP	G15_060	FROM->TO	CIMARRON - DRAPER LAKE 345KV CKT 1	717	717	0.1246	102.3559	GEN672392 1-NBECGT1G 18.000
FDNS	00NR	0	16WP	G15_060	FROM->TO	CIMARRON - DRAPER LAKE 345KV CKT 1	717	717	0.12472	102.3552	EARLSBORO 4138.00 - FIXICO TAP 138KV CKT 1
FDNS	00NR	0	16WP	G15_060	FROM->TO	CIMARRON - DRAPER LAKE 345KV CKT 1	717	717	0.1246	102.3552	GEN629070 2-BEAVER CHANNEL GENERATORFOR UNIT NO 2
FDNS	00NR	0	16WP	G15_060	FROM->TO	CIMARRON - DRAPER LAKE 345KV CKT 1	717	717	0.1246	102.3445	GEN526331 1-JONES GEN #1 22 KV
FDNS	00NR	0	16WP	G15_060	FROM->TO	CIMARRON - DRAPER LAKE 345KV CKT 1	717	717	0.1246	102.3445	GEN526332 1-JONES GEN #2 21 KV
FDNS	00NR	0	16WP	G15_060	FROM->TO	CIMARRON - DRAPER LAKE 345KV CKT 1	717	717	0.12475	102.3431	CANADIAN RIVER - MCALESTER SOUTH 138KV CKT 1
FDNS	00NR	0	16WP	G15_060	FROM->TO	CIMARRON - DRAPER LAKE 345KV CKT 1	717	717	0.12475	102.3431	CANADIAN RIVER - MCALESTER SOUTH 138KV CKT 1
FDNS	00NR	0	16WP	G15_060	FROM->TO	CIMARRON - DRAPER LAKE 345KV CKT 1	717	717	0.1246	102.343	GEN562596 1-G14_059_3 0.6900
FDNS	00NR	0	16WP	G15_060	FROM->TO	CIMARRON - DRAPER LAKE 345KV CKT 1	717	717	0.12475	102.3417	CANADIAN RIVER () 345/138/13.8KV TRANSFORMER CKT 1
FDNS	00NR	0	16WP	G15_060	FROM->TO	CIMARRON - DRAPER LAKE 345KV CKT 1	717	717	0.12475	102.3417	CANADIAN RIVER () 345/138/13.8KV TRANSFORMER CKT 1
FDNS	00NR	0	16WP	G15_060	FROM->TO	CIMARRON - DRAPER LAKE 345KV CKT 1	717	717	0.1246	102.336	GEN615010 1-STANTON4
FDNS	00NR	0	16WP	G15_060	FROM->TO	CIMARRON - DRAPER LAKE 345KV CKT 1	717	717	0.1246	102.3359	GEN629071 1-BURLINGTON GENERATOR FOR UNIT NO 1 E
FDNS	00NR	0	16WP	G15_060	FROM->TO	CIMARRON - DRAPER LAKE 345KV CKT 1	717	717	0.12423	102.3342	CHISNEY - HIGHLAND 138KV CKT 1
FDNS	00NR	0	16WP	G15_060	FROM->TO	CIMARRON - DRAPER LAKE 345KV CKT 1	717	717	0.1246	102.3307	GEN515365 1-CENT 21 0.7000
FDNS	00NR	0	16WP	G15_060	FROM->TO	CIMARRON - DRAPER LAKE 345KV CKT 1	717	717	0.1246	102.3205	GEN562983 1-G15061_4 0.6900
FDNS	00NR	0	16WP	G15_060	FROM->TO	CIMARRON - DRAPER LAKE 345KV CKT 1	717	717	0.1246	102.3205	GEN562984 1-G15061_5 0.6900
FDNS	00NR	0	16WP	G15_060	FROM->TO	CIMARRON - DRAPER LAKE 345KV CKT 1	717	717	0.12462	102.3203	P12:138:WFEC:MSL07
FDNS	00NR	0	16WP	G15_060	FROM->TO	CIMARRON - DRAPER LAKE 345KV CKT 1	717	717	0.12462	102.3203	P12:138:WFEC-AEPW:HUGOPP4:ATOKA--4
FDNS	00NR	0	16WP	G15_060	FROM->TO	CIMARRON - DRAPER LAKE 345KV CKT 1	717	717	0.1246	102.3161	GEN562017 1-G11_022_3 0.6900
FDNS	00NR	0	16WP	G15_060	FROM->TO	CIMARRON - DRAPER LAKE 345KV CKT 1	717	717	0.1246	102.3138	GEN615021 1-GRE-ER 14G 16.000
FDNS	00NR	0	16WP	G15_060	FROM->TO	CIMARRON - DRAPER LAKE 345KV CKT 1	717	717	0.12468	102.3122	GRPRAR1-LNX3345.00 - HOLT.CO3 345.00 345KV CKT 1
FDNS	00NR	0	16WP	G15_060	FROM->TO	CIMARRON - DRAPER LAKE 345KV CKT 1	717	717	0.12469	102.3107	P12:138:AEPW:SHAM4WT:CHILD4WT
FDNS	00NR	0	16WP	G15_060	FROM->TO	CIMARRON - DRAPER LAKE 345KV CKT 1	717	717	0.12468	102.3086	GRPRAR1-LNX3345.00 - GRPRAR 345KV CKT Z
FDNS	00NR	0	16WP	G15_060	FROM->TO	CIMARRON - DRAPER LAKE 345KV CKT 1	717	717	0.1246	102.3034	GEN562429 1-G13-029 0.6900
FDNS	00NR	0	16WP	G15_060	FROM->TO	CIMARRON - DRAPER LAKE 345KV CKT 1	717	717	0.1246	102.3021	GEN562432 1-G13-030 0.6900
FDNS	00NR	0	16WP	G15_060	FROM->TO	CIMARRON - DRAPER LAKE 345KV CKT 1	717	717	0.1246	102.3019	GEN560105 1-G08-22 0.6900
FDNS	00NR	0	16WP	G15_060	FROM->TO	CIMARRON - DRAPER LAKE 345KV CKT 1	717	717	0.1246	102.3006	INDEPENDENCE 500/26.0KV TRANSFORMER CKT 1
FDNS	00NR	0	16WP	G15_060	FROM->TO	CIMARRON - DRAPER LAKE 345KV CKT 1	717	717	0.1246	102.2985	GEN532663 1-LAWRENCE ENERGY CENTER UNIT 5
FDNS	00NR	0	16WP	G15_060	FROM->TO	CIMARRON - DRAPER LAKE 345KV CKT 1	717	717	0.12457	102.2985	P12:138:AEPW-SWPA:LONEOAK4:TUPELO4
FDNS	00NR	0	16WP	G15_060	FROM->TO	CIMARRON - DRAPER LAKE 345KV CKT 1	717	717	0.12457	102.2984	P12:138:WFEC:MSL06
FDNS	00NR	0	16WP	G15_060	FROM->TO	CIMARRON - DRAPER LAKE 345KV CKT 1	717	717	0.12493	102.2966	OVEXFRMCCOVE
FDNS	00NR	0	16WP	G15_060	FROM->TO	CIMARRON - DRAPER LAKE 345KV CKT 1	717	717	0.12477	102.2931	DELL 500 - INDEPENDENCE 500KV CKT 1
FDNS	00NR	0	16WP	G15_060	FROM->TO	CIMARRON - DRAPER LAKE 345KV CKT 1	717	717	0.1246	102.2894	BURLINGTON NO1 + NO 2 + NO 3 161/20.0KV TRANSFORMER CKT 1
FDNS	00NR	0	16WP	G15_060	FROM->TO	CIMARRON - DRAPER LAKE 345KV CKT 1	717	717	0.12474	102.2839	P12:138:AEPW-OGE:WELETK4:MAUD 4
FDNS	00NR	0	16WP	G15_060	FROM->TO	CIMARRON - DRAPER LAKE 345KV CKT 1	717	717	0.1231	102.2797	P12:230:AEPW:ELKCITY6:SWEETWT6
FDNS	00NR	0	16WP	G15_060	FROM->TO	CIMARRON - DRAPER LAKE 345KV CKT 1	717	717	0.1246	102.2752	GEN527882 1-CUNNINGHAM GEN #2 20 KV
FDNS	00NR	0	16WP	G15_060	FROM->TO	CIMARRON - DRAPER LAKE 345KV CKT 1	717	717	0.12474	102.2741	P12:138:WFEC:MSL16
FDNS	00NR	0	16WP	G15_060	FROM->TO	CIMARRON - DRAPER LAKE 345KV CKT 1	717	717	0.12472	102.2712	EARLSBORO 4138.00 - MAUD 138KV CKT 1
FDNS	00NR	0	16WP	G15_060	FROM->TO	CIMARRON - DRAPER LAKE 345KV CKT 1	717	717	0.12472	102.2712	EARLSBORO 4138.00 - MAUD 138KV CKT 1
FDNS	00NR	0	16WP	G15_060	FROM->TO	CIMARRON - DRAPER LAKE 345KV CKT 1	717	717	0.1246	102.2674	GEN562550 1-G14_040_3 0.6900
FDNS	00NR	0	16WP	G15_060	FROM->TO	CIMARRON - DRAPER LAKE 345KV CKT 1	717	717	0.1246	102.2642	GEN524295 1-SPNSPUR_WND10.6900
FDNS	00NR	0	16WP	G15_060	FROM->TO	CIMARRON - DRAPER LAKE 345KV CKT 1	717	717	0.1246	102.2579	GEN562832 1-G15042_3 0.6900
FDNS	00NR	0	16WP	G15_060	FROM->TO	CIMARRON - DRAPER LAKE 345KV CKT 1	717	717	0.12585	102.2486	MAUD - SEMINOLE 138KV CKT 1
FDNS	00NR	0	16WP	G15_060	FROM->TO	CIMARRON - DRAPER LAKE 345KV CKT 1	717	717	0.12399	102.2397	STLN-DEMARC6 - SWEETWATER 230KV CKT 1
FDNS	00NR	0	16WP	G15_060	FROM->TO	CIMARRON - DRAPER LAKE 345KV CKT 1	717	717	0.12399	102.2392	P12:230:AEPW-SPS:SWEETWT6:WHEELER 6
FDNS	00NR	0	16WP	G15_060	FROM->TO	CIMARRON - DRAPER LAKE 345KV CKT 1	717	717	0.12399	102.2372	STATELINE INTERCHANGE - STLN-DEMARC6 230KV CKT 1
FDNS	00NR	0	16WP	G15_060	FROM->TO	CIMARRON - DRAPER LAKE 345KV CKT 1	717	717	0.1246	102.221	GEN531447 1-HOLCOMB GENERATOR
FDNS	00NR	0	16WP	G15_060	FROM->TO	CIMARRON - DRAPER LAKE 345KV CKT 1	717	717	0.1246	102.2207	P12:230:UMZB:# 112 #: NU IN SD. NU-RCDC & DRY CREEK XFMR
FDNS	00NR	0	16WP	G15_060	FROM->TO	CIMARRON - DRAPER LAKE 345KV CKT 1	717	717	0.1246	102.2195	RCDC EAST 4230.00 - RED CEDAR DC 230KV CKT 1
FDNS	00NR	0	16WP	G15_060	FROM->TO	CIMARRON - DRAPER LAKE 345KV CKT 1	717	717	0.1246	102.2165	GEN645011 1-NEBRASKA CITY 1

SOLUTION	GROUP	SCENARIO	SEASON	SOURCE	DIRECTION	MONITORED ELEMENT	RATEA (MVA)	RATEB(MVA)	TDF	TC%LOADING (% MVA)	CONTINGENCY
FDNS	00NR	0	16WP	G15_060	FROM->TO	CIMARRON - DRAPER LAKE 345KV CKT 1	717	717	0.1246	102.2156	GEN345671 2-1RUSH G2 18.000
FDNS	00NR	0	16WP	G15_060	FROM->TO	CIMARRON - DRAPER LAKE 345KV CKT 1	717	717	0.1246	102.2137	GEN345670 1-1RUSH G1 18.000
FDNS	00NR	0	16WP	G15_060	FROM->TO	CIMARRON - DRAPER LAKE 345KV CKT 1	717	717	0.1246	102.2132	GEN515606 1-CANDN11 0.6900
FDNS	00NR	0	16WP	G15_060	FROM->TO	CIMARRON - DRAPER LAKE 345KV CKT 1	717	717	0.1246	102.2132	GEN515607 1-CANDN12 0.6900
FDNS	00NR	0	16WP	G15_060	FROM->TO	CIMARRON - DRAPER LAKE 345KV CKT 1	717	717	0.12423	102.2079	HIGHLAND - PINK SW 138KV CKT 1
FDNS	00NR	0	16WP	G15_060	FROM->TO	CIMARRON - DRAPER LAKE 345KV CKT 1	717	717	0.1246	102.1858	GEN515443 1-MNCOWND1 0.7000
FDNS	00NR	0	16WP	G15_060	FROM->TO	CIMARRON - DRAPER LAKE 345KV CKT 1	717	717	0.1246	102.1851	GEN562794 1-G15038_5 0.6900
FDNS	00NR	0	16WP	G15_060	FROM->TO	CIMARRON - DRAPER LAKE 345KV CKT 1	717	717	0.1246	102.1851	GEN562795 1-G15038_6 0.6900
FDNS	00NR	0	16WP	G15_060	FROM->TO	CIMARRON - DRAPER LAKE 345KV CKT 1	717	717	0.1246	102.1817	GEN563092 1-G15074_3 0.6900
FDNS	00NR	0	16WP	G15_060	FROM->TO	CIMARRON - DRAPER LAKE 345KV CKT 1	717	717	0.1254	102.1805	FT SMITH - MUSKOGEE 345KV CKT 1
FDNS	00NR	0	16WP	G15_060	FROM->TO	CIMARRON - DRAPER LAKE 345KV CKT 1	717	717	0.1246	102.1774	GEN542951 5-HAWTHORN UNIT #5
FDNS	00NR	0	16WP	G15_060	FROM->TO	CIMARRON - DRAPER LAKE 345KV CKT 1	717	717	0.1246	102.1724	GEN645012 2-NEBRASKA CITY 2
FDNSLock	00NR	0	16WP	G15_060	FROM->TO	CIMARRON - DRAPER LAKE 345KV CKT 1	717	717	0.1246	102.1642	GEN629072 4-LANSING GENERATOR FOR UNITS NO4 EIA CODE 1
FDNS	00NR	0	16WP	G15_060	FROM->TO	CIMARRON - DRAPER LAKE 345KV CKT 1	717	717	0.1246	102.1533	GEN562512 1-G14_020_3 0.6900
FDNS	00NR	0	16WP	G15_060	FROM->TO	CIMARRON - DRAPER LAKE 345KV CKT 1	717	717	0.12484	102.1446	KEO EHV - WEST MEMPHIS 500 500KV CKT 1
FDNS	00NR	0	16WP	G15_060	FROM->TO	CIMARRON - DRAPER LAKE 345KV CKT 1	717	717	0.12399	102.1408	CHISHOLM6 230.00 - SWEETWATER 230KV CKT 1
FDNS	00NR	0	16WP	G15_060	FROM->TO	CIMARRON - DRAPER LAKE 345KV CKT 1	717	717	0.1246	102.134	GEN657749 1-YOUNG 1 GENERATOR
FDNS	00NR	0	16WP	G15_060	FROM->TO	CIMARRON - DRAPER LAKE 345KV CKT 1	717	717	0.1246	102.1262	GEN562699 1-G15_018_3 0.6900
FDNS	00NR	0	16WP	G15_060	FROM->TO	CIMARRON - DRAPER LAKE 345KV CKT 1	717	717	0.1246	102.1114	GEN640009 1-COOPER NUCLEAR STATION
FDNS	00NR	0	16WP	G15_060	FROM->TO	CIMARRON - DRAPER LAKE 345KV CKT 1	717	717	0.1246	102.1042	GEN529201 1-OMCDLEC1 13.800
FDNS	00NR	0	16WP	G15_060	FROM->TO	CIMARRON - DRAPER LAKE 345KV CKT 1	717	717	0.12503	102.1014	FRISCCO4 138.00 - LULA 138KV CKT 1
FDNS	00NR	0	16WP	G15_060	FROM->TO	CIMARRON - DRAPER LAKE 345KV CKT 1	717	717	0.1246	102.0883	GEN563122 1-G15077_3 0.3850
FDNS	00NR	0	16WP	G15_060	FROM->TO	CIMARRON - DRAPER LAKE 345KV CKT 1	717	717	0.1246	102.0793	GEN563182 1-G15083_3 0.6900
FDNSLock	00NR	0	16WP	G15_060	FROM->TO	CIMARRON - DRAPER LAKE 345KV CKT 1	717	717	0.1246	102.0662	GEN681522 3-GENOA 3
FDNS	00NR	0	16WP	G15_060	FROM->TO	CIMARRON - DRAPER LAKE 345KV CKT 1	717	717	0.1246	102.0608	GEN562685 1-G15_013_3 0.3550
FDNS	00NR	0	16WP	G15_060	FROM->TO	CIMARRON - DRAPER LAKE 345KV CKT 1	717	717	0.12608	102.0437	HOLLYWOOD - MIDWEST TAP 138KV CKT 1
FDNS	00NR	0	16WP	G15_060	FROM->TO	CIMARRON - DRAPER LAKE 345KV CKT 1	717	717	0.1246	102.0354	GEN344895 2-1LAB G2 20.000
FDNS	00NR	0	16WP	G15_060	FROM->TO	CIMARRON - DRAPER LAKE 345KV CKT 1	717	717	0.12462	102.0328	TUPELO - TUPELO TAP 138KV CKT 1
FDNS	00NR	0	16WP	G15_060	FROM->TO	CIMARRON - DRAPER LAKE 345KV CKT 1	717	717	0.12293	102.0286	CHISHOLM7 345.00 - GRACEMONT 345KV CKT 1
FDNS	00NR	0	16WP	G15_060	FROM->TO	CIMARRON - DRAPER LAKE 345KV CKT 1	717	717	0.1246	102.0223	GEN563222 1-G15088_3 0.6900
FDNS	00NR	0	16WP	G15_060	FROM->TO	CIMARRON - DRAPER LAKE 345KV CKT 1	717	717	0.1246	102.0212	4SIOUX 1 138.00 138/18.0KV TRANSFORMER CKT 1
FDNS	00NR	0	16WP	G15_060	FROM->TO	CIMARRON - DRAPER LAKE 345KV CKT 1	717	717	0.12445	102.0151	CIMARRON - TUTTLE CONOCO TAP 138KV CKT 1
FDNS	00NR	0	16WP	G15_060	FROM->TO	CIMARRON - DRAPER LAKE 345KV CKT 1	717	717	0.12503	102.0133	FRISCCO4 138.00 - HARDEN 4 138.00 138KV CKT 1
FDNS	00NR	0	16WP	G15_060	FROM->TO	CIMARRON - DRAPER LAKE 345KV CKT 1	717	717	0.1246	102.0083	GEN523461 1-BLACKHAWK GEN #1
FDNS	00NR	0	16WP	G15_060	FROM->TO	CIMARRON - DRAPER LAKE 345KV CKT 1	717	717	0.1246	102.0082	GEN523462 1-BLACKHAWK GEN #2
FDNS	00NR	0	16WP	G15_060	FROM->TO	CIMARRON - DRAPER LAKE 345KV CKT 1	717	717	0.1246	102.0073	GEN344896 3-1LAB G3 20.000
FDNS	00NR	0	16WP	G15_060	FROM->TO	CIMARRON - DRAPER LAKE 345KV CKT 1	717	717	0.1246	102.0058	GEN344894 1-1LAB G1 20.000
FDNS	00NR	0	16WP	G15_060	FROM->TO	CIMARRON - DRAPER LAKE 345KV CKT 1	717	717	0.1246	102.0047	GEN344897 4-1LAB G4 20.000
FDNS	00NR	0	16WP	G15_060	FROM->TO	CIMARRON - DRAPER LAKE 345KV CKT 1	717	717	0.1246	102.0003	GEN562587 1-G14_056_3 0.6900
FDNS	00NR	0	16WP	G15_060	FROM->TO	CIMARRON - DRAPER LAKE 345KV CKT 1	717	717	0.1246	101.9772	GEN515602 1-KNGFSR12 0.7000
FDNS	00NR	0	16WP	G15_060	FROM->TO	CIMARRON - DRAPER LAKE 345KV CKT 1	717	717	0.1246	101.9571	GEN563082 1-G15073_3 0.6900
FDNS	00NR	0	16WP	G15_060	FROM->TO	CIMARRON - DRAPER LAKE 345KV CKT 1	717	717	0.12445	101.9436	TUTTLE - TUTTLE CONOCO TAP 138KV CKT 1
FDNS	00NR	0	16WP	G15_060	FROM->TO	CIMARRON - DRAPER LAKE 345KV CKT 1	717	717	0.12293	101.9367	CHISHOLM7 345.00 (CHISHOLM) 345/230/13.2KV TRANSFORMER CKT 1
FDNS	00NR	0	16WP	G15_060	FROM->TO	CIMARRON - DRAPER LAKE 345KV CKT 1	717	717	0.1246	101.9307	GEN562704 1-G15_020_3 0.3550
FDNS	00NR	0	16WP	G15_060	FROM->TO	CIMARRON - DRAPER LAKE 345KV CKT 1	717	717	0.1246	101.9129	GEN563202 1-G15085_3 0.5500
FDNS	00NR	0	16WP	G15_060	FROM->TO	CIMARRON - DRAPER LAKE 345KV CKT 1	717	717	0.1246	101.9087	CLAY BOSWELL 230/20.9KV TRANSFORMER CKT 1
FDNS	00NR	0	16WP	G15_060	FROM->TO	CIMARRON - DRAPER LAKE 345KV CKT 1	717	717	0.1246	101.8974	GEN640010 1-GERALD GENTLEMAN STATION UNIT 1
FDNS	00NR	0	16WP	G15_060	FROM->TO	CIMARRON - DRAPER LAKE 345KV CKT 1	717	717	0.1246	101.8665	GEN672321 1-SHAND GENERATOR 1
FDNS	00NR	0	16WP	G15_060	FROM->TO	CIMARRON - DRAPER LAKE 345KV CKT 1	717	717	0.12522	101.8497	LULA - TUPELO TAP 138KV CKT 1
FDNS	00NR	0	16WP	G15_060	FROM->TO	CIMARRON - DRAPER LAKE 345KV CKT 1	717	717	0.12468	101.8468	NORTHWEST TEXARKANA - VALLIANT 345KV CKT 1
FDNS	00NR	0	16WP	G15_060	FROM->TO	CIMARRON - DRAPER LAKE 345KV CKT 1	717	717	0.12468	101.8468	NORTHWEST TEXARKANA - VALLIANT 345KV CKT 1
FDNS	00NR	0	16WP	G15_060	FROM->TO	CIMARRON - DRAPER LAKE 345KV CKT 1	717	717	0.1246	101.8436	GEN562710 1-G15_022_3 0.5500
FDNS	00NR	0	16WP	G15_060	FROM->TO	CIMARRON - DRAPER LAKE 345KV CKT 1	717	717	0.12398	101.8429	SEMINOLE (SEMINOL1) 345/138/14.4KV TRANSFORMER CKT 1
FDNS	00NR	0	16WP	G15_060	FROM->TO	CIMARRON - DRAPER LAKE 345KV CKT 1	717	717	0.1246	101.8407	GEN672310 1-POPLAR RIVER GENERATOR 1
FDNS	00NR	0	16WP	G15_060	FROM->TO	CIMARRON - DRAPER LAKE 345KV CKT 1	717	717	0.1246	101.8406	GEN672311 2-POPLAR RIVER GENERATOR 2
FDNS	00NR	0	16WP	G15_060	FROM->TO	CIMARRON - DRAPER LAKE 345KV CKT 1	717	717	0.1246	101.8304	GEN672306 6-BOUNDARY DAM GENERATOR 6
FDNS	00NR	0	16WP	G15_060	FROM->TO	CIMARRON - DRAPER LAKE 345KV CKT 1	717	717	0.1246	101.8297	GEN640011 2-GERALD GENTLEMAN STATION UNIT 2
FDNS	00NR	0	16WP	G15_060	FROM->TO	CIMARRON - DRAPER LAKE 345KV CKT 1	717	717	0.1246	101.8274	GEN542956 2-LACYGNE UNIT #2
FDNS	00NR	0	16WP	G15_060	FROM->TO	CIMARRON - DRAPER LAKE 345KV CKT 1	717	717	0.1246	101.8181	GEN659118 1-LARAMIE RIVER UNIT1
FDNS	00NR	0	16WP	G15_060	FROM->TO	CIMARRON - DRAPER LAKE 345KV CKT 1	717	717	0.12503	101.7929	ETNA - HARDEN 4 138.00 138KV CKT 1
FDNS	00NR	0	16WP	G15_060	FROM->TO	CIMARRON - DRAPER LAKE 345KV CKT 1	717	717	0.12123	101.7872	RENFROW7 345.00 - VIOLA 7 345.00 345KV CKT 1
FDNS	01NR	0	17G	G15_060	FROM->TO	CIMARRON - DRAPER LAKE 345KV CKT 1	717	717	0.14013	101.7747	G14-057T 345.00 - SUNNYSIDE 345KV CKT 1
FDNS	00NR	0	16WP	G15_060	FROM->TO	CIMARRON - DRAPER LAKE 345KV CKT 1	717	717	0.12535	101.7737	P12:138:OKGE:3TERM22
FDNS	00NR	0	16WP	G15_060	FROM->TO	CIMARRON - DRAPER LAKE 345KV CKT 1	717	717	0.12535	101.7718	DRAPER LAKE - SOONER TAP 138KV CKT 1
FDNS	00NR	0	16WP	G15_060	FROM->TO	CIMARRON - DRAPER LAKE 345KV CKT 1	717	717	0.12423	101.7634	P12:138:WFEC:MSL08
FDNS	00NR	0	16WP	G15_060	FROM->TO	CIMARRON - DRAPER LAKE 345KV CKT 1	717	717	0.12423	101.7516	FRANKLIN - PINK SW 138KV CKT 1
FDNS	00NR	0	16WP	G15_060	FROM->TO	CIMARRON - DRAPER LAKE 345KV CKT 1	717	717	0.12466	101.7502	P12:138:WFEC:MSL09
FDNS	00NR	0	16WP	G15_060	FROM->TO	CIMARRON - DRAPER LAKE 345KV CKT 1	717	717	0.12669	101.7466	OAKCREEK - WILD MARY 138KV CKT 1
FDNS	00NR	0	16WP	G15_060	FROM->TO	CIMARRON - DRAPER LAKE 345KV CKT 1	717	717	0.1246	101.7397	GEN542957 1-IATAN UNIT #1
FDNSLock	00NR	0	16WP	G15_060	FROM->TO	CIMARRON - DRAPER LAKE 345KV CKT 1	717	717	0.1246	101.7355	GEN681542 6-JP MADGETT
FDNS	00NR	0	16WP	G15_060	FROM->TO	CIMARRON - DRAPER LAKE 345KV CKT 1	717	717	0.1246	101.7124	GEN530690 1-PRWINDG1 0.6900
FDNS	00NR	0	16WP	G15_060	FROM->TO	CIMARRON - DRAPER LAKE 345KV CKT 1	717	717	0.12503	101.7075	ETNA - PARK LANE 138KV CKT 1
FDNS	00NR	0	16WP	G15_060	FROM->TO	CIMARRON - DRAPER LAKE 345KV CKT 1	717	717	0.1246	101.7	GEN645001 1-FORT CALHOUN 1
FDNS	00NR	0	16WP	G15_060	FROM->TO	CIMARRON - DRAPER LAKE 345KV CKT 1	717	717	0.12049	101.6997	HUNTERS7 345.00 - RENFROW7 345.00 345KV CKT 1
FDNS	00NR	0	16WP	G15_060	FROM->TO	CIMARRON - DRAPER LAKE 345KV CKT 1	717	717	0.1246	101.658	GEN542955 1-LACYGNE UNIT #1
FDNS	00NR	0	16WP	G15_060	FROM->TO	CIMARRON - DRAPER LAKE 345KV CKT 1	717	717	0.1246	101.6477	GEN562754 1-G15031_5 0.6900
FDNS	00NR	0	16WP	G15_060	FROM->TO	CIMARRON - DRAPER LAKE 345KV CKT 1	717	717	0.1246	101.6356	GEN562556 1-G14_046_3 0.3420
FDNS	00NR	0	16WP	G15_060	FROM->TO	CIMARRON - DRAPER LAKE 345KV CKT 1	717	717	0.12386	101.6321	SEMINOLE (SEMINOL2) 345/138/14.4KV TRANSFORMER CKT 1
FDNS	00NR	0	16WP	G15_060	FROM->TO	CIMARRON - DRAPER LAKE 345KV CKT 1	717	717	0.1246	101.6108	GEN661015 1-COYOTE

SOLUTION	GROUP	SCENARIO	SEASON	SOURCE	DIRECTION	MONITORED ELEMENT	RATEA (MVA)	RATEB(MVA)	TDF	TC%LOADING (% MVA)	CONTINGENCY
FDNS	00NR	0	16WP	G15_060	FROM->TO	CIMARRON - DRAPER LAKE 345KV CKT 1	717	717	0.1246	101.6042	GEN562756 1-G15031_7 0.6900
FDNS	00NR	0	16WP	G15_060	FROM->TO	CIMARRON - DRAPER LAKE 345KV CKT 1	717	717	0.1246	101.6013	GEN532653 1-JEFFREY ENERGY CENTER UNIT 3
FDNS	00NR	0	16WP	G15_060	FROM->TO	CIMARRON - DRAPER LAKE 345KV CKT 1	717	717	0.1246	101.6012	GEN532652 1-JEFFREY ENERGY CENTER UNIT 2
FDNS	00NR	0	16WP	G15_060	FROM->TO	CIMARRON - DRAPER LAKE 345KV CKT 1	717	717	0.1246	101.5971	GEN532651 1-JEFFREY ENERGY CENTER UNIT 1
FDNS	00NR	0	16WP	G15_060	FROM->TO	CIMARRON - DRAPER LAKE 345KV CKT 1	717	717	0.1246	101.5894	GEN562974 1-G15060_5 0.6900
FDNS	00NR	0	16WP	G15_060	FROM->TO	CIMARRON - DRAPER LAKE 345KV CKT 1	717	717	0.1246	101.5883	GEN563142 1-G15079_3 0.5500
FDNS	00NR	0	16WP	G15_060	FROM->TO	CIMARRON - DRAPER LAKE 345KV CKT 1	717	717	0.1246	101.5883	GEN563151 1-G15080_2 0.5500
FDNS	00NR	0	16WP	G15_060	FROM->TO	CIMARRON - DRAPER LAKE 345KV CKT 1	717	717	0.1246	101.5778	GEN563042 1-G15068_3 0.6900
FDNS	00NR	0	16WP	G15_060	FROM->TO	CIMARRON - DRAPER LAKE 345KV CKT 1	717	717	0.1246	101.5733	GEN562973 1-G15060_4 0.6900
FDNS	00NR	0	16WP	G15_060	FROM->TO	CIMARRON - DRAPER LAKE 345KV CKT 1	717	717	0.1246	101.5428	GEN562078 1-G11_051_3 0.6900
FDNS	00NR	0	16WP	G15_060	FROM->TO	CIMARRON - DRAPER LAKE 345KV CKT 1	717	717	0.1246	101.531	GEN562691 1-G15_015_3 0.6900
FDNS	00NR	0	16WP	G15_060	FROM->TO	CIMARRON - DRAPER LAKE 345KV CKT 1	717	717	0.12669	101.52	AIRDEPT4 138.00 - WILD MARY 138KV CKT 1
FDNS	00NR	0	16WP	G15_060	FROM->TO	CIMARRON - DRAPER LAKE 345KV CKT 1	717	717	0.12559	101.4938	PARK LANE - SEMINOLE 138KV CKT 1
FDNS	00NR	0	16WP	G15_060	FROM->TO	CIMARRON - DRAPER LAKE 345KV CKT 1	717	717	0.1246	101.4886	GEN562655 1-G14_074_3 0.6900
FDNS	00NR	0	16WP	G15_060	FROM->TO	CIMARRON - DRAPER LAKE 345KV CKT 1	717	717	0.1246	101.4881	GEN562762 1-G15033_3 0.6900
FDNS	00NR	0	16WP	G15_060	FROM->TO	CIMARRON - DRAPER LAKE 345KV CKT 1	717	717	0.1246	101.4826	GEN657748 1-YOUNG 2 GENERATOR
FDNS	00NR	0	16WP	G15_060	FROM->TO	CIMARRON - DRAPER LAKE 345KV CKT 1	717	717	0.12423	101.468	FRANKLIN - FRANKLIN SW 138KV CKT 1
FDNS	00NR	0	16WP	G15_060	FROM->TO	CIMARRON - DRAPER LAKE 345KV CKT 1	717	717	0.1246	101.4312	GEN527901 1-HOBBS PLANT #1 (CT)
FDNS	00NR	0	16WP	G15_060	FROM->TO	CIMARRON - DRAPER LAKE 345KV CKT 1	717	717	0.1246	101.4312	GEN527902 1-HOBBS PLANT #2 (CT)
FDNS	00NR	0	16WP	G15_060	FROM->TO	CIMARRON - DRAPER LAKE 345KV CKT 1	717	717	0.1246	101.405	GEN563273 2-G15093_4 0.6900
FDNS	00NR	0	16WP	G15_060	FROM->TO	CIMARRON - DRAPER LAKE 345KV CKT 1	717	717	0.1246	101.389	GEN563043 1-G15068_4 0.6900
FDNS	00NR	0	16WP	G15_060	FROM->TO	CIMARRON - DRAPER LAKE 345KV CKT 1	717	717	0.12472	101.3853	LYDIA - WELSH 345KV CKT 1
FDNS	00NR	0	16WP	G15_060	FROM->TO	CIMARRON - DRAPER LAKE 345KV CKT 1	717	717	0.12472	101.3853	LYDIA - WELSH 345KV CKT 1
FDNS	00NR	0	16WP	G15_060	FROM->TO	CIMARRON - DRAPER LAKE 345KV CKT 1	717	717	0.1246	101.3678	GEN563052 1-G15069_3 0.6900
FDNS	00NR	0	16WP	G15_060	FROM->TO	CIMARRON - DRAPER LAKE 345KV CKT 1	717	717	0.1246	101.3481	GEN525845 1-ELK_2 1 138.00
FDNS	00NR	0	16WP	G15_060	FROM->TO	CIMARRON - DRAPER LAKE 345KV CKT 1	717	717	0.1246	101.3447	GEN525844 1-ELK_1 118.000
FDNS	00NR	0	16WP	G15_060	FROM->TO	CIMARRON - DRAPER LAKE 345KV CKT 1	717	717	0.1246	101.3169	GEN563242 1-G15090_3 0.6900
FDNS	00NR	0	16WP	G15_060	FROM->TO	CIMARRON - DRAPER LAKE 345KV CKT 1	717	717	0.1246	101.298	GEN526333 1-JONES GEN #3 21 KV
FDNS	00NR	0	16WP	G15_060	FROM->TO	CIMARRON - DRAPER LAKE 345KV CKT 1	717	717	0.1246	101.298	GEN526334 1-JONES_4 116.500
FDNS	00NR	0	16WP	G15_060	FROM->TO	CIMARRON - DRAPER LAKE 345KV CKT 1	717	717	0.12445	101.2942	P12:138:AEPW-OGE:CORNVIL4:CIMARON4
FDNS	00NR	0	16WP	G15_060	FROM->TO	CIMARRON - DRAPER LAKE 345KV CKT 1	717	717	0.1246	101.2934	GEN620315 1-BIG STONE GEN
FDNS	00NR	0	16WP	G15_060	FROM->TO	CIMARRON - DRAPER LAKE 345KV CKT 1	717	717	0.12669	101.2904	AIRDEPT4 138.00 - GM 138KV CKT 1
FDNS	00NR	0	16WP	G15_060	FROM->TO	CIMARRON - DRAPER LAKE 345KV CKT 1	717	717	0.1246	101.2796	GEN562772 1-G15034_3 0.6900
FDNS	00NR	0	16WP	G15_060	FROM->TO	CIMARRON - DRAPER LAKE 345KV CKT 1	717	717	0.12049	101.2661	HUNTERS7 345.00 - WOODRING 345KV CKT 1
FDNS	00NR	0	16WP	G15_060	FROM->TO	CIMARRON - DRAPER LAKE 345KV CKT 1	717	717	0.1246	101.2635	GEN523971 1-HARRINGTON GEN #1 24 KV
FDNS	00NR	0	16WP	G15_060	FROM->TO	CIMARRON - DRAPER LAKE 345KV CKT 1	717	717	0.1246	101.2635	GEN523972 1-HARRINGTON GEN #2 24 KV
FDNS	00NR	0	16WP	G15_060	FROM->TO	CIMARRON - DRAPER LAKE 345KV CKT 1	717	717	0.1246	101.2635	GEN523973 1-HARRINGTON GEN #3 24 KV
FDNS	00NR	0	16WP	G15_060	FROM->TO	CIMARRON - DRAPER LAKE 345KV CKT 1	717	717	0.1222	101.2533	RANCHRD7 345.00 - SOONER 345KV CKT 1
FDNS	00NR	0	16WP	G15_060	FROM->TO	CIMARRON - DRAPER LAKE 345KV CKT 1	717	717	0.1246	101.2384	GEN600004 2-PRAIRIE ISLAND G2
FDNS	00NR	0	16WP	G15_060	FROM->TO	CIMARRON - DRAPER LAKE 345KV CKT 1	717	717	0.1246	101.2354	GEN600003 1-PRAIRIE ISLAND G1
FDNSLock	00NR	0	16WP	G15_060	FROM->TO	CIMARRON - DRAPER LAKE 345KV CKT 1	717	717	0.1246	101.2218	GEN600006 1-AS KING
FDNSLock	00NR	0	16WP	G15_060	FROM->TO	CIMARRON - DRAPER LAKE 345KV CKT 1	717	717	0.1246	101.201	GEN636641 1-LOUISA UNIT 1
FDNS	00NR	0	16WP	G15_060	FROM->TO	CIMARRON - DRAPER LAKE 345KV CKT 1	717	717	0.12067	101.136	MUSKOGEE - SEMINOLE 345KV CKT 1
FDNS	00NR	0	16WP	G15_060	FROM->TO	CIMARRON - DRAPER LAKE 345KV CKT 1	717	717	0.1246	101.1035	GEN563292 1-G15095_3 0.6900
FDNS	00NR	0	16WP	G15_060	FROM->TO	CIMARRON - DRAPER LAKE 345KV CKT 1	717	717	0.1246	101.1	GEN542962 2-IATAN UNIT #2
FDNS	00NR	0	16WP	G15_060	FROM->TO	CIMARRON - DRAPER LAKE 345KV CKT 1	717	717	0.1246	101.1	GEN615002 2-COAL CREEK
FDNS	00NR	0	16WP	G15_060	FROM->TO	CIMARRON - DRAPER LAKE 345KV CKT 1	717	717	0.12547	101.0885	NORTHWEST - SPRING CREEK 345KV CKT 1
FDNS	00NR	0	16WP	G15_060	FROM->TO	CIMARRON - DRAPER LAKE 345KV CKT 1	717	717	0.1246	101.0833	GEN600005 1-MONTICELLO
FDNS	00NR	0	16WP	G15_060	FROM->TO	CIMARRON - DRAPER LAKE 345KV CKT 1	717	717	0.12669	101.082	DRAPER LAKE - GM 138KV CKT 1
FDNS	00NR	0	16WP	G15_060	FROM->TO	CIMARRON - DRAPER LAKE 345KV CKT 1	717	717	0.1246	101.0628	GEN527166 1-MUSTANG_6 118.000
FDNS	00NR	0	16WP	G15_060	FROM->TO	CIMARRON - DRAPER LAKE 345KV CKT 1	717	717	0.1246	101.0553	GEN525562 1-TOLK GEN #2 24 KV
FDNS	00NR	0	16WP	G15_060	FROM->TO	CIMARRON - DRAPER LAKE 345KV CKT 1	717	717	0.12547	101.0485	SOONER - SPRING CREEK 345KV CKT 1
FDNS	00NR	0	16WP	G15_060	FROM->TO	CIMARRON - DRAPER LAKE 345KV CKT 1	717	717	0.1302	101.0368	CLARKSVILLE - MUSKOGEE 345KV CKT 1
FDNS	00NR	0	16WP	G15_060	FROM->TO	CIMARRON - DRAPER LAKE 345KV CKT 1	717	717	0.1302	101.0368	CLARKSVILLE - MUSKOGEE 345KV CKT 1
FDNS	00NR	0	16WP	G15_060	FROM->TO	CIMARRON - DRAPER LAKE 345KV CKT 1	717	717	0.1246	101.0116	GEN562952 1-G15057_3 0.6500
FDNS	00NR	0	16WP	G15_060	FROM->TO	CIMARRON - DRAPER LAKE 345KV CKT 1	717	717	0.1246	101.0001	GEN563272 1-G15093_3 0.6900
FDNS	00NR	0	16WP	G15_060	FROM->TO	CIMARRON - DRAPER LAKE 345KV CKT 1	717	717	0.1246	101	GEN629074 1-ARNOLD LOWSIDE OF GSU XFMR
FDNS	00NR	0	16WP	G15_060	FROM->TO	CIMARRON - DRAPER LAKE 345KV CKT 1	717	717	0.1246	100.9585	GEN635213 3-NEAL UNIT 3
FDNS	00NR	0	16WP	G15_060	FROM->TO	CIMARRON - DRAPER LAKE 345KV CKT 1	717	717	0.12582	100.9479	FRANKLIN SW - MIDWEST TAP 138KV CKT 1
FDNS	00NR	0	16WP	G15_060	FROM->TO	CIMARRON - DRAPER LAKE 345KV CKT 1	717	717	0.1184	100.9426	DRAPER LAKE - SEMINOLE 345KV CKT 3
FDNS	00NR	0	16WP	G15_060	FROM->TO	CIMARRON - DRAPER LAKE 345KV CKT 1	717	717	0.1246	100.9128	GEN562892 1-G15048_3 0.6900
FDNS	00NR	0	16WP	G15_060	FROM->TO	CIMARRON - DRAPER LAKE 345KV CKT 1	717	717	0.1246	100.9011	BIG STONE 230/24.0KV TRANSFORMER CKT 1
FDNS	00NR	0	16WP	G15_060	FROM->TO	CIMARRON - DRAPER LAKE 345KV CKT 1	717	717	0.1246	100.8665	GEN563173 1-G15082_3 0.6900
FDNS	00NR	0	16WP	G15_060	FROM->TO	CIMARRON - DRAPER LAKE 345KV CKT 1	717	717	0.12576	100.8575	CHAMBER SPRINGS - CLARKSVILLE 345KV CKT 1
FDNS	00NR	0	16WP	G15_060	FROM->TO	CIMARRON - DRAPER LAKE 345KV CKT 1	717	717	0.1246	100.8263	GEN562902 1-G15052_3 0.6900
FDNS	00NR	0	16WP	G15_060	FROM->TO	CIMARRON - DRAPER LAKE 345KV CKT 1	717	717	0.12475	100.8149	LYDIA - VALLIANT 345KV CKT 1
FDNS	00NR	0	16WP	G15_060	FROM->TO	CIMARRON - DRAPER LAKE 345KV CKT 1	717	717	0.12475	100.8149	LYDIA - VALLIANT 345KV CKT 1
FDNS	00NR	0	16WP	G15_060	FROM->TO	CIMARRON - DRAPER LAKE 345KV CKT 1	717	717	0.1246	100.81	GEN514805 1-SOONER UNIT 1
FDNS	00NR	0	16WP	G15_060	FROM->TO	CIMARRON - DRAPER LAKE 345KV CKT 1	717	717	0.1246	100.787	GEN527903 1-HOBBS PLANT #3 (ST)
FDNS	00NR	0	16WP	G15_060	FROM->TO	CIMARRON - DRAPER LAKE 345KV CKT 1	717	717	0.1246	100.7504	GEN525561 1-TOLK GEN #1 24 KV
FDNSLock	00NR	0	16WP	G15_060	FROM->TO	CIMARRON - DRAPER LAKE 345KV CKT 1	717	717	0.1246	100.7392	GEN600000 1-SHERBURNECNTY G1
FDNS	00NR	0	16WP	G15_060	FROM->TO	CIMARRON - DRAPER LAKE 345KV CKT 1	717	717	0.12456	100.6808	P12:138:OKGE:3TERM23
FDNS	00NR	0	16WP	G15_060	FROM->TO	CIMARRON - DRAPER LAKE 345KV CKT 1	717	717	0.1246	100.6578	GEN600001 2-SHERBURNE CNTY G2
FDNS	00NR	0	16WP	G15_060	FROM->TO	CIMARRON - DRAPER LAKE 345KV CKT 1	717	717	0.12456	100.6216	BARNES 4 138.00 - DRAPER LAKE 138KV CKT 1
FDNS	00NR	0	16WP	G15_060	FROM->TO	CIMARRON - DRAPER LAKE 345KV CKT 1	717	717	0.1246	100.6	GEN344225 1-1CAL G1 25.000
FDNS	00NR	0	16WP	G15_060	FROM->TO	CIMARRON - DRAPER LAKE 345KV CKT 1	717	717	0.1246	100.5641	GEN514806 1-SOONER UNIT 2
FDNSLock	00NR	0	16WP	G15_060	FROM->TO	CIMARRON - DRAPER LAKE 345KV CKT 1	717	717	0.1246	100.5438	GEN629075 1-OTTUMWA GENERATOR FOR OTTUMWA UNIT NO 1
FDNS	00NR	0	16WP	G15_060	FROM->TO	CIMARRON - DRAPER LAKE 345KV CKT 1	717	717	0.1246	100.5167	GEN563162 1-G15081_3 0.6900
FDNS	00NR	0	16WP	G15_060	FROM->TO	CIMARRON - DRAPER LAKE 345KV CKT 1	717	717	0.12649	100.3768	DRAPER LAKE (DRAPER2) 345/138/13.8KV TRANSFORMER CKT 1

SOLUTION	GROUP	SCENARIO	SEASON	SOURCE	DIRECTION	MONITORED ELEMENT	RATEA (MVA)	RATEB(MVA)	TDF	TC%LOADING (% MVA)	CONTINGENCY
FDNS	00NR	0	16WP	G15_060	FROM->TO	CIMARRON - DRAPER LAKE 345KV CKT 1	717	717	0.1246	100.3192	SHERBURNE CO 345/24.0KV TRANSFORMER CKT 1
FDNS	00NR	0	16WP	G15_060	FROM->TO	CIMARRON - DRAPER LAKE 345KV CKT 1	717	717	0.12093	100.2891	CIMARRON - MATHWSN7 345.00 345KV CKT 1
FDNS	00NR	0	16WP	G15_060	FROM->TO	CIMARRON - DRAPER LAKE 345KV CKT 1	717	717	0.12093	100.2891	CIMARRON - MATHWSN7 345.00 345KV CKT 2
FDNS	00NR	0	16WP	G15_060	FROM->TO	CIMARRON - DRAPER LAKE 345KV CKT 1	717	717	0.12649	100.286	DRAPER LAKE (DRAPER3) 345/138/13.8KV TRANSFORMER CKT 1
FDNS	00NR	0	16WP	G15_060	FROM->TO	CIMARRON - DRAPER LAKE 345KV CKT 1	717	717	0.12649	100.286	DRAPER LAKE (DRAPER4) 345/138/13.8KV TRANSFORMER CKT 1
FDNSLock	00NR	0	16WP	G15_060	FROM->TO	CIMARRON - DRAPER LAKE 345KV CKT 1	717	717	0.1246	100.2812	GEN635214 4-NEAL UNIT 4
FDNS	00NR	0	16WP	G15_060	FROM->TO	CIMARRON - DRAPER LAKE 345KV CKT 1	717	717	0.1246	100.2003	GEN562882 1-G15047_3 0.6900
FDNS	00NR	0	16WP	G15_060	FROM->TO	CIMARRON - DRAPER LAKE 345KV CKT 1	717	717	0.1246	100.1889	GEN600002 3-SHERBURNE CNTY G3
FDNS	00NR	0	16WP	G15_060	FROM->TO	CIMARRON - DRAPER LAKE 345KV CKT 1	717	717	0.1246	99.8	GEN635023 3-WALTER SCOTT UNIT 3
FDNS	00NR	0	16WP	G15_060	FROM->TO	CIMARRON - DRAPER LAKE 345KV CKT 1	717	717	0.1246	99.7	GEN562023 1-G11_020_3 0.6900
FDNS	00NR	0	16WP	G15_060	FROM->TO	CIMARRON - DRAPER LAKE 345KV CKT 1	717	717	0.1246	99.7	GEN562026 1-G11_019_3 0.6900
FDNS	00NR	0	16WP	G15_060	FROM->TO	CIMARRON - DRAPER LAKE 345KV CKT 1	717	717	0.1246	99.6	EASTDC - ERCOT EQUIVALENCE 345KV CKT 1
FDNS	00NR	0	16WP	G15_060	FROM->TO	CIMARRON - DRAPER LAKE 345KV CKT 1	717	717	0.11302	99.5	DRAPER LAKE - SEMINOLE 345KV CKT 1
FDNS	00NR	0	16WP	G15_060	FROM->TO	CIMARRON - DRAPER LAKE 345KV CKT 1	717	717	0.11302	99.5	DRAPER LAKE - SEMINOLE 345KV CKT 2
FDNS	00NR	0	20WP	G15_060	TO->FROM	CIMARRON - MINCO 345KV CKT 1	956	956	0.08238	113.1031	G14-057T 345.00 - SUNNYSIDE 345KV CKT 1
FDNS	00NR	0	16WP	G15_060	TO->FROM	CIMARRON - MINCO 345KV CKT 1	956	956	0.08312	112.6453	G14-057T 345.00 - SUNNYSIDE 345KV CKT 1
FDNS	00NR	0	20WP	G15_060	TO->FROM	CLEARWATER - MILAN TAP 138KV CKT 1	110	110	0.03067	125.164	MATHWSN7 345.00 - TATONGA7 345.00 345KV CKT 1
FDNS	00NR	0	20WP	G15_060	TO->FROM	CLEARWATER - MILAN TAP 138KV CKT 1	110	110	0.03067	118.4183	G11_051T 345.00 - TATONGA7 345.00 345KV CKT 1
FDNS	00NR	0	20WP	G15_060	TO->FROM	CLEARWATER - MILAN TAP 138KV CKT 1	110	110	0.03067	108.3766	G11_051T 345.00 - WOODWARD DISTRICT EHV 345KV CKT 1
FDNS	01NR	0	20L	G15_060	TO->FROM	CLEARWATER - MILAN TAP 138KV CKT 1	110	110	0.03121	100.1509	MATHWSN7 345.00 - TATONGA7 345.00 345KV CKT 1
FDNS	01NR	0	20L	G15_060	FROM->TO	CLEO CORNER - CLEOPLT4 138.00 138KV CKT 1	191	191	0.04918	120.3357	MATHWSN7 345.00 - TATONGA7 345.00 345KV CKT 1
FDNSLock	00NR	0	16WP	G15_060	FROM->TO	CLEO CORNER - CLEOPLT4 138.00 138KV CKT 1	191	191	0.04841	118.7587	MATHWSN7 345.00 - TATONGA7 345.00 345KV CKT 1
FDNS	00NR	0	20WP	G15_060	FROM->TO	CLEO CORNER - CLEOPLT4 138.00 138KV CKT 1	191	191	0.04817	118.0033	MATHWSN7 345.00 - TATONGA7 345.00 345KV CKT 1
FDNSLock	00NR	0	16WP	G15_060	FROM->TO	CLEO CORNER - CLEOPLT4 138.00 138KV CKT 1	191	191	0.04841	114.6586	G11_051T 345.00 - TATONGA7 345.00 345KV CKT 1
FDNS	00NR	0	20WP	G15_060	FROM->TO	CLEO CORNER - CLEOPLT4 138.00 138KV CKT 1	191	191	0.04817	114.0655	G11_051T 345.00 - TATONGA7 345.00 345KV CKT 1
FDNS	01ALL	0	17SP	G15_060	FROM->TO	CLEO CORNER - CLEOPLT4 138.00 138KV CKT 1	191	191	0.03123	112.3589	BASE CASE
FDNS	01ALL	0	20WP	G15_060	FROM->TO	CLEO CORNER - CLEOPLT4 138.00 138KV CKT 1	191	191	0.03092	111.2513	BASE CASE
FDNS	01ALL	0	16WP	G15_060	FROM->TO	CLEO CORNER - CLEOPLT4 138.00 138KV CKT 1	191	191	0.03138	110.537	BASE CASE
FDNS	01NR	0	20L	G15_060	FROM->TO	CLEO CORNER - CLEOPLT4 138.00 138KV CKT 1	191	191	0.03804	110.5365	CLEO CORNER (CLEOCOR1) 138/69/13.8KV TRANSFORMER CKT 1
FDNS	00NR	0	17SP	G15_060	FROM->TO	CLEO CORNER - CLEOPLT4 138.00 138KV CKT 1	191	191	0.04798	110.1289	MATHWSN7 345.00 - TATONGA7 345.00 345KV CKT 1
FDNS	01ALL	0	20SP	G15_060	FROM->TO	CLEO CORNER - CLEOPLT4 138.00 138KV CKT 1	191	191	0.03115	109.6891	BASE CASE
FDNSLock	00NR	0	16WP	G15_060	FROM->TO	CLEO CORNER - CLEOPLT4 138.00 138KV CKT 1	191	191	0.04841	108.8545	G11_051T 345.00 - WOODWARD DISTRICT EHV 345KV CKT 1
FDNS	00NR	0	20WP	G15_060	FROM->TO	CLEO CORNER - CLEOPLT4 138.00 138KV CKT 1	191	191	0.04817	108.5453	G11_051T 345.00 - WOODWARD DISTRICT EHV 345KV CKT 1
FDNS	00NR	0	20WP	G15_060	FROM->TO	CLEO CORNER - CLEOPLT4 138.00 138KV CKT 1	191	191	0.03702	108.5379	CLEO CORNER (CLEOCOR1) 138/69/13.8KV TRANSFORMER CKT 1
FDNS	00NR	0	16WP	G15_060	FROM->TO	CLEO CORNER - CLEOPLT4 138.00 138KV CKT 1	191	191	0.03716	107.7863	CLEO CORNER (CLEOCOR1) 138/69/13.8KV TRANSFORMER CKT 1
FDNS	01NR	0	17G	G15_060	FROM->TO	CLEO CORNER - CLEOPLT4 138.00 138KV CKT 1	191	191	0.03716	107.6463	CLEO CORNER (CLEOCOR1) 138/69/13.8KV TRANSFORMER CKT 1
FDNS	01NR	0	20L	G15_060	FROM->TO	CLEO CORNER - CLEOPLT4 138.00 138KV CKT 1	191	191	0.04155	107.1442	P12:138:WFEC:MSL15
FDNS	00NR	0	17SP	G15_060	FROM->TO	CLEO CORNER - CLEOPLT4 138.00 138KV CKT 1	191	191	0.04798	106.7029	G11_051T 345.00 - TATONGA7 345.00 345KV CKT 1
FDNS	01NR	0	20L	G15_060	FROM->TO	CLEO CORNER - CLEOPLT4 138.00 138KV CKT 1	191	191	0.04918	106.302	G11_051T 345.00 - TATONGA7 345.00 345KV CKT 1
FDNS	01NR	0	20L	G15_060	FROM->TO	CLEO CORNER - CLEOPLT4 138.00 138KV CKT 1	191	191	0.04352	106.2473	MOORELAND - PIC4 138.00 138KV CKT 1
FDNS	01NR	0	20L	G15_060	FROM->TO	CLEO CORNER - CLEOPLT4 138.00 138KV CKT 1	191	191	0.04352	106.2372	P12:138:WFEC:MSL12
FDNS	01NR	0	20L	G15_060	FROM->TO	CLEO CORNER - CLEOPLT4 138.00 138KV CKT 1	191	191	0.04352	106.1501	CEDARDALE - PIC4 138.00 138KV CKT 1
FDNS	01NR	0	20L	G15_060	FROM->TO	CLEO CORNER - CLEOPLT4 138.00 138KV CKT 1	191	191	0.04155	106.076	NOEL_SW 138.00 - SALT_PLAINS 138.00 138KV CKT 1
FDNS	01NR	0	20L	G15_060	FROM->TO	CLEO CORNER - CLEOPLT4 138.00 138KV CKT 1	191	191	0.04501	106.0522	DOVER SW - OKEENE 138KV CKT 1
FDNS	01NR	0	20L	G15_060	FROM->TO	CLEO CORNER - CLEOPLT4 138.00 138KV CKT 1	191	191	0.04352	106.0416	CEDARDALE - OKEENE 138KV CKT 1
FDNS	01NR	0	20L	G15_060	FROM->TO	CLEO CORNER - CLEOPLT4 138.00 138KV CKT 1	191	191	0.0395	105.6019	CLEO CORNER - CLEO JCT 69KV CKT 1
FDNS	01NR	0	20L	G15_060	FROM->TO	CLEO CORNER - CLEOPLT4 138.00 138KV CKT 1	191	191	0.0395	105.5998	CLEO JCT - RINGWOOD 69KV CKT 1
FDNS	00NR	0	20SP	G15_060	FROM->TO	CLEO CORNER - CLEOPLT4 138.00 138KV CKT 1	191	191	0.04792	105.3449	MATHWSN7 345.00 - TATONGA7 345.00 345KV CKT 1
FDNS	01NR	0	20L	G15_060	FROM->TO	CLEO CORNER - CLEOPLT4 138.00 138KV CKT 1	191	191	0.04313	104.9017	P12:138:WFEC:MSL14
FDNS	01NR	0	20L	G15_060	FROM->TO	CLEO CORNER - CLEOPLT4 138.00 138KV CKT 1	191	191	0.04313	104.8688	BEARCAT 138.00 - MOORELAND 138KV CKT 1
FDNS	00NR	0	17SP	G15_060	FROM->TO	CLEO CORNER - CLEOPLT4 138.00 138KV CKT 1	191	191	0.03657	104.8243	CLEO CORNER (CLEOCOR1) 138/69/13.8KV TRANSFORMER CKT 1
FDNS	01NR	0	20L	G15_060	FROM->TO	CLEO CORNER - CLEOPLT4 138.00 138KV CKT 1	191	191	0.04296	104.7116	DEWEY - SOUTHARD 138KV CKT 1
FDNS	01NR	0	20L	G15_060	FROM->TO	CLEO CORNER - CLEOPLT4 138.00 138KV CKT 1	191	191	0.04155	104.4972	C_CITY_138 138.00 - SALT_PLAINS 138.00 138KV CKT 1
FDNS	01NR	0	20L	G15_060	FROM->TO	CLEO CORNER - CLEOPLT4 138.00 138KV CKT 1	191	191	0.04296	104.4554	ROMAN NOSE - SOUTHARD 138KV CKT 1
FDNS	01NR	0	20L	G15_060	FROM->TO	CLEO CORNER - CLEOPLT4 138.00 138KV CKT 1	191	191	0.04313	104.4004	BEARCAT 138.00 - NINE MILE 138KV CKT 1
FDNS	00NR	0	16WP	G15_060	FROM->TO	CLEO CORNER - CLEOPLT4 138.00 138KV CKT 1	191	191	0.04256	104.376	MOORELAND - PIC4 138.00 138KV CKT 1
FDNS	00NR	0	16WP	G15_060	FROM->TO	CLEO CORNER - CLEOPLT4 138.00 138KV CKT 1	191	191	0.04256	104.3524	P12:138:WFEC:MSL12
FDNS	01NR	0	20L	G15_060	FROM->TO	CLEO CORNER - CLEOPLT4 138.00 138KV CKT 1	191	191	0.04155	104.3502	BYRON_138 138.00 - C_CITY_138 138.00 138KV CKT 1
FDNS	00NR	0	16WP	G15_060	FROM->TO	CLEO CORNER - CLEOPLT4 138.00 138KV CKT 1	191	191	0.04256	104.2784	CEDARDALE - PIC4 138.00 138KV CKT 1
FDNS	00NR	0	16WP	G15_060	FROM->TO	CLEO CORNER - CLEOPLT4 138.00 138KV CKT 1	191	191	0.04256	104.0791	CEDARDALE - OKEENE 138KV CKT 1
FDNS	01NR	0	20L	G15_060	FROM->TO	CLEO CORNER - CLEOPLT4 138.00 138KV CKT 1	191	191	0.0395	104.0669	NSAH - RINGWOOD 69KV CKT 1
FDNS	01NR	0	20L	G15_060	FROM->TO	CLEO CORNER - CLEOPLT4 138.00 138KV CKT 1	191	191	0.04117	104.0663	THISTLE7 345.00 - WOODWARD DISTRICT EHV 345KV CKT 1
FDNS	01NR	0	20L	G15_060	FROM->TO	CLEO CORNER - CLEOPLT4 138.00 138KV CKT 1	191	191	0.04117	104.0663	THISTLE7 345.00 - WOODWARD DISTRICT EHV 345KV CKT 1
FDNS	01NR	0	20L	G15_060	FROM->TO	CLEO CORNER - CLEOPLT4 138.00 138KV CKT 1	191	191	0.04117	104.0663	THISTLE7 345.00 - WOODWARD DISTRICT EHV 345KV CKT 2
FDNS	01NR	0	20L	G15_060	FROM->TO	CLEO CORNER - CLEOPLT4 138.00 138KV CKT 1	191	191	0.04117	104.0663	THISTLE7 345.00 - WOODWARD DISTRICT EHV 345KV CKT 2
FDNS	00NR	0	20WP	G15_060	FROM->TO	CLEO CORNER - CLEOPLT4 138.00 138KV CKT 1	191	191	0.04243	104.0561	MOORELAND - PIC4 138.00 138KV CKT 1
FDNS	00NR	0	20WP	G15_060	FROM->TO	CLEO CORNER - CLEOPLT4 138.00 138KV CKT 1	191	191	0.04243	104.031	P12:138:WFEC:MSL12
FDNS	01NR	0	20L	G15_060	FROM->TO	CLEO CORNER - CLEOPLT4 138.00 138KV CKT 1	191	191	0.04027	104.0011	G15095_T 138.00 - ROSE_VALLEY 138.00 138KV CKT 1
FDNS	00NR	0	16WP	G15_060	FROM->TO	CLEO CORNER - CLEOPLT4 138.00 138KV CKT 1	191	191	0.03627	104.0002	WOODRING (WOODRNG2) 345/138/13.8KV TRANSFORMER CKT 1
FDNS	01NR	0	20L	G15_060	FROM->TO	CLEO CORNER - CLEOPLT4 138.00 138KV CKT 1	191	191	0.04089	103.9781	ELK CITY - RED HILLS WIND 138KV CKT 1
FDNS	01NR	0	20L	G15_060	FROM->TO	CLEO CORNER - CLEOPLT4 138.00 138KV CKT 1	191	191	0.04089	103.9781	ELK CITY - RED HILLS WIND 138KV CKT 1
FDNS	00NR	0	20WP	G15_060	FROM->TO	CLEO CORNER - CLEOPLT4 138.00 138KV CKT 1	191	191	0.04243	103.9586	CEDARDALE - PIC4 138.00 138KV CKT 1
FDNS	00NR	0	20WP	G15_060	FROM->TO	CLEO CORNER - CLEOPLT4 138.00 138KV CKT 1	191	191	0.03618	103.87	WOODRING (WOODRNG2) 345/138/13.8KV TRANSFORMER CKT 1
FDNS	00NR	0	17SP	G15_060	FROM->TO	CLEO CORNER - CLEOPLT4 138.00 138KV CKT 1	191	191	0.03567	103.8203	WOODRING (WOODRNG2) 345/138/13.8KV TRANSFORMER CKT 1
FDNS	00NR	0	20WP	G15_060	FROM->TO	CLEO CORNER - CLEOPLT4 138.00 138KV CKT 1	191	191	0.04243	103.7433	CEDARDALE - OKEENE 138KV CKT 1
FDNS	01NR	0	20L	G15_060	FROM->TO	CLEO CORNER - CLEOPLT4 138.00 138KV CKT 1	191	191	0.04027	103.6319	NOEL_SW 138.00 - ROSE_VALLEY 138.00 138KV CKT 1
FDNS	01NR	0	20L	G15_060	FROM->TO	CLEO CORNER - CLEOPLT4 138.00 138KV CKT 1	191	191	0.04313	103.6138	MOREWOOD SW - NINE MILE 138KV CKT 1
FDNS	00NR	0	16WP	G15_060	FROM->TO	CLEO CORNER - CLEOPLT4 138.00 138KV CKT 1	191	191	0.04399	103.1599	DOVER SW - OKEENE 138KV CKT 1
FDNS	00NR	0	16WP	G15_060	FROM->TO	CLEO CORNER - CLEOPLT4 138.00 138KV CKT 1	191	191	0.04056	103.0536	P12:138:WFEC:MSL15

SOLUTION	GROUP	SCENARIO	SEASON	SOURCE	DIRECTION	MONITORED ELEMENT	RATEA (MVA)	RATEB(MVA)	TDF	TC%LOADING (% MVA)	CONTINGENCY
FDNS	01NR	0	20L	G15_060	FROM->TO	CLEO CORNER - CLEOPLT4 138.00 138KV CKT 1	191	191	0.03744	102.9257	CLEO CORNER - CLEOTP 2 69.000 69KV CKT 1
FDNS	01NR	0	20L	G15_060	FROM->TO	CLEO CORNER - CLEOPLT4 138.00 138KV CKT 1	191	191	0.03744	102.83	ALINETP2 69.000 - CLEOTP 2 69.000 69KV CKT 1
FDNS	01NR	0	20L	G15_060	FROM->TO	CLEO CORNER - CLEOPLT4 138.00 138KV CKT 1	191	191	0.03876	102.8157	GEN514805 1-SOONER UNIT 1
FDNS	01NR	0	20L	G15_060	FROM->TO	CLEO CORNER - CLEOPLT4 138.00 138KV CKT 1	191	191	0.03744	102.782	ALINETP2 69.000 - ALVA 69KV CKT 1
FDNS	00NR	0	20WP	G15_060	FROM->TO	CLEO CORNER - CLEOPLT4 138.00 138KV CKT 1	191	191	0.04042	102.7537	P12:138:WFEC:MSL15
FDNS	01NR	0	20L	G15_060	FROM->TO	CLEO CORNER - CLEOPLT4 138.00 138KV CKT 1	191	191	0.04155	102.7227	BYRON_138 138.00 - SANDY_CN_138138.00 138KV CKT 1
FDNS	01NR	0	20L	G15_060	FROM->TO	CLEO CORNER - CLEOPLT4 138.00 138KV CKT 1	191	191	0.0395	102.6136	CIMARRON - MINCO 345KV CKT 1
FDNS	01NR	0	20L	G15_060	FROM->TO	CLEO CORNER - CLEOPLT4 138.00 138KV CKT 1	191	191	0.03972	102.5673	Hitchland Interchange - WALKTAP7 345.00 345KV CKT 1
FDNS	01NR	0	20L	G15_060	FROM->TO	CLEO CORNER - CLEOPLT4 138.00 138KV CKT 1	191	191	0.03972	102.5673	Hitchland Interchange - WALKTAP7 345.00 345KV CKT 1
FDNS	01NR	0	20L	G15_060	FROM->TO	CLEO CORNER - CLEOPLT4 138.00 138KV CKT 1	191	191	0.03972	102.555	P12:345:SPS:J07.1.FINN.HITCH
FDNS	00NR	0	16WP	G15_060	FROM->TO	CLEO CORNER - CLEOPLT4 138.00 138KV CKT 1	191	191	0.04209	102.5524	DEWEY - SOUTHARD 138KV CKT 1
FDNS	00NR	0	20WP	G15_060	FROM->TO	CLEO CORNER - CLEOPLT4 138.00 138KV CKT 1	191	191	0.04385	102.5062	DOVER SW - OKEENE 138KV CKT 1
FDNS	01NR	0	20L	G15_060	FROM->TO	CLEO CORNER - CLEOPLT4 138.00 138KV CKT 1	191	191	0.0395	102.5034	NSAH - WAKITA 69KV CKT 1
FDNS	01NR	0	20L	G15_060	FROM->TO	CLEO CORNER - CLEOPLT4 138.00 138KV CKT 1	191	191	0.0395	102.5	WAKITAS4 138.00 (WAKITA_XMER) 138/69/13.8KV TRANSFORMER CKT 1
FDNS	01NR	0	17G	G15_060	FROM->TO	CLEO CORNER - CLEOPLT4 138.00 138KV CKT 1	191	191	0.04057	102.4945	P12:138:WFEC:MSL15
FDNS	01NR	0	20L	G15_060	FROM->TO	CLEO CORNER - CLEOPLT4 138.00 138KV CKT 1	191	191	0.03924	102.2678	G14-057T 345.00 - SUNNYSIDE 345KV CKT 1
FDNS	00NR	0	16WP	G15_060	FROM->TO	CLEO CORNER - CLEOPLT4 138.00 138KV CKT 1	191	191	0.03892	102.2628	G14-074T 345.00 - OKLAUNION 345KV CKT 1
FDNS	00NR	0	20WP	G15_060	FROM->TO	CLEO CORNER - CLEOPLT4 138.00 138KV CKT 1	191	191	0.03843	102.2039	CLEO CORNER - CLEO JCT 69KV CKT 1
FDNS	00NR	0	20WP	G15_060	FROM->TO	CLEO CORNER - CLEOPLT4 138.00 138KV CKT 1	191	191	0.03843	102.2015	CLEO JCT - RINGWOOD 69KV CKT 1
FDNS	00NR	0	20SP	G15_060	FROM->TO	CLEO CORNER - CLEOPLT4 138.00 138KV CKT 1	191	191	0.03655	102.1709	CLEO CORNER (CLEOCOR1) 138/69/13.8KV TRANSFORMER CKT 1
FDNS	00NR	0	16WP	G15_060	FROM->TO	CLEO CORNER - CLEOPLT4 138.00 138KV CKT 1	191	191	0.04209	102.125	ROMAN NOSE - SOUTHARD 138KV CKT 1
FDNS	00NR	0	20WP	G15_060	FROM->TO	CLEO CORNER - CLEOPLT4 138.00 138KV CKT 1	191	191	0.04196	102.0673	DEWEY - SOUTHARD 138KV CKT 1
FDNS	00NR	0	20WP	G15_060	FROM->TO	CLEO CORNER - CLEOPLT4 138.00 138KV CKT 1	191	191	0.03879	102.0025	G14-074T 345.00 - OKLAUNION 345KV CKT 1
FDNS	00NR	0	20SP	G15_060	FROM->TO	CLEO CORNER - CLEOPLT4 138.00 138KV CKT 1	191	191	0.04792	101.9636	G11_051T 345.00 - TATONGA7 345.00 345KV CKT 1
FDNS	01NR	0	20L	G15_060	FROM->TO	CLEO CORNER - CLEOPLT4 138.00 138KV CKT 1	191	191	0.04921	101.9219	WOODWARD DISTRICT EHV (WWDEHV-T2) 345/138/13.8KV TRANSFORMER CKT 2
FDNS	00NR	0	16WP	G15_060	FROM->TO	CLEO CORNER - CLEOPLT4 138.00 138KV CKT 1	191	191	0.03855	101.8999	CLEO CORNER - CLEO JCT 69KV CKT 1
FDNS	00NR	0	16WP	G15_060	FROM->TO	CLEO CORNER - CLEOPLT4 138.00 138KV CKT 1	191	191	0.03855	101.8973	CLEO JCT - RINGWOOD 69KV CKT 1
FDNS	00NR	0	16WP	G15_060	FROM->TO	CLEO CORNER - CLEOPLT4 138.00 138KV CKT 1	191	191	0.03852	101.8842	CIMARRON - MINCO 345KV CKT 1
FDNS	00NR	0	16WP	G15_060	FROM->TO	CLEO CORNER - CLEOPLT4 138.00 138KV CKT 1	191	191	0.04056	101.8377	NOEL_SW 138.00 - SALT_PLAINS 138.00 138KV CKT 1
FDNS	01NR	0	20L	G15_060	FROM->TO	CLEO CORNER - CLEOPLT4 138.00 138KV CKT 1	191	191	0.0487	101.8138	WOODWARD DISTRICT EHV (WWDEHV) 345/138/13.8KV TRANSFORMER CKT 1
FDNS	01NR	0	20L	G15_060	FROM->TO	CLEO CORNER - CLEOPLT4 138.00 138KV CKT 1	191	191	0.03979	101.794	G1524G1525 345.00 - THISTLE7 345.00 345KV CKT 1
FDNS	01NR	0	20L	G15_060	FROM->TO	CLEO CORNER - CLEOPLT4 138.00 138KV CKT 1	191	191	0.03979	101.794	G1524G1525 345.00 - THISTLE7 345.00 345KV CKT 2
FDNS	01NR	0	20L	G15_060	FROM->TO	CLEO CORNER - CLEOPLT4 138.00 138KV CKT 1	191	191	0.03889	101.7733	G15063_T 345.00 - WOODRING 345KV CKT 1
FDNS	01NR	0	20L	G15_060	FROM->TO	CLEO CORNER - CLEOPLT4 138.00 138KV CKT 1	191	191	0.03924	101.7672	G14-057T 345.00 - LAWTON EASTSIDE 345KV CKT 1
FDNS	00NR	0	17SP	G15_060	FROM->TO	CLEO CORNER - CLEOPLT4 138.00 138KV CKT 1	191	191	0.04798	101.7172	G11_051T 345.00 - WOODWARD DISTRICT EHV 345KV CKT 1
FDNS	01NR	0	20L	G15_060	FROM->TO	CLEO CORNER - CLEOPLT4 138.00 138KV CKT 1	191	191	0.03876	101.6439	GEN514806 1-SOONER UNIT 2
FDNS	01NR	0	17G	G15_060	FROM->TO	CLEO CORNER - CLEOPLT4 138.00 138KV CKT 1	191	191	0.04257	101.6419	MOORELAND - PIC4 138.00 138KV CKT 1
FDNS	00NR	0	20WP	G15_060	FROM->TO	CLEO CORNER - CLEOPLT4 138.00 138KV CKT 1	191	191	0.04196	101.6375	ROMAN NOSE - SOUTHARD 138KV CKT 1
FDNS	01NR	0	17G	G15_060	FROM->TO	CLEO CORNER - CLEOPLT4 138.00 138KV CKT 1	191	191	0.04257	101.6199	P12:138:WFEC:MSL12
FDNS	01NR	0	17G	G15_060	FROM->TO	CLEO CORNER - CLEOPLT4 138.00 138KV CKT 1	191	191	0.03856	101.6036	CLEO CORNER - CLEO JCT 69KV CKT 1
FDNS	01NR	0	17G	G15_060	FROM->TO	CLEO CORNER - CLEOPLT4 138.00 138KV CKT 1	191	191	0.03856	101.6013	CLEO JCT - RINGWOOD 69KV CKT 1
FDNS	01NR	0	17G	G15_060	FROM->TO	CLEO CORNER - CLEOPLT4 138.00 138KV CKT 1	191	191	0.04257	101.5434	CEDARDALE - PIC4 138.00 138KV CKT 1
FDNS	00NR	0	20WP	G15_060	FROM->TO	CLEO CORNER - CLEOPLT4 138.00 138KV CKT 1	191	191	0.04042	101.5026	NOEL_SW 138.00 - SALT_PLAINS 138.00 138KV CKT 1
FDNS	00NR	0	20WP	G15_060	FROM->TO	CLEO CORNER - CLEOPLT4 138.00 138KV CKT 1	191	191	0.03839	101.5004	CIMARRON - MINCO 345KV CKT 1
FDNS	01NR	0	17G	G15_060	FROM->TO	CLEO CORNER - CLEOPLT4 138.00 138KV CKT 1	191	191	0.04057	101.4863	NOEL_SW 138.00 - SALT_PLAINS 138.00 138KV CKT 1
FDNS	00NR	0	16WP	G15_060	FROM->TO	CLEO CORNER - CLEOPLT4 138.00 138KV CKT 1	191	191	0.0423	101.4559	P12:138:WFEC:MSL14
FDNS	00NR	0	16WP	G15_060	FROM->TO	CLEO CORNER - CLEOPLT4 138.00 138KV CKT 1	191	191	0.0423	101.4214	BEARCAT 138.00 - MOORELAND 138KV CKT 1
FDNS	01NR	0	17G	G15_060	FROM->TO	CLEO CORNER - CLEOPLT4 138.00 138KV CKT 1	191	191	0.04257	101.3562	CEDARDALE - OKEENE 138KV CKT 1
FDNS	01NR	0	20L	G15_060	FROM->TO	CLEO CORNER - CLEOPLT4 138.00 138KV CKT 1	191	191	0.03906	101.3253	MINGO - RED WILLOW 345KV CKT 1
FDNS	01NR	0	20L	G15_060	FROM->TO	CLEO CORNER - CLEOPLT4 138.00 138KV CKT 1	191	191	0.03906	101.3253	MINGO - RED WILLOW 345KV CKT 1
FDNS	01NR	0	20L	G15_060	FROM->TO	CLEO CORNER - CLEOPLT4 138.00 138KV CKT 1	191	191	0.04004	101.2632	CHISHOLM7 345.00 - GRACEMONT 345KV CKT 1
FDNS	01NR	0	20L	G15_060	FROM->TO	CLEO CORNER - CLEOPLT4 138.00 138KV CKT 1	191	191	0.0407	101.2504	CZYCRVT2 69.000 - KNOBHILL 69KV CKT 1
FDNS	00NR	0	16WP	G15_060	FROM->TO	CLEO CORNER - CLEOPLT4 138.00 138KV CKT 1	191	191	0.03655	101.2141	CLEO CORNER - CLEOTP 2 69.000 69KV CKT 1
FDNS	01NR	0	20L	G15_060	FROM->TO	CLEO CORNER - CLEOPLT4 138.00 138KV CKT 1	191	191	0.03889	101.104	G15063_T 345.00 - MATHWSN7 345.00 345KV CKT 1
FDNS	00NR	0	16WP	G15_060	FROM->TO	CLEO CORNER - CLEOPLT4 138.00 138KV CKT 1	191	191	0.03835	101.0972	G14-057T 345.00 - SUNNYSIDE 345KV CKT 1
FDNS	00NR	0	16WP	G15_060	FROM->TO	CLEO CORNER - CLEOPLT4 138.00 138KV CKT 1	191	191	0.03933	101.0846	G15095_T 138.00 - ROSE_VALLEY 138.00 138KV CKT 1
FDNS	00NR	0	16WP	G15_060	FROM->TO	CLEO CORNER - CLEOPLT4 138.00 138KV CKT 1	191	191	0.03655	100.9964	ALINETP2 69.000 - CLEOTP 2 69.000 69KV CKT 1
FDNS	00NR	0	20WP	G15_060	FROM->TO	CLEO CORNER - CLEOPLT4 138.00 138KV CKT 1	191	191	0.03643	100.9831	CLEO CORNER - CLEOTP 2 69.000 69KV CKT 1
FDNS	01NR	0	17G	G15_060	FROM->TO	CLEO CORNER - CLEOPLT4 138.00 138KV CKT 1	191	191	0.04841	100.9643	G11_051T 345.00 - TATONGA7 345.00 345KV CKT 1
FDNS	00NR	0	16WP	G15_060	FROM->TO	CLEO CORNER - CLEOPLT4 138.00 138KV CKT 1	191	191	0.0423	100.9334	BEARCAT 138.00 - NINE MILE 138KV CKT 1
FDNS	00NR	0	16WP	G15_060	FROM->TO	CLEO CORNER - CLEOPLT4 138.00 138KV CKT 1	191	191	0.04049	100.9002	HUNTERS7 345.00 - WOODRING 345KV CKT 1
FDNS	00NR	0	16WP	G15_060	FROM->TO	CLEO CORNER - CLEOPLT4 138.00 138KV CKT 1	191	191	0.03655	100.8966	ALINETP2 69.000 - ALVA 69KV CKT 1
FDNS	00NR	0	20WP	G15_060	FROM->TO	CLEO CORNER - CLEOPLT4 138.00 138KV CKT 1	191	191	0.03918	100.8431	G15095_T 138.00 - ROSE_VALLEY 138.00 138KV CKT 1
FDNS	00NR	0	20WP	G15_060	FROM->TO	CLEO CORNER - CLEOPLT4 138.00 138KV CKT 1	191	191	0.0422	100.8109	P12:138:WFEC:MSL14
FDNS	00NR	0	20WP	G15_060	FROM->TO	CLEO CORNER - CLEOPLT4 138.00 138KV CKT 1	191	191	0.0422	100.7788	BEARCAT 138.00 - MOORELAND 138KV CKT 1
FDNS	00NR	0	20WP	G15_060	FROM->TO	CLEO CORNER - CLEOPLT4 138.00 138KV CKT 1	191	191	0.03643	100.7617	ALINETP2 69.000 - CLEOTP 2 69.000 69KV CKT 1
FDNS	00NR	0	16WP	G15_060	FROM->TO	CLEO CORNER - CLEOPLT4 138.00 138KV CKT 1	191	191	0.03933	100.751	NOEL_SW 138.00 - ROSE_VALLEY 138.00 138KV CKT 1
FDNS	00NR	0	20WP	G15_060	FROM->TO	CLEO CORNER - CLEOPLT4 138.00 138KV CKT 1	191	191	0.03643	100.6638	ALINETP2 69.000 - ALVA 69KV CKT 1
FDNS	01NR	0	17G	G15_060	FROM->TO	CLEO CORNER - CLEOPLT4 138.00 138KV CKT 1	191	191	0.04399	100.656	DOVER SW - OKEENE 138KV CKT 1
FDNS	00NR	0	20WP	G15_060	FROM->TO	CLEO CORNER - CLEOPLT4 138.00 138KV CKT 1	191	191	0.03823	100.5563	G14-057T 345.00 - SUNNYSIDE 345KV CKT 1
FDNS	00NR	0	16WP	G15_060	FROM->TO	CLEO CORNER - CLEOPLT4 138.00 138KV CKT 1	191	191	0.04021	100.5293	THISTLE7 345.00 - WOODWARD DISTRICT EHV 345KV CKT 1
FDNS	00NR	0	16WP	G15_060	FROM->TO	CLEO CORNER - CLEOPLT4 138.00 138KV CKT 1	191	191	0.04021	100.5293	THISTLE7 345.00 - WOODWARD DISTRICT EHV 345KV CKT 1
FDNS	00NR	0	16WP	G15_060	FROM->TO	CLEO CORNER - CLEOPLT4 138.00 138KV CKT 1	191	191	0.04021	100.5293	THISTLE7 345.00 - WOODWARD DISTRICT EHV 345KV CKT 2
FDNS	00NR	0	16WP	G15_060	FROM->TO	CLEO CORNER - CLEOPLT4 138.00 138KV CKT 1	191	191	0.04021	100.5293	THISTLE7 345.00 - WOODWARD DISTRICT EHV 345KV CKT 2
FDNS	00NR	0	20WP	G15_060	FROM->TO	CLEO CORNER - CLEOPLT4 138.00 138KV CKT 1	191	191	0.03918	100.4856	NOEL_SW 138.00 - ROSE_VALLEY 138.00 138KV CKT 1
FDNS	01ALL	0	20L	G15_060	FROM->TO	CLEO CORNER - CLEOPLT4 138.00 138KV CKT 1	191	191	0.0343	100.4438	BASE CASE
FDNS	00NR	0	20WP	G15_060	FROM->TO	CLEO CORNER - CLEOPLT4 138.00 138KV CKT 1	191	191	0.0422	100.2863	BEARCAT 138.00 - NINE MILE 138KV CKT 1
FDNS	00NR	0	16WP	G15_060	FROM->TO	CLEO CORNER - CLEOPLT4 138.00 138KV CKT 1	191	191	0.03916	100.2513	CHISHOLM7 345.00 - GRACEMONT 345KV CKT 1
FDNS	00NR	0	17SP	G15_060	FROM->TO	CLEO CORNER - CLEOPLT4 138.00 138KV CKT 1	191	191	0.04202	100.2502	MOORELAND - PIC4 138.00 138KV CKT 1

SOLUTION	GROUP	SCENARIO	SEASON	SOURCE	DIRECTION	MONITORED ELEMENT	RATEA (MVA)	RATEB(MVA)	TDF	TC%LOADING (% MVA)	CONTINGENCY
FDNS	00NR	0	20WP	G15_060	FROM->TO	CLEO CORNER - CLEOPLT4 138.00 138KV CKT 1	191	191	0.04009	100.24	THISTLE7 345.00 - WOODWARD DISTRICT EHV 345KV CKT 1
FDNS	00NR	0	20WP	G15_060	FROM->TO	CLEO CORNER - CLEOPLT4 138.00 138KV CKT 1	191	191	0.04009	100.24	THISTLE7 345.00 - WOODWARD DISTRICT EHV 345KV CKT 1
FDNS	00NR	0	20WP	G15_060	FROM->TO	CLEO CORNER - CLEOPLT4 138.00 138KV CKT 1	191	191	0.04009	100.24	THISTLE7 345.00 - WOODWARD DISTRICT EHV 345KV CKT 2
FDNS	00NR	0	20WP	G15_060	FROM->TO	CLEO CORNER - CLEOPLT4 138.00 138KV CKT 1	191	191	0.04009	100.24	THISTLE7 345.00 - WOODWARD DISTRICT EHV 345KV CKT 2
FDNS	00NR	0	17SP	G15_060	FROM->TO	CLEO CORNER - CLEOPLT4 138.00 138KV CKT 1	191	191	0.04202	100.2278	P12:138:WFEC:MSL12
FDNS	00NR	0	16WP	G15_060	FROM->TO	CLEO CORNER - CLEOPLT4 138.00 138KV CKT 1	191	191	0.04056	100.1954	C_CITY_138 138.00 - SALT_PLAINS 138.00 138KV CKT 1
FDNS	01NR	0	17G	G15_060	FROM->TO	CLEO CORNER - CLEOPLT4 138.00 138KV CKT 1	191	191	0.04021	100.1748	THISTLE7 345.00 - WOODWARD DISTRICT EHV 345KV CKT 1
FDNS	01NR	0	17G	G15_060	FROM->TO	CLEO CORNER - CLEOPLT4 138.00 138KV CKT 1	191	191	0.04021	100.1748	THISTLE7 345.00 - WOODWARD DISTRICT EHV 345KV CKT 1
FDNS	01NR	0	17G	G15_060	FROM->TO	CLEO CORNER - CLEOPLT4 138.00 138KV CKT 1	191	191	0.04021	100.1748	THISTLE7 345.00 - WOODWARD DISTRICT EHV 345KV CKT 2
FDNS	01NR	0	17G	G15_060	FROM->TO	CLEO CORNER - CLEOPLT4 138.00 138KV CKT 1	191	191	0.04021	100.1748	THISTLE7 345.00 - WOODWARD DISTRICT EHV 345KV CKT 2
FDNS	01NR	0	17G	G15_060	FROM->TO	CLEO CORNER - CLEOPLT4 138.00 138KV CKT 1	191	191	0.0423	100.1685	P12:138:WFEC:MSL14
FDNS	00NR	0	17SP	G15_060	FROM->TO	CLEO CORNER - CLEOPLT4 138.00 138KV CKT 1	191	191	0.04202	100.1554	CEDARDALE - PIC4 138.00 138KV CKT 1
FDNS	01NR	0	17G	G15_060	FROM->TO	CLEO CORNER - CLEOPLT4 138.00 138KV CKT 1	191	191	0.0423	100.1355	BEARCAT 138.00 - MOORELAND 138KV CKT 1
FDNS	00NR	0	16WP	G15_060	FROM->TO	CLEO CORNER - CLEOPLT4 138.00 138KV CKT 1	191	191	0.0423	100.1341	MOREWOOD SW - NINE MILE 138KV CKT 1
FDNS	01NR	0	17G	G15_060	FROM->TO	CLEO CORNER - CLEOPLT4 138.00 138KV CKT 1	191	191	0.04209	100.1238	DEWEY - SOUTHARD 138KV CKT 1
FDNS	00NR	0	17SP	G15_060	FROM->TO	CLEO CORNER - CLEOPLT4 138.00 138KV CKT 1	191	191	0.04202	100	CEDARDALE - OKEENE 138KV CKT 1
FDNS	00NR	0	16WP	G15_060	FROM->TO	CLEO CORNER - CLEOPLT4 138.00 138KV CKT 1	191	191	0.04056	99.9	BYRON_138 138.00 - C_CITY_138 138.00 138KV CKT 1
FDNS	01NR	0	17G	G15_060	FROM->TO	CLEO CORNER - CLEOPLT4 138.00 138KV CKT 1	191	191	0.04057	99.9	C_CITY_138 138.00 - SALT_PLAINS 138.00 138KV CKT 1
FDNS	00NR	0	20WP	G15_060	FROM->TO	CLEO CORNER - CLEOPLT4 138.00 138KV CKT 1	191	191	0.04042	99.9	C_CITY_138 138.00 - SALT_PLAINS 138.00 138KV CKT 1
FDNS	00NR	0	20WP	G15_060	FROM->TO	CLEO CORNER - CLEOPLT4 138.00 138KV CKT 1	191	191	0.03901	99.9	CHISHOLM7 345.00 - GRACEMONT 345KV CKT 1
FDNS	00NR	0	16WP	G15_060	FROM->TO	CLEO CORNER - CLEOPLT4 138.00 138KV CKT 1	191	191	0.04049	99.8	HUNTERS7 345.00 - RENFROW7 345.00 345KV CKT 1
FDNS	00NR	0	16WP	G15_060	FROM->TO	CLEO CORNER - CLEOPLT4 138.00 138KV CKT 1	191	191	0.03855	99.8	NSAH - RINGWOOD 69KV CKT 1
FDNS	00NR	0	16WP	G15_060	FROM->TO	CLEO CORNER - CLEOPLT4 138.00 138KV CKT 1	191	191	0.03852	99.8	GRACEMONT - MINCO 345KV CKT 1
FDNS	01NR	0	17G	G15_060	FROM->TO	CLEO CORNER - CLEOPLT4 138.00 138KV CKT 1	191	191	0.03933	99.8	G15095_T 138.00 - ROSE_VALLEY 138.00 138KV CKT 1
FDNS	00NR	0	20SP	G15_060	FROM->TO	CLEO CORNER - CLEOPLT4 138.00 138KV CKT 1	191	191	0.03572	99.8	WOODRING (WOODRNG2) 345/138/13.8KV TRANSFORMER CKT 1
FDNS	01NR	0	17G	G15_060	FROM->TO	CLEO CORNER - CLEOPLT4 138.00 138KV CKT 1	191	191	0.0423	99.7	BEARCAT 138.00 - NINE MILE 138KV CKT 1
FDNS	01NR	0	17G	G15_060	FROM->TO	CLEO CORNER - CLEOPLT4 138.00 138KV CKT 1	191	191	0.04209	99.7	ROMAN NOSE - SOUTHARD 138KV CKT 1
FDNS	01NR	0	17G	G15_060	FROM->TO	CLEO CORNER - CLEOPLT4 138.00 138KV CKT 1	191	191	0.04057	99.7	BYRON_138 138.00 - C_CITY_138 138.00 138KV CKT 1
FDNS	00NR	0	16WP	G15_060	FROM->TO	CLEO CORNER - CLEOPLT4 138.00 138KV CKT 1	191	191	0.03916	99.5	CHISHOLM7 345.00 (CHISHOLM) 345/230/13.2KV TRANSFORMER CKT 1
FDNS	00NR	0	16WP	G15_060	FROM->TO	CLEO CORNER - CLEOPLT4 138.00 138KV CKT 1	191	191	0.03886	99.5	G1524G1525 345.00 - THISTLE7 345.00 345KV CKT 1
FDNS	00NR	0	16WP	G15_060	FROM->TO	CLEO CORNER - CLEOPLT4 138.00 138KV CKT 1	191	191	0.03886	99.5	G1524G1525 345.00 - THISTLE7 345.00 345KV CKT 2
FDNS	00NR	0	16WP	G15_060	FROM->TO	CLEO CORNER - CLEOPLT4 138.00 138KV CKT 1	191	191	0.03835	99.5	G14-057T 345.00 - LAWTON EASTSIDE 345KV CKT 1
FDNS	00NR	0	16WP	G15_060	FROM->TO	CLEO CORNER - CLEOPLT4 138.00 138KV CKT 1	191	191	0.03782	99.5	GEN514805 1-SOONER UNIT 1
FDNS	01NR	0	17G	G15_060	FROM->TO	CLEO CORNER - CLEOPLT4 138.00 138KV CKT 1	191	191	0.03856	99.5	NSAH - RINGWOOD 69KV CKT 1
FDNS	01NR	0	20L	G15_060	FROM->TO	CLEO CORNER - CLEOPLT4 138.00 138KV CKT 1	191	191	0.03876	99.5	BASE CASE
FDNS	00NR	0	20WP	G15_060	FROM->TO	CLEO CORNER - CLEOPLT4 138.00 138KV CKT 1	191	191	0.0422	99.5	MOREWOOD SW - NINE MILE 138KV CKT 1
FDNS	00NR	0	20WP	G15_060	TO->FROM	DEWEY - IODINE 138KV CKT 1	249	270	0.10573	104.196	MATHWSN7 345.00 - TATONGA7 345.00 345KV CKT 1
FDNS	00NR	0	17SP	G15_060	TO->FROM	DEWEY - IODINE 138KV CKT 1	194	222	0.10774	102.87	MATHWSN7 345.00 - TATONGA7 345.00 345KV CKT 1
FDNS	00NR	0	20SP	G15_060	TO->FROM	DEWEY - IODINE 138KV CKT 1	194	222	0.10738	102.1747	MATHWSN7 345.00 - TATONGA7 345.00 345KV CKT 1
FDNSLock	00NR	0	16WP	G15_060	TO->FROM	DEWEY - IODINE 138KV CKT 1	249	270	0.10626	100.2321	MATHWSN7 345.00 - TATONGA7 345.00 345KV CKT 1
FDNS	00NR	0	20WP	G15_060	TO->FROM	FPL SWITCH - WOODWARD 138KV CKT 1	171	185	0.14071	131.8709	MATHWSN7 345.00 - TATONGA7 345.00 345KV CKT 1
FDNSLock	00NR	0	16WP	G15_060	TO->FROM	FPL SWITCH - WOODWARD 138KV CKT 1	171	185	0.14139	126.1968	MATHWSN7 345.00 - TATONGA7 345.00 345KV CKT 1
FDNS	00NR	0	20WP	G15_060	TO->FROM	FPL SWITCH - WOODWARD 138KV CKT 1	171	185	0.14071	119.6762	G11_051T 345.00 - TATONGA7 345.00 345KV CKT 1
FDNS	01NR	0	20L	G15_060	TO->FROM	FPL SWITCH - WOODWARD 138KV CKT 1	133	153	0.14114	114.6092	MATHWSN7 345.00 - TATONGA7 345.00 345KV CKT 1
FDNSLock	00NR	0	16WP	G15_060	TO->FROM	FPL SWITCH - WOODWARD 138KV CKT 1	171	185	0.14139	113.0036	G11_051T 345.00 - TATONGA7 345.00 345KV CKT 1
FDNS	00NR	0	20WP	G15_060	TO->FROM	FPL SWITCH - WOODWARD 138KV CKT 1	171	185	0.14071	100.1164	G11_051T 345.00 - WOODWARD DISTRICT EHV 345KV CKT 1
FDNS	00NR	0	16WP	G15_060	FROM->TO	G14-057T 345.00 - SUNNYSIDE 345KV CKT 1	717	789	0.08224	141.3261	CIMARRON - MINCO 345KV CKT 1
FDNS	00NR	0	20WP	G15_060	FROM->TO	G14-057T 345.00 - SUNNYSIDE 345KV CKT 1	717	789	0.08152	139.8556	CIMARRON - MINCO 345KV CKT 1
FDNS	00NR	0	16WP	G15_060	FROM->TO	G14-057T 345.00 - SUNNYSIDE 345KV CKT 1	717	789	0.08224	130.2319	GRACEMONT - MINCO 345KV CKT 1
FDNS	00NR	0	20WP	G15_060	FROM->TO	G14-057T 345.00 - SUNNYSIDE 345KV CKT 1	717	789	0.08152	128.6283	GRACEMONT - MINCO 345KV CKT 1
FDNS	00NR	0	16WP	G15_060	FROM->TO	G14-057T 345.00 - SUNNYSIDE 345KV CKT 1	717	789	0.06091	125.8516	PITTSBURG - SEMINOLE 345KV CKT 1
FDNS	00NR	0	16WP	G15_060	FROM->TO	G14-057T 345.00 - SUNNYSIDE 345KV CKT 1	717	789	0.06091	125.8516	PITTSBURG - SEMINOLE 345KV CKT 1
FDNS	00NR	0	16WP	G15_060	FROM->TO	G14-057T 345.00 - SUNNYSIDE 345KV CKT 1	717	789	0.06609	125.7317	BASE CASE
FDNS	00NR	0	20WP	G15_060	FROM->TO	G14-057T 345.00 - SUNNYSIDE 345KV CKT 1	717	789	0.06555	123.4961	BASE CASE
FDNS	00NR	0	16WP	G15_060	FROM->TO	G14-057T 345.00 - SUNNYSIDE 345KV CKT 1	717	789	0.07766	123.2027	CIMARRON - DRAPER LAKE 345KV CKT 1
FDNS	00NR	0	20WP	G15_060	FROM->TO	G14-057T 345.00 - SUNNYSIDE 345KV CKT 1	717	789	0.06031	122.942	PITTSBURG - SEMINOLE 345KV CKT 1
FDNS	00NR	0	20WP	G15_060	FROM->TO	G14-057T 345.00 - SUNNYSIDE 345KV CKT 1	717	789	0.06031	122.942	PITTSBURG - SEMINOLE 345KV CKT 1
FDNS	00NR	0	20WP	G15_060	FROM->TO	G14-057T 345.00 - SUNNYSIDE 345KV CKT 1	717	789	0.07704	120.8155	CIMARRON - DRAPER LAKE 345KV CKT 1
FDNS	00NR	0	16WP	G15_060	FROM->TO	G14-057T 345.00 - SUNNYSIDE 345KV CKT 1	717	789	0.07097	120.3338	P12:138:WFEC:MSL03
FDNS	00NR	0	16WP	G15_060	FROM->TO	G14-057T 345.00 - SUNNYSIDE 345KV CKT 1	717	789	0.06483	119.7169	PITTSBURG - VALLIANT 345KV CKT 1
FDNS	00NR	0	16WP	G15_060	FROM->TO	G14-057T 345.00 - SUNNYSIDE 345KV CKT 1	717	789	0.06483	119.7169	PITTSBURG - VALLIANT 345KV CKT 1
FDNSLock	00NR	0	16WP	G15_060	FROM->TO	G14-057T 345.00 - SUNNYSIDE 345KV CKT 1	717	789	0.06609	119.4097	GEN509403 1-PIRKEY GENERATION
FDNS	00NR	0	16WP	G15_060	FROM->TO	G14-057T 345.00 - SUNNYSIDE 345KV CKT 1	717	789	0.06609	119.3291	GEN509416 1-TURK GENERATION
FDNS	00NR	0	16WP	G15_060	FROM->TO	G14-057T 345.00 - SUNNYSIDE 345KV CKT 1	717	789	0.06787	119.038	CLEVELAND - G15066_T 345.00 345KV CKT 1
FDNS	00NR	0	16WP	G15_060	FROM->TO	G14-057T 345.00 - SUNNYSIDE 345KV CKT 1	717	789	0.06787	118.7424	G15066_T 345.00 - SOONER 345KV CKT 1
FDNS	00NR	0	20WP	G15_060	FROM->TO	G14-057T 345.00 - SUNNYSIDE 345KV CKT 1	717	789	0.07048	118.4531	P12:138:WFEC:MSL03
FDNS	00NR	0	16WP	G15_060	FROM->TO	G14-057T 345.00 - SUNNYSIDE 345KV CKT 1	717	789	0.06609	118.4277	GEN501801 1-DOLET HILLS UNIT1
FDNS	00NR	0	16WP	G15_060	FROM->TO	G14-057T 345.00 - SUNNYSIDE 345KV CKT 1	717	789	0.06609	118.0417	GEN509404 1-WELSH #1
FDNS	00NR	0	16WP	G15_060	FROM->TO	G14-057T 345.00 - SUNNYSIDE 345KV CKT 1	717	789	0.06609	118.0417	GEN509406 1-WELSH #3
FDNS	00NR	0	16WP	G15_060	FROM->TO	G14-057T 345.00 - SUNNYSIDE 345KV CKT 1	717	789	0.0591	117.7945	BORDER 7345.00 - WOODWARD DISTRICT EHV 345KV CKT 1
FDNS	00NR	0	16WP	G15_060	FROM->TO	G14-057T 345.00 - SUNNYSIDE 345KV CKT 1	717	789	0.06627	117.3154	7SAREPTA% 345.00 - LONGWOOD 345KV CKT 1
FDNS	00NR	0	16WP	G15_060	FROM->TO	G14-057T 345.00 - SUNNYSIDE 345KV CKT 1	717	789	0.06627	117.3154	7SAREPTA% 345.00 - LONGWOOD 345KV CKT 1
FDNS	00NR	0	20WP	G15_060	FROM->TO	G14-057T 345.00 - SUNNYSIDE 345KV CKT 1	717	789	0.06555	117.2677	GEN509403 1-PIRKEY GENERATION
FDNS	00NR	0	16WP	G15_060	FROM->TO	G14-057T 345.00 - SUNNYSIDE 345KV CKT 1	717	789	0.06754	117.2341	CORN TAP - NAPLESTP 138.00 138KV CKT 1
FDNS	00NR	0	20WP	G15_060	FROM->TO	G14-057T 345.00 - SUNNYSIDE 345KV CKT 1	717	789	0.06555	117.1868	GEN509416 1-TURK GENERATION
FDNS	00NR	0	16WP	G15_060	FROM->TO	G14-057T 345.00 - SUNNYSIDE 345KV CKT 1	717	789	0.06754	117.1497	NAPLESTP 138.00 - PAYNE 138.00 138KV CKT 1
FDNS	00NR	0	16WP	G15_060	FROM->TO	G14-057T 345.00 - SUNNYSIDE 345KV CKT 1	717	789	0.06621	117.1471	DOLET HILLS - SOUTHWEST SHREVEPORT 345KV CKT 1
FDNS	00NR	0	16WP	G15_060	FROM->TO	G14-057T 345.00 - SUNNYSIDE 345KV CKT 1	717	789	0.06621	117.1471	DOLET HILLS - SOUTHWEST SHREVEPORT 345KV CKT 1
FDNS	00NR	0	16WP	G15_060	FROM->TO	G14-057T 345.00 - SUNNYSIDE 345KV CKT 1	717	789	0.06725	117.1448	ANADARKO - POCASSETT 138KV CKT 1

SOLUTION	GROUP	SCENARIO	SEASON	SOURCE	DIRECTION	MONITORED ELEMENT	RATEA (MVA)	RATEB(MVA)	TDF	TC%LOADING (% MVA)	CONTINGENCY
FDNSLock	00NR	0	16WP	G15_060	FROM->TO	G14-057T 345.00 - SUNNYSIDE 345KV CKT 1	717	789	0.06609	117.1301	GEN336821 1-GRAND GULF UNIT
FDNS	00NR	0	16WP	G15_060	FROM->TO	G14-057T 345.00 - SUNNYSIDE 345KV CKT 1	717	789	0.06728	117.0898	CLEVELAND - TULSA NORTH 345KV CKT 1
FDNS	00NR	0	16WP	G15_060	FROM->TO	G14-057T 345.00 - SUNNYSIDE 345KV CKT 1	717	789	0.06728	117.0898	CLEVELAND - TULSA NORTH 345KV CKT 1
FDNS	00NR	0	16WP	G15_060	FROM->TO	G14-057T 345.00 - SUNNYSIDE 345KV CKT 1	717	789	0.06732	117.0742	COMANCHE - LOCO 138KV CKT 1
FDNSLock	00NR	0	16WP	G15_060	FROM->TO	G14-057T 345.00 - SUNNYSIDE 345KV CKT 1	717	789	0.06609	117.0352	GEN336153 1-WATERFORD UNIT#3
FDNS	00NR	0	16WP	G15_060	FROM->TO	G14-057T 345.00 - SUNNYSIDE 345KV CKT 1	717	789	0.06244	117.0161	CANADIAN RIVER - MUSKOGEE 345KV CKT 1
FDNS	00NR	0	16WP	G15_060	FROM->TO	G14-057T 345.00 - SUNNYSIDE 345KV CKT 1	717	789	0.06725	116.9961	POCASSETT - TUTTLE 138KV CKT 1
FDNS	00NR	0	20WP	G15_060	FROM->TO	G14-057T 345.00 - SUNNYSIDE 345KV CKT 1	717	789	0.06728	116.9383	CLEVELAND - G15066_T 345.00 345KV CKT 1
FDNSLock	00NR	0	16WP	G15_060	FROM->TO	G14-057T 345.00 - SUNNYSIDE 345KV CKT 1	717	789	0.07286	116.891	MATHWSN7 345.00 - TATONGA7 345.00 345KV CKT 1
FDNS	00NR	0	16WP	G15_060	FROM->TO	G14-057T 345.00 - SUNNYSIDE 345KV CKT 1	717	789	0.0591	116.8671	BORDER 7345.00 - TUCO_2 345.00 345KV CKT 1
FDNS	00NR	0	20WP	G15_060	FROM->TO	G14-057T 345.00 - SUNNYSIDE 345KV CKT 1	717	789	0.06428	116.8606	PITTSBURG - VALLIANT 345KV CKT 1
FDNS	00NR	0	20WP	G15_060	FROM->TO	G14-057T 345.00 - SUNNYSIDE 345KV CKT 1	717	789	0.06428	116.8606	PITTSBURG - VALLIANT 345KV CKT 1
FDNS	00NR	0	16WP	G15_060	FROM->TO	G14-057T 345.00 - SUNNYSIDE 345KV CKT 1	717	789	0.07588	116.8117	ARCADIA - NORTHWEST 345KV CKT 1
FDNS	00NR	0	16WP	G15_060	FROM->TO	G14-057T 345.00 - SUNNYSIDE 345KV CKT 1	717	789	0.06609	116.7419	GRAND GULF 500/22.0KV TRANSFORMER CKT 1
FDNSLock	00NR	0	16WP	G15_060	FROM->TO	G14-057T 345.00 - SUNNYSIDE 345KV CKT 1	717	789	0.06609	116.7414	GEN335831 1-RIVERBEND UNIT#1
FDNS	00NR	0	16WP	G15_060	FROM->TO	G14-057T 345.00 - SUNNYSIDE 345KV CKT 1	717	789	0.06609	116.7065	GEN515577 1-ARBWND11 0.6900
FDNS	00NR	0	16WP	G15_060	FROM->TO	G14-057T 345.00 - SUNNYSIDE 345KV CKT 1	717	789	0.06726	116.6977	ARCADIA - SEMINOLE 345KV CKT 1
FDNS	00NR	0	16WP	G15_060	FROM->TO	G14-057T 345.00 - SUNNYSIDE 345KV CKT 1	717	789	0.06609	116.6641	GEN509409 1-WILKES #3
FDNS	00NR	0	16WP	G15_060	FROM->TO	G14-057T 345.00 - SUNNYSIDE 345KV CKT 1	717	789	0.06619	116.6569	7SAREPTA% 345.00 - ELDORADO EHV 345KV CKT 1
FDNS	00NR	0	16WP	G15_060	FROM->TO	G14-057T 345.00 - SUNNYSIDE 345KV CKT 1	717	789	0.06619	116.6567	3TR3AR8EL7EL
FDNS	00NR	0	16WP	G15_060	FROM->TO	G14-057T 345.00 - SUNNYSIDE 345KV CKT 1	717	789	0.06619	116.6476	ELDORADO EHV 500/345KV TRANSFORMER CKT 1
FDNS	00NR	0	20WP	G15_060	FROM->TO	G14-057T 345.00 - SUNNYSIDE 345KV CKT 1	717	789	0.06728	116.6463	G15066_T 345.00 - SOONER 345KV CKT 1
FDNS	00NR	0	16WP	G15_060	FROM->TO	G14-057T 345.00 - SUNNYSIDE 345KV CKT 1	717	789	0.06688	116.6347	P12:138:AEPW:DUNCAN-4:L.E.S.-4
FDNS	00NR	0	16WP	G15_060	FROM->TO	G14-057T 345.00 - SUNNYSIDE 345KV CKT 1	717	789	0.06725	116.6144	BRIDGECR 138.00 - TUTTLE 138KV CKT 1
FDNS	00NR	0	16WP	G15_060	FROM->TO	G14-057T 345.00 - SUNNYSIDE 345KV CKT 1	717	789	0.06688	116.5237	COMANCHE TAP - OMPA-DUNCAN 840 138KV CKT 1
FDNS	00NR	0	16WP	G15_060	FROM->TO	G14-057T 345.00 - SUNNYSIDE 345KV CKT 1	717	789	0.06751	116.4781	HEALDTON - LOCO 138KV CKT 1
FDNS	00NR	0	20WP	G15_060	FROM->TO	G14-057T 345.00 - SUNNYSIDE 345KV CKT 1	717	789	0.06555	116.4704	GEN501801 1-DOLET HILLS UNIT1
FDNS	00NR	0	16WP	G15_060	FROM->TO	G14-057T 345.00 - SUNNYSIDE 345KV CKT 1	717	789	0.07044	116.4505	FINNEY SWITCHING STATION - HOLCOMB 345KV CKT 1
FDNS	00NR	0	16WP	G15_060	FROM->TO	G14-057T 345.00 - SUNNYSIDE 345KV CKT 1	717	789	0.07044	116.4505	FINNEY SWITCHING STATION - HOLCOMB 345KV CKT 1
FDNS	00NR	0	16WP	G15_060	FROM->TO	G14-057T 345.00 - SUNNYSIDE 345KV CKT 1	717	789	0.06609	116.4	GEN300006 1-NEW MADRID UNIT 1
FDNS	00NR	0	16WP	G15_060	FROM->TO	G14-057T 345.00 - SUNNYSIDE 345KV CKT 1	717	789	0.06609	116.4	GEN300007 1-NEW MADRID UNIT 2
FDNS	00NR	0	16WP	G15_060	FROM->TO	G14-057T 345.00 - SUNNYSIDE 345KV CKT 1	717	789	0.06647	116.3928	LACYGNE - WAVERLY7 345.00 345KV CKT 1
FDNS	00NR	0	16WP	G15_060	FROM->TO	G14-057T 345.00 - SUNNYSIDE 345KV CKT 1	717	789	0.06609	116.369	GEN501813 1-RODEMACHER UNIT 3
FDNS	00NR	0	16WP	G15_060	FROM->TO	G14-057T 345.00 - SUNNYSIDE 345KV CKT 1	717	789	0.06725	116.3452	P12:138:WFEC:MSL01
FDNS	00NR	0	16WP	G15_060	FROM->TO	G14-057T 345.00 - SUNNYSIDE 345KV CKT 1	717	789	0.06725	116.3403	BRIDGECR 138.00 - SUNSHINE CANYON 138KV CKT 1
FDNS	00NR	0	16WP	G15_060	FROM->TO	G14-057T 345.00 - SUNNYSIDE 345KV CKT 1	717	789	0.06751	116.3386	HEALDTON - RINGLING 138KV CKT 1
FDNS	00NR	0	16WP	G15_060	FROM->TO	G14-057T 345.00 - SUNNYSIDE 345KV CKT 1	717	789	0.06647	116.2527	WAVERLY7 345.00 - WOLF CREEK 345KV CKT 1
FDNS	00NR	0	16WP	G15_060	FROM->TO	G14-057T 345.00 - SUNNYSIDE 345KV CKT 1	717	789	0.06609	116.2503	GEN520947 1-HUGO1
FDNS	00NR	0	16WP	G15_060	FROM->TO	G14-057T 345.00 - SUNNYSIDE 345KV CKT 1	717	789	0.06688	116.2417	DUNCAN - OMPA-DUNCAN 840 138KV CKT 1
FDNS	00NR	0	16WP	G15_060	FROM->TO	G14-057T 345.00 - SUNNYSIDE 345KV CKT 1	717	789	0.06688	116.2417	DUNCAN - OMPA-DUNCAN 840 138KV CKT 1
FDNS	00NR	0	20WP	G15_060	FROM->TO	G14-057T 345.00 - SUNNYSIDE 345KV CKT 1	717	789	0.05873	116.2407	BORDER 7345.00 - WOODWARD DISTRICT EHV 345KV CKT 1
FDNSLock	00NR	0	16WP	G15_060	FROM->TO	G14-057T 345.00 - SUNNYSIDE 345KV CKT 1	717	789	0.07286	116.2034	G11_051T 345.00 - TATONGA7 345.00 345KV CKT 1
FDNS	00NR	0	16WP	G15_060	FROM->TO	G14-057T 345.00 - SUNNYSIDE 345KV CKT 1	717	789	0.06751	116.1742	RINGLING - SOUTH WILSON 138KV CKT 1
FDNS	00NR	0	16WP	G15_060	FROM->TO	G14-057T 345.00 - SUNNYSIDE 345KV CKT 1	717	789	0.06609	116.1685	GEN335206 1-NELSON UNIT 6
FDNS	00NR	0	16WP	G15_060	FROM->TO	G14-057T 345.00 - SUNNYSIDE 345KV CKT 1	717	789	0.07044	116.0651	FINNEY SWITCHING STATION - Hitchland Interchange 345KV CKT 1
FDNS	00NR	0	16WP	G15_060	FROM->TO	G14-057T 345.00 - SUNNYSIDE 345KV CKT 1	717	789	0.06609	116.0517	DOLET HILLS 345/24.0KV TRANSFORMER CKT 1
FDNS	00NR	0	16WP	G15_060	FROM->TO	G14-057T 345.00 - SUNNYSIDE 345KV CKT 1	717	789	0.06605	116.0067	P12:138:AEPW:SHERID4:112GORE4
FDNS	00NR	0	16WP	G15_060	FROM->TO	G14-057T 345.00 - SUNNYSIDE 345KV CKT 1	717	789	0.06492	115.998	PARK LANE - SEMINOLE 138KV CKT 1
FDNSLock	00NR	0	16WP	G15_060	FROM->TO	G14-057T 345.00 - SUNNYSIDE 345KV CKT 1	717	789	0.06609	115.9851	GEN590011 2-ERCOT EQUIVALENCE
FDNS	00NR	0	16WP	G15_060	FROM->TO	G14-057T 345.00 - SUNNYSIDE 345KV CKT 1	717	789	0.06609	115.9826	GEN501812 1-RODEMACHER UNIT 2
FDNS	00NR	0	16WP	G15_060	FROM->TO	G14-057T 345.00 - SUNNYSIDE 345KV CKT 1	717	789	0.07081	115.9522	THISTLE7 345.00 - WOODWARD DISTRICT EHV 345KV CKT 1
FDNS	00NR	0	16WP	G15_060	FROM->TO	G14-057T 345.00 - SUNNYSIDE 345KV CKT 1	717	789	0.07081	115.9522	THISTLE7 345.00 - WOODWARD DISTRICT EHV 345KV CKT 1
FDNS	00NR	0	16WP	G15_060	FROM->TO	G14-057T 345.00 - SUNNYSIDE 345KV CKT 1	717	789	0.07081	115.9522	THISTLE7 345.00 - WOODWARD DISTRICT EHV 345KV CKT 2
FDNS	00NR	0	16WP	G15_060	FROM->TO	G14-057T 345.00 - SUNNYSIDE 345KV CKT 1	717	789	0.07081	115.9522	THISTLE7 345.00 - WOODWARD DISTRICT EHV 345KV CKT 2
FDNS	00NR	0	20WP	G15_060	FROM->TO	G14-057T 345.00 - SUNNYSIDE 345KV CKT 1	717	789	0.06555	115.9478	GEN509406 1-WELSH #3
FDNS	00NR	0	20WP	G15_060	FROM->TO	G14-057T 345.00 - SUNNYSIDE 345KV CKT 1	717	789	0.06555	115.9475	GEN509404 1-WELSH #1
FDNS	00NR	0	16WP	G15_060	FROM->TO	G14-057T 345.00 - SUNNYSIDE 345KV CKT 1	717	789	0.06731	115.9348	CANEYRV7 345.00 - NEOSHO 345KV CKT 1
FDNS	00NR	0	16WP	G15_060	FROM->TO	G14-057T 345.00 - SUNNYSIDE 345KV CKT 1	717	789	0.06609	115.9221	GEN515564 1-ORIGIN11 0.6900
FDNS	00NR	0	16WP	G15_060	FROM->TO	G14-057T 345.00 - SUNNYSIDE 345KV CKT 1	717	789	0.06609	115.9221	GEN515565 1-ORIGIN21 0.6900
FDNSLock	00NR	0	16WP	G15_060	FROM->TO	G14-057T 345.00 - SUNNYSIDE 345KV CKT 1	717	789	0.06609	115.9096	GEN590010 1-ERCOT EQUIVALENCE
FDNS	00NR	0	16WP	G15_060	FROM->TO	G14-057T 345.00 - SUNNYSIDE 345KV CKT 1	717	789	0.06751	115.8986	MARIETTA - SOUTH WILSON 138KV CKT 1
FDNS	00NR	0	16WP	G15_060	FROM->TO	G14-057T 345.00 - SUNNYSIDE 345KV CKT 1	717	789	0.06609	115.8352	GEN509408 1-WILKES #2
FDNS	00NR	0	16WP	G15_060	FROM->TO	G14-057T 345.00 - SUNNYSIDE 345KV CKT 1	717	789	0.06751	115.8012	P12:138:WFEC:MSL17
FDNS	00NR	0	16WP	G15_060	FROM->TO	G14-057T 345.00 - SUNNYSIDE 345KV CKT 1	717	789	0.06731	115.7954	CANEYRV7 345.00 - LATHAMS7 345.00 345KV CKT 1
FDNS	00NR	0	16WP	G15_060	FROM->TO	G14-057T 345.00 - SUNNYSIDE 345KV CKT 1	717	789	0.06652	115.7632	P12:138:WFEC:MSL02
FDNS	00NR	0	16WP	G15_060	FROM->TO	G14-057T 345.00 - SUNNYSIDE 345KV CKT 1	717	789	0.06609	115.7471	P12:161:AEPW:DYESS 5:HYLAND 5
FDNS	00NR	0	16WP	G15_060	FROM->TO	G14-057T 345.00 - SUNNYSIDE 345KV CKT 1	717	789	0.06609	115.7452	GEN506754 1-LEBROCK STEAM 1
FDNS	00NR	0	16WP	G15_060	FROM->TO	G14-057T 345.00 - SUNNYSIDE 345KV CKT 1	717	789	0.06609	115.7417	P12:69:AEPW:L.E.S.-2:LAW WC2
FDNS	00NR	0	16WP	G15_060	FROM->TO	G14-057T 345.00 - SUNNYSIDE 345KV CKT 1	717	789	0.06588	115.7311	REDBUD - RIVERSIDE STATION 345KV CKT 1
FDNS	00NR	0	16WP	G15_060	FROM->TO	G14-057T 345.00 - SUNNYSIDE 345KV CKT 1	717	789	0.06588	115.7311	REDBUD - RIVERSIDE STATION 345KV CKT 1
FDNS	00NR	0	16WP	G15_060	FROM->TO	G14-057T 345.00 - SUNNYSIDE 345KV CKT 1	717	789	0.06606	115.7085	ELDORADO EHV - MOUNT OLIVE 500KV CKT 1
FDNS	00NR	0	16WP	G15_060	FROM->TO	G14-057T 345.00 - SUNNYSIDE 345KV CKT 1	717	789	0.06609	115.6998	GEN334440 1-SABINE UNIT 4
FDNS	00NR	0	16WP	G15_060	FROM->TO	G14-057T 345.00 - SUNNYSIDE 345KV CKT 1	717	789	0.06724	115.6769	CIVIT - PAOLI 138KV CKT 1
FDNS	00NR	0	16WP	G15_060	FROM->TO	G14-057T 345.00 - SUNNYSIDE 345KV CKT 1	717	789	0.06639	115.675	ANADARKO - GEORGIA 138KV CKT 1
FDNS	00NR	0	16WP	G15_060	FROM->TO	G14-057T 345.00 - SUNNYSIDE 345KV CKT 1	717	789	0.0686	115.6471	MATHWSN7 345.00 - NORTHWEST 345KV CKT 1
FDNS	00NR	0	16WP	G15_060	FROM->TO	G14-057T 345.00 - SUNNYSIDE 345KV CKT 1	717	789	0.06606	115.6371	P12:138:AEPW:112GORE4:L.E.S.-4
FDNS	00NR	0	16WP	G15_060	FROM->TO	G14-057T 345.00 - SUNNYSIDE 345KV CKT 1	717	789	0.06598	115.6268	ELDORADO EHV - SHERIDAN EHV 500KV CKT 1
FDNS	00NR	0	16WP	G15_060	FROM->TO	G14-057T 345.00 - SUNNYSIDE 345KV CKT 1	717	789	0.06793	115.6192	P12:138:AEPW-OGE:CORNVIL4:MAUD 4
FDNS	00NR	0	16WP	G15_060	FROM->TO	G14-057T 345.00 - SUNNYSIDE 345KV CKT 1	717	789	0.06609	115.6004	NEW MADRID 161/22.0KV TRANSFORMER CKT 1

SOLUTION	GROUP	SCENARIO	SEASON	SOURCE	DIRECTION	MONITORED ELEMENT	RATEA (MVA)	RATEB(MVA)	TDF	TC%LOADING (% MVA)	CONTINGENCY
FDNS	00NR	0	16WP	G15_060	FROM->TO	G14-057T 345.00 - SUNNYSIDE 345KV CKT 1	717	789	0.06624	115.5963	WEBRE - WELLS 500KV CKT 1
FDNS	00NR	0	16WP	G15_060	FROM->TO	G14-057T 345.00 - SUNNYSIDE 345KV CKT 1	717	789	0.06638	115.5952	PAOLI - PAYNE 138.00 138KV CKT 1
FDNS	00NR	0	16WP	G15_060	FROM->TO	G14-057T 345.00 - SUNNYSIDE 345KV CKT 1	717	789	0.06609	115.5952	GEN503909 1-FULTONU1 1 16.000
FDNS	00NR	0	16WP	G15_060	FROM->TO	G14-057T 345.00 - SUNNYSIDE 345KV CKT 1	717	789	0.06609	115.5865	NEW MADRID 345/22.0KV TRANSFORMER CKT 1
FDNS	00NR	0	16WP	G15_060	FROM->TO	G14-057T 345.00 - SUNNYSIDE 345KV CKT 1	717	789	0.06639	115.5859	FLETCHER - GEORGIA 138KV CKT 1
FDNS	00NR	0	16WP	G15_060	FROM->TO	G14-057T 345.00 - SUNNYSIDE 345KV CKT 1	717	789	0.06731	115.5778	LATHAMS7 345.00 - ROSE HILL 345KV CKT 1
FDNS	00NR	0	16WP	G15_060	FROM->TO	G14-057T 345.00 - SUNNYSIDE 345KV CKT 1	717	789	0.06616	115.5671	LAWTON EASTSIDE (LES 5) 345/138/13.8KV TRANSFORMER CKT 2
FDNS	00NR	0	16WP	G15_060	FROM->TO	G14-057T 345.00 - SUNNYSIDE 345KV CKT 1	717	789	0.06616	115.5671	LAWTON EASTSIDE (LES 5) 345/138/13.8KV TRANSFORMER CKT 2
FDNS	00NR	0	16WP	G15_060	FROM->TO	G14-057T 345.00 - SUNNYSIDE 345KV CKT 1	717	789	0.06609	115.5633	FRONTIER - GRIMES 345KV CKT 1
FDNS	00NR	0	16WP	G15_060	FROM->TO	G14-057T 345.00 - SUNNYSIDE 345KV CKT 1	717	789	0.06648	115.5527	EMPIRE - FLETCHER 138KV CKT 1
FDNS	00NR	0	16WP	G15_060	FROM->TO	G14-057T 345.00 - SUNNYSIDE 345KV CKT 1	717	789	0.06793	115.5491	BLANCHARD - CORNVILLE 138KV CKT 1
FDNS	00NR	0	16WP	G15_060	FROM->TO	G14-057T 345.00 - SUNNYSIDE 345KV CKT 1	717	789	0.06724	115.5364	CIVIT - STRATFORD 138KV CKT 1
FDNS	00NR	0	16WP	G15_060	FROM->TO	G14-057T 345.00 - SUNNYSIDE 345KV CKT 1	717	789	0.06605	115.5229	TUPELO - TUPELO TAP 138KV CKT 1
FDNS	00NR	0	16WP	G15_060	FROM->TO	G14-057T 345.00 - SUNNYSIDE 345KV CKT 1	717	789	0.06648	115.4711	COMANCHE - EMPIRE 138KV CKT 1
FDNS	00NR	0	16WP	G15_060	FROM->TO	G14-057T 345.00 - SUNNYSIDE 345KV CKT 1	717	789	0.0681	115.4691	G1524G1525 345.00 - THISTLE7 345.00 345KV CKT 1
FDNS	00NR	0	16WP	G15_060	FROM->TO	G14-057T 345.00 - SUNNYSIDE 345KV CKT 1	717	789	0.0681	115.4691	G1524G1525 345.00 - THISTLE7 345.00 345KV CKT 2
FDNS	00NR	0	16WP	G15_060	FROM->TO	G14-057T 345.00 - SUNNYSIDE 345KV CKT 1	717	789	0.06609	115.4679	GEN509393 S1-ARSENAL HILL GENS #4 (STALL)
FDNS	00NR	0	16WP	G15_060	FROM->TO	G14-057T 345.00 - SUNNYSIDE 345KV CKT 1	717	789	0.06609	115.4437	GEN509392 G2-ARSENAL HILL GENS #3 (STALL)
FDNS	00NR	0	16WP	G15_060	FROM->TO	G14-057T 345.00 - SUNNYSIDE 345KV CKT 1	717	789	0.06609	115.4436	GEN509391 G1-ARSENAL HILL GENS #2 (STALL)
FDNS	00NR	0	16WP	G15_060	FROM->TO	G14-057T 345.00 - SUNNYSIDE 345KV CKT 1	717	789	0.06609	115.429	GEN336252 1-NINEMILE POINT UNIT#5
FDNS	00NR	0	16WP	G15_060	FROM->TO	G14-057T 345.00 - SUNNYSIDE 345KV CKT 1	717	789	0.06724	115.419	OIL CENTER - STRATFORD 138KV CKT 1
FDNS	00NR	0	16WP	G15_060	FROM->TO	G14-057T 345.00 - SUNNYSIDE 345KV CKT 1	717	789	0.06609	115.4027	DELL 500 - ESSEX UNIT 2 500KV CKT Z1
FDNS	00NR	0	16WP	G15_060	FROM->TO	G14-057T 345.00 - SUNNYSIDE 345KV CKT 1	717	789	0.06609	115.3907	GEN334071 1-LEWIS CREEK 2
FDNS	00NR	0	16WP	G15_060	FROM->TO	G14-057T 345.00 - SUNNYSIDE 345KV CKT 1	717	789	0.06609	115.3817	GEN334070 1-LEWIS CREEK 1
FDNS	00NR	0	16WP	G15_060	FROM->TO	G14-057T 345.00 - SUNNYSIDE 345KV CKT 1	717	789	0.06609	115.3782	GEN335204 1-NELSON UNIT 4
FDNS	00NR	0	20WP	G15_060	FROM->TO	G14-057T 345.00 - SUNNYSIDE 345KV CKT 1	717	789	0.06574	115.3748	7SAREPTA% 345.00 - LONGWOOD 345KV CKT 1
FDNS	00NR	0	20WP	G15_060	FROM->TO	G14-057T 345.00 - SUNNYSIDE 345KV CKT 1	717	789	0.06574	115.3748	7SAREPTA% 345.00 - LONGWOOD 345KV CKT 1
FDNS	00NR	0	20WP	G15_060	FROM->TO	G14-057T 345.00 - SUNNYSIDE 345KV CKT 1	717	789	0.06706	115.3669	CORN TAP - NAPLESTP 138.00 138KV CKT 1
FDNS	00NR	0	16WP	G15_060	FROM->TO	G14-057T 345.00 - SUNNYSIDE 345KV CKT 1	717	789	0.06629	115.3542	DUNCAN (DUNCAN) 138/69/13.8KV TRANSFORMER CKT 1
FDNS	00NR	0	16WP	G15_060	FROM->TO	G14-057T 345.00 - SUNNYSIDE 345KV CKT 1	717	789	0.06629	115.3542	DUNCAN (DUNCAN) 138/69/13.8KV TRANSFORMER CKT 1
FDNS	00NR	0	16WP	G15_060	FROM->TO	G14-057T 345.00 - SUNNYSIDE 345KV CKT 1	717	789	0.06793	115.3522	BLANCHARD - MAUD 138KV CKT 1
FDNS	00NR	0	16WP	G15_060	FROM->TO	G14-057T 345.00 - SUNNYSIDE 345KV CKT 1	717	789	0.06609	115.3434	GEN334441 1-SABINE UNIT 5
FDNS	00NR	0	16WP	G15_060	FROM->TO	G14-057T 345.00 - SUNNYSIDE 345KV CKT 1	717	789	0.06609	115.3149	GEN337653 1-WHITE BLUFF UNIT #2
FDNS	00NR	0	20WP	G15_060	FROM->TO	G14-057T 345.00 - SUNNYSIDE 345KV CKT 1	717	789	0.05873	115.3146	BORDER 7345.00 - TUCO_2 345.00 345KV CKT 1
FDNS	00NR	0	16WP	G15_060	FROM->TO	G14-057T 345.00 - SUNNYSIDE 345KV CKT 1	717	789	0.06613	115.3081	P12:138:AEPW:CATOOSA4:T.S.E.-4
FDNS	00NR	0	16WP	G15_060	FROM->TO	G14-057T 345.00 - SUNNYSIDE 345KV CKT 1	717	789	0.06608	115.3065	P12:161:AEPW-SWPA:BEAVER5:EROGERS5
FDNS	00NR	0	16WP	G15_060	FROM->TO	G14-057T 345.00 - SUNNYSIDE 345KV CKT 1	717	789	0.06609	115.3	GEN300003 1-THOMAS HILL UNIT 3
FDNS	00NR	0	16WP	G15_060	FROM->TO	G14-057T 345.00 - SUNNYSIDE 345KV CKT 1	717	789	0.06617	115.2966	6LAYFLD 230.00 - CARROLL 230KV CKT 1
FDNS	00NR	0	16WP	G15_060	FROM->TO	G14-057T 345.00 - SUNNYSIDE 345KV CKT 1	717	789	0.06609	115.2935	GEN506752 1-LEBROCK GAS 1
FDNS	00NR	0	16WP	G15_060	FROM->TO	G14-057T 345.00 - SUNNYSIDE 345KV CKT 1	717	789	0.06609	115.2933	GEN506753 1-LEBROCK GAS 2
FDNS	00NR	0	16WP	G15_060	FROM->TO	G14-057T 345.00 - SUNNYSIDE 345KV CKT 1	717	789	0.06609	115.2879	GEN334030 1-FRONTIER UNIT 1
FDNS	00NR	0	16WP	G15_060	FROM->TO	G14-057T 345.00 - SUNNYSIDE 345KV CKT 1	717	789	0.06623	115.2871	TUTTLE - TUTTLE CONOCO TAP 138KV CKT 1
FDNS	00NR	0	16WP	G15_060	FROM->TO	G14-057T 345.00 - SUNNYSIDE 345KV CKT 1	717	789	0.06609	115.2864	GEN334031 1-FRONTIER UNIT 2
FDNS	00NR	0	20WP	G15_060	FROM->TO	G14-057T 345.00 - SUNNYSIDE 345KV CKT 1	717	789	0.06706	115.2754	NAPLESTP 138.00 - PAYNE 138.00 138KV CKT 1
FDNS	00NR	0	16WP	G15_060	FROM->TO	G14-057T 345.00 - SUNNYSIDE 345KV CKT 1	717	789	0.06772	115.2707	BAILEY4 138.00 - SUNSHINE CANYON 138KV CKT 1
FDNS	00NR	0	16WP	G15_060	FROM->TO	G14-057T 345.00 - SUNNYSIDE 345KV CKT 1	717	789	0.06609	115.2699	GEN515040 1-SEMINOLE 1G
FDNS	00NR	0	16WP	G15_060	FROM->TO	G14-057T 345.00 - SUNNYSIDE 345KV CKT 1	717	789	0.06729	115.2647	GRACEMONT - LAWTON EASTSIDE 345KV CKT 1
FDNS	00NR	0	16WP	G15_060	FROM->TO	G14-057T 345.00 - SUNNYSIDE 345KV CKT 1	717	789	0.06729	115.2647	GRACEMONT - LAWTON EASTSIDE 345KV CKT 1
FDNS	00NR	0	16WP	G15_060	FROM->TO	G14-057T 345.00 - SUNNYSIDE 345KV CKT 1	717	789	0.06617	115.2642	FULTON 115 - HOPE 115KV CKT 1
FDNS	00NR	0	16WP	G15_060	FROM->TO	G14-057T 345.00 - SUNNYSIDE 345KV CKT 1	717	789	0.06617	115.2642	FULTON 115 - HOPE 115KV CKT 1
FDNS	00NR	0	16WP	G15_060	FROM->TO	G14-057T 345.00 - SUNNYSIDE 345KV CKT 1	717	789	0.06613	115.249	8DANIEL8 500.00 - MCKNIGHT 500KV CKT 1
FDNS	00NR	0	16WP	G15_060	FROM->TO	G14-057T 345.00 - SUNNYSIDE 345KV CKT 1	717	789	0.06724	115.2478	LATTA JCT - OIL CENTER 138KV CKT 1
FDNS	00NR	0	16WP	G15_060	FROM->TO	G14-057T 345.00 - SUNNYSIDE 345KV CKT 1	717	789	0.06609	115.2473	GEN515226 1-MUSKOGEE 6G
FDNS	00NR	0	16WP	G15_060	FROM->TO	G14-057T 345.00 - SUNNYSIDE 345KV CKT 1	717	789	0.06652	115.2426	P12:138:AEPW-OGE:WTH_JCT4:JENSEN4
FDNS	00NR	0	16WP	G15_060	FROM->TO	G14-057T 345.00 - SUNNYSIDE 345KV CKT 1	717	789	0.06609	115.2333	GEN300015 1-1SGPDEL 18.000
FDNSLock	00NR	0	16WP	G15_060	FROM->TO	G14-057T 345.00 - SUNNYSIDE 345KV CKT 1	717	789	0.06609	115.2307	GEN337911 1-ARKANSAS NUCLEAR ONE UNIT #2
FDNS	00NR	0	16WP	G15_060	FROM->TO	G14-057T 345.00 - SUNNYSIDE 345KV CKT 1	717	789	0.06609	115.2299	P12:161:AEPW:DYESS5:ELMSPRNG:TONTITN5
FDNS	00NR	0	16WP	G15_060	FROM->TO	G14-057T 345.00 - SUNNYSIDE 345KV CKT 1	717	789	0.06609	115.2278	GEN337652 1-WHITE BLUFF UNIT #1
FDNS	00NR	0	16WP	G15_060	FROM->TO	G14-057T 345.00 - SUNNYSIDE 345KV CKT 1	717	789	0.06609	115.2235	GEN336251 1-NINEMILE POINT UNIT#4
FDNS	00NR	0	16WP	G15_060	FROM->TO	G14-057T 345.00 - SUNNYSIDE 345KV CKT 1	717	789	0.06642	115.2215	P12:138:AEPW:CORNVIL4:S.W.S.-4
FDNS	00NR	0	16WP	G15_060	FROM->TO	G14-057T 345.00 - SUNNYSIDE 345KV CKT 1	717	789	0.06609	115.2199	GEN501811 1-RODEMACHER UNIT 1
FDNS	00NR	0	16WP	G15_060	FROM->TO	G14-057T 345.00 - SUNNYSIDE 345KV CKT 1	717	789	0.06609	115.2185	GEN336831 1-BAXTER WILSON SES
FDNS	00NR	0	16WP	G15_060	FROM->TO	G14-057T 345.00 - SUNNYSIDE 345KV CKT 1	717	789	0.06646	115.2077	P12:138:AEPW:CORNVIL4:DUNCAN-4
FDNS	00NR	0	16WP	G15_060	FROM->TO	G14-057T 345.00 - SUNNYSIDE 345KV CKT 1	717	789	0.06635	115.2071	G15074_T 345.00 - HOYT 345KV CKT 1
FDNS	00NR	0	16WP	G15_060	FROM->TO	G14-057T 345.00 - SUNNYSIDE 345KV CKT 1	717	789	0.06623	115.206	CIMARRON - TUTTLE CONOCO TAP 138KV CKT 1
FDNS	00NR	0	20WP	G15_060	FROM->TO	G14-057T 345.00 - SUNNYSIDE 345KV CKT 1	717	789	0.06555	115.2011	GEN336821 1-GRAND GULF UNIT
FDNS	00NR	0	16WP	G15_060	FROM->TO	G14-057T 345.00 - SUNNYSIDE 345KV CKT 1	717	789	0.06634	115.2	G15088_T 345.00 - MOORE 345KV CKT 1
FDNS	00NR	0	16WP	G15_060	FROM->TO	G14-057T 345.00 - SUNNYSIDE 345KV CKT 1	717	789	0.06609	115.1975	GEN334433 1-SABINE UNIT 3
FDNS	00NR	0	16WP	G15_060	FROM->TO	G14-057T 345.00 - SUNNYSIDE 345KV CKT 1	717	789	0.06629	115.1706	P12:69:WFEC-AEPW:COMANCH2:DUNCAN-2
FDNS	00NR	0	16WP	G15_060	FROM->TO	G14-057T 345.00 - SUNNYSIDE 345KV CKT 1	717	789	0.06661	115.1663	BUCKNER7 345.00 - SPEARVILLE 345KV CKT 1
FDNS	00NR	0	16WP	G15_060	FROM->TO	G14-057T 345.00 - SUNNYSIDE 345KV CKT 1	717	789	0.06661	115.1663	BUCKNER7 345.00 - SPEARVILLE 345KV CKT 1
FDNS	00NR	0	16WP	G15_060	FROM->TO	G14-057T 345.00 - SUNNYSIDE 345KV CKT 1	717	789	0.06609	115.164	GEN562783 1-G15036_4 0.6900
FDNS	00NR	0	16WP	G15_060	FROM->TO	G14-057T 345.00 - SUNNYSIDE 345KV CKT 1	717	789	0.06609	115.164	GEN562784 1-G15036_5 0.6900
FDNSLock	00NR	0	16WP	G15_060	FROM->TO	G14-057T 345.00 - SUNNYSIDE 345KV CKT 1	717	789	0.06609	115.1601	GEN505432 1-SIKESTON
FDNS	00NR	0	16WP	G15_060	FROM->TO	G14-057T 345.00 - SUNNYSIDE 345KV CKT 1	717	789	0.06664	115.158	CIMARRON - CZECH HALL 138KV CKT 1
FDNS	00NR	0	16WP	G15_060	FROM->TO	G14-057T 345.00 - SUNNYSIDE 345KV CKT 1	717	789	0.06609	115.1483	GEN515223 1-MUSKOGEE 4G
FDNS	00NR	0	16WP	G15_060	FROM->TO	G14-057T 345.00 - SUNNYSIDE 345KV CKT 1	717	789	0.06609	115.1483	GEN515225 1-MUSKOGEE 5G
FDNS	00NR	0	16WP	G15_060	FROM->TO	G14-057T 345.00 - SUNNYSIDE 345KV CKT 1	717	789	0.06629	115.1473	P12:138:AEPW:WTHWF4:CLINTJC4
FDNS	00NR	0	16WP	G15_060	FROM->TO	G14-057T 345.00 - SUNNYSIDE 345KV CKT 1	717	789	0.06664	115.1258	CIMARRON - SARA 138KV CKT 1

SOLUTION	GROUP	SCENARIO	SEASON	SOURCE	DIRECTION	MONITORED ELEMENT	RATEA (MVA)	RATEB(MVA)	TDF	TC%LOADING (% MVA)	CONTINGENCY
FDNS	00NR	0	16WP	G15_060	FROM->TO	G14-057T 345.00 - SUNNYSIDE 345KV CKT 1	717	789	0.06609	115.1244	P12:161:AEPW:EROGERS5:ECNTRTN5
FDNS	00NR	0	16WP	G15_060	FROM->TO	G14-057T 345.00 - SUNNYSIDE 345KV CKT 1	717	789	0.06607	115.1205	LAYFLD8 500.00 - MOUNT OLIVE 500KV CKT 1
FDNS	00NR	0	16WP	G15_060	FROM->TO	G14-057T 345.00 - SUNNYSIDE 345KV CKT 1	717	789	0.06607	115.1205	LAYFLD8 500.00 - MOUNT OLIVE 500KV CKT 1
FDNS	00NR	0	16WP	G15_060	FROM->TO	G14-057T 345.00 - SUNNYSIDE 345KV CKT 1	717	789	0.06629	115.1191	DUNCAN - TOSCO 69KV CKT 1
FDNS	00NR	0	16WP	G15_060	FROM->TO	G14-057T 345.00 - SUNNYSIDE 345KV CKT 1	717	789	0.06609	115.1185	RODEMACHER 230/22.0KV TRANSFORMER CKT 1
FDNS	00NR	0	16WP	G15_060	FROM->TO	G14-057T 345.00 - SUNNYSIDE 345KV CKT 1	717	789	0.06609	115.118	WHITE BLUFF 500/26.0KV TRANSFORMER CKT 1
FDNS	00NR	0	16WP	G15_060	FROM->TO	G14-057T 345.00 - SUNNYSIDE 345KV CKT 1	717	789	0.06629	115.1125	P12:138:AEPW:WTHWF4:WTH_SE4
FDNS	00NR	0	16WP	G15_060	FROM->TO	G14-057T 345.00 - SUNNYSIDE 345KV CKT 1	717	789	0.06611	115.1104	MC NIEL 500/115KV TRANSFORMER CKT 1
FDNS	00NR	0	16WP	G15_060	FROM->TO	G14-057T 345.00 - SUNNYSIDE 345KV CKT 1	717	789	0.06281	115.1076	CANADIAN RIVER - PITTSBURG 345KV CKT 1
FDNS	00NR	0	16WP	G15_060	FROM->TO	G14-057T 345.00 - SUNNYSIDE 345KV CKT 1	717	789	0.06281	115.1076	CANADIAN RIVER - PITTSBURG 345KV CKT 1
FDNS	00NR	0	20WP	G15_060	FROM->TO	G14-057T 345.00 - SUNNYSIDE 345KV CKT 1	717	789	0.0667	115.1068	ANADARKO - POCASSETT 138KV CKT 1
FDNS	00NR	0	16WP	G15_060	FROM->TO	G14-057T 345.00 - SUNNYSIDE 345KV CKT 1	717	789	0.06613	115.1055	BISMARK - HOT SPRINGS WEST BUS 115KV CKT 1
FDNS	00NR	0	16WP	G15_060	FROM->TO	G14-057T 345.00 - SUNNYSIDE 345KV CKT 1	717	789	0.06609	115.1045	GEN303007 1-1BC2 U2
FDNS	00NR	0	16WP	G15_060	FROM->TO	G14-057T 345.00 - SUNNYSIDE 345KV CKT 1	717	789	0.06772	115.1009	BAILEY4 138.00 - WESTMOORE 138KV CKT 1
FDNS	00NR	0	16WP	G15_060	FROM->TO	G14-057T 345.00 - SUNNYSIDE 345KV CKT 1	717	789	0.06608	115.1003	HOT SPRINGS EHV - MAGNET COVE 500KV CKT 1
FDNS	00NR	0	16WP	G15_060	FROM->TO	G14-057T 345.00 - SUNNYSIDE 345KV CKT 1	717	789	0.06609	115.0992	GEN303006 1-1BC2 U1
FDNS	00NR	0	16WP	G15_060	FROM->TO	G14-057T 345.00 - SUNNYSIDE 345KV CKT 1	717	789	0.06721	115.0967	CLEO CORNER - CLEOPLT4 138.00 138KV CKT 1
FDNS	00NR	0	16WP	G15_060	FROM->TO	G14-057T 345.00 - SUNNYSIDE 345KV CKT 1	717	789	0.0654	115.0929	ARBWIND4 138.00 - CARTER 138KV CKT 1
FDNS	00NR	0	16WP	G15_060	FROM->TO	G14-057T 345.00 - SUNNYSIDE 345KV CKT 1	717	789	0.067	115.0928	G15095_T 138.00 - ROSE_VALLEY 138.00 138KV CKT 1
FDNS	00NR	0	16WP	G15_060	FROM->TO	G14-057T 345.00 - SUNNYSIDE 345KV CKT 1	717	789	0.06616	115.0921	P12:69:AEPW-OMPA:COMANC-2:OMWALTR2
FDNS	00NR	0	20WP	G15_060	FROM->TO	G14-057T 345.00 - SUNNYSIDE 345KV CKT 1	717	789	0.06555	115.0919	GEN336153 1-WATERFORD UNIT#3
FDNS	00NR	0	16WP	G15_060	FROM->TO	G14-057T 345.00 - SUNNYSIDE 345KV CKT 1	717	789	0.06609	115.0853	GEN337910 1-ARKANSAS NUCLEAR ONE UNIT #1
FDNS	00NR	0	16WP	G15_060	FROM->TO	G14-057T 345.00 - SUNNYSIDE 345KV CKT 1	717	789	0.06525	115.0838	SEMINOLE - VANOSTP4 138.00 138KV CKT 1
FDNS	00NR	0	16WP	G15_060	FROM->TO	G14-057T 345.00 - SUNNYSIDE 345KV CKT 1	717	789	0.06721	115.0828	CLEOPLT4 138.00 - MEN TAP 138KV CKT 1
FDNS	00NR	0	16WP	G15_060	FROM->TO	G14-057T 345.00 - SUNNYSIDE 345KV CKT 1	717	789	0.06609	115.0797	GEN300010 1-ST FRANCIS UNIT 1
FDNS	00NR	0	16WP	G15_060	FROM->TO	G14-057T 345.00 - SUNNYSIDE 345KV CKT 1	717	789	0.06609	115.0766	GEN336191 1-LITTLE GYPSY UNIT#3
FDNS	00NR	0	16WP	G15_060	FROM->TO	G14-057T 345.00 - SUNNYSIDE 345KV CKT 1	717	789	0.06721	115.0709	IMO TAP - MEN TAP 138KV CKT 1
FDNS	00NR	0	16WP	G15_060	FROM->TO	G14-057T 345.00 - SUNNYSIDE 345KV CKT 1	717	789	0.06664	115.0701	CZECH HALL - XEROX 138KV CKT 1
FDNS	00NR	0	16WP	G15_060	FROM->TO	G14-057T 345.00 - SUNNYSIDE 345KV CKT 1	717	789	0.06664	115.0657	MORGAN - XEROX 138KV CKT 1
FDNS	00NR	0	16WP	G15_060	FROM->TO	G14-057T 345.00 - SUNNYSIDE 345KV CKT 1	717	789	0.06612	115.057	P12:138:AEPW:N.E.S.-4:CATOOSA4
FDNS	00NR	0	16WP	G15_060	FROM->TO	G14-057T 345.00 - SUNNYSIDE 345KV CKT 1	717	789	0.06609	115.0559	NELSON 230/20.0KV TRANSFORMER CKT 1
FDNS	00NR	0	16WP	G15_060	FROM->TO	G14-057T 345.00 - SUNNYSIDE 345KV CKT 1	717	789	0.06613	115.0529	ALPINE AECC - BISMARK 115KV CKT 1
FDNS	00NR	0	16WP	G15_060	FROM->TO	G14-057T 345.00 - SUNNYSIDE 345KV CKT 1	717	789	0.06609	115.0513	GEN335614 1-WILLOW GLENN UNIT#4
FDNS	00NR	0	16WP	G15_060	FROM->TO	G14-057T 345.00 - SUNNYSIDE 345KV CKT 1	717	789	0.06629	115.0494	COMANCHE TAP - TOSCO 69KV CKT 1
FDNS	00NR	0	16WP	G15_060	FROM->TO	G14-057T 345.00 - SUNNYSIDE 345KV CKT 1	717	789	0.06664	115.0419	MORGAN - MUSTANG 138KV CKT 1
FDNS	00NR	0	16WP	G15_060	FROM->TO	G14-057T 345.00 - SUNNYSIDE 345KV CKT 1	717	789	0.0677	115.0417	BENTON - WICHITA 345KV CKT 1
FDNS	00NR	0	16WP	G15_060	FROM->TO	G14-057T 345.00 - SUNNYSIDE 345KV CKT 1	717	789	0.06609	115.0396	GEN303008 1-1BC2 U3
FDNS	00NR	0	16WP	G15_060	FROM->TO	G14-057T 345.00 - SUNNYSIDE 345KV CKT 1	717	789	0.06609	115.03	GEN300011 1-ST FRANCIS UNIT 2
FDNS	00NR	0	16WP	G15_060	FROM->TO	G14-057T 345.00 - SUNNYSIDE 345KV CKT 1	717	789	0.067	115.0247	NOEL_SW 138.00 - ROSE_VALLEY 138.00 138KV CKT 1
FDNS	00NR	0	16WP	G15_060	FROM->TO	G14-057T 345.00 - SUNNYSIDE 345KV CKT 1	717	789	0.06609	115.0126	GEN336170 1-GULF OXY U4
FDNS	00NR	0	16WP	G15_060	FROM->TO	G14-057T 345.00 - SUNNYSIDE 345KV CKT 1	717	789	0.06643	115.0103	WEATHERFORD JCT. - WEATHERFORD SOUTHEAST 138KV CKT 1
FDNS	00NR	0	16WP	G15_060	FROM->TO	G14-057T 345.00 - SUNNYSIDE 345KV CKT 1	717	789	0.06643	115.0103	WEATHERFORD JCT. - WEATHERFORD SOUTHEAST 138KV CKT 1
FDNS	00NR	0	16WP	G15_060	FROM->TO	G14-057T 345.00 - SUNNYSIDE 345KV CKT 1	717	789	0.0661	115.0093	CYPRESS - HARTBURG 500KV CKT 1
FDNS	00NR	0	16WP	G15_060	FROM->TO	G14-057T 345.00 - SUNNYSIDE 345KV CKT 1	717	789	0.06613	115.0092	ALPINE AECC - AMITY SS 115KV CKT 1
FDNS	00NR	0	16WP	G15_060	FROM->TO	G14-057T 345.00 - SUNNYSIDE 345KV CKT 1	717	789	0.06609	115.0076	GEN336464 1-MICHOUD UNIT #3
FDNS	00NR	0	20WP	G15_060	FROM->TO	G14-057T 345.00 - SUNNYSIDE 345KV CKT 1	717	789	0.06671	115.0036	CLEVELAND - TULSA NORTH 345KV CKT 1
FDNS	00NR	0	20WP	G15_060	FROM->TO	G14-057T 345.00 - SUNNYSIDE 345KV CKT 1	717	789	0.06671	115.0036	CLEVELAND - TULSA NORTH 345KV CKT 1
FDNS	00NR	0	16WP	G15_060	FROM->TO	G14-057T 345.00 - SUNNYSIDE 345KV CKT 1	717	789	0.06635	114.998	HOYT - STRANGER CREEK 345KV CKT 1
FDNS	00NR	0	16WP	G15_060	FROM->TO	G14-057T 345.00 - SUNNYSIDE 345KV CKT 1	717	789	0.06572	114.9964	CHISHOLM6 230.00 - ELK CITY 230KV 230KV CKT 1
FDNS	00NR	0	20WP	G15_060	FROM->TO	G14-057T 345.00 - SUNNYSIDE 345KV CKT 1	717	789	0.06676	114.9957	COMANCHE - LOCO 138KV CKT 1
FDNS	00NR	0	16WP	G15_060	FROM->TO	G14-057T 345.00 - SUNNYSIDE 345KV CKT 1	717	789	0.06629	114.9952	COMANCHE - COMANCHE TAP 69KV CKT 1
FDNS	00NR	0	16WP	G15_060	FROM->TO	G14-057T 345.00 - SUNNYSIDE 345KV CKT 1	717	789	0.06572	114.9949	ELK CITY 230KV (ELKCTY-6) 230/138/13.8KV TRANSFORMER CKT 1
FDNS	00NR	0	16WP	G15_060	FROM->TO	G14-057T 345.00 - SUNNYSIDE 345KV CKT 1	717	789	0.06572	114.9949	ELK CITY 230KV (ELKCTY-6) 230/138/13.8KV TRANSFORMER CKT 1
FDNS	00NR	0	16WP	G15_060	FROM->TO	G14-057T 345.00 - SUNNYSIDE 345KV CKT 1	717	789	0.06609	114.9914	GEN300016 1-1G1GPDEL 18.000
FDNS	00NR	0	16WP	G15_060	FROM->TO	G14-057T 345.00 - SUNNYSIDE 345KV CKT 1	717	789	0.06609	114.9913	8CAJUN2 500/24.0KV TRANSFORMER CKT 1
FDNS	00NR	0	20WP	G15_060	FROM->TO	G14-057T 345.00 - SUNNYSIDE 345KV CKT 1	717	789	0.06683	114.9873	GRACEMONT - LAWTON EASTSIDE 345KV CKT 1
FDNS	00NR	0	20WP	G15_060	FROM->TO	G14-057T 345.00 - SUNNYSIDE 345KV CKT 1	717	789	0.06683	114.9873	GRACEMONT - LAWTON EASTSIDE 345KV CKT 1
FDNS	00NR	0	16WP	G15_060	FROM->TO	G14-057T 345.00 - SUNNYSIDE 345KV CKT 1	717	789	0.06717	114.9818	P12:138:OKGE-AEPW:JENSEN4:REDROCKRD4
FDNS	00NR	0	16WP	G15_060	FROM->TO	G14-057T 345.00 - SUNNYSIDE 345KV CKT 1	717	789	0.06609	114.9768	GEN337041 1-GERALD ANDRUS
FDNS	00NR	0	16WP	G15_060	FROM->TO	G14-057T 345.00 - SUNNYSIDE 345KV CKT 1	717	789	0.06739	114.9721	CANADIAN - NOBLE 138KV CKT 1
FDNS	00NR	0	16WP	G15_060	FROM->TO	G14-057T 345.00 - SUNNYSIDE 345KV CKT 1	717	789	0.06609	114.9655	GEN501910 1-ACADIA UNIT ST1
FDNS	00NR	0	16WP	G15_060	FROM->TO	G14-057T 345.00 - SUNNYSIDE 345KV CKT 1	717	789	0.06609	114.9604	P12:138:AEPW:R.S.S.-4:S.HUD.-4
FDNS	00NR	0	16WP	G15_060	FROM->TO	G14-057T 345.00 - SUNNYSIDE 345KV CKT 1	717	789	0.06724	114.9568	LASALLE - LATTA JCT 138KV CKT 1
FDNS	00NR	0	16WP	G15_060	FROM->TO	G14-057T 345.00 - SUNNYSIDE 345KV CKT 1	717	789	0.06643	114.9568	P12:138:AEPW:REDROCKRD4:WTH_JCT4
FDNS	00NR	0	16WP	G15_060	FROM->TO	G14-057T 345.00 - SUNNYSIDE 345KV CKT 1	717	789	0.06608	114.9566	7JASPER 345.00 - BLACKBERRY 345KV CKT 1
FDNS	00NR	0	16WP	G15_060	FROM->TO	G14-057T 345.00 - SUNNYSIDE 345KV CKT 1	717	789	0.06634	114.955	WALTERS - WALTERS 69KV CKT 1
FDNS	00NR	0	16WP	G15_060	FROM->TO	G14-057T 345.00 - SUNNYSIDE 345KV CKT 1	717	789	0.06741	114.9539	P12:138:OKGE:3TERM27
FDNS	00NR	0	20WP	G15_060	FROM->TO	G14-057T 345.00 - SUNNYSIDE 345KV CKT 1	717	789	0.0667	114.9532	POCASSETT - TUTTLE 138KV CKT 1
FDNS	00NR	0	16WP	G15_060	FROM->TO	G14-057T 345.00 - SUNNYSIDE 345KV CKT 1	717	789	0.06635	114.9521	G15074_T 345.00 - JEFFREY ENERGY CENTER 345KV CKT 1
FDNS	00NR	0	16WP	G15_060	FROM->TO	G14-057T 345.00 - SUNNYSIDE 345KV CKT 1	717	789	0.06651	114.9482	BLACKBERRY - NEOSHO 345KV CKT 1
FDNS	00NR	0	16WP	G15_060	FROM->TO	G14-057T 345.00 - SUNNYSIDE 345KV CKT 1	717	789	0.06647	114.9468	SWISSVALE - WEST GARDNER 345KV CKT 1
FDNS	00NR	0	16WP	G15_060	FROM->TO	G14-057T 345.00 - SUNNYSIDE 345KV CKT 1	717	789	0.06645	114.9464	NORGE ROAD - SOUTHWESTERN STATION 138KV CKT 1
FDNS	00NR	0	16WP	G15_060	FROM->TO	G14-057T 345.00 - SUNNYSIDE 345KV CKT 1	717	789	0.06645	114.9464	NORGE ROAD - SOUTHWESTERN STATION 138KV CKT 1
FDNS	00NR	0	16WP	G15_060	FROM->TO	G14-057T 345.00 - SUNNYSIDE 345KV CKT 1	717	789	0.06772	114.9431	FRANKLIN SW - WESTMOORE 138KV CKT 1
FDNS	00NR	0	16WP	G15_060	FROM->TO	G14-057T 345.00 - SUNNYSIDE 345KV CKT 1	717	789	0.06851	114.9374	DRAPER LAKE - SEMINOLE 345KV CKT 2
FDNS	00NR	0	16WP	G15_060	FROM->TO	G14-057T 345.00 - SUNNYSIDE 345KV CKT 1	717	789	0.06851	114.9373	DRAPER LAKE - SEMINOLE 345KV CKT 1
FDNS	00NR	0	20WP	G15_060	FROM->TO	G14-057T 345.00 - SUNNYSIDE 345KV CKT 1	717	789	0.06568	114.9356	DOLET HILLS - SOUTHWEST SHREVEPORT 345KV CKT 1
FDNS	00NR	0	20WP	G15_060	FROM->TO	G14-057T 345.00 - SUNNYSIDE 345KV CKT 1	717	789	0.06568	114.9356	DOLET HILLS - SOUTHWEST SHREVEPORT 345KV CKT 1
FDNS	00NR	0	16WP	G15_060	FROM->TO	G14-057T 345.00 - SUNNYSIDE 345KV CKT 1	717	789	0.06664	114.933	SARA - STHLAKE4 138.00 138KV CKT 1

SOLUTION	GROUP	SCENARIO	SEASON	SOURCE	DIRECTION	MONITORED ELEMENT	RATEA (MVA)	RATEB(MVA)	TDF	TC%LOADING (% MVA)	CONTINGENCY
FDNS	00NR	0	16WP	G15_060	FROM->TO	G14-057T 345.00 - SUNNYSIDE 345KV CKT 1	717	789	0.0641	114.9289	G14_038T 345.00 - Hitchland Interchange 345KV CKT 1
FDNS	00NR	0	16WP	G15_060	FROM->TO	G14-057T 345.00 - SUNNYSIDE 345KV CKT 1	717	789	0.06605	114.9274	ETTA (DUKE HOTSPRINGS) - MC NIEL 500KV CKT 1
FDNS	00NR	0	16WP	G15_060	FROM->TO	G14-057T 345.00 - SUNNYSIDE 345KV CKT 1	717	789	0.06609	114.9218	P12:138:AEPW:YARCH-S4:T.S.E.-4
FDNS	00NR	0	16WP	G15_060	FROM->TO	G14-057T 345.00 - SUNNYSIDE 345KV CKT 1	717	789	0.06616	114.9213	LAWTON RELIFT TAP - OMPA-WALTERS 69KV CKT 1
FDNS	00NR	0	16WP	G15_060	FROM->TO	G14-057T 345.00 - SUNNYSIDE 345KV CKT 1	717	789	0.06609	114.9181	SABINE 230/24.0KV TRANSFORMER CKT 1
FDNS	00NR	0	16WP	G15_060	FROM->TO	G14-057T 345.00 - SUNNYSIDE 345KV CKT 1	717	789	0.06609	114.9164	ESSEX UNIT 2 500/18.0KV TRANSFORMER CKT 1
FDNS	00NR	0	16WP	G15_060	FROM->TO	G14-057T 345.00 - SUNNYSIDE 345KV CKT 1	717	789	0.06609	114.9157	P12:69:AEPW:NROGERS2:ECNTRTN2
FDNS	00NR	0	16WP	G15_060	FROM->TO	G14-057T 345.00 - SUNNYSIDE 345KV CKT 1	717	789	0.06609	114.9156	P12:138:AEPW:BA_71ST4:T.S.E.-4
FDNS	00NR	0	16WP	G15_060	FROM->TO	G14-057T 345.00 - SUNNYSIDE 345KV CKT 1	717	789	0.06609	114.9151	GEN336801 1-BAXTER WILSON UNIT #1
FDNS	00NR	0	16WP	G15_060	FROM->TO	G14-057T 345.00 - SUNNYSIDE 345KV CKT 1	717	789	0.06659	114.9126	EMPORIA ENERGY CENTER - G14_001T 345.00 345KV CKT 1
FDNS	00NR	0	16WP	G15_060	FROM->TO	G14-057T 345.00 - SUNNYSIDE 345KV CKT 1	717	789	0.06622	114.9076	7LUTESVIL 345.00 - 7ST FRANC 345.00 345KV CKT 1
FDNS	00NR	0	16WP	G15_060	FROM->TO	G14-057T 345.00 - SUNNYSIDE 345KV CKT 1	717	789	0.06664	114.9039	MCCLAIN - STHLAKE4 138.00 138KV CKT 1
FDNS	00NR	0	16WP	G15_060	FROM->TO	G14-057T 345.00 - SUNNYSIDE 345KV CKT 1	717	789	0.06609	114.8963	FRONTIER 345/18.0KV TRANSFORMER CKT 1
FDNS	00NR	0	16WP	G15_060	FROM->TO	G14-057T 345.00 - SUNNYSIDE 345KV CKT 1	717	789	0.06617	114.8959	HOPE - MCNAB REC 115KV CKT 1
FDNS	00NR	0	16WP	G15_060	FROM->TO	G14-057T 345.00 - SUNNYSIDE 345KV CKT 1	717	789	0.06609	114.8947	FRONTIER 345/18.0KV TRANSFORMER CKT 1
FDNS	00NR	0	16WP	G15_060	FROM->TO	G14-057T 345.00 - SUNNYSIDE 345KV CKT 1	717	789	0.06623	114.888	P12:138:AEPW-OGE:SHIDLER4:OSAGE 4
FDNS	00NR	0	16WP	G15_060	FROM->TO	G14-057T 345.00 - SUNNYSIDE 345KV CKT 1	717	789	0.06617	114.887	P12:115:AEPW:TURK3:HOPE3
FDNS	00NR	0	16WP	G15_060	FROM->TO	G14-057T 345.00 - SUNNYSIDE 345KV CKT 1	717	789	0.06609	114.8839	P12:161:AEPW:CHAMSPR5:FARMING5
FDNS	00NR	0	16WP	G15_060	FROM->TO	G14-057T 345.00 - SUNNYSIDE 345KV CKT 1	717	789	0.06642	114.8809	SOUTHWESTERN STATION - VERDEN 138KV CKT 1
FDNS	00NR	0	16WP	G15_060	FROM->TO	G14-057T 345.00 - SUNNYSIDE 345KV CKT 1	717	789	0.06739	114.8807	NOBLE - PURCELL4 138.00 138KV CKT 1
FDNS	00NR	0	16WP	G15_060	FROM->TO	G14-057T 345.00 - SUNNYSIDE 345KV CKT 1	717	789	0.06643	114.8796	HINTON - WEATHERFORD JCT. 138KV CKT 1
FDNS	00NR	0	16WP	G15_060	FROM->TO	G14-057T 345.00 - SUNNYSIDE 345KV CKT 1	717	789	0.06593	114.8773	ENOWILT - LONE OAK 138KV CKT 1
FDNS	00NR	0	16WP	G15_060	FROM->TO	G14-057T 345.00 - SUNNYSIDE 345KV CKT 1	717	789	0.06643	114.8748	ANADARKO - SEQUOYAHJ4 138.00 138KV CKT 1
FDNS	00NR	0	16WP	G15_060	FROM->TO	G14-057T 345.00 - SUNNYSIDE 345KV CKT 1	717	789	0.06643	114.8744	CORN TAP - SEQUOYAHJ4 138.00 138KV CKT 1
FDNS	00NR	0	16WP	G15_060	FROM->TO	G14-057T 345.00 - SUNNYSIDE 345KV CKT 1	717	789	0.06479	114.8724	ARBUCKLE - VANOSTP4 138.00 138KV CKT 1
FDNS	00NR	0	16WP	G15_060	FROM->TO	G14-057T 345.00 - SUNNYSIDE 345KV CKT 1	717	789	0.06629	114.872	WEATHERFORD TAP - WEATHERFORD WIND FARM 138KV CKT 1
FDNS	00NR	0	16WP	G15_060	FROM->TO	G14-057T 345.00 - SUNNYSIDE 345KV CKT 1	717	789	0.06625	114.8684	8WNEWMADRID 500.00 - DELL 500 500KV CKT 1
FDNS	00NR	0	16WP	G15_060	FROM->TO	G14-057T 345.00 - SUNNYSIDE 345KV CKT 1	717	789	0.06593	114.8684	ENOWILT - SARDIS 138KV CKT 1
FDNS	00NR	0	16WP	G15_060	FROM->TO	G14-057T 345.00 - SUNNYSIDE 345KV CKT 1	717	789	0.06609	114.8662	GEN505616 1-BROKEN BOW
FDNS	00NR	0	16WP	G15_060	FROM->TO	G14-057T 345.00 - SUNNYSIDE 345KV CKT 1	717	789	0.06659	114.8654	CLINTON JUNCTION - ELK CITY 138KV CKT 1
FDNS	00NR	0	16WP	G15_060	FROM->TO	G14-057T 345.00 - SUNNYSIDE 345KV CKT 1	717	789	0.06659	114.8654	CLINTON JUNCTION - ELK CITY 138KV CKT 1
FDNS	00NR	0	16WP	G15_060	FROM->TO	G14-057T 345.00 - SUNNYSIDE 345KV CKT 1	717	789	0.06617	114.8645	MCNAB REC - Turk 115 115KV CKT 1
FDNS	00NR	0	16WP	G15_060	FROM->TO	G14-057T 345.00 - SUNNYSIDE 345KV CKT 1	717	789	0.06617	114.8645	TURK (TURK 1) 138/115/13.2KV TRANSFORMER CKT 1
FDNS	00NR	0	16WP	G15_060	FROM->TO	G14-057T 345.00 - SUNNYSIDE 345KV CKT 1	717	789	0.06617	114.8645	TURK (TURK 1) 138/115/13.2KV TRANSFORMER CKT 1
FDNS	00NR	0	16WP	G15_060	FROM->TO	G14-057T 345.00 - SUNNYSIDE 345KV CKT 1	717	789	0.06642	114.86	NORTH 29TH CHICKASHA - VERDEN 138KV CKT 1
FDNS	00NR	0	16WP	G15_060	FROM->TO	G14-057T 345.00 - SUNNYSIDE 345KV CKT 1	717	789	0.06659	114.8591	G14_001T 345.00 - WICHITA 345KV CKT 1
FDNS	00NR	0	16WP	G15_060	FROM->TO	G14-057T 345.00 - SUNNYSIDE 345KV CKT 1	717	789	0.06609	114.8585	LEWIS CREEK SWITCHYARD 138/22.0KV TRANSFORMER CKT 1
FDNS	00NR	0	16WP	G15_060	FROM->TO	G14-057T 345.00 - SUNNYSIDE 345KV CKT 1	717	789	0.06705	114.8545	G13-010T 345.00 - POST ROCK 345KV CKT 1
FDNS	00NR	0	16WP	G15_060	FROM->TO	G14-057T 345.00 - SUNNYSIDE 345KV CKT 1	717	789	0.06616	114.8545	OMPA-WALTERS - WALTERS 69KV CKT 1
FDNS	00NR	0	16WP	G15_060	FROM->TO	G14-057T 345.00 - SUNNYSIDE 345KV CKT 1	717	789	0.06616	114.8545	OMPA-WALTERS - WALTERS 69KV CKT 1
FDNS	00NR	0	16WP	G15_060	FROM->TO	G14-057T 345.00 - SUNNYSIDE 345KV CKT 1	717	789	0.06614	114.8539	COUCH SES - MC NIEL 115KV CKT 1
FDNS	00NR	0	16WP	G15_060	FROM->TO	G14-057T 345.00 - SUNNYSIDE 345KV CKT 1	717	789	0.06609	114.8536	LEWIS CREEK SWITCHYARD 138/22.0KV TRANSFORMER CKT 1
FDNS	00NR	0	16WP	G15_060	FROM->TO	G14-057T 345.00 - SUNNYSIDE 345KV CKT 1	717	789	0.06637	114.8433	EMPORIA ENERGY CENTER - SWISSVALE 345KV CKT 1
FDNS	00NR	0	16WP	G15_060	FROM->TO	G14-057T 345.00 - SUNNYSIDE 345KV CKT 1	717	789	0.06634	114.8397	P12:69:WFEC-AEPW:COMANCH2:WALTRS-2
FDNS	00NR	0	16WP	G15_060	FROM->TO	G14-057T 345.00 - SUNNYSIDE 345KV CKT 1	717	789	0.06609	114.8396	GEN501970 1-EVANGELINE UNIT 7
FDNS	00NR	0	16WP	G15_060	FROM->TO	G14-057T 345.00 - SUNNYSIDE 345KV CKT 1	717	789	0.06616	114.835	MORISNT4 138.00 - STILLWATER 138KV CKT 1
FDNS	00NR	0	16WP	G15_060	FROM->TO	G14-057T 345.00 - SUNNYSIDE 345KV CKT 1	717	789	0.06593	114.8336	CLAYTON - SARDIS 138KV CKT 1
FDNS	00NR	0	16WP	G15_060	FROM->TO	G14-057T 345.00 - SUNNYSIDE 345KV CKT 1	717	789	0.06618	114.8296	P12:138:OKGE:3TERM2
FDNS	00NR	0	16WP	G15_060	FROM->TO	G14-057T 345.00 - SUNNYSIDE 345KV CKT 1	717	789	0.06643	114.8285	HINTON - REDROCKRD4 138.00 138KV CKT 1
FDNS	00NR	0	16WP	G15_060	FROM->TO	G14-057T 345.00 - SUNNYSIDE 345KV CKT 1	717	789	0.06609	114.8271	GEN334392 1-EXXON MOBIL IPP 1
FDNS	00NR	0	16WP	G15_060	FROM->TO	G14-057T 345.00 - SUNNYSIDE 345KV CKT 1	717	789	0.06645	114.826	CORNVILLE - NORGE ROAD 138KV CKT 1
FDNS	00NR	0	16WP	G15_060	FROM->TO	G14-057T 345.00 - SUNNYSIDE 345KV CKT 1	717	789	0.06645	114.826	CORNVILLE - NORGE ROAD 138KV CKT 1
FDNS	00NR	0	16WP	G15_060	FROM->TO	G14-057T 345.00 - SUNNYSIDE 345KV CKT 1	717	789	0.06724	114.822	LASALLE - STONEWAL LH138.00 138KV CKT 1
FDNS	00NR	0	16WP	G15_060	FROM->TO	G14-057T 345.00 - SUNNYSIDE 345KV CKT 1	717	789	0.06609	114.8203	GEN334393 1-EXXON MOBIL IPP 2
FDNS	00NR	0	16WP	G15_060	FROM->TO	G14-057T 345.00 - SUNNYSIDE 345KV CKT 1	717	789	0.06609	114.8203	GEN334394 1-EXXON MOBIL IPP 3
FDNS	00NR	0	16WP	G15_060	FROM->TO	G14-057T 345.00 - SUNNYSIDE 345KV CKT 1	717	789	0.06615	114.8155	P12:138:OKGE:3TERM12
FDNS	00NR	0	16WP	G15_060	FROM->TO	G14-057T 345.00 - SUNNYSIDE 345KV CKT 1	717	789	0.06609	114.812	GEN336222 1-LITTLE GYPSY UNIT#2
FDNS	00NR	0	16WP	G15_060	FROM->TO	G14-057T 345.00 - SUNNYSIDE 345KV CKT 1	717	789	0.06724	114.807	STONEWAL LH138.00 - TUPELO TAP 138KV CKT 1
FDNS	00NR	0	16WP	G15_060	FROM->TO	G14-057T 345.00 - SUNNYSIDE 345KV CKT 1	717	789	0.06593	114.8059	P12:138:AEPW-SWPA:LONEOAK4:BRKNBW4
FDNS	00NR	0	16WP	G15_060	FROM->TO	G14-057T 345.00 - SUNNYSIDE 345KV CKT 1	717	789	0.06618	114.803	FLETCHER - MARLOW JCT 69KV CKT 1
FDNS	00NR	0	20WP	G15_060	FROM->TO	G14-057T 345.00 - SUNNYSIDE 345KV CKT 1	717	789	0.06555	114.7966	GEN335831 1-RIVERBEND UNIT#1
FDNS	00NR	0	16WP	G15_060	FROM->TO	G14-057T 345.00 - SUNNYSIDE 345KV CKT 1	717	789	0.06614	114.7955	7JASPER 345.00 - MORGAN 345KV CKT 1
FDNS	00NR	0	16WP	G15_060	FROM->TO	G14-057T 345.00 - SUNNYSIDE 345KV CKT 1	717	789	0.0661	114.7941	P12:138:AEPW:R.S.S-4:T.P.S.-4
FDNS	00NR	0	16WP	G15_060	FROM->TO	G14-057T 345.00 - SUNNYSIDE 345KV CKT 1	717	789	0.06609	114.7937	GEN506749 1-EASTMAN GENERATION A
FDNS	00NR	0	16WP	G15_060	FROM->TO	G14-057T 345.00 - SUNNYSIDE 345KV CKT 1	717	789	0.06593	114.792	CLAYTON - NASHOBA 138KV CKT 1
FDNS	00NR	0	16WP	G15_060	FROM->TO	G14-057T 345.00 - SUNNYSIDE 345KV CKT 1	717	789	0.06733	114.7904	CLARKSVILLE - ONETA 345KV CKT 1
FDNS	00NR	0	16WP	G15_060	FROM->TO	G14-057T 345.00 - SUNNYSIDE 345KV CKT 1	717	789	0.06733	114.7904	CLARKSVILLE - ONETA 345KV CKT 1
FDNS	00NR	0	16WP	G15_060	FROM->TO	G14-057T 345.00 - SUNNYSIDE 345KV CKT 1	717	789	0.06642	114.7904	CORNVILLE - NORTH 29TH CHICKASHA 138KV CKT 1
FDNS	00NR	0	16WP	G15_060	FROM->TO	G14-057T 345.00 - SUNNYSIDE 345KV CKT 1	717	789	0.06609	114.7901	GEN334431 1-SABINE UNIT 1
FDNS	00NR	0	16WP	G15_060	FROM->TO	G14-057T 345.00 - SUNNYSIDE 345KV CKT 1	717	789	0.06609	114.79	GEN334432 1-SABINE UNIT 2
FDNS	00NR	0	16WP	G15_060	FROM->TO	G14-057T 345.00 - SUNNYSIDE 345KV CKT 1	717	789	0.06622	114.785	FRANKLIN - FRANKLIN SW 138KV CKT 1
FDNS	00NR	0	16WP	G15_060	FROM->TO	G14-057T 345.00 - SUNNYSIDE 345KV CKT 1	717	789	0.06629	114.7845	WEATHERFORD SOUTHEAST - WEATHERFORD TAP 138KV CKT 1
FDNS	00NR	0	16WP	G15_060	FROM->TO	G14-057T 345.00 - SUNNYSIDE 345KV CKT 1	717	789	0.06609	114.7829	GEN501972 1-EVANGELINE UNIT 7-2
FDNS	00NR	0	16WP	G15_060	FROM->TO	G14-057T 345.00 - SUNNYSIDE 345KV CKT 1	717	789	0.06609	114.7828	GEN501971 1-EVANGELINE UNIT 7-1
FDNS	00NR	0	16WP	G15_060	FROM->TO	G14-057T 345.00 - SUNNYSIDE 345KV CKT 1	717	789	0.06609	114.7826	GEN336152 1-WATERFORD UNIT#2
FDNS	00NR	0	16WP	G15_060	FROM->TO	G14-057T 345.00 - SUNNYSIDE 345KV CKT 1	717	789	0.06609	114.7815	GEN336151 1-WATERFORD UNIT#1
FDNS	00NR	0	16WP	G15_060	FROM->TO	G14-057T 345.00 - SUNNYSIDE 345KV CKT 1	717	789	0.06593	114.779	BETHEL - NASHOBA 138KV CKT 1
FDNS	00NR	0	16WP	G15_060	FROM->TO	G14-057T 345.00 - SUNNYSIDE 345KV CKT 1	717	789	0.06609	114.7698	P12:138:AEPW:R.S.S.-4:R:96YALE-4
FDNS	00NR	0	20WP	G15_060	FROM->TO	G14-057T 345.00 - SUNNYSIDE 345KV CKT 1	717	789	0.07534	114.7697	ARCADIA - NORTHWEST 345KV CKT 1

SOLUTION	GROUP	SCENARIO	SEASON	SOURCE	DIRECTION	MONITORED ELEMENT	RATEA (MVA)	RATEB(MVA)	TDF	TC%LOADING (% MVA)	CONTINGENCY
FDNS	00NR	0	20WP	G15_060	FROM->TO	G14-057T 345.00 - SUNNYSIDE 345KV CKT 1	717	789	0.06555	114.7537	GRAND GULF 500/22.0KV TRANSFORMER CKT 1
FDNS	00NR	0	16WP	G15_060	FROM->TO	G14-057T 345.00 - SUNNYSIDE 345KV CKT 1	717	789	0.06751	114.7505	MARIETTA - MARIETTA4 138.00 138KV CKT 1
FDNS	00NR	0	16WP	G15_060	FROM->TO	G14-057T 345.00 - SUNNYSIDE 345KV CKT 1	717	789	0.06717	114.7347	Canadian Pump Station - REDROCKRD4 138.00 138KV CKT 1
FDNS	00NR	0	16WP	G15_060	FROM->TO	G14-057T 345.00 - SUNNYSIDE 345KV CKT 1	717	789	0.06629	114.73	CLINTON JUNCTION - CLINTON NATURAL GAS TAP 138KV CKT 1
FDNS	00NR	0	16WP	G15_060	FROM->TO	G14-057T 345.00 - SUNNYSIDE 345KV CKT 1	717	789	0.06623	114.7223	P12:138:OKGE:3TERM47
FDNS	00NR	0	16WP	G15_060	FROM->TO	G14-057T 345.00 - SUNNYSIDE 345KV CKT 1	717	789	0.06721	114.7209	CIMARRON - NORTHWEST 345KV CKT 1
FDNS	00NR	0	16WP	G15_060	FROM->TO	G14-057T 345.00 - SUNNYSIDE 345KV CKT 1	717	789	0.06627	114.7076	HAMMETT TAP - HORSESHOE LAKE 138KV CKT 1
FDNS	00NR	0	20WP	G15_060	FROM->TO	G14-057T 345.00 - SUNNYSIDE 345KV CKT 1	717	789	0.06566	114.7044	7SAREPTA% 345.00 - ELDORADO EHV 345KV CKT 1
FDNS	00NR	0	20WP	G15_060	FROM->TO	G14-057T 345.00 - SUNNYSIDE 345KV CKT 1	717	789	0.06566	114.7042	3TR3AR8EL7EL
FDNS	00NR	0	20WP	G15_060	FROM->TO	G14-057T 345.00 - SUNNYSIDE 345KV CKT 1	717	789	0.06566	114.6934	ELDORADO EHV 500/345KV TRANSFORMER CKT 1
FDNS	00NR	0	20WP	G15_060	FROM->TO	G14-057T 345.00 - SUNNYSIDE 345KV CKT 1	717	789	0.06632	114.6786	P12:138:AEPW:DUNCAN-4:L.E.S.-4
FDNS	00NR	0	16WP	G15_060	FROM->TO	G14-057T 345.00 - SUNNYSIDE 345KV CKT 1	717	789	0.06634	114.6677	COMANCHE - WALTERS 69KV CKT 1
FDNS	00NR	0	20WP	G15_060	FROM->TO	G14-057T 345.00 - SUNNYSIDE 345KV CKT 1	717	789	0.06555	114.608	GEN515577 1-ARBWND11 0.6900
FDNS	00NR	0	20WP	G15_060	FROM->TO	G14-057T 345.00 - SUNNYSIDE 345KV CKT 1	717	789	0.07213	114.5615	MATHWSN7 345.00 - TATONGA7 345.00 345KV CKT 1
FDNS	00NR	0	20WP	G15_060	FROM->TO	G14-057T 345.00 - SUNNYSIDE 345KV CKT 1	717	789	0.06632	114.5571	COMANCHE TAP - OMPA-DUNCAN 840 138KV CKT 1
FDNS	00NR	0	20WP	G15_060	FROM->TO	G14-057T 345.00 - SUNNYSIDE 345KV CKT 1	717	789	0.0667	114.5549	BRIDGECR 138.00 - TUTTLE 138KV CKT 1
FDNS	00NR	0	20WP	G15_060	FROM->TO	G14-057T 345.00 - SUNNYSIDE 345KV CKT 1	717	789	0.06193	114.5467	CANADIAN RIVER - MUSKOGEE 345KV CKT 1
FDNS	00NR	0	20WP	G15_060	FROM->TO	G14-057T 345.00 - SUNNYSIDE 345KV CKT 1	717	789	0.06555	114.4684	GEN509409 1-WILKES #3
FDNS	00NR	0	20WP	G15_060	FROM->TO	G14-057T 345.00 - SUNNYSIDE 345KV CKT 1	717	789	0.07014	114.4388	Hitchland Interchange - WALKTAP7 345.00 345KV CKT 1
FDNS	00NR	0	20WP	G15_060	FROM->TO	G14-057T 345.00 - SUNNYSIDE 345KV CKT 1	717	789	0.07014	114.4388	Hitchland Interchange - WALKTAP7 345.00 345KV CKT 1
FDNS	00NR	0	20WP	G15_060	FROM->TO	G14-057T 345.00 - SUNNYSIDE 345KV CKT 1	717	789	0.06697	114.4317	HEALDTON - LOCO 138KV CKT 1
FDNS	00NR	0	20WP	G15_060	FROM->TO	G14-057T 345.00 - SUNNYSIDE 345KV CKT 1	717	789	0.06669	114.4268	ARCADIA - SEMINOLE 345KV CKT 1
FDNS	00NR	0	20WP	G15_060	FROM->TO	G14-057T 345.00 - SUNNYSIDE 345KV CKT 1	717	789	0.07014	114.4189	P12:345:SPS:J07.1.FINN.HITCH
FDNS	00NR	0	20WP	G15_060	FROM->TO	G14-057T 345.00 - SUNNYSIDE 345KV CKT 1	717	789	0.06555	114.4089	GEN501813 1-RODEMACHER UNIT 3
FDNS	00NR	0	20WP	G15_060	FROM->TO	G14-057T 345.00 - SUNNYSIDE 345KV CKT 1	717	789	0.06555	114.3121	GEN300006 1-NEW MADRID UNIT 1
FDNS	00NR	0	20WP	G15_060	FROM->TO	G14-057T 345.00 - SUNNYSIDE 345KV CKT 1	717	789	0.06555	114.2922	GEN300007 1-NEW MADRID UNIT 2
FDNS	00NR	0	20WP	G15_060	FROM->TO	G14-057T 345.00 - SUNNYSIDE 345KV CKT 1	717	789	0.06697	114.2876	HEALDTON - RINGLING 138KV CKT 1
FDNS	00NR	0	20WP	G15_060	FROM->TO	G14-057T 345.00 - SUNNYSIDE 345KV CKT 1	717	789	0.06593	114.2757	LACYGNE - WAVERLY7 345.00 345KV CKT 1
FDNS	00NR	0	20WP	G15_060	FROM->TO	G14-057T 345.00 - SUNNYSIDE 345KV CKT 1	717	789	0.06632	114.2686	DUNCAN - OMPA-DUNCAN 840 138KV CKT 1
FDNS	00NR	0	20WP	G15_060	FROM->TO	G14-057T 345.00 - SUNNYSIDE 345KV CKT 1	717	789	0.06632	114.2686	DUNCAN - OMPA-DUNCAN 840 138KV CKT 1
FDNS	00NR	0	20WP	G15_060	FROM->TO	G14-057T 345.00 - SUNNYSIDE 345KV CKT 1	717	789	0.0667	114.2678	P12:138:WFEC:MSL01
FDNS	00NR	0	16WP	G15_060	FROM->TO	G14-057T 345.00 - SUNNYSIDE 345KV CKT 1	717	789	0.06609	114.2581	803-OKLAUNION
FDNS	00NR	0	20WP	G15_060	FROM->TO	G14-057T 345.00 - SUNNYSIDE 345KV CKT 1	717	789	0.0667	114.2563	BRIDGECR 138.00 - SUNSHINE CANYON 138KV CKT 1
FDNS	00NR	0	20WP	G15_060	FROM->TO	G14-057T 345.00 - SUNNYSIDE 345KV CKT 1	717	789	0.06555	114.1972	GEN335206 1-NELSON UNIT 6
FDNS	00NR	0	20WP	G15_060	FROM->TO	G14-057T 345.00 - SUNNYSIDE 345KV CKT 1	717	789	0.06593	114.1543	WAVERLY7 345.00 - WOLF CREEK 345KV CKT 1
FDNS	00NR	0	20WP	G15_060	FROM->TO	G14-057T 345.00 - SUNNYSIDE 345KV CKT 1	717	789	0.06555	114.1257	GEN520947 1-HUGO1
FDNS	00NR	0	20WP	G15_060	FROM->TO	G14-057T 345.00 - SUNNYSIDE 345KV CKT 1	717	789	0.06697	114.1171	RINGLING - SOUTH WILSON 138KV CKT 1
FDNS	00NR	0	16WP	G15_060	FROM->TO	G14-057T 345.00 - SUNNYSIDE 345KV CKT 1	717	789	0.0649	114.0994	P12:138:OKGE:3TERM39
FDNS	00NR	0	20WP	G15_060	FROM->TO	G14-057T 345.00 - SUNNYSIDE 345KV CKT 1	717	789	0.07213	114.0411	G11_051T 345.00 - TATONGA7 345.00 345KV CKT 1
FDNS	00NR	0	20WP	G15_060	FROM->TO	G14-057T 345.00 - SUNNYSIDE 345KV CKT 1	717	789	0.06553	114.0258	ELDORADO EHV - MOUNT OLIVE 500KV CKT 1
FDNS	00NR	0	20WP	G15_060	FROM->TO	G14-057T 345.00 - SUNNYSIDE 345KV CKT 1	717	789	0.06555	114.0121	GEN501812 1-RODEMACHER UNIT 2
FDNS	00NR	0	20WP	G15_060	FROM->TO	G14-057T 345.00 - SUNNYSIDE 345KV CKT 1	717	789	0.06552	114.0071	P12:138:AEPW:SHERID4:112GORE4
FDNS	00NR	0	20WP	G15_060	FROM->TO	G14-057T 345.00 - SUNNYSIDE 345KV CKT 1	717	789	0.06555	114.0013	DOLET HILLS 345/24.0KV TRANSFORMER CKT 1
FDNS	00NR	0	20WP	G15_060	FROM->TO	G14-057T 345.00 - SUNNYSIDE 345KV CKT 1	717	789	0.07023	113.9961	THISTLE7 345.00 - WOODWARD DISTRICT EHV 345KV CKT 1
FDNS	00NR	0	20WP	G15_060	FROM->TO	G14-057T 345.00 - SUNNYSIDE 345KV CKT 1	717	789	0.07023	113.9961	THISTLE7 345.00 - WOODWARD DISTRICT EHV 345KV CKT 1
FDNS	00NR	0	20WP	G15_060	FROM->TO	G14-057T 345.00 - SUNNYSIDE 345KV CKT 1	717	789	0.07023	113.9961	THISTLE7 345.00 - WOODWARD DISTRICT EHV 345KV CKT 2
FDNS	00NR	0	20WP	G15_060	FROM->TO	G14-057T 345.00 - SUNNYSIDE 345KV CKT 1	717	789	0.07023	113.9961	THISTLE7 345.00 - WOODWARD DISTRICT EHV 345KV CKT 2
FDNS	00NR	0	20WP	G15_060	FROM->TO	G14-057T 345.00 - SUNNYSIDE 345KV CKT 1	717	789	0.06438	113.9283	PARK LANE - SEMINOLE 138KV CKT 1
FDNS	00NR	0	20WP	G15_060	FROM->TO	G14-057T 345.00 - SUNNYSIDE 345KV CKT 1	717	789	0.06571	113.8762	WEBRE - WELLS 500KV CKT 1
FDNS	00NR	0	20WP	G15_060	FROM->TO	G14-057T 345.00 - SUNNYSIDE 345KV CKT 1	717	789	0.06555	113.875	GEN515564 1-ORIGIN11 0.6900
FDNS	00NR	0	20WP	G15_060	FROM->TO	G14-057T 345.00 - SUNNYSIDE 345KV CKT 1	717	789	0.06555	113.875	GEN515565 1-ORIGIN21 0.6900
FDNS	00NR	0	16WP	G15_060	FROM->TO	G14-057T 345.00 - SUNNYSIDE 345KV CKT 1	717	789	0.06524	113.8718	MAYSVILLE - MAYSVLT4 138.00 138KV CKT 1
FDNS	00NR	0	16WP	G15_060	FROM->TO	G14-057T 345.00 - SUNNYSIDE 345KV CKT 1	717	789	0.06649	113.8663	DRAPER LAKE - MIDWEST TAP 138KV CKT 1
FDNS	00NR	0	16WP	G15_060	FROM->TO	G14-057T 345.00 - SUNNYSIDE 345KV CKT 1	717	789	0.06616	113.8628	GLASSES - MADILL INDUSTRIAL TAP 138KV CKT 1
FDNS	00NR	0	20WP	G15_060	FROM->TO	G14-057T 345.00 - SUNNYSIDE 345KV CKT 1	717	789	0.06555	113.8527	GEN334440 1-SABINE UNIT 4
FDNS	00NR	0	16WP	G15_060	FROM->TO	G14-057T 345.00 - SUNNYSIDE 345KV CKT 1	717	789	0.06551	113.8517	CIMARRON - MATHWSN7 345.00 345KV CKT 1
FDNS	00NR	0	16WP	G15_060	FROM->TO	G14-057T 345.00 - SUNNYSIDE 345KV CKT 1	717	789	0.06551	113.8517	CIMARRON - MATHWSN7 345.00 345KV CKT 2
FDNS	00NR	0	16WP	G15_060	FROM->TO	G14-057T 345.00 - SUNNYSIDE 345KV CKT 1	717	789	0.06609	113.8451	GEN562691 1-G15_015_3 0.6900
FDNS	00NR	0	16WP	G15_060	FROM->TO	G14-057T 345.00 - SUNNYSIDE 345KV CKT 1	717	789	0.06609	113.8449	GEN562772 1-G15034_3 0.6900
FDNS	00NR	0	16WP	G15_060	FROM->TO	G14-057T 345.00 - SUNNYSIDE 345KV CKT 1	717	789	0.06651	113.8438	P12:138:OKGE:3TERM21
FDNS	00NR	0	16WP	G15_060	FROM->TO	G14-057T 345.00 - SUNNYSIDE 345KV CKT 1	717	789	0.06602	113.8375	HUGO (HUGO 1) 345/138/13.8KV TRANSFORMER CKT 1
FDNS	00NR	0	20WP	G15_060	FROM->TO	G14-057T 345.00 - SUNNYSIDE 345KV CKT 1	717	789	0.06675	113.8344	CANEYRV7 345.00 - NEOSHO 345KV CKT 1
FDNS	00NR	0	20WP	G15_060	FROM->TO	G14-057T 345.00 - SUNNYSIDE 345KV CKT 1	717	789	0.06697	113.8289	MARIETTA - SOUTH WILSON 138KV CKT 1
FDNS	00NR	0	20WP	G15_060	FROM->TO	G14-057T 345.00 - SUNNYSIDE 345KV CKT 1	717	789	0.06555	113.8232	GEN590011 2-ERCOT EQUIVALENCE
FDNS	00NR	0	16WP	G15_060	FROM->TO	G14-057T 345.00 - SUNNYSIDE 345KV CKT 1	717	789	0.06609	113.8171	GEN521103 1-BLUE CANYON WIND FARM
FDNS	00NR	0	16WP	G15_060	FROM->TO	G14-057T 345.00 - SUNNYSIDE 345KV CKT 1	717	789	0.06609	113.8166	GEN520812 1-ANADRK5
FDNS	00NR	0	16WP	G15_060	FROM->TO	G14-057T 345.00 - SUNNYSIDE 345KV CKT 1	717	789	0.06609	113.8165	GEN520813 1-ANADRK6
FDNS	00NR	0	16WP	G15_060	FROM->TO	G14-057T 345.00 - SUNNYSIDE 345KV CKT 1	717	789	0.06524	113.8102	MAYSVLT4 138.00 - PRAIRIE POINT 138KV CKT 1
FDNS	00NR	0	16WP	G15_060	FROM->TO	G14-057T 345.00 - SUNNYSIDE 345KV CKT 1	717	789	0.06616	113.8033	GLASSES - RUSSETT 138KV CKT 1
FDNS	00NR	0	20WP	G15_060	FROM->TO	G14-057T 345.00 - SUNNYSIDE 345KV CKT 1	717	789	0.06555	113.7939	DELL 500 - ESSEX UNIT 2 500KV CKT Z1
FDNS	00NR	0	20WP	G15_060	FROM->TO	G14-057T 345.00 - SUNNYSIDE 345KV CKT 1	717	789	0.06555	113.7926	P12:161:AEPW:DYESS 5:HYLAND 5
FDNS	00NR	0	16WP	G15_060	FROM->TO	G14-057T 345.00 - SUNNYSIDE 345KV CKT 1	717	789	0.0654	113.785	ARBUCKLE - SULPHR 4 138.00 138KV CKT 1
FDNS	00NR	0	20WP	G15_060	FROM->TO	G14-057T 345.00 - SUNNYSIDE 345KV CKT 1	717	789	0.06538	113.7845	REDBUD - RIVERSIDE STATION 345KV CKT 1
FDNS	00NR	0	20WP	G15_060	FROM->TO	G14-057T 345.00 - SUNNYSIDE 345KV CKT 1	717	789	0.06538	113.7845	REDBUD - RIVERSIDE STATION 345KV CKT 1
FDNS	00NR	0	16WP	G15_060	FROM->TO	G14-057T 345.00 - SUNNYSIDE 345KV CKT 1	717	789	0.06611	113.7802	P12:138:WFEC:MSL11
FDNS	00NR	0	16WP	G15_060	FROM->TO	G14-057T 345.00 - SUNNYSIDE 345KV CKT 1	717	789	0.06611	113.7802	P12:138:WFEC-AEPW:PHAROAH4:LONEOAK4
FDNS	00NR	0	16WP	G15_060	FROM->TO	G14-057T 345.00 - SUNNYSIDE 345KV CKT 1	717	789	0.06616	113.7755	CANEY CREEK - JOHNSON COUNTY 138KV CKT 1
FDNS	00NR	0	16WP	G15_060	FROM->TO	G14-057T 345.00 - SUNNYSIDE 345KV CKT 1	717	789	0.06609	113.7736	GEN511961 1-DEMPSEY-WTG10.7000
FDNS	00NR	0	16WP	G15_060	FROM->TO	G14-057T 345.00 - SUNNYSIDE 345KV CKT 1	717	789	0.06609	113.758	P12:069:OKGE:3TERM42

SOLUTION	GROUP	SCENARIO	SEASON	SOURCE	DIRECTION	MONITORED ELEMENT	RATEA (MVA)	RATEB(MVA)	TDF	TC%LOADING (% MVA)	CONTINGENCY
FDNS	00NR	0	20WP	G15_060	FROM->TO	G14-057T 345.00 - SUNNYSIDE 345KV CKT 1	717	789	0.06555	113.7534	GEN590010 1-ERCOT EQUIVALENCE
FDNS	00NR	0	20WP	G15_060	FROM->TO	G14-057T 345.00 - SUNNYSIDE 345KV CKT 1	717	789	0.06555	113.7453	P12:69:AEPW:L.E.S.-2:LAW WC2
FDNS	00NR	0	20WP	G15_060	FROM->TO	G14-057T 345.00 - SUNNYSIDE 345KV CKT 1	717	789	0.06562	113.7442	LAWTON EASTSIDE (LES 5) 345/138/13.8KV TRANSFORMER CKT 2
FDNS	00NR	0	20WP	G15_060	FROM->TO	G14-057T 345.00 - SUNNYSIDE 345KV CKT 1	717	789	0.06562	113.7442	LAWTON EASTSIDE (LES 5) 345/138/13.8KV TRANSFORMER CKT 2
FDNS	00NR	0	16WP	G15_060	FROM->TO	G14-057T 345.00 - SUNNYSIDE 345KV CKT 1	717	789	0.06609	113.7348	GEN629070 2-BEAVER CHANNEL GENERATORFOR UNIT NO 2
FDNS	00NR	0	16WP	G15_060	FROM->TO	G14-057T 345.00 - SUNNYSIDE 345KV CKT 1	717	789	0.06617	113.7272	GRPRAR1-LNX3345.00 - HOLT.CO3 345.00 345KV CKT 1
FDNS	00NR	0	20WP	G15_060	FROM->TO	G14-057T 345.00 - SUNNYSIDE 345KV CKT 1	717	789	0.06697	113.7272	P12:138:WFEC:MSL17
FDNS	00NR	0	16WP	G15_060	FROM->TO	G14-057T 345.00 - SUNNYSIDE 345KV CKT 1	717	789	0.06609	113.7271	GEN515443 1-MNCOWND1 0.7000
FDNS	00NR	0	16WP	G15_060	FROM->TO	G14-057T 345.00 - SUNNYSIDE 345KV CKT 1	717	789	0.06617	113.7234	GRPRAR1-LNX3345.00 - GRPRAR 345KV CKT Z
FDNS	00NR	0	20WP	G15_060	FROM->TO	G14-057T 345.00 - SUNNYSIDE 345KV CKT 1	717	789	0.06597	113.7227	P12:138:WFEC:MSL02
FDNS	00NR	0	16WP	G15_060	FROM->TO	G14-057T 345.00 - SUNNYSIDE 345KV CKT 1	717	789	0.06622	113.7218	P12:138:WFEC:MSL08
FDNS	00NR	0	16WP	G15_060	FROM->TO	G14-057T 345.00 - SUNNYSIDE 345KV CKT 1	717	789	0.06609	113.7183	GEN615021 1-GRE-ER 14G 16.000
FDNS	00NR	0	16WP	G15_060	FROM->TO	G14-057T 345.00 - SUNNYSIDE 345KV CKT 1	717	789	0.06609	113.7147	GEN562902 1-G15052_3 0.6900
FDNS	00NR	0	16WP	G15_060	FROM->TO	G14-057T 345.00 - SUNNYSIDE 345KV CKT 1	717	789	0.06524	113.7129	PRAIRIE POINT - RATLIFF 138KV CKT 1
FDNS	00NR	0	16WP	G15_060	FROM->TO	G14-057T 345.00 - SUNNYSIDE 345KV CKT 1	717	789	0.06601	113.7093	CARTER - CHICKASAW 138KV CKT 1
FDNS	00NR	0	16WP	G15_060	FROM->TO	G14-057T 345.00 - SUNNYSIDE 345KV CKT 1	717	789	0.06609	113.7078	GEN563242 1-G15090_3 0.6900
FDNS	00NR	0	16WP	G15_060	FROM->TO	G14-057T 345.00 - SUNNYSIDE 345KV CKT 1	717	789	0.06609	113.7066	GEN560183 1-REDHIL-WTG1 12.000
FDNS	00NR	0	16WP	G15_060	FROM->TO	G14-057T 345.00 - SUNNYSIDE 345KV CKT 1	717	789	0.06609	113.7049	GEN629071 1-BURLINGTON GENERATOR FOR UNIT NO 1 E
FDNS	00NR	0	16WP	G15_060	FROM->TO	G14-057T 345.00 - SUNNYSIDE 345KV CKT 1	717	789	0.06626	113.7009	CANADIAN RIVER - MCALESTER SOUTH 138KV CKT 1
FDNS	00NR	0	16WP	G15_060	FROM->TO	G14-057T 345.00 - SUNNYSIDE 345KV CKT 1	717	789	0.06626	113.7009	CANADIAN RIVER - MCALESTER SOUTH 138KV CKT 1
FDNS	00NR	0	16WP	G15_060	FROM->TO	G14-057T 345.00 - SUNNYSIDE 345KV CKT 1	717	789	0.06626	113.6996	CANADIAN RIVER () 345/138/13.8KV TRANSFORMER CKT 1
FDNS	00NR	0	16WP	G15_060	FROM->TO	G14-057T 345.00 - SUNNYSIDE 345KV CKT 1	717	789	0.06626	113.6996	CANADIAN RIVER () 345/138/13.8KV TRANSFORMER CKT 1
FDNS	00NR	0	16WP	G15_060	FROM->TO	G14-057T 345.00 - SUNNYSIDE 345KV CKT 1	717	789	0.06636	113.6995	NORTHWEST - SPRING CREEK 345KV CKT 1
FDNS	00NR	0	16WP	G15_060	FROM->TO	G14-057T 345.00 - SUNNYSIDE 345KV CKT 1	717	789	0.06275	113.6963	MOREWOOD SW - NINE MILE 138KV CKT 1
FDNS	00NR	0	16WP	G15_060	FROM->TO	G14-057T 345.00 - SUNNYSIDE 345KV CKT 1	717	789	0.06582	113.6922	ROCKY POINT - SPRINGDALE 138KV CKT 1
FDNS	00NR	0	16WP	G15_060	FROM->TO	G14-057T 345.00 - SUNNYSIDE 345KV CKT 1	717	789	0.06636	113.6897	SOONER - SPRING CREEK 345KV CKT 1
FDNS	00NR	0	20WP	G15_060	FROM->TO	G14-057T 345.00 - SUNNYSIDE 345KV CKT 1	717	789	0.06675	113.687	CANEYRV7 345.00 - LATHAMS7 345.00 345KV CKT 1
FDNS	00NR	0	16WP	G15_060	FROM->TO	G14-057T 345.00 - SUNNYSIDE 345KV CKT 1	717	789	0.06609	113.679	INDEPENDENCE 500/26.0KV TRANSFORMER CKT 1
FDNS	00NR	0	16WP	G15_060	FROM->TO	G14-057T 345.00 - SUNNYSIDE 345KV CKT 1	717	789	0.06609	113.6766	BURLINGTON NO1 + NO 2 + NO 3 161/20.0KV TRANSFORMER CKT 1
FDNS	00NR	0	20WP	G15_060	FROM->TO	G14-057T 345.00 - SUNNYSIDE 345KV CKT 1	717	789	0.06555	113.676	GEN509408 1-WILKES #2
FDNS	00NR	0	16WP	G15_060	FROM->TO	G14-057T 345.00 - SUNNYSIDE 345KV CKT 1	717	789	0.06589	113.6747	ALTUS JUNCTION - RUSSELL 138KV CKT 1
FDNS	00NR	0	16WP	G15_060	FROM->TO	G14-057T 345.00 - SUNNYSIDE 345KV CKT 1	717	789	0.06589	113.6747	ALTUS JUNCTION - RUSSELL 138KV CKT 1
FDNS	00NR	0	16WP	G15_060	FROM->TO	G14-057T 345.00 - SUNNYSIDE 345KV CKT 1	717	789	0.06614	113.6724	NORTHWEST TEXARKANA - WELSH 345KV CKT 1
FDNS	00NR	0	16WP	G15_060	FROM->TO	G14-057T 345.00 - SUNNYSIDE 345KV CKT 1	717	789	0.06614	113.6724	NORTHWEST TEXARKANA - WELSH 345KV CKT 1
FDNS	00NR	0	16WP	G15_060	FROM->TO	G14-057T 345.00 - SUNNYSIDE 345KV CKT 1	717	789	0.06609	113.6705	GEN514805 1-SOONER UNIT 1
FDNS	00NR	0	16WP	G15_060	FROM->TO	G14-057T 345.00 - SUNNYSIDE 345KV CKT 1	717	789	0.06609	113.6637	GEN514806 1-SOONER UNIT 2
FDNS	00NR	0	20WP	G15_060	FROM->TO	G14-057T 345.00 - SUNNYSIDE 345KV CKT 1	717	789	0.06586	113.6598	PAOLI - PAYNE 138.00 138KV CKT 1
FDNS	00NR	0	20WP	G15_060	FROM->TO	G14-057T 345.00 - SUNNYSIDE 345KV CKT 1	717	789	0.06545	113.6598	ELDORADO EHV - SHERIDAN EHV 500KV CKT 1
FDNS	00NR	0	16WP	G15_060	FROM->TO	G14-057T 345.00 - SUNNYSIDE 345KV CKT 1	717	789	0.06631	113.6579	KEO EHV - WEST MEMPHIS 500 500KV CKT 1
FDNS	00NR	0	16WP	G15_060	FROM->TO	G14-057T 345.00 - SUNNYSIDE 345KV CKT 1	717	789	0.06646	113.6508	CHAMBER SPRINGS - CLARKSVILLE 345KV CKT 1
FDNS	00NR	0	20WP	G15_060	FROM->TO	G14-057T 345.00 - SUNNYSIDE 345KV CKT 1	717	789	0.06555	113.6501	GEN506754 1-LEBROCK STEAM 1
FDNS	00NR	0	16WP	G15_060	FROM->TO	G14-057T 345.00 - SUNNYSIDE 345KV CKT 1	717	789	0.06609	113.6474	GEN562078 1-G11_051_3 0.6900
FDNS	00NR	0	20WP	G15_060	FROM->TO	G14-057T 345.00 - SUNNYSIDE 345KV CKT 1	717	789	0.06585	113.6428	ANADARKO - GEORGIA 138KV CKT 1
FDNS	00NR	0	16WP	G15_060	FROM->TO	G14-057T 345.00 - SUNNYSIDE 345KV CKT 1	717	789	0.06609	113.6379	P12:230:UMZB:# 112 #: NU IN SD. NU-RCDC & DRY CREEK XFMR
FDNS	00NR	0	16WP	G15_060	FROM->TO	G14-057T 345.00 - SUNNYSIDE 345KV CKT 1	717	789	0.06609	113.6365	RCDC EAST 4230.00 - RED CEDAR DC 230KV CKT 1
FDNS	00NR	0	16WP	G15_060	FROM->TO	G14-057T 345.00 - SUNNYSIDE 345KV CKT 1	717	789	0.0654	113.6334	JOLLYVILLE - SULPHR 4 138.00 138KV CKT 1
FDNS	00NR	0	16WP	G15_060	FROM->TO	G14-057T 345.00 - SUNNYSIDE 345KV CKT 1	717	789	0.06609	113.6189	GEN562802 1-G15039_3 0.3570
FDNS	00NR	0	20WP	G15_060	FROM->TO	G14-057T 345.00 - SUNNYSIDE 345KV CKT 1	717	789	0.06552	113.6137	P12:138:AEPW:112GORE4:L.E.S.-4
FDNS	00NR	0	16WP	G15_060	FROM->TO	G14-057T 345.00 - SUNNYSIDE 345KV CKT 1	717	789	0.06609	113.6124	GEN524285 1-WILDORADO WIND GEN
FDNS	00NR	0	20WP	G15_060	FROM->TO	G14-057T 345.00 - SUNNYSIDE 345KV CKT 1	717	789	0.06671	113.6016	CIVIT - PAOLI 138KV CKT 1
FDNS	00NR	0	20WP	G15_060	FROM->TO	G14-057T 345.00 - SUNNYSIDE 345KV CKT 1	717	789	0.06804	113.5945	MATHWSN7 345.00 - NORTHWEST 345KV CKT 1
FDNS	00NR	0	16WP	G15_060	FROM->TO	G14-057T 345.00 - SUNNYSIDE 345KV CKT 1	717	789	0.06609	113.5926	GEN524295 1-SPNSPUR_WND10.6900
FDNS	00NR	0	16WP	G15_060	FROM->TO	G14-057T 345.00 - SUNNYSIDE 345KV CKT 1	717	789	0.06609	113.5923	GEN562587 1-G14_056_3 0.6900
FDNS	00NR	0	16WP	G15_060	FROM->TO	G14-057T 345.00 - SUNNYSIDE 345KV CKT 1	717	789	0.06609	113.5856	GEN560331 1-G10-46 13.800
FDNS	00NR	0	16WP	G15_060	FROM->TO	G14-057T 345.00 - SUNNYSIDE 345KV CKT 1	717	789	0.06508	113.5745	ARKANSAS NUCLEAR ONE - FT SMITH 500KV CKT 1
FDNS	00NR	0	16WP	G15_060	FROM->TO	G14-057T 345.00 - SUNNYSIDE 345KV CKT 1	717	789	0.06508	113.5745	ARKANSAS NUCLEAR ONE - FT SMITH 500KV CKT 1
FDNSLock	00NR	0	16WP	G15_060	FROM->TO	G14-057T 345.00 - SUNNYSIDE 345KV CKT 1	717	789	0.06609	113.5733	GEN629072 4-LANSING GENERATOR FOR UNITS NO4 EIA CODE 1
FDNS	00NR	0	20WP	G15_060	FROM->TO	G14-057T 345.00 - SUNNYSIDE 345KV CKT 1	717	789	0.06555	113.5691	GEN336252 1-NINEMILE POINT UNIT#5
FDNS	00NR	0	16WP	G15_060	FROM->TO	G14-057T 345.00 - SUNNYSIDE 345KV CKT 1	717	789	0.0654	113.5649	JOLLYVILLE - KERR MCGEE CIMARRON 138KV CKT 1
FDNS	00NR	0	16WP	G15_060	FROM->TO	G14-057T 345.00 - SUNNYSIDE 345KV CKT 1	717	789	0.06609	113.5641	GEN562882 1-G15047_3 0.6900
FDNS	00NR	0	16WP	G15_060	FROM->TO	G14-057T 345.00 - SUNNYSIDE 345KV CKT 1	717	789	0.06275	113.5619	BEARCAT 138.00 - NINE MILE 138KV CKT 1
FDNS	00NR	0	16WP	G15_060	FROM->TO	G14-057T 345.00 - SUNNYSIDE 345KV CKT 1	717	789	0.06609	113.555	GEN562269 1-G12-020-1 0.6900
FDNS	00NR	0	16WP	G15_060	FROM->TO	G14-057T 345.00 - SUNNYSIDE 345KV CKT 1	717	789	0.06609	113.5529	GEN657749 1-YOUNG 1 GENERATOR
FDNS	00NR	0	20WP	G15_060	FROM->TO	G14-057T 345.00 - SUNNYSIDE 345KV CKT 1	717	789	0.06585	113.5467	FLETCHER - GEORGIA 138KV CKT 1
FDNS	00NR	0	20WP	G15_060	FROM->TO	G14-057T 345.00 - SUNNYSIDE 345KV CKT 1	717	789	0.06739	113.5386	P12:138:AEPW-OGE:CORNVIL4:MAUD 4
FDNS	00NR	0	20WP	G15_060	FROM->TO	G14-057T 345.00 - SUNNYSIDE 345KV CKT 1	717	789	0.06555	113.5228	FRONTIER - GRIMES 345KV CKT 1
FDNS	00NR	0	16WP	G15_060	FROM->TO	G14-057T 345.00 - SUNNYSIDE 345KV CKT 1	717	789	0.0654	113.5143	ARBWIND4 138.00 - KERR MCGEE CIMARRON 138KV CKT 1
FDNS	00NR	0	20WP	G15_060	FROM->TO	G14-057T 345.00 - SUNNYSIDE 345KV CKT 1	717	789	0.06555	113.5117	GEN335204 1-NELSON UNIT 4
FDNS	00NR	0	16WP	G15_060	FROM->TO	G14-057T 345.00 - SUNNYSIDE 345KV CKT 1	717	789	0.06609	113.51	GEN562270 1-G12-020-2 0.6900
FDNS	00NR	0	20WP	G15_060	FROM->TO	G14-057T 345.00 - SUNNYSIDE 345KV CKT 1	717	789	0.06555	113.5052	GEN503909 1-FULTONU1 1 16.000
FDNS	00NR	0	20WP	G15_060	FROM->TO	G14-057T 345.00 - SUNNYSIDE 345KV CKT 1	717	789	0.06555	113.5045	GEN334441 1-SABINE UNIT 5
FDNS	00NR	0	16WP	G15_060	FROM->TO	G14-057T 345.00 - SUNNYSIDE 345KV CKT 1	717	789	0.06609	113.5044	GEN562812 1-G15040_3 0.3570
FDNS	00NR	0	20WP	G15_060	FROM->TO	G14-057T 345.00 - SUNNYSIDE 345KV CKT 1	717	789	0.06594	113.5041	EMPIRE - FLETCHER 138KV CKT 1
FDNS	00NR	0	16WP	G15_060	FROM->TO	G14-057T 345.00 - SUNNYSIDE 345KV CKT 1	717	789	0.06531	113.503	P12:138:AEPW:112GORE4:SNYDER-4
FDNS	00NR	0	16WP	G15_060	FROM->TO	G14-057T 345.00 - SUNNYSIDE 345KV CKT 1	717	789	0.06856	113.5027	CLARKSVILLE - MUSKOGEE 345KV CKT 1
FDNS	00NR	0	16WP	G15_060	FROM->TO	G14-057T 345.00 - SUNNYSIDE 345KV CKT 1	717	789	0.06856	113.5027	CLARKSVILLE - MUSKOGEE 345KV CKT 1
FDNS	00NR	0	16WP	G15_060	FROM->TO	G14-057T 345.00 - SUNNYSIDE 345KV CKT 1	717	789	0.06609	113.5015	GEN563102 1-G15075_3 0.5500
FDNS	00NR	0	16WP	G15_060	FROM->TO	G14-057T 345.00 - SUNNYSIDE 345KV CKT 1	717	789	0.06609	113.4982	GEN562974 1-G15060_5 0.6900
FDNS	00NR	0	16WP	G15_060	FROM->TO	G14-057T 345.00 - SUNNYSIDE 345KV CKT 1	717	789	0.06609	113.4946	GEN563062 1-G15071_3 0.6900

SOLUTION	GROUP	SCENARIO	SEASON	SOURCE	DIRECTION	MONITORED ELEMENT	RATEA (MVA)	RATEB(MVA)	TDF	TC%LOADING (% MVA)	CONTINGENCY
FDNS	00NR	0	16WP	G15_060	FROM->TO	G14-057T 345.00 - SUNNYSIDE 345KV CKT 1	717	789	0.06609	113.4938	GEN563132 1-G15078_3 0.3570
FDNS	00NR	0	16WP	G15_060	FROM->TO	G14-057T 345.00 - SUNNYSIDE 345KV CKT 1	717	789	0.06609	113.4887	GEN562973 1-G15060_4 0.6900
FDNS	00NR	0	20WP	G15_060	FROM->TO	G14-057T 345.00 - SUNNYSIDE 345KV CKT 1	717	789	0.06551	113.4836	TUPELO - TUPELO TAP 138KV CKT 1
FDNSLock	00NR	0	16WP	G15_060	FROM->TO	G14-057T 345.00 - SUNNYSIDE 345KV CKT 1	717	789	0.06609	113.4834	GEN681522 3-GENOA 3
FDNS	00NR	0	16WP	G15_060	FROM->TO	G14-057T 345.00 - SUNNYSIDE 345KV CKT 1	717	789	0.06275	113.4794	P12:138:WFEC:MSL14
FDNS	00NR	0	20WP	G15_060	FROM->TO	G14-057T 345.00 - SUNNYSIDE 345KV CKT 1	717	789	0.06675	113.4741	LATHAMS7 345.00 - ROSE HILL 345KV CKT 1
FDNS	00NR	0	16WP	G15_060	FROM->TO	G14-057T 345.00 - SUNNYSIDE 345KV CKT 1	717	789	0.06275	113.4666	BEARCAT 138.00 - MOORELAND 138KV CKT 1
FDNS	00NR	0	20WP	G15_060	FROM->TO	G14-057T 345.00 - SUNNYSIDE 345KV CKT 1	717	789	0.06739	113.4632	BLANCHARD - CORNVILLE 138KV CKT 1
FDNS	00NR	0	20WP	G15_060	FROM->TO	G14-057T 345.00 - SUNNYSIDE 345KV CKT 1	717	789	0.06671	113.4605	CIVIT - STRATFORD 138KV CKT 1
FDNS	00NR	0	16WP	G15_060	FROM->TO	G14-057T 345.00 - SUNNYSIDE 345KV CKT 1	717	789	0.06603	113.4561	BROWN - RUSSETT 138KV CKT 1
FDNS	00NR	0	16WP	G15_060	FROM->TO	G14-057T 345.00 - SUNNYSIDE 345KV CKT 1	717	789	0.06548	113.4351	CHICKASAW - TOTAL 138KV CKT 1
FDNS	00NR	0	16WP	G15_060	FROM->TO	G14-057T 345.00 - SUNNYSIDE 345KV CKT 1	717	789	0.06599	113.4301	RUSSETT - SPRINGDALE 138KV CKT 1
FDNS	00NR	0	16WP	G15_060	FROM->TO	G14-057T 345.00 - SUNNYSIDE 345KV CKT 1	717	789	0.06609	113.4267	GEN345671 2-1RUSH G2 18.000
FDNS	00NR	0	16WP	G15_060	FROM->TO	G14-057T 345.00 - SUNNYSIDE 345KV CKT 1	717	789	0.06609	113.4248	GEN345670 1-1RUSH G1 18.000
FDNS	00NR	0	20WP	G15_060	FROM->TO	G14-057T 345.00 - SUNNYSIDE 345KV CKT 1	717	789	0.06594	113.4227	COMANCHE - EMPIRE 138KV CKT 1
FDNS	00NR	0	20WP	G15_060	FROM->TO	G14-057T 345.00 - SUNNYSIDE 345KV CKT 1	717	789	0.06553	113.4172	LAYFLD8 500.00 - MOUNT OLIVE 500KV CKT 1
FDNS	00NR	0	20WP	G15_060	FROM->TO	G14-057T 345.00 - SUNNYSIDE 345KV CKT 1	717	789	0.06553	113.4172	LAYFLD8 500.00 - MOUNT OLIVE 500KV CKT 1
FDNS	00NR	0	16WP	G15_060	FROM->TO	G14-057T 345.00 - SUNNYSIDE 345KV CKT 1	717	789	0.06609	113.4132	GEN526331 1-JONES GEN #1 22 KV
FDNS	00NR	0	16WP	G15_060	FROM->TO	G14-057T 345.00 - SUNNYSIDE 345KV CKT 1	717	789	0.06609	113.4131	GEN526332 1-JONES GEN #2 21 KV
FDNS	00NR	0	16WP	G15_060	FROM->TO	G14-057T 345.00 - SUNNYSIDE 345KV CKT 1	717	789	0.06609	113.4028	GEN560105 1-G08-22 0.6900
FDNS	00NR	0	16WP	G15_060	FROM->TO	G14-057T 345.00 - SUNNYSIDE 345KV CKT 1	717	789	0.06609	113.3993	GEN562550 1-G14_040_3 0.6900
FDNS	00NR	0	16WP	G15_060	FROM->TO	G14-057T 345.00 - SUNNYSIDE 345KV CKT 1	717	789	0.06572	113.3982	ROCKY POINT - SUNNYSIDE 138KV CKT 1
FDNS	00NR	0	20WP	G15_060	FROM->TO	G14-057T 345.00 - SUNNYSIDE 345KV CKT 1	717	789	0.06555	113.3982	GEN336251 1-NINEMILE POINT UNIT#4
FDNS	00NR	0	20WP	G15_060	FROM->TO	G14-057T 345.00 - SUNNYSIDE 345KV CKT 1	717	789	0.06754	113.393	G1524G1525 345.00 - THISTLE7 345.00 345KV CKT 1
FDNS	00NR	0	20WP	G15_060	FROM->TO	G14-057T 345.00 - SUNNYSIDE 345KV CKT 1	717	789	0.06754	113.393	G1524G1525 345.00 - THISTLE7 345.00 345KV CKT 2
FDNS	00NR	0	20WP	G15_060	FROM->TO	G14-057T 345.00 - SUNNYSIDE 345KV CKT 1	717	789	0.06832	113.3929	FINNEY SWITCHING STATION - HOLCOMB 345KV CKT 1
FDNS	00NR	0	20WP	G15_060	FROM->TO	G14-057T 345.00 - SUNNYSIDE 345KV CKT 1	717	789	0.06832	113.3929	FINNEY SWITCHING STATION - HOLCOMB 345KV CKT 1
FDNS	00NR	0	20WP	G15_060	FROM->TO	G14-057T 345.00 - SUNNYSIDE 345KV CKT 1	717	789	0.06555	113.3927	GEN334071 1-LEWIS CREEK 2
FDNS	00NR	0	16WP	G15_060	FROM->TO	G14-057T 345.00 - SUNNYSIDE 345KV CKT 1	717	789	0.06603	113.3879	RUSSETT - RUSSETT 138KV CKT 1
FDNS	00NR	0	20WP	G15_060	FROM->TO	G14-057T 345.00 - SUNNYSIDE 345KV CKT 1	717	789	0.06555	113.3843	GEN334070 1-LEWIS CREEK 1
FDNS	00NR	0	16WP	G15_060	FROM->TO	G14-057T 345.00 - SUNNYSIDE 345KV CKT 1	717	789	0.06609	113.3775	4SIOUX 1 138.00 138/18.0KV TRANSFORMER CKT 1
FDNS	00NR	0	16WP	G15_060	FROM->TO	G14-057T 345.00 - SUNNYSIDE 345KV CKT 1	717	789	0.06599	113.3694	P12:138:WFEC:MSL07
FDNS	00NR	0	16WP	G15_060	FROM->TO	G14-057T 345.00 - SUNNYSIDE 345KV CKT 1	717	789	0.06599	113.3694	P12:138:WFEC-AEPW:HUGOPP4:ATOKA--4
FDNS	00NR	0	20WP	G15_060	FROM->TO	G14-057T 345.00 - SUNNYSIDE 345KV CKT 1	717	789	0.06554	113.3642	P12:161:AEPW-SWPA:BEAVER5:EROGERS5
FDNS	00NR	0	20WP	G15_060	FROM->TO	G14-057T 345.00 - SUNNYSIDE 345KV CKT 1	717	789	0.06555	113.3603	GEN509392 G2-ARSENAL HILL GENS #3 (STALL)
FDNS	00NR	0	20WP	G15_060	FROM->TO	G14-057T 345.00 - SUNNYSIDE 345KV CKT 1	717	789	0.06555	113.3602	GEN509391 G1-ARSENAL HILL GENS #2 (STALL)
FDNS	00NR	0	16WP	G15_060	FROM->TO	G14-057T 345.00 - SUNNYSIDE 345KV CKT 1	717	789	0.06609	113.3591	GEN511962 2-RKYRDGW2-1 0.7000
FDNS	00NR	0	20WP	G15_060	FROM->TO	G14-057T 345.00 - SUNNYSIDE 345KV CKT 1	717	789	0.06555	113.3581	GEN509393 S1-ARSENAL HILL GENS #4 (STALL)
FDNS	00NR	0	16WP	G15_060	FROM->TO	G14-057T 345.00 - SUNNYSIDE 345KV CKT 1	717	789	0.06609	113.3577	GEN521112 1-ORME3 13.800
FDNS	00NR	0	16WP	G15_060	FROM->TO	G14-057T 345.00 - SUNNYSIDE 345KV CKT 1	717	789	0.06609	113.3553	CLAY BOSWELL 230/20.9KV TRANSFORMER CKT 1
FDNS	00NR	0	16WP	G15_060	FROM->TO	G14-057T 345.00 - SUNNYSIDE 345KV CKT 1	717	789	0.06609	113.3532	GEN527882 1-CUNNINGHAM GEN #2 20 KV
FDNS	00NR	0	20WP	G15_060	FROM->TO	G14-057T 345.00 - SUNNYSIDE 345KV CKT 1	717	789	0.06555	113.3465	GEN334433 1-SABINE UNIT 3
FDNS	00NR	0	20WP	G15_060	FROM->TO	G14-057T 345.00 - SUNNYSIDE 345KV CKT 1	717	789	0.06671	113.3428	OIL CENTER - STRATFORD 138KV CKT 1
FDNS	00NR	0	16WP	G15_060	FROM->TO	G14-057T 345.00 - SUNNYSIDE 345KV CKT 1	717	789	0.06609	113.3369	GEN562892 1-G15048_3 0.6900
FDNS	00NR	0	20WP	G15_060	FROM->TO	G14-057T 345.00 - SUNNYSIDE 345KV CKT 1	717	789	0.06555	113.3339	GEN337653 1-WHITE BLUFF UNIT #2
FDNS	00NR	0	16WP	G15_060	FROM->TO	G14-057T 345.00 - SUNNYSIDE 345KV CKT 1	717	789	0.06525	113.3312	ARDMORE WEST - CARTER 138KV CKT 1
FDNS	00NR	0	16WP	G15_060	FROM->TO	G14-057T 345.00 - SUNNYSIDE 345KV CKT 1	717	789	0.06609	113.3247	GEN562512 1-G14_020_3 0.6900
FDNS	00NR	0	20WP	G15_060	FROM->TO	G14-057T 345.00 - SUNNYSIDE 345KV CKT 1	717	789	0.06555	113.323	GEN336831 1-BAXTER WILSON SES
FDNS	00NR	0	16WP	G15_060	FROM->TO	G14-057T 345.00 - SUNNYSIDE 345KV CKT 1	717	789	0.06609	113.3179	GEN672321 1-SHAND GENERATOR 1
FDNS	00NR	0	16WP	G15_060	FROM->TO	G14-057T 345.00 - SUNNYSIDE 345KV CKT 1	717	789	0.06609	113.3158	GEN563192 1-G15084_3 0.5500
FDNS	00NR	0	20WP	G15_060	FROM->TO	G14-057T 345.00 - SUNNYSIDE 345KV CKT 1	717	789	0.06623	113.3115	P12:138:AEPW:S.W.S.-4:L.E.S.-4
FDNS	00NR	0	16WP	G15_060	FROM->TO	G14-057T 345.00 - SUNNYSIDE 345KV CKT 1	717	789	0.06609	113.3067	GEN511853 1-COMANCHE #3
FDNS	00NR	0	20WP	G15_060	FROM->TO	G14-057T 345.00 - SUNNYSIDE 345KV CKT 1	717	789	0.06555	113.3019	P12:161:AEPW:DYESS5:ELMSPRNG:TONTITN5
FDNS	00NR	0	20WP	G15_060	FROM->TO	G14-057T 345.00 - SUNNYSIDE 345KV CKT 1	717	789	0.06575	113.2967	DUNCAN (DUNCAN) 138/69/13.8KV TRANSFORMER CKT 1
FDNS	00NR	0	20WP	G15_060	FROM->TO	G14-057T 345.00 - SUNNYSIDE 345KV CKT 1	717	789	0.06575	113.2967	DUNCAN (DUNCAN) 138/69/13.8KV TRANSFORMER CKT 1
FDNS	00NR	0	16WP	G15_060	FROM->TO	G14-057T 345.00 - SUNNYSIDE 345KV CKT 1	717	789	0.06609	113.2937	GEN672310 1-POPLAR RIVER GENERATOR 1
FDNS	00NR	0	16WP	G15_060	FROM->TO	G14-057T 345.00 - SUNNYSIDE 345KV CKT 1	717	789	0.06609	113.2937	GEN672311 2-POPLAR RIVER GENERATOR 2
FDNS	00NR	0	16WP	G15_060	FROM->TO	G14-057T 345.00 - SUNNYSIDE 345KV CKT 1	717	789	0.06616	113.2933	P12:138:WFEC:MSL16
FDNS	00NR	0	16WP	G15_060	FROM->TO	G14-057T 345.00 - SUNNYSIDE 345KV CKT 1	717	789	0.06607	113.2886	P12:138:WFEC-AEPW:GOLDENSW4:CRAIGJT4
FDNS	00NR	0	16WP	G15_060	FROM->TO	G14-057T 345.00 - SUNNYSIDE 345KV CKT 1	717	789	0.06609	113.2851	GEN672306 6-BOUNDARY DAM GENERATOR 6
FDNS	00NR	0	16WP	G15_060	FROM->TO	G14-057T 345.00 - SUNNYSIDE 345KV CKT 1	717	789	0.0653	113.2851	SUNNYSIDE (SUNNYSD5) 345/138/13.8KV TRANSFORMER CKT 1
FDNS	00NR	0	20WP	G15_060	FROM->TO	G14-057T 345.00 - SUNNYSIDE 345KV CKT 1	717	789	0.06555	113.2821	GEN337911 1-ARKANSAS NUCLEAR ONE UNIT #2
FDNS	00NR	0	20WP	G15_060	FROM->TO	G14-057T 345.00 - SUNNYSIDE 345KV CKT 1	717	789	0.06555	113.2788	GEN515040 1-SEMINOLE 1G
FDNS	00NR	0	20WP	G15_060	FROM->TO	G14-057T 345.00 - SUNNYSIDE 345KV CKT 1	717	789	0.06355	113.2722	G14_038T 345.00 - Hitchland Interchange 345KV CKT 1
FDNS	00NR	0	20WP	G15_060	FROM->TO	G14-057T 345.00 - SUNNYSIDE 345KV CKT 1	717	789	0.06555	113.2716	GEN334030 1-FRONTIER UNIT 1
FDNS	00NR	0	16WP	G15_060	FROM->TO	G14-057T 345.00 - SUNNYSIDE 345KV CKT 1	717	789	0.06609	113.271	GEN344895 2-1LAB G2 20.000
FDNS	00NR	0	20WP	G15_060	FROM->TO	G14-057T 345.00 - SUNNYSIDE 345KV CKT 1	717	789	0.06555	113.2693	GEN334031 1-FRONTIER UNIT 2
FDNS	00NR	0	16WP	G15_060	FROM->TO	G14-057T 345.00 - SUNNYSIDE 345KV CKT 1	717	789	0.06609	113.2581	GEN523461 1-BLACKHAWK GEN #1
FDNS	00NR	0	16WP	G15_060	FROM->TO	G14-057T 345.00 - SUNNYSIDE 345KV CKT 1	717	789	0.06609	113.258	GEN523462 1-BLACKHAWK GEN #2
FDNS	00NR	0	20WP	G15_060	FROM->TO	G14-057T 345.00 - SUNNYSIDE 345KV CKT 1	717	789	0.0657	113.2548	TUTTLE - TUTTLE CONOCO TAP 138KV CKT 1
FDNS	00NR	0	16WP	G15_060	FROM->TO	G14-057T 345.00 - SUNNYSIDE 345KV CKT 1	717	789	0.06609	113.2537	GEN511852 1-COMANCHE #2
FDNS	00NR	0	20WP	G15_060	FROM->TO	G14-057T 345.00 - SUNNYSIDE 345KV CKT 1	717	789	0.06559	113.2501	P12:138:AEPW:CATOOSA4:T.S.E.-4
FDNS	00NR	0	20WP	G15_060	FROM->TO	G14-057T 345.00 - SUNNYSIDE 345KV CKT 1	717	789	0.06739	113.2433	BLANCHARD - MAUD 138KV CKT 1
FDNS	00NR	0	16WP	G15_060	FROM->TO	G14-057T 345.00 - SUNNYSIDE 345KV CKT 1	717	789	0.06609	113.2389	GEN344896 3-1LAB G3 20.000
FDNS	00NR	0	16WP	G15_060	FROM->TO	G14-057T 345.00 - SUNNYSIDE 345KV CKT 1	717	789	0.06609	113.2375	GEN344894 1-1LAB G1 20.000
FDNS	00NR	0	16WP	G15_060	FROM->TO	G14-057T 345.00 - SUNNYSIDE 345KV CKT 1	717	789	0.06609	113.2361	GEN344897 4-1LAB G4 20.000
FDNS	00NR	0	20WP	G15_060	FROM->TO	G14-057T 345.00 - SUNNYSIDE 345KV CKT 1	717	789	0.06564	113.2345	FULTON 115 - HOPE 115KV CKT 1
FDNS	00NR	0	20WP	G15_060	FROM->TO	G14-057T 345.00 - SUNNYSIDE 345KV CKT 1	717	789	0.06564	113.2345	FULTON 115 - HOPE 115KV CKT 1
FDNS	00NR	0	20WP	G15_060	FROM->TO	G14-057T 345.00 - SUNNYSIDE 345KV CKT 1	717	789	0.06596	113.2314	P12:138:AEPW-OGE:WTH_JCT4:JENSEN4

SOLUTION	GROUP	SCENARIO	SEASON	SOURCE	DIRECTION	MONITORED ELEMENT	RATEA (MVA)	RATEB(MVA)	TDF	TC%LOADING (% MVA)	CONTINGENCY
FDNS	00NR	0	20WP	G15_060	FROM->TO	G14-057T 345.00 - SUNNYSIDE 345KV CKT 1	717	789	0.06555	113.2306	GEN337652 1-WHITE BLUFF UNIT #1
FDNS	00NR	0	20WP	G15_060	FROM->TO	G14-057T 345.00 - SUNNYSIDE 345KV CKT 1	717	789	0.06555	113.2297	GEN501811 1-RODEMACHER UNIT 1
FDNS	00NR	0	20WP	G15_060	FROM->TO	G14-057T 345.00 - SUNNYSIDE 345KV CKT 1	717	789	0.06591	113.2296	P12:138:AEPW:CORNVIL4:DUNCAN-4
FDNS	00NR	0	20WP	G15_060	FROM->TO	G14-057T 345.00 - SUNNYSIDE 345KV CKT 1	717	789	0.06555	113.2154	GEN506752 1-LEBROCK GAS 1
FDNS	00NR	0	16WP	G15_060	FROM->TO	G14-057T 345.00 - SUNNYSIDE 345KV CKT 1	717	789	0.06525	113.2152	ARDMORE WEST - UNIROYAL 138KV CKT 1
FDNS	00NR	0	20WP	G15_060	FROM->TO	G14-057T 345.00 - SUNNYSIDE 345KV CKT 1	717	789	0.06555	113.2151	GEN506753 1-LEBROCK GAS 2
FDNS	00NR	0	20WP	G15_060	FROM->TO	G14-057T 345.00 - SUNNYSIDE 345KV CKT 1	717	789	0.06555	113.212	GEN300015 1-1SGPDEL 18.000
FDNS	00NR	0	20WP	G15_060	FROM->TO	G14-057T 345.00 - SUNNYSIDE 345KV CKT 1	717	789	0.06555	113.2097	GEN515226 1-MUSKOGEE 6G
FDNS	00NR	0	20WP	G15_060	FROM->TO	G14-057T 345.00 - SUNNYSIDE 345KV CKT 1	717	789	0.06555	113.2086	GEN300003 1-THOMAS HILL UNIT 3
FDNS	00NR	0	16WP	G15_060	FROM->TO	G14-057T 345.00 - SUNNYSIDE 345KV CKT 1	717	789	0.06606	113.2023	P12:138:AEPW-SWPA:LONEOAK4:TUPELO4
FDNS	00NR	0	16WP	G15_060	FROM->TO	G14-057T 345.00 - SUNNYSIDE 345KV CKT 1	717	789	0.06606	113.2023	P12:138:WFEC:MSL06
FDNS	00NR	0	16WP	G15_060	FROM->TO	G14-057T 345.00 - SUNNYSIDE 345KV CKT 1	717	789	0.06581	113.2022	P12:138:OKGE:3TERM40
FDNS	00NR	0	20WP	G15_060	FROM->TO	G14-057T 345.00 - SUNNYSIDE 345KV CKT 1	717	789	0.06555	113.197	GEN336191 1-LITTLE GYPSY UNIT#3
FDNS	00NR	0	16WP	G15_060	FROM->TO	G14-057T 345.00 - SUNNYSIDE 345KV CKT 1	717	789	0.06609	113.1818	GEN563162 1-G15081_3 0.6900
FDNSLock	00NR	0	16WP	G15_060	FROM->TO	G14-057T 345.00 - SUNNYSIDE 345KV CKT 1	717	789	0.06609	113.1814	GEN681542 6-JP MADGETT
FDNS	00NR	0	16WP	G15_060	FROM->TO	G14-057T 345.00 - SUNNYSIDE 345KV CKT 1	717	789	0.06609	113.1784	GEN521110 1-ORME1 13.800
FDNS	00NR	0	16WP	G15_060	FROM->TO	G14-057T 345.00 - SUNNYSIDE 345KV CKT 1	717	789	0.06609	113.1784	GEN521111 1-ORME2 13.800
FDNS	00NR	0	20WP	G15_060	FROM->TO	G14-057T 345.00 - SUNNYSIDE 345KV CKT 1	717	789	0.06587	113.1781	P12:138:AEPW:CORNVIL4:S.W.S.-4
FDNS	00NR	0	20WP	G15_060	FROM->TO	G14-057T 345.00 - SUNNYSIDE 345KV CKT 1	717	789	0.06564	113.1775	6LAYFLD 230.00 - CARROLL 230KV CKT 1
FDNS	00NR	0	16WP	G15_060	FROM->TO	G14-057T 345.00 - SUNNYSIDE 345KV CKT 1	717	789	0.06609	113.1714	GEN562699 1-G15_018_3 0.6900
FDNS	00NR	0	16WP	G15_060	FROM->TO	G14-057T 345.00 - SUNNYSIDE 345KV CKT 1	717	789	0.06587	113.1706	G15085_T 138.00 - RUSSELL 138KV CKT 1
FDNS	00NR	0	16WP	G15_060	FROM->TO	G14-057T 345.00 - SUNNYSIDE 345KV CKT 1	717	789	0.06553	113.1705	CARTRCO4 138.00 - RATLIFF 138KV CKT 1
FDNS	00NR	0	20WP	G15_060	FROM->TO	G14-057T 345.00 - SUNNYSIDE 345KV CKT 1	717	789	0.06671	113.1702	LATTA JCT - OIL CENTER 138KV CKT 1
FDNS	00NR	0	20WP	G15_060	FROM->TO	G14-057T 345.00 - SUNNYSIDE 345KV CKT 1	717	789	0.06555	113.1681	GEN335614 1-WILLOW GLENN UNIT#4
FDNS	00NR	0	20WP	G15_060	FROM->TO	G14-057T 345.00 - SUNNYSIDE 345KV CKT 1	717	789	0.0657	113.162	CIMARRON - TUTTLE CONOCO TAP 138KV CKT 1
FDNS	00NR	0	16WP	G15_060	FROM->TO	G14-057T 345.00 - SUNNYSIDE 345KV CKT 1	717	789	0.06609	113.159	GEN563292 1-G15095_3 0.6900
FDNS	00NR	0	20WP	G15_060	FROM->TO	G14-057T 345.00 - SUNNYSIDE 345KV CKT 1	717	789	0.0656	113.1529	8DANIEL8 500.00 - MCKNIGHT 500KV CKT 1
FDNS	00NR	0	20WP	G15_060	FROM->TO	G14-057T 345.00 - SUNNYSIDE 345KV CKT 1	717	789	0.06716	113.1398	BAILEY4 138.00 - SUNSHINE CANYON 138KV CKT 1
FDNS	00NR	0	20WP	G15_060	FROM->TO	G14-057T 345.00 - SUNNYSIDE 345KV CKT 1	717	789	0.06646	113.1297	G15095_T 138.00 - ROSE_VALLEY 138.00 138KV CKT 1
FDNS	00NR	0	16WP	G15_060	FROM->TO	G14-057T 345.00 - SUNNYSIDE 345KV CKT 1	717	789	0.06571	113.1295	G15063_T 345.00 - MATHWSN7 345.00 345KV CKT 1
FDNS	00NR	0	20WP	G15_060	FROM->TO	G14-057T 345.00 - SUNNYSIDE 345KV CKT 1	717	789	0.06555	113.1261	GEN337910 1-ARKANSAS NUCLEAR ONE UNIT #1
FDNS	00NR	0	20WP	G15_060	FROM->TO	G14-057T 345.00 - SUNNYSIDE 345KV CKT 1	717	789	0.06556	113.1241	P12:161:AEPW:EROGERS5:ECNTRTN5
FDNS	00NR	0	20WP	G15_060	FROM->TO	G14-057T 345.00 - SUNNYSIDE 345KV CKT 1	717	789	0.06602	113.1228	BUCKNER7 345.00 - SPEARVILLE 345KV CKT 1
FDNS	00NR	0	20WP	G15_060	FROM->TO	G14-057T 345.00 - SUNNYSIDE 345KV CKT 1	717	789	0.06602	113.1228	BUCKNER7 345.00 - SPEARVILLE 345KV CKT 1
FDNS	00NR	0	20WP	G15_060	FROM->TO	G14-057T 345.00 - SUNNYSIDE 345KV CKT 1	717	789	0.06555	113.122	GEN303007 1-1BC2 U2
FDNS	00NR	0	20WP	G15_060	FROM->TO	G14-057T 345.00 - SUNNYSIDE 345KV CKT 1	717	789	0.06832	113.1199	FINNEY SWITCHING STATION - WALKTAP7 345.00 345KV CKT 1
FDNS	00NR	0	20WP	G15_060	FROM->TO	G14-057T 345.00 - SUNNYSIDE 345KV CKT 1	717	789	0.06832	113.1199	FINNEY SWITCHING STATION - WALKTAP7 345.00 345KV CKT 1
FDNS	00NR	0	16WP	G15_060	FROM->TO	G14-057T 345.00 - SUNNYSIDE 345KV CKT 1	717	789	0.06531	113.1195	CACHE - SNYDER 138KV CKT 1
FDNS	00NR	0	20WP	G15_060	FROM->TO	G14-057T 345.00 - SUNNYSIDE 345KV CKT 1	717	789	0.06555	113.1171	GEN336464 1-MICHOUD UNIT #3
FDNS	00NR	0	20WP	G15_060	FROM->TO	G14-057T 345.00 - SUNNYSIDE 345KV CKT 1	717	789	0.06555	113.116	GEN303006 1-1BC2 U1
FDNS	00NR	0	20WP	G15_060	FROM->TO	G14-057T 345.00 - SUNNYSIDE 345KV CKT 1	717	789	0.06575	113.1158	P12:138:AEPW:WTHWF4:CLINTJC4
FDNS	00NR	0	20WP	G15_060	FROM->TO	G14-057T 345.00 - SUNNYSIDE 345KV CKT 1	717	789	0.06555	113.1142	WHITE BLUFF 500/26.0KV TRANSFORMER CKT 1
FDNS	00NR	0	20WP	G15_060	FROM->TO	G14-057T 345.00 - SUNNYSIDE 345KV CKT 1	717	789	0.06575	113.1123	P12:69:WFEC-AEPW:COMANCH2:DUNCAN-2
FDNS	00NR	0	20WP	G15_060	FROM->TO	G14-057T 345.00 - SUNNYSIDE 345KV CKT 1	717	789	0.06555	113.1123	GEN515223 1-MUSKOGEE 4G
FDNS	00NR	0	20WP	G15_060	FROM->TO	G14-057T 345.00 - SUNNYSIDE 345KV CKT 1	717	789	0.06555	113.1123	GEN515225 1-MUSKOGEE 5G
FDNS	00NR	0	20WP	G15_060	FROM->TO	G14-057T 345.00 - SUNNYSIDE 345KV CKT 1	717	789	0.06555	113.1096	GEN562783 1-G15036_4 0.6900
FDNS	00NR	0	20WP	G15_060	FROM->TO	G14-057T 345.00 - SUNNYSIDE 345KV CKT 1	717	789	0.06555	113.1096	GEN562784 1-G15036_5 0.6900
FDNS	00NR	0	20WP	G15_060	FROM->TO	G14-057T 345.00 - SUNNYSIDE 345KV CKT 1	717	789	0.06578	113.1077	G15088_T 345.00 - MOORE 345KV CKT 1
FDNS	00NR	0	20WP	G15_060	FROM->TO	G14-057T 345.00 - SUNNYSIDE 345KV CKT 1	717	789	0.06562	113.1046	P12:69:AEPW-OMPA:COMANC-2:OMWALTR2
FDNS	00NR	0	20WP	G15_060	FROM->TO	G14-057T 345.00 - SUNNYSIDE 345KV CKT 1	717	789	0.0656	113.0985	BISMARK - HOT SPRINGS WEST BUS 115KV CKT 1
FDNS	00NR	0	20WP	G15_060	FROM->TO	G14-057T 345.00 - SUNNYSIDE 345KV CKT 1	717	789	0.06608	113.0959	CIMARRON - CZECH HALL 138KV CKT 1
FDNS	00NR	0	20WP	G15_060	FROM->TO	G14-057T 345.00 - SUNNYSIDE 345KV CKT 1	717	789	0.06581	113.0936	G15074_T 345.00 - HOYT 345KV CKT 1
FDNS	00NR	0	20WP	G15_060	FROM->TO	G14-057T 345.00 - SUNNYSIDE 345KV CKT 1	717	789	0.06558	113.0914	MC NIEL 500/115KV TRANSFORMER CKT 1
FDNS	00NR	0	20WP	G15_060	FROM->TO	G14-057T 345.00 - SUNNYSIDE 345KV CKT 1	717	789	0.06555	113.0857	GEN300010 1-ST FRANCIS UNIT 1
FDNS	00NR	0	20WP	G15_060	FROM->TO	G14-057T 345.00 - SUNNYSIDE 345KV CKT 1	717	789	0.06575	113.0853	DUNCAN - TOSCO 69KV CKT 1
FDNS	00NR	0	20WP	G15_060	FROM->TO	G14-057T 345.00 - SUNNYSIDE 345KV CKT 1	717	789	0.06575	113.0823	P12:138:AEPW:WTHWF4:WTH_SE4
FDNS	00NR	0	16WP	G15_060	FROM->TO	G14-057T 345.00 - SUNNYSIDE 345KV CKT 1	717	789	0.06609	113.0731	GEN563122 1-G15077_3 0.3850
FDNS	00NR	0	16WP	G15_060	FROM->TO	G14-057T 345.00 - SUNNYSIDE 345KV CKT 1	717	789	0.06609	113.0722	GEN661015 1-COYOTE
FDNS	00NR	0	20WP	G15_060	FROM->TO	G14-057T 345.00 - SUNNYSIDE 345KV CKT 1	717	789	0.06554	113.0703	HOT SPRINGS EHV - MAGNET COVE 500KV CKT 1
FDNS	00NR	0	20WP	G15_060	FROM->TO	G14-057T 345.00 - SUNNYSIDE 345KV CKT 1	717	789	0.06667	113.0696	CLEO CORNER - CLEOPLT4 138.00 138KV CKT 1
FDNS	00NR	0	20WP	G15_060	FROM->TO	G14-057T 345.00 - SUNNYSIDE 345KV CKT 1	717	789	0.06555	113.0607	GEN337041 1-GERALD ANDRUS
FDNS	00NR	0	20WP	G15_060	FROM->TO	G14-057T 345.00 - SUNNYSIDE 345KV CKT 1	717	789	0.06555	113.059	GEN505432 1-SIKESTON
FDNS	00NR	0	16WP	G15_060	FROM->TO	G14-057T 345.00 - SUNNYSIDE 345KV CKT 1	717	789	0.06609	113.0554	GEN562861 1-G15045_2 0.4800
FDNS	00NR	0	20WP	G15_060	FROM->TO	G14-057T 345.00 - SUNNYSIDE 345KV CKT 1	717	789	0.06555	113.0543	GEN303008 1-1BC2 U3
FDNS	00NR	0	20WP	G15_060	FROM->TO	G14-057T 345.00 - SUNNYSIDE 345KV CKT 1	717	789	0.0652	113.0517	CHISHOLM6 230.00 - ELK CITY 230KV 230KV CKT 1
FDNS	00NR	0	20WP	G15_060	FROM->TO	G14-057T 345.00 - SUNNYSIDE 345KV CKT 1	717	789	0.06646	113.0491	NOEL_SW 138.00 - ROSE_VALLEY 138.00 138KV CKT 1
FDNS	00NR	0	20WP	G15_060	FROM->TO	G14-057T 345.00 - SUNNYSIDE 345KV CKT 1	717	789	0.06667	113.0487	CLEOPLT4 138.00 - MEN TAP 138KV CKT 1
FDNS	00NR	0	20WP	G15_060	FROM->TO	G14-057T 345.00 - SUNNYSIDE 345KV CKT 1	717	789	0.0652	113.0487	ELK CITY 230KV (ELKCTY-6) 230/138/13.8KV TRANSFORMER CKT 1
FDNS	00NR	0	20WP	G15_060	FROM->TO	G14-057T 345.00 - SUNNYSIDE 345KV CKT 1	717	789	0.0652	113.0487	ELK CITY 230KV (ELKCTY-6) 230/138/13.8KV TRANSFORMER CKT 1
FDNS	00NR	0	20WP	G15_060	FROM->TO	G14-057T 345.00 - SUNNYSIDE 345KV CKT 1	717	789	0.0656	113.047	ALPINE AECC - BISMARK 115KV CKT 1
FDNS	00NR	0	16WP	G15_060	FROM->TO	G14-057T 345.00 - SUNNYSIDE 345KV CKT 1	717	789	0.06609	113.0454	GEN520811 1-ANADRK4
FDNS	00NR	0	20WP	G15_060	FROM->TO	G14-057T 345.00 - SUNNYSIDE 345KV CKT 1	717	789	0.06611	113.0419	CIMARRON - SARA 138KV CKT 1
FDNS	00NR	0	20WP	G15_060	FROM->TO	G14-057T 345.00 - SUNNYSIDE 345KV CKT 1	717	789	0.06667	113.0367	IMO TAP - MEN TAP 138KV CKT 1
FDNS	00NR	0	20WP	G15_060	FROM->TO	G14-057T 345.00 - SUNNYSIDE 345KV CKT 1	717	789	0.06555	113.0282	GEN300011 1-ST FRANCIS UNIT 2
FDNS	00NR	0	20WP	G15_060	FROM->TO	G14-057T 345.00 - SUNNYSIDE 345KV CKT 1	717	789	0.06555	113.0251	GEN336170 1-GULF OXY U4
FDNS	00NR	0	20WP	G15_060	FROM->TO	G14-057T 345.00 - SUNNYSIDE 345KV CKT 1	717	789	0.06558	113.0227	P12:138:AEPW:N.E.S.-4:CATOOSA4
FDNSLock	00NR	0	16WP	G15_060	FROM->TO	G14-057T 345.00 - SUNNYSIDE 345KV CKT 1	717	789	0.06609	113.0211	GEN532751 1-WOLF CREEK GENERATING STATION UNIT 1
FDNS	00NR	0	20WP	G15_060	FROM->TO	G14-057T 345.00 - SUNNYSIDE 345KV CKT 1	717	789	0.06471	113.0209	SEMINOLE - VANOSTP4 138.00 138KV CKT 1
FDNS	00NR	0	20WP	G15_060	FROM->TO	G14-057T 345.00 - SUNNYSIDE 345KV CKT 1	717	789	0.06608	113.0172	CZECH HALL - XEROX 138KV CKT 1

SOLUTION	GROUP	SCENARIO	SEASON	SOURCE	DIRECTION	MONITORED ELEMENT	RATEA (MVA)	RATEB(MVA)	TDF	TC%LOADING (% MVA)	CONTINGENCY
FDNS	00NR	0	20WP	G15_060	FROM->TO	G14-057T 345.00 - SUNNYSIDE 345KV CKT 1	717	789	0.06575	113.0167	COMANCHE TAP - TOSCO 69KV CKT 1
FDNS	00NR	0	20WP	G15_060	FROM->TO	G14-057T 345.00 - SUNNYSIDE 345KV CKT 1	717	789	0.06555	113.0167	NELSON 230/20.0KV TRANSFORMER CKT 1
FDNS	00NR	0	16WP	G15_060	FROM->TO	G14-057T 345.00 - SUNNYSIDE 345KV CKT 1	717	789	0.06685	113.0164	P12:138:WFEC:MSL15
FDNS	00NR	0	20WP	G15_060	FROM->TO	G14-057T 345.00 - SUNNYSIDE 345KV CKT 1	717	789	0.06608	113.0131	MORGAN - XEROX 138KV CKT 1
FDNS	00NR	0	20WP	G15_060	FROM->TO	G14-057T 345.00 - SUNNYSIDE 345KV CKT 1	717	789	0.06555	113.0062	GEN336801 1-BAXTER WILSON UNIT #1
FDNS	00NR	0	20WP	G15_060	FROM->TO	G14-057T 345.00 - SUNNYSIDE 345KV CKT 1	717	789	0.0656	112.9982	ALPINE AECC - AMITY SS 115KV CKT 1
FDNS	00NR	0	20WP	G15_060	FROM->TO	G14-057T 345.00 - SUNNYSIDE 345KV CKT 1	717	789	0.06487	112.9962	ARBWIND4 138.00 - CARTER 138KV CKT 1
FDNS	00NR	0	16WP	G15_060	FROM->TO	G14-057T 345.00 - SUNNYSIDE 345KV CKT 1	717	789	0.06525	112.9937	SUNNYSIDE - UNIROYAL 138KV CKT 1
FDNS	00NR	0	20WP	G15_060	FROM->TO	G14-057T 345.00 - SUNNYSIDE 345KV CKT 1	717	789	0.06608	112.9905	MORGAN - MUSTANG 138KV CKT 1
FDNS	00NR	0	20WP	G15_060	FROM->TO	G14-057T 345.00 - SUNNYSIDE 345KV CKT 1	717	789	0.06588	112.9897	WEATHERFORD JCT. - WEATHERFORD SOUTHEAST 138KV CKT 1
FDNS	00NR	0	20WP	G15_060	FROM->TO	G14-057T 345.00 - SUNNYSIDE 345KV CKT 1	717	789	0.06588	112.9897	WEATHERFORD JCT. - WEATHERFORD SOUTHEAST 138KV CKT 1
FDNS	00NR	0	20WP	G15_060	FROM->TO	G14-057T 345.00 - SUNNYSIDE 345KV CKT 1	717	789	0.06555	112.9775	8CAJUN2 500/24.0KV TRANSFORMER CKT 1
FDNS	00NR	0	20WP	G15_060	FROM->TO	G14-057T 345.00 - SUNNYSIDE 345KV CKT 1	717	789	0.06555	112.9766	GEN501910 1-ACADIA UNIT ST1
FDNS	00NR	0	16WP	G15_060	FROM->TO	G14-057T 345.00 - SUNNYSIDE 345KV CKT 1	717	789	0.06609	112.9741	GEN562992 1-G15063_3 0.6900
FDNS	00NR	0	20WP	G15_060	FROM->TO	G14-057T 345.00 - SUNNYSIDE 345KV CKT 1	717	789	0.06593	112.9676	ANADARKO - SEQUOYAHJ4 138.00 138KV CKT 1
FDNS	00NR	0	20WP	G15_060	FROM->TO	G14-057T 345.00 - SUNNYSIDE 345KV CKT 1	717	789	0.06593	112.9661	CORN TAP - SEQUOYAHJ4 138.00 138KV CKT 1
FDNS	00NR	0	20WP	G15_060	FROM->TO	G14-057T 345.00 - SUNNYSIDE 345KV CKT 1	717	789	0.06575	112.9645	COMANCHE - COMANCHE TAP 69KV CKT 1
FDNS	00NR	0	20WP	G15_060	FROM->TO	G14-057T 345.00 - SUNNYSIDE 345KV CKT 1	717	789	0.06716	112.9615	BAILEY4 138.00 - WESTMOORE 138KV CKT 1
FDNS	00NR	0	16WP	G15_060	FROM->TO	G14-057T 345.00 - SUNNYSIDE 345KV CKT 1	717	789	0.06609	112.9554	GEN657748 1-YOUNG 2 GENERATOR
FDNS	00NR	0	16WP	G15_060	FROM->TO	G14-057T 345.00 - SUNNYSIDE 345KV CKT 1	717	789	0.06497	112.9501	GRAPEVINE INTERCHANGE - STATELINE INTERCHANGE 230KV CKT 1
FDNS	00NR	0	16WP	G15_060	FROM->TO	G14-057T 345.00 - SUNNYSIDE 345KV CKT 1	717	789	0.06497	112.9501	GRAPEVINE INTERCHANGE - STATELINE INTERCHANGE 230KV CKT 1
FDNS	00NR	0	20WP	G15_060	FROM->TO	G14-057T 345.00 - SUNNYSIDE 345KV CKT 1	717	789	0.06662	112.95	P12:138:OKGE-AEPW:JENSEN4:REDROCKRD4
FDNS	00NR	0	20WP	G15_060	FROM->TO	G14-057T 345.00 - SUNNYSIDE 345KV CKT 1	717	789	0.06579	112.94	WALTERS - WALTERS 69KV CKT 1
FDNS	00NR	0	20WP	G15_060	FROM->TO	G14-057T 345.00 - SUNNYSIDE 345KV CKT 1	717	789	0.06588	112.9379	P12:138:AEPW:REDROCKRD4:WTH_JCT4
FDNS	00NR	0	20WP	G15_060	FROM->TO	G14-057T 345.00 - SUNNYSIDE 345KV CKT 1	717	789	0.06555	112.9375	SABINE 230/24.0KV TRANSFORMER CKT 1
FDNS	00NR	0	20WP	G15_060	FROM->TO	G14-057T 345.00 - SUNNYSIDE 345KV CKT 1	717	789	0.06555	112.9335	GEN300016 1-1G1GPDEL 18.000
FDNS	00NR	0	20WP	G15_060	FROM->TO	G14-057T 345.00 - SUNNYSIDE 345KV CKT 1	717	789	0.06611	112.9306	SARA - STHLAKE4 138.00 138KV CKT 1
FDNS	00NR	0	16WP	G15_060	FROM->TO	G14-057T 345.00 - SUNNYSIDE 345KV CKT 1	717	789	0.06751	112.9294	CANEY CREEK - TEXOMA JCT 138KV CKT 1
FDNS	00NR	0	20WP	G15_060	FROM->TO	G14-057T 345.00 - SUNNYSIDE 345KV CKT 1	717	789	0.06556	112.9286	P12:138:AEPW:R.S.S.-4:S.HUD.-4
FDNS	00NR	0	20WP	G15_060	FROM->TO	G14-057T 345.00 - SUNNYSIDE 345KV CKT 1	717	789	0.06552	112.9232	ETTA (DUKE HOTSPRINGS) - MC NIEL 500KV CKT 1
FDNS	00NR	0	20WP	G15_060	FROM->TO	G14-057T 345.00 - SUNNYSIDE 345KV CKT 1	717	789	0.06555	112.9218	GEN336222 1-LITTLE GYPSY UNIT#2
FDNS	00NR	0	16WP	G15_060	FROM->TO	G14-057T 345.00 - SUNNYSIDE 345KV CKT 1	717	789	0.06587	112.9113	P12:138:AEPW:SHAM4WT:CHILD4WT
FDNS	00NR	0	20WP	G15_060	FROM->TO	G14-057T 345.00 - SUNNYSIDE 345KV CKT 1	717	789	0.06562	112.9105	LAWTON RELIFT TAP - OMPA-WALTERS 69KV CKT 1
FDNS	00NR	0	20WP	G15_060	FROM->TO	G14-057T 345.00 - SUNNYSIDE 345KV CKT 1	717	789	0.06611	112.9005	MCCLAIN - STHLAKE4 138.00 138KV CKT 1
FDNS	00NR	0	20WP	G15_060	FROM->TO	G14-057T 345.00 - SUNNYSIDE 345KV CKT 1	717	789	0.06555	112.897	P12:69:AEPW:NROGERS2:ECNTRTN2
FDNS	00NR	0	20WP	G15_060	FROM->TO	G14-057T 345.00 - SUNNYSIDE 345KV CKT 1	717	789	0.06653	112.8964	G13-010T 345.00 - POST ROCK 345KV CKT 1
FDNS	00NR	0	16WP	G15_060	FROM->TO	G14-057T 345.00 - SUNNYSIDE 345KV CKT 1	717	789	0.06609	112.8952	GEN562704 1-G15_020_3 0.3550
FDNS	00NR	0	20WP	G15_060	FROM->TO	G14-057T 345.00 - SUNNYSIDE 345KV CKT 1	717	789	0.06671	112.8932	LASALLE - LATTA JCT 138KV CKT 1
FDNS	00NR	0	20WP	G15_060	FROM->TO	G14-057T 345.00 - SUNNYSIDE 345KV CKT 1	717	789	0.0659	112.8928	NORGE ROAD - SOUTHWESTERN STATION 138KV CKT 1
FDNS	00NR	0	20WP	G15_060	FROM->TO	G14-057T 345.00 - SUNNYSIDE 345KV CKT 1	717	789	0.0659	112.8928	NORGE ROAD - SOUTHWESTERN STATION 138KV CKT 1
FDNS	00NR	0	16WP	G15_060	FROM->TO	G14-057T 345.00 - SUNNYSIDE 345KV CKT 1	717	789	0.06609	112.8914	GEN562952 1-G15057_3 0.6500
FDNS	00NR	0	20WP	G15_060	FROM->TO	G14-057T 345.00 - SUNNYSIDE 345KV CKT 1	717	789	0.06555	112.8872	GEN336152 1-WATERFORD UNIT#2
FDNS	00NR	0	20WP	G15_060	FROM->TO	G14-057T 345.00 - SUNNYSIDE 345KV CKT 1	717	789	0.06556	112.8868	P12:138:AEPW:BA_71ST4:T.S.E.-4
FDNS	00NR	0	20WP	G15_060	FROM->TO	G14-057T 345.00 - SUNNYSIDE 345KV CKT 1	717	789	0.06555	112.8864	GEN336151 1-WATERFORD UNIT#1
FDNS	00NR	0	20WP	G15_060	FROM->TO	G14-057T 345.00 - SUNNYSIDE 345KV CKT 1	717	789	0.06555	112.882	P12:138:AEPW:YARCH-S4:T.S.E.-4
FDNS	00NR	0	20WP	G15_060	FROM->TO	G14-057T 345.00 - SUNNYSIDE 345KV CKT 1	717	789	0.06605	112.8781	EMPORIA ENERGY CENTER - G14_001T 345.00 345KV CKT 1
FDNS	00NR	0	20WP	G15_060	FROM->TO	G14-057T 345.00 - SUNNYSIDE 345KV CKT 1	717	789	0.06582	112.8777	HOYT - STRANGER CREEK 345KV CKT 1
FDNS	00NR	0	20WP	G15_060	FROM->TO	G14-057T 345.00 - SUNNYSIDE 345KV CKT 1	717	789	0.0657	112.8772	P12:138:AEPW-OGE:SHIDLER4:OSAGE 4
FDNS	00NR	0	20WP	G15_060	FROM->TO	G14-057T 345.00 - SUNNYSIDE 345KV CKT 1	717	789	0.06555	112.875	GEN300017 1-1G2GPDEL 18.000
FDNS	00NR	0	20WP	G15_060	FROM->TO	G14-057T 345.00 - SUNNYSIDE 345KV CKT 1	717	789	0.06555	112.8749	FRONTIER 345/18.0KV TRANSFORMER CKT 1
FDNS	00NR	0	20WP	G15_060	FROM->TO	G14-057T 345.00 - SUNNYSIDE 345KV CKT 1	717	789	0.06555	112.8727	FRONTIER 345/18.0KV TRANSFORMER CKT 1
FDNS	00NR	0	20WP	G15_060	FROM->TO	G14-057T 345.00 - SUNNYSIDE 345KV CKT 1	717	789	0.06566	112.8685	P12:138:OKGE:3TERM2
FDNS	00NR	0	20WP	G15_060	FROM->TO	G14-057T 345.00 - SUNNYSIDE 345KV CKT 1	717	789	0.06604	112.8667	CLINTON JUNCTION - ELK CITY 138KV CKT 1
FDNS	00NR	0	20WP	G15_060	FROM->TO	G14-057T 345.00 - SUNNYSIDE 345KV CKT 1	717	789	0.06604	112.8667	CLINTON JUNCTION - ELK CITY 138KV CKT 1
FDNS	00NR	0	20WP	G15_060	FROM->TO	G14-057T 345.00 - SUNNYSIDE 345KV CKT 1	717	789	0.06564	112.8667	HOPE - MCNAB REC 115KV CKT 1
FDNS	00NR	0	20WP	G15_060	FROM->TO	G14-057T 345.00 - SUNNYSIDE 345KV CKT 1	717	789	0.06564	112.8653	MORISNT4 138.00 - STILLWATER 138KV CKT 1
FDNS	00NR	0	20WP	G15_060	FROM->TO	G14-057T 345.00 - SUNNYSIDE 345KV CKT 1	717	789	0.06564	112.856	P12:115:AEPW:TURK3:HOPE3
FDNS	00NR	0	20WP	G15_060	FROM->TO	G14-057T 345.00 - SUNNYSIDE 345KV CKT 1	717	789	0.06703	112.8552	BENTON - WICHITA 345KV CKT 1
FDNS	00NR	0	20WP	G15_060	FROM->TO	G14-057T 345.00 - SUNNYSIDE 345KV CKT 1	717	789	0.06581	112.853	G15074_T 345.00 - JEFFREY ENERGY CENTER 345KV CKT 1
FDNS	00NR	0	16WP	G15_060	FROM->TO	G14-057T 345.00 - SUNNYSIDE 345KV CKT 1	717	789	0.06609	112.8518	GEN563173 1-G15082_3 0.6900
FDNS	00NR	0	20WP	G15_060	FROM->TO	G14-057T 345.00 - SUNNYSIDE 345KV CKT 1	717	789	0.06653	112.8505	G13-010T 345.00 - SPEARVILLE 345KV CKT 1
FDNS	00NR	0	20WP	G15_060	FROM->TO	G14-057T 345.00 - SUNNYSIDE 345KV CKT 1	717	789	0.0656	112.8485	COUCH SES - MC NIEL 115KV CKT 1
FDNS	00NR	0	20WP	G15_060	FROM->TO	G14-057T 345.00 - SUNNYSIDE 345KV CKT 1	717	789	0.06575	112.8447	WEATHERFORD TAP - WEATHERFORD WIND FARM 138KV CKT 1
FDNS	00NR	0	20WP	G15_060	FROM->TO	G14-057T 345.00 - SUNNYSIDE 345KV CKT 1	717	789	0.06596	112.8444	BLACKBERRY - NEOSHO 345KV CKT 1
FDNS	00NR	0	20WP	G15_060	FROM->TO	G14-057T 345.00 - SUNNYSIDE 345KV CKT 1	717	789	0.06555	112.8441	LEWIS CREEK SWITCHYARD 138/22.0KV TRANSFORMER CKT 1
FDNS	00NR	0	20WP	G15_060	FROM->TO	G14-057T 345.00 - SUNNYSIDE 345KV CKT 1	717	789	0.06588	112.8435	HINTON - WEATHERFORD JCT. 138KV CKT 1
FDNS	00NR	0	20WP	G15_060	FROM->TO	G14-057T 345.00 - SUNNYSIDE 345KV CKT 1	717	789	0.06555	112.8396	LEWIS CREEK SWITCHYARD 138/22.0KV TRANSFORMER CKT 1
FDNS	00NR	0	16WP	G15_060	FROM->TO	G14-057T 345.00 - SUNNYSIDE 345KV CKT 1	717	789	0.06498	112.8375	GRAPEVINE INTERCHANGE - NICHOLS STATION 230KV CKT 1
FDNS	00NR	0	16WP	G15_060	FROM->TO	G14-057T 345.00 - SUNNYSIDE 345KV CKT 1	717	789	0.06498	112.8375	GRAPEVINE INTERCHANGE - NICHOLS STATION 230KV CKT 1
FDNS	00NR	0	20WP	G15_060	FROM->TO	G14-057T 345.00 - SUNNYSIDE 345KV CKT 1	717	789	0.06562	112.8369	OMPA-WALTERS - WALTERS 69KV CKT 1
FDNS	00NR	0	20WP	G15_060	FROM->TO	G14-057T 345.00 - SUNNYSIDE 345KV CKT 1	717	789	0.06562	112.8369	OMPA-WALTERS - WALTERS 69KV CKT 1
FDNS	00NR	0	20WP	G15_060	FROM->TO	G14-057T 345.00 - SUNNYSIDE 345KV CKT 1	717	789	0.06556	112.8359	CYPRESS - HARTBURG 500KV CKT 1
FDNS	00NR	0	20WP	G15_060	FROM->TO	G14-057T 345.00 - SUNNYSIDE 345KV CKT 1	717	789	0.06587	112.8325	SOUTHWESTERN STATION - VERDEN 138KV CKT 1
FDNS	00NR	0	20WP	G15_060	FROM->TO	G14-057T 345.00 - SUNNYSIDE 345KV CKT 1	717	789	0.06555	112.8315	GEN334432 1-SABINE UNIT 2
FDNS	00NR	0	20WP	G15_060	FROM->TO	G14-057T 345.00 - SUNNYSIDE 345KV CKT 1	717	789	0.06555	112.831	GEN334431 1-SABINE UNIT 1
FDNS	00NR	0	20WP	G15_060	FROM->TO	G14-057T 345.00 - SUNNYSIDE 345KV CKT 1	717	789	0.06564	112.8308	TURK (TURK 1) 138/115/13.2KV TRANSFORMER CKT 1
FDNS	00NR	0	20WP	G15_060	FROM->TO	G14-057T 345.00 - SUNNYSIDE 345KV CKT 1	717	789	0.06564	112.8308	TURK (TURK 1) 138/115/13.2KV TRANSFORMER CKT 1
FDNS	00NR	0	20WP	G15_060	FROM->TO	G14-057T 345.00 - SUNNYSIDE 345KV CKT 1	717	789	0.06564	112.8307	MCNAB REC - Turk 115 115KV CKT 1
FDNS	00NR	0	20WP	G15_060	FROM->TO	G14-057T 345.00 - SUNNYSIDE 345KV CKT 1	717	789	0.06554	112.8301	7JASPER 345.00 - BLACKBERRY 345KV CKT 1

SOLUTION	GROUP	SCENARIO	SEASON	SOURCE	DIRECTION	MONITORED ELEMENT	RATEA (MVA)	RATEB(MVA)	TDF	TC%LOADING (% MVA)	CONTINGENCY
FDNS	00NR	0	20WP	G15_060	FROM->TO	G14-057T 345.00 - SUNNYSIDE 345KV CKT 1	717	789	0.06555	112.8268	GEN501823 1-TECHE UNIT 3
FDNS	00NR	0	20WP	G15_060	FROM->TO	G14-057T 345.00 - SUNNYSIDE 345KV CKT 1	717	789	0.06555	112.8248	GEN501970 1-EVANGELINE UNIT 7
FDNS	00NR	0	20WP	G15_060	FROM->TO	G14-057T 345.00 - SUNNYSIDE 345KV CKT 1	717	789	0.06555	112.8197	GEN505616 1-BROKEN BOW
FDNS	00NR	0	20WP	G15_060	FROM->TO	G14-057T 345.00 - SUNNYSIDE 345KV CKT 1	717	789	0.06579	112.8185	P12:69:WFEC-AEPW:COMANCH2:WALTRS-2
FDNS	00NR	0	20WP	G15_060	FROM->TO	G14-057T 345.00 - SUNNYSIDE 345KV CKT 1	717	789	0.06685	112.8114	CANADIAN - NOBLE 138KV CKT 1
FDNS	00NR	0	20WP	G15_060	FROM->TO	G14-057T 345.00 - SUNNYSIDE 345KV CKT 1	717	789	0.06587	112.8107	NORTH 29TH CHICKASHA - VERDEN 138KV CKT 1
FDNS	00NR	0	20WP	G15_060	FROM->TO	G14-057T 345.00 - SUNNYSIDE 345KV CKT 1	717	789	0.06555	112.8098	P12:161:AEPW:CHAMSPR5:FARMING5
FDNS	00NR	0	16WP	G15_060	FROM->TO	G14-057T 345.00 - SUNNYSIDE 345KV CKT 1	717	789	0.06609	112.8084	GEN562710 1-G15_022_3 0.5500
FDNS	00NR	0	20WP	G15_060	FROM->TO	G14-057T 345.00 - SUNNYSIDE 345KV CKT 1	717	789	0.06568	112.8043	7LUTESVIL 345.00 - 7ST FRANC 345.00 345KV CKT 1
FDNS	00NR	0	20WP	G15_060	FROM->TO	G14-057T 345.00 - SUNNYSIDE 345KV CKT 1	717	789	0.06555	112.8033	GEN334392 1-EXXON MOBIL IPP 1
FDNS	00NR	0	20WP	G15_060	FROM->TO	G14-057T 345.00 - SUNNYSIDE 345KV CKT 1	717	789	0.06605	112.8	G14_001T 345.00 - WICHITA 345KV CKT 1
FDNS	00NR	0	20WP	G15_060	FROM->TO	G14-057T 345.00 - SUNNYSIDE 345KV CKT 1	717	789	0.06555	112.7969	GEN334393 1-EXXON MOBIL IPP 2
FDNS	00NR	0	20WP	G15_060	FROM->TO	G14-057T 345.00 - SUNNYSIDE 345KV CKT 1	717	789	0.06555	112.7969	GEN334394 1-EXXON MOBIL IPP 3
FDNS	00NR	0	20WP	G15_060	FROM->TO	G14-057T 345.00 - SUNNYSIDE 345KV CKT 1	717	789	0.06716	112.7939	FRANKLIN SW - WESTMOORE 138KV CKT 1
FDNS	00NR	0	20WP	G15_060	FROM->TO	G14-057T 345.00 - SUNNYSIDE 345KV CKT 1	717	789	0.06566	112.7921	LAKEOVER - MCADAMS 500KV CKT 1
FDNS	00NR	0	16WP	G15_060	FROM->TO	G14-057T 345.00 - SUNNYSIDE 345KV CKT 1	717	789	0.06609	112.7898	GEN620315 1-BIG STONE GEN
FDNS	00NR	0	20WP	G15_060	FROM->TO	G14-057T 345.00 - SUNNYSIDE 345KV CKT 1	717	789	0.06687	112.7872	P12:138:OKGE:3TERM27
FDNS	00NR	0	20WP	G15_060	FROM->TO	G14-057T 345.00 - SUNNYSIDE 345KV CKT 1	717	789	0.06583	112.7859	EMPORIA ENERGY CENTER - SWISSVALE 345KV CKT 1
FDNS	00NR	0	20WP	G15_060	FROM->TO	G14-057T 345.00 - SUNNYSIDE 345KV CKT 1	717	789	0.06555	112.7835	ST FRANCIS - ST FRANCIS 1 161KV CKT Z1
FDNS	00NR	0	20WP	G15_060	FROM->TO	G14-057T 345.00 - SUNNYSIDE 345KV CKT 1	717	789	0.06576	112.7809	MCADAMS - WOLF CREEK 500KV CKT 1
FDNS	00NR	0	20WP	G15_060	FROM->TO	G14-057T 345.00 - SUNNYSIDE 345KV CKT 1	717	789	0.06555	112.779	SABINE 230/22.0KV TRANSFORMER CKT 1
FDNS	00NR	0	20WP	G15_060	FROM->TO	G14-057T 345.00 - SUNNYSIDE 345KV CKT 1	717	789	0.06564	112.7787	FLETCHER - MARLOW JCT 69KV CKT 1
FDNS	00NR	0	20WP	G15_060	FROM->TO	G14-057T 345.00 - SUNNYSIDE 345KV CKT 1	717	789	0.06592	112.7734	SWISSVALE - WEST GARDNER 345KV CKT 1
FDNS	00NR	0	20WP	G15_060	FROM->TO	G14-057T 345.00 - SUNNYSIDE 345KV CKT 1	717	789	0.06588	112.7689	HINTON - REDROCKRD4 138.00 138KV CKT 1
FDNS	00NR	0	16WP	G15_060	FROM->TO	G14-057T 345.00 - SUNNYSIDE 345KV CKT 1	717	789	0.06609	112.7677	GEN511851 1-COMANCHE #1
FDNS	00NR	0	20WP	G15_060	FROM->TO	G14-057T 345.00 - SUNNYSIDE 345KV CKT 1	717	789	0.06555	112.7667	GEN501972 1-EVANGELINE UNIT 7-2
FDNS	00NR	0	20WP	G15_060	FROM->TO	G14-057T 345.00 - SUNNYSIDE 345KV CKT 1	717	789	0.06555	112.7666	GEN501971 1-EVANGELINE UNIT 7-1
FDNS	00NR	0	20WP	G15_060	FROM->TO	G14-057T 345.00 - SUNNYSIDE 345KV CKT 1	717	789	0.06556	112.7601	P12:138:AEPW:R.S.S-4:T.P.S.-4
FDNS	00NR	0	20WP	G15_060	FROM->TO	G14-057T 345.00 - SUNNYSIDE 345KV CKT 1	717	789	0.0659	112.7558	CORNVILLE - NORGE ROAD 138KV CKT 1
FDNS	00NR	0	20WP	G15_060	FROM->TO	G14-057T 345.00 - SUNNYSIDE 345KV CKT 1	717	789	0.0659	112.7558	CORNVILLE - NORGE ROAD 138KV CKT 1
FDNS	00NR	0	20WP	G15_060	FROM->TO	G14-057T 345.00 - SUNNYSIDE 345KV CKT 1	717	789	0.06561	112.7544	P12:138:OKGE:3TERM12
FDNS	00NR	0	20WP	G15_060	FROM->TO	G14-057T 345.00 - SUNNYSIDE 345KV CKT 1	717	789	0.06539	112.7529	ENOWILT - LONE OAK 138KV CKT 1
FDNS	00NR	0	20WP	G15_060	FROM->TO	G14-057T 345.00 - SUNNYSIDE 345KV CKT 1	717	789	0.06575	112.7506	WEATHERFORD SOUTHEAST - WEATHERFORD TAP 138KV CKT 1
FDNS	00NR	0	20WP	G15_060	FROM->TO	G14-057T 345.00 - SUNNYSIDE 345KV CKT 1	717	789	0.06539	112.7442	ENOWILT - SARDIS 138KV CKT 1
FDNS	00NR	0	20WP	G15_060	FROM->TO	G14-057T 345.00 - SUNNYSIDE 345KV CKT 1	717	789	0.06555	112.7431	GEN501912 1-ACADIA UNIT CT1B
FDNS	00NR	0	20WP	G15_060	FROM->TO	G14-057T 345.00 - SUNNYSIDE 345KV CKT 1	717	789	0.06568	112.743	FRANKLIN - FRANKLIN SW 138KV CKT 1
FDNS	00NR	0	20WP	G15_060	FROM->TO	G14-057T 345.00 - SUNNYSIDE 345KV CKT 1	717	789	0.06541	112.7424	P12:138:WFEC-AEPW:ELKCTY-4:ERICK4
FDNS	00NR	0	20WP	G15_060	FROM->TO	G14-057T 345.00 - SUNNYSIDE 345KV CKT 1	717	789	0.06555	112.7423	GEN501911 1-ACADIA UNIT CT1A
FDNS	00NR	0	20WP	G15_060	FROM->TO	G14-057T 345.00 - SUNNYSIDE 345KV CKT 1	717	789	0.06671	112.7421	LASALLE - STONEWAL LH138.00 138KV CKT 1
FDNS	00NR	0	20WP	G15_060	FROM->TO	G14-057T 345.00 - SUNNYSIDE 345KV CKT 1	717	789	0.0656	112.7364	AMITY SS - MURFREESBORO EAST (AECC) 115KV CKT 1
FDNS	00NR	0	20WP	G15_060	FROM->TO	G14-057T 345.00 - SUNNYSIDE 345KV CKT 1	717	789	0.06556	112.7343	P12:138:AEPW:R.S.S.-4:R:96YALE-4
FDNS	00NR	0	16WP	G15_060	FROM->TO	G14-057T 345.00 - SUNNYSIDE 345KV CKT 1	717	789	0.06609	112.7303	GEN600004 2-PRAIRIE ISLAND G2
FDNS	00NR	0	16WP	G15_060	FROM->TO	G14-057T 345.00 - SUNNYSIDE 345KV CKT 1	717	789	0.06609	112.7275	GEN600003 1-PRAIRIE ISLAND G1
FDNS	00NR	0	20WP	G15_060	FROM->TO	G14-057T 345.00 - SUNNYSIDE 345KV CKT 1	717	789	0.06587	112.7268	CORNVILLE - NORTH 29TH CHICKASHA 138KV CKT 1
FDNS	00NR	0	20WP	G15_060	FROM->TO	G14-057T 345.00 - SUNNYSIDE 345KV CKT 1	717	789	0.06671	112.724	STONEWAL LH138.00 - TUPELO TAP 138KV CKT 1
FDNS	00NR	0	20WP	G15_060	FROM->TO	G14-057T 345.00 - SUNNYSIDE 345KV CKT 1	717	789	0.06685	112.7182	NOBLE - PURCELL4 138.00 138KV CKT 1
FDNSLock	00NR	0	16WP	G15_060	FROM->TO	G14-057T 345.00 - SUNNYSIDE 345KV CKT 1	717	789	0.06609	112.715	GEN600006 1-AS KING
FDNS	00NR	0	20WP	G15_060	FROM->TO	G14-057T 345.00 - SUNNYSIDE 345KV CKT 1	717	789	0.06668	112.7058	CIMARRON - NORTHWEST 345KV CKT 1
FDNS	00NR	0	20WP	G15_060	FROM->TO	G14-057T 345.00 - SUNNYSIDE 345KV CKT 1	717	789	0.06575	112.7001	CLINTON JUNCTION - CLINTON NATURAL GAS TAP 138KV CKT 1
FDNS	00NR	0	20WP	G15_060	FROM->TO	G14-057T 345.00 - SUNNYSIDE 345KV CKT 1	717	789	0.06662	112.6983	Canadian Pump Station - REDROCKRD4 138.00 138KV CKT 1
FDNS	00NR	0	20WP	G15_060	FROM->TO	G14-057T 345.00 - SUNNYSIDE 345KV CKT 1	717	789	0.06607	112.6767	CRINER - PAYNE 138.00 138KV CKT 1
FDNS	00NR	0	16WP	G15_060	FROM->TO	G14-057T 345.00 - SUNNYSIDE 345KV CKT 1	717	789	0.06613	112.6686	P12:138:WFEC:MSL09
FDNS	00NR	0	16WP	G15_060	FROM->TO	G14-057T 345.00 - SUNNYSIDE 345KV CKT 1	717	789	0.06623	112.6633	P12:138:AEPW-OGE:CORNVIL4:CIMARON4
FDNS	00NR	0	20WP	G15_060	FROM->TO	G14-057T 345.00 - SUNNYSIDE 345KV CKT 1	717	789	0.06579	112.6419	COMANCHE - WALTERS 69KV CKT 1
FDNSLock	00NR	0	16WP	G15_060	FROM->TO	G14-057T 345.00 - SUNNYSIDE 345KV CKT 1	717	789	0.06609	112.6382	GEN636641 1-LOUISA UNIT 1
FDNS	00NR	0	16WP	G15_060	FROM->TO	G14-057T 345.00 - SUNNYSIDE 345KV CKT 1	717	789	0.06609	112.6	GEN615002 2-COAL CREEK
FDNS	00NR	0	16WP	G15_060	FROM->TO	G14-057T 345.00 - SUNNYSIDE 345KV CKT 1	717	789	0.06609	112.5883	GEN600005 1-MONTICELLO
FDNS	00NR	0	16WP	G15_060	FROM->TO	G14-057T 345.00 - SUNNYSIDE 345KV CKT 1	717	789	0.06299	112.5634	CHISHOLM7 345.00 (CHISHOLM) 345/230/13.2KV TRANSFORMER CKT 1
FDNS	00NR	0	16WP	G15_060	FROM->TO	G14-057T 345.00 - SUNNYSIDE 345KV CKT 1	717	789	0.06609	112.5594	GEN562754 1-G15031_5 0.6900
FDNS	00NR	0	16WP	G15_060	FROM->TO	G14-057T 345.00 - SUNNYSIDE 345KV CKT 1	717	789	0.06609	112.5259	GEN635213 3-NEAL UNIT 3
FDNS	00NR	0	16WP	G15_060	FROM->TO	G14-057T 345.00 - SUNNYSIDE 345KV CKT 1	717	789	0.06609	112.5005	GEN562756 1-G15031_7 0.6900
FDNS	00NR	0	16WP	G15_060	FROM->TO	G14-057T 345.00 - SUNNYSIDE 345KV CKT 1	717	789	0.06609	112.5	GEN629074 1-ARNOLD LOWSIDE OF GSU XFMR
FDNS	00NR	0	16WP	G15_060	FROM->TO	G14-057T 345.00 - SUNNYSIDE 345KV CKT 1	717	789	0.06609	112.4623	GEN562023 1-G11_020_3 0.6900
FDNS	00NR	0	16WP	G15_060	FROM->TO	G14-057T 345.00 - SUNNYSIDE 345KV CKT 1	717	789	0.06609	112.4623	GEN562026 1-G11_019_3 0.6900
FDNS	00NR	0	16WP	G15_060	FROM->TO	G14-057T 345.00 - SUNNYSIDE 345KV CKT 1	717	789	0.06609	112.4584	GEN562556 1-G14_046_3 0.3420
FDNS	00NR	0	16WP	G15_060	FROM->TO	G14-057T 345.00 - SUNNYSIDE 345KV CKT 1	717	789	0.06299	112.4526	CHISHOLM7 345.00 - GRACEMONT 345KV CKT 1
FDNS	00NR	0	16WP	G15_060	FROM->TO	G14-057T 345.00 - SUNNYSIDE 345KV CKT 1	717	789	0.06609	112.451	BIG STONE 230/24.0KV TRANSFORMER CKT 1
FDNS	00NR	0	16WP	G15_060	FROM->TO	G14-057T 345.00 - SUNNYSIDE 345KV CKT 1	717	789	0.06609	112.3702	GEN563142 1-G15079_3 0.5500
FDNS	00NR	0	16WP	G15_060	FROM->TO	G14-057T 345.00 - SUNNYSIDE 345KV CKT 1	717	789	0.06609	112.3702	GEN563151 1-G15080_2 0.5500
FDNS	00NR	0	16WP	G15_060	FROM->TO	G14-057T 345.00 - SUNNYSIDE 345KV CKT 1	717	789	0.06609	112.3332	GEN523971 1-HARRINGTON GEN #1 24 KV
FDNS	00NR	0	16WP	G15_060	FROM->TO	G14-057T 345.00 - SUNNYSIDE 345KV CKT 1	717	789	0.06609	112.3331	GEN523973 1-HARRINGTON GEN #3 24 KV
FDNS	00NR	0	16WP	G15_060	FROM->TO	G14-057T 345.00 - SUNNYSIDE 345KV CKT 1	717	789	0.06609	112.333	GEN523972 1-HARRINGTON GEN #2 24 KV
FDNS	00NR	0	16WP	G15_060	FROM->TO	G14-057T 345.00 - SUNNYSIDE 345KV CKT 1	717	789	0.06624	112.293	NORTHWEST TEXARKANA - VALLIANT 345KV CKT 1
FDNS	00NR	0	16WP	G15_060	FROM->TO	G14-057T 345.00 - SUNNYSIDE 345KV CKT 1	717	789	0.06624	112.293	NORTHWEST TEXARKANA - VALLIANT 345KV CKT 1
FDNS	00NR	0	16WP	G15_060	FROM->TO	G14-057T 345.00 - SUNNYSIDE 345KV CKT 1	717	789	0.06411	112.2788	P12:230:AEPW-SPS:SWEETWT6:WHEELER 6
FDNS	00NR	0	16WP	G15_060	FROM->TO	G14-057T 345.00 - SUNNYSIDE 345KV CKT 1	717	789	0.06411	112.2782	STLN-DEMARC6 - SWEETWATER 230KV CKT 1
FDNS	00NR	0	16WP	G15_060	FROM->TO	G14-057T 345.00 - SUNNYSIDE 345KV CKT 1	717	789	0.06411	112.2771	STATELINE INTERCHANGE - STLN-DEMARC6 230KV CKT 1
FDNSLock	00NR	0	16WP	G15_060	FROM->TO	G14-057T 345.00 - SUNNYSIDE 345KV CKT 1	717	789	0.06609	112.2748	GEN600000 1-SHERBURNECNTY G1
FDNS	00NR	0	16WP	G15_060	FROM->TO	G14-057T 345.00 - SUNNYSIDE 345KV CKT 1	717	789	0.06609	112.2359	GEN511848 1-SOUTHWESTERN STATION #3

SOLUTION	GROUP	SCENARIO	SEASON	SOURCE	DIRECTION	MONITORED ELEMENT	RATEA (MVA)	RATEB(MVA)	TDF	TC%LOADING (% MVA)	CONTINGENCY
FDNS	00NR	0	20WP	G15_060	FROM->TO	G14-057T 345.00 - SUNNYSIDE 345KV CKT 1	717	789	0.06555	112.2265	803-OKLAUNION
FDNS	00NR	0	16WP	G15_060	FROM->TO	G14-057T 345.00 - SUNNYSIDE 345KV CKT 1	717	789	0.06609	112.2003	GEN600001 2-SHERBURNE CNTY G2
FDNS	00NR	0	16WP	G15_060	FROM->TO	G14-057T 345.00 - SUNNYSIDE 345KV CKT 1	717	789	0.06609	112.163	GEN563042 1-G15068_3 0.6900
FDNS	00NR	0	16WP	G15_060	FROM->TO	G14-057T 345.00 - SUNNYSIDE 345KV CKT 1	717	789	0.06609	112.1422	GEN527901 1-HOBBS PLANT #1 (CT)
FDNS	00NR	0	16WP	G15_060	FROM->TO	G14-057T 345.00 - SUNNYSIDE 345KV CKT 1	717	789	0.06609	112.1422	GEN527902 1-HOBBS PLANT #2 (CT)
FDNSLock	00NR	0	16WP	G15_060	FROM->TO	G14-057T 345.00 - SUNNYSIDE 345KV CKT 1	717	789	0.06609	112.0855	GEN629075 1-OTTUMWA GENERATOR FOR OTTUMWA UNIT NO 1
FDNS	00NR	0	20WP	G15_060	FROM->TO	G14-057T 345.00 - SUNNYSIDE 345KV CKT 1	717	789	0.06437	111.9515	P12:138:OKGE:3TERM39
FDNSLock	00NR	0	16WP	G15_060	FROM->TO	G14-057T 345.00 - SUNNYSIDE 345KV CKT 1	717	789	0.06609	111.9266	GEN635214 4-NEAL UNIT 4
FDNS	00NR	0	16WP	G15_060	FROM->TO	G14-057T 345.00 - SUNNYSIDE 345KV CKT 1	717	789	0.06609	111.9233	SHERBURNE CO 345/24.0KV TRANSFORMER CKT 1
FDNS	00NR	0	20WP	G15_060	FROM->TO	G14-057T 345.00 - SUNNYSIDE 345KV CKT 1	717	789	0.06516	111.9074	RANCHRD7 345.00 - SOONER 345KV CKT 1
FDNS	00NR	0	20WP	G15_060	FROM->TO	G14-057T 345.00 - SUNNYSIDE 345KV CKT 1	717	789	0.06516	111.8943	CHILDRESS - LAKE PAULINE 138KV CKT 1
FDNS	00NR	0	20WP	G15_060	FROM->TO	G14-057T 345.00 - SUNNYSIDE 345KV CKT 1	717	789	0.06516	111.8943	CHILDRESS - LAKE PAULINE 138KV CKT 1
FDNS	00NR	0	20WP	G15_060	FROM->TO	G14-057T 345.00 - SUNNYSIDE 345KV CKT 1	717	789	0.06534	111.8901	CHILDRESS - HOLLIS TAP 138KV CKT 1
FDNS	00NR	0	20WP	G15_060	FROM->TO	G14-057T 345.00 - SUNNYSIDE 345KV CKT 1	717	789	0.06555	111.8664	GEN562084 1-G11_050_3 0.6900
FDNS	00NR	0	16WP	G15_060	FROM->TO	G14-057T 345.00 - SUNNYSIDE 345KV CKT 1	717	789	0.06609	111.861	GEN563043 1-G15068_4 0.6900
FDNS	00NR	0	16WP	G15_060	FROM->TO	G14-057T 345.00 - SUNNYSIDE 345KV CKT 1	717	789	0.06609	111.8591	GEN563273 2-G15093_4 0.6900
FDNS	00NR	0	20WP	G15_060	FROM->TO	G14-057T 345.00 - SUNNYSIDE 345KV CKT 1	717	789	0.06471	111.847	MAYSVILLE - PAOLI 138KV CKT 1
FDNS	00NR	0	20WP	G15_060	FROM->TO	G14-057T 345.00 - SUNNYSIDE 345KV CKT 1	717	789	0.06555	111.8386	GEN560187 1-WTH WIND 0.5750
FDNS	00NR	0	16WP	G15_060	FROM->TO	G14-057T 345.00 - SUNNYSIDE 345KV CKT 1	717	789	0.06609	111.8362	GEN526333 1-JONES GEN #3 21 KV
FDNS	00NR	0	16WP	G15_060	FROM->TO	G14-057T 345.00 - SUNNYSIDE 345KV CKT 1	717	789	0.06609	111.8361	GEN526334 1-JONES_4 116.500
FDNS	00NR	0	20WP	G15_060	FROM->TO	G14-057T 345.00 - SUNNYSIDE 345KV CKT 1	717	789	0.06498	111.8224	CIMARRON - MATHWSN7 345.00 345KV CKT 1
FDNS	00NR	0	20WP	G15_060	FROM->TO	G14-057T 345.00 - SUNNYSIDE 345KV CKT 1	717	789	0.06498	111.8224	CIMARRON - MATHWSN7 345.00 345KV CKT 2
FDNS	00NR	0	20WP	G15_060	FROM->TO	G14-057T 345.00 - SUNNYSIDE 345KV CKT 1	717	789	0.06555	111.8182	GEN560112 1-G08_037_3 0.6900
FDNS	00NR	0	16WP	G15_060	FROM->TO	G14-057T 345.00 - SUNNYSIDE 345KV CKT 1	717	789	0.06609	111.8	GEN344225 1-1CAL G1 25.000
FDNS	00NR	0	16WP	G15_060	FROM->TO	G14-057T 345.00 - SUNNYSIDE 345KV CKT 1	717	789	0.06272	111.7926	P12:230:AEPW:ELKCITY6:SWEETWT6
FDNS	00NR	0	16WP	G15_060	FROM->TO	G14-057T 345.00 - SUNNYSIDE 345KV CKT 1	717	789	0.06609	111.7857	GEN525844 1-ELK_1 118.000
FDNS	00NR	0	20WP	G15_060	FROM->TO	G14-057T 345.00 - SUNNYSIDE 345KV CKT 1	717	789	0.06555	111.7821	GEN521103 1-BLUE CANYON WIND FARM
FDNS	00NR	0	20WP	G15_060	FROM->TO	G14-057T 345.00 - SUNNYSIDE 345KV CKT 1	717	789	0.06555	111.7799	GEN520812 1-ANADRK5
FDNS	00NR	0	20WP	G15_060	FROM->TO	G14-057T 345.00 - SUNNYSIDE 345KV CKT 1	717	789	0.06555	111.7798	GEN520813 1-ANADRK6
FDNS	00NR	0	20WP	G15_060	FROM->TO	G14-057T 345.00 - SUNNYSIDE 345KV CKT 1	717	789	0.06596	111.7795	DRAPER LAKE - MIDWEST TAP 138KV CKT 1
FDNS	00NR	0	16WP	G15_060	FROM->TO	G14-057T 345.00 - SUNNYSIDE 345KV CKT 1	717	789	0.06609	111.779	GEN525845 1-ELK_2 1 138.00
FDNS	00NR	0	20WP	G15_060	FROM->TO	G14-057T 345.00 - SUNNYSIDE 345KV CKT 1	717	789	0.06555	111.7781	GEN563052 1-G15069_3 0.6900
FDNS	00NR	0	16WP	G15_060	FROM->TO	G14-057T 345.00 - SUNNYSIDE 345KV CKT 1	717	789	0.06609	111.7743	GEN600002 3-SHERBURNE CNTY G3
FDNS	00NR	0	20WP	G15_060	FROM->TO	G14-057T 345.00 - SUNNYSIDE 345KV CKT 1	717	789	0.06471	111.7716	MAYSVILLE - MAYSVLT4 138.00 138KV CKT 1
FDNS	00NR	0	20WP	G15_060	FROM->TO	G14-057T 345.00 - SUNNYSIDE 345KV CKT 1	717	789	0.06598	111.7619	P12:138:OKGE:3TERM21
FDNS	00NR	0	20WP	G15_060	FROM->TO	G14-057T 345.00 - SUNNYSIDE 345KV CKT 1	717	789	0.06555	111.7611	GEN562691 1-G15_015_3 0.6900
FDNS	00NR	0	20WP	G15_060	FROM->TO	G14-057T 345.00 - SUNNYSIDE 345KV CKT 1	717	789	0.06555	111.7556	GEN562772 1-G15034_3 0.6900
FDNS	00NR	0	20WP	G15_060	FROM->TO	G14-057T 345.00 - SUNNYSIDE 345KV CKT 1	717	789	0.06555	111.7408	GEN511961 1-DEMPSEY-WTG10.7000
FDNS	00NR	0	20WP	G15_060	FROM->TO	G14-057T 345.00 - SUNNYSIDE 345KV CKT 1	717	789	0.06582	111.7297	SOONER - SPRING CREEK 345KV CKT 1
FDNS	00NR	0	20WP	G15_060	FROM->TO	G14-057T 345.00 - SUNNYSIDE 345KV CKT 1	717	789	0.06555	111.7267	P12:069:OKGE:3TERM42
FDNS	00NR	0	20WP	G15_060	FROM->TO	G14-057T 345.00 - SUNNYSIDE 345KV CKT 1	717	789	0.06582	111.7265	NORTHWEST - SPRING CREEK 345KV CKT 1
FDNS	00NR	0	20WP	G15_060	FROM->TO	G14-057T 345.00 - SUNNYSIDE 345KV CKT 1	717	789	0.06487	111.7238	ARBUCKLE - SULPHR 4 138.00 138KV CKT 1
FDNS	00NR	0	20WP	G15_060	FROM->TO	G14-057T 345.00 - SUNNYSIDE 345KV CKT 1	717	789	0.06562	111.7062	GLASSES - MADILL INDUSTRIAL TAP 138KV CKT 1
FDNS	00NR	0	20WP	G15_060	FROM->TO	G14-057T 345.00 - SUNNYSIDE 345KV CKT 1	717	789	0.06471	111.7055	MAYSVLT4 138.00 - PRAIRIE POINT 138KV CKT 1
FDNS	00NR	0	20WP	G15_060	FROM->TO	G14-057T 345.00 - SUNNYSIDE 345KV CKT 1	717	789	0.06558	111.7005	P12:138:WFEC:MSL11
FDNS	00NR	0	20WP	G15_060	FROM->TO	G14-057T 345.00 - SUNNYSIDE 345KV CKT 1	717	789	0.06558	111.7005	P12:138:WFEC-AEPW:PHAROAH4:LONEOAK4
FDNS	00NR	0	20WP	G15_060	FROM->TO	G14-057T 345.00 - SUNNYSIDE 345KV CKT 1	717	789	0.06563	111.6941	CANEY CREEK - JOHNSON COUNTY 138KV CKT 1
FDNS	00NR	0	20WP	G15_060	FROM->TO	G14-057T 345.00 - SUNNYSIDE 345KV CKT 1	717	789	0.06555	111.689	GEN515443 1-MNCOWND1 0.7000
FDNS	00NR	0	20WP	G15_060	FROM->TO	G14-057T 345.00 - SUNNYSIDE 345KV CKT 1	717	789	0.06221	111.6853	MOREWOOD SW - NINE MILE 138KV CKT 1
FDNS	00NR	0	20WP	G15_060	FROM->TO	G14-057T 345.00 - SUNNYSIDE 345KV CKT 1	717	789	0.06536	111.6712	ALTUS JUNCTION - RUSSELL 138KV CKT 1
FDNS	00NR	0	20WP	G15_060	FROM->TO	G14-057T 345.00 - SUNNYSIDE 345KV CKT 1	717	789	0.06536	111.6712	ALTUS JUNCTION - RUSSELL 138KV CKT 1
FDNS	00NR	0	20WP	G15_060	FROM->TO	G14-057T 345.00 - SUNNYSIDE 345KV CKT 1	717	789	0.06555	111.6708	GEN560183 1-REDHIL-WTG1 12.000
FDNS	00NR	0	20WP	G15_060	FROM->TO	G14-057T 345.00 - SUNNYSIDE 345KV CKT 1	717	789	0.06555	111.6625	INDEPENDENCE 500/26.0KV TRANSFORMER CKT 1
FDNS	00NR	0	20WP	G15_060	FROM->TO	G14-057T 345.00 - SUNNYSIDE 345KV CKT 1	717	789	0.06562	111.6578	GLASSES - RUSSETT 138KV CKT 1
FDNS	00NR	0	20WP	G15_060	FROM->TO	G14-057T 345.00 - SUNNYSIDE 345KV CKT 1	717	789	0.06555	111.654	GEN600067 9-HIGH BRIDGE
FDNS	00NR	0	20WP	G15_060	FROM->TO	G14-057T 345.00 - SUNNYSIDE 345KV CKT 1	717	789	0.06582	111.6529	OVEXFRMCCOVE
FDNS	00NR	0	20WP	G15_060	FROM->TO	G14-057T 345.00 - SUNNYSIDE 345KV CKT 1	717	789	0.06568	111.6441	P12:138:WFEC:MSL08
FDNS	00NR	0	16WP	G15_060	FROM->TO	G14-057T 345.00 - SUNNYSIDE 345KV CKT 1	717	789	0.06609	111.6433	GEN525562 1-TOLK GEN #2 24 KV
FDNS	00NR	0	20WP	G15_060	FROM->TO	G14-057T 345.00 - SUNNYSIDE 345KV CKT 1	717	789	0.06548	111.6433	CARTER - CHICKASAW 138KV CKT 1
FDNS	00NR	0	16WP	G15_060	FROM->TO	G14-057T 345.00 - SUNNYSIDE 345KV CKT 1	717	789	0.06609	111.6359	GEN563202 1-G15085_3 0.5500
FDNS	00NR	0	20WP	G15_060	FROM->TO	G14-057T 345.00 - SUNNYSIDE 345KV CKT 1	717	789	0.06573	111.6359	CANADIAN RIVER - MCALESTER SOUTH 138KV CKT 1
FDNS	00NR	0	20WP	G15_060	FROM->TO	G14-057T 345.00 - SUNNYSIDE 345KV CKT 1	717	789	0.06573	111.6359	CANADIAN RIVER - MCALESTER SOUTH 138KV CKT 1
FDNS	00NR	0	20WP	G15_060	FROM->TO	G14-057T 345.00 - SUNNYSIDE 345KV CKT 1	717	789	0.06697	111.6344	LEBANON - TEXOMA JCT 138KV CKT 1
FDNS	00NR	0	20WP	G15_060	FROM->TO	G14-057T 345.00 - SUNNYSIDE 345KV CKT 1	717	789	0.06573	111.6341	CANADIAN RIVER () 345/138/13.8KV TRANSFORMER CKT 1
FDNS	00NR	0	20WP	G15_060	FROM->TO	G14-057T 345.00 - SUNNYSIDE 345KV CKT 1	717	789	0.06573	111.6341	CANADIAN RIVER () 345/138/13.8KV TRANSFORMER CKT 1
FDNS	00NR	0	20WP	G15_060	FROM->TO	G14-057T 345.00 - SUNNYSIDE 345KV CKT 1	717	789	0.06555	111.6328	P12:230:UMZB:# 112 #: NU IN SD. NU-RCDC & DRY CREEK XFMR
FDNS	00NR	0	16WP	G15_060	FROM->TO	G14-057T 345.00 - SUNNYSIDE 345KV CKT 1	717	789	0.06632	111.6299	LYDIA - WELSH 345KV CKT 1
FDNS	00NR	0	16WP	G15_060	FROM->TO	G14-057T 345.00 - SUNNYSIDE 345KV CKT 1	717	789	0.06632	111.6299	LYDIA - WELSH 345KV CKT 1
FDNS	00NR	0	20WP	G15_060	FROM->TO	G14-057T 345.00 - SUNNYSIDE 345KV CKT 1	717	789	0.06555	111.627	RCDC EAST 4230.00 - RED CEDAR DC 230KV CKT 1
FDNS	00NR	0	20WP	G15_060	FROM->TO	G14-057T 345.00 - SUNNYSIDE 345KV CKT 1	717	789	0.06529	111.6223	ROCKY POINT - SPRINGDALE 138KV CKT 1
FDNS	00NR	0	20WP	G15_060	FROM->TO	G14-057T 345.00 - SUNNYSIDE 345KV CKT 1	717	789	0.06555	111.6211	GEN562902 1-G15052_3 0.6900
FDNS	00NR	0	20WP	G15_060	FROM->TO	G14-057T 345.00 - SUNNYSIDE 345KV CKT 1	717	789	0.06548	111.621	HUGO (HUGO 1) 345/138/13.8KV TRANSFORMER CKT 1
FDNS	00NR	0	20WP	G15_060	FROM->TO	G14-057T 345.00 - SUNNYSIDE 345KV CKT 1	717	789	0.06555	111.6184	GEN563242 1-G15090_3 0.6900
FDNS	00NR	0	20WP	G15_060	FROM->TO	G14-057T 345.00 - SUNNYSIDE 345KV CKT 1	717	789	0.06471	111.6131	PRAIRIE POINT - RATLIFF 138KV CKT 1
FDNS	00NR	0	20WP	G15_060	FROM->TO	G14-057T 345.00 - SUNNYSIDE 345KV CKT 1	717	789	0.06592	111.6118	CHAMBER SPRINGS - CLARKSVILLE 345KV CKT 1
FDNS	00NR	0	20WP	G15_060	FROM->TO	G14-057T 345.00 - SUNNYSIDE 345KV CKT 1	717	789	0.06568	111.6064	GRPRAR1-LNX3345.00 - GRPRAR 345KV CKT Z
FDNS	00NR	0	20WP	G15_060	FROM->TO	G14-057T 345.00 - SUNNYSIDE 345KV CKT 1	717	789	0.06568	111.606	GRPRAR1-LNX3345.00 - HOLT.CO3 345.00 345KV CKT 1
FDNS	00NR	0	16WP	G15_060	FROM->TO	G14-057T 345.00 - SUNNYSIDE 345KV CKT 1	717	789	0.06609	111.5979	GEN527166 1-MUSTANG_6 118.000
FDNS	00NR	0	20WP	G15_060	FROM->TO	G14-057T 345.00 - SUNNYSIDE 345KV CKT 1	717	789	0.06555	111.5943	GEN629072 4-LANSING GENERATOR FOR UNITS NO4 EIA CODE 1

SOLUTION	GROUP	SCENARIO	SEASON	SOURCE	DIRECTION	MONITORED ELEMENT	RATEA (MVA)	RATEB(MVA)	TDF	TC%LOADING (% MVA)	CONTINGENCY
FDNS	00NR	0	16WP	G15_060	FROM->TO	G14-057T 345.00 - SUNNYSIDE 345KV CKT 1	717	789	0.06411	111.5888	CHISHOLM6 230.00 - SWEETWATER 230KV CKT 1
FDNS	00NR	0	20WP	G15_060	FROM->TO	G14-057T 345.00 - SUNNYSIDE 345KV CKT 1	717	789	0.06555	111.5796	GEN562078 1-G11_051_3 0.6900
FDNS	00NR	0	20WP	G15_060	FROM->TO	G14-057T 345.00 - SUNNYSIDE 345KV CKT 1	717	789	0.06481	111.5767	P12:138:AEPW:112GORE4:SNYDER-4
FDNS	00NR	0	20WP	G15_060	FROM->TO	G14-057T 345.00 - SUNNYSIDE 345KV CKT 1	717	789	0.06555	111.5711	GEN524285 1-WILDORADO WIND GEN
FDNS	00NR	0	20WP	G15_060	FROM->TO	G14-057T 345.00 - SUNNYSIDE 345KV CKT 1	717	789	0.06487	111.5694	JOLLYVILLE - SULPHR 4 138.00 138KV CKT 1
FDNS	00NR	0	20WP	G15_060	FROM->TO	G14-057T 345.00 - SUNNYSIDE 345KV CKT 1	717	789	0.06555	111.5522	GEN562587 1-G14_056_3 0.6900
FDNS	00NR	0	20WP	G15_060	FROM->TO	G14-057T 345.00 - SUNNYSIDE 345KV CKT 1	717	789	0.06555	111.5512	GEN514805 1-SOONER UNIT 1
FDNS	00NR	0	20WP	G15_060	FROM->TO	G14-057T 345.00 - SUNNYSIDE 345KV CKT 1	717	789	0.06221	111.5491	BEARCAT 138.00 - NINE MILE 138KV CKT 1
FDNS	00NR	0	20WP	G15_060	FROM->TO	G14-057T 345.00 - SUNNYSIDE 345KV CKT 1	717	789	0.06555	111.5454	GEN524295 1-SPNSPUR_WND10.6900
FDNS	00NR	0	20WP	G15_060	FROM->TO	G14-057T 345.00 - SUNNYSIDE 345KV CKT 1	717	789	0.06555	111.5399	GEN657749 1-YOUNG 1 GENERATOR
FDNS	00NR	0	16WP	G15_060	FROM->TO	G14-057T 345.00 - SUNNYSIDE 345KV CKT 1	717	789	0.0656	111.5346	JOHNSON COUNTY (JOHNCO) 345/138/13.8KV TRANSFORMER CKT 1
FDNS	00NR	0	16WP	G15_060	FROM->TO	G14-057T 345.00 - SUNNYSIDE 345KV CKT 1	717	789	0.06609	111.5255	GEN635023 3-WALTER SCOTT UNIT 3
FDNS	00NR	0	20WP	G15_060	FROM->TO	G14-057T 345.00 - SUNNYSIDE 345KV CKT 1	717	789	0.06555	111.5198	GEN514806 1-SOONER UNIT 2
FDNS	00NR	0	20WP	G15_060	FROM->TO	G14-057T 345.00 - SUNNYSIDE 345KV CKT 1	717	789	0.06555	111.5196	GEN524023 1-NICHOLS GEN #3 22 KV
FDNS	00NR	0	16WP	G15_060	FROM->TO	G14-057T 345.00 - SUNNYSIDE 345KV CKT 1	717	789	0.06609	111.5165	GEN562590 1-G14_057_3 0.6900
FDNS	00NR	0	20WP	G15_060	FROM->TO	G14-057T 345.00 - SUNNYSIDE 345KV CKT 1	717	789	0.06563	111.5107	CROCKETT - TENASKA RUSK COUNTY 345KV CKT 1
FDNS	00NR	0	20WP	G15_060	FROM->TO	G14-057T 345.00 - SUNNYSIDE 345KV CKT 1	717	789	0.06563	111.5059	LEBROCK - TENASKA RUSK COUNTY 345KV CKT 1
FDNS	00NR	0	20WP	G15_060	FROM->TO	G14-057T 345.00 - SUNNYSIDE 345KV CKT 1	717	789	0.06487	111.4877	JOLLYVILLE - KERR MCGEE CIMARRON 138KV CKT 1
FDNS	00NR	0	20WP	G15_060	FROM->TO	G14-057T 345.00 - SUNNYSIDE 345KV CKT 1	717	789	0.06555	111.4834	GEN562812 1-G15040_3 0.3570
FDNS	00NR	0	20WP	G15_060	FROM->TO	G14-057T 345.00 - SUNNYSIDE 345KV CKT 1	717	789	0.06555	111.4785	GEN562270 1-G12-020-2 0.6900
FDNS	00NR	0	20WP	G15_060	FROM->TO	G14-057T 345.00 - SUNNYSIDE 345KV CKT 1	717	789	0.06555	111.4769	GEN562882 1-G15047_3 0.6900
FDNS	00NR	0	20WP	G15_060	FROM->TO	G14-057T 345.00 - SUNNYSIDE 345KV CKT 1	717	789	0.06555	111.4766	GEN563132 1-G15078_3 0.3570
FDNS	00NR	0	20WP	G15_060	FROM->TO	G14-057T 345.00 - SUNNYSIDE 345KV CKT 1	717	789	0.06555	111.4697	GEN563102 1-G15075_3 0.5500
FDNS	00NR	0	20WP	G15_060	FROM->TO	G14-057T 345.00 - SUNNYSIDE 345KV CKT 1	717	789	0.06555	111.4569	GEN563062 1-G15071_3 0.6900
FDNS	00NR	0	20WP	G15_060	FROM->TO	G14-057T 345.00 - SUNNYSIDE 345KV CKT 1	717	789	0.06221	111.4547	BEARCAT 138.00 - MOORELAND 138KV CKT 1
FDNS	00NR	0	20WP	G15_060	FROM->TO	G14-057T 345.00 - SUNNYSIDE 345KV CKT 1	717	789	0.06221	111.4501	P12:138:WFEC:MSL14
FDNS	00NR	0	20WP	G15_060	FROM->TO	G14-057T 345.00 - SUNNYSIDE 345KV CKT 1	717	789	0.06487	111.4369	ARBWIND4 138.00 - KERR MCGEE CIMARRON 138KV CKT 1
FDNS	00NR	0	20WP	G15_060	FROM->TO	G14-057T 345.00 - SUNNYSIDE 345KV CKT 1	717	789	0.06555	111.4202	GEN562974 1-G15060_5 0.6900
FDNS	00NR	0	20WP	G15_060	FROM->TO	G14-057T 345.00 - SUNNYSIDE 345KV CKT 1	717	789	0.06555	111.4197	GEN521112 1-ORME3 13.800
FDNS	00NR	0	20WP	G15_060	FROM->TO	G14-057T 345.00 - SUNNYSIDE 345KV CKT 1	717	789	0.06549	111.4177	BROWN - RUSSETT 138KV CKT 1
FDNS	00NR	0	16WP	G15_060	FROM->TO	G14-057T 345.00 - SUNNYSIDE 345KV CKT 1	717	789	0.06609	111.4166	GEN562762 1-G15033_3 0.6900
FDNS	00NR	0	20WP	G15_060	FROM->TO	G14-057T 345.00 - SUNNYSIDE 345KV CKT 1	717	789	0.06555	111.4113	GEN345671 2-1RUSH G2 18.000
FDNS	00NR	0	20WP	G15_060	FROM->TO	G14-057T 345.00 - SUNNYSIDE 345KV CKT 1	717	789	0.06555	111.4104	GEN562973 1-G15060_4 0.6900
FDNS	00NR	0	20WP	G15_060	FROM->TO	G14-057T 345.00 - SUNNYSIDE 345KV CKT 1	717	789	0.06555	111.4094	GEN345670 1-1RUSH G1 18.000
FDNS	00NR	0	16WP	G15_060	FROM->TO	G14-057T 345.00 - SUNNYSIDE 345KV CKT 1	717	789	0.06609	111.4055	GEN562655 1-G14_074_3 0.6900
FDNS	00NR	0	20WP	G15_060	FROM->TO	G14-057T 345.00 - SUNNYSIDE 345KV CKT 1	717	789	0.06494	111.3964	CHICKASAW - TOTAL 138KV CKT 1
FDNS	00NR	0	20WP	G15_060	FROM->TO	G14-057T 345.00 - SUNNYSIDE 345KV CKT 1	717	789	0.06555	111.3839	GEN560105 1-G08-22 0.6900
FDNS	00NR	0	20WP	G15_060	FROM->TO	G14-057T 345.00 - SUNNYSIDE 345KV CKT 1	717	789	0.06555	111.3817	4SIOUX 1 138.00 138/18.0KV TRANSFORMER CKT 1
FDNS	00NR	0	20WP	G15_060	FROM->TO	G14-057T 345.00 - SUNNYSIDE 345KV CKT 1	717	789	0.06549	111.372	RUSSETT - RUSSETT 138KV CKT 1
FDNS	00NR	0	20WP	G15_060	FROM->TO	G14-057T 345.00 - SUNNYSIDE 345KV CKT 1	717	789	0.06555	111.3666	GEN562550 1-G14_040_3 0.6900
FDNS	00NR	0	20WP	G15_060	FROM->TO	G14-057T 345.00 - SUNNYSIDE 345KV CKT 1	717	789	0.06555	111.3633	GEN681522 3-GENOA 3
FDNS	00NR	0	16WP	G15_060	FROM->TO	G14-057T 345.00 - SUNNYSIDE 345KV CKT 1	717	789	0.06609	111.3403	GEN562685 1-G15_013_3 0.3550
FDNS	00NR	0	20WP	G15_060	FROM->TO	G14-057T 345.00 - SUNNYSIDE 345KV CKT 1	717	789	0.06555	111.3293	GEN511853 1-COMANCHE #3
FDNS	00NR	0	20WP	G15_060	FROM->TO	G14-057T 345.00 - SUNNYSIDE 345KV CKT 1	717	789	0.06555	111.3226	GEN527161 1-MUSTANG GEN #1
FDNS	00NR	0	20WP	G15_060	FROM->TO	G14-057T 345.00 - SUNNYSIDE 345KV CKT 1	717	789	0.06555	111.3226	GEN527162 1-MUSTANG GEN #2
FDNS	00NR	0	20WP	G15_060	FROM->TO	G14-057T 345.00 - SUNNYSIDE 345KV CKT 1	717	789	0.06519	111.3211	ROCKY POINT - SUNNYSIDE 138KV CKT 1
FDNS	00NR	0	20WP	G15_060	FROM->TO	G14-057T 345.00 - SUNNYSIDE 345KV CKT 1	717	789	0.06555	111.3161	EASTDC - ERCOT EQUIVALENCE 345KV CKT 1
FDNS	00NR	0	20WP	G15_060	FROM->TO	G14-057T 345.00 - SUNNYSIDE 345KV CKT 1	717	789	0.06555	111.3113	GEN511962 2-RKYRDGW2-1 0.7000
FDNS	00NR	0	20WP	G15_060	FROM->TO	G14-057T 345.00 - SUNNYSIDE 345KV CKT 1	717	789	0.06555	111.2988	GEN672321 1-SHAND GENERATOR 1
FDNS	00NR	0	20WP	G15_060	FROM->TO	G14-057T 345.00 - SUNNYSIDE 345KV CKT 1	717	789	0.06546	111.2978	RUSSETT - SPRINGDALE 138KV CKT 1
FDNS	00NR	0	20WP	G15_060	FROM->TO	G14-057T 345.00 - SUNNYSIDE 345KV CKT 1	717	789	0.06555	111.2896	GEN525494 1-PLANT X GEN #4 20 KV
FDNS	00NR	0	20WP	G15_060	FROM->TO	G14-057T 345.00 - SUNNYSIDE 345KV CKT 1	717	789	0.06515	111.2832	G15063_T 345.00 - MATHWSN7 345.00 345KV CKT 1
FDNS	00NR	0	20WP	G15_060	FROM->TO	G14-057T 345.00 - SUNNYSIDE 345KV CKT 1	717	789	0.06555	111.2755	GEN672310 1-POPLAR RIVER GENERATOR 1
FDNS	00NR	0	20WP	G15_060	FROM->TO	G14-057T 345.00 - SUNNYSIDE 345KV CKT 1	717	789	0.06555	111.2755	GEN672311 2-POPLAR RIVER GENERATOR 2
FDNS	00NR	0	20WP	G15_060	FROM->TO	G14-057T 345.00 - SUNNYSIDE 345KV CKT 1	717	789	0.06555	111.2739	GEN527882 1-CUNNINGHAM GEN #2 20 KV
FDNS	00NR	0	20WP	G15_060	FROM->TO	G14-057T 345.00 - SUNNYSIDE 345KV CKT 1	717	789	0.06555	111.266	GEN672306 6-BOUNDARY DAM GENERATOR 6
FDNS	00NR	0	20WP	G15_060	FROM->TO	G14-057T 345.00 - SUNNYSIDE 345KV CKT 1	717	789	0.06555	111.2655	GEN563192 1-G15084_3 0.5500
FDNS	00NR	0	20WP	G15_060	FROM->TO	G14-057T 345.00 - SUNNYSIDE 345KV CKT 1	717	789	0.06555	111.2616	GEN562512 1-G14_020_3 0.6900
FDNS	00NR	0	20WP	G15_060	FROM->TO	G14-057T 345.00 - SUNNYSIDE 345KV CKT 1	717	789	0.06555	111.2595	GEN511852 1-COMANCHE #2
FDNS	00NR	0	20WP	G15_060	FROM->TO	G14-057T 345.00 - SUNNYSIDE 345KV CKT 1	717	789	0.06555	111.2591	GEN344895 2-1LAB G2 20.000
FDNS	00NR	0	20WP	G15_060	FROM->TO	G14-057T 345.00 - SUNNYSIDE 345KV CKT 1	717	789	0.06555	111.258	GEN527163 1-MUSTANG GEN #3 22 KV
FDNS	00NR	0	20WP	G15_060	FROM->TO	G14-057T 345.00 - SUNNYSIDE 345KV CKT 1	717	789	0.06553	111.2526	P12:138:WFEC-AEPW:GOLDENSW4:CRAIGJT4
FDNS	00NR	0	20WP	G15_060	FROM->TO	G14-057T 345.00 - SUNNYSIDE 345KV CKT 1	717	789	0.06555	111.2434	GEN562892 1-G15048_3 0.6900
FDNS	00NR	0	20WP	G15_060	FROM->TO	G14-057T 345.00 - SUNNYSIDE 345KV CKT 1	717	789	0.06555	111.2366	GEN681542 6-JP MADGETT
FDNS	00NR	0	20WP	G15_060	FROM->TO	G14-057T 345.00 - SUNNYSIDE 345KV CKT 1	717	789	0.06455	111.235	ARKANSAS NUCLEAR ONE - FT SMITH 500KV CKT 1
FDNS	00NR	0	20WP	G15_060	FROM->TO	G14-057T 345.00 - SUNNYSIDE 345KV CKT 1	717	789	0.06455	111.235	ARKANSAS NUCLEAR ONE - FT SMITH 500KV CKT 1
FDNS	00NR	0	20WP	G15_060	FROM->TO	G14-057T 345.00 - SUNNYSIDE 345KV CKT 1	717	789	0.06555	111.2295	GEN344896 3-1LAB G3 20.000
FDNS	00NR	0	20WP	G15_060	FROM->TO	G14-057T 345.00 - SUNNYSIDE 345KV CKT 1	717	789	0.06555	111.2284	GEN344897 4-1LAB G4 20.000
FDNS	00NR	0	20WP	G15_060	FROM->TO	G14-057T 345.00 - SUNNYSIDE 345KV CKT 1	717	789	0.06555	111.2281	GEN344894 1-1LAB G1 20.000
FDNS	00NR	0	20WP	G15_060	FROM->TO	G14-057T 345.00 - SUNNYSIDE 345KV CKT 1	717	789	0.06561	111.2223	P12:138:WFEC:MSL16
FDNS	00NR	0	20WP	G15_060	FROM->TO	G14-057T 345.00 - SUNNYSIDE 345KV CKT 1	717	789	0.06471	111.2221	ARDMORE WEST - CARTER 138KV CKT 1
FDNS	00NR	0	16WP	G15_060	FROM->TO	G14-057T 345.00 - SUNNYSIDE 345KV CKT 1	717	789	0.06609	111.2074	GEN525561 1-TOLK GEN #1 24 KV
FDNS	00NR	0	16WP	G15_060	FROM->TO	G14-057T 345.00 - SUNNYSIDE 345KV CKT 1	717	789	0.06609	111.2074	GEN527903 1-HOBBS PLANT #3 (ST)
FDNS	00NR	0	16WP	G15_060	FROM->TO	G14-057T 345.00 - SUNNYSIDE 345KV CKT 1	717	789	0.06609	111.2054	GEN563272 1-G15093_3 0.6900
FDNS	00NR	0	20WP	G15_060	FROM->TO	G14-057T 345.00 - SUNNYSIDE 345KV CKT 1	717	789	0.06555	111.2032	GEN523461 1-BLACKHAWK GEN #1
FDNS	00NR	0	20WP	G15_060	FROM->TO	G14-057T 345.00 - SUNNYSIDE 345KV CKT 1	717	789	0.06555	111.2031	GEN523462 1-BLACKHAWK GEN #2
FDNS	00NR	0	20WP	G15_060	FROM->TO	G14-057T 345.00 - SUNNYSIDE 345KV CKT 1	717	789	0.06481	111.1791	CACHE - SNYDER 138KV CKT 1
FDNS	00NR	0	20WP	G15_060	FROM->TO	G14-057T 345.00 - SUNNYSIDE 345KV CKT 1	717	789	0.06545	111.1605	P12:138:WFEC:MSL07
FDNS	00NR	0	20WP	G15_060	FROM->TO	G14-057T 345.00 - SUNNYSIDE 345KV CKT 1	717	789	0.06545	111.1605	P12:138:WFEC-AEPW:HUGOPP4:ATOKA--4

SOLUTION	GROUP	SCENARIO	SEASON	SOURCE	DIRECTION	MONITORED ELEMENT	RATEA (MVA)	RATEB(MVA)	TDF	TC%LOADING (% MVA)	CONTINGENCY
FDNS	00NR	0	20WP	G15_060	FROM->TO	G14-057T 345.00 - SUNNYSIDE 345KV CKT 1	717	789	0.06553	111.1553	P12:138:AEPW-SWPA:LONEOAK4:TUPELO4
FDNS	00NR	0	20WP	G15_060	FROM->TO	G14-057T 345.00 - SUNNYSIDE 345KV CKT 1	717	789	0.06553	111.1553	P12:138:WFEC:MSL06
FDNS	00NR	0	20WP	G15_060	FROM->TO	G14-057T 345.00 - SUNNYSIDE 345KV CKT 1	717	789	0.06555	111.1514	GEN521111 1-ORME2 13.800
FDNS	00NR	0	20WP	G15_060	FROM->TO	G14-057T 345.00 - SUNNYSIDE 345KV CKT 1	717	789	0.06555	111.1465	GEN562699 1-G15_018_3 0.6900
FDNS	00NR	0	20WP	G15_060	FROM->TO	G14-057T 345.00 - SUNNYSIDE 345KV CKT 1	717	789	0.06477	111.1385	SUNNYSIDE (SUNNYSD5) 345/138/13.8KV TRANSFORMER CKT 1
FDNS	00NR	0	20WP	G15_060	FROM->TO	G14-057T 345.00 - SUNNYSIDE 345KV CKT 1	717	789	0.06555	111.1382	GEN521110 1-ORME1 13.800
FDNS	00NR	0	20WP	G15_060	FROM->TO	G14-057T 345.00 - SUNNYSIDE 345KV CKT 1	717	789	0.06802	111.1308	CLARKSVILLE - MUSKOGEE 345KV CKT 1
FDNS	00NR	0	20WP	G15_060	FROM->TO	G14-057T 345.00 - SUNNYSIDE 345KV CKT 1	717	789	0.06802	111.1308	CLARKSVILLE - MUSKOGEE 345KV CKT 1
FDNS	00NR	0	20WP	G15_060	FROM->TO	G14-057T 345.00 - SUNNYSIDE 345KV CKT 1	717	789	0.06534	111.1294	G15085_T 138.00 - RUSSELL 138KV CKT 1
FDNS	00NR	0	20WP	G15_060	FROM->TO	G14-057T 345.00 - SUNNYSIDE 345KV CKT 1	717	789	0.06471	111.1097	ARDMORE WEST - UNIROYAL 138KV CKT 1
FDNS	00NR	0	16WP	G15_060	FROM->TO	G14-057T 345.00 - SUNNYSIDE 345KV CKT 1	717	789	0.06609	111.1021	GEN635024 4-WALTER SCOTT UNIT 4
FDNS	00NR	0	20WP	G15_060	FROM->TO	G14-057T 345.00 - SUNNYSIDE 345KV CKT 1	717	789	0.06555	111.0967	GEN520811 1-ANADRK4
FDNS	00NR	0	20WP	G15_060	FROM->TO	G14-057T 345.00 - SUNNYSIDE 345KV CKT 1	717	789	0.06555	111.0961	GEN563162 1-G15081_3 0.6900
FDNS	00NR	0	20WP	G15_060	FROM->TO	G14-057T 345.00 - SUNNYSIDE 345KV CKT 1	717	789	0.06555	111.0703	GEN661015 1-COYOTE
FDNS	00NR	0	20WP	G15_060	FROM->TO	G14-057T 345.00 - SUNNYSIDE 345KV CKT 1	717	789	0.06555	111.0659	GEN563292 1-G15095_3 0.6900
FDNS	00NR	0	20WP	G15_060	FROM->TO	G14-057T 345.00 - SUNNYSIDE 345KV CKT 1	717	789	0.06528	111.0612	P12:138:OKGE:3TERM40
FDNS	00NR	0	20WP	G15_060	FROM->TO	G14-057T 345.00 - SUNNYSIDE 345KV CKT 1	717	789	0.06499	111.0535	CARTRCO4 138.00 - RATLIFF 138KV CKT 1
FDNS	00NR	0	20WP	G15_060	FROM->TO	G14-057T 345.00 - SUNNYSIDE 345KV CKT 1	717	789	0.06555	111.0431	GEN563122 1-G15077_3 0.3850
FDNS	00NR	0	20WP	G15_060	FROM->TO	G14-057T 345.00 - SUNNYSIDE 345KV CKT 1	717	789	0.06555	111.0154	GEN562861 1-G15045_2 0.4800
FDNS	00NR	0	20WP	G15_060	FROM->TO	G14-057T 345.00 - SUNNYSIDE 345KV CKT 1	717	789	0.06555	110.9573	GEN657748 1-YOUNG 2 GENERATOR
FDNS	00NR	0	20WP	G15_060	FROM->TO	G14-057T 345.00 - SUNNYSIDE 345KV CKT 1	717	789	0.06555	110.9312	GEN527883 1-CUNNINGHAM GEN #3 22 KV
FDNS	00NR	0	20WP	G15_060	FROM->TO	G14-057T 345.00 - SUNNYSIDE 345KV CKT 1	717	789	0.06555	110.9282	GEN527884 1-CUNNINGHAM GEN #4 22 KV
FDNS	00NR	0	20WP	G15_060	FROM->TO	G14-057T 345.00 - SUNNYSIDE 345KV CKT 1	717	789	0.06631	110.9202	P12:138:WFEC:MSL15
FDNS	00NR	0	20WP	G15_060	FROM->TO	G14-057T 345.00 - SUNNYSIDE 345KV CKT 1	717	789	0.06555	110.8807	GEN562992 1-G15063_3 0.6900
FDNS	00NR	0	20WP	G15_060	FROM->TO	G14-057T 345.00 - SUNNYSIDE 345KV CKT 1	717	789	0.06471	110.8733	SUNNYSIDE - UNIROYAL 138KV CKT 1
FDNS	00NR	0	20WP	G15_060	FROM->TO	G14-057T 345.00 - SUNNYSIDE 345KV CKT 1	717	789	0.06534	110.8647	P12:138:AEPW:SHAM4WT:CHILD4WT
FDNS	00NR	0	20WP	G15_060	FROM->TO	G14-057T 345.00 - SUNNYSIDE 345KV CKT 1	717	789	0.06555	110.8625	GEN562704 1-G15_020_3 0.3550
FDNS	00NR	0	20WP	G15_060	FROM->TO	G14-057T 345.00 - SUNNYSIDE 345KV CKT 1	717	789	0.06555	110.8623	GEN526331 1-JONES GEN #1 22 KV
FDNS	00NR	0	20WP	G15_060	FROM->TO	G14-057T 345.00 - SUNNYSIDE 345KV CKT 1	717	789	0.06555	110.8621	GEN526332 1-JONES GEN #2 21 KV
FDNS	00NR	0	20WP	G15_060	FROM->TO	G14-057T 345.00 - SUNNYSIDE 345KV CKT 1	717	789	0.06555	110.8621	GEN620315 1-BIG STONE GEN
FDNS	00NR	0	20WP	G15_060	FROM->TO	G14-057T 345.00 - SUNNYSIDE 345KV CKT 1	717	789	0.06555	110.8294	GEN562952 1-G15057_3 0.6500
FDNS	00NR	0	20WP	G15_060	FROM->TO	G14-057T 345.00 - SUNNYSIDE 345KV CKT 1	717	789	0.06555	110.7897	GEN511851 1-COMANCHE #1
FDNS	00NR	0	20WP	G15_060	FROM->TO	G14-057T 345.00 - SUNNYSIDE 345KV CKT 1	717	789	0.06555	110.7889	GEN600004 2-PRAIRIE ISLAND G2
FDNS	00NR	0	17SP	G15_060	FROM->TO	G14-057T 345.00 - SUNNYSIDE 345KV CKT 1	717	789	0.07563	110.7884	CIMARRON - MINCO 345KV CKT 1
FDNS	00NR	0	20WP	G15_060	FROM->TO	G14-057T 345.00 - SUNNYSIDE 345KV CKT 1	717	789	0.06555	110.7863	GEN600003 1-PRAIRIE ISLAND G1
FDNS	00NR	0	20WP	G15_060	FROM->TO	G14-057T 345.00 - SUNNYSIDE 345KV CKT 1	717	789	0.06555	110.7686	GEN600006 1-AS KING
FDNS	00NR	0	20WP	G15_060	FROM->TO	G14-057T 345.00 - SUNNYSIDE 345KV CKT 1	717	789	0.06555	110.7635	GEN563173 1-G15082_3 0.6900
FDNS	00NR	0	20WP	G15_060	FROM->TO	G14-057T 345.00 - SUNNYSIDE 345KV CKT 1	717	789	0.06555	110.7507	GEN562710 1-G15_022_3 0.5500
FDNS	00NR	0	20WP	G15_060	FROM->TO	G14-057T 345.00 - SUNNYSIDE 345KV CKT 1	717	789	0.06697	110.7451	CANEY CREEK - TEXOMA JCT 138KV CKT 1
FDNS	00NR	0	20WP	G15_060	FROM->TO	G14-057T 345.00 - SUNNYSIDE 345KV CKT 1	717	789	0.06446	110.7436	GRAPEVINE INTERCHANGE - STATELINE INTERCHANGE 230KV CKT 1
FDNS	00NR	0	20WP	G15_060	FROM->TO	G14-057T 345.00 - SUNNYSIDE 345KV CKT 1	717	789	0.06446	110.7436	GRAPEVINE INTERCHANGE - STATELINE INTERCHANGE 230KV CKT 1
FDNS	00NR	0	20WP	G15_060	FROM->TO	G14-057T 345.00 - SUNNYSIDE 345KV CKT 1	717	789	0.06555	110.7218	GEN532751 1-WOLF CREEK GENERATING STATION UNIT 1
FDNS	00NR	0	20WP	G15_060	FROM->TO	G14-057T 345.00 - SUNNYSIDE 345KV CKT 1	717	789	0.0657	110.6708	P12:138:AEPW-OGE:CORNVIL4:CIMARON4
FDNS	00NR	0	20WP	G15_060	FROM->TO	G14-057T 345.00 - SUNNYSIDE 345KV CKT 1	717	789	0.06447	110.6105	GRAPEVINE INTERCHANGE - NICHOLS STATION 230KV CKT 1
FDNS	00NR	0	20WP	G15_060	FROM->TO	G14-057T 345.00 - SUNNYSIDE 345KV CKT 1	717	789	0.06447	110.6105	GRAPEVINE INTERCHANGE - NICHOLS STATION 230KV CKT 1
FDNS	00NR	0	20WP	G15_060	FROM->TO	G14-057T 345.00 - SUNNYSIDE 345KV CKT 1	717	789	0.06555	110.6	GEN615002 2-COAL CREEK
FDNS	00NR	0	20WP	G15_060	FROM->TO	G14-057T 345.00 - SUNNYSIDE 345KV CKT 1	717	789	0.06555	110.5967	GEN635213 3-NEAL UNIT 3
FDNS	00NR	0	20WP	G15_060	FROM->TO	G14-057T 345.00 - SUNNYSIDE 345KV CKT 1	717	789	0.06555	110.5961	GEN629074 1-ARNOLD LOWSIDE OF GSU XFMR
FDNS	00NR	0	20WP	G15_060	FROM->TO	G14-057T 345.00 - SUNNYSIDE 345KV CKT 1	717	789	0.06572	110.531	NORTHWEST TEXARKANA - VALLIANT 345KV CKT 1
FDNS	00NR	0	20WP	G15_060	FROM->TO	G14-057T 345.00 - SUNNYSIDE 345KV CKT 1	717	789	0.06572	110.531	NORTHWEST TEXARKANA - VALLIANT 345KV CKT 1
FDNS	00NR	0	20WP	G15_060	FROM->TO	G14-057T 345.00 - SUNNYSIDE 345KV CKT 1	717	789	0.06559	110.5277	P12:138:WFEC:MSL09
FDNS	00NR	0	16WP	G15_060	FROM->TO	G14-057T 345.00 - SUNNYSIDE 345KV CKT 1	717	789	0.0664	110.5148	LYDIA - VALLIANT 345KV CKT 1
FDNS	00NR	0	16WP	G15_060	FROM->TO	G14-057T 345.00 - SUNNYSIDE 345KV CKT 1	717	789	0.0664	110.5148	LYDIA - VALLIANT 345KV CKT 1
FDNS	00NR	0	20WP	G15_060	FROM->TO	G14-057T 345.00 - SUNNYSIDE 345KV CKT 1	717	789	0.06555	110.5037	GEN636641 1-LOUISA UNIT 1
FDNS	00NR	0	20WP	G15_060	FROM->TO	G14-057T 345.00 - SUNNYSIDE 345KV CKT 1	717	789	0.06555	110.5028	GEN562754 1-G15031_5 0.6900
FDNS	00NR	0	20WP	G15_060	FROM->TO	G14-057T 345.00 - SUNNYSIDE 345KV CKT 1	717	789	0.06555	110.469	GEN600005 1-MONTICELLO
FDNS	00NR	0	20WP	G15_060	FROM->TO	G14-057T 345.00 - SUNNYSIDE 345KV CKT 1	717	789	0.06252	110.4636	CHISHOLM7 345.00 () 345/230/13.2KV TRANSFORMER CKT 1
FDNS	00NR	0	20WP	G15_060	FROM->TO	G14-057T 345.00 - SUNNYSIDE 345KV CKT 1	717	789	0.06555	110.445	GEN562556 1-G14_046_3 0.3420
FDNS	00NR	0	20WP	G15_060	FROM->TO	G14-057T 345.00 - SUNNYSIDE 345KV CKT 1	717	789	0.06555	110.444	GEN562756 1-G15031_7 0.6900
FDNS	00NR	0	20WP	G15_060	FROM->TO	G14-057T 345.00 - SUNNYSIDE 345KV CKT 1	717	789	0.06252	110.3828	CHISHOLM7 345.00 - GRACEMONT 345KV CKT 1
FDNS	00NR	0	20WP	G15_060	FROM->TO	G14-057T 345.00 - SUNNYSIDE 345KV CKT 1	717	789	0.06555	110.3618	GEN563142 1-G15079_3 0.5500
FDNS	00NR	0	20WP	G15_060	FROM->TO	G14-057T 345.00 - SUNNYSIDE 345KV CKT 1	717	789	0.06555	110.3618	GEN563151 1-G15080_2 0.5500
FDNS	00NR	0	20WP	G15_060	FROM->TO	G14-057T 345.00 - SUNNYSIDE 345KV CKT 1	717	789	0.06555	110.3553	GEN562023 1-G11_020_3 0.6900
FDNS	00NR	0	20WP	G15_060	FROM->TO	G14-057T 345.00 - SUNNYSIDE 345KV CKT 1	717	789	0.06555	110.3553	GEN562026 1-G11_019_3 0.6900
FDNS	00NR	0	20WP	G15_060	FROM->TO	G14-057T 345.00 - SUNNYSIDE 345KV CKT 1	717	789	0.06555	110.3434	GEN600000 1-SHERBURNECNTY G1
FDNS	00NR	0	20WP	G15_060	FROM->TO	G14-057T 345.00 - SUNNYSIDE 345KV CKT 1	717	789	0.06555	110.3082	GEN629075 1-OTTUMWA GENERATOR FOR OTTUMWA UNIT NO 1
FDNS	00NR	0	20WP	G15_060	FROM->TO	G14-057T 345.00 - SUNNYSIDE 345KV CKT 1	717	789	0.06555	110.2904	GEN600001 2-SHERBURNE CNTY G2
FDNS	00NR	0	20WP	G15_060	FROM->TO	G14-057T 345.00 - SUNNYSIDE 345KV CKT 1	717	789	0.06555	110.2626	GEN523971 1-HARRINGTON GEN #1 24 KV
FDNS	00NR	0	20WP	G15_060	FROM->TO	G14-057T 345.00 - SUNNYSIDE 345KV CKT 1	717	789	0.06555	110.2626	GEN523972 1-HARRINGTON GEN #2 24 KV
FDNS	00NR	0	20WP	G15_060	FROM->TO	G14-057T 345.00 - SUNNYSIDE 345KV CKT 1	717	789	0.06555	110.2626	GEN523973 1-HARRINGTON GEN #3 24 KV
FDNS	00NR	0	20WP	G15_060	FROM->TO	G14-057T 345.00 - SUNNYSIDE 345KV CKT 1	717	789	0.06555	110.2331	GEN511848 1-SOUTHWESTERN STATION #3
FDNS	00NR	0	20WP	G15_060	FROM->TO	G14-057T 345.00 - SUNNYSIDE 345KV CKT 1	717	789	0.0658	110.1764	LYDIA - WELSH 345KV CKT 1
FDNS	00NR	0	20WP	G15_060	FROM->TO	G14-057T 345.00 - SUNNYSIDE 345KV CKT 1	717	789	0.0658	110.1764	LYDIA - WELSH 345KV CKT 1
FDNS	00NR	0	20WP	G15_060	FROM->TO	G14-057T 345.00 - SUNNYSIDE 345KV CKT 1	717	789	0.06555	110.163	GEN527901 1-HOBBS PLANT #1 (CT)
FDNS	00NR	0	20WP	G15_060	FROM->TO	G14-057T 345.00 - SUNNYSIDE 345KV CKT 1	717	789	0.06555	110.163	GEN527902 1-HOBBS PLANT #2 (CT)
FDNS	00NR	0	20WP	G15_060	FROM->TO	G14-057T 345.00 - SUNNYSIDE 345KV CKT 1	717	789	0.06555	110.1255	GEN563042 1-G15068_3 0.6900
FDNS	00NR	0	20WP	G15_060	FROM->TO	G14-057T 345.00 - SUNNYSIDE 345KV CKT 1	717	789	0.06555	110.028	GEN635214 4-NEAL UNIT 4
FDNS	00NR	0	20WP	G15_060	FROM->TO	G14-057T 345.00 - SUNNYSIDE 345KV CKT 1	717	789	0.06362	109.9254	STATELINE INTERCHANGE - STLN-DEMARC6 230KV CKT 1
FDNS	00NR	0	20WP	G15_060	FROM->TO	G14-057T 345.00 - SUNNYSIDE 345KV CKT 1	717	789	0.06362	109.9227	STLN-DEMARC6 - SWEETWATER 230KV CKT 1

SOLUTION	GROUP	SCENARIO	SEASON	SOURCE	DIRECTION	MONITORED ELEMENT	RATEA (MVA)	RATEB(MVA)	TDF	TC%LOADING (% MVA)	CONTINGENCY
FDNS	00NR	0	20WP	G15_060	FROM->TO	G14-057T 345.00 - SUNNYSIDE 345KV CKT 1	717	789	0.06362	109.9175	P12:230:AEPW-SPS:SWEETWT6:WHEELER 6
FDNS	00NR	0	20WP	G15_060	FROM->TO	G14-057T 345.00 - SUNNYSIDE 345KV CKT 1	717	789	0.06555	109.8577	GEN600002 3-SHERBURNE CNTY G3
FDNS	00NR	0	20WP	G15_060	FROM->TO	G14-057T 345.00 - SUNNYSIDE 345KV CKT 1	717	789	0.06555	109.827	GEN563043 1-G15068_4 0.6900
FDNS	00NR	0	20WP	G15_060	FROM->TO	G14-057T 345.00 - SUNNYSIDE 345KV CKT 1	717	789	0.06555	109.8013	GEN526333 1-JONES GEN #3 21 KV
FDNS	00NR	0	20WP	G15_060	FROM->TO	G14-057T 345.00 - SUNNYSIDE 345KV CKT 1	717	789	0.06555	109.8012	GEN526334 1-JONES_4 116.500
FDNS	00NR	0	20WP	G15_060	FROM->TO	G14-057T 345.00 - SUNNYSIDE 345KV CKT 1	717	789	0.06555	109.7846	GEN563273 2-G15093_4 0.6900
FDNS	00NR	0	20WP	G15_060	FROM->TO	G14-057T 345.00 - SUNNYSIDE 345KV CKT 1	717	789	0.06555	109.7685	GEN344225 1-1CAL G1 25.000
FDNS	00NR	0	20WP	G15_060	FROM->TO	G14-057T 345.00 - SUNNYSIDE 345KV CKT 1	717	789	0.06555	109.7635	GEN525844 1-ELK_1 118.000
FDNS	00NR	0	20WP	G15_060	FROM->TO	G14-057T 345.00 - SUNNYSIDE 345KV CKT 1	717	789	0.06555	109.7458	GEN525845 1-ELK_2 1 18.000
FDNS	00NR	0	20WP	G15_060	FROM->TO	G14-057T 345.00 - SUNNYSIDE 345KV CKT 1	717	789	0.06555	109.6155	GEN527166 1-MUSTANG_6 118.000
FDNS	00NR	0	20WP	G15_060	FROM->TO	G14-057T 345.00 - SUNNYSIDE 345KV CKT 1	717	789	0.06555	109.5706	GEN635023 3-WALTER SCOTT UNIT 3
FDNS	00NR	0	20WP	G15_060	FROM->TO	G14-057T 345.00 - SUNNYSIDE 345KV CKT 1	717	789	0.06555	109.5526	GEN563202 1-G15085_3 0.5500
FDNS	00NR	0	20WP	G15_060	FROM->TO	G14-057T 345.00 - SUNNYSIDE 345KV CKT 1	717	789	0.06555	109.5515	GEN528501 1-G14_012 24.000
FDNS	00NR	0	20WP	G15_060	FROM->TO	G14-057T 345.00 - SUNNYSIDE 345KV CKT 1	717	789	0.06226	109.4942	P12:230:AEPW:ELKCITY6:SWEETWT6
FDNS	00NR	0	20WP	G15_060	FROM->TO	G14-057T 345.00 - SUNNYSIDE 345KV CKT 1	717	789	0.06555	109.4928	GEN562590 1-G14_057_3 0.6900
FDNS	00NR	0	16WP	G15_060	FROM->TO	G14-057T 345.00 - SUNNYSIDE 345KV CKT 1	717	789	0.06609	109.4478	EASTDC - ERCOT EQUIVALENCE 345KV CKT 1
FDNS	00NR	0	20WP	G15_060	FROM->TO	G14-057T 345.00 - SUNNYSIDE 345KV CKT 1	717	789	0.06555	109.3772	GEN562762 1-G15033_3 0.6900
FDNS	00NR	0	20WP	G15_060	FROM->TO	G14-057T 345.00 - SUNNYSIDE 345KV CKT 1	717	789	0.06555	109.3658	GEN562655 1-G14_074_3 0.6900
FDNS	00NR	0	20WP	G15_060	FROM->TO	G14-057T 345.00 - SUNNYSIDE 345KV CKT 1	717	789	0.06555	109.3638	GEN525562 1-TOLK GEN #2 24 KV
FDNS	00NR	0	20WP	G15_060	FROM->TO	G14-057T 345.00 - SUNNYSIDE 345KV CKT 1	717	789	0.06506	109.2753	JOHNSON COUNTY (JOHNCO) 345/138/13.8KV TRANSFORMER CKT 1
FDNS	00NR	0	20WP	G15_060	FROM->TO	G14-057T 345.00 - SUNNYSIDE 345KV CKT 1	717	789	0.06555	109.27	GEN562685 1-G15_013_3 0.3550
FDNS	00NR	0	20WP	G15_060	FROM->TO	G14-057T 345.00 - SUNNYSIDE 345KV CKT 1	717	789	0.06555	109.2675	GEN527903 1-HOBBS PLANT #3 (ST)
FDNS	00NR	0	20WP	G15_060	FROM->TO	G14-057T 345.00 - SUNNYSIDE 345KV CKT 1	717	789	0.06362	109.2452	CHISHOLM6 230.00 - SWEETWATER 230KV CKT 1
FDNS	00NR	0	20WP	G15_060	FROM->TO	G14-057T 345.00 - SUNNYSIDE 345KV CKT 1	717	789	0.06555	109.1665	GEN635024 4-WALTER SCOTT UNIT 4
FDNS	00NR	0	20WP	G15_060	FROM->TO	G14-057T 345.00 - SUNNYSIDE 345KV CKT 1	717	789	0.06555	109.1256	GEN563272 1-G15093_3 0.6900
FDNS	00NR	0	20WP	G15_060	FROM->TO	G14-057T 345.00 - SUNNYSIDE 345KV CKT 1	717	789	0.06588	109.1187	LYDIA - VALLIANT 345KV CKT 1
FDNS	00NR	0	20WP	G15_060	FROM->TO	G14-057T 345.00 - SUNNYSIDE 345KV CKT 1	717	789	0.06588	109.1187	LYDIA - VALLIANT 345KV CKT 1
FDNS	00NR	0	20WP	G15_060	FROM->TO	G14-057T 345.00 - SUNNYSIDE 345KV CKT 1	717	789	0.06555	108.7846	GEN525561 1-TOLK GEN #1 24 KV
FDNS	00NR	0	16WP	G15_060	FROM->TO	G14-057T 345.00 - SUNNYSIDE 345KV CKT 1	717	789	0.05594	108.4243	JOHNSON COUNTY - PITTSBURG 345KV CKT 1
FDNS	00NR	0	16WP	G15_060	FROM->TO	G14-057T 345.00 - SUNNYSIDE 345KV CKT 1	717	789	0.05594	108.4243	JOHNSON COUNTY - PITTSBURG 345KV CKT 1
FDNS	00NR	0	16WP	G15_060	FROM->TO	G14-057T 345.00 - SUNNYSIDE 345KV CKT 1	717	789	0.06609	108.057	GEN563263 1-G15092_4 0.6900
FDNS	00NR	0	16WP	G15_060	FROM->TO	G14-057T 345.00 - SUNNYSIDE 345KV CKT 1	717	789	0.0648	107.6655	HUGO - VALLIANT 345KV CKT 1
FDNS	00NR	0	16WP	G15_060	FROM->TO	G14-057T 345.00 - SUNNYSIDE 345KV CKT 1	717	789	0.0648	107.6655	HUGO - VALLIANT 345KV CKT 1
FDNS	00NR	0	20WP	G15_060	FROM->TO	G14-057T 345.00 - SUNNYSIDE 345KV CKT 1	717	789	0.05545	106.869	JOHNSON COUNTY - PITTSBURG 345KV CKT 1
FDNS	00NR	0	20WP	G15_060	FROM->TO	G14-057T 345.00 - SUNNYSIDE 345KV CKT 1	717	789	0.05545	106.869	JOHNSON COUNTY - PITTSBURG 345KV CKT 1
FDNS	00NR	0	20WP	G15_060	FROM->TO	G14-057T 345.00 - SUNNYSIDE 345KV CKT 1	717	789	0.0643	106.5939	HUGO - VALLIANT 345KV CKT 1
FDNS	00NR	0	20WP	G15_060	FROM->TO	G14-057T 345.00 - SUNNYSIDE 345KV CKT 1	717	789	0.0643	106.5939	HUGO - VALLIANT 345KV CKT 1
FDNS	00NR	0	16WP	G15_060	FROM->TO	G14-057T 345.00 - SUNNYSIDE 345KV CKT 1	717	789	0.06609	106.381	GEN563262 1-G15092_3 0.6900
FDNS	00NR	0	20WP	G15_060	FROM->TO	G14-057T 345.00 - SUNNYSIDE 345KV CKT 1	717	789	0.06555	105.9962	GEN563263 1-G15092_4 0.6900
FDNS	00NR	0	16WP	G15_060	FROM->TO	G14-057T 345.00 - SUNNYSIDE 345KV CKT 1	717	789	0.04773	104.8432	G14-074T 345.00 - TUCO INTERCHANGE 345KV CKT 1
FDNS	00NR	0	20WP	G15_060	FROM->TO	G14-057T 345.00 - SUNNYSIDE 345KV CKT 1	717	789	0.06555	104.3167	GEN563262 1-G15092_3 0.6900
FDNS	00NR	0	16WP	G15_060	FROM->TO	G14-057T 345.00 - SUNNYSIDE 345KV CKT 1	717	789	0.05348	102.6669	JOHNSON COUNTY - SUNNYSIDE 345KV CKT 1
FDNS	00NR	0	20WP	G15_060	FROM->TO	G14-057T 345.00 - SUNNYSIDE 345KV CKT 1	717	789	0.04729	101.6269	G14-074T 345.00 - TUCO INTERCHANGE 345KV CKT 1
FDNS	00NR	0	20SP	G15_060	FROM->TO	G14-057T 345.00 - SUNNYSIDE 345KV CKT 1	717	789	0.07523	100.8006	CIMARRON - MINCO 345KV CKT 1
FDNS	00NR	0	17SP	G15_060	FROM->TO	G14-057T 345.00 - SUNNYSIDE 345KV CKT 1	717	789	0.07563	100.4284	GRACEMONT - MINCO 345KV CKT 1
FDNS	00NR	0	20WP	G15_060	FROM->TO	G14-057T 345.00 - SUNNYSIDE 345KV CKT 1	717	789	0.053	100.3152	JOHNSON COUNTY - SUNNYSIDE 345KV CKT 1
FDNS	01ALL	0	17G	G15_060	FROM->TO	G15095_T 138.00 - ROSE_VALLEY 138.00 138KV CKT 1	183	228	0.02974	99.5	BASE CASE
FDNS	01ALL	0	20WP	G15_060	TO->FROM	MATHWSN7 345.00 - TATONGA7 345.00 345KV CKT 1	1195	1195	0.265	120.7669	THISTLE7 345.00 - WOODWARD DISTRICT EHV 345KV CKT 1
FDNS	01ALL	0	20WP	G15_060	TO->FROM	MATHWSN7 345.00 - TATONGA7 345.00 345KV CKT 1	1195	1195	0.265	120.7669	THISTLE7 345.00 - WOODWARD DISTRICT EHV 345KV CKT 1
FDNS	01ALL	0	20WP	G15_060	TO->FROM	MATHWSN7 345.00 - TATONGA7 345.00 345KV CKT 1	1195	1195	0.265	120.7669	THISTLE7 345.00 - WOODWARD DISTRICT EHV 345KV CKT 2
FDNS	01ALL	0	20WP	G15_060	TO->FROM	MATHWSN7 345.00 - TATONGA7 345.00 345KV CKT 1	1195	1195	0.265	120.7669	THISTLE7 345.00 - WOODWARD DISTRICT EHV 345KV CKT 2
FDNS	01ALL	0	16WP	G15_060	TO->FROM	MATHWSN7 345.00 - TATONGA7 345.00 345KV CKT 1	1195	1195	0.27126	115.6156	THISTLE7 345.00 - WOODWARD DISTRICT EHV 345KV CKT 1
FDNS	01ALL	0	16WP	G15_060	TO->FROM	MATHWSN7 345.00 - TATONGA7 345.00 345KV CKT 1	1195	1195	0.27126	115.6156	THISTLE7 345.00 - WOODWARD DISTRICT EHV 345KV CKT 1
FDNS	01ALL	0	16WP	G15_060	TO->FROM	MATHWSN7 345.00 - TATONGA7 345.00 345KV CKT 1	1195	1195	0.27126	115.6156	THISTLE7 345.00 - WOODWARD DISTRICT EHV 345KV CKT 2
FDNS	01ALL	0	16WP	G15_060	TO->FROM	MATHWSN7 345.00 - TATONGA7 345.00 345KV CKT 1	1195	1195	0.27126	115.6156	THISTLE7 345.00 - WOODWARD DISTRICT EHV 345KV CKT 2
FDNS	01ALL	0	20WP	G15_060	TO->FROM	MATHWSN7 345.00 - TATONGA7 345.00 345KV CKT 1	1195	1195	0.24493	114.4647	Hitchland Interchange - WALKTAP7 345.00 345KV CKT 1
FDNS	01ALL	0	20WP	G15_060	TO->FROM	MATHWSN7 345.00 - TATONGA7 345.00 345KV CKT 1	1195	1195	0.24493	114.4647	Hitchland Interchange - WALKTAP7 345.00 345KV CKT 1
FDNS	01ALL	0	20WP	G15_060	TO->FROM	MATHWSN7 345.00 - TATONGA7 345.00 345KV CKT 1	1195	1195	0.24493	114.423	P12:345:SPS:J07.1.FINN.HITCH
FDNS	01ALL	0	20WP	G15_060	TO->FROM	MATHWSN7 345.00 - TATONGA7 345.00 345KV CKT 1	1195	1195	0.24341	113.7175	G1524G1525 345.00 - THISTLE7 345.00 345KV CKT 1
FDNS	01ALL	0	20WP	G15_060	TO->FROM	MATHWSN7 345.00 - TATONGA7 345.00 345KV CKT 1	1195	1195	0.24341	113.7175	G1524G1525 345.00 - THISTLE7 345.00 345KV CKT 2
FDNS	01ALL	0	20WP	G15_060	TO->FROM	MATHWSN7 345.00 - TATONGA7 345.00 345KV CKT 1	1195	1195	0.23153	113.1773	CIMARRON - MINCO 345KV CKT 1
FDNS	01ALL	0	20WP	G15_060	TO->FROM	MATHWSN7 345.00 - TATONGA7 345.00 345KV CKT 1	1195	1195	0.24624	112.744	BORDER 7345.00 - TUCO_2 345.00 345KV CKT 1
FDNS	01ALL	0	20WP	G15_060	TO->FROM	MATHWSN7 345.00 - TATONGA7 345.00 345KV CKT 1	1195	1195	0.24624	111.7827	BORDER 7345.00 - WOODWARD DISTRICT EHV 345KV CKT 1
FDNS	01ALL	0	20L	G15_060	TO->FROM	MATHWSN7 345.00 - TATONGA7 345.00 345KV CKT 1	1195	1195	0.27715	111.6874	THISTLE7 345.00 - WOODWARD DISTRICT EHV 345KV CKT 1
FDNS	01ALL	0	20L	G15_060	TO->FROM	MATHWSN7 345.00 - TATONGA7 345.00 345KV CKT 1	1195	1195	0.27715	111.6874	THISTLE7 345.00 - WOODWARD DISTRICT EHV 345KV CKT 1
FDNS	01ALL	0	20L	G15_060	TO->FROM	MATHWSN7 345.00 - TATONGA7 345.00 345KV CKT 1	1195	1195	0.27715	111.6874	THISTLE7 345.00 - WOODWARD DISTRICT EHV 345KV CKT 2
FDNS	01ALL	0	20L	G15_060	TO->FROM	MATHWSN7 345.00 - TATONGA7 345.00 345KV CKT 1	1195	1195	0.27715	111.6874	THISTLE7 345.00 - WOODWARD DISTRICT EHV 345KV CKT 2
FDNS	01ALL	0	20WP	G15_060	TO->FROM	MATHWSN7 345.00 - TATONGA7 345.00 345KV CKT 1	1195	1195	0.23954	111.5372	FINNEY SWITCHING STATION - HOLCOMB 345KV CKT 1
FDNS	01ALL	0	20WP	G15_060	TO->FROM	MATHWSN7 345.00 - TATONGA7 345.00 345KV CKT 1	1195	1195	0.23954	111.5372	FINNEY SWITCHING STATION - HOLCOMB 345KV CKT 1
FDNS	01ALL	0	20WP	G15_060	TO->FROM	MATHWSN7 345.00 - TATONGA7 345.00 345KV CKT 1	1195	1195	0.24282	111.4758	DEWEY - SOUTHARD 138KV CKT 1
FDNS	01ALL	0	20WP	G15_060	TO->FROM	MATHWSN7 345.00 - TATONGA7 345.00 345KV CKT 1	1195	1195	0.24282	111.2588	ROMAN NOSE - SOUTHARD 138KV CKT 1
FDNS	01ALL	0	20WP	G15_060	TO->FROM	MATHWSN7 345.00 - TATONGA7 345.00 345KV CKT 1	1195	1195	0.23598	111.1491	G13-010T 345.00 - POST ROCK 345KV CKT 1
FDNS	01ALL	0	20WP	G15_060	TO->FROM	MATHWSN7 345.00 - TATONGA7 345.00 345KV CKT 1	1195	1195	0.23598	111.0566	G13-010T 345.00 - SPEARVILLE 345KV CKT 1
FDNS	01ALL	0	20WP	G15_060	TO->FROM	MATHWSN7 345.00 - TATONGA7 345.00 345KV CKT 1	1195	1195	0.23954	111.0009	FINNEY SWITCHING STATION - WALKTAP7 345.00 345KV CKT 1
FDNS	01ALL	0	20WP	G15_060	TO->FROM	MATHWSN7 345.00 - TATONGA7 345.00 345KV CKT 1	1195	1195	0.23954	111.0009	FINNEY SWITCHING STATION - WALKTAP7 345.00 345KV CKT 1
FDNS	00NR	0	20WP	G15_060	TO->FROM	MATHWSN7 345.00 - TATONGA7 345.00 345KV CKT 1	1195	1195	0.31444	110.9769	G14-074T 345.00 - OKLAUNION 345KV CKT 1
FDNS	01ALL	0	20WP	G15_060	TO->FROM	MATHWSN7 345.00 - TATONGA7 345.00 345KV CKT 1	1195	1195	0.23516	110.9766	CHISHOLM6 230.00 - SWEETWATER 230KV CKT 1
FDNS	01ALL	0	20WP	G15_060	TO->FROM	MATHWSN7 345.00 - TATONGA7 345.00 345KV CKT 1	1195	1195	0.23824	110.93	MINGO - RED WILLOW 345KV CKT 1
FDNS	01ALL	0	20WP	G15_060	TO->FROM	MATHWSN7 345.00 - TATONGA7 345.00 345KV CKT 1	1195	1195	0.23824	110.93	MINGO - RED WILLOW 345KV CKT 1

SOLUTION	GROUP	SCENARIO	SEASON	SOURCE	DIRECTION	MONITORED ELEMENT	RATEA (MVA)	RATEB(MVA)	TDF	TC%LOADING (% MVA)	CONTINGENCY
FDNS	01ALL	0	20WP	G15_060	TO->FROM	MATHWSN7 345.00 - TATONGA7 345.00 345KV CKT 1	1195	1195	0.24068	110.8625	G14-074T 345.00 - OKLAUNION 345KV CKT 1
FDNS	01ALL	0	20WP	G15_060	TO->FROM	MATHWSN7 345.00 - TATONGA7 345.00 345KV CKT 1	1195	1195	0.24923	110.7371	IODINE - WOODWARD EHV 138KV CKT 1
FDNS	01ALL	0	20WP	G15_060	TO->FROM	MATHWSN7 345.00 - TATONGA7 345.00 345KV CKT 1	1195	1195	0.23632	110.7173	P12:230:AEPW:ELKCITY6:SWEETWT6
FDNS	01ALL	0	20WP	G15_060	TO->FROM	MATHWSN7 345.00 - TATONGA7 345.00 345KV CKT 1	1195	1195	0.24923	110.5739	DEWEY - IODINE 138KV CKT 1
FDNS	01ALL	0	20WP	G15_060	TO->FROM	MATHWSN7 345.00 - TATONGA7 345.00 345KV CKT 1	1195	1195	0.23546	110.48	CLEO CORNER - CLEOPLT4 138.00 138KV CKT 1
FDNS	01ALL	0	20WP	G15_060	TO->FROM	MATHWSN7 345.00 - TATONGA7 345.00 345KV CKT 1	1195	1195	0.23546	110.4274	CLEOPLT4 138.00 - MEN TAP 138KV CKT 1
FDNS	01ALL	0	20WP	G15_060	TO->FROM	MATHWSN7 345.00 - TATONGA7 345.00 345KV CKT 1	1195	1195	0.23687	110.424	MINGO - SETAB 345KV CKT 1
FDNS	01ALL	0	20WP	G15_060	TO->FROM	MATHWSN7 345.00 - TATONGA7 345.00 345KV CKT 1	1195	1195	0.23687	110.424	MINGO - SETAB 345KV CKT 1
FDNS	01ALL	0	20WP	G15_060	TO->FROM	MATHWSN7 345.00 - TATONGA7 345.00 345KV CKT 1	1195	1195	0.23546	110.3983	IMO TAP - MEN TAP 138KV CKT 1
FDNS	01ALL	0	20WP	G15_060	TO->FROM	MATHWSN7 345.00 - TATONGA7 345.00 345KV CKT 1	1195	1195	0.23138	110.2258	GEN520947 1-HUGO1
FDNS	01ALL	0	20WP	G15_060	TO->FROM	MATHWSN7 345.00 - TATONGA7 345.00 345KV CKT 1	1195	1195	0.23427	110.1953	G15095_T 138.00 - ROSE_VALLEY 138.00 138KV CKT 1
FDNS	01ALL	0	20WP	G15_060	TO->FROM	MATHWSN7 345.00 - TATONGA7 345.00 345KV CKT 1	1195	1195	0.23581	110.1585	AXTELL - POST ROCK 345KV CKT 1
FDNS	01ALL	0	20WP	G15_060	TO->FROM	MATHWSN7 345.00 - TATONGA7 345.00 345KV CKT 1	1195	1195	0.23138	110.112	GEN514806 1-SOONER UNIT 2
FDNS	01ALL	0	20WP	G15_060	TO->FROM	MATHWSN7 345.00 - TATONGA7 345.00 345KV CKT 1	1195	1195	0.23138	110.0988	GEN509416 1-TURK GENERATION
FDNS	01ALL	0	20WP	G15_060	TO->FROM	MATHWSN7 345.00 - TATONGA7 345.00 345KV CKT 1	1195	1195	0.23427	110.0696	NOEL_SW 138.00 - ROSE_VALLEY 138.00 138KV CKT 1
FDNS	01ALL	0	20WP	G15_060	TO->FROM	MATHWSN7 345.00 - TATONGA7 345.00 345KV CKT 1	1195	1195	0.23138	110.0339	GEN509403 1-PIRKEY GENERATION
FDNS	01ALL	0	20WP	G15_060	TO->FROM	MATHWSN7 345.00 - TATONGA7 345.00 345KV CKT 1	1195	1195	0.23336	109.9487	GRAPEVINE INTERCHANGE - NICHOLS STATION 230KV CKT 1
FDNS	01ALL	0	20WP	G15_060	TO->FROM	MATHWSN7 345.00 - TATONGA7 345.00 345KV CKT 1	1195	1195	0.23336	109.9487	GRAPEVINE INTERCHANGE - NICHOLS STATION 230KV CKT 1
FDNS	01ALL	0	20WP	G15_060	TO->FROM	MATHWSN7 345.00 - TATONGA7 345.00 345KV CKT 1	1195	1195	0.23138	109.913	GEN336821 1-GRAND GULF UNIT
FDNS	01ALL	0	20WP	G15_060	TO->FROM	MATHWSN7 345.00 - TATONGA7 345.00 345KV CKT 1	1195	1195	0.23541	109.909	HOLCOMB - SETAB 345KV CKT 1
FDNS	01ALL	0	20WP	G15_060	TO->FROM	MATHWSN7 345.00 - TATONGA7 345.00 345KV CKT 1	1195	1195	0.23541	109.909	HOLCOMB - SETAB 345KV CKT 1
FDNS	01ALL	0	20WP	G15_060	TO->FROM	MATHWSN7 345.00 - TATONGA7 345.00 345KV CKT 1	1195	1195	0.23138	109.9086	GEN514805 1-SOONER UNIT 1
FDNS	01ALL	0	20WP	G15_060	TO->FROM	MATHWSN7 345.00 - TATONGA7 345.00 345KV CKT 1	1195	1195	0.23138	109.8608	GEN337911 1-ARKANSAS NUCLEAR ONE UNIT #2
FDNS	01ALL	0	16WP	G15_060	TO->FROM	MATHWSN7 345.00 - TATONGA7 345.00 345KV CKT 1	1195	1195	0.25041	109.8352	FINNEY SWITCHING STATION - HOLCOMB 345KV CKT 1
FDNS	01ALL	0	16WP	G15_060	TO->FROM	MATHWSN7 345.00 - TATONGA7 345.00 345KV CKT 1	1195	1195	0.25041	109.8352	FINNEY SWITCHING STATION - HOLCOMB 345KV CKT 1
FDNS	01ALL	0	20WP	G15_060	TO->FROM	MATHWSN7 345.00 - TATONGA7 345.00 345KV CKT 1	1195	1195	0.23138	109.8345	GEN515602 1-KNGFSR12 0.7000
FDNS	01ALL	0	20WP	G15_060	TO->FROM	MATHWSN7 345.00 - TATONGA7 345.00 345KV CKT 1	1195	1195	0.23138	109.8165	GEN562587 1-G14_056_3 0.6900
FDNS	01ALL	0	20WP	G15_060	TO->FROM	MATHWSN7 345.00 - TATONGA7 345.00 345KV CKT 1	1195	1195	0.23138	109.8028	GEN515226 1-MUSKOGEE 6G
FDNS	01ALL	0	20WP	G15_060	TO->FROM	MATHWSN7 345.00 - TATONGA7 345.00 345KV CKT 1	1195	1195	0.23138	109.7346	GEN515040 1-SEMINOLE 1G
FDNS	01ALL	0	20WP	G15_060	TO->FROM	MATHWSN7 345.00 - TATONGA7 345.00 345KV CKT 1	1195	1195	0.23478	109.6858	G1524G1525 345.00 - WICHITA 345KV CKT 1
FDNS	01ALL	0	20WP	G15_060	TO->FROM	MATHWSN7 345.00 - TATONGA7 345.00 345KV CKT 1	1195	1195	0.23478	109.6858	G1524G1525 345.00 - WICHITA 345KV CKT 2
FDNS	01ALL	0	20WP	G15_060	TO->FROM	MATHWSN7 345.00 - TATONGA7 345.00 345KV CKT 1	1195	1195	0.23138	109.6436	GEN509406 1-WELSH #3
FDNS	01ALL	0	20WP	G15_060	TO->FROM	MATHWSN7 345.00 - TATONGA7 345.00 345KV CKT 1	1195	1195	0.23138	109.6435	GEN509404 1-WELSH #1
FDNS	01ALL	0	20WP	G15_060	TO->FROM	MATHWSN7 345.00 - TATONGA7 345.00 345KV CKT 1	1195	1195	0.23138	109.6337	GEN336153 1-WATERFORD UNIT#3
FDNS	01ALL	0	20WP	G15_060	TO->FROM	MATHWSN7 345.00 - TATONGA7 345.00 345KV CKT 1	1195	1195	0.23138	109.6215	GEN511843 1-RIVERSIDE STATION #2
FDNS	01ALL	0	20WP	G15_060	TO->FROM	MATHWSN7 345.00 - TATONGA7 345.00 345KV CKT 1	1195	1195	0.23138	109.6144	GEN515225 1-MUSKOGEE 5G
FDNS	01ALL	0	20WP	G15_060	TO->FROM	MATHWSN7 345.00 - TATONGA7 345.00 345KV CKT 1	1195	1195	0.23138	109.6143	GEN515223 1-MUSKOGEE 4G
FDNS	01ALL	0	20WP	G15_060	TO->FROM	MATHWSN7 345.00 - TATONGA7 345.00 345KV CKT 1	1195	1195	0.23138	109.5665	GEN337910 1-ARKANSAS NUCLEAR ONE UNIT #1
FDNS	01ALL	0	20WP	G15_060	TO->FROM	MATHWSN7 345.00 - TATONGA7 345.00 345KV CKT 1	1195	1195	0.23138	109.5557	GEN515042 1-SEMINOLE 3G
FDNS	01ALL	0	20WP	G15_060	TO->FROM	MATHWSN7 345.00 - TATONGA7 345.00 345KV CKT 1	1195	1195	0.23138	109.4825	GEN501801 1-DOLET HILLS UNIT1
FDNS	01ALL	0	20WP	G15_060	TO->FROM	MATHWSN7 345.00 - TATONGA7 345.00 345KV CKT 1	1195	1195	0.23723	109.476	BENTON - WICHITA 345KV CKT 1
FDNS	01ALL	0	20WP	G15_060	TO->FROM	MATHWSN7 345.00 - TATONGA7 345.00 345KV CKT 1	1195	1195	0.23258	109.4666	G14-057T 345.00 - SUNNYSIDE 345KV CKT 1
FDNS	01ALL	0	20WP	G15_060	TO->FROM	MATHWSN7 345.00 - TATONGA7 345.00 345KV CKT 1	1195	1195	0.23537	109.4544	P12:138:WFEC:MSL14
FDNS	01ALL	0	20WP	G15_060	TO->FROM	MATHWSN7 345.00 - TATONGA7 345.00 345KV CKT 1	1195	1195	0.24854	109.4475	FPL SWITCH - MOORELAND 138KV CKT 1
FDNS	01ALL	0	20WP	G15_060	TO->FROM	MATHWSN7 345.00 - TATONGA7 345.00 345KV CKT 1	1195	1195	0.23138	109.4459	GEN335831 1-RIVERBEND UNIT#1
FDNS	01ALL	0	20WP	G15_060	TO->FROM	MATHWSN7 345.00 - TATONGA7 345.00 345KV CKT 1	1195	1195	0.23138	109.4436	GEN515443 1-MNCOWND1 0.7000
FDNS	01ALL	0	20WP	G15_060	TO->FROM	MATHWSN7 345.00 - TATONGA7 345.00 345KV CKT 1	1195	1195	0.23349	109.4101	P12:138:WFEC:MSL15
FDNS	01ALL	0	20WP	G15_060	TO->FROM	MATHWSN7 345.00 - TATONGA7 345.00 345KV CKT 1	1195	1195	0.23537	109.4068	BEARCAT 138.00 - MOORELAND 138KV CKT 1
FDNS	01ALL	0	20WP	G15_060	TO->FROM	MATHWSN7 345.00 - TATONGA7 345.00 345KV CKT 1	1195	1195	0.23466	109.4064	P12:138:WFEC:MSL12
FDNS	01ALL	0	20WP	G15_060	TO->FROM	MATHWSN7 345.00 - TATONGA7 345.00 345KV CKT 1	1195	1195	0.23466	109.391	MOORELAND - PIC4 138.00 138KV CKT 1
FDNS	01ALL	0	20WP	G15_060	TO->FROM	MATHWSN7 345.00 - TATONGA7 345.00 345KV CKT 1	1195	1195	0.23138	109.3883	P12:345:GRDA:CHOUTEAU-SPORTSMANACRES
FDNS	01ALL	0	20WP	G15_060	TO->FROM	MATHWSN7 345.00 - TATONGA7 345.00 345KV CKT 1	1195	1195	0.23138	109.3841	GEN509394 1-FLINT CREEK
FDNS	01ALL	0	20WP	G15_060	TO->FROM	MATHWSN7 345.00 - TATONGA7 345.00 345KV CKT 1	1195	1195	0.23466	109.3759	CEDARDALE - PIC4 138.00 138KV CKT 1
FDNS	01ALL	0	20WP	G15_060	TO->FROM	MATHWSN7 345.00 - TATONGA7 345.00 345KV CKT 1	1195	1195	0.23138	109.3672	GEN562794 1-G15038_5 0.6900
FDNS	01ALL	0	20WP	G15_060	TO->FROM	MATHWSN7 345.00 - TATONGA7 345.00 345KV CKT 1	1195	1195	0.23138	109.3672	GEN562795 1-G15038_6 0.6900
FDNS	01ALL	0	20WP	G15_060	TO->FROM	MATHWSN7 345.00 - TATONGA7 345.00 345KV CKT 1	1195	1195	0.23138	109.3543	GEN515606 1-CANDN11 0.6900
FDNS	01ALL	0	20WP	G15_060	TO->FROM	MATHWSN7 345.00 - TATONGA7 345.00 345KV CKT 1	1195	1195	0.23138	109.3543	GEN515607 1-CANDN12 0.6900
FDNS	01ALL	0	20WP	G15_060	TO->FROM	MATHWSN7 345.00 - TATONGA7 345.00 345KV CKT 1	1195	1195	0.23466	109.3461	CEDARDALE - OKEENE 138KV CKT 1
FDNS	01ALL	0	20WP	G15_060	TO->FROM	MATHWSN7 345.00 - TATONGA7 345.00 345KV CKT 1	1195	1195	0.23138	109.3438	GEN511840 1-NORTHEASTERN STATION #3
FDNS	01ALL	0	20WP	G15_060	TO->FROM	MATHWSN7 345.00 - TATONGA7 345.00 345KV CKT 1	1195	1195	0.23537	109.3248	BEARCAT 138.00 - NINE MILE 138KV CKT 1
FDNS	01ALL	0	20WP	G15_060	TO->FROM	MATHWSN7 345.00 - TATONGA7 345.00 345KV CKT 1	1195	1195	0.23509	109.2999	POTTER COUNTY INTERCHANGE (WAUK 90343-A) 345/230/13.2KV TRANSFORMER CKT 1
FDNS	01ALL	0	20WP	G15_060	TO->FROM	MATHWSN7 345.00 - TATONGA7 345.00 345KV CKT 1	1195	1195	0.23509	109.2999	POTTER COUNTY INTERCHANGE (WAUK 90343-A) 345/230/13.2KV TRANSFORMER CKT 1
FDNS	01ALL	0	20WP	G15_060	TO->FROM	MATHWSN7 345.00 - TATONGA7 345.00 345KV CKT 1	1195	1195	0.23516	109.2812	STLN-DEMARC6 - SWEETWATER 230KV CKT 1
FDNS	01ALL	0	20WP	G15_060	TO->FROM	MATHWSN7 345.00 - TATONGA7 345.00 345KV CKT 1	1195	1195	0.23516	109.2765	STATELINE INTERCHANGE - STLN-DEMARC6 230KV CKT 1
FDNS	01ALL	0	20WP	G15_060	TO->FROM	MATHWSN7 345.00 - TATONGA7 345.00 345KV CKT 1	1195	1195	0.23516	109.2752	P12:230:AEPW-SPS:SWEETWT6:WHEELER 6
FDNS	01ALL	0	20WP	G15_060	TO->FROM	MATHWSN7 345.00 - TATONGA7 345.00 345KV CKT 1	1195	1195	0.23138	109.2708	GEN511839 1-NORTHEASTERN STATION #2
FDNS	01ALL	0	20WP	G15_060	TO->FROM	MATHWSN7 345.00 - TATONGA7 345.00 345KV CKT 1	1195	1195	0.24068	109.2658	G14-074T 345.00 - TUCO INTERCHANGE 345KV CKT 1
FDNS	01ALL	0	20WP	G15_060	TO->FROM	MATHWSN7 345.00 - TATONGA7 345.00 345KV CKT 1	1195	1195	0.23138	109.2409	GEN515041 1-SEMINOLE 2G
FDNS	01ALL	0	20WP	G15_060	TO->FROM	MATHWSN7 345.00 - TATONGA7 345.00 345KV CKT 1	1195	1195	0.2335	109.2355	GRAPEVINE INTERCHANGE - STATELINE INTERCHANGE 230KV CKT 1
FDNS	01ALL	0	20WP	G15_060	TO->FROM	MATHWSN7 345.00 - TATONGA7 345.00 345KV CKT 1	1195	1195	0.2335	109.2355	GRAPEVINE INTERCHANGE - STATELINE INTERCHANGE 230KV CKT 1
FDNS	01ALL	0	20WP	G15_060	TO->FROM	MATHWSN7 345.00 - TATONGA7 345.00 345KV CKT 1	1195	1195	0.23138	109.2143	GEN511842 1-RIVERSIDE STATION #1
FDNS	01ALL	0	20WP	G15_060	TO->FROM	MATHWSN7 345.00 - TATONGA7 345.00 345KV CKT 1	1195	1195	0.23258	109.2138	G14-057T 345.00 - LAWTON EASTSIDE 345KV CKT 1
FDNS	01ALL	0	20WP	G15_060	TO->FROM	MATHWSN7 345.00 - TATONGA7 345.00 345KV CKT 1	1195	1195	0.23537	109.1837	MOREWOOD SW - NINE MILE 138KV CKT 1
FDNS	01ALL	0	20WP	G15_060	TO->FROM	MATHWSN7 345.00 - TATONGA7 345.00 345KV CKT 1	1195	1195	0.23138	109.1819	GEN513601 1-GRECCTG_1 20.000
FDNS	01ALL	0	20WP	G15_060	TO->FROM	MATHWSN7 345.00 - TATONGA7 345.00 345KV CKT 1	1195	1195	0.23359	109.156	FLATRDG3 - THISTLE4 138.00 138KV CKT 1
FDNS	01ALL	0	20WP	G15_060	TO->FROM	MATHWSN7 345.00 - TATONGA7 345.00 345KV CKT 1	1195	1195	0.23359	109.156	FLATRDG3 - THISTLE4 138.00 138KV CKT 1
FDNS	01ALL	0	20WP	G15_060	TO->FROM	MATHWSN7 345.00 - TATONGA7 345.00 345KV CKT 1	1195	1195	0.23359	109.1553	THISTLE7 345.00 (THISTLE T1) 345/138/13.8KV TRANSFORMER CKT 1
FDNS	01ALL	0	20WP	G15_060	TO->FROM	MATHWSN7 345.00 - TATONGA7 345.00 345KV CKT 1	1195	1195	0.23349	109.1506	NOEL_SW 138.00 - SALT_PLAINS 138.00 138KV CKT 1
FDNS	01ALL	0	20WP	G15_060	TO->FROM	MATHWSN7 345.00 - TATONGA7 345.00 345KV CKT 1	1195	1195	0.23565	109.1459	DOVER SW - OKEENE 138KV CKT 1

SOLUTION	GROUP	SCENARIO	SEASON	SOURCE	DIRECTION	MONITORED ELEMENT	RATEA (MVA)	RATEB(MVA)	TDF	TC%LOADING (% MVA)	CONTINGENCY
FDNS	01ALL	0	20WP	G15_060	TO->FROM	MATHWSN7 345.00 - TATONGA7 345.00 345KV CKT 1	1195	1195	0.23138	109.1275	GEN337653 1-WHITE BLUFF UNIT #2
FDNS	01ALL	0	16WP	G15_060	TO->FROM	MATHWSN7 345.00 - TATONGA7 345.00 345KV CKT 1	1195	1195	0.25041	109.1002	FINNEY SWITCHING STATION - Hitchland Interchange 345KV CKT 1
FDNS	01ALL	0	20WP	G15_060	TO->FROM	MATHWSN7 345.00 - TATONGA7 345.00 345KV CKT 1	1195	1195	0.23205	109.0999	G15074_T 345.00 - HOYT 345KV CKT 1
FDNS	01ALL	0	20WP	G15_060	TO->FROM	MATHWSN7 345.00 - TATONGA7 345.00 345KV CKT 1	1195	1195	0.23138	109.0798	GEN300006 1-NEW MADRID UNIT 1
FDNS	01ALL	0	20WP	G15_060	TO->FROM	MATHWSN7 345.00 - TATONGA7 345.00 345KV CKT 1	1195	1195	0.23138	109.0772	GEN512688 2-GRDA1 GSU2 22
FDNS	01ALL	0	20WP	G15_060	TO->FROM	MATHWSN7 345.00 - TATONGA7 345.00 345KV CKT 1	1195	1195	0.23138	109.0712	GEN300007 1-NEW MADRID UNIT 2
FDNS	01ALL	0	20WP	G15_060	TO->FROM	MATHWSN7 345.00 - TATONGA7 345.00 345KV CKT 1	1195	1195	0.23205	109.0311	G15074_T 345.00 - JEFFREY ENERGY CENTER 345KV CKT 1
FDNS	01ALL	0	20WP	G15_060	TO->FROM	MATHWSN7 345.00 - TATONGA7 345.00 345KV CKT 1	1195	1195	0.2321	109.0293	LACYGNE - WAVERLY7 345.00 345KV CKT 1
FDNS	01ALL	0	20WP	G15_060	TO->FROM	MATHWSN7 345.00 - TATONGA7 345.00 345KV CKT 1	1195	1195	0.23138	109.0194	GEN337652 1-WHITE BLUFF UNIT #1
FDNS	01ALL	0	20WP	G15_060	TO->FROM	MATHWSN7 345.00 - TATONGA7 345.00 345KV CKT 1	1195	1195	0.23138	108.9974	GEN501813 1-RODEMACHER UNIT 3
FDNS	01ALL	0	20WP	G15_060	TO->FROM	MATHWSN7 345.00 - TATONGA7 345.00 345KV CKT 1	1195	1195	0.23335	108.9913	CANEYRV7 345.00 - NEOSHO 345KV CKT 1
FDNS	01ALL	0	20WP	G15_060	TO->FROM	MATHWSN7 345.00 - TATONGA7 345.00 345KV CKT 1	1195	1195	0.23138	108.9884	GEN509409 1-WILKES #3
FDNS	01ALL	0	20WP	G15_060	TO->FROM	MATHWSN7 345.00 - TATONGA7 345.00 345KV CKT 1	1195	1195	0.2321	108.9641	WAVERLY7 345.00 - WOLF CREEK 345KV CKT 1
FDNS	01ALL	0	20WP	G15_060	TO->FROM	MATHWSN7 345.00 - TATONGA7 345.00 345KV CKT 1	1195	1195	0.2353	108.9523	CHISHOLM7 345.00 - GRACEMONT 345KV CKT 1
FDNS	01ALL	0	20WP	G15_060	TO->FROM	MATHWSN7 345.00 - TATONGA7 345.00 345KV CKT 1	1195	1195	0.23335	108.8936	CANEYRV7 345.00 - LATHAMS7 345.00 345KV CKT 1
FDNS	01ALL	0	20WP	G15_060	TO->FROM	MATHWSN7 345.00 - TATONGA7 345.00 345KV CKT 1	1195	1195	0.23138	108.8935	GEN335206 1-NELSON UNIT 6
FDNS	01ALL	0	20WP	G15_060	TO->FROM	MATHWSN7 345.00 - TATONGA7 345.00 345KV CKT 1	1195	1195	0.23349	108.8927	C_CITY_138 138.00 - SALT_PLAINS 138.00 138KV CKT 1
FDNS	01ALL	0	20WP	G15_060	TO->FROM	MATHWSN7 345.00 - TATONGA7 345.00 345KV CKT 1	1195	1195	0.23138	108.8877	GEN514910 2-REDBUD GEN
FDNS	01ALL	0	20WP	G15_060	TO->FROM	MATHWSN7 345.00 - TATONGA7 345.00 345KV CKT 1	1195	1195	0.23138	108.8761	GEN515601 1-KNGFSR11 0.7000
FDNS	01ALL	0	20WP	G15_060	TO->FROM	MATHWSN7 345.00 - TATONGA7 345.00 345KV CKT 1	1195	1195	0.23789	108.8657	G11-14T 345.00 - WOODWARD DISTRICT EHV 345KV CKT 1
FDNS	01ALL	0	20WP	G15_060	TO->FROM	MATHWSN7 345.00 - TATONGA7 345.00 345KV CKT 1	1195	1195	0.23789	108.8657	G11-14T 345.00 - WOODWARD DISTRICT EHV 345KV CKT 2
FDNS	01ALL	0	20WP	G15_060	TO->FROM	MATHWSN7 345.00 - TATONGA7 345.00 345KV CKT 1	1195	1195	0.23223	108.8558	MULLERGREN - SPEARVILLE 230KV CKT 1
FDNS	01ALL	0	20WP	G15_060	TO->FROM	MATHWSN7 345.00 - TATONGA7 345.00 345KV CKT 1	1195	1195	0.23223	108.8558	MULLERGREN - SPEARVILLE 230KV CKT 1
FDNS	01ALL	0	20WP	G15_060	TO->FROM	MATHWSN7 345.00 - TATONGA7 345.00 345KV CKT 1	1195	1195	0.23138	108.8397	GRAND GULF 500/22.0KV TRANSFORMER CKT 1
FDNS	01ALL	0	20WP	G15_060	TO->FROM	MATHWSN7 345.00 - TATONGA7 345.00 345KV CKT 1	1195	1195	0.23179	108.8303	BUCKNER7 345.00 - SPEARVILLE 345KV CKT 1
FDNS	01ALL	0	20WP	G15_060	TO->FROM	MATHWSN7 345.00 - TATONGA7 345.00 345KV CKT 1	1195	1195	0.23179	108.8303	BUCKNER7 345.00 - SPEARVILLE 345KV CKT 1
FDNS	01ALL	0	20WP	G15_060	TO->FROM	MATHWSN7 345.00 - TATONGA7 345.00 345KV CKT 1	1195	1195	0.23138	108.8302	GEN514911 2-REDBUD GEN
FDNS	01ALL	0	20WP	G15_060	TO->FROM	MATHWSN7 345.00 - TATONGA7 345.00 345KV CKT 1	1195	1195	0.23138	108.8302	GEN514942 2-REDBUD4G
FDNS	01ALL	0	20WP	G15_060	TO->FROM	MATHWSN7 345.00 - TATONGA7 345.00 345KV CKT 1	1195	1195	0.23349	108.8293	BYRON_138 138.00 - C_CITY_138 138.00 138KV CKT 1
FDNS	01ALL	0	20WP	G15_060	TO->FROM	MATHWSN7 345.00 - TATONGA7 345.00 345KV CKT 1	1195	1195	0.23222	108.8049	AXTELL - PAULINE 345KV CKT 1
FDNS	01ALL	0	20WP	G15_060	TO->FROM	MATHWSN7 345.00 - TATONGA7 345.00 345KV CKT 1	1195	1195	0.23138	108.8039	DELL 500 - ESSEX UNIT 2 500KV CKT Z1
FDNS	01ALL	0	20WP	G15_060	TO->FROM	MATHWSN7 345.00 - TATONGA7 345.00 345KV CKT 1	1195	1195	0.23208	108.8016	G15088_T 345.00 - MOORE 345KV CKT 1
FDNS	01ALL	0	20WP	G15_060	TO->FROM	MATHWSN7 345.00 - TATONGA7 345.00 345KV CKT 1	1195	1195	0.23138	108.8014	GEN501812 1-RODEMACHER UNIT 2
FDNS	01ALL	0	20WP	G15_060	TO->FROM	MATHWSN7 345.00 - TATONGA7 345.00 345KV CKT 1	1195	1195	0.23209	108.7762	HOYT - STRANGER CREEK 345KV CKT 1
FDNS	01ALL	0	20WP	G15_060	TO->FROM	MATHWSN7 345.00 - TATONGA7 345.00 345KV CKT 1	1195	1195	0.23509	108.7742	G14_038T 345.00 - POTTER COUNTY INTERCHANGE 345KV CKT 1
FDNS	01ALL	0	20WP	G15_060	TO->FROM	MATHWSN7 345.00 - TATONGA7 345.00 345KV CKT 1	1195	1195	0.23138	108.7734	GEN514940 1-REDBUD GEN
FDNS	01ALL	0	20WP	G15_060	TO->FROM	MATHWSN7 345.00 - TATONGA7 345.00 345KV CKT 1	1195	1195	0.23138	108.7723	GEN338146 1-INDEPENDENCE UNIT #2
FDNS	01ALL	0	20WP	G15_060	TO->FROM	MATHWSN7 345.00 - TATONGA7 345.00 345KV CKT 1	1195	1195	0.23138	108.7678	GEN511848 1-SOUTHWESTERN STATION #3
FDNS	01ALL	0	20WP	G15_060	TO->FROM	MATHWSN7 345.00 - TATONGA7 345.00 345KV CKT 1	1195	1195	0.23138	108.7674	GEN514900 1-REDBUD2S
FDNS	01ALL	0	20WP	G15_060	TO->FROM	MATHWSN7 345.00 - TATONGA7 345.00 345KV CKT 1	1195	1195	0.23138	108.7673	GEN514899 1-REDBUD1S
FDNS	01ALL	0	20WP	G15_060	TO->FROM	MATHWSN7 345.00 - TATONGA7 345.00 345KV CKT 1	1195	1195	0.23298	108.7641	G14_001T 345.00 - WICHITA 345KV CKT 1
FDNS	01ALL	0	20WP	G15_060	TO->FROM	MATHWSN7 345.00 - TATONGA7 345.00 345KV CKT 1	1195	1195	0.23195	108.764	GRAND ISLAND - SWEETWATER 345KV CKT 1
FDNS	01ALL	0	16WP	G15_060	TO->FROM	MATHWSN7 345.00 - TATONGA7 345.00 345KV CKT 1	1195	1195	0.25071	108.756	BORDER 7345.00 - TUCO_2 345.00 345KV CKT 1
FDNS	01ALL	0	20WP	G15_060	TO->FROM	MATHWSN7 345.00 - TATONGA7 345.00 345KV CKT 1	1195	1195	0.23181	108.7365	SMOKYHL6 230.00 - SUMMIT 230KV CKT 1
FDNS	01ALL	0	20WP	G15_060	TO->FROM	MATHWSN7 345.00 - TATONGA7 345.00 345KV CKT 1	1195	1195	0.23443	108.7347	GERALD GENTLEMAN STATION - RED WILLOW 345KV CKT 1
FDNS	01ALL	0	20WP	G15_060	TO->FROM	MATHWSN7 345.00 - TATONGA7 345.00 345KV CKT 1	1195	1195	0.23319	108.7325	P12:138:MKEC:HARPER-CLEARWATER::
FDNS	01ALL	0	20WP	G15_060	TO->FROM	MATHWSN7 345.00 - TATONGA7 345.00 345KV CKT 1	1195	1195	0.23138	108.732	GEN336252 1-NINEMILE POINT UNIT#5
FDNS	01ALL	0	20WP	G15_060	TO->FROM	MATHWSN7 345.00 - TATONGA7 345.00 345KV CKT 1	1195	1195	0.23138	108.732	GEN338143 1-INDEPENDENCE UNIT #1
FDNS	01ALL	0	20WP	G15_060	TO->FROM	MATHWSN7 345.00 - TATONGA7 345.00 345KV CKT 1	1195	1195	0.23319	108.7278	P12:138:WERE:CLWA-MKEC_138F::
FDNS	01ALL	0	20WP	G15_060	TO->FROM	MATHWSN7 345.00 - TATONGA7 345.00 345KV CKT 1	1195	1195	0.23335	108.7246	LATHAMS7 345.00 - ROSE HILL 345KV CKT 1
FDNS	01ALL	0	20WP	G15_060	TO->FROM	MATHWSN7 345.00 - TATONGA7 345.00 345KV CKT 1	1195	1195	0.23138	108.7188	GEN514905 1-REDBUD3S
FDNS	01ALL	0	20WP	G15_060	TO->FROM	MATHWSN7 345.00 - TATONGA7 345.00 345KV CKT 1	1195	1195	0.23138	108.7154	GEN563272 1-G15093_3 0.6900
FDNS	01ALL	0	20WP	G15_060	TO->FROM	MATHWSN7 345.00 - TATONGA7 345.00 345KV CKT 1	1195	1195	0.23298	108.7127	EMPORIA ENERGY CENTER - G14_001T 345.00 345KV CKT 1
FDNS	01ALL	0	20WP	G15_060	TO->FROM	MATHWSN7 345.00 - TATONGA7 345.00 345KV CKT 1	1195	1195	0.23138	108.6972	GEN590011 2-ERCOT EQUIVALENCE
FDNS	01ALL	0	20WP	G15_060	TO->FROM	MATHWSN7 345.00 - TATONGA7 345.00 345KV CKT 1	1195	1195	0.23561	108.697	GLASS MOUNTAIN - MOORELAND 138KV CKT 1
FDNS	01ALL	0	20WP	G15_060	TO->FROM	MATHWSN7 345.00 - TATONGA7 345.00 345KV CKT 1	1195	1195	0.23138	108.6875	GEN334440 1-SABINE UNIT 4
FDNS	01ALL	0	20WP	G15_060	TO->FROM	MATHWSN7 345.00 - TATONGA7 345.00 345KV CKT 1	1195	1195	0.23138	108.6836	GEN515550 1-MNCWND31 0.6900
FDNS	01ALL	0	20WP	G15_060	TO->FROM	MATHWSN7 345.00 - TATONGA7 345.00 345KV CKT 1	1195	1195	0.23138	108.6761	GEN562952 1-G15057_3 0.6500
FDNS	01ALL	0	20WP	G15_060	TO->FROM	MATHWSN7 345.00 - TATONGA7 345.00 345KV CKT 1	1195	1195	0.23316	108.671	P12:138:WERE:MURR-MKEC_138P::
FDNS	01ALL	0	20WP	G15_060	TO->FROM	MATHWSN7 345.00 - TATONGA7 345.00 345KV CKT 1	1195	1195	0.23138	108.6707	GEN336831 1-BAXTER WILSON SES
FDNS	01ALL	0	20WP	G15_060	TO->FROM	MATHWSN7 345.00 - TATONGA7 345.00 345KV CKT 1	1195	1195	0.23138	108.6622	GEN590010 1-ERCOT EQUIVALENCE
FDNS	01ALL	0	20WP	G15_060	TO->FROM	MATHWSN7 345.00 - TATONGA7 345.00 345KV CKT 1	1195	1195	0.23561	108.6554	CLEO CORNER - GLASS MOUNTAIN 138KV CKT 1
FDNS	01ALL	0	20WP	G15_060	TO->FROM	MATHWSN7 345.00 - TATONGA7 345.00 345KV CKT 1	1195	1195	0.23208	108.6546	G15088_T 345.00 - PAULINE 345KV CKT 1
FDNS	01ALL	0	20WP	G15_060	TO->FROM	MATHWSN7 345.00 - TATONGA7 345.00 345KV CKT 1	1195	1195	0.23138	108.6389	GEN562512 1-G14_020_3 0.6900
FDNS	01ALL	0	20WP	G15_060	TO->FROM	MATHWSN7 345.00 - TATONGA7 345.00 345KV CKT 1	1195	1195	0.23138	108.6343	GEN511938 1-OEC STEAM # 1
FDNS	00NR	0	16WP	G15_060	TO->FROM	MATHWSN7 345.00 - TATONGA7 345.00 345KV CKT 1	1195	1195	0.31625	108.6268	G14-074T 345.00 - OKLAUNION 345KV CKT 1
FDNS	01ALL	0	20WP	G15_060	TO->FROM	MATHWSN7 345.00 - TATONGA7 345.00 345KV CKT 1	1195	1195	0.23138	108.6266	GEN336251 1-NINEMILE POINT UNIT#4
FDNS	01ALL	0	20WP	G15_060	TO->FROM	MATHWSN7 345.00 - TATONGA7 345.00 345KV CKT 1	1195	1195	0.23416	108.6089	EL RENO - ROMAN NOSE 138KV CKT 1
FDNS	01ALL	0	20WP	G15_060	TO->FROM	MATHWSN7 345.00 - TATONGA7 345.00 345KV CKT 1	1195	1195	0.23138	108.5907	GEN337041 1-GERALD ANDRUS
FDNS	01ALL	0	20WP	G15_060	TO->FROM	MATHWSN7 345.00 - TATONGA7 345.00 345KV CKT 1	1195	1195	0.23324	108.5741	TUCO INTERCHANGE - TUCO_2 345.00 345KV CKT 1
FDNS	01ALL	0	20WP	G15_060	TO->FROM	MATHWSN7 345.00 - TATONGA7 345.00 345KV CKT 1	1195	1195	0.23349	108.5689	BYRON_138 138.00 - SANDY_CN_138138.00 138KV CKT 1
FDNS	01ALL	0	20WP	G15_060	TO->FROM	MATHWSN7 345.00 - TATONGA7 345.00 345KV CKT 1	1195	1195	0.23138	108.5585	GEN511941 1-OEC STEAM # 2
FDNS	01ALL	0	20WP	G15_060	TO->FROM	MATHWSN7 345.00 - TATONGA7 345.00 345KV CKT 1	1195	1195	0.23236	108.5556	SWISSVALE - WEST GARDNER 345KV CKT 1
FDNS	01ALL	0	20WP	G15_060	TO->FROM	MATHWSN7 345.00 - TATONGA7 345.00 345KV CKT 1	1195	1195	0.23138	108.5508	GEN335204 1-NELSON UNIT 4
FDNS	01ALL	0	20WP	G15_060	TO->FROM	MATHWSN7 345.00 - TATONGA7 345.00 345KV CKT 1	1195	1195	0.23138	108.5473	GEN300024 1-1CHOTST6 16.000
FDNS	01ALL	0	20WP	G15_060	TO->FROM	MATHWSN7 345.00 - TATONGA7 345.00 345KV CKT 1	1195	1195	0.23138	108.5471	GEN300031 1-CHOUTEAU CTG 1
FDNS	01ALL	0	20WP	G15_060	TO->FROM	MATHWSN7 345.00 - TATONGA7 345.00 345KV CKT 1	1195	1195	0.23138	108.5454	WHITE BLUFF 500/26.0KV TRANSFORMER CKT 1
FDNS	01ALL	0	20WP	G15_060	TO->FROM	MATHWSN7 345.00 - TATONGA7 345.00 345KV CKT 1	1195	1195	0.23138	108.5442	GEN563273 2-G15093_4 0.6900
FDNS	01ALL	0	20WP	G15_060	TO->FROM	MATHWSN7 345.00 - TATONGA7 345.00 345KV CKT 1	1195	1195	0.23138	108.5249	GEN334441 1-SABINE UNIT 5

SOLUTION	GROUP	SCENARIO	SEASON	SOURCE	DIRECTION	MONITORED ELEMENT	RATEA (MVA)	RATEB(MVA)	TDF	TC%LOADING (% MVA)	CONTINGENCY
FDNS	01ALL	0	20WP	G15_060	TO->FROM	MATHWSN7 345.00 - TATONGA7 345.00 345KV CKT 1	1195	1195	0.23138	108.5242	GEN300020 1-1CHOTCT4 16.000
FDNS	01ALL	0	20WP	G15_060	TO->FROM	MATHWSN7 345.00 - TATONGA7 345.00 345KV CKT 1	1195	1195	0.23138	108.5242	GEN300021 1-1CHOTCT5 16.000
FDNS	01ALL	0	20WP	G15_060	TO->FROM	MATHWSN7 345.00 - TATONGA7 345.00 345KV CKT 1	1195	1195	0.23138	108.524	GEN300032 1-CHOUTEAU CTG 2
FDNS	01ALL	0	20WP	G15_060	TO->FROM	MATHWSN7 345.00 - TATONGA7 345.00 345KV CKT 1	1195	1195	0.23138	108.524	GEN300033 1-CHOUTEAU STG 3
FDNS	01ALL	0	20WP	G15_060	TO->FROM	MATHWSN7 345.00 - TATONGA7 345.00 345KV CKT 1	1195	1195	0.23086	108.5233	ARKANSAS NUCLEAR ONE - FT SMITH 500KV CKT 1
FDNS	01ALL	0	20WP	G15_060	TO->FROM	MATHWSN7 345.00 - TATONGA7 345.00 345KV CKT 1	1195	1195	0.23086	108.5233	ARKANSAS NUCLEAR ONE - FT SMITH 500KV CKT 1
FDNS	01ALL	0	16WP	G15_060	TO->FROM	MATHWSN7 345.00 - TATONGA7 345.00 345KV CKT 1	1195	1195	0.24956	108.5231	G1524G1525 345.00 - THISTLE7 345.00 345KV CKT 1
FDNS	01ALL	0	16WP	G15_060	TO->FROM	MATHWSN7 345.00 - TATONGA7 345.00 345KV CKT 1	1195	1195	0.24956	108.5231	G1524G1525 345.00 - THISTLE7 345.00 345KV CKT 2
FDNS	01ALL	0	20WP	G15_060	TO->FROM	MATHWSN7 345.00 - TATONGA7 345.00 345KV CKT 1	1195	1195	0.23153	108.5105	GRAND ISLAND - MCCOOL 345KV CKT 1
FDNS	01ALL	0	20WP	G15_060	TO->FROM	MATHWSN7 345.00 - TATONGA7 345.00 345KV CKT 1	1195	1195	0.23314	108.508	DEWEY - TALOGA 138KV CKT 1
FDNS	01ALL	0	20WP	G15_060	TO->FROM	MATHWSN7 345.00 - TATONGA7 345.00 345KV CKT 1	1195	1195	0.23357	108.5032	BVRCNTY7 345.00 - OPTIMA 345.00 345KV CKT 1
FDNS	01ALL	0	20WP	G15_060	TO->FROM	MATHWSN7 345.00 - TATONGA7 345.00 345KV CKT 1	1195	1195	0.23357	108.5032	BVRCNTY7 345.00 - OPTIMA 345.00 345KV CKT 2
FDNS	01ALL	0	20WP	G15_060	TO->FROM	MATHWSN7 345.00 - TATONGA7 345.00 345KV CKT 1	1195	1195	0.23138	108.4961	GEN336191 1-LITTLE GYPSY UNIT#3
FDNS	01ALL	0	20WP	G15_060	TO->FROM	MATHWSN7 345.00 - TATONGA7 345.00 345KV CKT 1	1195	1195	0.23332	108.4947	ELK CITY - RED HILLS WIND 138KV CKT 1
FDNS	01ALL	0	20WP	G15_060	TO->FROM	MATHWSN7 345.00 - TATONGA7 345.00 345KV CKT 1	1195	1195	0.23332	108.4947	ELK CITY - RED HILLS WIND 138KV CKT 1
FDNS	01ALL	0	20WP	G15_060	TO->FROM	MATHWSN7 345.00 - TATONGA7 345.00 345KV CKT 1	1195	1195	0.23138	108.4815	GEN509393 S1-ARSENAL HILL GENS #4 (STALL)
FDNS	01ALL	0	20WP	G15_060	TO->FROM	MATHWSN7 345.00 - TATONGA7 345.00 345KV CKT 1	1195	1195	0.2353	108.4801	CHISHOLM7 345.00 () 345/230/13.2KV TRANSFORMER CKT 1
FDNS	01ALL	0	20WP	G15_060	TO->FROM	MATHWSN7 345.00 - TATONGA7 345.00 345KV CKT 1	1195	1195	0.23509	108.4755	G14_038T 345.00 - Hitchland Interchange 345KV CKT 1
FDNS	01ALL	0	20WP	G15_060	TO->FROM	MATHWSN7 345.00 - TATONGA7 345.00 345KV CKT 1	1195	1195	0.23138	108.4754	GEN335614 1-WILLOW GLENN UNIT#4
FDNS	01ALL	0	20WP	G15_060	TO->FROM	MATHWSN7 345.00 - TATONGA7 345.00 345KV CKT 1	1195	1195	0.23138	108.4586	GEN336464 1-MICHOUD UNIT #3
FDNS	01ALL	0	20WP	G15_060	TO->FROM	MATHWSN7 345.00 - TATONGA7 345.00 345KV CKT 1	1195	1195	0.23187	108.4574	CIRCLE - MULLERGREN 230KV CKT 1
FDNS	01ALL	0	20WP	G15_060	TO->FROM	MATHWSN7 345.00 - TATONGA7 345.00 345KV CKT 1	1195	1195	0.23187	108.4574	CIRCLE - MULLERGREN 230KV CKT 1
FDNS	01ALL	0	20WP	G15_060	TO->FROM	MATHWSN7 345.00 - TATONGA7 345.00 345KV CKT 1	1195	1195	0.23138	108.4529	GEN336801 1-BAXTER WILSON UNIT #1
FDNS	01ALL	0	20WP	G15_060	TO->FROM	MATHWSN7 345.00 - TATONGA7 345.00 345KV CKT 1	1195	1195	0.23138	108.4512	GEN334433 1-SABINE UNIT 3
FDNS	01ALL	0	20WP	G15_060	TO->FROM	MATHWSN7 345.00 - TATONGA7 345.00 345KV CKT 1	1195	1195	0.23138	108.4465	GEN300015 1-1SGPDEL 18.000
FDNS	01ALL	0	20WP	G15_060	TO->FROM	MATHWSN7 345.00 - TATONGA7 345.00 345KV CKT 1	1195	1195	0.23138	108.4455	GEN562992 1-G15063_3 0.6900
FDNS	01ALL	0	20WP	G15_060	TO->FROM	MATHWSN7 345.00 - TATONGA7 345.00 345KV CKT 1	1195	1195	0.23411	108.4441	BENTON - ROSE HILL 345KV CKT 1
FDNS	01ALL	0	20WP	G15_060	TO->FROM	MATHWSN7 345.00 - TATONGA7 345.00 345KV CKT 1	1195	1195	0.23246	108.4409	TALOGA (TALOGA) 138/69/13.8KV TRANSFORMER CKT 1
FDNS	01ALL	0	20WP	G15_060	TO->FROM	MATHWSN7 345.00 - TATONGA7 345.00 345KV CKT 1	1195	1195	0.23138	108.4402	GEN303007 1-1BC2 U2
FDNS	01ALL	0	20WP	G15_060	TO->FROM	MATHWSN7 345.00 - TATONGA7 345.00 345KV CKT 1	1195	1195	0.23138	108.4397	GEN303006 1-1BC2 U1
FDNS	01ALL	0	20WP	G15_060	TO->FROM	MATHWSN7 345.00 - TATONGA7 345.00 345KV CKT 1	1195	1195	0.23223	108.4272	EMPORIA ENERGY CENTER - SWISSVALE 345KV CKT 1
FDNS	01ALL	0	20WP	G15_060	TO->FROM	MATHWSN7 345.00 - TATONGA7 345.00 345KV CKT 1	1195	1195	0.23138	108.4185	GEN520812 1-ANADRK5
FDNS	01ALL	0	20WP	G15_060	TO->FROM	MATHWSN7 345.00 - TATONGA7 345.00 345KV CKT 1	1195	1195	0.23138	108.4184	GEN520813 1-ANADRK6
FDNS	01ALL	0	20WP	G15_060	TO->FROM	MATHWSN7 345.00 - TATONGA7 345.00 345KV CKT 1	1195	1195	0.23138	108.4131	GEN334071 1-LEWIS CREEK 2
FDNS	01ALL	0	17G	G15_060	TO->FROM	MATHWSN7 345.00 - TATONGA7 345.00 345KV CKT 1	1195	1195	0.27765	108.4116	THISTLE7 345.00 - WOODWARD DISTRICT EHV 345KV CKT 1
FDNS	01ALL	0	17G	G15_060	TO->FROM	MATHWSN7 345.00 - TATONGA7 345.00 345KV CKT 1	1195	1195	0.27765	108.4116	THISTLE7 345.00 - WOODWARD DISTRICT EHV 345KV CKT 2
FDNS	01ALL	0	20WP	G15_060	TO->FROM	MATHWSN7 345.00 - TATONGA7 345.00 345KV CKT 1	1195	1195	0.23138	108.4105	GEN501811 1-RODEMACHER UNIT 1
FDNS	01ALL	0	20WP	G15_060	TO->FROM	MATHWSN7 345.00 - TATONGA7 345.00 345KV CKT 1	1195	1195	0.23138	108.4095	GEN334070 1-LEWIS CREEK 1
FDNS	01ALL	0	20WP	G15_060	TO->FROM	MATHWSN7 345.00 - TATONGA7 345.00 345KV CKT 1	1195	1195	0.23138	108.4091	GEN509392 G2-ARSENAL HILL GENS #3 (STALL)
FDNS	01ALL	0	20WP	G15_060	TO->FROM	MATHWSN7 345.00 - TATONGA7 345.00 345KV CKT 1	1195	1195	0.23138	108.4052	GEN511939 1-OEC GAS # 1-1
FDNS	01ALL	0	20WP	G15_060	TO->FROM	MATHWSN7 345.00 - TATONGA7 345.00 345KV CKT 1	1195	1195	0.23138	108.4042	GEN503909 1-FULTONU1 1 16.000
FDNS	01ALL	0	20WP	G15_060	TO->FROM	MATHWSN7 345.00 - TATONGA7 345.00 345KV CKT 1	1195	1195	0.23138	108.4032	GEN300010 1-ST FRANCIS UNIT 1
FDNS	01ALL	0	20WP	G15_060	TO->FROM	MATHWSN7 345.00 - TATONGA7 345.00 345KV CKT 1	1195	1195	0.23138	108.4027	GEN303008 1-1BC2 U3
FDNS	01ALL	0	20WP	G15_060	TO->FROM	MATHWSN7 345.00 - TATONGA7 345.00 345KV CKT 1	1195	1195	0.23174	108.4017	GERALD GENTLEMAN STATION - THEDFRD3 345.00 345KV CKT 1
FDNS	01ALL	0	20WP	G15_060	TO->FROM	MATHWSN7 345.00 - TATONGA7 345.00 345KV CKT 1	1195	1195	0.23138	108.4001	GEN506754 1-LEBROCK STEAM 1
FDNS	01ALL	0	20WP	G15_060	TO->FROM	MATHWSN7 345.00 - TATONGA7 345.00 345KV CKT 1	1195	1195	0.23138	108.4	GEN515266 1-AES 1G
FDNS	01ALL	0	20WP	G15_060	TO->FROM	MATHWSN7 345.00 - TATONGA7 345.00 345KV CKT 1	1195	1195	0.23138	108.4	GEN515267 1-AES 2G
FDNS	01ALL	0	20WP	G15_060	TO->FROM	MATHWSN7 345.00 - TATONGA7 345.00 345KV CKT 1	1195	1195	0.23138	108.3971	GEN509391 G1-ARSENAL HILL GENS #2 (STALL)
FDNS	01ALL	0	20WP	G15_060	TO->FROM	MATHWSN7 345.00 - TATONGA7 345.00 345KV CKT 1	1195	1195	0.23138	108.3947	GEN549893 2-SOUTHWEST 2
FDNS	01ALL	0	20WP	G15_060	TO->FROM	MATHWSN7 345.00 - TATONGA7 345.00 345KV CKT 1	1195	1195	0.23138	108.3921	GEN336170 1-GULF OXY U4
FDNS	01ALL	0	20WP	G15_060	TO->FROM	MATHWSN7 345.00 - TATONGA7 345.00 345KV CKT 1	1195	1195	0.23256	108.3901	CANTON - TALOGA 69KV CKT 1
FDNS	01ALL	0	20WP	G15_060	TO->FROM	MATHWSN7 345.00 - TATONGA7 345.00 345KV CKT 1	1195	1195	0.23138	108.3891	GEN511838 1-NORTHEASTERN STATION # 1-1B
FDNS	01ALL	0	20WP	G15_060	TO->FROM	MATHWSN7 345.00 - TATONGA7 345.00 345KV CKT 1	1195	1195	0.23138	108.3889	GEN511837 1-NORTHEASTERN STATION # 1-1A
FDNS	01ALL	0	20WP	G15_060	TO->FROM	MATHWSN7 345.00 - TATONGA7 345.00 345KV CKT 1	1195	1195	0.23138	108.3763	GEN513602 1-GRECSTG_1 17.500
FDNS	01ALL	0	20WP	G15_060	TO->FROM	MATHWSN7 345.00 - TATONGA7 345.00 345KV CKT 1	1195	1195	0.23138	108.3714	GEN300011 1-ST FRANCIS UNIT 2
FDNS	01ALL	0	20WP	G15_060	TO->FROM	MATHWSN7 345.00 - TATONGA7 345.00 345KV CKT 1	1195	1195	0.23332	108.3688	ELLIS 4 138.00 - MOREWOOD SW 138KV CKT 1
FDNS	01ALL	0	20WP	G15_060	TO->FROM	MATHWSN7 345.00 - TATONGA7 345.00 345KV CKT 1	1195	1195	0.23138	108.3656	GEN300003 1-THOMAS HILL UNIT 3
FDNS	01ALL	0	20WP	G15_060	TO->FROM	MATHWSN7 345.00 - TATONGA7 345.00 345KV CKT 1	1195	1195	0.23138	108.365	GEN505432 1-SIKESTON
FDNS	01ALL	0	20WP	G15_060	TO->FROM	MATHWSN7 345.00 - TATONGA7 345.00 345KV CKT 1	1195	1195	0.23287	108.3544	P12:138:AEPW-OGE:WTH_JCT4:JENSEN4
FDNS	01ALL	0	20WP	G15_060	TO->FROM	MATHWSN7 345.00 - TATONGA7 345.00 345KV CKT 1	1195	1195	0.23179	108.3507	BUCKNER7 345.00 - HOLCOMB 345KV CKT 1
FDNS	01ALL	0	20WP	G15_060	TO->FROM	MATHWSN7 345.00 - TATONGA7 345.00 345KV CKT 1	1195	1195	0.23179	108.3507	BUCKNER7 345.00 - HOLCOMB 345KV CKT 1
FDNS	01ALL	0	20WP	G15_060	TO->FROM	MATHWSN7 345.00 - TATONGA7 345.00 345KV CKT 1	1195	1195	0.23256	108.3483	CANTON - OKEENE 69KV CKT 1
FDNS	01ALL	0	20WP	G15_060	TO->FROM	MATHWSN7 345.00 - TATONGA7 345.00 345KV CKT 1	1195	1195	0.23138	108.3418	GEN511955 G-COGENTRIX GAS # 2
FDNS	01ALL	0	20WP	G15_060	TO->FROM	MATHWSN7 345.00 - TATONGA7 345.00 345KV CKT 1	1195	1195	0.23269	108.3392	DARLINGTNRD4138.00 - ROMAN NOSE 138KV CKT 1
FDNS	01ALL	0	20WP	G15_060	TO->FROM	MATHWSN7 345.00 - TATONGA7 345.00 345KV CKT 1	1195	1195	0.23106	108.3361	LACYGNE - NEOSHO 345KV CKT 1
FDNS	01ALL	0	20WP	G15_060	TO->FROM	MATHWSN7 345.00 - TATONGA7 345.00 345KV CKT 1	1195	1195	0.23138	108.3296	GEN336222 1-LITTLE GYPSY UNIT#2
FDNS	01ALL	0	20WP	G15_060	TO->FROM	MATHWSN7 345.00 - TATONGA7 345.00 345KV CKT 1	1195	1195	0.23154	108.3284	MCCOOL - MOORE 345KV CKT 1
FDNS	01ALL	0	20WP	G15_060	TO->FROM	MATHWSN7 345.00 - TATONGA7 345.00 345KV CKT 1	1195	1195	0.23138	108.322	GEN337766 1-TRACTEBEL UNIT S1
FDNS	01ALL	0	20WP	G15_060	TO->FROM	MATHWSN7 345.00 - TATONGA7 345.00 345KV CKT 1	1195	1195	0.23138	108.3172	GEN511953 G-COGENTRIX GAS # 1
FDNS	01ALL	0	20WP	G15_060	TO->FROM	MATHWSN7 345.00 - TATONGA7 345.00 345KV CKT 1	1195	1195	0.23138	108.3158	GEN501910 1-ACADIA UNIT ST1
FDNS	01ALL	0	20WP	G15_060	TO->FROM	MATHWSN7 345.00 - TATONGA7 345.00 345KV CKT 1	1195	1195	0.23138	108.3116	GEN334030 1-FRONTIER UNIT 1
FDNS	01ALL	0	20WP	G15_060	TO->FROM	MATHWSN7 345.00 - TATONGA7 345.00 345KV CKT 1	1195	1195	0.23138	108.3111	GEN336152 1-WATERFORD UNIT#2
FDNS	01ALL	0	20WP	G15_060	TO->FROM	MATHWSN7 345.00 - TATONGA7 345.00 345KV CKT 1	1195	1195	0.23138	108.311	GEN334031 1-FRONTIER UNIT 2
FDNS	01ALL	0	20WP	G15_060	TO->FROM	MATHWSN7 345.00 - TATONGA7 345.00 345KV CKT 1	1195	1195	0.23137	108.3109	DOLET HILLS - SOUTHWEST SHREVEPORT 345KV CKT 1
FDNS	01ALL	0	20WP	G15_060	TO->FROM	MATHWSN7 345.00 - TATONGA7 345.00 345KV CKT 1	1195	1195	0.23137	108.3109	DOLET HILLS - SOUTHWEST SHREVEPORT 345KV CKT 1
FDNS	01ALL	0	20WP	G15_060	TO->FROM	MATHWSN7 345.00 - TATONGA7 345.00 345KV CKT 1	1195	1195	0.23138	108.3106	GEN336151 1-WATERFORD UNIT#1
FDNS	01ALL	0	20WP	G15_060	TO->FROM	MATHWSN7 345.00 - TATONGA7 345.00 345KV CKT 1	1195	1195	0.23177	108.309	CLINTON JUNCTION - ELK CITY 138KV CKT 1
FDNS	01ALL	0	20WP	G15_060	TO->FROM	MATHWSN7 345.00 - TATONGA7 345.00 345KV CKT 1	1195	1195	0.23177	108.309	CLINTON JUNCTION - ELK CITY 138KV CKT 1
FDNS	01ALL	0	20WP	G15_060	TO->FROM	MATHWSN7 345.00 - TATONGA7 345.00 345KV CKT 1	1195	1195	0.2318	108.3065	P12:115:MKEC:BARBER-RIVERROAD:::

SOLUTION	GROUP	SCENARIO	SEASON	SOURCE	DIRECTION	MONITORED ELEMENT	RATEA (MVA)	RATEB(MVA)	TDF	TC%LOADING (% MVA)	CONTINGENCY
FDNS	01ALL	0	20WP	G15_060	TO->FROM	MATHWSN7 345.00 - TATONGA7 345.00 345KV CKT 1	1195	1195	0.23273	108.3026	Canadian Pump Station - REDROCKRD4 138.00 138KV CKT 1
FDNS	01ALL	0	20WP	G15_060	TO->FROM	MATHWSN7 345.00 - TATONGA7 345.00 345KV CKT 1	1195	1195	0.23138	108.3011	GEN511836 1-NORTHEASTERN STATION #1
FDNS	01ALL	0	20WP	G15_060	TO->FROM	MATHWSN7 345.00 - TATONGA7 345.00 345KV CKT 1	1195	1195	0.2318	108.2993	BARBER 3 115.00 - SAWYER 3 115.00 115KV CKT 1
FDNS	01ALL	0	20WP	G15_060	TO->FROM	MATHWSN7 345.00 - TATONGA7 345.00 345KV CKT 1	1195	1195	0.23168	108.2968	HOLT.CO3 345.00 - THEDFRD3 345.00 345KV CKT 1
FDNS	01ALL	0	20WP	G15_060	TO->FROM	MATHWSN7 345.00 - TATONGA7 345.00 345KV CKT 1	1195	1195	0.23138	108.2967	GEN511957 G-COGENTRIX GAS # 3
FDNS	01ALL	0	20WP	G15_060	TO->FROM	MATHWSN7 345.00 - TATONGA7 345.00 345KV CKT 1	1195	1195	0.23138	108.2956	GEN511954 S-COGENTRIX STEAM # 1
FDNS	01ALL	0	20WP	G15_060	TO->FROM	MATHWSN7 345.00 - TATONGA7 345.00 345KV CKT 1	1195	1195	0.23138	108.2956	GEN511956 S-COGENTRIX STEAM # 2
FDNS	01ALL	0	20WP	G15_060	TO->FROM	MATHWSN7 345.00 - TATONGA7 345.00 345KV CKT 1	1195	1195	0.23138	108.2941	GEN300016 1-1G1GPDEL 18.000
FDNS	01ALL	0	20WP	G15_060	TO->FROM	MATHWSN7 345.00 - TATONGA7 345.00 345KV CKT 1	1195	1195	0.23235	108.2909	HITCHLAND INTERCHANGE - MOORE COUNTY INTERCHANGE 230KV CKT 1
FDNS	01ALL	0	20WP	G15_060	TO->FROM	MATHWSN7 345.00 - TATONGA7 345.00 345KV CKT 1	1195	1195	0.23235	108.2909	HITCHLAND INTERCHANGE - MOORE COUNTY INTERCHANGE 230KV CKT 1
FDNS	01ALL	0	20WP	G15_060	TO->FROM	MATHWSN7 345.00 - TATONGA7 345.00 345KV CKT 1	1195	1195	0.23427	108.2877	G15095_T 138.00 - MOORELAND 138KV CKT 1
FDNS	01ALL	0	20WP	G15_060	TO->FROM	MATHWSN7 345.00 - TATONGA7 345.00 345KV CKT 1	1195	1195	0.23138	108.285	GEN514912 2-REDBUD GEN
FDNS	01ALL	0	20WP	G15_060	TO->FROM	MATHWSN7 345.00 - TATONGA7 345.00 345KV CKT 1	1195	1195	0.2318	108.2844	ALEXANDER - SAWYER 3 115.00 115KV CKT 1
FDNS	01ALL	0	20WP	G15_060	TO->FROM	MATHWSN7 345.00 - TATONGA7 345.00 345KV CKT 1	1195	1195	0.23138	108.2843	GEN520811 1-ANADRK4
FDNS	01ALL	0	20WP	G15_060	TO->FROM	MATHWSN7 345.00 - TATONGA7 345.00 345KV CKT 1	1195	1195	0.23138	108.2805	DOLET HILLS 345/24.0KV TRANSFORMER CKT 1
FDNS	01ALL	0	20WP	G15_060	TO->FROM	MATHWSN7 345.00 - TATONGA7 345.00 345KV CKT 1	1195	1195	0.23269	108.28	DARLINGTNRD4138.00 - REDROCKRD4 138.00 138KV CKT 1
FDNS	01ALL	0	20WP	G15_060	TO->FROM	MATHWSN7 345.00 - TATONGA7 345.00 345KV CKT 1	1195	1195	0.23269	108.28	DARLINGTNRD4138.00 - REDROCKRD4 138.00 138KV CKT 1
FDNS	01ALL	0	20WP	G15_060	TO->FROM	MATHWSN7 345.00 - TATONGA7 345.00 345KV CKT 1	1195	1195	0.23273	108.2779	P12:138:OKGE-AEPW:JENSEN4:REDROCKRD4
FDNS	01ALL	0	20WP	G15_060	TO->FROM	MATHWSN7 345.00 - TATONGA7 345.00 345KV CKT 1	1195	1195	0.23138	108.2756	GEN506752 1-LEBROCK GAS 1
FDNS	01ALL	0	20WP	G15_060	TO->FROM	MATHWSN7 345.00 - TATONGA7 345.00 345KV CKT 1	1195	1195	0.23138	108.2755	GEN506753 1-LEBROCK GAS 2
FDNS	01ALL	0	20WP	G15_060	TO->FROM	MATHWSN7 345.00 - TATONGA7 345.00 345KV CKT 1	1195	1195	0.23332	108.2745	CUSTER4 138.00 - ELLIS 4 138.00 138KV CKT 1
FDNS	01ALL	0	20WP	G15_060	TO->FROM	MATHWSN7 345.00 - TATONGA7 345.00 345KV CKT 1	1195	1195	0.23138	108.2739	GEN511940 1-OEC GAS # 1-2
FDNS	01ALL	0	20WP	G15_060	TO->FROM	MATHWSN7 345.00 - TATONGA7 345.00 345KV CKT 1	1195	1195	0.23184	108.2715	BLACKBERRY - NEOSHO 345KV CKT 1
FDNS	01ALL	0	20WP	G15_060	TO->FROM	MATHWSN7 345.00 - TATONGA7 345.00 345KV CKT 1	1195	1195	0.23179	108.2684	RENO COUNTY - SUMMIT 345KV CKT 1
FDNS	01ALL	0	20WP	G15_060	TO->FROM	MATHWSN7 345.00 - TATONGA7 345.00 345KV CKT 1	1195	1195	0.23173	108.2662	WALKEMEYER - WALKTAP3 115.00 115KV CKT 1
FDNS	01ALL	0	20WP	G15_060	TO->FROM	MATHWSN7 345.00 - TATONGA7 345.00 345KV CKT 1	1195	1195	0.23173	108.2662	WALKEMEYER - WALKTAP3 115.00 115KV CKT 1
FDNS	01ALL	0	20WP	G15_060	TO->FROM	MATHWSN7 345.00 - TATONGA7 345.00 345KV CKT 1	1195	1195	0.23173	108.2661	WALKTAP7 345.00 (WALKE345) 345/115/13.8KV TRANSFORMER CKT 1
FDNS	01ALL	0	20WP	G15_060	TO->FROM	MATHWSN7 345.00 - TATONGA7 345.00 345KV CKT 1	1195	1195	0.23173	108.2661	WALKTAP7 345.00 (WALKE345) 345/115/13.8KV TRANSFORMER CKT 1
FDNS	01ALL	0	20WP	G15_060	TO->FROM	MATHWSN7 345.00 - TATONGA7 345.00 345KV CKT 1	1195	1195	0.23138	108.2626	GEN337764 1-TRACTEBEL UNIT C1
FDNS	01ALL	0	20WP	G15_060	TO->FROM	MATHWSN7 345.00 - TATONGA7 345.00 345KV CKT 1	1195	1195	0.23138	108.2626	GEN337765 1-TRACTEBEL UNIT C2
FDNS	01ALL	0	20WP	G15_060	TO->FROM	MATHWSN7 345.00 - TATONGA7 345.00 345KV CKT 1	1195	1195	0.23138	108.2623	GEN300017 1-1G2GPDEL 18.000
FDNS	01ALL	0	20WP	G15_060	TO->FROM	MATHWSN7 345.00 - TATONGA7 345.00 345KV CKT 1	1195	1195	0.23167	108.2619	CONWAY SUB - NICHOLS STATION 115KV CKT 1
FDNS	01ALL	0	20WP	G15_060	TO->FROM	MATHWSN7 345.00 - TATONGA7 345.00 345KV CKT 1	1195	1195	0.23138	108.2571	ST FRANCIS - ST FRANCIS 1 161KV CKT Z1
FDNS	01ALL	0	20WP	G15_060	TO->FROM	MATHWSN7 345.00 - TATONGA7 345.00 345KV CKT 1	1195	1195	0.23164	108.256	NUNDRWD - WAYSIDE 230KV CKT 1
FDNS	01ALL	0	20WP	G15_060	TO->FROM	MATHWSN7 345.00 - TATONGA7 345.00 345KV CKT 1	1195	1195	0.23332	108.2552	CUSTER4 138.00 - RED HILLS WIND 138KV CKT 1
FDNS	01ALL	0	20WP	G15_060	TO->FROM	MATHWSN7 345.00 - TATONGA7 345.00 345KV CKT 1	1195	1195	0.23138	108.2526	GEN509408 1-WILKES #2
FDNS	01ALL	0	20WP	G15_060	TO->FROM	MATHWSN7 345.00 - TATONGA7 345.00 345KV CKT 1	1195	1195	0.23137	108.2526	WEBRE - WELLS 500KV CKT 1
FDNS	01ALL	0	20WP	G15_060	TO->FROM	MATHWSN7 345.00 - TATONGA7 345.00 345KV CKT 1	1195	1195	0.23138	108.2514	GEN549890 1-SOUTHWEST 1
FDNS	01ALL	0	20WP	G15_060	TO->FROM	MATHWSN7 345.00 - TATONGA7 345.00 345KV CKT 1	1195	1195	0.23237	108.2462	PUTNAM - TALOGA 69KV CKT 1
FDNS	01ALL	0	20WP	G15_060	TO->FROM	MATHWSN7 345.00 - TATONGA7 345.00 345KV CKT 1	1195	1195	0.23138	108.2449	GEN501823 1-TECHE UNIT 3
FDNS	01ALL	0	20WP	G15_060	TO->FROM	MATHWSN7 345.00 - TATONGA7 345.00 345KV CKT 1	1195	1195	0.23138	108.2437	GEN511851 1-COMANCHE #1
FDNS	01ALL	0	20WP	G15_060	TO->FROM	MATHWSN7 345.00 - TATONGA7 345.00 345KV CKT 1	1195	1195	0.23138	108.2381	GEN562882 1-G15047_3 0.6900
FDNS	01ALL	0	20WP	G15_060	TO->FROM	MATHWSN7 345.00 - TATONGA7 345.00 345KV CKT 1	1195	1195	0.23172	108.2372	RED WILLOW (RD.WILLOW T1) 345/115/13.8KV TRANSFORMER CKT 1
FDNS	01ALL	0	20WP	G15_060	TO->FROM	MATHWSN7 345.00 - TATONGA7 345.00 345KV CKT 1	1195	1195	0.23172	108.2372	RED WILLOW (RD.WILLOW T1) 345/115/13.8KV TRANSFORMER CKT 1
FDNS	01ALL	0	20WP	G15_060	TO->FROM	MATHWSN7 345.00 - TATONGA7 345.00 345KV CKT 1	1195	1195	0.23139	108.2366	GERALD GENTLEMAN STATION - SWEETWATER 345KV CKT 1
FDNS	01ALL	0	20WP	G15_060	TO->FROM	MATHWSN7 345.00 - TATONGA7 345.00 345KV CKT 1	1195	1195	0.23138	108.2332	GEN501970 1-EVANGELINE UNIT 7
FDNS	01ALL	0	20WP	G15_060	TO->FROM	MATHWSN7 345.00 - TATONGA7 345.00 345KV CKT 1	1195	1195	0.23138	108.2304	7SAREPTA% 345.00 - LONGWOOD 345KV CKT 1
FDNS	01ALL	0	20WP	G15_060	TO->FROM	MATHWSN7 345.00 - TATONGA7 345.00 345KV CKT 1	1195	1195	0.23138	108.2304	7SAREPTA% 345.00 - LONGWOOD 345KV CKT 1
FDNS	01ALL	0	20WP	G15_060	TO->FROM	MATHWSN7 345.00 - TATONGA7 345.00 345KV CKT 1	1195	1195	0.2318	108.2292	ALEXANDER - NINNESC3 115.00 115KV CKT 1
FDNS	01ALL	0	20WP	G15_060	TO->FROM	MATHWSN7 345.00 - TATONGA7 345.00 345KV CKT 1	1195	1195	0.23138	108.2282	ST FRANCIS 345/161KV TRANSFORMER CKT 1
FDNS	01ALL	0	20WP	G15_060	TO->FROM	MATHWSN7 345.00 - TATONGA7 345.00 345KV CKT 1	1195	1195	0.23277	108.2261	WOODWARD (WOODWRD2) 138/69/13.2KV TRANSFORMER CKT 1
FDNS	01ALL	0	20WP	G15_060	TO->FROM	MATHWSN7 345.00 - TATONGA7 345.00 345KV CKT 1	1195	1195	0.23157	108.2259	KNOLL 230 - POSTROCK6 230.00 230KV CKT 1
FDNS	01ALL	0	20WP	G15_060	TO->FROM	MATHWSN7 345.00 - TATONGA7 345.00 345KV CKT 1	1195	1195	0.23167	108.224	P12:115:SPS:T53.1.NICHLS.KIRBY
FDNS	01ALL	0	20WP	G15_060	TO->FROM	MATHWSN7 345.00 - TATONGA7 345.00 345KV CKT 1	1195	1195	0.23138	108.2232	GEN336242 1-1NMIL ST1 18.000
FDNS	01ALL	0	20WP	G15_060	TO->FROM	MATHWSN7 345.00 - TATONGA7 345.00 345KV CKT 1	1195	1195	0.23138	108.2214	ARKANSAS NUCLEAR ONE 500/22.0KV TRANSFORMER CKT 1
FDNS	01ALL	0	20WP	G15_060	TO->FROM	MATHWSN7 345.00 - TATONGA7 345.00 345KV CKT 1	1195	1195	0.23138	108.2201	GEN338388 1-1PLUM PT U1 23.000
FDNS	01ALL	0	20WP	G15_060	TO->FROM	MATHWSN7 345.00 - TATONGA7 345.00 345KV CKT 1	1195	1195	0.23181	108.2161	KNOLL 230 - SMOKYHL6 230.00 230KV CKT 1
FDNS	01ALL	0	20WP	G15_060	TO->FROM	MATHWSN7 345.00 - TATONGA7 345.00 345KV CKT 1	1195	1195	0.23138	108.2154	GEN503900 1-FITZHUGH CT1
FDNS	01ALL	0	20WP	G15_060	TO->FROM	MATHWSN7 345.00 - TATONGA7 345.00 345KV CKT 1	1195	1195	0.23237	108.2146	HAMON BUTLER - PUTNAM 69KV CKT 1
FDNS	01ALL	0	20WP	G15_060	TO->FROM	MATHWSN7 345.00 - TATONGA7 345.00 345KV CKT 1	1195	1195	0.23142	108.2143	POST ROCK (POSTROCK T1) 345/230/13.8KV TRANSFORMER CKT 1
FDNS	01ALL	0	20WP	G15_060	TO->FROM	MATHWSN7 345.00 - TATONGA7 345.00 345KV CKT 1	1195	1195	0.23237	108.2139	ARAPAHO - HAMON BUTLER 69KV CKT 1
FDNS	01ALL	0	20WP	G15_060	TO->FROM	MATHWSN7 345.00 - TATONGA7 345.00 345KV CKT 1	1195	1195	0.23137	108.2135	8DANIEL8 500.00 - MCKNIGHT 500KV CKT 1
FDNS	01ALL	0	20WP	G15_060	TO->FROM	MATHWSN7 345.00 - TATONGA7 345.00 345KV CKT 1	1195	1195	0.23138	108.2127	GEN334431 1-SABINE UNIT 1
FDNS	01ALL	0	20WP	G15_060	TO->FROM	MATHWSN7 345.00 - TATONGA7 345.00 345KV CKT 1	1195	1195	0.23138	108.2127	GEN334432 1-SABINE UNIT 2
FDNS	01ALL	0	20WP	G15_060	TO->FROM	MATHWSN7 345.00 - TATONGA7 345.00 345KV CKT 1	1195	1195	0.23237	108.2125	ARAPAHO - INDUSTRIAL PARK 69KV CKT 1
FDNS	01ALL	0	20WP	G15_060	TO->FROM	MATHWSN7 345.00 - TATONGA7 345.00 345KV CKT 1	1195	1195	0.23138	108.2119	3TR3AR8EL7EL
FDNS	01ALL	0	20WP	G15_060	TO->FROM	MATHWSN7 345.00 - TATONGA7 345.00 345KV CKT 1	1195	1195	0.23138	108.2119	7SAREPTA% 345.00 - ELDORADO EHV 345KV CKT 1
FDNS	01ALL	0	20WP	G15_060	TO->FROM	MATHWSN7 345.00 - TATONGA7 345.00 345KV CKT 1	1195	1195	0.23138	108.2095	ELDORADO EHV 500/345KV TRANSFORMER CKT 1
FDNS	01ALL	0	20WP	G15_060	TO->FROM	MATHWSN7 345.00 - TATONGA7 345.00 345KV CKT 1	1195	1195	0.23216	108.208	FTTHOM2-LNX3345.00 - GRPRAR2-LNX3345.00 345KV CKT 1
FDNS	01ALL	0	20WP	G15_060	TO->FROM	MATHWSN7 345.00 - TATONGA7 345.00 345KV CKT 1	1195	1195	0.23167	108.2047	CONWAY SUB - KIRBY SWITCHING STATION 115KV CKT 1
FDNS	01ALL	0	20WP	G15_060	TO->FROM	MATHWSN7 345.00 - TATONGA7 345.00 345KV CKT 1	1195	1195	0.23162	108.2038	KIRBY SWITCHING STATION - MCCLELLAN SUB 115KV CKT 1
FDNS	01ALL	0	20WP	G15_060	TO->FROM	MATHWSN7 345.00 - TATONGA7 345.00 345KV CKT 1	1195	1195	0.23138	108.2024	GEN501971 1-EVANGELINE UNIT 7-1
FDNS	01ALL	0	20WP	G15_060	TO->FROM	MATHWSN7 345.00 - TATONGA7 345.00 345KV CKT 1	1195	1195	0.23138	108.2024	GEN501972 1-EVANGELINE UNIT 7-2
FDNS	01ALL	0	20WP	G15_060	TO->FROM	MATHWSN7 345.00 - TATONGA7 345.00 345KV CKT 1	1195	1195	0.23138	108.2017	GEN337430 1-PERYVILLE UNIT #3
FDNS	01ALL	0	20WP	G15_060	TO->FROM	MATHWSN7 345.00 - TATONGA7 345.00 345KV CKT 1	1195	1195	0.23162	108.2016	MCCLELLAN SUB - MCLEAN RURAL SUB 115KV CKT 1
FDNS	01ALL	0	20WP	G15_060	TO->FROM	MATHWSN7 345.00 - TATONGA7 345.00 345KV CKT 1	1195	1195	0.23138	108.2013	GEN337428 1-PERYVILLE UNIT #1
FDNS	01ALL	0	20WP	G15_060	TO->FROM	MATHWSN7 345.00 - TATONGA7 345.00 345KV CKT 1	1195	1195	0.23216	108.2005	FT THOMPSON - FTTHOM2-LNX3345.00 345KV CKT Z
FDNS	01ALL	0	20WP	G15_060	TO->FROM	MATHWSN7 345.00 - TATONGA7 345.00 345KV CKT 1	1195	1195	0.23138	108.2003	GEN501912 1-ACADIA UNIT CT1B
FDNS	01ALL	0	20WP	G15_060	TO->FROM	MATHWSN7 345.00 - TATONGA7 345.00 345KV CKT 1	1195	1195	0.23138	108.2	GEN501911 1-ACADIA UNIT CT1A

SOLUTION	GROUP	SCENARIO	SEASON	SOURCE	DIRECTION	MONITORED ELEMENT	RATEA (MVA)	RATEB(MVA)	TDF	TC%LOADING (% MVA)	CONTINGENCY
FDNS	01ALL	0	20WP	G15_060	TO->FROM	MATHWSN7 345.00 - TATONGA7 345.00 345KV CKT 1	1195	1195	0.23273	108.1989	Canadian Pump Station - JENSEN ROAD 138KV CKT 1
FDNS	01ALL	0	20WP	G15_060	TO->FROM	MATHWSN7 345.00 - TATONGA7 345.00 345KV CKT 1	1195	1195	0.23138	108.1982	FRONTIER - GRIMES 345KV CKT 1
FDNS	01ALL	0	20WP	G15_060	TO->FROM	MATHWSN7 345.00 - TATONGA7 345.00 345KV CKT 1	1195	1195	0.23138	108.1955	GEN334392 1-EXXON MOBIL IPP 1
FDNS	01ALL	0	20WP	G15_060	TO->FROM	MATHWSN7 345.00 - TATONGA7 345.00 345KV CKT 1	1195	1195	0.23138	108.195	GEN334393 1-EXXON MOBIL IPP 2
FDNS	01ALL	0	20WP	G15_060	TO->FROM	MATHWSN7 345.00 - TATONGA7 345.00 345KV CKT 1	1195	1195	0.23138	108.195	GEN334394 1-EXXON MOBIL IPP 3
FDNS	01ALL	0	20WP	G15_060	TO->FROM	MATHWSN7 345.00 - TATONGA7 345.00 345KV CKT 1	1195	1195	0.23138	108.195	RODEMACHER 230/22.0KV TRANSFORMER CKT 1
FDNS	01ALL	0	20WP	G15_060	TO->FROM	MATHWSN7 345.00 - TATONGA7 345.00 345KV CKT 1	1195	1195	0.23138	107.9199	BASE CASE
FDNS	01ALL	0	16WP	G15_060	TO->FROM	MATHWSN7 345.00 - TATONGA7 345.00 345KV CKT 1	1195	1195	0.23774	107.898	CIMARRON - MINCO 345KV CKT 1
FDNS	01ALL	0	20WP	G15_060	TO->FROM	MATHWSN7 345.00 - TATONGA7 345.00 345KV CKT 1	1195	1195	0.23138	107.7753	GEN532751 1-WOLF CREEK GENERATING STATION UNIT 1
FDNS	01ALL	0	16WP	G15_060	TO->FROM	MATHWSN7 345.00 - TATONGA7 345.00 345KV CKT 1	1195	1195	0.25071	107.7618	BORDER 7345.00 - WOODWARD DISTRICT EHV 345KV CKT 1
FDNS	01ALL	0	20WP	G15_060	TO->FROM	MATHWSN7 345.00 - TATONGA7 345.00 345KV CKT 1	1195	1195	0.23151	107.6368	NEWKIRK4 - PECKHAM TAP 138KV CKT 1
FDNS	01ALL	0	20WP	G15_060	TO->FROM	MATHWSN7 345.00 - TATONGA7 345.00 345KV CKT 1	1195	1195	0.23138	107.6363	GEN530594 1-SMKYP1G1 0.6900
FDNS	01ALL	0	20WP	G15_060	TO->FROM	MATHWSN7 345.00 - TATONGA7 345.00 345KV CKT 1	1195	1195	0.23138	107.6343	GEN657705 X-DRAYTON
FDNS	01ALL	0	20WP	G15_060	TO->FROM	MATHWSN7 345.00 - TATONGA7 345.00 345KV CKT 1	1195	1195	0.23138	107.6322	GEN629068 1-EMERY GAS TURBINE 2
FDNS	01ALL	0	20WP	G15_060	TO->FROM	MATHWSN7 345.00 - TATONGA7 345.00 345KV CKT 1	1195	1195	0.23177	107.6299	P12:138:WERE:CRSW-OGE_138::
FDNS	01ALL	0	20WP	G15_060	TO->FROM	MATHWSN7 345.00 - TATONGA7 345.00 345KV CKT 1	1195	1195	0.23138	107.6292	GEN629067 1-EMERY GAS TURBINE 1
FDNS	01ALL	0	20WP	G15_060	TO->FROM	MATHWSN7 345.00 - TATONGA7 345.00 345KV CKT 1	1195	1195	0.23138	107.628	GEN562556 1-G14_046_3 0.3420
FDNS	01ALL	0	20WP	G15_060	TO->FROM	MATHWSN7 345.00 - TATONGA7 345.00 345KV CKT 1	1195	1195	0.23138	107.6273	GEN600050 1-FEP
FDNS	01ALL	0	20WP	G15_060	TO->FROM	MATHWSN7 345.00 - TATONGA7 345.00 345KV CKT 1	1195	1195	0.23138	107.6262	GEN563042 1-G15068_3 0.6900
FDNS	01ALL	0	20WP	G15_060	TO->FROM	MATHWSN7 345.00 - TATONGA7 345.00 345KV CKT 1	1195	1195	0.23138	107.6237	GEN562754 1-G15031_5 0.6900
FDNS	01ALL	0	20WP	G15_060	TO->FROM	MATHWSN7 345.00 - TATONGA7 345.00 345KV CKT 1	1195	1195	0.23138	107.6216	GEN615032 2-PLEASANT VALLEY
FDNS	01ALL	0	20WP	G15_060	TO->FROM	MATHWSN7 345.00 - TATONGA7 345.00 345KV CKT 1	1195	1195	0.23138	107.6208	GEN563142 1-G15079_3 0.5500
FDNS	01ALL	0	20WP	G15_060	TO->FROM	MATHWSN7 345.00 - TATONGA7 345.00 345KV CKT 1	1195	1195	0.23138	107.6208	GEN563151 1-G15080_2 0.5500
FDNS	01ALL	0	20WP	G15_060	TO->FROM	MATHWSN7 345.00 - TATONGA7 345.00 345KV CKT 1	1195	1195	0.23138	107.6184	GEN563002 1-G15064_3 0.6900
FDNS	01ALL	0	20WP	G15_060	TO->FROM	MATHWSN7 345.00 - TATONGA7 345.00 345KV CKT 1	1195	1195	0.23138	107.6176	GEN523170 1-GOODWELL_1 10.6900
FDNS	01ALL	0	20WP	G15_060	TO->FROM	MATHWSN7 345.00 - TATONGA7 345.00 345KV CKT 1	1195	1195	0.23138	107.6173	GEN615052 1-CAMBRIDGE GENERATING STATION
FDNS	01ALL	0	20WP	G15_060	TO->FROM	MATHWSN7 345.00 - TATONGA7 345.00 345KV CKT 1	1195	1195	0.23138	107.6167	GEN539785 1-ENSNGW 1 0.5750
FDNS	01ALL	0	20WP	G15_060	TO->FROM	MATHWSN7 345.00 - TATONGA7 345.00 345KV CKT 1	1195	1195	0.23151	107.6165	NEWKIRK4 - NWKRKAT4 138.00 138KV CKT 1
FDNS	01ALL	0	20WP	G15_060	TO->FROM	MATHWSN7 345.00 - TATONGA7 345.00 345KV CKT 1	1195	1195	0.23151	107.615	CRESWELL - MIDLTNT4 138.00 138KV CKT 1
FDNS	01ALL	0	20WP	G15_060	TO->FROM	MATHWSN7 345.00 - TATONGA7 345.00 345KV CKT 1	1195	1195	0.23138	107.6144	GEN600065 7-HIGH BRIDGE
FDNS	01ALL	0	20WP	G15_060	TO->FROM	MATHWSN7 345.00 - TATONGA7 345.00 345KV CKT 1	1195	1195	0.23138	107.6144	GEN600066 8-HIGH BRIDGE
FDNS	01ALL	0	20WP	G15_060	TO->FROM	MATHWSN7 345.00 - TATONGA7 345.00 345KV CKT 1	1195	1195	0.23138	107.6135	GEN562756 1-G15031_7 0.6900
FDNS	01ALL	0	20WP	G15_060	TO->FROM	MATHWSN7 345.00 - TATONGA7 345.00 345KV CKT 1	1195	1195	0.23138	107.6134	GEN600070 9-RIVER SIDE
FDNS	01ALL	0	20WP	G15_060	TO->FROM	MATHWSN7 345.00 - TATONGA7 345.00 345KV CKT 1	1195	1195	0.23138	107.6134	GEN600071 10-RIVER SIDE
FDNS	01ALL	0	20WP	G15_060	TO->FROM	MATHWSN7 345.00 - TATONGA7 345.00 345KV CKT 1	1195	1195	0.23123	107.6107	P12:138:AECI:LUTHER-JONES
FDNS	01ALL	0	20WP	G15_060	TO->FROM	MATHWSN7 345.00 - TATONGA7 345.00 345KV CKT 1	1195	1195	0.23138	107.6095	GEN600007 7-RIVERSIDE GEN 7
FDNS	01ALL	0	20WP	G15_060	TO->FROM	MATHWSN7 345.00 - TATONGA7 345.00 345KV CKT 1	1195	1195	0.23138	107.6083	GEN562298 1-G12-024 0.6500
FDNS	01ALL	0	20WP	G15_060	TO->FROM	MATHWSN7 345.00 - TATONGA7 345.00 345KV CKT 1	1195	1195	0.23138	107.607	GEN600011 5-BLACK DOG GEN 1
FDNS	01ALL	0	20WP	G15_060	TO->FROM	MATHWSN7 345.00 - TATONGA7 345.00 345KV CKT 1	1195	1195	0.23138	107.6055	GEN563012 1-G15065_3 0.6900
FDNS	01ALL	0	20WP	G15_060	TO->FROM	MATHWSN7 345.00 - TATONGA7 345.00 345KV CKT 1	1195	1195	0.23138	107.6052	GEN523171 1-GOODWELL_2 10.6900
FDNS	01ALL	0	20WP	G15_060	TO->FROM	MATHWSN7 345.00 - TATONGA7 345.00 345KV CKT 1	1195	1195	0.23138	107.604	GEN600014 4-BLACK DOG GEN 4
FDNS	01ALL	0	20WP	G15_060	TO->FROM	MATHWSN7 345.00 - TATONGA7 345.00 345KV CKT 1	1195	1195	0.23138	107.6014	GEN539630 1-FLTRDG-WG1 0.6000
FDNS	01ALL	0	20WP	G15_060	TO->FROM	MATHWSN7 345.00 - TATONGA7 345.00 345KV CKT 1	1195	1195	0.23138	107.597	GEN539762 1-SSWIND 1 34.500
FDNS	01ALL	0	20WP	G15_060	TO->FROM	MATHWSN7 345.00 - TATONGA7 345.00 345KV CKT 1	1195	1195	0.2315	107.5965	7MCCREDIE 345.00 - 7MONTGMRY 345.00 345KV CKT 1
FDNS	01ALL	0	20WP	G15_060	TO->FROM	MATHWSN7 345.00 - TATONGA7 345.00 345KV CKT 1	1195	1195	0.23098	107.5953	LYDIA - WELSH 345KV CKT 1
FDNS	01ALL	0	20WP	G15_060	TO->FROM	MATHWSN7 345.00 - TATONGA7 345.00 345KV CKT 1	1195	1195	0.23098	107.5953	LYDIA - WELSH 345KV CKT 1
FDNS	01ALL	0	20WP	G15_060	TO->FROM	MATHWSN7 345.00 - TATONGA7 345.00 345KV CKT 1	1195	1195	0.23177	107.5937	P12:138:OKGE:3TERM7
FDNS	01ALL	0	20WP	G15_060	TO->FROM	MATHWSN7 345.00 - TATONGA7 345.00 345KV CKT 1	1195	1195	0.23138	107.5899	GEN531505 1-CIMWD2 1 0.6900
FDNS	01ALL	0	20WP	G15_060	TO->FROM	MATHWSN7 345.00 - TATONGA7 345.00 345KV CKT 1	1195	1195	0.23138	107.5881	GEN562483 1-G13_027_3 0.6900
FDNS	01ALL	0	20WP	G15_060	TO->FROM	MATHWSN7 345.00 - TATONGA7 345.00 345KV CKT 1	1195	1195	0.23133	107.5871	ARKANSAS NUCLEAR ONE - PLEASANT HILL 500KV CKT 1
FDNS	01ALL	0	20WP	G15_060	TO->FROM	MATHWSN7 345.00 - TATONGA7 345.00 345KV CKT 1	1195	1195	0.23128	107.5863	VIOLA 7 345.00 (VIOLA 1X) 345/138/13.8KV TRANSFORMER CKT 1
FDNS	01ALL	0	20WP	G15_060	TO->FROM	MATHWSN7 345.00 - TATONGA7 345.00 345KV CKT 1	1195	1195	0.23138	107.5843	GEN563043 1-G15068_4 0.6900
FDNS	01ALL	0	20WP	G15_060	TO->FROM	MATHWSN7 345.00 - TATONGA7 345.00 345KV CKT 1	1195	1195	0.23138	107.5839	GEN542902 1-GPW_G1 0.7000
FDNS	01ALL	0	20WP	G15_060	TO->FROM	MATHWSN7 345.00 - TATONGA7 345.00 345KV CKT 1	1195	1195	0.23119	107.5832	7JASPER 345.00 - BLACKBERRY 345KV CKT 1
FDNS	01ALL	0	20WP	G15_060	TO->FROM	MATHWSN7 345.00 - TATONGA7 345.00 345KV CKT 1	1195	1195	0.23138	107.5826	GEN600017 C-LS POWER CT
FDNS	01ALL	0	20WP	G15_060	TO->FROM	MATHWSN7 345.00 - TATONGA7 345.00 345KV CKT 1	1195	1195	0.23138	107.5817	GEN560586 1-G06-44-4 4.1600
FDNS	01ALL	0	20WP	G15_060	TO->FROM	MATHWSN7 345.00 - TATONGA7 345.00 345KV CKT 1	1195	1195	0.23138	107.5773	GEN533202 1-CNTRPL-WTG1 1.0000
FDNS	01ALL	0	20WP	G15_060	TO->FROM	MATHWSN7 345.00 - TATONGA7 345.00 345KV CKT 1	1195	1195	0.23138	107.5742	GEN560693 1-G11-008-1 0.6900
FDNS	01ALL	0	20WP	G15_060	TO->FROM	MATHWSN7 345.00 - TATONGA7 345.00 345KV CKT 1	1195	1195	0.23138	107.5739	GEN562035 1-G11_016_3 0.6900
FDNS	01ALL	0	20WP	G15_060	TO->FROM	MATHWSN7 345.00 - TATONGA7 345.00 345KV CKT 1	1195	1195	0.23138	107.5736	GEN562688 1-G15_014_3 0.6900
FDNS	01ALL	0	20WP	G15_060	TO->FROM	MATHWSN7 345.00 - TATONGA7 345.00 345KV CKT 1	1195	1195	0.23138	107.5736	GEN672305 5-BOUNDARY DAM GENERATOR 5
FDNS	01ALL	0	20WP	G15_060	TO->FROM	MATHWSN7 345.00 - TATONGA7 345.00 345KV CKT 1	1195	1195	0.23138	107.5735	GEN672303 3-BOUNDARY DAM GENERATOR 3
FDNS	01ALL	0	20WP	G15_060	TO->FROM	MATHWSN7 345.00 - TATONGA7 345.00 345KV CKT 1	1195	1195	0.23138	107.5735	GEN672304 4-BOUNDARY DAM GENERATOR 4
FDNS	01ALL	0	20WP	G15_060	TO->FROM	MATHWSN7 345.00 - TATONGA7 345.00 345KV CKT 1	1195	1195	0.23151	107.5713	KILDARE4 - NWKRKAT4 138.00 138KV CKT 1
FDNS	01ALL	0	20WP	G15_060	TO->FROM	MATHWSN7 345.00 - TATONGA7 345.00 345KV CKT 1	1195	1195	0.23103	107.571	ARCADIA - SEMINOLE 345KV CKT 1
FDNS	01ALL	0	20WP	G15_060	TO->FROM	MATHWSN7 345.00 - TATONGA7 345.00 345KV CKT 1	1195	1195	0.23138	107.5583	GEN600046 1-MECST
FDNS	01ALL	0	20WP	G15_060	TO->FROM	MATHWSN7 345.00 - TATONGA7 345.00 345KV CKT 1	1195	1195	0.2313	107.5529	7MONTGMRY 345.00 - 7SPENCER 345.00 345KV CKT 1
FDNS	01ALL	0	20WP	G15_060	TO->FROM	MATHWSN7 345.00 - TATONGA7 345.00 345KV CKT 1	1195	1195	0.23145	107.5526	CLARKSVILLE - MUSKOGEE 345KV CKT 1
FDNS	01ALL	0	20WP	G15_060	TO->FROM	MATHWSN7 345.00 - TATONGA7 345.00 345KV CKT 1	1195	1195	0.23145	107.5526	CLARKSVILLE - MUSKOGEE 345KV CKT 1
FDNS	01ALL	0	20WP	G15_060	TO->FROM	MATHWSN7 345.00 - TATONGA7 345.00 345KV CKT 1	1195	1195	0.23138	107.5526	GEN560432 1-G08-124 0.6900
FDNS	01ALL	0	20WP	G15_060	TO->FROM	MATHWSN7 345.00 - TATONGA7 345.00 345KV CKT 1	1195	1195	0.2313	107.5521	7MAYWOOD 345.00 - 7SPENCER 345.00 345KV CKT 1
FDNS	01ALL	0	20WP	G15_060	TO->FROM	MATHWSN7 345.00 - TATONGA7 345.00 345KV CKT 1	1195	1195	0.23138	107.5511	GEN530690 1-PRWINDG1 0.6900
FDNS	01ALL	0	20WP	G15_060	TO->FROM	MATHWSN7 345.00 - TATONGA7 345.00 345KV CKT 1	1195	1195	0.23138	107.5489	GEN600047 1-MECCT1
FDNS	01ALL	0	20WP	G15_060	TO->FROM	MATHWSN7 345.00 - TATONGA7 345.00 345KV CKT 1	1195	1195	0.23138	107.5478	GEN672392 1-NBECGT1G 18.000
FDNS	01ALL	0	20WP	G15_060	TO->FROM	MATHWSN7 345.00 - TATONGA7 345.00 345KV CKT 1	1195	1195	0.23138	107.5477	GEN560585 1-G06-44-3 4.1600
FDNS	01ALL	0	20WP	G15_060	TO->FROM	MATHWSN7 345.00 - TATONGA7 345.00 345KV CKT 1	1195	1195	0.23138	107.5469	4SIOUX 1 138.00 138/18.0KV TRANSFORMER CKT 1
FDNS	01ALL	0	20WP	G15_060	TO->FROM	MATHWSN7 345.00 - TATONGA7 345.00 345KV CKT 1	1195	1195	0.22996	107.5454	CIMARRON - MATHWSN7 345.00 345KV CKT 1
FDNS	01ALL	0	20WP	G15_060	TO->FROM	MATHWSN7 345.00 - TATONGA7 345.00 345KV CKT 1	1195	1195	0.22996	107.5454	CIMARRON - MATHWSN7 345.00 345KV CKT 2
FDNS	01ALL	0	20WP	G15_060	TO->FROM	MATHWSN7 345.00 - TATONGA7 345.00 345KV CKT 1	1195	1195	0.23138	107.5396	GEN542957 1-IATAN UNIT #1

SOLUTION	GROUP	SCENARIO	SEASON	SOURCE	DIRECTION	MONITORED ELEMENT	RATEA (MVA)	RATEB(MVA)	TDF	TC%LOADING (% MVA)	CONTINGENCY
FDNS	01ALL	0	20WP	G15_060	TO->FROM	MATHWSN7 345.00 - TATONGA7 345.00 345KV CKT 1	1195	1195	0.23134	107.5352	DELL 500 - INDEPENDENCE 500KV CKT 1
FDNS	01ALL	0	20WP	G15_060	TO->FROM	MATHWSN7 345.00 - TATONGA7 345.00 345KV CKT 1	1195	1195	0.23138	107.5347	GEN539653 1-CIMARRON RIVER PLANT GENERATOR
FDNS	01ALL	0	20WP	G15_060	TO->FROM	MATHWSN7 345.00 - TATONGA7 345.00 345KV CKT 1	1195	1195	0.23153	107.5334	OVEXFRMCCOVE
FDNS	01ALL	0	20WP	G15_060	TO->FROM	MATHWSN7 345.00 - TATONGA7 345.00 345KV CKT 1	1195	1195	0.23138	107.529	GEN615021 1-GRE-ER 14G 16.000
FDNS	01ALL	0	20WP	G15_060	TO->FROM	MATHWSN7 345.00 - TATONGA7 345.00 345KV CKT 1	1195	1195	0.23138	107.5288	GEN659111 2-LELAND OLDS UNIT2
FDNS	01ALL	0	20WP	G15_060	TO->FROM	MATHWSN7 345.00 - TATONGA7 345.00 345KV CKT 1	1195	1195	0.23138	107.527	GEN560329 1-G10-45 0.6900
FDNS	01ALL	0	20WP	G15_060	TO->FROM	MATHWSN7 345.00 - TATONGA7 345.00 345KV CKT 1	1195	1195	0.23138	107.5214	GEN531503 1-CIMRRN 1 0.6900
FDNS	01ALL	0	20WP	G15_060	TO->FROM	MATHWSN7 345.00 - TATONGA7 345.00 345KV CKT 1	1195	1195	0.23195	107.5114	VIOLA 7 345.00 - WICHITA 345KV CKT 1
FDNS	01ALL	0	20WP	G15_060	TO->FROM	MATHWSN7 345.00 - TATONGA7 345.00 345KV CKT 1	1195	1195	0.23138	107.5046	GEN629072 4-LANSING GENERATOR FOR UNITS NO4 EIA CODE 1
FDNS	01ALL	0	20WP	G15_060	TO->FROM	MATHWSN7 345.00 - TATONGA7 345.00 345KV CKT 1	1195	1195	0.23138	107.5039	GEN641089 2-ENERGY CENTER 2
FDNS	01ALL	0	20WP	G15_060	TO->FROM	MATHWSN7 345.00 - TATONGA7 345.00 345KV CKT 1	1195	1195	0.23138	107.4956	GEN542962 2-IATAN UNIT #2
FDNS	01ALL	0	20WP	G15_060	TO->FROM	MATHWSN7 345.00 - TATONGA7 345.00 345KV CKT 1	1195	1195	0.23122	107.4908	LACYGNE - STILWELL 345KV CKT 1
FDNS	01ALL	0	20WP	G15_060	TO->FROM	MATHWSN7 345.00 - TATONGA7 345.00 345KV CKT 1	1195	1195	0.23138	107.487	GEN600067 9-HIGH BRIDGE
FDNS	01ALL	0	20WP	G15_060	TO->FROM	MATHWSN7 345.00 - TATONGA7 345.00 345KV CKT 1	1195	1195	0.23138	107.481	GEN659103 1-ANTELOPE VALLEY UNIT1
FDNS	01ALL	0	20WP	G15_060	TO->FROM	MATHWSN7 345.00 - TATONGA7 345.00 345KV CKT 1	1195	1195	0.23138	107.481	GEN659107 2-ANTELOPE VALLEY UNIT2
FDNS	01ALL	0	20WP	G15_060	TO->FROM	MATHWSN7 345.00 - TATONGA7 345.00 345KV CKT 1	1195	1195	0.23128	107.4669	LACYGNE - WEST GARDNER 345KV CKT 1
FDNS	01ALL	0	20WP	G15_060	TO->FROM	MATHWSN7 345.00 - TATONGA7 345.00 345KV CKT 1	1195	1195	0.23132	107.4536	KEO EHV - WEST MEMPHIS 500 500KV CKT 1
FDNS	01ALL	0	20WP	G15_060	TO->FROM	MATHWSN7 345.00 - TATONGA7 345.00 345KV CKT 1	1195	1195	0.23088	107.4444	LYDIA - VALLIANT 345KV CKT 1
FDNS	01ALL	0	20WP	G15_060	TO->FROM	MATHWSN7 345.00 - TATONGA7 345.00 345KV CKT 1	1195	1195	0.23088	107.4444	LYDIA - VALLIANT 345KV CKT 1
FDNS	01ALL	0	20WP	G15_060	TO->FROM	MATHWSN7 345.00 - TATONGA7 345.00 345KV CKT 1	1195	1195	0.23077	107.4437	FT SMITH - MUSKOGEE 345KV CKT 1
FDNS	01ALL	0	20WP	G15_060	TO->FROM	MATHWSN7 345.00 - TATONGA7 345.00 345KV CKT 1	1195	1195	0.23138	107.439	GEN615010 1-STANTON4
FDNS	01ALL	0	20WP	G15_060	TO->FROM	MATHWSN7 345.00 - TATONGA7 345.00 345KV CKT 1	1195	1195	0.23033	107.4321	CLEVELAND - TULSA NORTH 345KV CKT 1
FDNS	01ALL	0	20WP	G15_060	TO->FROM	MATHWSN7 345.00 - TATONGA7 345.00 345KV CKT 1	1195	1195	0.23033	107.4321	CLEVELAND - TULSA NORTH 345KV CKT 1
FDNS	01ALL	0	20WP	G15_060	TO->FROM	MATHWSN7 345.00 - TATONGA7 345.00 345KV CKT 1	1195	1195	0.23112	107.429	BROOKLINE - FLINT CREEK 345KV CKT 1
FDNS	01ALL	0	20WP	G15_060	TO->FROM	MATHWSN7 345.00 - TATONGA7 345.00 345KV CKT 1	1195	1195	0.23112	107.429	BROOKLINE - FLINT CREEK 345KV CKT 1
FDNS	01ALL	0	20WP	G15_060	TO->FROM	MATHWSN7 345.00 - TATONGA7 345.00 345KV CKT 1	1195	1195	0.23138	107.4211	GEN562269 1-G12-020-1 0.6900
FDNS	01ALL	0	20WP	G15_060	TO->FROM	MATHWSN7 345.00 - TATONGA7 345.00 345KV CKT 1	1195	1195	0.23138	107.4174	GEN539807 1-G05-12-1 0.6900
FDNS	01ALL	0	20WP	G15_060	TO->FROM	MATHWSN7 345.00 - TATONGA7 345.00 345KV CKT 1	1195	1195	0.23138	107.4039	GEN645011 1-NEBRASKA CITY 1
FDNS	01ALL	0	20WP	G15_060	TO->FROM	MATHWSN7 345.00 - TATONGA7 345.00 345KV CKT 1	1195	1195	0.23138	107.3921	GEN562270 1-G12-020-2 0.6900
FDNS	01ALL	0	20WP	G15_060	TO->FROM	MATHWSN7 345.00 - TATONGA7 345.00 345KV CKT 1	1195	1195	0.23138	107.3884	RCDC EAST 4230.00 - RED CEDAR DC 230KV CKT 1
FDNS	01ALL	0	20WP	G15_060	TO->FROM	MATHWSN7 345.00 - TATONGA7 345.00 345KV CKT 1	1195	1195	0.23138	107.3855	P12:230:UMZB:# 112 #: NU IN SD. NU-RCDC & DRY CREEK XFMR
FDNS	01ALL	0	20WP	G15_060	TO->FROM	MATHWSN7 345.00 - TATONGA7 345.00 345KV CKT 1	1195	1195	0.23138	107.3795	GEN525844 1-ELK_1 118.000
FDNS	01ALL	0	20WP	G15_060	TO->FROM	MATHWSN7 345.00 - TATONGA7 345.00 345KV CKT 1	1195	1195	0.23138	107.376	GEN562524 1-G14_026_3 12.000
FDNS	01ALL	0	20WP	G15_060	TO->FROM	MATHWSN7 345.00 - TATONGA7 345.00 345KV CKT 1	1195	1195	0.23138	107.3744	GEN528361 1-MADDOX GEN #1
FDNS	01ALL	0	20WP	G15_060	TO->FROM	MATHWSN7 345.00 - TATONGA7 345.00 345KV CKT 1	1195	1195	0.23138	107.3697	GEN645012 2-NEBRASKA CITY 2
FDNS	01ALL	0	20WP	G15_060	TO->FROM	MATHWSN7 345.00 - TATONGA7 345.00 345KV CKT 1	1195	1195	0.23138	107.356	GEN560286 1-G10-01-1WTG 0.6900
FDNS	01ALL	0	20WP	G15_060	TO->FROM	MATHWSN7 345.00 - TATONGA7 345.00 345KV CKT 1	1195	1195	0.23138	107.356	GEN560287 1-G10-01-2WTG 0.6900
FDNS	01ALL	0	20WP	G15_060	TO->FROM	MATHWSN7 345.00 - TATONGA7 345.00 345KV CKT 1	1195	1195	0.23138	107.3529	GEN681522 3-GENOA 3
FDNS	01ALL	0	20WP	G15_060	TO->FROM	MATHWSN7 345.00 - TATONGA7 345.00 345KV CKT 1	1195	1195	0.23138	107.3425	GEN520998 1-MORLND3
FDNS	01ALL	0	20WP	G15_060	TO->FROM	MATHWSN7 345.00 - TATONGA7 345.00 345KV CKT 1	1195	1195	0.2287	107.3412	SOONER - SPRING CREEK 345KV CKT 1
FDNS	01ALL	0	20WP	G15_060	TO->FROM	MATHWSN7 345.00 - TATONGA7 345.00 345KV CKT 1	1195	1195	0.2287	107.3395	NORTHWEST - SPRING CREEK 345KV CKT 1
FDNS	01ALL	0	20WP	G15_060	TO->FROM	MATHWSN7 345.00 - TATONGA7 345.00 345KV CKT 1	1195	1195	0.23138	107.3292	GEN525493 1-PLANT X GEN #3
FDNS	01ALL	0	20WP	G15_060	TO->FROM	MATHWSN7 345.00 - TATONGA7 345.00 345KV CKT 1	1195	1195	0.23138	107.3171	GEN560256 1-G10-14-1 0.6900
FDNS	01ALL	0	20WP	G15_060	TO->FROM	MATHWSN7 345.00 - TATONGA7 345.00 345KV CKT 1	1195	1195	0.23139	107.315	CIMARRON (CIMARON1) 345/138/13.8KV TRANSFORMER CKT 1
FDNS	01ALL	0	20L	G15_060	TO->FROM	MATHWSN7 345.00 - TATONGA7 345.00 345KV CKT 1	1195	1195	0.25748	107.3105	BORDER 7345.00 - TUCO_2 345.00 345KV CKT 1
FDNS	01ALL	0	20WP	G15_060	TO->FROM	MATHWSN7 345.00 - TATONGA7 345.00 345KV CKT 1	1195	1195	0.23139	107.306	CIMARRON (CIMARON2) 345/138/13.8KV TRANSFORMER CKT 1
FDNS	01ALL	0	20WP	G15_060	TO->FROM	MATHWSN7 345.00 - TATONGA7 345.00 345KV CKT 1	1195	1195	0.23138	107.3016	GEN560257 1-G10-14-2 0.6900
FDNS	01ALL	0	20WP	G15_060	TO->FROM	MATHWSN7 345.00 - TATONGA7 345.00 345KV CKT 1	1195	1195	0.23138	107.2826	GEN640009 1-COOPER NUCLEAR STATION
FDNS	01ALL	0	20WP	G15_060	TO->FROM	MATHWSN7 345.00 - TATONGA7 345.00 345KV CKT 1	1195	1195	0.23138	107.2793	GEN657749 1-YOUNG 1 GENERATOR
FDNS	01ALL	0	20WP	G15_060	TO->FROM	MATHWSN7 345.00 - TATONGA7 345.00 345KV CKT 1	1195	1195	0.23138	107.2782	GEN524285 1-WILDORADO WIND GEN
FDNS	01ALL	0	20WP	G15_060	TO->FROM	MATHWSN7 345.00 - TATONGA7 345.00 345KV CKT 1	1195	1195	0.23138	107.2782	GEN562544 1-G14_038_3 0.6900
FDNS	01ALL	0	20WP	G15_060	TO->FROM	MATHWSN7 345.00 - TATONGA7 345.00 345KV CKT 1	1195	1195	0.23133	107.2608	7SPORTSMAN - BLACKBERRY 345KV CKT 1
FDNS	01ALL	0	20WP	G15_060	TO->FROM	MATHWSN7 345.00 - TATONGA7 345.00 345KV CKT 1	1195	1195	0.23102	107.2512	GRDA1 - GREC TAP5 345.00 345KV CKT 1
FDNS	01ALL	0	20WP	G15_060	TO->FROM	MATHWSN7 345.00 - TATONGA7 345.00 345KV CKT 1	1195	1195	0.23138	107.2458	GEN560105 1-G08-22 0.6900
FDNS	01ALL	0	20WP	G15_060	TO->FROM	MATHWSN7 345.00 - TATONGA7 345.00 345KV CKT 1	1195	1195	0.23138	107.2435	GEN532653 1-JEFFREY ENERGY CENTER UNIT 3
FDNS	01ALL	0	20WP	G15_060	TO->FROM	MATHWSN7 345.00 - TATONGA7 345.00 345KV CKT 1	1195	1195	0.23138	107.2433	GEN532652 1-JEFFREY ENERGY CENTER UNIT 2
FDNS	01ALL	0	20WP	G15_060	TO->FROM	MATHWSN7 345.00 - TATONGA7 345.00 345KV CKT 1	1195	1195	0.23138	107.2428	GEN562648 1-G14_037_3 0.6900
FDNS	01ALL	0	20WP	G15_060	TO->FROM	MATHWSN7 345.00 - TATONGA7 345.00 345KV CKT 1	1195	1195	0.23138	107.2415	GEN681542 6-JP MADGETT
FDNS	01ALL	0	20WP	G15_060	TO->FROM	MATHWSN7 345.00 - TATONGA7 345.00 345KV CKT 1	1195	1195	0.23138	107.23	GEN532651 1-JEFFREY ENERGY CENTER UNIT 1
FDNS	01ALL	0	20WP	G15_060	TO->FROM	MATHWSN7 345.00 - TATONGA7 345.00 345KV CKT 1	1195	1195	0.23138	107.2257	GEN528501 1-G14_012 24.000
FDNS	01ALL	0	20WP	G15_060	TO->FROM	MATHWSN7 345.00 - TATONGA7 345.00 345KV CKT 1	1195	1195	0.23138	107.22	GEN645001 1-FORT CALHOUN 1
FDNS	01ALL	0	20WP	G15_060	TO->FROM	MATHWSN7 345.00 - TATONGA7 345.00 345KV CKT 1	1195	1195	0.23138	107.2011	GEN562550 1-G14_040_3 0.6900
FDNS	01ALL	0	20WP	G15_060	TO->FROM	MATHWSN7 345.00 - TATONGA7 345.00 345KV CKT 1	1195	1195	0.23013	107.1803	G15066_T 345.00 - SOONER 345KV CKT 1
FDNS	01ALL	0	20WP	G15_060	TO->FROM	MATHWSN7 345.00 - TATONGA7 345.00 345KV CKT 1	1195	1195	0.23138	107.1615	GEN672321 1-SHAND GENERATOR 1
FDNS	01ALL	0	20WP	G15_060	TO->FROM	MATHWSN7 345.00 - TATONGA7 345.00 345KV CKT 1	1195	1195	0.23138	107.1473	GEN563173 1-G15082_3 0.6900
FDNS	01ALL	0	20WP	G15_060	TO->FROM	MATHWSN7 345.00 - TATONGA7 345.00 345KV CKT 1	1195	1195	0.23138	107.1451	GEN562042 1-G11_014_3 0.6900
FDNS	01ALL	0	20WP	G15_060	TO->FROM	MATHWSN7 345.00 - TATONGA7 345.00 345KV CKT 1	1195	1195	0.23138	107.145	GEN672310 1-POPLAR RIVER GENERATOR 1
FDNS	01ALL	0	20WP	G15_060	TO->FROM	MATHWSN7 345.00 - TATONGA7 345.00 345KV CKT 1	1195	1195	0.23138	107.145	GEN672311 2-POPLAR RIVER GENERATOR 2
FDNS	01ALL	0	20WP	G15_060	TO->FROM	MATHWSN7 345.00 - TATONGA7 345.00 345KV CKT 1	1195	1195	0.23138	107.1352	GEN672306 6-BOUNDARY DAM GENERATOR 6
FDNS	01ALL	0	20WP	G15_060	TO->FROM	MATHWSN7 345.00 - TATONGA7 345.00 345KV CKT 1	1195	1195	0.23138	107.1198	GEN524022 1-NICHOLS GEN #2
FDNS	01ALL	0	20WP	G15_060	TO->FROM	MATHWSN7 345.00 - TATONGA7 345.00 345KV CKT 1	1195	1195	0.23138	107.1173	GEN520922 1-SLEEPING BEAR
FDNS	01ALL	0	20WP	G15_060	TO->FROM	MATHWSN7 345.00 - TATONGA7 345.00 345KV CKT 1	1195	1195	0.23013	107.1052	CLEVELAND - G15066_T 345.00 345KV CKT 1
FDNS	01ALL	0	17SP	G15_060	TO->FROM	MATHWSN7 345.00 - TATONGA7 345.00 345KV CKT 1	1195	1195	0.26865	107.0918	THISTLE7 345.00 - WOODWARD DISTRICT EHV 345KV CKT 1
FDNS	01ALL	0	17SP	G15_060	TO->FROM	MATHWSN7 345.00 - TATONGA7 345.00 345KV CKT 1	1195	1195	0.26865	107.0918	THISTLE7 345.00 - WOODWARD DISTRICT EHV 345KV CKT 1
FDNS	01ALL	0	17SP	G15_060	TO->FROM	MATHWSN7 345.00 - TATONGA7 345.00 345KV CKT 1	1195	1195	0.26865	107.0918	THISTLE7 345.00 - WOODWARD DISTRICT EHV 345KV CKT 2
FDNS	01ALL	0	17SP	G15_060	TO->FROM	MATHWSN7 345.00 - TATONGA7 345.00 345KV CKT 1	1195	1195	0.26865	107.0918	THISTLE7 345.00 - WOODWARD DISTRICT EHV 345KV CKT 2
FDNS	01ALL	0	20WP	G15_060	TO->FROM	MATHWSN7 345.00 - TATONGA7 345.00 345KV CKT 1	1195	1195	0.23138	107.0741	GEN515787 1-OKLA WIND ENERGY CENTER
FDNS	01ALL	0	20WP	G15_060	TO->FROM	MATHWSN7 345.00 - TATONGA7 345.00 345KV CKT 1	1195	1195	0.23042	107.0555	PITTSBURG - VALLIANT 345KV CKT 1
FDNS	01ALL	0	20WP	G15_060	TO->FROM	MATHWSN7 345.00 - TATONGA7 345.00 345KV CKT 1	1195	1195	0.23042	107.0555	PITTSBURG - VALLIANT 345KV CKT 1

SOLUTION	GROUP	SCENARIO	SEASON	SOURCE	DIRECTION	MONITORED ELEMENT	RATEA (MVA)	RATEB(MVA)	TDF	TC%LOADING (% MVA)	CONTINGENCY
FDNS	01ALL	0	20WP	G15_060	TO->FROM	MATHWSN7 345.00 - TATONGA7 345.00 345KV CKT 1	1195	1195	0.23138	107.0472	GEN524295 1-SPNSPUR_WND10.6900
FDNS	01ALL	0	20WP	G15_060	TO->FROM	MATHWSN7 345.00 - TATONGA7 345.00 345KV CKT 1	1195	1195	0.23138	107.0412	GEN636641 1-LOUISA UNIT 1
FDNS	01ALL	0	20WP	G15_060	TO->FROM	MATHWSN7 345.00 - TATONGA7 345.00 345KV CKT 1	1195	1195	0.23139	107.0382	DELAWARE - NEOSHO 345KV CKT 1
FDNS	01ALL	0	20WP	G15_060	TO->FROM	MATHWSN7 345.00 - TATONGA7 345.00 345KV CKT 1	1195	1195	0.23139	107.0382	DELAWARE - NEOSHO 345KV CKT 1
FDNS	01ALL	0	20WP	G15_060	TO->FROM	MATHWSN7 345.00 - TATONGA7 345.00 345KV CKT 1	1195	1195	0.23123	107.0364	CHAMBER SPRINGS - CLARKSVILLE 345KV CKT 1
FDNS	01ALL	0	20WP	G15_060	TO->FROM	MATHWSN7 345.00 - TATONGA7 345.00 345KV CKT 1	1195	1195	0.23138	106.9937	GEN515591 1-PALDRW11 0.6900
FDNS	01ALL	0	20WP	G15_060	TO->FROM	MATHWSN7 345.00 - TATONGA7 345.00 345KV CKT 1	1195	1195	0.22751	106.9793	ARCADIA - NORTHWEST 345KV CKT 1
FDNS	01ALL	0	20WP	G15_060	TO->FROM	MATHWSN7 345.00 - TATONGA7 345.00 345KV CKT 1	1195	1195	0.2323	106.97	RANCHRD7 345.00 - SOONER 345KV CKT 1
FDNS	01ALL	0	20WP	G15_060	TO->FROM	MATHWSN7 345.00 - TATONGA7 345.00 345KV CKT 1	1195	1195	0.23138	106.9587	GEN629074 1-ARNOLD LOWSIDE OF GSU XFMR
FDNS	01ALL	0	20WP	G15_060	TO->FROM	MATHWSN7 345.00 - TATONGA7 345.00 345KV CKT 1	1195	1195	0.23138	106.9507	GEN562074 1-G1149G1504 0.6900
FDNS	01ALL	0	20WP	G15_060	TO->FROM	MATHWSN7 345.00 - TATONGA7 345.00 345KV CKT 1	1195	1195	0.23138	106.9248	GEN562017 1-G11_022_3 0.6900
FDNS	01ALL	0	20WP	G15_060	TO->FROM	MATHWSN7 345.00 - TATONGA7 345.00 345KV CKT 1	1195	1195	0.23138	106.9043	GEN527883 1-CUNNINGHAM GEN #3 22 KV
FDNS	01ALL	0	20WP	G15_060	TO->FROM	MATHWSN7 345.00 - TATONGA7 345.00 345KV CKT 1	1195	1195	0.23138	106.9026	GEN563292 1-G15095_3 0.6900
FDNS	01ALL	0	20WP	G15_060	TO->FROM	MATHWSN7 345.00 - TATONGA7 345.00 345KV CKT 1	1195	1195	0.23138	106.9013	GEN527884 1-CUNNINGHAM GEN #4 22 KV
FDNS	01ALL	0	20WP	G15_060	TO->FROM	MATHWSN7 345.00 - TATONGA7 345.00 345KV CKT 1	1195	1195	0.23138	106.884	GEN620315 1-BIG STONE GEN
FDNS	01ALL	0	20WP	G15_060	TO->FROM	MATHWSN7 345.00 - TATONGA7 345.00 345KV CKT 1	1195	1195	0.23138	106.8819	GEN629075 1-OTTUMWA GENERATOR FOR OTTUMWA UNIT NO 1
FDNS	01ALL	0	20WP	G15_060	TO->FROM	MATHWSN7 345.00 - TATONGA7 345.00 345KV CKT 1	1195	1195	0.23138	106.8809	GEN520997 1-MORLND2
FDNS	01ALL	0	20WP	G15_060	TO->FROM	MATHWSN7 345.00 - TATONGA7 345.00 345KV CKT 1	1195	1195	0.23138	106.8757	GEN600004 2-PRAIRIE ISLAND G2
FDNS	01ALL	0	20WP	G15_060	TO->FROM	MATHWSN7 345.00 - TATONGA7 345.00 345KV CKT 1	1195	1195	0.23138	106.8739	GEN600003 1-PRAIRIE ISLAND G1
FDNS	01ALL	0	20WP	G15_060	TO->FROM	MATHWSN7 345.00 - TATONGA7 345.00 345KV CKT 1	1195	1195	0.23138	106.8587	GEN661015 1-COYOTE
FDNS	01ALL	0	20WP	G15_060	TO->FROM	MATHWSN7 345.00 - TATONGA7 345.00 345KV CKT 1	1195	1195	0.23138	106.843	GEN600006 1-AS KING
FDNS	01ALL	0	20WP	G15_060	TO->FROM	MATHWSN7 345.00 - TATONGA7 345.00 345KV CKT 1	1195	1195	0.23138	106.8263	GEN562432 1-G13-030 0.6900
FDNS	01ALL	0	20WP	G15_060	TO->FROM	MATHWSN7 345.00 - TATONGA7 345.00 345KV CKT 1	1195	1195	0.23138	106.8254	GEN523461 1-BLACKHAWK GEN #1
FDNS	01ALL	0	20WP	G15_060	TO->FROM	MATHWSN7 345.00 - TATONGA7 345.00 345KV CKT 1	1195	1195	0.23138	106.8252	GEN523462 1-BLACKHAWK GEN #2
FDNS	01ALL	0	20WP	G15_060	TO->FROM	MATHWSN7 345.00 - TATONGA7 345.00 345KV CKT 1	1195	1195	0.2085	106.8163	WOODWARD DISTRICT EHV (WWDEHV) 345/138/13.8KV TRANSFORMER CKT 1
FDNS	01ALL	0	20WP	G15_060	TO->FROM	MATHWSN7 345.00 - TATONGA7 345.00 345KV CKT 1	1195	1195	0.23138	106.8144	GEN539670 4-JUDSON LARGE GENERATOR
FDNS	01ALL	0	20WP	G15_060	TO->FROM	MATHWSN7 345.00 - TATONGA7 345.00 345KV CKT 1	1195	1195	0.23138	106.7648	GEN524023 1-NICHOLS GEN #3 22 KV
FDNS	01ALL	0	20WP	G15_060	TO->FROM	MATHWSN7 345.00 - TATONGA7 345.00 345KV CKT 1	1195	1195	0.20733	106.7601	WOODWARD DISTRICT EHV (WWDEHV-T2) 345/138/13.8KV TRANSFORMER CKT 2
FDNS	01ALL	0	20WP	G15_060	TO->FROM	MATHWSN7 345.00 - TATONGA7 345.00 345KV CKT 1	1195	1195	0.23138	106.7565	GEN657748 1-YOUNG 2 GENERATOR
FDNS	01ALL	0	20WP	G15_060	TO->FROM	MATHWSN7 345.00 - TATONGA7 345.00 345KV CKT 1	1195	1195	0.23138	106.7282	GEN635213 3-NEAL UNIT 3
FDNS	01ALL	0	20WP	G15_060	TO->FROM	MATHWSN7 345.00 - TATONGA7 345.00 345KV CKT 1	1195	1195	0.23142	106.7173	DELAWARE - NORTHEAST STATION 345KV CKT 1
FDNS	01ALL	0	20WP	G15_060	TO->FROM	MATHWSN7 345.00 - TATONGA7 345.00 345KV CKT 1	1195	1195	0.23142	106.7173	DELAWARE - NORTHEAST STATION 345KV CKT 1
FDNS	01ALL	0	20WP	G15_060	TO->FROM	MATHWSN7 345.00 - TATONGA7 345.00 345KV CKT 1	1195	1195	0.23138	106.7134	GEN527161 1-MUSTANG GEN #1
FDNS	01ALL	0	20WP	G15_060	TO->FROM	MATHWSN7 345.00 - TATONGA7 345.00 345KV CKT 1	1195	1195	0.23138	106.7134	GEN527162 1-MUSTANG GEN #2
FDNS	01ALL	0	20WP	G15_060	TO->FROM	MATHWSN7 345.00 - TATONGA7 345.00 345KV CKT 1	1195	1195	0.23138	106.7107	GEN515389 1-TLGWND-WTG1 0.7000
FDNS	01ALL	0	20WP	G15_060	TO->FROM	MATHWSN7 345.00 - TATONGA7 345.00 345KV CKT 1	1195	1195	0.22994	106.6597	PITTSBURG - SEMINOLE 345KV CKT 1
FDNS	01ALL	0	20WP	G15_060	TO->FROM	MATHWSN7 345.00 - TATONGA7 345.00 345KV CKT 1	1195	1195	0.22994	106.6597	PITTSBURG - SEMINOLE 345KV CKT 1
FDNS	01ALL	0	20WP	G15_060	TO->FROM	MATHWSN7 345.00 - TATONGA7 345.00 345KV CKT 1	1195	1195	0.23138	106.6333	GEN527882 1-CUNNINGHAM GEN #2 20 KV
FDNS	01ALL	0	20WP	G15_060	TO->FROM	MATHWSN7 345.00 - TATONGA7 345.00 345KV CKT 1	1195	1195	0.22877	106.6254	REDBUD - RIVERSIDE STATION 345KV CKT 1
FDNS	01ALL	0	20WP	G15_060	TO->FROM	MATHWSN7 345.00 - TATONGA7 345.00 345KV CKT 1	1195	1195	0.22877	106.6254	REDBUD - RIVERSIDE STATION 345KV CKT 1
FDNS	01ALL	0	20WP	G15_060	TO->FROM	MATHWSN7 345.00 - TATONGA7 345.00 345KV CKT 1	1195	1195	0.23138	106.6181	GEN600001 2-SHERBURNE CNTY G2
FDNS	01ALL	0	20WP	G15_060	TO->FROM	MATHWSN7 345.00 - TATONGA7 345.00 345KV CKT 1	1195	1195	0.23138	106.6179	GEN527163 1-MUSTANG GEN #3 22 KV
FDNS	01ALL	0	20WP	G15_060	TO->FROM	MATHWSN7 345.00 - TATONGA7 345.00 345KV CKT 1	1195	1195	0.23138	106.6083	GEN525494 1-PLANT X GEN #4 20 KV
FDNS	01ALL	0	20WP	G15_060	TO->FROM	MATHWSN7 345.00 - TATONGA7 345.00 345KV CKT 1	1195	1195	0.23138	106.6045	GEN600005 1-MONTICELLO
FDNS	01ALL	0	16WP	G15_060	TO->FROM	MATHWSN7 345.00 - TATONGA7 345.00 345KV CKT 1	1195	1195	0.24866	106.5585	DEWEY - SOUTHARD 138KV CKT 1
FDNS	01ALL	0	20WP	G15_060	TO->FROM	MATHWSN7 345.00 - TATONGA7 345.00 345KV CKT 1	1195	1195	0.23138	106.5392	GEN526333 1-JONES GEN #3 21 KV
FDNS	01ALL	0	20WP	G15_060	TO->FROM	MATHWSN7 345.00 - TATONGA7 345.00 345KV CKT 1	1195	1195	0.23138	106.5151	GEN600000 1-SHERBURNECNTY G1
FDNS	01ALL	0	20WP	G15_060	TO->FROM	MATHWSN7 345.00 - TATONGA7 345.00 345KV CKT 1	1195	1195	0.23138	106.466	GEN560155 1-G10-11 0.7000
FDNS	01ALL	0	20WP	G15_060	TO->FROM	MATHWSN7 345.00 - TATONGA7 345.00 345KV CKT 1	1195	1195	0.23138	106.4217	SHERBURNE CO 345/24.0KV TRANSFORMER CKT 1
FDNS	01ALL	0	20WP	G15_060	TO->FROM	MATHWSN7 345.00 - TATONGA7 345.00 345KV CKT 1	1195	1195	0.23138	106.4096	GEN615001 1-COAL CREEK
FDNS	01ALL	0	20L	G15_060	TO->FROM	MATHWSN7 345.00 - TATONGA7 345.00 345KV CKT 1	1195	1195	0.25714	106.4035	Hitchland Interchange - WALKTAP7 345.00 345KV CKT 1
FDNS	01ALL	0	20L	G15_060	TO->FROM	MATHWSN7 345.00 - TATONGA7 345.00 345KV CKT 1	1195	1195	0.25714	106.4035	Hitchland Interchange - WALKTAP7 345.00 345KV CKT 1
FDNS	01ALL	0	20WP	G15_060	TO->FROM	MATHWSN7 345.00 - TATONGA7 345.00 345KV CKT 1	1195	1195	0.23138	106.3944	GEN640011 2-GERALD GENTLEMAN STATION UNIT 2
FDNS	01ALL	0	20WP	G15_060	TO->FROM	MATHWSN7 345.00 - TATONGA7 345.00 345KV CKT 1	1195	1195	0.23138	106.3873	GEN615002 2-COAL CREEK
FDNS	01ALL	0	20L	G15_060	TO->FROM	MATHWSN7 345.00 - TATONGA7 345.00 345KV CKT 1	1195	1195	0.25714	106.3866	P12:345:SPS:J07.1.FINN.HITCH
FDNS	01ALL	0	20WP	G15_060	TO->FROM	MATHWSN7 345.00 - TATONGA7 345.00 345KV CKT 1	1195	1195	0.23392	106.3632	HUNTERS7 345.00 - WOODRING 345KV CKT 1
FDNS	01ALL	0	20WP	G15_060	TO->FROM	MATHWSN7 345.00 - TATONGA7 345.00 345KV CKT 1	1195	1195	0.23138	106.3598	GEN659118 1-LARAMIE RIVER UNIT1
FDNS	01ALL	0	16WP	G15_060	TO->FROM	MATHWSN7 345.00 - TATONGA7 345.00 345KV CKT 1	1195	1195	0.24866	106.3448	ROMAN NOSE - SOUTHARD 138KV CKT 1
FDNS	01ALL	0	20L	G15_060	TO->FROM	MATHWSN7 345.00 - TATONGA7 345.00 345KV CKT 1	1195	1195	0.25748	106.3447	BORDER 7345.00 - WOODWARD DISTRICT EHV 345KV CKT 1
FDNS	01ALL	0	20WP	G15_060	TO->FROM	MATHWSN7 345.00 - TATONGA7 345.00 345KV CKT 1	1195	1195	0.26239	106.3324	WOODWARD EHV - WWPAR4 138.00 138KV CKT 1
FDNS	01ALL	0	20WP	G15_060	TO->FROM	MATHWSN7 345.00 - TATONGA7 345.00 345KV CKT 1	1195	1195	0.26239	106.3306	WOODWARD - WWPAR4 138.00 138KV CKT 1
FDNS	01ALL	0	20WP	G15_060	TO->FROM	MATHWSN7 345.00 - TATONGA7 345.00 345KV CKT 1	1195	1195	0.23138	106.307	GEN640010 1-GERALD GENTLEMAN STATION UNIT 1
FDNS	01ALL	0	20WP	G15_060	TO->FROM	MATHWSN7 345.00 - TATONGA7 345.00 345KV CKT 1	1195	1195	0.23138	106.2925	GEN515365 1-CENT 21 0.7000
FDNS	01ALL	0	20WP	G15_060	TO->FROM	MATHWSN7 345.00 - TATONGA7 345.00 345KV CKT 1	1195	1195	0.2323	106.2813	OPENSKY7 345.00 - RANCHRD7 345.00 345KV CKT 1
FDNS	01ALL	0	20WP	G15_060	TO->FROM	MATHWSN7 345.00 - TATONGA7 345.00 345KV CKT 1	1195	1195	0.23138	106.2771	GEN527901 1-HOBBS PLANT #1 (CT)
FDNS	01ALL	0	20WP	G15_060	TO->FROM	MATHWSN7 345.00 - TATONGA7 345.00 345KV CKT 1	1195	1195	0.23138	106.2771	GEN527902 1-HOBBS PLANT #2 (CT)
FDNS	01ALL	0	20WP	G15_060	TO->FROM	MATHWSN7 345.00 - TATONGA7 345.00 345KV CKT 1	1195	1195	0.23138	106.2556	GEN635214 4-NEAL UNIT 4
FDNS	01ALL	0	20WP	G15_060	TO->FROM	MATHWSN7 345.00 - TATONGA7 345.00 345KV CKT 1	1195	1195	0.23021	106.2135	GRACEMONT - LAWTON EASTSIDE 345KV CKT 1
FDNS	01ALL	0	20WP	G15_060	TO->FROM	MATHWSN7 345.00 - TATONGA7 345.00 345KV CKT 1	1195	1195	0.23021	106.2135	GRACEMONT - LAWTON EASTSIDE 345KV CKT 1
FDNS	01ALL	0	20WP	G15_060	TO->FROM	MATHWSN7 345.00 - TATONGA7 345.00 345KV CKT 1	1195	1195	0.23138	106.1787	GEN526331 1-JONES GEN #1 22 KV
FDNS	01ALL	0	20WP	G15_060	TO->FROM	MATHWSN7 345.00 - TATONGA7 345.00 345KV CKT 1	1195	1195	0.23138	106.1784	GEN526332 1-JONES GEN #2 21 KV
FDNS	01ALL	0	20WP	G15_060	TO->FROM	MATHWSN7 345.00 - TATONGA7 345.00 345KV CKT 1	1195	1195	0.23138	106.1524	GEN600002 3-SHERBURNE CNTY G3
FDNS	01ALL	0	20WP	G15_060	TO->FROM	MATHWSN7 345.00 - TATONGA7 345.00 345KV CKT 1	1195	1195	0.23138	106.0696	GEN635023 3-WALTER SCOTT UNIT 3
FDNS	01ALL	0	16WP	G15_060	TO->FROM	MATHWSN7 345.00 - TATONGA7 345.00 345KV CKT 1	1195	1195	0.24166	106.0326	G13-010T 345.00 - POST ROCK 345KV CKT 1
FDNS	01ALL	0	20WP	G15_060	TO->FROM	MATHWSN7 345.00 - TATONGA7 345.00 345KV CKT 1	1195	1195	0.23175	106.0101	RENFROW7 345.00 - VIOLA 7 345.00 345KV CKT 1
FDNS	01ALL	0	20WP	G15_060	TO->FROM	MATHWSN7 345.00 - TATONGA7 345.00 345KV CKT 1	1195	1195	0.23153	105.9985	GRACEMONT - MINCO 345KV CKT 1
FDNS	01ALL	0	16WP	G15_060	TO->FROM	MATHWSN7 345.00 - TATONGA7 345.00 345KV CKT 1	1195	1195	0.24166	105.9496	G13-010T 345.00 - SPEARVILLE 345KV CKT 1
FDNS	01ALL	0	20WP	G15_060	TO->FROM	MATHWSN7 345.00 - TATONGA7 345.00 345KV CKT 1	1195	1195	0.2323	105.8141	G15052_T 345.00 - OPENSKY7 345.00 345KV CKT 1
FDNS	01ALL	0	20WP	G15_060	TO->FROM	MATHWSN7 345.00 - TATONGA7 345.00 345KV CKT 1	1195	1195	0.23138	105.8078	GEN515397 1-OUSPRT 1 0.6900

SOLUTION	GROUP	SCENARIO	SEASON	SOURCE	DIRECTION	MONITORED ELEMENT	RATEA (MVA)	RATEB(MVA)	TDF	TC%LOADING (% MVA)	CONTINGENCY
FDNS	01ALL	0	20WP	G15_060	TO->FROM	MATHWSN7 345.00 - TATONGA7 345.00 345KV CKT 1	1195	1195	0.23138	105.7904	GEN635024 4-WALTER SCOTT UNIT 4
FDNS	01ALL	0	20WP	G15_060	TO->FROM	MATHWSN7 345.00 - TATONGA7 345.00 345KV CKT 1	1195	1195	0.23392	105.7256	HUNTERS7 345.00 - RENFROW7 345.00 345KV CKT 1
FDNS	01ALL	0	16WP	G15_060	TO->FROM	MATHWSN7 345.00 - TATONGA7 345.00 345KV CKT 1	1195	1195	0.25521	105.6398	IODINE - WOODWARD EHV 138KV CKT 1
FDNS	01ALL	0	16WP	G15_060	TO->FROM	MATHWSN7 345.00 - TATONGA7 345.00 345KV CKT 1	1195	1195	0.2412	105.5877	CLEO CORNER - CLEOPLT4 138.00 138KV CKT 1
FDNS	01ALL	0	20WP	G15_060	TO->FROM	MATHWSN7 345.00 - TATONGA7 345.00 345KV CKT 1	1195	1195	0.23138	105.5672	GEN527903 1-HOBBS PLANT #3 (ST)
FDNS	01ALL	0	16WP	G15_060	TO->FROM	MATHWSN7 345.00 - TATONGA7 345.00 345KV CKT 1	1195	1195	0.2412	105.5504	CLEOPLT4 138.00 - MEN TAP 138KV CKT 1
FDNS	01ALL	0	20WP	G15_060	TO->FROM	MATHWSN7 345.00 - TATONGA7 345.00 345KV CKT 1	1195	1195	0.23138	105.5335	GEN531447 1-HOLCOMB GENERATOR
FDNS	01ALL	0	16WP	G15_060	TO->FROM	MATHWSN7 345.00 - TATONGA7 345.00 345KV CKT 1	1195	1195	0.2412	105.5211	IMO TAP - MEN TAP 138KV CKT 1
FDNS	01ALL	0	16WP	G15_060	TO->FROM	MATHWSN7 345.00 - TATONGA7 345.00 345KV CKT 1	1195	1195	0.23704	105.4839	GEN520947 1-HUGO1
FDNS	01ALL	0	16WP	G15_060	TO->FROM	MATHWSN7 345.00 - TATONGA7 345.00 345KV CKT 1	1195	1195	0.25521	105.4836	DEWEY - IODINE 138KV CKT 1
FDNS	01ALL	0	20WP	G15_060	TO->FROM	MATHWSN7 345.00 - TATONGA7 345.00 345KV CKT 1	1195	1195	0.22815	105.3917	CIMARRON - DRAPER LAKE 345KV CKT 1
FDNS	01ALL	0	16WP	G15_060	TO->FROM	MATHWSN7 345.00 - TATONGA7 345.00 345KV CKT 1	1195	1195	0.23704	105.381	GEN509416 1-TURK GENERATION
FDNS	01ALL	0	20WP	G15_060	TO->FROM	MATHWSN7 345.00 - TATONGA7 345.00 345KV CKT 1	1195	1195	0.2323	105.3361	G15052_T 345.00 - ROSE HILL 345KV CKT 1
FDNS	01ALL	0	16WP	G15_060	TO->FROM	MATHWSN7 345.00 - TATONGA7 345.00 345KV CKT 1	1195	1195	0.24357	105.3199	MINGO - RED WILLOW 345KV CKT 1
FDNS	01ALL	0	16WP	G15_060	TO->FROM	MATHWSN7 345.00 - TATONGA7 345.00 345KV CKT 1	1195	1195	0.24357	105.3199	MINGO - RED WILLOW 345KV CKT 1
FDNS	01ALL	0	16WP	G15_060	TO->FROM	MATHWSN7 345.00 - TATONGA7 345.00 345KV CKT 1	1195	1195	0.23704	105.3199	GEN509403 1-PIRKEY GENERATION
FDNS	01ALL	0	20SP	G15_060	TO->FROM	MATHWSN7 345.00 - TATONGA7 345.00 345KV CKT 1	1195	1195	0.26823	105.3165	THISTLE7 345.00 - WOODWARD DISTRICT EHV 345KV CKT 1
FDNS	01ALL	0	20SP	G15_060	TO->FROM	MATHWSN7 345.00 - TATONGA7 345.00 345KV CKT 1	1195	1195	0.26823	105.3165	THISTLE7 345.00 - WOODWARD DISTRICT EHV 345KV CKT 1
FDNS	01ALL	0	20SP	G15_060	TO->FROM	MATHWSN7 345.00 - TATONGA7 345.00 345KV CKT 1	1195	1195	0.26823	105.3165	THISTLE7 345.00 - WOODWARD DISTRICT EHV 345KV CKT 2
FDNS	01ALL	0	20SP	G15_060	TO->FROM	MATHWSN7 345.00 - TATONGA7 345.00 345KV CKT 1	1195	1195	0.26823	105.3165	THISTLE7 345.00 - WOODWARD DISTRICT EHV 345KV CKT 2
FDNS	01ALL	0	20WP	G15_060	TO->FROM	MATHWSN7 345.00 - TATONGA7 345.00 345KV CKT 1	1195	1195	0.23138	105.2925	GEN523971 1-HARRINGTON GEN #1 24 KV
FDNS	01ALL	0	20WP	G15_060	TO->FROM	MATHWSN7 345.00 - TATONGA7 345.00 345KV CKT 1	1195	1195	0.23138	105.2924	GEN523973 1-HARRINGTON GEN #3 24 KV
FDNS	01ALL	0	20WP	G15_060	TO->FROM	MATHWSN7 345.00 - TATONGA7 345.00 345KV CKT 1	1195	1195	0.23138	105.2923	GEN523972 1-HARRINGTON GEN #2 24 KV
FDNS	01ALL	0	20WP	G15_060	TO->FROM	MATHWSN7 345.00 - TATONGA7 345.00 345KV CKT 1	1195	1195	0.23138	105.2782	GEN562974 1-G15060_5 0.6900
FDNS	01ALL	0	16WP	G15_060	TO->FROM	MATHWSN7 345.00 - TATONGA7 345.00 345KV CKT 1	1195	1195	0.23704	105.2781	GEN514806 1-SOONER UNIT 2
FDNS	01ALL	0	20L	G15_060	TO->FROM	MATHWSN7 345.00 - TATONGA7 345.00 345KV CKT 1	1195	1195	0.2556	105.272	G1524G1525 345.00 - THISTLE7 345.00 345KV CKT 1
FDNS	01ALL	0	20L	G15_060	TO->FROM	MATHWSN7 345.00 - TATONGA7 345.00 345KV CKT 1	1195	1195	0.2556	105.272	G1524G1525 345.00 - THISTLE7 345.00 345KV CKT 2
FDNS	01ALL	0	16WP	G15_060	TO->FROM	MATHWSN7 345.00 - TATONGA7 345.00 345KV CKT 1	1195	1195	0.2417	105.2688	CHISHOLM6 230.00 - SWEETWATER 230KV CKT 1
FDNS	01ALL	0	20WP	G15_060	TO->FROM	MATHWSN7 345.00 - TATONGA7 345.00 345KV CKT 1	1195	1195	0.22822	105.2505	G15063_T 345.00 - MATHWSN7 345.00 345KV CKT 1
FDNS	01ALL	0	20WP	G15_060	TO->FROM	MATHWSN7 345.00 - TATONGA7 345.00 345KV CKT 1	1195	1195	0.23138	105.2467	GEN562973 1-G15060_4 0.6900
FDNS	01ALL	0	16WP	G15_060	TO->FROM	MATHWSN7 345.00 - TATONGA7 345.00 345KV CKT 1	1195	1195	0.24002	105.2144	G15095_T 138.00 - ROSE_VALLEY 138.00 138KV CKT 1
FDNS	01ALL	0	16WP	G15_060	TO->FROM	MATHWSN7 345.00 - TATONGA7 345.00 345KV CKT 1	1195	1195	0.24142	105.1518	AXTELL - POST ROCK 345KV CKT 1
FDNS	01ALL	0	16WP	G15_060	TO->FROM	MATHWSN7 345.00 - TATONGA7 345.00 345KV CKT 1	1195	1195	0.24002	105.1068	NOEL_SW 138.00 - ROSE_VALLEY 138.00 138KV CKT 1
FDNS	01ALL	0	16WP	G15_060	TO->FROM	MATHWSN7 345.00 - TATONGA7 345.00 345KV CKT 1	1195	1195	0.23704	105.1065	GEN336821 1-GRAND GULF UNIT
FDNS	01ALL	0	16WP	G15_060	TO->FROM	MATHWSN7 345.00 - TATONGA7 345.00 345KV CKT 1	1195	1195	0.23704	105.0821	GEN514805 1-SOONER UNIT 1
FDNS	01ALL	0	16WP	G15_060	TO->FROM	MATHWSN7 345.00 - TATONGA7 345.00 345KV CKT 1	1195	1195	0.23704	105.0636	GEN515602 1-KNGFSR12 0.7000
FDNS	01ALL	0	16WP	G15_060	TO->FROM	MATHWSN7 345.00 - TATONGA7 345.00 345KV CKT 1	1195	1195	0.2429	105.0592	P12:230:AEPW:ELKCITY6:SWEETWT6
FDNS	01ALL	0	16WP	G15_060	TO->FROM	MATHWSN7 345.00 - TATONGA7 345.00 345KV CKT 1	1195	1195	0.23704	105.0574	GEN562587 1-G14_056_3 0.6900
FDNS	01ALL	0	16WP	G15_060	TO->FROM	MATHWSN7 345.00 - TATONGA7 345.00 345KV CKT 1	1195	1195	0.23704	105.0387	GEN337911 1-ARKANSAS NUCLEAR ONE UNIT #2
FDNS	01ALL	0	16WP	G15_060	TO->FROM	MATHWSN7 345.00 - TATONGA7 345.00 345KV CKT 1	1195	1195	0.24044	105.0187	POTTER COUNTY INTERCHANGE (WAUK 90343-A) 345/230/13.2KV TRANSFORMER CKT 1
FDNS	01ALL	0	16WP	G15_060	TO->FROM	MATHWSN7 345.00 - TATONGA7 345.00 345KV CKT 1	1195	1195	0.24044	105.0187	POTTER COUNTY INTERCHANGE (WAUK 90343-A) 345/230/13.2KV TRANSFORMER CKT 1
FDNS	01ALL	0	16WP	G15_060	TO->FROM	MATHWSN7 345.00 - TATONGA7 345.00 345KV CKT 1	1195	1195	0.23704	104.9957	GEN515226 1-MUSKOGEE 6G
FDNS	01ALL	0	16WP	G15_060	TO->FROM	MATHWSN7 345.00 - TATONGA7 345.00 345KV CKT 1	1195	1195	0.24242	104.9735	MINGO - SETAB 345KV CKT 1
FDNS	01ALL	0	16WP	G15_060	TO->FROM	MATHWSN7 345.00 - TATONGA7 345.00 345KV CKT 1	1195	1195	0.24242	104.9735	MINGO - SETAB 345KV CKT 1
FDNS	01ALL	0	16WP	G15_060	TO->FROM	MATHWSN7 345.00 - TATONGA7 345.00 345KV CKT 1	1195	1195	0.23704	104.9071	GEN509406 1-WELSH #3
FDNS	01ALL	0	16WP	G15_060	TO->FROM	MATHWSN7 345.00 - TATONGA7 345.00 345KV CKT 1	1195	1195	0.23704	104.907	GEN509404 1-WELSH #1
FDNS	01ALL	0	16WP	G15_060	TO->FROM	MATHWSN7 345.00 - TATONGA7 345.00 345KV CKT 1	1195	1195	0.23704	104.9021	GEN515040 1-SEMINOLE 1G
FDNS	01ALL	0	16WP	G15_060	TO->FROM	MATHWSN7 345.00 - TATONGA7 345.00 345KV CKT 1	1195	1195	0.24114	104.8759	HOLCOMB - SETAB 345KV CKT 1
FDNS	01ALL	0	16WP	G15_060	TO->FROM	MATHWSN7 345.00 - TATONGA7 345.00 345KV CKT 1	1195	1195	0.24114	104.8759	HOLCOMB - SETAB 345KV CKT 1
FDNS	01ALL	0	20WP	G15_060	TO->FROM	MATHWSN7 345.00 - TATONGA7 345.00 345KV CKT 1	1195	1195	0.22588	104.8728	MATHWSN7 345.00 - NORTHWEST 345KV CKT 1
FDNS	01ALL	0	16WP	G15_060	TO->FROM	MATHWSN7 345.00 - TATONGA7 345.00 345KV CKT 1	1195	1195	0.23704	104.8549	GEN511843 1-RIVERSIDE STATION #2
FDNS	01ALL	0	16WP	G15_060	TO->FROM	MATHWSN7 345.00 - TATONGA7 345.00 345KV CKT 1	1195	1195	0.23704	104.8273	GEN336153 1-WATERFORD UNIT#3
FDNS	01ALL	0	16WP	G15_060	TO->FROM	MATHWSN7 345.00 - TATONGA7 345.00 345KV CKT 1	1195	1195	0.23704	104.8088	GEN515225 1-MUSKOGEE 5G
FDNS	01ALL	0	16WP	G15_060	TO->FROM	MATHWSN7 345.00 - TATONGA7 345.00 345KV CKT 1	1195	1195	0.23704	104.8087	GEN515223 1-MUSKOGEE 4G
FDNS	01ALL	0	16WP	G15_060	TO->FROM	MATHWSN7 345.00 - TATONGA7 345.00 345KV CKT 1	1195	1195	0.24058	104.7569	G1524G1525 345.00 - WICHITA 345KV CKT 1
FDNS	01ALL	0	16WP	G15_060	TO->FROM	MATHWSN7 345.00 - TATONGA7 345.00 345KV CKT 1	1195	1195	0.24058	104.7569	G1524G1525 345.00 - WICHITA 345KV CKT 2
FDNS	01ALL	0	16WP	G15_060	TO->FROM	MATHWSN7 345.00 - TATONGA7 345.00 345KV CKT 1	1195	1195	0.23704	104.7498	GEN337910 1-ARKANSAS NUCLEAR ONE UNIT #1
FDNS	01ALL	0	16WP	G15_060	TO->FROM	MATHWSN7 345.00 - TATONGA7 345.00 345KV CKT 1	1195	1195	0.24325	104.7235	BENTON - WICHITA 345KV CKT 1
FDNS	01ALL	0	20WP	G15_060	TO->FROM	MATHWSN7 345.00 - TATONGA7 345.00 345KV CKT 1	1195	1195	0.23138	104.7206	GEN515393 1-OGEWND2G
FDNS	01ALL	0	16WP	G15_060	TO->FROM	MATHWSN7 345.00 - TATONGA7 345.00 345KV CKT 1	1195	1195	0.23704	104.6769	GEN515443 1-MNCOWND1 0.7000
FDNS	01ALL	0	16WP	G15_060	TO->FROM	MATHWSN7 345.00 - TATONGA7 345.00 345KV CKT 1	1195	1195	0.24099	104.6577	P12:138:WFEC:MSL14
FDNS	01ALL	0	16WP	G15_060	TO->FROM	MATHWSN7 345.00 - TATONGA7 345.00 345KV CKT 1	1195	1195	0.23838	104.6549	G14-057T 345.00 - SUNNYSIDE 345KV CKT 1
FDNS	01ALL	0	16WP	G15_060	TO->FROM	MATHWSN7 345.00 - TATONGA7 345.00 345KV CKT 1	1195	1195	0.23704	104.6485	GEN501801 1-DOLET HILLS UNIT1
FDNS	01ALL	0	16WP	G15_060	TO->FROM	MATHWSN7 345.00 - TATONGA7 345.00 345KV CKT 1	1195	1195	0.23704	104.6387	GEN335831 1-RIVERBEND UNIT#1
FDNS	01ALL	0	16WP	G15_060	TO->FROM	MATHWSN7 345.00 - TATONGA7 345.00 345KV CKT 1	1195	1195	0.23704	104.6188	GEN509394 1-FLINT CREEK
FDNS	01ALL	0	16WP	G15_060	TO->FROM	MATHWSN7 345.00 - TATONGA7 345.00 345KV CKT 1	1195	1195	0.24099	104.6111	BEARCAT 138.00 - MOORELAND 138KV CKT 1
FDNS	01ALL	0	16WP	G15_060	TO->FROM	MATHWSN7 345.00 - TATONGA7 345.00 345KV CKT 1	1195	1195	0.23704	104.5929	GEN562794 1-G15038_5 0.6900
FDNS	01ALL	0	16WP	G15_060	TO->FROM	MATHWSN7 345.00 - TATONGA7 345.00 345KV CKT 1	1195	1195	0.23704	104.5929	GEN562795 1-G15038_6 0.6900
FDNS	01ALL	0	16WP	G15_060	TO->FROM	MATHWSN7 345.00 - TATONGA7 345.00 345KV CKT 1	1195	1195	0.23704	104.578	GEN515606 1-CANDN11 0.6900
FDNS	01ALL	0	16WP	G15_060	TO->FROM	MATHWSN7 345.00 - TATONGA7 345.00 345KV CKT 1	1195	1195	0.23704	104.578	GEN515607 1-CANDN12 0.6900
FDNS	01ALL	0	16WP	G15_060	TO->FROM	MATHWSN7 345.00 - TATONGA7 345.00 345KV CKT 1	1195	1195	0.23704	104.5724	GEN511840 1-NORTHEASTERN STATION #3
FDNS	01ALL	0	16WP	G15_060	TO->FROM	MATHWSN7 345.00 - TATONGA7 345.00 345KV CKT 1	1195	1195	0.23925	104.5593	P12:138:WFEC:MSL15
FDNS	01ALL	0	16WP	G15_060	TO->FROM	MATHWSN7 345.00 - TATONGA7 345.00 345KV CKT 1	1195	1195	0.23947	104.5533	GRAPEVINE INTERCHANGE - NICHOLS STATION 230KV CKT 1
FDNS	01ALL	0	16WP	G15_060	TO->FROM	MATHWSN7 345.00 - TATONGA7 345.00 345KV CKT 1	1195	1195	0.23947	104.5533	GRAPEVINE INTERCHANGE - NICHOLS STATION 230KV CKT 1
FDNS	01ALL	0	20WP	G15_060	TO->FROM	MATHWSN7 345.00 - TATONGA7 345.00 345KV CKT 1	1195	1195	0.22822	104.5445	G15063_T 345.00 - WOODRING 345KV CKT 1
FDNS	01ALL	0	16WP	G15_060	TO->FROM	MATHWSN7 345.00 - TATONGA7 345.00 345KV CKT 1	1195	1195	0.24099	104.5308	BEARCAT 138.00 - NINE MILE 138KV CKT 1
FDNS	01ALL	0	16WP	G15_060	TO->FROM	MATHWSN7 345.00 - TATONGA7 345.00 345KV CKT 1	1195	1195	0.24039	104.5204	P12:138:WFEC:MSL12
FDNS	01ALL	0	16WP	G15_060	TO->FROM	MATHWSN7 345.00 - TATONGA7 345.00 345KV CKT 1	1195	1195	0.24039	104.506	MOORELAND - PIC4 138.00 138KV CKT 1
FDNS	01ALL	0	16WP	G15_060	TO->FROM	MATHWSN7 345.00 - TATONGA7 345.00 345KV CKT 1	1195	1195	0.23704	104.4997	GEN511839 1-NORTHEASTERN STATION #2

SOLUTION	GROUP	SCENARIO	SEASON	SOURCE	DIRECTION	MONITORED ELEMENT	RATEA (MVA)	RATEB(MVA)	TDF	TC%LOADING (% MVA)	CONTINGENCY
FDNS	01ALL	0	16WP	G15_060	TO->FROM	MATHWSN7 345.00 - TATONGA7 345.00 345KV CKT 1	1195	1195	0.24039	104.4911	CEDARDALE - PIC4 138.00 138KV CKT 1
FDNS	01ALL	0	16WP	G15_060	TO->FROM	MATHWSN7 345.00 - TATONGA7 345.00 345KV CKT 1	1195	1195	0.24044	104.4713	G14_038T 345.00 - POTTER COUNTY INTERCHANGE 345KV CKT 1
FDNS	01ALL	0	16WP	G15_060	TO->FROM	MATHWSN7 345.00 - TATONGA7 345.00 345KV CKT 1	1195	1195	0.23705	104.4701	P12:345:GRDA:CHOUTEAU-SPORTSMANACRES
FDNS	01ALL	0	16WP	G15_060	TO->FROM	MATHWSN7 345.00 - TATONGA7 345.00 345KV CKT 1	1195	1195	0.24039	104.4641	CEDARDALE - OKEENE 138KV CKT 1
FDNS	01ALL	0	16WP	G15_060	TO->FROM	MATHWSN7 345.00 - TATONGA7 345.00 345KV CKT 1	1195	1195	0.23704	104.4421	GEN511842 1-RIVERSIDE STATION #1
FDNS	01ALL	0	20L	G15_060	TO->FROM	MATHWSN7 345.00 - TATONGA7 345.00 345KV CKT 1	1195	1195	0.2498	104.434	MINGO - RED WILLOW 345KV CKT 1
FDNS	01ALL	0	20L	G15_060	TO->FROM	MATHWSN7 345.00 - TATONGA7 345.00 345KV CKT 1	1195	1195	0.2498	104.434	MINGO - RED WILLOW 345KV CKT 1
FDNS	01ALL	0	16WP	G15_060	TO->FROM	MATHWSN7 345.00 - TATONGA7 345.00 345KV CKT 1	1195	1195	0.24906	104.4022	G14-074T 345.00 - OKLAUNION 345KV CKT 1
FDNS	01ALL	0	16WP	G15_060	TO->FROM	MATHWSN7 345.00 - TATONGA7 345.00 345KV CKT 1	1195	1195	0.24099	104.3933	MOREWOOD SW - NINE MILE 138KV CKT 1
FDNS	01ALL	0	16WP	G15_060	TO->FROM	MATHWSN7 345.00 - TATONGA7 345.00 345KV CKT 1	1195	1195	0.23801	104.393	GRAND ISLAND - SWEETWATER 345KV CKT 1
FDNS	01ALL	0	16WP	G15_060	TO->FROM	MATHWSN7 345.00 - TATONGA7 345.00 345KV CKT 1	1195	1195	0.23774	104.3728	G15074_T 345.00 - HOYT 345KV CKT 1
FDNS	01ALL	0	16WP	G15_060	TO->FROM	MATHWSN7 345.00 - TATONGA7 345.00 345KV CKT 1	1195	1195	0.23704	104.3396	GEN512688 2-GRDA1 GSU2 22
FDNS	01ALL	0	16WP	G15_060	TO->FROM	MATHWSN7 345.00 - TATONGA7 345.00 345KV CKT 1	1195	1195	0.23704	104.3259	GEN337653 1-WHITE BLUFF UNIT #2
FDNS	01ALL	0	16WP	G15_060	TO->FROM	MATHWSN7 345.00 - TATONGA7 345.00 345KV CKT 1	1195	1195	0.2414	104.3201	DOVER SW - OKEENE 138KV CKT 1
FDNS	01ALL	0	16WP	G15_060	TO->FROM	MATHWSN7 345.00 - TATONGA7 345.00 345KV CKT 1	1195	1195	0.23838	104.3189	G14-057T 345.00 - LAWTON EASTSIDE 345KV CKT 1
FDNS	01ALL	0	16WP	G15_060	TO->FROM	MATHWSN7 345.00 - TATONGA7 345.00 345KV CKT 1	1195	1195	0.25453	104.3068	FPL SWITCH - MOORELAND 138KV CKT 1
FDNS	01ALL	0	16WP	G15_060	TO->FROM	MATHWSN7 345.00 - TATONGA7 345.00 345KV CKT 1	1195	1195	0.23774	104.3018	G15074_T 345.00 - JEFFREY ENERGY CENTER 345KV CKT 1
FDNS	01ALL	0	16WP	G15_060	TO->FROM	MATHWSN7 345.00 - TATONGA7 345.00 345KV CKT 1	1195	1195	0.23925	104.2943	NOEL_SW 138.00 - SALT_PLAINS 138.00 138KV CKT 1
FDNS	01ALL	0	16WP	G15_060	TO->FROM	MATHWSN7 345.00 - TATONGA7 345.00 345KV CKT 1	1195	1195	0.23704	104.2906	GEN515042 1-SEMINOLE 3G
FDNS	01ALL	0	16WP	G15_060	TO->FROM	MATHWSN7 345.00 - TATONGA7 345.00 345KV CKT 1	1195	1195	0.23704	104.2853	GEN300006 1-NEW MADRID UNIT 1
FDNS	01ALL	0	16WP	G15_060	TO->FROM	MATHWSN7 345.00 - TATONGA7 345.00 345KV CKT 1	1195	1195	0.24318	104.2832	G11-14T 345.00 - WOODWARD DISTRICT EHV 345KV CKT 1
FDNS	01ALL	0	16WP	G15_060	TO->FROM	MATHWSN7 345.00 - TATONGA7 345.00 345KV CKT 1	1195	1195	0.24318	104.2832	G11-14T 345.00 - WOODWARD DISTRICT EHV 345KV CKT 2
FDNS	01ALL	0	16WP	G15_060	TO->FROM	MATHWSN7 345.00 - TATONGA7 345.00 345KV CKT 1	1195	1195	0.23704	104.2807	GEN300007 1-NEW MADRID UNIT 2
FDNS	01ALL	0	16WP	G15_060	TO->FROM	MATHWSN7 345.00 - TATONGA7 345.00 345KV CKT 1	1195	1195	0.23783	104.2795	LACYGNE - WAVERLY7 345.00 345KV CKT 1
FDNS	01ALL	0	16WP	G15_060	TO->FROM	MATHWSN7 345.00 - TATONGA7 345.00 345KV CKT 1	1195	1195	0.23704	104.2616	GEN509409 1-WILKES #3
FDNS	01ALL	0	20WP	G15_060	TO->FROM	MATHWSN7 345.00 - TATONGA7 345.00 345KV CKT 1	1195	1195	0.23138	104.2475	GEN562078 1-G11_051_3 0.6900
FDNS	01ALL	0	20L	G15_060	TO->FROM	MATHWSN7 345.00 - TATONGA7 345.00 345KV CKT 1	1195	1195	0.24623	104.2439	CIMARRON - MINCO 345KV CKT 1
FDNS	01ALL	0	16WP	G15_060	TO->FROM	MATHWSN7 345.00 - TATONGA7 345.00 345KV CKT 1	1195	1195	0.23704	104.2303	GEN337652 1-WHITE BLUFF UNIT #1
FDNS	01ALL	0	16WP	G15_060	TO->FROM	MATHWSN7 345.00 - TATONGA7 345.00 345KV CKT 1	1195	1195	0.23906	104.2255	FLATRDG3 - THISTLE4 138.00 138KV CKT 1
FDNS	01ALL	0	16WP	G15_060	TO->FROM	MATHWSN7 345.00 - TATONGA7 345.00 345KV CKT 1	1195	1195	0.23906	104.2255	FLATRDG3 - THISTLE4 138.00 138KV CKT 1
FDNS	01ALL	0	16WP	G15_060	TO->FROM	MATHWSN7 345.00 - TATONGA7 345.00 345KV CKT 1	1195	1195	0.23906	104.2252	THISTLE7 345.00 (THISTLE T1) 345/138/13.8KV TRANSFORMER CKT 1
FDNS	01ALL	0	16WP	G15_060	TO->FROM	MATHWSN7 345.00 - TATONGA7 345.00 345KV CKT 1	1195	1195	0.23704	104.2066	GEN515041 1-SEMINOLE 2G
FDNS	01ALL	0	16WP	G15_060	TO->FROM	MATHWSN7 345.00 - TATONGA7 345.00 345KV CKT 1	1195	1195	0.23783	104.2054	WAVERLY7 345.00 - WOLF CREEK 345KV CKT 1
FDNS	01ALL	0	16WP	G15_060	TO->FROM	MATHWSN7 345.00 - TATONGA7 345.00 345KV CKT 1	1195	1195	0.23704	104.1936	GEN501813 1-RODEMACHER UNIT 3
FDNS	01ALL	0	16WP	G15_060	TO->FROM	MATHWSN7 345.00 - TATONGA7 345.00 345KV CKT 1	1195	1195	0.23918	104.1821	CANEYRV7 345.00 - NEOSHO 345KV CKT 1
FDNS	01ALL	0	16WP	G15_060	TO->FROM	MATHWSN7 345.00 - TATONGA7 345.00 345KV CKT 1	1195	1195	0.24044	104.1612	G14_038T 345.00 - Hitchland Interchange 345KV CKT 1
FDNS	01ALL	0	20WP	G15_060	TO->FROM	MATHWSN7 345.00 - TATONGA7 345.00 345KV CKT 1	1195	1195	0.23138	104.1498	GEN525561 1-TOLK GEN #1 24 KV
FDNS	01ALL	0	16WP	G15_060	TO->FROM	MATHWSN7 345.00 - TATONGA7 345.00 345KV CKT 1	1195	1195	0.23786	104.1172	G15088_T 345.00 - MOORE 345KV CKT 1
FDNS	01ALL	0	20WP	G15_060	TO->FROM	MATHWSN7 345.00 - TATONGA7 345.00 345KV CKT 1	1195	1195	0.23138	104.1126	GEN560219 1-G07_062_8 0.6900
FDNS	01ALL	0	16WP	G15_060	TO->FROM	MATHWSN7 345.00 - TATONGA7 345.00 345KV CKT 1	1195	1195	0.23704	104.0909	GEN335206 1-NELSON UNIT 6
FDNS	01ALL	0	16WP	G15_060	TO->FROM	MATHWSN7 345.00 - TATONGA7 345.00 345KV CKT 1	1195	1195	0.23704	104.0753	GEN513601 1-GRECCTG_1 20.000
FDNS	01ALL	0	16WP	G15_060	TO->FROM	MATHWSN7 345.00 - TATONGA7 345.00 345KV CKT 1	1195	1195	0.23918	104.0752	CANEYRV7 345.00 - LATHAMS7 345.00 345KV CKT 1
FDNS	01ALL	0	16WP	G15_060	TO->FROM	MATHWSN7 345.00 - TATONGA7 345.00 345KV CKT 1	1195	1195	0.23704	104.0684	GEN515601 1-KNGFSR11 0.7000
FDNS	01ALL	0	16WP	G15_060	TO->FROM	MATHWSN7 345.00 - TATONGA7 345.00 345KV CKT 1	1195	1195	0.23704	104.0604	GEN514910 2-REDBUD GEN
FDNS	01ALL	0	16WP	G15_060	TO->FROM	MATHWSN7 345.00 - TATONGA7 345.00 345KV CKT 1	1195	1195	0.23704	104.0582	GRAND GULF 500/22.0KV TRANSFORMER CKT 1
FDNS	01ALL	0	16WP	G15_060	TO->FROM	MATHWSN7 345.00 - TATONGA7 345.00 345KV CKT 1	1195	1195	0.23803	104.0502	AXTELL - PAULINE 345KV CKT 1
FDNS	01ALL	0	16WP	G15_060	TO->FROM	MATHWSN7 345.00 - TATONGA7 345.00 345KV CKT 1	1195	1195	0.23925	104.0428	C_CITY_138 138.00 - SALT_PLAINS 138.00 138KV CKT 1
FDNS	01ALL	0	16WP	G15_060	TO->FROM	MATHWSN7 345.00 - TATONGA7 345.00 345KV CKT 1	1195	1195	0.23777	104.028	HOYT - STRANGER CREEK 345KV CKT 1
FDNS	01ALL	0	16WP	G15_060	TO->FROM	MATHWSN7 345.00 - TATONGA7 345.00 345KV CKT 1	1195	1195	0.23704	104.0042	GEN511848 1-SOUTHWESTERN STATION #3
FDNS	01ALL	0	16WP	G15_060	TO->FROM	MATHWSN7 345.00 - TATONGA7 345.00 345KV CKT 1	1195	1195	0.23704	104.0037	GEN514911 2-REDBUD GEN
FDNS	01ALL	0	16WP	G15_060	TO->FROM	MATHWSN7 345.00 - TATONGA7 345.00 345KV CKT 1	1195	1195	0.23704	104.0037	GEN514942 2-REDBUD4G
FDNS	01ALL	0	16WP	G15_060	TO->FROM	MATHWSN7 345.00 - TATONGA7 345.00 345KV CKT 1	1195	1195	0.23925	103.9974	BYRON_138 138.00 - C_CITY_138 138.00 138KV CKT 1
FDNS	01ALL	0	16WP	G15_060	TO->FROM	MATHWSN7 345.00 - TATONGA7 345.00 345KV CKT 1	1195	1195	0.23704	103.9843	GEN338146 1-INDEPENDENCE UNIT #2
FDNS	01ALL	0	16WP	G15_060	TO->FROM	MATHWSN7 345.00 - TATONGA7 345.00 345KV CKT 1	1195	1195	0.2379	103.9766	MULLERGREN - SPEARVILLE 230KV CKT 1
FDNS	01ALL	0	16WP	G15_060	TO->FROM	MATHWSN7 345.00 - TATONGA7 345.00 345KV CKT 1	1195	1195	0.2379	103.9766	MULLERGREN - SPEARVILLE 230KV CKT 1
FDNS	01ALL	0	16WP	G15_060	TO->FROM	MATHWSN7 345.00 - TATONGA7 345.00 345KV CKT 1	1195	1195	0.23786	103.9703	G15088_T 345.00 - PAULINE 345KV CKT 1
FDNS	01ALL	0	16WP	G15_060	TO->FROM	MATHWSN7 345.00 - TATONGA7 345.00 345KV CKT 1	1195	1195	0.23704	103.9694	GEN501812 1-RODEMACHER UNIT 2
FDNS	01ALL	0	16WP	G15_060	TO->FROM	MATHWSN7 345.00 - TATONGA7 345.00 345KV CKT 1	1195	1195	0.23704	103.9652	GEN590011 2-ERCOT EQUIVALENCE
FDNS	01ALL	0	16WP	G15_060	TO->FROM	MATHWSN7 345.00 - TATONGA7 345.00 345KV CKT 1	1195	1195	0.23862	103.9633	P12:138:WERE:MURR-MKEC_138P::
FDNS	01ALL	0	16WP	G15_060	TO->FROM	MATHWSN7 345.00 - TATONGA7 345.00 345KV CKT 1	1195	1195	0.23865	103.9513	G14_001T 345.00 - WICHITA 345KV CKT 1
FDNS	01ALL	0	20WP	G15_060	TO->FROM	MATHWSN7 345.00 - TATONGA7 345.00 345KV CKT 1	1195	1195	0.23138	103.9477	GEN525562 1-TOLK GEN #2 24 KV
FDNS	01ALL	0	16WP	G15_060	TO->FROM	MATHWSN7 345.00 - TATONGA7 345.00 345KV CKT 1	1195	1195	0.23704	103.9476	GEN514940 1-REDBUD GEN
FDNS	01ALL	0	16WP	G15_060	TO->FROM	MATHWSN7 345.00 - TATONGA7 345.00 345KV CKT 1	1195	1195	0.23704	103.9422	GEN338143 1-INDEPENDENCE UNIT #1
FDNS	01ALL	0	16WP	G15_060	TO->FROM	MATHWSN7 345.00 - TATONGA7 345.00 345KV CKT 1	1195	1195	0.23704	103.9416	GEN514900 1-REDBUD2S
FDNS	01ALL	0	16WP	G15_060	TO->FROM	MATHWSN7 345.00 - TATONGA7 345.00 345KV CKT 1	1195	1195	0.23704	103.9415	GEN514899 1-REDBUD1S
FDNS	01ALL	0	16WP	G15_060	TO->FROM	MATHWSN7 345.00 - TATONGA7 345.00 345KV CKT 1	1195	1195	0.23862	103.9366	P12:138:MKEC:HARPER-CLEARWATER::
FDNS	01ALL	0	16WP	G15_060	TO->FROM	MATHWSN7 345.00 - TATONGA7 345.00 345KV CKT 1	1195	1195	0.23862	103.9366	P12:138:WERE:CLWA-MKEC_138F::
FDNS	01ALL	0	16WP	G15_060	TO->FROM	MATHWSN7 345.00 - TATONGA7 345.00 345KV CKT 1	1195	1195	0.23704	103.9335	GEN511938 1-OEC STEAM # 1
FDNS	01ALL	0	16WP	G15_060	TO->FROM	MATHWSN7 345.00 - TATONGA7 345.00 345KV CKT 1	1195	1195	0.23704	103.9329	GEN511941 1-OEC STEAM # 2
FDNS	01ALL	0	16WP	G15_060	TO->FROM	MATHWSN7 345.00 - TATONGA7 345.00 345KV CKT 1	1195	1195	0.23704	103.9281	GEN590010 1-ERCOT EQUIVALENCE
FDNS	01ALL	0	16WP	G15_060	TO->FROM	MATHWSN7 345.00 - TATONGA7 345.00 345KV CKT 1	1195	1195	0.23704	103.9208	GEN563272 1-G15093_3 0.6900
FDNS	01ALL	0	16WP	G15_060	TO->FROM	MATHWSN7 345.00 - TATONGA7 345.00 345KV CKT 1	1195	1195	0.23865	103.9186	EMPORIA ENERGY CENTER - G14_001T 345.00 345KV CKT 1
FDNS	01ALL	0	16WP	G15_060	TO->FROM	MATHWSN7 345.00 - TATONGA7 345.00 345KV CKT 1	1195	1195	0.23704	103.8937	GEN514905 1-REDBUD3S
FDNS	01ALL	0	16WP	G15_060	TO->FROM	MATHWSN7 345.00 - TATONGA7 345.00 345KV CKT 1	1195	1195	0.23966	103.8914	GRAPEVINE INTERCHANGE - STATELINE INTERCHANGE 230KV CKT 1
FDNS	01ALL	0	16WP	G15_060	TO->FROM	MATHWSN7 345.00 - TATONGA7 345.00 345KV CKT 1	1195	1195	0.23966	103.8914	GRAPEVINE INTERCHANGE - STATELINE INTERCHANGE 230KV CKT 1
FDNS	01ALL	0	16WP	G15_060	TO->FROM	MATHWSN7 345.00 - TATONGA7 345.00 345KV CKT 1	1195	1195	0.23918	103.8899	LATHAMS7 345.00 - ROSE HILL 345KV CKT 1
FDNS	01ALL	0	16WP	G15_060	TO->FROM	MATHWSN7 345.00 - TATONGA7 345.00 345KV CKT 1	1195	1195	0.2414	103.8855	CHISHOLM7 345.00 - GRACEMONT 345KV CKT 1
FDNS	01ALL	0	16WP	G15_060	TO->FROM	MATHWSN7 345.00 - TATONGA7 345.00 345KV CKT 1	1195	1195	0.23704	103.8801	GEN515550 1-MNCWND31 0.6900
FDNS	01ALL	0	16WP	G15_060	TO->FROM	MATHWSN7 345.00 - TATONGA7 345.00 345KV CKT 1	1195	1195	0.23704	103.8732	GEN562952 1-G15057_3 0.6500

SOLUTION	GROUP	SCENARIO	SEASON	SOURCE	DIRECTION	MONITORED ELEMENT	RATEA (MVA)	RATEB(MVA)	TDF	TC%LOADING (% MVA)	CONTINGENCY
FDNS	01ALL	0	16WP	G15_060	TO->FROM	MATHWSN7 345.00 - TATONGA7 345.00 345KV CKT 1	1195	1195	0.2375	103.8652	SMOKYHL6 230.00 - SUMMIT 230KV CKT 1
FDNS	01ALL	0	16WP	G15_060	TO->FROM	MATHWSN7 345.00 - TATONGA7 345.00 345KV CKT 1	1195	1195	0.23704	103.8487	GEN336252 1-NINEMILE POINT UNIT#5
FDNS	01ALL	0	16WP	G15_060	TO->FROM	MATHWSN7 345.00 - TATONGA7 345.00 345KV CKT 1	1195	1195	0.23862	103.8382	CLEARWATER - GILL ENERGY CENTER WEST 138KV CKT 1
FDNS	01ALL	0	16WP	G15_060	TO->FROM	MATHWSN7 345.00 - TATONGA7 345.00 345KV CKT 1	1195	1195	0.23704	103.8351	GEN562512 1-G14_020_3 0.6900
FDNS	01ALL	0	16WP	G15_060	TO->FROM	MATHWSN7 345.00 - TATONGA7 345.00 345KV CKT 1	1195	1195	0.23767	103.8151	BUCKNER7 345.00 - SPEARVILLE 345KV CKT 1
FDNS	01ALL	0	16WP	G15_060	TO->FROM	MATHWSN7 345.00 - TATONGA7 345.00 345KV CKT 1	1195	1195	0.23767	103.8151	BUCKNER7 345.00 - SPEARVILLE 345KV CKT 1
FDNS	01ALL	0	16WP	G15_060	TO->FROM	MATHWSN7 345.00 - TATONGA7 345.00 345KV CKT 1	1195	1195	0.24137	103.8143	GLASS MOUNTAIN - MOORELAND 138KV CKT 1
FDNS	01ALL	0	16WP	G15_060	TO->FROM	MATHWSN7 345.00 - TATONGA7 345.00 345KV CKT 1	1195	1195	0.23704	103.8013	GEN336831 1-BAXTER WILSON SES
FDNS	01ALL	0	16WP	G15_060	TO->FROM	MATHWSN7 345.00 - TATONGA7 345.00 345KV CKT 1	1195	1195	0.23704	103.7965	DELL 500 - ESSEX UNIT 2 500KV CKT Z1
FDNS	01ALL	0	16WP	G15_060	TO->FROM	MATHWSN7 345.00 - TATONGA7 345.00 345KV CKT 1	1195	1195	0.23811	103.7927	SWISSVALE - WEST GARDNER 345KV CKT 1
FDNS	01ALL	0	16WP	G15_060	TO->FROM	MATHWSN7 345.00 - TATONGA7 345.00 345KV CKT 1	1195	1195	0.23704	103.787	GEN334440 1-SABINE UNIT 4
FDNS	01ALL	0	16WP	G15_060	TO->FROM	MATHWSN7 345.00 - TATONGA7 345.00 345KV CKT 1	1195	1195	0.23988	103.7804	EL RENO - ROMAN NOSE 138KV CKT 1
FDNS	01ALL	0	16WP	G15_060	TO->FROM	MATHWSN7 345.00 - TATONGA7 345.00 345KV CKT 1	1195	1195	0.24137	103.776	CLEO CORNER - GLASS MOUNTAIN 138KV CKT 1
FDNS	01ALL	0	16WP	G15_060	TO->FROM	MATHWSN7 345.00 - TATONGA7 345.00 345KV CKT 1	1195	1195	0.23704	103.7645	WHITE BLUFF 500/26.0KV TRANSFORMER CKT 1
FDNS	01ALL	0	16WP	G15_060	TO->FROM	MATHWSN7 345.00 - TATONGA7 345.00 345KV CKT 1	1195	1195	0.23911	103.7623	BVRCNTY7 345.00 - OPTIMA 345.00 345KV CKT 1
FDNS	01ALL	0	16WP	G15_060	TO->FROM	MATHWSN7 345.00 - TATONGA7 345.00 345KV CKT 1	1195	1195	0.23911	103.7623	BVRCNTY7 345.00 - OPTIMA 345.00 345KV CKT 2
FDNS	01ALL	0	16WP	G15_060	TO->FROM	MATHWSN7 345.00 - TATONGA7 345.00 345KV CKT 1	1195	1195	0.23925	103.7555	BYRON_138 138.00 - SANDY_CN_138138.00 138KV CKT 1
FDNS	01ALL	0	16WP	G15_060	TO->FROM	MATHWSN7 345.00 - TATONGA7 345.00 345KV CKT 1	1195	1195	0.23704	103.7452	GEN563273 2-G15093_4 0.6900
FDNS	01ALL	0	16WP	G15_060	TO->FROM	MATHWSN7 345.00 - TATONGA7 345.00 345KV CKT 1	1195	1195	0.23704	103.723	GEN336251 1-NINEMILE POINT UNIT#4
FDNS	01ALL	0	16WP	G15_060	TO->FROM	MATHWSN7 345.00 - TATONGA7 345.00 345KV CKT 1	1195	1195	0.23704	103.723	GEN337041 1-GERALD ANDRUS
FDNS	01ALL	0	16WP	G15_060	TO->FROM	MATHWSN7 345.00 - TATONGA7 345.00 345KV CKT 1	1195	1195	0.23704	103.7126	GEN509393 S1-ARSENAL HILL GENS #4 (STALL)
FDNS	01ALL	0	16WP	G15_060	TO->FROM	MATHWSN7 345.00 - TATONGA7 345.00 345KV CKT 1	1195	1195	0.23704	103.7122	GEN300024 1-1CHOTST6 16.000
FDNS	01ALL	0	16WP	G15_060	TO->FROM	MATHWSN7 345.00 - TATONGA7 345.00 345KV CKT 1	1195	1195	0.23704	103.712	GEN300031 1-CHOUTEAU CTG 1
FDNS	01ALL	0	16WP	G15_060	TO->FROM	MATHWSN7 345.00 - TATONGA7 345.00 345KV CKT 1	1195	1195	0.23896	103.7013	ELK CITY - RED HILLS WIND 138KV CKT 1
FDNS	01ALL	0	16WP	G15_060	TO->FROM	MATHWSN7 345.00 - TATONGA7 345.00 345KV CKT 1	1195	1195	0.23896	103.7013	ELK CITY - RED HILLS WIND 138KV CKT 1
FDNS	01ALL	0	16WP	G15_060	TO->FROM	MATHWSN7 345.00 - TATONGA7 345.00 345KV CKT 1	1195	1195	0.2372	103.6834	GRAND ISLAND - MCCOOL 345KV CKT 1
FDNS	01ALL	0	16WP	G15_060	TO->FROM	MATHWSN7 345.00 - TATONGA7 345.00 345KV CKT 1	1195	1195	0.23704	103.6803	GEN511939 1-OEC GAS # 1-1
FDNS	01ALL	0	16WP	G15_060	TO->FROM	MATHWSN7 345.00 - TATONGA7 345.00 345KV CKT 1	1195	1195	0.23704	103.6803	GEN511940 1-OEC GAS # 1-2
FDNS	01ALL	0	16WP	G15_060	TO->FROM	MATHWSN7 345.00 - TATONGA7 345.00 345KV CKT 1	1195	1195	0.23704	103.6803	GEN511942 1-OEC GAS # 2-1
FDNS	01ALL	0	16WP	G15_060	TO->FROM	MATHWSN7 345.00 - TATONGA7 345.00 345KV CKT 1	1195	1195	0.23704	103.6803	GEN511943 1-OEC GAS # 2-2
FDNS	01ALL	0	16WP	G15_060	TO->FROM	MATHWSN7 345.00 - TATONGA7 345.00 345KV CKT 1	1195	1195	0.23704	103.6735	GEN300020 1-1CHOTCT4 16.000
FDNS	01ALL	0	16WP	G15_060	TO->FROM	MATHWSN7 345.00 - TATONGA7 345.00 345KV CKT 1	1195	1195	0.23704	103.6735	GEN300021 1-1CHOTCT5 16.000
FDNS	01ALL	0	16WP	G15_060	TO->FROM	MATHWSN7 345.00 - TATONGA7 345.00 345KV CKT 1	1195	1195	0.23704	103.6733	GEN300032 1-CHOUTEAU CTG 2
FDNS	01ALL	0	16WP	G15_060	TO->FROM	MATHWSN7 345.00 - TATONGA7 345.00 345KV CKT 1	1195	1195	0.23704	103.6733	GEN300033 1-CHOUTEAU STG 3
FDNS	01ALL	0	16WP	G15_060	TO->FROM	MATHWSN7 345.00 - TATONGA7 345.00 345KV CKT 1	1195	1195	0.23704	103.6629	GEN335204 1-NELSON UNIT 4
FDNS	01ALL	0	16WP	G15_060	TO->FROM	MATHWSN7 345.00 - TATONGA7 345.00 345KV CKT 1	1195	1195	0.23792	103.6499	EMPORIA ENERGY CENTER - SWISSVALE 345KV CKT 1
FDNS	01ALL	0	16WP	G15_060	TO->FROM	MATHWSN7 345.00 - TATONGA7 345.00 345KV CKT 1	1195	1195	0.23704	103.6455	GEN300015 1-1SGPDEL 18.000
FDNS	01ALL	0	16WP	G15_060	TO->FROM	MATHWSN7 345.00 - TATONGA7 345.00 345KV CKT 1	1195	1195	0.23704	103.6375	GEN509392 G2-ARSENAL HILL GENS #3 (STALL)
FDNS	01ALL	0	16WP	G15_060	TO->FROM	MATHWSN7 345.00 - TATONGA7 345.00 345KV CKT 1	1195	1195	0.23704	103.6328	GEN562992 1-G15063_3 0.6900
FDNS	01ALL	0	16WP	G15_060	TO->FROM	MATHWSN7 345.00 - TATONGA7 345.00 345KV CKT 1	1195	1195	0.23704	103.6323	GEN503909 1-FULTONU1 1 16.000
FDNS	01ALL	0	16WP	G15_060	TO->FROM	MATHWSN7 345.00 - TATONGA7 345.00 345KV CKT 1	1195	1195	0.23704	103.6283	GEN506754 1-LEBROCK STEAM 1
FDNS	01ALL	0	16WP	G15_060	TO->FROM	MATHWSN7 345.00 - TATONGA7 345.00 345KV CKT 1	1195	1195	0.23884	103.6251	DEWEY - TALOGA 138KV CKT 1
FDNS	01ALL	0	16WP	G15_060	TO->FROM	MATHWSN7 345.00 - TATONGA7 345.00 345KV CKT 1	1195	1195	0.23704	103.625	GEN509391 G1-ARSENAL HILL GENS #2 (STALL)
FDNS	01ALL	0	16WP	G15_060	TO->FROM	MATHWSN7 345.00 - TATONGA7 345.00 345KV CKT 1	1195	1195	0.23704	103.6217	GEN334441 1-SABINE UNIT 5
FDNS	01ALL	0	16WP	G15_060	TO->FROM	MATHWSN7 345.00 - TATONGA7 345.00 345KV CKT 1	1195	1195	0.23879	103.6215	TUCO INTERCHANGE - TUCO_2 345.00 345KV CKT 1
FDNS	01ALL	0	16WP	G15_060	TO->FROM	MATHWSN7 345.00 - TATONGA7 345.00 345KV CKT 1	1195	1195	0.23713	103.62	GERALD GENTLEMAN STATION - SWEETWATER 345KV CKT 1
FDNS	01ALL	0	16WP	G15_060	TO->FROM	MATHWSN7 345.00 - TATONGA7 345.00 345KV CKT 1	1195	1195	0.23704	103.6175	GEN520812 1-ANADRK5
FDNS	01ALL	0	16WP	G15_060	TO->FROM	MATHWSN7 345.00 - TATONGA7 345.00 345KV CKT 1	1195	1195	0.23704	103.6174	GEN520813 1-ANADRK6
FDNS	01ALL	0	16WP	G15_060	TO->FROM	MATHWSN7 345.00 - TATONGA7 345.00 345KV CKT 1	1195	1195	0.23704	103.6144	GEN303007 1-1BC2 U2
FDNS	01ALL	0	16WP	G15_060	TO->FROM	MATHWSN7 345.00 - TATONGA7 345.00 345KV CKT 1	1195	1195	0.23704	103.614	GEN303006 1-1BC2 U1
FDNS	01ALL	0	16WP	G15_060	TO->FROM	MATHWSN7 345.00 - TATONGA7 345.00 345KV CKT 1	1195	1195	0.23704	103.6131	GEN515266 1-AES 1G
FDNS	01ALL	0	16WP	G15_060	TO->FROM	MATHWSN7 345.00 - TATONGA7 345.00 345KV CKT 1	1195	1195	0.23704	103.6131	GEN515267 1-AES 2G
FDNS	01ALL	0	16WP	G15_060	TO->FROM	MATHWSN7 345.00 - TATONGA7 345.00 345KV CKT 1	1195	1195	0.2417	103.611	P12:230:AEPW-SPS:SWEETWT6:WHEELER 6
FDNS	01ALL	0	16WP	G15_060	TO->FROM	MATHWSN7 345.00 - TATONGA7 345.00 345KV CKT 1	1195	1195	0.2417	103.6107	STATELINE INTERCHANGE - STLN-DEMARC6 230KV CKT 1
FDNS	01ALL	0	16WP	G15_060	TO->FROM	MATHWSN7 345.00 - TATONGA7 345.00 345KV CKT 1	1195	1195	0.2417	103.609	STLN-DEMARC6 - SWEETWATER 230KV CKT 1
FDNS	01ALL	0	16WP	G15_060	TO->FROM	MATHWSN7 345.00 - TATONGA7 345.00 345KV CKT 1	1195	1195	0.23704	103.6088	GEN505432 1-SIKESTON
FDNS	01ALL	0	16WP	G15_060	TO->FROM	MATHWSN7 345.00 - TATONGA7 345.00 345KV CKT 1	1195	1195	0.23704	103.607	GEN336191 1-LITTLE GYPSY UNIT#3
FDNS	01ALL	0	16WP	G15_060	TO->FROM	MATHWSN7 345.00 - TATONGA7 345.00 345KV CKT 1	1195	1195	0.23704	103.6039	GEN336801 1-BAXTER WILSON UNIT #1
FDNS	01ALL	0	16WP	G15_060	TO->FROM	MATHWSN7 345.00 - TATONGA7 345.00 345KV CKT 1	1195	1195	0.23793	103.598	HITCHLAND INTERCHANGE - MOORE COUNTY INTERCHANGE 230KV CKT 1
FDNS	01ALL	0	16WP	G15_060	TO->FROM	MATHWSN7 345.00 - TATONGA7 345.00 345KV CKT 1	1195	1195	0.23793	103.598	HITCHLAND INTERCHANGE - MOORE COUNTY INTERCHANGE 230KV CKT 1
FDNS	01ALL	0	16WP	G15_060	TO->FROM	MATHWSN7 345.00 - TATONGA7 345.00 345KV CKT 1	1195	1195	0.23704	103.5968	GEN300003 1-THOMAS HILL UNIT 3
FDNS	01ALL	0	16WP	G15_060	TO->FROM	MATHWSN7 345.00 - TATONGA7 345.00 345KV CKT 1	1195	1195	0.23704	103.5903	GEN549893 2-SOUTHWEST 2
FDNS	01ALL	0	16WP	G15_060	TO->FROM	MATHWSN7 345.00 - TATONGA7 345.00 345KV CKT 1	1195	1195	0.23814	103.59	TALOGA (TALOGA) 138/69/13.8KV TRANSFORMER CKT 1
FDNS	01ALL	0	16WP	G15_060	TO->FROM	MATHWSN7 345.00 - TATONGA7 345.00 345KV CKT 1	1195	1195	0.23704	103.589	GEN335614 1-WILLOW GLENN UNIT#4
FDNS	01ALL	0	16WP	G15_060	TO->FROM	MATHWSN7 345.00 - TATONGA7 345.00 345KV CKT 1	1195	1195	0.23704	103.5862	GEN501811 1-RODEMACHER UNIT 1
FDNS	01ALL	0	16WP	G15_060	TO->FROM	MATHWSN7 345.00 - TATONGA7 345.00 345KV CKT 1	1195	1195	0.23704	103.5841	GEN300010 1-ST FRANCIS UNIT 1
FDNS	01ALL	0	16WP	G15_060	TO->FROM	MATHWSN7 345.00 - TATONGA7 345.00 345KV CKT 1	1195	1195	0.23704	103.5818	GEN334071 1-LEWIS CREEK 2
FDNS	01ALL	0	16WP	G15_060	TO->FROM	MATHWSN7 345.00 - TATONGA7 345.00 345KV CKT 1	1195	1195	0.23704	103.5788	GEN511837 1-NORTHEASTERN STATION # 1-1A
FDNS	01ALL	0	16WP	G15_060	TO->FROM	MATHWSN7 345.00 - TATONGA7 345.00 345KV CKT 1	1195	1195	0.23704	103.5788	GEN511838 1-NORTHEASTERN STATION # 1-1B
FDNS	01ALL	0	16WP	G15_060	TO->FROM	MATHWSN7 345.00 - TATONGA7 345.00 345KV CKT 1	1195	1195	0.23996	103.5781	BENTON - ROSE HILL 345KV CKT 1
FDNS	01ALL	0	16WP	G15_060	TO->FROM	MATHWSN7 345.00 - TATONGA7 345.00 345KV CKT 1	1195	1195	0.23704	103.578	GEN334070 1-LEWIS CREEK 1
FDNS	01ALL	0	16WP	G15_060	TO->FROM	MATHWSN7 345.00 - TATONGA7 345.00 345KV CKT 1	1195	1195	0.23704	103.5777	GEN303008 1-1BC2 U3
FDNS	01ALL	0	16WP	G15_060	TO->FROM	MATHWSN7 345.00 - TATONGA7 345.00 345KV CKT 1	1195	1195	0.23896	103.5773	ELLIS 4 138.00 - MOREWOOD SW 138KV CKT 1
FDNS	01ALL	0	16WP	G15_060	TO->FROM	MATHWSN7 345.00 - TATONGA7 345.00 345KV CKT 1	1195	1195	0.23704	103.5747	GEN336464 1-MICHOUD UNIT #3
FDNS	01ALL	0	16WP	G15_060	TO->FROM	MATHWSN7 345.00 - TATONGA7 345.00 345KV CKT 1	1195	1195	0.23704	103.5741	GEN513602 1-GRECSTG_1 17.500
FDNS	01ALL	0	16WP	G15_060	TO->FROM	MATHWSN7 345.00 - TATONGA7 345.00 345KV CKT 1	1195	1195	0.23704	103.568	GEN336170 1-GULF OXY U4
FDNS	01ALL	0	16WP	G15_060	TO->FROM	MATHWSN7 345.00 - TATONGA7 345.00 345KV CKT 1	1195	1195	0.23704	103.5576	GEN300011 1-ST FRANCIS UNIT 2
FDNS	01ALL	0	16WP	G15_060	TO->FROM	MATHWSN7 345.00 - TATONGA7 345.00 345KV CKT 1	1195	1195	0.23704	103.5571	GEN334433 1-SABINE UNIT 3
FDNS	01ALL	0	16WP	G15_060	TO->FROM	MATHWSN7 345.00 - TATONGA7 345.00 345KV CKT 1	1195	1195	0.23756	103.5494	CIRCLE - MULLERGREN 230KV CKT 1

SOLUTION	GROUP	SCENARIO	SEASON	SOURCE	DIRECTION	MONITORED ELEMENT	RATEA (MVA)	RATEB(MVA)	TDF	TC%LOADING (% MVA)	CONTINGENCY
FDNS	01ALL	0	16WP	G15_060	TO->FROM	MATHWSN7 345.00 - TATONGA7 345.00 345KV CKT 1	1195	1195	0.23756	103.5494	CIRCLE - MULLERGREN 230KV CKT 1
FDNS	01ALL	0	16WP	G15_060	TO->FROM	MATHWSN7 345.00 - TATONGA7 345.00 345KV CKT 1	1195	1195	0.23722	103.5484	MCCOOL - MOORE 345KV CKT 1
FDNS	01ALL	0	16WP	G15_060	TO->FROM	MATHWSN7 345.00 - TATONGA7 345.00 345KV CKT 1	1195	1195	0.23704	103.5422	DOLET HILLS - SOUTHWEST SHREVEPORT 345KV CKT 1
FDNS	01ALL	0	16WP	G15_060	TO->FROM	MATHWSN7 345.00 - TATONGA7 345.00 345KV CKT 1	1195	1195	0.23704	103.5422	DOLET HILLS - SOUTHWEST SHREVEPORT 345KV CKT 1
FDNS	01ALL	0	16WP	G15_060	TO->FROM	MATHWSN7 345.00 - TATONGA7 345.00 345KV CKT 1	1195	1195	0.23825	103.54	CANTON - TALOGA 69KV CKT 1
FDNSLock	01ALL	0	16WP	G15_060	TO->FROM	MATHWSN7 345.00 - TATONGA7 345.00 345KV CKT 1	1195	1195	0.23735	103.5393	STEGALL (SGQ KV3A) 345/230/13.8KV TRANSFORMER CKT 1
FDNS	01ALL	0	16WP	G15_060	TO->FROM	MATHWSN7 345.00 - TATONGA7 345.00 345KV CKT 1	1195	1195	0.23983	103.5366	GERALD GENTLEMAN STATION - RED WILLOW 345KV CKT 1
FDNS	01ALL	0	16WP	G15_060	TO->FROM	MATHWSN7 345.00 - TATONGA7 345.00 345KV CKT 1	1195	1195	0.23704	103.5323	GEN511955 G-COGENTRIX GAS # 2
FDNS	01ALL	0	16WP	G15_060	TO->FROM	MATHWSN7 345.00 - TATONGA7 345.00 345KV CKT 1	1195	1195	0.23704	103.5152	GEN300016 1-1G1GPDEL 18.000
FDNS	01ALL	0	16WP	G15_060	TO->FROM	MATHWSN7 345.00 - TATONGA7 345.00 345KV CKT 1	1195	1195	0.23858	103.5141	P12:138:AEPW-OGE:WTH_JCT4:JENSEN4
FDNS	01ALL	0	16WP	G15_060	TO->FROM	MATHWSN7 345.00 - TATONGA7 345.00 345KV CKT 1	1195	1195	0.23837	103.5105	DARLINGTNRD4138.00 - ROMAN NOSE 138KV CKT 1
FDNS	01ALL	0	16WP	G15_060	TO->FROM	MATHWSN7 345.00 - TATONGA7 345.00 345KV CKT 1	1195	1195	0.23825	103.5012	CANTON - OKEENE 69KV CKT 1
FDNS	01ALL	0	16WP	G15_060	TO->FROM	MATHWSN7 345.00 - TATONGA7 345.00 345KV CKT 1	1195	1195	0.23748	103.5011	P12:115:MKEC:BARBER-RIVERROAD::
FDNS	01ALL	0	16WP	G15_060	TO->FROM	MATHWSN7 345.00 - TATONGA7 345.00 345KV CKT 1	1195	1195	0.23704	103.4999	GEN337766 1-TRACTEBEL UNIT S1
FDNS	01ALL	0	16WP	G15_060	TO->FROM	MATHWSN7 345.00 - TATONGA7 345.00 345KV CKT 1	1195	1195	0.23704	103.4987	GEN511953 G-COGENTRIX GAS # 1
FDNS	01ALL	0	16WP	G15_060	TO->FROM	MATHWSN7 345.00 - TATONGA7 345.00 345KV CKT 1	1195	1195	0.2374	103.4945	NUNDRWD - WAYSIDE 230KV CKT 1
FDNS	01ALL	0	16WP	G15_060	TO->FROM	MATHWSN7 345.00 - TATONGA7 345.00 345KV CKT 1	1195	1195	0.23748	103.4942	BARBER 3 115.00 - SAWYER 3 115.00 115KV CKT 1
FDNS	01NR	0	20L	G15_060	TO->FROM	MATHWSN7 345.00 - TATONGA7 345.00 345KV CKT 1	1195	1195	0.32434	103.4941	THISTLE7 345.00 - WOODWARD DISTRICT EHV 345KV CKT 1
FDNS	01NR	0	20L	G15_060	TO->FROM	MATHWSN7 345.00 - TATONGA7 345.00 345KV CKT 1	1195	1195	0.32434	103.4941	THISTLE7 345.00 - WOODWARD DISTRICT EHV 345KV CKT 1
FDNS	01NR	0	20L	G15_060	TO->FROM	MATHWSN7 345.00 - TATONGA7 345.00 345KV CKT 1	1195	1195	0.32434	103.4941	THISTLE7 345.00 - WOODWARD DISTRICT EHV 345KV CKT 2
FDNS	01NR	0	20L	G15_060	TO->FROM	MATHWSN7 345.00 - TATONGA7 345.00 345KV CKT 1	1195	1195	0.32434	103.4941	THISTLE7 345.00 - WOODWARD DISTRICT EHV 345KV CKT 2
FDNS	01ALL	0	16WP	G15_060	TO->FROM	MATHWSN7 345.00 - TATONGA7 345.00 345KV CKT 1	1195	1195	0.23704	103.4923	GEN501910 1-ACADIA UNIT ST1
FDNS	01ALL	0	16WP	G15_060	TO->FROM	MATHWSN7 345.00 - TATONGA7 345.00 345KV CKT 1	1195	1195	0.23704	103.4905	GEN334030 1-FRONTIER UNIT 1
FDNS	01ALL	0	16WP	G15_060	TO->FROM	MATHWSN7 345.00 - TATONGA7 345.00 345KV CKT 1	1195	1195	0.23704	103.49	GEN334031 1-FRONTIER UNIT 2
FDNS	01ALL	0	16WP	G15_060	TO->FROM	MATHWSN7 345.00 - TATONGA7 345.00 345KV CKT 1	1195	1195	0.23704	103.4898	GEN511836 1-NORTHEASTERN STATION #1
FDNS	01ALL	0	16WP	G15_060	TO->FROM	MATHWSN7 345.00 - TATONGA7 345.00 345KV CKT 1	1195	1195	0.23704	103.4865	GEN511957 G-COGENTRIX GAS # 3
FDNS	01ALL	0	16WP	G15_060	TO->FROM	MATHWSN7 345.00 - TATONGA7 345.00 345KV CKT 1	1195	1195	0.23704	103.486	GEN520811 1-ANADRK4
FDNS	01ALL	0	16WP	G15_060	TO->FROM	MATHWSN7 345.00 - TATONGA7 345.00 345KV CKT 1	1195	1195	0.23704	103.4855	GEN511954 S-COGENTRIX STEAM # 1
FDNS	01ALL	0	16WP	G15_060	TO->FROM	MATHWSN7 345.00 - TATONGA7 345.00 345KV CKT 1	1195	1195	0.23704	103.4855	GEN511956 S-COGENTRIX STEAM # 2
FDNS	01ALL	0	16WP	G15_060	TO->FROM	MATHWSN7 345.00 - TATONGA7 345.00 345KV CKT 1	1195	1195	0.23896	103.4852	CUSTER4 138.00 - ELLIS 4 138.00 138KV CKT 1
FDNS	01ALL	0	16WP	G15_060	TO->FROM	MATHWSN7 345.00 - TATONGA7 345.00 345KV CKT 1	1195	1195	0.23748	103.4801	ALEXANDER - SAWYER 3 115.00 115KV CKT 1
FDNS	01ALL	0	16WP	G15_060	TO->FROM	MATHWSN7 345.00 - TATONGA7 345.00 345KV CKT 1	1195	1195	0.23754	103.4743	BLACKBERRY - NEOSHO 345KV CKT 1
FDNS	01ALL	0	16WP	G15_060	TO->FROM	MATHWSN7 345.00 - TATONGA7 345.00 345KV CKT 1	1195	1195	0.23704	103.4724	GEN506752 1-LEBROCK GAS 1
FDNS	01ALL	0	16WP	G15_060	TO->FROM	MATHWSN7 345.00 - TATONGA7 345.00 345KV CKT 1	1195	1195	0.23704	103.4724	GEN506753 1-LEBROCK GAS 2
FDNS	01ALL	0	16WP	G15_060	TO->FROM	MATHWSN7 345.00 - TATONGA7 345.00 345KV CKT 1	1195	1195	0.23845	103.4697	Canadian Pump Station - REDROCKRD4 138.00 138KV CKT 1
FDNS	01ALL	0	16WP	G15_060	TO->FROM	MATHWSN7 345.00 - TATONGA7 345.00 345KV CKT 1	1195	1195	0.23896	103.4663	CUSTER4 138.00 - RED HILLS WIND 138KV CKT 1
FDNS	01ALL	0	16WP	G15_060	TO->FROM	MATHWSN7 345.00 - TATONGA7 345.00 345KV CKT 1	1195	1195	0.23711	103.4633	GERALD GENTLEMAN STATION - SWEETWATER 345KV CKT 2
FDNS	01ALL	0	16WP	G15_060	TO->FROM	MATHWSN7 345.00 - TATONGA7 345.00 345KV CKT 1	1195	1195	0.23657	103.4622	ARKANSAS NUCLEAR ONE - FT SMITH 500KV CKT 1
FDNS	01ALL	0	16WP	G15_060	TO->FROM	MATHWSN7 345.00 - TATONGA7 345.00 345KV CKT 1	1195	1195	0.23657	103.4622	ARKANSAS NUCLEAR ONE - FT SMITH 500KV CKT 1
FDNS	01ALL	0	16WP	G15_060	TO->FROM	MATHWSN7 345.00 - TATONGA7 345.00 345KV CKT 1	1195	1195	0.23881	103.458	BVRCNTY7 345.00 - G11-14T 345.00 345KV CKT 1
FDNS	01ALL	0	16WP	G15_060	TO->FROM	MATHWSN7 345.00 - TATONGA7 345.00 345KV CKT 1	1195	1195	0.23881	103.458	BVRCNTY7 345.00 - G11-14T 345.00 345KV CKT 2
FDNS	01ALL	0	16WP	G15_060	TO->FROM	MATHWSN7 345.00 - TATONGA7 345.00 345KV CKT 1	1195	1195	0.23725	103.4573	STEGALL-LNX3230.00 - WAYSIDE 230KV CKT 1
FDNS	01ALL	0	16WP	G15_060	TO->FROM	MATHWSN7 345.00 - TATONGA7 345.00 345KV CKT 1	1195	1195	0.23704	103.4544	GEN509408 1-WILKES #2
FDNS	01ALL	0	16WP	G15_060	TO->FROM	MATHWSN7 345.00 - TATONGA7 345.00 345KV CKT 1	1195	1195	0.23749	103.4537	CLINTON JUNCTION - ELK CITY 138KV CKT 1
FDNS	01ALL	0	16WP	G15_060	TO->FROM	MATHWSN7 345.00 - TATONGA7 345.00 345KV CKT 1	1195	1195	0.23749	103.4537	CLINTON JUNCTION - ELK CITY 138KV CKT 1
FDNS	01ALL	0	16WP	G15_060	TO->FROM	MATHWSN7 345.00 - TATONGA7 345.00 345KV CKT 1	1195	1195	0.23725	103.4521	STEGALL - STEGALL-LNX3230.00 230KV CKT Z
FDNS	01ALL	0	16WP	G15_060	TO->FROM	MATHWSN7 345.00 - TATONGA7 345.00 345KV CKT 1	1195	1195	0.23837	103.4511	DARLINGTNRD4138.00 - REDROCKRD4 138.00 138KV CKT 1
FDNS	01ALL	0	16WP	G15_060	TO->FROM	MATHWSN7 345.00 - TATONGA7 345.00 345KV CKT 1	1195	1195	0.23837	103.4511	DARLINGTNRD4138.00 - REDROCKRD4 138.00 138KV CKT 1
FDNS	01ALL	0	16WP	G15_060	TO->FROM	MATHWSN7 345.00 - TATONGA7 345.00 345KV CKT 1	1195	1195	0.23845	103.4456	P12:138:OKGE-AEPW:JENSEN4:REDROCKRD4
FDNS	01ALL	0	16WP	G15_060	TO->FROM	MATHWSN7 345.00 - TATONGA7 345.00 345KV CKT 1	1195	1195	0.23704	103.4454	GEN549890 1-SOUTHWEST 1
FDNS	01ALL	0	16WP	G15_060	TO->FROM	MATHWSN7 345.00 - TATONGA7 345.00 345KV CKT 1	1195	1195	0.23704	103.4447	GEN336222 1-LITTLE GYPSY UNIT#2
FDNS	01ALL	0	16WP	G15_060	TO->FROM	MATHWSN7 345.00 - TATONGA7 345.00 345KV CKT 1	1195	1195	0.23704	103.4415	GEN337764 1-TRACTEBEL UNIT C1
FDNS	01ALL	0	16WP	G15_060	TO->FROM	MATHWSN7 345.00 - TATONGA7 345.00 345KV CKT 1	1195	1195	0.23704	103.4415	GEN337765 1-TRACTEBEL UNIT C2
FDNS	01ALL	0	16WP	G15_060	TO->FROM	MATHWSN7 345.00 - TATONGA7 345.00 345KV CKT 1	1195	1195	0.23704	103.4414	GEN511851 1-COMANCHE #1
FDNS	01ALL	0	16WP	G15_060	TO->FROM	MATHWSN7 345.00 - TATONGA7 345.00 345KV CKT 1	1195	1195	0.23704	103.4349	GEN514912 2-REDBUD GEN
FDNS	01ALL	0	16WP	G15_060	TO->FROM	MATHWSN7 345.00 - TATONGA7 345.00 345KV CKT 1	1195	1195	0.23704	103.4296	8DANIEL8 500.00 - MCKNIGHT 500KV CKT 1
FDNS	01ALL	0	16WP	G15_060	TO->FROM	MATHWSN7 345.00 - TATONGA7 345.00 345KV CKT 1	1195	1195	0.23704	103.4289	GEN336152 1-WATERFORD UNIT#2
FDNS	01ALL	0	16WP	G15_060	TO->FROM	MATHWSN7 345.00 - TATONGA7 345.00 345KV CKT 1	1195	1195	0.23704	103.4282	GEN336151 1-WATERFORD UNIT#1
FDNS	01ALL	0	16WP	G15_060	TO->FROM	MATHWSN7 345.00 - TATONGA7 345.00 345KV CKT 1	1195	1195	0.23704	103.4252	GEN562882 1-G15047_3 0.6900
FDNS	01ALL	0	16WP	G15_060	TO->FROM	MATHWSN7 345.00 - TATONGA7 345.00 345KV CKT 1	1195	1195	0.23804	103.4242	PUTNAM - TALOGA 69KV CKT 1
FDNS	01ALL	0	16WP	G15_060	TO->FROM	MATHWSN7 345.00 - TATONGA7 345.00 345KV CKT 1	1195	1195	0.237	103.4219	AS KING - EAU CLAIRE 345KV CKT 1
FDNS	01ALL	0	16WP	G15_060	TO->FROM	MATHWSN7 345.00 - TATONGA7 345.00 345KV CKT 1	1195	1195	0.23705	103.4214	7SAREPTA% 345.00 - LONGWOOD 345KV CKT 1
FDNS	01ALL	0	16WP	G15_060	TO->FROM	MATHWSN7 345.00 - TATONGA7 345.00 345KV CKT 1	1195	1195	0.23705	103.4214	7SAREPTA% 345.00 - LONGWOOD 345KV CKT 1
FDNS	01ALL	0	16WP	G15_060	TO->FROM	MATHWSN7 345.00 - TATONGA7 345.00 345KV CKT 1	1195	1195	0.23748	103.4151	ALEXANDER - NINNESC3 115.00 115KV CKT 1
FDNS	01ALL	0	16WP	G15_060	TO->FROM	MATHWSN7 345.00 - TATONGA7 345.00 345KV CKT 1	1195	1195	0.23704	103.4131	ST FRANCIS - ST FRANCIS 1 161KV CKT Z1
FDNS	01ALL	0	20L	G15_060	TO->FROM	MATHWSN7 345.00 - TATONGA7 345.00 345KV CKT 1	1195	1195	0.25161	103.4123	FINNEY SWITCHING STATION - HOLCOMB 345KV CKT 1
FDNS	01ALL	0	20L	G15_060	TO->FROM	MATHWSN7 345.00 - TATONGA7 345.00 345KV CKT 1	1195	1195	0.25161	103.4123	FINNEY SWITCHING STATION - HOLCOMB 345KV CKT 1
FDNS	01ALL	0	16WP	G15_060	TO->FROM	MATHWSN7 345.00 - TATONGA7 345.00 345KV CKT 1	1195	1195	0.2414	103.412	CHISHOLM7 345.00 (CHISHOLM) 345/230/13.2KV TRANSFORMER CKT 1
FDNS	01ALL	0	16WP	G15_060	TO->FROM	MATHWSN7 345.00 - TATONGA7 345.00 345KV CKT 1	1195	1195	0.23704	103.4114	GEN501970 1-EVANGELINE UNIT 7
FDNS	01ALL	0	16WP	G15_060	TO->FROM	MATHWSN7 345.00 - TATONGA7 345.00 345KV CKT 1	1195	1195	0.23758	103.4094	SPEARVILLE (SPEARVL) 345/230/13.8KV TRANSFORMER CKT 1
FDNS	01ALL	0	16WP	G15_060	TO->FROM	MATHWSN7 345.00 - TATONGA7 345.00 345KV CKT 1	1195	1195	0.23758	103.4094	SPEARVILLE (SPEARVL) 345/230/13.8KV TRANSFORMER CKT 1
FDNS	01ALL	0	16WP	G15_060	TO->FROM	MATHWSN7 345.00 - TATONGA7 345.00 345KV CKT 1	1195	1195	0.23704	103.4085	GEN503900 1-FITZHUGH CT1
FDNS	01ALL	0	16WP	G15_060	TO->FROM	MATHWSN7 345.00 - TATONGA7 345.00 345KV CKT 1	1195	1195	0.23724	103.4066	BUSHLAND INTERCHANGE - DEAF SMITH COUNTY INTERCHANGE 230KV CKT 1
FDNS	01ALL	0	16WP	G15_060	TO->FROM	MATHWSN7 345.00 - TATONGA7 345.00 345KV CKT 1	1195	1195	0.23724	103.4066	BUSHLAND INTERCHANGE - DEAF SMITH COUNTY INTERCHANGE 230KV CKT 1
FDNS	01ALL	0	16WP	G15_060	TO->FROM	MATHWSN7 345.00 - TATONGA7 345.00 345KV CKT 1	1195	1195	0.2374	103.4044	RED WILLOW (RD.WILLOW T1) 345/115/13.8KV TRANSFORMER CKT 1
FDNS	01ALL	0	16WP	G15_060	TO->FROM	MATHWSN7 345.00 - TATONGA7 345.00 345KV CKT 1	1195	1195	0.2374	103.4044	RED WILLOW (RD.WILLOW T1) 345/115/13.8KV TRANSFORMER CKT 1
FDNS	01ALL	0	16WP	G15_060	TO->FROM	MATHWSN7 345.00 - TATONGA7 345.00 345KV CKT 1	1195	1195	0.23704	103.4023	GEN336242 1-1NMIL ST1 18.000
FDNS	01ALL	0	16WP	G15_060	TO->FROM	MATHWSN7 345.00 - TATONGA7 345.00 345KV CKT 1	1195	1195	0.23804	103.399	HAMON BUTLER - PUTNAM 69KV CKT 1
FDNS	01ALL	0	16WP	G15_060	TO->FROM	MATHWSN7 345.00 - TATONGA7 345.00 345KV CKT 1	1195	1195	0.23804	103.3984	ARAPAHO - HAMON BUTLER 69KV CKT 1

SOLUTION	GROUP	SCENARIO	SEASON	SOURCE	DIRECTION	MONITORED ELEMENT	RATEA (MVA)	RATEB(MVA)	TDF	TC%LOADING (% MVA)	CONTINGENCY
FDNS	01ALL	0	16WP	G15_060	TO->FROM	MATHWSN7 345.00 - TATONGA7 345.00 345KV CKT 1	1195	1195	0.23804	103.3972	ARAPAHO - INDUSTRIAL PARK 69KV CKT 1
FDNS	01ALL	0	16WP	G15_060	TO->FROM	MATHWSN7 345.00 - TATONGA7 345.00 345KV CKT 1	1195	1195	0.23704	103.3937	3TR3AR8EL7EL
FDNS	01ALL	0	16WP	G15_060	TO->FROM	MATHWSN7 345.00 - TATONGA7 345.00 345KV CKT 1	1195	1195	0.23704	103.3937	7SAREPTA% 345.00 - ELDORADO EHV 345KV CKT 1
FDNS	01ALL	0	16WP	G15_060	TO->FROM	MATHWSN7 345.00 - TATONGA7 345.00 345KV CKT 1	1195	1195	0.23704	103.3924	ELDORADO EHV 500/345KV TRANSFORMER CKT 1
FDNS	01ALL	0	16WP	G15_060	TO->FROM	MATHWSN7 345.00 - TATONGA7 345.00 345KV CKT 1	1195	1195	0.23709	103.391	POST ROCK (POSTROCK T1) 345/230/13.8KV TRANSFORMER CKT 1
FDNS	01ALL	0	16WP	G15_060	TO->FROM	MATHWSN7 345.00 - TATONGA7 345.00 345KV CKT 1	1195	1195	0.23704	103.3874	ST FRANCIS 345/161KV TRANSFORMER CKT 1
FDNS	01ALL	0	16WP	G15_060	TO->FROM	MATHWSN7 345.00 - TATONGA7 345.00 345KV CKT 1	1195	1195	0.23704	103.3833	FRONTIER - GRIMES 345KV CKT 1
FDNS	01ALL	0	16WP	G15_060	TO->FROM	MATHWSN7 345.00 - TATONGA7 345.00 345KV CKT 1	1195	1195	0.23704	103.3819	GEN337430 1-PERYVILLE UNIT #3
FDNS	01ALL	0	16WP	G15_060	TO->FROM	MATHWSN7 345.00 - TATONGA7 345.00 345KV CKT 1	1195	1195	0.23704	103.3815	GEN337428 1-PERYVILLE UNIT #1
FDNS	01ALL	0	16WP	G15_060	TO->FROM	MATHWSN7 345.00 - TATONGA7 345.00 345KV CKT 1	1195	1195	0.23704	103.3813	GEN501972 1-EVANGELINE UNIT 7-2
FDNS	01ALL	0	16WP	G15_060	TO->FROM	MATHWSN7 345.00 - TATONGA7 345.00 345KV CKT 1	1195	1195	0.23704	103.3812	GEN501971 1-EVANGELINE UNIT 7-1
FDNS	01ALL	0	16WP	G15_060	TO->FROM	MATHWSN7 345.00 - TATONGA7 345.00 345KV CKT 1	1195	1195	0.23704	103.3791	GEN501912 1-ACADIA UNIT CT1B
FDNS	01ALL	0	16WP	G15_060	TO->FROM	MATHWSN7 345.00 - TATONGA7 345.00 345KV CKT 1	1195	1195	0.23704	103.3788	GEN501911 1-ACADIA UNIT CT1A
FDNS	01ALL	0	16WP	G15_060	TO->FROM	MATHWSN7 345.00 - TATONGA7 345.00 345KV CKT 1	1195	1195	0.23703	103.3764	WEBRE - WELLS 500KV CKT 1
FDNS	01ALL	0	16WP	G15_060	TO->FROM	MATHWSN7 345.00 - TATONGA7 345.00 345KV CKT 1	1195	1195	0.23704	103.3755	GEN334392 1-EXXON MOBIL IPP 1
FDNS	01ALL	0	16WP	G15_060	TO->FROM	MATHWSN7 345.00 - TATONGA7 345.00 345KV CKT 1	1195	1195	0.23704	103.3751	GEN334393 1-EXXON MOBIL IPP 2
FDNS	01ALL	0	16WP	G15_060	TO->FROM	MATHWSN7 345.00 - TATONGA7 345.00 345KV CKT 1	1195	1195	0.23704	103.3751	GEN334394 1-EXXON MOBIL IPP 3
FDNS	01ALL	0	16WP	G15_060	TO->FROM	MATHWSN7 345.00 - TATONGA7 345.00 345KV CKT 1	1195	1195	0.23704	103.3692	GEN338388 1-1PLUM PT U1 23.000
FDNS	01ALL	0	20WP	G15_060	TO->FROM	MATHWSN7 345.00 - TATONGA7 345.00 345KV CKT 1	1195	1195	0.23138	103.2961	GEN515449 1-CRSRDW11 0.6900
FDNS	01ALL	0	20WP	G15_060	TO->FROM	MATHWSN7 345.00 - TATONGA7 345.00 345KV CKT 1	1195	1195	0.23138	103.2329	GEN515450 1-CRSRDW21 0.6900
FDNS	01ALL	0	20WP	G15_060	TO->FROM	MATHWSN7 345.00 - TATONGA7 345.00 345KV CKT 1	1195	1195	0.23138	103.2218	GEN515632 1-SLINGW21 0.6900
FDNS	01ALL	0	20L	G15_060	TO->FROM	MATHWSN7 345.00 - TATONGA7 345.00 345KV CKT 1	1195	1195	0.25515	103.1999	DEWEY - SOUTHARD 138KV CKT 1
FDNS	01ALL	0	20WP	G15_060	TO->FROM	MATHWSN7 345.00 - TATONGA7 345.00 345KV CKT 1	1195	1195	0.23138	103.1914	GEN515611 1-NBUFFRG1 0.6900
FDNS	01ALL	0	20WP	G15_060	TO->FROM	MATHWSN7 345.00 - TATONGA7 345.00 345KV CKT 1	1195	1195	0.23138	103.1914	GEN560217 1-G07_062_6 0.6900
FDNS	01ALL	0	20WP	G15_060	TO->FROM	MATHWSN7 345.00 - TATONGA7 345.00 345KV CKT 1	1195	1195	0.23138	103.1914	GEN560218 1-G07_062_7 0.6900
FDNS	01ALL	0	20WP	G15_060	TO->FROM	MATHWSN7 345.00 - TATONGA7 345.00 345KV CKT 1	1195	1195	0.23138	103.1359	GEN515586 1-MMTHPW11 0.5750
FDNS	01ALL	0	20WP	G15_060	TO->FROM	MATHWSN7 345.00 - TATONGA7 345.00 345KV CKT 1	1195	1195	0.23138	103.1332	GEN515583 1-SLINGW11 0.6900
FDNS	01ALL	0	16WP	G15_060	TO->FROM	MATHWSN7 345.00 - TATONGA7 345.00 345KV CKT 1	1195	1195	0.23704	103.1041	BASE CASE
FDNS	01ALL	0	20L	G15_060	TO->FROM	MATHWSN7 345.00 - TATONGA7 345.00 345KV CKT 1	1195	1195	0.24774	103.0992	G13-010T 345.00 - POST ROCK 345KV CKT 1
FDNS	01ALL	0	20L	G15_060	TO->FROM	MATHWSN7 345.00 - TATONGA7 345.00 345KV CKT 1	1195	1195	0.25515	103.0582	ROMAN NOSE - SOUTHARD 138KV CKT 1
FDNS	01ALL	0	20L	G15_060	TO->FROM	MATHWSN7 345.00 - TATONGA7 345.00 345KV CKT 1	1195	1195	0.24855	103.0514	MINGO - SETAB 345KV CKT 1
FDNS	01ALL	0	20L	G15_060	TO->FROM	MATHWSN7 345.00 - TATONGA7 345.00 345KV CKT 1	1195	1195	0.24855	103.0514	MINGO - SETAB 345KV CKT 1
FDNS	01ALL	0	20L	G15_060	TO->FROM	MATHWSN7 345.00 - TATONGA7 345.00 345KV CKT 1	1195	1195	0.24774	103.0108	G13-010T 345.00 - SPEARVILLE 345KV CKT 1
FDNS	01ALL	0	16WP	G15_060	TO->FROM	MATHWSN7 345.00 - TATONGA7 345.00 345KV CKT 1	1195	1195	0.23704	102.9362	GEN532751 1-WOLF CREEK GENERATING STATION UNIT 1
FDNS	01ALL	0	20L	G15_060	TO->FROM	MATHWSN7 345.00 - TATONGA7 345.00 345KV CKT 1	1195	1195	0.24652	102.9012	POTTER COUNTY INTERCHANGE (WAUK 90343-A) 345/230/13.2KV TRANSFORMER CKT 1
FDNS	01ALL	0	20L	G15_060	TO->FROM	MATHWSN7 345.00 - TATONGA7 345.00 345KV CKT 1	1195	1195	0.24652	102.9012	POTTER COUNTY INTERCHANGE (WAUK 90343-A) 345/230/13.2KV TRANSFORMER CKT 1
FDNS	01ALL	0	20L	G15_060	TO->FROM	MATHWSN7 345.00 - TATONGA7 345.00 345KV CKT 1	1195	1195	0.25161	102.8883	FINNEY SWITCHING STATION - WALKTAP7 345.00 345KV CKT 1
FDNS	01ALL	0	20L	G15_060	TO->FROM	MATHWSN7 345.00 - TATONGA7 345.00 345KV CKT 1	1195	1195	0.25161	102.8883	FINNEY SWITCHING STATION - WALKTAP7 345.00 345KV CKT 1
FDNS	01ALL	0	16WP	G15_060	TO->FROM	MATHWSN7 345.00 - TATONGA7 345.00 345KV CKT 1	1195	1195	0.2368	102.8276	NORTHWEST TEXARKANA - VALLIANT 345KV CKT 1
FDNS	01ALL	0	16WP	G15_060	TO->FROM	MATHWSN7 345.00 - TATONGA7 345.00 345KV CKT 1	1195	1195	0.2368	102.8276	NORTHWEST TEXARKANA - VALLIANT 345KV CKT 1
FDNS	01ALL	0	16WP	G15_060	TO->FROM	MATHWSN7 345.00 - TATONGA7 345.00 345KV CKT 1	1195	1195	0.23704	102.8269	GEN629070 2-BEAVER CHANNEL GENERATORFOR UNIT NO 2
FDNS	01ALL	0	16WP	G15_060	TO->FROM	MATHWSN7 345.00 - TATONGA7 345.00 345KV CKT 1	1195	1195	0.23704	102.8221	GEN600065 7-HIGH BRIDGE
FDNS	01ALL	0	16WP	G15_060	TO->FROM	MATHWSN7 345.00 - TATONGA7 345.00 345KV CKT 1	1195	1195	0.23704	102.8221	GEN600066 8-HIGH BRIDGE
FDNS	01ALL	0	16WP	G15_060	TO->FROM	MATHWSN7 345.00 - TATONGA7 345.00 345KV CKT 1	1195	1195	0.23704	102.8195	GEN524890 1-SNJN-WTGA1 10.6000
FDNS	01ALL	0	16WP	G15_060	TO->FROM	MATHWSN7 345.00 - TATONGA7 345.00 345KV CKT 1	1195	1195	0.23704	102.8193	GEN530594 1-SMKYP1G1 0.6900
FDNS	01ALL	0	16WP	G15_060	TO->FROM	MATHWSN7 345.00 - TATONGA7 345.00 345KV CKT 1	1195	1195	0.23707	102.8172	P12:138:AEPW-WERE:NBVILLE4:DEARING4
FDNS	01ALL	0	16WP	G15_060	TO->FROM	MATHWSN7 345.00 - TATONGA7 345.00 345KV CKT 1	1195	1195	0.23704	102.8111	GEN562754 1-G15031_5 0.6900
FDNS	01ALL	0	16WP	G15_060	TO->FROM	MATHWSN7 345.00 - TATONGA7 345.00 345KV CKT 1	1195	1195	0.2369	102.811	P12:138:AECI:LUTHER-JONES
FDNS	01ALL	0	16WP	G15_060	TO->FROM	MATHWSN7 345.00 - TATONGA7 345.00 345KV CKT 1	1195	1195	0.23704	102.8108	GEN600050 1-FEP
FDNS	01ALL	0	16WP	G15_060	TO->FROM	MATHWSN7 345.00 - TATONGA7 345.00 345KV CKT 1	1195	1195	0.23706	102.8094	CLARKSVILLE - MUSKOGEE 345KV CKT 1
FDNS	01ALL	0	16WP	G15_060	TO->FROM	MATHWSN7 345.00 - TATONGA7 345.00 345KV CKT 1	1195	1195	0.23706	102.8094	CLARKSVILLE - MUSKOGEE 345KV CKT 1
FDNS	01ALL	0	16WP	G15_060	TO->FROM	MATHWSN7 345.00 - TATONGA7 345.00 345KV CKT 1	1195	1195	0.23704	102.8045	GEN523170 1-GOODWELL_1 10.6900
FDNS	01ALL	0	16WP	G15_060	TO->FROM	MATHWSN7 345.00 - TATONGA7 345.00 345KV CKT 1	1195	1195	0.23704	102.8036	GEN615052 1-CAMBRIDGE GENERATING STATION
FDNS	01ALL	0	16WP	G15_060	TO->FROM	MATHWSN7 345.00 - TATONGA7 345.00 345KV CKT 1	1195	1195	0.23704	102.8033	GEN563002 1-G15064_3 0.6900
FDNS	01ALL	0	16WP	G15_060	TO->FROM	MATHWSN7 345.00 - TATONGA7 345.00 345KV CKT 1	1195	1195	0.23704	102.801	GEN562756 1-G15031_7 0.6900
FDNS	01ALL	0	16WP	G15_060	TO->FROM	MATHWSN7 345.00 - TATONGA7 345.00 345KV CKT 1	1195	1195	0.23704	102.798	GEN629067 1-EMERY GAS TURBINE 1
FDNS	01ALL	0	16WP	G15_060	TO->FROM	MATHWSN7 345.00 - TATONGA7 345.00 345KV CKT 1	1195	1195	0.23704	102.7972	GEN600070 9-RIVER SIDE
FDNS	01ALL	0	16WP	G15_060	TO->FROM	MATHWSN7 345.00 - TATONGA7 345.00 345KV CKT 1	1195	1195	0.23704	102.7972	GEN600071 10-RIVER SIDE
FDNS	01ALL	0	16WP	G15_060	TO->FROM	MATHWSN7 345.00 - TATONGA7 345.00 345KV CKT 1	1195	1195	0.23704	102.7966	GEN562298 1-G12-024 0.6500
FDNS	01ALL	0	16WP	G15_060	TO->FROM	MATHWSN7 345.00 - TATONGA7 345.00 345KV CKT 1	1195	1195	0.2372	102.7949	7MCCREDIE 345.00 - 7MONTGMRY 345.00 345KV CKT 1
FDNS	01ALL	0	16WP	G15_060	TO->FROM	MATHWSN7 345.00 - TATONGA7 345.00 345KV CKT 1	1195	1195	0.23704	102.7944	GEN562556 1-G14_046_3 0.3420
FDNS	01ALL	0	16WP	G15_060	TO->FROM	MATHWSN7 345.00 - TATONGA7 345.00 345KV CKT 1	1195	1195	0.23704	102.7943	GEN615032 2-PLEASANT VALLEY
FDNS	01ALL	0	16WP	G15_060	TO->FROM	MATHWSN7 345.00 - TATONGA7 345.00 345KV CKT 1	1195	1195	0.23704	102.7939	GEN600067 9-HIGH BRIDGE
FDNS	01ALL	0	16WP	G15_060	TO->FROM	MATHWSN7 345.00 - TATONGA7 345.00 345KV CKT 1	1195	1195	0.23704	102.7929	GEN600007 7-RIVERSIDE GEN 7
FDNS	01ALL	0	16WP	G15_060	TO->FROM	MATHWSN7 345.00 - TATONGA7 345.00 345KV CKT 1	1195	1195	0.23704	102.7923	GEN523171 1-GOODWELL_2 10.6900
FDNS	01ALL	0	16WP	G15_060	TO->FROM	MATHWSN7 345.00 - TATONGA7 345.00 345KV CKT 1	1195	1195	0.23704	102.7887	GEN600011 5-BLACK DOG GEN 1
FDNS	01ALL	0	16WP	G15_060	TO->FROM	MATHWSN7 345.00 - TATONGA7 345.00 345KV CKT 1	1195	1195	0.23704	102.786	GEN563012 1-G15065_3 0.6900
FDNS	01ALL	0	16WP	G15_060	TO->FROM	MATHWSN7 345.00 - TATONGA7 345.00 345KV CKT 1	1195	1195	0.23704	102.7854	GEN600014 4-BLACK DOG GEN 4
FDNS	01ALL	0	16WP	G15_060	TO->FROM	MATHWSN7 345.00 - TATONGA7 345.00 345KV CKT 1	1195	1195	0.23704	102.7851	GEN563043 1-G15068_4 0.6900
FDNS	01ALL	0	16WP	G15_060	TO->FROM	MATHWSN7 345.00 - TATONGA7 345.00 345KV CKT 1	1195	1195	0.23704	102.781	GEN563142 1-G15079_3 0.5500
FDNS	01ALL	0	16WP	G15_060	TO->FROM	MATHWSN7 345.00 - TATONGA7 345.00 345KV CKT 1	1195	1195	0.23704	102.781	GEN563151 1-G15080_2 0.5500
FDNS	01ALL	0	16WP	G15_060	TO->FROM	MATHWSN7 345.00 - TATONGA7 345.00 345KV CKT 1	1195	1195	0.23704	102.7801	GEN531505 1-CIMWD2 1 0.6900
FDNS	01ALL	0	16WP	G15_060	TO->FROM	MATHWSN7 345.00 - TATONGA7 345.00 345KV CKT 1	1195	1195	0.23704	102.7762	GEN539762 1-SSWIND 1 34.500
FDNS	01ALL	0	16WP	G15_060	TO->FROM	MATHWSN7 345.00 - TATONGA7 345.00 345KV CKT 1	1195	1195	0.23704	102.7742	GEN672303 3-BOUNDARY DAM GENERATOR 3
FDNS	01ALL	0	16WP	G15_060	TO->FROM	MATHWSN7 345.00 - TATONGA7 345.00 345KV CKT 1	1195	1195	0.23704	102.7742	GEN672304 4-BOUNDARY DAM GENERATOR 4
FDNS	01ALL	0	16WP	G15_060	TO->FROM	MATHWSN7 345.00 - TATONGA7 345.00 345KV CKT 1	1195	1195	0.23704	102.7742	GEN672305 5-BOUNDARY DAM GENERATOR 5
FDNS	01ALL	0	16WP	G15_060	TO->FROM	MATHWSN7 345.00 - TATONGA7 345.00 345KV CKT 1	1195	1195	0.23704	102.774	GEN539630 1-FLTRDG-WG1 0.6000
FDNS	01ALL	0	16WP	G15_060	TO->FROM	MATHWSN7 345.00 - TATONGA7 345.00 345KV CKT 1	1195	1195	0.23704	102.7708	GEN530690 1-PRWINDG1 0.6900
FDNS	01ALL	0	16WP	G15_060	TO->FROM	MATHWSN7 345.00 - TATONGA7 345.00 345KV CKT 1	1195	1195	0.23701	102.7675	8BHAM STEEL 500.00 - WEST MEMPHIS 500 500KV CKT 1

SOLUTION	GROUP	SCENARIO	SEASON	SOURCE	DIRECTION	MONITORED ELEMENT	RATEA (MVA)	RATEB(MVA)	TDF	TC%LOADING (% MVA)	CONTINGENCY
FDNS	01ALL	0	16WP	G15_060	TO->FROM	MATHWSN7 345.00 - TATONGA7 345.00 345KV CKT 1	1195	1195	0.23704	102.7652	GEN560586 1-G06-44-4 4.1600
FDNS	01ALL	0	16WP	G15_060	TO->FROM	MATHWSN7 345.00 - TATONGA7 345.00 345KV CKT 1	1195	1195	0.237	102.7652	ARKANSAS NUCLEAR ONE - PLEASANT HILL 500KV CKT 1
FDNS	01ALL	0	16WP	G15_060	TO->FROM	MATHWSN7 345.00 - TATONGA7 345.00 345KV CKT 1	1195	1195	0.23704	102.7649	GEN533202 1-CNTRPL-WTG1 1.0000
FDNS	01ALL	0	16WP	G15_060	TO->FROM	MATHWSN7 345.00 - TATONGA7 345.00 345KV CKT 1	1195	1195	0.25453	102.7648	FPL SWITCH - WOODWARD 138KV CKT 1
FDNS	01ALL	0	16WP	G15_060	TO->FROM	MATHWSN7 345.00 - TATONGA7 345.00 345KV CKT 1	1195	1195	0.23704	102.7629	GEN560693 1-G11-008-1 0.6900
FDNS	01ALL	0	16WP	G15_060	TO->FROM	MATHWSN7 345.00 - TATONGA7 345.00 345KV CKT 1	1195	1195	0.23704	102.7621	GEN562035 1-G11_016_3 0.6900
FDNS	01ALL	0	16WP	G15_060	TO->FROM	MATHWSN7 345.00 - TATONGA7 345.00 345KV CKT 1	1195	1195	0.23704	102.762	GEN600017 C-LS POWER CT
FDNS	01ALL	0	16WP	G15_060	TO->FROM	MATHWSN7 345.00 - TATONGA7 345.00 345KV CKT 1	1195	1195	0.23697	102.761	7MONTGMRY 345.00 - 7SPENCER 345.00 345KV CKT 1
FDNS	01ALL	0	16WP	G15_060	TO->FROM	MATHWSN7 345.00 - TATONGA7 345.00 345KV CKT 1	1195	1195	0.23697	102.7603	7MAYWOOD 345.00 - 7SPENCER 345.00 345KV CKT 1
FDNS	01ALL	0	16WP	G15_060	TO->FROM	MATHWSN7 345.00 - TATONGA7 345.00 345KV CKT 1	1195	1195	0.23704	102.7582	GEN659111 2-LELAND OLDS UNIT2
FDNS	01ALL	0	16WP	G15_060	TO->FROM	MATHWSN7 345.00 - TATONGA7 345.00 345KV CKT 1	1195	1195	0.23704	102.7563	GEN562483 1-G13_027_3 0.6900
FDNS	01ALL	0	20L	G15_060	TO->FROM	MATHWSN7 345.00 - TATONGA7 345.00 345KV CKT 1	1195	1195	0.24333	102.7489	GEN514806 1-SOONER UNIT 2
FDNS	01ALL	0	16WP	G15_060	TO->FROM	MATHWSN7 345.00 - TATONGA7 345.00 345KV CKT 1	1195	1195	0.23704	102.7417	GEN560432 1-G08-124 0.6900
FDNS	00NR	0	20WP	G15_060	TO->FROM	MATHWSN7 345.00 - TATONGA7 345.00 345KV CKT 1	1195	1195	0.32529	102.7399	THISTLE7 345.00 - WOODWARD DISTRICT EHV 345KV CKT 1
FDNS	00NR	0	20WP	G15_060	TO->FROM	MATHWSN7 345.00 - TATONGA7 345.00 345KV CKT 1	1195	1195	0.32529	102.7399	THISTLE7 345.00 - WOODWARD DISTRICT EHV 345KV CKT 1
FDNS	00NR	0	20WP	G15_060	TO->FROM	MATHWSN7 345.00 - TATONGA7 345.00 345KV CKT 1	1195	1195	0.32529	102.7399	THISTLE7 345.00 - WOODWARD DISTRICT EHV 345KV CKT 2
FDNS	00NR	0	20WP	G15_060	TO->FROM	MATHWSN7 345.00 - TATONGA7 345.00 345KV CKT 1	1195	1195	0.32529	102.7399	THISTLE7 345.00 - WOODWARD DISTRICT EHV 345KV CKT 2
FDNS	01ALL	0	16WP	G15_060	TO->FROM	MATHWSN7 345.00 - TATONGA7 345.00 345KV CKT 1	1195	1195	0.23704	102.7362	GEN562688 1-G15_014_3 0.6900
FDNS	01ALL	0	16WP	G15_060	TO->FROM	MATHWSN7 345.00 - TATONGA7 345.00 345KV CKT 1	1195	1195	0.23704	102.7312	GEN560585 1-G06-44-3 4.1600
FDNS	01ALL	0	16WP	G15_060	TO->FROM	MATHWSN7 345.00 - TATONGA7 345.00 345KV CKT 1	1195	1195	0.23723	102.7289	OVEXFRMCCOVE
FDNS	01ALL	0	16WP	G15_060	TO->FROM	MATHWSN7 345.00 - TATONGA7 345.00 345KV CKT 1	1195	1195	0.2367	102.7265	ARCADIA - SEMINOLE 345KV CKT 1
FDNS	01ALL	0	20L	G15_060	TO->FROM	MATHWSN7 345.00 - TATONGA7 345.00 345KV CKT 1	1195	1195	0.24756	102.7218	AXTELL - POST ROCK 345KV CKT 1
FDNS	01ALL	0	16WP	G15_060	TO->FROM	MATHWSN7 345.00 - TATONGA7 345.00 345KV CKT 1	1195	1195	0.23704	102.7175	GEN560329 1-G10-45 0.6900
FDNS	01ALL	0	16WP	G15_060	TO->FROM	MATHWSN7 345.00 - TATONGA7 345.00 345KV CKT 1	1195	1195	0.23704	102.7171	GEN672392 1-NBECGT1G 18.000
FDNS	01ALL	0	16WP	G15_060	TO->FROM	MATHWSN7 345.00 - TATONGA7 345.00 345KV CKT 1	1195	1195	0.23704	102.7159	GEN659103 1-ANTELOPE VALLEY UNIT1
FDNS	01ALL	0	16WP	G15_060	TO->FROM	MATHWSN7 345.00 - TATONGA7 345.00 345KV CKT 1	1195	1195	0.23704	102.7159	GEN659107 2-ANTELOPE VALLEY UNIT2
FDNS	01ALL	0	16WP	G15_060	TO->FROM	MATHWSN7 345.00 - TATONGA7 345.00 345KV CKT 1	1195	1195	0.23563	102.7144	CIMARRON - MATHWSN7 345.00 345KV CKT 1
FDNS	01ALL	0	16WP	G15_060	TO->FROM	MATHWSN7 345.00 - TATONGA7 345.00 345KV CKT 1	1195	1195	0.23563	102.7144	CIMARRON - MATHWSN7 345.00 345KV CKT 2
FDNS	01ALL	0	16WP	G15_060	TO->FROM	MATHWSN7 345.00 - TATONGA7 345.00 345KV CKT 1	1195	1195	0.23704	102.7128	GEN531503 1-CIMRRN 1 0.6900
FDNS	01ALL	0	16WP	G15_060	TO->FROM	MATHWSN7 345.00 - TATONGA7 345.00 345KV CKT 1	1195	1195	0.23704	102.7099	GEN615021 1-GRE-ER 14G 16.000
FDNS	01ALL	0	16WP	G15_060	TO->FROM	MATHWSN7 345.00 - TATONGA7 345.00 345KV CKT 1	1195	1195	0.23704	102.7087	GEN539767 1-GRAY COUNTY WIND FARM
FDNS	01ALL	0	16WP	G15_060	TO->FROM	MATHWSN7 345.00 - TATONGA7 345.00 345KV CKT 1	1195	1195	0.23664	102.6946	LYDIA - WELSH 345KV CKT 1
FDNS	01ALL	0	16WP	G15_060	TO->FROM	MATHWSN7 345.00 - TATONGA7 345.00 345KV CKT 1	1195	1195	0.23664	102.6946	LYDIA - WELSH 345KV CKT 1
FDNS	01ALL	0	16WP	G15_060	TO->FROM	MATHWSN7 345.00 - TATONGA7 345.00 345KV CKT 1	1195	1195	0.23713	102.6862	MIDLTNT4 138.00 - PECKHAM TAP 138KV CKT 1
FDNS	01ALL	0	16WP	G15_060	TO->FROM	MATHWSN7 345.00 - TATONGA7 345.00 345KV CKT 1	1195	1195	0.23713	102.6654	NEWKIRK4 - PECKHAM TAP 138KV CKT 1
FDNS	01ALL	0	16WP	G15_060	TO->FROM	MATHWSN7 345.00 - TATONGA7 345.00 345KV CKT 1	1195	1195	0.23689	102.6632	LACYGNE - STILWELL 345KV CKT 1
FDNS	01ALL	0	16WP	G15_060	TO->FROM	MATHWSN7 345.00 - TATONGA7 345.00 345KV CKT 1	1195	1195	0.23704	102.663	GEN629072 4-LANSING GENERATOR FOR UNITS NO4 EIA CODE 1
FDNS	01ALL	0	16WP	G15_060	TO->FROM	MATHWSN7 345.00 - TATONGA7 345.00 345KV CKT 1	1195	1195	0.23704	102.6625	GEN641089 2-ENERGY CENTER 2
FDNS	01ALL	0	16WP	G15_060	TO->FROM	MATHWSN7 345.00 - TATONGA7 345.00 345KV CKT 1	1195	1195	0.23738	102.6551	P12:138:WERE:CRSW-OGE_138:::
FDNS	01ALL	0	16WP	G15_060	TO->FROM	MATHWSN7 345.00 - TATONGA7 345.00 345KV CKT 1	1195	1195	0.23713	102.6468	NEWKIRK4 - NWKRKAT4 138.00 138KV CKT 1
FDNS	01ALL	0	16WP	G15_060	TO->FROM	MATHWSN7 345.00 - TATONGA7 345.00 345KV CKT 1	1195	1195	0.23738	102.6428	P12:138:OKGE:3TERM7
FDNS	01ALL	0	16WP	G15_060	TO->FROM	MATHWSN7 345.00 - TATONGA7 345.00 345KV CKT 1	1195	1195	0.23591	102.6417	CLEVELAND - TULSA NORTH 345KV CKT 1
FDNS	01ALL	0	16WP	G15_060	TO->FROM	MATHWSN7 345.00 - TATONGA7 345.00 345KV CKT 1	1195	1195	0.23591	102.6417	CLEVELAND - TULSA NORTH 345KV CKT 1
FDNS	01ALL	0	16WP	G15_060	TO->FROM	MATHWSN7 345.00 - TATONGA7 345.00 345KV CKT 1	1195	1195	0.23701	102.6396	DELL 500 - INDEPENDENCE 500KV CKT 1
FDNS	01ALL	0	16WP	G15_060	TO->FROM	MATHWSN7 345.00 - TATONGA7 345.00 345KV CKT 1	1195	1195	0.23413	102.6343	SOONER - SPRING CREEK 345KV CKT 1
FDNS	01ALL	0	16WP	G15_060	TO->FROM	MATHWSN7 345.00 - TATONGA7 345.00 345KV CKT 1	1195	1195	0.23713	102.6338	CRESWELL - MIDLTNT4 138.00 138KV CKT 1
FDNS	01ALL	0	16WP	G15_060	TO->FROM	MATHWSN7 345.00 - TATONGA7 345.00 345KV CKT 1	1195	1195	0.23696	102.633	LACYGNE - WEST GARDNER 345KV CKT 1
FDNS	01ALL	0	16WP	G15_060	TO->FROM	MATHWSN7 345.00 - TATONGA7 345.00 345KV CKT 1	1195	1195	0.23413	102.6324	NORTHWEST - SPRING CREEK 345KV CKT 1
FDNS	01ALL	0	16WP	G15_060	TO->FROM	MATHWSN7 345.00 - TATONGA7 345.00 345KV CKT 1	1195	1195	0.23704	102.6309	GEN615010 1-STANTON4
FDNS	01ALL	0	16WP	G15_060	TO->FROM	MATHWSN7 345.00 - TATONGA7 345.00 345KV CKT 1	1195	1195	0.23704	102.6226	GEN562269 1-G12-020-1 0.6900
FDNS	01ALL	0	16WP	G15_060	TO->FROM	MATHWSN7 345.00 - TATONGA7 345.00 345KV CKT 1	1195	1195	0.23704	102.6101	GEN539807 1-G05-12-1 0.6900
FDNS	01ALL	0	16WP	G15_060	TO->FROM	MATHWSN7 345.00 - TATONGA7 345.00 345KV CKT 1	1195	1195	0.23713	102.6079	KILDARE4 - NWKRKAT4 138.00 138KV CKT 1
FDNS	01ALL	0	16WP	G15_060	TO->FROM	MATHWSN7 345.00 - TATONGA7 345.00 345KV CKT 1	1195	1195	0.23704	102.6069	RCDC EAST 4230.00 - RED CEDAR DC 230KV CKT 1
FDNS	01ALL	0	16WP	G15_060	TO->FROM	MATHWSN7 345.00 - TATONGA7 345.00 345KV CKT 1	1195	1195	0.23704	102.6044	P12:230:UMZB:# 112 #: NU IN SD. NU-RCDC & DRY CREEK XFMR
FDNS	01ALL	0	20L	G15_060	TO->FROM	MATHWSN7 345.00 - TATONGA7 345.00 345KV CKT 1	1195	1195	0.26126	102.6036	IODINE - WOODWARD EHV 138KV CKT 1
FDNS	01ALL	0	16WP	G15_060	TO->FROM	MATHWSN7 345.00 - TATONGA7 345.00 345KV CKT 1	1195	1195	0.23704	102.6007	GEN524021 1-NICHOLS GEN #1
FDNS	01ALL	0	16WP	G15_060	TO->FROM	MATHWSN7 345.00 - TATONGA7 345.00 345KV CKT 1	1195	1195	0.237	102.5986	KEO EHV - WEST MEMPHIS 500 500KV CKT 1
FDNS	01ALL	0	16WP	G15_060	TO->FROM	MATHWSN7 345.00 - TATONGA7 345.00 345KV CKT 1	1195	1195	0.23704	102.5948	GEN681522 3-GENOA 3
FDNS	01ALL	0	16WP	G15_060	TO->FROM	MATHWSN7 345.00 - TATONGA7 345.00 345KV CKT 1	1195	1195	0.23704	102.5943	GEN562270 1-G12-020-2 0.6900
FDNS	01ALL	0	16WP	G15_060	TO->FROM	MATHWSN7 345.00 - TATONGA7 345.00 345KV CKT 1	1195	1195	0.23681	102.5833	BROOKLINE - FLINT CREEK 345KV CKT 1
FDNS	01ALL	0	16WP	G15_060	TO->FROM	MATHWSN7 345.00 - TATONGA7 345.00 345KV CKT 1	1195	1195	0.23681	102.5833	BROOKLINE - FLINT CREEK 345KV CKT 1
FDNS	01ALL	0	16WP	G15_060	TO->FROM	MATHWSN7 345.00 - TATONGA7 345.00 345KV CKT 1	1195	1195	0.23646	102.5662	FT SMITH - MUSKOGEE 345KV CKT 1
FDNS	01ALL	0	16WP	G15_060	TO->FROM	MATHWSN7 345.00 - TATONGA7 345.00 345KV CKT 1	1195	1195	0.23704	102.565	GEN645011 1-NEBRASKA CITY 1
FDNS	01ALL	0	16WP	G15_060	TO->FROM	MATHWSN7 345.00 - TATONGA7 345.00 345KV CKT 1	1195	1195	0.23704	102.5604	GEN562524 1-G14_026_3 12.000
FDNS	01ALL	0	16WP	G15_060	TO->FROM	MATHWSN7 345.00 - TATONGA7 345.00 345KV CKT 1	1195	1195	0.23653	102.549	LYDIA - VALLIANT 345KV CKT 1
FDNS	01ALL	0	16WP	G15_060	TO->FROM	MATHWSN7 345.00 - TATONGA7 345.00 345KV CKT 1	1195	1195	0.23653	102.549	LYDIA - VALLIANT 345KV CKT 1
FDNS	01ALL	0	16WP	G15_060	TO->FROM	MATHWSN7 345.00 - TATONGA7 345.00 345KV CKT 1	1195	1195	0.23704	102.5467	GEN560286 1-G10-01-1WTG 0.6900
FDNS	01ALL	0	16WP	G15_060	TO->FROM	MATHWSN7 345.00 - TATONGA7 345.00 345KV CKT 1	1195	1195	0.23704	102.5467	GEN560287 1-G10-01-2WTG 0.6900
FDNS	01ALL	0	20L	G15_060	TO->FROM	MATHWSN7 345.00 - TATONGA7 345.00 345KV CKT 1	1195	1195	0.24333	102.5454	GEN515040 1-SEMINOLE 1G
FDNS	01ALL	0	20L	G15_060	TO->FROM	MATHWSN7 345.00 - TATONGA7 345.00 345KV CKT 1	1195	1195	0.24333	102.5411	GEN514805 1-SOONER UNIT 1
FDNS	01ALL	0	16WP	G15_060	TO->FROM	MATHWSN7 345.00 - TATONGA7 345.00 345KV CKT 1	1195	1195	0.23704	102.5348	GEN528361 1-MADDOX GEN #1
FDNS	01ALL	0	16WP	G15_060	TO->FROM	MATHWSN7 345.00 - TATONGA7 345.00 345KV CKT 1	1195	1195	0.23704	102.5324	GEN645012 2-NEBRASKA CITY 2
FDNS	01ALL	0	16WP	G15_060	TO->FROM	MATHWSN7 345.00 - TATONGA7 345.00 345KV CKT 1	1195	1195	0.23705	102.519	CIMARRON (CIMARON1) 345/138/13.8KV TRANSFORMER CKT 1
FDNS	01ALL	0	16WP	G15_060	TO->FROM	MATHWSN7 345.00 - TATONGA7 345.00 345KV CKT 1	1195	1195	0.23705	102.5098	CIMARRON (CIMARON2) 345/138/13.8KV TRANSFORMER CKT 1
FDNS	01ALL	0	16WP	G15_060	TO->FROM	MATHWSN7 345.00 - TATONGA7 345.00 345KV CKT 1	1195	1195	0.23704	102.5022	GEN560256 1-G10-14-1 0.6900
FDNS	01ALL	0	16WP	G15_060	TO->FROM	MATHWSN7 345.00 - TATONGA7 345.00 345KV CKT 1	1195	1195	0.2367	102.491	GRDA1 - GREC TAP5 345.00 345KV CKT 1
FDNS	01ALL	0	16WP	G15_060	TO->FROM	MATHWSN7 345.00 - TATONGA7 345.00 345KV CKT 1	1195	1195	0.23704	102.4865	GEN560257 1-G10-14-2 0.6900
FDNS	01ALL	0	16WP	G15_060	TO->FROM	MATHWSN7 345.00 - TATONGA7 345.00 345KV CKT 1	1195	1195	0.23704	102.4818	GEN520998 1-MORLND3
FDNS	01ALL	0	16WP	G15_060	TO->FROM	MATHWSN7 345.00 - TATONGA7 345.00 345KV CKT 1	1195	1195	0.23704	102.4678	GEN645001 1-FORT CALHOUN 1

SOLUTION	GROUP	SCENARIO	SEASON	SOURCE	DIRECTION	MONITORED ELEMENT	RATEA (MVA)	RATEB(MVA)	TDF	TC%LOADING (% MVA)	CONTINGENCY
FDNS	01ALL	0	16WP	G15_060	TO->FROM	MATHWSN7 345.00 - TATONGA7 345.00 345KV CKT 1	1195	1195	0.23704	102.4661	GEN562544 1-G14_038_3 0.6900
FDNS	01ALL	0	16WP	G15_060	TO->FROM	MATHWSN7 345.00 - TATONGA7 345.00 345KV CKT 1	1195	1195	0.23704	102.4639	GEN524285 1-WILDORADO WIND GEN
FDNS	01ALL	0	16WP	G15_060	TO->FROM	MATHWSN7 345.00 - TATONGA7 345.00 345KV CKT 1	1195	1195	0.23704	102.4622	GEN657749 1-YOUNG 1 GENERATOR
FDNS	01ALL	0	16WP	G15_060	TO->FROM	MATHWSN7 345.00 - TATONGA7 345.00 345KV CKT 1	1195	1195	0.23704	102.452	GEN640009 1-COOPER NUCLEAR STATION
FDNS	01ALL	0	16WP	G15_060	TO->FROM	MATHWSN7 345.00 - TATONGA7 345.00 345KV CKT 1	1195	1195	0.23704	102.442	GEN532653 1-JEFFREY ENERGY CENTER UNIT 3
FDNS	01ALL	0	16WP	G15_060	TO->FROM	MATHWSN7 345.00 - TATONGA7 345.00 345KV CKT 1	1195	1195	0.23704	102.4418	GEN532652 1-JEFFREY ENERGY CENTER UNIT 2
FDNS	01ALL	0	20L	G15_060	TO->FROM	MATHWSN7 345.00 - TATONGA7 345.00 345KV CKT 1	1195	1195	0.26126	102.4416	DEWEY - IODINE 138KV CKT 1
FDNS	01ALL	0	16WP	G15_060	TO->FROM	MATHWSN7 345.00 - TATONGA7 345.00 345KV CKT 1	1195	1195	0.23704	102.4356	GEN532651 1-JEFFREY ENERGY CENTER UNIT 1
FDNS	01ALL	0	16WP	G15_060	TO->FROM	MATHWSN7 345.00 - TATONGA7 345.00 345KV CKT 1	1195	1195	0.23704	102.4298	GEN562648 1-G14_037_3 0.6900
FDNS	00NR	0	20WP	G15_060	TO->FROM	MATHWSN7 345.00 - TATONGA7 345.00 345KV CKT 1	1195	1195	0.30298	102.4191	CHISHOLM6 230.00 - SWEETWATER 230KV CKT 1
FDNS	01ALL	0	16WP	G15_060	TO->FROM	MATHWSN7 345.00 - TATONGA7 345.00 345KV CKT 1	1195	1195	0.23704	102.4108	7SPORTSMAN - BLACKBERRY 345KV CKT 1
FDNS	00NR	0	20WP	G15_060	TO->FROM	MATHWSN7 345.00 - TATONGA7 345.00 345KV CKT 1	1195	1195	0.31444	102.4108	G14-074T 345.00 - TUCO INTERCHANGE 345KV CKT 1
FDNS	01ALL	0	16WP	G15_060	TO->FROM	MATHWSN7 345.00 - TATONGA7 345.00 345KV CKT 1	1195	1195	0.23704	102.3971	GEN560105 1-G08-22 0.6900
FDNS	01ALL	0	16WP	G15_060	TO->FROM	MATHWSN7 345.00 - TATONGA7 345.00 345KV CKT 1	1195	1195	0.23568	102.3933	G15066_T 345.00 - SOONER 345KV CKT 1
FDNS	01ALL	0	20L	G15_060	TO->FROM	MATHWSN7 345.00 - TATONGA7 345.00 345KV CKT 1	1195	1195	0.24786	102.3813	CLEO CORNER - CLEOPLT4 138.00 138KV CKT 1
FDNS	01ALL	0	16WP	G15_060	TO->FROM	MATHWSN7 345.00 - TATONGA7 345.00 345KV CKT 1	1195	1195	0.23704	102.3769	GEN562550 1-G14_040_3 0.6900
FDNS	01ALL	0	16WP	G15_060	TO->FROM	MATHWSN7 345.00 - TATONGA7 345.00 345KV CKT 1	1195	1195	0.23704	102.375	GEN681542 6-JP MADGETT
FDNS	01ALL	0	20L	G15_060	TO->FROM	MATHWSN7 345.00 - TATONGA7 345.00 345KV CKT 1	1195	1195	0.24786	102.3748	IMO TAP - MEN TAP 138KV CKT 1
FDNS	01ALL	0	16WP	G15_060	TO->FROM	MATHWSN7 345.00 - TATONGA7 345.00 345KV CKT 1	1195	1195	0.23704	102.351	GEN672321 1-SHAND GENERATOR 1
FDNS	01ALL	0	16WP	G15_060	TO->FROM	MATHWSN7 345.00 - TATONGA7 345.00 345KV CKT 1	1195	1195	0.23704	102.3369	GEN563173 1-G15082_3 0.6900
FDNS	01ALL	0	16WP	G15_060	TO->FROM	MATHWSN7 345.00 - TATONGA7 345.00 345KV CKT 1	1195	1195	0.23704	102.335	GEN562042 1-G11_014_3 0.6900
FDNS	01ALL	0	16WP	G15_060	TO->FROM	MATHWSN7 345.00 - TATONGA7 345.00 345KV CKT 1	1195	1195	0.23704	102.3335	GEN672310 1-POPLAR RIVER GENERATOR 1
FDNS	01ALL	0	16WP	G15_060	TO->FROM	MATHWSN7 345.00 - TATONGA7 345.00 345KV CKT 1	1195	1195	0.23704	102.3335	GEN672311 2-POPLAR RIVER GENERATOR 2
FDNS	01ALL	0	20L	G15_060	TO->FROM	MATHWSN7 345.00 - TATONGA7 345.00 345KV CKT 1	1195	1195	0.24786	102.3325	CLEOPLT4 138.00 - MEN TAP 138KV CKT 1
FDNS	01ALL	0	16WP	G15_060	TO->FROM	MATHWSN7 345.00 - TATONGA7 345.00 345KV CKT 1	1195	1195	0.23704	102.3312	GEN520922 1-SLEEPING BEAR
FDNS	01ALL	0	16WP	G15_060	TO->FROM	MATHWSN7 345.00 - TATONGA7 345.00 345KV CKT 1	1195	1195	0.23704	102.3249	GEN527882 1-CUNNINGHAM GEN #2 20 KV
FDNS	01ALL	0	16WP	G15_060	TO->FROM	MATHWSN7 345.00 - TATONGA7 345.00 345KV CKT 1	1195	1195	0.23704	102.3249	GEN672306 6-BOUNDARY DAM GENERATOR 6
FDNS	01ALL	0	16WP	G15_060	TO->FROM	MATHWSN7 345.00 - TATONGA7 345.00 345KV CKT 1	1195	1195	0.23568	102.3203	CLEVELAND - G15066_T 345.00 345KV CKT 1
FDNS	01ALL	0	20L	G15_060	TO->FROM	MATHWSN7 345.00 - TATONGA7 345.00 345KV CKT 1	1195	1195	0.24333	102.3081	GEN562587 1-G14_056_3 0.6900
FDNS	01ALL	0	16WP	G15_060	TO->FROM	MATHWSN7 345.00 - TATONGA7 345.00 345KV CKT 1	1195	1195	0.23704	102.2982	GEN524023 1-NICHOLS GEN #3 22 KV
FDNS	01ALL	0	16WP	G15_060	TO->FROM	MATHWSN7 345.00 - TATONGA7 345.00 345KV CKT 1	1195	1195	0.23704	102.29	GEN515787 1-OKLA WIND ENERGY CENTER
FDNS	01ALL	0	20L	G15_060	TO->FROM	MATHWSN7 345.00 - TATONGA7 345.00 345KV CKT 1	1195	1195	0.24718	102.2806	HOLCOMB - SETAB 345KV CKT 1
FDNS	01ALL	0	20L	G15_060	TO->FROM	MATHWSN7 345.00 - TATONGA7 345.00 345KV CKT 1	1195	1195	0.24718	102.2806	HOLCOMB - SETAB 345KV CKT 1
FDNS	01ALL	0	20L	G15_060	TO->FROM	MATHWSN7 345.00 - TATONGA7 345.00 345KV CKT 1	1195	1195	0.24333	102.2713	GEN515602 1-KNGFSR12 0.7000
FDNS	01ALL	0	16WP	G15_060	TO->FROM	MATHWSN7 345.00 - TATONGA7 345.00 345KV CKT 1	1195	1195	0.23704	102.2568	GEN636641 1-LOUISA UNIT 1
FDNS	01ALL	0	16WP	G15_060	TO->FROM	MATHWSN7 345.00 - TATONGA7 345.00 345KV CKT 1	1195	1195	0.23704	102.2374	GEN524295 1-SPNSPUR_WND10.6900
FDNS	01ALL	0	16WP	G15_060	TO->FROM	MATHWSN7 345.00 - TATONGA7 345.00 345KV CKT 1	1195	1195	0.23304	102.2264	ARCADIA - NORTHWEST 345KV CKT 1
FDNS	01ALL	0	20L	G15_060	TO->FROM	MATHWSN7 345.00 - TATONGA7 345.00 345KV CKT 1	1195	1195	0.24333	102.2042	GEN509403 1-PIRKEY GENERATION
FDNS	01ALL	0	16WP	G15_060	TO->FROM	MATHWSN7 345.00 - TATONGA7 345.00 345KV CKT 1	1195	1195	0.23606	102.1988	PITTSBURG - VALLIANT 345KV CKT 1
FDNS	01ALL	0	16WP	G15_060	TO->FROM	MATHWSN7 345.00 - TATONGA7 345.00 345KV CKT 1	1195	1195	0.23606	102.1988	PITTSBURG - VALLIANT 345KV CKT 1
FDNS	01ALL	0	16WP	G15_060	TO->FROM	MATHWSN7 345.00 - TATONGA7 345.00 345KV CKT 1	1195	1195	0.23693	102.1942	CHAMBER SPRINGS - CLARKSVILLE 345KV CKT 1
FDNS	01ALL	0	16WP	G15_060	TO->FROM	MATHWSN7 345.00 - TATONGA7 345.00 345KV CKT 1	1195	1195	0.23704	102.183	GEN515591 1-PALDRW11 0.6900
FDNS	00NR	0	20WP	G15_060	TO->FROM	MATHWSN7 345.00 - TATONGA7 345.00 345KV CKT 1	1195	1195	0.30441	102.1811	P12:230:AEPW:ELKCITY6:SWEETWT6
FDNS	01ALL	0	16WP	G15_060	TO->FROM	MATHWSN7 345.00 - TATONGA7 345.00 345KV CKT 1	1195	1195	0.23704	102.1675	GEN562074 1-G1149G1504 0.6900
FDNS	01ALL	0	16WP	G15_060	TO->FROM	MATHWSN7 345.00 - TATONGA7 345.00 345KV CKT 1	1195	1195	0.23704	102.1495	GEN563292 1-G15095_3 0.6900
FDNS	01ALL	0	17G	G15_060	TO->FROM	MATHWSN7 345.00 - TATONGA7 345.00 345KV CKT 1	1195	1195	0.25645	102.1181	FINNEY SWITCHING STATION - HOLCOMB 345KV CKT 1
FDNS	01ALL	0	16WP	G15_060	TO->FROM	MATHWSN7 345.00 - TATONGA7 345.00 345KV CKT 1	1195	1195	0.23704	102.1131	GEN562017 1-G11_022_3 0.6900
FDNS	01ALL	0	16WP	G15_060	TO->FROM	MATHWSN7 345.00 - TATONGA7 345.00 345KV CKT 1	1195	1195	0.23704	102.0963	GEN520997 1-MORLND2
FDNS	01ALL	0	17G	G15_060	TO->FROM	MATHWSN7 345.00 - TATONGA7 345.00 345KV CKT 1	1195	1195	0.25791	102.0895	BORDER 7345.00 - TUCO_2 345.00 345KV CKT 1
FDNS	01ALL	0	16WP	G15_060	TO->FROM	MATHWSN7 345.00 - TATONGA7 345.00 345KV CKT 1	1195	1195	0.23704	102.0854	GEN539670 4-JUDSON LARGE GENERATOR
FDNS	01ALL	0	20L	G15_060	TO->FROM	MATHWSN7 345.00 - TATONGA7 345.00 345KV CKT 1	1195	1195	0.24333	102.0799	GEN509416 1-TURK GENERATION
FDNS	01ALL	0	20L	G15_060	TO->FROM	MATHWSN7 345.00 - TATONGA7 345.00 345KV CKT 1	1195	1195	0.24333	102.0704	GEN336821 1-GRAND GULF UNIT
FDNS	01ALL	0	16WP	G15_060	TO->FROM	MATHWSN7 345.00 - TATONGA7 345.00 345KV CKT 1	1195	1195	0.23993	102.0673	HUNTERS7 345.00 - WOODRING 345KV CKT 1
FDNS	01ALL	0	16WP	G15_060	TO->FROM	MATHWSN7 345.00 - TATONGA7 345.00 345KV CKT 1	1195	1195	0.23704	102.0485	GEN629074 1-ARNOLD LOWSIDE OF GSU XFMR
FDNS	01ALL	0	20L	G15_060	TO->FROM	MATHWSN7 345.00 - TATONGA7 345.00 345KV CKT 1	1195	1195	0.24333	102.0384	GEN337911 1-ARKANSAS NUCLEAR ONE UNIT #2
FDNS	01ALL	0	16WP	G15_060	TO->FROM	MATHWSN7 345.00 - TATONGA7 345.00 345KV CKT 1	1195	1195	0.23704	102.0287	GEN526332 1-JONES GEN #2 21 KV
FDNS	01ALL	0	16WP	G15_060	TO->FROM	MATHWSN7 345.00 - TATONGA7 345.00 345KV CKT 1	1195	1195	0.2372	102.028	DELAWARE - NEOSHO 345KV CKT 1
FDNS	01ALL	0	16WP	G15_060	TO->FROM	MATHWSN7 345.00 - TATONGA7 345.00 345KV CKT 1	1195	1195	0.2372	102.028	DELAWARE - NEOSHO 345KV CKT 1
FDNS	01ALL	0	16WP	G15_060	TO->FROM	MATHWSN7 345.00 - TATONGA7 345.00 345KV CKT 1	1195	1195	0.23704	102.0241	GEN661015 1-COYOTE
FDNS	01ALL	0	16WP	G15_060	TO->FROM	MATHWSN7 345.00 - TATONGA7 345.00 345KV CKT 1	1195	1195	0.23704	102.0207	GEN523461 1-BLACKHAWK GEN #1
FDNS	01ALL	0	16WP	G15_060	TO->FROM	MATHWSN7 345.00 - TATONGA7 345.00 345KV CKT 1	1195	1195	0.23704	102.0206	GEN523462 1-BLACKHAWK GEN #2
FDNS	01ALL	0	16WP	G15_060	TO->FROM	MATHWSN7 345.00 - TATONGA7 345.00 345KV CKT 1	1195	1195	0.23704	102.0179	GEN562432 1-G13-030 0.6900
FDNS	01ALL	0	16WP	G15_060	TO->FROM	MATHWSN7 345.00 - TATONGA7 345.00 345KV CKT 1	1195	1195	0.23704	102.0164	GEN620315 1-BIG STONE GEN
FDNS	01ALL	0	16WP	G15_060	TO->FROM	MATHWSN7 345.00 - TATONGA7 345.00 345KV CKT 1	1195	1195	0.23704	102.0039	EASTDC - ERCOT EQUIVALENCE 345KV CKT 1
FDNS	01ALL	0	20L	G15_060	TO->FROM	MATHWSN7 345.00 - TATONGA7 345.00 345KV CKT 1	1195	1195	0.24649	101.9998	G15095_T 138.00 - ROSE_VALLEY 138.00 138KV CKT 1
FDNS	01ALL	0	20L	G15_060	TO->FROM	MATHWSN7 345.00 - TATONGA7 345.00 345KV CKT 1	1195	1195	0.26026	101.9957	FPL SWITCH - MOORELAND 138KV CKT 1
FDNS	01ALL	0	20L	G15_060	TO->FROM	MATHWSN7 345.00 - TATONGA7 345.00 345KV CKT 1	1195	1195	0.24333	101.9805	GEN515223 1-MUSKOGEE 4G
FDNS	01ALL	0	16WP	G15_060	TO->FROM	MATHWSN7 345.00 - TATONGA7 345.00 345KV CKT 1	1195	1195	0.23704	101.9793	GEN600004 2-PRAIRIE ISLAND G2
FDNS	01ALL	0	16WP	G15_060	TO->FROM	MATHWSN7 345.00 - TATONGA7 345.00 345KV CKT 1	1195	1195	0.23704	101.9773	GEN600003 1-PRAIRIE ISLAND G1
FDNS	01ALL	0	16WP	G15_060	TO->FROM	MATHWSN7 345.00 - TATONGA7 345.00 345KV CKT 1	1195	1195	0.23704	101.959	GEN600006 1-AS KING
FDNS	01ALL	0	16WP	G15_060	TO->FROM	MATHWSN7 345.00 - TATONGA7 345.00 345KV CKT 1	1195	1195	0.23417	101.9535	REDBUD - RIVERSIDE STATION 345KV CKT 1
FDNS	01ALL	0	16WP	G15_060	TO->FROM	MATHWSN7 345.00 - TATONGA7 345.00 345KV CKT 1	1195	1195	0.23417	101.9535	REDBUD - RIVERSIDE STATION 345KV CKT 1
FDNS	01ALL	0	20L	G15_060	TO->FROM	MATHWSN7 345.00 - TATONGA7 345.00 345KV CKT 1	1195	1195	0.24652	101.9408	G14_038T 345.00 - POTTER COUNTY INTERCHANGE 345KV CKT 1
FDNS	01ALL	0	16WP	G15_060	TO->FROM	MATHWSN7 345.00 - TATONGA7 345.00 345KV CKT 1	1195	1195	0.23704	101.9256	GEN515389 1-TLGWND-WTG1 0.7000
FDNS	01ALL	0	16WP	G15_060	TO->FROM	MATHWSN7 345.00 - TATONGA7 345.00 345KV CKT 1	1195	1195	0.23704	101.9156	GEN657748 1-YOUNG 2 GENERATOR
FDNS	01ALL	0	16WP	G15_060	TO->FROM	MATHWSN7 345.00 - TATONGA7 345.00 345KV CKT 1	1195	1195	0.21411	101.9091	WOODWARD DISTRICT EHV (WWDEHV) 345/138/13.8KV TRANSFORMER CKT 1
FDNS	01ALL	0	20L	G15_060	TO->FROM	MATHWSN7 345.00 - TATONGA7 345.00 345KV CKT 1	1195	1195	0.24649	101.8905	NOEL_SW 138.00 - ROSE_VALLEY 138.00 138KV CKT 1
FDNS	01ALL	0	20L	G15_060	TO->FROM	MATHWSN7 345.00 - TATONGA7 345.00 345KV CKT 1	1195	1195	0.24333	101.8891	GEN515443 1-MNCOWND1 0.7000
FDNS	01ALL	0	16WP	G15_060	TO->FROM	MATHWSN7 345.00 - TATONGA7 345.00 345KV CKT 1	1195	1195	0.23704	101.8656	GEN527161 1-MUSTANG GEN #1

SOLUTION	GROUP	SCENARIO	SEASON	SOURCE	DIRECTION	MONITORED ELEMENT	RATEA (MVA)	RATEB(MVA)	TDF	TC%LOADING (% MVA)	CONTINGENCY
FDNS	01ALL	0	16WP	G15_060	TO->FROM	MATHWSN7 345.00 - TATONGA7 345.00 345KV CKT 1	1195	1195	0.23704	101.8656	GEN527162 1-MUSTANG GEN #2
FDNS	01ALL	0	16WP	G15_060	TO->FROM	MATHWSN7 345.00 - TATONGA7 345.00 345KV CKT 1	1195	1195	0.21293	101.8483	WOODWARD DISTRICT EHV (WWDEHV-T2) 345/138/13.8KV TRANSFORMER CKT 2
FDNS	01ALL	0	20L	G15_060	TO->FROM	MATHWSN7 345.00 - TATONGA7 345.00 345KV CKT 1	1195	1195	0.24927	101.8421	P12:230:AEPW:ELKCITY6:SWEETWT6
FDNS	01ALL	0	16WP	G15_060	TO->FROM	MATHWSN7 345.00 - TATONGA7 345.00 345KV CKT 1	1195	1195	0.23704	101.8403	GEN600005 1-MONTICELLO
FDNS	01ALL	0	16WP	G15_060	TO->FROM	MATHWSN7 345.00 - TATONGA7 345.00 345KV CKT 1	1195	1195	0.23704	101.8354	GEN635213 3-NEAL UNIT 3
FDNSLock	01ALL	0	16WP	G15_060	TO->FROM	MATHWSN7 345.00 - TATONGA7 345.00 345KV CKT 1	1195	1195	0.23704	101.8204	GEN629075 1-OTTUMWA GENERATOR FOR OTTUMWA UNIT NO 1
FDNS	01ALL	0	16WP	G15_060	TO->FROM	MATHWSN7 345.00 - TATONGA7 345.00 345KV CKT 1	1195	1195	0.23552	101.8155	PITTSBURG - SEMINOLE 345KV CKT 1
FDNS	01ALL	0	16WP	G15_060	TO->FROM	MATHWSN7 345.00 - TATONGA7 345.00 345KV CKT 1	1195	1195	0.23552	101.8155	PITTSBURG - SEMINOLE 345KV CKT 1
FDNS	01ALL	0	20L	G15_060	TO->FROM	MATHWSN7 345.00 - TATONGA7 345.00 345KV CKT 1	1195	1195	0.24333	101.8146	GEN336153 1-WATERFORD UNIT#3
FDNS	01ALL	0	20L	G15_060	TO->FROM	MATHWSN7 345.00 - TATONGA7 345.00 345KV CKT 1	1195	1195	0.24333	101.8129	GEN509394 1-FLINT CREEK
FDNS	01ALL	0	16WP	G15_060	TO->FROM	MATHWSN7 345.00 - TATONGA7 345.00 345KV CKT 1	1195	1195	0.23704	101.768	GEN527163 1-MUSTANG GEN #3 22 KV
FDNS	01ALL	0	20L	G15_060	TO->FROM	MATHWSN7 345.00 - TATONGA7 345.00 345KV CKT 1	1195	1195	0.24333	101.7671	GEN562794 1-G15038_5 0.6900
FDNS	01ALL	0	20L	G15_060	TO->FROM	MATHWSN7 345.00 - TATONGA7 345.00 345KV CKT 1	1195	1195	0.24333	101.7671	GEN562795 1-G15038_6 0.6900
FDNS	01ALL	0	20L	G15_060	TO->FROM	MATHWSN7 345.00 - TATONGA7 345.00 345KV CKT 1	1195	1195	0.24333	101.763	GEN300007 1-NEW MADRID UNIT 2
FDNS	01ALL	0	20L	G15_060	TO->FROM	MATHWSN7 345.00 - TATONGA7 345.00 345KV CKT 1	1195	1195	0.24805	101.7606	CHISHOLM6 230.00 - SWEETWATER 230KV CKT 1
FDNS	01ALL	0	20L	G15_060	TO->FROM	MATHWSN7 345.00 - TATONGA7 345.00 345KV CKT 1	1195	1195	0.24333	101.7569	GEN337910 1-ARKANSAS NUCLEAR ONE UNIT #1
FDNS	01ALL	0	20L	G15_060	TO->FROM	MATHWSN7 345.00 - TATONGA7 345.00 345KV CKT 1	1195	1195	0.24681	101.7532	G1524G1525 345.00 - WICHITA 345KV CKT 1
FDNS	01ALL	0	20L	G15_060	TO->FROM	MATHWSN7 345.00 - TATONGA7 345.00 345KV CKT 1	1195	1195	0.24681	101.7532	G1524G1525 345.00 - WICHITA 345KV CKT 2
FDNS	01ALL	0	20L	G15_060	TO->FROM	MATHWSN7 345.00 - TATONGA7 345.00 345KV CKT 1	1195	1195	0.24333	101.7495	GEN515606 1-CANDN11 0.6900
FDNS	01ALL	0	20L	G15_060	TO->FROM	MATHWSN7 345.00 - TATONGA7 345.00 345KV CKT 1	1195	1195	0.24333	101.7495	GEN515607 1-CANDN12 0.6900
FDNS	01ALL	0	16WP	G15_060	TO->FROM	MATHWSN7 345.00 - TATONGA7 345.00 345KV CKT 1	1195	1195	0.23815	101.7469	RANCHRD7 345.00 - SOONER 345KV CKT 1
FDNS	01ALL	0	16WP	G15_060	TO->FROM	MATHWSN7 345.00 - TATONGA7 345.00 345KV CKT 1	1195	1195	0.23704	101.7122	GEN600001 2-SHERBURNE CNTY G2
FDNS	01ALL	0	16WP	G15_060	TO->FROM	MATHWSN7 345.00 - TATONGA7 345.00 345KV CKT 1	1195	1195	0.23724	101.6972	DELAWARE - NORTHEAST STATION 345KV CKT 1
FDNS	01ALL	0	16WP	G15_060	TO->FROM	MATHWSN7 345.00 - TATONGA7 345.00 345KV CKT 1	1195	1195	0.23724	101.6972	DELAWARE - NORTHEAST STATION 345KV CKT 1
FDNS	01ALL	0	20L	G15_060	TO->FROM	MATHWSN7 345.00 - TATONGA7 345.00 345KV CKT 1	1195	1195	0.24497	101.6829	CANEYRV7 345.00 - NEOSHO 345KV CKT 1
FDNS	01ALL	0	20L	G15_060	TO->FROM	MATHWSN7 345.00 - TATONGA7 345.00 345KV CKT 1	1195	1195	0.24615	101.6655	GERALD GENTLEMAN STATION - RED WILLOW 345KV CKT 1
FDNS	01ALL	0	16WP	G15_060	TO->FROM	MATHWSN7 345.00 - TATONGA7 345.00 345KV CKT 1	1195	1195	0.23704	101.6633	GEN560155 1-G10-11 0.7000
FDNS	01ALL	0	20L	G15_060	TO->FROM	MATHWSN7 345.00 - TATONGA7 345.00 345KV CKT 1	1195	1195	0.24333	101.638	GEN501801 1-DOLET HILLS UNIT1
FDNS	01ALL	0	20L	G15_060	TO->FROM	MATHWSN7 345.00 - TATONGA7 345.00 345KV CKT 1	1195	1195	0.24333	101.634	GEN335831 1-RIVERBEND UNIT#1
FDNS	01ALL	0	20L	G15_060	TO->FROM	MATHWSN7 345.00 - TATONGA7 345.00 345KV CKT 1	1195	1195	0.24652	101.6246	G14_038T 345.00 - Hitchland Interchange 345KV CKT 1
FDNS	01ALL	0	16WP	G15_060	TO->FROM	MATHWSN7 345.00 - TATONGA7 345.00 345KV CKT 1	1195	1195	0.23704	101.6083	GEN640011 2-GERALD GENTLEMAN STATION UNIT 2
FDNS	01ALL	0	16WP	G15_060	TO->FROM	MATHWSN7 345.00 - TATONGA7 345.00 345KV CKT 1	1195	1195	0.23704	101.6038	GEN600000 1-SHERBURNECNTY G1
FDNS	01ALL	0	20L	G15_060	TO->FROM	MATHWSN7 345.00 - TATONGA7 345.00 345KV CKT 1	1195	1195	0.24947	101.5911	BENTON - WICHITA 345KV CKT 1
FDNS	01ALL	0	16WP	G15_060	TO->FROM	MATHWSN7 345.00 - TATONGA7 345.00 345KV CKT 1	1195	1195	0.23704	101.5625	GEN615001 1-COAL CREEK
FDNS	01ALL	0	20WP	G15_060	TO->FROM	MATHWSN7 345.00 - TATONGA7 345.00 345KV CKT 1	1195	1195	0.23138	101.5621	GEN563162 1-G15081_3 0.6900
FDNS	01ALL	0	20L	G15_060	TO->FROM	MATHWSN7 345.00 - TATONGA7 345.00 345KV CKT 1	1195	1195	0.24448	101.5541	G14-057T 345.00 - SUNNYSIDE 345KV CKT 1
FDNS	01ALL	0	20L	G15_060	TO->FROM	MATHWSN7 345.00 - TATONGA7 345.00 345KV CKT 1	1195	1195	0.24497	101.5529	CANEYRV7 345.00 - LATHAMS7 345.00 345KV CKT 1
FDNS	01ALL	0	17G	G15_060	TO->FROM	MATHWSN7 345.00 - TATONGA7 345.00 345KV CKT 1	1195	1195	0.25648	101.5453	G1524G1525 345.00 - THISTLE7 345.00 345KV CKT 1
FDNS	01ALL	0	17G	G15_060	TO->FROM	MATHWSN7 345.00 - TATONGA7 345.00 345KV CKT 1	1195	1195	0.25648	101.5453	G1524G1525 345.00 - THISTLE7 345.00 345KV CKT 2
FDNS	01ALL	0	16WP	G15_060	TO->FROM	MATHWSN7 345.00 - TATONGA7 345.00 345KV CKT 1	1195	1195	0.23704	101.545	GEN640010 1-GERALD GENTLEMAN STATION UNIT 1
FDNS	01ALL	0	16WP	G15_060	TO->FROM	MATHWSN7 345.00 - TATONGA7 345.00 345KV CKT 1	1195	1195	0.23704	101.5387	GEN615002 2-COAL CREEK
FDNS	01ALL	0	20L	G15_060	TO->FROM	MATHWSN7 345.00 - TATONGA7 345.00 345KV CKT 1	1195	1195	0.24948	101.5332	G11-14T 345.00 - WOODWARD DISTRICT EHV 345KV CKT 1
FDNS	01ALL	0	20L	G15_060	TO->FROM	MATHWSN7 345.00 - TATONGA7 345.00 345KV CKT 1	1195	1195	0.24948	101.5332	G11-14T 345.00 - WOODWARD DISTRICT EHV 345KV CKT 2
FDNS	01ALL	0	16WP	G15_060	TO->FROM	MATHWSN7 345.00 - TATONGA7 345.00 345KV CKT 1	1195	1195	0.23704	101.5134	GEN515365 1-CENT 21 0.7000
FDNS	01ALL	0	20L	G15_060	TO->FROM	MATHWSN7 345.00 - TATONGA7 345.00 345KV CKT 1	1195	1195	0.24393	101.5097	LACYGNE - WAVERLY7 345.00 345KV CKT 1
FDNS	01ALL	0	20L	G15_060	TO->FROM	MATHWSN7 345.00 - TATONGA7 345.00 345KV CKT 1	1195	1195	0.24562	101.5023	P12:138:WFEC:MSL15
FDNS	01ALL	0	20L	G15_060	TO->FROM	MATHWSN7 345.00 - TATONGA7 345.00 345KV CKT 1	1195	1195	0.24393	101.4933	WAVERLY7 345.00 - WOLF CREEK 345KV CKT 1
FDNS	01ALL	0	16WP	G15_060	TO->FROM	MATHWSN7 345.00 - TATONGA7 345.00 345KV CKT 1	1195	1195	0.23789	101.4713	RENFROW7 345.00 - VIOLA 7 345.00 345KV CKT 1
FDNS	01ALL	0	16WP	G15_060	TO->FROM	MATHWSN7 345.00 - TATONGA7 345.00 345KV CKT 1	1195	1195	0.23704	101.4615	GEN659118 1-LARAMIE RIVER UNIT1
FDNS	01ALL	0	20L	G15_060	TO->FROM	MATHWSN7 345.00 - TATONGA7 345.00 345KV CKT 1	1195	1195	0.24333	101.4603	GEN511840 1-NORTHEASTERN STATION #3
FDNS	01ALL	0	16WP	G15_060	TO->FROM	MATHWSN7 345.00 - TATONGA7 345.00 345KV CKT 1	1195	1195	0.23704	101.4314	GEN526331 1-JONES GEN #1 22 KV
FDNS	01ALL	0	17G	G15_060	TO->FROM	MATHWSN7 345.00 - TATONGA7 345.00 345KV CKT 1	1195	1195	0.25645	101.4052	FINNEY SWITCHING STATION - Hitchland Interchange 345KV CKT 1
FDNS	01ALL	0	20L	G15_060	TO->FROM	MATHWSN7 345.00 - TATONGA7 345.00 345KV CKT 1	1195	1195	0.24333	101.3763	GEN300006 1-NEW MADRID UNIT 1
FDNS	01ALL	0	16WP	G15_060	TO->FROM	MATHWSN7 345.00 - TATONGA7 345.00 345KV CKT 1	1195	1195	0.23993	101.3724	HUNTERS7 345.00 - RENFROW7 345.00 345KV CKT 1
FDNS	01ALL	0	20L	G15_060	TO->FROM	MATHWSN7 345.00 - TATONGA7 345.00 345KV CKT 1	1195	1195	0.24333	101.3575	GEN337652 1-WHITE BLUFF UNIT #1
FDNS	01ALL	0	20L	G15_060	TO->FROM	MATHWSN7 345.00 - TATONGA7 345.00 345KV CKT 1	1195	1195	0.24333	101.3455	GEN590011 2-ERCOT EQUIVALENCE
FDNS	01ALL	0	20L	G15_060	TO->FROM	MATHWSN7 345.00 - TATONGA7 345.00 345KV CKT 1	1195	1195	0.24448	101.343	G14-057T 345.00 - LAWTON EASTSIDE 345KV CKT 1
FDNS	01ALL	0	20L	G15_060	TO->FROM	MATHWSN7 345.00 - TATONGA7 345.00 345KV CKT 1	1195	1195	0.24333	101.34	GEN337653 1-WHITE BLUFF UNIT #2
FDNS	01ALL	0	20L	G15_060	TO->FROM	MATHWSN7 345.00 - TATONGA7 345.00 345KV CKT 1	1195	1195	0.24777	101.3318	CHISHOLM7 345.00 - GRACEMONT 345KV CKT 1
FDNS	01ALL	0	16WP	G15_060	TO->FROM	MATHWSN7 345.00 - TATONGA7 345.00 345KV CKT 1	1195	1195	0.23704	101.3179	GEN635214 4-NEAL UNIT 4
FDNS	01ALL	0	16WP	G15_060	TO->FROM	MATHWSN7 345.00 - TATONGA7 345.00 345KV CKT 1	1195	1195	0.23704	101.3115	GEN527901 1-HOBBS PLANT #1 (CT)
FDNS	01ALL	0	16WP	G15_060	TO->FROM	MATHWSN7 345.00 - TATONGA7 345.00 345KV CKT 1	1195	1195	0.23704	101.3115	GEN527902 1-HOBBS PLANT #2 (CT)
FDNS	01ALL	0	20L	G15_060	TO->FROM	MATHWSN7 345.00 - TATONGA7 345.00 345KV CKT 1	1195	1195	0.24497	101.3105	LATHAMS7 345.00 - ROSE HILL 345KV CKT 1
FDNS	01ALL	0	20L	G15_060	TO->FROM	MATHWSN7 345.00 - TATONGA7 345.00 345KV CKT 1	1195	1195	0.24333	101.2941	GEN590010 1-ERCOT EQUIVALENCE
FDNS	01ALL	0	20L	G15_060	TO->FROM	MATHWSN7 345.00 - TATONGA7 345.00 345KV CKT 1	1195	1195	0.24692	101.2649	P12:138:WFEC:MSL12
FDNS	01ALL	0	16WP	G15_060	TO->FROM	MATHWSN7 345.00 - TATONGA7 345.00 345KV CKT 1	1195	1195	0.23604	101.2583	GRACEMONT - LAWTON EASTSIDE 345KV CKT 1
FDNS	01ALL	0	16WP	G15_060	TO->FROM	MATHWSN7 345.00 - TATONGA7 345.00 345KV CKT 1	1195	1195	0.23604	101.2583	GRACEMONT - LAWTON EASTSIDE 345KV CKT 1
FDNS	01ALL	0	20L	G15_060	TO->FROM	MATHWSN7 345.00 - TATONGA7 345.00 345KV CKT 1	1195	1195	0.24475	101.258	EMPORIA ENERGY CENTER - G14_001T 345.00 345KV CKT 1
FDNS	01ALL	0	20L	G15_060	TO->FROM	MATHWSN7 345.00 - TATONGA7 345.00 345KV CKT 1	1195	1195	0.24692	101.2518	MOORELAND - PIC4 138.00 138KV CKT 1
FDNS	01ALL	0	20L	G15_060	TO->FROM	MATHWSN7 345.00 - TATONGA7 345.00 345KV CKT 1	1195	1195	0.24736	101.2407	P12:138:WFEC:MSL14
FDNS	01ALL	0	20L	G15_060	TO->FROM	MATHWSN7 345.00 - TATONGA7 345.00 345KV CKT 1	1195	1195	0.24692	101.2366	CEDARDALE - PIC4 138.00 138KV CKT 1
FDNS	01ALL	0	20L	G15_060	TO->FROM	MATHWSN7 345.00 - TATONGA7 345.00 345KV CKT 1	1195	1195	0.24333	101.2326	GEN515601 1-KNGFSR11 0.7000
FDNS	01ALL	0	20L	G15_060	TO->FROM	MATHWSN7 345.00 - TATONGA7 345.00 345KV CKT 1	1195	1195	0.24475	101.2316	G14_001T 345.00 - WICHITA 345KV CKT 1
FDNS	01ALL	0	20L	G15_060	TO->FROM	MATHWSN7 345.00 - TATONGA7 345.00 345KV CKT 1	1195	1195	0.24562	101.2303	NOEL_SW 138.00 - SALT_PLAINS 138.00 138KV CKT 1
FDNS	01ALL	0	20L	G15_060	TO->FROM	MATHWSN7 345.00 - TATONGA7 345.00 345KV CKT 1	1195	1195	0.24333	101.2274	GEN514910 2-REDBUD GEN
FDNS	01ALL	0	20L	G15_060	TO->FROM	MATHWSN7 345.00 - TATONGA7 345.00 345KV CKT 1	1195	1195	0.24802	101.2244	DOVER SW - OKEENE 138KV CKT 1
FDNS	01ALL	0	20L	G15_060	TO->FROM	MATHWSN7 345.00 - TATONGA7 345.00 345KV CKT 1	1195	1195	0.24333	101.2244	GEN514911 2-REDBUD GEN
FDNS	01ALL	0	20L	G15_060	TO->FROM	MATHWSN7 345.00 - TATONGA7 345.00 345KV CKT 1	1195	1195	0.24333	101.2244	GEN514942 2-REDBUD4G
FDNS	01ALL	0	20L	G15_060	TO->FROM	MATHWSN7 345.00 - TATONGA7 345.00 345KV CKT 1	1195	1195	0.24692	101.2233	CEDARDALE - OKEENE 138KV CKT 1

SOLUTION	GROUP	SCENARIO	SEASON	SOURCE	DIRECTION	MONITORED ELEMENT	RATEA (MVA)	RATEB(MVA)	TDF	TC%LOADING (% MVA)	CONTINGENCY
FDNS	01ALL	0	16WP	G15_060	TO->FROM	MATHWSN7 345.00 - TATONGA7 345.00 345KV CKT 1	1195	1195	0.23704	101.2098	GEN600002 3-SHERBURNE CNTY G3
FDNS	01ALL	0	20L	G15_060	TO->FROM	MATHWSN7 345.00 - TATONGA7 345.00 345KV CKT 1	1195	1195	0.24736	101.1922	BEARCAT 138.00 - MOORELAND 138KV CKT 1
FDNS	01ALL	0	16WP	G15_060	TO->FROM	MATHWSN7 345.00 - TATONGA7 345.00 345KV CKT 1	1195	1195	0.23704	101.1762	GEN635023 3-WALTER SCOTT UNIT 3
FDNS	01ALL	0	20L	G15_060	TO->FROM	MATHWSN7 345.00 - TATONGA7 345.00 345KV CKT 1	1195	1195	0.24333	101.1475	GEN509404 1-WELSH #1
FDNS	01ALL	0	20L	G15_060	TO->FROM	MATHWSN7 345.00 - TATONGA7 345.00 345KV CKT 1	1195	1195	0.24333	101.1421	GEN532751 1-WOLF CREEK GENERATING STATION UNIT 1
FDNS	01ALL	0	20L	G15_060	TO->FROM	MATHWSN7 345.00 - TATONGA7 345.00 345KV CKT 1	1195	1195	0.24333	101.1188	GEN563272 1-G15093_3 0.6900
FDNS	01ALL	0	20L	G15_060	TO->FROM	MATHWSN7 345.00 - TATONGA7 345.00 345KV CKT 1	1195	1195	0.24333	101.1177	GEN335206 1-NELSON UNIT 6
FDNS	01ALL	0	20L	G15_060	TO->FROM	MATHWSN7 345.00 - TATONGA7 345.00 345KV CKT 1	1195	1195	0.24736	101.1159	BEARCAT 138.00 - NINE MILE 138KV CKT 1
FDNS	01ALL	0	17G	G15_060	TO->FROM	MATHWSN7 345.00 - TATONGA7 345.00 345KV CKT 1	1195	1195	0.25791	101.1096	BORDER 7345.00 - WOODWARD DISTRICT EHV 345KV CKT 1
FDNS	01ALL	0	20L	G15_060	TO->FROM	MATHWSN7 345.00 - TATONGA7 345.00 345KV CKT 1	1195	1195	0.24333	101.1065	GEN513602 1-GRECSTG_1 17.500
FDNS	01ALL	0	20L	G15_060	TO->FROM	MATHWSN7 345.00 - TATONGA7 345.00 345KV CKT 1	1195	1195	0.24333	101.0972	GEN514905 1-REDBUD3S
FDNS	01ALL	0	20L	G15_060	TO->FROM	MATHWSN7 345.00 - TATONGA7 345.00 345KV CKT 1	1195	1195	0.24561	101.0964	FLATRDG3 - THISTLE4 138.00 138KV CKT 1
FDNS	01ALL	0	20L	G15_060	TO->FROM	MATHWSN7 345.00 - TATONGA7 345.00 345KV CKT 1	1195	1195	0.24561	101.0964	FLATRDG3 - THISTLE4 138.00 138KV CKT 1
FDNS	01ALL	0	20L	G15_060	TO->FROM	MATHWSN7 345.00 - TATONGA7 345.00 345KV CKT 1	1195	1195	0.24561	101.0961	THISTLE7 345.00 (THISTLE T1) 345/138/13.8KV TRANSFORMER CKT 1
FDNS	01ALL	0	20L	G15_060	TO->FROM	MATHWSN7 345.00 - TATONGA7 345.00 345KV CKT 1	1195	1195	0.24333	101.0845	GRAND GULF 500/22.0KV TRANSFORMER CKT 1
FDNS	01ALL	0	20L	G15_060	TO->FROM	MATHWSN7 345.00 - TATONGA7 345.00 345KV CKT 1	1195	1195	0.24333	101.0827	GEN338146 1-INDEPENDENCE UNIT #2
FDNS	01ALL	0	20L	G15_060	TO->FROM	MATHWSN7 345.00 - TATONGA7 345.00 345KV CKT 1	1195	1195	0.24333	101.0468	GEN515550 1-MNCWND31 0.6900
FDNS	01ALL	0	20L	G15_060	TO->FROM	MATHWSN7 345.00 - TATONGA7 345.00 345KV CKT 1	1195	1195	0.24524	101.0402	TUCO INTERCHANGE - TUCO_2 345.00 345KV CKT 1
FDNS	01ALL	0	20L	G15_060	TO->FROM	MATHWSN7 345.00 - TATONGA7 345.00 345KV CKT 1	1195	1195	0.24333	101.0399	GEN562952 1-G15057_3 0.6500
FDNS	01ALL	0	20L	G15_060	TO->FROM	MATHWSN7 345.00 - TATONGA7 345.00 345KV CKT 1	1195	1195	0.24333	101.0351	GEN338143 1-INDEPENDENCE UNIT #1
FDNS	01ALL	0	16WP	G15_060	TO->FROM	MATHWSN7 345.00 - TATONGA7 345.00 345KV CKT 1	1195	1195	0.23815	101.0303	OPENSKY7 345.00 - RANCHRD7 345.00 345KV CKT 1
FDNS	01ALL	0	16WP	G15_060	TO->FROM	MATHWSN7 345.00 - TATONGA7 345.00 345KV CKT 1	1195	1195	0.23704	101.0231	GEN515397 1-OUSPRT 1 0.6900
FDNS	01ALL	0	20WP	G15_060	TO->FROM	MATHWSN7 345.00 - TATONGA7 345.00 345KV CKT 1	1195	1195	0.23138	101.0112	GEN562023 1-G11_020_3 0.6900
FDNS	01ALL	0	20WP	G15_060	TO->FROM	MATHWSN7 345.00 - TATONGA7 345.00 345KV CKT 1	1195	1195	0.23138	101.0112	GEN562026 1-G11_019_3 0.6900
FDNS	00NR	0	16WP	G15_060	TO->FROM	MATHWSN7 345.00 - TATONGA7 345.00 345KV CKT 1	1195	1195	0.32673	101.0086	THISTLE7 345.00 - WOODWARD DISTRICT EHV 345KV CKT 1
FDNS	00NR	0	16WP	G15_060	TO->FROM	MATHWSN7 345.00 - TATONGA7 345.00 345KV CKT 1	1195	1195	0.32673	101.0086	THISTLE7 345.00 - WOODWARD DISTRICT EHV 345KV CKT 1
FDNS	00NR	0	16WP	G15_060	TO->FROM	MATHWSN7 345.00 - TATONGA7 345.00 345KV CKT 1	1195	1195	0.32673	101.0086	THISTLE7 345.00 - WOODWARD DISTRICT EHV 345KV CKT 2
FDNS	00NR	0	16WP	G15_060	TO->FROM	MATHWSN7 345.00 - TATONGA7 345.00 345KV CKT 1	1195	1195	0.32673	101.0086	THISTLE7 345.00 - WOODWARD DISTRICT EHV 345KV CKT 2
FDNS	01ALL	0	20L	G15_060	TO->FROM	MATHWSN7 345.00 - TATONGA7 345.00 345KV CKT 1	1195	1195	0.24375	100.9987	SMOKYHL6 230.00 - SUMMIT 230KV CKT 1
FDNS	01ALL	0	20L	G15_060	TO->FROM	MATHWSN7 345.00 - TATONGA7 345.00 345KV CKT 1	1195	1195	0.24333	100.9966	GEN562512 1-G14_020_3 0.6900
FDNS	01ALL	0	20L	G15_060	TO->FROM	MATHWSN7 345.00 - TATONGA7 345.00 345KV CKT 1	1195	1195	0.24562	100.9949	C_CITY_138 138.00 - SALT_PLAINS 138.00 138KV CKT 1
FDNS	01ALL	0	20L	G15_060	TO->FROM	MATHWSN7 345.00 - TATONGA7 345.00 345KV CKT 1	1195	1195	0.2453	100.9947	ELK CITY - RED HILLS WIND 138KV CKT 1
FDNS	01ALL	0	20L	G15_060	TO->FROM	MATHWSN7 345.00 - TATONGA7 345.00 345KV CKT 1	1195	1195	0.2453	100.9947	ELK CITY - RED HILLS WIND 138KV CKT 1
FDNS	01ALL	0	20L	G15_060	TO->FROM	MATHWSN7 345.00 - TATONGA7 345.00 345KV CKT 1	1195	1195	0.24333	100.9902	GEN513601 1-GRECCTG_1 20.000
FDNS	01ALL	0	20L	G15_060	TO->FROM	MATHWSN7 345.00 - TATONGA7 345.00 345KV CKT 1	1195	1195	0.24736	100.9789	MOREWOOD SW - NINE MILE 138KV CKT 1
FDNS	01ALL	0	20L	G15_060	TO->FROM	MATHWSN7 345.00 - TATONGA7 345.00 345KV CKT 1	1195	1195	0.24562	100.9759	BYRON_138 138.00 - C_CITY_138 138.00 138KV CKT 1
FDNS	01ALL	0	16WP	G15_060	TO->FROM	MATHWSN7 345.00 - TATONGA7 345.00 345KV CKT 1	1195	1195	0.23365	100.9612	G15063_T 345.00 - MATHWSN7 345.00 345KV CKT 1
FDNS	01ALL	0	20L	G15_060	TO->FROM	MATHWSN7 345.00 - TATONGA7 345.00 345KV CKT 1	1195	1195	0.24415	100.9606	MULLERGREN - SPEARVILLE 230KV CKT 1
FDNS	01ALL	0	20L	G15_060	TO->FROM	MATHWSN7 345.00 - TATONGA7 345.00 345KV CKT 1	1195	1195	0.24415	100.9606	MULLERGREN - SPEARVILLE 230KV CKT 1
FDNS	01ALL	0	16WP	G15_060	TO->FROM	MATHWSN7 345.00 - TATONGA7 345.00 345KV CKT 1	1195	1195	0.23704	100.9482	GEN531447 1-HOLCOMB GENERATOR
FDNS	01ALL	0	20L	G15_060	TO->FROM	MATHWSN7 345.00 - TATONGA7 345.00 345KV CKT 1	1195	1195	0.24333	100.9211	GEN563273 2-G15093_4 0.6900
FDNS	01ALL	0	16WP	G15_060	TO->FROM	MATHWSN7 345.00 - TATONGA7 345.00 345KV CKT 1	1195	1195	0.26866	100.9108	WOODWARD EHV - WWPAR4 138.00 138KV CKT 1
FDNS	01ALL	0	20L	G15_060	TO->FROM	MATHWSN7 345.00 - TATONGA7 345.00 345KV CKT 1	1195	1195	0.2454	100.9092	BVRCNTY7 345.00 - OPTIMA 345.00 345KV CKT 1
FDNS	01ALL	0	20L	G15_060	TO->FROM	MATHWSN7 345.00 - TATONGA7 345.00 345KV CKT 1	1195	1195	0.2454	100.9092	BVRCNTY7 345.00 - OPTIMA 345.00 345KV CKT 2
FDNS	01ALL	0	16WP	G15_060	TO->FROM	MATHWSN7 345.00 - TATONGA7 345.00 345KV CKT 1	1195	1195	0.26866	100.9087	WOODWARD - WWPAR4 138.00 138KV CKT 1
FDNS	01ALL	0	20L	G15_060	TO->FROM	MATHWSN7 345.00 - TATONGA7 345.00 345KV CKT 1	1195	1195	0.24525	100.8922	P12:138:WERE:CLWA-MKEC_138F::
FDNS	01ALL	0	20L	G15_060	TO->FROM	MATHWSN7 345.00 - TATONGA7 345.00 345KV CKT 1	1195	1195	0.24525	100.8915	P12:138:MKEC:HARPER-CLEARWATER::
FDNS	01ALL	0	20L	G15_060	TO->FROM	MATHWSN7 345.00 - TATONGA7 345.00 345KV CKT 1	1195	1195	0.24578	100.8785	GRAPEVINE INTERCHANGE - NICHOLS STATION 230KV CKT 1
FDNS	01ALL	0	20L	G15_060	TO->FROM	MATHWSN7 345.00 - TATONGA7 345.00 345KV CKT 1	1195	1195	0.24578	100.8785	GRAPEVINE INTERCHANGE - NICHOLS STATION 230KV CKT 1
FDNS	01ALL	0	16WP	G15_060	TO->FROM	MATHWSN7 345.00 - TATONGA7 345.00 345KV CKT 1	1195	1195	0.23704	100.8782	GEN635024 4-WALTER SCOTT UNIT 4
FDNS	01ALL	0	20L	G15_060	TO->FROM	MATHWSN7 345.00 - TATONGA7 345.00 345KV CKT 1	1195	1195	0.24333	100.8732	GEN501813 1-RODEMACHER UNIT 3
FDNS	01ALL	0	20L	G15_060	TO->FROM	MATHWSN7 345.00 - TATONGA7 345.00 345KV CKT 1	1195	1195	0.24777	100.8722	CHISHOLM7 345.00 () 345/230/13.2KV TRANSFORMER CKT 1
FDNS	00NR	0	20WP	G15_060	TO->FROM	MATHWSN7 345.00 - TATONGA7 345.00 345KV CKT 1	1195	1195	0.30043	100.869	CIMARRON - MINCO 345KV CKT 1
FDNS	01ALL	0	20L	G15_060	TO->FROM	MATHWSN7 345.00 - TATONGA7 345.00 345KV CKT 1	1195	1195	0.24333	100.8648	GEN505432 1-SIKESTON
FDNS	01ALL	0	20L	G15_060	TO->FROM	MATHWSN7 345.00 - TATONGA7 345.00 345KV CKT 1	1195	1195	0.24333	100.8562	GEN501812 1-RODEMACHER UNIT 2
FDNS	01ALL	0	20L	G15_060	TO->FROM	MATHWSN7 345.00 - TATONGA7 345.00 345KV CKT 1	1195	1195	0.24523	100.8503	P12:138:WERE:MURR-MKEC_138P::
FDNS	01ALL	0	20L	G15_060	TO->FROM	MATHWSN7 345.00 - TATONGA7 345.00 345KV CKT 1	1195	1195	0.24646	100.8397	BENTON - ROSE HILL 345KV CKT 1
FDNS	01ALL	0	20L	G15_060	TO->FROM	MATHWSN7 345.00 - TATONGA7 345.00 345KV CKT 1	1195	1195	0.24416	100.8361	HITCHLAND INTERCHANGE - MOORE COUNTY INTERCHANGE 230KV CKT 1
FDNS	01ALL	0	20L	G15_060	TO->FROM	MATHWSN7 345.00 - TATONGA7 345.00 345KV CKT 1	1195	1195	0.24416	100.8361	HITCHLAND INTERCHANGE - MOORE COUNTY INTERCHANGE 230KV CKT 1
FDNS	01ALL	0	16WP	G15_060	TO->FROM	MATHWSN7 345.00 - TATONGA7 345.00 345KV CKT 1	1195	1195	0.23774	100.8209	GRACEMONT - MINCO 345KV CKT 1
FDNS	01ALL	0	20L	G15_060	TO->FROM	MATHWSN7 345.00 - TATONGA7 345.00 345KV CKT 1	1195	1195	0.24333	100.8047	WHITE BLUFF 500/26.0KV TRANSFORMER CKT 1
FDNS	01ALL	0	20L	G15_060	TO->FROM	MATHWSN7 345.00 - TATONGA7 345.00 345KV CKT 1	1195	1195	0.24333	100.8044	GEN515225 1-MUSKOGEE 5G
FDNS	01ALL	0	20L	G15_060	TO->FROM	MATHWSN7 345.00 - TATONGA7 345.00 345KV CKT 1	1195	1195	0.24625	100.8036	EL RENO - ROMAN NOSE 138KV CKT 1
FDNS	01ALL	0	20L	G15_060	TO->FROM	MATHWSN7 345.00 - TATONGA7 345.00 345KV CKT 1	1195	1195	0.24502	100.787	DEWEY - TALOGA 138KV CKT 1
FDNS	01ALL	0	20L	G15_060	TO->FROM	MATHWSN7 345.00 - TATONGA7 345.00 345KV CKT 1	1195	1195	0.24333	100.7693	GEN506754 1-LEBROCK STEAM 1
FDNS	01ALL	0	20L	G15_060	TO->FROM	MATHWSN7 345.00 - TATONGA7 345.00 345KV CKT 1	1195	1195	0.24403	100.7655	G15088_T 345.00 - MOORE 345KV CKT 1
FDNS	01ALL	0	20L	G15_060	TO->FROM	MATHWSN7 345.00 - TATONGA7 345.00 345KV CKT 1	1195	1195	0.24333	100.7644	GEN562992 1-G15063_3 0.6900
FDNS	01ALL	0	20L	G15_060	TO->FROM	MATHWSN7 345.00 - TATONGA7 345.00 345KV CKT 1	1195	1195	0.24562	100.7579	BYRON_138 138.00 - SANDY_CN_138138.00 138KV CKT 1
FDNS	01ALL	0	20L	G15_060	TO->FROM	MATHWSN7 345.00 - TATONGA7 345.00 345KV CKT 1	1195	1195	0.24417	100.7443	EMPORIA ENERGY CENTER - SWISSVALE 345KV CKT 1
FDNS	01ALL	0	20L	G15_060	TO->FROM	MATHWSN7 345.00 - TATONGA7 345.00 345KV CKT 1	1195	1195	0.24333	100.7441	GEN514912 2-REDBUD GEN
FDNS	01ALL	0	20L	G15_060	TO->FROM	MATHWSN7 345.00 - TATONGA7 345.00 345KV CKT 1	1195	1195	0.24433	100.7427	SWISSVALE - WEST GARDNER 345KV CKT 1
FDNS	01ALL	0	20L	G15_060	TO->FROM	MATHWSN7 345.00 - TATONGA7 345.00 345KV CKT 1	1195	1195	0.24399	100.7307	BLUSTEM7 345.00 - SUMMIT 345KV CKT 1
FDNS	01ALL	0	17SP	G15_060	TO->FROM	MATHWSN7 345.00 - TATONGA7 345.00 345KV CKT 1	1195	1195	0.24874	100.7197	BORDER 7345.00 - TUCO_2 345.00 345KV CKT 1
FDNS	01ALL	0	20L	G15_060	TO->FROM	MATHWSN7 345.00 - TATONGA7 345.00 345KV CKT 1	1195	1195	0.24418	100.6938	AXTELL - PAULINE 345KV CKT 1
FDNS	01ALL	0	20L	G15_060	TO->FROM	MATHWSN7 345.00 - TATONGA7 345.00 345KV CKT 1	1195	1195	0.24418	100.681	G15074_T 345.00 - HOYT 345KV CKT 1
FDNS	01ALL	0	20L	G15_060	TO->FROM	MATHWSN7 345.00 - TATONGA7 345.00 345KV CKT 1	1195	1195	0.2442	100.6642	HOYT - STRANGER CREEK 345KV CKT 1
FDNS	01ALL	0	20L	G15_060	TO->FROM	MATHWSN7 345.00 - TATONGA7 345.00 345KV CKT 1	1195	1195	0.24418	100.661	G15074_T 345.00 - JEFFREY ENERGY CENTER 345KV CKT 1
FDNS	01ALL	0	20L	G15_060	TO->FROM	MATHWSN7 345.00 - TATONGA7 345.00 345KV CKT 1	1195	1195	0.24382	100.6503	CIRCLE - MULLERGREN 230KV CKT 1
FDNS	01ALL	0	20L	G15_060	TO->FROM	MATHWSN7 345.00 - TATONGA7 345.00 345KV CKT 1	1195	1195	0.24382	100.6503	CIRCLE - MULLERGREN 230KV CKT 1

SOLUTION	GROUP	SCENARIO	SEASON	SOURCE	DIRECTION	MONITORED ELEMENT	RATEA (MVA)	RATEB(MVA)	TDF	TC%LOADING (% MVA)	CONTINGENCY
FDNS	01ALL	0	20L	G15_060	TO->FROM	MATHWSN7 345.00 - TATONGA7 345.00 345KV CKT 1	1195	1195	0.24403	100.6478	G15088_T 345.00 - PAULINE 345KV CKT 1
FDNS	01ALL	0	20L	G15_060	TO->FROM	MATHWSN7 345.00 - TATONGA7 345.00 345KV CKT 1	1195	1195	0.24333	100.6454	GEN336831 1-BAXTER WILSON SES
FDNS	01ALL	0	20L	G15_060	TO->FROM	MATHWSN7 345.00 - TATONGA7 345.00 345KV CKT 1	1195	1195	0.24333	100.6434	GEN336170 1-GULF OXY U4
FDNS	01ALL	0	20L	G15_060	TO->FROM	MATHWSN7 345.00 - TATONGA7 345.00 345KV CKT 1	1195	1195	0.24333	100.6428	GEN334440 1-SABINE UNIT 4
FDNS	01ALL	0	16WP	G15_060	TO->FROM	MATHWSN7 345.00 - TATONGA7 345.00 345KV CKT 1	1195	1195	0.23704	100.6411	GEN523971 1-HARRINGTON GEN #1 24 KV
FDNS	01ALL	0	16WP	G15_060	TO->FROM	MATHWSN7 345.00 - TATONGA7 345.00 345KV CKT 1	1195	1195	0.23704	100.641	GEN523973 1-HARRINGTON GEN #3 24 KV
FDNS	01ALL	0	16WP	G15_060	TO->FROM	MATHWSN7 345.00 - TATONGA7 345.00 345KV CKT 1	1195	1195	0.23704	100.6409	GEN523972 1-HARRINGTON GEN #2 24 KV
FDNS	01ALL	0	20L	G15_060	TO->FROM	MATHWSN7 345.00 - TATONGA7 345.00 345KV CKT 1	1195	1195	0.2437	100.6395	WALKTAP7 345.00 (WALKE345) 345/115/13.8KV TRANSFORMER CKT 1
FDNS	01ALL	0	20L	G15_060	TO->FROM	MATHWSN7 345.00 - TATONGA7 345.00 345KV CKT 1	1195	1195	0.2437	100.6395	WALKTAP7 345.00 (WALKE345) 345/115/13.8KV TRANSFORMER CKT 1
FDNS	01ALL	0	20L	G15_060	TO->FROM	MATHWSN7 345.00 - TATONGA7 345.00 345KV CKT 1	1195	1195	0.24333	100.6375	GEN336252 1-NINEMILE POINT UNIT#5
FDNS	01ALL	0	20L	G15_060	TO->FROM	MATHWSN7 345.00 - TATONGA7 345.00 345KV CKT 1	1195	1195	0.2437	100.6367	WALKEMEYER - WALKTAP3 115.00 115KV CKT 1
FDNS	01ALL	0	20L	G15_060	TO->FROM	MATHWSN7 345.00 - TATONGA7 345.00 345KV CKT 1	1195	1195	0.2437	100.6367	WALKEMEYER - WALKTAP3 115.00 115KV CKT 1
FDNS	01ALL	0	20L	G15_060	TO->FROM	MATHWSN7 345.00 - TATONGA7 345.00 345KV CKT 1	1195	1195	0.24356	100.6363	BUSHLAND INTERCHANGE - DEAF SMITH COUNTY INTERCHANGE 230KV CKT 1
FDNS	01ALL	0	20L	G15_060	TO->FROM	MATHWSN7 345.00 - TATONGA7 345.00 345KV CKT 1	1195	1195	0.24356	100.6363	BUSHLAND INTERCHANGE - DEAF SMITH COUNTY INTERCHANGE 230KV CKT 1
FDNS	01ALL	0	20L	G15_060	TO->FROM	MATHWSN7 345.00 - TATONGA7 345.00 345KV CKT 1	1195	1195	0.24328	100.6324	WEBRE - WELLS 500KV CKT 1
FDNS	01ALL	0	20L	G15_060	TO->FROM	MATHWSN7 345.00 - TATONGA7 345.00 345KV CKT 1	1195	1195	0.24443	100.6083	TALOGA (TALOGA) 138/69/13.8KV TRANSFORMER CKT 1
FDNS	01ALL	0	20L	G15_060	TO->FROM	MATHWSN7 345.00 - TATONGA7 345.00 345KV CKT 1	1195	1195	0.24333	100.6033	GEN549893 2-SOUTHWEST 2
FDNS	01ALL	0	20L	G15_060	TO->FROM	MATHWSN7 345.00 - TATONGA7 345.00 345KV CKT 1	1195	1195	0.24333	100.5986	GEN335204 1-NELSON UNIT 4
FDNS	01ALL	0	20L	G15_060	TO->FROM	MATHWSN7 345.00 - TATONGA7 345.00 345KV CKT 1	1195	1195	0.24333	100.5957	GEN506752 1-LEBROCK GAS 1
FDNS	01ALL	0	20L	G15_060	TO->FROM	MATHWSN7 345.00 - TATONGA7 345.00 345KV CKT 1	1195	1195	0.24333	100.5955	GEN506753 1-LEBROCK GAS 2
FDNS	01ALL	0	20L	G15_060	TO->FROM	MATHWSN7 345.00 - TATONGA7 345.00 345KV CKT 1	1195	1195	0.24495	100.5929	P12:138:AEPW-OGE:WTH_JCT4:JENSEN4
FDNS	01ALL	0	20L	G15_060	TO->FROM	MATHWSN7 345.00 - TATONGA7 345.00 345KV CKT 1	1195	1195	0.24333	100.5903	GEN337041 1-GERALD ANDRUS
FDNS	01ALL	0	20L	G15_060	TO->FROM	MATHWSN7 345.00 - TATONGA7 345.00 345KV CKT 1	1195	1195	0.24511	100.59	BVRCNTY7 345.00 - G11-14T 345.00 345KV CKT 1
FDNS	01ALL	0	20L	G15_060	TO->FROM	MATHWSN7 345.00 - TATONGA7 345.00 345KV CKT 1	1195	1195	0.24511	100.59	BVRCNTY7 345.00 - G11-14T 345.00 345KV CKT 2
FDNS	01ALL	0	20L	G15_060	TO->FROM	MATHWSN7 345.00 - TATONGA7 345.00 345KV CKT 1	1195	1195	0.24801	100.5861	GLASS MOUNTAIN - MOORELAND 138KV CKT 1
FDNS	01ALL	0	16WP	G15_060	TO->FROM	MATHWSN7 345.00 - TATONGA7 345.00 345KV CKT 1	1195	1195	0.23376	100.581	CIMARRON - DRAPER LAKE 345KV CKT 1
FDNS	01ALL	0	20L	G15_060	TO->FROM	MATHWSN7 345.00 - TATONGA7 345.00 345KV CKT 1	1195	1195	0.24368	100.574	RENO COUNTY - SUMMIT 345KV CKT 1
FDNS	01ALL	0	20L	G15_060	TO->FROM	MATHWSN7 345.00 - TATONGA7 345.00 345KV CKT 1	1195	1195	0.24457	100.5687	CANTON - TALOGA 69KV CKT 1
FDNS	01ALL	0	20L	G15_060	TO->FROM	MATHWSN7 345.00 - TATONGA7 345.00 345KV CKT 1	1195	1195	0.24377	100.5641	BLACKBERRY - NEOSHO 345KV CKT 1
FDNS	01ALL	0	20L	G15_060	TO->FROM	MATHWSN7 345.00 - TATONGA7 345.00 345KV CKT 1	1195	1195	0.24395	100.5629	GRAND ISLAND - SWEETWATER 345KV CKT 1
FDNS	00NR	0	16WP	G15_060	TO->FROM	MATHWSN7 345.00 - TATONGA7 345.00 345KV CKT 1	1195	1195	0.31625	100.5612	G14-074T 345.00 - TUCO INTERCHANGE 345KV CKT 1
FDNS	01ALL	0	20L	G15_060	TO->FROM	MATHWSN7 345.00 - TATONGA7 345.00 345KV CKT 1	1195	1195	0.24333	100.5602	GEN562882 1-G15047_3 0.6900
FDNS	01ALL	0	20L	G15_060	TO->FROM	MATHWSN7 345.00 - TATONGA7 345.00 345KV CKT 1	1195	1195	0.24483	100.5569	Canadian Pump Station - REDROCKRD4 138.00 138KV CKT 1
FDNS	01ALL	0	20L	G15_060	TO->FROM	MATHWSN7 345.00 - TATONGA7 345.00 345KV CKT 1	1195	1195	0.24333	100.5553	GEN334030 1-FRONTIER UNIT 1
FDNS	01ALL	0	20L	G15_060	TO->FROM	MATHWSN7 345.00 - TATONGA7 345.00 345KV CKT 1	1195	1195	0.24598	100.5546	GRAPEVINE INTERCHANGE - STATELINE INTERCHANGE 230KV CKT 1
FDNS	01ALL	0	20L	G15_060	TO->FROM	MATHWSN7 345.00 - TATONGA7 345.00 345KV CKT 1	1195	1195	0.24598	100.5546	GRAPEVINE INTERCHANGE - STATELINE INTERCHANGE 230KV CKT 1
FDNS	01ALL	0	20L	G15_060	TO->FROM	MATHWSN7 345.00 - TATONGA7 345.00 345KV CKT 1	1195	1195	0.24387	100.5546	BLUSTEM7 345.00 - JEFFREY ENERGY CENTER 345KV CKT 1
FDNS	01ALL	0	20L	G15_060	TO->FROM	MATHWSN7 345.00 - TATONGA7 345.00 345KV CKT 1	1195	1195	0.24333	100.5546	GEN334031 1-FRONTIER UNIT 2
FDNS	01ALL	0	20L	G15_060	TO->FROM	MATHWSN7 345.00 - TATONGA7 345.00 345KV CKT 1	1195	1195	0.24357	100.5543	NEWHART 230 - POTTER COUNTY INTERCHANGE 230KV CKT 1
FDNS	01ALL	0	20L	G15_060	TO->FROM	MATHWSN7 345.00 - TATONGA7 345.00 345KV CKT 1	1195	1195	0.24467	100.5514	DARLINGTNRD4138.00 - ROMAN NOSE 138KV CKT 1
FDNS	01ALL	0	20L	G15_060	TO->FROM	MATHWSN7 345.00 - TATONGA7 345.00 345KV CKT 1	1195	1195	0.24801	100.5498	CLEO CORNER - GLASS MOUNTAIN 138KV CKT 1
FDNS	01ALL	0	20L	G15_060	TO->FROM	MATHWSN7 345.00 - TATONGA7 345.00 345KV CKT 1	1195	1195	0.24457	100.5489	CANTON - OKEENE 69KV CKT 1
FDNS	01ALL	0	20L	G15_060	TO->FROM	MATHWSN7 345.00 - TATONGA7 345.00 345KV CKT 1	1195	1195	0.24333	100.5475	GEN521103 1-BLUE CANYON WIND FARM
FDNS	01ALL	0	16WP	G15_060	TO->FROM	MATHWSN7 345.00 - TATONGA7 345.00 345KV CKT 1	1195	1195	0.23815	100.5404	G15052_T 345.00 - OPENSKY7 345.00 345KV CKT 1
FDNS	01ALL	0	20L	G15_060	TO->FROM	MATHWSN7 345.00 - TATONGA7 345.00 345KV CKT 1	1195	1195	0.24483	100.5379	P12:138:OKGE-AEPW:JENSEN4:REDROCKRD4
FDNS	01ALL	0	20L	G15_060	TO->FROM	MATHWSN7 345.00 - TATONGA7 345.00 345KV CKT 1	1195	1195	0.24333	100.5286	GEN506749 1-EASTMAN GENERATION A
FDNS	01ALL	0	16WP	G15_060	TO->FROM	MATHWSN7 345.00 - TATONGA7 345.00 345KV CKT 1	1195	1195	0.23704	100.5257	GEN527903 1-HOBBS PLANT #3 (ST)
FDNS	01ALL	0	20L	G15_060	TO->FROM	MATHWSN7 345.00 - TATONGA7 345.00 345KV CKT 1	1195	1195	0.24333	100.5204	DOLET HILLS 345/24.0KV TRANSFORMER CKT 1
FDNS	01ALL	0	20L	G15_060	TO->FROM	MATHWSN7 345.00 - TATONGA7 345.00 345KV CKT 1	1195	1195	0.24333	100.5176	GEN335614 1-WILLOW GLENN UNIT#4
FDNS	01ALL	0	20L	G15_060	TO->FROM	MATHWSN7 345.00 - TATONGA7 345.00 345KV CKT 1	1195	1195	0.24404	100.5083	FTTHOM2-LNX3345.00 - GRPRAR2-LNX3345.00 345KV CKT 1
FDNS	01ALL	0	20L	G15_060	TO->FROM	MATHWSN7 345.00 - TATONGA7 345.00 345KV CKT 1	1195	1195	0.24333	100.508	GEN509408 1-WILKES #2
FDNS	01ALL	0	20L	G15_060	TO->FROM	MATHWSN7 345.00 - TATONGA7 345.00 345KV CKT 1	1195	1195	0.24333	100.5076	GEN336464 1-MICHOUD UNIT #3
FDNS	01ALL	0	20L	G15_060	TO->FROM	MATHWSN7 345.00 - TATONGA7 345.00 345KV CKT 1	1195	1195	0.24333	100.507	GEN336191 1-LITTLE GYPSY UNIT#3
FDNS	01ALL	0	20L	G15_060	TO->FROM	MATHWSN7 345.00 - TATONGA7 345.00 345KV CKT 1	1195	1195	0.2439	100.5068	BUCKNER7 345.00 - SPEARVILLE 345KV CKT 1
FDNS	01ALL	0	20L	G15_060	TO->FROM	MATHWSN7 345.00 - TATONGA7 345.00 345KV CKT 1	1195	1195	0.2439	100.5068	BUCKNER7 345.00 - SPEARVILLE 345KV CKT 1
FDNS	01ALL	0	16WP	G15_060	TO->FROM	MATHWSN7 345.00 - TATONGA7 345.00 345KV CKT 1	1195	1195	0.23704	100.5064	GEN562974 1-G15060_5 0.6900
FDNS	01ALL	0	20L	G15_060	TO->FROM	MATHWSN7 345.00 - TATONGA7 345.00 345KV CKT 1	1195	1195	0.24333	100.5021	GEN336801 1-BAXTER WILSON UNIT #1
FDNS	01ALL	0	20L	G15_060	TO->FROM	MATHWSN7 345.00 - TATONGA7 345.00 345KV CKT 1	1195	1195	0.24375	100.5007	KNOLL 230 - SMOKYHL6 230.00 230KV CKT 1
FDNS	01ALL	0	20L	G15_060	TO->FROM	MATHWSN7 345.00 - TATONGA7 345.00 345KV CKT 1	1195	1195	0.24333	100.4991	GEN599951 1-PSCO LAMAR DC TIE
FDNS	01ALL	0	20L	G15_060	TO->FROM	MATHWSN7 345.00 - TATONGA7 345.00 345KV CKT 1	1195	1195	0.24404	100.4986	FT THOMPSON - FTTHOM2-LNX3345.00 345KV CKT Z
FDNS	01ALL	0	20L	G15_060	TO->FROM	MATHWSN7 345.00 - TATONGA7 345.00 345KV CKT 1	1195	1195	0.24379	100.4942	CLINTON JUNCTION - ELK CITY 138KV CKT 1
FDNS	01ALL	0	20L	G15_060	TO->FROM	MATHWSN7 345.00 - TATONGA7 345.00 345KV CKT 1	1195	1195	0.24379	100.4942	CLINTON JUNCTION - ELK CITY 138KV CKT 1
FDNS	01ALL	0	20L	G15_060	TO->FROM	MATHWSN7 345.00 - TATONGA7 345.00 345KV CKT 1	1195	1195	0.24404	100.4929	GRPRAR2-LNX3345.00 - YANKTON 345KV CKT Z
FDNS	01ALL	0	20L	G15_060	TO->FROM	MATHWSN7 345.00 - TATONGA7 345.00 345KV CKT 1	1195	1195	0.24333	100.4919	GEN563022 1-G15066_3 0.6900
FDNS	01ALL	0	20L	G15_060	TO->FROM	MATHWSN7 345.00 - TATONGA7 345.00 345KV CKT 1	1195	1195	0.24373	100.4916	P12:115:MKEC:BARBER-RIVERROAD::
FDNS	01ALL	0	20L	G15_060	TO->FROM	MATHWSN7 345.00 - TATONGA7 345.00 345KV CKT 1	1195	1195	0.24327	100.4884	DOLET HILLS - SOUTHWEST SHREVEPORT 345KV CKT 1
FDNS	01ALL	0	20L	G15_060	TO->FROM	MATHWSN7 345.00 - TATONGA7 345.00 345KV CKT 1	1195	1195	0.24327	100.4884	DOLET HILLS - SOUTHWEST SHREVEPORT 345KV CKT 1
FDNS	01ALL	0	20L	G15_060	TO->FROM	MATHWSN7 345.00 - TATONGA7 345.00 345KV CKT 1	1195	1195	0.24373	100.4877	BARBER 3 115.00 - SAWYER 3 115.00 115KV CKT 1
FDNS	01ALL	0	20L	G15_060	TO->FROM	MATHWSN7 345.00 - TATONGA7 345.00 345KV CKT 1	1195	1195	0.24467	100.4858	DARLINGTNRD4138.00 - REDROCKRD4 138.00 138KV CKT 1
FDNS	01ALL	0	20L	G15_060	TO->FROM	MATHWSN7 345.00 - TATONGA7 345.00 345KV CKT 1	1195	1195	0.24467	100.4858	DARLINGTNRD4138.00 - REDROCKRD4 138.00 138KV CKT 1
FDNS	01ALL	0	20L	G15_060	TO->FROM	MATHWSN7 345.00 - TATONGA7 345.00 345KV CKT 1	1195	1195	0.24333	100.4855	GEN303007 1-1BC2 U2
FDNS	01ALL	0	20L	G15_060	TO->FROM	MATHWSN7 345.00 - TATONGA7 345.00 345KV CKT 1	1195	1195	0.24446	100.4854	CRESENT - TWIN LAKES 138KV CKT 1
FDNS	01ALL	0	20L	G15_060	TO->FROM	MATHWSN7 345.00 - TATONGA7 345.00 345KV CKT 1	1195	1195	0.24333	100.4843	GEN336242 1-1NMIL ST1 18.000
FDNS	01ALL	0	20L	G15_060	TO->FROM	MATHWSN7 345.00 - TATONGA7 345.00 345KV CKT 1	1195	1195	0.24333	100.4806	ARKANSAS NUCLEAR ONE 500/22.0KV TRANSFORMER CKT 1
FDNS	01ALL	0	20L	G15_060	TO->FROM	MATHWSN7 345.00 - TATONGA7 345.00 345KV CKT 1	1195	1195	0.24373	100.4797	ALEXANDER - SAWYER 3 115.00 115KV CKT 1
FDNS	01ALL	0	20L	G15_060	TO->FROM	MATHWSN7 345.00 - TATONGA7 345.00 345KV CKT 1	1195	1195	0.24333	100.4784	GEN303006 1-1BC2 U1
FDNS	01ALL	0	20L	G15_060	TO->FROM	MATHWSN7 345.00 - TATONGA7 345.00 345KV CKT 1	1195	1195	0.24333	100.4766	GEN562611 1-G14_064_3 0.6900
FDNS	01ALL	0	16WP	G15_060	TO->FROM	MATHWSN7 345.00 - TATONGA7 345.00 345KV CKT 1	1195	1195	0.23704	100.4751	GEN562973 1-G15060_4 0.6900
FDNS	01ALL	0	20L	G15_060	TO->FROM	MATHWSN7 345.00 - TATONGA7 345.00 345KV CKT 1	1195	1195	0.24333	100.473	GEN562590 1-G14_057_3 0.6900

SOLUTION	GROUP	SCENARIO	SEASON	SOURCE	DIRECTION	MONITORED ELEMENT	RATEA (MVA)	RATEB(MVA)	TDF	TC%LOADING (% MVA)	CONTINGENCY
FDNS	01ALL	0	20L	G15_060	TO->FROM	MATHWSN7 345.00 - TATONGA7 345.00 345KV CKT 1	1195	1195	0.24333	100.4717	GEN542951 5-HAWTHORN UNIT #5
FDNS	01ALL	0	20L	G15_060	TO->FROM	MATHWSN7 345.00 - TATONGA7 345.00 345KV CKT 1	1195	1195	0.24333	100.4713	GEN334441 1-SABINE UNIT 5
FDNS	01ALL	0	20L	G15_060	TO->FROM	MATHWSN7 345.00 - TATONGA7 345.00 345KV CKT 1	1195	1195	0.24333	100.467	GEN336251 1-NINEMILE POINT UNIT#4
FDNS	01ALL	0	17G	G15_060	TO->FROM	MATHWSN7 345.00 - TATONGA7 345.00 345KV CKT 1	1195	1195	0.24492	100.466	CIMARRON - MINCO 345KV CKT 1
FDNS	01ALL	0	20L	G15_060	TO->FROM	MATHWSN7 345.00 - TATONGA7 345.00 345KV CKT 1	1195	1195	0.24333	100.4648	GEN338388 1-1PLUM PT U1 23.000
FDNS	01ALL	0	20L	G15_060	TO->FROM	MATHWSN7 345.00 - TATONGA7 345.00 345KV CKT 1	1195	1195	0.24333	100.4644	GEN337430 1-PERYVILLE UNIT #3
FDNS	01ALL	0	20L	G15_060	TO->FROM	MATHWSN7 345.00 - TATONGA7 345.00 345KV CKT 1	1195	1195	0.24333	100.4641	GEN337428 1-PERYVILLE UNIT #1
FDNS	01ALL	0	20L	G15_060	TO->FROM	MATHWSN7 345.00 - TATONGA7 345.00 345KV CKT 1	1195	1195	0.24333	100.4611	GEN334392 1-EXXON MOBIL IPP 1
FDNS	01ALL	0	20L	G15_060	TO->FROM	MATHWSN7 345.00 - TATONGA7 345.00 345KV CKT 1	1195	1195	0.24333	100.4605	GEN334393 1-EXXON MOBIL IPP 2
FDNS	01ALL	0	20L	G15_060	TO->FROM	MATHWSN7 345.00 - TATONGA7 345.00 345KV CKT 1	1195	1195	0.24333	100.4605	GEN334394 1-EXXON MOBIL IPP 3
FDNS	00NR	0	16WP	G15_060	TO->FROM	MATHWSN7 345.00 - TATONGA7 345.00 345KV CKT 1	1195	1195	0.30465	100.4392	CHISHOLM6 230.00 - SWEETWATER 230KV CKT 1
FDNS	01ALL	0	20WP	G15_060	TO->FROM	MATHWSN7 345.00 - TATONGA7 345.00 345KV CKT 1	1195	1195	0.23138	100.343	GEN562602 1-G15_029_3 0.6900
FDNS	00NR	0	20WP	G15_060	TO->FROM	MATHWSN7 345.00 - TATONGA7 345.00 345KV CKT 1	1195	1195	0.30298	100.3181	STLN-DEMARC6 - SWEETWATER 230KV CKT 1
FDNS	00NR	0	20WP	G15_060	TO->FROM	MATHWSN7 345.00 - TATONGA7 345.00 345KV CKT 1	1195	1195	0.30298	100.2999	STATELINE INTERCHANGE - STLN-DEMARC6 230KV CKT 1
FDNS	00NR	0	16WP	G15_060	TO->FROM	MATHWSN7 345.00 - TATONGA7 345.00 345KV CKT 1	1195	1195	0.30614	100.2694	P12:230:AEPW:ELKCITY6:SWEETWT6
FDNS	00NR	0	20WP	G15_060	TO->FROM	MATHWSN7 345.00 - TATONGA7 345.00 345KV CKT 1	1195	1195	0.30298	100.26	P12:230:AEPW-SPS:SWEETWT6:WHEELER 6
FDNS	01ALL	0	16WP	G15_060	TO->FROM	MATHWSN7 345.00 - TATONGA7 345.00 345KV CKT 1	1195	1195	0.23365	100.2505	G15063_T 345.00 - WOODRING 345KV CKT 1
FDNS	01ALL	0	17SP	G15_060	TO->FROM	MATHWSN7 345.00 - TATONGA7 345.00 345KV CKT 1	1195	1195	0.24888	100.2352	Hitchland Interchange - WALKTAP7 345.00 345KV CKT 1
FDNS	01ALL	0	17SP	G15_060	TO->FROM	MATHWSN7 345.00 - TATONGA7 345.00 345KV CKT 1	1195	1195	0.24888	100.2352	Hitchland Interchange - WALKTAP7 345.00 345KV CKT 1
FDNS	01ALL	0	17SP	G15_060	TO->FROM	MATHWSN7 345.00 - TATONGA7 345.00 345KV CKT 1	1195	1195	0.24888	100.2307	P12:345:SPS:J07.1.FINN.HITCH
FDNS	01ALL	0	20L	G15_060	TO->FROM	MATHWSN7 345.00 - TATONGA7 345.00 345KV CKT 1	1195	1195	0.24333	100.1968	BASE CASE
FDNS	01ALL	0	17SP	G15_060	TO->FROM	MATHWSN7 345.00 - TATONGA7 345.00 345KV CKT 1	1195	1195	0.2474	100.1571	G1524G1525 345.00 - THISTLE7 345.00 345KV CKT 1
FDNS	01ALL	0	17SP	G15_060	TO->FROM	MATHWSN7 345.00 - TATONGA7 345.00 345KV CKT 1	1195	1195	0.2474	100.1571	G1524G1525 345.00 - THISTLE7 345.00 345KV CKT 2
FDNS	01ALL	0	16WP	G15_060	TO->FROM	MATHWSN7 345.00 - TATONGA7 345.00 345KV CKT 1	1195	1195	0.23136	100.1511	MATHWSN7 345.00 - NORTHWEST 345KV CKT 1
FDNS	01ALL	0	17SP	G15_060	TO->FROM	MATHWSN7 345.00 - TATONGA7 345.00 345KV CKT 1	1195	1195	0.23558	100.1179	CIMARRON - MINCO 345KV CKT 1
FDNS	00NR	0	20WP	G15_060	TO->FROM	MATHWSN7 345.00 - TATONGA7 345.00 345KV CKT 1	1195	1195	0.30729	100.09	G1524G1525 345.00 - THISTLE7 345.00 345KV CKT 1
FDNS	00NR	0	20WP	G15_060	TO->FROM	MATHWSN7 345.00 - TATONGA7 345.00 345KV CKT 1	1195	1195	0.30729	100.09	G1524G1525 345.00 - THISTLE7 345.00 345KV CKT 2
FDNS	01ALL	0	16WP	G15_060	TO->FROM	MATHWSN7 345.00 - TATONGA7 345.00 345KV CKT 1	1195	1195	0.23815	100.0528	G15052_T 345.00 - ROSE HILL 345KV CKT 1
FDNS	01ALL	0	16WP	G15_060	TO->FROM	MATHWSN7 345.00 - TATONGA7 345.00 345KV CKT 1	1195	1195	0.23789	100	VIOLA 7 345.00 - WICHITA 345KV CKT 1
FDNS	01ALL	0	16WP	G15_060	TO->FROM	MATHWSN7 345.00 - TATONGA7 345.00 345KV CKT 1	1195	1195	0.23704	100	GEN515393 1-OGEWND2G
FDNS	01ALL	0	20L	G15_060	TO->FROM	MATHWSN7 345.00 - TATONGA7 345.00 345KV CKT 1	1195	1195	0.24347	99.9	DELAWARE - NEOSHO 345KV CKT 1
FDNS	01ALL	0	20L	G15_060	TO->FROM	MATHWSN7 345.00 - TATONGA7 345.00 345KV CKT 1	1195	1195	0.24347	99.9	DELAWARE - NEOSHO 345KV CKT 1
FDNS	01ALL	0	20L	G15_060	TO->FROM	MATHWSN7 345.00 - TATONGA7 345.00 345KV CKT 1	1195	1195	0.24333	99.9	BURLINGTON NO1 + NO 2 + NO 3 161/20.0KV TRANSFORMER CKT 1
FDNS	01ALL	0	20L	G15_060	TO->FROM	MATHWSN7 345.00 - TATONGA7 345.00 345KV CKT 1	1195	1195	0.24333	99.9	GEN523171 1-GOODWELL_2 10.6900
FDNS	01ALL	0	20L	G15_060	TO->FROM	MATHWSN7 345.00 - TATONGA7 345.00 345KV CKT 1	1195	1195	0.24333	99.9	GEN523815 1-LLANO ESTACADO WIND GEN
FDNS	01ALL	0	20L	G15_060	TO->FROM	MATHWSN7 345.00 - TATONGA7 345.00 345KV CKT 1	1195	1195	0.24333	99.9	GEN530690 1-PRWINDG1 0.6900
FDNS	01ALL	0	20L	G15_060	TO->FROM	MATHWSN7 345.00 - TATONGA7 345.00 345KV CKT 1	1195	1195	0.24333	99.9	GEN531503 1-CIMRRN 1 0.6900
FDNS	01ALL	0	20L	G15_060	TO->FROM	MATHWSN7 345.00 - TATONGA7 345.00 345KV CKT 1	1195	1195	0.24333	99.9	GEN531505 1-CIMWD2 1 0.6900
FDNS	01ALL	0	20L	G15_060	TO->FROM	MATHWSN7 345.00 - TATONGA7 345.00 345KV CKT 1	1195	1195	0.24333	99.9	GEN533202 1-CNTRPL-WTG1 1.0000
FDNS	01ALL	0	20L	G15_060	TO->FROM	MATHWSN7 345.00 - TATONGA7 345.00 345KV CKT 1	1195	1195	0.24333	99.9	GEN539630 1-FLTRDG-WG1 0.6000
FDNS	01ALL	0	20L	G15_060	TO->FROM	MATHWSN7 345.00 - TATONGA7 345.00 345KV CKT 1	1195	1195	0.24333	99.9	GEN539762 1-SSWIND 1 34.500
FDNS	01ALL	0	20L	G15_060	TO->FROM	MATHWSN7 345.00 - TATONGA7 345.00 345KV CKT 1	1195	1195	0.24333	99.9	GEN542902 1-GPW_G1 0.7000
FDNS	01ALL	0	20L	G15_060	TO->FROM	MATHWSN7 345.00 - TATONGA7 345.00 345KV CKT 1	1195	1195	0.24333	99.9	GEN560329 1-G10-45 0.6900
FDNS	01ALL	0	20L	G15_060	TO->FROM	MATHWSN7 345.00 - TATONGA7 345.00 345KV CKT 1	1195	1195	0.24333	99.9	GEN560432 1-G08-124 0.6900
FDNS	01ALL	0	20L	G15_060	TO->FROM	MATHWSN7 345.00 - TATONGA7 345.00 345KV CKT 1	1195	1195	0.24333	99.9	GEN560585 1-G06-44-3 4.1600
FDNS	01ALL	0	20L	G15_060	TO->FROM	MATHWSN7 345.00 - TATONGA7 345.00 345KV CKT 1	1195	1195	0.24333	99.9	GEN560586 1-G06-44-4 4.1600
FDNS	01ALL	0	20L	G15_060	TO->FROM	MATHWSN7 345.00 - TATONGA7 345.00 345KV CKT 1	1195	1195	0.24333	99.9	GEN560693 1-G11-008-1 0.6900
FDNS	01ALL	0	20L	G15_060	TO->FROM	MATHWSN7 345.00 - TATONGA7 345.00 345KV CKT 1	1195	1195	0.24333	99.9	GEN562035 1-G11_016_3 0.6900
FDNS	01ALL	0	20L	G15_060	TO->FROM	MATHWSN7 345.00 - TATONGA7 345.00 345KV CKT 1	1195	1195	0.24333	99.9	GEN562298 1-G12-024 0.6500
FDNS	01ALL	0	20L	G15_060	TO->FROM	MATHWSN7 345.00 - TATONGA7 345.00 345KV CKT 1	1195	1195	0.24333	99.9	GEN562483 1-G13_027_3 0.6900
FDNS	01ALL	0	20L	G15_060	TO->FROM	MATHWSN7 345.00 - TATONGA7 345.00 345KV CKT 1	1195	1195	0.24333	99.9	GEN562688 1-G15_014_3 0.6900
FDNS	01ALL	0	20L	G15_060	TO->FROM	MATHWSN7 345.00 - TATONGA7 345.00 345KV CKT 1	1195	1195	0.24333	99.9	GEN563043 1-G15068_4 0.6900
FDNS	01ALL	0	20L	G15_060	TO->FROM	MATHWSN7 345.00 - TATONGA7 345.00 345KV CKT 1	1195	1195	0.24333	99.9	GEN657749 1-YOUNG 1 GENERATOR
FDNS	01ALL	0	20L	G15_060	TO->FROM	MATHWSN7 345.00 - TATONGA7 345.00 345KV CKT 1	1195	1195	0.24333	99.9	GEN672321 1-SHAND GENERATOR 1
FDNS	01ALL	0	20L	G15_060	TO->FROM	MATHWSN7 345.00 - TATONGA7 345.00 345KV CKT 1	1195	1195	0.24333	99.9	INDEPENDENCE 500/26.0KV TRANSFORMER CKT 1
FDNS	01ALL	0	20L	G15_060	TO->FROM	MATHWSN7 345.00 - TATONGA7 345.00 345KV CKT 1	1195	1195	0.24329	99.9	ARKANSAS NUCLEAR ONE - PLEASANT HILL 500KV CKT 1
FDNS	01ALL	0	20L	G15_060	TO->FROM	MATHWSN7 345.00 - TATONGA7 345.00 345KV CKT 1	1195	1195	0.24325	99.9	8BHAM STEEL 500.00 - WEST MEMPHIS 500 500KV CKT 1
FDNS	01ALL	0	20L	G15_060	TO->FROM	MATHWSN7 345.00 - TATONGA7 345.00 345KV CKT 1	1195	1195	0.2431	99.9	GREC TAP5 345.00 - TULSA NORTH 345KV CKT 1
FDNS	01ALL	0	20L	G15_060	TO->FROM	MATHWSN7 345.00 - TATONGA7 345.00 345KV CKT 1	1195	1195	0.24309	99.9	HAMMETT TAP - HORSESHOE LAKE 138KV CKT 1
FDNS	01ALL	0	20L	G15_060	TO->FROM	MATHWSN7 345.00 - TATONGA7 345.00 345KV CKT 1	1195	1195	0.24307	99.9	LYDIA - WELSH 345KV CKT 1
FDNS	01ALL	0	20L	G15_060	TO->FROM	MATHWSN7 345.00 - TATONGA7 345.00 345KV CKT 1	1195	1195	0.24307	99.9	LYDIA - WELSH 345KV CKT 1
FDNS	01ALL	0	20L	G15_060	TO->FROM	MATHWSN7 345.00 - TATONGA7 345.00 345KV CKT 1	1195	1195	0.24211	99.9	CIMARRON - MATHWSN7 345.00 345KV CKT 1
FDNS	01ALL	0	20L	G15_060	TO->FROM	MATHWSN7 345.00 - TATONGA7 345.00 345KV CKT 1	1195	1195	0.24211	99.9	CIMARRON - MATHWSN7 345.00 345KV CKT 2
FDNS	01ALL	0	20L	G15_060	TO->FROM	MATHWSN7 345.00 - TATONGA7 345.00 345KV CKT 1	1195	1195	0.2416	99.9	SOONER - WOODRING 345KV CKT 1
FDNS	01ALL	0	20L	G15_060	TO->FROM	MATHWSN7 345.00 - TATONGA7 345.00 345KV CKT 1	1195	1195	0.24338	99.8	CIMARRON (CIMARON2) 345/138/13.8KV TRANSFORMER CKT 1
FDNS	01ALL	0	20L	G15_060	TO->FROM	MATHWSN7 345.00 - TATONGA7 345.00 345KV CKT 1	1195	1195	0.24337	99.8	CIMARRON (CIMARON1) 345/138/13.8KV TRANSFORMER CKT 1
FDNS	01ALL	0	20L	G15_060	TO->FROM	MATHWSN7 345.00 - TATONGA7 345.00 345KV CKT 1	1195	1195	0.24333	99.8	4SIOUX 2 138.00 138/18.0KV TRANSFORMER CKT 1
FDNS	01ALL	0	20L	G15_060	TO->FROM	MATHWSN7 345.00 - TATONGA7 345.00 345KV CKT 1	1195	1195	0.24333	99.8	CLAY BOSWELL 230/20.9KV TRANSFORMER CKT 1
FDNS	01ALL	0	20L	G15_060	TO->FROM	MATHWSN7 345.00 - TATONGA7 345.00 345KV CKT 1	1195	1195	0.24333	99.8	GEN528361 1-MADDOX GEN #1
FDNS	01ALL	0	20L	G15_060	TO->FROM	MATHWSN7 345.00 - TATONGA7 345.00 345KV CKT 1	1195	1195	0.24333	99.8	GEN562269 1-G12-020-1 0.6900
FDNS	01ALL	0	20L	G15_060	TO->FROM	MATHWSN7 345.00 - TATONGA7 345.00 345KV CKT 1	1195	1195	0.24333	99.8	GEN629072 4-LANSING GENERATOR FOR UNITS NO4 EIA CODE 1
FDNS	01ALL	0	20L	G15_060	TO->FROM	MATHWSN7 345.00 - TATONGA7 345.00 345KV CKT 1	1195	1195	0.24333	99.8	GEN681542 6-JP MADGETT
FDNS	01ALL	0	20L	G15_060	TO->FROM	MATHWSN7 345.00 - TATONGA7 345.00 345KV CKT 1	1195	1195	0.24325	99.8	CHAMBER SPRINGS - CLARKSVILLE 345KV CKT 1
FDNS	01ALL	0	20L	G15_060	TO->FROM	MATHWSN7 345.00 - TATONGA7 345.00 345KV CKT 1	1195	1195	0.24324	99.8	ARCADIA - SEMINOLE 345KV CKT 1
FDNS	01ALL	0	17SP	G15_060	TO->FROM	MATHWSN7 345.00 - TATONGA7 345.00 345KV CKT 1	1195	1195	0.24874	99.7	BORDER 7345.00 - WOODWARD DISTRICT EHV 345KV CKT 1
FDNS	01ALL	0	20L	G15_060	TO->FROM	MATHWSN7 345.00 - TATONGA7 345.00 345KV CKT 1	1195	1195	0.24687	99.7	RANCHRD7 345.00 - SOONER 345KV CKT 1
FDNS	01ALL	0	20L	G15_060	TO->FROM	MATHWSN7 345.00 - TATONGA7 345.00 345KV CKT 1	1195	1195	0.24333	99.7	GEN524485 1-CAPROCK WIND GEN
FDNS	01ALL	0	20L	G15_060	TO->FROM	MATHWSN7 345.00 - TATONGA7 345.00 345KV CKT 1	1195	1195	0.24333	99.7	GEN526331 1-JONES GEN #1 22 KV
FDNS	01ALL	0	20L	G15_060	TO->FROM	MATHWSN7 345.00 - TATONGA7 345.00 345KV CKT 1	1195	1195	0.24333	99.7	GEN526332 1-JONES GEN #2 21 KV

SOLUTION	GROUP	SCENARIO	SEASON	SOURCE	DIRECTION	MONITORED ELEMENT	RATEA (MVA)	RATEB(MVA)	TDF	TC%LOADING (% MVA)	CONTINGENCY
FDNS	01ALL	0	20L	G15_060	TO->FROM	MATHWSN7 345.00 - TATONGA7 345.00 345KV CKT 1	1195	1195	0.24333	99.7	GEN560286 1-G10-01-1WTG 0.6900
FDNS	01ALL	0	20L	G15_060	TO->FROM	MATHWSN7 345.00 - TATONGA7 345.00 345KV CKT 1	1195	1195	0.24333	99.7	GEN560287 1-G10-01-2WTG 0.6900
FDNS	01ALL	0	20L	G15_060	TO->FROM	MATHWSN7 345.00 - TATONGA7 345.00 345KV CKT 1	1195	1195	0.24333	99.7	GEN562270 1-G12-020-2 0.6900
FDNS	01ALL	0	20L	G15_060	TO->FROM	MATHWSN7 345.00 - TATONGA7 345.00 345KV CKT 1	1195	1195	0.24333	99.7	GEN562524 1-G14_026_3 12.000
FDNS	01ALL	0	20L	G15_060	TO->FROM	MATHWSN7 345.00 - TATONGA7 345.00 345KV CKT 1	1195	1195	0.24333	99.7	GEN661015 1-COYOTE
FDNS	01ALL	0	20L	G15_060	TO->FROM	MATHWSN7 345.00 - TATONGA7 345.00 345KV CKT 1	1195	1195	0.24325	99.7	DELL 500 - INDEPENDENCE 500KV CKT 1
FDNS	01ALL	0	20L	G15_060	TO->FROM	MATHWSN7 345.00 - TATONGA7 345.00 345KV CKT 1	1195	1195	0.24323	99.7	KEO EHV - WEST MEMPHIS 500 500KV CKT 1
FDNS	01ALL	0	20L	G15_060	TO->FROM	MATHWSN7 345.00 - TATONGA7 345.00 345KV CKT 1	1195	1195	0.24298	99.7	LYDIA - VALLIANT 345KV CKT 1
FDNS	01ALL	0	20L	G15_060	TO->FROM	MATHWSN7 345.00 - TATONGA7 345.00 345KV CKT 1	1195	1195	0.24298	99.7	LYDIA - VALLIANT 345KV CKT 1
FDNS	01ALL	0	20L	G15_060	TO->FROM	MATHWSN7 345.00 - TATONGA7 345.00 345KV CKT 1	1195	1195	0.24294	99.7	FT SMITH - MUSKOGEE 345KV CKT 1
FDNS	01ALL	0	20L	G15_060	TO->FROM	MATHWSN7 345.00 - TATONGA7 345.00 345KV CKT 1	1195	1195	0.2435	99.6	DELAWARE - NORTHEAST STATION 345KV CKT 1
FDNS	01ALL	0	20L	G15_060	TO->FROM	MATHWSN7 345.00 - TATONGA7 345.00 345KV CKT 1	1195	1195	0.2435	99.6	DELAWARE - NORTHEAST STATION 345KV CKT 1
FDNS	01ALL	0	20L	G15_060	TO->FROM	MATHWSN7 345.00 - TATONGA7 345.00 345KV CKT 1	1195	1195	0.24333	99.6	GEN527882 1-CUNNINGHAM GEN #2 20 KV
FDNS	01ALL	0	20L	G15_060	TO->FROM	MATHWSN7 345.00 - TATONGA7 345.00 345KV CKT 1	1195	1195	0.24333	99.6	GEN539670 4-JUDSON LARGE GENERATOR
FDNS	01ALL	0	20L	G15_060	TO->FROM	MATHWSN7 345.00 - TATONGA7 345.00 345KV CKT 1	1195	1195	0.24333	99.6	GEN560105 1-G08-22 0.6900
FDNS	01ALL	0	20L	G15_060	TO->FROM	MATHWSN7 345.00 - TATONGA7 345.00 345KV CKT 1	1195	1195	0.24333	99.6	GEN560256 1-G10-14-1 0.6900
FDNS	01ALL	0	20L	G15_060	TO->FROM	MATHWSN7 345.00 - TATONGA7 345.00 345KV CKT 1	1195	1195	0.24333	99.6	GEN560257 1-G10-14-2 0.6900
FDNS	01ALL	0	20L	G15_060	TO->FROM	MATHWSN7 345.00 - TATONGA7 345.00 345KV CKT 1	1195	1195	0.24333	99.6	GEN562544 1-G14_038_3 0.6900
FDNS	01ALL	0	20L	G15_060	TO->FROM	MATHWSN7 345.00 - TATONGA7 345.00 345KV CKT 1	1195	1195	0.24333	99.6	GEN562648 1-G14_037_3 0.6900
FDNS	01ALL	0	20L	G15_060	TO->FROM	MATHWSN7 345.00 - TATONGA7 345.00 345KV CKT 1	1195	1195	0.24333	99.6	GEN657748 1-YOUNG 2 GENERATOR
FDNS	01ALL	0	20L	G15_060	TO->FROM	MATHWSN7 345.00 - TATONGA7 345.00 345KV CKT 1	1195	1195	0.24333	99.6	GEN659118 1-LARAMIE RIVER UNIT1
FDNS	01ALL	0	20L	G15_060	TO->FROM	MATHWSN7 345.00 - TATONGA7 345.00 345KV CKT 1	1195	1195	0.24333	99.6	GEN672306 6-BOUNDARY DAM GENERATOR 6
FDNS	01ALL	0	20L	G15_060	TO->FROM	MATHWSN7 345.00 - TATONGA7 345.00 345KV CKT 1	1195	1195	0.24333	99.6	GEN672310 1-POPLAR RIVER GENERATOR 1
FDNS	01ALL	0	16WP	G15_060	TO->FROM	MATHWSN7 345.00 - TATONGA7 345.00 345KV CKT 1	1195	1195	0.23704	99.5	GEN562078 1-G11_051_3 0.6900
FDNS	01ALL	0	20L	G15_060	TO->FROM	MATHWSN7 345.00 - TATONGA7 345.00 345KV CKT 1	1195	1195	0.24333	99.5	GEN515787 1-OKLA WIND ENERGY CENTER
FDNS	01ALL	0	20L	G15_060	TO->FROM	MATHWSN7 345.00 - TATONGA7 345.00 345KV CKT 1	1195	1195	0.24333	99.5	GEN520922 1-SLEEPING BEAR
FDNS	01ALL	0	20L	G15_060	TO->FROM	MATHWSN7 345.00 - TATONGA7 345.00 345KV CKT 1	1195	1195	0.24333	99.5	GEN525844 1-ELK_1 118.000
FDNS	01ALL	0	20L	G15_060	TO->FROM	MATHWSN7 345.00 - TATONGA7 345.00 345KV CKT 1	1195	1195	0.24333	99.5	GEN539807 1-G05-12-1 0.6900
FDNS	01ALL	0	20L	G15_060	TO->FROM	MATHWSN7 345.00 - TATONGA7 345.00 345KV CKT 1	1195	1195	0.24333	99.5	GEN562042 1-G11_014_3 0.6900
FDNS	01ALL	0	20L	G15_060	TO->FROM	MATHWSN7 345.00 - TATONGA7 345.00 345KV CKT 1	1195	1195	0.24333	99.5	GEN562550 1-G14_040_3 0.6900
FDNS	01ALL	0	20L	G15_060	TO->FROM	MATHWSN7 345.00 - TATONGA7 345.00 345KV CKT 1	1195	1195	0.24333	99.5	GEN563173 1-G15082_3 0.6900
FDNS	01ALL	0	20L	G15_060	TO->FROM	MATHWSN7 345.00 - TATONGA7 345.00 345KV CKT 1	1195	1195	0.24333	99.5	GEN563292 1-G15095_3 0.6900
FDNS	01ALL	0	20L	G15_060	TO->FROM	MATHWSN7 345.00 - TATONGA7 345.00 345KV CKT 1	1195	1195	0.2431	99.5	GRDA1 - GREC TAP5 345.00 345KV CKT 1
FDNS	01NR	0	20L	G15_060	TO->FROM	ROMAN NOSE - SOUTHARD 138KV CKT 1	133	153	0.07228	122.4038	MATHWSN7 345.00 - TATONGA7 345.00 345KV CKT 1
FDNS	00NR	0	17SP	G15_060	TO->FROM	ROMAN NOSE - SOUTHARD 138KV CKT 1	133	153	0.0757	105.4044	MATHWSN7 345.00 - TATONGA7 345.00 345KV CKT 1
FDNSLock	00NR	0	16WP	G15_060	TO->FROM	ROMAN NOSE - SOUTHARD 138KV CKT 1	171	185	0.07341	104.3877	MATHWSN7 345.00 - TATONGA7 345.00 345KV CKT 1
FDNS	00NR	0	20WP	G15_060	TO->FROM	ROMAN NOSE - SOUTHARD 138KV CKT 1	171	185	0.07304	103.7546	MATHWSN7 345.00 - TATONGA7 345.00 345KV CKT 1
FDNS	01ALL	0	17SP	G15_060	TO->FROM	ROMAN NOSE - SOUTHARD 138KV CKT 1	133	153	0.04828	103.6561	BASE CASE
FDNS	01ALL	0	20SP	G15_060	TO->FROM	ROMAN NOSE - SOUTHARD 138KV CKT 1	133	153	0.04826	100.0583	BASE CASE
FDNS	00NR	0	17SP	G15_060	FROM->TO	SWISSVALE - WEST GARDNER 345KV CKT 1	717	717	0.0425	105.8268	HOYT - STRANGER CREEK 345KV CKT 1
FDNS	00NR	0	17SP	G15_060	FROM->TO	SWISSVALE - WEST GARDNER 345KV CKT 1	717	717	0.04002	104.7282	G15074_T 345.00 - HOYT 345KV CKT 1
FDNS	00NR	0	16WP	G15_060	FROM->TO	SWISSVALE - WEST GARDNER 345KV CKT 1	717	717	0.04496	101.7741	HOYT - STRANGER CREEK 345KV CKT 1
FDNS	00NR	0	16WP	G15_060	FROM->TO	SWISSVALE - WEST GARDNER 345KV CKT 1	717	717	0.04036	101.0038	LACYGNE - WAVERLY7 345.00 345KV CKT 1
FDNS	00NR	0	16WP	G15_060	FROM->TO	SWISSVALE - WEST GARDNER 345KV CKT 1	717	717	0.04236	99.7	G15074_T 345.00 - HOYT 345KV CKT 1
FDNS	00NR	0	16WP	G15_060	FROM->TO	SWISSVALE - WEST GARDNER 345KV CKT 1	717	717	0.04036	99.6	WAVERLY7 345.00 - WOLF CREEK 345KV CKT 1
FDNS	01ALL	0	25SP	G15_060	FROM->TO	WOODWARD DISTRICT EHV (WWDEHV) 345/138/13.8KV TRANSFORMER CKT 1	493	493	0.75495	110.7645	WOODWARD DISTRICT EHV (WWDEHV-T2) 345/138/13.8KV TRANSFORMER CKT 2
FDNS	01ALL	0	25SP	G15_060	FROM->TO	WOODWARD DISTRICT EHV (WWDEHV) 345/138/13.8KV TRANSFORMER CKT 1	493	493	0.75495	109.2561	WOODWARD DISTRICT EHV (WWDEHV-T2) 345/138/13.8KV TRANSFORMER CKT 2
FDNS	01ALL	0	25SP	G15_060	FROM->TO	WOODWARD DISTRICT EHV (WWDEHV-T2) 345/138/13.8KV TRANSFORMER CKT 2	493	493	0.75831	111.2094	WOODWARD DISTRICT EHV (WWDEHV) 345/138/13.8KV TRANSFORMER CKT 1
FDNS	01ALL	0	25SP	G15_060	FROM->TO	WOODWARD DISTRICT EHV (WWDEHV-T2) 345/138/13.8KV TRANSFORMER CKT 2	493	493	0.75831	109.7337	WOODWARD DISTRICT EHV (WWDEHV) 345/138/13.8KV TRANSFORMER CKT 1
FDNS	00NR	0	20WP	G15_060	FROM->TO	WOODWARD EHV - WWPAR4 138.00 138KV CKT 1	287	287	0.16951	104.4323	MATHWSN7 345.00 - TATONGA7 345.00 345KV CKT 1
FDNS	00NR	2	16WP	G15_060	FROM->TO	CIMARRON - DRAPER LAKE 345KV CKT 1	717	717	0.14173	116.4604	CLEVELAND - TULSA NORTH 345KV CKT 1
FDNS	00NR	2	16WP	G15_060	FROM->TO	CIMARRON - DRAPER LAKE 345KV CKT 1	717	717	0.14235	115.0647	P12:138:WFEC:MSL03
FDNS	00NR	2	16WP	G15_060	FROM->TO	CIMARRON - DRAPER LAKE 345KV CKT 1	717	717	0.13997	111.8969	P12:138:WFEC:MSL01
FDNS	00NR	2	16WP	G15_060	FROM->TO	CIMARRON - DRAPER LAKE 345KV CKT 1	717	717	0.1386	111.2482	GRAND GULF 500/22.0KV TRANSFORMER CKT 1
FDNS	00NR	2	16WP	G15_060	FROM->TO	CIMARRON - DRAPER LAKE 345KV CKT 1	717	717	0.13885	111.2407	P12:138:OKGE:3TERM14
FDNS	00NR	2	16WP	G15_060	FROM->TO	CIMARRON - DRAPER LAKE 345KV CKT 1	717	717	0.13876	111.1914	REDBUD - RIVERSIDE STATION 345KV CKT 1
FDNS	00NR	2	16WP	G15_060	FROM->TO	CIMARRON - DRAPER LAKE 345KV CKT 1	717	717	0.14162	111.1158	JOHNSON COUNTY - PITTSBURG 345KV CKT 1
FDNS	00NR	2	16WP	G15_060	FROM->TO	CIMARRON - DRAPER LAKE 345KV CKT 1	717	717	0.13877	111.0878	P12:138:OKGE:3TERM2
FDNS	00NR	2	16WP	G15_060	FROM->TO	CIMARRON - DRAPER LAKE 345KV CKT 1	717	717	0.13864	110.9474	7SAREPTA% 345.00 - LONGWOOD 345KV CKT 1
FDNS	00NR	2	16WP	G15_060	FROM->TO	CIMARRON - DRAPER LAKE 345KV CKT 1	717	717	0.13867	110.9352	P12:138:OKGE:3TERM12
FDNS	00NR	2	16WP	G15_060	FROM->TO	CIMARRON - DRAPER LAKE 345KV CKT 1	717	717	0.13863	110.9233	DOLET HILLS - SOUTHWEST SHREVEPORT 345KV CKT 1
FDNS	00NR	2	16WP	G15_060	FROM->TO	CIMARRON - DRAPER LAKE 345KV CKT 1	717	717	0.14005	110.7684	P12:138:OKGE:3TERM18
FDNS	00NR	2	16WP	G15_060	FROM->TO	CIMARRON - DRAPER LAKE 345KV CKT 1	717	717	0.1386	110.6806	NEW MADRID 161/22.0KV TRANSFORMER CKT 1
FDNS	00NR	2	16WP	G15_060	FROM->TO	CIMARRON - DRAPER LAKE 345KV CKT 1	717	717	0.14297	110.6721	THISTLE7 345.00 - WOODWARD DISTRICT EHV 345KV CKT 1
FDNS	00NR	2	16WP	G15_060	FROM->TO	CIMARRON - DRAPER LAKE 345KV CKT 1	717	717	0.14297	110.6721	THISTLE7 345.00 - WOODWARD DISTRICT EHV 345KV CKT 2
FDNS	00NR	2	16WP	G15_060	FROM->TO	CIMARRON - DRAPER LAKE 345KV CKT 1	717	717	0.1386	110.6721	NEW MADRID 345/22.0KV TRANSFORMER CKT 1
FDNS	00NR	2	16WP	G15_060	FROM->TO	CIMARRON - DRAPER LAKE 345KV CKT 1	717	717	0.13862	110.542	7SAREPTA% 345.00 - ELDORADO EHV 345KV CKT 1
FDNS	00NR	2	16WP	G15_060	FROM->TO	CIMARRON - DRAPER LAKE 345KV CKT 1	717	717	0.13862	110.5352	ELDORADO EHV 500/345KV TRANSFORMER CKT 1
FDNS	00NR	2	16WP	G15_060	FROM->TO	CIMARRON - DRAPER LAKE 345KV CKT 1	717	717	0.13974	110.4913	P12:138:OKGE:3TERM11
FDNS	00NR	2	16WP	G15_060	FROM->TO	CIMARRON - DRAPER LAKE 345KV CKT 1	717	717	0.13905	110.4789	P12:138:OKGE:3TERM17
FDNS	00NR	2	16WP	G15_060	FROM->TO	CIMARRON - DRAPER LAKE 345KV CKT 1	717	717	0.1386	110.4198	DELL 500 - ESSEX UNIT 2 500KV CKT Z1
FDNS	00NR	2	16WP	G15_060	FROM->TO	CIMARRON - DRAPER LAKE 345KV CKT 1	717	717	0.14042	110.3524	P12:138:AEPW-OGE:CORNVIL4:MAUD 4
FDNS	00NR	2	16WP	G15_060	FROM->TO	CIMARRON - DRAPER LAKE 345KV CKT 1	717	717	0.1392	110.3362	P12:138:OKGE:3TERM20
FDNS	00NR	2	16WP	G15_060	FROM->TO	CIMARRON - DRAPER LAKE 345KV CKT 1	717	717	0.14112	110.2891	CLARKSVILLE - ONETA 345KV CKT 1
FDNS	00NR	2	16WP	G15_060	FROM->TO	CIMARRON - DRAPER LAKE 345KV CKT 1	717	717	0.13876	110.281	P12:138:OKGE:3TERM47
FDNS	00NR	2	16WP	G15_060	FROM->TO	CIMARRON - DRAPER LAKE 345KV CKT 1	717	717	0.14079	110.2624	FINNEY SWITCHING STATION - HOLCOMB 345KV CKT 1
FDNS	00NR	2	16WP	G15_060	FROM->TO	CIMARRON - DRAPER LAKE 345KV CKT 1	717	717	0.1386	110.2574	DOLET HILLS 345/24.0KV TRANSFORMER CKT 1
FDNS	00NR	2	16WP	G15_060	FROM->TO	CIMARRON - DRAPER LAKE 345KV CKT 1	717	717	0.1386	110.2508	WHITE BLUFF 500/26.0KV TRANSFORMER CKT 1
FDNS	00NR	2	16WP	G15_060	FROM->TO	CIMARRON - DRAPER LAKE 345KV CKT 1	717	717	0.13916	110.2117	BLACKBERRY - NEOSHO 345KV CKT 1

SOLUTION	GROUP	SCENARIO	SEASON	SOURCE	DIRECTION	MONITORED ELEMENT	RATEA (MVA)	RATEB(MVA)	TDF	TC%LOADING (% MVA)	CONTINGENCY
FDNS	00NR	2	16WP	G15_060	FROM->TO	CIMARRON - DRAPER LAKE 345KV CKT 1	717	717	0.13889	110.142	P12:138:AEPW-OGE:SHIDLER4:OSAGE 4
FDNS	00NR	2	16WP	G15_060	FROM->TO	CIMARRON - DRAPER LAKE 345KV CKT 1	717	717	0.13886	110.1103	P12:138:WFEC:MSL02
FDNS	00NR	2	16WP	G15_060	FROM->TO	CIMARRON - DRAPER LAKE 345KV CKT 1	717	717	0.13984	110.1089	GRACEMONT - LAWTON EASTSIDE 345KV CKT 1
FDNS	00NR	2	16WP	G15_060	FROM->TO	CIMARRON - DRAPER LAKE 345KV CKT 1	717	717	0.13851	110.0911	P12:138:AEPW:OKMULGE4:R.S.S-4
FDNS	00NR	2	16WP	G15_060	FROM->TO	CIMARRON - DRAPER LAKE 345KV CKT 1	717	717	0.13867	110.0582	WEBRE - WELLS 500KV CKT 1
FDNS	00NR	2	16WP	G15_060	FROM->TO	CIMARRON - DRAPER LAKE 345KV CKT 1	717	717	0.1386	109.9538	FRONTIER - GRIMES 345KV CKT 1
FDNS	00NR	2	16WP	G15_060	FROM->TO	CIMARRON - DRAPER LAKE 345KV CKT 1	717	717	0.13878	109.9445	CLEAVELAND - CLEVLND 4 138.00 138KV CKT Z1
FDNS	00NR	2	16WP	G15_060	FROM->TO	CIMARRON - DRAPER LAKE 345KV CKT 1	717	717	0.13878	109.9443	CLEVELAND (CLVAUTO1) 345/138/13.8KV TRANSFORMER CKT 1
FDNS	00NR	2	16WP	G15_060	FROM->TO	CIMARRON - DRAPER LAKE 345KV CKT 1	717	717	0.1386	109.9391	P12:069:OKGE:3TERM4
FDNS	00NR	2	16WP	G15_060	FROM->TO	CIMARRON - DRAPER LAKE 345KV CKT 1	717	717	0.13964	109.9301	ARKANSAS NUCLEAR ONE - FT SMITH 500KV CKT 1
FDNS	00NR	2	16WP	G15_060	FROM->TO	CIMARRON - DRAPER LAKE 345KV CKT 1	717	717	0.13862	109.9269	8DANIEL8 500.00 - MCKNIGHT 500KV CKT 1
FDNS	00NR	2	16WP	G15_060	FROM->TO	CIMARRON - DRAPER LAKE 345KV CKT 1	717	717	0.13877	109.9207	P12:138:OKGE:3TERM13
FDNS	00NR	2	16WP	G15_060	FROM->TO	CIMARRON - DRAPER LAKE 345KV CKT 1	717	717	0.1386	109.9018	P12:161:AEPW:DYESS 5:HYLAND 5
FDNS	00NR	2	16WP	G15_060	FROM->TO	CIMARRON - DRAPER LAKE 345KV CKT 1	717	717	0.13862	109.853	P12:345:GRDA:CHOUTEAU-SPORTSMANACRES
FDNS	00NR	2	16WP	G15_060	FROM->TO	CIMARRON - DRAPER LAKE 345KV CKT 1	717	717	0.13858	109.8424	ELDORADO EHV - MOUNT OLIVE 500KV CKT 1
FDNS	00NR	2	16WP	G15_060	FROM->TO	CIMARRON - DRAPER LAKE 345KV CKT 1	717	717	0.1386	109.8363	ESSEX UNIT 2 500/18.0KV TRANSFORMER CKT 1
FDNS	00NR	2	16WP	G15_060	FROM->TO	CIMARRON - DRAPER LAKE 345KV CKT 1	717	717	0.13866	109.8338	P12:069:OKGE:3TERM19
FDNS	00NR	2	16WP	G15_060	FROM->TO	CIMARRON - DRAPER LAKE 345KV CKT 1	717	717	0.1387	109.8302	7LUTESVIL 345.00 - 7ST FRANC 345.00 345KV CKT 1
FDNS	00NR	2	16WP	G15_060	FROM->TO	CIMARRON - DRAPER LAKE 345KV CKT 1	717	717	0.1386	109.7675	RODEMACHER 230/22.0KV TRANSFORMER CKT 1
FDNS	00NR	2	16WP	G15_060	FROM->TO	CIMARRON - DRAPER LAKE 345KV CKT 1	717	717	0.13859	109.765	7JASPER 345.00 - BLACKBERRY 345KV CKT 1
FDNS	00NR	2	16WP	G15_060	FROM->TO	CIMARRON - DRAPER LAKE 345KV CKT 1	717	717	0.13867	109.7538	P12:138:AEPW-OGE:WTH_JCT4:JENSEN4
FDNS	00NR	2	16WP	G15_060	FROM->TO	CIMARRON - DRAPER LAKE 345KV CKT 1	717	717	0.13594	109.7486	CANADIAN RIVER - PITTSBURG 345KV CKT 1
FDNS	00NR	2	16WP	G15_060	FROM->TO	CIMARRON - DRAPER LAKE 345KV CKT 1	717	717	0.13873	109.7457	8WNEWMADRID 500.00 - DELL 500 500KV CKT 1
FDNS	00NR	2	16WP	G15_060	FROM->TO	CIMARRON - DRAPER LAKE 345KV CKT 1	717	717	0.13862	109.7367	6LAYFLD 230.00 - CARROLL 230KV CKT 1
FDNS	00NR	2	16WP	G15_060	FROM->TO	CIMARRON - DRAPER LAKE 345KV CKT 1	717	717	0.13832	109.7329	ELK CITY 230KV (ELKCTY-6) 230/138/13.8KV TRANSFORMER CKT 1
FDNS	00NR	2	16WP	G15_060	FROM->TO	CIMARRON - DRAPER LAKE 345KV CKT 1	717	717	0.13959	109.7216	TULSA NORTH - WEKIWA 345KV CKT 1
FDNS	00NR	2	16WP	G15_060	FROM->TO	CIMARRON - DRAPER LAKE 345KV CKT 1	717	717	0.13855	109.7203	ELDORADO EHV - SHERIDAN EHV 500KV CKT 1
FDNS	00NR	2	16WP	G15_060	FROM->TO	CIMARRON - DRAPER LAKE 345KV CKT 1	717	717	0.13865	109.7031	P12:138:AEPW:N.E.S.-4:CATOOSA4
FDNS	00NR	2	16WP	G15_060	FROM->TO	CIMARRON - DRAPER LAKE 345KV CKT 1	717	717	0.13874	109.7019	P13:138-161:WERE:NSES_TX-4OR5::
FDNS	00NR	2	16WP	G15_060	FROM->TO	CIMARRON - DRAPER LAKE 345KV CKT 1	717	717	0.1386	109.6988	ST FRANCIS 161/16.0KV TRANSFORMER CKT 1
FDNS	00NR	2	16WP	G15_060	FROM->TO	CIMARRON - DRAPER LAKE 345KV CKT 1	717	717	0.1386	109.6987	ST FRANCIS - ST FRANCIS 1 161KV CKT Z1
FDNS	00NR	2	16WP	G15_060	FROM->TO	CIMARRON - DRAPER LAKE 345KV CKT 1	717	717	0.13862	109.6925	FULTON 115 - HOPE 115KV CKT 1
FDNS	00NR	2	16WP	G15_060	FROM->TO	CIMARRON - DRAPER LAKE 345KV CKT 1	717	717	0.1386	109.6904	8CAJUN2 500/24.0KV TRANSFORMER CKT 1
FDNS	00NR	2	16WP	G15_060	FROM->TO	CIMARRON - DRAPER LAKE 345KV CKT 1	717	717	0.13878	109.6801	HUGO - VALLIANT 345KV CKT 1
FDNS	00NR	2	16WP	G15_060	FROM->TO	CIMARRON - DRAPER LAKE 345KV CKT 1	717	717	0.13865	109.6741	7JASPER 345.00 - MORGAN 345KV CKT 1
FDNS	00NR	2	16WP	G15_060	FROM->TO	CIMARRON - DRAPER LAKE 345KV CKT 1	717	717	0.1386	109.6734	P12:069:OKGE:3TERM3
FDNS	00NR	2	16WP	G15_060	FROM->TO	CIMARRON - DRAPER LAKE 345KV CKT 1	717	717	0.13856	109.6617	P12:138:OKGE-AEPW:JENSEN4:REDROCKRD4
FDNS	00NR	2	16WP	G15_060	FROM->TO	CIMARRON - DRAPER LAKE 345KV CKT 1	717	717	0.13872	109.6528	P12:138:AEPW:CATOOSA4:T.S.E.-4
FDNS	00NR	2	16WP	G15_060	FROM->TO	CIMARRON - DRAPER LAKE 345KV CKT 1	717	717	0.13868	109.6503	P12:138:OKGE:3TERM28
FDNS	00NR	2	16WP	G15_060	FROM->TO	CIMARRON - DRAPER LAKE 345KV CKT 1	717	717	0.1386	109.647	ESSEX UNIT 2 500/18.0KV TRANSFORMER CKT 1
FDNS	00NR	2	16WP	G15_060	FROM->TO	CIMARRON - DRAPER LAKE 345KV CKT 1	717	717	0.1386	109.6402	NELSON 230/20.0KV TRANSFORMER CKT 1
FDNS	00NR	2	16WP	G15_060	FROM->TO	CIMARRON - DRAPER LAKE 345KV CKT 1	717	717	0.13862	109.637	AS KING - EAU CLAIRE 345KV CKT 1
FDNS	00NR	2	16WP	G15_060	FROM->TO	CIMARRON - DRAPER LAKE 345KV CKT 1	717	717	0.1386	109.6339	ST FRANCIS 2 161/16.0KV TRANSFORMER CKT 2
FDNS	00NR	2	16WP	G15_060	FROM->TO	CIMARRON - DRAPER LAKE 345KV CKT 1	717	717	0.1386	109.6338	ST FRANCIS 345/161KV TRANSFORMER CKT 1
FDNS	00NR	2	16WP	G15_060	FROM->TO	CIMARRON - DRAPER LAKE 345KV CKT 1	717	717	0.1386	109.6287	P12:161:AEPW:EROGERS5:ECNTRTN5
FDNS	00NR	2	16WP	G15_060	FROM->TO	CIMARRON - DRAPER LAKE 345KV CKT 1	717	717	0.1386	109.6274	P12:138:AEPW:SHERID4:112GORE4
FDNS	00NR	2	16WP	G15_060	FROM->TO	CIMARRON - DRAPER LAKE 345KV CKT 1	717	717	0.1386	109.6228	P12:161:AEPW:DYESS5:ELMSPRNG:TONTITN5
FDNS	00NR	2	16WP	G15_060	FROM->TO	CIMARRON - DRAPER LAKE 345KV CKT 1	717	717	0.13875	109.6205	P12:138:AEPW:CORNVIL4:S.W.S.-4
FDNS	00NR	2	16WP	G15_060	FROM->TO	CIMARRON - DRAPER LAKE 345KV CKT 1	717	717	0.13866	109.6133	P12:161:AEPW-SWPA:BEAVER5:EROGERS5
FDNS	00NR	2	16WP	G15_060	FROM->TO	CIMARRON - DRAPER LAKE 345KV CKT 1	717	717	0.1386	109.5977	MC NIEL 500/115KV TRANSFORMER CKT 1
FDNS	00NR	2	16WP	G15_060	FROM->TO	CIMARRON - DRAPER LAKE 345KV CKT 1	717	717	0.13873	109.5932	BROOKLINE - MORGAN 345KV CKT 1
FDNS	00NR	2	16WP	G15_060	FROM->TO	CIMARRON - DRAPER LAKE 345KV CKT 1	717	717	0.1387	109.593	P12:138:AEPW:MOUNDRD4:SHIDLER4
FDNS	00NR	2	16WP	G15_060	FROM->TO	CIMARRON - DRAPER LAKE 345KV CKT 1	717	717	0.1386	109.5926	BISMARK - HOT SPRINGS WEST BUS 115KV CKT 1
FDNS	00NR	2	16WP	G15_060	FROM->TO	CIMARRON - DRAPER LAKE 345KV CKT 1	717	717	0.14021	109.5879	NORTHEAST STATION - ONETA 345KV CKT 1
FDNS	00NR	2	16WP	G15_060	FROM->TO	CIMARRON - DRAPER LAKE 345KV CKT 1	717	717	0.13868	109.5873	P12:138:WFEC:MSL15
FDNS	00NR	2	16WP	G15_060	FROM->TO	CIMARRON - DRAPER LAKE 345KV CKT 1	717	717	0.1387	109.5847	BRISTOW - SILVER CITY 138KV CKT 1
FDNS	00NR	2	16WP	G15_060	FROM->TO	CIMARRON - DRAPER LAKE 345KV CKT 1	717	717	0.13864	109.5683	ARPIN B4 345.00 - EAU CLAIRE 345KV CKT 1
FDNS	00NR	2	16WP	G15_060	FROM->TO	CIMARRON - DRAPER LAKE 345KV CKT 1	717	717	0.1386	109.565	CYPRESS - HARTBURG 500KV CKT 1
FDNS	00NR	2	16WP	G15_060	FROM->TO	CIMARRON - DRAPER LAKE 345KV CKT 1	717	717	0.1386	109.5595	ALPINE AECC - BISMARK 115KV CKT 1
FDNS	00NR	2	16WP	G15_060	FROM->TO	CIMARRON - DRAPER LAKE 345KV CKT 1	717	717	0.1386	109.5426	P12:69:AEPW:L.E.S.-2:LAW WC2
FDNS	00NR	2	16WP	G15_060	FROM->TO	CIMARRON - DRAPER LAKE 345KV CKT 1	717	717	0.1386	109.5408	SABINE 230/24.0KV TRANSFORMER CKT 1
FDNS	00NR	2	16WP	G15_060	FROM->TO	CIMARRON - DRAPER LAKE 345KV CKT 1	717	717	0.13858	109.5391	LAYFLD8 500.00 - MOUNT OLIVE 500KV CKT 1
FDNS	00NR	2	16WP	G15_060	FROM->TO	CIMARRON - DRAPER LAKE 345KV CKT 1	717	717	0.1386	109.0896	BASE CASE
FDNS	00NR	2	16WP	G15_060	FROM->TO	CIMARRON - DRAPER LAKE 345KV CKT 1	717	717	0.13877	108.6174	7MCCREDIE 345.00 - 7OVERTON 345.00 345KV CKT 1
FDNS	00NR	2	16WP	G15_060	FROM->TO	CIMARRON - DRAPER LAKE 345KV CKT 1	717	717	0.13831	108.6121	P12:138:WFEC:MSL10
FDNS	00NR	2	16WP	G15_060	FROM->TO	CIMARRON - DRAPER LAKE 345KV CKT 1	717	717	0.13988	108.5713	DELAWARE - NORTHEAST STATION 345KV CKT 1
FDNS	00NR	2	16WP	G15_060	FROM->TO	CIMARRON - DRAPER LAKE 345KV CKT 1	717	717	0.13886	108.5624	7MCCREDIE 345.00 - 7MONTGMRY 345.00 345KV CKT 1
FDNS	00NR	2	16WP	G15_060	FROM->TO	CIMARRON - DRAPER LAKE 345KV CKT 1	717	717	0.13868	108.5199	P12:138:AEPW:SHAM4WT:CHILD4WT
FDNS	00NR	2	16WP	G15_060	FROM->TO	CIMARRON - DRAPER LAKE 345KV CKT 1	717	717	0.13867	108.5167	P12:138:OKGE:3TERM36
FDNS	00NR	2	16WP	G15_060	FROM->TO	CIMARRON - DRAPER LAKE 345KV CKT 1	717	717	0.13861	108.5107	P12:138:WFEC:MSL07
FDNS	00NR	2	16WP	G15_060	FROM->TO	CIMARRON - DRAPER LAKE 345KV CKT 1	717	717	0.13861	108.5107	P12:138:WFEC-AEPW:HUGOPP4:ATOKA--4
FDNS	00NR	2	16WP	G15_060	FROM->TO	CIMARRON - DRAPER LAKE 345KV CKT 1	717	717	0.13875	108.5101	CANADIAN RIVER - MCALESTER SOUTH 138KV CKT 1
FDNS	00NR	2	16WP	G15_060	FROM->TO	CIMARRON - DRAPER LAKE 345KV CKT 1	717	717	0.13875	108.5091	CANADIAN RIVER () 345/138/13.8KV TRANSFORMER CKT 1
FDNS	00NR	2	16WP	G15_060	FROM->TO	CIMARRON - DRAPER LAKE 345KV CKT 1	717	717	0.13867	108.5058	P12:138:AEPW:WELETK4:EARLSBORO4
FDNS	00NR	2	16WP	G15_060	FROM->TO	CIMARRON - DRAPER LAKE 345KV CKT 1	717	717	0.13856	108.4969	P12:138:AEPW-SWPA:LONEOAK4:TUPELO4
FDNS	00NR	2	16WP	G15_060	FROM->TO	CIMARRON - DRAPER LAKE 345KV CKT 1	717	717	0.13856	108.4969	P12:138:WFEC:MSL06
FDNS	00NR	2	16WP	G15_060	FROM->TO	CIMARRON - DRAPER LAKE 345KV CKT 1	717	717	0.13871	108.485	P12:138:WFEC:MSL16
FDNS	00NR	2	16WP	G15_060	FROM->TO	CIMARRON - DRAPER LAKE 345KV CKT 1	717	717	0.1386	108.4672	INDEPENDENCE 500/26.0KV TRANSFORMER CKT 1
FDNS	00NR	2	16WP	G15_060	FROM->TO	CIMARRON - DRAPER LAKE 345KV CKT 1	717	717	0.1386	108.4545	BURLINGTON NO1 + NO 2 + NO 3 161/20.0KV TRANSFORMER CKT 1

SOLUTION	GROUP	SCENARIO	SEASON	SOURCE	DIRECTION	MONITORED ELEMENT	RATEA (MVA)	RATEB(MVA)	TDF	TC%LOADING (% MVA)	CONTINGENCY
FDNS	00NR	2	16WP	G15_060	FROM->TO	CIMARRON - DRAPER LAKE 345KV CKT 1	717	717	0.13955	108.436	MINGO - SETAB 345KV CKT 1
FDNS	00NR	2	16WP	G15_060	FROM->TO	CIMARRON - DRAPER LAKE 345KV CKT 1	717	717	0.13875	108.4316	DELL 500 - INDEPENDENCE 500KV CKT 1
FDNS	00NR	2	16WP	G15_060	FROM->TO	CIMARRON - DRAPER LAKE 345KV CKT 1	717	717	0.13867	108.4219	P12:138:AEPW-OGE:WELETK4:MAUD 4
FDNS	00NR	2	16WP	G15_060	FROM->TO	CIMARRON - DRAPER LAKE 345KV CKT 1	717	717	0.13867	108.4183	EARLSBORO 4138.00 - MAUD 138KV CKT 1
FDNS	00NR	2	16WP	G15_060	FROM->TO	CIMARRON - DRAPER LAKE 345KV CKT 1	717	717	0.1386	108.3752	THOMAS HILL 161/22.0KV TRANSFORMER CKT 1
FDNS	00NR	2	16WP	G15_060	FROM->TO	CIMARRON - DRAPER LAKE 345KV CKT 1	717	717	0.1386	108.3713	P12:230:UMZB:# 112 #: NU IN SD. NU-RCDC & DRY CREEK XFMR
FDNS	00NR	2	16WP	G15_060	FROM->TO	CIMARRON - DRAPER LAKE 345KV CKT 1	717	717	0.13882	108.2738	KEO EHV - WEST MEMPHIS 500 500KV CKT 1
FDNS	00NR	2	16WP	G15_060	FROM->TO	CIMARRON - DRAPER LAKE 345KV CKT 1	717	717	0.1386	108.1869	4SIOUX 1 138.00 138/18.0KV TRANSFORMER CKT 1
FDNS	00NR	2	16WP	G15_060	FROM->TO	CIMARRON - DRAPER LAKE 345KV CKT 1	717	717	0.1386	108.0523	CLAY BOSWELL 230/20.9KV TRANSFORMER CKT 1
FDNS	00NR	2	16WP	G15_060	FROM->TO	CIMARRON - DRAPER LAKE 345KV CKT 1	717	717	0.13864	107.9815	NORTHWEST TEXARKANA - VALLIANT 345KV CKT 1
FDNS	00NR	2	16WP	G15_060	FROM->TO	CIMARRON - DRAPER LAKE 345KV CKT 1	717	717	0.13869	107.9537	P12:138:WFEC:MSL09
FDNS	00NR	2	16WP	G15_060	FROM->TO	CIMARRON - DRAPER LAKE 345KV CKT 1	717	717	0.13929	107.9148	P12:138:OKGE:3TERM22
FDNS	00NR	2	16WP	G15_060	FROM->TO	CIMARRON - DRAPER LAKE 345KV CKT 1	717	717	0.13815	107.9092	P12:138:WFEC:MSL08
FDNS	00NR	2	16WP	G15_060	FROM->TO	CIMARRON - DRAPER LAKE 345KV CKT 1	717	717	0.13867	107.6099	P12:138:AEPW-OGE:CORNVIL4:CIMARON4
FDNS	00NR	2	16WP	G15_060	FROM->TO	CIMARRON - DRAPER LAKE 345KV CKT 1	717	717	0.13866	107.5056	LYDIA - WELSH 345KV CKT 1
FDNS	00NR	2	16WP	G15_060	FROM->TO	CIMARRON - DRAPER LAKE 345KV CKT 1	717	717	0.14402	107.1046	CLARKSVILLE - MUSKOGEE 345KV CKT 1
FDNS	00NR	2	16WP	G15_060	FROM->TO	CIMARRON - DRAPER LAKE 345KV CKT 1	717	717	0.1386	107.0031	BIG STONE 230/24.0KV TRANSFORMER CKT 1
FDNS	00NR	2	16WP	G15_060	FROM->TO	CIMARRON - DRAPER LAKE 345KV CKT 1	717	717	0.13868	106.9076	LYDIA - VALLIANT 345KV CKT 1
FDNS	00NR	2	16WP	G15_060	FROM->TO	CIMARRON - DRAPER LAKE 345KV CKT 1	717	717	0.13852	106.8165	P12:138:OKGE:3TERM23
FDNS	00NR	2	16WP	G15_060	FROM->TO	CIMARRON - DRAPER LAKE 345KV CKT 1	717	717	0.1386	106.4011	SHERBURNE CO 345/24.0KV TRANSFORMER CKT 1
FDNS	01ALL	2	16WP	G15_060	FROM->TO	CIMARRON - DRAPER LAKE 345KV CKT 1	717	717	0.08669	103.9899	BASE CASE
FDNS	00NR	2	16WP	G15_060	FROM->TO	CIMARRON - DRAPER LAKE 345KV CKT 1	717	717	0.14313	103.4591	P12:138:OKGE:3TERM21
FDNS	00NR	2	16WP	G15_060	FROM->TO	CIMARRON - DRAPER LAKE 345KV CKT 1	717	717	0.1401	101.6899	PITTSBURG - VALLIANT 345KV CKT 1
FDNS	00NR	2	16WP	G15_060	FROM->TO	G14-057T 345.00 - SUNNYSIDE 345KV CKT 1	717	789	0.05924	125.0762	PITTSBURG - SEMINOLE 345KV CKT 1
FDNS	00NR	2	16WP	G15_060	FROM->TO	G14-057T 345.00 - SUNNYSIDE 345KV CKT 1	717	789	0.06303	124.2437	BASE CASE
FDNS	00NR	2	20WP	G15_060	FROM->TO	G14-057T 345.00 - SUNNYSIDE 345KV CKT 1	717	789	0.05874	122.3486	PITTSBURG - SEMINOLE 345KV CKT 1
FDNS	00NR	2	20WP	G15_060	FROM->TO	G14-057T 345.00 - SUNNYSIDE 345KV CKT 1	717	789	0.06261	122.1851	BASE CASE
FDNS	00NR	2	16WP	G15_060	FROM->TO	G14-057T 345.00 - SUNNYSIDE 345KV CKT 1	717	789	0.06736	118.87	P12:138:WFEC:MSL03
FDNS	00NR	2	16WP	G15_060	FROM->TO	G14-057T 345.00 - SUNNYSIDE 345KV CKT 1	717	789	0.06198	118.2698	PITTSBURG - VALLIANT 345KV CKT 1
FDNS	00NR	2	20WP	G15_060	FROM->TO	G14-057T 345.00 - SUNNYSIDE 345KV CKT 1	717	789	0.06695	116.9352	P12:138:WFEC:MSL03
FDNS	00NR	2	16WP	G15_060	FROM->TO	G14-057T 345.00 - SUNNYSIDE 345KV CKT 1	717	789	0.06311	115.9008	7SAREPTA% 345.00 - LONGWOOD 345KV CKT 1
FDNS	00NR	2	20WP	G15_060	FROM->TO	G14-057T 345.00 - SUNNYSIDE 345KV CKT 1	717	789	0.06155	115.7887	PITTSBURG - VALLIANT 345KV CKT 1
FDNS	00NR	2	16WP	G15_060	FROM->TO	G14-057T 345.00 - SUNNYSIDE 345KV CKT 1	717	789	0.0631	115.7458	DOLET HILLS - SOUTHWEST SHREVEPORT 345KV CKT 1
FDNS	00NR	2	16WP	G15_060	FROM->TO	G14-057T 345.00 - SUNNYSIDE 345KV CKT 1	717	789	0.06435	115.7334	CLEVELAND - TULSA NORTH 345KV CKT 1
FDNS	00NR	2	16WP	G15_060	FROM->TO	G14-057T 345.00 - SUNNYSIDE 345KV CKT 1	717	789	0.06303	115.3409	GRAND GULF 500/22.0KV TRANSFORMER CKT 1
FDNS	00NR	2	16WP	G15_060	FROM->TO	G14-057T 345.00 - SUNNYSIDE 345KV CKT 1	717	789	0.06307	115.2476	7SAREPTA% 345.00 - ELDORADO EHV 345KV CKT 1
FDNS	00NR	2	16WP	G15_060	FROM->TO	G14-057T 345.00 - SUNNYSIDE 345KV CKT 1	717	789	0.06307	115.2364	ELDORADO EHV 500/345KV TRANSFORMER CKT 1
FDNS	00NR	2	16WP	G15_060	FROM->TO	G14-057T 345.00 - SUNNYSIDE 345KV CKT 1	717	789	0.06366	115.1782	P12:138:AEPW:DUNCAN-4:L.E.S.-4
FDNS	00NR	2	16WP	G15_060	FROM->TO	G14-057T 345.00 - SUNNYSIDE 345KV CKT 1	717	789	0.06403	114.8175	P12:138:WFEC:MSL01
FDNS	00NR	2	16WP	G15_060	FROM->TO	G14-057T 345.00 - SUNNYSIDE 345KV CKT 1	717	789	0.06366	114.7912	DUNCAN - OMPA-DUNCAN 840 138KV CKT 1
FDNS	00NR	2	16WP	G15_060	FROM->TO	G14-057T 345.00 - SUNNYSIDE 345KV CKT 1	717	789	0.06303	114.657	DOLET HILLS 345/24.0KV TRANSFORMER CKT 1
FDNS	00NR	2	16WP	G15_060	FROM->TO	G14-057T 345.00 - SUNNYSIDE 345KV CKT 1	717	789	0.063	114.6276	P12:138:AEPW:SHERID4:112GORE4
FDNS	00NR	2	16WP	G15_060	FROM->TO	G14-057T 345.00 - SUNNYSIDE 345KV CKT 1	717	789	0.06646	114.6104	FINNEY SWITCHING STATION - HOLCOMB 345KV CKT 1
FDNS	00NR	2	16WP	G15_060	FROM->TO	G14-057T 345.00 - SUNNYSIDE 345KV CKT 1	717	789	0.06316	114.5304	REDBUD - RIVERSIDE STATION 345KV CKT 1
FDNS	00NR	2	16WP	G15_060	FROM->TO	G14-057T 345.00 - SUNNYSIDE 345KV CKT 1	717	789	0.06447	114.4751	P12:138:WFEC:MSL17
FDNS	00NR	2	16WP	G15_060	FROM->TO	G14-057T 345.00 - SUNNYSIDE 345KV CKT 1	717	789	0.06303	114.3715	P12:69:AEPW:L.E.S.-2:LAW WC2
FDNS	00NR	2	16WP	G15_060	FROM->TO	G14-057T 345.00 - SUNNYSIDE 345KV CKT 1	717	789	0.06303	114.3488	P12:161:AEPW:DYESS 5:HYLAND 5
FDNS	00NR	2	16WP	G15_060	FROM->TO	G14-057T 345.00 - SUNNYSIDE 345KV CKT 1	717	789	0.06299	114.3229	ELDORADO EHV - MOUNT OLIVE 500KV CKT 1
FDNS	00NR	2	16WP	G15_060	FROM->TO	G14-057T 345.00 - SUNNYSIDE 345KV CKT 1	717	789	0.06344	114.3189	P12:138:WFEC:MSL02
FDNS	00NR	2	16WP	G15_060	FROM->TO	G14-057T 345.00 - SUNNYSIDE 345KV CKT 1	717	789	0.063	114.2825	P12:138:AEPW:112GORE4:L.E.S.-4
FDNS	00NR	2	16WP	G15_060	FROM->TO	G14-057T 345.00 - SUNNYSIDE 345KV CKT 1	717	789	0.06291	114.2476	ELDORADO EHV - SHERIDAN EHV 500KV CKT 1
FDNS	00NR	2	16WP	G15_060	FROM->TO	G14-057T 345.00 - SUNNYSIDE 345KV CKT 1	717	789	0.06303	114.2205	NEW MADRID 161/22.0KV TRANSFORMER CKT 1
FDNS	00NR	2	16WP	G15_060	FROM->TO	G14-057T 345.00 - SUNNYSIDE 345KV CKT 1	717	789	0.06481	114.2147	P12:138:AEPW-OGE:CORNVIL4:MAUD 4
FDNS	00NR	2	16WP	G15_060	FROM->TO	G14-057T 345.00 - SUNNYSIDE 345KV CKT 1	717	789	0.06303	114.2089	NEW MADRID 345/22.0KV TRANSFORMER CKT 1
FDNS	00NR	2	16WP	G15_060	FROM->TO	G14-057T 345.00 - SUNNYSIDE 345KV CKT 1	717	789	0.06314	114.2028	WEBRE - WELLS 500KV CKT 1
FDNS	00NR	2	16WP	G15_060	FROM->TO	G14-057T 345.00 - SUNNYSIDE 345KV CKT 1	717	789	0.06303	114.1815	FRONTIER - GRIMES 345KV CKT 1
FDNS	00NR	2	16WP	G15_060	FROM->TO	G14-057T 345.00 - SUNNYSIDE 345KV CKT 1	717	789	0.06302	114.1592	LAWTON EASTSIDE (LES 5) 345/138/13.8KV TRANSFORMER CKT 2
FDNS	00NR	2	20WP	G15_060	FROM->TO	G14-057T 345.00 - SUNNYSIDE 345KV CKT 1	717	789	0.06271	114.0928	7SAREPTA% 345.00 - LONGWOOD 345KV CKT 1
FDNS	00NR	2	16WP	G15_060	FROM->TO	G14-057T 345.00 - SUNNYSIDE 345KV CKT 1	717	789	0.06647	114.0392	THISTLE7 345.00 - WOODWARD DISTRICT EHV 345KV CKT 1
FDNS	00NR	2	16WP	G15_060	FROM->TO	G14-057T 345.00 - SUNNYSIDE 345KV CKT 1	717	789	0.06647	114.0392	THISTLE7 345.00 - WOODWARD DISTRICT EHV 345KV CKT 2
FDNS	00NR	2	16WP	G15_060	FROM->TO	G14-057T 345.00 - SUNNYSIDE 345KV CKT 1	717	789	0.06303	114.0181	DELL 500 - ESSEX UNIT 2 500KV CKT Z1
FDNS	00NR	2	16WP	G15_060	FROM->TO	G14-057T 345.00 - SUNNYSIDE 345KV CKT 1	717	789	0.06321	113.9738	DUNCAN (DUNCAN) 138/69/13.8KV TRANSFORMER CKT 1
FDNS	00NR	2	16WP	G15_060	FROM->TO	G14-057T 345.00 - SUNNYSIDE 345KV CKT 1	717	789	0.06302	113.9424	P12:161:AEPW-SWPA:BEAVER5:EROGERS5
FDNS	00NR	2	16WP	G15_060	FROM->TO	G14-057T 345.00 - SUNNYSIDE 345KV CKT 1	717	789	0.06306	113.9237	P12:138:AEPW:CATOOSA4:T.S.E.-4
FDNS	00NR	2	16WP	G15_060	FROM->TO	G14-057T 345.00 - SUNNYSIDE 345KV CKT 1	717	789	0.06308	113.9117	6LAYFLD 230.00 - CARROLL 230KV CKT 1
FDNS	00NR	2	16WP	G15_060	FROM->TO	G14-057T 345.00 - SUNNYSIDE 345KV CKT 1	717	789	0.06306	113.8781	FULTON 115 - HOPE 115KV CKT 1
FDNS	00NR	2	16WP	G15_060	FROM->TO	G14-057T 345.00 - SUNNYSIDE 345KV CKT 1	717	789	0.06306	113.8739	8DANIEL8 500.00 - MCKNIGHT 500KV CKT 1
FDNS	00NR	2	16WP	G15_060	FROM->TO	G14-057T 345.00 - SUNNYSIDE 345KV CKT 1	717	789	0.06303	113.8724	P12:161:AEPW:DYESS5:ELMSPRNG:TONTITN5
FDNS	00NR	2	20WP	G15_060	FROM->TO	G14-057T 345.00 - SUNNYSIDE 345KV CKT 1	717	789	0.0639	113.8412	CLEVELAND - TULSA NORTH 345KV CKT 1
FDNS	00NR	2	16WP	G15_060	FROM->TO	G14-057T 345.00 - SUNNYSIDE 345KV CKT 1	717	789	0.0633	113.8378	P12:138:AEPW:CORNVIL4:S.W.S.-4
FDNS	00NR	2	16WP	G15_060	FROM->TO	G14-057T 345.00 - SUNNYSIDE 345KV CKT 1	717	789	0.0633	113.8049	P12:138:AEPW:CORNVIL4:DUNCAN-4
FDNS	00NR	2	16WP	G15_060	FROM->TO	G14-057T 345.00 - SUNNYSIDE 345KV CKT 1	717	789	0.06321	113.8023	P12:69:WFEC-AEPW:COMANCH2:DUNCAN-2
FDNS	00NR	2	16WP	G15_060	FROM->TO	G14-057T 345.00 - SUNNYSIDE 345KV CKT 1	717	789	0.06329	113.7798	P12:138:AEPW-OGE:WTH_JCT4:JENSEN4
FDNS	00NR	2	16WP	G15_060	FROM->TO	G14-057T 345.00 - SUNNYSIDE 345KV CKT 1	717	789	0.06303	113.7588	P12:161:AEPW:EROGERS5:ECNTRTN5
FDNS	00NR	2	16WP	G15_060	FROM->TO	G14-057T 345.00 - SUNNYSIDE 345KV CKT 1	717	789	0.06299	113.7486	LAYFLD8 500.00 - MOUNT OLIVE 500KV CKT 1
FDNS	00NR	2	16WP	G15_060	FROM->TO	G14-057T 345.00 - SUNNYSIDE 345KV CKT 1	717	789	0.06303	113.7485	RODEMACHER 230/22.0KV TRANSFORMER CKT 1
FDNS	00NR	2	16WP	G15_060	FROM->TO	G14-057T 345.00 - SUNNYSIDE 345KV CKT 1	717	789	0.06303	113.7391	WHITE BLUFF 500/26.0KV TRANSFORMER CKT 1
FDNS	00NR	2	16WP	G15_060	FROM->TO	G14-057T 345.00 - SUNNYSIDE 345KV CKT 1	717	789	0.06315	113.7384	P12:138:AEPW:WTHWF4:CLINTJC4
FDNS	00NR	2	16WP	G15_060	FROM->TO	G14-057T 345.00 - SUNNYSIDE 345KV CKT 1	717	789	0.06303	113.7358	MC NIEL 500/115KV TRANSFORMER CKT 1

SOLUTION	GROUP	SCENARIO	SEASON	SOURCE	DIRECTION	MONITORED ELEMENT	RATEA (MVA)	RATEB(MVA)	TDF	TC%LOADING (% MVA)	CONTINGENCY
FDNS	00NR	2	16WP	G15_060	FROM->TO	G14-057T 345.00 - SUNNYSIDE 345KV CKT 1	717	789	0.06301	113.7307	HOT SPRINGS EHV - MAGNET COVE 500KV CKT 1
FDNS	00NR	2	16WP	G15_060	FROM->TO	G14-057T 345.00 - SUNNYSIDE 345KV CKT 1	717	789	0.06304	113.7275	BISMARK - HOT SPRINGS WEST BUS 115KV CKT 1
FDNS	00NR	2	16WP	G15_060	FROM->TO	G14-057T 345.00 - SUNNYSIDE 345KV CKT 1	717	789	0.06309	113.7242	P12:69:AEPW-OMPA:COMANC-2:OMWALTR2
FDNS	00NR	2	16WP	G15_060	FROM->TO	G14-057T 345.00 - SUNNYSIDE 345KV CKT 1	717	789	0.06344	113.7165	BUCKNER7 345.00 - SPEARVILLE 345KV CKT 1
FDNS	00NR	2	16WP	G15_060	FROM->TO	G14-057T 345.00 - SUNNYSIDE 345KV CKT 1	717	789	0.06315	113.6923	P12:138:AEPW:WTHWF4:WTH_SE4
FDNS	00NR	2	16WP	G15_060	FROM->TO	G14-057T 345.00 - SUNNYSIDE 345KV CKT 1	717	789	0.06305	113.6922	P12:138:AEPW:N.E.S.-4:CATOOSA4
FDNS	00NR	2	20WP	G15_060	FROM->TO	G14-057T 345.00 - SUNNYSIDE 345KV CKT 1	717	789	0.06269	113.6826	DOLET HILLS - SOUTHWEST SHREVEPORT 345KV CKT 1
FDNS	00NR	2	16WP	G15_060	FROM->TO	G14-057T 345.00 - SUNNYSIDE 345KV CKT 1	717	789	0.06303	113.6815	NELSON 230/20.0KV TRANSFORMER CKT 1
FDNS	00NR	2	16WP	G15_060	FROM->TO	G14-057T 345.00 - SUNNYSIDE 345KV CKT 1	717	789	0.06304	113.6759	ALPINE AECC - BISMARK 115KV CKT 1
FDNS	00NR	2	16WP	G15_060	FROM->TO	G14-057T 345.00 - SUNNYSIDE 345KV CKT 1	717	789	0.06449	113.6755	P12:138:OKGE:3TERM27
FDNS	00NR	2	16WP	G15_060	FROM->TO	G14-057T 345.00 - SUNNYSIDE 345KV CKT 1	717	789	0.06303	113.64	CYPRESS - HARTBURG 500KV CKT 1
FDNS	00NR	2	16WP	G15_060	FROM->TO	G14-057T 345.00 - SUNNYSIDE 345KV CKT 1	717	789	0.06267	113.6346	ELK CITY 230KV (ELKCTY-6) 230/138/13.8KV TRANSFORMER CKT 1
FDNS	00NR	2	16WP	G15_060	FROM->TO	G14-057T 345.00 - SUNNYSIDE 345KV CKT 1	717	789	0.06304	113.6333	ALPINE AECC - AMITY SS 115KV CKT 1
FDNS	00NR	2	16WP	G15_060	FROM->TO	G14-057T 345.00 - SUNNYSIDE 345KV CKT 1	717	789	0.06303	113.6232	8CAJUN2 500/24.0KV TRANSFORMER CKT 1
FDNS	00NR	2	16WP	G15_060	FROM->TO	G14-057T 345.00 - SUNNYSIDE 345KV CKT 1	717	789	0.05946	113.6224	CANADIAN RIVER - PITTSBURG 345KV CKT 1
FDNS	00NR	2	16WP	G15_060	FROM->TO	G14-057T 345.00 - SUNNYSIDE 345KV CKT 1	717	789	0.06303	113.609	7JASPER 345.00 - BLACKBERRY 345KV CKT 1
FDNS	00NR	2	16WP	G15_060	FROM->TO	G14-057T 345.00 - SUNNYSIDE 345KV CKT 1	717	789	0.06303	113.5983	P12:138:AEPW:R.S.S.-4:S.HUD.-4
FDNS	00NR	2	16WP	G15_060	FROM->TO	G14-057T 345.00 - SUNNYSIDE 345KV CKT 1	717	789	0.06299	113.5627	ETTA (DUKE HOTSPRINGS) - MC NIEL 500KV CKT 1
FDNS	00NR	2	16WP	G15_060	FROM->TO	G14-057T 345.00 - SUNNYSIDE 345KV CKT 1	717	789	0.06303	113.5603	P12:138:AEPW:YARCH-S4:T.S.E.-4
FDNS	00NR	2	16WP	G15_060	FROM->TO	G14-057T 345.00 - SUNNYSIDE 345KV CKT 1	717	789	0.06323	113.5565	WEATHERFORD JCT. - WEATHERFORD SOUTHEAST 138KV CKT 1
FDNS	00NR	2	16WP	G15_060	FROM->TO	G14-057T 345.00 - SUNNYSIDE 345KV CKT 1	717	789	0.06303	113.5542	P12:138:AEPW:BA_71ST4:T.S.E.-4
FDNS	00NR	2	16WP	G15_060	FROM->TO	G14-057T 345.00 - SUNNYSIDE 345KV CKT 1	717	789	0.06303	113.5534	P12:69:AEPW:NROGERS2:ECNTRTN2
FDNS	00NR	2	16WP	G15_060	FROM->TO	G14-057T 345.00 - SUNNYSIDE 345KV CKT 1	717	789	0.06303	113.5458	SABINE 230/24.0KV TRANSFORMER CKT 1
FDNS	00NR	2	16WP	G15_060	FROM->TO	G14-057T 345.00 - SUNNYSIDE 345KV CKT 1	717	789	0.06339	113.5397	BLACKBERRY - NEOSHO 345KV CKT 1
FDNS	00NR	2	16WP	G15_060	FROM->TO	G14-057T 345.00 - SUNNYSIDE 345KV CKT 1	717	789	0.06313	113.5342	7LUTESVIL 345.00 - 7ST FRANC 345.00 345KV CKT 1
FDNS	00NR	2	16WP	G15_060	FROM->TO	G14-057T 345.00 - SUNNYSIDE 345KV CKT 1	717	789	0.06303	113.5301	FRONTIER 345/18.0KV TRANSFORMER CKT 1
FDNS	00NR	2	20WP	G15_060	FROM->TO	G14-057T 345.00 - SUNNYSIDE 345KV CKT 1	717	789	0.06261	113.53	GRAND GULF 500/22.0KV TRANSFORMER CKT 1
FDNS	00NR	2	16WP	G15_060	FROM->TO	G14-057T 345.00 - SUNNYSIDE 345KV CKT 1	717	789	0.06303	113.5285	FRONTIER 345/18.0KV TRANSFORMER CKT 1
FDNS	00NR	2	16WP	G15_060	FROM->TO	G14-057T 345.00 - SUNNYSIDE 345KV CKT 1	717	789	0.06303	113.5223	P12:161:AEPW:CHAMSPR5:FARMING5
FDNS	00NR	2	16WP	G15_060	FROM->TO	G14-057T 345.00 - SUNNYSIDE 345KV CKT 1	717	789	0.0639	113.5201	P12:138:OKGE-AEPW:JENSEN4:REDROCKRD4
FDNS	00NR	2	16WP	G15_060	FROM->TO	G14-057T 345.00 - SUNNYSIDE 345KV CKT 1	717	789	0.06303	113.52	ESSEX UNIT 2 500/18.0KV TRANSFORMER CKT 1
FDNS	00NR	2	16WP	G15_060	FROM->TO	G14-057T 345.00 - SUNNYSIDE 345KV CKT 1	717	789	0.06316	113.5188	P12:138:AEPW-OGE:SHIDLER4:OSAGE 4
FDNS	00NR	2	16WP	G15_060	FROM->TO	G14-057T 345.00 - SUNNYSIDE 345KV CKT 1	717	789	0.06332	113.5131	NORGE ROAD - SOUTHWESTERN STATION 138KV CKT 1
FDNS	00NR	2	16WP	G15_060	FROM->TO	G14-057T 345.00 - SUNNYSIDE 345KV CKT 1	717	789	0.06306	113.5071	P12:115:AEPW:TURK3:HOPE3
FDNS	00NR	2	16WP	G15_060	FROM->TO	G14-057T 345.00 - SUNNYSIDE 345KV CKT 1	717	789	0.06323	113.5062	P12:138:AEPW:REDROCKRD4:WTH_JCT4
FDNS	00NR	2	16WP	G15_060	FROM->TO	G14-057T 345.00 - SUNNYSIDE 345KV CKT 1	717	789	0.06316	113.4943	8WNEWMADRID 500.00 - DELL 500 500KV CKT 1
FDNS	00NR	2	16WP	G15_060	FROM->TO	G14-057T 345.00 - SUNNYSIDE 345KV CKT 1	717	789	0.06303	113.4932	LEWIS CREEK SWITCHYARD 138/22.0KV TRANSFORMER CKT 1
FDNS	00NR	2	16WP	G15_060	FROM->TO	G14-057T 345.00 - SUNNYSIDE 345KV CKT 1	717	789	0.06303	113.4884	LEWIS CREEK SWITCHYARD 138/22.0KV TRANSFORMER CKT 1
FDNS	00NR	2	16WP	G15_060	FROM->TO	G14-057T 345.00 - SUNNYSIDE 345KV CKT 1	717	789	0.06309	113.4861	OMPA-WALTERS - WALTERS 69KV CKT 1
FDNS	00NR	2	16WP	G15_060	FROM->TO	G14-057T 345.00 - SUNNYSIDE 345KV CKT 1	717	789	0.06306	113.4852	TURK (TURK 1) 138/115/13.2KV TRANSFORMER CKT 1
FDNS	00NR	2	16WP	G15_060	FROM->TO	G14-057T 345.00 - SUNNYSIDE 345KV CKT 1	717	789	0.06305	113.4831	COUCH SES - MC NIEL 115KV CKT 1
FDNS	00NR	2	16WP	G15_060	FROM->TO	G14-057T 345.00 - SUNNYSIDE 345KV CKT 1	717	789	0.06309	113.4667	P12:138:OKGE:3TERM12
FDNS	00NR	2	16WP	G15_060	FROM->TO	G14-057T 345.00 - SUNNYSIDE 345KV CKT 1	717	789	0.06324	113.4631	P12:69:WFEC-AEPW:COMANCH2:WALTRS-2
FDNS	00NR	2	16WP	G15_060	FROM->TO	G14-057T 345.00 - SUNNYSIDE 345KV CKT 1	717	789	0.06288	113.4581	P12:138:AEPW-SWPA:LONEOAK4:BRKNBW4
FDNS	00NR	2	20WP	G15_060	FROM->TO	G14-057T 345.00 - SUNNYSIDE 345KV CKT 1	717	789	0.06266	113.452	7SAREPTA% 345.00 - ELDORADO EHV 345KV CKT 1
FDNS	00NR	2	16WP	G15_060	FROM->TO	G14-057T 345.00 - SUNNYSIDE 345KV CKT 1	717	789	0.06309	113.4484	P12:138:OKGE:3TERM2
FDNS	00NR	2	20WP	G15_060	FROM->TO	G14-057T 345.00 - SUNNYSIDE 345KV CKT 1	717	789	0.06266	113.4413	ELDORADO EHV 500/345KV TRANSFORMER CKT 1
FDNS	00NR	2	16WP	G15_060	FROM->TO	G14-057T 345.00 - SUNNYSIDE 345KV CKT 1	717	789	0.06308	113.4391	7JASPER 345.00 - MORGAN 345KV CKT 1
FDNS	00NR	2	16WP	G15_060	FROM->TO	G14-057T 345.00 - SUNNYSIDE 345KV CKT 1	717	789	0.06344	113.4377	BUCKNER7 345.00 - HOLCOMB 345KV CKT 1
FDNS	00NR	2	16WP	G15_060	FROM->TO	G14-057T 345.00 - SUNNYSIDE 345KV CKT 1	717	789	0.06304	113.434	P12:138:AEPW:R.S.S-4:T.P.S.-4
FDNS	00NR	2	16WP	G15_060	FROM->TO	G14-057T 345.00 - SUNNYSIDE 345KV CKT 1	717	789	0.06341	113.4303	CLINTON JUNCTION - ELK CITY 138KV CKT 1
FDNS	00NR	2	16WP	G15_060	FROM->TO	G14-057T 345.00 - SUNNYSIDE 345KV CKT 1	717	789	0.06425	113.4299	CLARKSVILLE - ONETA 345KV CKT 1
FDNS	00NR	2	20WP	G15_060	FROM->TO	G14-057T 345.00 - SUNNYSIDE 345KV CKT 1	717	789	0.06324	113.4146	P12:138:AEPW:DUNCAN-4:L.E.S.-4
FDNS	00NR	2	16WP	G15_060	FROM->TO	G14-057T 345.00 - SUNNYSIDE 345KV CKT 1	717	789	0.06303	113.4106	P12:138:AEPW:R.S.S.-4:R:96YALE-4
FDNS	00NR	2	16WP	G15_060	FROM->TO	G14-057T 345.00 - SUNNYSIDE 345KV CKT 1	717	789	0.06332	113.3952	CORNVILLE - NORGE ROAD 138KV CKT 1
FDNS	00NR	2	16WP	G15_060	FROM->TO	G14-057T 345.00 - SUNNYSIDE 345KV CKT 1	717	789	0.06303	113.3951	P12:138:AEPW:MOHAWK4:T.NO--4
FDNS	00NR	2	16WP	G15_060	FROM->TO	G14-057T 345.00 - SUNNYSIDE 345KV CKT 1	717	789	0.06303	113.3891	ST FRANCIS 161/16.0KV TRANSFORMER CKT 1
FDNS	00NR	2	16WP	G15_060	FROM->TO	G14-057T 345.00 - SUNNYSIDE 345KV CKT 1	717	789	0.06303	113.389	ST FRANCIS - ST FRANCIS 1 161KV CKT Z1
FDNS	00NR	2	16WP	G15_060	FROM->TO	G14-057T 345.00 - SUNNYSIDE 345KV CKT 1	717	789	0.06299	113.3855	P12:138:AEPW:OKMULGE4:R.S.S-4
FDNS	00NR	2	16WP	G15_060	FROM->TO	G14-057T 345.00 - SUNNYSIDE 345KV CKT 1	717	789	0.06304	113.385	LAYFLD8 500.00 (LAYFLD AUTO) 500/230/13.8KV TRANSFORMER CKT 1
FDNS	00NR	2	16WP	G15_060	FROM->TO	G14-057T 345.00 - SUNNYSIDE 345KV CKT 1	717	789	0.06303	113.3786	SABINE 230/22.0KV TRANSFORMER CKT 1
FDNS	00NR	2	16WP	G15_060	FROM->TO	G14-057T 345.00 - SUNNYSIDE 345KV CKT 1	717	789	0.06304	113.3764	AMITY SS - MURFREESBORO EAST (AECC) 115KV CKT 1
FDNS	00NR	2	16WP	G15_060	FROM->TO	G14-057T 345.00 - SUNNYSIDE 345KV CKT 1	717	789	0.0629	113.3747	P12:138:WFEC-AEPW:ELKCTY-4:ERICK4
FDNS	00NR	2	16WP	G15_060	FROM->TO	G14-057T 345.00 - SUNNYSIDE 345KV CKT 1	717	789	0.06319	113.3729	P12:138:OKGE:3TERM47
FDNS	00NR	2	20WP	G15_060	FROM->TO	G14-057T 345.00 - SUNNYSIDE 345KV CKT 1	717	789	0.06324	113.0115	DUNCAN - OMPA-DUNCAN 840 138KV CKT 1
FDNS	00NR	2	20WP	G15_060	FROM->TO	G14-057T 345.00 - SUNNYSIDE 345KV CKT 1	717	789	0.06362	112.9602	P12:138:WFEC:MSL01
FDNS	00NR	2	16WP	G15_060	FROM->TO	G14-057T 345.00 - SUNNYSIDE 345KV CKT 1	717	789	0.06303	112.9058	803-OKLAUNION
FDNS	00NR	2	20WP	G15_060	FROM->TO	G14-057T 345.00 - SUNNYSIDE 345KV CKT 1	717	789	0.06258	112.8133	ELDORADO EHV - MOUNT OLIVE 500KV CKT 1
FDNS	00NR	2	20WP	G15_060	FROM->TO	G14-057T 345.00 - SUNNYSIDE 345KV CKT 1	717	789	0.06258	112.8085	P12:138:AEPW:SHERID4:112GORE4
FDNS	00NR	2	20WP	G15_060	FROM->TO	G14-057T 345.00 - SUNNYSIDE 345KV CKT 1	717	789	0.06261	112.7873	DOLET HILLS 345/24.0KV TRANSFORMER CKT 1
FDNS	00NR	2	20WP	G15_060	FROM->TO	G14-057T 345.00 - SUNNYSIDE 345KV CKT 1	717	789	0.06623	112.7668	Hitchland Interchange - WALKTAP7 345.00 345KV CKT 1
FDNS	00NR	2	20WP	G15_060	FROM->TO	G14-057T 345.00 - SUNNYSIDE 345KV CKT 1	717	789	0.06623	112.7573	P12:345:SPS:J07.1.FINN.HITCH
FDNS	00NR	2	20WP	G15_060	FROM->TO	G14-057T 345.00 - SUNNYSIDE 345KV CKT 1	717	789	0.06278	112.7566	REDBUD - RIVERSIDE STATION 345KV CKT 1
FDNS	00NR	2	20WP	G15_060	FROM->TO	G14-057T 345.00 - SUNNYSIDE 345KV CKT 1	717	789	0.06273	112.653	WEBRE - WELLS 500KV CKT 1
FDNS	00NR	2	20WP	G15_060	FROM->TO	G14-057T 345.00 - SUNNYSIDE 345KV CKT 1	717	789	0.06261	112.6136	P12:161:AEPW:DYESS 5:HYLAND 5
FDNS	00NR	2	20WP	G15_060	FROM->TO	G14-057T 345.00 - SUNNYSIDE 345KV CKT 1	717	789	0.06261	112.5779	DELL 500 - ESSEX UNIT 2 500KV CKT Z1
FDNS	00NR	2	20WP	G15_060	FROM->TO	G14-057T 345.00 - SUNNYSIDE 345KV CKT 1	717	789	0.06261	112.5497	P12:69:AEPW:L.E.S.-2:LAW WC2
FDNS	00NR	2	20WP	G15_060	FROM->TO	G14-057T 345.00 - SUNNYSIDE 345KV CKT 1	717	789	0.06404	112.5491	P12:138:WFEC:MSL17
FDNS	00NR	2	20WP	G15_060	FROM->TO	G14-057T 345.00 - SUNNYSIDE 345KV CKT 1	717	789	0.06303	112.4804	P12:138:WFEC:MSL02

SOLUTION	GROUP	SCENARIO	SEASON	SOURCE	DIRECTION	MONITORED ELEMENT	RATEA (MVA)	RATEB(MVA)	TDF	TC%LOADING (% MVA)	CONTINGENCY
FDNS	00NR	2	20WP	G15_060	FROM->TO	G14-057T 345.00 - SUNNYSIDE 345KV CKT 1	717	789	0.06261	112.4648	LAWTON EASTSIDE (LES 5) 345/138/13.8KV TRANSFORMER CKT 2
FDNS	00NR	2	20WP	G15_060	FROM->TO	G14-057T 345.00 - SUNNYSIDE 345KV CKT 1	717	789	0.06249	112.4575	ELDORADO EHV - SHERIDAN EHV 500KV CKT 1
FDNS	00NR	2	16WP	G15_060	FROM->TO	G14-057T 345.00 - SUNNYSIDE 345KV CKT 1	717	789	0.0634	112.4486	P12:138:OKGE:3TERM21
FDNS	00NR	2	16WP	G15_060	FROM->TO	G14-057T 345.00 - SUNNYSIDE 345KV CKT 1	717	789	0.06305	112.4396	P12:138:WFEC:MSL11
FDNS	00NR	2	16WP	G15_060	FROM->TO	G14-057T 345.00 - SUNNYSIDE 345KV CKT 1	717	789	0.06305	112.4396	P12:138:WFEC-AEPW:PHAROAH4:LONEOAK4
FDNS	00NR	2	20WP	G15_060	FROM->TO	G14-057T 345.00 - SUNNYSIDE 345KV CKT 1	717	789	0.06258	112.4267	P12:138:AEPW:112GORE4:L.E.S.-4
FDNS	00NR	2	16WP	G15_060	FROM->TO	G14-057T 345.00 - SUNNYSIDE 345KV CKT 1	717	789	0.06302	112.4178	P12:069:OKGE:3TERM42
FDNS	00NR	2	16WP	G15_060	FROM->TO	G14-057T 345.00 - SUNNYSIDE 345KV CKT 1	717	789	0.06318	112.4163	P12:138:WFEC:MSL08
FDNS	00NR	2	16WP	G15_060	FROM->TO	G14-057T 345.00 - SUNNYSIDE 345KV CKT 1	717	789	0.06316	112.411	DELL 500 - INDEPENDENCE 500KV CKT 1
FDNS	00NR	2	16WP	G15_060	FROM->TO	G14-057T 345.00 - SUNNYSIDE 345KV CKT 1	717	789	0.06012	112.3839	P12:138:WFEC:MSL14
FDNS	00NR	2	16WP	G15_060	FROM->TO	G14-057T 345.00 - SUNNYSIDE 345KV CKT 1	717	789	0.06303	112.3439	BURLINGTON NO1 + NO 2 + NO 3 161/20.0KV TRANSFORMER CKT 1
FDNS	00NR	2	16WP	G15_060	FROM->TO	G14-057T 345.00 - SUNNYSIDE 345KV CKT 1	717	789	0.06303	112.3431	INDEPENDENCE 500/26.0KV TRANSFORMER CKT 1
FDNS	00NR	2	16WP	G15_060	FROM->TO	G14-057T 345.00 - SUNNYSIDE 345KV CKT 1	717	789	0.06319	112.3389	CANADIAN RIVER - MCALESTER SOUTH 138KV CKT 1
FDNS	00NR	2	16WP	G15_060	FROM->TO	G14-057T 345.00 - SUNNYSIDE 345KV CKT 1	717	789	0.06319	112.3377	CANADIAN RIVER () 345/138/13.8KV TRANSFORMER CKT 1
FDNS	00NR	2	16WP	G15_060	FROM->TO	G14-057T 345.00 - SUNNYSIDE 345KV CKT 1	717	789	0.06287	112.3253	ALTUS JUNCTION - RUSSELL 138KV CKT 1
FDNS	00NR	2	20WP	G15_060	FROM->TO	G14-057T 345.00 - SUNNYSIDE 345KV CKT 1	717	789	0.06261	112.3175	FRONTIER - GRIMES 345KV CKT 1
FDNS	00NR	2	16WP	G15_060	FROM->TO	G14-057T 345.00 - SUNNYSIDE 345KV CKT 1	717	789	0.06306	112.3173	NORTHWEST TEXARKANA - WELSH 345KV CKT 1
FDNS	00NR	2	16WP	G15_060	FROM->TO	G14-057T 345.00 - SUNNYSIDE 345KV CKT 1	717	789	0.06402	112.315	MINGO - SETAB 345KV CKT 1
FDNS	00NR	2	20WP	G15_060	FROM->TO	G14-057T 345.00 - SUNNYSIDE 345KV CKT 1	717	789	0.06439	112.3124	P12:138:AEPW-OGE:CORNVIL4:MAUD 4
FDNS	00NR	2	16WP	G15_060	FROM->TO	G14-057T 345.00 - SUNNYSIDE 345KV CKT 1	717	789	0.06303	112.3074	P12:230:UMZB:# 112 #: NU IN SD. NU-RCDC & DRY CREEK XFMR
FDNS	00NR	2	16WP	G15_060	FROM->TO	G14-057T 345.00 - SUNNYSIDE 345KV CKT 1	717	789	0.06322	112.2896	KEO EHV - WEST MEMPHIS 500 500KV CKT 1
FDNS	00NR	2	16WP	G15_060	FROM->TO	G14-057T 345.00 - SUNNYSIDE 345KV CKT 1	717	789	0.06303	112.2707	THOMAS HILL 161/22.0KV TRANSFORMER CKT 1
FDNS	00NR	2	16WP	G15_060	FROM->TO	G14-057T 345.00 - SUNNYSIDE 345KV CKT 1	717	789	0.06208	112.257	ARKANSAS NUCLEAR ONE - FT SMITH 500KV CKT 1
FDNS	00NR	2	20WP	G15_060	FROM->TO	G14-057T 345.00 - SUNNYSIDE 345KV CKT 1	717	789	0.06258	112.2143	LAYFLD8 500.00 - MOUNT OLIVE 500KV CKT 1
FDNS	00NR	2	20WP	G15_060	FROM->TO	G14-057T 345.00 - SUNNYSIDE 345KV CKT 1	717	789	0.06602	112.2058	THISTLE7 345.00 - WOODWARD DISTRICT EHV 345KV CKT 1
FDNS	00NR	2	20WP	G15_060	FROM->TO	G14-057T 345.00 - SUNNYSIDE 345KV CKT 1	717	789	0.06602	112.2058	THISTLE7 345.00 - WOODWARD DISTRICT EHV 345KV CKT 2
FDNS	00NR	2	20WP	G15_060	FROM->TO	G14-057T 345.00 - SUNNYSIDE 345KV CKT 1	717	789	0.0626	112.1722	P12:161:AEPW-SWPA:BEAVER5:EROGERS5
FDNS	00NR	2	16WP	G15_060	FROM->TO	G14-057T 345.00 - SUNNYSIDE 345KV CKT 1	717	789	0.06235	112.1653	P12:138:AEPW:112GORE4:SNYDER-4
FDNS	00NR	2	20WP	G15_060	FROM->TO	G14-057T 345.00 - SUNNYSIDE 345KV CKT 1	717	789	0.0628	112.1515	DUNCAN (DUNCAN) 138/69/13.8KV TRANSFORMER CKT 1
FDNS	00NR	2	20WP	G15_060	FROM->TO	G14-057T 345.00 - SUNNYSIDE 345KV CKT 1	717	789	0.06261	112.1323	P12:161:AEPW:DYESS5:ELMSPRNG:TONTITN5
FDNS	00NR	2	16WP	G15_060	FROM->TO	G14-057T 345.00 - SUNNYSIDE 345KV CKT 1	717	789	0.06539	112.1239	CLARKSVILLE - MUSKOGEE 345KV CKT 1
FDNS	00NR	2	20WP	G15_060	FROM->TO	G14-057T 345.00 - SUNNYSIDE 345KV CKT 1	717	789	0.06265	112.054	P12:138:AEPW:CATOOSA4:T.S.E.-4
FDNS	00NR	2	16WP	G15_060	FROM->TO	G14-057T 345.00 - SUNNYSIDE 345KV CKT 1	717	789	0.06303	112.0482	4SIOUX 1 138.00 138/18.0KV TRANSFORMER CKT 1
FDNS	00NR	2	16WP	G15_060	FROM->TO	G14-057T 345.00 - SUNNYSIDE 345KV CKT 1	717	789	0.06296	112.0471	P12:138:WFEC:MSL07
FDNS	00NR	2	16WP	G15_060	FROM->TO	G14-057T 345.00 - SUNNYSIDE 345KV CKT 1	717	789	0.06296	112.0471	P12:138:WFEC-AEPW:HUGOPP4:ATOKA--4
FDNS	00NR	2	16WP	G15_060	FROM->TO	G14-057T 345.00 - SUNNYSIDE 345KV CKT 1	717	789	0.06303	112.0336	CLAY BOSWELL 230/20.9KV TRANSFORMER CKT 1
FDNS	00NR	2	20WP	G15_060	FROM->TO	G14-057T 345.00 - SUNNYSIDE 345KV CKT 1	717	789	0.06265	112.0214	FULTON 115 - HOPE 115KV CKT 1
FDNS	00NR	2	20WP	G15_060	FROM->TO	G14-057T 345.00 - SUNNYSIDE 345KV CKT 1	717	789	0.06302	112.008	P12:138:AEPW:S.W.S.-4:L.E.S.-4
FDNS	00NR	2	16WP	G15_060	FROM->TO	G14-057T 345.00 - SUNNYSIDE 345KV CKT 1	717	789	0.06308	111.997	P12:138:WFEC:MSL16
FDNS	00NR	2	20WP	G15_060	FROM->TO	G14-057T 345.00 - SUNNYSIDE 345KV CKT 1	717	789	0.06288	111.993	P12:138:AEPW:CORNVIL4:DUNCAN-4
FDNS	00NR	2	20WP	G15_060	FROM->TO	G14-057T 345.00 - SUNNYSIDE 345KV CKT 1	717	789	0.06267	111.9655	6LAYFLD 230.00 - CARROLL 230KV CKT 1
FDNS	00NR	2	20WP	G15_060	FROM->TO	G14-057T 345.00 - SUNNYSIDE 345KV CKT 1	717	789	0.0628	111.9597	P12:69:WFEC-AEPW:COMANCH2:DUNCAN-2
FDNS	00NR	2	20WP	G15_060	FROM->TO	G14-057T 345.00 - SUNNYSIDE 345KV CKT 1	717	789	0.06265	111.9504	8DANIEL8 500.00 - MCKNIGHT 500KV CKT 1
FDNS	00NR	2	20WP	G15_060	FROM->TO	G14-057T 345.00 - SUNNYSIDE 345KV CKT 1	717	789	0.06289	111.9499	P12:138:AEPW:CORNVIL4:S.W.S.-4
FDNS	00NR	2	16WP	G15_060	FROM->TO	G14-057T 345.00 - SUNNYSIDE 345KV CKT 1	717	789	0.063	111.9491	P12:138:WFEC-AEPW:GOLDENSW4:CRAIGJT4
FDNS	00NR	2	20WP	G15_060	FROM->TO	G14-057T 345.00 - SUNNYSIDE 345KV CKT 1	717	789	0.06286	111.9426	P12:138:AEPW-OGE:WTH_JCT4:JENSEN4
FDNS	00NR	2	20WP	G15_060	FROM->TO	G14-057T 345.00 - SUNNYSIDE 345KV CKT 1	717	789	0.06262	111.9316	P12:161:AEPW:EROGERS5:ECNTRTN5
FDNS	00NR	2	20WP	G15_060	FROM->TO	G14-057T 345.00 - SUNNYSIDE 345KV CKT 1	717	789	0.06481	111.9134	FINNEY SWITCHING STATION - HOLCOMB 345KV CKT 1
FDNS	00NR	2	20WP	G15_060	FROM->TO	G14-057T 345.00 - SUNNYSIDE 345KV CKT 1	717	789	0.06261	111.9095	WHITE BLUFF 500/26.0KV TRANSFORMER CKT 1
FDNS	00NR	2	20WP	G15_060	FROM->TO	G14-057T 345.00 - SUNNYSIDE 345KV CKT 1	717	789	0.06263	111.8936	BISMARK - HOT SPRINGS WEST BUS 115KV CKT 1
FDNS	00NR	2	20WP	G15_060	FROM->TO	G14-057T 345.00 - SUNNYSIDE 345KV CKT 1	717	789	0.06267	111.8896	P12:69:AEPW-OMPA:COMANC-2:OMWALTR2
FDNS	00NR	2	20WP	G15_060	FROM->TO	G14-057T 345.00 - SUNNYSIDE 345KV CKT 1	717	789	0.06262	111.8895	MC NIEL 500/115KV TRANSFORMER CKT 1
FDNS	00NR	2	20WP	G15_060	FROM->TO	G14-057T 345.00 - SUNNYSIDE 345KV CKT 1	717	789	0.06261	111.8895	RODEMACHER 230/22.0KV TRANSFORMER CKT 1
FDNS	00NR	2	20WP	G15_060	FROM->TO	G14-057T 345.00 - SUNNYSIDE 345KV CKT 1	717	789	0.06273	111.8774	P12:138:AEPW:WTHWF4:CLINTJC4
FDNS	00NR	2	20WP	G15_060	FROM->TO	G14-057T 345.00 - SUNNYSIDE 345KV CKT 1	717	789	0.0626	111.8739	HOT SPRINGS EHV - MAGNET COVE 500KV CKT 1
FDNS	00NR	2	16WP	G15_060	FROM->TO	G14-057T 345.00 - SUNNYSIDE 345KV CKT 1	717	789	0.063	111.8719	P12:138:AEPW-SWPA:LONEOAK4:TUPELO4
FDNS	00NR	2	16WP	G15_060	FROM->TO	G14-057T 345.00 - SUNNYSIDE 345KV CKT 1	717	789	0.063	111.8719	P12:138:WFEC:MSL06
FDNS	00NR	2	20WP	G15_060	FROM->TO	G14-057T 345.00 - SUNNYSIDE 345KV CKT 1	717	789	0.06227	111.866	ELK CITY 230KV (ELKCTY-6) 230/138/13.8KV TRANSFORMER CKT 1
FDNS	00NR	2	20WP	G15_060	FROM->TO	G14-057T 345.00 - SUNNYSIDE 345KV CKT 1	717	789	0.06298	111.8593	BUCKNER7 345.00 - SPEARVILLE 345KV CKT 1
FDNS	00NR	2	16WP	G15_060	FROM->TO	G14-057T 345.00 - SUNNYSIDE 345KV CKT 1	717	789	0.06276	111.8539	P12:138:OKGE:3TERM40
FDNS	00NR	2	20WP	G15_060	FROM->TO	G14-057T 345.00 - SUNNYSIDE 345KV CKT 1	717	789	0.06263	111.8396	ALPINE AECC - BISMARK 115KV CKT 1
FDNS	00NR	2	20WP	G15_060	FROM->TO	G14-057T 345.00 - SUNNYSIDE 345KV CKT 1	717	789	0.06273	111.8391	P12:138:AEPW:WTHWF4:WTH_SE4
FDNS	00NR	2	20WP	G15_060	FROM->TO	G14-057T 345.00 - SUNNYSIDE 345KV CKT 1	717	789	0.06264	111.8307	P12:138:AEPW:N.E.S.-4:CATOOSA4
FDNS	00NR	2	20WP	G15_060	FROM->TO	G14-057T 345.00 - SUNNYSIDE 345KV CKT 1	717	789	0.06261	111.8199	NELSON 230/20.0KV TRANSFORMER CKT 1
FDNS	00NR	2	16WP	G15_060	FROM->TO	G14-057T 345.00 - SUNNYSIDE 345KV CKT 1	717	789	0.05971	111.8167	GRACEMONT - LAWTON EASTSIDE 345KV CKT 1
FDNS	00NR	2	20WP	G15_060	FROM->TO	G14-057T 345.00 - SUNNYSIDE 345KV CKT 1	717	789	0.06263	111.7914	ALPINE AECC - AMITY SS 115KV CKT 1
FDNS	00NR	2	16WP	G15_060	FROM->TO	G14-057T 345.00 - SUNNYSIDE 345KV CKT 1	717	789	0.06217	111.7803	GRAPEVINE INTERCHANGE - STATELINE INTERCHANGE 230KV CKT 1
FDNS	00NR	2	20WP	G15_060	FROM->TO	G14-057T 345.00 - SUNNYSIDE 345KV CKT 1	717	789	0.06261	111.7693	8CAJUN2 500/24.0KV TRANSFORMER CKT 1
FDNS	00NR	2	20WP	G15_060	FROM->TO	G14-057T 345.00 - SUNNYSIDE 345KV CKT 1	717	789	0.06261	111.7376	P12:138:AEPW:R.S.S.-4:S.HUD.-4
FDNS	00NR	2	20WP	G15_060	FROM->TO	G14-057T 345.00 - SUNNYSIDE 345KV CKT 1	717	789	0.06261	111.7312	SABINE 230/24.0KV TRANSFORMER CKT 1
FDNS	00NR	2	20WP	G15_060	FROM->TO	G14-057T 345.00 - SUNNYSIDE 345KV CKT 1	717	789	0.06257	111.7295	ETTA (DUKE HOTSPRINGS) - MC NIEL 500KV CKT 1
FDNS	00NR	2	20WP	G15_060	FROM->TO	G14-057T 345.00 - SUNNYSIDE 345KV CKT 1	717	789	0.06261	111.727	LAWTON EASTSIDE (LES 4) 345/138/13.8KV TRANSFORMER CKT 1
FDNS	00NR	2	20WP	G15_060	FROM->TO	G14-057T 345.00 - SUNNYSIDE 345KV CKT 1	717	789	0.06261	111.7065	P12:69:AEPW:NROGERS2:ECNTRTN2
FDNS	00NR	2	20WP	G15_060	FROM->TO	G14-057T 345.00 - SUNNYSIDE 345KV CKT 1	717	789	0.06281	111.6987	WEATHERFORD JCT. - WEATHERFORD SOUTHEAST 138KV CKT 1
FDNS	00NR	2	20WP	G15_060	FROM->TO	G14-057T 345.00 - SUNNYSIDE 345KV CKT 1	717	789	0.06262	111.6968	P12:138:AEPW:BA_71ST4:T.S.E.-4
FDNS	00NR	2	20WP	G15_060	FROM->TO	G14-057T 345.00 - SUNNYSIDE 345KV CKT 1	717	789	0.06261	111.6915	P12:138:AEPW:YARCH-S4:T.S.E.-4
FDNS	00NR	2	20WP	G15_060	FROM->TO	G14-057T 345.00 - SUNNYSIDE 345KV CKT 1	717	789	0.06275	111.6801	P12:138:AEPW-OGE:SHIDLER4:OSAGE 4
FDNS	00NR	2	20WP	G15_060	FROM->TO	G14-057T 345.00 - SUNNYSIDE 345KV CKT 1	717	789	0.06261	111.6786	7JASPER 345.00 - BLACKBERRY 345KV CKT 1
FDNS	00NR	2	20WP	G15_060	FROM->TO	G14-057T 345.00 - SUNNYSIDE 345KV CKT 1	717	789	0.06291	111.6681	NORGE ROAD - SOUTHWESTERN STATION 138KV CKT 1

SOLUTION	GROUP	SCENARIO	SEASON	SOURCE	DIRECTION	MONITORED ELEMENT	RATEA (MVA)	RATEB(MVA)	TDF	TC%LOADING (% MVA)	CONTINGENCY
FDNS	00NR	2	20WP	G15_060	FROM->TO	G14-057T 345.00 - SUNNYSIDE 345KV CKT 1	717	789	0.06261	111.6665	FRONTIER 345/18.0KV TRANSFORMER CKT 1
FDNS	00NR	2	20WP	G15_060	FROM->TO	G14-057T 345.00 - SUNNYSIDE 345KV CKT 1	717	789	0.06261	111.6643	FRONTIER 345/18.0KV TRANSFORMER CKT 1
FDNS	00NR	2	20WP	G15_060	FROM->TO	G14-057T 345.00 - SUNNYSIDE 345KV CKT 1	717	789	0.06407	111.6636	P12:138:OKGE:3TERM27
FDNS	00NR	2	20WP	G15_060	FROM->TO	G14-057T 345.00 - SUNNYSIDE 345KV CKT 1	717	789	0.06281	111.6636	P12:138:AEPW:REDROCKRD4:WTH_JCT4
FDNS	00NR	2	20WP	G15_060	FROM->TO	G14-057T 345.00 - SUNNYSIDE 345KV CKT 1	717	789	0.06348	111.6606	P12:138:OKGE-AEPW:JENSEN4:REDROCKRD4
FDNS	00NR	2	20WP	G15_060	FROM->TO	G14-057T 345.00 - SUNNYSIDE 345KV CKT 1	717	789	0.06481	111.6573	FINNEY SWITCHING STATION - WALKTAP7 345.00 345KV CKT 1
FDNS	00NR	2	20WP	G15_060	FROM->TO	G14-057T 345.00 - SUNNYSIDE 345KV CKT 1	717	789	0.06265	111.6478	P12:115:AEPW:TURK3:HOPE3
FDNS	00NR	2	16WP	G15_060	FROM->TO	G14-057T 345.00 - SUNNYSIDE 345KV CKT 1	717	789	0.06218	111.6468	GRAPEVINE INTERCHANGE - NICHOLS STATION 230KV CKT 1
FDNS	00NR	2	20WP	G15_060	FROM->TO	G14-057T 345.00 - SUNNYSIDE 345KV CKT 1	717	789	0.06269	111.6463	P12:138:OKGE:3TERM2
FDNS	00NR	2	20WP	G15_060	FROM->TO	G14-057T 345.00 - SUNNYSIDE 345KV CKT 1	717	789	0.06264	111.646	COUCH SES - MC NIEL 115KV CKT 1
FDNS	00NR	2	20WP	G15_060	FROM->TO	G14-057T 345.00 - SUNNYSIDE 345KV CKT 1	717	789	0.06267	111.6439	OMPA-WALTERS - WALTERS 69KV CKT 1
FDNS	00NR	2	20WP	G15_060	FROM->TO	G14-057T 345.00 - SUNNYSIDE 345KV CKT 1	717	789	0.06262	111.6428	CYPRESS - HARTBURG 500KV CKT 1
FDNS	00NR	2	20WP	G15_060	FROM->TO	G14-057T 345.00 - SUNNYSIDE 345KV CKT 1	717	789	0.06261	111.6362	LEWIS CREEK SWITCHYARD 138/22.0KV TRANSFORMER CKT 1
FDNS	00NR	2	20WP	G15_060	FROM->TO	G14-057T 345.00 - SUNNYSIDE 345KV CKT 1	717	789	0.06261	111.6318	LEWIS CREEK SWITCHYARD 138/22.0KV TRANSFORMER CKT 1
FDNS	00NR	2	20WP	G15_060	FROM->TO	G14-057T 345.00 - SUNNYSIDE 345KV CKT 1	717	789	0.06265	111.6221	TURK (TURK 1) 138/115/13.2KV TRANSFORMER CKT 1
FDNS	00NR	2	16WP	G15_060	FROM->TO	G14-057T 345.00 - SUNNYSIDE 345KV CKT 1	717	789	0.06286	111.6209	P12:138:AEPW:SHAM4WT:CHILD4WT
FDNS	00NR	2	20WP	G15_060	FROM->TO	G14-057T 345.00 - SUNNYSIDE 345KV CKT 1	717	789	0.06261	111.6197	P12:161:AEPW:CHAMSPR5:FARMING5
FDNS	00NR	2	16WP	G15_060	FROM->TO	G14-057T 345.00 - SUNNYSIDE 345KV CKT 1	717	789	0.06367	111.6149	P12:138:WFEC:MSL15
FDNS	00NR	2	20WP	G15_060	FROM->TO	G14-057T 345.00 - SUNNYSIDE 345KV CKT 1	717	789	0.06283	111.6141	P12:69:WFEC-AEPW:COMANCH2:WALTRS-2
FDNS	00NR	2	20WP	G15_060	FROM->TO	G14-057T 345.00 - SUNNYSIDE 345KV CKT 1	717	789	0.06272	111.6003	7LUTESVIL 345.00 - 7ST FRANC 345.00 345KV CKT 1
FDNS	00NR	2	20WP	G15_060	FROM->TO	G14-057T 345.00 - SUNNYSIDE 345KV CKT 1	717	789	0.06299	111.5953	CLINTON JUNCTION - ELK CITY 138KV CKT 1
FDNS	00NR	2	20WP	G15_060	FROM->TO	G14-057T 345.00 - SUNNYSIDE 345KV CKT 1	717	789	0.06261	111.5867	ST FRANCIS - ST FRANCIS 1 161KV CKT Z1
FDNS	00NR	2	20WP	G15_060	FROM->TO	G14-057T 345.00 - SUNNYSIDE 345KV CKT 1	717	789	0.06298	111.5864	BUCKNER7 345.00 - HOLCOMB 345KV CKT 1
FDNS	00NR	2	20WP	G15_060	FROM->TO	G14-057T 345.00 - SUNNYSIDE 345KV CKT 1	717	789	0.0627	111.5758	LAKEOVER - MCADAMS 500KV CKT 1
FDNS	00NR	2	20WP	G15_060	FROM->TO	G14-057T 345.00 - SUNNYSIDE 345KV CKT 1	717	789	0.06261	111.5739	SABINE 230/22.0KV TRANSFORMER CKT 1
FDNS	00NR	2	20WP	G15_060	FROM->TO	G14-057T 345.00 - SUNNYSIDE 345KV CKT 1	717	789	0.06268	111.5724	P12:138:OKGE:3TERM12
FDNS	00NR	2	20WP	G15_060	FROM->TO	G14-057T 345.00 - SUNNYSIDE 345KV CKT 1	717	789	0.06262	111.5703	P12:138:AEPW:R.S.S-4:T.P.S.-4
FDNS	00NR	2	20WP	G15_060	FROM->TO	G14-057T 345.00 - SUNNYSIDE 345KV CKT 1	717	789	0.06278	111.5586	MCADAMS - WOLF CREEK 500KV CKT 1
FDNS	00NR	2	20WP	G15_060	FROM->TO	G14-057T 345.00 - SUNNYSIDE 345KV CKT 1	717	789	0.06249	111.5573	P12:138:WFEC-AEPW:ELKCTY-4:ERICK4
FDNS	00NR	2	20WP	G15_060	FROM->TO	G14-057T 345.00 - SUNNYSIDE 345KV CKT 1	717	789	0.06261	111.5451	P12:138:AEPW:R.S.S.-4:R:96YALE-4
FDNS	00NR	2	20WP	G15_060	FROM->TO	G14-057T 345.00 - SUNNYSIDE 345KV CKT 1	717	789	0.06263	111.5353	AMITY SS - MURFREESBORO EAST (AECC) 115KV CKT 1
FDNS	00NR	2	20WP	G15_060	FROM->TO	G14-057T 345.00 - SUNNYSIDE 345KV CKT 1	717	789	0.06261	111.5338	NELSON 230/24.0KV TRANSFORMER CKT 1
FDNS	00NR	2	20WP	G15_060	FROM->TO	G14-057T 345.00 - SUNNYSIDE 345KV CKT 1	717	789	0.06275	111.5289	8WNEWMADRID 500.00 - DELL 500 500KV CKT 1
FDNS	00NR	2	20WP	G15_060	FROM->TO	G14-057T 345.00 - SUNNYSIDE 345KV CKT 1	717	789	0.06261	111.5241	ST FRANCIS 345/161KV TRANSFORMER CKT 1
FDNS	00NR	2	20WP	G15_060	FROM->TO	G14-057T 345.00 - SUNNYSIDE 345KV CKT 1	717	789	0.06261	111.5229	P12:138:AEPW:MOHAWK4:T.NO--4
FDNS	00NR	2	20WP	G15_060	FROM->TO	G14-057T 345.00 - SUNNYSIDE 345KV CKT 1	717	789	0.06291	111.521	CORNVILLE - NORGE ROAD 138KV CKT 1
FDNS	00NR	2	20WP	G15_060	FROM->TO	G14-057T 345.00 - SUNNYSIDE 345KV CKT 1	717	789	0.06263	111.5172	LAYFLD8 500.00 (LAYFLD AUTO) 500/230/13.8KV TRANSFORMER CKT 1
FDNS	00NR	2	20WP	G15_060	FROM->TO	G14-057T 345.00 - SUNNYSIDE 345KV CKT 1	717	789	0.06247	111.5029	P12:138:AEPW-SWPA:LONEOAK4:BRKNBW4
FDNS	00NR	2	20WP	G15_060	FROM->TO	G14-057T 345.00 - SUNNYSIDE 345KV CKT 1	717	789	0.06266	111.4903	7JASPER 345.00 - MORGAN 345KV CKT 1
FDNS	00NR	2	20WP	G15_060	FROM->TO	G14-057T 345.00 - SUNNYSIDE 345KV CKT 1	717	789	0.06274	111.4562	P12:138:OKGE:3TERM20
FDNS	00NR	2	20WP	G15_060	FROM->TO	G14-057T 345.00 - SUNNYSIDE 345KV CKT 1	717	789	0.05938	111.4559	GRACEMONT - LAWTON EASTSIDE 345KV CKT 1
FDNS	00NR	2	16WP	G15_060	FROM->TO	G14-057T 345.00 - SUNNYSIDE 345KV CKT 1	717	789	0.06309	111.3775	P12:138:WFEC:MSL09
FDNS	00NR	2	16WP	G15_060	FROM->TO	G14-057T 345.00 - SUNNYSIDE 345KV CKT 1	717	789	0.06152	111.219	P12:230:AEPW-SPS:SWEETWT6:WHEELER 6
FDNS	00NR	2	16WP	G15_060	FROM->TO	G14-057T 345.00 - SUNNYSIDE 345KV CKT 1	717	789	0.06296	111.2158	P12:138:AEPW-OGE:CORNVIL4:CIMARON4
FDNS	00NR	2	16WP	G15_060	FROM->TO	G14-057T 345.00 - SUNNYSIDE 345KV CKT 1	717	789	0.06303	111.1543	BIG STONE 230/24.0KV TRANSFORMER CKT 1
FDNS	00NR	2	20WP	G15_060	FROM->TO	G14-057T 345.00 - SUNNYSIDE 345KV CKT 1	717	789	0.06261	111.0351	803-OKLAUNION
FDNS	00NR	2	16WP	G15_060	FROM->TO	G14-057T 345.00 - SUNNYSIDE 345KV CKT 1	717	789	0.06311	110.9204	NORTHWEST TEXARKANA - VALLIANT 345KV CKT 1
FDNS	00NR	2	16WP	G15_060	FROM->TO	G14-057T 345.00 - SUNNYSIDE 345KV CKT 1	717	789	0.06037	110.8617	P12:230:AEPW:ELKCITY6:SWEETWT6
FDNS	00NR	2	20WP	G15_060	FROM->TO	G14-057T 345.00 - SUNNYSIDE 345KV CKT 1	717	789	0.06153	110.81	P12:138:OKGE:3TERM39
FDNS	00NR	2	16WP	G15_060	FROM->TO	G14-057T 345.00 - SUNNYSIDE 345KV CKT 1	717	789	0.06303	110.6383	SHERBURNE CO 345/24.0KV TRANSFORMER CKT 1
FDNS	00NR	2	20WP	G15_060	FROM->TO	G14-057T 345.00 - SUNNYSIDE 345KV CKT 1	717	789	0.06265	110.6101	NORTHWEST TEXARKANA - WELSH 345KV CKT 1
FDNS	00NR	2	20WP	G15_060	FROM->TO	G14-057T 345.00 - SUNNYSIDE 345KV CKT 1	717	789	0.06261	110.549	P12:069:OKGE:3TERM42
FDNS	00NR	2	20WP	G15_060	FROM->TO	G14-057T 345.00 - SUNNYSIDE 345KV CKT 1	717	789	0.0597	110.5478	P12:138:WFEC:MSL14
FDNS	00NR	2	20WP	G15_060	FROM->TO	G14-057T 345.00 - SUNNYSIDE 345KV CKT 1	717	789	0.06261	110.5385	BURLINGTON NO1 + NO 2 + NO 3 161/20.0KV TRANSFORMER CKT 1
FDNS	00NR	2	20WP	G15_060	FROM->TO	G14-057T 345.00 - SUNNYSIDE 345KV CKT 1	717	789	0.06299	110.536	P12:138:OKGE:3TERM21
FDNS	00NR	2	20WP	G15_060	FROM->TO	G14-057T 345.00 - SUNNYSIDE 345KV CKT 1	717	789	0.06264	110.5303	P12:138:WFEC:MSL11
FDNS	00NR	2	20WP	G15_060	FROM->TO	G14-057T 345.00 - SUNNYSIDE 345KV CKT 1	717	789	0.06264	110.5303	P12:138:WFEC-AEPW:PHAROAH4:LONEOAK4
FDNS	00NR	2	20WP	G15_060	FROM->TO	G14-057T 345.00 - SUNNYSIDE 345KV CKT 1	717	789	0.06276	110.4954	P12:138:WFEC:MSL08
FDNS	00NR	2	20WP	G15_060	FROM->TO	G14-057T 345.00 - SUNNYSIDE 345KV CKT 1	717	789	0.06261	110.4869	INDEPENDENCE 500/26.0KV TRANSFORMER CKT 1
FDNS	00NR	2	20WP	G15_060	FROM->TO	G14-057T 345.00 - SUNNYSIDE 345KV CKT 1	717	789	0.06261	110.4606	P12:230:UMZB:# 112 #: NU IN SD. NU-RCDC & DRY CREEK XFMR
FDNS	00NR	2	20WP	G15_060	FROM->TO	G14-057T 345.00 - SUNNYSIDE 345KV CKT 1	717	789	0.06246	110.4558	ALTUS JUNCTION - RUSSELL 138KV CKT 1
FDNS	00NR	2	20WP	G15_060	FROM->TO	G14-057T 345.00 - SUNNYSIDE 345KV CKT 1	717	789	0.06278	110.4489	CANADIAN RIVER - MCALESTER SOUTH 138KV CKT 1
FDNS	00NR	2	20WP	G15_060	FROM->TO	G14-057T 345.00 - SUNNYSIDE 345KV CKT 1	717	789	0.06278	110.4471	CANADIAN RIVER () 345/138/13.8KV TRANSFORMER CKT 1
FDNS	00NR	2	20WP	G15_060	FROM->TO	G14-057T 345.00 - SUNNYSIDE 345KV CKT 1	717	789	0.06197	110.4101	P12:138:AEPW:112GORE4:SNYDER-4
FDNS	00NR	2	16WP	G15_060	FROM->TO	G14-057T 345.00 - SUNNYSIDE 345KV CKT 1	717	789	0.06315	110.2331	LYDIA - WELSH 345KV CKT 1
FDNS	00NR	2	20WP	G15_060	FROM->TO	G14-057T 345.00 - SUNNYSIDE 345KV CKT 1	717	789	0.06261	110.2097	4SIOUX 1 138.00 138/18.0KV TRANSFORMER CKT 1
FDNS	00NR	2	20WP	G15_060	FROM->TO	G14-057T 345.00 - SUNNYSIDE 345KV CKT 1	717	789	0.06259	110.0798	P12:138:WFEC-AEPW:GOLDENSW4:CRAIGJT4
FDNS	00NR	2	20WP	G15_060	FROM->TO	G14-057T 345.00 - SUNNYSIDE 345KV CKT 1	717	789	0.06167	110.0749	ARKANSAS NUCLEAR ONE - FT SMITH 500KV CKT 1
FDNS	00NR	2	20WP	G15_060	FROM->TO	G14-057T 345.00 - SUNNYSIDE 345KV CKT 1	717	789	0.06261	110.0725	CLAY BOSWELL 230/20.9KV TRANSFORMER CKT 1
FDNS	00NR	2	20WP	G15_060	FROM->TO	G14-057T 345.00 - SUNNYSIDE 345KV CKT 1	717	789	0.06267	110.0622	P12:138:WFEC:MSL16
FDNS	00NR	2	20WP	G15_060	FROM->TO	G14-057T 345.00 - SUNNYSIDE 345KV CKT 1	717	789	0.06254	110.0031	P12:138:WFEC:MSL07
FDNS	00NR	2	20WP	G15_060	FROM->TO	G14-057T 345.00 - SUNNYSIDE 345KV CKT 1	717	789	0.06254	110.0031	P12:138:WFEC-AEPW:HUGOPP4:ATOKA--4
FDNS	00NR	2	20WP	G15_060	FROM->TO	G14-057T 345.00 - SUNNYSIDE 345KV CKT 1	717	789	0.06258	109.9818	P12:138:AEPW-SWPA:LONEOAK4:TUPELO4
FDNS	00NR	2	20WP	G15_060	FROM->TO	G14-057T 345.00 - SUNNYSIDE 345KV CKT 1	717	789	0.06258	109.9818	P12:138:WFEC:MSL06
FDNS	00NR	2	20WP	G15_060	FROM->TO	G14-057T 345.00 - SUNNYSIDE 345KV CKT 1	717	789	0.06497	109.9188	CLARKSVILLE - MUSKOGEE 345KV CKT 1
FDNS	00NR	2	20WP	G15_060	FROM->TO	G14-057T 345.00 - SUNNYSIDE 345KV CKT 1	717	789	0.06235	109.883	P12:138:OKGE:3TERM40
FDNS	00NR	2	20WP	G15_060	FROM->TO	G14-057T 345.00 - SUNNYSIDE 345KV CKT 1	717	789	0.06177	109.7869	GRAPEVINE INTERCHANGE - STATELINE INTERCHANGE 230KV CKT 1
FDNS	00NR	2	20WP	G15_060	FROM->TO	G14-057T 345.00 - SUNNYSIDE 345KV CKT 1	717	789	0.06244	109.726	P12:138:AEPW:SHAM4WT:CHILD4WT
FDNS	00NR	2	20WP	G15_060	FROM->TO	G14-057T 345.00 - SUNNYSIDE 345KV CKT 1	717	789	0.06326	109.6934	P12:138:WFEC:MSL15

SOLUTION	GROUP	SCENARIO	SEASON	SOURCE	DIRECTION	MONITORED ELEMENT	RATEA (MVA)	RATEB(MVA)	TDF	TC%LOADING (% MVA)	CONTINGENCY
FDNS	00NR	2	20WP	G15_060	FROM->TO	G14-057T 345.00 - SUNNYSIDE 345KV CKT 1	717	789	0.06178	109.6263	GRAPEVINE INTERCHANGE - NICHOLS STATION 230KV CKT 1
FDNS	00NR	2	20WP	G15_060	FROM->TO	G14-057T 345.00 - SUNNYSIDE 345KV CKT 1	717	789	0.06261	109.4111	BIG STONE 230/24.0KV TRANSFORMER CKT 1
FDNS	00NR	2	20WP	G15_060	FROM->TO	G14-057T 345.00 - SUNNYSIDE 345KV CKT 1	717	789	0.06267	109.3862	P12:138:WFEC:MSL09
FDNS	00NR	2	20WP	G15_060	FROM->TO	G14-057T 345.00 - SUNNYSIDE 345KV CKT 1	717	789	0.06255	109.3646	P12:138:AEPW-OGE:CORNVIL4:CIMARON4
FDNS	00NR	2	20WP	G15_060	FROM->TO	G14-057T 345.00 - SUNNYSIDE 345KV CKT 1	717	789	0.0627	109.316	NORTHWEST TEXARKANA - VALLIANT 345KV CKT 1
FDNS	00NR	2	20WP	G15_060	FROM->TO	G14-057T 345.00 - SUNNYSIDE 345KV CKT 1	717	789	0.06114	109.1361	P12:230:AEPW-SPS:SWEETWT6:WHEELER 6
FDNS	00NR	2	16WP	G15_060	FROM->TO	G14-057T 345.00 - SUNNYSIDE 345KV CKT 1	717	789	0.06319	109.1144	LYDIA - VALLIANT 345KV CKT 1
FDNS	00NR	2	20WP	G15_060	FROM->TO	G14-057T 345.00 - SUNNYSIDE 345KV CKT 1	717	789	0.06275	108.9522	LYDIA - WELSH 345KV CKT 1
FDNS	00NR	2	20WP	G15_060	FROM->TO	G14-057T 345.00 - SUNNYSIDE 345KV CKT 1	717	789	0.06261	108.9029	SHERBURNE CO 345/24.0KV TRANSFORMER CKT 1
FDNS	00NR	2	20WP	G15_060	FROM->TO	G14-057T 345.00 - SUNNYSIDE 345KV CKT 1	717	789	0.06001	108.8988	P12:230:AEPW:ELKCITY6:SWEETWT6
FDNS	00NR	2	20WP	G15_060	FROM->TO	G14-057T 345.00 - SUNNYSIDE 345KV CKT 1	717	789	0.0628	107.8976	LYDIA - VALLIANT 345KV CKT 1
FDNS	00NR	2	16WP	G15_060	FROM->TO	G14-057T 345.00 - SUNNYSIDE 345KV CKT 1	717	789	0.05326	107.1829	JOHNSON COUNTY - PITTSBURG 345KV CKT 1
FDNS	00NR	2	16WP	G15_060	FROM->TO	G14-057T 345.00 - SUNNYSIDE 345KV CKT 1	717	789	0.06159	106.2395	HUGO - VALLIANT 345KV CKT 1
FDNS	00NR	2	20WP	G15_060	FROM->TO	G14-057T 345.00 - SUNNYSIDE 345KV CKT 1	717	789	0.05289	105.821	JOHNSON COUNTY - PITTSBURG 345KV CKT 1
FDNS	00NR	2	20WP	G15_060	FROM->TO	G14-057T 345.00 - SUNNYSIDE 345KV CKT 1	717	789	0.06121	105.3214	HUGO - VALLIANT 345KV CKT 1
FDNS	01ALL	2	25SP	G15_060	FROM->TO	WOODWARD DISTRICT EHV (WWDEHV) 345/138/13.8KV TRANSFORMER CKT 1	493	493	0.75495	110.7659	WOODWARD DISTRICT EHV (WWDEHV-T2) 345/138/13.8KV TRANSFORMER CKT 2
FDNS	01ALL	2	25SP	G15_060	FROM->TO	WOODWARD DISTRICT EHV (WWDEHV) 345/138/13.8KV TRANSFORMER CKT 1	493	493	0.75495	109.2572	WOODWARD DISTRICT EHV (WWDEHV-T2) 345/138/13.8KV TRANSFORMER CKT 2
FDNS	01ALL	2	17SP	G15_060	FROM->TO	WOODWARD DISTRICT EHV (WWDEHV) 345/138/13.8KV TRANSFORMER CKT 1	493	493	0.75438	107.674	WOODWARD DISTRICT EHV (WWDEHV-T2) 345/138/13.8KV TRANSFORMER CKT 2
FDNS	01ALL	2	17SP	G15_060	FROM->TO	WOODWARD DISTRICT EHV (WWDEHV) 345/138/13.8KV TRANSFORMER CKT 1	493	493	0.75438	106.0733	WOODWARD DISTRICT EHV (WWDEHV-T2) 345/138/13.8KV TRANSFORMER CKT 2
FDNS	01ALL	2	16WP	G15_060	FROM->TO	WOODWARD DISTRICT EHV (WWDEHV) 345/138/13.8KV TRANSFORMER CKT 1	493	493	0.75305	105.1984	WOODWARD DISTRICT EHV (WWDEHV-T2) 345/138/13.8KV TRANSFORMER CKT 2
FDNS	01ALL	2	20SP	G15_060	FROM->TO	WOODWARD DISTRICT EHV (WWDEHV) 345/138/13.8KV TRANSFORMER CKT 1	493	493	0.75458	105.0912	WOODWARD DISTRICT EHV (WWDEHV-T2) 345/138/13.8KV TRANSFORMER CKT 2
FDNS	01ALL	2	16WP	G15_060	FROM->TO	WOODWARD DISTRICT EHV (WWDEHV) 345/138/13.8KV TRANSFORMER CKT 1	493	493	0.75305	103.8456	WOODWARD DISTRICT EHV (WWDEHV-T2) 345/138/13.8KV TRANSFORMER CKT 2
FDNS	01ALL	2	20SP	G15_060	FROM->TO	WOODWARD DISTRICT EHV (WWDEHV) 345/138/13.8KV TRANSFORMER CKT 1	493	493	0.75458	103.5376	WOODWARD DISTRICT EHV (WWDEHV-T2) 345/138/13.8KV TRANSFORMER CKT 2
FDNS	01ALL	2	20L	G15_060	FROM->TO	WOODWARD DISTRICT EHV (WWDEHV) 345/138/13.8KV TRANSFORMER CKT 1	493	493	0.75665	102.1901	WOODWARD DISTRICT EHV (WWDEHV-T2) 345/138/13.8KV TRANSFORMER CKT 2
FDNS	01ALL	2	20L	G15_060	FROM->TO	WOODWARD DISTRICT EHV (WWDEHV) 345/138/13.8KV TRANSFORMER CKT 1	493	493	0.75665	100.7683	WOODWARD DISTRICT EHV (WWDEHV-T2) 345/138/13.8KV TRANSFORMER CKT 2
FDNS	01ALL	2	25SP	G15_060	FROM->TO	WOODWARD DISTRICT EHV (WWDEHV-T2) 345/138/13.8KV TRANSFORMER CKT 2	493	493	0.75831	111.2109	WOODWARD DISTRICT EHV (WWDEHV) 345/138/13.8KV TRANSFORMER CKT 1
FDNS	01ALL	2	25SP	G15_060	FROM->TO	WOODWARD DISTRICT EHV (WWDEHV-T2) 345/138/13.8KV TRANSFORMER CKT 2	493	493	0.75831	109.7348	WOODWARD DISTRICT EHV (WWDEHV) 345/138/13.8KV TRANSFORMER CKT 1
FDNS	01ALL	2	17SP	G15_060	FROM->TO	WOODWARD DISTRICT EHV (WWDEHV-T2) 345/138/13.8KV TRANSFORMER CKT 2	493	493	0.75773	108.1014	WOODWARD DISTRICT EHV (WWDEHV) 345/138/13.8KV TRANSFORMER CKT 1
FDNS	01ALL	2	17SP	G15_060	FROM->TO	WOODWARD DISTRICT EHV (WWDEHV-T2) 345/138/13.8KV TRANSFORMER CKT 2	493	493	0.75773	106.5345	WOODWARD DISTRICT EHV (WWDEHV) 345/138/13.8KV TRANSFORMER CKT 1
FDNS	01ALL	2	16WP	G15_060	FROM->TO	WOODWARD DISTRICT EHV (WWDEHV-T2) 345/138/13.8KV TRANSFORMER CKT 2	493	493	0.7564	105.6189	WOODWARD DISTRICT EHV (WWDEHV) 345/138/13.8KV TRANSFORMER CKT 1
FDNS	01ALL	2	20SP	G15_060	FROM->TO	WOODWARD DISTRICT EHV (WWDEHV-T2) 345/138/13.8KV TRANSFORMER CKT 2	493	493	0.75794	105.5079	WOODWARD DISTRICT EHV (WWDEHV) 345/138/13.8KV TRANSFORMER CKT 1
FDNS	01ALL	2	16WP	G15_060	FROM->TO	WOODWARD DISTRICT EHV (WWDEHV-T2) 345/138/13.8KV TRANSFORMER CKT 2	493	493	0.7564	104.2959	WOODWARD DISTRICT EHV (WWDEHV) 345/138/13.8KV TRANSFORMER CKT 1
FDNS	01ALL	2	20SP	G15_060	FROM->TO	WOODWARD DISTRICT EHV (WWDEHV-T2) 345/138/13.8KV TRANSFORMER CKT 2	493	493	0.75794	103.9868	WOODWARD DISTRICT EHV (WWDEHV) 345/138/13.8KV TRANSFORMER CKT 1
FDNS	01ALL	2	20L	G15_060	FROM->TO	WOODWARD DISTRICT EHV (WWDEHV-T2) 345/138/13.8KV TRANSFORMER CKT 2	493	493	0.76002	102.5964	WOODWARD DISTRICT EHV (WWDEHV) 345/138/13.8KV TRANSFORMER CKT 1
FDNS	01ALL	2	20L	G15_060	FROM->TO	WOODWARD DISTRICT EHV (WWDEHV-T2) 345/138/13.8KV TRANSFORMER CKT 2	493	493	0.76002	101.206	WOODWARD DISTRICT EHV (WWDEHV) 345/138/13.8KV TRANSFORMER CKT 1
FDNS	00NR	3	16WP	G15_060	FROM->TO	G14-057T 345.00 - SUNNYSIDE 345KV CKT 1	717	789	0.06974	134.7924	CIMARRON - MINCO 345KV CKT 1
FDNS	00NR	3	20WP	G15_060	FROM->TO	G14-057T 345.00 - SUNNYSIDE 345KV CKT 1	717	789	0.06957	133.9604	CIMARRON - MINCO 345KV CKT 1
FDNS	00NR	3	16WP	G15_060	FROM->TO	G14-057T 345.00 - SUNNYSIDE 345KV CKT 1	717	789	0.05871	124.8136	PITTSBURG - SEMINOLE 345KV CKT 1
FDNS	00NR	3	16WP	G15_060	FROM->TO	G14-057T 345.00 - SUNNYSIDE 345KV CKT 1	717	789	0.05871	124.8136	PITTSBURG - SEMINOLE 345KV CKT 1
FDNS	00NR	3	16WP	G15_060	FROM->TO	G14-057T 345.00 - SUNNYSIDE 345KV CKT 1	717	789	0.06974	124.109	GRACEMONT - MINCO 345KV CKT 1
FDNS	00NR	3	16WP	G15_060	FROM->TO	G14-057T 345.00 - SUNNYSIDE 345KV CKT 1	717	789	0.06255	124.008	BASE CASE
FDNS	00NR	3	20WP	G15_060	FROM->TO	G14-057T 345.00 - SUNNYSIDE 345KV CKT 1	717	789	0.06957	123.2947	GRACEMONT - MINCO 345KV CKT 1
FDNS	00NR	3	20WP	G15_060	FROM->TO	G14-057T 345.00 - SUNNYSIDE 345KV CKT 1	717	789	0.05842	122.341	PITTSBURG - SEMINOLE 345KV CKT 1
FDNS	00NR	3	20WP	G15_060	FROM->TO	G14-057T 345.00 - SUNNYSIDE 345KV CKT 1	717	789	0.05842	122.341	PITTSBURG - SEMINOLE 345KV CKT 1
FDNS	00NR	3	20WP	G15_060	FROM->TO	G14-057T 345.00 - SUNNYSIDE 345KV CKT 1	717	789	0.06233	122.1742	BASE CASE
FDNS	00NR	3	16WP	G15_060	FROM->TO	G14-057T 345.00 - SUNNYSIDE 345KV CKT 1	717	789	0.0755	122.0119	CIMARRON - DRAPER LAKE 345KV CKT 1
FDNS	00NR	3	20WP	G15_060	FROM->TO	G14-057T 345.00 - SUNNYSIDE 345KV CKT 1	717	789	0.07523	120.1547	CIMARRON - DRAPER LAKE 345KV CKT 1
FDNS	00NR	3	16WP	G15_060	FROM->TO	G14-057T 345.00 - SUNNYSIDE 345KV CKT 1	717	789	0.06681	118.6121	P12:138:WFEC:MSL03
FDNS	00NR	3	16WP	G15_060	FROM->TO	G14-057T 345.00 - SUNNYSIDE 345KV CKT 1	717	789	0.06148	118.0416	PITTSBURG - VALLIANT 345KV CKT 1
FDNS	00NR	3	16WP	G15_060	FROM->TO	G14-057T 345.00 - SUNNYSIDE 345KV CKT 1	717	789	0.06148	118.0416	PITTSBURG - VALLIANT 345KV CKT 1
FDNS	00NR	3	16WP	G15_060	FROM->TO	G14-057T 345.00 - SUNNYSIDE 345KV CKT 1	717	789	0.06255	117.8049	GEN509403 1-PIRKEY GENERATION
FDNS	00NR	3	16WP	G15_060	FROM->TO	G14-057T 345.00 - SUNNYSIDE 345KV CKT 1	717	789	0.06255	117.7043	GEN509416 1-TURK GENERATION
FDNS	00NR	3	16WP	G15_060	FROM->TO	G14-057T 345.00 - SUNNYSIDE 345KV CKT 1	717	789	0.06448	117.4601	CLEVELAND - G15066_T 345.00 345KV CKT 1
FDNS	00NR	3	16WP	G15_060	FROM->TO	G14-057T 345.00 - SUNNYSIDE 345KV CKT 1	717	789	0.06448	117.173	G15066_T 345.00 - SOONER 345KV CKT 1
FDNS	00NR	3	20WP	G15_060	FROM->TO	G14-057T 345.00 - SUNNYSIDE 345KV CKT 1	717	789	0.0666	116.9133	P12:138:WFEC:MSL03
FDNS	00NR	3	16WP	G15_060	FROM->TO	G14-057T 345.00 - SUNNYSIDE 345KV CKT 1	717	789	0.06255	116.8021	GEN501801 1-DOLET HILLS UNIT1
FDNS	00NR	3	16WP	G15_060	FROM->TO	G14-057T 345.00 - SUNNYSIDE 345KV CKT 1	717	789	0.0569	116.6882	BORDER 7345.00 - WOODWARD DISTRICT EHV 345KV CKT 1
FDNS	00NR	3	16WP	G15_060	FROM->TO	G14-057T 345.00 - SUNNYSIDE 345KV CKT 1	717	789	0.06255	116.404	GEN509406 1-WELSH #3
FDNS	00NR	3	16WP	G15_060	FROM->TO	G14-057T 345.00 - SUNNYSIDE 345KV CKT 1	717	789	0.06255	116.4039	GEN509404 1-WELSH #1
FDNS	00NR	3	20WP	G15_060	FROM->TO	G14-057T 345.00 - SUNNYSIDE 345KV CKT 1	717	789	0.06233	116.0922	GEN509403 1-PIRKEY GENERATION
FDNS	00NR	3	20WP	G15_060	FROM->TO	G14-057T 345.00 - SUNNYSIDE 345KV CKT 1	717	789	0.06233	116.0108	GEN509416 1-TURK GENERATION
FDNS	00NR	3	20WP	G15_060	FROM->TO	G14-057T 345.00 - SUNNYSIDE 345KV CKT 1	717	789	0.06421	115.8354	CLEVELAND - G15066_T 345.00 345KV CKT 1
FDNS	00NR	3	20WP	G15_060	FROM->TO	G14-057T 345.00 - SUNNYSIDE 345KV CKT 1	717	789	0.06125	115.7845	PITTSBURG - VALLIANT 345KV CKT 1
FDNS	00NR	3	20WP	G15_060	FROM->TO	G14-057T 345.00 - SUNNYSIDE 345KV CKT 1	717	789	0.06125	115.7845	PITTSBURG - VALLIANT 345KV CKT 1
FDNS	00NR	3	16WP	G15_060	FROM->TO	G14-057T 345.00 - SUNNYSIDE 345KV CKT 1	717	789	0.06392	115.7786	CORN TAP - NAPLESTP 138.00 138KV CKT 1
FDNS	00NR	3	16WP	G15_060	FROM->TO	G14-057T 345.00 - SUNNYSIDE 345KV CKT 1	717	789	0.0569	115.7529	BORDER 7345.00 - TUCO_2 345.00 345KV CKT 1
FDNS	00NR	3	16WP	G15_060	FROM->TO	G14-057T 345.00 - SUNNYSIDE 345KV CKT 1	717	789	0.06392	115.6961	NAPLESTP 138.00 - PAYNE 138.00 138KV CKT 1
FDNS	00NR	3	16WP	G15_060	FROM->TO	G14-057T 345.00 - SUNNYSIDE 345KV CKT 1	717	789	0.06264	115.6773	7SAREPTA% 345.00 - LONGWOOD 345KV CKT 1
FDNS	00NR	3	16WP	G15_060	FROM->TO	G14-057T 345.00 - SUNNYSIDE 345KV CKT 1	717	789	0.06264	115.6773	7SAREPTA% 345.00 - LONGWOOD 345KV CKT 1
FDNS	00NR	3	20WP	G15_060	FROM->TO	G14-057T 345.00 - SUNNYSIDE 345KV CKT 1	717	789	0.05681	115.5781	BORDER 7345.00 - WOODWARD DISTRICT EHV 345KV CKT 1
FDNS	00NR	3	20WP	G15_060	FROM->TO	G14-057T 345.00 - SUNNYSIDE 345KV CKT 1	717	789	0.06421	115.5413	G15066_T 345.00 - SOONER 345KV CKT 1
FDNS	00NR	3	16WP	G15_060	FROM->TO	G14-057T 345.00 - SUNNYSIDE 345KV CKT 1	717	789	0.06263	115.5202	DOLET HILLS - SOUTHWEST SHREVEPORT 345KV CKT 1
FDNS	00NR	3	16WP	G15_060	FROM->TO	G14-057T 345.00 - SUNNYSIDE 345KV CKT 1	717	789	0.06263	115.5202	DOLET HILLS - SOUTHWEST SHREVEPORT 345KV CKT 1
FDNS	00NR	3	16WP	G15_060	FROM->TO	G14-057T 345.00 - SUNNYSIDE 345KV CKT 1	717	789	0.06385	115.5069	CLEVELAND - TULSA NORTH 345KV CKT 1
FDNS	00NR	3	16WP	G15_060	FROM->TO	G14-057T 345.00 - SUNNYSIDE 345KV CKT 1	717	789	0.06385	115.5069	CLEVELAND - TULSA NORTH 345KV CKT 1
FDNSLock	00NR	3	16WP	G15_060	FROM->TO	G14-057T 345.00 - SUNNYSIDE 345KV CKT 1	717	789	0.06255	115.4962	GEN336821 1-GRAND GULF UNIT
FDNS	00NR	3	16WP	G15_060	FROM->TO	G14-057T 345.00 - SUNNYSIDE 345KV CKT 1	717	789	0.07325	115.448	ARCADIA - NORTHWEST 345KV CKT 1
FDNSLock	00NR	3	16WP	G15_060	FROM->TO	G14-057T 345.00 - SUNNYSIDE 345KV CKT 1	717	789	0.06255	115.4165	GEN336153 1-WATERFORD UNIT#3
FDNS	00NR	3	16WP	G15_060	FROM->TO	G14-057T 345.00 - SUNNYSIDE 345KV CKT 1	717	789	0.06368	115.4159	COMANCHE - LOCO 138KV CKT 1

SOLUTION	GROUP	SCENARIO	SEASON	SOURCE	DIRECTION	MONITORED ELEMENT	RATEA (MVA)	RATEB(MVA)	TDF	TC%LOADING (% MVA)	CONTINGENCY
FDNS	00NR	3	16WP	G15_060	FROM->TO	G14-057T 345.00 - SUNNYSIDE 345KV CKT 1	717	789	0.06354	115.353	ANADARKO - POCASSETT 138KV CKT 1
FDNS	00NR	3	16WP	G15_060	FROM->TO	G14-057T 345.00 - SUNNYSIDE 345KV CKT 1	717	789	0.05868	115.3212	CANADIAN RIVER - MUSKOGEE 345KV CKT 1
FDNS	00NR	3	20WP	G15_060	FROM->TO	G14-057T 345.00 - SUNNYSIDE 345KV CKT 1	717	789	0.06233	115.253	GEN501801 1-DOLET HILLS UNIT1
FDNS	00NR	3	16WP	G15_060	FROM->TO	G14-057T 345.00 - SUNNYSIDE 345KV CKT 1	717	789	0.06396	115.2138	ARCADIA - SEMINOLE 345KV CKT 1
FDNS	00NR	3	16WP	G15_060	FROM->TO	G14-057T 345.00 - SUNNYSIDE 345KV CKT 1	717	789	0.06354	115.2125	POCASSETT - TUTTLE 138KV CKT 1
FDNSLock	00NR	3	16WP	G15_060	FROM->TO	G14-057T 345.00 - SUNNYSIDE 345KV CKT 1	717	789	0.06255	115.1249	GEN335831 1-RIVERBEND UNIT#1
FDNS	00NR	3	16WP	G15_060	FROM->TO	G14-057T 345.00 - SUNNYSIDE 345KV CKT 1	717	789	0.06255	115.1143	GRAND GULF 500/22.0KV TRANSFORMER CKT 1
FDNS	00NR	3	16WP	G15_060	FROM->TO	G14-057T 345.00 - SUNNYSIDE 345KV CKT 1	717	789	0.06255	115.0932	GEN515577 1-ARBWND11 0.6900
FDNS	00NR	3	16WP	G15_060	FROM->TO	G14-057T 345.00 - SUNNYSIDE 345KV CKT 1	717	789	0.0626	115.0342	7SAREPTA% 345.00 - ELDORADO EHV 345KV CKT 1
FDNS	00NR	3	16WP	G15_060	FROM->TO	G14-057T 345.00 - SUNNYSIDE 345KV CKT 1	717	789	0.0626	115.034	3TR3AR8EL7EL
FDNS	00NR	3	16WP	G15_060	FROM->TO	G14-057T 345.00 - SUNNYSIDE 345KV CKT 1	717	789	0.06255	115.0265	GEN509409 1-WILKES #3
FDNS	00NR	3	16WP	G15_060	FROM->TO	G14-057T 345.00 - SUNNYSIDE 345KV CKT 1	717	789	0.0626	115.0233	ELDORADO EHV 500/345KV TRANSFORMER CKT 1
FDNS	00NR	3	16WP	G15_060	FROM->TO	G14-057T 345.00 - SUNNYSIDE 345KV CKT 1	717	789	0.0632	114.9623	P12:138:AEPW:DUNCAN-4:L.E.S.-4
FDNS	00NR	3	16WP	G15_060	FROM->TO	G14-057T 345.00 - SUNNYSIDE 345KV CKT 1	717	789	0.06395	114.9274	HEALDTON - LOCO 138KV CKT 1
FDNS	00NR	3	16WP	G15_060	FROM->TO	G14-057T 345.00 - SUNNYSIDE 345KV CKT 1	717	789	0.06354	114.8486	BRIDGECR 138.00 - TUTTLE 138KV CKT 1
FDNS	00NR	3	16WP	G15_060	FROM->TO	G14-057T 345.00 - SUNNYSIDE 345KV CKT 1	717	789	0.0632	114.8474	COMANCHE TAP - OMPA-DUNCAN 840 138KV CKT 1
FDNS	00NR	3	16WP	G15_060	FROM->TO	G14-057T 345.00 - SUNNYSIDE 345KV CKT 1	717	789	0.06395	114.7868	HEALDTON - RINGLING 138KV CKT 1
FDNS	00NR	3	16WP	G15_060	FROM->TO	G14-057T 345.00 - SUNNYSIDE 345KV CKT 1	717	789	0.06255	114.7634	GEN501813 1-RODEMACHER UNIT 3
FDNSLock	00NR	3	16WP	G15_060	FROM->TO	G14-057T 345.00 - SUNNYSIDE 345KV CKT 1	717	789	0.06255	114.7487	GEN300006 1-NEW MADRID UNIT 1
FDNSLock	00NR	3	16WP	G15_060	FROM->TO	G14-057T 345.00 - SUNNYSIDE 345KV CKT 1	717	789	0.06255	114.7366	GEN300007 1-NEW MADRID UNIT 2
FDNS	00NR	3	20WP	G15_060	FROM->TO	G14-057T 345.00 - SUNNYSIDE 345KV CKT 1	717	789	0.06233	114.7319	GEN509406 1-WELSH #3
FDNS	00NR	3	20WP	G15_060	FROM->TO	G14-057T 345.00 - SUNNYSIDE 345KV CKT 1	717	789	0.06233	114.7317	GEN509404 1-WELSH #1
FDNS	00NR	3	16WP	G15_060	FROM->TO	G14-057T 345.00 - SUNNYSIDE 345KV CKT 1	717	789	0.0629	114.7109	LACYGNE - WAVERLY7 345.00 345KV CKT 1
FDNS	00NR	3	20WP	G15_060	FROM->TO	G14-057T 345.00 - SUNNYSIDE 345KV CKT 1	717	789	0.05681	114.6379	BORDER 7345.00 - TUCO_2 345.00 345KV CKT 1
FDNS	00NR	3	16WP	G15_060	FROM->TO	G14-057T 345.00 - SUNNYSIDE 345KV CKT 1	717	789	0.06255	114.6254	GEN520947 1-HUGO1
FDNS	00NR	3	16WP	G15_060	FROM->TO	G14-057T 345.00 - SUNNYSIDE 345KV CKT 1	717	789	0.06395	114.6225	RINGLING - SOUTH WILSON 138KV CKT 1
FDNS	00NR	3	16WP	G15_060	FROM->TO	G14-057T 345.00 - SUNNYSIDE 345KV CKT 1	717	789	0.0629	114.5992	WAVERLY7 345.00 - WOLF CREEK 345KV CKT 1
FDNS	00NR	3	16WP	G15_060	FROM->TO	G14-057T 345.00 - SUNNYSIDE 345KV CKT 1	717	789	0.06354	114.5952	P12:138:WFEC:MSL01
FDNS	00NR	3	16WP	G15_060	FROM->TO	G14-057T 345.00 - SUNNYSIDE 345KV CKT 1	717	789	0.06354	114.5868	BRIDGECR 138.00 - SUNSHINE CANYON 138KV CKT 1
FDNS	00NR	3	16WP	G15_060	FROM->TO	G14-057T 345.00 - SUNNYSIDE 345KV CKT 1	717	789	0.0632	114.5765	DUNCAN - OMPA-DUNCAN 840 138KV CKT 1
FDNS	00NR	3	16WP	G15_060	FROM->TO	G14-057T 345.00 - SUNNYSIDE 345KV CKT 1	717	789	0.0632	114.5765	DUNCAN - OMPA-DUNCAN 840 138KV CKT 1
FDNS	00NR	3	16WP	G15_060	FROM->TO	G14-057T 345.00 - SUNNYSIDE 345KV CKT 1	717	789	0.06255	114.566	GEN335206 1-NELSON UNIT 6
FDNS	00NR	3	16WP	G15_060	FROM->TO	G14-057T 345.00 - SUNNYSIDE 345KV CKT 1	717	789	0.06255	114.4229	DOLET HILLS 345/24.0KV TRANSFORMER CKT 1
FDNS	00NR	3	16WP	G15_060	FROM->TO	G14-057T 345.00 - SUNNYSIDE 345KV CKT 1	717	789	0.06252	114.4188	P12:138:AEPW:SHERID4:112GORE4
FDNS	00NR	3	16WP	G15_060	FROM->TO	G14-057T 345.00 - SUNNYSIDE 345KV CKT 1	717	789	0.06147	114.4101	PARK LANE - SEMINOLE 138KV CKT 1
FDNS	00NR	3	16WP	G15_060	FROM->TO	G14-057T 345.00 - SUNNYSIDE 345KV CKT 1	717	789	0.06255	114.3829	GEN501812 1-RODEMACHER UNIT 2
FDNS	00NR	3	16WP	G15_060	FROM->TO	G14-057T 345.00 - SUNNYSIDE 345KV CKT 1	717	789	0.06255	114.3533	GEN590011 2-ERCOT EQUIVALENCE
FDNS	00NR	3	16WP	G15_060	FROM->TO	G14-057T 345.00 - SUNNYSIDE 345KV CKT 1	717	789	0.06395	114.3473	MARIETTA - SOUTH WILSON 138KV CKT 1
FDNS	00NR	3	16WP	G15_060	FROM->TO	G14-057T 345.00 - SUNNYSIDE 345KV CKT 1	717	789	0.06255	114.3456	GEN515564 1-ORIGIN11 0.6900
FDNS	00NR	3	16WP	G15_060	FROM->TO	G14-057T 345.00 - SUNNYSIDE 345KV CKT 1	717	789	0.06255	114.3456	GEN515565 1-ORIGIN21 0.6900
FDNS	00NR	3	16WP	G15_060	FROM->TO	G14-057T 345.00 - SUNNYSIDE 345KV CKT 1	717	789	0.06266	114.3132	REDBUD - RIVERSIDE STATION 345KV CKT 1
FDNS	00NR	3	16WP	G15_060	FROM->TO	G14-057T 345.00 - SUNNYSIDE 345KV CKT 1	717	789	0.06266	114.3132	REDBUD - RIVERSIDE STATION 345KV CKT 1
FDNS	00NR	3	16WP	G15_060	FROM->TO	G14-057T 345.00 - SUNNYSIDE 345KV CKT 1	717	789	0.06626	114.2953	Hitchland Interchange - WALKTAP7 345.00 345KV CKT 1
FDNS	00NR	3	16WP	G15_060	FROM->TO	G14-057T 345.00 - SUNNYSIDE 345KV CKT 1	717	789	0.06626	114.2953	Hitchland Interchange - WALKTAP7 345.00 345KV CKT 1
FDNS	00NR	3	16WP	G15_060	FROM->TO	G14-057T 345.00 - SUNNYSIDE 345KV CKT 1	717	789	0.06579	114.2952	MATHWSN7 345.00 - NORTHWEST 345KV CKT 1
FDNS	00NR	3	16WP	G15_060	FROM->TO	G14-057T 345.00 - SUNNYSIDE 345KV CKT 1	717	789	0.06626	114.2807	P12:345:SPS:J07.1.FINN.HITCH
FDNS	00NR	3	16WP	G15_060	FROM->TO	G14-057T 345.00 - SUNNYSIDE 345KV CKT 1	717	789	0.06255	114.2786	GEN590010 1-ERCOT EQUIVALENCE
FDNS	00NR	3	16WP	G15_060	FROM->TO	G14-057T 345.00 - SUNNYSIDE 345KV CKT 1	717	789	0.06395	114.2632	P12:138:WFEC:MSL17
FDNS	00NR	3	16WP	G15_060	FROM->TO	G14-057T 345.00 - SUNNYSIDE 345KV CKT 1	717	789	0.06362	114.2419	CANEYRV7 345.00 - NEOSHO 345KV CKT 1
FDNS	00NR	3	16WP	G15_060	FROM->TO	G14-057T 345.00 - SUNNYSIDE 345KV CKT 1	717	789	0.06373	114.1859	CIVIT - PAOLI 138KV CKT 1
FDNS	00NR	3	16WP	G15_060	FROM->TO	G14-057T 345.00 - SUNNYSIDE 345KV CKT 1	717	789	0.06255	114.1631	P12:69:AEPW:L.E.S.-2:LAW WC2
FDNS	00NR	3	16WP	G15_060	FROM->TO	G14-057T 345.00 - SUNNYSIDE 345KV CKT 1	717	789	0.06255	114.1449	P12:161:AEPW:DYESS 5:HYLAND 5
FDNS	00NR	3	16WP	G15_060	FROM->TO	G14-057T 345.00 - SUNNYSIDE 345KV CKT 1	717	789	0.06255	114.1444	GEN509408 1-WILKES #2
FDNS	00NR	3	20WP	G15_060	FROM->TO	G14-057T 345.00 - SUNNYSIDE 345KV CKT 1	717	789	0.0637	114.1414	CORN TAP - NAPLESTP 138.00 138KV CKT 1
FDNS	00NR	3	16WP	G15_060	FROM->TO	G14-057T 345.00 - SUNNYSIDE 345KV CKT 1	717	789	0.06255	114.1339	GEN506754 1-LEBROCK STEAM 1
FDNS	00NR	3	16WP	G15_060	FROM->TO	G14-057T 345.00 - SUNNYSIDE 345KV CKT 1	717	789	0.06251	114.1161	ELDORADO EHV - MOUNT OLIVE 500KV CKT 1
FDNS	00NR	3	16WP	G15_060	FROM->TO	G14-057T 345.00 - SUNNYSIDE 345KV CKT 1	717	789	0.06362	114.1082	CANEYRV7 345.00 - LATHAMS7 345.00 345KV CKT 1
FDNS	00NR	3	16WP	G15_060	FROM->TO	G14-057T 345.00 - SUNNYSIDE 345KV CKT 1	717	789	0.06295	114.1072	P12:138:WFEC:MSL02
FDNS	00NR	3	16WP	G15_060	FROM->TO	G14-057T 345.00 - SUNNYSIDE 345KV CKT 1	717	789	0.06289	114.1066	PAOLI - PAYNE 138.00 138KV CKT 1
FDNS	00NR	3	16WP	G15_060	FROM->TO	G14-057T 345.00 - SUNNYSIDE 345KV CKT 1	717	789	0.06255	114.1045	GEN334440 1-SABINE UNIT 4
FDNS	00NR	3	20WP	G15_060	FROM->TO	G14-057T 345.00 - SUNNYSIDE 345KV CKT 1	717	789	0.06243	114.0897	7SAREPTA% 345.00 - LONGWOOD 345KV CKT 1
FDNS	00NR	3	20WP	G15_060	FROM->TO	G14-057T 345.00 - SUNNYSIDE 345KV CKT 1	717	789	0.06243	114.0897	7SAREPTA% 345.00 - LONGWOOD 345KV CKT 1
FDNS	00NR	3	16WP	G15_060	FROM->TO	G14-057T 345.00 - SUNNYSIDE 345KV CKT 1	717	789	0.06252	114.0744	P12:138:AEPW:112GORE4:L.E.S.-4
FDNS	00NR	3	20WP	G15_060	FROM->TO	G14-057T 345.00 - SUNNYSIDE 345KV CKT 1	717	789	0.0637	114.0575	NAPLESTP 138.00 - PAYNE 138.00 138KV CKT 1
FDNS	00NR	3	16WP	G15_060	FROM->TO	G14-057T 345.00 - SUNNYSIDE 345KV CKT 1	717	789	0.06373	114.0436	CIVIT - STRATFORD 138KV CKT 1
FDNS	00NR	3	16WP	G15_060	FROM->TO	G14-057T 345.00 - SUNNYSIDE 345KV CKT 1	717	789	0.06243	114.0419	ELDORADO EHV - SHERIDAN EHV 500KV CKT 1
FDNS	00NR	3	16WP	G15_060	FROM->TO	G14-057T 345.00 - SUNNYSIDE 345KV CKT 1	717	789	0.06283	114.0191	ANADARKO - GEORGIA 138KV CKT 1
FDNS	00NR	3	16WP	G15_060	FROM->TO	G14-057T 345.00 - SUNNYSIDE 345KV CKT 1	717	789	0.06259	114.0156	TUPELO - TUPELO TAP 138KV CKT 1
FDNS	00NR	3	16WP	G15_060	FROM->TO	G14-057T 345.00 - SUNNYSIDE 345KV CKT 1	717	789	0.06267	113.9972	WEBRE - WELLS 500KV CKT 1
FDNS	00NR	3	16WP	G15_060	FROM->TO	G14-057T 345.00 - SUNNYSIDE 345KV CKT 1	717	789	0.0643	113.9928	P12:138:AEPW-OGE:CORNVIL4:MAUD 4
FDNS	00NR	3	16WP	G15_060	FROM->TO	G14-057T 345.00 - SUNNYSIDE 345KV CKT 1	717	789	0.06255	113.9809	GEN503909 1-FULTONU1 1 16.000
FDNS	00NR	3	16WP	G15_060	FROM->TO	G14-057T 345.00 - SUNNYSIDE 345KV CKT 1	717	789	0.06255	113.9741	FRONTIER - GRIMES 345KV CKT 1
FDNS	00NR	3	20WP	G15_060	FROM->TO	G14-057T 345.00 - SUNNYSIDE 345KV CKT 1	717	789	0.06233	113.9718	GEN336821 1-GRAND GULF UNIT
FDNS	00NR	3	16WP	G15_060	FROM->TO	G14-057T 345.00 - SUNNYSIDE 345KV CKT 1	717	789	0.06283	113.9406	FLETCHER - GEORGIA 138KV CKT 1
FDNS	00NR	3	16WP	G15_060	FROM->TO	G14-057T 345.00 - SUNNYSIDE 345KV CKT 1	717	789	0.0626	113.9351	LAWTON EASTSIDE (LES 5) 345/138/13.8KV TRANSFORMER CKT 2
FDNS	00NR	3	16WP	G15_060	FROM->TO	G14-057T 345.00 - SUNNYSIDE 345KV CKT 1	717	789	0.0626	113.9351	LAWTON EASTSIDE (LES 5) 345/138/13.8KV TRANSFORMER CKT 2
FDNS	00NR	3	16WP	G15_060	FROM->TO	G14-057T 345.00 - SUNNYSIDE 345KV CKT 1	717	789	0.06373	113.9244	OIL CENTER - STRATFORD 138KV CKT 1
FDNS	00NR	3	16WP	G15_060	FROM->TO	G14-057T 345.00 - SUNNYSIDE 345KV CKT 1	717	789	0.0643	113.9189	BLANCHARD - CORNVILLE 138KV CKT 1
FDNS	00NR	3	16WP	G15_060	FROM->TO	G14-057T 345.00 - SUNNYSIDE 345KV CKT 1	717	789	0.06291	113.9064	EMPIRE - FLETCHER 138KV CKT 1

SOLUTION	GROUP	SCENARIO	SEASON	SOURCE	DIRECTION	MONITORED ELEMENT	RATEA (MVA)	RATEB(MVA)	TDF	TC%LOADING (% MVA)	CONTINGENCY
FDNS	00NR	3	16WP	G15_060	FROM->TO	G14-057T 345.00 - SUNNYSIDE 345KV CKT 1	717	789	0.06362	113.8979	LATHAMS7 345.00 - ROSE HILL 345KV CKT 1
FDNS	00NR	3	20WP	G15_060	FROM->TO	G14-057T 345.00 - SUNNYSIDE 345KV CKT 1	717	789	0.06233	113.8628	GEN336153 1-WATERFORD UNIT#3
FDNS	00NR	3	16WP	G15_060	FROM->TO	G14-057T 345.00 - SUNNYSIDE 345KV CKT 1	717	789	0.06255	113.855	GEN509393 S1-ARSENAL HILL GENS #4 (STALL)
FDNS	00NR	3	20WP	G15_060	FROM->TO	G14-057T 345.00 - SUNNYSIDE 345KV CKT 1	717	789	0.0636	113.8408	CLEVELAND - TULSA NORTH 345KV CKT 1
FDNS	00NR	3	20WP	G15_060	FROM->TO	G14-057T 345.00 - SUNNYSIDE 345KV CKT 1	717	789	0.0636	113.8408	CLEVELAND - TULSA NORTH 345KV CKT 1
FDNS	00NR	3	16WP	G15_060	FROM->TO	G14-057T 345.00 - SUNNYSIDE 345KV CKT 1	717	789	0.06255	113.8313	GEN509392 G2-ARSENAL HILL GENS #3 (STALL)
FDNS	00NR	3	16WP	G15_060	FROM->TO	G14-057T 345.00 - SUNNYSIDE 345KV CKT 1	717	789	0.06255	113.8312	GEN509391 G1-ARSENAL HILL GENS #2 (STALL)
FDNS	00NR	3	16WP	G15_060	FROM->TO	G14-057T 345.00 - SUNNYSIDE 345KV CKT 1	717	789	0.06291	113.8286	COMANCHE - EMPIRE 138KV CKT 1
FDNS	00NR	3	16WP	G15_060	FROM->TO	G14-057T 345.00 - SUNNYSIDE 345KV CKT 1	717	789	0.06255	113.8154	GEN336252 1-NINEMILE POINT UNIT#5
FDNS	00NR	3	20WP	G15_060	FROM->TO	G14-057T 345.00 - SUNNYSIDE 345KV CKT 1	717	789	0.07304	113.8144	ARCADIA - NORTHWEST 345KV CKT 1
FDNS	00NR	3	16WP	G15_060	FROM->TO	G14-057T 345.00 - SUNNYSIDE 345KV CKT 1	717	789	0.06255	113.7996	GEN334071 1-LEWIS CREEK 2
FDNS	00NR	3	16WP	G15_060	FROM->TO	G14-057T 345.00 - SUNNYSIDE 345KV CKT 1	717	789	0.06255	113.7967	DELL 500 - ESSEX UNIT 2 500KV CKT Z1
FDNS	00NR	3	16WP	G15_060	FROM->TO	G14-057T 345.00 - SUNNYSIDE 345KV CKT 1	717	789	0.06255	113.7907	GEN334070 1-LEWIS CREEK 1
FDNS	00NR	3	16WP	G15_060	FROM->TO	G14-057T 345.00 - SUNNYSIDE 345KV CKT 1	717	789	0.06255	113.7883	GEN335204 1-NELSON UNIT 4
FDNS	00NR	3	16WP	G15_060	FROM->TO	G14-057T 345.00 - SUNNYSIDE 345KV CKT 1	717	789	0.06598	113.7671	THISTLE7 345.00 - WOODWARD DISTRICT EHV 345KV CKT 1
FDNS	00NR	3	16WP	G15_060	FROM->TO	G14-057T 345.00 - SUNNYSIDE 345KV CKT 1	717	789	0.06598	113.7671	THISTLE7 345.00 - WOODWARD DISTRICT EHV 345KV CKT 1
FDNS	00NR	3	16WP	G15_060	FROM->TO	G14-057T 345.00 - SUNNYSIDE 345KV CKT 1	717	789	0.06598	113.7671	THISTLE7 345.00 - WOODWARD DISTRICT EHV 345KV CKT 2
FDNS	00NR	3	16WP	G15_060	FROM->TO	G14-057T 345.00 - SUNNYSIDE 345KV CKT 1	717	789	0.06598	113.7671	THISTLE7 345.00 - WOODWARD DISTRICT EHV 345KV CKT 2
FDNS	00NR	3	20WP	G15_060	FROM->TO	G14-057T 345.00 - SUNNYSIDE 345KV CKT 1	717	789	0.06332	113.7671	ANADARKO - POCASSETT 138KV CKT 1
FDNS	00NR	3	16WP	G15_060	FROM->TO	G14-057T 345.00 - SUNNYSIDE 345KV CKT 1	717	789	0.06274	113.7574	DUNCAN (DUNCAN) 138/69/13.8KV TRANSFORMER CKT 1
FDNS	00NR	3	16WP	G15_060	FROM->TO	G14-057T 345.00 - SUNNYSIDE 345KV CKT 1	717	789	0.06274	113.7574	DUNCAN (DUNCAN) 138/69/13.8KV TRANSFORMER CKT 1
FDNS	00NR	3	16WP	G15_060	FROM->TO	G14-057T 345.00 - SUNNYSIDE 345KV CKT 1	717	789	0.06255	113.7542	GEN334441 1-SABINE UNIT 5
FDNS	00NR	3	16WP	G15_060	FROM->TO	G14-057T 345.00 - SUNNYSIDE 345KV CKT 1	717	789	0.06373	113.7458	LATTA JCT - OIL CENTER 138KV CKT 1
FDNS	00NR	3	20WP	G15_060	FROM->TO	G14-057T 345.00 - SUNNYSIDE 345KV CKT 1	717	789	0.06346	113.7368	COMANCHE - LOCO 138KV CKT 1
FDNS	00NR	3	16WP	G15_060	FROM->TO	G14-057T 345.00 - SUNNYSIDE 345KV CKT 1	717	789	0.06254	113.7361	P12:161:AEPW-SWPA:BEAVER5:EROGERS5
FDNS	00NR	3	16WP	G15_060	FROM->TO	G14-057T 345.00 - SUNNYSIDE 345KV CKT 1	717	789	0.0643	113.7205	BLANCHARD - MAUD 138KV CKT 1
FDNS	00NR	3	16WP	G15_060	FROM->TO	G14-057T 345.00 - SUNNYSIDE 345KV CKT 1	717	789	0.06259	113.7186	P12:138:AEPW:CATOOSA4:T.S.E.-4
FDNS	00NR	3	16WP	G15_060	FROM->TO	G14-057T 345.00 - SUNNYSIDE 345KV CKT 1	717	789	0.06255	113.709	GEN337653 1-WHITE BLUFF UNIT #2
FDNS	00NR	3	16WP	G15_060	FROM->TO	G14-057T 345.00 - SUNNYSIDE 345KV CKT 1	717	789	0.0626	113.708	6LAYFLD 230.00 - CARROLL 230KV CKT 1
FDNS	00NR	3	16WP	G15_060	FROM->TO	G14-057T 345.00 - SUNNYSIDE 345KV CKT 1	717	789	0.06255	113.7044	GEN334030 1-FRONTIER UNIT 1
FDNS	00NR	3	16WP	G15_060	FROM->TO	G14-057T 345.00 - SUNNYSIDE 345KV CKT 1	717	789	0.06255	113.7028	GEN334031 1-FRONTIER UNIT 2
FDNS	00NR	3	16WP	G15_060	FROM->TO	G14-057T 345.00 - SUNNYSIDE 345KV CKT 1	717	789	0.06255	113.7	GEN300003 1-THOMAS HILL UNIT 3
FDNS	00NR	3	16WP	G15_060	FROM->TO	G14-057T 345.00 - SUNNYSIDE 345KV CKT 1	717	789	0.06255	113.6896	GEN506752 1-LEBROCK GAS 1
FDNS	00NR	3	16WP	G15_060	FROM->TO	G14-057T 345.00 - SUNNYSIDE 345KV CKT 1	717	789	0.06255	113.6894	GEN506753 1-LEBROCK GAS 2
FDNS	00NR	3	20WP	G15_060	FROM->TO	G14-057T 345.00 - SUNNYSIDE 345KV CKT 1	717	789	0.06241	113.6795	DOLET HILLS - SOUTHWEST SHREVEPORT 345KV CKT 1
FDNS	00NR	3	20WP	G15_060	FROM->TO	G14-057T 345.00 - SUNNYSIDE 345KV CKT 1	717	789	0.06241	113.6795	DOLET HILLS - SOUTHWEST SHREVEPORT 345KV CKT 1
FDNS	00NR	3	16WP	G15_060	FROM->TO	G14-057T 345.00 - SUNNYSIDE 345KV CKT 1	717	789	0.06259	113.6747	FULTON 115 - HOPE 115KV CKT 1
FDNS	00NR	3	16WP	G15_060	FROM->TO	G14-057T 345.00 - SUNNYSIDE 345KV CKT 1	717	789	0.06259	113.6747	FULTON 115 - HOPE 115KV CKT 1
FDNS	00NR	3	16WP	G15_060	FROM->TO	G14-057T 345.00 - SUNNYSIDE 345KV CKT 1	717	789	0.06259	113.6675	8DANIEL8 500.00 - MCKNIGHT 500KV CKT 1
FDNS	00NR	3	16WP	G15_060	FROM->TO	G14-057T 345.00 - SUNNYSIDE 345KV CKT 1	717	789	0.06255	113.6672	P12:161:AEPW:DYESS5:ELMSPRNG:TONTITN5
FDNS	00NR	3	16WP	G15_060	FROM->TO	G14-057T 345.00 - SUNNYSIDE 345KV CKT 1	717	789	0.06255	113.637	GEN515226 1-MUSKOGEE 6G
FDNS	00NR	3	16WP	G15_060	FROM->TO	G14-057T 345.00 - SUNNYSIDE 345KV CKT 1	717	789	0.06255	113.6367	GEN501811 1-RODEMACHER UNIT 1
FDNS	00NR	3	16WP	G15_060	FROM->TO	G14-057T 345.00 - SUNNYSIDE 345KV CKT 1	717	789	0.06255	113.6288	GEN300015 1-1SGPDEL 18.000
FDNS	00NR	3	16WP	G15_060	FROM->TO	G14-057T 345.00 - SUNNYSIDE 345KV CKT 1	717	789	0.06282	113.6265	P12:138:AEPW:CORNVIL4:S.W.S.-4
FDNS	00NR	3	16WP	G15_060	FROM->TO	G14-057T 345.00 - SUNNYSIDE 345KV CKT 1	717	789	0.06255	113.624	GEN337911 1-ARKANSAS NUCLEAR ONE UNIT #2
FDNS	00NR	3	16WP	G15_060	FROM->TO	G14-057T 345.00 - SUNNYSIDE 345KV CKT 1	717	789	0.06255	113.6187	GEN336251 1-NINEMILE POINT UNIT#4
FDNS	00NR	3	16WP	G15_060	FROM->TO	G14-057T 345.00 - SUNNYSIDE 345KV CKT 1	717	789	0.06255	113.618	GEN337652 1-WHITE BLUFF UNIT #1
FDNS	00NR	3	16WP	G15_060	FROM->TO	G14-057T 345.00 - SUNNYSIDE 345KV CKT 1	717	789	0.06255	113.6154	GEN334433 1-SABINE UNIT 3
FDNS	00NR	3	20WP	G15_060	FROM->TO	G14-057T 345.00 - SUNNYSIDE 345KV CKT 1	717	789	0.06332	113.6148	POCASSETT - TUTTLE 138KV CKT 1
FDNS	00NR	3	16WP	G15_060	FROM->TO	G14-057T 345.00 - SUNNYSIDE 345KV CKT 1	717	789	0.06255	113.6126	GEN336831 1-BAXTER WILSON SES
FDNS	00NR	3	16WP	G15_060	FROM->TO	G14-057T 345.00 - SUNNYSIDE 345KV CKT 1	717	789	0.06277	113.5975	G15074_T 345.00 - HOYT 345KV CKT 1
FDNS	00NR	3	16WP	G15_060	FROM->TO	G14-057T 345.00 - SUNNYSIDE 345KV CKT 1	717	789	0.06283	113.5963	P12:138:AEPW:CORNVIL4:DUNCAN-4
FDNS	00NR	3	16WP	G15_060	FROM->TO	G14-057T 345.00 - SUNNYSIDE 345KV CKT 1	717	789	0.06274	113.5953	P12:69:WFEC-AEPW:COMANCH2:DUNCAN-2
FDNS	00NR	3	16WP	G15_060	FROM->TO	G14-057T 345.00 - SUNNYSIDE 345KV CKT 1	717	789	0.06255	113.5846	GEN562783 1-G15036_4 0.6900
FDNS	00NR	3	16WP	G15_060	FROM->TO	G14-057T 345.00 - SUNNYSIDE 345KV CKT 1	717	789	0.06255	113.5846	GEN562784 1-G15036_5 0.6900
FDNS	00NR	3	16WP	G15_060	FROM->TO	G14-057T 345.00 - SUNNYSIDE 345KV CKT 1	717	789	0.06391	113.5764	BAILEY4 138.00 - SUNSHINE CANYON 138KV CKT 1
FDNS	00NR	3	16WP	G15_060	FROM->TO	G14-057T 345.00 - SUNNYSIDE 345KV CKT 1	717	789	0.06248	113.5753	TUTTLE - TUTTLE CONOCO TAP 138KV CKT 1
FDNSLock	00NR	3	16WP	G15_060	FROM->TO	G14-057T 345.00 - SUNNYSIDE 345KV CKT 1	717	789	0.06276	113.5721	G15088_T 345.00 - MOORE 345KV CKT 1
FDNS	00NR	3	16WP	G15_060	FROM->TO	G14-057T 345.00 - SUNNYSIDE 345KV CKT 1	717	789	0.0631	113.5699	CIMARRON - CZECH HALL 138KV CKT 1
FDNS	00NR	3	16WP	G15_060	FROM->TO	G14-057T 345.00 - SUNNYSIDE 345KV CKT 1	717	789	0.06408	113.565	G1524G1525 345.00 - THISTLE7 345.00 345KV CKT 1
FDNS	00NR	3	16WP	G15_060	FROM->TO	G14-057T 345.00 - SUNNYSIDE 345KV CKT 1	717	789	0.06408	113.565	G1524G1525 345.00 - THISTLE7 345.00 345KV CKT 2
FDNS	00NR	3	20WP	G15_060	FROM->TO	G14-057T 345.00 - SUNNYSIDE 345KV CKT 1	717	789	0.06233	113.5641	GEN335831 1-RIVERBEND UNIT#1
FDNS	00NR	3	16WP	G15_060	FROM->TO	G14-057T 345.00 - SUNNYSIDE 345KV CKT 1	717	789	0.06283	113.5595	P12:138:AEPW-OGE:WTH_JCT4:JENSEN4
FDNS	00NR	3	16WP	G15_060	FROM->TO	G14-057T 345.00 - SUNNYSIDE 345KV CKT 1	717	789	0.06255	113.5563	GEN505432 1-SIKESTON
FDNS	00NR	3	16WP	G15_060	FROM->TO	G14-057T 345.00 - SUNNYSIDE 345KV CKT 1	717	789	0.06255	113.554	P12:161:AEPW:EROGERS5:ECNTRTN5
FDNS	00NR	3	16WP	G15_060	FROM->TO	G14-057T 345.00 - SUNNYSIDE 345KV CKT 1	717	789	0.06312	113.5536	CIMARRON - SARA 138KV CKT 1
FDNS	00NR	3	16WP	G15_060	FROM->TO	G14-057T 345.00 - SUNNYSIDE 345KV CKT 1	717	789	0.06255	113.5512	GEN515040 1-SEMINOLE 1G
FDNS	00NR	3	16WP	G15_060	FROM->TO	G14-057T 345.00 - SUNNYSIDE 345KV CKT 1	717	789	0.06252	113.545	LAYFLD8 500.00 - MOUNT OLIVE 500KV CKT 1
FDNS	00NR	3	16WP	G15_060	FROM->TO	G14-057T 345.00 - SUNNYSIDE 345KV CKT 1	717	789	0.06252	113.545	LAYFLD8 500.00 - MOUNT OLIVE 500KV CKT 1
FDNS	00NR	3	16WP	G15_060	FROM->TO	G14-057T 345.00 - SUNNYSIDE 345KV CKT 1	717	789	0.06193	113.5433	ARBWIND4 138.00 - CARTER 138KV CKT 1
FDNS	00NR	3	16WP	G15_060	FROM->TO	G14-057T 345.00 - SUNNYSIDE 345KV CKT 1	717	789	0.06255	113.5426	RODEMACHER 230/22.0KV TRANSFORMER CKT 1
FDNS	00NR	3	16WP	G15_060	FROM->TO	G14-057T 345.00 - SUNNYSIDE 345KV CKT 1	717	789	0.06274	113.5415	DUNCAN - TOSCO 69KV CKT 1
FDNS	00NR	3	16WP	G15_060	FROM->TO	G14-057T 345.00 - SUNNYSIDE 345KV CKT 1	717	789	0.06255	113.5409	GEN515223 1-MUSKOGEE 4G
FDNS	00NR	3	16WP	G15_060	FROM->TO	G14-057T 345.00 - SUNNYSIDE 345KV CKT 1	717	789	0.06255	113.5409	GEN515225 1-MUSKOGEE 5G
FDNS	00NR	3	16WP	G15_060	FROM->TO	G14-057T 345.00 - SUNNYSIDE 345KV CKT 1	717	789	0.06097	113.5371	G14_038T 345.00 - Hitchland Interchange 345KV CKT 1
FDNS	00NR	3	16WP	G15_060	FROM->TO	G14-057T 345.00 - SUNNYSIDE 345KV CKT 1	717	789	0.06269	113.5328	P12:138:AEPW:WTHWF4:CLINTJC4
FDNS	00NR	3	16WP	G15_060	FROM->TO	G14-057T 345.00 - SUNNYSIDE 345KV CKT 1	717	789	0.06256	113.5321	MC NIEL 500/115KV TRANSFORMER CKT 1
FDNS	00NR	3	20WP	G15_060	FROM->TO	G14-057T 345.00 - SUNNYSIDE 345KV CKT 1	717	789	0.06233	113.527	GRAND GULF 500/22.0KV TRANSFORMER CKT 1
FDNS	00NR	3	16WP	G15_060	FROM->TO	G14-057T 345.00 - SUNNYSIDE 345KV CKT 1	717	789	0.06253	113.5264	HOT SPRINGS EHV - MAGNET COVE 500KV CKT 1

SOLUTION	GROUP	SCENARIO	SEASON	SOURCE	DIRECTION	MONITORED ELEMENT	RATEA (MVA)	RATEB(MVA)	TDF	TC%LOADING (% MVA)	CONTINGENCY
FDNS	00NR	3	16WP	G15_060	FROM->TO	G14-057T 345.00 - SUNNYSIDE 345KV CKT 1	717	789	0.06257	113.5229	BISMARK - HOT SPRINGS WEST BUS 115KV CKT 1
FDNS	00NR	3	16WP	G15_060	FROM->TO	G14-057T 345.00 - SUNNYSIDE 345KV CKT 1	717	789	0.06255	113.5226	GEN303007 1-1BC2 U2
FDNS	00NR	3	16WP	G15_060	FROM->TO	G14-057T 345.00 - SUNNYSIDE 345KV CKT 1	717	789	0.06255	113.5208	WHITE BLUFF 500/26.0KV TRANSFORMER CKT 1
FDNS	00NR	3	16WP	G15_060	FROM->TO	G14-057T 345.00 - SUNNYSIDE 345KV CKT 1	717	789	0.06255	113.5177	GEN303006 1-1BC2 U1
FDNS	00NR	3	16WP	G15_060	FROM->TO	G14-057T 345.00 - SUNNYSIDE 345KV CKT 1	717	789	0.06262	113.5176	P12:69:AEPW-OMPA:COMANC-2:OMWALTR2
FDNS	00NR	3	16WP	G15_060	FROM->TO	G14-057T 345.00 - SUNNYSIDE 345KV CKT 1	717	789	0.06177	113.5174	SEMINOLE - VANOSTP4 138.00 138KV CKT 1
FDNS	00NR	3	16WP	G15_060	FROM->TO	G14-057T 345.00 - SUNNYSIDE 345KV CKT 1	717	789	0.06274	113.4974	COMANCHE TAP - TOSCO 69KV CKT 1
FDNS	00NR	3	16WP	G15_060	FROM->TO	G14-057T 345.00 - SUNNYSIDE 345KV CKT 1	717	789	0.06248	113.4956	CIMARRON - TUTTLE CONOCO TAP 138KV CKT 1
FDNS	00NR	3	16WP	G15_060	FROM->TO	G14-057T 345.00 - SUNNYSIDE 345KV CKT 1	717	789	0.06255	113.4954	GEN336191 1-LITTLE GYPSY UNIT#3
FDNS	00NR	3	16WP	G15_060	FROM->TO	G14-057T 345.00 - SUNNYSIDE 345KV CKT 1	717	789	0.06398	113.4942	CANADIAN - NOBLE 138KV CKT 1
FDNS	00NR	3	16WP	G15_060	FROM->TO	G14-057T 345.00 - SUNNYSIDE 345KV CKT 1	717	789	0.0631	113.4938	CZECH HALL - XEROX 138KV CKT 1
FDNS	00NR	3	16WP	G15_060	FROM->TO	G14-057T 345.00 - SUNNYSIDE 345KV CKT 1	717	789	0.0631	113.4896	MORGAN - XEROX 138KV CKT 1
FDNS	00NR	3	16WP	G15_060	FROM->TO	G14-057T 345.00 - SUNNYSIDE 345KV CKT 1	717	789	0.06257	113.4871	P12:138:AEPW:N.E.S.-4:CATOOSA4
FDNS	00NR	3	16WP	G15_060	FROM->TO	G14-057T 345.00 - SUNNYSIDE 345KV CKT 1	717	789	0.06255	113.4833	GEN337910 1-ARKANSAS NUCLEAR ONE UNIT #1
FDNS	00NR	3	16WP	G15_060	FROM->TO	G14-057T 345.00 - SUNNYSIDE 345KV CKT 1	717	789	0.06296	113.4805	BUCKNER7 345.00 - SPEARVILLE 345KV CKT 1
FDNS	00NR	3	16WP	G15_060	FROM->TO	G14-057T 345.00 - SUNNYSIDE 345KV CKT 1	717	789	0.06296	113.4805	BUCKNER7 345.00 - SPEARVILLE 345KV CKT 1
FDNS	00NR	3	16WP	G15_060	FROM->TO	G14-057T 345.00 - SUNNYSIDE 345KV CKT 1	717	789	0.06255	113.4774	GEN300010 1-ST FRANCIS UNIT 1
FDNS	00NR	3	16WP	G15_060	FROM->TO	G14-057T 345.00 - SUNNYSIDE 345KV CKT 1	717	789	0.06269	113.4769	P12:138:AEPW:WTHWF4:WTH_SE4
FDNS	00NR	3	16WP	G15_060	FROM->TO	G14-057T 345.00 - SUNNYSIDE 345KV CKT 1	717	789	0.06373	113.473	LASALLE - LATTA JCT 138KV CKT 1
FDNS	00NR	3	16WP	G15_060	FROM->TO	G14-057T 345.00 - SUNNYSIDE 345KV CKT 1	717	789	0.06255	113.4723	NELSON 230/20.0KV TRANSFORMER CKT 1
FDNS	00NR	3	16WP	G15_060	FROM->TO	G14-057T 345.00 - SUNNYSIDE 345KV CKT 1	717	789	0.06257	113.4715	ALPINE AECC - BISMARK 115KV CKT 1
FDNS	00NR	3	16WP	G15_060	FROM->TO	G14-057T 345.00 - SUNNYSIDE 345KV CKT 1	717	789	0.06255	113.4706	GEN335614 1-WILLOW GLENN UNIT#4
FDNS	00NR	3	16WP	G15_060	FROM->TO	G14-057T 345.00 - SUNNYSIDE 345KV CKT 1	717	789	0.0631	113.4666	MORGAN - MUSTANG 138KV CKT 1
FDNS	00NR	3	16WP	G15_060	FROM->TO	G14-057T 345.00 - SUNNYSIDE 345KV CKT 1	717	789	0.06399	113.4645	P12:138:OKGE:3TERM27
FDNS	00NR	3	16WP	G15_060	FROM->TO	G14-057T 345.00 - SUNNYSIDE 345KV CKT 1	717	789	0.06255	113.4591	GEN303008 1-1BC2 U3
FDNS	00NR	3	16WP	G15_060	FROM->TO	G14-057T 345.00 - SUNNYSIDE 345KV CKT 1	717	789	0.06477	113.4492	FINNEY SWITCHING STATION - HOLCOMB 345KV CKT 1
FDNS	00NR	3	16WP	G15_060	FROM->TO	G14-057T 345.00 - SUNNYSIDE 345KV CKT 1	717	789	0.06477	113.4492	FINNEY SWITCHING STATION - HOLCOMB 345KV CKT 1
FDNS	00NR	3	20WP	G15_060	FROM->TO	G14-057T 345.00 - SUNNYSIDE 345KV CKT 1	717	789	0.06238	113.4437	7SAREPTA% 345.00 - ELDORADO EHV 345KV CKT 1
FDNS	00NR	3	20WP	G15_060	FROM->TO	G14-057T 345.00 - SUNNYSIDE 345KV CKT 1	717	789	0.06238	113.4435	3TR3AR8EL7EL
FDNS	00NR	3	16WP	G15_060	FROM->TO	G14-057T 345.00 - SUNNYSIDE 345KV CKT 1	717	789	0.06274	113.4348	COMANCHE - COMANCHE TAP 69KV CKT 1
FDNS	00NR	3	16WP	G15_060	FROM->TO	G14-057T 345.00 - SUNNYSIDE 345KV CKT 1	717	789	0.06256	113.4347	CYPRESS - HARTBURG 500KV CKT 1
FDNS	00NR	3	20WP	G15_060	FROM->TO	G14-057T 345.00 - SUNNYSIDE 345KV CKT 1	717	789	0.06238	113.4329	ELDORADO EHV 500/345KV TRANSFORMER CKT 1
FDNS	00NR	3	16WP	G15_060	FROM->TO	G14-057T 345.00 - SUNNYSIDE 345KV CKT 1	717	789	0.06255	113.4325	GEN336170 1-GULF OXY U4
FDNS	00NR	3	16WP	G15_060	FROM->TO	G14-057T 345.00 - SUNNYSIDE 345KV CKT 1	717	789	0.06257	113.4287	ALPINE AECC - AMITY SS 115KV CKT 1
FDNS	00NR	3	16WP	G15_060	FROM->TO	G14-057T 345.00 - SUNNYSIDE 345KV CKT 1	717	789	0.06255	113.4284	GEN300011 1-ST FRANCIS UNIT 2
FDNS	00NR	3	16WP	G15_060	FROM->TO	G14-057T 345.00 - SUNNYSIDE 345KV CKT 1	717	789	0.06255	113.4275	GEN336464 1-MICHOUD UNIT #3
FDNS	00NR	3	16WP	G15_060	FROM->TO	G14-057T 345.00 - SUNNYSIDE 345KV CKT 1	717	789	0.06234	113.4253	CHISHOLM6 230.00 - ELK CITY 230KV 230KV CKT 1
FDNS	00NR	3	16WP	G15_060	FROM->TO	G14-057T 345.00 - SUNNYSIDE 345KV CKT 1	717	789	0.05901	113.4235	CANADIAN RIVER - PITTSBURG 345KV CKT 1
FDNS	00NR	3	16WP	G15_060	FROM->TO	G14-057T 345.00 - SUNNYSIDE 345KV CKT 1	717	789	0.05901	113.4235	CANADIAN RIVER - PITTSBURG 345KV CKT 1
FDNS	00NR	3	16WP	G15_060	FROM->TO	G14-057T 345.00 - SUNNYSIDE 345KV CKT 1	717	789	0.06255	113.4182	8CAJUN2 500/24.0KV TRANSFORMER CKT 1
FDNS	00NR	3	16WP	G15_060	FROM->TO	G14-057T 345.00 - SUNNYSIDE 345KV CKT 1	717	789	0.06234	113.4176	ELK CITY 230KV (ELKCTY-6) 230/138/13.8KV TRANSFORMER CKT 1
FDNS	00NR	3	16WP	G15_060	FROM->TO	G14-057T 345.00 - SUNNYSIDE 345KV CKT 1	717	789	0.06234	113.4176	ELK CITY 230KV (ELKCTY-6) 230/138/13.8KV TRANSFORMER CKT 1
FDNS	00NR	3	16WP	G15_060	FROM->TO	G14-057T 345.00 - SUNNYSIDE 345KV CKT 1	717	789	0.06286	113.4121	GRACEMONT (BANK 1) 345/138/13.8KV TRANSFORMER CKT 1
FDNS	00NR	3	20WP	G15_060	FROM->TO	G14-057T 345.00 - SUNNYSIDE 345KV CKT 1	717	789	0.06297	113.4112	P12:138:AEPW:DUNCAN-4:L.E.S.-4
FDNS	00NR	3	16WP	G15_060	FROM->TO	G14-057T 345.00 - SUNNYSIDE 345KV CKT 1	717	789	0.06391	113.4106	BAILEY4 138.00 - WESTMOORE 138KV CKT 1
FDNS	00NR	3	20WP	G15_060	FROM->TO	G14-057T 345.00 - SUNNYSIDE 345KV CKT 1	717	789	0.06233	113.409	GEN515577 1-ARBWND11 0.6900
FDNS	00NR	3	16WP	G15_060	FROM->TO	G14-057T 345.00 - SUNNYSIDE 345KV CKT 1	717	789	0.06514	113.4036	DRAPER LAKE - SEMINOLE 345KV CKT 1
FDNS	00NR	3	16WP	G15_060	FROM->TO	G14-057T 345.00 - SUNNYSIDE 345KV CKT 1	717	789	0.06514	113.4036	DRAPER LAKE - SEMINOLE 345KV CKT 2
FDNS	00NR	3	16WP	G15_060	FROM->TO	G14-057T 345.00 - SUNNYSIDE 345KV CKT 1	717	789	0.06398	113.4027	NOBLE - PURCELL4 138.00 138KV CKT 1
FDNS	00NR	3	16WP	G15_060	FROM->TO	G14-057T 345.00 - SUNNYSIDE 345KV CKT 1	717	789	0.06277	113.3955	HOYT - STRANGER CREEK 345KV CKT 1
FDNS	00NR	3	16WP	G15_060	FROM->TO	G14-057T 345.00 - SUNNYSIDE 345KV CKT 1	717	789	0.06255	113.3936	7JASPER 345.00 - BLACKBERRY 345KV CKT 1
FDNS	00NR	3	16WP	G15_060	FROM->TO	G14-057T 345.00 - SUNNYSIDE 345KV CKT 1	717	789	0.06255	113.393	GEN300016 1-1G1GPDEL 18.000
FDNS	00NR	3	16WP	G15_060	FROM->TO	G14-057T 345.00 - SUNNYSIDE 345KV CKT 1	717	789	0.06255	113.3926	P12:138:AEPW:R.S.S.-4:S.HUD.-4
FDNS	00NR	3	16WP	G15_060	FROM->TO	G14-057T 345.00 - SUNNYSIDE 345KV CKT 1	717	789	0.06255	113.3866	GEN501910 1-ACADIA UNIT ST1
FDNS	00NR	3	16WP	G15_060	FROM->TO	G14-057T 345.00 - SUNNYSIDE 345KV CKT 1	717	789	0.06319	113.3762	G15095_T 138.00 - ROSE_VALLEY 138.00 138KV CKT 1
FDNS	00NR	3	16WP	G15_060	FROM->TO	G14-057T 345.00 - SUNNYSIDE 345KV CKT 1	717	789	0.06255	113.3742	GEN337041 1-GERALD ANDRUS
FDNS	00NR	3	16WP	G15_060	FROM->TO	G14-057T 345.00 - SUNNYSIDE 345KV CKT 1	717	789	0.06312	113.3698	SARA - STHLAKE4 138.00 138KV CKT 1
FDNS	00NR	3	16WP	G15_060	FROM->TO	G14-057T 345.00 - SUNNYSIDE 345KV CKT 1	717	789	0.06277	113.3592	G15074_T 345.00 - JEFFREY ENERGY CENTER 345KV CKT 1
FDNS	00NR	3	16WP	G15_060	FROM->TO	G14-057T 345.00 - SUNNYSIDE 345KV CKT 1	717	789	0.06251	113.3574	ETTA (DUKE HOTSPRINGS) - MC NIEL 500KV CKT 1
FDNS	00NR	3	16WP	G15_060	FROM->TO	G14-057T 345.00 - SUNNYSIDE 345KV CKT 1	717	789	0.06255	113.3546	P12:138:AEPW:YARCH-S4:T.S.E.-4
FDNS	00NR	3	16WP	G15_060	FROM->TO	G14-057T 345.00 - SUNNYSIDE 345KV CKT 1	717	789	0.06276	113.3531	WALTERS - WALTERS 69KV CKT 1
FDNS	00NR	3	16WP	G15_060	FROM->TO	G14-057T 345.00 - SUNNYSIDE 345KV CKT 1	717	789	0.06288	113.3511	ANADARKO - SEQUOYAHJ4 138.00 138KV CKT 1
FDNS	00NR	3	16WP	G15_060	FROM->TO	G14-057T 345.00 - SUNNYSIDE 345KV CKT 1	717	789	0.06255	113.3484	P12:138:AEPW:BA_71ST4:T.S.E.-4
FDNS	00NR	3	16WP	G15_060	FROM->TO	G14-057T 345.00 - SUNNYSIDE 345KV CKT 1	717	789	0.06255	113.3477	P12:69:AEPW:NROGERS2:ECNTRTN2
FDNS	00NR	3	16WP	G15_060	FROM->TO	G14-057T 345.00 - SUNNYSIDE 345KV CKT 1	717	789	0.06288	113.3455	CORN TAP - SEQUOYAHJ4 138.00 138KV CKT 1
FDNS	00NR	3	20WP	G15_060	FROM->TO	G14-057T 345.00 - SUNNYSIDE 345KV CKT 1	717	789	0.06371	113.3441	ARCADIA - SEMINOLE 345KV CKT 1
FDNS	00NR	3	16WP	G15_060	FROM->TO	G14-057T 345.00 - SUNNYSIDE 345KV CKT 1	717	789	0.06312	113.3421	MCCLAIN - STHLAKE4 138.00 138KV CKT 1
FDNS	00NR	3	16WP	G15_060	FROM->TO	G14-057T 345.00 - SUNNYSIDE 345KV CKT 1	717	789	0.06255	113.3405	SABINE 230/24.0KV TRANSFORMER CKT 1
FDNS	00NR	3	16WP	G15_060	FROM->TO	G14-057T 345.00 - SUNNYSIDE 345KV CKT 1	717	789	0.06255	113.3362	GEN336801 1-BAXTER WILSON UNIT #1
FDNS	00NR	3	16WP	G15_060	FROM->TO	G14-057T 345.00 - SUNNYSIDE 345KV CKT 1	717	789	0.06278	113.3355	WEATHERFORD JCT. - WEATHERFORD SOUTHEAST 138KV CKT 1
FDNS	00NR	3	16WP	G15_060	FROM->TO	G14-057T 345.00 - SUNNYSIDE 345KV CKT 1	717	789	0.06278	113.3355	WEATHERFORD JCT. - WEATHERFORD SOUTHEAST 138KV CKT 1
FDNS	00NR	3	16WP	G15_060	FROM->TO	G14-057T 345.00 - SUNNYSIDE 345KV CKT 1	717	789	0.06292	113.3323	BLACKBERRY - NEOSHO 345KV CKT 1
FDNS	00NR	3	16WP	G15_060	FROM->TO	G14-057T 345.00 - SUNNYSIDE 345KV CKT 1	717	789	0.06262	113.3317	LAWTON RELIFT TAP - OMPA-WALTERS 69KV CKT 1
FDNS	00NR	3	16WP	G15_060	FROM->TO	G14-057T 345.00 - SUNNYSIDE 345KV CKT 1	717	789	0.06266	113.3282	7LUTESVIL 345.00 - 7ST FRANC 345.00 345KV CKT 1
FDNS	00NR	3	16WP	G15_060	FROM->TO	G14-057T 345.00 - SUNNYSIDE 345KV CKT 1	717	789	0.06255	113.3247	FRONTIER 345/18.0KV TRANSFORMER CKT 1
FDNS	00NR	3	16WP	G15_060	FROM->TO	G14-057T 345.00 - SUNNYSIDE 345KV CKT 1	717	789	0.06287	113.3235	SWISSVALE - WEST GARDNER 345KV CKT 1
FDNS	00NR	3	16WP	G15_060	FROM->TO	G14-057T 345.00 - SUNNYSIDE 345KV CKT 1	717	789	0.06255	113.323	FRONTIER 345/18.0KV TRANSFORMER CKT 1
FDNS	00NR	3	16WP	G15_060	FROM->TO	G14-057T 345.00 - SUNNYSIDE 345KV CKT 1	717	789	0.0624	113.3228	ENOWILT - LONE OAK 138KV CKT 1
FDNS	00NR	3	16WP	G15_060	FROM->TO	G14-057T 345.00 - SUNNYSIDE 345KV CKT 1	717	789	0.06319	113.3201	NOEL_SW 138.00 - ROSE_VALLEY 138.00 138KV CKT 1

SOLUTION	GROUP	SCENARIO	SEASON	SOURCE	DIRECTION	MONITORED ELEMENT	RATEA (MVA)	RATEB(MVA)	TDF	TC%LOADING (% MVA)	CONTINGENCY
FDNS	00NR	3	16WP	G15_060	FROM->TO	G14-057T 345.00 - SUNNYSIDE 345KV CKT 1	717	789	0.06284	113.3193	NORGE ROAD - SOUTHWESTERN STATION 138KV CKT 1
FDNS	00NR	3	16WP	G15_060	FROM->TO	G14-057T 345.00 - SUNNYSIDE 345KV CKT 1	717	789	0.06284	113.3193	NORGE ROAD - SOUTHWESTERN STATION 138KV CKT 1
FDNS	00NR	3	16WP	G15_060	FROM->TO	G14-057T 345.00 - SUNNYSIDE 345KV CKT 1	717	789	0.06255	113.3188	GEN512688 2-GRDA1 GSU2 22
FDNS	00NR	3	16WP	G15_060	FROM->TO	G14-057T 345.00 - SUNNYSIDE 345KV CKT 1	717	789	0.06134	113.3185	ARBUCKLE - VANOSTP4 138.00 138KV CKT 1
FDNS	00NR	3	16WP	G15_060	FROM->TO	G14-057T 345.00 - SUNNYSIDE 345KV CKT 1	717	789	0.06373	113.3171	LASALLE - STONEWAL LH138.00 138KV CKT 1
FDNS	00NR	3	16WP	G15_060	FROM->TO	G14-057T 345.00 - SUNNYSIDE 345KV CKT 1	717	789	0.06255	113.3165	P12:161:AEPW:CHAMSPR5:FARMING5
FDNS	00NR	3	16WP	G15_060	FROM->TO	G14-057T 345.00 - SUNNYSIDE 345KV CKT 1	717	789	0.0624	113.3139	ENOWILT - SARDIS 138KV CKT 1
FDNS	00NR	3	16WP	G15_060	FROM->TO	G14-057T 345.00 - SUNNYSIDE 345KV CKT 1	717	789	0.06332	113.3124	P12:138:OKGE-AEPW:JENSEN4:REDROCKRD4
FDNS	00NR	3	16WP	G15_060	FROM->TO	G14-057T 345.00 - SUNNYSIDE 345KV CKT 1	717	789	0.06268	113.312	P12:138:AEPW-OGE:SHIDLER4:OSAGE 4
FDNS	00NR	3	16WP	G15_060	FROM->TO	G14-057T 345.00 - SUNNYSIDE 345KV CKT 1	717	789	0.06259	113.3118	HOPE - MCNAB REC 115KV CKT 1
FDNS	00NR	3	16WP	G15_060	FROM->TO	G14-057T 345.00 - SUNNYSIDE 345KV CKT 1	717	789	0.06299	113.3064	EMPORIA ENERGY CENTER - G14_001T 345.00 345KV CKT 1
FDNS	00NR	3	16WP	G15_060	FROM->TO	G14-057T 345.00 - SUNNYSIDE 345KV CKT 1	717	789	0.06259	113.3033	P12:115:AEPW:TURK3:HOPE3
FDNS	00NR	3	16WP	G15_060	FROM->TO	G14-057T 345.00 - SUNNYSIDE 345KV CKT 1	717	789	0.06373	113.3024	STONEWAL LH138.00 - TUPELO TAP 138KV CKT 1
FDNS	00NR	3	16WP	G15_060	FROM->TO	G14-057T 345.00 - SUNNYSIDE 345KV CKT 1	717	789	0.06384	113.2971	BENTON - WICHITA 345KV CKT 1
FDNS	00NR	3	16WP	G15_060	FROM->TO	G14-057T 345.00 - SUNNYSIDE 345KV CKT 1	717	789	0.06335	113.2951	CLEO CORNER - CLEOPLT4 138.00 138KV CKT 1
FDNS	00NR	3	20WP	G15_060	FROM->TO	G14-057T 345.00 - SUNNYSIDE 345KV CKT 1	717	789	0.06297	113.2941	COMANCHE TAP - OMPA-DUNCAN 840 138KV CKT 1
FDNS	00NR	3	16WP	G15_060	FROM->TO	G14-057T 345.00 - SUNNYSIDE 345KV CKT 1	717	789	0.06269	113.2889	8WNEWMADRID 500.00 - DELL 500 500KV CKT 1
FDNS	00NR	3	16WP	G15_060	FROM->TO	G14-057T 345.00 - SUNNYSIDE 345KV CKT 1	717	789	0.06255	113.2876	LEWIS CREEK SWITCHYARD 138/22.0KV TRANSFORMER CKT 1
FDNS	00NR	3	16WP	G15_060	FROM->TO	G14-057T 345.00 - SUNNYSIDE 345KV CKT 1	717	789	0.06255	113.2872	GEN505616 1-BROKEN BOW
FDNS	00NR	3	16WP	G15_060	FROM->TO	G14-057T 345.00 - SUNNYSIDE 345KV CKT 1	717	789	0.06278	113.2857	P12:138:AEPW:REDROCKRD4:WTH_JCT4
FDNS	00NR	3	16WP	G15_060	FROM->TO	G14-057T 345.00 - SUNNYSIDE 345KV CKT 1	717	789	0.06335	113.2836	CLEOPLT4 138.00 - MEN TAP 138KV CKT 1
FDNS	00NR	3	16WP	G15_060	FROM->TO	G14-057T 345.00 - SUNNYSIDE 345KV CKT 1	717	789	0.06255	113.2828	LEWIS CREEK SWITCHYARD 138/22.0KV TRANSFORMER CKT 1
FDNS	00NR	3	16WP	G15_060	FROM->TO	G14-057T 345.00 - SUNNYSIDE 345KV CKT 1	717	789	0.06259	113.2811	MCNAB REC - Turk 115 115KV CKT 1
FDNS	00NR	3	16WP	G15_060	FROM->TO	G14-057T 345.00 - SUNNYSIDE 345KV CKT 1	717	789	0.06259	113.2811	TURK (TURK 1) 138/115/13.2KV TRANSFORMER CKT 1
FDNS	00NR	3	16WP	G15_060	FROM->TO	G14-057T 345.00 - SUNNYSIDE 345KV CKT 1	717	789	0.06259	113.2811	TURK (TURK 1) 138/115/13.2KV TRANSFORMER CKT 1
FDNS	00NR	3	16WP	G15_060	FROM->TO	G14-057T 345.00 - SUNNYSIDE 345KV CKT 1	717	789	0.0624	113.2796	CLAYTON - SARDIS 138KV CKT 1
FDNS	00NR	3	16WP	G15_060	FROM->TO	G14-057T 345.00 - SUNNYSIDE 345KV CKT 1	717	789	0.06282	113.2795	SOUTHWESTERN STATION - VERDEN 138KV CKT 1
FDNS	00NR	3	16WP	G15_060	FROM->TO	G14-057T 345.00 - SUNNYSIDE 345KV CKT 1	717	789	0.06257	113.2784	COUCH SES - MC NIEL 115KV CKT 1
FDNS	00NR	3	16WP	G15_060	FROM->TO	G14-057T 345.00 - SUNNYSIDE 345KV CKT 1	717	789	0.06097	113.2751	G14_038T 345.00 - POTTER COUNTY INTERCHANGE 345KV CKT 1
FDNS	00NR	3	16WP	G15_060	FROM->TO	G14-057T 345.00 - SUNNYSIDE 345KV CKT 1	717	789	0.06335	113.2735	IMO TAP - MEN TAP 138KV CKT 1
FDNS	00NR	3	16WP	G15_060	FROM->TO	G14-057T 345.00 - SUNNYSIDE 345KV CKT 1	717	789	0.06262	113.2659	OMPA-WALTERS - WALTERS 69KV CKT 1
FDNS	00NR	3	16WP	G15_060	FROM->TO	G14-057T 345.00 - SUNNYSIDE 345KV CKT 1	717	789	0.06262	113.2659	OMPA-WALTERS - WALTERS 69KV CKT 1
FDNS	00NR	3	16WP	G15_060	FROM->TO	G14-057T 345.00 - SUNNYSIDE 345KV CKT 1	717	789	0.06255	113.2631	GEN501970 1-EVANGELINE UNIT 7
FDNS	00NR	3	16WP	G15_060	FROM->TO	G14-057T 345.00 - SUNNYSIDE 345KV CKT 1	717	789	0.06261	113.2597	P12:138:OKGE:3TERM12
FDNS	00NR	3	16WP	G15_060	FROM->TO	G14-057T 345.00 - SUNNYSIDE 345KV CKT 1	717	789	0.06282	113.2593	NORTH 29TH CHICKASHA - VERDEN 138KV CKT 1
FDNS	00NR	3	16WP	G15_060	FROM->TO	G14-057T 345.00 - SUNNYSIDE 345KV CKT 1	717	789	0.06391	113.2549	FRANKLIN SW - WESTMOORE 138KV CKT 1
FDNS	00NR	3	16WP	G15_060	FROM->TO	G14-057T 345.00 - SUNNYSIDE 345KV CKT 1	717	789	0.06276	113.254	P12:69:WFEC-AEPW:COMANCH2:WALTRS-2
FDNS	00NR	3	16WP	G15_060	FROM->TO	G14-057T 345.00 - SUNNYSIDE 345KV CKT 1	717	789	0.06279	113.2526	EMPORIA ENERGY CENTER - SWISSVALE 345KV CKT 1
FDNS	00NR	3	16WP	G15_060	FROM->TO	G14-057T 345.00 - SUNNYSIDE 345KV CKT 1	717	789	0.0624	113.2521	P12:138:AEPW-SWPA:LONEOAK4:BRKNBW4
FDNS	00NR	3	16WP	G15_060	FROM->TO	G14-057T 345.00 - SUNNYSIDE 345KV CKT 1	717	789	0.06255	113.2509	GEN334392 1-EXXON MOBIL IPP 1
FDNS	00NR	3	16WP	G15_060	FROM->TO	G14-057T 345.00 - SUNNYSIDE 345KV CKT 1	717	789	0.06259	113.2458	MORISNT4 138.00 - STILLWATER 138KV CKT 1
FDNS	00NR	3	20WP	G15_060	FROM->TO	G14-057T 345.00 - SUNNYSIDE 345KV CKT 1	717	789	0.06233	113.2451	GEN509409 1-WILKES #3
FDNS	00NR	3	16WP	G15_060	FROM->TO	G14-057T 345.00 - SUNNYSIDE 345KV CKT 1	717	789	0.06255	113.2443	GEN334393 1-EXXON MOBIL IPP 2
FDNS	00NR	3	16WP	G15_060	FROM->TO	G14-057T 345.00 - SUNNYSIDE 345KV CKT 1	717	789	0.06255	113.2443	GEN334394 1-EXXON MOBIL IPP 3
FDNS	00NR	3	16WP	G15_060	FROM->TO	G14-057T 345.00 - SUNNYSIDE 345KV CKT 1	717	789	0.06299	113.242	G14_001T 345.00 - WICHITA 345KV CKT 1
FDNS	00NR	3	16WP	G15_060	FROM->TO	G14-057T 345.00 - SUNNYSIDE 345KV CKT 1	717	789	0.06255	113.2419	GEN659125 1-COVEY
FDNS	00NR	3	20WP	G15_060	FROM->TO	G14-057T 345.00 - SUNNYSIDE 345KV CKT 1	717	789	0.06372	113.2416	HEALDTON - LOCO 138KV CKT 1
FDNS	00NR	3	16WP	G15_060	FROM->TO	G14-057T 345.00 - SUNNYSIDE 345KV CKT 1	717	789	0.06261	113.2403	P12:138:OKGE:3TERM2
FDNS	00NR	3	16WP	G15_060	FROM->TO	G14-057T 345.00 - SUNNYSIDE 345KV CKT 1	717	789	0.06269	113.2392	WEATHERFORD TAP - WEATHERFORD WIND FARM 138KV CKT 1
FDNS	00NR	3	16WP	G15_060	FROM->TO	G14-057T 345.00 - SUNNYSIDE 345KV CKT 1	717	789	0.0624	113.2392	CLAYTON - NASHOBA 138KV CKT 1
FDNS	00NR	3	16WP	G15_060	FROM->TO	G14-057T 345.00 - SUNNYSIDE 345KV CKT 1	717	789	0.06255	113.2373	GEN509394 1-FLINT CREEK
FDNS	00NR	3	20WP	G15_060	FROM->TO	G14-057T 345.00 - SUNNYSIDE 345KV CKT 1	717	789	0.05848	113.2365	CANADIAN RIVER - MUSKOGEE 345KV CKT 1
FDNS	00NR	3	16WP	G15_060	FROM->TO	G14-057T 345.00 - SUNNYSIDE 345KV CKT 1	717	789	0.06255	113.2355	GEN336222 1-LITTLE GYPSY UNIT#2
FDNS	00NR	3	16WP	G15_060	FROM->TO	G14-057T 345.00 - SUNNYSIDE 345KV CKT 1	717	789	0.0627	113.2354	FRANKLIN - FRANKLIN SW 138KV CKT 1
FDNS	00NR	3	16WP	G15_060	FROM->TO	G14-057T 345.00 - SUNNYSIDE 345KV CKT 1	717	789	0.06296	113.2312	BUCKNER7 345.00 - HOLCOMB 345KV CKT 1
FDNS	00NR	3	16WP	G15_060	FROM->TO	G14-057T 345.00 - SUNNYSIDE 345KV CKT 1	717	789	0.06296	113.2312	BUCKNER7 345.00 - HOLCOMB 345KV CKT 1
FDNS	00NR	3	16WP	G15_060	FROM->TO	G14-057T 345.00 - SUNNYSIDE 345KV CKT 1	717	789	0.06256	113.2279	P12:138:AEPW:R.S.S-4:T.P.S.-4
FDNS	00NR	3	16WP	G15_060	FROM->TO	G14-057T 345.00 - SUNNYSIDE 345KV CKT 1	717	789	0.0624	113.2263	BETHEL - NASHOBA 138KV CKT 1
FDNS	00NR	3	16WP	G15_060	FROM->TO	G14-057T 345.00 - SUNNYSIDE 345KV CKT 1	717	789	0.06395	113.2253	MARIETTA - MARIETTA4 138.00 138KV CKT 1
FDNS	00NR	3	16WP	G15_060	FROM->TO	G14-057T 345.00 - SUNNYSIDE 345KV CKT 1	717	789	0.06377	113.2238	CLARKSVILLE - ONETA 345KV CKT 1
FDNS	00NR	3	16WP	G15_060	FROM->TO	G14-057T 345.00 - SUNNYSIDE 345KV CKT 1	717	789	0.06377	113.2238	CLARKSVILLE - ONETA 345KV CKT 1
FDNS	00NR	3	20WP	G15_060	FROM->TO	G14-057T 345.00 - SUNNYSIDE 345KV CKT 1	717	789	0.06332	113.2232	BRIDGECR 138.00 - TUTTLE 138KV CKT 1
FDNS	00NR	3	16WP	G15_060	FROM->TO	G14-057T 345.00 - SUNNYSIDE 345KV CKT 1	717	789	0.06255	113.2174	GEN506749 1-EASTMAN GENERATION A
FDNS	00NR	3	16WP	G15_060	FROM->TO	G14-057T 345.00 - SUNNYSIDE 345KV CKT 1	717	789	0.06255	113.2146	GEN334432 1-SABINE UNIT 2
FDNS	00NR	3	16WP	G15_060	FROM->TO	G14-057T 345.00 - SUNNYSIDE 345KV CKT 1	717	789	0.0626	113.2145	7JASPER 345.00 - MORGAN 345KV CKT 1
FDNS	00NR	3	16WP	G15_060	FROM->TO	G14-057T 345.00 - SUNNYSIDE 345KV CKT 1	717	789	0.06255	113.2145	GEN334431 1-SABINE UNIT 1
FDNS	00NR	3	16WP	G15_060	FROM->TO	G14-057T 345.00 - SUNNYSIDE 345KV CKT 1	717	789	0.06278	113.2094	HINTON - WEATHERFORD JCT. 138KV CKT 1
FDNS	00NR	3	16WP	G15_060	FROM->TO	G14-057T 345.00 - SUNNYSIDE 345KV CKT 1	717	789	0.06255	113.2073	GEN501971 1-EVANGELINE UNIT 7-1
FDNS	00NR	3	16WP	G15_060	FROM->TO	G14-057T 345.00 - SUNNYSIDE 345KV CKT 1	717	789	0.06255	113.2073	GEN501972 1-EVANGELINE UNIT 7-2
FDNS	00NR	3	16WP	G15_060	FROM->TO	G14-057T 345.00 - SUNNYSIDE 345KV CKT 1	717	789	0.06255	113.2066	GEN336152 1-WATERFORD UNIT#2
FDNS	00NR	3	16WP	G15_060	FROM->TO	G14-057T 345.00 - SUNNYSIDE 345KV CKT 1	717	789	0.06255	113.2056	GEN336151 1-WATERFORD UNIT#1
FDNS	00NR	3	16WP	G15_060	FROM->TO	G14-057T 345.00 - SUNNYSIDE 345KV CKT 1	717	789	0.06255	113.2044	P12:138:AEPW:R.S.S.-4:R:96YALE-4
FDNS	00NR	3	16WP	G15_060	FROM->TO	G14-057T 345.00 - SUNNYSIDE 345KV CKT 1	717	789	0.06292	113.2038	CLINTON JUNCTION - ELK CITY 138KV CKT 1
FDNS	00NR	3	16WP	G15_060	FROM->TO	G14-057T 345.00 - SUNNYSIDE 345KV CKT 1	717	789	0.06292	113.2038	CLINTON JUNCTION - ELK CITY 138KV CKT 1
FDNS	00NR	3	16WP	G15_060	FROM->TO	G14-057T 345.00 - SUNNYSIDE 345KV CKT 1	717	789	0.06284	113.2005	CORNVILLE - NORGE ROAD 138KV CKT 1
FDNS	00NR	3	16WP	G15_060	FROM->TO	G14-057T 345.00 - SUNNYSIDE 345KV CKT 1	717	789	0.06284	113.2005	CORNVILLE - NORGE ROAD 138KV CKT 1
FDNS	00NR	3	16WP	G15_060	FROM->TO	G14-057T 345.00 - SUNNYSIDE 345KV CKT 1	717	789	0.06477	113.1938	FINNEY SWITCHING STATION - WALKTAP7 345.00 345KV CKT 1
FDNS	00NR	3	16WP	G15_060	FROM->TO	G14-057T 345.00 - SUNNYSIDE 345KV CKT 1	717	789	0.06477	113.1938	FINNEY SWITCHING STATION - WALKTAP7 345.00 345KV CKT 1
FDNS	00NR	3	16WP	G15_060	FROM->TO	G14-057T 345.00 - SUNNYSIDE 345KV CKT 1	717	789	0.06398	113.1938	PURCELL4 138.00 - WALNUT CREEK 138KV CKT 1

SOLUTION	GROUP	SCENARIO	SEASON	SOURCE	DIRECTION	MONITORED ELEMENT	RATEA (MVA)	RATEB(MVA)	TDF	TC%LOADING (% MVA)	CONTINGENCY
FDNS	00NR	3	16WP	G15_060	FROM->TO	G14-057T 345.00 - SUNNYSIDE 345KV CKT 1	717	789	0.06282	113.1935	CORNVILLE - NORTH 29TH CHICKASHA 138KV CKT 1
FDNS	00NR	3	16WP	G15_060	FROM->TO	G14-057T 345.00 - SUNNYSIDE 345KV CKT 1	717	789	0.06255	113.189	P12:138:AEPW:MOHAWK4:T.NO--4
FDNS	00NR	3	16WP	G15_060	FROM->TO	G14-057T 345.00 - SUNNYSIDE 345KV CKT 1	717	789	0.06255	113.1839	GEN501912 1-ACADIA UNIT CT1B
FDNS	00NR	3	16WP	G15_060	FROM->TO	G14-057T 345.00 - SUNNYSIDE 345KV CKT 1	717	789	0.06334	113.1837	G13-010T 345.00 - POST ROCK 345KV CKT 1
FDNS	00NR	3	16WP	G15_060	FROM->TO	G14-057T 345.00 - SUNNYSIDE 345KV CKT 1	717	789	0.06255	113.1832	GEN501911 1-ACADIA UNIT CT1A
FDNS	00NR	3	16WP	G15_060	FROM->TO	G14-057T 345.00 - SUNNYSIDE 345KV CKT 1	717	789	0.06255	113.1825	ST FRANCIS - ST FRANCIS 1 161KV CKT Z1
FDNS	00NR	3	20WP	G15_060	FROM->TO	G14-057T 345.00 - SUNNYSIDE 345KV CKT 1	717	789	0.06233	113.1822	GEN501813 1-RODEMACHER UNIT 3
FDNS	00NR	3	16WP	G15_060	FROM->TO	G14-057T 345.00 - SUNNYSIDE 345KV CKT 1	717	789	0.06278	113.181	HAMMETT TAP - HORSESHOE LAKE 138KV CKT 1
FDNS	00NR	3	16WP	G15_060	FROM->TO	G14-057T 345.00 - SUNNYSIDE 345KV CKT 1	717	789	0.06256	113.1799	LAYFLD8 500.00 (LAYFLD AUTO) 500/230/13.8KV TRANSFORMER CKT 1
FDNS	00NR	3	16WP	G15_060	FROM->TO	G14-057T 345.00 - SUNNYSIDE 345KV CKT 1	717	789	0.06256	113.1799	LAYFLD8 500.00 (LAYFLD AUTO) 500/230/13.8KV TRANSFORMER CKT 1
FDNS	00NR	3	16WP	G15_060	FROM->TO	G14-057T 345.00 - SUNNYSIDE 345KV CKT 1	717	789	0.06251	113.1784	P12:138:AEPW:OKMULGE4:R.S.S-4
FDNS	00NR	3	16WP	G15_060	FROM->TO	G14-057T 345.00 - SUNNYSIDE 345KV CKT 1	717	789	0.06197	113.1736	ARBUCKLE - MILLCREEK 138KV CKT 1
FDNS	00NR	3	16WP	G15_060	FROM->TO	G14-057T 345.00 - SUNNYSIDE 345KV CKT 1	717	789	0.06255	113.1727	SABINE 230/22.0KV TRANSFORMER CKT 1
FDNS	00NR	3	16WP	G15_060	FROM->TO	G14-057T 345.00 - SUNNYSIDE 345KV CKT 1	717	789	0.0624	113.1722	BETHEL - BROKEN BOW 138KV CKT 1
FDNS	00NR	3	16WP	G15_060	FROM->TO	G14-057T 345.00 - SUNNYSIDE 345KV CKT 1	717	789	0.06257	113.1713	AMITY SS - MURFREESBORO EAST (AECC) 115KV CKT 1
FDNS	00NR	3	16WP	G15_060	FROM->TO	G14-057T 345.00 - SUNNYSIDE 345KV CKT 1	717	789	0.06263	113.1701	FLETCHER - MARLOW JCT 69KV CKT 1
FDNS	00NR	3	16WP	G15_060	FROM->TO	G14-057T 345.00 - SUNNYSIDE 345KV CKT 1	717	789	0.0627	113.1658	P12:138:OKGE:3TERM47
FDNS	00NR	3	16WP	G15_060	FROM->TO	G14-057T 345.00 - SUNNYSIDE 345KV CKT 1	717	789	0.06245	113.1648	P12:138:WFEC-AEPW:ELKCTY-4:ERICK4
FDNS	00NR	3	16WP	G15_060	FROM->TO	G14-057T 345.00 - SUNNYSIDE 345KV CKT 1	717	789	0.06255	113.1593	GEN336242 1-1NMIL ST1 18.000
FDNS	00NR	3	16WP	G15_060	FROM->TO	G14-057T 345.00 - SUNNYSIDE 345KV CKT 1	717	789	0.06278	113.1531	HINTON - REDROCKRD4 138.00 138KV CKT 1
FDNS	00NR	3	16WP	G15_060	FROM->TO	G14-057T 345.00 - SUNNYSIDE 345KV CKT 1	717	789	0.06269	113.1518	WEATHERFORD SOUTHEAST - WEATHERFORD TAP 138KV CKT 1
FDNS	00NR	3	16WP	G15_060	FROM->TO	G14-057T 345.00 - SUNNYSIDE 345KV CKT 1	717	789	0.06369	113.1417	CIMARRON - NORTHWEST 345KV CKT 1
FDNS	00NR	3	16WP	G15_060	FROM->TO	G14-057T 345.00 - SUNNYSIDE 345KV CKT 1	717	789	0.06285	113.1395	SEMINOLE (SEMINOL2) 345/138/14.4KV TRANSFORMER CKT 1
FDNS	00NR	3	20WP	G15_060	FROM->TO	G14-057T 345.00 - SUNNYSIDE 345KV CKT 1	717	789	0.06233	113.11	GEN300006 1-NEW MADRID UNIT 1
FDNS	00NR	3	20WP	G15_060	FROM->TO	G14-057T 345.00 - SUNNYSIDE 345KV CKT 1	717	789	0.06372	113.0974	HEALDTON - RINGLING 138KV CKT 1
FDNS	00NR	3	20WP	G15_060	FROM->TO	G14-057T 345.00 - SUNNYSIDE 345KV CKT 1	717	789	0.06233	113.0898	GEN300007 1-NEW MADRID UNIT 2
FDNS	00NR	3	20WP	G15_060	FROM->TO	G14-057T 345.00 - SUNNYSIDE 345KV CKT 1	717	789	0.06267	113.0279	LACYGNE - WAVERLY7 345.00 345KV CKT 1
FDNS	00NR	3	20WP	G15_060	FROM->TO	G14-057T 345.00 - SUNNYSIDE 345KV CKT 1	717	789	0.06297	113.0084	DUNCAN - OMPA-DUNCAN 840 138KV CKT 1
FDNS	00NR	3	20WP	G15_060	FROM->TO	G14-057T 345.00 - SUNNYSIDE 345KV CKT 1	717	789	0.06297	113.0084	DUNCAN - OMPA-DUNCAN 840 138KV CKT 1
FDNS	00NR	3	20WP	G15_060	FROM->TO	G14-057T 345.00 - SUNNYSIDE 345KV CKT 1	717	789	0.06233	112.9726	GEN335206 1-NELSON UNIT 6
FDNS	00NR	3	20WP	G15_060	FROM->TO	G14-057T 345.00 - SUNNYSIDE 345KV CKT 1	717	789	0.06332	112.9475	P12:138:WFEC:MSL01
FDNS	00NR	3	20WP	G15_060	FROM->TO	G14-057T 345.00 - SUNNYSIDE 345KV CKT 1	717	789	0.06233	112.9471	GEN520947 1-HUGO1
FDNS	00NR	3	20WP	G15_060	FROM->TO	G14-057T 345.00 - SUNNYSIDE 345KV CKT 1	717	789	0.06332	112.9409	BRIDGECR 138.00 - SUNSHINE CANYON 138KV CKT 1
FDNS	00NR	3	20WP	G15_060	FROM->TO	G14-057T 345.00 - SUNNYSIDE 345KV CKT 1	717	789	0.06372	112.9263	RINGLING - SOUTH WILSON 138KV CKT 1
FDNS	00NR	3	20WP	G15_060	FROM->TO	G14-057T 345.00 - SUNNYSIDE 345KV CKT 1	717	789	0.06267	112.9164	WAVERLY7 345.00 - WOLF CREEK 345KV CKT 1
FDNS	00NR	3	20WP	G15_060	FROM->TO	G14-057T 345.00 - SUNNYSIDE 345KV CKT 1	717	789	0.06229	112.8103	ELDORADO EHV - MOUNT OLIVE 500KV CKT 1
FDNS	00NR	3	20WP	G15_060	FROM->TO	G14-057T 345.00 - SUNNYSIDE 345KV CKT 1	717	789	0.0623	112.8048	P12:138:AEPW:SHERID4:112GORE4
FDNS	00NR	3	20WP	G15_060	FROM->TO	G14-057T 345.00 - SUNNYSIDE 345KV CKT 1	717	789	0.06233	112.7894	GEN501812 1-RODEMACHER UNIT 2
FDNS	00NR	3	20WP	G15_060	FROM->TO	G14-057T 345.00 - SUNNYSIDE 345KV CKT 1	717	789	0.06233	112.7848	DOLET HILLS 345/24.0KV TRANSFORMER CKT 1
FDNS	00NR	3	20WP	G15_060	FROM->TO	G14-057T 345.00 - SUNNYSIDE 345KV CKT 1	717	789	0.06604	112.7635	Hitchland Interchange - WALKTAP7 345.00 345KV CKT 1
FDNS	00NR	3	20WP	G15_060	FROM->TO	G14-057T 345.00 - SUNNYSIDE 345KV CKT 1	717	789	0.06604	112.7635	Hitchland Interchange - WALKTAP7 345.00 345KV CKT 1
FDNS	00NR	3	20WP	G15_060	FROM->TO	G14-057T 345.00 - SUNNYSIDE 345KV CKT 1	717	789	0.06248	112.7532	REDBUD - RIVERSIDE STATION 345KV CKT 1
FDNS	00NR	3	20WP	G15_060	FROM->TO	G14-057T 345.00 - SUNNYSIDE 345KV CKT 1	717	789	0.06248	112.7532	REDBUD - RIVERSIDE STATION 345KV CKT 1
FDNS	00NR	3	20WP	G15_060	FROM->TO	G14-057T 345.00 - SUNNYSIDE 345KV CKT 1	717	789	0.06125	112.7515	PARK LANE - SEMINOLE 138KV CKT 1
FDNS	00NR	3	20WP	G15_060	FROM->TO	G14-057T 345.00 - SUNNYSIDE 345KV CKT 1	717	789	0.06604	112.7315	P12:345:SPS:J07.1.FINN.HITCH
FDNS	00NR	3	16WP	G15_060	FROM->TO	G14-057T 345.00 - SUNNYSIDE 345KV CKT 1	717	789	0.06255	112.6917	803-OKLAUNION
FDNS	00NR	3	20WP	G15_060	FROM->TO	G14-057T 345.00 - SUNNYSIDE 345KV CKT 1	717	789	0.06233	112.6663	GEN515564 1-ORIGIN11 0.6900
FDNS	00NR	3	20WP	G15_060	FROM->TO	G14-057T 345.00 - SUNNYSIDE 345KV CKT 1	717	789	0.06233	112.6663	GEN515565 1-ORIGIN21 0.6900
FDNS	00NR	3	20WP	G15_060	FROM->TO	G14-057T 345.00 - SUNNYSIDE 345KV CKT 1	717	789	0.06245	112.6503	WEBRE - WELLS 500KV CKT 1
FDNS	00NR	3	20WP	G15_060	FROM->TO	G14-057T 345.00 - SUNNYSIDE 345KV CKT 1	717	789	0.06556	112.6484	MATHWSN7 345.00 - NORTHWEST 345KV CKT 1
FDNS	00NR	3	20WP	G15_060	FROM->TO	G14-057T 345.00 - SUNNYSIDE 345KV CKT 1	717	789	0.06372	112.6402	MARIETTA - SOUTH WILSON 138KV CKT 1
FDNS	00NR	3	20WP	G15_060	FROM->TO	G14-057T 345.00 - SUNNYSIDE 345KV CKT 1	717	789	0.06233	112.6312	GEN334440 1-SABINE UNIT 4
FDNS	00NR	3	20WP	G15_060	FROM->TO	G14-057T 345.00 - SUNNYSIDE 345KV CKT 1	717	789	0.06233	112.6087	P12:161:AEPW:DYESS 5:HYLAND 5
FDNS	00NR	3	20WP	G15_060	FROM->TO	G14-057T 345.00 - SUNNYSIDE 345KV CKT 1	717	789	0.06233	112.6022	GEN590011 2-ERCOT EQUIVALENCE
FDNS	00NR	3	20WP	G15_060	FROM->TO	G14-057T 345.00 - SUNNYSIDE 345KV CKT 1	717	789	0.06338	112.5781	CANEYRV7 345.00 - NEOSHO 345KV CKT 1
FDNS	00NR	3	20WP	G15_060	FROM->TO	G14-057T 345.00 - SUNNYSIDE 345KV CKT 1	717	789	0.06233	112.5754	DELL 500 - ESSEX UNIT 2 500KV CKT Z1
FDNS	00NR	3	20WP	G15_060	FROM->TO	G14-057T 345.00 - SUNNYSIDE 345KV CKT 1	717	789	0.06233	112.5462	P12:69:AEPW:L.E.S.-2:LAW WC2
FDNS	00NR	3	20WP	G15_060	FROM->TO	G14-057T 345.00 - SUNNYSIDE 345KV CKT 1	717	789	0.06372	112.5445	P12:138:WFEC:MSL17
FDNS	00NR	3	20WP	G15_060	FROM->TO	G14-057T 345.00 - SUNNYSIDE 345KV CKT 1	717	789	0.06233	112.5331	GEN590010 1-ERCOT EQUIVALENCE
FDNS	00NR	3	20WP	G15_060	FROM->TO	G14-057T 345.00 - SUNNYSIDE 345KV CKT 1	717	789	0.06273	112.4743	P12:138:WFEC:MSL02
FDNS	00NR	3	20WP	G15_060	FROM->TO	G14-057T 345.00 - SUNNYSIDE 345KV CKT 1	717	789	0.06267	112.4659	PAOLI - PAYNE 138.00 138KV CKT 1
FDNS	00NR	3	20WP	G15_060	FROM->TO	G14-057T 345.00 - SUNNYSIDE 345KV CKT 1	717	789	0.06221	112.457	ELDORADO EHV - SHERIDAN EHV 500KV CKT 1
FDNS	00NR	3	20WP	G15_060	FROM->TO	G14-057T 345.00 - SUNNYSIDE 345KV CKT 1	717	789	0.06238	112.4554	LAWTON EASTSIDE (LES 5) 345/138/13.8KV TRANSFORMER CKT 2
FDNS	00NR	3	20WP	G15_060	FROM->TO	G14-057T 345.00 - SUNNYSIDE 345KV CKT 1	717	789	0.06238	112.4554	LAWTON EASTSIDE (LES 5) 345/138/13.8KV TRANSFORMER CKT 2
FDNS	00NR	3	20WP	G15_060	FROM->TO	G14-057T 345.00 - SUNNYSIDE 345KV CKT 1	717	789	0.06233	112.4511	GEN506754 1-LEBROCK STEAM 1
FDNS	00NR	3	20WP	G15_060	FROM->TO	G14-057T 345.00 - SUNNYSIDE 345KV CKT 1	717	789	0.06338	112.4369	CANEYRV7 345.00 - LATHAMS7 345.00 345KV CKT 1
FDNS	00NR	3	20WP	G15_060	FROM->TO	G14-057T 345.00 - SUNNYSIDE 345KV CKT 1	717	789	0.0635	112.4276	CIVIT - PAOLI 138KV CKT 1
FDNS	00NR	3	20WP	G15_060	FROM->TO	G14-057T 345.00 - SUNNYSIDE 345KV CKT 1	717	789	0.0623	112.4232	P12:138:AEPW:112GORE4:L.E.S.-4
FDNS	00NR	3	20WP	G15_060	FROM->TO	G14-057T 345.00 - SUNNYSIDE 345KV CKT 1	717	789	0.06233	112.4064	GEN509408 1-WILKES #2
FDNS	00NR	3	20WP	G15_060	FROM->TO	G14-057T 345.00 - SUNNYSIDE 345KV CKT 1	717	789	0.06261	112.4035	ANADARKO - GEORGIA 138KV CKT 1
FDNS	00NR	3	20WP	G15_060	FROM->TO	G14-057T 345.00 - SUNNYSIDE 345KV CKT 1	717	789	0.06233	112.3511	GEN336252 1-NINEMILE POINT UNIT#5
FDNS	00NR	3	20WP	G15_060	FROM->TO	G14-057T 345.00 - SUNNYSIDE 345KV CKT 1	717	789	0.06261	112.3173	FLETCHER - GEORGIA 138KV CKT 1
FDNS	00NR	3	20WP	G15_060	FROM->TO	G14-057T 345.00 - SUNNYSIDE 345KV CKT 1	717	789	0.06233	112.3147	FRONTIER - GRIMES 345KV CKT 1
FDNS	00NR	3	16WP	G15_060	FROM->TO	G14-057T 345.00 - SUNNYSIDE 345KV CKT 1	717	789	0.06259	112.3105	JOHNSON COUNTY - RUSSETT 138KV CKT 1
FDNS	00NR	3	20WP	G15_060	FROM->TO	G14-057T 345.00 - SUNNYSIDE 345KV CKT 1	717	789	0.06408	112.3086	P12:138:AEPW-OGE:CORNVIL4:MAUD 4
FDNS	00NR	3	20WP	G15_060	FROM->TO	G14-057T 345.00 - SUNNYSIDE 345KV CKT 1	717	789	0.06233	112.3074	GEN503909 1-FULTONU1 1 16.000
FDNS	00NR	3	16WP	G15_060	FROM->TO	G14-057T 345.00 - SUNNYSIDE 345KV CKT 1	717	789	0.06186	112.305	MAYSVLT4 138.00 - PRAIRIE POINT 138KV CKT 1
FDNS	00NR	3	16WP	G15_060	FROM->TO	G14-057T 345.00 - SUNNYSIDE 345KV CKT 1	717	789	0.06331	112.3037	NORTHWEST - SPRING CREEK 345KV CKT 1
FDNS	00NR	3	20WP	G15_060	FROM->TO	G14-057T 345.00 - SUNNYSIDE 345KV CKT 1	717	789	0.06236	112.3024	TUPELO - TUPELO TAP 138KV CKT 1

SOLUTION	GROUP	SCENARIO	SEASON	SOURCE	DIRECTION	MONITORED ELEMENT	RATEA (MVA)	RATEB(MVA)	TDF	TC%LOADING (% MVA)	CONTINGENCY
FDNS	00NR	3	16WP	G15_060	FROM->TO	G14-057T 345.00 - SUNNYSIDE 345KV CKT 1	717	789	0.06261	112.2986	GLASSES - MADILL INDUSTRIAL TAP 138KV CKT 1
FDNS	00NR	3	16WP	G15_060	FROM->TO	G14-057T 345.00 - SUNNYSIDE 345KV CKT 1	717	789	0.06331	112.2965	SOONER - SPRING CREEK 345KV CKT 1
FDNS	00NR	3	20WP	G15_060	FROM->TO	G14-057T 345.00 - SUNNYSIDE 345KV CKT 1	717	789	0.06233	112.2943	GEN335204 1-NELSON UNIT 4
FDNS	00NR	3	20WP	G15_060	FROM->TO	G14-057T 345.00 - SUNNYSIDE 345KV CKT 1	717	789	0.0635	112.2874	CIVIT - STRATFORD 138KV CKT 1
FDNS	00NR	3	20WP	G15_060	FROM->TO	G14-057T 345.00 - SUNNYSIDE 345KV CKT 1	717	789	0.06233	112.2871	GEN334441 1-SABINE UNIT 5
FDNS	00NR	3	16WP	G15_060	FROM->TO	G14-057T 345.00 - SUNNYSIDE 345KV CKT 1	717	789	0.06255	112.2764	GEN562772 1-G15034_3 0.6900
FDNS	00NR	3	16WP	G15_060	FROM->TO	G14-057T 345.00 - SUNNYSIDE 345KV CKT 1	717	789	0.06249	112.2747	HUGO (HUGO 1) 345/138/13.8KV TRANSFORMER CKT 1
FDNS	00NR	3	16WP	G15_060	FROM->TO	G14-057T 345.00 - SUNNYSIDE 345KV CKT 1	717	789	0.06255	112.2677	GEN521103 1-BLUE CANYON WIND FARM
FDNS	00NR	3	16WP	G15_060	FROM->TO	G14-057T 345.00 - SUNNYSIDE 345KV CKT 1	717	789	0.06255	112.264	GEN562691 1-G15_015_3 0.6900
FDNS	00NR	3	20WP	G15_060	FROM->TO	G14-057T 345.00 - SUNNYSIDE 345KV CKT 1	717	789	0.06269	112.262	EMPIRE - FLETCHER 138KV CKT 1
FDNS	00NR	3	16WP	G15_060	FROM->TO	G14-057T 345.00 - SUNNYSIDE 345KV CKT 1	717	789	0.06291	112.2614	DRAPER LAKE - MIDWEST TAP 138KV CKT 1
FDNS	00NR	3	20WP	G15_060	FROM->TO	G14-057T 345.00 - SUNNYSIDE 345KV CKT 1	717	789	0.06073	112.2457	G14_038T 345.00 - Hitchland Interchange 345KV CKT 1
FDNS	00NR	3	16WP	G15_060	FROM->TO	G14-057T 345.00 - SUNNYSIDE 345KV CKT 1	717	789	0.06193	112.2436	ARBUCKLE - SULPHR 4 138.00 138KV CKT 1
FDNS	00NR	3	16WP	G15_060	FROM->TO	G14-057T 345.00 - SUNNYSIDE 345KV CKT 1	717	789	0.06255	112.2392	GEN520812 1-ANADRK5
FDNS	00NR	3	16WP	G15_060	FROM->TO	G14-057T 345.00 - SUNNYSIDE 345KV CKT 1	717	789	0.06255	112.2391	GEN520813 1-ANADRK6
FDNS	00NR	3	16WP	G15_060	FROM->TO	G14-057T 345.00 - SUNNYSIDE 345KV CKT 1	717	789	0.06261	112.2379	GLASSES - RUSSETT 138KV CKT 1
FDNS	00NR	3	16WP	G15_060	FROM->TO	G14-057T 345.00 - SUNNYSIDE 345KV CKT 1	717	789	0.06257	112.2346	P12:138:WFEC:MSL11
FDNS	00NR	3	16WP	G15_060	FROM->TO	G14-057T 345.00 - SUNNYSIDE 345KV CKT 1	717	789	0.06257	112.2346	P12:138:WFEC-AEPW:PHAROAH4:LONEOAK4
FDNS	00NR	3	16WP	G15_060	FROM->TO	G14-057T 345.00 - SUNNYSIDE 345KV CKT 1	717	789	0.06014	112.2325	BEARCAT 138.00 - NINE MILE 138KV CKT 1
FDNS	00NR	3	20WP	G15_060	FROM->TO	G14-057T 345.00 - SUNNYSIDE 345KV CKT 1	717	789	0.06408	112.2312	BLANCHARD - CORNVILLE 138KV CKT 1
FDNS	00NR	3	16WP	G15_060	FROM->TO	G14-057T 345.00 - SUNNYSIDE 345KV CKT 1	717	789	0.06255	112.2289	GEN511961 1-DEMPSEY-WTG10.7000
FDNS	00NR	3	16WP	G15_060	FROM->TO	G14-057T 345.00 - SUNNYSIDE 345KV CKT 1	717	789	0.06255	112.2149	GEN600017 C-LS POWER CT
FDNS	00NR	3	16WP	G15_060	FROM->TO	G14-057T 345.00 - SUNNYSIDE 345KV CKT 1	717	789	0.0627	112.2118	P12:138:WFEC:MSL08
FDNS	00NR	3	16WP	G15_060	FROM->TO	G14-057T 345.00 - SUNNYSIDE 345KV CKT 1	717	789	0.06255	112.2113	P12:069:OKGE:3TERM42
FDNS	00NR	3	20WP	G15_060	FROM->TO	G14-057T 345.00 - SUNNYSIDE 345KV CKT 1	717	789	0.0623	112.2112	LAYFLD8 500.00 - MOUNT OLIVE 500KV CKT 1
FDNS	00NR	3	20WP	G15_060	FROM->TO	G14-057T 345.00 - SUNNYSIDE 345KV CKT 1	717	789	0.0623	112.2112	LAYFLD8 500.00 - MOUNT OLIVE 500KV CKT 1
FDNS	00NR	3	20WP	G15_060	FROM->TO	G14-057T 345.00 - SUNNYSIDE 345KV CKT 1	717	789	0.06338	112.2105	LATHAMS7 345.00 - ROSE HILL 345KV CKT 1
FDNS	00NR	3	16WP	G15_060	FROM->TO	G14-057T 345.00 - SUNNYSIDE 345KV CKT 1	717	789	0.06291	112.2096	P12:138:OKGE:3TERM21
FDNS	00NR	3	16WP	G15_060	FROM->TO	G14-057T 345.00 - SUNNYSIDE 345KV CKT 1	717	789	0.06186	112.2081	PRAIRIE POINT - RATLIFF 138KV CKT 1
FDNS	00NR	3	16WP	G15_060	FROM->TO	G14-057T 345.00 - SUNNYSIDE 345KV CKT 1	717	789	0.06268	112.2038	DELL 500 - INDEPENDENCE 500KV CKT 1
FDNS	00NR	3	20WP	G15_060	FROM->TO	G14-057T 345.00 - SUNNYSIDE 345KV CKT 1	717	789	0.06584	112.1996	THISTLE7 345.00 - WOODWARD DISTRICT EHV 345KV CKT 1
FDNS	00NR	3	20WP	G15_060	FROM->TO	G14-057T 345.00 - SUNNYSIDE 345KV CKT 1	717	789	0.06584	112.1996	THISTLE7 345.00 - WOODWARD DISTRICT EHV 345KV CKT 1
FDNS	00NR	3	20WP	G15_060	FROM->TO	G14-057T 345.00 - SUNNYSIDE 345KV CKT 1	717	789	0.06584	112.1996	THISTLE7 345.00 - WOODWARD DISTRICT EHV 345KV CKT 2
FDNS	00NR	3	20WP	G15_060	FROM->TO	G14-057T 345.00 - SUNNYSIDE 345KV CKT 1	717	789	0.06584	112.1996	THISTLE7 345.00 - WOODWARD DISTRICT EHV 345KV CKT 2
FDNS	00NR	3	16WP	G15_060	FROM->TO	G14-057T 345.00 - SUNNYSIDE 345KV CKT 1	717	789	0.06174	112.1984	CIMARRON - MATHWSN7 345.00 345KV CKT 1
FDNS	00NR	3	16WP	G15_060	FROM->TO	G14-057T 345.00 - SUNNYSIDE 345KV CKT 1	717	789	0.06174	112.1984	CIMARRON - MATHWSN7 345.00 345KV CKT 2
FDNS	00NR	3	20WP	G15_060	FROM->TO	G14-057T 345.00 - SUNNYSIDE 345KV CKT 1	717	789	0.06233	112.1966	GEN334071 1-LEWIS CREEK 2
FDNS	00NR	3	16WP	G15_060	FROM->TO	G14-057T 345.00 - SUNNYSIDE 345KV CKT 1	717	789	0.06255	112.1901	GEN672392 1-NBECGT1G 18.000
FDNS	00NR	3	20WP	G15_060	FROM->TO	G14-057T 345.00 - SUNNYSIDE 345KV CKT 1	717	789	0.06233	112.1883	GEN334070 1-LEWIS CREEK 1
FDNS	00NR	3	16WP	G15_060	FROM->TO	G14-057T 345.00 - SUNNYSIDE 345KV CKT 1	717	789	0.06282	112.1877	OVEXFRMCCOVE
FDNS	00NR	3	20WP	G15_060	FROM->TO	G14-057T 345.00 - SUNNYSIDE 345KV CKT 1	717	789	0.06269	112.1831	COMANCHE - EMPIRE 138KV CKT 1
FDNS	00NR	3	20WP	G15_060	FROM->TO	G14-057T 345.00 - SUNNYSIDE 345KV CKT 1	717	789	0.06233	112.1813	GEN336251 1-NINEMILE POINT UNIT#4
FDNS	00NR	3	16WP	G15_060	FROM->TO	G14-057T 345.00 - SUNNYSIDE 345KV CKT 1	717	789	0.06255	112.1744	GEN528361 1-MADDOX GEN #1
FDNS	00NR	3	16WP	G15_060	FROM->TO	G14-057T 345.00 - SUNNYSIDE 345KV CKT 1	717	789	0.06262	112.1735	GRPRAR1-LNX3345.00 - HOLT.CO3 345.00 345KV CKT 1
FDNS	00NR	3	16WP	G15_060	FROM->TO	G14-057T 345.00 - SUNNYSIDE 345KV CKT 1	717	789	0.06014	112.1726	P12:138:WFEC:MSL14
FDNS	00NR	3	16WP	G15_060	FROM->TO	G14-057T 345.00 - SUNNYSIDE 345KV CKT 1	717	789	0.06262	112.1714	CANEY CREEK - JOHNSON COUNTY 138KV CKT 1
FDNS	00NR	3	16WP	G15_060	FROM->TO	G14-057T 345.00 - SUNNYSIDE 345KV CKT 1	717	789	0.06255	112.1704	GEN615010 1-STANTON4
FDNS	00NR	3	20WP	G15_060	FROM->TO	G14-057T 345.00 - SUNNYSIDE 345KV CKT 1	717	789	0.0635	112.1703	OIL CENTER - STRATFORD 138KV CKT 1
FDNS	00NR	3	20WP	G15_060	FROM->TO	G14-057T 345.00 - SUNNYSIDE 345KV CKT 1	717	789	0.06232	112.1694	P12:161:AEPW-SWPA:BEAVER5:EROGERS5
FDNS	00NR	3	20WP	G15_060	FROM->TO	G14-057T 345.00 - SUNNYSIDE 345KV CKT 1	717	789	0.06233	112.1647	GEN509392 G2-ARSENAL HILL GENS #3 (STALL)
FDNS	00NR	3	16WP	G15_060	FROM->TO	G14-057T 345.00 - SUNNYSIDE 345KV CKT 1	717	789	0.06255	112.1645	GEN629070 2-BEAVER CHANNEL GENERATORFOR UNIT NO 2
FDNS	00NR	3	20WP	G15_060	FROM->TO	G14-057T 345.00 - SUNNYSIDE 345KV CKT 1	717	789	0.06233	112.1645	GEN509391 G1-ARSENAL HILL GENS #2 (STALL)
FDNS	00NR	3	16WP	G15_060	FROM->TO	G14-057T 345.00 - SUNNYSIDE 345KV CKT 1	717	789	0.06262	112.1628	GRPRAR1-LNX3345.00 - GRPRAR 345KV CKT Z
FDNS	00NR	3	20WP	G15_060	FROM->TO	G14-057T 345.00 - SUNNYSIDE 345KV CKT 1	717	789	0.06233	112.1625	GEN509393 S1-ARSENAL HILL GENS #4 (STALL)
FDNS	00NR	3	16WP	G15_060	FROM->TO	G14-057T 345.00 - SUNNYSIDE 345KV CKT 1	717	789	0.06255	112.155	GEN560183 1-REDHIL-WTG1 12.000
FDNS	00NR	3	16WP	G15_060	FROM->TO	G14-057T 345.00 - SUNNYSIDE 345KV CKT 1	717	789	0.06255	112.1545	GEN515443 1-MNCOWND1 0.7000
FDNS	00NR	3	16WP	G15_060	FROM->TO	G14-057T 345.00 - SUNNYSIDE 345KV CKT 1	717	789	0.06255	112.15	GEN629071 1-BURLINGTON GENERATOR FOR UNIT NO 1 E
FDNS	00NR	3	16WP	G15_060	FROM->TO	G14-057T 345.00 - SUNNYSIDE 345KV CKT 1	717	789	0.06255	112.1499	GEN615021 1-GRE-ER 14G 16.000
FDNS	00NR	3	20WP	G15_060	FROM->TO	G14-057T 345.00 - SUNNYSIDE 345KV CKT 1	717	789	0.06251	112.1481	DUNCAN (DUNCAN) 138/69/13.8KV TRANSFORMER CKT 1
FDNS	00NR	3	20WP	G15_060	FROM->TO	G14-057T 345.00 - SUNNYSIDE 345KV CKT 1	717	789	0.06251	112.1481	DUNCAN (DUNCAN) 138/69/13.8KV TRANSFORMER CKT 1
FDNS	00NR	3	16WP	G15_060	FROM->TO	G14-057T 345.00 - SUNNYSIDE 345KV CKT 1	717	789	0.06248	112.146	CARTER - CHICKASAW 138KV CKT 1
FDNS	00NR	3	16WP	G15_060	FROM->TO	G14-057T 345.00 - SUNNYSIDE 345KV CKT 1	717	789	0.06255	112.1366	INDEPENDENCE 500/26.0KV TRANSFORMER CKT 1
FDNS	00NR	3	16WP	G15_060	FROM->TO	G14-057T 345.00 - SUNNYSIDE 345KV CKT 1	717	789	0.06255	112.1349	GEN562902 1-G15052_3 0.6900
FDNS	00NR	3	16WP	G15_060	FROM->TO	G14-057T 345.00 - SUNNYSIDE 345KV CKT 1	717	789	0.06255	112.1348	GEN563242 1-G15090_3 0.6900
FDNS	00NR	3	16WP	G15_060	FROM->TO	G14-057T 345.00 - SUNNYSIDE 345KV CKT 1	717	789	0.06255	112.1346	BURLINGTON NO1 + NO 2 + NO 3 161/20.0KV TRANSFORMER CKT 1
FDNS	00NR	3	16WP	G15_060	FROM->TO	G14-057T 345.00 - SUNNYSIDE 345KV CKT 1	717	789	0.0623	112.1346	ROCKY POINT - SPRINGDALE 138KV CKT 1
FDNS	00NR	3	16WP	G15_060	FROM->TO	G14-057T 345.00 - SUNNYSIDE 345KV CKT 1	717	789	0.06014	112.134	BEARCAT 138.00 - MOORELAND 138KV CKT 1
FDNS	00NR	3	16WP	G15_060	FROM->TO	G14-057T 345.00 - SUNNYSIDE 345KV CKT 1	717	789	0.06271	112.131	CANADIAN RIVER - MCALESTER SOUTH 138KV CKT 1
FDNS	00NR	3	16WP	G15_060	FROM->TO	G14-057T 345.00 - SUNNYSIDE 345KV CKT 1	717	789	0.06271	112.131	CANADIAN RIVER - MCALESTER SOUTH 138KV CKT 1
FDNS	00NR	3	20WP	G15_060	FROM->TO	G14-057T 345.00 - SUNNYSIDE 345KV CKT 1	717	789	0.06233	112.1307	GEN334433 1-SABINE UNIT 3
FDNS	00NR	3	16WP	G15_060	FROM->TO	G14-057T 345.00 - SUNNYSIDE 345KV CKT 1	717	789	0.06271	112.1297	CANADIAN RIVER () 345/138/13.8KV TRANSFORMER CKT 1
FDNS	00NR	3	16WP	G15_060	FROM->TO	G14-057T 345.00 - SUNNYSIDE 345KV CKT 1	717	789	0.06271	112.1297	CANADIAN RIVER () 345/138/13.8KV TRANSFORMER CKT 1
FDNS	00NR	3	20WP	G15_060	FROM->TO	G14-057T 345.00 - SUNNYSIDE 345KV CKT 1	717	789	0.06233	112.1296	P12:161:AEPW:DYESS5:ELMSPRNG:TONTITN5
FDNS	00NR	3	20WP	G15_060	FROM->TO	G14-057T 345.00 - SUNNYSIDE 345KV CKT 1	717	789	0.06233	112.1167	GEN337653 1-WHITE BLUFF UNIT #2
FDNS	00NR	3	16WP	G15_060	FROM->TO	G14-057T 345.00 - SUNNYSIDE 345KV CKT 1	717	789	0.06239	112.1149	ALTUS JUNCTION - RUSSELL 138KV CKT 1
FDNS	00NR	3	16WP	G15_060	FROM->TO	G14-057T 345.00 - SUNNYSIDE 345KV CKT 1	717	789	0.06239	112.1149	ALTUS JUNCTION - RUSSELL 138KV CKT 1
FDNS	00NR	3	16WP	G15_060	FROM->TO	G14-057T 345.00 - SUNNYSIDE 345KV CKT 1	717	789	0.06258	112.1082	NORTHWEST TEXARKANA - WELSH 345KV CKT 1
FDNS	00NR	3	16WP	G15_060	FROM->TO	G14-057T 345.00 - SUNNYSIDE 345KV CKT 1	717	789	0.06258	112.1082	NORTHWEST TEXARKANA - WELSH 345KV CKT 1
FDNS	00NR	3	20WP	G15_060	FROM->TO	G14-057T 345.00 - SUNNYSIDE 345KV CKT 1	717	789	0.06233	112.1075	GEN336831 1-BAXTER WILSON SES

SOLUTION	GROUP	SCENARIO	SEASON	SOURCE	DIRECTION	MONITORED ELEMENT	RATEA (MVA)	RATEB(MVA)	TDF	TC%LOADING (% MVA)	CONTINGENCY
FDNS	00NR	3	16WP	G15_060	FROM->TO	G14-057T 345.00 - SUNNYSIDE 345KV CKT 1	717	789	0.06255	112.1003	GEN562078 1-G11_051_3 0.6900
FDNS	00NR	3	16WP	G15_060	FROM->TO	G14-057T 345.00 - SUNNYSIDE 345KV CKT 1	717	789	0.06358	112.0975	MINGO - SETAB 345KV CKT 1
FDNS	00NR	3	16WP	G15_060	FROM->TO	G14-057T 345.00 - SUNNYSIDE 345KV CKT 1	717	789	0.06358	112.0975	MINGO - SETAB 345KV CKT 1
FDNS	00NR	3	16WP	G15_060	FROM->TO	G14-057T 345.00 - SUNNYSIDE 345KV CKT 1	717	789	0.06288	112.0928	CHAMBER SPRINGS - CLARKSVILLE 345KV CKT 1
FDNS	00NR	3	16WP	G15_060	FROM->TO	G14-057T 345.00 - SUNNYSIDE 345KV CKT 1	717	789	0.06193	112.0919	JOLLYVILLE - SULPHR 4 138.00 138KV CKT 1
FDNS	00NR	3	16WP	G15_060	FROM->TO	G14-057T 345.00 - SUNNYSIDE 345KV CKT 1	717	789	0.06255	112.0854	P12:230:UMZB:# 112 #: NU IN SD. NU-RCDC & DRY CREEK XFMR
FDNS	00NR	3	16WP	G15_060	FROM->TO	G14-057T 345.00 - SUNNYSIDE 345KV CKT 1	717	789	0.06255	112.0839	RCDC EAST 4230.00 - RED CEDAR DC 230KV CKT 1
FDNS	00NR	3	16WP	G15_060	FROM->TO	G14-057T 345.00 - SUNNYSIDE 345KV CKT 1	717	789	0.06274	112.0816	KEO EHV - WEST MEMPHIS 500 500KV CKT 1
FDNS	00NR	3	20WP	G15_060	FROM->TO	G14-057T 345.00 - SUNNYSIDE 345KV CKT 1	717	789	0.06233	112.0763	GEN334030 1-FRONTIER UNIT 1
FDNS	00NR	3	16WP	G15_060	FROM->TO	G14-057T 345.00 - SUNNYSIDE 345KV CKT 1	717	789	0.06255	112.076	GEN562802 1-G15039_3 0.3570
FDNS	00NR	3	20WP	G15_060	FROM->TO	G14-057T 345.00 - SUNNYSIDE 345KV CKT 1	717	789	0.06233	112.074	GEN334031 1-FRONTIER UNIT 2
FDNS	00NR	3	16WP	G15_060	FROM->TO	G14-057T 345.00 - SUNNYSIDE 345KV CKT 1	717	789	0.06255	112.0707	GEN524285 1-WILDORADO WIND GEN
FDNS	00NR	3	16WP	G15_060	FROM->TO	G14-057T 345.00 - SUNNYSIDE 345KV CKT 1	717	789	0.06255	112.0633	GEN514805 1-SOONER UNIT 1
FDNS	00NR	3	20WP	G15_060	FROM->TO	G14-057T 345.00 - SUNNYSIDE 345KV CKT 1	717	789	0.06233	112.0614	GEN337911 1-ARKANSAS NUCLEAR ONE UNIT #2
FDNS	00NR	3	16WP	G15_060	FROM->TO	G14-057T 345.00 - SUNNYSIDE 345KV CKT 1	717	789	0.06255	112.0546	GEN524295 1-SPNSPUR_WND10.6900
FDNS	00NR	3	16WP	G15_060	FROM->TO	G14-057T 345.00 - SUNNYSIDE 345KV CKT 1	717	789	0.06255	112.0543	GEN514806 1-SOONER UNIT 2
FDNS	00NR	3	20WP	G15_060	FROM->TO	G14-057T 345.00 - SUNNYSIDE 345KV CKT 1	717	789	0.06236	112.0512	P12:138:AEPW:CATOOSA4:T.S.E.-4
FDNS	00NR	3	16WP	G15_060	FROM->TO	G14-057T 345.00 - SUNNYSIDE 345KV CKT 1	717	789	0.06255	112.0426	GEN560331 1-G10-46 13.800
FDNS	00NR	3	16WP	G15_060	FROM->TO	G14-057T 345.00 - SUNNYSIDE 345KV CKT 1	717	789	0.0616	112.0377	ARKANSAS NUCLEAR ONE - FT SMITH 500KV CKT 1
FDNS	00NR	3	16WP	G15_060	FROM->TO	G14-057T 345.00 - SUNNYSIDE 345KV CKT 1	717	789	0.0616	112.0377	ARKANSAS NUCLEAR ONE - FT SMITH 500KV CKT 1
FDNS	00NR	3	20WP	G15_060	FROM->TO	G14-057T 345.00 - SUNNYSIDE 345KV CKT 1	717	789	0.06408	112.026	BLANCHARD - MAUD 138KV CKT 1
FDNS	00NR	3	16WP	G15_060	FROM->TO	G14-057T 345.00 - SUNNYSIDE 345KV CKT 1	717	789	0.06193	112.0245	JOLLYVILLE - KERR MCGEE CIMARRON 138KV CKT 1
FDNS	00NR	3	20WP	G15_060	FROM->TO	G14-057T 345.00 - SUNNYSIDE 345KV CKT 1	717	789	0.06237	112.0213	FULTON 115 - HOPE 115KV CKT 1
FDNS	00NR	3	20WP	G15_060	FROM->TO	G14-057T 345.00 - SUNNYSIDE 345KV CKT 1	717	789	0.06237	112.0213	FULTON 115 - HOPE 115KV CKT 1
FDNS	00NR	3	20WP	G15_060	FROM->TO	G14-057T 345.00 - SUNNYSIDE 345KV CKT 1	717	789	0.06233	112.021	GEN506752 1-LEBROCK GAS 1
FDNS	00NR	3	20WP	G15_060	FROM->TO	G14-057T 345.00 - SUNNYSIDE 345KV CKT 1	717	789	0.06233	112.0206	GEN506753 1-LEBROCK GAS 2
FDNS	00NR	3	16WP	G15_060	FROM->TO	G14-057T 345.00 - SUNNYSIDE 345KV CKT 1	717	789	0.06255	112.0196	GEN562587 1-G14_056_3 0.6900
FDNS	00NR	3	20WP	G15_060	FROM->TO	G14-057T 345.00 - SUNNYSIDE 345KV CKT 1	717	789	0.06233	112.0151	GEN501811 1-RODEMACHER UNIT 1
FDNS	00NR	3	20WP	G15_060	FROM->TO	G14-057T 345.00 - SUNNYSIDE 345KV CKT 1	717	789	0.06233	112.0142	GEN337652 1-WHITE BLUFF UNIT #1
FDNS	00NR	3	16WP	G15_060	FROM->TO	G14-057T 345.00 - SUNNYSIDE 345KV CKT 1	717	789	0.06255	112.0133	GEN562269 1-G12-020-1 0.6900
FDNS	00NR	3	20WP	G15_060	FROM->TO	G14-057T 345.00 - SUNNYSIDE 345KV CKT 1	717	789	0.06279	112.0111	P12:138:AEPW:S.W.S.-4:L.E.S.-4
FDNS	00NR	3	20WP	G15_060	FROM->TO	G14-057T 345.00 - SUNNYSIDE 345KV CKT 1	717	789	0.06233	112.0088	GEN300003 1-THOMAS HILL UNIT 3
FDNS	00NR	3	16WP	G15_060	FROM->TO	G14-057T 345.00 - SUNNYSIDE 345KV CKT 1	717	789	0.06255	112.008	GEN629072 4-LANSING GENERATOR FOR UNITS NO4 EIA CODE 1
FDNS	00NR	3	20WP	G15_060	FROM->TO	G14-057T 345.00 - SUNNYSIDE 345KV CKT 1	717	789	0.0635	111.9975	LATTA JCT - OIL CENTER 138KV CKT 1
FDNS	00NR	3	20WP	G15_060	FROM->TO	G14-057T 345.00 - SUNNYSIDE 345KV CKT 1	717	789	0.06233	111.9962	GEN300015 1-1SGPDEL 18.000
FDNS	00NR	3	20WP	G15_060	FROM->TO	G14-057T 345.00 - SUNNYSIDE 345KV CKT 1	717	789	0.06233	111.9908	GEN515226 1-MUSKOGEE 6G
FDNS	00NR	3	20WP	G15_060	FROM->TO	G14-057T 345.00 - SUNNYSIDE 345KV CKT 1	717	789	0.06261	111.989	P12:138:AEPW:CORNVIL4:DUNCAN-4
FDNS	00NR	3	16WP	G15_060	FROM->TO	G14-057T 345.00 - SUNNYSIDE 345KV CKT 1	717	789	0.06255	111.9885	GEN657749 1-YOUNG 1 GENERATOR
FDNS	00NR	3	16WP	G15_060	FROM->TO	G14-057T 345.00 - SUNNYSIDE 345KV CKT 1	717	789	0.06255	111.9876	GEN562882 1-G15047_3 0.6900
FDNS	00NR	3	20WP	G15_060	FROM->TO	G14-057T 345.00 - SUNNYSIDE 345KV CKT 1	717	789	0.06233	111.9824	GEN336191 1-LITTLE GYPSY UNIT#3
FDNS	00NR	3	16WP	G15_060	FROM->TO	G14-057T 345.00 - SUNNYSIDE 345KV CKT 1	717	789	0.06193	111.9735	ARBWIND4 138.00 - KERR MCGEE CIMARRON 138KV CKT 1
FDNS	00NR	3	16WP	G15_060	FROM->TO	G14-057T 345.00 - SUNNYSIDE 345KV CKT 1	717	789	0.06255	111.9699	GEN562270 1-G12-020-2 0.6900
FDNS	00NR	3	16WP	G15_060	FROM->TO	G14-057T 345.00 - SUNNYSIDE 345KV CKT 1	717	789	0.06326	111.9688	G15063_T 345.00 - MATHWSN7 345.00 345KV CKT 1
FDNS	00NR	3	16WP	G15_060	FROM->TO	G14-057T 345.00 - SUNNYSIDE 345KV CKT 1	717	789	0.06255	111.964	GEN562812 1-G15040_3 0.3570
FDNS	00NR	3	20WP	G15_060	FROM->TO	G14-057T 345.00 - SUNNYSIDE 345KV CKT 1	717	789	0.06238	111.9635	6LAYFLD 230.00 - CARROLL 230KV CKT 1
FDNS	00NR	3	16WP	G15_060	FROM->TO	G14-057T 345.00 - SUNNYSIDE 345KV CKT 1	717	789	0.06255	111.9615	GEN563102 1-G15075_3 0.5500
FDNS	00NR	3	20WP	G15_060	FROM->TO	G14-057T 345.00 - SUNNYSIDE 345KV CKT 1	717	789	0.06383	111.9575	G1524G1525 345.00 - THISTLE7 345.00 345KV CKT 1
FDNS	00NR	3	20WP	G15_060	FROM->TO	G14-057T 345.00 - SUNNYSIDE 345KV CKT 1	717	789	0.06383	111.9575	G1524G1525 345.00 - THISTLE7 345.00 345KV CKT 2
FDNS	00NR	3	16WP	G15_060	FROM->TO	G14-057T 345.00 - SUNNYSIDE 345KV CKT 1	717	789	0.06255	111.9565	GEN562974 1-G15060_5 0.6900
FDNS	00NR	3	20WP	G15_060	FROM->TO	G14-057T 345.00 - SUNNYSIDE 345KV CKT 1	717	789	0.06251	111.9564	P12:69:WFEC-AEPW:COMANCH2:DUNCAN-2
FDNS	00NR	3	20WP	G15_060	FROM->TO	G14-057T 345.00 - SUNNYSIDE 345KV CKT 1	717	789	0.06233	111.9539	GEN335614 1-WILLOW GLENN UNIT#4
FDNS	00NR	3	16WP	G15_060	FROM->TO	G14-057T 345.00 - SUNNYSIDE 345KV CKT 1	717	789	0.06255	111.9538	GEN563132 1-G15078_3 0.3570
FDNS	00NR	3	16WP	G15_060	FROM->TO	G14-057T 345.00 - SUNNYSIDE 345KV CKT 1	717	789	0.06255	111.9476	GEN562973 1-G15060_4 0.6900
FDNS	00NR	3	20WP	G15_060	FROM->TO	G14-057T 345.00 - SUNNYSIDE 345KV CKT 1	717	789	0.06237	111.9476	8DANIEL8 500.00 - MCKNIGHT 500KV CKT 1
FDNS	00NR	3	20WP	G15_060	FROM->TO	G14-057T 345.00 - SUNNYSIDE 345KV CKT 1	717	789	0.06233	111.9452	GEN515040 1-SEMINOLE 1G
FDNS	00NR	3	16WP	G15_060	FROM->TO	G14-057T 345.00 - SUNNYSIDE 345KV CKT 1	717	789	0.06193	111.9451	P12:138:AEPW:112GORE4:SNYDER-4
FDNS	00NR	3	20WP	G15_060	FROM->TO	G14-057T 345.00 - SUNNYSIDE 345KV CKT 1	717	789	0.0626	111.9448	P12:138:AEPW:CORNVIL4:S.W.S.-4
FDNS	00NR	3	16WP	G15_060	FROM->TO	G14-057T 345.00 - SUNNYSIDE 345KV CKT 1	717	789	0.06255	111.9371	GEN563062 1-G15071_3 0.6900
FDNS	00NR	3	20WP	G15_060	FROM->TO	G14-057T 345.00 - SUNNYSIDE 345KV CKT 1	717	789	0.06073	111.9367	G14_038T 345.00 - POTTER COUNTY INTERCHANGE 345KV CKT 1
FDNS	00NR	3	20WP	G15_060	FROM->TO	G14-057T 345.00 - SUNNYSIDE 345KV CKT 1	717	789	0.0626	111.9306	P12:138:AEPW-OGE:WTH_JCT4:JENSEN4
FDNS	00NR	3	20WP	G15_060	FROM->TO	G14-057T 345.00 - SUNNYSIDE 345KV CKT 1	717	789	0.06233	111.9287	P12:161:AEPW:EROGERS5:ECNTRTN5
FDNS	00NR	3	16WP	G15_060	FROM->TO	G14-057T 345.00 - SUNNYSIDE 345KV CKT 1	717	789	0.06492	111.9195	CLARKSVILLE - MUSKOGEE 345KV CKT 1
FDNS	00NR	3	16WP	G15_060	FROM->TO	G14-057T 345.00 - SUNNYSIDE 345KV CKT 1	717	789	0.06492	111.9195	CLARKSVILLE - MUSKOGEE 345KV CKT 1
FDNS	00NR	3	20WP	G15_060	FROM->TO	G14-057T 345.00 - SUNNYSIDE 345KV CKT 1	717	789	0.06227	111.919	TUTTLE - TUTTLE CONOCO TAP 138KV CKT 1
FDNS	00NR	3	20WP	G15_060	FROM->TO	G14-057T 345.00 - SUNNYSIDE 345KV CKT 1	717	789	0.06457	111.9104	FINNEY SWITCHING STATION - HOLCOMB 345KV CKT 1
FDNS	00NR	3	20WP	G15_060	FROM->TO	G14-057T 345.00 - SUNNYSIDE 345KV CKT 1	717	789	0.06457	111.9104	FINNEY SWITCHING STATION - HOLCOMB 345KV CKT 1
FDNS	00NR	3	20WP	G15_060	FROM->TO	G14-057T 345.00 - SUNNYSIDE 345KV CKT 1	717	789	0.06233	111.9081	GEN303007 1-1BC2 U2
FDNS	00NR	3	20WP	G15_060	FROM->TO	G14-057T 345.00 - SUNNYSIDE 345KV CKT 1	717	789	0.06233	111.9079	GEN337910 1-ARKANSAS NUCLEAR ONE UNIT #1
FDNS	00NR	3	20WP	G15_060	FROM->TO	G14-057T 345.00 - SUNNYSIDE 345KV CKT 1	717	789	0.06233	111.9067	WHITE BLUFF 500/26.0KV TRANSFORMER CKT 1
FDNS	00NR	3	20WP	G15_060	FROM->TO	G14-057T 345.00 - SUNNYSIDE 345KV CKT 1	717	789	0.06251	111.9057	DUNCAN - TOSCO 69KV CKT 1
FDNS	00NR	3	20WP	G15_060	FROM->TO	G14-057T 345.00 - SUNNYSIDE 345KV CKT 1	717	789	0.06233	111.9033	GEN336464 1-MICHOUD UNIT #3
FDNS	00NR	3	20WP	G15_060	FROM->TO	G14-057T 345.00 - SUNNYSIDE 345KV CKT 1	717	789	0.06233	111.9023	GEN303006 1-1BC2 U1
FDNS	00NR	3	20WP	G15_060	FROM->TO	G14-057T 345.00 - SUNNYSIDE 345KV CKT 1	717	789	0.06286	111.9021	CIMARRON - CZECH HALL 138KV CKT 1
FDNS	00NR	3	16WP	G15_060	FROM->TO	G14-057T 345.00 - SUNNYSIDE 345KV CKT 1	717	789	0.062	111.9015	CHICKASAW - TOTAL 138KV CKT 1
FDNS	00NR	3	16WP	G15_060	FROM->TO	G14-057T 345.00 - SUNNYSIDE 345KV CKT 1	717	789	0.06255	111.9	GEN681522 3-GENOA 3
FDNS	00NR	3	20WP	G15_060	FROM->TO	G14-057T 345.00 - SUNNYSIDE 345KV CKT 1	717	789	0.06233	111.8989	GEN562783 1-G15036_4 0.6900
FDNS	00NR	3	20WP	G15_060	FROM->TO	G14-057T 345.00 - SUNNYSIDE 345KV CKT 1	717	789	0.06233	111.8989	GEN562784 1-G15036_5 0.6900
FDNS	00NR	3	20WP	G15_060	FROM->TO	G14-057T 345.00 - SUNNYSIDE 345KV CKT 1	717	789	0.06233	111.8941	GEN515223 1-MUSKOGEE 4G
FDNS	00NR	3	20WP	G15_060	FROM->TO	G14-057T 345.00 - SUNNYSIDE 345KV CKT 1	717	789	0.06233	111.8941	GEN515225 1-MUSKOGEE 5G

SOLUTION	GROUP	SCENARIO	SEASON	SOURCE	DIRECTION	MONITORED ELEMENT	RATEA (MVA)	RATEB(MVA)	TDF	TC%LOADING (% MVA)	CONTINGENCY
FDNS	00NR	3	20WP	G15_060	FROM->TO	G14-057T 345.00 - SUNNYSIDE 345KV CKT 1	717	789	0.06235	111.8903	BISMARK - HOT SPRINGS WEST BUS 115KV CKT 1
FDNS	00NR	3	16WP	G15_060	FROM->TO	G14-057T 345.00 - SUNNYSIDE 345KV CKT 1	717	789	0.06248	111.887	BROWN - RUSSETT 138KV CKT 1
FDNS	00NR	3	20WP	G15_060	FROM->TO	G14-057T 345.00 - SUNNYSIDE 345KV CKT 1	717	789	0.06239	111.8865	P12:69:AEPW-OMPA:COMANC-2:OMWALTR2
FDNS	00NR	3	20WP	G15_060	FROM->TO	G14-057T 345.00 - SUNNYSIDE 345KV CKT 1	717	789	0.06234	111.8863	MC NIEL 500/115KV TRANSFORMER CKT 1
FDNS	00NR	3	20WP	G15_060	FROM->TO	G14-057T 345.00 - SUNNYSIDE 345KV CKT 1	717	789	0.06233	111.8863	RODEMACHER 230/22.0KV TRANSFORMER CKT 1
FDNS	00NR	3	16WP	G15_060	FROM->TO	G14-057T 345.00 - SUNNYSIDE 345KV CKT 1	717	789	0.06255	111.876	GEN526331 1-JONES GEN #1 22 KV
FDNS	00NR	3	16WP	G15_060	FROM->TO	G14-057T 345.00 - SUNNYSIDE 345KV CKT 1	717	789	0.06255	111.8759	GEN526332 1-JONES GEN #2 21 KV
FDNS	00NR	3	20WP	G15_060	FROM->TO	G14-057T 345.00 - SUNNYSIDE 345KV CKT 1	717	789	0.06252	111.8745	G15088_T 345.00 - MOORE 345KV CKT 1
FDNS	00NR	3	20WP	G15_060	FROM->TO	G14-057T 345.00 - SUNNYSIDE 345KV CKT 1	717	789	0.06231	111.8706	HOT SPRINGS EHV - MAGNET COVE 500KV CKT 1
FDNS	00NR	3	20WP	G15_060	FROM->TO	G14-057T 345.00 - SUNNYSIDE 345KV CKT 1	717	789	0.06233	111.8701	GEN300010 1-ST FRANCIS UNIT 1
FDNS	00NR	3	16WP	G15_060	FROM->TO	G14-057T 345.00 - SUNNYSIDE 345KV CKT 1	717	789	0.06245	111.87	RUSSETT - SPRINGDALE 138KV CKT 1
FDNS	00NR	3	20WP	G15_060	FROM->TO	G14-057T 345.00 - SUNNYSIDE 345KV CKT 1	717	789	0.06246	111.8695	P12:138:AEPW:WTHWF4:CLINTJC4
FDNS	00NR	3	20WP	G15_060	FROM->TO	G14-057T 345.00 - SUNNYSIDE 345KV CKT 1	717	789	0.06212	111.8682	CHISHOLM6 230.00 - ELK CITY 230KV 230KV CKT 1
FDNS	00NR	3	20WP	G15_060	FROM->TO	G14-057T 345.00 - SUNNYSIDE 345KV CKT 1	717	789	0.06212	111.8675	ELK CITY 230KV (ELKCTY-6) 230/138/13.8KV TRANSFORMER CKT 1
FDNS	00NR	3	20WP	G15_060	FROM->TO	G14-057T 345.00 - SUNNYSIDE 345KV CKT 1	717	789	0.06212	111.8675	ELK CITY 230KV (ELKCTY-6) 230/138/13.8KV TRANSFORMER CKT 1
FDNS	00NR	3	16WP	G15_060	FROM->TO	G14-057T 345.00 - SUNNYSIDE 345KV CKT 1	717	789	0.06255	111.8657	GEN560105 1-G08-22 0.6900
FDNS	00NR	3	16WP	G15_060	FROM->TO	G14-057T 345.00 - SUNNYSIDE 345KV CKT 1	717	789	0.06255	111.8633	GEN562550 1-G14_040_3 0.6900
FDNS	00NR	3	20WP	G15_060	FROM->TO	G14-057T 345.00 - SUNNYSIDE 345KV CKT 1	717	789	0.0629	111.8624	CIMARRON - SARA 138KV CKT 1
FDNS	00NR	3	20WP	G15_060	FROM->TO	G14-057T 345.00 - SUNNYSIDE 345KV CKT 1	717	789	0.0637	111.8621	BAILEY4 138.00 - SUNSHINE CANYON 138KV CKT 1
FDNS	00NR	3	20WP	G15_060	FROM->TO	G14-057T 345.00 - SUNNYSIDE 345KV CKT 1	717	789	0.06251	111.8602	COMANCHE TAP - TOSCO 69KV CKT 1
FDNS	00NR	3	16WP	G15_060	FROM->TO	G14-057T 345.00 - SUNNYSIDE 345KV CKT 1	717	789	0.06255	111.8567	GEN345671 2-1RUSH G2 18.000
FDNS	00NR	3	20WP	G15_060	FROM->TO	G14-057T 345.00 - SUNNYSIDE 345KV CKT 1	717	789	0.0627	111.8552	BUCKNER7 345.00 - SPEARVILLE 345KV CKT 1
FDNS	00NR	3	20WP	G15_060	FROM->TO	G14-057T 345.00 - SUNNYSIDE 345KV CKT 1	717	789	0.0627	111.8552	BUCKNER7 345.00 - SPEARVILLE 345KV CKT 1
FDNS	00NR	3	16WP	G15_060	FROM->TO	G14-057T 345.00 - SUNNYSIDE 345KV CKT 1	717	789	0.06255	111.8549	GEN345670 1-1RUSH G1 18.000
FDNS	00NR	3	20WP	G15_060	FROM->TO	G14-057T 345.00 - SUNNYSIDE 345KV CKT 1	717	789	0.06254	111.85	G15074_T 345.00 - HOYT 345KV CKT 1
FDNS	00NR	3	20WP	G15_060	FROM->TO	G14-057T 345.00 - SUNNYSIDE 345KV CKT 1	717	789	0.06233	111.847	GEN337041 1-GERALD ANDRUS
FDNS	00NR	3	16WP	G15_060	FROM->TO	G14-057T 345.00 - SUNNYSIDE 345KV CKT 1	717	789	0.06221	111.8445	ROCKY POINT - SUNNYSIDE 138KV CKT 1
FDNS	00NR	3	20WP	G15_060	FROM->TO	G14-057T 345.00 - SUNNYSIDE 345KV CKT 1	717	789	0.06233	111.8445	GEN505432 1-SIKESTON
FDNS	00NR	3	20WP	G15_060	FROM->TO	G14-057T 345.00 - SUNNYSIDE 345KV CKT 1	717	789	0.06155	111.8443	SEMINOLE - VANOSTP4 138.00 138KV CKT 1
FDNS	00NR	3	16WP	G15_060	FROM->TO	G14-057T 345.00 - SUNNYSIDE 345KV CKT 1	717	789	0.06248	111.8418	P12:138:WFEC:MSL07
FDNS	00NR	3	16WP	G15_060	FROM->TO	G14-057T 345.00 - SUNNYSIDE 345KV CKT 1	717	789	0.06248	111.8418	P12:138:WFEC-AEPW:HUGOPP4:ATOKA--4
FDNS	00NR	3	20WP	G15_060	FROM->TO	G14-057T 345.00 - SUNNYSIDE 345KV CKT 1	717	789	0.06233	111.8414	GEN303008 1-1BCZ U3
FDNS	00NR	3	20WP	G15_060	FROM->TO	G14-057T 345.00 - SUNNYSIDE 345KV CKT 1	717	789	0.06227	111.8396	CIMARRON - TUTTLE CONOCO TAP 138KV CKT 1
FDNS	00NR	3	16WP	G15_060	FROM->TO	G14-057T 345.00 - SUNNYSIDE 345KV CKT 1	717	789	0.06255	111.8382	4SIOUX 1 138.00 138/18.0KV TRANSFORMER CKT 1
FDNS	00NR	3	20WP	G15_060	FROM->TO	G14-057T 345.00 - SUNNYSIDE 345KV CKT 1	717	789	0.06235	111.8363	ALPINE AECC - BISMARK 115KV CKT 1
FDNS	00NR	3	20WP	G15_060	FROM->TO	G14-057T 345.00 - SUNNYSIDE 345KV CKT 1	717	789	0.06171	111.834	ARBWIND4 138.00 - CARTER 138KV CKT 1
FDNS	00NR	3	20WP	G15_060	FROM->TO	G14-057T 345.00 - SUNNYSIDE 345KV CKT 1	717	789	0.06246	111.8304	P12:138:AEPW:WTHWF4:WTH_SE4
FDNS	00NR	3	20WP	G15_060	FROM->TO	G14-057T 345.00 - SUNNYSIDE 345KV CKT 1	717	789	0.06235	111.8279	P12:138:AEPW:N.E.S.-4:CATOOSA4
FDNS	00NR	3	20WP	G15_060	FROM->TO	G14-057T 345.00 - SUNNYSIDE 345KV CKT 1	717	789	0.06286	111.8273	CZECH HALL - XEROX 138KV CKT 1
FDNS	00NR	3	16WP	G15_060	FROM->TO	G14-057T 345.00 - SUNNYSIDE 345KV CKT 1	717	789	0.06255	111.8246	GEN511962 2-RKYRDGW2-1 0.7000
FDNS	00NR	3	20WP	G15_060	FROM->TO	G14-057T 345.00 - SUNNYSIDE 345KV CKT 1	717	789	0.06286	111.8232	MORGAN - XEROX 138KV CKT 1
FDNS	00NR	3	16WP	G15_060	FROM->TO	G14-057T 345.00 - SUNNYSIDE 345KV CKT 1	717	789	0.06248	111.8183	RUSSETT - RUSSETT 138KV CKT 1
FDNS	00NR	3	16WP	G15_060	FROM->TO	G14-057T 345.00 - SUNNYSIDE 345KV CKT 1	717	789	0.06255	111.8177	GEN527882 1-CUNNINGHAM GEN #2 20 KV
FDNS	00NR	3	20WP	G15_060	FROM->TO	G14-057T 345.00 - SUNNYSIDE 345KV CKT 1	717	789	0.06233	111.8171	NELSON 230/20.0KV TRANSFORMER CKT 1
FDNS	00NR	3	20WP	G15_060	FROM->TO	G14-057T 345.00 - SUNNYSIDE 345KV CKT 1	717	789	0.06233	111.8136	GEN300011 1-ST FRANCIS UNIT 2
FDNS	00NR	3	20WP	G15_060	FROM->TO	G14-057T 345.00 - SUNNYSIDE 345KV CKT 1	717	789	0.06233	111.8124	GEN336170 1-GULF OXY U4
FDNS	00NR	3	20WP	G15_060	FROM->TO	G14-057T 345.00 - SUNNYSIDE 345KV CKT 1	717	789	0.06263	111.8108	GRACEMONT (BANK 1) 345/138/13.8KV TRANSFORMER CKT 1
FDNS	00NR	3	16WP	G15_060	FROM->TO	G14-057T 345.00 - SUNNYSIDE 345KV CKT 1	717	789	0.06255	111.8089	CLAY BOSWELL 230/20.9KV TRANSFORMER CKT 1
FDNS	00NR	3	20WP	G15_060	FROM->TO	G14-057T 345.00 - SUNNYSIDE 345KV CKT 1	717	789	0.06297	111.8014	G15095_T 138.00 - ROSE_VALLEY 138.00 138KV CKT 1
FDNS	00NR	3	20WP	G15_060	FROM->TO	G14-057T 345.00 - SUNNYSIDE 345KV CKT 1	717	789	0.06286	111.801	MORGAN - MUSTANG 138KV CKT 1
FDNS	00NR	3	16WP	G15_060	FROM->TO	G14-057T 345.00 - SUNNYSIDE 345KV CKT 1	717	789	0.06255	111.7989	GEN521112 1-ORME3 13.800
FDNS	00NR	3	16WP	G15_060	FROM->TO	G14-057T 345.00 - SUNNYSIDE 345KV CKT 1	717	789	0.06255	111.7937	GEN563192 1-G15084_3 0.5500
FDNS	00NR	3	20WP	G15_060	FROM->TO	G14-057T 345.00 - SUNNYSIDE 345KV CKT 1	717	789	0.06233	111.7932	GEN336801 1-BAXTER WILSON UNIT #1
FDNS	00NR	3	16WP	G15_060	FROM->TO	G14-057T 345.00 - SUNNYSIDE 345KV CKT 1	717	789	0.0626	111.7906	P12:138:WFEC:MSL16
FDNS	00NR	3	16WP	G15_060	FROM->TO	G14-057T 345.00 - SUNNYSIDE 345KV CKT 1	717	789	0.06178	111.7903	ARDMORE WEST - CARTER 138KV CKT 1
FDNS	00NR	3	20WP	G15_060	FROM->TO	G14-057T 345.00 - SUNNYSIDE 345KV CKT 1	717	789	0.06235	111.7887	ALPINE AECC - AMITY SS 115KV CKT 1
FDNS	00NR	3	20WP	G15_060	FROM->TO	G14-057T 345.00 - SUNNYSIDE 345KV CKT 1	717	789	0.06251	111.7828	COMANCHE - COMANCHE TAP 69KV CKT 1
FDNS	00NR	3	16WP	G15_060	FROM->TO	G14-057T 345.00 - SUNNYSIDE 345KV CKT 1	717	789	0.06255	111.7721	GEN562892 1-G15048_3 0.6900
FDNS	00NR	3	16WP	G15_060	FROM->TO	G14-057T 345.00 - SUNNYSIDE 345KV CKT 1	717	789	0.06255	111.7673	GEN520811 1-ANADRK4
FDNS	00NR	3	20WP	G15_060	FROM->TO	G14-057T 345.00 - SUNNYSIDE 345KV CKT 1	717	789	0.06233	111.7665	8CAJUN2 500/24.0KV TRANSFORMER CKT 1
FDNS	00NR	3	20WP	G15_060	FROM->TO	G14-057T 345.00 - SUNNYSIDE 345KV CKT 1	717	789	0.06233	111.7649	GEN501910 1-ACADIA UNIT ST1
FDNS	00NR	3	16WP	G15_060	FROM->TO	G14-057T 345.00 - SUNNYSIDE 345KV CKT 1	717	789	0.06255	111.7579	GEN672321 1-SHAND GENERATOR 1
FDNS	00NR	3	20WP	G15_060	FROM->TO	G14-057T 345.00 - SUNNYSIDE 345KV CKT 1	717	789	0.0629	111.7535	SARA - STHLAKE4 138.00 138KV CKT 1
FDNS	00NR	3	16WP	G15_060	FROM->TO	G14-057T 345.00 - SUNNYSIDE 345KV CKT 1	717	789	0.06185	111.7506	SUNNYSIDE (SUNNYSD5) 345/138/13.8KV TRANSFORMER CKT 1
FDNS	00NR	3	16WP	G15_060	FROM->TO	G14-057T 345.00 - SUNNYSIDE 345KV CKT 1	717	789	0.06252	111.7436	P12:138:WFEC-AEPW:GOLDENSW4:CRAIGJT4
FDNS	00NR	3	16WP	G15_060	FROM->TO	G14-057T 345.00 - SUNNYSIDE 345KV CKT 1	717	789	0.06255	111.7409	GEN562512 1-G14_020_3 0.6900
FDNS	00NR	3	20WP	G15_060	FROM->TO	G14-057T 345.00 - SUNNYSIDE 345KV CKT 1	717	789	0.06233	111.7346	P12:138:AEPW:R.S.S.-4:S.HUD.-4
FDNS	00NR	3	16WP	G15_060	FROM->TO	G14-057T 345.00 - SUNNYSIDE 345KV CKT 1	717	789	0.06255	111.7343	GEN672310 1-POPLAR RIVER GENERATOR 1
FDNS	00NR	3	20WP	G15_060	FROM->TO	G14-057T 345.00 - SUNNYSIDE 345KV CKT 1	717	789	0.06297	111.7343	NOEL_SW 138.00 - ROSE_VALLEY 138.00 138KV CKT 1
FDNS	00NR	3	16WP	G15_060	FROM->TO	G14-057T 345.00 - SUNNYSIDE 345KV CKT 1	717	789	0.06255	111.7342	GEN672311 2-POPLAR RIVER GENERATOR 2
FDNS	00NR	3	16WP	G15_060	FROM->TO	G14-057T 345.00 - SUNNYSIDE 345KV CKT 1	717	789	0.06255	111.7315	GEN523461 1-BLACKHAWK GEN #1
FDNS	00NR	3	16WP	G15_060	FROM->TO	G14-057T 345.00 - SUNNYSIDE 345KV CKT 1	717	789	0.06255	111.7314	GEN523462 1-BLACKHAWK GEN #2
FDNS	00NR	3	20WP	G15_060	FROM->TO	G14-057T 345.00 - SUNNYSIDE 345KV CKT 1	717	789	0.06233	111.7283	SABINE 230/24.0KV TRANSFORMER CKT 1
FDNS	00NR	3	20WP	G15_060	FROM->TO	G14-057T 345.00 - SUNNYSIDE 345KV CKT 1	717	789	0.06229	111.7263	ETTA (DUKE HOTSPRINGS) - MC NIEL 500KV CKT 1
FDNS	00NR	3	16WP	G15_060	FROM->TO	G14-057T 345.00 - SUNNYSIDE 345KV CKT 1	717	789	0.06255	111.7262	GEN672306 6-BOUNDARY DAM GENERATOR 6
FDNS	00NR	3	20WP	G15_060	FROM->TO	G14-057T 345.00 - SUNNYSIDE 345KV CKT 1	717	789	0.0629	111.7241	MCCLAIN - STHLAKE4 138.00 138KV CKT 1
FDNS	00NR	3	20WP	G15_060	FROM->TO	G14-057T 345.00 - SUNNYSIDE 345KV CKT 1	717	789	0.06254	111.7215	WALTERS - WALTERS 69KV CKT 1
FDNS	00NR	3	20WP	G15_060	FROM->TO	G14-057T 345.00 - SUNNYSIDE 345KV CKT 1	717	789	0.06233	111.7206	GEN300016 1-1G1GPDEL 18.000
FDNS	00NR	3	20WP	G15_060	FROM->TO	G14-057T 345.00 - SUNNYSIDE 345KV CKT 1	717	789	0.0635	111.7186	LASALLE - LATTA JCT 138KV CKT 1

SOLUTION	GROUP	SCENARIO	SEASON	SOURCE	DIRECTION	MONITORED ELEMENT	RATEA (MVA)	RATEB(MVA)	TDF	TC%LOADING (% MVA)	CONTINGENCY
FDNS	00NR	3	20WP	G15_060	FROM->TO	G14-057T 345.00 - SUNNYSIDE 345KV CKT 1	717	789	0.06235	111.7178	LAWTON EASTSIDE (LES 4) 345/138/13.8KV TRANSFORMER CKT 1
FDNS	00NR	3	20WP	G15_060	FROM->TO	G14-057T 345.00 - SUNNYSIDE 345KV CKT 1	717	789	0.06235	111.7178	LAWTON EASTSIDE (LES 4) 345/138/13.8KV TRANSFORMER CKT 1
FDNS	00NR	3	20WP	G15_060	FROM->TO	G14-057T 345.00 - SUNNYSIDE 345KV CKT 1	717	789	0.06233	111.7104	GEN336222 1-LITTLE GYPSY UNIT#2
FDNS	00NR	3	20WP	G15_060	FROM->TO	G14-057T 345.00 - SUNNYSIDE 345KV CKT 1	717	789	0.06233	111.7036	P12:69:AEPW:NROGERS2:ECNTRTN2
FDNS	00NR	3	20WP	G15_060	FROM->TO	G14-057T 345.00 - SUNNYSIDE 345KV CKT 1	717	789	0.06266	111.7013	ANADARKO - SEQUOYAHJ4 138.00 138KV CKT 1
FDNS	00NR	3	20WP	G15_060	FROM->TO	G14-057T 345.00 - SUNNYSIDE 345KV CKT 1	717	789	0.06239	111.7011	LAWTON RELIFT TAP - OMPA-WALTERS 69KV CKT 1
FDNS	00NR	3	20WP	G15_060	FROM->TO	G14-057T 345.00 - SUNNYSIDE 345KV CKT 1	717	789	0.06266	111.6985	CORN TAP - SEQUOYAHJ4 138.00 138KV CKT 1
FDNS	00NR	3	16WP	G15_060	FROM->TO	G14-057T 345.00 - SUNNYSIDE 345KV CKT 1	717	789	0.06255	111.6964	GEN344895 2-1LAB G2 20.000
FDNS	00NR	3	20WP	G15_060	FROM->TO	G14-057T 345.00 - SUNNYSIDE 345KV CKT 1	717	789	0.06233	111.6938	P12:138:AEPW:BA_71ST4:T.S.E.-4
FDNS	00NR	3	20WP	G15_060	FROM->TO	G14-057T 345.00 - SUNNYSIDE 345KV CKT 1	717	789	0.06233	111.6885	P12:138:AEPW:YARCH-S4:T.S.E.-4
FDNS	00NR	3	20WP	G15_060	FROM->TO	G14-057T 345.00 - SUNNYSIDE 345KV CKT 1	717	789	0.0637	111.6873	BAILEY4 138.00 - WESTMOORE 138KV CKT 1
FDNS	00NR	3	20WP	G15_060	FROM->TO	G14-057T 345.00 - SUNNYSIDE 345KV CKT 1	717	789	0.06375	111.6872	CANADIAN - NOBLE 138KV CKT 1
FDNS	00NR	3	20WP	G15_060	FROM->TO	G14-057T 345.00 - SUNNYSIDE 345KV CKT 1	717	789	0.06256	111.6867	WEATHERFORD JCT. - WEATHERFORD SOUTHEAST 138KV CKT 1
FDNS	00NR	3	20WP	G15_060	FROM->TO	G14-057T 345.00 - SUNNYSIDE 345KV CKT 1	717	789	0.06256	111.6867	WEATHERFORD JCT. - WEATHERFORD SOUTHEAST 138KV CKT 1
FDNS	00NR	3	20WP	G15_060	FROM->TO	G14-057T 345.00 - SUNNYSIDE 345KV CKT 1	717	789	0.06246	111.6785	P12:138:AEPW-OGE:SHIDLER4:OSAGE 4
FDNS	00NR	3	20WP	G15_060	FROM->TO	G14-057T 345.00 - SUNNYSIDE 345KV CKT 1	717	789	0.06232	111.6766	7JASPER 345.00 - BLACKBERRY 345KV CKT 1
FDNS	00NR	3	20WP	G15_060	FROM->TO	G14-057T 345.00 - SUNNYSIDE 345KV CKT 1	717	789	0.06233	111.6762	GEN336152 1-WATERFORD UNIT#2
FDNS	00NR	3	16WP	G15_060	FROM->TO	G14-057T 345.00 - SUNNYSIDE 345KV CKT 1	717	789	0.06178	111.6754	ARDMORE WEST - UNIROYAL 138KV CKT 1
FDNS	00NR	3	20WP	G15_060	FROM->TO	G14-057T 345.00 - SUNNYSIDE 345KV CKT 1	717	789	0.06233	111.6754	GEN336151 1-WATERFORD UNIT#1
FDNS	00NR	3	16WP	G15_060	FROM->TO	G14-057T 345.00 - SUNNYSIDE 345KV CKT 1	717	789	0.06255	111.6717	GEN511853 1-COMANCHE #3
FDNS	00NR	3	16WP	G15_060	FROM->TO	G14-057T 345.00 - SUNNYSIDE 345KV CKT 1	717	789	0.06252	111.6662	P12:138:AEPW-SWPA:LONEOAK4:TUPELO4
FDNS	00NR	3	16WP	G15_060	FROM->TO	G14-057T 345.00 - SUNNYSIDE 345KV CKT 1	717	789	0.06252	111.6662	P12:138:WFEC:MSL06
FDNS	00NR	3	16WP	G15_060	FROM->TO	G14-057T 345.00 - SUNNYSIDE 345KV CKT 1	717	789	0.06255	111.6643	GEN344896 3-1LAB G3 20.000
FDNS	00NR	3	20WP	G15_060	FROM->TO	G14-057T 345.00 - SUNNYSIDE 345KV CKT 1	717	789	0.06233	111.6636	FRONTIER 345/18.0KV TRANSFORMER CKT 1
FDNS	00NR	3	20WP	G15_060	FROM->TO	G14-057T 345.00 - SUNNYSIDE 345KV CKT 1	717	789	0.06262	111.6632	NORGE ROAD - SOUTHWESTERN STATION 138KV CKT 1
FDNS	00NR	3	20WP	G15_060	FROM->TO	G14-057T 345.00 - SUNNYSIDE 345KV CKT 1	717	789	0.06262	111.6632	NORGE ROAD - SOUTHWESTERN STATION 138KV CKT 1
FDNS	00NR	3	16WP	G15_060	FROM->TO	G14-057T 345.00 - SUNNYSIDE 345KV CKT 1	717	789	0.06255	111.663	GEN344894 1-1LAB G1 20.000
FDNS	00NR	3	20WP	G15_060	FROM->TO	G14-057T 345.00 - SUNNYSIDE 345KV CKT 1	717	789	0.06233	111.6629	GEN300017 1-1G2GPDEL 18.000
FDNS	00NR	3	16WP	G15_060	FROM->TO	G14-057T 345.00 - SUNNYSIDE 345KV CKT 1	717	789	0.06255	111.6622	GEN563162 1-G15081_3 0.6900
FDNS	00NR	3	16WP	G15_060	FROM->TO	G14-057T 345.00 - SUNNYSIDE 345KV CKT 1	717	789	0.06255	111.6615	GEN344897 4-1LAB G4 20.000
FDNS	00NR	3	20WP	G15_060	FROM->TO	G14-057T 345.00 - SUNNYSIDE 345KV CKT 1	717	789	0.06233	111.6613	FRONTIER 345/18.0KV TRANSFORMER CKT 1
FDNS	00NR	3	20WP	G15_060	FROM->TO	G14-057T 345.00 - SUNNYSIDE 345KV CKT 1	717	789	0.06309	111.6592	P12:138:OKGE-AEPW:JENSEN4:REDROCKRD4
FDNS	00NR	3	20WP	G15_060	FROM->TO	G14-057T 345.00 - SUNNYSIDE 345KV CKT 1	717	789	0.06376	111.6575	P12:138:OKGE:3TERM27
FDNS	00NR	3	16WP	G15_060	FROM->TO	G14-057T 345.00 - SUNNYSIDE 345KV CKT 1	717	789	0.06209	111.656	CARTRCO4 138.00 - RATLIFF 138KV CKT 1
FDNS	00NR	3	20WP	G15_060	FROM->TO	G14-057T 345.00 - SUNNYSIDE 345KV CKT 1	717	789	0.06457	111.6547	FINNEY SWITCHING STATION - WALKTAP7 345.00 345KV CKT 1
FDNS	00NR	3	20WP	G15_060	FROM->TO	G14-057T 345.00 - SUNNYSIDE 345KV CKT 1	717	789	0.06457	111.6547	FINNEY SWITCHING STATION - WALKTAP7 345.00 345KV CKT 1
FDNS	00NR	3	20WP	G15_060	FROM->TO	G14-057T 345.00 - SUNNYSIDE 345KV CKT 1	717	789	0.06237	111.6543	HOPE - MCNAB REC 115KV CKT 1
FDNS	00NR	3	20WP	G15_060	FROM->TO	G14-057T 345.00 - SUNNYSIDE 345KV CKT 1	717	789	0.06256	111.6513	P12:138:AEPW:REDROCKRD4:WTH_JCT4
FDNS	00NR	3	20WP	G15_060	FROM->TO	G14-057T 345.00 - SUNNYSIDE 345KV CKT 1	717	789	0.06238	111.6507	MORISNT4 138.00 - STILLWATER 138KV CKT 1
FDNS	00NR	3	16WP	G15_060	FROM->TO	G14-057T 345.00 - SUNNYSIDE 345KV CKT 1	717	789	0.06229	111.6475	P12:138:OKGE:3TERM40
FDNS	00NR	3	20WP	G15_060	FROM->TO	G14-057T 345.00 - SUNNYSIDE 345KV CKT 1	717	789	0.0624	111.6449	P12:138:OKGE:3TERM2
FDNS	00NR	3	20WP	G15_060	FROM->TO	G14-057T 345.00 - SUNNYSIDE 345KV CKT 1	717	789	0.06313	111.6448	CLEO CORNER - CLEOPLT4 138.00 138KV CKT 1
FDNS	00NR	3	20WP	G15_060	FROM->TO	G14-057T 345.00 - SUNNYSIDE 345KV CKT 1	717	789	0.06237	111.6444	P12:115:AEPW:TURK3:HOPE3
FDNS	00NR	3	20WP	G15_060	FROM->TO	G14-057T 345.00 - SUNNYSIDE 345KV CKT 1	717	789	0.06236	111.6427	COUCH SES - MC NIEL 115KV CKT 1
FDNS	00NR	3	20WP	G15_060	FROM->TO	G14-057T 345.00 - SUNNYSIDE 345KV CKT 1	717	789	0.06255	111.6425	HOYT - STRANGER CREEK 345KV CKT 1
FDNS	00NR	3	20WP	G15_060	FROM->TO	G14-057T 345.00 - SUNNYSIDE 345KV CKT 1	717	789	0.06233	111.6414	GEN334432 1-SABINE UNIT 2
FDNS	00NR	3	16WP	G15_060	FROM->TO	G14-057T 345.00 - SUNNYSIDE 345KV CKT 1	717	789	0.06255	111.6412	GEN562699 1-G15_018_3 0.6900
FDNS	00NR	3	20WP	G15_060	FROM->TO	G14-057T 345.00 - SUNNYSIDE 345KV CKT 1	717	789	0.06233	111.6412	GEN334431 1-SABINE UNIT 1
FDNS	00NR	3	20WP	G15_060	FROM->TO	G14-057T 345.00 - SUNNYSIDE 345KV CKT 1	717	789	0.06233	111.6399	CYPRESS - HARTBURG 500KV CKT 1
FDNS	00NR	3	20WP	G15_060	FROM->TO	G14-057T 345.00 - SUNNYSIDE 345KV CKT 1	717	789	0.06491	111.6398	DRAPER LAKE - SEMINOLE 345KV CKT 1
FDNS	00NR	3	20WP	G15_060	FROM->TO	G14-057T 345.00 - SUNNYSIDE 345KV CKT 1	717	789	0.06491	111.6398	DRAPER LAKE - SEMINOLE 345KV CKT 2
FDNS	00NR	3	16WP	G15_060	FROM->TO	G14-057T 345.00 - SUNNYSIDE 345KV CKT 1	717	789	0.06255	111.6389	GEN511852 1-COMANCHE #2
FDNS	00NR	3	20WP	G15_060	FROM->TO	G14-057T 345.00 - SUNNYSIDE 345KV CKT 1	717	789	0.06112	111.6383	ARBUCKLE - VANOSTP4 138.00 138KV CKT 1
FDNS	00NR	3	20WP	G15_060	FROM->TO	G14-057T 345.00 - SUNNYSIDE 345KV CKT 1	717	789	0.06233	111.6369	GEN501823 1-TECHE UNIT 3
FDNS	00NR	3	20WP	G15_060	FROM->TO	G14-057T 345.00 - SUNNYSIDE 345KV CKT 1	717	789	0.06233	111.635	GEN501970 1-EVANGELINE UNIT 7
FDNS	00NR	3	20WP	G15_060	FROM->TO	G14-057T 345.00 - SUNNYSIDE 345KV CKT 1	717	789	0.06239	111.6342	OMPA-WALTERS - WALTERS 69KV CKT 1
FDNS	00NR	3	20WP	G15_060	FROM->TO	G14-057T 345.00 - SUNNYSIDE 345KV CKT 1	717	789	0.06239	111.6342	OMPA-WALTERS - WALTERS 69KV CKT 1
FDNS	00NR	3	20WP	G15_060	FROM->TO	G14-057T 345.00 - SUNNYSIDE 345KV CKT 1	717	789	0.06233	111.6333	LEWIS CREEK SWITCHYARD 138/22.0KV TRANSFORMER CKT 1
FDNS	00NR	3	20WP	G15_060	FROM->TO	G14-057T 345.00 - SUNNYSIDE 345KV CKT 1	717	789	0.06276	111.6323	EMPORIA ENERGY CENTER - G14_001T 345.00 345KV CKT 1
FDNS	00NR	3	20WP	G15_060	FROM->TO	G14-057T 345.00 - SUNNYSIDE 345KV CKT 1	717	789	0.06268	111.6296	BLACKBERRY - NEOSHO 345KV CKT 1
FDNS	00NR	3	20WP	G15_060	FROM->TO	G14-057T 345.00 - SUNNYSIDE 345KV CKT 1	717	789	0.06233	111.6288	LEWIS CREEK SWITCHYARD 138/22.0KV TRANSFORMER CKT 1
FDNS	00NR	3	20WP	G15_060	FROM->TO	G14-057T 345.00 - SUNNYSIDE 345KV CKT 1	717	789	0.06303	111.6282	G15063_T 345.00 - WOODRING 345KV CKT 1
FDNS	00NR	3	20WP	G15_060	FROM->TO	G14-057T 345.00 - SUNNYSIDE 345KV CKT 1	717	789	0.06313	111.6279	CLEOPLT4 138.00 - MEN TAP 138KV CKT 1
FDNS	00NR	3	16WP	G15_060	FROM->TO	G14-057T 345.00 - SUNNYSIDE 345KV CKT 1	717	789	0.06255	111.6238	GEN521110 1-ORME1 13.800
FDNS	00NR	3	16WP	G15_060	FROM->TO	G14-057T 345.00 - SUNNYSIDE 345KV CKT 1	717	789	0.06255	111.6238	GEN521111 1-ORME2 13.800
FDNS	00NR	3	16WP	G15_060	FROM->TO	G14-057T 345.00 - SUNNYSIDE 345KV CKT 1	717	789	0.06255	111.6195	GEN563292 1-G15095_3 0.6900
FDNS	00NR	3	20WP	G15_060	FROM->TO	G14-057T 345.00 - SUNNYSIDE 345KV CKT 1	717	789	0.06237	111.6188	TURK (TURK 1) 138/115/13.2KV TRANSFORMER CKT 1
FDNS	00NR	3	20WP	G15_060	FROM->TO	G14-057T 345.00 - SUNNYSIDE 345KV CKT 1	717	789	0.06237	111.6188	TURK (TURK 1) 138/115/13.2KV TRANSFORMER CKT 1
FDNS	00NR	3	20WP	G15_060	FROM->TO	G14-057T 345.00 - SUNNYSIDE 345KV CKT 1	717	789	0.06237	111.6187	MCNAB REC - Turk 115 115KV CKT 1
FDNS	00NR	3	20WP	G15_060	FROM->TO	G14-057T 345.00 - SUNNYSIDE 345KV CKT 1	717	789	0.06254	111.6181	G15074_T 345.00 - JEFFREY ENERGY CENTER 345KV CKT 1
FDNS	00NR	3	20WP	G15_060	FROM->TO	G14-057T 345.00 - SUNNYSIDE 345KV CKT 1	717	789	0.06313	111.618	IMO TAP - MEN TAP 138KV CKT 1
FDNS	00NR	3	20WP	G15_060	FROM->TO	G14-057T 345.00 - SUNNYSIDE 345KV CKT 1	717	789	0.06233	111.6167	P12:161:AEPW:CHAMSPR5:FARMING5
FDNS	00NR	3	20WP	G15_060	FROM->TO	G14-057T 345.00 - SUNNYSIDE 345KV CKT 1	717	789	0.06233	111.6138	GEN334392 1-EXXON MOBIL IPP 1
FDNS	00NR	3	20WP	G15_060	FROM->TO	G14-057T 345.00 - SUNNYSIDE 345KV CKT 1	717	789	0.06233	111.6109	GEN505616 1-BROKEN BOW
FDNS	00NR	3	20WP	G15_060	FROM->TO	G14-057T 345.00 - SUNNYSIDE 345KV CKT 1	717	789	0.06254	111.6104	P12:69:WFEC-AEPW:COMANCH2:WALTRS-2
FDNS	00NR	3	20WP	G15_060	FROM->TO	G14-057T 345.00 - SUNNYSIDE 345KV CKT 1	717	789	0.06233	111.6075	GEN334393 1-EXXON MOBIL IPP 2
FDNS	00NR	3	20WP	G15_060	FROM->TO	G14-057T 345.00 - SUNNYSIDE 345KV CKT 1	717	789	0.06233	111.6075	GEN334394 1-EXXON MOBIL IPP 3
FDNS	00NR	3	20WP	G15_060	FROM->TO	G14-057T 345.00 - SUNNYSIDE 345KV CKT 1	717	789	0.06233	111.606	GEN515042 1-SEMINOLE 3G
FDNS	00NR	3	16WP	G15_060	FROM->TO	G14-057T 345.00 - SUNNYSIDE 345KV CKT 1	717	789	0.06238	111.6031	G15085_T 138.00 - RUSSELL 138KV CKT 1

SOLUTION	GROUP	SCENARIO	SEASON	SOURCE	DIRECTION	MONITORED ELEMENT	RATEA (MVA)	RATEB(MVA)	TDF	TC%LOADING (% MVA)	CONTINGENCY
FDNS	00NR	3	20WP	G15_060	FROM->TO	G14-057T 345.00 - SUNNYSIDE 345KV CKT 1	717	789	0.06243	111.5974	7LUTESVIL 345.00 - 7ST FRANC 345.00 345KV CKT 1
FDNS	00NR	3	20WP	G15_060	FROM->TO	G14-057T 345.00 - SUNNYSIDE 345KV CKT 1	717	789	0.06246	111.5949	WEATHERFORD TAP - WEATHERFORD WIND FARM 138KV CKT 1
FDNS	00NR	3	20WP	G15_060	FROM->TO	G14-057T 345.00 - SUNNYSIDE 345KV CKT 1	717	789	0.06375	111.5943	NOBLE - PURCELL4 138.00 138KV CKT 1
FDNS	00NR	3	20WP	G15_060	FROM->TO	G14-057T 345.00 - SUNNYSIDE 345KV CKT 1	717	789	0.0626	111.5935	SOUTHWESTERN STATION - VERDEN 138KV CKT 1
FDNS	00NR	3	20WP	G15_060	FROM->TO	G14-057T 345.00 - SUNNYSIDE 345KV CKT 1	717	789	0.06312	111.592	G13-010T 345.00 - POST ROCK 345KV CKT 1
FDNS	00NR	3	20WP	G15_060	FROM->TO	G14-057T 345.00 - SUNNYSIDE 345KV CKT 1	717	789	0.06269	111.5879	CLINTON JUNCTION - ELK CITY 138KV CKT 1
FDNS	00NR	3	20WP	G15_060	FROM->TO	G14-057T 345.00 - SUNNYSIDE 345KV CKT 1	717	789	0.06269	111.5879	CLINTON JUNCTION - ELK CITY 138KV CKT 1
FDNS	00NR	3	20WP	G15_060	FROM->TO	G14-057T 345.00 - SUNNYSIDE 345KV CKT 1	717	789	0.06233	111.5838	ST FRANCIS - ST FRANCIS 1 161KV CKT Z1
FDNS	00NR	3	20WP	G15_060	FROM->TO	G14-057T 345.00 - SUNNYSIDE 345KV CKT 1	717	789	0.0627	111.5828	BUCKNER7 345.00 - HOLCOMB 345KV CKT 1
FDNS	00NR	3	20WP	G15_060	FROM->TO	G14-057T 345.00 - SUNNYSIDE 345KV CKT 1	717	789	0.0627	111.5828	BUCKNER7 345.00 - HOLCOMB 345KV CKT 1
FDNS	00NR	3	20WP	G15_060	FROM->TO	G14-057T 345.00 - SUNNYSIDE 345KV CKT 1	717	789	0.0635	111.5788	LASALLE - STONEWAL LH138.00 138KV CKT 1
FDNS	00NR	3	16WP	G15_060	FROM->TO	G14-057T 345.00 - SUNNYSIDE 345KV CKT 1	717	789	0.06163	111.5774	GRAPEVINE INTERCHANGE - STATELINE INTERCHANGE 230KV CKT 1
FDNS	00NR	3	16WP	G15_060	FROM->TO	G14-057T 345.00 - SUNNYSIDE 345KV CKT 1	717	789	0.06163	111.5774	GRAPEVINE INTERCHANGE - STATELINE INTERCHANGE 230KV CKT 1
FDNS	00NR	3	20WP	G15_060	FROM->TO	G14-057T 345.00 - SUNNYSIDE 345KV CKT 1	717	789	0.06233	111.5772	GEN501971 1-EVANGELINE UNIT 7-1
FDNS	00NR	3	20WP	G15_060	FROM->TO	G14-057T 345.00 - SUNNYSIDE 345KV CKT 1	717	789	0.06233	111.5772	GEN501972 1-EVANGELINE UNIT 7-2
FDNS	00NR	3	20WP	G15_060	FROM->TO	G14-057T 345.00 - SUNNYSIDE 345KV CKT 1	717	789	0.06276	111.5767	G14_001T 345.00 - WICHITA 345KV CKT 1
FDNS	00NR	3	20WP	G15_060	FROM->TO	G14-057T 345.00 - SUNNYSIDE 345KV CKT 1	717	789	0.06247	111.5754	FRANKLIN - FRANKLIN SW 138KV CKT 1
FDNS	00NR	3	20WP	G15_060	FROM->TO	G14-057T 345.00 - SUNNYSIDE 345KV CKT 1	717	789	0.06241	111.5725	LAKEOVER - MCADAMS 500KV CKT 1
FDNS	00NR	3	20WP	G15_060	FROM->TO	G14-057T 345.00 - SUNNYSIDE 345KV CKT 1	717	789	0.0626	111.5724	NORTH 29TH CHICKASHA - VERDEN 138KV CKT 1
FDNS	00NR	3	20WP	G15_060	FROM->TO	G14-057T 345.00 - SUNNYSIDE 345KV CKT 1	717	789	0.06233	111.5709	SABINE 230/22.0KV TRANSFORMER CKT 1
FDNS	00NR	3	20WP	G15_060	FROM->TO	G14-057T 345.00 - SUNNYSIDE 345KV CKT 1	717	789	0.06257	111.5705	EMPORIA ENERGY CENTER - SWISSVALE 345KV CKT 1
FDNS	00NR	3	20WP	G15_060	FROM->TO	G14-057T 345.00 - SUNNYSIDE 345KV CKT 1	717	789	0.06218	111.5696	ENOWILT - LONE OAK 138KV CKT 1
FDNS	00NR	3	20WP	G15_060	FROM->TO	G14-057T 345.00 - SUNNYSIDE 345KV CKT 1	717	789	0.06239	111.5693	P12:138:OKGE:3TERM12
FDNS	00NR	3	20WP	G15_060	FROM->TO	G14-057T 345.00 - SUNNYSIDE 345KV CKT 1	717	789	0.0624	111.5689	FLETCHER - MARLOW JCT 69KV CKT 1
FDNS	00NR	3	20WP	G15_060	FROM->TO	G14-057T 345.00 - SUNNYSIDE 345KV CKT 1	717	789	0.06234	111.5672	P12:138:AEPW:R.S.S-4:T.P.S.-4
FDNS	00NR	3	20WP	G15_060	FROM->TO	G14-057T 345.00 - SUNNYSIDE 345KV CKT 1	717	789	0.0635	111.5636	STONEWAL LH138.00 - TUPELO TAP 138KV CKT 1
FDNS	00NR	3	20WP	G15_060	FROM->TO	G14-057T 345.00 - SUNNYSIDE 345KV CKT 1	717	789	0.06218	111.5609	ENOWILT - SARDIS 138KV CKT 1
FDNS	00NR	3	16WP	G15_060	FROM->TO	G14-057T 345.00 - SUNNYSIDE 345KV CKT 1	717	789	0.06193	111.5593	CACHE - SNYDER 138KV CKT 1
FDNS	00NR	3	20WP	G15_060	FROM->TO	G14-057T 345.00 - SUNNYSIDE 345KV CKT 1	717	789	0.06256	111.5564	HINTON - WEATHERFORD JCT. 138KV CKT 1
FDNS	00NR	3	20WP	G15_060	FROM->TO	G14-057T 345.00 - SUNNYSIDE 345KV CKT 1	717	789	0.0625	111.5553	MCADAMS - WOLF CREEK 500KV CKT 1
FDNS	00NR	3	20WP	G15_060	FROM->TO	G14-057T 345.00 - SUNNYSIDE 345KV CKT 1	717	789	0.06233	111.5542	GEN501912 1-ACADIA UNIT CT1B
FDNS	00NR	3	20WP	G15_060	FROM->TO	G14-057T 345.00 - SUNNYSIDE 345KV CKT 1	717	789	0.06233	111.5534	GEN501911 1-ACADIA UNIT CT1A
FDNS	00NR	3	20WP	G15_060	FROM->TO	G14-057T 345.00 - SUNNYSIDE 345KV CKT 1	717	789	0.06222	111.5533	P12:138:WFEC-AEPW:ELKCTY-4:ERICK4
FDNS	00NR	3	20WP	G15_060	FROM->TO	G14-057T 345.00 - SUNNYSIDE 345KV CKT 1	717	789	0.06312	111.5453	G13-010T 345.00 - SPEARVILLE 345KV CKT 1
FDNS	00NR	3	20WP	G15_060	FROM->TO	G14-057T 345.00 - SUNNYSIDE 345KV CKT 1	717	789	0.06263	111.5441	SWISSVALE - WEST GARDNER 345KV CKT 1
FDNS	00NR	3	16WP	G15_060	FROM->TO	G14-057T 345.00 - SUNNYSIDE 345KV CKT 1	717	789	0.06255	111.5424	GEN563122 1-G15077_3 0.3850
FDNS	00NR	3	20WP	G15_060	FROM->TO	G14-057T 345.00 - SUNNYSIDE 345KV CKT 1	717	789	0.06233	111.5421	P12:138:AEPW:R.S.S.-4:R:96YALE-4
FDNS	00NR	3	20WP	G15_060	FROM->TO	G14-057T 345.00 - SUNNYSIDE 345KV CKT 1	717	789	0.06233	111.5379	GEN506749 1-EASTMAN GENERATION A
FDNS	00NR	3	16WP	G15_060	FROM->TO	G14-057T 345.00 - SUNNYSIDE 345KV CKT 1	717	789	0.06255	111.5346	GEN562861 1-G15045_2 0.4800
FDNS	00NR	3	20WP	G15_060	FROM->TO	G14-057T 345.00 - SUNNYSIDE 345KV CKT 1	717	789	0.06262	111.5342	CORNVILLE - NORGE ROAD 138KV CKT 1
FDNS	00NR	3	20WP	G15_060	FROM->TO	G14-057T 345.00 - SUNNYSIDE 345KV CKT 1	717	789	0.06262	111.5342	CORNVILLE - NORGE ROAD 138KV CKT 1
FDNS	00NR	3	20WP	G15_060	FROM->TO	G14-057T 345.00 - SUNNYSIDE 345KV CKT 1	717	789	0.06235	111.5319	AMITY SS - MURFREESBORO EAST (AECC) 115KV CKT 1
FDNS	00NR	3	20WP	G15_060	FROM->TO	G14-057T 345.00 - SUNNYSIDE 345KV CKT 1	717	789	0.06233	111.5307	NELSON 230/24.0KV TRANSFORMER CKT 1
FDNS	00NR	3	20WP	G15_060	FROM->TO	G14-057T 345.00 - SUNNYSIDE 345KV CKT 1	717	789	0.06233	111.5287	GEN336242 1-1NMIL ST1 18.000
FDNS	00NR	3	16WP	G15_060	FROM->TO	G14-057T 345.00 - SUNNYSIDE 345KV CKT 1	717	789	0.05956	111.5277	GRACEMONT - LAWTON EASTSIDE 345KV CKT 1
FDNS	00NR	3	16WP	G15_060	FROM->TO	G14-057T 345.00 - SUNNYSIDE 345KV CKT 1	717	789	0.05956	111.5277	GRACEMONT - LAWTON EASTSIDE 345KV CKT 1
FDNS	00NR	3	20WP	G15_060	FROM->TO	G14-057T 345.00 - SUNNYSIDE 345KV CKT 1	717	789	0.06246	111.5271	8WNEWMADRID 500.00 - DELL 500 500KV CKT 1
FDNS	00NR	3	20WP	G15_060	FROM->TO	G14-057T 345.00 - SUNNYSIDE 345KV CKT 1	717	789	0.0635	111.5252	BENTON - WICHITA 345KV CKT 1
FDNS	00NR	3	20WP	G15_060	FROM->TO	G14-057T 345.00 - SUNNYSIDE 345KV CKT 1	717	789	0.0637	111.5246	FRANKLIN SW - WESTMOORE 138KV CKT 1
FDNS	00NR	3	20WP	G15_060	FROM->TO	G14-057T 345.00 - SUNNYSIDE 345KV CKT 1	717	789	0.06218	111.5223	CLAYTON - SARDIS 138KV CKT 1
FDNS	00NR	3	20WP	G15_060	FROM->TO	G14-057T 345.00 - SUNNYSIDE 345KV CKT 1	717	789	0.06233	111.5212	ST FRANCIS 345/161KV TRANSFORMER CKT 1
FDNS	00NR	3	20WP	G15_060	FROM->TO	G14-057T 345.00 - SUNNYSIDE 345KV CKT 1	717	789	0.06233	111.5199	P12:138:AEPW:MOHAWK4:T.NO--4
FDNS	00NR	3	16WP	G15_060	FROM->TO	G14-057T 345.00 - SUNNYSIDE 345KV CKT 1	717	789	0.06255	111.5178	GEN661015 1-COYOTE
FDNS	00NR	3	20WP	G15_060	FROM->TO	G14-057T 345.00 - SUNNYSIDE 345KV CKT 1	717	789	0.06234	111.5138	LAYFLD8 500.00 (LAYFLD AUTO) 500/230/13.8KV TRANSFORMER CKT 1
FDNS	00NR	3	20WP	G15_060	FROM->TO	G14-057T 345.00 - SUNNYSIDE 345KV CKT 1	717	789	0.06234	111.5138	LAYFLD8 500.00 (LAYFLD AUTO) 500/230/13.8KV TRANSFORMER CKT 1
FDNS	00NR	3	20WP	G15_060	FROM->TO	G14-057T 345.00 - SUNNYSIDE 345KV CKT 1	717	789	0.06348	111.5114	CIMARRON - NORTHWEST 345KV CKT 1
FDNS	00NR	3	20WP	G15_060	FROM->TO	G14-057T 345.00 - SUNNYSIDE 345KV CKT 1	717	789	0.0626	111.5059	CORNVILLE - NORTH 29TH CHICKASHA 138KV CKT 1
FDNS	00NR	3	20WP	G15_060	FROM->TO	G14-057T 345.00 - SUNNYSIDE 345KV CKT 1	717	789	0.06174	111.5036	ARBUCKLE - MILLCREEK 138KV CKT 1
FDNS	00NR	3	20WP	G15_060	FROM->TO	G14-057T 345.00 - SUNNYSIDE 345KV CKT 1	717	789	0.06246	111.5033	WEATHERFORD SOUTHEAST - WEATHERFORD TAP 138KV CKT 1
FDNS	00NR	3	20WP	G15_060	FROM->TO	G14-057T 345.00 - SUNNYSIDE 345KV CKT 1	717	789	0.06218	111.5001	P12:138:AEPW-SWPA:LONEOAK4:BRKNBW4
FDNS	00NR	3	20WP	G15_060	FROM->TO	G14-057T 345.00 - SUNNYSIDE 345KV CKT 1	717	789	0.06233	111.4992	SABINE 138/22.0KV TRANSFORMER CKT 1
FDNS	00NR	3	20WP	G15_060	FROM->TO	G14-057T 345.00 - SUNNYSIDE 345KV CKT 1	717	789	0.06218	111.489	CLAYTON - NASHOBA 138KV CKT 1
FDNS	00NR	3	20WP	G15_060	FROM->TO	G14-057T 345.00 - SUNNYSIDE 345KV CKT 1	717	789	0.06237	111.4879	7JASPER 345.00 - MORGAN 345KV CKT 1
FDNS	00NR	3	20WP	G15_060	FROM->TO	G14-057T 345.00 - SUNNYSIDE 345KV CKT 1	717	789	0.06256	111.4844	HINTON - REDROCKRD4 138.00 138KV CKT 1
FDNS	00NR	3	20WP	G15_060	FROM->TO	G14-057T 345.00 - SUNNYSIDE 345KV CKT 1	717	789	0.06262	111.4828	SEMINOLE (SEMINOL2) 345/138/14.4KV TRANSFORMER CKT 1
FDNS	00NR	3	20WP	G15_060	FROM->TO	G14-057T 345.00 - SUNNYSIDE 345KV CKT 1	717	789	0.06233	111.4828	GEN338146 1-INDEPENDENCE UNIT #2
FDNS	00NR	3	16WP	G15_060	FROM->TO	G14-057T 345.00 - SUNNYSIDE 345KV CKT 1	717	789	0.06178	111.4571	SUNNYSIDE - UNIROYAL 138KV CKT 1
FDNS	00NR	3	20WP	G15_060	FROM->TO	G14-057T 345.00 - SUNNYSIDE 345KV CKT 1	717	789	0.06246	111.4536	P12:138:OKGE:3TERM20
FDNS	00NR	3	20WP	G15_060	FROM->TO	G14-057T 345.00 - SUNNYSIDE 345KV CKT 1	717	789	0.06246	111.4533	CLINTON JUNCTION - CLINTON NATURAL GAS TAP 138KV CKT 1
FDNS	00NR	3	20WP	G15_060	FROM->TO	G14-057T 345.00 - SUNNYSIDE 345KV CKT 1	717	789	0.05944	111.4488	GRACEMONT - LAWTON EASTSIDE 345KV CKT 1
FDNS	00NR	3	20WP	G15_060	FROM->TO	G14-057T 345.00 - SUNNYSIDE 345KV CKT 1	717	789	0.05944	111.4488	GRACEMONT - LAWTON EASTSIDE 345KV CKT 1
FDNS	00NR	3	20WP	G15_060	FROM->TO	G14-057T 345.00 - SUNNYSIDE 345KV CKT 1	717	789	0.06372	111.4413	MARIETTA - MARIETTA4 138.00 138KV CKT 1
FDNS	00NR	3	16WP	G15_060	FROM->TO	G14-057T 345.00 - SUNNYSIDE 345KV CKT 1	717	789	0.06164	111.44	GRAPEVINE INTERCHANGE - NICHOLS STATION 230KV CKT 1
FDNS	00NR	3	16WP	G15_060	FROM->TO	G14-057T 345.00 - SUNNYSIDE 345KV CKT 1	717	789	0.06164	111.44	GRAPEVINE INTERCHANGE - NICHOLS STATION 230KV CKT 1
FDNS	00NR	3	20WP	G15_060	FROM->TO	G14-057T 345.00 - SUNNYSIDE 345KV CKT 1	717	789	0.06254	111.4355	COMANCHE - WALTERS 69KV CKT 1
FDNS	00NR	3	16WP	G15_060	FROM->TO	G14-057T 345.00 - SUNNYSIDE 345KV CKT 1	717	789	0.06237	111.4174	P12:138:AEPW:SHAM4WT:CHILD4WT
FDNS	00NR	3	16WP	G15_060	FROM->TO	G14-057T 345.00 - SUNNYSIDE 345KV CKT 1	717	789	0.06306	111.4115	P12:138:WFEC:MSL15
FDNS	00NR	3	16WP	G15_060	FROM->TO	G14-057T 345.00 - SUNNYSIDE 345KV CKT 1	717	789	0.0602	111.4067	CHISHOLM7 345.00 (CHISHOLM) 345/230/13.2KV TRANSFORMER CKT 1
FDNS	00NR	3	16WP	G15_060	FROM->TO	G14-057T 345.00 - SUNNYSIDE 345KV CKT 1	717	789	0.06255	111.4034	GEN657748 1-YOUNG 2 GENERATOR

SOLUTION	GROUP	SCENARIO	SEASON	SOURCE	DIRECTION	MONITORED ELEMENT	RATEA (MVA)	RATEB(MVA)	TDF	TC%LOADING (% MVA)	CONTINGENCY
FDNS	00NR	3	16WP	G15_060	FROM->TO	G14-057T 345.00 - SUNNYSIDE 345KV CKT 1	717	789	0.06255	111.4	GEN532751 1-WOLF CREEK GENERATING STATION UNIT 1
FDNS	00NR	3	16WP	G15_060	FROM->TO	G14-057T 345.00 - SUNNYSIDE 345KV CKT 1	717	789	0.06255	111.3811	GEN562992 1-G15063_3 0.6900
FDNS	00NR	3	16WP	G15_060	FROM->TO	G14-057T 345.00 - SUNNYSIDE 345KV CKT 1	717	789	0.06255	111.3562	GEN562704 1-G15_020_3 0.3550
FDNS	00NR	3	16WP	G15_060	FROM->TO	G14-057T 345.00 - SUNNYSIDE 345KV CKT 1	717	789	0.06255	111.3542	GEN563173 1-G15082_3 0.6900
FDNS	00NR	3	16WP	G15_060	FROM->TO	G14-057T 345.00 - SUNNYSIDE 345KV CKT 1	717	789	0.06395	111.3478	CANEY CREEK - TEXOMA JCT 138KV CKT 1
FDNS	00NR	3	16WP	G15_060	FROM->TO	G14-057T 345.00 - SUNNYSIDE 345KV CKT 1	717	789	0.06255	111.3165	GEN562952 1-G15057_3 0.6500
FDNS	00NR	3	16WP	G15_060	FROM->TO	G14-057T 345.00 - SUNNYSIDE 345KV CKT 1	717	789	0.06255	111.2724	GEN562710 1-G15_022_3 0.5500
FDNS	00NR	3	16WP	G15_060	FROM->TO	G14-057T 345.00 - SUNNYSIDE 345KV CKT 1	717	789	0.06255	111.2411	GEN620315 1-BIG STONE GEN
FDNS	00NR	3	16WP	G15_060	FROM->TO	G14-057T 345.00 - SUNNYSIDE 345KV CKT 1	717	789	0.0602	111.1801	CHISHOLM7 345.00 - GRACEMONT 345KV CKT 1
FDNSLock	00NR	3	16WP	G15_060	FROM->TO	G14-057T 345.00 - SUNNYSIDE 345KV CKT 1	717	789	0.06255	111.1763	GEN600004 2-PRAIRIE ISLAND G2
FDNSLock	00NR	3	16WP	G15_060	FROM->TO	G14-057T 345.00 - SUNNYSIDE 345KV CKT 1	717	789	0.06255	111.1736	GEN600003 1-PRAIRIE ISLAND G1
FDNS	00NR	3	16WP	G15_060	FROM->TO	G14-057T 345.00 - SUNNYSIDE 345KV CKT 1	717	789	0.06261	111.1734	P12:138:WFEC:MSL09
FDNSLock	00NR	3	16WP	G15_060	FROM->TO	G14-057T 345.00 - SUNNYSIDE 345KV CKT 1	717	789	0.06255	111.1659	GEN600006 1-AS KING
FDNS	00NR	3	16WP	G15_060	FROM->TO	G14-057T 345.00 - SUNNYSIDE 345KV CKT 1	717	789	0.06255	111.1295	GEN511851 1-COMANCHE #1
FDNS	00NR	3	16WP	G15_060	FROM->TO	G14-057T 345.00 - SUNNYSIDE 345KV CKT 1	717	789	0.06255	111.1	GEN636641 1-LOUISA UNIT 1
FDNS	00NR	3	16WP	G15_060	FROM->TO	G14-057T 345.00 - SUNNYSIDE 345KV CKT 1	717	789	0.06255	111.0396	GEN600005 1-MONTICELLO
FDNS	00NR	3	16WP	G15_060	FROM->TO	G14-057T 345.00 - SUNNYSIDE 345KV CKT 1	717	789	0.06093	111.0304	P12:230:AEPW-SPS:SWEETWT6:WHEELER 6
FDNS	00NR	3	16WP	G15_060	FROM->TO	G14-057T 345.00 - SUNNYSIDE 345KV CKT 1	717	789	0.06093	111.0294	STATELINE INTERCHANGE - STLN-DEMARC6 230KV CKT 1
FDNS	00NR	3	16WP	G15_060	FROM->TO	G14-057T 345.00 - SUNNYSIDE 345KV CKT 1	717	789	0.06093	111.0283	STLN-DEMARC6 - SWEETWATER 230KV CKT 1
FDNS	00NR	3	16WP	G15_060	FROM->TO	G14-057T 345.00 - SUNNYSIDE 345KV CKT 1	717	789	0.06255	111.0266	GEN562754 1-G15031_5 0.6900
FDNS	00NR	3	20WP	G15_060	FROM->TO	G14-057T 345.00 - SUNNYSIDE 345KV CKT 1	717	789	0.06233	111.0252	803-OKLAUNION
FDNS	00NR	3	16WP	G15_060	FROM->TO	G14-057T 345.00 - SUNNYSIDE 345KV CKT 1	717	789	0.06255	111.0089	GEN615002 2-COAL CREEK
FDNS	00NR	3	16WP	G15_060	FROM->TO	G14-057T 345.00 - SUNNYSIDE 345KV CKT 1	717	789	0.06255	111	GEN629074 1-ARNOLD LOWSIDE OF GSU XFMR
FDNS	00NR	3	16WP	G15_060	FROM->TO	G14-057T 345.00 - SUNNYSIDE 345KV CKT 1	717	789	0.06248	110.9877	P12:138:AEPW-OGE:CORNVIL4:CIMARON4
FDNS	00NR	3	16WP	G15_060	FROM->TO	G14-057T 345.00 - SUNNYSIDE 345KV CKT 1	717	789	0.06255	110.9862	GEN562023 1-G11_020_3 0.6900
FDNS	00NR	3	16WP	G15_060	FROM->TO	G14-057T 345.00 - SUNNYSIDE 345KV CKT 1	717	789	0.06255	110.9862	GEN562026 1-G11_019_3 0.6900
FDNS	00NR	3	16WP	G15_060	FROM->TO	G14-057T 345.00 - SUNNYSIDE 345KV CKT 1	717	789	0.06255	110.9797	GEN635213 3-NEAL UNIT 3
FDNS	00NR	3	16WP	G15_060	FROM->TO	G14-057T 345.00 - SUNNYSIDE 345KV CKT 1	717	789	0.06255	110.9682	GEN562756 1-G15031_7 0.6900
FDNS	00NR	3	16WP	G15_060	FROM->TO	G14-057T 345.00 - SUNNYSIDE 345KV CKT 1	717	789	0.06255	110.9258	BIG STONE 230/24.0KV TRANSFORMER CKT 1
FDNS	00NR	3	16WP	G15_060	FROM->TO	G14-057T 345.00 - SUNNYSIDE 345KV CKT 1	717	789	0.06255	110.9216	GEN562556 1-G14_046_3 0.3420
FDNS	00NR	3	16WP	G15_060	FROM->TO	G14-057T 345.00 - SUNNYSIDE 345KV CKT 1	717	789	0.06255	110.8335	GEN563142 1-G15079_3 0.5500
FDNS	00NR	3	16WP	G15_060	FROM->TO	G14-057T 345.00 - SUNNYSIDE 345KV CKT 1	717	789	0.06255	110.8335	GEN563151 1-G15080_2 0.5500
FDNS	00NR	3	16WP	G15_060	FROM->TO	G14-057T 345.00 - SUNNYSIDE 345KV CKT 1	717	789	0.06255	110.8185	GEN523971 1-HARRINGTON GEN #1 24 KV
FDNS	00NR	3	16WP	G15_060	FROM->TO	G14-057T 345.00 - SUNNYSIDE 345KV CKT 1	717	789	0.06255	110.8185	GEN523973 1-HARRINGTON GEN #3 24 KV
FDNS	00NR	3	16WP	G15_060	FROM->TO	G14-057T 345.00 - SUNNYSIDE 345KV CKT 1	717	789	0.06255	110.8184	GEN523972 1-HARRINGTON GEN #2 24 KV
FDNS	00NR	3	20WP	G15_060	FROM->TO	G14-057T 345.00 - SUNNYSIDE 345KV CKT 1	717	789	0.06125	110.8058	P12:138:OKGE:3TERM39
FDNS	00NR	3	16WP	G15_060	FROM->TO	G14-057T 345.00 - SUNNYSIDE 345KV CKT 1	717	789	0.06255	110.7304	GEN600000 1-SHERBURNECNTY G1
FDNS	00NR	3	16WP	G15_060	FROM->TO	G14-057T 345.00 - SUNNYSIDE 345KV CKT 1	717	789	0.06264	110.7146	NORTHWEST TEXARKANA - VALLIANT 345KV CKT 1
FDNS	00NR	3	16WP	G15_060	FROM->TO	G14-057T 345.00 - SUNNYSIDE 345KV CKT 1	717	789	0.06264	110.7146	NORTHWEST TEXARKANA - VALLIANT 345KV CKT 1
FDNS	00NR	3	16WP	G15_060	FROM->TO	G14-057T 345.00 - SUNNYSIDE 345KV CKT 1	717	789	0.05995	110.6535	P12:230:AEPW:ELKCITY6:SWEETWT6
FDNS	00NR	3	16WP	G15_060	FROM->TO	G14-057T 345.00 - SUNNYSIDE 345KV CKT 1	717	789	0.06255	110.6508	GEN600001 2-SHERBURNE CNTY G2
FDNS	00NR	3	20WP	G15_060	FROM->TO	G14-057T 345.00 - SUNNYSIDE 345KV CKT 1	717	789	0.06163	110.6277	MAYSVILLE - MAYSVLT4 138.00 138KV CKT 1
FDNS	00NR	3	16WP	G15_060	FROM->TO	G14-057T 345.00 - SUNNYSIDE 345KV CKT 1	717	789	0.06255	110.6206	GEN563042 1-G15068_3 0.6900
FDNS	00NR	3	16WP	G15_060	FROM->TO	G14-057T 345.00 - SUNNYSIDE 345KV CKT 1	717	789	0.06255	110.6069	GEN527901 1-HOBBS PLANT #1 (CT)
FDNS	00NR	3	16WP	G15_060	FROM->TO	G14-057T 345.00 - SUNNYSIDE 345KV CKT 1	717	789	0.06255	110.6069	GEN527902 1-HOBBS PLANT #2 (CT)
FDNS	00NR	3	16WP	G15_060	FROM->TO	G14-057T 345.00 - SUNNYSIDE 345KV CKT 1	717	789	0.06255	110.6027	GEN511848 1-SOUTHWESTERN STATION #3
FDNS	00NR	3	20WP	G15_060	FROM->TO	G14-057T 345.00 - SUNNYSIDE 345KV CKT 1	717	789	0.05991	110.5975	BEARCAT 138.00 - NINE MILE 138KV CKT 1
FDNS	00NR	3	20WP	G15_060	FROM->TO	G14-057T 345.00 - SUNNYSIDE 345KV CKT 1	717	789	0.06233	110.5893	GEN521103 1-BLUE CANYON WIND FARM
FDNS	00NR	3	20WP	G15_060	FROM->TO	G14-057T 345.00 - SUNNYSIDE 345KV CKT 1	717	789	0.06233	110.5787	GEN562691 1-G15_015_3 0.6900
FDNS	00NR	3	20WP	G15_060	FROM->TO	G14-057T 345.00 - SUNNYSIDE 345KV CKT 1	717	789	0.06233	110.5785	GEN520812 1-ANADRK5
FDNS	00NR	3	20WP	G15_060	FROM->TO	G14-057T 345.00 - SUNNYSIDE 345KV CKT 1	717	789	0.06233	110.5784	GEN520813 1-ANADRK6
FDNS	00NR	3	20WP	G15_060	FROM->TO	G14-057T 345.00 - SUNNYSIDE 345KV CKT 1	717	789	0.06233	110.5753	GEN563052 1-G15069_3 0.6900
FDNS	00NR	3	20WP	G15_060	FROM->TO	G14-057T 345.00 - SUNNYSIDE 345KV CKT 1	717	789	0.06233	110.5696	GEN562772 1-G15034_3 0.6900
FDNS	00NR	3	20WP	G15_060	FROM->TO	G14-057T 345.00 - SUNNYSIDE 345KV CKT 1	717	789	0.06269	110.5695	DRAPER LAKE - MIDWEST TAP 138KV CKT 1
FDNS	00NR	3	20WP	G15_060	FROM->TO	G14-057T 345.00 - SUNNYSIDE 345KV CKT 1	717	789	0.06233	110.5621	GEN600046 1-MECST
FDNS	00NR	3	20WP	G15_060	FROM->TO	G14-057T 345.00 - SUNNYSIDE 345KV CKT 1	717	789	0.06163	110.5618	MAYSVLT4 138.00 - PRAIRIE POINT 138KV CKT 1
FDNS	00NR	3	20WP	G15_060	FROM->TO	G14-057T 345.00 - SUNNYSIDE 345KV CKT 1	717	789	0.06233	110.5514	GEN629070 2-BEAVER CHANNEL GENERATORFOR UNIT NO 2
FDNS	00NR	3	20WP	G15_060	FROM->TO	G14-057T 345.00 - SUNNYSIDE 345KV CKT 1	717	789	0.06233	110.5496	GEN511961 1-DEMPSEY-WTG10.7000
FDNS	00NR	3	20WP	G15_060	FROM->TO	G14-057T 345.00 - SUNNYSIDE 345KV CKT 1	717	789	0.06233	110.5482	GEN600047 1-MECCT1
FDNS	00NR	3	20WP	G15_060	FROM->TO	G14-057T 345.00 - SUNNYSIDE 345KV CKT 1	717	789	0.06232	110.5464	P12:069:OKGE:3TERM42
FDNS	00NR	3	20WP	G15_060	FROM->TO	G14-057T 345.00 - SUNNYSIDE 345KV CKT 1	717	789	0.06171	110.546	ARBUCKLE - SULPHR 4 138.00 138KV CKT 1
FDNS	00NR	3	20WP	G15_060	FROM->TO	G14-057T 345.00 - SUNNYSIDE 345KV CKT 1	717	789	0.06233	110.5432	GEN629071 1-BURLINGTON GENERATOR FOR UNIT NO 1 E
FDNS	00NR	3	20WP	G15_060	FROM->TO	G14-057T 345.00 - SUNNYSIDE 345KV CKT 1	717	789	0.06152	110.5428	CIMARRON - MATHWSN7 345.00 345KV CKT 1
FDNS	00NR	3	20WP	G15_060	FROM->TO	G14-057T 345.00 - SUNNYSIDE 345KV CKT 1	717	789	0.06152	110.5428	CIMARRON - MATHWSN7 345.00 345KV CKT 2
FDNS	00NR	3	20WP	G15_060	FROM->TO	G14-057T 345.00 - SUNNYSIDE 345KV CKT 1	717	789	0.05991	110.5403	P12:138:WFEC:MSL14
FDNS	00NR	3	20WP	G15_060	FROM->TO	G14-057T 345.00 - SUNNYSIDE 345KV CKT 1	717	789	0.06269	110.5392	P12:138:OKGE:3TERM21
FDNS	00NR	3	20WP	G15_060	FROM->TO	G14-057T 345.00 - SUNNYSIDE 345KV CKT 1	717	789	0.06303	110.5365	G15063_T 345.00 - MATHWSN7 345.00 345KV CKT 1
FDNS	00NR	3	20WP	G15_060	FROM->TO	G14-057T 345.00 - SUNNYSIDE 345KV CKT 1	717	789	0.06233	110.5362	BURLINGTON NO1 + NO 2 + NO 3 161/20.0KV TRANSFORMER CKT 1
FDNSLock	00NR	3	16WP	G15_060	FROM->TO	G14-057T 345.00 - SUNNYSIDE 345KV CKT 1	717	789	0.06255	110.5323	GEN629075 1-OTTUMWA GENERATOR FOR OTTUMWA UNIT NO 1
FDNS	00NR	3	20WP	G15_060	FROM->TO	G14-057T 345.00 - SUNNYSIDE 345KV CKT 1	717	789	0.06235	110.5286	P12:138:WFEC:MSL11
FDNS	00NR	3	20WP	G15_060	FROM->TO	G14-057T 345.00 - SUNNYSIDE 345KV CKT 1	717	789	0.06235	110.5286	P12:138:WFEC-AEPW:PHAROAH4:LONEOAK4
FDNS	00NR	3	20WP	G15_060	FROM->TO	G14-057T 345.00 - SUNNYSIDE 345KV CKT 1	717	789	0.06233	110.525	GEN615010 1-STANTON4
FDNS	00NR	3	20WP	G15_060	FROM->TO	G14-057T 345.00 - SUNNYSIDE 345KV CKT 1	717	789	0.06233	110.5192	GEN615021 1-GRE-ER 14G 16.000
FDNS	00NR	3	20WP	G15_060	FROM->TO	G14-057T 345.00 - SUNNYSIDE 345KV CKT 1	717	789	0.06239	110.5122	GLASSES - MADILL INDUSTRIAL TAP 138KV CKT 1
FDNS	00NR	3	20WP	G15_060	FROM->TO	G14-057T 345.00 - SUNNYSIDE 345KV CKT 1	717	789	0.0624	110.4994	CANEY CREEK - JOHNSON COUNTY 138KV CKT 1
FDNS	00NR	3	20WP	G15_060	FROM->TO	G14-057T 345.00 - SUNNYSIDE 345KV CKT 1	717	789	0.05991	110.4961	BEARCAT 138.00 - MOORELAND 138KV CKT 1
FDNS	00NR	3	20WP	G15_060	FROM->TO	G14-057T 345.00 - SUNNYSIDE 345KV CKT 1	717	789	0.06247	110.4941	P12:138:WFEC:MSL08
FDNS	00NR	3	20WP	G15_060	FROM->TO	G14-057T 345.00 - SUNNYSIDE 345KV CKT 1	717	789	0.06233	110.4852	GEN531447 1-HOLCOMB GENERATOR
FDNS	00NR	3	20WP	G15_060	FROM->TO	G14-057T 345.00 - SUNNYSIDE 345KV CKT 1	717	789	0.06233	110.4848	GEN515443 1-MNCOWND1 0.7000

SOLUTION	GROUP	SCENARIO	SEASON	SOURCE	DIRECTION	MONITORED ELEMENT	RATEA (MVA)	RATEB(MVA)	TDF	TC%LOADING (% MVA)	CONTINGENCY
FDNS	00NR	3	20WP	G15_060	FROM->TO	G14-057T 345.00 - SUNNYSIDE 345KV CKT 1	717	789	0.06233	110.4842	INDEPENDENCE 500/26.0KV TRANSFORMER CKT 1
FDNS	00NR	3	20WP	G15_060	FROM->TO	G14-057T 345.00 - SUNNYSIDE 345KV CKT 1	717	789	0.06372	110.4812	LEBANON - TEXOMA JCT 138KV CKT 1
FDNS	00NR	3	20WP	G15_060	FROM->TO	G14-057T 345.00 - SUNNYSIDE 345KV CKT 1	717	789	0.06233	110.4761	GEN560183 1-REDHIL-WTG1 12.000
FDNS	00NR	3	20WP	G15_060	FROM->TO	G14-057T 345.00 - SUNNYSIDE 345KV CKT 1	717	789	0.06163	110.4698	PRAIRIE POINT - RATLIFF 138KV CKT 1
FDNS	00NR	3	20WP	G15_060	FROM->TO	G14-057T 345.00 - SUNNYSIDE 345KV CKT 1	717	789	0.06233	110.4591	GEN600067 9-HIGH BRIDGE
FDNS	00NR	3	20WP	G15_060	FROM->TO	G14-057T 345.00 - SUNNYSIDE 345KV CKT 1	717	789	0.06233	110.4575	P12:230:UMZB:# 112 #: NU IN SD. NU-RCDC & DRY CREEK XFMR
FDNS	00NR	3	20WP	G15_060	FROM->TO	G14-057T 345.00 - SUNNYSIDE 345KV CKT 1	717	789	0.06233	110.4571	RCDC EAST 4230.00 - RED CEDAR DC 230KV CKT 1
FDNS	00NR	3	20WP	G15_060	FROM->TO	G14-057T 345.00 - SUNNYSIDE 345KV CKT 1	717	789	0.06256	110.4567	OVEXFRMCCOVE
FDNS	00NR	3	20WP	G15_060	FROM->TO	G14-057T 345.00 - SUNNYSIDE 345KV CKT 1	717	789	0.06226	110.4537	CARTER - CHICKASAW 138KV CKT 1
FDNS	00NR	3	20WP	G15_060	FROM->TO	G14-057T 345.00 - SUNNYSIDE 345KV CKT 1	717	789	0.06217	110.4531	ALTUS JUNCTION - RUSSELL 138KV CKT 1
FDNS	00NR	3	20WP	G15_060	FROM->TO	G14-057T 345.00 - SUNNYSIDE 345KV CKT 1	717	789	0.06217	110.4531	ALTUS JUNCTION - RUSSELL 138KV CKT 1
FDNS	00NR	3	20WP	G15_060	FROM->TO	G14-057T 345.00 - SUNNYSIDE 345KV CKT 1	717	789	0.06239	110.4518	GLASSES - RUSSETT 138KV CKT 1
FDNS	00NR	3	20WP	G15_060	FROM->TO	G14-057T 345.00 - SUNNYSIDE 345KV CKT 1	717	789	0.06249	110.4453	CANADIAN RIVER - MCALESTER SOUTH 138KV CKT 1
FDNS	00NR	3	20WP	G15_060	FROM->TO	G14-057T 345.00 - SUNNYSIDE 345KV CKT 1	717	789	0.06249	110.4453	CANADIAN RIVER - MCALESTER SOUTH 138KV CKT 1
FDNS	00NR	3	20WP	G15_060	FROM->TO	G14-057T 345.00 - SUNNYSIDE 345KV CKT 1	717	789	0.06249	110.4435	CANADIAN RIVER () 345/138/13.8KV TRANSFORMER CKT 1
FDNS	00NR	3	20WP	G15_060	FROM->TO	G14-057T 345.00 - SUNNYSIDE 345KV CKT 1	717	789	0.06249	110.4435	CANADIAN RIVER () 345/138/13.8KV TRANSFORMER CKT 1
FDNS	00NR	3	20WP	G15_060	FROM->TO	G14-057T 345.00 - SUNNYSIDE 345KV CKT 1	717	789	0.06243	110.4405	GRPRAR1-LNX3345.00 - HOLT.CO3 345.00 345KV CKT 1
FDNS	00NR	3	20WP	G15_060	FROM->TO	G14-057T 345.00 - SUNNYSIDE 345KV CKT 1	717	789	0.06243	110.4383	GRPRAR1-LNX3345.00 - GRPRAR 345KV CKT Z
FDNS	00NR	3	20WP	G15_060	FROM->TO	G14-057T 345.00 - SUNNYSIDE 345KV CKT 1	717	789	0.06233	110.4359	GEN563242 1-G15090_3 0.6900
FDNS	00NR	3	20WP	G15_060	FROM->TO	G14-057T 345.00 - SUNNYSIDE 345KV CKT 1	717	789	0.06227	110.4311	HUGO (HUGO 1) 345/138/13.8KV TRANSFORMER CKT 1
FDNS	00NR	3	20WP	G15_060	FROM->TO	G14-057T 345.00 - SUNNYSIDE 345KV CKT 1	717	789	0.06208	110.4292	ROCKY POINT - SPRINGDALE 138KV CKT 1
FDNS	00NR	3	20WP	G15_060	FROM->TO	G14-057T 345.00 - SUNNYSIDE 345KV CKT 1	717	789	0.06266	110.419	CHAMBER SPRINGS - CLARKSVILLE 345KV CKT 1
FDNS	00NR	3	20WP	G15_060	FROM->TO	G14-057T 345.00 - SUNNYSIDE 345KV CKT 1	717	789	0.06233	110.4157	GEN562902 1-G15052_3 0.6900
FDNS	00NR	3	20WP	G15_060	FROM->TO	G14-057T 345.00 - SUNNYSIDE 345KV CKT 1	717	789	0.06174	110.4053	P12:138:AEPW:112GORE4:SNYDER-4
FDNS	00NR	3	16WP	G15_060	FROM->TO	G14-057T 345.00 - SUNNYSIDE 345KV CKT 1	717	789	0.06255	110.405	SHERBURNE CO 345/24.0KV TRANSFORMER CKT 1
FDNS	00NR	3	20WP	G15_060	FROM->TO	G14-057T 345.00 - SUNNYSIDE 345KV CKT 1	717	789	0.06233	110.4025	GEN562078 1-G11_051_3 0.6900
FDNS	00NR	3	20WP	G15_060	FROM->TO	G14-057T 345.00 - SUNNYSIDE 345KV CKT 1	717	789	0.06171	110.4003	JOLLYVILLE - SULPHR 4 138.00 138KV CKT 1
FDNS	00NR	3	16WP	G15_060	FROM->TO	G14-057T 345.00 - SUNNYSIDE 345KV CKT 1	717	789	0.06255	110.4	GEN635214 4-NEAL UNIT 4
FDNS	00NR	3	20WP	G15_060	FROM->TO	G14-057T 345.00 - SUNNYSIDE 345KV CKT 1	717	789	0.06233	110.3996	GEN629072 4-LANSING GENERATOR FOR UNITS NO4 EIA CODE 1
FDNS	00NR	3	20WP	G15_060	FROM->TO	G14-057T 345.00 - SUNNYSIDE 345KV CKT 1	717	789	0.06233	110.397	GEN562802 1-G15039_3 0.3570
FDNS	00NR	3	20WP	G15_060	FROM->TO	G14-057T 345.00 - SUNNYSIDE 345KV CKT 1	717	789	0.06233	110.3855	GEN524285 1-WILDORADO WIND GEN
FDNS	00NR	3	20WP	G15_060	FROM->TO	G14-057T 345.00 - SUNNYSIDE 345KV CKT 1	717	789	0.06233	110.368	GEN560331 1-G10-46 13.800
FDNS	00NR	3	20WP	G15_060	FROM->TO	G14-057T 345.00 - SUNNYSIDE 345KV CKT 1	717	789	0.06233	110.3627	GEN524295 1-SPNSPUR_WND10.6900
FDNS	00NR	3	20WP	G15_060	FROM->TO	G14-057T 345.00 - SUNNYSIDE 345KV CKT 1	717	789	0.06233	110.3483	GEN562587 1-G14_056_3 0.6900
FDNS	00NR	3	20WP	G15_060	FROM->TO	G14-057T 345.00 - SUNNYSIDE 345KV CKT 1	717	789	0.06233	110.3477	GEN657749 1-YOUNG 1 GENERATOR
FDNS	00NR	3	20WP	G15_060	FROM->TO	G14-057T 345.00 - SUNNYSIDE 345KV CKT 1	717	789	0.06233	110.342	GEN514805 1-SOONER UNIT 1
FDNS	00NR	3	20WP	G15_060	FROM->TO	G14-057T 345.00 - SUNNYSIDE 345KV CKT 1	717	789	0.06233	110.337	GEN562269 1-G12-020-1 0.6900
FDNS	00NR	3	20WP	G15_060	FROM->TO	G14-057T 345.00 - SUNNYSIDE 345KV CKT 1	717	789	0.06233	110.3367	GEN524023 1-NICHOLS GEN #3 22 KV
FDNS	00NR	3	20WP	G15_060	FROM->TO	G14-057T 345.00 - SUNNYSIDE 345KV CKT 1	717	789	0.06171	110.3364	JOLLYVILLE - KERR MCGEE CIMARRON 138KV CKT 1
FDNS	00NR	3	16WP	G15_060	FROM->TO	G14-057T 345.00 - SUNNYSIDE 345KV CKT 1	717	789	0.06255	110.328	GEN563273 2-G15093_4 0.6900
FDNS	00NR	3	20WP	G15_060	FROM->TO	G14-057T 345.00 - SUNNYSIDE 345KV CKT 1	717	789	0.06233	110.3222	GEN514806 1-SOONER UNIT 2
FDNS	00NR	3	20WP	G15_060	FROM->TO	G14-057T 345.00 - SUNNYSIDE 345KV CKT 1	717	789	0.06238	110.3219	CROCKETT - TENASKA RUSK COUNTY 345KV CKT 1
FDNS	00NR	3	16WP	G15_060	FROM->TO	G14-057T 345.00 - SUNNYSIDE 345KV CKT 1	717	789	0.06255	110.3185	GEN563043 1-G15068_4 0.6900
FDNS	00NR	3	20WP	G15_060	FROM->TO	G14-057T 345.00 - SUNNYSIDE 345KV CKT 1	717	789	0.06238	110.3172	LEBROCK - TENASKA RUSK COUNTY 345KV CKT 1
FDNS	00NR	3	16WP	G15_060	FROM->TO	G14-057T 345.00 - SUNNYSIDE 345KV CKT 1	717	789	0.06093	110.3023	CHISHOLM6 230.00 - SWEETWATER 230KV CKT 1
FDNS	00NR	3	16WP	G15_060	FROM->TO	G14-057T 345.00 - SUNNYSIDE 345KV CKT 1	717	789	0.06255	110.2979	GEN526333 1-JONES GEN #3 21 KV
FDNS	00NR	3	16WP	G15_060	FROM->TO	G14-057T 345.00 - SUNNYSIDE 345KV CKT 1	717	789	0.06255	110.2979	GEN526334 1-JONES_4 116.500
FDNS	00NR	3	20WP	G15_060	FROM->TO	G14-057T 345.00 - SUNNYSIDE 345KV CKT 1	717	789	0.06233	110.2978	GEN562812 1-G15040_3 0.3570
FDNS	00NR	3	20WP	G15_060	FROM->TO	G14-057T 345.00 - SUNNYSIDE 345KV CKT 1	717	789	0.06233	110.2935	GEN562270 1-G12-020-2 0.6900
FDNS	00NR	3	20WP	G15_060	FROM->TO	G14-057T 345.00 - SUNNYSIDE 345KV CKT 1	717	789	0.06171	110.2924	ARBWIND4 138.00 - KERR MCGEE CIMARRON 138KV CKT 1
FDNS	00NR	3	20WP	G15_060	FROM->TO	G14-057T 345.00 - SUNNYSIDE 345KV CKT 1	717	789	0.06233	110.2912	GEN563132 1-G15078_3 0.3570
FDNS	00NR	3	20WP	G15_060	FROM->TO	G14-057T 345.00 - SUNNYSIDE 345KV CKT 1	717	789	0.06233	110.2846	GEN563102 1-G15075_3 0.5500
FDNS	00NR	3	20WP	G15_060	FROM->TO	G14-057T 345.00 - SUNNYSIDE 345KV CKT 1	717	789	0.06233	110.2683	GEN562882 1-G15047_3 0.6900
FDNS	00NR	3	20WP	G15_060	FROM->TO	G14-057T 345.00 - SUNNYSIDE 345KV CKT 1	717	789	0.06233	110.2606	GEN562974 1-G15060_5 0.6900
FDNS	00NR	3	20WP	G15_060	FROM->TO	G14-057T 345.00 - SUNNYSIDE 345KV CKT 1	717	789	0.06233	110.2605	GEN563062 1-G15071_3 0.6900
FDNS	00NR	3	20WP	G15_060	FROM->TO	G14-057T 345.00 - SUNNYSIDE 345KV CKT 1	717	789	0.06233	110.251	GEN562973 1-G15060_4 0.6900
FDNS	00NR	3	16WP	G15_060	FROM->TO	G14-057T 345.00 - SUNNYSIDE 345KV CKT 1	717	789	0.06255	110.2441	GEN525844 1-ELK_1 118.000
FDNS	00NR	3	16WP	G15_060	FROM->TO	G14-057T 345.00 - SUNNYSIDE 345KV CKT 1	717	789	0.06255	110.2387	GEN525845 1-ELK_2 1 138.00
FDNS	00NR	3	20WP	G15_060	FROM->TO	G14-057T 345.00 - SUNNYSIDE 345KV CKT 1	717	789	0.06233	110.2364	GEN345671 2-1RUSH G2 18.000
FDNS	00NR	3	20WP	G15_060	FROM->TO	G14-057T 345.00 - SUNNYSIDE 345KV CKT 1	717	789	0.06178	110.235	CHICKASAW - TOTAL 138KV CKT 1
FDNS	00NR	3	20WP	G15_060	FROM->TO	G14-057T 345.00 - SUNNYSIDE 345KV CKT 1	717	789	0.06233	110.2345	GEN345670 1-1RUSH G1 18.000
FDNS	00NR	3	20WP	G15_060	FROM->TO	G14-057T 345.00 - SUNNYSIDE 345KV CKT 1	717	789	0.06226	110.229	BROWN - RUSSETT 138KV CKT 1
FDNS	00NR	3	20WP	G15_060	FROM->TO	G14-057T 345.00 - SUNNYSIDE 345KV CKT 1	717	789	0.06233	110.2248	GEN521112 1-ORME3 13.800
FDNS	00NR	3	16WP	G15_060	FROM->TO	G14-057T 345.00 - SUNNYSIDE 345KV CKT 1	717	789	0.06255	110.2242	GEN600002 3-SHERBURNE CNTY G3
FDNS	00NR	3	20WP	G15_060	FROM->TO	G14-057T 345.00 - SUNNYSIDE 345KV CKT 1	717	789	0.06233	110.2069	4SIOUX 1 138.00 138/18.0KV TRANSFORMER CKT 1
FDNS	00NR	3	20WP	G15_060	FROM->TO	G14-057T 345.00 - SUNNYSIDE 345KV CKT 1	717	789	0.06233	110.2006	GEN560105 1-G08-22 0.6900
FDNS	00NR	3	16WP	G15_060	FROM->TO	G14-057T 345.00 - SUNNYSIDE 345KV CKT 1	717	789	0.06255	110.2	GEN344225 1-1CAL G1 25.000
FDNS	00NR	3	20WP	G15_060	FROM->TO	G14-057T 345.00 - SUNNYSIDE 345KV CKT 1	717	789	0.06233	110.1843	GEN562550 1-G14_040_3 0.6900
FDNS	00NR	3	20WP	G15_060	FROM->TO	G14-057T 345.00 - SUNNYSIDE 345KV CKT 1	717	789	0.06233	110.1721	GEN681522 3-GENOA 3
FDNS	00NR	3	20WP	G15_060	FROM->TO	G14-057T 345.00 - SUNNYSIDE 345KV CKT 1	717	789	0.06226	110.1597	RUSSETT - RUSSETT 138KV CKT 1
FDNS	00NR	3	20WP	G15_060	FROM->TO	G14-057T 345.00 - SUNNYSIDE 345KV CKT 1	717	789	0.06233	110.1569	GEN520811 1-ANADRK4
FDNS	00NR	3	16WP	G15_060	FROM->TO	G14-057T 345.00 - SUNNYSIDE 345KV CKT 1	717	789	0.06255	110.1546	GEN563202 1-G15085_3 0.5500
FDNS	00NR	3	20WP	G15_060	FROM->TO	G14-057T 345.00 - SUNNYSIDE 345KV CKT 1	717	789	0.06233	110.1419	EASTDC - ERCOT EQUIVALENCE 345KV CKT 1
FDNS	00NR	3	20WP	G15_060	FROM->TO	G14-057T 345.00 - SUNNYSIDE 345KV CKT 1	717	789	0.06233	110.1409	GEN527161 1-MUSTANG GEN #1
FDNS	00NR	3	20WP	G15_060	FROM->TO	G14-057T 345.00 - SUNNYSIDE 345KV CKT 1	717	789	0.06233	110.1409	GEN527162 1-MUSTANG GEN #2
FDNS	00NR	3	20WP	G15_060	FROM->TO	G14-057T 345.00 - SUNNYSIDE 345KV CKT 1	717	789	0.06199	110.1322	ROCKY POINT - SUNNYSIDE 138KV CKT 1
FDNS	00NR	3	20WP	G15_060	FROM->TO	G14-057T 345.00 - SUNNYSIDE 345KV CKT 1	717	789	0.06233	110.1314	GEN511962 2-RKYRDGW2-1 0.7000
FDNS	00NR	3	20WP	G15_060	FROM->TO	G14-057T 345.00 - SUNNYSIDE 345KV CKT 1	717	789	0.06233	110.1099	GEN672321 1-SHAND GENERATOR 1
FDNS	00NR	3	20WP	G15_060	FROM->TO	G14-057T 345.00 - SUNNYSIDE 345KV CKT 1	717	789	0.06223	110.1098	RUSSETT - SPRINGDALE 138KV CKT 1

SOLUTION	GROUP	SCENARIO	SEASON	SOURCE	DIRECTION	MONITORED ELEMENT	RATEA (MVA)	RATEB(MVA)	TDF	TC%LOADING (% MVA)	CONTINGENCY
FDNS	00NR	3	20WP	G15_060	FROM->TO	G14-057T 345.00 - SUNNYSIDE 345KV CKT 1	717	789	0.06233	110.1087	GEN525494 1-PLANT X GEN #4 20 KV
FDNS	00NR	3	16WP	G15_060	FROM->TO	G14-057T 345.00 - SUNNYSIDE 345KV CKT 1	717	789	0.06255	110.1083	GEN525562 1-TOLK GEN #2 24 KV
FDNS	00NR	3	20WP	G15_060	FROM->TO	G14-057T 345.00 - SUNNYSIDE 345KV CKT 1	717	789	0.06233	110.0936	GEN563192 1-G15084_3 0.5500
FDNS	00NR	3	20WP	G15_060	FROM->TO	G14-057T 345.00 - SUNNYSIDE 345KV CKT 1	717	789	0.06233	110.0933	GEN527882 1-CUNNINGHAM GEN #2 20 KV
FDNS	00NR	3	20WP	G15_060	FROM->TO	G14-057T 345.00 - SUNNYSIDE 345KV CKT 1	717	789	0.06233	110.087	GEN672310 1-POPLAR RIVER GENERATOR 1
FDNS	00NR	3	20WP	G15_060	FROM->TO	G14-057T 345.00 - SUNNYSIDE 345KV CKT 1	717	789	0.06233	110.087	GEN672311 2-POPLAR RIVER GENERATOR 2
FDNS	00NR	3	20WP	G15_060	FROM->TO	G14-057T 345.00 - SUNNYSIDE 345KV CKT 1	717	789	0.06233	110.0849	GEN344895 2-1LAB G2 20.000
FDNS	00NR	3	20WP	G15_060	FROM->TO	G14-057T 345.00 - SUNNYSIDE 345KV CKT 1	717	789	0.0623	110.0781	P12:138:WFEC-AEPW:GOLDENSW4:CRAIGJT4
FDNS	00NR	3	20WP	G15_060	FROM->TO	G14-057T 345.00 - SUNNYSIDE 345KV CKT 1	717	789	0.06233	110.0779	GEN527163 1-MUSTANG GEN #3 22 KV
FDNS	00NR	3	20WP	G15_060	FROM->TO	G14-057T 345.00 - SUNNYSIDE 345KV CKT 1	717	789	0.06233	110.0777	GEN672306 6-BOUNDARY DAM GENERATOR 6
FDNS	00NR	3	20WP	G15_060	FROM->TO	G14-057T 345.00 - SUNNYSIDE 345KV CKT 1	717	789	0.06138	110.0767	ARKANSAS NUCLEAR ONE - FT SMITH 500KV CKT 1
FDNS	00NR	3	20WP	G15_060	FROM->TO	G14-057T 345.00 - SUNNYSIDE 345KV CKT 1	717	789	0.06138	110.0767	ARKANSAS NUCLEAR ONE - FT SMITH 500KV CKT 1
FDNS	00NR	3	20WP	G15_060	FROM->TO	G14-057T 345.00 - SUNNYSIDE 345KV CKT 1	717	789	0.06233	110.0692	CLAY BOSWELL 230/20.9KV TRANSFORMER CKT 1
FDNS	00NR	3	20WP	G15_060	FROM->TO	G14-057T 345.00 - SUNNYSIDE 345KV CKT 1	717	789	0.06233	110.0685	GEN511853 1-COMANCHE #3
FDNS	00NR	3	16WP	G15_060	FROM->TO	G14-057T 345.00 - SUNNYSIDE 345KV CKT 1	717	789	0.06255	110.0622	GEN527166 1-MUSTANG_6 118.000
FDNS	00NR	3	20WP	G15_060	FROM->TO	G14-057T 345.00 - SUNNYSIDE 345KV CKT 1	717	789	0.06233	110.0608	GEN562512 1-G14_020_3 0.6900
FDNS	00NR	3	20WP	G15_060	FROM->TO	G14-057T 345.00 - SUNNYSIDE 345KV CKT 1	717	789	0.06233	110.0598	GEN562892 1-G15048_3 0.6900
FDNS	00NR	3	20WP	G15_060	FROM->TO	G14-057T 345.00 - SUNNYSIDE 345KV CKT 1	717	789	0.06233	110.0557	GEN344896 3-1LAB G3 20.000
FDNS	00NR	3	20WP	G15_060	FROM->TO	G14-057T 345.00 - SUNNYSIDE 345KV CKT 1	717	789	0.06233	110.0546	GEN344897 4-1LAB G4 20.000
FDNS	00NR	3	20WP	G15_060	FROM->TO	G14-057T 345.00 - SUNNYSIDE 345KV CKT 1	717	789	0.06233	110.0543	GEN344894 1-1LAB G1 20.000
FDNS	00NR	3	20WP	G15_060	FROM->TO	G14-057T 345.00 - SUNNYSIDE 345KV CKT 1	717	789	0.06238	110.052	P12:138:WFEC:MSL16
FDNS	00NR	3	20WP	G15_060	FROM->TO	G14-057T 345.00 - SUNNYSIDE 345KV CKT 1	717	789	0.06233	110.048	GEN681542 6-JP MADGETT
FDNS	00NR	3	20WP	G15_060	FROM->TO	G14-057T 345.00 - SUNNYSIDE 345KV CKT 1	717	789	0.06156	110.045	ARDMORE WEST - CARTER 138KV CKT 1
FDNS	00NR	3	20WP	G15_060	FROM->TO	G14-057T 345.00 - SUNNYSIDE 345KV CKT 1	717	789	0.06233	110.0283	GEN523461 1-BLACKHAWK GEN #1
FDNS	00NR	3	20WP	G15_060	FROM->TO	G14-057T 345.00 - SUNNYSIDE 345KV CKT 1	717	789	0.06233	110.0282	GEN523462 1-BLACKHAWK GEN #2
FDNS	00NR	3	16WP	G15_060	FROM->TO	G14-057T 345.00 - SUNNYSIDE 345KV CKT 1	717	789	0.06269	110.0259	LYDIA - WELSH 345KV CKT 1
FDNS	00NR	3	16WP	G15_060	FROM->TO	G14-057T 345.00 - SUNNYSIDE 345KV CKT 1	717	789	0.06269	110.0259	LYDIA - WELSH 345KV CKT 1
FDNS	00NR	3	20WP	G15_060	FROM->TO	G14-057T 345.00 - SUNNYSIDE 345KV CKT 1	717	789	0.06233	110.0211	GEN511852 1-COMANCHE #2
FDNS	00NR	3	20WP	G15_060	FROM->TO	G14-057T 345.00 - SUNNYSIDE 345KV CKT 1	717	789	0.06225	110.0017	P12:138:WFEC:MSL07
FDNS	00NR	3	20WP	G15_060	FROM->TO	G14-057T 345.00 - SUNNYSIDE 345KV CKT 1	717	789	0.06225	110.0017	P12:138:WFEC-AEPW:HUGOPP4:ATOKA--4
FDNS	00NR	3	20WP	G15_060	FROM->TO	G14-057T 345.00 - SUNNYSIDE 345KV CKT 1	717	789	0.06174	109.9974	CACHE - SNYDER 138KV CKT 1
FDNS	00NR	3	16WP	G15_060	FROM->TO	G14-057T 345.00 - SUNNYSIDE 345KV CKT 1	717	789	0.06215	109.9851	JOHNSON COUNTY (JOHNCO) 345/138/13.8KV TRANSFORMER CKT 1
FDNS	00NR	3	20WP	G15_060	FROM->TO	G14-057T 345.00 - SUNNYSIDE 345KV CKT 1	717	789	0.0623	109.9835	P12:138:WFEC:MSL06
FDNS	00NR	3	20WP	G15_060	FROM->TO	G14-057T 345.00 - SUNNYSIDE 345KV CKT 1	717	789	0.0623	109.9834	P12:138:AEPW-SWPA:LONEOAK4:TUPELO4
FDNS	00NR	3	20WP	G15_060	FROM->TO	G14-057T 345.00 - SUNNYSIDE 345KV CKT 1	717	789	0.06163	109.9829	SUNNYSIDE (SUNNYSD5) 345/138/13.8KV TRANSFORMER CKT 1
FDNS	00NR	3	16WP	G15_060	FROM->TO	G14-057T 345.00 - SUNNYSIDE 345KV CKT 1	717	789	0.06255	109.9726	GEN635023 3-WALTER SCOTT UNIT 3
FDNS	00NR	3	20WP	G15_060	FROM->TO	G14-057T 345.00 - SUNNYSIDE 345KV CKT 1	717	789	0.06233	109.9691	GEN562699 1-G15_018_3 0.6900
FDNS	00NR	3	20WP	G15_060	FROM->TO	G14-057T 345.00 - SUNNYSIDE 345KV CKT 1	717	789	0.06233	109.9656	GEN521111 1-ORME2 13.800
FDNS	00NR	3	20WP	G15_060	FROM->TO	G14-057T 345.00 - SUNNYSIDE 345KV CKT 1	717	789	0.06233	109.9576	GEN563162 1-G15081_3 0.6900
FDNS	00NR	3	20WP	G15_060	FROM->TO	G14-057T 345.00 - SUNNYSIDE 345KV CKT 1	717	789	0.06215	109.9548	G15085_T 138.00 - RUSSELL 138KV CKT 1
FDNS	00NR	3	20WP	G15_060	FROM->TO	G14-057T 345.00 - SUNNYSIDE 345KV CKT 1	717	789	0.06233	109.9527	GEN521110 1-ORME1 13.800
FDNS	00NR	3	20WP	G15_060	FROM->TO	G14-057T 345.00 - SUNNYSIDE 345KV CKT 1	717	789	0.06156	109.9336	ARDMORE WEST - UNIROYAL 138KV CKT 1
FDNS	00NR	3	16WP	G15_060	FROM->TO	G14-057T 345.00 - SUNNYSIDE 345KV CKT 1	717	789	0.06255	109.9237	GEN562590 1-G14_057_3 0.6900
FDNS	00NR	3	20WP	G15_060	FROM->TO	G14-057T 345.00 - SUNNYSIDE 345KV CKT 1	717	789	0.06469	109.9147	CLARKSVILLE - MUSKOGEE 345KV CKT 1
FDNS	00NR	3	20WP	G15_060	FROM->TO	G14-057T 345.00 - SUNNYSIDE 345KV CKT 1	717	789	0.06469	109.9147	CLARKSVILLE - MUSKOGEE 345KV CKT 1
FDNS	00NR	3	20WP	G15_060	FROM->TO	G14-057T 345.00 - SUNNYSIDE 345KV CKT 1	717	789	0.06233	109.9067	GEN563292 1-G15095_3 0.6900
FDNS	00NR	3	20WP	G15_060	FROM->TO	G14-057T 345.00 - SUNNYSIDE 345KV CKT 1	717	789	0.06186	109.9062	CARTRCO4 138.00 - RATLIFF 138KV CKT 1
FDNS	00NR	3	16WP	G15_060	FROM->TO	G14-057T 345.00 - SUNNYSIDE 345KV CKT 1	717	789	0.06255	109.8862	GEN562762 1-G15033_3 0.6900
FDNS	00NR	3	20WP	G15_060	FROM->TO	G14-057T 345.00 - SUNNYSIDE 345KV CKT 1	717	789	0.06233	109.8853	GEN661015 1-COYOTE
FDNS	00NR	3	20WP	G15_060	FROM->TO	G14-057T 345.00 - SUNNYSIDE 345KV CKT 1	717	789	0.06207	109.8801	P12:138:OKGE:3TERM40
FDNS	00NR	3	16WP	G15_060	FROM->TO	G14-057T 345.00 - SUNNYSIDE 345KV CKT 1	717	789	0.06255	109.8763	GEN562655 1-G14_074_3 0.6900
FDNS	00NR	3	20WP	G15_060	FROM->TO	G14-057T 345.00 - SUNNYSIDE 345KV CKT 1	717	789	0.06233	109.868	GEN563122 1-G15077_3 0.3850
FDNS	00NR	3	20WP	G15_060	FROM->TO	G14-057T 345.00 - SUNNYSIDE 345KV CKT 1	717	789	0.06233	109.8597	GEN562861 1-G15045_2 0.4800
FDNS	00NR	3	16WP	G15_060	FROM->TO	G14-057T 345.00 - SUNNYSIDE 345KV CKT 1	717	789	0.06255	109.827	GEN562685 1-G15_013_3 0.3550
FDNS	00NR	3	16WP	G15_060	FROM->TO	G14-057T 345.00 - SUNNYSIDE 345KV CKT 1	717	789	0.06255	109.8155	GEN525561 1-TOLK GEN #1 24 KV
FDNS	00NR	3	20WP	G15_060	FROM->TO	G14-057T 345.00 - SUNNYSIDE 345KV CKT 1	717	789	0.06143	109.7898	GRAPEVINE INTERCHANGE - STATELINE INTERCHANGE 230KV CKT 1
FDNS	00NR	3	20WP	G15_060	FROM->TO	G14-057T 345.00 - SUNNYSIDE 345KV CKT 1	717	789	0.06143	109.7898	GRAPEVINE INTERCHANGE - STATELINE INTERCHANGE 230KV CKT 1
FDNS	00NR	3	20WP	G15_060	FROM->TO	G14-057T 345.00 - SUNNYSIDE 345KV CKT 1	717	789	0.06233	109.7741	GEN657748 1-YOUNG 2 GENERATOR
FDNS	00NR	3	20WP	G15_060	FROM->TO	G14-057T 345.00 - SUNNYSIDE 345KV CKT 1	717	789	0.06233	109.7573	GEN527883 1-CUNNINGHAM GEN #3 22 KV
FDNS	00NR	3	20WP	G15_060	FROM->TO	G14-057T 345.00 - SUNNYSIDE 345KV CKT 1	717	789	0.06233	109.7543	GEN527884 1-CUNNINGHAM GEN #4 22 KV
FDNS	00NR	3	20WP	G15_060	FROM->TO	G14-057T 345.00 - SUNNYSIDE 345KV CKT 1	717	789	0.06215	109.724	P12:138:AEPW:SHAM4WT:CHILD4WT
FDNS	00NR	3	20WP	G15_060	FROM->TO	G14-057T 345.00 - SUNNYSIDE 345KV CKT 1	717	789	0.06156	109.7208	SUNNYSIDE - UNIROYAL 138KV CKT 1
FDNS	00NR	3	20WP	G15_060	FROM->TO	G14-057T 345.00 - SUNNYSIDE 345KV CKT 1	717	789	0.06284	109.6964	P12:138:WFEC:MSL15
FDNS	00NR	3	20WP	G15_060	FROM->TO	G14-057T 345.00 - SUNNYSIDE 345KV CKT 1	717	789	0.06002	109.6947	CHISHOLM7 345.00 () 345/230/13.2KV TRANSFORMER CKT 1
FDNS	00NR	3	20WP	G15_060	FROM->TO	G14-057T 345.00 - SUNNYSIDE 345KV CKT 1	717	789	0.06233	109.6877	GEN562704 1-G15_020_3 0.3550
FDNS	00NR	3	16WP	G15_060	FROM->TO	G14-057T 345.00 - SUNNYSIDE 345KV CKT 1	717	789	0.06255	109.6872	GEN563272 1-G15093_3 0.6900
FDNS	00NR	3	20WP	G15_060	FROM->TO	G14-057T 345.00 - SUNNYSIDE 345KV CKT 1	717	789	0.06233	109.6868	GEN526331 1-JONES GEN #1 22 KV
FDNS	00NR	3	20WP	G15_060	FROM->TO	G14-057T 345.00 - SUNNYSIDE 345KV CKT 1	717	789	0.06233	109.6866	GEN526332 1-JONES GEN #2 21 KV
FDNS	00NR	3	20WP	G15_060	FROM->TO	G14-057T 345.00 - SUNNYSIDE 345KV CKT 1	717	789	0.06233	109.6806	GEN620315 1-BIG STONE GEN
FDNS	00NR	3	20WP	G15_060	FROM->TO	G14-057T 345.00 - SUNNYSIDE 345KV CKT 1	717	789	0.06233	109.6773	GEN562992 1-G15063_3 0.6900
FDNS	00NR	3	16WP	G15_060	FROM->TO	G14-057T 345.00 - SUNNYSIDE 345KV CKT 1	717	789	0.06255	109.6728	GEN527903 1-HOBBS PLANT #3 (ST)
FDNS	00NR	3	20WP	G15_060	FROM->TO	G14-057T 345.00 - SUNNYSIDE 345KV CKT 1	717	789	0.06233	109.6301	GEN562952 1-G15057_3 0.6500
FDNS	00NR	3	20WP	G15_060	FROM->TO	G14-057T 345.00 - SUNNYSIDE 345KV CKT 1	717	789	0.06144	109.6281	GRAPEVINE INTERCHANGE - NICHOLS STATION 230KV CKT 1
FDNS	00NR	3	20WP	G15_060	FROM->TO	G14-057T 345.00 - SUNNYSIDE 345KV CKT 1	717	789	0.06144	109.6281	GRAPEVINE INTERCHANGE - NICHOLS STATION 230KV CKT 1
FDNS	00NR	3	20WP	G15_060	FROM->TO	G14-057T 345.00 - SUNNYSIDE 345KV CKT 1	717	789	0.06233	109.6258	GEN563173 1-G15082_3 0.6900
FDNS	00NR	3	20WP	G15_060	FROM->TO	G14-057T 345.00 - SUNNYSIDE 345KV CKT 1	717	789	0.06233	109.6067	GEN600004 2-PRAIRIE ISLAND G2
FDNS	00NR	3	20WP	G15_060	FROM->TO	G14-057T 345.00 - SUNNYSIDE 345KV CKT 1	717	789	0.06233	109.6041	GEN600003 1-PRAIRIE ISLAND G1
FDNS	00NR	3	20WP	G15_060	FROM->TO	G14-057T 345.00 - SUNNYSIDE 345KV CKT 1	717	789	0.06233	109.5869	GEN600006 1-AS KING
FDNS	00NR	3	20WP	G15_060	FROM->TO	G14-057T 345.00 - SUNNYSIDE 345KV CKT 1	717	789	0.06233	109.5867	GEN562710 1-G15_022_3 0.5500

SOLUTION	GROUP	SCENARIO	SEASON	SOURCE	DIRECTION	MONITORED ELEMENT	RATEA (MVA)	RATEB(MVA)	TDF	TC%LOADING (% MVA)	CONTINGENCY
FDNS	00NR	3	16WP	G15_060	FROM->TO	G14-057T 345.00 - SUNNYSIDE 345KV CKT 1	717	789	0.06255	109.5478	GEN635024 4-WALTER SCOTT UNIT 4
FDNS	00NR	3	20WP	G15_060	FROM->TO	G14-057T 345.00 - SUNNYSIDE 345KV CKT 1	717	789	0.06372	109.5472	CANEY CREEK - TEXOMA JCT 138KV CKT 1
FDNS	00NR	3	20WP	G15_060	FROM->TO	G14-057T 345.00 - SUNNYSIDE 345KV CKT 1	717	789	0.06233	109.5368	GEN511851 1-COMANCHE #1
FDNS	00NR	3	20WP	G15_060	FROM->TO	G14-057T 345.00 - SUNNYSIDE 345KV CKT 1	717	789	0.06002	109.5187	CHISHOLM7 345.00 - GRACEMONT 345KV CKT 1
FDNS	00NR	3	20WP	G15_060	FROM->TO	G14-057T 345.00 - SUNNYSIDE 345KV CKT 1	717	789	0.06233	109.509	GEN532751 1-WOLF CREEK GENERATING STATION UNIT 1
FDNS	00NR	3	20WP	G15_060	FROM->TO	G14-057T 345.00 - SUNNYSIDE 345KV CKT 1	717	789	0.06233	109.421	GEN635213 3-NEAL UNIT 3
FDNS	00NR	3	20WP	G15_060	FROM->TO	G14-057T 345.00 - SUNNYSIDE 345KV CKT 1	717	789	0.06233	109.4142	GEN629074 1-ARNOLD LOWSIDE OF GSU XFMR
FDNS	00NR	3	20WP	G15_060	FROM->TO	G14-057T 345.00 - SUNNYSIDE 345KV CKT 1	717	789	0.06233	109.4059	BIG STONE 230/24.0KV TRANSFORMER CKT 1
FDNSLock	00NR	3	20WP	G15_060	FROM->TO	G14-057T 345.00 - SUNNYSIDE 345KV CKT 1	717	789	0.06233	109.3781	GEN615002 2-COAL CREEK
FDNS	00NR	3	20WP	G15_060	FROM->TO	G14-057T 345.00 - SUNNYSIDE 345KV CKT 1	717	789	0.06238	109.3754	P12:138:WFEC:MSL09
FDNS	00NR	3	20WP	G15_060	FROM->TO	G14-057T 345.00 - SUNNYSIDE 345KV CKT 1	717	789	0.06227	109.354	P12:138:AEPW-OGE:CORNVIL4:CIMARON4
FDNS	00NR	3	20WP	G15_060	FROM->TO	G14-057T 345.00 - SUNNYSIDE 345KV CKT 1	717	789	0.06233	109.3349	GEN562754 1-G15031_5 0.6900
FDNS	00NR	3	20WP	G15_060	FROM->TO	G14-057T 345.00 - SUNNYSIDE 345KV CKT 1	717	789	0.06233	109.322	GEN636641 1-LOUISA UNIT 1
FDNS	00NR	3	20WP	G15_060	FROM->TO	G14-057T 345.00 - SUNNYSIDE 345KV CKT 1	717	789	0.06242	109.312	NORTHWEST TEXARKANA - VALLIANT 345KV CKT 1
FDNS	00NR	3	20WP	G15_060	FROM->TO	G14-057T 345.00 - SUNNYSIDE 345KV CKT 1	717	789	0.06242	109.312	NORTHWEST TEXARKANA - VALLIANT 345KV CKT 1
FDNS	00NR	3	20WP	G15_060	FROM->TO	G14-057T 345.00 - SUNNYSIDE 345KV CKT 1	717	789	0.06233	109.2925	GEN600005 1-MONTICELLO
FDNS	00NR	3	20WP	G15_060	FROM->TO	G14-057T 345.00 - SUNNYSIDE 345KV CKT 1	717	789	0.06233	109.2751	GEN562756 1-G15031_7 0.6900
FDNS	00NR	3	20WP	G15_060	FROM->TO	G14-057T 345.00 - SUNNYSIDE 345KV CKT 1	717	789	0.06233	109.274	GEN562556 1-G14_046_3 0.3420
FDNS	00NR	3	20WP	G15_060	FROM->TO	G14-057T 345.00 - SUNNYSIDE 345KV CKT 1	717	789	0.06233	109.2337	GEN562023 1-G11_020_3 0.6900
FDNS	00NR	3	20WP	G15_060	FROM->TO	G14-057T 345.00 - SUNNYSIDE 345KV CKT 1	717	789	0.06233	109.2337	GEN562026 1-G11_019_3 0.6900
FDNS	00NR	3	20WP	G15_060	FROM->TO	G14-057T 345.00 - SUNNYSIDE 345KV CKT 1	717	789	0.06233	109.1895	GEN563142 1-G15079_3 0.5500
FDNS	00NR	3	20WP	G15_060	FROM->TO	G14-057T 345.00 - SUNNYSIDE 345KV CKT 1	717	789	0.06233	109.1895	GEN563151 1-G15080_2 0.5500
FDNS	00NR	3	20WP	G15_060	FROM->TO	G14-057T 345.00 - SUNNYSIDE 345KV CKT 1	717	789	0.06233	109.1688	GEN600000 1-SHERBURNECNTY G1
FDNS	00NR	3	20WP	G15_060	FROM->TO	G14-057T 345.00 - SUNNYSIDE 345KV CKT 1	717	789	0.06075	109.1401	STLN-DEMARC6 - SWEETWATER 230KV CKT 1
FDNS	00NR	3	20WP	G15_060	FROM->TO	G14-057T 345.00 - SUNNYSIDE 345KV CKT 1	717	789	0.06075	109.1394	P12:230:AEPW-SPS:SWEETWT6:WHEELER 6
FDNS	00NR	3	20WP	G15_060	FROM->TO	G14-057T 345.00 - SUNNYSIDE 345KV CKT 1	717	789	0.06075	109.1378	STATELINE INTERCHANGE - STLN-DEMARC6 230KV CKT 1
FDNS	00NR	3	20WP	G15_060	FROM->TO	G14-057T 345.00 - SUNNYSIDE 345KV CKT 1	717	789	0.06233	109.1289	GEN629075 1-OTTUMWA GENERATOR FOR OTTUMWA UNIT NO 1
FDNS	00NR	3	20WP	G15_060	FROM->TO	G14-057T 345.00 - SUNNYSIDE 345KV CKT 1	717	789	0.06233	109.1195	GEN600001 2-SHERBURNE CNTY G2
FDNS	00NR	3	20WP	G15_060	FROM->TO	G14-057T 345.00 - SUNNYSIDE 345KV CKT 1	717	789	0.06233	109.097	GEN523971 1-HARRINGTON GEN #1 24 KV
FDNS	00NR	3	20WP	G15_060	FROM->TO	G14-057T 345.00 - SUNNYSIDE 345KV CKT 1	717	789	0.06233	109.0969	GEN523972 1-HARRINGTON GEN #2 24 KV
FDNS	00NR	3	20WP	G15_060	FROM->TO	G14-057T 345.00 - SUNNYSIDE 345KV CKT 1	717	789	0.06233	109.0969	GEN523973 1-HARRINGTON GEN #3 24 KV
FDNS	00NR	3	20WP	G15_060	FROM->TO	G14-057T 345.00 - SUNNYSIDE 345KV CKT 1	717	789	0.06233	109.0143	GEN511848 1-SOUTHWESTERN STATION #3
FDNS	00NR	3	20WP	G15_060	FROM->TO	G14-057T 345.00 - SUNNYSIDE 345KV CKT 1	717	789	0.06233	108.9872	GEN527901 1-HOBBS PLANT #1 (CT)
FDNS	00NR	3	20WP	G15_060	FROM->TO	G14-057T 345.00 - SUNNYSIDE 345KV CKT 1	717	789	0.06233	108.9872	GEN527902 1-HOBBS PLANT #2 (CT)
FDNS	00NR	3	20WP	G15_060	FROM->TO	G14-057T 345.00 - SUNNYSIDE 345KV CKT 1	717	789	0.06248	108.9494	LYDIA - WELSH 345KV CKT 1
FDNS	00NR	3	20WP	G15_060	FROM->TO	G14-057T 345.00 - SUNNYSIDE 345KV CKT 1	717	789	0.06248	108.9494	LYDIA - WELSH 345KV CKT 1
FDNS	00NR	3	20WP	G15_060	FROM->TO	G14-057T 345.00 - SUNNYSIDE 345KV CKT 1	717	789	0.06233	108.9486	GEN563042 1-G15068_3 0.6900
FDNS	00NR	3	20WP	G15_060	FROM->TO	G14-057T 345.00 - SUNNYSIDE 345KV CKT 1	717	789	0.05979	108.9039	P12:230:AEPW:ELKCITY6:SWEETWT6
FDNS	00NR	3	20WP	G15_060	FROM->TO	G14-057T 345.00 - SUNNYSIDE 345KV CKT 1	717	789	0.06233	108.8995	SHERBURNE CO 345/24.0KV TRANSFORMER CKT 1
FDNS	00NR	3	16WP	G15_060	FROM->TO	G14-057T 345.00 - SUNNYSIDE 345KV CKT 1	717	789	0.06273	108.8865	LYDIA - VALLIANT 345KV CKT 1
FDNS	00NR	3	16WP	G15_060	FROM->TO	G14-057T 345.00 - SUNNYSIDE 345KV CKT 1	717	789	0.06273	108.8865	LYDIA - VALLIANT 345KV CKT 1
FDNS	00NR	3	20WP	G15_060	FROM->TO	G14-057T 345.00 - SUNNYSIDE 345KV CKT 1	717	789	0.06233	108.8563	GEN635214 4-NEAL UNIT 4
FDNS	00NR	3	20WP	G15_060	FROM->TO	G14-057T 345.00 - SUNNYSIDE 345KV CKT 1	717	789	0.06233	108.6853	GEN600002 3-SHERBURNE CNTY G3
FDNS	00NR	3	20WP	G15_060	FROM->TO	G14-057T 345.00 - SUNNYSIDE 345KV CKT 1	717	789	0.06233	108.6493	GEN563043 1-G15068_4 0.6900
FDNS	00NR	3	20WP	G15_060	FROM->TO	G14-057T 345.00 - SUNNYSIDE 345KV CKT 1	717	789	0.06233	108.6374	GEN563273 2-G15093_4 0.6900
FDNS	00NR	3	20WP	G15_060	FROM->TO	G14-057T 345.00 - SUNNYSIDE 345KV CKT 1	717	789	0.06233	108.6252	GEN526333 1-JONES GEN #3 21 KV
FDNS	00NR	3	20WP	G15_060	FROM->TO	G14-057T 345.00 - SUNNYSIDE 345KV CKT 1	717	789	0.06233	108.6251	GEN526334 1-JONES_4 116.500
FDNS	00NR	3	20WP	G15_060	FROM->TO	G14-057T 345.00 - SUNNYSIDE 345KV CKT 1	717	789	0.06233	108.6086	GEN344225 1-1CAL G1 25.000
FDNS	00NR	3	20WP	G15_060	FROM->TO	G14-057T 345.00 - SUNNYSIDE 345KV CKT 1	717	789	0.06233	108.5859	GEN525844 1-ELK_1 118.000
FDNS	00NR	3	20WP	G15_060	FROM->TO	G14-057T 345.00 - SUNNYSIDE 345KV CKT 1	717	789	0.06233	108.5697	GEN525845 1-ELK_2 1 18.000
FDNS	00NR	3	20WP	G15_060	FROM->TO	G14-057T 345.00 - SUNNYSIDE 345KV CKT 1	717	789	0.06075	108.5198	CHISHOLM6 230.00 - SWEETWATER 230KV CKT 1
FDNS	00NR	3	20WP	G15_060	FROM->TO	G14-057T 345.00 - SUNNYSIDE 345KV CKT 1	717	789	0.06233	108.4391	GEN527166 1-MUSTANG_6 118.000
FDNS	00NR	3	20WP	G15_060	FROM->TO	G14-057T 345.00 - SUNNYSIDE 345KV CKT 1	717	789	0.06233	108.4294	GEN563202 1-G15085_3 0.5500
FDNS	00NR	3	20WP	G15_060	FROM->TO	G14-057T 345.00 - SUNNYSIDE 345KV CKT 1	717	789	0.06233	108.3924	GEN635023 3-WALTER SCOTT UNIT 3
FDNS	00NR	3	20WP	G15_060	FROM->TO	G14-057T 345.00 - SUNNYSIDE 345KV CKT 1	717	789	0.06233	108.3748	GEN528501 1-G14_012 24.000
FDNS	00NR	3	20WP	G15_060	FROM->TO	G14-057T 345.00 - SUNNYSIDE 345KV CKT 1	717	789	0.06233	108.2669	GEN562590 1-G14_057_3 0.6900
FDNS	00NR	3	20WP	G15_060	FROM->TO	G14-057T 345.00 - SUNNYSIDE 345KV CKT 1	717	789	0.06233	108.2159	GEN562762 1-G15033_3 0.6900
FDNS	00NR	3	20WP	G15_060	FROM->TO	G14-057T 345.00 - SUNNYSIDE 345KV CKT 1	717	789	0.06233	108.2058	GEN562655 1-G14_074_3 0.6900
FDNS	00NR	3	20WP	G15_060	FROM->TO	G14-057T 345.00 - SUNNYSIDE 345KV CKT 1	717	789	0.06233	108.1862	GEN525562 1-TOLK GEN #2 24 KV
FDNS	00NR	3	20WP	G15_060	FROM->TO	G14-057T 345.00 - SUNNYSIDE 345KV CKT 1	717	789	0.06192	108.1302	JOHNSON COUNTY (JOHNCO) 345/138/13.8KV TRANSFORMER CKT 1
FDNS	00NR	3	20WP	G15_060	FROM->TO	G14-057T 345.00 - SUNNYSIDE 345KV CKT 1	717	789	0.06233	108.1293	GEN562685 1-G15_013_3 0.3550
FDNS	00NR	3	20WP	G15_060	FROM->TO	G14-057T 345.00 - SUNNYSIDE 345KV CKT 1	717	789	0.06233	108.0904	GEN527903 1-HOBBS PLANT #3 (ST)
FDNS	00NR	3	20WP	G15_060	FROM->TO	G14-057T 345.00 - SUNNYSIDE 345KV CKT 1	717	789	0.06233	107.9849	GEN563272 1-G15093_3 0.6900
FDNS	00NR	3	20WP	G15_060	FROM->TO	G14-057T 345.00 - SUNNYSIDE 345KV CKT 1	717	789	0.06233	107.9844	GEN635024 4-WALTER SCOTT UNIT 4
FDNS	00NR	3	16WP	G15_060	FROM->TO	G14-057T 345.00 - SUNNYSIDE 345KV CKT 1	717	789	0.06255	107.8948	EASTDC - ERCOT EQUIVALENCE 345KV CKT 1
FDNS	00NR	3	20WP	G15_060	FROM->TO	G14-057T 345.00 - SUNNYSIDE 345KV CKT 1	717	789	0.06253	107.8931	LYDIA - VALLIANT 345KV CKT 1
FDNS	00NR	3	20WP	G15_060	FROM->TO	G14-057T 345.00 - SUNNYSIDE 345KV CKT 1	717	789	0.06253	107.8931	LYDIA - VALLIANT 345KV CKT 1
FDNS	00NR	3	20WP	G15_060	FROM->TO	G14-057T 345.00 - SUNNYSIDE 345KV CKT 1	717	789	0.06233	107.7483	GEN525561 1-TOLK GEN #1 24 KV
FDNS	00NR	3	16WP	G15_060	FROM->TO	G14-057T 345.00 - SUNNYSIDE 345KV CKT 1	717	789	0.05286	106.9904	JOHNSON COUNTY - PITTSBURG 345KV CKT 1
FDNS	00NR	3	16WP	G15_060	FROM->TO	G14-057T 345.00 - SUNNYSIDE 345KV CKT 1	717	789	0.05286	106.9904	JOHNSON COUNTY - PITTSBURG 345KV CKT 1
FDNS	00NR	3	16WP	G15_060	FROM->TO	G14-057T 345.00 - SUNNYSIDE 345KV CKT 1	717	789	0.06255	106.4713	GEN563263 1-G15092_4 0.6900
FDNS	00NR	3	16WP	G15_060	FROM->TO	G14-057T 345.00 - SUNNYSIDE 345KV CKT 1	717	789	0.06115	106.0336	HUGO - VALLIANT 345KV CKT 1
FDNS	00NR	3	16WP	G15_060	FROM->TO	G14-057T 345.00 - SUNNYSIDE 345KV CKT 1	717	789	0.06115	106.0336	HUGO - VALLIANT 345KV CKT 1
FDNS	00NR	3	17SP	G15_060	FROM->TO	G14-057T 345.00 - SUNNYSIDE 345KV CKT 1	717	789	0.06324	105.9521	CIMARRON - MINCO 345KV CKT 1
FDNS	00NR	3	20WP	G15_060	FROM->TO	G14-057T 345.00 - SUNNYSIDE 345KV CKT 1	717	789	0.05266	105.8204	JOHNSON COUNTY - PITTSBURG 345KV CKT 1
FDNS	00NR	3	20WP	G15_060	FROM->TO	G14-057T 345.00 - SUNNYSIDE 345KV CKT 1	717	789	0.05266	105.8204	JOHNSON COUNTY - PITTSBURG 345KV CKT 1
FDNS	00NR	3	20WP	G15_060	FROM->TO	G14-057T 345.00 - SUNNYSIDE 345KV CKT 1	717	789	0.06095	105.3179	HUGO - VALLIANT 345KV CKT 1
FDNS	00NR	3	20WP	G15_060	FROM->TO	G14-057T 345.00 - SUNNYSIDE 345KV CKT 1	717	789	0.06095	105.3179	HUGO - VALLIANT 345KV CKT 1
FDNS	00NR	3	16WP	G15_060	FROM->TO	G14-057T 345.00 - SUNNYSIDE 345KV CKT 1	717	789	0.04803	105.0413	G14-074T 345.00 - TUCO INTERCHANGE 345KV CKT 1

SOLUTION	GROUP	SCENARIO	SEASON	SOURCE	DIRECTION	MONITORED ELEMENT	RATEA (MVA)	RATEB(MVA)	TDF	TC%LOADING (% MVA)	CONTINGENCY
FDNS	00NR	3	20WP	G15_060	FROM->TO	G14-057T 345.00 - SUNNYSIDE 345KV CKT 1	717	789	0.06233	104.8195	GEN563263 1-G15092_4 0.6900
FDNS	00NR	3	16WP	G15_060	FROM->TO	G14-057T 345.00 - SUNNYSIDE 345KV CKT 1	717	789	0.06255	104.7958	GEN563262 1-G15092_3 0.6900
FDNS	00NR	3	20WP	G15_060	FROM->TO	G14-057T 345.00 - SUNNYSIDE 345KV CKT 1	717	789	0.06233	103.1549	GEN563262 1-G15092_3 0.6900
FDNS	00NR	3	20WP	G15_060	FROM->TO	G14-057T 345.00 - SUNNYSIDE 345KV CKT 1	717	789	0.0478	102.2467	G14-074T 345.00 - TUCO INTERCHANGE 345KV CKT 1
FDNS	00NR	3	16WP	G15_060	FROM->TO	G14-057T 345.00 - SUNNYSIDE 345KV CKT 1	717	789	0.05069	101.3793	JOHNSON COUNTY - SUNNYSIDE 345KV CKT 1
FDNS	00NR	3	17SP	G15_060	FROM->TO	SWISSVALE - WEST GARDNER 345KV CKT 1	717	717	0.03631	104.6634	HOYT - STRANGER CREEK 345KV CKT 1
FDNS	00NR	3	17SP	G15_060	FROM->TO	SWISSVALE - WEST GARDNER 345KV CKT 1	717	717	0.03418	103.3576	G15074_T 345.00 - HOYT 345KV CKT 1
FDNS	00NR	0	25SP	G15_061	FROM->TO	GR ISLD-LNX3345.00 - GRAND ISLAND 345KV CKT Z	720	720	0.04315	110.312	MINGO - SETAB 345KV CKT 1
FDNS	00NR	0	25SP	G15_061	FROM->TO	GR ISLD-LNX3345.00 - GRAND ISLAND 345KV CKT Z	720	720	0.04315	110.312	MINGO - SETAB 345KV CKT 1
FDNS	00NR	0	20SP	G15_061	FROM->TO	GR ISLD-LNX3345.00 - GRAND ISLAND 345KV CKT Z	720	720	0.04323	110.0096	MINGO - SETAB 345KV CKT 1
FDNS	00NR	0	20SP	G15_061	FROM->TO	GR ISLD-LNX3345.00 - GRAND ISLAND 345KV CKT Z	720	720	0.04323	110.0096	MINGO - SETAB 345KV CKT 1
FDNS	00NR	0	25SP	G15_061	FROM->TO	GR ISLD-LNX3345.00 - GRAND ISLAND 345KV CKT Z	720	720	0.03231	109.2127	HOLCOMB - SETAB 345KV CKT 1
FDNS	00NR	0	25SP	G15_061	FROM->TO	GR ISLD-LNX3345.00 - GRAND ISLAND 345KV CKT Z	720	720	0.03231	109.2127	HOLCOMB - SETAB 345KV CKT 1
FDNS	00NR	0	25SP	G15_061	TO->FROM	GR ISLD-LNX3345.00 - HOLT.CO3 345.00 345KV CKT 1	720	720	0.04315	109.4375	MINGO - SETAB 345KV CKT 1
FDNS	00NR	0	25SP	G15_061	TO->FROM	GR ISLD-LNX3345.00 - HOLT.CO3 345.00 345KV CKT 1	720	720	0.04315	109.4375	MINGO - SETAB 345KV CKT 1
FDNS	00NR	0	20SP	G15_061	TO->FROM	GR ISLD-LNX3345.00 - HOLT.CO3 345.00 345KV CKT 1	720	720	0.04323	109.1605	MINGO - SETAB 345KV CKT 1
FDNS	00NR	0	20SP	G15_061	TO->FROM	GR ISLD-LNX3345.00 - HOLT.CO3 345.00 345KV CKT 1	720	720	0.04323	109.1605	MINGO - SETAB 345KV CKT 1
FDNS	00NR	0	25SP	G15_061	TO->FROM	GR ISLD-LNX3345.00 - HOLT.CO3 345.00 345KV CKT 1	720	720	0.03231	108.3719	HOLCOMB - SETAB 345KV CKT 1
FDNS	00NR	0	25SP	G15_061	TO->FROM	GR ISLD-LNX3345.00 - HOLT.CO3 345.00 345KV CKT 1	720	720	0.03231	108.3719	HOLCOMB - SETAB 345KV CKT 1
FDNS	00NR	2	25SP	G15_061	FROM->TO	GR ISLD-LNX3345.00 - GRAND ISLAND 345KV CKT Z	720	720	0.04315	110.3081	MINGO - SETAB 345KV CKT 1
FDNS	00NR	2	25SP	G15_061	FROM->TO	GR ISLD-LNX3345.00 - GRAND ISLAND 345KV CKT Z	720	720	0.04315	110.3081	MINGO - SETAB 345KV CKT 1
FDNS	00NR	2	20SP	G15_061	FROM->TO	GR ISLD-LNX3345.00 - GRAND ISLAND 345KV CKT Z	720	720	0.04322	110.0126	MINGO - SETAB 345KV CKT 1
FDNS	00NR	2	20SP	G15_061	FROM->TO	GR ISLD-LNX3345.00 - GRAND ISLAND 345KV CKT Z	720	720	0.04322	110.0126	MINGO - SETAB 345KV CKT 1
FDNS	00NR	2	25SP	G15_061	FROM->TO	GR ISLD-LNX3345.00 - GRAND ISLAND 345KV CKT Z	720	720	0.03231	109.213	HOLCOMB - SETAB 345KV CKT 1
FDNS	00NR	2	25SP	G15_061	FROM->TO	GR ISLD-LNX3345.00 - GRAND ISLAND 345KV CKT Z	720	720	0.03231	109.213	HOLCOMB - SETAB 345KV CKT 1
FDNS	00NR	2	25SP	G15_061	TO->FROM	GR ISLD-LNX3345.00 - HOLT.CO3 345.00 345KV CKT 1	720	720	0.04315	109.434	MINGO - SETAB 345KV CKT 1
FDNS	00NR	2	25SP	G15_061	TO->FROM	GR ISLD-LNX3345.00 - HOLT.CO3 345.00 345KV CKT 1	720	720	0.04315	109.434	MINGO - SETAB 345KV CKT 1
FDNS	00NR	2	20SP	G15_061	TO->FROM	GR ISLD-LNX3345.00 - HOLT.CO3 345.00 345KV CKT 1	720	720	0.04322	109.1634	MINGO - SETAB 345KV CKT 1
FDNS	00NR	2	20SP	G15_061	TO->FROM	GR ISLD-LNX3345.00 - HOLT.CO3 345.00 345KV CKT 1	720	720	0.04322	109.1634	MINGO - SETAB 345KV CKT 1
FDNS	00NR	2	25SP	G15_061	TO->FROM	GR ISLD-LNX3345.00 - HOLT.CO3 345.00 345KV CKT 1	720	720	0.03231	108.3722	HOLCOMB - SETAB 345KV CKT 1
FDNS	00NR	2	25SP	G15_061	TO->FROM	GR ISLD-LNX3345.00 - HOLT.CO3 345.00 345KV CKT 1	720	720	0.03231	108.3722	HOLCOMB - SETAB 345KV CKT 1
FDNS	00NR	3	25SP	G15_061	FROM->TO	GR ISLD-LNX3345.00 - GRAND ISLAND 345KV CKT Z	720	720	0.04315	110.3051	MINGO - SETAB 345KV CKT 1
FDNS	00NR	3	25SP	G15_061	FROM->TO	GR ISLD-LNX3345.00 - GRAND ISLAND 345KV CKT Z	720	720	0.04315	110.3051	MINGO - SETAB 345KV CKT 1
FDNS	00NR	3	20SP	G15_061	FROM->TO	GR ISLD-LNX3345.00 - GRAND ISLAND 345KV CKT Z	720	720	0.04323	110.0134	MINGO - SETAB 345KV CKT 1
FDNS	00NR	3	20SP	G15_061	FROM->TO	GR ISLD-LNX3345.00 - GRAND ISLAND 345KV CKT Z	720	720	0.04323	110.0134	MINGO - SETAB 345KV CKT 1
FDNS	00NR	3	25SP	G15_061	FROM->TO	GR ISLD-LNX3345.00 - GRAND ISLAND 345KV CKT Z	720	720	0.03231	109.2132	HOLCOMB - SETAB 345KV CKT 1
FDNS	00NR	3	25SP	G15_061	FROM->TO	GR ISLD-LNX3345.00 - GRAND ISLAND 345KV CKT Z	720	720	0.03231	109.2132	HOLCOMB - SETAB 345KV CKT 1
FDNS	00NR	3	25SP	G15_061	TO->FROM	GR ISLD-LNX3345.00 - HOLT.CO3 345.00 345KV CKT 1	720	720	0.04315	109.4311	MINGO - SETAB 345KV CKT 1
FDNS	00NR	3	25SP	G15_061	TO->FROM	GR ISLD-LNX3345.00 - HOLT.CO3 345.00 345KV CKT 1	720	720	0.04315	109.4311	MINGO - SETAB 345KV CKT 1
FDNS	00NR	3	20SP	G15_061	TO->FROM	GR ISLD-LNX3345.00 - HOLT.CO3 345.00 345KV CKT 1	720	720	0.04323	109.1643	MINGO - SETAB 345KV CKT 1
FDNS	00NR	3	20SP	G15_061	TO->FROM	GR ISLD-LNX3345.00 - HOLT.CO3 345.00 345KV CKT 1	720	720	0.04323	109.1643	MINGO - SETAB 345KV CKT 1
FDNS	00NR	3	25SP	G15_061	TO->FROM	GR ISLD-LNX3345.00 - HOLT.CO3 345.00 345KV CKT 1	720	720	0.03231	108.3724	HOLCOMB - SETAB 345KV CKT 1
FDNS	00NR	3	25SP	G15_061	TO->FROM	GR ISLD-LNX3345.00 - HOLT.CO3 345.00 345KV CKT 1	720	720	0.03231	108.3724	HOLCOMB - SETAB 345KV CKT 1
FDNS	08ALL	0	25SP	G15_062	FROM->TO	G15063_T 345.00 - MATHWSN7 345.00 345KV CKT 1	956	956	0.20863	122.7751	NORTHWEST - SPRING CREEK 345KV CKT 1
FDNS	08ALL	0	25SP	G15_062	FROM->TO	G15063_T 345.00 - MATHWSN7 345.00 345KV CKT 1	956	956	0.20867	122	NORTHWEST - SPRING CREEK 345KV CKT 1
FDNS	08ALL	0	16WP	G15_062	FROM->TO	G15063_T 345.00 - MATHWSN7 345.00 345KV CKT 1	956	956	0.20321	120.4934	SOONER - SPRING CREEK 345KV CKT 1
FDNS	08ALL	0	16WP	G15_062	FROM->TO	G15063_T 345.00 - MATHWSN7 345.00 345KV CKT 1	956	956	0.20321	120.3955	NORTHWEST - SPRING CREEK 345KV CKT 1
FDNS	08ALL	0	17G	G15_062	FROM->TO	G15063_T 345.00 - MATHWSN7 345.00 345KV CKT 1	956	956	0.20464	116.0214	SOONER - SPRING CREEK 345KV CKT 1
FDNS	08ALL	0	17G	G15_062	FROM->TO	G15063_T 345.00 - MATHWSN7 345.00 345KV CKT 1	956	956	0.20464	115.9242	NORTHWEST - SPRING CREEK 345KV CKT 1
FDNS	08ALL	0	17SP	G15_062	FROM->TO	G15063_T 345.00 - MATHWSN7 345.00 345KV CKT 1	956	956	0.20808	115.5287	NORTHWEST - SPRING CREEK 345KV CKT 1
FDNS	08ALL	0	25SP	G15_062	FROM->TO	G15063_T 345.00 - MATHWSN7 345.00 345KV CKT 1	956	956	0.2093	115.4817	SOONER - SPRING CREEK 345KV CKT 1
FDNS	08ALL	0	25SP	G15_062	FROM->TO	G15063_T 345.00 - MATHWSN7 345.00 345KV CKT 1	956	956	0.20934	114.6846	SOONER - SPRING CREEK 345KV CKT 1
FDNS	08ALL	0	20WP	G15_062	FROM->TO	G15063_T 345.00 - MATHWSN7 345.00 345KV CKT 1	956	956	0.20133	114.0932	SOONER - SPRING CREEK 345KV CKT 1
FDNS	08ALL	0	16WP	G15_062	FROM->TO	G15063_T 345.00 - MATHWSN7 345.00 345KV CKT 1	956	956	0.24164	114.0569	VIOLA 7 345.00 - WICHITA 345KV CKT 1
FDNS	08ALL	0	20WP	G15_062	FROM->TO	G15063_T 345.00 - MATHWSN7 345.00 345KV CKT 1	956	956	0.20133	114.0069	NORTHWEST - SPRING CREEK 345KV CKT 1
FDNS	08ALL	0	20WP	G15_062	FROM->TO	G15063_T 345.00 - MATHWSN7 345.00 345KV CKT 1	956	956	0.20128	113.2299	SOONER - SPRING CREEK 345KV CKT 1
FDNS	08ALL	0	20WP	G15_062	FROM->TO	G15063_T 345.00 - MATHWSN7 345.00 345KV CKT 1	956	956	0.20128	113.1451	NORTHWEST - SPRING CREEK 345KV CKT 1
FDNS	08ALL	0	20L	G15_062	FROM->TO	G15063_T 345.00 - MATHWSN7 345.00 345KV CKT 1	956	956	0.19727	111.8235	CLEVELAND - G15066_T 345.00 345KV CKT 1
FDNS	08ALL	0	17G	G15_062	FROM->TO	G15063_T 345.00 - MATHWSN7 345.00 345KV CKT 1	956	956	0.24158	111.4901	VIOLA 7 345.00 - WICHITA 345KV CKT 1
FDNS	08ALL	0	16WP	G15_062	FROM->TO	G15063_T 345.00 - MATHWSN7 345.00 345KV CKT 1	956	956	0.21263	108.6267	CLEVELAND - G15066_T 345.00 345KV CKT 1
FDNS	08ALL	0	17SP	G15_062	FROM->TO	G15063_T 345.00 - MATHWSN7 345.00 345KV CKT 1	956	956	0.20876	108.1073	SOONER - SPRING CREEK 345KV CKT 1
FDNS	08ALL	0	20L	G15_062	FROM->TO	G15063_T 345.00 - MATHWSN7 345.00 345KV CKT 1	956	956	0.19727	107.0367	G15066_T 345.00 - SOONER 345KV CKT 1
FDNS	08ALL	0	17G	G15_062	FROM->TO	G15063_T 345.00 - MATHWSN7 345.00 345KV CKT 1	956	956	0.2137	105.8573	CLEVELAND - G15066_T 345.00 345KV CKT 1
FDNS	08ALL	0	20SP	G15_062	FROM->TO	G15063_T 345.00 - MATHWSN7 345.00 345KV CKT 1	956	956	0.20513	105.8099	NORTHWEST - SPRING CREEK 345KV CKT 1
FDNS	08ALL	0	17SP	G15_062	FROM->TO	G15063_T 345.00 - MATHWSN7 345.00 345KV CKT 1	956	956	0.24625	104.4467	VIOLA 7 345.00 - WICHITA 345KV CKT 1
FDNS	08ALL	0	16WP	G15_062	FROM->TO	G15063_T 345.00 - MATHWSN7 345.00 345KV CKT 1	956	956	0.21263	104.1209	G15066_T 345.00 - SOONER 345KV CKT 1
FDNS	08ALL	0	20WP	G15_062	FROM->TO	G15063_T 345.00 - MATHWSN7 345.00 345KV CKT 1	956	956	0.20931	104.0414	CLEVELAND - G15066_T 345.00 345KV CKT 1
FDNS	08ALL	0	20WP	G15_062	FROM->TO	G15063_T 345.00 - MATHWSN7 345.00 345KV CKT 1	956	956	0.20926	103.1141	CLEVELAND - G15066_T 345.00 345KV CKT 1
FDNS	08ALL	0	16WP	G15_062	FROM->TO	G15063_T 345.00 - MATHWSN7 345.00 345KV CKT 1	956	956	0.2075	102.5577	CLEVELAND - TULSA NORTH 345KV CKT 1
FDNS	08ALL	0	16WP	G15_062	FROM->TO	G15063_T 345.00 - MATHWSN7 345.00 345KV CKT 1	956	956	0.2075	102.5577	CLEVELAND - TULSA NORTH 345KV CKT 1
FDNS	08ALL	0	25SP	G15_062	FROM->TO	G15063_T 345.00 - MATHWSN7 345.00 345KV CKT 1	956	956	0.21573	102.4902	CLEVELAND - G15066_T 345.00 345KV CKT 1
FDNS	08ALL	0	25SP	G15_062	FROM->TO	G15063_T 345.00 - MATHWSN7 345.00 345KV CKT 1	956	956	0.21575	101.6496	CLEVELAND - G15066_T 345.00 345KV CKT 1
FDNS	08ALL	0	17G	G15_062	FROM->TO	G15063_T 345.00 - MATHWSN7 345.00 345KV CKT 1	956	956	0.2137	101.365	G15066_T 345.00 - SOONER 345KV CKT 1
FDNS	08ALL	0	17SP	G15_062	FROM->TO	G15063_T 345.00 - MATHWSN7 345.00 345KV CKT 1	956	956	0.21532	100.053	CLEVELAND - G15066_T 345.00 345KV CKT 1
FDNS	08ALL	0	17G	G15_062	FROM->TO	G15063_T 345.00 - MATHWSN7 345.00 345KV CKT 1	956	956	0.20863	99.8	CLEVELAND - TULSA NORTH 345KV CKT 1
FDNS	08ALL	0	20L	G15_062	FROM->TO	G15063_T 345.00 - MATHWSN7 345.00 345KV CKT 1	956	956	0.20654	99.8	VIOLA 7 345.00 - WICHITA 345KV CKT 1
FDNS	08ALL	0	20WP	G15_062	FROM->TO	G15063_T 345.00 - MATHWSN7 345.00 345KV CKT 1	956	956	0.20931	99.6	G15066_T 345.00 - SOONER 345KV CKT 1
FDNS	00NR	0	16WP	G15_063	FROM->TO	CIMARRON - DRAPER LAKE 345KV CKT 1	717	717	0.17541	134.3506	G14-057T 345.00 - SUNNYSIDE 345KV CKT 1
FDNS	00NR	0	16WP	G15_063	FROM->TO	CIMARRON - DRAPER LAKE 345KV CKT 1	717	717	0.17541	123.7884	G14-057T 345.00 - LAWTON EASTSIDE 345KV CKT 1

SOLUTION	GROUP	SCENARIO	SEASON	SOURCE	DIRECTION	MONITORED ELEMENT	RATEA (MVA)	RATEB(MVA)	TDF	TC%LOADING (% MVA)	CONTINGENCY
FDNS	00NR	0	16WP	G15_063	FROM->TO	CIMARRON - DRAPER LAKE 345KV CKT 1	717	717	0.17604	118.5269	ARCADIA - SEMINOLE 345KV CKT 1
FDNS	00NR	0	16WP	G15_063	FROM->TO	CIMARRON - DRAPER LAKE 345KV CKT 1	717	717	0.17428	117.4511	CLEVELAND - G15066_T 345.00 345KV CKT 1
FDNS	00NR	0	16WP	G15_063	FROM->TO	CIMARRON - DRAPER LAKE 345KV CKT 1	717	717	0.22224	117.2631	ARCADIA - NORTHWEST 345KV CKT 1
FDNS	00NR	0	16WP	G15_063	FROM->TO	CIMARRON - DRAPER LAKE 345KV CKT 1	717	717	0.17428	116.6742	G15066_T 345.00 - SOONER 345KV CKT 1
FDNS	00NR	0	16WP	G15_063	FROM->TO	CIMARRON - DRAPER LAKE 345KV CKT 1	717	717	0.17103	112.0614	CLEVELAND - TULSA NORTH 345KV CKT 1
FDNS	00NR	0	16WP	G15_063	FROM->TO	CIMARRON - DRAPER LAKE 345KV CKT 1	717	717	0.17103	112.0614	CLEVELAND - TULSA NORTH 345KV CKT 1
FDNS	00NR	0	16WP	G15_063	FROM->TO	CIMARRON - DRAPER LAKE 345KV CKT 1	717	717	0.18401	111.8128	MATHWSN7 345.00 - NORTHWEST 345KV CKT 1
FDNS	00NR	0	16WP	G15_063	FROM->TO	CIMARRON - DRAPER LAKE 345KV CKT 1	717	717	0.16883	110.8894	CIMARRON - SARA 138KV CKT 1
FDNS	00NR	0	16WP	G15_063	FROM->TO	CIMARRON - DRAPER LAKE 345KV CKT 1	717	717	0.1677	110.5522	P12:138:WFEC:MSL03
FDNS	00NR	0	16WP	G15_063	FROM->TO	CIMARRON - DRAPER LAKE 345KV CKT 1	717	717	0.16875	109.7061	CIMARRON (CIMARON2) 345/138/13.8KV TRANSFORMER CKT 1
FDNS	00NR	0	16WP	G15_063	FROM->TO	CIMARRON - DRAPER LAKE 345KV CKT 1	717	717	0.16883	109.5963	SARA - STHLAKE4 138.00 138KV CKT 1
FDNS	00NR	0	16WP	G15_063	FROM->TO	CIMARRON - DRAPER LAKE 345KV CKT 1	717	717	0.1686	109.5351	CIMARRON (CIMARON1) 345/138/13.8KV TRANSFORMER CKT 1
FDNS	00NR	0	16WP	G15_063	FROM->TO	CIMARRON - DRAPER LAKE 345KV CKT 1	717	717	0.16883	109.3968	MCCLAIN - STHLAKE4 138.00 138KV CKT 1
FDNS	00NR	0	16WP	G15_063	FROM->TO	CIMARRON - DRAPER LAKE 345KV CKT 1	717	717	0.1671	109.096	CIMARRON - CZECH HALL 138KV CKT 1
FDNS	00NR	0	16WP	G15_063	FROM->TO	CIMARRON - DRAPER LAKE 345KV CKT 1	717	717	0.1671	108.742	CZECH HALL - XEROX 138KV CKT 1
FDNS	00NR	0	16WP	G15_063	FROM->TO	CIMARRON - DRAPER LAKE 345KV CKT 1	717	717	0.1671	108.7224	MORGAN - XEROX 138KV CKT 1
FDNS	00NR	0	16WP	G15_063	FROM->TO	CIMARRON - DRAPER LAKE 345KV CKT 1	717	717	0.1671	108.6051	MORGAN - MUSTANG 138KV CKT 1
FDNS	00NR	0	16WP	G15_063	FROM->TO	CIMARRON - DRAPER LAKE 345KV CKT 1	717	717	0.16537	108.5311	ANADARKO - POCASSETT 138KV CKT 1
FDNS	00NR	0	16WP	G15_063	FROM->TO	CIMARRON - DRAPER LAKE 345KV CKT 1	717	717	0.16475	108.4112	GEN515040 1-SEMINOLE 1G
FDNS	00NR	0	16WP	G15_063	FROM->TO	CIMARRON - DRAPER LAKE 345KV CKT 1	717	717	0.16537	108.3378	POCASSETT - TUTTLE 138KV CKT 1
FDNS	00NR	0	16WP	G15_063	FROM->TO	CIMARRON - DRAPER LAKE 345KV CKT 1	717	717	0.16529	108.2504	LACYGNE - WAVERLY7 345.00 345KV CKT 1
FDNS	00NR	0	16WP	G15_063	FROM->TO	CIMARRON - DRAPER LAKE 345KV CKT 1	717	717	0.16573	108.2269	CORN TAP - NAPLESTP 138.00 138KV CKT 1
FDNS	00NR	0	16WP	G15_063	FROM->TO	CIMARRON - DRAPER LAKE 345KV CKT 1	717	717	0.16705	108.1986	JOHNSON COUNTY - SUNNYSIDE 345KV CKT 1
FDNS	00NR	0	16WP	G15_063	FROM->TO	CIMARRON - DRAPER LAKE 345KV CKT 1	717	717	0.16573	108.1312	NAPLESTP 138.00 - PAYNE 138.00 138KV CKT 1
FDNS	00NR	0	16WP	G15_063	FROM->TO	CIMARRON - DRAPER LAKE 345KV CKT 1	717	717	0.16529	108.0479	WAVERLY7 345.00 - WOLF CREEK 345KV CKT 1
FDNS	00NR	0	16WP	G15_063	FROM->TO	CIMARRON - DRAPER LAKE 345KV CKT 1	717	717	0.16475	108.0171	GEN509403 1-PIRKEY GENERATION
FDNS	00NR	0	16WP	G15_063	FROM->TO	CIMARRON - DRAPER LAKE 345KV CKT 1	717	717	0.16475	107.9678	GEN501801 1-DOLET HILLS UNIT1
FDNS	00NR	0	16WP	G15_063	FROM->TO	CIMARRON - DRAPER LAKE 345KV CKT 1	717	717	0.16475	107.9603	GEN509416 1-TURK GENERATION
FDNS	00NR	0	16WP	G15_063	FROM->TO	CIMARRON - DRAPER LAKE 345KV CKT 1	717	717	0.16614	107.9501	CANEYRV7 345.00 - NEOSHO 345KV CKT 1
FDNS	00NR	0	16WP	G15_063	FROM->TO	CIMARRON - DRAPER LAKE 345KV CKT 1	717	717	0.16537	107.828	BRIDGECR 138.00 - TUTTLE 138KV CKT 1
FDNS	00NR	0	16WP	G15_063	FROM->TO	CIMARRON - DRAPER LAKE 345KV CKT 1	717	717	0.16614	107.6474	CANEYRV7 345.00 - LATHAMS7 345.00 345KV CKT 1
FDNS	00NR	0	16WP	G15_063	FROM->TO	CIMARRON - DRAPER LAKE 345KV CKT 1	717	717	0.16475	107.6452	GEN336821 1-GRAND GULF UNIT
FDNS	00NR	0	16WP	G15_063	FROM->TO	CIMARRON - DRAPER LAKE 345KV CKT 1	717	717	0.16475	107.5478	GEN515042 1-SEMINOLE 3G
FDNS	00NR	0	16WP	G15_063	FROM->TO	CIMARRON - DRAPER LAKE 345KV CKT 1	717	717	0.16537	107.4572	BRIDGECR 138.00 - SUNSHINE CANYON 138KV CKT 1
FDNS	00NR	0	16WP	G15_063	FROM->TO	CIMARRON - DRAPER LAKE 345KV CKT 1	717	717	0.16537	107.4436	P12:138:WFEC:MSL01
FDNS	00NR	0	16WP	G15_063	FROM->TO	CIMARRON - DRAPER LAKE 345KV CKT 1	717	717	0.16475	107.3491	GEN336153 1-WATERFORD UNIT#3
FDNS	00NR	0	16WP	G15_063	FROM->TO	CIMARRON - DRAPER LAKE 345KV CKT 1	717	717	0.16475	107.3142	GEN515041 1-SEMINOLE 2G
FDNS	00NR	0	16WP	G15_063	FROM->TO	CIMARRON - DRAPER LAKE 345KV CKT 1	717	717	0.16614	107.2046	LATHAMS7 345.00 - ROSE HILL 345KV CKT 1
FDNS	00NR	0	16WP	G15_063	FROM->TO	CIMARRON - DRAPER LAKE 345KV CKT 1	717	717	0.16475	107.1162	GEN509406 1-WELSH #3
FDNS	00NR	0	16WP	G15_063	FROM->TO	CIMARRON - DRAPER LAKE 345KV CKT 1	717	717	0.16475	107.1161	GEN509404 1-WELSH #1
FDNS	00NR	0	16WP	G15_063	FROM->TO	CIMARRON - DRAPER LAKE 345KV CKT 1	717	717	0.16899	107.0907	CIMARRON - NORTHWEST 345KV CKT 1
FDNS	00NR	0	16WP	G15_063	FROM->TO	CIMARRON - DRAPER LAKE 345KV CKT 1	717	717	0.16475	107.0506	GEN335831 1-RIVERBEND UNIT#1
FDNS	00NR	0	16WP	G15_063	FROM->TO	CIMARRON - DRAPER LAKE 345KV CKT 1	717	717	0.16475	107.0233	GEN337911 1-ARKANSAS NUCLEAR ONE UNIT #2
FDNS	00NR	0	17SP	G15_063	FROM->TO	CIMARRON - DRAPER LAKE 345KV CKT 1	717	717	0.16458	106.8873	G14-057T 345.00 - SUNNYSIDE 345KV CKT 1
FDNS	00NR	0	16WP	G15_063	FROM->TO	CIMARRON - DRAPER LAKE 345KV CKT 1	717	717	0.16202	106.7664	CANADIAN RIVER - MUSKOGEE 345KV CKT 1
FDNS	00NR	0	16WP	G15_063	FROM->TO	CIMARRON - DRAPER LAKE 345KV CKT 1	717	717	0.16516	106.7529	HUGO - SUNNYSIDE 345KV CKT 1
FDNS	00NR	0	16WP	G15_063	FROM->TO	CIMARRON - DRAPER LAKE 345KV CKT 1	717	717	0.16536	106.6582	P12:138:OKGE:3TERM14
FDNS	00NR	0	16WP	G15_063	FROM->TO	CIMARRON - DRAPER LAKE 345KV CKT 1	717	717	0.16701	106.6521	JOHNSON COUNTY - PITTSBURG 345KV CKT 1
FDNS	00NR	0	16WP	G15_063	FROM->TO	CIMARRON - DRAPER LAKE 345KV CKT 1	717	717	0.16701	106.6521	JOHNSON COUNTY - PITTSBURG 345KV CKT 1
FDNS	00NR	0	16WP	G15_063	FROM->TO	CIMARRON - DRAPER LAKE 345KV CKT 1	717	717	0.16475	106.6508	GRAND GULF 500/22.0KV TRANSFORMER CKT 1
FDNS	00NR	0	16WP	G15_063	FROM->TO	CIMARRON - DRAPER LAKE 345KV CKT 1	717	717	0.16475	106.6478	GEN337910 1-ARKANSAS NUCLEAR ONE UNIT #1
FDNS	00NR	0	16WP	G15_063	FROM->TO	CIMARRON - DRAPER LAKE 345KV CKT 1	717	717	0.16633	106.638	HORSESHOE LAKE - JONES TAP 138KV CKT 1
FDNS	00NR	0	16WP	G15_063	FROM->TO	CIMARRON - DRAPER LAKE 345KV CKT 1	717	717	0.16528	106.6264	MORISNT4 138.00 - STILLWATER 138KV CKT 1
FDNS	00NR	0	16WP	G15_063	FROM->TO	CIMARRON - DRAPER LAKE 345KV CKT 1	717	717	0.16531	106.6217	P12:138:OKGE:3TERM2
FDNS	00NR	0	16WP	G15_063	FROM->TO	CIMARRON - DRAPER LAKE 345KV CKT 1	717	717	0.16553	106.5968	REDBUD - RIVERSIDE STATION 345KV CKT 1
FDNS	00NR	0	16WP	G15_063	FROM->TO	CIMARRON - DRAPER LAKE 345KV CKT 1	717	717	0.16553	106.5968	REDBUD - RIVERSIDE STATION 345KV CKT 1
FDNS	00NR	0	16WP	G15_063	FROM->TO	CIMARRON - DRAPER LAKE 345KV CKT 1	717	717	0.16475	106.4972	GEN501813 1-RODEMACHER UNIT 3
FDNS	00NR	0	16WP	G15_063	FROM->TO	CIMARRON - DRAPER LAKE 345KV CKT 1	717	717	0.16475	106.4895	GEN515226 1-MUSKOGEE 6G
FDNS	00NR	0	16WP	G15_063	FROM->TO	CIMARRON - DRAPER LAKE 345KV CKT 1	717	717	0.16579	106.4055	NORTHWEST (NORTWST2) 345/138/13.8KV TRANSFORMER CKT 1
FDNS	00NR	0	16WP	G15_063	FROM->TO	CIMARRON - DRAPER LAKE 345KV CKT 1	717	717	0.16452	106.3991	ARCADIA - KAMO MEMORIAL 138KV CKT 1
FDNS	00NR	0	16WP	G15_063	FROM->TO	CIMARRON - DRAPER LAKE 345KV CKT 1	717	717	0.1659	106.3954	BAILEY4 138.00 - SUNSHINE CANYON 138KV CKT 1
FDNS	00NR	0	16WP	G15_063	FROM->TO	CIMARRON - DRAPER LAKE 345KV CKT 1	717	717	0.16484	106.372	P12:138:OKGE:3TERM12
FDNS	00NR	0	16WP	G15_063	FROM->TO	CIMARRON - DRAPER LAKE 345KV CKT 1	717	717	0.16471	106.3312	7SAREPTA% 345.00 - LONGWOOD 345KV CKT 1
FDNS	00NR	0	16WP	G15_063	FROM->TO	CIMARRON - DRAPER LAKE 345KV CKT 1	717	717	0.16471	106.3312	7SAREPTA% 345.00 - LONGWOOD 345KV CKT 1
FDNS	00NR	0	16WP	G15_063	FROM->TO	CIMARRON - DRAPER LAKE 345KV CKT 1	717	717	0.16614	106.3119	MEMORIAL - SKYLINE 138KV CKT 1
FDNS	00NR	0	16WP	G15_063	FROM->TO	CIMARRON - DRAPER LAKE 345KV CKT 1	717	717	0.16475	106.3084	GEN335206 1-NELSON UNIT 6
FDNS	00NR	0	16WP	G15_063	FROM->TO	CIMARRON - DRAPER LAKE 345KV CKT 1	717	717	0.16475	106.3062	DOLET HILLS - SOUTHWEST SHREVEPORT 345KV CKT 1
FDNS	00NR	0	16WP	G15_063	FROM->TO	CIMARRON - DRAPER LAKE 345KV CKT 1	717	717	0.16475	106.3062	DOLET HILLS - SOUTHWEST SHREVEPORT 345KV CKT 1
FDNS	00NR	0	16WP	G15_063	FROM->TO	CIMARRON - DRAPER LAKE 345KV CKT 1	717	717	0.16475	106.2932	GEN515225 1-MUSKOGEE 5G
FDNS	00NR	0	16WP	G15_063	FROM->TO	CIMARRON - DRAPER LAKE 345KV CKT 1	717	717	0.16475	106.293	GEN515223 1-MUSKOGEE 4G
FDNS	00NR	0	16WP	G15_063	FROM->TO	CIMARRON - DRAPER LAKE 345KV CKT 1	717	717	0.16611	106.2567	GRACEMONT (BANK 1) 345/138/13.8KV TRANSFORMER CKT 1
FDNS	00NR	0	16WP	G15_063	FROM->TO	CIMARRON - DRAPER LAKE 345KV CKT 1	717	717	0.16492	106.2077	G15074_T 345.00 - HOYT 345KV CKT 1
FDNS	00NR	0	16WP	G15_063	FROM->TO	CIMARRON - DRAPER LAKE 345KV CKT 1	717	717	0.16635	106.2007	QUAIL CREEK - SKYLINE 138KV CKT 1
FDNS	00NR	0	16WP	G15_063	FROM->TO	CIMARRON - DRAPER LAKE 345KV CKT 1	717	717	0.16647	106.1737	P12:138:OKGE:3TERM18
FDNS	00NR	0	16WP	G15_063	FROM->TO	CIMARRON - DRAPER LAKE 345KV CKT 1	717	717	0.16475	106.155	GEN509409 1-WILKES #3
FDNS	00NR	0	16WP	G15_063	FROM->TO	CIMARRON - DRAPER LAKE 345KV CKT 1	717	717	0.16475	106.1438	GEN337653 1-WHITE BLUFF UNIT #2
FDNS	00NR	0	16WP	G15_063	FROM->TO	CIMARRON - DRAPER LAKE 345KV CKT 1	717	717	0.16571	106.141	NORTHWEST (NORTWST4) 345/138/13.8KV TRANSFORMER CKT 1
FDNS	00NR	0	16WP	G15_063	FROM->TO	CIMARRON - DRAPER LAKE 345KV CKT 1	717	717	0.16475	106.1364	GEN501812 1-RODEMACHER UNIT 2
FDNS	00NR	0	16WP	G15_063	FROM->TO	CIMARRON - DRAPER LAKE 345KV CKT 1	717	717	0.1659	106.0956	BAILEY4 138.00 - WESTMOORE 138KV CKT 1

SOLUTION	GROUP	SCENARIO	SEASON	SOURCE	DIRECTION	MONITORED ELEMENT	RATEA (MVA)	RATEB(MVA)	TDF	TC%LOADING (% MVA)	CONTINGENCY
FDNS	00NR	0	16WP	G15_063	FROM->TO	CIMARRON - DRAPER LAKE 345KV CKT 1	717	717	0.1664	106.0919	36 & MERIDIAN - CHEMTRON 138KV CKT 1
FDNS	00NR	0	16WP	G15_063	FROM->TO	CIMARRON - DRAPER LAKE 345KV CKT 1	717	717	0.16475	106.0776	NEW MADRID 161/22.0KV TRANSFORMER CKT 1
FDNS	00NR	0	16WP	G15_063	FROM->TO	CIMARRON - DRAPER LAKE 345KV CKT 1	717	717	0.16475	106.065	NEW MADRID 345/22.0KV TRANSFORMER CKT 1
FDNS	00NR	0	16WP	G15_063	FROM->TO	CIMARRON - DRAPER LAKE 345KV CKT 1	717	717	0.16475	106.0426	GEN520947 1-HUGO1
FDNS	00NR	0	16WP	G15_063	FROM->TO	CIMARRON - DRAPER LAKE 345KV CKT 1	717	717	0.16571	106.0146	NORTHWEST (NORTWST3) 345/138/13.8KV TRANSFORMER CKT 1
FDNS	00NR	0	16WP	G15_063	FROM->TO	CIMARRON - DRAPER LAKE 345KV CKT 1	717	717	0.16475	106.0144	GEN337652 1-WHITE BLUFF UNIT #1
FDNS	00NR	0	16WP	G15_063	FROM->TO	CIMARRON - DRAPER LAKE 345KV CKT 1	717	717	0.1664	106.0049	CHEMTRON - PENNSYLVANIA 138KV CKT 1
FDNS	00NR	0	16WP	G15_063	FROM->TO	CIMARRON - DRAPER LAKE 345KV CKT 1	717	717	0.16497	105.9815	THISTLE7 345.00 - WOODWARD DISTRICT EHV 345KV CKT 1
FDNS	00NR	0	16WP	G15_063	FROM->TO	CIMARRON - DRAPER LAKE 345KV CKT 1	717	717	0.16497	105.9815	THISTLE7 345.00 - WOODWARD DISTRICT EHV 345KV CKT 1
FDNS	00NR	0	16WP	G15_063	FROM->TO	CIMARRON - DRAPER LAKE 345KV CKT 1	717	717	0.16497	105.9815	THISTLE7 345.00 - WOODWARD DISTRICT EHV 345KV CKT 2
FDNS	00NR	0	16WP	G15_063	FROM->TO	CIMARRON - DRAPER LAKE 345KV CKT 1	717	717	0.16497	105.9815	THISTLE7 345.00 - WOODWARD DISTRICT EHV 345KV CKT 2
FDNS	00NR	0	16WP	G15_063	FROM->TO	CIMARRON - DRAPER LAKE 345KV CKT 1	717	717	0.16473	105.9566	7SAREPTA% 345.00 - ELDORADO EHV 345KV CKT 1
FDNS	00NR	0	16WP	G15_063	FROM->TO	CIMARRON - DRAPER LAKE 345KV CKT 1	717	717	0.16473	105.9565	3TR3AR8EL7EL
FDNS	00NR	0	16WP	G15_063	FROM->TO	CIMARRON - DRAPER LAKE 345KV CKT 1	717	717	0.16473	105.9502	ELDORADO EHV 500/345KV TRANSFORMER CKT 1
FDNS	00NR	0	16WP	G15_063	FROM->TO	CIMARRON - DRAPER LAKE 345KV CKT 1	717	717	0.16616	105.9269	BLANCHARD - CORNVILLE 138KV CKT 1
FDNS	00NR	0	16WP	G15_063	FROM->TO	CIMARRON - DRAPER LAKE 345KV CKT 1	717	717	0.16535	105.9039	P12:138:OKGE:3TERM17
FDNS	00NR	0	16WP	G15_063	FROM->TO	CIMARRON - DRAPER LAKE 345KV CKT 1	717	717	0.16512	105.8927	COMANCHE - LOCO 138KV CKT 1
FDNS	00NR	0	16WP	G15_063	FROM->TO	CIMARRON - DRAPER LAKE 345KV CKT 1	717	717	0.16501	105.8801	G15052_T 345.00 - ROSE HILL 345KV CKT 1
FDNS	00NR	0	16WP	G15_063	FROM->TO	CIMARRON - DRAPER LAKE 345KV CKT 1	717	717	0.16623	105.8629	P12:138:OKGE:3TERM11
FDNS	00NR	0	16WP	G15_063	FROM->TO	CIMARRON - DRAPER LAKE 345KV CKT 1	717	717	0.16475	105.8597	GEN515577 1-ARBWND11 0.6900
FDNS	00NR	0	16WP	G15_063	FROM->TO	CIMARRON - DRAPER LAKE 345KV CKT 1	717	717	0.16475	105.8412	GEN334440 1-SABINE UNIT 4
FDNS	00NR	0	16WP	G15_063	FROM->TO	CIMARRON - DRAPER LAKE 345KV CKT 1	717	717	0.16542	105.8407	LONEOAK - NORTHWEST 138KV CKT 1
FDNS	00NR	0	16WP	G15_063	FROM->TO	CIMARRON - DRAPER LAKE 345KV CKT 1	717	717	0.16616	105.836	P12:138:AEPW-OGE:CORNVIL4:MAUD 4
FDNS	00NR	0	16WP	G15_063	FROM->TO	CIMARRON - DRAPER LAKE 345KV CKT 1	717	717	0.16492	105.8344	HOYT - STRANGER CREEK 345KV CKT 1
FDNS	00NR	0	16WP	G15_063	FROM->TO	CIMARRON - DRAPER LAKE 345KV CKT 1	717	717	0.16747	105.8287	CLARKSVILLE - ONETA 345KV CKT 1
FDNS	00NR	0	16WP	G15_063	FROM->TO	CIMARRON - DRAPER LAKE 345KV CKT 1	717	717	0.16747	105.8287	CLARKSVILLE - ONETA 345KV CKT 1
FDNS	00NR	0	16WP	G15_063	FROM->TO	CIMARRON - DRAPER LAKE 345KV CKT 1	717	717	0.16492	105.8278	G15074_T 345.00 - JEFFREY ENERGY CENTER 345KV CKT 1
FDNS	00NR	0	16WP	G15_063	FROM->TO	CIMARRON - DRAPER LAKE 345KV CKT 1	717	717	0.16475	105.8272	DELL 500 - ESSEX UNIT 2 500KV CKT Z1
FDNS	00NR	0	16WP	G15_063	FROM->TO	CIMARRON - DRAPER LAKE 345KV CKT 1	717	717	0.1662	105.8261	KETCH TAP - NORTHWEST 138KV CKT 1
FDNS	00NR	0	16WP	G15_063	FROM->TO	CIMARRON - DRAPER LAKE 345KV CKT 1	717	717	0.16555	105.8169	DIVISION AVE - LAKESIDE 138KV CKT 1
FDNS	00NR	0	16WP	G15_063	FROM->TO	CIMARRON - DRAPER LAKE 345KV CKT 1	717	717	0.1659	105.8143	FRANKLIN SW - WESTMOORE 138KV CKT 1
FDNS	00NR	0	16WP	G15_063	FROM->TO	CIMARRON - DRAPER LAKE 345KV CKT 1	717	717	0.16445	105.8006	HORSESHOE LAKE - KAMO MEMORIAL 138KV CKT 1
FDNS	00NR	0	16WP	G15_063	FROM->TO	CIMARRON - DRAPER LAKE 345KV CKT 1	717	717	0.16536	105.7553	NORTHWEST - PANTHER 138KV CKT 1
FDNS	00NR	0	16WP	G15_063	FROM->TO	CIMARRON - DRAPER LAKE 345KV CKT 1	717	717	0.16569	105.7501	P12:138:OKGE:3TERM20
FDNS	00NR	0	16WP	G15_063	FROM->TO	CIMARRON - DRAPER LAKE 345KV CKT 1	717	717	0.16616	105.7337	BLANCHARD - MAUD 138KV CKT 1
FDNS	00NR	0	16WP	G15_063	FROM->TO	CIMARRON - DRAPER LAKE 345KV CKT 1	717	717	0.16504	105.7247	P12:138:OKGE:3TERM47
FDNS	00NR	0	16WP	G15_063	FROM->TO	CIMARRON - DRAPER LAKE 345KV CKT 1	717	717	0.16537	105.7232	CIMARRON - HAYMAKER 138KV CKT 1
FDNS	00NR	0	16WP	G15_063	FROM->TO	CIMARRON - DRAPER LAKE 345KV CKT 1	717	717	0.16515	105.7124	BLACKBERRY - NEOSHO 345KV CKT 1
FDNS	00NR	0	16WP	G15_063	FROM->TO	CIMARRON - DRAPER LAKE 345KV CKT 1	717	717	0.16515	105.7124	BLACKBERRY - NEOSHO 345KV CKT 1
FDNS	00NR	0	16WP	G15_063	FROM->TO	CIMARRON - DRAPER LAKE 345KV CKT 1	717	717	0.16536	105.7049	PANTHER - SILVER LAKE 138KV CKT 1
FDNS	00NR	0	16WP	G15_063	FROM->TO	CIMARRON - DRAPER LAKE 345KV CKT 1	717	717	0.16499	105.7001	G14-074T 345.00 - OKLAUNION 345KV CKT 1
FDNS	00NR	0	16WP	G15_063	FROM->TO	CIMARRON - DRAPER LAKE 345KV CKT 1	717	717	0.16475	105.6978	DOLET HILLS 345/24.0KV TRANSFORMER CKT 1
FDNS	00NR	0	16WP	G15_063	FROM->TO	CIMARRON - DRAPER LAKE 345KV CKT 1	717	717	0.16555	105.6953	HEFNER - LAKESIDE 138KV CKT 1
FDNS	00NR	0	16WP	G15_063	FROM->TO	CIMARRON - DRAPER LAKE 345KV CKT 1	717	717	0.16475	105.6911	GEN336252 1-NINEMILE POINT UNIT#5
FDNS	00NR	0	16WP	G15_063	FROM->TO	CIMARRON - DRAPER LAKE 345KV CKT 1	717	717	0.16583	105.6582	KETCH - KETCH TAP 138KV CKT 1
FDNS	00NR	0	16WP	G15_063	FROM->TO	CIMARRON - DRAPER LAKE 345KV CKT 1	717	717	0.16475	105.6581	WHITE BLUFF 500/26.0KV TRANSFORMER CKT 1
FDNS	00NR	0	16WP	G15_063	FROM->TO	CIMARRON - DRAPER LAKE 345KV CKT 1	717	717	0.16499	105.6489	SWISSVALE - WEST GARDNER 345KV CKT 1
FDNS	00NR	0	16WP	G15_063	FROM->TO	CIMARRON - DRAPER LAKE 345KV CKT 1	717	717	0.1653	105.6337	DIVISION AVE - MUSTANG 138KV CKT 1
FDNS	00NR	0	16WP	G15_063	FROM->TO	CIMARRON - DRAPER LAKE 345KV CKT 1	717	717	0.16498	105.6281	FINNEY SWITCHING STATION - HOLCOMB 345KV CKT 1
FDNS	00NR	0	16WP	G15_063	FROM->TO	CIMARRON - DRAPER LAKE 345KV CKT 1	717	717	0.16498	105.6281	FINNEY SWITCHING STATION - HOLCOMB 345KV CKT 1
FDNS	00NR	0	16WP	G15_063	FROM->TO	CIMARRON - DRAPER LAKE 345KV CKT 1	717	717	0.16519	105.6273	P12:138:AEPW-OGE:SHIDLER4:OSAGE 4
FDNS	00NR	0	16WP	G15_063	FROM->TO	CIMARRON - DRAPER LAKE 345KV CKT 1	717	717	0.16475	105.6224	GEN509408 1-WILKES #2
FDNS	00NR	0	16WP	G15_063	FROM->TO	CIMARRON - DRAPER LAKE 345KV CKT 1	717	717	0.16537	105.6153	DIVISION AVE - HAYMAKER 138KV CKT 1
FDNS	00NR	0	16WP	G15_063	FROM->TO	CIMARRON - DRAPER LAKE 345KV CKT 1	717	717	0.16475	105.6104	GEN300006 1-NEW MADRID UNIT 1
FDNS	00NR	0	16WP	G15_063	FROM->TO	CIMARRON - DRAPER LAKE 345KV CKT 1	717	717	0.16606	105.606	MCCLAIN - PLEASANT VALLEY 138KV CKT 1
FDNS	00NR	0	16WP	G15_063	FROM->TO	CIMARRON - DRAPER LAKE 345KV CKT 1	717	717	0.16475	105.5979	GEN300007 1-NEW MADRID UNIT 2
FDNS	00NR	0	16WP	G15_063	FROM->TO	CIMARRON - DRAPER LAKE 345KV CKT 1	717	717	0.16512	105.5812	LACYGNE - NEOSHO 345KV CKT 1
FDNS	00NR	0	16WP	G15_063	FROM->TO	CIMARRON - DRAPER LAKE 345KV CKT 1	717	717	0.16495	105.5812	P12:138:WFEC:MSL02
FDNS	00NR	0	16WP	G15_063	FROM->TO	CIMARRON - DRAPER LAKE 345KV CKT 1	717	717	0.16467	105.5746	P12:138:AEPW:OKMULGE4:R.S.S-4
FDNS	00NR	0	16WP	G15_063	FROM->TO	CIMARRON - DRAPER LAKE 345KV CKT 1	717	717	0.16475	105.5699	GEN335204 1-NELSON UNIT 4
FDNS	00NR	0	16WP	G15_063	FROM->TO	CIMARRON - DRAPER LAKE 345KV CKT 1	717	717	0.16475	105.5521	GEN336831 1-BAXTER WILSON SES
FDNS	00NR	0	16WP	G15_063	FROM->TO	CIMARRON - DRAPER LAKE 345KV CKT 1	717	717	0.16481	105.5478	G15088_T 345.00 - MOORE 345KV CKT 1
FDNS	00NR	0	16WP	G15_063	FROM->TO	CIMARRON - DRAPER LAKE 345KV CKT 1	717	717	0.16583	105.5474	CLASSEN - ROBINSON 138KV CKT 1
FDNS	00NR	0	16WP	G15_063	FROM->TO	CIMARRON - DRAPER LAKE 345KV CKT 1	717	717	0.1649	105.5471	ANADARKO - GEORGIA 138KV CKT 1
FDNS	00NR	0	16WP	G15_063	FROM->TO	CIMARRON - DRAPER LAKE 345KV CKT 1	717	717	0.16496	105.5397	EMPORIA ENERGY CENTER - SWISSVALE 345KV CKT 1
FDNS	00NR	0	16WP	G15_063	FROM->TO	CIMARRON - DRAPER LAKE 345KV CKT 1	717	717	0.16528	105.5351	BENTON - WICHITA 345KV CKT 1
FDNS	00NR	0	16WP	G15_063	FROM->TO	CIMARRON - DRAPER LAKE 345KV CKT 1	717	717	0.16475	105.527	GEN506754 1-LEBROCK STEAM 1
FDNS	00NR	0	16WP	G15_063	FROM->TO	CIMARRON - DRAPER LAKE 345KV CKT 1	717	717	0.16524	105.5241	EMPORIA ENERGY CENTER - G14_001T 345.00 345KV CKT 1
FDNS	00NR	0	16WP	G15_063	FROM->TO	CIMARRON - DRAPER LAKE 345KV CKT 1	717	717	0.16475	105.5183	GEN334441 1-SABINE UNIT 5
FDNS	00NR	0	16WP	G15_063	FROM->TO	CIMARRON - DRAPER LAKE 345KV CKT 1	717	717	0.16475	105.5125	GEN334071 1-LEWIS CREEK 2
FDNS	00NR	0	16WP	G15_063	FROM->TO	CIMARRON - DRAPER LAKE 345KV CKT 1	717	717	0.16475	105.5046	GEN334070 1-LEWIS CREEK 1
FDNS	00NR	0	16WP	G15_063	FROM->TO	CIMARRON - DRAPER LAKE 345KV CKT 1	717	717	0.165	105.4882	CRINER - PAYNE 138.00 138KV CKT 1
FDNS	00NR	0	16WP	G15_063	FROM->TO	CIMARRON - DRAPER LAKE 345KV CKT 1	717	717	0.16475	105.4875	GEN336251 1-NINEMILE POINT UNIT#4
FDNS	00NR	0	16WP	G15_063	FROM->TO	CIMARRON - DRAPER LAKE 345KV CKT 1	717	717	0.1649	105.4831	FLETCHER - GEORGIA 138KV CKT 1
FDNS	00NR	0	16WP	G15_063	FROM->TO	CIMARRON - DRAPER LAKE 345KV CKT 1	717	717	0.16475	105.4603	GEN590011 2-ERCOT EQUIVALENCE
FDNS	00NR	0	16WP	G15_063	FROM->TO	CIMARRON - DRAPER LAKE 345KV CKT 1	717	717	0.16478	105.4593	WEBRE - WELLS 500KV CKT 1
FDNS	00NR	0	16WP	G15_063	FROM->TO	CIMARRON - DRAPER LAKE 345KV CKT 1	717	717	0.16498	105.4403	FINNEY SWITCHING STATION - Hitchland Interchange 345KV CKT 1
FDNS	00NR	0	16WP	G15_063	FROM->TO	CIMARRON - DRAPER LAKE 345KV CKT 1	717	717	0.16825	105.4384	WOODRING (WOODRNG2) 345/138/13.8KV TRANSFORMER CKT 1
FDNS	00NR	0	16WP	G15_063	FROM->TO	CIMARRON - DRAPER LAKE 345KV CKT 1	717	717	0.16542	105.4361	LONEOAK - QUAIL CREEK 138KV CKT 1

SOLUTION	GROUP	SCENARIO	SEASON	SOURCE	DIRECTION	MONITORED ELEMENT	RATEA (MVA)	RATEB(MVA)	TDF	TC%LOADING (% MVA)	CONTINGENCY
FDNS	00NR	0	16WP	G15_063	FROM->TO	CIMARRON - DRAPER LAKE 345KV CKT 1	717	717	0.16493	105.4308	EMPIRE - FLETCHER 138KV CKT 1
FDNS	00NR	0	16WP	G15_063	FROM->TO	CIMARRON - DRAPER LAKE 345KV CKT 1	717	717	0.16475	105.427	GEN501811 1-RODEMACHER UNIT 1
FDNS	00NR	0	16WP	G15_063	FROM->TO	CIMARRON - DRAPER LAKE 345KV CKT 1	717	717	0.16519	105.4212	OSAGE - WEBB CITY TAP 138KV CKT 1
FDNS	00NR	0	16WP	G15_063	FROM->TO	CIMARRON - DRAPER LAKE 345KV CKT 1	717	717	0.16475	105.4196	GEN590010 1-ERCOT EQUIVALENCE
FDNS	00NR	0	16WP	G15_063	FROM->TO	CIMARRON - DRAPER LAKE 345KV CKT 1	717	717	0.16475	105.4129	GEN503909 1-FULTONU1 1 16.000
FDNS	00NR	0	16WP	G15_063	FROM->TO	CIMARRON - DRAPER LAKE 345KV CKT 1	717	717	0.16475	105.4096	GEN338146 1-INDEPENDENCE UNIT #2
FDNS	00NR	0	16WP	G15_063	FROM->TO	CIMARRON - DRAPER LAKE 345KV CKT 1	717	717	0.16477	105.3989	G1524G1525 345.00 - THISTLE7 345.00 345KV CKT 1
FDNS	00NR	0	16WP	G15_063	FROM->TO	CIMARRON - DRAPER LAKE 345KV CKT 1	717	717	0.16477	105.3989	G1524G1525 345.00 - THISTLE7 345.00 345KV CKT 2
FDNS	00NR	0	16WP	G15_063	FROM->TO	CIMARRON - DRAPER LAKE 345KV CKT 1	717	717	0.16526	105.3963	SPVALLY4 138.00 - STILLWATER 138KV CKT 1
FDNS	00NR	0	16WP	G15_063	FROM->TO	CIMARRON - DRAPER LAKE 345KV CKT 1	717	717	0.16475	105.3904	GEN334433 1-SABINE UNIT 3
FDNS	00NR	0	16WP	G15_063	FROM->TO	CIMARRON - DRAPER LAKE 345KV CKT 1	717	717	0.16524	105.3883	G14_001T 345.00 - WICHITA 345KV CKT 1
FDNS	00NR	0	16WP	G15_063	FROM->TO	CIMARRON - DRAPER LAKE 345KV CKT 1	717	717	0.16475	105.3876	P12:069:OKGE:3TERM4
FDNS	00NR	0	16WP	G15_063	FROM->TO	CIMARRON - DRAPER LAKE 345KV CKT 1	717	717	0.16475	105.3874	FRONTIER - GRIMES 345KV CKT 1
FDNS	00NR	0	16WP	G15_063	FROM->TO	CIMARRON - DRAPER LAKE 345KV CKT 1	717	717	0.16475	105.3845	GEN334030 1-FRONTIER UNIT 1
FDNS	00NR	0	16WP	G15_063	FROM->TO	CIMARRON - DRAPER LAKE 345KV CKT 1	717	717	0.16475	105.3833	GEN334031 1-FRONTIER UNIT 2
FDNS	00NR	0	16WP	G15_063	FROM->TO	CIMARRON - DRAPER LAKE 345KV CKT 1	717	717	0.16475	105.3819	GEN303007 1-1BC2 U2
FDNS	00NR	0	16WP	G15_063	FROM->TO	CIMARRON - DRAPER LAKE 345KV CKT 1	717	717	0.16475	105.3771	GEN303006 1-1BC2 U1
FDNS	00NR	0	16WP	G15_063	FROM->TO	CIMARRON - DRAPER LAKE 345KV CKT 1	717	717	0.16493	105.3681	COMANCHE - EMPIRE 138KV CKT 1
FDNS	00NR	0	16WP	G15_063	FROM->TO	CIMARRON - DRAPER LAKE 345KV CKT 1	717	717	0.16526	105.3668	PAYNESB4 138.00 - SPVALLY4 138.00 138KV CKT 1
FDNS	00NR	0	16WP	G15_063	FROM->TO	CIMARRON - DRAPER LAKE 345KV CKT 1	717	717	0.165	105.3625	COLE - CRINER 138KV CKT 1
FDNS	00NR	0	16WP	G15_063	FROM->TO	CIMARRON - DRAPER LAKE 345KV CKT 1	717	717	0.16475	105.3603	GEN336191 1-LITTLE GYPSY UNIT#3
FDNS	00NR	0	16WP	G15_063	FROM->TO	CIMARRON - DRAPER LAKE 345KV CKT 1	717	717	0.16475	105.3582	GEN337041 1-GERALD ANDRUS
FDNS	00NR	0	16WP	G15_063	FROM->TO	CIMARRON - DRAPER LAKE 345KV CKT 1	717	717	0.16475	105.3531	P12:161:AEPW:DYESS 5:HYLAND 5
FDNS	00NR	0	16WP	G15_063	FROM->TO	CIMARRON - DRAPER LAKE 345KV CKT 1	717	717	0.16526	105.3512	CUSHING - PAYNESB4 138.00 138KV CKT 1
FDNS	00NR	0	16WP	G15_063	FROM->TO	CIMARRON - DRAPER LAKE 345KV CKT 1	717	717	0.16498	105.3504	P12:138:OKGE:3TERM13
FDNS	00NR	0	16WP	G15_063	FROM->TO	CIMARRON - DRAPER LAKE 345KV CKT 1	717	717	0.16476	105.3477	8DANIEL8 500.00 - MCKNIGHT 500KV CKT 1
FDNS	00NR	0	16WP	G15_063	FROM->TO	CIMARRON - DRAPER LAKE 345KV CKT 1	717	717	0.16217	105.3461	CANADIAN RIVER - PITTSBURG 345KV CKT 1
FDNS	00NR	0	16WP	G15_063	FROM->TO	CIMARRON - DRAPER LAKE 345KV CKT 1	717	717	0.16217	105.3461	CANADIAN RIVER - PITTSBURG 345KV CKT 1
FDNS	00NR	0	16WP	G15_063	FROM->TO	CIMARRON - DRAPER LAKE 345KV CKT 1	717	717	0.1651	105.3451	CLEAVELAND - CLEVLND 4 138.00 138KV CKT Z1
FDNS	00NR	0	16WP	G15_063	FROM->TO	CIMARRON - DRAPER LAKE 345KV CKT 1	717	717	0.1651	105.3451	CLEAVELAND - CLEVLND 4 138.00 138KV CKT Z1
FDNS	00NR	0	16WP	G15_063	FROM->TO	CIMARRON - DRAPER LAKE 345KV CKT 1	717	717	0.1651	105.3448	CLEVELAND (CLVAUTO1) 345/138/13.8KV TRANSFORMER CKT 1
FDNS	00NR	0	16WP	G15_063	FROM->TO	CIMARRON - DRAPER LAKE 345KV CKT 1	717	717	0.1651	105.3448	CLEVELAND (CLVAUTO1) 345/138/13.8KV TRANSFORMER CKT 1
FDNS	00NR	0	16WP	G15_063	FROM->TO	CIMARRON - DRAPER LAKE 345KV CKT 1	717	717	0.16475	105.3324	GEN509393 S1-ARSENAL HILL GENS #4 (STALL)
FDNS	00NR	0	16WP	G15_063	FROM->TO	CIMARRON - DRAPER LAKE 345KV CKT 1	717	717	0.1653	105.332	DAYTON - MUSTANG 138KV CKT 1
FDNS	00NR	0	16WP	G15_063	FROM->TO	CIMARRON - DRAPER LAKE 345KV CKT 1	717	717	0.16475	105.3283	GEN335614 1-WILLOW GLENN UNIT#4
FDNS	00NR	0	16WP	G15_063	FROM->TO	CIMARRON - DRAPER LAKE 345KV CKT 1	717	717	0.1653	105.327	DAYTON - HOBBY LOBBY 138KV CKT 1
FDNS	00NR	0	16WP	G15_063	FROM->TO	CIMARRON - DRAPER LAKE 345KV CKT 1	717	717	0.16475	105.3168	GEN303008 1-1BC2 U3
FDNS	00NR	0	16WP	G15_063	FROM->TO	CIMARRON - DRAPER LAKE 345KV CKT 1	717	717	0.16475	105.3135	GEN509392 G2-ARSENAL HILL GENS #3 (STALL)
FDNS	00NR	0	16WP	G15_063	FROM->TO	CIMARRON - DRAPER LAKE 345KV CKT 1	717	717	0.16475	105.3134	GEN509391 G1-ARSENAL HILL GENS #2 (STALL)
FDNS	00NR	0	16WP	G15_063	FROM->TO	CIMARRON - DRAPER LAKE 345KV CKT 1	717	717	0.16527	105.3098	MUSTANG - SW 5TH 138KV CKT 1
FDNS	00NR	0	16WP	G15_063	FROM->TO	CIMARRON - DRAPER LAKE 345KV CKT 1	717	717	0.16482	105.3026	7LUTESVIL 345.00 - 7ST FRANC 345.00 345KV CKT 1
FDNS	00NR	0	16WP	G15_063	FROM->TO	CIMARRON - DRAPER LAKE 345KV CKT 1	717	717	0.16475	105.2951	GEN336170 1-GULF OXY U4
FDNS	00NR	0	16WP	G15_063	FROM->TO	CIMARRON - DRAPER LAKE 345KV CKT 1	717	717	0.16475	105.2924	GEN336464 1-MICHOUD UNIT #3
FDNS	00NR	0	16WP	G15_063	FROM->TO	CIMARRON - DRAPER LAKE 345KV CKT 1	717	717	0.16473	105.2896	ELDORADO EHV - MOUNT OLIVE 500KV CKT 1
FDNS	00NR	0	16WP	G15_063	FROM->TO	CIMARRON - DRAPER LAKE 345KV CKT 1	717	717	0.16475	105.2808	GEN338143 1-INDEPENDENCE UNIT #1
FDNS	00NR	0	16WP	G15_063	FROM->TO	CIMARRON - DRAPER LAKE 345KV CKT 1	717	717	0.16483	105.2695	P12:069:OKGE:3TERM19
FDNS	00NR	0	16WP	G15_063	FROM->TO	CIMARRON - DRAPER LAKE 345KV CKT 1	717	717	0.16537	105.2578	OUMED 4 - STONEWALL 138KV CKT 1
FDNS	00NR	0	16WP	G15_063	FROM->TO	CIMARRON - DRAPER LAKE 345KV CKT 1	717	717	0.16475	105.2571	ESSEX UNIT 2 500/18.0KV TRANSFORMER CKT 1
FDNS	00NR	0	16WP	G15_063	FROM->TO	CIMARRON - DRAPER LAKE 345KV CKT 1	717	717	0.16583	105.2549	LIGHTNING CREEK - ROBINSON 138KV CKT 1
FDNS	00NR	0	16WP	G15_063	FROM->TO	CIMARRON - DRAPER LAKE 345KV CKT 1	717	717	0.1648	105.2531	7JASPER 345.00 - BLACKBERRY 345KV CKT 1
FDNS	00NR	0	16WP	G15_063	FROM->TO	CIMARRON - DRAPER LAKE 345KV CKT 1	717	717	0.16475	105.2474	GEN336801 1-BAXTER WILSON UNIT #1
FDNS	00NR	0	16WP	G15_063	FROM->TO	CIMARRON - DRAPER LAKE 345KV CKT 1	717	717	0.16442	105.2433	ARCADIA - LGARBER4 138.00 138KV CKT 1
FDNS	00NR	0	16WP	G15_063	FROM->TO	CIMARRON - DRAPER LAKE 345KV CKT 1	717	717	0.16519	105.2416	FAIRFAX TAP - SHIDLER 138KV CKT 1
FDNS	00NR	0	16WP	G15_063	FROM->TO	CIMARRON - DRAPER LAKE 345KV CKT 1	717	717	0.16519	105.2415	FAIRFAX TAP - WEBB CITY TAP 138KV CKT 1
FDNS	00NR	0	16WP	G15_063	FROM->TO	CIMARRON - DRAPER LAKE 345KV CKT 1	717	717	0.16484	105.2221	8WNEWMADRID 500.00 - DELL 500 500KV CKT 1
FDNS	00NR	0	16WP	G15_063	FROM->TO	CIMARRON - DRAPER LAKE 345KV CKT 1	717	717	0.16576	105.217	TULSA NORTH - WEKIWA 345KV CKT 1
FDNS	00NR	0	16WP	G15_063	FROM->TO	CIMARRON - DRAPER LAKE 345KV CKT 1	717	717	0.16576	105.217	TULSA NORTH - WEKIWA 345KV CKT 1
FDNS	00NR	0	16WP	G15_063	FROM->TO	CIMARRON - DRAPER LAKE 345KV CKT 1	717	717	0.16551	105.2167	ARKANSAS NUCLEAR ONE - FT SMITH 500KV CKT 1
FDNS	00NR	0	16WP	G15_063	FROM->TO	CIMARRON - DRAPER LAKE 345KV CKT 1	717	717	0.16551	105.2167	ARKANSAS NUCLEAR ONE - FT SMITH 500KV CKT 1
FDNS	00NR	0	16WP	G15_063	FROM->TO	CIMARRON - DRAPER LAKE 345KV CKT 1	717	717	0.16442	105.2134	CHITWOOD - LGARBER4 138.00 138KV CKT 1
FDNS	00NR	0	16WP	G15_063	FROM->TO	CIMARRON - DRAPER LAKE 345KV CKT 1	717	717	0.16475	105.2118	GEN506752 1-LEBROCK GAS 1
FDNS	00NR	0	16WP	G15_063	FROM->TO	CIMARRON - DRAPER LAKE 345KV CKT 1	717	717	0.16475	105.2116	GEN506753 1-LEBROCK GAS 2
FDNS	00NR	0	16WP	G15_063	FROM->TO	CIMARRON - DRAPER LAKE 345KV CKT 1	717	717	0.16475	105.21	GEN501910 1-ACADIA UNIT ST1
FDNS	00NR	0	16WP	G15_063	FROM->TO	CIMARRON - DRAPER LAKE 345KV CKT 1	717	717	0.16442	105.201	CHITWOOD - JONES TAP 138KV CKT 1
FDNS	00NR	0	16WP	G15_063	FROM->TO	CIMARRON - DRAPER LAKE 345KV CKT 1	717	717	0.16475	105.1977	RODEMACHER 230/22.0KV TRANSFORMER CKT 1
FDNS	00NR	0	16WP	G15_063	FROM->TO	CIMARRON - DRAPER LAKE 345KV CKT 1	717	717	0.16477	105.1943	P12:138:AEPW-OGE:WTH_JCT4:JENSEN4
FDNS	00NR	0	16WP	G15_063	FROM->TO	CIMARRON - DRAPER LAKE 345KV CKT 1	717	717	0.16477	105.1937	P12:345:GRDA:CHOUTEAU-SPORTSMANACRES
FDNS	00NR	0	16WP	G15_063	FROM->TO	CIMARRON - DRAPER LAKE 345KV CKT 1	717	717	0.1647	105.1881	ELDORADO EHV - SHERIDAN EHV 500KV CKT 1
FDNS	00NR	0	16WP	G15_063	FROM->TO	CIMARRON - DRAPER LAKE 345KV CKT 1	717	717	0.16487	105.1795	ANADARKO - SEQUOYAHJ4 138.00 138KV CKT 1
FDNS	00NR	0	16WP	G15_063	FROM->TO	CIMARRON - DRAPER LAKE 345KV CKT 1	717	717	0.16487	105.179	CORN TAP - SEQUOYAHJ4 138.00 138KV CKT 1
FDNS	00NR	0	16WP	G15_063	FROM->TO	CIMARRON - DRAPER LAKE 345KV CKT 1	717	717	0.16475	105.1749	GEN511843 1-RIVERSIDE STATION #2
FDNS	00NR	0	16WP	G15_063	FROM->TO	CIMARRON - DRAPER LAKE 345KV CKT 1	717	717	0.16476	105.1727	CHISHOLM6 230.00 - ELK CITY 230KV 230KV CKT 1
FDNS	00NR	0	16WP	G15_063	FROM->TO	CIMARRON - DRAPER LAKE 345KV CKT 1	717	717	0.16476	105.1696	ELK CITY 230KV (ELKCTY-6) 230/138/13.8KV TRANSFORMER CKT 1
FDNS	00NR	0	16WP	G15_063	FROM->TO	CIMARRON - DRAPER LAKE 345KV CKT 1	717	717	0.16476	105.1696	ELK CITY 230KV (ELKCTY-6) 230/138/13.8KV TRANSFORMER CKT 1
FDNS	00NR	0	16WP	G15_063	FROM->TO	CIMARRON - DRAPER LAKE 345KV CKT 1	717	717	0.16475	105.158	6LAYFLD 230.00 - CARROLL 230KV CKT 1
FDNS	00NR	0	16WP	G15_063	FROM->TO	CIMARRON - DRAPER LAKE 345KV CKT 1	717	717	0.16537	105.1566	OUMED 4 - PARK PLACE 138KV CKT 1
FDNS	00NR	0	16WP	G15_063	FROM->TO	CIMARRON - DRAPER LAKE 345KV CKT 1	717	717	0.1648	105.1528	P12:138:AEPW:N.E.S.-4:CATOOSA4
FDNS	00NR	0	16WP	G15_063	FROM->TO	CIMARRON - DRAPER LAKE 345KV CKT 1	717	717	0.16617	105.1452	NORTHEAST STATION - ONETA 345KV CKT 1
FDNS	00NR	0	16WP	G15_063	FROM->TO	CIMARRON - DRAPER LAKE 345KV CKT 1	717	717	0.16617	105.1452	NORTHEAST STATION - ONETA 345KV CKT 1

SOLUTION	GROUP	SCENARIO	SEASON	SOURCE	DIRECTION	MONITORED ELEMENT	RATEA (MVA)	RATEB(MVA)	TDF	TC%LOADING (% MVA)	CONTINGENCY
FDNS	00NR	0	16WP	G15_063	FROM->TO	CIMARRON - DRAPER LAKE 345KV CKT 1	717	717	0.16485	105.1444	P13:138-161:WERE:NSES_TX-4OR5::
FDNS	00NR	0	16WP	G15_063	FROM->TO	CIMARRON - DRAPER LAKE 345KV CKT 1	717	717	0.1647	105.1443	MORISNT4 138.00 - SOONER 138KV CKT 1
FDNS	00NR	0	16WP	G15_063	FROM->TO	CIMARRON - DRAPER LAKE 345KV CKT 1	717	717	0.16514	105.1413	ANADARKO - GRACMNT4 138.00 138KV CKT 1
FDNS	00NR	0	16WP	G15_063	FROM->TO	CIMARRON - DRAPER LAKE 345KV CKT 1	717	717	0.16483	105.1371	7JASPER 345.00 - MORGAN 345KV CKT 1
FDNS	00NR	0	16WP	G15_063	FROM->TO	CIMARRON - DRAPER LAKE 345KV CKT 1	717	717	0.16475	105.1304	8CAJUN2 500/24.0KV TRANSFORMER CKT 1
FDNS	00NR	0	16WP	G15_063	FROM->TO	CIMARRON - DRAPER LAKE 345KV CKT 1	717	717	0.17034	105.1269	GRACEMONT - LAWTON EASTSIDE 345KV CKT 1
FDNS	00NR	0	16WP	G15_063	FROM->TO	CIMARRON - DRAPER LAKE 345KV CKT 1	717	717	0.17034	105.1269	GRACEMONT - LAWTON EASTSIDE 345KV CKT 1
FDNS	00NR	0	16WP	G15_063	FROM->TO	CIMARRON - DRAPER LAKE 345KV CKT 1	717	717	0.16592	105.1243	DALE - HORSESHOE LAKE 138KV CKT 1
FDNS	00NR	0	16WP	G15_063	FROM->TO	CIMARRON - DRAPER LAKE 345KV CKT 1	717	717	0.16475	105.1235	ST FRANCIS - ST FRANCIS 1 161KV CKT Z1
FDNS	00NR	0	16WP	G15_063	FROM->TO	CIMARRON - DRAPER LAKE 345KV CKT 1	717	717	0.16475	105.1235	ST FRANCIS 161/16.0KV TRANSFORMER CKT 1
FDNS	00NR	0	16WP	G15_063	FROM->TO	CIMARRON - DRAPER LAKE 345KV CKT 1	717	717	0.16474	105.1208	FULTON 115 - HOPE 115KV CKT 1
FDNS	00NR	0	16WP	G15_063	FROM->TO	CIMARRON - DRAPER LAKE 345KV CKT 1	717	717	0.16474	105.1208	FULTON 115 - HOPE 115KV CKT 1
FDNS	00NR	0	16WP	G15_063	FROM->TO	CIMARRON - DRAPER LAKE 345KV CKT 1	717	717	0.16583	105.1175	LIGHTNING CREEK - TROSPER 138KV CKT 1
FDNS	00NR	0	16WP	G15_063	FROM->TO	CIMARRON - DRAPER LAKE 345KV CKT 1	717	717	0.16475	105.1151	P12:069:OKGE:3TERM3
FDNS	00NR	0	16WP	G15_063	FROM->TO	CIMARRON - DRAPER LAKE 345KV CKT 1	717	717	0.165	105.1134	COLE - OUSW4 138KV CKT 1
FDNS	00NR	0	16WP	G15_063	FROM->TO	CIMARRON - DRAPER LAKE 345KV CKT 1	717	717	0.16492	105.112	G13-010T 345.00 - POST ROCK 345KV CKT 1
FDNS	00NR	0	16WP	G15_063	FROM->TO	CIMARRON - DRAPER LAKE 345KV CKT 1	717	717	0.16485	105.1086	P12:138:AEPW:CATOOSA4:T.S.E.-4
FDNS	00NR	0	16WP	G15_063	FROM->TO	CIMARRON - DRAPER LAKE 345KV CKT 1	717	717	0.1653	105.0977	36 & MERIDIAN - HOBBY LOBBY 138KV CKT 1
FDNS	00NR	0	16WP	G15_063	FROM->TO	CIMARRON - DRAPER LAKE 345KV CKT 1	717	717	0.16475	105.0962	GEN337766 1-TRACTEBEL UNIT S1
FDNS	00NR	0	16WP	G15_063	FROM->TO	CIMARRON - DRAPER LAKE 345KV CKT 1	717	717	0.16493	105.0932	HUGO - VALLIANT 345KV CKT 1
FDNS	00NR	0	16WP	G15_063	FROM->TO	CIMARRON - DRAPER LAKE 345KV CKT 1	717	717	0.16493	105.0932	HUGO - VALLIANT 345KV CKT 1
FDNS	00NR	0	16WP	G15_063	FROM->TO	CIMARRON - DRAPER LAKE 345KV CKT 1	717	717	0.16475	105.0928	P12:138:AEPW:SHERID4:112GORE4
FDNS	00NR	0	16WP	G15_063	FROM->TO	CIMARRON - DRAPER LAKE 345KV CKT 1	717	717	0.1649	105.0924	HAMMETT TAP - HAMMETT2 138KV CKT 1
FDNS	00NR	0	16WP	G15_063	FROM->TO	CIMARRON - DRAPER LAKE 345KV CKT 1	717	717	0.16475	105.0914	GEN336222 1-LITTLE GYPSY UNIT#2
FDNS	00NR	0	16WP	G15_063	FROM->TO	CIMARRON - DRAPER LAKE 345KV CKT 1	717	717	0.16475	105.0889	GEN515564 1-ORIGIN11 0.6900
FDNS	00NR	0	16WP	G15_063	FROM->TO	CIMARRON - DRAPER LAKE 345KV CKT 1	717	717	0.16475	105.0889	GEN515565 1-ORIGIN21 0.6900
FDNS	00NR	0	16WP	G15_063	FROM->TO	CIMARRON - DRAPER LAKE 345KV CKT 1	717	717	0.16484	105.0878	P12:138:OKGE:3TERM28
FDNS	00NR	0	16WP	G15_063	FROM->TO	CIMARRON - DRAPER LAKE 345KV CKT 1	717	717	0.16475	105.0868	GEN300015 1-1SGPDEL 18.000
FDNS	00NR	0	16WP	G15_063	FROM->TO	CIMARRON - DRAPER LAKE 345KV CKT 1	717	717	0.16592	105.0827	DALE - SQUIRL CREEK 138KV CKT 1
FDNS	00NR	0	16WP	G15_063	FROM->TO	CIMARRON - DRAPER LAKE 345KV CKT 1	717	717	0.16475	105.0826	NELSON 230/20.0KV TRANSFORMER CKT 1
FDNS	00NR	0	16WP	G15_063	FROM->TO	CIMARRON - DRAPER LAKE 345KV CKT 1	717	717	0.16475	105.0796	GEN501970 1-EVANGELINE UNIT 7
FDNS	00NR	0	16WP	G15_063	FROM->TO	CIMARRON - DRAPER LAKE 345KV CKT 1	717	717	0.16497	105.0794	NW164TH4 138.00 - PIEDMONT 138KV CKT 1
FDNS	00NR	0	16WP	G15_063	FROM->TO	CIMARRON - DRAPER LAKE 345KV CKT 1	717	717	0.16504	105.0782	HEALDTON - LOCO 138KV CKT 1
FDNS	00NR	0	16WP	G15_063	FROM->TO	CIMARRON - DRAPER LAKE 345KV CKT 1	717	717	0.16497	105.0775	NORTHWEST - NW164TH4 138.00 138KV CKT 1
FDNS	00NR	0	16WP	G15_063	FROM->TO	CIMARRON - DRAPER LAKE 345KV CKT 1	717	717	0.16476	105.0744	P12:161:AEPW:EROGERS5:ECNTRTN5
FDNS	00NR	0	16WP	G15_063	FROM->TO	CIMARRON - DRAPER LAKE 345KV CKT 1	717	717	0.16476	105.0733	AS KING - EAU CLAIRE 345KV CKT 1
FDNS	00NR	0	16WP	G15_063	FROM->TO	CIMARRON - DRAPER LAKE 345KV CKT 1	717	717	0.16475	105.0727	ESSEX UNIT 2 500/18.0KV TRANSFORMER CKT 1
FDNS	00NR	0	16WP	G15_063	FROM->TO	CIMARRON - DRAPER LAKE 345KV CKT 1	717	717	0.16475	105.0725	P12:138:OKGE-AEPW:JENSEN4:REDROCKRD4
FDNS	00NR	0	16WP	G15_063	FROM->TO	CIMARRON - DRAPER LAKE 345KV CKT 1	717	717	0.1648	105.0659	FLETCHER - MARLOW JCT 69KV CKT 1
FDNS	00NR	0	16WP	G15_063	FROM->TO	CIMARRON - DRAPER LAKE 345KV CKT 1	717	717	0.16479	105.0653	COMANCHE TAP - OMPA-DUNCAN 840 138KV CKT 1
FDNS	00NR	0	16WP	G15_063	FROM->TO	CIMARRON - DRAPER LAKE 345KV CKT 1	717	717	0.16556	105.0629	MARSHALL - WOODRING 138KV CKT 1
FDNS	00NR	0	16WP	G15_063	FROM->TO	CIMARRON - DRAPER LAKE 345KV CKT 1	717	717	0.16556	105.0619	COTTONWOOD CREEK - MARSHALL 138KV CKT 1
FDNS	00NR	0	16WP	G15_063	FROM->TO	CIMARRON - DRAPER LAKE 345KV CKT 1	717	717	0.16475	105.0617	P12:161:AEPW:DYESS5:ELMSPRNG:TONTITN5
FDNS	00NR	0	16WP	G15_063	FROM->TO	CIMARRON - DRAPER LAKE 345KV CKT 1	717	717	0.16492	105.0606	G13-010T 345.00 - SPEARVILLE 345KV CKT 1
FDNS	00NR	0	16WP	G15_063	FROM->TO	CIMARRON - DRAPER LAKE 345KV CKT 1	717	717	0.16475	105.0599	GEN336152 1-WATERFORD UNIT#2
FDNS	00NR	0	16WP	G15_063	FROM->TO	CIMARRON - DRAPER LAKE 345KV CKT 1	717	717	0.16475	105.0591	ST FRANCIS 345/161KV TRANSFORMER CKT 1
FDNS	00NR	0	16WP	G15_063	FROM->TO	CIMARRON - DRAPER LAKE 345KV CKT 1	717	717	0.16475	105.059	ST FRANCIS 2 161/16.0KV TRANSFORMER CKT 2
FDNS	00NR	0	16WP	G15_063	FROM->TO	CIMARRON - DRAPER LAKE 345KV CKT 1	717	717	0.16478	105.0589	P12:161:AEPW-SWPA:BEAVER5:EROGERS5
FDNS	00NR	0	16WP	G15_063	FROM->TO	CIMARRON - DRAPER LAKE 345KV CKT 1	717	717	0.16475	105.0588	GEN336151 1-WATERFORD UNIT#1
FDNS	00NR	0	16WP	G15_063	FROM->TO	CIMARRON - DRAPER LAKE 345KV CKT 1	717	717	0.16499	105.0488	HEFNER - TULSA 138KV CKT 1
FDNS	00NR	0	16WP	G15_063	FROM->TO	CIMARRON - DRAPER LAKE 345KV CKT 1	717	717	0.16497	105.0485	P12:138:AEPW:MOUNDRD4:SHIDLER4
FDNS	00NR	0	16WP	G15_063	FROM->TO	CIMARRON - DRAPER LAKE 345KV CKT 1	717	717	0.16475	105.0484	GEN334392 1-EXXON MOBIL IPP 1
FDNS	00NR	0	16WP	G15_063	FROM->TO	CIMARRON - DRAPER LAKE 345KV CKT 1	717	717	0.16481	105.046	P12:138:AEPW:CORNVIL4:S.W.S.-4
FDNS	00NR	0	16WP	G15_063	FROM->TO	CIMARRON - DRAPER LAKE 345KV CKT 1	717	717	0.16475	105.0414	GEN334393 1-EXXON MOBIL IPP 2
FDNS	00NR	0	16WP	G15_063	FROM->TO	CIMARRON - DRAPER LAKE 345KV CKT 1	717	717	0.16475	105.0414	GEN334394 1-EXXON MOBIL IPP 3
FDNS	00NR	0	16WP	G15_063	FROM->TO	CIMARRON - DRAPER LAKE 345KV CKT 1	717	717	0.1649	105.0411	BRISTOW - SILVER CITY 138KV CKT 1
FDNS	00NR	0	16WP	G15_063	FROM->TO	CIMARRON - DRAPER LAKE 345KV CKT 1	717	717	0.16823	105.0401	PECAN CREEK - RIVERSIDE STATION 345KV CKT 1
FDNS	00NR	0	16WP	G15_063	FROM->TO	CIMARRON - DRAPER LAKE 345KV CKT 1	717	717	0.16823	105.0401	PECAN CREEK - RIVERSIDE STATION 345KV CKT 1
FDNS	00NR	0	16WP	G15_063	FROM->TO	CIMARRON - DRAPER LAKE 345KV CKT 1	717	717	0.16505	105.0374	EL RENO SW - MUSTANG2 69.000 69KV CKT 1
FDNS	00NR	0	16WP	G15_063	FROM->TO	CIMARRON - DRAPER LAKE 345KV CKT 1	717	717	0.16504	105.0369	HEALDTON - RINGLING 138KV CKT 1
FDNS	00NR	0	16WP	G15_063	FROM->TO	CIMARRON - DRAPER LAKE 345KV CKT 1	717	717	0.16474	105.0351	MC NIEL 500/115KV TRANSFORMER CKT 1
FDNS	00NR	0	16WP	G15_063	FROM->TO	CIMARRON - DRAPER LAKE 345KV CKT 1	717	717	0.16483	105.0326	KELLYAV4 138.00 - MEMORIAL 138KV CKT 1
FDNS	00NR	0	16WP	G15_063	FROM->TO	CIMARRON - DRAPER LAKE 345KV CKT 1	717	717	0.16497	105.0321	SHIDLER - WEST PAWHUSKA 138KV CKT 1
FDNS	00NR	0	16WP	G15_063	FROM->TO	CIMARRON - DRAPER LAKE 345KV CKT 1	717	717	0.16474	105.0275	BISMARK - HOT SPRINGS WEST BUS 115KV CKT 1
FDNS	00NR	0	16WP	G15_063	FROM->TO	CIMARRON - DRAPER LAKE 345KV CKT 1	717	717	0.16475	105.0258	GEN501972 1-EVANGELINE UNIT 7-2
FDNS	00NR	0	16WP	G15_063	FROM->TO	CIMARRON - DRAPER LAKE 345KV CKT 1	717	717	0.16475	105.0257	GEN501971 1-EVANGELINE UNIT 7-1
FDNS	00NR	0	16WP	G15_063	FROM->TO	CIMARRON - DRAPER LAKE 345KV CKT 1	717	717	0.1667	105.0243	BRYANT - MEMORIAL 138KV CKT 1
FDNS	00NR	0	16WP	G15_063	FROM->TO	CIMARRON - DRAPER LAKE 345KV CKT 1	717	717	0.16477	105.0183	ARPIN B4 345.00 - EAU CLAIRE 345KV CKT 1
FDNS	00NR	0	16WP	G15_063	FROM->TO	CIMARRON - DRAPER LAKE 345KV CKT 1	717	717	0.16475	105.0168	GEN334431 1-SABINE UNIT 1
FDNS	00NR	0	16WP	G15_063	FROM->TO	CIMARRON - DRAPER LAKE 345KV CKT 1	717	717	0.16475	105.0167	GEN334432 1-SABINE UNIT 2
FDNS	00NR	0	16WP	G15_063	FROM->TO	CIMARRON - DRAPER LAKE 345KV CKT 1	717	717	0.16537	105.0163	BODLE - PARK PLACE 138KV CKT 1
FDNS	00NR	0	16WP	G15_063	FROM->TO	CIMARRON - DRAPER LAKE 345KV CKT 1	717	717	0.16497	105.0152	PAWHUSKA TAP - WEST PAWHUSKA 138KV CKT 1
FDNS	00NR	0	16WP	G15_063	FROM->TO	CIMARRON - DRAPER LAKE 345KV CKT 1	717	717	0.16483	105.0143	BROOKLINE - MORGAN 345KV CKT 1
FDNS	00NR	0	16WP	G15_063	FROM->TO	CIMARRON - DRAPER LAKE 345KV CKT 1	717	717	0.16483	105.0143	BROOKLINE - MORGAN 345KV CKT 1
FDNS	00NR	0	16WP	G15_063	FROM->TO	CIMARRON - DRAPER LAKE 345KV CKT 1	717	717	0.16475	105.0133	GEN336242 1-1NMIL ST1 18.000
FDNS	00NR	0	16WP	G15_063	FROM->TO	CIMARRON - DRAPER LAKE 345KV CKT 1	717	717	0.16475	105.0124	GEN337765 1-TRACTEBEL UNIT C2
FDNS	00NR	0	16WP	G15_063	FROM->TO	CIMARRON - DRAPER LAKE 345KV CKT 1	717	717	0.16475	105.0123	GEN337764 1-TRACTEBEL UNIT C1
FDNS	00NR	0	16WP	G15_063	FROM->TO	CIMARRON - DRAPER LAKE 345KV CKT 1	717	717	0.16475	105.0112	GEN501912 1-ACADIA UNIT CT1B
FDNS	00NR	0	16WP	G15_063	FROM->TO	CIMARRON - DRAPER LAKE 345KV CKT 1	717	717	0.16475	105.0105	GEN501911 1-ACADIA UNIT CT1A

SOLUTION	GROUP	SCENARIO	SEASON	SOURCE	DIRECTION	MONITORED ELEMENT	RATEA (MVA)	RATEB(MVA)	TDF	TC%LOADING (% MVA)	CONTINGENCY
FDNS	00NR	0	16WP	G15_063	FROM->TO	CIMARRON - DRAPER LAKE 345KV CKT 1	717	717	0.165	105.0101	COUNCIL - MUSTANG 138KV CKT 1
FDNS	00NR	0	16WP	G15_063	FROM->TO	CIMARRON - DRAPER LAKE 345KV CKT 1	717	717	0.16497	105.0038	PIEDMONT - RICHRDS 138KV CKT 1
FDNS	00NR	0	16WP	G15_063	FROM->TO	CIMARRON - DRAPER LAKE 345KV CKT 1	717	717	0.1649	105.0021	HAMMETT2 - MEEKER 138KV CKT 1
FDNS	00NR	0	16WP	G15_063	FROM->TO	CIMARRON - DRAPER LAKE 345KV CKT 1	717	717	0.16475	105.0018	CYPRESS - HARTBURG 500KV CKT 1
FDNS	00NR	0	16WP	G15_063	FROM->TO	CIMARRON - DRAPER LAKE 345KV CKT 1	717	717	0.16483	105.0011	KELLYAV4 138.00 - REMNGTON PARK 138KV CKT 1
FDNS	00NR	0	16WP	G15_063	FROM->TO	CIMARRON - DRAPER LAKE 345KV CKT 1	717	717	0.1651	105.0002	CIVIT - PAOLI 138KV CKT 1
FDNS	00NR	0	16WP	G15_063	FROM->TO	CIMARRON - DRAPER LAKE 345KV CKT 1	717	717	0.16475	104.997	P12:69:AEPW:L.E.S.-2:LAW WC2
FDNS	00NR	0	16WP	G15_063	FROM->TO	CIMARRON - DRAPER LAKE 345KV CKT 1	717	717	0.16509	104.9966	HAMMETT TAP - HORSESHOE LAKE 138KV CKT 1
FDNS	00NR	0	16WP	G15_063	FROM->TO	CIMARRON - DRAPER LAKE 345KV CKT 1	717	717	0.16504	104.9951	RINGLING - SOUTH WILSON 138KV CKT 1
FDNS	00NR	0	16WP	G15_063	FROM->TO	CIMARRON - DRAPER LAKE 345KV CKT 1	717	717	0.16474	104.9943	ALPINE AECC - BISMARK 115KV CKT 1
FDNS	00NR	0	16WP	G15_063	FROM->TO	CIMARRON - DRAPER LAKE 345KV CKT 1	717	717	0.16473	104.9884	LAYFLD8 500.00 - MOUNT OLIVE 500KV CKT 1
FDNS	00NR	0	16WP	G15_063	FROM->TO	CIMARRON - DRAPER LAKE 345KV CKT 1	717	717	0.16473	104.9884	LAYFLD8 500.00 - MOUNT OLIVE 500KV CKT 1
FDNS	00NR	0	16WP	G15_063	FROM->TO	CIMARRON - DRAPER LAKE 345KV CKT 1	717	717	0.16493	104.9787	CORN TAP - CORNVILLE 138KV CKT 1
FDNS	00NR	0	16WP	G15_063	FROM->TO	CIMARRON - DRAPER LAKE 345KV CKT 1	717	717	0.165	104.9554	COUNCIL - WESTOAKS 138KV CKT 1
FDNS	00NR	0	16WP	G15_063	FROM->TO	CIMARRON - DRAPER LAKE 345KV CKT 1	717	717	0.1667	104.9463	ACORN 4 138.00 - BRYANT 138KV CKT 1
FDNS	00NR	0	16WP	G15_063	FROM->TO	CIMARRON - DRAPER LAKE 345KV CKT 1	717	717	0.16475	104.5287	BASE CASE
FDNS	00NR	0	16WP	G15_063	FROM->TO	CIMARRON - DRAPER LAKE 345KV CKT 1	717	717	0.16474	104.2117	GRAPEVINE INTERCHANGE - NICHOLS STATION 230KV CKT 1
FDNS	00NR	0	16WP	G15_063	FROM->TO	CIMARRON - DRAPER LAKE 345KV CKT 1	717	717	0.16474	104.2117	GRAPEVINE INTERCHANGE - NICHOLS STATION 230KV CKT 1
FDNS	00NR	0	16WP	G15_063	FROM->TO	CIMARRON - DRAPER LAKE 345KV CKT 1	717	717	0.16556	104.1606	BURGETT4 138.00 - RNDBARN4 138.00 138KV CKT 1
FDNS	00NR	0	16WP	G15_063	FROM->TO	CIMARRON - DRAPER LAKE 345KV CKT 1	717	717	0.16556	104.1583	BURGETT4 138.00 - DANFORTH 138KV CKT 1
FDNS	00NR	0	16WP	G15_063	FROM->TO	CIMARRON - DRAPER LAKE 345KV CKT 1	717	717	0.16556	104.1481	ARCADIA - RNDBARN4 138.00 138KV CKT 1
FDNS	00NR	0	16WP	G15_063	FROM->TO	CIMARRON - DRAPER LAKE 345KV CKT 1	717	717	0.16475	104.1054	GEN515550 1-MNCWND31 0.6900
FDNS	00NR	0	16WP	G15_063	FROM->TO	CIMARRON - DRAPER LAKE 345KV CKT 1	717	717	0.16475	104.0891	GEN562611 1-G14_064_3 0.6900
FDNS	00NR	0	16WP	G15_063	FROM->TO	CIMARRON - DRAPER LAKE 345KV CKT 1	717	717	0.16475	104.0845	GEN659125 1-COVEY
FDNS	00NR	0	16WP	G15_063	FROM->TO	CIMARRON - DRAPER LAKE 345KV CKT 1	717	717	0.16474	104.0804	GRAPEVINE INTERCHANGE - STATELINE INTERCHANGE 230KV CKT 1
FDNS	00NR	0	16WP	G15_063	FROM->TO	CIMARRON - DRAPER LAKE 345KV CKT 1	717	717	0.16474	104.0804	GRAPEVINE INTERCHANGE - STATELINE INTERCHANGE 230KV CKT 1
FDNS	00NR	0	16WP	G15_063	FROM->TO	CIMARRON - DRAPER LAKE 345KV CKT 1	717	717	0.1644	104.0687	P12:138:WFEC:MSL10
FDNS	00NR	0	16WP	G15_063	FROM->TO	CIMARRON - DRAPER LAKE 345KV CKT 1	717	717	0.16475	104.0684	GEN511848 1-SOUTHWESTERN STATION #3
FDNS	00NR	0	16WP	G15_063	FROM->TO	CIMARRON - DRAPER LAKE 345KV CKT 1	717	717	0.16475	104.0611	GEN672303 3-BOUNDARY DAM GENERATOR 3
FDNS	00NR	0	16WP	G15_063	FROM->TO	CIMARRON - DRAPER LAKE 345KV CKT 1	717	717	0.16475	104.0611	GEN672304 4-BOUNDARY DAM GENERATOR 4
FDNS	00NR	0	16WP	G15_063	FROM->TO	CIMARRON - DRAPER LAKE 345KV CKT 1	717	717	0.16475	104.0611	GEN672305 5-BOUNDARY DAM GENERATOR 5
FDNS	00NR	0	16WP	G15_063	FROM->TO	CIMARRON - DRAPER LAKE 345KV CKT 1	717	717	0.16475	104.0606	GEN515601 1-KNGFSR11 0.7000
FDNS	00NR	0	16WP	G15_063	FROM->TO	CIMARRON - DRAPER LAKE 345KV CKT 1	717	717	0.16475	104.0588	GEN600007 7-RIVERSIDE GEN 7
FDNS	00NR	0	16WP	G15_063	FROM->TO	CIMARRON - DRAPER LAKE 345KV CKT 1	717	717	0.16475	104.0583	GEN600067 9-HIGH BRIDGE
FDNS	00NR	0	16WP	G15_063	FROM->TO	CIMARRON - DRAPER LAKE 345KV CKT 1	717	717	0.16475	104.0537	GEN615052 1-CAMBRIDGE GENERATING STATION
FDNS	00NR	0	16WP	G15_063	FROM->TO	CIMARRON - DRAPER LAKE 345KV CKT 1	717	717	0.16475	104.0492	GEN600011 5-BLACK DOG GEN 1
FDNS	00NR	0	16WP	G15_063	FROM->TO	CIMARRON - DRAPER LAKE 345KV CKT 1	717	717	0.16475	104.0471	GEN563062 1-G15071_3 0.6900
FDNS	00NR	0	16WP	G15_063	FROM->TO	CIMARRON - DRAPER LAKE 345KV CKT 1	717	717	0.16475	104.0434	GEN600014 4-BLACK DOG GEN 4
FDNS	00NR	0	16WP	G15_063	FROM->TO	CIMARRON - DRAPER LAKE 345KV CKT 1	717	717	0.16475	104.0429	GEN640020 2-SHELDON STATION UNIT 2
FDNS	00NR	0	16WP	G15_063	FROM->TO	CIMARRON - DRAPER LAKE 345KV CKT 1	717	717	0.16475	104.0357	GEN615032 2-PLEASANT VALLEY
FDNS	00NR	0	16WP	G15_063	FROM->TO	CIMARRON - DRAPER LAKE 345KV CKT 1	717	717	0.16427	104.0338	CHISNEY - CLARKSVILLE 138KV CKT 1
FDNS	00NR	0	16WP	G15_063	FROM->TO	CIMARRON - DRAPER LAKE 345KV CKT 1	717	717	0.16475	104.0335	GEN541151 3-SIBLEY GENERATING UNIT #3
FDNS	00NR	0	16WP	G15_063	FROM->TO	CIMARRON - DRAPER LAKE 345KV CKT 1	717	717	0.16493	104.0303	OVEXFRMCCOVE
FDNS	00NR	0	16WP	G15_063	FROM->TO	CIMARRON - DRAPER LAKE 345KV CKT 1	717	717	0.16475	104.0286	GEN629067 1-EMERY GAS TURBINE 1
FDNS	00NR	0	16WP	G15_063	FROM->TO	CIMARRON - DRAPER LAKE 345KV CKT 1	717	717	0.16475	104.0274	GEN563282 1-G15094_3 0.6900
FDNS	00NR	0	16WP	G15_063	FROM->TO	CIMARRON - DRAPER LAKE 345KV CKT 1	717	717	0.16475	104.0231	GEN562802 1-G15039_3 0.3570
FDNS	00NR	0	16WP	G15_063	FROM->TO	CIMARRON - DRAPER LAKE 345KV CKT 1	717	717	0.16475	104.0218	GEN652353 2-GR PRAIRIEG 0.6900
FDNS	00NR	0	16WP	G15_063	FROM->TO	CIMARRON - DRAPER LAKE 345KV CKT 1	717	717	0.16475	104.0126	GEN515591 1-PALDRW11 0.6900
FDNS	00NR	0	16WP	G15_063	FROM->TO	CIMARRON - DRAPER LAKE 345KV CKT 1	717	717	0.1666	104.0116	FOREST HILL - MAUD 138KV CKT 1
FDNS	00NR	0	16WP	G15_063	FROM->TO	CIMARRON - DRAPER LAKE 345KV CKT 1	717	717	0.16475	104.0099	GEN600017 C-LS POWER CT
FDNS	00NR	0	16WP	G15_063	FROM->TO	CIMARRON - DRAPER LAKE 345KV CKT 1	717	717	0.16475	104.0098	GEN563102 1-G15075_3 0.5500
FDNS	00NR	0	16WP	G15_063	FROM->TO	CIMARRON - DRAPER LAKE 345KV CKT 1	717	717	0.16475	104.0095	GEN562602 1-G15_029_3 0.6900
FDNS	00NR	0	16WP	G15_063	FROM->TO	CIMARRON - DRAPER LAKE 345KV CKT 1	717	717	0.16495	103.9981	MINGO - SETAB 345KV CKT 1
FDNS	00NR	0	16WP	G15_063	FROM->TO	CIMARRON - DRAPER LAKE 345KV CKT 1	717	717	0.16495	103.9981	MINGO - SETAB 345KV CKT 1
FDNS	00NR	0	16WP	G15_063	FROM->TO	CIMARRON - DRAPER LAKE 345KV CKT 1	717	717	0.16475	103.9916	GEN562812 1-G15040_3 0.3570
FDNS	00NR	0	16WP	G15_063	FROM->TO	CIMARRON - DRAPER LAKE 345KV CKT 1	717	717	0.16512	103.9911	SEMINOLE - VANOSTP4 138.00 138KV CKT 1
FDNS	00NR	0	16WP	G15_063	FROM->TO	CIMARRON - DRAPER LAKE 345KV CKT 1	717	717	0.16475	103.9854	GEN563132 1-G15078_3 0.3570
FDNS	00NR	0	16WP	G15_063	FROM->TO	CIMARRON - DRAPER LAKE 345KV CKT 1	717	717	0.16475	103.9813	GEN672392 1-NBECGT1G 18.000
FDNS	00NR	0	16WP	G15_063	FROM->TO	CIMARRON - DRAPER LAKE 345KV CKT 1	717	717	0.16475	103.9764	GEN524285 1-WILDORADO WIND GEN
FDNS	00NR	0	16WP	G15_063	FROM->TO	CIMARRON - DRAPER LAKE 345KV CKT 1	717	717	0.16475	103.9735	GEN562074 1-G1149G1504 0.6900
FDNS	00NR	0	16WP	G15_063	FROM->TO	CIMARRON - DRAPER LAKE 345KV CKT 1	717	717	0.16475	103.9724	GEN629070 2-BEAVER CHANNEL GENERATORFOR UNIT NO 2
FDNS	00NR	0	16WP	G15_063	FROM->TO	CIMARRON - DRAPER LAKE 345KV CKT 1	717	717	0.16476	103.972	P12:138:AEPW:WELETK4:EARLSBORO4
FDNS	00NR	0	16WP	G15_063	FROM->TO	CIMARRON - DRAPER LAKE 345KV CKT 1	717	717	0.16476	103.972	P12:138:OKGE:3TERM36
FDNS	00NR	0	16WP	G15_063	FROM->TO	CIMARRON - DRAPER LAKE 345KV CKT 1	717	717	0.16478	103.9644	EARLSBORO 4138.00 - FIXICO TAP 138KV CKT 1
FDNS	00NR	0	16WP	G15_063	FROM->TO	CIMARRON - DRAPER LAKE 345KV CKT 1	717	717	0.1649	103.958	CANADIAN RIVER - MCALESTER SOUTH 138KV CKT 1
FDNS	00NR	0	16WP	G15_063	FROM->TO	CIMARRON - DRAPER LAKE 345KV CKT 1	717	717	0.1649	103.958	CANADIAN RIVER - MCALESTER SOUTH 138KV CKT 1
FDNS	00NR	0	16WP	G15_063	FROM->TO	CIMARRON - DRAPER LAKE 345KV CKT 1	717	717	0.16475	103.9579	GEN615010 1-STANTON4
FDNS	00NR	0	16WP	G15_063	FROM->TO	CIMARRON - DRAPER LAKE 345KV CKT 1	717	717	0.1649	103.9566	CANADIAN RIVER () 345/138/13.8KV TRANSFORMER CKT 1
FDNS	00NR	0	16WP	G15_063	FROM->TO	CIMARRON - DRAPER LAKE 345KV CKT 1	717	717	0.1649	103.9566	CANADIAN RIVER () 345/138/13.8KV TRANSFORMER CKT 1
FDNS	00NR	0	16WP	G15_063	FROM->TO	CIMARRON - DRAPER LAKE 345KV CKT 1	717	717	0.16475	103.9515	GEN526331 1-JONES GEN #1 22 KV
FDNS	00NR	0	16WP	G15_063	FROM->TO	CIMARRON - DRAPER LAKE 345KV CKT 1	717	717	0.16475	103.9514	GEN526332 1-JONES GEN #2 21 KV
FDNS	00NR	0	16WP	G15_063	FROM->TO	CIMARRON - DRAPER LAKE 345KV CKT 1	717	717	0.16475	103.9475	GEN562596 1-G14_059_3 0.6900
FDNS	00NR	0	16WP	G15_063	FROM->TO	CIMARRON - DRAPER LAKE 345KV CKT 1	717	717	0.16475	103.9433	GEN629071 1-BURLINGTON GENERATOR FOR UNIT NO 1 E
FDNS	00NR	0	16WP	G15_063	FROM->TO	CIMARRON - DRAPER LAKE 345KV CKT 1	717	717	0.16475	103.9421	GEN515365 1-CENT 21 0.7000
FDNS	00NR	0	16WP	G15_063	FROM->TO	CIMARRON - DRAPER LAKE 345KV CKT 1	717	717	0.16427	103.9416	CHISNEY - HIGHLAND 138KV CKT 1
FDNS	00NR	0	16WP	G15_063	FROM->TO	CIMARRON - DRAPER LAKE 345KV CKT 1	717	717	0.16475	103.9408	P12:138:WFEC:MSL07
FDNS	00NR	0	16WP	G15_063	FROM->TO	CIMARRON - DRAPER LAKE 345KV CKT 1	717	717	0.16475	103.9408	P12:138:WFEC-AEPW:HUGOPP4:ATOKA--4
FDNS	00NR	0	16WP	G15_063	FROM->TO	CIMARRON - DRAPER LAKE 345KV CKT 1	717	717	0.16475	103.9376	GEN615021 1-GRE-ER 14G 16.000
FDNS	00NR	0	16WP	G15_063	FROM->TO	CIMARRON - DRAPER LAKE 345KV CKT 1	717	717	0.16475	103.9343	INDEPENDENCE 500/26.0KV TRANSFORMER CKT 1

SOLUTION	GROUP	SCENARIO	SEASON	SOURCE	DIRECTION	MONITORED ELEMENT	RATEA (MVA)	RATEB(MVA)	TDF	TC%LOADING (% MVA)	CONTINGENCY
FDNS	00NR	0	16WP	G15_063	FROM->TO	CIMARRON - DRAPER LAKE 345KV CKT 1	717	717	0.16478	103.9325	GRPRAR1-LNX3345.00 - GRPRAR 345KV CKT Z
FDNS	00NR	0	16WP	G15_063	FROM->TO	CIMARRON - DRAPER LAKE 345KV CKT 1	717	717	0.16476	103.9304	P12:138:AEPW:SHAM4WT:CHILD4WT
FDNS	00NR	0	16WP	G15_063	FROM->TO	CIMARRON - DRAPER LAKE 345KV CKT 1	717	717	0.16478	103.9291	GRPRAR1-LNX3345.00 - HOLT.CO3 345.00 345KV CKT 1
FDNS	00NR	0	16WP	G15_063	FROM->TO	CIMARRON - DRAPER LAKE 345KV CKT 1	717	717	0.16475	103.927	GEN562983 1-G15061_4 0.6900
FDNS	00NR	0	16WP	G15_063	FROM->TO	CIMARRON - DRAPER LAKE 345KV CKT 1	717	717	0.16475	103.927	GEN562984 1-G15061_5 0.6900
FDNS	00NR	0	16WP	G15_063	FROM->TO	CIMARRON - DRAPER LAKE 345KV CKT 1	717	717	0.16475	103.9254	GEN562017 1-G11_022_3 0.6900
FDNS	00NR	0	16WP	G15_063	FROM->TO	CIMARRON - DRAPER LAKE 345KV CKT 1	717	717	0.16472	103.9203	P12:138:AEPW-SWPA:LONEOAK4:TUPELO4
FDNS	00NR	0	16WP	G15_063	FROM->TO	CIMARRON - DRAPER LAKE 345KV CKT 1	717	717	0.16472	103.9202	P12:138:WFEC:MSL06
FDNS	00NR	0	16WP	G15_063	FROM->TO	CIMARRON - DRAPER LAKE 345KV CKT 1	717	717	0.16475	103.9131	GEN562429 1-G13-029 0.6900
FDNS	00NR	0	16WP	G15_063	FROM->TO	CIMARRON - DRAPER LAKE 345KV CKT 1	717	717	0.16475	103.9116	GEN562432 1-G13-030 0.6900
FDNS	00NR	0	16WP	G15_063	FROM->TO	CIMARRON - DRAPER LAKE 345KV CKT 1	717	717	0.16475	103.9092	GEN560105 1-G08-22 0.6900
FDNS	00NR	0	16WP	G15_063	FROM->TO	CIMARRON - DRAPER LAKE 345KV CKT 1	717	717	0.16475	103.9056	GEN300003 1-THOMAS HILL UNIT 3
FDNS	00NR	0	16WP	G15_063	FROM->TO	CIMARRON - DRAPER LAKE 345KV CKT 1	717	717	0.21005	103.9018	G15063_T 345.00 - WOODRING 345KV CKT 1
FDNS	00NR	0	16WP	G15_063	FROM->TO	CIMARRON - DRAPER LAKE 345KV CKT 1	717	717	0.16475	103.8967	BURLINGTON NO1 + NO 2 + NO 3 161/20.0KV TRANSFORMER CKT 1
FDNS	00NR	0	16WP	G15_063	FROM->TO	CIMARRON - DRAPER LAKE 345KV CKT 1	717	717	0.16476	103.8902	P12:138:AEPW-OGE:WELETK4:MAUD 4
FDNS	00NR	0	16WP	G15_063	FROM->TO	CIMARRON - DRAPER LAKE 345KV CKT 1	717	717	0.1648	103.8864	P12:138:WFEC:MSL16
FDNS	00NR	0	16WP	G15_063	FROM->TO	CIMARRON - DRAPER LAKE 345KV CKT 1	717	717	0.16475	103.8824	GEN527882 1-CUNNINGHAM GEN #2 20 KV
FDNS	00NR	0	16WP	G15_063	FROM->TO	CIMARRON - DRAPER LAKE 345KV CKT 1	717	717	0.16478	103.8804	EARLSBORO 4138.00 - MAUD 138KV CKT 1
FDNS	00NR	0	16WP	G15_063	FROM->TO	CIMARRON - DRAPER LAKE 345KV CKT 1	717	717	0.16478	103.8804	EARLSBORO 4138.00 - MAUD 138KV CKT 1
FDNS	00NR	0	16WP	G15_063	FROM->TO	CIMARRON - DRAPER LAKE 345KV CKT 1	717	717	0.16485	103.8782	DELL 500 - INDEPENDENCE 500KV CKT 1
FDNS	00NR	0	16WP	G15_063	FROM->TO	CIMARRON - DRAPER LAKE 345KV CKT 1	717	717	0.16475	103.8745	GEN562550 1-G14_040_3 0.6900
FDNS	00NR	0	16WP	G15_063	FROM->TO	CIMARRON - DRAPER LAKE 345KV CKT 1	717	717	0.16597	103.8731	MAUD - SEMINOLE 138KV CKT 1
FDNS	00NR	0	16WP	G15_063	FROM->TO	CIMARRON - DRAPER LAKE 345KV CKT 1	717	717	0.16475	103.8723	GEN524295 1-SPNSPUR_WND10.6900
FDNS	00NR	0	16WP	G15_063	FROM->TO	CIMARRON - DRAPER LAKE 345KV CKT 1	717	717	0.16475	103.8505	GEN562832 1-G15042_3 0.6900
FDNS	00NR	0	16WP	G15_063	FROM->TO	CIMARRON - DRAPER LAKE 345KV CKT 1	717	717	0.16473	103.8482	P12:230:AEPW:ELKCITY6:SWEETWT6
FDNS	00NR	0	16WP	G15_063	FROM->TO	CIMARRON - DRAPER LAKE 345KV CKT 1	717	717	0.16475	103.8446	P12:230:UMZB:# 112 #: NU IN SD. NU-RCDC & DRY CREEK XFMR
FDNS	00NR	0	16WP	G15_063	FROM->TO	CIMARRON - DRAPER LAKE 345KV CKT 1	717	717	0.16475	103.844	RCDC EAST 4230.00 - RED CEDAR DC 230KV CKT 1
FDNS	00NR	0	16WP	G15_063	FROM->TO	CIMARRON - DRAPER LAKE 345KV CKT 1	717	717	0.16475	103.8352	THOMAS HILL 161/22.0KV TRANSFORMER CKT 1
FDNS	00NR	0	16WP	G15_063	FROM->TO	CIMARRON - DRAPER LAKE 345KV CKT 1	717	717	0.16475	103.8274	GEN515606 1-CANDN11 0.6900
FDNS	00NR	0	16WP	G15_063	FROM->TO	CIMARRON - DRAPER LAKE 345KV CKT 1	717	717	0.16475	103.8274	GEN515607 1-CANDN12 0.6900
FDNS	00NR	0	16WP	G15_063	FROM->TO	CIMARRON - DRAPER LAKE 345KV CKT 1	717	717	0.16475	103.8273	GEN345671 2-1RUSH G2 18.000
FDNS	00NR	0	16WP	G15_063	FROM->TO	CIMARRON - DRAPER LAKE 345KV CKT 1	717	717	0.16474	103.826	STLN-DEMARC6 - SWEETWATER 230KV CKT 1
FDNS	00NR	0	16WP	G15_063	FROM->TO	CIMARRON - DRAPER LAKE 345KV CKT 1	717	717	0.16475	103.8253	GEN345670 1-1RUSH G1 18.000
FDNS	00NR	0	16WP	G15_063	FROM->TO	CIMARRON - DRAPER LAKE 345KV CKT 1	717	717	0.16475	103.8218	GEN531447 1-HOLCOMB GENERATOR
FDNS	00NR	0	16WP	G15_063	FROM->TO	CIMARRON - DRAPER LAKE 345KV CKT 1	717	717	0.16427	103.8152	HIGHLAND - PINK SW 138KV CKT 1
FDNS	00NR	0	16WP	G15_063	FROM->TO	CIMARRON - DRAPER LAKE 345KV CKT 1	717	717	0.16474	103.8149	P12:230:AEPW-SPS:SWEETWT6:WHEELER 6
FDNS	00NR	0	16WP	G15_063	FROM->TO	CIMARRON - DRAPER LAKE 345KV CKT 1	717	717	0.16474	103.8129	STATELINE INTERCHANGE - STLN-DEMARC6 230KV CKT 1
FDNS	00NR	0	16WP	G15_063	FROM->TO	CIMARRON - DRAPER LAKE 345KV CKT 1	717	717	0.16475	103.8022	GEN645011 1-NEBRASKA CITY 1
FDNS	00NR	0	16WP	G15_063	FROM->TO	CIMARRON - DRAPER LAKE 345KV CKT 1	717	717	0.16475	103.7992	GEN515443 1-MNCOWND1 0.7000
FDNS	00NR	0	16WP	G15_063	FROM->TO	CIMARRON - DRAPER LAKE 345KV CKT 1	717	717	0.16475	103.7992	GEN562794 1-G15038_5 0.6900
FDNS	00NR	0	16WP	G15_063	FROM->TO	CIMARRON - DRAPER LAKE 345KV CKT 1	717	717	0.16475	103.7992	GEN562795 1-G15038_6 0.6900
FDNS	00NR	0	16WP	G15_063	FROM->TO	CIMARRON - DRAPER LAKE 345KV CKT 1	717	717	0.16475	103.788	GEN629072 4-LANSING GENERATOR FOR UNITS NO4 EIA CODE 1
FDNS	00NR	0	16WP	G15_063	FROM->TO	CIMARRON - DRAPER LAKE 345KV CKT 1	717	717	0.16475	103.7758	GEN563092 1-G15074_3 0.6900
FDNS	00NR	0	16WP	G15_063	FROM->TO	CIMARRON - DRAPER LAKE 345KV CKT 1	717	717	0.16475	103.7641	GEN542951 5-HAWTHORN UNIT #5
FDNS	00NR	0	16WP	G15_063	FROM->TO	CIMARRON - DRAPER LAKE 345KV CKT 1	717	717	0.16475	103.7579	GEN657749 1-YOUNG 1 GENERATOR
FDNS	00NR	0	16WP	G15_063	FROM->TO	CIMARRON - DRAPER LAKE 345KV CKT 1	717	717	0.16475	103.7568	GEN645012 2-NEBRASKA CITY 2
FDNS	00NR	0	16WP	G15_063	FROM->TO	CIMARRON - DRAPER LAKE 345KV CKT 1	717	717	0.16475	103.7502	GEN562512 1-G14_020_3 0.6900
FDNS	00NR	0	16WP	G15_063	FROM->TO	CIMARRON - DRAPER LAKE 345KV CKT 1	717	717	0.16475	103.7299	GEN562699 1-G15_018_3 0.6900
FDNS	00NR	0	16WP	G15_063	FROM->TO	CIMARRON - DRAPER LAKE 345KV CKT 1	717	717	0.16474	103.713	CHISHOLM6 230.00 - SWEETWATER 230KV CKT 1
FDNS	00NR	0	16WP	G15_063	FROM->TO	CIMARRON - DRAPER LAKE 345KV CKT 1	717	717	0.16489	103.7064	KEO EHV - WEST MEMPHIS 500 500KV CKT 1
FDNS	00NR	0	16WP	G15_063	FROM->TO	CIMARRON - DRAPER LAKE 345KV CKT 1	717	717	0.16503	103.7033	FRISCCO4 138.00 - LULA 138KV CKT 1
FDNS	00NR	0	16WP	G15_063	FROM->TO	CIMARRON - DRAPER LAKE 345KV CKT 1	717	717	0.16475	103.7007	GEN529201 1-OMCDLEC1 13.800
FDNS	00NR	0	16WP	G15_063	FROM->TO	CIMARRON - DRAPER LAKE 345KV CKT 1	717	717	0.16665	103.692	HOLLYWOOD - MIDWEST TAP 138KV CKT 1
FDNS	00NR	0	16WP	G15_063	FROM->TO	CIMARRON - DRAPER LAKE 345KV CKT 1	717	717	0.16475	103.6906	GEN640009 1-COOPER NUCLEAR STATION
FDNS	00NR	0	16WP	G15_063	FROM->TO	CIMARRON - DRAPER LAKE 345KV CKT 1	717	717	0.16475	103.6906	GEN681522 3-GENOA 3
FDNS	00NR	0	16WP	G15_063	FROM->TO	CIMARRON - DRAPER LAKE 345KV CKT 1	717	717	0.16475	103.6891	GEN563122 1-G15077_3 0.3850
FDNS	00NR	0	16WP	G15_063	FROM->TO	CIMARRON - DRAPER LAKE 345KV CKT 1	717	717	0.16475	103.6723	GEN563182 1-G15083_3 0.6900
FDNS	00NR	0	16WP	G15_063	FROM->TO	CIMARRON - DRAPER LAKE 345KV CKT 1	717	717	0.16475	103.6598	GEN562685 1-G15_013_3 0.3550
FDNS	00NR	0	16WP	G15_063	FROM->TO	CIMARRON - DRAPER LAKE 345KV CKT 1	717	717	0.1652	103.6576	FT SMITH - MUSKOGEE 345KV CKT 1
FDNS	00NR	0	16WP	G15_063	FROM->TO	CIMARRON - DRAPER LAKE 345KV CKT 1	717	717	0.16475	103.6431	4SIOUX 1 138.00 138/18.0KV TRANSFORMER CKT 1
FDNS	00NR	0	16WP	G15_063	FROM->TO	CIMARRON - DRAPER LAKE 345KV CKT 1	717	717	0.16543	103.6414	CIMARRON - TUTTLE CONOCO TAP 138KV CKT 1
FDNS	00NR	0	16WP	G15_063	FROM->TO	CIMARRON - DRAPER LAKE 345KV CKT 1	717	717	0.16472	103.6327	CHISHOLM7 345.00 - GRACEMONT 345KV CKT 1
FDNS	00NR	0	16WP	G15_063	FROM->TO	CIMARRON - DRAPER LAKE 345KV CKT 1	717	717	0.16475	103.6323	GEN344895 2-1LAB G2 20.000
FDNS	00NR	0	16WP	G15_063	FROM->TO	CIMARRON - DRAPER LAKE 345KV CKT 1	717	717	0.16467	103.6289	TUPELO - TUPELO TAP 138KV CKT 1
FDNS	00NR	0	16WP	G15_063	FROM->TO	CIMARRON - DRAPER LAKE 345KV CKT 1	717	717	0.16475	103.6171	GEN563222 1-G15088_3 0.6900
FDNS	00NR	0	16WP	G15_063	FROM->TO	CIMARRON - DRAPER LAKE 345KV CKT 1	717	717	0.16475	103.6127	GEN562587 1-G14_056_3 0.6900
FDNS	00NR	0	16WP	G15_063	FROM->TO	CIMARRON - DRAPER LAKE 345KV CKT 1	717	717	0.16475	103.6124	GEN523461 1-BLACKHAWK GEN #1
FDNS	00NR	0	16WP	G15_063	FROM->TO	CIMARRON - DRAPER LAKE 345KV CKT 1	717	717	0.16475	103.6123	GEN523462 1-BLACKHAWK GEN #2
FDNS	00NR	0	16WP	G15_063	FROM->TO	CIMARRON - DRAPER LAKE 345KV CKT 1	717	717	0.16503	103.6082	FRISCCO4 138.00 - HARDEN 4 138.00 138KV CKT 1
FDNS	00NR	0	16WP	G15_063	FROM->TO	CIMARRON - DRAPER LAKE 345KV CKT 1	717	717	0.16475	103.6036	GEN344896 3-1LAB G3 20.000
FDNS	00NR	0	16WP	G15_063	FROM->TO	CIMARRON - DRAPER LAKE 345KV CKT 1	717	717	0.16475	103.6021	GEN344894 1-1LAB G1 20.000
FDNS	00NR	0	16WP	G15_063	FROM->TO	CIMARRON - DRAPER LAKE 345KV CKT 1	717	717	0.16475	103.6009	GEN344897 4-1LAB G4 20.000
FDNS	00NR	0	16WP	G15_063	FROM->TO	CIMARRON - DRAPER LAKE 345KV CKT 1	717	717	0.16475	103.5904	GEN515602 1-KNGFSR12 0.7000
FDNS	00NR	0	16WP	G15_063	FROM->TO	CIMARRON - DRAPER LAKE 345KV CKT 1	717	717	0.16543	103.5701	TUTTLE - TUTTLE CONOCO TAP 138KV CKT 1
FDNS	00NR	0	16WP	G15_063	FROM->TO	CIMARRON - DRAPER LAKE 345KV CKT 1	717	717	0.16475	103.5566	GEN563082 1-G15073_3 0.6900
FDNS	00NR	0	16WP	G15_063	FROM->TO	CIMARRON - DRAPER LAKE 345KV CKT 1	717	717	0.16472	103.5441	CHISHOLM7 345.00 (CHISHOLM) 345/230/13.2KV TRANSFORMER CKT 1
FDNS	00NR	0	16WP	G15_063	FROM->TO	CIMARRON - DRAPER LAKE 345KV CKT 1	717	717	0.16475	103.5224	CLAY BOSWELL 230/20.9KV TRANSFORMER CKT 1
FDNS	00NR	0	16WP	G15_063	FROM->TO	CIMARRON - DRAPER LAKE 345KV CKT 1	717	717	0.16475	103.5204	GEN562704 1-G15_020_3 0.3550
FDNS	00NR	0	16WP	G15_063	FROM->TO	CIMARRON - DRAPER LAKE 345KV CKT 1	717	717	0.16475	103.5105	GEN563202 1-G15085_3 0.5500

SOLUTION	GROUP	SCENARIO	SEASON	SOURCE	DIRECTION	MONITORED ELEMENT	RATEA (MVA)	RATEB(MVA)	TDF	TC%LOADING (% MVA)	CONTINGENCY
FDNS	00NR	0	16WP	G15_063	FROM->TO	CIMARRON - DRAPER LAKE 345KV CKT 1	717	717	0.16475	103.4932	GEN672321 1-SHAND GENERATOR 1
FDNS	00NR	0	16WP	G15_063	FROM->TO	CIMARRON - DRAPER LAKE 345KV CKT 1	717	717	0.16475	103.4917	GEN640010 1-GERALD GENTLEMAN STATION UNIT 1
FDNS	00NR	0	16WP	G15_063	FROM->TO	CIMARRON - DRAPER LAKE 345KV CKT 1	717	717	0.16475	103.4674	GEN672310 1-POPLAR RIVER GENERATOR 1
FDNS	00NR	0	16WP	G15_063	FROM->TO	CIMARRON - DRAPER LAKE 345KV CKT 1	717	717	0.16475	103.4674	GEN672311 2-POPLAR RIVER GENERATOR 2
FDNS	00NR	0	16WP	G15_063	FROM->TO	CIMARRON - DRAPER LAKE 345KV CKT 1	717	717	0.16381	103.4637	SEMINOLE (SEMINOL1) 345/138/14.4KV TRANSFORMER CKT 1
FDNS	00NR	0	16WP	G15_063	FROM->TO	CIMARRON - DRAPER LAKE 345KV CKT 1	717	717	0.16475	103.4579	GEN672306 6-BOUNDARY DAM GENERATOR 6
FDNS	00NR	0	16WP	G15_063	FROM->TO	CIMARRON - DRAPER LAKE 345KV CKT 1	717	717	0.16515	103.4387	LULA - TUPELO TAP 138KV CKT 1
FDNS	00NR	0	16WP	G15_063	FROM->TO	CIMARRON - DRAPER LAKE 345KV CKT 1	717	717	0.16475	103.4317	GEN562710 1-G15_022_3 0.5500
FDNS	00NR	0	16WP	G15_063	FROM->TO	CIMARRON - DRAPER LAKE 345KV CKT 1	717	717	0.16475	103.4227	GEN640011 2-GERALD GENTLEMAN STATION UNIT 2
FDNS	00NR	0	16WP	G15_063	FROM->TO	CIMARRON - DRAPER LAKE 345KV CKT 1	717	717	0.16473	103.4174	NORTHWEST TEXARKANA - VALLIANT 345KV CKT 1
FDNS	00NR	0	16WP	G15_063	FROM->TO	CIMARRON - DRAPER LAKE 345KV CKT 1	717	717	0.16473	103.4174	NORTHWEST TEXARKANA - VALLIANT 345KV CKT 1
FDNS	00NR	0	16WP	G15_063	FROM->TO	CIMARRON - DRAPER LAKE 345KV CKT 1	717	717	0.16475	103.4136	GEN542956 2-LACYGNE UNIT #2
FDNS	00NR	0	16WP	G15_063	FROM->TO	CIMARRON - DRAPER LAKE 345KV CKT 1	717	717	0.16475	103.4059	GEN659118 1-LARAMIE RIVER UNIT1
FDNS	00NR	0	16WP	G15_063	FROM->TO	CIMARRON - DRAPER LAKE 345KV CKT 1	717	717	0.16697	103.3991	OAKCREEK - WILD MARY 138KV CKT 1
FDNS	00NR	0	16WP	G15_063	FROM->TO	CIMARRON - DRAPER LAKE 345KV CKT 1	717	717	0.16522	103.3991	P12:138:OKGE:3TERM22
FDNS	00NR	0	16WP	G15_063	FROM->TO	CIMARRON - DRAPER LAKE 345KV CKT 1	717	717	0.16524	103.3973	DRAPER LAKE - SOONER TAP 138KV CKT 1
FDNS	00NR	0	16WP	G15_063	FROM->TO	CIMARRON - DRAPER LAKE 345KV CKT 1	717	717	0.16503	103.3924	ETNA - HARDEN 4 138.00 138KV CKT 1
FDNS	00NR	0	16WP	G15_063	FROM->TO	CIMARRON - DRAPER LAKE 345KV CKT 1	717	717	0.16427	103.375	P12:138:WFEC:MSL08
FDNS	00NR	0	16WP	G15_063	FROM->TO	CIMARRON - DRAPER LAKE 345KV CKT 1	717	717	0.1649	103.3611	P12:138:WFEC:MSL09
FDNS	00NR	0	16WP	G15_063	FROM->TO	CIMARRON - DRAPER LAKE 345KV CKT 1	717	717	0.16475	103.3604	GEN681542 6-JP MADGETT
FDNS	00NR	0	16WP	G15_063	FROM->TO	CIMARRON - DRAPER LAKE 345KV CKT 1	717	717	0.16427	103.3601	FRANKLIN - PINK SW 138KV CKT 1
FDNS	00NR	0	16WP	G15_063	FROM->TO	CIMARRON - DRAPER LAKE 345KV CKT 1	717	717	0.16475	103.3237	GEN542957 1-IATAN UNIT #1
FDNS	00NR	0	16WP	G15_063	FROM->TO	CIMARRON - DRAPER LAKE 345KV CKT 1	717	717	0.16503	103.3222	ETNA - PARK LANE 138KV CKT 1
FDNS	00NR	0	16WP	G15_063	FROM->TO	CIMARRON - DRAPER LAKE 345KV CKT 1	717	717	0.16475	103.2984	GEN530690 1-PRWINDG1 0.6900
FDNS	00NR	0	16WP	G15_063	FROM->TO	CIMARRON - DRAPER LAKE 345KV CKT 1	717	717	0.16475	103.259	GEN645001 1-FORT CALHOUN 1
FDNS	00NR	0	16WP	G15_063	FROM->TO	CIMARRON - DRAPER LAKE 345KV CKT 1	717	717	0.16362	103.2536	SEMINOLE (SEMINOL2) 345/138/14.4KV TRANSFORMER CKT 1
FDNS	00NR	0	16WP	G15_063	FROM->TO	CIMARRON - DRAPER LAKE 345KV CKT 1	717	717	0.16475	103.2424	ALMA 161 161/24.0KV TRANSFORMER CKT 1
FDNS	00NR	0	16WP	G15_063	FROM->TO	CIMARRON - DRAPER LAKE 345KV CKT 1	717	717	0.16475	103.2409	GEN542955 1-LACYGNE UNIT #1
FDNS	00NR	0	16WP	G15_063	FROM->TO	CIMARRON - DRAPER LAKE 345KV CKT 1	717	717	0.16475	103.2366	GEN661015 1-COYOTE
FDNS	00NR	0	16WP	G15_063	FROM->TO	CIMARRON - DRAPER LAKE 345KV CKT 1	717	717	0.16475	103.2318	GEN562754 1-G15031_5 0.6900
FDNS	00NR	0	16WP	G15_063	FROM->TO	CIMARRON - DRAPER LAKE 345KV CKT 1	717	717	0.16475	103.2195	GEN562556 1-G14_046_3 0.3420
FDNS	00NR	0	16WP	G15_063	FROM->TO	CIMARRON - DRAPER LAKE 345KV CKT 1	717	717	0.16859	103.2152	RENFROW7 345.00 - VIOLA 7 345.00 345KV CKT 1
FDNS	00NR	0	16WP	G15_063	FROM->TO	CIMARRON - DRAPER LAKE 345KV CKT 1	717	717	0.16475	103.1998	GEN532652 1-JEFFREY ENERGY CENTER UNIT 2
FDNS	00NR	0	16WP	G15_063	FROM->TO	CIMARRON - DRAPER LAKE 345KV CKT 1	717	717	0.16475	103.1962	GEN532651 1-JEFFREY ENERGY CENTER UNIT 1
FDNS	00NR	0	16WP	G15_063	FROM->TO	CIMARRON - DRAPER LAKE 345KV CKT 1	717	717	0.16475	103.1877	GEN562756 1-G15031_7 0.6900
FDNS	00NR	0	16WP	G15_063	FROM->TO	CIMARRON - DRAPER LAKE 345KV CKT 1	717	717	0.16475	103.1838	GEN562974 1-G15060_5 0.6900
FDNS	00NR	0	16WP	G15_063	FROM->TO	CIMARRON - DRAPER LAKE 345KV CKT 1	717	717	0.16697	103.1728	AIRDEPT4 138.00 - WILD MARY 138KV CKT 1
FDNS	00NR	0	16WP	G15_063	FROM->TO	CIMARRON - DRAPER LAKE 345KV CKT 1	717	717	0.16475	103.1716	GEN563142 1-G15079_3 0.5500
FDNS	00NR	0	16WP	G15_063	FROM->TO	CIMARRON - DRAPER LAKE 345KV CKT 1	717	717	0.16475	103.1716	GEN563151 1-G15080_2 0.5500
FDNS	00NR	0	16WP	G15_063	FROM->TO	CIMARRON - DRAPER LAKE 345KV CKT 1	717	717	0.16475	103.1676	GEN562973 1-G15060_4 0.6900
FDNS	00NR	0	16WP	G15_063	FROM->TO	CIMARRON - DRAPER LAKE 345KV CKT 1	717	717	0.16475	103.1581	GEN563042 1-G15068_3 0.6900
FDNS	00NR	0	16WP	G15_063	FROM->TO	CIMARRON - DRAPER LAKE 345KV CKT 1	717	717	0.16475	103.1393	GEN562078 1-G11_051_3 0.6900
FDNS	00NR	0	16WP	G15_063	FROM->TO	CIMARRON - DRAPER LAKE 345KV CKT 1	717	717	0.16475	103.1315	GEN562691 1-G15_015_3 0.6900
FDNS	00NR	0	16WP	G15_063	FROM->TO	CIMARRON - DRAPER LAKE 345KV CKT 1	717	717	0.16999	103.128	HUNTERS7 345.00 - RENFROW7 345.00 345KV CKT 1
FDNS	00NR	0	16WP	G15_063	FROM->TO	CIMARRON - DRAPER LAKE 345KV CKT 1	717	717	0.16475	103.1094	GEN657748 1-YOUNG 2 GENERATOR
FDNS	00NR	0	16WP	G15_063	FROM->TO	CIMARRON - DRAPER LAKE 345KV CKT 1	717	717	0.16543	103.0782	PARK LANE - SEMINOLE 138KV CKT 1
FDNS	00NR	0	16WP	G15_063	FROM->TO	CIMARRON - DRAPER LAKE 345KV CKT 1	717	717	0.16427	103.0762	FRANKLIN - FRANKLIN SW 138KV CKT 1
FDNS	00NR	0	16WP	G15_063	FROM->TO	CIMARRON - DRAPER LAKE 345KV CKT 1	717	717	0.16475	103.0759	GEN562655 1-G14_074_3 0.6900
FDNS	00NR	0	16WP	G15_063	FROM->TO	CIMARRON - DRAPER LAKE 345KV CKT 1	717	717	0.16475	103.0754	GEN562762 1-G15033_3 0.6900
FDNS	00NR	0	16WP	G15_063	FROM->TO	CIMARRON - DRAPER LAKE 345KV CKT 1	717	717	0.16475	103.0131	GEN527901 1-HOBBS PLANT #1 (CT)
FDNS	00NR	0	16WP	G15_063	FROM->TO	CIMARRON - DRAPER LAKE 345KV CKT 1	717	717	0.16475	103.0131	GEN527902 1-HOBBS PLANT #2 (CT)
FDNS	00NR	0	16WP	G15_063	FROM->TO	CIMARRON - DRAPER LAKE 345KV CKT 1	717	717	0.16475	103.0015	GEN563273 2-G15093_4 0.6900
FDNS	00NR	0	16WP	G15_063	FROM->TO	CIMARRON - DRAPER LAKE 345KV CKT 1	717	717	0.16475	102.9743	GEN563043 1-G15068_4 0.6900
FDNS	00NR	0	16WP	G15_063	FROM->TO	CIMARRON - DRAPER LAKE 345KV CKT 1	717	717	0.16475	102.9598	GEN563052 1-G15069_3 0.6900
FDNS	00NR	0	16WP	G15_063	FROM->TO	CIMARRON - DRAPER LAKE 345KV CKT 1	717	717	0.16697	102.9434	AIRDEPT4 138.00 - GM 138KV CKT 1
FDNS	00NR	0	16WP	G15_063	FROM->TO	CIMARRON - DRAPER LAKE 345KV CKT 1	717	717	0.16475	102.9328	GEN525845 1-ELK_2 1 138.00
FDNS	00NR	0	16WP	G15_063	FROM->TO	CIMARRON - DRAPER LAKE 345KV CKT 1	717	717	0.16475	102.9294	GEN525844 1-ELK_1 118.000
FDNS	00NR	0	16WP	G15_063	FROM->TO	CIMARRON - DRAPER LAKE 345KV CKT 1	717	717	0.16473	102.9285	LYDIA - WELSH 345KV CKT 1
FDNS	00NR	0	16WP	G15_063	FROM->TO	CIMARRON - DRAPER LAKE 345KV CKT 1	717	717	0.16473	102.9285	LYDIA - WELSH 345KV CKT 1
FDNS	00NR	0	16WP	G15_063	FROM->TO	CIMARRON - DRAPER LAKE 345KV CKT 1	717	717	0.16543	102.9208	P12:138:AEPW-OGE:CORNVIL4:CIMARON4
FDNS	00NR	0	16WP	G15_063	FROM->TO	CIMARRON - DRAPER LAKE 345KV CKT 1	717	717	0.16475	102.9195	GEN620315 1-BIG STONE GEN
FDNS	00NR	0	16WP	G15_063	FROM->TO	CIMARRON - DRAPER LAKE 345KV CKT 1	717	717	0.16475	102.9123	GEN563242 1-G15090_3 0.6900
FDNS	00NR	0	16WP	G15_063	FROM->TO	CIMARRON - DRAPER LAKE 345KV CKT 1	717	717	0.16475	102.8811	GEN526333 1-JONES GEN #3 21 KV
FDNS	00NR	0	16WP	G15_063	FROM->TO	CIMARRON - DRAPER LAKE 345KV CKT 1	717	717	0.16475	102.8811	GEN526334 1-JONES_4 116.500
FDNS	00NR	0	16WP	G15_063	FROM->TO	CIMARRON - DRAPER LAKE 345KV CKT 1	717	717	0.16475	102.874	GEN562772 1-G15034_3 0.6900
FDNS	00NR	0	16WP	G15_063	FROM->TO	CIMARRON - DRAPER LAKE 345KV CKT 1	717	717	0.16475	102.8671	GEN600004 2-PRAIRIE ISLAND G2
FDNS	00NR	0	16WP	G15_063	FROM->TO	CIMARRON - DRAPER LAKE 345KV CKT 1	717	717	0.16475	102.864	GEN600003 1-PRAIRIE ISLAND G1
FDNS	00NR	0	16WP	G15_063	FROM->TO	CIMARRON - DRAPER LAKE 345KV CKT 1	717	717	0.16475	102.8553	GEN600006 1-AS KING
FDNS	00NR	0	16WP	G15_063	FROM->TO	CIMARRON - DRAPER LAKE 345KV CKT 1	717	717	0.16475	102.8474	GEN523971 1-HARRINGTON GEN #1 24 KV
FDNS	00NR	0	16WP	G15_063	FROM->TO	CIMARRON - DRAPER LAKE 345KV CKT 1	717	717	0.16475	102.8473	GEN523972 1-HARRINGTON GEN #2 24 KV
FDNS	00NR	0	16WP	G15_063	FROM->TO	CIMARRON - DRAPER LAKE 345KV CKT 1	717	717	0.16475	102.8473	GEN523973 1-HARRINGTON GEN #3 24 KV
FDNS	00NR	0	16WP	G15_063	FROM->TO	CIMARRON - DRAPER LAKE 345KV CKT 1	717	717	0.16475	102.8213	GEN636641 1-LOUISA UNIT 1
FDNS	00NR	0	16WP	G15_063	FROM->TO	CIMARRON - DRAPER LAKE 345KV CKT 1	717	717	0.17005	102.7681	CLARKSVILLE - MUSKOGEE 345KV CKT 1
FDNS	00NR	0	16WP	G15_063	FROM->TO	CIMARRON - DRAPER LAKE 345KV CKT 1	717	717	0.17005	102.7681	CLARKSVILLE - MUSKOGEE 345KV CKT 1
FDNS	00NR	0	16WP	G15_063	FROM->TO	CIMARRON - DRAPER LAKE 345KV CKT 1	717	717	0.16501	102.7389	RANCHRD7 345.00 - SOONER 345KV CKT 1
FDNS	00NR	0	16WP	G15_063	FROM->TO	CIMARRON - DRAPER LAKE 345KV CKT 1	717	717	0.16697	102.7355	DRAPER LAKE - GM 138KV CKT 1
FDNS	00NR	0	16WP	G15_063	FROM->TO	CIMARRON - DRAPER LAKE 345KV CKT 1	717	717	0.16475	102.7125	GEN600005 1-MONTICELLO
FDNS	00NR	0	16WP	G15_063	FROM->TO	CIMARRON - DRAPER LAKE 345KV CKT 1	717	717	0.16475	102.7111	GEN542962 2-IATAN UNIT #2
FDNS	00NR	0	16WP	G15_063	FROM->TO	CIMARRON - DRAPER LAKE 345KV CKT 1	717	717	0.16475	102.7017	GEN563292 1-G15095_3 0.6900

SOLUTION	GROUP	SCENARIO	SEASON	SOURCE	DIRECTION	MONITORED ELEMENT	RATEA (MVA)	RATEB(MVA)	TDF	TC%LOADING (% MVA)	CONTINGENCY
FDNS	00NR	0	16WP	G15_063	FROM->TO	CIMARRON - DRAPER LAKE 345KV CKT 1	717	717	0.16999	102.6917	HUNTERS7 345.00 - WOODRING 345KV CKT 1
FDNS	00NR	0	16WP	G15_063	FROM->TO	CIMARRON - DRAPER LAKE 345KV CKT 1	717	717	0.16475	102.6463	GEN527166 1-MUSTANG_6 118.000
FDNS	00NR	0	16WP	G15_063	FROM->TO	CIMARRON - DRAPER LAKE 345KV CKT 1	717	717	0.16475	102.6368	GEN525562 1-TOLK GEN #2 24 KV
FDNS	00NR	0	16WP	G15_063	FROM->TO	CIMARRON - DRAPER LAKE 345KV CKT 1	717	717	0.16475	102.6194	GEN629074 1-ARNOLD LOWSIDE OF GSU XFMR
FDNS	00NR	0	16WP	G15_063	FROM->TO	CIMARRON - DRAPER LAKE 345KV CKT 1	717	717	0.15827	102.6103	MUSKOGEE - SEMINOLE 345KV CKT 1
FDNS	00NR	0	16WP	G15_063	FROM->TO	CIMARRON - DRAPER LAKE 345KV CKT 1	717	717	0.16475	102.61	GEN562952 1-G15057_3 0.6500
FDNS	00NR	0	16WP	G15_063	FROM->TO	CIMARRON - DRAPER LAKE 345KV CKT 1	717	717	0.16475	102.6048	GEN563272 1-G15093_3 0.6900
FDNS	00NR	0	16WP	G15_063	FROM->TO	CIMARRON - DRAPER LAKE 345KV CKT 1	717	717	0.16628	102.5846	NORTHWEST - SPRING CREEK 345KV CKT 1
FDNS	00NR	0	16WP	G15_063	FROM->TO	CIMARRON - DRAPER LAKE 345KV CKT 1	717	717	0.16475	102.5625	GEN635213 3-NEAL UNIT 3
FDNS	00NR	0	16WP	G15_063	FROM->TO	CIMARRON - DRAPER LAKE 345KV CKT 1	717	717	0.16468	102.5557	FRANKLIN SW - MIDWEST TAP 138KV CKT 1
FDNS	00NR	0	16WP	G15_063	FROM->TO	CIMARRON - DRAPER LAKE 345KV CKT 1	717	717	0.16628	102.5531	SOONER - SPRING CREEK 345KV CKT 1
FDNS	00NR	0	16WP	G15_063	FROM->TO	CIMARRON - DRAPER LAKE 345KV CKT 1	717	717	0.16475	102.5132	BIG STONE 230/24.0KV TRANSFORMER CKT 1
FDNS	00NR	0	16WP	G15_063	FROM->TO	CIMARRON - DRAPER LAKE 345KV CKT 1	717	717	0.16475	102.507	GEN562892 1-G15048_3 0.6900
FDNS	00NR	0	16WP	G15_063	FROM->TO	CIMARRON - DRAPER LAKE 345KV CKT 1	717	717	0.16559	102.4824	CHAMBER SPRINGS - CLARKSVILLE 345KV CKT 1
FDNS	00NR	0	16WP	G15_063	FROM->TO	CIMARRON - DRAPER LAKE 345KV CKT 1	717	717	0.15739	102.4731	DRAPER LAKE - SEMINOLE 345KV CKT 3
FDNS	00NR	0	16WP	G15_063	FROM->TO	CIMARRON - DRAPER LAKE 345KV CKT 1	717	717	0.16475	102.4615	GEN563173 1-G15082_3 0.6900
FDNS	00NR	0	16WP	G15_063	FROM->TO	CIMARRON - DRAPER LAKE 345KV CKT 1	717	717	0.16475	102.4099	GEN562902 1-G15052_3 0.6900
FDNS	00NR	0	16WP	G15_063	FROM->TO	CIMARRON - DRAPER LAKE 345KV CKT 1	717	717	0.16475	102.4	GEN514805 1-SOONER UNIT 1
FDNS	00NR	0	16WP	G15_063	FROM->TO	CIMARRON - DRAPER LAKE 345KV CKT 1	717	717	0.16475	102.3707	GEN600000 1-SHERBURNECNTY G1
FDNS	00NR	0	16WP	G15_063	FROM->TO	CIMARRON - DRAPER LAKE 345KV CKT 1	717	717	0.16475	102.3666	GEN527903 1-HOBBS PLANT #3 (ST)
FDNS	00NR	0	16WP	G15_063	FROM->TO	CIMARRON - DRAPER LAKE 345KV CKT 1	717	717	0.16475	102.3474	GEN525561 1-TOLK GEN #1 24 KV
FDNS	00NR	0	16WP	G15_063	FROM->TO	CIMARRON - DRAPER LAKE 345KV CKT 1	717	717	0.16491	102.3228	P12:138:OKGE:3TERM23
FDNS	00NR	0	16WP	G15_063	FROM->TO	CIMARRON - DRAPER LAKE 345KV CKT 1	717	717	0.16472	102.3201	LYDIA - VALLIANT 345KV CKT 1
FDNS	00NR	0	16WP	G15_063	FROM->TO	CIMARRON - DRAPER LAKE 345KV CKT 1	717	717	0.16472	102.3201	LYDIA - VALLIANT 345KV CKT 1
FDNS	00NR	0	16WP	G15_063	FROM->TO	CIMARRON - DRAPER LAKE 345KV CKT 1	717	717	0.16475	102.2716	GEN600001 2-SHERBURNE CNTY G2
FDNS	00NR	0	16WP	G15_063	FROM->TO	CIMARRON - DRAPER LAKE 345KV CKT 1	717	717	0.16491	102.2636	BARNES 4 138.00 - DRAPER LAKE 138KV CKT 1
FDNS	00NR	0	16WP	G15_063	FROM->TO	CIMARRON - DRAPER LAKE 345KV CKT 1	717	717	0.16475	102.1932	GEN344225 1-1CAL G1 25.000
FDNS	00NR	0	16WP	G15_063	FROM->TO	CIMARRON - DRAPER LAKE 345KV CKT 1	717	717	0.16475	102.1468	GEN514806 1-SOONER UNIT 2
FDNS	00NR	0	16WP	G15_063	FROM->TO	CIMARRON - DRAPER LAKE 345KV CKT 1	717	717	0.16475	102.1418	GEN629075 1-OTTUMWA GENERATOR FOR OTTUMWA UNIT NO 1
FDNS	00NR	0	16WP	G15_063	FROM->TO	CIMARRON - DRAPER LAKE 345KV CKT 1	717	717	0.16475	102.1124	GEN563162 1-G15081_3 0.6900
FDNS	00NR	0	16WP	G15_063	FROM->TO	CIMARRON - DRAPER LAKE 345KV CKT 1	717	717	0.1662	102.0198	DRAPER LAKE (DRAPER2) 345/138/13.8KV TRANSFORMER CKT 1
FDNS	00NR	0	16WP	G15_063	FROM->TO	CIMARRON - DRAPER LAKE 345KV CKT 1	717	717	0.16619	101.9327	DRAPER LAKE (DRAPER3) 345/138/13.8KV TRANSFORMER CKT 1
FDNS	00NR	0	16WP	G15_063	FROM->TO	CIMARRON - DRAPER LAKE 345KV CKT 1	717	717	0.16619	101.9327	DRAPER LAKE (DRAPER4) 345/138/13.8KV TRANSFORMER CKT 1
FDNS	00NR	0	16WP	G15_063	FROM->TO	CIMARRON - DRAPER LAKE 345KV CKT 1	717	717	0.16475	101.9167	SHERBURNE CO 345/24.0KV TRANSFORMER CKT 1
FDNS	00NR	0	16WP	G15_063	FROM->TO	CIMARRON - DRAPER LAKE 345KV CKT 1	717	717	0.16475	101.9096	GEN532653 1-JEFFREY ENERGY CENTER UNIT 3
FDNS	00NR	0	16WP	G15_063	FROM->TO	CIMARRON - DRAPER LAKE 345KV CKT 1	717	717	0.16475	101.9024	GEN635214 4-NEAL UNIT 4
FDNS	00NR	0	16WP	G15_063	FROM->TO	CIMARRON - DRAPER LAKE 345KV CKT 1	717	717	0.15623	101.8242	CIMARRON - MATHWSN7 345.00 345KV CKT 1
FDNS	00NR	0	16WP	G15_063	FROM->TO	CIMARRON - DRAPER LAKE 345KV CKT 1	717	717	0.15623	101.8242	CIMARRON - MATHWSN7 345.00 345KV CKT 2
FDNS	00NR	0	16WP	G15_063	FROM->TO	CIMARRON - DRAPER LAKE 345KV CKT 1	717	717	0.16475	101.8106	GEN600002 3-SHERBURNE CNTY G3
FDNS	00NR	0	16WP	G15_063	FROM->TO	CIMARRON - DRAPER LAKE 345KV CKT 1	717	717	0.16475	101.7843	GEN562882 1-G15047_3 0.6900
FDNS	00NR	0	16WP	G15_063	FROM->TO	CIMARRON - DRAPER LAKE 345KV CKT 1	717	717	0.16475	101.4209	GEN635023 3-WALTER SCOTT UNIT 3
FDNS	00NR	0	16WP	G15_063	FROM->TO	CIMARRON - DRAPER LAKE 345KV CKT 1	717	717	0.16475	101.2971	GEN562023 1-G11_020_3 0.6900
FDNS	00NR	0	16WP	G15_063	FROM->TO	CIMARRON - DRAPER LAKE 345KV CKT 1	717	717	0.16475	101.2971	GEN562026 1-G11_019_3 0.6900
FDNS	00NR	0	16WP	G15_063	FROM->TO	CIMARRON - DRAPER LAKE 345KV CKT 1	717	717	0.16475	101.2072	EASTDC - ERCOT EQUIVALENCE 345KV CKT 1
FDNS	00NR	0	16WP	G15_063	FROM->TO	CIMARRON - DRAPER LAKE 345KV CKT 1	717	717	0.15101	100.9489	DRAPER LAKE - SEMINOLE 345KV CKT 1
FDNS	00NR	0	16WP	G15_063	FROM->TO	CIMARRON - DRAPER LAKE 345KV CKT 1	717	717	0.15101	100.9487	DRAPER LAKE - SEMINOLE 345KV CKT 2
FDNS	00NR	0	16WP	G15_063	FROM->TO	CIMARRON - DRAPER LAKE 345KV CKT 1	717	717	0.16475	100.9406	GEN635024 4-WALTER SCOTT UNIT 4
FDNS	00NR	0	16WP	G15_063	FROM->TO	CIMARRON - DRAPER LAKE 345KV CKT 1	717	717	0.16475	99.6	GEN562992 1-G15063_3 0.6900
FDNS	00NR	0	17SP	G15_063	TO->FROM	CLEAVELAND - CLEVLND 4 138.00 138KV CKT Z1	305	371	0.03339	110.9479	CLEVELAND - TULSA NORTH 345KV CKT 1
FDNS	00NR	0	17SP	G15_063	TO->FROM	CLEAVELAND - CLEVLND 4 138.00 138KV CKT Z1	305	371	0.03339	110.9479	CLEVELAND - TULSA NORTH 345KV CKT 1
FDNS	00NR	0	20SP	G15_063	TO->FROM	CLEAVELAND - CLEVLND 4 138.00 138KV CKT Z1	305	371	0.03334	110.0566	CLEVELAND - TULSA NORTH 345KV CKT 1
FDNS	00NR	0	20SP	G15_063	TO->FROM	CLEAVELAND - CLEVLND 4 138.00 138KV CKT Z1	305	371	0.03334	110.0566	CLEVELAND - TULSA NORTH 345KV CKT 1
FDNS	00NR	0	16WP	G15_063	FROM->TO	G14-057T 345.00 - SUNNYSIDE 345KV CKT 1	717	789	0.04477	127.2961	PITTSBURG - SEMINOLE 345KV CKT 1
FDNS	00NR	0	16WP	G15_063	FROM->TO	G14-057T 345.00 - SUNNYSIDE 345KV CKT 1	717	789	0.04477	127.2961	PITTSBURG - SEMINOLE 345KV CKT 1
FDNS	00NR	0	16WP	G15_063	FROM->TO	G14-057T 345.00 - SUNNYSIDE 345KV CKT 1	717	789	0.04554	126.8401	BASE CASE
FDNS	00NR	0	16WP	G15_063	FROM->TO	G14-057T 345.00 - SUNNYSIDE 345KV CKT 1	717	789	0.06082	124.2897	CIMARRON - DRAPER LAKE 345KV CKT 1
FDNS	00NR	0	20WP	G15_063	FROM->TO	G14-057T 345.00 - SUNNYSIDE 345KV CKT 1	717	789	0.04524	123.8696	BASE CASE
FDNS	00NR	0	20WP	G15_063	FROM->TO	G14-057T 345.00 - SUNNYSIDE 345KV CKT 1	717	789	0.04438	123.481	PITTSBURG - SEMINOLE 345KV CKT 1
FDNS	00NR	0	20WP	G15_063	FROM->TO	G14-057T 345.00 - SUNNYSIDE 345KV CKT 1	717	789	0.04438	123.481	PITTSBURG - SEMINOLE 345KV CKT 1
FDNS	00NR	0	16WP	G15_063	FROM->TO	G14-057T 345.00 - SUNNYSIDE 345KV CKT 1	717	789	0.04759	121.5485	P12:138:WFEC:MSL03
FDNS	00NR	0	20WP	G15_063	FROM->TO	G14-057T 345.00 - SUNNYSIDE 345KV CKT 1	717	789	0.06044	121.2133	CIMARRON - DRAPER LAKE 345KV CKT 1
FDNS	00NR	0	16WP	G15_063	FROM->TO	G14-057T 345.00 - SUNNYSIDE 345KV CKT 1	717	789	0.04499	120.9122	PITTSBURG - VALLIANT 345KV CKT 1
FDNS	00NR	0	16WP	G15_063	FROM->TO	G14-057T 345.00 - SUNNYSIDE 345KV CKT 1	717	789	0.04499	120.9122	PITTSBURG - VALLIANT 345KV CKT 1
FDNS	00NR	0	16WP	G15_063	FROM->TO	G14-057T 345.00 - SUNNYSIDE 345KV CKT 1	717	789	0.04554	120.4075	GEN509403 1-PIRKEY GENERATION
FDNS	00NR	0	16WP	G15_063	FROM->TO	G14-057T 345.00 - SUNNYSIDE 345KV CKT 1	717	789	0.04554	120.3109	GEN509416 1-TURK GENERATION
FDNS	00NR	0	16WP	G15_063	FROM->TO	G14-057T 345.00 - SUNNYSIDE 345KV CKT 1	717	789	0.04938	120.1483	CLEVELAND - G15066_T 345.00 345KV CKT 1
FDNS	00NR	0	16WP	G15_063	FROM->TO	G14-057T 345.00 - SUNNYSIDE 345KV CKT 1	717	789	0.04938	119.8485	G15066_T 345.00 - SOONER 345KV CKT 1
FDNS	00NR	0	16WP	G15_063	FROM->TO	G14-057T 345.00 - SUNNYSIDE 345KV CKT 1	717	789	0.04554	119.4219	GEN501801 1-DOLET HILLS UNIT1
FDNS	00NR	0	16WP	G15_063	FROM->TO	G14-057T 345.00 - SUNNYSIDE 345KV CKT 1	717	789	0.04554	119.0388	GEN509404 1-WELSH #1
FDNS	00NR	0	16WP	G15_063	FROM->TO	G14-057T 345.00 - SUNNYSIDE 345KV CKT 1	717	789	0.04554	119.0388	GEN509406 1-WELSH #3
FDNS	00NR	0	20WP	G15_063	FROM->TO	G14-057T 345.00 - SUNNYSIDE 345KV CKT 1	717	789	0.04728	118.7744	P12:138:WFEC:MSL03
FDNS	00NR	0	16WP	G15_063	FROM->TO	G14-057T 345.00 - SUNNYSIDE 345KV CKT 1	717	789	0.04497	118.5917	BORDER 7345.00 - WOODWARD DISTRICT EHV 345KV CKT 1
FDNS	00NR	0	16WP	G15_063	FROM->TO	G14-057T 345.00 - SUNNYSIDE 345KV CKT 1	717	789	0.04643	118.4383	CORN TAP - NAPLESTP 138.00 138KV CKT 1
FDNS	00NR	0	16WP	G15_063	FROM->TO	G14-057T 345.00 - SUNNYSIDE 345KV CKT 1	717	789	0.04643	118.3531	NAPLESTP 138.00 - PAYNE 138.00 138KV CKT 1
FDNS	00NR	0	16WP	G15_063	FROM->TO	G14-057T 345.00 - SUNNYSIDE 345KV CKT 1	717	789	0.04547	118.2426	7SAREPTA% 345.00 - LONGWOOD 345KV CKT 1
FDNS	00NR	0	16WP	G15_063	FROM->TO	G14-057T 345.00 - SUNNYSIDE 345KV CKT 1	717	789	0.04547	118.2426	7SAREPTA% 345.00 - LONGWOOD 345KV CKT 1
FDNS	00NR	0	16WP	G15_063	FROM->TO	G14-057T 345.00 - SUNNYSIDE 345KV CKT 1	717	789	0.04554	118.1594	GEN336821 1-GRAND GULF UNIT
FDNS	00NR	0	16WP	G15_063	FROM->TO	G14-057T 345.00 - SUNNYSIDE 345KV CKT 1	717	789	0.04816	118.1389	CLEVELAND - TULSA NORTH 345KV CKT 1
FDNS	00NR	0	16WP	G15_063	FROM->TO	G14-057T 345.00 - SUNNYSIDE 345KV CKT 1	717	789	0.04816	118.1389	CLEVELAND - TULSA NORTH 345KV CKT 1

SOLUTION	GROUP	SCENARIO	SEASON	SOURCE	DIRECTION	MONITORED ELEMENT	RATEA (MVA)	RATEB(MVA)	TDF	TC%LOADING (% MVA)	CONTINGENCY
FDNS	00NR	0	16WP	G15_063	FROM->TO	G14-057T 345.00 - SUNNYSIDE 345KV CKT 1	717	789	0.04554	118.0972	DOLET HILLS - SOUTHWEST SHREVEPORT 345KV CKT 1
FDNS	00NR	0	16WP	G15_063	FROM->TO	G14-057T 345.00 - SUNNYSIDE 345KV CKT 1	717	789	0.04554	118.0972	DOLET HILLS - SOUTHWEST SHREVEPORT 345KV CKT 1
FDNS	00NR	0	16WP	G15_063	FROM->TO	G14-057T 345.00 - SUNNYSIDE 345KV CKT 1	717	789	0.046	118.0833	ANADARKO - POCASSETT 138KV CKT 1
FDNS	00NR	0	16WP	G15_063	FROM->TO	G14-057T 345.00 - SUNNYSIDE 345KV CKT 1	717	789	0.0417	118.0715	CANADIAN RIVER - MUSKOGEE 345KV CKT 1
FDNS	00NR	0	16WP	G15_063	FROM->TO	G14-057T 345.00 - SUNNYSIDE 345KV CKT 1	717	789	0.04554	118.0667	GEN336153 1-WATERFORD UNIT#3
FDNS	00NR	0	16WP	G15_063	FROM->TO	G14-057T 345.00 - SUNNYSIDE 345KV CKT 1	717	789	0.04635	118.0445	COMANCHE - LOCO 138KV CKT 1
FDNS	00NR	0	16WP	G15_063	FROM->TO	G14-057T 345.00 - SUNNYSIDE 345KV CKT 1	717	789	0.046	117.9379	POCASSETT - TUTTLE 138KV CKT 1
FDNS	00NR	0	16WP	G15_063	FROM->TO	G14-057T 345.00 - SUNNYSIDE 345KV CKT 1	717	789	0.05761	117.8798	ARCADIA - NORTHWEST 345KV CKT 1
FDNS	00NR	0	16WP	G15_063	FROM->TO	G14-057T 345.00 - SUNNYSIDE 345KV CKT 1	717	789	0.04554	117.7674	GEN335831 1-RIVERBEND UNIT#1
FDNS	00NR	0	16WP	G15_063	FROM->TO	G14-057T 345.00 - SUNNYSIDE 345KV CKT 1	717	789	0.04554	117.7647	GRAND GULF 500/22.0KV TRANSFORMER CKT 1
FDNS	00NR	0	16WP	G15_063	FROM->TO	G14-057T 345.00 - SUNNYSIDE 345KV CKT 1	717	789	0.04768	117.7594	ARCADIA - SEMINOLE 345KV CKT 1
FDNS	00NR	0	16WP	G15_063	FROM->TO	G14-057T 345.00 - SUNNYSIDE 345KV CKT 1	717	789	0.04554	117.6887	GEN515577 1-ARBWND11 0.6900
FDNS	00NR	0	16WP	G15_063	FROM->TO	G14-057T 345.00 - SUNNYSIDE 345KV CKT 1	717	789	0.04554	117.6725	GEN509409 1-WILKES #3
FDNS	00NR	0	16WP	G15_063	FROM->TO	G14-057T 345.00 - SUNNYSIDE 345KV CKT 1	717	789	0.04497	117.6629	BORDER 7345.00 - TUCO_2 345.00 345KV CKT 1
FDNS	00NR	0	16WP	G15_063	FROM->TO	G14-057T 345.00 - SUNNYSIDE 345KV CKT 1	717	789	0.04487	117.6393	MATHWSN7 345.00 - TATONGA7 345.00 345KV CKT 1
FDNS	00NR	0	16WP	G15_063	FROM->TO	G14-057T 345.00 - SUNNYSIDE 345KV CKT 1	717	789	0.04573	117.6117	P12:138:AEPW:DUNCAN-4:L.E.S.-4
FDNS	00NR	0	16WP	G15_063	FROM->TO	G14-057T 345.00 - SUNNYSIDE 345KV CKT 1	717	789	0.0455	117.6051	7SAREPTA% 345.00 - ELDORADO EHV 345KV CKT 1
FDNS	00NR	0	16WP	G15_063	FROM->TO	G14-057T 345.00 - SUNNYSIDE 345KV CKT 1	717	789	0.0455	117.6049	3TR3AR8EL7EL
FDNS	00NR	0	16WP	G15_063	FROM->TO	G14-057T 345.00 - SUNNYSIDE 345KV CKT 1	717	789	0.0455	117.5943	ELDORADO EHV 500/345KV TRANSFORMER CKT 1
FDNS	00NR	0	20WP	G15_063	FROM->TO	G14-057T 345.00 - SUNNYSIDE 345KV CKT 1	717	789	0.04524	117.5819	GEN509403 1-PIRKEY GENERATION
FDNS	00NR	0	16WP	G15_063	FROM->TO	G14-057T 345.00 - SUNNYSIDE 345KV CKT 1	717	789	0.046	117.5607	BRIDGECR 138.00 - TUTTLE 138KV CKT 1
FDNS	00NR	0	16WP	G15_063	FROM->TO	G14-057T 345.00 - SUNNYSIDE 345KV CKT 1	717	789	0.04676	117.5339	HEALDTON - LOCO 138KV CKT 1
FDNS	00NR	0	20WP	G15_063	FROM->TO	G14-057T 345.00 - SUNNYSIDE 345KV CKT 1	717	789	0.04524	117.5035	GEN509416 1-TURK GENERATION
FDNS	00NR	0	16WP	G15_063	FROM->TO	G14-057T 345.00 - SUNNYSIDE 345KV CKT 1	717	789	0.04573	117.5006	COMANCHE TAP - OMPA-DUNCAN 840 138KV CKT 1
FDNS	00NR	0	16WP	G15_063	FROM->TO	G14-057T 345.00 - SUNNYSIDE 345KV CKT 1	717	789	0.04676	117.3949	HEALDTON - RINGLING 138KV CKT 1
FDNS	00NR	0	16WP	G15_063	FROM->TO	G14-057T 345.00 - SUNNYSIDE 345KV CKT 1	717	789	0.04554	117.3736	GEN501813 1-RODEMACHER UNIT 3
FDNS	00NR	0	16WP	G15_063	FROM->TO	G14-057T 345.00 - SUNNYSIDE 345KV CKT 1	717	789	0.04554	117.3664	GEN300006 1-NEW MADRID UNIT 1
FDNS	00NR	0	16WP	G15_063	FROM->TO	G14-057T 345.00 - SUNNYSIDE 345KV CKT 1	717	789	0.04588	117.357	LACYGNE - WAVERLY7 345.00 345KV CKT 1
FDNS	00NR	0	16WP	G15_063	FROM->TO	G14-057T 345.00 - SUNNYSIDE 345KV CKT 1	717	789	0.04554	117.3547	GEN300007 1-NEW MADRID UNIT 2
FDNS	00NR	0	16WP	G15_063	FROM->TO	G14-057T 345.00 - SUNNYSIDE 345KV CKT 1	717	789	0.04599	117.331	FINNEY SWITCHING STATION - HOLCOMB 345KV CKT 1
FDNS	00NR	0	16WP	G15_063	FROM->TO	G14-057T 345.00 - SUNNYSIDE 345KV CKT 1	717	789	0.04599	117.331	FINNEY SWITCHING STATION - HOLCOMB 345KV CKT 1
FDNS	00NR	0	20WP	G15_063	FROM->TO	G14-057T 345.00 - SUNNYSIDE 345KV CKT 1	717	789	0.04898	117.3306	CLEVELAND - G15066_T 345.00 345KV CKT 1
FDNS	00NR	0	16WP	G15_063	FROM->TO	G14-057T 345.00 - SUNNYSIDE 345KV CKT 1	717	789	0.046	117.2904	P12:138:WFEC:MSL01
FDNS	00NR	0	16WP	G15_063	FROM->TO	G14-057T 345.00 - SUNNYSIDE 345KV CKT 1	717	789	0.046	117.2899	BRIDGECR 138.00 - SUNSHINE CANYON 138KV CKT 1
FDNS	00NR	0	20WP	G15_063	FROM->TO	G14-057T 345.00 - SUNNYSIDE 345KV CKT 1	717	789	0.04468	117.2828	PITTSBURG - VALLIANT 345KV CKT 1
FDNS	00NR	0	20WP	G15_063	FROM->TO	G14-057T 345.00 - SUNNYSIDE 345KV CKT 1	717	789	0.04468	117.2828	PITTSBURG - VALLIANT 345KV CKT 1
FDNS	00NR	0	16WP	G15_063	FROM->TO	G14-057T 345.00 - SUNNYSIDE 345KV CKT 1	717	789	0.04554	117.2551	GEN520947 1-HUGO1
FDNS	00NR	0	16WP	G15_063	FROM->TO	G14-057T 345.00 - SUNNYSIDE 345KV CKT 1	717	789	0.04588	117.2406	WAVERLY7 345.00 - WOLF CREEK 345KV CKT 1
FDNS	00NR	0	16WP	G15_063	FROM->TO	G14-057T 345.00 - SUNNYSIDE 345KV CKT 1	717	789	0.04676	117.23	RINGLING - SOUTH WILSON 138KV CKT 1
FDNS	00NR	0	16WP	G15_063	FROM->TO	G14-057T 345.00 - SUNNYSIDE 345KV CKT 1	717	789	0.04573	117.2191	DUNCAN - OMPA-DUNCAN 840 138KV CKT 1
FDNS	00NR	0	16WP	G15_063	FROM->TO	G14-057T 345.00 - SUNNYSIDE 345KV CKT 1	717	789	0.04573	117.2191	DUNCAN - OMPA-DUNCAN 840 138KV CKT 1
FDNS	00NR	0	16WP	G15_063	FROM->TO	G14-057T 345.00 - SUNNYSIDE 345KV CKT 1	717	789	0.04554	117.1733	GEN335206 1-NELSON UNIT 6
FDNS	00NR	0	16WP	G15_063	FROM->TO	G14-057T 345.00 - SUNNYSIDE 345KV CKT 1	717	789	0.04554	117.0655	DOLET HILLS 345/24.0KV TRANSFORMER CKT 1
FDNS	00NR	0	16WP	G15_063	FROM->TO	G14-057T 345.00 - SUNNYSIDE 345KV CKT 1	717	789	0.04473	117.0424	PARK LANE - SEMINOLE 138KV CKT 1
FDNS	00NR	0	20WP	G15_063	FROM->TO	G14-057T 345.00 - SUNNYSIDE 345KV CKT 1	717	789	0.04898	117.0379	G15066_T 345.00 - SOONER 345KV CKT 1
FDNS	00NR	0	16WP	G15_063	FROM->TO	G14-057T 345.00 - SUNNYSIDE 345KV CKT 1	717	789	0.04553	117.0085	P12:138:AEPW:SHERID4:112GORE4
FDNS	00NR	0	16WP	G15_063	FROM->TO	G14-057T 345.00 - SUNNYSIDE 345KV CKT 1	717	789	0.04632	117.0036	CANEYRV7 345.00 - NEOSHO 345KV CKT 1
FDNS	00NR	0	16WP	G15_063	FROM->TO	G14-057T 345.00 - SUNNYSIDE 345KV CKT 1	717	789	0.04554	116.9868	GEN501812 1-RODEMACHER UNIT 2
FDNS	00NR	0	16WP	G15_063	FROM->TO	G14-057T 345.00 - SUNNYSIDE 345KV CKT 1	717	789	0.04554	116.9782	GEN590011 2-ERCOT EQUIVALENCE
FDNS	00NR	0	16WP	G15_063	FROM->TO	G14-057T 345.00 - SUNNYSIDE 345KV CKT 1	717	789	0.04676	116.9532	MARIETTA - SOUTH WILSON 138KV CKT 1
FDNS	00NR	0	16WP	G15_063	FROM->TO	G14-057T 345.00 - SUNNYSIDE 345KV CKT 1	717	789	0.04599	116.95	FINNEY SWITCHING STATION - Hitchland Interchange 345KV CKT 1
FDNS	00NR	0	16WP	G15_063	FROM->TO	G14-057T 345.00 - SUNNYSIDE 345KV CKT 1	717	789	0.04554	116.9263	GEN515564 1-ORIGIN11 0.6900
FDNS	00NR	0	16WP	G15_063	FROM->TO	G14-057T 345.00 - SUNNYSIDE 345KV CKT 1	717	789	0.04554	116.9263	GEN515565 1-ORIGIN21 0.6900
FDNS	00NR	0	16WP	G15_063	FROM->TO	G14-057T 345.00 - SUNNYSIDE 345KV CKT 1	717	789	0.04554	116.9041	GEN590010 1-ERCOT EQUIVALENCE
FDNS	00NR	0	16WP	G15_063	FROM->TO	G14-057T 345.00 - SUNNYSIDE 345KV CKT 1	717	789	0.04554	116.8838	GEN509408 1-WILKES #2
FDNS	00NR	0	16WP	G15_063	FROM->TO	G14-057T 345.00 - SUNNYSIDE 345KV CKT 1	717	789	0.04578	116.8836	THISTLE7 345.00 - WOODWARD DISTRICT EHV 345KV CKT 1
FDNS	00NR	0	16WP	G15_063	FROM->TO	G14-057T 345.00 - SUNNYSIDE 345KV CKT 1	717	789	0.04578	116.8836	THISTLE7 345.00 - WOODWARD DISTRICT EHV 345KV CKT 1
FDNS	00NR	0	16WP	G15_063	FROM->TO	G14-057T 345.00 - SUNNYSIDE 345KV CKT 1	717	789	0.04578	116.8836	THISTLE7 345.00 - WOODWARD DISTRICT EHV 345KV CKT 2
FDNS	00NR	0	16WP	G15_063	FROM->TO	G14-057T 345.00 - SUNNYSIDE 345KV CKT 1	717	789	0.04578	116.8836	THISTLE7 345.00 - WOODWARD DISTRICT EHV 345KV CKT 2
FDNS	00NR	0	16WP	G15_063	FROM->TO	G14-057T 345.00 - SUNNYSIDE 345KV CKT 1	717	789	0.04676	116.8563	P12:138:WFEC:MSL17
FDNS	00NR	0	16WP	G15_063	FROM->TO	G14-057T 345.00 - SUNNYSIDE 345KV CKT 1	717	789	0.04632	116.8184	CANEYRV7 345.00 - LATHAMS7 345.00 345KV CKT 1
FDNS	00NR	0	20WP	G15_063	FROM->TO	G14-057T 345.00 - SUNNYSIDE 345KV CKT 1	717	789	0.04524	116.8056	GEN501801 1-DOLET HILLS UNIT1
FDNS	00NR	0	16WP	G15_063	FROM->TO	G14-057T 345.00 - SUNNYSIDE 345KV CKT 1	717	789	0.04616	116.7597	REDBUD - RIVERSIDE STATION 345KV CKT 1
FDNS	00NR	0	16WP	G15_063	FROM->TO	G14-057T 345.00 - SUNNYSIDE 345KV CKT 1	717	789	0.04616	116.7597	REDBUD - RIVERSIDE STATION 345KV CKT 1
FDNS	00NR	0	16WP	G15_063	FROM->TO	G14-057T 345.00 - SUNNYSIDE 345KV CKT 1	717	789	0.04663	116.7588	CIVIT - PAOLI 138KV CKT 1
FDNS	00NR	0	16WP	G15_063	FROM->TO	G14-057T 345.00 - SUNNYSIDE 345KV CKT 1	717	789	0.04554	116.7523	GEN506754 1-LEBROCK STEAM 1
FDNS	00NR	0	16WP	G15_063	FROM->TO	G14-057T 345.00 - SUNNYSIDE 345KV CKT 1	717	789	0.04554	116.7444	P12:69:AEPW:L.E.S.-2:LAW WC2
FDNS	00NR	0	16WP	G15_063	FROM->TO	G14-057T 345.00 - SUNNYSIDE 345KV CKT 1	717	789	0.04554	116.7274	P12:161:AEPW:DYESS 5:HYLAND 5
FDNS	00NR	0	16WP	G15_063	FROM->TO	G14-057T 345.00 - SUNNYSIDE 345KV CKT 1	717	789	0.04586	116.7253	P12:138:WFEC:MSL02
FDNS	00NR	0	16WP	G15_063	FROM->TO	G14-057T 345.00 - SUNNYSIDE 345KV CKT 1	717	789	0.04594	116.7112	PAOLI - PAYNE 138.00 138KV CKT 1
FDNS	00NR	0	16WP	G15_063	FROM->TO	G14-057T 345.00 - SUNNYSIDE 345KV CKT 1	717	789	0.04549	116.7092	ELDORADO EHV - MOUNT OLIVE 500KV CKT 1
FDNS	00NR	0	16WP	G15_063	FROM->TO	G14-057T 345.00 - SUNNYSIDE 345KV CKT 1	717	789	0.04554	116.7036	GEN334440 1-SABINE UNIT 4
FDNS	00NR	0	16WP	G15_063	FROM->TO	G14-057T 345.00 - SUNNYSIDE 345KV CKT 1	717	789	0.04954	116.6605	MATHWSN7 345.00 - NORTHWEST 345KV CKT 1
FDNS	00NR	0	16WP	G15_063	FROM->TO	G14-057T 345.00 - SUNNYSIDE 345KV CKT 1	717	789	0.04542	116.6588	ELDORADO EHV - SHERIDAN EHV 500KV CKT 1
FDNS	00NR	0	16WP	G15_063	FROM->TO	G14-057T 345.00 - SUNNYSIDE 345KV CKT 1	717	789	0.04553	116.6441	P12:138:AEPW:112GORE4:L.E.S.-4
FDNS	00NR	0	16WP	G15_063	FROM->TO	G14-057T 345.00 - SUNNYSIDE 345KV CKT 1	717	789	0.04554	116.6369	NEW MADRID 161/22.0KV TRANSFORMER CKT 1
FDNS	00NR	0	16WP	G15_063	FROM->TO	G14-057T 345.00 - SUNNYSIDE 345KV CKT 1	717	789	0.04577	116.6341	ANADARKO - GEORGIA 138KV CKT 1
FDNS	00NR	0	16WP	G15_063	FROM->TO	G14-057T 345.00 - SUNNYSIDE 345KV CKT 1	717	789	0.04692	116.6297	P12:138:AEPW-OGE:CORNVIL4:MAUD 4
FDNS	00NR	0	16WP	G15_063	FROM->TO	G14-057T 345.00 - SUNNYSIDE 345KV CKT 1	717	789	0.04554	116.6238	NEW MADRID 345/22.0KV TRANSFORMER CKT 1

SOLUTION	GROUP	SCENARIO	SEASON	SOURCE	DIRECTION	MONITORED ELEMENT	RATEA (MVA)	RATEB(MVA)	TDF	TC%LOADING (% MVA)	CONTINGENCY
FDNS	00NR	0	16WP	G15_063	FROM->TO	G14-057T 345.00 - SUNNYSIDE 345KV CKT 1	717	789	0.04663	116.616	CIVIT - STRATFORD 138KV CKT 1
FDNS	00NR	0	16WP	G15_063	FROM->TO	G14-057T 345.00 - SUNNYSIDE 345KV CKT 1	717	789	0.04632	116.601	LATHAMS7 345.00 - ROSE HILL 345KV CKT 1
FDNS	00NR	0	16WP	G15_063	FROM->TO	G14-057T 345.00 - SUNNYSIDE 345KV CKT 1	717	789	0.04569	116.5869	TUPELO - TUPELO TAP 138KV CKT 1
FDNS	00NR	0	16WP	G15_063	FROM->TO	G14-057T 345.00 - SUNNYSIDE 345KV CKT 1	717	789	0.04554	116.5712	GEN503909 1-FULTONU1 1 16.000
FDNS	00NR	0	16WP	G15_063	FROM->TO	G14-057T 345.00 - SUNNYSIDE 345KV CKT 1	717	789	0.04554	116.5618	FRONTIER - GRIMES 345KV CKT 1
FDNS	00NR	0	16WP	G15_063	FROM->TO	G14-057T 345.00 - SUNNYSIDE 345KV CKT 1	717	789	0.04692	116.5579	BLANCHARD - CORNVILLE 138KV CKT 1
FDNS	00NR	0	16WP	G15_063	FROM->TO	G14-057T 345.00 - SUNNYSIDE 345KV CKT 1	717	789	0.04545	116.5565	LAWTON EASTSIDE (LES 5) 345/138/13.8KV TRANSFORMER CKT 2
FDNS	00NR	0	16WP	G15_063	FROM->TO	G14-057T 345.00 - SUNNYSIDE 345KV CKT 1	717	789	0.04545	116.5565	LAWTON EASTSIDE (LES 5) 345/138/13.8KV TRANSFORMER CKT 2
FDNS	00NR	0	16WP	G15_063	FROM->TO	G14-057T 345.00 - SUNNYSIDE 345KV CKT 1	717	789	0.04559	116.5529	WEBRE - WELLS 500KV CKT 1
FDNS	00NR	0	16WP	G15_063	FROM->TO	G14-057T 345.00 - SUNNYSIDE 345KV CKT 1	717	789	0.04577	116.5505	FLETCHER - GEORGIA 138KV CKT 1
FDNS	00NR	0	16WP	G15_063	FROM->TO	G14-057T 345.00 - SUNNYSIDE 345KV CKT 1	717	789	0.04582	116.5273	EMPIRE - FLETCHER 138KV CKT 1
FDNS	00NR	0	16WP	G15_063	FROM->TO	G14-057T 345.00 - SUNNYSIDE 345KV CKT 1	717	789	0.04663	116.4968	OIL CENTER - STRATFORD 138KV CKT 1
FDNS	00NR	0	16WP	G15_063	FROM->TO	G14-057T 345.00 - SUNNYSIDE 345KV CKT 1	717	789	0.04554	116.4483	GEN509393 S1-ARSENAL HILL GENS #4 (STALL)
FDNS	00NR	0	16WP	G15_063	FROM->TO	G14-057T 345.00 - SUNNYSIDE 345KV CKT 1	717	789	0.04582	116.4422	COMANCHE - EMPIRE 138KV CKT 1
FDNS	00NR	0	16WP	G15_063	FROM->TO	G14-057T 345.00 - SUNNYSIDE 345KV CKT 1	717	789	0.04554	116.4295	DELL 500 - ESSEX UNIT 2 500KV CKT Z1
FDNS	00NR	0	16WP	G15_063	FROM->TO	G14-057T 345.00 - SUNNYSIDE 345KV CKT 1	717	789	0.04554	116.4209	GEN509392 G2-ARSENAL HILL GENS #3 (STALL)
FDNS	00NR	0	16WP	G15_063	FROM->TO	G14-057T 345.00 - SUNNYSIDE 345KV CKT 1	717	789	0.04554	116.4207	GEN509391 G1-ARSENAL HILL GENS #2 (STALL)
FDNS	00NR	0	16WP	G15_063	FROM->TO	G14-057T 345.00 - SUNNYSIDE 345KV CKT 1	717	789	0.04557	116.4114	G1524G1525 345.00 - THISTLE7 345.00 345KV CKT 1
FDNS	00NR	0	16WP	G15_063	FROM->TO	G14-057T 345.00 - SUNNYSIDE 345KV CKT 1	717	789	0.04557	116.4114	G1524G1525 345.00 - THISTLE7 345.00 345KV CKT 2
FDNS	00NR	0	16WP	G15_063	FROM->TO	G14-057T 345.00 - SUNNYSIDE 345KV CKT 1	717	789	0.04554	116.409	GEN336252 1-NINEMILE POINT UNIT#5
FDNS	00NR	0	16WP	G15_063	FROM->TO	G14-057T 345.00 - SUNNYSIDE 345KV CKT 1	717	789	0.04554	116.3938	GEN334071 1-LEWIS CREEK 2
FDNS	00NR	0	16WP	G15_063	FROM->TO	G14-057T 345.00 - SUNNYSIDE 345KV CKT 1	717	789	0.04567	116.3886	G15074_T 345.00 - HOYT 345KV CKT 1
FDNS	00NR	0	16WP	G15_063	FROM->TO	G14-057T 345.00 - SUNNYSIDE 345KV CKT 1	717	789	0.04554	116.3847	GEN334070 1-LEWIS CREEK 1
FDNS	00NR	0	20WP	G15_063	FROM->TO	G14-057T 345.00 - SUNNYSIDE 345KV CKT 1	717	789	0.04468	116.3825	BORDER 7345.00 - WOODWARD DISTRICT EHV 345KV CKT 1
FDNS	00NR	0	16WP	G15_063	FROM->TO	G14-057T 345.00 - SUNNYSIDE 345KV CKT 1	717	789	0.04554	116.3824	GEN335204 1-NELSON UNIT 4
FDNS	00NR	0	16WP	G15_063	FROM->TO	G14-057T 345.00 - SUNNYSIDE 345KV CKT 1	717	789	0.04692	116.3614	BLANCHARD - MAUD 138KV CKT 1
FDNS	00NR	0	16WP	G15_063	FROM->TO	G14-057T 345.00 - SUNNYSIDE 345KV CKT 1	717	789	0.04567	116.356	DUNCAN (DUNCAN) 138/69/13.8KV TRANSFORMER CKT 1
FDNS	00NR	0	16WP	G15_063	FROM->TO	G14-057T 345.00 - SUNNYSIDE 345KV CKT 1	717	789	0.04567	116.356	DUNCAN (DUNCAN) 138/69/13.8KV TRANSFORMER CKT 1
FDNS	00NR	0	16WP	G15_063	FROM->TO	G14-057T 345.00 - SUNNYSIDE 345KV CKT 1	717	789	0.04554	116.3474	GEN334441 1-SABINE UNIT 5
FDNS	00NR	0	16WP	G15_063	FROM->TO	G14-057T 345.00 - SUNNYSIDE 345KV CKT 1	717	789	0.04663	116.3242	LATTA JCT - OIL CENTER 138KV CKT 1
FDNS	00NR	0	16WP	G15_063	FROM->TO	G14-057T 345.00 - SUNNYSIDE 345KV CKT 1	717	789	0.04554	116.3101	P12:161:AEPW-SWPA:BEAVER5:EROGERS5
FDNS	00NR	0	16WP	G15_063	FROM->TO	G14-057T 345.00 - SUNNYSIDE 345KV CKT 1	717	789	0.04554	116.3075	GEN300003 1-THOMAS HILL UNIT 3
FDNS	00NR	0	16WP	G15_063	FROM->TO	G14-057T 345.00 - SUNNYSIDE 345KV CKT 1	717	789	0.04554	116.3024	GEN515040 1-SEMINOLE 1G
FDNS	00NR	0	16WP	G15_063	FROM->TO	G14-057T 345.00 - SUNNYSIDE 345KV CKT 1	717	789	0.04554	116.2944	GEN334030 1-FRONTIER UNIT 1
FDNS	00NR	0	16WP	G15_063	FROM->TO	G14-057T 345.00 - SUNNYSIDE 345KV CKT 1	717	789	0.04554	116.2927	GEN334031 1-FRONTIER UNIT 2
FDNS	00NR	0	16WP	G15_063	FROM->TO	G14-057T 345.00 - SUNNYSIDE 345KV CKT 1	717	789	0.04554	116.2917	GEN337653 1-WHITE BLUFF UNIT #2
FDNS	00NR	0	16WP	G15_063	FROM->TO	G14-057T 345.00 - SUNNYSIDE 345KV CKT 1	717	789	0.04557	116.2912	P12:138:AEPW:CATOOSA4:T.S.E.-4
FDNS	00NR	0	16WP	G15_063	FROM->TO	G14-057T 345.00 - SUNNYSIDE 345KV CKT 1	717	789	0.04554	116.2752	GEN506752 1-LEBROCK GAS 1
FDNS	00NR	0	16WP	G15_063	FROM->TO	G14-057T 345.00 - SUNNYSIDE 345KV CKT 1	717	789	0.04554	116.2749	GEN506753 1-LEBROCK GAS 2
FDNS	00NR	0	16WP	G15_063	FROM->TO	G14-057T 345.00 - SUNNYSIDE 345KV CKT 1	717	789	0.0449	116.2743	TUTTLE - TUTTLE CONOCO TAP 138KV CKT 1
FDNS	00NR	0	20WP	G15_063	FROM->TO	G14-057T 345.00 - SUNNYSIDE 345KV CKT 1	717	789	0.04524	116.2669	GEN509406 1-WELSH #3
FDNS	00NR	0	20WP	G15_063	FROM->TO	G14-057T 345.00 - SUNNYSIDE 345KV CKT 1	717	789	0.04524	116.2666	GEN509404 1-WELSH #1
FDNS	00NR	0	16WP	G15_063	FROM->TO	G14-057T 345.00 - SUNNYSIDE 345KV CKT 1	717	789	0.04554	116.2603	6LAYFLD 230.00 - CARROLL 230KV CKT 1
FDNS	00NR	0	16WP	G15_063	FROM->TO	G14-057T 345.00 - SUNNYSIDE 345KV CKT 1	717	789	0.04556	116.252	8DANIEL8 500.00 - MCKNIGHT 500KV CKT 1
FDNS	00NR	0	16WP	G15_063	FROM->TO	G14-057T 345.00 - SUNNYSIDE 345KV CKT 1	717	789	0.04554	116.2455	GEN515226 1-MUSKOGEE 6G
FDNS	00NR	0	16WP	G15_063	FROM->TO	G14-057T 345.00 - SUNNYSIDE 345KV CKT 1	717	789	0.04554	116.2437	GEN337911 1-ARKANSAS NUCLEAR ONE UNIT #2
FDNS	00NR	0	16WP	G15_063	FROM->TO	G14-057T 345.00 - SUNNYSIDE 345KV CKT 1	717	789	0.0462	116.2426	BAILEY4 138.00 - SUNSHINE CANYON 138KV CKT 1
FDNS	00NR	0	16WP	G15_063	FROM->TO	G14-057T 345.00 - SUNNYSIDE 345KV CKT 1	717	789	0.04546	116.2391	P12:138:AEPW-OGE:WTH_JCT4:JENSEN4
FDNS	00NR	0	16WP	G15_063	FROM->TO	G14-057T 345.00 - SUNNYSIDE 345KV CKT 1	717	789	0.04554	116.237	P12:161:AEPW:DYESS5:ELMSPRNG:TONTITN5
FDNS	00NR	0	16WP	G15_063	FROM->TO	G14-057T 345.00 - SUNNYSIDE 345KV CKT 1	717	789	0.04551	116.2353	FULTON 115 - HOPE 115KV CKT 1
FDNS	00NR	0	16WP	G15_063	FROM->TO	G14-057T 345.00 - SUNNYSIDE 345KV CKT 1	717	789	0.04551	116.2353	FULTON 115 - HOPE 115KV CKT 1
FDNS	00NR	0	16WP	G15_063	FROM->TO	G14-057T 345.00 - SUNNYSIDE 345KV CKT 1	717	789	0.04554	116.2351	GEN300015 1-1SGPDEL 18.000
FDNS	00NR	0	16WP	G15_063	FROM->TO	G14-057T 345.00 - SUNNYSIDE 345KV CKT 1	717	789	0.0456	116.2277	G15088_T 345.00 - MOORE 345KV CKT 1
FDNS	00NR	0	16WP	G15_063	FROM->TO	G14-057T 345.00 - SUNNYSIDE 345KV CKT 1	717	789	0.04554	116.2274	GEN501811 1-RODEMACHER UNIT 1
FDNS	00NR	0	16WP	G15_063	FROM->TO	G14-057T 345.00 - SUNNYSIDE 345KV CKT 1	717	789	0.04554	116.2101	GEN337652 1-WHITE BLUFF UNIT #1
FDNS	00NR	0	16WP	G15_063	FROM->TO	G14-057T 345.00 - SUNNYSIDE 345KV CKT 1	717	789	0.04554	116.209	GEN336251 1-NINEMILE POINT UNIT#4
FDNS	00NR	0	16WP	G15_063	FROM->TO	G14-057T 345.00 - SUNNYSIDE 345KV CKT 1	717	789	0.04554	116.2056	GEN334433 1-SABINE UNIT 3
FDNS	00NR	0	16WP	G15_063	FROM->TO	G14-057T 345.00 - SUNNYSIDE 345KV CKT 1	717	789	0.04554	116.2031	GEN336831 1-BAXTER WILSON SES
FDNS	00NR	0	16WP	G15_063	FROM->TO	G14-057T 345.00 - SUNNYSIDE 345KV CKT 1	717	789	0.04565	116.1983	P12:138:AEPW:CORNVIL4:S.W.S.-4
FDNS	00NR	0	16WP	G15_063	FROM->TO	G14-057T 345.00 - SUNNYSIDE 345KV CKT 1	717	789	0.0449	116.1936	CIMARRON - TUTTLE CONOCO TAP 138KV CKT 1
FDNS	00NR	0	16WP	G15_063	FROM->TO	G14-057T 345.00 - SUNNYSIDE 345KV CKT 1	717	789	0.04555	116.1934	P12:138:AEPW:CORNVIL4:DUNCAN-4
FDNS	00NR	0	16WP	G15_063	FROM->TO	G14-057T 345.00 - SUNNYSIDE 345KV CKT 1	717	789	0.04553	116.1804	BUCKNER7 345.00 - SPEARVILLE 345KV CKT 1
FDNS	00NR	0	16WP	G15_063	FROM->TO	G14-057T 345.00 - SUNNYSIDE 345KV CKT 1	717	789	0.04553	116.1804	BUCKNER7 345.00 - SPEARVILLE 345KV CKT 1
FDNS	00NR	0	16WP	G15_063	FROM->TO	G14-057T 345.00 - SUNNYSIDE 345KV CKT 1	717	789	0.04567	116.1728	P12:69:WFEC-AEPW:COMANCH2:DUNCAN-2
FDNS	00NR	0	16WP	G15_063	FROM->TO	G14-057T 345.00 - SUNNYSIDE 345KV CKT 1	717	789	0.04554	116.1725	GEN562783 1-G15036_4 0.6900
FDNS	00NR	0	16WP	G15_063	FROM->TO	G14-057T 345.00 - SUNNYSIDE 345KV CKT 1	717	789	0.04554	116.1725	GEN562784 1-G15036_5 0.6900
FDNS	00NR	0	16WP	G15_063	FROM->TO	G14-057T 345.00 - SUNNYSIDE 345KV CKT 1	717	789	0.04205	116.1645	CANADIAN RIVER - PITTSBURG 345KV CKT 1
FDNS	00NR	0	16WP	G15_063	FROM->TO	G14-057T 345.00 - SUNNYSIDE 345KV CKT 1	717	789	0.04205	116.1645	CANADIAN RIVER - PITTSBURG 345KV CKT 1
FDNS	00NR	0	16WP	G15_063	FROM->TO	G14-057T 345.00 - SUNNYSIDE 345KV CKT 1	717	789	0.04554	116.1607	GEN505432 1-SIKESTON
FDNS	00NR	0	16WP	G15_063	FROM->TO	G14-057T 345.00 - SUNNYSIDE 345KV CKT 1	717	789	0.04601	116.16	CIMARRON - CZECH HALL 138KV CKT 1
FDNS	00NR	0	16WP	G15_063	FROM->TO	G14-057T 345.00 - SUNNYSIDE 345KV CKT 1	717	789	0.04554	116.1487	GEN515223 1-MUSKOGEE 4G
FDNS	00NR	0	16WP	G15_063	FROM->TO	G14-057T 345.00 - SUNNYSIDE 345KV CKT 1	717	789	0.04554	116.1487	GEN515225 1-MUSKOGEE 5G
FDNS	00NR	0	16WP	G15_063	FROM->TO	G14-057T 345.00 - SUNNYSIDE 345KV CKT 1	717	789	0.04549	116.147	P12:138:AEPW:WTHWF4:CLINTJC4
FDNS	00NR	0	16WP	G15_063	FROM->TO	G14-057T 345.00 - SUNNYSIDE 345KV CKT 1	717	789	0.04554	116.1455	WHITE BLUFF 500/26.0KV TRANSFORMER CKT 1
FDNS	00NR	0	16WP	G15_063	FROM->TO	G14-057T 345.00 - SUNNYSIDE 345KV CKT 1	717	789	0.04567	116.1402	HOYT - STRANGER CREEK 345KV CKT 1
FDNS	00NR	0	16WP	G15_063	FROM->TO	G14-057T 345.00 - SUNNYSIDE 345KV CKT 1	717	789	0.04567	116.1352	G15074_T 345.00 - JEFFREY ENERGY CENTER 345KV CKT 1
FDNS	00NR	0	16WP	G15_063	FROM->TO	G14-057T 345.00 - SUNNYSIDE 345KV CKT 1	717	789	0.04554	116.1317	P12:161:AEPW:EROGERS5:ECNTRTN5
FDNS	00NR	0	16WP	G15_063	FROM->TO	G14-057T 345.00 - SUNNYSIDE 345KV CKT 1	717	789	0.0455	116.1296	LAYFLD8 500.00 - MOUNT OLIVE 500KV CKT 1
FDNS	00NR	0	16WP	G15_063	FROM->TO	G14-057T 345.00 - SUNNYSIDE 345KV CKT 1	717	789	0.0455	116.1296	LAYFLD8 500.00 - MOUNT OLIVE 500KV CKT 1

SOLUTION	GROUP	SCENARIO	SEASON	SOURCE	DIRECTION	MONITORED ELEMENT	RATEA (MVA)	RATEB(MVA)	TDF	TC%LOADING (% MVA)	CONTINGENCY
FDNS	00NR	0	16WP	G15_063	FROM->TO	G14-057T 345.00 - SUNNYSIDE 345KV CKT 1	717	789	0.04611	116.1276	CIMARRON - SARA 138KV CKT 1
FDNS	00NR	0	16WP	G15_063	FROM->TO	G14-057T 345.00 - SUNNYSIDE 345KV CKT 1	717	789	0.04554	116.1253	RODEMACHER 230/22.0KV TRANSFORMER CKT 1
FDNS	00NR	0	16WP	G15_063	FROM->TO	G14-057T 345.00 - SUNNYSIDE 345KV CKT 1	717	789	0.04567	116.122	DUNCAN - TOSCO 69KV CKT 1
FDNS	00NR	0	16WP	G15_063	FROM->TO	G14-057T 345.00 - SUNNYSIDE 345KV CKT 1	717	789	0.04514	116.1219	ARBWIND4 138.00 - CARTER 138KV CKT 1
FDNS	00NR	0	16WP	G15_063	FROM->TO	G14-057T 345.00 - SUNNYSIDE 345KV CKT 1	717	789	0.04551	116.1119	HOT SPRINGS EHV - MAGNET COVE 500KV CKT 1
FDNS	00NR	0	16WP	G15_063	FROM->TO	G14-057T 345.00 - SUNNYSIDE 345KV CKT 1	717	789	0.04554	116.1118	GEN303007 1-1BC2 U2
FDNS	00NR	0	16WP	G15_063	FROM->TO	G14-057T 345.00 - SUNNYSIDE 345KV CKT 1	717	789	0.04549	116.1104	P12:138:AEPW:WTHWF4:WTH_SE4
FDNS	00NR	0	16WP	G15_063	FROM->TO	G14-057T 345.00 - SUNNYSIDE 345KV CKT 1	717	789	0.04496	116.1083	SEMINOLE - VANOSTP4 138.00 138KV CKT 1
FDNS	00NR	0	16WP	G15_063	FROM->TO	G14-057T 345.00 - SUNNYSIDE 345KV CKT 1	717	789	0.04554	116.1071	GEN303006 1-1BC2 U1
FDNS	00NR	0	16WP	G15_063	FROM->TO	G14-057T 345.00 - SUNNYSIDE 345KV CKT 1	717	789	0.04553	116.1039	MC NIEL 500/115KV TRANSFORMER CKT 1
FDNS	00NR	0	16WP	G15_063	FROM->TO	G14-057T 345.00 - SUNNYSIDE 345KV CKT 1	717	789	0.04554	116.1005	GEN337910 1-ARKANSAS NUCLEAR ONE UNIT #1
FDNS	00NR	0	16WP	G15_063	FROM->TO	G14-057T 345.00 - SUNNYSIDE 345KV CKT 1	717	789	0.04544	116.0979	CLEO CORNER - CLEOPLT4 138.00 138KV CKT 1
FDNS	00NR	0	16WP	G15_063	FROM->TO	G14-057T 345.00 - SUNNYSIDE 345KV CKT 1	717	789	0.04558	116.095	P12:69:AEPW-OMPA:COMANC-2:OMWALTR2
FDNS	00NR	0	16WP	G15_063	FROM->TO	G14-057T 345.00 - SUNNYSIDE 345KV CKT 1	717	789	0.04551	116.0928	BISMARK - HOT SPRINGS WEST BUS 115KV CKT 1
FDNS	00NR	0	16WP	G15_063	FROM->TO	G14-057T 345.00 - SUNNYSIDE 345KV CKT 1	717	789	0.04545	116.0894	G15095_T 138.00 - ROSE_VALLEY 138.00 138KV CKT 1
FDNS	00NR	0	16WP	G15_063	FROM->TO	G14-057T 345.00 - SUNNYSIDE 345KV CKT 1	717	789	0.04554	116.0879	NELSON 230/20.0KV TRANSFORMER CKT 1
FDNS	00NR	0	16WP	G15_063	FROM->TO	G14-057T 345.00 - SUNNYSIDE 345KV CKT 1	717	789	0.04554	116.0848	GEN336191 1-LITTLE GYPSY UNIT#3
FDNS	00NR	0	16WP	G15_063	FROM->TO	G14-057T 345.00 - SUNNYSIDE 345KV CKT 1	717	789	0.04544	116.0841	CLEOPLT4 138.00 - MEN TAP 138KV CKT 1
FDNS	00NR	0	16WP	G15_063	FROM->TO	G14-057T 345.00 - SUNNYSIDE 345KV CKT 1	717	789	0.04554	116.0827	GEN300010 1-ST FRANCIS UNIT 1
FDNS	00NR	0	16WP	G15_063	FROM->TO	G14-057T 345.00 - SUNNYSIDE 345KV CKT 1	717	789	0.04601	116.0767	CZECH HALL - XEROX 138KV CKT 1
FDNS	00NR	0	16WP	G15_063	FROM->TO	G14-057T 345.00 - SUNNYSIDE 345KV CKT 1	717	789	0.0462	116.0749	BAILEY4 138.00 - WESTMOORE 138KV CKT 1
FDNS	00NR	0	16WP	G15_063	FROM->TO	G14-057T 345.00 - SUNNYSIDE 345KV CKT 1	717	789	0.04601	116.0723	MORGAN - XEROX 138KV CKT 1
FDNS	00NR	0	16WP	G15_063	FROM->TO	G14-057T 345.00 - SUNNYSIDE 345KV CKT 1	717	789	0.04544	116.0722	IMO TAP - MEN TAP 138KV CKT 1
FDNS	00NR	0	16WP	G15_063	FROM->TO	G14-057T 345.00 - SUNNYSIDE 345KV CKT 1	717	789	0.046	116.0683	BENTON - WICHITA 345KV CKT 1
FDNS	00NR	0	16WP	G15_063	FROM->TO	G14-057T 345.00 - SUNNYSIDE 345KV CKT 1	717	789	0.04556	116.0654	P12:138:AEPW:N.E.S.-4:CATOOSA4
FDNS	00NR	0	16WP	G15_063	FROM->TO	G14-057T 345.00 - SUNNYSIDE 345KV CKT 1	717	789	0.04554	116.0582	GEN335614 1-WILLOW GLENN UNIT#4
FDNS	00NR	0	16WP	G15_063	FROM->TO	G14-057T 345.00 - SUNNYSIDE 345KV CKT 1	717	789	0.04567	116.0523	COMANCHE TAP - TOSCO 69KV CKT 1
FDNS	00NR	0	16WP	G15_063	FROM->TO	G14-057T 345.00 - SUNNYSIDE 345KV CKT 1	717	789	0.04601	116.0486	MORGAN - MUSTANG 138KV CKT 1
FDNS	00NR	0	16WP	G15_063	FROM->TO	G14-057T 345.00 - SUNNYSIDE 345KV CKT 1	717	789	0.04663	116.0475	LASALLE - LATTA JCT 138KV CKT 1
FDNS	00NR	0	16WP	G15_063	FROM->TO	G14-057T 345.00 - SUNNYSIDE 345KV CKT 1	717	789	0.04554	116.0474	GEN303008 1-1BC2 U3
FDNS	00NR	0	16WP	G15_063	FROM->TO	G14-057T 345.00 - SUNNYSIDE 345KV CKT 1	717	789	0.04551	116.0404	ALPINE AECC - BISMARK 115KV CKT 1
FDNS	00NR	0	16WP	G15_063	FROM->TO	G14-057T 345.00 - SUNNYSIDE 345KV CKT 1	717	789	0.04554	116.0326	GEN300011 1-ST FRANCIS UNIT 2
FDNS	00NR	0	16WP	G15_063	FROM->TO	G14-057T 345.00 - SUNNYSIDE 345KV CKT 1	717	789	0.04726	116.0221	CANADIAN - NOBLE 138KV CKT 1
FDNS	00NR	0	16WP	G15_063	FROM->TO	G14-057T 345.00 - SUNNYSIDE 345KV CKT 1	717	789	0.04545	116.0217	NOEL_SW 138.00 - ROSE_VALLEY 138.00 138KV CKT 1
FDNS	00NR	0	16WP	G15_063	FROM->TO	G14-057T 345.00 - SUNNYSIDE 345KV CKT 1	717	789	0.04554	116.0207	GEN336170 1-GULF OXY U4
FDNS	00NR	0	16WP	G15_063	FROM->TO	G14-057T 345.00 - SUNNYSIDE 345KV CKT 1	717	789	0.04554	116.0145	GEN336464 1-MICHOUD UNIT #3
FDNS	00NR	0	16WP	G15_063	FROM->TO	G14-057T 345.00 - SUNNYSIDE 345KV CKT 1	717	789	0.0456	116.0109	7JASPER 345.00 - BLACKBERRY 345KV CKT 1
FDNS	00NR	0	16WP	G15_063	FROM->TO	G14-057T 345.00 - SUNNYSIDE 345KV CKT 1	717	789	0.04554	116.0107	CYPRESS - HARTBURG 500KV CKT 1
FDNS	00NR	0	16WP	G15_063	FROM->TO	G14-057T 345.00 - SUNNYSIDE 345KV CKT 1	717	789	0.04545	116.0055	WEATHERFORD JCT. - WEATHERFORD SOUTHEAST 138KV CKT 1
FDNS	00NR	0	16WP	G15_063	FROM->TO	G14-057T 345.00 - SUNNYSIDE 345KV CKT 1	717	789	0.04545	116.0055	WEATHERFORD JCT. - WEATHERFORD SOUTHEAST 138KV CKT 1
FDNS	00NR	0	16WP	G15_063	FROM->TO	G14-057T 345.00 - SUNNYSIDE 345KV CKT 1	717	789	0.04555	116.0021	CHISHOLM6 230.00 - ELK CITY 230KV 230KV CKT 1
FDNS	00NR	0	16WP	G15_063	FROM->TO	G14-057T 345.00 - SUNNYSIDE 345KV CKT 1	717	789	0.04724	116.0005	P12:138:OKGE:3TERM27
FDNS	00NR	0	16WP	G15_063	FROM->TO	G14-057T 345.00 - SUNNYSIDE 345KV CKT 1	717	789	0.04555	116.0004	ELK CITY 230KV (ELKCTY-6) 230/138/13.8KV TRANSFORMER CKT 1
FDNS	00NR	0	16WP	G15_063	FROM->TO	G14-057T 345.00 - SUNNYSIDE 345KV CKT 1	717	789	0.04555	116.0004	ELK CITY 230KV (ELKCTY-6) 230/138/13.8KV TRANSFORMER CKT 1
FDNS	00NR	0	16WP	G15_063	FROM->TO	G14-057T 345.00 - SUNNYSIDE 345KV CKT 1	717	789	0.04554	115.9993	GEN300016 1-1G1GPDEL 18.000
FDNS	00NR	0	16WP	G15_063	FROM->TO	G14-057T 345.00 - SUNNYSIDE 345KV CKT 1	717	789	0.04567	115.9982	COMANCHE - COMANCHE TAP 69KV CKT 1
FDNS	00NR	0	16WP	G15_063	FROM->TO	G14-057T 345.00 - SUNNYSIDE 345KV CKT 1	717	789	0.04554	115.997	8CAJUN2 500/24.0KV TRANSFORMER CKT 1
FDNS	00NR	0	16WP	G15_063	FROM->TO	G14-057T 345.00 - SUNNYSIDE 345KV CKT 1	717	789	0.04551	115.9968	ALPINE AECC - AMITY SS 115KV CKT 1
FDNS	00NR	0	16WP	G15_063	FROM->TO	G14-057T 345.00 - SUNNYSIDE 345KV CKT 1	717	789	0.04571	115.9966	ANADARKO - SEQUOYAHJ4 138.00 138KV CKT 1
FDNS	00NR	0	16WP	G15_063	FROM->TO	G14-057T 345.00 - SUNNYSIDE 345KV CKT 1	717	789	0.04571	115.9953	CORN TAP - SEQUOYAHJ4 138.00 138KV CKT 1
FDNS	00NR	0	16WP	G15_063	FROM->TO	G14-057T 345.00 - SUNNYSIDE 345KV CKT 1	717	789	0.04555	115.9874	P12:138:OKGE-AEPW:JENSEN4:REDROCKRD4
FDNS	00NR	0	16WP	G15_063	FROM->TO	G14-057T 345.00 - SUNNYSIDE 345KV CKT 1	717	789	0.04571	115.9797	SWISSVALE - WEST GARDNER 345KV CKT 1
FDNS	00NR	0	16WP	G15_063	FROM->TO	G14-057T 345.00 - SUNNYSIDE 345KV CKT 1	717	789	0.04581	115.9738	BLACKBERRY - NEOSHO 345KV CKT 1
FDNS	00NR	0	16WP	G15_063	FROM->TO	G14-057T 345.00 - SUNNYSIDE 345KV CKT 1	717	789	0.04581	115.9738	BLACKBERRY - NEOSHO 345KV CKT 1
FDNS	00NR	0	16WP	G15_063	FROM->TO	G14-057T 345.00 - SUNNYSIDE 345KV CKT 1	717	789	0.04554	115.9724	GEN501910 1-ACADIA UNIT ST1
FDNS	00NR	0	16WP	G15_063	FROM->TO	G14-057T 345.00 - SUNNYSIDE 345KV CKT 1	717	789	0.04841	115.97	DRAPER LAKE - SEMINOLE 345KV CKT 1
FDNS	00NR	0	16WP	G15_063	FROM->TO	G14-057T 345.00 - SUNNYSIDE 345KV CKT 1	717	789	0.04841	115.97	DRAPER LAKE - SEMINOLE 345KV CKT 2
FDNS	00NR	0	16WP	G15_063	FROM->TO	G14-057T 345.00 - SUNNYSIDE 345KV CKT 1	717	789	0.04554	115.9681	P12:138:AEPW:R.S.S.-4:S.HUD.-4
FDNS	00NR	0	16WP	G15_063	FROM->TO	G14-057T 345.00 - SUNNYSIDE 345KV CKT 1	717	789	0.04554	115.961	GEN337041 1-GERALD ANDRUS
FDNS	00NR	0	16WP	G15_063	FROM->TO	G14-057T 345.00 - SUNNYSIDE 345KV CKT 1	717	789	0.04565	115.9557	WALTERS - WALTERS 69KV CKT 1
FDNS	00NR	0	16WP	G15_063	FROM->TO	G14-057T 345.00 - SUNNYSIDE 345KV CKT 1	717	789	0.04561	115.954	7LUTESVIL 345.00 - 7ST FRANC 345.00 345KV CKT 1
FDNS	00NR	0	16WP	G15_063	FROM->TO	G14-057T 345.00 - SUNNYSIDE 345KV CKT 1	717	789	0.04545	115.9528	P12:138:AEPW:REDROCKRD4:WTH_JCT4
FDNS	00NR	0	16WP	G15_063	FROM->TO	G14-057T 345.00 - SUNNYSIDE 345KV CKT 1	717	789	0.0455	115.9432	ETTA (DUKE HOTSPRINGS) - MC NIEL 500KV CKT 1
FDNS	00NR	0	16WP	G15_063	FROM->TO	G14-057T 345.00 - SUNNYSIDE 345KV CKT 1	717	789	0.04611	115.9398	SARA - STHLAKE4 138.00 138KV CKT 1
FDNS	00NR	0	16WP	G15_063	FROM->TO	G14-057T 345.00 - SUNNYSIDE 345KV CKT 1	717	789	0.04726	115.9306	NOBLE - PURCELL4 138.00 138KV CKT 1
FDNS	00NR	0	16WP	G15_063	FROM->TO	G14-057T 345.00 - SUNNYSIDE 345KV CKT 1	717	789	0.04554	115.9293	P12:138:AEPW:YARCH-S4:T.S.E.-4
FDNS	00NR	0	16WP	G15_063	FROM->TO	G14-057T 345.00 - SUNNYSIDE 345KV CKT 1	717	789	0.04566	115.9283	NORGE ROAD - SOUTHWESTERN STATION 138KV CKT 1
FDNS	00NR	0	16WP	G15_063	FROM->TO	G14-057T 345.00 - SUNNYSIDE 345KV CKT 1	717	789	0.04566	115.9283	NORGE ROAD - SOUTHWESTERN STATION 138KV CKT 1
FDNS	00NR	0	16WP	G15_063	FROM->TO	G14-057T 345.00 - SUNNYSIDE 345KV CKT 1	717	789	0.04558	115.926	LAWTON RELIFT TAP - OMPA-WALTERS 69KV CKT 1
FDNS	00NR	0	16WP	G15_063	FROM->TO	G14-057T 345.00 - SUNNYSIDE 345KV CKT 1	717	789	0.04554	115.9231	P12:138:AEPW:BA_71ST4:T.S.E.-4
FDNS	00NR	0	16WP	G15_063	FROM->TO	G14-057T 345.00 - SUNNYSIDE 345KV CKT 1	717	789	0.04554	115.9227	P12:69:AEPW:NROGERS2:ECNTRTN2
FDNS	00NR	0	16WP	G15_063	FROM->TO	G14-057T 345.00 - SUNNYSIDE 345KV CKT 1	717	789	0.04554	115.9219	GEN336801 1-BAXTER WILSON UNIT #1
FDNS	00NR	0	16WP	G15_063	FROM->TO	G14-057T 345.00 - SUNNYSIDE 345KV CKT 1	717	789	0.04554	115.9198	SABINE 230/24.0KV TRANSFORMER CKT 1
FDNS	00NR	0	16WP	G15_063	FROM->TO	G14-057T 345.00 - SUNNYSIDE 345KV CKT 1	717	789	0.0462	115.919	FRANKLIN SW - WESTMOORE 138KV CKT 1
FDNS	00NR	0	16WP	G15_063	FROM->TO	G14-057T 345.00 - SUNNYSIDE 345KV CKT 1	717	789	0.04563	115.9167	8WNEWMADRID 500.00 - DELL 500 500KV CKT 1
FDNS	00NR	0	16WP	G15_063	FROM->TO	G14-057T 345.00 - SUNNYSIDE 345KV CKT 1	717	789	0.04611	115.9108	MCCLAIN - STHLAKE4 138.00 138KV CKT 1
FDNS	00NR	0	16WP	G15_063	FROM->TO	G14-057T 345.00 - SUNNYSIDE 345KV CKT 1	717	789	0.04464	115.9103	ARBUCKLE - VANOSTP4 138.00 138KV CKT 1
FDNS	00NR	0	16WP	G15_063	FROM->TO	G14-057T 345.00 - SUNNYSIDE 345KV CKT 1	717	789	0.04546	115.9088	ENOWILT - LONE OAK 138KV CKT 1
FDNS	00NR	0	16WP	G15_063	FROM->TO	G14-057T 345.00 - SUNNYSIDE 345KV CKT 1	717	789	0.04574	115.904	P12:138:AEPW-OGE:SHIDLER4:OSAGE 4

SOLUTION	GROUP	SCENARIO	SEASON	SOURCE	DIRECTION	MONITORED ELEMENT	RATEA (MVA)	RATEB(MVA)	TDF	TC%LOADING (% MVA)	CONTINGENCY
FDNS	00NR	0	16WP	G15_063	FROM->TO	G14-057T 345.00 - SUNNYSIDE 345KV CKT 1	717	789	0.04554	115.9018	FRONTIER 345/18.0KV TRANSFORMER CKT 1
FDNS	00NR	0	16WP	G15_063	FROM->TO	G14-057T 345.00 - SUNNYSIDE 345KV CKT 1	717	789	0.04554	115.9002	FRONTIER 345/18.0KV TRANSFORMER CKT 1
FDNS	00NR	0	16WP	G15_063	FROM->TO	G14-057T 345.00 - SUNNYSIDE 345KV CKT 1	717	789	0.04546	115.8998	ENOWILT - SARDIS 138KV CKT 1
FDNS	00NR	0	16WP	G15_063	FROM->TO	G14-057T 345.00 - SUNNYSIDE 345KV CKT 1	717	789	0.04554	115.8945	ESSEX UNIT 2 500/18.0KV TRANSFORMER CKT 1
FDNS	00NR	0	16WP	G15_063	FROM->TO	G14-057T 345.00 - SUNNYSIDE 345KV CKT 1	717	789	0.04554	115.8914	P12:161:AEPW:CHAMSPR5:FARMING5
FDNS	00NR	0	16WP	G15_063	FROM->TO	G14-057T 345.00 - SUNNYSIDE 345KV CKT 1	717	789	0.04569	115.8885	EMPORIA ENERGY CENTER - SWISSVALE 345KV CKT 1
FDNS	00NR	0	16WP	G15_063	FROM->TO	G14-057T 345.00 - SUNNYSIDE 345KV CKT 1	717	789	0.04663	115.8881	LASALLE - STONEWAL LH138.00 138KV CKT 1
FDNS	00NR	0	16WP	G15_063	FROM->TO	G14-057T 345.00 - SUNNYSIDE 345KV CKT 1	717	789	0.04545	115.8755	HINTON - WEATHERFORD JCT. 138KV CKT 1
FDNS	00NR	0	16WP	G15_063	FROM->TO	G14-057T 345.00 - SUNNYSIDE 345KV CKT 1	717	789	0.04663	115.8727	STONEWAL LH138.00 - TUPELO TAP 138KV CKT 1
FDNS	00NR	0	16WP	G15_063	FROM->TO	G14-057T 345.00 - SUNNYSIDE 345KV CKT 1	717	789	0.04554	115.872	GEN505616 1-BROKEN BOW
FDNS	00NR	0	16WP	G15_063	FROM->TO	G14-057T 345.00 - SUNNYSIDE 345KV CKT 1	717	789	0.04549	115.8712	WEATHERFORD TAP - WEATHERFORD WIND FARM 138KV CKT 1
FDNS	00NR	0	16WP	G15_063	FROM->TO	G14-057T 345.00 - SUNNYSIDE 345KV CKT 1	717	789	0.04557	115.8701	CLINTON JUNCTION - ELK CITY 138KV CKT 1
FDNS	00NR	0	16WP	G15_063	FROM->TO	G14-057T 345.00 - SUNNYSIDE 345KV CKT 1	717	789	0.04557	115.8701	CLINTON JUNCTION - ELK CITY 138KV CKT 1
FDNS	00NR	0	16WP	G15_063	FROM->TO	G14-057T 345.00 - SUNNYSIDE 345KV CKT 1	717	789	0.04551	115.8677	HOPE - MCNAB REC 115KV CKT 1
FDNS	00NR	0	16WP	G15_063	FROM->TO	G14-057T 345.00 - SUNNYSIDE 345KV CKT 1	717	789	0.04554	115.8648	LEWIS CREEK SWITCHYARD 138/22.0KV TRANSFORMER CKT 1
FDNS	00NR	0	16WP	G15_063	FROM->TO	G14-057T 345.00 - SUNNYSIDE 345KV CKT 1	717	789	0.04546	115.8625	CLAYTON - SARDIS 138KV CKT 1
FDNS	00NR	0	16WP	G15_063	FROM->TO	G14-057T 345.00 - SUNNYSIDE 345KV CKT 1	717	789	0.04554	115.8599	LEWIS CREEK SWITCHYARD 138/22.0KV TRANSFORMER CKT 1
FDNS	00NR	0	16WP	G15_063	FROM->TO	G14-057T 345.00 - SUNNYSIDE 345KV CKT 1	717	789	0.04558	115.8591	OMPA-WALTERS - WALTERS 69KV CKT 1
FDNS	00NR	0	16WP	G15_063	FROM->TO	G14-057T 345.00 - SUNNYSIDE 345KV CKT 1	717	789	0.04558	115.8591	OMPA-WALTERS - WALTERS 69KV CKT 1
FDNS	00NR	0	16WP	G15_063	FROM->TO	G14-057T 345.00 - SUNNYSIDE 345KV CKT 1	717	789	0.04565	115.8588	SOUTHWESTERN STATION - VERDEN 138KV CKT 1
FDNS	00NR	0	16WP	G15_063	FROM->TO	G14-057T 345.00 - SUNNYSIDE 345KV CKT 1	717	789	0.04551	115.8587	P12:115:AEPW:TURK3:HOPE3
FDNS	00NR	0	16WP	G15_063	FROM->TO	G14-057T 345.00 - SUNNYSIDE 345KV CKT 1	717	789	0.04587	115.8523	EMPORIA ENERGY CENTER - G14_001T 345.00 345KV CKT 1
FDNS	00NR	0	16WP	G15_063	FROM->TO	G14-057T 345.00 - SUNNYSIDE 345KV CKT 1	717	789	0.0457	115.8516	MORISNT4 138.00 - STILLWATER 138KV CKT 1
FDNS	00NR	0	16WP	G15_063	FROM->TO	G14-057T 345.00 - SUNNYSIDE 345KV CKT 1	717	789	0.04554	115.8466	GEN501970 1-EVANGELINE UNIT 7
FDNS	00NR	0	16WP	G15_063	FROM->TO	G14-057T 345.00 - SUNNYSIDE 345KV CKT 1	717	789	0.04573	115.8461	P12:138:OKGE:3TERM2
FDNS	00NR	0	16WP	G15_063	FROM->TO	G14-057T 345.00 - SUNNYSIDE 345KV CKT 1	717	789	0.04565	115.8413	P12:69:WFEC-AEPW:COMANCH2:WALTRS-2
FDNS	00NR	0	16WP	G15_063	FROM->TO	G14-057T 345.00 - SUNNYSIDE 345KV CKT 1	717	789	0.04553	115.8385	COUCH SES - MC NIEL 115KV CKT 1
FDNS	00NR	0	16WP	G15_063	FROM->TO	G14-057T 345.00 - SUNNYSIDE 345KV CKT 1	717	789	0.04565	115.8384	NORTH 29TH CHICKASHA - VERDEN 138KV CKT 1
FDNS	00NR	0	16WP	G15_063	FROM->TO	G14-057T 345.00 - SUNNYSIDE 345KV CKT 1	717	789	0.04687	115.8372	CLARKSVILLE - ONETA 345KV CKT 1
FDNS	00NR	0	16WP	G15_063	FROM->TO	G14-057T 345.00 - SUNNYSIDE 345KV CKT 1	717	789	0.04687	115.8372	CLARKSVILLE - ONETA 345KV CKT 1
FDNS	00NR	0	16WP	G15_063	FROM->TO	G14-057T 345.00 - SUNNYSIDE 345KV CKT 1	717	789	0.04546	115.8369	P12:138:AEPW-SWPA:LONEOAK4:BRKNBW4
FDNS	00NR	0	16WP	G15_063	FROM->TO	G14-057T 345.00 - SUNNYSIDE 345KV CKT 1	717	789	0.04551	115.8362	MCNAB REC - Turk 115 115KV CKT 1
FDNS	00NR	0	16WP	G15_063	FROM->TO	G14-057T 345.00 - SUNNYSIDE 345KV CKT 1	717	789	0.04551	115.8362	TURK (TURK 1) 138/115/13.2KV TRANSFORMER CKT 1
FDNS	00NR	0	16WP	G15_063	FROM->TO	G14-057T 345.00 - SUNNYSIDE 345KV CKT 1	717	789	0.04551	115.8362	TURK (TURK 1) 138/115/13.2KV TRANSFORMER CKT 1
FDNS	00NR	0	16WP	G15_063	FROM->TO	G14-057T 345.00 - SUNNYSIDE 345KV CKT 1	717	789	0.04554	115.8349	GEN334392 1-EXXON MOBIL IPP 1
FDNS	00NR	0	16WP	G15_063	FROM->TO	G14-057T 345.00 - SUNNYSIDE 345KV CKT 1	717	789	0.04554	115.8273	GEN334393 1-EXXON MOBIL IPP 2
FDNS	00NR	0	16WP	G15_063	FROM->TO	G14-057T 345.00 - SUNNYSIDE 345KV CKT 1	717	789	0.04554	115.8273	GEN334394 1-EXXON MOBIL IPP 3
FDNS	00NR	0	16WP	G15_063	FROM->TO	G14-057T 345.00 - SUNNYSIDE 345KV CKT 1	717	789	0.04545	115.8245	HINTON - REDROCKRD4 138.00 138KV CKT 1
FDNS	00NR	0	16WP	G15_063	FROM->TO	G14-057T 345.00 - SUNNYSIDE 345KV CKT 1	717	789	0.04546	115.8219	CLAYTON - NASHOBA 138KV CKT 1
FDNS	00NR	0	16WP	G15_063	FROM->TO	G14-057T 345.00 - SUNNYSIDE 345KV CKT 1	717	789	0.04559	115.8217	P12:138:OKGE:3TERM12
FDNS	00NR	0	16WP	G15_063	FROM->TO	G14-057T 345.00 - SUNNYSIDE 345KV CKT 1	717	789	0.04554	115.8198	GEN336222 1-LITTLE GYPSY UNIT#2
FDNS	00NR	0	16WP	G15_063	FROM->TO	G14-057T 345.00 - SUNNYSIDE 345KV CKT 1	717	789	0.04676	115.8179	MARIETTA - MARIETTA4 138.00 138KV CKT 1
FDNS	00NR	0	16WP	G15_063	FROM->TO	G14-057T 345.00 - SUNNYSIDE 345KV CKT 1	717	789	0.04563	115.8089	7JASPER 345.00 - MORGAN 345KV CKT 1
FDNS	00NR	0	16WP	G15_063	FROM->TO	G14-057T 345.00 - SUNNYSIDE 345KV CKT 1	717	789	0.04546	115.8088	BETHEL - NASHOBA 138KV CKT 1
FDNS	00NR	0	16WP	G15_063	FROM->TO	G14-057T 345.00 - SUNNYSIDE 345KV CKT 1	717	789	0.04555	115.802	P12:138:AEPW:R.S.S-4:T.P.S.-4
FDNS	00NR	0	16WP	G15_063	FROM->TO	G14-057T 345.00 - SUNNYSIDE 345KV CKT 1	717	789	0.04571	115.7996	FRANKLIN - FRANKLIN SW 138KV CKT 1
FDNS	00NR	0	16WP	G15_063	FROM->TO	G14-057T 345.00 - SUNNYSIDE 345KV CKT 1	717	789	0.04554	115.7994	GEN506749 1-EASTMAN GENERATION A
FDNS	00NR	0	16WP	G15_063	FROM->TO	G14-057T 345.00 - SUNNYSIDE 345KV CKT 1	717	789	0.04554	115.7979	GEN334431 1-SABINE UNIT 1
FDNS	00NR	0	16WP	G15_063	FROM->TO	G14-057T 345.00 - SUNNYSIDE 345KV CKT 1	717	789	0.04554	115.7978	GEN334432 1-SABINE UNIT 2
FDNS	00NR	0	16WP	G15_063	FROM->TO	G14-057T 345.00 - SUNNYSIDE 345KV CKT 1	717	789	0.04587	115.7934	G14_001T 345.00 - WICHITA 345KV CKT 1
FDNS	00NR	0	16WP	G15_063	FROM->TO	G14-057T 345.00 - SUNNYSIDE 345KV CKT 1	717	789	0.04554	115.7899	GEN501971 1-EVANGELINE UNIT 7-1
FDNS	00NR	0	16WP	G15_063	FROM->TO	G14-057T 345.00 - SUNNYSIDE 345KV CKT 1	717	789	0.04554	115.7899	GEN501972 1-EVANGELINE UNIT 7-2
FDNS	00NR	0	16WP	G15_063	FROM->TO	G14-057T 345.00 - SUNNYSIDE 345KV CKT 1	717	789	0.04554	115.7896	GEN336152 1-WATERFORD UNIT#2
FDNS	00NR	0	16WP	G15_063	FROM->TO	G14-057T 345.00 - SUNNYSIDE 345KV CKT 1	717	789	0.04554	115.7885	GEN336151 1-WATERFORD UNIT#1
FDNS	00NR	0	16WP	G15_063	FROM->TO	G14-057T 345.00 - SUNNYSIDE 345KV CKT 1	717	789	0.04559	115.7879	FLETCHER - MARLOW JCT 69KV CKT 1
FDNS	00NR	0	16WP	G15_063	FROM->TO	G14-057T 345.00 - SUNNYSIDE 345KV CKT 1	717	789	0.04549	115.7843	WEATHERFORD SOUTHEAST - WEATHERFORD TAP 138KV CKT 1
FDNS	00NR	0	16WP	G15_063	FROM->TO	G14-057T 345.00 - SUNNYSIDE 345KV CKT 1	717	789	0.04566	115.7829	CORNVILLE - NORGE ROAD 138KV CKT 1
FDNS	00NR	0	16WP	G15_063	FROM->TO	G14-057T 345.00 - SUNNYSIDE 345KV CKT 1	717	789	0.04566	115.7829	CORNVILLE - NORGE ROAD 138KV CKT 1
FDNS	00NR	0	16WP	G15_063	FROM->TO	G14-057T 345.00 - SUNNYSIDE 345KV CKT 1	717	789	0.03089	115.7778	GRACEMONT - LAWTON EASTSIDE 345KV CKT 1
FDNS	00NR	0	16WP	G15_063	FROM->TO	G14-057T 345.00 - SUNNYSIDE 345KV CKT 1	717	789	0.03089	115.7778	GRACEMONT - LAWTON EASTSIDE 345KV CKT 1
FDNS	00NR	0	16WP	G15_063	FROM->TO	G14-057T 345.00 - SUNNYSIDE 345KV CKT 1	717	789	0.04565	115.7745	CORNVILLE - NORTH 29TH CHICKASHA 138KV CKT 1
FDNS	00NR	0	16WP	G15_063	FROM->TO	G14-057T 345.00 - SUNNYSIDE 345KV CKT 1	717	789	0.04555	115.7403	Canadian Pump Station - REDROCKRD4 138.00 138KV CKT 1
FDNS	00NR	0	16WP	G15_063	FROM->TO	G14-057T 345.00 - SUNNYSIDE 345KV CKT 1	717	789	0.04574	115.7322	P12:138:OKGE:3TERM47
FDNS	00NR	0	16WP	G15_063	FROM->TO	G14-057T 345.00 - SUNNYSIDE 345KV CKT 1	717	789	0.04549	115.7304	CLINTON JUNCTION - CLINTON NATURAL GAS TAP 138KV CKT 1
FDNS	00NR	0	16WP	G15_063	FROM->TO	G14-057T 345.00 - SUNNYSIDE 345KV CKT 1	717	789	0.04726	115.7216	PURCELL4 138.00 - WALNUT CREEK 138KV CKT 1
FDNS	00NR	0	16WP	G15_063	FROM->TO	G14-057T 345.00 - SUNNYSIDE 345KV CKT 1	717	789	0.04584	115.7197	HAMMETT TAP - HORSESHOE LAKE 138KV CKT 1
FDNS	00NR	0	20WP	G15_063	FROM->TO	G14-057T 345.00 - SUNNYSIDE 345KV CKT 1	717	789	0.04613	115.7085	CORN TAP - NAPLESTP 138.00 138KV CKT 1
FDNS	00NR	0	16WP	G15_063	FROM->TO	G14-057T 345.00 - SUNNYSIDE 345KV CKT 1	717	789	0.04565	115.6692	COMANCHE - WALTERS 69KV CKT 1
FDNS	00NR	0	20WP	G15_063	FROM->TO	G14-057T 345.00 - SUNNYSIDE 345KV CKT 1	717	789	0.04518	115.6541	7SAREPTA% 345.00 - LONGWOOD 345KV CKT 1
FDNS	00NR	0	20WP	G15_063	FROM->TO	G14-057T 345.00 - SUNNYSIDE 345KV CKT 1	717	789	0.04518	115.6541	7SAREPTA% 345.00 - LONGWOOD 345KV CKT 1
FDNS	00NR	0	20WP	G15_063	FROM->TO	G14-057T 345.00 - SUNNYSIDE 345KV CKT 1	717	789	0.04613	115.6237	NAPLESTP 138.00 - PAYNE 138.00 138KV CKT 1
FDNS	00NR	0	20WP	G15_063	FROM->TO	G14-057T 345.00 - SUNNYSIDE 345KV CKT 1	717	789	0.04524	115.5383	GEN336821 1-GRAND GULF UNIT
FDNS	00NR	0	20WP	G15_063	FROM->TO	G14-057T 345.00 - SUNNYSIDE 345KV CKT 1	717	789	0.04468	115.4791	BORDER 7345.00 - TUCO_2 345.00 345KV CKT 1
FDNS	00NR	0	20WP	G15_063	FROM->TO	G14-057T 345.00 - SUNNYSIDE 345KV CKT 1	717	789	0.0457	115.441	ANADARKO - POCASSETT 138KV CKT 1
FDNS	00NR	0	20WP	G15_063	FROM->TO	G14-057T 345.00 - SUNNYSIDE 345KV CKT 1	717	789	0.04524	115.4317	GEN336153 1-WATERFORD UNIT#3
FDNS	00NR	0	20WP	G15_063	FROM->TO	G14-057T 345.00 - SUNNYSIDE 345KV CKT 1	717	789	0.04605	115.3645	COMANCHE - LOCO 138KV CKT 1
FDNS	00NR	0	20WP	G15_063	FROM->TO	G14-057T 345.00 - SUNNYSIDE 345KV CKT 1	717	789	0.04778	115.36	CLEVELAND - TULSA NORTH 345KV CKT 1
FDNS	00NR	0	20WP	G15_063	FROM->TO	G14-057T 345.00 - SUNNYSIDE 345KV CKT 1	717	789	0.04778	115.36	CLEVELAND - TULSA NORTH 345KV CKT 1
FDNS	00NR	0	20WP	G15_063	FROM->TO	G14-057T 345.00 - SUNNYSIDE 345KV CKT 1	717	789	0.0457	115.2933	POCASSETT - TUTTLE 138KV CKT 1

SOLUTION	GROUP	SCENARIO	SEASON	SOURCE	DIRECTION	MONITORED ELEMENT	RATEA (MVA)	RATEB(MVA)	TDF	TC%LOADING (% MVA)	CONTINGENCY
FDNS	00NR	0	16WP	G15_063	FROM->TO	G14-057T 345.00 - SUNNYSIDE 345KV CKT 1	717	789	0.04554	115.2654	803-OKLAUNION
FDNS	00NR	0	20WP	G15_063	FROM->TO	G14-057T 345.00 - SUNNYSIDE 345KV CKT 1	717	789	0.04524	115.2528	DOLET HILLS - SOUTHWEST SHREVEPORT 345KV CKT 1
FDNS	00NR	0	20WP	G15_063	FROM->TO	G14-057T 345.00 - SUNNYSIDE 345KV CKT 1	717	789	0.04524	115.2528	DOLET HILLS - SOUTHWEST SHREVEPORT 345KV CKT 1
FDNS	00NR	0	16WP	G15_063	FROM->TO	G14-057T 345.00 - SUNNYSIDE 345KV CKT 1	717	789	0.04484	115.142	P12:138:OKGE:3TERM39
FDNS	00NR	0	20WP	G15_063	FROM->TO	G14-057T 345.00 - SUNNYSIDE 345KV CKT 1	717	789	0.04524	115.135	GEN335831 1-RIVERBEND UNIT#1
FDNS	00NR	0	20WP	G15_063	FROM->TO	G14-057T 345.00 - SUNNYSIDE 345KV CKT 1	717	789	0.0573	115.0999	ARCADIA - NORTHWEST 345KV CKT 1
FDNS	00NR	0	20WP	G15_063	FROM->TO	G14-057T 345.00 - SUNNYSIDE 345KV CKT 1	717	789	0.04524	115.0972	GRAND GULF 500/22.0KV TRANSFORMER CKT 1
FDNS	00NR	0	20WP	G15_063	FROM->TO	G14-057T 345.00 - SUNNYSIDE 345KV CKT 1	717	789	0.0452	115.0303	7SAREPTA% 345.00 - ELDORADO EHV 345KV CKT 1
FDNS	00NR	0	20WP	G15_063	FROM->TO	G14-057T 345.00 - SUNNYSIDE 345KV CKT 1	717	789	0.0452	115.0301	3TR3AR8EL7EL
FDNS	00NR	0	20WP	G15_063	FROM->TO	G14-057T 345.00 - SUNNYSIDE 345KV CKT 1	717	789	0.0452	115.0196	ELDORADO EHV 500/345KV TRANSFORMER CKT 1
FDNS	00NR	0	20WP	G15_063	FROM->TO	G14-057T 345.00 - SUNNYSIDE 345KV CKT 1	717	789	0.04543	115.0113	P12:138:AEPW:DUNCAN-4:L.E.S.-4
FDNS	00NR	0	20WP	G15_063	FROM->TO	G14-057T 345.00 - SUNNYSIDE 345KV CKT 1	717	789	0.04524	114.9624	GEN515577 1-ARBWND11 0.6900
FDNS	00NR	0	16WP	G15_063	FROM->TO	G14-057T 345.00 - SUNNYSIDE 345KV CKT 1	717	789	0.04559	114.9333	RANCHRD7 345.00 - SOONER 345KV CKT 1
FDNS	00NR	0	20WP	G15_063	FROM->TO	G14-057T 345.00 - SUNNYSIDE 345KV CKT 1	717	789	0.04144	114.9295	CANADIAN RIVER - MUSKOGEE 345KV CKT 1
FDNS	00NR	0	20WP	G15_063	FROM->TO	G14-057T 345.00 - SUNNYSIDE 345KV CKT 1	717	789	0.03072	114.9223	GRACEMONT - LAWTON EASTSIDE 345KV CKT 1
FDNS	00NR	0	20WP	G15_063	FROM->TO	G14-057T 345.00 - SUNNYSIDE 345KV CKT 1	717	789	0.03072	114.9223	GRACEMONT - LAWTON EASTSIDE 345KV CKT 1
FDNS	00NR	0	20WP	G15_063	FROM->TO	G14-057T 345.00 - SUNNYSIDE 345KV CKT 1	717	789	0.04459	114.9079	MATHWSN7 345.00 - TATONGA7 345.00 345KV CKT 1
FDNS	00NR	0	20WP	G15_063	FROM->TO	G14-057T 345.00 - SUNNYSIDE 345KV CKT 1	717	789	0.04543	114.8947	COMANCHE TAP - OMPA-DUNCAN 840 138KV CKT 1
FDNS	00NR	0	20WP	G15_063	FROM->TO	G14-057T 345.00 - SUNNYSIDE 345KV CKT 1	717	789	0.0457	114.8899	BRIDGECR 138.00 - TUTTLE 138KV CKT 1
FDNS	00NR	0	16WP	G15_063	FROM->TO	G14-057T 345.00 - SUNNYSIDE 345KV CKT 1	717	789	0.04557	114.8851	JOHNSON COUNTY - RUSSETT 138KV CKT 1
FDNS	00NR	0	16WP	G15_063	FROM->TO	G14-057T 345.00 - SUNNYSIDE 345KV CKT 1	717	789	0.0456	114.8666	GLASSES - MADILL INDUSTRIAL TAP 138KV CKT 1
FDNS	00NR	0	16WP	G15_063	FROM->TO	G14-057T 345.00 - SUNNYSIDE 345KV CKT 1	717	789	0.0458	114.8615	DRAPER LAKE - MIDWEST TAP 138KV CKT 1
FDNS	00NR	0	16WP	G15_063	FROM->TO	G14-057T 345.00 - SUNNYSIDE 345KV CKT 1	717	789	0.04531	114.8583	MAYSVLT4 138.00 - PRAIRIE POINT 138KV CKT 1
FDNS	00NR	0	16WP	G15_063	FROM->TO	G14-057T 345.00 - SUNNYSIDE 345KV CKT 1	717	789	0.04554	114.8546	GEN562691 1-G15_015_3 0.6900
FDNS	00NR	0	16WP	G15_063	FROM->TO	G14-057T 345.00 - SUNNYSIDE 345KV CKT 1	717	789	0.04554	114.8501	GEN562772 1-G15034_3 0.6900
FDNS	00NR	0	16WP	G15_063	FROM->TO	G14-057T 345.00 - SUNNYSIDE 345KV CKT 1	717	789	0.0442	114.8451	CIMARRON - MATHWSN7 345.00 345KV CKT 1
FDNS	00NR	0	16WP	G15_063	FROM->TO	G14-057T 345.00 - SUNNYSIDE 345KV CKT 1	717	789	0.0442	114.8451	CIMARRON - MATHWSN7 345.00 345KV CKT 2
FDNS	00NR	0	16WP	G15_063	FROM->TO	G14-057T 345.00 - SUNNYSIDE 345KV CKT 1	717	789	0.04552	114.8417	HUGO (HUGO 1) 345/138/13.8KV TRANSFORMER CKT 1
FDNS	00NR	0	16WP	G15_063	FROM->TO	G14-057T 345.00 - SUNNYSIDE 345KV CKT 1	717	789	0.04575	114.8404	P12:138:OKGE:3TERM21
FDNS	00NR	0	16WP	G15_063	FROM->TO	G14-057T 345.00 - SUNNYSIDE 345KV CKT 1	717	789	0.04554	114.8235	GEN521103 1-BLUE CANYON WIND FARM
FDNS	00NR	0	16WP	G15_063	FROM->TO	G14-057T 345.00 - SUNNYSIDE 345KV CKT 1	717	789	0.04554	114.8218	GEN520812 1-ANADRK5
FDNS	00NR	0	16WP	G15_063	FROM->TO	G14-057T 345.00 - SUNNYSIDE 345KV CKT 1	717	789	0.04554	114.8217	GEN520813 1-ANADRK6
FDNS	00NR	0	20WP	G15_063	FROM->TO	G14-057T 345.00 - SUNNYSIDE 345KV CKT 1	717	789	0.04524	114.8097	GEN509409 1-WILKES #3
FDNS	00NR	0	16WP	G15_063	FROM->TO	G14-057T 345.00 - SUNNYSIDE 345KV CKT 1	717	789	0.04514	114.809	ARBUCKLE - SULPHR 4 138.00 138KV CKT 1
FDNS	00NR	0	16WP	G15_063	FROM->TO	G14-057T 345.00 - SUNNYSIDE 345KV CKT 1	717	789	0.0456	114.8069	GLASSES - RUSSETT 138KV CKT 1
FDNS	00NR	0	20WP	G15_063	FROM->TO	G14-057T 345.00 - SUNNYSIDE 345KV CKT 1	717	789	0.04733	114.7999	ARCADIA - SEMINOLE 345KV CKT 1
FDNS	00NR	0	16WP	G15_063	FROM->TO	G14-057T 345.00 - SUNNYSIDE 345KV CKT 1	717	789	0.04559	114.7931	P12:138:WFEC:MSL11
FDNS	00NR	0	16WP	G15_063	FROM->TO	G14-057T 345.00 - SUNNYSIDE 345KV CKT 1	717	789	0.04559	114.7931	P12:138:WFEC-AEPW:PHAROAH4:LONEOAK4
FDNS	00NR	0	20WP	G15_063	FROM->TO	G14-057T 345.00 - SUNNYSIDE 345KV CKT 1	717	789	0.04645	114.7869	HEALDTON - LOCO 138KV CKT 1
FDNS	00NR	0	16WP	G15_063	FROM->TO	G14-057T 345.00 - SUNNYSIDE 345KV CKT 1	717	789	0.04554	114.7787	GEN511961 1-DEMPSEY-WTG10.7000
FDNS	00NR	0	16WP	G15_063	FROM->TO	G14-057T 345.00 - SUNNYSIDE 345KV CKT 1	717	789	0.04554	114.7674	P12:069:OKGE:3TERM42
FDNS	00NR	0	16WP	G15_063	FROM->TO	G14-057T 345.00 - SUNNYSIDE 345KV CKT 1	717	789	0.04531	114.7607	PRAIRIE POINT - RATLIFF 138KV CKT 1
FDNS	00NR	0	20WP	G15_063	FROM->TO	G14-057T 345.00 - SUNNYSIDE 345KV CKT 1	717	789	0.04524	114.7552	GEN501813 1-RODEMACHER UNIT 3
FDNS	00NR	0	16WP	G15_063	FROM->TO	G14-057T 345.00 - SUNNYSIDE 345KV CKT 1	717	789	0.0456	114.7484	CANEY CREEK - JOHNSON COUNTY 138KV CKT 1
FDNS	00NR	0	16WP	G15_063	FROM->TO	G14-057T 345.00 - SUNNYSIDE 345KV CKT 1	717	789	0.04563	114.7466	DELL 500 - INDEPENDENCE 500KV CKT 1
FDNS	00NR	0	16WP	G15_063	FROM->TO	G14-057T 345.00 - SUNNYSIDE 345KV CKT 1	717	789	0.04571	114.7396	P12:138:WFEC:MSL08
FDNS	00NR	0	16WP	G15_063	FROM->TO	G14-057T 345.00 - SUNNYSIDE 345KV CKT 1	717	789	0.04554	114.7303	GEN515443 1-MNCOWND1 0.7000
FDNS	00NR	0	16WP	G15_063	FROM->TO	G14-057T 345.00 - SUNNYSIDE 345KV CKT 1	717	789	0.04554	114.7275	INDEPENDENCE 500/26.0KV TRANSFORMER CKT 1
FDNS	00NR	0	16WP	G15_063	FROM->TO	G14-057T 345.00 - SUNNYSIDE 345KV CKT 1	717	789	0.04549	114.7167	CARTER - CHICKASAW 138KV CKT 1
FDNS	00NR	0	16WP	G15_063	FROM->TO	G14-057T 345.00 - SUNNYSIDE 345KV CKT 1	717	789	0.04554	114.7159	GEN532653 1-JEFFREY ENERGY CENTER UNIT 3
FDNS	00NR	0	16WP	G15_063	FROM->TO	G14-057T 345.00 - SUNNYSIDE 345KV CKT 1	717	789	0.04554	114.713	GEN563242 1-G15090_3 0.6900
FDNS	00NR	0	16WP	G15_063	FROM->TO	G14-057T 345.00 - SUNNYSIDE 345KV CKT 1	717	789	0.04554	114.7124	GEN562902 1-G15052_3 0.6900
FDNS	00NR	0	16WP	G15_063	FROM->TO	G14-057T 345.00 - SUNNYSIDE 345KV CKT 1	717	789	0.04554	114.7108	GEN560183 1-REDHIL-WTG1 12.000
FDNS	00NR	0	16WP	G15_063	FROM->TO	G14-057T 345.00 - SUNNYSIDE 345KV CKT 1	717	789	0.04482	114.7082	ARKANSAS NUCLEAR ONE - FT SMITH 500KV CKT 1
FDNS	00NR	0	16WP	G15_063	FROM->TO	G14-057T 345.00 - SUNNYSIDE 345KV CKT 1	717	789	0.04482	114.7082	ARKANSAS NUCLEAR ONE - FT SMITH 500KV CKT 1
FDNS	00NR	0	16WP	G15_063	FROM->TO	G14-057T 345.00 - SUNNYSIDE 345KV CKT 1	717	789	0.04554	114.7038	GEN629071 1-BURLINGTON GENERATOR FOR UNIT NO 1 E
FDNS	00NR	0	16WP	G15_063	FROM->TO	G14-057T 345.00 - SUNNYSIDE 345KV CKT 1	717	789	0.04571	114.7034	CANADIAN RIVER - MCALESTER SOUTH 138KV CKT 1
FDNS	00NR	0	16WP	G15_063	FROM->TO	G14-057T 345.00 - SUNNYSIDE 345KV CKT 1	717	789	0.04571	114.7034	CANADIAN RIVER - MCALESTER SOUTH 138KV CKT 1
FDNS	00NR	0	16WP	G15_063	FROM->TO	G14-057T 345.00 - SUNNYSIDE 345KV CKT 1	717	789	0.04538	114.703	ROCKY POINT - SPRINGDALE 138KV CKT 1
FDNS	00NR	0	16WP	G15_063	FROM->TO	G14-057T 345.00 - SUNNYSIDE 345KV CKT 1	717	789	0.04571	114.7019	CANADIAN RIVER () 345/138/13.8KV TRANSFORMER CKT 1
FDNS	00NR	0	16WP	G15_063	FROM->TO	G14-057T 345.00 - SUNNYSIDE 345KV CKT 1	717	789	0.04571	114.7019	CANADIAN RIVER () 345/138/13.8KV TRANSFORMER CKT 1
FDNS	00NR	0	16WP	G15_063	FROM->TO	G14-057T 345.00 - SUNNYSIDE 345KV CKT 1	717	789	0.04552	114.6917	ALTUS JUNCTION - RUSSELL 138KV CKT 1
FDNS	00NR	0	16WP	G15_063	FROM->TO	G14-057T 345.00 - SUNNYSIDE 345KV CKT 1	717	789	0.04552	114.6917	ALTUS JUNCTION - RUSSELL 138KV CKT 1
FDNS	00NR	0	20WP	G15_063	FROM->TO	G14-057T 345.00 - SUNNYSIDE 345KV CKT 1	717	789	0.0457	114.6836	Hitchland Interchange - WALKTAP7 345.00 345KV CKT 1
FDNS	00NR	0	20WP	G15_063	FROM->TO	G14-057T 345.00 - SUNNYSIDE 345KV CKT 1	717	789	0.0457	114.6836	Hitchland Interchange - WALKTAP7 345.00 345KV CKT 1
FDNS	00NR	0	16WP	G15_063	FROM->TO	G14-057T 345.00 - SUNNYSIDE 345KV CKT 1	717	789	0.04525	114.6801	MOREWOOD SW - NINE MILE 138KV CKT 1
FDNS	00NR	0	16WP	G15_063	FROM->TO	G14-057T 345.00 - SUNNYSIDE 345KV CKT 1	717	789	0.04554	114.6731	BURLINGTON NO1 + NO 2 + NO 3 161/20.0KV TRANSFORMER CKT 1
FDNS	00NR	0	16WP	G15_063	FROM->TO	G14-057T 345.00 - SUNNYSIDE 345KV CKT 1	717	789	0.04554	114.668	GEN514805 1-SOONER UNIT 1
FDNS	00NR	0	16WP	G15_063	FROM->TO	G14-057T 345.00 - SUNNYSIDE 345KV CKT 1	717	789	0.04602	114.6668	NORTHWEST - SPRING CREEK 345KV CKT 1
FDNS	00NR	0	16WP	G15_063	FROM->TO	G14-057T 345.00 - SUNNYSIDE 345KV CKT 1	717	789	0.04581	114.6641	CHAMBER SPRINGS - CLARKSVILLE 345KV CKT 1
FDNS	00NR	0	16WP	G15_063	FROM->TO	G14-057T 345.00 - SUNNYSIDE 345KV CKT 1	717	789	0.04554	114.6632	P12:230:UMZB:# 112 #: NU IN SD. NU-RCDC & DRY CREEK XFMR
FDNS	00NR	0	16WP	G15_063	FROM->TO	G14-057T 345.00 - SUNNYSIDE 345KV CKT 1	717	789	0.04554	114.6627	RCDC EAST 4230.00 - RED CEDAR DC 230KV CKT 1
FDNS	00NR	0	16WP	G15_063	FROM->TO	G14-057T 345.00 - SUNNYSIDE 345KV CKT 1	717	789	0.04602	114.6588	SOONER - SPRING CREEK 345KV CKT 1
FDNS	00NR	0	16WP	G15_063	FROM->TO	G14-057T 345.00 - SUNNYSIDE 345KV CKT 1	717	789	0.04554	114.6582	GEN514806 1-SOONER UNIT 2
FDNS	00NR	0	16WP	G15_063	FROM->TO	G14-057T 345.00 - SUNNYSIDE 345KV CKT 1	717	789	0.04554	114.6573	NORTHWEST TEXARKANA - WELSH 345KV CKT 1
FDNS	00NR	0	16WP	G15_063	FROM->TO	G14-057T 345.00 - SUNNYSIDE 345KV CKT 1	717	789	0.04554	114.6573	NORTHWEST TEXARKANA - WELSH 345KV CKT 1
FDNS	00NR	0	16WP	G15_063	FROM->TO	G14-057T 345.00 - SUNNYSIDE 345KV CKT 1	717	789	0.04514	114.6569	JOLLYVILLE - SULPHR 4 138.00 138KV CKT 1
FDNS	00NR	0	20WP	G15_063	FROM->TO	G14-057T 345.00 - SUNNYSIDE 345KV CKT 1	717	789	0.0457	114.6429	P12:345:SPS:J07.1.FINN.HITCH
FDNS	00NR	0	20WP	G15_063	FROM->TO	G14-057T 345.00 - SUNNYSIDE 345KV CKT 1	717	789	0.04645	114.6424	HEALDTON - RINGLING 138KV CKT 1

SOLUTION	GROUP	SCENARIO	SEASON	SOURCE	DIRECTION	MONITORED ELEMENT	RATEA (MVA)	RATEB(MVA)	TDF	TC%LOADING (% MVA)	CONTINGENCY
FDNS	00NR	0	16WP	G15_063	FROM->TO	G14-057T 345.00 - SUNNYSIDE 345KV CKT 1	717	789	0.04554	114.6336	THOMAS HILL 161/22.0KV TRANSFORMER CKT 1
FDNS	00NR	0	16WP	G15_063	FROM->TO	G14-057T 345.00 - SUNNYSIDE 345KV CKT 1	717	789	0.04554	114.6328	GEN562078 1-G11_051_3 0.6900
FDNS	00NR	0	16WP	G15_063	FROM->TO	G14-057T 345.00 - SUNNYSIDE 345KV CKT 1	717	789	0.04554	114.6215	GEN562802 1-G15039_3 0.3570
FDNS	00NR	0	16WP	G15_063	FROM->TO	G14-057T 345.00 - SUNNYSIDE 345KV CKT 1	717	789	0.04554	114.6151	GEN524285 1-WILDORADO WIND GEN
FDNS	00NR	0	20WP	G15_063	FROM->TO	G14-057T 345.00 - SUNNYSIDE 345KV CKT 1	717	789	0.04524	114.6127	GEN300006 1-NEW MADRID UNIT 1
FDNS	00NR	0	16WP	G15_063	FROM->TO	G14-057T 345.00 - SUNNYSIDE 345KV CKT 1	717	789	0.04567	114.6082	KEO EHV - WEST MEMPHIS 500 500KV CKT 1
FDNS	00NR	0	20WP	G15_063	FROM->TO	G14-057T 345.00 - SUNNYSIDE 345KV CKT 1	717	789	0.04543	114.6043	DUNCAN - OMPA-DUNCAN 840 138KV CKT 1
FDNS	00NR	0	20WP	G15_063	FROM->TO	G14-057T 345.00 - SUNNYSIDE 345KV CKT 1	717	789	0.04543	114.6043	DUNCAN - OMPA-DUNCAN 840 138KV CKT 1
FDNS	00NR	0	16WP	G15_063	FROM->TO	G14-057T 345.00 - SUNNYSIDE 345KV CKT 1	717	789	0.04554	114.6	GEN629072 4-LANSING GENERATOR FOR UNITS NO4 EIA CODE 1
FDNS	00NR	0	20WP	G15_063	FROM->TO	G14-057T 345.00 - SUNNYSIDE 345KV CKT 1	717	789	0.0457	114.5997	BRIDGECR 138.00 - SUNSHINE CANYON 138KV CKT 1
FDNS	00NR	0	16WP	G15_063	FROM->TO	G14-057T 345.00 - SUNNYSIDE 345KV CKT 1	717	789	0.04554	114.5946	GEN562587 1-G14_056_3 0.6900
FDNS	00NR	0	16WP	G15_063	FROM->TO	G14-057T 345.00 - SUNNYSIDE 345KV CKT 1	717	789	0.04554	114.5945	GEN524295 1-SPNSPUR_WND10.6900
FDNS	00NR	0	20WP	G15_063	FROM->TO	G14-057T 345.00 - SUNNYSIDE 345KV CKT 1	717	789	0.04524	114.593	GEN300007 1-NEW MADRID UNIT 2
FDNS	00NR	0	20WP	G15_063	FROM->TO	G14-057T 345.00 - SUNNYSIDE 345KV CKT 1	717	789	0.04559	114.5927	LACYGNE - WAVERLY7 345.00 345KV CKT 1
FDNS	00NR	0	20WP	G15_063	FROM->TO	G14-057T 345.00 - SUNNYSIDE 345KV CKT 1	717	789	0.0457	114.589	P12:138:WFEC:MSL01
FDNS	00NR	0	16WP	G15_063	FROM->TO	G14-057T 345.00 - SUNNYSIDE 345KV CKT 1	717	789	0.04514	114.5882	JOLLYVILLE - KERR MCGEE CIMARRON 138KV CKT 1
FDNS	00NR	0	16WP	G15_063	FROM->TO	G14-057T 345.00 - SUNNYSIDE 345KV CKT 1	717	789	0.04554	114.5875	GEN560331 1-G10-46 13.800
FDNS	00NR	0	16WP	G15_063	FROM->TO	G14-057T 345.00 - SUNNYSIDE 345KV CKT 1	717	789	0.04554	114.5795	GEN657749 1-YOUNG 1 GENERATOR
FDNS	00NR	0	16WP	G15_063	FROM->TO	G14-057T 345.00 - SUNNYSIDE 345KV CKT 1	717	789	0.04788	114.5669	CLARKSVILLE - MUSKOGEE 345KV CKT 1
FDNS	00NR	0	16WP	G15_063	FROM->TO	G14-057T 345.00 - SUNNYSIDE 345KV CKT 1	717	789	0.04788	114.5669	CLARKSVILLE - MUSKOGEE 345KV CKT 1
FDNS	00NR	0	16WP	G15_063	FROM->TO	G14-057T 345.00 - SUNNYSIDE 345KV CKT 1	717	789	0.04554	114.5606	GEN562882 1-G15047_3 0.6900
FDNS	00NR	0	16WP	G15_063	FROM->TO	G14-057T 345.00 - SUNNYSIDE 345KV CKT 1	717	789	0.04554	114.5566	GEN562269 1-G12-020-1 0.6900
FDNS	00NR	0	16WP	G15_063	FROM->TO	G14-057T 345.00 - SUNNYSIDE 345KV CKT 1	717	789	0.04525	114.5457	BEARCAT 138.00 - NINE MILE 138KV CKT 1
FDNS	00NR	0	20WP	G15_063	FROM->TO	G14-057T 345.00 - SUNNYSIDE 345KV CKT 1	717	789	0.04524	114.5438	GEN335206 1-NELSON UNIT 6
FDNS	00NR	0	16WP	G15_063	FROM->TO	G14-057T 345.00 - SUNNYSIDE 345KV CKT 1	717	789	0.04514	114.5375	ARBWIND4 138.00 - KERR MCGEE CIMARRON 138KV CKT 1
FDNS	00NR	0	16WP	G15_063	FROM->TO	G14-057T 345.00 - SUNNYSIDE 345KV CKT 1	717	789	0.04554	114.5113	GEN562270 1-G12-020-2 0.6900
FDNS	00NR	0	16WP	G15_063	FROM->TO	G14-057T 345.00 - SUNNYSIDE 345KV CKT 1	717	789	0.04554	114.5107	GEN681522 3-GENOA 3
FDNS	00NR	0	16WP	G15_063	FROM->TO	G14-057T 345.00 - SUNNYSIDE 345KV CKT 1	717	789	0.04554	114.5063	GEN562812 1-G15040_3 0.3570
FDNS	00NR	0	16WP	G15_063	FROM->TO	G14-057T 345.00 - SUNNYSIDE 345KV CKT 1	717	789	0.04554	114.5002	GEN563102 1-G15075_3 0.5500
FDNS	00NR	0	16WP	G15_063	FROM->TO	G14-057T 345.00 - SUNNYSIDE 345KV CKT 1	717	789	0.04554	114.4984	GEN563062 1-G15071_3 0.6900
FDNS	00NR	0	16WP	G15_063	FROM->TO	G14-057T 345.00 - SUNNYSIDE 345KV CKT 1	717	789	0.04554	114.4959	GEN563132 1-G15078_3 0.3570
FDNS	00NR	0	16WP	G15_063	FROM->TO	G14-057T 345.00 - SUNNYSIDE 345KV CKT 1	717	789	0.04537	114.4939	P12:138:AEPW:112GORE4:SNYDER-4
FDNS	00NR	0	20WP	G15_063	FROM->TO	G14-057T 345.00 - SUNNYSIDE 345KV CKT 1	717	789	0.04524	114.4852	GEN520947 1-HUGO1
FDNS	00NR	0	16WP	G15_063	FROM->TO	G14-057T 345.00 - SUNNYSIDE 345KV CKT 1	717	789	0.04554	114.4838	GEN562974 1-G15060_5 0.6900
FDNS	00NR	0	16WP	G15_063	FROM->TO	G14-057T 345.00 - SUNNYSIDE 345KV CKT 1	717	789	0.04554	114.4743	GEN562973 1-G15060_4 0.6900
FDNS	00NR	0	20WP	G15_063	FROM->TO	G14-057T 345.00 - SUNNYSIDE 345KV CKT 1	717	789	0.04559	114.4711	WAVERLY7 345.00 - WOLF CREEK 345KV CKT 1
FDNS	00NR	0	20WP	G15_063	FROM->TO	G14-057T 345.00 - SUNNYSIDE 345KV CKT 1	717	789	0.04645	114.4699	RINGLING - SOUTH WILSON 138KV CKT 1
FDNS	00NR	0	16WP	G15_063	FROM->TO	G14-057T 345.00 - SUNNYSIDE 345KV CKT 1	717	789	0.04525	114.4625	P12:138:WFEC:MSL14
FDNS	00NR	0	16WP	G15_063	FROM->TO	G14-057T 345.00 - SUNNYSIDE 345KV CKT 1	717	789	0.04519	114.4551	CHICKASAW - TOTAL 138KV CKT 1
FDNS	00NR	0	16WP	G15_063	FROM->TO	G14-057T 345.00 - SUNNYSIDE 345KV CKT 1	717	789	0.04525	114.4504	BEARCAT 138.00 - MOORELAND 138KV CKT 1
FDNS	00NR	0	16WP	G15_063	FROM->TO	G14-057T 345.00 - SUNNYSIDE 345KV CKT 1	717	789	0.04549	114.4494	BROWN - RUSSETT 138KV CKT 1
FDNS	00NR	0	16WP	G15_063	FROM->TO	G14-057T 345.00 - SUNNYSIDE 345KV CKT 1	717	789	0.04554	114.442	GEN345671 2-1RUSH G2 18.000
FDNS	00NR	0	16WP	G15_063	FROM->TO	G14-057T 345.00 - SUNNYSIDE 345KV CKT 1	717	789	0.04554	114.4401	GEN345670 1-1RUSH G1 18.000
FDNS	00NR	0	16WP	G15_063	FROM->TO	G14-057T 345.00 - SUNNYSIDE 345KV CKT 1	717	789	0.04547	114.4315	RUSSETT - SPRINGDALE 138KV CKT 1
FDNS	00NR	0	16WP	G15_063	FROM->TO	G14-057T 345.00 - SUNNYSIDE 345KV CKT 1	717	789	0.04554	114.4131	GEN526331 1-JONES GEN #1 22 KV
FDNS	00NR	0	16WP	G15_063	FROM->TO	G14-057T 345.00 - SUNNYSIDE 345KV CKT 1	717	789	0.04554	114.413	GEN526332 1-JONES GEN #2 21 KV
FDNS	00NR	0	16WP	G15_063	FROM->TO	G14-057T 345.00 - SUNNYSIDE 345KV CKT 1	717	789	0.04532	114.4107	ROCKY POINT - SUNNYSIDE 138KV CKT 1
FDNS	00NR	0	16WP	G15_063	FROM->TO	G14-057T 345.00 - SUNNYSIDE 345KV CKT 1	717	789	0.04554	114.4037	GEN560105 1-G08-22 0.6900
FDNS	00NR	0	16WP	G15_063	FROM->TO	G14-057T 345.00 - SUNNYSIDE 345KV CKT 1	717	789	0.04554	114.4003	GEN562550 1-G14_040_3 0.6900
FDNS	00NR	0	16WP	G15_063	FROM->TO	G14-057T 345.00 - SUNNYSIDE 345KV CKT 1	717	789	0.04554	114.3936	P12:138:WFEC:MSL07
FDNS	00NR	0	16WP	G15_063	FROM->TO	G14-057T 345.00 - SUNNYSIDE 345KV CKT 1	717	789	0.04554	114.3936	P12:138:WFEC-AEPW:HUGOPP4:ATOKA--4
FDNS	00NR	0	16WP	G15_063	FROM->TO	G14-057T 345.00 - SUNNYSIDE 345KV CKT 1	717	789	0.04554	114.3865	4SIOUX 1 138.00 138/18.0KV TRANSFORMER CKT 1
FDNS	00NR	0	16WP	G15_063	FROM->TO	G14-057T 345.00 - SUNNYSIDE 345KV CKT 1	717	789	0.04549	114.3812	RUSSETT - RUSSETT 138KV CKT 1
FDNS	00NR	0	20WP	G15_063	FROM->TO	G14-057T 345.00 - SUNNYSIDE 345KV CKT 1	717	789	0.04459	114.3781	G11_051T 345.00 - TATONGA7 345.00 345KV CKT 1
FDNS	00NR	0	20WP	G15_063	FROM->TO	G14-057T 345.00 - SUNNYSIDE 345KV CKT 1	717	789	0.04519	114.3761	ELDORADO EHV - MOUNT OLIVE 500KV CKT 1
FDNS	00NR	0	16WP	G15_063	FROM->TO	G14-057T 345.00 - SUNNYSIDE 345KV CKT 1	717	789	0.04554	114.3717	CLAY BOSWELL 230/20.9KV TRANSFORMER CKT 1
FDNS	00NR	0	16WP	G15_063	FROM->TO	G14-057T 345.00 - SUNNYSIDE 345KV CKT 1	717	789	0.04554	114.3653	GEN521112 1-ORME3 13.800
FDNS	00NR	0	16WP	G15_063	FROM->TO	G14-057T 345.00 - SUNNYSIDE 345KV CKT 1	717	789	0.04554	114.3636	GEN511962 2-RKYRDGW2-1 0.7000
FDNS	00NR	0	16WP	G15_063	FROM->TO	G14-057T 345.00 - SUNNYSIDE 345KV CKT 1	717	789	0.04504	114.3543	ARDMORE WEST - CARTER 138KV CKT 1
FDNS	00NR	0	16WP	G15_063	FROM->TO	G14-057T 345.00 - SUNNYSIDE 345KV CKT 1	717	789	0.04554	114.354	GEN527882 1-CUNNINGHAM GEN #2 20 KV
FDNS	00NR	0	20WP	G15_063	FROM->TO	G14-057T 345.00 - SUNNYSIDE 345KV CKT 1	717	789	0.04524	114.3526	GEN501812 1-RODEMACHER UNIT 2
FDNS	00NR	0	20WP	G15_063	FROM->TO	G14-057T 345.00 - SUNNYSIDE 345KV CKT 1	717	789	0.04523	114.3477	P12:138:AEPW:SHERID4:112GORE4
FDNS	00NR	0	16WP	G15_063	FROM->TO	G14-057T 345.00 - SUNNYSIDE 345KV CKT 1	717	789	0.04554	114.3476	GEN672321 1-SHAND GENERATOR 1
FDNS	00NR	0	20WP	G15_063	FROM->TO	G14-057T 345.00 - SUNNYSIDE 345KV CKT 1	717	789	0.04524	114.3471	DOLET HILLS 345/24.0KV TRANSFORMER CKT 1
FDNS	00NR	0	16WP	G15_063	FROM->TO	G14-057T 345.00 - SUNNYSIDE 345KV CKT 1	717	789	0.04554	114.3429	GEN562892 1-G15048_3 0.6900
FDNS	00NR	0	16WP	G15_063	FROM->TO	G14-057T 345.00 - SUNNYSIDE 345KV CKT 1	717	789	0.04554	114.3236	GEN672310 1-POPLAR RIVER GENERATOR 1
FDNS	00NR	0	16WP	G15_063	FROM->TO	G14-057T 345.00 - SUNNYSIDE 345KV CKT 1	717	789	0.04554	114.3236	GEN672311 2-POPLAR RIVER GENERATOR 2
FDNS	00NR	0	16WP	G15_063	FROM->TO	G14-057T 345.00 - SUNNYSIDE 345KV CKT 1	717	789	0.04554	114.3194	GEN563192 1-G15084_3 0.5500
FDNS	00NR	0	16WP	G15_063	FROM->TO	G14-057T 345.00 - SUNNYSIDE 345KV CKT 1	717	789	0.04554	114.3156	GEN672306 6-BOUNDARY DAM GENERATOR 6
FDNS	00NR	0	16WP	G15_063	FROM->TO	G14-057T 345.00 - SUNNYSIDE 345KV CKT 1	717	789	0.04513	114.3112	SUNNYSIDE (SUNNYSD5) 345/138/13.8KV TRANSFORMER CKT 1
FDNS	00NR	0	16WP	G15_063	FROM->TO	G14-057T 345.00 - SUNNYSIDE 345KV CKT 1	717	789	0.04554	114.3069	GEN562512 1-G14_020_3 0.6900
FDNS	00NR	0	16WP	G15_063	FROM->TO	G14-057T 345.00 - SUNNYSIDE 345KV CKT 1	717	789	0.04554	114.3062	GEN511853 1-COMANCHE #3
FDNS	00NR	0	16WP	G15_063	FROM->TO	G14-057T 345.00 - SUNNYSIDE 345KV CKT 1	717	789	0.04558	114.3029	P12:138:WFEC:MSL16
FDNS	00NR	0	16WP	G15_063	FROM->TO	G14-057T 345.00 - SUNNYSIDE 345KV CKT 1	717	789	0.04551	114.2883	P12:138:WFEC-AEPW:GOLDENSW4:CRAIGJT4
FDNS	00NR	0	20WP	G15_063	FROM->TO	G14-057T 345.00 - SUNNYSIDE 345KV CKT 1	717	789	0.04443	114.2843	PARK LANE - SEMINOLE 138KV CKT 1
FDNS	00NR	0	16WP	G15_063	FROM->TO	G14-057T 345.00 - SUNNYSIDE 345KV CKT 1	717	789	0.04554	114.2575	GEN523461 1-BLACKHAWK GEN #1
FDNS	00NR	0	16WP	G15_063	FROM->TO	G14-057T 345.00 - SUNNYSIDE 345KV CKT 1	717	789	0.04554	114.2574	GEN523462 1-BLACKHAWK GEN #2
FDNS	00NR	0	20WP	G15_063	FROM->TO	G14-057T 345.00 - SUNNYSIDE 345KV CKT 1	717	789	0.04547	114.2545	THISTLE7 345.00 - WOODWARD DISTRICT EHV 345KV CKT 1
FDNS	00NR	0	20WP	G15_063	FROM->TO	G14-057T 345.00 - SUNNYSIDE 345KV CKT 1	717	789	0.04547	114.2545	THISTLE7 345.00 - WOODWARD DISTRICT EHV 345KV CKT 1

SOLUTION	GROUP	SCENARIO	SEASON	SOURCE	DIRECTION	MONITORED ELEMENT	RATEA (MVA)	RATEB(MVA)	TDF	TC%LOADING (% MVA)	CONTINGENCY
FDNS	00NR	0	20WP	G15_063	FROM->TO	G14-057T 345.00 - SUNNYSIDE 345KV CKT 1	717	789	0.04547	114.2545	THISTLE7 345.00 - WOODWARD DISTRICT EHV 345KV CKT 2
FDNS	00NR	0	20WP	G15_063	FROM->TO	G14-057T 345.00 - SUNNYSIDE 345KV CKT 1	717	789	0.04547	114.2545	THISTLE7 345.00 - WOODWARD DISTRICT EHV 345KV CKT 2
FDNS	00NR	0	16WP	G15_063	FROM->TO	G14-057T 345.00 - SUNNYSIDE 345KV CKT 1	717	789	0.04554	114.2527	GEN344895 2-1LAB G2 20.000
FDNS	00NR	0	16WP	G15_063	FROM->TO	G14-057T 345.00 - SUNNYSIDE 345KV CKT 1	717	789	0.04554	114.2498	GEN511852 1-COMANCHE #2
FDNS	00NR	0	16WP	G15_063	FROM->TO	G14-057T 345.00 - SUNNYSIDE 345KV CKT 1	717	789	0.04504	114.2376	ARDMORE WEST - UNIROYAL 138KV CKT 1
FDNS	00NR	0	16WP	G15_063	FROM->TO	G14-057T 345.00 - SUNNYSIDE 345KV CKT 1	717	789	0.04554	114.2201	GEN344896 3-1LAB G3 20.000
FDNS	00NR	0	16WP	G15_063	FROM->TO	G14-057T 345.00 - SUNNYSIDE 345KV CKT 1	717	789	0.04554	114.2187	GEN344894 1-1LAB G1 20.000
FDNS	00NR	0	16WP	G15_063	FROM->TO	G14-057T 345.00 - SUNNYSIDE 345KV CKT 1	717	789	0.04554	114.2172	GEN344897 4-1LAB G4 20.000
FDNS	00NR	0	20WP	G15_063	FROM->TO	G14-057T 345.00 - SUNNYSIDE 345KV CKT 1	717	789	0.04603	114.215	CANEYRV7 345.00 - NEOSHO 345KV CKT 1
FDNS	00NR	0	16WP	G15_063	FROM->TO	G14-057T 345.00 - SUNNYSIDE 345KV CKT 1	717	789	0.04551	114.2146	P12:138:AEPW-SWPA:LONEOAK4:TUPELO4
FDNS	00NR	0	16WP	G15_063	FROM->TO	G14-057T 345.00 - SUNNYSIDE 345KV CKT 1	717	789	0.04551	114.2146	P12:138:WFEC:MSL06
FDNS	00NR	0	20WP	G15_063	FROM->TO	G14-057T 345.00 - SUNNYSIDE 345KV CKT 1	717	789	0.04524	114.2108	GEN515564 1-ORIGIN11 0.6900
FDNS	00NR	0	20WP	G15_063	FROM->TO	G14-057T 345.00 - SUNNYSIDE 345KV CKT 1	717	789	0.04524	114.2108	GEN515565 1-ORIGIN21 0.6900
FDNS	00NR	0	16WP	G15_063	FROM->TO	G14-057T 345.00 - SUNNYSIDE 345KV CKT 1	717	789	0.04554	114.2097	GEN681542 6-JP MADGETT
FDNS	00NR	0	16WP	G15_063	FROM->TO	G14-057T 345.00 - SUNNYSIDE 345KV CKT 1	717	789	0.04536	114.207	P12:138:OKGE:3TERM40
FDNS	00NR	0	16WP	G15_063	FROM->TO	G14-057T 345.00 - SUNNYSIDE 345KV CKT 1	717	789	0.04539	114.2012	CARTRCO4 138.00 - RATLIFF 138KV CKT 1
FDNS	00NR	0	20WP	G15_063	FROM->TO	G14-057T 345.00 - SUNNYSIDE 345KV CKT 1	717	789	0.04529	114.1947	WEBRE - WELLS 500KV CKT 1
FDNS	00NR	0	20WP	G15_063	FROM->TO	G14-057T 345.00 - SUNNYSIDE 345KV CKT 1	717	789	0.04524	114.193	GEN334440 1-SABINE UNIT 4
FDNS	00NR	0	16WP	G15_063	FROM->TO	G14-057T 345.00 - SUNNYSIDE 345KV CKT 1	717	789	0.04554	114.1885	GEN563162 1-G15081_3 0.6900
FDNS	00NR	0	16WP	G15_063	FROM->TO	G14-057T 345.00 - SUNNYSIDE 345KV CKT 1	717	789	0.04554	114.1846	GEN521110 1-ORME1 13.800
FDNS	00NR	0	16WP	G15_063	FROM->TO	G14-057T 345.00 - SUNNYSIDE 345KV CKT 1	717	789	0.04554	114.1846	GEN521111 1-ORME2 13.800
FDNS	00NR	0	16WP	G15_063	FROM->TO	G14-057T 345.00 - SUNNYSIDE 345KV CKT 1	717	789	0.04552	114.1812	G15085_T 138.00 - RUSSELL 138KV CKT 1
FDNS	00NR	0	20WP	G15_063	FROM->TO	G14-057T 345.00 - SUNNYSIDE 345KV CKT 1	717	789	0.04645	114.1812	MARIETTA - SOUTH WILSON 138KV CKT 1
FDNS	00NR	0	16WP	G15_063	FROM->TO	G14-057T 345.00 - SUNNYSIDE 345KV CKT 1	717	789	0.04554	114.1693	GEN562699 1-G15_018_3 0.6900
FDNS	00NR	0	16WP	G15_063	FROM->TO	G14-057T 345.00 - SUNNYSIDE 345KV CKT 1	717	789	0.04554	114.1677	GEN563292 1-G15095_3 0.6900
FDNS	00NR	0	20WP	G15_063	FROM->TO	G14-057T 345.00 - SUNNYSIDE 345KV CKT 1	717	789	0.04524	114.1435	DELL 500 - ESSEX UNIT 2 500KV CKT Z1
FDNS	00NR	0	20WP	G15_063	FROM->TO	G14-057T 345.00 - SUNNYSIDE 345KV CKT 1	717	789	0.04524	114.1355	P12:161:AEPW:DYESS 5:HYLAND 5
FDNS	00NR	0	20WP	G15_063	FROM->TO	G14-057T 345.00 - SUNNYSIDE 345KV CKT 1	717	789	0.04588	114.1298	REDBUD - RIVERSIDE STATION 345KV CKT 1
FDNS	00NR	0	20WP	G15_063	FROM->TO	G14-057T 345.00 - SUNNYSIDE 345KV CKT 1	717	789	0.04588	114.1298	REDBUD - RIVERSIDE STATION 345KV CKT 1
FDNS	00NR	0	20WP	G15_063	FROM->TO	G14-057T 345.00 - SUNNYSIDE 345KV CKT 1	717	789	0.04524	114.1212	GEN590011 2-ERCOT EQUIVALENCE
FDNS	00NR	0	16WP	G15_063	FROM->TO	G14-057T 345.00 - SUNNYSIDE 345KV CKT 1	717	789	0.04554	114.1146	ALMA 161 161/24.0KV TRANSFORMER CKT 1
FDNS	00NR	0	16WP	G15_063	FROM->TO	G14-057T 345.00 - SUNNYSIDE 345KV CKT 1	717	789	0.04537	114.11	CACHE - SNYDER 138KV CKT 1
FDNS	00NR	0	16WP	G15_063	FROM->TO	G14-057T 345.00 - SUNNYSIDE 345KV CKT 1	717	789	0.04554	114.1019	GEN661015 1-COYOTE
FDNS	00NR	0	20WP	G15_063	FROM->TO	G14-057T 345.00 - SUNNYSIDE 345KV CKT 1	717	789	0.04524	114.0866	P12:69:AEPW:L.E.S.-2:LAW WC2
FDNS	00NR	0	16WP	G15_063	FROM->TO	G14-057T 345.00 - SUNNYSIDE 345KV CKT 1	717	789	0.04554	114.083	GEN520811 1-ANADRK4
FDNS	00NR	0	20WP	G15_063	FROM->TO	G14-057T 345.00 - SUNNYSIDE 345KV CKT 1	717	789	0.04645	114.0746	P12:138:WFEC:MSL17
FDNS	00NR	0	20WP	G15_063	FROM->TO	G14-057T 345.00 - SUNNYSIDE 345KV CKT 1	717	789	0.04603	114.0675	CANEYRV7 345.00 - LATHAMS7 345.00 345KV CKT 1
FDNS	00NR	0	20WP	G15_063	FROM->TO	G14-057T 345.00 - SUNNYSIDE 345KV CKT 1	717	789	0.04524	114.0666	GEN590010 1-ERCOT EQUIVALENCE
FDNS	00NR	0	16WP	G15_063	FROM->TO	G14-057T 345.00 - SUNNYSIDE 345KV CKT 1	717	789	0.04554	114.0663	GEN563122 1-G15077_3 0.3850
FDNS	00NR	0	20WP	G15_063	FROM->TO	G14-057T 345.00 - SUNNYSIDE 345KV CKT 1	717	789	0.04556	114.0616	P12:138:WFEC:MSL02
FDNS	00NR	0	16WP	G15_063	FROM->TO	G14-057T 345.00 - SUNNYSIDE 345KV CKT 1	717	789	0.04554	114.0597	GEN562861 1-G15045_2 0.4800
FDNS	00NR	0	20WP	G15_063	FROM->TO	G14-057T 345.00 - SUNNYSIDE 345KV CKT 1	717	789	0.04515	114.059	LAWTON EASTSIDE (LES 5) 345/138/13.8KV TRANSFORMER CKT 2
FDNS	00NR	0	20WP	G15_063	FROM->TO	G14-057T 345.00 - SUNNYSIDE 345KV CKT 1	717	789	0.04515	114.059	LAWTON EASTSIDE (LES 5) 345/138/13.8KV TRANSFORMER CKT 2
FDNS	00NR	0	20WP	G15_063	FROM->TO	G14-057T 345.00 - SUNNYSIDE 345KV CKT 1	717	789	0.04524	114.0373	GEN509408 1-WILKES #2
FDNS	00NR	0	16WP	G15_063	FROM->TO	G14-057T 345.00 - SUNNYSIDE 345KV CKT 1	717	789	0.04545	114.0333	P12:138:WFEC:MSL15
FDNS	00NR	0	20WP	G15_063	FROM->TO	G14-057T 345.00 - SUNNYSIDE 345KV CKT 1	717	789	0.04512	114.0218	ELDORADO EHV - SHERIDAN EHV 500KV CKT 1
FDNS	00NR	0	16WP	G15_063	FROM->TO	G14-057T 345.00 - SUNNYSIDE 345KV CKT 1	717	789	0.04504	114.0152	SUNNYSIDE - UNIROYAL 138KV CKT 1
FDNS	00NR	0	20WP	G15_063	FROM->TO	G14-057T 345.00 - SUNNYSIDE 345KV CKT 1	717	789	0.04564	114.0055	PAOLI - PAYNE 138.00 138KV CKT 1
FDNS	00NR	0	20WP	G15_063	FROM->TO	G14-057T 345.00 - SUNNYSIDE 345KV CKT 1	717	789	0.04524	114.0013	GEN506754 1-LEBROCK STEAM 1
FDNS	00NR	0	20WP	G15_063	FROM->TO	G14-057T 345.00 - SUNNYSIDE 345KV CKT 1	717	789	0.04547	113.9884	ANADARKO - GEORGIA 138KV CKT 1
FDNS	00NR	0	16WP	G15_063	FROM->TO	G14-057T 345.00 - SUNNYSIDE 345KV CKT 1	717	789	0.04554	113.986	GEN657748 1-YOUNG 2 GENERATOR
FDNS	00NR	0	16WP	G15_063	FROM->TO	G14-057T 345.00 - SUNNYSIDE 345KV CKT 1	717	789	0.04676	113.9715	CANEY CREEK - TEXOMA JCT 138KV CKT 1
FDNS	00NR	0	16WP	G15_063	FROM->TO	G14-057T 345.00 - SUNNYSIDE 345KV CKT 1	717	789	0.04554	113.9701	GEN562992 1-G15063_3 0.6900
FDNS	00NR	0	16WP	G15_063	FROM->TO	G14-057T 345.00 - SUNNYSIDE 345KV CKT 1	717	789	0.04551	113.9624	GRAPEVINE INTERCHANGE - STATELINE INTERCHANGE 230KV CKT 1
FDNS	00NR	0	16WP	G15_063	FROM->TO	G14-057T 345.00 - SUNNYSIDE 345KV CKT 1	717	789	0.04551	113.9624	GRAPEVINE INTERCHANGE - STATELINE INTERCHANGE 230KV CKT 1
FDNS	00NR	0	20WP	G15_063	FROM->TO	G14-057T 345.00 - SUNNYSIDE 345KV CKT 1	717	789	0.04523	113.9545	P12:138:AEPW:112GORE4:L.E.S.-4
FDNS	00NR	0	16WP	G15_063	FROM->TO	G14-057T 345.00 - SUNNYSIDE 345KV CKT 1	717	789	0.04554	113.9498	GEN532751 1-WOLF CREEK GENERATING STATION UNIT 1
FDNS	00NR	0	20WP	G15_063	FROM->TO	G14-057T 345.00 - SUNNYSIDE 345KV CKT 1	717	789	0.04632	113.9497	CIVIT - PAOLI 138KV CKT 1
FDNS	00NR	0	20WP	G15_063	FROM->TO	G14-057T 345.00 - SUNNYSIDE 345KV CKT 1	717	789	0.04922	113.9382	MATHWSN7 345.00 - NORTHWEST 345KV CKT 1
FDNS	00NR	0	16WP	G15_063	FROM->TO	G14-057T 345.00 - SUNNYSIDE 345KV CKT 1	717	789	0.04552	113.9211	P12:138:AEPW:SHAM4WT:CHILD4WT
FDNS	00NR	0	20WP	G15_063	FROM->TO	G14-057T 345.00 - SUNNYSIDE 345KV CKT 1	717	789	0.04524	113.9068	GEN336252 1-NINEMILE POINT UNIT#5
FDNS	00NR	0	20WP	G15_063	FROM->TO	G14-057T 345.00 - SUNNYSIDE 345KV CKT 1	717	789	0.04547	113.8867	FLETCHER - GEORGIA 138KV CKT 1
FDNS	00NR	0	20WP	G15_063	FROM->TO	G14-057T 345.00 - SUNNYSIDE 345KV CKT 1	717	789	0.04662	113.8825	P12:138:AEPW-OGE:CORNVIL4:MAUD 4
FDNS	00NR	0	16WP	G15_063	FROM->TO	G14-057T 345.00 - SUNNYSIDE 345KV CKT 1	717	789	0.04554	113.8763	GEN562952 1-G15057_3 0.6500
FDNS	00NR	0	16WP	G15_063	FROM->TO	G14-057T 345.00 - SUNNYSIDE 345KV CKT 1	717	789	0.04554	113.8729	GEN562704 1-G15_020_3 0.3550
FDNS	00NR	0	20WP	G15_063	FROM->TO	G14-057T 345.00 - SUNNYSIDE 345KV CKT 1	717	789	0.04524	113.8632	FRONTIER - GRIMES 345KV CKT 1
FDNS	00NR	0	16WP	G15_063	FROM->TO	G14-057T 345.00 - SUNNYSIDE 345KV CKT 1	717	789	0.04554	113.8575	GEN563173 1-G15082_3 0.6900
FDNS	00NR	0	20WP	G15_063	FROM->TO	G14-057T 345.00 - SUNNYSIDE 345KV CKT 1	717	789	0.04524	113.8574	GEN503909 1-FULTONU1 1 16.000
FDNS	00NR	0	20WP	G15_063	FROM->TO	G14-057T 345.00 - SUNNYSIDE 345KV CKT 1	717	789	0.04524	113.8514	GEN335204 1-NELSON UNIT 4
FDNS	00NR	0	20WP	G15_063	FROM->TO	G14-057T 345.00 - SUNNYSIDE 345KV CKT 1	717	789	0.04603	113.8496	LATHAMS7 345.00 - ROSE HILL 345KV CKT 1
FDNS	00NR	0	20WP	G15_063	FROM->TO	G14-057T 345.00 - SUNNYSIDE 345KV CKT 1	717	789	0.04552	113.8466	EMPIRE - FLETCHER 138KV CKT 1
FDNS	00NR	0	16WP	G15_063	FROM->TO	G14-057T 345.00 - SUNNYSIDE 345KV CKT 1	717	789	0.04551	113.8455	GRAPEVINE INTERCHANGE - NICHOLS STATION 230KV CKT 1
FDNS	00NR	0	16WP	G15_063	FROM->TO	G14-057T 345.00 - SUNNYSIDE 345KV CKT 1	717	789	0.04551	113.8455	GRAPEVINE INTERCHANGE - NICHOLS STATION 230KV CKT 1
FDNS	00NR	0	20WP	G15_063	FROM->TO	G14-057T 345.00 - SUNNYSIDE 345KV CKT 1	717	789	0.04524	113.844	GEN334441 1-SABINE UNIT 5
FDNS	00NR	0	20WP	G15_063	FROM->TO	G14-057T 345.00 - SUNNYSIDE 345KV CKT 1	717	789	0.04538	113.8355	TUPELO - TUPELO TAP 138KV CKT 1
FDNS	00NR	0	16WP	G15_063	FROM->TO	G14-057T 345.00 - SUNNYSIDE 345KV CKT 1	717	789	0.04554	113.82	GEN620315 1-BIG STONE GEN
FDNS	00NR	0	20WP	G15_063	FROM->TO	G14-057T 345.00 - SUNNYSIDE 345KV CKT 1	717	789	0.04632	113.8083	CIVIT - STRATFORD 138KV CKT 1
FDNS	00NR	0	20WP	G15_063	FROM->TO	G14-057T 345.00 - SUNNYSIDE 345KV CKT 1	717	789	0.04662	113.8081	BLANCHARD - CORNVILLE 138KV CKT 1
FDNS	00NR	0	16WP	G15_063	FROM->TO	G14-057T 345.00 - SUNNYSIDE 345KV CKT 1	717	789	0.04554	113.7852	GEN562710 1-G15_022_3 0.5500

SOLUTION	GROUP	SCENARIO	SEASON	SOURCE	DIRECTION	MONITORED ELEMENT	RATEA (MVA)	RATEB(MVA)	TDF	TC%LOADING (% MVA)	CONTINGENCY
FDNS	00NR	0	20WP	G15_063	FROM->TO	G14-057T 345.00 - SUNNYSIDE 345KV CKT 1	717	789	0.04527	113.7681	G1524G1525 345.00 - THISTLE7 345.00 345KV CKT 1
FDNS	00NR	0	20WP	G15_063	FROM->TO	G14-057T 345.00 - SUNNYSIDE 345KV CKT 1	717	789	0.04527	113.7681	G1524G1525 345.00 - THISTLE7 345.00 345KV CKT 2
FDNS	00NR	0	20WP	G15_063	FROM->TO	G14-057T 345.00 - SUNNYSIDE 345KV CKT 1	717	789	0.04552	113.7637	COMANCHE - EMPIRE 138KV CKT 1
FDNS	00NR	0	16WP	G15_063	FROM->TO	G14-057T 345.00 - SUNNYSIDE 345KV CKT 1	717	789	0.04554	113.7632	GEN600004 2-PRAIRIE ISLAND G2
FDNS	00NR	0	20WP	G15_063	FROM->TO	G14-057T 345.00 - SUNNYSIDE 345KV CKT 1	717	789	0.0452	113.7628	LAYFLD8 500.00 - MOUNT OLIVE 500KV CKT 1
FDNS	00NR	0	20WP	G15_063	FROM->TO	G14-057T 345.00 - SUNNYSIDE 345KV CKT 1	717	789	0.0452	113.7628	LAYFLD8 500.00 - MOUNT OLIVE 500KV CKT 1
FDNS	00NR	0	16WP	G15_063	FROM->TO	G14-057T 345.00 - SUNNYSIDE 345KV CKT 1	717	789	0.04554	113.7604	GEN600003 1-PRAIRIE ISLAND G1
FDNS	00NR	0	16WP	G15_063	FROM->TO	G14-057T 345.00 - SUNNYSIDE 345KV CKT 1	717	789	0.04554	113.7577	GEN511851 1-COMANCHE #1
FDNS	00NR	0	20WP	G15_063	FROM->TO	G14-057T 345.00 - SUNNYSIDE 345KV CKT 1	717	789	0.04524	113.7524	GEN334071 1-LEWIS CREEK 2
FDNS	00NR	0	16WP	G15_063	FROM->TO	G14-057T 345.00 - SUNNYSIDE 345KV CKT 1	717	789	0.04554	113.7523	GEN600006 1-AS KING
FDNS	00NR	0	20WP	G15_063	FROM->TO	G14-057T 345.00 - SUNNYSIDE 345KV CKT 1	717	789	0.04524	113.744	GEN334070 1-LEWIS CREEK 1
FDNS	00NR	0	20WP	G15_063	FROM->TO	G14-057T 345.00 - SUNNYSIDE 345KV CKT 1	717	789	0.04524	113.7346	GEN336251 1-NINEMILE POINT UNIT#4
FDNS	00NR	0	20WP	G15_063	FROM->TO	G14-057T 345.00 - SUNNYSIDE 345KV CKT 1	717	789	0.04524	113.7145	GEN509393 S1-ARSENAL HILL GENS #4 (STALL)
FDNS	00NR	0	20WP	G15_063	FROM->TO	G14-057T 345.00 - SUNNYSIDE 345KV CKT 1	717	789	0.04524	113.713	GEN509392 G2-ARSENAL HILL GENS #3 (STALL)
FDNS	00NR	0	20WP	G15_063	FROM->TO	G14-057T 345.00 - SUNNYSIDE 345KV CKT 1	717	789	0.04524	113.7129	GEN509391 G1-ARSENAL HILL GENS #2 (STALL)
FDNS	00NR	0	20WP	G15_063	FROM->TO	G14-057T 345.00 - SUNNYSIDE 345KV CKT 1	717	789	0.04523	113.7078	P12:161:AEPW-SWPA:BEAVER5:EROGERS5
FDNS	00NR	0	20WP	G15_063	FROM->TO	G14-057T 345.00 - SUNNYSIDE 345KV CKT 1	717	789	0.04632	113.6904	OIL CENTER - STRATFORD 138KV CKT 1
FDNS	00NR	0	16WP	G15_063	FROM->TO	G14-057T 345.00 - SUNNYSIDE 345KV CKT 1	717	789	0.04564	113.6876	P12:138:WFEC:MSL09
FDNS	00NR	0	20WP	G15_063	FROM->TO	G14-057T 345.00 - SUNNYSIDE 345KV CKT 1	717	789	0.04524	113.6862	GEN334433 1-SABINE UNIT 3
FDNS	00NR	0	20WP	G15_063	FROM->TO	G14-057T 345.00 - SUNNYSIDE 345KV CKT 1	717	789	0.04524	113.6699	GEN337653 1-WHITE BLUFF UNIT #2
FDNS	00NR	0	16WP	G15_063	FROM->TO	G14-057T 345.00 - SUNNYSIDE 345KV CKT 1	717	789	0.04554	113.6636	GEN636641 1-LOUISA UNIT 1
FDNS	00NR	0	16WP	G15_063	FROM->TO	G14-057T 345.00 - SUNNYSIDE 345KV CKT 1	717	789	0.0449	113.6599	P12:138:AEPW-OGE:CORNVIL4:CIMARON4
FDNS	00NR	0	20WP	G15_063	FROM->TO	G14-057T 345.00 - SUNNYSIDE 345KV CKT 1	717	789	0.04524	113.6599	GEN336831 1-BAXTER WILSON SES
FDNS	00NR	0	20WP	G15_063	FROM->TO	G14-057T 345.00 - SUNNYSIDE 345KV CKT 1	717	789	0.04553	113.6541	FINNEY SWITCHING STATION - HOLCOMB 345KV CKT 1
FDNS	00NR	0	20WP	G15_063	FROM->TO	G14-057T 345.00 - SUNNYSIDE 345KV CKT 1	717	789	0.04553	113.6541	FINNEY SWITCHING STATION - HOLCOMB 345KV CKT 1
FDNS	00NR	0	20WP	G15_063	FROM->TO	G14-057T 345.00 - SUNNYSIDE 345KV CKT 1	717	789	0.04524	113.6458	GEN515040 1-SEMINOLE 1G
FDNS	00NR	0	20WP	G15_063	FROM->TO	G14-057T 345.00 - SUNNYSIDE 345KV CKT 1	717	789	0.04524	113.6432	P12:161:AEPW:DYESS5:ELMSPRNG:TONTITN5
FDNS	00NR	0	20WP	G15_063	FROM->TO	G14-057T 345.00 - SUNNYSIDE 345KV CKT 1	717	789	0.04536	113.6336	DUNCAN (DUNCAN) 138/69/13.8KV TRANSFORMER CKT 1
FDNS	00NR	0	20WP	G15_063	FROM->TO	G14-057T 345.00 - SUNNYSIDE 345KV CKT 1	717	789	0.04536	113.6336	DUNCAN (DUNCAN) 138/69/13.8KV TRANSFORMER CKT 1
FDNS	00NR	0	16WP	G15_063	FROM->TO	G14-057T 345.00 - SUNNYSIDE 345KV CKT 1	717	789	0.04554	113.6211	GEN600005 1-MONTICELLO
FDNS	00NR	0	20WP	G15_063	FROM->TO	G14-057T 345.00 - SUNNYSIDE 345KV CKT 1	717	789	0.04524	113.6167	GEN337911 1-ARKANSAS NUCLEAR ONE UNIT #2
FDNS	00NR	0	20WP	G15_063	FROM->TO	G14-057T 345.00 - SUNNYSIDE 345KV CKT 1	717	789	0.04524	113.6116	GEN334030 1-FRONTIER UNIT 1
FDNS	00NR	0	20WP	G15_063	FROM->TO	G14-057T 345.00 - SUNNYSIDE 345KV CKT 1	717	789	0.04524	113.6093	GEN334031 1-FRONTIER UNIT 2
FDNS	00NR	0	20WP	G15_063	FROM->TO	G14-057T 345.00 - SUNNYSIDE 345KV CKT 1	717	789	0.04527	113.5913	P12:138:AEPW:CATOOSA4:T.S.E.-4
FDNS	00NR	0	20WP	G15_063	FROM->TO	G14-057T 345.00 - SUNNYSIDE 345KV CKT 1	717	789	0.0446	113.5874	TUTTLE - TUTTLE CONOCO TAP 138KV CKT 1
FDNS	00NR	0	20WP	G15_063	FROM->TO	G14-057T 345.00 - SUNNYSIDE 345KV CKT 1	717	789	0.04662	113.5864	BLANCHARD - MAUD 138KV CKT 1
FDNS	00NR	0	20WP	G15_063	FROM->TO	G14-057T 345.00 - SUNNYSIDE 345KV CKT 1	717	789	0.04524	113.5692	GEN506752 1-LEBROCK GAS 1
FDNS	00NR	0	20WP	G15_063	FROM->TO	G14-057T 345.00 - SUNNYSIDE 345KV CKT 1	717	789	0.04524	113.5689	GEN506753 1-LEBROCK GAS 2
FDNS	00NR	0	20WP	G15_063	FROM->TO	G14-057T 345.00 - SUNNYSIDE 345KV CKT 1	717	789	0.04524	113.5686	GEN501811 1-RODEMACHER UNIT 1
FDNS	00NR	0	20WP	G15_063	FROM->TO	G14-057T 345.00 - SUNNYSIDE 345KV CKT 1	717	789	0.04515	113.5678	P12:138:AEPW-OGE:WTH_JCT4:JENSEN4
FDNS	00NR	0	20WP	G15_063	FROM->TO	G14-057T 345.00 - SUNNYSIDE 345KV CKT 1	717	789	0.04524	113.5664	GEN337652 1-WHITE BLUFF UNIT #1
FDNS	00NR	0	20WP	G15_063	FROM->TO	G14-057T 345.00 - SUNNYSIDE 345KV CKT 1	717	789	0.04525	113.5634	P12:138:AEPW:CORNVIL4:DUNCAN-4
FDNS	00NR	0	16WP	G15_063	FROM->TO	G14-057T 345.00 - SUNNYSIDE 345KV CKT 1	717	789	0.04549	113.5617	CHISHOLM7 345.00 (CHISHOLM) 345/230/13.2KV TRANSFORMER CKT 1
FDNS	00NR	0	20WP	G15_063	FROM->TO	G14-057T 345.00 - SUNNYSIDE 345KV CKT 1	717	789	0.04522	113.559	FULTON 115 - HOPE 115KV CKT 1
FDNS	00NR	0	20WP	G15_063	FROM->TO	G14-057T 345.00 - SUNNYSIDE 345KV CKT 1	717	789	0.04522	113.559	FULTON 115 - HOPE 115KV CKT 1
FDNS	00NR	0	20WP	G15_063	FROM->TO	G14-057T 345.00 - SUNNYSIDE 345KV CKT 1	717	789	0.04512	113.538	G14_038T 345.00 - Hitchland Interchange 345KV CKT 1
FDNS	00NR	0	16WP	G15_063	FROM->TO	G14-057T 345.00 - SUNNYSIDE 345KV CKT 1	717	789	0.04554	113.536	GEN635213 3-NEAL UNIT 3
FDNS	00NR	0	20WP	G15_063	FROM->TO	G14-057T 345.00 - SUNNYSIDE 345KV CKT 1	717	789	0.04524	113.5345	GEN336191 1-LITTLE GYPSY UNIT#3
FDNS	00NR	0	20WP	G15_063	FROM->TO	G14-057T 345.00 - SUNNYSIDE 345KV CKT 1	717	789	0.04524	113.5341	GEN300015 1-1SGPDEL 18.000
FDNS	00NR	0	16WP	G15_063	FROM->TO	G14-057T 345.00 - SUNNYSIDE 345KV CKT 1	717	789	0.04554	113.5331	GEN562754 1-G15031_5 0.6900
FDNS	00NR	0	20WP	G15_063	FROM->TO	G14-057T 345.00 - SUNNYSIDE 345KV CKT 1	717	789	0.04632	113.5177	LATTA JCT - OIL CENTER 138KV CKT 1
FDNS	00NR	0	20WP	G15_063	FROM->TO	G14-057T 345.00 - SUNNYSIDE 345KV CKT 1	717	789	0.04535	113.5164	P12:138:AEPW:CORNVIL4:S.W.S.-4
FDNS	00NR	0	20WP	G15_063	FROM->TO	G14-057T 345.00 - SUNNYSIDE 345KV CKT 1	717	789	0.04524	113.5154	GEN515226 1-MUSKOGEE 6G
FDNS	00NR	0	16WP	G15_063	FROM->TO	G14-057T 345.00 - SUNNYSIDE 345KV CKT 1	717	789	0.04554	113.5076	GEN629074 1-ARNOLD LOWSIDE OF GSU XFMR
FDNS	00NR	0	20WP	G15_063	FROM->TO	G14-057T 345.00 - SUNNYSIDE 345KV CKT 1	717	789	0.04524	113.5041	GEN335614 1-WILLOW GLENN UNIT#4
FDNS	00NR	0	20WP	G15_063	FROM->TO	G14-057T 345.00 - SUNNYSIDE 345KV CKT 1	717	789	0.04524	113.5006	GEN300003 1-THOMAS HILL UNIT 3
FDNS	00NR	0	20WP	G15_063	FROM->TO	G14-057T 345.00 - SUNNYSIDE 345KV CKT 1	717	789	0.04524	113.4965	6LAYFLD 230.00 - CARROLL 230KV CKT 1
FDNS	00NR	0	20WP	G15_063	FROM->TO	G14-057T 345.00 - SUNNYSIDE 345KV CKT 1	717	789	0.0446	113.4953	CIMARRON - TUTTLE CONOCO TAP 138KV CKT 1
FDNS	00NR	0	20WP	G15_063	FROM->TO	G14-057T 345.00 - SUNNYSIDE 345KV CKT 1	717	789	0.04526	113.4935	8DANIEL8 500.00 - MCKNIGHT 500KV CKT 1
FDNS	00NR	0	20WP	G15_063	FROM->TO	G14-057T 345.00 - SUNNYSIDE 345KV CKT 1	717	789	0.0459	113.4759	BAILEY4 138.00 - SUNSHINE CANYON 138KV CKT 1
FDNS	00NR	0	16WP	G15_063	FROM->TO	G14-057T 345.00 - SUNNYSIDE 345KV CKT 1	717	789	0.04554	113.4741	GEN562756 1-G15031_7 0.6900
FDNS	00NR	0	20WP	G15_063	FROM->TO	G14-057T 345.00 - SUNNYSIDE 345KV CKT 1	717	789	0.04524	113.4652	P12:161:AEPW:EROGERS5:ECNTRTN5
FDNS	00NR	0	20WP	G15_063	FROM->TO	G14-057T 345.00 - SUNNYSIDE 345KV CKT 1	717	789	0.04515	113.4622	G15095_T 138.00 - ROSE_VALLEY 138.00 138KV CKT 1
FDNS	00NR	0	16WP	G15_063	FROM->TO	G14-057T 345.00 - SUNNYSIDE 345KV CKT 1	717	789	0.04554	113.4614	BIG STONE 230/24.0KV TRANSFORMER CKT 1
FDNS	00NR	0	20WP	G15_063	FROM->TO	G14-057T 345.00 - SUNNYSIDE 345KV CKT 1	717	789	0.04524	113.4607	GEN337910 1-ARKANSAS NUCLEAR ONE UNIT #1
FDNS	00NR	0	20WP	G15_063	FROM->TO	G14-057T 345.00 - SUNNYSIDE 345KV CKT 1	717	789	0.04524	113.4596	GEN303007 1-1BC2 U2
FDNS	00NR	0	20WP	G15_063	FROM->TO	G14-057T 345.00 - SUNNYSIDE 345KV CKT 1	717	789	0.04536	113.4595	P12:69:WFEC-AEPW:COMANCH2:DUNCAN-2
FDNS	00NR	0	16WP	G15_063	FROM->TO	G14-057T 345.00 - SUNNYSIDE 345KV CKT 1	717	789	0.04554	113.4548	GEN562023 1-G11_020_3 0.6900
FDNS	00NR	0	16WP	G15_063	FROM->TO	G14-057T 345.00 - SUNNYSIDE 345KV CKT 1	717	789	0.04554	113.4548	GEN562026 1-G11_019_3 0.6900
FDNS	00NR	0	20WP	G15_063	FROM->TO	G14-057T 345.00 - SUNNYSIDE 345KV CKT 1	717	789	0.04524	113.4538	GEN303006 1-1BC2 U1
FDNS	00NR	0	20WP	G15_063	FROM->TO	G14-057T 345.00 - SUNNYSIDE 345KV CKT 1	717	789	0.04519	113.4533	P12:138:AEPW:WTHWF4:CLINTJC4
FDNS	00NR	0	20WP	G15_063	FROM->TO	G14-057T 345.00 - SUNNYSIDE 345KV CKT 1	717	789	0.04524	113.4532	GEN336464 1-MICHOUD UNIT #3
FDNS	00NR	0	20WP	G15_063	FROM->TO	G14-057T 345.00 - SUNNYSIDE 345KV CKT 1	717	789	0.04524	113.453	WHITE BLUFF 500/26.0KV TRANSFORMER CKT 1
FDNS	00NR	0	20WP	G15_063	FROM->TO	G14-057T 345.00 - SUNNYSIDE 345KV CKT 1	717	789	0.04522	113.451	BUCKNER7 345.00 - SPEARVILLE 345KV CKT 1
FDNS	00NR	0	20WP	G15_063	FROM->TO	G14-057T 345.00 - SUNNYSIDE 345KV CKT 1	717	789	0.04522	113.451	BUCKNER7 345.00 - SPEARVILLE 345KV CKT 1
FDNS	00NR	0	20WP	G15_063	FROM->TO	G14-057T 345.00 - SUNNYSIDE 345KV CKT 1	717	789	0.04524	113.4497	GEN562783 1-G15036_4 0.6900
FDNS	00NR	0	20WP	G15_063	FROM->TO	G14-057T 345.00 - SUNNYSIDE 345KV CKT 1	717	789	0.04524	113.4497	GEN562784 1-G15036_5 0.6900
FDNS	00NR	0	20WP	G15_063	FROM->TO	G14-057T 345.00 - SUNNYSIDE 345KV CKT 1	717	789	0.04524	113.4447	RODEMACHER 230/22.0KV TRANSFORMER CKT 1
FDNS	00NR	0	20WP	G15_063	FROM->TO	G14-057T 345.00 - SUNNYSIDE 345KV CKT 1	717	789	0.04528	113.4435	P12:69:AEPW-OMPA:COMANC-2:OMWALTR2

SOLUTION	GROUP	SCENARIO	SEASON	SOURCE	DIRECTION	MONITORED ELEMENT	RATEA (MVA)	RATEB(MVA)	TDF	TC%LOADING (% MVA)	CONTINGENCY
FDNS	00NR	0	20WP	G15_063	FROM->TO	G14-057T 345.00 - SUNNYSIDE 345KV CKT 1	717	789	0.04569	113.4374	CIMARRON - CZECH HALL 138KV CKT 1
FDNS	00NR	0	16WP	G15_063	FROM->TO	G14-057T 345.00 - SUNNYSIDE 345KV CKT 1	717	789	0.04549	113.4352	CHISHOLM7 345.00 - GRACEMONT 345KV CKT 1
FDNS	00NR	0	20WP	G15_063	FROM->TO	G14-057T 345.00 - SUNNYSIDE 345KV CKT 1	717	789	0.0453	113.4339	G15088_T 345.00 - MOORE 345KV CKT 1
FDNS	00NR	0	20WP	G15_063	FROM->TO	G14-057T 345.00 - SUNNYSIDE 345KV CKT 1	717	789	0.04524	113.4338	GEN515225 1-MUSKOGEE 5G
FDNS	00NR	0	20WP	G15_063	FROM->TO	G14-057T 345.00 - SUNNYSIDE 345KV CKT 1	717	789	0.04524	113.4337	GEN515223 1-MUSKOGEE 4G
FDNS	00NR	0	16WP	G15_063	FROM->TO	G14-057T 345.00 - SUNNYSIDE 345KV CKT 1	717	789	0.04554	113.4308	GEN562556 1-G14_046_3 0.3420
FDNS	00NR	0	20WP	G15_063	FROM->TO	G14-057T 345.00 - SUNNYSIDE 345KV CKT 1	717	789	0.04521	113.4308	BISMARK - HOT SPRINGS WEST BUS 115KV CKT 1
FDNS	00NR	0	20WP	G15_063	FROM->TO	G14-057T 345.00 - SUNNYSIDE 345KV CKT 1	717	789	0.04536	113.427	DUNCAN - TOSCO 69KV CKT 1
FDNS	00NR	0	20WP	G15_063	FROM->TO	G14-057T 345.00 - SUNNYSIDE 345KV CKT 1	717	789	0.04519	113.427	P12:138:AEPW:WTHWF4:WTH_SE4
FDNS	00NR	0	20WP	G15_063	FROM->TO	G14-057T 345.00 - SUNNYSIDE 345KV CKT 1	717	789	0.04523	113.4262	MC NIEL 500/115KV TRANSFORMER CKT 1
FDNS	00NR	0	20WP	G15_063	FROM->TO	G14-057T 345.00 - SUNNYSIDE 345KV CKT 1	717	789	0.04537	113.4235	G15074_T 345.00 - HOYT 345KV CKT 1
FDNS	00NR	0	20WP	G15_063	FROM->TO	G14-057T 345.00 - SUNNYSIDE 345KV CKT 1	717	789	0.04521	113.4158	HOT SPRINGS EHV - MAGNET COVE 500KV CKT 1
FDNS	00NR	0	20WP	G15_063	FROM->TO	G14-057T 345.00 - SUNNYSIDE 345KV CKT 1	717	789	0.04524	113.4072	GEN300010 1-ST FRANCIS UNIT 1
FDNS	00NR	0	20WP	G15_063	FROM->TO	G14-057T 345.00 - SUNNYSIDE 345KV CKT 1	717	789	0.04514	113.4038	CLEO CORNER - CLEOPLT4 138.00 138KV CKT 1
FDNS	00NR	0	20WP	G15_063	FROM->TO	G14-057T 345.00 - SUNNYSIDE 345KV CKT 1	717	789	0.04524	113.3966	GEN337041 1-GERALD ANDRUS
FDNS	00NR	0	20WP	G15_063	FROM->TO	G14-057T 345.00 - SUNNYSIDE 345KV CKT 1	717	789	0.04524	113.3929	GEN303008 1-1BC2 U3
FDNS	00NR	0	20WP	G15_063	FROM->TO	G14-057T 345.00 - SUNNYSIDE 345KV CKT 1	717	789	0.04582	113.3855	CIMARRON - SARA 138KV CKT 1
FDNS	00NR	0	20WP	G15_063	FROM->TO	G14-057T 345.00 - SUNNYSIDE 345KV CKT 1	717	789	0.04514	113.3828	CLEOPLT4 138.00 - MEN TAP 138KV CKT 1
FDNS	00NR	0	20WP	G15_063	FROM->TO	G14-057T 345.00 - SUNNYSIDE 345KV CKT 1	717	789	0.04524	113.3807	GEN505432 1-SIKESTON
FDNS	00NR	0	20WP	G15_063	FROM->TO	G14-057T 345.00 - SUNNYSIDE 345KV CKT 1	717	789	0.04553	113.3806	FINNEY SWITCHING STATION - WALKTAP7 345.00 345KV CKT 1
FDNS	00NR	0	20WP	G15_063	FROM->TO	G14-057T 345.00 - SUNNYSIDE 345KV CKT 1	717	789	0.04553	113.3806	FINNEY SWITCHING STATION - WALKTAP7 345.00 345KV CKT 1
FDNS	00NR	0	20WP	G15_063	FROM->TO	G14-057T 345.00 - SUNNYSIDE 345KV CKT 1	717	789	0.04515	113.3803	NOEL_SW 138.00 - ROSE_VALLEY 138.00 138KV CKT 1
FDNS	00NR	0	20WP	G15_063	FROM->TO	G14-057T 345.00 - SUNNYSIDE 345KV CKT 1	717	789	0.04525	113.3796	ELK CITY 230KV (ELKCTY-6) 230/138/13.8KV TRANSFORMER CKT 1
FDNS	00NR	0	20WP	G15_063	FROM->TO	G14-057T 345.00 - SUNNYSIDE 345KV CKT 1	717	789	0.04525	113.3796	ELK CITY 230KV (ELKCTY-6) 230/138/13.8KV TRANSFORMER CKT 1
FDNS	00NR	0	20WP	G15_063	FROM->TO	G14-057T 345.00 - SUNNYSIDE 345KV CKT 1	717	789	0.04521	113.379	ALPINE AECC - BISMARK 115KV CKT 1
FDNS	00NR	0	20WP	G15_063	FROM->TO	G14-057T 345.00 - SUNNYSIDE 345KV CKT 1	717	789	0.04466	113.3733	SEMINOLE - VANOSTP4 138.00 138KV CKT 1
FDNS	00NR	0	20WP	G15_063	FROM->TO	G14-057T 345.00 - SUNNYSIDE 345KV CKT 1	717	789	0.04514	113.3709	IMO TAP - MEN TAP 138KV CKT 1
FDNS	00NR	0	20WP	G15_063	FROM->TO	G14-057T 345.00 - SUNNYSIDE 345KV CKT 1	717	789	0.04569	113.3682	CZECH HALL - XEROX 138KV CKT 1
FDNS	00NR	0	20WP	G15_063	FROM->TO	G14-057T 345.00 - SUNNYSIDE 345KV CKT 1	717	789	0.04525	113.3668	CHISHOLM6 230.00 - ELK CITY 230KV 230KV CKT 1
FDNS	00NR	0	20WP	G15_063	FROM->TO	G14-057T 345.00 - SUNNYSIDE 345KV CKT 1	717	789	0.04526	113.3644	P12:138:AEPW:N.E.S.-4:CATOOSA4
FDNS	00NR	0	20WP	G15_063	FROM->TO	G14-057T 345.00 - SUNNYSIDE 345KV CKT 1	717	789	0.04569	113.3642	MORGAN - XEROX 138KV CKT 1
FDNS	00NR	0	20WP	G15_063	FROM->TO	G14-057T 345.00 - SUNNYSIDE 345KV CKT 1	717	789	0.04524	113.3642	GEN336170 1-GULF OXY U4
FDNS	00NR	0	20WP	G15_063	FROM->TO	G14-057T 345.00 - SUNNYSIDE 345KV CKT 1	717	789	0.04536	113.3638	COMANCHE TAP - TOSCO 69KV CKT 1
FDNS	00NR	0	20WP	G15_063	FROM->TO	G14-057T 345.00 - SUNNYSIDE 345KV CKT 1	717	789	0.04524	113.3586	NELSON 230/20.0KV TRANSFORMER CKT 1
FDNS	00NR	0	20WP	G15_063	FROM->TO	G14-057T 345.00 - SUNNYSIDE 345KV CKT 1	717	789	0.04524	113.35	GEN300011 1-ST FRANCIS UNIT 2
FDNS	00NR	0	20WP	G15_063	FROM->TO	G14-057T 345.00 - SUNNYSIDE 345KV CKT 1	717	789	0.04484	113.3485	ARBWIND4 138.00 - CARTER 138KV CKT 1
FDNS	00NR	0	16WP	G15_063	FROM->TO	G14-057T 345.00 - SUNNYSIDE 345KV CKT 1	717	789	0.04554	113.3423	GEN563142 1-G15079_3 0.5500
FDNS	00NR	0	16WP	G15_063	FROM->TO	G14-057T 345.00 - SUNNYSIDE 345KV CKT 1	717	789	0.04554	113.3423	GEN563151 1-G15080_2 0.5500
FDNS	00NR	0	20WP	G15_063	FROM->TO	G14-057T 345.00 - SUNNYSIDE 345KV CKT 1	717	789	0.04524	113.3417	GEN336801 1-BAXTER WILSON UNIT #1
FDNS	00NR	0	20WP	G15_063	FROM->TO	G14-057T 345.00 - SUNNYSIDE 345KV CKT 1	717	789	0.04569	113.3413	MORGAN - MUSTANG 138KV CKT 1
FDNS	00NR	0	20WP	G15_063	FROM->TO	G14-057T 345.00 - SUNNYSIDE 345KV CKT 1	717	789	0.04521	113.3302	ALPINE AECC - AMITY SS 115KV CKT 1
FDNS	00NR	0	20WP	G15_063	FROM->TO	G14-057T 345.00 - SUNNYSIDE 345KV CKT 1	717	789	0.04515	113.3242	WEATHERFORD JCT. - WEATHERFORD SOUTHEAST 138KV CKT 1
FDNS	00NR	0	20WP	G15_063	FROM->TO	G14-057T 345.00 - SUNNYSIDE 345KV CKT 1	717	789	0.04515	113.3242	WEATHERFORD JCT. - WEATHERFORD SOUTHEAST 138KV CKT 1
FDNS	00NR	0	20WP	G15_063	FROM->TO	G14-057T 345.00 - SUNNYSIDE 345KV CKT 1	717	789	0.04524	113.3189	8CAJUN2 500/24.0KV TRANSFORMER CKT 1
FDNS	00NR	0	20WP	G15_063	FROM->TO	G14-057T 345.00 - SUNNYSIDE 345KV CKT 1	717	789	0.04524	113.3146	GEN501910 1-ACADIA UNIT ST1
FDNS	00NR	0	16WP	G15_063	FROM->TO	G14-057T 345.00 - SUNNYSIDE 345KV CKT 1	717	789	0.04554	113.3117	GEN523971 1-HARRINGTON GEN #1 24 KV
FDNS	00NR	0	16WP	G15_063	FROM->TO	G14-057T 345.00 - SUNNYSIDE 345KV CKT 1	717	789	0.04554	113.3117	GEN523973 1-HARRINGTON GEN #3 24 KV
FDNS	00NR	0	16WP	G15_063	FROM->TO	G14-057T 345.00 - SUNNYSIDE 345KV CKT 1	717	789	0.04554	113.3116	GEN523972 1-HARRINGTON GEN #2 24 KV
FDNS	00NR	0	20WP	G15_063	FROM->TO	G14-057T 345.00 - SUNNYSIDE 345KV CKT 1	717	789	0.04536	113.3102	COMANCHE - COMANCHE TAP 69KV CKT 1
FDNS	00NR	0	16WP	G15_063	FROM->TO	G14-057T 345.00 - SUNNYSIDE 345KV CKT 1	717	789	0.04554	113.3067	GEN600000 1-SHERBURNECNTY G1
FDNS	00NR	0	20WP	G15_063	FROM->TO	G14-057T 345.00 - SUNNYSIDE 345KV CKT 1	717	789	0.0454	113.3027	ANADARKO - SEQUOYAHJ4 138.00 138KV CKT 1
FDNS	00NR	0	20WP	G15_063	FROM->TO	G14-057T 345.00 - SUNNYSIDE 345KV CKT 1	717	789	0.0454	113.3012	CORN TAP - SEQUOYAHJ4 138.00 138KV CKT 1
FDNS	00NR	0	20WP	G15_063	FROM->TO	G14-057T 345.00 - SUNNYSIDE 345KV CKT 1	717	789	0.0459	113.2991	BAILEY4 138.00 - WESTMOORE 138KV CKT 1
FDNS	00NR	0	20WP	G15_063	FROM->TO	G14-057T 345.00 - SUNNYSIDE 345KV CKT 1	717	789	0.04525	113.29	P12:138:OKGE-AEPW:JENSEN4:REDROCKRD4
FDNS	00NR	0	20WP	G15_063	FROM->TO	G14-057T 345.00 - SUNNYSIDE 345KV CKT 1	717	789	0.04515	113.279	P12:138:AEPW:REDROCKRD4:WTH_JCT4
FDNS	00NR	0	20WP	G15_063	FROM->TO	G14-057T 345.00 - SUNNYSIDE 345KV CKT 1	717	789	0.04524	113.2786	SABINE 230/24.0KV TRANSFORMER CKT 1
FDNS	00NR	0	20WP	G15_063	FROM->TO	G14-057T 345.00 - SUNNYSIDE 345KV CKT 1	717	789	0.04582	113.276	SARA - STHLAKE4 138.00 138KV CKT 1
FDNS	00NR	0	20WP	G15_063	FROM->TO	G14-057T 345.00 - SUNNYSIDE 345KV CKT 1	717	789	0.04535	113.2756	WALTERS - WALTERS 69KV CKT 1
FDNS	00NR	0	20WP	G15_063	FROM->TO	G14-057T 345.00 - SUNNYSIDE 345KV CKT 1	717	789	0.0452	113.2703	ETTA (DUKE HOTSPRINGS) - MC NIEL 500KV CKT 1
FDNS	00NR	0	20WP	G15_063	FROM->TO	G14-057T 345.00 - SUNNYSIDE 345KV CKT 1	717	789	0.04524	113.2697	P12:138:AEPW:R.S.S.-4:S.HUD.-4
FDNS	00NR	0	20WP	G15_063	FROM->TO	G14-057T 345.00 - SUNNYSIDE 345KV CKT 1	717	789	0.04524	113.2607	GEN336222 1-LITTLE GYPSY UNIT#2
FDNS	00NR	0	20WP	G15_063	FROM->TO	G14-057T 345.00 - SUNNYSIDE 345KV CKT 1	717	789	0.04524	113.2597	GEN300016 1-1G1GPDEL 18.000
FDNS	00NR	0	20WP	G15_063	FROM->TO	G14-057T 345.00 - SUNNYSIDE 345KV CKT 1	717	789	0.04528	113.249	LAWTON RELIFT TAP - OMPA-WALTERS 69KV CKT 1
FDNS	00NR	0	20WP	G15_063	FROM->TO	G14-057T 345.00 - SUNNYSIDE 345KV CKT 1	717	789	0.04582	113.2459	MCCLAIN - STHLAKE4 138.00 138KV CKT 1
FDNS	00NR	0	16WP	G15_063	FROM->TO	G14-057T 345.00 - SUNNYSIDE 345KV CKT 1	717	789	0.04549	113.2448	STLN-DEMARC6 - SWEETWATER 230KV CKT 1
FDNS	00NR	0	20WP	G15_063	FROM->TO	G14-057T 345.00 - SUNNYSIDE 345KV CKT 1	717	789	0.04524	113.2379	P12:69:AEPW:NROGERS2:ECNTRTN2
FDNS	00NR	0	16WP	G15_063	FROM->TO	G14-057T 345.00 - SUNNYSIDE 345KV CKT 1	717	789	0.04549	113.2375	P12:230:AEPW-SPS:SWEETWT6:WHEELER 6
FDNS	00NR	0	16WP	G15_063	FROM->TO	G14-057T 345.00 - SUNNYSIDE 345KV CKT 1	717	789	0.04549	113.2358	STATELINE INTERCHANGE - STLN-DEMARC6 230KV CKT 1
FDNS	00NR	0	20WP	G15_063	FROM->TO	G14-057T 345.00 - SUNNYSIDE 345KV CKT 1	717	789	0.04536	113.2337	NORGE ROAD - SOUTHWESTERN STATION 138KV CKT 1
FDNS	00NR	0	20WP	G15_063	FROM->TO	G14-057T 345.00 - SUNNYSIDE 345KV CKT 1	717	789	0.04536	113.2337	NORGE ROAD - SOUTHWESTERN STATION 138KV CKT 1
FDNS	00NR	0	20WP	G15_063	FROM->TO	G14-057T 345.00 - SUNNYSIDE 345KV CKT 1	717	789	0.04524	113.2278	P12:138:AEPW:BA_71ST4:T.S.E.-4
FDNS	00NR	0	20WP	G15_063	FROM->TO	G14-057T 345.00 - SUNNYSIDE 345KV CKT 1	717	789	0.04524	113.2251	GEN336152 1-WATERFORD UNIT#2
FDNS	00NR	0	20WP	G15_063	FROM->TO	G14-057T 345.00 - SUNNYSIDE 345KV CKT 1	717	789	0.04632	113.2249	LASALLE - LATTA JCT 138KV CKT 1
FDNS	00NR	0	20WP	G15_063	FROM->TO	G14-057T 345.00 - SUNNYSIDE 345KV CKT 1	717	789	0.04524	113.2243	GEN336151 1-WATERFORD UNIT#1
FDNS	00NR	0	20WP	G15_063	FROM->TO	G14-057T 345.00 - SUNNYSIDE 345KV CKT 1	717	789	0.04524	113.2231	P12:138:AEPW:YARCH-S4:T.S.E.-4
FDNS	00NR	0	20WP	G15_063	FROM->TO	G14-057T 345.00 - SUNNYSIDE 345KV CKT 1	717	789	0.04544	113.2206	P12:138:AEPW-OGE:SHIDLER4:OSAGE 4
FDNS	00NR	0	16WP	G15_063	FROM->TO	G14-057T 345.00 - SUNNYSIDE 345KV CKT 1	717	789	0.04551	113.22	NORTHWEST TEXARKANA - VALLIANT 345KV CKT 1
FDNS	00NR	0	16WP	G15_063	FROM->TO	G14-057T 345.00 - SUNNYSIDE 345KV CKT 1	717	789	0.04551	113.22	NORTHWEST TEXARKANA - VALLIANT 345KV CKT 1
FDNS	00NR	0	20WP	G15_063	FROM->TO	G14-057T 345.00 - SUNNYSIDE 345KV CKT 1	717	789	0.04542	113.2197	MORISNT4 138.00 - STILLWATER 138KV CKT 1

SOLUTION	GROUP	SCENARIO	SEASON	SOURCE	DIRECTION	MONITORED ELEMENT	RATEA (MVA)	RATEB(MVA)	TDF	TC%LOADING (% MVA)	CONTINGENCY
FDNS	00NR	0	20WP	G15_063	FROM->TO	G14-057T 345.00 - SUNNYSIDE 345KV CKT 1	717	789	0.04524	113.2158	FRONTIER 345/18.0KV TRANSFORMER CKT 1
FDNS	00NR	0	16WP	G15_063	FROM->TO	G14-057T 345.00 - SUNNYSIDE 345KV CKT 1	717	789	0.04554	113.2157	GEN600001 2-SHERBURNE CNTY G2
FDNS	00NR	0	20WP	G15_063	FROM->TO	G14-057T 345.00 - SUNNYSIDE 345KV CKT 1	717	789	0.04544	113.2143	P12:138:OKGE:3TERM2
FDNS	00NR	0	20WP	G15_063	FROM->TO	G14-057T 345.00 - SUNNYSIDE 345KV CKT 1	717	789	0.04524	113.2136	FRONTIER 345/18.0KV TRANSFORMER CKT 1
FDNS	00NR	0	20WP	G15_063	FROM->TO	G14-057T 345.00 - SUNNYSIDE 345KV CKT 1	717	789	0.04537	113.2053	HOYT - STRANGER CREEK 345KV CKT 1
FDNS	00NR	0	20WP	G15_063	FROM->TO	G14-057T 345.00 - SUNNYSIDE 345KV CKT 1	717	789	0.04551	113.2033	BLACKBERRY - NEOSHO 345KV CKT 1
FDNS	00NR	0	20WP	G15_063	FROM->TO	G14-057T 345.00 - SUNNYSIDE 345KV CKT 1	717	789	0.04524	113.2021	GEN300017 1-1G2GPDEL 18.000
FDNS	00NR	0	20WP	G15_063	FROM->TO	G14-057T 345.00 - SUNNYSIDE 345KV CKT 1	717	789	0.04527	113.2006	CLINTON JUNCTION - ELK CITY 138KV CKT 1
FDNS	00NR	0	20WP	G15_063	FROM->TO	G14-057T 345.00 - SUNNYSIDE 345KV CKT 1	717	789	0.04527	113.2006	CLINTON JUNCTION - ELK CITY 138KV CKT 1
FDNS	00NR	0	20WP	G15_063	FROM->TO	G14-057T 345.00 - SUNNYSIDE 345KV CKT 1	717	789	0.0453	113.2001	7JASPER 345.00 - BLACKBERRY 345KV CKT 1
FDNS	00NR	0	16WP	G15_063	FROM->TO	G14-057T 345.00 - SUNNYSIDE 345KV CKT 1	717	789	0.04554	113.2	GEN511848 1-SOUTHWESTERN STATION #3
FDNS	00NR	0	20WP	G15_063	FROM->TO	G14-057T 345.00 - SUNNYSIDE 345KV CKT 1	717	789	0.0456	113.198	BENTON - WICHITA 345KV CKT 1
FDNS	00NR	0	20WP	G15_063	FROM->TO	G14-057T 345.00 - SUNNYSIDE 345KV CKT 1	717	789	0.04522	113.1911	HOPE - MCNAB REC 115KV CKT 1
FDNS	00NR	0	20WP	G15_063	FROM->TO	G14-057T 345.00 - SUNNYSIDE 345KV CKT 1	717	789	0.04543	113.1899	G13-010T 345.00 - POST ROCK 345KV CKT 1
FDNS	00NR	0	20WP	G15_063	FROM->TO	G14-057T 345.00 - SUNNYSIDE 345KV CKT 1	717	789	0.04519	113.1892	WEATHERFORD TAP - WEATHERFORD WIND FARM 138KV CKT 1
FDNS	00NR	0	20WP	G15_063	FROM->TO	G14-057T 345.00 - SUNNYSIDE 345KV CKT 1	717	789	0.04537	113.1862	G15074_T 345.00 - JEFFREY ENERGY CENTER 345KV CKT 1
FDNS	00NR	0	20WP	G15_063	FROM->TO	G14-057T 345.00 - SUNNYSIDE 345KV CKT 1	717	789	0.04524	113.1852	GEN501823 1-TECHE UNIT 3
FDNS	00NR	0	20WP	G15_063	FROM->TO	G14-057T 345.00 - SUNNYSIDE 345KV CKT 1	717	789	0.04524	113.1847	LEWIS CREEK SWITCHYARD 138/22.0KV TRANSFORMER CKT 1
FDNS	00NR	0	20WP	G15_063	FROM->TO	G14-057T 345.00 - SUNNYSIDE 345KV CKT 1	717	789	0.04515	113.1844	HINTON - WEATHERFORD JCT. 138KV CKT 1
FDNS	00NR	0	20WP	G15_063	FROM->TO	G14-057T 345.00 - SUNNYSIDE 345KV CKT 1	717	789	0.04524	113.1832	GEN501970 1-EVANGELINE UNIT 7
FDNS	00NR	0	20WP	G15_063	FROM->TO	G14-057T 345.00 - SUNNYSIDE 345KV CKT 1	717	789	0.04522	113.1824	P12:115:AEPW:TURK3:HOPE3
FDNS	00NR	0	20WP	G15_063	FROM->TO	G14-057T 345.00 - SUNNYSIDE 345KV CKT 1	717	789	0.04524	113.1802	LEWIS CREEK SWITCHYARD 138/22.0KV TRANSFORMER CKT 1
FDNS	00NR	0	20WP	G15_063	FROM->TO	G14-057T 345.00 - SUNNYSIDE 345KV CKT 1	717	789	0.04523	113.1793	COUCH SES - MC NIEL 115KV CKT 1
FDNS	00NR	0	20WP	G15_063	FROM->TO	G14-057T 345.00 - SUNNYSIDE 345KV CKT 1	717	789	0.04434	113.178	ARBUCKLE - VANOSTP4 138.00 138KV CKT 1
FDNS	00NR	0	20WP	G15_063	FROM->TO	G14-057T 345.00 - SUNNYSIDE 345KV CKT 1	717	789	0.04528	113.1755	OMPA-WALTERS - WALTERS 69KV CKT 1
FDNS	00NR	0	20WP	G15_063	FROM->TO	G14-057T 345.00 - SUNNYSIDE 345KV CKT 1	717	789	0.04528	113.1755	OMPA-WALTERS - WALTERS 69KV CKT 1
FDNS	00NR	0	20WP	G15_063	FROM->TO	G14-057T 345.00 - SUNNYSIDE 345KV CKT 1	717	789	0.04524	113.1754	CYPRESS - HARTBURG 500KV CKT 1
FDNS	00NR	0	20WP	G15_063	FROM->TO	G14-057T 345.00 - SUNNYSIDE 345KV CKT 1	717	789	0.04535	113.1728	SOUTHWESTERN STATION - VERDEN 138KV CKT 1
FDNS	00NR	0	20WP	G15_063	FROM->TO	G14-057T 345.00 - SUNNYSIDE 345KV CKT 1	717	789	0.04524	113.1715	GEN334432 1-SABINE UNIT 2
FDNS	00NR	0	20WP	G15_063	FROM->TO	G14-057T 345.00 - SUNNYSIDE 345KV CKT 1	717	789	0.04524	113.1713	GEN334431 1-SABINE UNIT 1
FDNS	00NR	0	20WP	G15_063	FROM->TO	G14-057T 345.00 - SUNNYSIDE 345KV CKT 1	717	789	0.04694	113.168	CANADIAN - NOBLE 138KV CKT 1
FDNS	00NR	0	20WP	G15_063	FROM->TO	G14-057T 345.00 - SUNNYSIDE 345KV CKT 1	717	789	0.04531	113.1665	7LUTESVIL 345.00 - 7ST FRANC 345.00 345KV CKT 1
FDNS	00NR	0	20WP	G15_063	FROM->TO	G14-057T 345.00 - SUNNYSIDE 345KV CKT 1	717	789	0.04557	113.1642	EMPORIA ENERGY CENTER - G14_001T 345.00 345KV CKT 1
FDNS	00NR	0	20WP	G15_063	FROM->TO	G14-057T 345.00 - SUNNYSIDE 345KV CKT 1	717	789	0.04524	113.1584	GEN505616 1-BROKEN BOW
FDNS	00NR	0	20WP	G15_063	FROM->TO	G14-057T 345.00 - SUNNYSIDE 345KV CKT 1	717	789	0.04522	113.1552	TURK (TURK 1) 138/115/13.2KV TRANSFORMER CKT 1
FDNS	00NR	0	20WP	G15_063	FROM->TO	G14-057T 345.00 - SUNNYSIDE 345KV CKT 1	717	789	0.04522	113.1552	TURK (TURK 1) 138/115/13.2KV TRANSFORMER CKT 1
FDNS	00NR	0	20WP	G15_063	FROM->TO	G14-057T 345.00 - SUNNYSIDE 345KV CKT 1	717	789	0.04522	113.1551	MCNAB REC - Turk 115 115KV CKT 1
FDNS	00NR	0	20WP	G15_063	FROM->TO	G14-057T 345.00 - SUNNYSIDE 345KV CKT 1	717	789	0.04535	113.1547	P12:69:WFEC-AEPW:COMANCH2:WALTRS-2
FDNS	00NR	0	20WP	G15_063	FROM->TO	G14-057T 345.00 - SUNNYSIDE 345KV CKT 1	717	789	0.04524	113.1509	P12:161:AEPW:CHAMSPR5:FARMING5
FDNS	00NR	0	20WP	G15_063	FROM->TO	G14-057T 345.00 - SUNNYSIDE 345KV CKT 1	717	789	0.04535	113.1508	NORTH 29TH CHICKASHA - VERDEN 138KV CKT 1
FDNS	00NR	0	20WP	G15_063	FROM->TO	G14-057T 345.00 - SUNNYSIDE 345KV CKT 1	717	789	0.04692	113.1437	P12:138:OKGE:3TERM27
FDNS	00NR	0	20WP	G15_063	FROM->TO	G14-057T 345.00 - SUNNYSIDE 345KV CKT 1	717	789	0.04524	113.1437	GEN334392 1-EXXON MOBIL IPP 1
FDNS	00NR	0	20WP	G15_063	FROM->TO	G14-057T 345.00 - SUNNYSIDE 345KV CKT 1	717	789	0.04543	113.1415	G13-010T 345.00 - SPEARVILLE 345KV CKT 1
FDNS	00NR	0	20WP	G15_063	FROM->TO	G14-057T 345.00 - SUNNYSIDE 345KV CKT 1	717	789	0.04524	113.137	GEN334393 1-EXXON MOBIL IPP 2
FDNS	00NR	0	20WP	G15_063	FROM->TO	G14-057T 345.00 - SUNNYSIDE 345KV CKT 1	717	789	0.04524	113.137	GEN334394 1-EXXON MOBIL IPP 3
FDNS	00NR	0	20WP	G15_063	FROM->TO	G14-057T 345.00 - SUNNYSIDE 345KV CKT 1	717	789	0.0459	113.1333	FRANKLIN SW - WESTMOORE 138KV CKT 1
FDNS	00NR	0	20WP	G15_063	FROM->TO	G14-057T 345.00 - SUNNYSIDE 345KV CKT 1	717	789	0.0454	113.1327	SWISSVALE - WEST GARDNER 345KV CKT 1
FDNS	00NR	0	16WP	G15_063	FROM->TO	G14-057T 345.00 - SUNNYSIDE 345KV CKT 1	717	789	0.04554	113.1315	GEN563042 1-G15068_3 0.6900
FDNS	00NR	0	20WP	G15_063	FROM->TO	G14-057T 345.00 - SUNNYSIDE 345KV CKT 1	717	789	0.04529	113.1266	FLETCHER - MARLOW JCT 69KV CKT 1
FDNS	00NR	0	20WP	G15_063	FROM->TO	G14-057T 345.00 - SUNNYSIDE 345KV CKT 1	717	789	0.04524	113.1202	ST FRANCIS - ST FRANCIS 1 161KV CKT Z1
FDNS	00NR	0	20WP	G15_063	FROM->TO	G14-057T 345.00 - SUNNYSIDE 345KV CKT 1	717	789	0.04529	113.1201	LAKEOVER - MCADAMS 500KV CKT 1
FDNS	00NR	0	20WP	G15_063	FROM->TO	G14-057T 345.00 - SUNNYSIDE 345KV CKT 1	717	789	0.04524	113.1195	SABINE 230/22.0KV TRANSFORMER CKT 1
FDNS	00NR	0	20WP	G15_063	FROM->TO	G14-057T 345.00 - SUNNYSIDE 345KV CKT 1	717	789	0.04539	113.1171	EMPORIA ENERGY CENTER - SWISSVALE 345KV CKT 1
FDNS	00NR	0	16WP	G15_063	FROM->TO	G14-057T 345.00 - SUNNYSIDE 345KV CKT 1	717	789	0.04554	113.1143	GEN527901 1-HOBBS PLANT #1 (CT)
FDNS	00NR	0	16WP	G15_063	FROM->TO	G14-057T 345.00 - SUNNYSIDE 345KV CKT 1	717	789	0.04554	113.1143	GEN527902 1-HOBBS PLANT #2 (CT)
FDNS	00NR	0	20WP	G15_063	FROM->TO	G14-057T 345.00 - SUNNYSIDE 345KV CKT 1	717	789	0.04515	113.1084	HINTON - REDROCKRD4 138.00 138KV CKT 1
FDNS	00NR	0	20WP	G15_063	FROM->TO	G14-057T 345.00 - SUNNYSIDE 345KV CKT 1	717	789	0.04516	113.1065	ENOWILT - LONE OAK 138KV CKT 1
FDNS	00NR	0	20WP	G15_063	FROM->TO	G14-057T 345.00 - SUNNYSIDE 345KV CKT 1	717	789	0.04557	113.1061	G14_001T 345.00 - WICHITA 345KV CKT 1
FDNS	00NR	0	20WP	G15_063	FROM->TO	G14-057T 345.00 - SUNNYSIDE 345KV CKT 1	717	789	0.04524	113.1057	GEN501972 1-EVANGELINE UNIT 7-2
FDNS	00NR	0	20WP	G15_063	FROM->TO	G14-057T 345.00 - SUNNYSIDE 345KV CKT 1	717	789	0.04524	113.1056	GEN501971 1-EVANGELINE UNIT 7-1
FDNS	00NR	0	20WP	G15_063	FROM->TO	G14-057T 345.00 - SUNNYSIDE 345KV CKT 1	717	789	0.04536	113.1014	CORNVILLE - NORGE ROAD 138KV CKT 1
FDNS	00NR	0	20WP	G15_063	FROM->TO	G14-057T 345.00 - SUNNYSIDE 345KV CKT 1	717	789	0.04536	113.1014	CORNVILLE - NORGE ROAD 138KV CKT 1
FDNS	00NR	0	20WP	G15_063	FROM->TO	G14-057T 345.00 - SUNNYSIDE 345KV CKT 1	717	789	0.04525	113.1012	P12:138:AEPW:R.S.S-4:T.P.S.-4
FDNS	00NR	0	20WP	G15_063	FROM->TO	G14-057T 345.00 - SUNNYSIDE 345KV CKT 1	717	789	0.04516	113.0978	ENOWILT - SARDIS 138KV CKT 1
FDNS	00NR	0	20WP	G15_063	FROM->TO	G14-057T 345.00 - SUNNYSIDE 345KV CKT 1	717	789	0.04529	113.0957	P12:138:OKGE:3TERM12
FDNS	00NR	0	20WP	G15_063	FROM->TO	G14-057T 345.00 - SUNNYSIDE 345KV CKT 1	717	789	0.04534	113.093	MCADAMS - WOLF CREEK 500KV CKT 1
FDNS	00NR	0	16WP	G15_063	FROM->TO	G14-057T 345.00 - SUNNYSIDE 345KV CKT 1	717	789	0.04554	113.0888	GEN629075 1-OTTUMWA GENERATOR FOR OTTUMWA UNIT NO 1
FDNS	00NR	0	20WP	G15_063	FROM->TO	G14-057T 345.00 - SUNNYSIDE 345KV CKT 1	717	789	0.04519	113.0883	WEATHERFORD SOUTHEAST - WEATHERFORD TAP 138KV CKT 1
FDNS	00NR	0	20WP	G15_063	FROM->TO	G14-057T 345.00 - SUNNYSIDE 345KV CKT 1	717	789	0.0454	113.0876	FRANKLIN - FRANKLIN SW 138KV CKT 1
FDNS	00NR	0	20WP	G15_063	FROM->TO	G14-057T 345.00 - SUNNYSIDE 345KV CKT 1	717	789	0.04632	113.0866	LASALLE - STONEWAL LH138.00 138KV CKT 1
FDNS	00NR	0	20WP	G15_063	FROM->TO	G14-057T 345.00 - SUNNYSIDE 345KV CKT 1	717	789	0.04524	113.0823	GEN501912 1-ACADIA UNIT CT1B
FDNS	00NR	0	20WP	G15_063	FROM->TO	G14-057T 345.00 - SUNNYSIDE 345KV CKT 1	717	789	0.04523	113.0821	P12:138:WFEC-AEPW:ELKCTY-4:ERICK4
FDNS	00NR	0	20WP	G15_063	FROM->TO	G14-057T 345.00 - SUNNYSIDE 345KV CKT 1	717	789	0.04524	113.0816	GEN501911 1-ACADIA UNIT CT1A
FDNS	00NR	0	20WP	G15_063	FROM->TO	G14-057T 345.00 - SUNNYSIDE 345KV CKT 1	717	789	0.04533	113.0761	8WNEWMADRID 500.00 - DELL 500 500KV CKT 1
FDNS	00NR	0	20WP	G15_063	FROM->TO	G14-057T 345.00 - SUNNYSIDE 345KV CKT 1	717	789	0.04524	113.0752	P12:138:AEPW:R.S.S.-4:R:96YALE-4
FDNS	00NR	0	20WP	G15_063	FROM->TO	G14-057T 345.00 - SUNNYSIDE 345KV CKT 1	717	789	0.04694	113.0747	NOBLE - PURCELL4 138.00 138KV CKT 1
FDNS	00NR	0	20WP	G15_063	FROM->TO	G14-057T 345.00 - SUNNYSIDE 345KV CKT 1	717	789	0.04632	113.0712	STONEWAL LH138.00 - TUPELO TAP 138KV CKT 1
FDNS	00NR	0	20WP	G15_063	FROM->TO	G14-057T 345.00 - SUNNYSIDE 345KV CKT 1	717	789	0.04535	113.0668	CORNVILLE - NORTH 29TH CHICKASHA 138KV CKT 1
FDNS	00NR	0	20WP	G15_063	FROM->TO	G14-057T 345.00 - SUNNYSIDE 345KV CKT 1	717	789	0.04516	113.0625	CLAYTON - SARDIS 138KV CKT 1

SOLUTION	GROUP	SCENARIO	SEASON	SOURCE	DIRECTION	MONITORED ELEMENT	RATEA (MVA)	RATEB(MVA)	TDF	TC%LOADING (% MVA)	CONTINGENCY
FDNS	00NR	0	20WP	G15_063	FROM->TO	G14-057T 345.00 - SUNNYSIDE 345KV CKT 1	717	789	0.04525	113.04	Canadian Pump Station - REDROCKRD4 138.00 138KV CKT 1
FDNS	00NR	0	20WP	G15_063	FROM->TO	G14-057T 345.00 - SUNNYSIDE 345KV CKT 1	717	789	0.046	113.0387	CIMARRON - NORTHWEST 345KV CKT 1
FDNS	00NR	0	20WP	G15_063	FROM->TO	G14-057T 345.00 - SUNNYSIDE 345KV CKT 1	717	789	0.04519	113.0375	CLINTON JUNCTION - CLINTON NATURAL GAS TAP 138KV CKT 1
FDNS	00NR	0	20WP	G15_063	FROM->TO	G14-057T 345.00 - SUNNYSIDE 345KV CKT 1	717	789	0.04536	113.0069	CRINER - PAYNE 138.00 138KV CKT 1
FDNS	00NR	0	20WP	G15_063	FROM->TO	G14-057T 345.00 - SUNNYSIDE 345KV CKT 1	717	789	0.04535	112.978	COMANCHE - WALTERS 69KV CKT 1
FDNS	00NR	0	20WP	G15_063	FROM->TO	G14-057T 345.00 - SUNNYSIDE 345KV CKT 1	717	789	0.04538	112.9762	P12:138:OKGE:3TERM20
FDNS	00NR	0	16WP	G15_063	FROM->TO	G14-057T 345.00 - SUNNYSIDE 345KV CKT 1	717	789	0.04554	112.9469	GEN635214 4-NEAL UNIT 4
FDNS	00NR	0	16WP	G15_063	FROM->TO	G14-057T 345.00 - SUNNYSIDE 345KV CKT 1	717	789	0.04554	112.9141	SHERBURNE CO 345/24.0KV TRANSFORMER CKT 1
FDNS	00NR	0	16WP	G15_063	FROM->TO	G14-057T 345.00 - SUNNYSIDE 345KV CKT 1	717	789	0.04554	112.8505	GEN563043 1-G15068_4 0.6900
FDNS	00NR	0	16WP	G15_063	FROM->TO	G14-057T 345.00 - SUNNYSIDE 345KV CKT 1	717	789	0.04554	112.8432	GEN563273 2-G15093_4 0.6900
FDNS	00NR	0	16WP	G15_063	FROM->TO	G14-057T 345.00 - SUNNYSIDE 345KV CKT 1	717	789	0.04554	112.8228	GEN526333 1-JONES GEN #3 21 KV
FDNS	00NR	0	16WP	G15_063	FROM->TO	G14-057T 345.00 - SUNNYSIDE 345KV CKT 1	717	789	0.04554	112.8228	GEN526334 1-JONES_4 116.500
FDNS	00NR	0	16WP	G15_063	FROM->TO	G14-057T 345.00 - SUNNYSIDE 345KV CKT 1	717	789	0.04554	112.7951	GEN600002 3-SHERBURNE CNTY G3
FDNS	00NR	0	16WP	G15_063	FROM->TO	G14-057T 345.00 - SUNNYSIDE 345KV CKT 1	717	789	0.04554	112.7748	GEN525844 1-ELK_1 118.000
FDNS	00NR	0	16WP	G15_063	FROM->TO	G14-057T 345.00 - SUNNYSIDE 345KV CKT 1	717	789	0.04554	112.768	GEN525845 1-ELK_2 1 138.00
FDNS	00NR	0	16WP	G15_063	FROM->TO	G14-057T 345.00 - SUNNYSIDE 345KV CKT 1	717	789	0.04548	112.7313	P12:230:AEPW:ELKCITY6:SWEETWT6
FDNS	00NR	0	16WP	G15_063	FROM->TO	G14-057T 345.00 - SUNNYSIDE 345KV CKT 1	717	789	0.04554	112.7011	GEN344225 1-1CAL G1 25.000
FDNS	00NR	0	16WP	G15_063	FROM->TO	G14-057T 345.00 - SUNNYSIDE 345KV CKT 1	717	789	0.04554	112.6306	GEN525562 1-TOLK GEN #2 24 KV
FDNS	00NR	0	16WP	G15_063	FROM->TO	G14-057T 345.00 - SUNNYSIDE 345KV CKT 1	717	789	0.04554	112.6222	GEN563202 1-G15085_3 0.5500
FDNS	00NR	0	16WP	G15_063	FROM->TO	G14-057T 345.00 - SUNNYSIDE 345KV CKT 1	717	789	0.04554	112.5874	GEN527166 1-MUSTANG_6 118.000
FDNS	00NR	0	16WP	G15_063	FROM->TO	G14-057T 345.00 - SUNNYSIDE 345KV CKT 1	717	789	0.04539	112.5679	JOHNSON COUNTY (JOHNCO) 345/138/13.8KV TRANSFORMER CKT 1
FDNS	00NR	0	20WP	G15_063	FROM->TO	G14-057T 345.00 - SUNNYSIDE 345KV CKT 1	717	789	0.04524	112.5659	803-OKLAUNION
FDNS	00NR	0	16WP	G15_063	FROM->TO	G14-057T 345.00 - SUNNYSIDE 345KV CKT 1	717	789	0.04554	112.5489	GEN635023 3-WALTER SCOTT UNIT 3
FDNS	00NR	0	16WP	G15_063	FROM->TO	G14-057T 345.00 - SUNNYSIDE 345KV CKT 1	717	789	0.04549	112.533	CHISHOLM6 230.00 - SWEETWATER 230KV CKT 1
FDNS	00NR	0	16WP	G15_063	FROM->TO	G14-057T 345.00 - SUNNYSIDE 345KV CKT 1	717	789	0.04554	112.5126	GEN562590 1-G14_057_3 0.6900
FDNS	00NR	0	16WP	G15_063	FROM->TO	G14-057T 345.00 - SUNNYSIDE 345KV CKT 1	717	789	0.0455	112.4979	LYDIA - WELSH 345KV CKT 1
FDNS	00NR	0	16WP	G15_063	FROM->TO	G14-057T 345.00 - SUNNYSIDE 345KV CKT 1	717	789	0.0455	112.4979	LYDIA - WELSH 345KV CKT 1
FDNS	00NR	0	16WP	G15_063	FROM->TO	G14-057T 345.00 - SUNNYSIDE 345KV CKT 1	717	789	0.04554	112.4088	GEN562762 1-G15033_3 0.6900
FDNS	00NR	0	16WP	G15_063	FROM->TO	G14-057T 345.00 - SUNNYSIDE 345KV CKT 1	717	789	0.04554	112.3978	GEN562655 1-G14_074_3 0.6900
FDNS	00NR	0	16WP	G15_063	FROM->TO	G14-057T 345.00 - SUNNYSIDE 345KV CKT 1	717	789	0.04554	112.3256	GEN562685 1-G15_013_3 0.3550
FDNS	00NR	0	20WP	G15_063	FROM->TO	G14-057T 345.00 - SUNNYSIDE 345KV CKT 1	717	789	0.04454	112.3082	P12:138:OKGE:3TERM39
FDNS	00NR	0	20WP	G15_063	FROM->TO	G14-057T 345.00 - SUNNYSIDE 345KV CKT 1	717	789	0.04527	112.2413	RANCHRD7 345.00 - SOONER 345KV CKT 1
FDNS	00NR	0	20WP	G15_063	FROM->TO	G14-057T 345.00 - SUNNYSIDE 345KV CKT 1	717	789	0.0452	112.2316	CHILDRESS - LAKE PAULINE 138KV CKT 1
FDNS	00NR	0	20WP	G15_063	FROM->TO	G14-057T 345.00 - SUNNYSIDE 345KV CKT 1	717	789	0.0452	112.2316	CHILDRESS - LAKE PAULINE 138KV CKT 1
FDNS	00NR	0	20WP	G15_063	FROM->TO	G14-057T 345.00 - SUNNYSIDE 345KV CKT 1	717	789	0.04522	112.2234	CHILDRESS - HOLLIS TAP 138KV CKT 1
FDNS	00NR	0	16WP	G15_063	FROM->TO	G14-057T 345.00 - SUNNYSIDE 345KV CKT 1	717	789	0.04554	112.2195	GEN525561 1-TOLK GEN #1 24 KV
FDNS	00NR	0	16WP	G15_063	FROM->TO	G14-057T 345.00 - SUNNYSIDE 345KV CKT 1	717	789	0.04554	112.2163	GEN563272 1-G15093_3 0.6900
FDNS	00NR	0	20WP	G15_063	FROM->TO	G14-057T 345.00 - SUNNYSIDE 345KV CKT 1	717	789	0.04501	112.2086	MAYSVILLE - PAOLI 138KV CKT 1
FDNS	00NR	0	20WP	G15_063	FROM->TO	G14-057T 345.00 - SUNNYSIDE 345KV CKT 1	717	789	0.04524	112.203	GEN562084 1-G11_050_3 0.6900
FDNS	00NR	0	16WP	G15_063	FROM->TO	G14-057T 345.00 - SUNNYSIDE 345KV CKT 1	717	789	0.04554	112.1939	GEN527903 1-HOBBS PLANT #3 (ST)
FDNS	00NR	0	20WP	G15_063	FROM->TO	G14-057T 345.00 - SUNNYSIDE 345KV CKT 1	717	789	0.04524	112.1735	GEN560187 1-WTH WIND 0.5750
FDNS	00NR	0	20WP	G15_063	FROM->TO	G14-057T 345.00 - SUNNYSIDE 345KV CKT 1	717	789	0.04524	112.1542	GEN560112 1-G08_037_3 0.6900
FDNS	00NR	0	20WP	G15_063	FROM->TO	G14-057T 345.00 - SUNNYSIDE 345KV CKT 1	717	789	0.0439	112.1541	CIMARRON - MATHWSN7 345.00 345KV CKT 1
FDNS	00NR	0	20WP	G15_063	FROM->TO	G14-057T 345.00 - SUNNYSIDE 345KV CKT 1	717	789	0.0439	112.1541	CIMARRON - MATHWSN7 345.00 345KV CKT 2
FDNS	00NR	0	20WP	G15_063	FROM->TO	G14-057T 345.00 - SUNNYSIDE 345KV CKT 1	717	789	0.04501	112.1331	MAYSVILLE - MAYSVLT4 138.00 138KV CKT 1
FDNS	00NR	0	16WP	G15_063	FROM->TO	G14-057T 345.00 - SUNNYSIDE 345KV CKT 1	717	789	0.04554	112.1285	GEN635024 4-WALTER SCOTT UNIT 4
FDNS	00NR	0	20WP	G15_063	FROM->TO	G14-057T 345.00 - SUNNYSIDE 345KV CKT 1	717	789	0.04524	112.1176	GEN521103 1-BLUE CANYON WIND FARM
FDNS	00NR	0	20WP	G15_063	FROM->TO	G14-057T 345.00 - SUNNYSIDE 345KV CKT 1	717	789	0.04549	112.1131	DRAPER LAKE - MIDWEST TAP 138KV CKT 1
FDNS	00NR	0	20WP	G15_063	FROM->TO	G14-057T 345.00 - SUNNYSIDE 345KV CKT 1	717	789	0.04524	112.1129	GEN520812 1-ANADRK5
FDNS	00NR	0	20WP	G15_063	FROM->TO	G14-057T 345.00 - SUNNYSIDE 345KV CKT 1	717	789	0.04524	112.1128	GEN520813 1-ANADRK6
FDNS	00NR	0	20WP	G15_063	FROM->TO	G14-057T 345.00 - SUNNYSIDE 345KV CKT 1	717	789	0.04524	112.1065	GEN562691 1-G15_015_3 0.6900
FDNS	00NR	0	20WP	G15_063	FROM->TO	G14-057T 345.00 - SUNNYSIDE 345KV CKT 1	717	789	0.04545	112.1011	P12:138:OKGE:3TERM21
FDNS	00NR	0	20WP	G15_063	FROM->TO	G14-057T 345.00 - SUNNYSIDE 345KV CKT 1	717	789	0.04524	112.0978	GEN562772 1-G15034_3 0.6900
FDNS	00NR	0	20WP	G15_063	FROM->TO	G14-057T 345.00 - SUNNYSIDE 345KV CKT 1	717	789	0.04524	112.0945	GEN563052 1-G15069_3 0.6900
FDNS	00NR	0	20WP	G15_063	FROM->TO	G14-057T 345.00 - SUNNYSIDE 345KV CKT 1	717	789	0.04524	112.0755	GEN511961 1-DEMPSEY-WTG10.7000
FDNS	00NR	0	20WP	G15_063	FROM->TO	G14-057T 345.00 - SUNNYSIDE 345KV CKT 1	717	789	0.04484	112.0716	ARBUCKLE - SULPHR 4 138.00 138KV CKT 1
FDNS	00NR	0	20WP	G15_063	FROM->TO	G14-057T 345.00 - SUNNYSIDE 345KV CKT 1	717	789	0.04501	112.067	MAYSVLT4 138.00 - PRAIRIE POINT 138KV CKT 1
FDNS	00NR	0	20WP	G15_063	FROM->TO	G14-057T 345.00 - SUNNYSIDE 345KV CKT 1	717	789	0.04524	112.0656	P12:069:OKGE:3TERM42
FDNS	00NR	0	20WP	G15_063	FROM->TO	G14-057T 345.00 - SUNNYSIDE 345KV CKT 1	717	789	0.04571	112.0489	SOONER - SPRING CREEK 345KV CKT 1
FDNS	00NR	0	20WP	G15_063	FROM->TO	G14-057T 345.00 - SUNNYSIDE 345KV CKT 1	717	789	0.04571	112.0457	NORTHWEST - SPRING CREEK 345KV CKT 1
FDNS	00NR	0	20WP	G15_063	FROM->TO	G14-057T 345.00 - SUNNYSIDE 345KV CKT 1	717	789	0.04524	112.045	BURLINGTON NO1 + NO 2 + NO 3 161/20.0KV TRANSFORMER CKT 1
FDNS	00NR	0	20WP	G15_063	FROM->TO	G14-057T 345.00 - SUNNYSIDE 345KV CKT 1	717	789	0.0453	112.0432	GLASSES - MADILL INDUSTRIAL TAP 138KV CKT 1
FDNS	00NR	0	20WP	G15_063	FROM->TO	G14-057T 345.00 - SUNNYSIDE 345KV CKT 1	717	789	0.04529	112.0426	P12:138:WFEC:MSL11
FDNS	00NR	0	20WP	G15_063	FROM->TO	G14-057T 345.00 - SUNNYSIDE 345KV CKT 1	717	789	0.04529	112.0426	P12:138:WFEC-AEPW:PHAROAH4:LONEOAK4
FDNS	00NR	0	20WP	G15_063	FROM->TO	G14-057T 345.00 - SUNNYSIDE 345KV CKT 1	717	789	0.0453	112.0352	CANEY CREEK - JOHNSON COUNTY 138KV CKT 1
FDNS	00NR	0	20WP	G15_063	FROM->TO	G14-057T 345.00 - SUNNYSIDE 345KV CKT 1	717	789	0.04539	112.0342	OVEXFRMCCOVE
FDNS	00NR	0	20WP	G15_063	FROM->TO	G14-057T 345.00 - SUNNYSIDE 345KV CKT 1	717	789	0.04524	112.025	GEN515443 1-MNCOWND1 0.7000
FDNS	00NR	0	20WP	G15_063	FROM->TO	G14-057T 345.00 - SUNNYSIDE 345KV CKT 1	717	789	0.04522	112.0114	ALTUS JUNCTION - RUSSELL 138KV CKT 1
FDNS	00NR	0	20WP	G15_063	FROM->TO	G14-057T 345.00 - SUNNYSIDE 345KV CKT 1	717	789	0.04522	112.0114	ALTUS JUNCTION - RUSSELL 138KV CKT 1
FDNS	00NR	0	20WP	G15_063	FROM->TO	G14-057T 345.00 - SUNNYSIDE 345KV CKT 1	717	789	0.04495	112.0092	MOREWOOD SW - NINE MILE 138KV CKT 1
FDNS	00NR	0	20WP	G15_063	FROM->TO	G14-057T 345.00 - SUNNYSIDE 345KV CKT 1	717	789	0.04524	112.0048	GEN560183 1-REDHIL-WTG1 12.000
FDNS	00NR	0	20WP	G15_063	FROM->TO	G14-057T 345.00 - SUNNYSIDE 345KV CKT 1	717	789	0.04524	112.0028	INDEPENDENCE 500/26.0KV TRANSFORMER CKT 1
FDNS	00NR	0	20WP	G15_063	FROM->TO	G14-057T 345.00 - SUNNYSIDE 345KV CKT 1	717	789	0.04524	111.9949	GEN600067 9-HIGH BRIDGE
FDNS	00NR	0	20WP	G15_063	FROM->TO	G14-057T 345.00 - SUNNYSIDE 345KV CKT 1	717	789	0.0453	111.9908	GLASSES - RUSSETT 138KV CKT 1
FDNS	00NR	0	20WP	G15_063	FROM->TO	G14-057T 345.00 - SUNNYSIDE 345KV CKT 1	717	789	0.04519	111.9864	CARTER - CHICKASAW 138KV CKT 1
FDNS	00NR	0	20WP	G15_063	FROM->TO	G14-057T 345.00 - SUNNYSIDE 345KV CKT 1	717	789	0.04645	111.9822	LEBANON - TEXOMA JCT 138KV CKT 1
FDNS	00NR	0	20WP	G15_063	FROM->TO	G14-057T 345.00 - SUNNYSIDE 345KV CKT 1	717	789	0.0454	111.9819	P12:138:WFEC:MSL08
FDNS	00NR	0	20WP	G15_063	FROM->TO	G14-057T 345.00 - SUNNYSIDE 345KV CKT 1	717	789	0.04541	111.9794	CANADIAN RIVER - MCALESTER SOUTH 138KV CKT 1
FDNS	00NR	0	20WP	G15_063	FROM->TO	G14-057T 345.00 - SUNNYSIDE 345KV CKT 1	717	789	0.04541	111.9794	CANADIAN RIVER - MCALESTER SOUTH 138KV CKT 1

SOLUTION	GROUP	SCENARIO	SEASON	SOURCE	DIRECTION	MONITORED ELEMENT	RATEA (MVA)	RATEB(MVA)	TDF	TC%LOADING (% MVA)	CONTINGENCY
FDNS	00NR	0	20WP	G15_063	FROM->TO	G14-057T 345.00 - SUNNYSIDE 345KV CKT 1	717	789	0.04541	111.9773	CANADIAN RIVER () 345/138/13.8KV TRANSFORMER CKT 1
FDNS	00NR	0	20WP	G15_063	FROM->TO	G14-057T 345.00 - SUNNYSIDE 345KV CKT 1	717	789	0.04541	111.9773	CANADIAN RIVER () 345/138/13.8KV TRANSFORMER CKT 1
FDNS	00NR	0	20WP	G15_063	FROM->TO	G14-057T 345.00 - SUNNYSIDE 345KV CKT 1	717	789	0.04501	111.9747	PRAIRIE POINT - RATLIFF 138KV CKT 1
FDNS	00NR	0	20WP	G15_063	FROM->TO	G14-057T 345.00 - SUNNYSIDE 345KV CKT 1	717	789	0.04524	111.9663	P12:230:UMZB:# 112 #: NU IN SD. NU-RCDC & DRY CREEK XFMR
FDNS	00NR	0	20WP	G15_063	FROM->TO	G14-057T 345.00 - SUNNYSIDE 345KV CKT 1	717	789	0.04524	111.9661	RCDC EAST 4230.00 - RED CEDAR DC 230KV CKT 1
FDNS	00NR	0	20WP	G15_063	FROM->TO	G14-057T 345.00 - SUNNYSIDE 345KV CKT 1	717	789	0.04522	111.9654	HUGO (HUGO 1) 345/138/13.8KV TRANSFORMER CKT 1
FDNS	00NR	0	20WP	G15_063	FROM->TO	G14-057T 345.00 - SUNNYSIDE 345KV CKT 1	717	789	0.04508	111.9643	ROCKY POINT - SPRINGDALE 138KV CKT 1
FDNS	00NR	0	20WP	G15_063	FROM->TO	G14-057T 345.00 - SUNNYSIDE 345KV CKT 1	717	789	0.04524	111.9618	GEN563242 1-G15090_3 0.6900
FDNS	00NR	0	20WP	G15_063	FROM->TO	G14-057T 345.00 - SUNNYSIDE 345KV CKT 1	717	789	0.04551	111.9538	CHAMBER SPRINGS - CLARKSVILLE 345KV CKT 1
FDNS	00NR	0	20WP	G15_063	FROM->TO	G14-057T 345.00 - SUNNYSIDE 345KV CKT 1	717	789	0.04528	111.9489	GRPRAR1-LNX3345.00 - HOLT.CO3 345.00 345KV CKT 1
FDNS	00NR	0	20WP	G15_063	FROM->TO	G14-057T 345.00 - SUNNYSIDE 345KV CKT 1	717	789	0.04528	111.941	GRPRAR1-LNX3345.00 - GRPRAR 345KV CKT Z
FDNS	00NR	0	20WP	G15_063	FROM->TO	G14-057T 345.00 - SUNNYSIDE 345KV CKT 1	717	789	0.04524	111.9342	GEN629072 4-LANSING GENERATOR FOR UNITS NO4 EIA CODE 1
FDNS	00NR	0	20WP	G15_063	FROM->TO	G14-057T 345.00 - SUNNYSIDE 345KV CKT 1	717	789	0.04484	111.9258	JOLLYVILLE - SULPHR 4 138.00 138KV CKT 1
FDNS	00NR	0	20WP	G15_063	FROM->TO	G14-057T 345.00 - SUNNYSIDE 345KV CKT 1	717	789	0.04524	111.9232	GEN562902 1-G15052_3 0.6900
FDNS	00NR	0	20WP	G15_063	FROM->TO	G14-057T 345.00 - SUNNYSIDE 345KV CKT 1	717	789	0.04524	111.912	GEN562078 1-G11_051_3 0.6900
FDNS	00NR	0	20WP	G15_063	FROM->TO	G14-057T 345.00 - SUNNYSIDE 345KV CKT 1	717	789	0.04508	111.9069	P12:138:AEPW:112GORE4:SNYDER-4
FDNS	00NR	0	20WP	G15_063	FROM->TO	G14-057T 345.00 - SUNNYSIDE 345KV CKT 1	717	789	0.04524	111.9062	GEN524285 1-WILDORADO WIND GEN
FDNS	00NR	0	20WP	G15_063	FROM->TO	G14-057T 345.00 - SUNNYSIDE 345KV CKT 1	717	789	0.04524	111.8874	GEN562587 1-G14_056_3 0.6900
FDNS	00NR	0	20WP	G15_063	FROM->TO	G14-057T 345.00 - SUNNYSIDE 345KV CKT 1	717	789	0.04524	111.8805	GEN524295 1-SPNSPUR_WND10.6900
FDNS	00NR	0	20WP	G15_063	FROM->TO	G14-057T 345.00 - SUNNYSIDE 345KV CKT 1	717	789	0.04524	111.8798	GEN657749 1-YOUNG 1 GENERATOR
FDNS	00NR	0	20WP	G15_063	FROM->TO	G14-057T 345.00 - SUNNYSIDE 345KV CKT 1	717	789	0.04495	111.8759	BEARCAT 138.00 - NINE MILE 138KV CKT 1
FDNS	00NR	0	20WP	G15_063	FROM->TO	G14-057T 345.00 - SUNNYSIDE 345KV CKT 1	717	789	0.04524	111.8654	GEN514805 1-SOONER UNIT 1
FDNS	00NR	0	20WP	G15_063	FROM->TO	G14-057T 345.00 - SUNNYSIDE 345KV CKT 1	717	789	0.04524	111.8559	GEN562269 1-G12-020-1 0.6900
FDNS	00NR	0	20WP	G15_063	FROM->TO	G14-057T 345.00 - SUNNYSIDE 345KV CKT 1	717	789	0.04524	111.8508	GEN524023 1-NICHOLS GEN #3 22 KV
FDNS	00NR	0	20WP	G15_063	FROM->TO	G14-057T 345.00 - SUNNYSIDE 345KV CKT 1	717	789	0.04484	111.8366	JOLLYVILLE - KERR MCGEE CIMARRON 138KV CKT 1
FDNS	00NR	0	20WP	G15_063	FROM->TO	G14-057T 345.00 - SUNNYSIDE 345KV CKT 1	717	789	0.04524	111.8334	CROCKETT - TENASKA RUSK COUNTY 345KV CKT 1
FDNS	00NR	0	20WP	G15_063	FROM->TO	G14-057T 345.00 - SUNNYSIDE 345KV CKT 1	717	789	0.04524	111.8333	GEN514806 1-SOONER UNIT 2
FDNS	00NR	0	20WP	G15_063	FROM->TO	G14-057T 345.00 - SUNNYSIDE 345KV CKT 1	717	789	0.04524	111.8287	LEBROCK - TENASKA RUSK COUNTY 345KV CKT 1
FDNS	00NR	0	20WP	G15_063	FROM->TO	G14-057T 345.00 - SUNNYSIDE 345KV CKT 1	717	789	0.04524	111.8154	GEN562812 1-G15040_3 0.3570
FDNS	00NR	0	20WP	G15_063	FROM->TO	G14-057T 345.00 - SUNNYSIDE 345KV CKT 1	717	789	0.04524	111.8105	GEN562270 1-G12-020-2 0.6900
FDNS	00NR	0	20WP	G15_063	FROM->TO	G14-057T 345.00 - SUNNYSIDE 345KV CKT 1	717	789	0.04524	111.8085	GEN563132 1-G15078_3 0.3570
FDNS	00NR	0	20WP	G15_063	FROM->TO	G14-057T 345.00 - SUNNYSIDE 345KV CKT 1	717	789	0.04524	111.7996	GEN563102 1-G15075_3 0.5500
FDNS	00NR	0	20WP	G15_063	FROM->TO	G14-057T 345.00 - SUNNYSIDE 345KV CKT 1	717	789	0.04524	111.7899	GEN563062 1-G15071_3 0.6900
FDNS	00NR	0	20WP	G15_063	FROM->TO	G14-057T 345.00 - SUNNYSIDE 345KV CKT 1	717	789	0.04484	111.786	ARBWIND4 138.00 - KERR MCGEE CIMARRON 138KV CKT 1
FDNS	00NR	0	20WP	G15_063	FROM->TO	G14-057T 345.00 - SUNNYSIDE 345KV CKT 1	717	789	0.04495	111.7811	BEARCAT 138.00 - MOORELAND 138KV CKT 1
FDNS	00NR	0	20WP	G15_063	FROM->TO	G14-057T 345.00 - SUNNYSIDE 345KV CKT 1	717	789	0.04524	111.7786	GEN562882 1-G15047_3 0.6900
FDNS	00NR	0	20WP	G15_063	FROM->TO	G14-057T 345.00 - SUNNYSIDE 345KV CKT 1	717	789	0.04495	111.7748	P12:138:WFEC:MSL14
FDNS	00NR	0	20WP	G15_063	FROM->TO	G14-057T 345.00 - SUNNYSIDE 345KV CKT 1	717	789	0.04524	111.7695	GEN345671 2-1RUSH G2 18.000
FDNS	00NR	0	20WP	G15_063	FROM->TO	G14-057T 345.00 - SUNNYSIDE 345KV CKT 1	717	789	0.04524	111.768	GEN562974 1-G15060_5 0.6900
FDNS	00NR	0	20WP	G15_063	FROM->TO	G14-057T 345.00 - SUNNYSIDE 345KV CKT 1	717	789	0.04524	111.7676	GEN345670 1-1RUSH G1 18.000
FDNS	00NR	0	20WP	G15_063	FROM->TO	G14-057T 345.00 - SUNNYSIDE 345KV CKT 1	717	789	0.04524	111.758	GEN562973 1-G15060_4 0.6900
FDNS	00NR	0	20WP	G15_063	FROM->TO	G14-057T 345.00 - SUNNYSIDE 345KV CKT 1	717	789	0.04519	111.7553	BROWN - RUSSETT 138KV CKT 1
FDNS	00NR	0	20WP	G15_063	FROM->TO	G14-057T 345.00 - SUNNYSIDE 345KV CKT 1	717	789	0.04524	111.7522	GEN521112 1-ORME3 13.800
FDNS	00NR	0	20WP	G15_063	FROM->TO	G14-057T 345.00 - SUNNYSIDE 345KV CKT 1	717	789	0.04488	111.7434	CHICKASAW - TOTAL 138KV CKT 1
FDNS	00NR	0	20WP	G15_063	FROM->TO	G14-057T 345.00 - SUNNYSIDE 345KV CKT 1	717	789	0.04524	111.7235	4SIOUX 1 138.00 138/18.0KV TRANSFORMER CKT 1
FDNS	00NR	0	20WP	G15_063	FROM->TO	G14-057T 345.00 - SUNNYSIDE 345KV CKT 1	717	789	0.04524	111.7154	GEN560105 1-G08-22 0.6900
FDNS	00NR	0	20WP	G15_063	FROM->TO	G14-057T 345.00 - SUNNYSIDE 345KV CKT 1	717	789	0.04519	111.7098	RUSSETT - RUSSETT 138KV CKT 1
FDNS	00NR	0	20WP	G15_063	FROM->TO	G14-057T 345.00 - SUNNYSIDE 345KV CKT 1	717	789	0.04524	111.7038	GEN681522 3-GENOA 3
FDNS	00NR	0	20WP	G15_063	FROM->TO	G14-057T 345.00 - SUNNYSIDE 345KV CKT 1	717	789	0.04524	111.6987	GEN562550 1-G14_040_3 0.6900
FDNS	00NR	0	20WP	G15_063	FROM->TO	G14-057T 345.00 - SUNNYSIDE 345KV CKT 1	717	789	0.04502	111.665	ROCKY POINT - SUNNYSIDE 138KV CKT 1
FDNS	00NR	0	20WP	G15_063	FROM->TO	G14-057T 345.00 - SUNNYSIDE 345KV CKT 1	717	789	0.04524	111.6559	GEN511853 1-COMANCHE #3
FDNS	00NR	0	20WP	G15_063	FROM->TO	G14-057T 345.00 - SUNNYSIDE 345KV CKT 1	717	789	0.04524	111.6535	EASTDC - ERCOT EQUIVALENCE 345KV CKT 1
FDNS	00NR	0	20WP	G15_063	FROM->TO	G14-057T 345.00 - SUNNYSIDE 345KV CKT 1	717	789	0.04524	111.6489	GEN527161 1-MUSTANG GEN #1
FDNS	00NR	0	20WP	G15_063	FROM->TO	G14-057T 345.00 - SUNNYSIDE 345KV CKT 1	717	789	0.04524	111.6489	GEN527162 1-MUSTANG GEN #2
FDNS	00NR	0	20WP	G15_063	FROM->TO	G14-057T 345.00 - SUNNYSIDE 345KV CKT 1	717	789	0.04524	111.6465	GEN511962 2-RKYRDGW2-1 0.7000
FDNS	00NR	0	20WP	G15_063	FROM->TO	G14-057T 345.00 - SUNNYSIDE 345KV CKT 1	717	789	0.04524	111.64	GEN672321 1-SHAND GENERATOR 1
FDNS	00NR	0	20WP	G15_063	FROM->TO	G14-057T 345.00 - SUNNYSIDE 345KV CKT 1	717	789	0.04517	111.6366	RUSSETT - SPRINGDALE 138KV CKT 1
FDNS	00NR	0	20WP	G15_063	FROM->TO	G14-057T 345.00 - SUNNYSIDE 345KV CKT 1	717	789	0.04453	111.6212	ARKANSAS NUCLEAR ONE - FT SMITH 500KV CKT 1
FDNS	00NR	0	20WP	G15_063	FROM->TO	G14-057T 345.00 - SUNNYSIDE 345KV CKT 1	717	789	0.04453	111.6212	ARKANSAS NUCLEAR ONE - FT SMITH 500KV CKT 1
FDNS	00NR	0	20WP	G15_063	FROM->TO	G14-057T 345.00 - SUNNYSIDE 345KV CKT 1	717	789	0.04524	111.6168	GEN672310 1-POPLAR RIVER GENERATOR 1
FDNS	00NR	0	20WP	G15_063	FROM->TO	G14-057T 345.00 - SUNNYSIDE 345KV CKT 1	717	789	0.04524	111.6168	GEN672311 2-POPLAR RIVER GENERATOR 2
FDNS	00NR	0	20WP	G15_063	FROM->TO	G14-057T 345.00 - SUNNYSIDE 345KV CKT 1	717	789	0.04524	111.616	GEN525494 1-PLANT X GEN #4 20 KV
FDNS	00NR	0	20WP	G15_063	FROM->TO	G14-057T 345.00 - SUNNYSIDE 345KV CKT 1	717	789	0.04524	111.6094	GEN562512 1-G14_020_3 0.6900
FDNS	00NR	0	20WP	G15_063	FROM->TO	G14-057T 345.00 - SUNNYSIDE 345KV CKT 1	717	789	0.04524	111.6075	GEN672306 6-BOUNDARY DAM GENERATOR 6
FDNS	00NR	0	20WP	G15_063	FROM->TO	G14-057T 345.00 - SUNNYSIDE 345KV CKT 1	717	789	0.04524	111.6015	GEN563192 1-G15084_3 0.5500
FDNS	00NR	0	20WP	G15_063	FROM->TO	G14-057T 345.00 - SUNNYSIDE 345KV CKT 1	717	789	0.04524	111.5999	GEN527882 1-CUNNINGHAM GEN #2 20 KV
FDNS	00NR	0	20WP	G15_063	FROM->TO	G14-057T 345.00 - SUNNYSIDE 345KV CKT 1	717	789	0.04524	111.5953	GEN344895 2-1LAB G2 20.000
FDNS	00NR	0	20WP	G15_063	FROM->TO	G14-057T 345.00 - SUNNYSIDE 345KV CKT 1	717	789	0.04524	111.5905	GEN511852 1-COMANCHE #2
FDNS	00NR	0	20WP	G15_063	FROM->TO	G14-057T 345.00 - SUNNYSIDE 345KV CKT 1	717	789	0.04521	111.588	P12:138:WFEC-AEPW:GOLDENSW4:CRAIGJT4
FDNS	00NR	0	20WP	G15_063	FROM->TO	G14-057T 345.00 - SUNNYSIDE 345KV CKT 1	717	789	0.04524	111.5853	GEN562892 1-G15048_3 0.6900
FDNS	00NR	0	20WP	G15_063	FROM->TO	G14-057T 345.00 - SUNNYSIDE 345KV CKT 1	717	789	0.04524	111.5834	GEN527163 1-MUSTANG GEN #3 22 KV
FDNS	00NR	0	20WP	G15_063	FROM->TO	G14-057T 345.00 - SUNNYSIDE 345KV CKT 1	717	789	0.04524	111.5767	GEN681542 6-JP MADGETT
FDNS	00NR	0	20WP	G15_063	FROM->TO	G14-057T 345.00 - SUNNYSIDE 345KV CKT 1	717	789	0.04524	111.5723	CLAY BOSWELL 230/20.9KV TRANSFORMER CKT 1
FDNS	00NR	0	20WP	G15_063	FROM->TO	G14-057T 345.00 - SUNNYSIDE 345KV CKT 1	717	789	0.04474	111.5708	ARDMORE WEST - CARTER 138KV CKT 1
FDNS	00NR	0	20WP	G15_063	FROM->TO	G14-057T 345.00 - SUNNYSIDE 345KV CKT 1	717	789	0.04524	111.5658	GEN344896 3-1LAB G3 20.000
FDNS	00NR	0	20WP	G15_063	FROM->TO	G14-057T 345.00 - SUNNYSIDE 345KV CKT 1	717	789	0.04524	111.5646	GEN344897 4-1LAB G4 20.000
FDNS	00NR	0	20WP	G15_063	FROM->TO	G14-057T 345.00 - SUNNYSIDE 345KV CKT 1	717	789	0.04524	111.5644	GEN344894 1-1LAB G1 20.000
FDNS	00NR	0	20WP	G15_063	FROM->TO	G14-057T 345.00 - SUNNYSIDE 345KV CKT 1	717	789	0.04527	111.5548	P12:138:WFEC:MSL16
FDNS	00NR	0	20WP	G15_063	FROM->TO	G14-057T 345.00 - SUNNYSIDE 345KV CKT 1	717	789	0.04524	111.536	GEN523461 1-BLACKHAWK GEN #1

SOLUTION	GROUP	SCENARIO	SEASON	SOURCE	DIRECTION	MONITORED ELEMENT	RATEA (MVA)	RATEB(MVA)	TDF	TC%LOADING (% MVA)	CONTINGENCY
FDNS	00NR	0	20WP	G15_063	FROM->TO	G14-057T 345.00 - SUNNYSIDE 345KV CKT 1	717	789	0.04524	111.5359	GEN523462 1-BLACKHAWK GEN #2
FDNS	00NR	0	20WP	G15_063	FROM->TO	G14-057T 345.00 - SUNNYSIDE 345KV CKT 1	717	789	0.04508	111.5113	CACHE - SNYDER 138KV CKT 1
FDNS	00NR	0	20WP	G15_063	FROM->TO	G14-057T 345.00 - SUNNYSIDE 345KV CKT 1	717	789	0.04758	111.4993	CLARKSVILLE - MUSKOGEE 345KV CKT 1
FDNS	00NR	0	20WP	G15_063	FROM->TO	G14-057T 345.00 - SUNNYSIDE 345KV CKT 1	717	789	0.04758	111.4993	CLARKSVILLE - MUSKOGEE 345KV CKT 1
FDNS	00NR	0	20WP	G15_063	FROM->TO	G14-057T 345.00 - SUNNYSIDE 345KV CKT 1	717	789	0.04524	111.499	P12:138:WFEC:MSL07
FDNS	00NR	0	20WP	G15_063	FROM->TO	G14-057T 345.00 - SUNNYSIDE 345KV CKT 1	717	789	0.04524	111.499	P12:138:WFEC-AEPW:HUGOPP4:ATOKA--4
FDNS	00NR	0	20WP	G15_063	FROM->TO	G14-057T 345.00 - SUNNYSIDE 345KV CKT 1	717	789	0.04521	111.494	P12:138:AEPW-SWPA:LONEOAK4:TUPELO4
FDNS	00NR	0	20WP	G15_063	FROM->TO	G14-057T 345.00 - SUNNYSIDE 345KV CKT 1	717	789	0.04521	111.4939	P12:138:WFEC:MSL06
FDNS	00NR	0	20WP	G15_063	FROM->TO	G14-057T 345.00 - SUNNYSIDE 345KV CKT 1	717	789	0.04483	111.488	SUNNYSIDE (SUNNYSD5) 345/138/13.8KV TRANSFORMER CKT 1
FDNS	00NR	0	20WP	G15_063	FROM->TO	G14-057T 345.00 - SUNNYSIDE 345KV CKT 1	717	789	0.04524	111.4866	GEN521111 1-ORME2 13.800
FDNS	00NR	0	20WP	G15_063	FROM->TO	G14-057T 345.00 - SUNNYSIDE 345KV CKT 1	717	789	0.04524	111.4763	GEN562699 1-G15_018_3 0.6900
FDNS	00NR	0	20WP	G15_063	FROM->TO	G14-057T 345.00 - SUNNYSIDE 345KV CKT 1	717	789	0.04524	111.4734	GEN521110 1-ORME1 13.800
FDNS	00NR	0	20WP	G15_063	FROM->TO	G14-057T 345.00 - SUNNYSIDE 345KV CKT 1	717	789	0.04522	111.4689	G15085_T 138.00 - RUSSELL 138KV CKT 1
FDNS	00NR	0	20WP	G15_063	FROM->TO	G14-057T 345.00 - SUNNYSIDE 345KV CKT 1	717	789	0.04474	111.458	ARDMORE WEST - UNIROYAL 138KV CKT 1
FDNS	00NR	0	20WP	G15_063	FROM->TO	G14-057T 345.00 - SUNNYSIDE 345KV CKT 1	717	789	0.04524	111.4374	GEN563162 1-G15081_3 0.6900
FDNS	00NR	0	20WP	G15_063	FROM->TO	G14-057T 345.00 - SUNNYSIDE 345KV CKT 1	717	789	0.04524	111.4198	GEN520811 1-ANADRK4
FDNS	00NR	0	20WP	G15_063	FROM->TO	G14-057T 345.00 - SUNNYSIDE 345KV CKT 1	717	789	0.04524	111.4124	GEN661015 1-COYOTE
FDNS	00NR	0	20WP	G15_063	FROM->TO	G14-057T 345.00 - SUNNYSIDE 345KV CKT 1	717	789	0.04524	111.4088	GEN563292 1-G15095_3 0.6900
FDNS	00NR	0	20WP	G15_063	FROM->TO	G14-057T 345.00 - SUNNYSIDE 345KV CKT 1	717	789	0.04508	111.4066	CARTRCO4 138.00 - RATLIFF 138KV CKT 1
FDNS	00NR	0	20WP	G15_063	FROM->TO	G14-057T 345.00 - SUNNYSIDE 345KV CKT 1	717	789	0.04506	111.4025	P12:138:OKGE:3TERM40
FDNS	00NR	0	20WP	G15_063	FROM->TO	G14-057T 345.00 - SUNNYSIDE 345KV CKT 1	717	789	0.04524	111.3704	GEN563122 1-G15077_3 0.3850
FDNS	00NR	0	20WP	G15_063	FROM->TO	G14-057T 345.00 - SUNNYSIDE 345KV CKT 1	717	789	0.04524	111.3507	GEN562861 1-G15045_2 0.4800
FDNS	00NR	0	16WP	G15_063	FROM->TO	G14-057T 345.00 - SUNNYSIDE 345KV CKT 1	717	789	0.04548	111.3277	LYDIA - VALLIANT 345KV CKT 1
FDNS	00NR	0	16WP	G15_063	FROM->TO	G14-057T 345.00 - SUNNYSIDE 345KV CKT 1	717	789	0.04548	111.3277	LYDIA - VALLIANT 345KV CKT 1
FDNS	00NR	0	20WP	G15_063	FROM->TO	G14-057T 345.00 - SUNNYSIDE 345KV CKT 1	717	789	0.04524	111.2997	GEN657748 1-YOUNG 2 GENERATOR
FDNS	00NR	0	20WP	G15_063	FROM->TO	G14-057T 345.00 - SUNNYSIDE 345KV CKT 1	717	789	0.04524	111.2613	GEN527883 1-CUNNINGHAM GEN #3 22 KV
FDNS	00NR	0	20WP	G15_063	FROM->TO	G14-057T 345.00 - SUNNYSIDE 345KV CKT 1	717	789	0.04515	111.2589	P12:138:WFEC:MSL15
FDNS	00NR	0	20WP	G15_063	FROM->TO	G14-057T 345.00 - SUNNYSIDE 345KV CKT 1	717	789	0.04524	111.2583	GEN527884 1-CUNNINGHAM GEN #4 22 KV
FDNS	00NR	0	20WP	G15_063	FROM->TO	G14-057T 345.00 - SUNNYSIDE 345KV CKT 1	717	789	0.04474	111.222	SUNNYSIDE - UNIROYAL 138KV CKT 1
FDNS	00NR	0	20WP	G15_063	FROM->TO	G14-057T 345.00 - SUNNYSIDE 345KV CKT 1	717	789	0.04524	111.2084	GEN620315 1-BIG STONE GEN
FDNS	00NR	0	20WP	G15_063	FROM->TO	G14-057T 345.00 - SUNNYSIDE 345KV CKT 1	717	789	0.04522	111.2073	P12:138:AEPW:SHAM4WT:CHILD4WT
FDNS	00NR	0	20WP	G15_063	FROM->TO	G14-057T 345.00 - SUNNYSIDE 345KV CKT 1	717	789	0.04524	111.1958	GEN562992 1-G15063_3 0.6900
FDNS	00NR	0	20WP	G15_063	FROM->TO	G14-057T 345.00 - SUNNYSIDE 345KV CKT 1	717	789	0.04524	111.1914	GEN562704 1-G15_020_3 0.3550
FDNS	00NR	0	20WP	G15_063	FROM->TO	G14-057T 345.00 - SUNNYSIDE 345KV CKT 1	717	789	0.04524	111.1832	GEN526331 1-JONES GEN #1 22 KV
FDNS	00NR	0	20WP	G15_063	FROM->TO	G14-057T 345.00 - SUNNYSIDE 345KV CKT 1	717	789	0.04524	111.183	GEN526332 1-JONES GEN #2 21 KV
FDNS	00NR	0	20WP	G15_063	FROM->TO	G14-057T 345.00 - SUNNYSIDE 345KV CKT 1	717	789	0.04524	111.1776	GEN562952 1-G15057_3 0.6500
FDNS	00NR	0	20WP	G15_063	FROM->TO	G14-057T 345.00 - SUNNYSIDE 345KV CKT 1	717	789	0.04524	111.1344	GEN600004 2-PRAIRIE ISLAND G2
FDNS	00NR	0	20WP	G15_063	FROM->TO	G14-057T 345.00 - SUNNYSIDE 345KV CKT 1	717	789	0.04524	111.1319	GEN600003 1-PRAIRIE ISLAND G1
FDNS	00NR	0	20WP	G15_063	FROM->TO	G14-057T 345.00 - SUNNYSIDE 345KV CKT 1	717	789	0.04524	111.115	GEN511851 1-COMANCHE #1
FDNS	00NR	0	20WP	G15_063	FROM->TO	G14-057T 345.00 - SUNNYSIDE 345KV CKT 1	717	789	0.04524	111.1111	GEN600006 1-AS KING
FDNS	00NR	0	20WP	G15_063	FROM->TO	G14-057T 345.00 - SUNNYSIDE 345KV CKT 1	717	789	0.04524	111.0995	GEN563173 1-G15082_3 0.6900
FDNS	00NR	0	20WP	G15_063	FROM->TO	G14-057T 345.00 - SUNNYSIDE 345KV CKT 1	717	789	0.04645	111.0934	CANEY CREEK - TEXOMA JCT 138KV CKT 1
FDNS	00NR	0	20WP	G15_063	FROM->TO	G14-057T 345.00 - SUNNYSIDE 345KV CKT 1	717	789	0.04521	111.092	GRAPEVINE INTERCHANGE - STATELINE INTERCHANGE 230KV CKT 1
FDNS	00NR	0	20WP	G15_063	FROM->TO	G14-057T 345.00 - SUNNYSIDE 345KV CKT 1	717	789	0.04521	111.092	GRAPEVINE INTERCHANGE - STATELINE INTERCHANGE 230KV CKT 1
FDNS	00NR	0	20WP	G15_063	FROM->TO	G14-057T 345.00 - SUNNYSIDE 345KV CKT 1	717	789	0.04524	111.091	GEN562710 1-G15_022_3 0.5500
FDNS	00NR	0	20WP	G15_063	FROM->TO	G14-057T 345.00 - SUNNYSIDE 345KV CKT 1	717	789	0.0446	111.0004	P12:138:AEPW-OGE:CORNVIL4:CIMARON4
FDNS	00NR	0	20WP	G15_063	FROM->TO	G14-057T 345.00 - SUNNYSIDE 345KV CKT 1	717	789	0.04524	110.9695	GEN532751 1-WOLF CREEK GENERATING STATION UNIT 1
FDNS	00NR	0	20WP	G15_063	FROM->TO	G14-057T 345.00 - SUNNYSIDE 345KV CKT 1	717	789	0.04521	110.9578	GRAPEVINE INTERCHANGE - NICHOLS STATION 230KV CKT 1
FDNS	00NR	0	20WP	G15_063	FROM->TO	G14-057T 345.00 - SUNNYSIDE 345KV CKT 1	717	789	0.04521	110.9578	GRAPEVINE INTERCHANGE - NICHOLS STATION 230KV CKT 1
FDNS	00NR	0	20WP	G15_063	FROM->TO	G14-057T 345.00 - SUNNYSIDE 345KV CKT 1	717	789	0.04524	110.9379	GEN629074 1-ARNOLD LOWSIDE OF GSU XFMR
FDNS	00NR	0	20WP	G15_063	FROM->TO	G14-057T 345.00 - SUNNYSIDE 345KV CKT 1	717	789	0.04524	110.9331	GEN615001 1-COAL CREEK
FDNS	00NR	0	20WP	G15_063	FROM->TO	G14-057T 345.00 - SUNNYSIDE 345KV CKT 1	717	789	0.04524	110.9313	GEN635213 3-NEAL UNIT 3
FDNS	00NR	0	20WP	G15_063	FROM->TO	G14-057T 345.00 - SUNNYSIDE 345KV CKT 1	717	789	0.04524	110.9078	GEN615002 2-COAL CREEK
FDNS	00NR	0	20WP	G15_063	FROM->TO	G14-057T 345.00 - SUNNYSIDE 345KV CKT 1	717	789	0.04524	110.8843	BIG STONE 230/24.0KV TRANSFORMER CKT 1
FDNS	00NR	0	20WP	G15_063	FROM->TO	G14-057T 345.00 - SUNNYSIDE 345KV CKT 1	717	789	0.04533	110.8668	P12:138:WFEC:MSL09
FDNS	00NR	0	20WP	G15_063	FROM->TO	G14-057T 345.00 - SUNNYSIDE 345KV CKT 1	717	789	0.04524	110.8438	GEN636641 1-LOUISA UNIT 1
FDNS	00NR	0	20WP	G15_063	FROM->TO	G14-057T 345.00 - SUNNYSIDE 345KV CKT 1	717	789	0.04524	110.8394	GEN562754 1-G15031_5 0.6900
FDNS	00NR	0	20WP	G15_063	FROM->TO	G14-057T 345.00 - SUNNYSIDE 345KV CKT 1	717	789	0.04521	110.8309	NORTHWEST TEXARKANA - VALLIANT 345KV CKT 1
FDNS	00NR	0	20WP	G15_063	FROM->TO	G14-057T 345.00 - SUNNYSIDE 345KV CKT 1	717	789	0.04521	110.8309	NORTHWEST TEXARKANA - VALLIANT 345KV CKT 1
FDNS	00NR	0	20WP	G15_063	FROM->TO	G14-057T 345.00 - SUNNYSIDE 345KV CKT 1	717	789	0.04519	110.8147	CHISHOLM7 345.00 () 345/230/13.2KV TRANSFORMER CKT 1
FDNS	00NR	0	20WP	G15_063	FROM->TO	G14-057T 345.00 - SUNNYSIDE 345KV CKT 1	717	789	0.04524	110.8126	GEN600005 1-MONTICELLO
FDNS	00NR	0	20WP	G15_063	FROM->TO	G14-057T 345.00 - SUNNYSIDE 345KV CKT 1	717	789	0.04524	110.7807	GEN562556 1-G14_046_3 0.3420
FDNS	00NR	0	20WP	G15_063	FROM->TO	G14-057T 345.00 - SUNNYSIDE 345KV CKT 1	717	789	0.04524	110.7798	GEN562756 1-G15031_7 0.6900
FDNS	00NR	0	20WP	G15_063	FROM->TO	G14-057T 345.00 - SUNNYSIDE 345KV CKT 1	717	789	0.04519	110.7266	CHISHOLM7 345.00 - GRACEMONT 345KV CKT 1
FDNS	00NR	0	20WP	G15_063	FROM->TO	G14-057T 345.00 - SUNNYSIDE 345KV CKT 1	717	789	0.04524	110.6962	GEN563142 1-G15079_3 0.5500
FDNS	00NR	0	20WP	G15_063	FROM->TO	G14-057T 345.00 - SUNNYSIDE 345KV CKT 1	717	789	0.04524	110.6962	GEN563151 1-G15080_2 0.5500
FDNS	00NR	0	20WP	G15_063	FROM->TO	G14-057T 345.00 - SUNNYSIDE 345KV CKT 1	717	789	0.04524	110.6876	GEN600000 1-SHERBURNECNTY G1
FDNS	00NR	0	20WP	G15_063	FROM->TO	G14-057T 345.00 - SUNNYSIDE 345KV CKT 1	717	789	0.04524	110.6759	GEN562023 1-G11_020_3 0.6900
FDNS	00NR	0	20WP	G15_063	FROM->TO	G14-057T 345.00 - SUNNYSIDE 345KV CKT 1	717	789	0.04524	110.6759	GEN562026 1-G11_019_3 0.6900
FDNS	00NR	0	20WP	G15_063	FROM->TO	G14-057T 345.00 - SUNNYSIDE 345KV CKT 1	717	789	0.04524	110.6503	GEN629075 1-OTTUMWA GENERATOR FOR OTTUMWA UNIT NO 1
FDNS	00NR	0	20WP	G15_063	FROM->TO	G14-057T 345.00 - SUNNYSIDE 345KV CKT 1	717	789	0.04524	110.6347	GEN600001 2-SHERBURNE CNTY G2
FDNS	00NR	0	20WP	G15_063	FROM->TO	G14-057T 345.00 - SUNNYSIDE 345KV CKT 1	717	789	0.04524	110.5948	GEN523971 1-HARRINGTON GEN #1 24 KV
FDNS	00NR	0	20WP	G15_063	FROM->TO	G14-057T 345.00 - SUNNYSIDE 345KV CKT 1	717	789	0.04524	110.5948	GEN523972 1-HARRINGTON GEN #2 24 KV
FDNS	00NR	0	20WP	G15_063	FROM->TO	G14-057T 345.00 - SUNNYSIDE 345KV CKT 1	717	789	0.04524	110.5948	GEN523973 1-HARRINGTON GEN #3 24 KV
FDNS	00NR	0	20WP	G15_063	FROM->TO	G14-057T 345.00 - SUNNYSIDE 345KV CKT 1	717	789	0.04524	110.5682	GEN511848 1-SOUTHWESTERN STATION #3
FDNS	00NR	0	20WP	G15_063	FROM->TO	G14-057T 345.00 - SUNNYSIDE 345KV CKT 1	717	789	0.04524	110.4952	GEN527901 1-HOBBS PLANT #1 (CT)
FDNS	00NR	0	20WP	G15_063	FROM->TO	G14-057T 345.00 - SUNNYSIDE 345KV CKT 1	717	789	0.04524	110.4952	GEN527902 1-HOBBS PLANT #2 (CT)
FDNS	00NR	0	16WP	G15_063	FROM->TO	G14-057T 345.00 - SUNNYSIDE 345KV CKT 1	717	789	0.04554	110.4622	EASTDC - ERCOT EQUIVALENCE 345KV CKT 1
FDNS	00NR	0	20WP	G15_063	FROM->TO	G14-057T 345.00 - SUNNYSIDE 345KV CKT 1	717	789	0.04524	110.4587	GEN563042 1-G15068_3 0.6900

SOLUTION	GROUP	SCENARIO	SEASON	SOURCE	DIRECTION	MONITORED ELEMENT	RATEA (MVA)	RATEB(MVA)	TDF	TC%LOADING (% MVA)	CONTINGENCY
FDNS	00NR	0	20WP	G15_063	FROM->TO	G14-057T 345.00 - SUNNYSIDE 345KV CKT 1	717	789	0.04521	110.4581	LYDIA - WELSH 345KV CKT 1
FDNS	00NR	0	20WP	G15_063	FROM->TO	G14-057T 345.00 - SUNNYSIDE 345KV CKT 1	717	789	0.04521	110.4581	LYDIA - WELSH 345KV CKT 1
FDNS	00NR	0	20WP	G15_063	FROM->TO	G14-057T 345.00 - SUNNYSIDE 345KV CKT 1	717	789	0.04524	110.3783	GEN635214 4-NEAL UNIT 4
FDNS	00NR	0	20WP	G15_063	FROM->TO	G14-057T 345.00 - SUNNYSIDE 345KV CKT 1	717	789	0.04524	110.3726	SHERBURNE CO 345/24.0KV TRANSFORMER CKT 1
FDNS	00NR	0	20WP	G15_063	FROM->TO	G14-057T 345.00 - SUNNYSIDE 345KV CKT 1	717	789	0.04519	110.3131	P12:230:AEPW-SPS:SWEETWT6:WHEELER 6
FDNS	00NR	0	20WP	G15_063	FROM->TO	G14-057T 345.00 - SUNNYSIDE 345KV CKT 1	717	789	0.04519	110.3112	STATELINE INTERCHANGE - STLN-DEMARC6 230KV CKT 1
FDNS	00NR	0	20WP	G15_063	FROM->TO	G14-057T 345.00 - SUNNYSIDE 345KV CKT 1	717	789	0.04519	110.3099	STLN-DEMARC6 - SWEETWATER 230KV CKT 1
FDNS	00NR	0	20WP	G15_063	FROM->TO	G14-057T 345.00 - SUNNYSIDE 345KV CKT 1	717	789	0.04524	110.2086	GEN600002 3-SHERBURNE CNTY G3
FDNS	00NR	0	20WP	G15_063	FROM->TO	G14-057T 345.00 - SUNNYSIDE 345KV CKT 1	717	789	0.04524	110.1565	GEN563043 1-G15068_4 0.6900
FDNS	00NR	0	20WP	G15_063	FROM->TO	G14-057T 345.00 - SUNNYSIDE 345KV CKT 1	717	789	0.04524	110.1318	GEN563273 2-G15093_4 0.6900
FDNS	00NR	0	20WP	G15_063	FROM->TO	G14-057T 345.00 - SUNNYSIDE 345KV CKT 1	717	789	0.04524	110.1257	GEN526333 1-JONES GEN #3 21 KV
FDNS	00NR	0	20WP	G15_063	FROM->TO	G14-057T 345.00 - SUNNYSIDE 345KV CKT 1	717	789	0.04524	110.1255	GEN526334 1-JONES_4 116.500
FDNS	00NR	0	20WP	G15_063	FROM->TO	G14-057T 345.00 - SUNNYSIDE 345KV CKT 1	717	789	0.04524	110.1092	GEN344225 1-1CAL G1 25.000
FDNS	00NR	0	20WP	G15_063	FROM->TO	G14-057T 345.00 - SUNNYSIDE 345KV CKT 1	717	789	0.04524	110.0925	GEN525844 1-ELK_1 118.000
FDNS	00NR	0	20WP	G15_063	FROM->TO	G14-057T 345.00 - SUNNYSIDE 345KV CKT 1	717	789	0.04524	110.0744	GEN525845 1-ELK_2 1 18.000
FDNS	00NR	0	20WP	G15_063	FROM->TO	G14-057T 345.00 - SUNNYSIDE 345KV CKT 1	717	789	0.04524	109.9402	GEN527166 1-MUSTANG_6 118.000
FDNS	00NR	0	20WP	G15_063	FROM->TO	G14-057T 345.00 - SUNNYSIDE 345KV CKT 1	717	789	0.04518	109.9293	P12:230:AEPW:ELKCITY6:SWEETWT6
FDNS	00NR	0	20WP	G15_063	FROM->TO	G14-057T 345.00 - SUNNYSIDE 345KV CKT 1	717	789	0.04524	109.9216	GEN635023 3-WALTER SCOTT UNIT 3
FDNS	00NR	0	20WP	G15_063	FROM->TO	G14-057T 345.00 - SUNNYSIDE 345KV CKT 1	717	789	0.04524	109.8989	GEN563202 1-G15085_3 0.5500
FDNS	00NR	0	20WP	G15_063	FROM->TO	G14-057T 345.00 - SUNNYSIDE 345KV CKT 1	717	789	0.04524	109.8758	GEN528501 1-G14_012 24.000
FDNS	00NR	0	20WP	G15_063	FROM->TO	G14-057T 345.00 - SUNNYSIDE 345KV CKT 1	717	789	0.04524	109.8267	GEN562590 1-G14_057_3 0.6900
FDNS	00NR	0	20WP	G15_063	FROM->TO	G14-057T 345.00 - SUNNYSIDE 345KV CKT 1	717	789	0.04524	109.7108	GEN562762 1-G15033_3 0.6900
FDNS	00NR	0	20WP	G15_063	FROM->TO	G14-057T 345.00 - SUNNYSIDE 345KV CKT 1	717	789	0.04524	109.6995	GEN562655 1-G14_074_3 0.6900
FDNS	00NR	0	20WP	G15_063	FROM->TO	G14-057T 345.00 - SUNNYSIDE 345KV CKT 1	717	789	0.04524	109.6711	GEN525562 1-TOLK GEN #2 24 KV
FDNS	00NR	0	20WP	G15_063	FROM->TO	G14-057T 345.00 - SUNNYSIDE 345KV CKT 1	717	789	0.04519	109.6711	CHISHOLM6 230.00 - SWEETWATER 230KV CKT 1
FDNS	00NR	0	20WP	G15_063	FROM->TO	G14-057T 345.00 - SUNNYSIDE 345KV CKT 1	717	789	0.04509	109.6242	JOHNSON COUNTY (JOHNCO) 345/138/13.8KV TRANSFORMER CKT 1
FDNS	00NR	0	20WP	G15_063	FROM->TO	G14-057T 345.00 - SUNNYSIDE 345KV CKT 1	717	789	0.04524	109.6154	GEN562685 1-G15_013_3 0.3550
FDNS	00NR	0	20WP	G15_063	FROM->TO	G14-057T 345.00 - SUNNYSIDE 345KV CKT 1	717	789	0.04524	109.5881	GEN527903 1-HOBBS PLANT #3 (ST)
FDNS	00NR	0	20WP	G15_063	FROM->TO	G14-057T 345.00 - SUNNYSIDE 345KV CKT 1	717	789	0.04524	109.5189	GEN635024 4-WALTER SCOTT UNIT 4
FDNS	00NR	0	20WP	G15_063	FROM->TO	G14-057T 345.00 - SUNNYSIDE 345KV CKT 1	717	789	0.04524	109.4698	GEN563272 1-G15093_3 0.6900
FDNS	00NR	0	20WP	G15_063	FROM->TO	G14-057T 345.00 - SUNNYSIDE 345KV CKT 1	717	789	0.04519	109.3905	LYDIA - VALLIANT 345KV CKT 1
FDNS	00NR	0	20WP	G15_063	FROM->TO	G14-057T 345.00 - SUNNYSIDE 345KV CKT 1	717	789	0.04519	109.3905	LYDIA - VALLIANT 345KV CKT 1
FDNS	00NR	0	16WP	G15_063	FROM->TO	G14-057T 345.00 - SUNNYSIDE 345KV CKT 1	717	789	0.03823	109.3734	JOHNSON COUNTY - PITTSBURG 345KV CKT 1
FDNS	00NR	0	16WP	G15_063	FROM->TO	G14-057T 345.00 - SUNNYSIDE 345KV CKT 1	717	789	0.03823	109.3734	JOHNSON COUNTY - PITTSBURG 345KV CKT 1
FDNS	00NR	0	20WP	G15_063	FROM->TO	G14-057T 345.00 - SUNNYSIDE 345KV CKT 1	717	789	0.04524	109.1215	GEN525561 1-TOLK GEN #1 24 KV
FDNS	00NR	0	16WP	G15_063	FROM->TO	G14-057T 345.00 - SUNNYSIDE 345KV CKT 1	717	789	0.04554	109.0304	GEN563263 1-G15092_4 0.6900
FDNS	00NR	0	16WP	G15_063	FROM->TO	G14-057T 345.00 - SUNNYSIDE 345KV CKT 1	717	789	0.04418	108.4262	HUGO - VALLIANT 345KV CKT 1
FDNS	00NR	0	16WP	G15_063	FROM->TO	G14-057T 345.00 - SUNNYSIDE 345KV CKT 1	717	789	0.04418	108.4262	HUGO - VALLIANT 345KV CKT 1
FDNS	00NR	0	16WP	G15_063	FROM->TO	G14-057T 345.00 - SUNNYSIDE 345KV CKT 1	717	789	0.04554	107.3751	GEN563262 1-G15092_3 0.6900
FDNS	00NR	0	20WP	G15_063	FROM->TO	G14-057T 345.00 - SUNNYSIDE 345KV CKT 1	717	789	0.03797	107.2115	JOHNSON COUNTY - PITTSBURG 345KV CKT 1
FDNS	00NR	0	20WP	G15_063	FROM->TO	G14-057T 345.00 - SUNNYSIDE 345KV CKT 1	717	789	0.03797	107.2115	JOHNSON COUNTY - PITTSBURG 345KV CKT 1
FDNS	00NR	0	20WP	G15_063	FROM->TO	G14-057T 345.00 - SUNNYSIDE 345KV CKT 1	717	789	0.04391	106.8236	HUGO - VALLIANT 345KV CKT 1
FDNS	00NR	0	20WP	G15_063	FROM->TO	G14-057T 345.00 - SUNNYSIDE 345KV CKT 1	717	789	0.04391	106.8236	HUGO - VALLIANT 345KV CKT 1
FDNS	00NR	0	20WP	G15_063	FROM->TO	G14-057T 345.00 - SUNNYSIDE 345KV CKT 1	717	789	0.04524	106.3421	GEN563263 1-G15092_4 0.6900
FDNS	00NR	0	16WP	G15_063	FROM->TO	G14-057T 345.00 - SUNNYSIDE 345KV CKT 1	717	789	0.04382	105.9541	G14-074T 345.00 - TUCO INTERCHANGE 345KV CKT 1
FDNS	00NR	0	20WP	G15_063	FROM->TO	G14-057T 345.00 - SUNNYSIDE 345KV CKT 1	717	789	0.04524	104.6622	GEN563262 1-G15092_3 0.6900
FDNS	00NR	0	16WP	G15_063	FROM->TO	G14-057T 345.00 - SUNNYSIDE 345KV CKT 1	717	789	0.03701	103.684	JOHNSON COUNTY - SUNNYSIDE 345KV CKT 1
FDNS	00NR	0	20WP	G15_063	FROM->TO	G14-057T 345.00 - SUNNYSIDE 345KV CKT 1	717	789	0.04352	102.2257	G14-074T 345.00 - TUCO INTERCHANGE 345KV CKT 1
FDNS	00NR	0	20WP	G15_063	FROM->TO	G14-057T 345.00 - SUNNYSIDE 345KV CKT 1	717	789	0.03674	100.6926	JOHNSON COUNTY - SUNNYSIDE 345KV CKT 1
FDNS	08ALL	0	25SP	G15_063	FROM->TO	G15063_T 345.00 - MATHWSN7 345.00 345KV CKT 1	956	956	0.58147	122.7751	NORTHWEST - SPRING CREEK 345KV CKT 1
FDNS	08ALL	0	25SP	G15_063	FROM->TO	G15063_T 345.00 - MATHWSN7 345.00 345KV CKT 1	956	956	0.58151	122	NORTHWEST - SPRING CREEK 345KV CKT 1
FDNS	08ALL	0	16WP	G15_063	FROM->TO	G15063_T 345.00 - MATHWSN7 345.00 345KV CKT 1	956	956	0.56472	120.4934	SOONER - SPRING CREEK 345KV CKT 1
FDNS	08ALL	0	16WP	G15_063	FROM->TO	G15063_T 345.00 - MATHWSN7 345.00 345KV CKT 1	956	956	0.56472	120.3955	NORTHWEST - SPRING CREEK 345KV CKT 1
FDNS	08ALL	0	20L	G15_063	FROM->TO	G15063_T 345.00 - MATHWSN7 345.00 345KV CKT 1	956	956	0.55582	116.2318	SOONER - SPRING CREEK 345KV CKT 1
FDNS	08ALL	0	20L	G15_063	FROM->TO	G15063_T 345.00 - MATHWSN7 345.00 345KV CKT 1	956	956	0.55582	116.1246	NORTHWEST - SPRING CREEK 345KV CKT 1
FDNS	08ALL	0	17G	G15_063	FROM->TO	G15063_T 345.00 - MATHWSN7 345.00 345KV CKT 1	956	956	0.56613	116.0214	SOONER - SPRING CREEK 345KV CKT 1
FDNS	08ALL	0	17G	G15_063	FROM->TO	G15063_T 345.00 - MATHWSN7 345.00 345KV CKT 1	956	956	0.56613	115.9242	NORTHWEST - SPRING CREEK 345KV CKT 1
FDNS	08ALL	0	17SP	G15_063	FROM->TO	G15063_T 345.00 - MATHWSN7 345.00 345KV CKT 1	956	956	0.56962	115.5287	NORTHWEST - SPRING CREEK 345KV CKT 1
FDNS	08ALL	0	25SP	G15_063	FROM->TO	G15063_T 345.00 - MATHWSN7 345.00 345KV CKT 1	956	956	0.58214	115.4817	SOONER - SPRING CREEK 345KV CKT 1
FDNS	08ALL	0	25SP	G15_063	FROM->TO	G15063_T 345.00 - MATHWSN7 345.00 345KV CKT 1	956	956	0.58218	114.6846	SOONER - SPRING CREEK 345KV CKT 1
FDNS	08ALL	0	20WP	G15_063	FROM->TO	G15063_T 345.00 - MATHWSN7 345.00 345KV CKT 1	956	956	0.56534	114.0932	SOONER - SPRING CREEK 345KV CKT 1
FDNS	08ALL	0	16WP	G15_063	FROM->TO	G15063_T 345.00 - MATHWSN7 345.00 345KV CKT 1	956	956	0.63072	114.0569	VIOLA 7 345.00 - WICHITA 345KV CKT 1
FDNS	08ALL	0	20WP	G15_063	FROM->TO	G15063_T 345.00 - MATHWSN7 345.00 345KV CKT 1	956	956	0.56534	114.0069	NORTHWEST - SPRING CREEK 345KV CKT 1
FDNS	08ALL	0	20WP	G15_063	FROM->TO	G15063_T 345.00 - MATHWSN7 345.00 345KV CKT 1	956	956	0.56529	113.2299	SOONER - SPRING CREEK 345KV CKT 1
FDNS	08ALL	0	20WP	G15_063	FROM->TO	G15063_T 345.00 - MATHWSN7 345.00 345KV CKT 1	956	956	0.56529	113.1451	NORTHWEST - SPRING CREEK 345KV CKT 1
FDNS	08ALL	0	20L	G15_063	FROM->TO	G15063_T 345.00 - MATHWSN7 345.00 345KV CKT 1	956	956	0.58905	111.8235	CLEVELAND - G15066_T 345.00 345KV CKT 1
FDNS	08ALL	0	17G	G15_063	FROM->TO	G15063_T 345.00 - MATHWSN7 345.00 345KV CKT 1	956	956	0.63066	111.4901	VIOLA 7 345.00 - WICHITA 345KV CKT 1
FDNS	08ALL	0	16WP	G15_063	FROM->TO	G15063_T 345.00 - MATHWSN7 345.00 345KV CKT 1	956	956	0.60291	108.6267	CLEVELAND - G15066_T 345.00 345KV CKT 1
FDNS	08ALL	0	17SP	G15_063	FROM->TO	G15063_T 345.00 - MATHWSN7 345.00 345KV CKT 1	956	956	0.5703	108.1073	SOONER - SPRING CREEK 345KV CKT 1
FDNS	08ALL	0	20L	G15_063	FROM->TO	G15063_T 345.00 - MATHWSN7 345.00 345KV CKT 1	956	956	0.58905	107.0367	G15066_T 345.00 - SOONER 345KV CKT 1
FDNS	08ALL	0	17G	G15_063	FROM->TO	G15063_T 345.00 - MATHWSN7 345.00 345KV CKT 1	956	956	0.60399	105.8573	CLEVELAND - G15066_T 345.00 345KV CKT 1
FDNS	08ALL	0	20SP	G15_063	FROM->TO	G15063_T 345.00 - MATHWSN7 345.00 345KV CKT 1	956	956	0.56914	105.8099	NORTHWEST - SPRING CREEK 345KV CKT 1
FDNS	08ALL	0	20L	G15_063	FROM->TO	G15063_T 345.00 - MATHWSN7 345.00 345KV CKT 1	956	956	0.54996	105.2798	MATHWSN7 345.00 - TATONGA7 345.00 345KV CKT 1
FDNS	08ALL	0	16WP	G15_063	FROM->TO	G15063_T 345.00 - MATHWSN7 345.00 345KV CKT 1	956	956	0.55812	105.0739	MATHWSN7 345.00 - TATONGA7 345.00 345KV CKT 1
FDNS	08ALL	0	20L	G15_063	FROM->TO	G15063_T 345.00 - MATHWSN7 345.00 345KV CKT 1	956	956	0.58495	104.6184	CLEVELAND - TULSA NORTH 345KV CKT 1
FDNS	08ALL	0	20L	G15_063	FROM->TO	G15063_T 345.00 - MATHWSN7 345.00 345KV CKT 1	956	956	0.58495	104.6184	CLEVELAND - TULSA NORTH 345KV CKT 1
FDNS	08ALL	0	17SP	G15_063	FROM->TO	G15063_T 345.00 - MATHWSN7 345.00 345KV CKT 1	956	956	0.63535	104.4467	VIOLA 7 345.00 - WICHITA 345KV CKT 1
FDNS	08ALL	0	16WP	G15_063	FROM->TO	G15063_T 345.00 - MATHWSN7 345.00 345KV CKT 1	956	956	0.60291	104.1209	G15066_T 345.00 - SOONER 345KV CKT 1
FDNS	08ALL	0	20WP	G15_063	FROM->TO	G15063_T 345.00 - MATHWSN7 345.00 345KV CKT 1	956	956	0.60109	104.0414	CLEVELAND - G15066_T 345.00 345KV CKT 1

SOLUTION	GROUP	SCENARIO	SEASON	SOURCE	DIRECTION	MONITORED ELEMENT	RATEA (MVA)	RATEB(MVA)	TDF	TC%LOADING (% MVA)	CONTINGENCY
FDNS	08ALL	0	20WP	G15_063	FROM->TO	G15063_T 345.00 - MATHWSN7 345.00 345KV CKT 1	956	956	0.60104	103.1141	CLEVELAND - G15066_T 345.00 345KV CKT 1
FDNS	08ALL	0	16WP	G15_063	FROM->TO	G15063_T 345.00 - MATHWSN7 345.00 345KV CKT 1	956	956	0.59637	102.5577	CLEVELAND - TULSA NORTH 345KV CKT 1
FDNS	08ALL	0	16WP	G15_063	FROM->TO	G15063_T 345.00 - MATHWSN7 345.00 345KV CKT 1	956	956	0.59637	102.5577	CLEVELAND - TULSA NORTH 345KV CKT 1
FDNS	08ALL	0	25SP	G15_063	FROM->TO	G15063_T 345.00 - MATHWSN7 345.00 345KV CKT 1	956	956	0.61413	102.4902	CLEVELAND - G15066_T 345.00 345KV CKT 1
FDNS	08ALL	0	25SP	G15_063	FROM->TO	G15063_T 345.00 - MATHWSN7 345.00 345KV CKT 1	956	956	0.61415	101.6496	CLEVELAND - G15066_T 345.00 345KV CKT 1
FDNS	08NR	0	20L	G15_063	FROM->TO	G15063_T 345.00 - MATHWSN7 345.00 345KV CKT 1	956	956	0.57776	101.6468	SOONER - SPRING CREEK 345KV CKT 1
FDNS	08NR	0	20L	G15_063	FROM->TO	G15063_T 345.00 - MATHWSN7 345.00 345KV CKT 1	956	956	0.57776	101.6199	NORTHWEST - SPRING CREEK 345KV CKT 1
FDNS	08ALL	0	20WP	G15_063	FROM->TO	G15063_T 345.00 - MATHWSN7 345.00 345KV CKT 1	956	956	0.55634	101.5012	MATHWSN7 345.00 - TATONGA7 345.00 345KV CKT 1
FDNS	08ALL	0	17G	G15_063	FROM->TO	G15063_T 345.00 - MATHWSN7 345.00 345KV CKT 1	956	956	0.60399	101.365	G15066_T 345.00 - SOONER 345KV CKT 1
FDNS	08ALL	0	20WP	G15_063	FROM->TO	G15063_T 345.00 - MATHWSN7 345.00 345KV CKT 1	956	956	0.55625	100.7141	MATHWSN7 345.00 - TATONGA7 345.00 345KV CKT 1
FDNS	08ALL	0	17G	G15_063	FROM->TO	G15063_T 345.00 - MATHWSN7 345.00 345KV CKT 1	956	956	0.56034	100.5949	MATHWSN7 345.00 - TATONGA7 345.00 345KV CKT 1
FDNS	08ALL	0	17SP	G15_063	FROM->TO	G15063_T 345.00 - MATHWSN7 345.00 345KV CKT 1	956	956	0.60562	100.053	CLEVELAND - G15066_T 345.00 345KV CKT 1
FDNS	08ALL	0	16WP	G15_063	FROM->TO	G15063_T 345.00 - MATHWSN7 345.00 345KV CKT 1	956	956	0.55812	99.9	G11_051T 345.00 - TATONGA7 345.00 345KV CKT 1
FDNS	08ALL	0	17G	G15_063	FROM->TO	G15063_T 345.00 - MATHWSN7 345.00 345KV CKT 1	956	956	0.5975	99.8	CLEVELAND - TULSA NORTH 345KV CKT 1
FDNS	08ALL	0	20L	G15_063	FROM->TO	G15063_T 345.00 - MATHWSN7 345.00 345KV CKT 1	956	956	0.59715	99.8	VIOLA 7 345.00 - WICHITA 345KV CKT 1
FDNS	08ALL	0	20WP	G15_063	FROM->TO	G15063_T 345.00 - MATHWSN7 345.00 345KV CKT 1	956	956	0.60109	99.6	G15066_T 345.00 - SOONER 345KV CKT 1
FDNS	00NR	2	16WP	G15_063	FROM->TO	CIMARRON - DRAPER LAKE 345KV CKT 1	717	717	0.17541	134.3343	G14-057T 345.00 - SUNNYSIDE 345KV CKT 1
FDNS	00NR	2	16WP	G15_063	FROM->TO	CIMARRON - DRAPER LAKE 345KV CKT 1	717	717	0.17541	123.771	G14-057T 345.00 - LAWTON EASTSIDE 345KV CKT 1
FDNS	00NR	2	16WP	G15_063	FROM->TO	CIMARRON - DRAPER LAKE 345KV CKT 1	717	717	0.17603	118.5113	ARCADIA - SEMINOLE 345KV CKT 1
FDNS	00NR	2	16WP	G15_063	FROM->TO	CIMARRON - DRAPER LAKE 345KV CKT 1	717	717	0.17427	117.4388	CLEVELAND - G15066_T 345.00 345KV CKT 1
FDNS	00NR	2	16WP	G15_063	FROM->TO	CIMARRON - DRAPER LAKE 345KV CKT 1	717	717	0.22223	117.2468	ARCADIA - NORTHWEST 345KV CKT 1
FDNS	00NR	2	16WP	G15_063	FROM->TO	CIMARRON - DRAPER LAKE 345KV CKT 1	717	717	0.17427	116.6621	G15066_T 345.00 - SOONER 345KV CKT 1
FDNS	00NR	2	16WP	G15_063	FROM->TO	CIMARRON - DRAPER LAKE 345KV CKT 1	717	717	0.17102	112.0487	CLEVELAND - TULSA NORTH 345KV CKT 1
FDNS	00NR	2	16WP	G15_063	FROM->TO	CIMARRON - DRAPER LAKE 345KV CKT 1	717	717	0.17102	112.0487	CLEVELAND - TULSA NORTH 345KV CKT 1
FDNS	00NR	2	16WP	G15_063	FROM->TO	CIMARRON - DRAPER LAKE 345KV CKT 1	717	717	0.184	111.8034	MATHWSN7 345.00 - NORTHWEST 345KV CKT 1
FDNS	00NR	2	16WP	G15_063	FROM->TO	CIMARRON - DRAPER LAKE 345KV CKT 1	717	717	0.16883	110.8771	CIMARRON - SARA 138KV CKT 1
FDNS	00NR	2	16WP	G15_063	FROM->TO	CIMARRON - DRAPER LAKE 345KV CKT 1	717	717	0.16769	110.5381	P12:138:WFEC:MSL03
FDNS	00NR	2	16WP	G15_063	FROM->TO	CIMARRON - DRAPER LAKE 345KV CKT 1	717	717	0.16874	109.6954	CIMARRON (CIMARON2) 345/138/13.8KV TRANSFORMER CKT 1
FDNS	00NR	2	16WP	G15_063	FROM->TO	CIMARRON - DRAPER LAKE 345KV CKT 1	717	717	0.16883	109.5839	SARA - STHLAKE4 138.00 138KV CKT 1
FDNS	00NR	2	16WP	G15_063	FROM->TO	CIMARRON - DRAPER LAKE 345KV CKT 1	717	717	0.16859	109.5243	CIMARRON (CIMARON1) 345/138/13.8KV TRANSFORMER CKT 1
FDNS	00NR	2	16WP	G15_063	FROM->TO	CIMARRON - DRAPER LAKE 345KV CKT 1	717	717	0.16883	109.3844	MCCLAIN - STHLAKE4 138.00 138KV CKT 1
FDNS	00NR	2	16WP	G15_063	FROM->TO	CIMARRON - DRAPER LAKE 345KV CKT 1	717	717	0.1671	109.0835	CIMARRON - CZECH HALL 138KV CKT 1
FDNS	00NR	2	16WP	G15_063	FROM->TO	CIMARRON - DRAPER LAKE 345KV CKT 1	717	717	0.1671	108.7295	CZECH HALL - XEROX 138KV CKT 1
FDNS	00NR	2	16WP	G15_063	FROM->TO	CIMARRON - DRAPER LAKE 345KV CKT 1	717	717	0.1671	108.71	MORGAN - XEROX 138KV CKT 1
FDNS	00NR	2	16WP	G15_063	FROM->TO	CIMARRON - DRAPER LAKE 345KV CKT 1	717	717	0.1671	108.5927	MORGAN - MUSTANG 138KV CKT 1
FDNS	00NR	2	16WP	G15_063	FROM->TO	CIMARRON - DRAPER LAKE 345KV CKT 1	717	717	0.16537	108.5218	ANADARKO - POCASSETT 138KV CKT 1
FDNS	00NR	2	16WP	G15_063	FROM->TO	CIMARRON - DRAPER LAKE 345KV CKT 1	717	717	0.16475	108.4142	GEN515040 1-SEMINOLE 1G
FDNS	00NR	2	16WP	G15_063	FROM->TO	CIMARRON - DRAPER LAKE 345KV CKT 1	717	717	0.16537	108.3238	POCASSETT - TUTTLE 138KV CKT 1
FDNS	00NR	2	16WP	G15_063	FROM->TO	CIMARRON - DRAPER LAKE 345KV CKT 1	717	717	0.16529	108.2369	LACYGNE - WAVERLY7 345.00 345KV CKT 1
FDNS	00NR	2	16WP	G15_063	FROM->TO	CIMARRON - DRAPER LAKE 345KV CKT 1	717	717	0.16572	108.2139	CORN TAP - NAPLESTP 138.00 138KV CKT 1
FDNS	00NR	2	16WP	G15_063	FROM->TO	CIMARRON - DRAPER LAKE 345KV CKT 1	717	717	0.16704	108.1853	JOHNSON COUNTY - SUNNYSIDE 345KV CKT 1
FDNS	00NR	2	16WP	G15_063	FROM->TO	CIMARRON - DRAPER LAKE 345KV CKT 1	717	717	0.16572	108.1177	NAPLESTP 138.00 - PAYNE 138.00 138KV CKT 1
FDNS	00NR	2	16WP	G15_063	FROM->TO	CIMARRON - DRAPER LAKE 345KV CKT 1	717	717	0.16529	108.0345	WAVERLY7 345.00 - WOLF CREEK 345KV CKT 1
FDNS	00NR	2	16WP	G15_063	FROM->TO	CIMARRON - DRAPER LAKE 345KV CKT 1	717	717	0.16475	108.0025	GEN509403 1-PIRKEY GENERATION
FDNS	00NR	2	16WP	G15_063	FROM->TO	CIMARRON - DRAPER LAKE 345KV CKT 1	717	717	0.16475	107.9538	GEN501801 1-DOLET HILLS UNIT1
FDNS	00NR	2	16WP	G15_063	FROM->TO	CIMARRON - DRAPER LAKE 345KV CKT 1	717	717	0.16475	107.9462	GEN509416 1-TURK GENERATION
FDNS	00NR	2	16WP	G15_063	FROM->TO	CIMARRON - DRAPER LAKE 345KV CKT 1	717	717	0.16613	107.9364	CANEYRV7 345.00 - NEOSHO 345KV CKT 1
FDNS	00NR	2	16WP	G15_063	FROM->TO	CIMARRON - DRAPER LAKE 345KV CKT 1	717	717	0.16537	107.8144	BRIDGECR 138.00 - TUTTLE 138KV CKT 1
FDNS	00NR	2	16WP	G15_063	FROM->TO	CIMARRON - DRAPER LAKE 345KV CKT 1	717	717	0.16613	107.6338	CANEYRV7 345.00 - LATHAMS7 345.00 345KV CKT 1
FDNS	00NR	2	16WP	G15_063	FROM->TO	CIMARRON - DRAPER LAKE 345KV CKT 1	717	717	0.16475	107.6312	GEN336821 1-GRAND GULF UNIT
FDNS	00NR	2	16WP	G15_063	FROM->TO	CIMARRON - DRAPER LAKE 345KV CKT 1	717	717	0.16475	107.5364	GEN515042 1-SEMINOLE 3G
FDNS	00NR	2	16WP	G15_063	FROM->TO	CIMARRON - DRAPER LAKE 345KV CKT 1	717	717	0.16537	107.4437	BRIDGECR 138.00 - SUNSHINE CANYON 138KV CKT 1
FDNS	00NR	2	16WP	G15_063	FROM->TO	CIMARRON - DRAPER LAKE 345KV CKT 1	717	717	0.16537	107.4304	P12:138:WFEC:MSL01
FDNS	00NR	2	16WP	G15_063	FROM->TO	CIMARRON - DRAPER LAKE 345KV CKT 1	717	717	0.16475	107.3353	GEN336153 1-WATERFORD UNIT#3
FDNS	00NR	2	16WP	G15_063	FROM->TO	CIMARRON - DRAPER LAKE 345KV CKT 1	717	717	0.16475	107.3028	GEN515041 1-SEMINOLE 2G
FDNS	00NR	2	16WP	G15_063	FROM->TO	CIMARRON - DRAPER LAKE 345KV CKT 1	717	717	0.16613	107.1911	LATHAMS7 345.00 - ROSE HILL 345KV CKT 1
FDNS	00NR	2	16WP	G15_063	FROM->TO	CIMARRON - DRAPER LAKE 345KV CKT 1	717	717	0.16475	107.1021	GEN509406 1-WELSH #3
FDNS	00NR	2	16WP	G15_063	FROM->TO	CIMARRON - DRAPER LAKE 345KV CKT 1	717	717	0.16475	107.1019	GEN509404 1-WELSH #1
FDNS	00NR	2	16WP	G15_063	FROM->TO	CIMARRON - DRAPER LAKE 345KV CKT 1	717	717	0.16898	107.0778	CIMARRON - NORTHWEST 345KV CKT 1
FDNS	00NR	2	16WP	G15_063	FROM->TO	CIMARRON - DRAPER LAKE 345KV CKT 1	717	717	0.16475	107.0366	GEN335831 1-RIVERBEND UNIT#1
FDNS	00NR	2	16WP	G15_063	FROM->TO	CIMARRON - DRAPER LAKE 345KV CKT 1	717	717	0.16475	107.0093	GEN337911 1-ARKANSAS NUCLEAR ONE UNIT #2
FDNS	00NR	2	17SP	G15_063	FROM->TO	CIMARRON - DRAPER LAKE 345KV CKT 1	717	717	0.16457	106.8798	G14-057T 345.00 - SUNNYSIDE 345KV CKT 1
FDNS	00NR	2	16WP	G15_063	FROM->TO	CIMARRON - DRAPER LAKE 345KV CKT 1	717	717	0.16201	106.7532	CANADIAN RIVER - MUSKOGEE 345KV CKT 1
FDNS	00NR	2	16WP	G15_063	FROM->TO	CIMARRON - DRAPER LAKE 345KV CKT 1	717	717	0.16516	106.7407	HUGO - SUNNYSIDE 345KV CKT 1
FDNS	00NR	2	16WP	G15_063	FROM->TO	CIMARRON - DRAPER LAKE 345KV CKT 1	717	717	0.16536	106.6461	P12:138:OKGE:3TERM14
FDNS	00NR	2	16WP	G15_063	FROM->TO	CIMARRON - DRAPER LAKE 345KV CKT 1	717	717	0.167	106.6391	JOHNSON COUNTY - PITTSBURG 345KV CKT 1
FDNS	00NR	2	16WP	G15_063	FROM->TO	CIMARRON - DRAPER LAKE 345KV CKT 1	717	717	0.167	106.6391	JOHNSON COUNTY - PITTSBURG 345KV CKT 1
FDNS	00NR	2	16WP	G15_063	FROM->TO	CIMARRON - DRAPER LAKE 345KV CKT 1	717	717	0.16475	106.638	GRAND GULF 500/22.0KV TRANSFORMER CKT 1
FDNS	00NR	2	16WP	G15_063	FROM->TO	CIMARRON - DRAPER LAKE 345KV CKT 1	717	717	0.16475	106.6339	GEN337910 1-ARKANSAS NUCLEAR ONE UNIT #1
FDNS	00NR	2	16WP	G15_063	FROM->TO	CIMARRON - DRAPER LAKE 345KV CKT 1	717	717	0.16633	106.6257	HORSESHOE LAKE - JONES TAP 138KV CKT 1
FDNS	00NR	2	16WP	G15_063	FROM->TO	CIMARRON - DRAPER LAKE 345KV CKT 1	717	717	0.16527	106.6133	MORISNT4 138.00 - STILLWATER 138KV CKT 1
FDNS	00NR	2	16WP	G15_063	FROM->TO	CIMARRON - DRAPER LAKE 345KV CKT 1	717	717	0.1653	106.6087	P12:138:OKGE:3TERM2
FDNS	00NR	2	16WP	G15_063	FROM->TO	CIMARRON - DRAPER LAKE 345KV CKT 1	717	717	0.16553	106.5858	REDBUD - RIVERSIDE STATION 345KV CKT 1
FDNS	00NR	2	16WP	G15_063	FROM->TO	CIMARRON - DRAPER LAKE 345KV CKT 1	717	717	0.16553	106.5858	REDBUD - RIVERSIDE STATION 345KV CKT 1
FDNS	00NR	2	16WP	G15_063	FROM->TO	CIMARRON - DRAPER LAKE 345KV CKT 1	717	717	0.16475	106.4831	GEN501813 1-RODEMACHER UNIT 3
FDNS	00NR	2	16WP	G15_063	FROM->TO	CIMARRON - DRAPER LAKE 345KV CKT 1	717	717	0.16475	106.4757	GEN515226 1-MUSKOGEE 6G
FDNS	00NR	2	16WP	G15_063	FROM->TO	CIMARRON - DRAPER LAKE 345KV CKT 1	717	717	0.16579	106.3936	NORTHWEST (NORTWST2) 345/138/13.8KV TRANSFORMER CKT 1
FDNS	00NR	2	16WP	G15_063	FROM->TO	CIMARRON - DRAPER LAKE 345KV CKT 1	717	717	0.16452	106.3867	ARCADIA - KAMO MEMORIAL 138KV CKT 1
FDNS	00NR	2	16WP	G15_063	FROM->TO	CIMARRON - DRAPER LAKE 345KV CKT 1	717	717	0.1659	106.382	BAILEY4 138.00 - SUNSHINE CANYON 138KV CKT 1

SOLUTION	GROUP	SCENARIO	SEASON	SOURCE	DIRECTION	MONITORED ELEMENT	RATEA (MVA)	RATEB(MVA)	TDF	TC%LOADING (% MVA)	CONTINGENCY
FDNS	00NR	2	16WP	G15_063	FROM->TO	CIMARRON - DRAPER LAKE 345KV CKT 1	717	717	0.16484	106.3599	P12:138:OKGE:3TERM12
FDNS	00NR	2	16WP	G15_063	FROM->TO	CIMARRON - DRAPER LAKE 345KV CKT 1	717	717	0.16471	106.3184	7SAREPTA% 345.00 - LONGWOOD 345KV CKT 1
FDNS	00NR	2	16WP	G15_063	FROM->TO	CIMARRON - DRAPER LAKE 345KV CKT 1	717	717	0.16471	106.3184	7SAREPTA% 345.00 - LONGWOOD 345KV CKT 1
FDNS	00NR	2	16WP	G15_063	FROM->TO	CIMARRON - DRAPER LAKE 345KV CKT 1	717	717	0.16474	106.3044	DOLET HILLS - SOUTHWEST SHREVEPORT 345KV CKT 1
FDNS	00NR	2	16WP	G15_063	FROM->TO	CIMARRON - DRAPER LAKE 345KV CKT 1	717	717	0.16474	106.3044	DOLET HILLS - SOUTHWEST SHREVEPORT 345KV CKT 1
FDNS	00NR	2	16WP	G15_063	FROM->TO	CIMARRON - DRAPER LAKE 345KV CKT 1	717	717	0.16613	106.2996	MEMORIAL - SKYLINE 138KV CKT 1
FDNS	00NR	2	16WP	G15_063	FROM->TO	CIMARRON - DRAPER LAKE 345KV CKT 1	717	717	0.16475	106.2945	GEN335206 1-NELSON UNIT 6
FDNS	00NR	2	16WP	G15_063	FROM->TO	CIMARRON - DRAPER LAKE 345KV CKT 1	717	717	0.16475	106.2794	GEN515225 1-MUSKOGEE 5G
FDNS	00NR	2	16WP	G15_063	FROM->TO	CIMARRON - DRAPER LAKE 345KV CKT 1	717	717	0.16475	106.2793	GEN515223 1-MUSKOGEE 4G
FDNS	00NR	2	16WP	G15_063	FROM->TO	CIMARRON - DRAPER LAKE 345KV CKT 1	717	717	0.1661	106.2422	GRACEMONT (BANK 1) 345/138/13.8KV TRANSFORMER CKT 1
FDNS	00NR	2	16WP	G15_063	FROM->TO	CIMARRON - DRAPER LAKE 345KV CKT 1	717	717	0.16491	106.1951	G15074_T 345.00 - HOYT 345KV CKT 1
FDNS	00NR	2	16WP	G15_063	FROM->TO	CIMARRON - DRAPER LAKE 345KV CKT 1	717	717	0.16635	106.1886	QUAIL CREEK - SKYLINE 138KV CKT 1
FDNS	00NR	2	16WP	G15_063	FROM->TO	CIMARRON - DRAPER LAKE 345KV CKT 1	717	717	0.16647	106.1598	P12:138:OKGE:3TERM18
FDNS	00NR	2	16WP	G15_063	FROM->TO	CIMARRON - DRAPER LAKE 345KV CKT 1	717	717	0.16475	106.1411	GEN509409 1-WILKES #3
FDNS	00NR	2	16WP	G15_063	FROM->TO	CIMARRON - DRAPER LAKE 345KV CKT 1	717	717	0.16475	106.1299	GEN337653 1-WHITE BLUFF UNIT #2
FDNS	00NR	2	16WP	G15_063	FROM->TO	CIMARRON - DRAPER LAKE 345KV CKT 1	717	717	0.1657	106.129	NORTHWEST (NORTWST4) 345/138/13.8KV TRANSFORMER CKT 1
FDNS	00NR	2	16WP	G15_063	FROM->TO	CIMARRON - DRAPER LAKE 345KV CKT 1	717	717	0.16475	106.1234	GEN501812 1-RODEMACHER UNIT 2
FDNS	00NR	2	16WP	G15_063	FROM->TO	CIMARRON - DRAPER LAKE 345KV CKT 1	717	717	0.1659	106.0822	BAILEY4 138.00 - WESTMOORE 138KV CKT 1
FDNS	00NR	2	16WP	G15_063	FROM->TO	CIMARRON - DRAPER LAKE 345KV CKT 1	717	717	0.1664	106.0779	36 & MERIDIAN - CHEMTRON 138KV CKT 1
FDNS	00NR	2	16WP	G15_063	FROM->TO	CIMARRON - DRAPER LAKE 345KV CKT 1	717	717	0.16475	106.0648	NEW MADRID 161/22.0KV TRANSFORMER CKT 1
FDNS	00NR	2	16WP	G15_063	FROM->TO	CIMARRON - DRAPER LAKE 345KV CKT 1	717	717	0.16475	106.0522	NEW MADRID 345/22.0KV TRANSFORMER CKT 1
FDNS	00NR	2	16WP	G15_063	FROM->TO	CIMARRON - DRAPER LAKE 345KV CKT 1	717	717	0.16475	106.0286	GEN520947 1-HUGO1
FDNS	00NR	2	16WP	G15_063	FROM->TO	CIMARRON - DRAPER LAKE 345KV CKT 1	717	717	0.1657	106.0025	NORTHWEST (NORTWST3) 345/138/13.8KV TRANSFORMER CKT 1
FDNS	00NR	2	16WP	G15_063	FROM->TO	CIMARRON - DRAPER LAKE 345KV CKT 1	717	717	0.16475	106.001	GEN337652 1-WHITE BLUFF UNIT #1
FDNS	00NR	2	16WP	G15_063	FROM->TO	CIMARRON - DRAPER LAKE 345KV CKT 1	717	717	0.1664	105.991	CHEMTRON - PENNSYLVANIA 138KV CKT 1
FDNS	00NR	2	16WP	G15_063	FROM->TO	CIMARRON - DRAPER LAKE 345KV CKT 1	717	717	0.16496	105.9645	THISTLE7 345.00 - WOODWARD DISTRICT EHV 345KV CKT 1
FDNS	00NR	2	16WP	G15_063	FROM->TO	CIMARRON - DRAPER LAKE 345KV CKT 1	717	717	0.16496	105.9645	THISTLE7 345.00 - WOODWARD DISTRICT EHV 345KV CKT 1
FDNS	00NR	2	16WP	G15_063	FROM->TO	CIMARRON - DRAPER LAKE 345KV CKT 1	717	717	0.16496	105.9645	THISTLE7 345.00 - WOODWARD DISTRICT EHV 345KV CKT 2
FDNS	00NR	2	16WP	G15_063	FROM->TO	CIMARRON - DRAPER LAKE 345KV CKT 1	717	717	0.16496	105.9645	THISTLE7 345.00 - WOODWARD DISTRICT EHV 345KV CKT 2
FDNS	00NR	2	16WP	G15_063	FROM->TO	CIMARRON - DRAPER LAKE 345KV CKT 1	717	717	0.16473	105.943	7SAREPTA% 345.00 - ELDORADO EHV 345KV CKT 1
FDNS	00NR	2	16WP	G15_063	FROM->TO	CIMARRON - DRAPER LAKE 345KV CKT 1	717	717	0.16473	105.9429	3TR3AR8EL7EL
FDNS	00NR	2	16WP	G15_063	FROM->TO	CIMARRON - DRAPER LAKE 345KV CKT 1	717	717	0.16473	105.9366	ELDORADO EHV 500/345KV TRANSFORMER CKT 1
FDNS	00NR	2	16WP	G15_063	FROM->TO	CIMARRON - DRAPER LAKE 345KV CKT 1	717	717	0.16616	105.9137	BLANCHARD - CORNVILLE 138KV CKT 1
FDNS	00NR	2	16WP	G15_063	FROM->TO	CIMARRON - DRAPER LAKE 345KV CKT 1	717	717	0.16534	105.8917	P12:138:OKGE:3TERM17
FDNS	00NR	2	16WP	G15_063	FROM->TO	CIMARRON - DRAPER LAKE 345KV CKT 1	717	717	0.16511	105.8801	COMANCHE - LOCO 138KV CKT 1
FDNS	00NR	2	16WP	G15_063	FROM->TO	CIMARRON - DRAPER LAKE 345KV CKT 1	717	717	0.16501	105.869	G15052_T 345.00 - ROSE HILL 345KV CKT 1
FDNS	00NR	2	16WP	G15_063	FROM->TO	CIMARRON - DRAPER LAKE 345KV CKT 1	717	717	0.16622	105.8508	P12:138:OKGE:3TERM11
FDNS	00NR	2	16WP	G15_063	FROM->TO	CIMARRON - DRAPER LAKE 345KV CKT 1	717	717	0.16475	105.8458	GEN515577 1-ARBWND11 0.6900
FDNS	00NR	2	16WP	G15_063	FROM->TO	CIMARRON - DRAPER LAKE 345KV CKT 1	717	717	0.16542	105.8285	LONEOAK - NORTHWEST 138KV CKT 1
FDNS	00NR	2	16WP	G15_063	FROM->TO	CIMARRON - DRAPER LAKE 345KV CKT 1	717	717	0.16475	105.8273	GEN334440 1-SABINE UNIT 4
FDNS	00NR	2	16WP	G15_063	FROM->TO	CIMARRON - DRAPER LAKE 345KV CKT 1	717	717	0.16616	105.8228	P12:138:AEPW-OGE:CORNVIL4:MAUD 4
FDNS	00NR	2	16WP	G15_063	FROM->TO	CIMARRON - DRAPER LAKE 345KV CKT 1	717	717	0.16491	105.8211	HOYT - STRANGER CREEK 345KV CKT 1
FDNS	00NR	2	16WP	G15_063	FROM->TO	CIMARRON - DRAPER LAKE 345KV CKT 1	717	717	0.16747	105.8162	CLARKSVILLE - ONETA 345KV CKT 1
FDNS	00NR	2	16WP	G15_063	FROM->TO	CIMARRON - DRAPER LAKE 345KV CKT 1	717	717	0.16747	105.8162	CLARKSVILLE - ONETA 345KV CKT 1
FDNS	00NR	2	16WP	G15_063	FROM->TO	CIMARRON - DRAPER LAKE 345KV CKT 1	717	717	0.16491	105.8145	G15074_T 345.00 - JEFFREY ENERGY CENTER 345KV CKT 1
FDNS	00NR	2	16WP	G15_063	FROM->TO	CIMARRON - DRAPER LAKE 345KV CKT 1	717	717	0.16475	105.8145	DELL 500 - ESSEX UNIT 2 500KV CKT Z1
FDNS	00NR	2	16WP	G15_063	FROM->TO	CIMARRON - DRAPER LAKE 345KV CKT 1	717	717	0.16619	105.8141	KETCH TAP - NORTHWEST 138KV CKT 1
FDNS	00NR	2	16WP	G15_063	FROM->TO	CIMARRON - DRAPER LAKE 345KV CKT 1	717	717	0.16554	105.8047	DIVISION AVE - LAKESIDE 138KV CKT 1
FDNS	00NR	2	16WP	G15_063	FROM->TO	CIMARRON - DRAPER LAKE 345KV CKT 1	717	717	0.1659	105.8009	FRANKLIN SW - WESTMOORE 138KV CKT 1
FDNS	00NR	2	16WP	G15_063	FROM->TO	CIMARRON - DRAPER LAKE 345KV CKT 1	717	717	0.16444	105.7881	HORSESHOE LAKE - KAMO MEMORIAL 138KV CKT 1
FDNS	00NR	2	16WP	G15_063	FROM->TO	CIMARRON - DRAPER LAKE 345KV CKT 1	717	717	0.16536	105.7432	NORTHWEST - PANTHER 138KV CKT 1
FDNS	00NR	2	16WP	G15_063	FROM->TO	CIMARRON - DRAPER LAKE 345KV CKT 1	717	717	0.16569	105.7378	P12:138:OKGE:3TERM20
FDNS	00NR	2	16WP	G15_063	FROM->TO	CIMARRON - DRAPER LAKE 345KV CKT 1	717	717	0.16616	105.7206	BLANCHARD - MAUD 138KV CKT 1
FDNS	00NR	2	16WP	G15_063	FROM->TO	CIMARRON - DRAPER LAKE 345KV CKT 1	717	717	0.16503	105.7122	P12:138:OKGE:3TERM47
FDNS	00NR	2	16WP	G15_063	FROM->TO	CIMARRON - DRAPER LAKE 345KV CKT 1	717	717	0.16537	105.7091	CIMARRON - HAYMAKER 138KV CKT 1
FDNS	00NR	2	16WP	G15_063	FROM->TO	CIMARRON - DRAPER LAKE 345KV CKT 1	717	717	0.16514	105.6998	BLACKBERRY - NEOSHO 345KV CKT 1
FDNS	00NR	2	16WP	G15_063	FROM->TO	CIMARRON - DRAPER LAKE 345KV CKT 1	717	717	0.16514	105.6998	BLACKBERRY - NEOSHO 345KV CKT 1
FDNS	00NR	2	16WP	G15_063	FROM->TO	CIMARRON - DRAPER LAKE 345KV CKT 1	717	717	0.16498	105.6957	G14-074T 345.00 - OKLAUNION 345KV CKT 1
FDNS	00NR	2	16WP	G15_063	FROM->TO	CIMARRON - DRAPER LAKE 345KV CKT 1	717	717	0.16536	105.6927	PANTHER - SILVER LAKE 138KV CKT 1
FDNS	00NR	2	16WP	G15_063	FROM->TO	CIMARRON - DRAPER LAKE 345KV CKT 1	717	717	0.16475	105.685	DOLET HILLS 345/24.0KV TRANSFORMER CKT 1
FDNS	00NR	2	16WP	G15_063	FROM->TO	CIMARRON - DRAPER LAKE 345KV CKT 1	717	717	0.16554	105.6804	HEFNER - LAKESIDE 138KV CKT 1
FDNS	00NR	2	16WP	G15_063	FROM->TO	CIMARRON - DRAPER LAKE 345KV CKT 1	717	717	0.16475	105.6772	GEN336252 1-NINEMILE POINT UNIT#5
FDNS	00NR	2	16WP	G15_063	FROM->TO	CIMARRON - DRAPER LAKE 345KV CKT 1	717	717	0.16582	105.6457	KETCH - KETCH TAP 138KV CKT 1
FDNS	00NR	2	16WP	G15_063	FROM->TO	CIMARRON - DRAPER LAKE 345KV CKT 1	717	717	0.16475	105.6454	WHITE BLUFF 500/26.0KV TRANSFORMER CKT 1
FDNS	00NR	2	16WP	G15_063	FROM->TO	CIMARRON - DRAPER LAKE 345KV CKT 1	717	717	0.16498	105.636	SWISSVALE - WEST GARDNER 345KV CKT 1
FDNS	00NR	2	16WP	G15_063	FROM->TO	CIMARRON - DRAPER LAKE 345KV CKT 1	717	717	0.16529	105.6215	DIVISION AVE - MUSTANG 138KV CKT 1
FDNS	00NR	2	16WP	G15_063	FROM->TO	CIMARRON - DRAPER LAKE 345KV CKT 1	717	717	0.16519	105.6148	P12:138:AEPW-OGE:SHIDLER4:OSAGE 4
FDNS	00NR	2	16WP	G15_063	FROM->TO	CIMARRON - DRAPER LAKE 345KV CKT 1	717	717	0.16498	105.6086	FINNEY SWITCHING STATION - HOLCOMB 345KV CKT 1
FDNS	00NR	2	16WP	G15_063	FROM->TO	CIMARRON - DRAPER LAKE 345KV CKT 1	717	717	0.16498	105.6086	FINNEY SWITCHING STATION - HOLCOMB 345KV CKT 1
FDNS	00NR	2	16WP	G15_063	FROM->TO	CIMARRON - DRAPER LAKE 345KV CKT 1	717	717	0.16475	105.6079	GEN509408 1-WILKES #2
FDNS	00NR	2	16WP	G15_063	FROM->TO	CIMARRON - DRAPER LAKE 345KV CKT 1	717	717	0.16537	105.6013	DIVISION AVE - HAYMAKER 138KV CKT 1
FDNS	00NR	2	16WP	G15_063	FROM->TO	CIMARRON - DRAPER LAKE 345KV CKT 1	717	717	0.16475	105.5965	GEN300006 1-NEW MADRID UNIT 1
FDNS	00NR	2	16WP	G15_063	FROM->TO	CIMARRON - DRAPER LAKE 345KV CKT 1	717	717	0.16605	105.5922	MCCLAIN - PLEASANT VALLEY 138KV CKT 1
FDNS	00NR	2	16WP	G15_063	FROM->TO	CIMARRON - DRAPER LAKE 345KV CKT 1	717	717	0.16475	105.5839	GEN300007 1-NEW MADRID UNIT 2
FDNS	00NR	2	16WP	G15_063	FROM->TO	CIMARRON - DRAPER LAKE 345KV CKT 1	717	717	0.16495	105.5687	P12:138:WFEC:MSL02
FDNS	00NR	2	16WP	G15_063	FROM->TO	CIMARRON - DRAPER LAKE 345KV CKT 1	717	717	0.16512	105.5653	LACYGNE - NEOSHO 345KV CKT 1
FDNS	00NR	2	16WP	G15_063	FROM->TO	CIMARRON - DRAPER LAKE 345KV CKT 1	717	717	0.16467	105.562	P12:138:AEPW:OKMULGE4:R.S.S-4
FDNS	00NR	2	16WP	G15_063	FROM->TO	CIMARRON - DRAPER LAKE 345KV CKT 1	717	717	0.16475	105.556	GEN335204 1-NELSON UNIT 4
FDNS	00NR	2	16WP	G15_063	FROM->TO	CIMARRON - DRAPER LAKE 345KV CKT 1	717	717	0.16475	105.5382	GEN336831 1-BAXTER WILSON SES

SOLUTION	GROUP	SCENARIO	SEASON	SOURCE	DIRECTION	MONITORED ELEMENT	RATEA (MVA)	RATEB(MVA)	TDF	TC%LOADING (% MVA)	CONTINGENCY
FDNS	00NR	2	16WP	G15_063	FROM->TO	CIMARRON - DRAPER LAKE 345KV CKT 1	717	717	0.16489	105.5345	ANADARKO - GEORGIA 138KV CKT 1
FDNS	00NR	2	16WP	G15_063	FROM->TO	CIMARRON - DRAPER LAKE 345KV CKT 1	717	717	0.16481	105.5344	G15088_T 345.00 - MOORE 345KV CKT 1
FDNS	00NR	2	16WP	G15_063	FROM->TO	CIMARRON - DRAPER LAKE 345KV CKT 1	717	717	0.16583	105.5337	CLASSEN - ROBINSON 138KV CKT 1
FDNS	00NR	2	16WP	G15_063	FROM->TO	CIMARRON - DRAPER LAKE 345KV CKT 1	717	717	0.16496	105.5269	EMPORIA ENERGY CENTER - SWISSVALE 345KV CKT 1
FDNS	00NR	2	16WP	G15_063	FROM->TO	CIMARRON - DRAPER LAKE 345KV CKT 1	717	717	0.16527	105.521	BENTON - WICHITA 345KV CKT 1
FDNS	00NR	2	16WP	G15_063	FROM->TO	CIMARRON - DRAPER LAKE 345KV CKT 1	717	717	0.16475	105.5131	GEN506754 1-LEBROCK STEAM 1
FDNS	00NR	2	16WP	G15_063	FROM->TO	CIMARRON - DRAPER LAKE 345KV CKT 1	717	717	0.16523	105.5113	EMPORIA ENERGY CENTER - G14_001T 345.00 345KV CKT 1
FDNS	00NR	2	16WP	G15_063	FROM->TO	CIMARRON - DRAPER LAKE 345KV CKT 1	717	717	0.16475	105.5044	GEN334441 1-SABINE UNIT 5
FDNS	00NR	2	16WP	G15_063	FROM->TO	CIMARRON - DRAPER LAKE 345KV CKT 1	717	717	0.16475	105.4986	GEN334071 1-LEWIS CREEK 2
FDNS	00NR	2	16WP	G15_063	FROM->TO	CIMARRON - DRAPER LAKE 345KV CKT 1	717	717	0.16475	105.4908	GEN334070 1-LEWIS CREEK 1
FDNS	00NR	2	16WP	G15_063	FROM->TO	CIMARRON - DRAPER LAKE 345KV CKT 1	717	717	0.165	105.474	CRINER - PAYNE 138.00 138KV CKT 1
FDNS	00NR	2	16WP	G15_063	FROM->TO	CIMARRON - DRAPER LAKE 345KV CKT 1	717	717	0.16475	105.4738	GEN336251 1-NINEMILE POINT UNIT#4
FDNS	00NR	2	16WP	G15_063	FROM->TO	CIMARRON - DRAPER LAKE 345KV CKT 1	717	717	0.16489	105.4706	FLETCHER - GEORGIA 138KV CKT 1
FDNS	00NR	2	16WP	G15_063	FROM->TO	CIMARRON - DRAPER LAKE 345KV CKT 1	717	717	0.16478	105.4467	WEBRE - WELLS 500KV CKT 1
FDNS	00NR	2	16WP	G15_063	FROM->TO	CIMARRON - DRAPER LAKE 345KV CKT 1	717	717	0.16475	105.4465	GEN590011 2-ERCOT EQUIVALENCE
FDNS	00NR	2	16WP	G15_063	FROM->TO	CIMARRON - DRAPER LAKE 345KV CKT 1	717	717	0.16824	105.4267	WOODRING (WOODRNG2) 345/138/13.8KV TRANSFORMER CKT 1
FDNS	00NR	2	16WP	G15_063	FROM->TO	CIMARRON - DRAPER LAKE 345KV CKT 1	717	717	0.16498	105.4241	FINNEY SWITCHING STATION - Hitchland Interchange 345KV CKT 1
FDNS	00NR	2	16WP	G15_063	FROM->TO	CIMARRON - DRAPER LAKE 345KV CKT 1	717	717	0.16542	105.4224	LONEOAK - QUAIL CREEK 138KV CKT 1
FDNS	00NR	2	16WP	G15_063	FROM->TO	CIMARRON - DRAPER LAKE 345KV CKT 1	717	717	0.16492	105.4183	EMPIRE - FLETCHER 138KV CKT 1
FDNS	00NR	2	16WP	G15_063	FROM->TO	CIMARRON - DRAPER LAKE 345KV CKT 1	717	717	0.16475	105.4132	GEN501811 1-RODEMACHER UNIT 1
FDNS	00NR	2	16WP	G15_063	FROM->TO	CIMARRON - DRAPER LAKE 345KV CKT 1	717	717	0.16519	105.4087	OSAGE - WEBB CITY TAP 138KV CKT 1
FDNS	00NR	2	16WP	G15_063	FROM->TO	CIMARRON - DRAPER LAKE 345KV CKT 1	717	717	0.16475	105.4058	GEN590010 1-ERCOT EQUIVALENCE
FDNS	00NR	2	16WP	G15_063	FROM->TO	CIMARRON - DRAPER LAKE 345KV CKT 1	717	717	0.16475	105.3996	GEN503909 1-FULTONU1 1 16.000
FDNS	00NR	2	16WP	G15_063	FROM->TO	CIMARRON - DRAPER LAKE 345KV CKT 1	717	717	0.16475	105.3959	GEN338146 1-INDEPENDENCE UNIT #2
FDNS	00NR	2	16WP	G15_063	FROM->TO	CIMARRON - DRAPER LAKE 345KV CKT 1	717	717	0.16475	105.3903	FRONTIER - GRIMES 345KV CKT 1
FDNS	00NR	2	16WP	G15_063	FROM->TO	CIMARRON - DRAPER LAKE 345KV CKT 1	717	717	0.16476	105.3841	G1524G1525 345.00 - THISTLE7 345.00 345KV CKT 1
FDNS	00NR	2	16WP	G15_063	FROM->TO	CIMARRON - DRAPER LAKE 345KV CKT 1	717	717	0.16476	105.3841	G1524G1525 345.00 - THISTLE7 345.00 345KV CKT 2
FDNS	00NR	2	16WP	G15_063	FROM->TO	CIMARRON - DRAPER LAKE 345KV CKT 1	717	717	0.16526	105.3824	SPVALLY4 138.00 - STILLWATER 138KV CKT 1
FDNS	00NR	2	16WP	G15_063	FROM->TO	CIMARRON - DRAPER LAKE 345KV CKT 1	717	717	0.16475	105.3766	GEN334433 1-SABINE UNIT 3
FDNS	00NR	2	16WP	G15_063	FROM->TO	CIMARRON - DRAPER LAKE 345KV CKT 1	717	717	0.16523	105.3756	G14_001T 345.00 - WICHITA 345KV CKT 1
FDNS	00NR	2	16WP	G15_063	FROM->TO	CIMARRON - DRAPER LAKE 345KV CKT 1	717	717	0.16475	105.3752	P12:069:OKGE:3TERM4
FDNS	00NR	2	16WP	G15_063	FROM->TO	CIMARRON - DRAPER LAKE 345KV CKT 1	717	717	0.16475	105.3707	GEN334030 1-FRONTIER UNIT 1
FDNS	00NR	2	16WP	G15_063	FROM->TO	CIMARRON - DRAPER LAKE 345KV CKT 1	717	717	0.16475	105.3695	GEN334031 1-FRONTIER UNIT 2
FDNS	00NR	2	16WP	G15_063	FROM->TO	CIMARRON - DRAPER LAKE 345KV CKT 1	717	717	0.16475	105.3681	GEN303007 1-1BC2 U2
FDNS	00NR	2	16WP	G15_063	FROM->TO	CIMARRON - DRAPER LAKE 345KV CKT 1	717	717	0.16475	105.3633	GEN303006 1-1BC2 U1
FDNS	00NR	2	16WP	G15_063	FROM->TO	CIMARRON - DRAPER LAKE 345KV CKT 1	717	717	0.16492	105.3556	COMANCHE - EMPIRE 138KV CKT 1
FDNS	00NR	2	16WP	G15_063	FROM->TO	CIMARRON - DRAPER LAKE 345KV CKT 1	717	717	0.16526	105.353	PAYNESB4 138.00 - SPVALLY4 138.00 138KV CKT 1
FDNS	00NR	2	16WP	G15_063	FROM->TO	CIMARRON - DRAPER LAKE 345KV CKT 1	717	717	0.165	105.3494	COLE - CRINER 138KV CKT 1
FDNS	00NR	2	16WP	G15_063	FROM->TO	CIMARRON - DRAPER LAKE 345KV CKT 1	717	717	0.16475	105.3464	GEN336191 1-LITTLE GYPSY UNIT#3
FDNS	00NR	2	16WP	G15_063	FROM->TO	CIMARRON - DRAPER LAKE 345KV CKT 1	717	717	0.16475	105.3444	GEN337041 1-GERALD ANDRUS
FDNS	00NR	2	16WP	G15_063	FROM->TO	CIMARRON - DRAPER LAKE 345KV CKT 1	717	717	0.16475	105.3407	P12:161:AEPW:DYESS 5:HYLAND 5
FDNS	00NR	2	16WP	G15_063	FROM->TO	CIMARRON - DRAPER LAKE 345KV CKT 1	717	717	0.16498	105.3381	P12:138:OKGE:3TERM13
FDNS	00NR	2	16WP	G15_063	FROM->TO	CIMARRON - DRAPER LAKE 345KV CKT 1	717	717	0.16526	105.3373	CUSHING - PAYNESB4 138.00 138KV CKT 1
FDNS	00NR	2	16WP	G15_063	FROM->TO	CIMARRON - DRAPER LAKE 345KV CKT 1	717	717	0.16476	105.3353	8DANIEL8 500.00 - MCKNIGHT 500KV CKT 1
FDNS	00NR	2	16WP	G15_063	FROM->TO	CIMARRON - DRAPER LAKE 345KV CKT 1	717	717	0.1651	105.3336	CLEAVELAND - CLEVLND 4 138.00 138KV CKT Z1
FDNS	00NR	2	16WP	G15_063	FROM->TO	CIMARRON - DRAPER LAKE 345KV CKT 1	717	717	0.1651	105.3336	CLEAVELAND - CLEVLND 4 138.00 138KV CKT Z1
FDNS	00NR	2	16WP	G15_063	FROM->TO	CIMARRON - DRAPER LAKE 345KV CKT 1	717	717	0.1651	105.3333	CLEVELAND (CLVAUTO1) 345/138/13.8KV TRANSFORMER CKT 1
FDNS	00NR	2	16WP	G15_063	FROM->TO	CIMARRON - DRAPER LAKE 345KV CKT 1	717	717	0.1651	105.3333	CLEVELAND (CLVAUTO1) 345/138/13.8KV TRANSFORMER CKT 1
FDNS	00NR	2	16WP	G15_063	FROM->TO	CIMARRON - DRAPER LAKE 345KV CKT 1	717	717	0.16217	105.3313	CANADIAN RIVER - PITTSBURG 345KV CKT 1
FDNS	00NR	2	16WP	G15_063	FROM->TO	CIMARRON - DRAPER LAKE 345KV CKT 1	717	717	0.16217	105.3313	CANADIAN RIVER - PITTSBURG 345KV CKT 1
FDNS	00NR	2	16WP	G15_063	FROM->TO	CIMARRON - DRAPER LAKE 345KV CKT 1	717	717	0.16475	105.3185	GEN509393 S1-ARSENAL HILL GENS #4 (STALL)
FDNS	00NR	2	16WP	G15_063	FROM->TO	CIMARRON - DRAPER LAKE 345KV CKT 1	717	717	0.1653	105.3182	DAYTON - MUSTANG 138KV CKT 1
FDNS	00NR	2	16WP	G15_063	FROM->TO	CIMARRON - DRAPER LAKE 345KV CKT 1	717	717	0.16475	105.3145	GEN335614 1-WILLOW GLENN UNIT#4
FDNS	00NR	2	16WP	G15_063	FROM->TO	CIMARRON - DRAPER LAKE 345KV CKT 1	717	717	0.1653	105.3132	DAYTON - HOBBY LOBBY 138KV CKT 1
FDNS	00NR	2	16WP	G15_063	FROM->TO	CIMARRON - DRAPER LAKE 345KV CKT 1	717	717	0.16475	105.303	GEN303008 1-1BC2 U3
FDNS	00NR	2	16WP	G15_063	FROM->TO	CIMARRON - DRAPER LAKE 345KV CKT 1	717	717	0.16475	105.2997	GEN509392 G2-ARSENAL HILL GENS #3 (STALL)
FDNS	00NR	2	16WP	G15_063	FROM->TO	CIMARRON - DRAPER LAKE 345KV CKT 1	717	717	0.16475	105.2996	GEN509391 G1-ARSENAL HILL GENS #2 (STALL)
FDNS	00NR	2	16WP	G15_063	FROM->TO	CIMARRON - DRAPER LAKE 345KV CKT 1	717	717	0.16527	105.296	MUSTANG - SW 5TH 138KV CKT 1
FDNS	00NR	2	16WP	G15_063	FROM->TO	CIMARRON - DRAPER LAKE 345KV CKT 1	717	717	0.16481	105.2901	7LUTESVIL 345.00 - 7ST FRANC 345.00 345KV CKT 1
FDNS	00NR	2	16WP	G15_063	FROM->TO	CIMARRON - DRAPER LAKE 345KV CKT 1	717	717	0.16475	105.2812	GEN336170 1-GULF OXY U4
FDNS	00NR	2	16WP	G15_063	FROM->TO	CIMARRON - DRAPER LAKE 345KV CKT 1	717	717	0.16475	105.2786	GEN336464 1-MICHOUD UNIT #3
FDNS	00NR	2	16WP	G15_063	FROM->TO	CIMARRON - DRAPER LAKE 345KV CKT 1	717	717	0.16473	105.2772	ELDORADO EHV - MOUNT OLIVE 500KV CKT 1
FDNS	00NR	2	16WP	G15_063	FROM->TO	CIMARRON - DRAPER LAKE 345KV CKT 1	717	717	0.16475	105.267	GEN338143 1-INDEPENDENCE UNIT #1
FDNS	00NR	2	16WP	G15_063	FROM->TO	CIMARRON - DRAPER LAKE 345KV CKT 1	717	717	0.16483	105.2572	P12:069:OKGE:3TERM19
FDNS	00NR	2	16WP	G15_063	FROM->TO	CIMARRON - DRAPER LAKE 345KV CKT 1	717	717	0.16475	105.2447	ESSEX UNIT 2 500/18.0KV TRANSFORMER CKT 1
FDNS	00NR	2	16WP	G15_063	FROM->TO	CIMARRON - DRAPER LAKE 345KV CKT 1	717	717	0.16536	105.244	OUMED 4 - STONEWALL 138KV CKT 1
FDNS	00NR	2	16WP	G15_063	FROM->TO	CIMARRON - DRAPER LAKE 345KV CKT 1	717	717	0.16583	105.241	LIGHTNING CREEK - ROBINSON 138KV CKT 1
FDNS	00NR	2	16WP	G15_063	FROM->TO	CIMARRON - DRAPER LAKE 345KV CKT 1	717	717	0.1648	105.2408	7JASPER 345.00 - BLACKBERRY 345KV CKT 1
FDNS	00NR	2	16WP	G15_063	FROM->TO	CIMARRON - DRAPER LAKE 345KV CKT 1	717	717	0.16475	105.2336	GEN336801 1-BAXTER WILSON UNIT #1
FDNS	00NR	2	16WP	G15_063	FROM->TO	CIMARRON - DRAPER LAKE 345KV CKT 1	717	717	0.16441	105.2308	ARCADIA - LGARBER4 138.00 138KV CKT 1
FDNS	00NR	2	16WP	G15_063	FROM->TO	CIMARRON - DRAPER LAKE 345KV CKT 1	717	717	0.16519	105.2291	FAIRFAX TAP - SHIDLER 138KV CKT 1
FDNS	00NR	2	16WP	G15_063	FROM->TO	CIMARRON - DRAPER LAKE 345KV CKT 1	717	717	0.16519	105.229	FAIRFAX TAP - WEBB CITY TAP 138KV CKT 1
FDNS	00NR	2	16WP	G15_063	FROM->TO	CIMARRON - DRAPER LAKE 345KV CKT 1	717	717	0.16483	105.2096	8WNEWMADRID 500.00 - DELL 500 500KV CKT 1
FDNS	00NR	2	16WP	G15_063	FROM->TO	CIMARRON - DRAPER LAKE 345KV CKT 1	717	717	0.16576	105.2044	TULSA NORTH - WEKIWA 345KV CKT 1
FDNS	00NR	2	16WP	G15_063	FROM->TO	CIMARRON - DRAPER LAKE 345KV CKT 1	717	717	0.16576	105.2044	TULSA NORTH - WEKIWA 345KV CKT 1
FDNS	00NR	2	16WP	G15_063	FROM->TO	CIMARRON - DRAPER LAKE 345KV CKT 1	717	717	0.16551	105.2039	ARKANSAS NUCLEAR ONE - FT SMITH 500KV CKT 1
FDNS	00NR	2	16WP	G15_063	FROM->TO	CIMARRON - DRAPER LAKE 345KV CKT 1	717	717	0.16551	105.2039	ARKANSAS NUCLEAR ONE - FT SMITH 500KV CKT 1
FDNS	00NR	2	16WP	G15_063	FROM->TO	CIMARRON - DRAPER LAKE 345KV CKT 1	717	717	0.16441	105.2009	CHITWOOD - LGARBER4 138.00 138KV CKT 1
FDNS	00NR	2	16WP	G15_063	FROM->TO	CIMARRON - DRAPER LAKE 345KV CKT 1	717	717	0.16475	105.198	GEN506752 1-LEBROCK GAS 1

SOLUTION	GROUP	SCENARIO	SEASON	SOURCE	DIRECTION	MONITORED ELEMENT	RATEA (MVA)	RATEB(MVA)	TDF	TC%LOADING (% MVA)	CONTINGENCY
FDNS	00NR	2	16WP	G15_063	FROM->TO	CIMARRON - DRAPER LAKE 345KV CKT 1	717	717	0.16475	105.1978	GEN506753 1-LEBROCK GAS 2
FDNS	00NR	2	16WP	G15_063	FROM->TO	CIMARRON - DRAPER LAKE 345KV CKT 1	717	717	0.16475	105.1962	GEN501910 1-ACADIA UNIT ST1
FDNS	00NR	2	16WP	G15_063	FROM->TO	CIMARRON - DRAPER LAKE 345KV CKT 1	717	717	0.16441	105.1885	CHITWOOD - JONES TAP 138KV CKT 1
FDNS	00NR	2	16WP	G15_063	FROM->TO	CIMARRON - DRAPER LAKE 345KV CKT 1	717	717	0.16475	105.1852	RODEMACHER 230/22.0KV TRANSFORMER CKT 1
FDNS	00NR	2	16WP	G15_063	FROM->TO	CIMARRON - DRAPER LAKE 345KV CKT 1	717	717	0.16476	105.1817	P12:138:AEPW-OGE:WTH_JCT4:JENSEN4
FDNS	00NR	2	16WP	G15_063	FROM->TO	CIMARRON - DRAPER LAKE 345KV CKT 1	717	717	0.16476	105.1808	P12:345:GRDA:CHOUTEAU-SPORTSMANACRES
FDNS	00NR	2	16WP	G15_063	FROM->TO	CIMARRON - DRAPER LAKE 345KV CKT 1	717	717	0.1647	105.1757	ELDORADO EHV - SHERIDAN EHV 500KV CKT 1
FDNS	00NR	2	16WP	G15_063	FROM->TO	CIMARRON - DRAPER LAKE 345KV CKT 1	717	717	0.16487	105.1668	ANADARKO - SEQUOYAHJ4 138.00 138KV CKT 1
FDNS	00NR	2	16WP	G15_063	FROM->TO	CIMARRON - DRAPER LAKE 345KV CKT 1	717	717	0.16487	105.1663	CORN TAP - SEQUOYAHJ4 138.00 138KV CKT 1
FDNS	00NR	2	16WP	G15_063	FROM->TO	CIMARRON - DRAPER LAKE 345KV CKT 1	717	717	0.16475	105.1611	GEN511843 1-RIVERSIDE STATION #2
FDNS	00NR	2	16WP	G15_063	FROM->TO	CIMARRON - DRAPER LAKE 345KV CKT 1	717	717	0.16475	105.1602	CHISHOLM6 230.00 - ELK CITY 230KV 230KV CKT 1
FDNS	00NR	2	16WP	G15_063	FROM->TO	CIMARRON - DRAPER LAKE 345KV CKT 1	717	717	0.16475	105.1571	ELK CITY 230KV (ELKCTY-6) 230/138/13.8KV TRANSFORMER CKT 1
FDNS	00NR	2	16WP	G15_063	FROM->TO	CIMARRON - DRAPER LAKE 345KV CKT 1	717	717	0.16475	105.1571	ELK CITY 230KV (ELKCTY-6) 230/138/13.8KV TRANSFORMER CKT 1
FDNS	00NR	2	16WP	G15_063	FROM->TO	CIMARRON - DRAPER LAKE 345KV CKT 1	717	717	0.16474	105.1454	6LAYFLD 230.00 - CARROLL 230KV CKT 1
FDNS	00NR	2	16WP	G15_063	FROM->TO	CIMARRON - DRAPER LAKE 345KV CKT 1	717	717	0.16536	105.1428	OUMED 4 - PARK PLACE 138KV CKT 1
FDNS	00NR	2	16WP	G15_063	FROM->TO	CIMARRON - DRAPER LAKE 345KV CKT 1	717	717	0.1648	105.1404	P12:138:AEPW:N.E.S.-4:CATOOSA4
FDNS	00NR	2	16WP	G15_063	FROM->TO	CIMARRON - DRAPER LAKE 345KV CKT 1	717	717	0.16485	105.132	P13:138-161:WERE:NSES_TX-4OR5::
FDNS	00NR	2	16WP	G15_063	FROM->TO	CIMARRON - DRAPER LAKE 345KV CKT 1	717	717	0.16469	105.1317	MORISNT4 138.00 - SOONER 138KV CKT 1
FDNS	00NR	2	16WP	G15_063	FROM->TO	CIMARRON - DRAPER LAKE 345KV CKT 1	717	717	0.16617	105.131	NORTHEAST STATION - ONETA 345KV CKT 1
FDNS	00NR	2	16WP	G15_063	FROM->TO	CIMARRON - DRAPER LAKE 345KV CKT 1	717	717	0.16617	105.131	NORTHEAST STATION - ONETA 345KV CKT 1
FDNS	00NR	2	16WP	G15_063	FROM->TO	CIMARRON - DRAPER LAKE 345KV CKT 1	717	717	0.16514	105.1287	ANADARKO - GRACMNT4 138.00 138KV CKT 1
FDNS	00NR	2	16WP	G15_063	FROM->TO	CIMARRON - DRAPER LAKE 345KV CKT 1	717	717	0.16483	105.1248	7JASPER 345.00 - MORGAN 345KV CKT 1
FDNS	00NR	2	16WP	G15_063	FROM->TO	CIMARRON - DRAPER LAKE 345KV CKT 1	717	717	0.16475	105.118	8CAJUN2 500/24.0KV TRANSFORMER CKT 1
FDNS	00NR	2	16WP	G15_063	FROM->TO	CIMARRON - DRAPER LAKE 345KV CKT 1	717	717	0.17034	105.1161	GRACEMONT - LAWTON EASTSIDE 345KV CKT 1
FDNS	00NR	2	16WP	G15_063	FROM->TO	CIMARRON - DRAPER LAKE 345KV CKT 1	717	717	0.17034	105.1161	GRACEMONT - LAWTON EASTSIDE 345KV CKT 1
FDNS	00NR	2	16WP	G15_063	FROM->TO	CIMARRON - DRAPER LAKE 345KV CKT 1	717	717	0.16591	105.1116	DALE - HORSESHOE LAKE 138KV CKT 1
FDNS	00NR	2	16WP	G15_063	FROM->TO	CIMARRON - DRAPER LAKE 345KV CKT 1	717	717	0.16475	105.1113	ST FRANCIS - ST FRANCIS 1 161KV CKT Z1
FDNS	00NR	2	16WP	G15_063	FROM->TO	CIMARRON - DRAPER LAKE 345KV CKT 1	717	717	0.16475	105.1113	ST FRANCIS 161/16.0KV TRANSFORMER CKT 1
FDNS	00NR	2	16WP	G15_063	FROM->TO	CIMARRON - DRAPER LAKE 345KV CKT 1	717	717	0.16473	105.1084	FULTON 115 - HOPE 115KV CKT 1
FDNS	00NR	2	16WP	G15_063	FROM->TO	CIMARRON - DRAPER LAKE 345KV CKT 1	717	717	0.16473	105.1084	FULTON 115 - HOPE 115KV CKT 1
FDNS	00NR	2	16WP	G15_063	FROM->TO	CIMARRON - DRAPER LAKE 345KV CKT 1	717	717	0.16583	105.1037	LIGHTNING CREEK - TROSPER 138KV CKT 1
FDNS	00NR	2	16WP	G15_063	FROM->TO	CIMARRON - DRAPER LAKE 345KV CKT 1	717	717	0.16475	105.1027	P12:069:OKGE:3TERM3
FDNS	00NR	2	16WP	G15_063	FROM->TO	CIMARRON - DRAPER LAKE 345KV CKT 1	717	717	0.16492	105.1006	G13-010T 345.00 - POST ROCK 345KV CKT 1
FDNS	00NR	2	16WP	G15_063	FROM->TO	CIMARRON - DRAPER LAKE 345KV CKT 1	717	717	0.165	105.099	COLE - OUSW4 138KV CKT 1
FDNS	00NR	2	16WP	G15_063	FROM->TO	CIMARRON - DRAPER LAKE 345KV CKT 1	717	717	0.16485	105.0962	P12:138:AEPW:CATOOSA4:T.S.E.-4
FDNS	00NR	2	16WP	G15_063	FROM->TO	CIMARRON - DRAPER LAKE 345KV CKT 1	717	717	0.16492	105.0879	HUGO - VALLIANT 345KV CKT 1
FDNS	00NR	2	16WP	G15_063	FROM->TO	CIMARRON - DRAPER LAKE 345KV CKT 1	717	717	0.16492	105.0879	HUGO - VALLIANT 345KV CKT 1
FDNS	00NR	2	16WP	G15_063	FROM->TO	CIMARRON - DRAPER LAKE 345KV CKT 1	717	717	0.1653	105.0838	36 & MERIDIAN - HOBBY LOBBY 138KV CKT 1
FDNS	00NR	2	16WP	G15_063	FROM->TO	CIMARRON - DRAPER LAKE 345KV CKT 1	717	717	0.16475	105.0825	GEN337766 1-TRACTEBEL UNIT S1
FDNS	00NR	2	16WP	G15_063	FROM->TO	CIMARRON - DRAPER LAKE 345KV CKT 1	717	717	0.16475	105.0805	P12:138:AEPW:SHERID4:112GORE4
FDNS	00NR	2	16WP	G15_063	FROM->TO	CIMARRON - DRAPER LAKE 345KV CKT 1	717	717	0.16489	105.0804	HAMMETT TAP - HAMMETT2 138KV CKT 1
FDNS	00NR	2	16WP	G15_063	FROM->TO	CIMARRON - DRAPER LAKE 345KV CKT 1	717	717	0.16475	105.0776	GEN336222 1-LITTLE GYPSY UNIT#2
FDNS	00NR	2	16WP	G15_063	FROM->TO	CIMARRON - DRAPER LAKE 345KV CKT 1	717	717	0.16484	105.0756	P12:138:OKGE:3TERM28
FDNS	00NR	2	16WP	G15_063	FROM->TO	CIMARRON - DRAPER LAKE 345KV CKT 1	717	717	0.16475	105.0751	GEN515564 1-ORIGIN11 0.6900
FDNS	00NR	2	16WP	G15_063	FROM->TO	CIMARRON - DRAPER LAKE 345KV CKT 1	717	717	0.16475	105.0751	GEN515565 1-ORIGIN21 0.6900
FDNS	00NR	2	16WP	G15_063	FROM->TO	CIMARRON - DRAPER LAKE 345KV CKT 1	717	717	0.16475	105.073	GEN300015 1-1SGPDEL 18.000
FDNS	00NR	2	16WP	G15_063	FROM->TO	CIMARRON - DRAPER LAKE 345KV CKT 1	717	717	0.16591	105.0701	DALE - SQUIRL CREEK 138KV CKT 1
FDNS	00NR	2	16WP	G15_063	FROM->TO	CIMARRON - DRAPER LAKE 345KV CKT 1	717	717	0.16475	105.07	NELSON 230/20.0KV TRANSFORMER CKT 1
FDNS	00NR	2	16WP	G15_063	FROM->TO	CIMARRON - DRAPER LAKE 345KV CKT 1	717	717	0.16475	105.0658	GEN501970 1-EVANGELINE UNIT 7
FDNS	00NR	2	16WP	G15_063	FROM->TO	CIMARRON - DRAPER LAKE 345KV CKT 1	717	717	0.16504	105.0657	HEALDTON - LOCO 138KV CKT 1
FDNS	00NR	2	16WP	G15_063	FROM->TO	CIMARRON - DRAPER LAKE 345KV CKT 1	717	717	0.16497	105.0657	NW164TH4 138.00 - PIEDMONT 138KV CKT 1
FDNS	00NR	2	16WP	G15_063	FROM->TO	CIMARRON - DRAPER LAKE 345KV CKT 1	717	717	0.16497	105.0637	NORTHWEST - NW164TH4 138.00 138KV CKT 1
FDNS	00NR	2	16WP	G15_063	FROM->TO	CIMARRON - DRAPER LAKE 345KV CKT 1	717	717	0.16475	105.062	P12:161:AEPW:EROGERS5:ECNTRTN5
FDNS	00NR	2	16WP	G15_063	FROM->TO	CIMARRON - DRAPER LAKE 345KV CKT 1	717	717	0.16476	105.0607	AS KING - EAU CLAIRE 345KV CKT 1
FDNS	00NR	2	16WP	G15_063	FROM->TO	CIMARRON - DRAPER LAKE 345KV CKT 1	717	717	0.16475	105.0604	ESSEX UNIT 2 500/18.0KV TRANSFORMER CKT 1
FDNS	00NR	2	16WP	G15_063	FROM->TO	CIMARRON - DRAPER LAKE 345KV CKT 1	717	717	0.16475	105.0601	P12:138:OKGE-AEPW:JENSEN4:REDROCKRD4
FDNS	00NR	2	16WP	G15_063	FROM->TO	CIMARRON - DRAPER LAKE 345KV CKT 1	717	717	0.16498	105.059	HEFNER - TULSA 138KV CKT 1
FDNS	00NR	2	16WP	G15_063	FROM->TO	CIMARRON - DRAPER LAKE 345KV CKT 1	717	717	0.1648	105.0534	FLETCHER - MARLOW JCT 69KV CKT 1
FDNS	00NR	2	16WP	G15_063	FROM->TO	CIMARRON - DRAPER LAKE 345KV CKT 1	717	717	0.16478	105.0528	COMANCHE TAP - OMPA-DUNCAN 840 138KV CKT 1
FDNS	00NR	2	16WP	G15_063	FROM->TO	CIMARRON - DRAPER LAKE 345KV CKT 1	717	717	0.16475	105.0493	P12:161:AEPW:DYESS5:ELMSPRNG:TONTITN5
FDNS	00NR	2	16WP	G15_063	FROM->TO	CIMARRON - DRAPER LAKE 345KV CKT 1	717	717	0.16556	105.0492	COTTONWOOD CREEK - MARSHALL 138KV CKT 1
FDNS	00NR	2	16WP	G15_063	FROM->TO	CIMARRON - DRAPER LAKE 345KV CKT 1	717	717	0.16556	105.0488	MARSHALL - WOODRING 138KV CKT 1
FDNS	00NR	2	16WP	G15_063	FROM->TO	CIMARRON - DRAPER LAKE 345KV CKT 1	717	717	0.16475	105.0466	ST FRANCIS 2 161/16.0KV TRANSFORMER CKT 2
FDNS	00NR	2	16WP	G15_063	FROM->TO	CIMARRON - DRAPER LAKE 345KV CKT 1	717	717	0.16475	105.0466	ST FRANCIS 345/161KV TRANSFORMER CKT 1
FDNS	00NR	2	16WP	G15_063	FROM->TO	CIMARRON - DRAPER LAKE 345KV CKT 1	717	717	0.16478	105.0465	P12:161:AEPW-SWPA:BEAVER5:EROGERS5
FDNS	00NR	2	16WP	G15_063	FROM->TO	CIMARRON - DRAPER LAKE 345KV CKT 1	717	717	0.16475	105.0461	GEN336152 1-WATERFORD UNIT#2
FDNS	00NR	2	16WP	G15_063	FROM->TO	CIMARRON - DRAPER LAKE 345KV CKT 1	717	717	0.16492	105.0457	G13-010T 345.00 - SPEARVILLE 345KV CKT 1
FDNS	00NR	2	16WP	G15_063	FROM->TO	CIMARRON - DRAPER LAKE 345KV CKT 1	717	717	0.16475	105.045	GEN336151 1-WATERFORD UNIT#1
FDNS	00NR	2	16WP	G15_063	FROM->TO	CIMARRON - DRAPER LAKE 345KV CKT 1	717	717	0.16497	105.0362	P12:138:AEPW:MOUNDRD4:SHIDLER4
FDNS	00NR	2	16WP	G15_063	FROM->TO	CIMARRON - DRAPER LAKE 345KV CKT 1	717	717	0.16475	105.0346	GEN334392 1-EXXON MOBIL IPP 1
FDNS	00NR	2	16WP	G15_063	FROM->TO	CIMARRON - DRAPER LAKE 345KV CKT 1	717	717	0.16481	105.0334	P12:138:AEPW:CORNVIL4:S.W.S.-4
FDNS	00NR	2	16WP	G15_063	FROM->TO	CIMARRON - DRAPER LAKE 345KV CKT 1	717	717	0.1649	105.0287	BRISTOW - SILVER CITY 138KV CKT 1
FDNS	00NR	2	16WP	G15_063	FROM->TO	CIMARRON - DRAPER LAKE 345KV CKT 1	717	717	0.16823	105.0276	PECAN CREEK - RIVERSIDE STATION 345KV CKT 1
FDNS	00NR	2	16WP	G15_063	FROM->TO	CIMARRON - DRAPER LAKE 345KV CKT 1	717	717	0.16823	105.0276	PECAN CREEK - RIVERSIDE STATION 345KV CKT 1
FDNS	00NR	2	16WP	G15_063	FROM->TO	CIMARRON - DRAPER LAKE 345KV CKT 1	717	717	0.16475	105.0276	GEN334393 1-EXXON MOBIL IPP 2
FDNS	00NR	2	16WP	G15_063	FROM->TO	CIMARRON - DRAPER LAKE 345KV CKT 1	717	717	0.16475	105.0276	GEN334394 1-EXXON MOBIL IPP 3
FDNS	00NR	2	16WP	G15_063	FROM->TO	CIMARRON - DRAPER LAKE 345KV CKT 1	717	717	0.16504	105.0249	EL RENO SW - MUSTANG2 69.000 69KV CKT 1
FDNS	00NR	2	16WP	G15_063	FROM->TO	CIMARRON - DRAPER LAKE 345KV CKT 1	717	717	0.16504	105.0245	HEALDTON - RINGLING 138KV CKT 1
FDNS	00NR	2	16WP	G15_063	FROM->TO	CIMARRON - DRAPER LAKE 345KV CKT 1	717	717	0.16474	105.0226	MC NIEL 500/115KV TRANSFORMER CKT 1

SOLUTION	GROUP	SCENARIO	SEASON	SOURCE	DIRECTION	MONITORED ELEMENT	RATEA (MVA)	RATEB(MVA)	TDF	TC%LOADING (% MVA)	CONTINGENCY
FDNS	00NR	2	16WP	G15_063	FROM->TO	CIMARRON - DRAPER LAKE 345KV CKT 1	717	717	0.16497	105.0199	SHIDLER - WEST PAWHUSKA 138KV CKT 1
FDNS	00NR	2	16WP	G15_063	FROM->TO	CIMARRON - DRAPER LAKE 345KV CKT 1	717	717	0.16482	105.0188	KELLYAV4 138.00 - MEMORIAL 138KV CKT 1
FDNS	00NR	2	16WP	G15_063	FROM->TO	CIMARRON - DRAPER LAKE 345KV CKT 1	717	717	0.16473	105.0151	BISMARK - HOT SPRINGS WEST BUS 115KV CKT 1
FDNS	00NR	2	16WP	G15_063	FROM->TO	CIMARRON - DRAPER LAKE 345KV CKT 1	717	717	0.16475	105.012	GEN501972 1-EVANGELINE UNIT 7-2
FDNS	00NR	2	16WP	G15_063	FROM->TO	CIMARRON - DRAPER LAKE 345KV CKT 1	717	717	0.16475	105.0119	GEN501971 1-EVANGELINE UNIT 7-1
FDNS	00NR	2	16WP	G15_063	FROM->TO	CIMARRON - DRAPER LAKE 345KV CKT 1	717	717	0.1667	105.0105	BRYANT - MEMORIAL 138KV CKT 1
FDNS	00NR	2	16WP	G15_063	FROM->TO	CIMARRON - DRAPER LAKE 345KV CKT 1	717	717	0.16477	105.0056	ARPIN B4 345.00 - EAU CLAIRE 345KV CKT 1
FDNS	00NR	2	16WP	G15_063	FROM->TO	CIMARRON - DRAPER LAKE 345KV CKT 1	717	717	0.16475	105.003	GEN334431 1-SABINE UNIT 1
FDNS	00NR	2	16WP	G15_063	FROM->TO	CIMARRON - DRAPER LAKE 345KV CKT 1	717	717	0.16497	105.0029	PAWHUSKA TAP - WEST PAWHUSKA 138KV CKT 1
FDNS	00NR	2	16WP	G15_063	FROM->TO	CIMARRON - DRAPER LAKE 345KV CKT 1	717	717	0.16475	105.0029	GEN334432 1-SABINE UNIT 2
FDNS	00NR	2	16WP	G15_063	FROM->TO	CIMARRON - DRAPER LAKE 345KV CKT 1	717	717	0.16536	105.0025	BODLE - PARK PLACE 138KV CKT 1
FDNS	00NR	2	16WP	G15_063	FROM->TO	CIMARRON - DRAPER LAKE 345KV CKT 1	717	717	0.16482	105.0018	BROOKLINE - MORGAN 345KV CKT 1
FDNS	00NR	2	16WP	G15_063	FROM->TO	CIMARRON - DRAPER LAKE 345KV CKT 1	717	717	0.16482	105.0018	BROOKLINE - MORGAN 345KV CKT 1
FDNS	00NR	2	16WP	G15_063	FROM->TO	CIMARRON - DRAPER LAKE 345KV CKT 1	717	717	0.16475	104.9995	GEN336242 1-1NMIL ST1 18.000
FDNS	00NR	2	16WP	G15_063	FROM->TO	CIMARRON - DRAPER LAKE 345KV CKT 1	717	717	0.16475	104.9986	GEN337764 1-TRACTEBEL UNIT C1
FDNS	00NR	2	16WP	G15_063	FROM->TO	CIMARRON - DRAPER LAKE 345KV CKT 1	717	717	0.16475	104.9986	GEN337765 1-TRACTEBEL UNIT C2
FDNS	00NR	2	16WP	G15_063	FROM->TO	CIMARRON - DRAPER LAKE 345KV CKT 1	717	717	0.16499	104.9978	COUNCIL - MUSTANG 138KV CKT 1
FDNS	00NR	2	16WP	G15_063	FROM->TO	CIMARRON - DRAPER LAKE 345KV CKT 1	717	717	0.16475	104.9974	GEN501912 1-ACADIA UNIT CT1B
FDNS	00NR	2	16WP	G15_063	FROM->TO	CIMARRON - DRAPER LAKE 345KV CKT 1	717	717	0.16475	104.9967	GEN501911 1-ACADIA UNIT CT1A
FDNS	00NR	2	16WP	G15_063	FROM->TO	CIMARRON - DRAPER LAKE 345KV CKT 1	717	717	0.16497	104.99	PIEDMONT - RICHRDS 138KV CKT 1
FDNS	00NR	2	16WP	G15_063	FROM->TO	CIMARRON - DRAPER LAKE 345KV CKT 1	717	717	0.16489	104.99	HAMMETT2 - MEEKER 138KV CKT 1
FDNS	00NR	2	16WP	G15_063	FROM->TO	CIMARRON - DRAPER LAKE 345KV CKT 1	717	717	0.16475	104.9894	CYPRESS - HARTBURG 500KV CKT 1
FDNS	00NR	2	16WP	G15_063	FROM->TO	CIMARRON - DRAPER LAKE 345KV CKT 1	717	717	0.16509	104.9878	CIVIT - PAOLI 138KV CKT 1
FDNS	00NR	2	16WP	G15_063	FROM->TO	CIMARRON - DRAPER LAKE 345KV CKT 1	717	717	0.16482	104.9873	KELLYAV4 138.00 - REMNGTON PARK 138KV CKT 1
FDNS	00NR	2	16WP	G15_063	FROM->TO	CIMARRON - DRAPER LAKE 345KV CKT 1	717	717	0.16475	104.9847	P12:69:AEPW:L.E.S.-2:LAW WC2
FDNS	00NR	2	16WP	G15_063	FROM->TO	CIMARRON - DRAPER LAKE 345KV CKT 1	717	717	0.16508	104.9844	HAMMETT TAP - HORSESHOE LAKE 138KV CKT 1
FDNS	00NR	2	16WP	G15_063	FROM->TO	CIMARRON - DRAPER LAKE 345KV CKT 1	717	717	0.16504	104.9827	RINGLING - SOUTH WILSON 138KV CKT 1
FDNS	00NR	2	16WP	G15_063	FROM->TO	CIMARRON - DRAPER LAKE 345KV CKT 1	717	717	0.16473	104.9818	ALPINE AECC - BISMARK 115KV CKT 1
FDNS	00NR	2	16WP	G15_063	FROM->TO	CIMARRON - DRAPER LAKE 345KV CKT 1	717	717	0.16473	104.9759	LAYFLD8 500.00 - MOUNT OLIVE 500KV CKT 1
FDNS	00NR	2	16WP	G15_063	FROM->TO	CIMARRON - DRAPER LAKE 345KV CKT 1	717	717	0.16473	104.9759	LAYFLD8 500.00 - MOUNT OLIVE 500KV CKT 1
FDNS	00NR	2	16WP	G15_063	FROM->TO	CIMARRON - DRAPER LAKE 345KV CKT 1	717	717	0.16493	104.9664	CORN TAP - CORNVILLE 138KV CKT 1
FDNS	00NR	2	16WP	G15_063	FROM->TO	CIMARRON - DRAPER LAKE 345KV CKT 1	717	717	0.16499	104.9416	COUNCIL - WESTOAKS 138KV CKT 1
FDNS	00NR	2	16WP	G15_063	FROM->TO	CIMARRON - DRAPER LAKE 345KV CKT 1	717	717	0.1667	104.9325	ACORN 4 138.00 - BRYANT 138KV CKT 1
FDNS	00NR	2	16WP	G15_063	FROM->TO	CIMARRON - DRAPER LAKE 345KV CKT 1	717	717	0.16475	104.5149	BASE CASE
FDNS	00NR	2	16WP	G15_063	FROM->TO	CIMARRON - DRAPER LAKE 345KV CKT 1	717	717	0.16474	104.1986	GRAPEVINE INTERCHANGE - NICHOLS STATION 230KV CKT 1
FDNS	00NR	2	16WP	G15_063	FROM->TO	CIMARRON - DRAPER LAKE 345KV CKT 1	717	717	0.16474	104.1986	GRAPEVINE INTERCHANGE - NICHOLS STATION 230KV CKT 1
FDNS	00NR	2	16WP	G15_063	FROM->TO	CIMARRON - DRAPER LAKE 345KV CKT 1	717	717	0.16556	104.148	BURGETT4 138.00 - RNDBARN4 138.00 138KV CKT 1
FDNS	00NR	2	16WP	G15_063	FROM->TO	CIMARRON - DRAPER LAKE 345KV CKT 1	717	717	0.16556	104.1457	BURGETT4 138.00 - DANFORTH 138KV CKT 1
FDNS	00NR	2	16WP	G15_063	FROM->TO	CIMARRON - DRAPER LAKE 345KV CKT 1	717	717	0.16556	104.1354	ARCADIA - RNDBARN4 138.00 138KV CKT 1
FDNS	00NR	2	16WP	G15_063	FROM->TO	CIMARRON - DRAPER LAKE 345KV CKT 1	717	717	0.16475	104.0916	GEN515550 1-MNCWND31 0.6900
FDNS	00NR	2	16WP	G15_063	FROM->TO	CIMARRON - DRAPER LAKE 345KV CKT 1	717	717	0.16474	104.0802	GRAPEVINE INTERCHANGE - STATELINE INTERCHANGE 230KV CKT 1
FDNS	00NR	2	16WP	G15_063	FROM->TO	CIMARRON - DRAPER LAKE 345KV CKT 1	717	717	0.16474	104.0802	GRAPEVINE INTERCHANGE - STATELINE INTERCHANGE 230KV CKT 1
FDNS	00NR	2	16WP	G15_063	FROM->TO	CIMARRON - DRAPER LAKE 345KV CKT 1	717	717	0.16475	104.0753	GEN562611 1-G14_064_3 0.6900
FDNS	00NR	2	16WP	G15_063	FROM->TO	CIMARRON - DRAPER LAKE 345KV CKT 1	717	717	0.16475	104.0709	GEN659125 1-COVEY
FDNS	00NR	2	16WP	G15_063	FROM->TO	CIMARRON - DRAPER LAKE 345KV CKT 1	717	717	0.16439	104.0563	P12:138:WFEC:MSL10
FDNS	00NR	2	16WP	G15_063	FROM->TO	CIMARRON - DRAPER LAKE 345KV CKT 1	717	717	0.16475	104.0543	GEN511848 1-SOUTHWESTERN STATION #3
FDNS	00NR	2	16WP	G15_063	FROM->TO	CIMARRON - DRAPER LAKE 345KV CKT 1	717	717	0.16475	104.0473	GEN672303 3-BOUNDARY DAM GENERATOR 3
FDNS	00NR	2	16WP	G15_063	FROM->TO	CIMARRON - DRAPER LAKE 345KV CKT 1	717	717	0.16475	104.0473	GEN672304 4-BOUNDARY DAM GENERATOR 4
FDNS	00NR	2	16WP	G15_063	FROM->TO	CIMARRON - DRAPER LAKE 345KV CKT 1	717	717	0.16475	104.0473	GEN672305 5-BOUNDARY DAM GENERATOR 5
FDNS	00NR	2	16WP	G15_063	FROM->TO	CIMARRON - DRAPER LAKE 345KV CKT 1	717	717	0.16475	104.0468	GEN515601 1-KNGFSR11 0.7000
FDNS	00NR	2	16WP	G15_063	FROM->TO	CIMARRON - DRAPER LAKE 345KV CKT 1	717	717	0.16475	104.045	GEN600007 7-RIVERSIDE GEN 7
FDNS	00NR	2	16WP	G15_063	FROM->TO	CIMARRON - DRAPER LAKE 345KV CKT 1	717	717	0.16475	104.0445	GEN600067 9-HIGH BRIDGE
FDNS	00NR	2	16WP	G15_063	FROM->TO	CIMARRON - DRAPER LAKE 345KV CKT 1	717	717	0.16475	104.0399	GEN615052 1-CAMBRIDGE GENERATING STATION
FDNS	00NR	2	16WP	G15_063	FROM->TO	CIMARRON - DRAPER LAKE 345KV CKT 1	717	717	0.16475	104.0353	GEN600011 5-BLACK DOG GEN 1
FDNS	00NR	2	16WP	G15_063	FROM->TO	CIMARRON - DRAPER LAKE 345KV CKT 1	717	717	0.16475	104.0334	GEN563062 1-G15071_3 0.6900
FDNS	00NR	2	16WP	G15_063	FROM->TO	CIMARRON - DRAPER LAKE 345KV CKT 1	717	717	0.16475	104.0296	GEN600014 4-BLACK DOG GEN 4
FDNS	00NR	2	16WP	G15_063	FROM->TO	CIMARRON - DRAPER LAKE 345KV CKT 1	717	717	0.16475	104.0293	GEN640020 2-SHELDON STATION UNIT 2
FDNS	00NR	2	16WP	G15_063	FROM->TO	CIMARRON - DRAPER LAKE 345KV CKT 1	717	717	0.16475	104.0218	GEN615032 2-PLEASANT VALLEY
FDNS	00NR	2	16WP	G15_063	FROM->TO	CIMARRON - DRAPER LAKE 345KV CKT 1	717	717	0.16427	104.0198	CHISNEY - CLARKSVILLE 138KV CKT 1
FDNS	00NR	2	16WP	G15_063	FROM->TO	CIMARRON - DRAPER LAKE 345KV CKT 1	717	717	0.16475	104.0197	GEN541151 3-SIBLEY GENERATING UNIT #3
FDNS	00NR	2	16WP	G15_063	FROM->TO	CIMARRON - DRAPER LAKE 345KV CKT 1	717	717	0.16493	104.0178	OVEXFRMCCOVE
FDNS	00NR	2	16WP	G15_063	FROM->TO	CIMARRON - DRAPER LAKE 345KV CKT 1	717	717	0.16475	104.0148	GEN629067 1-EMERY GAS TURBINE 1
FDNS	00NR	2	16WP	G15_063	FROM->TO	CIMARRON - DRAPER LAKE 345KV CKT 1	717	717	0.16475	104.0137	GEN563282 1-G15094_3 0.6900
FDNS	00NR	2	16WP	G15_063	FROM->TO	CIMARRON - DRAPER LAKE 345KV CKT 1	717	717	0.16475	104.0096	GEN562802 1-G15039_3 0.3570
FDNS	00NR	2	16WP	G15_063	FROM->TO	CIMARRON - DRAPER LAKE 345KV CKT 1	717	717	0.16475	104.008	GEN652353 2-GR PRAIRIEG 0.6900
FDNS	00NR	2	16WP	G15_063	FROM->TO	CIMARRON - DRAPER LAKE 345KV CKT 1	717	717	0.16475	103.9989	GEN515591 1-PALDRW11 0.6900
FDNS	00NR	2	16WP	G15_063	FROM->TO	CIMARRON - DRAPER LAKE 345KV CKT 1	717	717	0.16659	103.9985	FOREST HILL - MAUD 138KV CKT 1
FDNS	00NR	2	16WP	G15_063	FROM->TO	CIMARRON - DRAPER LAKE 345KV CKT 1	717	717	0.16475	103.9964	GEN563102 1-G15075_3 0.5500
FDNS	00NR	2	16WP	G15_063	FROM->TO	CIMARRON - DRAPER LAKE 345KV CKT 1	717	717	0.16475	103.9961	GEN562602 1-G15_029_3 0.6900
FDNS	00NR	2	16WP	G15_063	FROM->TO	CIMARRON - DRAPER LAKE 345KV CKT 1	717	717	0.16475	103.996	GEN600017 C-LS POWER CT
FDNS	00NR	2	16WP	G15_063	FROM->TO	CIMARRON - DRAPER LAKE 345KV CKT 1	717	717	0.16494	103.9854	MINGO - SETAB 345KV CKT 1
FDNS	00NR	2	16WP	G15_063	FROM->TO	CIMARRON - DRAPER LAKE 345KV CKT 1	717	717	0.16494	103.9854	MINGO - SETAB 345KV CKT 1
FDNS	00NR	2	16WP	G15_063	FROM->TO	CIMARRON - DRAPER LAKE 345KV CKT 1	717	717	0.16475	103.9781	GEN562812 1-G15040_3 0.3570
FDNS	00NR	2	16WP	G15_063	FROM->TO	CIMARRON - DRAPER LAKE 345KV CKT 1	717	717	0.16511	103.9769	SEMINOLE - VANOSTP4 138.00 138KV CKT 1
FDNS	00NR	2	16WP	G15_063	FROM->TO	CIMARRON - DRAPER LAKE 345KV CKT 1	717	717	0.16475	103.9719	GEN563132 1-G15078_3 0.3570
FDNS	00NR	2	16WP	G15_063	FROM->TO	CIMARRON - DRAPER LAKE 345KV CKT 1	717	717	0.16475	103.9675	GEN672392 1-NBECGT1G 18.000
FDNS	00NR	2	16WP	G15_063	FROM->TO	CIMARRON - DRAPER LAKE 345KV CKT 1	717	717	0.16475	103.9629	GEN524285 1-WILDORADO WIND GEN
FDNS	00NR	2	16WP	G15_063	FROM->TO	CIMARRON - DRAPER LAKE 345KV CKT 1	717	717	0.16475	103.9598	GEN562074 1-G1149G1504 0.6900
FDNS	00NR	2	16WP	G15_063	FROM->TO	CIMARRON - DRAPER LAKE 345KV CKT 1	717	717	0.16475	103.9585	GEN629070 2-BEAVER CHANNEL GENERATORFOR UNIT NO 2

SOLUTION	GROUP	SCENARIO	SEASON	SOURCE	DIRECTION	MONITORED ELEMENT	RATEA (MVA)	RATEB(MVA)	TDF	TC%LOADING (% MVA)	CONTINGENCY
FDNS	00NR	2	16WP	G15_063	FROM->TO	CIMARRON - DRAPER LAKE 345KV CKT 1	717	717	0.16476	103.9577	P12:138:AEPW:WELETK4:EARLSBORO4
FDNS	00NR	2	16WP	G15_063	FROM->TO	CIMARRON - DRAPER LAKE 345KV CKT 1	717	717	0.16476	103.9577	P12:138:OKGE:3TERM36
FDNS	00NR	2	16WP	G15_063	FROM->TO	CIMARRON - DRAPER LAKE 345KV CKT 1	717	717	0.16478	103.9503	EARLSBORO 4138.00 - FIXICO TAP 138KV CKT 1
FDNS	00NR	2	16WP	G15_063	FROM->TO	CIMARRON - DRAPER LAKE 345KV CKT 1	717	717	0.1649	103.9456	CANADIAN RIVER - MCALESTER SOUTH 138KV CKT 1
FDNS	00NR	2	16WP	G15_063	FROM->TO	CIMARRON - DRAPER LAKE 345KV CKT 1	717	717	0.1649	103.9456	CANADIAN RIVER - MCALESTER SOUTH 138KV CKT 1
FDNS	00NR	2	16WP	G15_063	FROM->TO	CIMARRON - DRAPER LAKE 345KV CKT 1	717	717	0.1649	103.9442	CANADIAN RIVER () 345/138/13.8KV TRANSFORMER CKT 1
FDNS	00NR	2	16WP	G15_063	FROM->TO	CIMARRON - DRAPER LAKE 345KV CKT 1	717	717	0.1649	103.9442	CANADIAN RIVER () 345/138/13.8KV TRANSFORMER CKT 1
FDNS	00NR	2	16WP	G15_063	FROM->TO	CIMARRON - DRAPER LAKE 345KV CKT 1	717	717	0.16475	103.9441	GEN615010 1-STANTON4
FDNS	00NR	2	16WP	G15_063	FROM->TO	CIMARRON - DRAPER LAKE 345KV CKT 1	717	717	0.16475	103.938	GEN526331 1-JONES GEN #1 22 KV
FDNS	00NR	2	16WP	G15_063	FROM->TO	CIMARRON - DRAPER LAKE 345KV CKT 1	717	717	0.16475	103.938	GEN526332 1-JONES GEN #2 21 KV
FDNS	00NR	2	16WP	G15_063	FROM->TO	CIMARRON - DRAPER LAKE 345KV CKT 1	717	717	0.16475	103.9338	GEN562596 1-G14_059_3 0.6900
FDNS	00NR	2	16WP	G15_063	FROM->TO	CIMARRON - DRAPER LAKE 345KV CKT 1	717	717	0.16475	103.9295	GEN629071 1-BURLINGTON GENERATOR FOR UNIT NO 1 E
FDNS	00NR	2	16WP	G15_063	FROM->TO	CIMARRON - DRAPER LAKE 345KV CKT 1	717	717	0.16475	103.9285	P12:138:WFEC:MSL07
FDNS	00NR	2	16WP	G15_063	FROM->TO	CIMARRON - DRAPER LAKE 345KV CKT 1	717	717	0.16475	103.9285	P12:138:WFEC-AEPW:HUGOPP4:ATOKA--4
FDNS	00NR	2	16WP	G15_063	FROM->TO	CIMARRON - DRAPER LAKE 345KV CKT 1	717	717	0.16475	103.9283	GEN515365 1-CENT 21 0.7000
FDNS	00NR	2	16WP	G15_063	FROM->TO	CIMARRON - DRAPER LAKE 345KV CKT 1	717	717	0.16427	103.9276	CHISNEY - HIGHLAND 138KV CKT 1
FDNS	00NR	2	16WP	G15_063	FROM->TO	CIMARRON - DRAPER LAKE 345KV CKT 1	717	717	0.16475	103.9238	GEN615021 1-GRE-ER 14G 16.000
FDNS	00NR	2	16WP	G15_063	FROM->TO	CIMARRON - DRAPER LAKE 345KV CKT 1	717	717	0.16475	103.922	INDEPENDENCE 500/26.0KV TRANSFORMER CKT 1
FDNS	00NR	2	16WP	G15_063	FROM->TO	CIMARRON - DRAPER LAKE 345KV CKT 1	717	717	0.16477	103.9203	GRPRAR1-LNX3345.00 - GRPRAR 345KV CKT Z
FDNS	00NR	2	16WP	G15_063	FROM->TO	CIMARRON - DRAPER LAKE 345KV CKT 1	717	717	0.16475	103.9181	P12:138:AEPW:SHAM4WT:CHILD4WT
FDNS	00NR	2	16WP	G15_063	FROM->TO	CIMARRON - DRAPER LAKE 345KV CKT 1	717	717	0.16477	103.917	GRPRAR1-LNX3345.00 - HOLT.CO3 345.00 345KV CKT 1
FDNS	00NR	2	16WP	G15_063	FROM->TO	CIMARRON - DRAPER LAKE 345KV CKT 1	717	717	0.16475	103.9133	GEN562983 1-G15061_4 0.6900
FDNS	00NR	2	16WP	G15_063	FROM->TO	CIMARRON - DRAPER LAKE 345KV CKT 1	717	717	0.16475	103.9133	GEN562984 1-G15061_5 0.6900
FDNS	00NR	2	16WP	G15_063	FROM->TO	CIMARRON - DRAPER LAKE 345KV CKT 1	717	717	0.16475	103.9117	GEN562017 1-G11_022_3 0.6900
FDNS	00NR	2	16WP	G15_063	FROM->TO	CIMARRON - DRAPER LAKE 345KV CKT 1	717	717	0.16471	103.908	P12:138:AEPW-SWPA:LONEOAK4:TUPELO4
FDNS	00NR	2	16WP	G15_063	FROM->TO	CIMARRON - DRAPER LAKE 345KV CKT 1	717	717	0.16471	103.9079	P12:138:WFEC:MSL06
FDNS	00NR	2	16WP	G15_063	FROM->TO	CIMARRON - DRAPER LAKE 345KV CKT 1	717	717	0.16475	103.8993	GEN562429 1-G13-029 0.6900
FDNS	00NR	2	16WP	G15_063	FROM->TO	CIMARRON - DRAPER LAKE 345KV CKT 1	717	717	0.16475	103.8979	GEN562432 1-G13-030 0.6900
FDNS	00NR	2	16WP	G15_063	FROM->TO	CIMARRON - DRAPER LAKE 345KV CKT 1	717	717	0.16475	103.8957	GEN560105 1-G08-22 0.6900
FDNS	00NR	2	16WP	G15_063	FROM->TO	CIMARRON - DRAPER LAKE 345KV CKT 1	717	717	0.21003	103.8945	G15063_T 345.00 - WOODRING 345KV CKT 1
FDNS	00NR	2	16WP	G15_063	FROM->TO	CIMARRON - DRAPER LAKE 345KV CKT 1	717	717	0.16475	103.8919	GEN300003 1-THOMAS HILL UNIT 3
FDNS	00NR	2	16WP	G15_063	FROM->TO	CIMARRON - DRAPER LAKE 345KV CKT 1	717	717	0.16597	103.8852	MAUD - SEMINOLE 138KV CKT 1
FDNS	00NR	2	16WP	G15_063	FROM->TO	CIMARRON - DRAPER LAKE 345KV CKT 1	717	717	0.16475	103.8845	BURLINGTON NO1 + NO 2 + NO 3 161/20.0KV TRANSFORMER CKT 1
FDNS	00NR	2	16WP	G15_063	FROM->TO	CIMARRON - DRAPER LAKE 345KV CKT 1	717	717	0.16476	103.8775	P12:138:AEPW-OGE:WELETK4:MAUD 4
FDNS	00NR	2	16WP	G15_063	FROM->TO	CIMARRON - DRAPER LAKE 345KV CKT 1	717	717	0.16479	103.8742	P12:138:WFEC:MSL16
FDNS	00NR	2	16WP	G15_063	FROM->TO	CIMARRON - DRAPER LAKE 345KV CKT 1	717	717	0.16475	103.8689	GEN527882 1-CUNNINGHAM GEN #2 20 KV
FDNS	00NR	2	16WP	G15_063	FROM->TO	CIMARRON - DRAPER LAKE 345KV CKT 1	717	717	0.16478	103.8663	EARLSBORO 4138.00 - MAUD 138KV CKT 1
FDNS	00NR	2	16WP	G15_063	FROM->TO	CIMARRON - DRAPER LAKE 345KV CKT 1	717	717	0.16478	103.8663	EARLSBORO 4138.00 - MAUD 138KV CKT 1
FDNS	00NR	2	16WP	G15_063	FROM->TO	CIMARRON - DRAPER LAKE 345KV CKT 1	717	717	0.16484	103.866	DELL 500 - INDEPENDENCE 500KV CKT 1
FDNS	00NR	2	16WP	G15_063	FROM->TO	CIMARRON - DRAPER LAKE 345KV CKT 1	717	717	0.16475	103.861	GEN562550 1-G14_040_3 0.6900
FDNS	00NR	2	16WP	G15_063	FROM->TO	CIMARRON - DRAPER LAKE 345KV CKT 1	717	717	0.16475	103.8588	GEN524295 1-SPNSPUR_WND10.6900
FDNS	00NR	2	16WP	G15_063	FROM->TO	CIMARRON - DRAPER LAKE 345KV CKT 1	717	717	0.16475	103.8369	GEN562832 1-G15042_3 0.6900
FDNS	00NR	2	16WP	G15_063	FROM->TO	CIMARRON - DRAPER LAKE 345KV CKT 1	717	717	0.16472	103.8333	P12:230:AEPW:ELKCITY6:SWEETWT6
FDNS	00NR	2	16WP	G15_063	FROM->TO	CIMARRON - DRAPER LAKE 345KV CKT 1	717	717	0.16475	103.8324	P12:230:UMZB:# 112 #: NU IN SD. NU-RCDC & DRY CREEK XFMR
FDNS	00NR	2	16WP	G15_063	FROM->TO	CIMARRON - DRAPER LAKE 345KV CKT 1	717	717	0.16475	103.8318	RCDC EAST 4230.00 - RED CEDAR DC 230KV CKT 1
FDNS	00NR	2	16WP	G15_063	FROM->TO	CIMARRON - DRAPER LAKE 345KV CKT 1	717	717	0.16475	103.823	THOMAS HILL 161/22.0KV TRANSFORMER CKT 1
FDNS	00NR	2	16WP	G15_063	FROM->TO	CIMARRON - DRAPER LAKE 345KV CKT 1	717	717	0.16475	103.8136	GEN515606 1-CANDN11 0.6900
FDNS	00NR	2	16WP	G15_063	FROM->TO	CIMARRON - DRAPER LAKE 345KV CKT 1	717	717	0.16475	103.8136	GEN515607 1-CANDN12 0.6900
FDNS	00NR	2	16WP	G15_063	FROM->TO	CIMARRON - DRAPER LAKE 345KV CKT 1	717	717	0.16475	103.8134	GEN345671 2-1RUSH G2 18.000
FDNS	00NR	2	16WP	G15_063	FROM->TO	CIMARRON - DRAPER LAKE 345KV CKT 1	717	717	0.16473	103.8125	P12:230:AEPW-SPS:SWEETWT6:WHEELER 6
FDNS	00NR	2	16WP	G15_063	FROM->TO	CIMARRON - DRAPER LAKE 345KV CKT 1	717	717	0.16473	103.8121	STLN-DEMARC6 - SWEETWATER 230KV CKT 1
FDNS	00NR	2	16WP	G15_063	FROM->TO	CIMARRON - DRAPER LAKE 345KV CKT 1	717	717	0.16475	103.8115	GEN345670 1-1RUSH G1 18.000
FDNS	00NR	2	16WP	G15_063	FROM->TO	CIMARRON - DRAPER LAKE 345KV CKT 1	717	717	0.16473	103.8105	STATELINE INTERCHANGE - STLN-DEMARC6 230KV CKT 1
FDNS	00NR	2	16WP	G15_063	FROM->TO	CIMARRON - DRAPER LAKE 345KV CKT 1	717	717	0.16475	103.8082	GEN531447 1-HOLCOMB GENERATOR
FDNS	00NR	2	16WP	G15_063	FROM->TO	CIMARRON - DRAPER LAKE 345KV CKT 1	717	717	0.16475	103.7885	GEN645011 1-NEBRASKA CITY 1
FDNS	00NR	2	16WP	G15_063	FROM->TO	CIMARRON - DRAPER LAKE 345KV CKT 1	717	717	0.16475	103.7854	GEN515443 1-MNCOWND1 0.7000
FDNS	00NR	2	16WP	G15_063	FROM->TO	CIMARRON - DRAPER LAKE 345KV CKT 1	717	717	0.16475	103.7854	GEN562794 1-G15038_5 0.6900
FDNS	00NR	2	16WP	G15_063	FROM->TO	CIMARRON - DRAPER LAKE 345KV CKT 1	717	717	0.16475	103.7854	GEN562795 1-G15038_6 0.6900
FDNS	00NR	2	16WP	G15_063	FROM->TO	CIMARRON - DRAPER LAKE 345KV CKT 1	717	717	0.16427	103.7826	HIGHLAND - PINK SW 138KV CKT 1
FDNS	00NR	2	16WP	G15_063	FROM->TO	CIMARRON - DRAPER LAKE 345KV CKT 1	717	717	0.16475	103.7741	GEN629072 4-LANSING GENERATOR FOR UNITS NO4 EIA CODE 1
FDNS	00NR	2	16WP	G15_063	FROM->TO	CIMARRON - DRAPER LAKE 345KV CKT 1	717	717	0.16475	103.7621	GEN563092 1-G15074_3 0.6900
FDNS	00NR	2	16WP	G15_063	FROM->TO	CIMARRON - DRAPER LAKE 345KV CKT 1	717	717	0.16475	103.7504	GEN542951 5-HAWTHORN UNIT #5
FDNS	00NR	2	16WP	G15_063	FROM->TO	CIMARRON - DRAPER LAKE 345KV CKT 1	717	717	0.16475	103.744	GEN657749 1-YOUNG 1 GENERATOR
FDNS	00NR	2	16WP	G15_063	FROM->TO	CIMARRON - DRAPER LAKE 345KV CKT 1	717	717	0.16475	103.7431	GEN645012 2-NEBRASKA CITY 2
FDNS	00NR	2	16WP	G15_063	FROM->TO	CIMARRON - DRAPER LAKE 345KV CKT 1	717	717	0.16475	103.7355	GEN562512 1-G14_020_3 0.6900
FDNS	00NR	2	16WP	G15_063	FROM->TO	CIMARRON - DRAPER LAKE 345KV CKT 1	717	717	0.16475	103.7165	GEN562699 1-G15_018_3 0.6900
FDNS	00NR	2	16WP	G15_063	FROM->TO	CIMARRON - DRAPER LAKE 345KV CKT 1	717	717	0.16473	103.6978	CHISHOLM6 230.00 - SWEETWATER 230KV CKT 1
FDNS	00NR	2	16WP	G15_063	FROM->TO	CIMARRON - DRAPER LAKE 345KV CKT 1	717	717	0.16489	103.6942	KEO EHV - WEST MEMPHIS 500 500KV CKT 1
FDNS	00NR	2	16WP	G15_063	FROM->TO	CIMARRON - DRAPER LAKE 345KV CKT 1	717	717	0.16502	103.6906	FRISCCO4 138.00 - LULA 138KV CKT 1
FDNS	00NR	2	16WP	G15_063	FROM->TO	CIMARRON - DRAPER LAKE 345KV CKT 1	717	717	0.16475	103.6869	GEN529201 1-OMCDLEC1 13.800
FDNS	00NR	2	16WP	G15_063	FROM->TO	CIMARRON - DRAPER LAKE 345KV CKT 1	717	717	0.16664	103.678	HOLLYWOOD - MIDWEST TAP 138KV CKT 1
FDNS	00NR	2	16WP	G15_063	FROM->TO	CIMARRON - DRAPER LAKE 345KV CKT 1	717	717	0.16475	103.6768	GEN640009 1-COOPER NUCLEAR STATION
FDNS	00NR	2	16WP	G15_063	FROM->TO	CIMARRON - DRAPER LAKE 345KV CKT 1	717	717	0.16475	103.6768	GEN681522 3-GENOA 3
FDNS	00NR	2	16WP	G15_063	FROM->TO	CIMARRON - DRAPER LAKE 345KV CKT 1	717	717	0.16475	103.6757	GEN563122 1-G15077_3 0.3850
FDNS	00NR	2	16WP	G15_063	FROM->TO	CIMARRON - DRAPER LAKE 345KV CKT 1	717	717	0.16475	103.6586	GEN563182 1-G15083_3 0.6900
FDNS	00NR	2	16WP	G15_063	FROM->TO	CIMARRON - DRAPER LAKE 345KV CKT 1	717	717	0.16475	103.6462	GEN562685 1-G15_013_3 0.3550
FDNS	00NR	2	16WP	G15_063	FROM->TO	CIMARRON - DRAPER LAKE 345KV CKT 1	717	717	0.16519	103.6451	FT SMITH - MUSKOGEE 345KV CKT 1
FDNS	00NR	2	16WP	G15_063	FROM->TO	CIMARRON - DRAPER LAKE 345KV CKT 1	717	717	0.16475	103.631	4SIOUX 1 138.00 138/18.0KV TRANSFORMER CKT 1
FDNS	00NR	2	16WP	G15_063	FROM->TO	CIMARRON - DRAPER LAKE 345KV CKT 1	717	717	0.16542	103.6291	CIMARRON - TUTTLE CONOCO TAP 138KV CKT 1

SOLUTION	GROUP	SCENARIO	SEASON	SOURCE	DIRECTION	MONITORED ELEMENT	RATEA (MVA)	RATEB(MVA)	TDF	TC%LOADING (% MVA)	CONTINGENCY
FDNS	00NR	2	16WP	G15_063	FROM->TO	CIMARRON - DRAPER LAKE 345KV CKT 1	717	717	0.16472	103.6205	CHISHOLM7 345.00 - GRACEMONT 345KV CKT 1
FDNS	00NR	2	16WP	G15_063	FROM->TO	CIMARRON - DRAPER LAKE 345KV CKT 1	717	717	0.16475	103.6185	GEN344895 2-1LAB G2 20.000
FDNS	00NR	2	16WP	G15_063	FROM->TO	CIMARRON - DRAPER LAKE 345KV CKT 1	717	717	0.16466	103.6162	TUPELO - TUPELO TAP 138KV CKT 1
FDNS	00NR	2	16WP	G15_063	FROM->TO	CIMARRON - DRAPER LAKE 345KV CKT 1	717	717	0.16475	103.6035	GEN563222 1-G15088_3 0.6900
FDNS	00NR	2	16WP	G15_063	FROM->TO	CIMARRON - DRAPER LAKE 345KV CKT 1	717	717	0.16475	103.599	GEN523461 1-BLACKHAWK GEN #1
FDNS	00NR	2	16WP	G15_063	FROM->TO	CIMARRON - DRAPER LAKE 345KV CKT 1	717	717	0.16475	103.5989	GEN523462 1-BLACKHAWK GEN #2
FDNS	00NR	2	16WP	G15_063	FROM->TO	CIMARRON - DRAPER LAKE 345KV CKT 1	717	717	0.16475	103.5989	GEN562587 1-G14_056_3 0.6900
FDNS	00NR	2	16WP	G15_063	FROM->TO	CIMARRON - DRAPER LAKE 345KV CKT 1	717	717	0.16502	103.5954	FRISCCO4 138.00 - HARDEN 4 138.00 138KV CKT 1
FDNS	00NR	2	16WP	G15_063	FROM->TO	CIMARRON - DRAPER LAKE 345KV CKT 1	717	717	0.16475	103.5898	GEN344896 3-1LAB G3 20.000
FDNS	00NR	2	16WP	G15_063	FROM->TO	CIMARRON - DRAPER LAKE 345KV CKT 1	717	717	0.16475	103.5883	GEN344894 1-1LAB G1 20.000
FDNS	00NR	2	16WP	G15_063	FROM->TO	CIMARRON - DRAPER LAKE 345KV CKT 1	717	717	0.16475	103.5872	GEN344897 4-1LAB G4 20.000
FDNS	00NR	2	16WP	G15_063	FROM->TO	CIMARRON - DRAPER LAKE 345KV CKT 1	717	717	0.16475	103.5766	GEN515602 1-KNGFSR12 0.7000
FDNS	00NR	2	16WP	G15_063	FROM->TO	CIMARRON - DRAPER LAKE 345KV CKT 1	717	717	0.16542	103.5578	TUTTLE - TUTTLE CONOCO TAP 138KV CKT 1
FDNS	00NR	2	16WP	G15_063	FROM->TO	CIMARRON - DRAPER LAKE 345KV CKT 1	717	717	0.16475	103.5428	GEN563082 1-G15073_3 0.6900
FDNS	00NR	2	16WP	G15_063	FROM->TO	CIMARRON - DRAPER LAKE 345KV CKT 1	717	717	0.16472	103.5323	CHISHOLM7 345.00 (CHISHOLM) 345/230/13.2KV TRANSFORMER CKT 1
FDNS	00NR	2	16WP	G15_063	FROM->TO	CIMARRON - DRAPER LAKE 345KV CKT 1	717	717	0.16475	103.5102	CLAY BOSWELL 230/20.9KV TRANSFORMER CKT 1
FDNS	00NR	2	16WP	G15_063	FROM->TO	CIMARRON - DRAPER LAKE 345KV CKT 1	717	717	0.16475	103.5071	GEN562704 1-G15_020_3 0.3550
FDNS	00NR	2	16WP	G15_063	FROM->TO	CIMARRON - DRAPER LAKE 345KV CKT 1	717	717	0.16475	103.497	GEN563202 1-G15085_3 0.5500
FDNS	00NR	2	16WP	G15_063	FROM->TO	CIMARRON - DRAPER LAKE 345KV CKT 1	717	717	0.16475	103.4794	GEN672321 1-SHAND GENERATOR 1
FDNS	00NR	2	16WP	G15_063	FROM->TO	CIMARRON - DRAPER LAKE 345KV CKT 1	717	717	0.16475	103.4781	GEN640010 1-GERALD GENTLEMAN STATION UNIT 1
FDNS	00NR	2	16WP	G15_063	FROM->TO	CIMARRON - DRAPER LAKE 345KV CKT 1	717	717	0.16475	103.4536	GEN672310 1-POPLAR RIVER GENERATOR 1
FDNS	00NR	2	16WP	G15_063	FROM->TO	CIMARRON - DRAPER LAKE 345KV CKT 1	717	717	0.16475	103.4536	GEN672311 2-POPLAR RIVER GENERATOR 2
FDNS	00NR	2	16WP	G15_063	FROM->TO	CIMARRON - DRAPER LAKE 345KV CKT 1	717	717	0.1638	103.4531	SEMINOLE (SEMINOL1) 345/138/14.4KV TRANSFORMER CKT 1
FDNS	00NR	2	16WP	G15_063	FROM->TO	CIMARRON - DRAPER LAKE 345KV CKT 1	717	717	0.16475	103.4441	GEN672306 6-BOUNDARY DAM GENERATOR 6
FDNS	00NR	2	16WP	G15_063	FROM->TO	CIMARRON - DRAPER LAKE 345KV CKT 1	717	717	0.16514	103.4258	LULA - TUPELO TAP 138KV CKT 1
FDNS	00NR	2	16WP	G15_063	FROM->TO	CIMARRON - DRAPER LAKE 345KV CKT 1	717	717	0.16475	103.4184	GEN562710 1-G15_022_3 0.5500
FDNS	00NR	2	16WP	G15_063	FROM->TO	CIMARRON - DRAPER LAKE 345KV CKT 1	717	717	0.16475	103.409	GEN640011 2-GERALD GENTLEMAN STATION UNIT 2
FDNS	00NR	2	16WP	G15_063	FROM->TO	CIMARRON - DRAPER LAKE 345KV CKT 1	717	717	0.16473	103.4051	NORTHWEST TEXARKANA - VALLIANT 345KV CKT 1
FDNS	00NR	2	16WP	G15_063	FROM->TO	CIMARRON - DRAPER LAKE 345KV CKT 1	717	717	0.16473	103.4051	NORTHWEST TEXARKANA - VALLIANT 345KV CKT 1
FDNS	00NR	2	16WP	G15_063	FROM->TO	CIMARRON - DRAPER LAKE 345KV CKT 1	717	717	0.16475	103.3998	GEN542956 2-LACYGNE UNIT #2
FDNS	00NR	2	16WP	G15_063	FROM->TO	CIMARRON - DRAPER LAKE 345KV CKT 1	717	717	0.16475	103.3923	GEN659118 1-LARAMIE RIVER UNIT1
FDNS	00NR	2	16WP	G15_063	FROM->TO	CIMARRON - DRAPER LAKE 345KV CKT 1	717	717	0.16521	103.3849	P12:138:OKGE:3TERM22
FDNS	00NR	2	16WP	G15_063	FROM->TO	CIMARRON - DRAPER LAKE 345KV CKT 1	717	717	0.16696	103.3848	OAKCREEK - WILD MARY 138KV CKT 1
FDNS	00NR	2	16WP	G15_063	FROM->TO	CIMARRON - DRAPER LAKE 345KV CKT 1	717	717	0.16523	103.3831	DRAPER LAKE - SOONER TAP 138KV CKT 1
FDNS	00NR	2	16WP	G15_063	FROM->TO	CIMARRON - DRAPER LAKE 345KV CKT 1	717	717	0.16502	103.3797	ETNA - HARDEN 4 138.00 138KV CKT 1
FDNS	00NR	2	16WP	G15_063	FROM->TO	CIMARRON - DRAPER LAKE 345KV CKT 1	717	717	0.16427	103.3625	P12:138:WFEC:MSL08
FDNS	00NR	2	16WP	G15_063	FROM->TO	CIMARRON - DRAPER LAKE 345KV CKT 1	717	717	0.16489	103.3492	P12:138:WFEC:MSL09
FDNS	00NR	2	16WP	G15_063	FROM->TO	CIMARRON - DRAPER LAKE 345KV CKT 1	717	717	0.16427	103.3474	FRANKLIN - PINK SW 138KV CKT 1
FDNS	00NR	2	16WP	G15_063	FROM->TO	CIMARRON - DRAPER LAKE 345KV CKT 1	717	717	0.16475	103.3467	GEN681542 6-JP MADGETT
FDNS	00NR	2	16WP	G15_063	FROM->TO	CIMARRON - DRAPER LAKE 345KV CKT 1	717	717	0.16475	103.31	GEN542957 1-IATAN UNIT #1
FDNS	00NR	2	16WP	G15_063	FROM->TO	CIMARRON - DRAPER LAKE 345KV CKT 1	717	717	0.16502	103.3095	ETNA - PARK LANE 138KV CKT 1
FDNS	00NR	2	16WP	G15_063	FROM->TO	CIMARRON - DRAPER LAKE 345KV CKT 1	717	717	0.16475	103.2846	GEN530690 1-PRWINDG1 0.6900
FDNS	00NR	2	16WP	G15_063	FROM->TO	CIMARRON - DRAPER LAKE 345KV CKT 1	717	717	0.16475	103.2451	GEN645001 1-FORT CALHOUN 1
FDNS	00NR	2	16WP	G15_063	FROM->TO	CIMARRON - DRAPER LAKE 345KV CKT 1	717	717	0.16361	103.2433	SEMINOLE (SEMINOL2) 345/138/14.4KV TRANSFORMER CKT 1
FDNS	00NR	2	16WP	G15_063	FROM->TO	CIMARRON - DRAPER LAKE 345KV CKT 1	717	717	0.16475	103.2302	ALMA 161 161/24.0KV TRANSFORMER CKT 1
FDNS	00NR	2	16WP	G15_063	FROM->TO	CIMARRON - DRAPER LAKE 345KV CKT 1	717	717	0.16475	103.2271	GEN542955 1-LACYGNE UNIT #1
FDNS	00NR	2	16WP	G15_063	FROM->TO	CIMARRON - DRAPER LAKE 345KV CKT 1	717	717	0.16475	103.2228	GEN661015 1-COYOTE
FDNS	00NR	2	16WP	G15_063	FROM->TO	CIMARRON - DRAPER LAKE 345KV CKT 1	717	717	0.16475	103.2191	GEN562754 1-G15031_5 0.6900
FDNS	00NR	2	16WP	G15_063	FROM->TO	CIMARRON - DRAPER LAKE 345KV CKT 1	717	717	0.16475	103.2067	GEN562556 1-G14_046_3 0.3420
FDNS	00NR	2	16WP	G15_063	FROM->TO	CIMARRON - DRAPER LAKE 345KV CKT 1	717	717	0.16858	103.2049	RENFROW7 345.00 - VIOLA 7 345.00 345KV CKT 1
FDNS	00NR	2	16WP	G15_063	FROM->TO	CIMARRON - DRAPER LAKE 345KV CKT 1	717	717	0.16475	103.1865	GEN532652 1-JEFFREY ENERGY CENTER UNIT 2
FDNS	00NR	2	16WP	G15_063	FROM->TO	CIMARRON - DRAPER LAKE 345KV CKT 1	717	717	0.16475	103.1829	GEN532651 1-JEFFREY ENERGY CENTER UNIT 1
FDNS	00NR	2	16WP	G15_063	FROM->TO	CIMARRON - DRAPER LAKE 345KV CKT 1	717	717	0.16475	103.175	GEN562756 1-G15031_7 0.6900
FDNS	00NR	2	16WP	G15_063	FROM->TO	CIMARRON - DRAPER LAKE 345KV CKT 1	717	717	0.16475	103.1705	GEN562974 1-G15060_5 0.6900
FDNS	00NR	2	16WP	G15_063	FROM->TO	CIMARRON - DRAPER LAKE 345KV CKT 1	717	717	0.16475	103.1589	GEN563142 1-G15079_3 0.5500
FDNS	00NR	2	16WP	G15_063	FROM->TO	CIMARRON - DRAPER LAKE 345KV CKT 1	717	717	0.16475	103.1589	GEN563151 1-G15080_2 0.5500
FDNS	00NR	2	16WP	G15_063	FROM->TO	CIMARRON - DRAPER LAKE 345KV CKT 1	717	717	0.16696	103.1584	AIRDEPT4 138.00 - WILD MARY 138KV CKT 1
FDNS	00NR	2	16WP	G15_063	FROM->TO	CIMARRON - DRAPER LAKE 345KV CKT 1	717	717	0.16475	103.1542	GEN562973 1-G15060_4 0.6900
FDNS	00NR	2	16WP	G15_063	FROM->TO	CIMARRON - DRAPER LAKE 345KV CKT 1	717	717	0.16475	103.1455	GEN563042 1-G15068_3 0.6900
FDNS	00NR	2	16WP	G15_063	FROM->TO	CIMARRON - DRAPER LAKE 345KV CKT 1	717	717	0.16475	103.1261	GEN562078 1-G11_051_3 0.6900
FDNS	00NR	2	16WP	G15_063	FROM->TO	CIMARRON - DRAPER LAKE 345KV CKT 1	717	717	0.16475	103.1178	GEN562691 1-G15_015_3 0.6900
FDNS	00NR	2	16WP	G15_063	FROM->TO	CIMARRON - DRAPER LAKE 345KV CKT 1	717	717	0.16998	103.1136	HUNTERS7 345.00 - RENFROW7 345.00 345KV CKT 1
FDNS	00NR	2	16WP	G15_063	FROM->TO	CIMARRON - DRAPER LAKE 345KV CKT 1	717	717	0.16475	103.0957	GEN657748 1-YOUNG 2 GENERATOR
FDNS	00NR	2	16WP	G15_063	FROM->TO	CIMARRON - DRAPER LAKE 345KV CKT 1	717	717	0.16543	103.0651	PARK LANE - SEMINOLE 138KV CKT 1
FDNS	00NR	2	16WP	G15_063	FROM->TO	CIMARRON - DRAPER LAKE 345KV CKT 1	717	717	0.16427	103.0635	FRANKLIN - FRANKLIN SW 138KV CKT 1
FDNS	00NR	2	16WP	G15_063	FROM->TO	CIMARRON - DRAPER LAKE 345KV CKT 1	717	717	0.16475	103.0633	GEN562655 1-G14_074_3 0.6900
FDNS	00NR	2	16WP	G15_063	FROM->TO	CIMARRON - DRAPER LAKE 345KV CKT 1	717	717	0.16475	103.0628	GEN562762 1-G15033_3 0.6900
FDNS	00NR	2	16WP	G15_063	FROM->TO	CIMARRON - DRAPER LAKE 345KV CKT 1	717	717	0.16475	103.0004	GEN527901 1-HOBBS PLANT #1 (CT)
FDNS	00NR	2	16WP	G15_063	FROM->TO	CIMARRON - DRAPER LAKE 345KV CKT 1	717	717	0.16475	103.0004	GEN527902 1-HOBBS PLANT #2 (CT)
FDNS	00NR	2	16WP	G15_063	FROM->TO	CIMARRON - DRAPER LAKE 345KV CKT 1	717	717	0.16475	102.988	GEN563273 2-G15093_4 0.6900
FDNS	00NR	2	16WP	G15_063	FROM->TO	CIMARRON - DRAPER LAKE 345KV CKT 1	717	717	0.16475	102.9617	GEN563043 1-G15068_4 0.6900
FDNS	00NR	2	16WP	G15_063	FROM->TO	CIMARRON - DRAPER LAKE 345KV CKT 1	717	717	0.16475	102.9457	GEN563052 1-G15069_3 0.6900
FDNS	00NR	2	16WP	G15_063	FROM->TO	CIMARRON - DRAPER LAKE 345KV CKT 1	717	717	0.16696	102.929	AIRDEPT4 138.00 - GM 138KV CKT 1
FDNS	00NR	2	16WP	G15_063	FROM->TO	CIMARRON - DRAPER LAKE 345KV CKT 1	717	717	0.16475	102.9202	GEN525845 1-ELK_2 1 138.00
FDNS	00NR	2	16WP	G15_063	FROM->TO	CIMARRON - DRAPER LAKE 345KV CKT 1	717	717	0.16475	102.9168	GEN525844 1-ELK_1 118.000
FDNS	00NR	2	16WP	G15_063	FROM->TO	CIMARRON - DRAPER LAKE 345KV CKT 1	717	717	0.16473	102.9163	LYDIA - WELSH 345KV CKT 1
FDNS	00NR	2	16WP	G15_063	FROM->TO	CIMARRON - DRAPER LAKE 345KV CKT 1	717	717	0.16473	102.9163	LYDIA - WELSH 345KV CKT 1
FDNS	00NR	2	16WP	G15_063	FROM->TO	CIMARRON - DRAPER LAKE 345KV CKT 1	717	717	0.16542	102.9086	P12:138:AEPW-OGE:CORNVIL4:CIMARON4
FDNS	00NR	2	16WP	G15_063	FROM->TO	CIMARRON - DRAPER LAKE 345KV CKT 1	717	717	0.16475	102.9058	GEN620315 1-BIG STONE GEN

SOLUTION	GROUP	SCENARIO	SEASON	SOURCE	DIRECTION	MONITORED ELEMENT	RATEA (MVA)	RATEB(MVA)	TDF	TC%LOADING (% MVA)	CONTINGENCY
FDNS	00NR	2	16WP	G15_063	FROM->TO	CIMARRON - DRAPER LAKE 345KV CKT 1	717	717	0.16475	102.8984	GEN563242 1-G15090_3 0.6900
FDNS	00NR	2	16WP	G15_063	FROM->TO	CIMARRON - DRAPER LAKE 345KV CKT 1	717	717	0.16475	102.8684	GEN526333 1-JONES GEN #3 21 KV
FDNS	00NR	2	16WP	G15_063	FROM->TO	CIMARRON - DRAPER LAKE 345KV CKT 1	717	717	0.16475	102.8684	GEN526334 1-JONES_4 116.500
FDNS	00NR	2	16WP	G15_063	FROM->TO	CIMARRON - DRAPER LAKE 345KV CKT 1	717	717	0.16475	102.8603	GEN562772 1-G15034_3 0.6900
FDNS	00NR	2	16WP	G15_063	FROM->TO	CIMARRON - DRAPER LAKE 345KV CKT 1	717	717	0.16475	102.8532	GEN600004 2-PRAIRIE ISLAND G2
FDNS	00NR	2	16WP	G15_063	FROM->TO	CIMARRON - DRAPER LAKE 345KV CKT 1	717	717	0.16475	102.8503	GEN600003 1-PRAIRIE ISLAND G1
FDNS	00NR	2	16WP	G15_063	FROM->TO	CIMARRON - DRAPER LAKE 345KV CKT 1	717	717	0.16475	102.8417	GEN600006 1-AS KING
FDNS	00NR	2	16WP	G15_063	FROM->TO	CIMARRON - DRAPER LAKE 345KV CKT 1	717	717	0.16475	102.8346	GEN523971 1-HARRINGTON GEN #1 24 KV
FDNS	00NR	2	16WP	G15_063	FROM->TO	CIMARRON - DRAPER LAKE 345KV CKT 1	717	717	0.16475	102.8346	GEN523972 1-HARRINGTON GEN #2 24 KV
FDNS	00NR	2	16WP	G15_063	FROM->TO	CIMARRON - DRAPER LAKE 345KV CKT 1	717	717	0.16475	102.8346	GEN523973 1-HARRINGTON GEN #3 24 KV
FDNS	00NR	2	16WP	G15_063	FROM->TO	CIMARRON - DRAPER LAKE 345KV CKT 1	717	717	0.16475	102.8075	GEN636641 1-LOUISA UNIT 1
FDNS	00NR	2	16WP	G15_063	FROM->TO	CIMARRON - DRAPER LAKE 345KV CKT 1	717	717	0.17004	102.7763	CLARKSVILLE - MUSKOGEE 345KV CKT 1
FDNS	00NR	2	16WP	G15_063	FROM->TO	CIMARRON - DRAPER LAKE 345KV CKT 1	717	717	0.17004	102.7763	CLARKSVILLE - MUSKOGEE 345KV CKT 1
FDNS	00NR	2	16WP	G15_063	FROM->TO	CIMARRON - DRAPER LAKE 345KV CKT 1	717	717	0.16501	102.7277	RANCHRD7 345.00 - SOONER 345KV CKT 1
FDNS	00NR	2	16WP	G15_063	FROM->TO	CIMARRON - DRAPER LAKE 345KV CKT 1	717	717	0.16696	102.721	DRAPER LAKE - GM 138KV CKT 1
FDNS	00NR	2	16WP	G15_063	FROM->TO	CIMARRON - DRAPER LAKE 345KV CKT 1	717	717	0.16475	102.6987	GEN600005 1-MONTICELLO
FDNS	00NR	2	16WP	G15_063	FROM->TO	CIMARRON - DRAPER LAKE 345KV CKT 1	717	717	0.16475	102.6974	GEN542962 2-IATAN UNIT #2
FDNS	00NR	2	16WP	G15_063	FROM->TO	CIMARRON - DRAPER LAKE 345KV CKT 1	717	717	0.16475	102.6882	GEN563292 1-G15095_3 0.6900
FDNS	00NR	2	16WP	G15_063	FROM->TO	CIMARRON - DRAPER LAKE 345KV CKT 1	717	717	0.16998	102.6811	HUNTERS7 345.00 - WOODRING 345KV CKT 1
FDNS	00NR	2	16WP	G15_063	FROM->TO	CIMARRON - DRAPER LAKE 345KV CKT 1	717	717	0.16475	102.6338	GEN527166 1-MUSTANG_6 118.000
FDNS	00NR	2	16WP	G15_063	FROM->TO	CIMARRON - DRAPER LAKE 345KV CKT 1	717	717	0.16475	102.6243	GEN525562 1-TOLK GEN #2 24 KV
FDNS	00NR	2	16WP	G15_063	FROM->TO	CIMARRON - DRAPER LAKE 345KV CKT 1	717	717	0.16475	102.6056	GEN629074 1-ARNOLD LOWSIDE OF GSU XFMR
FDNS	00NR	2	16WP	G15_063	FROM->TO	CIMARRON - DRAPER LAKE 345KV CKT 1	717	717	0.16475	102.5961	GEN562952 1-G15057_3 0.6500
FDNS	00NR	2	16WP	G15_063	FROM->TO	CIMARRON - DRAPER LAKE 345KV CKT 1	717	717	0.15827	102.592	MUSKOGEE - SEMINOLE 345KV CKT 1
FDNS	00NR	2	16WP	G15_063	FROM->TO	CIMARRON - DRAPER LAKE 345KV CKT 1	717	717	0.16475	102.5912	GEN563272 1-G15093_3 0.6900
FDNS	00NR	2	16WP	G15_063	FROM->TO	CIMARRON - DRAPER LAKE 345KV CKT 1	717	717	0.16627	102.5737	NORTHWEST - SPRING CREEK 345KV CKT 1
FDNS	00NR	2	16WP	G15_063	FROM->TO	CIMARRON - DRAPER LAKE 345KV CKT 1	717	717	0.16475	102.5488	GEN635213 3-NEAL UNIT 3
FDNS	00NR	2	16WP	G15_063	FROM->TO	CIMARRON - DRAPER LAKE 345KV CKT 1	717	717	0.16468	102.5423	FRANKLIN SW - MIDWEST TAP 138KV CKT 1
FDNS	00NR	2	16WP	G15_063	FROM->TO	CIMARRON - DRAPER LAKE 345KV CKT 1	717	717	0.16627	102.5415	SOONER - SPRING CREEK 345KV CKT 1
FDNS	00NR	2	16WP	G15_063	FROM->TO	CIMARRON - DRAPER LAKE 345KV CKT 1	717	717	0.16475	102.5016	BIG STONE 230/24.0KV TRANSFORMER CKT 1
FDNS	00NR	2	16WP	G15_063	FROM->TO	CIMARRON - DRAPER LAKE 345KV CKT 1	717	717	0.16475	102.4936	GEN562892 1-G15048_3 0.6900
FDNS	00NR	2	16WP	G15_063	FROM->TO	CIMARRON - DRAPER LAKE 345KV CKT 1	717	717	0.16558	102.4699	CHAMBER SPRINGS - CLARKSVILLE 345KV CKT 1
FDNS	00NR	2	16WP	G15_063	FROM->TO	CIMARRON - DRAPER LAKE 345KV CKT 1	717	717	0.15739	102.4616	DRAPER LAKE - SEMINOLE 345KV CKT 3
FDNS	00NR	2	16WP	G15_063	FROM->TO	CIMARRON - DRAPER LAKE 345KV CKT 1	717	717	0.16475	102.4485	GEN563173 1-G15082_3 0.6900
FDNS	00NR	2	16WP	G15_063	FROM->TO	CIMARRON - DRAPER LAKE 345KV CKT 1	717	717	0.16475	102.3962	GEN562902 1-G15052_3 0.6900
FDNS	00NR	2	16WP	G15_063	FROM->TO	CIMARRON - DRAPER LAKE 345KV CKT 1	717	717	0.16475	102.3855	GEN514805 1-SOONER UNIT 1
FDNS	00NR	2	16WP	G15_063	FROM->TO	CIMARRON - DRAPER LAKE 345KV CKT 1	717	717	0.16475	102.3571	GEN600000 1-SHERBURNECNTY G1
FDNS	00NR	2	16WP	G15_063	FROM->TO	CIMARRON - DRAPER LAKE 345KV CKT 1	717	717	0.16475	102.3543	GEN527903 1-HOBBS PLANT #3 (ST)
FDNS	00NR	2	16WP	G15_063	FROM->TO	CIMARRON - DRAPER LAKE 345KV CKT 1	717	717	0.16475	102.3358	GEN525561 1-TOLK GEN #1 24 KV
FDNS	00NR	2	16WP	G15_063	FROM->TO	CIMARRON - DRAPER LAKE 345KV CKT 1	717	717	0.16472	102.3139	LYDIA - VALLIANT 345KV CKT 1
FDNS	00NR	2	16WP	G15_063	FROM->TO	CIMARRON - DRAPER LAKE 345KV CKT 1	717	717	0.16472	102.3139	LYDIA - VALLIANT 345KV CKT 1
FDNS	00NR	2	16WP	G15_063	FROM->TO	CIMARRON - DRAPER LAKE 345KV CKT 1	717	717	0.16491	102.3097	P12:138:OKGE:3TERM23
FDNS	00NR	2	16WP	G15_063	FROM->TO	CIMARRON - DRAPER LAKE 345KV CKT 1	717	717	0.16475	102.2581	GEN600001 2-SHERBURNE CNTY G2
FDNS	00NR	2	16WP	G15_063	FROM->TO	CIMARRON - DRAPER LAKE 345KV CKT 1	717	717	0.16491	102.2506	BARNES 4 138.00 - DRAPER LAKE 138KV CKT 1
FDNS	00NR	2	16WP	G15_063	FROM->TO	CIMARRON - DRAPER LAKE 345KV CKT 1	717	717	0.16475	102.18	GEN344225 1-1CAL G1 25.000
FDNS	00NR	2	16WP	G15_063	FROM->TO	CIMARRON - DRAPER LAKE 345KV CKT 1	717	717	0.16475	102.1326	GEN514806 1-SOONER UNIT 2
FDNS	00NR	2	16WP	G15_063	FROM->TO	CIMARRON - DRAPER LAKE 345KV CKT 1	717	717	0.16475	102.1283	GEN629075 1-OTTUMWA GENERATOR FOR OTTUMWA UNIT NO 1
FDNS	00NR	2	16WP	G15_063	FROM->TO	CIMARRON - DRAPER LAKE 345KV CKT 1	717	717	0.16475	102.1	GEN563162 1-G15081_3 0.6900
FDNS	00NR	2	16WP	G15_063	FROM->TO	CIMARRON - DRAPER LAKE 345KV CKT 1	717	717	0.16619	102.0066	DRAPER LAKE (DRAPER2) 345/138/13.8KV TRANSFORMER CKT 1
FDNS	00NR	2	16WP	G15_063	FROM->TO	CIMARRON - DRAPER LAKE 345KV CKT 1	717	717	0.16619	101.9188	DRAPER LAKE (DRAPER3) 345/138/13.8KV TRANSFORMER CKT 1
FDNS	00NR	2	16WP	G15_063	FROM->TO	CIMARRON - DRAPER LAKE 345KV CKT 1	717	717	0.16619	101.9188	DRAPER LAKE (DRAPER4) 345/138/13.8KV TRANSFORMER CKT 1
FDNS	00NR	2	16WP	G15_063	FROM->TO	CIMARRON - DRAPER LAKE 345KV CKT 1	717	717	0.16475	101.9056	SHERBURNE CO 345/24.0KV TRANSFORMER CKT 1
FDNS	00NR	2	16WP	G15_063	FROM->TO	CIMARRON - DRAPER LAKE 345KV CKT 1	717	717	0.16475	101.8959	GEN532653 1-JEFFREY ENERGY CENTER UNIT 3
FDNS	00NR	2	16WP	G15_063	FROM->TO	CIMARRON - DRAPER LAKE 345KV CKT 1	717	717	0.16475	101.8892	GEN635214 4-NEAL UNIT 4
FDNS	00NR	2	16WP	G15_063	FROM->TO	CIMARRON - DRAPER LAKE 345KV CKT 1	717	717	0.15623	101.8113	CIMARRON - MATHWSN7 345.00 345KV CKT 1
FDNS	00NR	2	16WP	G15_063	FROM->TO	CIMARRON - DRAPER LAKE 345KV CKT 1	717	717	0.15623	101.8113	CIMARRON - MATHWSN7 345.00 345KV CKT 2
FDNS	00NR	2	16WP	G15_063	FROM->TO	CIMARRON - DRAPER LAKE 345KV CKT 1	717	717	0.16475	101.7972	GEN600002 3-SHERBURNE CNTY G3
FDNS	00NR	2	16WP	G15_063	FROM->TO	CIMARRON - DRAPER LAKE 345KV CKT 1	717	717	0.16475	101.7706	GEN562882 1-G15047_3 0.6900
FDNS	00NR	2	16WP	G15_063	FROM->TO	CIMARRON - DRAPER LAKE 345KV CKT 1	717	717	0.16475	101.4077	GEN635023 3-WALTER SCOTT UNIT 3
FDNS	00NR	2	16WP	G15_063	FROM->TO	CIMARRON - DRAPER LAKE 345KV CKT 1	717	717	0.16475	101.2842	GEN562023 1-G11_020_3 0.6900
FDNS	00NR	2	16WP	G15_063	FROM->TO	CIMARRON - DRAPER LAKE 345KV CKT 1	717	717	0.16475	101.2842	GEN562026 1-G11_019_3 0.6900
FDNS	00NR	2	16WP	G15_063	FROM->TO	CIMARRON - DRAPER LAKE 345KV CKT 1	717	717	0.16475	101.1938	EASTDC - ERCOT EQUIVALENCE 345KV CKT 1
FDNS	00NR	2	16WP	G15_063	FROM->TO	CIMARRON - DRAPER LAKE 345KV CKT 1	717	717	0.15101	100.9388	DRAPER LAKE - SEMINOLE 345KV CKT 1
FDNS	00NR	2	16WP	G15_063	FROM->TO	CIMARRON - DRAPER LAKE 345KV CKT 1	717	717	0.15101	100.9387	DRAPER LAKE - SEMINOLE 345KV CKT 2
FDNS	00NR	2	16WP	G15_063	FROM->TO	CIMARRON - DRAPER LAKE 345KV CKT 1	717	717	0.16475	100.9275	GEN635024 4-WALTER SCOTT UNIT 4
FDNS	00NR	2	16WP	G15_063	FROM->TO	CIMARRON - DRAPER LAKE 345KV CKT 1	717	717	0.16475	99.6	GEN562992 1-G15063_3 0.6900
FDNS	00NR	2	17SP	G15_063	TO->FROM	CLEAVELAND - CLEVLND 4 138.00 138KV CKT Z1	305	371	0.03339	110.9467	CLEVELAND - TULSA NORTH 345KV CKT 1
FDNS	00NR	2	17SP	G15_063	TO->FROM	CLEAVELAND - CLEVLND 4 138.00 138KV CKT Z1	305	371	0.03339	110.9467	CLEVELAND - TULSA NORTH 345KV CKT 1
FDNS	00NR	2	20SP	G15_063	TO->FROM	CLEAVELAND - CLEVLND 4 138.00 138KV CKT Z1	305	371	0.03334	110.0555	CLEVELAND - TULSA NORTH 345KV CKT 1
FDNS	00NR	2	20SP	G15_063	TO->FROM	CLEAVELAND - CLEVLND 4 138.00 138KV CKT Z1	305	371	0.03334	110.0555	CLEVELAND - TULSA NORTH 345KV CKT 1
FDNS	00NR	2	16WP	G15_063	FROM->TO	G14-057T 345.00 - SUNNYSIDE 345KV CKT 1	717	789	0.04477	127.2824	PITTSBURG - SEMINOLE 345KV CKT 1
FDNS	00NR	2	16WP	G15_063	FROM->TO	G14-057T 345.00 - SUNNYSIDE 345KV CKT 1	717	789	0.04477	127.2824	PITTSBURG - SEMINOLE 345KV CKT 1
FDNS	00NR	2	16WP	G15_063	FROM->TO	G14-057T 345.00 - SUNNYSIDE 345KV CKT 1	717	789	0.04554	126.8195	BASE CASE
FDNS	00NR	2	16WP	G15_063	FROM->TO	G14-057T 345.00 - SUNNYSIDE 345KV CKT 1	717	789	0.06082	124.2707	CIMARRON - DRAPER LAKE 345KV CKT 1
FDNS	00NR	2	20WP	G15_063	FROM->TO	G14-057T 345.00 - SUNNYSIDE 345KV CKT 1	717	789	0.04524	123.8479	BASE CASE
FDNS	00NR	2	20WP	G15_063	FROM->TO	G14-057T 345.00 - SUNNYSIDE 345KV CKT 1	717	789	0.04438	123.4848	PITTSBURG - SEMINOLE 345KV CKT 1
FDNS	00NR	2	20WP	G15_063	FROM->TO	G14-057T 345.00 - SUNNYSIDE 345KV CKT 1	717	789	0.04438	123.4848	PITTSBURG - SEMINOLE 345KV CKT 1
FDNS	00NR	2	16WP	G15_063	FROM->TO	G14-057T 345.00 - SUNNYSIDE 345KV CKT 1	717	789	0.04759	121.5267	P12:138:WFEC:MSL03
FDNS	00NR	2	20WP	G15_063	FROM->TO	G14-057T 345.00 - SUNNYSIDE 345KV CKT 1	717	789	0.06044	121.1948	CIMARRON - DRAPER LAKE 345KV CKT 1

SOLUTION	GROUP	SCENARIO	SEASON	SOURCE	DIRECTION	MONITORED ELEMENT	RATEA (MVA)	RATEB(MVA)	TDF	TC%LOADING (% MVA)	CONTINGENCY
FDNS	00NR	2	16WP	G15_063	FROM->TO	G14-057T 345.00 - SUNNYSIDE 345KV CKT 1	717	789	0.04499	120.8946	PITTSBURG - VALLIANT 345KV CKT 1
FDNS	00NR	2	16WP	G15_063	FROM->TO	G14-057T 345.00 - SUNNYSIDE 345KV CKT 1	717	789	0.04499	120.8946	PITTSBURG - VALLIANT 345KV CKT 1
FDNS	00NR	2	16WP	G15_063	FROM->TO	G14-057T 345.00 - SUNNYSIDE 345KV CKT 1	717	789	0.04554	120.3891	GEN509403 1-PIRKEY GENERATION
FDNS	00NR	2	16WP	G15_063	FROM->TO	G14-057T 345.00 - SUNNYSIDE 345KV CKT 1	717	789	0.04554	120.2923	GEN509416 1-TURK GENERATION
FDNS	00NR	2	16WP	G15_063	FROM->TO	G14-057T 345.00 - SUNNYSIDE 345KV CKT 1	717	789	0.04938	120.13	CLEVELAND - G15066_T 345.00 345KV CKT 1
FDNS	00NR	2	16WP	G15_063	FROM->TO	G14-057T 345.00 - SUNNYSIDE 345KV CKT 1	717	789	0.04938	119.8302	G15066_T 345.00 - SOONER 345KV CKT 1
FDNS	00NR	2	16WP	G15_063	FROM->TO	G14-057T 345.00 - SUNNYSIDE 345KV CKT 1	717	789	0.04554	119.4032	GEN501801 1-DOLET HILLS UNIT1
FDNS	00NR	2	16WP	G15_063	FROM->TO	G14-057T 345.00 - SUNNYSIDE 345KV CKT 1	717	789	0.04554	119.0201	GEN509404 1-WELSH #1
FDNS	00NR	2	16WP	G15_063	FROM->TO	G14-057T 345.00 - SUNNYSIDE 345KV CKT 1	717	789	0.04554	119.02	GEN509406 1-WELSH #3
FDNS	00NR	2	20WP	G15_063	FROM->TO	G14-057T 345.00 - SUNNYSIDE 345KV CKT 1	717	789	0.04728	118.7528	P12:138:WFEC:MSL03
FDNS	00NR	2	16WP	G15_063	FROM->TO	G14-057T 345.00 - SUNNYSIDE 345KV CKT 1	717	789	0.04497	118.5769	BORDER 7345.00 - WOODWARD DISTRICT EHV 345KV CKT 1
FDNS	00NR	2	16WP	G15_063	FROM->TO	G14-057T 345.00 - SUNNYSIDE 345KV CKT 1	717	789	0.04643	118.4188	CORN TAP - NAPLESTP 138.00 138KV CKT 1
FDNS	00NR	2	16WP	G15_063	FROM->TO	G14-057T 345.00 - SUNNYSIDE 345KV CKT 1	717	789	0.04643	118.3333	NAPLESTP 138.00 - PAYNE 138.00 138KV CKT 1
FDNS	00NR	2	16WP	G15_063	FROM->TO	G14-057T 345.00 - SUNNYSIDE 345KV CKT 1	717	789	0.04547	118.2238	7SAREPTA% 345.00 - LONGWOOD 345KV CKT 1
FDNS	00NR	2	16WP	G15_063	FROM->TO	G14-057T 345.00 - SUNNYSIDE 345KV CKT 1	717	789	0.04547	118.2238	7SAREPTA% 345.00 - LONGWOOD 345KV CKT 1
FDNS	00NR	2	16WP	G15_063	FROM->TO	G14-057T 345.00 - SUNNYSIDE 345KV CKT 1	717	789	0.04554	118.1405	GEN336821 1-GRAND GULF UNIT
FDNS	00NR	2	16WP	G15_063	FROM->TO	G14-057T 345.00 - SUNNYSIDE 345KV CKT 1	717	789	0.04816	118.1204	CLEVELAND - TULSA NORTH 345KV CKT 1
FDNS	00NR	2	16WP	G15_063	FROM->TO	G14-057T 345.00 - SUNNYSIDE 345KV CKT 1	717	789	0.04816	118.1204	CLEVELAND - TULSA NORTH 345KV CKT 1
FDNS	00NR	2	16WP	G15_063	FROM->TO	G14-057T 345.00 - SUNNYSIDE 345KV CKT 1	717	789	0.04554	118.1089	DOLET HILLS - SOUTHWEST SHREVEPORT 345KV CKT 1
FDNS	00NR	2	16WP	G15_063	FROM->TO	G14-057T 345.00 - SUNNYSIDE 345KV CKT 1	717	789	0.04554	118.1089	DOLET HILLS - SOUTHWEST SHREVEPORT 345KV CKT 1
FDNS	00NR	2	16WP	G15_063	FROM->TO	G14-057T 345.00 - SUNNYSIDE 345KV CKT 1	717	789	0.046	118.0656	ANADARKO - POCASSETT 138KV CKT 1
FDNS	00NR	2	16WP	G15_063	FROM->TO	G14-057T 345.00 - SUNNYSIDE 345KV CKT 1	717	789	0.0417	118.052	CANADIAN RIVER - MUSKOGEE 345KV CKT 1
FDNS	00NR	2	16WP	G15_063	FROM->TO	G14-057T 345.00 - SUNNYSIDE 345KV CKT 1	717	789	0.04554	118.0479	GEN336153 1-WATERFORD UNIT#3
FDNS	00NR	2	16WP	G15_063	FROM->TO	G14-057T 345.00 - SUNNYSIDE 345KV CKT 1	717	789	0.04635	118.0254	COMANCHE - LOCO 138KV CKT 1
FDNS	00NR	2	16WP	G15_063	FROM->TO	G14-057T 345.00 - SUNNYSIDE 345KV CKT 1	717	789	0.046	117.9108	POCASSETT - TUTTLE 138KV CKT 1
FDNS	00NR	2	16WP	G15_063	FROM->TO	G14-057T 345.00 - SUNNYSIDE 345KV CKT 1	717	789	0.05761	117.8602	ARCADIA - NORTHWEST 345KV CKT 1
FDNS	00NR	2	16WP	G15_063	FROM->TO	G14-057T 345.00 - SUNNYSIDE 345KV CKT 1	717	789	0.04554	117.7485	GEN335831 1-RIVERBEND UNIT#1
FDNS	00NR	2	16WP	G15_063	FROM->TO	G14-057T 345.00 - SUNNYSIDE 345KV CKT 1	717	789	0.04554	117.7459	GRAND GULF 500/22.0KV TRANSFORMER CKT 1
FDNS	00NR	2	16WP	G15_063	FROM->TO	G14-057T 345.00 - SUNNYSIDE 345KV CKT 1	717	789	0.04768	117.7399	ARCADIA - SEMINOLE 345KV CKT 1
FDNS	00NR	2	16WP	G15_063	FROM->TO	G14-057T 345.00 - SUNNYSIDE 345KV CKT 1	717	789	0.04554	117.67	GEN515577 1-ARBWND11 0.6900
FDNS	00NR	2	16WP	G15_063	FROM->TO	G14-057T 345.00 - SUNNYSIDE 345KV CKT 1	717	789	0.04554	117.6537	GEN509409 1-WILKES #3
FDNS	00NR	2	16WP	G15_063	FROM->TO	G14-057T 345.00 - SUNNYSIDE 345KV CKT 1	717	789	0.04497	117.6481	BORDER 7345.00 - TUCO_2 345.00 345KV CKT 1
FDNS	00NR	2	16WP	G15_063	FROM->TO	G14-057T 345.00 - SUNNYSIDE 345KV CKT 1	717	789	0.04487	117.6376	MATHWSN7 345.00 - TATONGA7 345.00 345KV CKT 1
FDNS	00NR	2	16WP	G15_063	FROM->TO	G14-057T 345.00 - SUNNYSIDE 345KV CKT 1	717	789	0.04573	117.5924	P12:138:AEPW:DUNCAN-4:L.E.S.-4
FDNS	00NR	2	16WP	G15_063	FROM->TO	G14-057T 345.00 - SUNNYSIDE 345KV CKT 1	717	789	0.0455	117.5858	7SAREPTA% 345.00 - ELDORADO EHV 345KV CKT 1
FDNS	00NR	2	16WP	G15_063	FROM->TO	G14-057T 345.00 - SUNNYSIDE 345KV CKT 1	717	789	0.0455	117.5856	3TR3AR8EL7EL
FDNS	00NR	2	16WP	G15_063	FROM->TO	G14-057T 345.00 - SUNNYSIDE 345KV CKT 1	717	789	0.0455	117.575	ELDORADO EHV 500/345KV TRANSFORMER CKT 1
FDNS	00NR	2	20WP	G15_063	FROM->TO	G14-057T 345.00 - SUNNYSIDE 345KV CKT 1	717	789	0.04524	117.5634	GEN509403 1-PIRKEY GENERATION
FDNS	00NR	2	16WP	G15_063	FROM->TO	G14-057T 345.00 - SUNNYSIDE 345KV CKT 1	717	789	0.046	117.5347	BRIDGECR 138.00 - TUTTLE 138KV CKT 1
FDNS	00NR	2	16WP	G15_063	FROM->TO	G14-057T 345.00 - SUNNYSIDE 345KV CKT 1	717	789	0.04676	117.515	HEALDTON - LOCO 138KV CKT 1
FDNS	00NR	2	20WP	G15_063	FROM->TO	G14-057T 345.00 - SUNNYSIDE 345KV CKT 1	717	789	0.04524	117.485	GEN509416 1-TURK GENERATION
FDNS	00NR	2	16WP	G15_063	FROM->TO	G14-057T 345.00 - SUNNYSIDE 345KV CKT 1	717	789	0.04573	117.4814	COMANCHE TAP - OMPA-DUNCAN 840 138KV CKT 1
FDNS	00NR	2	16WP	G15_063	FROM->TO	G14-057T 345.00 - SUNNYSIDE 345KV CKT 1	717	789	0.04676	117.376	HEALDTON - RINGLING 138KV CKT 1
FDNS	00NR	2	16WP	G15_063	FROM->TO	G14-057T 345.00 - SUNNYSIDE 345KV CKT 1	717	789	0.04554	117.3548	GEN501813 1-RODEMACHER UNIT 3
FDNS	00NR	2	16WP	G15_063	FROM->TO	G14-057T 345.00 - SUNNYSIDE 345KV CKT 1	717	789	0.04554	117.3476	GEN300006 1-NEW MADRID UNIT 1
FDNS	00NR	2	16WP	G15_063	FROM->TO	G14-057T 345.00 - SUNNYSIDE 345KV CKT 1	717	789	0.04588	117.338	LACYGNE - WAVERLY7 345.00 345KV CKT 1
FDNS	00NR	2	16WP	G15_063	FROM->TO	G14-057T 345.00 - SUNNYSIDE 345KV CKT 1	717	789	0.04554	117.3358	GEN300007 1-NEW MADRID UNIT 2
FDNS	00NR	2	20WP	G15_063	FROM->TO	G14-057T 345.00 - SUNNYSIDE 345KV CKT 1	717	789	0.04898	117.3123	CLEVELAND - G15066_T 345.00 345KV CKT 1
FDNS	00NR	2	16WP	G15_063	FROM->TO	G14-057T 345.00 - SUNNYSIDE 345KV CKT 1	717	789	0.04599	117.3058	FINNEY SWITCHING STATION - HOLCOMB 345KV CKT 1
FDNS	00NR	2	16WP	G15_063	FROM->TO	G14-057T 345.00 - SUNNYSIDE 345KV CKT 1	717	789	0.04599	117.3058	FINNEY SWITCHING STATION - HOLCOMB 345KV CKT 1
FDNS	00NR	2	16WP	G15_063	FROM->TO	G14-057T 345.00 - SUNNYSIDE 345KV CKT 1	717	789	0.046	117.2709	P12:138:WFEC:MSL01
FDNS	00NR	2	16WP	G15_063	FROM->TO	G14-057T 345.00 - SUNNYSIDE 345KV CKT 1	717	789	0.046	117.2647	BRIDGECR 138.00 - SUNSHINE CANYON 138KV CKT 1
FDNS	00NR	2	20WP	G15_063	FROM->TO	G14-057T 345.00 - SUNNYSIDE 345KV CKT 1	717	789	0.04468	117.2647	PITTSBURG - VALLIANT 345KV CKT 1
FDNS	00NR	2	20WP	G15_063	FROM->TO	G14-057T 345.00 - SUNNYSIDE 345KV CKT 1	717	789	0.04468	117.2647	PITTSBURG - VALLIANT 345KV CKT 1
FDNS	00NR	2	16WP	G15_063	FROM->TO	G14-057T 345.00 - SUNNYSIDE 345KV CKT 1	717	789	0.04554	117.2366	GEN520947 1-HUGO1
FDNS	00NR	2	16WP	G15_063	FROM->TO	G14-057T 345.00 - SUNNYSIDE 345KV CKT 1	717	789	0.04588	117.2216	WAVERLY7 345.00 - WOLF CREEK 345KV CKT 1
FDNS	00NR	2	16WP	G15_063	FROM->TO	G14-057T 345.00 - SUNNYSIDE 345KV CKT 1	717	789	0.04676	117.2111	RINGLING - SOUTH WILSON 138KV CKT 1
FDNS	00NR	2	16WP	G15_063	FROM->TO	G14-057T 345.00 - SUNNYSIDE 345KV CKT 1	717	789	0.04573	117.1999	DUNCAN - OMPA-DUNCAN 840 138KV CKT 1
FDNS	00NR	2	16WP	G15_063	FROM->TO	G14-057T 345.00 - SUNNYSIDE 345KV CKT 1	717	789	0.04573	117.1999	DUNCAN - OMPA-DUNCAN 840 138KV CKT 1
FDNS	00NR	2	16WP	G15_063	FROM->TO	G14-057T 345.00 - SUNNYSIDE 345KV CKT 1	717	789	0.04554	117.1546	GEN335206 1-NELSON UNIT 6
FDNS	00NR	2	16WP	G15_063	FROM->TO	G14-057T 345.00 - SUNNYSIDE 345KV CKT 1	717	789	0.04554	117.0466	DOLET HILLS 345/24.0KV TRANSFORMER CKT 1
FDNS	00NR	2	16WP	G15_063	FROM->TO	G14-057T 345.00 - SUNNYSIDE 345KV CKT 1	717	789	0.04474	117.0247	PARK LANE - SEMINOLE 138KV CKT 1
FDNS	00NR	2	20WP	G15_063	FROM->TO	G14-057T 345.00 - SUNNYSIDE 345KV CKT 1	717	789	0.04898	117.0174	G15066_T 345.00 - SOONER 345KV CKT 1
FDNS	00NR	2	16WP	G15_063	FROM->TO	G14-057T 345.00 - SUNNYSIDE 345KV CKT 1	717	789	0.04553	116.9897	P12:138:AEPW:SHERID4:112GORE4
FDNS	00NR	2	16WP	G15_063	FROM->TO	G14-057T 345.00 - SUNNYSIDE 345KV CKT 1	717	789	0.04632	116.9842	CANEYRV7 345.00 - NEOSHO 345KV CKT 1
FDNS	00NR	2	16WP	G15_063	FROM->TO	G14-057T 345.00 - SUNNYSIDE 345KV CKT 1	717	789	0.04554	116.969	GEN501812 1-RODEMACHER UNIT 2
FDNS	00NR	2	16WP	G15_063	FROM->TO	G14-057T 345.00 - SUNNYSIDE 345KV CKT 1	717	789	0.04554	116.9593	GEN590011 2-ERCOT EQUIVALENCE
FDNS	00NR	2	16WP	G15_063	FROM->TO	G14-057T 345.00 - SUNNYSIDE 345KV CKT 1	717	789	0.04676	116.9343	MARIETTA - SOUTH WILSON 138KV CKT 1
FDNS	00NR	2	16WP	G15_063	FROM->TO	G14-057T 345.00 - SUNNYSIDE 345KV CKT 1	717	789	0.04599	116.928	FINNEY SWITCHING STATION - Hitchland Interchange 345KV CKT 1
FDNS	00NR	2	16WP	G15_063	FROM->TO	G14-057T 345.00 - SUNNYSIDE 345KV CKT 1	717	789	0.04554	116.9075	GEN515564 1-ORIGIN11 0.6900
FDNS	00NR	2	16WP	G15_063	FROM->TO	G14-057T 345.00 - SUNNYSIDE 345KV CKT 1	717	789	0.04554	116.9075	GEN515565 1-ORIGIN21 0.6900
FDNS	00NR	2	16WP	G15_063	FROM->TO	G14-057T 345.00 - SUNNYSIDE 345KV CKT 1	717	789	0.04554	116.8852	GEN590010 1-ERCOT EQUIVALENCE
FDNS	00NR	2	16WP	G15_063	FROM->TO	G14-057T 345.00 - SUNNYSIDE 345KV CKT 1	717	789	0.04554	116.8642	GEN509408 1-WILKES #2
FDNS	00NR	2	16WP	G15_063	FROM->TO	G14-057T 345.00 - SUNNYSIDE 345KV CKT 1	717	789	0.04579	116.8604	THISTLE7 345.00 - WOODWARD DISTRICT EHV 345KV CKT 1
FDNS	00NR	2	16WP	G15_063	FROM->TO	G14-057T 345.00 - SUNNYSIDE 345KV CKT 1	717	789	0.04579	116.8604	THISTLE7 345.00 - WOODWARD DISTRICT EHV 345KV CKT 1
FDNS	00NR	2	16WP	G15_063	FROM->TO	G14-057T 345.00 - SUNNYSIDE 345KV CKT 1	717	789	0.04579	116.8604	THISTLE7 345.00 - WOODWARD DISTRICT EHV 345KV CKT 2
FDNS	00NR	2	16WP	G15_063	FROM->TO	G14-057T 345.00 - SUNNYSIDE 345KV CKT 1	717	789	0.04579	116.8604	THISTLE7 345.00 - WOODWARD DISTRICT EHV 345KV CKT 2
FDNS	00NR	2	16WP	G15_063	FROM->TO	G14-057T 345.00 - SUNNYSIDE 345KV CKT 1	717	789	0.04676	116.8374	P12:138:WFEC:MSL17
FDNS	00NR	2	16WP	G15_063	FROM->TO	G14-057T 345.00 - SUNNYSIDE 345KV CKT 1	717	789	0.04632	116.7991	CANEYRV7 345.00 - LATHAMS7 345.00 345KV CKT 1

SOLUTION	GROUP	SCENARIO	SEASON	SOURCE	DIRECTION	MONITORED ELEMENT	RATEA (MVA)	RATEB(MVA)	TDF	TC%LOADING (% MVA)	CONTINGENCY
FDNS	00NR	2	20WP	G15_063	FROM->TO	G14-057T 345.00 - SUNNYSIDE 345KV CKT 1	717	789	0.04524	116.7867	GEN501801 1-DOLET HILLS UNIT1
FDNS	00NR	2	16WP	G15_063	FROM->TO	G14-057T 345.00 - SUNNYSIDE 345KV CKT 1	717	789	0.04616	116.742	REDBUD - RIVERSIDE STATION 345KV CKT 1
FDNS	00NR	2	16WP	G15_063	FROM->TO	G14-057T 345.00 - SUNNYSIDE 345KV CKT 1	717	789	0.04616	116.742	REDBUD - RIVERSIDE STATION 345KV CKT 1
FDNS	00NR	2	16WP	G15_063	FROM->TO	G14-057T 345.00 - SUNNYSIDE 345KV CKT 1	717	789	0.04663	116.74	CIVIT - PAOLI 138KV CKT 1
FDNS	00NR	2	16WP	G15_063	FROM->TO	G14-057T 345.00 - SUNNYSIDE 345KV CKT 1	717	789	0.04554	116.7336	GEN506754 1-LEBROCK STEAM 1
FDNS	00NR	2	16WP	G15_063	FROM->TO	G14-057T 345.00 - SUNNYSIDE 345KV CKT 1	717	789	0.04554	116.7256	P12:69:AEPW:L.E.S.-2:LAW WC2
FDNS	00NR	2	16WP	G15_063	FROM->TO	G14-057T 345.00 - SUNNYSIDE 345KV CKT 1	717	789	0.04554	116.7088	P12:161:AEPW:DYESS 5:HYLAND 5
FDNS	00NR	2	16WP	G15_063	FROM->TO	G14-057T 345.00 - SUNNYSIDE 345KV CKT 1	717	789	0.04586	116.7066	P12:138:WFEC:MSL02
FDNS	00NR	2	16WP	G15_063	FROM->TO	G14-057T 345.00 - SUNNYSIDE 345KV CKT 1	717	789	0.04594	116.6926	PAOLI - PAYNE 138.00 138KV CKT 1
FDNS	00NR	2	16WP	G15_063	FROM->TO	G14-057T 345.00 - SUNNYSIDE 345KV CKT 1	717	789	0.04549	116.6907	ELDORADO EHV - MOUNT OLIVE 500KV CKT 1
FDNS	00NR	2	16WP	G15_063	FROM->TO	G14-057T 345.00 - SUNNYSIDE 345KV CKT 1	717	789	0.04554	116.6849	GEN334440 1-SABINE UNIT 4
FDNS	00NR	2	16WP	G15_063	FROM->TO	G14-057T 345.00 - SUNNYSIDE 345KV CKT 1	717	789	0.04955	116.6428	MATHWSN7 345.00 - NORTHWEST 345KV CKT 1
FDNS	00NR	2	16WP	G15_063	FROM->TO	G14-057T 345.00 - SUNNYSIDE 345KV CKT 1	717	789	0.04542	116.6402	ELDORADO EHV - SHERIDAN EHV 500KV CKT 1
FDNS	00NR	2	16WP	G15_063	FROM->TO	G14-057T 345.00 - SUNNYSIDE 345KV CKT 1	717	789	0.04553	116.6254	P12:138:AEPW:112GORE4:L.E.S.-4
FDNS	00NR	2	16WP	G15_063	FROM->TO	G14-057T 345.00 - SUNNYSIDE 345KV CKT 1	717	789	0.04554	116.6181	NEW MADRID 161/22.0KV TRANSFORMER CKT 1
FDNS	00NR	2	16WP	G15_063	FROM->TO	G14-057T 345.00 - SUNNYSIDE 345KV CKT 1	717	789	0.04577	116.6152	ANADARKO - GEORGIA 138KV CKT 1
FDNS	00NR	2	16WP	G15_063	FROM->TO	G14-057T 345.00 - SUNNYSIDE 345KV CKT 1	717	789	0.04692	116.6102	P12:138:AEPW-OGE:CORNVIL4:MAUD 4
FDNS	00NR	2	16WP	G15_063	FROM->TO	G14-057T 345.00 - SUNNYSIDE 345KV CKT 1	717	789	0.04554	116.6049	NEW MADRID 345/22.0KV TRANSFORMER CKT 1
FDNS	00NR	2	16WP	G15_063	FROM->TO	G14-057T 345.00 - SUNNYSIDE 345KV CKT 1	717	789	0.04663	116.5972	CIVIT - STRATFORD 138KV CKT 1
FDNS	00NR	2	16WP	G15_063	FROM->TO	G14-057T 345.00 - SUNNYSIDE 345KV CKT 1	717	789	0.04632	116.5818	LATHAMS7 345.00 - ROSE HILL 345KV CKT 1
FDNS	00NR	2	16WP	G15_063	FROM->TO	G14-057T 345.00 - SUNNYSIDE 345KV CKT 1	717	789	0.04554	116.5793	FRONTIER - GRIMES 345KV CKT 1
FDNS	00NR	2	16WP	G15_063	FROM->TO	G14-057T 345.00 - SUNNYSIDE 345KV CKT 1	717	789	0.04569	116.5688	TUPELO - TUPELO TAP 138KV CKT 1
FDNS	00NR	2	16WP	G15_063	FROM->TO	G14-057T 345.00 - SUNNYSIDE 345KV CKT 1	717	789	0.04554	116.5525	GEN503909 1-FULTONU1 1 16.000
FDNS	00NR	2	16WP	G15_063	FROM->TO	G14-057T 345.00 - SUNNYSIDE 345KV CKT 1	717	789	0.04692	116.5384	BLANCHARD - CORNVILLE 138KV CKT 1
FDNS	00NR	2	16WP	G15_063	FROM->TO	G14-057T 345.00 - SUNNYSIDE 345KV CKT 1	717	789	0.04545	116.5372	LAWTON EASTSIDE (LES 5) 345/138/13.8KV TRANSFORMER CKT 2
FDNS	00NR	2	16WP	G15_063	FROM->TO	G14-057T 345.00 - SUNNYSIDE 345KV CKT 1	717	789	0.04545	116.5372	LAWTON EASTSIDE (LES 5) 345/138/13.8KV TRANSFORMER CKT 2
FDNS	00NR	2	16WP	G15_063	FROM->TO	G14-057T 345.00 - SUNNYSIDE 345KV CKT 1	717	789	0.04559	116.534	WEBRE - WELLS 500KV CKT 1
FDNS	00NR	2	16WP	G15_063	FROM->TO	G14-057T 345.00 - SUNNYSIDE 345KV CKT 1	717	789	0.04577	116.5316	FLETCHER - GEORGIA 138KV CKT 1
FDNS	00NR	2	16WP	G15_063	FROM->TO	G14-057T 345.00 - SUNNYSIDE 345KV CKT 1	717	789	0.04582	116.5084	EMPIRE - FLETCHER 138KV CKT 1
FDNS	00NR	2	16WP	G15_063	FROM->TO	G14-057T 345.00 - SUNNYSIDE 345KV CKT 1	717	789	0.04663	116.478	OIL CENTER - STRATFORD 138KV CKT 1
FDNS	00NR	2	16WP	G15_063	FROM->TO	G14-057T 345.00 - SUNNYSIDE 345KV CKT 1	717	789	0.04554	116.4296	GEN509393 S1-ARSENAL HILL GENS #4 (STALL)
FDNS	00NR	2	16WP	G15_063	FROM->TO	G14-057T 345.00 - SUNNYSIDE 345KV CKT 1	717	789	0.04582	116.4233	COMANCHE - EMPIRE 138KV CKT 1
FDNS	00NR	2	16WP	G15_063	FROM->TO	G14-057T 345.00 - SUNNYSIDE 345KV CKT 1	717	789	0.04554	116.4107	DELL 500 - ESSEX UNIT 2 500KV CKT Z1
FDNS	00NR	2	16WP	G15_063	FROM->TO	G14-057T 345.00 - SUNNYSIDE 345KV CKT 1	717	789	0.04554	116.4022	GEN509392 G2-ARSENAL HILL GENS #3 (STALL)
FDNS	00NR	2	16WP	G15_063	FROM->TO	G14-057T 345.00 - SUNNYSIDE 345KV CKT 1	717	789	0.04554	116.4021	GEN509391 G1-ARSENAL HILL GENS #2 (STALL)
FDNS	00NR	2	20WP	G15_063	FROM->TO	G14-057T 345.00 - SUNNYSIDE 345KV CKT 1	717	789	0.04468	116.3933	BORDER 7345.00 - WOODWARD DISTRICT EHV 345KV CKT 1
FDNS	00NR	2	16WP	G15_063	FROM->TO	G14-057T 345.00 - SUNNYSIDE 345KV CKT 1	717	789	0.04554	116.3903	GEN336252 1-NINEMILE POINT UNIT#5
FDNS	00NR	2	16WP	G15_063	FROM->TO	G14-057T 345.00 - SUNNYSIDE 345KV CKT 1	717	789	0.04557	116.3902	G1524G1525 345.00 - THISTLE7 345.00 345KV CKT 1
FDNS	00NR	2	16WP	G15_063	FROM->TO	G14-057T 345.00 - SUNNYSIDE 345KV CKT 1	717	789	0.04557	116.3902	G1524G1525 345.00 - THISTLE7 345.00 345KV CKT 2
FDNS	00NR	2	16WP	G15_063	FROM->TO	G14-057T 345.00 - SUNNYSIDE 345KV CKT 1	717	789	0.04554	116.375	GEN334071 1-LEWIS CREEK 2
FDNS	00NR	2	16WP	G15_063	FROM->TO	G14-057T 345.00 - SUNNYSIDE 345KV CKT 1	717	789	0.04567	116.3699	G15074_T 345.00 - HOYT 345KV CKT 1
FDNS	00NR	2	16WP	G15_063	FROM->TO	G14-057T 345.00 - SUNNYSIDE 345KV CKT 1	717	789	0.04554	116.366	GEN334070 1-LEWIS CREEK 1
FDNS	00NR	2	16WP	G15_063	FROM->TO	G14-057T 345.00 - SUNNYSIDE 345KV CKT 1	717	789	0.04554	116.3637	GEN335204 1-NELSON UNIT 4
FDNS	00NR	2	16WP	G15_063	FROM->TO	G14-057T 345.00 - SUNNYSIDE 345KV CKT 1	717	789	0.04692	116.3419	BLANCHARD - MAUD 138KV CKT 1
FDNS	00NR	2	16WP	G15_063	FROM->TO	G14-057T 345.00 - SUNNYSIDE 345KV CKT 1	717	789	0.04567	116.3372	DUNCAN (DUNCAN) 138/69/13.8KV TRANSFORMER CKT 1
FDNS	00NR	2	16WP	G15_063	FROM->TO	G14-057T 345.00 - SUNNYSIDE 345KV CKT 1	717	789	0.04567	116.3372	DUNCAN (DUNCAN) 138/69/13.8KV TRANSFORMER CKT 1
FDNS	00NR	2	16WP	G15_063	FROM->TO	G14-057T 345.00 - SUNNYSIDE 345KV CKT 1	717	789	0.04554	116.3286	GEN334441 1-SABINE UNIT 5
FDNS	00NR	2	16WP	G15_063	FROM->TO	G14-057T 345.00 - SUNNYSIDE 345KV CKT 1	717	789	0.04663	116.3054	LATTA JCT - OIL CENTER 138KV CKT 1
FDNS	00NR	2	16WP	G15_063	FROM->TO	G14-057T 345.00 - SUNNYSIDE 345KV CKT 1	717	789	0.04554	116.2916	P12:161:AEPW-SWPA:BEAVER5:EROGERS5
FDNS	00NR	2	16WP	G15_063	FROM->TO	G14-057T 345.00 - SUNNYSIDE 345KV CKT 1	717	789	0.04554	116.2887	GEN300003 1-THOMAS HILL UNIT 3
FDNS	00NR	2	16WP	G15_063	FROM->TO	G14-057T 345.00 - SUNNYSIDE 345KV CKT 1	717	789	0.04554	116.2871	GEN515040 1-SEMINOLE 1G
FDNS	00NR	2	16WP	G15_063	FROM->TO	G14-057T 345.00 - SUNNYSIDE 345KV CKT 1	717	789	0.04554	116.2756	GEN334030 1-FRONTIER UNIT 1
FDNS	00NR	2	16WP	G15_063	FROM->TO	G14-057T 345.00 - SUNNYSIDE 345KV CKT 1	717	789	0.04554	116.2739	GEN334031 1-FRONTIER UNIT 2
FDNS	00NR	2	16WP	G15_063	FROM->TO	G14-057T 345.00 - SUNNYSIDE 345KV CKT 1	717	789	0.04554	116.2729	GEN337653 1-WHITE BLUFF UNIT #2
FDNS	00NR	2	16WP	G15_063	FROM->TO	G14-057T 345.00 - SUNNYSIDE 345KV CKT 1	717	789	0.04557	116.2726	P12:138:AEPW:CATOOSA4:T.S.E.-4
FDNS	00NR	2	20WP	G15_063	FROM->TO	G14-057T 345.00 - SUNNYSIDE 345KV CKT 1	717	789	0.04524	116.2609	GEN509406 1-WELSH #3
FDNS	00NR	2	20WP	G15_063	FROM->TO	G14-057T 345.00 - SUNNYSIDE 345KV CKT 1	717	789	0.04524	116.2606	GEN509404 1-WELSH #1
FDNS	00NR	2	16WP	G15_063	FROM->TO	G14-057T 345.00 - SUNNYSIDE 345KV CKT 1	717	789	0.04554	116.2565	GEN506752 1-LEBROCK GAS 1
FDNS	00NR	2	16WP	G15_063	FROM->TO	G14-057T 345.00 - SUNNYSIDE 345KV CKT 1	717	789	0.04554	116.2563	GEN506753 1-LEBROCK GAS 2
FDNS	00NR	2	16WP	G15_063	FROM->TO	G14-057T 345.00 - SUNNYSIDE 345KV CKT 1	717	789	0.0449	116.2549	TUTTLE - TUTTLE CONOCO TAP 138KV CKT 1
FDNS	00NR	2	16WP	G15_063	FROM->TO	G14-057T 345.00 - SUNNYSIDE 345KV CKT 1	717	789	0.04554	116.2416	6LAYFLD 230.00 - CARROLL 230KV CKT 1
FDNS	00NR	2	16WP	G15_063	FROM->TO	G14-057T 345.00 - SUNNYSIDE 345KV CKT 1	717	789	0.04556	116.2333	8DANIEL8 500.00 - MCKNIGHT 500KV CKT 1
FDNS	00NR	2	16WP	G15_063	FROM->TO	G14-057T 345.00 - SUNNYSIDE 345KV CKT 1	717	789	0.04554	116.2265	GEN515226 1-MUSKOGEE 6G
FDNS	00NR	2	16WP	G15_063	FROM->TO	G14-057T 345.00 - SUNNYSIDE 345KV CKT 1	717	789	0.04554	116.2246	GEN337911 1-ARKANSAS NUCLEAR ONE UNIT #2
FDNS	00NR	2	16WP	G15_063	FROM->TO	G14-057T 345.00 - SUNNYSIDE 345KV CKT 1	717	789	0.0462	116.2233	BAILEY4 138.00 - SUNSHINE CANYON 138KV CKT 1
FDNS	00NR	2	16WP	G15_063	FROM->TO	G14-057T 345.00 - SUNNYSIDE 345KV CKT 1	717	789	0.04546	116.2197	P12:138:AEPW-OGE:WTH_JCT4:JENSEN4
FDNS	00NR	2	16WP	G15_063	FROM->TO	G14-057T 345.00 - SUNNYSIDE 345KV CKT 1	717	789	0.04554	116.2185	P12:161:AEPW:DYESS5:ELMSPRNG:TONTITN5
FDNS	00NR	2	16WP	G15_063	FROM->TO	G14-057T 345.00 - SUNNYSIDE 345KV CKT 1	717	789	0.04552	116.2165	FULTON 115 - HOPE 115KV CKT 1
FDNS	00NR	2	16WP	G15_063	FROM->TO	G14-057T 345.00 - SUNNYSIDE 345KV CKT 1	717	789	0.04552	116.2165	FULTON 115 - HOPE 115KV CKT 1
FDNS	00NR	2	16WP	G15_063	FROM->TO	G14-057T 345.00 - SUNNYSIDE 345KV CKT 1	717	789	0.04554	116.2163	GEN300015 1-1SGPDEL 18.000
FDNS	00NR	2	16WP	G15_063	FROM->TO	G14-057T 345.00 - SUNNYSIDE 345KV CKT 1	717	789	0.04554	116.2086	GEN501811 1-RODEMACHER UNIT 1
FDNS	00NR	2	16WP	G15_063	FROM->TO	G14-057T 345.00 - SUNNYSIDE 345KV CKT 1	717	789	0.0456	116.2082	G15088_T 345.00 - MOORE 345KV CKT 1
FDNS	00NR	2	16WP	G15_063	FROM->TO	G14-057T 345.00 - SUNNYSIDE 345KV CKT 1	717	789	0.04554	116.1913	GEN337652 1-WHITE BLUFF UNIT #1
FDNS	00NR	2	16WP	G15_063	FROM->TO	G14-057T 345.00 - SUNNYSIDE 345KV CKT 1	717	789	0.04554	116.1903	GEN336251 1-NINEMILE POINT UNIT#4
FDNS	00NR	2	16WP	G15_063	FROM->TO	G14-057T 345.00 - SUNNYSIDE 345KV CKT 1	717	789	0.04554	116.1869	GEN334433 1-SABINE UNIT 3
FDNS	00NR	2	16WP	G15_063	FROM->TO	G14-057T 345.00 - SUNNYSIDE 345KV CKT 1	717	789	0.04554	116.1843	GEN336831 1-BAXTER WILSON SES
FDNS	00NR	2	16WP	G15_063	FROM->TO	G14-057T 345.00 - SUNNYSIDE 345KV CKT 1	717	789	0.04566	116.1794	P12:138:AEPW:CORNVIL4:S.W.S.-4
FDNS	00NR	2	16WP	G15_063	FROM->TO	G14-057T 345.00 - SUNNYSIDE 345KV CKT 1	717	789	0.04555	116.1744	P12:138:AEPW:CORNVIL4:DUNCAN-4
FDNS	00NR	2	16WP	G15_063	FROM->TO	G14-057T 345.00 - SUNNYSIDE 345KV CKT 1	717	789	0.0449	116.1743	CIMARRON - TUTTLE CONOCO TAP 138KV CKT 1

SOLUTION	GROUP	SCENARIO	SEASON	SOURCE	DIRECTION	MONITORED ELEMENT	RATEA (MVA)	RATEB(MVA)	TDF	TC%LOADING (% MVA)	CONTINGENCY
FDNS	00NR	2	16WP	G15_063	FROM->TO	G14-057T 345.00 - SUNNYSIDE 345KV CKT 1	717	789	0.04553	116.1606	BUCKNER7 345.00 - SPEARVILLE 345KV CKT 1
FDNS	00NR	2	16WP	G15_063	FROM->TO	G14-057T 345.00 - SUNNYSIDE 345KV CKT 1	717	789	0.04553	116.1606	BUCKNER7 345.00 - SPEARVILLE 345KV CKT 1
FDNS	00NR	2	16WP	G15_063	FROM->TO	G14-057T 345.00 - SUNNYSIDE 345KV CKT 1	717	789	0.04567	116.154	P12:69:WFEC-AEPW:COMANCH2:DUNCAN-2
FDNS	00NR	2	16WP	G15_063	FROM->TO	G14-057T 345.00 - SUNNYSIDE 345KV CKT 1	717	789	0.04554	116.1537	GEN562783 1-G15036_4 0.6900
FDNS	00NR	2	16WP	G15_063	FROM->TO	G14-057T 345.00 - SUNNYSIDE 345KV CKT 1	717	789	0.04554	116.1537	GEN562784 1-G15036_5 0.6900
FDNS	00NR	2	16WP	G15_063	FROM->TO	G14-057T 345.00 - SUNNYSIDE 345KV CKT 1	717	789	0.04205	116.1448	CANADIAN RIVER - PITTSBURG 345KV CKT 1
FDNS	00NR	2	16WP	G15_063	FROM->TO	G14-057T 345.00 - SUNNYSIDE 345KV CKT 1	717	789	0.04205	116.1448	CANADIAN RIVER - PITTSBURG 345KV CKT 1
FDNS	00NR	2	16WP	G15_063	FROM->TO	G14-057T 345.00 - SUNNYSIDE 345KV CKT 1	717	789	0.04554	116.1418	GEN505432 1-SIKESTON
FDNS	00NR	2	16WP	G15_063	FROM->TO	G14-057T 345.00 - SUNNYSIDE 345KV CKT 1	717	789	0.04601	116.1412	CIMARRON - CZECH HALL 138KV CKT 1
FDNS	00NR	2	16WP	G15_063	FROM->TO	G14-057T 345.00 - SUNNYSIDE 345KV CKT 1	717	789	0.04554	116.1297	GEN515223 1-MUSKOGEE 4G
FDNS	00NR	2	16WP	G15_063	FROM->TO	G14-057T 345.00 - SUNNYSIDE 345KV CKT 1	717	789	0.04554	116.1297	GEN515225 1-MUSKOGEE 5G
FDNS	00NR	2	16WP	G15_063	FROM->TO	G14-057T 345.00 - SUNNYSIDE 345KV CKT 1	717	789	0.04549	116.1281	P12:138:AEPW:WTHWF4:CLINTJC4
FDNS	00NR	2	16WP	G15_063	FROM->TO	G14-057T 345.00 - SUNNYSIDE 345KV CKT 1	717	789	0.04554	116.1265	WHITE BLUFF 500/26.0KV TRANSFORMER CKT 1
FDNS	00NR	2	16WP	G15_063	FROM->TO	G14-057T 345.00 - SUNNYSIDE 345KV CKT 1	717	789	0.04567	116.1209	HOYT - STRANGER CREEK 345KV CKT 1
FDNS	00NR	2	16WP	G15_063	FROM->TO	G14-057T 345.00 - SUNNYSIDE 345KV CKT 1	717	789	0.04567	116.1159	G15074_T 345.00 - JEFFREY ENERGY CENTER 345KV CKT 1
FDNS	00NR	2	16WP	G15_063	FROM->TO	G14-057T 345.00 - SUNNYSIDE 345KV CKT 1	717	789	0.04555	116.1131	P12:161:AEPW:EROGERS5:ECNTRTN5
FDNS	00NR	2	16WP	G15_063	FROM->TO	G14-057T 345.00 - SUNNYSIDE 345KV CKT 1	717	789	0.0455	116.1109	LAYFLD8 500.00 - MOUNT OLIVE 500KV CKT 1
FDNS	00NR	2	16WP	G15_063	FROM->TO	G14-057T 345.00 - SUNNYSIDE 345KV CKT 1	717	789	0.0455	116.1109	LAYFLD8 500.00 - MOUNT OLIVE 500KV CKT 1
FDNS	00NR	2	16WP	G15_063	FROM->TO	G14-057T 345.00 - SUNNYSIDE 345KV CKT 1	717	789	0.04611	116.1088	CIMARRON - SARA 138KV CKT 1
FDNS	00NR	2	16WP	G15_063	FROM->TO	G14-057T 345.00 - SUNNYSIDE 345KV CKT 1	717	789	0.04554	116.1066	RODEMACHER 230/22.0KV TRANSFORMER CKT 1
FDNS	00NR	2	16WP	G15_063	FROM->TO	G14-057T 345.00 - SUNNYSIDE 345KV CKT 1	717	789	0.04514	116.1037	ARBWIND4 138.00 - CARTER 138KV CKT 1
FDNS	00NR	2	16WP	G15_063	FROM->TO	G14-057T 345.00 - SUNNYSIDE 345KV CKT 1	717	789	0.04567	116.1033	DUNCAN - TOSCO 69KV CKT 1
FDNS	00NR	2	16WP	G15_063	FROM->TO	G14-057T 345.00 - SUNNYSIDE 345KV CKT 1	717	789	0.04551	116.0933	HOT SPRINGS EHV - MAGNET COVE 500KV CKT 1
FDNS	00NR	2	16WP	G15_063	FROM->TO	G14-057T 345.00 - SUNNYSIDE 345KV CKT 1	717	789	0.04554	116.093	GEN303007 1-1BC2 U2
FDNS	00NR	2	16WP	G15_063	FROM->TO	G14-057T 345.00 - SUNNYSIDE 345KV CKT 1	717	789	0.04549	116.0914	P12:138:AEPW:WTHWF4:WTH_SE4
FDNS	00NR	2	16WP	G15_063	FROM->TO	G14-057T 345.00 - SUNNYSIDE 345KV CKT 1	717	789	0.04496	116.0901	SEMINOLE - VANOSTP4 138.00 138KV CKT 1
FDNS	00NR	2	16WP	G15_063	FROM->TO	G14-057T 345.00 - SUNNYSIDE 345KV CKT 1	717	789	0.04554	116.0883	GEN303006 1-1BC2 U1
FDNS	00NR	2	16WP	G15_063	FROM->TO	G14-057T 345.00 - SUNNYSIDE 345KV CKT 1	717	789	0.04553	116.0852	MC NIEL 500/115KV TRANSFORMER CKT 1
FDNS	00NR	2	16WP	G15_063	FROM->TO	G14-057T 345.00 - SUNNYSIDE 345KV CKT 1	717	789	0.04554	116.0814	GEN337910 1-ARKANSAS NUCLEAR ONE UNIT #1
FDNS	00NR	2	16WP	G15_063	FROM->TO	G14-057T 345.00 - SUNNYSIDE 345KV CKT 1	717	789	0.04544	116.0779	CLEO CORNER - CLEOPLT4 138.00 138KV CKT 1
FDNS	00NR	2	16WP	G15_063	FROM->TO	G14-057T 345.00 - SUNNYSIDE 345KV CKT 1	717	789	0.04558	116.0763	P12:69:AEPW-OMPA:COMANC-2:OMWALTR2
FDNS	00NR	2	16WP	G15_063	FROM->TO	G14-057T 345.00 - SUNNYSIDE 345KV CKT 1	717	789	0.04551	116.0741	BISMARK - HOT SPRINGS WEST BUS 115KV CKT 1
FDNS	00NR	2	16WP	G15_063	FROM->TO	G14-057T 345.00 - SUNNYSIDE 345KV CKT 1	717	789	0.04545	116.0696	G15095_T 138.00 - ROSE_VALLEY 138.00 138KV CKT 1
FDNS	00NR	2	16WP	G15_063	FROM->TO	G14-057T 345.00 - SUNNYSIDE 345KV CKT 1	717	789	0.04554	116.069	NELSON 230/20.0KV TRANSFORMER CKT 1
FDNS	00NR	2	16WP	G15_063	FROM->TO	G14-057T 345.00 - SUNNYSIDE 345KV CKT 1	717	789	0.04554	116.066	GEN336191 1-LITTLE GYPSY UNIT#3
FDNS	00NR	2	16WP	G15_063	FROM->TO	G14-057T 345.00 - SUNNYSIDE 345KV CKT 1	717	789	0.04544	116.064	CLEOPLT4 138.00 - MEN TAP 138KV CKT 1
FDNS	00NR	2	16WP	G15_063	FROM->TO	G14-057T 345.00 - SUNNYSIDE 345KV CKT 1	717	789	0.04554	116.0638	GEN300010 1-ST FRANCIS UNIT 1
FDNS	00NR	2	16WP	G15_063	FROM->TO	G14-057T 345.00 - SUNNYSIDE 345KV CKT 1	717	789	0.04601	116.0579	CZECH HALL - XEROX 138KV CKT 1
FDNS	00NR	2	16WP	G15_063	FROM->TO	G14-057T 345.00 - SUNNYSIDE 345KV CKT 1	717	789	0.0462	116.0556	BAILEY4 138.00 - WESTMOORE 138KV CKT 1
FDNS	00NR	2	16WP	G15_063	FROM->TO	G14-057T 345.00 - SUNNYSIDE 345KV CKT 1	717	789	0.04601	116.0535	MORGAN - XEROX 138KV CKT 1
FDNS	00NR	2	16WP	G15_063	FROM->TO	G14-057T 345.00 - SUNNYSIDE 345KV CKT 1	717	789	0.04544	116.0522	IMO TAP - MEN TAP 138KV CKT 1
FDNS	00NR	2	16WP	G15_063	FROM->TO	G14-057T 345.00 - SUNNYSIDE 345KV CKT 1	717	789	0.046	116.0483	BENTON - WICHITA 345KV CKT 1
FDNS	00NR	2	16WP	G15_063	FROM->TO	G14-057T 345.00 - SUNNYSIDE 345KV CKT 1	717	789	0.04556	116.0468	P12:138:AEPW:N.E.S.-4:CATOOSA4
FDNS	00NR	2	16WP	G15_063	FROM->TO	G14-057T 345.00 - SUNNYSIDE 345KV CKT 1	717	789	0.04554	116.0394	GEN335614 1-WILLOW GLENN UNIT#4
FDNS	00NR	2	16WP	G15_063	FROM->TO	G14-057T 345.00 - SUNNYSIDE 345KV CKT 1	717	789	0.04567	116.0336	COMANCHE TAP - TOSCO 69KV CKT 1
FDNS	00NR	2	16WP	G15_063	FROM->TO	G14-057T 345.00 - SUNNYSIDE 345KV CKT 1	717	789	0.04601	116.0298	MORGAN - MUSTANG 138KV CKT 1
FDNS	00NR	2	16WP	G15_063	FROM->TO	G14-057T 345.00 - SUNNYSIDE 345KV CKT 1	717	789	0.04663	116.0288	LASALLE - LATTA JCT 138KV CKT 1
FDNS	00NR	2	16WP	G15_063	FROM->TO	G14-057T 345.00 - SUNNYSIDE 345KV CKT 1	717	789	0.04554	116.0286	GEN303008 1-1BC2 U3
FDNS	00NR	2	16WP	G15_063	FROM->TO	G14-057T 345.00 - SUNNYSIDE 345KV CKT 1	717	789	0.04551	116.0217	ALPINE AECC - BISMARK 115KV CKT 1
FDNS	00NR	2	16WP	G15_063	FROM->TO	G14-057T 345.00 - SUNNYSIDE 345KV CKT 1	717	789	0.04554	116.0137	GEN300011 1-ST FRANCIS UNIT 2
FDNS	00NR	2	16WP	G15_063	FROM->TO	G14-057T 345.00 - SUNNYSIDE 345KV CKT 1	717	789	0.04726	116.0031	CANADIAN - NOBLE 138KV CKT 1
FDNS	00NR	2	16WP	G15_063	FROM->TO	G14-057T 345.00 - SUNNYSIDE 345KV CKT 1	717	789	0.04545	116.0023	NOEL_SW 138.00 - ROSE_VALLEY 138.00 138KV CKT 1
FDNS	00NR	2	16WP	G15_063	FROM->TO	G14-057T 345.00 - SUNNYSIDE 345KV CKT 1	717	789	0.04554	116.0019	GEN336170 1-GULF OXY U4
FDNS	00NR	2	16WP	G15_063	FROM->TO	G14-057T 345.00 - SUNNYSIDE 345KV CKT 1	717	789	0.04554	115.9957	GEN336464 1-MICHOUD UNIT #3
FDNS	00NR	2	16WP	G15_063	FROM->TO	G14-057T 345.00 - SUNNYSIDE 345KV CKT 1	717	789	0.0456	115.9923	7JASPER 345.00 - BLACKBERRY 345KV CKT 1
FDNS	00NR	2	16WP	G15_063	FROM->TO	G14-057T 345.00 - SUNNYSIDE 345KV CKT 1	717	789	0.04554	115.992	CYPRESS - HARTBURG 500KV CKT 1
FDNS	00NR	2	16WP	G15_063	FROM->TO	G14-057T 345.00 - SUNNYSIDE 345KV CKT 1	717	789	0.04545	115.9862	WEATHERFORD JCT. - WEATHERFORD SOUTHEAST 138KV CKT 1
FDNS	00NR	2	16WP	G15_063	FROM->TO	G14-057T 345.00 - SUNNYSIDE 345KV CKT 1	717	789	0.04545	115.9862	WEATHERFORD JCT. - WEATHERFORD SOUTHEAST 138KV CKT 1
FDNS	00NR	2	16WP	G15_063	FROM->TO	G14-057T 345.00 - SUNNYSIDE 345KV CKT 1	717	789	0.04724	115.9815	P12:138:OKGE:3TERM27
FDNS	00NR	2	16WP	G15_063	FROM->TO	G14-057T 345.00 - SUNNYSIDE 345KV CKT 1	717	789	0.04555	115.9815	CHISHOLM6 230.00 - ELK CITY 230KV 230KV CKT 1
FDNS	00NR	2	16WP	G15_063	FROM->TO	G14-057T 345.00 - SUNNYSIDE 345KV CKT 1	717	789	0.04554	115.9805	GEN300016 1-1G1GPDEL 18.000
FDNS	00NR	2	16WP	G15_063	FROM->TO	G14-057T 345.00 - SUNNYSIDE 345KV CKT 1	717	789	0.04555	115.9801	ELK CITY 230KV (ELKCTY-6) 230/138/13.8KV TRANSFORMER CKT 1
FDNS	00NR	2	16WP	G15_063	FROM->TO	G14-057T 345.00 - SUNNYSIDE 345KV CKT 1	717	789	0.04555	115.9801	ELK CITY 230KV (ELKCTY-6) 230/138/13.8KV TRANSFORMER CKT 1
FDNS	00NR	2	16WP	G15_063	FROM->TO	G14-057T 345.00 - SUNNYSIDE 345KV CKT 1	717	789	0.04567	115.9794	COMANCHE - COMANCHE TAP 69KV CKT 1
FDNS	00NR	2	16WP	G15_063	FROM->TO	G14-057T 345.00 - SUNNYSIDE 345KV CKT 1	717	789	0.04554	115.9784	8CAJUN2 500/24.0KV TRANSFORMER CKT 1
FDNS	00NR	2	16WP	G15_063	FROM->TO	G14-057T 345.00 - SUNNYSIDE 345KV CKT 1	717	789	0.04551	115.978	ALPINE AECC - AMITY SS 115KV CKT 1
FDNS	00NR	2	16WP	G15_063	FROM->TO	G14-057T 345.00 - SUNNYSIDE 345KV CKT 1	717	789	0.04571	115.9775	ANADARKO - SEQUOYAHJ4 138.00 138KV CKT 1
FDNS	00NR	2	16WP	G15_063	FROM->TO	G14-057T 345.00 - SUNNYSIDE 345KV CKT 1	717	789	0.04571	115.9762	CORN TAP - SEQUOYAHJ4 138.00 138KV CKT 1
FDNS	00NR	2	16WP	G15_063	FROM->TO	G14-057T 345.00 - SUNNYSIDE 345KV CKT 1	717	789	0.04555	115.9681	P12:138:OKGE-AEPW:JENSEN4:REDROCKRD4
FDNS	00NR	2	16WP	G15_063	FROM->TO	G14-057T 345.00 - SUNNYSIDE 345KV CKT 1	717	789	0.04571	115.9607	SWISSVALE - WEST GARDNER 345KV CKT 1
FDNS	00NR	2	16WP	G15_063	FROM->TO	G14-057T 345.00 - SUNNYSIDE 345KV CKT 1	717	789	0.04581	115.955	BLACKBERRY - NEOSHO 345KV CKT 1
FDNS	00NR	2	16WP	G15_063	FROM->TO	G14-057T 345.00 - SUNNYSIDE 345KV CKT 1	717	789	0.04581	115.955	BLACKBERRY - NEOSHO 345KV CKT 1
FDNS	00NR	2	16WP	G15_063	FROM->TO	G14-057T 345.00 - SUNNYSIDE 345KV CKT 1	717	789	0.04554	115.9536	GEN501910 1-ACADIA UNIT ST1
FDNS	00NR	2	16WP	G15_063	FROM->TO	G14-057T 345.00 - SUNNYSIDE 345KV CKT 1	717	789	0.04841	115.9509	DRAPER LAKE - SEMINOLE 345KV CKT 2
FDNS	00NR	2	16WP	G15_063	FROM->TO	G14-057T 345.00 - SUNNYSIDE 345KV CKT 1	717	789	0.04841	115.9508	DRAPER LAKE - SEMINOLE 345KV CKT 1
FDNS	00NR	2	16WP	G15_063	FROM->TO	G14-057T 345.00 - SUNNYSIDE 345KV CKT 1	717	789	0.04554	115.9495	P12:138:AEPW:R.S.S.-4:S.HUD.-4
FDNS	00NR	2	16WP	G15_063	FROM->TO	G14-057T 345.00 - SUNNYSIDE 345KV CKT 1	717	789	0.04554	115.9422	GEN337041 1-GERALD ANDRUS
FDNS	00NR	2	16WP	G15_063	FROM->TO	G14-057T 345.00 - SUNNYSIDE 345KV CKT 1	717	789	0.04565	115.9367	WALTERS - WALTERS 69KV CKT 1
FDNS	00NR	2	16WP	G15_063	FROM->TO	G14-057T 345.00 - SUNNYSIDE 345KV CKT 1	717	789	0.04561	115.9352	7LUTESVIL 345.00 - 7ST FRANC 345.00 345KV CKT 1

SOLUTION	GROUP	SCENARIO	SEASON	SOURCE	DIRECTION	MONITORED ELEMENT	RATEA (MVA)	RATEB(MVA)	TDF	TC%LOADING (% MVA)	CONTINGENCY
FDNS	00NR	2	16WP	G15_063	FROM->TO	G14-057T 345.00 - SUNNYSIDE 345KV CKT 1	717	789	0.04545	115.9335	P12:138:AEPW:REDROCKRD4:WTH_JCT4
FDNS	00NR	2	16WP	G15_063	FROM->TO	G14-057T 345.00 - SUNNYSIDE 345KV CKT 1	717	789	0.0455	115.9245	ETTA (DUKE HOTSPRINGS) - MC NIEL 500KV CKT 1
FDNS	00NR	2	16WP	G15_063	FROM->TO	G14-057T 345.00 - SUNNYSIDE 345KV CKT 1	717	789	0.04611	115.9211	SARA - STHLAKE4 138.00 138KV CKT 1
FDNS	00NR	2	16WP	G15_063	FROM->TO	G14-057T 345.00 - SUNNYSIDE 345KV CKT 1	717	789	0.04726	115.9116	NOBLE - PURCELL4 138.00 138KV CKT 1
FDNS	00NR	2	16WP	G15_063	FROM->TO	G14-057T 345.00 - SUNNYSIDE 345KV CKT 1	717	789	0.04554	115.9107	P12:138:AEPW:YARCH-S4:T.S.E.-4
FDNS	00NR	2	16WP	G15_063	FROM->TO	G14-057T 345.00 - SUNNYSIDE 345KV CKT 1	717	789	0.04566	115.9094	NORGE ROAD - SOUTHWESTERN STATION 138KV CKT 1
FDNS	00NR	2	16WP	G15_063	FROM->TO	G14-057T 345.00 - SUNNYSIDE 345KV CKT 1	717	789	0.04566	115.9094	NORGE ROAD - SOUTHWESTERN STATION 138KV CKT 1
FDNS	00NR	2	16WP	G15_063	FROM->TO	G14-057T 345.00 - SUNNYSIDE 345KV CKT 1	717	789	0.04558	115.9072	LAWTON RELIFT TAP - OMPA-WALTERS 69KV CKT 1
FDNS	00NR	2	16WP	G15_063	FROM->TO	G14-057T 345.00 - SUNNYSIDE 345KV CKT 1	717	789	0.04555	115.9045	P12:138:AEPW:BA_71ST4:T.S.E.-4
FDNS	00NR	2	16WP	G15_063	FROM->TO	G14-057T 345.00 - SUNNYSIDE 345KV CKT 1	717	789	0.04554	115.9041	P12:69:AEPW:NROGERS2:ECNTRTN2
FDNS	00NR	2	16WP	G15_063	FROM->TO	G14-057T 345.00 - SUNNYSIDE 345KV CKT 1	717	789	0.04554	115.9031	GEN336801 1-BAXTER WILSON UNIT #1
FDNS	00NR	2	16WP	G15_063	FROM->TO	G14-057T 345.00 - SUNNYSIDE 345KV CKT 1	717	789	0.04554	115.9009	SABINE 230/24.0KV TRANSFORMER CKT 1
FDNS	00NR	2	16WP	G15_063	FROM->TO	G14-057T 345.00 - SUNNYSIDE 345KV CKT 1	717	789	0.0462	115.8997	FRANKLIN SW - WESTMOORE 138KV CKT 1
FDNS	00NR	2	16WP	G15_063	FROM->TO	G14-057T 345.00 - SUNNYSIDE 345KV CKT 1	717	789	0.04564	115.8979	8WNEWMADRID 500.00 - DELL 500 500KV CKT 1
FDNS	00NR	2	16WP	G15_063	FROM->TO	G14-057T 345.00 - SUNNYSIDE 345KV CKT 1	717	789	0.04464	115.8924	ARBUCKLE - VANOSTP4 138.00 138KV CKT 1
FDNS	00NR	2	16WP	G15_063	FROM->TO	G14-057T 345.00 - SUNNYSIDE 345KV CKT 1	717	789	0.04611	115.8922	MCCLAIN - STHLAKE4 138.00 138KV CKT 1
FDNS	00NR	2	16WP	G15_063	FROM->TO	G14-057T 345.00 - SUNNYSIDE 345KV CKT 1	717	789	0.04546	115.8903	ENOWILT - LONE OAK 138KV CKT 1
FDNS	00NR	2	16WP	G15_063	FROM->TO	G14-057T 345.00 - SUNNYSIDE 345KV CKT 1	717	789	0.04574	115.8853	P12:138:AEPW-OGE:SHIDLER4:OSAGE 4
FDNS	00NR	2	16WP	G15_063	FROM->TO	G14-057T 345.00 - SUNNYSIDE 345KV CKT 1	717	789	0.04554	115.8832	FRONTIER 345/18.0KV TRANSFORMER CKT 1
FDNS	00NR	2	16WP	G15_063	FROM->TO	G14-057T 345.00 - SUNNYSIDE 345KV CKT 1	717	789	0.04554	115.8815	FRONTIER 345/18.0KV TRANSFORMER CKT 1
FDNS	00NR	2	16WP	G15_063	FROM->TO	G14-057T 345.00 - SUNNYSIDE 345KV CKT 1	717	789	0.04546	115.8813	ENOWILT - SARDIS 138KV CKT 1
FDNS	00NR	2	16WP	G15_063	FROM->TO	G14-057T 345.00 - SUNNYSIDE 345KV CKT 1	717	789	0.04554	115.8758	ESSEX UNIT 2 500/18.0KV TRANSFORMER CKT 1
FDNS	00NR	2	16WP	G15_063	FROM->TO	G14-057T 345.00 - SUNNYSIDE 345KV CKT 1	717	789	0.04554	115.8728	P12:161:AEPW:CHAMSPR5:FARMING5
FDNS	00NR	2	16WP	G15_063	FROM->TO	G14-057T 345.00 - SUNNYSIDE 345KV CKT 1	717	789	0.04569	115.8696	EMPORIA ENERGY CENTER - SWISSVALE 345KV CKT 1
FDNS	00NR	2	16WP	G15_063	FROM->TO	G14-057T 345.00 - SUNNYSIDE 345KV CKT 1	717	789	0.04663	115.8693	LASALLE - STONEWAL LH138.00 138KV CKT 1
FDNS	00NR	2	16WP	G15_063	FROM->TO	G14-057T 345.00 - SUNNYSIDE 345KV CKT 1	717	789	0.04545	115.865	HINTON - WEATHERFORD JCT. 138KV CKT 1
FDNS	00NR	2	16WP	G15_063	FROM->TO	G14-057T 345.00 - SUNNYSIDE 345KV CKT 1	717	789	0.04663	115.8539	STONEWAL LH138.00 - TUPELO TAP 138KV CKT 1
FDNS	00NR	2	16WP	G15_063	FROM->TO	G14-057T 345.00 - SUNNYSIDE 345KV CKT 1	717	789	0.04554	115.8532	GEN505616 1-BROKEN BOW
FDNS	00NR	2	16WP	G15_063	FROM->TO	G14-057T 345.00 - SUNNYSIDE 345KV CKT 1	717	789	0.04549	115.8521	WEATHERFORD TAP - WEATHERFORD WIND FARM 138KV CKT 1
FDNS	00NR	2	16WP	G15_063	FROM->TO	G14-057T 345.00 - SUNNYSIDE 345KV CKT 1	717	789	0.04557	115.851	CLINTON JUNCTION - ELK CITY 138KV CKT 1
FDNS	00NR	2	16WP	G15_063	FROM->TO	G14-057T 345.00 - SUNNYSIDE 345KV CKT 1	717	789	0.04557	115.851	CLINTON JUNCTION - ELK CITY 138KV CKT 1
FDNS	00NR	2	16WP	G15_063	FROM->TO	G14-057T 345.00 - SUNNYSIDE 345KV CKT 1	717	789	0.04552	115.8489	HOPE - MCNAB REC 115KV CKT 1
FDNS	00NR	2	16WP	G15_063	FROM->TO	G14-057T 345.00 - SUNNYSIDE 345KV CKT 1	717	789	0.04554	115.8461	LEWIS CREEK SWITCHYARD 138/22.0KV TRANSFORMER CKT 1
FDNS	00NR	2	16WP	G15_063	FROM->TO	G14-057T 345.00 - SUNNYSIDE 345KV CKT 1	717	789	0.04546	115.844	CLAYTON - SARDIS 138KV CKT 1
FDNS	00NR	2	16WP	G15_063	FROM->TO	G14-057T 345.00 - SUNNYSIDE 345KV CKT 1	717	789	0.04554	115.8412	LEWIS CREEK SWITCHYARD 138/22.0KV TRANSFORMER CKT 1
FDNS	00NR	2	16WP	G15_063	FROM->TO	G14-057T 345.00 - SUNNYSIDE 345KV CKT 1	717	789	0.04558	115.8402	OMPA-WALTERS - WALTERS 69KV CKT 1
FDNS	00NR	2	16WP	G15_063	FROM->TO	G14-057T 345.00 - SUNNYSIDE 345KV CKT 1	717	789	0.04558	115.8402	OMPA-WALTERS - WALTERS 69KV CKT 1
FDNS	00NR	2	16WP	G15_063	FROM->TO	G14-057T 345.00 - SUNNYSIDE 345KV CKT 1	717	789	0.04552	115.84	P12:115:AEPW:TURK3:HOPE3
FDNS	00NR	2	16WP	G15_063	FROM->TO	G14-057T 345.00 - SUNNYSIDE 345KV CKT 1	717	789	0.04566	115.8399	SOUTHWESTERN STATION - VERDEN 138KV CKT 1
FDNS	00NR	2	16WP	G15_063	FROM->TO	G14-057T 345.00 - SUNNYSIDE 345KV CKT 1	717	789	0.04587	115.8333	EMPORIA ENERGY CENTER - G14_001T 345.00 345KV CKT 1
FDNS	00NR	2	16WP	G15_063	FROM->TO	G14-057T 345.00 - SUNNYSIDE 345KV CKT 1	717	789	0.0457	115.8327	MORISNT4 138.00 - STILLWATER 138KV CKT 1
FDNS	00NR	2	16WP	G15_063	FROM->TO	G14-057T 345.00 - SUNNYSIDE 345KV CKT 1	717	789	0.04554	115.8278	GEN501970 1-EVANGELINE UNIT 7
FDNS	00NR	2	16WP	G15_063	FROM->TO	G14-057T 345.00 - SUNNYSIDE 345KV CKT 1	717	789	0.04573	115.8272	P12:138:OKGE:3TERM2
FDNS	00NR	2	16WP	G15_063	FROM->TO	G14-057T 345.00 - SUNNYSIDE 345KV CKT 1	717	789	0.04565	115.8224	P12:69:WFEC-AEPW:COMANCH2:WALTRS-2
FDNS	00NR	2	16WP	G15_063	FROM->TO	G14-057T 345.00 - SUNNYSIDE 345KV CKT 1	717	789	0.04553	115.8197	COUCH SES - MC NIEL 115KV CKT 1
FDNS	00NR	2	16WP	G15_063	FROM->TO	G14-057T 345.00 - SUNNYSIDE 345KV CKT 1	717	789	0.04566	115.8195	NORTH 29TH CHICKASHA - VERDEN 138KV CKT 1
FDNS	00NR	2	16WP	G15_063	FROM->TO	G14-057T 345.00 - SUNNYSIDE 345KV CKT 1	717	789	0.04687	115.8184	CLARKSVILLE - ONETA 345KV CKT 1
FDNS	00NR	2	16WP	G15_063	FROM->TO	G14-057T 345.00 - SUNNYSIDE 345KV CKT 1	717	789	0.04687	115.8184	CLARKSVILLE - ONETA 345KV CKT 1
FDNS	00NR	2	16WP	G15_063	FROM->TO	G14-057T 345.00 - SUNNYSIDE 345KV CKT 1	717	789	0.04546	115.8184	P12:138:AEPW-SWPA:LONEOAK4:BRKNBW4
FDNS	00NR	2	16WP	G15_063	FROM->TO	G14-057T 345.00 - SUNNYSIDE 345KV CKT 1	717	789	0.04552	115.8174	MCNAB REC - Turk 115 115KV CKT 1
FDNS	00NR	2	16WP	G15_063	FROM->TO	G14-057T 345.00 - SUNNYSIDE 345KV CKT 1	717	789	0.04552	115.8174	TURK (TURK 1) 138/115/13.2KV TRANSFORMER CKT 1
FDNS	00NR	2	16WP	G15_063	FROM->TO	G14-057T 345.00 - SUNNYSIDE 345KV CKT 1	717	789	0.04552	115.8174	TURK (TURK 1) 138/115/13.2KV TRANSFORMER CKT 1
FDNS	00NR	2	16WP	G15_063	FROM->TO	G14-057T 345.00 - SUNNYSIDE 345KV CKT 1	717	789	0.04554	115.8162	GEN334392 1-EXXON MOBIL IPP 1
FDNS	00NR	2	16WP	G15_063	FROM->TO	G14-057T 345.00 - SUNNYSIDE 345KV CKT 1	717	789	0.04554	115.8085	GEN334393 1-EXXON MOBIL IPP 2
FDNS	00NR	2	16WP	G15_063	FROM->TO	G14-057T 345.00 - SUNNYSIDE 345KV CKT 1	717	789	0.04554	115.8085	GEN334394 1-EXXON MOBIL IPP 3
FDNS	00NR	2	16WP	G15_063	FROM->TO	G14-057T 345.00 - SUNNYSIDE 345KV CKT 1	717	789	0.04545	115.8052	HINTON - REDROCKRD4 138.00 138KV CKT 1
FDNS	00NR	2	16WP	G15_063	FROM->TO	G14-057T 345.00 - SUNNYSIDE 345KV CKT 1	717	789	0.04546	115.8034	CLAYTON - NASHOBA 138KV CKT 1
FDNS	00NR	2	16WP	G15_063	FROM->TO	G14-057T 345.00 - SUNNYSIDE 345KV CKT 1	717	789	0.0456	115.8032	P12:138:OKGE:3TERM12
FDNS	00NR	2	16WP	G15_063	FROM->TO	G14-057T 345.00 - SUNNYSIDE 345KV CKT 1	717	789	0.04554	115.801	GEN336222 1-LITTLE GYPSY UNIT#2
FDNS	00NR	2	16WP	G15_063	FROM->TO	G14-057T 345.00 - SUNNYSIDE 345KV CKT 1	717	789	0.04676	115.7991	MARIETTA - MARIETTA4 138.00 138KV CKT 1
FDNS	00NR	2	16WP	G15_063	FROM->TO	G14-057T 345.00 - SUNNYSIDE 345KV CKT 1	717	789	0.04563	115.7904	7JASPER 345.00 - MORGAN 345KV CKT 1
FDNS	00NR	2	16WP	G15_063	FROM->TO	G14-057T 345.00 - SUNNYSIDE 345KV CKT 1	717	789	0.04546	115.7903	BETHEL - NASHOBA 138KV CKT 1
FDNS	00NR	2	16WP	G15_063	FROM->TO	G14-057T 345.00 - SUNNYSIDE 345KV CKT 1	717	789	0.04555	115.7834	P12:138:AEPW:R.S.S-4:T.P.S.-4
FDNS	00NR	2	16WP	G15_063	FROM->TO	G14-057T 345.00 - SUNNYSIDE 345KV CKT 1	717	789	0.04571	115.7809	FRANKLIN - FRANKLIN SW 138KV CKT 1
FDNS	00NR	2	16WP	G15_063	FROM->TO	G14-057T 345.00 - SUNNYSIDE 345KV CKT 1	717	789	0.04554	115.7807	GEN506749 1-EASTMAN GENERATION A
FDNS	00NR	2	16WP	G15_063	FROM->TO	G14-057T 345.00 - SUNNYSIDE 345KV CKT 1	717	789	0.04554	115.7791	GEN334431 1-SABINE UNIT 1
FDNS	00NR	2	16WP	G15_063	FROM->TO	G14-057T 345.00 - SUNNYSIDE 345KV CKT 1	717	789	0.04554	115.779	GEN334432 1-SABINE UNIT 2
FDNS	00NR	2	16WP	G15_063	FROM->TO	G14-057T 345.00 - SUNNYSIDE 345KV CKT 1	717	789	0.04587	115.7744	G14_001T 345.00 - WICHITA 345KV CKT 1
FDNS	00NR	2	16WP	G15_063	FROM->TO	G14-057T 345.00 - SUNNYSIDE 345KV CKT 1	717	789	0.04554	115.7712	GEN501972 1-EVANGELINE UNIT 7-2
FDNS	00NR	2	16WP	G15_063	FROM->TO	G14-057T 345.00 - SUNNYSIDE 345KV CKT 1	717	789	0.04554	115.7711	GEN501971 1-EVANGELINE UNIT 7-1
FDNS	00NR	2	16WP	G15_063	FROM->TO	G14-057T 345.00 - SUNNYSIDE 345KV CKT 1	717	789	0.04554	115.7708	GEN336152 1-WATERFORD UNIT#2
FDNS	00NR	2	16WP	G15_063	FROM->TO	G14-057T 345.00 - SUNNYSIDE 345KV CKT 1	717	789	0.04554	115.7697	GEN336151 1-WATERFORD UNIT#1
FDNS	00NR	2	16WP	G15_063	FROM->TO	G14-057T 345.00 - SUNNYSIDE 345KV CKT 1	717	789	0.04559	115.7691	FLETCHER - MARLOW JCT 69KV CKT 1
FDNS	00NR	2	16WP	G15_063	FROM->TO	G14-057T 345.00 - SUNNYSIDE 345KV CKT 1	717	789	0.04549	115.7652	WEATHERFORD SOUTHEAST - WEATHERFORD TAP 138KV CKT 1
FDNS	00NR	2	16WP	G15_063	FROM->TO	G14-057T 345.00 - SUNNYSIDE 345KV CKT 1	717	789	0.04566	115.7639	CORNVILLE - NORGE ROAD 138KV CKT 1
FDNS	00NR	2	16WP	G15_063	FROM->TO	G14-057T 345.00 - SUNNYSIDE 345KV CKT 1	717	789	0.04566	115.7639	CORNVILLE - NORGE ROAD 138KV CKT 1
FDNS	00NR	2	16WP	G15_063	FROM->TO	G14-057T 345.00 - SUNNYSIDE 345KV CKT 1	717	789	0.04551	115.7624	P12:138:AEPW:OKMULGE4:R.S.S-4
FDNS	00NR	2	16WP	G15_063	FROM->TO	G14-057T 345.00 - SUNNYSIDE 345KV CKT 1	717	789	0.04566	115.7556	CORNVILLE - NORTH 29TH CHICKASHA 138KV CKT 1
FDNS	00NR	2	16WP	G15_063	FROM->TO	G14-057T 345.00 - SUNNYSIDE 345KV CKT 1	717	789	0.03089	115.7496	GRACEMONT - LAWTON EASTSIDE 345KV CKT 1

SOLUTION	GROUP	SCENARIO	SEASON	SOURCE	DIRECTION	MONITORED ELEMENT	RATEA (MVA)	RATEB(MVA)	TDF	TC%LOADING (% MVA)	CONTINGENCY
FDNS	00NR	2	16WP	G15_063	FROM->TO	G14-057T 345.00 - SUNNYSIDE 345KV CKT 1	717	789	0.03089	115.7496	GRACEMONT - LAWTON EASTSIDE 345KV CKT 1
FDNS	00NR	2	16WP	G15_063	FROM->TO	G14-057T 345.00 - SUNNYSIDE 345KV CKT 1	717	789	0.04555	115.7211	Canadian Pump Station - REDROCKRD4 138.00 138KV CKT 1
FDNS	00NR	2	16WP	G15_063	FROM->TO	G14-057T 345.00 - SUNNYSIDE 345KV CKT 1	717	789	0.04574	115.7136	P12:138:OKGE:3TERM47
FDNS	00NR	2	16WP	G15_063	FROM->TO	G14-057T 345.00 - SUNNYSIDE 345KV CKT 1	717	789	0.04549	115.7134	CLINTON JUNCTION - CLINTON NATURAL GAS TAP 138KV CKT 1
FDNS	00NR	2	16WP	G15_063	FROM->TO	G14-057T 345.00 - SUNNYSIDE 345KV CKT 1	717	789	0.04726	115.7026	PURCELL4 138.00 - WALNUT CREEK 138KV CKT 1
FDNS	00NR	2	16WP	G15_063	FROM->TO	G14-057T 345.00 - SUNNYSIDE 345KV CKT 1	717	789	0.04584	115.7012	HAMMETT TAP - HORSESHOE LAKE 138KV CKT 1
FDNS	00NR	2	20WP	G15_063	FROM->TO	G14-057T 345.00 - SUNNYSIDE 345KV CKT 1	717	789	0.04613	115.689	CORN TAP - NAPLESTP 138.00 138KV CKT 1
FDNS	00NR	2	16WP	G15_063	FROM->TO	G14-057T 345.00 - SUNNYSIDE 345KV CKT 1	717	789	0.04566	115.6883	CRINER - PAYNE 138.00 138KV CKT 1
FDNS	00NR	2	16WP	G15_063	FROM->TO	G14-057T 345.00 - SUNNYSIDE 345KV CKT 1	717	789	0.04565	115.6503	COMANCHE - WALTERS 69KV CKT 1
FDNS	00NR	2	20WP	G15_063	FROM->TO	G14-057T 345.00 - SUNNYSIDE 345KV CKT 1	717	789	0.04518	115.6344	7SAREPTA% 345.00 - LONGWOOD 345KV CKT 1
FDNS	00NR	2	20WP	G15_063	FROM->TO	G14-057T 345.00 - SUNNYSIDE 345KV CKT 1	717	789	0.04518	115.6344	7SAREPTA% 345.00 - LONGWOOD 345KV CKT 1
FDNS	00NR	2	20WP	G15_063	FROM->TO	G14-057T 345.00 - SUNNYSIDE 345KV CKT 1	717	789	0.04613	115.6032	NAPLESTP 138.00 - PAYNE 138.00 138KV CKT 1
FDNS	00NR	2	20WP	G15_063	FROM->TO	G14-057T 345.00 - SUNNYSIDE 345KV CKT 1	717	789	0.04524	115.5196	GEN336821 1-GRAND GULF UNIT
FDNS	00NR	2	20WP	G15_063	FROM->TO	G14-057T 345.00 - SUNNYSIDE 345KV CKT 1	717	789	0.04468	115.4634	BORDER 7345.00 - TUCO_2 345.00 345KV CKT 1
FDNS	00NR	2	20WP	G15_063	FROM->TO	G14-057T 345.00 - SUNNYSIDE 345KV CKT 1	717	789	0.0457	115.421	ANADARKO - POCASSETT 138KV CKT 1
FDNS	00NR	2	20WP	G15_063	FROM->TO	G14-057T 345.00 - SUNNYSIDE 345KV CKT 1	717	789	0.04524	115.4121	GEN336153 1-WATERFORD UNIT#3
FDNS	00NR	2	20WP	G15_063	FROM->TO	G14-057T 345.00 - SUNNYSIDE 345KV CKT 1	717	789	0.04605	115.3452	COMANCHE - LOCO 138KV CKT 1
FDNS	00NR	2	20WP	G15_063	FROM->TO	G14-057T 345.00 - SUNNYSIDE 345KV CKT 1	717	789	0.04779	115.3406	CLEVELAND - TULSA NORTH 345KV CKT 1
FDNS	00NR	2	20WP	G15_063	FROM->TO	G14-057T 345.00 - SUNNYSIDE 345KV CKT 1	717	789	0.04779	115.3406	CLEVELAND - TULSA NORTH 345KV CKT 1
FDNS	00NR	2	20WP	G15_063	FROM->TO	G14-057T 345.00 - SUNNYSIDE 345KV CKT 1	717	789	0.0457	115.264	POCASSETT - TUTTLE 138KV CKT 1
FDNS	00NR	2	16WP	G15_063	FROM->TO	G14-057T 345.00 - SUNNYSIDE 345KV CKT 1	717	789	0.04554	115.2466	803-OKLAUNION
FDNS	00NR	2	20WP	G15_063	FROM->TO	G14-057T 345.00 - SUNNYSIDE 345KV CKT 1	717	789	0.04524	115.2331	DOLET HILLS - SOUTHWEST SHREVEPORT 345KV CKT 1
FDNS	00NR	2	20WP	G15_063	FROM->TO	G14-057T 345.00 - SUNNYSIDE 345KV CKT 1	717	789	0.04524	115.2331	DOLET HILLS - SOUTHWEST SHREVEPORT 345KV CKT 1
FDNSLock	00NR	2	16WP	G15_063	FROM->TO	G14-057T 345.00 - SUNNYSIDE 345KV CKT 1	717	789	0.04554	115.169	OKLAUNION 345KV SWITCHED SHUNT
FDNS	00NR	2	16WP	G15_063	FROM->TO	G14-057T 345.00 - SUNNYSIDE 345KV CKT 1	717	789	0.04554	115.167	OKLAUNION 345KV SWITCHED SHUNT
FDNS	00NR	2	16WP	G15_063	FROM->TO	G14-057T 345.00 - SUNNYSIDE 345KV CKT 1	717	789	0.04484	115.124	P12:138:OKGE:3TERM39
FDNS	00NR	2	20WP	G15_063	FROM->TO	G14-057T 345.00 - SUNNYSIDE 345KV CKT 1	717	789	0.04524	115.116	GEN335831 1-RIVERBEND UNIT#1
FDNS	00NR	2	20WP	G15_063	FROM->TO	G14-057T 345.00 - SUNNYSIDE 345KV CKT 1	717	789	0.0573	115.1007	ARCADIA - NORTHWEST 345KV CKT 1
FDNS	00NR	2	20WP	G15_063	FROM->TO	G14-057T 345.00 - SUNNYSIDE 345KV CKT 1	717	789	0.04524	115.0774	GRAND GULF 500/22.0KV TRANSFORMER CKT 1
FDNS	00NR	2	20WP	G15_063	FROM->TO	G14-057T 345.00 - SUNNYSIDE 345KV CKT 1	717	789	0.04521	115.0107	7SAREPTA% 345.00 - ELDORADO EHV 345KV CKT 1
FDNS	00NR	2	20WP	G15_063	FROM->TO	G14-057T 345.00 - SUNNYSIDE 345KV CKT 1	717	789	0.04521	115.0105	3TR3AR8EL7EL
FDNS	00NR	2	20WP	G15_063	FROM->TO	G14-057T 345.00 - SUNNYSIDE 345KV CKT 1	717	789	0.04521	115	ELDORADO EHV 500/345KV TRANSFORMER CKT 1
FDNS	00NR	2	20WP	G15_063	FROM->TO	G14-057T 345.00 - SUNNYSIDE 345KV CKT 1	717	789	0.04543	114.9902	P12:138:AEPW:DUNCAN-4:L.E.S.-4
FDNS	00NR	2	20WP	G15_063	FROM->TO	G14-057T 345.00 - SUNNYSIDE 345KV CKT 1	717	789	0.04524	114.9434	GEN515577 1-ARBWND11 0.6900
FDNS	00NR	2	20WP	G15_063	FROM->TO	G14-057T 345.00 - SUNNYSIDE 345KV CKT 1	717	789	0.04459	114.9314	MATHWSN7 345.00 - TATONGA7 345.00 345KV CKT 1
FDNS	00NR	2	16WP	G15_063	FROM->TO	G14-057T 345.00 - SUNNYSIDE 345KV CKT 1	717	789	0.04559	114.9144	RANCHRD7 345.00 - SOONER 345KV CKT 1
FDNS	00NR	2	20WP	G15_063	FROM->TO	G14-057T 345.00 - SUNNYSIDE 345KV CKT 1	717	789	0.04144	114.9095	CANADIAN RIVER - MUSKOGEE 345KV CKT 1
FDNS	00NR	2	20WP	G15_063	FROM->TO	G14-057T 345.00 - SUNNYSIDE 345KV CKT 1	717	789	0.03072	114.892	GRACEMONT - LAWTON EASTSIDE 345KV CKT 1
FDNS	00NR	2	20WP	G15_063	FROM->TO	G14-057T 345.00 - SUNNYSIDE 345KV CKT 1	717	789	0.03072	114.892	GRACEMONT - LAWTON EASTSIDE 345KV CKT 1
FDNS	00NR	2	20WP	G15_063	FROM->TO	G14-057T 345.00 - SUNNYSIDE 345KV CKT 1	717	789	0.04543	114.8725	COMANCHE TAP - OMPA-DUNCAN 840 138KV CKT 1
FDNS	00NR	2	20WP	G15_063	FROM->TO	G14-057T 345.00 - SUNNYSIDE 345KV CKT 1	717	789	0.0457	114.8702	BRIDGECR 138.00 - TUTTLE 138KV CKT 1
FDNS	00NR	2	16WP	G15_063	FROM->TO	G14-057T 345.00 - SUNNYSIDE 345KV CKT 1	717	789	0.04557	114.8665	JOHNSON COUNTY - RUSSETT 138KV CKT 1
FDNS	00NR	2	16WP	G15_063	FROM->TO	G14-057T 345.00 - SUNNYSIDE 345KV CKT 1	717	789	0.0456	114.8479	GLASSES - MADILL INDUSTRIAL TAP 138KV CKT 1
FDNS	00NR	2	16WP	G15_063	FROM->TO	G14-057T 345.00 - SUNNYSIDE 345KV CKT 1	717	789	0.0458	114.8427	DRAPER LAKE - MIDWEST TAP 138KV CKT 1
FDNS	00NR	2	16WP	G15_063	FROM->TO	G14-057T 345.00 - SUNNYSIDE 345KV CKT 1	717	789	0.04531	114.8402	MAYSVLT4 138.00 - PRAIRIE POINT 138KV CKT 1
FDNS	00NR	2	16WP	G15_063	FROM->TO	G14-057T 345.00 - SUNNYSIDE 345KV CKT 1	717	789	0.04554	114.8356	GEN562691 1-G15_015_3 0.6900
FDNS	00NR	2	16WP	G15_063	FROM->TO	G14-057T 345.00 - SUNNYSIDE 345KV CKT 1	717	789	0.04554	114.8311	GEN562772 1-G15034_3 0.6900
FDNS	00NR	2	16WP	G15_063	FROM->TO	G14-057T 345.00 - SUNNYSIDE 345KV CKT 1	717	789	0.0442	114.8265	CIMARRON - MATHWSN7 345.00 345KV CKT 1
FDNS	00NR	2	16WP	G15_063	FROM->TO	G14-057T 345.00 - SUNNYSIDE 345KV CKT 1	717	789	0.0442	114.8265	CIMARRON - MATHWSN7 345.00 345KV CKT 2
FDNS	00NR	2	16WP	G15_063	FROM->TO	G14-057T 345.00 - SUNNYSIDE 345KV CKT 1	717	789	0.04552	114.8232	HUGO (HUGO 1) 345/138/13.8KV TRANSFORMER CKT 1
FDNS	00NR	2	16WP	G15_063	FROM->TO	G14-057T 345.00 - SUNNYSIDE 345KV CKT 1	717	789	0.04575	114.8216	P12:138:OKGE:3TERM21
FDNS	00NR	2	16WP	G15_063	FROM->TO	G14-057T 345.00 - SUNNYSIDE 345KV CKT 1	717	789	0.04554	114.8048	GEN521103 1-BLUE CANYON WIND FARM
FDNS	00NR	2	16WP	G15_063	FROM->TO	G14-057T 345.00 - SUNNYSIDE 345KV CKT 1	717	789	0.04554	114.803	GEN520812 1-ANADRK5
FDNS	00NR	2	16WP	G15_063	FROM->TO	G14-057T 345.00 - SUNNYSIDE 345KV CKT 1	717	789	0.04554	114.8029	GEN520813 1-ANADRK6
FDNS	00NR	2	20WP	G15_063	FROM->TO	G14-057T 345.00 - SUNNYSIDE 345KV CKT 1	717	789	0.04524	114.7908	GEN509409 1-WILKES #3
FDNS	00NR	2	16WP	G15_063	FROM->TO	G14-057T 345.00 - SUNNYSIDE 345KV CKT 1	717	789	0.04514	114.7906	ARBUCKLE - SULPHR 4 138.00 138KV CKT 1
FDNS	00NR	2	16WP	G15_063	FROM->TO	G14-057T 345.00 - SUNNYSIDE 345KV CKT 1	717	789	0.0456	114.7883	GLASSES - RUSSETT 138KV CKT 1
FDNS	00NR	2	20WP	G15_063	FROM->TO	G14-057T 345.00 - SUNNYSIDE 345KV CKT 1	717	789	0.04733	114.7797	ARCADIA - SEMINOLE 345KV CKT 1
FDNS	00NR	2	16WP	G15_063	FROM->TO	G14-057T 345.00 - SUNNYSIDE 345KV CKT 1	717	789	0.04559	114.7746	P12:138:WFEC:MSL11
FDNS	00NR	2	16WP	G15_063	FROM->TO	G14-057T 345.00 - SUNNYSIDE 345KV CKT 1	717	789	0.04559	114.7746	P12:138:WFEC-AEPW:PHAROAH4:LONEOAK4
FDNS	00NR	2	20WP	G15_063	FROM->TO	G14-057T 345.00 - SUNNYSIDE 345KV CKT 1	717	789	0.04645	114.7671	HEALDTON - LOCO 138KV CKT 1
FDNS	00NR	2	16WP	G15_063	FROM->TO	G14-057T 345.00 - SUNNYSIDE 345KV CKT 1	717	789	0.04554	114.7601	GEN511961 1-DEMPSEY-WTG10.7000
FDNS	00NR	2	16WP	G15_063	FROM->TO	G14-057T 345.00 - SUNNYSIDE 345KV CKT 1	717	789	0.04554	114.7488	P12:069:OKGE:3TERM42
FDNS	00NR	2	16WP	G15_063	FROM->TO	G14-057T 345.00 - SUNNYSIDE 345KV CKT 1	717	789	0.04531	114.7426	PRAIRIE POINT - RATLIFF 138KV CKT 1
FDNS	00NR	2	20WP	G15_063	FROM->TO	G14-057T 345.00 - SUNNYSIDE 345KV CKT 1	717	789	0.04524	114.7362	GEN501813 1-RODEMACHER UNIT 3
FDNS	00NR	2	16WP	G15_063	FROM->TO	G14-057T 345.00 - SUNNYSIDE 345KV CKT 1	717	789	0.04561	114.7296	CANEY CREEK - JOHNSON COUNTY 138KV CKT 1
FDNS	00NR	2	16WP	G15_063	FROM->TO	G14-057T 345.00 - SUNNYSIDE 345KV CKT 1	717	789	0.04563	114.7279	DELL 500 - INDEPENDENCE 500KV CKT 1
FDNS	00NR	2	16WP	G15_063	FROM->TO	G14-057T 345.00 - SUNNYSIDE 345KV CKT 1	717	789	0.04571	114.7211	P12:138:WFEC:MSL08
FDNS	00NR	2	16WP	G15_063	FROM->TO	G14-057T 345.00 - SUNNYSIDE 345KV CKT 1	717	789	0.04554	114.7116	GEN515443 1-MNCOWND1 0.7000
FDNS	00NR	2	16WP	G15_063	FROM->TO	G14-057T 345.00 - SUNNYSIDE 345KV CKT 1	717	789	0.04554	114.7087	INDEPENDENCE 500/26.0KV TRANSFORMER CKT 1
FDNS	00NR	2	16WP	G15_063	FROM->TO	G14-057T 345.00 - SUNNYSIDE 345KV CKT 1	717	789	0.04549	114.6981	CARTER - CHICKASAW 138KV CKT 1
FDNS	00NR	2	16WP	G15_063	FROM->TO	G14-057T 345.00 - SUNNYSIDE 345KV CKT 1	717	789	0.04554	114.6971	GEN532653 1-JEFFREY ENERGY CENTER UNIT 3
FDNS	00NR	2	16WP	G15_063	FROM->TO	G14-057T 345.00 - SUNNYSIDE 345KV CKT 1	717	789	0.04554	114.6941	GEN563242 1-G15090_3 0.6900
FDNS	00NR	2	16WP	G15_063	FROM->TO	G14-057T 345.00 - SUNNYSIDE 345KV CKT 1	717	789	0.04554	114.6934	GEN562902 1-G15052_3 0.6900
FDNS	00NR	2	16WP	G15_063	FROM->TO	G14-057T 345.00 - SUNNYSIDE 345KV CKT 1	717	789	0.04554	114.692	GEN560183 1-REDHIL-WTG1 12.000
FDNS	00NR	2	16WP	G15_063	FROM->TO	G14-057T 345.00 - SUNNYSIDE 345KV CKT 1	717	789	0.04578	114.6898	MINGO - SETAB 345KV CKT 1
FDNS	00NR	2	16WP	G15_063	FROM->TO	G14-057T 345.00 - SUNNYSIDE 345KV CKT 1	717	789	0.04578	114.6898	MINGO - SETAB 345KV CKT 1
FDNS	00NR	2	16WP	G15_063	FROM->TO	G14-057T 345.00 - SUNNYSIDE 345KV CKT 1	717	789	0.04482	114.6894	ARKANSAS NUCLEAR ONE - FT SMITH 500KV CKT 1
FDNS	00NR	2	16WP	G15_063	FROM->TO	G14-057T 345.00 - SUNNYSIDE 345KV CKT 1	717	789	0.04482	114.6894	ARKANSAS NUCLEAR ONE - FT SMITH 500KV CKT 1

SOLUTION	GROUP	SCENARIO	SEASON	SOURCE	DIRECTION	MONITORED ELEMENT	RATEA (MVA)	RATEB(MVA)	TDF	TC%LOADING (% MVA)	CONTINGENCY
FDNS	00NR	2	16WP	G15_063	FROM->TO	G14-057T 345.00 - SUNNYSIDE 345KV CKT 1	717	789	0.04554	114.685	GEN629071 1-BURLINGTON GENERATOR FOR UNIT NO 1 E
FDNS	00NR	2	16WP	G15_063	FROM->TO	G14-057T 345.00 - SUNNYSIDE 345KV CKT 1	717	789	0.04571	114.6846	CANADIAN RIVER - MCALESTER SOUTH 138KV CKT 1
FDNS	00NR	2	16WP	G15_063	FROM->TO	G14-057T 345.00 - SUNNYSIDE 345KV CKT 1	717	789	0.04571	114.6846	CANADIAN RIVER - MCALESTER SOUTH 138KV CKT 1
FDNS	00NR	2	16WP	G15_063	FROM->TO	G14-057T 345.00 - SUNNYSIDE 345KV CKT 1	717	789	0.04538	114.6837	ROCKY POINT - SPRINGDALE 138KV CKT 1
FDNS	00NR	2	16WP	G15_063	FROM->TO	G14-057T 345.00 - SUNNYSIDE 345KV CKT 1	717	789	0.04571	114.6832	CANADIAN RIVER () 345/138/13.8KV TRANSFORMER CKT 1
FDNS	00NR	2	16WP	G15_063	FROM->TO	G14-057T 345.00 - SUNNYSIDE 345KV CKT 1	717	789	0.04571	114.6832	CANADIAN RIVER () 345/138/13.8KV TRANSFORMER CKT 1
FDNS	00NR	2	16WP	G15_063	FROM->TO	G14-057T 345.00 - SUNNYSIDE 345KV CKT 1	717	789	0.04552	114.673	ALTUS JUNCTION - RUSSELL 138KV CKT 1
FDNS	00NR	2	16WP	G15_063	FROM->TO	G14-057T 345.00 - SUNNYSIDE 345KV CKT 1	717	789	0.04552	114.673	ALTUS JUNCTION - RUSSELL 138KV CKT 1
FDNS	00NR	2	16WP	G15_063	FROM->TO	G14-057T 345.00 - SUNNYSIDE 345KV CKT 1	717	789	0.04525	114.6621	MOREWOOD SW - NINE MILE 138KV CKT 1
FDNS	00NR	2	20WP	G15_063	FROM->TO	G14-057T 345.00 - SUNNYSIDE 345KV CKT 1	717	789	0.0457	114.6564	Hitchland Interchange - WALKTAP7 345.00 345KV CKT 1
FDNS	00NR	2	20WP	G15_063	FROM->TO	G14-057T 345.00 - SUNNYSIDE 345KV CKT 1	717	789	0.0457	114.6564	Hitchland Interchange - WALKTAP7 345.00 345KV CKT 1
FDNS	00NR	2	16WP	G15_063	FROM->TO	G14-057T 345.00 - SUNNYSIDE 345KV CKT 1	717	789	0.04554	114.6544	BURLINGTON NO1 + NO 2 + NO 3 161/20.0KV TRANSFORMER CKT 1
FDNS	00NR	2	16WP	G15_063	FROM->TO	G14-057T 345.00 - SUNNYSIDE 345KV CKT 1	717	789	0.04602	114.6487	NORTHWEST - SPRING CREEK 345KV CKT 1
FDNS	00NR	2	16WP	G15_063	FROM->TO	G14-057T 345.00 - SUNNYSIDE 345KV CKT 1	717	789	0.04554	114.6486	GEN514805 1-SOONER UNIT 1
FDNS	00NR	2	16WP	G15_063	FROM->TO	G14-057T 345.00 - SUNNYSIDE 345KV CKT 1	717	789	0.04581	114.6454	CHAMBER SPRINGS - CLARKSVILLE 345KV CKT 1
FDNS	00NR	2	16WP	G15_063	FROM->TO	G14-057T 345.00 - SUNNYSIDE 345KV CKT 1	717	789	0.04554	114.6445	P12:230:UMZB:# 112 #: NU IN SD. NU-RCDC & DRY CREEK XFMR
FDNS	00NR	2	16WP	G15_063	FROM->TO	G14-057T 345.00 - SUNNYSIDE 345KV CKT 1	717	789	0.04554	114.644	RCDC EAST 4230.00 - RED CEDAR DC 230KV CKT 1
FDNS	00NR	2	16WP	G15_063	FROM->TO	G14-057T 345.00 - SUNNYSIDE 345KV CKT 1	717	789	0.04602	114.6404	SOONER - SPRING CREEK 345KV CKT 1
FDNS	00NR	2	16WP	G15_063	FROM->TO	G14-057T 345.00 - SUNNYSIDE 345KV CKT 1	717	789	0.04554	114.639	GEN514806 1-SOONER UNIT 2
FDNS	00NR	2	16WP	G15_063	FROM->TO	G14-057T 345.00 - SUNNYSIDE 345KV CKT 1	717	789	0.04514	114.6386	JOLLYVILLE - SULPHR 4 138.00 138KV CKT 1
FDNS	00NR	2	16WP	G15_063	FROM->TO	G14-057T 345.00 - SUNNYSIDE 345KV CKT 1	717	789	0.04554	114.6385	NORTHWEST TEXARKANA - WELSH 345KV CKT 1
FDNS	00NR	2	16WP	G15_063	FROM->TO	G14-057T 345.00 - SUNNYSIDE 345KV CKT 1	717	789	0.04554	114.6385	NORTHWEST TEXARKANA - WELSH 345KV CKT 1
FDNS	00NR	2	20WP	G15_063	FROM->TO	G14-057T 345.00 - SUNNYSIDE 345KV CKT 1	717	789	0.04645	114.6227	HEALDTON - RINGLING 138KV CKT 1
FDNS	00NR	2	20WP	G15_063	FROM->TO	G14-057T 345.00 - SUNNYSIDE 345KV CKT 1	717	789	0.0457	114.6211	P12:345:SPS:J07.1.FINN.HITCH
FDNS	00NR	2	16WP	G15_063	FROM->TO	G14-057T 345.00 - SUNNYSIDE 345KV CKT 1	717	789	0.04554	114.6149	THOMAS HILL 161/22.0KV TRANSFORMER CKT 1
FDNS	00NR	2	16WP	G15_063	FROM->TO	G14-057T 345.00 - SUNNYSIDE 345KV CKT 1	717	789	0.04554	114.6144	GEN562078 1-G11_051_3 0.6900
FDNS	00NR	2	16WP	G15_063	FROM->TO	G14-057T 345.00 - SUNNYSIDE 345KV CKT 1	717	789	0.04554	114.6029	GEN562802 1-G15039_3 0.3570
FDNS	00NR	2	16WP	G15_063	FROM->TO	G14-057T 345.00 - SUNNYSIDE 345KV CKT 1	717	789	0.04554	114.5965	GEN524285 1-WILDORADO WIND GEN
FDNS	00NR	2	20WP	G15_063	FROM->TO	G14-057T 345.00 - SUNNYSIDE 345KV CKT 1	717	789	0.04524	114.5931	GEN300006 1-NEW MADRID UNIT 1
FDNS	00NR	2	16WP	G15_063	FROM->TO	G14-057T 345.00 - SUNNYSIDE 345KV CKT 1	717	789	0.04567	114.5896	KEO EHV - WEST MEMPHIS 500 500KV CKT 1
FDNS	00NR	2	20WP	G15_063	FROM->TO	G14-057T 345.00 - SUNNYSIDE 345KV CKT 1	717	789	0.04543	114.5838	DUNCAN - OMPA-DUNCAN 840 138KV CKT 1
FDNS	00NR	2	20WP	G15_063	FROM->TO	G14-057T 345.00 - SUNNYSIDE 345KV CKT 1	717	789	0.04543	114.5838	DUNCAN - OMPA-DUNCAN 840 138KV CKT 1
FDNS	00NR	2	16WP	G15_063	FROM->TO	G14-057T 345.00 - SUNNYSIDE 345KV CKT 1	717	789	0.04554	114.5811	GEN629072 4-LANSING GENERATOR FOR UNITS NO4 EIA CODE 1
FDNS	00NR	2	20WP	G15_063	FROM->TO	G14-057T 345.00 - SUNNYSIDE 345KV CKT 1	717	789	0.0457	114.58	BRIDGECR 138.00 - SUNSHINE CANYON 138KV CKT 1
FDNS	00NR	2	20WP	G15_063	FROM->TO	G14-057T 345.00 - SUNNYSIDE 345KV CKT 1	717	789	0.0457	114.578	P12:138:WFEC:MSL01
FDNS	00NR	2	16WP	G15_063	FROM->TO	G14-057T 345.00 - SUNNYSIDE 345KV CKT 1	717	789	0.04554	114.576	GEN524295 1-SPNSPUR_WND10.6900
FDNS	00NR	2	16WP	G15_063	FROM->TO	G14-057T 345.00 - SUNNYSIDE 345KV CKT 1	717	789	0.04554	114.5758	GEN562587 1-G14_056_3 0.6900
FDNS	00NR	2	20WP	G15_063	FROM->TO	G14-057T 345.00 - SUNNYSIDE 345KV CKT 1	717	789	0.04524	114.5734	GEN300007 1-NEW MADRID UNIT 2
FDNS	00NR	2	20WP	G15_063	FROM->TO	G14-057T 345.00 - SUNNYSIDE 345KV CKT 1	717	789	0.04559	114.5711	LACYGNE - WAVERLY7 345.00 345KV CKT 1
FDNS	00NR	2	16WP	G15_063	FROM->TO	G14-057T 345.00 - SUNNYSIDE 345KV CKT 1	717	789	0.04514	114.5699	JOLLYVILLE - KERR MCGEE CIMARRON 138KV CKT 1
FDNS	00NR	2	16WP	G15_063	FROM->TO	G14-057T 345.00 - SUNNYSIDE 345KV CKT 1	717	789	0.04554	114.569	GEN560331 1-G10-46 13.800
FDNS	00NR	2	16WP	G15_063	FROM->TO	G14-057T 345.00 - SUNNYSIDE 345KV CKT 1	717	789	0.04554	114.5607	GEN657749 1-YOUNG 1 GENERATOR
FDNS	00NR	2	16WP	G15_063	FROM->TO	G14-057T 345.00 - SUNNYSIDE 345KV CKT 1	717	789	0.04788	114.5463	CLARKSVILLE - MUSKOGEE 345KV CKT 1
FDNS	00NR	2	16WP	G15_063	FROM->TO	G14-057T 345.00 - SUNNYSIDE 345KV CKT 1	717	789	0.04788	114.5463	CLARKSVILLE - MUSKOGEE 345KV CKT 1
FDNS	00NR	2	16WP	G15_063	FROM->TO	G14-057T 345.00 - SUNNYSIDE 345KV CKT 1	717	789	0.04554	114.5414	GEN562882 1-G15047_3 0.6900
FDNS	00NR	2	16WP	G15_063	FROM->TO	G14-057T 345.00 - SUNNYSIDE 345KV CKT 1	717	789	0.04554	114.538	GEN562269 1-G12-020-1 0.6900
FDNS	00NR	2	16WP	G15_063	FROM->TO	G14-057T 345.00 - SUNNYSIDE 345KV CKT 1	717	789	0.04525	114.5277	BEARCAT 138.00 - NINE MILE 138KV CKT 1
FDNS	00NR	2	16WP	G15_063	FROM->TO	G14-057T 345.00 - SUNNYSIDE 345KV CKT 1	717	789	0.04514	114.5192	ARBWIND4 138.00 - KERR MCGEE CIMARRON 138KV CKT 1
FDNS	00NR	2	20WP	G15_063	FROM->TO	G14-057T 345.00 - SUNNYSIDE 345KV CKT 1	717	789	0.04524	114.5187	GEN335206 1-NELSON UNIT 6
FDNS	00NR	2	16WP	G15_063	FROM->TO	G14-057T 345.00 - SUNNYSIDE 345KV CKT 1	717	789	0.04554	114.4928	GEN562270 1-G12-020-2 0.6900
FDNS	00NR	2	16WP	G15_063	FROM->TO	G14-057T 345.00 - SUNNYSIDE 345KV CKT 1	717	789	0.04554	114.4918	GEN681522 3-GENOA 3
FDNS	00NR	2	16WP	G15_063	FROM->TO	G14-057T 345.00 - SUNNYSIDE 345KV CKT 1	717	789	0.04554	114.4877	GEN562812 1-G15040_3 0.3570
FDNS	00NR	2	16WP	G15_063	FROM->TO	G14-057T 345.00 - SUNNYSIDE 345KV CKT 1	717	789	0.04554	114.4816	GEN563102 1-G15075_3 0.5500
FDNS	00NR	2	16WP	G15_063	FROM->TO	G14-057T 345.00 - SUNNYSIDE 345KV CKT 1	717	789	0.04554	114.4798	GEN563062 1-G15071_3 0.6900
FDNS	00NR	2	16WP	G15_063	FROM->TO	G14-057T 345.00 - SUNNYSIDE 345KV CKT 1	717	789	0.04554	114.4773	GEN563132 1-G15078_3 0.3570
FDNS	00NR	2	16WP	G15_063	FROM->TO	G14-057T 345.00 - SUNNYSIDE 345KV CKT 1	717	789	0.04537	114.4752	P12:138:AEPW:112GORE4:SNYDER-4
FDNS	00NR	2	20WP	G15_063	FROM->TO	G14-057T 345.00 - SUNNYSIDE 345KV CKT 1	717	789	0.04524	114.4658	GEN520947 1-HUGO1
FDNS	00NR	2	16WP	G15_063	FROM->TO	G14-057T 345.00 - SUNNYSIDE 345KV CKT 1	717	789	0.04554	114.4656	GEN562974 1-G15060_5 0.6900
FDNS	00NR	2	16WP	G15_063	FROM->TO	G14-057T 345.00 - SUNNYSIDE 345KV CKT 1	717	789	0.04554	114.4561	GEN562973 1-G15060_4 0.6900
FDNS	00NR	2	20WP	G15_063	FROM->TO	G14-057T 345.00 - SUNNYSIDE 345KV CKT 1	717	789	0.04559	114.4509	WAVERLY7 345.00 - WOLF CREEK 345KV CKT 1
FDNS	00NR	2	20WP	G15_063	FROM->TO	G14-057T 345.00 - SUNNYSIDE 345KV CKT 1	717	789	0.04645	114.4502	RINGLING - SOUTH WILSON 138KV CKT 1
FDNS	00NR	2	16WP	G15_063	FROM->TO	G14-057T 345.00 - SUNNYSIDE 345KV CKT 1	717	789	0.04525	114.4445	P12:138:WFEC:MSL14
FDNS	00NR	2	16WP	G15_063	FROM->TO	G14-057T 345.00 - SUNNYSIDE 345KV CKT 1	717	789	0.04519	114.4367	CHICKASAW - TOTAL 138KV CKT 1
FDNS	00NR	2	16WP	G15_063	FROM->TO	G14-057T 345.00 - SUNNYSIDE 345KV CKT 1	717	789	0.04525	114.4323	BEARCAT 138.00 - MOORELAND 138KV CKT 1
FDNS	00NR	2	16WP	G15_063	FROM->TO	G14-057T 345.00 - SUNNYSIDE 345KV CKT 1	717	789	0.04549	114.4307	BROWN - RUSSETT 138KV CKT 1
FDNS	00NR	2	16WP	G15_063	FROM->TO	G14-057T 345.00 - SUNNYSIDE 345KV CKT 1	717	789	0.04554	114.423	GEN345671 2-1RUSH G2 18.000
FDNS	00NR	2	16WP	G15_063	FROM->TO	G14-057T 345.00 - SUNNYSIDE 345KV CKT 1	717	789	0.04554	114.4212	GEN345670 1-1RUSH G1 18.000
FDNS	00NR	2	16WP	G15_063	FROM->TO	G14-057T 345.00 - SUNNYSIDE 345KV CKT 1	717	789	0.04547	114.4128	RUSSETT - SPRINGDALE 138KV CKT 1
FDNS	00NR	2	16WP	G15_063	FROM->TO	G14-057T 345.00 - SUNNYSIDE 345KV CKT 1	717	789	0.04554	114.3945	GEN526331 1-JONES GEN #1 22 KV
FDNS	00NR	2	16WP	G15_063	FROM->TO	G14-057T 345.00 - SUNNYSIDE 345KV CKT 1	717	789	0.04554	114.3944	GEN526332 1-JONES GEN #2 21 KV
FDNS	00NR	2	16WP	G15_063	FROM->TO	G14-057T 345.00 - SUNNYSIDE 345KV CKT 1	717	789	0.04532	114.3921	ROCKY POINT - SUNNYSIDE 138KV CKT 1
FDNS	00NR	2	16WP	G15_063	FROM->TO	G14-057T 345.00 - SUNNYSIDE 345KV CKT 1	717	789	0.04554	114.3851	GEN560105 1-G08-22 0.6900
FDNS	00NR	2	16WP	G15_063	FROM->TO	G14-057T 345.00 - SUNNYSIDE 345KV CKT 1	717	789	0.04554	114.3818	GEN562550 1-G14_040_3 0.6900
FDNS	00NR	2	16WP	G15_063	FROM->TO	G14-057T 345.00 - SUNNYSIDE 345KV CKT 1	717	789	0.04554	114.375	P12:138:WFEC:MSL07
FDNS	00NR	2	16WP	G15_063	FROM->TO	G14-057T 345.00 - SUNNYSIDE 345KV CKT 1	717	789	0.04554	114.375	P12:138:WFEC-AEPW:HUGOPP4:ATOKA--4
FDNS	00NR	2	20WP	G15_063	FROM->TO	G14-057T 345.00 - SUNNYSIDE 345KV CKT 1	717	789	0.04459	114.373	G11_051T 345.00 - TATONGA7 345.00 345KV CKT 1
FDNS	00NR	2	16WP	G15_063	FROM->TO	G14-057T 345.00 - SUNNYSIDE 345KV CKT 1	717	789	0.04554	114.3678	4SIOUX 1 138.00 138/18.0KV TRANSFORMER CKT 1
FDNS	00NR	2	16WP	G15_063	FROM->TO	G14-057T 345.00 - SUNNYSIDE 345KV CKT 1	717	789	0.04549	114.3625	RUSSETT - RUSSETT 138KV CKT 1
FDNS	00NR	2	20WP	G15_063	FROM->TO	G14-057T 345.00 - SUNNYSIDE 345KV CKT 1	717	789	0.04519	114.3566	ELDORADO EHV - MOUNT OLIVE 500KV CKT 1

SOLUTION	GROUP	SCENARIO	SEASON	SOURCE	DIRECTION	MONITORED ELEMENT	RATEA (MVA)	RATEB(MVA)	TDF	TC%LOADING (% MVA)	CONTINGENCY
FDNS	00NR	2	16WP	G15_063	FROM->TO	G14-057T 345.00 - SUNNYSIDE 345KV CKT 1	717	789	0.04554	114.3535	CLAY BOSWELL 230/20.9KV TRANSFORMER CKT 1
FDNS	00NR	2	16WP	G15_063	FROM->TO	G14-057T 345.00 - SUNNYSIDE 345KV CKT 1	717	789	0.04554	114.3465	GEN521112 1-ORME3 13.800
FDNS	00NR	2	16WP	G15_063	FROM->TO	G14-057T 345.00 - SUNNYSIDE 345KV CKT 1	717	789	0.04554	114.3449	GEN511962 2-RKYRDGW2-1 0.7000
FDNS	00NR	2	16WP	G15_063	FROM->TO	G14-057T 345.00 - SUNNYSIDE 345KV CKT 1	717	789	0.04504	114.336	ARDMORE WEST - CARTER 138KV CKT 1
FDNS	00NR	2	16WP	G15_063	FROM->TO	G14-057T 345.00 - SUNNYSIDE 345KV CKT 1	717	789	0.04554	114.3355	GEN527882 1-CUNNINGHAM GEN #2 20 KV
FDNS	00NR	2	20WP	G15_063	FROM->TO	G14-057T 345.00 - SUNNYSIDE 345KV CKT 1	717	789	0.04524	114.3327	GEN501812 1-RODEMACHER UNIT 2
FDNS	00NR	2	16WP	G15_063	FROM->TO	G14-057T 345.00 - SUNNYSIDE 345KV CKT 1	717	789	0.04554	114.3288	GEN672321 1-SHAND GENERATOR 1
FDNS	00NR	2	20WP	G15_063	FROM->TO	G14-057T 345.00 - SUNNYSIDE 345KV CKT 1	717	789	0.04523	114.3288	P12:138:AEPW:SHERID4:112GORE4
FDNS	00NR	2	20WP	G15_063	FROM->TO	G14-057T 345.00 - SUNNYSIDE 345KV CKT 1	717	789	0.04524	114.3275	DOLET HILLS 345/24.0KV TRANSFORMER CKT 1
FDNS	00NR	2	16WP	G15_063	FROM->TO	G14-057T 345.00 - SUNNYSIDE 345KV CKT 1	717	789	0.04554	114.3241	GEN562892 1-G15048_3 0.6900
FDNS	00NR	2	16WP	G15_063	FROM->TO	G14-057T 345.00 - SUNNYSIDE 345KV CKT 1	717	789	0.04554	114.3048	GEN672310 1-POPLAR RIVER GENERATOR 1
FDNS	00NR	2	16WP	G15_063	FROM->TO	G14-057T 345.00 - SUNNYSIDE 345KV CKT 1	717	789	0.04554	114.3048	GEN672311 2-POPLAR RIVER GENERATOR 2
FDNS	00NR	2	16WP	G15_063	FROM->TO	G14-057T 345.00 - SUNNYSIDE 345KV CKT 1	717	789	0.04554	114.3009	GEN563192 1-G15084_3 0.5500
FDNS	00NR	2	16WP	G15_063	FROM->TO	G14-057T 345.00 - SUNNYSIDE 345KV CKT 1	717	789	0.04554	114.2968	GEN672306 6-BOUNDARY DAM GENERATOR 6
FDNS	00NR	2	16WP	G15_063	FROM->TO	G14-057T 345.00 - SUNNYSIDE 345KV CKT 1	717	789	0.04513	114.2929	SUNNYSIDE (SUNNYSD5) 345/138/13.8KV TRANSFORMER CKT 1
FDNS	00NR	2	16WP	G15_063	FROM->TO	G14-057T 345.00 - SUNNYSIDE 345KV CKT 1	717	789	0.04554	114.2871	GEN511853 1-COMANCHE #3
FDNS	00NR	2	16WP	G15_063	FROM->TO	G14-057T 345.00 - SUNNYSIDE 345KV CKT 1	717	789	0.04554	114.2863	GEN562512 1-G14_020_3 0.6900
FDNS	00NR	2	16WP	G15_063	FROM->TO	G14-057T 345.00 - SUNNYSIDE 345KV CKT 1	717	789	0.04558	114.2844	P12:138:WFEC:MSL16
FDNS	00NR	2	16WP	G15_063	FROM->TO	G14-057T 345.00 - SUNNYSIDE 345KV CKT 1	717	789	0.04551	114.2696	P12:138:WFEC-AEPW:GOLDENSW4:CRAIGJT4
FDNS	00NR	2	20WP	G15_063	FROM->TO	G14-057T 345.00 - SUNNYSIDE 345KV CKT 1	717	789	0.04443	114.2657	PARK LANE - SEMINOLE 138KV CKT 1
FDNS	00NR	2	16WP	G15_063	FROM->TO	G14-057T 345.00 - SUNNYSIDE 345KV CKT 1	717	789	0.04554	114.2391	GEN523461 1-BLACKHAWK GEN #1
FDNS	00NR	2	16WP	G15_063	FROM->TO	G14-057T 345.00 - SUNNYSIDE 345KV CKT 1	717	789	0.04554	114.239	GEN523462 1-BLACKHAWK GEN #2
FDNS	00NR	2	16WP	G15_063	FROM->TO	G14-057T 345.00 - SUNNYSIDE 345KV CKT 1	717	789	0.04554	114.2339	GEN344895 2-1LAB G2 20.000
FDNS	00NR	2	16WP	G15_063	FROM->TO	G14-057T 345.00 - SUNNYSIDE 345KV CKT 1	717	789	0.04554	114.2311	GEN511852 1-COMANCHE #2
FDNS	00NR	2	20WP	G15_063	FROM->TO	G14-057T 345.00 - SUNNYSIDE 345KV CKT 1	717	789	0.04547	114.2298	THISTLE7 345.00 - WOODWARD DISTRICT EHV 345KV CKT 1
FDNS	00NR	2	20WP	G15_063	FROM->TO	G14-057T 345.00 - SUNNYSIDE 345KV CKT 1	717	789	0.04547	114.2298	THISTLE7 345.00 - WOODWARD DISTRICT EHV 345KV CKT 1
FDNS	00NR	2	20WP	G15_063	FROM->TO	G14-057T 345.00 - SUNNYSIDE 345KV CKT 1	717	789	0.04547	114.2298	THISTLE7 345.00 - WOODWARD DISTRICT EHV 345KV CKT 2
FDNS	00NR	2	20WP	G15_063	FROM->TO	G14-057T 345.00 - SUNNYSIDE 345KV CKT 1	717	789	0.04547	114.2298	THISTLE7 345.00 - WOODWARD DISTRICT EHV 345KV CKT 2
FDNS	00NR	2	16WP	G15_063	FROM->TO	G14-057T 345.00 - SUNNYSIDE 345KV CKT 1	717	789	0.04504	114.2194	ARDMORE WEST - UNIROYAL 138KV CKT 1
FDNS	00NR	2	16WP	G15_063	FROM->TO	G14-057T 345.00 - SUNNYSIDE 345KV CKT 1	717	789	0.04554	114.2012	GEN344896 3-1LAB G3 20.000
FDNS	00NR	2	16WP	G15_063	FROM->TO	G14-057T 345.00 - SUNNYSIDE 345KV CKT 1	717	789	0.04554	114.1999	GEN344894 1-1LAB G1 20.000
FDNS	00NR	2	16WP	G15_063	FROM->TO	G14-057T 345.00 - SUNNYSIDE 345KV CKT 1	717	789	0.04554	114.1984	GEN344897 4-1LAB G4 20.000
FDNS	00NR	2	16WP	G15_063	FROM->TO	G14-057T 345.00 - SUNNYSIDE 345KV CKT 1	717	789	0.04551	114.196	P12:138:AEPW-SWPA:LONEOAK4:TUPELO4
FDNS	00NR	2	16WP	G15_063	FROM->TO	G14-057T 345.00 - SUNNYSIDE 345KV CKT 1	717	789	0.04551	114.1959	P12:138:WFEC:MSL06
FDNS	00NR	2	20WP	G15_063	FROM->TO	G14-057T 345.00 - SUNNYSIDE 345KV CKT 1	717	789	0.04603	114.1948	CANEYRV7 345.00 - NEOSHO 345KV CKT 1
FDNS	00NR	2	20WP	G15_063	FROM->TO	G14-057T 345.00 - SUNNYSIDE 345KV CKT 1	717	789	0.04524	114.1911	GEN515564 1-ORIGIN11 0.6900
FDNS	00NR	2	20WP	G15_063	FROM->TO	G14-057T 345.00 - SUNNYSIDE 345KV CKT 1	717	789	0.04524	114.1911	GEN515565 1-ORIGIN21 0.6900
FDNS	00NR	2	16WP	G15_063	FROM->TO	G14-057T 345.00 - SUNNYSIDE 345KV CKT 1	717	789	0.04554	114.1909	GEN681542 6-JP MADGETT
FDNS	00NR	2	16WP	G15_063	FROM->TO	G14-057T 345.00 - SUNNYSIDE 345KV CKT 1	717	789	0.04536	114.1884	P12:138:OKGE:3TERM40
FDNS	00NR	2	16WP	G15_063	FROM->TO	G14-057T 345.00 - SUNNYSIDE 345KV CKT 1	717	789	0.04539	114.183	CARTRCO4 138.00 - RATLIFF 138KV CKT 1
FDNS	00NR	2	20WP	G15_063	FROM->TO	G14-057T 345.00 - SUNNYSIDE 345KV CKT 1	717	789	0.0453	114.1753	WEBRE - WELLS 500KV CKT 1
FDNS	00NR	2	20WP	G15_063	FROM->TO	G14-057T 345.00 - SUNNYSIDE 345KV CKT 1	717	789	0.04524	114.1732	GEN334440 1-SABINE UNIT 4
FDNS	00NR	2	16WP	G15_063	FROM->TO	G14-057T 345.00 - SUNNYSIDE 345KV CKT 1	717	789	0.04554	114.1711	GEN563162 1-G15081_3 0.6900
FDNS	00NR	2	16WP	G15_063	FROM->TO	G14-057T 345.00 - SUNNYSIDE 345KV CKT 1	717	789	0.04554	114.1671	GEN521110 1-ORME1 13.800
FDNS	00NR	2	16WP	G15_063	FROM->TO	G14-057T 345.00 - SUNNYSIDE 345KV CKT 1	717	789	0.04554	114.1671	GEN521111 1-ORME2 13.800
FDNS	00NR	2	16WP	G15_063	FROM->TO	G14-057T 345.00 - SUNNYSIDE 345KV CKT 1	717	789	0.04552	114.1625	G15085_T 138.00 - RUSSELL 138KV CKT 1
FDNS	00NR	2	20WP	G15_063	FROM->TO	G14-057T 345.00 - SUNNYSIDE 345KV CKT 1	717	789	0.04645	114.1615	MARIETTA - SOUTH WILSON 138KV CKT 1
FDNS	00NR	2	16WP	G15_063	FROM->TO	G14-057T 345.00 - SUNNYSIDE 345KV CKT 1	717	789	0.04554	114.1508	GEN562699 1-G15_018_3 0.6900
FDNS	00NR	2	16WP	G15_063	FROM->TO	G14-057T 345.00 - SUNNYSIDE 345KV CKT 1	717	789	0.04554	114.1491	GEN563292 1-G15095_3 0.6900
FDNS	00NR	2	20WP	G15_063	FROM->TO	G14-057T 345.00 - SUNNYSIDE 345KV CKT 1	717	789	0.04524	114.1247	DELL 500 - ESSEX UNIT 2 500KV CKT Z1
FDNS	00NR	2	20WP	G15_063	FROM->TO	G14-057T 345.00 - SUNNYSIDE 345KV CKT 1	717	789	0.04524	114.1162	P12:161:AEPW:DYESS 5:HYLAND 5
FDNS	00NR	2	20WP	G15_063	FROM->TO	G14-057T 345.00 - SUNNYSIDE 345KV CKT 1	717	789	0.04524	114.1158	GEN590011 2-ERCOT EQUIVALENCE
FDNS	00NR	2	20WP	G15_063	FROM->TO	G14-057T 345.00 - SUNNYSIDE 345KV CKT 1	717	789	0.04588	114.1118	REDBUD - RIVERSIDE STATION 345KV CKT 1
FDNS	00NR	2	20WP	G15_063	FROM->TO	G14-057T 345.00 - SUNNYSIDE 345KV CKT 1	717	789	0.04588	114.1118	REDBUD - RIVERSIDE STATION 345KV CKT 1
FDNS	00NR	2	16WP	G15_063	FROM->TO	G14-057T 345.00 - SUNNYSIDE 345KV CKT 1	717	789	0.04554	114.0959	ALMA 161 161/24.0KV TRANSFORMER CKT 1
FDNS	00NR	2	16WP	G15_063	FROM->TO	G14-057T 345.00 - SUNNYSIDE 345KV CKT 1	717	789	0.04537	114.0913	CACHE - SNYDER 138KV CKT 1
FDNS	00NR	2	16WP	G15_063	FROM->TO	G14-057T 345.00 - SUNNYSIDE 345KV CKT 1	717	789	0.04554	114.083	GEN661015 1-COYOTE
FDNS	00NR	2	20WP	G15_063	FROM->TO	G14-057T 345.00 - SUNNYSIDE 345KV CKT 1	717	789	0.04524	114.067	P12:69:AEPW:L.E.S.-2:LAW WC2
FDNS	00NR	2	16WP	G15_063	FROM->TO	G14-057T 345.00 - SUNNYSIDE 345KV CKT 1	717	789	0.04554	114.0652	GEN520811 1-ANADRK4
FDNS	00NR	2	20WP	G15_063	FROM->TO	G14-057T 345.00 - SUNNYSIDE 345KV CKT 1	717	789	0.04645	114.0572	P12:138:WFEC:MSL17
FDNS	00NR	2	16WP	G15_063	FROM->TO	G14-057T 345.00 - SUNNYSIDE 345KV CKT 1	717	789	0.04554	114.0478	GEN563122 1-G15077_3 0.3850
FDNS	00NR	2	20WP	G15_063	FROM->TO	G14-057T 345.00 - SUNNYSIDE 345KV CKT 1	717	789	0.04603	114.0474	CANEYRV7 345.00 - LATHAMS7 345.00 345KV CKT 1
FDNS	00NR	2	20WP	G15_063	FROM->TO	G14-057T 345.00 - SUNNYSIDE 345KV CKT 1	717	789	0.04524	114.0468	GEN590010 1-ERCOT EQUIVALENCE
FDNS	00NR	2	20WP	G15_063	FROM->TO	G14-057T 345.00 - SUNNYSIDE 345KV CKT 1	717	789	0.04556	114.0415	P12:138:WFEC:MSL02
FDNS	00NR	2	16WP	G15_063	FROM->TO	G14-057T 345.00 - SUNNYSIDE 345KV CKT 1	717	789	0.04554	114.0411	GEN562861 1-G15045_2 0.4800
FDNS	00NR	2	20WP	G15_063	FROM->TO	G14-057T 345.00 - SUNNYSIDE 345KV CKT 1	717	789	0.04515	114.0398	LAWTON EASTSIDE (LES 5) 345/138/13.8KV TRANSFORMER CKT 2
FDNS	00NR	2	20WP	G15_063	FROM->TO	G14-057T 345.00 - SUNNYSIDE 345KV CKT 1	717	789	0.04515	114.0398	LAWTON EASTSIDE (LES 5) 345/138/13.8KV TRANSFORMER CKT 2
FDNS	00NR	2	20WP	G15_063	FROM->TO	G14-057T 345.00 - SUNNYSIDE 345KV CKT 1	717	789	0.04524	114.0185	GEN509408 1-WILKES #2
FDNS	00NR	2	16WP	G15_063	FROM->TO	G14-057T 345.00 - SUNNYSIDE 345KV CKT 1	717	789	0.04545	114.0142	P12:138:WFEC:MSL15
FDNS	00NR	2	20WP	G15_063	FROM->TO	G14-057T 345.00 - SUNNYSIDE 345KV CKT 1	717	789	0.04512	114.0026	ELDORADO EHV - SHERIDAN EHV 500KV CKT 1
FDNS	00NR	2	20WP	G15_063	FROM->TO	G14-057T 345.00 - SUNNYSIDE 345KV CKT 1	717	789	0.04564	113.9861	PAOLI - PAYNE 138.00 138KV CKT 1
FDNS	00NR	2	20WP	G15_063	FROM->TO	G14-057T 345.00 - SUNNYSIDE 345KV CKT 1	717	789	0.04524	113.9832	GEN506754 1-LEBROCK STEAM 1
FDNS	00NR	2	16WP	G15_063	FROM->TO	G14-057T 345.00 - SUNNYSIDE 345KV CKT 1	717	789	0.04504	113.9813	SUNNYSIDE - UNIROYAL 138KV CKT 1
FDNS	00NR	2	16WP	G15_063	FROM->TO	G14-057T 345.00 - SUNNYSIDE 345KV CKT 1	717	789	0.04554	113.9673	GEN657748 1-YOUNG 2 GENERATOR
FDNS	00NR	2	20WP	G15_063	FROM->TO	G14-057T 345.00 - SUNNYSIDE 345KV CKT 1	717	789	0.04547	113.9666	ANADARKO - GEORGIA 138KV CKT 1
FDNS	00NR	2	16WP	G15_063	FROM->TO	G14-057T 345.00 - SUNNYSIDE 345KV CKT 1	717	789	0.04676	113.9524	CANEY CREEK - TEXOMA JCT 138KV CKT 1
FDNS	00NR	2	16WP	G15_063	FROM->TO	G14-057T 345.00 - SUNNYSIDE 345KV CKT 1	717	789	0.04554	113.9507	GEN562992 1-G15063_3 0.6900
FDNS	00NR	2	16WP	G15_063	FROM->TO	G14-057T 345.00 - SUNNYSIDE 345KV CKT 1	717	789	0.04551	113.9436	GRAPEVINE INTERCHANGE - STATELINE INTERCHANGE 230KV CKT 1
FDNS	00NR	2	16WP	G15_063	FROM->TO	G14-057T 345.00 - SUNNYSIDE 345KV CKT 1	717	789	0.04551	113.9436	GRAPEVINE INTERCHANGE - STATELINE INTERCHANGE 230KV CKT 1

SOLUTION	GROUP	SCENARIO	SEASON	SOURCE	DIRECTION	MONITORED ELEMENT	RATEA (MVA)	RATEB(MVA)	TDF	TC%LOADING (% MVA)	CONTINGENCY
FDNS	00NR	2	20WP	G15_063	FROM->TO	G14-057T 345.00 - SUNNYSIDE 345KV CKT 1	717	789	0.04523	113.9349	P12:138:AEPW:112GORE4:L.E.S.-4
FDNS	00NR	2	16WP	G15_063	FROM->TO	G14-057T 345.00 - SUNNYSIDE 345KV CKT 1	717	789	0.04554	113.9305	GEN532751 1-WOLF CREEK GENERATING STATION UNIT 1
FDNS	00NR	2	20WP	G15_063	FROM->TO	G14-057T 345.00 - SUNNYSIDE 345KV CKT 1	717	789	0.04632	113.9301	CIVIT - PAOLI 138KV CKT 1
FDNS	00NR	2	20WP	G15_063	FROM->TO	G14-057T 345.00 - SUNNYSIDE 345KV CKT 1	717	789	0.04922	113.919	MATHWSN7 345.00 - NORTHWEST 345KV CKT 1
FDNS	00NR	2	16WP	G15_063	FROM->TO	G14-057T 345.00 - SUNNYSIDE 345KV CKT 1	717	789	0.04552	113.9027	P12:138:AEPW:SHAM4WT:CHILD4WT
FDNS	00NR	2	20WP	G15_063	FROM->TO	G14-057T 345.00 - SUNNYSIDE 345KV CKT 1	717	789	0.04524	113.8942	NEW MADRID 161/22.0KV TRANSFORMER CKT 1
FDNS	00NR	2	20WP	G15_063	FROM->TO	G14-057T 345.00 - SUNNYSIDE 345KV CKT 1	717	789	0.04524	113.8877	GEN336252 1-NINEMILE POINT UNIT#5
FDNS	00NR	2	20WP	G15_063	FROM->TO	G14-057T 345.00 - SUNNYSIDE 345KV CKT 1	717	789	0.04524	113.8781	NEW MADRID 345/22.0KV TRANSFORMER CKT 1
FDNS	00NR	2	20WP	G15_063	FROM->TO	G14-057T 345.00 - SUNNYSIDE 345KV CKT 1	717	789	0.04547	113.8644	FLETCHER - GEORGIA 138KV CKT 1
FDNS	00NR	2	20WP	G15_063	FROM->TO	G14-057T 345.00 - SUNNYSIDE 345KV CKT 1	717	789	0.04662	113.8623	P12:138:AEPW-OGE:CORNVIL4:MAUD 4
FDNS	00NR	2	16WP	G15_063	FROM->TO	G14-057T 345.00 - SUNNYSIDE 345KV CKT 1	717	789	0.04554	113.8575	GEN562952 1-G15057_3 0.6500
FDNS	00NR	2	16WP	G15_063	FROM->TO	G14-057T 345.00 - SUNNYSIDE 345KV CKT 1	717	789	0.04554	113.8544	GEN562704 1-G15_020_3 0.3550
FDNS	00NR	2	20WP	G15_063	FROM->TO	G14-057T 345.00 - SUNNYSIDE 345KV CKT 1	717	789	0.04524	113.8436	FRONTIER - GRIMES 345KV CKT 1
FDNS	00NR	2	16WP	G15_063	FROM->TO	G14-057T 345.00 - SUNNYSIDE 345KV CKT 1	717	789	0.04554	113.8401	GEN563173 1-G15082_3 0.6900
FDNS	00NR	2	20WP	G15_063	FROM->TO	G14-057T 345.00 - SUNNYSIDE 345KV CKT 1	717	789	0.04524	113.8384	GEN503909 1-FULTONU1 1 16.000
FDNS	00NR	2	20WP	G15_063	FROM->TO	G14-057T 345.00 - SUNNYSIDE 345KV CKT 1	717	789	0.04524	113.8323	GEN335204 1-NELSON UNIT 4
FDNS	00NR	2	20WP	G15_063	FROM->TO	G14-057T 345.00 - SUNNYSIDE 345KV CKT 1	717	789	0.04603	113.8302	LATHAMS7 345.00 - ROSE HILL 345KV CKT 1
FDNS	00NR	2	16WP	G15_063	FROM->TO	G14-057T 345.00 - SUNNYSIDE 345KV CKT 1	717	789	0.04551	113.8285	GRAPEVINE INTERCHANGE - NICHOLS STATION 230KV CKT 1
FDNS	00NR	2	16WP	G15_063	FROM->TO	G14-057T 345.00 - SUNNYSIDE 345KV CKT 1	717	789	0.04551	113.8285	GRAPEVINE INTERCHANGE - NICHOLS STATION 230KV CKT 1
FDNS	00NR	2	20WP	G15_063	FROM->TO	G14-057T 345.00 - SUNNYSIDE 345KV CKT 1	717	789	0.04524	113.825	GEN334441 1-SABINE UNIT 5
FDNS	00NR	2	20WP	G15_063	FROM->TO	G14-057T 345.00 - SUNNYSIDE 345KV CKT 1	717	789	0.04552	113.8246	EMPIRE - FLETCHER 138KV CKT 1
FDNS	00NR	2	20WP	G15_063	FROM->TO	G14-057T 345.00 - SUNNYSIDE 345KV CKT 1	717	789	0.04538	113.8165	TUPELO - TUPELO TAP 138KV CKT 1
FDNS	00NR	2	16WP	G15_063	FROM->TO	G14-057T 345.00 - SUNNYSIDE 345KV CKT 1	717	789	0.04554	113.8012	GEN620315 1-BIG STONE GEN
FDNS	00NR	2	20WP	G15_063	FROM->TO	G14-057T 345.00 - SUNNYSIDE 345KV CKT 1	717	789	0.04632	113.7887	CIVIT - STRATFORD 138KV CKT 1
FDNS	00NR	2	20WP	G15_063	FROM->TO	G14-057T 345.00 - SUNNYSIDE 345KV CKT 1	717	789	0.04662	113.7865	BLANCHARD - CORNVILLE 138KV CKT 1
FDNS	00NR	2	16WP	G15_063	FROM->TO	G14-057T 345.00 - SUNNYSIDE 345KV CKT 1	717	789	0.04554	113.7668	GEN562710 1-G15_022_3 0.5500
FDNS	00NR	2	20WP	G15_063	FROM->TO	G14-057T 345.00 - SUNNYSIDE 345KV CKT 1	717	789	0.04527	113.7467	G1524G1525 345.00 - THISTLE7 345.00 345KV CKT 1
FDNS	00NR	2	20WP	G15_063	FROM->TO	G14-057T 345.00 - SUNNYSIDE 345KV CKT 1	717	789	0.04527	113.7467	G1524G1525 345.00 - THISTLE7 345.00 345KV CKT 2
FDNS	00NR	2	16WP	G15_063	FROM->TO	G14-057T 345.00 - SUNNYSIDE 345KV CKT 1	717	789	0.04554	113.7443	GEN600004 2-PRAIRIE ISLAND G2
FDNS	00NR	2	20WP	G15_063	FROM->TO	G14-057T 345.00 - SUNNYSIDE 345KV CKT 1	717	789	0.0452	113.7434	LAYFLD8 500.00 - MOUNT OLIVE 500KV CKT 1
FDNS	00NR	2	20WP	G15_063	FROM->TO	G14-057T 345.00 - SUNNYSIDE 345KV CKT 1	717	789	0.0452	113.7434	LAYFLD8 500.00 - MOUNT OLIVE 500KV CKT 1
FDNS	00NR	2	16WP	G15_063	FROM->TO	G14-057T 345.00 - SUNNYSIDE 345KV CKT 1	717	789	0.04554	113.7416	GEN600003 1-PRAIRIE ISLAND G1
FDNS	00NR	2	20WP	G15_063	FROM->TO	G14-057T 345.00 - SUNNYSIDE 345KV CKT 1	717	789	0.04552	113.7415	COMANCHE - EMPIRE 138KV CKT 1
FDNS	00NR	2	16WP	G15_063	FROM->TO	G14-057T 345.00 - SUNNYSIDE 345KV CKT 1	717	789	0.04554	113.739	GEN511851 1-COMANCHE #1
FDNS	00NR	2	16WP	G15_063	FROM->TO	G14-057T 345.00 - SUNNYSIDE 345KV CKT 1	717	789	0.04554	113.7336	GEN600006 1-AS KING
FDNS	00NR	2	20WP	G15_063	FROM->TO	G14-057T 345.00 - SUNNYSIDE 345KV CKT 1	717	789	0.04524	113.7325	GEN334071 1-LEWIS CREEK 2
FDNS	00NR	2	20WP	G15_063	FROM->TO	G14-057T 345.00 - SUNNYSIDE 345KV CKT 1	717	789	0.04524	113.724	GEN334070 1-LEWIS CREEK 1
FDNS	00NR	2	20WP	G15_063	FROM->TO	G14-057T 345.00 - SUNNYSIDE 345KV CKT 1	717	789	0.04524	113.7147	GEN336251 1-NINEMILE POINT UNIT#4
FDNS	00NR	2	20WP	G15_063	FROM->TO	G14-057T 345.00 - SUNNYSIDE 345KV CKT 1	717	789	0.04524	113.6955	GEN509393 S1-ARSENAL HILL GENS #4 (STALL)
FDNS	00NR	2	20WP	G15_063	FROM->TO	G14-057T 345.00 - SUNNYSIDE 345KV CKT 1	717	789	0.04524	113.694	GEN509392 G2-ARSENAL HILL GENS #3 (STALL)
FDNS	00NR	2	20WP	G15_063	FROM->TO	G14-057T 345.00 - SUNNYSIDE 345KV CKT 1	717	789	0.04524	113.6939	GEN509391 G1-ARSENAL HILL GENS #2 (STALL)
FDNS	00NR	2	20WP	G15_063	FROM->TO	G14-057T 345.00 - SUNNYSIDE 345KV CKT 1	717	789	0.04524	113.6886	P12:161:AEPW-SWPA:BEAVER5:EROGERS5
FDNS	00NR	2	20WP	G15_063	FROM->TO	G14-057T 345.00 - SUNNYSIDE 345KV CKT 1	717	789	0.04632	113.6707	OIL CENTER - STRATFORD 138KV CKT 1
FDNS	00NR	2	16WP	G15_063	FROM->TO	G14-057T 345.00 - SUNNYSIDE 345KV CKT 1	717	789	0.04564	113.6693	P12:138:WFEC:MSL09
FDNS	00NR	2	20WP	G15_063	FROM->TO	G14-057T 345.00 - SUNNYSIDE 345KV CKT 1	717	789	0.04524	113.6662	GEN334433 1-SABINE UNIT 3
FDNS	00NR	2	20WP	G15_063	FROM->TO	G14-057T 345.00 - SUNNYSIDE 345KV CKT 1	717	789	0.04524	113.6508	GEN337653 1-WHITE BLUFF UNIT #2
FDNS	00NR	2	16WP	G15_063	FROM->TO	G14-057T 345.00 - SUNNYSIDE 345KV CKT 1	717	789	0.04554	113.6449	GEN636641 1-LOUISA UNIT 1
FDNS	00NR	2	20WP	G15_063	FROM->TO	G14-057T 345.00 - SUNNYSIDE 345KV CKT 1	717	789	0.04524	113.6408	GEN336831 1-BAXTER WILSON SES
FDNS	00NR	2	16WP	G15_063	FROM->TO	G14-057T 345.00 - SUNNYSIDE 345KV CKT 1	717	789	0.0449	113.6406	P12:138:AEPW-OGE:CORNVIL4:CIMARON4
FDNS	00NR	2	20WP	G15_063	FROM->TO	G14-057T 345.00 - SUNNYSIDE 345KV CKT 1	717	789	0.04553	113.6392	FINNEY SWITCHING STATION - HOLCOMB 345KV CKT 1
FDNS	00NR	2	20WP	G15_063	FROM->TO	G14-057T 345.00 - SUNNYSIDE 345KV CKT 1	717	789	0.04553	113.6392	FINNEY SWITCHING STATION - HOLCOMB 345KV CKT 1
FDNS	00NR	2	20WP	G15_063	FROM->TO	G14-057T 345.00 - SUNNYSIDE 345KV CKT 1	717	789	0.04524	113.6287	GEN515040 1-SEMINOLE 1G
FDNS	00NR	2	20WP	G15_063	FROM->TO	G14-057T 345.00 - SUNNYSIDE 345KV CKT 1	717	789	0.04524	113.6241	P12:161:AEPW:DYESS5:ELMSPRNG:TONTITN5
FDNS	00NR	2	20WP	G15_063	FROM->TO	G14-057T 345.00 - SUNNYSIDE 345KV CKT 1	717	789	0.04536	113.6141	DUNCAN (DUNCAN) 138/69/13.8KV TRANSFORMER CKT 1
FDNS	00NR	2	20WP	G15_063	FROM->TO	G14-057T 345.00 - SUNNYSIDE 345KV CKT 1	717	789	0.04536	113.6141	DUNCAN (DUNCAN) 138/69/13.8KV TRANSFORMER CKT 1
FDNS	00NR	2	16WP	G15_063	FROM->TO	G14-057T 345.00 - SUNNYSIDE 345KV CKT 1	717	789	0.04554	113.6023	GEN600005 1-MONTICELLO
FDNS	00NR	2	20WP	G15_063	FROM->TO	G14-057T 345.00 - SUNNYSIDE 345KV CKT 1	717	789	0.04524	113.5965	GEN337911 1-ARKANSAS NUCLEAR ONE UNIT #2
FDNS	00NR	2	20WP	G15_063	FROM->TO	G14-057T 345.00 - SUNNYSIDE 345KV CKT 1	717	789	0.04524	113.5925	GEN334030 1-FRONTIER UNIT 1
FDNS	00NR	2	20WP	G15_063	FROM->TO	G14-057T 345.00 - SUNNYSIDE 345KV CKT 1	717	789	0.04524	113.5902	GEN334031 1-FRONTIER UNIT 2
FDNS	00NR	2	20WP	G15_063	FROM->TO	G14-057T 345.00 - SUNNYSIDE 345KV CKT 1	717	789	0.04527	113.5721	P12:138:AEPW:CATOOSA4:T.S.E.-4
FDNS	00NR	2	20WP	G15_063	FROM->TO	G14-057T 345.00 - SUNNYSIDE 345KV CKT 1	717	789	0.0446	113.5674	TUTTLE - TUTTLE CONOCO TAP 138KV CKT 1
FDNS	00NR	2	20WP	G15_063	FROM->TO	G14-057T 345.00 - SUNNYSIDE 345KV CKT 1	717	789	0.04662	113.5654	BLANCHARD - MAUD 138KV CKT 1
FDNS	00NR	2	20WP	G15_063	FROM->TO	G14-057T 345.00 - SUNNYSIDE 345KV CKT 1	717	789	0.04524	113.5493	GEN506752 1-LEBROCK GAS 1
FDNS	00NR	2	20WP	G15_063	FROM->TO	G14-057T 345.00 - SUNNYSIDE 345KV CKT 1	717	789	0.04524	113.549	GEN506753 1-LEBROCK GAS 2
FDNS	00NR	2	20WP	G15_063	FROM->TO	G14-057T 345.00 - SUNNYSIDE 345KV CKT 1	717	789	0.04524	113.5488	GEN501811 1-RODEMACHER UNIT 1
FDNS	00NR	2	20WP	G15_063	FROM->TO	G14-057T 345.00 - SUNNYSIDE 345KV CKT 1	717	789	0.04515	113.5485	P12:138:AEPW-OGE:WTH_JCT4:JENSEN4
FDNS	00NR	2	20WP	G15_063	FROM->TO	G14-057T 345.00 - SUNNYSIDE 345KV CKT 1	717	789	0.04524	113.5473	GEN337652 1-WHITE BLUFF UNIT #1
FDNS	00NR	2	16WP	G15_063	FROM->TO	G14-057T 345.00 - SUNNYSIDE 345KV CKT 1	717	789	0.04549	113.5448	CHISHOLM7 345.00 (CHISHOLM) 345/230/13.2KV TRANSFORMER CKT 1
FDNS	00NR	2	20WP	G15_063	FROM->TO	G14-057T 345.00 - SUNNYSIDE 345KV CKT 1	717	789	0.04525	113.5442	P12:138:AEPW:CORNVIL4:DUNCAN-4
FDNS	00NR	2	20WP	G15_063	FROM->TO	G14-057T 345.00 - SUNNYSIDE 345KV CKT 1	717	789	0.04522	113.5396	FULTON 115 - HOPE 115KV CKT 1
FDNS	00NR	2	20WP	G15_063	FROM->TO	G14-057T 345.00 - SUNNYSIDE 345KV CKT 1	717	789	0.04522	113.5396	FULTON 115 - HOPE 115KV CKT 1
FDNS	00NR	2	20WP	G15_063	FROM->TO	G14-057T 345.00 - SUNNYSIDE 345KV CKT 1	717	789	0.04512	113.5197	G14_038T 345.00 - Hitchland Interchange 345KV CKT 1
FDNS	00NR	2	16WP	G15_063	FROM->TO	G14-057T 345.00 - SUNNYSIDE 345KV CKT 1	717	789	0.04554	113.5173	GEN635213 3-NEAL UNIT 3
FDNS	00NR	2	16WP	G15_063	FROM->TO	G14-057T 345.00 - SUNNYSIDE 345KV CKT 1	717	789	0.04554	113.5156	GEN562754 1-G15031_5 0.6900
FDNS	00NR	2	20WP	G15_063	FROM->TO	G14-057T 345.00 - SUNNYSIDE 345KV CKT 1	717	789	0.04524	113.5155	GEN336191 1-LITTLE GYPSY UNIT#3
FDNS	00NR	2	20WP	G15_063	FROM->TO	G14-057T 345.00 - SUNNYSIDE 345KV CKT 1	717	789	0.04524	113.5143	GEN300015 1-1SGPDEL 18.000
FDNS	00NR	2	20WP	G15_063	FROM->TO	G14-057T 345.00 - SUNNYSIDE 345KV CKT 1	717	789	0.04524	113.5105	GEN515226 1-MUSKOGEE 6G
FDNS	00NR	2	20WP	G15_063	FROM->TO	G14-057T 345.00 - SUNNYSIDE 345KV CKT 1	717	789	0.04632	113.4981	LATTA JCT - OIL CENTER 138KV CKT 1
FDNS	00NR	2	20WP	G15_063	FROM->TO	G14-057T 345.00 - SUNNYSIDE 345KV CKT 1	717	789	0.04535	113.4966	P12:138:AEPW:CORNVIL4:S.W.S.-4

SOLUTION	GROUP	SCENARIO	SEASON	SOURCE	DIRECTION	MONITORED ELEMENT	RATEA (MVA)	RATEB(MVA)	TDF	TC%LOADING (% MVA)	CONTINGENCY
FDNS	00NR	2	16WP	G15_063	FROM->TO	G14-057T 345.00 - SUNNYSIDE 345KV CKT 1	717	789	0.04554	113.4887	GEN629074 1-ARNOLD LOWSIDE OF GSU XFMR
FDNS	00NR	2	20WP	G15_063	FROM->TO	G14-057T 345.00 - SUNNYSIDE 345KV CKT 1	717	789	0.04524	113.4852	GEN335614 1-WILLOW GLENN UNIT#4
FDNS	00NR	2	20WP	G15_063	FROM->TO	G14-057T 345.00 - SUNNYSIDE 345KV CKT 1	717	789	0.04524	113.4819	GEN300003 1-THOMAS HILL UNIT 3
FDNS	00NR	2	20WP	G15_063	FROM->TO	G14-057T 345.00 - SUNNYSIDE 345KV CKT 1	717	789	0.04524	113.4769	6LAYFLD 230.00 - CARROLL 230KV CKT 1
FDNS	00NR	2	20WP	G15_063	FROM->TO	G14-057T 345.00 - SUNNYSIDE 345KV CKT 1	717	789	0.0446	113.4753	CIMARRON - TUTTLE CONOCO TAP 138KV CKT 1
FDNS	00NR	2	20WP	G15_063	FROM->TO	G14-057T 345.00 - SUNNYSIDE 345KV CKT 1	717	789	0.04526	113.474	8DANIEL8 500.00 - MCKNIGHT 500KV CKT 1
FDNS	00NR	2	20WP	G15_063	FROM->TO	G14-057T 345.00 - SUNNYSIDE 345KV CKT 1	717	789	0.0459	113.4566	BAILEY4 138.00 - SUNSHINE CANYON 138KV CKT 1
FDNS	00NR	2	16WP	G15_063	FROM->TO	G14-057T 345.00 - SUNNYSIDE 345KV CKT 1	717	789	0.04554	113.4565	GEN562756 1-G15031_7 0.6900
FDNS	00NR	2	20WP	G15_063	FROM->TO	G14-057T 345.00 - SUNNYSIDE 345KV CKT 1	717	789	0.04524	113.4457	P12:161:AEPW:EROGERS5:ECNTRTN5
FDNS	00NR	2	16WP	G15_063	FROM->TO	G14-057T 345.00 - SUNNYSIDE 345KV CKT 1	717	789	0.04554	113.4429	BIG STONE 230/24.0KV TRANSFORMER CKT 1
FDNS	00NR	2	20WP	G15_063	FROM->TO	G14-057T 345.00 - SUNNYSIDE 345KV CKT 1	717	789	0.04524	113.4415	GEN337910 1-ARKANSAS NUCLEAR ONE UNIT #1
FDNS	00NR	2	20WP	G15_063	FROM->TO	G14-057T 345.00 - SUNNYSIDE 345KV CKT 1	717	789	0.04515	113.4411	G15095_T 138.00 - ROSE_VALLEY 138.00 138KV CKT 1
FDNS	00NR	2	20WP	G15_063	FROM->TO	G14-057T 345.00 - SUNNYSIDE 345KV CKT 1	717	789	0.04524	113.4407	GEN303007 1-1BC2 U2
FDNS	00NR	2	20WP	G15_063	FROM->TO	G14-057T 345.00 - SUNNYSIDE 345KV CKT 1	717	789	0.04536	113.4402	P12:69:WFEC-AEPW:COMANCH2:DUNCAN-2
FDNS	00NR	2	16WP	G15_063	FROM->TO	G14-057T 345.00 - SUNNYSIDE 345KV CKT 1	717	789	0.04554	113.4377	GEN562023 1-G11_020_3 0.6900
FDNS	00NR	2	16WP	G15_063	FROM->TO	G14-057T 345.00 - SUNNYSIDE 345KV CKT 1	717	789	0.04554	113.4377	GEN562026 1-G11_019_3 0.6900
FDNS	00NR	2	20WP	G15_063	FROM->TO	G14-057T 345.00 - SUNNYSIDE 345KV CKT 1	717	789	0.04524	113.4349	GEN303006 1-1BC2 U1
FDNS	00NR	2	20WP	G15_063	FROM->TO	G14-057T 345.00 - SUNNYSIDE 345KV CKT 1	717	789	0.04524	113.4343	GEN336464 1-MICHOUD UNIT #3
FDNS	00NR	2	20WP	G15_063	FROM->TO	G14-057T 345.00 - SUNNYSIDE 345KV CKT 1	717	789	0.04519	113.4336	P12:138:AEPW:WTHWF4:CLINTJC4
FDNS	00NR	2	20WP	G15_063	FROM->TO	G14-057T 345.00 - SUNNYSIDE 345KV CKT 1	717	789	0.04524	113.4335	WHITE BLUFF 500/26.0KV TRANSFORMER CKT 1
FDNS	00NR	2	20WP	G15_063	FROM->TO	G14-057T 345.00 - SUNNYSIDE 345KV CKT 1	717	789	0.04522	113.4305	BUCKNER7 345.00 - SPEARVILLE 345KV CKT 1
FDNS	00NR	2	20WP	G15_063	FROM->TO	G14-057T 345.00 - SUNNYSIDE 345KV CKT 1	717	789	0.04522	113.4305	BUCKNER7 345.00 - SPEARVILLE 345KV CKT 1
FDNS	00NR	2	20WP	G15_063	FROM->TO	G14-057T 345.00 - SUNNYSIDE 345KV CKT 1	717	789	0.04524	113.4301	GEN562783 1-G15036_4 0.6900
FDNS	00NR	2	20WP	G15_063	FROM->TO	G14-057T 345.00 - SUNNYSIDE 345KV CKT 1	717	789	0.04524	113.4301	GEN562784 1-G15036_5 0.6900
FDNS	00NR	2	20WP	G15_063	FROM->TO	G14-057T 345.00 - SUNNYSIDE 345KV CKT 1	717	789	0.04524	113.4252	RODEMACHER 230/22.0KV TRANSFORMER CKT 1
FDNS	00NR	2	20WP	G15_063	FROM->TO	G14-057T 345.00 - SUNNYSIDE 345KV CKT 1	717	789	0.04528	113.4237	P12:69:AEPW-OMPA:COMANC-2:OMWALTR2
FDNS	00NR	2	20WP	G15_063	FROM->TO	G14-057T 345.00 - SUNNYSIDE 345KV CKT 1	717	789	0.04569	113.4187	CIMARRON - CZECH HALL 138KV CKT 1
FDNS	00NR	2	16WP	G15_063	FROM->TO	G14-057T 345.00 - SUNNYSIDE 345KV CKT 1	717	789	0.04549	113.4184	CHISHOLM7 345.00 - GRACEMONT 345KV CKT 1
FDNS	00NR	2	20WP	G15_063	FROM->TO	G14-057T 345.00 - SUNNYSIDE 345KV CKT 1	717	789	0.04524	113.4138	GEN515225 1-MUSKOGEE 5G
FDNS	00NR	2	20WP	G15_063	FROM->TO	G14-057T 345.00 - SUNNYSIDE 345KV CKT 1	717	789	0.04524	113.4137	GEN515223 1-MUSKOGEE 4G
FDNS	00NR	2	20WP	G15_063	FROM->TO	G14-057T 345.00 - SUNNYSIDE 345KV CKT 1	717	789	0.0453	113.4136	G15088_T 345.00 - MOORE 345KV CKT 1
FDNS	00NR	2	16WP	G15_063	FROM->TO	G14-057T 345.00 - SUNNYSIDE 345KV CKT 1	717	789	0.04554	113.4132	GEN562556 1-G14_046_3 0.3420
FDNS	00NR	2	20WP	G15_063	FROM->TO	G14-057T 345.00 - SUNNYSIDE 345KV CKT 1	717	789	0.04522	113.4117	BISMARK - HOT SPRINGS WEST BUS 115KV CKT 1
FDNS	00NR	2	20WP	G15_063	FROM->TO	G14-057T 345.00 - SUNNYSIDE 345KV CKT 1	717	789	0.04536	113.4077	DUNCAN - TOSCO 69KV CKT 1
FDNS	00NR	2	20WP	G15_063	FROM->TO	G14-057T 345.00 - SUNNYSIDE 345KV CKT 1	717	789	0.04523	113.4068	MC NIEL 500/115KV TRANSFORMER CKT 1
FDNS	00NR	2	20WP	G15_063	FROM->TO	G14-057T 345.00 - SUNNYSIDE 345KV CKT 1	717	789	0.04537	113.4046	G15074_T 345.00 - HOYT 345KV CKT 1
FDNS	00NR	2	20WP	G15_063	FROM->TO	G14-057T 345.00 - SUNNYSIDE 345KV CKT 1	717	789	0.04519	113.4013	P12:138:AEPW:WTHWF4:WTH_SE4
FDNS	00NR	2	20WP	G15_063	FROM->TO	G14-057T 345.00 - SUNNYSIDE 345KV CKT 1	717	789	0.04521	113.3965	HOT SPRINGS EHV - MAGNET COVE 500KV CKT 1
FDNS	00NR	2	20WP	G15_063	FROM->TO	G14-057T 345.00 - SUNNYSIDE 345KV CKT 1	717	789	0.04524	113.3873	GEN300010 1-ST FRANCIS UNIT 1
FDNS	00NR	2	20WP	G15_063	FROM->TO	G14-057T 345.00 - SUNNYSIDE 345KV CKT 1	717	789	0.04514	113.3827	CLEO CORNER - CLEOPLT4 138.00 138KV CKT 1
FDNS	00NR	2	20WP	G15_063	FROM->TO	G14-057T 345.00 - SUNNYSIDE 345KV CKT 1	717	789	0.04525	113.3784	CHISHOLM6 230.00 - ELK CITY 230KV 230KV CKT 1
FDNS	00NR	2	20WP	G15_063	FROM->TO	G14-057T 345.00 - SUNNYSIDE 345KV CKT 1	717	789	0.04524	113.3768	GEN337041 1-GERALD ANDRUS
FDNS	00NR	2	20WP	G15_063	FROM->TO	G14-057T 345.00 - SUNNYSIDE 345KV CKT 1	717	789	0.04525	113.3759	ELK CITY 230KV (ELKCTY-6) 230/138/13.8KV TRANSFORMER CKT 1
FDNS	00NR	2	20WP	G15_063	FROM->TO	G14-057T 345.00 - SUNNYSIDE 345KV CKT 1	717	789	0.04525	113.3759	ELK CITY 230KV (ELKCTY-6) 230/138/13.8KV TRANSFORMER CKT 1
FDNS	00NR	2	20WP	G15_063	FROM->TO	G14-057T 345.00 - SUNNYSIDE 345KV CKT 1	717	789	0.04524	113.3731	GEN303008 1-1BC2 U3
FDNS	00NR	2	20WP	G15_063	FROM->TO	G14-057T 345.00 - SUNNYSIDE 345KV CKT 1	717	789	0.04582	113.3661	CIMARRON - SARA 138KV CKT 1
FDNS	00NR	2	20WP	G15_063	FROM->TO	G14-057T 345.00 - SUNNYSIDE 345KV CKT 1	717	789	0.04514	113.3619	CLEOPLT4 138.00 - MEN TAP 138KV CKT 1
FDNS	00NR	2	20WP	G15_063	FROM->TO	G14-057T 345.00 - SUNNYSIDE 345KV CKT 1	717	789	0.04524	113.3608	GEN505432 1-SIKESTON
FDNS	00NR	2	20WP	G15_063	FROM->TO	G14-057T 345.00 - SUNNYSIDE 345KV CKT 1	717	789	0.04553	113.3595	FINNEY SWITCHING STATION - WALKTAP7 345.00 345KV CKT 1
FDNS	00NR	2	20WP	G15_063	FROM->TO	G14-057T 345.00 - SUNNYSIDE 345KV CKT 1	717	789	0.04553	113.3595	FINNEY SWITCHING STATION - WALKTAP7 345.00 345KV CKT 1
FDNS	00NR	2	20WP	G15_063	FROM->TO	G14-057T 345.00 - SUNNYSIDE 345KV CKT 1	717	789	0.04515	113.3595	NOEL_SW 138.00 - ROSE_VALLEY 138.00 138KV CKT 1
FDNS	00NR	2	20WP	G15_063	FROM->TO	G14-057T 345.00 - SUNNYSIDE 345KV CKT 1	717	789	0.04522	113.357	ALPINE AECC - BISMARK 115KV CKT 1
FDNS	00NR	2	20WP	G15_063	FROM->TO	G14-057T 345.00 - SUNNYSIDE 345KV CKT 1	717	789	0.04466	113.3546	SEMINOLE - VANOSTP4 138.00 138KV CKT 1
FDNS	00NR	2	20WP	G15_063	FROM->TO	G14-057T 345.00 - SUNNYSIDE 345KV CKT 1	717	789	0.04514	113.35	IMO TAP - MEN TAP 138KV CKT 1
FDNS	00NR	2	20WP	G15_063	FROM->TO	G14-057T 345.00 - SUNNYSIDE 345KV CKT 1	717	789	0.04526	113.345	P12:138:AEPW:N.E.S.-4:CATOOSA4
FDNS	00NR	2	20WP	G15_063	FROM->TO	G14-057T 345.00 - SUNNYSIDE 345KV CKT 1	717	789	0.04536	113.3445	COMANCHE TAP - TOSCO 69KV CKT 1
FDNS	00NR	2	20WP	G15_063	FROM->TO	G14-057T 345.00 - SUNNYSIDE 345KV CKT 1	717	789	0.04524	113.3444	GEN336170 1-GULF OXY U4
FDNS	00NR	2	20WP	G15_063	FROM->TO	G14-057T 345.00 - SUNNYSIDE 345KV CKT 1	717	789	0.04569	113.3399	CZECH HALL - XEROX 138KV CKT 1
FDNS	00NR	2	20WP	G15_063	FROM->TO	G14-057T 345.00 - SUNNYSIDE 345KV CKT 1	717	789	0.04524	113.3385	NELSON 230/20.0KV TRANSFORMER CKT 1
FDNS	00NR	2	20WP	G15_063	FROM->TO	G14-057T 345.00 - SUNNYSIDE 345KV CKT 1	717	789	0.04569	113.3358	MORGAN - XEROX 138KV CKT 1
FDNS	00NR	2	20WP	G15_063	FROM->TO	G14-057T 345.00 - SUNNYSIDE 345KV CKT 1	717	789	0.04524	113.3301	GEN300011 1-ST FRANCIS UNIT 2
FDNS	00NR	2	20WP	G15_063	FROM->TO	G14-057T 345.00 - SUNNYSIDE 345KV CKT 1	717	789	0.04484	113.3298	ARBWIND4 138.00 - CARTER 138KV CKT 1
FDNS	00NR	2	16WP	G15_063	FROM->TO	G14-057T 345.00 - SUNNYSIDE 345KV CKT 1	717	789	0.04554	113.3248	GEN563142 1-G15079_3 0.5500
FDNS	00NR	2	16WP	G15_063	FROM->TO	G14-057T 345.00 - SUNNYSIDE 345KV CKT 1	717	789	0.04554	113.3248	GEN563151 1-G15080_2 0.5500
FDNS	00NR	2	20WP	G15_063	FROM->TO	G14-057T 345.00 - SUNNYSIDE 345KV CKT 1	717	789	0.04524	113.3229	GEN336801 1-BAXTER WILSON UNIT #1
FDNS	00NR	2	20WP	G15_063	FROM->TO	G14-057T 345.00 - SUNNYSIDE 345KV CKT 1	717	789	0.04569	113.3131	MORGAN - MUSTANG 138KV CKT 1
FDNS	00NR	2	20WP	G15_063	FROM->TO	G14-057T 345.00 - SUNNYSIDE 345KV CKT 1	717	789	0.04522	113.311	ALPINE AECC - AMITY SS 115KV CKT 1
FDNS	00NR	2	20WP	G15_063	FROM->TO	G14-057T 345.00 - SUNNYSIDE 345KV CKT 1	717	789	0.04515	113.3086	WEATHERFORD JCT. - WEATHERFORD SOUTHEAST 138KV CKT 1
FDNS	00NR	2	20WP	G15_063	FROM->TO	G14-057T 345.00 - SUNNYSIDE 345KV CKT 1	717	789	0.04515	113.3086	WEATHERFORD JCT. - WEATHERFORD SOUTHEAST 138KV CKT 1
FDNS	00NR	2	20WP	G15_063	FROM->TO	G14-057T 345.00 - SUNNYSIDE 345KV CKT 1	717	789	0.04524	113.2995	8CAJUN2 500/24.0KV TRANSFORMER CKT 1
FDNS	00NR	2	20WP	G15_063	FROM->TO	G14-057T 345.00 - SUNNYSIDE 345KV CKT 1	717	789	0.04524	113.2955	GEN501910 1-ACADIA UNIT ST1
FDNS	00NR	2	16WP	G15_063	FROM->TO	G14-057T 345.00 - SUNNYSIDE 345KV CKT 1	717	789	0.04554	113.2943	GEN523971 1-HARRINGTON GEN #1 24 KV
FDNS	00NR	2	16WP	G15_063	FROM->TO	G14-057T 345.00 - SUNNYSIDE 345KV CKT 1	717	789	0.04554	113.2942	GEN523973 1-HARRINGTON GEN #3 24 KV
FDNS	00NR	2	16WP	G15_063	FROM->TO	G14-057T 345.00 - SUNNYSIDE 345KV CKT 1	717	789	0.04554	113.2941	GEN523972 1-HARRINGTON GEN #2 24 KV
FDNS	00NR	2	20WP	G15_063	FROM->TO	G14-057T 345.00 - SUNNYSIDE 345KV CKT 1	717	789	0.04536	113.2908	COMANCHE - COMANCHE TAP 69KV CKT 1
FDNS	00NR	2	16WP	G15_063	FROM->TO	G14-057T 345.00 - SUNNYSIDE 345KV CKT 1	717	789	0.04554	113.288	GEN600000 1-SHERBURNECNTY G1
FDNS	00NR	2	20WP	G15_063	FROM->TO	G14-057T 345.00 - SUNNYSIDE 345KV CKT 1	717	789	0.04541	113.2805	ANADARKO - SEQUOYAHJ4 138.00 138KV CKT 1
FDNS	00NR	2	20WP	G15_063	FROM->TO	G14-057T 345.00 - SUNNYSIDE 345KV CKT 1	717	789	0.04541	113.2789	CORN TAP - SEQUOYAHJ4 138.00 138KV CKT 1
FDNS	00NR	2	20WP	G15_063	FROM->TO	G14-057T 345.00 - SUNNYSIDE 345KV CKT 1	717	789	0.0459	113.2787	BAILEY4 138.00 - WESTMOORE 138KV CKT 1

SOLUTION	GROUP	SCENARIO	SEASON	SOURCE	DIRECTION	MONITORED ELEMENT	RATEA (MVA)	RATEB(MVA)	TDF	TC%LOADING (% MVA)	CONTINGENCY
FDNS	00NR	2	20WP	G15_063	FROM->TO	G14-057T 345.00 - SUNNYSIDE 345KV CKT 1	717	789	0.04525	113.2707	P12:138:OKGE-AEPW:JENSEN4:REDROCKRD4
FDNS	00NR	2	20WP	G15_063	FROM->TO	G14-057T 345.00 - SUNNYSIDE 345KV CKT 1	717	789	0.04524	113.2595	SABINE 230/24.0KV TRANSFORMER CKT 1
FDNS	00NR	2	20WP	G15_063	FROM->TO	G14-057T 345.00 - SUNNYSIDE 345KV CKT 1	717	789	0.04582	113.2567	SARA - STHLAKE4 138.00 138KV CKT 1
FDNS	00NR	2	20WP	G15_063	FROM->TO	G14-057T 345.00 - SUNNYSIDE 345KV CKT 1	717	789	0.04535	113.2557	WALTERS - WALTERS 69KV CKT 1
FDNS	00NR	2	20WP	G15_063	FROM->TO	G14-057T 345.00 - SUNNYSIDE 345KV CKT 1	717	789	0.04515	113.2538	P12:138:AEPW:REDROCKRD4:WTH_JCT4
FDNS	00NR	2	20WP	G15_063	FROM->TO	G14-057T 345.00 - SUNNYSIDE 345KV CKT 1	717	789	0.0452	113.251	ETTA (DUKE HOTSPRINGS) - MC NIEL 500KV CKT 1
FDNS	00NR	2	20WP	G15_063	FROM->TO	G14-057T 345.00 - SUNNYSIDE 345KV CKT 1	717	789	0.04524	113.2504	P12:138:AEPW:R.S.S.-4:S.HUD.-4
FDNS	00NR	2	20WP	G15_063	FROM->TO	G14-057T 345.00 - SUNNYSIDE 345KV CKT 1	717	789	0.04524	113.2409	GEN336222 1-LITTLE GYPSY UNIT#2
FDNS	00NR	2	20WP	G15_063	FROM->TO	G14-057T 345.00 - SUNNYSIDE 345KV CKT 1	717	789	0.04524	113.2399	GEN300016 1-1G1GPDEL 18.000
FDNS	00NR	2	20WP	G15_063	FROM->TO	G14-057T 345.00 - SUNNYSIDE 345KV CKT 1	717	789	0.04528	113.2294	LAWTON RELIFT TAP - OMPA-WALTERS 69KV CKT 1
FDNS	00NR	2	20WP	G15_063	FROM->TO	G14-057T 345.00 - SUNNYSIDE 345KV CKT 1	717	789	0.04524	113.2277	ESSEX UNIT 2 500/18.0KV TRANSFORMER CKT 1
FDNS	00NR	2	16WP	G15_063	FROM->TO	G14-057T 345.00 - SUNNYSIDE 345KV CKT 1	717	789	0.04549	113.2276	STLN-DEMARC6 - SWEETWATER 230KV CKT 1
FDNS	00NR	2	16WP	G15_063	FROM->TO	G14-057T 345.00 - SUNNYSIDE 345KV CKT 1	717	789	0.04549	113.2267	P12:230:AEPW-SPS:SWEETWT6:WHEELER 6
FDNS	00NR	2	20WP	G15_063	FROM->TO	G14-057T 345.00 - SUNNYSIDE 345KV CKT 1	717	789	0.04582	113.2266	MCCLAIN - STHLAKE4 138.00 138KV CKT 1
FDNS	00NR	2	16WP	G15_063	FROM->TO	G14-057T 345.00 - SUNNYSIDE 345KV CKT 1	717	789	0.04549	113.225	STATELINE INTERCHANGE - STLN-DEMARC6 230KV CKT 1
FDNS	00NR	2	20WP	G15_063	FROM->TO	G14-057T 345.00 - SUNNYSIDE 345KV CKT 1	717	789	0.04524	113.2187	P12:69:AEPW:NROGERS2:ECNTRTN2
FDNS	00NR	2	20WP	G15_063	FROM->TO	G14-057T 345.00 - SUNNYSIDE 345KV CKT 1	717	789	0.04536	113.2139	NORGE ROAD - SOUTHWESTERN STATION 138KV CKT 1
FDNS	00NR	2	20WP	G15_063	FROM->TO	G14-057T 345.00 - SUNNYSIDE 345KV CKT 1	717	789	0.04536	113.2139	NORGE ROAD - SOUTHWESTERN STATION 138KV CKT 1
FDNS	00NR	2	20WP	G15_063	FROM->TO	G14-057T 345.00 - SUNNYSIDE 345KV CKT 1	717	789	0.04524	113.2085	P12:138:AEPW:BA_71ST4:T.S.E.-4
FDNS	00NR	2	20WP	G15_063	FROM->TO	G14-057T 345.00 - SUNNYSIDE 345KV CKT 1	717	789	0.04524	113.206	GEN336152 1-WATERFORD UNIT#2
FDNS	00NR	2	20WP	G15_063	FROM->TO	G14-057T 345.00 - SUNNYSIDE 345KV CKT 1	717	789	0.04524	113.2052	GEN336151 1-WATERFORD UNIT#1
FDNS	00NR	2	20WP	G15_063	FROM->TO	G14-057T 345.00 - SUNNYSIDE 345KV CKT 1	717	789	0.04632	113.2049	LASALLE - LATTA JCT 138KV CKT 1
FDNS	00NR	2	20WP	G15_063	FROM->TO	G14-057T 345.00 - SUNNYSIDE 345KV CKT 1	717	789	0.04524	113.2037	P12:138:AEPW:YARCH-S4:T.S.E.-4
FDNS	00NR	2	20WP	G15_063	FROM->TO	G14-057T 345.00 - SUNNYSIDE 345KV CKT 1	717	789	0.04544	113.2014	P12:138:AEPW-OGE:SHIDLER4:OSAGE 4
FDNS	00NR	2	16WP	G15_063	FROM->TO	G14-057T 345.00 - SUNNYSIDE 345KV CKT 1	717	789	0.04551	113.2012	NORTHWEST TEXARKANA - VALLIANT 345KV CKT 1
FDNS	00NR	2	16WP	G15_063	FROM->TO	G14-057T 345.00 - SUNNYSIDE 345KV CKT 1	717	789	0.04551	113.2012	NORTHWEST TEXARKANA - VALLIANT 345KV CKT 1
FDNS	00NR	2	20WP	G15_063	FROM->TO	G14-057T 345.00 - SUNNYSIDE 345KV CKT 1	717	789	0.04542	113.2008	MORISNT4 138.00 - STILLWATER 138KV CKT 1
FDNS	00NR	2	16WP	G15_063	FROM->TO	G14-057T 345.00 - SUNNYSIDE 345KV CKT 1	717	789	0.04554	113.1971	GEN600001 2-SHERBURNE CNTY G2
FDNS	00NR	2	20WP	G15_063	FROM->TO	G14-057T 345.00 - SUNNYSIDE 345KV CKT 1	717	789	0.04524	113.1964	FRONTIER 345/18.0KV TRANSFORMER CKT 1
FDNS	00NR	2	20WP	G15_063	FROM->TO	G14-057T 345.00 - SUNNYSIDE 345KV CKT 1	717	789	0.04544	113.1945	P12:138:OKGE:3TERM2
FDNS	00NR	2	20WP	G15_063	FROM->TO	G14-057T 345.00 - SUNNYSIDE 345KV CKT 1	717	789	0.04524	113.1942	FRONTIER 345/18.0KV TRANSFORMER CKT 1
FDNS	00NR	2	20WP	G15_063	FROM->TO	G14-057T 345.00 - SUNNYSIDE 345KV CKT 1	717	789	0.04543	113.1881	G13-010T 345.00 - POST ROCK 345KV CKT 1
FDNS	00NR	2	20WP	G15_063	FROM->TO	G14-057T 345.00 - SUNNYSIDE 345KV CKT 1	717	789	0.04537	113.1865	HOYT - STRANGER CREEK 345KV CKT 1
FDNS	00NR	2	20WP	G15_063	FROM->TO	G14-057T 345.00 - SUNNYSIDE 345KV CKT 1	717	789	0.04551	113.1838	BLACKBERRY - NEOSHO 345KV CKT 1
FDNS	00NR	2	20WP	G15_063	FROM->TO	G14-057T 345.00 - SUNNYSIDE 345KV CKT 1	717	789	0.04524	113.1832	GEN300017 1-1G2GPDEL 18.000
FDNS	00NR	2	16WP	G15_063	FROM->TO	G14-057T 345.00 - SUNNYSIDE 345KV CKT 1	717	789	0.04554	113.1811	GEN511848 1-SOUTHWESTERN STATION #3
FDNS	00NR	2	20WP	G15_063	FROM->TO	G14-057T 345.00 - SUNNYSIDE 345KV CKT 1	717	789	0.04527	113.1809	CLINTON JUNCTION - ELK CITY 138KV CKT 1
FDNS	00NR	2	20WP	G15_063	FROM->TO	G14-057T 345.00 - SUNNYSIDE 345KV CKT 1	717	789	0.04527	113.1809	CLINTON JUNCTION - ELK CITY 138KV CKT 1
FDNS	00NR	2	20WP	G15_063	FROM->TO	G14-057T 345.00 - SUNNYSIDE 345KV CKT 1	717	789	0.0453	113.1808	7JASPER 345.00 - BLACKBERRY 345KV CKT 1
FDNS	00NR	2	20WP	G15_063	FROM->TO	G14-057T 345.00 - SUNNYSIDE 345KV CKT 1	717	789	0.0456	113.1772	BENTON - WICHITA 345KV CKT 1
FDNS	00NR	2	20WP	G15_063	FROM->TO	G14-057T 345.00 - SUNNYSIDE 345KV CKT 1	717	789	0.04522	113.1718	HOPE - MCNAB REC 115KV CKT 1
FDNS	00NR	2	20WP	G15_063	FROM->TO	G14-057T 345.00 - SUNNYSIDE 345KV CKT 1	717	789	0.04537	113.1672	G15074_T 345.00 - JEFFREY ENERGY CENTER 345KV CKT 1
FDNS	00NR	2	20WP	G15_063	FROM->TO	G14-057T 345.00 - SUNNYSIDE 345KV CKT 1	717	789	0.04524	113.1661	GEN501823 1-TECHE UNIT 3
FDNS	00NR	2	20WP	G15_063	FROM->TO	G14-057T 345.00 - SUNNYSIDE 345KV CKT 1	717	789	0.04524	113.1653	LEWIS CREEK SWITCHYARD 138/22.0KV TRANSFORMER CKT 1
FDNS	00NR	2	20WP	G15_063	FROM->TO	G14-057T 345.00 - SUNNYSIDE 345KV CKT 1	717	789	0.04524	113.1641	GEN501970 1-EVANGELINE UNIT 7
FDNS	00NR	2	20WP	G15_063	FROM->TO	G14-057T 345.00 - SUNNYSIDE 345KV CKT 1	717	789	0.04519	113.1624	WEATHERFORD TAP - WEATHERFORD WIND FARM 138KV CKT 1
FDNS	00NR	2	20WP	G15_063	FROM->TO	G14-057T 345.00 - SUNNYSIDE 345KV CKT 1	717	789	0.04524	113.1608	LEWIS CREEK SWITCHYARD 138/22.0KV TRANSFORMER CKT 1
FDNS	00NR	2	20WP	G15_063	FROM->TO	G14-057T 345.00 - SUNNYSIDE 345KV CKT 1	717	789	0.04522	113.1606	P12:115:AEPW:TURK3:HOPE3
FDNS	00NR	2	20WP	G15_063	FROM->TO	G14-057T 345.00 - SUNNYSIDE 345KV CKT 1	717	789	0.04523	113.16	COUCH SES - MC NIEL 115KV CKT 1
FDNS	00NR	2	20WP	G15_063	FROM->TO	G14-057T 345.00 - SUNNYSIDE 345KV CKT 1	717	789	0.04515	113.1596	HINTON - WEATHERFORD JCT. 138KV CKT 1
FDNS	00NR	2	20WP	G15_063	FROM->TO	G14-057T 345.00 - SUNNYSIDE 345KV CKT 1	717	789	0.04434	113.1593	ARBUCKLE - VANOSTP4 138.00 138KV CKT 1
FDNS	00NR	2	20WP	G15_063	FROM->TO	G14-057T 345.00 - SUNNYSIDE 345KV CKT 1	717	789	0.04524	113.1561	CYPRESS - HARTBURG 500KV CKT 1
FDNS	00NR	2	20WP	G15_063	FROM->TO	G14-057T 345.00 - SUNNYSIDE 345KV CKT 1	717	789	0.04528	113.1557	OMPA-WALTERS - WALTERS 69KV CKT 1
FDNS	00NR	2	20WP	G15_063	FROM->TO	G14-057T 345.00 - SUNNYSIDE 345KV CKT 1	717	789	0.04528	113.1557	OMPA-WALTERS - WALTERS 69KV CKT 1
FDNS	00NR	2	20WP	G15_063	FROM->TO	G14-057T 345.00 - SUNNYSIDE 345KV CKT 1	717	789	0.04535	113.1529	SOUTHWESTERN STATION - VERDEN 138KV CKT 1
FDNS	00NR	2	20WP	G15_063	FROM->TO	G14-057T 345.00 - SUNNYSIDE 345KV CKT 1	717	789	0.04524	113.1526	GEN334432 1-SABINE UNIT 2
FDNS	00NR	2	20WP	G15_063	FROM->TO	G14-057T 345.00 - SUNNYSIDE 345KV CKT 1	717	789	0.04524	113.1524	GEN334431 1-SABINE UNIT 1
FDNS	00NR	2	20WP	G15_063	FROM->TO	G14-057T 345.00 - SUNNYSIDE 345KV CKT 1	717	789	0.04694	113.148	CANADIAN - NOBLE 138KV CKT 1
FDNS	00NR	2	20WP	G15_063	FROM->TO	G14-057T 345.00 - SUNNYSIDE 345KV CKT 1	717	789	0.04531	113.147	7LUTESVIL 345.00 - 7ST FRANC 345.00 345KV CKT 1
FDNS	00NR	2	20WP	G15_063	FROM->TO	G14-057T 345.00 - SUNNYSIDE 345KV CKT 1	717	789	0.04557	113.1445	EMPORIA ENERGY CENTER - G14_001T 345.00 345KV CKT 1
FDNS	00NR	2	20WP	G15_063	FROM->TO	G14-057T 345.00 - SUNNYSIDE 345KV CKT 1	717	789	0.04524	113.1395	GEN505616 1-BROKEN BOW
FDNS	00NR	2	20WP	G15_063	FROM->TO	G14-057T 345.00 - SUNNYSIDE 345KV CKT 1	717	789	0.04522	113.1358	TURK (TURK 1) 138/115/13.2KV TRANSFORMER CKT 1
FDNS	00NR	2	20WP	G15_063	FROM->TO	G14-057T 345.00 - SUNNYSIDE 345KV CKT 1	717	789	0.04522	113.1358	TURK (TURK 1) 138/115/13.2KV TRANSFORMER CKT 1
FDNS	00NR	2	20WP	G15_063	FROM->TO	G14-057T 345.00 - SUNNYSIDE 345KV CKT 1	717	789	0.04522	113.1357	MCNAB REC - Turk 115 115KV CKT 1
FDNS	00NR	2	20WP	G15_063	FROM->TO	G14-057T 345.00 - SUNNYSIDE 345KV CKT 1	717	789	0.04535	113.1349	P12:69:WFEC-AEPW:COMANCH2:WALTRS-2
FDNS	00NR	2	20WP	G15_063	FROM->TO	G14-057T 345.00 - SUNNYSIDE 345KV CKT 1	717	789	0.04524	113.1315	P12:161:AEPW:CHAMSPR5:FARMING5
FDNS	00NR	2	20WP	G15_063	FROM->TO	G14-057T 345.00 - SUNNYSIDE 345KV CKT 1	717	789	0.04535	113.1309	NORTH 29TH CHICKASHA - VERDEN 138KV CKT 1
FDNS	00NR	2	20WP	G15_063	FROM->TO	G14-057T 345.00 - SUNNYSIDE 345KV CKT 1	717	789	0.04524	113.1247	GEN334392 1-EXXON MOBIL IPP 1
FDNS	00NR	2	20WP	G15_063	FROM->TO	G14-057T 345.00 - SUNNYSIDE 345KV CKT 1	717	789	0.04692	113.1237	P12:138:OKGE:3TERM27
FDNS	00NR	2	20WP	G15_063	FROM->TO	G14-057T 345.00 - SUNNYSIDE 345KV CKT 1	717	789	0.04543	113.121	G13-010T 345.00 - SPEARVILLE 345KV CKT 1
FDNS	00NR	2	20WP	G15_063	FROM->TO	G14-057T 345.00 - SUNNYSIDE 345KV CKT 1	717	789	0.04524	113.1175	GEN334393 1-EXXON MOBIL IPP 2
FDNS	00NR	2	20WP	G15_063	FROM->TO	G14-057T 345.00 - SUNNYSIDE 345KV CKT 1	717	789	0.04524	113.1175	GEN334394 1-EXXON MOBIL IPP 3
FDNS	00NR	2	16WP	G15_063	FROM->TO	G14-057T 345.00 - SUNNYSIDE 345KV CKT 1	717	789	0.04554	113.1139	GEN563042 1-G15068_3 0.6900
FDNS	00NR	2	20WP	G15_063	FROM->TO	G14-057T 345.00 - SUNNYSIDE 345KV CKT 1	717	789	0.0459	113.1133	FRANKLIN SW - WESTMOORE 138KV CKT 1
FDNS	00NR	2	20WP	G15_063	FROM->TO	G14-057T 345.00 - SUNNYSIDE 345KV CKT 1	717	789	0.0454	113.1131	SWISSVALE - WEST GARDNER 345KV CKT 1
FDNS	00NR	2	20WP	G15_063	FROM->TO	G14-057T 345.00 - SUNNYSIDE 345KV CKT 1	717	789	0.04524	113.1059	ST FRANCIS - ST FRANCIS 1 161KV CKT Z1
FDNS	00NR	2	20WP	G15_063	FROM->TO	G14-057T 345.00 - SUNNYSIDE 345KV CKT 1	717	789	0.04524	113.1059	ST FRANCIS 161/16.0KV TRANSFORMER CKT 1
FDNS	00NR	2	20WP	G15_063	FROM->TO	G14-057T 345.00 - SUNNYSIDE 345KV CKT 1	717	789	0.04529	113.1028	FLETCHER - MARLOW JCT 69KV CKT 1
FDNS	00NR	2	20WP	G15_063	FROM->TO	G14-057T 345.00 - SUNNYSIDE 345KV CKT 1	717	789	0.04529	113.1006	LAKEOVER - MCADAMS 500KV CKT 1

SOLUTION	GROUP	SCENARIO	SEASON	SOURCE	DIRECTION	MONITORED ELEMENT	RATEA (MVA)	RATEB(MVA)	TDF	TC%LOADING (% MVA)	CONTINGENCY
FDNS	00NR	2	20WP	G15_063	FROM->TO	G14-057T 345.00 - SUNNYSIDE 345KV CKT 1	717	789	0.04524	113.1	SABINE 230/22.0KV TRANSFORMER CKT 1
FDNS	00NR	2	20WP	G15_063	FROM->TO	G14-057T 345.00 - SUNNYSIDE 345KV CKT 1	717	789	0.04539	113.0977	EMPORIA ENERGY CENTER - SWISSVALE 345KV CKT 1
FDNS	00NR	2	16WP	G15_063	FROM->TO	G14-057T 345.00 - SUNNYSIDE 345KV CKT 1	717	789	0.04554	113.0968	GEN527901 1-HOBBS PLANT #1 (CT)
FDNS	00NR	2	16WP	G15_063	FROM->TO	G14-057T 345.00 - SUNNYSIDE 345KV CKT 1	717	789	0.04554	113.0968	GEN527902 1-HOBBS PLANT #2 (CT)
FDNS	00NR	2	20WP	G15_063	FROM->TO	G14-057T 345.00 - SUNNYSIDE 345KV CKT 1	717	789	0.04516	113.0872	ENOWILT - LONE OAK 138KV CKT 1
FDNS	00NR	2	20WP	G15_063	FROM->TO	G14-057T 345.00 - SUNNYSIDE 345KV CKT 1	717	789	0.04524	113.0867	GEN501971 1-EVANGELINE UNIT 7-1
FDNS	00NR	2	20WP	G15_063	FROM->TO	G14-057T 345.00 - SUNNYSIDE 345KV CKT 1	717	789	0.04524	113.0867	GEN501972 1-EVANGELINE UNIT 7-2
FDNS	00NR	2	20WP	G15_063	FROM->TO	G14-057T 345.00 - SUNNYSIDE 345KV CKT 1	717	789	0.04557	113.0863	G14_001T 345.00 - WICHITA 345KV CKT 1
FDNS	00NR	2	20WP	G15_063	FROM->TO	G14-057T 345.00 - SUNNYSIDE 345KV CKT 1	717	789	0.04515	113.0858	HINTON - REDROCKRD4 138.00 138KV CKT 1
FDNS	00NR	2	20WP	G15_063	FROM->TO	G14-057T 345.00 - SUNNYSIDE 345KV CKT 1	717	789	0.04525	113.0818	P12:138:AEPW:R.S.S-4:T.P.S.-4
FDNS	00NR	2	20WP	G15_063	FROM->TO	G14-057T 345.00 - SUNNYSIDE 345KV CKT 1	717	789	0.04536	113.0816	CORNVILLE - NORGE ROAD 138KV CKT 1
FDNS	00NR	2	20WP	G15_063	FROM->TO	G14-057T 345.00 - SUNNYSIDE 345KV CKT 1	717	789	0.04536	113.0816	CORNVILLE - NORGE ROAD 138KV CKT 1
FDNS	00NR	2	20WP	G15_063	FROM->TO	G14-057T 345.00 - SUNNYSIDE 345KV CKT 1	717	789	0.04516	113.0784	ENOWILT - SARDIS 138KV CKT 1
FDNS	00NR	2	20WP	G15_063	FROM->TO	G14-057T 345.00 - SUNNYSIDE 345KV CKT 1	717	789	0.0453	113.0763	P12:138:OKGE:3TERM12
FDNS	00NR	2	20WP	G15_063	FROM->TO	G14-057T 345.00 - SUNNYSIDE 345KV CKT 1	717	789	0.04534	113.0734	MCADAMS - WOLF CREEK 500KV CKT 1
FDNS	00NR	2	16WP	G15_063	FROM->TO	G14-057T 345.00 - SUNNYSIDE 345KV CKT 1	717	789	0.04554	113.0701	GEN629075 1-OTTUMWA GENERATOR FOR OTTUMWA UNIT NO 1
FDNS	00NR	2	20WP	G15_063	FROM->TO	G14-057T 345.00 - SUNNYSIDE 345KV CKT 1	717	789	0.04519	113.0692	WEATHERFORD SOUTHEAST - WEATHERFORD TAP 138KV CKT 1
FDNS	00NR	2	20WP	G15_063	FROM->TO	G14-057T 345.00 - SUNNYSIDE 345KV CKT 1	717	789	0.0454	113.0677	FRANKLIN - FRANKLIN SW 138KV CKT 1
FDNS	00NR	2	20WP	G15_063	FROM->TO	G14-057T 345.00 - SUNNYSIDE 345KV CKT 1	717	789	0.04632	113.067	LASALLE - STONEWAL LH138.00 138KV CKT 1
FDNS	00NR	2	20WP	G15_063	FROM->TO	G14-057T 345.00 - SUNNYSIDE 345KV CKT 1	717	789	0.04524	113.0634	GEN501912 1-ACADIA UNIT CT1B
FDNS	00NR	2	20WP	G15_063	FROM->TO	G14-057T 345.00 - SUNNYSIDE 345KV CKT 1	717	789	0.04523	113.0627	P12:138:WFEC-AEPW:ELKCTY-4:ERICK4
FDNS	00NR	2	20WP	G15_063	FROM->TO	G14-057T 345.00 - SUNNYSIDE 345KV CKT 1	717	789	0.04524	113.0626	GEN501911 1-ACADIA UNIT CT1A
FDNS	00NR	2	20WP	G15_063	FROM->TO	G14-057T 345.00 - SUNNYSIDE 345KV CKT 1	717	789	0.04533	113.0567	8WNEWMADRID 500.00 - DELL 500 500KV CKT 1
FDNS	00NR	2	20WP	G15_063	FROM->TO	G14-057T 345.00 - SUNNYSIDE 345KV CKT 1	717	789	0.04524	113.0559	P12:138:AEPW:R.S.S.-4:R:96YALE-4
FDNS	00NR	2	20WP	G15_063	FROM->TO	G14-057T 345.00 - SUNNYSIDE 345KV CKT 1	717	789	0.04694	113.0547	NOBLE - PURCELL4 138.00 138KV CKT 1
FDNS	00NR	2	20WP	G15_063	FROM->TO	G14-057T 345.00 - SUNNYSIDE 345KV CKT 1	717	789	0.04632	113.0516	STONEWAL LH138.00 - TUPELO TAP 138KV CKT 1
FDNS	00NR	2	20WP	G15_063	FROM->TO	G14-057T 345.00 - SUNNYSIDE 345KV CKT 1	717	789	0.04535	113.047	CORNVILLE - NORTH 29TH CHICKASHA 138KV CKT 1
FDNS	00NR	2	20WP	G15_063	FROM->TO	G14-057T 345.00 - SUNNYSIDE 345KV CKT 1	717	789	0.04516	113.0432	CLAYTON - SARDIS 138KV CKT 1
FDNS	00NR	2	20WP	G15_063	FROM->TO	G14-057T 345.00 - SUNNYSIDE 345KV CKT 1	717	789	0.04532	113.0298	7JASPER 345.00 - MORGAN 345KV CKT 1
FDNS	00NR	2	20WP	G15_063	FROM->TO	G14-057T 345.00 - SUNNYSIDE 345KV CKT 1	717	789	0.046	113.0188	CIMARRON - NORTHWEST 345KV CKT 1
FDNS	00NR	2	20WP	G15_063	FROM->TO	G14-057T 345.00 - SUNNYSIDE 345KV CKT 1	717	789	0.04525	113.0187	Canadian Pump Station - REDROCKRD4 138.00 138KV CKT 1
FDNS	00NR	2	20WP	G15_063	FROM->TO	G14-057T 345.00 - SUNNYSIDE 345KV CKT 1	717	789	0.04519	113.0183	CLINTON JUNCTION - CLINTON NATURAL GAS TAP 138KV CKT 1
FDNS	00NR	2	20WP	G15_063	FROM->TO	G14-057T 345.00 - SUNNYSIDE 345KV CKT 1	717	789	0.04536	112.9872	CRINER - PAYNE 138.00 138KV CKT 1
FDNS	00NR	2	20WP	G15_063	FROM->TO	G14-057T 345.00 - SUNNYSIDE 345KV CKT 1	717	789	0.04535	112.9583	COMANCHE - WALTERS 69KV CKT 1
FDNS	00NR	2	20WP	G15_063	FROM->TO	G14-057T 345.00 - SUNNYSIDE 345KV CKT 1	717	789	0.04538	112.9567	P12:138:OKGE:3TERM20
FDNS	00NR	2	16WP	G15_063	FROM->TO	G14-057T 345.00 - SUNNYSIDE 345KV CKT 1	717	789	0.04554	112.929	GEN635214 4-NEAL UNIT 4
FDNS	00NR	2	16WP	G15_063	FROM->TO	G14-057T 345.00 - SUNNYSIDE 345KV CKT 1	717	789	0.04554	112.8968	SHERBURNE CO 345/24.0KV TRANSFORMER CKT 1
FDNS	00NR	2	16WP	G15_063	FROM->TO	G14-057T 345.00 - SUNNYSIDE 345KV CKT 1	717	789	0.04554	112.8327	GEN563043 1-G15068_4 0.6900
FDNS	00NR	2	16WP	G15_063	FROM->TO	G14-057T 345.00 - SUNNYSIDE 345KV CKT 1	717	789	0.04554	112.8246	GEN563273 2-G15093_4 0.6900
FDNS	00NR	2	16WP	G15_063	FROM->TO	G14-057T 345.00 - SUNNYSIDE 345KV CKT 1	717	789	0.04554	112.8052	GEN526333 1-JONES GEN #3 21 KV
FDNS	00NR	2	16WP	G15_063	FROM->TO	G14-057T 345.00 - SUNNYSIDE 345KV CKT 1	717	789	0.04554	112.8052	GEN526334 1-JONES_4 116.500
FDNS	00NR	2	16WP	G15_063	FROM->TO	G14-057T 345.00 - SUNNYSIDE 345KV CKT 1	717	789	0.04554	112.777	GEN600002 3-SHERBURNE CNTY G3
FDNS	00NR	2	16WP	G15_063	FROM->TO	G14-057T 345.00 - SUNNYSIDE 345KV CKT 1	717	789	0.04554	112.7572	GEN525844 1-ELK_1 118.000
FDNS	00NR	2	16WP	G15_063	FROM->TO	G14-057T 345.00 - SUNNYSIDE 345KV CKT 1	717	789	0.04554	112.7504	GEN525845 1-ELK_2 1 138.00
FDNS	00NR	2	16WP	G15_063	FROM->TO	G14-057T 345.00 - SUNNYSIDE 345KV CKT 1	717	789	0.04548	112.714	P12:230:AEPW:ELKCITY6:SWEETWT6
FDNS	00NR	2	16WP	G15_063	FROM->TO	G14-057T 345.00 - SUNNYSIDE 345KV CKT 1	717	789	0.04554	112.683	GEN344225 1-1CAL G1 25.000
FDNS	00NR	2	16WP	G15_063	FROM->TO	G14-057T 345.00 - SUNNYSIDE 345KV CKT 1	717	789	0.04554	112.613	GEN525562 1-TOLK GEN #2 24 KV
FDNS	00NR	2	16WP	G15_063	FROM->TO	G14-057T 345.00 - SUNNYSIDE 345KV CKT 1	717	789	0.04554	112.6037	GEN563202 1-G15085_3 0.5500
FDNS	00NR	2	16WP	G15_063	FROM->TO	G14-057T 345.00 - SUNNYSIDE 345KV CKT 1	717	789	0.04554	112.5699	GEN527166 1-MUSTANG_6 118.000
FDNS	00NR	2	16WP	G15_063	FROM->TO	G14-057T 345.00 - SUNNYSIDE 345KV CKT 1	717	789	0.04539	112.5498	JOHNSON COUNTY (JOHNCO) 345/138/13.8KV TRANSFORMER CKT 1
FDNS	00NR	2	20WP	G15_063	FROM->TO	G14-057T 345.00 - SUNNYSIDE 345KV CKT 1	717	789	0.04524	112.5462	803-OKLAUNION
FDNS	00NR	2	16WP	G15_063	FROM->TO	G14-057T 345.00 - SUNNYSIDE 345KV CKT 1	717	789	0.04554	112.5311	GEN635023 3-WALTER SCOTT UNIT 3
FDNS	00NR	2	16WP	G15_063	FROM->TO	G14-057T 345.00 - SUNNYSIDE 345KV CKT 1	717	789	0.04549	112.5151	CHISHOLM6 230.00 - SWEETWATER 230KV CKT 1
FDNS	00NR	2	16WP	G15_063	FROM->TO	G14-057T 345.00 - SUNNYSIDE 345KV CKT 1	717	789	0.04554	112.494	GEN562590 1-G14_057_3 0.6900
FDNS	00NR	2	16WP	G15_063	FROM->TO	G14-057T 345.00 - SUNNYSIDE 345KV CKT 1	717	789	0.04551	112.4789	LYDIA - WELSH 345KV CKT 1
FDNS	00NR	2	16WP	G15_063	FROM->TO	G14-057T 345.00 - SUNNYSIDE 345KV CKT 1	717	789	0.04551	112.4789	LYDIA - WELSH 345KV CKT 1
FDNS	00NR	2	16WP	G15_063	FROM->TO	G14-057T 345.00 - SUNNYSIDE 345KV CKT 1	717	789	0.04554	112.3912	GEN562762 1-G15033_3 0.6900
FDNS	00NR	2	16WP	G15_063	FROM->TO	G14-057T 345.00 - SUNNYSIDE 345KV CKT 1	717	789	0.04554	112.3802	GEN562655 1-G14_074_3 0.6900
FDNS	00NR	2	16WP	G15_063	FROM->TO	G14-057T 345.00 - SUNNYSIDE 345KV CKT 1	717	789	0.04554	112.3071	GEN562685 1-G15_013_3 0.3550
FDNS	00NR	2	20WP	G15_063	FROM->TO	G14-057T 345.00 - SUNNYSIDE 345KV CKT 1	717	789	0.04454	112.2897	P12:138:OKGE:3TERM39
FDNS	00NR	2	20WP	G15_063	FROM->TO	G14-057T 345.00 - SUNNYSIDE 345KV CKT 1	717	789	0.04527	112.2216	RANCHRD7 345.00 - SOONER 345KV CKT 1
FDNS	00NR	2	20WP	G15_063	FROM->TO	G14-057T 345.00 - SUNNYSIDE 345KV CKT 1	717	789	0.0452	112.2121	CHILDRESS - LAKE PAULINE 138KV CKT 1
FDNS	00NR	2	20WP	G15_063	FROM->TO	G14-057T 345.00 - SUNNYSIDE 345KV CKT 1	717	789	0.0452	112.2121	CHILDRESS - LAKE PAULINE 138KV CKT 1
FDNS	00NR	2	20WP	G15_063	FROM->TO	G14-057T 345.00 - SUNNYSIDE 345KV CKT 1	717	789	0.04522	112.2048	CHILDRESS - HOLLIS TAP 138KV CKT 1
FDNS	00NR	2	16WP	G15_063	FROM->TO	G14-057T 345.00 - SUNNYSIDE 345KV CKT 1	717	789	0.04554	112.2033	GEN525561 1-TOLK GEN #1 24 KV
FDNS	00NR	2	16WP	G15_063	FROM->TO	G14-057T 345.00 - SUNNYSIDE 345KV CKT 1	717	789	0.04554	112.1977	GEN563272 1-G15093_3 0.6900
FDNS	00NR	2	20WP	G15_063	FROM->TO	G14-057T 345.00 - SUNNYSIDE 345KV CKT 1	717	789	0.04501	112.1897	MAYSVILLE - PAOLI 138KV CKT 1
FDNS	00NR	2	20WP	G15_063	FROM->TO	G14-057T 345.00 - SUNNYSIDE 345KV CKT 1	717	789	0.04524	112.1834	GEN562084 1-G11_050_3 0.6900
FDNS	00NR	2	16WP	G15_063	FROM->TO	G14-057T 345.00 - SUNNYSIDE 345KV CKT 1	717	789	0.04554	112.1765	GEN527903 1-HOBBS PLANT #3 (ST)
FDNS	00NR	2	20WP	G15_063	FROM->TO	G14-057T 345.00 - SUNNYSIDE 345KV CKT 1	717	789	0.04524	112.1545	GEN560187 1-WTH WIND 0.5750
FDNS	00NR	2	20WP	G15_063	FROM->TO	G14-057T 345.00 - SUNNYSIDE 345KV CKT 1	717	789	0.0439	112.1389	CIMARRON - MATHWSN7 345.00 345KV CKT 1
FDNS	00NR	2	20WP	G15_063	FROM->TO	G14-057T 345.00 - SUNNYSIDE 345KV CKT 1	717	789	0.0439	112.1389	CIMARRON - MATHWSN7 345.00 345KV CKT 2
FDNS	00NR	2	20WP	G15_063	FROM->TO	G14-057T 345.00 - SUNNYSIDE 345KV CKT 1	717	789	0.04524	112.1345	GEN560112 1-G08_037_3 0.6900
FDNS	00NR	2	20WP	G15_063	FROM->TO	G14-057T 345.00 - SUNNYSIDE 345KV CKT 1	717	789	0.04501	112.1141	MAYSVILLE - MAYSVLT4 138.00 138KV CKT 1
FDNS	00NR	2	16WP	G15_063	FROM->TO	G14-057T 345.00 - SUNNYSIDE 345KV CKT 1	717	789	0.04554	112.1107	GEN635024 4-WALTER SCOTT UNIT 4
FDNS	00NR	2	20WP	G15_063	FROM->TO	G14-057T 345.00 - SUNNYSIDE 345KV CKT 1	717	789	0.04524	112.098	GEN521103 1-BLUE CANYON WIND FARM
FDNS	00NR	2	20WP	G15_063	FROM->TO	G14-057T 345.00 - SUNNYSIDE 345KV CKT 1	717	789	0.0455	112.0936	DRAPER LAKE - MIDWEST TAP 138KV CKT 1
FDNS	00NR	2	20WP	G15_063	FROM->TO	G14-057T 345.00 - SUNNYSIDE 345KV CKT 1	717	789	0.04524	112.0927	GEN520812 1-ANADRK5
FDNS	00NR	2	20WP	G15_063	FROM->TO	G14-057T 345.00 - SUNNYSIDE 345KV CKT 1	717	789	0.04524	112.0926	GEN520813 1-ANADRK6

SOLUTION	GROUP	SCENARIO	SEASON	SOURCE	DIRECTION	MONITORED ELEMENT	RATEA (MVA)	RATEB(MVA)	TDF	TC%LOADING (% MVA)	CONTINGENCY
FDNS	00NR	2	20WP	G15_063	FROM->TO	G14-057T 345.00 - SUNNYSIDE 345KV CKT 1	717	789	0.04524	112.0875	GEN562691 1-G15_015_3 0.6900
FDNS	00NR	2	20WP	G15_063	FROM->TO	G14-057T 345.00 - SUNNYSIDE 345KV CKT 1	717	789	0.04545	112.0817	P12:138:OKGE:3TERM21
FDNS	00NR	2	20WP	G15_063	FROM->TO	G14-057T 345.00 - SUNNYSIDE 345KV CKT 1	717	789	0.04524	112.0784	GEN562772 1-G15034_3 0.6900
FDNS	00NR	2	20WP	G15_063	FROM->TO	G14-057T 345.00 - SUNNYSIDE 345KV CKT 1	717	789	0.04524	112.0747	GEN563052 1-G15069_3 0.6900
FDNS	00NR	2	20WP	G15_063	FROM->TO	G14-057T 345.00 - SUNNYSIDE 345KV CKT 1	717	789	0.04524	112.0559	GEN511961 1-DEMPSEY-WTG10.7000
FDNS	00NR	2	20WP	G15_063	FROM->TO	G14-057T 345.00 - SUNNYSIDE 345KV CKT 1	717	789	0.04484	112.0523	ARBUCKLE - SULPHR 4 138.00 138KV CKT 1
FDNS	00NR	2	20WP	G15_063	FROM->TO	G14-057T 345.00 - SUNNYSIDE 345KV CKT 1	717	789	0.04501	112.048	MAYSVLT4 138.00 - PRAIRIE POINT 138KV CKT 1
FDNS	00NR	2	20WP	G15_063	FROM->TO	G14-057T 345.00 - SUNNYSIDE 345KV CKT 1	717	789	0.04524	112.0462	P12:069:OKGE:3TERM42
FDNS	00NR	2	20WP	G15_063	FROM->TO	G14-057T 345.00 - SUNNYSIDE 345KV CKT 1	717	789	0.04571	112.0298	SOONER - SPRING CREEK 345KV CKT 1
FDNS	00NR	2	20WP	G15_063	FROM->TO	G14-057T 345.00 - SUNNYSIDE 345KV CKT 1	717	789	0.04571	112.0258	NORTHWEST - SPRING CREEK 345KV CKT 1
FDNS	00NR	2	20WP	G15_063	FROM->TO	G14-057T 345.00 - SUNNYSIDE 345KV CKT 1	717	789	0.04524	112.0255	BURLINGTON NO1 + NO 2 + NO 3 161/20.0KV TRANSFORMER CKT 1
FDNS	00NR	2	20WP	G15_063	FROM->TO	G14-057T 345.00 - SUNNYSIDE 345KV CKT 1	717	789	0.0453	112.0241	GLASSES - MADILL INDUSTRIAL TAP 138KV CKT 1
FDNS	00NR	2	20WP	G15_063	FROM->TO	G14-057T 345.00 - SUNNYSIDE 345KV CKT 1	717	789	0.04529	112.0233	P12:138:WFEC:MSL11
FDNS	00NR	2	20WP	G15_063	FROM->TO	G14-057T 345.00 - SUNNYSIDE 345KV CKT 1	717	789	0.04529	112.0233	P12:138:WFEC-AEPW:PHAROAH4:LONEOAK4
FDNS	00NR	2	20WP	G15_063	FROM->TO	G14-057T 345.00 - SUNNYSIDE 345KV CKT 1	717	789	0.0453	112.0157	CANEY CREEK - JOHNSON COUNTY 138KV CKT 1
FDNS	00NR	2	20WP	G15_063	FROM->TO	G14-057T 345.00 - SUNNYSIDE 345KV CKT 1	717	789	0.04539	112.0145	OVEXFRMCCOVE
FDNS	00NR	2	20WP	G15_063	FROM->TO	G14-057T 345.00 - SUNNYSIDE 345KV CKT 1	717	789	0.04524	112.0049	GEN515443 1-MNCOWND1 0.7000
FDNS	00NR	2	20WP	G15_063	FROM->TO	G14-057T 345.00 - SUNNYSIDE 345KV CKT 1	717	789	0.04522	111.9935	ALTUS JUNCTION - RUSSELL 138KV CKT 1
FDNS	00NR	2	20WP	G15_063	FROM->TO	G14-057T 345.00 - SUNNYSIDE 345KV CKT 1	717	789	0.04522	111.9935	ALTUS JUNCTION - RUSSELL 138KV CKT 1
FDNS	00NR	2	20WP	G15_063	FROM->TO	G14-057T 345.00 - SUNNYSIDE 345KV CKT 1	717	789	0.04495	111.9912	MOREWOOD SW - NINE MILE 138KV CKT 1
FDNS	00NR	2	20WP	G15_063	FROM->TO	G14-057T 345.00 - SUNNYSIDE 345KV CKT 1	717	789	0.04524	111.9851	GEN560183 1-REDHIL-WTG1 12.000
FDNS	00NR	2	20WP	G15_063	FROM->TO	G14-057T 345.00 - SUNNYSIDE 345KV CKT 1	717	789	0.04524	111.9836	INDEPENDENCE 500/26.0KV TRANSFORMER CKT 1
FDNS	00NR	2	20WP	G15_063	FROM->TO	G14-057T 345.00 - SUNNYSIDE 345KV CKT 1	717	789	0.04524	111.9752	GEN600067 9-HIGH BRIDGE
FDNS	00NR	2	20WP	G15_063	FROM->TO	G14-057T 345.00 - SUNNYSIDE 345KV CKT 1	717	789	0.0453	111.9715	GLASSES - RUSSETT 138KV CKT 1
FDNS	00NR	2	20WP	G15_063	FROM->TO	G14-057T 345.00 - SUNNYSIDE 345KV CKT 1	717	789	0.04519	111.9671	CARTER - CHICKASAW 138KV CKT 1
FDNS	00NR	2	20WP	G15_063	FROM->TO	G14-057T 345.00 - SUNNYSIDE 345KV CKT 1	717	789	0.0454	111.9627	P12:138:WFEC:MSL08
FDNS	00NR	2	20WP	G15_063	FROM->TO	G14-057T 345.00 - SUNNYSIDE 345KV CKT 1	717	789	0.04645	111.9626	LEBANON - TEXOMA JCT 138KV CKT 1
FDNS	00NR	2	20WP	G15_063	FROM->TO	G14-057T 345.00 - SUNNYSIDE 345KV CKT 1	717	789	0.04541	111.9598	CANADIAN RIVER - MCALESTER SOUTH 138KV CKT 1
FDNS	00NR	2	20WP	G15_063	FROM->TO	G14-057T 345.00 - SUNNYSIDE 345KV CKT 1	717	789	0.04541	111.9598	CANADIAN RIVER - MCALESTER SOUTH 138KV CKT 1
FDNS	00NR	2	20WP	G15_063	FROM->TO	G14-057T 345.00 - SUNNYSIDE 345KV CKT 1	717	789	0.04541	111.9577	CANADIAN RIVER () 345/138/13.8KV TRANSFORMER CKT 1
FDNS	00NR	2	20WP	G15_063	FROM->TO	G14-057T 345.00 - SUNNYSIDE 345KV CKT 1	717	789	0.04541	111.9577	CANADIAN RIVER () 345/138/13.8KV TRANSFORMER CKT 1
FDNS	00NR	2	20WP	G15_063	FROM->TO	G14-057T 345.00 - SUNNYSIDE 345KV CKT 1	717	789	0.04501	111.9557	PRAIRIE POINT - RATLIFF 138KV CKT 1
FDNS	00NR	2	20WP	G15_063	FROM->TO	G14-057T 345.00 - SUNNYSIDE 345KV CKT 1	717	789	0.04524	111.9469	P12:230:UMZB:# 112 #: NU IN SD. NU-RCDC & DRY CREEK XFMR
FDNS	00NR	2	20WP	G15_063	FROM->TO	G14-057T 345.00 - SUNNYSIDE 345KV CKT 1	717	789	0.04524	111.9467	RCDC EAST 4230.00 - RED CEDAR DC 230KV CKT 1
FDNS	00NR	2	20WP	G15_063	FROM->TO	G14-057T 345.00 - SUNNYSIDE 345KV CKT 1	717	789	0.04522	111.9464	HUGO (HUGO 1) 345/138/13.8KV TRANSFORMER CKT 1
FDNS	00NR	2	20WP	G15_063	FROM->TO	G14-057T 345.00 - SUNNYSIDE 345KV CKT 1	717	789	0.04508	111.9448	ROCKY POINT - SPRINGDALE 138KV CKT 1
FDNS	00NR	2	20WP	G15_063	FROM->TO	G14-057T 345.00 - SUNNYSIDE 345KV CKT 1	717	789	0.04524	111.942	GEN563242 1-G15090_3 0.6900
FDNS	00NR	2	20WP	G15_063	FROM->TO	G14-057T 345.00 - SUNNYSIDE 345KV CKT 1	717	789	0.04551	111.9351	CHAMBER SPRINGS - CLARKSVILLE 345KV CKT 1
FDNS	00NR	2	20WP	G15_063	FROM->TO	G14-057T 345.00 - SUNNYSIDE 345KV CKT 1	717	789	0.04528	111.9295	GRPRAR1-LNX3345.00 - HOLT.CO3 345.00 345KV CKT 1
FDNS	00NR	2	20WP	G15_063	FROM->TO	G14-057T 345.00 - SUNNYSIDE 345KV CKT 1	717	789	0.04528	111.9216	GRPRAR1-LNX3345.00 - GRPRAR 345KV CKT Z
FDNS	00NR	2	20WP	G15_063	FROM->TO	G14-057T 345.00 - SUNNYSIDE 345KV CKT 1	717	789	0.04524	111.9177	GEN562902 1-G15052_3 0.6900
FDNS	00NR	2	20WP	G15_063	FROM->TO	G14-057T 345.00 - SUNNYSIDE 345KV CKT 1	717	789	0.04524	111.9145	GEN629072 4-LANSING GENERATOR FOR UNITS NO4 EIA CODE 1
FDNS	00NR	2	20WP	G15_063	FROM->TO	G14-057T 345.00 - SUNNYSIDE 345KV CKT 1	717	789	0.04484	111.9065	JOLLYVILLE - SULPHR 4 138.00 138KV CKT 1
FDNS	00NR	2	20WP	G15_063	FROM->TO	G14-057T 345.00 - SUNNYSIDE 345KV CKT 1	717	789	0.04524	111.8992	GEN562802 1-G15039_3 0.3570
FDNS	00NR	2	20WP	G15_063	FROM->TO	G14-057T 345.00 - SUNNYSIDE 345KV CKT 1	717	789	0.04524	111.8927	GEN562078 1-G11_051_3 0.6900
FDNS	00NR	2	20WP	G15_063	FROM->TO	G14-057T 345.00 - SUNNYSIDE 345KV CKT 1	717	789	0.04508	111.8888	P12:138:AEPW:112GORE4:SNYDER-4
FDNS	00NR	2	20WP	G15_063	FROM->TO	G14-057T 345.00 - SUNNYSIDE 345KV CKT 1	717	789	0.04524	111.8867	GEN524285 1-WILDORADO WIND GEN
FDNS	00NR	2	20WP	G15_063	FROM->TO	G14-057T 345.00 - SUNNYSIDE 345KV CKT 1	717	789	0.04524	111.8678	GEN562587 1-G14_056_3 0.6900
FDNS	00NR	2	20WP	G15_063	FROM->TO	G14-057T 345.00 - SUNNYSIDE 345KV CKT 1	717	789	0.04524	111.8611	GEN524295 1-SPNSPUR_WND10.6900
FDNS	00NR	2	20WP	G15_063	FROM->TO	G14-057T 345.00 - SUNNYSIDE 345KV CKT 1	717	789	0.04524	111.8601	GEN657749 1-YOUNG 1 GENERATOR
FDNS	00NR	2	20WP	G15_063	FROM->TO	G14-057T 345.00 - SUNNYSIDE 345KV CKT 1	717	789	0.04495	111.857	BEARCAT 138.00 - NINE MILE 138KV CKT 1
FDNS	00NR	2	20WP	G15_063	FROM->TO	G14-057T 345.00 - SUNNYSIDE 345KV CKT 1	717	789	0.04524	111.845	GEN514805 1-SOONER UNIT 1
FDNS	00NR	2	20WP	G15_063	FROM->TO	G14-057T 345.00 - SUNNYSIDE 345KV CKT 1	717	789	0.04524	111.8364	GEN562269 1-G12-020-1 0.6900
FDNS	00NR	2	20WP	G15_063	FROM->TO	G14-057T 345.00 - SUNNYSIDE 345KV CKT 1	717	789	0.04524	111.8313	GEN524023 1-NICHOLS GEN #3 22 KV
FDNS	00NR	2	20WP	G15_063	FROM->TO	G14-057T 345.00 - SUNNYSIDE 345KV CKT 1	717	789	0.04484	111.8175	JOLLYVILLE - KERR MCGEE CIMARRON 138KV CKT 1
FDNS	00NR	2	20WP	G15_063	FROM->TO	G14-057T 345.00 - SUNNYSIDE 345KV CKT 1	717	789	0.04525	111.8138	CROCKETT - TENASKA RUSK COUNTY 345KV CKT 1
FDNS	00NR	2	20WP	G15_063	FROM->TO	G14-057T 345.00 - SUNNYSIDE 345KV CKT 1	717	789	0.04524	111.8132	GEN514806 1-SOONER UNIT 2
FDNS	00NR	2	20WP	G15_063	FROM->TO	G14-057T 345.00 - SUNNYSIDE 345KV CKT 1	717	789	0.04525	111.8091	LEBROCK - TENASKA RUSK COUNTY 345KV CKT 1
FDNS	00NR	2	20WP	G15_063	FROM->TO	G14-057T 345.00 - SUNNYSIDE 345KV CKT 1	717	789	0.04524	111.796	GEN562812 1-G15040_3 0.3570
FDNS	00NR	2	20WP	G15_063	FROM->TO	G14-057T 345.00 - SUNNYSIDE 345KV CKT 1	717	789	0.04524	111.7909	GEN562270 1-G12-020-2 0.6900
FDNS	00NR	2	20WP	G15_063	FROM->TO	G14-057T 345.00 - SUNNYSIDE 345KV CKT 1	717	789	0.04524	111.789	GEN563132 1-G15078_3 0.3570
FDNS	00NR	2	20WP	G15_063	FROM->TO	G14-057T 345.00 - SUNNYSIDE 345KV CKT 1	717	789	0.04524	111.78	GEN563102 1-G15075_3 0.5500
FDNS	00NR	2	20WP	G15_063	FROM->TO	G14-057T 345.00 - SUNNYSIDE 345KV CKT 1	717	789	0.04524	111.7737	GEN562882 1-G15047_3 0.6900
FDNS	00NR	2	20WP	G15_063	FROM->TO	G14-057T 345.00 - SUNNYSIDE 345KV CKT 1	717	789	0.04524	111.7704	GEN563062 1-G15071_3 0.6900
FDNS	00NR	2	20WP	G15_063	FROM->TO	G14-057T 345.00 - SUNNYSIDE 345KV CKT 1	717	789	0.04484	111.7668	ARBWIND4 138.00 - KERR MCGEE CIMARRON 138KV CKT 1
FDNS	00NR	2	20WP	G15_063	FROM->TO	G14-057T 345.00 - SUNNYSIDE 345KV CKT 1	717	789	0.04495	111.7621	BEARCAT 138.00 - MOORELAND 138KV CKT 1
FDNS	00NR	2	20WP	G15_063	FROM->TO	G14-057T 345.00 - SUNNYSIDE 345KV CKT 1	717	789	0.04495	111.7564	P12:138:WFEC:MSL14
FDNS	00NR	2	20WP	G15_063	FROM->TO	G14-057T 345.00 - SUNNYSIDE 345KV CKT 1	717	789	0.04524	111.7496	GEN345671 2-1RUSH G2 18.000
FDNS	00NR	2	20WP	G15_063	FROM->TO	G14-057T 345.00 - SUNNYSIDE 345KV CKT 1	717	789	0.04524	111.7489	THOMAS HILL 161/22.0KV TRANSFORMER CKT 1
FDNS	00NR	2	20WP	G15_063	FROM->TO	G14-057T 345.00 - SUNNYSIDE 345KV CKT 1	717	789	0.04524	111.7488	GEN562974 1-G15060_5 0.6900
FDNS	00NR	2	20WP	G15_063	FROM->TO	G14-057T 345.00 - SUNNYSIDE 345KV CKT 1	717	789	0.04524	111.7477	GEN345670 1-1RUSH G1 18.000
FDNS	00NR	2	20WP	G15_063	FROM->TO	G14-057T 345.00 - SUNNYSIDE 345KV CKT 1	717	789	0.04524	111.7389	GEN562973 1-G15060_4 0.6900
FDNS	00NR	2	20WP	G15_063	FROM->TO	G14-057T 345.00 - SUNNYSIDE 345KV CKT 1	717	789	0.04519	111.7358	BROWN - RUSSETT 138KV CKT 1
FDNS	00NR	2	20WP	G15_063	FROM->TO	G14-057T 345.00 - SUNNYSIDE 345KV CKT 1	717	789	0.04524	111.7326	GEN521112 1-ORME3 13.800
FDNS	00NR	2	20WP	G15_063	FROM->TO	G14-057T 345.00 - SUNNYSIDE 345KV CKT 1	717	789	0.04489	111.7242	CHICKASAW - TOTAL 138KV CKT 1
FDNS	00NR	2	20WP	G15_063	FROM->TO	G14-057T 345.00 - SUNNYSIDE 345KV CKT 1	717	789	0.04524	111.7039	4SIOUX 1 138.00 138/18.0KV TRANSFORMER CKT 1
FDNS	00NR	2	20WP	G15_063	FROM->TO	G14-057T 345.00 - SUNNYSIDE 345KV CKT 1	717	789	0.04524	111.6959	GEN560105 1-G08-22 0.6900
FDNS	00NR	2	20WP	G15_063	FROM->TO	G14-057T 345.00 - SUNNYSIDE 345KV CKT 1	717	789	0.04519	111.6903	RUSSETT - RUSSETT 138KV CKT 1
FDNS	00NR	2	20WP	G15_063	FROM->TO	G14-057T 345.00 - SUNNYSIDE 345KV CKT 1	717	789	0.04524	111.6841	GEN681522 3-GENOA 3

SOLUTION	GROUP	SCENARIO	SEASON	SOURCE	DIRECTION	MONITORED ELEMENT	RATEA (MVA)	RATEB(MVA)	TDF	TC%LOADING (% MVA)	CONTINGENCY
FDNS	00NR	2	20WP	G15_063	FROM->TO	G14-057T 345.00 - SUNNYSIDE 345KV CKT 1	717	789	0.04524	111.6792	GEN562550 1-G14_040_3 0.6900
FDNS	00NR	2	20WP	G15_063	FROM->TO	G14-057T 345.00 - SUNNYSIDE 345KV CKT 1	717	789	0.04502	111.6456	ROCKY POINT - SUNNYSIDE 138KV CKT 1
FDNS	00NR	2	20WP	G15_063	FROM->TO	G14-057T 345.00 - SUNNYSIDE 345KV CKT 1	717	789	0.04524	111.6356	GEN511853 1-COMANCHE #3
FDNS	00NR	2	20WP	G15_063	FROM->TO	G14-057T 345.00 - SUNNYSIDE 345KV CKT 1	717	789	0.04524	111.6339	EASTDC - ERCOT EQUIVALENCE 345KV CKT 1
FDNS	00NR	2	20WP	G15_063	FROM->TO	G14-057T 345.00 - SUNNYSIDE 345KV CKT 1	717	789	0.04524	111.6294	GEN527161 1-MUSTANG GEN #1
FDNS	00NR	2	20WP	G15_063	FROM->TO	G14-057T 345.00 - SUNNYSIDE 345KV CKT 1	717	789	0.04524	111.6293	GEN527162 1-MUSTANG GEN #2
FDNS	00NR	2	20WP	G15_063	FROM->TO	G14-057T 345.00 - SUNNYSIDE 345KV CKT 1	717	789	0.04524	111.6279	GEN511962 2-RKYRDGW2-1 0.7000
FDNS	00NR	2	20WP	G15_063	FROM->TO	G14-057T 345.00 - SUNNYSIDE 345KV CKT 1	717	789	0.04524	111.6203	GEN672321 1-SHAND GENERATOR 1
FDNS	00NR	2	20WP	G15_063	FROM->TO	G14-057T 345.00 - SUNNYSIDE 345KV CKT 1	717	789	0.04517	111.6171	RUSSETT - SPRINGDALE 138KV CKT 1
FDNS	00NR	2	20WP	G15_063	FROM->TO	G14-057T 345.00 - SUNNYSIDE 345KV CKT 1	717	789	0.04524	111.5971	GEN672310 1-POPLAR RIVER GENERATOR 1
FDNS	00NR	2	20WP	G15_063	FROM->TO	G14-057T 345.00 - SUNNYSIDE 345KV CKT 1	717	789	0.04524	111.5971	GEN672311 2-POPLAR RIVER GENERATOR 2
FDNS	00NR	2	20WP	G15_063	FROM->TO	G14-057T 345.00 - SUNNYSIDE 345KV CKT 1	717	789	0.04453	111.5971	ARKANSAS NUCLEAR ONE - FT SMITH 500KV CKT 1
FDNS	00NR	2	20WP	G15_063	FROM->TO	G14-057T 345.00 - SUNNYSIDE 345KV CKT 1	717	789	0.04453	111.5971	ARKANSAS NUCLEAR ONE - FT SMITH 500KV CKT 1
FDNS	00NR	2	20WP	G15_063	FROM->TO	G14-057T 345.00 - SUNNYSIDE 345KV CKT 1	717	789	0.04524	111.5966	GEN525494 1-PLANT X GEN #4 20 KV
FDNS	00NR	2	20WP	G15_063	FROM->TO	G14-057T 345.00 - SUNNYSIDE 345KV CKT 1	717	789	0.04524	111.59	GEN562512 1-G14_020_3 0.6900
FDNS	00NR	2	20WP	G15_063	FROM->TO	G14-057T 345.00 - SUNNYSIDE 345KV CKT 1	717	789	0.04524	111.5878	GEN672306 6-BOUNDARY DAM GENERATOR 6
FDNS	00NR	2	20WP	G15_063	FROM->TO	G14-057T 345.00 - SUNNYSIDE 345KV CKT 1	717	789	0.04524	111.582	GEN563192 1-G15084_3 0.5500
FDNS	00NR	2	20WP	G15_063	FROM->TO	G14-057T 345.00 - SUNNYSIDE 345KV CKT 1	717	789	0.04524	111.5803	GEN527882 1-CUNNINGHAM GEN #2 20 KV
FDNS	00NR	2	20WP	G15_063	FROM->TO	G14-057T 345.00 - SUNNYSIDE 345KV CKT 1	717	789	0.04524	111.5754	GEN344895 2-1LAB G2 20.000
FDNS	00NR	2	20WP	G15_063	FROM->TO	G14-057T 345.00 - SUNNYSIDE 345KV CKT 1	717	789	0.04524	111.5707	GEN511852 1-COMANCHE #2
FDNS	00NR	2	20WP	G15_063	FROM->TO	G14-057T 345.00 - SUNNYSIDE 345KV CKT 1	717	789	0.04521	111.5687	P12:138:WFEC-AEPW:GOLDENSW4:CRAIGJT4
FDNS	00NR	2	20WP	G15_063	FROM->TO	G14-057T 345.00 - SUNNYSIDE 345KV CKT 1	717	789	0.04524	111.5657	GEN562892 1-G15048_3 0.6900
FDNS	00NR	2	20WP	G15_063	FROM->TO	G14-057T 345.00 - SUNNYSIDE 345KV CKT 1	717	789	0.04524	111.5639	GEN527163 1-MUSTANG GEN #3 22 KV
FDNS	00NR	2	20WP	G15_063	FROM->TO	G14-057T 345.00 - SUNNYSIDE 345KV CKT 1	717	789	0.04524	111.557	GEN681542 6-JP MADGETT
FDNS	00NR	2	20WP	G15_063	FROM->TO	G14-057T 345.00 - SUNNYSIDE 345KV CKT 1	717	789	0.04524	111.5523	CLAY BOSWELL 230/20.9KV TRANSFORMER CKT 1
FDNS	00NR	2	20WP	G15_063	FROM->TO	G14-057T 345.00 - SUNNYSIDE 345KV CKT 1	717	789	0.04474	111.5516	ARDMORE WEST - CARTER 138KV CKT 1
FDNS	00NR	2	20WP	G15_063	FROM->TO	G14-057T 345.00 - SUNNYSIDE 345KV CKT 1	717	789	0.04524	111.5459	GEN344896 3-1LAB G3 20.000
FDNS	00NR	2	20WP	G15_063	FROM->TO	G14-057T 345.00 - SUNNYSIDE 345KV CKT 1	717	789	0.04524	111.5448	GEN344897 4-1LAB G4 20.000
FDNS	00NR	2	20WP	G15_063	FROM->TO	G14-057T 345.00 - SUNNYSIDE 345KV CKT 1	717	789	0.04524	111.5445	GEN344894 1-1LAB G1 20.000
FDNS	00NR	2	20WP	G15_063	FROM->TO	G14-057T 345.00 - SUNNYSIDE 345KV CKT 1	717	789	0.04528	111.5354	P12:138:WFEC:MSL16
FDNS	00NR	2	20WP	G15_063	FROM->TO	G14-057T 345.00 - SUNNYSIDE 345KV CKT 1	717	789	0.04524	111.5167	GEN523461 1-BLACKHAWK GEN #1
FDNS	00NR	2	20WP	G15_063	FROM->TO	G14-057T 345.00 - SUNNYSIDE 345KV CKT 1	717	789	0.04524	111.5166	GEN523462 1-BLACKHAWK GEN #2
FDNS	00NR	2	20WP	G15_063	FROM->TO	G14-057T 345.00 - SUNNYSIDE 345KV CKT 1	717	789	0.04508	111.4924	CACHE - SNYDER 138KV CKT 1
FDNS	00NR	2	20WP	G15_063	FROM->TO	G14-057T 345.00 - SUNNYSIDE 345KV CKT 1	717	789	0.04524	111.4868	P12:138:WFEC:MSL07
FDNS	00NR	2	20WP	G15_063	FROM->TO	G14-057T 345.00 - SUNNYSIDE 345KV CKT 1	717	789	0.04524	111.4868	P12:138:WFEC-AEPW:HUGOPP4:ATOKA--4
FDNS	00NR	2	20WP	G15_063	FROM->TO	G14-057T 345.00 - SUNNYSIDE 345KV CKT 1	717	789	0.04758	111.4795	CLARKSVILLE - MUSKOGEE 345KV CKT 1
FDNS	00NR	2	20WP	G15_063	FROM->TO	G14-057T 345.00 - SUNNYSIDE 345KV CKT 1	717	789	0.04758	111.4795	CLARKSVILLE - MUSKOGEE 345KV CKT 1
FDNS	00NR	2	20WP	G15_063	FROM->TO	G14-057T 345.00 - SUNNYSIDE 345KV CKT 1	717	789	0.04521	111.4746	P12:138:AEPW-SWPA:LONEOAK4:TUPELO4
FDNS	00NR	2	20WP	G15_063	FROM->TO	G14-057T 345.00 - SUNNYSIDE 345KV CKT 1	717	789	0.04521	111.4746	P12:138:WFEC:MSL06
FDNS	00NR	2	20WP	G15_063	FROM->TO	G14-057T 345.00 - SUNNYSIDE 345KV CKT 1	717	789	0.04522	111.4721	G15085_T 138.00 - RUSSELL 138KV CKT 1
FDNS	00NR	2	20WP	G15_063	FROM->TO	G14-057T 345.00 - SUNNYSIDE 345KV CKT 1	717	789	0.04524	111.4699	ALMA 161 161/24.0KV TRANSFORMER CKT 1
FDNS	00NR	2	20WP	G15_063	FROM->TO	G14-057T 345.00 - SUNNYSIDE 345KV CKT 1	717	789	0.04483	111.4689	SUNNYSIDE (SUNNYSD5) 345/138/13.8KV TRANSFORMER CKT 1
FDNS	00NR	2	20WP	G15_063	FROM->TO	G14-057T 345.00 - SUNNYSIDE 345KV CKT 1	717	789	0.04524	111.4671	GEN521111 1-ORME2 13.800
FDNS	00NR	2	20WP	G15_063	FROM->TO	G14-057T 345.00 - SUNNYSIDE 345KV CKT 1	717	789	0.04524	111.4569	GEN562699 1-G15_018_3 0.6900
FDNS	00NR	2	20WP	G15_063	FROM->TO	G14-057T 345.00 - SUNNYSIDE 345KV CKT 1	717	789	0.04524	111.4538	GEN521110 1-ORME1 13.800
FDNS	00NR	2	20WP	G15_063	FROM->TO	G14-057T 345.00 - SUNNYSIDE 345KV CKT 1	717	789	0.04474	111.4389	ARDMORE WEST - UNIROYAL 138KV CKT 1
FDNS	00NR	2	20WP	G15_063	FROM->TO	G14-057T 345.00 - SUNNYSIDE 345KV CKT 1	717	789	0.04524	111.419	GEN563162 1-G15081_3 0.6900
FDNS	00NR	2	20WP	G15_063	FROM->TO	G14-057T 345.00 - SUNNYSIDE 345KV CKT 1	717	789	0.04524	111.4011	GEN520811 1-ANADRK4
FDNS	00NR	2	20WP	G15_063	FROM->TO	G14-057T 345.00 - SUNNYSIDE 345KV CKT 1	717	789	0.04524	111.3927	GEN661015 1-COYOTE
FDNS	00NR	2	20WP	G15_063	FROM->TO	G14-057T 345.00 - SUNNYSIDE 345KV CKT 1	717	789	0.04524	111.3895	GEN563292 1-G15095_3 0.6900
FDNS	00NR	2	20WP	G15_063	FROM->TO	G14-057T 345.00 - SUNNYSIDE 345KV CKT 1	717	789	0.04509	111.3875	CARTRCO4 138.00 - RATLIFF 138KV CKT 1
FDNS	00NR	2	20WP	G15_063	FROM->TO	G14-057T 345.00 - SUNNYSIDE 345KV CKT 1	717	789	0.04506	111.3831	P12:138:OKGE:3TERM40
FDNS	00NR	2	20WP	G15_063	FROM->TO	G14-057T 345.00 - SUNNYSIDE 345KV CKT 1	717	789	0.04524	111.3512	GEN563122 1-G15077_3 0.3850
FDNS	00NR	2	20WP	G15_063	FROM->TO	G14-057T 345.00 - SUNNYSIDE 345KV CKT 1	717	789	0.04524	111.3312	GEN562861 1-G15045_2 0.4800
FDNS	00NR	2	16WP	G15_063	FROM->TO	G14-057T 345.00 - SUNNYSIDE 345KV CKT 1	717	789	0.04548	111.3105	LYDIA - VALLIANT 345KV CKT 1
FDNS	00NR	2	16WP	G15_063	FROM->TO	G14-057T 345.00 - SUNNYSIDE 345KV CKT 1	717	789	0.04548	111.3105	LYDIA - VALLIANT 345KV CKT 1
FDNS	00NR	2	20WP	G15_063	FROM->TO	G14-057T 345.00 - SUNNYSIDE 345KV CKT 1	717	789	0.04524	111.28	GEN657748 1-YOUNG 2 GENERATOR
FDNS	00NR	2	20WP	G15_063	FROM->TO	G14-057T 345.00 - SUNNYSIDE 345KV CKT 1	717	789	0.04524	111.2429	GEN527883 1-CUNNINGHAM GEN #3 22 KV
FDNS	00NR	2	20WP	G15_063	FROM->TO	G14-057T 345.00 - SUNNYSIDE 345KV CKT 1	717	789	0.04524	111.2399	GEN527884 1-CUNNINGHAM GEN #4 22 KV
FDNS	00NR	2	20WP	G15_063	FROM->TO	G14-057T 345.00 - SUNNYSIDE 345KV CKT 1	717	789	0.04516	111.2392	P12:138:WFEC:MSL15
FDNS	00NR	2	20WP	G15_063	FROM->TO	G14-057T 345.00 - SUNNYSIDE 345KV CKT 1	717	789	0.04474	111.203	SUNNYSIDE - UNIROYAL 138KV CKT 1
FDNS	00NR	2	20WP	G15_063	FROM->TO	G14-057T 345.00 - SUNNYSIDE 345KV CKT 1	717	789	0.04524	111.1888	GEN620315 1-BIG STONE GEN
FDNS	00NR	2	20WP	G15_063	FROM->TO	G14-057T 345.00 - SUNNYSIDE 345KV CKT 1	717	789	0.04522	111.1882	P12:138:AEPW:SHAM4WT:CHILD4WT
FDNS	00NR	2	20WP	G15_063	FROM->TO	G14-057T 345.00 - SUNNYSIDE 345KV CKT 1	717	789	0.04524	111.1764	GEN562992 1-G15063_3 0.6900
FDNS	00NR	2	20WP	G15_063	FROM->TO	G14-057T 345.00 - SUNNYSIDE 345KV CKT 1	717	789	0.04524	111.1731	GEN562704 1-G15_020_3 0.3550
FDNS	00NR	2	20WP	G15_063	FROM->TO	G14-057T 345.00 - SUNNYSIDE 345KV CKT 1	717	789	0.04524	111.1647	GEN526331 1-JONES GEN #1 22 KV
FDNS	00NR	2	20WP	G15_063	FROM->TO	G14-057T 345.00 - SUNNYSIDE 345KV CKT 1	717	789	0.04524	111.1645	GEN526332 1-JONES GEN #2 21 KV
FDNS	00NR	2	20WP	G15_063	FROM->TO	G14-057T 345.00 - SUNNYSIDE 345KV CKT 1	717	789	0.04524	111.1576	GEN562952 1-G15057_3 0.6500
FDNS	00NR	2	20WP	G15_063	FROM->TO	G14-057T 345.00 - SUNNYSIDE 345KV CKT 1	717	789	0.04524	111.1147	GEN600004 2-PRAIRIE ISLAND G2
FDNS	00NR	2	20WP	G15_063	FROM->TO	G14-057T 345.00 - SUNNYSIDE 345KV CKT 1	717	789	0.04524	111.1121	GEN600003 1-PRAIRIE ISLAND G1
FDNS	00NR	2	20WP	G15_063	FROM->TO	G14-057T 345.00 - SUNNYSIDE 345KV CKT 1	717	789	0.04524	111.0959	GEN511851 1-COMANCHE #1
FDNS	00NR	2	20WP	G15_063	FROM->TO	G14-057T 345.00 - SUNNYSIDE 345KV CKT 1	717	789	0.04524	111.0915	GEN600006 1-AS KING
FDNS	00NR	2	20WP	G15_063	FROM->TO	G14-057T 345.00 - SUNNYSIDE 345KV CKT 1	717	789	0.04524	111.0808	GEN563173 1-G15082_3 0.6900
FDNS	00NR	2	20WP	G15_063	FROM->TO	G14-057T 345.00 - SUNNYSIDE 345KV CKT 1	717	789	0.04645	111.0735	CANEY CREEK - TEXOMA JCT 138KV CKT 1
FDNS	00NR	2	20WP	G15_063	FROM->TO	G14-057T 345.00 - SUNNYSIDE 345KV CKT 1	717	789	0.04521	111.0731	GRAPEVINE INTERCHANGE - STATELINE INTERCHANGE 230KV CKT 1
FDNS	00NR	2	20WP	G15_063	FROM->TO	G14-057T 345.00 - SUNNYSIDE 345KV CKT 1	717	789	0.04521	111.0731	GRAPEVINE INTERCHANGE - STATELINE INTERCHANGE 230KV CKT 1
FDNS	00NR	2	20WP	G15_063	FROM->TO	G14-057T 345.00 - SUNNYSIDE 345KV CKT 1	717	789	0.04524	111.0725	GEN562710 1-G15_022_3 0.5500
FDNS	00NR	2	20WP	G15_063	FROM->TO	G14-057T 345.00 - SUNNYSIDE 345KV CKT 1	717	789	0.0446	110.9802	P12:138:AEPW-OGE:CORNVIL4:CIMARON4
FDNS	00NR	2	20WP	G15_063	FROM->TO	G14-057T 345.00 - SUNNYSIDE 345KV CKT 1	717	789	0.04524	110.9494	GEN532751 1-WOLF CREEK GENERATING STATION UNIT 1

SOLUTION	GROUP	SCENARIO	SEASON	SOURCE	DIRECTION	MONITORED ELEMENT	RATEA (MVA)	RATEB(MVA)	TDF	TC%LOADING (% MVA)	CONTINGENCY
FDNS	00NR	2	20WP	G15_063	FROM->TO	G14-057T 345.00 - SUNNYSIDE 345KV CKT 1	717	789	0.04521	110.9407	GRAPEVINE INTERCHANGE - NICHOLS STATION 230KV CKT 1
FDNS	00NR	2	20WP	G15_063	FROM->TO	G14-057T 345.00 - SUNNYSIDE 345KV CKT 1	717	789	0.04521	110.9407	GRAPEVINE INTERCHANGE - NICHOLS STATION 230KV CKT 1
FDNS	00NR	2	20WP	G15_063	FROM->TO	G14-057T 345.00 - SUNNYSIDE 345KV CKT 1	717	789	0.04524	110.9182	GEN629074 1-ARNOLD LOWSIDE OF GSU XFMR
FDNS	00NR	2	20WP	G15_063	FROM->TO	G14-057T 345.00 - SUNNYSIDE 345KV CKT 1	717	789	0.04524	110.9134	GEN615001 1-COAL CREEK
FDNS	00NR	2	20WP	G15_063	FROM->TO	G14-057T 345.00 - SUNNYSIDE 345KV CKT 1	717	789	0.04524	110.9116	GEN635213 3-NEAL UNIT 3
FDNS	00NR	2	20WP	G15_063	FROM->TO	G14-057T 345.00 - SUNNYSIDE 345KV CKT 1	717	789	0.04524	110.8881	GEN615002 2-COAL CREEK
FDNS	00NR	2	20WP	G15_063	FROM->TO	G14-057T 345.00 - SUNNYSIDE 345KV CKT 1	717	789	0.04524	110.865	BIG STONE 230/24.0KV TRANSFORMER CKT 1
FDNS	00NR	2	20WP	G15_063	FROM->TO	G14-057T 345.00 - SUNNYSIDE 345KV CKT 1	717	789	0.04533	110.8476	P12:138:WFEC:MSL09
FDNS	00NR	2	20WP	G15_063	FROM->TO	G14-057T 345.00 - SUNNYSIDE 345KV CKT 1	717	789	0.04524	110.8241	GEN636641 1-LOUISA UNIT 1
FDNS	00NR	2	20WP	G15_063	FROM->TO	G14-057T 345.00 - SUNNYSIDE 345KV CKT 1	717	789	0.04524	110.821	GEN562754 1-G15031_5 0.6900
FDNS	00NR	2	20WP	G15_063	FROM->TO	G14-057T 345.00 - SUNNYSIDE 345KV CKT 1	717	789	0.04521	110.8111	NORTHWEST TEXARKANA - VALLIANT 345KV CKT 1
FDNS	00NR	2	20WP	G15_063	FROM->TO	G14-057T 345.00 - SUNNYSIDE 345KV CKT 1	717	789	0.04521	110.8111	NORTHWEST TEXARKANA - VALLIANT 345KV CKT 1
FDNS	00NR	2	20WP	G15_063	FROM->TO	G14-057T 345.00 - SUNNYSIDE 345KV CKT 1	717	789	0.04519	110.7976	CHISHOLM7 345.00 () 345/230/13.2KV TRANSFORMER CKT 1
FDNS	00NR	2	20WP	G15_063	FROM->TO	G14-057T 345.00 - SUNNYSIDE 345KV CKT 1	717	789	0.04524	110.7928	GEN600005 1-MONTICELLO
FDNS	00NR	2	20WP	G15_063	FROM->TO	G14-057T 345.00 - SUNNYSIDE 345KV CKT 1	717	789	0.04524	110.7623	GEN562556 1-G14_046_3 0.3420
FDNS	00NR	2	20WP	G15_063	FROM->TO	G14-057T 345.00 - SUNNYSIDE 345KV CKT 1	717	789	0.04524	110.7615	GEN562756 1-G15031_7 0.6900
FDNS	00NR	2	20WP	G15_063	FROM->TO	G14-057T 345.00 - SUNNYSIDE 345KV CKT 1	717	789	0.04519	110.7091	CHISHOLM7 345.00 - GRACEMONT 345KV CKT 1
FDNS	00NR	2	20WP	G15_063	FROM->TO	G14-057T 345.00 - SUNNYSIDE 345KV CKT 1	717	789	0.04524	110.6778	GEN563142 1-G15079_3 0.5500
FDNS	00NR	2	20WP	G15_063	FROM->TO	G14-057T 345.00 - SUNNYSIDE 345KV CKT 1	717	789	0.04524	110.6778	GEN563151 1-G15080_2 0.5500
FDNS	00NR	2	20WP	G15_063	FROM->TO	G14-057T 345.00 - SUNNYSIDE 345KV CKT 1	717	789	0.04524	110.6679	GEN600000 1-SHERBURNECNTY G1
FDNS	00NR	2	20WP	G15_063	FROM->TO	G14-057T 345.00 - SUNNYSIDE 345KV CKT 1	717	789	0.04524	110.6589	GEN562023 1-G11_020_3 0.6900
FDNS	00NR	2	20WP	G15_063	FROM->TO	G14-057T 345.00 - SUNNYSIDE 345KV CKT 1	717	789	0.04524	110.6589	GEN562026 1-G11_019_3 0.6900
FDNS	00NR	2	20WP	G15_063	FROM->TO	G14-057T 345.00 - SUNNYSIDE 345KV CKT 1	717	789	0.04524	110.6305	GEN629075 1-OTTUMWA GENERATOR FOR OTTUMWA UNIT NO 1
FDNS	00NR	2	20WP	G15_063	FROM->TO	G14-057T 345.00 - SUNNYSIDE 345KV CKT 1	717	789	0.04524	110.615	GEN600001 2-SHERBURNE CNTY G2
FDNS	00NR	2	20WP	G15_063	FROM->TO	G14-057T 345.00 - SUNNYSIDE 345KV CKT 1	717	789	0.04524	110.5766	GEN523971 1-HARRINGTON GEN #1 24 KV
FDNS	00NR	2	20WP	G15_063	FROM->TO	G14-057T 345.00 - SUNNYSIDE 345KV CKT 1	717	789	0.04524	110.5766	GEN523973 1-HARRINGTON GEN #3 24 KV
FDNS	00NR	2	20WP	G15_063	FROM->TO	G14-057T 345.00 - SUNNYSIDE 345KV CKT 1	717	789	0.04524	110.5765	GEN523972 1-HARRINGTON GEN #2 24 KV
FDNS	00NR	2	20WP	G15_063	FROM->TO	G14-057T 345.00 - SUNNYSIDE 345KV CKT 1	717	789	0.04524	110.5492	GEN511848 1-SOUTHWESTERN STATION #3
FDNS	00NR	2	20WP	G15_063	FROM->TO	G14-057T 345.00 - SUNNYSIDE 345KV CKT 1	717	789	0.04524	110.4768	GEN527901 1-HOBBS PLANT #1 (CT)
FDNS	00NR	2	20WP	G15_063	FROM->TO	G14-057T 345.00 - SUNNYSIDE 345KV CKT 1	717	789	0.04524	110.4768	GEN527902 1-HOBBS PLANT #2 (CT)
FDNS	00NR	2	16WP	G15_063	FROM->TO	G14-057T 345.00 - SUNNYSIDE 345KV CKT 1	717	789	0.04554	110.4424	EASTDC - ERCOT EQUIVALENCE 345KV CKT 1
FDNS	00NR	2	20WP	G15_063	FROM->TO	G14-057T 345.00 - SUNNYSIDE 345KV CKT 1	717	789	0.04524	110.4403	GEN563042 1-G15068_3 0.6900
FDNS	00NR	2	20WP	G15_063	FROM->TO	G14-057T 345.00 - SUNNYSIDE 345KV CKT 1	717	789	0.04521	110.4381	LYDIA - WELSH 345KV CKT 1
FDNS	00NR	2	20WP	G15_063	FROM->TO	G14-057T 345.00 - SUNNYSIDE 345KV CKT 1	717	789	0.04521	110.4381	LYDIA - WELSH 345KV CKT 1
FDNS	00NR	2	20WP	G15_063	FROM->TO	G14-057T 345.00 - SUNNYSIDE 345KV CKT 1	717	789	0.04524	110.3596	GEN635214 4-NEAL UNIT 4
FDNS	00NR	2	20WP	G15_063	FROM->TO	G14-057T 345.00 - SUNNYSIDE 345KV CKT 1	717	789	0.04524	110.3544	SHERBURNE CO 345/24.0KV TRANSFORMER CKT 1
FDNS	00NR	2	20WP	G15_063	FROM->TO	G14-057T 345.00 - SUNNYSIDE 345KV CKT 1	717	789	0.04519	110.2949	P12:230:AEPW-SPS:SWEETWT6:WHEELER 6
FDNS	00NR	2	20WP	G15_063	FROM->TO	G14-057T 345.00 - SUNNYSIDE 345KV CKT 1	717	789	0.04519	110.2929	STATELINE INTERCHANGE - STLN-DEMARC6 230KV CKT 1
FDNS	00NR	2	20WP	G15_063	FROM->TO	G14-057T 345.00 - SUNNYSIDE 345KV CKT 1	717	789	0.04519	110.2917	STLN-DEMARC6 - SWEETWATER 230KV CKT 1
FDNS	00NR	2	20WP	G15_063	FROM->TO	G14-057T 345.00 - SUNNYSIDE 345KV CKT 1	717	789	0.04524	110.1899	GEN600002 3-SHERBURNE CNTY G3
FDNS	00NR	2	20WP	G15_063	FROM->TO	G14-057T 345.00 - SUNNYSIDE 345KV CKT 1	717	789	0.04524	110.1381	GEN563043 1-G15068_4 0.6900
FDNS	00NR	2	20WP	G15_063	FROM->TO	G14-057T 345.00 - SUNNYSIDE 345KV CKT 1	717	789	0.04524	110.1121	GEN563273 2-G15093_4 0.6900
FDNS	00NR	2	20WP	G15_063	FROM->TO	G14-057T 345.00 - SUNNYSIDE 345KV CKT 1	717	789	0.04524	110.1073	GEN526333 1-JONES GEN #3 21 KV
FDNS	00NR	2	20WP	G15_063	FROM->TO	G14-057T 345.00 - SUNNYSIDE 345KV CKT 1	717	789	0.04524	110.1072	GEN526334 1-JONES_4 116.500
FDNS	00NR	2	20WP	G15_063	FROM->TO	G14-057T 345.00 - SUNNYSIDE 345KV CKT 1	717	789	0.04524	110.0913	GEN344225 1-1CAL G1 25.000
FDNS	00NR	2	20WP	G15_063	FROM->TO	G14-057T 345.00 - SUNNYSIDE 345KV CKT 1	717	789	0.04524	110.0741	GEN525844 1-ELK_1 118.000
FDNS	00NR	2	20WP	G15_063	FROM->TO	G14-057T 345.00 - SUNNYSIDE 345KV CKT 1	717	789	0.04524	110.0561	GEN525845 1-ELK_2 1 18.000
FDNS	00NR	2	20WP	G15_063	FROM->TO	G14-057T 345.00 - SUNNYSIDE 345KV CKT 1	717	789	0.04524	109.9219	GEN527166 1-MUSTANG_6 118.000
FDNS	00NR	2	20WP	G15_063	FROM->TO	G14-057T 345.00 - SUNNYSIDE 345KV CKT 1	717	789	0.04519	109.9115	P12:230:AEPW:ELKCITY6:SWEETWT6
FDNS	00NR	2	20WP	G15_063	FROM->TO	G14-057T 345.00 - SUNNYSIDE 345KV CKT 1	717	789	0.04524	109.9029	GEN635023 3-WALTER SCOTT UNIT 3
FDNS	00NR	2	20WP	G15_063	FROM->TO	G14-057T 345.00 - SUNNYSIDE 345KV CKT 1	717	789	0.04524	109.8797	GEN563202 1-G15085_3 0.5500
FDNS	00NR	2	20WP	G15_063	FROM->TO	G14-057T 345.00 - SUNNYSIDE 345KV CKT 1	717	789	0.04524	109.8575	GEN528501 1-G14_012 24.000
FDNS	00NR	2	20WP	G15_063	FROM->TO	G14-057T 345.00 - SUNNYSIDE 345KV CKT 1	717	789	0.04524	109.8072	GEN562590 1-G14_057_3 0.6900
FDNS	00NR	2	20WP	G15_063	FROM->TO	G14-057T 345.00 - SUNNYSIDE 345KV CKT 1	717	789	0.04524	109.6924	GEN562762 1-G15033_3 0.6900
FDNS	00NR	2	20WP	G15_063	FROM->TO	G14-057T 345.00 - SUNNYSIDE 345KV CKT 1	717	789	0.04524	109.6812	GEN562655 1-G14_074_3 0.6900
FDNS	00NR	2	20WP	G15_063	FROM->TO	G14-057T 345.00 - SUNNYSIDE 345KV CKT 1	717	789	0.04524	109.6528	GEN525562 1-TOLK GEN #2 24 KV
FDNS	00NR	2	20WP	G15_063	FROM->TO	G14-057T 345.00 - SUNNYSIDE 345KV CKT 1	717	789	0.04519	109.652	CHISHOLM6 230.00 - SWEETWATER 230KV CKT 1
FDNS	00NR	2	20WP	G15_063	FROM->TO	G14-057T 345.00 - SUNNYSIDE 345KV CKT 1	717	789	0.04509	109.605	JOHNSON COUNTY (JOHNCO) 345/138/13.8KV TRANSFORMER CKT 1
FDNS	00NR	2	20WP	G15_063	FROM->TO	G14-057T 345.00 - SUNNYSIDE 345KV CKT 1	717	789	0.04524	109.596	GEN562685 1-G15_013_3 0.3550
FDNS	00NR	2	20WP	G15_063	FROM->TO	G14-057T 345.00 - SUNNYSIDE 345KV CKT 1	717	789	0.04524	109.5698	GEN527903 1-HOBBS PLANT #3 (ST)
FDNS	00NR	2	20WP	G15_063	FROM->TO	G14-057T 345.00 - SUNNYSIDE 345KV CKT 1	717	789	0.04524	109.5003	GEN635024 4-WALTER SCOTT UNIT 4
FDNS	00NR	2	20WP	G15_063	FROM->TO	G14-057T 345.00 - SUNNYSIDE 345KV CKT 1	717	789	0.04524	109.4502	GEN563272 1-G15093_3 0.6900
FDNS	00NR	2	20WP	G15_063	FROM->TO	G14-057T 345.00 - SUNNYSIDE 345KV CKT 1	717	789	0.04519	109.3705	LYDIA - VALLIANT 345KV CKT 1
FDNS	00NR	2	20WP	G15_063	FROM->TO	G14-057T 345.00 - SUNNYSIDE 345KV CKT 1	717	789	0.04519	109.3705	LYDIA - VALLIANT 345KV CKT 1
FDNS	00NR	2	16WP	G15_063	FROM->TO	G14-057T 345.00 - SUNNYSIDE 345KV CKT 1	717	789	0.03823	109.3559	JOHNSON COUNTY - PITTSBURG 345KV CKT 1
FDNS	00NR	2	16WP	G15_063	FROM->TO	G14-057T 345.00 - SUNNYSIDE 345KV CKT 1	717	789	0.03823	109.3559	JOHNSON COUNTY - PITTSBURG 345KV CKT 1
FDNS	00NR	2	20WP	G15_063	FROM->TO	G14-057T 345.00 - SUNNYSIDE 345KV CKT 1	717	789	0.04524	109.1046	GEN525561 1-TOLK GEN #1 24 KV
FDNS	00NR	2	16WP	G15_063	FROM->TO	G14-057T 345.00 - SUNNYSIDE 345KV CKT 1	717	789	0.04554	109.0121	GEN563263 1-G15092_4 0.6900
FDNS	00NR	2	16WP	G15_063	FROM->TO	G14-057T 345.00 - SUNNYSIDE 345KV CKT 1	717	789	0.04418	108.41	HUGO - VALLIANT 345KV CKT 1
FDNS	00NR	2	16WP	G15_063	FROM->TO	G14-057T 345.00 - SUNNYSIDE 345KV CKT 1	717	789	0.04418	108.41	HUGO - VALLIANT 345KV CKT 1
FDNS	00NR	2	16WP	G15_063	FROM->TO	G14-057T 345.00 - SUNNYSIDE 345KV CKT 1	717	789	0.04554	107.3568	GEN563262 1-G15092_3 0.6900
FDNS	00NR	2	20WP	G15_063	FROM->TO	G14-057T 345.00 - SUNNYSIDE 345KV CKT 1	717	789	0.03797	107.1931	JOHNSON COUNTY - PITTSBURG 345KV CKT 1
FDNS	00NR	2	20WP	G15_063	FROM->TO	G14-057T 345.00 - SUNNYSIDE 345KV CKT 1	717	789	0.03797	107.1931	JOHNSON COUNTY - PITTSBURG 345KV CKT 1
FDNS	00NR	2	20WP	G15_063	FROM->TO	G14-057T 345.00 - SUNNYSIDE 345KV CKT 1	717	789	0.04391	106.804	HUGO - VALLIANT 345KV CKT 1
FDNS	00NR	2	20WP	G15_063	FROM->TO	G14-057T 345.00 - SUNNYSIDE 345KV CKT 1	717	789	0.04391	106.804	HUGO - VALLIANT 345KV CKT 1
FDNS	00NR	2	20WP	G15_063	FROM->TO	G14-057T 345.00 - SUNNYSIDE 345KV CKT 1	717	789	0.04524	106.323	GEN563263 1-G15092_4 0.6900
FDNS	00NR	2	16WP	G15_063	FROM->TO	G14-057T 345.00 - SUNNYSIDE 345KV CKT 1	717	789	0.04382	105.9463	G14-074T 345.00 - TUCO INTERCHANGE 345KV CKT 1
FDNS	00NR	2	20WP	G15_063	FROM->TO	G14-057T 345.00 - SUNNYSIDE 345KV CKT 1	717	789	0.04524	104.6433	GEN563262 1-G15092_3 0.6900
FDNS	00NR	2	16WP	G15_063	FROM->TO	G14-057T 345.00 - SUNNYSIDE 345KV CKT 1	717	789	0.03701	103.6686	JOHNSON COUNTY - SUNNYSIDE 345KV CKT 1

SOLUTION	GROUP	SCENARIO	SEASON	SOURCE	DIRECTION	MONITORED ELEMENT	RATEA (MVA)	RATEB(MVA)	TDF	TC%LOADING (% MVA)	CONTINGENCY
FDNS	00NR	2	20WP	G15_063	FROM->TO	G14-057T 345.00 - SUNNYSIDE 345KV CKT 1	717	789	0.04352	102.2176	G14-074T 345.00 - TUCO INTERCHANGE 345KV CKT 1
FDNS	00NR	2	20WP	G15_063	FROM->TO	G14-057T 345.00 - SUNNYSIDE 345KV CKT 1	717	789	0.03674	100.6769	JOHNSON COUNTY - SUNNYSIDE 345KV CKT 1
FDNS	00NR	3	17SP	G15_063	TO->FROM	CLEAVELAND - CLEVLND 4 138.00 138KV CKT Z1	305	371	0.03346	110.6964	CLEVELAND - TULSA NORTH 345KV CKT 1
FDNS	00NR	3	17SP	G15_063	TO->FROM	CLEAVELAND - CLEVLND 4 138.00 138KV CKT Z1	305	371	0.03346	110.6964	CLEVELAND - TULSA NORTH 345KV CKT 1
FDNS	00NR	3	20SP	G15_063	TO->FROM	CLEAVELAND - CLEVLND 4 138.00 138KV CKT Z1	305	371	0.03362	110.6119	CLEVELAND - TULSA NORTH 345KV CKT 1
FDNS	00NR	3	20SP	G15_063	TO->FROM	CLEAVELAND - CLEVLND 4 138.00 138KV CKT Z1	305	371	0.03362	110.6119	CLEVELAND - TULSA NORTH 345KV CKT 1
FDNS	00NR	3	16WP	G15_063	FROM->TO	G14-057T 345.00 - SUNNYSIDE 345KV CKT 1	717	789	0.04464	127.1073	PITTSBURG - SEMINOLE 345KV CKT 1
FDNS	00NR	3	16WP	G15_063	FROM->TO	G14-057T 345.00 - SUNNYSIDE 345KV CKT 1	717	789	0.04464	127.1073	PITTSBURG - SEMINOLE 345KV CKT 1
FDNS	00NR	3	16WP	G15_063	FROM->TO	G14-057T 345.00 - SUNNYSIDE 345KV CKT 1	717	789	0.04545	126.6776	BASE CASE
FDNS	00NR	3	16WP	G15_063	FROM->TO	G14-057T 345.00 - SUNNYSIDE 345KV CKT 1	717	789	0.06069	124.106	CIMARRON - DRAPER LAKE 345KV CKT 1
FDNS	00NR	3	20WP	G15_063	FROM->TO	G14-057T 345.00 - SUNNYSIDE 345KV CKT 1	717	789	0.04524	123.8437	BASE CASE
FDNS	00NR	3	20WP	G15_063	FROM->TO	G14-057T 345.00 - SUNNYSIDE 345KV CKT 1	717	789	0.04437	123.4802	PITTSBURG - SEMINOLE 345KV CKT 1
FDNS	00NR	3	20WP	G15_063	FROM->TO	G14-057T 345.00 - SUNNYSIDE 345KV CKT 1	717	789	0.04437	123.4802	PITTSBURG - SEMINOLE 345KV CKT 1
FDNS	00NR	3	16WP	G15_063	FROM->TO	G14-057T 345.00 - SUNNYSIDE 345KV CKT 1	717	789	0.04749	121.3957	P12:138:WFEC:MSL03
FDNS	00NR	3	20WP	G15_063	FROM->TO	G14-057T 345.00 - SUNNYSIDE 345KV CKT 1	717	789	0.06044	121.2004	CIMARRON - DRAPER LAKE 345KV CKT 1
FDNS	00NR	3	16WP	G15_063	FROM->TO	G14-057T 345.00 - SUNNYSIDE 345KV CKT 1	717	789	0.04489	120.7562	PITTSBURG - VALLIANT 345KV CKT 1
FDNS	00NR	3	16WP	G15_063	FROM->TO	G14-057T 345.00 - SUNNYSIDE 345KV CKT 1	717	789	0.04489	120.7562	PITTSBURG - VALLIANT 345KV CKT 1
FDNS	00NR	3	16WP	G15_063	FROM->TO	G14-057T 345.00 - SUNNYSIDE 345KV CKT 1	717	789	0.04545	120.2612	GEN509403 1-PIRKEY GENERATION
FDNS	00NR	3	16WP	G15_063	FROM->TO	G14-057T 345.00 - SUNNYSIDE 345KV CKT 1	717	789	0.04545	120.1644	GEN509416 1-TURK GENERATION
FDNS	00NR	3	16WP	G15_063	FROM->TO	G14-057T 345.00 - SUNNYSIDE 345KV CKT 1	717	789	0.04925	119.9589	CLEVELAND - G15066_T 345.00 345KV CKT 1
FDNS	00NR	3	16WP	G15_063	FROM->TO	G14-057T 345.00 - SUNNYSIDE 345KV CKT 1	717	789	0.04925	119.66	G15066_T 345.00 - SOONER 345KV CKT 1
FDNS	00NR	3	16WP	G15_063	FROM->TO	G14-057T 345.00 - SUNNYSIDE 345KV CKT 1	717	789	0.04545	119.2763	GEN501801 1-DOLET HILLS UNIT1
FDNS	00NR	3	16WP	G15_063	FROM->TO	G14-057T 345.00 - SUNNYSIDE 345KV CKT 1	717	789	0.04545	118.8922	GEN509404 1-WELSH #1
FDNS	00NR	3	16WP	G15_063	FROM->TO	G14-057T 345.00 - SUNNYSIDE 345KV CKT 1	717	789	0.04545	118.8922	GEN509406 1-WELSH #3
FDNS	00NR	3	20WP	G15_063	FROM->TO	G14-057T 345.00 - SUNNYSIDE 345KV CKT 1	717	789	0.04728	118.7486	P12:138:WFEC:MSL03
FDNS	00NR	3	16WP	G15_063	FROM->TO	G14-057T 345.00 - SUNNYSIDE 345KV CKT 1	717	789	0.04487	118.4464	BORDER 7345.00 - WOODWARD DISTRICT EHV 345KV CKT 1
FDNS	00NR	3	16WP	G15_063	FROM->TO	G14-057T 345.00 - SUNNYSIDE 345KV CKT 1	717	789	0.04633	118.2865	CORN TAP - NAPLESTP 138.00 138KV CKT 1
FDNS	00NR	3	16WP	G15_063	FROM->TO	G14-057T 345.00 - SUNNYSIDE 345KV CKT 1	717	789	0.04633	118.2013	NAPLESTP 138.00 - PAYNE 138.00 138KV CKT 1
FDNS	00NR	3	16WP	G15_063	FROM->TO	G14-057T 345.00 - SUNNYSIDE 345KV CKT 1	717	789	0.04538	118.0999	7SAREPTA% 345.00 - LONGWOOD 345KV CKT 1
FDNS	00NR	3	16WP	G15_063	FROM->TO	G14-057T 345.00 - SUNNYSIDE 345KV CKT 1	717	789	0.04538	118.0999	7SAREPTA% 345.00 - LONGWOOD 345KV CKT 1
FDNS	00NR	3	16WP	G15_063	FROM->TO	G14-057T 345.00 - SUNNYSIDE 345KV CKT 1	717	789	0.04545	118.0076	GEN336821 1-GRAND GULF UNIT
FDNS	00NR	3	16WP	G15_063	FROM->TO	G14-057T 345.00 - SUNNYSIDE 345KV CKT 1	717	789	0.04544	117.9828	DOLET HILLS - SOUTHWEST SHREVEPORT 345KV CKT 1
FDNS	00NR	3	16WP	G15_063	FROM->TO	G14-057T 345.00 - SUNNYSIDE 345KV CKT 1	717	789	0.04544	117.9828	DOLET HILLS - SOUTHWEST SHREVEPORT 345KV CKT 1
FDNS	00NR	3	16WP	G15_063	FROM->TO	G14-057T 345.00 - SUNNYSIDE 345KV CKT 1	717	789	0.04803	117.9553	CLEVELAND - TULSA NORTH 345KV CKT 1
FDNS	00NR	3	16WP	G15_063	FROM->TO	G14-057T 345.00 - SUNNYSIDE 345KV CKT 1	717	789	0.04803	117.9553	CLEVELAND - TULSA NORTH 345KV CKT 1
FDNS	00NR	3	16WP	G15_063	FROM->TO	G14-057T 345.00 - SUNNYSIDE 345KV CKT 1	717	789	0.04162	117.9411	CANADIAN RIVER - MUSKOGEE 345KV CKT 1
FDNS	00NR	3	16WP	G15_063	FROM->TO	G14-057T 345.00 - SUNNYSIDE 345KV CKT 1	717	789	0.0459	117.9269	ANADARKO - POCASSETT 138KV CKT 1
FDNS	00NR	3	16WP	G15_063	FROM->TO	G14-057T 345.00 - SUNNYSIDE 345KV CKT 1	717	789	0.04545	117.9149	GEN336153 1-WATERFORD UNIT#3
FDNS	00NR	3	16WP	G15_063	FROM->TO	G14-057T 345.00 - SUNNYSIDE 345KV CKT 1	717	789	0.04625	117.8932	COMANCHE - LOCO 138KV CKT 1
FDNS	00NR	3	16WP	G15_063	FROM->TO	G14-057T 345.00 - SUNNYSIDE 345KV CKT 1	717	789	0.0459	117.7807	POCASSETT - TUTTLE 138KV CKT 1
FDNS	00NR	3	16WP	G15_063	FROM->TO	G14-057T 345.00 - SUNNYSIDE 345KV CKT 1	717	789	0.05749	117.7066	ARCADIA - NORTHWEST 345KV CKT 1
FDNS	00NR	3	16WP	G15_063	FROM->TO	G14-057T 345.00 - SUNNYSIDE 345KV CKT 1	717	789	0.04545	117.6207	GEN335831 1-RIVERBEND UNIT#1
FDNS	00NR	3	16WP	G15_063	FROM->TO	G14-057T 345.00 - SUNNYSIDE 345KV CKT 1	717	789	0.04545	117.6178	GRAND GULF 500/22.0KV TRANSFORMER CKT 1
FDNS	00NR	3	16WP	G15_063	FROM->TO	G14-057T 345.00 - SUNNYSIDE 345KV CKT 1	717	789	0.04758	117.6049	ARCADIA - SEMINOLE 345KV CKT 1
FDNS	00NR	3	20WP	G15_063	FROM->TO	G14-057T 345.00 - SUNNYSIDE 345KV CKT 1	717	789	0.04524	117.5594	GEN509403 1-PIRKEY GENERATION
FDNS	00NR	3	16WP	G15_063	FROM->TO	G14-057T 345.00 - SUNNYSIDE 345KV CKT 1	717	789	0.04478	117.5414	MATHWSN7 345.00 - TATONGA7 345.00 345KV CKT 1
FDNS	00NR	3	16WP	G15_063	FROM->TO	G14-057T 345.00 - SUNNYSIDE 345KV CKT 1	717	789	0.04545	117.5412	GEN515577 1-ARBWND11 0.6900
FDNS	00NR	3	16WP	G15_063	FROM->TO	G14-057T 345.00 - SUNNYSIDE 345KV CKT 1	717	789	0.04545	117.5245	GEN509409 1-WILKES #3
FDNS	00NR	3	16WP	G15_063	FROM->TO	G14-057T 345.00 - SUNNYSIDE 345KV CKT 1	717	789	0.04487	117.5211	BORDER 7345.00 - TUCO_2 345.00 345KV CKT 1
FDNS	00NR	3	20WP	G15_063	FROM->TO	G14-057T 345.00 - SUNNYSIDE 345KV CKT 1	717	789	0.04524	117.481	GEN509416 1-TURK GENERATION
FDNS	00NR	3	16WP	G15_063	FROM->TO	G14-057T 345.00 - SUNNYSIDE 345KV CKT 1	717	789	0.04563	117.4633	P12:138:AEPW:DUNCAN-4:L.E.S.-4
FDNS	00NR	3	16WP	G15_063	FROM->TO	G14-057T 345.00 - SUNNYSIDE 345KV CKT 1	717	789	0.04541	117.4609	7SAREPTA% 345.00 - ELDORADO EHV 345KV CKT 1
FDNS	00NR	3	16WP	G15_063	FROM->TO	G14-057T 345.00 - SUNNYSIDE 345KV CKT 1	717	789	0.04541	117.4606	3TR3AR8EL7EL
FDNS	00NR	3	16WP	G15_063	FROM->TO	G14-057T 345.00 - SUNNYSIDE 345KV CKT 1	717	789	0.04541	117.4501	ELDORADO EHV 500/345KV TRANSFORMER CKT 1
FDNS	00NR	3	16WP	G15_063	FROM->TO	G14-057T 345.00 - SUNNYSIDE 345KV CKT 1	717	789	0.0459	117.4046	BRIDGECR 138.00 - TUTTLE 138KV CKT 1
FDNS	00NR	3	16WP	G15_063	FROM->TO	G14-057T 345.00 - SUNNYSIDE 345KV CKT 1	717	789	0.04666	117.3821	HEALDTON - LOCO 138KV CKT 1
FDNS	00NR	3	16WP	G15_063	FROM->TO	G14-057T 345.00 - SUNNYSIDE 345KV CKT 1	717	789	0.04563	117.3525	COMANCHE TAP - OMPA-DUNCAN 840 138KV CKT 1
FDNS	00NR	3	20WP	G15_063	FROM->TO	G14-057T 345.00 - SUNNYSIDE 345KV CKT 1	717	789	0.04898	117.3099	CLEVELAND - G15066_T 345.00 345KV CKT 1
FDNS	00NR	3	20WP	G15_063	FROM->TO	G14-057T 345.00 - SUNNYSIDE 345KV CKT 1	717	789	0.04468	117.2609	PITTSBURG - VALLIANT 345KV CKT 1
FDNS	00NR	3	20WP	G15_063	FROM->TO	G14-057T 345.00 - SUNNYSIDE 345KV CKT 1	717	789	0.04468	117.2609	PITTSBURG - VALLIANT 345KV CKT 1
FDNS	00NR	3	16WP	G15_063	FROM->TO	G14-057T 345.00 - SUNNYSIDE 345KV CKT 1	717	789	0.04666	117.243	HEALDTON - RINGLING 138KV CKT 1
FDNS	00NR	3	16WP	G15_063	FROM->TO	G14-057T 345.00 - SUNNYSIDE 345KV CKT 1	717	789	0.0458	117.2346	LACYGNE - WAVERLY7 345.00 345KV CKT 1
FDNS	00NR	3	16WP	G15_063	FROM->TO	G14-057T 345.00 - SUNNYSIDE 345KV CKT 1	717	789	0.04545	117.2263	GEN501813 1-RODEMACHER UNIT 3
FDNS	00NR	3	16WP	G15_063	FROM->TO	G14-057T 345.00 - SUNNYSIDE 345KV CKT 1	717	789	0.04545	117.2179	GEN300006 1-NEW MADRID UNIT 1
FDNS	00NR	3	16WP	G15_063	FROM->TO	G14-057T 345.00 - SUNNYSIDE 345KV CKT 1	717	789	0.04545	117.2062	GEN300007 1-NEW MADRID UNIT 2
FDNS	00NR	3	16WP	G15_063	FROM->TO	G14-057T 345.00 - SUNNYSIDE 345KV CKT 1	717	789	0.04588	117.1684	FINNEY SWITCHING STATION - HOLCOMB 345KV CKT 1
FDNS	00NR	3	16WP	G15_063	FROM->TO	G14-057T 345.00 - SUNNYSIDE 345KV CKT 1	717	789	0.04588	117.1684	FINNEY SWITCHING STATION - HOLCOMB 345KV CKT 1
FDNS	00NR	3	16WP	G15_063	FROM->TO	G14-057T 345.00 - SUNNYSIDE 345KV CKT 1	717	789	0.0459	117.1413	P12:138:WFEC:MSL01
FDNS	00NR	3	16WP	G15_063	FROM->TO	G14-057T 345.00 - SUNNYSIDE 345KV CKT 1	717	789	0.0459	117.1347	BRIDGECR 138.00 - SUNSHINE CANYON 138KV CKT 1
FDNS	00NR	3	16WP	G15_063	FROM->TO	G14-057T 345.00 - SUNNYSIDE 345KV CKT 1	717	789	0.0458	117.1176	WAVERLY7 345.00 - WOLF CREEK 345KV CKT 1
FDNS	00NR	3	16WP	G15_063	FROM->TO	G14-057T 345.00 - SUNNYSIDE 345KV CKT 1	717	789	0.04545	117.1083	GEN520947 1-HUGO1
FDNS	00NR	3	16WP	G15_063	FROM->TO	G14-057T 345.00 - SUNNYSIDE 345KV CKT 1	717	789	0.04666	117.0782	RINGLING - SOUTH WILSON 138KV CKT 1
FDNS	00NR	3	16WP	G15_063	FROM->TO	G14-057T 345.00 - SUNNYSIDE 345KV CKT 1	717	789	0.04563	117.071	DUNCAN - OMPA-DUNCAN 840 138KV CKT 1
FDNS	00NR	3	16WP	G15_063	FROM->TO	G14-057T 345.00 - SUNNYSIDE 345KV CKT 1	717	789	0.04563	117.071	DUNCAN - OMPA-DUNCAN 840 138KV CKT 1
FDNS	00NR	3	16WP	G15_063	FROM->TO	G14-057T 345.00 - SUNNYSIDE 345KV CKT 1	717	789	0.04545	117.0263	GEN335206 1-NELSON UNIT 6
FDNS	00NR	3	20WP	G15_063	FROM->TO	G14-057T 345.00 - SUNNYSIDE 345KV CKT 1	717	789	0.04898	117.017	G15066_T 345.00 - SOONER 345KV CKT 1
FDNS	00NR	3	16WP	G15_063	FROM->TO	G14-057T 345.00 - SUNNYSIDE 345KV CKT 1	717	789	0.04545	116.9182	DOLET HILLS 345/24.0KV TRANSFORMER CKT 1
FDNS	00NR	3	16WP	G15_063	FROM->TO	G14-057T 345.00 - SUNNYSIDE 345KV CKT 1	717	789	0.04464	116.8916	PARK LANE - SEMINOLE 138KV CKT 1
FDNS	00NR	3	16WP	G15_063	FROM->TO	G14-057T 345.00 - SUNNYSIDE 345KV CKT 1	717	789	0.04625	116.8912	CANEYRV7 345.00 - NEOSHO 345KV CKT 1

SOLUTION	GROUP	SCENARIO	SEASON	SOURCE	DIRECTION	MONITORED ELEMENT	RATEA (MVA)	RATEB(MVA)	TDF	TC%LOADING (% MVA)	CONTINGENCY
FDNS	00NR	3	16WP	G15_063	FROM->TO	G14-057T 345.00 - SUNNYSIDE 345KV CKT 1	717	789	0.04544	116.86	P12:138:AEPW:SHERID4:112GORE4
FDNS	00NR	3	16WP	G15_063	FROM->TO	G14-057T 345.00 - SUNNYSIDE 345KV CKT 1	717	789	0.04545	116.8403	GEN501812 1-RODEMACHER UNIT 2
FDNS	00NR	3	16WP	G15_063	FROM->TO	G14-057T 345.00 - SUNNYSIDE 345KV CKT 1	717	789	0.04545	116.8296	GEN590011 2-ERCOT EQUIVALENCE
FDNS	00NR	3	16WP	G15_063	FROM->TO	G14-057T 345.00 - SUNNYSIDE 345KV CKT 1	717	789	0.04666	116.8015	MARIETTA - SOUTH WILSON 138KV CKT 1
FDNS	00NR	3	16WP	G15_063	FROM->TO	G14-057T 345.00 - SUNNYSIDE 345KV CKT 1	717	789	0.04588	116.7862	FINNEY SWITCHING STATION - Hitchland Interchange 345KV CKT 1
FDNS	00NR	3	20WP	G15_063	FROM->TO	G14-057T 345.00 - SUNNYSIDE 345KV CKT 1	717	789	0.04524	116.7827	GEN501801 1-DOLET HILLS UNIT1
FDNS	00NR	3	16WP	G15_063	FROM->TO	G14-057T 345.00 - SUNNYSIDE 345KV CKT 1	717	789	0.04545	116.7786	GEN515564 1-ORIGIN11 0.6900
FDNS	00NR	3	16WP	G15_063	FROM->TO	G14-057T 345.00 - SUNNYSIDE 345KV CKT 1	717	789	0.04545	116.7786	GEN515565 1-ORIGIN21 0.6900
FDNS	00NR	3	16WP	G15_063	FROM->TO	G14-057T 345.00 - SUNNYSIDE 345KV CKT 1	717	789	0.04545	116.7553	GEN590010 1-ERCOT EQUIVALENCE
FDNS	00NR	3	16WP	G15_063	FROM->TO	G14-057T 345.00 - SUNNYSIDE 345KV CKT 1	717	789	0.04545	116.7329	GEN509408 1-WILKES #2
FDNS	00NR	3	16WP	G15_063	FROM->TO	G14-057T 345.00 - SUNNYSIDE 345KV CKT 1	717	789	0.04568	116.7191	THISTLE7 345.00 - WOODWARD DISTRICT EHV 345KV CKT 1
FDNS	00NR	3	16WP	G15_063	FROM->TO	G14-057T 345.00 - SUNNYSIDE 345KV CKT 1	717	789	0.04568	116.7191	THISTLE7 345.00 - WOODWARD DISTRICT EHV 345KV CKT 1
FDNS	00NR	3	16WP	G15_063	FROM->TO	G14-057T 345.00 - SUNNYSIDE 345KV CKT 1	717	789	0.04568	116.7191	THISTLE7 345.00 - WOODWARD DISTRICT EHV 345KV CKT 2
FDNS	00NR	3	16WP	G15_063	FROM->TO	G14-057T 345.00 - SUNNYSIDE 345KV CKT 1	717	789	0.04568	116.7191	THISTLE7 345.00 - WOODWARD DISTRICT EHV 345KV CKT 2
FDNS	00NR	3	16WP	G15_063	FROM->TO	G14-057T 345.00 - SUNNYSIDE 345KV CKT 1	717	789	0.04666	116.7047	P12:138:WFEC:MSL17
FDNS	00NR	3	16WP	G15_063	FROM->TO	G14-057T 345.00 - SUNNYSIDE 345KV CKT 1	717	789	0.04625	116.7021	CANEYRV7 345.00 - LATHAMS7 345.00 345KV CKT 1
FDNS	00NR	3	16WP	G15_063	FROM->TO	G14-057T 345.00 - SUNNYSIDE 345KV CKT 1	717	789	0.04653	116.6073	CIVIT - PAOLI 138KV CKT 1
FDNS	00NR	3	16WP	G15_063	FROM->TO	G14-057T 345.00 - SUNNYSIDE 345KV CKT 1	717	789	0.04545	116.6042	GEN506754 1-LEBROCK STEAM 1
FDNS	00NR	3	16WP	G15_063	FROM->TO	G14-057T 345.00 - SUNNYSIDE 345KV CKT 1	717	789	0.04545	116.596	P12:69:AEPW:L.E.S.-2:LAW WC2
FDNS	00NR	3	16WP	G15_063	FROM->TO	G14-057T 345.00 - SUNNYSIDE 345KV CKT 1	717	789	0.04605	116.5945	REDBUD - RIVERSIDE STATION 345KV CKT 1
FDNS	00NR	3	16WP	G15_063	FROM->TO	G14-057T 345.00 - SUNNYSIDE 345KV CKT 1	717	789	0.04605	116.5945	REDBUD - RIVERSIDE STATION 345KV CKT 1
FDNS	00NR	3	16WP	G15_063	FROM->TO	G14-057T 345.00 - SUNNYSIDE 345KV CKT 1	717	789	0.04545	116.5827	P12:161:AEPW:DYESS 5:HYLAND 5
FDNS	00NR	3	16WP	G15_063	FROM->TO	G14-057T 345.00 - SUNNYSIDE 345KV CKT 1	717	789	0.04576	116.5761	P12:138:WFEC:MSL02
FDNS	00NR	3	16WP	G15_063	FROM->TO	G14-057T 345.00 - SUNNYSIDE 345KV CKT 1	717	789	0.0454	116.5657	ELDORADO EHV - MOUNT OLIVE 500KV CKT 1
FDNS	00NR	3	16WP	G15_063	FROM->TO	G14-057T 345.00 - SUNNYSIDE 345KV CKT 1	717	789	0.04584	116.5567	PAOLI - PAYNE 138.00 138KV CKT 1
FDNS	00NR	3	16WP	G15_063	FROM->TO	G14-057T 345.00 - SUNNYSIDE 345KV CKT 1	717	789	0.04545	116.5564	GEN334440 1-SABINE UNIT 4
FDNS	00NR	3	16WP	G15_063	FROM->TO	G14-057T 345.00 - SUNNYSIDE 345KV CKT 1	717	789	0.04532	116.5124	ELDORADO EHV - SHERIDAN EHV 500KV CKT 1
FDNS	00NR	3	16WP	G15_063	FROM->TO	G14-057T 345.00 - SUNNYSIDE 345KV CKT 1	717	789	0.04943	116.4998	MATHWSN7 345.00 - NORTHWEST 345KV CKT 1
FDNS	00NR	3	16WP	G15_063	FROM->TO	G14-057T 345.00 - SUNNYSIDE 345KV CKT 1	717	789	0.04544	116.4958	P12:138:AEPW:112GORE4:L.E.S.-4
FDNS	00NR	3	16WP	G15_063	FROM->TO	G14-057T 345.00 - SUNNYSIDE 345KV CKT 1	717	789	0.04625	116.4873	LATHAMS7 345.00 - ROSE HILL 345KV CKT 1
FDNS	00NR	3	16WP	G15_063	FROM->TO	G14-057T 345.00 - SUNNYSIDE 345KV CKT 1	717	789	0.04567	116.4851	ANADARKO - GEORGIA 138KV CKT 1
FDNS	00NR	3	16WP	G15_063	FROM->TO	G14-057T 345.00 - SUNNYSIDE 345KV CKT 1	717	789	0.04683	116.4788	P12:138:AEPW-OGE:CORNVIL4:MAUD 4
FDNS	00NR	3	16WP	G15_063	FROM->TO	G14-057T 345.00 - SUNNYSIDE 345KV CKT 1	717	789	0.04653	116.4646	CIVIT - STRATFORD 138KV CKT 1
FDNS	00NR	3	16WP	G15_063	FROM->TO	G14-057T 345.00 - SUNNYSIDE 345KV CKT 1	717	789	0.04545	116.4504	FRONTIER - GRIMES 345KV CKT 1
FDNS	00NR	3	16WP	G15_063	FROM->TO	G14-057T 345.00 - SUNNYSIDE 345KV CKT 1	717	789	0.04559	116.4336	TUPELO - TUPELO TAP 138KV CKT 1
FDNS	00NR	3	16WP	G15_063	FROM->TO	G14-057T 345.00 - SUNNYSIDE 345KV CKT 1	717	789	0.04545	116.4236	GEN503909 1-FULTONU1 1 16.000
FDNS	00NR	3	16WP	G15_063	FROM->TO	G14-057T 345.00 - SUNNYSIDE 345KV CKT 1	717	789	0.04535	116.4095	LAWTON EASTSIDE (LES 5) 345/138/13.8KV TRANSFORMER CKT 2
FDNS	00NR	3	16WP	G15_063	FROM->TO	G14-057T 345.00 - SUNNYSIDE 345KV CKT 1	717	789	0.04535	116.4095	LAWTON EASTSIDE (LES 5) 345/138/13.8KV TRANSFORMER CKT 2
FDNS	00NR	3	16WP	G15_063	FROM->TO	G14-057T 345.00 - SUNNYSIDE 345KV CKT 1	717	789	0.04683	116.407	BLANCHARD - CORNVILLE 138KV CKT 1
FDNS	00NR	3	16WP	G15_063	FROM->TO	G14-057T 345.00 - SUNNYSIDE 345KV CKT 1	717	789	0.0455	116.4068	WEBRE - WELLS 500KV CKT 1
FDNS	00NR	3	16WP	G15_063	FROM->TO	G14-057T 345.00 - SUNNYSIDE 345KV CKT 1	717	789	0.04567	116.4016	FLETCHER - GEORGIA 138KV CKT 1
FDNS	00NR	3	20WP	G15_063	FROM->TO	G14-057T 345.00 - SUNNYSIDE 345KV CKT 1	717	789	0.04468	116.3895	BORDER 7345.00 - WOODWARD DISTRICT EHV 345KV CKT 1
FDNS	00NR	3	16WP	G15_063	FROM->TO	G14-057T 345.00 - SUNNYSIDE 345KV CKT 1	717	789	0.04573	116.3716	EMPIRE - FLETCHER 138KV CKT 1
FDNS	00NR	3	16WP	G15_063	FROM->TO	G14-057T 345.00 - SUNNYSIDE 345KV CKT 1	717	789	0.04653	116.3454	OIL CENTER - STRATFORD 138KV CKT 1
FDNS	00NR	3	16WP	G15_063	FROM->TO	G14-057T 345.00 - SUNNYSIDE 345KV CKT 1	717	789	0.04545	116.3007	GEN509393 S1-ARSENAL HILL GENS #4 (STALL)
FDNS	00NR	3	16WP	G15_063	FROM->TO	G14-057T 345.00 - SUNNYSIDE 345KV CKT 1	717	789	0.04573	116.2931	COMANCHE - EMPIRE 138KV CKT 1
FDNS	00NR	3	16WP	G15_063	FROM->TO	G14-057T 345.00 - SUNNYSIDE 345KV CKT 1	717	789	0.04545	116.2825	DELL 500 - ESSEX UNIT 2 500KV CKT Z1
FDNS	00NR	3	16WP	G15_063	FROM->TO	G14-057T 345.00 - SUNNYSIDE 345KV CKT 1	717	789	0.04545	116.2732	GEN509392 G2-ARSENAL HILL GENS #3 (STALL)
FDNS	00NR	3	16WP	G15_063	FROM->TO	G14-057T 345.00 - SUNNYSIDE 345KV CKT 1	717	789	0.04545	116.2731	GEN509391 G1-ARSENAL HILL GENS #2 (STALL)
FDNS	00NR	3	16WP	G15_063	FROM->TO	G14-057T 345.00 - SUNNYSIDE 345KV CKT 1	717	789	0.04548	116.2646	G1524G1525 345.00 - THISTLE7 345.00 345KV CKT 1
FDNS	00NR	3	16WP	G15_063	FROM->TO	G14-057T 345.00 - SUNNYSIDE 345KV CKT 1	717	789	0.04548	116.2646	G1524G1525 345.00 - THISTLE7 345.00 345KV CKT 2
FDNS	00NR	3	16WP	G15_063	FROM->TO	G14-057T 345.00 - SUNNYSIDE 345KV CKT 1	717	789	0.04545	116.2616	GEN336252 1-NINEMILE POINT UNIT#5
FDNS	00NR	3	20WP	G15_063	FROM->TO	G14-057T 345.00 - SUNNYSIDE 345KV CKT 1	717	789	0.04524	116.257	GEN509406 1-WELSH #3
FDNS	00NR	3	20WP	G15_063	FROM->TO	G14-057T 345.00 - SUNNYSIDE 345KV CKT 1	717	789	0.04524	116.2567	GEN509404 1-WELSH #1
FDNS	00NR	3	16WP	G15_063	FROM->TO	G14-057T 345.00 - SUNNYSIDE 345KV CKT 1	717	789	0.04545	116.2465	GEN334071 1-LEWIS CREEK 2
FDNS	00NR	3	16WP	G15_063	FROM->TO	G14-057T 345.00 - SUNNYSIDE 345KV CKT 1	717	789	0.04557	116.2397	G15074_T 345.00 - HOYT 345KV CKT 1
FDNS	00NR	3	16WP	G15_063	FROM->TO	G14-057T 345.00 - SUNNYSIDE 345KV CKT 1	717	789	0.04545	116.2374	GEN334070 1-LEWIS CREEK 1
FDNS	00NR	3	16WP	G15_063	FROM->TO	G14-057T 345.00 - SUNNYSIDE 345KV CKT 1	717	789	0.04545	116.2351	GEN335204 1-NELSON UNIT 4
FDNS	00NR	3	16WP	G15_063	FROM->TO	G14-057T 345.00 - SUNNYSIDE 345KV CKT 1	717	789	0.04683	116.2107	BLANCHARD - MAUD 138KV CKT 1
FDNS	00NR	3	16WP	G15_063	FROM->TO	G14-057T 345.00 - SUNNYSIDE 345KV CKT 1	717	789	0.04557	116.2075	DUNCAN (DUNCAN) 138/69/13.8KV TRANSFORMER CKT 1
FDNS	00NR	3	16WP	G15_063	FROM->TO	G14-057T 345.00 - SUNNYSIDE 345KV CKT 1	717	789	0.04557	116.2075	DUNCAN (DUNCAN) 138/69/13.8KV TRANSFORMER CKT 1
FDNS	00NR	3	16WP	G15_063	FROM->TO	G14-057T 345.00 - SUNNYSIDE 345KV CKT 1	717	789	0.04545	116.2	GEN334441 1-SABINE UNIT 5
FDNS	00NR	3	16WP	G15_063	FROM->TO	G14-057T 345.00 - SUNNYSIDE 345KV CKT 1	717	789	0.04653	116.1728	LATTA JCT - OIL CENTER 138KV CKT 1
FDNS	00NR	3	16WP	G15_063	FROM->TO	G14-057T 345.00 - SUNNYSIDE 345KV CKT 1	717	789	0.04544	116.1625	P12:161:AEPW-SWPA:BEAVER5:EROGERS5
FDNS	00NR	3	16WP	G15_063	FROM->TO	G14-057T 345.00 - SUNNYSIDE 345KV CKT 1	717	789	0.04545	116.1573	GEN300003 1-THOMAS HILL UNIT 3
FDNS	00NR	3	16WP	G15_063	FROM->TO	G14-057T 345.00 - SUNNYSIDE 345KV CKT 1	717	789	0.04545	116.1497	GEN515040 1-SEMINOLE 1G
FDNS	00NR	3	16WP	G15_063	FROM->TO	G14-057T 345.00 - SUNNYSIDE 345KV CKT 1	717	789	0.04545	116.1471	GEN334030 1-FRONTIER UNIT 1
FDNS	00NR	3	16WP	G15_063	FROM->TO	G14-057T 345.00 - SUNNYSIDE 345KV CKT 1	717	789	0.04545	116.1454	GEN334031 1-FRONTIER UNIT 2
FDNS	00NR	3	16WP	G15_063	FROM->TO	G14-057T 345.00 - SUNNYSIDE 345KV CKT 1	717	789	0.04545	116.1451	GEN337653 1-WHITE BLUFF UNIT #2
FDNS	00NR	3	16WP	G15_063	FROM->TO	G14-057T 345.00 - SUNNYSIDE 345KV CKT 1	717	789	0.04548	116.144	P12:138:AEPW:CATOOSA4:T.S.E.-4
FDNS	00NR	3	16WP	G15_063	FROM->TO	G14-057T 345.00 - SUNNYSIDE 345KV CKT 1	717	789	0.04481	116.1281	TUTTLE - TUTTLE CONOCO TAP 138KV CKT 1
FDNS	00NR	3	16WP	G15_063	FROM->TO	G14-057T 345.00 - SUNNYSIDE 345KV CKT 1	717	789	0.04545	116.1275	GEN506752 1-LEBROCK GAS 1
FDNS	00NR	3	16WP	G15_063	FROM->TO	G14-057T 345.00 - SUNNYSIDE 345KV CKT 1	717	789	0.04545	116.1273	GEN506753 1-LEBROCK GAS 2
FDNS	00NR	3	16WP	G15_063	FROM->TO	G14-057T 345.00 - SUNNYSIDE 345KV CKT 1	717	789	0.04544	116.1145	6LAYFLD 230.00 - CARROLL 230KV CKT 1
FDNS	00NR	3	16WP	G15_063	FROM->TO	G14-057T 345.00 - SUNNYSIDE 345KV CKT 1	717	789	0.04546	116.105	8DANIEL8 500.00 - MCKNIGHT 500KV CKT 1
FDNS	00NR	3	16WP	G15_063	FROM->TO	G14-057T 345.00 - SUNNYSIDE 345KV CKT 1	717	789	0.04545	116.0981	GEN515226 1-MUSKOGEE 6G
FDNS	00NR	3	16WP	G15_063	FROM->TO	G14-057T 345.00 - SUNNYSIDE 345KV CKT 1	717	789	0.04545	116.0968	GEN337911 1-ARKANSAS NUCLEAR ONE UNIT #2
FDNS	00NR	3	16WP	G15_063	FROM->TO	G14-057T 345.00 - SUNNYSIDE 345KV CKT 1	717	789	0.0461	116.093	BAILEY4 138.00 - SUNSHINE CANYON 138KV CKT 1
FDNS	00NR	3	16WP	G15_063	FROM->TO	G14-057T 345.00 - SUNNYSIDE 345KV CKT 1	717	789	0.04536	116.091	P12:138:AEPW-OGE:WTH_JCT4:JENSEN4

SOLUTION	GROUP	SCENARIO	SEASON	SOURCE	DIRECTION	MONITORED ELEMENT	RATEA (MVA)	RATEB(MVA)	TDF	TC%LOADING (% MVA)	CONTINGENCY
FDNS	00NR	3	16WP	G15_063	FROM->TO	G14-057T 345.00 - SUNNYSIDE 345KV CKT 1	717	789	0.04545	116.0896	P12:161:AEPW:DYESS5:ELMSPRNG:TONTITN5
FDNS	00NR	3	16WP	G15_063	FROM->TO	G14-057T 345.00 - SUNNYSIDE 345KV CKT 1	717	789	0.04542	116.0894	FULTON 115 - HOPE 115KV CKT 1
FDNS	00NR	3	16WP	G15_063	FROM->TO	G14-057T 345.00 - SUNNYSIDE 345KV CKT 1	717	789	0.04542	116.0894	FULTON 115 - HOPE 115KV CKT 1
FDNS	00NR	3	16WP	G15_063	FROM->TO	G14-057T 345.00 - SUNNYSIDE 345KV CKT 1	717	789	0.04545	116.0872	GEN300015 1-1SGPDEL 18.000
FDNS	00NR	3	16WP	G15_063	FROM->TO	G14-057T 345.00 - SUNNYSIDE 345KV CKT 1	717	789	0.04545	116.08	GEN501811 1-RODEMACHER UNIT 1
FDNS	00NR	3	16WP	G15_063	FROM->TO	G14-057T 345.00 - SUNNYSIDE 345KV CKT 1	717	789	0.04551	116.0784	G15088_T 345.00 - MOORE 345KV CKT 1
FDNS	00NR	3	16WP	G15_063	FROM->TO	G14-057T 345.00 - SUNNYSIDE 345KV CKT 1	717	789	0.04545	116.0635	GEN337652 1-WHITE BLUFF UNIT #1
FDNS	00NR	3	16WP	G15_063	FROM->TO	G14-057T 345.00 - SUNNYSIDE 345KV CKT 1	717	789	0.04545	116.0616	GEN336251 1-NINEMILE POINT UNIT#4
FDNS	00NR	3	16WP	G15_063	FROM->TO	G14-057T 345.00 - SUNNYSIDE 345KV CKT 1	717	789	0.04545	116.0583	GEN334433 1-SABINE UNIT 3
FDNS	00NR	3	16WP	G15_063	FROM->TO	G14-057T 345.00 - SUNNYSIDE 345KV CKT 1	717	789	0.04545	116.0556	GEN336831 1-BAXTER WILSON SES
FDNS	00NR	3	16WP	G15_063	FROM->TO	G14-057T 345.00 - SUNNYSIDE 345KV CKT 1	717	789	0.04556	116.05	P12:138:AEPW:CORNVIL4:S.W.S.-4
FDNS	00NR	3	16WP	G15_063	FROM->TO	G14-057T 345.00 - SUNNYSIDE 345KV CKT 1	717	789	0.04481	116.0475	CIMARRON - TUTTLE CONOCO TAP 138KV CKT 1
FDNS	00NR	3	16WP	G15_063	FROM->TO	G14-057T 345.00 - SUNNYSIDE 345KV CKT 1	717	789	0.04546	116.0453	P12:138:AEPW:CORNVIL4:DUNCAN-4
FDNS	00NR	3	16WP	G15_063	FROM->TO	G14-057T 345.00 - SUNNYSIDE 345KV CKT 1	717	789	0.04196	116.0367	CANADIAN RIVER - PITTSBURG 345KV CKT 1
FDNS	00NR	3	16WP	G15_063	FROM->TO	G14-057T 345.00 - SUNNYSIDE 345KV CKT 1	717	789	0.04196	116.0367	CANADIAN RIVER - PITTSBURG 345KV CKT 1
FDNS	00NR	3	16WP	G15_063	FROM->TO	G14-057T 345.00 - SUNNYSIDE 345KV CKT 1	717	789	0.04543	116.0269	BUCKNER7 345.00 - SPEARVILLE 345KV CKT 1
FDNS	00NR	3	16WP	G15_063	FROM->TO	G14-057T 345.00 - SUNNYSIDE 345KV CKT 1	717	789	0.04543	116.0269	BUCKNER7 345.00 - SPEARVILLE 345KV CKT 1
FDNS	00NR	3	16WP	G15_063	FROM->TO	G14-057T 345.00 - SUNNYSIDE 345KV CKT 1	717	789	0.04545	116.0247	GEN562783 1-G15036_4 0.6900
FDNS	00NR	3	16WP	G15_063	FROM->TO	G14-057T 345.00 - SUNNYSIDE 345KV CKT 1	717	789	0.04545	116.0247	GEN562784 1-G15036_5 0.6900
FDNS	00NR	3	16WP	G15_063	FROM->TO	G14-057T 345.00 - SUNNYSIDE 345KV CKT 1	717	789	0.04557	116.0243	P12:69:WFEC-AEPW:COMANCH2:DUNCAN-2
FDNS	00NR	3	16WP	G15_063	FROM->TO	G14-057T 345.00 - SUNNYSIDE 345KV CKT 1	717	789	0.04545	116.0128	GEN505432 1-SIKESTON
FDNS	00NR	3	16WP	G15_063	FROM->TO	G14-057T 345.00 - SUNNYSIDE 345KV CKT 1	717	789	0.04591	116.0103	CIMARRON - CZECH HALL 138KV CKT 1
FDNS	00NR	3	16WP	G15_063	FROM->TO	G14-057T 345.00 - SUNNYSIDE 345KV CKT 1	717	789	0.04545	116.0009	GEN515223 1-MUSKOGEE 4G
FDNS	00NR	3	16WP	G15_063	FROM->TO	G14-057T 345.00 - SUNNYSIDE 345KV CKT 1	717	789	0.04545	116.0009	GEN515225 1-MUSKOGEE 5G
FDNS	00NR	3	16WP	G15_063	FROM->TO	G14-057T 345.00 - SUNNYSIDE 345KV CKT 1	717	789	0.04539	115.999	P12:138:AEPW:WTHWF4:CLINTJC4
FDNS	00NR	3	16WP	G15_063	FROM->TO	G14-057T 345.00 - SUNNYSIDE 345KV CKT 1	717	789	0.04545	115.9977	WHITE BLUFF 500/26.0KV TRANSFORMER CKT 1
FDNS	00NR	3	16WP	G15_063	FROM->TO	G14-057T 345.00 - SUNNYSIDE 345KV CKT 1	717	789	0.04557	115.9916	HOYT - STRANGER CREEK 345KV CKT 1
FDNS	00NR	3	16WP	G15_063	FROM->TO	G14-057T 345.00 - SUNNYSIDE 345KV CKT 1	717	789	0.04557	115.9863	G15074_T 345.00 - JEFFREY ENERGY CENTER 345KV CKT 1
FDNS	00NR	3	16WP	G15_063	FROM->TO	G14-057T 345.00 - SUNNYSIDE 345KV CKT 1	717	789	0.04545	115.9843	P12:161:AEPW:EROGERS5:ECNTRTN5
FDNS	00NR	3	16WP	G15_063	FROM->TO	G14-057T 345.00 - SUNNYSIDE 345KV CKT 1	717	789	0.0454	115.9828	LAYFLD8 500.00 - MOUNT OLIVE 500KV CKT 1
FDNS	00NR	3	16WP	G15_063	FROM->TO	G14-057T 345.00 - SUNNYSIDE 345KV CKT 1	717	789	0.0454	115.9828	LAYFLD8 500.00 - MOUNT OLIVE 500KV CKT 1
FDNS	00NR	3	16WP	G15_063	FROM->TO	G14-057T 345.00 - SUNNYSIDE 345KV CKT 1	717	789	0.04545	115.978	RODEMACHER 230/22.0KV TRANSFORMER CKT 1
FDNS	00NR	3	16WP	G15_063	FROM->TO	G14-057T 345.00 - SUNNYSIDE 345KV CKT 1	717	789	0.04602	115.9778	CIMARRON - SARA 138KV CKT 1
FDNS	00NR	3	16WP	G15_063	FROM->TO	G14-057T 345.00 - SUNNYSIDE 345KV CKT 1	717	789	0.04557	115.9736	DUNCAN - TOSCO 69KV CKT 1
FDNS	00NR	3	16WP	G15_063	FROM->TO	G14-057T 345.00 - SUNNYSIDE 345KV CKT 1	717	789	0.04504	115.9735	ARBWIND4 138.00 - CARTER 138KV CKT 1
FDNS	00NR	3	16WP	G15_063	FROM->TO	G14-057T 345.00 - SUNNYSIDE 345KV CKT 1	717	789	0.04542	115.9648	HOT SPRINGS EHV - MAGNET COVE 500KV CKT 1
FDNS	00NR	3	16WP	G15_063	FROM->TO	G14-057T 345.00 - SUNNYSIDE 345KV CKT 1	717	789	0.04545	115.9644	GEN303007 1-1BC2 U2
FDNS	00NR	3	16WP	G15_063	FROM->TO	G14-057T 345.00 - SUNNYSIDE 345KV CKT 1	717	789	0.04539	115.9624	P12:138:AEPW:WTHWF4:WTH_SE4
FDNS	00NR	3	16WP	G15_063	FROM->TO	G14-057T 345.00 - SUNNYSIDE 345KV CKT 1	717	789	0.04545	115.9596	GEN303006 1-1BC2 U1
FDNS	00NR	3	16WP	G15_063	FROM->TO	G14-057T 345.00 - SUNNYSIDE 345KV CKT 1	717	789	0.04486	115.9591	SEMINOLE - VANOSTP4 138.00 138KV CKT 1
FDNS	00NR	3	16WP	G15_063	FROM->TO	G14-057T 345.00 - SUNNYSIDE 345KV CKT 1	717	789	0.04543	115.9572	MC NIEL 500/115KV TRANSFORMER CKT 1
FDNS	00NR	3	16WP	G15_063	FROM->TO	G14-057T 345.00 - SUNNYSIDE 345KV CKT 1	717	789	0.04545	115.9535	GEN337910 1-ARKANSAS NUCLEAR ONE UNIT #1
FDNS	00NR	3	16WP	G15_063	FROM->TO	G14-057T 345.00 - SUNNYSIDE 345KV CKT 1	717	789	0.04535	115.9526	CLEO CORNER - CLEOPLT4 138.00 138KV CKT 1
FDNS	00NR	3	16WP	G15_063	FROM->TO	G14-057T 345.00 - SUNNYSIDE 345KV CKT 1	717	789	0.04548	115.9471	P12:69:AEPW-OMPA:COMANC-2:OMWALTR2
FDNS	00NR	3	16WP	G15_063	FROM->TO	G14-057T 345.00 - SUNNYSIDE 345KV CKT 1	717	789	0.04542	115.9464	BISMARK - HOT SPRINGS WEST BUS 115KV CKT 1
FDNS	00NR	3	16WP	G15_063	FROM->TO	G14-057T 345.00 - SUNNYSIDE 345KV CKT 1	717	789	0.04545	115.9405	NELSON 230/20.0KV TRANSFORMER CKT 1
FDNS	00NR	3	16WP	G15_063	FROM->TO	G14-057T 345.00 - SUNNYSIDE 345KV CKT 1	717	789	0.04535	115.9388	CLEOPLT4 138.00 - MEN TAP 138KV CKT 1
FDNS	00NR	3	16WP	G15_063	FROM->TO	G14-057T 345.00 - SUNNYSIDE 345KV CKT 1	717	789	0.04536	115.9384	G15095_T 138.00 - ROSE_VALLEY 138.00 138KV CKT 1
FDNS	00NR	3	16WP	G15_063	FROM->TO	G14-057T 345.00 - SUNNYSIDE 345KV CKT 1	717	789	0.04545	115.9373	GEN336191 1-LITTLE GYPSY UNIT#3
FDNS	00NR	3	16WP	G15_063	FROM->TO	G14-057T 345.00 - SUNNYSIDE 345KV CKT 1	717	789	0.04545	115.9347	GEN300010 1-ST FRANCIS UNIT 1
FDNS	00NR	3	16WP	G15_063	FROM->TO	G14-057T 345.00 - SUNNYSIDE 345KV CKT 1	717	789	0.04591	115.9271	CZECH HALL - XEROX 138KV CKT 1
FDNS	00NR	3	16WP	G15_063	FROM->TO	G14-057T 345.00 - SUNNYSIDE 345KV CKT 1	717	789	0.04535	115.9269	IMO TAP - MEN TAP 138KV CKT 1
FDNS	00NR	3	16WP	G15_063	FROM->TO	G14-057T 345.00 - SUNNYSIDE 345KV CKT 1	717	789	0.0461	115.9254	BAILEY4 138.00 - WESTMOORE 138KV CKT 1
FDNS	00NR	3	16WP	G15_063	FROM->TO	G14-057T 345.00 - SUNNYSIDE 345KV CKT 1	717	789	0.04591	115.9227	MORGAN - XEROX 138KV CKT 1
FDNS	00NR	3	16WP	G15_063	FROM->TO	G14-057T 345.00 - SUNNYSIDE 345KV CKT 1	717	789	0.04547	115.9182	P12:138:AEPW:N.E.S.-4:CATOOSA4
FDNS	00NR	3	16WP	G15_063	FROM->TO	G14-057T 345.00 - SUNNYSIDE 345KV CKT 1	717	789	0.04545	115.9107	GEN335614 1-WILLOW GLENN UNIT#4
FDNS	00NR	3	16WP	G15_063	FROM->TO	G14-057T 345.00 - SUNNYSIDE 345KV CKT 1	717	789	0.04557	115.904	COMANCHE TAP - TOSCO 69KV CKT 1
FDNS	00NR	3	16WP	G15_063	FROM->TO	G14-057T 345.00 - SUNNYSIDE 345KV CKT 1	717	789	0.04545	115.8999	GEN303008 1-1BC2 U3
FDNS	00NR	3	16WP	G15_063	FROM->TO	G14-057T 345.00 - SUNNYSIDE 345KV CKT 1	717	789	0.04591	115.899	MORGAN - MUSTANG 138KV CKT 1
FDNS	00NR	3	16WP	G15_063	FROM->TO	G14-057T 345.00 - SUNNYSIDE 345KV CKT 1	717	789	0.04653	115.8963	LASALLE - LATTA JCT 138KV CKT 1
FDNS	00NR	3	16WP	G15_063	FROM->TO	G14-057T 345.00 - SUNNYSIDE 345KV CKT 1	717	789	0.04542	115.8939	ALPINE AECC - BISMARK 115KV CKT 1
FDNS	00NR	3	16WP	G15_063	FROM->TO	G14-057T 345.00 - SUNNYSIDE 345KV CKT 1	717	789	0.04545	115.8847	GEN300011 1-ST FRANCIS UNIT 2
FDNS	00NR	3	16WP	G15_063	FROM->TO	G14-057T 345.00 - SUNNYSIDE 345KV CKT 1	717	789	0.04536	115.8832	NOEL_SW 138.00 - ROSE_VALLEY 138.00 138KV CKT 1
FDNS	00NR	3	16WP	G15_063	FROM->TO	G14-057T 345.00 - SUNNYSIDE 345KV CKT 1	717	789	0.04545	115.8732	GEN336170 1-GULF OXY U4
FDNS	00NR	3	16WP	G15_063	FROM->TO	G14-057T 345.00 - SUNNYSIDE 345KV CKT 1	717	789	0.04716	115.8711	CANADIAN - NOBLE 138KV CKT 1
FDNS	00NR	3	16WP	G15_063	FROM->TO	G14-057T 345.00 - SUNNYSIDE 345KV CKT 1	717	789	0.04545	115.867	GEN336464 1-MICHOUD UNIT #3
FDNS	00NR	3	16WP	G15_063	FROM->TO	G14-057T 345.00 - SUNNYSIDE 345KV CKT 1	717	789	0.04551	115.8665	7JASPER 345.00 - BLACKBERRY 345KV CKT 1
FDNS	00NR	3	16WP	G15_063	FROM->TO	G14-057T 345.00 - SUNNYSIDE 345KV CKT 1	717	789	0.04545	115.8634	CYPRESS - HARTBURG 500KV CKT 1
FDNS	00NR	3	16WP	G15_063	FROM->TO	G14-057T 345.00 - SUNNYSIDE 345KV CKT 1	717	789	0.04536	115.8576	WEATHERFORD JCT. - WEATHERFORD SOUTHEAST 138KV CKT 1
FDNS	00NR	3	16WP	G15_063	FROM->TO	G14-057T 345.00 - SUNNYSIDE 345KV CKT 1	717	789	0.04536	115.8576	WEATHERFORD JCT. - WEATHERFORD SOUTHEAST 138KV CKT 1
FDNS	00NR	3	16WP	G15_063	FROM->TO	G14-057T 345.00 - SUNNYSIDE 345KV CKT 1	717	789	0.04545	115.8531	CHISHOLM6 230.00 - ELK CITY 230KV 230KV CKT 1
FDNS	00NR	3	16WP	G15_063	FROM->TO	G14-057T 345.00 - SUNNYSIDE 345KV CKT 1	717	789	0.04545	115.8517	ELK CITY 230KV (ELKCTY-6) 230/138/13.8KV TRANSFORMER CKT 1
FDNS	00NR	3	16WP	G15_063	FROM->TO	G14-057T 345.00 - SUNNYSIDE 345KV CKT 1	717	789	0.04545	115.8517	ELK CITY 230KV (ELKCTY-6) 230/138/13.8KV TRANSFORMER CKT 1
FDNS	00NR	3	16WP	G15_063	FROM->TO	G14-057T 345.00 - SUNNYSIDE 345KV CKT 1	717	789	0.04545	115.8505	GEN300016 1-1G1GPDEL 18.000
FDNS	00NR	3	16WP	G15_063	FROM->TO	G14-057T 345.00 - SUNNYSIDE 345KV CKT 1	717	789	0.04542	115.8503	ALPINE AECC - AMITY SS 115KV CKT 1
FDNS	00NR	3	16WP	G15_063	FROM->TO	G14-057T 345.00 - SUNNYSIDE 345KV CKT 1	717	789	0.04557	115.8498	COMANCHE - COMANCHE TAP 69KV CKT 1
FDNS	00NR	3	16WP	G15_063	FROM->TO	G14-057T 345.00 - SUNNYSIDE 345KV CKT 1	717	789	0.04714	115.8497	P12:138:OKGE:3TERM27
FDNS	00NR	3	16WP	G15_063	FROM->TO	G14-057T 345.00 - SUNNYSIDE 345KV CKT 1	717	789	0.04545	115.8497	8CAJUN2 500/24.0KV TRANSFORMER CKT 1
FDNS	00NR	3	16WP	G15_063	FROM->TO	G14-057T 345.00 - SUNNYSIDE 345KV CKT 1	717	789	0.04561	115.8479	ANADARKO - SEQUOYAHJ4 138.00 138KV CKT 1

SOLUTION	GROUP	SCENARIO	SEASON	SOURCE	DIRECTION	MONITORED ELEMENT	RATEA (MVA)	RATEB(MVA)	TDF	TC%LOADING (% MVA)	CONTINGENCY
FDNS	00NR	3	16WP	G15_063	FROM->TO	G14-057T 345.00 - SUNNYSIDE 345KV CKT 1	717	789	0.04561	115.8466	CORN TAP - SEQUOYAHJ4 138.00 138KV CKT 1
FDNS	00NR	3	16WP	G15_063	FROM->TO	G14-057T 345.00 - SUNNYSIDE 345KV CKT 1	717	789	0.04545	115.8391	P12:138:OKGE-AEPW:JENSEN4:REDROCKRD4
FDNS	00NR	3	16WP	G15_063	FROM->TO	G14-057T 345.00 - SUNNYSIDE 345KV CKT 1	717	789	0.04572	115.8348	BLACKBERRY - NEOSHO 345KV CKT 1
FDNS	00NR	3	16WP	G15_063	FROM->TO	G14-057T 345.00 - SUNNYSIDE 345KV CKT 1	717	789	0.04561	115.8276	SWISSVALE - WEST GARDNER 345KV CKT 1
FDNS	00NR	3	16WP	G15_063	FROM->TO	G14-057T 345.00 - SUNNYSIDE 345KV CKT 1	717	789	0.04545	115.8249	GEN501910 1-ACADIA UNIT ST1
FDNS	00NR	3	16WP	G15_063	FROM->TO	G14-057T 345.00 - SUNNYSIDE 345KV CKT 1	717	789	0.04545	115.8205	P12:138:AEPW:R.S.S.-4:S.HUD.-4
FDNS	00NR	3	16WP	G15_063	FROM->TO	G14-057T 345.00 - SUNNYSIDE 345KV CKT 1	717	789	0.04831	115.8155	DRAPER LAKE - SEMINOLE 345KV CKT 1
FDNS	00NR	3	16WP	G15_063	FROM->TO	G14-057T 345.00 - SUNNYSIDE 345KV CKT 1	717	789	0.04831	115.8155	DRAPER LAKE - SEMINOLE 345KV CKT 2
FDNS	00NR	3	16WP	G15_063	FROM->TO	G14-057T 345.00 - SUNNYSIDE 345KV CKT 1	717	789	0.04545	115.8134	GEN337041 1-GERALD ANDRUS
FDNS	00NR	3	16WP	G15_063	FROM->TO	G14-057T 345.00 - SUNNYSIDE 345KV CKT 1	717	789	0.04581	115.8086	BENTON - WICHITA 345KV CKT 1
FDNS	00NR	3	16WP	G15_063	FROM->TO	G14-057T 345.00 - SUNNYSIDE 345KV CKT 1	717	789	0.04555	115.8073	WALTERS - WALTERS 69KV CKT 1
FDNS	00NR	3	16WP	G15_063	FROM->TO	G14-057T 345.00 - SUNNYSIDE 345KV CKT 1	717	789	0.04552	115.8073	7LUTESVIL 345.00 - 7ST FRANC 345.00 345KV CKT 1
FDNS	00NR	3	16WP	G15_063	FROM->TO	G14-057T 345.00 - SUNNYSIDE 345KV CKT 1	717	789	0.04536	115.8048	P12:138:AEPW:REDROCKRD4:WTH_JCT4
FDNS	00NR	3	16WP	G15_063	FROM->TO	G14-057T 345.00 - SUNNYSIDE 345KV CKT 1	717	789	0.0454	115.796	ETTA (DUKE HOTSPRINGS) - MC NIEL 500KV CKT 1
FDNS	00NR	3	16WP	G15_063	FROM->TO	G14-057T 345.00 - SUNNYSIDE 345KV CKT 1	717	789	0.04602	115.7903	SARA - STHLAKE4 138.00 138KV CKT 1
FDNS	00NR	3	16WP	G15_063	FROM->TO	G14-057T 345.00 - SUNNYSIDE 345KV CKT 1	717	789	0.04545	115.7817	P12:138:AEPW:YARCH-S4:T.S.E.-4
FDNS	00NR	3	16WP	G15_063	FROM->TO	G14-057T 345.00 - SUNNYSIDE 345KV CKT 1	717	789	0.04557	115.7801	NORGE ROAD - SOUTHWESTERN STATION 138KV CKT 1
FDNS	00NR	3	16WP	G15_063	FROM->TO	G14-057T 345.00 - SUNNYSIDE 345KV CKT 1	717	789	0.04557	115.7801	NORGE ROAD - SOUTHWESTERN STATION 138KV CKT 1
FDNS	00NR	3	16WP	G15_063	FROM->TO	G14-057T 345.00 - SUNNYSIDE 345KV CKT 1	717	789	0.04716	115.7796	NOBLE - PURCELL4 138.00 138KV CKT 1
FDNS	00NR	3	16WP	G15_063	FROM->TO	G14-057T 345.00 - SUNNYSIDE 345KV CKT 1	717	789	0.04548	115.7781	LAWTON RELIFT TAP - OMPA-WALTERS 69KV CKT 1
FDNS	00NR	3	16WP	G15_063	FROM->TO	G14-057T 345.00 - SUNNYSIDE 345KV CKT 1	717	789	0.04545	115.7755	P12:138:AEPW:BA_71ST4:T.S.E.-4
FDNS	00NR	3	16WP	G15_063	FROM->TO	G14-057T 345.00 - SUNNYSIDE 345KV CKT 1	717	789	0.04545	115.7752	P12:69:AEPW:NROGERS2:ECNTRTN2
FDNS	00NR	3	16WP	G15_063	FROM->TO	G14-057T 345.00 - SUNNYSIDE 345KV CKT 1	717	789	0.04545	115.7743	GEN336801 1-BAXTER WILSON UNIT #1
FDNS	00NR	3	16WP	G15_063	FROM->TO	G14-057T 345.00 - SUNNYSIDE 345KV CKT 1	717	789	0.04545	115.7721	SABINE 230/24.0KV TRANSFORMER CKT 1
FDNS	00NR	3	16WP	G15_063	FROM->TO	G14-057T 345.00 - SUNNYSIDE 345KV CKT 1	717	789	0.04554	115.7701	8WNEWMADRID 500.00 - DELL 500 500KV CKT 1
FDNS	00NR	3	16WP	G15_063	FROM->TO	G14-057T 345.00 - SUNNYSIDE 345KV CKT 1	717	789	0.0461	115.7695	FRANKLIN SW - WESTMOORE 138KV CKT 1
FDNS	00NR	3	16WP	G15_063	FROM->TO	G14-057T 345.00 - SUNNYSIDE 345KV CKT 1	717	789	0.04602	115.7613	MCCLAIN - STHLAKE4 138.00 138KV CKT 1
FDNS	00NR	3	16WP	G15_063	FROM->TO	G14-057T 345.00 - SUNNYSIDE 345KV CKT 1	717	789	0.04536	115.7612	ENOWILT - LONE OAK 138KV CKT 1
FDNS	00NR	3	16WP	G15_063	FROM->TO	G14-057T 345.00 - SUNNYSIDE 345KV CKT 1	717	789	0.04454	115.7611	ARBUCKLE - VANOSTP4 138.00 138KV CKT 1
FDNS	00NR	3	16WP	G15_063	FROM->TO	G14-057T 345.00 - SUNNYSIDE 345KV CKT 1	717	789	0.04545	115.7544	FRONTIER 345/18.0KV TRANSFORMER CKT 1
FDNS	00NR	3	16WP	G15_063	FROM->TO	G14-057T 345.00 - SUNNYSIDE 345KV CKT 1	717	789	0.04565	115.7536	P12:138:AEPW-OGE:SHIDLER4:OSAGE 4
FDNS	00NR	3	16WP	G15_063	FROM->TO	G14-057T 345.00 - SUNNYSIDE 345KV CKT 1	717	789	0.04545	115.7527	FRONTIER 345/18.0KV TRANSFORMER CKT 1
FDNS	00NR	3	16WP	G15_063	FROM->TO	G14-057T 345.00 - SUNNYSIDE 345KV CKT 1	717	789	0.04536	115.7521	ENOWILT - SARDIS 138KV CKT 1
FDNS	00NR	3	16WP	G15_063	FROM->TO	G14-057T 345.00 - SUNNYSIDE 345KV CKT 1	717	789	0.04545	115.7439	P12:161:AEPW:CHAMSPR5:FARMING5
FDNS	00NR	3	16WP	G15_063	FROM->TO	G14-057T 345.00 - SUNNYSIDE 345KV CKT 1	717	789	0.04559	115.7375	EMPORIA ENERGY CENTER - SWISSVALE 345KV CKT 1
FDNS	00NR	3	16WP	G15_063	FROM->TO	G14-057T 345.00 - SUNNYSIDE 345KV CKT 1	717	789	0.04653	115.7369	LASALLE - STONEWAL LH138.00 138KV CKT 1
FDNS	00NR	3	16WP	G15_063	FROM->TO	G14-057T 345.00 - SUNNYSIDE 345KV CKT 1	717	789	0.04536	115.7276	HINTON - WEATHERFORD JCT. 138KV CKT 1
FDNS	00NR	3	16WP	G15_063	FROM->TO	G14-057T 345.00 - SUNNYSIDE 345KV CKT 1	717	789	0.04545	115.7243	GEN505616 1-BROKEN BOW
FDNS	00NR	3	16WP	G15_063	FROM->TO	G14-057T 345.00 - SUNNYSIDE 345KV CKT 1	717	789	0.04539	115.7233	WEATHERFORD TAP - WEATHERFORD WIND FARM 138KV CKT 1
FDNS	00NR	3	16WP	G15_063	FROM->TO	G14-057T 345.00 - SUNNYSIDE 345KV CKT 1	717	789	0.04561	115.7226	MORISNT4 138.00 - STILLWATER 138KV CKT 1
FDNS	00NR	3	16WP	G15_063	FROM->TO	G14-057T 345.00 - SUNNYSIDE 345KV CKT 1	717	789	0.04547	115.722	CLINTON JUNCTION - ELK CITY 138KV CKT 1
FDNS	00NR	3	16WP	G15_063	FROM->TO	G14-057T 345.00 - SUNNYSIDE 345KV CKT 1	717	789	0.04547	115.722	CLINTON JUNCTION - ELK CITY 138KV CKT 1
FDNS	00NR	3	16WP	G15_063	FROM->TO	G14-057T 345.00 - SUNNYSIDE 345KV CKT 1	717	789	0.04542	115.7216	HOPE - MCNAB REC 115KV CKT 1
FDNS	00NR	3	16WP	G15_063	FROM->TO	G14-057T 345.00 - SUNNYSIDE 345KV CKT 1	717	789	0.04653	115.7215	STONEWAL LH138.00 - TUPELO TAP 138KV CKT 1
FDNS	00NR	3	16WP	G15_063	FROM->TO	G14-057T 345.00 - SUNNYSIDE 345KV CKT 1	717	789	0.04545	115.7173	LEWIS CREEK SWITCHYARD 138/22.0KV TRANSFORMER CKT 1
FDNS	00NR	3	16WP	G15_063	FROM->TO	G14-057T 345.00 - SUNNYSIDE 345KV CKT 1	717	789	0.04563	115.7171	P12:138:OKGE:3TERM2
FDNS	00NR	3	16WP	G15_063	FROM->TO	G14-057T 345.00 - SUNNYSIDE 345KV CKT 1	717	789	0.04536	115.7149	CLAYTON - SARDIS 138KV CKT 1
FDNS	00NR	3	16WP	G15_063	FROM->TO	G14-057T 345.00 - SUNNYSIDE 345KV CKT 1	717	789	0.04542	115.7127	P12:115:AEPW:TURK3:HOPE3
FDNS	00NR	3	16WP	G15_063	FROM->TO	G14-057T 345.00 - SUNNYSIDE 345KV CKT 1	717	789	0.04545	115.7124	LEWIS CREEK SWITCHYARD 138/22.0KV TRANSFORMER CKT 1
FDNS	00NR	3	16WP	G15_063	FROM->TO	G14-057T 345.00 - SUNNYSIDE 345KV CKT 1	717	789	0.04548	115.7112	OMPA-WALTERS - WALTERS 69KV CKT 1
FDNS	00NR	3	16WP	G15_063	FROM->TO	G14-057T 345.00 - SUNNYSIDE 345KV CKT 1	717	789	0.04548	115.7112	OMPA-WALTERS - WALTERS 69KV CKT 1
FDNS	00NR	3	16WP	G15_063	FROM->TO	G14-057T 345.00 - SUNNYSIDE 345KV CKT 1	717	789	0.04556	115.7107	SOUTHWESTERN STATION - VERDEN 138KV CKT 1
FDNS	00NR	3	16WP	G15_063	FROM->TO	G14-057T 345.00 - SUNNYSIDE 345KV CKT 1	717	789	0.04545	115.6991	GEN501970 1-EVANGELINE UNIT 7
FDNS	00NR	3	16WP	G15_063	FROM->TO	G14-057T 345.00 - SUNNYSIDE 345KV CKT 1	717	789	0.04577	115.6981	EMPORIA ENERGY CENTER - G14_001T 345.00 345KV CKT 1
FDNS	00NR	3	16WP	G15_063	FROM->TO	G14-057T 345.00 - SUNNYSIDE 345KV CKT 1	717	789	0.04555	115.6929	P12:69:WFEC-AEPW:COMANCH2:WALTRS-2
FDNS	00NR	3	16WP	G15_063	FROM->TO	G14-057T 345.00 - SUNNYSIDE 345KV CKT 1	717	789	0.04543	115.6919	COUCH SES - MC NIEL 115KV CKT 1
FDNS	00NR	3	16WP	G15_063	FROM->TO	G14-057T 345.00 - SUNNYSIDE 345KV CKT 1	717	789	0.04677	115.6915	CLARKSVILLE - ONETA 345KV CKT 1
FDNS	00NR	3	16WP	G15_063	FROM->TO	G14-057T 345.00 - SUNNYSIDE 345KV CKT 1	717	789	0.04677	115.6915	CLARKSVILLE - ONETA 345KV CKT 1
FDNS	00NR	3	16WP	G15_063	FROM->TO	G14-057T 345.00 - SUNNYSIDE 345KV CKT 1	717	789	0.04556	115.6903	NORTH 29TH CHICKASHA - VERDEN 138KV CKT 1
FDNS	00NR	3	16WP	G15_063	FROM->TO	G14-057T 345.00 - SUNNYSIDE 345KV CKT 1	717	789	0.04542	115.6901	MCNAB REC - Turk 115 115KV CKT 1
FDNS	00NR	3	16WP	G15_063	FROM->TO	G14-057T 345.00 - SUNNYSIDE 345KV CKT 1	717	789	0.04542	115.6901	TURK (TURK 1) 138/115/13.2KV TRANSFORMER CKT 1
FDNS	00NR	3	16WP	G15_063	FROM->TO	G14-057T 345.00 - SUNNYSIDE 345KV CKT 1	717	789	0.04542	115.6901	TURK (TURK 1) 138/115/13.2KV TRANSFORMER CKT 1
FDNS	00NR	3	16WP	G15_063	FROM->TO	G14-057T 345.00 - SUNNYSIDE 345KV CKT 1	717	789	0.04536	115.6892	P12:138:AEPW-SWPA:LONEOAK4:BRKNBW4
FDNS	00NR	3	16WP	G15_063	FROM->TO	G14-057T 345.00 - SUNNYSIDE 345KV CKT 1	717	789	0.04545	115.6874	GEN334392 1-EXXON MOBIL IPP 1
FDNS	00NR	3	20WP	G15_063	FROM->TO	G14-057T 345.00 - SUNNYSIDE 345KV CKT 1	717	789	0.04613	115.685	CORN TAP - NAPLESTP 138.00 138KV CKT 1
FDNS	00NR	3	16WP	G15_063	FROM->TO	G14-057T 345.00 - SUNNYSIDE 345KV CKT 1	717	789	0.04545	115.6797	GEN334393 1-EXXON MOBIL IPP 2
FDNS	00NR	3	16WP	G15_063	FROM->TO	G14-057T 345.00 - SUNNYSIDE 345KV CKT 1	717	789	0.04545	115.6797	GEN334394 1-EXXON MOBIL IPP 3
FDNS	00NR	3	16WP	G15_063	FROM->TO	G14-057T 345.00 - SUNNYSIDE 345KV CKT 1	717	789	0.04536	115.6766	HINTON - REDROCKRD4 138.00 138KV CKT 1
FDNS	00NR	3	16WP	G15_063	FROM->TO	G14-057T 345.00 - SUNNYSIDE 345KV CKT 1	717	789	0.03085	115.6746	GRACEMONT - LAWTON EASTSIDE 345KV CKT 1
FDNS	00NR	3	16WP	G15_063	FROM->TO	G14-057T 345.00 - SUNNYSIDE 345KV CKT 1	717	789	0.03085	115.6746	GRACEMONT - LAWTON EASTSIDE 345KV CKT 1
FDNS	00NR	3	16WP	G15_063	FROM->TO	G14-057T 345.00 - SUNNYSIDE 345KV CKT 1	717	789	0.04536	115.6743	CLAYTON - NASHOBA 138KV CKT 1
FDNS	00NR	3	16WP	G15_063	FROM->TO	G14-057T 345.00 - SUNNYSIDE 345KV CKT 1	717	789	0.0455	115.6739	P12:138:OKGE:3TERM12
FDNS	00NR	3	16WP	G15_063	FROM->TO	G14-057T 345.00 - SUNNYSIDE 345KV CKT 1	717	789	0.04545	115.6722	GEN336222 1-LITTLE GYPSY UNIT#2
FDNS	00NR	3	16WP	G15_063	FROM->TO	G14-057T 345.00 - SUNNYSIDE 345KV CKT 1	717	789	0.04666	115.6665	MARIETTA - MARIETTA4 138.00 138KV CKT 1
FDNS	00NR	3	16WP	G15_063	FROM->TO	G14-057T 345.00 - SUNNYSIDE 345KV CKT 1	717	789	0.04553	115.6645	7JASPER 345.00 - MORGAN 345KV CKT 1
FDNS	00NR	3	16WP	G15_063	FROM->TO	G14-057T 345.00 - SUNNYSIDE 345KV CKT 1	717	789	0.04536	115.6612	BETHEL - NASHOBA 138KV CKT 1
FDNS	00NR	3	16WP	G15_063	FROM->TO	G14-057T 345.00 - SUNNYSIDE 345KV CKT 1	717	789	0.04545	115.6543	P12:138:AEPW:R.S.S-4:T.P.S.-4
FDNS	00NR	3	16WP	G15_063	FROM->TO	G14-057T 345.00 - SUNNYSIDE 345KV CKT 1	717	789	0.04545	115.6517	GEN506749 1-EASTMAN GENERATION A
FDNS	00NR	3	16WP	G15_063	FROM->TO	G14-057T 345.00 - SUNNYSIDE 345KV CKT 1	717	789	0.04545	115.6503	GEN334431 1-SABINE UNIT 1

SOLUTION	GROUP	SCENARIO	SEASON	SOURCE	DIRECTION	MONITORED ELEMENT	RATEA (MVA)	RATEB(MVA)	TDF	TC%LOADING (% MVA)	CONTINGENCY
FDNS	00NR	3	16WP	G15_063	FROM->TO	G14-057T 345.00 - SUNNYSIDE 345KV CKT 1	717	789	0.04545	115.6502	GEN334432 1-SABINE UNIT 2
FDNS	00NR	3	16WP	G15_063	FROM->TO	G14-057T 345.00 - SUNNYSIDE 345KV CKT 1	717	789	0.04561	115.65	FRANKLIN - FRANKLIN SW 138KV CKT 1
FDNS	00NR	3	16WP	G15_063	FROM->TO	G14-057T 345.00 - SUNNYSIDE 345KV CKT 1	717	789	0.04545	115.6424	GEN501972 1-EVANGELINE UNIT 7-2
FDNS	00NR	3	16WP	G15_063	FROM->TO	G14-057T 345.00 - SUNNYSIDE 345KV CKT 1	717	789	0.04545	115.6423	GEN501971 1-EVANGELINE UNIT 7-1
FDNS	00NR	3	16WP	G15_063	FROM->TO	G14-057T 345.00 - SUNNYSIDE 345KV CKT 1	717	789	0.04545	115.6419	GEN336152 1-WATERFORD UNIT#2
FDNS	00NR	3	16WP	G15_063	FROM->TO	G14-057T 345.00 - SUNNYSIDE 345KV CKT 1	717	789	0.04545	115.6409	GEN336151 1-WATERFORD UNIT#1
FDNS	00NR	3	16WP	G15_063	FROM->TO	G14-057T 345.00 - SUNNYSIDE 345KV CKT 1	717	789	0.0455	115.6396	FLETCHER - MARLOW JCT 69KV CKT 1
FDNS	00NR	3	16WP	G15_063	FROM->TO	G14-057T 345.00 - SUNNYSIDE 345KV CKT 1	717	789	0.04577	115.6373	G14_001T 345.00 - WICHITA 345KV CKT 1
FDNS	00NR	3	16WP	G15_063	FROM->TO	G14-057T 345.00 - SUNNYSIDE 345KV CKT 1	717	789	0.04539	115.6364	WEATHERFORD SOUTHEAST - WEATHERFORD TAP 138KV CKT 1
FDNS	00NR	3	16WP	G15_063	FROM->TO	G14-057T 345.00 - SUNNYSIDE 345KV CKT 1	717	789	0.04557	115.6347	CORNVILLE - NORGE ROAD 138KV CKT 1
FDNS	00NR	3	16WP	G15_063	FROM->TO	G14-057T 345.00 - SUNNYSIDE 345KV CKT 1	717	789	0.04557	115.6347	CORNVILLE - NORGE ROAD 138KV CKT 1
FDNS	00NR	3	16WP	G15_063	FROM->TO	G14-057T 345.00 - SUNNYSIDE 345KV CKT 1	717	789	0.04541	115.6347	P12:138:AEPW:OKMULGE4:R.S.S-4
FDNS	00NR	3	20WP	G15_063	FROM->TO	G14-057T 345.00 - SUNNYSIDE 345KV CKT 1	717	789	0.04517	115.6304	7SAREPTA% 345.00 - LONGWOOD 345KV CKT 1
FDNS	00NR	3	20WP	G15_063	FROM->TO	G14-057T 345.00 - SUNNYSIDE 345KV CKT 1	717	789	0.04517	115.6304	7SAREPTA% 345.00 - LONGWOOD 345KV CKT 1
FDNS	00NR	3	16WP	G15_063	FROM->TO	G14-057T 345.00 - SUNNYSIDE 345KV CKT 1	717	789	0.04556	115.6264	CORNVILLE - NORTH 29TH CHICKASHA 138KV CKT 1
FDNS	00NR	3	20WP	G15_063	FROM->TO	G14-057T 345.00 - SUNNYSIDE 345KV CKT 1	717	789	0.04613	115.5991	NAPLESTP 138.00 - PAYNE 138.00 138KV CKT 1
FDNS	00NR	3	16WP	G15_063	FROM->TO	G14-057T 345.00 - SUNNYSIDE 345KV CKT 1	717	789	0.04545	115.5922	Canadian Pump Station - REDROCKRD4 138.00 138KV CKT 1
FDNS	00NR	3	16WP	G15_063	FROM->TO	G14-057T 345.00 - SUNNYSIDE 345KV CKT 1	717	789	0.04539	115.5824	CLINTON JUNCTION - CLINTON NATURAL GAS TAP 138KV CKT 1
FDNS	00NR	3	16WP	G15_063	FROM->TO	G14-057T 345.00 - SUNNYSIDE 345KV CKT 1	717	789	0.04575	115.5797	HAMMETT TAP - HORSESHOE LAKE 138KV CKT 1
FDNS	00NR	3	16WP	G15_063	FROM->TO	G14-057T 345.00 - SUNNYSIDE 345KV CKT 1	717	789	0.04716	115.5707	PURCELL4 138.00 - WALNUT CREEK 138KV CKT 1
FDNS	00NR	3	16WP	G15_063	FROM->TO	G14-057T 345.00 - SUNNYSIDE 345KV CKT 1	717	789	0.04555	115.5209	COMANCHE - WALTERS 69KV CKT 1
FDNS	00NR	3	20WP	G15_063	FROM->TO	G14-057T 345.00 - SUNNYSIDE 345KV CKT 1	717	789	0.04524	115.5156	GEN336821 1-GRAND GULF UNIT
FDNS	00NR	3	20WP	G15_063	FROM->TO	G14-057T 345.00 - SUNNYSIDE 345KV CKT 1	717	789	0.04468	115.4596	BORDER 7345.00 - TUCO_2 345.00 345KV CKT 1
FDNS	00NR	3	20WP	G15_063	FROM->TO	G14-057T 345.00 - SUNNYSIDE 345KV CKT 1	717	789	0.0457	115.417	ANADARKO - POCASSETT 138KV CKT 1
FDNS	00NR	3	20WP	G15_063	FROM->TO	G14-057T 345.00 - SUNNYSIDE 345KV CKT 1	717	789	0.04524	115.408	GEN336153 1-WATERFORD UNIT#3
FDNS	00NR	3	20WP	G15_063	FROM->TO	G14-057T 345.00 - SUNNYSIDE 345KV CKT 1	717	789	0.04604	115.3412	COMANCHE - LOCO 138KV CKT 1
FDNS	00NR	3	20WP	G15_063	FROM->TO	G14-057T 345.00 - SUNNYSIDE 345KV CKT 1	717	789	0.04777	115.3237	CLEVELAND - TULSA NORTH 345KV CKT 1
FDNS	00NR	3	20WP	G15_063	FROM->TO	G14-057T 345.00 - SUNNYSIDE 345KV CKT 1	717	789	0.04777	115.3237	CLEVELAND - TULSA NORTH 345KV CKT 1
FDNS	00NR	3	20WP	G15_063	FROM->TO	G14-057T 345.00 - SUNNYSIDE 345KV CKT 1	717	789	0.0457	115.26	POCASSETT - TUTTLE 138KV CKT 1
FDNS	00NR	3	20WP	G15_063	FROM->TO	G14-057T 345.00 - SUNNYSIDE 345KV CKT 1	717	789	0.04524	115.2292	DOLET HILLS - SOUTHWEST SHREVEPORT 345KV CKT 1
FDNS	00NR	3	20WP	G15_063	FROM->TO	G14-057T 345.00 - SUNNYSIDE 345KV CKT 1	717	789	0.04524	115.2292	DOLET HILLS - SOUTHWEST SHREVEPORT 345KV CKT 1
FDNS	00NR	3	16WP	G15_063	FROM->TO	G14-057T 345.00 - SUNNYSIDE 345KV CKT 1	717	789	0.04545	115.1176	803-OKLAUNION
FDNS	00NR	3	20WP	G15_063	FROM->TO	G14-057T 345.00 - SUNNYSIDE 345KV CKT 1	717	789	0.04524	115.1121	GEN335831 1-RIVERBEND UNIT#1
FDNS	00NR	3	20WP	G15_063	FROM->TO	G14-057T 345.00 - SUNNYSIDE 345KV CKT 1	717	789	0.0573	115.0957	ARCADIA - NORTHWEST 345KV CKT 1
FDNS	00NR	3	20WP	G15_063	FROM->TO	G14-057T 345.00 - SUNNYSIDE 345KV CKT 1	717	789	0.04524	115.0735	GRAND GULF 500/22.0KV TRANSFORMER CKT 1
FDNS	00NR	3	20WP	G15_063	FROM->TO	G14-057T 345.00 - SUNNYSIDE 345KV CKT 1	717	789	0.0452	115.0068	7SAREPTA% 345.00 - ELDORADO EHV 345KV CKT 1
FDNS	00NR	3	20WP	G15_063	FROM->TO	G14-057T 345.00 - SUNNYSIDE 345KV CKT 1	717	789	0.0452	115.0066	3TR3AR8EL7EL
FDNS	00NR	3	20WP	G15_063	FROM->TO	G14-057T 345.00 - SUNNYSIDE 345KV CKT 1	717	789	0.0452	114.996	ELDORADO EHV 500/345KV TRANSFORMER CKT 1
FDNS	00NR	3	16WP	G15_063	FROM->TO	G14-057T 345.00 - SUNNYSIDE 345KV CKT 1	717	789	0.04474	114.9936	P12:138:OKGE:3TERM39
FDNS	00NR	3	20WP	G15_063	FROM->TO	G14-057T 345.00 - SUNNYSIDE 345KV CKT 1	717	789	0.04542	114.9863	P12:138:AEPW:DUNCAN-4:L.E.S.-4
FDNS	00NR	3	20WP	G15_063	FROM->TO	G14-057T 345.00 - SUNNYSIDE 345KV CKT 1	717	789	0.04524	114.9395	GEN515577 1-ARBWND11 0.6900
FDNS	00NR	3	20WP	G15_063	FROM->TO	G14-057T 345.00 - SUNNYSIDE 345KV CKT 1	717	789	0.04459	114.9275	MATHWSN7 345.00 - TATONGA7 345.00 345KV CKT 1
FDNS	00NR	3	20WP	G15_063	FROM->TO	G14-057T 345.00 - SUNNYSIDE 345KV CKT 1	717	789	0.04144	114.9057	CANADIAN RIVER - MUSKOGEE 345KV CKT 1
FDNS	00NR	3	20WP	G15_063	FROM->TO	G14-057T 345.00 - SUNNYSIDE 345KV CKT 1	717	789	0.03072	114.889	GRACEMONT - LAWTON EASTSIDE 345KV CKT 1
FDNS	00NR	3	20WP	G15_063	FROM->TO	G14-057T 345.00 - SUNNYSIDE 345KV CKT 1	717	789	0.03072	114.889	GRACEMONT - LAWTON EASTSIDE 345KV CKT 1
FDNS	00NR	3	20WP	G15_063	FROM->TO	G14-057T 345.00 - SUNNYSIDE 345KV CKT 1	717	789	0.04542	114.8686	COMANCHE TAP - OMPA-DUNCAN 840 138KV CKT 1
FDNS	00NR	3	20WP	G15_063	FROM->TO	G14-057T 345.00 - SUNNYSIDE 345KV CKT 1	717	789	0.0457	114.8662	BRIDGECR 138.00 - TUTTLE 138KV CKT 1
FDNS	00NR	3	16WP	G15_063	FROM->TO	G14-057T 345.00 - SUNNYSIDE 345KV CKT 1	717	789	0.04548	114.8075	RANCHRD7 345.00 - SOONER 345KV CKT 1
FDNS	00NR	3	20WP	G15_063	FROM->TO	G14-057T 345.00 - SUNNYSIDE 345KV CKT 1	717	789	0.04524	114.7869	GEN509409 1-WILKES #3
FDNS	00NR	3	20WP	G15_063	FROM->TO	G14-057T 345.00 - SUNNYSIDE 345KV CKT 1	717	789	0.04733	114.7757	ARCADIA - SEMINOLE 345KV CKT 1
FDNS	00NR	3	20WP	G15_063	FROM->TO	G14-057T 345.00 - SUNNYSIDE 345KV CKT 1	717	789	0.04645	114.7632	HEALDTON - LOCO 138KV CKT 1
FDNS	00NR	3	16WP	G15_063	FROM->TO	G14-057T 345.00 - SUNNYSIDE 345KV CKT 1	717	789	0.04548	114.7374	JOHNSON COUNTY - RUSSETT 138KV CKT 1
FDNS	00NR	3	20WP	G15_063	FROM->TO	G14-057T 345.00 - SUNNYSIDE 345KV CKT 1	717	789	0.04524	114.7322	GEN501813 1-RODEMACHER UNIT 3
FDNS	00NR	3	16WP	G15_063	FROM->TO	G14-057T 345.00 - SUNNYSIDE 345KV CKT 1	717	789	0.0455	114.7187	GLASSES - MADILL INDUSTRIAL TAP 138KV CKT 1
FDNS	00NR	3	16WP	G15_063	FROM->TO	G14-057T 345.00 - SUNNYSIDE 345KV CKT 1	717	789	0.0457	114.7136	DRAPER LAKE - MIDWEST TAP 138KV CKT 1
FDNS	00NR	3	16WP	G15_063	FROM->TO	G14-057T 345.00 - SUNNYSIDE 345KV CKT 1	717	789	0.04522	114.7086	MAYSVLT4 138.00 - PRAIRIE POINT 138KV CKT 1
FDNS	00NR	3	16WP	G15_063	FROM->TO	G14-057T 345.00 - SUNNYSIDE 345KV CKT 1	717	789	0.04545	114.7011	GEN562772 1-G15034_3 0.6900
FDNS	00NR	3	16WP	G15_063	FROM->TO	G14-057T 345.00 - SUNNYSIDE 345KV CKT 1	717	789	0.04411	114.7002	CIMARRON - MATHWSN7 345.00 345KV CKT 1
FDNS	00NR	3	16WP	G15_063	FROM->TO	G14-057T 345.00 - SUNNYSIDE 345KV CKT 1	717	789	0.04411	114.7002	CIMARRON - MATHWSN7 345.00 345KV CKT 2
FDNS	00NR	3	16WP	G15_063	FROM->TO	G14-057T 345.00 - SUNNYSIDE 345KV CKT 1	717	789	0.04542	114.6947	HUGO (HUGO 1) 345/138/13.8KV TRANSFORMER CKT 1
FDNS	00NR	3	16WP	G15_063	FROM->TO	G14-057T 345.00 - SUNNYSIDE 345KV CKT 1	717	789	0.04565	114.6926	P12:138:OKGE:3TERM21
FDNS	00NR	3	16WP	G15_063	FROM->TO	G14-057T 345.00 - SUNNYSIDE 345KV CKT 1	717	789	0.04545	114.676	GEN521103 1-BLUE CANYON WIND FARM
FDNS	00NR	3	16WP	G15_063	FROM->TO	G14-057T 345.00 - SUNNYSIDE 345KV CKT 1	717	789	0.04545	114.6743	GEN520812 1-ANADRK5
FDNS	00NR	3	16WP	G15_063	FROM->TO	G14-057T 345.00 - SUNNYSIDE 345KV CKT 1	717	789	0.04545	114.6742	GEN520813 1-ANADRK6
FDNS	00NR	3	16WP	G15_063	FROM->TO	G14-057T 345.00 - SUNNYSIDE 345KV CKT 1	717	789	0.04504	114.6607	ARBUCKLE - SULPHR 4 138.00 138KV CKT 1
FDNS	00NR	3	16WP	G15_063	FROM->TO	G14-057T 345.00 - SUNNYSIDE 345KV CKT 1	717	789	0.0455	114.6591	GLASSES - RUSSETT 138KV CKT 1
FDNS	00NR	3	20WP	G15_063	FROM->TO	G14-057T 345.00 - SUNNYSIDE 345KV CKT 1	717	789	0.0457	114.6525	Hitchland Interchange - WALKTAP7 345.00 345KV CKT 1
FDNS	00NR	3	20WP	G15_063	FROM->TO	G14-057T 345.00 - SUNNYSIDE 345KV CKT 1	717	789	0.0457	114.6525	Hitchland Interchange - WALKTAP7 345.00 345KV CKT 1
FDNS	00NR	3	16WP	G15_063	FROM->TO	G14-057T 345.00 - SUNNYSIDE 345KV CKT 1	717	789	0.04549	114.6462	P12:138:WFEC:MSL11
FDNS	00NR	3	16WP	G15_063	FROM->TO	G14-057T 345.00 - SUNNYSIDE 345KV CKT 1	717	789	0.04549	114.6462	P12:138:WFEC-AEPW:PHAROAH4:LONEOAK4
FDNS	00NR	3	16WP	G15_063	FROM->TO	G14-057T 345.00 - SUNNYSIDE 345KV CKT 1	717	789	0.04545	114.6314	GEN511961 1-DEMPSEY-WTG10.7000
FDNS	00NR	3	16WP	G15_063	FROM->TO	G14-057T 345.00 - SUNNYSIDE 345KV CKT 1	717	789	0.04544	114.6197	P12:069:OKGE:3TERM42
FDNS	00NR	3	20WP	G15_063	FROM->TO	G14-057T 345.00 - SUNNYSIDE 345KV CKT 1	717	789	0.04645	114.6187	HEALDTON - RINGLING 138KV CKT 1
FDNS	00NR	3	20WP	G15_063	FROM->TO	G14-057T 345.00 - SUNNYSIDE 345KV CKT 1	717	789	0.0457	114.6173	P12:345:SPS:J07.1.FINN.HITCH
FDNS	00NR	3	16WP	G15_063	FROM->TO	G14-057T 345.00 - SUNNYSIDE 345KV CKT 1	717	789	0.04522	114.611	PRAIRIE POINT - RATLIFF 138KV CKT 1
FDNS	00NR	3	16WP	G15_063	FROM->TO	G14-057T 345.00 - SUNNYSIDE 345KV CKT 1	717	789	0.04551	114.6005	CANEY CREEK - JOHNSON COUNTY 138KV CKT 1
FDNS	00NR	3	16WP	G15_063	FROM->TO	G14-057T 345.00 - SUNNYSIDE 345KV CKT 1	717	789	0.04553	114.5989	DELL 500 - INDEPENDENCE 500KV CKT 1
FDNS	00NR	3	16WP	G15_063	FROM->TO	G14-057T 345.00 - SUNNYSIDE 345KV CKT 1	717	789	0.04561	114.592	P12:138:WFEC:MSL08
FDNS	00NR	3	20WP	G15_063	FROM->TO	G14-057T 345.00 - SUNNYSIDE 345KV CKT 1	717	789	0.04524	114.5892	GEN300006 1-NEW MADRID UNIT 1

SOLUTION	GROUP	SCENARIO	SEASON	SOURCE	DIRECTION	MONITORED ELEMENT	RATEA (MVA)	RATEB(MVA)	TDF	TC%LOADING (% MVA)	CONTINGENCY
FDNS	00NR	3	16WP	G15_063	FROM->TO	G14-057T 345.00 - SUNNYSIDE 345KV CKT 1	717	789	0.04545	114.5831	GEN515443 1-MNCOWND1 0.7000
FDNS	00NR	3	20WP	G15_063	FROM->TO	G14-057T 345.00 - SUNNYSIDE 345KV CKT 1	717	789	0.04542	114.5799	DUNCAN - OMPA-DUNCAN 840 138KV CKT 1
FDNS	00NR	3	20WP	G15_063	FROM->TO	G14-057T 345.00 - SUNNYSIDE 345KV CKT 1	717	789	0.04542	114.5799	DUNCAN - OMPA-DUNCAN 840 138KV CKT 1
FDNS	00NR	3	16WP	G15_063	FROM->TO	G14-057T 345.00 - SUNNYSIDE 345KV CKT 1	717	789	0.04545	114.579	INDEPENDENCE 500/26.0KV TRANSFORMER CKT 1
FDNS	00NR	3	20WP	G15_063	FROM->TO	G14-057T 345.00 - SUNNYSIDE 345KV CKT 1	717	789	0.0457	114.576	BRIDGECR 138.00 - SUNSHINE CANYON 138KV CKT 1
FDNS	00NR	3	20WP	G15_063	FROM->TO	G14-057T 345.00 - SUNNYSIDE 345KV CKT 1	717	789	0.0457	114.574	P12:138:WFEC:MSL01
FDNS	00NR	3	20WP	G15_063	FROM->TO	G14-057T 345.00 - SUNNYSIDE 345KV CKT 1	717	789	0.04524	114.5695	GEN300007 1-NEW MADRID UNIT 2
FDNS	00NR	3	16WP	G15_063	FROM->TO	G14-057T 345.00 - SUNNYSIDE 345KV CKT 1	717	789	0.0454	114.569	CARTER - CHICKASAW 138KV CKT 1
FDNS	00NR	3	20WP	G15_063	FROM->TO	G14-057T 345.00 - SUNNYSIDE 345KV CKT 1	717	789	0.04559	114.567	LACYGNE - WAVERLY7 345.00 345KV CKT 1
FDNS	00NR	3	16WP	G15_063	FROM->TO	G14-057T 345.00 - SUNNYSIDE 345KV CKT 1	717	789	0.04545	114.5662	GEN532653 1-JEFFREY ENERGY CENTER UNIT 3
FDNS	00NR	3	16WP	G15_063	FROM->TO	G14-057T 345.00 - SUNNYSIDE 345KV CKT 1	717	789	0.04545	114.5645	GEN563242 1-G15090_3 0.6900
FDNS	00NR	3	16WP	G15_063	FROM->TO	G14-057T 345.00 - SUNNYSIDE 345KV CKT 1	717	789	0.04545	114.5635	GEN560183 1-REDHIL-WTG1 12.000
FDNS	00NR	3	16WP	G15_063	FROM->TO	G14-057T 345.00 - SUNNYSIDE 345KV CKT 1	717	789	0.04545	114.5601	GEN562902 1-G15052_3 0.6900
FDNS	00NR	3	16WP	G15_063	FROM->TO	G14-057T 345.00 - SUNNYSIDE 345KV CKT 1	717	789	0.04568	114.5586	MINGO - SETAB 345KV CKT 1
FDNS	00NR	3	16WP	G15_063	FROM->TO	G14-057T 345.00 - SUNNYSIDE 345KV CKT 1	717	789	0.04568	114.5586	MINGO - SETAB 345KV CKT 1
FDNS	00NR	3	16WP	G15_063	FROM->TO	G14-057T 345.00 - SUNNYSIDE 345KV CKT 1	717	789	0.04473	114.5585	ARKANSAS NUCLEAR ONE - FT SMITH 500KV CKT 1
FDNS	00NR	3	16WP	G15_063	FROM->TO	G14-057T 345.00 - SUNNYSIDE 345KV CKT 1	717	789	0.04473	114.5585	ARKANSAS NUCLEAR ONE - FT SMITH 500KV CKT 1
FDNS	00NR	3	16WP	G15_063	FROM->TO	G14-057T 345.00 - SUNNYSIDE 345KV CKT 1	717	789	0.04545	114.5557	GEN629071 1-BURLINGTON GENERATOR FOR UNIT NO 1 E
FDNS	00NR	3	16WP	G15_063	FROM->TO	G14-057T 345.00 - SUNNYSIDE 345KV CKT 1	717	789	0.04528	114.5555	ROCKY POINT - SPRINGDALE 138KV CKT 1
FDNS	00NR	3	16WP	G15_063	FROM->TO	G14-057T 345.00 - SUNNYSIDE 345KV CKT 1	717	789	0.04561	114.5554	CANADIAN RIVER - MCALESTER SOUTH 138KV CKT 1
FDNS	00NR	3	16WP	G15_063	FROM->TO	G14-057T 345.00 - SUNNYSIDE 345KV CKT 1	717	789	0.04561	114.5554	CANADIAN RIVER - MCALESTER SOUTH 138KV CKT 1
FDNS	00NR	3	16WP	G15_063	FROM->TO	G14-057T 345.00 - SUNNYSIDE 345KV CKT 1	717	789	0.04561	114.554	CANADIAN RIVER () 345/138/13.8KV TRANSFORMER CKT 1
FDNS	00NR	3	16WP	G15_063	FROM->TO	G14-057T 345.00 - SUNNYSIDE 345KV CKT 1	717	789	0.04561	114.554	CANADIAN RIVER () 345/138/13.8KV TRANSFORMER CKT 1
FDNS	00NR	3	16WP	G15_063	FROM->TO	G14-057T 345.00 - SUNNYSIDE 345KV CKT 1	717	789	0.04543	114.5441	ALTUS JUNCTION - RUSSELL 138KV CKT 1
FDNS	00NR	3	16WP	G15_063	FROM->TO	G14-057T 345.00 - SUNNYSIDE 345KV CKT 1	717	789	0.04543	114.5441	ALTUS JUNCTION - RUSSELL 138KV CKT 1
FDNS	00NR	3	16WP	G15_063	FROM->TO	G14-057T 345.00 - SUNNYSIDE 345KV CKT 1	717	789	0.04515	114.5362	MOREWOOD SW - NINE MILE 138KV CKT 1
FDNS	00NR	3	16WP	G15_063	FROM->TO	G14-057T 345.00 - SUNNYSIDE 345KV CKT 1	717	789	0.04545	114.525	BURLINGTON NO1 + NO 2 + NO 3 161/20.0KV TRANSFORMER CKT 1
FDNS	00NR	3	16WP	G15_063	FROM->TO	G14-057T 345.00 - SUNNYSIDE 345KV CKT 1	717	789	0.04545	114.5215	GEN514805 1-SOONER UNIT 1
FDNS	00NR	3	16WP	G15_063	FROM->TO	G14-057T 345.00 - SUNNYSIDE 345KV CKT 1	717	789	0.04592	114.5197	NORTHWEST - SPRING CREEK 345KV CKT 1
FDNS	00NR	3	16WP	G15_063	FROM->TO	G14-057T 345.00 - SUNNYSIDE 345KV CKT 1	717	789	0.04571	114.5171	CHAMBER SPRINGS - CLARKSVILLE 345KV CKT 1
FDNS	00NR	3	16WP	G15_063	FROM->TO	G14-057T 345.00 - SUNNYSIDE 345KV CKT 1	717	789	0.04545	114.5151	P12:230:UMZB:# 112 #: NU IN SD. NU-RCDC & DRY CREEK XFMR
FDNS	00NR	3	20WP	G15_063	FROM->TO	G14-057T 345.00 - SUNNYSIDE 345KV CKT 1	717	789	0.04524	114.5147	GEN335206 1-NELSON UNIT 6
FDNS	00NR	3	16WP	G15_063	FROM->TO	G14-057T 345.00 - SUNNYSIDE 345KV CKT 1	717	789	0.04545	114.5146	RCDC EAST 4230.00 - RED CEDAR DC 230KV CKT 1
FDNS	00NR	3	16WP	G15_063	FROM->TO	G14-057T 345.00 - SUNNYSIDE 345KV CKT 1	717	789	0.04545	114.5126	GEN514806 1-SOONER UNIT 2
FDNS	00NR	3	16WP	G15_063	FROM->TO	G14-057T 345.00 - SUNNYSIDE 345KV CKT 1	717	789	0.04544	114.5102	NORTHWEST TEXARKANA - WELSH 345KV CKT 1
FDNS	00NR	3	16WP	G15_063	FROM->TO	G14-057T 345.00 - SUNNYSIDE 345KV CKT 1	717	789	0.04544	114.5102	NORTHWEST TEXARKANA - WELSH 345KV CKT 1
FDNS	00NR	3	16WP	G15_063	FROM->TO	G14-057T 345.00 - SUNNYSIDE 345KV CKT 1	717	789	0.04504	114.5087	JOLLYVILLE - SULPHR 4 138.00 138KV CKT 1
FDNS	00NR	3	16WP	G15_063	FROM->TO	G14-057T 345.00 - SUNNYSIDE 345KV CKT 1	717	789	0.04592	114.5068	SOONER - SPRING CREEK 345KV CKT 1
FDNS	00NR	3	16WP	G15_063	FROM->TO	G14-057T 345.00 - SUNNYSIDE 345KV CKT 1	717	789	0.04545	114.4865	GEN562078 1-G11_051_3 0.6900
FDNS	00NR	3	16WP	G15_063	FROM->TO	G14-057T 345.00 - SUNNYSIDE 345KV CKT 1	717	789	0.04545	114.4745	GEN562802 1-G15039_3 0.3570
FDNS	00NR	3	16WP	G15_063	FROM->TO	G14-057T 345.00 - SUNNYSIDE 345KV CKT 1	717	789	0.04545	114.4683	GEN524285 1-WILDORADO WIND GEN
FDNS	00NR	3	20WP	G15_063	FROM->TO	G14-057T 345.00 - SUNNYSIDE 345KV CKT 1	717	789	0.04524	114.4619	GEN520947 1-HUGO1
FDNS	00NR	3	16WP	G15_063	FROM->TO	G14-057T 345.00 - SUNNYSIDE 345KV CKT 1	717	789	0.04557	114.4606	KEO EHV - WEST MEMPHIS 500 500KV CKT 1
FDNS	00NR	3	16WP	G15_063	FROM->TO	G14-057T 345.00 - SUNNYSIDE 345KV CKT 1	717	789	0.04545	114.4516	GEN629072 4-LANSING GENERATOR FOR UNITS NO4 EIA CODE 1
FDNS	00NR	3	16WP	G15_063	FROM->TO	G14-057T 345.00 - SUNNYSIDE 345KV CKT 1	717	789	0.04545	114.4478	GEN524295 1-SPNSPUR_WND10.6900
FDNS	00NR	3	16WP	G15_063	FROM->TO	G14-057T 345.00 - SUNNYSIDE 345KV CKT 1	717	789	0.04545	114.4475	GEN562587 1-G14_056_3 0.6900
FDNS	00NR	3	20WP	G15_063	FROM->TO	G14-057T 345.00 - SUNNYSIDE 345KV CKT 1	717	789	0.04559	114.4467	WAVERLY7 345.00 - WOLF CREEK 345KV CKT 1
FDNS	00NR	3	20WP	G15_063	FROM->TO	G14-057T 345.00 - SUNNYSIDE 345KV CKT 1	717	789	0.04645	114.4463	RINGLING - SOUTH WILSON 138KV CKT 1
FDNS	00NR	3	16WP	G15_063	FROM->TO	G14-057T 345.00 - SUNNYSIDE 345KV CKT 1	717	789	0.04545	114.4405	GEN560331 1-G10-46 13.800
FDNS	00NR	3	16WP	G15_063	FROM->TO	G14-057T 345.00 - SUNNYSIDE 345KV CKT 1	717	789	0.04504	114.44	JOLLYVILLE - KERR MCGEE CIMARRON 138KV CKT 1
FDNS	00NR	3	16WP	G15_063	FROM->TO	G14-057T 345.00 - SUNNYSIDE 345KV CKT 1	717	789	0.04545	114.4314	GEN657749 1-YOUNG 1 GENERATOR
FDNS	00NR	3	16WP	G15_063	FROM->TO	G14-057T 345.00 - SUNNYSIDE 345KV CKT 1	717	789	0.04779	114.4224	CLARKSVILLE - MUSKOGEE 345KV CKT 1
FDNS	00NR	3	16WP	G15_063	FROM->TO	G14-057T 345.00 - SUNNYSIDE 345KV CKT 1	717	789	0.04779	114.4224	CLARKSVILLE - MUSKOGEE 345KV CKT 1
FDNS	00NR	3	16WP	G15_063	FROM->TO	G14-057T 345.00 - SUNNYSIDE 345KV CKT 1	717	789	0.04545	114.414	GEN562882 1-G15047_3 0.6900
FDNS	00NR	3	16WP	G15_063	FROM->TO	G14-057T 345.00 - SUNNYSIDE 345KV CKT 1	717	789	0.04545	114.4096	GEN562269 1-G12-020-1 0.6900
FDNS	00NR	3	16WP	G15_063	FROM->TO	G14-057T 345.00 - SUNNYSIDE 345KV CKT 1	717	789	0.04515	114.4019	BEARCAT 138.00 - NINE MILE 138KV CKT 1
FDNS	00NR	3	16WP	G15_063	FROM->TO	G14-057T 345.00 - SUNNYSIDE 345KV CKT 1	717	789	0.04504	114.3893	ARBWIND4 138.00 - KERR MCGEE CIMARRON 138KV CKT 1
FDNS	00NR	3	20WP	G15_063	FROM->TO	G14-057T 345.00 - SUNNYSIDE 345KV CKT 1	717	789	0.04459	114.3691	G11_051T 345.00 - TATONGA7 345.00 345KV CKT 1
FDNS	00NR	3	16WP	G15_063	FROM->TO	G14-057T 345.00 - SUNNYSIDE 345KV CKT 1	717	789	0.04545	114.3644	GEN562270 1-G12-020-2 0.6900
FDNS	00NR	3	16WP	G15_063	FROM->TO	G14-057T 345.00 - SUNNYSIDE 345KV CKT 1	717	789	0.04545	114.3623	GEN681522 3-GENOA 3
FDNS	00NR	3	16WP	G15_063	FROM->TO	G14-057T 345.00 - SUNNYSIDE 345KV CKT 1	717	789	0.04545	114.3594	GEN562812 1-G15040_3 0.3570
FDNS	00NR	3	16WP	G15_063	FROM->TO	G14-057T 345.00 - SUNNYSIDE 345KV CKT 1	717	789	0.04545	114.3533	GEN563102 1-G15075_3 0.5500
FDNS	00NR	3	20WP	G15_063	FROM->TO	G14-057T 345.00 - SUNNYSIDE 345KV CKT 1	717	789	0.04519	114.3528	ELDORADO EHV - MOUNT OLIVE 500KV CKT 1
FDNS	00NR	3	16WP	G15_063	FROM->TO	G14-057T 345.00 - SUNNYSIDE 345KV CKT 1	717	789	0.04545	114.3512	GEN563062 1-G15071_3 0.6900
FDNS	00NR	3	16WP	G15_063	FROM->TO	G14-057T 345.00 - SUNNYSIDE 345KV CKT 1	717	789	0.04545	114.349	GEN563132 1-G15078_3 0.3570
FDNS	00NR	3	16WP	G15_063	FROM->TO	G14-057T 345.00 - SUNNYSIDE 345KV CKT 1	717	789	0.04528	114.3465	P12:138:AEPW:112GORE4:SNYDER-4
FDNS	00NR	3	16WP	G15_063	FROM->TO	G14-057T 345.00 - SUNNYSIDE 345KV CKT 1	717	789	0.04545	114.3385	GEN562974 1-G15060_5 0.6900
FDNS	00NR	3	16WP	G15_063	FROM->TO	G14-057T 345.00 - SUNNYSIDE 345KV CKT 1	717	789	0.04545	114.329	GEN562973 1-G15060_4 0.6900
FDNS	00NR	3	20WP	G15_063	FROM->TO	G14-057T 345.00 - SUNNYSIDE 345KV CKT 1	717	789	0.04524	114.3288	GEN501812 1-RODEMACHER UNIT 2
FDNS	00NR	3	20WP	G15_063	FROM->TO	G14-057T 345.00 - SUNNYSIDE 345KV CKT 1	717	789	0.04523	114.3249	P12:138:AEPW:SHERID4:112GORE4
FDNS	00NR	3	20WP	G15_063	FROM->TO	G14-057T 345.00 - SUNNYSIDE 345KV CKT 1	717	789	0.04524	114.3234	DOLET HILLS 345/24.0KV TRANSFORMER CKT 1
FDNS	00NR	3	16WP	G15_063	FROM->TO	G14-057T 345.00 - SUNNYSIDE 345KV CKT 1	717	789	0.04515	114.3187	P12:138:WFEC:MSL14
FDNS	00NR	3	16WP	G15_063	FROM->TO	G14-057T 345.00 - SUNNYSIDE 345KV CKT 1	717	789	0.04509	114.3068	CHICKASAW - TOTAL 138KV CKT 1
FDNS	00NR	3	16WP	G15_063	FROM->TO	G14-057T 345.00 - SUNNYSIDE 345KV CKT 1	717	789	0.04515	114.3066	BEARCAT 138.00 - MOORELAND 138KV CKT 1
FDNS	00NR	3	16WP	G15_063	FROM->TO	G14-057T 345.00 - SUNNYSIDE 345KV CKT 1	717	789	0.04539	114.3022	BROWN - RUSSETT 138KV CKT 1
FDNS	00NR	3	16WP	G15_063	FROM->TO	G14-057T 345.00 - SUNNYSIDE 345KV CKT 1	717	789	0.04545	114.293	GEN345671 2-1RUSH G2 18.000
FDNS	00NR	3	16WP	G15_063	FROM->TO	G14-057T 345.00 - SUNNYSIDE 345KV CKT 1	717	789	0.04545	114.2911	GEN345670 1-1RUSH G1 18.000
FDNS	00NR	3	16WP	G15_063	FROM->TO	G14-057T 345.00 - SUNNYSIDE 345KV CKT 1	717	789	0.04537	114.2845	RUSSETT - SPRINGDALE 138KV CKT 1
FDNS	00NR	3	16WP	G15_063	FROM->TO	G14-057T 345.00 - SUNNYSIDE 345KV CKT 1	717	789	0.04545	114.2662	GEN526331 1-JONES GEN #1 22 KV

SOLUTION	GROUP	SCENARIO	SEASON	SOURCE	DIRECTION	MONITORED ELEMENT	RATEA (MVA)	RATEB(MVA)	TDF	TC%LOADING (% MVA)	CONTINGENCY
FDNS	00NR	3	16WP	G15_063	FROM->TO	G14-057T 345.00 - SUNNYSIDE 345KV CKT 1	717	789	0.04545	114.2662	GEN526332 1-JONES GEN #2 21 KV
FDNS	00NR	3	16WP	G15_063	FROM->TO	G14-057T 345.00 - SUNNYSIDE 345KV CKT 1	717	789	0.04522	114.2632	ROCKY POINT - SUNNYSIDE 138KV CKT 1
FDNS	00NR	3	20WP	G15_063	FROM->TO	G14-057T 345.00 - SUNNYSIDE 345KV CKT 1	717	789	0.04443	114.2618	PARK LANE - SEMINOLE 138KV CKT 1
FDNS	00NR	3	16WP	G15_063	FROM->TO	G14-057T 345.00 - SUNNYSIDE 345KV CKT 1	717	789	0.04545	114.2569	GEN560105 1-G08-22 0.6900
FDNS	00NR	3	16WP	G15_063	FROM->TO	G14-057T 345.00 - SUNNYSIDE 345KV CKT 1	717	789	0.04545	114.2536	GEN562550 1-G14_040_3 0.6900
FDNS	00NR	3	16WP	G15_063	FROM->TO	G14-057T 345.00 - SUNNYSIDE 345KV CKT 1	717	789	0.04544	114.2457	P12:138:WFEC:MSL07
FDNS	00NR	3	16WP	G15_063	FROM->TO	G14-057T 345.00 - SUNNYSIDE 345KV CKT 1	717	789	0.04544	114.2457	P12:138:WFEC-AEPW:HUGOPP4:ATOKA--4
FDNS	00NR	3	16WP	G15_063	FROM->TO	G14-057T 345.00 - SUNNYSIDE 345KV CKT 1	717	789	0.04545	114.238	4SIOUX 1 138.00 138/18.0KV TRANSFORMER CKT 1
FDNS	00NR	3	16WP	G15_063	FROM->TO	G14-057T 345.00 - SUNNYSIDE 345KV CKT 1	717	789	0.04539	114.2341	RUSSETT - RUSSETT 138KV CKT 1
FDNS	00NR	3	20WP	G15_063	FROM->TO	G14-057T 345.00 - SUNNYSIDE 345KV CKT 1	717	789	0.04547	114.226	THISTLE7 345.00 - WOODWARD DISTRICT EHV 345KV CKT 1
FDNS	00NR	3	20WP	G15_063	FROM->TO	G14-057T 345.00 - SUNNYSIDE 345KV CKT 1	717	789	0.04547	114.226	THISTLE7 345.00 - WOODWARD DISTRICT EHV 345KV CKT 1
FDNS	00NR	3	20WP	G15_063	FROM->TO	G14-057T 345.00 - SUNNYSIDE 345KV CKT 1	717	789	0.04547	114.226	THISTLE7 345.00 - WOODWARD DISTRICT EHV 345KV CKT 2
FDNS	00NR	3	20WP	G15_063	FROM->TO	G14-057T 345.00 - SUNNYSIDE 345KV CKT 1	717	789	0.04547	114.226	THISTLE7 345.00 - WOODWARD DISTRICT EHV 345KV CKT 2
FDNS	00NR	3	16WP	G15_063	FROM->TO	G14-057T 345.00 - SUNNYSIDE 345KV CKT 1	717	789	0.04545	114.2239	CLAY BOSWELL 230/20.9KV TRANSFORMER CKT 1
FDNS	00NR	3	16WP	G15_063	FROM->TO	G14-057T 345.00 - SUNNYSIDE 345KV CKT 1	717	789	0.04545	114.2181	GEN521112 1-ORME3 13.800
FDNS	00NR	3	16WP	G15_063	FROM->TO	G14-057T 345.00 - SUNNYSIDE 345KV CKT 1	717	789	0.04545	114.2164	GEN511962 2-RKYRDGW2-1 0.7000
FDNS	00NR	3	16WP	G15_063	FROM->TO	G14-057T 345.00 - SUNNYSIDE 345KV CKT 1	717	789	0.04545	114.2073	GEN527882 1-CUNNINGHAM GEN #2 20 KV
FDNS	00NR	3	16WP	G15_063	FROM->TO	G14-057T 345.00 - SUNNYSIDE 345KV CKT 1	717	789	0.04494	114.2065	ARDMORE WEST - CARTER 138KV CKT 1
FDNS	00NR	3	16WP	G15_063	FROM->TO	G14-057T 345.00 - SUNNYSIDE 345KV CKT 1	717	789	0.04545	114.1994	GEN672321 1-SHAND GENERATOR 1
FDNS	00NR	3	16WP	G15_063	FROM->TO	G14-057T 345.00 - SUNNYSIDE 345KV CKT 1	717	789	0.04545	114.1972	GEN562892 1-G15048_3 0.6900
FDNS	00NR	3	20WP	G15_063	FROM->TO	G14-057T 345.00 - SUNNYSIDE 345KV CKT 1	717	789	0.04603	114.1906	CANEYRV7 345.00 - NEOSHO 345KV CKT 1
FDNS	00NR	3	20WP	G15_063	FROM->TO	G14-057T 345.00 - SUNNYSIDE 345KV CKT 1	717	789	0.04524	114.1873	GEN515564 1-ORIGIN11 0.6900
FDNS	00NR	3	20WP	G15_063	FROM->TO	G14-057T 345.00 - SUNNYSIDE 345KV CKT 1	717	789	0.04524	114.1873	GEN515565 1-ORIGIN21 0.6900
FDNS	00NR	3	16WP	G15_063	FROM->TO	G14-057T 345.00 - SUNNYSIDE 345KV CKT 1	717	789	0.04545	114.1754	GEN672310 1-POPLAR RIVER GENERATOR 1
FDNS	00NR	3	16WP	G15_063	FROM->TO	G14-057T 345.00 - SUNNYSIDE 345KV CKT 1	717	789	0.04545	114.1754	GEN672311 2-POPLAR RIVER GENERATOR 2
FDNS	00NR	3	16WP	G15_063	FROM->TO	G14-057T 345.00 - SUNNYSIDE 345KV CKT 1	717	789	0.04545	114.1724	GEN563192 1-G15084_3 0.5500
FDNS	00NR	3	20WP	G15_063	FROM->TO	G14-057T 345.00 - SUNNYSIDE 345KV CKT 1	717	789	0.04529	114.1714	WEBRE - WELLS 500KV CKT 1
FDNS	00NR	3	20WP	G15_063	FROM->TO	G14-057T 345.00 - SUNNYSIDE 345KV CKT 1	717	789	0.04524	114.1693	GEN334440 1-SABINE UNIT 4
FDNS	00NR	3	16WP	G15_063	FROM->TO	G14-057T 345.00 - SUNNYSIDE 345KV CKT 1	717	789	0.04545	114.1674	GEN672306 6-BOUNDARY DAM GENERATOR 6
FDNS	00NR	3	16WP	G15_063	FROM->TO	G14-057T 345.00 - SUNNYSIDE 345KV CKT 1	717	789	0.04503	114.1631	SUNNYSIDE (SUNNYSD5) 345/138/13.8KV TRANSFORMER CKT 1
FDNS	00NR	3	16WP	G15_063	FROM->TO	G14-057T 345.00 - SUNNYSIDE 345KV CKT 1	717	789	0.04545	114.16	GEN562512 1-G14_020_3 0.6900
FDNS	00NR	3	16WP	G15_063	FROM->TO	G14-057T 345.00 - SUNNYSIDE 345KV CKT 1	717	789	0.04545	114.1584	GEN511853 1-COMANCHE #3
FDNS	00NR	3	20WP	G15_063	FROM->TO	G14-057T 345.00 - SUNNYSIDE 345KV CKT 1	717	789	0.04645	114.1575	MARIETTA - SOUTH WILSON 138KV CKT 1
FDNS	00NR	3	16WP	G15_063	FROM->TO	G14-057T 345.00 - SUNNYSIDE 345KV CKT 1	717	789	0.04548	114.1555	P12:138:WFEC:MSL16
FDNS	00NR	3	16WP	G15_063	FROM->TO	G14-057T 345.00 - SUNNYSIDE 345KV CKT 1	717	789	0.04542	114.1412	P12:138:WFEC-AEPW:GOLDENSW4:CRAIGJT4
FDNS	00NR	3	20WP	G15_063	FROM->TO	G14-057T 345.00 - SUNNYSIDE 345KV CKT 1	717	789	0.04524	114.1207	DELL 500 - ESSEX UNIT 2 500KV CKT Z1
FDNS	00NR	3	20WP	G15_063	FROM->TO	G14-057T 345.00 - SUNNYSIDE 345KV CKT 1	717	789	0.04524	114.1123	P12:161:AEPW:DYESS 5:HYLAND 5
FDNS	00NR	3	20WP	G15_063	FROM->TO	G14-057T 345.00 - SUNNYSIDE 345KV CKT 1	717	789	0.04524	114.1119	GEN590011 2-ERCOT EQUIVALENCE
FDNS	00NR	3	16WP	G15_063	FROM->TO	G14-057T 345.00 - SUNNYSIDE 345KV CKT 1	717	789	0.04545	114.1113	GEN523461 1-BLACKHAWK GEN #1
FDNS	00NR	3	16WP	G15_063	FROM->TO	G14-057T 345.00 - SUNNYSIDE 345KV CKT 1	717	789	0.04545	114.1111	GEN523462 1-BLACKHAWK GEN #2
FDNS	00NR	3	20WP	G15_063	FROM->TO	G14-057T 345.00 - SUNNYSIDE 345KV CKT 1	717	789	0.04588	114.1074	REDBUD - RIVERSIDE STATION 345KV CKT 1
FDNS	00NR	3	20WP	G15_063	FROM->TO	G14-057T 345.00 - SUNNYSIDE 345KV CKT 1	717	789	0.04588	114.1074	REDBUD - RIVERSIDE STATION 345KV CKT 1
FDNS	00NR	3	16WP	G15_063	FROM->TO	G14-057T 345.00 - SUNNYSIDE 345KV CKT 1	717	789	0.04545	114.1041	GEN344895 2-1LAB G2 20.000
FDNS	00NR	3	16WP	G15_063	FROM->TO	G14-057T 345.00 - SUNNYSIDE 345KV CKT 1	717	789	0.04545	114.1028	GEN511852 1-COMANCHE #2
FDNS	00NR	3	16WP	G15_063	FROM->TO	G14-057T 345.00 - SUNNYSIDE 345KV CKT 1	717	789	0.04494	114.0899	ARDMORE WEST - UNIROYAL 138KV CKT 1
FDNS	00NR	3	16WP	G15_063	FROM->TO	G14-057T 345.00 - SUNNYSIDE 345KV CKT 1	717	789	0.04545	114.0715	GEN344896 3-1LAB G3 20.000
FDNS	00NR	3	16WP	G15_063	FROM->TO	G14-057T 345.00 - SUNNYSIDE 345KV CKT 1	717	789	0.04545	114.0701	GEN344894 1-1LAB G1 20.000
FDNS	00NR	3	16WP	G15_063	FROM->TO	G14-057T 345.00 - SUNNYSIDE 345KV CKT 1	717	789	0.04545	114.0686	GEN344897 4-1LAB G4 20.000
FDNS	00NR	3	16WP	G15_063	FROM->TO	G14-057T 345.00 - SUNNYSIDE 345KV CKT 1	717	789	0.04542	114.0676	P12:138:AEPW-SWPA:LONEOAK4:TUPELO4
FDNS	00NR	3	16WP	G15_063	FROM->TO	G14-057T 345.00 - SUNNYSIDE 345KV CKT 1	717	789	0.04542	114.0675	P12:138:WFEC:MSL06
FDNS	00NR	3	20WP	G15_063	FROM->TO	G14-057T 345.00 - SUNNYSIDE 345KV CKT 1	717	789	0.04524	114.0631	P12:69:AEPW:L.E.S.-2:LAW WC2
FDNS	00NR	3	16WP	G15_063	FROM->TO	G14-057T 345.00 - SUNNYSIDE 345KV CKT 1	717	789	0.04545	114.0613	GEN681542 6-JP MADGETT
FDNS	00NR	3	16WP	G15_063	FROM->TO	G14-057T 345.00 - SUNNYSIDE 345KV CKT 1	717	789	0.04526	114.0599	P12:138:OKGE:3TERM40
FDNS	00NR	3	20WP	G15_063	FROM->TO	G14-057T 345.00 - SUNNYSIDE 345KV CKT 1	717	789	0.04645	114.0532	P12:138:WFEC:MSL17
FDNS	00NR	3	16WP	G15_063	FROM->TO	G14-057T 345.00 - SUNNYSIDE 345KV CKT 1	717	789	0.04529	114.0523	CARTRCO4 138.00 - RATLIFF 138KV CKT 1
FDNS	00NR	3	16WP	G15_063	FROM->TO	G14-057T 345.00 - SUNNYSIDE 345KV CKT 1	717	789	0.04545	114.0441	GEN563162 1-G15081_3 0.6900
FDNS	00NR	3	20WP	G15_063	FROM->TO	G14-057T 345.00 - SUNNYSIDE 345KV CKT 1	717	789	0.04603	114.0433	CANEYRV7 345.00 - LATHAMS7 345.00 345KV CKT 1
FDNS	00NR	3	20WP	G15_063	FROM->TO	G14-057T 345.00 - SUNNYSIDE 345KV CKT 1	717	789	0.04524	114.0429	GEN590010 1-ERCOT EQUIVALENCE
FDNS	00NR	3	20WP	G15_063	FROM->TO	G14-057T 345.00 - SUNNYSIDE 345KV CKT 1	717	789	0.04555	114.0376	P12:138:WFEC:MSL02
FDNS	00NR	3	16WP	G15_063	FROM->TO	G14-057T 345.00 - SUNNYSIDE 345KV CKT 1	717	789	0.04545	114.0375	GEN521110 1-ORME1 13.800
FDNS	00NR	3	16WP	G15_063	FROM->TO	G14-057T 345.00 - SUNNYSIDE 345KV CKT 1	717	789	0.04545	114.0375	GEN521111 1-ORME2 13.800
FDNS	00NR	3	20WP	G15_063	FROM->TO	G14-057T 345.00 - SUNNYSIDE 345KV CKT 1	717	789	0.04515	114.0359	LAWTON EASTSIDE (LES 5) 345/138/13.8KV TRANSFORMER CKT 2
FDNS	00NR	3	20WP	G15_063	FROM->TO	G14-057T 345.00 - SUNNYSIDE 345KV CKT 1	717	789	0.04515	114.0359	LAWTON EASTSIDE (LES 5) 345/138/13.8KV TRANSFORMER CKT 2
FDNS	00NR	3	16WP	G15_063	FROM->TO	G14-057T 345.00 - SUNNYSIDE 345KV CKT 1	717	789	0.04543	114.0336	G15085_T 138.00 - RUSSELL 138KV CKT 1
FDNS	00NR	3	16WP	G15_063	FROM->TO	G14-057T 345.00 - SUNNYSIDE 345KV CKT 1	717	789	0.04545	114.0229	GEN562699 1-G15_018_3 0.6900
FDNS	00NR	3	16WP	G15_063	FROM->TO	G14-057T 345.00 - SUNNYSIDE 345KV CKT 1	717	789	0.04545	114.0225	GEN563292 1-G15095_3 0.6900
FDNS	00NR	3	20WP	G15_063	FROM->TO	G14-057T 345.00 - SUNNYSIDE 345KV CKT 1	717	789	0.04524	114.0146	GEN509408 1-WILKES #2
FDNS	00NR	3	20WP	G15_063	FROM->TO	G14-057T 345.00 - SUNNYSIDE 345KV CKT 1	717	789	0.04512	113.9988	ELDORADO EHV - SHERIDAN EHV 500KV CKT 1
FDNS	00NR	3	20WP	G15_063	FROM->TO	G14-057T 345.00 - SUNNYSIDE 345KV CKT 1	717	789	0.04563	113.9822	PAOLI - PAYNE 138.00 138KV CKT 1
FDNS	00NR	3	20WP	G15_063	FROM->TO	G14-057T 345.00 - SUNNYSIDE 345KV CKT 1	717	789	0.04524	113.9793	GEN506754 1-LEBROCK STEAM 1
FDNS	00NR	3	16WP	G15_063	FROM->TO	G14-057T 345.00 - SUNNYSIDE 345KV CKT 1	717	789	0.04528	113.9628	CACHE - SNYDER 138KV CKT 1
FDNS	00NR	3	20WP	G15_063	FROM->TO	G14-057T 345.00 - SUNNYSIDE 345KV CKT 1	717	789	0.04547	113.9627	ANADARKO - GEORGIA 138KV CKT 1
FDNS	00NR	3	16WP	G15_063	FROM->TO	G14-057T 345.00 - SUNNYSIDE 345KV CKT 1	717	789	0.04545	113.9537	GEN661015 1-COYOTE
FDNS	00NR	3	16WP	G15_063	FROM->TO	G14-057T 345.00 - SUNNYSIDE 345KV CKT 1	717	789	0.04545	113.9363	GEN520811 1-ANADRK4
FDNS	00NR	3	20WP	G15_063	FROM->TO	G14-057T 345.00 - SUNNYSIDE 345KV CKT 1	717	789	0.04523	113.931	P12:138:AEPW:112GORE4:L.E.S.-4
FDNS	00NR	3	20WP	G15_063	FROM->TO	G14-057T 345.00 - SUNNYSIDE 345KV CKT 1	717	789	0.04631	113.9261	CIVIT - PAOLI 138KV CKT 1
FDNS	00NR	3	16WP	G15_063	FROM->TO	G14-057T 345.00 - SUNNYSIDE 345KV CKT 1	717	789	0.04545	113.9199	GEN563122 1-G15077_3 0.3850
FDNS	00NR	3	20WP	G15_063	FROM->TO	G14-057T 345.00 - SUNNYSIDE 345KV CKT 1	717	789	0.04921	113.915	MATHWSN7 345.00 - NORTHWEST 345KV CKT 1
FDNS	00NR	3	16WP	G15_063	FROM->TO	G14-057T 345.00 - SUNNYSIDE 345KV CKT 1	717	789	0.04545	113.9124	GEN562861 1-G15045_2 0.4800

SOLUTION	GROUP	SCENARIO	SEASON	SOURCE	DIRECTION	MONITORED ELEMENT	RATEA (MVA)	RATEB(MVA)	TDF	TC%LOADING (% MVA)	CONTINGENCY
FDNS	00NR	3	16WP	G15_063	FROM->TO	G14-057T 345.00 - SUNNYSIDE 345KV CKT 1	717	789	0.04536	113.8901	P12:138:WFEC:MSL15
FDNS	00NR	3	20WP	G15_063	FROM->TO	G14-057T 345.00 - SUNNYSIDE 345KV CKT 1	717	789	0.04524	113.8898	NEW MADRID 161/22.0KV TRANSFORMER CKT 1
FDNS	00NR	3	20WP	G15_063	FROM->TO	G14-057T 345.00 - SUNNYSIDE 345KV CKT 1	717	789	0.04524	113.8829	GEN336252 1-NINEMILE POINT UNIT#5
FDNS	00NR	3	20WP	G15_063	FROM->TO	G14-057T 345.00 - SUNNYSIDE 345KV CKT 1	717	789	0.04524	113.8739	NEW MADRID 345/22.0KV TRANSFORMER CKT 1
FDNS	00NR	3	16WP	G15_063	FROM->TO	G14-057T 345.00 - SUNNYSIDE 345KV CKT 1	717	789	0.04494	113.8675	SUNNYSIDE - UNIROYAL 138KV CKT 1
FDNS	00NR	3	20WP	G15_063	FROM->TO	G14-057T 345.00 - SUNNYSIDE 345KV CKT 1	717	789	0.04547	113.8605	FLETCHER - GEORGIA 138KV CKT 1
FDNS	00NR	3	20WP	G15_063	FROM->TO	G14-057T 345.00 - SUNNYSIDE 345KV CKT 1	717	789	0.04661	113.8583	P12:138:AEPW-OGE:CORNVIL4:MAUD 4
FDNS	00NR	3	20WP	G15_063	FROM->TO	G14-057T 345.00 - SUNNYSIDE 345KV CKT 1	717	789	0.04524	113.8392	FRONTIER - GRIMES 345KV CKT 1
FDNS	00NR	3	16WP	G15_063	FROM->TO	G14-057T 345.00 - SUNNYSIDE 345KV CKT 1	717	789	0.04545	113.838	GEN657748 1-YOUNG 2 GENERATOR
FDNS	00NR	3	20WP	G15_063	FROM->TO	G14-057T 345.00 - SUNNYSIDE 345KV CKT 1	717	789	0.04524	113.8346	GEN503909 1-FULTONU1 1 16.000
FDNS	00NR	3	20WP	G15_063	FROM->TO	G14-057T 345.00 - SUNNYSIDE 345KV CKT 1	717	789	0.04524	113.8284	GEN335204 1-NELSON UNIT 4
FDNS	00NR	3	16WP	G15_063	FROM->TO	G14-057T 345.00 - SUNNYSIDE 345KV CKT 1	717	789	0.04545	113.8268	GEN562992 1-G15063_3 0.6900
FDNS	00NR	3	20WP	G15_063	FROM->TO	G14-057T 345.00 - SUNNYSIDE 345KV CKT 1	717	789	0.04603	113.8261	LATHAMS7 345.00 - ROSE HILL 345KV CKT 1
FDNS	00NR	3	20WP	G15_063	FROM->TO	G14-057T 345.00 - SUNNYSIDE 345KV CKT 1	717	789	0.04524	113.8211	GEN334441 1-SABINE UNIT 5
FDNS	00NR	3	20WP	G15_063	FROM->TO	G14-057T 345.00 - SUNNYSIDE 345KV CKT 1	717	789	0.04552	113.8207	EMPIRE - FLETCHER 138KV CKT 1
FDNS	00NR	3	16WP	G15_063	FROM->TO	G14-057T 345.00 - SUNNYSIDE 345KV CKT 1	717	789	0.04666	113.8202	CANEY CREEK - TEXOMA JCT 138KV CKT 1
FDNS	00NR	3	20WP	G15_063	FROM->TO	G14-057T 345.00 - SUNNYSIDE 345KV CKT 1	717	789	0.04537	113.8123	TUPELO - TUPELO TAP 138KV CKT 1
FDNS	00NR	3	16WP	G15_063	FROM->TO	G14-057T 345.00 - SUNNYSIDE 345KV CKT 1	717	789	0.04541	113.8098	GRAPEVINE INTERCHANGE - STATELINE INTERCHANGE 230KV CKT 1
FDNS	00NR	3	16WP	G15_063	FROM->TO	G14-057T 345.00 - SUNNYSIDE 345KV CKT 1	717	789	0.04541	113.8098	GRAPEVINE INTERCHANGE - STATELINE INTERCHANGE 230KV CKT 1
FDNS	00NR	3	20WP	G15_063	FROM->TO	G14-057T 345.00 - SUNNYSIDE 345KV CKT 1	717	789	0.04631	113.7846	CIVIT - STRATFORD 138KV CKT 1
FDNS	00NR	3	20WP	G15_063	FROM->TO	G14-057T 345.00 - SUNNYSIDE 345KV CKT 1	717	789	0.04661	113.7825	BLANCHARD - CORNVILLE 138KV CKT 1
FDNS	00NR	3	16WP	G15_063	FROM->TO	G14-057T 345.00 - SUNNYSIDE 345KV CKT 1	717	789	0.04545	113.7762	GEN532751 1-WOLF CREEK GENERATING STATION UNIT 1
FDNS	00NR	3	16WP	G15_063	FROM->TO	G14-057T 345.00 - SUNNYSIDE 345KV CKT 1	717	789	0.04543	113.7738	P12:138:AEPW:SHAM4WT:CHILD4WT
FDNS	00NR	3	20WP	G15_063	FROM->TO	G14-057T 345.00 - SUNNYSIDE 345KV CKT 1	717	789	0.04527	113.7429	G1524G1525 345.00 - THISTLE7 345.00 345KV CKT 1
FDNS	00NR	3	20WP	G15_063	FROM->TO	G14-057T 345.00 - SUNNYSIDE 345KV CKT 1	717	789	0.04527	113.7429	G1524G1525 345.00 - THISTLE7 345.00 345KV CKT 2
FDNS	00NR	3	20WP	G15_063	FROM->TO	G14-057T 345.00 - SUNNYSIDE 345KV CKT 1	717	789	0.0452	113.7395	LAYFLD8 500.00 - MOUNT OLIVE 500KV CKT 1
FDNS	00NR	3	20WP	G15_063	FROM->TO	G14-057T 345.00 - SUNNYSIDE 345KV CKT 1	717	789	0.0452	113.7395	LAYFLD8 500.00 - MOUNT OLIVE 500KV CKT 1
FDNS	00NR	3	20WP	G15_063	FROM->TO	G14-057T 345.00 - SUNNYSIDE 345KV CKT 1	717	789	0.04552	113.7376	COMANCHE - EMPIRE 138KV CKT 1
FDNS	00NR	3	16WP	G15_063	FROM->TO	G14-057T 345.00 - SUNNYSIDE 345KV CKT 1	717	789	0.04545	113.7295	GEN562952 1-G15057_3 0.6500
FDNS	00NR	3	20WP	G15_063	FROM->TO	G14-057T 345.00 - SUNNYSIDE 345KV CKT 1	717	789	0.04524	113.7286	GEN334071 1-LEWIS CREEK 2
FDNS	00NR	3	16WP	G15_063	FROM->TO	G14-057T 345.00 - SUNNYSIDE 345KV CKT 1	717	789	0.04545	113.7268	GEN562704 1-G15_020_3 0.3550
FDNS	00NR	3	20WP	G15_063	FROM->TO	G14-057T 345.00 - SUNNYSIDE 345KV CKT 1	717	789	0.04524	113.7201	GEN334070 1-LEWIS CREEK 1
FDNS	00NR	3	16WP	G15_063	FROM->TO	G14-057T 345.00 - SUNNYSIDE 345KV CKT 1	717	789	0.04545	113.7132	GEN563173 1-G15082_3 0.6900
FDNS	00NR	3	20WP	G15_063	FROM->TO	G14-057T 345.00 - SUNNYSIDE 345KV CKT 1	717	789	0.04524	113.7107	GEN336251 1-NINEMILE POINT UNIT#4
FDNS	00NR	3	16WP	G15_063	FROM->TO	G14-057T 345.00 - SUNNYSIDE 345KV CKT 1	717	789	0.04541	113.6993	GRAPEVINE INTERCHANGE - NICHOLS STATION 230KV CKT 1
FDNS	00NR	3	16WP	G15_063	FROM->TO	G14-057T 345.00 - SUNNYSIDE 345KV CKT 1	717	789	0.04541	113.6993	GRAPEVINE INTERCHANGE - NICHOLS STATION 230KV CKT 1
FDNS	00NR	3	20WP	G15_063	FROM->TO	G14-057T 345.00 - SUNNYSIDE 345KV CKT 1	717	789	0.04524	113.6916	GEN509393 S1-ARSENAL HILL GENS #4 (STALL)
FDNS	00NR	3	20WP	G15_063	FROM->TO	G14-057T 345.00 - SUNNYSIDE 345KV CKT 1	717	789	0.04524	113.6901	GEN509392 G2-ARSENAL HILL GENS #3 (STALL)
FDNS	00NR	3	20WP	G15_063	FROM->TO	G14-057T 345.00 - SUNNYSIDE 345KV CKT 1	717	789	0.04524	113.69	GEN509391 G1-ARSENAL HILL GENS #2 (STALL)
FDNS	00NR	3	20WP	G15_063	FROM->TO	G14-057T 345.00 - SUNNYSIDE 345KV CKT 1	717	789	0.04523	113.6847	P12:161:AEPW-SWPA:BEAVER5:EROGERS5
FDNS	00NR	3	16WP	G15_063	FROM->TO	G14-057T 345.00 - SUNNYSIDE 345KV CKT 1	717	789	0.04545	113.6718	GEN620315 1-BIG STONE GEN
FDNS	00NR	3	20WP	G15_063	FROM->TO	G14-057T 345.00 - SUNNYSIDE 345KV CKT 1	717	789	0.04631	113.6667	OIL CENTER - STRATFORD 138KV CKT 1
FDNS	00NR	3	20WP	G15_063	FROM->TO	G14-057T 345.00 - SUNNYSIDE 345KV CKT 1	717	789	0.04524	113.6623	GEN334433 1-SABINE UNIT 3
FDNS	00NR	3	20WP	G15_063	FROM->TO	G14-057T 345.00 - SUNNYSIDE 345KV CKT 1	717	789	0.04524	113.6468	GEN337653 1-WHITE BLUFF UNIT #2
FDNS	00NR	3	16WP	G15_063	FROM->TO	G14-057T 345.00 - SUNNYSIDE 345KV CKT 1	717	789	0.04545	113.6394	GEN562710 1-G15_022_3 0.5500
FDNS	00NR	3	20WP	G15_063	FROM->TO	G14-057T 345.00 - SUNNYSIDE 345KV CKT 1	717	789	0.04524	113.6369	GEN336831 1-BAXTER WILSON SES
FDNS	00NR	3	20WP	G15_063	FROM->TO	G14-057T 345.00 - SUNNYSIDE 345KV CKT 1	717	789	0.04552	113.6354	FINNEY SWITCHING STATION - HOLCOMB 345KV CKT 1
FDNS	00NR	3	20WP	G15_063	FROM->TO	G14-057T 345.00 - SUNNYSIDE 345KV CKT 1	717	789	0.04552	113.6354	FINNEY SWITCHING STATION - HOLCOMB 345KV CKT 1
FDNS	00NR	3	20WP	G15_063	FROM->TO	G14-057T 345.00 - SUNNYSIDE 345KV CKT 1	717	789	0.04524	113.6205	GEN515040 1-SEMINOLE 1G
FDNS	00NR	3	20WP	G15_063	FROM->TO	G14-057T 345.00 - SUNNYSIDE 345KV CKT 1	717	789	0.04524	113.6202	P12:161:AEPW:DYESS5:ELMSPRNG:TONTITN5
FDNS	00NR	3	16WP	G15_063	FROM->TO	G14-057T 345.00 - SUNNYSIDE 345KV CKT 1	717	789	0.04545	113.6149	GEN600004 2-PRAIRIE ISLAND G2
FDNS	00NR	3	16WP	G15_063	FROM->TO	G14-057T 345.00 - SUNNYSIDE 345KV CKT 1	717	789	0.04545	113.6121	GEN600003 1-PRAIRIE ISLAND G1
FDNS	00NR	3	16WP	G15_063	FROM->TO	G14-057T 345.00 - SUNNYSIDE 345KV CKT 1	717	789	0.04545	113.611	GEN511851 1-COMANCHE #1
FDNS	00NR	3	20WP	G15_063	FROM->TO	G14-057T 345.00 - SUNNYSIDE 345KV CKT 1	717	789	0.04536	113.6102	DUNCAN (DUNCAN) 138/69/13.8KV TRANSFORMER CKT 1
FDNS	00NR	3	20WP	G15_063	FROM->TO	G14-057T 345.00 - SUNNYSIDE 345KV CKT 1	717	789	0.04536	113.6102	DUNCAN (DUNCAN) 138/69/13.8KV TRANSFORMER CKT 1
FDNS	00NR	3	16WP	G15_063	FROM->TO	G14-057T 345.00 - SUNNYSIDE 345KV CKT 1	717	789	0.04545	113.6041	GEN600006 1-AS KING
FDNS	00NR	3	20WP	G15_063	FROM->TO	G14-057T 345.00 - SUNNYSIDE 345KV CKT 1	717	789	0.04524	113.5925	GEN337911 1-ARKANSAS NUCLEAR ONE UNIT #2
FDNS	00NR	3	20WP	G15_063	FROM->TO	G14-057T 345.00 - SUNNYSIDE 345KV CKT 1	717	789	0.04524	113.5886	GEN334030 1-FRONTIER UNIT 1
FDNS	00NR	3	20WP	G15_063	FROM->TO	G14-057T 345.00 - SUNNYSIDE 345KV CKT 1	717	789	0.04524	113.5863	GEN334031 1-FRONTIER UNIT 2
FDNS	00NR	3	20WP	G15_063	FROM->TO	G14-057T 345.00 - SUNNYSIDE 345KV CKT 1	717	789	0.04527	113.5682	P12:138:AEPW:CATOOSA4:T.S.E.-4
FDNS	00NR	3	20WP	G15_063	FROM->TO	G14-057T 345.00 - SUNNYSIDE 345KV CKT 1	717	789	0.0446	113.5636	TUTTLE - TUTTLE CONOCO TAP 138KV CKT 1
FDNS	00NR	3	20WP	G15_063	FROM->TO	G14-057T 345.00 - SUNNYSIDE 345KV CKT 1	717	789	0.04661	113.5613	BLANCHARD - MAUD 138KV CKT 1
FDNS	00NR	3	20WP	G15_063	FROM->TO	G14-057T 345.00 - SUNNYSIDE 345KV CKT 1	717	789	0.04524	113.5454	GEN506752 1-LEBROCK GAS 1
FDNS	00NR	3	20WP	G15_063	FROM->TO	G14-057T 345.00 - SUNNYSIDE 345KV CKT 1	717	789	0.04524	113.5451	GEN506753 1-LEBROCK GAS 2
FDNS	00NR	3	20WP	G15_063	FROM->TO	G14-057T 345.00 - SUNNYSIDE 345KV CKT 1	717	789	0.04524	113.5449	GEN501811 1-RODEMACHER UNIT 1
FDNS	00NR	3	20WP	G15_063	FROM->TO	G14-057T 345.00 - SUNNYSIDE 345KV CKT 1	717	789	0.04515	113.5446	P12:138:AEPW-OGE:WTH_JCT4:JENSEN4
FDNS	00NR	3	20WP	G15_063	FROM->TO	G14-057T 345.00 - SUNNYSIDE 345KV CKT 1	717	789	0.04524	113.5434	GEN337652 1-WHITE BLUFF UNIT #1
FDNS	00NR	3	20WP	G15_063	FROM->TO	G14-057T 345.00 - SUNNYSIDE 345KV CKT 1	717	789	0.04525	113.5403	P12:138:AEPW:CORNVIL4:DUNCAN-4
FDNS	00NR	3	16WP	G15_063	FROM->TO	G14-057T 345.00 - SUNNYSIDE 345KV CKT 1	717	789	0.04554	113.54	P12:138:WFEC:MSL09
FDNS	00NR	3	20WP	G15_063	FROM->TO	G14-057T 345.00 - SUNNYSIDE 345KV CKT 1	717	789	0.04522	113.5357	FULTON 115 - HOPE 115KV CKT 1
FDNS	00NR	3	20WP	G15_063	FROM->TO	G14-057T 345.00 - SUNNYSIDE 345KV CKT 1	717	789	0.04522	113.5357	FULTON 115 - HOPE 115KV CKT 1
FDNS	00NR	3	20WP	G15_063	FROM->TO	G14-057T 345.00 - SUNNYSIDE 345KV CKT 1	717	789	0.04511	113.5159	G14_038T 345.00 - Hitchland Interchange 345KV CKT 1
FDNS	00NR	3	16WP	G15_063	FROM->TO	G14-057T 345.00 - SUNNYSIDE 345KV CKT 1	717	789	0.04545	113.5149	GEN636641 1-LOUISA UNIT 1
FDNS	00NR	3	16WP	G15_063	FROM->TO	G14-057T 345.00 - SUNNYSIDE 345KV CKT 1	717	789	0.04481	113.5147	P12:138:AEPW-OGE:CORNVIL4:CIMARON4
FDNS	00NR	3	20WP	G15_063	FROM->TO	G14-057T 345.00 - SUNNYSIDE 345KV CKT 1	717	789	0.04524	113.5117	GEN336191 1-LITTLE GYPSY UNIT#3
FDNS	00NR	3	20WP	G15_063	FROM->TO	G14-057T 345.00 - SUNNYSIDE 345KV CKT 1	717	789	0.04524	113.5105	GEN300015 1-1SGPDEL 18.000
FDNS	00NR	3	20WP	G15_063	FROM->TO	G14-057T 345.00 - SUNNYSIDE 345KV CKT 1	717	789	0.04524	113.5056	GEN515226 1-MUSKOGEE 6G
FDNS	00NR	3	20WP	G15_063	FROM->TO	G14-057T 345.00 - SUNNYSIDE 345KV CKT 1	717	789	0.04631	113.494	LATTA JCT - OIL CENTER 138KV CKT 1
FDNS	00NR	3	20WP	G15_063	FROM->TO	G14-057T 345.00 - SUNNYSIDE 345KV CKT 1	717	789	0.04535	113.4927	P12:138:AEPW:CORNVIL4:S.W.S.-4

SOLUTION	GROUP	SCENARIO	SEASON	SOURCE	DIRECTION	MONITORED ELEMENT	RATEA (MVA)	RATEB(MVA)	TDF	TC%LOADING (% MVA)	CONTINGENCY
FDNS	00NR	3	20WP	G15_063	FROM->TO	G14-057T 345.00 - SUNNYSIDE 345KV CKT 1	717	789	0.04524	113.4813	GEN335614 1-WILLOW GLENN UNIT#4
FDNS	00NR	3	20WP	G15_063	FROM->TO	G14-057T 345.00 - SUNNYSIDE 345KV CKT 1	717	789	0.04524	113.4781	GEN300003 1-THOMAS HILL UNIT 3
FDNS	00NR	3	20WP	G15_063	FROM->TO	G14-057T 345.00 - SUNNYSIDE 345KV CKT 1	717	789	0.04524	113.473	6LAYFLD 230.00 - CARROLL 230KV CKT 1
FDNS	00NR	3	16WP	G15_063	FROM->TO	G14-057T 345.00 - SUNNYSIDE 345KV CKT 1	717	789	0.04545	113.4728	GEN600005 1-MONTICELLO
FDNS	00NR	3	20WP	G15_063	FROM->TO	G14-057T 345.00 - SUNNYSIDE 345KV CKT 1	717	789	0.0446	113.4715	CIMARRON - TUTTLE CONOCO TAP 138KV CKT 1
FDNS	00NR	3	20WP	G15_063	FROM->TO	G14-057T 345.00 - SUNNYSIDE 345KV CKT 1	717	789	0.04526	113.4701	8DANIEL8 500.00 - MCKNIGHT 500KV CKT 1
FDNS	00NR	3	20WP	G15_063	FROM->TO	G14-057T 345.00 - SUNNYSIDE 345KV CKT 1	717	789	0.0459	113.4527	BAILEY4 138.00 - SUNSHINE CANYON 138KV CKT 1
FDNS	00NR	3	20WP	G15_063	FROM->TO	G14-057T 345.00 - SUNNYSIDE 345KV CKT 1	717	789	0.04524	113.4418	P12:161:AEPW:EROGERS5:ECNTRTN5
FDNS	00NR	3	20WP	G15_063	FROM->TO	G14-057T 345.00 - SUNNYSIDE 345KV CKT 1	717	789	0.04524	113.4375	GEN337910 1-ARKANSAS NUCLEAR ONE UNIT #1
FDNS	00NR	3	20WP	G15_063	FROM->TO	G14-057T 345.00 - SUNNYSIDE 345KV CKT 1	717	789	0.04515	113.4373	G15095_T 138.00 - ROSE_VALLEY 138.00 138KV CKT 1
FDNS	00NR	3	20WP	G15_063	FROM->TO	G14-057T 345.00 - SUNNYSIDE 345KV CKT 1	717	789	0.04524	113.4368	GEN303007 1-1BC2 U2
FDNS	00NR	3	20WP	G15_063	FROM->TO	G14-057T 345.00 - SUNNYSIDE 345KV CKT 1	717	789	0.04536	113.4363	P12:69:WFEC-AEPW:COMANCH2:DUNCAN-2
FDNS	00NR	3	20WP	G15_063	FROM->TO	G14-057T 345.00 - SUNNYSIDE 345KV CKT 1	717	789	0.04524	113.431	GEN303006 1-1BC2 U1
FDNS	00NR	3	20WP	G15_063	FROM->TO	G14-057T 345.00 - SUNNYSIDE 345KV CKT 1	717	789	0.04524	113.4304	GEN336464 1-MICHOUD UNIT #3
FDNS	00NR	3	20WP	G15_063	FROM->TO	G14-057T 345.00 - SUNNYSIDE 345KV CKT 1	717	789	0.04519	113.4297	P12:138:AEPW:WTHWF4:CLINTJC4
FDNS	00NR	3	20WP	G15_063	FROM->TO	G14-057T 345.00 - SUNNYSIDE 345KV CKT 1	717	789	0.04524	113.4296	WHITE BLUFF 500/26.0KV TRANSFORMER CKT 1
FDNS	00NR	3	20WP	G15_063	FROM->TO	G14-057T 345.00 - SUNNYSIDE 345KV CKT 1	717	789	0.04522	113.4267	BUCKNER7 345.00 - SPEARVILLE 345KV CKT 1
FDNS	00NR	3	20WP	G15_063	FROM->TO	G14-057T 345.00 - SUNNYSIDE 345KV CKT 1	717	789	0.04522	113.4267	BUCKNER7 345.00 - SPEARVILLE 345KV CKT 1
FDNS	00NR	3	20WP	G15_063	FROM->TO	G14-057T 345.00 - SUNNYSIDE 345KV CKT 1	717	789	0.04524	113.4263	GEN562783 1-G15036_4 0.6900
FDNS	00NR	3	20WP	G15_063	FROM->TO	G14-057T 345.00 - SUNNYSIDE 345KV CKT 1	717	789	0.04524	113.4263	GEN562784 1-G15036_5 0.6900
FDNS	00NR	3	20WP	G15_063	FROM->TO	G14-057T 345.00 - SUNNYSIDE 345KV CKT 1	717	789	0.04524	113.4214	RODEMACHER 230/22.0KV TRANSFORMER CKT 1
FDNS	00NR	3	20WP	G15_063	FROM->TO	G14-057T 345.00 - SUNNYSIDE 345KV CKT 1	717	789	0.04528	113.4198	P12:69:AEPW-OMPA:COMANC-2:OMWALTR2
FDNS	00NR	3	16WP	G15_063	FROM->TO	G14-057T 345.00 - SUNNYSIDE 345KV CKT 1	717	789	0.04539	113.4151	CHISHOLM7 345.00 (CHISHOLM) 345/230/13.2KV TRANSFORMER CKT 1
FDNS	00NR	3	20WP	G15_063	FROM->TO	G14-057T 345.00 - SUNNYSIDE 345KV CKT 1	717	789	0.04569	113.4148	CIMARRON - CZECH HALL 138KV CKT 1
FDNS	00NR	3	20WP	G15_063	FROM->TO	G14-057T 345.00 - SUNNYSIDE 345KV CKT 1	717	789	0.04524	113.4098	GEN515223 1-MUSKOGEE 4G
FDNS	00NR	3	20WP	G15_063	FROM->TO	G14-057T 345.00 - SUNNYSIDE 345KV CKT 1	717	789	0.04524	113.4098	GEN515225 1-MUSKOGEE 5G
FDNS	00NR	3	20WP	G15_063	FROM->TO	G14-057T 345.00 - SUNNYSIDE 345KV CKT 1	717	789	0.04529	113.4097	G15088_T 345.00 - MOORE 345KV CKT 1
FDNS	00NR	3	20WP	G15_063	FROM->TO	G14-057T 345.00 - SUNNYSIDE 345KV CKT 1	717	789	0.04521	113.4078	BISMARK - HOT SPRINGS WEST BUS 115KV CKT 1
FDNS	00NR	3	20WP	G15_063	FROM->TO	G14-057T 345.00 - SUNNYSIDE 345KV CKT 1	717	789	0.04536	113.4039	DUNCAN - TOSCO 69KV CKT 1
FDNS	00NR	3	20WP	G15_063	FROM->TO	G14-057T 345.00 - SUNNYSIDE 345KV CKT 1	717	789	0.04523	113.4029	MC NIEL 500/115KV TRANSFORMER CKT 1
FDNS	00NR	3	20WP	G15_063	FROM->TO	G14-057T 345.00 - SUNNYSIDE 345KV CKT 1	717	789	0.04536	113.4006	G15074_T 345.00 - HOYT 345KV CKT 1
FDNS	00NR	3	20WP	G15_063	FROM->TO	G14-057T 345.00 - SUNNYSIDE 345KV CKT 1	717	789	0.04519	113.3974	P12:138:AEPW:WTHWF4:WTH_SE4
FDNS	00NR	3	20WP	G15_063	FROM->TO	G14-057T 345.00 - SUNNYSIDE 345KV CKT 1	717	789	0.04521	113.3926	HOT SPRINGS EHV - MAGNET COVE 500KV CKT 1
FDNS	00NR	3	16WP	G15_063	FROM->TO	G14-057T 345.00 - SUNNYSIDE 345KV CKT 1	717	789	0.04545	113.3898	GEN562754 1-G15031_5 0.6900
FDNS	00NR	3	16WP	G15_063	FROM->TO	G14-057T 345.00 - SUNNYSIDE 345KV CKT 1	717	789	0.04545	113.3878	GEN635213 3-NEAL UNIT 3
FDNS	00NR	3	20WP	G15_063	FROM->TO	G14-057T 345.00 - SUNNYSIDE 345KV CKT 1	717	789	0.04524	113.3835	GEN300010 1-ST FRANCIS UNIT 1
FDNS	00NR	3	20WP	G15_063	FROM->TO	G14-057T 345.00 - SUNNYSIDE 345KV CKT 1	717	789	0.04514	113.3789	CLEO CORNER - CLEOPLT4 138.00 138KV CKT 1
FDNS	00NR	3	20WP	G15_063	FROM->TO	G14-057T 345.00 - SUNNYSIDE 345KV CKT 1	717	789	0.04525	113.3746	CHISHOLM6 230.00 - ELK CITY 230KV 230KV CKT 1
FDNS	00NR	3	20WP	G15_063	FROM->TO	G14-057T 345.00 - SUNNYSIDE 345KV CKT 1	717	789	0.04524	113.3729	GEN337041 1-GERALD ANDRUS
FDNS	00NR	3	20WP	G15_063	FROM->TO	G14-057T 345.00 - SUNNYSIDE 345KV CKT 1	717	789	0.04525	113.3721	ELK CITY 230KV (ELKCTY-6) 230/138/13.8KV TRANSFORMER CKT 1
FDNS	00NR	3	20WP	G15_063	FROM->TO	G14-057T 345.00 - SUNNYSIDE 345KV CKT 1	717	789	0.04525	113.3721	ELK CITY 230KV (ELKCTY-6) 230/138/13.8KV TRANSFORMER CKT 1
FDNS	00NR	3	20WP	G15_063	FROM->TO	G14-057T 345.00 - SUNNYSIDE 345KV CKT 1	717	789	0.04524	113.3692	GEN303008 1-1BC2 U3
FDNS	00NR	3	20WP	G15_063	FROM->TO	G14-057T 345.00 - SUNNYSIDE 345KV CKT 1	717	789	0.04582	113.3622	CIMARRON - SARA 138KV CKT 1
FDNS	00NR	3	16WP	G15_063	FROM->TO	G14-057T 345.00 - SUNNYSIDE 345KV CKT 1	717	789	0.04545	113.3588	GEN629074 1-ARNOLD LOWSIDE OF GSU XFMR
FDNS	00NR	3	20WP	G15_063	FROM->TO	G14-057T 345.00 - SUNNYSIDE 345KV CKT 1	717	789	0.04514	113.3581	CLEOPLT4 138.00 - MEN TAP 138KV CKT 1
FDNS	00NR	3	20WP	G15_063	FROM->TO	G14-057T 345.00 - SUNNYSIDE 345KV CKT 1	717	789	0.04524	113.3569	GEN505432 1-SIKESTON
FDNS	00NR	3	20WP	G15_063	FROM->TO	G14-057T 345.00 - SUNNYSIDE 345KV CKT 1	717	789	0.04515	113.3558	NOEL_SW 138.00 - ROSE_VALLEY 138.00 138KV CKT 1
FDNS	00NR	3	20WP	G15_063	FROM->TO	G14-057T 345.00 - SUNNYSIDE 345KV CKT 1	717	789	0.04552	113.3557	FINNEY SWITCHING STATION - WALKTAP7 345.00 345KV CKT 1
FDNS	00NR	3	20WP	G15_063	FROM->TO	G14-057T 345.00 - SUNNYSIDE 345KV CKT 1	717	789	0.04552	113.3557	FINNEY SWITCHING STATION - WALKTAP7 345.00 345KV CKT 1
FDNS	00NR	3	20WP	G15_063	FROM->TO	G14-057T 345.00 - SUNNYSIDE 345KV CKT 1	717	789	0.04521	113.3532	ALPINE AECC - BISMARK 115KV CKT 1
FDNS	00NR	3	20WP	G15_063	FROM->TO	G14-057T 345.00 - SUNNYSIDE 345KV CKT 1	717	789	0.04466	113.3507	SEMINOLE - VANOSTP4 138.00 138KV CKT 1
FDNS	00NR	3	20WP	G15_063	FROM->TO	G14-057T 345.00 - SUNNYSIDE 345KV CKT 1	717	789	0.04514	113.3462	IMO TAP - MEN TAP 138KV CKT 1
FDNS	00NR	3	20WP	G15_063	FROM->TO	G14-057T 345.00 - SUNNYSIDE 345KV CKT 1	717	789	0.04526	113.3411	P12:138:AEPW:N.E.S.-4:CATOOSA4
FDNS	00NR	3	20WP	G15_063	FROM->TO	G14-057T 345.00 - SUNNYSIDE 345KV CKT 1	717	789	0.04536	113.3407	COMANCHE TAP - TOSCO 69KV CKT 1
FDNS	00NR	3	20WP	G15_063	FROM->TO	G14-057T 345.00 - SUNNYSIDE 345KV CKT 1	717	789	0.04524	113.3405	GEN336170 1-GULF OXY U4
FDNS	00NR	3	20WP	G15_063	FROM->TO	G14-057T 345.00 - SUNNYSIDE 345KV CKT 1	717	789	0.04569	113.336	CZECH HALL - XEROX 138KV CKT 1
FDNS	00NR	3	20WP	G15_063	FROM->TO	G14-057T 345.00 - SUNNYSIDE 345KV CKT 1	717	789	0.04524	113.3347	NELSON 230/20.0KV TRANSFORMER CKT 1
FDNS	00NR	3	20WP	G15_063	FROM->TO	G14-057T 345.00 - SUNNYSIDE 345KV CKT 1	717	789	0.04569	113.3319	MORGAN - XEROX 138KV CKT 1
FDNS	00NR	3	16WP	G15_063	FROM->TO	G14-057T 345.00 - SUNNYSIDE 345KV CKT 1	717	789	0.04545	113.3308	GEN562756 1-G15031_7 0.6900
FDNS	00NR	3	20WP	G15_063	FROM->TO	G14-057T 345.00 - SUNNYSIDE 345KV CKT 1	717	789	0.04524	113.3262	GEN300011 1-ST FRANCIS UNIT 2
FDNS	00NR	3	20WP	G15_063	FROM->TO	G14-057T 345.00 - SUNNYSIDE 345KV CKT 1	717	789	0.04484	113.326	ARBWIND4 138.00 - CARTER 138KV CKT 1
FDNS	00NR	3	20WP	G15_063	FROM->TO	G14-057T 345.00 - SUNNYSIDE 345KV CKT 1	717	789	0.04524	113.319	GEN336801 1-BAXTER WILSON UNIT #1
FDNS	00NR	3	16WP	G15_063	FROM->TO	G14-057T 345.00 - SUNNYSIDE 345KV CKT 1	717	789	0.04545	113.3132	BIG STONE 230/24.0KV TRANSFORMER CKT 1
FDNS	00NR	3	16WP	G15_063	FROM->TO	G14-057T 345.00 - SUNNYSIDE 345KV CKT 1	717	789	0.04545	113.3113	GEN562023 1-G11_020_3 0.6900
FDNS	00NR	3	16WP	G15_063	FROM->TO	G14-057T 345.00 - SUNNYSIDE 345KV CKT 1	717	789	0.04545	113.3113	GEN562026 1-G11_019_3 0.6900
FDNS	00NR	3	20WP	G15_063	FROM->TO	G14-057T 345.00 - SUNNYSIDE 345KV CKT 1	717	789	0.04569	113.3093	MORGAN - MUSTANG 138KV CKT 1
FDNS	00NR	3	20WP	G15_063	FROM->TO	G14-057T 345.00 - SUNNYSIDE 345KV CKT 1	717	789	0.04521	113.3068	ALPINE AECC - AMITY SS 115KV CKT 1
FDNS	00NR	3	20WP	G15_063	FROM->TO	G14-057T 345.00 - SUNNYSIDE 345KV CKT 1	717	789	0.04515	113.3048	WEATHERFORD JCT. - WEATHERFORD SOUTHEAST 138KV CKT 1
FDNS	00NR	3	20WP	G15_063	FROM->TO	G14-057T 345.00 - SUNNYSIDE 345KV CKT 1	717	789	0.04515	113.3048	WEATHERFORD JCT. - WEATHERFORD SOUTHEAST 138KV CKT 1
FDNS	00NR	3	20WP	G15_063	FROM->TO	G14-057T 345.00 - SUNNYSIDE 345KV CKT 1	717	789	0.04524	113.2956	8CAJUN2 500/24.0KV TRANSFORMER CKT 1
FDNS	00NR	3	20WP	G15_063	FROM->TO	G14-057T 345.00 - SUNNYSIDE 345KV CKT 1	717	789	0.04524	113.2916	GEN501910 1-ACADIA UNIT ST1
FDNS	00NR	3	16WP	G15_063	FROM->TO	G14-057T 345.00 - SUNNYSIDE 345KV CKT 1	717	789	0.04539	113.2901	CHISHOLM7 345.00 - GRACEMONT 345KV CKT 1
FDNS	00NR	3	16WP	G15_063	FROM->TO	G14-057T 345.00 - SUNNYSIDE 345KV CKT 1	717	789	0.04545	113.2875	GEN562556 1-G14_046_3 0.3420
FDNS	00NR	3	20WP	G15_063	FROM->TO	G14-057T 345.00 - SUNNYSIDE 345KV CKT 1	717	789	0.04536	113.2869	COMANCHE - COMANCHE TAP 69KV CKT 1
FDNS	00NR	3	20WP	G15_063	FROM->TO	G14-057T 345.00 - SUNNYSIDE 345KV CKT 1	717	789	0.0454	113.2766	ANADARKO - SEQUOYAHJ4 138.00 138KV CKT 1
FDNS	00NR	3	20WP	G15_063	FROM->TO	G14-057T 345.00 - SUNNYSIDE 345KV CKT 1	717	789	0.0454	113.275	CORN TAP - SEQUOYAHJ4 138.00 138KV CKT 1
FDNS	00NR	3	20WP	G15_063	FROM->TO	G14-057T 345.00 - SUNNYSIDE 345KV CKT 1	717	789	0.0459	113.2748	BAILEY4 138.00 - WESTMOORE 138KV CKT 1
FDNS	00NR	3	20WP	G15_063	FROM->TO	G14-057T 345.00 - SUNNYSIDE 345KV CKT 1	717	789	0.04524	113.2668	P12:138:OKGE-AEPW:JENSEN4:REDROCKRD4
FDNS	00NR	3	20WP	G15_063	FROM->TO	G14-057T 345.00 - SUNNYSIDE 345KV CKT 1	717	789	0.04524	113.2556	SABINE 230/24.0KV TRANSFORMER CKT 1

SOLUTION	GROUP	SCENARIO	SEASON	SOURCE	DIRECTION	MONITORED ELEMENT	RATEA (MVA)	RATEB(MVA)	TDF	TC%LOADING (% MVA)	CONTINGENCY
FDNS	00NR	3	20WP	G15_063	FROM->TO	G14-057T 345.00 - SUNNYSIDE 345KV CKT 1	717	789	0.04582	113.2528	SARA - STHLAKE4 138.00 138KV CKT 1
FDNS	00NR	3	20WP	G15_063	FROM->TO	G14-057T 345.00 - SUNNYSIDE 345KV CKT 1	717	789	0.04534	113.2518	WALTERS - WALTERS 69KV CKT 1
FDNS	00NR	3	20WP	G15_063	FROM->TO	G14-057T 345.00 - SUNNYSIDE 345KV CKT 1	717	789	0.04515	113.2508	P12:138:AEPW:REDROCKRD4:WTH_JCT4
FDNS	00NR	3	20WP	G15_063	FROM->TO	G14-057T 345.00 - SUNNYSIDE 345KV CKT 1	717	789	0.04519	113.2471	ETTA (DUKE HOTSPRINGS) - MC NIEL 500KV CKT 1
FDNS	00NR	3	20WP	G15_063	FROM->TO	G14-057T 345.00 - SUNNYSIDE 345KV CKT 1	717	789	0.04524	113.2465	P12:138:AEPW:R.S.S.-4:S.HUD.-4
FDNS	00NR	3	20WP	G15_063	FROM->TO	G14-057T 345.00 - SUNNYSIDE 345KV CKT 1	717	789	0.04524	113.237	GEN336222 1-LITTLE GYPSY UNIT#2
FDNS	00NR	3	20WP	G15_063	FROM->TO	G14-057T 345.00 - SUNNYSIDE 345KV CKT 1	717	789	0.04524	113.236	GEN300016 1-1G1GPDEL 18.000
FDNS	00NR	3	20WP	G15_063	FROM->TO	G14-057T 345.00 - SUNNYSIDE 345KV CKT 1	717	789	0.04528	113.2255	LAWTON RELIFT TAP - OMPA-WALTERS 69KV CKT 1
FDNS	00NR	3	20WP	G15_063	FROM->TO	G14-057T 345.00 - SUNNYSIDE 345KV CKT 1	717	789	0.04524	113.2238	ESSEX UNIT 2 500/18.0KV TRANSFORMER CKT 1
FDNS	00NR	3	20WP	G15_063	FROM->TO	G14-057T 345.00 - SUNNYSIDE 345KV CKT 1	717	789	0.04582	113.2227	MCCLAIN - STHLAKE4 138.00 138KV CKT 1
FDNS	00NR	3	20WP	G15_063	FROM->TO	G14-057T 345.00 - SUNNYSIDE 345KV CKT 1	717	789	0.04524	113.2149	P12:69:AEPW:NROGERS2:ECNTRTN2
FDNS	00NR	3	20WP	G15_063	FROM->TO	G14-057T 345.00 - SUNNYSIDE 345KV CKT 1	717	789	0.04536	113.2101	NORGE ROAD - SOUTHWESTERN STATION 138KV CKT 1
FDNS	00NR	3	20WP	G15_063	FROM->TO	G14-057T 345.00 - SUNNYSIDE 345KV CKT 1	717	789	0.04536	113.2101	NORGE ROAD - SOUTHWESTERN STATION 138KV CKT 1
FDNS	00NR	3	20WP	G15_063	FROM->TO	G14-057T 345.00 - SUNNYSIDE 345KV CKT 1	717	789	0.04524	113.2046	P12:138:AEPW:BA_71ST4:T.S.E.-4
FDNS	00NR	3	20WP	G15_063	FROM->TO	G14-057T 345.00 - SUNNYSIDE 345KV CKT 1	717	789	0.04524	113.2021	GEN336152 1-WATERFORD UNIT#2
FDNS	00NR	3	20WP	G15_063	FROM->TO	G14-057T 345.00 - SUNNYSIDE 345KV CKT 1	717	789	0.04524	113.2013	GEN336151 1-WATERFORD UNIT#1
FDNS	00NR	3	20WP	G15_063	FROM->TO	G14-057T 345.00 - SUNNYSIDE 345KV CKT 1	717	789	0.04631	113.2012	LASALLE - LATTA JCT 138KV CKT 1
FDNS	00NR	3	20WP	G15_063	FROM->TO	G14-057T 345.00 - SUNNYSIDE 345KV CKT 1	717	789	0.04524	113.1999	P12:138:AEPW:YARCH-S4:T.S.E.-4
FDNS	00NR	3	16WP	G15_063	FROM->TO	G14-057T 345.00 - SUNNYSIDE 345KV CKT 1	717	789	0.04545	113.1991	GEN563142 1-G15079_3 0.5500
FDNS	00NR	3	16WP	G15_063	FROM->TO	G14-057T 345.00 - SUNNYSIDE 345KV CKT 1	717	789	0.04545	113.1991	GEN563151 1-G15080_2 0.5500
FDNS	00NR	3	20WP	G15_063	FROM->TO	G14-057T 345.00 - SUNNYSIDE 345KV CKT 1	717	789	0.04544	113.198	P12:138:AEPW-OGE:SHIDLER4:OSAGE 4
FDNS	00NR	3	20WP	G15_063	FROM->TO	G14-057T 345.00 - SUNNYSIDE 345KV CKT 1	717	789	0.04542	113.1961	MORISNT4 138.00 - STILLWATER 138KV CKT 1
FDNS	00NR	3	20WP	G15_063	FROM->TO	G14-057T 345.00 - SUNNYSIDE 345KV CKT 1	717	789	0.04524	113.1925	FRONTIER 345/18.0KV TRANSFORMER CKT 1
FDNS	00NR	3	20WP	G15_063	FROM->TO	G14-057T 345.00 - SUNNYSIDE 345KV CKT 1	717	789	0.04524	113.1902	FRONTIER 345/18.0KV TRANSFORMER CKT 1
FDNS	00NR	3	20WP	G15_063	FROM->TO	G14-057T 345.00 - SUNNYSIDE 345KV CKT 1	717	789	0.04544	113.1898	P12:138:OKGE:3TERM2
FDNS	00NR	3	20WP	G15_063	FROM->TO	G14-057T 345.00 - SUNNYSIDE 345KV CKT 1	717	789	0.04543	113.1843	G13-010T 345.00 - POST ROCK 345KV CKT 1
FDNS	00NR	3	20WP	G15_063	FROM->TO	G14-057T 345.00 - SUNNYSIDE 345KV CKT 1	717	789	0.04537	113.1826	HOYT - STRANGER CREEK 345KV CKT 1
FDNS	00NR	3	20WP	G15_063	FROM->TO	G14-057T 345.00 - SUNNYSIDE 345KV CKT 1	717	789	0.0455	113.1799	BLACKBERRY - NEOSHO 345KV CKT 1
FDNS	00NR	3	20WP	G15_063	FROM->TO	G14-057T 345.00 - SUNNYSIDE 345KV CKT 1	717	789	0.04524	113.1794	GEN300017 1-1G2GPDEL 18.000
FDNS	00NR	3	20WP	G15_063	FROM->TO	G14-057T 345.00 - SUNNYSIDE 345KV CKT 1	717	789	0.04526	113.177	CLINTON JUNCTION - ELK CITY 138KV CKT 1
FDNS	00NR	3	20WP	G15_063	FROM->TO	G14-057T 345.00 - SUNNYSIDE 345KV CKT 1	717	789	0.04526	113.177	CLINTON JUNCTION - ELK CITY 138KV CKT 1
FDNS	00NR	3	20WP	G15_063	FROM->TO	G14-057T 345.00 - SUNNYSIDE 345KV CKT 1	717	789	0.0453	113.1768	7JASPER 345.00 - BLACKBERRY 345KV CKT 1
FDNS	00NR	3	20WP	G15_063	FROM->TO	G14-057T 345.00 - SUNNYSIDE 345KV CKT 1	717	789	0.0456	113.1735	BENTON - WICHITA 345KV CKT 1
FDNS	00NR	3	16WP	G15_063	FROM->TO	G14-057T 345.00 - SUNNYSIDE 345KV CKT 1	717	789	0.04545	113.1689	GEN523971 1-HARRINGTON GEN #1 24 KV
FDNS	00NR	3	16WP	G15_063	FROM->TO	G14-057T 345.00 - SUNNYSIDE 345KV CKT 1	717	789	0.04545	113.1689	GEN523973 1-HARRINGTON GEN #3 24 KV
FDNS	00NR	3	16WP	G15_063	FROM->TO	G14-057T 345.00 - SUNNYSIDE 345KV CKT 1	717	789	0.04545	113.1687	GEN523972 1-HARRINGTON GEN #2 24 KV
FDNS	00NR	3	20WP	G15_063	FROM->TO	G14-057T 345.00 - SUNNYSIDE 345KV CKT 1	717	789	0.04522	113.168	HOPE - MCNAB REC 115KV CKT 1
FDNS	00NR	3	20WP	G15_063	FROM->TO	G14-057T 345.00 - SUNNYSIDE 345KV CKT 1	717	789	0.04536	113.1633	G15074_T 345.00 - JEFFREY ENERGY CENTER 345KV CKT 1
FDNS	00NR	3	20WP	G15_063	FROM->TO	G14-057T 345.00 - SUNNYSIDE 345KV CKT 1	717	789	0.04524	113.1623	GEN501823 1-TECHE UNIT 3
FDNS	00NR	3	20WP	G15_063	FROM->TO	G14-057T 345.00 - SUNNYSIDE 345KV CKT 1	717	789	0.04524	113.1614	LEWIS CREEK SWITCHYARD 138/22.0KV TRANSFORMER CKT 1
FDNS	00NR	3	20WP	G15_063	FROM->TO	G14-057T 345.00 - SUNNYSIDE 345KV CKT 1	717	789	0.04524	113.1602	GEN501970 1-EVANGELINE UNIT 7
FDNS	00NR	3	16WP	G15_063	FROM->TO	G14-057T 345.00 - SUNNYSIDE 345KV CKT 1	717	789	0.04545	113.1586	GEN600000 1-SHERBURNECNTY G1
FDNS	00NR	3	20WP	G15_063	FROM->TO	G14-057T 345.00 - SUNNYSIDE 345KV CKT 1	717	789	0.04519	113.1586	WEATHERFORD TAP - WEATHERFORD WIND FARM 138KV CKT 1
FDNS	00NR	3	20WP	G15_063	FROM->TO	G14-057T 345.00 - SUNNYSIDE 345KV CKT 1	717	789	0.04524	113.1569	LEWIS CREEK SWITCHYARD 138/22.0KV TRANSFORMER CKT 1
FDNS	00NR	3	20WP	G15_063	FROM->TO	G14-057T 345.00 - SUNNYSIDE 345KV CKT 1	717	789	0.04522	113.1567	P12:115:AEPW:TURK3:HOPE3
FDNS	00NR	3	20WP	G15_063	FROM->TO	G14-057T 345.00 - SUNNYSIDE 345KV CKT 1	717	789	0.04523	113.1561	COUCH SES - MC NIEL 115KV CKT 1
FDNS	00NR	3	20WP	G15_063	FROM->TO	G14-057T 345.00 - SUNNYSIDE 345KV CKT 1	717	789	0.04515	113.1558	HINTON - WEATHERFORD JCT. 138KV CKT 1
FDNS	00NR	3	20WP	G15_063	FROM->TO	G14-057T 345.00 - SUNNYSIDE 345KV CKT 1	717	789	0.04434	113.1555	ARBUCKLE - VANOSTP4 138.00 138KV CKT 1
FDNS	00NR	3	20WP	G15_063	FROM->TO	G14-057T 345.00 - SUNNYSIDE 345KV CKT 1	717	789	0.04524	113.1522	CYPRESS - HARTBURG 500KV CKT 1
FDNS	00NR	3	20WP	G15_063	FROM->TO	G14-057T 345.00 - SUNNYSIDE 345KV CKT 1	717	789	0.04528	113.1518	OMPA-WALTERS - WALTERS 69KV CKT 1
FDNS	00NR	3	20WP	G15_063	FROM->TO	G14-057T 345.00 - SUNNYSIDE 345KV CKT 1	717	789	0.04528	113.1518	OMPA-WALTERS - WALTERS 69KV CKT 1
FDNS	00NR	3	20WP	G15_063	FROM->TO	G14-057T 345.00 - SUNNYSIDE 345KV CKT 1	717	789	0.04535	113.149	SOUTHWESTERN STATION - VERDEN 138KV CKT 1
FDNS	00NR	3	20WP	G15_063	FROM->TO	G14-057T 345.00 - SUNNYSIDE 345KV CKT 1	717	789	0.04524	113.1487	GEN334432 1-SABINE UNIT 2
FDNS	00NR	3	20WP	G15_063	FROM->TO	G14-057T 345.00 - SUNNYSIDE 345KV CKT 1	717	789	0.04524	113.1485	GEN334431 1-SABINE UNIT 1
FDNS	00NR	3	20WP	G15_063	FROM->TO	G14-057T 345.00 - SUNNYSIDE 345KV CKT 1	717	789	0.04694	113.1441	CANADIAN - NOBLE 138KV CKT 1
FDNS	00NR	3	20WP	G15_063	FROM->TO	G14-057T 345.00 - SUNNYSIDE 345KV CKT 1	717	789	0.04531	113.1431	7LUTESVIL 345.00 - 7ST FRANC 345.00 345KV CKT 1
FDNS	00NR	3	20WP	G15_063	FROM->TO	G14-057T 345.00 - SUNNYSIDE 345KV CKT 1	717	789	0.04556	113.1406	EMPORIA ENERGY CENTER - G14_001T 345.00 345KV CKT 1
FDNS	00NR	3	20WP	G15_063	FROM->TO	G14-057T 345.00 - SUNNYSIDE 345KV CKT 1	717	789	0.04524	113.1356	GEN505616 1-BROKEN BOW
FDNS	00NR	3	20WP	G15_063	FROM->TO	G14-057T 345.00 - SUNNYSIDE 345KV CKT 1	717	789	0.04522	113.1319	TURK (TURK 1) 138/115/13.2KV TRANSFORMER CKT 1
FDNS	00NR	3	20WP	G15_063	FROM->TO	G14-057T 345.00 - SUNNYSIDE 345KV CKT 1	717	789	0.04522	113.1319	TURK (TURK 1) 138/115/13.2KV TRANSFORMER CKT 1
FDNS	00NR	3	20WP	G15_063	FROM->TO	G14-057T 345.00 - SUNNYSIDE 345KV CKT 1	717	789	0.04522	113.1318	MCNAB REC - Turk 115 115KV CKT 1
FDNS	00NR	3	20WP	G15_063	FROM->TO	G14-057T 345.00 - SUNNYSIDE 345KV CKT 1	717	789	0.04534	113.131	P12:69:WFEC-AEPW:COMANCH2:WALTRS-2
FDNS	00NR	3	20WP	G15_063	FROM->TO	G14-057T 345.00 - SUNNYSIDE 345KV CKT 1	717	789	0.04524	113.1277	P12:161:AEPW:CHAMSPR5:FARMING5
FDNS	00NR	3	20WP	G15_063	FROM->TO	G14-057T 345.00 - SUNNYSIDE 345KV CKT 1	717	789	0.04535	113.127	NORTH 29TH CHICKASHA - VERDEN 138KV CKT 1
FDNS	00NR	3	20WP	G15_063	FROM->TO	G14-057T 345.00 - SUNNYSIDE 345KV CKT 1	717	789	0.04524	113.1209	GEN334392 1-EXXON MOBIL IPP 1
FDNS	00NR	3	20WP	G15_063	FROM->TO	G14-057T 345.00 - SUNNYSIDE 345KV CKT 1	717	789	0.04692	113.1198	P12:138:OKGE:3TERM27
FDNS	00NR	3	20WP	G15_063	FROM->TO	G14-057T 345.00 - SUNNYSIDE 345KV CKT 1	717	789	0.04543	113.1171	G13-010T 345.00 - SPEARVILLE 345KV CKT 1
FDNS	00NR	3	20WP	G15_063	FROM->TO	G14-057T 345.00 - SUNNYSIDE 345KV CKT 1	717	789	0.04524	113.1136	GEN334393 1-EXXON MOBIL IPP 2
FDNS	00NR	3	20WP	G15_063	FROM->TO	G14-057T 345.00 - SUNNYSIDE 345KV CKT 1	717	789	0.04524	113.1136	GEN334394 1-EXXON MOBIL IPP 3
FDNS	00NR	3	20WP	G15_063	FROM->TO	G14-057T 345.00 - SUNNYSIDE 345KV CKT 1	717	789	0.0459	113.1094	FRANKLIN SW - WESTMOORE 138KV CKT 1
FDNS	00NR	3	20WP	G15_063	FROM->TO	G14-057T 345.00 - SUNNYSIDE 345KV CKT 1	717	789	0.0454	113.1092	SWISSVALE - WEST GARDNER 345KV CKT 1
FDNS	00NR	3	20WP	G15_063	FROM->TO	G14-057T 345.00 - SUNNYSIDE 345KV CKT 1	717	789	0.04524	113.102	ST FRANCIS - ST FRANCIS 1 161KV CKT Z1
FDNS	00NR	3	20WP	G15_063	FROM->TO	G14-057T 345.00 - SUNNYSIDE 345KV CKT 1	717	789	0.04524	113.102	ST FRANCIS 161/16.0KV TRANSFORMER CKT 1
FDNS	00NR	3	20WP	G15_063	FROM->TO	G14-057T 345.00 - SUNNYSIDE 345KV CKT 1	717	789	0.04529	113.0989	FLETCHER - MARLOW JCT 69KV CKT 1
FDNS	00NR	3	20WP	G15_063	FROM->TO	G14-057T 345.00 - SUNNYSIDE 345KV CKT 1	717	789	0.04529	113.0967	LAKEOVER - MCADAMS 500KV CKT 1
FDNS	00NR	3	16WP	G15_063	FROM->TO	G14-057T 345.00 - SUNNYSIDE 345KV CKT 1	717	789	0.04539	113.0965	STLN-DEMARC6 - SWEETWATER 230KV CKT 1
FDNS	00NR	3	20WP	G15_063	FROM->TO	G14-057T 345.00 - SUNNYSIDE 345KV CKT 1	717	789	0.04524	113.0961	SABINE 230/22.0KV TRANSFORMER CKT 1
FDNS	00NR	3	16WP	G15_063	FROM->TO	G14-057T 345.00 - SUNNYSIDE 345KV CKT 1	717	789	0.04539	113.0956	P12:230:AEPW-SPS:SWEETWT6:WHEELER 6
FDNS	00NR	3	16WP	G15_063	FROM->TO	G14-057T 345.00 - SUNNYSIDE 345KV CKT 1	717	789	0.04539	113.094	STATELINE INTERCHANGE - STLN-DEMARC6 230KV CKT 1

SOLUTION	GROUP	SCENARIO	SEASON	SOURCE	DIRECTION	MONITORED ELEMENT	RATEA (MVA)	RATEB(MVA)	TDF	TC%LOADING (% MVA)	CONTINGENCY
FDNS	00NR	3	20WP	G15_063	FROM->TO	G14-057T 345.00 - SUNNYSIDE 345KV CKT 1	717	789	0.04538	113.0938	EMPORIA ENERGY CENTER - SWISSVALE 345KV CKT 1
FDNS	00NR	3	20WP	G15_063	FROM->TO	G14-057T 345.00 - SUNNYSIDE 345KV CKT 1	717	789	0.04516	113.0834	ENOWILT - LONE OAK 138KV CKT 1
FDNS	00NR	3	20WP	G15_063	FROM->TO	G14-057T 345.00 - SUNNYSIDE 345KV CKT 1	717	789	0.04524	113.0829	GEN501972 1-EVANGELINE UNIT 7-2
FDNS	00NR	3	20WP	G15_063	FROM->TO	G14-057T 345.00 - SUNNYSIDE 345KV CKT 1	717	789	0.04524	113.0828	GEN501971 1-EVANGELINE UNIT 7-1
FDNS	00NR	3	20WP	G15_063	FROM->TO	G14-057T 345.00 - SUNNYSIDE 345KV CKT 1	717	789	0.04556	113.0823	G14_001T 345.00 - WICHITA 345KV CKT 1
FDNS	00NR	3	20WP	G15_063	FROM->TO	G14-057T 345.00 - SUNNYSIDE 345KV CKT 1	717	789	0.04515	113.082	HINTON - REDROCKRD4 138.00 138KV CKT 1
FDNS	00NR	3	20WP	G15_063	FROM->TO	G14-057T 345.00 - SUNNYSIDE 345KV CKT 1	717	789	0.04525	113.078	P12:138:AEPW:R.S.S-4:T.P.S.-4
FDNS	00NR	3	20WP	G15_063	FROM->TO	G14-057T 345.00 - SUNNYSIDE 345KV CKT 1	717	789	0.04536	113.0777	CORNVILLE - NORGE ROAD 138KV CKT 1
FDNS	00NR	3	20WP	G15_063	FROM->TO	G14-057T 345.00 - SUNNYSIDE 345KV CKT 1	717	789	0.04536	113.0777	CORNVILLE - NORGE ROAD 138KV CKT 1
FDNS	00NR	3	16WP	G15_063	FROM->TO	G14-057T 345.00 - SUNNYSIDE 345KV CKT 1	717	789	0.04541	113.0749	NORTHWEST TEXARKANA - VALLIANT 345KV CKT 1
FDNS	00NR	3	16WP	G15_063	FROM->TO	G14-057T 345.00 - SUNNYSIDE 345KV CKT 1	717	789	0.04541	113.0749	NORTHWEST TEXARKANA - VALLIANT 345KV CKT 1
FDNS	00NR	3	20WP	G15_063	FROM->TO	G14-057T 345.00 - SUNNYSIDE 345KV CKT 1	717	789	0.04516	113.0747	ENOWILT - SARDIS 138KV CKT 1
FDNS	00NR	3	20WP	G15_063	FROM->TO	G14-057T 345.00 - SUNNYSIDE 345KV CKT 1	717	789	0.04529	113.0724	P12:138:OKGE:3TERM12
FDNS	00NR	3	20WP	G15_063	FROM->TO	G14-057T 345.00 - SUNNYSIDE 345KV CKT 1	717	789	0.04534	113.0695	MCADAMS - WOLF CREEK 500KV CKT 1
FDNS	00NR	3	16WP	G15_063	FROM->TO	G14-057T 345.00 - SUNNYSIDE 345KV CKT 1	717	789	0.04545	113.0676	GEN600001 2-SHERBURNE CNTY G2
FDNS	00NR	3	20WP	G15_063	FROM->TO	G14-057T 345.00 - SUNNYSIDE 345KV CKT 1	717	789	0.04519	113.0653	WEATHERFORD SOUTHEAST - WEATHERFORD TAP 138KV CKT 1
FDNS	00NR	3	20WP	G15_063	FROM->TO	G14-057T 345.00 - SUNNYSIDE 345KV CKT 1	717	789	0.0454	113.0636	FRANKLIN - FRANKLIN SW 138KV CKT 1
FDNS	00NR	3	20WP	G15_063	FROM->TO	G14-057T 345.00 - SUNNYSIDE 345KV CKT 1	717	789	0.04631	113.063	LASALLE - STONEWAL LH138.00 138KV CKT 1
FDNS	00NR	3	20WP	G15_063	FROM->TO	G14-057T 345.00 - SUNNYSIDE 345KV CKT 1	717	789	0.04524	113.0595	GEN501912 1-ACADIA UNIT CT1B
FDNS	00NR	3	20WP	G15_063	FROM->TO	G14-057T 345.00 - SUNNYSIDE 345KV CKT 1	717	789	0.04523	113.0588	P12:138:WFEC-AEPW:ELKCTY-4:ERICK4
FDNS	00NR	3	20WP	G15_063	FROM->TO	G14-057T 345.00 - SUNNYSIDE 345KV CKT 1	717	789	0.04524	113.0587	GEN501911 1-ACADIA UNIT CT1A
FDNS	00NR	3	16WP	G15_063	FROM->TO	G14-057T 345.00 - SUNNYSIDE 345KV CKT 1	717	789	0.04545	113.0537	GEN511848 1-SOUTHWESTERN STATION #3
FDNS	00NR	3	20WP	G15_063	FROM->TO	G14-057T 345.00 - SUNNYSIDE 345KV CKT 1	717	789	0.04533	113.0528	8WNEWMADRID 500.00 - DELL 500 500KV CKT 1
FDNS	00NR	3	20WP	G15_063	FROM->TO	G14-057T 345.00 - SUNNYSIDE 345KV CKT 1	717	789	0.04524	113.0521	P12:138:AEPW:R.S.S.-4:R:96YALE-4
FDNS	00NR	3	20WP	G15_063	FROM->TO	G14-057T 345.00 - SUNNYSIDE 345KV CKT 1	717	789	0.04694	113.0508	NOBLE - PURCELL4 138.00 138KV CKT 1
FDNS	00NR	3	20WP	G15_063	FROM->TO	G14-057T 345.00 - SUNNYSIDE 345KV CKT 1	717	789	0.04631	113.0476	STONEWAL LH138.00 - TUPELO TAP 138KV CKT 1
FDNS	00NR	3	20WP	G15_063	FROM->TO	G14-057T 345.00 - SUNNYSIDE 345KV CKT 1	717	789	0.04535	113.0432	CORNVILLE - NORTH 29TH CHICKASHA 138KV CKT 1
FDNS	00NR	3	20WP	G15_063	FROM->TO	G14-057T 345.00 - SUNNYSIDE 345KV CKT 1	717	789	0.04516	113.0394	CLAYTON - SARDIS 138KV CKT 1
FDNS	00NR	3	20WP	G15_063	FROM->TO	G14-057T 345.00 - SUNNYSIDE 345KV CKT 1	717	789	0.04532	113.0258	7JASPER 345.00 - MORGAN 345KV CKT 1
FDNS	00NR	3	20WP	G15_063	FROM->TO	G14-057T 345.00 - SUNNYSIDE 345KV CKT 1	717	789	0.046	113.0151	CIMARRON - NORTHWEST 345KV CKT 1
FDNS	00NR	3	20WP	G15_063	FROM->TO	G14-057T 345.00 - SUNNYSIDE 345KV CKT 1	717	789	0.04524	113.0148	Canadian Pump Station - REDROCKRD4 138.00 138KV CKT 1
FDNS	00NR	3	20WP	G15_063	FROM->TO	G14-057T 345.00 - SUNNYSIDE 345KV CKT 1	717	789	0.04519	113.0144	CLINTON JUNCTION - CLINTON NATURAL GAS TAP 138KV CKT 1
FDNS	00NR	3	16WP	G15_063	FROM->TO	G14-057T 345.00 - SUNNYSIDE 345KV CKT 1	717	789	0.04545	112.9882	GEN563042 1-G15068_3 0.6900
FDNS	00NR	3	20WP	G15_063	FROM->TO	G14-057T 345.00 - SUNNYSIDE 345KV CKT 1	717	789	0.04536	112.9827	CRINER - PAYNE 138.00 138KV CKT 1
FDNS	00NR	3	16WP	G15_063	FROM->TO	G14-057T 345.00 - SUNNYSIDE 345KV CKT 1	717	789	0.04545	112.9712	GEN527901 1-HOBBS PLANT #1 (CT)
FDNS	00NR	3	16WP	G15_063	FROM->TO	G14-057T 345.00 - SUNNYSIDE 345KV CKT 1	717	789	0.04545	112.9712	GEN527902 1-HOBBS PLANT #2 (CT)
FDNS	00NR	3	20WP	G15_063	FROM->TO	G14-057T 345.00 - SUNNYSIDE 345KV CKT 1	717	789	0.04534	112.9544	COMANCHE - WALTERS 69KV CKT 1
FDNS	00NR	3	20WP	G15_063	FROM->TO	G14-057T 345.00 - SUNNYSIDE 345KV CKT 1	717	789	0.04538	112.9528	P12:138:OKGE:3TERM20
FDNS	00NR	3	16WP	G15_063	FROM->TO	G14-057T 345.00 - SUNNYSIDE 345KV CKT 1	717	789	0.04545	112.9402	GEN629075 1-OTTUMWA GENERATOR FOR OTTUMWA UNIT NO 1
FDNS	00NR	3	16WP	G15_063	FROM->TO	G14-057T 345.00 - SUNNYSIDE 345KV CKT 1	717	789	0.04545	112.8009	GEN635214 4-NEAL UNIT 4
FDNS	00NR	3	16WP	G15_063	FROM->TO	G14-057T 345.00 - SUNNYSIDE 345KV CKT 1	717	789	0.04545	112.7679	SHERBURNE CO 345/24.0KV TRANSFORMER CKT 1
FDNS	00NR	3	16WP	G15_063	FROM->TO	G14-057T 345.00 - SUNNYSIDE 345KV CKT 1	717	789	0.04545	112.707	GEN563043 1-G15068_4 0.6900
FDNS	00NR	3	16WP	G15_063	FROM->TO	G14-057T 345.00 - SUNNYSIDE 345KV CKT 1	717	789	0.04545	112.6968	GEN563273 2-G15093_4 0.6900
FDNS	00NR	3	16WP	G15_063	FROM->TO	G14-057T 345.00 - SUNNYSIDE 345KV CKT 1	717	789	0.04545	112.6795	GEN526333 1-JONES GEN #3 21 KV
FDNS	00NR	3	16WP	G15_063	FROM->TO	G14-057T 345.00 - SUNNYSIDE 345KV CKT 1	717	789	0.04545	112.6795	GEN526334 1-JONES_4 116.500
FDNS	00NR	3	16WP	G15_063	FROM->TO	G14-057T 345.00 - SUNNYSIDE 345KV CKT 1	717	789	0.04545	112.6491	GEN600002 3-SHERBURNE CNTY G3
FDNS	00NR	3	16WP	G15_063	FROM->TO	G14-057T 345.00 - SUNNYSIDE 345KV CKT 1	717	789	0.04545	112.6315	GEN525844 1-ELK_1 118.000
FDNS	00NR	3	16WP	G15_063	FROM->TO	G14-057T 345.00 - SUNNYSIDE 345KV CKT 1	717	789	0.04545	112.6247	GEN525845 1-ELK_2 1 138.00
FDNS	00NR	3	16WP	G15_063	FROM->TO	G14-057T 345.00 - SUNNYSIDE 345KV CKT 1	717	789	0.04538	112.5808	P12:230:AEPW:ELKCITY6:SWEETWT6
FDNS	00NR	3	16WP	G15_063	FROM->TO	G14-057T 345.00 - SUNNYSIDE 345KV CKT 1	717	789	0.04545	112.5558	GEN344225 1-1CAL G1 25.000
FDNS	00NR	3	20WP	G15_063	FROM->TO	G14-057T 345.00 - SUNNYSIDE 345KV CKT 1	717	789	0.04524	112.5423	803-OKLAUNION
FDNS	00NR	3	16WP	G15_063	FROM->TO	G14-057T 345.00 - SUNNYSIDE 345KV CKT 1	717	789	0.04545	112.4876	GEN525562 1-TOLK GEN #2 24 KV
FDNS	00NR	3	16WP	G15_063	FROM->TO	G14-057T 345.00 - SUNNYSIDE 345KV CKT 1	717	789	0.04545	112.476	GEN563202 1-G15085_3 0.5500
FDNS	00NR	3	16WP	G15_063	FROM->TO	G14-057T 345.00 - SUNNYSIDE 345KV CKT 1	717	789	0.04545	112.4445	GEN527166 1-MUSTANG_6 118.000
FDNS	00NR	3	16WP	G15_063	FROM->TO	G14-057T 345.00 - SUNNYSIDE 345KV CKT 1	717	789	0.0453	112.4186	JOHNSON COUNTY (JOHNCO) 345/138/13.8KV TRANSFORMER CKT 1
FDNS	00NR	3	16WP	G15_063	FROM->TO	G14-057T 345.00 - SUNNYSIDE 345KV CKT 1	717	789	0.04545	112.4027	GEN635023 3-WALTER SCOTT UNIT 3
FDNS	00NR	3	16WP	G15_063	FROM->TO	G14-057T 345.00 - SUNNYSIDE 345KV CKT 1	717	789	0.04539	112.3813	CHISHOLM6 230.00 - SWEETWATER 230KV CKT 1
FDNS	00NR	3	16WP	G15_063	FROM->TO	G14-057T 345.00 - SUNNYSIDE 345KV CKT 1	717	789	0.04545	112.366	GEN562590 1-G14_057_3 0.6900
FDNS	00NR	3	16WP	G15_063	FROM->TO	G14-057T 345.00 - SUNNYSIDE 345KV CKT 1	717	789	0.04541	112.3534	LYDIA - WELSH 345KV CKT 1
FDNS	00NR	3	16WP	G15_063	FROM->TO	G14-057T 345.00 - SUNNYSIDE 345KV CKT 1	717	789	0.04541	112.3534	LYDIA - WELSH 345KV CKT 1
FDNS	00NR	3	20WP	G15_063	FROM->TO	G14-057T 345.00 - SUNNYSIDE 345KV CKT 1	717	789	0.04453	112.2859	P12:138:OKGE:3TERM39
FDNS	00NR	3	16WP	G15_063	FROM->TO	G14-057T 345.00 - SUNNYSIDE 345KV CKT 1	717	789	0.04545	112.2652	GEN562762 1-G15033_3 0.6900
FDNS	00NR	3	16WP	G15_063	FROM->TO	G14-057T 345.00 - SUNNYSIDE 345KV CKT 1	717	789	0.04545	112.2542	GEN562655 1-G14_074_3 0.6900
FDNS	00NR	3	20WP	G15_063	FROM->TO	G14-057T 345.00 - SUNNYSIDE 345KV CKT 1	717	789	0.04527	112.2177	RANCHRD7 345.00 - SOONER 345KV CKT 1
FDNS	00NR	3	20WP	G15_063	FROM->TO	G14-057T 345.00 - SUNNYSIDE 345KV CKT 1	717	789	0.0452	112.2082	CHILDRESS - LAKE PAULINE 138KV CKT 1
FDNS	00NR	3	20WP	G15_063	FROM->TO	G14-057T 345.00 - SUNNYSIDE 345KV CKT 1	717	789	0.0452	112.2082	CHILDRESS - LAKE PAULINE 138KV CKT 1
FDNS	00NR	3	20WP	G15_063	FROM->TO	G14-057T 345.00 - SUNNYSIDE 345KV CKT 1	717	789	0.04522	112.2009	CHILDRESS - HOLLIS TAP 138KV CKT 1
FDNS	00NR	3	20WP	G15_063	FROM->TO	G14-057T 345.00 - SUNNYSIDE 345KV CKT 1	717	789	0.045	112.1858	MAYSVILLE - PAOLI 138KV CKT 1
FDNS	00NR	3	20WP	G15_063	FROM->TO	G14-057T 345.00 - SUNNYSIDE 345KV CKT 1	717	789	0.04524	112.1796	GEN562084 1-G11_050_3 0.6900
FDNS	00NR	3	16WP	G15_063	FROM->TO	G14-057T 345.00 - SUNNYSIDE 345KV CKT 1	717	789	0.04545	112.1794	GEN562685 1-G15_013_3 0.3550
FDNS	00NR	3	20WP	G15_063	FROM->TO	G14-057T 345.00 - SUNNYSIDE 345KV CKT 1	717	789	0.04524	112.1507	GEN560187 1-WTH WIND 0.5750
FDNS	00NR	3	20WP	G15_063	FROM->TO	G14-057T 345.00 - SUNNYSIDE 345KV CKT 1	717	789	0.0439	112.1351	CIMARRON - MATHWSN7 345.00 345KV CKT 1
FDNS	00NR	3	20WP	G15_063	FROM->TO	G14-057T 345.00 - SUNNYSIDE 345KV CKT 1	717	789	0.0439	112.1351	CIMARRON - MATHWSN7 345.00 345KV CKT 2
FDNS	00NR	3	20WP	G15_063	FROM->TO	G14-057T 345.00 - SUNNYSIDE 345KV CKT 1	717	789	0.04524	112.1306	GEN560112 1-G08_037_3 0.6900
FDNS	00NR	3	20WP	G15_063	FROM->TO	G14-057T 345.00 - SUNNYSIDE 345KV CKT 1	717	789	0.045	112.1103	MAYSVILLE - MAYSVLT4 138.00 138KV CKT 1
FDNS	00NR	3	20WP	G15_063	FROM->TO	G14-057T 345.00 - SUNNYSIDE 345KV CKT 1	717	789	0.04524	112.0942	GEN521103 1-BLUE CANYON WIND FARM
FDNS	00NR	3	20WP	G15_063	FROM->TO	G14-057T 345.00 - SUNNYSIDE 345KV CKT 1	717	789	0.04549	112.0898	DRAPER LAKE - MIDWEST TAP 138KV CKT 1
FDNS	00NR	3	20WP	G15_063	FROM->TO	G14-057T 345.00 - SUNNYSIDE 345KV CKT 1	717	789	0.04524	112.0895	GEN520812 1-ANADRK5
FDNS	00NR	3	20WP	G15_063	FROM->TO	G14-057T 345.00 - SUNNYSIDE 345KV CKT 1	717	789	0.04524	112.0888	GEN520813 1-ANADRK6

SOLUTION	GROUP	SCENARIO	SEASON	SOURCE	DIRECTION	MONITORED ELEMENT	RATEA (MVA)	RATEB(MVA)	TDF	TC%LOADING (% MVA)	CONTINGENCY
FDNS	00NR	3	20WP	G15_063	FROM->TO	G14-057T 345.00 - SUNNYSIDE 345KV CKT 1	717	789	0.04524	112.0837	GEN562691 1-G15_015_3 0.6900
FDNS	00NR	3	20WP	G15_063	FROM->TO	G14-057T 345.00 - SUNNYSIDE 345KV CKT 1	717	789	0.04545	112.0778	P12:138:OKGE:3TERM21
FDNS	00NR	3	16WP	G15_063	FROM->TO	G14-057T 345.00 - SUNNYSIDE 345KV CKT 1	717	789	0.04545	112.0777	GEN525561 1-TOLK GEN #1 24 KV
FDNS	00NR	3	20WP	G15_063	FROM->TO	G14-057T 345.00 - SUNNYSIDE 345KV CKT 1	717	789	0.04524	112.0747	GEN562772 1-G15034_3 0.6900
FDNS	00NR	3	20WP	G15_063	FROM->TO	G14-057T 345.00 - SUNNYSIDE 345KV CKT 1	717	789	0.04524	112.0709	GEN563052 1-G15069_3 0.6900
FDNS	00NR	3	16WP	G15_063	FROM->TO	G14-057T 345.00 - SUNNYSIDE 345KV CKT 1	717	789	0.04545	112.0698	GEN563272 1-G15093_3 0.6900
FDNS	00NR	3	20WP	G15_063	FROM->TO	G14-057T 345.00 - SUNNYSIDE 345KV CKT 1	717	789	0.04524	112.052	GEN511961 1-DEMPSEY-WTG10.7000
FDNS	00NR	3	16WP	G15_063	FROM->TO	G14-057T 345.00 - SUNNYSIDE 345KV CKT 1	717	789	0.04545	112.0515	GEN527903 1-HOBBS PLANT #3 (ST)
FDNS	00NR	3	20WP	G15_063	FROM->TO	G14-057T 345.00 - SUNNYSIDE 345KV CKT 1	717	789	0.04484	112.0485	ARBUCKLE - SULPHR 4 138.00 138KV CKT 1
FDNS	00NR	3	20WP	G15_063	FROM->TO	G14-057T 345.00 - SUNNYSIDE 345KV CKT 1	717	789	0.045	112.0441	MAYSVLT4 138.00 - PRAIRIE POINT 138KV CKT 1
FDNS	00NR	3	20WP	G15_063	FROM->TO	G14-057T 345.00 - SUNNYSIDE 345KV CKT 1	717	789	0.04524	112.0424	P12:069:OKGE:3TERM42
FDNS	00NR	3	20WP	G15_063	FROM->TO	G14-057T 345.00 - SUNNYSIDE 345KV CKT 1	717	789	0.04571	112.0263	SOONER - SPRING CREEK 345KV CKT 1
FDNS	00NR	3	20WP	G15_063	FROM->TO	G14-057T 345.00 - SUNNYSIDE 345KV CKT 1	717	789	0.04571	112.0231	NORTHWEST - SPRING CREEK 345KV CKT 1
FDNS	00NR	3	20WP	G15_063	FROM->TO	G14-057T 345.00 - SUNNYSIDE 345KV CKT 1	717	789	0.04524	112.0217	BURLINGTON NO1 + NO 2 + NO 3 161/20.0KV TRANSFORMER CKT 1
FDNS	00NR	3	20WP	G15_063	FROM->TO	G14-057T 345.00 - SUNNYSIDE 345KV CKT 1	717	789	0.0453	112.0203	GLASSES - MADILL INDUSTRIAL TAP 138KV CKT 1
FDNS	00NR	3	20WP	G15_063	FROM->TO	G14-057T 345.00 - SUNNYSIDE 345KV CKT 1	717	789	0.04529	112.0196	P12:138:WFEC:MSL11
FDNS	00NR	3	20WP	G15_063	FROM->TO	G14-057T 345.00 - SUNNYSIDE 345KV CKT 1	717	789	0.04529	112.0196	P12:138:WFEC-AEPW:PHAROAH4:LONEOAK4
FDNS	00NR	3	20WP	G15_063	FROM->TO	G14-057T 345.00 - SUNNYSIDE 345KV CKT 1	717	789	0.0453	112.0119	CANEY CREEK - JOHNSON COUNTY 138KV CKT 1
FDNS	00NR	3	20WP	G15_063	FROM->TO	G14-057T 345.00 - SUNNYSIDE 345KV CKT 1	717	789	0.04539	112.0107	OVEXFRMCCOVE
FDNS	00NR	3	20WP	G15_063	FROM->TO	G14-057T 345.00 - SUNNYSIDE 345KV CKT 1	717	789	0.04524	112.001	GEN515443 1-MNCOWND1 0.7000
FDNS	00NR	3	20WP	G15_063	FROM->TO	G14-057T 345.00 - SUNNYSIDE 345KV CKT 1	717	789	0.04522	111.9896	ALTUS JUNCTION - RUSSELL 138KV CKT 1
FDNS	00NR	3	20WP	G15_063	FROM->TO	G14-057T 345.00 - SUNNYSIDE 345KV CKT 1	717	789	0.04522	111.9896	ALTUS JUNCTION - RUSSELL 138KV CKT 1
FDNS	00NR	3	20WP	G15_063	FROM->TO	G14-057T 345.00 - SUNNYSIDE 345KV CKT 1	717	789	0.04494	111.9874	MOREWOOD SW - NINE MILE 138KV CKT 1
FDNS	00NR	3	16WP	G15_063	FROM->TO	G14-057T 345.00 - SUNNYSIDE 345KV CKT 1	717	789	0.04545	111.9822	GEN635024 4-WALTER SCOTT UNIT 4
FDNS	00NR	3	20WP	G15_063	FROM->TO	G14-057T 345.00 - SUNNYSIDE 345KV CKT 1	717	789	0.04524	111.9812	GEN560183 1-REDHIL-WTG1 12.000
FDNS	00NR	3	20WP	G15_063	FROM->TO	G14-057T 345.00 - SUNNYSIDE 345KV CKT 1	717	789	0.04524	111.9797	INDEPENDENCE 500/26.0KV TRANSFORMER CKT 1
FDNS	00NR	3	20WP	G15_063	FROM->TO	G14-057T 345.00 - SUNNYSIDE 345KV CKT 1	717	789	0.04524	111.9713	GEN600067 9-HIGH BRIDGE
FDNS	00NR	3	20WP	G15_063	FROM->TO	G14-057T 345.00 - SUNNYSIDE 345KV CKT 1	717	789	0.0453	111.9676	GLASSES - RUSSETT 138KV CKT 1
FDNS	00NR	3	20WP	G15_063	FROM->TO	G14-057T 345.00 - SUNNYSIDE 345KV CKT 1	717	789	0.04519	111.9632	CARTER - CHICKASAW 138KV CKT 1
FDNS	00NR	3	20WP	G15_063	FROM->TO	G14-057T 345.00 - SUNNYSIDE 345KV CKT 1	717	789	0.04645	111.9587	LEBANON - TEXOMA JCT 138KV CKT 1
FDNS	00NR	3	20WP	G15_063	FROM->TO	G14-057T 345.00 - SUNNYSIDE 345KV CKT 1	717	789	0.0454	111.9587	P12:138:WFEC:MSL08
FDNS	00NR	3	20WP	G15_063	FROM->TO	G14-057T 345.00 - SUNNYSIDE 345KV CKT 1	717	789	0.04541	111.956	CANADIAN RIVER - MCALESTER SOUTH 138KV CKT 1
FDNS	00NR	3	20WP	G15_063	FROM->TO	G14-057T 345.00 - SUNNYSIDE 345KV CKT 1	717	789	0.04541	111.956	CANADIAN RIVER - MCALESTER SOUTH 138KV CKT 1
FDNS	00NR	3	20WP	G15_063	FROM->TO	G14-057T 345.00 - SUNNYSIDE 345KV CKT 1	717	789	0.04541	111.9539	CANADIAN RIVER () 345/138/13.8KV TRANSFORMER CKT 1
FDNS	00NR	3	20WP	G15_063	FROM->TO	G14-057T 345.00 - SUNNYSIDE 345KV CKT 1	717	789	0.04541	111.9539	CANADIAN RIVER () 345/138/13.8KV TRANSFORMER CKT 1
FDNS	00NR	3	20WP	G15_063	FROM->TO	G14-057T 345.00 - SUNNYSIDE 345KV CKT 1	717	789	0.045	111.9519	PRAIRIE POINT - RATLIFF 138KV CKT 1
FDNS	00NR	3	20WP	G15_063	FROM->TO	G14-057T 345.00 - SUNNYSIDE 345KV CKT 1	717	789	0.04524	111.9431	P12:230:UMZB:# 112 #: NU IN SD. NU-RCDC & DRY CREEK XFMR
FDNS	00NR	3	20WP	G15_063	FROM->TO	G14-057T 345.00 - SUNNYSIDE 345KV CKT 1	717	789	0.04524	111.9429	RCDC EAST 4230.00 - RED CEDAR DC 230KV CKT 1
FDNS	00NR	3	20WP	G15_063	FROM->TO	G14-057T 345.00 - SUNNYSIDE 345KV CKT 1	717	789	0.04521	111.9426	HUGO (HUGO 1) 345/138/13.8KV TRANSFORMER CKT 1
FDNS	00NR	3	20WP	G15_063	FROM->TO	G14-057T 345.00 - SUNNYSIDE 345KV CKT 1	717	789	0.04508	111.9409	ROCKY POINT - SPRINGDALE 138KV CKT 1
FDNS	00NR	3	20WP	G15_063	FROM->TO	G14-057T 345.00 - SUNNYSIDE 345KV CKT 1	717	789	0.04524	111.9382	GEN563242 1-G15090_3 0.6900
FDNS	00NR	3	20WP	G15_063	FROM->TO	G14-057T 345.00 - SUNNYSIDE 345KV CKT 1	717	789	0.0455	111.9315	CHAMBER SPRINGS - CLARKSVILLE 345KV CKT 1
FDNS	00NR	3	20WP	G15_063	FROM->TO	G14-057T 345.00 - SUNNYSIDE 345KV CKT 1	717	789	0.04528	111.9256	GRPRAR1-LNX3345.00 - HOLT.CO3 345.00 345KV CKT 1
FDNS	00NR	3	20WP	G15_063	FROM->TO	G14-057T 345.00 - SUNNYSIDE 345KV CKT 1	717	789	0.04528	111.9178	GRPRAR1-LNX3345.00 - GRPRAR 345KV CKT Z
FDNS	00NR	3	20WP	G15_063	FROM->TO	G14-057T 345.00 - SUNNYSIDE 345KV CKT 1	717	789	0.04524	111.914	GEN562902 1-G15052_3 0.6900
FDNS	00NR	3	20WP	G15_063	FROM->TO	G14-057T 345.00 - SUNNYSIDE 345KV CKT 1	717	789	0.04524	111.9106	GEN629072 4-LANSING GENERATOR FOR UNITS NO4 EIA CODE 1
FDNS	00NR	3	20WP	G15_063	FROM->TO	G14-057T 345.00 - SUNNYSIDE 345KV CKT 1	717	789	0.04484	111.9027	JOLLYVILLE - SULPHR 4 138.00 138KV CKT 1
FDNS	00NR	3	20WP	G15_063	FROM->TO	G14-057T 345.00 - SUNNYSIDE 345KV CKT 1	717	789	0.04524	111.8954	GEN562802 1-G15039_3 0.3570
FDNS	00NR	3	20WP	G15_063	FROM->TO	G14-057T 345.00 - SUNNYSIDE 345KV CKT 1	717	789	0.04524	111.8889	GEN562078 1-G11_051_3 0.6900
FDNS	00NR	3	20WP	G15_063	FROM->TO	G14-057T 345.00 - SUNNYSIDE 345KV CKT 1	717	789	0.04508	111.8849	P12:138:AEPW:112GORE4:SNYDER-4
FDNS	00NR	3	20WP	G15_063	FROM->TO	G14-057T 345.00 - SUNNYSIDE 345KV CKT 1	717	789	0.04524	111.8828	GEN524285 1-WILDORADO WIND GEN
FDNS	00NR	3	20WP	G15_063	FROM->TO	G14-057T 345.00 - SUNNYSIDE 345KV CKT 1	717	789	0.04524	111.8639	GEN562587 1-G14_056_3 0.6900
FDNS	00NR	3	20WP	G15_063	FROM->TO	G14-057T 345.00 - SUNNYSIDE 345KV CKT 1	717	789	0.04524	111.8572	GEN524295 1-SPNSPUR_WND10.6900
FDNS	00NR	3	20WP	G15_063	FROM->TO	G14-057T 345.00 - SUNNYSIDE 345KV CKT 1	717	789	0.04524	111.8563	GEN657749 1-YOUNG 1 GENERATOR
FDNS	00NR	3	20WP	G15_063	FROM->TO	G14-057T 345.00 - SUNNYSIDE 345KV CKT 1	717	789	0.04494	111.8532	BEARCAT 138.00 - NINE MILE 138KV CKT 1
FDNS	00NR	3	20WP	G15_063	FROM->TO	G14-057T 345.00 - SUNNYSIDE 345KV CKT 1	717	789	0.04524	111.8414	GEN514805 1-SOONER UNIT 1
FDNS	00NR	3	20WP	G15_063	FROM->TO	G14-057T 345.00 - SUNNYSIDE 345KV CKT 1	717	789	0.04524	111.8325	GEN562269 1-G12-020-1 0.6900
FDNS	00NR	3	20WP	G15_063	FROM->TO	G14-057T 345.00 - SUNNYSIDE 345KV CKT 1	717	789	0.04524	111.8275	GEN524023 1-NICHOLS GEN #3 22 KV
FDNS	00NR	3	20WP	G15_063	FROM->TO	G14-057T 345.00 - SUNNYSIDE 345KV CKT 1	717	789	0.04484	111.8137	JOLLYVILLE - KERR MCGEE CIMARRON 138KV CKT 1
FDNS	00NR	3	20WP	G15_063	FROM->TO	G14-057T 345.00 - SUNNYSIDE 345KV CKT 1	717	789	0.04524	111.8099	CROCKETT - TENASKA RUSK COUNTY 345KV CKT 1
FDNS	00NR	3	20WP	G15_063	FROM->TO	G14-057T 345.00 - SUNNYSIDE 345KV CKT 1	717	789	0.04524	111.8096	GEN514806 1-SOONER UNIT 2
FDNS	00NR	3	20WP	G15_063	FROM->TO	G14-057T 345.00 - SUNNYSIDE 345KV CKT 1	717	789	0.04524	111.8052	LEBROCK - TENASKA RUSK COUNTY 345KV CKT 1
FDNS	00NR	3	20WP	G15_063	FROM->TO	G14-057T 345.00 - SUNNYSIDE 345KV CKT 1	717	789	0.04524	111.7921	GEN562812 1-G15040_3 0.3570
FDNS	00NR	3	20WP	G15_063	FROM->TO	G14-057T 345.00 - SUNNYSIDE 345KV CKT 1	717	789	0.04524	111.787	GEN562270 1-G12-020-2 0.6900
FDNS	00NR	3	20WP	G15_063	FROM->TO	G14-057T 345.00 - SUNNYSIDE 345KV CKT 1	717	789	0.04524	111.7851	GEN563132 1-G15078_3 0.3570
FDNS	00NR	3	20WP	G15_063	FROM->TO	G14-057T 345.00 - SUNNYSIDE 345KV CKT 1	717	789	0.04524	111.7761	GEN563102 1-G15075_3 0.5500
FDNS	00NR	3	20WP	G15_063	FROM->TO	G14-057T 345.00 - SUNNYSIDE 345KV CKT 1	717	789	0.04524	111.7701	GEN562882 1-G15047_3 0.6900
FDNS	00NR	3	20WP	G15_063	FROM->TO	G14-057T 345.00 - SUNNYSIDE 345KV CKT 1	717	789	0.04524	111.7665	GEN563062 1-G15071_3 0.6900
FDNS	00NR	3	20WP	G15_063	FROM->TO	G14-057T 345.00 - SUNNYSIDE 345KV CKT 1	717	789	0.04484	111.763	ARBWIND4 138.00 - KERR MCGEE CIMARRON 138KV CKT 1
FDNS	00NR	3	20WP	G15_063	FROM->TO	G14-057T 345.00 - SUNNYSIDE 345KV CKT 1	717	789	0.04494	111.7583	BEARCAT 138.00 - MOORELAND 138KV CKT 1
FDNS	00NR	3	20WP	G15_063	FROM->TO	G14-057T 345.00 - SUNNYSIDE 345KV CKT 1	717	789	0.04494	111.7526	P12:138:WFEC:MSL14
FDNS	00NR	3	20WP	G15_063	FROM->TO	G14-057T 345.00 - SUNNYSIDE 345KV CKT 1	717	789	0.04524	111.7457	GEN345671 2-1RUSH G2 18.000
FDNS	00NR	3	20WP	G15_063	FROM->TO	G14-057T 345.00 - SUNNYSIDE 345KV CKT 1	717	789	0.04524	111.745	GEN562974 1-G15060_5 0.6900
FDNS	00NR	3	20WP	G15_063	FROM->TO	G14-057T 345.00 - SUNNYSIDE 345KV CKT 1	717	789	0.04524	111.745	THOMAS HILL 161/22.0KV TRANSFORMER CKT 1
FDNS	00NR	3	20WP	G15_063	FROM->TO	G14-057T 345.00 - SUNNYSIDE 345KV CKT 1	717	789	0.04524	111.7438	GEN345670 1-1RUSH G1 18.000
FDNS	00NR	3	20WP	G15_063	FROM->TO	G14-057T 345.00 - SUNNYSIDE 345KV CKT 1	717	789	0.04524	111.7351	GEN562973 1-G15060_4 0.6900
FDNS	00NR	3	20WP	G15_063	FROM->TO	G14-057T 345.00 - SUNNYSIDE 345KV CKT 1	717	789	0.04519	111.7319	BROWN - RUSSETT 138KV CKT 1
FDNS	00NR	3	20WP	G15_063	FROM->TO	G14-057T 345.00 - SUNNYSIDE 345KV CKT 1	717	789	0.04524	111.7287	GEN521112 1-ORME3 13.800
FDNS	00NR	3	20WP	G15_063	FROM->TO	G14-057T 345.00 - SUNNYSIDE 345KV CKT 1	717	789	0.04488	111.7204	CHICKASAW - TOTAL 138KV CKT 1

SOLUTION	GROUP	SCENARIO	SEASON	SOURCE	DIRECTION	MONITORED ELEMENT	RATEA (MVA)	RATEB(MVA)	TDF	TC%LOADING (% MVA)	CONTINGENCY
FDNS	00NR	3	20WP	G15_063	FROM->TO	G14-057T 345.00 - SUNNYSIDE 345KV CKT 1	717	789	0.04524	111.7001	4SIOUX 1 138.00 138/18.0KV TRANSFORMER CKT 1
FDNS	00NR	3	20WP	G15_063	FROM->TO	G14-057T 345.00 - SUNNYSIDE 345KV CKT 1	717	789	0.04524	111.692	GEN560105 1-G08-22 0.6900
FDNS	00NR	3	20WP	G15_063	FROM->TO	G14-057T 345.00 - SUNNYSIDE 345KV CKT 1	717	789	0.04519	111.6865	RUSSETT - RUSSETT 138KV CKT 1
FDNS	00NR	3	20WP	G15_063	FROM->TO	G14-057T 345.00 - SUNNYSIDE 345KV CKT 1	717	789	0.04524	111.6803	GEN681522 3-GENOA 3
FDNS	00NR	3	20WP	G15_063	FROM->TO	G14-057T 345.00 - SUNNYSIDE 345KV CKT 1	717	789	0.04524	111.6753	GEN562550 1-G14_040_3 0.6900
FDNS	00NR	3	20WP	G15_063	FROM->TO	G14-057T 345.00 - SUNNYSIDE 345KV CKT 1	717	789	0.04502	111.6418	ROCKY POINT - SUNNYSIDE 138KV CKT 1
FDNS	00NR	3	20WP	G15_063	FROM->TO	G14-057T 345.00 - SUNNYSIDE 345KV CKT 1	717	789	0.04524	111.6317	GEN511853 1-COMANCHE #3
FDNS	00NR	3	20WP	G15_063	FROM->TO	G14-057T 345.00 - SUNNYSIDE 345KV CKT 1	717	789	0.04524	111.6301	EASTDC - ERCOT EQUIVALENCE 345KV CKT 1
FDNS	00NR	3	20WP	G15_063	FROM->TO	G14-057T 345.00 - SUNNYSIDE 345KV CKT 1	717	789	0.04524	111.6255	GEN527161 1-MUSTANG GEN #1
FDNS	00NR	3	20WP	G15_063	FROM->TO	G14-057T 345.00 - SUNNYSIDE 345KV CKT 1	717	789	0.04524	111.6255	GEN527162 1-MUSTANG GEN #2
FDNS	00NR	3	20WP	G15_063	FROM->TO	G14-057T 345.00 - SUNNYSIDE 345KV CKT 1	717	789	0.04524	111.6241	GEN511962 2-RKYRDGW2-1 0.7000
FDNS	00NR	3	20WP	G15_063	FROM->TO	G14-057T 345.00 - SUNNYSIDE 345KV CKT 1	717	789	0.04524	111.6165	GEN672321 1-SHAND GENERATOR 1
FDNS	00NR	3	20WP	G15_063	FROM->TO	G14-057T 345.00 - SUNNYSIDE 345KV CKT 1	717	789	0.04517	111.6133	RUSSETT - SPRINGDALE 138KV CKT 1
FDNS	00NR	3	20WP	G15_063	FROM->TO	G14-057T 345.00 - SUNNYSIDE 345KV CKT 1	717	789	0.04524	111.5933	GEN672310 1-POPLAR RIVER GENERATOR 1
FDNS	00NR	3	20WP	G15_063	FROM->TO	G14-057T 345.00 - SUNNYSIDE 345KV CKT 1	717	789	0.04524	111.5933	GEN672311 2-POPLAR RIVER GENERATOR 2
FDNS	00NR	3	20WP	G15_063	FROM->TO	G14-057T 345.00 - SUNNYSIDE 345KV CKT 1	717	789	0.04453	111.5931	ARKANSAS NUCLEAR ONE - FT SMITH 500KV CKT 1
FDNS	00NR	3	20WP	G15_063	FROM->TO	G14-057T 345.00 - SUNNYSIDE 345KV CKT 1	717	789	0.04453	111.5931	ARKANSAS NUCLEAR ONE - FT SMITH 500KV CKT 1
FDNS	00NR	3	20WP	G15_063	FROM->TO	G14-057T 345.00 - SUNNYSIDE 345KV CKT 1	717	789	0.04524	111.5927	GEN525494 1-PLANT X GEN #4 20 KV
FDNS	00NR	3	20WP	G15_063	FROM->TO	G14-057T 345.00 - SUNNYSIDE 345KV CKT 1	717	789	0.04524	111.5862	GEN562512 1-G14_020_3 0.6900
FDNS	00NR	3	20WP	G15_063	FROM->TO	G14-057T 345.00 - SUNNYSIDE 345KV CKT 1	717	789	0.04524	111.5839	GEN672306 6-BOUNDARY DAM GENERATOR 6
FDNS	00NR	3	20WP	G15_063	FROM->TO	G14-057T 345.00 - SUNNYSIDE 345KV CKT 1	717	789	0.04524	111.5782	GEN563192 1-G15084_3 0.5500
FDNS	00NR	3	20WP	G15_063	FROM->TO	G14-057T 345.00 - SUNNYSIDE 345KV CKT 1	717	789	0.04524	111.5765	GEN527882 1-CUNNINGHAM GEN #2 20 KV
FDNS	00NR	3	20WP	G15_063	FROM->TO	G14-057T 345.00 - SUNNYSIDE 345KV CKT 1	717	789	0.04524	111.5716	GEN344895 2-1LAB G2 20.000
FDNS	00NR	3	20WP	G15_063	FROM->TO	G14-057T 345.00 - SUNNYSIDE 345KV CKT 1	717	789	0.04524	111.5669	GEN511852 1-COMANCHE #2
FDNS	00NR	3	20WP	G15_063	FROM->TO	G14-057T 345.00 - SUNNYSIDE 345KV CKT 1	717	789	0.04521	111.5648	P12:138:WFEC-AEPW:GOLDENSW4:CRAIGJT4
FDNS	00NR	3	20WP	G15_063	FROM->TO	G14-057T 345.00 - SUNNYSIDE 345KV CKT 1	717	789	0.04524	111.5619	GEN562892 1-G15048_3 0.6900
FDNS	00NR	3	20WP	G15_063	FROM->TO	G14-057T 345.00 - SUNNYSIDE 345KV CKT 1	717	789	0.04524	111.56	GEN527163 1-MUSTANG GEN #3 22 KV
FDNS	00NR	3	20WP	G15_063	FROM->TO	G14-057T 345.00 - SUNNYSIDE 345KV CKT 1	717	789	0.04524	111.5532	GEN681542 6-JP MADGETT
FDNS	00NR	3	20WP	G15_063	FROM->TO	G14-057T 345.00 - SUNNYSIDE 345KV CKT 1	717	789	0.04524	111.5485	CLAY BOSWELL 230/20.9KV TRANSFORMER CKT 1
FDNS	00NR	3	20WP	G15_063	FROM->TO	G14-057T 345.00 - SUNNYSIDE 345KV CKT 1	717	789	0.04473	111.5478	ARDMORE WEST - CARTER 138KV CKT 1
FDNS	00NR	3	20WP	G15_063	FROM->TO	G14-057T 345.00 - SUNNYSIDE 345KV CKT 1	717	789	0.04524	111.5421	GEN344896 3-1LAB G3 20.000
FDNS	00NR	3	20WP	G15_063	FROM->TO	G14-057T 345.00 - SUNNYSIDE 345KV CKT 1	717	789	0.04524	111.541	GEN344897 4-1LAB G4 20.000
FDNS	00NR	3	20WP	G15_063	FROM->TO	G14-057T 345.00 - SUNNYSIDE 345KV CKT 1	717	789	0.04524	111.5407	GEN344894 1-1LAB G1 20.000
FDNS	00NR	3	20WP	G15_063	FROM->TO	G14-057T 345.00 - SUNNYSIDE 345KV CKT 1	717	789	0.04527	111.5316	P12:138:WFEC:MSL16
FDNS	00NR	3	20WP	G15_063	FROM->TO	G14-057T 345.00 - SUNNYSIDE 345KV CKT 1	717	789	0.04524	111.5129	GEN523461 1-BLACKHAWK GEN #1
FDNS	00NR	3	20WP	G15_063	FROM->TO	G14-057T 345.00 - SUNNYSIDE 345KV CKT 1	717	789	0.04524	111.5128	GEN523462 1-BLACKHAWK GEN #2
FDNS	00NR	3	20WP	G15_063	FROM->TO	G14-057T 345.00 - SUNNYSIDE 345KV CKT 1	717	789	0.04508	111.4885	CACHE - SNYDER 138KV CKT 1
FDNS	00NR	3	20WP	G15_063	FROM->TO	G14-057T 345.00 - SUNNYSIDE 345KV CKT 1	717	789	0.04523	111.483	P12:138:WFEC:MSL07
FDNS	00NR	3	20WP	G15_063	FROM->TO	G14-057T 345.00 - SUNNYSIDE 345KV CKT 1	717	789	0.04523	111.483	P12:138:WFEC-AEPW:HUGOPP4:ATOKA--4
FDNS	00NR	3	20WP	G15_063	FROM->TO	G14-057T 345.00 - SUNNYSIDE 345KV CKT 1	717	789	0.04758	111.4756	CLARKSVILLE - MUSKOGEE 345KV CKT 1
FDNS	00NR	3	20WP	G15_063	FROM->TO	G14-057T 345.00 - SUNNYSIDE 345KV CKT 1	717	789	0.04758	111.4756	CLARKSVILLE - MUSKOGEE 345KV CKT 1
FDNS	00NR	3	20WP	G15_063	FROM->TO	G14-057T 345.00 - SUNNYSIDE 345KV CKT 1	717	789	0.04521	111.4708	P12:138:AEPW-SWPA:LONEOAK4:TUPELO4
FDNS	00NR	3	20WP	G15_063	FROM->TO	G14-057T 345.00 - SUNNYSIDE 345KV CKT 1	717	789	0.04521	111.4708	P12:138:WFEC:MSL06
FDNS	00NR	3	20WP	G15_063	FROM->TO	G14-057T 345.00 - SUNNYSIDE 345KV CKT 1	717	789	0.04522	111.4682	G15085_T 138.00 - RUSSELL 138KV CKT 1
FDNS	00NR	3	20WP	G15_063	FROM->TO	G14-057T 345.00 - SUNNYSIDE 345KV CKT 1	717	789	0.04524	111.4661	ALMA 161 161/24.0KV TRANSFORMER CKT 1
FDNS	00NR	3	20WP	G15_063	FROM->TO	G14-057T 345.00 - SUNNYSIDE 345KV CKT 1	717	789	0.04482	111.4651	SUNNYSIDE (SUNNYSD5) 345/138/13.8KV TRANSFORMER CKT 1
FDNS	00NR	3	20WP	G15_063	FROM->TO	G14-057T 345.00 - SUNNYSIDE 345KV CKT 1	717	789	0.04524	111.4632	GEN521111 1-ORME2 13.800
FDNS	00NR	3	20WP	G15_063	FROM->TO	G14-057T 345.00 - SUNNYSIDE 345KV CKT 1	717	789	0.04524	111.453	GEN562699 1-G15_018_3 0.6900
FDNS	00NR	3	20WP	G15_063	FROM->TO	G14-057T 345.00 - SUNNYSIDE 345KV CKT 1	717	789	0.04524	111.45	GEN521110 1-ORME1 13.800
FDNS	00NR	3	20WP	G15_063	FROM->TO	G14-057T 345.00 - SUNNYSIDE 345KV CKT 1	717	789	0.04473	111.4351	ARDMORE WEST - UNIROYAL 138KV CKT 1
FDNS	00NR	3	20WP	G15_063	FROM->TO	G14-057T 345.00 - SUNNYSIDE 345KV CKT 1	717	789	0.04524	111.4152	GEN563162 1-G15081_3 0.6900
FDNS	00NR	3	20WP	G15_063	FROM->TO	G14-057T 345.00 - SUNNYSIDE 345KV CKT 1	717	789	0.04524	111.3974	GEN520811 1-ANADRK4
FDNS	00NR	3	20WP	G15_063	FROM->TO	G14-057T 345.00 - SUNNYSIDE 345KV CKT 1	717	789	0.04524	111.3889	GEN661015 1-COYOTE
FDNS	00NR	3	20WP	G15_063	FROM->TO	G14-057T 345.00 - SUNNYSIDE 345KV CKT 1	717	789	0.04524	111.3856	GEN563292 1-G15095_3 0.6900
FDNS	00NR	3	20WP	G15_063	FROM->TO	G14-057T 345.00 - SUNNYSIDE 345KV CKT 1	717	789	0.04508	111.3836	CARTRCO4 138.00 - RATLIFF 138KV CKT 1
FDNS	00NR	3	20WP	G15_063	FROM->TO	G14-057T 345.00 - SUNNYSIDE 345KV CKT 1	717	789	0.04506	111.3793	P12:138:OKGE:3TERM40
FDNS	00NR	3	20WP	G15_063	FROM->TO	G14-057T 345.00 - SUNNYSIDE 345KV CKT 1	717	789	0.04524	111.3476	GEN563122 1-G15077_3 0.3850
FDNS	00NR	3	20WP	G15_063	FROM->TO	G14-057T 345.00 - SUNNYSIDE 345KV CKT 1	717	789	0.04524	111.3274	GEN562861 1-G15045_2 0.4800
FDNS	00NR	3	20WP	G15_063	FROM->TO	G14-057T 345.00 - SUNNYSIDE 345KV CKT 1	717	789	0.04524	111.2762	GEN657748 1-YOUNG 2 GENERATOR
FDNS	00NR	3	20WP	G15_063	FROM->TO	G14-057T 345.00 - SUNNYSIDE 345KV CKT 1	717	789	0.04524	111.2391	GEN527883 1-CUNNINGHAM GEN #3 22 KV
FDNS	00NR	3	20WP	G15_063	FROM->TO	G14-057T 345.00 - SUNNYSIDE 345KV CKT 1	717	789	0.04524	111.2361	GEN527884 1-CUNNINGHAM GEN #4 22 KV
FDNS	00NR	3	20WP	G15_063	FROM->TO	G14-057T 345.00 - SUNNYSIDE 345KV CKT 1	717	789	0.04515	111.2353	P12:138:WFEC:MSL15
FDNS	00NR	3	20WP	G15_063	FROM->TO	G14-057T 345.00 - SUNNYSIDE 345KV CKT 1	717	789	0.04473	111.1992	SUNNYSIDE - UNIROYAL 138KV CKT 1
FDNS	00NR	3	16WP	G15_063	FROM->TO	G14-057T 345.00 - SUNNYSIDE 345KV CKT 1	717	789	0.04539	111.1868	LYDIA - VALLIANT 345KV CKT 1
FDNS	00NR	3	16WP	G15_063	FROM->TO	G14-057T 345.00 - SUNNYSIDE 345KV CKT 1	717	789	0.04539	111.1868	LYDIA - VALLIANT 345KV CKT 1
FDNS	00NR	3	20WP	G15_063	FROM->TO	G14-057T 345.00 - SUNNYSIDE 345KV CKT 1	717	789	0.04524	111.185	GEN620315 1-BIG STONE GEN
FDNS	00NR	3	20WP	G15_063	FROM->TO	G14-057T 345.00 - SUNNYSIDE 345KV CKT 1	717	789	0.04522	111.1843	P12:138:AEPW:SHAM4WT:CHILD4WT
FDNS	00NR	3	20WP	G15_063	FROM->TO	G14-057T 345.00 - SUNNYSIDE 345KV CKT 1	717	789	0.04524	111.1726	GEN562992 1-G15063_3 0.6900
FDNS	00NR	3	20WP	G15_063	FROM->TO	G14-057T 345.00 - SUNNYSIDE 345KV CKT 1	717	789	0.04524	111.1693	GEN562704 1-G15_020_3 0.3550
FDNS	00NR	3	20WP	G15_063	FROM->TO	G14-057T 345.00 - SUNNYSIDE 345KV CKT 1	717	789	0.04524	111.1609	GEN526331 1-JONES GEN #1 22 KV
FDNS	00NR	3	20WP	G15_063	FROM->TO	G14-057T 345.00 - SUNNYSIDE 345KV CKT 1	717	789	0.04524	111.1607	GEN526332 1-JONES GEN #2 21 KV
FDNS	00NR	3	20WP	G15_063	FROM->TO	G14-057T 345.00 - SUNNYSIDE 345KV CKT 1	717	789	0.04524	111.1538	GEN562952 1-G15057_3 0.6500
FDNS	00NR	3	20WP	G15_063	FROM->TO	G14-057T 345.00 - SUNNYSIDE 345KV CKT 1	717	789	0.04524	111.1109	GEN600004 2-PRAIRIE ISLAND G2
FDNS	00NR	3	20WP	G15_063	FROM->TO	G14-057T 345.00 - SUNNYSIDE 345KV CKT 1	717	789	0.04524	111.1084	GEN600003 1-PRAIRIE ISLAND G1
FDNS	00NR	3	20WP	G15_063	FROM->TO	G14-057T 345.00 - SUNNYSIDE 345KV CKT 1	717	789	0.04524	111.0921	GEN511851 1-COMANCHE #1
FDNS	00NR	3	20WP	G15_063	FROM->TO	G14-057T 345.00 - SUNNYSIDE 345KV CKT 1	717	789	0.04524	111.0877	GEN600006 1-AS KING
FDNS	00NR	3	20WP	G15_063	FROM->TO	G14-057T 345.00 - SUNNYSIDE 345KV CKT 1	717	789	0.04524	111.0769	GEN563173 1-G15082_3 0.6900
FDNS	00NR	3	20WP	G15_063	FROM->TO	G14-057T 345.00 - SUNNYSIDE 345KV CKT 1	717	789	0.04645	111.0695	CANEY CREEK - TEXOMA JCT 138KV CKT 1
FDNS	00NR	3	20WP	G15_063	FROM->TO	G14-057T 345.00 - SUNNYSIDE 345KV CKT 1	717	789	0.04521	111.0693	GRAPEVINE INTERCHANGE - STATELINE INTERCHANGE 230KV CKT 1

SOLUTION	GROUP	SCENARIO	SEASON	SOURCE	DIRECTION	MONITORED ELEMENT	RATEA (MVA)	RATEB(MVA)	TDF	TC%LOADING (% MVA)	CONTINGENCY
FDNS	00NR	3	20WP	G15_063	FROM->TO	G14-057T 345.00 - SUNNYSIDE 345KV CKT 1	717	789	0.04521	111.0693	GRAPEVINE INTERCHANGE - STATELINE INTERCHANGE 230KV CKT 1
FDNS	00NR	3	20WP	G15_063	FROM->TO	G14-057T 345.00 - SUNNYSIDE 345KV CKT 1	717	789	0.04524	111.0688	GEN562710 1-G15_022_3 0.5500
FDNS	00NR	3	20WP	G15_063	FROM->TO	G14-057T 345.00 - SUNNYSIDE 345KV CKT 1	717	789	0.0446	110.9764	P12:138:AEPW-OGE:CORNVIL4:CIMARON4
FDNS	00NR	3	20WP	G15_063	FROM->TO	G14-057T 345.00 - SUNNYSIDE 345KV CKT 1	717	789	0.04524	110.9459	GEN532751 1-WOLF CREEK GENERATING STATION UNIT 1
FDNS	00NR	3	20WP	G15_063	FROM->TO	G14-057T 345.00 - SUNNYSIDE 345KV CKT 1	717	789	0.0452	110.9355	GRAPEVINE INTERCHANGE - NICHOLS STATION 230KV CKT 1
FDNS	00NR	3	20WP	G15_063	FROM->TO	G14-057T 345.00 - SUNNYSIDE 345KV CKT 1	717	789	0.0452	110.9355	GRAPEVINE INTERCHANGE - NICHOLS STATION 230KV CKT 1
FDNS	00NR	3	20WP	G15_063	FROM->TO	G14-057T 345.00 - SUNNYSIDE 345KV CKT 1	717	789	0.04524	110.9145	GEN629074 1-ARNOLD LOWSIDE OF GSU XFMR
FDNS	00NR	3	20WP	G15_063	FROM->TO	G14-057T 345.00 - SUNNYSIDE 345KV CKT 1	717	789	0.04524	110.9096	GEN615001 1-COAL CREEK
FDNS	00NR	3	20WP	G15_063	FROM->TO	G14-057T 345.00 - SUNNYSIDE 345KV CKT 1	717	789	0.04524	110.9079	GEN635213 3-NEAL UNIT 3
FDNS	00NR	3	20WP	G15_063	FROM->TO	G14-057T 345.00 - SUNNYSIDE 345KV CKT 1	717	789	0.04524	110.8843	GEN615002 2-COAL CREEK
FDNS	00NR	3	20WP	G15_063	FROM->TO	G14-057T 345.00 - SUNNYSIDE 345KV CKT 1	717	789	0.04524	110.8612	BIG STONE 230/24.0KV TRANSFORMER CKT 1
FDNS	00NR	3	20WP	G15_063	FROM->TO	G14-057T 345.00 - SUNNYSIDE 345KV CKT 1	717	789	0.04533	110.8438	P12:138:WFEC:MSL09
FDNS	00NR	3	20WP	G15_063	FROM->TO	G14-057T 345.00 - SUNNYSIDE 345KV CKT 1	717	789	0.04524	110.8203	GEN636641 1-LOUISA UNIT 1
FDNS	00NR	3	20WP	G15_063	FROM->TO	G14-057T 345.00 - SUNNYSIDE 345KV CKT 1	717	789	0.04524	110.8172	GEN562754 1-G15031_5 0.6900
FDNS	00NR	3	20WP	G15_063	FROM->TO	G14-057T 345.00 - SUNNYSIDE 345KV CKT 1	717	789	0.04521	110.8073	NORTHWEST TEXARKANA - VALLIANT 345KV CKT 1
FDNS	00NR	3	20WP	G15_063	FROM->TO	G14-057T 345.00 - SUNNYSIDE 345KV CKT 1	717	789	0.04521	110.8073	NORTHWEST TEXARKANA - VALLIANT 345KV CKT 1
FDNS	00NR	3	20WP	G15_063	FROM->TO	G14-057T 345.00 - SUNNYSIDE 345KV CKT 1	717	789	0.04519	110.7938	CHISHOLM7 345.00 () 345/230/13.2KV TRANSFORMER CKT 1
FDNS	00NR	3	20WP	G15_063	FROM->TO	G14-057T 345.00 - SUNNYSIDE 345KV CKT 1	717	789	0.04524	110.789	GEN600005 1-MONTICELLO
FDNS	00NR	3	20WP	G15_063	FROM->TO	G14-057T 345.00 - SUNNYSIDE 345KV CKT 1	717	789	0.04524	110.7585	GEN562556 1-G14_046_3 0.3420
FDNS	00NR	3	20WP	G15_063	FROM->TO	G14-057T 345.00 - SUNNYSIDE 345KV CKT 1	717	789	0.04524	110.7577	GEN562756 1-G15031_7 0.6900
FDNS	00NR	3	20WP	G15_063	FROM->TO	G14-057T 345.00 - SUNNYSIDE 345KV CKT 1	717	789	0.04519	110.7053	CHISHOLM7 345.00 - GRACEMONT 345KV CKT 1
FDNS	00NR	3	20WP	G15_063	FROM->TO	G14-057T 345.00 - SUNNYSIDE 345KV CKT 1	717	789	0.04524	110.674	GEN563142 1-G15079_3 0.5500
FDNS	00NR	3	20WP	G15_063	FROM->TO	G14-057T 345.00 - SUNNYSIDE 345KV CKT 1	717	789	0.04524	110.674	GEN563151 1-G15080_2 0.5500
FDNS	00NR	3	20WP	G15_063	FROM->TO	G14-057T 345.00 - SUNNYSIDE 345KV CKT 1	717	789	0.04524	110.6641	GEN600000 1-SHERBURNECNTY G1
FDNS	00NR	3	20WP	G15_063	FROM->TO	G14-057T 345.00 - SUNNYSIDE 345KV CKT 1	717	789	0.04524	110.6551	GEN562023 1-G11_020_3 0.6900
FDNS	00NR	3	20WP	G15_063	FROM->TO	G14-057T 345.00 - SUNNYSIDE 345KV CKT 1	717	789	0.04524	110.6551	GEN562026 1-G11_019_3 0.6900
FDNS	00NR	3	20WP	G15_063	FROM->TO	G14-057T 345.00 - SUNNYSIDE 345KV CKT 1	717	789	0.04524	110.6267	GEN629075 1-OTTUMWA GENERATOR FOR OTTUMWA UNIT NO 1
FDNS	00NR	3	20WP	G15_063	FROM->TO	G14-057T 345.00 - SUNNYSIDE 345KV CKT 1	717	789	0.04524	110.6112	GEN600001 2-SHERBURNE CNTY G2
FDNS	00NR	3	20WP	G15_063	FROM->TO	G14-057T 345.00 - SUNNYSIDE 345KV CKT 1	717	789	0.04524	110.5728	GEN523971 1-HARRINGTON GEN #1 24 KV
FDNS	00NR	3	20WP	G15_063	FROM->TO	G14-057T 345.00 - SUNNYSIDE 345KV CKT 1	717	789	0.04524	110.5728	GEN523973 1-HARRINGTON GEN #3 24 KV
FDNS	00NR	3	20WP	G15_063	FROM->TO	G14-057T 345.00 - SUNNYSIDE 345KV CKT 1	717	789	0.04524	110.5727	GEN523972 1-HARRINGTON GEN #2 24 KV
FDNS	00NR	3	20WP	G15_063	FROM->TO	G14-057T 345.00 - SUNNYSIDE 345KV CKT 1	717	789	0.04524	110.5454	GEN511848 1-SOUTHWESTERN STATION #3
FDNS	00NR	3	20WP	G15_063	FROM->TO	G14-057T 345.00 - SUNNYSIDE 345KV CKT 1	717	789	0.04524	110.473	GEN527901 1-HOBBS PLANT #1 (CT)
FDNS	00NR	3	20WP	G15_063	FROM->TO	G14-057T 345.00 - SUNNYSIDE 345KV CKT 1	717	789	0.04524	110.473	GEN527902 1-HOBBS PLANT #2 (CT)
FDNS	00NR	3	20WP	G15_063	FROM->TO	G14-057T 345.00 - SUNNYSIDE 345KV CKT 1	717	789	0.04524	110.4365	GEN563042 1-G15068_3 0.6900
FDNS	00NR	3	20WP	G15_063	FROM->TO	G14-057T 345.00 - SUNNYSIDE 345KV CKT 1	717	789	0.04521	110.4342	LYDIA - WELSH 345KV CKT 1
FDNS	00NR	3	20WP	G15_063	FROM->TO	G14-057T 345.00 - SUNNYSIDE 345KV CKT 1	717	789	0.04521	110.4342	LYDIA - WELSH 345KV CKT 1
FDNS	00NR	3	20WP	G15_063	FROM->TO	G14-057T 345.00 - SUNNYSIDE 345KV CKT 1	717	789	0.04524	110.3559	GEN635214 4-NEAL UNIT 4
FDNS	00NR	3	20WP	G15_063	FROM->TO	G14-057T 345.00 - SUNNYSIDE 345KV CKT 1	717	789	0.04524	110.3507	SHERBURNE CO 345/24.0KV TRANSFORMER CKT 1
FDNS	00NR	3	16WP	G15_063	FROM->TO	G14-057T 345.00 - SUNNYSIDE 345KV CKT 1	717	789	0.04545	110.3126	EASTDC - ERCOT EQUIVALENCE 345KV CKT 1
FDNS	00NR	3	20WP	G15_063	FROM->TO	G14-057T 345.00 - SUNNYSIDE 345KV CKT 1	717	789	0.04519	110.2912	P12:230:AEPW-SPS:SWEETWT6:WHEELER 6
FDNS	00NR	3	20WP	G15_063	FROM->TO	G14-057T 345.00 - SUNNYSIDE 345KV CKT 1	717	789	0.04519	110.2892	STATELINE INTERCHANGE - STLN-DEMARC6 230KV CKT 1
FDNS	00NR	3	20WP	G15_063	FROM->TO	G14-057T 345.00 - SUNNYSIDE 345KV CKT 1	717	789	0.04519	110.2879	STLN-DEMARC6 - SWEETWATER 230KV CKT 1
FDNS	00NR	3	20WP	G15_063	FROM->TO	G14-057T 345.00 - SUNNYSIDE 345KV CKT 1	717	789	0.04524	110.1861	GEN600002 3-SHERBURNE CNTY G3
FDNS	00NR	3	20WP	G15_063	FROM->TO	G14-057T 345.00 - SUNNYSIDE 345KV CKT 1	717	789	0.04524	110.1343	GEN563043 1-G15068_4 0.6900
FDNS	00NR	3	20WP	G15_063	FROM->TO	G14-057T 345.00 - SUNNYSIDE 345KV CKT 1	717	789	0.04524	110.1083	GEN563273 2-G15093_4 0.6900
FDNS	00NR	3	20WP	G15_063	FROM->TO	G14-057T 345.00 - SUNNYSIDE 345KV CKT 1	717	789	0.04524	110.1035	GEN526333 1-JONES GEN #3 21 KV
FDNS	00NR	3	20WP	G15_063	FROM->TO	G14-057T 345.00 - SUNNYSIDE 345KV CKT 1	717	789	0.04524	110.1034	GEN526334 1-JONES_4 116.500
FDNS	00NR	3	20WP	G15_063	FROM->TO	G14-057T 345.00 - SUNNYSIDE 345KV CKT 1	717	789	0.04524	110.0876	GEN344225 1-1CAL G1 25.000
FDNS	00NR	3	20WP	G15_063	FROM->TO	G14-057T 345.00 - SUNNYSIDE 345KV CKT 1	717	789	0.04524	110.0703	GEN525844 1-ELK_1 118.000
FDNS	00NR	3	20WP	G15_063	FROM->TO	G14-057T 345.00 - SUNNYSIDE 345KV CKT 1	717	789	0.04524	110.0523	GEN525845 1-ELK_2 1 18.000
FDNS	00NR	3	20WP	G15_063	FROM->TO	G14-057T 345.00 - SUNNYSIDE 345KV CKT 1	717	789	0.04524	109.9181	GEN527166 1-MUSTANG_6 118.000
FDNS	00NR	3	20WP	G15_063	FROM->TO	G14-057T 345.00 - SUNNYSIDE 345KV CKT 1	717	789	0.04518	109.9078	P12:230:AEPW:ELKCITY6:SWEETWT6
FDNS	00NR	3	20WP	G15_063	FROM->TO	G14-057T 345.00 - SUNNYSIDE 345KV CKT 1	717	789	0.04524	109.8992	GEN635023 3-WALTER SCOTT UNIT 3
FDNS	00NR	3	20WP	G15_063	FROM->TO	G14-057T 345.00 - SUNNYSIDE 345KV CKT 1	717	789	0.04524	109.8759	GEN563202 1-G15085_3 0.5500
FDNS	00NR	3	20WP	G15_063	FROM->TO	G14-057T 345.00 - SUNNYSIDE 345KV CKT 1	717	789	0.04524	109.8537	GEN528501 1-G14_012 24.000
FDNS	00NR	3	20WP	G15_063	FROM->TO	G14-057T 345.00 - SUNNYSIDE 345KV CKT 1	717	789	0.04524	109.8033	GEN562590 1-G14_057_3 0.6900
FDNS	00NR	3	20WP	G15_063	FROM->TO	G14-057T 345.00 - SUNNYSIDE 345KV CKT 1	717	789	0.04524	109.6887	GEN562762 1-G15033_3 0.6900
FDNS	00NR	3	20WP	G15_063	FROM->TO	G14-057T 345.00 - SUNNYSIDE 345KV CKT 1	717	789	0.04524	109.6774	GEN562655 1-G14_074_3 0.6900
FDNS	00NR	3	20WP	G15_063	FROM->TO	G14-057T 345.00 - SUNNYSIDE 345KV CKT 1	717	789	0.04524	109.649	GEN525562 1-TOLK GEN #2 24 KV
FDNS	00NR	3	20WP	G15_063	FROM->TO	G14-057T 345.00 - SUNNYSIDE 345KV CKT 1	717	789	0.04519	109.6482	CHISHOLM6 230.00 - SWEETWATER 230KV CKT 1
FDNS	00NR	3	20WP	G15_063	FROM->TO	G14-057T 345.00 - SUNNYSIDE 345KV CKT 1	717	789	0.04509	109.6012	JOHNSON COUNTY (JOHNCO) 345/138/13.8KV TRANSFORMER CKT 1
FDNS	00NR	3	20WP	G15_063	FROM->TO	G14-057T 345.00 - SUNNYSIDE 345KV CKT 1	717	789	0.04524	109.5921	GEN562685 1-G15_013_3 0.3550
FDNS	00NR	3	20WP	G15_063	FROM->TO	G14-057T 345.00 - SUNNYSIDE 345KV CKT 1	717	789	0.04524	109.566	GEN527903 1-HOBBS PLANT #3 (ST)
FDNS	00NR	3	20WP	G15_063	FROM->TO	G14-057T 345.00 - SUNNYSIDE 345KV CKT 1	717	789	0.04524	109.4964	GEN635024 4-WALTER SCOTT UNIT 4
FDNS	00NR	3	20WP	G15_063	FROM->TO	G14-057T 345.00 - SUNNYSIDE 345KV CKT 1	717	789	0.04524	109.4463	GEN563272 1-G15093_3 0.6900
FDNS	00NR	3	20WP	G15_063	FROM->TO	G14-057T 345.00 - SUNNYSIDE 345KV CKT 1	717	789	0.04519	109.3665	LYDIA - VALLIANT 345KV CKT 1
FDNS	00NR	3	20WP	G15_063	FROM->TO	G14-057T 345.00 - SUNNYSIDE 345KV CKT 1	717	789	0.04519	109.3665	LYDIA - VALLIANT 345KV CKT 1
FDNS	00NR	3	16WP	G15_063	FROM->TO	G14-057T 345.00 - SUNNYSIDE 345KV CKT 1	717	789	0.03815	109.2476	JOHNSON COUNTY - PITTSBURG 345KV CKT 1
FDNS	00NR	3	16WP	G15_063	FROM->TO	G14-057T 345.00 - SUNNYSIDE 345KV CKT 1	717	789	0.03815	109.2476	JOHNSON COUNTY - PITTSBURG 345KV CKT 1
FDNS	00NR	3	20WP	G15_063	FROM->TO	G14-057T 345.00 - SUNNYSIDE 345KV CKT 1	717	789	0.04524	109.1008	GEN525561 1-TOLK GEN #1 24 KV
FDNS	00NR	3	16WP	G15_063	FROM->TO	G14-057T 345.00 - SUNNYSIDE 345KV CKT 1	717	789	0.04545	108.8851	GEN563263 1-G15092_4 0.6900
FDNS	00NR	3	16WP	G15_063	FROM->TO	G14-057T 345.00 - SUNNYSIDE 345KV CKT 1	717	789	0.0441	108.2937	HUGO - VALLIANT 345KV CKT 1
FDNS	00NR	3	16WP	G15_063	FROM->TO	G14-057T 345.00 - SUNNYSIDE 345KV CKT 1	717	789	0.0441	108.2937	HUGO - VALLIANT 345KV CKT 1
FDNS	00NR	3	16WP	G15_063	FROM->TO	G14-057T 345.00 - SUNNYSIDE 345KV CKT 1	717	789	0.04545	107.23	GEN563262 1-G15092_3 0.6900
FDNS	00NR	3	20WP	G15_063	FROM->TO	G14-057T 345.00 - SUNNYSIDE 345KV CKT 1	717	789	0.03796	107.1896	JOHNSON COUNTY - PITTSBURG 345KV CKT 1
FDNS	00NR	3	20WP	G15_063	FROM->TO	G14-057T 345.00 - SUNNYSIDE 345KV CKT 1	717	789	0.03796	107.1896	JOHNSON COUNTY - PITTSBURG 345KV CKT 1
FDNS	00NR	3	20WP	G15_063	FROM->TO	G14-057T 345.00 - SUNNYSIDE 345KV CKT 1	717	789	0.0439	106.8001	HUGO - VALLIANT 345KV CKT 1
FDNS	00NR	3	20WP	G15_063	FROM->TO	G14-057T 345.00 - SUNNYSIDE 345KV CKT 1	717	789	0.0439	106.8001	HUGO - VALLIANT 345KV CKT 1

SOLUTION	GROUP	SCENARIO	SEASON	SOURCE	DIRECTION	MONITORED ELEMENT	RATEA (MVA)	RATEB(MVA)	TDF	TC%LOADING (% MVA)	CONTINGENCY
FDNS	00NR	3	20WP	G15_063	FROM->TO	G14-057T 345.00 - SUNNYSIDE 345KV CKT 1	717	789	0.04524	106.3192	GEN563263 1-G15092_4 0.6900
FDNS	00NR	3	16WP	G15_063	FROM->TO	G14-057T 345.00 - SUNNYSIDE 345KV CKT 1	717	789	0.0437	105.8087	G14-074T 345.00 - TUCO INTERCHANGE 345KV CKT 1
FDNS	00NR	3	20WP	G15_063	FROM->TO	G14-057T 345.00 - SUNNYSIDE 345KV CKT 1	717	789	0.04524	104.6395	GEN563262 1-G15092_3 0.6900
FDNS	00NR	3	16WP	G15_063	FROM->TO	G14-057T 345.00 - SUNNYSIDE 345KV CKT 1	717	789	0.03692	103.5559	JOHNSON COUNTY - SUNNYSIDE 345KV CKT 1
FDNS	00NR	3	20WP	G15_063	FROM->TO	G14-057T 345.00 - SUNNYSIDE 345KV CKT 1	717	789	0.04351	102.214	G14-074T 345.00 - TUCO INTERCHANGE 345KV CKT 1
FDNS	00NR	3	20WP	G15_063	FROM->TO	G14-057T 345.00 - SUNNYSIDE 345KV CKT 1	717	789	0.03674	100.6737	JOHNSON COUNTY - SUNNYSIDE 345KV CKT 1
FDNSLock-Blown up	06ALL	0	16WP	G15_068		Non-Converged Contingency	1792	1972	0.5169	-	TUCO INTERCHANGE - TUCO_2 345.00 345KV CKT 1
FDNSLock-Blown up	06ALL	0	16WP	G15_068		Non-Converged Contingency	1022	1124	0.24824	-	G14-074T 345.00 - OKLAUNION 345KV CKT 1
FDNSLock-Blown up	06ALL	0	16WP	G15_068		Non-Converged Contingency	1022	1124	0.24824	-	G14-074T 345.00 - TUCO INTERCHANGE 345KV CKT 1
FDNSLock-Blown up	06ALL	0	16WP	G15_068		Non-Converged Contingency	1022	1124	0.24824	-	GEN509403 1-PIRKEY GENERATION
FDNSLock-Blown up	06ALL	0	16WP	G15_068		Non-Converged Contingency	1022	1124	0.24824	-	GEN509404 1-WELSH #1
FDNSLock-Blown up	06ALL	0	16WP	G15_068		Non-Converged Contingency	1022	1124	0.24824	-	GEN509406 1-WELSH #3
FDNSLock-Blown up	06ALL	0	16WP	G15_068		Non-Converged Contingency	1022	1124	0.24824	-	GEN509416 1-TURK GENERATION
FDNSLock-Blown up	06ALL	0	16WP	G15_068		Non-Converged Contingency	1022	1124	0.24824	-	GEN511848 1-SOUTHWESTERN STATION #3
FDNSLock-Blown up	06ALL	0	16WP	G15_068		Non-Converged Contingency	1792	1792	0.20895	-	CHISHOLM7 345.00 - WOODWARD DISTRICT EHV 345KV CKT 1
FDNSLock-Blown up	06ALL	0	16WP	G15_068		Non-Converged Contingency	1792	1792	0.2062	-	BORDER 7345.00 - CHISHOLM7 345.00 345KV CKT 1
FDNSLock-Blown up	06ALL	0	16WP	G15_068		Non-Converged Contingency	1792	1792	0.2062	-	BORDER 7345.00 - CHISHOLM7 345.00 345KV CKT 2
FDNSLock-Blown up	06ALL	0	16WP	G15_068		Non-Converged Contingency	1792	1972	0.2062	-	BORDER 7345.00 - TUCO_2 345.00 345KV CKT 1
FDNSLock-Blown up	06ALL	0	16WP	G15_068		Non-Converged Contingency	1420	1775	0.2062	-	BORDER 7345.00 - TUCO_2 345.00 345KV CKT 2
FDNSLock-Blown up	06ALL	0	16WP	G15_068		Non-Converged Contingency	956	956	0.20157	-	CIMARRON - MINCO 345KV CKT 1
FDNSLock-Blown up	06ALL	0	16WP	G15_068		Non-Converged Contingency	1195	1195	0.20157	-	GRACEMONT - MINCO 345KV CKT 1
FDNSLock-Blown up	06ALL	0	16WP	G15_068		Non-Converged Contingency	1330	1940	0.16689	-	CHISHOLM7 345.00 - GRACEMONT 345KV CKT 1
FDNSLock-Blown up	06ALL	0	16WP	G15_068		Non-Converged Contingency	717	789	0.14251	-	G14-057T 345.00 - LAWTON EASTSIDE 345KV CKT 1
FDNSLock-Blown up	06ALL	0	16WP	G15_068		Non-Converged Contingency	717	789	0.14251	-	G14-057T 345.00 - SUNNYSIDE 345KV CKT 1
FDNSLock-Blown up	06ALL	0	16WP	G15_068		Non-Converged Contingency	987.16	1082.8	0.11471	-	FINNEY SWITCHING STATION - Hitchland Interchange 345KV CKT 1
FDNSLock-Blown up	06ALL	0	16WP	G15_068		Non-Converged Contingency	956.09	1051.7	0.11471	-	FINNEY SWITCHING STATION - HOLCOMB 345KV CKT 1
FDNSLock-Blown up	06ALL	0	16WP	G15_068		Non-Converged Contingency	987.16	1082.8	0.11359	-	G14_038T 345.00 - Hitchland Interchange 345KV CKT 1
FDNSLock-Blown up	06ALL	0	16WP	G15_068		Non-Converged Contingency	987.16	1082.8	0.11359	-	G14_038T 345.00 - POTTER COUNTY INTERCHANGE 345KV CKT 1
FDNSLock-Blown up	06ALL	0	16WP	G15_068		Non-Converged Contingency	560	560	0.11359	-	POTTER COUNTY INTERCHANGE (WAUK 90343-A) 345/230/13.2KV TRANSFORMER CKT 1
FDNSLock-Blown up	06ALL	0	16WP	G15_068		Non-Converged Contingency	1561	1793	0.0925	-	THISTLE7 345.00 - WOODWARD DISTRICT EHV 345KV CKT 1
FDNSLock-Blown up	06ALL	0	16WP	G15_068		Non-Converged Contingency	1561	1793	0.0925	-	THISTLE7 345.00 - WOODWARD DISTRICT EHV 345KV CKT 2
FDNSLock-Blown up	06ALL	0	16WP	G15_068		Non-Converged Contingency	329.05	360.92	0.08808	-	AMARILLO SOUTH INTERCHANGE - G15031_T 230.00 230KV CKT 1
FDNSLock-Blown up	06ALL	0	16WP	G15_068		Non-Converged Contingency	1420	1775	0.08565	-	G11_051T 345.00 - TATONGA7 345.00 345KV CKT 1
FDNSLock-Blown up	06ALL	0	16WP	G15_068		Non-Converged Contingency	1420	1775	0.08565	-	G11_051T 345.00 - WOODWARD DISTRICT EHV 345KV CKT 1
FDNSLock-Blown up	06ALL	0	16WP	G15_068		Non-Converged Contingency	1195	1195	0.08565	-	MATHWSN7 345.00 - TATONGA7 345.00 345KV CKT 1
FDNSLock-Blown up	06ALL	0	16WP	G15_068		Non-Converged Contingency	557	557	0.08032	-	NEWHART 230 - POTTER COUNTY INTERCHANGE 230KV CKT 1
FDNSLock-Blown up	06ALL	0	16WP	G15_068		Non-Converged Contingency	557	557	0.07063	-	BUSHLAND INTERCHANGE - DEAF SMITH COUNTY INTERCHANGE 230KV CKT 1
FDNSLock-Blown up	06ALL	0	16WP	G15_068		Non-Converged Contingency	1532	1793	0.06937	-	G1524G1525 345.00 - THISTLE7 345.00 345KV CKT 1
FDNSLock-Blown up	06ALL	0	16WP	G15_068		Non-Converged Contingency	1532	1793	0.06937	-	G1524G1525 345.00 - THISTLE7 345.00 345KV CKT 2
FDNSLock-Blown up	06ALL	0	16WP	G15_068		Non-Converged Contingency	1532	1793	0.06937	-	GEN532751 1-WOLF CREEK GENERATING STATION UNIT 1
FDNSLock-Blown up	06ALL	0	16WP	G15_068		Non-Converged Contingency	329.05	360.92	0.0653	-	BUSHLAND INTERCHANGE - POTTER COUNTY INTERCHANGE 230KV CKT 1
FDNSLock-Blown up	06ALL	0	16WP	G15_068		Non-Converged Contingency	439	439	0.06444	-	CHISHOLM6 230.00 - ELK CITY 230KV 230KV CKT 1
FDNSLock-Blown up	06ALL	0	16WP	G15_068		Non-Converged Contingency	450	450	0.06444	-	ELK CITY 230KV (ELKCTY-6) 230/138/13.8KV TRANSFORMER CKT 1
FDNSLock-Blown up	06ALL	0	16WP	G15_068		Non-Converged Contingency	717	789	0.06362	-	GRACEMONT - LAWTON EASTSIDE 345KV CKT 1
FDNSLock-Blown up	06ALL	0	16WP	G15_068		Non-Converged Contingency	717	717	0.06268	-	CIMARRON - DRAPER LAKE 345KV CKT 1
FDNSLock-Blown up	06ALL	0	16WP	G15_068		Non-Converged Contingency	1195	1195	0.06179	-	GEN520947 1-HUGO1
FDNSLock-Blown up	06ALL	0	16WP	G15_068		Non-Converged Contingency	785	785	0.05976	-	MINGO - RED WILLOW 345KV CKT 1
FDNSLock-Blown up	06ALL	0	16WP	G15_068		Non-Converged Contingency	717.1	717.1	0.05964	-	HOLCOMB - SETAB 345KV CKT 1
FDNSLock-Blown up	06ALL	0	16WP	G15_068		Non-Converged Contingency	762.5	762.5	0.05895	-	MINGO - SETAB 345KV CKT 1
FDNSLock-Blown up	06ALL	0	16WP	G15_068		Non-Converged Contingency	329.05	360.92	0.05841	-	DEAF SMITH COUNTY INTERCHANGE - G15039_T 230.00 230KV CKT 1
FDNSLock-Blown up	06ALL	0	16WP	G15_068		Non-Converged Contingency	329.05	360.92	0.05841	-	G15039_T 230.00 - PLANT X STATION 230KV CKT 1
FDNSLock-Blown up	06ALL	0	16WP	G15_068		Non-Converged Contingency	1793	1793	0.05279	-	G13-010T 345.00 - POST ROCK 345KV CKT 1
FDNSLock-Blown up	06ALL	0	16WP	G15_068		Non-Converged Contingency	1793	1793	0.05279	-	G13-010T 345.00 - SPEARVILLE 345KV CKT 1
FDNSLock-Blown up	06ALL	0	16WP	G15_068		Non-Converged Contingency	556.92	556.92	0.04849	-	HITCHLAND INTERCHANGE - MOORE COUNTY INTERCHANGE 230KV CKT 1
FDNSLock-Blown up	06ALL	0	16WP	G15_068		Non-Converged Contingency	1793	1793	0.04445	-	BVRCNTY7 345.00 - G11-14T 345.00 345KV CKT 1
FDNSLock-Blown up	06ALL	0	16WP	G15_068		Non-Converged Contingency	1716	1793	0.04445	-	BVRCNTY7 345.00 - G11-14T 345.00 345KV CKT 2
FDNSLock-Blown up	06ALL	0	16WP	G15_068		Non-Converged Contingency	1792	1792	0.04445	-	BVRCNTY7 345.00 - OPTIMA 345.00 345KV CKT 1
FDNSLock-Blown up	06ALL	0	16WP	G15_068		Non-Converged Contingency	1792	1792	0.04445	-	BVRCNTY7 345.00 - OPTIMA 345.00 345KV CKT 2
FDNSLock-Blown up	06ALL	0	16WP	G15_068		Non-Converged Contingency	1793	1793	0.04445	-	G11-14T 345.00 - WOODWARD DISTRICT EHV 345KV CKT 1
FDNSLock-Blown up	06ALL	0	16WP	G15_068		Non-Converged Contingency	1716	1793	0.04445	-	G11-14T 345.00 - WOODWARD DISTRICT EHV 345KV CKT 2
FDNSLock-Blown up	06ALL	0	16WP	G15_068		Non-Converged Contingency	726.6	726.6	0.04091	-	BUCKNER7 345.00 - HOLCOMB 345KV CKT 1
FDNSLock-Blown up	06ALL	0	16WP	G15_068		Non-Converged Contingency	1413	1517	0.04091	-	BUCKNER7 345.00 - SPEARVILLE 345KV CKT 1
FDNSLock-Blown up	06ALL	0	16WP	G15_068		Non-Converged Contingency	329.05	360.92	0.04056	-	MOORE COUNTY INTERCHANGE - POTTER COUNTY INTERCHANGE 230KV CKT 1
FDNSLock-Blown up	06NR	0	17G	G15_068		Non-Converged Contingency	1022	1124	0.10191	-	G14-074T 345.00 - OKLAUNION 345KV CKT 1
FDNSLock-Blown up	06NR	0	17G	G15_068		Non-Converged Contingency	1022	1124	0.10191	-	G14-074T 345.00 - TUCO INTERCHANGE 345KV CKT 1
FDNSLock-Blown up	06NR	0	17G	G15_068		Non-Converged Contingency	1792	1972	0.0962	-	BORDER 7345.00 - TUCO_2 345.00 345KV CKT 1
FDNSLock-Blown up	06NR	0	17G	G15_068		Non-Converged Contingency	1792	1792	0.0962	-	BORDER 7345.00 - WOODWARD DISTRICT EHV 345KV CKT 1
FDNSLock-Blown up	06NR	0	17G	G15_068		Non-Converged Contingency	318.7	350.57	0.08077	-	AMARILLO SOUTH INTERCHANGE - G15031_T 230.00 230KV CKT 1
FDNSLock-Blown up	06NR	0	17G	G15_068		Non-Converged Contingency	478	502	0.04338	-	NEWHART 230 - POTTER COUNTY INTERCHANGE 230KV CKT 1
FDNSLock-Blown up	06ALL	0	17SP	G15_068		Non-Converged Contingency	956	1042	0.24558	-	G14-074T 345.00 - OKLAUNION 345KV CKT 1
FDNSLock-Blown up	06ALL	0	17SP	G15_068		Non-Converged Contingency	956	1042	0.24558	-	G14-074T 345.00 - TUCO INTERCHANGE 345KV CKT 1
FDNSLock-Blown up	06ALL	0	17SP	G15_068		Non-Converged Contingency	1792	1972	0.20453	-	BORDER 7345.00 - TUCO_2 345.00 345KV CKT 1
FDNSLock-Blown up	06ALL	0	17SP	G15_068		Non-Converged Contingency	1420	1775	0.20453	-	BORDER 7345.00 - TUCO_2 345.00 345KV CKT 2
FDNSLock-Blown up	06ALL	0	17SP	G15_068		Non-Converged Contingency	956.09	1051.7	0.11412	-	G14_038T 345.00 - Hitchland Interchange 345KV CKT 1
FDNSLock-Blown up	06ALL	0	17SP	G15_068		Non-Converged Contingency	956.09	1051.7	0.11412	-	G14_038T 345.00 - POTTER COUNTY INTERCHANGE 345KV CKT 1
FDNSLock-Blown up	06ALL	0	17SP	G15_068		Non-Converged Contingency	560	560	0.11412	-	POTTER COUNTY INTERCHANGE (WAUK 90343-A) 345/230/13.2KV TRANSFORMER CKT 1
FDNSLock-Blown up	06ALL	0	20L	G15_068		Non-Converged Contingency	1792	1972	0.45683	-	TUCO INTERCHANGE - TUCO_2 345.00 345KV CKT 1
FDNSLock-Blown up	06ALL	0	20L	G15_068		Non-Converged Contingency	1022	1124	0.2068	-	G14-074T 345.00 - OKLAUNION 345KV CKT 1
FDNSLock-Blown up	06ALL	0	20L	G15_068		Non-Converged Contingency	1022	1124	0.2068	-	G14-074T 345.00 - TUCO INTERCHANGE 345KV CKT 1

SOLUTION	GROUP	SCENARIO	SEASON	SOURCE	DIRECTION	MONITORED ELEMENT	RATEA (MVA)	RATEB(MVA)	TDF	TC%LOADING (% MVA)	CONTINGENCY
FDNSLock-Blown up	06ALL	0	20L	G15_068		Non-Converged Contingency	1022	1124	0.2068	-	GEN506754 1-LEBROCK STEAM 1
FDNSLock-Blown up	06ALL	0	20L	G15_068		Non-Converged Contingency	1022	1124	0.2068	-	GEN509394 1-FLINT CREEK
FDNSLock-Blown up	06ALL	0	20L	G15_068		Non-Converged Contingency	1022	1124	0.2068	-	GEN509403 1-PIRKEY GENERATION
FDNSLock-Blown up	06ALL	0	20L	G15_068		Non-Converged Contingency	1022	1124	0.2068	-	GEN509404 1-WELSH #1
FDNSLock-Blown up	06ALL	0	20L	G15_068		Non-Converged Contingency	1022	1124	0.2068	-	GEN509406 1-WELSH #3
FDNSLock-Blown up	06ALL	0	20L	G15_068		Non-Converged Contingency	1022	1124	0.2068	-	GEN509408 1-WILKES #2
FDNSLock-Blown up	06ALL	0	20L	G15_068		Non-Converged Contingency	1022	1124	0.2068	-	GEN509416 1-TURK GENERATION
FDNSLock-Blown up	06ALL	0	20L	G15_068		Non-Converged Contingency	1022	1124	0.2068	-	GEN511840 1-NORTHEASTERN STATION #3
FDNSLock-Blown up	06ALL	0	20L	G15_068		Non-Converged Contingency	1022	1124	0.2068	-	GEN511960 1-ROARK1 0.7000
FDNSLock-Blown up	06ALL	0	20L	G15_068		Non-Converged Contingency	1022	1124	0.2068	-	GEN562590 1-G14_057_3 0.6900
FDNSLock-Blown up	06ALL	0	20L	G15_068		Non-Converged Contingency	1022	1124	0.2068	-	OKLAUNION 345KV SWITCHED SHUNT
FDNSLock-Blown up	06ALL	0	20L	G15_068		Non-Converged Contingency	1792	1792	0.1799	-	CHISHOLM7 345.00 - WOODWARD DISTRICT EHV 345KV CKT 1
FDNSLock-Blown up	06ALL	0	20L	G15_068		Non-Converged Contingency	956	956	0.17577	-	CIMARRON - MINCO 345KV CKT 1
FDNSLock-Blown up	06ALL	0	20L	G15_068		Non-Converged Contingency	1195	1195	0.17577	-	GRACEMONT - MINCO 345KV CKT 1
FDNSLock-Blown up	06ALL	0	20L	G15_068		Non-Converged Contingency	1792	1792	0.17566	-	BORDER 7345.00 - CHISHOLM7 345.00 345KV CKT 1
FDNSLock-Blown up	06ALL	0	20L	G15_068		Non-Converged Contingency	1792	1792	0.17566	-	BORDER 7345.00 - CHISHOLM7 345.00 345KV CKT 2
FDNSLock-Blown up	06ALL	0	20L	G15_068		Non-Converged Contingency	1792	1972	0.17566	-	BORDER 7345.00 - TUCO_2 345.00 345KV CKT 1
FDNSLock-Blown up	06ALL	0	20L	G15_068		Non-Converged Contingency	1420	1775	0.17566	-	BORDER 7345.00 - TUCO_2 345.00 345KV CKT 2
FDNSLock-Blown up	06ALL	0	20L	G15_068		Non-Converged Contingency	1792	1972	0.17566	-	BORDER 7345.00 345KV SWITCHED SHUNT
FDNSLock-Blown up	06ALL	0	20L	G15_068		Non-Converged Contingency	0	0	0.17547	-	P12:345:SPS:J07.1.FINN.HITCH
FDNSLock-Blown up	06ALL	0	20L	G15_068		Non-Converged Contingency	1584	2098	0.13277	-	CHISHOLM7 345.00 - GRACEMONT 345KV CKT 1
FDNSLock-Blown up	06ALL	0	20L	G15_068		Non-Converged Contingency	1584	2098	0.13277	-	GEN514805 1-SOONER UNIT 1
FDNSLock-Blown up	06ALL	0	20L	G15_068		Non-Converged Contingency	1584	2098	0.13277	-	GEN514806 1-SOONER UNIT 2
FDNSLock-Blown up	06ALL	0	20L	G15_068		Non-Converged Contingency	1584	2098	0.13277	-	GEN515040 1-SEMINOLE 1G
FDNSLock-Blown up	06ALL	0	20L	G15_068		Non-Converged Contingency	1584	2098	0.13277	-	GEN515223 1-MUSKOGEE 4G
FDNSLock-Blown up	06ALL	0	20L	G15_068		Non-Converged Contingency	717	789	0.11223	-	G14-057T 345.00 - LAWTON EASTSIDE 345KV CKT 1
FDNSLock-Blown up	06ALL	0	20L	G15_068		Non-Converged Contingency	717	789	0.11223	-	G14-057T 345.00 - SUNNYSIDE 345KV CKT 1
FDNSLock-Blown up	06ALL	0	20L	G15_068		Non-Converged Contingency	956.09	1051.7	0.09372	-	Hitchland Interchange - WALKTAP7 345.00 345KV CKT 1
FDNSLock-Blown up	06ALL	0	20L	G15_068		Non-Converged Contingency	956.09	1051.7	0.09372	-	Hitchland Interchange - WALKTAP7 345.00 345KV CKT 1
FDNSLock-Blown up	06NR	0	20L	G15_068		Non-Converged Contingency	1022	1124	0.09073	-	G14-074T 345.00 - OKLAUNION 345KV CKT 1
FDNSLock-Blown up	06NR	0	20L	G15_068		Non-Converged Contingency	1022	1124	0.09073	-	G14-074T 345.00 - TUCO INTERCHANGE 345KV CKT 1
FDNSLock-Blown up	06NR	0	20L	G15_068		Non-Converged Contingency	1022	1124	0.09073	-	OKLAUNION 345KV SWITCHED SHUNT
FDNSLock-Blown up	06NR	0	20L	G15_068		Non-Converged Contingency	1792	1972	0.0858	-	BORDER 7345.00 - TUCO_2 345.00 345KV CKT 1
FDNSLock-Blown up	06NR	0	20L	G15_068		Non-Converged Contingency	1792	1792	0.0858	-	BORDER 7345.00 - WOODWARD DISTRICT EHV 345KV CKT 1
FDNSLock-Blown up	06NR	0	20L	G15_068		Non-Converged Contingency	1792	1972	0.0858	-	BORDER 7345.00 345KV SWITCHED SHUNT
FDNSLock-Blown up	06ALL	0	20L	G15_068		Non-Converged Contingency	478	502	0.08475	-	AMARILLO SOUTH INTERCHANGE - G15031_T 230.00 230KV CKT 1
FDNSLock-Blown up	06NR	0	20L	G15_068		Non-Converged Contingency	478	502	0.08365	-	AMARILLO SOUTH INTERCHANGE - G15031_T 230.00 230KV CKT 1
FDNSLock-Blown up	06ALL	0	20L	G15_068		Non-Converged Contingency	956.09	1051.7	0.08221	-	G14_038T 345.00 - Hitchland Interchange 345KV CKT 1
FDNSLock-Blown up	06ALL	0	20L	G15_068		Non-Converged Contingency	956.09	1051.7	0.08221	-	G14_038T 345.00 - POTTER COUNTY INTERCHANGE 345KV CKT 1
FDNSLock-Blown up	06ALL	0	20L	G15_068		Non-Converged Contingency	560	560	0.08221	-	POTTER COUNTY INTERCHANGE (WAUK 90343-A) 345/230/13.2KV TRANSFORMER CKT 1
FDNSLock-Blown up	06ALL	0	20L	G15_068		Non-Converged Contingency	560	560	0.08221	-	POTTER COUNTY INTERCHANGE (WAUK 90343-A) 345/230/13.2KV TRANSFORMER CKT 1
FDNSLock-Blown up	06ALL	0	20L	G15_068		Non-Converged Contingency	956.09	1051.7	0.08175	-	FINNEY SWITCHING STATION - HOLCOMB 345KV CKT 1
FDNSLock-Blown up	06ALL	0	20L	G15_068		Non-Converged Contingency	956.09	1051.7	0.08175	-	FINNEY SWITCHING STATION - HOLCOMB 345KV CKT 1
FDNSLock-Blown up	06ALL	0	20L	G15_068		Non-Converged Contingency	956.09	1051.7	0.08175	-	FINNEY SWITCHING STATION - WALKTAP7 345.00 345KV CKT 1
FDNSLock-Blown up	06ALL	0	20L	G15_068		Non-Converged Contingency	956.09	1051.7	0.08175	-	FINNEY SWITCHING STATION - WALKTAP7 345.00 345KV CKT 1
FDNSLock-Blown up	06ALL	0	20L	G15_068		Non-Converged Contingency	478	502	0.075	-	NEWHART 230 - POTTER COUNTY INTERCHANGE 230KV CKT 1
FDNSLock-Blown up	06ALL	0	20L	G15_068		Non-Converged Contingency	1561	1793	0.07455	-	THISTLE7 345.00 - WOODWARD DISTRICT EHV 345KV CKT 1
FDNSLock-Blown up	06ALL	0	20L	G15_068		Non-Converged Contingency	1561	1793	0.07455	-	THISTLE7 345.00 - WOODWARD DISTRICT EHV 345KV CKT 1
FDNSLock-Blown up	06ALL	0	20L	G15_068		Non-Converged Contingency	1561	1793	0.07455	-	THISTLE7 345.00 - WOODWARD DISTRICT EHV 345KV CKT 2
FDNSLock-Blown up	06ALL	0	20L	G15_068		Non-Converged Contingency	1561	1793	0.07455	-	THISTLE7 345.00 - WOODWARD DISTRICT EHV 345KV CKT 2
FDNSLock-Blown up	06ALL	0	20L	G15_068		Non-Converged Contingency	956	956	0.07362	-	CIMARRON - NORTHWEST 345KV CKT 1
FDNSLock-Blown up	06ALL	0	20L	G15_068		Non-Converged Contingency	1195	1195	0.07185	-	ARCADIA - NORTHWEST 345KV CKT 1
FDNSLock-Blown up	06ALL	0	20L	G15_068		Non-Converged Contingency	1420	1775	0.06666	-	G11_051T 345.00 - TATONGA7 345.00 345KV CKT 1
FDNSLock-Blown up	06ALL	0	20L	G15_068		Non-Converged Contingency	1420	1775	0.06666	-	G11_051T 345.00 - WOODWARD DISTRICT EHV 345KV CKT 1
FDNSLock-Blown up	06ALL	0	20L	G15_068		Non-Converged Contingency	1195	1195	0.06666	-	MATHWSN7 345.00 - TATONGA7 345.00 345KV CKT 1
FDNSLock-Blown up	06ALL	0	20L	G15_068		Non-Converged Contingency	478	502	0.0652	-	BUSHLAND INTERCHANGE - DEAF SMITH COUNTY INTERCHANGE 230KV CKT 1
FDNSLock-Blown up	06ALL	0	20L	G15_068		Non-Converged Contingency	478	502	0.0652	-	BUSHLAND INTERCHANGE - DEAF SMITH COUNTY INTERCHANGE 230KV CKT 1
FDNSLock-Blown up	06ALL	0	20L	G15_068		Non-Converged Contingency	478	502	0.0652	-	BUSHLAND INTERCHANGE 230KV SWITCHED SHUNT
FDNSLock-Blown up	06ALL	0	20L	G15_068		Non-Converged Contingency	956	956	0.06258	-	G15063_T 345.00 - MATHWSN7 345.00 345KV CKT 1
FDNSLock-Blown up	06ALL	0	20L	G15_068		Non-Converged Contingency	956	956	0.06258	-	G15063_T 345.00 - WOODRING 345KV CKT 1
FDNSLock-Blown up	06ALL	0	20L	G15_068		Non-Converged Contingency	0	0	0.06213	-	P12:230:AEPW:ELKCITY6:SWEETWT6
FDNSLock-Blown up	06ALL	0	20L	G15_068		Non-Converged Contingency	717	789	0.06207	-	GRACEMONT - LAWTON EASTSIDE 345KV CKT 1
FDNSLock-Blown up	06ALL	0	20L	G15_068		Non-Converged Contingency	717	789	0.06207	-	GRACEMONT - LAWTON EASTSIDE 345KV CKT 1
FDNSLock-Blown up	06ALL	0	20L	G15_068		Non-Converged Contingency	1195	1195	0.06196	-	MATHWSN7 345.00 - NORTHWEST 345KV CKT 1
FDNSLock-Blown up	06ALL	0	20L	G15_068		Non-Converged Contingency	0	0	0.0602	-	P12:138:AEPW-OGE:WTH_JCT4:JENSEN4
FDNSLock-Blown up	06ALL	0	20L	G15_068		Non-Converged Contingency	318.7	350.57	0.0595	-	BUSHLAND INTERCHANGE - POTTER COUNTY INTERCHANGE 230KV CKT 1
FDNSLock-Blown up	06ALL	0	20L	G15_068		Non-Converged Contingency	318.7	350.57	0.0595	-	BUSHLAND INTERCHANGE - POTTER COUNTY INTERCHANGE 230KV CKT 1
FDNSLock-Blown up	06ALL	0	20L	G15_068		Non-Converged Contingency	1039	1195	0.05923	-	NORTHWEST - SPRING CREEK 345KV CKT 1
FDNSLock-Blown up	06ALL	0	20L	G15_068		Non-Converged Contingency	1039	1195	0.05923	-	SOONER - SPRING CREEK 345KV CKT 1
FDNSLock-Blown up	06ALL	0	20L	G15_068		Non-Converged Contingency	0	0	0.05583	-	P12:138:AEPW:S.W.S.-4:L.E.S.-4
FDNSLock-Blown up	06ALL	0	20L	G15_068		Non-Converged Contingency	318.7	350.57	0.05505	-	DEAF SMITH COUNTY INTERCHANGE - G15039_T 230.00 230KV CKT 1
FDNSLock-Blown up	06ALL	0	20L	G15_068		Non-Converged Contingency	318.7	350.57	0.05505	-	G15039_T 230.00 - PLANT X STATION 230KV CKT 1
FDNSLock-Blown up	06NR	0	20L	G15_068		Non-Converged Contingency	478	502	0.05447	-	NEWHART 230 - POTTER COUNTY INTERCHANGE 230KV CKT 1
FDNSLock-Blown up	06ALL	0	20L	G15_068		Non-Converged Contingency	1532	1793	0.05326	-	G1524G1525 345.00 - THISTLE7 345.00 345KV CKT 1
FDNSLock-Blown up	06ALL	0	20L	G15_068		Non-Converged Contingency	1532	1793	0.05326	-	G1524G1525 345.00 - THISTLE7 345.00 345KV CKT 2
FDNSLock-Blown up	06ALL	0	20L	G15_068		Non-Converged Contingency	1532	1793	0.05326	-	G1524G1525 345.00 - WICHITA 345KV CKT 1
FDNSLock-Blown up	06ALL	0	20L	G15_068		Non-Converged Contingency	1532	1793	0.05326	-	G1524G1525 345.00 - WICHITA 345KV CKT 2
FDNSLock-Blown up	06ALL	0	20L	G15_068		Non-Converged Contingency	1532	1793	0.05326	-	GEN532653 1-JEFFREY ENERGY CENTER UNIT 3
FDNSLock-Blown up	06ALL	0	20L	G15_068		Non-Converged Contingency	1532	1793	0.05326	-	GEN532663 1-LAWRENCE ENERGY CENTER UNIT 5

SOLUTION	GROUP	SCENARIO	SEASON	SOURCE	DIRECTION	MONITORED ELEMENT	RATEA (MVA)	RATEB(MVA)	TDF	TC%LOADING (% MVA)	CONTINGENCY
FDNSLock-Blown up	06ALL	0	20L	G15_068		Non-Converged Contingency	1532	1793	0.05326	-	GEN532751 1-WOLF CREEK GENERATING STATION UNIT 1
FDNSLock-Blown up	06ALL	0	20L	G15_068		Non-Converged Contingency	1195	1195	0.05176	-	JOHNSON COUNTY - SUNNYSIDE 345KV CKT 1
FDNSLock-Blown up	06ALL	0	20L	G15_068		Non-Converged Contingency	1195	1195	0.05059	-	SOONER - WOODRING 345KV CKT 1
FDNSLock-Blown up	06ALL	0	20L	G15_068		Non-Converged Contingency	439	439	0.05038	-	CHISHOLM6 230.00 - ELK CITY 230KV 230KV CKT 1
FDNSLock-Blown up	06ALL	0	20L	G15_068		Non-Converged Contingency	450	450	0.05038	-	ELK CITY 230KV (ELKCTY-6) 230/138/13.8KV TRANSFORMER CKT 1
FDNSLock-Blown up	06ALL	0	20L	G15_068		Non-Converged Contingency	450	450	0.05038	-	ELK CITY 230KV (ELKCTY-6) 230/138/13.8KV TRANSFORMER CKT 1
FDNSLock-Blown up	06ALL	0	20L	G15_068		Non-Converged Contingency	435.82	501.55	0.05024	-	Harrington Station Mid Bus - RANDALL COUNTY INTERCHANGE 230KV CKT 1
FDNSLock-Blown up	06ALL	0	20L	G15_068		Non-Converged Contingency	435.82	501.55	0.05024	-	Harrington Station Mid Bus - RANDALL COUNTY INTERCHANGE 230KV CKT 1
FDNSLock-Blown up	06ALL	0	20L	G15_068		Non-Converged Contingency	785	785	0.04922	-	GEN640009 1-COOPER NUCLEAR STATION
FDNSLock-Blown up	06ALL	0	20L	G15_068		Non-Converged Contingency	785	785	0.04922	-	MINGO - RED WILLOW 345KV CKT 1
FDNSLock-Blown up	06ALL	0	20L	G15_068		Non-Converged Contingency	785	785	0.04922	-	MINGO - RED WILLOW 345KV CKT 1
FDNSLock-Blown up	06ALL	0	20L	G15_068		Non-Converged Contingency	762.5	762.5	0.04745	-	MINGO - SETAB 345KV CKT 1
FDNSLock-Blown up	06ALL	0	20L	G15_068		Non-Converged Contingency	762.5	762.5	0.04745	-	MINGO - SETAB 345KV CKT 1
FDNSLock-Blown up	06ALL	0	20L	G15_068		Non-Converged Contingency	1151	1195	0.04741	-	JOHNSON COUNTY - PITTSBURG 345KV CKT 1
FDNSLock-Blown up	06ALL	0	20L	G15_068		Non-Converged Contingency	1151	1195	0.04741	-	JOHNSON COUNTY - PITTSBURG 345KV CKT 1
FDNSLock-Blown up	06ALL	0	20L	G15_068		Non-Converged Contingency	0	0	0.04737	-	P12:115:SPS:T66.1.RNDALL.HAPPY
FDNSLock-Blown up	06ALL	0	20L	G15_068		Non-Converged Contingency	0	0	0.04737	-	P12:115:SPS:T67.1.HAPPY.KRESS
FDNSLock-Blown up	06ALL	0	20L	G15_068		Non-Converged Contingency	717.1	717.1	0.04692	-	HOLCOMB - SETAB 345KV CKT 1
FDNSLock-Blown up	06ALL	0	20L	G15_068		Non-Converged Contingency	717.1	717.1	0.04692	-	HOLCOMB - SETAB 345KV CKT 1
FDNSLock-Blown up	06ALL	0	20L	G15_068		Non-Converged Contingency	0	0	0.04409	-	P12:138:AEPW-OGE:CORNVIL4:CIMARON4
FDNSLock-Blown up	06ALL	0	20L	G15_068		Non-Converged Contingency	478.05	501.55	0.04406	-	AMARILLO SOUTH INTERCHANGE - NICHOLS STATION 230KV CKT 1
FDNSLock-Blown up	06ALL	0	20L	G15_068		Non-Converged Contingency	478.05	501.55	0.04406	-	AMARILLO SOUTH INTERCHANGE - NICHOLS STATION 230KV CKT 1
FDNSLock-Blown up	06ALL	0	20L	G15_068		Non-Converged Contingency	0	0	0.04382	-	P12:115:SPS:W40.1.WCANYON.DFSMTH
FDNSLock-Blown up	06ALL	0	20L	G15_068		Non-Converged Contingency	1504	1792	0.04381	-	AXTELL - POST ROCK 345KV CKT 1
FDNSLock-Blown up	06ALL	0	20L	G15_068		Non-Converged Contingency	1195	1195	0.0436	-	CIMARRON - DRAPER LAKE 345KV CKT 1
FDNSLock-Blown up	06ALL	0	20L	G15_068		Non-Converged Contingency	1195	1195	0.04213	-	GEN520811 1-ANADRK4
FDNSLock-Blown up	06ALL	0	20L	G15_068		Non-Converged Contingency	1195	1195	0.04213	-	HUGO - SUNNYSIDE 345KV CKT 1
FDNSLock-Blown up	06ALL	0	20L	G15_068		Non-Converged Contingency	1505	1793	0.04201	-	G13-010T 345.00 - POST ROCK 345KV CKT 1
FDNSLock-Blown up	06ALL	0	20L	G15_068		Non-Converged Contingency	1505	1793	0.04201	-	G13-010T 345.00 - SPEARVILLE 345KV CKT 1
FDNSLock-Blown up	06ALL	0	20L	G15_068		Non-Converged Contingency	878	956	0.041	-	BENTON - WICHITA 345KV CKT 1
FDNSLock-Blown up	06ALL	0	20L	G15_068		Non-Converged Contingency	1035	1035	0.04027	-	EMPORIA ENERGY CENTER - G14_001T 345.00 345KV CKT 1
FDNSLock-Blown up	06ALL	0	20L	G15_068		Non-Converged Contingency	1035	1035	0.04027	-	G14_001T 345.00 - WICHITA 345KV CKT 1
FDNSLock-Blown up	06ALL	0	20L	G15_068		Non-Converged Contingency	0	0	0.03993	-	P12:138:WFEC-AEPW:WASHITA4:CLINTJC4
FDNSLock-Blown up	06ALL	0	20L	G15_068		Non-Converged Contingency	956	956	0.03855	-	GERALD GENTLEMAN STATION - RED WILLOW 345KV CKT 1
FDNSLock-Blown up	06ALL	0	20L	G15_068		Non-Converged Contingency	0	0	0.03786	-	P12:115:SPS:T59.1.CARGIL.CURRY
FDNSLock-Blown up	06ALL	0	20L	G15_068		Non-Converged Contingency	1141	1195	0.03769	-	GEN542951 5-HAWTHORN UNIT #5
FDNSLock-Blown up	06ALL	0	20L	G15_068		Non-Converged Contingency	1141	1195	0.03769	-	LACYGNE - WAVERLY7 345.00 345KV CKT 1
FDNSLock-Blown up	06ALL	0	20L	G15_068		Non-Converged Contingency	1141	1195	0.03769	-	WAVERLY7 345.00 - WOLF CREEK 345KV CKT 1
FDNSLock-Blown up	06ALL	0	20L	G15_068		Non-Converged Contingency	1195	1195	0.0373	-	MUSKOGEE - SEMINOLE 345KV CKT 1
FDNSLock-Blown up	06ALL	0	20L	G15_068		Non-Converged Contingency	497.17	546.96	0.03558	-	AMARILLO SOUTH INTERCHANGE - RANDALL COUNTY INTERCHANGE 230KV CKT 1
FDNSLock-Blown up	06ALL	0	20L	G15_068		Non-Converged Contingency	497.17	546.96	0.03558	-	AMARILLO SOUTH INTERCHANGE - RANDALL COUNTY INTERCHANGE 230KV CKT 1
FDNSLock-Blown up	06ALL	0	20L	G15_068		Non-Converged Contingency	501.95	501.95	0.03491	-	HITCHLAND INTERCHANGE - MOORE COUNTY INTERCHANGE 230KV CKT 1
FDNSLock-Blown up	06ALL	0	20L	G15_068		Non-Converged Contingency	501.95	501.95	0.03491	-	HITCHLAND INTERCHANGE - MOORE COUNTY INTERCHANGE 230KV CKT 1
FDNSLock-Blown up	06ALL	0	20L	G15_068		Non-Converged Contingency	1076	1076	0.03468	-	G15074_T 345.00 - HOYT 345KV CKT 1
FDNSLock-Blown up	06ALL	0	20L	G15_068		Non-Converged Contingency	1076	1076	0.03468	-	G15074_T 345.00 - JEFFREY ENERGY CENTER 345KV CKT 1
FDNSLock-Blown up	06ALL	0	20L	G15_068		Non-Converged Contingency	1036	1195	0.03448	-	HOYT - STRANGER CREEK 345KV CKT 1
FDNSLock-Blown up	06ALL	0	20L	G15_068		Non-Converged Contingency	560	644	0.03428	-	Hitchland Interchange (SIEM 8743067) 345/230/13.2KV TRANSFORMER CKT 2
FDNSLock-Blown up	06ALL	0	20L	G15_068		Non-Converged Contingency	560	644	0.03428	-	Hitchland Interchange (SIEM 8743067) 345/230/13.2KV TRANSFORMER CKT 2
FDNSLock-Blown up	06ALL	0	20L	G15_068		Non-Converged Contingency	0	0	0.0333	-	P12:138:AEPW:DUNCAN-4:L.E.S.-4
FDNSLock-Blown up	06ALL	0	20L	G15_068		Non-Converged Contingency	0	0	0.03239	-	P12:138:OKGE:3TERM10
FDNSLock-Blown up	06ALL	0	20L	G15_068		Non-Converged Contingency	0	0	0.0311	-	P12:138:AEPW:REDROCKRD4:WTH_JCT4
FDNSLock-Blown up	06ALL	0	20L	G15_068		Non-Converged Contingency	717	717	0.03109	-	EMPORIA ENERGY CENTER - SWISSVALE 345KV CKT 1
FDNSLock-Blown up	06ALL	0	20L	G15_068		Non-Converged Contingency	0	0	0.03058	-	P12:115:SPS:T04.1.DFSMTH.CASTRO
FDNSLock-Blown up	06ALL	0	20L	G15_068		Non-Converged Contingency	0	0	0.03021	-	P12:115:SPS:V03.1.NICHLS.EPLANT
FDNSLock-Blown up	06ALL	0	20L	G15_068		Non-Converged Contingency	560	644	0.02982	-	Hitchland Interchange (H TB80155502) 345/230/13.2KV TRANSFORMER CKT 1
FDNSLock-Blown up	06ALL	0	20L	G15_068		Non-Converged Contingency	560	644	0.02982	-	Hitchland Interchange (H TB80155502) 345/230/13.2KV TRANSFORMER CKT 1
FDNSLock-Blown up	06ALL	0	20L	G15_068		Non-Converged Contingency	318.7	350.57	0.02975	-	MOORE COUNTY INTERCHANGE - POTTER COUNTY INTERCHANGE 230KV CKT 1
FDNSLock-Blown up	06ALL	0	20L	G15_068		Non-Converged Contingency	318.7	350.57	0.02975	-	MOORE COUNTY INTERCHANGE - POTTER COUNTY INTERCHANGE 230KV CKT 1
FDNSLock-Blown up	06ALL	0	20SP	G15_068		Non-Converged Contingency	956	1042	0.24161	-	G14-074T 345.00 - OKLAUNION 345KV CKT 1
FDNSLock-Blown up	06ALL	0	20SP	G15_068		Non-Converged Contingency	1792	1972	0.20053	-	BORDER 7345.00 - TUCO_2 345.00 345KV CKT 1
FDNSLock-Blown up	06ALL	0	20SP	G15_068		Non-Converged Contingency	1420	1775	0.20053	-	BORDER 7345.00 - TUCO_2 345.00 345KV CKT 2
FDNSLock-Blown up	06ALL	0	20SP	G15_068		Non-Converged Contingency	956.09	1051.7	0.11646	-	G14_038T 345.00 - Hitchland Interchange 345KV CKT 1
FDNSLock-Blown up	06ALL	0	20SP	G15_068		Non-Converged Contingency	956.09	1051.7	0.11646	-	G14_038T 345.00 - POTTER COUNTY INTERCHANGE 345KV CKT 1
FDNSLock-Blown up	06ALL	0	20WP	G15_068		Non-Converged Contingency	1792	1972	0.48509	-	TUCO INTERCHANGE - TUCO_2 345.00 345KV CKT 1
FDNSLock-Blown up	06ALL	0	20WP	G15_068		Non-Converged Contingency	1022	1124	0.23675	-	G14-074T 345.00 - OKLAUNION 345KV CKT 1
FDNSLock-Blown up	06ALL	0	20WP	G15_068		Non-Converged Contingency	1022	1124	0.23675	-	G14-074T 345.00 - TUCO INTERCHANGE 345KV CKT 1
FDNSLock-Blown up	06ALL	0	20WP	G15_068		Non-Converged Contingency	1022	1124	0.23675	-	OKLAUNION 345KV SWITCHED SHUNT
FDNSLock-Blown up	06ALL	0	20WP	G15_068		Non-Converged Contingency	0	0	0.21735	-	P12:345:SPS:J07.1.FINN.HITCH
FDNSLock-Blown up	06ALL	0	20WP	G15_068		Non-Converged Contingency	1792	1792	0.20004	-	CHISHOLM7 345.00 - WOODWARD DISTRICT EHV 345KV CKT 1
FDNSLock-Blown up	06ALL	0	20WP	G15_068		Non-Converged Contingency	1792	1972	0.19686	-	BORDER 7345.00 - TUCO_2 345.00 345KV CKT 1
FDNSLock-Blown up	06ALL	0	20WP	G15_068		Non-Converged Contingency	1420	1775	0.19686	-	BORDER 7345.00 - TUCO_2 345.00 345KV CKT 2
FDNSLock-Blown up	06ALL	0	20WP	G15_068		Non-Converged Contingency	1792	1972	0.19686	-	BORDER 7345.00 345KV SWITCHED SHUNT
FDNSLock-Blown up	06ALL	0	20WP	G15_068		Non-Converged Contingency	956	956	0.19251	-	CIMARRON - MINCO 345KV CKT 1
FDNSLock-Blown up	06ALL	0	20WP	G15_068		Non-Converged Contingency	1195	1195	0.19251	-	GRACEMONT - MINCO 345KV CKT 1
FDNSLock-Blown up	06ALL	0	20WP	G15_068		Non-Converged Contingency	1584	2098	0.15889	-	CHISHOLM7 345.00 - GRACEMONT 345KV CKT 1
FDNSLock-Blown up	06ALL	0	20WP	G15_068		Non-Converged Contingency	717	789	0.13598	-	G14-057T 345.00 - LAWTON EASTSIDE 345KV CKT 1
FDNSLock-Blown up	06ALL	0	20WP	G15_068		Non-Converged Contingency	717	789	0.13598	-	G14-057T 345.00 - SUNNYSIDE 345KV CKT 1
FDNSLock-Blown up	06ALL	0	20WP	G15_068		Non-Converged Contingency	987.16	1082.8	0.11584	-	Hitchland Interchange - WALKTAP7 345.00 345KV CKT 1
FDNSLock-Blown up	06ALL	0	20WP	G15_068		Non-Converged Contingency	987.16	1082.8	0.11584	-	Hitchland Interchange - WALKTAP7 345.00 345KV CKT 1

SOLUTION	GROUP	SCENARIO	SEASON	SOURCE	DIRECTION	MONITORED ELEMENT	RATEA (MVA)	RATEB(MVA)	TDF	TC%LOADING (% MVA)	CONTINGENCY
FDNSLock-Blown up	06ALL	0	20WP	G15_068		Non-Converged Contingency	987.16	1082.8	0.11138	-	G14_038T 345.00 - Hitchland Interchange 345KV CKT 1
FDNSLock-Blown up	06ALL	0	20WP	G15_068		Non-Converged Contingency	987.16	1082.8	0.11138	-	G14_038T 345.00 - POTTER COUNTY INTERCHANGE 345KV CKT 1
FDNSLock-Blown up	06ALL	0	20WP	G15_068		Non-Converged Contingency	560	560	0.11138	-	POTTER COUNTY INTERCHANGE (WAUK 90343-A) 345/230/13.2KV TRANSFORMER CKT 1
FDNSLock-Blown up	06ALL	0	20WP	G15_068		Non-Converged Contingency	560	560	0.11138	-	POTTER COUNTY INTERCHANGE (WAUK 90343-A) 345/230/13.2KV TRANSFORMER CKT 1
FDNSLock-Blown up	06ALL	0	20WP	G15_068		Non-Converged Contingency	956.09	1051.7	0.10151	-	FINNEY SWITCHING STATION - HOLCOMB 345KV CKT 1
FDNSLock-Blown up	06ALL	0	20WP	G15_068		Non-Converged Contingency	956.09	1051.7	0.10151	-	FINNEY SWITCHING STATION - HOLCOMB 345KV CKT 1
FDNSLock-Blown up	06ALL	0	20WP	G15_068		Non-Converged Contingency	987.16	1082.8	0.10151	-	FINNEY SWITCHING STATION - WALKTAP7 345.00 345KV CKT 1
FDNSLock-Blown up	06ALL	0	20WP	G15_068		Non-Converged Contingency	987.16	1082.8	0.10151	-	FINNEY SWITCHING STATION - WALKTAP7 345.00 345KV CKT 1
FDNSLock-Blown up	06ALL	0	20WP	G15_068		Non-Converged Contingency	0	0	0.08923	-	P12:230:AEPW:ELKCITY6:SWEETWT6
FDNSLock-Blown up	06ALL	0	20WP	G15_068		Non-Converged Contingency	1561	1793	0.08841	-	THISTLE7 345.00 - WOODWARD DISTRICT EHV 345KV CKT 1
FDNSLock-Blown up	06ALL	0	20WP	G15_068		Non-Converged Contingency	1561	1793	0.08841	-	THISTLE7 345.00 - WOODWARD DISTRICT EHV 345KV CKT 1
FDNSLock-Blown up	06ALL	0	20WP	G15_068		Non-Converged Contingency	1561	1793	0.08841	-	THISTLE7 345.00 - WOODWARD DISTRICT EHV 345KV CKT 2
FDNSLock-Blown up	06ALL	0	20WP	G15_068		Non-Converged Contingency	1561	1793	0.08841	-	THISTLE7 345.00 - WOODWARD DISTRICT EHV 345KV CKT 2
FDNSLock-Blown up	06ALL	0	20WP	G15_068		Non-Converged Contingency	478	502	0.08658	-	AMARILLO SOUTH INTERCHANGE - G15031_T 230.00 230KV CKT 1
FDNSLock-Blown up	06ALL	0	20WP	G15_068		Non-Converged Contingency	1420	1775	0.0811	-	G11_051T 345.00 - TATONGA7 345.00 345KV CKT 1
FDNSLock-Blown up	06ALL	0	20WP	G15_068		Non-Converged Contingency	1420	1775	0.0811	-	G11_051T 345.00 - WOODWARD DISTRICT EHV 345KV CKT 1
FDNSLock-Blown up	06ALL	0	20WP	G15_068		Non-Converged Contingency	1195	1195	0.0811	-	MATHWSN7 345.00 - TATONGA7 345.00 345KV CKT 1
FDNSLock-Blown up	06ALL	0	20WP	G15_068		Non-Converged Contingency	557	557	0.0808	-	NEWHART 230 - POTTER COUNTY INTERCHANGE 230KV CKT 1
FDNSLock-Blown up	06ALL	0	20WP	G15_068		Non-Converged Contingency	557	557	0.07361	-	BUSHLAND INTERCHANGE - DEAF SMITH COUNTY INTERCHANGE 230KV CKT 1
FDNSLock-Blown up	06ALL	0	20WP	G15_068		Non-Converged Contingency	557	557	0.07361	-	BUSHLAND INTERCHANGE - DEAF SMITH COUNTY INTERCHANGE 230KV CKT 1
FDNSLock-Blown up	06ALL	0	20WP	G15_068		Non-Converged Contingency	329.05	360.92	0.06763	-	BUSHLAND INTERCHANGE - POTTER COUNTY INTERCHANGE 230KV CKT 1
FDNSLock-Blown up	06ALL	0	20WP	G15_068		Non-Converged Contingency	329.05	360.92	0.06763	-	BUSHLAND INTERCHANGE - POTTER COUNTY INTERCHANGE 230KV CKT 1
FDNSLock-Blown up	06ALL	0	20WP	G15_068		Non-Converged Contingency	329.05	360.92	0.06282	-	DEAF SMITH COUNTY INTERCHANGE - G15039_T 230.00 230KV CKT 1
FDNSLock-Blown up	06ALL	0	20WP	G15_068		Non-Converged Contingency	329.05	360.92	0.06282	-	G15039_T 230.00 - PLANT X STATION 230KV CKT 1
FDNSLock-Blown up	06ALL	0	20WP	G15_068		Non-Converged Contingency	0	0	0.05443	-	P12:230:AEPW-SPS:SWEETWT6:WHEELER 6
FDNSLock-Blown up	06ALL	0	20WP	G15_068		Non-Converged Contingency	556.92	556.92	0.04745	-	HITCHLAND INTERCHANGE - MOORE COUNTY INTERCHANGE 230KV CKT 1
FDNSLock-Blown up	06ALL	0	20WP	G15_068		Non-Converged Contingency	556.92	556.92	0.04745	-	HITCHLAND INTERCHANGE - MOORE COUNTY INTERCHANGE 230KV CKT 1
FDNSLock-Blown up	06ALL	0	20WP	G15_068		Non-Converged Contingency	1793	1793	0.04171	-	G11-14T 345.00 - WOODWARD DISTRICT EHV 345KV CKT 1
FDNSLock-Blown up	06ALL	0	20WP	G15_068		Non-Converged Contingency	1716	1793	0.04171	-	G11-14T 345.00 - WOODWARD DISTRICT EHV 345KV CKT 2
FDNSLock-Blown up	06ALL	0	20WP	G15_068		Non-Converged Contingency	329.05	360.92	0.03996	-	MOORE COUNTY INTERCHANGE - POTTER COUNTY INTERCHANGE 230KV CKT 1
FDNSLock-Blown up	06ALL	0	20WP	G15_068		Non-Converged Contingency	329.05	360.92	0.03996	-	MOORE COUNTY INTERCHANGE - POTTER COUNTY INTERCHANGE 230KV CKT 1
FDNSLock-Blown up	06ALL	2	16WP	G15_068		Non-Converged Contingency	1022	1124	0.24858	-	G14-074T 345.00 - OKLAUNION 345KV CKT 1
FDNSLock-Blown up	06ALL	2	16WP	G15_068		Non-Converged Contingency	1022	1124	0.24858	-	G14-074T 345.00 - TUCO INTERCHANGE 345KV CKT 1
FDNSLock-Blown up	06ALL	2	16WP	G15_068		Non-Converged Contingency	1792	1972	0.20648	-	BORDER 7345.00 - TUCO_2 345.00 345KV CKT 1
FDNSLock-Blown up	06ALL	2	16WP	G15_068		Non-Converged Contingency	1420	1775	0.20648	-	BORDER 7345.00 - TUCO_2 345.00 345KV CKT 2
FDNSLock-Blown up	06ALL	2	16WP	G15_068		Non-Converged Contingency	987.16	1082.8	0.11392	-	G14_038T 345.00 - Hitchland Interchange 345KV CKT 1
FDNSLock-Blown up	06ALL	2	16WP	G15_068		Non-Converged Contingency	987.16	1082.8	0.11392	-	G14_038T 345.00 - POTTER COUNTY INTERCHANGE 345KV CKT 1
FDNSLock-Blown up	06ALL	2	16WP	G15_068		Non-Converged Contingency	560	560	0.11392	-	POTTER COUNTY INTERCHANGE (WAUK 90343-A) 345/230/13.2KV TRANSFORMER CKT 1
FDNSLock-Blown up	06ALL	2	17G	G15_068		Non-Converged Contingency	1022	1124	0.24203	-	G14-074T 345.00 - OKLAUNION 345KV CKT 1
FDNSLock-Blown up	06ALL	2	17G	G15_068		Non-Converged Contingency	1022	1124	0.24203	-	G14-074T 345.00 - TUCO INTERCHANGE 345KV CKT 1
FDNSLock-Blown up	06ALL	2	17G	G15_068		Non-Converged Contingency	1792	1972	0.20074	-	BORDER 7345.00 - TUCO_2 345.00 345KV CKT 1
FDNSLock-Blown up	06ALL	2	17G	G15_068		Non-Converged Contingency	1420	1775	0.20074	-	BORDER 7345.00 - TUCO_2 345.00 345KV CKT 2
FDNSLock-Blown up	06ALL	2	17G	G15_068		Non-Converged Contingency	956.09	1051.7	0.1047	-	G14_038T 345.00 - Hitchland Interchange 345KV CKT 1
FDNSLock-Blown up	06ALL	2	17G	G15_068		Non-Converged Contingency	956.09	1051.7	0.1047	-	G14_038T 345.00 - POTTER COUNTY INTERCHANGE 345KV CKT 1
FDNSLock-Blown up	06ALL	2	17G	G15_068		Non-Converged Contingency	560	560	0.1047	-	POTTER COUNTY INTERCHANGE (WAUK 90343-A) 345/230/13.2KV TRANSFORMER CKT 1
FDNSLock-Blown up	06NR	2	17G	G15_068		Non-Converged Contingency	1022	1124	0.10191	-	G14-074T 345.00 - OKLAUNION 345KV CKT 1
FDNSLock-Blown up	06NR	2	17G	G15_068		Non-Converged Contingency	1022	1124	0.10191	-	G14-074T 345.00 - TUCO INTERCHANGE 345KV CKT 1
FDNSLock-Blown up	06NR	2	17G	G15_068		Non-Converged Contingency	1792	1972	0.0962	-	BORDER 7345.00 - TUCO_2 345.00 345KV CKT 1
FDNSLock-Blown up	06NR	2	17G	G15_068		Non-Converged Contingency	1792	1792	0.0962	-	BORDER 7345.00 - WOODWARD DISTRICT EHV 345KV CKT 1
FDNSLock-Blown up	06ALL	2	17SP	G15_068		Non-Converged Contingency	956	1042	0.24567	-	G14-074T 345.00 - OKLAUNION 345KV CKT 1
FDNSLock-Blown up	06ALL	2	20L	G15_068		Non-Converged Contingency	1022	1124	0.20754	-	G14-074T 345.00 - OKLAUNION 345KV CKT 1
FDNSLock-Blown up	06ALL	2	20L	G15_068		Non-Converged Contingency	1022	1124	0.20754	-	G14-074T 345.00 - TUCO INTERCHANGE 345KV CKT 1
FDNSLock-Blown up	06ALL	2	20L	G15_068		Non-Converged Contingency	1022	1124	0.20754	-	OKLAUNION 345KV SWITCHED SHUNT
FDNSLock-Blown up	06ALL	2	20L	G15_068		Non-Converged Contingency	0	0	0.17678	-	P12:345:SPS:J07.1.FINN.HITCH
FDNSLock-Blown up	06ALL	2	20L	G15_068		Non-Converged Contingency	1792	1972	0.17633	-	BORDER 7345.00 - TUCO_2 345.00 345KV CKT 1
FDNSLock-Blown up	06ALL	2	20L	G15_068		Non-Converged Contingency	1420	1775	0.17633	-	BORDER 7345.00 - TUCO_2 345.00 345KV CKT 2
FDNSLock-Blown up	06ALL	2	20L	G15_068		Non-Converged Contingency	1584	2098	0.13322	-	CHISHOLM7 345.00 - GRACEMONT 345KV CKT 1
FDNSLock-Blown up	06ALL	2	20L	G15_068		Non-Converged Contingency	956.09	1051.7	0.09441	-	Hitchland Interchange - WALKTAP7 345.00 345KV CKT 1
FDNSLock-Blown up	06ALL	2	20L	G15_068		Non-Converged Contingency	956.09	1051.7	0.09441	-	Hitchland Interchange - WALKTAP7 345.00 345KV CKT 1
FDNSLock-Blown up	06NR	2	20L	G15_068		Non-Converged Contingency	1022	1124	0.09073	-	G14-074T 345.00 - OKLAUNION 345KV CKT 1
FDNSLock-Blown up	06NR	2	20L	G15_068		Non-Converged Contingency	1022	1124	0.09073	-	G14-074T 345.00 - TUCO INTERCHANGE 345KV CKT 1
FDNSLock-Blown up	06NR	2	20L	G15_068		Non-Converged Contingency	1022	1124	0.09073	-	OKLAUNION 345KV SWITCHED SHUNT
FDNSLock-Blown up	06NR	2	20L	G15_068		Non-Converged Contingency	1792	1972	0.0858	-	BORDER 7345.00 - TUCO_2 345.00 345KV CKT 1
FDNSLock-Blown up	06NR	2	20L	G15_068		Non-Converged Contingency	1792	1792	0.0858	-	BORDER 7345.00 - WOODWARD DISTRICT EHV 345KV CKT 1
FDNSLock-Blown up	06NR	2	20L	G15_068		Non-Converged Contingency	1792	1972	0.0858	-	BORDER 7345.00 345KV SWITCHED SHUNT
FDNSLock-Blown up	06NR	2	20L	G15_068		Non-Converged Contingency	478	502	0.08365	-	AMARILLO SOUTH INTERCHANGE - G15031_T 230.00 230KV CKT 1
FDNSLock-Blown up	06ALL	2	20L	G15_068		Non-Converged Contingency	956.09	1051.7	0.08285	-	G14_038T 345.00 - Hitchland Interchange 345KV CKT 1
FDNSLock-Blown up	06ALL	2	20L	G15_068		Non-Converged Contingency	956.09	1051.7	0.08285	-	G14_038T 345.00 - POTTER COUNTY INTERCHANGE 345KV CKT 1
FDNSLock-Blown up	06ALL	2	20L	G15_068		Non-Converged Contingency	560	560	0.08285	-	POTTER COUNTY INTERCHANGE (WAUK 90343-A) 345/230/13.2KV TRANSFORMER CKT 1
FDNSLock-Blown up	06ALL	2	20L	G15_068		Non-Converged Contingency	560	560	0.08285	-	POTTER COUNTY INTERCHANGE (WAUK 90343-A) 345/230/13.2KV TRANSFORMER CKT 1
FDNSLock-Blown up	06ALL	2	20L	G15_068		Non-Converged Contingency	1195	1195	0.06693	-	MATHWSN7 345.00 - TATONGA7 345.00 345KV CKT 1
FDNSLock-Blown up	06ALL	2	20L	G15_068		Non-Converged Contingency	0	0	0.06248	-	P12:230:AEPW:ELKCITY6:SWEETWT6
FDNSLock-Blown up	06NR	2	20L	G15_068		Non-Converged Contingency	478	502	0.05447	-	NEWHART 230 - POTTER COUNTY INTERCHANGE 230KV CKT 1
FDNSLock-Blown up	06ALL	2	20SP	G15_068		Non-Converged Contingency	956	1042	0.2417	-	G14-074T 345.00 - OKLAUNION 345KV CKT 1
FDNSLock-Blown up	06ALL	2	20WP	G15_068		Non-Converged Contingency	1022	1124	0.23699	-	G14-074T 345.00 - OKLAUNION 345KV CKT 1
FDNSLock-Blown up	06ALL	2	20WP	G15_068		Non-Converged Contingency	1022	1124	0.23699	-	G14-074T 345.00 - TUCO INTERCHANGE 345KV CKT 1
FDNSLock-Blown up	06ALL	2	20WP	G15_068		Non-Converged Contingency	1792	1972	0.19707	-	BORDER 7345.00 - TUCO_2 345.00 345KV CKT 1
FDNSLock-Blown up	06ALL	2	20WP	G15_068		Non-Converged Contingency	1420	1775	0.19707	-	BORDER 7345.00 - TUCO_2 345.00 345KV CKT 2
FDNSLock-Blown up	06ALL	2	20WP	G15_068		Non-Converged Contingency	987.16	1082.8	0.1116	-	G14_038T 345.00 - Hitchland Interchange 345KV CKT 1

SOLUTION	GROUP	SCENARIO	SEASON	SOURCE	DIRECTION	MONITORED ELEMENT	RATEA (MVA)	RATEB(MVA)	TDF	TC%LOADING (% MVA)	CONTINGENCY
FDNSLock-Blown up	06ALL	2	20WP	G15_068		Non-Converged Contingency	987.16	1082.8	0.1116	-	G14_038T 345.00 - POTTER COUNTY INTERCHANGE 345KV CKT 1
FDNSLock-Blown up	06ALL	2	20WP	G15_068		Non-Converged Contingency	560	560	0.1116	-	POTTER COUNTY INTERCHANGE (WAUK 90343-A) 345/230/13.2KV TRANSFORMER CKT 1
FDNSLock-Blown up	06ALL	2	20WP	G15_068		Non-Converged Contingency	560	560	0.1116	-	POTTER COUNTY INTERCHANGE (WAUK 90343-A) 345/230/13.2KV TRANSFORMER CKT 1
FDNSLock-Blown up	06ALL	3	16WP	G15_068		Non-Converged Contingency	1022	1124	0.2444	-	G14-074T 345.00 - OKLAUNION 345KV CKT 1
FDNSLock-Blown up	06ALL	3	16WP	G15_068		Non-Converged Contingency	1022	1124	0.2444	-	G14-074T 345.00 - TUCO INTERCHANGE 345KV CKT 1
FDNSLock-Blown up	06NR	3	17G	G15_068		Non-Converged Contingency	1022	1124	0.08358	-	G14-074T 345.00 - OKLAUNION 345KV CKT 1
FDNSLock-Blown up	06NR	3	17G	G15_068		Non-Converged Contingency	1022	1124	0.08358	-	G14-074T 345.00 - TUCO INTERCHANGE 345KV CKT 1
FDNSLock-Blown up	06NR	3	17G	G15_068		Non-Converged Contingency	1792	1972	0.07737	-	BORDER 7345.00 - TUCO_2 345.00 345KV CKT 1
FDNSLock-Blown up	06NR	3	17G	G15_068		Non-Converged Contingency	1792	1792	0.07737	-	BORDER 7345.00 - WOODWARD DISTRICT EHV 345KV CKT 1
FDNSLock-Blown up	06ALL	3	17SP	G15_068		Non-Converged Contingency	956	1042	0.24131	-	G14-074T 345.00 - OKLAUNION 345KV CKT 1
FDNSLock-Blown up	06ALL	3	20L	G15_068		Non-Converged Contingency	1022	1124	0.20455	-	G14-074T 345.00 - OKLAUNION 345KV CKT 1
FDNSLock-Blown up	06ALL	3	20L	G15_068		Non-Converged Contingency	1022	1124	0.20455	-	G14-074T 345.00 - TUCO INTERCHANGE 345KV CKT 1
FDNSLock-Blown up	06ALL	3	20L	G15_068		Non-Converged Contingency	1792	1972	0.17228	-	BORDER 7345.00 - TUCO_2 345.00 345KV CKT 1
FDNSLock-Blown up	06ALL	3	20L	G15_068		Non-Converged Contingency	1420	1775	0.17228	-	BORDER 7345.00 - TUCO_2 345.00 345KV CKT 2
FDNSLock-Blown up	06ALL	3	20L	G15_068		Non-Converged Contingency	1584	2098	0.13312	-	CHISHOLM7 345.00 - GRACEMONT 345KV CKT 1
FDNSLock-Blown up	06ALL	3	20L	G15_068		Non-Converged Contingency	956.09	1051.7	0.09732	-	Hitchland Interchange - WALKTAP7 345.00 345KV CKT 1
FDNSLock-Blown up	06ALL	3	20L	G15_068		Non-Converged Contingency	956.09	1051.7	0.08864	-	G14_038T 345.00 - Hitchland Interchange 345KV CKT 1
FDNSLock-Blown up	06ALL	3	20L	G15_068		Non-Converged Contingency	956.09	1051.7	0.08864	-	G14_038T 345.00 - POTTER COUNTY INTERCHANGE 345KV CKT 1
FDNSLock-Blown up	06ALL	3	20L	G15_068		Non-Converged Contingency	560	560	0.08864	-	POTTER COUNTY INTERCHANGE (WAUK 90343-A) 345/230/13.2KV TRANSFORMER CKT 1
FDNSLock-Blown up	06NR	3	20L	G15_068		Non-Converged Contingency	1022	1124	0.07987	-	G14-074T 345.00 - OKLAUNION 345KV CKT 1
FDNSLock-Blown up	06NR	3	20L	G15_068		Non-Converged Contingency	1022	1124	0.07987	-	G14-074T 345.00 - TUCO INTERCHANGE 345KV CKT 1
FDNSLock-Blown up	06NR	3	20L	G15_068		Non-Converged Contingency	1022	1124	0.07987	-	OKLAUNION 345KV SWITCHED SHUNT
FDNSLock-Blown up	06NR	3	20L	G15_068		Non-Converged Contingency	1792	1972	0.07438	-	BORDER 7345.00 - TUCO_2 345.00 345KV CKT 1
FDNSLock-Blown up	06NR	3	20L	G15_068		Non-Converged Contingency	1792	1792	0.07438	-	BORDER 7345.00 - WOODWARD DISTRICT EHV 345KV CKT 1
FDNSLock-Blown up	06NR	3	20L	G15_068		Non-Converged Contingency	1792	1972	0.07438	-	BORDER 7345.00 345KV SWITCHED SHUNT
FDNSLock-Blown up	06ALL	3	20L	G15_068		Non-Converged Contingency	1195	1195	0.06866	-	MATHWSN7 345.00 - TATONGA7 345.00 345KV CKT 1
FDNSLock-Blown up	06ALL	3	20SP	G15_068		Non-Converged Contingency	956	1042	0.23882	-	G14-074T 345.00 - OKLAUNION 345KV CKT 1
FDNSLock-Blown up	06ALL	3	20WP	G15_068		Non-Converged Contingency	1022	1124	0.23423	-	G14-074T 345.00 - OKLAUNION 345KV CKT 1
FDNSLock-Blown up	06ALL	3	20WP	G15_068		Non-Converged Contingency	1022	1124	0.23423	-	G14-074T 345.00 - TUCO INTERCHANGE 345KV CKT 1
FDNSLock-Blown up	06ALL	3	20WP	G15_068		Non-Converged Contingency	1792	1972	0.1935	-	BORDER 7345.00 - TUCO_2 345.00 345KV CKT 1
FDNSLock-Blown up	06ALL	3	20WP	G15_068		Non-Converged Contingency	1420	1775	0.1935	-	BORDER 7345.00 - TUCO_2 345.00 345KV CKT 2
FDNSLock-Blown up	06ALL	3	20WP	G15_068		Non-Converged Contingency	987.16	1082.8	0.11606	-	G14_038T 345.00 - Hitchland Interchange 345KV CKT 1
FDNSLock-Blown up	06ALL	3	20WP	G15_068		Non-Converged Contingency	987.16	1082.8	0.11606	-	G14_038T 345.00 - POTTER COUNTY INTERCHANGE 345KV CKT 1
FDNSLock-Blown up	06ALL	4	16WP	G15_068		Non-Converged Contingency	1022	1124	0.22762	-	G14-074T 345.00 - OKLAUNION 345KV CKT 1
FDNSLock-Blown up	06ALL	4	17G	G15_068		Non-Converged Contingency	1022	1124	0.2211	-	G14-074T 345.00 - OKLAUNION 345KV CKT 1
FDNSLock-Blown up	06ALL	4	17G	G15_068		Non-Converged Contingency	1022	1124	0.2211	-	G14-074T 345.00 - TUCO INTERCHANGE 345KV CKT 1
FDNSLock-Blown up	06ALL	4	17G	G15_068		Non-Converged Contingency	956.09	1051.7	0.1548	-	G14_038T 345.00 - Hitchland Interchange 345KV CKT 1
FDNSLock-Blown up	06ALL	4	17G	G15_068		Non-Converged Contingency	956.09	1051.7	0.1548	-	G14_038T 345.00 - POTTER COUNTY INTERCHANGE 345KV CKT 1
FDNSLock-Blown up	06NR	4	17G	G15_068		Non-Converged Contingency	1022	1124	0.0729	-	G14-074T 345.00 - OKLAUNION 345KV CKT 1
FDNSLock-Blown up	06NR	4	17G	G15_068		Non-Converged Contingency	1022	1124	0.0729	-	G14-074T 345.00 - TUCO INTERCHANGE 345KV CKT 1
FDNSLock-Blown up	06NR	4	17G	G15_068		Non-Converged Contingency	1792	1972	0.06629	-	BORDER 7345.00 - TUCO_2 345.00 345KV CKT 1
FDNSLock-Blown up	06NR	4	17G	G15_068		Non-Converged Contingency	1792	1792	0.06629	-	BORDER 7345.00 - WOODWARD DISTRICT EHV 345KV CKT 1
FDNSLock-Blown up	06ALL	4	20L	G15_068		Non-Converged Contingency	0	0	0.20227	-	P12:345:SPS:J07.1.FINN.HITCH
FDNSLock-Blown up	06ALL	4	20L	G15_068		Non-Converged Contingency	1022	1124	0.18943	-	G14-074T 345.00 - OKLAUNION 345KV CKT 1
FDNSLock-Blown up	06ALL	4	20L	G15_068		Non-Converged Contingency	1022	1124	0.18943	-	G14-074T 345.00 - TUCO INTERCHANGE 345KV CKT 1
FDNSLock-Blown up	06ALL	4	20L	G15_068		Non-Converged Contingency	1792	1972	0.15596	-	BORDER 7345.00 - TUCO_2 345.00 345KV CKT 1
FDNSLock-Blown up	06ALL	4	20L	G15_068		Non-Converged Contingency	1420	1775	0.15596	-	BORDER 7345.00 - TUCO_2 345.00 345KV CKT 2
FDNSLock-Blown up	06ALL	4	20L	G15_068		Non-Converged Contingency	1584	2098	0.12999	-	CHISHOLM7 345.00 - GRACEMONT 345KV CKT 1
FDNSLock-Blown up	06ALL	4	20L	G15_068		Non-Converged Contingency	956.09	1051.7	0.1299	-	G14_038T 345.00 - Hitchland Interchange 345KV CKT 1
FDNSLock-Blown up	06ALL	4	20L	G15_068		Non-Converged Contingency	956.09	1051.7	0.1299	-	G14_038T 345.00 - POTTER COUNTY INTERCHANGE 345KV CKT 1
FDNSLock-Blown up	06ALL	4	20L	G15_068		Non-Converged Contingency	956.09	1051.7	0.108	-	Hitchland Interchange - WALKTAP7 345.00 345KV CKT 1
FDNSLock-Blown up	06ALL	4	20L	G15_068		Non-Converged Contingency	956.09	1051.7	0.108	-	Hitchland Interchange - WALKTAP7 345.00 345KV CKT 1
FDNSLock-Blown up	06ALL	4	20L	G15_068		Non-Converged Contingency	0	0	0.07382	-	P12:230:AEPW:ELKCITY6:SWEETWT6
FDNSLock-Blown up	06NR	4	20L	G15_068		Non-Converged Contingency	1022	1124	0.06743	-	G14-074T 345.00 - OKLAUNION 345KV CKT 1
FDNSLock-Blown up	06NR	4	20L	G15_068		Non-Converged Contingency	1022	1124	0.06743	-	G14-074T 345.00 - TUCO INTERCHANGE 345KV CKT 1
FDNSLock-Blown up	06NR	4	20L	G15_068		Non-Converged Contingency	1022	1124	0.06743	-	OKLAUNION 345KV SWITCHED SHUNT
FDNSLock-Blown up	06NR	4	20L	G15_068		Non-Converged Contingency	1792	1972	0.0615	-	BORDER 7345.00 - TUCO_2 345.00 345KV CKT 1
FDNSLock-Blown up	06NR	4	20L	G15_068		Non-Converged Contingency	1792	1792	0.0615	-	BORDER 7345.00 - WOODWARD DISTRICT EHV 345KV CKT 1
FDNSLock-Blown up	06ALL	4	20WP	G15_068		Non-Converged Contingency	1022	1124	0.21737	-	G14-074T 345.00 - OKLAUNION 345KV CKT 1
FDNSLock-Blown up	06ALL	4	20WP	G15_068		Non-Converged Contingency	1022	1124	0.21737	-	G14-074T 345.00 - TUCO INTERCHANGE 345KV CKT 1
FDNSLock-Blown up	06ALL	4	20WP	G15_068		Non-Converged Contingency	987.16	1082.8	0.16041	-	G14_038T 345.00 - Hitchland Interchange 345KV CKT 1
FDNSLock-Blown up	06ALL	5	16WP	G15_068		Non-Converged Contingency	1022	1124	0.22352	-	G14-074T 345.00 - OKLAUNION 345KV CKT 1
FDNSLock-Blown up	06ALL	5	17G	G15_068		Non-Converged Contingency	1022	1124	0.21749	-	G14-074T 345.00 - OKLAUNION 345KV CKT 1
FDNSLock-Blown up	06NR	5	17G	G15_068		Non-Converged Contingency	1022	1124	0.07754	-	G14-074T 345.00 - OKLAUNION 345KV CKT 1
FDNSLock-Blown up	06NR	5	17G	G15_068		Non-Converged Contingency	1792	1792	0.06804	-	BORDER 7345.00 - WOODWARD DISTRICT EHV 345KV CKT 1
FDNSLock-Blown up	06ALL	5	20L	G15_068		Non-Converged Contingency	1022	1124	0.18784	-	G14-074T 345.00 - OKLAUNION 345KV CKT 1
FDNSLock-Blown up	06NR	5	20L	G15_068		Non-Converged Contingency	1022	1124	0.07129	-	G14-074T 345.00 - OKLAUNION 345KV CKT 1
FDNSLock-Blown up	06NR	5	20L	G15_068		Non-Converged Contingency	1022	1124	0.07129	-	G14-074T 345.00 - TUCO INTERCHANGE 345KV CKT 1
FDNSLock-Blown up	06NR	5	20L	G15_068		Non-Converged Contingency	1792	1972	0.06298	-	BORDER 7345.00 - TUCO_2 345.00 345KV CKT 1
FDNSLock-Blown up	06NR	5	20L	G15_068		Non-Converged Contingency	1792	1792	0.06298	-	BORDER 7345.00 - WOODWARD DISTRICT EHV 345KV CKT 1
FDNSLock-Blown up	06ALL	5	20WP	G15_068		Non-Converged Contingency	1022	1124	0.21297	-	G14-074T 345.00 - OKLAUNION 345KV CKT 1
FDNSLock-Blown up	06ALL	6	17G	G15_068		Non-Converged Contingency	1022	1124	0.2109	-	G14-074T 345.00 - OKLAUNION 345KV CKT 1
FDNSLock-Blown up	06NR	6	17G	G15_068		Non-Converged Contingency	1022	1124	0.07782	-	G14-074T 345.00 - OKLAUNION 345KV CKT 1
FDNSLock-Blown up	06ALL	6	20L	G15_068		Non-Converged Contingency	1022	1124	0.18213	-	G14-074T 345.00 - OKLAUNION 345KV CKT 1
FDNSLock-Blown up	06NR	6	20L	G15_068		Non-Converged Contingency	1022	1124	0.07153	-	G14-074T 345.00 - OKLAUNION 345KV CKT 1
FDNSLock-Blown up	06NR	6	20L	G15_068		Non-Converged Contingency	1792	1972	0.06353	-	BORDER 7345.00 - TUCO_2 345.00 345KV CKT 1
FDNSLock-Blown up	06NR	6	20L	G15_068		Non-Converged Contingency	1792	1792	0.06353	-	BORDER 7345.00 - WOODWARD DISTRICT EHV 345KV CKT 1
FDNSLock-Blown up	06ALL	6	20WP	G15_068		Non-Converged Contingency	1022	1124	0.20643	-	G14-074T 345.00 - OKLAUNION 345KV CKT 1
FDNSLock-Blown up	06NR	7	20L	G15_068		Non-Converged Contingency	1022	1124	0.07153	-	G14-074T 345.00 - OKLAUNION 345KV CKT 1

SOLUTION	GROUP	SCENARIO	SEASON	SOURCE	DIRECTION	MONITORED ELEMENT	RATEA (MVA)	RATEB(MVA)	TDF	TC%LOADING (% MVA)	CONTINGENCY
FDNS	06ALL	0	16WP	G15_068	FROM->TO	BUSHLAND INTERCHANGE - POTTER COUNTY INTERCHANGE 230KV CKT 1	329.05	360.92	0.0653	103.4995	BASE CASE
FDNS	00NR	0	25SP	G15_068	FROM->TO	CARLISLE INTERCHANGE - LP-DOUD_TP 3115.00 115KV CKT 1	159	160	0.03328	110.1627	WOLFFORTH INTERCHANGE (WH 7001668) 230/115/13.2KV TRANSFORMER CKT 1
FDNS	00NR	0	25SP	G15_068	FROM->TO	CARLISLE INTERCHANGE - LP-DOUD_TP 3115.00 115KV CKT 1	159	160	0.03328	110.1627	WOLFFORTH INTERCHANGE (WH 7001668) 230/115/13.2KV TRANSFORMER CKT 1
FDNS	00NR	0	25SP	G15_068	FROM->TO	CARLISLE INTERCHANGE - LP-DOUD_TP 3115.00 115KV CKT 1	159	160	0.04998	99.9	TUCO INTERCHANGE - YOAKUM_345 345.00 345KV CKT 1
FDNS	06ALL	0	20SP	G15_068	FROM->TO	CHISHOLM6 230.00 - ELK CITY 230KV 230KV CKT 1	353	353	0.06371	106.4803	BASE CASE
FDNS	06ALL	0	17SP	G15_068	FROM->TO	CHISHOLM6 230.00 - ELK CITY 230KV 230KV CKT 1	353	353	0.06397	104.7427	BASE CASE
FDNS	06ALL	0	17SP	G15_068	TO->FROM	CIMARRON - MINCO 345KV CKT 1	956	956	0.26835	123.2446	G14-057T 345.00 - SUNNYSIDE 345KV CKT 1
FDNS	06ALL	0	20SP	G15_068	TO->FROM	CIMARRON - MINCO 345KV CKT 1	956	956	0.26507	120.5642	G14-057T 345.00 - SUNNYSIDE 345KV CKT 1
FDNS	06ALL	0	17SP	G15_068	TO->FROM	CIMARRON - MINCO 345KV CKT 1	956	956	0.26835	117.8925	G14-057T 345.00 - LAWTON EASTSIDE 345KV CKT 1
FDNS	06ALL	0	20SP	G15_068	TO->FROM	CIMARRON - MINCO 345KV CKT 1	956	956	0.26507	115.1699	G14-057T 345.00 - LAWTON EASTSIDE 345KV CKT 1
FDNS	06ALL	0	17SP	G15_068	TO->FROM	CIMARRON - MINCO 345KV CKT 1	956	956	0.22346	105.5731	MATHWSN7 345.00 - TATONGA7 345.00 345KV CKT 1
FDNS	06ALL	0	20SP	G15_068	TO->FROM	CIMARRON - MINCO 345KV CKT 1	956	956	0.22125	104.5241	MATHWSN7 345.00 - TATONGA7 345.00 345KV CKT 1
FDNS	06NR	0	17G	G15_068	TO->FROM	CIMARRON - MINCO 345KV CKT 1	956	956	0.02972	103.8817	G14-057T 345.00 - SUNNYSIDE 345KV CKT 1
FDNS	06ALL	0	20SP	G15_068	TO->FROM	CIMARRON - MINCO 345KV CKT 1	956	956	0.27244	102.9387	CHISHOLM7 345.00 - WOODWARD DISTRICT EHV 345KV CKT 1
FDNS	06ALL	0	17SP	G15_068	TO->FROM	CIMARRON - MINCO 345KV CKT 1	956	956	0.27664	102.0892	CHISHOLM7 345.00 - WOODWARD DISTRICT EHV 345KV CKT 1
FDNS	06ALL	0	20WP	G15_068	TO->FROM	CIMARRON - MINCO 345KV CKT 1	956	956	0.20835	100.5381	P12:138:WFEC:MSL03
FDNS	06ALL	0	17SP	G15_068	TO->FROM	CIMARRON - MINCO 345KV CKT 1	956	956	0.22346	100.3376	G11_051T 345.00 - TATONGA7 345.00 345KV CKT 1
FDNS	06ALL	0	20SP	G15_068	TO->FROM	DEAF SMITH COUNTY INTERCHANGE - G15039_T 230.00 230KV CKT 1	318.7	350.57	0.0641	110.3343	BASE CASE
FDNS	06ALL	0	17SP	G15_068	TO->FROM	DEAF SMITH COUNTY INTERCHANGE - G15039_T 230.00 230KV CKT 1	318.7	350.57	0.05938	108.4885	BASE CASE
FDNSLock	06ALL	0	20WP	G15_068		ELK CITY 230KV (ELKCTY-6) 230/138/13.8KV TRANSFORMER CKT 1	450	450	0.06201	87.66341	BASE CASE
FDNSLock	06ALL	0	20WP	G15_068		ELK CITY 230KV (ELKCTY-6) 230/138/13.8KV TRANSFORMER CKT 1	450	450	0.06201	87.66341	BASE CASE
FDNS	06ALL	0	20L	G15_068	TO->FROM	G14-057T 345.00 - LAWTON EASTSIDE 345KV CKT 1	717	789	0.11223	108.0268	BASE CASE
FDNS	06ALL	0	17SP	G15_068	TO->FROM	G14-057T 345.00 - LAWTON EASTSIDE 345KV CKT 1	717	789	0.19572	106.8675	CIMARRON - MINCO 345KV CKT 1
FDNS	06ALL	0	17SP	G15_068	TO->FROM	G14-057T 345.00 - LAWTON EASTSIDE 345KV CKT 1	717	789	0.19572	101.8214	GRACEMONT - MINCO 345KV CKT 1
FDNS	06ALL	0	20L	G15_068	FROM->TO	G14-057T 345.00 - SUNNYSIDE 345KV CKT 1	717	789	0.11223	120.8788	BASE CASE
FDNS	06ALL	0	17SP	G15_068	FROM->TO	G14-057T 345.00 - SUNNYSIDE 345KV CKT 1	717	789	0.19572	119.3728	CIMARRON - MINCO 345KV CKT 1
FDNS	00NR	0	16WP	G15_068	FROM->TO	G14-057T 345.00 - SUNNYSIDE 345KV CKT 1	717	789	0.03414	118.5917	BORDER 7345.00 - WOODWARD DISTRICT EHV 345KV CKT 1
FDNS	00NR	0	16WP	G15_068	FROM->TO	G14-057T 345.00 - SUNNYSIDE 345KV CKT 1	717	789	0.03414	117.6629	BORDER 7345.00 - TUCO_2 345.00 345KV CKT 1
FDNS	00NR	0	16WP	G15_068	FROM->TO	G14-057T 345.00 - SUNNYSIDE 345KV CKT 1	717	789	0.04365	115.7778	GRACEMONT - LAWTON EASTSIDE 345KV CKT 1
FDNS	00NR	0	16WP	G15_068	FROM->TO	G14-057T 345.00 - SUNNYSIDE 345KV CKT 1	717	789	0.04365	115.7778	GRACEMONT - LAWTON EASTSIDE 345KV CKT 1
FDNS	00NR	0	20WP	G15_068	FROM->TO	G14-057T 345.00 - SUNNYSIDE 345KV CKT 1	717	789	0.0355	114.9223	GRACEMONT - LAWTON EASTSIDE 345KV CKT 1
FDNS	00NR	0	20WP	G15_068	FROM->TO	G14-057T 345.00 - SUNNYSIDE 345KV CKT 1	717	789	0.0355	114.9223	GRACEMONT - LAWTON EASTSIDE 345KV CKT 1
FDNS	06ALL	0	17SP	G15_068	FROM->TO	G14-057T 345.00 - SUNNYSIDE 345KV CKT 1	717	789	0.19572	114.1303	GRACEMONT - MINCO 345KV CKT 1
FDNS	06NR	0	20L	G15_068	FROM->TO	G14-057T 345.00 - SUNNYSIDE 345KV CKT 1	717	789	0.0397	110.7164	GRACEMONT - LAWTON EASTSIDE 345KV CKT 1
FDNS	06NR	0	20L	G15_068	FROM->TO	G14-057T 345.00 - SUNNYSIDE 345KV CKT 1	717	789	0.0397	110.7164	GRACEMONT - LAWTON EASTSIDE 345KV CKT 1
FDNS	06ALL	0	20WP	G15_068	FROM->TO	G14-057T 345.00 - SUNNYSIDE 345KV CKT 1	717	789	0.13598	107.5634	BASE CASE
FDNS	06ALL	0	17G	G15_068	FROM->TO	G14-057T 345.00 - SUNNYSIDE 345KV CKT 1	717	789	0.13922	106.9763	BASE CASE
FDNS	06ALL	0	16WP	G15_068	FROM->TO	G14-057T 345.00 - SUNNYSIDE 345KV CKT 1	717	789	0.14251	105.0999	BASE CASE
FDNS	06NR	0	17G	G15_068	FROM->TO	G14-057T 345.00 - SUNNYSIDE 345KV CKT 1	717	789	0.04456	101.3715	GRACEMONT - LAWTON EASTSIDE 345KV CKT 1
FDNS	06NR	0	17G	G15_068	FROM->TO	G14-057T 345.00 - SUNNYSIDE 345KV CKT 1	717	789	0.04456	101.3715	GRACEMONT - LAWTON EASTSIDE 345KV CKT 1
FDNS	06NR	0	20L	G15_068	FROM->TO	G14-074T 345.00 - OKLAUNION 345KV CKT 1	1022	1124	0.09073	106.9322	BASE CASE
FDNS	06NR	0	17G	G15_068	FROM->TO	G14-074T 345.00 - OKLAUNION 345KV CKT 1	1022	1124	0.10191	102.2735	BASE CASE
FDNS	06NR	0	20L	G15_068	FROM->TO	G14-074T 345.00 - OKLAUNION 345KV CKT 1	1022	1124	0.08659	102.2532	CHISHOLM7 345.00 - GRACEMONT 345KV CKT 1
FDNS	06NR	0	20L	G15_068	FROM->TO	G14-074T 345.00 - OKLAUNION 345KV CKT 1	1022	1124	0.08659	101.8896	CHISHOLM7 345.00 () 345/230/13.2KV TRANSFORMER CKT 1
FDNS	06NR	0	20L	G15_068	FROM->TO	G14-074T 345.00 - OKLAUNION 345KV CKT 1	1022	1124	0.11123	101.4902	TUCO INTERCHANGE - TUCO_2 345.00 345KV CKT 1
FDNS	06NR	0	20L	G15_068	FROM->TO	G14-074T 345.00 - OKLAUNION 345KV CKT 1	1022	1124	0.09475	101.2851	BUSHLAND INTERCHANGE - DEAF SMITH COUNTY INTERCHANGE 230KV CKT 1
FDNS	06NR	0	20L	G15_068	FROM->TO	G14-074T 345.00 - OKLAUNION 345KV CKT 1	1022	1124	0.09475	101.2851	BUSHLAND INTERCHANGE - DEAF SMITH COUNTY INTERCHANGE 230KV CKT 1
FDNS	06NR	0	20L	G15_068	FROM->TO	G14-074T 345.00 - OKLAUNION 345KV CKT 1	1022	1124	0.08996	101.2671	MOORE COUNTY INTERCHANGE - POTTER COUNTY INTERCHANGE 230KV CKT 1
FDNS	06NR	0	20L	G15_068	FROM->TO	G14-074T 345.00 - OKLAUNION 345KV CKT 1	1022	1124	0.08996	101.2671	MOORE COUNTY INTERCHANGE - POTTER COUNTY INTERCHANGE 230KV CKT 1
FDNS	06NR	0	20L	G15_068	FROM->TO	G14-074T 345.00 - OKLAUNION 345KV CKT 1	1022	1124	0.08922	101.2654	G11-14T 345.00 - WOODWARD DISTRICT EHV 345KV CKT 1
FDNS	06NR	0	20L	G15_068	FROM->TO	G14-074T 345.00 - OKLAUNION 345KV CKT 1	1022	1124	0.08922	101.2654	G11-14T 345.00 - WOODWARD DISTRICT EHV 345KV CKT 2
FDNS	00NR	0	25SP	G15_068	FROM->TO	Hitchland Interchange (H TB80155502) 345/230/13.2KV TRANSFORMER CKT 1	560	644	0.04979	100	Hitchland Interchange (SIEM 8743067) 345/230/13.2KV TRANSFORMER CKT 2
FDNS	00NR	0	25SP	G15_068	FROM->TO	Hitchland Interchange (H TB80155502) 345/230/13.2KV TRANSFORMER CKT 1	560	644	0.04979	100	Hitchland Interchange (SIEM 8743067) 345/230/13.2KV TRANSFORMER CKT 2
FDNS	00NR	0	25SP	G15_068	FROM->TO	Hitchland Interchange (SIEM 8743067) 345/230/13.2KV TRANSFORMER CKT 2	560	644	0.05082	102.3531	Hitchland Interchange (H TB80155502) 345/230/13.2KV TRANSFORMER CKT 1
FDNS	00NR	0	25SP	G15_068	FROM->TO	Hitchland Interchange (SIEM 8743067) 345/230/13.2KV TRANSFORMER CKT 2	560	644	0.05082	102.3531	Hitchland Interchange (H TB80155502) 345/230/13.2KV TRANSFORMER CKT 1
FDNS	00NR	0	25SP	G15_068	FROM->TO	Hitchland Interchange (SIEM 8743067) 345/230/13.2KV TRANSFORMER CKT 2	560	644	0.05082	100.5303	Hitchland Interchange (H TB80155502) 345/230/13.2KV TRANSFORMER CKT 1
FDNS	00NR	0	25SP	G15_068	FROM->TO	Hitchland Interchange (SIEM 8743067) 345/230/13.2KV TRANSFORMER CKT 2	560	644	0.05082	100.5303	Hitchland Interchange (H TB80155502) 345/230/13.2KV TRANSFORMER CKT 1
FDNS	00NR	0	25SP	G15_068	TO->FROM	JONES STATION - TUCO INTERCHANGE 230KV CKT 1	343.79	343.79	0.17401	139.3518	CARLISLE INTERCHANGE - TUCO INTERCHANGE 230KV CKT 1
FDNS	00NR	0	25SP	G15_068	TO->FROM	JONES STATION - TUCO INTERCHANGE 230KV CKT 1	343.79	343.79	0.17401	139.3518	CARLISLE INTERCHANGE - TUCO INTERCHANGE 230KV CKT 1
FDNS	00NR	0	25SP	G15_068	TO->FROM	JONES STATION - TUCO INTERCHANGE 230KV CKT 1	343.79	343.79	0.17131	123.0773	TUCO INTERCHANGE - YOAKUM_345 345.00 345KV CKT 1
FDNS	00NR	0	25SP	G15_068	TO->FROM	JONES STATION - TUCO INTERCHANGE 230KV CKT 1	343.79	343.79	0.1316	119.4572	GEN526333 1-JONES GEN #3 21 KV
FDNS	00NR	0	25SP	G15_068	TO->FROM	JONES STATION - TUCO INTERCHANGE 230KV CKT 1	343.79	343.79	0.1316	119.0504	GEN526334 1-JONES_4 116.500
FDNS	00NR	0	25SP	G15_068	TO->FROM	JONES STATION - TUCO INTERCHANGE 230KV CKT 1	343.79	343.79	0.15547	111.1942	CARLISLE INTERCHANGE - WOLFFORTH INTERCHANGE 230KV CKT 1
FDNS	00NR	0	25SP	G15_068	TO->FROM	JONES STATION - TUCO INTERCHANGE 230KV CKT 1	343.79	343.79	0.13838	107.2791	TUCO INTERCHANGE (ENRCO 136401) 230/115/13.2KV TRANSFORMER CKT 1
FDNS	00NR	0	25SP	G15_068	TO->FROM	JONES STATION - TUCO INTERCHANGE 230KV CKT 1	343.79	343.79	0.13838	107.2791	TUCO INTERCHANGE (ENRCO 136401) 230/115/13.2KV TRANSFORMER CKT 1
FDNS	00NR	0	25SP	G15_068	TO->FROM	JONES STATION - TUCO INTERCHANGE 230KV CKT 1	343.79	343.79	0.13838	107.2791	TUCO INTERCHANGE (ENRCO 136401) 230/115/13.2KV TRANSFORMER CKT 2
FDNS	00NR	0	25SP	G15_068	TO->FROM	JONES STATION - TUCO INTERCHANGE 230KV CKT 1	343.79	343.79	0.13838	107.2791	TUCO INTERCHANGE (ENRCO 136401) 230/115/13.2KV TRANSFORMER CKT 2
FDNS	00NR	0	25SP	G15_068	TO->FROM	JONES STATION - TUCO INTERCHANGE 230KV CKT 1	343.79	343.79	0.1316	106.7618	GEN526332 1-JONES GEN #2 21 KV
FDNS	00NR	0	25SP	G15_068	TO->FROM	JONES STATION - TUCO INTERCHANGE 230KV CKT 1	343.79	343.79	0.1316	106.7593	GEN526331 1-JONES GEN #1 22 KV
FDNS	00NR	0	25SP	G15_068	TO->FROM	JONES STATION - TUCO INTERCHANGE 230KV CKT 1	343.79	343.79	0.12697	105.7876	PLANT X STATION - SUNDOWN INTERCHANGE 230KV CKT 1
FDNS	00NR	0	25SP	G15_068	TO->FROM	JONES STATION - TUCO INTERCHANGE 230KV CKT 1	343.79	343.79	0.12697	105.7876	PLANT X STATION - SUNDOWN INTERCHANGE 230KV CKT 1
FDNS	00NR	0	25SP	G15_068	TO->FROM	JONES STATION - TUCO INTERCHANGE 230KV CKT 1	343.79	343.79	0.14042	105.7418	LUBBOCK EAST INTERCHANGE - TUCO INTERCHANGE 115KV CKT 1
FDNS	00NR	0	25SP	G15_068	TO->FROM	JONES STATION - TUCO INTERCHANGE 230KV CKT 1	343.79	343.79	0.14042	105.7418	LUBBOCK EAST INTERCHANGE - TUCO INTERCHANGE 115KV CKT 1
FDNS	00NR	0	25SP	G15_068	TO->FROM	JONES STATION - TUCO INTERCHANGE 230KV CKT 1	343.79	343.79	0.13554	102.5912	STANTON SUB - TUCO INTERCHANGE 115KV CKT 1
FDNS	00NR	0	25SP	G15_068	TO->FROM	JONES STATION - TUCO INTERCHANGE 230KV CKT 1	343.79	343.79	0.13369	102.3658	P12:230:LPL:K39.1.CRLSLE.LP-MLWK
FDNS	00NR	0	25SP	G15_068	TO->FROM	JONES STATION - TUCO INTERCHANGE 230KV CKT 1	343.79	343.79	0.13369	102.3646	CARLISLE INTERCHANGE - LUBBOCK POWER & LIGHT-MILWAUKEE 230KV CKT 1
FDNS	00NR	0	25SP	G15_068	TO->FROM	JONES STATION - TUCO INTERCHANGE 230KV CKT 1	343.79	343.79	0.13369	102.363	LUBBOCK POWER & LIGHT-MILWAUKEE (M-E C0681251) 230/69/13.5KV TRANSFORMER CKT 1
FDNS	00NR	0	25SP	G15_068	TO->FROM	JONES STATION - TUCO INTERCHANGE 230KV CKT 1	343.79	343.79	0.13369	102.363	LUBBOCK POWER & LIGHT-MILWAUKEE (M-E C0681251) 230/69/13.5KV TRANSFORMER CKT 1
FDNS	00NR	0	25SP	G15_068	TO->FROM	JONES STATION - TUCO INTERCHANGE 230KV CKT 1	343.79	343.79	0.14988	102.0923	TOLK STATION EAST - TUCO INTERCHANGE 230KV CKT 1

SOLUTION	GROUP	SCENARIO	SEASON	SOURCE	DIRECTION	MONITORED ELEMENT	RATEA (MVA)	RATEB(MVA)	TDF	TC%LOADING (% MVA)	CONTINGENCY
FDNS	00NR	0	25SP	G15_068	TO->FROM	JONES STATION - TUCO INTERCHANGE 230KV CKT 1	343.79	343.79	0.14988	102.0923	TOLK STATION EAST - TUCO INTERCHANGE 230KV CKT 1
FDNS	00NR	0	25SP	G15_068	TO->FROM	JONES STATION - TUCO INTERCHANGE 230KV CKT 1	343.79	343.79	0.13554	101.6363	P12:115:SPS:V15.1.TUCO.INDANA
FDNS	00NR	0	25SP	G15_068	TO->FROM	JONES STATION - TUCO INTERCHANGE 230KV CKT 1	343.79	343.79	0.13554	101.6061	INDIANA SUB - STANTON SUB 115KV CKT 1
FDNS	00NR	0	25SP	G15_068	TO->FROM	JONES STATION - TUCO INTERCHANGE 230KV CKT 1	343.79	343.79	0.1316	101.0841	GEN527903 1-HOBBS PLANT #3 (ST)
FDNS	00NR	0	25SP	G15_068	TO->FROM	JONES STATION - TUCO INTERCHANGE 230KV CKT 1	343.79	343.79	0.1316	101.0701	GEN527166 1-MUSTANG_6 118.000
FDNS	00NR	0	25SP	G15_068	TO->FROM	JONES STATION - TUCO INTERCHANGE 230KV CKT 1	343.79	343.79	0.1316	100.6214	GEN528501 1-G14_012 24.000
FDNS	00NR	0	25SP	G15_068	TO->FROM	JONES STATION - TUCO INTERCHANGE 230KV CKT 1	343.79	343.79	0.132	100.6076	KRESS INTERCHANGE - SWISHER COUNTY INTERCHANGE 115KV CKT 1
FDNS	00NR	0	25SP	G15_068	TO->FROM	JONES STATION - TUCO INTERCHANGE 230KV CKT 1	343.79	343.79	0.132	100.6076	KRESS INTERCHANGE - SWISHER COUNTY INTERCHANGE 115KV CKT 1
FDNS	00NR	0	25SP	G15_068	TO->FROM	JONES STATION - TUCO INTERCHANGE 230KV CKT 1	343.79	343.79	0.13257	100.4516	CARLISLE INTERCHANGE - MURPHY SUB 115KV CKT 1
FDNS	00NR	0	25SP	G15_068	TO->FROM	JONES STATION - TUCO INTERCHANGE 230KV CKT 1	343.79	343.79	0.13257	100.4516	CARLISLE INTERCHANGE - MURPHY SUB 115KV CKT 1
FDNS	00NR	0	25SP	G15_068	TO->FROM	JONES STATION - TUCO INTERCHANGE 230KV CKT 1	343.79	343.79	0.141	100.2532	YOAKUM_345 345.00 (UPDATE DATA) 345/230/13.2KV TRANSFORMER CKT 1
FDNS	00NR	0	25SP	G15_068	TO->FROM	JONES STATION - TUCO INTERCHANGE 230KV CKT 1	343.79	343.79	0.13256	100	POTTER COUNTY INTERCHANGE (WAUK 90343-A) 345/230/13.2KV TRANSFORMER CKT 1
FDNS	00NR	0	25SP	G15_068	TO->FROM	JONES STATION - TUCO INTERCHANGE 230KV CKT 1	343.79	343.79	0.13256	100	POTTER COUNTY INTERCHANGE (WAUK 90343-A) 345/230/13.2KV TRANSFORMER CKT 1
FDNS	00NR	0	25SP	G15_068	TO->FROM	JONES STATION - TUCO INTERCHANGE 230KV CKT 1	343.79	343.79	0.1316	100	GEN563122 1-G15077_3 0.3850
FDNS	00NR	0	25SP	G15_068	TO->FROM	JONES STATION - TUCO INTERCHANGE 230KV CKT 1	343.79	343.79	0.13554	99.9	INDIANA SUB - SOUTH PLAINS REC-ERSKINE 115KV CKT 1
FDNS	00NR	0	25SP	G15_068	TO->FROM	JONES STATION - TUCO INTERCHANGE 230KV CKT 1	343.79	343.79	0.1316	99.9	GEN527901 1-HOBBS PLANT #1 (CT)
FDNS	00NR	0	25SP	G15_068	TO->FROM	JONES STATION - TUCO INTERCHANGE 230KV CKT 1	343.79	343.79	0.1316	99.9	GEN527902 1-HOBBS PLANT #2 (CT)
FDNS	00NR	0	25SP	G15_068	TO->FROM	JONES STATION - TUCO INTERCHANGE 230KV CKT 1	343.79	343.79	0.1316	99.9	GEN563102 1-G15075_3 0.5500
FDNS	00NR	0	25SP	G15_068	TO->FROM	JONES STATION - TUCO INTERCHANGE 230KV CKT 1	343.79	343.79	0.13437	99.7	HOBBS - YOAKUM_345 345.00 345KV CKT 1
FDNS	00NR	0	25SP	G15_068	TO->FROM	JONES STATION - TUCO INTERCHANGE 230KV CKT 1	343.79	343.79	0.13324	99.7	FLOYD COUNTY INTERCHANGE - TUCO INTERCHANGE 115KV CKT 1
FDNS	00NR	0	25SP	G15_068	TO->FROM	JONES STATION - TUCO INTERCHANGE 230KV CKT 1	343.79	343.79	0.13324	99.7	FLOYD COUNTY INTERCHANGE - TUCO INTERCHANGE 115KV CKT 1
FDNS	00NR	0	25SP	G15_068	TO->FROM	JONES STATION - TUCO INTERCHANGE 230KV CKT 1	343.79	343.79	0.13306	99.6	P12:345:SPS:J02.1.TOLK.EDDY
FDNS	00NR	0	25SP	G15_068	TO->FROM	JONES STATION - TUCO INTERCHANGE 230KV CKT 1	343.79	343.79	0.13256	99.6	G14_038T 345.00 - POTTER COUNTY INTERCHANGE 345KV CKT 1
FDNS	00NR	0	25SP	G15_068	TO->FROM	JONES STATION - TUCO INTERCHANGE 230KV CKT 1	343.79	343.79	0.1316	99.6	GEN563142 1-G15079_3 0.5500
FDNS	00NR	0	25SP	G15_068	TO->FROM	JONES STATION - TUCO INTERCHANGE 230KV CKT 1	343.79	343.79	0.1316	99.6	GEN563151 1-G15080_2 0.5500
FDNS	00NR	0	25SP	G15_068	TO->FROM	JONES STATION - TUCO INTERCHANGE 230KV CKT 1	343.79	343.79	0.13122	99.6	BUSHLAND INTERCHANGE - DEAF SMITH COUNTY INTERCHANGE 230KV CKT 1
FDNS	00NR	0	25SP	G15_068	TO->FROM	JONES STATION - TUCO INTERCHANGE 230KV CKT 1	343.79	343.79	0.13122	99.6	BUSHLAND INTERCHANGE - DEAF SMITH COUNTY INTERCHANGE 230KV CKT 1
FDNS	00NR	0	25SP	G15_068	TO->FROM	KRESS INTERCHANGE - SWISHER COUNTY INTERCHANGE 115KV CKT 1	218	239	0.03074	118.9572	NEWHART 230 - SWISHER COUNTY INTERCHANGE 230KV CKT 1
FDNS	00NR	0	17SP	G15_068	TO->FROM	KRESS INTERCHANGE - SWISHER COUNTY INTERCHANGE 115KV CKT 1	218	239	0.0454	103.7156	NEWHART 230 - SWISHER COUNTY INTERCHANGE 230KV CKT 1
FDNS	00NR	0	20SP	G15_068	TO->FROM	KRESS INTERCHANGE - SWISHER COUNTY INTERCHANGE 115KV CKT 1	218	239	0.03144	101.9578	NEWHART 230 - SWISHER COUNTY INTERCHANGE 230KV CKT 1
FDNS	00NR	0	25SP	G15_068	FROM->TO	LUBBOCK POWER & LIGHT-HOLLY PLANT (SHIH T101039) 230/69/13.5KV TRANSFORMER CKT 1	224	224	0.03597	104.8294	LUBBOCK POWER & LIGHT-SOUTHEAST - LUBBOCK SOUTH INTERCHANGE 230KV CKT 1
FDNS	00NR	0	25SP	G15_068	FROM->TO	LUBBOCK POWER & LIGHT-HOLLY PLANT (SHIH T101039) 230/69/13.5KV TRANSFORMER CKT 1	224	224	0.03597	104.8165	P12:LPL:SPS:K64.1.LP-SE.LUBBS
FDNS	00NR	0	25SP	G15_068	FROM->TO	LUBBOCK POWER & LIGHT-HOLLY PLANT (SHIH T101039) 230/69/13.5KV TRANSFORMER CKT 1	224	224	0.0354	101.9053	LUBBOCK EAST INTERCHANGE - LUBBOCK POWER & LIGHT-WADSWORTH 230KV CKT 1
FDNS	00NR	0	25SP	G15_068	FROM->TO	LUBBOCK POWER & LIGHT-HOLLY PLANT (SHIH T101039) 230/69/13.5KV TRANSFORMER CKT 1	224	224	0.0354	101.8957	P12:230:LPL:K57.1.LP-WADS.LUBBE
FDNS	00NR	0	25SP	G15_068	FROM->TO	LUBBOCK POWER & LIGHT-HOLLY PLANT (SHIH T101039) 230/69/13.5KV TRANSFORMER CKT 1	224	224	0.0354	101.8956	LUBBOCK POWER & LIGHT-WADSWORTH (SHIH T101038) 230/69/13.5KV TRANSFORMER CKT 1
FDNS	00NR	0	25SP	G15_068	FROM->TO	LUBBOCK POWER & LIGHT-HOLLY PLANT (SHIH T101039) 230/69/13.5KV TRANSFORMER CKT 1	224	224	0.0354	101.8956	LUBBOCK POWER & LIGHT-WADSWORTH (SHIH T101038) 230/69/13.5KV TRANSFORMER CKT 1
FDNSLock	06ALL	0	20WP	G15_068		Non-Converged Contingency	1792	1792	0.19686	-	BORDER 7345.00 - CHISHOLM7 345.00 345KV CKT 1
FDNSLock	06ALL	0	20WP	G15_068		Non-Converged Contingency	1792	1792	0.19686	-	BORDER 7345.00 - CHISHOLM7 345.00 345KV CKT 2
FDNSLock	06ALL	0	20WP	G15_068		Non-Converged Contingency	439	439	0.06201	-	CHISHOLM6 230.00 - ELK CITY 230KV 230KV CKT 1
FDNS	00NR	0	25SP	G15_068	FROM->TO	POTTER COUNTY INTERCHANGE (WAUK 90343-A) 345/230/13.2KV TRANSFORMER CKT 1	560	560	0.03495	106.174	G14-074T 345.00 - TUCO INTERCHANGE 345KV CKT 1
FDNS	00NR	0	25SP	G15_068	FROM->TO	POTTER COUNTY INTERCHANGE (WAUK 90343-A) 345/230/13.2KV TRANSFORMER CKT 1	560	560	0.05966	105.4342	HITCHLAND INTERCHANGE - MOORE COUNTY INTERCHANGE 230KV CKT 1
FDNS	00NR	0	25SP	G15_068	FROM->TO	POTTER COUNTY INTERCHANGE (WAUK 90343-A) 345/230/13.2KV TRANSFORMER CKT 1	560	560	0.05966	105.4342	HITCHLAND INTERCHANGE - MOORE COUNTY INTERCHANGE 230KV CKT 1
FDNS	00NR	0	25SP	G15_068	FROM->TO	POTTER COUNTY INTERCHANGE (WAUK 90343-A) 345/230/13.2KV TRANSFORMER CKT 1	560	560	0.03495	104.1075	G14-074T 345.00 - TUCO INTERCHANGE 345KV CKT 1
FDNS	00NR	0	25SP	G15_068	FROM->TO	POTTER COUNTY INTERCHANGE (WAUK 90343-A) 345/230/13.2KV TRANSFORMER CKT 1	560	560	0.05966	103.6189	HITCHLAND INTERCHANGE - MOORE COUNTY INTERCHANGE 230KV CKT 1
FDNS	00NR	0	25SP	G15_068	FROM->TO	POTTER COUNTY INTERCHANGE (WAUK 90343-A) 345/230/13.2KV TRANSFORMER CKT 1	560	560	0.05966	103.6189	HITCHLAND INTERCHANGE - MOORE COUNTY INTERCHANGE 230KV CKT 1
FDNS	00NR	0	25SP	G15_068	FROM->TO	POTTER COUNTY INTERCHANGE (WAUK 90343-A) 345/230/13.2KV TRANSFORMER CKT 1	560	560	0.03172	103.6147	BORDER 7345.00 - TUCO_2 345.00 345KV CKT 1
FDNS	06ALL	0	20WP	G15_068	FROM->TO	POTTER COUNTY INTERCHANGE (WAUK 90343-A) 345/230/13.2KV TRANSFORMER CKT 1	560	560	0.11138	101.9937	BASE CASE
FDNS	00NR	0	25SP	G15_068	FROM->TO	POTTER COUNTY INTERCHANGE (WAUK 90343-A) 345/230/13.2KV TRANSFORMER CKT 1	560	560	0.03172	101.7534	BORDER 7345.00 - TUCO_2 345.00 345KV CKT 1
FDNS	06ALL	0	20WP	G15_068	FROM->TO	POTTER COUNTY INTERCHANGE (WAUK 90343-A) 345/230/13.2KV TRANSFORMER CKT 1	560	560	0.11138	100.9471	BASE CASE
FDNS	00NR	0	25SP	G15_068	FROM->TO	POTTER COUNTY INTERCHANGE (WAUK 90343-A) 345/230/13.2KV TRANSFORMER CKT 1	560	560	0.03172	100.8317	BORDER 7345.00 - WOODWARD DISTRICT EHV 345KV CKT 1
FDNS	06ALL	0	20SP	G15_068	FROM->TO	TUCO INTERCHANGE - TUCO_2 230.00 230KV CKT 1	497	547	0.43458	176.1131	TUCO INTERCHANGE - TUCO_2 345.00 345KV CKT 1
FDNS	06ALL	0	17SP	G15_068	FROM->TO	TUCO INTERCHANGE - TUCO_2 230.00 230KV CKT 1	497	547	0.45356	172.1789	TUCO INTERCHANGE - TUCO_2 345.00 345KV CKT 1
FDNS	06NR	0	17G	G15_068	FROM->TO	TUCO INTERCHANGE - TUCO_2 230.00 230KV CKT 1	497	547	0.24046	120.0923	TUCO INTERCHANGE - TUCO_2 345.00 345KV CKT 1
FDNS	06NR	0	20L	G15_068	FROM->TO	TUCO INTERCHANGE - TUCO_2 230.00 230KV CKT 1	497	547	0.20622	110.6573	TUCO INTERCHANGE - TUCO_2 345.00 345KV CKT 1
FDNS	06ALL	0	25SP	G15_068	FROM->TO	TUCO INTERCHANGE - TUCO_2 230.00 230KV CKT 1	497	547	0.44496	101.2227615	TUCO INTERCHANGE - TUCO_2 345.00 345KV CKT 1
FDNS	00NR	0	25SP	G15_068	FROM->TO	TUCO INTERCHANGE (ENRCO 136401) 230/115/13.2KV TRANSFORMER CKT 1	250	288	0.07112	123.8204	TUCO INTERCHANGE (ENRCO 136401) 230/115/13.2KV TRANSFORMER CKT 2
FDNS	00NR	0	25SP	G15_068	FROM->TO	TUCO INTERCHANGE (ENRCO 136401) 230/115/13.2KV TRANSFORMER CKT 1	250	288	0.07112	123.8204	TUCO INTERCHANGE (ENRCO 136401) 230/115/13.2KV TRANSFORMER CKT 2
FDNS	00NR	0	25SP	G15_068	FROM->TO	TUCO INTERCHANGE (ENRCO 136401) 230/115/13.2KV TRANSFORMER CKT 1	250	288	0.07112	115.7916	TUCO INTERCHANGE (ENRCO 136401) 230/115/13.2KV TRANSFORMER CKT 2
FDNS	00NR	0	25SP	G15_068	FROM->TO	TUCO INTERCHANGE (ENRCO 136401) 230/115/13.2KV TRANSFORMER CKT 1	250	288	0.07112	115.7916	TUCO INTERCHANGE (ENRCO 136401) 230/115/13.2KV TRANSFORMER CKT 2
FDNS	00NR	0	25SP	G15_068	FROM->TO	TUCO INTERCHANGE (ENRCO 136401) 230/115/13.2KV TRANSFORMER CKT 2	250	288	0.07112	123.8204	TUCO INTERCHANGE (ENRCO 136401) 230/115/13.2KV TRANSFORMER CKT 1
FDNS	00NR	0	25SP	G15_068	FROM->TO	TUCO INTERCHANGE (ENRCO 136401) 230/115/13.2KV TRANSFORMER CKT 2	250	288	0.07112	123.8204	TUCO INTERCHANGE (ENRCO 136401) 230/115/13.2KV TRANSFORMER CKT 1
FDNS	00NR	0	25SP	G15_068	FROM->TO	TUCO INTERCHANGE (ENRCO 136401) 230/115/13.2KV TRANSFORMER CKT 2	250	288	0.07112	115.7916	TUCO INTERCHANGE (ENRCO 136401) 230/115/13.2KV TRANSFORMER CKT 1
FDNS	00NR	0	25SP	G15_068	FROM->TO	TUCO INTERCHANGE (ENRCO 136401) 230/115/13.2KV TRANSFORMER CKT 2	250	288	0.07112	115.7916	TUCO INTERCHANGE (ENRCO 136401) 230/115/13.2KV TRANSFORMER CKT 1
FDNS	00NR	0	17SP	G15_068	FROM->TO	TUCO INTERCHANGE (GE M102345) 230/115/13.2KV TRANSFORMER CKT 1	242	252	0.09683	103.022	TUCO INTERCHANGE (ENRCO 136401) 230/115/13.2KV TRANSFORMER CKT 2
FDNS	00NR	0	17SP	G15_068	FROM->TO	TUCO INTERCHANGE (GE M102345) 230/115/13.2KV TRANSFORMER CKT 1	242	252	0.09683	103.022	TUCO INTERCHANGE (ENRCO 136401) 230/115/13.2KV TRANSFORMER CKT 2
FDNS	00NR	0	17SP	G15_068	FROM->TO	TUCO INTERCHANGE (GE M102345) 230/115/13.2KV TRANSFORMER CKT 1	242	252	0.09683	102.376	TUCO INTERCHANGE (ENRCO 136401) 230/115/13.2KV TRANSFORMER CKT 2
FDNS	00NR	0	17SP	G15_068	FROM->TO	TUCO INTERCHANGE (GE M102345) 230/115/13.2KV TRANSFORMER CKT 1	242	252	0.09683	102.376	TUCO INTERCHANGE (ENRCO 136401) 230/115/13.2KV TRANSFORMER CKT 2
FDNS	06ALL	0	20SP	G15_068	FROM->TO	TUCO_2 345.00 (TUCO_2 XFMR) 345/230/13.2KV TRANSFORMER CKT 1	560	560	0.31889	168.9327	TUCO INTERCHANGE - TUCO_2 345.00 345KV CKT 1
FDNS	06ALL	0	17SP	G15_068	FROM->TO	TUCO_2 345.00 (TUCO_2 XFMR) 345/230/13.2KV TRANSFORMER CKT 1	560	560	0.32384	168.0719	TUCO INTERCHANGE - TUCO_2 345.00 345KV CKT 1
FDNS	06ALL	0	20SP	G15_068	FROM->TO	TUCO_2 345.00 (TUCO_2 XFMR) 345/230/13.2KV TRANSFORMER CKT 1	560	560	0.31889	162.4281	TUCO INTERCHANGE - TUCO_2 345.00 345KV CKT 1
FDNS	06ALL	0	17SP	G15_068	FROM->TO	TUCO_2 345.00 (TUCO_2 XFMR) 345/230/13.2KV TRANSFORMER CKT 1	560	560	0.32384	161.5424	TUCO INTERCHANGE - TUCO_2 345.00 345KV CKT 1
FDNS	06NR	0	17G	G15_068	FROM->TO	TUCO_2 345.00 (TUCO_2 XFMR) 345/230/13.2KV TRANSFORMER CKT 1	560	560	0.06028	114.7643	TUCO INTERCHANGE - TUCO_2 345.00 345KV CKT 1
FDNS	06NR	0	17G	G15_068	FROM->TO	TUCO_2 345.00 (TUCO_2 XFMR) 345/230/13.2KV TRANSFORMER CKT 1	560	560	0.06028	111.8684	TUCO INTERCHANGE - TUCO_2 345.00 345KV CKT 1
FDNS	06NR	0	20L	G15_068	FROM->TO	TUCO_2 345.00 (TUCO_2 XFMR) 345/230/13.2KV TRANSFORMER CKT 1	560	560	0.05749	110.8936	TUCO INTERCHANGE - TUCO_2 345.00 345KV CKT 1
FDNS	06NR	0	20L	G15_068	FROM->TO	TUCO_2 345.00 (TUCO_2 XFMR) 345/230/13.2KV TRANSFORMER CKT 1	560	560	0.05749	108.3383	TUCO INTERCHANGE - TUCO_2 345.00 345KV CKT 1
FDNS	06NR	2	17G	G15_068	TO->FROM	AMARILLO SOUTH INTERCHANGE - G15031_T 230.00 230KV CKT 1	318.7	350.57	0.09525	103.4449	NEWHART 230 - POTTER COUNTY INTERCHANGE 230KV CKT 1
FDNS	00NR	2	25SP	G15_068	FROM->TO	CARLISLE INTERCHANGE - LP-DOUD_TP 3115.00 115KV CKT 1	159	160	0.03328	110.2252	WOLFFORTH INTERCHANGE (WH 7001668) 230/115/13.2KV TRANSFORMER CKT 1
FDNS	00NR	2	25SP	G15_068	FROM->TO	CARLISLE INTERCHANGE - LP-DOUD_TP 3115.00 115KV CKT 1	159	160	0.03328	110.2252	WOLFFORTH INTERCHANGE (WH 7001668) 230/115/13.2KV TRANSFORMER CKT 1
FDNS	00NR	2	25SP	G15_068	FROM->TO	CARLISLE INTERCHANGE - LP-DOUD_TP 3115.00 115KV CKT 1	159	160	0.04998	100	TUCO INTERCHANGE - YOAKUM_345 345.00 345KV CKT 1

SOLUTION	GROUP	SCENARIO	SEASON	SOURCE	DIRECTION	MONITORED ELEMENT	RATEA (MVA)	RATEB(MVA)	TDF	TC%LOADING (% MVA)	CONTINGENCY
FDNS	06ALL	2	20SP	G15_068	FROM->TO	CHISHOLM6 230.00 - ELK CITY 230KV 230KV CKT 1	353	353	0.06374	103.9805	BASE CASE
FDNS	06ALL	2	17SP	G15_068	FROM->TO	CHISHOLM6 230.00 - ELK CITY 230KV 230KV CKT 1	353	353	0.06399	101.7938	BASE CASE
FDNS	06ALL	2	20L	G15_068	TO->FROM	CIMARRON - MINCO 345KV CKT 1	956	956	0.23152	140.1322	G14-057T 345.00 - SUNNYSIDE 345KV CKT 1
FDNS	06ALL	2	20L	G15_068	TO->FROM	CIMARRON - MINCO 345KV CKT 1	956	956	0.23152	133.5433	G14-057T 345.00 - LAWTON EASTSIDE 345KV CKT 1
FDNS	06ALL	2	17G	G15_068	TO->FROM	CIMARRON - MINCO 345KV CKT 1	956	956	0.26493	131.7687	G14-057T 345.00 - SUNNYSIDE 345KV CKT 1
FDNS	06ALL	2	20WP	G15_068	TO->FROM	CIMARRON - MINCO 345KV CKT 1	956	956	0.259	130.9595	G14-057T 345.00 - SUNNYSIDE 345KV CKT 1
FDNS	06ALL	2	17G	G15_068	TO->FROM	CIMARRON - MINCO 345KV CKT 1	956	956	0.26493	126.2954	G14-057T 345.00 - LAWTON EASTSIDE 345KV CKT 1
FDNS	06ALL	2	20WP	G15_068	TO->FROM	CIMARRON - MINCO 345KV CKT 1	956	956	0.259	125.3296	G14-057T 345.00 - LAWTON EASTSIDE 345KV CKT 1
FDNS	06ALL	2	16WP	G15_068	TO->FROM	CIMARRON - MINCO 345KV CKT 1	956	956	0.27149	123.9324	G14-057T 345.00 - SUNNYSIDE 345KV CKT 1
FDNS	06ALL	2	17SP	G15_068	TO->FROM	CIMARRON - MINCO 345KV CKT 1	956	956	0.26847	123.0412	G14-057T 345.00 - SUNNYSIDE 345KV CKT 1
FDNS	06ALL	2	20SP	G15_068	TO->FROM	CIMARRON - MINCO 345KV CKT 1	956	956	0.2652	120.4683	G14-057T 345.00 - SUNNYSIDE 345KV CKT 1
FDNS	06ALL	2	16WP	G15_068	TO->FROM	CIMARRON - MINCO 345KV CKT 1	956	956	0.27149	118.3934	G14-057T 345.00 - LAWTON EASTSIDE 345KV CKT 1
FDNS	06ALL	2	17SP	G15_068	TO->FROM	CIMARRON - MINCO 345KV CKT 1	956	956	0.26847	117.7499	G14-057T 345.00 - LAWTON EASTSIDE 345KV CKT 1
FDNS	06ALL	2	20SP	G15_068	TO->FROM	CIMARRON - MINCO 345KV CKT 1	956	956	0.2652	115.0256	G14-057T 345.00 - LAWTON EASTSIDE 345KV CKT 1
FDNS	06ALL	2	17G	G15_068	TO->FROM	CIMARRON - MINCO 345KV CKT 1	956	956	0.22015	111.0722	MATHWSN7 345.00 - TATONGA7 345.00 345KV CKT 1
FDNS	06ALL	2	20WP	G15_068	TO->FROM	CIMARRON - MINCO 345KV CKT 1	956	956	0.21464	110.8109	MATHWSN7 345.00 - TATONGA7 345.00 345KV CKT 1
FDNS	06ALL	2	20L	G15_068	TO->FROM	CIMARRON - MINCO 345KV CKT 1	956	956	0.24254	107.6011	CHISHOLM7 345.00 - WOODWARD DISTRICT EHV 345KV CKT 1
FDNS	06ALL	2	17G	G15_068	TO->FROM	CIMARRON - MINCO 345KV CKT 1	956	956	0.27029	107.4004	CHISHOLM7 345.00 - WOODWARD DISTRICT EHV 345KV CKT 1
FDNS	06ALL	2	20WP	G15_068	TO->FROM	CIMARRON - MINCO 345KV CKT 1	956	956	0.21464	105.5266	G11_051T 345.00 - TATONGA7 345.00 345KV CKT 1
FDNSLock	06ALL	2	17G	G15_068	TO->FROM	CIMARRON - MINCO 345KV CKT 1	956	956	0.22015	105.1772	G11_051T 345.00 - TATONGA7 345.00 345KV CKT 1
FDNS	06ALL	2	17SP	G15_068	TO->FROM	CIMARRON - MINCO 345KV CKT 1	956	956	0.22358	104.7953	MATHWSN7 345.00 - TATONGA7 345.00 345KV CKT 1
FDNS	06NR	2	17G	G15_068	TO->FROM	CIMARRON - MINCO 345KV CKT 1	956	956	0.02972	104.6584	G14-057T 345.00 - SUNNYSIDE 345KV CKT 1
FDNS	06ALL	2	20SP	G15_068	TO->FROM	CIMARRON - MINCO 345KV CKT 1	956	956	0.22136	104.2231	MATHWSN7 345.00 - TATONGA7 345.00 345KV CKT 1
FDNS	06ALL	2	16WP	G15_068	TO->FROM	CIMARRON - MINCO 345KV CKT 1	956	956	0.22514	104.0692	MATHWSN7 345.00 - TATONGA7 345.00 345KV CKT 1
FDNS	06ALL	2	20WP	G15_068	TO->FROM	CIMARRON - MINCO 345KV CKT 1	956	956	0.21464	103.9402	G11_051T 345.00 - WOODWARD DISTRICT EHV 345KV CKT 1
FDNS	06ALL	2	20WP	G15_068	TO->FROM	CIMARRON - MINCO 345KV CKT 1	956	956	0.26563	103.712	CHISHOLM7 345.00 - WOODWARD DISTRICT EHV 345KV CKT 1
FDNSLock	06ALL	2	17G	G15_068	TO->FROM	CIMARRON - MINCO 345KV CKT 1	956	956	0.22015	103.655	G11_051T 345.00 - WOODWARD DISTRICT EHV 345KV CKT 1
FDNS	06ALL	2	20SP	G15_068	TO->FROM	CIMARRON - MINCO 345KV CKT 1	956	956	0.27257	102.1101	CHISHOLM7 345.00 - WOODWARD DISTRICT EHV 345KV CKT 1
FDNS	06ALL	2	17SP	G15_068	TO->FROM	CIMARRON - MINCO 345KV CKT 1	956	956	0.27678	100.969	CHISHOLM7 345.00 - WOODWARD DISTRICT EHV 345KV CKT 1
FDNS	06ALL	2	17SP	G15_068	TO->FROM	CIMARRON - MINCO 345KV CKT 1	956	956	0.22358	99.6	G11_051T 345.00 - TATONGA7 345.00 345KV CKT 1
FDNS	06ALL	2	20SP	G15_068	TO->FROM	DEAF SMITH COUNTY INTERCHANGE - G15039_T 230.00 230KV CKT 1	318.7	350.57	0.06418	106.1518	BASE CASE
FDNS	06ALL	2	17SP	G15_068	TO->FROM	DEAF SMITH COUNTY INTERCHANGE - G15039_T 230.00 230KV CKT 1	318.7	350.57	0.05947	104.2255	BASE CASE
FDNS	06ALL	2	17G	G15_068	TO->FROM	G14-057T 345.00 - LAWTON EASTSIDE 345KV CKT 1	717	789	0.19542	118.2994	CIMARRON - MINCO 345KV CKT 1
FDNS	06ALL	2	16WP	G15_068	TO->FROM	G14-057T 345.00 - LAWTON EASTSIDE 345KV CKT 1	717	789	0.20012	113.4595	CIMARRON - MINCO 345KV CKT 1
FDNS	06ALL	2	17G	G15_068	TO->FROM	G14-057T 345.00 - LAWTON EASTSIDE 345KV CKT 1	717	789	0.19542	112.8183	GRACEMONT - MINCO 345KV CKT 1
FDNS	06ALL	2	16WP	G15_068	TO->FROM	G14-057T 345.00 - LAWTON EASTSIDE 345KV CKT 1	717	789	0.20012	108.2342	GRACEMONT - MINCO 345KV CKT 1
FDNS	06ALL	2	17SP	G15_068	TO->FROM	G14-057T 345.00 - LAWTON EASTSIDE 345KV CKT 1	717	789	0.19579	105.8621	CIMARRON - MINCO 345KV CKT 1
FDNS	06ALL	2	20L	G15_068	TO->FROM	G14-057T 345.00 - LAWTON EASTSIDE 345KV CKT 1	717	789	0.11251	105.4406	BASE CASE
FDNS	06ALL	2	17SP	G15_068	TO->FROM	G14-057T 345.00 - LAWTON EASTSIDE 345KV CKT 1	717	789	0.19579	100.8378	GRACEMONT - MINCO 345KV CKT 1
FDNS	06ALL	2	17G	G15_068	FROM->TO	G14-057T 345.00 - SUNNYSIDE 345KV CKT 1	717	789	0.19542	131.1423	CIMARRON - MINCO 345KV CKT 1
FDNS	06ALL	2	16WP	G15_068	FROM->TO	G14-057T 345.00 - SUNNYSIDE 345KV CKT 1	717	789	0.20012	126.2328	CIMARRON - MINCO 345KV CKT 1
FDNS	06ALL	2	17G	G15_068	FROM->TO	G14-057T 345.00 - SUNNYSIDE 345KV CKT 1	717	789	0.19542	125.4979	GRACEMONT - MINCO 345KV CKT 1
FDNS	06ALL	2	16WP	G15_068	FROM->TO	G14-057T 345.00 - SUNNYSIDE 345KV CKT 1	717	789	0.20012	120.863	GRACEMONT - MINCO 345KV CKT 1
FDNS	00NR	2	16WP	G15_068	FROM->TO	G14-057T 345.00 - SUNNYSIDE 345KV CKT 1	717	789	0.03414	118.7202	BORDER 7345.00 - WOODWARD DISTRICT EHV 345KV CKT 1
FDNS	06ALL	2	20L	G15_068	FROM->TO	G14-057T 345.00 - SUNNYSIDE 345KV CKT 1	717	789	0.11251	118.6576	BASE CASE
FDNS	06ALL	2	17SP	G15_068	FROM->TO	G14-057T 345.00 - SUNNYSIDE 345KV CKT 1	717	789	0.19579	118.456	CIMARRON - MINCO 345KV CKT 1
FDNS	00NR	2	16WP	G15_068	FROM->TO	G14-057T 345.00 - SUNNYSIDE 345KV CKT 1	717	789	0.03414	117.7383	BORDER 7345.00 - TUCO_2 345.00 345KV CKT 1
FDNS	00NR	2	16WP	G15_068	FROM->TO	G14-057T 345.00 - SUNNYSIDE 345KV CKT 1	717	789	0.04365	115.4668	GRACEMONT - LAWTON EASTSIDE 345KV CKT 1
FDNS	00NR	2	16WP	G15_068	FROM->TO	G14-057T 345.00 - SUNNYSIDE 345KV CKT 1	717	789	0.04365	115.4668	GRACEMONT - LAWTON EASTSIDE 345KV CKT 1
FDNS	00NR	2	20WP	G15_068	FROM->TO	G14-057T 345.00 - SUNNYSIDE 345KV CKT 1	717	789	0.0355	114.2225	GRACEMONT - LAWTON EASTSIDE 345KV CKT 1
FDNS	00NR	2	20WP	G15_068	FROM->TO	G14-057T 345.00 - SUNNYSIDE 345KV CKT 1	717	789	0.0355	114.2225	GRACEMONT - LAWTON EASTSIDE 345KV CKT 1
FDNS	06ALL	2	17SP	G15_068	FROM->TO	G14-057T 345.00 - SUNNYSIDE 345KV CKT 1	717	789	0.19579	113.2999	GRACEMONT - MINCO 345KV CKT 1
FDNS	06NR	2	20L	G15_068	FROM->TO	G14-057T 345.00 - SUNNYSIDE 345KV CKT 1	717	789	0.0397	110.7164	GRACEMONT - LAWTON EASTSIDE 345KV CKT 1
FDNS	06NR	2	20L	G15_068	FROM->TO	G14-057T 345.00 - SUNNYSIDE 345KV CKT 1	717	789	0.0397	110.7164	GRACEMONT - LAWTON EASTSIDE 345KV CKT 1
FDNS	06ALL	2	20WP	G15_068	FROM->TO	G14-057T 345.00 - SUNNYSIDE 345KV CKT 1	717	789	0.13611	106.4822	BASE CASE
FDNS	06ALL	2	17G	G15_068	FROM->TO	G14-057T 345.00 - SUNNYSIDE 345KV CKT 1	717	789	0.1394	105.8626	BASE CASE
FDNS	06ALL	2	16WP	G15_068	FROM->TO	G14-057T 345.00 - SUNNYSIDE 345KV CKT 1	717	789	0.1427	104.4384	BASE CASE
FDNS	06NR	2	17G	G15_068	FROM->TO	G14-057T 345.00 - SUNNYSIDE 345KV CKT 1	717	789	0.04456	101.117	GRACEMONT - LAWTON EASTSIDE 345KV CKT 1
FDNS	06NR	2	17G	G15_068	FROM->TO	G14-057T 345.00 - SUNNYSIDE 345KV CKT 1	717	789	0.04456	101.117	GRACEMONT - LAWTON EASTSIDE 345KV CKT 1
FDNS	06NR	2	20L	G15_068	FROM->TO	G14-074T 345.00 - OKLAUNION 345KV CKT 1	1022	1124	0.09073	106.9322	BASE CASE
FDNS	06NR	2	17G	G15_068	FROM->TO	G14-074T 345.00 - OKLAUNION 345KV CKT 1	1022	1124	0.10191	102.9455	BASE CASE
FDNS	06NR	2	20L	G15_068	FROM->TO	G14-074T 345.00 - OKLAUNION 345KV CKT 1	1022	1124	0.08659	102.2532	CHISHOLM7 345.00 - GRACEMONT 345KV CKT 1
FDNS	06NR	2	20L	G15_068	FROM->TO	G14-074T 345.00 - OKLAUNION 345KV CKT 1	1022	1124	0.08659	101.8896	CHISHOLM7 345.00 () 345/230/13.2KV TRANSFORMER CKT 1
FDNS	06NR	2	20L	G15_068	FROM->TO	G14-074T 345.00 - OKLAUNION 345KV CKT 1	1022	1124	0.11123	101.4902	TUCO INTERCHANGE - TUCO_2 345.00 345KV CKT 1
FDNS	06NR	2	20L	G15_068	FROM->TO	G14-074T 345.00 - OKLAUNION 345KV CKT 1	1022	1124	0.09475	101.2851	BUSHLAND INTERCHANGE - DEAF SMITH COUNTY INTERCHANGE 230KV CKT 1
FDNS	06NR	2	20L	G15_068	FROM->TO	G14-074T 345.00 - OKLAUNION 345KV CKT 1	1022	1124	0.09475	101.2851	BUSHLAND INTERCHANGE - DEAF SMITH COUNTY INTERCHANGE 230KV CKT 1
FDNS	06NR	2	20L	G15_068	FROM->TO	G14-074T 345.00 - OKLAUNION 345KV CKT 1	1022	1124	0.08996	101.2671	MOORE COUNTY INTERCHANGE - POTTER COUNTY INTERCHANGE 230KV CKT 1
FDNS	06NR	2	20L	G15_068	FROM->TO	G14-074T 345.00 - OKLAUNION 345KV CKT 1	1022	1124	0.08996	101.2671	MOORE COUNTY INTERCHANGE - POTTER COUNTY INTERCHANGE 230KV CKT 1
FDNS	06NR	2	20L	G15_068	FROM->TO	G14-074T 345.00 - OKLAUNION 345KV CKT 1	1022	1124	0.08922	101.2654	G11-14T 345.00 - WOODWARD DISTRICT EHV 345KV CKT 1
FDNS	06NR	2	20L	G15_068	FROM->TO	G14-074T 345.00 - OKLAUNION 345KV CKT 1	1022	1124	0.08922	101.2654	G11-14T 345.00 - WOODWARD DISTRICT EHV 345KV CKT 2
FDNS	06ALL	2	20L	G15_068	FROM->TO	GRACEMONT - MINCO 345KV CKT 1	1195	1195	0.23152	101.0673	G14-057T 345.00 - SUNNYSIDE 345KV CKT 1
FDNS	00NR	2	25SP	G15_068	FROM->TO	Hitchland Interchange (H TB80155502) 345/230/13.2KV TRANSFORMER CKT 1	560	644	0.04979	99.7	Hitchland Interchange (SIEM 8743067) 345/230/13.2KV TRANSFORMER CKT 2
FDNS	00NR	2	25SP	G15_068	FROM->TO	Hitchland Interchange (H TB80155502) 345/230/13.2KV TRANSFORMER CKT 1	560	644	0.04979	99.7	Hitchland Interchange (SIEM 8743067) 345/230/13.2KV TRANSFORMER CKT 2
FDNS	00NR	2	25SP	G15_068	FROM->TO	Hitchland Interchange (SIEM 8743067) 345/230/13.2KV TRANSFORMER CKT 2	560	644	0.05082	101.9783	Hitchland Interchange (H TB80155502) 345/230/13.2KV TRANSFORMER CKT 1
FDNS	00NR	2	25SP	G15_068	FROM->TO	Hitchland Interchange (SIEM 8743067) 345/230/13.2KV TRANSFORMER CKT 2	560	644	0.05082	101.9783	Hitchland Interchange (H TB80155502) 345/230/13.2KV TRANSFORMER CKT 1
FDNS	00NR	2	25SP	G15_068	FROM->TO	Hitchland Interchange (SIEM 8743067) 345/230/13.2KV TRANSFORMER CKT 2	560	644	0.05082	100.1637	Hitchland Interchange (H TB80155502) 345/230/13.2KV TRANSFORMER CKT 1
FDNS	00NR	2	25SP	G15_068	FROM->TO	Hitchland Interchange (SIEM 8743067) 345/230/13.2KV TRANSFORMER CKT 2	560	644	0.05082	100.1637	Hitchland Interchange (H TB80155502) 345/230/13.2KV TRANSFORMER CKT 1
FDNS	00NR	2	25SP	G15_068	TO->FROM	JONES STATION - TUCO INTERCHANGE 230KV CKT 1	343.79	343.79	0.17401	139.1643	CARLISLE INTERCHANGE - TUCO INTERCHANGE 230KV CKT 1
FDNS	00NR	2	25SP	G15_068	TO->FROM	JONES STATION - TUCO INTERCHANGE 230KV CKT 1	343.79	343.79	0.17401	139.1643	CARLISLE INTERCHANGE - TUCO INTERCHANGE 230KV CKT 1

SOLUTION	GROUP	SCENARIO	SEASON	SOURCE	DIRECTION	MONITORED ELEMENT	RATEA (MVA)	RATEB(MVA)	TDF	TC%LOADING (% MVA)	CONTINGENCY
FDNS	00NR	2	25SP	G15_068	TO->FROM	JONES STATION - TUCO INTERCHANGE 230KV CKT 1	343.79	343.79	0.17131	122.6847	TUCO INTERCHANGE - YOAKUM_345 345.00 345KV CKT 1
FDNS	00NR	2	25SP	G15_068	TO->FROM	JONES STATION - TUCO INTERCHANGE 230KV CKT 1	343.79	343.79	0.1316	119.1138	GEN526333 1-JONES GEN #3 21 KV
FDNS	00NR	2	25SP	G15_068	TO->FROM	JONES STATION - TUCO INTERCHANGE 230KV CKT 1	343.79	343.79	0.1316	118.7159	GEN526334 1-JONES_4 116.500
FDNS	00NR	2	25SP	G15_068	TO->FROM	JONES STATION - TUCO INTERCHANGE 230KV CKT 1	343.79	343.79	0.15547	111.2162	CARLISLE INTERCHANGE - WOLFFORTH INTERCHANGE 230KV CKT 1
FDNS	00NR	2	25SP	G15_068	TO->FROM	JONES STATION - TUCO INTERCHANGE 230KV CKT 1	343.79	343.79	0.13838	106.9963	TUCO INTERCHANGE (ENRCO 136401) 230/115/13.2KV TRANSFORMER CKT 1
FDNS	00NR	2	25SP	G15_068	TO->FROM	JONES STATION - TUCO INTERCHANGE 230KV CKT 1	343.79	343.79	0.13838	106.9963	TUCO INTERCHANGE (ENRCO 136401) 230/115/13.2KV TRANSFORMER CKT 1
FDNS	00NR	2	25SP	G15_068	TO->FROM	JONES STATION - TUCO INTERCHANGE 230KV CKT 1	343.79	343.79	0.13838	106.9963	TUCO INTERCHANGE (ENRCO 136401) 230/115/13.2KV TRANSFORMER CKT 2
FDNS	00NR	2	25SP	G15_068	TO->FROM	JONES STATION - TUCO INTERCHANGE 230KV CKT 1	343.79	343.79	0.13838	106.9963	TUCO INTERCHANGE (ENRCO 136401) 230/115/13.2KV TRANSFORMER CKT 2
FDNS	00NR	2	25SP	G15_068	TO->FROM	JONES STATION - TUCO INTERCHANGE 230KV CKT 1	343.79	343.79	0.1316	106.4847	GEN526332 1-JONES GEN #2 21 KV
FDNS	00NR	2	25SP	G15_068	TO->FROM	JONES STATION - TUCO INTERCHANGE 230KV CKT 1	343.79	343.79	0.1316	106.4826	GEN526331 1-JONES GEN #1 22 KV
FDNS	00NR	2	25SP	G15_068	TO->FROM	JONES STATION - TUCO INTERCHANGE 230KV CKT 1	343.79	343.79	0.14042	105.6092	LUBBOCK EAST INTERCHANGE - TUCO INTERCHANGE 115KV CKT 1
FDNS	00NR	2	25SP	G15_068	TO->FROM	JONES STATION - TUCO INTERCHANGE 230KV CKT 1	343.79	343.79	0.14042	105.6092	LUBBOCK EAST INTERCHANGE - TUCO INTERCHANGE 115KV CKT 1
FDNS	00NR	2	25SP	G15_068	TO->FROM	JONES STATION - TUCO INTERCHANGE 230KV CKT 1	343.79	343.79	0.12697	105.4194	PLANT X STATION - SUNDOWN INTERCHANGE 230KV CKT 1
FDNS	00NR	2	25SP	G15_068	TO->FROM	JONES STATION - TUCO INTERCHANGE 230KV CKT 1	343.79	343.79	0.12697	105.4194	PLANT X STATION - SUNDOWN INTERCHANGE 230KV CKT 1
FDNS	00NR	2	25SP	G15_068	TO->FROM	JONES STATION - TUCO INTERCHANGE 230KV CKT 1	343.79	343.79	0.13554	102.5525	STANTON SUB - TUCO INTERCHANGE 115KV CKT 1
FDNS	00NR	2	25SP	G15_068	TO->FROM	JONES STATION - TUCO INTERCHANGE 230KV CKT 1	343.79	343.79	0.13369	102.3349	P12:230:LPL:K39.1.CRLSLE.LP-MLWK
FDNS	00NR	2	25SP	G15_068	TO->FROM	JONES STATION - TUCO INTERCHANGE 230KV CKT 1	343.79	343.79	0.13369	102.3335	LUBBOCK POWER & LIGHT-MILWAUKEE (M-E C0681251) 230/69/13.5KV TRANSFORMER CKT 1
FDNS	00NR	2	25SP	G15_068	TO->FROM	JONES STATION - TUCO INTERCHANGE 230KV CKT 1	343.79	343.79	0.13369	102.3335	LUBBOCK POWER & LIGHT-MILWAUKEE (M-E C0681251) 230/69/13.5KV TRANSFORMER CKT 1
FDNS	00NR	2	25SP	G15_068	TO->FROM	JONES STATION - TUCO INTERCHANGE 230KV CKT 1	343.79	343.79	0.13369	102.3328	CARLISLE INTERCHANGE - LUBBOCK POWER & LIGHT-MILWAUKEE 230KV CKT 1
FDNS	00NR	2	25SP	G15_068	TO->FROM	JONES STATION - TUCO INTERCHANGE 230KV CKT 1	343.79	343.79	0.14988	101.8206	TOLK STATION EAST - TUCO INTERCHANGE 230KV CKT 1
FDNS	00NR	2	25SP	G15_068	TO->FROM	JONES STATION - TUCO INTERCHANGE 230KV CKT 1	343.79	343.79	0.14988	101.8206	TOLK STATION EAST - TUCO INTERCHANGE 230KV CKT 1
FDNS	00NR	2	25SP	G15_068	TO->FROM	JONES STATION - TUCO INTERCHANGE 230KV CKT 1	343.79	343.79	0.13554	101.6251	P12:115:SPS:V15.1.TUCO.INDANA
FDNS	00NR	2	25SP	G15_068	TO->FROM	JONES STATION - TUCO INTERCHANGE 230KV CKT 1	343.79	343.79	0.13554	101.5793	INDIANA SUB - STANTON SUB 115KV CKT 1
FDNS	00NR	2	25SP	G15_068	TO->FROM	JONES STATION - TUCO INTERCHANGE 230KV CKT 1	343.79	343.79	0.1316	100.7469	GEN527166 1-MUSTANG_6 118.000
FDNS	00NR	2	25SP	G15_068	TO->FROM	JONES STATION - TUCO INTERCHANGE 230KV CKT 1	343.79	343.79	0.1316	100.7466	GEN527903 1-HOBBS PLANT #3 (ST)
FDNS	00NR	2	25SP	G15_068	TO->FROM	JONES STATION - TUCO INTERCHANGE 230KV CKT 1	343.79	343.79	0.13257	100.3452	CARLISLE INTERCHANGE - MURPHY SUB 115KV CKT 1
FDNS	00NR	2	25SP	G15_068	TO->FROM	JONES STATION - TUCO INTERCHANGE 230KV CKT 1	343.79	343.79	0.13257	100.3452	CARLISLE INTERCHANGE - MURPHY SUB 115KV CKT 1
FDNS	00NR	2	25SP	G15_068	TO->FROM	JONES STATION - TUCO INTERCHANGE 230KV CKT 1	343.79	343.79	0.132	100.3228	KRESS INTERCHANGE - SWISHER COUNTY INTERCHANGE 115KV CKT 1
FDNS	00NR	2	25SP	G15_068	TO->FROM	JONES STATION - TUCO INTERCHANGE 230KV CKT 1	343.79	343.79	0.132	100.3228	KRESS INTERCHANGE - SWISHER COUNTY INTERCHANGE 115KV CKT 1
FDNS	00NR	2	25SP	G15_068	TO->FROM	JONES STATION - TUCO INTERCHANGE 230KV CKT 1	343.79	343.79	0.1316	100.2967	GEN528501 1-G14_012 24.000
FDNS	00NR	2	25SP	G15_068	TO->FROM	JONES STATION - TUCO INTERCHANGE 230KV CKT 1	343.79	343.79	0.141	100.1964	YOAKUM_345 345.00 (UPDATE DATA) 345/230/13.2KV TRANSFORMER CKT 1
FDNS	00NR	2	25SP	G15_068	TO->FROM	JONES STATION - TUCO INTERCHANGE 230KV CKT 1	343.79	343.79	0.13554	99.9	INDIANA SUB - SOUTH PLAINS REC-ERSKINE 115KV CKT 1
FDNS	00NR	2	25SP	G15_068	TO->FROM	JONES STATION - TUCO INTERCHANGE 230KV CKT 1	343.79	343.79	0.13324	99.8	FLOYD COUNTY INTERCHANGE - TUCO INTERCHANGE 115KV CKT 1
FDNS	00NR	2	25SP	G15_068	TO->FROM	JONES STATION - TUCO INTERCHANGE 230KV CKT 1	343.79	343.79	0.13324	99.8	FLOYD COUNTY INTERCHANGE - TUCO INTERCHANGE 115KV CKT 1
FDNS	00NR	2	25SP	G15_068	TO->FROM	JONES STATION - TUCO INTERCHANGE 230KV CKT 1	343.79	343.79	0.13256	99.7	POTTER COUNTY INTERCHANGE (WAUK 90343-A) 345/230/13.2KV TRANSFORMER CKT 1
FDNS	00NR	2	25SP	G15_068	TO->FROM	JONES STATION - TUCO INTERCHANGE 230KV CKT 1	343.79	343.79	0.13256	99.7	POTTER COUNTY INTERCHANGE (WAUK 90343-A) 345/230/13.2KV TRANSFORMER CKT 1
FDNS	00NR	2	25SP	G15_068	TO->FROM	JONES STATION - TUCO INTERCHANGE 230KV CKT 1	343.79	343.79	0.1316	99.7	GEN563122 1-G15077_3 0.3850
FDNS	00NR	2	25SP	G15_068	TO->FROM	JONES STATION - TUCO INTERCHANGE 230KV CKT 1	343.79	343.79	0.1316	99.6	GEN527901 1-HOBBS PLANT #1 (CT)
FDNS	00NR	2	25SP	G15_068	TO->FROM	JONES STATION - TUCO INTERCHANGE 230KV CKT 1	343.79	343.79	0.1316	99.6	GEN527902 1-HOBBS PLANT #2 (CT)
FDNS	00NR	2	25SP	G15_068	TO->FROM	JONES STATION - TUCO INTERCHANGE 230KV CKT 1	343.79	343.79	0.1316	99.6	GEN563102 1-G15075_3 0.5500
FDNS	00NR	2	25SP	G15_068	TO->FROM	KRESS INTERCHANGE - SWISHER COUNTY INTERCHANGE 115KV CKT 1	218	239	0.03074	118.9382	NEWHART 230 - SWISHER COUNTY INTERCHANGE 230KV CKT 1
FDNS	00NR	2	17SP	G15_068	TO->FROM	KRESS INTERCHANGE - SWISHER COUNTY INTERCHANGE 115KV CKT 1	218	239	0.0454	103.6501	NEWHART 230 - SWISHER COUNTY INTERCHANGE 230KV CKT 1
FDNS	00NR	2	20SP	G15_068	TO->FROM	KRESS INTERCHANGE - SWISHER COUNTY INTERCHANGE 115KV CKT 1	218	239	0.03144	101.6807	NEWHART 230 - SWISHER COUNTY INTERCHANGE 230KV CKT 1
FDNS	00NR	2	25SP	G15_068	FROM->TO	LUBBOCK POWER & LIGHT-HOLLY PLANT (SHIH T101039) 230/69/13.5KV TRANSFORMER CKT 1	224	224	0.03597	104.7613	LUBBOCK POWER & LIGHT-SOUTHEAST - LUBBOCK SOUTH INTERCHANGE 230KV CKT 1
FDNS	00NR	2	25SP	G15_068	FROM->TO	LUBBOCK POWER & LIGHT-HOLLY PLANT (SHIH T101039) 230/69/13.5KV TRANSFORMER CKT 1	224	224	0.03597	104.7484	P12:LPL:SPS:K64.1.LP-SE.LUBBS
FDNS	00NR	2	25SP	G15_068	FROM->TO	LUBBOCK POWER & LIGHT-HOLLY PLANT (SHIH T101039) 230/69/13.5KV TRANSFORMER CKT 1	224	224	0.0354	102.133	P12:230:LPL:K57.1.LP-WADS.LUBBE
FDNS	00NR	2	25SP	G15_068	FROM->TO	LUBBOCK POWER & LIGHT-HOLLY PLANT (SHIH T101039) 230/69/13.5KV TRANSFORMER CKT 1	224	224	0.0354	102.1329	LUBBOCK POWER & LIGHT-WADSWORTH (SHIH T101038) 230/69/13.5KV TRANSFORMER CKT 1
FDNS	00NR	2	25SP	G15_068	FROM->TO	LUBBOCK POWER & LIGHT-HOLLY PLANT (SHIH T101039) 230/69/13.5KV TRANSFORMER CKT 1	224	224	0.0354	102.1329	LUBBOCK POWER & LIGHT-WADSWORTH (SHIH T101038) 230/69/13.5KV TRANSFORMER CKT 1
FDNS	00NR	2	25SP	G15_068	FROM->TO	LUBBOCK POWER & LIGHT-HOLLY PLANT (SHIH T101039) 230/69/13.5KV TRANSFORMER CKT 1	224	224	0.0354	101.829	LUBBOCK EAST INTERCHANGE - LUBBOCK POWER & LIGHT-WADSWORTH 230KV CKT 1
FDNSLock	06ALL	2	20WP	G15_068		P12:230:AEPW:ELKCITY6:SWEETWT6	0	0	0.08937	9999	BASE CASE
FDNS	00NR	2	25SP	G15_068	FROM->TO	POTTER COUNTY INTERCHANGE (WAUK 90343-A) 345/230/13.2KV TRANSFORMER CKT 1	560	560	0.05966	104.4906	HITCHLAND INTERCHANGE - MOORE COUNTY INTERCHANGE 230KV CKT 1
FDNS	00NR	2	25SP	G15_068	FROM->TO	POTTER COUNTY INTERCHANGE (WAUK 90343-A) 345/230/13.2KV TRANSFORMER CKT 1	560	560	0.05966	104.4906	HITCHLAND INTERCHANGE - MOORE COUNTY INTERCHANGE 230KV CKT 1
FDNS	00NR	2	25SP	G15_068	FROM->TO	POTTER COUNTY INTERCHANGE (WAUK 90343-A) 345/230/13.2KV TRANSFORMER CKT 1	560	560	0.03495	104.4508	G14-074T 345.00 - TUCO INTERCHANGE 345KV CKT 1
FDNS	00NR	2	25SP	G15_068	FROM->TO	POTTER COUNTY INTERCHANGE (WAUK 90343-A) 345/230/13.2KV TRANSFORMER CKT 1	560	560	0.03172	103.5835	BORDER 7345.00 - TUCO_2 345.00 345KV CKT 1
FDNS	00NR	2	25SP	G15_068	FROM->TO	POTTER COUNTY INTERCHANGE (WAUK 90343-A) 345/230/13.2KV TRANSFORMER CKT 1	560	560	0.05966	102.7887	HITCHLAND INTERCHANGE - MOORE COUNTY INTERCHANGE 230KV CKT 1
FDNS	00NR	2	25SP	G15_068	FROM->TO	POTTER COUNTY INTERCHANGE (WAUK 90343-A) 345/230/13.2KV TRANSFORMER CKT 1	560	560	0.05966	102.7887	HITCHLAND INTERCHANGE - MOORE COUNTY INTERCHANGE 230KV CKT 1
FDNS	00NR	2	25SP	G15_068	FROM->TO	POTTER COUNTY INTERCHANGE (WAUK 90343-A) 345/230/13.2KV TRANSFORMER CKT 1	560	560	0.03495	102.5774	G14-074T 345.00 - TUCO INTERCHANGE 345KV CKT 1
FDNS	00NR	2	25SP	G15_068	FROM->TO	POTTER COUNTY INTERCHANGE (WAUK 90343-A) 345/230/13.2KV TRANSFORMER CKT 1	560	560	0.03172	101.7573	BORDER 7345.00 - TUCO_2 345.00 345KV CKT 1
FDNS	00NR	2	25SP	G15_068	FROM->TO	POTTER COUNTY INTERCHANGE (WAUK 90343-A) 345/230/13.2KV TRANSFORMER CKT 1	560	560	0.03172	100.8717	BORDER 7345.00 - WOODWARD DISTRICT EHV 345KV CKT 1
FDNS	06ALL	2	20L	G15_068	FROM->TO	TUCO INTERCHANGE - TUCO_2 230.00 230KV CKT 1	497	547	0.39741	181.2199	TUCO INTERCHANGE - TUCO_2 345.00 345KV CKT 1
FDNS	06ALL	2	17G	G15_068	FROM->TO	TUCO INTERCHANGE - TUCO_2 230.00 230KV CKT 1	497	547	0.44968	176.0864	TUCO INTERCHANGE - TUCO_2 345.00 345KV CKT 1
FDNS	06ALL	2	20SP	G15_068	FROM->TO	TUCO INTERCHANGE - TUCO_2 230.00 230KV CKT 1	497	547	0.43471	166.2483	TUCO INTERCHANGE - TUCO_2 345.00 345KV CKT 1
FDNS	06ALL	2	17SP	G15_068	FROM->TO	TUCO INTERCHANGE - TUCO_2 230.00 230KV CKT 1	497	547	0.45369	159.9768	TUCO INTERCHANGE - TUCO_2 345.00 345KV CKT 1
FDNS	06ALL	2	20WP	G15_068	FROM->TO	TUCO INTERCHANGE - TUCO_2 230.00 230KV CKT 1	552	608	0.42923	155.2742	TUCO INTERCHANGE - TUCO_2 345.00 345KV CKT 1
FDNS	06ALL	2	16WP	G15_068	FROM->TO	TUCO INTERCHANGE - TUCO_2 230.00 230KV CKT 1	552	608	0.45931	142.7524	TUCO INTERCHANGE - TUCO_2 345.00 345KV CKT 1
FDNS	06NR	2	20L	G15_068	FROM->TO	TUCO INTERCHANGE - TUCO_2 230.00 230KV CKT 1	497	547	0.20622	110.6574	TUCO INTERCHANGE - TUCO_2 345.00 345KV CKT 1
FDNS	06NR	2	17G	G15_068	FROM->TO	TUCO INTERCHANGE - TUCO_2 230.00 230KV CKT 1	497	547	0.24046	106.5066	TUCO INTERCHANGE - TUCO_2 345.00 345KV CKT 1
FDNS	06ALL	2	25SP	G15_068	FROM->TO	TUCO INTERCHANGE - TUCO_2 230.00 230KV CKT 1	497	547	0.44497	102.0482993	TUCO INTERCHANGE - TUCO_2 345.00 345KV CKT 1
FDNS	00NR	2	25SP	G15_068	FROM->TO	TUCO INTERCHANGE (ENRCO 136401) 230/115/13.2KV TRANSFORMER CKT 1	250	288	0.07112	123.4792	TUCO INTERCHANGE (ENRCO 136401) 230/115/13.2KV TRANSFORMER CKT 2
FDNS	00NR	2	25SP	G15_068	FROM->TO	TUCO INTERCHANGE (ENRCO 136401) 230/115/13.2KV TRANSFORMER CKT 1	250	288	0.07112	123.4792	TUCO INTERCHANGE (ENRCO 136401) 230/115/13.2KV TRANSFORMER CKT 2
FDNS	00NR	2	25SP	G15_068	FROM->TO	TUCO INTERCHANGE (ENRCO 136401) 230/115/13.2KV TRANSFORMER CKT 1	250	288	0.07112	115.8221	TUCO INTERCHANGE (ENRCO 136401) 230/115/13.2KV TRANSFORMER CKT 2
FDNS	00NR	2	25SP	G15_068	FROM->TO	TUCO INTERCHANGE (ENRCO 136401) 230/115/13.2KV TRANSFORMER CKT 1	250	288	0.07112	115.8221	TUCO INTERCHANGE (ENRCO 136401) 230/115/13.2KV TRANSFORMER CKT 2
FDNS	00NR	2	25SP	G15_068	FROM->TO	TUCO INTERCHANGE (ENRCO 136401) 230/115/13.2KV TRANSFORMER CKT 2	250	288	0.07112	123.4792	TUCO INTERCHANGE (ENRCO 136401) 230/115/13.2KV TRANSFORMER CKT 1
FDNS	00NR	2	25SP	G15_068	FROM->TO	TUCO INTERCHANGE (ENRCO 136401) 230/115/13.2KV TRANSFORMER CKT 2	250	288	0.07112	123.4792	TUCO INTERCHANGE (ENRCO 136401) 230/115/13.2KV TRANSFORMER CKT 1
FDNS	00NR	2	25SP	G15_068	FROM->TO	TUCO INTERCHANGE (ENRCO 136401) 230/115/13.2KV TRANSFORMER CKT 2	250	288	0.07112	115.8221	TUCO INTERCHANGE (ENRCO 136401) 230/115/13.2KV TRANSFORMER CKT 1
FDNS	00NR	2	25SP	G15_068	FROM->TO	TUCO INTERCHANGE (ENRCO 136401) 230/115/13.2KV TRANSFORMER CKT 2	250	288	0.07112	115.8221	TUCO INTERCHANGE (ENRCO 136401) 230/115/13.2KV TRANSFORMER CKT 1
FDNS	00NR	2	17SP	G15_068	FROM->TO	TUCO INTERCHANGE (GE M102345) 230/115/13.2KV TRANSFORMER CKT 1	242	252	0.09683	102.8207	TUCO INTERCHANGE (ENRCO 136401) 230/115/13.2KV TRANSFORMER CKT 2
FDNS	00NR	2	17SP	G15_068	FROM->TO	TUCO INTERCHANGE (GE M102345) 230/115/13.2KV TRANSFORMER CKT 1	242	252	0.09683	102.8207	TUCO INTERCHANGE (ENRCO 136401) 230/115/13.2KV TRANSFORMER CKT 2
FDNS	00NR	2	17SP	G15_068	FROM->TO	TUCO INTERCHANGE (GE M102345) 230/115/13.2KV TRANSFORMER CKT 1	242	252	0.09683	102.1676	TUCO INTERCHANGE (ENRCO 136401) 230/115/13.2KV TRANSFORMER CKT 2

SOLUTION	GROUP	SCENARIO	SEASON	SOURCE	DIRECTION	MONITORED ELEMENT	RATEA (MVA)	RATEB(MVA)	TDF	TC%LOADING (% MVA)	CONTINGENCY
FDNS	00NR	2	17SP	G15_068	FROM->TO	TUCO INTERCHANGE (GE M102345) 230/115/13.2KV TRANSFORMER CKT 1	242	252	0.09683	102.1676	TUCO INTERCHANGE (ENRCO 136401) 230/115/13.2KV TRANSFORMER CKT 2
FDNS	06ALL	2	20L	G15_068	FROM->TO	TUCO_2 345.00 (TUCO_2 XFMR) 345/230/13.2KV TRANSFORMER CKT 1	560	560	0.27588	190.1451	TUCO INTERCHANGE - TUCO_2 345.00 345KV CKT 1
FDNS	06ALL	2	20WP	G15_068	FROM->TO	TUCO_2 345.00 (TUCO_2 XFMR) 345/230/13.2KV TRANSFORMER CKT 1	560	560	0.31271	189.4604	TUCO INTERCHANGE - TUCO_2 345.00 345KV CKT 1
FDNS	06ALL	2	17G	G15_068	FROM->TO	TUCO_2 345.00 (TUCO_2 XFMR) 345/230/13.2KV TRANSFORMER CKT 1	560	560	0.31702	187.4581	TUCO INTERCHANGE - TUCO_2 345.00 345KV CKT 1
FDNS	06ALL	2	20WP	G15_068	FROM->TO	TUCO_2 345.00 (TUCO_2 XFMR) 345/230/13.2KV TRANSFORMER CKT 1	560	560	0.31271	184.0471	TUCO INTERCHANGE - TUCO_2 345.00 345KV CKT 1
FDNS	06ALL	2	20L	G15_068	FROM->TO	TUCO_2 345.00 (TUCO_2 XFMR) 345/230/13.2KV TRANSFORMER CKT 1	560	560	0.27588	184.0031	TUCO INTERCHANGE - TUCO_2 345.00 345KV CKT 1
FDNS	06ALL	2	17G	G15_068	FROM->TO	TUCO_2 345.00 (TUCO_2 XFMR) 345/230/13.2KV TRANSFORMER CKT 1	560	560	0.31702	182.4703	TUCO INTERCHANGE - TUCO_2 345.00 345KV CKT 1
FDNS	06ALL	2	16WP	G15_068	FROM->TO	TUCO_2 345.00 (TUCO_2 XFMR) 345/230/13.2KV TRANSFORMER CKT 1	560	560	0.32755	175.5009	TUCO INTERCHANGE - TUCO_2 345.00 345KV CKT 1
FDNS	06ALL	2	16WP	G15_068	FROM->TO	TUCO_2 345.00 (TUCO_2 XFMR) 345/230/13.2KV TRANSFORMER CKT 1	560	560	0.32755	172.6087	TUCO INTERCHANGE - TUCO_2 345.00 345KV CKT 1
FDNS	06ALL	2	20SP	G15_068	FROM->TO	TUCO_2 345.00 (TUCO_2 XFMR) 345/230/13.2KV TRANSFORMER CKT 1	560	560	0.31903	166.4217	TUCO INTERCHANGE - TUCO_2 345.00 345KV CKT 1
FDNS	06ALL	2	17SP	G15_068	FROM->TO	TUCO_2 345.00 (TUCO_2 XFMR) 345/230/13.2KV TRANSFORMER CKT 1	560	560	0.32398	164.6979	TUCO INTERCHANGE - TUCO_2 345.00 345KV CKT 1
FDNS	06ALL	2	20SP	G15_068	FROM->TO	TUCO_2 345.00 (TUCO_2 XFMR) 345/230/13.2KV TRANSFORMER CKT 1	560	560	0.31903	163.5805	TUCO INTERCHANGE - TUCO_2 345.00 345KV CKT 1
FDNS	06ALL	2	17SP	G15_068	FROM->TO	TUCO_2 345.00 (TUCO_2 XFMR) 345/230/13.2KV TRANSFORMER CKT 1	560	560	0.32398	162.1713	TUCO INTERCHANGE - TUCO_2 345.00 345KV CKT 1
FDNS	06NR	2	20L	G15_068	FROM->TO	TUCO_2 345.00 (TUCO_2 XFMR) 345/230/13.2KV TRANSFORMER CKT 1	560	560	0.05749	110.8937	TUCO INTERCHANGE - TUCO_2 345.00 345KV CKT 1
FDNS	06NR	2	20L	G15_068	FROM->TO	TUCO_2 345.00 (TUCO_2 XFMR) 345/230/13.2KV TRANSFORMER CKT 1	560	560	0.05749	108.3383	TUCO INTERCHANGE - TUCO_2 345.00 345KV CKT 1
FDNS	06NR	2	17G	G15_068	FROM->TO	TUCO_2 345.00 (TUCO_2 XFMR) 345/230/13.2KV TRANSFORMER CKT 1	560	560	0.06028	107.0023	TUCO INTERCHANGE - TUCO_2 345.00 345KV CKT 1
FDNS	06NR	2	17G	G15_068	FROM->TO	TUCO_2 345.00 (TUCO_2 XFMR) 345/230/13.2KV TRANSFORMER CKT 1	560	560	0.06028	104.728	TUCO INTERCHANGE - TUCO_2 345.00 345KV CKT 1
FDNS	06NR	3	17G	G15_068	TO->FROM	AMARILLO SOUTH INTERCHANGE - G15031_T 230.00 230KV CKT 1	318.7	350.57	0.09533	103.2239	NEWHART 230 - POTTER COUNTY INTERCHANGE 230KV CKT 1
FDNS	06NR	3	20L	G15_068	FROM->TO	BUSHLAND INTERCHANGE - POTTER COUNTY INTERCHANGE 230KV CKT 1	318.7	350.57	0.05651	102.6252	NEWHART 230 - POTTER COUNTY INTERCHANGE 230KV CKT 1
FDNS	06ALL	3	20SP	G15_068	FROM->TO	CHISHOLM6 230.00 - ELK CITY 230KV 230KV CKT 1	353	353	0.06371	104.1963	BASE CASE
FDNS	06ALL	3	17SP	G15_068	FROM->TO	CHISHOLM6 230.00 - ELK CITY 230KV 230KV CKT 1	353	353	0.06396	101.9728	BASE CASE
FDNS	06ALL	3	20L	G15_068	TO->FROM	CIMARRON - MINCO 345KV CKT 1	956	956	0.22986	140.6921	G14-057T 345.00 - SUNNYSIDE 345KV CKT 1
FDNS	06ALL	3	20L	G15_068	TO->FROM	CIMARRON - MINCO 345KV CKT 1	956	956	0.22986	134.2883	G14-057T 345.00 - LAWTON EASTSIDE 345KV CKT 1
FDNS	06ALL	3	17G	G15_068	TO->FROM	CIMARRON - MINCO 345KV CKT 1	956	956	0.2619	132.797	G14-057T 345.00 - SUNNYSIDE 345KV CKT 1
FDNS	06ALL	3	20WP	G15_068	TO->FROM	CIMARRON - MINCO 345KV CKT 1	956	956	0.25718	131.9094	G14-057T 345.00 - SUNNYSIDE 345KV CKT 1
FDNS	06ALL	3	17G	G15_068	TO->FROM	CIMARRON - MINCO 345KV CKT 1	956	956	0.2619	127.3481	G14-057T 345.00 - LAWTON EASTSIDE 345KV CKT 1
FDNS	06ALL	3	20WP	G15_068	TO->FROM	CIMARRON - MINCO 345KV CKT 1	956	956	0.25718	126.3057	G14-057T 345.00 - LAWTON EASTSIDE 345KV CKT 1
FDNS	06ALL	3	16WP	G15_068	TO->FROM	CIMARRON - MINCO 345KV CKT 1	956	956	0.26881	125.3645	G14-057T 345.00 - SUNNYSIDE 345KV CKT 1
FDNS	06ALL	3	17SP	G15_068	TO->FROM	CIMARRON - MINCO 345KV CKT 1	956	956	0.26548	124.3731	G14-057T 345.00 - SUNNYSIDE 345KV CKT 1
FDNS	06ALL	3	20SP	G15_068	TO->FROM	CIMARRON - MINCO 345KV CKT 1	956	956	0.26319	121.3286	G14-057T 345.00 - SUNNYSIDE 345KV CKT 1
FDNS	06ALL	3	16WP	G15_068	TO->FROM	CIMARRON - MINCO 345KV CKT 1	956	956	0.26881	119.9255	G14-057T 345.00 - LAWTON EASTSIDE 345KV CKT 1
FDNS	06ALL	3	17SP	G15_068	TO->FROM	CIMARRON - MINCO 345KV CKT 1	956	956	0.26548	118.8978	G14-057T 345.00 - LAWTON EASTSIDE 345KV CKT 1
FDNS	06ALL	3	20SP	G15_068	TO->FROM	CIMARRON - MINCO 345KV CKT 1	956	956	0.26319	116.0894	G14-057T 345.00 - LAWTON EASTSIDE 345KV CKT 1
FDNS	06ALL	3	20WP	G15_068	TO->FROM	CIMARRON - MINCO 345KV CKT 1	956	956	0.2136	111.5734	MATHWSN7 345.00 - TATONGA7 345.00 345KV CKT 1
FDNS	06ALL	3	20L	G15_068	TO->FROM	CIMARRON - MINCO 345KV CKT 1	956	956	0.23953	109.488	CHISHOLM7 345.00 - WOODWARD DISTRICT EHV 345KV CKT 1
FDNS	06ALL	3	17G	G15_068	TO->FROM	CIMARRON - MINCO 345KV CKT 1	956	956	0.26546	109.1031	CHISHOLM7 345.00 - WOODWARD DISTRICT EHV 345KV CKT 1
FDNS	06ALL	3	20WP	G15_068	TO->FROM	CIMARRON - MINCO 345KV CKT 1	956	956	0.2136	106.2571	G11_051T 345.00 - TATONGA7 345.00 345KV CKT 1
FDNS	06ALL	3	17G	G15_068	TO->FROM	CIMARRON - MINCO 345KV CKT 1	956	956	0.21837	106.016	G11_051T 345.00 - TATONGA7 345.00 345KV CKT 1
FDNS	06ALL	3	17SP	G15_068	TO->FROM	CIMARRON - MINCO 345KV CKT 1	956	956	0.22176	105.6361	MATHWSN7 345.00 - TATONGA7 345.00 345KV CKT 1
FDNS	06ALL	3	20WP	G15_068	TO->FROM	CIMARRON - MINCO 345KV CKT 1	956	956	0.26264	105.2058	CHISHOLM7 345.00 - WOODWARD DISTRICT EHV 345KV CKT 1
FDNS	06ALL	3	16WP	G15_068	TO->FROM	CIMARRON - MINCO 345KV CKT 1	956	956	0.22364	105.1594	MATHWSN7 345.00 - TATONGA7 345.00 345KV CKT 1
FDNS	06ALL	3	20SP	G15_068	TO->FROM	CIMARRON - MINCO 345KV CKT 1	956	956	0.22015	104.8651	MATHWSN7 345.00 - TATONGA7 345.00 345KV CKT 1
FDNS	06ALL	3	20WP	G15_068	TO->FROM	CIMARRON - MINCO 345KV CKT 1	956	956	0.2136	104.6601	G11_051T 345.00 - WOODWARD DISTRICT EHV 345KV CKT 1
FDNS	06ALL	3	17G	G15_068	TO->FROM	CIMARRON - MINCO 345KV CKT 1	956	956	0.21837	104.4511	G11_051T 345.00 - WOODWARD DISTRICT EHV 345KV CKT 1
FDNS	06ALL	3	20SP	G15_068	TO->FROM	CIMARRON - MINCO 345KV CKT 1	956	956	0.26942	103.3967	CHISHOLM7 345.00 - WOODWARD DISTRICT EHV 345KV CKT 1
FDNS	06ALL	3	17SP	G15_068	TO->FROM	CIMARRON - MINCO 345KV CKT 1	956	956	0.27213	102.6701	CHISHOLM7 345.00 - WOODWARD DISTRICT EHV 345KV CKT 1
FDNS	06ALL	3	17SP	G15_068	TO->FROM	CIMARRON - MINCO 345KV CKT 1	956	956	0.22176	100.4546	G11_051T 345.00 - TATONGA7 345.00 345KV CKT 1
FDNS	06ALL	3	20WP	G15_068	TO->FROM	CIMARRON - MINCO 345KV CKT 1	956	956	0.20716	100.2954	P12:138:WFEC:MSL03
FDNS	06ALL	3	16WP	G15_068	TO->FROM	CIMARRON - MINCO 345KV CKT 1	956	956	0.22364	99.8	G11_051T 345.00 - TATONGA7 345.00 345KV CKT 1
FDNS	06ALL	3	20SP	G15_068	TO->FROM	CIMARRON - MINCO 345KV CKT 1	956	956	0.22015	99.7	G11_051T 345.00 - TATONGA7 345.00 345KV CKT 1
FDNS	06ALL	3	17SP	G15_068	TO->FROM	CIMARRON - MINCO 345KV CKT 1	956	956	0.2151	99.6	P12:138:WFEC:MSL03
FDNS	06ALL	3	20SP	G15_068	TO->FROM	CIMARRON - MINCO 345KV CKT 1	956	956	0.21337	99.6	P12:138:WFEC:MSL03
FDNS	06ALL	3	16WP	G15_068	TO->FROM	G14-057T 345.00 - LAWTON EASTSIDE 345KV CKT 1	717	789	0.19835	114.7254	CIMARRON - MINCO 345KV CKT 1
FDNS	06ALL	3	16WP	G15_068	TO->FROM	G14-057T 345.00 - LAWTON EASTSIDE 345KV CKT 1	717	789	0.19835	109.5268	GRACEMONT - MINCO 345KV CKT 1
FDNS	06ALL	3	20L	G15_068	TO->FROM	G14-057T 345.00 - LAWTON EASTSIDE 345KV CKT 1	717	789	0.11183	106.0801	BASE CASE
FDNS	06ALL	3	16WP	G15_068	FROM->TO	G14-057T 345.00 - SUNNYSIDE 345KV CKT 1	717	789	0.19835	127.524	CIMARRON - MINCO 345KV CKT 1
FDNS	06ALL	3	16WP	G15_068	FROM->TO	G14-057T 345.00 - SUNNYSIDE 345KV CKT 1	717	789	0.19835	122.1796	GRACEMONT - MINCO 345KV CKT 1
FDNS	06ALL	3	20L	G15_068	FROM->TO	G14-057T 345.00 - SUNNYSIDE 345KV CKT 1	717	789	0.11183	119.3111	BASE CASE
FDNS	00NR	3	16WP	G15_068	FROM->TO	G14-057T 345.00 - SUNNYSIDE 345KV CKT 1	717	789	0.0352	115.1889	GRACEMONT - LAWTON EASTSIDE 345KV CKT 1
FDNS	00NR	3	16WP	G15_068	FROM->TO	G14-057T 345.00 - SUNNYSIDE 345KV CKT 1	717	789	0.0352	115.1889	GRACEMONT - LAWTON EASTSIDE 345KV CKT 1
FDNS	00NR	3	20WP	G15_068	FROM->TO	G14-057T 345.00 - SUNNYSIDE 345KV CKT 1	717	789	0.03052	114.2681	GRACEMONT - LAWTON EASTSIDE 345KV CKT 1
FDNS	00NR	3	20WP	G15_068	FROM->TO	G14-057T 345.00 - SUNNYSIDE 345KV CKT 1	717	789	0.03052	114.2681	GRACEMONT - LAWTON EASTSIDE 345KV CKT 1
FDNS	06NR	3	20L	G15_068	FROM->TO	G14-057T 345.00 - SUNNYSIDE 345KV CKT 1	717	789	0.03491	111.5658	GRACEMONT - LAWTON EASTSIDE 345KV CKT 1
FDNS	06NR	3	20L	G15_068	FROM->TO	G14-057T 345.00 - SUNNYSIDE 345KV CKT 1	717	789	0.03491	111.5658	GRACEMONT - LAWTON EASTSIDE 345KV CKT 1
FDNS	06ALL	3	20WP	G15_068	FROM->TO	G14-057T 345.00 - SUNNYSIDE 345KV CKT 1	717	789	0.13536	107.198	BASE CASE
FDNS	06ALL	3	17G	G15_068	FROM->TO	G14-057T 345.00 - SUNNYSIDE 345KV CKT 1	717	789	0.13811	106.7167	BASE CASE
FDNS	06ALL	3	16WP	G15_068	FROM->TO	G14-057T 345.00 - SUNNYSIDE 345KV CKT 1	717	789	0.14158	105.3992	BASE CASE
FDNS	06NR	3	17G	G15_068	FROM->TO	G14-057T 345.00 - SUNNYSIDE 345KV CKT 1	717	789	0.03647	102.1075	GRACEMONT - LAWTON EASTSIDE 345KV CKT 1
FDNS	06NR	3	17G	G15_068	FROM->TO	G14-057T 345.00 - SUNNYSIDE 345KV CKT 1	717	789	0.03647	102.1075	GRACEMONT - LAWTON EASTSIDE 345KV CKT 1
FDNS	06NR	3	20L	G15_068	FROM->TO	G14-074T 345.00 - OKLAUNION 345KV CKT 1	1022	1124	0.07987	108.2612	BASE CASE
FDNS	06NR	3	17G	G15_068	FROM->TO	G14-074T 345.00 - OKLAUNION 345KV CKT 1	1022	1124	0.08243	106.9843	G11_051T 345.00 - WOODWARD DISTRICT EHV 345KV CKT 1
FDNS	06NR	3	17G	G15_068	FROM->TO	G14-074T 345.00 - OKLAUNION 345KV CKT 1	1022	1124	0.08358	105.0698	BASE CASE
FDNS	06NR	3	20L	G15_068	FROM->TO	G14-074T 345.00 - OKLAUNION 345KV CKT 1	1022	1124	0.07616	103.3966	CHISHOLM7 345.00 - GRACEMONT 345KV CKT 1
FDNS	06NR	3	20L	G15_068	FROM->TO	G14-074T 345.00 - OKLAUNION 345KV CKT 1	1022	1124	0.07616	102.9036	CHISHOLM7 345.00 () 345/230/13.2KV TRANSFORMER CKT 1
FDNS	06NR	3	20L	G15_068	FROM->TO	G14-074T 345.00 - OKLAUNION 345KV CKT 1	1022	1124	0.09073	102.6829	AMARILLO SOUTH INTERCHANGE - G15031_T 230.00 230KV CKT 1
FDNS	06NR	3	20L	G15_068	FROM->TO	G14-074T 345.00 - OKLAUNION 345KV CKT 1	1022	1124	0.0875	102.2907	NEWHART 230 - POTTER COUNTY INTERCHANGE 230KV CKT 1
FDNS	06NR	3	20L	G15_068	FROM->TO	G14-074T 345.00 - OKLAUNION 345KV CKT 1	1022	1124	0.08433	101.9316	DEAF SMITH COUNTY INTERCHANGE - G15039_T 230.00 230KV CKT 1
FDNS	06NR	3	20L	G15_068	FROM->TO	G14-074T 345.00 - OKLAUNION 345KV CKT 1	1022	1124	0.08433	100.8261	G15039_T 230.00 - PLANT X STATION 230KV CKT 1
FDNS	06NR	3	20L	G15_068	FROM->TO	G14-074T 345.00 - OKLAUNION 345KV CKT 1	1022	1124	0.0796	100.637	MINGO - RED WILLOW 345KV CKT 1

SOLUTION	GROUP	SCENARIO	SEASON	SOURCE	DIRECTION	MONITORED ELEMENT	RATEA (MVA)	RATEB(MVA)	TDF	TC%LOADING (% MVA)	CONTINGENCY
FDNS	06NR	3	20L	G15_068	FROM->TO	G14-074T 345.00 - OKLAUNION 345KV CKT 1	1022	1124	0.0796	100.637	MINGO - RED WILLOW 345KV CKT 1
FDNS	06NR	3	20L	G15_068	FROM->TO	G14-074T 345.00 - OKLAUNION 345KV CKT 1	1022	1124	0.07879	100.065	CHILDRESS - LAKE PAULINE 138KV CKT 1
FDNS	06NR	3	20L	G15_068	FROM->TO	G14-074T 345.00 - OKLAUNION 345KV CKT 1	1022	1124	0.07879	100.065	CHILDRESS - LAKE PAULINE 138KV CKT 1
FDNS	06NR	3	20L	G15_068	FROM->TO	G14-074T 345.00 - OKLAUNION 345KV CKT 1	1022	1124	0.07919	100	CONWAY SUB - NICHOLS STATION 115KV CKT 1
FDNS	06NR	3	20L	G15_068	FROM->TO	G14-074T 345.00 - OKLAUNION 345KV CKT 1	1022	1124	0.07919	99.9	CONWAY SUB - KIRBY SWITCHING STATION 115KV CKT 1
FDNS	06NR	3	17G	G15_068	FROM->TO	G14-074T 345.00 - OKLAUNION 345KV CKT 1	1022	1124	0.09397	99.8	AMARILLO SOUTH INTERCHANGE - G15031_T 230.00 230KV CKT 1
FDNS	06NR	3	20L	G15_068	FROM->TO	G14-074T 345.00 - OKLAUNION 345KV CKT 1	1022	1124	0.07919	99.8	P12:115:SPS:T53.1.NICHLS.KIRBY
FDNS	06NR	3	20L	G15_068	FROM->TO	G14-074T 345.00 - OKLAUNION 345KV CKT 1	1022	1124	0.07982	99.7	IODINE - WOODWARD EHV 138KV CKT 1
FDNS	06NR	3	20L	G15_068	FROM->TO	G14-074T 345.00 - OKLAUNION 345KV CKT 1	1022	1124	0.07982	99.6	DEWEY - IODINE 138KV CKT 1
FDNS	06NR	3	20L	G15_068	FROM->TO	G14-074T 345.00 - OKLAUNION 345KV CKT 1	1022	1124	0.07982	99.6	WOODWARD - WWPAR4 138.00 138KV CKT 1
FDNS	06NR	3	20L	G15_068	FROM->TO	G14-074T 345.00 - OKLAUNION 345KV CKT 1	1022	1124	0.07982	99.6	WOODWARD EHV - WWPAR4 138.00 138KV CKT 1
FDNS	06NR	3	17G	G15_068	FROM->TO	G14-074T 345.00 - OKLAUNION 345KV CKT 1	1022	1124	0.07964	99.5	CHISHOLM7 345.00 - GRACEMONT 345KV CKT 1
FDNS	06NR	3	20L	G15_068	FROM->TO	G14-074T 345.00 - OKLAUNION 345KV CKT 1	1022	1124	0.07928	99.5	KIRBY SWITCHING STATION - MCCLELLAN SUB 115KV CKT 1
FDNS	06NR	3	20L	G15_068	FROM->TO	G14-074T 345.00 - OKLAUNION 345KV CKT 1	1022	1124	0.07928	99.5	MCCLELLAN SUB - MCLEAN RURAL SUB 115KV CKT 1
FDNS	06ALL	3	20L	G15_068	FROM->TO	GRACEMONT - MINCO 345KV CKT 1	1195	1195	0.22986	101.53	G14-057T 345.00 - SUNNYSIDE 345KV CKT 1
FDNS	00NR	3	25SP	G15_068	FROM->TO	Hitchland Interchange (SIEM 8743067) 345/230/13.2KV TRANSFORMER CKT 2	560	644	0.04397	100.776	Hitchland Interchange (H TB80155502) 345/230/13.2KV TRANSFORMER CKT 1
FDNS	00NR	3	25SP	G15_068	FROM->TO	Hitchland Interchange (SIEM 8743067) 345/230/13.2KV TRANSFORMER CKT 2	560	644	0.04397	100.776	Hitchland Interchange (H TB80155502) 345/230/13.2KV TRANSFORMER CKT 1
FDNS	00NR	3	25SP	G15_068	TO->FROM	JONES STATION - TUCO INTERCHANGE 230KV CKT 1	343.79	343.79	0.15033	130.1614	CARLISLE INTERCHANGE - TUCO INTERCHANGE 230KV CKT 1
FDNS	00NR	3	25SP	G15_068	TO->FROM	JONES STATION - TUCO INTERCHANGE 230KV CKT 1	343.79	343.79	0.15033	130.1614	CARLISLE INTERCHANGE - TUCO INTERCHANGE 230KV CKT 1
FDNS	00NR	3	25SP	G15_068	TO->FROM	JONES STATION - TUCO INTERCHANGE 230KV CKT 1	343.79	343.79	0.11608	113.3309	GEN526333 1-JONES GEN #3 21 KV
FDNS	00NR	3	25SP	G15_068	TO->FROM	JONES STATION - TUCO INTERCHANGE 230KV CKT 1	343.79	343.79	0.11608	112.9359	GEN526334 1-JONES_4 116.500
FDNS	00NR	3	25SP	G15_068	TO->FROM	JONES STATION - TUCO INTERCHANGE 230KV CKT 1	343.79	343.79	0.14047	108.5941	TUCO INTERCHANGE - YOAKUM_345 345.00 345KV CKT 1
FDNS	00NR	3	25SP	G15_068	TO->FROM	JONES STATION - TUCO INTERCHANGE 230KV CKT 1	343.79	343.79	0.13495	103.864	CARLISLE INTERCHANGE - WOLFFORTH INTERCHANGE 230KV CKT 1
FDNS	00NR	3	25SP	G15_068	TO->FROM	JONES STATION - TUCO INTERCHANGE 230KV CKT 1	343.79	343.79	0.11513	101.6819	PLANT X STATION - SUNDOWN INTERCHANGE 230KV CKT 1
FDNS	00NR	3	25SP	G15_068	TO->FROM	JONES STATION - TUCO INTERCHANGE 230KV CKT 1	343.79	343.79	0.11513	101.6819	PLANT X STATION - SUNDOWN INTERCHANGE 230KV CKT 1
FDNS	00NR	3	25SP	G15_068	TO->FROM	JONES STATION - TUCO INTERCHANGE 230KV CKT 1	343.79	343.79	0.11608	100.8779	GEN526332 1-JONES GEN #2 21 KV
FDNS	00NR	3	25SP	G15_068	TO->FROM	JONES STATION - TUCO INTERCHANGE 230KV CKT 1	343.79	343.79	0.11608	100.876	GEN526331 1-JONES GEN #1 22 KV
FDNS	00NR	3	25SP	G15_068	TO->FROM	JONES STATION - TUCO INTERCHANGE 230KV CKT 1	343.79	343.79	0.12142	100.7208	TUCO INTERCHANGE (ENRCO 136401) 230/115/13.2KV TRANSFORMER CKT 1
FDNS	00NR	3	25SP	G15_068	TO->FROM	JONES STATION - TUCO INTERCHANGE 230KV CKT 1	343.79	343.79	0.12142	100.7208	TUCO INTERCHANGE (ENRCO 136401) 230/115/13.2KV TRANSFORMER CKT 1
FDNS	00NR	3	25SP	G15_068	TO->FROM	JONES STATION - TUCO INTERCHANGE 230KV CKT 1	343.79	343.79	0.12142	100.7208	TUCO INTERCHANGE (ENRCO 136401) 230/115/13.2KV TRANSFORMER CKT 2
FDNS	00NR	3	25SP	G15_068	TO->FROM	JONES STATION - TUCO INTERCHANGE 230KV CKT 1	343.79	343.79	0.12142	100.7208	TUCO INTERCHANGE (ENRCO 136401) 230/115/13.2KV TRANSFORMER CKT 2
FDNS	00NR	3	25SP	G15_068	TO->FROM	JONES STATION - TUCO INTERCHANGE 230KV CKT 1	343.79	343.79	0.12413	99.8	LUBBOCK EAST INTERCHANGE - TUCO INTERCHANGE 115KV CKT 1
FDNS	00NR	3	25SP	G15_068	TO->FROM	JONES STATION - TUCO INTERCHANGE 230KV CKT 1	343.79	343.79	0.12413	99.8	LUBBOCK EAST INTERCHANGE - TUCO INTERCHANGE 115KV CKT 1
FDNS	00NR	3	25SP	G15_068	FROM->TO	LUBBOCK POWER & LIGHT-HOLLY PLANT (SHIH T101039) 230/69/13.5KV TRANSFORMER CKT 1	224	224	0.03593	104.7002	LUBBOCK POWER & LIGHT-SOUTHEAST - LUBBOCK SOUTH INTERCHANGE 230KV CKT 1
FDNS	00NR	3	25SP	G15_068	FROM->TO	LUBBOCK POWER & LIGHT-HOLLY PLANT (SHIH T101039) 230/69/13.5KV TRANSFORMER CKT 1	224	224	0.03593	104.6872	P12:LPL:SPS:K64.1.LP-SE.LUBBS
FDNS	00NR	3	25SP	G15_068	FROM->TO	LUBBOCK POWER & LIGHT-HOLLY PLANT (SHIH T101039) 230/69/13.5KV TRANSFORMER CKT 1	224	224	0.03516	101.9683	LUBBOCK EAST INTERCHANGE - LUBBOCK POWER & LIGHT-WADSWORTH 230KV CKT 1
FDNS	00NR	3	25SP	G15_068	FROM->TO	LUBBOCK POWER & LIGHT-HOLLY PLANT (SHIH T101039) 230/69/13.5KV TRANSFORMER CKT 1	224	224	0.03516	101.9535	P12:230:LPL:K57.1.LP-WADS.LUBBE
FDNS	00NR	3	25SP	G15_068	FROM->TO	LUBBOCK POWER & LIGHT-HOLLY PLANT (SHIH T101039) 230/69/13.5KV TRANSFORMER CKT 1	224	224	0.03516	101.9534	LUBBOCK POWER & LIGHT-WADSWORTH (SHIH T101038) 230/69/13.5KV TRANSFORMER CKT 1
FDNS	00NR	3	25SP	G15_068	FROM->TO	LUBBOCK POWER & LIGHT-HOLLY PLANT (SHIH T101039) 230/69/13.5KV TRANSFORMER CKT 1	224	224	0.03516	101.9534	LUBBOCK POWER & LIGHT-WADSWORTH (SHIH T101038) 230/69/13.5KV TRANSFORMER CKT 1
FDNS	00NR	3	25SP	G15_068	FROM->TO	POTTER COUNTY INTERCHANGE (WAUK 90343-A) 345/230/13.2KV TRANSFORMER CKT 1	560	560	0.04899	102.244	HITCHLAND INTERCHANGE - MOORE COUNTY INTERCHANGE 230KV CKT 1
FDNS	00NR	3	25SP	G15_068	FROM->TO	POTTER COUNTY INTERCHANGE (WAUK 90343-A) 345/230/13.2KV TRANSFORMER CKT 1	560	560	0.04899	102.244	HITCHLAND INTERCHANGE - MOORE COUNTY INTERCHANGE 230KV CKT 1
FDNS	00NR	3	25SP	G15_068	FROM->TO	POTTER COUNTY INTERCHANGE (WAUK 90343-A) 345/230/13.2KV TRANSFORMER CKT 1	560	560	0.04899	100.6701	HITCHLAND INTERCHANGE - MOORE COUNTY INTERCHANGE 230KV CKT 1
FDNS	00NR	3	25SP	G15_068	FROM->TO	POTTER COUNTY INTERCHANGE (WAUK 90343-A) 345/230/13.2KV TRANSFORMER CKT 1	560	560	0.04899	100.6701	HITCHLAND INTERCHANGE - MOORE COUNTY INTERCHANGE 230KV CKT 1
FDNS	06ALL	3	17G	G15_068	FROM->TO	TUCO INTERCHANGE - TUCO_2 230.00 230KV CKT 1	497	547	0.45468	106.1901	TUCO INTERCHANGE - TUCO_2 345.00 345KV CKT 1
FDNS	06ALL	3	20L	G15_068	FROM->TO	TUCO INTERCHANGE - TUCO_2 230.00 230KV CKT 1	497	547	0.39862	105.0803	TUCO INTERCHANGE - TUCO_2 345.00 345KV CKT 1
FDNS	06ALL	3	20SP	G15_068	FROM->TO	TUCO INTERCHANGE - TUCO_2 230.00 230KV CKT 1	497	547	0.41798	99.5	TUCO INTERCHANGE - TUCO_2 345.00 345KV CKT 1
FDNS	00NR	3	25SP	G15_068	FROM->TO	TUCO INTERCHANGE (ENRCO 136401) 230/115/13.2KV TRANSFORMER CKT 1	250	288	0.05739	118.111	TUCO INTERCHANGE (ENRCO 136401) 230/115/13.2KV TRANSFORMER CKT 2
FDNS	00NR	3	25SP	G15_068	FROM->TO	TUCO INTERCHANGE (ENRCO 136401) 230/115/13.2KV TRANSFORMER CKT 1	250	288	0.05739	118.111	TUCO INTERCHANGE (ENRCO 136401) 230/115/13.2KV TRANSFORMER CKT 2
FDNS	00NR	3	25SP	G15_068	FROM->TO	TUCO INTERCHANGE (ENRCO 136401) 230/115/13.2KV TRANSFORMER CKT 1	250	288	0.05739	110.7214	TUCO INTERCHANGE (ENRCO 136401) 230/115/13.2KV TRANSFORMER CKT 2
FDNS	00NR	3	25SP	G15_068	FROM->TO	TUCO INTERCHANGE (ENRCO 136401) 230/115/13.2KV TRANSFORMER CKT 1	250	288	0.05739	110.7214	TUCO INTERCHANGE (ENRCO 136401) 230/115/13.2KV TRANSFORMER CKT 2
FDNS	00NR	3	25SP	G15_068	FROM->TO	TUCO INTERCHANGE (ENRCO 136401) 230/115/13.2KV TRANSFORMER CKT 2	250	288	0.05739	118.111	TUCO INTERCHANGE (ENRCO 136401) 230/115/13.2KV TRANSFORMER CKT 1
FDNS	00NR	3	25SP	G15_068	FROM->TO	TUCO INTERCHANGE (ENRCO 136401) 230/115/13.2KV TRANSFORMER CKT 2	250	288	0.05739	118.111	TUCO INTERCHANGE (ENRCO 136401) 230/115/13.2KV TRANSFORMER CKT 1
FDNS	00NR	3	25SP	G15_068	FROM->TO	TUCO INTERCHANGE (ENRCO 136401) 230/115/13.2KV TRANSFORMER CKT 2	250	288	0.05739	110.7214	TUCO INTERCHANGE (ENRCO 136401) 230/115/13.2KV TRANSFORMER CKT 1
FDNS	00NR	3	25SP	G15_068	FROM->TO	TUCO INTERCHANGE (ENRCO 136401) 230/115/13.2KV TRANSFORMER CKT 2	250	288	0.05739	110.7214	TUCO INTERCHANGE (ENRCO 136401) 230/115/13.2KV TRANSFORMER CKT 1
FDNS	06ALL	3	20L	G15_068	FROM->TO	TUCO_2 345.00 (TUCO_2 XFMR) 345/230/13.2KV TRANSFORMER CKT 1	560	560	0.27716	109.4409	TUCO INTERCHANGE - TUCO_2 345.00 345KV CKT 1
FDNS	06ALL	3	17G	G15_068	FROM->TO	TUCO_2 345.00 (TUCO_2 XFMR) 345/230/13.2KV TRANSFORMER CKT 1	560	560	0.32335	108.0493	TUCO INTERCHANGE - TUCO_2 345.00 345KV CKT 1
FDNS	06ALL	3	20L	G15_068	FROM->TO	TUCO_2 345.00 (TUCO_2 XFMR) 345/230/13.2KV TRANSFORMER CKT 1	560	560	0.27716	106.0962	TUCO INTERCHANGE - TUCO_2 345.00 345KV CKT 1
FDNS	06ALL	3	17G	G15_068	FROM->TO	TUCO_2 345.00 (TUCO_2 XFMR) 345/230/13.2KV TRANSFORMER CKT 1	560	560	0.32335	104.8896	TUCO INTERCHANGE - TUCO_2 345.00 345KV CKT 1
FDNS	06ALL	3	20WP	G15_068	FROM->TO	TUCO_2 345.00 (TUCO_2 XFMR) 345/230/13.2KV TRANSFORMER CKT 1	560	560	0.29538	104.2621	TUCO INTERCHANGE - TUCO_2 345.00 345KV CKT 1
FDNS	06ALL	3	20WP	G15_068	FROM->TO	TUCO_2 345.00 (TUCO_2 XFMR) 345/230/13.2KV TRANSFORMER CKT 1	560	560	0.29538	101.0986	TUCO INTERCHANGE - TUCO_2 345.00 345KV CKT 1
FDNS	06ALL	4	20SP	G15_068	FROM->TO	CHISHOLM6 230.00 - ELK CITY 230KV 230KV CKT 1	353	353	0.06223	103.152	BASE CASE
FDNS	06ALL	4	17SP	G15_068	FROM->TO	CHISHOLM6 230.00 - ELK CITY 230KV 230KV CKT 1	353	353	0.06249	100.7007	BASE CASE
FDNS	06ALL	4	20L	G15_068	TO->FROM	CIMARRON - MINCO 345KV CKT 1	956	956	0.21814	136.9659	G14-057T 345.00 - SUNNYSIDE 345KV CKT 1
FDNS	06ALL	4	20L	G15_068	TO->FROM	CIMARRON - MINCO 345KV CKT 1	956	956	0.21814	130.9905	G14-057T 345.00 - LAWTON EASTSIDE 345KV CKT 1
FDNS	06ALL	4	17G	G15_068	TO->FROM	CIMARRON - MINCO 345KV CKT 1	956	956	0.24901	129.7974	G14-057T 345.00 - SUNNYSIDE 345KV CKT 1
FDNS	06ALL	4	20WP	G15_068	TO->FROM	CIMARRON - MINCO 345KV CKT 1	956	956	0.24386	128.511	G14-057T 345.00 - SUNNYSIDE 345KV CKT 1
FDNS	06ALL	4	17G	G15_068	TO->FROM	CIMARRON - MINCO 345KV CKT 1	956	956	0.24901	124.286	G14-057T 345.00 - LAWTON EASTSIDE 345KV CKT 1
FDNS	06ALL	4	20WP	G15_068	TO->FROM	CIMARRON - MINCO 345KV CKT 1	956	956	0.24386	123.0537	G14-057T 345.00 - LAWTON EASTSIDE 345KV CKT 1
FDNS	06ALL	4	16WP	G15_068	TO->FROM	CIMARRON - MINCO 345KV CKT 1	956	956	0.25558	122.1275	G14-057T 345.00 - SUNNYSIDE 345KV CKT 1
FDNS	06ALL	4	17SP	G15_068	TO->FROM	CIMARRON - MINCO 345KV CKT 1	956	956	0.25204	121.005	G14-057T 345.00 - SUNNYSIDE 345KV CKT 1
FDNS	06ALL	4	20SP	G15_068	TO->FROM	CIMARRON - MINCO 345KV CKT 1	956	956	0.2496	117.7968	G14-057T 345.00 - SUNNYSIDE 345KV CKT 1
FDNS	06ALL	4	16WP	G15_068	TO->FROM	CIMARRON - MINCO 345KV CKT 1	956	956	0.25558	116.5578	G14-057T 345.00 - LAWTON EASTSIDE 345KV CKT 1
FDNS	06ALL	4	17SP	G15_068	TO->FROM	CIMARRON - MINCO 345KV CKT 1	956	956	0.25204	115.6625	G14-057T 345.00 - LAWTON EASTSIDE 345KV CKT 1
FDNS	06ALL	4	20SP	G15_068	TO->FROM	CIMARRON - MINCO 345KV CKT 1	956	956	0.2496	112.5931	G14-057T 345.00 - LAWTON EASTSIDE 345KV CKT 1
FDNSLock	06ALL	4	17G	G15_068	TO->FROM	CIMARRON - MINCO 345KV CKT 1	956	956	0.21046	110.3749	MATHWSN7 345.00 - TATONGA7 345.00 345KV CKT 1
FDNS	06ALL	4	20WP	G15_068	TO->FROM	CIMARRON - MINCO 345KV CKT 1	956	956	0.20534	109.8635	MATHWSN7 345.00 - TATONGA7 345.00 345KV CKT 1
FDNS	06ALL	4	20WP	G15_068	TO->FROM	CIMARRON - MINCO 345KV CKT 1	956	956	0.20534	104.457	G11_051T 345.00 - TATONGA7 345.00 345KV CKT 1
FDNS	06ALL	4	17G	G15_068	TO->FROM	CIMARRON - MINCO 345KV CKT 1	956	956	0.24536	104.4362	CHISHOLM7 345.00 - WOODWARD DISTRICT EHV 345KV CKT 1
FDNS	06ALL	4	17G	G15_068	TO->FROM	CIMARRON - MINCO 345KV CKT 1	956	956	0.21046	104.3067	G11_051T 345.00 - TATONGA7 345.00 345KV CKT 1

SOLUTION	GROUP	SCENARIO	SEASON	SOURCE	DIRECTION	MONITORED ELEMENT	RATEA (MVA)	RATEB(MVA)	TDF	TC%LOADING (% MVA)	CONTINGENCY
FDNS	06ALL	4	20L	G15_068	TO->FROM	CIMARRON - MINCO 345KV CKT 1	956	956	0.22111	103.7687	CHISHOLM7 345.00 - WOODWARD DISTRICT EHV 345KV CKT 1
FDNS	06ALL	4	17SP	G15_068	TO->FROM	CIMARRON - MINCO 345KV CKT 1	956	956	0.21342	103.6969	MATHWSN7 345.00 - TATONGA7 345.00 345KV CKT 1
FDNS	06ALL	4	16WP	G15_068	TO->FROM	CIMARRON - MINCO 345KV CKT 1	956	956	0.21551	103.3746	MATHWSN7 345.00 - TATONGA7 345.00 345KV CKT 1
FDNS	06ALL	4	20WP	G15_068	TO->FROM	CIMARRON - MINCO 345KV CKT 1	956	956	0.20534	102.8471	G11_051T 345.00 - WOODWARD DISTRICT EHV 345KV CKT 1
FDNS	06ALL	4	20SP	G15_068	TO->FROM	CIMARRON - MINCO 345KV CKT 1	956	956	0.2117	102.8303	MATHWSN7 345.00 - TATONGA7 345.00 345KV CKT 1
FDNS	06ALL	4	17G	G15_068	TO->FROM	CIMARRON - MINCO 345KV CKT 1	956	956	0.21046	102.7262	G11_051T 345.00 - WOODWARD DISTRICT EHV 345KV CKT 1
FDNS	06ALL	4	20WP	G15_068	TO->FROM	CIMARRON - MINCO 345KV CKT 1	956	956	0.24197	100.3052	CHISHOLM7 345.00 - WOODWARD DISTRICT EHV 345KV CKT 1
FDNSLock	06ALL	4	16WP	G15_068		G14_001T 345.00 - WICHITA 345KV CKT 1	1035	1035	0.05364	25.24282	BASE CASE
FDNS	06ALL	4	20L	G15_068	TO->FROM	G14-057T 345.00 - LAWTON EASTSIDE 345KV CKT 1	717	789	0.10673	104.3251	BASE CASE
FDNS	06ALL	4	20L	G15_068	FROM->TO	G14-057T 345.00 - SUNNYSIDE 345KV CKT 1	717	789	0.10673	117.5276	BASE CASE
FDNS	00NR	4	16WP	G15_068	FROM->TO	G14-057T 345.00 - SUNNYSIDE 345KV CKT 1	717	789	0.03062	114.6085	GRACEMONT - LAWTON EASTSIDE 345KV CKT 1
FDNS	00NR	4	16WP	G15_068	FROM->TO	G14-057T 345.00 - SUNNYSIDE 345KV CKT 1	717	789	0.03062	114.6085	GRACEMONT - LAWTON EASTSIDE 345KV CKT 1
FDNS	06ALL	4	20WP	G15_068	FROM->TO	G14-057T 345.00 - SUNNYSIDE 345KV CKT 1	717	789	0.12962	105.3579	BASE CASE
FDNS	06ALL	4	17G	G15_068	FROM->TO	G14-057T 345.00 - SUNNYSIDE 345KV CKT 1	717	789	0.13257	105.0325	BASE CASE
FDNS	06ALL	4	16WP	G15_068	FROM->TO	G14-057T 345.00 - SUNNYSIDE 345KV CKT 1	717	789	0.1359	103.6585	BASE CASE
FDNS	06NR	4	17G	G15_068	FROM->TO	G14-074T 345.00 - OKLAUNION 345KV CKT 1	1022	1124	0.06237	105.4861	STATELINE INTERCHANGE - STLN-DEMARC6 230KV CKT 1
FDNS	06NR	4	17G	G15_068	FROM->TO	G14-074T 345.00 - OKLAUNION 345KV CKT 1	1022	1124	0.06237	105.4832	P12:230:AEPW-SPS:SWEETWT6:WHEELER 6
FDNS	06NR	4	17G	G15_068	FROM->TO	G14-074T 345.00 - OKLAUNION 345KV CKT 1	1022	1124	0.06237	105.0392	STLN-DEMARC6 - SWEETWATER 230KV CKT 1
FDNS	06NR	4	20L	G15_068	FROM->TO	G14-074T 345.00 - OKLAUNION 345KV CKT 1	1022	1124	0.06185	103.8229	GRAPEVINE INTERCHANGE - STATELINE INTERCHANGE 230KV CKT 1
FDNS	06NR	4	20L	G15_068	FROM->TO	G14-074T 345.00 - OKLAUNION 345KV CKT 1	1022	1124	0.06185	103.8229	GRAPEVINE INTERCHANGE - STATELINE INTERCHANGE 230KV CKT 1
FDNS	06NR	4	17G	G15_068	FROM->TO	G14-074T 345.00 - OKLAUNION 345KV CKT 1	1022	1124	0.07201	102.9967	MATHWSN7 345.00 - TATONGA7 345.00 345KV CKT 1
FDNS	06NR	4	20L	G15_068	FROM->TO	G14-074T 345.00 - OKLAUNION 345KV CKT 1	1022	1124	0.06743	101.1904	BASE CASE
FDNS	06NR	4	17G	G15_068	FROM->TO	G14-074T 345.00 - OKLAUNION 345KV CKT 1	1022	1124	0.06735	101.0862	GRAPEVINE INTERCHANGE - NICHOLS STATION 230KV CKT 1
FDNS	06NR	4	17G	G15_068	FROM->TO	G14-074T 345.00 - OKLAUNION 345KV CKT 1	1022	1124	0.06735	101.0862	GRAPEVINE INTERCHANGE - NICHOLS STATION 230KV CKT 1
FDNS	06NR	4	17G	G15_068	FROM->TO	G14-074T 345.00 - OKLAUNION 345KV CKT 1	1022	1124	0.07201	99.8	G11_051T 345.00 - TATONGA7 345.00 345KV CKT 1
FDNS	00NR	4	25SP	G15_068	FROM->TO	Hitchland Interchange (SIEM 8743067) 345/230/13.2KV TRANSFORMER CKT 2	560	644	0.04452	100.255	Hitchland Interchange (H TB80155502) 345/230/13.2KV TRANSFORMER CKT 1
FDNS	00NR	4	25SP	G15_068	FROM->TO	Hitchland Interchange (SIEM 8743067) 345/230/13.2KV TRANSFORMER CKT 2	560	644	0.04452	100.255	Hitchland Interchange (H TB80155502) 345/230/13.2KV TRANSFORMER CKT 1
FDNS	00NR	4	25SP	G15_068	TO->FROM	JONES STATION - TUCO INTERCHANGE 230KV CKT 1	343.79	343.79	0.15052	129.809	CARLISLE INTERCHANGE - TUCO INTERCHANGE 230KV CKT 1
FDNS	00NR	4	25SP	G15_068	TO->FROM	JONES STATION - TUCO INTERCHANGE 230KV CKT 1	343.79	343.79	0.15052	129.809	CARLISLE INTERCHANGE - TUCO INTERCHANGE 230KV CKT 1
FDNS	00NR	4	25SP	G15_068	TO->FROM	JONES STATION - TUCO INTERCHANGE 230KV CKT 1	343.79	343.79	0.11616	113.028	GEN526333 1-JONES GEN #3 21 KV
FDNS	00NR	4	25SP	G15_068	TO->FROM	JONES STATION - TUCO INTERCHANGE 230KV CKT 1	343.79	343.79	0.11616	112.6359	GEN526334 1-JONES_4 116.500
FDNS	00NR	4	25SP	G15_068	TO->FROM	JONES STATION - TUCO INTERCHANGE 230KV CKT 1	343.79	343.79	0.14075	108.0461	TUCO INTERCHANGE - YOAKUM_345 345.00 345KV CKT 1
FDNS	00NR	4	25SP	G15_068	TO->FROM	JONES STATION - TUCO INTERCHANGE 230KV CKT 1	343.79	343.79	0.13513	103.563	CARLISLE INTERCHANGE - WOLFFORTH INTERCHANGE 230KV CKT 1
FDNS	00NR	4	25SP	G15_068	TO->FROM	JONES STATION - TUCO INTERCHANGE 230KV CKT 1	343.79	343.79	0.11532	101.3715	PLANT X STATION - SUNDOWN INTERCHANGE 230KV CKT 1
FDNS	00NR	4	25SP	G15_068	TO->FROM	JONES STATION - TUCO INTERCHANGE 230KV CKT 1	343.79	343.79	0.11532	101.3715	PLANT X STATION - SUNDOWN INTERCHANGE 230KV CKT 1
FDNS	00NR	4	25SP	G15_068	TO->FROM	JONES STATION - TUCO INTERCHANGE 230KV CKT 1	343.79	343.79	0.12861	100.6898	P12:345:SPS:J02.1.TOLK.EDDY
FDNS	00NR	4	25SP	G15_068	TO->FROM	JONES STATION - TUCO INTERCHANGE 230KV CKT 1	343.79	343.79	0.11616	100.6764	GEN526332 1-JONES GEN #2 21 KV
FDNS	00NR	4	25SP	G15_068	TO->FROM	JONES STATION - TUCO INTERCHANGE 230KV CKT 1	343.79	343.79	0.11616	100.6745	GEN526331 1-JONES GEN #1 22 KV
FDNS	00NR	4	25SP	G15_068	TO->FROM	JONES STATION - TUCO INTERCHANGE 230KV CKT 1	343.79	343.79	0.12139	100.6429	TUCO INTERCHANGE (ENRCO 136401) 230/115/13.2KV TRANSFORMER CKT 1
FDNS	00NR	4	25SP	G15_068	TO->FROM	JONES STATION - TUCO INTERCHANGE 230KV CKT 1	343.79	343.79	0.12139	100.6429	TUCO INTERCHANGE (ENRCO 136401) 230/115/13.2KV TRANSFORMER CKT 1
FDNS	00NR	4	25SP	G15_068	TO->FROM	JONES STATION - TUCO INTERCHANGE 230KV CKT 1	343.79	343.79	0.12139	100.6429	TUCO INTERCHANGE (ENRCO 136401) 230/115/13.2KV TRANSFORMER CKT 2
FDNS	00NR	4	25SP	G15_068	TO->FROM	JONES STATION - TUCO INTERCHANGE 230KV CKT 1	343.79	343.79	0.12139	100.6429	TUCO INTERCHANGE (ENRCO 136401) 230/115/13.2KV TRANSFORMER CKT 2
FDNS	00NR	4	25SP	G15_068	TO->FROM	JONES STATION - TUCO INTERCHANGE 230KV CKT 1	343.79	343.79	0.12431	99.8	LUBBOCK EAST INTERCHANGE - TUCO INTERCHANGE 115KV CKT 1
FDNS	00NR	4	25SP	G15_068	TO->FROM	JONES STATION - TUCO INTERCHANGE 230KV CKT 1	343.79	343.79	0.12431	99.8	LUBBOCK EAST INTERCHANGE - TUCO INTERCHANGE 115KV CKT 1
FDNS	00NR	4	25SP	G15_068	FROM->TO	LUBBOCK POWER & LIGHT-HOLLY PLANT (SHIH T101039) 230/69/13.5KV TRANSFORMER CKT 1	224	224	0.03593	104.6928	LUBBOCK POWER & LIGHT-SOUTHEAST - LUBBOCK SOUTH INTERCHANGE 230KV CKT 1
FDNS	00NR	4	25SP	G15_068	FROM->TO	LUBBOCK POWER & LIGHT-HOLLY PLANT (SHIH T101039) 230/69/13.5KV TRANSFORMER CKT 1	224	224	0.03593	104.6926	P12:LPL:SPS:K64.1.LP-SE.LUBBS
FDNS	00NR	4	25SP	G15_068	FROM->TO	LUBBOCK POWER & LIGHT-HOLLY PLANT (SHIH T101039) 230/69/13.5KV TRANSFORMER CKT 1	224	224	0.03517	101.9377	LUBBOCK EAST INTERCHANGE - LUBBOCK POWER & LIGHT-WADSWORTH 230KV CKT 1
FDNS	00NR	4	25SP	G15_068	FROM->TO	LUBBOCK POWER & LIGHT-HOLLY PLANT (SHIH T101039) 230/69/13.5KV TRANSFORMER CKT 1	224	224	0.03517	101.923	P12:230:LPL:K57.1.LP-WADS.LUBBE
FDNS	00NR	4	25SP	G15_068	FROM->TO	LUBBOCK POWER & LIGHT-HOLLY PLANT (SHIH T101039) 230/69/13.5KV TRANSFORMER CKT 1	224	224	0.03517	101.9229	LUBBOCK POWER & LIGHT-WADSWORTH (SHIH T101038) 230/69/13.5KV TRANSFORMER CKT 1
FDNS	00NR	4	25SP	G15_068	FROM->TO	LUBBOCK POWER & LIGHT-HOLLY PLANT (SHIH T101039) 230/69/13.5KV TRANSFORMER CKT 1	224	224	0.03517	101.9229	LUBBOCK POWER & LIGHT-WADSWORTH (SHIH T101038) 230/69/13.5KV TRANSFORMER CKT 1
FDNSLock	06ALL	4	20L	G15_068		OKLAUNION 345KV SWITCHED SHUNT	1022	1124	0.18943	86.37846	BASE CASE
FDNS	06ALL	4	17G	G15_068	FROM->TO	TUCO INTERCHANGE - TUCO_2 230.00 230KV CKT 1	497	547	0.45733	105.7922	TUCO INTERCHANGE - TUCO_2 345.00 345KV CKT 1
FDNS	06ALL	4	20L	G15_068	FROM->TO	TUCO INTERCHANGE - TUCO_2 230.00 230KV CKT 1	497	547	0.3991	103.1103	TUCO INTERCHANGE - TUCO_2 345.00 345KV CKT 1
FDNS	00NR	4	25SP	G15_068	FROM->TO	TUCO INTERCHANGE (ENRCO 136401) 230/115/13.2KV TRANSFORMER CKT 1	250	288	0.0562	119.2845	TUCO INTERCHANGE (ENRCO 136401) 230/115/13.2KV TRANSFORMER CKT 2
FDNS	00NR	4	25SP	G15_068	FROM->TO	TUCO INTERCHANGE (ENRCO 136401) 230/115/13.2KV TRANSFORMER CKT 1	250	288	0.0562	119.2845	TUCO INTERCHANGE (ENRCO 136401) 230/115/13.2KV TRANSFORMER CKT 2
FDNS	00NR	4	25SP	G15_068	FROM->TO	TUCO INTERCHANGE (ENRCO 136401) 230/115/13.2KV TRANSFORMER CKT 1	250	288	0.0562	111.9148	TUCO INTERCHANGE (ENRCO 136401) 230/115/13.2KV TRANSFORMER CKT 2
FDNS	00NR	4	25SP	G15_068	FROM->TO	TUCO INTERCHANGE (ENRCO 136401) 230/115/13.2KV TRANSFORMER CKT 1	250	288	0.0562	111.9148	TUCO INTERCHANGE (ENRCO 136401) 230/115/13.2KV TRANSFORMER CKT 2
FDNS	00NR	4	25SP	G15_068	FROM->TO	TUCO INTERCHANGE (ENRCO 136401) 230/115/13.2KV TRANSFORMER CKT 2	250	288	0.0562	119.2845	TUCO INTERCHANGE (ENRCO 136401) 230/115/13.2KV TRANSFORMER CKT 1
FDNS	00NR	4	25SP	G15_068	FROM->TO	TUCO INTERCHANGE (ENRCO 136401) 230/115/13.2KV TRANSFORMER CKT 2	250	288	0.0562	119.2845	TUCO INTERCHANGE (ENRCO 136401) 230/115/13.2KV TRANSFORMER CKT 1
FDNS	00NR	4	25SP	G15_068	FROM->TO	TUCO INTERCHANGE (ENRCO 136401) 230/115/13.2KV TRANSFORMER CKT 2	250	288	0.0562	111.9148	TUCO INTERCHANGE (ENRCO 136401) 230/115/13.2KV TRANSFORMER CKT 1
FDNS	00NR	4	25SP	G15_068	FROM->TO	TUCO INTERCHANGE (ENRCO 136401) 230/115/13.2KV TRANSFORMER CKT 2	250	288	0.0562	111.9148	TUCO INTERCHANGE (ENRCO 136401) 230/115/13.2KV TRANSFORMER CKT 1
FDNS	06ALL	4	20L	G15_068	FROM->TO	TUCO_2 345.00 (TUCO_2 XFMR) 345/230/13.2KV TRANSFORMER CKT 1	560	560	0.29422	116.7572	TUCO INTERCHANGE - TUCO_2 345.00 345KV CKT 1
FDNS	06ALL	4	17G	G15_068	FROM->TO	TUCO_2 345.00 (TUCO_2 XFMR) 345/230/13.2KV TRANSFORMER CKT 1	560	560	0.34248	116.3962	TUCO INTERCHANGE - TUCO_2 345.00 345KV CKT 1
FDNS	06ALL	4	20L	G15_068	FROM->TO	TUCO_2 345.00 (TUCO_2 XFMR) 345/230/13.2KV TRANSFORMER CKT 1	560	560	0.29422	114.2306	TUCO INTERCHANGE - TUCO_2 345.00 345KV CKT 1
FDNS	06ALL	4	17G	G15_068	FROM->TO	TUCO_2 345.00 (TUCO_2 XFMR) 345/230/13.2KV TRANSFORMER CKT 1	560	560	0.34248	113.9028	TUCO INTERCHANGE - TUCO_2 345.00 345KV CKT 1
FDNS	06ALL	4	20WP	G15_068	FROM->TO	TUCO_2 345.00 (TUCO_2 XFMR) 345/230/13.2KV TRANSFORMER CKT 1	560	560	0.31385	111.7671	TUCO INTERCHANGE - TUCO_2 345.00 345KV CKT 1
FDNS	06ALL	4	20WP	G15_068	FROM->TO	TUCO_2 345.00 (TUCO_2 XFMR) 345/230/13.2KV TRANSFORMER CKT 1	560	560	0.31385	109.2949	TUCO INTERCHANGE - TUCO_2 345.00 345KV CKT 1
FDNS	06ALL	4	16WP	G15_068	FROM->TO	TUCO_2 345.00 (TUCO_2 XFMR) 345/230/13.2KV TRANSFORMER CKT 1	560	560	0.34923	99.9	TUCO INTERCHANGE - TUCO_2 345.00 345KV CKT 1
FDNS	06ALL	5	20SP	G15_068	FROM->TO	CHISHOLM6 230.00 - ELK CITY 230KV 230KV CKT 1	353	353	0.06502	107.7212	BASE CASE
FDNS	06ALL	5	17SP	G15_068	FROM->TO	CHISHOLM6 230.00 - ELK CITY 230KV 230KV CKT 1	353	353	0.06519	105.7594	BASE CASE
FDNS	06ALL	5	20L	G15_068	TO->FROM	CIMARRON - MINCO 345KV CKT 1	956	956	0.22307	139.1694	G14-057T 345.00 - SUNNYSIDE 345KV CKT 1
FDNS	06ALL	5	20L	G15_068	TO->FROM	CIMARRON - MINCO 345KV CKT 1	956	956	0.22307	133.4583	G14-057T 345.00 - LAWTON EASTSIDE 345KV CKT 1
FDNS	06ALL	5	17G	G15_068	TO->FROM	CIMARRON - MINCO 345KV CKT 1	956	956	0.25393	132.5137	G14-057T 345.00 - SUNNYSIDE 345KV CKT 1
FDNS	06ALL	5	20WP	G15_068	TO->FROM	CIMARRON - MINCO 345KV CKT 1	956	956	0.24823	131.4126	G14-057T 345.00 - SUNNYSIDE 345KV CKT 1
FDNS	06ALL	5	17G	G15_068	TO->FROM	CIMARRON - MINCO 345KV CKT 1	956	956	0.25393	127.0859	G14-057T 345.00 - LAWTON EASTSIDE 345KV CKT 1
FDNS	06ALL	5	20WP	G15_068	TO->FROM	CIMARRON - MINCO 345KV CKT 1	956	956	0.24823	126.0182	G14-057T 345.00 - LAWTON EASTSIDE 345KV CKT 1
FDNS	06ALL	5	16WP	G15_068	TO->FROM	CIMARRON - MINCO 345KV CKT 1	956	956	0.26068	125.0103	G14-057T 345.00 - SUNNYSIDE 345KV CKT 1
FDNS	06ALL	5	17SP	G15_068	TO->FROM	CIMARRON - MINCO 345KV CKT 1	956	956	0.25676	123.5221	G14-057T 345.00 - SUNNYSIDE 345KV CKT 1
FDNS	06ALL	5	20SP	G15_068	TO->FROM	CIMARRON - MINCO 345KV CKT 1	956	956	0.25442	120.476	G14-057T 345.00 - SUNNYSIDE 345KV CKT 1

SOLUTION	GROUP	SCENARIO	SEASON	SOURCE	DIRECTION	MONITORED ELEMENT	RATEA (MVA)	RATEB(MVA)	TDF	TC%LOADING (% MVA)	CONTINGENCY
FDNS	06ALL	5	16WP	G15_068	TO->FROM	CIMARRON - MINCO 345KV CKT 1	956	956	0.26068	119.6144	G14-057T 345.00 - LAWTON EASTSIDE 345KV CKT 1
FDNS	06ALL	5	17SP	G15_068	TO->FROM	CIMARRON - MINCO 345KV CKT 1	956	956	0.25676	118.2604	G14-057T 345.00 - LAWTON EASTSIDE 345KV CKT 1
FDNS	06ALL	5	20SP	G15_068	TO->FROM	CIMARRON - MINCO 345KV CKT 1	956	956	0.25442	115.0864	G14-057T 345.00 - LAWTON EASTSIDE 345KV CKT 1
FDNS	06ALL	5	17G	G15_068	TO->FROM	CIMARRON - MINCO 345KV CKT 1	956	956	0.21484	113.1247	MATHWSN7 345.00 - TATONGA7 345.00 345KV CKT 1
FDNS	06ALL	5	20WP	G15_068	TO->FROM	CIMARRON - MINCO 345KV CKT 1	956	956	0.20926	112.7231	MATHWSN7 345.00 - TATONGA7 345.00 345KV CKT 1
FDNS	06ALL	5	20L	G15_068	TO->FROM	CIMARRON - MINCO 345KV CKT 1	956	956	0.22364	110.4804	CHISHOLM7 345.00 - WOODWARD DISTRICT EHV 345KV CKT 1
FDNS	06ALL	5	17G	G15_068	TO->FROM	CIMARRON - MINCO 345KV CKT 1	956	956	0.24873	110.4087	CHISHOLM7 345.00 - WOODWARD DISTRICT EHV 345KV CKT 1
FDNS	06ALL	5	20WP	G15_068	TO->FROM	CIMARRON - MINCO 345KV CKT 1	956	956	0.20926	107.3503	G11_051T 345.00 - TATONGA7 345.00 345KV CKT 1
FDNS	06ALL	5	17G	G15_068	TO->FROM	CIMARRON - MINCO 345KV CKT 1	956	956	0.21484	107.1655	G11_051T 345.00 - TATONGA7 345.00 345KV CKT 1
FDNS	06ALL	5	20WP	G15_068	TO->FROM	CIMARRON - MINCO 345KV CKT 1	956	956	0.24502	106.6912	CHISHOLM7 345.00 - WOODWARD DISTRICT EHV 345KV CKT 1
FDNS	06ALL	5	16WP	G15_068	TO->FROM	CIMARRON - MINCO 345KV CKT 1	956	956	0.22006	106.1194	MATHWSN7 345.00 - TATONGA7 345.00 345KV CKT 1
FDNS	06ALL	5	17SP	G15_068	TO->FROM	CIMARRON - MINCO 345KV CKT 1	956	956	0.21766	106.0588	MATHWSN7 345.00 - TATONGA7 345.00 345KV CKT 1
FDNS	06ALL	5	20WP	G15_068	TO->FROM	CIMARRON - MINCO 345KV CKT 1	956	956	0.20926	105.6974	G11_051T 345.00 - WOODWARD DISTRICT EHV 345KV CKT 1
FDNS	06ALL	5	17G	G15_068	TO->FROM	CIMARRON - MINCO 345KV CKT 1	956	956	0.21484	105.5499	G11_051T 345.00 - WOODWARD DISTRICT EHV 345KV CKT 1
FDNS	06ALL	5	20SP	G15_068	TO->FROM	CIMARRON - MINCO 345KV CKT 1	956	956	0.21603	105.1459	MATHWSN7 345.00 - TATONGA7 345.00 345KV CKT 1
FDNS	06ALL	5	20SP	G15_068	TO->FROM	CIMARRON - MINCO 345KV CKT 1	956	956	0.25207	102.6282	CHISHOLM7 345.00 - WOODWARD DISTRICT EHV 345KV CKT 1
FDNS	06ALL	5	17SP	G15_068	TO->FROM	CIMARRON - MINCO 345KV CKT 1	956	956	0.25446	102.3712	CHISHOLM7 345.00 - WOODWARD DISTRICT EHV 345KV CKT 1
FDNS	06ALL	5	17G	G15_068	TO->FROM	CIMARRON - MINCO 345KV CKT 1	956	956	0.20489	102.1215	P12:138:WFEC:MSL03
FDNS	06ALL	5	20WP	G15_068	TO->FROM	CIMARRON - MINCO 345KV CKT 1	956	956	0.20059	101.0162	P12:138:WFEC:MSL03
FDNS	06ALL	5	17SP	G15_068	TO->FROM	CIMARRON - MINCO 345KV CKT 1	956	956	0.21766	100.8538	G11_051T 345.00 - TATONGA7 345.00 345KV CKT 1
FDNS	06ALL	5	16WP	G15_068	TO->FROM	CIMARRON - MINCO 345KV CKT 1	956	956	0.22006	100.7286	G11_051T 345.00 - TATONGA7 345.00 345KV CKT 1
FDNS	06ALL	5	20SP	G15_068	TO->FROM	CIMARRON - MINCO 345KV CKT 1	956	956	0.21603	100	G11_051T 345.00 - TATONGA7 345.00 345KV CKT 1
FDNS	06ALL	5	16WP	G15_068	TO->FROM	CIMARRON - MINCO 345KV CKT 1	956	956	0.25689	99.9	CHISHOLM7 345.00 - WOODWARD DISTRICT EHV 345KV CKT 1
FDNS	06ALL	5	17SP	G15_068	TO->FROM	CIMARRON - MINCO 345KV CKT 1	956	956	0.20875	99.5	P12:138:WFEC:MSL03
FDNS	06ALL	5	20L	G15_068	TO->FROM	G14-057T 345.00 - LAWTON EASTSIDE 345KV CKT 1	717	789	0.10818	104.5834	BASE CASE
FDNS	06ALL	5	20L	G15_068	FROM->TO	G14-057T 345.00 - SUNNYSIDE 345KV CKT 1	717	789	0.10818	117.7866	BASE CASE
FDNS	00NR	5	16WP	G15_068	FROM->TO	G14-057T 345.00 - SUNNYSIDE 345KV CKT 1	717	789	0.03137	113.0867	GRACEMONT - LAWTON EASTSIDE 345KV CKT 1
FDNS	00NR	5	16WP	G15_068	FROM->TO	G14-057T 345.00 - SUNNYSIDE 345KV CKT 1	717	789	0.03137	113.0867	GRACEMONT - LAWTON EASTSIDE 345KV CKT 1
FDNS	06ALL	5	20WP	G15_068	FROM->TO	G14-057T 345.00 - SUNNYSIDE 345KV CKT 1	717	789	0.13015	105.6059	BASE CASE
FDNS	06ALL	5	17G	G15_068	FROM->TO	G14-057T 345.00 - SUNNYSIDE 345KV CKT 1	717	789	0.13348	105.2883	BASE CASE
FDNS	06ALL	5	16WP	G15_068	FROM->TO	G14-057T 345.00 - SUNNYSIDE 345KV CKT 1	717	789	0.13674	103.9305	BASE CASE
FDNS	06ALL	5	20L	G15_068	FROM->TO	GRACEMONT - MINCO 345KV CKT 1	1195	1195	0.22307	100.3039	G14-057T 345.00 - SUNNYSIDE 345KV CKT 1
FDNS	00NR	5	25SP	G15_068	FROM->TO	Hitchland Interchange (SIEM 8743067) 345/230/13.2KV TRANSFORMER CKT 2	560	644	0.04311	99.8	Hitchland Interchange (H TB80155502) 345/230/13.2KV TRANSFORMER CKT 1
FDNS	00NR	5	25SP	G15_068	FROM->TO	Hitchland Interchange (SIEM 8743067) 345/230/13.2KV TRANSFORMER CKT 2	560	644	0.04311	99.8	Hitchland Interchange (H TB80155502) 345/230/13.2KV TRANSFORMER CKT 1
FDNS	00NR	5	25SP	G15_068	TO->FROM	JONES STATION - TUCO INTERCHANGE 230KV CKT 1	343.79	343.79	0.15025	129.641	CARLISLE INTERCHANGE - TUCO INTERCHANGE 230KV CKT 1
FDNS	00NR	5	25SP	G15_068	TO->FROM	JONES STATION - TUCO INTERCHANGE 230KV CKT 1	343.79	343.79	0.15025	129.641	CARLISLE INTERCHANGE - TUCO INTERCHANGE 230KV CKT 1
FDNS	00NR	5	25SP	G15_068	TO->FROM	JONES STATION - TUCO INTERCHANGE 230KV CKT 1	343.79	343.79	0.11598	112.7964	GEN526333 1-JONES GEN #3 21 KV
FDNS	00NR	5	25SP	G15_068	TO->FROM	JONES STATION - TUCO INTERCHANGE 230KV CKT 1	343.79	343.79	0.11598	112.4061	GEN526334 1-JONES_4 116.500
FDNS	00NR	5	25SP	G15_068	TO->FROM	JONES STATION - TUCO INTERCHANGE 230KV CKT 1	343.79	343.79	0.14043	107.7831	TUCO INTERCHANGE - YOAKUM_345 345.00 345KV CKT 1
FDNS	00NR	5	25SP	G15_068	TO->FROM	JONES STATION - TUCO INTERCHANGE 230KV CKT 1	343.79	343.79	0.1349	103.4197	CARLISLE INTERCHANGE - WOLFFORTH INTERCHANGE 230KV CKT 1
FDNS	00NR	5	25SP	G15_068	TO->FROM	JONES STATION - TUCO INTERCHANGE 230KV CKT 1	343.79	343.79	0.11519	101.2834	PLANT X STATION - SUNDOWN INTERCHANGE 230KV CKT 1
FDNS	00NR	5	25SP	G15_068	TO->FROM	JONES STATION - TUCO INTERCHANGE 230KV CKT 1	343.79	343.79	0.11519	101.2834	PLANT X STATION - SUNDOWN INTERCHANGE 230KV CKT 1
FDNS	00NR	5	25SP	G15_068	TO->FROM	JONES STATION - TUCO INTERCHANGE 230KV CKT 1	343.79	343.79	0.12854	100.5886	P12:345:SPS:J02.1.TOLK.EDDY
FDNS	00NR	5	25SP	G15_068	TO->FROM	JONES STATION - TUCO INTERCHANGE 230KV CKT 1	343.79	343.79	0.11598	100.5344	GEN526332 1-JONES GEN #2 21 KV
FDNS	00NR	5	25SP	G15_068	TO->FROM	JONES STATION - TUCO INTERCHANGE 230KV CKT 1	343.79	343.79	0.11598	100.5324	GEN526331 1-JONES GEN #1 22 KV
FDNS	00NR	5	25SP	G15_068	TO->FROM	JONES STATION - TUCO INTERCHANGE 230KV CKT 1	343.79	343.79	0.12119	100.5232	TUCO INTERCHANGE (ENRCO 136401) 230/115/13.2KV TRANSFORMER CKT 1
FDNS	00NR	5	25SP	G15_068	TO->FROM	JONES STATION - TUCO INTERCHANGE 230KV CKT 1	343.79	343.79	0.12119	100.5232	TUCO INTERCHANGE (ENRCO 136401) 230/115/13.2KV TRANSFORMER CKT 1
FDNS	00NR	5	25SP	G15_068	TO->FROM	JONES STATION - TUCO INTERCHANGE 230KV CKT 1	343.79	343.79	0.12119	100.5232	TUCO INTERCHANGE (ENRCO 136401) 230/115/13.2KV TRANSFORMER CKT 2
FDNS	00NR	5	25SP	G15_068	TO->FROM	JONES STATION - TUCO INTERCHANGE 230KV CKT 1	343.79	343.79	0.12119	100.5232	TUCO INTERCHANGE (ENRCO 136401) 230/115/13.2KV TRANSFORMER CKT 2
FDNS	00NR	5	25SP	G15_068	TO->FROM	JONES STATION - TUCO INTERCHANGE 230KV CKT 1	343.79	343.79	0.12412	99.6	LUBBOCK EAST INTERCHANGE - TUCO INTERCHANGE 115KV CKT 1
FDNS	00NR	5	25SP	G15_068	TO->FROM	JONES STATION - TUCO INTERCHANGE 230KV CKT 1	343.79	343.79	0.12412	99.6	LUBBOCK EAST INTERCHANGE - TUCO INTERCHANGE 115KV CKT 1
FDNS	00NR	5	25SP	G15_068	FROM->TO	LUBBOCK POWER & LIGHT-HOLLY PLANT (SHIH T101039) 230/69/13.5KV TRANSFORMER CKT 1	224	224	0.03593	104.6927	LUBBOCK POWER & LIGHT-SOUTHEAST - LUBBOCK SOUTH INTERCHANGE 230KV CKT 1
FDNS	00NR	5	25SP	G15_068	FROM->TO	LUBBOCK POWER & LIGHT-HOLLY PLANT (SHIH T101039) 230/69/13.5KV TRANSFORMER CKT 1	224	224	0.03593	104.6925	P12:LPL:SPS:K64.1.LP-SE.LUBBS
FDNS	00NR	5	25SP	G15_068	FROM->TO	LUBBOCK POWER & LIGHT-HOLLY PLANT (SHIH T101039) 230/69/13.5KV TRANSFORMER CKT 1	224	224	0.03517	101.9351	LUBBOCK EAST INTERCHANGE - LUBBOCK POWER & LIGHT-WADSWORTH 230KV CKT 1
FDNS	00NR	5	25SP	G15_068	FROM->TO	LUBBOCK POWER & LIGHT-HOLLY PLANT (SHIH T101039) 230/69/13.5KV TRANSFORMER CKT 1	224	224	0.03517	101.9204	P12:230:LPL:K57.1.LP-WADS.LUBBE
FDNS	00NR	5	25SP	G15_068	FROM->TO	LUBBOCK POWER & LIGHT-HOLLY PLANT (SHIH T101039) 230/69/13.5KV TRANSFORMER CKT 1	224	224	0.03517	101.9203	LUBBOCK POWER & LIGHT-WADSWORTH (SHIH T101038) 230/69/13.5KV TRANSFORMER CKT 1
FDNS	00NR	5	25SP	G15_068	FROM->TO	LUBBOCK POWER & LIGHT-HOLLY PLANT (SHIH T101039) 230/69/13.5KV TRANSFORMER CKT 1	224	224	0.03517	101.9203	LUBBOCK POWER & LIGHT-WADSWORTH (SHIH T101038) 230/69/13.5KV TRANSFORMER CKT 1
FDNS	06ALL	5	17G	G15_068	FROM->TO	TUCO INTERCHANGE - TUCO_2 230.00 230KV CKT 1	497	547	0.4555	99.8	TUCO INTERCHANGE - TUCO_2 345.00 345KV CKT 1
FDNS	00NR	5	25SP	G15_068	FROM->TO	TUCO INTERCHANGE (ENRCO 136401) 230/115/13.2KV TRANSFORMER CKT 1	250	288	0.05599	119.1885	TUCO INTERCHANGE (ENRCO 136401) 230/115/13.2KV TRANSFORMER CKT 2
FDNS	00NR	5	25SP	G15_068	FROM->TO	TUCO INTERCHANGE (ENRCO 136401) 230/115/13.2KV TRANSFORMER CKT 1	250	288	0.05599	119.1885	TUCO INTERCHANGE (ENRCO 136401) 230/115/13.2KV TRANSFORMER CKT 2
FDNS	00NR	5	25SP	G15_068	FROM->TO	TUCO INTERCHANGE (ENRCO 136401) 230/115/13.2KV TRANSFORMER CKT 1	250	288	0.05599	111.8019	TUCO INTERCHANGE (ENRCO 136401) 230/115/13.2KV TRANSFORMER CKT 2
FDNS	00NR	5	25SP	G15_068	FROM->TO	TUCO INTERCHANGE (ENRCO 136401) 230/115/13.2KV TRANSFORMER CKT 1	250	288	0.05599	111.8019	TUCO INTERCHANGE (ENRCO 136401) 230/115/13.2KV TRANSFORMER CKT 2
FDNS	00NR	5	25SP	G15_068	FROM->TO	TUCO INTERCHANGE (ENRCO 136401) 230/115/13.2KV TRANSFORMER CKT 2	250	288	0.05599	119.1885	TUCO INTERCHANGE (ENRCO 136401) 230/115/13.2KV TRANSFORMER CKT 1
FDNS	00NR	5	25SP	G15_068	FROM->TO	TUCO INTERCHANGE (ENRCO 136401) 230/115/13.2KV TRANSFORMER CKT 2	250	288	0.05599	119.1885	TUCO INTERCHANGE (ENRCO 136401) 230/115/13.2KV TRANSFORMER CKT 1
FDNS	00NR	5	25SP	G15_068	FROM->TO	TUCO INTERCHANGE (ENRCO 136401) 230/115/13.2KV TRANSFORMER CKT 2	250	288	0.05599	111.8019	TUCO INTERCHANGE (ENRCO 136401) 230/115/13.2KV TRANSFORMER CKT 1
FDNS	00NR	5	25SP	G15_068	FROM->TO	TUCO INTERCHANGE (ENRCO 136401) 230/115/13.2KV TRANSFORMER CKT 2	250	288	0.05599	111.8019	TUCO INTERCHANGE (ENRCO 136401) 230/115/13.2KV TRANSFORMER CKT 1
FDNS	06ALL	5	17G	G15_068	FROM->TO	TUCO_2 345.00 (TUCO_2 XFMR) 345/230/13.2KV TRANSFORMER CKT 1	560	560	0.3361	105.5369	TUCO INTERCHANGE - TUCO_2 345.00 345KV CKT 1
FDNS	06ALL	5	20L	G15_068	FROM->TO	TUCO_2 345.00 (TUCO_2 XFMR) 345/230/13.2KV TRANSFORMER CKT 1	560	560	0.2893	104.6777	TUCO INTERCHANGE - TUCO_2 345.00 345KV CKT 1
FDNS	06ALL	5	17G	G15_068	FROM->TO	TUCO_2 345.00 (TUCO_2 XFMR) 345/230/13.2KV TRANSFORMER CKT 1	560	560	0.3361	104.079	TUCO INTERCHANGE - TUCO_2 345.00 345KV CKT 1
FDNS	06ALL	5	20L	G15_068	FROM->TO	TUCO_2 345.00 (TUCO_2 XFMR) 345/230/13.2KV TRANSFORMER CKT 1	560	560	0.2893	103.3194	TUCO INTERCHANGE - TUCO_2 345.00 345KV CKT 1
FDNS	06ALL	5	20WP	G15_068	FROM->TO	TUCO_2 345.00 (TUCO_2 XFMR) 345/230/13.2KV TRANSFORMER CKT 1	560	560	0.3062	99.7	TUCO INTERCHANGE - TUCO_2 345.00 345KV CKT 1
FDNS	06ALL	6	20SP	G15_068	FROM->TO	CHISHOLM6 230.00 - ELK CITY 230KV 230KV CKT 1	353	353	0.05843	102.8848	BASE CASE
FDNS	06ALL	6	17SP	G15_068	FROM->TO	CHISHOLM6 230.00 - ELK CITY 230KV 230KV CKT 1	353	353	0.05857	100.6562	BASE CASE
FDNS	06ALL	6	20L	G15_068	TO->FROM	CIMARRON - MINCO 345KV CKT 1	956	956	0.20235	125.6464	G14-057T 345.00 - SUNNYSIDE 345KV CKT 1
FDNS	06ALL	6	17G	G15_068	TO->FROM	CIMARRON - MINCO 345KV CKT 1	956	956	0.22895	121.6178	G14-057T 345.00 - SUNNYSIDE 345KV CKT 1
FDNS	06ALL	6	20L	G15_068	TO->FROM	CIMARRON - MINCO 345KV CKT 1	956	956	0.20235	120.3754	G14-057T 345.00 - LAWTON EASTSIDE 345KV CKT 1
FDNS	06ALL	6	20WP	G15_068	TO->FROM	CIMARRON - MINCO 345KV CKT 1	956	956	0.22376	119.7395	G14-057T 345.00 - SUNNYSIDE 345KV CKT 1
FDNS	06ALL	6	17G	G15_068	TO->FROM	CIMARRON - MINCO 345KV CKT 1	956	956	0.22895	116.437	G14-057T 345.00 - LAWTON EASTSIDE 345KV CKT 1
FDNS	06ALL	6	20WP	G15_068	TO->FROM	CIMARRON - MINCO 345KV CKT 1	956	956	0.22376	114.5016	G14-057T 345.00 - LAWTON EASTSIDE 345KV CKT 1

SOLUTION	GROUP	SCENARIO	SEASON	SOURCE	DIRECTION	MONITORED ELEMENT	RATEA (MVA)	RATEB(MVA)	TDF	TC%LOADING (% MVA)	CONTINGENCY
FDNS	06ALL	6	17SP	G15_068	TO->FROM	CIMARRON - MINCO 345KV CKT 1	956	956	0.23145	114.4047	G14-057T 345.00 - SUNNYSIDE 345KV CKT 1
FDNS	06ALL	6	16WP	G15_068	TO->FROM	CIMARRON - MINCO 345KV CKT 1	956	956	0.23509	114.352	G14-057T 345.00 - SUNNYSIDE 345KV CKT 1
FDNS	06ALL	6	20SP	G15_068	TO->FROM	CIMARRON - MINCO 345KV CKT 1	956	956	0.22918	111.5632	G14-057T 345.00 - SUNNYSIDE 345KV CKT 1
FDNS	06ALL	6	17SP	G15_068	TO->FROM	CIMARRON - MINCO 345KV CKT 1	956	956	0.23145	109.1774	G14-057T 345.00 - LAWTON EASTSIDE 345KV CKT 1
FDNS	06ALL	6	16WP	G15_068	TO->FROM	CIMARRON - MINCO 345KV CKT 1	956	956	0.23509	108.975	G14-057T 345.00 - LAWTON EASTSIDE 345KV CKT 1
FDNS	06ALL	6	20SP	G15_068	TO->FROM	CIMARRON - MINCO 345KV CKT 1	956	956	0.22918	106.5254	G14-057T 345.00 - LAWTON EASTSIDE 345KV CKT 1
FDNS	06ALL	6	17G	G15_068	TO->FROM	CIMARRON - MINCO 345KV CKT 1	956	956	0.21881	105.9404	CHISHOLM7 345.00 - WOODWARD DISTRICT EHV 345KV CKT 1
FDNS	06ALL	6	20L	G15_068	TO->FROM	CIMARRON - MINCO 345KV CKT 1	956	956	0.1981	104.6976	CHISHOLM7 345.00 - WOODWARD DISTRICT EHV 345KV CKT 1
FDNS	06ALL	6	20WP	G15_068	TO->FROM	CIMARRON - MINCO 345KV CKT 1	956	956	0.21512	101.5954	CHISHOLM7 345.00 - WOODWARD DISTRICT EHV 345KV CKT 1
FDNS	06ALL	6	20L	G15_068	TO->FROM	G14-057T 345.00 - LAWTON EASTSIDE 345KV CKT 1	717	789	0.10374	102.0743	BASE CASE
FDNS	06ALL	6	20L	G15_068	FROM->TO	G14-057T 345.00 - SUNNYSIDE 345KV CKT 1	717	789	0.10374	115.279	BASE CASE
FDNS	00NR	6	16WP	G15_068	FROM->TO	G14-057T 345.00 - SUNNYSIDE 345KV CKT 1	717	789	0.03189	110.3112	GRACEMONT - LAWTON EASTSIDE 345KV CKT 1
FDNS	00NR	6	16WP	G15_068	FROM->TO	G14-057T 345.00 - SUNNYSIDE 345KV CKT 1	717	789	0.03189	110.3112	GRACEMONT - LAWTON EASTSIDE 345KV CKT 1
FDNS	06ALL	6	20WP	G15_068	FROM->TO	G14-057T 345.00 - SUNNYSIDE 345KV CKT 1	717	789	0.12523	103.5944	BASE CASE
FDNS	06ALL	6	17G	G15_068	FROM->TO	G14-057T 345.00 - SUNNYSIDE 345KV CKT 1	717	789	0.12856	103.4014	BASE CASE
FDNS	06NR	6	20L	G15_068	FROM->TO	G14-057T 345.00 - SUNNYSIDE 345KV CKT 1	717	789	0.02989	103.0603	GRACEMONT - LAWTON EASTSIDE 345KV CKT 1
FDNS	06NR	6	20L	G15_068	FROM->TO	G14-057T 345.00 - SUNNYSIDE 345KV CKT 1	717	789	0.02989	103.0603	GRACEMONT - LAWTON EASTSIDE 345KV CKT 1
FDNS	06ALL	6	16WP	G15_068	FROM->TO	G14-057T 345.00 - SUNNYSIDE 345KV CKT 1	717	789	0.13167	102.0868	BASE CASE
FDNS	00NR	6	25SP	G15_068	FROM->TO	Hitchland Interchange (SIEM 8743067) 345/230/13.2KV TRANSFORMER CKT 2	560	644	0.04139	100.0805	Hitchland Interchange (H TB80155502) 345/230/13.2KV TRANSFORMER CKT 1
FDNS	00NR	6	25SP	G15_068	FROM->TO	Hitchland Interchange (SIEM 8743067) 345/230/13.2KV TRANSFORMER CKT 2	560	644	0.04139	100.0805	Hitchland Interchange (H TB80155502) 345/230/13.2KV TRANSFORMER CKT 1
FDNS	00NR	6	25SP	G15_068	TO->FROM	JONES STATION - TUCO INTERCHANGE 230KV CKT 1	343.79	343.79	0.1502	129.6325	CARLISLE INTERCHANGE - TUCO INTERCHANGE 230KV CKT 1
FDNS	00NR	6	25SP	G15_068	TO->FROM	JONES STATION - TUCO INTERCHANGE 230KV CKT 1	343.79	343.79	0.1502	129.6325	CARLISLE INTERCHANGE - TUCO INTERCHANGE 230KV CKT 1
FDNS	00NR	6	25SP	G15_068	TO->FROM	JONES STATION - TUCO INTERCHANGE 230KV CKT 1	343.79	343.79	0.11595	112.7855	GEN526333 1-JONES GEN #3 21 KV
FDNS	00NR	6	25SP	G15_068	TO->FROM	JONES STATION - TUCO INTERCHANGE 230KV CKT 1	343.79	343.79	0.11595	112.3951	GEN526334 1-JONES_4 116.500
FDNS	00NR	6	25SP	G15_068	TO->FROM	JONES STATION - TUCO INTERCHANGE 230KV CKT 1	343.79	343.79	0.14039	107.7709	TUCO INTERCHANGE - YOAKUM_345 345.00 345KV CKT 1
FDNS	00NR	6	25SP	G15_068	TO->FROM	JONES STATION - TUCO INTERCHANGE 230KV CKT 1	343.79	343.79	0.13486	103.4125	CARLISLE INTERCHANGE - WOLFFORTH INTERCHANGE 230KV CKT 1
FDNS	00NR	6	25SP	G15_068	TO->FROM	JONES STATION - TUCO INTERCHANGE 230KV CKT 1	343.79	343.79	0.11517	101.2811	PLANT X STATION - SUNDOWN INTERCHANGE 230KV CKT 1
FDNS	00NR	6	25SP	G15_068	TO->FROM	JONES STATION - TUCO INTERCHANGE 230KV CKT 1	343.79	343.79	0.11517	101.2811	PLANT X STATION - SUNDOWN INTERCHANGE 230KV CKT 1
FDNS	00NR	6	25SP	G15_068	TO->FROM	JONES STATION - TUCO INTERCHANGE 230KV CKT 1	343.79	343.79	0.12853	100.5783	P12:345:SPS:J02.1.TOLK.EDDY
FDNS	00NR	6	25SP	G15_068	TO->FROM	JONES STATION - TUCO INTERCHANGE 230KV CKT 1	343.79	343.79	0.11595	100.5273	GEN526332 1-JONES GEN #2 21 KV
FDNS	00NR	6	25SP	G15_068	TO->FROM	JONES STATION - TUCO INTERCHANGE 230KV CKT 1	343.79	343.79	0.11595	100.5254	GEN526331 1-JONES GEN #1 22 KV
FDNS	00NR	6	25SP	G15_068	TO->FROM	JONES STATION - TUCO INTERCHANGE 230KV CKT 1	343.79	343.79	0.12116	100.5163	TUCO INTERCHANGE (ENRCO 136401) 230/115/13.2KV TRANSFORMER CKT 1
FDNS	00NR	6	25SP	G15_068	TO->FROM	JONES STATION - TUCO INTERCHANGE 230KV CKT 1	343.79	343.79	0.12116	100.5163	TUCO INTERCHANGE (ENRCO 136401) 230/115/13.2KV TRANSFORMER CKT 1
FDNS	00NR	6	25SP	G15_068	TO->FROM	JONES STATION - TUCO INTERCHANGE 230KV CKT 1	343.79	343.79	0.12116	100.5163	TUCO INTERCHANGE (ENRCO 136401) 230/115/13.2KV TRANSFORMER CKT 2
FDNS	00NR	6	25SP	G15_068	TO->FROM	JONES STATION - TUCO INTERCHANGE 230KV CKT 1	343.79	343.79	0.12116	100.5163	TUCO INTERCHANGE (ENRCO 136401) 230/115/13.2KV TRANSFORMER CKT 2
FDNS	00NR	6	25SP	G15_068	TO->FROM	JONES STATION - TUCO INTERCHANGE 230KV CKT 1	343.79	343.79	0.12409	99.6	LUBBOCK EAST INTERCHANGE - TUCO INTERCHANGE 115KV CKT 1
FDNS	00NR	6	25SP	G15_068	TO->FROM	JONES STATION - TUCO INTERCHANGE 230KV CKT 1	343.79	343.79	0.12409	99.6	LUBBOCK EAST INTERCHANGE - TUCO INTERCHANGE 115KV CKT 1
FDNS	00NR	6	25SP	G15_068	FROM->TO	LUBBOCK POWER & LIGHT-HOLLY PLANT (SHIH T101039) 230/69/13.5KV TRANSFORMER CKT 1	224	224	0.03593	104.6926	LUBBOCK POWER & LIGHT-SOUTHEAST - LUBBOCK SOUTH INTERCHANGE 230KV CKT 1
FDNS	00NR	6	25SP	G15_068	FROM->TO	LUBBOCK POWER & LIGHT-HOLLY PLANT (SHIH T101039) 230/69/13.5KV TRANSFORMER CKT 1	224	224	0.03593	104.6924	P12:LPL:SPS:K64.1.LP-SE.LUBBS
FDNS	00NR	6	25SP	G15_068	FROM->TO	LUBBOCK POWER & LIGHT-HOLLY PLANT (SHIH T101039) 230/69/13.5KV TRANSFORMER CKT 1	224	224	0.03517	101.9349	LUBBOCK EAST INTERCHANGE - LUBBOCK POWER & LIGHT-WADSWORTH 230KV CKT 1
FDNS	00NR	6	25SP	G15_068	FROM->TO	LUBBOCK POWER & LIGHT-HOLLY PLANT (SHIH T101039) 230/69/13.5KV TRANSFORMER CKT 1	224	224	0.03517	101.9202	LUBBOCK POWER & LIGHT-WADSWORTH (SHIH T101038) 230/69/13.5KV TRANSFORMER CKT 1
FDNS	00NR	6	25SP	G15_068	FROM->TO	LUBBOCK POWER & LIGHT-HOLLY PLANT (SHIH T101039) 230/69/13.5KV TRANSFORMER CKT 1	224	224	0.03517	101.9202	LUBBOCK POWER & LIGHT-WADSWORTH (SHIH T101038) 230/69/13.5KV TRANSFORMER CKT 1
FDNS	00NR	6	25SP	G15_068	FROM->TO	LUBBOCK POWER & LIGHT-HOLLY PLANT (SHIH T101039) 230/69/13.5KV TRANSFORMER CKT 1	224	224	0.03517	101.9202	P12:230:LPL:K57.1.LP-WADS.LUBBE
FDNS	06ALL	6	17G	G15_068	FROM->TO	TUCO INTERCHANGE - TUCO_2 230.00 230KV CKT 1	497	547	0.45908	102.3804	TUCO INTERCHANGE - TUCO_2 345.00 345KV CKT 1
FDNS	00NR	6	25SP	G15_068	FROM->TO	TUCO INTERCHANGE (ENRCO 136401) 230/115/13.2KV TRANSFORMER CKT 1	250	288	0.05596	119.1771	TUCO INTERCHANGE (ENRCO 136401) 230/115/13.2KV TRANSFORMER CKT 2
FDNS	00NR	6	25SP	G15_068	FROM->TO	TUCO INTERCHANGE (ENRCO 136401) 230/115/13.2KV TRANSFORMER CKT 1	250	288	0.05596	119.1771	TUCO INTERCHANGE (ENRCO 136401) 230/115/13.2KV TRANSFORMER CKT 2
FDNS	00NR	6	25SP	G15_068	FROM->TO	TUCO INTERCHANGE (ENRCO 136401) 230/115/13.2KV TRANSFORMER CKT 1	250	288	0.05596	111.7914	TUCO INTERCHANGE (ENRCO 136401) 230/115/13.2KV TRANSFORMER CKT 2
FDNS	00NR	6	25SP	G15_068	FROM->TO	TUCO INTERCHANGE (ENRCO 136401) 230/115/13.2KV TRANSFORMER CKT 1	250	288	0.05596	111.7914	TUCO INTERCHANGE (ENRCO 136401) 230/115/13.2KV TRANSFORMER CKT 2
FDNS	00NR	6	25SP	G15_068	FROM->TO	TUCO INTERCHANGE (ENRCO 136401) 230/115/13.2KV TRANSFORMER CKT 2	250	288	0.05596	119.1771	TUCO INTERCHANGE (ENRCO 136401) 230/115/13.2KV TRANSFORMER CKT 1
FDNS	00NR	6	25SP	G15_068	FROM->TO	TUCO INTERCHANGE (ENRCO 136401) 230/115/13.2KV TRANSFORMER CKT 2	250	288	0.05596	119.1771	TUCO INTERCHANGE (ENRCO 136401) 230/115/13.2KV TRANSFORMER CKT 1
FDNS	00NR	6	25SP	G15_068	FROM->TO	TUCO INTERCHANGE (ENRCO 136401) 230/115/13.2KV TRANSFORMER CKT 2	250	288	0.05596	111.7914	TUCO INTERCHANGE (ENRCO 136401) 230/115/13.2KV TRANSFORMER CKT 1
FDNS	00NR	6	25SP	G15_068	FROM->TO	TUCO INTERCHANGE (ENRCO 136401) 230/115/13.2KV TRANSFORMER CKT 2	250	288	0.05596	111.7914	TUCO INTERCHANGE (ENRCO 136401) 230/115/13.2KV TRANSFORMER CKT 1
FDNS	06ALL	6	17G	G15_068	FROM->TO	TUCO_2 345.00 (TUCO_2 XFMR) 345/230/13.2KV TRANSFORMER CKT 1	560	560	0.33923	107.102	TUCO INTERCHANGE - TUCO_2 345.00 345KV CKT 1
FDNS	06ALL	6	20L	G15_068	FROM->TO	TUCO_2 345.00 (TUCO_2 XFMR) 345/230/13.2KV TRANSFORMER CKT 1	560	560	0.29168	106.4088	TUCO INTERCHANGE - TUCO_2 345.00 345KV CKT 1
FDNS	06ALL	6	17G	G15_068	FROM->TO	TUCO_2 345.00 (TUCO_2 XFMR) 345/230/13.2KV TRANSFORMER CKT 1	560	560	0.33923	105.5988	TUCO INTERCHANGE - TUCO_2 345.00 345KV CKT 1
FDNS	06ALL	6	20L	G15_068	FROM->TO	TUCO_2 345.00 (TUCO_2 XFMR) 345/230/13.2KV TRANSFORMER CKT 1	560	560	0.29168	105.0837	TUCO INTERCHANGE - TUCO_2 345.00 345KV CKT 1
FDNS	06ALL	6	20WP	G15_068	FROM->TO	TUCO_2 345.00 (TUCO_2 XFMR) 345/230/13.2KV TRANSFORMER CKT 1	560	560	0.30907	101.28	TUCO INTERCHANGE - TUCO_2 345.00 345KV CKT 1
FDNS	06ALL	6	20WP	G15_068	FROM->TO	TUCO_2 345.00 (TUCO_2 XFMR) 345/230/13.2KV TRANSFORMER CKT 1	560	560	0.30907	99.8	TUCO INTERCHANGE - TUCO_2 345.00 345KV CKT 1
FDNS	06ALL	7	20SP	G15_068	FROM->TO	CHISHOLM6 230.00 - ELK CITY 230KV 230KV CKT 1	353	353	0.05843	100.158	BASE CASE
FDNS	06ALL	7	20L	G15_068	TO->FROM	CIMARRON - MINCO 345KV CKT 1	956	956	0.20243	121.4947	G14-057T 345.00 - SUNNYSIDE 345KV CKT 1
FDNS	06ALL	7	17G	G15_068	TO->FROM	CIMARRON - MINCO 345KV CKT 1	956	956	0.22898	117.9395	G14-057T 345.00 - SUNNYSIDE 345KV CKT 1
FDNS	06ALL	7	20WP	G15_068	TO->FROM	CIMARRON - MINCO 345KV CKT 1	956	956	0.22376	116.4002	G14-057T 345.00 - SUNNYSIDE 345KV CKT 1
FDNS	06ALL	7	20L	G15_068	TO->FROM	CIMARRON - MINCO 345KV CKT 1	956	956	0.20243	116.2758	G14-057T 345.00 - LAWTON EASTSIDE 345KV CKT 1
FDNS	06ALL	7	17G	G15_068	TO->FROM	CIMARRON - MINCO 345KV CKT 1	956	956	0.22898	112.8925	G14-057T 345.00 - LAWTON EASTSIDE 345KV CKT 1
FDNS	06ALL	7	16WP	G15_068	TO->FROM	CIMARRON - MINCO 345KV CKT 1	956	956	0.23511	111.0593	G14-057T 345.00 - SUNNYSIDE 345KV CKT 1
FDNS	06ALL	7	20WP	G15_068	TO->FROM	CIMARRON - MINCO 345KV CKT 1	956	956	0.22376	111.0342	G14-057T 345.00 - LAWTON EASTSIDE 345KV CKT 1
FDNS	06ALL	7	17SP	G15_068	TO->FROM	CIMARRON - MINCO 345KV CKT 1	956	956	0.23147	111.0288	G14-057T 345.00 - SUNNYSIDE 345KV CKT 1
FDNS	06ALL	7	20SP	G15_068	TO->FROM	CIMARRON - MINCO 345KV CKT 1	956	956	0.22919	108.4281	G14-057T 345.00 - SUNNYSIDE 345KV CKT 1
FDNS	06ALL	7	17SP	G15_068	TO->FROM	CIMARRON - MINCO 345KV CKT 1	956	956	0.23147	106.172	G14-057T 345.00 - LAWTON EASTSIDE 345KV CKT 1
FDNS	06ALL	7	16WP	G15_068	TO->FROM	CIMARRON - MINCO 345KV CKT 1	956	956	0.23511	105.9627	G14-057T 345.00 - LAWTON EASTSIDE 345KV CKT 1
FDNS	06ALL	7	20SP	G15_068	TO->FROM	CIMARRON - MINCO 345KV CKT 1	956	956	0.22919	103.5061	G14-057T 345.00 - LAWTON EASTSIDE 345KV CKT 1
FDNS	06ALL	7	20L	G15_068	TO->FROM	G14-057T 345.00 - LAWTON EASTSIDE 345KV CKT 1	717	789	0.10375	100.7791	BASE CASE
FDNS	06ALL	7	20L	G15_068	FROM->TO	G14-057T 345.00 - SUNNYSIDE 345KV CKT 1	717	789	0.10375	114.0012	BASE CASE
FDNS	00NR	7	16WP	G15_068	FROM->TO	G14-057T 345.00 - SUNNYSIDE 345KV CKT 1	717	789	0.03189	110.8457	GRACEMONT - LAWTON EASTSIDE 345KV CKT 1
FDNS	00NR	7	16WP	G15_068	FROM->TO	G14-057T 345.00 - SUNNYSIDE 345KV CKT 1	717	789	0.03189	110.8457	GRACEMONT - LAWTON EASTSIDE 345KV CKT 1
FDNS	06ALL	7	20WP	G15_068	FROM->TO	G14-057T 345.00 - SUNNYSIDE 345KV CKT 1	717	789	0.12523	102.5888	BASE CASE
FDNS	06ALL	7	17G	G15_068	FROM->TO	G14-057T 345.00 - SUNNYSIDE 345KV CKT 1	717	789	0.12857	102.2119	BASE CASE
FDNS	06NR	7	20L	G15_068	FROM->TO	G14-057T 345.00 - SUNNYSIDE 345KV CKT 1	717	789	0.02989	101.5168	GRACEMONT - LAWTON EASTSIDE 345KV CKT 1
FDNS	06NR	7	20L	G15_068	FROM->TO	G14-057T 345.00 - SUNNYSIDE 345KV CKT 1	717	789	0.02989	101.5168	GRACEMONT - LAWTON EASTSIDE 345KV CKT 1

SOLUTION	GROUP	SCENARIO	SEASON	SOURCE	DIRECTION	MONITORED ELEMENT	RATEA (MVA)	RATEB(MVA)	TDF	TC%LOADING (% MVA)	CONTINGENCY
FDNS	06ALL	7	16WP	G15_068	FROM->TO	G14-057T 345.00 - SUNNYSIDE 345KV CKT 1	717	789	0.13168	101.1576	BASE CASE
FDNS	00NR	7	25SP	G15_068	TO->FROM	JONES STATION - TUCO INTERCHANGE 230KV CKT 1	343.79	343.79	0.1502	129.1537	CARLISLE INTERCHANGE - TUCO INTERCHANGE 230KV CKT 1
FDNS	00NR	7	25SP	G15_068	TO->FROM	JONES STATION - TUCO INTERCHANGE 230KV CKT 1	343.79	343.79	0.1502	129.1537	CARLISLE INTERCHANGE - TUCO INTERCHANGE 230KV CKT 1
FDNS	00NR	7	25SP	G15_068	TO->FROM	JONES STATION - TUCO INTERCHANGE 230KV CKT 1	343.79	343.79	0.11595	112.419	GEN526333 1-JONES GEN #3 21 KV
FDNS	00NR	7	25SP	G15_068	TO->FROM	JONES STATION - TUCO INTERCHANGE 230KV CKT 1	343.79	343.79	0.11595	112.036	GEN526334 1-JONES_4 116.500
FDNS	00NR	7	25SP	G15_068	TO->FROM	JONES STATION - TUCO INTERCHANGE 230KV CKT 1	343.79	343.79	0.14039	107.2187	TUCO INTERCHANGE - YOAKUM_345 345.00 345KV CKT 1
FDNS	00NR	7	25SP	G15_068	TO->FROM	JONES STATION - TUCO INTERCHANGE 230KV CKT 1	343.79	343.79	0.13486	103.0013	CARLISLE INTERCHANGE - WOLFFORTH INTERCHANGE 230KV CKT 1
FDNS	00NR	7	25SP	G15_068	TO->FROM	JONES STATION - TUCO INTERCHANGE 230KV CKT 1	343.79	343.79	0.11517	101.0414	PLANT X STATION - SUNDOWN INTERCHANGE 230KV CKT 1
FDNS	00NR	7	25SP	G15_068	TO->FROM	JONES STATION - TUCO INTERCHANGE 230KV CKT 1	343.79	343.79	0.11517	101.0414	PLANT X STATION - SUNDOWN INTERCHANGE 230KV CKT 1
FDNS	00NR	7	25SP	G15_068	TO->FROM	JONES STATION - TUCO INTERCHANGE 230KV CKT 1	343.79	343.79	0.12853	100.2536	P12:345:SPS:J02.1.TOLK.EDDY
FDNS	00NR	7	25SP	G15_068	TO->FROM	JONES STATION - TUCO INTERCHANGE 230KV CKT 1	343.79	343.79	0.11595	100.1954	GEN526332 1-JONES GEN #2 21 KV
FDNS	00NR	7	25SP	G15_068	TO->FROM	JONES STATION - TUCO INTERCHANGE 230KV CKT 1	343.79	343.79	0.11595	100.1934	GEN526331 1-JONES GEN #1 22 KV
FDNS	00NR	7	25SP	G15_068	TO->FROM	JONES STATION - TUCO INTERCHANGE 230KV CKT 1	343.79	343.79	0.12116	100.1486	TUCO INTERCHANGE (ENRCO 136401) 230/115/13.2KV TRANSFORMER CKT 1
FDNS	00NR	7	25SP	G15_068	TO->FROM	JONES STATION - TUCO INTERCHANGE 230KV CKT 1	343.79	343.79	0.12116	100.1486	TUCO INTERCHANGE (ENRCO 136401) 230/115/13.2KV TRANSFORMER CKT 1
FDNS	00NR	7	25SP	G15_068	TO->FROM	JONES STATION - TUCO INTERCHANGE 230KV CKT 1	343.79	343.79	0.12116	100.1486	TUCO INTERCHANGE (ENRCO 136401) 230/115/13.2KV TRANSFORMER CKT 2
FDNS	00NR	7	25SP	G15_068	TO->FROM	JONES STATION - TUCO INTERCHANGE 230KV CKT 1	343.79	343.79	0.12116	100.1486	TUCO INTERCHANGE (ENRCO 136401) 230/115/13.2KV TRANSFORMER CKT 2
FDNS	00NR	7	25SP	G15_068	FROM->TO	LUBBOCK POWER & LIGHT-HOLLY PLANT (SHIH T101039) 230/69/13.5KV TRANSFORMER CKT 1	224	224	0.03593	104.7009	LUBBOCK POWER & LIGHT-SOUTHEAST - LUBBOCK SOUTH INTERCHANGE 230KV CKT 1
FDNS	00NR	7	25SP	G15_068	FROM->TO	LUBBOCK POWER & LIGHT-HOLLY PLANT (SHIH T101039) 230/69/13.5KV TRANSFORMER CKT 1	224	224	0.03593	104.6879	P12:LPL:SPS:K64.1.LP-SE.LUBBS
FDNS	00NR	7	25SP	G15_068	FROM->TO	LUBBOCK POWER & LIGHT-HOLLY PLANT (SHIH T101039) 230/69/13.5KV TRANSFORMER CKT 1	224	224	0.03517	101.9255	LUBBOCK EAST INTERCHANGE - LUBBOCK POWER & LIGHT-WADSWORTH 230KV CKT 1
FDNS	00NR	7	25SP	G15_068	FROM->TO	LUBBOCK POWER & LIGHT-HOLLY PLANT (SHIH T101039) 230/69/13.5KV TRANSFORMER CKT 1	224	224	0.03517	101.9108	P12:230:LPL:K57.1.LP-WADS.LUBBE
FDNS	00NR	7	25SP	G15_068	FROM->TO	LUBBOCK POWER & LIGHT-HOLLY PLANT (SHIH T101039) 230/69/13.5KV TRANSFORMER CKT 1	224	224	0.03517	101.9107	LUBBOCK POWER & LIGHT-WADSWORTH (SHIH T101038) 230/69/13.5KV TRANSFORMER CKT 1
FDNS	00NR	7	25SP	G15_068	FROM->TO	LUBBOCK POWER & LIGHT-HOLLY PLANT (SHIH T101039) 230/69/13.5KV TRANSFORMER CKT 1	224	224	0.03517	101.9107	LUBBOCK POWER & LIGHT-WADSWORTH (SHIH T101038) 230/69/13.5KV TRANSFORMER CKT 1
FDNS	00NR	7	25SP	G15_068	FROM->TO	POTTER COUNTY INTERCHANGE (WAUK 90343-A) 345/230/13.2KV TRANSFORMER CKT 1	560	560	0.07313	100.2945	P12:345:SPS:J15.1.XRDS.TOLK
FDNS	00NR	7	25SP	G15_068	FROM->TO	POTTER COUNTY INTERCHANGE (WAUK 90343-A) 345/230/13.2KV TRANSFORMER CKT 1	560	560	0.07313	100.0757	P12:345:SPS:J15.1.XRDS.TOLK
FDNS	06ALL	7	17G	G15_068	FROM->TO	TUCO INTERCHANGE - TUCO_2 230.00 230KV CKT 1	497	547	0.45909	102.9465	TUCO INTERCHANGE - TUCO_2 345.00 345KV CKT 1
FDNS	00NR	7	25SP	G15_068	FROM->TO	TUCO INTERCHANGE (ENRCO 136401) 230/115/13.2KV TRANSFORMER CKT 1	250	288	0.05596	118.7161	TUCO INTERCHANGE (ENRCO 136401) 230/115/13.2KV TRANSFORMER CKT 2
FDNS	00NR	7	25SP	G15_068	FROM->TO	TUCO INTERCHANGE (ENRCO 136401) 230/115/13.2KV TRANSFORMER CKT 1	250	288	0.05596	118.7161	TUCO INTERCHANGE (ENRCO 136401) 230/115/13.2KV TRANSFORMER CKT 2
FDNS	00NR	7	25SP	G15_068	FROM->TO	TUCO INTERCHANGE (ENRCO 136401) 230/115/13.2KV TRANSFORMER CKT 1	250	288	0.05596	111.3663	TUCO INTERCHANGE (ENRCO 136401) 230/115/13.2KV TRANSFORMER CKT 2
FDNS	00NR	7	25SP	G15_068	FROM->TO	TUCO INTERCHANGE (ENRCO 136401) 230/115/13.2KV TRANSFORMER CKT 1	250	288	0.05596	111.3663	TUCO INTERCHANGE (ENRCO 136401) 230/115/13.2KV TRANSFORMER CKT 2
FDNS	00NR	7	25SP	G15_068	FROM->TO	TUCO INTERCHANGE (ENRCO 136401) 230/115/13.2KV TRANSFORMER CKT 2	250	288	0.05596	118.7161	TUCO INTERCHANGE (ENRCO 136401) 230/115/13.2KV TRANSFORMER CKT 1
FDNS	00NR	7	25SP	G15_068	FROM->TO	TUCO INTERCHANGE (ENRCO 136401) 230/115/13.2KV TRANSFORMER CKT 2	250	288	0.05596	118.7161	TUCO INTERCHANGE (ENRCO 136401) 230/115/13.2KV TRANSFORMER CKT 1
FDNS	00NR	7	25SP	G15_068	FROM->TO	TUCO INTERCHANGE (ENRCO 136401) 230/115/13.2KV TRANSFORMER CKT 2	250	288	0.05596	111.3663	TUCO INTERCHANGE (ENRCO 136401) 230/115/13.2KV TRANSFORMER CKT 1
FDNS	00NR	7	25SP	G15_068	FROM->TO	TUCO INTERCHANGE (ENRCO 136401) 230/115/13.2KV TRANSFORMER CKT 2	250	288	0.05596	111.3663	TUCO INTERCHANGE (ENRCO 136401) 230/115/13.2KV TRANSFORMER CKT 1
FDNS	06ALL	7	17G	G15_068	FROM->TO	TUCO_2 345.00 (TUCO_2 XFMR) 345/230/13.2KV TRANSFORMER CKT 1	560	560	0.33924	107.5448	TUCO INTERCHANGE - TUCO_2 345.00 345KV CKT 1
FDNS	06ALL	7	20L	G15_068	FROM->TO	TUCO_2 345.00 (TUCO_2 XFMR) 345/230/13.2KV TRANSFORMER CKT 1	560	560	0.2917	106.6951	TUCO INTERCHANGE - TUCO_2 345.00 345KV CKT 1
FDNS	06ALL	7	17G	G15_068	FROM->TO	TUCO_2 345.00 (TUCO_2 XFMR) 345/230/13.2KV TRANSFORMER CKT 1	560	560	0.33924	106.1214	TUCO INTERCHANGE - TUCO_2 345.00 345KV CKT 1
FDNS	06ALL	7	20L	G15_068	FROM->TO	TUCO_2 345.00 (TUCO_2 XFMR) 345/230/13.2KV TRANSFORMER CKT 1	560	560	0.2917	105.4896	TUCO INTERCHANGE - TUCO_2 345.00 345KV CKT 1
FDNS	06ALL	7	20WP	G15_068	FROM->TO	TUCO_2 345.00 (TUCO_2 XFMR) 345/230/13.2KV TRANSFORMER CKT 1	560	560	0.30907	101.2891	TUCO INTERCHANGE - TUCO_2 345.00 345KV CKT 1
FDNS	06ALL	7	20WP	G15_068	FROM->TO	TUCO_2 345.00 (TUCO_2 XFMR) 345/230/13.2KV TRANSFORMER CKT 1	560	560	0.30907	99.9	TUCO INTERCHANGE - TUCO_2 345.00 345KV CKT 1
FDNS	00NR	8	25SP	G15_068	TO->FROM	JONES STATION - TUCO INTERCHANGE 230KV CKT 1	343.79	343.79	0.14927	128.3131	CARLISLE INTERCHANGE - TUCO INTERCHANGE 230KV CKT 1
FDNS	00NR	8	25SP	G15_068	TO->FROM	JONES STATION - TUCO INTERCHANGE 230KV CKT 1	343.79	343.79	0.14927	128.3131	CARLISLE INTERCHANGE - TUCO INTERCHANGE 230KV CKT 1
FDNS	00NR	8	25SP	G15_068	TO->FROM	JONES STATION - TUCO INTERCHANGE 230KV CKT 1	343.79	343.79	0.11532	111.8492	GEN526333 1-JONES GEN #3 21 KV
FDNS	00NR	8	25SP	G15_068	TO->FROM	JONES STATION - TUCO INTERCHANGE 230KV CKT 1	343.79	343.79	0.11532	111.4668	GEN526334 1-JONES_4 116.500
FDNS	00NR	8	25SP	G15_068	TO->FROM	JONES STATION - TUCO INTERCHANGE 230KV CKT 1	343.79	343.79	0.13842	106.1183	TUCO_2 345.00 - YOAKUM_345 345.00 345KV CKT 1
FDNS	00NR	8	25SP	G15_068	TO->FROM	JONES STATION - TUCO INTERCHANGE 230KV CKT 1	343.79	343.79	0.13403	102.3279	CARLISLE INTERCHANGE - WOLFFORTH INTERCHANGE 230KV CKT 1
FDNS	00NR	8	25SP	G15_068	TO->FROM	JONES STATION - TUCO INTERCHANGE 230KV CKT 1	343.79	343.79	0.11523	100.9491	PLANT X STATION - SUNDOWN INTERCHANGE 230KV CKT 1
FDNS	00NR	8	25SP	G15_068	TO->FROM	JONES STATION - TUCO INTERCHANGE 230KV CKT 1	343.79	343.79	0.11523	100.9491	PLANT X STATION - SUNDOWN INTERCHANGE 230KV CKT 1
FDNS	00NR	8	25SP	G15_068	TO->FROM	JONES STATION - TUCO INTERCHANGE 230KV CKT 1	343.79	343.79	0.12863	99.7	P12:345:SPS:J02.1.TOLK.EDDY
FDNS	00NR	8	25SP	G15_068	TO->FROM	JONES STATION - TUCO INTERCHANGE 230KV CKT 1	343.79	343.79	0.12042	99.5	TUCO INTERCHANGE (ENRCO 136401) 230/115/13.2KV TRANSFORMER CKT 1
FDNS	00NR	8	25SP	G15_068	TO->FROM	JONES STATION - TUCO INTERCHANGE 230KV CKT 1	343.79	343.79	0.12042	99.5	TUCO INTERCHANGE (ENRCO 136401) 230/115/13.2KV TRANSFORMER CKT 1
FDNS	00NR	8	25SP	G15_068	TO->FROM	JONES STATION - TUCO INTERCHANGE 230KV CKT 1	343.79	343.79	0.12042	99.5	TUCO INTERCHANGE (ENRCO 136401) 230/115/13.2KV TRANSFORMER CKT 2
FDNS	00NR	8	25SP	G15_068	TO->FROM	JONES STATION - TUCO INTERCHANGE 230KV CKT 1	343.79	343.79	0.12042	99.5	TUCO INTERCHANGE (ENRCO 136401) 230/115/13.2KV TRANSFORMER CKT 2
FDNS	00NR	8	25SP	G15_068	TO->FROM	JONES STATION - TUCO INTERCHANGE 230KV CKT 1	343.79	343.79	0.11532	99.5	GEN526331 1-JONES GEN #1 22 KV
FDNS	00NR	8	25SP	G15_068	TO->FROM	JONES STATION - TUCO INTERCHANGE 230KV CKT 1	343.79	343.79	0.11532	99.5	GEN526332 1-JONES GEN #2 21 KV
FDNS	00NR	8	25SP	G15_068	FROM->TO	LUBBOCK POWER & LIGHT-HOLLY PLANT (SHIH T101039) 230/69/13.5KV TRANSFORMER CKT 1	224	224	0.03593	104.7109	LUBBOCK POWER & LIGHT-SOUTHEAST - LUBBOCK SOUTH INTERCHANGE 230KV CKT 1
FDNS	00NR	8	25SP	G15_068	FROM->TO	LUBBOCK POWER & LIGHT-HOLLY PLANT (SHIH T101039) 230/69/13.5KV TRANSFORMER CKT 1	224	224	0.03593	104.6979	P12:LPL:SPS:K64.1.LP-SE.LUBBS
FDNS	00NR	8	25SP	G15_068	FROM->TO	LUBBOCK POWER & LIGHT-HOLLY PLANT (SHIH T101039) 230/69/13.5KV TRANSFORMER CKT 1	224	224	0.03516	101.953	LUBBOCK EAST INTERCHANGE - LUBBOCK POWER & LIGHT-WADSWORTH 230KV CKT 1
FDNS	00NR	8	25SP	G15_068	FROM->TO	LUBBOCK POWER & LIGHT-HOLLY PLANT (SHIH T101039) 230/69/13.5KV TRANSFORMER CKT 1	224	224	0.03516	101.9381	P12:230:LPL:K57.1.LP-WADS.LUBBE
FDNS	00NR	8	25SP	G15_068	FROM->TO	LUBBOCK POWER & LIGHT-HOLLY PLANT (SHIH T101039) 230/69/13.5KV TRANSFORMER CKT 1	224	224	0.03516	101.938	LUBBOCK POWER & LIGHT-WADSWORTH (SHIH T101038) 230/69/13.5KV TRANSFORMER CKT 1
FDNS	00NR	8	25SP	G15_068	FROM->TO	LUBBOCK POWER & LIGHT-HOLLY PLANT (SHIH T101039) 230/69/13.5KV TRANSFORMER CKT 1	224	224	0.03516	101.938	LUBBOCK POWER & LIGHT-WADSWORTH (SHIH T101038) 230/69/13.5KV TRANSFORMER CKT 1
FDNS	00NR	8	25SP	G15_068	FROM->TO	TUCO INTERCHANGE (ENRCO 136401) 230/115/13.2KV TRANSFORMER CKT 1	250	288	0.05484	117.845	TUCO INTERCHANGE (ENRCO 136401) 230/115/13.2KV TRANSFORMER CKT 2
FDNS	00NR	8	25SP	G15_068	FROM->TO	TUCO INTERCHANGE (ENRCO 136401) 230/115/13.2KV TRANSFORMER CKT 1	250	288	0.05484	117.845	TUCO INTERCHANGE (ENRCO 136401) 230/115/13.2KV TRANSFORMER CKT 2
FDNS	00NR	8	25SP	G15_068	FROM->TO	TUCO INTERCHANGE (ENRCO 136401) 230/115/13.2KV TRANSFORMER CKT 1	250	288	0.05484	110.4553	TUCO INTERCHANGE (ENRCO 136401) 230/115/13.2KV TRANSFORMER CKT 2
FDNS	00NR	8	25SP	G15_068	FROM->TO	TUCO INTERCHANGE (ENRCO 136401) 230/115/13.2KV TRANSFORMER CKT 1	250	288	0.05484	110.4553	TUCO INTERCHANGE (ENRCO 136401) 230/115/13.2KV TRANSFORMER CKT 2
FDNS	00NR	8	25SP	G15_068	FROM->TO	TUCO INTERCHANGE (ENRCO 136401) 230/115/13.2KV TRANSFORMER CKT 2	250	288	0.05484	117.845	TUCO INTERCHANGE (ENRCO 136401) 230/115/13.2KV TRANSFORMER CKT 1
FDNS	00NR	8	25SP	G15_068	FROM->TO	TUCO INTERCHANGE (ENRCO 136401) 230/115/13.2KV TRANSFORMER CKT 2	250	288	0.05484	117.845	TUCO INTERCHANGE (ENRCO 136401) 230/115/13.2KV TRANSFORMER CKT 1
FDNS	00NR	8	25SP	G15_068	FROM->TO	TUCO INTERCHANGE (ENRCO 136401) 230/115/13.2KV TRANSFORMER CKT 2	250	288	0.05484	110.4553	TUCO INTERCHANGE (ENRCO 136401) 230/115/13.2KV TRANSFORMER CKT 1
FDNS	00NR	8	25SP	G15_068	FROM->TO	TUCO INTERCHANGE (ENRCO 136401) 230/115/13.2KV TRANSFORMER CKT 2	250	288	0.05484	110.4553	TUCO INTERCHANGE (ENRCO 136401) 230/115/13.2KV TRANSFORMER CKT 1
FDNS	00NR	9	25SP	G15_068	FROM->TO	LUBBOCK POWER & LIGHT-HOLLY PLANT (SHIH T101039) 230/69/13.5KV TRANSFORMER CKT 1	224	224	0.03591	104.6637	LUBBOCK POWER & LIGHT-SOUTHEAST - LUBBOCK SOUTH INTERCHANGE 230KV CKT 1
FDNS	00NR	9	25SP	G15_068	FROM->TO	LUBBOCK POWER & LIGHT-HOLLY PLANT (SHIH T101039) 230/69/13.5KV TRANSFORMER CKT 1	224	224	0.03591	104.6507	P12:LPL:SPS:K64.1.LP-SE.LUBBS
FDNS	00NR	9	25SP	G15_068	FROM->TO	LUBBOCK POWER & LIGHT-HOLLY PLANT (SHIH T101039) 230/69/13.5KV TRANSFORMER CKT 1	224	224	0.03517	101.7729	LUBBOCK EAST INTERCHANGE - LUBBOCK POWER & LIGHT-WADSWORTH 230KV CKT 1
FDNS	00NR	9	25SP	G15_068	FROM->TO	LUBBOCK POWER & LIGHT-HOLLY PLANT (SHIH T101039) 230/69/13.5KV TRANSFORMER CKT 1	224	224	0.03517	101.758	P12:230:LPL:K57.1.LP-WADS.LUBBE
FDNS	00NR	9	25SP	G15_068	FROM->TO	LUBBOCK POWER & LIGHT-HOLLY PLANT (SHIH T101039) 230/69/13.5KV TRANSFORMER CKT 1	224	224	0.03517	101.7579	LUBBOCK POWER & LIGHT-WADSWORTH (SHIH T101038) 230/69/13.5KV TRANSFORMER CKT 1
FDNS	00NR	9	25SP	G15_068	FROM->TO	LUBBOCK POWER & LIGHT-HOLLY PLANT (SHIH T101039) 230/69/13.5KV TRANSFORMER CKT 1	224	224	0.03517	101.7579	LUBBOCK POWER & LIGHT-WADSWORTH (SHIH T101038) 230/69/13.5KV TRANSFORMER CKT 1
FDNS	00NR	9	25SP	G15_068	FROM->TO	TUCO INTERCHANGE (ENRCO 136401) 230/115/13.2KV TRANSFORMER CKT 1	250	288	0.04154	119.7997	TUCO INTERCHANGE (ENRCO 136401) 230/115/13.2KV TRANSFORMER CKT 2
FDNS	00NR	9	25SP	G15_068	FROM->TO	TUCO INTERCHANGE (ENRCO 136401) 230/115/13.2KV TRANSFORMER CKT 1	250	288	0.04154	119.7997	TUCO INTERCHANGE (ENRCO 136401) 230/115/13.2KV TRANSFORMER CKT 2
FDNS	00NR	9	25SP	G15_068	FROM->TO	TUCO INTERCHANGE (ENRCO 136401) 230/115/13.2KV TRANSFORMER CKT 1	250	288	0.04154	111.4731	TUCO INTERCHANGE (ENRCO 136401) 230/115/13.2KV TRANSFORMER CKT 2
FDNS	00NR	9	25SP	G15_068	FROM->TO	TUCO INTERCHANGE (ENRCO 136401) 230/115/13.2KV TRANSFORMER CKT 1	250	288	0.04154	111.4731	TUCO INTERCHANGE (ENRCO 136401) 230/115/13.2KV TRANSFORMER CKT 2
FDNS	00NR	9	25SP	G15_068	FROM->TO	TUCO INTERCHANGE (ENRCO 136401) 230/115/13.2KV TRANSFORMER CKT 2	250	288	0.04154	119.7997	TUCO INTERCHANGE (ENRCO 136401) 230/115/13.2KV TRANSFORMER CKT 1

SOLUTION	GROUP	SCENARIO	SEASON	SOURCE	DIRECTION	MONITORED ELEMENT	RATEA (MVA)	RATEB(MVA)	TDF	TC%LOADING (% MVA)	CONTINGENCY
FDNS	00NR	9	25SP	G15_068	FROM->TO	TUCO INTERCHANGE (ENRCO 136401) 230/115/13.2KV TRANSFORMER CKT 2	250	288	0.04154	119.7997	TUCO INTERCHANGE (ENRCO 136401) 230/115/13.2KV TRANSFORMER CKT 1
FDNS	00NR	9	25SP	G15_068	FROM->TO	TUCO INTERCHANGE (ENRCO 136401) 230/115/13.2KV TRANSFORMER CKT 2	250	288	0.04154	111.4731	TUCO INTERCHANGE (ENRCO 136401) 230/115/13.2KV TRANSFORMER CKT 1
FDNS	00NR	9	25SP	G15_068	FROM->TO	TUCO INTERCHANGE (ENRCO 136401) 230/115/13.2KV TRANSFORMER CKT 2	250	288	0.04154	111.4731	TUCO INTERCHANGE (ENRCO 136401) 230/115/13.2KV TRANSFORMER CKT 1
FDNS	08ALL	0	17SP	G15_069	FROM->TO	SWISSVALE - WEST GARDNER 345KV CKT 1	717	717	0.24842	124.2998	HOYT - STRANGER CREEK 345KV CKT 1
FDNS	08ALL	0	17SP	G15_069	FROM->TO	SWISSVALE - WEST GARDNER 345KV CKT 1	717	717	0.23302	121.6324	G15074_T 345.00 - HOYT 345KV CKT 1
FDNS	08ALL	0	17SP	G15_069	FROM->TO	SWISSVALE - WEST GARDNER 345KV CKT 1	717	717	0.23302	120.141	G15074_T 345.00 - JEFFREY ENERGY CENTER 345KV CKT 1
FDNS	08ALL	0	20SP	G15_069	FROM->TO	SWISSVALE - WEST GARDNER 345KV CKT 1	717	717	0.2482	112.874	HOYT - STRANGER CREEK 345KV CKT 1
FDNS	08ALL	0	17G	G15_069	FROM->TO	SWISSVALE - WEST GARDNER 345KV CKT 1	717	717	0.25086	111.7168	HOYT - STRANGER CREEK 345KV CKT 1
FDNS	08ALL	0	20SP	G15_069	FROM->TO	SWISSVALE - WEST GARDNER 345KV CKT 1	717	717	0.2325	111.2415	G15074_T 345.00 - HOYT 345KV CKT 1
FDNS	08ALL	0	20SP	G15_069	FROM->TO	SWISSVALE - WEST GARDNER 345KV CKT 1	717	717	0.2325	109.776	G15074_T 345.00 - JEFFREY ENERGY CENTER 345KV CKT 1
FDNS	08ALL	0	17G	G15_069	FROM->TO	SWISSVALE - WEST GARDNER 345KV CKT 1	717	717	0.23516	107.9669	G15074_T 345.00 - HOYT 345KV CKT 1
FDNS	08ALL	0	16WP	G15_069	FROM->TO	SWISSVALE - WEST GARDNER 345KV CKT 1	717	717	0.25845	107.0428	HOYT - STRANGER CREEK 345KV CKT 1
FDNS	08ALL	0	17G	G15_069	FROM->TO	SWISSVALE - WEST GARDNER 345KV CKT 1	717	717	0.23516	106.5338	G15074_T 345.00 - JEFFREY ENERGY CENTER 345KV CKT 1
FDNS	08ALL	0	16WP	G15_069	FROM->TO	SWISSVALE - WEST GARDNER 345KV CKT 1	717	717	0.19947	105.6128	LACYGNE - WAVERLY7 345.00 345KV CKT 1
FDNS	08ALL	0	16WP	G15_069	FROM->TO	SWISSVALE - WEST GARDNER 345KV CKT 1	717	717	0.24212	104.5462	G15074_T 345.00 - HOYT 345KV CKT 1
FDNS	08ALL	0	20WP	G15_069	FROM->TO	SWISSVALE - WEST GARDNER 345KV CKT 1	717	717	0.25319	104.2133	HOYT - STRANGER CREEK 345KV CKT 1
FDNS	08ALL	0	20WP	G15_069	FROM->TO	SWISSVALE - WEST GARDNER 345KV CKT 1	717	717	0.25309	103.691	HOYT - STRANGER CREEK 345KV CKT 1
FDNS	08ALL	0	16WP	G15_069	FROM->TO	SWISSVALE - WEST GARDNER 345KV CKT 1	717	717	0.24212	103.2464	G15074_T 345.00 - JEFFREY ENERGY CENTER 345KV CKT 1
FDNS	08ALL	0	20WP	G15_069	FROM->TO	SWISSVALE - WEST GARDNER 345KV CKT 1	717	717	0.23689	101.9452	G15074_T 345.00 - HOYT 345KV CKT 1
FDNS	08ALL	0	20WP	G15_069	FROM->TO	SWISSVALE - WEST GARDNER 345KV CKT 1	717	717	0.23679	101.498	G15074_T 345.00 - HOYT 345KV CKT 1
FDNS	08ALL	0	20WP	G15_069	FROM->TO	SWISSVALE - WEST GARDNER 345KV CKT 1	717	717	0.23689	100.5646	G15074_T 345.00 - JEFFREY ENERGY CENTER 345KV CKT 1
FDNS	08ALL	0	20WP	G15_069	FROM->TO	SWISSVALE - WEST GARDNER 345KV CKT 1	717	717	0.23679	100.1173	G15074_T 345.00 - JEFFREY ENERGY CENTER 345KV CKT 1
FDNS	07ALL	0	25SP	G15_071	TO->FROM	STATELINE INTERCHANGE - STLN-DEMARC6 230KV CKT 1	348.58	381.24	0.41297	121.575	CHISHOLM7 345.00 - GRACEMONT 345KV CKT 1
FDNS	07ALL	0	25SP	G15_071	TO->FROM	STATELINE INTERCHANGE - STLN-DEMARC6 230KV CKT 1	348.58	381.24	0.16599	112.3299	BASE CASE
FDNS	07ALL	0	25SP	G15_071	TO->FROM	STATELINE INTERCHANGE - STLN-DEMARC6 230KV CKT 1	348.58	381.24	0.19854	110.8602	CIMARRON - MINCO 345KV CKT 1
FDNS	07ALL	0	25SP	G15_071	TO->FROM	STATELINE INTERCHANGE - STLN-DEMARC6 230KV CKT 1	348.58	381.24	0.19854	107.8065	GRACEMONT - MINCO 345KV CKT 1
FDNS	07ALL	0	25SP	G15_071	TO->FROM	STATELINE INTERCHANGE - STLN-DEMARC6 230KV CKT 1	348.58	381.24	0.22254	105.7581	CHISHOLM6 230.00 - ELK CITY 230KV 230KV CKT 1
FDNS	07ALL	0	25SP	G15_071	TO->FROM	STATELINE INTERCHANGE - STLN-DEMARC6 230KV CKT 1	348.58	381.24	0.22254	105.7373	ELK CITY 230KV (ELKCTY-6) 230/138/13.8KV TRANSFORMER CKT 1
FDNS	07ALL	0	25SP	G15_071	TO->FROM	STATELINE INTERCHANGE - STLN-DEMARC6 230KV CKT 1	348.58	381.24	0.22254	105.7373	ELK CITY 230KV (ELKCTY-6) 230/138/13.8KV TRANSFORMER CKT 1
FDNS	07ALL	0	25SP	G15_071	TO->FROM	STLN-DEMARC6 - SWEETWATER 230KV CKT 1	353	353	0.41297	131.3015	CHISHOLM7 345.00 - GRACEMONT 345KV CKT 1
FDNS	07ALL	0	25SP	G15_071	TO->FROM	STLN-DEMARC6 - SWEETWATER 230KV CKT 1	353	353	0.19854	119.7307	CIMARRON - MINCO 345KV CKT 1
FDNS	07ALL	0	25SP	G15_071	TO->FROM	STLN-DEMARC6 - SWEETWATER 230KV CKT 1	353	353	0.19854	116.4309	GRACEMONT - MINCO 345KV CKT 1
FDNS	07ALL	0	25SP	G15_071	TO->FROM	STLN-DEMARC6 - SWEETWATER 230KV CKT 1	353	353	0.22254	114.2191	CHISHOLM6 230.00 - ELK CITY 230KV 230KV CKT 1
FDNS	07ALL	0	25SP	G15_071	TO->FROM	STLN-DEMARC6 - SWEETWATER 230KV CKT 1	353	353	0.22254	114.1966	ELK CITY 230KV (ELKCTY-6) 230/138/13.8KV TRANSFORMER CKT 1
FDNS	07ALL	0	25SP	G15_071	TO->FROM	STLN-DEMARC6 - SWEETWATER 230KV CKT 1	353	353	0.22254	114.1966	ELK CITY 230KV (ELKCTY-6) 230/138/13.8KV TRANSFORMER CKT 1
FDNS	07ALL	0	25SP	G15_071	TO->FROM	STLN-DEMARC6 - SWEETWATER 230KV CKT 1	353	353	0.16599	110.9234	BASE CASE
FDNS	07ALL	2	25SP	G15_071	TO->FROM	STATELINE INTERCHANGE - STLN-DEMARC6 230KV CKT 1	348.58	381.24	0.41318	121.7774	CHISHOLM7 345.00 - GRACEMONT 345KV CKT 1
FDNS	07ALL	2	25SP	G15_071	TO->FROM	STATELINE INTERCHANGE - STLN-DEMARC6 230KV CKT 1	348.58	381.24	0.16601	112.6111	BASE CASE
FDNS	07ALL	2	25SP	G15_071	TO->FROM	STATELINE INTERCHANGE - STLN-DEMARC6 230KV CKT 1	348.58	381.24	0.19847	111.051	CIMARRON - MINCO 345KV CKT 1
FDNS	07ALL	2	25SP	G15_071	TO->FROM	STATELINE INTERCHANGE - STLN-DEMARC6 230KV CKT 1	348.58	381.24	0.19847	108.0243	GRACEMONT - MINCO 345KV CKT 1
FDNS	07ALL	2	25SP	G15_071	TO->FROM	STATELINE INTERCHANGE - STLN-DEMARC6 230KV CKT 1	348.58	381.24	0.22267	105.9366	CHISHOLM6 230.00 - ELK CITY 230KV 230KV CKT 1
FDNS	07ALL	2	25SP	G15_071	TO->FROM	STATELINE INTERCHANGE - STLN-DEMARC6 230KV CKT 1	348.58	381.24	0.22267	105.9142	ELK CITY 230KV (ELKCTY-6) 230/138/13.8KV TRANSFORMER CKT 1
FDNS	07ALL	2	25SP	G15_071	TO->FROM	STATELINE INTERCHANGE - STLN-DEMARC6 230KV CKT 1	348.58	381.24	0.22267	105.9142	ELK CITY 230KV (ELKCTY-6) 230/138/13.8KV TRANSFORMER CKT 1
FDNS	07ALL	2	25SP	G15_071	TO->FROM	STLN-DEMARC6 - SWEETWATER 230KV CKT 1	353	353	0.41318	131.5213	CHISHOLM7 345.00 - GRACEMONT 345KV CKT 1
FDNS	07ALL	2	25SP	G15_071	TO->FROM	STLN-DEMARC6 - SWEETWATER 230KV CKT 1	353	353	0.19847	119.9351	CIMARRON - MINCO 345KV CKT 1
FDNS	07ALL	2	25SP	G15_071	TO->FROM	STLN-DEMARC6 - SWEETWATER 230KV CKT 1	353	353	0.19847	116.6663	GRACEMONT - MINCO 345KV CKT 1
FDNS	07ALL	2	25SP	G15_071	TO->FROM	STLN-DEMARC6 - SWEETWATER 230KV CKT 1	353	353	0.22267	114.4117	CHISHOLM6 230.00 - ELK CITY 230KV 230KV CKT 1
FDNS	07ALL	2	25SP	G15_071	TO->FROM	STLN-DEMARC6 - SWEETWATER 230KV CKT 1	353	353	0.22267	114.3876	ELK CITY 230KV (ELKCTY-6) 230/138/13.8KV TRANSFORMER CKT 1
FDNS	07ALL	2	25SP	G15_071	TO->FROM	STLN-DEMARC6 - SWEETWATER 230KV CKT 1	353	353	0.22267	114.3876	ELK CITY 230KV (ELKCTY-6) 230/138/13.8KV TRANSFORMER CKT 1
FDNS	07ALL	2	25SP	G15_071	TO->FROM	STLN-DEMARC6 - SWEETWATER 230KV CKT 1	353	353	0.16601	111.2011	BASE CASE
FDNS	00NR	0	17SP	G15_072	TO->FROM	CLEARWATER - MILAN TAP 138KV CKT 1	110	110	0.03261	104.0236	G1524G1525 345.00 - THISTLE7 345.00 345KV CKT 1
FDNS	00NR	0	17SP	G15_072	TO->FROM	CLEARWATER - MILAN TAP 138KV CKT 1	110	110	0.03261	104.0236	G1524G1525 345.00 - THISTLE7 345.00 345KV CKT 2
FDNS	00NR	0	20SP	G15_072	TO->FROM	KNOLL - N HAYS3 115.00 115KV CKT 1	83	99	0.15561	99.9	KNOLL 230 - POSTROCK6 230.00 230KV CKT 1
FDNS	00NR	0	20WP	G15_072	TO->FROM	MATHWSN7 345.00 - TATONGA7 345.00 345KV CKT 1	1195	1195	0.05657	110.9769	G14-074T 345.00 - OKLAUNION 345KV CKT 1
FDNS	00NR	0	16WP	G15_072	TO->FROM	MATHWSN7 345.00 - TATONGA7 345.00 345KV CKT 1	1195	1195	0.05708	108.6268	G14-074T 345.00 - OKLAUNION 345KV CKT 1
FDNS	00NR	0	20WP	G15_072	TO->FROM	MATHWSN7 345.00 - TATONGA7 345.00 345KV CKT 1	1195	1195	0.0486	102.7399	THISTLE7 345.00 - WOODWARD DISTRICT EHV 345KV CKT 1
FDNS	00NR	0	20WP	G15_072	TO->FROM	MATHWSN7 345.00 - TATONGA7 345.00 345KV CKT 1	1195	1195	0.0486	102.7399	THISTLE7 345.00 - WOODWARD DISTRICT EHV 345KV CKT 1
FDNS	00NR	0	20WP	G15_072	TO->FROM	MATHWSN7 345.00 - TATONGA7 345.00 345KV CKT 1	1195	1195	0.0486	102.7399	THISTLE7 345.00 - WOODWARD DISTRICT EHV 345KV CKT 2
FDNS	00NR	0	20WP	G15_072	TO->FROM	MATHWSN7 345.00 - TATONGA7 345.00 345KV CKT 1	1195	1195	0.0486	102.7399	THISTLE7 345.00 - WOODWARD DISTRICT EHV 345KV CKT 2
FDNS	00NR	0	20WP	G15_072	TO->FROM	MATHWSN7 345.00 - TATONGA7 345.00 345KV CKT 1	1195	1195	0.05454	102.4191	CHISHOLM6 230.00 - SWEETWATER 230KV CKT 1
FDNS	00NR	0	20WP	G15_072	TO->FROM	MATHWSN7 345.00 - TATONGA7 345.00 345KV CKT 1	1195	1195	0.05657	102.4108	G14-074T 345.00 - TUCO INTERCHANGE 345KV CKT 1
FDNS	00NR	0	20WP	G15_072	TO->FROM	MATHWSN7 345.00 - TATONGA7 345.00 345KV CKT 1	1195	1195	0.05467	102.1811	P12:230:AEPW:ELKCITY6:SWEETWT6
FDNS	00NR	0	16WP	G15_072	TO->FROM	MATHWSN7 345.00 - TATONGA7 345.00 345KV CKT 1	1195	1195	0.04889	101.0086	THISTLE7 345.00 - WOODWARD DISTRICT EHV 345KV CKT 1
FDNS	00NR	0	16WP	G15_072	TO->FROM	MATHWSN7 345.00 - TATONGA7 345.00 345KV CKT 1	1195	1195	0.04889	101.0086	THISTLE7 345.00 - WOODWARD DISTRICT EHV 345KV CKT 1
FDNS	00NR	0	16WP	G15_072	TO->FROM	MATHWSN7 345.00 - TATONGA7 345.00 345KV CKT 1	1195	1195	0.04889	101.0086	THISTLE7 345.00 - WOODWARD DISTRICT EHV 345KV CKT 2
FDNS	00NR	0	16WP	G15_072	TO->FROM	MATHWSN7 345.00 - TATONGA7 345.00 345KV CKT 1	1195	1195	0.04889	101.0086	THISTLE7 345.00 - WOODWARD DISTRICT EHV 345KV CKT 2
FDNS	00NR	0	20WP	G15_072	TO->FROM	MATHWSN7 345.00 - TATONGA7 345.00 345KV CKT 1	1195	1195	0.05304	100.869	CIMARRON - MINCO 345KV CKT 1
FDNS	00NR	0	16WP	G15_072	TO->FROM	MATHWSN7 345.00 - TATONGA7 345.00 345KV CKT 1	1195	1195	0.05708	100.5612	G14-074T 345.00 - TUCO INTERCHANGE 345KV CKT 1
FDNS	00NR	0	16WP	G15_072	TO->FROM	MATHWSN7 345.00 - TATONGA7 345.00 345KV CKT 1	1195	1195	0.05506	100.4392	CHISHOLM6 230.00 - SWEETWATER 230KV CKT 1
FDNS	00NR	0	20WP	G15_072	TO->FROM	MATHWSN7 345.00 - TATONGA7 345.00 345KV CKT 1	1195	1195	0.05454	100.3181	STLN-DEMARC6 - SWEETWATER 230KV CKT 1
FDNS	00NR	0	20WP	G15_072	TO->FROM	MATHWSN7 345.00 - TATONGA7 345.00 345KV CKT 1	1195	1195	0.05454	100.2999	STATELINE INTERCHANGE - STLN-DEMARC6 230KV CKT 1
FDNS	00NR	0	16WP	G15_072	TO->FROM	MATHWSN7 345.00 - TATONGA7 345.00 345KV CKT 1	1195	1195	0.0552	100.2694	P12:230:AEPW:ELKCITY6:SWEETWT6
FDNS	00NR	0	20WP	G15_072	TO->FROM	MATHWSN7 345.00 - TATONGA7 345.00 345KV CKT 1	1195	1195	0.05454	100.26	P12:230:AEPW-SPS:SWEETWT6:WHEELER 6
FDNS	00NR	0	20WP	G15_072	TO->FROM	MATHWSN7 345.00 - TATONGA7 345.00 345KV CKT 1	1195	1195	0.0627	100.09	G1524G1525 345.00 - THISTLE7 345.00 345KV CKT 1
FDNS	00NR	0	20WP	G15_072	TO->FROM	MATHWSN7 345.00 - TATONGA7 345.00 345KV CKT 1	1195	1195	0.0627	100.09	G1524G1525 345.00 - THISTLE7 345.00 345KV CKT 2
FDNS	00NR	0	20SP	G15_072	TO->FROM	N HAYS3 115.00 - VINETAP3 115.00 115KV CKT 1	83	99	0.15561	109.0693	KNOLL 230 - POSTROCK6 230.00 230KV CKT 1
FDNS	00NR	0	17SP	G15_072	TO->FROM	N HAYS3 115.00 - VINETAP3 115.00 115KV CKT 1	83	99	0.15511	105.5091	KNOLL 230 - POSTROCK6 230.00 230KV CKT 1
FDNS	00NR	0	25SP	G15_072	TO->FROM	N HAYS3 115.00 - VINETAP3 115.00 115KV CKT 1	83	99	0.0725	99.5	KNOLL 230 (KNOLL T1) 230/115/11.49KV TRANSFORMER CKT 1
FDNS	04ALL	0	20L	G15_072	FROM->TO	SMOKYHL6 230.00 - SUMMIT 230KV CKT 1	330	350	0.30162	110.2265	POST ROCK (POSTROCK T1) 345/230/13.8KV TRANSFORMER CKT 1

SOLUTION	GROUP	SCENARIO	SEASON	SOURCE	DIRECTION	MONITORED ELEMENT	RATEA (MVA)	RATEB(MVA)	TDF	TC%LOADING (% MVA)	CONTINGENCY
FDNS	04ALL	0	20WP	G15_072	FROM->TO	SMOKYHL6 230.00 - SUMMIT 230KV CKT 1	330	350	0.3039	102.4764	POST ROCK (POSTROCK T1) 345/230/13.8KV TRANSFORMER CKT 1
FDNS	04ALL	0	16WP	G15_072	FROM->TO	SMOKYHL6 230.00 - SUMMIT 230KV CKT 1	330	350	0.30534	100.7872	POST ROCK (POSTROCK T1) 345/230/13.8KV TRANSFORMER CKT 1
FDNS	04ALL	0	17SP	G15_072	FROM->TO	SMOKYHL6 230.00 - SUMMIT 230KV CKT 1	330	350	0.30517	99.6	POST ROCK (POSTROCK T1) 345/230/13.8KV TRANSFORMER CKT 1
FDNS	00NR	0	20SP	G15_072	FROM->TO	SOUTH HAYS (S HAYS T1) 230/115/12.47KV TRANSFORMER CKT 1	166.7	166.7	0.15561	101.5676	KNOLL 230 - POSTROCK6 230.00 230KV CKT 1
FDNS	00NR	0	20SP	G15_072	FROM->TO	SOUTH HAYS (S HAYS T1) 230/115/12.47KV TRANSFORMER CKT 1	166.7	166.7	0.15561	100.574	KNOLL 230 - POSTROCK6 230.00 230KV CKT 1
FDNS	00NR	0	25SP	G15_072	FROM->TO	SOUTH HAYS (S HAYS T1) 230/115/12.47KV TRANSFORMER CKT 1	166.7	166.7	0.0725	100.3506	KNOLL 230 (KNOLL T1) 230/115/11.49KV TRANSFORMER CKT 1
FDNS	00NR	2	17SP	G15_072	TO->FROM	CLEARWATER - MILAN TAP 138KV CKT 1	110	110	0.03259	104.3973	G1524G1525 345.00 - THISTLE7 345.00 345KV CKT 1
FDNS	00NR	2	17SP	G15_072	TO->FROM	CLEARWATER - MILAN TAP 138KV CKT 1	110	110	0.03259	104.3973	G1524G1525 345.00 - THISTLE7 345.00 345KV CKT 2
FDNS	00NR	2	20SP	G15_072	TO->FROM	KNOLL - N HAYS3 115.00 115KV CKT 1	83	99	0.15553	99.7	KNOLL 230 - POSTROCK6 230.00 230KV CKT 1
FDNS	00NR	2	20WP	G15_072	TO->FROM	MATHWSN7 345.00 - TATONGA7 345.00 345KV CKT 1	1195	1195	0.05629	110.3902	G14-074T 345.00 - OKLAUNION 345KV CKT 1
FDNS	00NR	2	16WP	G15_072	TO->FROM	MATHWSN7 345.00 - TATONGA7 345.00 345KV CKT 1	1195	1195	0.05679	108.0685	G14-074T 345.00 - OKLAUNION 345KV CKT 1
FDNS	00NR	2	20WP	G15_072	TO->FROM	MATHWSN7 345.00 - TATONGA7 345.00 345KV CKT 1	1195	1195	0.0484	102.3936	THISTLE7 345.00 - WOODWARD DISTRICT EHV 345KV CKT 1
FDNS	00NR	2	20WP	G15_072	TO->FROM	MATHWSN7 345.00 - TATONGA7 345.00 345KV CKT 1	1195	1195	0.0484	102.3936	THISTLE7 345.00 - WOODWARD DISTRICT EHV 345KV CKT 1
FDNS	00NR	2	20WP	G15_072	TO->FROM	MATHWSN7 345.00 - TATONGA7 345.00 345KV CKT 1	1195	1195	0.0484	102.3936	THISTLE7 345.00 - WOODWARD DISTRICT EHV 345KV CKT 2
FDNS	00NR	2	20WP	G15_072	TO->FROM	MATHWSN7 345.00 - TATONGA7 345.00 345KV CKT 1	1195	1195	0.0484	102.3936	THISTLE7 345.00 - WOODWARD DISTRICT EHV 345KV CKT 2
FDNS	00NR	2	20WP	G15_072	TO->FROM	MATHWSN7 345.00 - TATONGA7 345.00 345KV CKT 1	1195	1195	0.05629	101.9985	G14-074T 345.00 - TUCO INTERCHANGE 345KV CKT 1
FDNS	00NR	2	20WP	G15_072	TO->FROM	MATHWSN7 345.00 - TATONGA7 345.00 345KV CKT 1	1195	1195	0.05425	101.9007	CHISHOLM6 230.00 - SWEETWATER 230KV CKT 1
FDNS	00NR	2	20WP	G15_072	TO->FROM	MATHWSN7 345.00 - TATONGA7 345.00 345KV CKT 1	1195	1195	0.05439	101.6841	P12:230:AEPW:ELKCITY6:SWEETWT6
FDNS	00NR	2	16WP	G15_072	TO->FROM	MATHWSN7 345.00 - TATONGA7 345.00 345KV CKT 1	1195	1195	0.04868	100.6564	THISTLE7 345.00 - WOODWARD DISTRICT EHV 345KV CKT 1
FDNS	00NR	2	16WP	G15_072	TO->FROM	MATHWSN7 345.00 - TATONGA7 345.00 345KV CKT 1	1195	1195	0.04868	100.6564	THISTLE7 345.00 - WOODWARD DISTRICT EHV 345KV CKT 1
FDNS	00NR	2	16WP	G15_072	TO->FROM	MATHWSN7 345.00 - TATONGA7 345.00 345KV CKT 1	1195	1195	0.04868	100.6564	THISTLE7 345.00 - WOODWARD DISTRICT EHV 345KV CKT 2
FDNS	00NR	2	16WP	G15_072	TO->FROM	MATHWSN7 345.00 - TATONGA7 345.00 345KV CKT 1	1195	1195	0.04868	100.6564	THISTLE7 345.00 - WOODWARD DISTRICT EHV 345KV CKT 2
FDNS	00NR	2	20WP	G15_072	TO->FROM	MATHWSN7 345.00 - TATONGA7 345.00 345KV CKT 1	1195	1195	0.05283	100.5571	CIMARRON - MINCO 345KV CKT 1
FDNS	00NR	2	16WP	G15_072	TO->FROM	MATHWSN7 345.00 - TATONGA7 345.00 345KV CKT 1	1195	1195	0.05679	100.1126	G14-074T 345.00 - TUCO INTERCHANGE 345KV CKT 1
FDNS	00NR	2	16WP	G15_072	TO->FROM	MATHWSN7 345.00 - TATONGA7 345.00 345KV CKT 1	1195	1195	0.05476	99.9	CHISHOLM6 230.00 - SWEETWATER 230KV CKT 1
FDNS	00NR	2	20WP	G15_072	TO->FROM	MATHWSN7 345.00 - TATONGA7 345.00 345KV CKT 1	1195	1195	0.06247	99.8	G1524G1525 345.00 - THISTLE7 345.00 345KV CKT 1
FDNS	00NR	2	20WP	G15_072	TO->FROM	MATHWSN7 345.00 - TATONGA7 345.00 345KV CKT 1	1195	1195	0.06247	99.8	G1524G1525 345.00 - THISTLE7 345.00 345KV CKT 2
FDNS	00NR	2	20WP	G15_072	TO->FROM	MATHWSN7 345.00 - TATONGA7 345.00 345KV CKT 1	1195	1195	0.05425	99.8	P12:230:AEPW-SPS:SWEETWT6:WHEELER 6
FDNS	00NR	2	20WP	G15_072	TO->FROM	MATHWSN7 345.00 - TATONGA7 345.00 345KV CKT 1	1195	1195	0.05425	99.8	STATELINE INTERCHANGE - STLN-DEMARC6 230KV CKT 1
FDNS	00NR	2	20WP	G15_072	TO->FROM	MATHWSN7 345.00 - TATONGA7 345.00 345KV CKT 1	1195	1195	0.05425	99.8	STLN-DEMARC6 - SWEETWATER 230KV CKT 1
FDNS	00NR	2	16WP	G15_072	TO->FROM	MATHWSN7 345.00 - TATONGA7 345.00 345KV CKT 1	1195	1195	0.05491	99.7	P12:230:AEPW:ELKCITY6:SWEETWT6
FDNS	00NR	2	20SP	G15_072	TO->FROM	N HAYS3 115.00 - VINETAP3 115.00 115KV CKT 1	83	99	0.15553	108.914	KNOLL 230 - POSTROCK6 230.00 230KV CKT 1
FDNS	00NR	2	17SP	G15_072	TO->FROM	N HAYS3 115.00 - VINETAP3 115.00 115KV CKT 1	83	99	0.15502	106.3619	KNOLL 230 - POSTROCK6 230.00 230KV CKT 1
FDNS	00NR	2	25SP	G15_072	TO->FROM	N HAYS3 115.00 - VINETAP3 115.00 115KV CKT 1	83	99	0.07252	99.5	KNOLL 230 (KNOLL T1) 230/115/11.49KV TRANSFORMER CKT 1
FDNS	00NR	2	20SP	G15_072	FROM->TO	SOUTH HAYS (S HAYS T1) 230/115/12.47KV TRANSFORMER CKT 1	166.7	166.7	0.15553	101.4963	KNOLL 230 - POSTROCK6 230.00 230KV CKT 1
FDNS	00NR	2	20SP	G15_072	FROM->TO	SOUTH HAYS (S HAYS T1) 230/115/12.47KV TRANSFORMER CKT 1	166.7	166.7	0.15553	100.522	KNOLL 230 - POSTROCK6 230.00 230KV CKT 1
FDNS	00NR	2	25SP	G15_072	FROM->TO	SOUTH HAYS (S HAYS T1) 230/115/12.47KV TRANSFORMER CKT 1	166.7	166.7	0.07252	100.3496	KNOLL 230 (KNOLL T1) 230/115/11.49KV TRANSFORMER CKT 1
FDNS	00NR	3	20WP	G15_072	TO->FROM	MATHWSN7 345.00 - TATONGA7 345.00 345KV CKT 1	1195	1195	0.05616	110.3074	G14-074T 345.00 - OKLAUNION 345KV CKT 1
FDNS	00NR	3	16WP	G15_072	TO->FROM	MATHWSN7 345.00 - TATONGA7 345.00 345KV CKT 1	1195	1195	0.05669	107.9958	G14-074T 345.00 - OKLAUNION 345KV CKT 1
FDNS	00NR	3	20WP	G15_072	TO->FROM	MATHWSN7 345.00 - TATONGA7 345.00 345KV CKT 1	1195	1195	0.0483	102.3449	THISTLE7 345.00 - WOODWARD DISTRICT EHV 345KV CKT 1
FDNS	00NR	3	20WP	G15_072	TO->FROM	MATHWSN7 345.00 - TATONGA7 345.00 345KV CKT 1	1195	1195	0.0483	102.3449	THISTLE7 345.00 - WOODWARD DISTRICT EHV 345KV CKT 1
FDNS	00NR	3	20WP	G15_072	TO->FROM	MATHWSN7 345.00 - TATONGA7 345.00 345KV CKT 1	1195	1195	0.0483	102.3449	THISTLE7 345.00 - WOODWARD DISTRICT EHV 345KV CKT 2
FDNS	00NR	3	20WP	G15_072	TO->FROM	MATHWSN7 345.00 - TATONGA7 345.00 345KV CKT 1	1195	1195	0.0483	102.3449	THISTLE7 345.00 - WOODWARD DISTRICT EHV 345KV CKT 2
FDNS	00NR	3	20WP	G15_072	TO->FROM	MATHWSN7 345.00 - TATONGA7 345.00 345KV CKT 1	1195	1195	0.05616	101.9259	G14-074T 345.00 - TUCO INTERCHANGE 345KV CKT 1
FDNS	00NR	3	20WP	G15_072	TO->FROM	MATHWSN7 345.00 - TATONGA7 345.00 345KV CKT 1	1195	1195	0.05413	101.8258	CHISHOLM6 230.00 - SWEETWATER 230KV CKT 1
FDNS	00NR	3	20WP	G15_072	TO->FROM	MATHWSN7 345.00 - TATONGA7 345.00 345KV CKT 1	1195	1195	0.05427	101.6092	P12:230:AEPW:ELKCITY6:SWEETWT6
FDNS	00NR	3	16WP	G15_072	TO->FROM	MATHWSN7 345.00 - TATONGA7 345.00 345KV CKT 1	1195	1195	0.0486	100.6102	THISTLE7 345.00 - WOODWARD DISTRICT EHV 345KV CKT 1
FDNS	00NR	3	16WP	G15_072	TO->FROM	MATHWSN7 345.00 - TATONGA7 345.00 345KV CKT 1	1195	1195	0.0486	100.6102	THISTLE7 345.00 - WOODWARD DISTRICT EHV 345KV CKT 1
FDNS	00NR	3	16WP	G15_072	TO->FROM	MATHWSN7 345.00 - TATONGA7 345.00 345KV CKT 1	1195	1195	0.0486	100.6102	THISTLE7 345.00 - WOODWARD DISTRICT EHV 345KV CKT 2
FDNS	00NR	3	16WP	G15_072	TO->FROM	MATHWSN7 345.00 - TATONGA7 345.00 345KV CKT 1	1195	1195	0.0486	100.6102	THISTLE7 345.00 - WOODWARD DISTRICT EHV 345KV CKT 2
FDNS	00NR	3	20WP	G15_072	TO->FROM	MATHWSN7 345.00 - TATONGA7 345.00 345KV CKT 1	1195	1195	0.05271	100.489	CIMARRON - MINCO 345KV CKT 1
FDNS	00NR	3	16WP	G15_072	TO->FROM	MATHWSN7 345.00 - TATONGA7 345.00 345KV CKT 1	1195	1195	0.05669	100.0492	G14-074T 345.00 - TUCO INTERCHANGE 345KV CKT 1
FDNS	00NR	3	16WP	G15_072	TO->FROM	MATHWSN7 345.00 - TATONGA7 345.00 345KV CKT 1	1195	1195	0.05467	99.8	CHISHOLM6 230.00 - SWEETWATER 230KV CKT 1
FDNS	00NR	3	16WP	G15_072	TO->FROM	MATHWSN7 345.00 - TATONGA7 345.00 345KV CKT 1	1195	1195	0.05482	99.7	P12:230:AEPW:ELKCITY6:SWEETWT6
FDNS	00NR	3	20WP	G15_072	TO->FROM	MATHWSN7 345.00 - TATONGA7 345.00 345KV CKT 1	1195	1195	0.05413	99.7	P12:230:AEPW-SPS:SWEETWT6:WHEELER 6
FDNS	00NR	3	20WP	G15_072	TO->FROM	MATHWSN7 345.00 - TATONGA7 345.00 345KV CKT 1	1195	1195	0.05413	99.7	STATELINE INTERCHANGE - STLN-DEMARC6 230KV CKT 1
FDNS	00NR	3	20WP	G15_072	TO->FROM	MATHWSN7 345.00 - TATONGA7 345.00 345KV CKT 1	1195	1195	0.05413	99.7	STLN-DEMARC6 - SWEETWATER 230KV CKT 1
FDNS	00NR	3	20WP	G15_072	TO->FROM	MATHWSN7 345.00 - TATONGA7 345.00 345KV CKT 1	1195	1195	0.06228	99.6	G1524G1525 345.00 - THISTLE7 345.00 345KV CKT 1
FDNS	00NR	3	20WP	G15_072	TO->FROM	MATHWSN7 345.00 - TATONGA7 345.00 345KV CKT 1	1195	1195	0.06228	99.6	G1524G1525 345.00 - THISTLE7 345.00 345KV CKT 2
FDNS	08ALL	0	17SP	G15_073	FROM->TO	EMPORIA ENERGY CENTER - SWISSVALE 345KV CKT 1	717	717	0.40407	122.053	G15074_T 345.00 - HOYT 345KV CKT 1
FDNS	08ALL	0	17SP	G15_073	FROM->TO	EMPORIA ENERGY CENTER - SWISSVALE 345KV CKT 1	717	717	0.40407	120.8723	G15074_T 345.00 - JEFFREY ENERGY CENTER 345KV CKT 1
FDNS	08ALL	0	20SP	G15_073	FROM->TO	EMPORIA ENERGY CENTER - SWISSVALE 345KV CKT 1	717	717	0.40426	115.2183	G15074_T 345.00 - HOYT 345KV CKT 1
FDNS	08ALL	0	20SP	G15_073	FROM->TO	EMPORIA ENERGY CENTER - SWISSVALE 345KV CKT 1	717	717	0.40426	114.0553	G15074_T 345.00 - JEFFREY ENERGY CENTER 345KV CKT 1
FDNS	08ALL	0	17SP	G15_073	FROM->TO	EMPORIA ENERGY CENTER - SWISSVALE 345KV CKT 1	717	717	0.37511	110.3611	LACYGNE - WAVERLY7 345.00 345KV CKT 1
FDNS	08ALL	0	17SP	G15_073	FROM->TO	EMPORIA ENERGY CENTER - SWISSVALE 345KV CKT 1	717	717	0.39972	109.6781	HOYT - STRANGER CREEK 345KV CKT 1
FDNS	08ALL	0	25SP	G15_073	FROM->TO	EMPORIA ENERGY CENTER - SWISSVALE 345KV CKT 1	717	717	0.40435	105.8921	G15074_T 345.00 - HOYT 345KV CKT 1
FDNS	08ALL	0	17SP	G15_073	FROM->TO	EMPORIA ENERGY CENTER - SWISSVALE 345KV CKT 1	717	717	0.37511	105.8037	WAVERLY7 345.00 - WOLF CREEK 345KV CKT 1
FDNS	08ALL	0	25SP	G15_073	FROM->TO	EMPORIA ENERGY CENTER - SWISSVALE 345KV CKT 1	717	717	0.4043	105.1969	G15074_T 345.00 - HOYT 345KV CKT 1
FDNS	08ALL	0	25SP	G15_073	FROM->TO	EMPORIA ENERGY CENTER - SWISSVALE 345KV CKT 1	717	717	0.40435	104.7508	G15074_T 345.00 - JEFFREY ENERGY CENTER 345KV CKT 1
FDNS	08ALL	0	20SP	G15_073	FROM->TO	EMPORIA ENERGY CENTER - SWISSVALE 345KV CKT 1	717	717	0.37483	104.2762	LACYGNE - WAVERLY7 345.00 345KV CKT 1
FDNS	08ALL	0	25SP	G15_073	FROM->TO	EMPORIA ENERGY CENTER - SWISSVALE 345KV CKT 1	717	717	0.4043	104.0569	G15074_T 345.00 - JEFFREY ENERGY CENTER 345KV CKT 1
FDNS	08ALL	0	20SP	G15_073	FROM->TO	EMPORIA ENERGY CENTER - SWISSVALE 345KV CKT 1	717	717	0.39985	103.0637	HOYT - STRANGER CREEK 345KV CKT 1
FDNS	08ALL	0	16WP	G15_073	FROM->TO	EMPORIA ENERGY CENTER - SWISSVALE 345KV CKT 1	717	717	0.40722	102.2192	G15074_T 345.00 - HOYT 345KV CKT 1
FDNS	08ALL	0	16WP	G15_073	FROM->TO	EMPORIA ENERGY CENTER - SWISSVALE 345KV CKT 1	717	717	0.40722	101.0824	G15074_T 345.00 - JEFFREY ENERGY CENTER 345KV CKT 1
FDNS	08ALL	0	17SP	G15_073	FROM->TO	EMPORIA ENERGY CENTER - SWISSVALE 345KV CKT 1	717	717	0.39901	100.4914	LANG (LANG TX-1) 345/115/14.4KV TRANSFORMER CKT 1
FDNS	08ALL	0	17SP	G15_073	FROM->TO	EMPORIA ENERGY CENTER - SWISSVALE 345KV CKT 1	717	717	0.39901	100.4914	P13:115-345:WERE:LANG_TX-1::
FDNS	08ALL	0	17SP	G15_073	FROM->TO	EMPORIA ENERGY CENTER - SWISSVALE 345KV CKT 1	717	717	0.39901	100.4831	EMPORIA ENERGY CENTER - LANG 345KV CKT 1
FDNS	08ALL	0	20WP	G15_073	FROM->TO	EMPORIA ENERGY CENTER - SWISSVALE 345KV CKT 1	717	717	0.40741	100.394	G15074_T 345.00 - HOYT 345KV CKT 1
FDNS	08ALL	0	17SP	G15_073	FROM->TO	EMPORIA ENERGY CENTER - SWISSVALE 345KV CKT 1	717	717	0.37617	99.9	AUBURN ROAD - JEFFREY ENERGY CENTER 230KV CKT 1

SOLUTION	GROUP	SCENARIO	SEASON	SOURCE	DIRECTION	MONITORED ELEMENT	RATEA (MVA)	RATEB(MVA)	TDF	TC%LOADING (% MVA)	CONTINGENCY
FDNS	08ALL	0	17SP	G15_073	FROM->TO	EMPORIA ENERGY CENTER - SWISSVALE 345KV CKT 1	717	717	0.53433	99.7	EMPORIA ENERGY CENTER - MORRIS COUNTY 345KV CKT 1
FDNS	08ALL	0	20SP	G15_073	FROM->TO	EMPORIA ENERGY CENTER - SWISSVALE 345KV CKT 1	717	717	0.37483	99.7	WAVERLY7 345.00 - WOLF CREEK 345KV CKT 1
FDNS	08ALL	0	20WP	G15_073	FROM->TO	EMPORIA ENERGY CENTER - SWISSVALE 345KV CKT 1	717	717	0.40735	99.7	G15074_T 345.00 - HOYT 345KV CKT 1
FDNS	08ALL	0	17SP	G15_073	FROM->TO	SWISSVALE - WEST GARDNER 345KV CKT 1	717	717	0.34375	124.2998	HOYT - STRANGER CREEK 345KV CKT 1
FDNS	08ALL	0	17SP	G15_073	FROM->TO	SWISSVALE - WEST GARDNER 345KV CKT 1	717	717	0.32899	121.6324	G15074_T 345.00 - HOYT 345KV CKT 1
FDNS	08ALL	0	17SP	G15_073	FROM->TO	SWISSVALE - WEST GARDNER 345KV CKT 1	717	717	0.32899	120.141	G15074_T 345.00 - JEFFREY ENERGY CENTER 345KV CKT 1
FDNS	08ALL	0	17SP	G15_073	FROM->TO	SWISSVALE - WEST GARDNER 345KV CKT 1	717	717	0.29539	114.3288	LACYGNE - WAVERLY7 345.00 345KV CKT 1
FDNS	08ALL	0	20SP	G15_073	FROM->TO	SWISSVALE - WEST GARDNER 345KV CKT 1	717	717	0.34373	112.874	HOYT - STRANGER CREEK 345KV CKT 1
FDNS	08ALL	0	17G	G15_073	FROM->TO	SWISSVALE - WEST GARDNER 345KV CKT 1	717	717	0.34655	111.7168	HOYT - STRANGER CREEK 345KV CKT 1
FDNS	08ALL	0	20SP	G15_073	FROM->TO	SWISSVALE - WEST GARDNER 345KV CKT 1	717	717	0.32859	111.2415	G15074_T 345.00 - HOYT 345KV CKT 1
FDNS	00NR	0	16WP	G15_073	FROM->TO	SWISSVALE - WEST GARDNER 345KV CKT 1	717	717	0.07911	110.6347	HOYT - STRANGER CREEK 345KV CKT 1
FDNS	08ALL	0	20SP	G15_073	FROM->TO	SWISSVALE - WEST GARDNER 345KV CKT 1	717	717	0.32859	109.776	G15074_T 345.00 - JEFFREY ENERGY CENTER 345KV CKT 1
FDNS	00NR	0	17SP	G15_073	FROM->TO	SWISSVALE - WEST GARDNER 345KV CKT 1	717	717	0.11448	108.8474	HOYT - STRANGER CREEK 345KV CKT 1
FDNS	00NR	0	16WP	G15_073	FROM->TO	SWISSVALE - WEST GARDNER 345KV CKT 1	717	717	0.0816	108.202	G15074_T 345.00 - HOYT 345KV CKT 1
FDNS	08NR	0	17G	G15_073	FROM->TO	SWISSVALE - WEST GARDNER 345KV CKT 1	717	717	0.08662	108.0997	HOYT - STRANGER CREEK 345KV CKT 1
FDNS	08NR	0	20L	G15_073	FROM->TO	SWISSVALE - WEST GARDNER 345KV CKT 1	717	717	0.12873	108.0514	LACYGNE - WAVERLY7 345.00 345KV CKT 1
FDNS	08ALL	0	17G	G15_073	FROM->TO	SWISSVALE - WEST GARDNER 345KV CKT 1	717	717	0.33152	107.9669	G15074_T 345.00 - HOYT 345KV CKT 1
FDNS	08NR	0	20L	G15_073	FROM->TO	SWISSVALE - WEST GARDNER 345KV CKT 1	717	717	0.07152	107.6802	HOYT - STRANGER CREEK 345KV CKT 1
FDNS	08ALL	0	17G	G15_073	FROM->TO	SWISSVALE - WEST GARDNER 345KV CKT 1	717	717	0.29845	107.5475	LACYGNE - WAVERLY7 345.00 345KV CKT 1
FDNS	08ALL	0	17SP	G15_073	FROM->TO	SWISSVALE - WEST GARDNER 345KV CKT 1	717	717	0.29539	107.4033	WAVERLY7 345.00 - WOLF CREEK 345KV CKT 1
FDNS	00NR	0	17SP	G15_073	FROM->TO	SWISSVALE - WEST GARDNER 345KV CKT 1	717	717	0.11586	107.3217	G15074_T 345.00 - HOYT 345KV CKT 1
FDNS	08ALL	0	16WP	G15_073	FROM->TO	SWISSVALE - WEST GARDNER 345KV CKT 1	717	717	0.35414	107.0428	HOYT - STRANGER CREEK 345KV CKT 1
FDNS	08ALL	0	17G	G15_073	FROM->TO	SWISSVALE - WEST GARDNER 345KV CKT 1	717	717	0.33152	106.5338	G15074_T 345.00 - JEFFREY ENERGY CENTER 345KV CKT 1
FDNS	08ALL	0	16WP	G15_073	FROM->TO	SWISSVALE - WEST GARDNER 345KV CKT 1	717	717	0.30416	105.6128	LACYGNE - WAVERLY7 345.00 345KV CKT 1
FDNS	00NR	0	16WP	G15_073	FROM->TO	SWISSVALE - WEST GARDNER 345KV CKT 1	717	717	0.13416	104.9562	LACYGNE - WAVERLY7 345.00 345KV CKT 1
FDNS	08NR	0	17G	G15_073	FROM->TO	SWISSVALE - WEST GARDNER 345KV CKT 1	717	717	0.09253	104.5957	G15074_T 345.00 - HOYT 345KV CKT 1
FDNS	08ALL	0	16WP	G15_073	FROM->TO	SWISSVALE - WEST GARDNER 345KV CKT 1	717	717	0.33849	104.5462	G15074_T 345.00 - HOYT 345KV CKT 1
FDNS	08ALL	0	20L	G15_073	FROM->TO	SWISSVALE - WEST GARDNER 345KV CKT 1	717	717	0.29369	104.2293	LACYGNE - WAVERLY7 345.00 345KV CKT 1
FDNS	08ALL	0	20SP	G15_073	FROM->TO	SWISSVALE - WEST GARDNER 345KV CKT 1	717	717	0.29425	104.2274	LACYGNE - WAVERLY7 345.00 345KV CKT 1
FDNS	08ALL	0	20WP	G15_073	FROM->TO	SWISSVALE - WEST GARDNER 345KV CKT 1	717	717	0.34871	104.2133	HOYT - STRANGER CREEK 345KV CKT 1
FDNS	08ALL	0	20WP	G15_073	FROM->TO	SWISSVALE - WEST GARDNER 345KV CKT 1	717	717	0.29831	103.8876	LACYGNE - WAVERLY7 345.00 345KV CKT 1
FDNS	08ALL	0	20WP	G15_073	FROM->TO	SWISSVALE - WEST GARDNER 345KV CKT 1	717	717	0.34861	103.691	HOYT - STRANGER CREEK 345KV CKT 1
FDNS	00NR	0	16WP	G15_073	FROM->TO	SWISSVALE - WEST GARDNER 345KV CKT 1	717	717	0.13416	103.4943	WAVERLY7 345.00 - WOLF CREEK 345KV CKT 1
FDNS	08ALL	0	16WP	G15_073	FROM->TO	SWISSVALE - WEST GARDNER 345KV CKT 1	717	717	0.33849	103.2464	G15074_T 345.00 - JEFFREY ENERGY CENTER 345KV CKT 1
FDNS	08ALL	0	20WP	G15_073	FROM->TO	SWISSVALE - WEST GARDNER 345KV CKT 1	717	717	0.29825	103.2089	LACYGNE - WAVERLY7 345.00 345KV CKT 1
FDNS	08NR	0	20L	G15_073	FROM->TO	SWISSVALE - WEST GARDNER 345KV CKT 1	717	717	0.07491	103.1918	G15074_T 345.00 - HOYT 345KV CKT 1
FDNS	08NR	0	17G	G15_073	FROM->TO	SWISSVALE - WEST GARDNER 345KV CKT 1	717	717	0.09253	103.1433	G15074_T 345.00 - JEFFREY ENERGY CENTER 345KV CKT 1
FDNS	08NR	0	17G	G15_073	FROM->TO	SWISSVALE - WEST GARDNER 345KV CKT 1	717	717	0.1332	102.6438	LACYGNE - WAVERLY7 345.00 345KV CKT 1
FDNS	08NR	0	20L	G15_073	FROM->TO	SWISSVALE - WEST GARDNER 345KV CKT 1	717	717	0.12873	102.5082	WAVERLY7 345.00 - WOLF CREEK 345KV CKT 1
FDNS	08ALL	0	20WP	G15_073	FROM->TO	SWISSVALE - WEST GARDNER 345KV CKT 1	717	717	0.33299	101.9452	G15074_T 345.00 - HOYT 345KV CKT 1
FDNS	08NR	0	20L	G15_073	FROM->TO	SWISSVALE - WEST GARDNER 345KV CKT 1	717	717	0.07491	101.7664	G15074_T 345.00 - JEFFREY ENERGY CENTER 345KV CKT 1
FDNS	08ALL	0	20WP	G15_073	FROM->TO	SWISSVALE - WEST GARDNER 345KV CKT 1	717	717	0.33289	101.498	G15074_T 345.00 - HOYT 345KV CKT 1
FDNS	00NR	0	16WP	G15_073	FROM->TO	SWISSVALE - WEST GARDNER 345KV CKT 1	717	717	0.0816	101.251	G15074_T 345.00 - JEFFREY ENERGY CENTER 345KV CKT 1
FDNS	00NR	0	17SP	G15_073	FROM->TO	SWISSVALE - WEST GARDNER 345KV CKT 1	717	717	0.11586	100.7996	G15074_T 345.00 - JEFFREY ENERGY CENTER 345KV CKT 1
FDNS	08ALL	0	17G	G15_073	FROM->TO	SWISSVALE - WEST GARDNER 345KV CKT 1	717	717	0.29845	100.6242	WAVERLY7 345.00 - WOLF CREEK 345KV CKT 1
FDNS	08ALL	0	20WP	G15_073	FROM->TO	SWISSVALE - WEST GARDNER 345KV CKT 1	717	717	0.33299	100.5646	G15074_T 345.00 - JEFFREY ENERGY CENTER 345KV CKT 1
FDNS	08ALL	0	20WP	G15_073	FROM->TO	SWISSVALE - WEST GARDNER 345KV CKT 1	717	717	0.33289	100.1173	G15074_T 345.00 - JEFFREY ENERGY CENTER 345KV CKT 1
FDNS	00NR	0	17SP	G15_074	FROM->TO	SWISSVALE - WEST GARDNER 345KV CKT 1	717	717	0.04905	105.8268	HOYT - STRANGER CREEK 345KV CKT 1
FDNS	00NR	0	17SP	G15_074	FROM->TO	SWISSVALE - WEST GARDNER 345KV CKT 1	717	717	0.04988	104.7282	G15074_T 345.00 - HOYT 345KV CKT 1
FDNSLock-Blown up	06ALL	0	16WP	G15_075		Non-Converged Contingency	552	608	0.2566	-	TUCO INTERCHANGE - TUCO_2 230.00 230KV CKT 1
FDNSLock-Blown up	06ALL	0	16WP	G15_075		Non-Converged Contingency	1022	1124	0.22377	-	G14-074T 345.00 - OKLAUNION 345KV CKT 1
FDNSLock-Blown up	06ALL	0	16WP	G15_075		Non-Converged Contingency	1022	1124	0.22377	-	G14-074T 345.00 - TUCO INTERCHANGE 345KV CKT 1
FDNSLock-Blown up	06ALL	0	16WP	G15_075		Non-Converged Contingency	1022	1124	0.22377	-	GEN509403 1-PIRKEY GENERATION
FDNSLock-Blown up	06ALL	0	16WP	G15_075		Non-Converged Contingency	1022	1124	0.22377	-	GEN509404 1-WELSH #1
FDNSLock-Blown up	06ALL	0	16WP	G15_075		Non-Converged Contingency	1022	1124	0.22377	-	GEN509406 1-WELSH #3
FDNSLock-Blown up	06ALL	0	16WP	G15_075		Non-Converged Contingency	1022	1124	0.22377	-	GEN509416 1-TURK GENERATION
FDNSLock-Blown up	06ALL	0	16WP	G15_075		Non-Converged Contingency	1022	1124	0.22377	-	GEN511848 1-SOUTHWESTERN STATION #3
FDNSLock-Blown up	06ALL	0	16WP	G15_075		Non-Converged Contingency	560	560	0.22228	-	TUCO INTERCHANGE (GE M1022338) 345/230/13.2KV TRANSFORMER CKT 1
FDNSLock-Blown up	06ALL	0	16WP	G15_075		Non-Converged Contingency	616	700	0.19371	-	TUCO INTERCHANGE (SIEM 8743066) 345/230/13.2KV TRANSFORMER CKT 2
FDNSLock-Blown up	06ALL	0	16WP	G15_075		Non-Converged Contingency	1792	1972	0.19221	-	TUCO INTERCHANGE - TUCO_2 345.00 345KV CKT 1
FDNSLock-Blown up	06ALL	0	16WP	G15_075		Non-Converged Contingency	956	956	0.18941	-	CIMARRON - MINCO 345KV CKT 1
FDNSLock-Blown up	06ALL	0	16WP	G15_075		Non-Converged Contingency	1195	1195	0.18941	-	GRACEMONT - MINCO 345KV CKT 1
FDNSLock-Blown up	06ALL	0	16WP	G15_075		Non-Converged Contingency	427.05	427.05	0.18621	-	JONES STATION - TUCO INTERCHANGE 230KV CKT 1
FDNSLock-Blown up	06ALL	0	16WP	G15_075		Non-Converged Contingency	1792	1792	0.18469	-	CHISHOLM7 345.00 - WOODWARD DISTRICT EHV 345KV CKT 1
FDNSLock-Blown up	06ALL	0	16WP	G15_075		Non-Converged Contingency	1792	1792	0.18181	-	BORDER 7345.00 - CHISHOLM7 345.00 345KV CKT 1
FDNSLock-Blown up	06ALL	0	16WP	G15_075		Non-Converged Contingency	1792	1792	0.18181	-	BORDER 7345.00 - CHISHOLM7 345.00 345KV CKT 2
FDNSLock-Blown up	06ALL	0	16WP	G15_075		Non-Converged Contingency	1792	1972	0.18181	-	BORDER 7345.00 - TUCO_2 345.00 345KV CKT 1
FDNSLock-Blown up	06ALL	0	16WP	G15_075		Non-Converged Contingency	1420	1775	0.18181	-	BORDER 7345.00 - TUCO_2 345.00 345KV CKT 2
FDNSLock-Blown up	06ALL	0	16WP	G15_075		Non-Converged Contingency	560	560	0.1714	-	TUCO_2 345.00 (TUCO_2 XFMR) 345/230/13.2KV TRANSFORMER CKT 1
FDNSLock-Blown up	06ALL	0	16WP	G15_075		Non-Converged Contingency	1330	1940	0.16411	-	CHISHOLM7 345.00 - GRACEMONT 345KV CKT 1
FDNSLock-Blown up	06ALL	0	16WP	G15_075		Non-Converged Contingency	987.16	1082.8	0.14046	-	G14_038T 345.00 - Hitchland Interchange 345KV CKT 1
FDNSLock-Blown up	06ALL	0	16WP	G15_075		Non-Converged Contingency	987.16	1082.8	0.14046	-	G14_038T 345.00 - POTTER COUNTY INTERCHANGE 345KV CKT 1
FDNSLock-Blown up	06ALL	0	16WP	G15_075		Non-Converged Contingency	560	560	0.14046	-	POTTER COUNTY INTERCHANGE (WAUK 90343-A) 345/230/13.2KV TRANSFORMER CKT 1
FDNSLock-Blown up	06ALL	0	16WP	G15_075		Non-Converged Contingency	717	789	0.13504	-	G14-057T 345.00 - LAWTON EASTSIDE 345KV CKT 1
FDNSLock-Blown up	06ALL	0	16WP	G15_075		Non-Converged Contingency	717	789	0.13504	-	G14-057T 345.00 - SUNNYSIDE 345KV CKT 1
FDNSLock-Blown up	06ALL	0	16WP	G15_075		Non-Converged Contingency	987.16	1082.8	0.12656	-	FINNEY SWITCHING STATION - Hitchland Interchange 345KV CKT 1
FDNSLock-Blown up	06ALL	0	16WP	G15_075		Non-Converged Contingency	956.09	1051.7	0.12656	-	FINNEY SWITCHING STATION - HOLCOMB 345KV CKT 1
FDNSLock-Blown up	06ALL	0	16WP	G15_075		Non-Converged Contingency	557	557	0.10236	-	BUSHLAND INTERCHANGE - DEAF SMITH COUNTY INTERCHANGE 230KV CKT 1
FDNSLock-Blown up	06ALL	0	16WP	G15_075		Non-Converged Contingency	557	557	0.10017	-	NEWHART 230 - POTTER COUNTY INTERCHANGE 230KV CKT 1

SOLUTION	GROUP	SCENARIO	SEASON	SOURCE	DIRECTION	MONITORED ELEMENT	RATEA (MVA)	RATEB(MVA)	TDF	TC%LOADING (% MVA)	CONTINGENCY
FDNSLock-Blown up	06ALL	0	16WP	G15_075		Non-Converged Contingency	329.05	360.92	0.09653	-	AMARILLO SOUTH INTERCHANGE - G15031_T 230.00 230KV CKT 1
FDNSLock-Blown up	06ALL	0	16WP	G15_075		Non-Converged Contingency	1561	1793	0.09339	-	THISTLE7 345.00 - WOODWARD DISTRICT EHV 345KV CKT 1
FDNSLock-Blown up	06ALL	0	16WP	G15_075		Non-Converged Contingency	1561	1793	0.09339	-	THISTLE7 345.00 - WOODWARD DISTRICT EHV 345KV CKT 2
FDNSLock-Blown up	06ALL	0	16WP	G15_075		Non-Converged Contingency	1420	1775	0.09305	-	G11_051T 345.00 - TATONGA7 345.00 345KV CKT 1
FDNSLock-Blown up	06ALL	0	16WP	G15_075		Non-Converged Contingency	1420	1775	0.09305	-	G11_051T 345.00 - WOODWARD DISTRICT EHV 345KV CKT 1
FDNSLock-Blown up	06ALL	0	16WP	G15_075		Non-Converged Contingency	1195	1195	0.09305	-	MATHWSN7 345.00 - TATONGA7 345.00 345KV CKT 1
FDNSLock-Blown up	06ALL	0	16WP	G15_075		Non-Converged Contingency	329.05	360.92	0.09287	-	BUSHLAND INTERCHANGE - POTTER COUNTY INTERCHANGE 230KV CKT 1
FDNSLock-Blown up	06ALL	0	16WP	G15_075		Non-Converged Contingency	329.05	360.92	0.08799	-	DEAF SMITH COUNTY INTERCHANGE - G15039_T 230.00 230KV CKT 1
FDNSLock-Blown up	06ALL	0	16WP	G15_075		Non-Converged Contingency	329.05	360.92	0.08799	-	G15039_T 230.00 - PLANT X STATION 230KV CKT 1
FDNSLock-Blown up	06ALL	0	16WP	G15_075		Non-Converged Contingency	1532	1793	0.07256	-	G1524G1525 345.00 - THISTLE7 345.00 345KV CKT 1
FDNSLock-Blown up	06ALL	0	16WP	G15_075		Non-Converged Contingency	1532	1793	0.07256	-	G1524G1525 345.00 - THISTLE7 345.00 345KV CKT 2
FDNSLock-Blown up	06ALL	0	16WP	G15_075		Non-Converged Contingency	1532	1793	0.07256	-	GEN532751 1-WOLF CREEK GENERATING STATION UNIT 1
FDNSLock-Blown up	06ALL	0	16WP	G15_075		Non-Converged Contingency	556.53	611.5	0.06797	-	NEWHART 230 - PLANT X STATION 230KV CKT 1
FDNSLock-Blown up	06ALL	0	16WP	G15_075		Non-Converged Contingency	439	439	0.06424	-	CHISHOLM6 230.00 - ELK CITY 230KV 230KV CKT 1
FDNSLock-Blown up	06ALL	0	16WP	G15_075		Non-Converged Contingency	450	450	0.06424	-	ELK CITY 230KV (ELKCTY-6) 230/138/13.8KV TRANSFORMER CKT 1
FDNSLock-Blown up	06ALL	0	16WP	G15_075		Non-Converged Contingency	717.1	717.1	0.06314	-	HOLCOMB - SETAB 345KV CKT 1
FDNSLock-Blown up	06ALL	0	16WP	G15_075		Non-Converged Contingency	717	717	0.06313	-	CIMARRON - DRAPER LAKE 345KV CKT 1
FDNSLock-Blown up	06ALL	0	16WP	G15_075		Non-Converged Contingency	785	785	0.06269	-	MINGO - RED WILLOW 345KV CKT 1
FDNSLock-Blown up	06ALL	0	16WP	G15_075		Non-Converged Contingency	1793	1793	0.06224	-	BVRCNTY7 345.00 - G11-14T 345.00 345KV CKT 1
FDNSLock-Blown up	06ALL	0	16WP	G15_075		Non-Converged Contingency	1716	1793	0.06224	-	BVRCNTY7 345.00 - G11-14T 345.00 345KV CKT 2
FDNSLock-Blown up	06ALL	0	16WP	G15_075		Non-Converged Contingency	1792	1792	0.06224	-	BVRCNTY7 345.00 - OPTIMA 345.00 345KV CKT 1
FDNSLock-Blown up	06ALL	0	16WP	G15_075		Non-Converged Contingency	1792	1792	0.06224	-	BVRCNTY7 345.00 - OPTIMA 345.00 345KV CKT 2
FDNSLock-Blown up	06ALL	0	16WP	G15_075		Non-Converged Contingency	1793	1793	0.06224	-	G11-14T 345.00 - WOODWARD DISTRICT EHV 345KV CKT 1
FDNSLock-Blown up	06ALL	0	16WP	G15_075		Non-Converged Contingency	1716	1793	0.06224	-	G11-14T 345.00 - WOODWARD DISTRICT EHV 345KV CKT 2
FDNSLock-Blown up	06ALL	0	16WP	G15_075		Non-Converged Contingency	762.5	762.5	0.06224	-	MINGO - SETAB 345KV CKT 1
FDNSLock-Blown up	06ALL	0	16WP	G15_075		Non-Converged Contingency	556.92	556.92	0.05983	-	HITCHLAND INTERCHANGE - MOORE COUNTY INTERCHANGE 230KV CKT 1
FDNSLock-Blown up	06ALL	0	16WP	G15_075		Non-Converged Contingency	1195	1195	0.05951	-	GEN520947 1-HUGO1
FDNSLock-Blown up	06ALL	0	16WP	G15_075		Non-Converged Contingency	1793	1793	0.05476	-	G13-010T 345.00 - POST ROCK 345KV CKT 1
FDNSLock-Blown up	06ALL	0	16WP	G15_075		Non-Converged Contingency	1793	1793	0.05476	-	G13-010T 345.00 - SPEARVILLE 345KV CKT 1
FDNSLock-Blown up	06ALL	0	16WP	G15_075		Non-Converged Contingency	717	789	0.0525	-	GRACEMONT - LAWTON EASTSIDE 345KV CKT 1
FDNSLock-Blown up	06ALL	0	16WP	G15_075		Non-Converged Contingency	329.05	360.92	0.05044	-	MOORE COUNTY INTERCHANGE - POTTER COUNTY INTERCHANGE 230KV CKT 1
FDNSLock-Blown up	06ALL	0	16WP	G15_075		Non-Converged Contingency	439	439	0.04943	-	CHISHOLM6 230.00 - SWEETWATER 230KV CKT 1
FDNSLock-Blown up	06ALL	0	16WP	G15_075		Non-Converged Contingency	435.02	457.73	0.04943	-	STATELINE INTERCHANGE - STLN-DEMARC6 230KV CKT 1
FDNSLock-Blown up	06ALL	0	16WP	G15_075		Non-Converged Contingency	439	439	0.04943	-	STLN-DEMARC6 - SWEETWATER 230KV CKT 1
FDNSLock-Blown up	06ALL	0	16WP	G15_075		Non-Converged Contingency	726.6	726.6	0.04852	-	BUCKNER7 345.00 - HOLCOMB 345KV CKT 1
FDNSLock-Blown up	06ALL	0	16WP	G15_075		Non-Converged Contingency	1413	1517	0.04852	-	BUCKNER7 345.00 - SPEARVILLE 345KV CKT 1
FDNSLock-Blown up	06ALL	0	16WP	G15_075		Non-Converged Contingency	557	557	0.04296	-	GRAPEVINE INTERCHANGE - NICHOLS STATION 230KV CKT 1
FDNSLock-Blown up	06ALL	0	16WP	G15_075		Non-Converged Contingency	557	557	0.04214	-	GRAPEVINE INTERCHANGE - STATELINE INTERCHANGE 230KV CKT 1
FDNSLock-Blown up	06ALL	0	16WP	G15_075		Non-Converged Contingency	277	304	0.03124	-	HAPPY INTERCHANGE - PALO DURO SUB 115KV CKT 1
FDNSLock-Blown up	06ALL	0	16WP	G15_075		Non-Converged Contingency	276	304	0.03124	-	HAPPY INTERCHANGE - TULIA TAP 115KV CKT 1
FDNSLock-Blown up	06ALL	0	16WP	G15_075		Non-Converged Contingency	278	278	0.03124	-	KRESS INTERCHANGE - TULIA TAP 115KV CKT 1
FDNSLock-Blown up	06ALL	0	16WP	G15_075		Non-Converged Contingency	278	278	0.03124	-	PALO DURO SUB - RANDALL COUNTY INTERCHANGE 115KV CKT 1
FDNSLock-Blown up	06NR	0	17G	G15_075		Non-Converged Contingency	318.7	350.57	0.08598	-	AMARILLO SOUTH INTERCHANGE - G15031_T 230.00 230KV CKT 1
FDNSLock-Blown up	06NR	0	17G	G15_075		Non-Converged Contingency	1022	1124	0.06894	-	G14-074T 345.00 - OKLAUNION 345KV CKT 1
FDNSLock-Blown up	06NR	0	17G	G15_075		Non-Converged Contingency	1022	1124	0.06894	-	G14-074T 345.00 - TUCO INTERCHANGE 345KV CKT 1
FDNSLock-Blown up	06NR	0	17G	G15_075		Non-Converged Contingency	1792	1972	0.06609	-	BORDER 7345.00 - TUCO_2 345.00 345KV CKT 1
FDNSLock-Blown up	06NR	0	17G	G15_075		Non-Converged Contingency	1792	1792	0.06609	-	BORDER 7345.00 - WOODWARD DISTRICT EHV 345KV CKT 1
FDNSLock-Blown up	06NR	0	17G	G15_075		Non-Converged Contingency	478	502	0.0604	-	NEWHART 230 - POTTER COUNTY INTERCHANGE 230KV CKT 1
FDNSLock-Blown up	06NR	0	17G	G15_075		Non-Converged Contingency	478	502	0.04142	-	BUSHLAND INTERCHANGE - DEAF SMITH COUNTY INTERCHANGE 230KV CKT 1
FDNSLock-Blown up	06NR	0	17G	G15_075		Non-Converged Contingency	318.7	350.57	0.03385	-	BUSHLAND INTERCHANGE - POTTER COUNTY INTERCHANGE 230KV CKT 1
FDNSLock-Blown up	06NR	0	17G	G15_075		Non-Converged Contingency	318.7	350.57	0.03275	-	DEAF SMITH COUNTY INTERCHANGE - G15039_T 230.00 230KV CKT 1
FDNSLock-Blown up	06NR	0	17G	G15_075		Non-Converged Contingency	318.7	350.57	0.03275	-	G15039_T 230.00 - PLANT X STATION 230KV CKT 1
FDNSLock-Blown up	06ALL	0	17SP	G15_075		Non-Converged Contingency	956	1042	0.22109	-	G14-074T 345.00 - OKLAUNION 345KV CKT 1
FDNSLock-Blown up	06ALL	0	17SP	G15_075		Non-Converged Contingency	956	1042	0.22109	-	G14-074T 345.00 - TUCO INTERCHANGE 345KV CKT 1
FDNSLock-Blown up	06ALL	0	17SP	G15_075		Non-Converged Contingency	1792	1972	0.18015	-	BORDER 7345.00 - TUCO_2 345.00 345KV CKT 1
FDNSLock-Blown up	06ALL	0	17SP	G15_075		Non-Converged Contingency	1420	1775	0.18015	-	BORDER 7345.00 - TUCO_2 345.00 345KV CKT 2
FDNSLock-Blown up	06ALL	0	17SP	G15_075		Non-Converged Contingency	956.09	1051.7	0.14103	-	G14_038T 345.00 - Hitchland Interchange 345KV CKT 1
FDNSLock-Blown up	06ALL	0	17SP	G15_075		Non-Converged Contingency	956.09	1051.7	0.14103	-	G14_038T 345.00 - POTTER COUNTY INTERCHANGE 345KV CKT 1
FDNSLock-Blown up	06ALL	0	17SP	G15_075		Non-Converged Contingency	560	560	0.14103	-	POTTER COUNTY INTERCHANGE (WAUK 90343-A) 345/230/13.2KV TRANSFORMER CKT 1
FDNSLock-Blown up	06ALL	0	20L	G15_075		Non-Converged Contingency	0	0	0.44588	-	P12:115:SPS:V15.1.TUCO.INDANA
FDNSLock-Blown up	06ALL	0	20L	G15_075		Non-Converged Contingency	478	502	0.25581	-	CARLISLE INTERCHANGE - TUCO INTERCHANGE 230KV CKT 1
FDNSLock-Blown up	06ALL	0	20L	G15_075		Non-Converged Contingency	478	502	0.25581	-	CARLISLE INTERCHANGE - TUCO INTERCHANGE 230KV CKT 1
FDNSLock-Blown up	06ALL	0	20L	G15_075		Non-Converged Contingency	497	547	0.23267	-	TUCO INTERCHANGE - TUCO_2 230.00 230KV CKT 1
FDNSLock-Blown up	06ALL	0	20L	G15_075		Non-Converged Contingency	0	0	0.19328	-	P12:345:SPS:J07.1.FINN.HITCH
FDNSLock-Blown up	06ALL	0	20L	G15_075		Non-Converged Contingency	1022	1124	0.18769	-	G14-074T 345.00 - OKLAUNION 345KV CKT 1
FDNSLock-Blown up	06ALL	0	20L	G15_075		Non-Converged Contingency	1022	1124	0.18769	-	G14-074T 345.00 - TUCO INTERCHANGE 345KV CKT 1
FDNSLock-Blown up	06ALL	0	20L	G15_075		Non-Converged Contingency	1022	1124	0.18769	-	GEN506754 1-LEBROCK STEAM 1
FDNSLock-Blown up	06ALL	0	20L	G15_075		Non-Converged Contingency	1022	1124	0.18769	-	GEN509394 1-FLINT CREEK
FDNSLock-Blown up	06ALL	0	20L	G15_075		Non-Converged Contingency	1022	1124	0.18769	-	GEN509403 1-PIRKEY GENERATION
FDNSLock-Blown up	06ALL	0	20L	G15_075		Non-Converged Contingency	1022	1124	0.18769	-	GEN509404 1-WELSH #1
FDNSLock-Blown up	06ALL	0	20L	G15_075		Non-Converged Contingency	1022	1124	0.18769	-	GEN509406 1-WELSH #3
FDNSLock-Blown up	06ALL	0	20L	G15_075		Non-Converged Contingency	1022	1124	0.18769	-	GEN509408 1-WILKES #2
FDNSLock-Blown up	06ALL	0	20L	G15_075		Non-Converged Contingency	1022	1124	0.18769	-	GEN509416 1-TURK GENERATION
FDNSLock-Blown up	06ALL	0	20L	G15_075		Non-Converged Contingency	1022	1124	0.18769	-	GEN511840 1-NORTHEASTERN STATION #3
FDNSLock-Blown up	06ALL	0	20L	G15_075		Non-Converged Contingency	1022	1124	0.18769	-	GEN511960 1-ROARK1 0.7000
FDNSLock-Blown up	06ALL	0	20L	G15_075		Non-Converged Contingency	1022	1124	0.18769	-	GEN562590 1-G14_057_3 0.6900
FDNSLock-Blown up	06ALL	0	20L	G15_075		Non-Converged Contingency	1022	1124	0.18769	-	OKLAUNION 345KV SWITCHED SHUNT
FDNSLock-Blown up	06ALL	0	20L	G15_075		Non-Converged Contingency	560	560	0.18283	-	TUCO INTERCHANGE (GE M1022338) 345/230/13.2KV TRANSFORMER CKT 1
FDNSLock-Blown up	06ALL	0	20L	G15_075		Non-Converged Contingency	560	560	0.18283	-	TUCO INTERCHANGE (GE M1022338) 345/230/13.2KV TRANSFORMER CKT 1

SOLUTION	GROUP	SCENARIO	SEASON	SOURCE	DIRECTION	MONITORED ELEMENT	RATEA (MVA)	RATEB(MVA)	TDF	TC%LOADING (% MVA)	CONTINGENCY
FDNSLock-Blown up	06ALL	0	20L	G15_075		Non-Converged Contingency	1792	1972	0.1768	-	TUCO INTERCHANGE - TUCO_2 345.00 345KV CKT 1
FDNSLock-Blown up	06ALL	0	20L	G15_075		Non-Converged Contingency	343.79	343.79	0.17407	-	JONES STATION - TUCO INTERCHANGE 230KV CKT 1
FDNSLock-Blown up	06ALL	0	20L	G15_075		Non-Converged Contingency	343.79	343.79	0.17407	-	JONES STATION - TUCO INTERCHANGE 230KV CKT 1
FDNSLock-Blown up	06ALL	0	20L	G15_075		Non-Converged Contingency	956	956	0.16631	-	CIMARRON - MINCO 345KV CKT 1
FDNSLock-Blown up	06ALL	0	20L	G15_075		Non-Converged Contingency	1195	1195	0.16631	-	GRACEMONT - MINCO 345KV CKT 1
FDNSLock-Blown up	06ALL	0	20L	G15_075		Non-Converged Contingency	1792	1792	0.1612	-	CHISHOLM7 345.00 - WOODWARD DISTRICT EHV 345KV CKT 1
FDNSLock-Blown up	06ALL	0	20L	G15_075		Non-Converged Contingency	560	644	0.15933	-	TUCO INTERCHANGE (SIEM 8743066) 345/230/13.2KV TRANSFORMER CKT 2
FDNSLock-Blown up	06ALL	0	20L	G15_075		Non-Converged Contingency	560	644	0.15933	-	TUCO INTERCHANGE (SIEM 8743066) 345/230/13.2KV TRANSFORMER CKT 2
FDNSLock-Blown up	06ALL	0	20L	G15_075		Non-Converged Contingency	1792	1792	0.15682	-	BORDER 7345.00 - CHISHOLM7 345.00 345KV CKT 1
FDNSLock-Blown up	06ALL	0	20L	G15_075		Non-Converged Contingency	1792	1792	0.15682	-	BORDER 7345.00 - CHISHOLM7 345.00 345KV CKT 2
FDNSLock-Blown up	06ALL	0	20L	G15_075		Non-Converged Contingency	1792	1972	0.15682	-	BORDER 7345.00 - TUCO_2 345.00 345KV CKT 1
FDNSLock-Blown up	06ALL	0	20L	G15_075		Non-Converged Contingency	1420	1775	0.15682	-	BORDER 7345.00 - TUCO_2 345.00 345KV CKT 2
FDNSLock-Blown up	06ALL	0	20L	G15_075		Non-Converged Contingency	1792	1972	0.15682	-	BORDER 7345.00 345KV SWITCHED SHUNT
FDNSLock-Blown up	06ALL	0	20L	G15_075		Non-Converged Contingency	560	560	0.13684	-	TUCO_2 345.00 (TUCO_2 XFMR) 345/230/13.2KV TRANSFORMER CKT 1
FDNSLock-Blown up	06ALL	0	20L	G15_075		Non-Converged Contingency	1584	2098	0.13062	-	CHISHOLM7 345.00 - GRACEMONT 345KV CKT 1
FDNSLock-Blown up	06ALL	0	20L	G15_075		Non-Converged Contingency	1584	2098	0.13062	-	GEN514805 1-SOONER UNIT 1
FDNSLock-Blown up	06ALL	0	20L	G15_075		Non-Converged Contingency	1584	2098	0.13062	-	GEN514806 1-SOONER UNIT 2
FDNSLock-Blown up	06ALL	0	20L	G15_075		Non-Converged Contingency	1584	2098	0.13062	-	GEN515040 1-SEMINOLE 1G
FDNSLock-Blown up	06ALL	0	20L	G15_075		Non-Converged Contingency	1584	2098	0.13062	-	GEN515223 1-MUSKOGEE 4G
FDNSLock-Blown up	06ALL	0	20L	G15_075		Non-Converged Contingency	717	789	0.10639	-	G14-057T 345.00 - LAWTON EASTSIDE 345KV CKT 1
FDNSLock-Blown up	06ALL	0	20L	G15_075		Non-Converged Contingency	717	789	0.10639	-	G14-057T 345.00 - SUNNYSIDE 345KV CKT 1
FDNSLock-Blown up	06ALL	0	20L	G15_075		Non-Converged Contingency	956.09	1051.7	0.10321	-	Hitchland Interchange - WALKTAP7 345.00 345KV CKT 1
FDNSLock-Blown up	06ALL	0	20L	G15_075		Non-Converged Contingency	956.09	1051.7	0.10321	-	Hitchland Interchange - WALKTAP7 345.00 345KV CKT 1
FDNSLock-Blown up	06ALL	0	20L	G15_075		Non-Converged Contingency	956.09	1051.7	0.10299	-	G14_038T 345.00 - Hitchland Interchange 345KV CKT 1
FDNSLock-Blown up	06ALL	0	20L	G15_075		Non-Converged Contingency	956.09	1051.7	0.10299	-	G14_038T 345.00 - POTTER COUNTY INTERCHANGE 345KV CKT 1
FDNSLock-Blown up	06ALL	0	20L	G15_075		Non-Converged Contingency	560	560	0.10299	-	POTTER COUNTY INTERCHANGE (WAUK 90343-A) 345/230/13.2KV TRANSFORMER CKT 1
FDNSLock-Blown up	06ALL	0	20L	G15_075		Non-Converged Contingency	560	560	0.10299	-	POTTER COUNTY INTERCHANGE (WAUK 90343-A) 345/230/13.2KV TRANSFORMER CKT 1
FDNSLock-Blown up	06ALL	0	20L	G15_075		Non-Converged Contingency	478	502	0.09315	-	AMARILLO SOUTH INTERCHANGE - G15031_T 230.00 230KV CKT 1
FDNSLock-Blown up	06ALL	0	20L	G15_075		Non-Converged Contingency	478	502	0.09062	-	NEWHART 230 - POTTER COUNTY INTERCHANGE 230KV CKT 1
FDNSLock-Blown up	06ALL	0	20L	G15_075		Non-Converged Contingency	956.09	1051.7	0.09007	-	FINNEY SWITCHING STATION - HOLCOMB 345KV CKT 1
FDNSLock-Blown up	06ALL	0	20L	G15_075		Non-Converged Contingency	956.09	1051.7	0.09007	-	FINNEY SWITCHING STATION - HOLCOMB 345KV CKT 1
FDNSLock-Blown up	06ALL	0	20L	G15_075		Non-Converged Contingency	956.09	1051.7	0.09007	-	FINNEY SWITCHING STATION - WALKTAP7 345.00 345KV CKT 1
FDNSLock-Blown up	06ALL	0	20L	G15_075		Non-Converged Contingency	956.09	1051.7	0.09007	-	FINNEY SWITCHING STATION - WALKTAP7 345.00 345KV CKT 1
FDNSLock-Blown up	06NR	0	20L	G15_075		Non-Converged Contingency	478	502	0.08957	-	AMARILLO SOUTH INTERCHANGE - G15031_T 230.00 230KV CKT 1
FDNSLock-Blown up	06ALL	0	20L	G15_075		Non-Converged Contingency	478	502	0.08682	-	BUSHLAND INTERCHANGE - DEAF SMITH COUNTY INTERCHANGE 230KV CKT 1
FDNSLock-Blown up	06ALL	0	20L	G15_075		Non-Converged Contingency	478	502	0.08682	-	BUSHLAND INTERCHANGE - DEAF SMITH COUNTY INTERCHANGE 230KV CKT 1
FDNSLock-Blown up	06ALL	0	20L	G15_075		Non-Converged Contingency	478	502	0.08682	-	BUSHLAND INTERCHANGE 230KV SWITCHED SHUNT
FDNSLock-Blown up	06ALL	0	20L	G15_075		Non-Converged Contingency	0	0	0.07871	-	P12:230:AEPW:ELKCITY6:SWEETWT6
FDNSLock-Blown up	06ALL	0	20L	G15_075		Non-Converged Contingency	318.7	350.57	0.07852	-	BUSHLAND INTERCHANGE - POTTER COUNTY INTERCHANGE 230KV CKT 1
FDNSLock-Blown up	06ALL	0	20L	G15_075		Non-Converged Contingency	318.7	350.57	0.07852	-	BUSHLAND INTERCHANGE - POTTER COUNTY INTERCHANGE 230KV CKT 1
FDNSLock-Blown up	06ALL	0	20L	G15_075		Non-Converged Contingency	1561	1793	0.07519	-	THISTLE7 345.00 - WOODWARD DISTRICT EHV 345KV CKT 1
FDNSLock-Blown up	06ALL	0	20L	G15_075		Non-Converged Contingency	1561	1793	0.07519	-	THISTLE7 345.00 - WOODWARD DISTRICT EHV 345KV CKT 1
FDNSLock-Blown up	06ALL	0	20L	G15_075		Non-Converged Contingency	1561	1793	0.07519	-	THISTLE7 345.00 - WOODWARD DISTRICT EHV 345KV CKT 2
FDNSLock-Blown up	06ALL	0	20L	G15_075		Non-Converged Contingency	1561	1793	0.07519	-	THISTLE7 345.00 - WOODWARD DISTRICT EHV 345KV CKT 2
FDNSLock-Blown up	06ALL	0	20L	G15_075		Non-Converged Contingency	318.7	350.57	0.07506	-	DEAF SMITH COUNTY INTERCHANGE - G15039_T 230.00 230KV CKT 1
FDNSLock-Blown up	06ALL	0	20L	G15_075		Non-Converged Contingency	318.7	350.57	0.07506	-	G15039_T 230.00 - PLANT X STATION 230KV CKT 1
FDNSLock-Blown up	06ALL	0	20L	G15_075		Non-Converged Contingency	1420	1775	0.07233	-	G11_051T 345.00 - TATONGA7 345.00 345KV CKT 1
FDNSLock-Blown up	06ALL	0	20L	G15_075		Non-Converged Contingency	1420	1775	0.07233	-	G11_051T 345.00 - WOODWARD DISTRICT EHV 345KV CKT 1
FDNSLock-Blown up	06ALL	0	20L	G15_075		Non-Converged Contingency	1195	1195	0.07233	-	MATHWSN7 345.00 - TATONGA7 345.00 345KV CKT 1
FDNSLock-Blown up	06ALL	0	20L	G15_075		Non-Converged Contingency	1195	1195	0.07187	-	ARCADIA - NORTHWEST 345KV CKT 1
FDNSLock-Blown up	06ALL	0	20L	G15_075		Non-Converged Contingency	956	956	0.07089	-	CIMARRON - NORTHWEST 345KV CKT 1
FDNSLock-Blown up	06NR	0	20L	G15_075		Non-Converged Contingency	478	502	0.06785	-	NEWHART 230 - POTTER COUNTY INTERCHANGE 230KV CKT 1
FDNSLock-Blown up	06NR	0	20L	G15_075		Non-Converged Contingency	1022	1124	0.06513	-	G14-074T 345.00 - OKLAUNION 345KV CKT 1
FDNSLock-Blown up	06NR	0	20L	G15_075		Non-Converged Contingency	1022	1124	0.06513	-	G14-074T 345.00 - TUCO INTERCHANGE 345KV CKT 1
FDNSLock-Blown up	06NR	0	20L	G15_075		Non-Converged Contingency	1022	1124	0.06513	-	OKLAUNION 345KV SWITCHED SHUNT
FDNSLock-Blown up	06ALL	0	20L	G15_075		Non-Converged Contingency	1195	1195	0.06329	-	MATHWSN7 345.00 - NORTHWEST 345KV CKT 1
FDNSLock-Blown up	06NR	0	20L	G15_075		Non-Converged Contingency	1792	1972	0.06264	-	BORDER 7345.00 - TUCO_2 345.00 345KV CKT 1
FDNSLock-Blown up	06NR	0	20L	G15_075		Non-Converged Contingency	1792	1792	0.06264	-	BORDER 7345.00 - WOODWARD DISTRICT EHV 345KV CKT 1
FDNSLock-Blown up	06NR	0	20L	G15_075		Non-Converged Contingency	1792	1972	0.06264	-	BORDER 7345.00 345KV SWITCHED SHUNT
FDNSLock-Blown up	06ALL	0	20L	G15_075		Non-Converged Contingency	0	0	0.06012	-	P12:138:AEPW-OGE:WTH_JCT4:JENSEN4
FDNSLock-Blown up	06ALL	0	20L	G15_075		Non-Converged Contingency	956	956	0.05986	-	G15063_T 345.00 - MATHWSN7 345.00 345KV CKT 1
FDNSLock-Blown up	06ALL	0	20L	G15_075		Non-Converged Contingency	956	956	0.05986	-	G15063_T 345.00 - WOODRING 345KV CKT 1
FDNSLock-Blown up	06ALL	0	20L	G15_075		Non-Converged Contingency	0	0	0.05945	-	P12:115:SPS:T66.1.RNDALL.HAPPY
FDNSLock-Blown up	06ALL	0	20L	G15_075		Non-Converged Contingency	0	0	0.05945	-	P12:115:SPS:T67.1.HAPPY.KRESS
FDNSLock-Blown up	06ALL	0	20L	G15_075		Non-Converged Contingency	0	0	0.05917	-	P12:115:SPS:W40.1.WCANYON.DFSMTH
FDNSLock-Blown up	06ALL	0	20L	G15_075		Non-Converged Contingency	435.82	501.55	0.05807	-	Harrington Station Mid Bus - RANDALL COUNTY INTERCHANGE 230KV CKT 1
FDNSLock-Blown up	06ALL	0	20L	G15_075		Non-Converged Contingency	435.82	501.55	0.05807	-	Harrington Station Mid Bus - RANDALL COUNTY INTERCHANGE 230KV CKT 1
FDNSLock-Blown up	06ALL	0	20L	G15_075		Non-Converged Contingency	1039	1195	0.05739	-	NORTHWEST - SPRING CREEK 345KV CKT 1
FDNSLock-Blown up	06ALL	0	20L	G15_075		Non-Converged Contingency	1039	1195	0.05739	-	SOONER - SPRING CREEK 345KV CKT 1
FDNSLock-Blown up	06ALL	0	20L	G15_075		Non-Converged Contingency	0	0	0.0569	-	P12:230:AEPW-SPS:SWEETWT6:WHEELER 6
FDNSLock-Blown up	06ALL	0	20L	G15_075		Non-Converged Contingency	1532	1793	0.0557	-	G1524G1525 345.00 - THISTLE7 345.00 345KV CKT 1
FDNSLock-Blown up	06ALL	0	20L	G15_075		Non-Converged Contingency	1532	1793	0.0557	-	G1524G1525 345.00 - THISTLE7 345.00 345KV CKT 2
FDNSLock-Blown up	06ALL	0	20L	G15_075		Non-Converged Contingency	1532	1793	0.0557	-	G1524G1525 345.00 - WICHITA 345KV CKT 1
FDNSLock-Blown up	06ALL	0	20L	G15_075		Non-Converged Contingency	1532	1793	0.0557	-	G1524G1525 345.00 - WICHITA 345KV CKT 2
FDNSLock-Blown up	06ALL	0	20L	G15_075		Non-Converged Contingency	1532	1793	0.0557	-	GEN532653 1-JEFFREY ENERGY CENTER UNIT 3
FDNSLock-Blown up	06ALL	0	20L	G15_075		Non-Converged Contingency	1532	1793	0.0557	-	GEN532663 1-LAWRENCE ENERGY CENTER UNIT 5
FDNSLock-Blown up	06ALL	0	20L	G15_075		Non-Converged Contingency	1532	1793	0.0557	-	GEN532751 1-WOLF CREEK GENERATING STATION UNIT 1
FDNSLock-Blown up	06ALL	0	20L	G15_075		Non-Converged Contingency	717	789	0.05338	-	GRACEMONT - LAWTON EASTSIDE 345KV CKT 1
FDNSLock-Blown up	06ALL	0	20L	G15_075		Non-Converged Contingency	717	789	0.05338	-	GRACEMONT - LAWTON EASTSIDE 345KV CKT 1

SOLUTION	GROUP	SCENARIO	SEASON	SOURCE	DIRECTION	MONITORED ELEMENT	RATEA (MVA)	RATEB(MVA)	TDF	TC%LOADING (% MVA)	CONTINGENCY
FDNSLock-Blown up	06ALL	0	20L	G15_075		Non-Converged Contingency	0	0	0.05335	-	P12:138:AEPW:S.W.S.-4:L.E.S.-4
FDNSLock-Blown up	06ALL	0	20L	G15_075		Non-Converged Contingency	785	785	0.0516	-	GEN640009 1-COOPER NUCLEAR STATION
FDNSLock-Blown up	06ALL	0	20L	G15_075		Non-Converged Contingency	785	785	0.0516	-	MINGO - RED WILLOW 345KV CKT 1
FDNSLock-Blown up	06ALL	0	20L	G15_075		Non-Converged Contingency	785	785	0.0516	-	MINGO - RED WILLOW 345KV CKT 1
FDNSLock-Blown up	06ALL	0	20L	G15_075		Non-Converged Contingency	1195	1195	0.05057	-	SOONER - WOODRING 345KV CKT 1
FDNSLock-Blown up	06ALL	0	20L	G15_075		Non-Converged Contingency	439	439	0.05026	-	CHISHOLM6 230.00 - ELK CITY 230KV 230KV CKT 1
FDNSLock-Blown up	06ALL	0	20L	G15_075		Non-Converged Contingency	450	450	0.05026	-	ELK CITY 230KV (ELKCTY-6) 230/138/13.8KV TRANSFORMER CKT 1
FDNSLock-Blown up	06ALL	0	20L	G15_075		Non-Converged Contingency	450	450	0.05026	-	ELK CITY 230KV (ELKCTY-6) 230/138/13.8KV TRANSFORMER CKT 1
FDNSLock-Blown up	06ALL	0	20L	G15_075		Non-Converged Contingency	478.05	501.55	0.05015	-	AMARILLO SOUTH INTERCHANGE - NICHOLS STATION 230KV CKT 1
FDNSLock-Blown up	06ALL	0	20L	G15_075		Non-Converged Contingency	478.05	501.55	0.05015	-	AMARILLO SOUTH INTERCHANGE - NICHOLS STATION 230KV CKT 1
FDNSLock-Blown up	06ALL	0	20L	G15_075		Non-Converged Contingency	762.5	762.5	0.05008	-	MINGO - SETAB 345KV CKT 1
FDNSLock-Blown up	06ALL	0	20L	G15_075		Non-Converged Contingency	762.5	762.5	0.05008	-	MINGO - SETAB 345KV CKT 1
FDNSLock-Blown up	06ALL	0	20L	G15_075		Non-Converged Contingency	0	0	0.05001	-	P12:115:SPS:T59.1.CARGIL.CURRY
FDNSLock-Blown up	06ALL	0	20L	G15_075		Non-Converged Contingency	717.1	717.1	0.04958	-	HOLCOMB - SETAB 345KV CKT 1
FDNSLock-Blown up	06ALL	0	20L	G15_075		Non-Converged Contingency	717.1	717.1	0.04958	-	HOLCOMB - SETAB 345KV CKT 1
FDNSLock-Blown up	06ALL	0	20L	G15_075		Non-Converged Contingency	1195	1195	0.04891	-	JOHNSON COUNTY - SUNNYSIDE 345KV CKT 1
FDNSLock-Blown up	06ALL	0	20L	G15_075		Non-Converged Contingency	478.05	547.36	0.04847	-	NEWHART 230 - PLANT X STATION 230KV CKT 1
FDNSLock-Blown up	06ALL	0	20L	G15_075		Non-Converged Contingency	1151	1195	0.04496	-	JOHNSON COUNTY - PITTSBURG 345KV CKT 1
FDNSLock-Blown up	06ALL	0	20L	G15_075		Non-Converged Contingency	1151	1195	0.04496	-	JOHNSON COUNTY - PITTSBURG 345KV CKT 1
FDNSLock-Blown up	06NR	0	20L	G15_075		Non-Converged Contingency	318.7	350.57	0.0449	-	DEAF SMITH COUNTY INTERCHANGE - G15039_T 230.00 230KV CKT 1
FDNSLock-Blown up	06ALL	0	20L	G15_075		Non-Converged Contingency	1504	1792	0.04475	-	AXTELL - POST ROCK 345KV CKT 1
FDNSLock-Blown up	06NR	0	20L	G15_075		Non-Converged Contingency	318.7	350.57	0.04458	-	BUSHLAND INTERCHANGE - POTTER COUNTY INTERCHANGE 230KV CKT 1
FDNSLock-Blown up	06NR	0	20L	G15_075		Non-Converged Contingency	318.7	350.57	0.04458	-	BUSHLAND INTERCHANGE - POTTER COUNTY INTERCHANGE 230KV CKT 1
FDNSLock-Blown up	06ALL	0	20L	G15_075		Non-Converged Contingency	1195	1195	0.04391	-	CIMARRON - DRAPER LAKE 345KV CKT 1
FDNSLock-Blown up	06ALL	0	20L	G15_075		Non-Converged Contingency	0	0	0.04371	-	P12:138:WFEC-AEPW:WASHITA4:CLINTJC4
FDNSLock-Blown up	06ALL	0	20L	G15_075		Non-Converged Contingency	501.95	501.95	0.04369	-	HITCHLAND INTERCHANGE - MOORE COUNTY INTERCHANGE 230KV CKT 1
FDNSLock-Blown up	06ALL	0	20L	G15_075		Non-Converged Contingency	501.95	501.95	0.04369	-	HITCHLAND INTERCHANGE - MOORE COUNTY INTERCHANGE 230KV CKT 1
FDNSLock-Blown up	06ALL	0	20L	G15_075		Non-Converged Contingency	1505	1793	0.04357	-	G13-010T 345.00 - POST ROCK 345KV CKT 1
FDNSLock-Blown up	06ALL	0	20L	G15_075		Non-Converged Contingency	1505	1793	0.04357	-	G13-010T 345.00 - SPEARVILLE 345KV CKT 1
FDNSLock-Blown up	06ALL	0	20L	G15_075		Non-Converged Contingency	878	956	0.04356	-	BENTON - WICHITA 345KV CKT 1
FDNSLock-Blown up	06ALL	0	20L	G15_075		Non-Converged Contingency	560	644	0.04284	-	Hitchland Interchange (SIEM 8743067) 345/230/13.2KV TRANSFORMER CKT 2
FDNSLock-Blown up	06ALL	0	20L	G15_075		Non-Converged Contingency	560	644	0.04284	-	Hitchland Interchange (SIEM 8743067) 345/230/13.2KV TRANSFORMER CKT 2
FDNSLock-Blown up	06ALL	0	20L	G15_075		Non-Converged Contingency	0	0	0.04148	-	P12:138:AEPW-OGE:CORNVIL4:CIMARON4
FDNSLock-Blown up	06ALL	0	20L	G15_075		Non-Converged Contingency	1035	1035	0.04046	-	EMPORIA ENERGY CENTER - G14_001T 345.00 345KV CKT 1
FDNSLock-Blown up	06ALL	0	20L	G15_075		Non-Converged Contingency	1035	1035	0.04046	-	G14_001T 345.00 - WICHITA 345KV CKT 1
FDNSLock-Blown up	06ALL	0	20L	G15_075		Non-Converged Contingency	956	956	0.04043	-	GERALD GENTLEMAN STATION - RED WILLOW 345KV CKT 1
FDNSLock-Blown up	06ALL	0	20L	G15_075		Non-Converged Contingency	1195	1195	0.04034	-	GEN520811 1-ANADRK4
FDNSLock-Blown up	06ALL	0	20L	G15_075		Non-Converged Contingency	1195	1195	0.04034	-	HUGO - SUNNYSIDE 345KV CKT 1
FDNSLock-Blown up	06ALL	0	20L	G15_075		Non-Converged Contingency	1793	1793	0.03994	-	BVRCNTY7 345.00 - G11-14T 345.00 345KV CKT 1
FDNSLock-Blown up	06ALL	0	20L	G15_075		Non-Converged Contingency	1716	1793	0.03994	-	BVRCNTY7 345.00 - G11-14T 345.00 345KV CKT 2
FDNSLock-Blown up	06ALL	0	20L	G15_075		Non-Converged Contingency	1792	1792	0.03994	-	BVRCNTY7 345.00 - OPTIMA 345.00 345KV CKT 1
FDNSLock-Blown up	06ALL	0	20L	G15_075		Non-Converged Contingency	1792	1792	0.03994	-	BVRCNTY7 345.00 - OPTIMA 345.00 345KV CKT 2
FDNSLock-Blown up	06ALL	0	20L	G15_075		Non-Converged Contingency	1793	1793	0.03994	-	G11-14T 345.00 - WOODWARD DISTRICT EHV 345KV CKT 1
FDNSLock-Blown up	06ALL	0	20L	G15_075		Non-Converged Contingency	1716	1793	0.03994	-	G11-14T 345.00 - WOODWARD DISTRICT EHV 345KV CKT 2
FDNSLock-Blown up	06ALL	0	20L	G15_075		Non-Converged Contingency	1792	1792	0.03994	-	Hitchland Interchange - OPTIMA 345.00 345KV CKT 1
FDNSLock-Blown up	06ALL	0	20L	G15_075		Non-Converged Contingency	1792	1792	0.03994	-	Hitchland Interchange - OPTIMA 345.00 345KV CKT 2
FDNSLock-Blown up	06ALL	0	20L	G15_075		Non-Converged Contingency	0	0	0.03945	-	P12:115:SPS:V05.1.OSAGE.WCANYON
FDNSLock-Blown up	06ALL	0	20L	G15_075		Non-Converged Contingency	0	0	0.03863	-	P12:115:SPS:V03.1.NICHLS.EPLANT
FDNSLock-Blown up	06ALL	0	20L	G15_075		Non-Converged Contingency	497.17	546.96	0.03829	-	AMARILLO SOUTH INTERCHANGE - RANDALL COUNTY INTERCHANGE 230KV CKT 1
FDNSLock-Blown up	06ALL	0	20L	G15_075		Non-Converged Contingency	497.17	546.96	0.03829	-	AMARILLO SOUTH INTERCHANGE - RANDALL COUNTY INTERCHANGE 230KV CKT 1
FDNSLock-Blown up	06ALL	0	20L	G15_075		Non-Converged Contingency	0	0	0.03797	-	P12:115:SPS:T04.1.DFSMTH.CASTRO
FDNSLock-Blown up	06ALL	0	20L	G15_075		Non-Converged Contingency	1141	1195	0.0378	-	GEN542951 5-HAWTHORN UNIT #5
FDNSLock-Blown up	06ALL	0	20L	G15_075		Non-Converged Contingency	1141	1195	0.0378	-	LACYGNE - WAVERLY7 345.00 345KV CKT 1
FDNSLock-Blown up	06ALL	0	20L	G15_075		Non-Converged Contingency	1141	1195	0.0378	-	WAVERLY7 345.00 - WOLF CREEK 345KV CKT 1
FDNSLock-Blown up	06ALL	0	20L	G15_075		Non-Converged Contingency	0	0	0.03751	-	P12:115:SPS:T58.1.HERFRD.CARGIL
FDNSLock-Blown up	06ALL	0	20L	G15_075		Non-Converged Contingency	318.7	350.57	0.03735	-	MOORE COUNTY INTERCHANGE - POTTER COUNTY INTERCHANGE 230KV CKT 1
FDNSLock-Blown up	06ALL	0	20L	G15_075		Non-Converged Contingency	318.7	350.57	0.03735	-	MOORE COUNTY INTERCHANGE - POTTER COUNTY INTERCHANGE 230KV CKT 1
FDNSLock-Blown up	06ALL	0	20L	G15_075		Non-Converged Contingency	560	644	0.03726	-	Hitchland Interchange (H TB80155502) 345/230/13.2KV TRANSFORMER CKT 1
FDNSLock-Blown up	06ALL	0	20L	G15_075		Non-Converged Contingency	560	644	0.03726	-	Hitchland Interchange (H TB80155502) 345/230/13.2KV TRANSFORMER CKT 1
FDNSLock-Blown up	06ALL	0	20L	G15_075		Non-Converged Contingency	1195	1195	0.03636	-	MUSKOGEE - SEMINOLE 345KV CKT 1
FDNSLock-Blown up	06ALL	0	20L	G15_075		Non-Converged Contingency	1076	1076	0.03518	-	G15074_T 345.00 - HOYT 345KV CKT 1
FDNSLock-Blown up	06ALL	0	20L	G15_075		Non-Converged Contingency	1076	1076	0.03518	-	G15074_T 345.00 - JEFFREY ENERGY CENTER 345KV CKT 1
FDNSLock-Blown up	06ALL	0	20L	G15_075		Non-Converged Contingency	1036	1195	0.035	-	HOYT - STRANGER CREEK 345KV CKT 1
FDNSLock-Blown up	06ALL	0	20L	G15_075		Non-Converged Contingency	318.7	350.57	0.03383	-	LUBBOCK SOUTH INTERCHANGE - WOLFFORTH INTERCHANGE 230KV CKT 1
FDNSLock-Blown up	06ALL	0	20L	G15_075		Non-Converged Contingency	318.7	350.57	0.03383	-	LUBBOCK SOUTH INTERCHANGE - WOLFFORTH INTERCHANGE 230KV CKT 1
FDNSLock-Blown up	06ALL	0	20L	G15_075		Non-Converged Contingency	318.7	350.57	0.03383	-	LUBBOCK SOUTH INTERCHANGE 230KV SWITCHED SHUNT
FDNSLock-Blown up	06ALL	0	20L	G15_075		Non-Converged Contingency	0	0	0.0325	-	P12:138:OKGE:3TERM10
FDNSLock-Blown up	06ALL	0	20L	G15_075		Non-Converged Contingency	726.6	726.6	0.03234	-	BUCKNER7 345.00 - HOLCOMB 345KV CKT 1
FDNSLock-Blown up	06ALL	0	20L	G15_075		Non-Converged Contingency	726.6	726.6	0.03234	-	BUCKNER7 345.00 - HOLCOMB 345KV CKT 1
FDNSLock-Blown up	06ALL	0	20L	G15_075		Non-Converged Contingency	1413	1517	0.03234	-	BUCKNER7 345.00 - SPEARVILLE 345KV CKT 1
FDNSLock-Blown up	06ALL	0	20L	G15_075		Non-Converged Contingency	1413	1517	0.03234	-	BUCKNER7 345.00 - SPEARVILLE 345KV CKT 1
FDNSLock-Blown up	06ALL	0	20L	G15_075		Non-Converged Contingency	717	717	0.03154	-	EMPORIA ENERGY CENTER - SWISSVALE 345KV CKT 1
FDNSLock-Blown up	06ALL	0	20L	G15_075		Non-Converged Contingency	0	0	0.03072	-	P12:138:AEPW:DUNCAN-4:L.E.S.-4
FDNSLock-Blown up	06ALL	0	20L	G15_075		Non-Converged Contingency	0	0	0.0307	-	P12:138:AEPW:REDROCKRD4:WTH_JCT4
FDNSLock-Blown up	06ALL	0	20L	G15_075		Non-Converged Contingency	249	274	0.02972	-	HAPPY INTERCHANGE - PALO DURO SUB 115KV CKT 1
FDNSLock-Blown up	06ALL	0	20L	G15_075		Non-Converged Contingency	249	273	0.02972	-	HAPPY INTERCHANGE - TULIA TAP 115KV CKT 1
FDNSLock-Blown up	06ALL	0	20L	G15_075		Non-Converged Contingency	251	251	0.02972	-	KRESS INTERCHANGE - TULIA TAP 115KV CKT 1
FDNSLock-Blown up	06ALL	0	20L	G15_075		Non-Converged Contingency	251	251	0.02972	-	PALO DURO SUB - RANDALL COUNTY INTERCHANGE 115KV CKT 1
FDNSLock-Blown up	06ALL	0	20SP	G15_075		Non-Converged Contingency	956	1042	0.22246	-	G14-074T 345.00 - OKLAUNION 345KV CKT 1

SOLUTION	GROUP	SCENARIO	SEASON	SOURCE	DIRECTION	MONITORED ELEMENT	RATEA (MVA)	RATEB(MVA)	TDF	TC%LOADING (% MVA)	CONTINGENCY
FDNSLock-Blown up	06ALL	0	20SP	G15_075		Non-Converged Contingency	1792	1972	0.18165	-	BORDER 7345.00 - TUCO_2 345.00 345KV CKT 1
FDNSLock-Blown up	06ALL	0	20SP	G15_075		Non-Converged Contingency	1420	1775	0.18165	-	BORDER 7345.00 - TUCO_2 345.00 345KV CKT 2
FDNSLock-Blown up	06ALL	0	20SP	G15_075		Non-Converged Contingency	956.09	1051.7	0.13728	-	G14_038T 345.00 - Hitchland Interchange 345KV CKT 1
FDNSLock-Blown up	06ALL	0	20SP	G15_075		Non-Converged Contingency	956.09	1051.7	0.13728	-	G14_038T 345.00 - POTTER COUNTY INTERCHANGE 345KV CKT 1
FDNSLock-Blown up	06ALL	0	20WP	G15_075		Non-Converged Contingency	0	0	0.23519	-	P12:345:SPS:J07.1.FINN.HITCH
FDNSLock-Blown up	06ALL	0	20WP	G15_075		Non-Converged Contingency	1022	1124	0.2176	-	G14-074T 345.00 - OKLAUNION 345KV CKT 1
FDNSLock-Blown up	06ALL	0	20WP	G15_075		Non-Converged Contingency	1022	1124	0.2176	-	G14-074T 345.00 - TUCO INTERCHANGE 345KV CKT 1
FDNSLock-Blown up	06ALL	0	20WP	G15_075		Non-Converged Contingency	1022	1124	0.2176	-	OKLAUNION 345KV SWITCHED SHUNT
FDNSLock-Blown up	06ALL	0	20WP	G15_075		Non-Converged Contingency	1792	1972	0.20501	-	TUCO INTERCHANGE - TUCO_2 345.00 345KV CKT 1
FDNSLock-Blown up	06ALL	0	20WP	G15_075		Non-Converged Contingency	956	956	0.18302	-	CIMARRON - MINCO 345KV CKT 1
FDNSLock-Blown up	06ALL	0	20WP	G15_075		Non-Converged Contingency	1195	1195	0.18302	-	GRACEMONT - MINCO 345KV CKT 1
FDNSLock-Blown up	06ALL	0	20WP	G15_075		Non-Converged Contingency	1792	1792	0.1813	-	CHISHOLM7 345.00 - WOODWARD DISTRICT EHV 345KV CKT 1
FDNSLock-Blown up	06ALL	0	20WP	G15_075		Non-Converged Contingency	1792	1972	0.17798	-	BORDER 7345.00 - TUCO_2 345.00 345KV CKT 1
FDNSLock-Blown up	06ALL	0	20WP	G15_075		Non-Converged Contingency	1420	1775	0.17798	-	BORDER 7345.00 - TUCO_2 345.00 345KV CKT 2
FDNSLock-Blown up	06ALL	0	20WP	G15_075		Non-Converged Contingency	1792	1972	0.17798	-	BORDER 7345.00 345KV SWITCHED SHUNT
FDNSLock-Blown up	06ALL	0	20WP	G15_075		Non-Converged Contingency	1584	2098	0.15674	-	CHISHOLM7 345.00 - GRACEMONT 345KV CKT 1
FDNSLock-Blown up	06ALL	0	20WP	G15_075		Non-Converged Contingency	987.16	1082.8	0.13221	-	G14_038T 345.00 - Hitchland Interchange 345KV CKT 1
FDNSLock-Blown up	06ALL	0	20WP	G15_075		Non-Converged Contingency	987.16	1082.8	0.13221	-	G14_038T 345.00 - POTTER COUNTY INTERCHANGE 345KV CKT 1
FDNSLock-Blown up	06ALL	0	20WP	G15_075		Non-Converged Contingency	560	560	0.13221	-	POTTER COUNTY INTERCHANGE (WAUK 90343-A) 345/230/13.2KV TRANSFORMER CKT 1
FDNSLock-Blown up	06ALL	0	20WP	G15_075		Non-Converged Contingency	560	560	0.13221	-	POTTER COUNTY INTERCHANGE (WAUK 90343-A) 345/230/13.2KV TRANSFORMER CKT 1
FDNSLock-Blown up	06ALL	0	20WP	G15_075		Non-Converged Contingency	717	789	0.13013	-	G14-057T 345.00 - LAWTON EASTSIDE 345KV CKT 1
FDNSLock-Blown up	06ALL	0	20WP	G15_075		Non-Converged Contingency	717	789	0.13013	-	G14-057T 345.00 - SUNNYSIDE 345KV CKT 1
FDNSLock-Blown up	06ALL	0	20WP	G15_075		Non-Converged Contingency	987.16	1082.8	0.12535	-	Hitchland Interchange - WALKTAP7 345.00 345KV CKT 1
FDNSLock-Blown up	06ALL	0	20WP	G15_075		Non-Converged Contingency	987.16	1082.8	0.12535	-	Hitchland Interchange - WALKTAP7 345.00 345KV CKT 1
FDNSLock-Blown up	06ALL	0	20WP	G15_075		Non-Converged Contingency	956.09	1051.7	0.10984	-	FINNEY SWITCHING STATION - HOLCOMB 345KV CKT 1
FDNSLock-Blown up	06ALL	0	20WP	G15_075		Non-Converged Contingency	956.09	1051.7	0.10984	-	FINNEY SWITCHING STATION - HOLCOMB 345KV CKT 1
FDNSLock-Blown up	06ALL	0	20WP	G15_075		Non-Converged Contingency	987.16	1082.8	0.10984	-	FINNEY SWITCHING STATION - WALKTAP7 345.00 345KV CKT 1
FDNSLock-Blown up	06ALL	0	20WP	G15_075		Non-Converged Contingency	987.16	1082.8	0.10984	-	FINNEY SWITCHING STATION - WALKTAP7 345.00 345KV CKT 1
FDNSLock-Blown up	06ALL	0	20WP	G15_075		Non-Converged Contingency	0	0	0.10584	-	P12:230:AEPW:ELKCITY6:SWEETWT6
FDNSLock-Blown up	06ALL	0	20WP	G15_075		Non-Converged Contingency	557	557	0.09645	-	NEWHART 230 - POTTER COUNTY INTERCHANGE 230KV CKT 1
FDNSLock-Blown up	06ALL	0	20WP	G15_075		Non-Converged Contingency	557	557	0.09526	-	BUSHLAND INTERCHANGE - DEAF SMITH COUNTY INTERCHANGE 230KV CKT 1
FDNSLock-Blown up	06ALL	0	20WP	G15_075		Non-Converged Contingency	557	557	0.09526	-	BUSHLAND INTERCHANGE - DEAF SMITH COUNTY INTERCHANGE 230KV CKT 1
FDNSLock-Blown up	06ALL	0	20WP	G15_075		Non-Converged Contingency	478	502	0.09499	-	AMARILLO SOUTH INTERCHANGE - G15031_T 230.00 230KV CKT 1
FDNSLock-Blown up	06ALL	0	20WP	G15_075		Non-Converged Contingency	1561	1793	0.08905	-	THISTLE7 345.00 - WOODWARD DISTRICT EHV 345KV CKT 1
FDNSLock-Blown up	06ALL	0	20WP	G15_075		Non-Converged Contingency	1561	1793	0.08905	-	THISTLE7 345.00 - WOODWARD DISTRICT EHV 345KV CKT 1
FDNSLock-Blown up	06ALL	0	20WP	G15_075		Non-Converged Contingency	1561	1793	0.08905	-	THISTLE7 345.00 - WOODWARD DISTRICT EHV 345KV CKT 2
FDNSLock-Blown up	06ALL	0	20WP	G15_075		Non-Converged Contingency	1561	1793	0.08905	-	THISTLE7 345.00 - WOODWARD DISTRICT EHV 345KV CKT 2
FDNSLock-Blown up	06ALL	0	20WP	G15_075		Non-Converged Contingency	0	0	0.08791	-	P12:230:AEPW-SPS:SWEETWT6:WHEELER 6
FDNSLock-Blown up	06ALL	0	20WP	G15_075		Non-Converged Contingency	1420	1775	0.08677	-	G11_051T 345.00 - TATONGA7 345.00 345KV CKT 1
FDNSLock-Blown up	06ALL	0	20WP	G15_075		Non-Converged Contingency	1420	1775	0.08677	-	G11_051T 345.00 - WOODWARD DISTRICT EHV 345KV CKT 1
FDNSLock-Blown up	06ALL	0	20WP	G15_075		Non-Converged Contingency	1195	1195	0.08677	-	MATHWSN7 345.00 - TATONGA7 345.00 345KV CKT 1
FDNSLock-Blown up	06ALL	0	20WP	G15_075		Non-Converged Contingency	329.05	360.92	0.08667	-	BUSHLAND INTERCHANGE - POTTER COUNTY INTERCHANGE 230KV CKT 1
FDNSLock-Blown up	06ALL	0	20WP	G15_075		Non-Converged Contingency	329.05	360.92	0.08667	-	BUSHLAND INTERCHANGE - POTTER COUNTY INTERCHANGE 230KV CKT 1
FDNSLock-Blown up	06ALL	0	20WP	G15_075		Non-Converged Contingency	329.05	360.92	0.08284	-	DEAF SMITH COUNTY INTERCHANGE - G15039_T 230.00 230KV CKT 1
FDNSLock-Blown up	06ALL	0	20WP	G15_075		Non-Converged Contingency	329.05	360.92	0.08284	-	G15039_T 230.00 - PLANT X STATION 230KV CKT 1
FDNSLock-Blown up	06ALL	0	20WP	G15_075		Non-Converged Contingency	556.92	556.92	0.05625	-	HITCHLAND INTERCHANGE - MOORE COUNTY INTERCHANGE 230KV CKT 1
FDNSLock-Blown up	06ALL	0	20WP	G15_075		Non-Converged Contingency	556.92	556.92	0.05625	-	HITCHLAND INTERCHANGE - MOORE COUNTY INTERCHANGE 230KV CKT 1
FDNSLock-Blown up	06ALL	0	20WP	G15_075		Non-Converged Contingency	1793	1793	0.05538	-	G11-14T 345.00 - WOODWARD DISTRICT EHV 345KV CKT 1
FDNSLock-Blown up	06ALL	0	20WP	G15_075		Non-Converged Contingency	1716	1793	0.05538	-	G11-14T 345.00 - WOODWARD DISTRICT EHV 345KV CKT 2
FDNSLock-Blown up	06ALL	0	20WP	G15_075		Non-Converged Contingency	1792	1792	0.05274	-	TUCO INTERCHANGE - YOAKUM_345 345.00 345KV CKT 1
FDNSLock-Blown up	06ALL	0	20WP	G15_075		Non-Converged Contingency	329.05	360.92	0.04758	-	MOORE COUNTY INTERCHANGE - POTTER COUNTY INTERCHANGE 230KV CKT 1
FDNSLock-Blown up	06ALL	0	20WP	G15_075		Non-Converged Contingency	329.05	360.92	0.04758	-	MOORE COUNTY INTERCHANGE - POTTER COUNTY INTERCHANGE 230KV CKT 1
FDNSLock-Blown up	06ALL	0	20WP	G15_075		Non-Converged Contingency	421	439	0.04396	-	CHISHOLM6 230.00 - SWEETWATER 230KV CKT 1
FDNSLock-Blown up	06ALL	0	20WP	G15_075		Non-Converged Contingency	435.02	457.73	0.04396	-	STATELINE INTERCHANGE - STLN-DEMARC6 230KV CKT 1
FDNSLock-Blown up	06ALL	0	20WP	G15_075		Non-Converged Contingency	439	439	0.04396	-	STLN-DEMARC6 - SWEETWATER 230KV CKT 1
FDNSLock-Blown up	06ALL	0	20WP	G15_075		Non-Converged Contingency	557	557	0.03857	-	GRAPEVINE INTERCHANGE - NICHOLS STATION 230KV CKT 1
FDNSLock-Blown up	06ALL	0	20WP	G15_075		Non-Converged Contingency	557	557	0.03857	-	GRAPEVINE INTERCHANGE - NICHOLS STATION 230KV CKT 1
FDNSLock-Blown up	06ALL	0	20WP	G15_075		Non-Converged Contingency	557	557	0.03753	-	GRAPEVINE INTERCHANGE - STATELINE INTERCHANGE 230KV CKT 1
FDNSLock-Blown up	06ALL	0	20WP	G15_075		Non-Converged Contingency	557	557	0.03753	-	GRAPEVINE INTERCHANGE - STATELINE INTERCHANGE 230KV CKT 1
FDNSLock-Blown up	06ALL	2	16WP	G15_075		Non-Converged Contingency	1022	1124	0.22412	-	G14-074T 345.00 - OKLAUNION 345KV CKT 1
FDNSLock-Blown up	06ALL	2	16WP	G15_075		Non-Converged Contingency	1022	1124	0.22412	-	G14-074T 345.00 - TUCO INTERCHANGE 345KV CKT 1
FDNSLock-Blown up	06ALL	2	16WP	G15_075		Non-Converged Contingency	1792	1972	0.18209	-	BORDER 7345.00 - TUCO_2 345.00 345KV CKT 1
FDNSLock-Blown up	06ALL	2	16WP	G15_075		Non-Converged Contingency	1420	1775	0.18209	-	BORDER 7345.00 - TUCO_2 345.00 345KV CKT 2
FDNSLock-Blown up	06ALL	2	16WP	G15_075		Non-Converged Contingency	987.16	1082.8	0.14079	-	G14_038T 345.00 - Hitchland Interchange 345KV CKT 1
FDNSLock-Blown up	06ALL	2	16WP	G15_075		Non-Converged Contingency	987.16	1082.8	0.14079	-	G14_038T 345.00 - POTTER COUNTY INTERCHANGE 345KV CKT 1
FDNSLock-Blown up	06ALL	2	16WP	G15_075		Non-Converged Contingency	560	560	0.14079	-	POTTER COUNTY INTERCHANGE (WAUK 90343-A) 345/230/13.2KV TRANSFORMER CKT 1
FDNSLock-Blown up	06ALL	2	17G	G15_075		Non-Converged Contingency	1022	1124	0.21757	-	G14-074T 345.00 - OKLAUNION 345KV CKT 1
FDNSLock-Blown up	06ALL	2	17G	G15_075		Non-Converged Contingency	1022	1124	0.21757	-	G14-074T 345.00 - TUCO INTERCHANGE 345KV CKT 1
FDNSLock-Blown up	06ALL	2	17G	G15_075		Non-Converged Contingency	1792	1972	0.17635	-	BORDER 7345.00 - TUCO_2 345.00 345KV CKT 1
FDNSLock-Blown up	06ALL	2	17G	G15_075		Non-Converged Contingency	1420	1775	0.17635	-	BORDER 7345.00 - TUCO_2 345.00 345KV CKT 2
FDNSLock-Blown up	06ALL	2	17G	G15_075		Non-Converged Contingency	956.09	1051.7	0.13157	-	G14_038T 345.00 - Hitchland Interchange 345KV CKT 1
FDNSLock-Blown up	06ALL	2	17G	G15_075		Non-Converged Contingency	956.09	1051.7	0.13157	-	G14_038T 345.00 - POTTER COUNTY INTERCHANGE 345KV CKT 1
FDNSLock-Blown up	06ALL	2	17G	G15_075		Non-Converged Contingency	560	560	0.13157	-	POTTER COUNTY INTERCHANGE (WAUK 90343-A) 345/230/13.2KV TRANSFORMER CKT 1
FDNSLock-Blown up	06NR	2	17G	G15_075		Non-Converged Contingency	1022	1124	0.06894	-	G14-074T 345.00 - OKLAUNION 345KV CKT 1
FDNSLock-Blown up	06NR	2	17G	G15_075		Non-Converged Contingency	1022	1124	0.06894	-	G14-074T 345.00 - TUCO INTERCHANGE 345KV CKT 1
FDNSLock-Blown up	06NR	2	17G	G15_075		Non-Converged Contingency	1792	1972	0.06609	-	BORDER 7345.00 - TUCO_2 345.00 345KV CKT 1
FDNSLock-Blown up	06NR	2	17G	G15_075		Non-Converged Contingency	1792	1792	0.06609	-	BORDER 7345.00 - WOODWARD DISTRICT EHV 345KV CKT 1
FDNSLock-Blown up	06ALL	2	17SP	G15_075		Non-Converged Contingency	956	1042	0.22119	-	G14-074T 345.00 - OKLAUNION 345KV CKT 1
FDNSLock-Blown up	06ALL	2	20L	G15_075		Non-Converged Contingency	0	0	0.19459	-	P12:345:SPS:J07.1.FINN.HITCH

SOLUTION	GROUP	SCENARIO	SEASON	SOURCE	DIRECTION	MONITORED ELEMENT	RATEA (MVA)	RATEB(MVA)	TDF	TC%LOADING (% MVA)	CONTINGENCY
FDNSLock-Blown up	06ALL	2	20L	G15_075		Non-Converged Contingency	1022	1124	0.18842	-	G14-074T 345.00 - OKLAUNION 345KV CKT 1
FDNSLock-Blown up	06ALL	2	20L	G15_075		Non-Converged Contingency	1022	1124	0.18842	-	G14-074T 345.00 - TUCO INTERCHANGE 345KV CKT 1
FDNSLock-Blown up	06ALL	2	20L	G15_075		Non-Converged Contingency	1022	1124	0.18842	-	OKLAUNION 345KV SWITCHED SHUNT
FDNSLock-Blown up	06ALL	2	20L	G15_075		Non-Converged Contingency	1792	1972	0.15749	-	BORDER 7345.00 - TUCO_2 345.00 345KV CKT 1
FDNSLock-Blown up	06ALL	2	20L	G15_075		Non-Converged Contingency	1420	1775	0.15749	-	BORDER 7345.00 - TUCO_2 345.00 345KV CKT 2
FDNSLock-Blown up	06ALL	2	20L	G15_075		Non-Converged Contingency	1584	2098	0.13107	-	CHISHOLM7 345.00 - GRACEMONT 345KV CKT 1
FDNSLock-Blown up	06ALL	2	20L	G15_075		Non-Converged Contingency	956.09	1051.7	0.1039	-	Hitchland Interchange - WALKTAP7 345.00 345KV CKT 1
FDNSLock-Blown up	06ALL	2	20L	G15_075		Non-Converged Contingency	956.09	1051.7	0.1039	-	Hitchland Interchange - WALKTAP7 345.00 345KV CKT 1
FDNSLock-Blown up	06ALL	2	20L	G15_075		Non-Converged Contingency	956.09	1051.7	0.10364	-	G14_038T 345.00 - Hitchland Interchange 345KV CKT 1
FDNSLock-Blown up	06ALL	2	20L	G15_075		Non-Converged Contingency	956.09	1051.7	0.10364	-	G14_038T 345.00 - POTTER COUNTY INTERCHANGE 345KV CKT 1
FDNSLock-Blown up	06ALL	2	20L	G15_075		Non-Converged Contingency	560	560	0.10364	-	POTTER COUNTY INTERCHANGE (WAUK 90343-A) 345/230/13.2KV TRANSFORMER CKT 1
FDNSLock-Blown up	06ALL	2	20L	G15_075		Non-Converged Contingency	560	560	0.10364	-	POTTER COUNTY INTERCHANGE (WAUK 90343-A) 345/230/13.2KV TRANSFORMER CKT 1
FDNSLock-Blown up	06NR	2	20L	G15_075		Non-Converged Contingency	478	502	0.08957	-	AMARILLO SOUTH INTERCHANGE - G15031_T 230.00 230KV CKT 1
FDNSLock-Blown up	06ALL	2	20L	G15_075		Non-Converged Contingency	0	0	0.07907	-	P12:230:AEPW:ELKCITY6:SWEETWT6
FDNSLock-Blown up	06ALL	2	20L	G15_075		Non-Converged Contingency	1195	1195	0.07259	-	MATHWSN7 345.00 - TATONGA7 345.00 345KV CKT 1
FDNSLock-Blown up	06NR	2	20L	G15_075		Non-Converged Contingency	478	502	0.06785	-	NEWHART 230 - POTTER COUNTY INTERCHANGE 230KV CKT 1
FDNSLock-Blown up	06NR	2	20L	G15_075		Non-Converged Contingency	1022	1124	0.06513	-	G14-074T 345.00 - OKLAUNION 345KV CKT 1
FDNSLock-Blown up	06NR	2	20L	G15_075		Non-Converged Contingency	1022	1124	0.06513	-	G14-074T 345.00 - TUCO INTERCHANGE 345KV CKT 1
FDNSLock-Blown up	06NR	2	20L	G15_075		Non-Converged Contingency	1022	1124	0.06513	-	OKLAUNION 345KV SWITCHED SHUNT
FDNSLock-Blown up	06NR	2	20L	G15_075		Non-Converged Contingency	1792	1972	0.06264	-	BORDER 7345.00 - TUCO_2 345.00 345KV CKT 1
FDNSLock-Blown up	06NR	2	20L	G15_075		Non-Converged Contingency	1792	1792	0.06264	-	BORDER 7345.00 - WOODWARD DISTRICT EHV 345KV CKT 1
FDNSLock-Blown up	06NR	2	20L	G15_075		Non-Converged Contingency	1792	1972	0.06264	-	BORDER 7345.00 345KV SWITCHED SHUNT
FDNSLock-Blown up	06NR	2	20L	G15_075		Non-Converged Contingency	318.7	350.57	0.0449	-	DEAF SMITH COUNTY INTERCHANGE - G15039_T 230.00 230KV CKT 1
FDNSLock-Blown up	06NR	2	20L	G15_075		Non-Converged Contingency	318.7	350.57	0.04458	-	BUSHLAND INTERCHANGE - POTTER COUNTY INTERCHANGE 230KV CKT 1
FDNSLock-Blown up	06NR	2	20L	G15_075		Non-Converged Contingency	318.7	350.57	0.04458	-	BUSHLAND INTERCHANGE - POTTER COUNTY INTERCHANGE 230KV CKT 1
FDNSLock-Blown up	06ALL	2	20SP	G15_075		Non-Converged Contingency	956	1042	0.22255	-	G14-074T 345.00 - OKLAUNION 345KV CKT 1
FDNSLock-Blown up	06ALL	2	20WP	G15_075		Non-Converged Contingency	1022	1124	0.21784	-	G14-074T 345.00 - OKLAUNION 345KV CKT 1
FDNSLock-Blown up	06ALL	2	20WP	G15_075		Non-Converged Contingency	1022	1124	0.21784	-	G14-074T 345.00 - TUCO INTERCHANGE 345KV CKT 1
FDNSLock-Blown up	06ALL	2	20WP	G15_075		Non-Converged Contingency	1792	1972	0.17819	-	BORDER 7345.00 - TUCO_2 345.00 345KV CKT 1
FDNSLock-Blown up	06ALL	2	20WP	G15_075		Non-Converged Contingency	1420	1775	0.17819	-	BORDER 7345.00 - TUCO_2 345.00 345KV CKT 2
FDNSLock-Blown up	06ALL	2	20WP	G15_075		Non-Converged Contingency	987.16	1082.8	0.13243	-	G14_038T 345.00 - Hitchland Interchange 345KV CKT 1
FDNSLock-Blown up	06ALL	2	20WP	G15_075		Non-Converged Contingency	987.16	1082.8	0.13243	-	G14_038T 345.00 - POTTER COUNTY INTERCHANGE 345KV CKT 1
FDNSLock-Blown up	06ALL	2	20WP	G15_075		Non-Converged Contingency	560	560	0.13243	-	POTTER COUNTY INTERCHANGE (WAUK 90343-A) 345/230/13.2KV TRANSFORMER CKT 1
FDNSLock-Blown up	06ALL	2	20WP	G15_075		Non-Converged Contingency	560	560	0.13243	-	POTTER COUNTY INTERCHANGE (WAUK 90343-A) 345/230/13.2KV TRANSFORMER CKT 1
FDNSLock-Blown up	06ALL	3	16WP	G15_075		Non-Converged Contingency	1022	1124	0.22651	-	G14-074T 345.00 - OKLAUNION 345KV CKT 1
FDNSLock-Blown up	06ALL	3	16WP	G15_075		Non-Converged Contingency	1022	1124	0.22651	-	G14-074T 345.00 - TUCO INTERCHANGE 345KV CKT 1
FDNSLock-Blown up	06NR	3	17G	G15_075		Non-Converged Contingency	1022	1124	0.06004	-	G14-074T 345.00 - OKLAUNION 345KV CKT 1
FDNSLock-Blown up	06NR	3	17G	G15_075		Non-Converged Contingency	1022	1124	0.06004	-	G14-074T 345.00 - TUCO INTERCHANGE 345KV CKT 1
FDNSLock-Blown up	06NR	3	17G	G15_075		Non-Converged Contingency	1792	1972	0.05695	-	BORDER 7345.00 - TUCO_2 345.00 345KV CKT 1
FDNSLock-Blown up	06NR	3	17G	G15_075		Non-Converged Contingency	1792	1792	0.05695	-	BORDER 7345.00 - WOODWARD DISTRICT EHV 345KV CKT 1
FDNSLock-Blown up	06ALL	3	17SP	G15_075		Non-Converged Contingency	956	1042	0.22326	-	G14-074T 345.00 - OKLAUNION 345KV CKT 1
FDNSLock-Blown up	06ALL	3	20L	G15_075		Non-Converged Contingency	1022	1124	0.18928	-	G14-074T 345.00 - OKLAUNION 345KV CKT 1
FDNSLock-Blown up	06ALL	3	20L	G15_075		Non-Converged Contingency	1022	1124	0.18928	-	G14-074T 345.00 - TUCO INTERCHANGE 345KV CKT 1
FDNSLock-Blown up	06ALL	3	20L	G15_075		Non-Converged Contingency	1792	1972	0.15813	-	BORDER 7345.00 - TUCO_2 345.00 345KV CKT 1
FDNSLock-Blown up	06ALL	3	20L	G15_075		Non-Converged Contingency	1420	1775	0.15813	-	BORDER 7345.00 - TUCO_2 345.00 345KV CKT 2
FDNSLock-Blown up	06ALL	3	20L	G15_075		Non-Converged Contingency	1584	2098	0.13179	-	CHISHOLM7 345.00 - GRACEMONT 345KV CKT 1
FDNSLock-Blown up	06ALL	3	20L	G15_075		Non-Converged Contingency	956.09	1051.7	0.10462	-	Hitchland Interchange - WALKTAP7 345.00 345KV CKT 1
FDNSLock-Blown up	06ALL	3	20L	G15_075		Non-Converged Contingency	956.09	1051.7	0.10451	-	G14_038T 345.00 - Hitchland Interchange 345KV CKT 1
FDNSLock-Blown up	06ALL	3	20L	G15_075		Non-Converged Contingency	956.09	1051.7	0.10451	-	G14_038T 345.00 - POTTER COUNTY INTERCHANGE 345KV CKT 1
FDNSLock-Blown up	06ALL	3	20L	G15_075		Non-Converged Contingency	560	560	0.10451	-	POTTER COUNTY INTERCHANGE (WAUK 90343-A) 345/230/13.2KV TRANSFORMER CKT 1
FDNSLock-Blown up	06ALL	3	20L	G15_075		Non-Converged Contingency	1195	1195	0.07309	-	MATHWSN7 345.00 - TATONGA7 345.00 345KV CKT 1
FDNSLock-Blown up	06NR	3	20L	G15_075		Non-Converged Contingency	1022	1124	0.05983	-	G14-074T 345.00 - OKLAUNION 345KV CKT 1
FDNSLock-Blown up	06NR	3	20L	G15_075		Non-Converged Contingency	1022	1124	0.05983	-	G14-074T 345.00 - TUCO INTERCHANGE 345KV CKT 1
FDNSLock-Blown up	06NR	3	20L	G15_075		Non-Converged Contingency	1022	1124	0.05983	-	OKLAUNION 345KV SWITCHED SHUNT
FDNSLock-Blown up	06NR	3	20L	G15_075		Non-Converged Contingency	1792	1972	0.05706	-	BORDER 7345.00 - TUCO_2 345.00 345KV CKT 1
FDNSLock-Blown up	06NR	3	20L	G15_075		Non-Converged Contingency	1792	1792	0.05706	-	BORDER 7345.00 - WOODWARD DISTRICT EHV 345KV CKT 1
FDNSLock-Blown up	06NR	3	20L	G15_075		Non-Converged Contingency	1792	1972	0.05706	-	BORDER 7345.00 345KV SWITCHED SHUNT
FDNSLock-Blown up	06ALL	3	20SP	G15_075		Non-Converged Contingency	956	1042	0.22352	-	G14-074T 345.00 - OKLAUNION 345KV CKT 1
FDNSLock-Blown up	06ALL	3	20WP	G15_075		Non-Converged Contingency	1022	1124	0.21893	-	G14-074T 345.00 - OKLAUNION 345KV CKT 1
FDNSLock-Blown up	06ALL	3	20WP	G15_075		Non-Converged Contingency	1022	1124	0.21893	-	G14-074T 345.00 - TUCO INTERCHANGE 345KV CKT 1
FDNSLock-Blown up	06ALL	3	20WP	G15_075		Non-Converged Contingency	1792	1972	0.17932	-	BORDER 7345.00 - TUCO_2 345.00 345KV CKT 1
FDNSLock-Blown up	06ALL	3	20WP	G15_075		Non-Converged Contingency	1420	1775	0.17932	-	BORDER 7345.00 - TUCO_2 345.00 345KV CKT 2
FDNSLock-Blown up	06ALL	3	20WP	G15_075		Non-Converged Contingency	987.16	1082.8	0.13197	-	G14_038T 345.00 - Hitchland Interchange 345KV CKT 1
FDNSLock-Blown up	06ALL	3	20WP	G15_075		Non-Converged Contingency	987.16	1082.8	0.13197	-	G14_038T 345.00 - POTTER COUNTY INTERCHANGE 345KV CKT 1
FDNSLock-Blown up	06ALL	4	16WP	G15_075		Non-Converged Contingency	1022	1124	0.20951	-	G14-074T 345.00 - OKLAUNION 345KV CKT 1
FDNSLock-Blown up	06ALL	4	17G	G15_075		Non-Converged Contingency	1022	1124	0.20299	-	G14-074T 345.00 - OKLAUNION 345KV CKT 1
FDNSLock-Blown up	06ALL	4	17G	G15_075		Non-Converged Contingency	1022	1124	0.20299	-	G14-074T 345.00 - TUCO INTERCHANGE 345KV CKT 1
FDNSLock-Blown up	06ALL	4	17G	G15_075		Non-Converged Contingency	956.09	1051.7	0.17403	-	G14_038T 345.00 - Hitchland Interchange 345KV CKT 1
FDNSLock-Blown up	06ALL	4	17G	G15_075		Non-Converged Contingency	956.09	1051.7	0.17403	-	G14_038T 345.00 - POTTER COUNTY INTERCHANGE 345KV CKT 1
FDNSLock-Blown up	06NR	4	17G	G15_075		Non-Converged Contingency	1022	1124	0.04958	-	G14-074T 345.00 - OKLAUNION 345KV CKT 1
FDNSLock-Blown up	06NR	4	17G	G15_075		Non-Converged Contingency	1022	1124	0.04958	-	G14-074T 345.00 - TUCO INTERCHANGE 345KV CKT 1
FDNSLock-Blown up	06NR	4	17G	G15_075		Non-Converged Contingency	1792	1972	0.0461	-	BORDER 7345.00 - TUCO_2 345.00 345KV CKT 1
FDNSLock-Blown up	06NR	4	17G	G15_075		Non-Converged Contingency	1792	1792	0.0461	-	BORDER 7345.00 - WOODWARD DISTRICT EHV 345KV CKT 1
FDNSLock-Blown up	06ALL	4	20L	G15_075		Non-Converged Contingency	0	0	0.21571	-	P12:345:SPS:J07.1.FINN.HITCH
FDNSLock-Blown up	06ALL	4	20L	G15_075		Non-Converged Contingency	1022	1124	0.17436	-	G14-074T 345.00 - OKLAUNION 345KV CKT 1
FDNSLock-Blown up	06ALL	4	20L	G15_075		Non-Converged Contingency	1022	1124	0.17436	-	G14-074T 345.00 - TUCO INTERCHANGE 345KV CKT 1
FDNSLock-Blown up	06ALL	4	20L	G15_075		Non-Converged Contingency	956.09	1051.7	0.14526	-	G14_038T 345.00 - Hitchland Interchange 345KV CKT 1
FDNSLock-Blown up	06ALL	4	20L	G15_075		Non-Converged Contingency	956.09	1051.7	0.14526	-	G14_038T 345.00 - POTTER COUNTY INTERCHANGE 345KV CKT 1
FDNSLock-Blown up	06ALL	4	20L	G15_075		Non-Converged Contingency	1792	1972	0.14203	-	BORDER 7345.00 - TUCO_2 345.00 345KV CKT 1

SOLUTION	GROUP	SCENARIO	SEASON	SOURCE	DIRECTION	MONITORED ELEMENT	RATEA (MVA)	RATEB(MVA)	TDF	TC%LOADING (% MVA)	CONTINGENCY
FDNSLock-Blown up	06ALL	4	20L	G15_075		Non-Converged Contingency	1420	1775	0.14203	-	BORDER 7345.00 - TUCO_2 345.00 345KV CKT 2
FDNSLock-Blown up	06ALL	4	20L	G15_075		Non-Converged Contingency	1584	2098	0.1287	-	CHISHOLM7 345.00 - GRACEMONT 345KV CKT 1
FDNSLock-Blown up	06ALL	4	20L	G15_075		Non-Converged Contingency	956.09	1051.7	0.11517	-	Hitchland Interchange - WALKTAP7 345.00 345KV CKT 1
FDNSLock-Blown up	06ALL	4	20L	G15_075		Non-Converged Contingency	956.09	1051.7	0.11517	-	Hitchland Interchange - WALKTAP7 345.00 345KV CKT 1
FDNSLock-Blown up	06ALL	4	20L	G15_075		Non-Converged Contingency	0	0	0.08656	-	P12:230:AEPW:ELKCITY6:SWEETWT6
FDNSLock-Blown up	06NR	4	20L	G15_075		Non-Converged Contingency	1022	1124	0.04808	-	G14-074T 345.00 - OKLAUNION 345KV CKT 1
FDNSLock-Blown up	06NR	4	20L	G15_075		Non-Converged Contingency	1022	1124	0.04808	-	G14-074T 345.00 - TUCO INTERCHANGE 345KV CKT 1
FDNSLock-Blown up	06NR	4	20L	G15_075		Non-Converged Contingency	1022	1124	0.04808	-	OKLAUNION 345KV SWITCHED SHUNT
FDNSLock-Blown up	06NR	4	20L	G15_075		Non-Converged Contingency	1792	1972	0.04489	-	BORDER 7345.00 - TUCO_2 345.00 345KV CKT 1
FDNSLock-Blown up	06NR	4	20L	G15_075		Non-Converged Contingency	1792	1792	0.04489	-	BORDER 7345.00 - WOODWARD DISTRICT EHV 345KV CKT 1
FDNSLock-Blown up	06ALL	4	20WP	G15_075		Non-Converged Contingency	1022	1124	0.20228	-	G14-074T 345.00 - OKLAUNION 345KV CKT 1
FDNSLock-Blown up	06ALL	4	20WP	G15_075		Non-Converged Contingency	1022	1124	0.20228	-	G14-074T 345.00 - TUCO INTERCHANGE 345KV CKT 1
FDNSLock-Blown up	06ALL	4	20WP	G15_075		Non-Converged Contingency	987.16	1082.8	0.17579	-	G14_038T 345.00 - Hitchland Interchange 345KV CKT 1
FDNSLock-Blown up	06ALL	5	16WP	G15_075		Non-Converged Contingency	1022	1124	0.20375	-	G14-074T 345.00 - OKLAUNION 345KV CKT 1
FDNSLock-Blown up	06ALL	5	17G	G15_075		Non-Converged Contingency	1022	1124	0.19772	-	G14-074T 345.00 - OKLAUNION 345KV CKT 1
FDNSLock-Blown up	06NR	5	17G	G15_075		Non-Converged Contingency	1022	1124	0.05206	-	G14-074T 345.00 - OKLAUNION 345KV CKT 1
FDNSLock-Blown up	06NR	5	17G	G15_075		Non-Converged Contingency	1792	1792	0.04703	-	BORDER 7345.00 - WOODWARD DISTRICT EHV 345KV CKT 1
FDNSLock-Blown up	06ALL	5	20L	G15_075		Non-Converged Contingency	1022	1124	0.17141	-	G14-074T 345.00 - OKLAUNION 345KV CKT 1
FDNSLock-Blown up	06NR	5	20L	G15_075		Non-Converged Contingency	1022	1124	0.05021	-	G14-074T 345.00 - OKLAUNION 345KV CKT 1
FDNSLock-Blown up	06NR	5	20L	G15_075		Non-Converged Contingency	1022	1124	0.05021	-	G14-074T 345.00 - TUCO INTERCHANGE 345KV CKT 1
FDNSLock-Blown up	06NR	5	20L	G15_075		Non-Converged Contingency	1792	1972	0.04571	-	BORDER 7345.00 - TUCO_2 345.00 345KV CKT 1
FDNSLock-Blown up	06NR	5	20L	G15_075		Non-Converged Contingency	1792	1792	0.04571	-	BORDER 7345.00 - WOODWARD DISTRICT EHV 345KV CKT 1
FDNSLock-Blown up	06ALL	5	20WP	G15_075		Non-Converged Contingency	1022	1124	0.1965	-	G14-074T 345.00 - OKLAUNION 345KV CKT 1
FDNSLock-Blown up	06ALL	6	17G	G15_075		Non-Converged Contingency	1022	1124	0.19092	-	G14-074T 345.00 - OKLAUNION 345KV CKT 1
FDNSLock-Blown up	06NR	6	17G	G15_075		Non-Converged Contingency	1022	1124	0.05222	-	G14-074T 345.00 - OKLAUNION 345KV CKT 1
FDNSLock-Blown up	06ALL	6	20L	G15_075		Non-Converged Contingency	1022	1124	0.16553	-	G14-074T 345.00 - OKLAUNION 345KV CKT 1
FDNSLock-Blown up	06NR	6	20L	G15_075		Non-Converged Contingency	1022	1124	0.05035	-	G14-074T 345.00 - OKLAUNION 345KV CKT 1
FDNSLock-Blown up	06NR	6	20L	G15_075		Non-Converged Contingency	1792	1972	0.04596	-	BORDER 7345.00 - TUCO_2 345.00 345KV CKT 1
FDNSLock-Blown up	06NR	6	20L	G15_075		Non-Converged Contingency	1792	1792	0.04596	-	BORDER 7345.00 - WOODWARD DISTRICT EHV 345KV CKT 1
FDNSLock-Blown up	06ALL	6	20WP	G15_075		Non-Converged Contingency	1022	1124	0.1898	-	G14-074T 345.00 - OKLAUNION 345KV CKT 1
FDNSLock-Blown up	06NR	7	20L	G15_075		Non-Converged Contingency	1022	1124	0.05035	-	G14-074T 345.00 - OKLAUNION 345KV CKT 1
FDNS	06ALL	0	16WP	G15_075	FROM->TO	BUSHLAND INTERCHANGE - POTTER COUNTY INTERCHANGE 230KV CKT 1	329.05	360.92	0.09287	103.4995	BASE CASE
FDNS	06NR	0	17G	G15_075	FROM->TO	BUSHLAND INTERCHANGE - POTTER COUNTY INTERCHANGE 230KV CKT 1	318.7	350.57	0.03969	101.2444	BUSHLAND INTERCHANGE - HILLSIDE 115KV CKT 1
FDNS	06NR	0	17G	G15_075	FROM->TO	BUSHLAND INTERCHANGE - POTTER COUNTY INTERCHANGE 230KV CKT 1	318.7	350.57	0.03969	101.1735	BUSHLAND INTERCHANGE (WH 7001795) 230/115/13.2KV TRANSFORMER CKT 1
FDNS	06NR	0	17G	G15_075	FROM->TO	BUSHLAND INTERCHANGE - POTTER COUNTY INTERCHANGE 230KV CKT 1	318.7	350.57	0.03969	101.1735	BUSHLAND INTERCHANGE (WH 7001795) 230/115/13.2KV TRANSFORMER CKT 1
FDNS	06NR	0	17G	G15_075	FROM->TO	BUSHLAND INTERCHANGE - POTTER COUNTY INTERCHANGE 230KV CKT 1	318.7	350.57	0.03969	100.4335	P12:115:SPS:V52.1.COLTR.BSHLND
FDNS	00NR	0	25SP	G15_075	FROM->TO	CARLISLE INTERCHANGE - LP-DOUD_TP 3115.00 115KV CKT 1	159	160	0.18131	110.1627	WOLFFORTH INTERCHANGE (WH 7001668) 230/115/13.2KV TRANSFORMER CKT 1
FDNS	00NR	0	25SP	G15_075	FROM->TO	CARLISLE INTERCHANGE - LP-DOUD_TP 3115.00 115KV CKT 1	159	160	0.18131	110.1627	WOLFFORTH INTERCHANGE (WH 7001668) 230/115/13.2KV TRANSFORMER CKT 1
FDNS	00NR	0	25SP	G15_075	FROM->TO	CARLISLE INTERCHANGE - LP-DOUD_TP 3115.00 115KV CKT 1	159	160	0.28714	99.9	TUCO INTERCHANGE - YOAKUM_345 345.00 345KV CKT 1
FDNS	06NR	0	20L	G15_075	FROM->TO	CARLISLE INTERCHANGE (WH RLP38371) 115/69/13.2KV TRANSFORMER CKT 1	44.37	44.4	1	111.2393	BASE CASE
FDNS	06ALL	0	20L	G15_075	FROM->TO	CARLISLE INTERCHANGE (WH RLP38371) 115/69/13.2KV TRANSFORMER CKT 1	44.37	44.4	1	110.8846	BASE CASE
FDNS	06NR	0	20L	G15_075	FROM->TO	CARLISLE INTERCHANGE (WH RLP38371) 115/69/13.2KV TRANSFORMER CKT 1	44.37	44.4	1	109.59	BASE CASE
FDNS	06ALL	0	20L	G15_075	FROM->TO	CARLISLE INTERCHANGE (WH RLP38371) 115/69/13.2KV TRANSFORMER CKT 1	44.37	44.4	1	109.4795	BASE CASE
FDNS	06ALL	0	16WP	G15_075	FROM->TO	CARLISLE INTERCHANGE (WH RLP38371) 115/69/13.2KV TRANSFORMER CKT 1	44.37	44.4	1	108.1221	BASE CASE
FDNS	00NR	0	16WP	G15_075	FROM->TO	CARLISLE INTERCHANGE (WH RLP38371) 115/69/13.2KV TRANSFORMER CKT 1	44.37	44.4	1	107.8116	BASE CASE
FDNS	06ALL	0	20WP	G15_075	FROM->TO	CARLISLE INTERCHANGE (WH RLP38371) 115/69/13.2KV TRANSFORMER CKT 1	44.37	44.4	1	106.9085	BASE CASE
FDNS	00NR	0	20WP	G15_075	FROM->TO	CARLISLE INTERCHANGE (WH RLP38371) 115/69/13.2KV TRANSFORMER CKT 1	44.37	44.4	1	106.3467	BASE CASE
FDNS	06ALL	0	16WP	G15_075	FROM->TO	CARLISLE INTERCHANGE (WH RLP38371) 115/69/13.2KV TRANSFORMER CKT 1	44.37	44.4	1	106.2565	BASE CASE
FDNS	00NR	0	16WP	G15_075	FROM->TO	CARLISLE INTERCHANGE (WH RLP38371) 115/69/13.2KV TRANSFORMER CKT 1	44.37	44.4	1	106.1873	BASE CASE
FDNS	06ALL	0	20WP	G15_075	FROM->TO	CARLISLE INTERCHANGE (WH RLP38371) 115/69/13.2KV TRANSFORMER CKT 1	44.37	44.4	1	105.41	BASE CASE
FDNS	00NR	0	20WP	G15_075	FROM->TO	CARLISLE INTERCHANGE (WH RLP38371) 115/69/13.2KV TRANSFORMER CKT 1	44.37	44.4	1	105.262	BASE CASE
FDNS	06ALL	0	17G	G15_075	FROM->TO	CARLISLE INTERCHANGE (WH RLP38371) 115/69/13.2KV TRANSFORMER CKT 1	44.37	44.4	1	104.1647	BASE CASE
FDNS	06NR	0	17G	G15_075	FROM->TO	CARLISLE INTERCHANGE (WH RLP38371) 115/69/13.2KV TRANSFORMER CKT 1	44.37	44.4	1	103.225	BASE CASE
FDNS	06ALL	0	17G	G15_075	FROM->TO	CARLISLE INTERCHANGE (WH RLP38371) 115/69/13.2KV TRANSFORMER CKT 1	44.37	44.4	1	102.2471	BASE CASE
FDNS	06NR	0	17G	G15_075	FROM->TO	CARLISLE INTERCHANGE (WH RLP38371) 115/69/13.2KV TRANSFORMER CKT 1	44.37	44.4	1	101.8891	BASE CASE
FDNS	06ALL	0	17SP	G15_075	FROM->TO	CARLISLE INTERCHANGE (WH RLP38371) 115/69/13.2KV TRANSFORMER CKT 1	44.37	44.4	1	100.7561	BASE CASE
FDNS	00NR	0	17SP	G15_075	FROM->TO	CARLISLE INTERCHANGE (WH RLP38371) 115/69/13.2KV TRANSFORMER CKT 1	44.37	44.4	1	100.2558	BASE CASE
FDNS	00NR	0	20SP	G15_075	FROM->TO	CARLISLE INTERCHANGE (WH RLP38371) 115/69/13.2KV TRANSFORMER CKT 1	44.37	44.4	1	100.1639	BASE CASE
FDNS	06ALL	0	20SP	G15_075	FROM->TO	CARLISLE INTERCHANGE (WH RLP38371) 115/69/13.2KV TRANSFORMER CKT 1	44.37	44.4	1	99.7	BASE CASE
FDNS	06ALL	0	20SP	G15_075	FROM->TO	CHISHOLM6 230.00 - ELK CITY 230KV 230KV CKT 1	353	353	0.06358	106.4803	BASE CASE
FDNS	06ALL	0	17SP	G15_075	FROM->TO	CHISHOLM6 230.00 - ELK CITY 230KV 230KV CKT 1	353	353	0.06377	104.7427	BASE CASE
FDNS	06ALL	0	17SP	G15_075	TO->FROM	CIMARRON - MINCO 345KV CKT 1	956	956	0.25249	123.2446	G14-057T 345.00 - SUNNYSIDE 345KV CKT 1
FDNS	06ALL	0	20SP	G15_075	TO->FROM	CIMARRON - MINCO 345KV CKT 1	956	956	0.25274	120.5642	G14-057T 345.00 - SUNNYSIDE 345KV CKT 1
FDNS	06ALL	0	17SP	G15_075	TO->FROM	CIMARRON - MINCO 345KV CKT 1	956	956	0.25249	117.8925	G14-057T 345.00 - LAWTON EASTSIDE 345KV CKT 1
FDNS	06ALL	0	20SP	G15_075	TO->FROM	CIMARRON - MINCO 345KV CKT 1	956	956	0.25274	115.1699	G14-057T 345.00 - LAWTON EASTSIDE 345KV CKT 1
FDNS	06ALL	0	17SP	G15_075	TO->FROM	CIMARRON - MINCO 345KV CKT 1	956	956	0.21322	105.5731	MATHWSN7 345.00 - TATONGA7 345.00 345KV CKT 1
FDNS	06ALL	0	20SP	G15_075	TO->FROM	CIMARRON - MINCO 345KV CKT 1	956	956	0.21329	104.5241	MATHWSN7 345.00 - TATONGA7 345.00 345KV CKT 1
FDNS	06ALL	0	20SP	G15_075	TO->FROM	CIMARRON - MINCO 345KV CKT 1	956	956	0.25614	102.9387	CHISHOLM7 345.00 - WOODWARD DISTRICT EHV 345KV CKT 1
FDNS	06ALL	0	17SP	G15_075	TO->FROM	CIMARRON - MINCO 345KV CKT 1	956	956	0.25559	102.0892	CHISHOLM7 345.00 - WOODWARD DISTRICT EHV 345KV CKT 1
FDNS	06ALL	0	20WP	G15_075	TO->FROM	CIMARRON - MINCO 345KV CKT 1	956	956	0.19821	100.5381	P12:138:WFEC:MSL03
FDNS	06ALL	0	17SP	G15_075	TO->FROM	CIMARRON - MINCO 345KV CKT 1	956	956	0.21322	100.3376	G11_051T 345.00 - TATONGA7 345.00 345KV CKT 1
FDNS	06ALL	0	20SP	G15_075	TO->FROM	DEAF SMITH COUNTY INTERCHANGE - G15039_T 230.00 230KV CKT 1	318.7	350.57	0.08412	110.3343	BASE CASE
FDNS	06NR	0	17G	G15_075	TO->FROM	DEAF SMITH COUNTY INTERCHANGE - G15039_T 230.00 230KV CKT 1	318.7	350.57	0.02976	110.3216	NEWHART 230 - PLANT X STATION 230KV CKT 1
FDNS	06ALL	0	17SP	G15_075	TO->FROM	DEAF SMITH COUNTY INTERCHANGE - G15039_T 230.00 230KV CKT 1	318.7	350.57	0.0889	108.4885	BASE CASE
FDNS	06NR	0	17G	G15_075	TO->FROM	DEAF SMITH COUNTY INTERCHANGE - G15039_T 230.00 230KV CKT 1	318.7	350.57	0.03986	103.1436	P12:115:SPS:T04.1.DFSMTH.CASTRO
FDNS	06NR	0	17G	G15_075	TO->FROM	DEAF SMITH COUNTY INTERCHANGE - G15039_T 230.00 230KV CKT 1	318.7	350.57	0.03397	101.0528	CURRY COUNTY INTERCHANGE - DEAF SMITH REC-#20 115KV CKT 1
FDNS	06NR	0	17G	G15_075	TO->FROM	DEAF SMITH COUNTY INTERCHANGE - G15039_T 230.00 230KV CKT 1	318.7	350.57	0.03275	99.9	P12:230:SPS:CL.1.BSHLND.WLDRDO
FDNS	06NR	0	17G	G15_075	TO->FROM	DEAF SMITH COUNTY INTERCHANGE - G15039_T 230.00 230KV CKT 1	318.7	350.57	0.03397	99.6	DEAF SMITH REC-#20 - PARMER COUNTY SUB 115KV CKT 1
FDNSLock	06ALL	0	20WP	G15_075		ELK CITY 230KV (ELKCTY-6) 230/138/13.8KV TRANSFORMER CKT 1	450	450	0.06189	87.66341	BASE CASE

SOLUTION	GROUP	SCENARIO	SEASON	SOURCE	DIRECTION	MONITORED ELEMENT	RATEA (MVA)	RATEB(MVA)	TDF	TC%LOADING (% MVA)	CONTINGENCY
FDNSLock	06ALL	0	20WP	G15_075		ELK CITY 230KV (ELKCTY-6) 230/138/13.8KV TRANSFORMER CKT 1	450	450	0.06189	87.66341	BASE CASE
FDNS	06ALL	0	20L	G15_075	TO->FROM	G14-057T 345.00 - LAWTON EASTSIDE 345KV CKT 1	717	789	0.10639	108.0268	BASE CASE
FDNS	06ALL	0	20L	G15_075	FROM->TO	G14-057T 345.00 - SUNNYSIDE 345KV CKT 1	717	789	0.10639	120.8788	BASE CASE
FDNS	06ALL	0	20WP	G15_075	FROM->TO	G14-057T 345.00 - SUNNYSIDE 345KV CKT 1	717	789	0.13013	107.5634	BASE CASE
FDNS	06ALL	0	17G	G15_075	FROM->TO	G14-057T 345.00 - SUNNYSIDE 345KV CKT 1	717	789	0.13175	106.9763	BASE CASE
FDNS	06ALL	0	16WP	G15_075	FROM->TO	G14-057T 345.00 - SUNNYSIDE 345KV CKT 1	717	789	0.13504	105.0999	BASE CASE
FDNS	06NR	0	17G	G15_075	FROM->TO	G14-057T 345.00 - SUNNYSIDE 345KV CKT 1	717	789	0.03002	101.3715	GRACEMONT - LAWTON EASTSIDE 345KV CKT 1
FDNS	06NR	0	17G	G15_075	FROM->TO	G14-057T 345.00 - SUNNYSIDE 345KV CKT 1	717	789	0.03002	101.3715	GRACEMONT - LAWTON EASTSIDE 345KV CKT 1
FDNS	06NR	0	20L	G15_075	FROM->TO	G14-074T 345.00 - OKLAUNION 345KV CKT 1	1022	1124	0.06513	106.9322	BASE CASE
FDNS	06NR	0	17G	G15_075	FROM->TO	G14-074T 345.00 - OKLAUNION 345KV CKT 1	1022	1124	0.06894	102.2735	BASE CASE
FDNS	06NR	0	20L	G15_075	FROM->TO	G14-074T 345.00 - OKLAUNION 345KV CKT 1	1022	1124	0.0621	102.2532	CHISHOLM7 345.00 - GRACEMONT 345KV CKT 1
FDNS	06NR	0	20L	G15_075	FROM->TO	G14-074T 345.00 - OKLAUNION 345KV CKT 1	1022	1124	0.0621	101.8896	CHISHOLM7 345.00 () 345/230/13.2KV TRANSFORMER CKT 1
FDNS	06NR	0	20L	G15_075	FROM->TO	G14-074T 345.00 - OKLAUNION 345KV CKT 1	1022	1124	0.06549	101.4902	TUCO INTERCHANGE - TUCO_2 345.00 345KV CKT 1
FDNS	06NR	0	20L	G15_075	FROM->TO	G14-074T 345.00 - OKLAUNION 345KV CKT 1	1022	1124	0.07148	101.2851	BUSHLAND INTERCHANGE - DEAF SMITH COUNTY INTERCHANGE 230KV CKT 1
FDNS	06NR	0	20L	G15_075	FROM->TO	G14-074T 345.00 - OKLAUNION 345KV CKT 1	1022	1124	0.07148	101.2851	BUSHLAND INTERCHANGE - DEAF SMITH COUNTY INTERCHANGE 230KV CKT 1
FDNS	06NR	0	20L	G15_075	FROM->TO	G14-074T 345.00 - OKLAUNION 345KV CKT 1	1022	1124	0.06472	101.2671	MOORE COUNTY INTERCHANGE - POTTER COUNTY INTERCHANGE 230KV CKT 1
FDNS	06NR	0	20L	G15_075	FROM->TO	G14-074T 345.00 - OKLAUNION 345KV CKT 1	1022	1124	0.06472	101.2671	MOORE COUNTY INTERCHANGE - POTTER COUNTY INTERCHANGE 230KV CKT 1
FDNS	06NR	0	20L	G15_075	FROM->TO	G14-074T 345.00 - OKLAUNION 345KV CKT 1	1022	1124	0.06405	101.2654	G11-14T 345.00 - WOODWARD DISTRICT EHV 345KV CKT 1
FDNS	06NR	0	20L	G15_075	FROM->TO	G14-074T 345.00 - OKLAUNION 345KV CKT 1	1022	1124	0.06405	101.2654	G11-14T 345.00 - WOODWARD DISTRICT EHV 345KV CKT 2
FDNS	00NR	0	25SP	G15_075	FROM->TO	Hitchland Interchange (H TB80155502) 345/230/13.2KV TRANSFORMER CKT 1	560	644	0.03529	100	Hitchland Interchange (SIEM 8743067) 345/230/13.2KV TRANSFORMER CKT 2
FDNS	00NR	0	25SP	G15_075	FROM->TO	Hitchland Interchange (H TB80155502) 345/230/13.2KV TRANSFORMER CKT 1	560	644	0.03529	100	Hitchland Interchange (SIEM 8743067) 345/230/13.2KV TRANSFORMER CKT 2
FDNS	00NR	0	25SP	G15_075	FROM->TO	Hitchland Interchange (SIEM 8743067) 345/230/13.2KV TRANSFORMER CKT 2	560	644	0.03602	102.3531	Hitchland Interchange (H TB80155502) 345/230/13.2KV TRANSFORMER CKT 1
FDNS	00NR	0	25SP	G15_075	FROM->TO	Hitchland Interchange (SIEM 8743067) 345/230/13.2KV TRANSFORMER CKT 2	560	644	0.03602	102.3531	Hitchland Interchange (H TB80155502) 345/230/13.2KV TRANSFORMER CKT 1
FDNS	00NR	0	25SP	G15_075	FROM->TO	Hitchland Interchange (SIEM 8743067) 345/230/13.2KV TRANSFORMER CKT 2	560	644	0.03602	100.5303	Hitchland Interchange (H TB80155502) 345/230/13.2KV TRANSFORMER CKT 1
FDNS	00NR	0	25SP	G15_075	FROM->TO	Hitchland Interchange (SIEM 8743067) 345/230/13.2KV TRANSFORMER CKT 2	560	644	0.03602	100.5303	Hitchland Interchange (H TB80155502) 345/230/13.2KV TRANSFORMER CKT 1
FDNS	00NR	0	25SP	G15_075	FROM->TO	LUBBOCK POWER & LIGHT-HOLLY PLANT (SHIH T101039) 230/69/13.5KV TRANSFORMER CKT 1	224	224	0.03344	104.8294	LUBBOCK POWER & LIGHT-SOUTHEAST - LUBBOCK SOUTH INTERCHANGE 230KV CKT 1
FDNS	00NR	0	25SP	G15_075	FROM->TO	LUBBOCK POWER & LIGHT-HOLLY PLANT (SHIH T101039) 230/69/13.5KV TRANSFORMER CKT 1	224	224	0.03344	104.8165	P12:LPL:SPS:K64.1.LP-SE.LUBBS
FDNS	00NR	0	25SP	G15_075	FROM->TO	LUBBOCK POWER & LIGHT-HOLLY PLANT (SHIH T101039) 230/69/13.5KV TRANSFORMER CKT 1	224	224	0.03091	101.9053	LUBBOCK EAST INTERCHANGE - LUBBOCK POWER & LIGHT-WADSWORTH 230KV CKT 1
FDNS	00NR	0	25SP	G15_075	FROM->TO	LUBBOCK POWER & LIGHT-HOLLY PLANT (SHIH T101039) 230/69/13.5KV TRANSFORMER CKT 1	224	224	0.03091	101.8957	P12:230:LPL:K57.1.LP-WADS.LUBBE
FDNS	00NR	0	25SP	G15_075	FROM->TO	LUBBOCK POWER & LIGHT-HOLLY PLANT (SHIH T101039) 230/69/13.5KV TRANSFORMER CKT 1	224	224	0.03091	101.8956	LUBBOCK POWER & LIGHT-WADSWORTH (SHIH T101038) 230/69/13.5KV TRANSFORMER CKT 1
FDNS	00NR	0	25SP	G15_075	FROM->TO	LUBBOCK POWER & LIGHT-HOLLY PLANT (SHIH T101039) 230/69/13.5KV TRANSFORMER CKT 1	224	224	0.03091	101.8956	LUBBOCK POWER & LIGHT-WADSWORTH (SHIH T101038) 230/69/13.5KV TRANSFORMER CKT 1
FDNSLock	06ALL	0	20WP	G15_075		Non-Converged Contingency	1792	1792	0.17798	-	BORDER 7345.00 - CHISHOLM7 345.00 345KV CKT 1
FDNSLock	06ALL	0	20WP	G15_075		Non-Converged Contingency	1792	1792	0.17798	-	BORDER 7345.00 - CHISHOLM7 345.00 345KV CKT 2
FDNSLock	06ALL	0	20WP	G15_075		Non-Converged Contingency	439	439	0.06189	-	CHISHOLM6 230.00 - ELK CITY 230KV 230KV CKT 1
FDNS	00NR	0	25SP	G15_075	FROM->TO	POTTER COUNTY INTERCHANGE (WAUK 90343-A) 345/230/13.2KV TRANSFORMER CKT 1	560	560	0.03716	105.4342	HITCHLAND INTERCHANGE - MOORE COUNTY INTERCHANGE 230KV CKT 1
FDNS	00NR	0	25SP	G15_075	FROM->TO	POTTER COUNTY INTERCHANGE (WAUK 90343-A) 345/230/13.2KV TRANSFORMER CKT 1	560	560	0.03716	105.4342	HITCHLAND INTERCHANGE - MOORE COUNTY INTERCHANGE 230KV CKT 1
FDNS	00NR	0	25SP	G15_075	FROM->TO	POTTER COUNTY INTERCHANGE (WAUK 90343-A) 345/230/13.2KV TRANSFORMER CKT 1	560	560	0.03716	103.6189	HITCHLAND INTERCHANGE - MOORE COUNTY INTERCHANGE 230KV CKT 1
FDNS	00NR	0	25SP	G15_075	FROM->TO	POTTER COUNTY INTERCHANGE (WAUK 90343-A) 345/230/13.2KV TRANSFORMER CKT 1	560	560	0.03716	103.6189	HITCHLAND INTERCHANGE - MOORE COUNTY INTERCHANGE 230KV CKT 1
FDNS	06ALL	0	20WP	G15_075	FROM->TO	POTTER COUNTY INTERCHANGE (WAUK 90343-A) 345/230/13.2KV TRANSFORMER CKT 1	560	560	0.13221	101.9937	BASE CASE
FDNS	06ALL	0	20WP	G15_075	FROM->TO	POTTER COUNTY INTERCHANGE (WAUK 90343-A) 345/230/13.2KV TRANSFORMER CKT 1	560	560	0.13221	100.9471	BASE CASE
FDNS	00NR	0	25SP	G15_075	FROM->TO	SUNDOWN INTERCHANGE (WH XDS70381) 230/115/13.8KV TRANSFORMER CKT 1	187	187	0.03809	100.4435	AMOCO SWITCHING STATION - SUNDOWN INTERCHANGE 230KV CKT 1
FDNS	00NR	0	25SP	G15_075	FROM->TO	SUNDOWN INTERCHANGE (WH XDS70381) 230/115/13.8KV TRANSFORMER CKT 1	187	187	0.03809	100.4435	AMOCO SWITCHING STATION - SUNDOWN INTERCHANGE 230KV CKT 1
FDNS	06ALL	0	20SP	G15_075	FROM->TO	TUCO INTERCHANGE - TUCO_2 230.00 230KV CKT 1	497	547	0.41568	176.1131	TUCO INTERCHANGE - TUCO_2 345.00 345KV CKT 1
FDNS	06ALL	0	17SP	G15_075	FROM->TO	TUCO INTERCHANGE - TUCO_2 230.00 230KV CKT 1	497	547	0.41192	172.1789	TUCO INTERCHANGE - TUCO_2 345.00 345KV CKT 1
FDNS	06NR	0	17G	G15_075	FROM->TO	TUCO INTERCHANGE - TUCO_2 230.00 230KV CKT 1	497	547	0.19576	120.0923	TUCO INTERCHANGE - TUCO_2 345.00 345KV CKT 1
FDNS	06NR	0	20L	G15_075	FROM->TO	TUCO INTERCHANGE - TUCO_2 230.00 230KV CKT 1	497	547	0.18412	110.6573	TUCO INTERCHANGE - TUCO_2 345.00 345KV CKT 1
FDNS	06ALL	0	25SP	G15_075	FROM->TO	TUCO INTERCHANGE - TUCO_2 230.00 230KV CKT 1	497	547	0.42623	101.2227615	TUCO INTERCHANGE - TUCO_2 345.00 345KV CKT 1
FDNS	06ALL	0	20WP	G15_075	FROM->TO	TUCO INTERCHANGE (GE M1022338) 345/230/13.2KV TRANSFORMER CKT 1	560	560	0.26792	109.5718	TUCO_2 345.00 (TUCO_2 XFMR) 345/230/13.2KV TRANSFORMER CKT 1
FDNS	06ALL	0	20WP	G15_075	FROM->TO	TUCO INTERCHANGE (GE M1022338) 345/230/13.2KV TRANSFORMER CKT 1	560	560	0.28447	109.3652	TUCO INTERCHANGE (SIEM 8743066) 345/230/13.2KV TRANSFORMER CKT 2
FDNS	06ALL	0	20WP	G15_075	FROM->TO	TUCO INTERCHANGE (GE M1022338) 345/230/13.2KV TRANSFORMER CKT 1	560	560	0.28447	109.3652	TUCO INTERCHANGE (SIEM 8743066) 345/230/13.2KV TRANSFORMER CKT 2
FDNS	06ALL	0	20WP	G15_075	FROM->TO	TUCO INTERCHANGE (GE M1022338) 345/230/13.2KV TRANSFORMER CKT 1	560	560	0.26792	106.1247	TUCO_2 345.00 (TUCO_2 XFMR) 345/230/13.2KV TRANSFORMER CKT 1
FDNS	06ALL	0	20WP	G15_075	FROM->TO	TUCO INTERCHANGE (GE M1022338) 345/230/13.2KV TRANSFORMER CKT 1	560	560	0.28447	105.7755	TUCO INTERCHANGE (SIEM 8743066) 345/230/13.2KV TRANSFORMER CKT 2
FDNS	06ALL	0	20WP	G15_075	FROM->TO	TUCO INTERCHANGE (GE M1022338) 345/230/13.2KV TRANSFORMER CKT 1	560	560	0.28447	105.7755	TUCO INTERCHANGE (SIEM 8743066) 345/230/13.2KV TRANSFORMER CKT 2
FDNS	06ALL	0	20SP	G15_075	FROM->TO	TUCO_2 345.00 (TUCO_2 XFMR) 345/230/13.2KV TRANSFORMER CKT 1	560	560	0.32812	168.9327	TUCO INTERCHANGE - TUCO_2 345.00 345KV CKT 1
FDNS	06ALL	0	17SP	G15_075	FROM->TO	TUCO_2 345.00 (TUCO_2 XFMR) 345/230/13.2KV TRANSFORMER CKT 1	560	560	0.32879	168.0719	TUCO INTERCHANGE - TUCO_2 345.00 345KV CKT 1
FDNS	06ALL	0	20SP	G15_075	FROM->TO	TUCO_2 345.00 (TUCO_2 XFMR) 345/230/13.2KV TRANSFORMER CKT 1	560	560	0.32812	162.4281	TUCO INTERCHANGE - TUCO_2 345.00 345KV CKT 1
FDNS	06ALL	0	17SP	G15_075	FROM->TO	TUCO_2 345.00 (TUCO_2 XFMR) 345/230/13.2KV TRANSFORMER CKT 1	560	560	0.32879	161.5424	TUCO INTERCHANGE - TUCO_2 345.00 345KV CKT 1
FDNS	06NR	0	17G	G15_075	FROM->TO	TUCO_2 345.00 (TUCO_2 XFMR) 345/230/13.2KV TRANSFORMER CKT 1	560	560	0.06179	114.7643	TUCO INTERCHANGE - TUCO_2 345.00 345KV CKT 1
FDNS	06NR	0	17G	G15_075	FROM->TO	TUCO_2 345.00 (TUCO_2 XFMR) 345/230/13.2KV TRANSFORMER CKT 1	560	560	0.06179	111.8684	TUCO INTERCHANGE - TUCO_2 345.00 345KV CKT 1
FDNS	06NR	0	20L	G15_075	FROM->TO	TUCO_2 345.00 (TUCO_2 XFMR) 345/230/13.2KV TRANSFORMER CKT 1	560	560	0.06215	110.8936	TUCO INTERCHANGE - TUCO_2 345.00 345KV CKT 1
FDNS	06NR	0	20L	G15_075	FROM->TO	TUCO_2 345.00 (TUCO_2 XFMR) 345/230/13.2KV TRANSFORMER CKT 1	560	560	0.06215	108.3383	TUCO INTERCHANGE - TUCO_2 345.00 345KV CKT 1
FDNS	06ALL	0	20WP	G15_075	FROM->TO	TUCO_2 345.00 (TUCO_2 XFMR) 345/230/13.2KV TRANSFORMER CKT 1	560	560	0.23242	102.6075	TUCO INTERCHANGE (GE M1022338) 345/230/13.2KV TRANSFORMER CKT 1
FDNS	06ALL	0	20WP	G15_075	FROM->TO	TUCO_2 345.00 (TUCO_2 XFMR) 345/230/13.2KV TRANSFORMER CKT 1	560	560	0.23242	102.6075	TUCO INTERCHANGE (GE M1022338) 345/230/13.2KV TRANSFORMER CKT 1
FDNS	06ALL	0	20WP	G15_075	FROM->TO	TUCO_2 345.00 (TUCO_2 XFMR) 345/230/13.2KV TRANSFORMER CKT 1	560	560	0.23242	99.8	TUCO INTERCHANGE (GE M1022338) 345/230/13.2KV TRANSFORMER CKT 1
FDNS	06ALL	0	20WP	G15_075	FROM->TO	TUCO_2 345.00 (TUCO_2 XFMR) 345/230/13.2KV TRANSFORMER CKT 1	560	560	0.23242	99.8	TUCO INTERCHANGE (GE M1022338) 345/230/13.2KV TRANSFORMER CKT 1
FDNS	00NR	0	25SP	G15_075	FROM->TO	WOLFFORTH INTERCHANGE (WH 7001668) 230/115/13.2KV TRANSFORMER CKT 1	168	168	0.05543	109.9753	CARLISLE INTERCHANGE - LP-DOUD_TP 3115.00 115KV CKT 1
FDNS	00NR	0	25SP	G15_075	FROM->TO	WOLFFORTH INTERCHANGE (WH 7001668) 230/115/13.2KV TRANSFORMER CKT 1	168	168	0.05543	104.592	CARLISLE INTERCHANGE - LP-DOUD_TP 3115.00 115KV CKT 1
FDNS	06NR	2	17G	G15_075	TO->FROM	AMARILLO SOUTH INTERCHANGE - G15031_T 230.00 230KV CKT 1	318.7	350.57	0.10613	103.4449	NEWHART 230 - POTTER COUNTY INTERCHANGE 230KV CKT 1
FDNS	06NR	2	17G	G15_075	FROM->TO	BUSHLAND INTERCHANGE - POTTER COUNTY INTERCHANGE 230KV CKT 1	318.7	350.57	0.05089	103.6906	NEWHART 230 - POTTER COUNTY INTERCHANGE 230KV CKT 1
FDNS	00NR	2	25SP	G15_075	FROM->TO	CARLISLE INTERCHANGE - LP-DOUD_TP 3115.00 115KV CKT 1	159	160	0.18131	110.2252	WOLFFORTH INTERCHANGE (WH 7001668) 230/115/13.2KV TRANSFORMER CKT 1
FDNS	00NR	2	25SP	G15_075	FROM->TO	CARLISLE INTERCHANGE - LP-DOUD_TP 3115.00 115KV CKT 1	159	160	0.18131	110.2252	WOLFFORTH INTERCHANGE (WH 7001668) 230/115/13.2KV TRANSFORMER CKT 1
FDNS	00NR	2	25SP	G15_075	FROM->TO	CARLISLE INTERCHANGE - LP-DOUD_TP 3115.00 115KV CKT 1	159	160	0.28714	100	TUCO INTERCHANGE - YOAKUM_345 345.00 345KV CKT 1
FDNS	06ALL	2	20L	G15_075	FROM->TO	CARLISLE INTERCHANGE (WH RLP38371) 115/69/13.2KV TRANSFORMER CKT 1	44.37	44.4	1	111.4897	BASE CASE
FDNS	06NR	2	20L	G15_075	FROM->TO	CARLISLE INTERCHANGE (WH RLP38371) 115/69/13.2KV TRANSFORMER CKT 1	44.37	44.4	1	111.2393	BASE CASE
FDNS	06ALL	2	20L	G15_075	FROM->TO	CARLISLE INTERCHANGE (WH RLP38371) 115/69/13.2KV TRANSFORMER CKT 1	44.37	44.4	1	109.6781	BASE CASE
FDNS	06NR	2	20L	G15_075	FROM->TO	CARLISLE INTERCHANGE (WH RLP38371) 115/69/13.2KV TRANSFORMER CKT 1	44.37	44.4	1	109.59	BASE CASE
FDNS	06ALL	2	16WP	G15_075	FROM->TO	CARLISLE INTERCHANGE (WH RLP38371) 115/69/13.2KV TRANSFORMER CKT 1	44.37	44.4	1	109.2732	BASE CASE
FDNS	00NR	2	16WP	G15_075	FROM->TO	CARLISLE INTERCHANGE (WH RLP38371) 115/69/13.2KV TRANSFORMER CKT 1	44.37	44.4	1	107.8338	BASE CASE
FDNS	06ALL	2	20WP	G15_075	FROM->TO	CARLISLE INTERCHANGE (WH RLP38371) 115/69/13.2KV TRANSFORMER CKT 1	44.37	44.4	1	107.2791	BASE CASE

SOLUTION	GROUP	SCENARIO	SEASON	SOURCE	DIRECTION	MONITORED ELEMENT	RATEA (MVA)	RATEB(MVA)	TDF	TC%LOADING (% MVA)	CONTINGENCY
FDNS	06ALL	2	16WP	G15_075	FROM->TO	CARLISLE INTERCHANGE (WH RLP38371) 115/69/13.2KV TRANSFORMER CKT 1	44.37	44.4	1	106.78	BASE CASE
FDNS	00NR	2	20WP	G15_075	FROM->TO	CARLISLE INTERCHANGE (WH RLP38371) 115/69/13.2KV TRANSFORMER CKT 1	44.37	44.4	1	106.3674	BASE CASE
FDNS	00NR	2	16WP	G15_075	FROM->TO	CARLISLE INTERCHANGE (WH RLP38371) 115/69/13.2KV TRANSFORMER CKT 1	44.37	44.4	1	106.1961	BASE CASE
FDNS	06ALL	2	20WP	G15_075	FROM->TO	CARLISLE INTERCHANGE (WH RLP38371) 115/69/13.2KV TRANSFORMER CKT 1	44.37	44.4	1	105.5477	BASE CASE
FDNS	00NR	2	20WP	G15_075	FROM->TO	CARLISLE INTERCHANGE (WH RLP38371) 115/69/13.2KV TRANSFORMER CKT 1	44.37	44.4	1	105.2677	BASE CASE
FDNS	06ALL	2	17G	G15_075	FROM->TO	CARLISLE INTERCHANGE (WH RLP38371) 115/69/13.2KV TRANSFORMER CKT 1	44.37	44.4	1	105.0346	BASE CASE
FDNS	06NR	2	17G	G15_075	FROM->TO	CARLISLE INTERCHANGE (WH RLP38371) 115/69/13.2KV TRANSFORMER CKT 1	44.37	44.4	1	103.483	BASE CASE
FDNS	06ALL	2	17G	G15_075	FROM->TO	CARLISLE INTERCHANGE (WH RLP38371) 115/69/13.2KV TRANSFORMER CKT 1	44.37	44.4	1	102.6714	BASE CASE
FDNS	06NR	2	17G	G15_075	FROM->TO	CARLISLE INTERCHANGE (WH RLP38371) 115/69/13.2KV TRANSFORMER CKT 1	44.37	44.4	1	101.9854	BASE CASE
FDNS	06ALL	2	17SP	G15_075	FROM->TO	CARLISLE INTERCHANGE (WH RLP38371) 115/69/13.2KV TRANSFORMER CKT 1	44.37	44.4	1	100.4594	BASE CASE
FDNS	00NR	2	17SP	G15_075	FROM->TO	CARLISLE INTERCHANGE (WH RLP38371) 115/69/13.2KV TRANSFORMER CKT 1	44.37	44.4	1	100.2552	BASE CASE
FDNS	00NR	2	20SP	G15_075	FROM->TO	CARLISLE INTERCHANGE (WH RLP38371) 115/69/13.2KV TRANSFORMER CKT 1	44.37	44.4	1	100.0861	BASE CASE
FDNS	06ALL	2	20SP	G15_075	FROM->TO	CHISHOLM6 230.00 - ELK CITY 230KV 230KV CKT 1	353	353	0.06361	103.9805	BASE CASE
FDNS	06ALL	2	17SP	G15_075	FROM->TO	CHISHOLM6 230.00 - ELK CITY 230KV 230KV CKT 1	353	353	0.0638	101.7938	BASE CASE
FDNS	06ALL	2	20L	G15_075	TO->FROM	CIMARRON - MINCO 345KV CKT 1	956	956	0.21922	140.1322	G14-057T 345.00 - SUNNYSIDE 345KV CKT 1
FDNS	06ALL	2	20L	G15_075	TO->FROM	CIMARRON - MINCO 345KV CKT 1	956	956	0.21922	133.5433	G14-057T 345.00 - LAWTON EASTSIDE 345KV CKT 1
FDNS	06ALL	2	17G	G15_075	TO->FROM	CIMARRON - MINCO 345KV CKT 1	956	956	0.24913	131.7687	G14-057T 345.00 - SUNNYSIDE 345KV CKT 1
FDNS	06ALL	2	20WP	G15_075	TO->FROM	CIMARRON - MINCO 345KV CKT 1	956	956	0.24667	130.9595	G14-057T 345.00 - SUNNYSIDE 345KV CKT 1
FDNS	06ALL	2	17G	G15_075	TO->FROM	CIMARRON - MINCO 345KV CKT 1	956	956	0.24913	126.2954	G14-057T 345.00 - LAWTON EASTSIDE 345KV CKT 1
FDNS	06ALL	2	20WP	G15_075	TO->FROM	CIMARRON - MINCO 345KV CKT 1	956	956	0.24667	125.3296	G14-057T 345.00 - LAWTON EASTSIDE 345KV CKT 1
FDNS	06ALL	2	16WP	G15_075	TO->FROM	CIMARRON - MINCO 345KV CKT 1	956	956	0.25568	123.9324	G14-057T 345.00 - SUNNYSIDE 345KV CKT 1
FDNS	06ALL	2	17SP	G15_075	TO->FROM	CIMARRON - MINCO 345KV CKT 1	956	956	0.25261	123.0412	G14-057T 345.00 - SUNNYSIDE 345KV CKT 1
FDNS	06ALL	2	20SP	G15_075	TO->FROM	CIMARRON - MINCO 345KV CKT 1	956	956	0.25287	120.4683	G14-057T 345.00 - SUNNYSIDE 345KV CKT 1
FDNS	06ALL	2	16WP	G15_075	TO->FROM	CIMARRON - MINCO 345KV CKT 1	956	956	0.25568	118.3934	G14-057T 345.00 - LAWTON EASTSIDE 345KV CKT 1
FDNS	06ALL	2	17SP	G15_075	TO->FROM	CIMARRON - MINCO 345KV CKT 1	956	956	0.25261	117.7499	G14-057T 345.00 - LAWTON EASTSIDE 345KV CKT 1
FDNS	06ALL	2	20SP	G15_075	TO->FROM	CIMARRON - MINCO 345KV CKT 1	956	956	0.25287	115.0256	G14-057T 345.00 - LAWTON EASTSIDE 345KV CKT 1
FDNS	06ALL	2	17G	G15_075	TO->FROM	CIMARRON - MINCO 345KV CKT 1	956	956	0.20999	111.0722	MATHWSN7 345.00 - TATONGA7 345.00 345KV CKT 1
FDNS	06ALL	2	20WP	G15_075	TO->FROM	CIMARRON - MINCO 345KV CKT 1	956	956	0.20668	110.8109	MATHWSN7 345.00 - TATONGA7 345.00 345KV CKT 1
FDNS	06ALL	2	20L	G15_075	TO->FROM	CIMARRON - MINCO 345KV CKT 1	956	956	0.22627	107.6011	CHISHOLM7 345.00 - WOODWARD DISTRICT EHV 345KV CKT 1
FDNS	06ALL	2	17G	G15_075	TO->FROM	CIMARRON - MINCO 345KV CKT 1	956	956	0.24927	107.4004	CHISHOLM7 345.00 - WOODWARD DISTRICT EHV 345KV CKT 1
FDNS	06ALL	2	20WP	G15_075	TO->FROM	CIMARRON - MINCO 345KV CKT 1	956	956	0.20668	105.5266	G11_051T 345.00 - TATONGA7 345.00 345KV CKT 1
FDNSLock	06ALL	2	17G	G15_075	TO->FROM	CIMARRON - MINCO 345KV CKT 1	956	956	0.20999	105.1772	G11_051T 345.00 - TATONGA7 345.00 345KV CKT 1
FDNS	06ALL	2	17SP	G15_075	TO->FROM	CIMARRON - MINCO 345KV CKT 1	956	956	0.21334	104.7953	MATHWSN7 345.00 - TATONGA7 345.00 345KV CKT 1
FDNS	06ALL	2	20SP	G15_075	TO->FROM	CIMARRON - MINCO 345KV CKT 1	956	956	0.2134	104.2231	MATHWSN7 345.00 - TATONGA7 345.00 345KV CKT 1
FDNS	06ALL	2	16WP	G15_075	TO->FROM	CIMARRON - MINCO 345KV CKT 1	956	956	0.21498	104.0692	MATHWSN7 345.00 - TATONGA7 345.00 345KV CKT 1
FDNS	06ALL	2	20WP	G15_075	TO->FROM	CIMARRON - MINCO 345KV CKT 1	956	956	0.20668	103.9402	G11_051T 345.00 - WOODWARD DISTRICT EHV 345KV CKT 1
FDNS	06ALL	2	20WP	G15_075	TO->FROM	CIMARRON - MINCO 345KV CKT 1	956	956	0.24933	103.712	CHISHOLM7 345.00 - WOODWARD DISTRICT EHV 345KV CKT 1
FDNSLock	06ALL	2	17G	G15_075	TO->FROM	CIMARRON - MINCO 345KV CKT 1	956	956	0.20999	103.655	G11_051T 345.00 - WOODWARD DISTRICT EHV 345KV CKT 1
FDNS	06ALL	2	20SP	G15_075	TO->FROM	CIMARRON - MINCO 345KV CKT 1	956	956	0.25627	102.1101	CHISHOLM7 345.00 - WOODWARD DISTRICT EHV 345KV CKT 1
FDNS	06ALL	2	17SP	G15_075	TO->FROM	CIMARRON - MINCO 345KV CKT 1	956	956	0.25573	100.969	CHISHOLM7 345.00 - WOODWARD DISTRICT EHV 345KV CKT 1
FDNS	06ALL	2	17SP	G15_075	TO->FROM	CIMARRON - MINCO 345KV CKT 1	956	956	0.21334	99.6	G11_051T 345.00 - TATONGA7 345.00 345KV CKT 1
FDNS	06ALL	2	20SP	G15_075	TO->FROM	DEAF SMITH COUNTY INTERCHANGE - G15039_T 230.00 230KV CKT 1	318.7	350.57	0.08419	106.1518	BASE CASE
FDNS	06NR	2	17G	G15_075	TO->FROM	DEAF SMITH COUNTY INTERCHANGE - G15039_T 230.00 230KV CKT 1	318.7	350.57	0.02976	104.2484	NEWHART 230 - PLANT X STATION 230KV CKT 1
FDNS	06ALL	2	17SP	G15_075	TO->FROM	DEAF SMITH COUNTY INTERCHANGE - G15039_T 230.00 230KV CKT 1	318.7	350.57	0.08899	104.2255	BASE CASE
FDNS	06NR	2	17G	G15_075	TO->FROM	DEAF SMITH COUNTY INTERCHANGE - G15039_T 230.00 230KV CKT 1	318.7	350.57	0.04522	103.9799	NEWHART 230 - POTTER COUNTY INTERCHANGE 230KV CKT 1
FDNS	06NR	2	17G	G15_075	TO->FROM	DEAF SMITH COUNTY INTERCHANGE - G15039_T 230.00 230KV CKT 1	318.7	350.57	0.04769	102.5424	AMARILLO SOUTH INTERCHANGE - G15031_T 230.00 230KV CKT 1
FDNS	06ALL	2	20L	G15_075	TO->FROM	G14-057T 345.00 - LAWTON EASTSIDE 345KV CKT 1	717	789	0.10667	105.4406	BASE CASE
FDNS	06ALL	2	20L	G15_075	FROM->TO	G14-057T 345.00 - SUNNYSIDE 345KV CKT 1	717	789	0.10667	118.6576	BASE CASE
FDNS	06ALL	2	20WP	G15_075	FROM->TO	G14-057T 345.00 - SUNNYSIDE 345KV CKT 1	717	789	0.13026	106.4822	BASE CASE
FDNS	06ALL	2	17G	G15_075	FROM->TO	G14-057T 345.00 - SUNNYSIDE 345KV CKT 1	717	789	0.13193	105.8626	BASE CASE
FDNS	06ALL	2	16WP	G15_075	FROM->TO	G14-057T 345.00 - SUNNYSIDE 345KV CKT 1	717	789	0.13522	104.4384	BASE CASE
FDNS	06NR	2	17G	G15_075	FROM->TO	G14-057T 345.00 - SUNNYSIDE 345KV CKT 1	717	789	0.03002	101.117	GRACEMONT - LAWTON EASTSIDE 345KV CKT 1
FDNS	06NR	2	17G	G15_075	FROM->TO	G14-057T 345.00 - SUNNYSIDE 345KV CKT 1	717	789	0.03002	101.117	GRACEMONT - LAWTON EASTSIDE 345KV CKT 1
FDNS	06NR	2	20L	G15_075	FROM->TO	G14-074T 345.00 - OKLAUNION 345KV CKT 1	1022	1124	0.06513	106.9322	BASE CASE
FDNS	06NR	2	17G	G15_075	FROM->TO	G14-074T 345.00 - OKLAUNION 345KV CKT 1	1022	1124	0.06894	102.9455	BASE CASE
FDNS	06NR	2	20L	G15_075	FROM->TO	G14-074T 345.00 - OKLAUNION 345KV CKT 1	1022	1124	0.0621	102.2532	CHISHOLM7 345.00 - GRACEMONT 345KV CKT 1
FDNS	06NR	2	20L	G15_075	FROM->TO	G14-074T 345.00 - OKLAUNION 345KV CKT 1	1022	1124	0.0621	101.8896	CHISHOLM7 345.00 () 345/230/13.2KV TRANSFORMER CKT 1
FDNS	06NR	2	20L	G15_075	FROM->TO	G14-074T 345.00 - OKLAUNION 345KV CKT 1	1022	1124	0.06549	101.4902	TUCO INTERCHANGE - TUCO_2 345.00 345KV CKT 1
FDNS	06NR	2	20L	G15_075	FROM->TO	G14-074T 345.00 - OKLAUNION 345KV CKT 1	1022	1124	0.07148	101.2851	BUSHLAND INTERCHANGE - DEAF SMITH COUNTY INTERCHANGE 230KV CKT 1
FDNS	06NR	2	20L	G15_075	FROM->TO	G14-074T 345.00 - OKLAUNION 345KV CKT 1	1022	1124	0.07148	101.2851	BUSHLAND INTERCHANGE - DEAF SMITH COUNTY INTERCHANGE 230KV CKT 1
FDNS	06NR	2	20L	G15_075	FROM->TO	G14-074T 345.00 - OKLAUNION 345KV CKT 1	1022	1124	0.06472	101.2671	MOORE COUNTY INTERCHANGE - POTTER COUNTY INTERCHANGE 230KV CKT 1
FDNS	06NR	2	20L	G15_075	FROM->TO	G14-074T 345.00 - OKLAUNION 345KV CKT 1	1022	1124	0.06472	101.2671	MOORE COUNTY INTERCHANGE - POTTER COUNTY INTERCHANGE 230KV CKT 1
FDNS	06NR	2	20L	G15_075	FROM->TO	G14-074T 345.00 - OKLAUNION 345KV CKT 1	1022	1124	0.06405	101.2654	G11-14T 345.00 - WOODWARD DISTRICT EHV 345KV CKT 1
FDNS	06NR	2	20L	G15_075	FROM->TO	G14-074T 345.00 - OKLAUNION 345KV CKT 1	1022	1124	0.06405	101.2654	G11-14T 345.00 - WOODWARD DISTRICT EHV 345KV CKT 2
FDNS	06ALL	2	20L	G15_075	FROM->TO	GRACEMONT - MINCO 345KV CKT 1	1195	1195	0.21922	101.0673	G14-057T 345.00 - SUNNYSIDE 345KV CKT 1
FDNS	00NR	2	25SP	G15_075	FROM->TO	Hitchland Interchange (H TB80155502) 345/230/13.2KV TRANSFORMER CKT 1	560	644	0.03529	99.7	Hitchland Interchange (SIEM 8743067) 345/230/13.2KV TRANSFORMER CKT 2
FDNS	00NR	2	25SP	G15_075	FROM->TO	Hitchland Interchange (H TB80155502) 345/230/13.2KV TRANSFORMER CKT 1	560	644	0.03529	99.7	Hitchland Interchange (SIEM 8743067) 345/230/13.2KV TRANSFORMER CKT 2
FDNS	00NR	2	25SP	G15_075	FROM->TO	Hitchland Interchange (SIEM 8743067) 345/230/13.2KV TRANSFORMER CKT 2	560	644	0.03602	101.9783	Hitchland Interchange (H TB80155502) 345/230/13.2KV TRANSFORMER CKT 1
FDNS	00NR	2	25SP	G15_075	FROM->TO	Hitchland Interchange (SIEM 8743067) 345/230/13.2KV TRANSFORMER CKT 2	560	644	0.03602	101.9783	Hitchland Interchange (H TB80155502) 345/230/13.2KV TRANSFORMER CKT 1
FDNS	00NR	2	25SP	G15_075	FROM->TO	Hitchland Interchange (SIEM 8743067) 345/230/13.2KV TRANSFORMER CKT 2	560	644	0.03602	100.1637	Hitchland Interchange (H TB80155502) 345/230/13.2KV TRANSFORMER CKT 1
FDNS	00NR	2	25SP	G15_075	FROM->TO	Hitchland Interchange (SIEM 8743067) 345/230/13.2KV TRANSFORMER CKT 2	560	644	0.03602	100.1637	Hitchland Interchange (H TB80155502) 345/230/13.2KV TRANSFORMER CKT 1
FDNS	00NR	2	25SP	G15_075	FROM->TO	LUBBOCK POWER & LIGHT-HOLLY PLANT (SHIH T101039) 230/69/13.5KV TRANSFORMER CKT 1	224	224	0.03344	104.7613	LUBBOCK POWER & LIGHT-SOUTHEAST - LUBBOCK SOUTH INTERCHANGE 230KV CKT 1
FDNS	00NR	2	25SP	G15_075	FROM->TO	LUBBOCK POWER & LIGHT-HOLLY PLANT (SHIH T101039) 230/69/13.5KV TRANSFORMER CKT 1	224	224	0.03344	104.7484	P12:LPL:SPS:K64.1.LP-SE.LUBBS
FDNS	00NR	2	25SP	G15_075	FROM->TO	LUBBOCK POWER & LIGHT-HOLLY PLANT (SHIH T101039) 230/69/13.5KV TRANSFORMER CKT 1	224	224	0.03091	102.133	P12:230:LPL:K57.1.LP-WADS.LUBBE
FDNS	00NR	2	25SP	G15_075	FROM->TO	LUBBOCK POWER & LIGHT-HOLLY PLANT (SHIH T101039) 230/69/13.5KV TRANSFORMER CKT 1	224	224	0.03091	102.1329	LUBBOCK POWER & LIGHT-WADSWORTH (SHIH T101038) 230/69/13.5KV TRANSFORMER CKT 1
FDNS	00NR	2	25SP	G15_075	FROM->TO	LUBBOCK POWER & LIGHT-HOLLY PLANT (SHIH T101039) 230/69/13.5KV TRANSFORMER CKT 1	224	224	0.03091	102.1329	LUBBOCK POWER & LIGHT-WADSWORTH (SHIH T101038) 230/69/13.5KV TRANSFORMER CKT 1
FDNS	00NR	2	25SP	G15_075	FROM->TO	LUBBOCK POWER & LIGHT-HOLLY PLANT (SHIH T101039) 230/69/13.5KV TRANSFORMER CKT 1	224	224	0.03091	101.829	LUBBOCK EAST INTERCHANGE - LUBBOCK POWER & LIGHT-WADSWORTH 230KV CKT 1
FDNSLock	06ALL	2	20WP	G15_075		P12:230:AEPW:ELKCITY6:SWEETWT6	0	0	0.10599	9999	BASE CASE
FDNS	00NR	2	25SP	G15_075	FROM->TO	POTTER COUNTY INTERCHANGE (WAUK 90343-A) 345/230/13.2KV TRANSFORMER CKT 1	560	560	0.03716	104.4906	HITCHLAND INTERCHANGE - MOORE COUNTY INTERCHANGE 230KV CKT 1

SOLUTION	GROUP	SCENARIO	SEASON	SOURCE	DIRECTION	MONITORED ELEMENT	RATEA (MVA)	RATEB(MVA)	TDF	TC%LOADING (% MVA)	CONTINGENCY
FDNS	00NR	2	25SP	G15_075	FROM->TO	POTTER COUNTY INTERCHANGE (WAUK 90343-A) 345/230/13.2KV TRANSFORMER CKT 1	560	560	0.03716	104.4906	HITCHLAND INTERCHANGE - MOORE COUNTY INTERCHANGE 230KV CKT 1
FDNS	00NR	2	25SP	G15_075	FROM->TO	POTTER COUNTY INTERCHANGE (WAUK 90343-A) 345/230/13.2KV TRANSFORMER CKT 1	560	560	0.03716	102.7887	HITCHLAND INTERCHANGE - MOORE COUNTY INTERCHANGE 230KV CKT 1
FDNS	00NR	2	25SP	G15_075	FROM->TO	POTTER COUNTY INTERCHANGE (WAUK 90343-A) 345/230/13.2KV TRANSFORMER CKT 1	560	560	0.03716	102.7887	HITCHLAND INTERCHANGE - MOORE COUNTY INTERCHANGE 230KV CKT 1
FDNS	00NR	2	25SP	G15_075	FROM->TO	SUNDOWN INTERCHANGE (WH XDS70381) 230/115/13.8KV TRANSFORMER CKT 1	187	187	0.03809	100.4282	AMOCO SWITCHING STATION - SUNDOWN INTERCHANGE 230KV CKT 1
FDNS	00NR	2	25SP	G15_075	FROM->TO	SUNDOWN INTERCHANGE (WH XDS70381) 230/115/13.8KV TRANSFORMER CKT 1	187	187	0.03809	100.4282	AMOCO SWITCHING STATION - SUNDOWN INTERCHANGE 230KV CKT 1
FDNS	06ALL	2	20L	G15_075	FROM->TO	TUCO INTERCHANGE - TUCO_2 230.00 230KV CKT 1	497	547	0.37883	181.2199	TUCO INTERCHANGE - TUCO_2 345.00 345KV CKT 1
FDNS	06ALL	2	17G	G15_075	FROM->TO	TUCO INTERCHANGE - TUCO_2 230.00 230KV CKT 1	497	547	0.40755	176.0864	TUCO INTERCHANGE - TUCO_2 345.00 345KV CKT 1
FDNS	06ALL	2	20SP	G15_075	FROM->TO	TUCO INTERCHANGE - TUCO_2 230.00 230KV CKT 1	497	547	0.41581	166.2483	TUCO INTERCHANGE - TUCO_2 345.00 345KV CKT 1
FDNS	06ALL	2	17SP	G15_075	FROM->TO	TUCO INTERCHANGE - TUCO_2 230.00 230KV CKT 1	497	547	0.41205	159.9768	TUCO INTERCHANGE - TUCO_2 345.00 345KV CKT 1
FDNS	06ALL	2	20WP	G15_075	FROM->TO	TUCO INTERCHANGE - TUCO_2 230.00 230KV CKT 1	552	608	0.41033	155.2742	TUCO INTERCHANGE - TUCO_2 345.00 345KV CKT 1
FDNS	06ALL	2	16WP	G15_075	FROM->TO	TUCO INTERCHANGE - TUCO_2 230.00 230KV CKT 1	552	608	0.41718	142.7524	TUCO INTERCHANGE - TUCO_2 345.00 345KV CKT 1
FDNS	06NR	2	20L	G15_075	FROM->TO	TUCO INTERCHANGE - TUCO_2 230.00 230KV CKT 1	497	547	0.18412	110.6574	TUCO INTERCHANGE - TUCO_2 345.00 345KV CKT 1
FDNS	06NR	2	17G	G15_075	FROM->TO	TUCO INTERCHANGE - TUCO_2 230.00 230KV CKT 1	497	547	0.19576	106.5066	TUCO INTERCHANGE - TUCO_2 345.00 345KV CKT 1
FDNS	06ALL	2	25SP	G15_075	FROM->TO	TUCO INTERCHANGE - TUCO_2 230.00 230KV CKT 1	497	547	0.42624	102.0482993	TUCO INTERCHANGE - TUCO_2 345.00 345KV CKT 1
FDNS	06ALL	2	16WP	G15_075	FROM->TO	TUCO INTERCHANGE (GE M1022338) 345/230/13.2KV TRANSFORMER CKT 1	560	560	0.32627	120.5418	TUCO INTERCHANGE (SIEM 8743066) 345/230/13.2KV TRANSFORMER CKT 2
FDNS	06ALL	2	16WP	G15_075	FROM->TO	TUCO INTERCHANGE (GE M1022338) 345/230/13.2KV TRANSFORMER CKT 1	560	560	0.32627	120.5418	TUCO INTERCHANGE (SIEM 8743066) 345/230/13.2KV TRANSFORMER CKT 2
FDNS	06ALL	2	16WP	G15_075	FROM->TO	TUCO INTERCHANGE (GE M1022338) 345/230/13.2KV TRANSFORMER CKT 1	560	560	0.30758	120.3223	TUCO_2 345.00 (TUCO_2 XFMR) 345/230/13.2KV TRANSFORMER CKT 1
FDNS	06ALL	2	16WP	G15_075	FROM->TO	TUCO INTERCHANGE (GE M1022338) 345/230/13.2KV TRANSFORMER CKT 1	560	560	0.32627	118.6764	TUCO INTERCHANGE (SIEM 8743066) 345/230/13.2KV TRANSFORMER CKT 2
FDNS	06ALL	2	16WP	G15_075	FROM->TO	TUCO INTERCHANGE (GE M1022338) 345/230/13.2KV TRANSFORMER CKT 1	560	560	0.32627	118.6764	TUCO INTERCHANGE (SIEM 8743066) 345/230/13.2KV TRANSFORMER CKT 2
FDNS	06ALL	2	16WP	G15_075	FROM->TO	TUCO INTERCHANGE (GE M1022338) 345/230/13.2KV TRANSFORMER CKT 1	560	560	0.30758	118.6764	TUCO_2 345.00 (TUCO_2 XFMR) 345/230/13.2KV TRANSFORMER CKT 1
FDNS	06ALL	2	17G	G15_075	FROM->TO	TUCO INTERCHANGE (GE M1022338) 345/230/13.2KV TRANSFORMER CKT 1	560	560	0.31663	114.4569	TUCO INTERCHANGE (SIEM 8743066) 345/230/13.2KV TRANSFORMER CKT 2
FDNS	06ALL	2	17G	G15_075	FROM->TO	TUCO INTERCHANGE (GE M1022338) 345/230/13.2KV TRANSFORMER CKT 1	560	560	0.29818	114.4414	TUCO_2 345.00 (TUCO_2 XFMR) 345/230/13.2KV TRANSFORMER CKT 1
FDNS	06ALL	2	17G	G15_075	FROM->TO	TUCO INTERCHANGE (GE M1022338) 345/230/13.2KV TRANSFORMER CKT 1	560	560	0.29818	112.333	TUCO_2 345.00 (TUCO_2 XFMR) 345/230/13.2KV TRANSFORMER CKT 1
FDNS	06ALL	2	17G	G15_075	FROM->TO	TUCO INTERCHANGE (GE M1022338) 345/230/13.2KV TRANSFORMER CKT 1	560	560	0.31663	112.1874	TUCO INTERCHANGE (SIEM 8743066) 345/230/13.2KV TRANSFORMER CKT 2
FDNS	06ALL	2	20WP	G15_075	FROM->TO	TUCO INTERCHANGE (GE M1022338) 345/230/13.2KV TRANSFORMER CKT 1	560	560	0.26817	109.1954	TUCO_2 345.00 (TUCO_2 XFMR) 345/230/13.2KV TRANSFORMER CKT 1
FDNS	06ALL	2	20WP	G15_075	FROM->TO	TUCO INTERCHANGE (GE M1022338) 345/230/13.2KV TRANSFORMER CKT 1	560	560	0.28472	108.7397	TUCO INTERCHANGE (SIEM 8743066) 345/230/13.2KV TRANSFORMER CKT 2
FDNS	06ALL	2	20WP	G15_075	FROM->TO	TUCO INTERCHANGE (GE M1022338) 345/230/13.2KV TRANSFORMER CKT 1	560	560	0.28472	108.7397	TUCO INTERCHANGE (SIEM 8743066) 345/230/13.2KV TRANSFORMER CKT 2
FDNS	06ALL	2	20WP	G15_075	FROM->TO	TUCO INTERCHANGE (GE M1022338) 345/230/13.2KV TRANSFORMER CKT 1	560	560	0.26817	107.4489	TUCO_2 345.00 (TUCO_2 XFMR) 345/230/13.2KV TRANSFORMER CKT 1
FDNS	06ALL	2	20L	G15_075	FROM->TO	TUCO INTERCHANGE (GE M1022338) 345/230/13.2KV TRANSFORMER CKT 1	560	560	0.24741	106.9965	TUCO_2 345.00 (TUCO_2 XFMR) 345/230/13.2KV TRANSFORMER CKT 1
FDNS	06ALL	2	20L	G15_075	FROM->TO	TUCO INTERCHANGE (GE M1022338) 345/230/13.2KV TRANSFORMER CKT 1	560	560	0.26405	106.8935	TUCO INTERCHANGE (SIEM 8743066) 345/230/13.2KV TRANSFORMER CKT 2
FDNS	06ALL	2	20L	G15_075	FROM->TO	TUCO INTERCHANGE (GE M1022338) 345/230/13.2KV TRANSFORMER CKT 1	560	560	0.26405	106.8935	TUCO INTERCHANGE (SIEM 8743066) 345/230/13.2KV TRANSFORMER CKT 2
FDNS	06ALL	2	20WP	G15_075	FROM->TO	TUCO INTERCHANGE (GE M1022338) 345/230/13.2KV TRANSFORMER CKT 1	560	560	0.28472	106.8897	TUCO INTERCHANGE (SIEM 8743066) 345/230/13.2KV TRANSFORMER CKT 2
FDNS	06ALL	2	20WP	G15_075	FROM->TO	TUCO INTERCHANGE (GE M1022338) 345/230/13.2KV TRANSFORMER CKT 1	560	560	0.28472	106.8897	TUCO INTERCHANGE (SIEM 8743066) 345/230/13.2KV TRANSFORMER CKT 2
FDNS	06ALL	2	20L	G15_075	FROM->TO	TUCO INTERCHANGE (GE M1022338) 345/230/13.2KV TRANSFORMER CKT 1	560	560	0.24741	105.2674	TUCO_2 345.00 (TUCO_2 XFMR) 345/230/13.2KV TRANSFORMER CKT 1
FDNS	06ALL	2	20L	G15_075	FROM->TO	TUCO INTERCHANGE (GE M1022338) 345/230/13.2KV TRANSFORMER CKT 1	560	560	0.26405	105.0822	TUCO INTERCHANGE (SIEM 8743066) 345/230/13.2KV TRANSFORMER CKT 2
FDNS	06ALL	2	20L	G15_075	FROM->TO	TUCO INTERCHANGE (GE M1022338) 345/230/13.2KV TRANSFORMER CKT 1	560	560	0.26405	105.0822	TUCO INTERCHANGE (SIEM 8743066) 345/230/13.2KV TRANSFORMER CKT 2
FDNS	06ALL	2	16WP	G15_075	FROM->TO	TUCO INTERCHANGE (GE M1022338) 345/230/13.2KV TRANSFORMER CKT 1	560	560	0.33705	103.9349	TUCO INTERCHANGE - TUCO_2 230.00 230KV CKT 1
FDNS	06ALL	2	16WP	G15_075	FROM->TO	TUCO INTERCHANGE (GE M1022338) 345/230/13.2KV TRANSFORMER CKT 1	560	560	0.33705	102.2603	TUCO INTERCHANGE - TUCO_2 230.00 230KV CKT 1
FDNS	06ALL	2	17G	G15_075	FROM->TO	TUCO INTERCHANGE (GE M1022338) 345/230/13.2KV TRANSFORMER CKT 1	560	560	0.32832	100.6861	TUCO INTERCHANGE - TUCO_2 230.00 230KV CKT 1
FDNS	06ALL	2	20L	G15_075	FROM->TO	TUCO_2 345.00 (TUCO_2 XFMR) 345/230/13.2KV TRANSFORMER CKT 1	560	560	0.28518	190.1451	TUCO INTERCHANGE - TUCO_2 345.00 345KV CKT 1
FDNS	06ALL	2	20WP	G15_075	FROM->TO	TUCO_2 345.00 (TUCO_2 XFMR) 345/230/13.2KV TRANSFORMER CKT 1	560	560	0.32194	189.4604	TUCO INTERCHANGE - TUCO_2 345.00 345KV CKT 1
FDNS	06ALL	2	17G	G15_075	FROM->TO	TUCO_2 345.00 (TUCO_2 XFMR) 345/230/13.2KV TRANSFORMER CKT 1	560	560	0.32186	187.4581	TUCO INTERCHANGE - TUCO_2 345.00 345KV CKT 1
FDNS	06ALL	2	20WP	G15_075	FROM->TO	TUCO_2 345.00 (TUCO_2 XFMR) 345/230/13.2KV TRANSFORMER CKT 1	560	560	0.32194	184.0471	TUCO INTERCHANGE - TUCO_2 345.00 345KV CKT 1
FDNS	06ALL	2	20L	G15_075	FROM->TO	TUCO_2 345.00 (TUCO_2 XFMR) 345/230/13.2KV TRANSFORMER CKT 1	560	560	0.28518	184.0031	TUCO INTERCHANGE - TUCO_2 345.00 345KV CKT 1
FDNS	06ALL	2	17G	G15_075	FROM->TO	TUCO_2 345.00 (TUCO_2 XFMR) 345/230/13.2KV TRANSFORMER CKT 1	560	560	0.32186	182.4703	TUCO INTERCHANGE - TUCO_2 345.00 345KV CKT 1
FDNS	06ALL	2	16WP	G15_075	FROM->TO	TUCO_2 345.00 (TUCO_2 XFMR) 345/230/13.2KV TRANSFORMER CKT 1	560	560	0.33239	175.5009	TUCO INTERCHANGE - TUCO_2 345.00 345KV CKT 1
FDNS	06ALL	2	16WP	G15_075	FROM->TO	TUCO_2 345.00 (TUCO_2 XFMR) 345/230/13.2KV TRANSFORMER CKT 1	560	560	0.33239	172.6087	TUCO INTERCHANGE - TUCO_2 345.00 345KV CKT 1
FDNS	06ALL	2	20SP	G15_075	FROM->TO	TUCO_2 345.00 (TUCO_2 XFMR) 345/230/13.2KV TRANSFORMER CKT 1	560	560	0.32826	166.4217	TUCO INTERCHANGE - TUCO_2 345.00 345KV CKT 1
FDNS	06ALL	2	17SP	G15_075	FROM->TO	TUCO_2 345.00 (TUCO_2 XFMR) 345/230/13.2KV TRANSFORMER CKT 1	560	560	0.32893	164.6979	TUCO INTERCHANGE - TUCO_2 345.00 345KV CKT 1
FDNS	06ALL	2	20SP	G15_075	FROM->TO	TUCO_2 345.00 (TUCO_2 XFMR) 345/230/13.2KV TRANSFORMER CKT 1	560	560	0.32826	163.5805	TUCO INTERCHANGE - TUCO_2 345.00 345KV CKT 1
FDNS	06ALL	2	17SP	G15_075	FROM->TO	TUCO_2 345.00 (TUCO_2 XFMR) 345/230/13.2KV TRANSFORMER CKT 1	560	560	0.32893	162.1713	TUCO INTERCHANGE - TUCO_2 345.00 345KV CKT 1
FDNS	06ALL	2	16WP	G15_075	FROM->TO	TUCO_2 345.00 (TUCO_2 XFMR) 345/230/13.2KV TRANSFORMER CKT 1	560	560	0.26969	112.6263	TUCO INTERCHANGE (GE M1022338) 345/230/13.2KV TRANSFORMER CKT 1
FDNS	06ALL	2	16WP	G15_075	FROM->TO	TUCO_2 345.00 (TUCO_2 XFMR) 345/230/13.2KV TRANSFORMER CKT 1	560	560	0.26969	112.6263	TUCO INTERCHANGE (GE M1022338) 345/230/13.2KV TRANSFORMER CKT 1
FDNS	06ALL	2	16WP	G15_075	FROM->TO	TUCO_2 345.00 (TUCO_2 XFMR) 345/230/13.2KV TRANSFORMER CKT 1	560	560	0.26969	111.4972	TUCO INTERCHANGE (GE M1022338) 345/230/13.2KV TRANSFORMER CKT 1
FDNS	06ALL	2	16WP	G15_075	FROM->TO	TUCO_2 345.00 (TUCO_2 XFMR) 345/230/13.2KV TRANSFORMER CKT 1	560	560	0.26969	111.4972	TUCO INTERCHANGE (GE M1022338) 345/230/13.2KV TRANSFORMER CKT 1
FDNS	06NR	2	20L	G15_075	FROM->TO	TUCO_2 345.00 (TUCO_2 XFMR) 345/230/13.2KV TRANSFORMER CKT 1	560	560	0.06215	110.8937	TUCO INTERCHANGE - TUCO_2 345.00 345KV CKT 1
FDNS	06NR	2	20L	G15_075	FROM->TO	TUCO_2 345.00 (TUCO_2 XFMR) 345/230/13.2KV TRANSFORMER CKT 1	560	560	0.06215	108.3383	TUCO INTERCHANGE - TUCO_2 345.00 345KV CKT 1
FDNS	06ALL	2	17G	G15_075	FROM->TO	TUCO_2 345.00 (TUCO_2 XFMR) 345/230/13.2KV TRANSFORMER CKT 1	560	560	0.26107	107.1719	TUCO INTERCHANGE (GE M1022338) 345/230/13.2KV TRANSFORMER CKT 1
FDNS	06NR	2	17G	G15_075	FROM->TO	TUCO_2 345.00 (TUCO_2 XFMR) 345/230/13.2KV TRANSFORMER CKT 1	560	560	0.06179	107.0023	TUCO INTERCHANGE - TUCO_2 345.00 345KV CKT 1
FDNS	06ALL	2	16WP	G15_075	FROM->TO	TUCO_2 345.00 (TUCO_2 XFMR) 345/230/13.2KV TRANSFORMER CKT 1	560	560	0.25123	105.8242	TUCO INTERCHANGE (SIEM 8743066) 345/230/13.2KV TRANSFORMER CKT 2
FDNS	06ALL	2	16WP	G15_075	FROM->TO	TUCO_2 345.00 (TUCO_2 XFMR) 345/230/13.2KV TRANSFORMER CKT 1	560	560	0.25123	105.8242	TUCO INTERCHANGE (SIEM 8743066) 345/230/13.2KV TRANSFORMER CKT 2
FDNS	06ALL	2	17G	G15_075	FROM->TO	TUCO_2 345.00 (TUCO_2 XFMR) 345/230/13.2KV TRANSFORMER CKT 1	560	560	0.26107	105.6097	TUCO INTERCHANGE (GE M1022338) 345/230/13.2KV TRANSFORMER CKT 1
FDNS	06ALL	2	16WP	G15_075	FROM->TO	TUCO_2 345.00 (TUCO_2 XFMR) 345/230/13.2KV TRANSFORMER CKT 1	560	560	0.25123	104.8168	TUCO INTERCHANGE (SIEM 8743066) 345/230/13.2KV TRANSFORMER CKT 2
FDNS	06ALL	2	16WP	G15_075	FROM->TO	TUCO_2 345.00 (TUCO_2 XFMR) 345/230/13.2KV TRANSFORMER CKT 1	560	560	0.25123	104.8168	TUCO INTERCHANGE (SIEM 8743066) 345/230/13.2KV TRANSFORMER CKT 2
FDNS	06NR	2	17G	G15_075	FROM->TO	TUCO_2 345.00 (TUCO_2 XFMR) 345/230/13.2KV TRANSFORMER CKT 1	560	560	0.06179	104.728	TUCO INTERCHANGE - TUCO_2 345.00 345KV CKT 1
FDNS	06ALL	2	20WP	G15_075	FROM->TO	TUCO_2 345.00 (TUCO_2 XFMR) 345/230/13.2KV TRANSFORMER CKT 1	560	560	0.23264	102.7774	TUCO INTERCHANGE (GE M1022338) 345/230/13.2KV TRANSFORMER CKT 1
FDNS	06ALL	2	20WP	G15_075	FROM->TO	TUCO_2 345.00 (TUCO_2 XFMR) 345/230/13.2KV TRANSFORMER CKT 1	560	560	0.23264	102.7774	TUCO INTERCHANGE (GE M1022338) 345/230/13.2KV TRANSFORMER CKT 1
FDNS	06ALL	2	20WP	G15_075	FROM->TO	TUCO_2 345.00 (TUCO_2 XFMR) 345/230/13.2KV TRANSFORMER CKT 1	560	560	0.23264	101.4823	TUCO INTERCHANGE (GE M1022338) 345/230/13.2KV TRANSFORMER CKT 1
FDNS	06ALL	2	20WP	G15_075	FROM->TO	TUCO_2 345.00 (TUCO_2 XFMR) 345/230/13.2KV TRANSFORMER CKT 1	560	560	0.23264	101.4823	TUCO INTERCHANGE (GE M1022338) 345/230/13.2KV TRANSFORMER CKT 1
FDNS	06ALL	2	17G	G15_075	FROM->TO	TUCO_2 345.00 (TUCO_2 XFMR) 345/230/13.2KV TRANSFORMER CKT 1	560	560	0.24315	100.7205	TUCO INTERCHANGE (SIEM 8743066) 345/230/13.2KV TRANSFORMER CKT 2
FDNS	06ALL	2	20L	G15_075	FROM->TO	TUCO_2 345.00 (TUCO_2 XFMR) 345/230/13.2KV TRANSFORMER CKT 1	560	560	0.21299	100.3358	TUCO INTERCHANGE (GE M1022338) 345/230/13.2KV TRANSFORMER CKT 1
FDNS	06ALL	2	20L	G15_075	FROM->TO	TUCO_2 345.00 (TUCO_2 XFMR) 345/230/13.2KV TRANSFORMER CKT 1	560	560	0.21299	100.3358	TUCO INTERCHANGE (GE M1022338) 345/230/13.2KV TRANSFORMER CKT 1
FDNS	00NR	2	25SP	G15_075	FROM->TO	WOLFFORTH INTERCHANGE (WH 7001668) 230/115/13.2KV TRANSFORMER CKT 1	168	168	0.05543	110.0903	CARLISLE INTERCHANGE - LP-DOUD_TP 3115.00 115KV CKT 1
FDNS	00NR	2	25SP	G15_075	FROM->TO	WOLFFORTH INTERCHANGE (WH 7001668) 230/115/13.2KV TRANSFORMER CKT 1	168	168	0.05543	104.6807	CARLISLE INTERCHANGE - LP-DOUD_TP 3115.00 115KV CKT 1
FDNS	06NR	3	17G	G15_075	TO->FROM	AMARILLO SOUTH INTERCHANGE - G15031_T 230.00 230KV CKT 1	318.7	350.57	0.10617	103.2239	NEWHART 230 - POTTER COUNTY INTERCHANGE 230KV CKT 1
FDNS	06NR	3	20L	G15_075	FROM->TO	BUSHLAND INTERCHANGE - HILLSIDE 115KV CKT 1	159	160	0.03131	108.1399	BUSHLAND INTERCHANGE - POTTER COUNTY INTERCHANGE 230KV CKT 1
FDNS	06NR	3	20L	G15_075	FROM->TO	BUSHLAND INTERCHANGE - HILLSIDE 115KV CKT 1	159	160	0.03131	108.1399	BUSHLAND INTERCHANGE - POTTER COUNTY INTERCHANGE 230KV CKT 1
FDNS	06NR	3	20L	G15_075	FROM->TO	BUSHLAND INTERCHANGE - POTTER COUNTY INTERCHANGE 230KV CKT 1	318.7	350.57	0.07007	102.6252	NEWHART 230 - POTTER COUNTY INTERCHANGE 230KV CKT 1
FDNS	06NR	3	20L	G15_075	FROM->TO	BUSHLAND INTERCHANGE (WH 7001795) 230/115/13.2KV TRANSFORMER CKT 1	168	168	0.03131	106.6189	BUSHLAND INTERCHANGE - POTTER COUNTY INTERCHANGE 230KV CKT 1

SOLUTION	GROUP	SCENARIO	SEASON	SOURCE	DIRECTION	MONITORED ELEMENT	RATEA (MVA)	RATEB(MVA)	TDF	TC%LOADING (% MVA)	CONTINGENCY
FDNS	06NR	3	20L	G15_075	FROM->TO	BUSHLAND INTERCHANGE (WH 7001795) 230/115/13.2KV TRANSFORMER CKT 1	168	168	0.03131	106.6189	BUSHLAND INTERCHANGE - POTTER COUNTY INTERCHANGE 230KV CKT 1
FDNS	06NR	3	20L	G15_075	FROM->TO	BUSHLAND INTERCHANGE (WH 7001795) 230/115/13.2KV TRANSFORMER CKT 1	168	168	0.03131	104.4653	BUSHLAND INTERCHANGE - POTTER COUNTY INTERCHANGE 230KV CKT 1
FDNS	06NR	3	20L	G15_075	FROM->TO	BUSHLAND INTERCHANGE (WH 7001795) 230/115/13.2KV TRANSFORMER CKT 1	168	168	0.03131	104.4653	BUSHLAND INTERCHANGE - POTTER COUNTY INTERCHANGE 230KV CKT 1
FDNS	00NR	3	25SP	G15_075	FROM->TO	CARLISLE INTERCHANGE - LP-DOUD_TP 3115.00 115KV CKT 1	159	160	0.17794	105.1344	WOLFFORTH INTERCHANGE (WH 7001668) 230/115/13.2KV TRANSFORMER CKT 1
FDNS	00NR	3	25SP	G15_075	FROM->TO	CARLISLE INTERCHANGE - LP-DOUD_TP 3115.00 115KV CKT 1	159	160	0.17794	105.1344	WOLFFORTH INTERCHANGE (WH 7001668) 230/115/13.2KV TRANSFORMER CKT 1
FDNS	06ALL	3	20L	G15_075	FROM->TO	CARLISLE INTERCHANGE (WH RLP38371) 115/69/13.2KV TRANSFORMER CKT 1	44.37	44.4	1	111.8549	BASE CASE
FDNS	06NR	3	20L	G15_075	FROM->TO	CARLISLE INTERCHANGE (WH RLP38371) 115/69/13.2KV TRANSFORMER CKT 1	44.37	44.4	1	111.4407	BASE CASE
FDNS	06ALL	3	16WP	G15_075	FROM->TO	CARLISLE INTERCHANGE (WH RLP38371) 115/69/13.2KV TRANSFORMER CKT 1	44.37	44.4	1	110.3478	BASE CASE
FDNS	06ALL	3	20L	G15_075	FROM->TO	CARLISLE INTERCHANGE (WH RLP38371) 115/69/13.2KV TRANSFORMER CKT 1	44.37	44.4	1	109.8198	BASE CASE
FDNS	06NR	3	20L	G15_075	FROM->TO	CARLISLE INTERCHANGE (WH RLP38371) 115/69/13.2KV TRANSFORMER CKT 1	44.37	44.4	1	109.6602	BASE CASE
FDNS	00NR	3	16WP	G15_075	FROM->TO	CARLISLE INTERCHANGE (WH RLP38371) 115/69/13.2KV TRANSFORMER CKT 1	44.37	44.4	1	107.9033	BASE CASE
FDNS	06ALL	3	20WP	G15_075	FROM->TO	CARLISLE INTERCHANGE (WH RLP38371) 115/69/13.2KV TRANSFORMER CKT 1	44.37	44.4	1	107.697	BASE CASE
FDNS	06ALL	3	16WP	G15_075	FROM->TO	CARLISLE INTERCHANGE (WH RLP38371) 115/69/13.2KV TRANSFORMER CKT 1	44.37	44.4	1	107.3471	BASE CASE
FDNS	00NR	3	20WP	G15_075	FROM->TO	CARLISLE INTERCHANGE (WH RLP38371) 115/69/13.2KV TRANSFORMER CKT 1	44.37	44.4	1	106.3681	BASE CASE
FDNS	00NR	3	16WP	G15_075	FROM->TO	CARLISLE INTERCHANGE (WH RLP38371) 115/69/13.2KV TRANSFORMER CKT 1	44.37	44.4	1	106.224	BASE CASE
FDNS	06ALL	3	17G	G15_075	FROM->TO	CARLISLE INTERCHANGE (WH RLP38371) 115/69/13.2KV TRANSFORMER CKT 1	44.37	44.4	1	105.9271	BASE CASE
FDNS	06ALL	3	20WP	G15_075	FROM->TO	CARLISLE INTERCHANGE (WH RLP38371) 115/69/13.2KV TRANSFORMER CKT 1	44.37	44.4	1	105.7219	BASE CASE
FDNS	00NR	3	20WP	G15_075	FROM->TO	CARLISLE INTERCHANGE (WH RLP38371) 115/69/13.2KV TRANSFORMER CKT 1	44.37	44.4	1	105.2679	BASE CASE
FDNS	06NR	3	17G	G15_075	FROM->TO	CARLISLE INTERCHANGE (WH RLP38371) 115/69/13.2KV TRANSFORMER CKT 1	44.37	44.4	1	103.9269	BASE CASE
FDNS	06ALL	3	17G	G15_075	FROM->TO	CARLISLE INTERCHANGE (WH RLP38371) 115/69/13.2KV TRANSFORMER CKT 1	44.37	44.4	1	103.1559	BASE CASE
FDNS	06NR	3	17G	G15_075	FROM->TO	CARLISLE INTERCHANGE (WH RLP38371) 115/69/13.2KV TRANSFORMER CKT 1	44.37	44.4	1	102.1709	BASE CASE
FDNS	00NR	3	17SP	G15_075	FROM->TO	CARLISLE INTERCHANGE (WH RLP38371) 115/69/13.2KV TRANSFORMER CKT 1	44.37	44.4	1	100.2264	BASE CASE
FDNS	00NR	3	20SP	G15_075	FROM->TO	CARLISLE INTERCHANGE (WH RLP38371) 115/69/13.2KV TRANSFORMER CKT 1	44.37	44.4	1	100.0766	BASE CASE
FDNS	06ALL	3	17SP	G15_075	FROM->TO	CARLISLE INTERCHANGE (WH RLP38371) 115/69/13.2KV TRANSFORMER CKT 1	44.37	44.4	1	100.0636	BASE CASE
FDNS	06NR	3	20L	G15_075	FROM->TO	CASTRO COUNTY INTERCHANGE - DEAF SMITH REC-#21 115KV CKT 1	159	174	0.02951	101.2841	DEAF SMITH COUNTY INTERCHANGE - G15039_T 230.00 230KV CKT 1
FDNS	06ALL	3	20SP	G15_075	FROM->TO	CHISHOLM6 230.00 - ELK CITY 230KV 230KV CKT 1	353	353	0.0637	104.1963	BASE CASE
FDNS	06ALL	3	17SP	G15_075	FROM->TO	CHISHOLM6 230.00 - ELK CITY 230KV 230KV CKT 1	353	353	0.06394	101.9728	BASE CASE
FDNS	06ALL	3	20L	G15_075	TO->FROM	CIMARRON - MINCO 345KV CKT 1	956	956	0.22031	140.6921	G14-057T 345.00 - SUNNYSIDE 345KV CKT 1
FDNS	06ALL	3	20L	G15_075	TO->FROM	CIMARRON - MINCO 345KV CKT 1	956	956	0.22031	134.2883	G14-057T 345.00 - LAWTON EASTSIDE 345KV CKT 1
FDNS	06ALL	3	17G	G15_075	TO->FROM	CIMARRON - MINCO 345KV CKT 1	956	956	0.2507	132.797	G14-057T 345.00 - SUNNYSIDE 345KV CKT 1
FDNS	06ALL	3	20WP	G15_075	TO->FROM	CIMARRON - MINCO 345KV CKT 1	956	956	0.24761	131.9094	G14-057T 345.00 - SUNNYSIDE 345KV CKT 1
FDNS	06ALL	3	17G	G15_075	TO->FROM	CIMARRON - MINCO 345KV CKT 1	956	956	0.2507	127.3481	G14-057T 345.00 - LAWTON EASTSIDE 345KV CKT 1
FDNS	06ALL	3	20WP	G15_075	TO->FROM	CIMARRON - MINCO 345KV CKT 1	956	956	0.24761	126.3057	G14-057T 345.00 - LAWTON EASTSIDE 345KV CKT 1
FDNS	06ALL	3	16WP	G15_075	TO->FROM	CIMARRON - MINCO 345KV CKT 1	956	956	0.25761	125.3645	G14-057T 345.00 - SUNNYSIDE 345KV CKT 1
FDNS	06ALL	3	17SP	G15_075	TO->FROM	CIMARRON - MINCO 345KV CKT 1	956	956	0.25415	124.3731	G14-057T 345.00 - SUNNYSIDE 345KV CKT 1
FDNS	06ALL	3	20SP	G15_075	TO->FROM	CIMARRON - MINCO 345KV CKT 1	956	956	0.25361	121.3286	G14-057T 345.00 - SUNNYSIDE 345KV CKT 1
FDNS	06ALL	3	16WP	G15_075	TO->FROM	CIMARRON - MINCO 345KV CKT 1	956	956	0.25761	119.9255	G14-057T 345.00 - LAWTON EASTSIDE 345KV CKT 1
FDNS	06ALL	3	17SP	G15_075	TO->FROM	CIMARRON - MINCO 345KV CKT 1	956	956	0.25415	118.8978	G14-057T 345.00 - LAWTON EASTSIDE 345KV CKT 1
FDNS	06ALL	3	20SP	G15_075	TO->FROM	CIMARRON - MINCO 345KV CKT 1	956	956	0.25361	116.0894	G14-057T 345.00 - LAWTON EASTSIDE 345KV CKT 1
FDNS	06ALL	3	20WP	G15_075	TO->FROM	CIMARRON - MINCO 345KV CKT 1	956	956	0.20745	111.5734	MATHWSN7 345.00 - TATONGA7 345.00 345KV CKT 1
FDNS	06ALL	3	20L	G15_075	TO->FROM	CIMARRON - MINCO 345KV CKT 1	956	956	0.2271	109.488	CHISHOLM7 345.00 - WOODWARD DISTRICT EHV 345KV CKT 1
FDNS	06ALL	3	17G	G15_075	TO->FROM	CIMARRON - MINCO 345KV CKT 1	956	956	0.25085	109.1031	CHISHOLM7 345.00 - WOODWARD DISTRICT EHV 345KV CKT 1
FDNS	06ALL	3	20WP	G15_075	TO->FROM	CIMARRON - MINCO 345KV CKT 1	956	956	0.20745	106.2571	G11_051T 345.00 - TATONGA7 345.00 345KV CKT 1
FDNS	06ALL	3	17G	G15_075	TO->FROM	CIMARRON - MINCO 345KV CKT 1	956	956	0.21122	106.016	G11_051T 345.00 - TATONGA7 345.00 345KV CKT 1
FDNS	06ALL	3	17SP	G15_075	TO->FROM	CIMARRON - MINCO 345KV CKT 1	956	956	0.2145	105.6361	MATHWSN7 345.00 - TATONGA7 345.00 345KV CKT 1
FDNS	06ALL	3	20WP	G15_075	TO->FROM	CIMARRON - MINCO 345KV CKT 1	956	956	0.25018	105.2058	CHISHOLM7 345.00 - WOODWARD DISTRICT EHV 345KV CKT 1
FDNS	06ALL	3	16WP	G15_075	TO->FROM	CIMARRON - MINCO 345KV CKT 1	956	956	0.21648	105.1594	MATHWSN7 345.00 - TATONGA7 345.00 345KV CKT 1
FDNS	06ALL	3	20SP	G15_075	TO->FROM	CIMARRON - MINCO 345KV CKT 1	956	956	0.214	104.8651	MATHWSN7 345.00 - TATONGA7 345.00 345KV CKT 1
FDNS	06ALL	3	20WP	G15_075	TO->FROM	CIMARRON - MINCO 345KV CKT 1	956	956	0.20745	104.6601	G11_051T 345.00 - WOODWARD DISTRICT EHV 345KV CKT 1
FDNS	06ALL	3	17G	G15_075	TO->FROM	CIMARRON - MINCO 345KV CKT 1	956	956	0.21122	104.4511	G11_051T 345.00 - WOODWARD DISTRICT EHV 345KV CKT 1
FDNS	06ALL	3	20SP	G15_075	TO->FROM	CIMARRON - MINCO 345KV CKT 1	956	956	0.25696	103.3967	CHISHOLM7 345.00 - WOODWARD DISTRICT EHV 345KV CKT 1
FDNS	06ALL	3	17SP	G15_075	TO->FROM	CIMARRON - MINCO 345KV CKT 1	956	956	0.25737	102.6701	CHISHOLM7 345.00 - WOODWARD DISTRICT EHV 345KV CKT 1
FDNS	06ALL	3	17SP	G15_075	TO->FROM	CIMARRON - MINCO 345KV CKT 1	956	956	0.2145	100.4546	G11_051T 345.00 - TATONGA7 345.00 345KV CKT 1
FDNS	06ALL	3	20WP	G15_075	TO->FROM	CIMARRON - MINCO 345KV CKT 1	956	956	0.19931	100.2954	P12:138:WFEC:MSL03
FDNS	06ALL	3	16WP	G15_075	TO->FROM	CIMARRON - MINCO 345KV CKT 1	956	956	0.21648	99.8	G11_051T 345.00 - TATONGA7 345.00 345KV CKT 1
FDNS	06ALL	3	20SP	G15_075	TO->FROM	CIMARRON - MINCO 345KV CKT 1	956	956	0.214	99.7	G11_051T 345.00 - TATONGA7 345.00 345KV CKT 1
FDNS	06ALL	3	17SP	G15_075	TO->FROM	CIMARRON - MINCO 345KV CKT 1	956	956	0.20581	99.6	P12:138:WFEC:MSL03
FDNS	06ALL	3	20SP	G15_075	TO->FROM	CIMARRON - MINCO 345KV CKT 1	956	956	0.20551	99.6	P12:138:WFEC:MSL03
FDNS	06NR	3	20L	G15_075	TO->FROM	COULTER INTERCHANGE - HILLSIDE 115KV CKT 1	159	159	0.03131	105.531	BUSHLAND INTERCHANGE - POTTER COUNTY INTERCHANGE 230KV CKT 1
FDNS	06NR	3	20L	G15_075	TO->FROM	COULTER INTERCHANGE - HILLSIDE 115KV CKT 1	159	159	0.03131	105.531	BUSHLAND INTERCHANGE - POTTER COUNTY INTERCHANGE 230KV CKT 1
FDNS	06ALL	3	20L	G15_075	TO->FROM	G14-057T 345.00 - LAWTON EASTSIDE 345KV CKT 1	717	789	0.10723	106.0801	BASE CASE
FDNS	06ALL	3	20L	G15_075	FROM->TO	G14-057T 345.00 - SUNNYSIDE 345KV CKT 1	717	789	0.10723	119.3111	BASE CASE
FDNS	06ALL	3	20WP	G15_075	FROM->TO	G14-057T 345.00 - SUNNYSIDE 345KV CKT 1	717	789	0.13076	107.198	BASE CASE
FDNS	06ALL	3	17G	G15_075	FROM->TO	G14-057T 345.00 - SUNNYSIDE 345KV CKT 1	717	789	0.13274	106.7167	BASE CASE
FDNS	06ALL	3	16WP	G15_075	FROM->TO	G14-057T 345.00 - SUNNYSIDE 345KV CKT 1	717	789	0.13621	105.3992	BASE CASE
FDNS	06NR	3	20L	G15_075	FROM->TO	G14-074T 345.00 - OKLAUNION 345KV CKT 1	1022	1124	0.05983	108.2612	BASE CASE
FDNS	06NR	3	17G	G15_075	FROM->TO	G14-074T 345.00 - OKLAUNION 345KV CKT 1	1022	1124	0.05926	106.9843	G11_051T 345.00 - WOODWARD DISTRICT EHV 345KV CKT 1
FDNS	06NR	3	17G	G15_075	FROM->TO	G14-074T 345.00 - OKLAUNION 345KV CKT 1	1022	1124	0.06004	105.0698	BASE CASE
FDNS	06NR	3	20L	G15_075	FROM->TO	G14-074T 345.00 - OKLAUNION 345KV CKT 1	1022	1124	0.05699	103.3966	CHISHOLM7 345.00 - GRACEMONT 345KV CKT 1
FDNS	06NR	3	20L	G15_075	FROM->TO	G14-074T 345.00 - OKLAUNION 345KV CKT 1	1022	1124	0.05699	102.9036	CHISHOLM7 345.00 () 345/230/13.2KV TRANSFORMER CKT 1
FDNS	06NR	3	20L	G15_075	FROM->TO	G14-074T 345.00 - OKLAUNION 345KV CKT 1	1022	1124	0.0716	102.6829	AMARILLO SOUTH INTERCHANGE - G15031_T 230.00 230KV CKT 1
FDNS	06NR	3	20L	G15_075	FROM->TO	G14-074T 345.00 - OKLAUNION 345KV CKT 1	1022	1124	0.06882	102.2907	NEWHART 230 - POTTER COUNTY INTERCHANGE 230KV CKT 1
FDNS	06NR	3	20L	G15_075	FROM->TO	G14-074T 345.00 - OKLAUNION 345KV CKT 1	1022	1124	0.06536	101.9316	DEAF SMITH COUNTY INTERCHANGE - G15039_T 230.00 230KV CKT 1
FDNS	06NR	3	20L	G15_075	FROM->TO	G14-074T 345.00 - OKLAUNION 345KV CKT 1	1022	1124	0.06536	100.8261	G15039_T 230.00 - PLANT X STATION 230KV CKT 1
FDNS	06NR	3	20L	G15_075	FROM->TO	G14-074T 345.00 - OKLAUNION 345KV CKT 1	1022	1124	0.05963	100.637	MINGO - RED WILLOW 345KV CKT 1
FDNS	06NR	3	20L	G15_075	FROM->TO	G14-074T 345.00 - OKLAUNION 345KV CKT 1	1022	1124	0.05963	100.637	MINGO - RED WILLOW 345KV CKT 1
FDNS	06NR	3	20L	G15_075	FROM->TO	G14-074T 345.00 - OKLAUNION 345KV CKT 1	1022	1124	0.05901	100.065	CHILDRESS - LAKE PAULINE 138KV CKT 1
FDNS	06NR	3	20L	G15_075	FROM->TO	G14-074T 345.00 - OKLAUNION 345KV CKT 1	1022	1124	0.05901	100.065	CHILDRESS - LAKE PAULINE 138KV CKT 1
FDNS	06NR	3	20L	G15_075	FROM->TO	G14-074T 345.00 - OKLAUNION 345KV CKT 1	1022	1124	0.05933	100	CONWAY SUB - NICHOLS STATION 115KV CKT 1

SOLUTION	GROUP	SCENARIO	SEASON	SOURCE	DIRECTION	MONITORED ELEMENT	RATEA (MVA)	RATEB(MVA)	TDF	TC%LOADING (% MVA)	CONTINGENCY
FDNS	06NR	3	20L	G15_075	FROM->TO	G14-074T 345.00 - OKLAUNION 345KV CKT 1	1022	1124	0.05933	99.9	CONWAY SUB - KIRBY SWITCHING STATION 115KV CKT 1
FDNS	06NR	3	17G	G15_075	FROM->TO	G14-074T 345.00 - OKLAUNION 345KV CKT 1	1022	1124	0.07132	99.8	AMARILLO SOUTH INTERCHANGE - G15031_T 230.00 230KV CKT 1
FDNS	06NR	3	20L	G15_075	FROM->TO	G14-074T 345.00 - OKLAUNION 345KV CKT 1	1022	1124	0.05933	99.8	P12:115:SPS:T53.1.NICHLS.KIRBY
FDNS	06NR	3	20L	G15_075	FROM->TO	G14-074T 345.00 - OKLAUNION 345KV CKT 1	1022	1124	0.0598	99.7	IODINE - WOODWARD EHV 138KV CKT 1
FDNS	06NR	3	20L	G15_075	FROM->TO	G14-074T 345.00 - OKLAUNION 345KV CKT 1	1022	1124	0.0598	99.6	DEWEY - IODINE 138KV CKT 1
FDNS	06NR	3	20L	G15_075	FROM->TO	G14-074T 345.00 - OKLAUNION 345KV CKT 1	1022	1124	0.0598	99.6	WOODWARD - WWPAR4 138.00 138KV CKT 1
FDNS	06NR	3	20L	G15_075	FROM->TO	G14-074T 345.00 - OKLAUNION 345KV CKT 1	1022	1124	0.0598	99.6	WOODWARD EHV - WWPAR4 138.00 138KV CKT 1
FDNS	06NR	3	17G	G15_075	FROM->TO	G14-074T 345.00 - OKLAUNION 345KV CKT 1	1022	1124	0.05712	99.5	CHISHOLM7 345.00 - GRACEMONT 345KV CKT 1
FDNS	06NR	3	20L	G15_075	FROM->TO	G14-074T 345.00 - OKLAUNION 345KV CKT 1	1022	1124	0.05938	99.5	KIRBY SWITCHING STATION - MCCLELLAN SUB 115KV CKT 1
FDNS	06NR	3	20L	G15_075	FROM->TO	G14-074T 345.00 - OKLAUNION 345KV CKT 1	1022	1124	0.05938	99.5	MCCLELLAN SUB - MCLEAN RURAL SUB 115KV CKT 1
FDNS	06ALL	3	20L	G15_075	FROM->TO	GRACEMONT - MINCO 345KV CKT 1	1195	1195	0.22031	101.53	G14-057T 345.00 - SUNNYSIDE 345KV CKT 1
FDNS	00NR	3	25SP	G15_075	FROM->TO	Hitchland Interchange (SIEM 8743067) 345/230/13.2KV TRANSFORMER CKT 2	560	644	0.03262	100.776	Hitchland Interchange (H TB80155502) 345/230/13.2KV TRANSFORMER CKT 1
FDNS	00NR	3	25SP	G15_075	FROM->TO	Hitchland Interchange (SIEM 8743067) 345/230/13.2KV TRANSFORMER CKT 2	560	644	0.03262	100.776	Hitchland Interchange (H TB80155502) 345/230/13.2KV TRANSFORMER CKT 1
FDNS	00NR	3	25SP	G15_075	FROM->TO	LUBBOCK POWER & LIGHT-HOLLY PLANT (SHIH T101039) 230/69/13.5KV TRANSFORMER CKT 1	224	224	0.03342	104.7002	LUBBOCK POWER & LIGHT-SOUTHEAST - LUBBOCK SOUTH INTERCHANGE 230KV CKT 1
FDNS	00NR	3	25SP	G15_075	FROM->TO	LUBBOCK POWER & LIGHT-HOLLY PLANT (SHIH T101039) 230/69/13.5KV TRANSFORMER CKT 1	224	224	0.03342	104.6872	P12:LPL:SPS:K64.1.LP-SE.LUBBS
FDNS	00NR	3	25SP	G15_075	FROM->TO	LUBBOCK POWER & LIGHT-HOLLY PLANT (SHIH T101039) 230/69/13.5KV TRANSFORMER CKT 1	224	224	0.03079	101.9683	LUBBOCK EAST INTERCHANGE - LUBBOCK POWER & LIGHT-WADSWORTH 230KV CKT 1
FDNS	00NR	3	25SP	G15_075	FROM->TO	LUBBOCK POWER & LIGHT-HOLLY PLANT (SHIH T101039) 230/69/13.5KV TRANSFORMER CKT 1	224	224	0.03079	101.9535	P12:230:LPL:K57.1.LP-WADS.LUBBE
FDNS	00NR	3	25SP	G15_075	FROM->TO	LUBBOCK POWER & LIGHT-HOLLY PLANT (SHIH T101039) 230/69/13.5KV TRANSFORMER CKT 1	224	224	0.03079	101.9534	LUBBOCK POWER & LIGHT-WADSWORTH (SHIH T101038) 230/69/13.5KV TRANSFORMER CKT 1
FDNS	00NR	3	25SP	G15_075	FROM->TO	LUBBOCK POWER & LIGHT-HOLLY PLANT (SHIH T101039) 230/69/13.5KV TRANSFORMER CKT 1	224	224	0.03079	101.9534	LUBBOCK POWER & LIGHT-WADSWORTH (SHIH T101038) 230/69/13.5KV TRANSFORMER CKT 1
FDNS	00NR	3	25SP	G15_075	FROM->TO	POTTER COUNTY INTERCHANGE (WAUK 90343-A) 345/230/13.2KV TRANSFORMER CKT 1	560	560	0.03186	102.244	HITCHLAND INTERCHANGE - MOORE COUNTY INTERCHANGE 230KV CKT 1
FDNS	00NR	3	25SP	G15_075	FROM->TO	POTTER COUNTY INTERCHANGE (WAUK 90343-A) 345/230/13.2KV TRANSFORMER CKT 1	560	560	0.03186	102.244	HITCHLAND INTERCHANGE - MOORE COUNTY INTERCHANGE 230KV CKT 1
FDNS	00NR	3	25SP	G15_075	FROM->TO	POTTER COUNTY INTERCHANGE (WAUK 90343-A) 345/230/13.2KV TRANSFORMER CKT 1	560	560	0.03186	100.6701	HITCHLAND INTERCHANGE - MOORE COUNTY INTERCHANGE 230KV CKT 1
FDNS	00NR	3	25SP	G15_075	FROM->TO	POTTER COUNTY INTERCHANGE (WAUK 90343-A) 345/230/13.2KV TRANSFORMER CKT 1	560	560	0.03186	100.6701	HITCHLAND INTERCHANGE - MOORE COUNTY INTERCHANGE 230KV CKT 1
FDNS	06ALL	3	17G	G15_075	FROM->TO	TUCO INTERCHANGE - TUCO_2 230.00 230KV CKT 1	497	547	0.37159	106.1901	TUCO INTERCHANGE - TUCO_2 345.00 345KV CKT 1
FDNS	06ALL	3	20L	G15_075	FROM->TO	TUCO INTERCHANGE - TUCO_2 230.00 230KV CKT 1	497	547	0.35814	105.0803	TUCO INTERCHANGE - TUCO_2 345.00 345KV CKT 1
FDNS	06ALL	3	20SP	G15_075	FROM->TO	TUCO INTERCHANGE - TUCO_2 230.00 230KV CKT 1	497	547	0.37712	99.5	TUCO INTERCHANGE - TUCO_2 345.00 345KV CKT 1
FDNS	06ALL	3	20L	G15_075	FROM->TO	TUCO_2 345.00 (TUCO_2 XFMR) 345/230/13.2KV TRANSFORMER CKT 1	560	560	0.25984	109.4409	TUCO INTERCHANGE - TUCO_2 345.00 345KV CKT 1
FDNS	06ALL	3	17G	G15_075	FROM->TO	TUCO_2 345.00 (TUCO_2 XFMR) 345/230/13.2KV TRANSFORMER CKT 1	560	560	0.27585	108.0493	TUCO INTERCHANGE - TUCO_2 345.00 345KV CKT 1
FDNS	06ALL	3	20L	G15_075	FROM->TO	TUCO_2 345.00 (TUCO_2 XFMR) 345/230/13.2KV TRANSFORMER CKT 1	560	560	0.25984	106.0962	TUCO INTERCHANGE - TUCO_2 345.00 345KV CKT 1
FDNS	06ALL	3	17G	G15_075	FROM->TO	TUCO_2 345.00 (TUCO_2 XFMR) 345/230/13.2KV TRANSFORMER CKT 1	560	560	0.27585	104.8896	TUCO INTERCHANGE - TUCO_2 345.00 345KV CKT 1
FDNS	06ALL	3	20WP	G15_075	FROM->TO	TUCO_2 345.00 (TUCO_2 XFMR) 345/230/13.2KV TRANSFORMER CKT 1	560	560	0.27791	104.2621	TUCO INTERCHANGE - TUCO_2 345.00 345KV CKT 1
FDNS	06ALL	3	20WP	G15_075	FROM->TO	TUCO_2 345.00 (TUCO_2 XFMR) 345/230/13.2KV TRANSFORMER CKT 1	560	560	0.27791	101.0986	TUCO INTERCHANGE - TUCO_2 345.00 345KV CKT 1
FDNS	00NR	3	25SP	G15_075	FROM->TO	WOLFFORTH INTERCHANGE (WH 7001668) 230/115/13.2KV TRANSFORMER CKT 1	168	168	0.0522	106.3106	CARLISLE INTERCHANGE - LP-DOUD_TP 3115.00 115KV CKT 1
FDNS	00NR	3	25SP	G15_075	FROM->TO	WOLFFORTH INTERCHANGE (WH 7001668) 230/115/13.2KV TRANSFORMER CKT 1	168	168	0.0522	101.039	CARLISLE INTERCHANGE - LP-DOUD_TP 3115.00 115KV CKT 1
FDNS	00NR	4	25SP	G15_075	FROM->TO	CARLISLE INTERCHANGE - LP-DOUD_TP 3115.00 115KV CKT 1	159	160	0.17835	104.0959	WOLFFORTH INTERCHANGE (WH 7001668) 230/115/13.2KV TRANSFORMER CKT 1
FDNS	00NR	4	25SP	G15_075	FROM->TO	CARLISLE INTERCHANGE - LP-DOUD_TP 3115.00 115KV CKT 1	159	160	0.17835	104.0959	WOLFFORTH INTERCHANGE (WH 7001668) 230/115/13.2KV TRANSFORMER CKT 1
FDNS	06ALL	4	20L	G15_075	FROM->TO	CARLISLE INTERCHANGE (WH RLP38371) 115/69/13.2KV TRANSFORMER CKT 1	44.37	44.4	1	112.0098	BASE CASE
FDNS	06NR	4	20L	G15_075	FROM->TO	CARLISLE INTERCHANGE (WH RLP38371) 115/69/13.2KV TRANSFORMER CKT 1	44.37	44.4	1	111.6747	BASE CASE
FDNS	06ALL	4	16WP	G15_075	FROM->TO	CARLISLE INTERCHANGE (WH RLP38371) 115/69/13.2KV TRANSFORMER CKT 1	44.37	44.4	1	110.6325	BASE CASE
FDNS	06ALL	4	20L	G15_075	FROM->TO	CARLISLE INTERCHANGE (WH RLP38371) 115/69/13.2KV TRANSFORMER CKT 1	44.37	44.4	1	109.8839	BASE CASE
FDNS	06NR	4	20L	G15_075	FROM->TO	CARLISLE INTERCHANGE (WH RLP38371) 115/69/13.2KV TRANSFORMER CKT 1	44.37	44.4	1	109.748	BASE CASE
FDNS	00NR	4	16WP	G15_075	FROM->TO	CARLISLE INTERCHANGE (WH RLP38371) 115/69/13.2KV TRANSFORMER CKT 1	44.37	44.4	1	107.9003	BASE CASE
FDNS	06ALL	4	20WP	G15_075	FROM->TO	CARLISLE INTERCHANGE (WH RLP38371) 115/69/13.2KV TRANSFORMER CKT 1	44.37	44.4	1	107.8269	BASE CASE
FDNS	06ALL	4	16WP	G15_075	FROM->TO	CARLISLE INTERCHANGE (WH RLP38371) 115/69/13.2KV TRANSFORMER CKT 1	44.37	44.4	1	107.5065	BASE CASE
FDNS	00NR	4	20WP	G15_075	FROM->TO	CARLISLE INTERCHANGE (WH RLP38371) 115/69/13.2KV TRANSFORMER CKT 1	44.37	44.4	1	106.3614	BASE CASE
FDNS	00NR	4	16WP	G15_075	FROM->TO	CARLISLE INTERCHANGE (WH RLP38371) 115/69/13.2KV TRANSFORMER CKT 1	44.37	44.4	1	106.2228	BASE CASE
FDNS	06ALL	4	17G	G15_075	FROM->TO	CARLISLE INTERCHANGE (WH RLP38371) 115/69/13.2KV TRANSFORMER CKT 1	44.37	44.4	1	106.1054	BASE CASE
FDNS	06ALL	4	20WP	G15_075	FROM->TO	CARLISLE INTERCHANGE (WH RLP38371) 115/69/13.2KV TRANSFORMER CKT 1	44.37	44.4	1	105.7795	BASE CASE
FDNS	00NR	4	20WP	G15_075	FROM->TO	CARLISLE INTERCHANGE (WH RLP38371) 115/69/13.2KV TRANSFORMER CKT 1	44.37	44.4	1	105.266	BASE CASE
FDNS	06NR	4	17G	G15_075	FROM->TO	CARLISLE INTERCHANGE (WH RLP38371) 115/69/13.2KV TRANSFORMER CKT 1	44.37	44.4	1	104.1586	BASE CASE
FDNS	06ALL	4	17G	G15_075	FROM->TO	CARLISLE INTERCHANGE (WH RLP38371) 115/69/13.2KV TRANSFORMER CKT 1	44.37	44.4	1	103.2573	BASE CASE
FDNS	06NR	4	17G	G15_075	FROM->TO	CARLISLE INTERCHANGE (WH RLP38371) 115/69/13.2KV TRANSFORMER CKT 1	44.37	44.4	1	102.276	BASE CASE
FDNS	00NR	4	17SP	G15_075	FROM->TO	CARLISLE INTERCHANGE (WH RLP38371) 115/69/13.2KV TRANSFORMER CKT 1	44.37	44.4	1	100.2275	BASE CASE
FDNS	00NR	4	20SP	G15_075	FROM->TO	CARLISLE INTERCHANGE (WH RLP38371) 115/69/13.2KV TRANSFORMER CKT 1	44.37	44.4	1	100.0829	BASE CASE
FDNS	06ALL	4	17SP	G15_075	FROM->TO	CARLISLE INTERCHANGE (WH RLP38371) 115/69/13.2KV TRANSFORMER CKT 1	44.37	44.4	1	100	BASE CASE
FDNS	06ALL	4	20SP	G15_075	FROM->TO	CHISHOLM6 230.00 - ELK CITY 230KV 230KV CKT 1	353	353	0.06224	103.152	BASE CASE
FDNS	06ALL	4	17SP	G15_075	FROM->TO	CHISHOLM6 230.00 - ELK CITY 230KV 230KV CKT 1	353	353	0.06245	100.7007	BASE CASE
FDNS	06ALL	4	20L	G15_075	TO->FROM	CIMARRON - MINCO 345KV CKT 1	956	956	0.20876	136.9659	G14-057T 345.00 - SUNNYSIDE 345KV CKT 1
FDNS	06ALL	4	20L	G15_075	TO->FROM	CIMARRON - MINCO 345KV CKT 1	956	956	0.20876	130.9905	G14-057T 345.00 - LAWTON EASTSIDE 345KV CKT 1
FDNS	06ALL	4	17G	G15_075	TO->FROM	CIMARRON - MINCO 345KV CKT 1	956	956	0.23766	129.7974	G14-057T 345.00 - SUNNYSIDE 345KV CKT 1
FDNS	06ALL	4	20WP	G15_075	TO->FROM	CIMARRON - MINCO 345KV CKT 1	956	956	0.23445	128.511	G14-057T 345.00 - SUNNYSIDE 345KV CKT 1
FDNS	06ALL	4	17G	G15_075	TO->FROM	CIMARRON - MINCO 345KV CKT 1	956	956	0.23766	124.286	G14-057T 345.00 - LAWTON EASTSIDE 345KV CKT 1
FDNS	06ALL	4	20WP	G15_075	TO->FROM	CIMARRON - MINCO 345KV CKT 1	956	956	0.23445	123.0537	G14-057T 345.00 - LAWTON EASTSIDE 345KV CKT 1
FDNS	06ALL	4	16WP	G15_075	TO->FROM	CIMARRON - MINCO 345KV CKT 1	956	956	0.24423	122.1275	G14-057T 345.00 - SUNNYSIDE 345KV CKT 1
FDNS	06ALL	4	17SP	G15_075	TO->FROM	CIMARRON - MINCO 345KV CKT 1	956	956	0.24054	121.005	G14-057T 345.00 - SUNNYSIDE 345KV CKT 1
FDNS	06ALL	4	20SP	G15_075	TO->FROM	CIMARRON - MINCO 345KV CKT 1	956	956	0.2402	117.7968	G14-057T 345.00 - SUNNYSIDE 345KV CKT 1
FDNS	06ALL	4	16WP	G15_075	TO->FROM	CIMARRON - MINCO 345KV CKT 1	956	956	0.24423	116.5578	G14-057T 345.00 - LAWTON EASTSIDE 345KV CKT 1
FDNS	06ALL	4	17SP	G15_075	TO->FROM	CIMARRON - MINCO 345KV CKT 1	956	956	0.24054	115.6625	G14-057T 345.00 - LAWTON EASTSIDE 345KV CKT 1
FDNS	06ALL	4	20SP	G15_075	TO->FROM	CIMARRON - MINCO 345KV CKT 1	956	956	0.2402	112.5931	G14-057T 345.00 - LAWTON EASTSIDE 345KV CKT 1
FDNSLock	06ALL	4	17G	G15_075	TO->FROM	CIMARRON - MINCO 345KV CKT 1	956	956	0.20321	110.3749	MATHWSN7 345.00 - TATONGA7 345.00 345KV CKT 1
FDNS	06ALL	4	20WP	G15_075	TO->FROM	CIMARRON - MINCO 345KV CKT 1	956	956	0.19931	109.8635	MATHWSN7 345.00 - TATONGA7 345.00 345KV CKT 1
FDNS	06ALL	4	20WP	G15_075	TO->FROM	CIMARRON - MINCO 345KV CKT 1	956	956	0.19931	104.457	G11_051T 345.00 - TATONGA7 345.00 345KV CKT 1
FDNS	06ALL	4	17G	G15_075	TO->FROM	CIMARRON - MINCO 345KV CKT 1	956	956	0.23075	104.4362	CHISHOLM7 345.00 - WOODWARD DISTRICT EHV 345KV CKT 1
FDNS	06ALL	4	17G	G15_075	TO->FROM	CIMARRON - MINCO 345KV CKT 1	956	956	0.20321	104.3067	G11_051T 345.00 - TATONGA7 345.00 345KV CKT 1
FDNS	06ALL	4	20L	G15_075	TO->FROM	CIMARRON - MINCO 345KV CKT 1	956	956	0.20909	103.7687	CHISHOLM7 345.00 - WOODWARD DISTRICT EHV 345KV CKT 1
FDNS	06ALL	4	17SP	G15_075	TO->FROM	CIMARRON - MINCO 345KV CKT 1	956	956	0.20605	103.6969	MATHWSN7 345.00 - TATONGA7 345.00 345KV CKT 1
FDNS	06ALL	4	16WP	G15_075	TO->FROM	CIMARRON - MINCO 345KV CKT 1	956	956	0.20826	103.3746	MATHWSN7 345.00 - TATONGA7 345.00 345KV CKT 1
FDNS	06ALL	4	20WP	G15_075	TO->FROM	CIMARRON - MINCO 345KV CKT 1	956	956	0.19931	102.8471	G11_051T 345.00 - WOODWARD DISTRICT EHV 345KV CKT 1
FDNS	06ALL	4	20SP	G15_075	TO->FROM	CIMARRON - MINCO 345KV CKT 1	956	956	0.20567	102.8303	MATHWSN7 345.00 - TATONGA7 345.00 345KV CKT 1

SOLUTION	GROUP	SCENARIO	SEASON	SOURCE	DIRECTION	MONITORED ELEMENT	RATEA (MVA)	RATEB(MVA)	TDF	TC%LOADING (% MVA)	CONTINGENCY
FDNS	06ALL	4	17G	G15_075	TO->FROM	CIMARRON - MINCO 345KV CKT 1	956	956	0.20321	102.7262	G11_051T 345.00 - WOODWARD DISTRICT EHV 345KV CKT 1
FDNS	06ALL	4	20WP	G15_075	TO->FROM	CIMARRON - MINCO 345KV CKT 1	956	956	0.22993	100.3052	CHISHOLM7 345.00 - WOODWARD DISTRICT EHV 345KV CKT 1
FDNSLock	06ALL	4	16WP	G15_075		G14_001T 345.00 - WICHITA 345KV CKT 1	1035	1035	0.05382	25.24282	BASE CASE
FDNS	06ALL	4	20L	G15_075	TO->FROM	G14-057T 345.00 - LAWTON EASTSIDE 345KV CKT 1	717	789	0.1022	104.3251	BASE CASE
FDNS	06ALL	4	20L	G15_075	FROM->TO	G14-057T 345.00 - SUNNYSIDE 345KV CKT 1	717	789	0.1022	117.5276	BASE CASE
FDNS	06ALL	4	20WP	G15_075	FROM->TO	G14-057T 345.00 - SUNNYSIDE 345KV CKT 1	717	789	0.12508	105.3579	BASE CASE
FDNS	06ALL	4	17G	G15_075	FROM->TO	G14-057T 345.00 - SUNNYSIDE 345KV CKT 1	717	789	0.12713	105.0325	BASE CASE
FDNS	06ALL	4	16WP	G15_075	FROM->TO	G14-057T 345.00 - SUNNYSIDE 345KV CKT 1	717	789	0.13045	103.6585	BASE CASE
FDNS	06NR	4	17G	G15_075	FROM->TO	G14-074T 345.00 - OKLAUNION 345KV CKT 1	1022	1124	0.04193	105.4861	STATELINE INTERCHANGE - STLN-DEMARC6 230KV CKT 1
FDNS	06NR	4	17G	G15_075	FROM->TO	G14-074T 345.00 - OKLAUNION 345KV CKT 1	1022	1124	0.04193	105.4832	P12:230:AEPW-SPS:SWEETWT6:WHEELER 6
FDNS	06NR	4	17G	G15_075	FROM->TO	G14-074T 345.00 - OKLAUNION 345KV CKT 1	1022	1124	0.04193	105.0392	STLN-DEMARC6 - SWEETWATER 230KV CKT 1
FDNS	06NR	4	20L	G15_075	FROM->TO	G14-074T 345.00 - OKLAUNION 345KV CKT 1	1022	1124	0.04387	103.8229	GRAPEVINE INTERCHANGE - STATELINE INTERCHANGE 230KV CKT 1
FDNS	06NR	4	20L	G15_075	FROM->TO	G14-074T 345.00 - OKLAUNION 345KV CKT 1	1022	1124	0.04387	103.8229	GRAPEVINE INTERCHANGE - STATELINE INTERCHANGE 230KV CKT 1
FDNS	06NR	4	17G	G15_075	FROM->TO	G14-074T 345.00 - OKLAUNION 345KV CKT 1	1022	1124	0.04908	102.9967	MATHWSN7 345.00 - TATONGA7 345.00 345KV CKT 1
FDNS	06NR	4	20L	G15_075	FROM->TO	G14-074T 345.00 - OKLAUNION 345KV CKT 1	1022	1124	0.04808	101.1904	BASE CASE
FDNS	06NR	4	17G	G15_075	FROM->TO	G14-074T 345.00 - OKLAUNION 345KV CKT 1	1022	1124	0.04559	101.0862	GRAPEVINE INTERCHANGE - NICHOLS STATION 230KV CKT 1
FDNS	06NR	4	17G	G15_075	FROM->TO	G14-074T 345.00 - OKLAUNION 345KV CKT 1	1022	1124	0.04559	101.0862	GRAPEVINE INTERCHANGE - NICHOLS STATION 230KV CKT 1
FDNS	06NR	4	17G	G15_075	FROM->TO	G14-074T 345.00 - OKLAUNION 345KV CKT 1	1022	1124	0.04908	99.8	G11_051T 345.00 - TATONGA7 345.00 345KV CKT 1
FDNS	00NR	4	25SP	G15_075	FROM->TO	Hitchland Interchange (SIEM 8743067) 345/230/13.2KV TRANSFORMER CKT 2	560	644	0.03312	100.255	Hitchland Interchange (H TB80155502) 345/230/13.2KV TRANSFORMER CKT 1
FDNS	00NR	4	25SP	G15_075	FROM->TO	Hitchland Interchange (SIEM 8743067) 345/230/13.2KV TRANSFORMER CKT 2	560	644	0.03312	100.255	Hitchland Interchange (H TB80155502) 345/230/13.2KV TRANSFORMER CKT 1
FDNS	00NR	4	25SP	G15_075	FROM->TO	LUBBOCK POWER & LIGHT-HOLLY PLANT (SHIH T101039) 230/69/13.5KV TRANSFORMER CKT 1	224	224	0.03342	104.6928	LUBBOCK POWER & LIGHT-SOUTHEAST - LUBBOCK SOUTH INTERCHANGE 230KV CKT 1
FDNS	00NR	4	25SP	G15_075	FROM->TO	LUBBOCK POWER & LIGHT-HOLLY PLANT (SHIH T101039) 230/69/13.5KV TRANSFORMER CKT 1	224	224	0.03342	104.6926	P12:LPL:SPS:K64.1.LP-SE.LUBBS
FDNS	00NR	4	25SP	G15_075	FROM->TO	LUBBOCK POWER & LIGHT-HOLLY PLANT (SHIH T101039) 230/69/13.5KV TRANSFORMER CKT 1	224	224	0.0308	101.9377	LUBBOCK EAST INTERCHANGE - LUBBOCK POWER & LIGHT-WADSWORTH 230KV CKT 1
FDNS	00NR	4	25SP	G15_075	FROM->TO	LUBBOCK POWER & LIGHT-HOLLY PLANT (SHIH T101039) 230/69/13.5KV TRANSFORMER CKT 1	224	224	0.0308	101.923	P12:230:LPL:K57.1.LP-WADS.LUBBE
FDNS	00NR	4	25SP	G15_075	FROM->TO	LUBBOCK POWER & LIGHT-HOLLY PLANT (SHIH T101039) 230/69/13.5KV TRANSFORMER CKT 1	224	224	0.0308	101.9229	LUBBOCK POWER & LIGHT-WADSWORTH (SHIH T101038) 230/69/13.5KV TRANSFORMER CKT 1
FDNS	00NR	4	25SP	G15_075	FROM->TO	LUBBOCK POWER & LIGHT-HOLLY PLANT (SHIH T101039) 230/69/13.5KV TRANSFORMER CKT 1	224	224	0.0308	101.9229	LUBBOCK POWER & LIGHT-WADSWORTH (SHIH T101038) 230/69/13.5KV TRANSFORMER CKT 1
FDNSLock	06ALL	4	20L	G15_075		OKLAUNION 345KV SWITCHED SHUNT	1022	1124	0.17436	86.37846	BASE CASE
FDNS	06ALL	4	17G	G15_075	FROM->TO	TUCO INTERCHANGE - TUCO_2 230.00 230KV CKT 1	497	547	0.37456	105.7922	TUCO INTERCHANGE - TUCO_2 345.00 345KV CKT 1
FDNS	06ALL	4	20L	G15_075	FROM->TO	TUCO INTERCHANGE - TUCO_2 230.00 230KV CKT 1	497	547	0.35862	103.1103	TUCO INTERCHANGE - TUCO_2 345.00 345KV CKT 1
FDNS	06ALL	4	20L	G15_075	FROM->TO	TUCO_2 345.00 (TUCO_2 XFMR) 345/230/13.2KV TRANSFORMER CKT 1	560	560	0.27798	116.7572	TUCO INTERCHANGE - TUCO_2 345.00 345KV CKT 1
FDNS	06ALL	4	17G	G15_075	FROM->TO	TUCO_2 345.00 (TUCO_2 XFMR) 345/230/13.2KV TRANSFORMER CKT 1	560	560	0.29736	116.3962	TUCO INTERCHANGE - TUCO_2 345.00 345KV CKT 1
FDNS	06ALL	4	20L	G15_075	FROM->TO	TUCO_2 345.00 (TUCO_2 XFMR) 345/230/13.2KV TRANSFORMER CKT 1	560	560	0.27798	114.2306	TUCO INTERCHANGE - TUCO_2 345.00 345KV CKT 1
FDNS	06ALL	4	17G	G15_075	FROM->TO	TUCO_2 345.00 (TUCO_2 XFMR) 345/230/13.2KV TRANSFORMER CKT 1	560	560	0.29736	113.9028	TUCO INTERCHANGE - TUCO_2 345.00 345KV CKT 1
FDNS	06ALL	4	20WP	G15_075	FROM->TO	TUCO_2 345.00 (TUCO_2 XFMR) 345/230/13.2KV TRANSFORMER CKT 1	560	560	0.29744	111.7671	TUCO INTERCHANGE - TUCO_2 345.00 345KV CKT 1
FDNS	06ALL	4	20WP	G15_075	FROM->TO	TUCO_2 345.00 (TUCO_2 XFMR) 345/230/13.2KV TRANSFORMER CKT 1	560	560	0.29744	109.2949	TUCO INTERCHANGE - TUCO_2 345.00 345KV CKT 1
FDNS	06ALL	4	16WP	G15_075	FROM->TO	TUCO_2 345.00 (TUCO_2 XFMR) 345/230/13.2KV TRANSFORMER CKT 1	560	560	0.30411	99.9	TUCO INTERCHANGE - TUCO_2 345.00 345KV CKT 1
FDNS	00NR	4	25SP	G15_075	FROM->TO	WOLFFORTH INTERCHANGE (WH 7001668) 230/115/13.2KV TRANSFORMER CKT 1	168	168	0.05252	105.5176	CARLISLE INTERCHANGE - LP-DOUD_TP 3115.00 115KV CKT 1
FDNS	00NR	4	25SP	G15_075	FROM->TO	WOLFFORTH INTERCHANGE (WH 7001668) 230/115/13.2KV TRANSFORMER CKT 1	168	168	0.05252	100.2787	CARLISLE INTERCHANGE - LP-DOUD_TP 3115.00 115KV CKT 1
FDNS	00NR	5	25SP	G15_075	FROM->TO	CARLISLE INTERCHANGE - LP-DOUD_TP 3115.00 115KV CKT 1	159	160	0.17832	103.9974	WOLFFORTH INTERCHANGE (WH 7001668) 230/115/13.2KV TRANSFORMER CKT 1
FDNS	00NR	5	25SP	G15_075	FROM->TO	CARLISLE INTERCHANGE - LP-DOUD_TP 3115.00 115KV CKT 1	159	160	0.17832	103.9974	WOLFFORTH INTERCHANGE (WH 7001668) 230/115/13.2KV TRANSFORMER CKT 1
FDNS	06ALL	5	20L	G15_075	FROM->TO	CARLISLE INTERCHANGE (WH RLP38371) 115/69/13.2KV TRANSFORMER CKT 1	44.37	44.4	1	112.259	BASE CASE
FDNS	06NR	5	20L	G15_075	FROM->TO	CARLISLE INTERCHANGE (WH RLP38371) 115/69/13.2KV TRANSFORMER CKT 1	44.37	44.4	1	111.8879	BASE CASE
FDNS	06ALL	5	16WP	G15_075	FROM->TO	CARLISLE INTERCHANGE (WH RLP38371) 115/69/13.2KV TRANSFORMER CKT 1	44.37	44.4	1	110.7604	BASE CASE
FDNS	06ALL	5	20L	G15_075	FROM->TO	CARLISLE INTERCHANGE (WH RLP38371) 115/69/13.2KV TRANSFORMER CKT 1	44.37	44.4	1	109.9917	BASE CASE
FDNS	06NR	5	20L	G15_075	FROM->TO	CARLISLE INTERCHANGE (WH RLP38371) 115/69/13.2KV TRANSFORMER CKT 1	44.37	44.4	1	109.8332	BASE CASE
FDNS	06ALL	5	20WP	G15_075	FROM->TO	CARLISLE INTERCHANGE (WH RLP38371) 115/69/13.2KV TRANSFORMER CKT 1	44.37	44.4	1	108.0504	BASE CASE
FDNS	00NR	5	16WP	G15_075	FROM->TO	CARLISLE INTERCHANGE (WH RLP38371) 115/69/13.2KV TRANSFORMER CKT 1	44.37	44.4	1	107.9412	BASE CASE
FDNS	06ALL	5	16WP	G15_075	FROM->TO	CARLISLE INTERCHANGE (WH RLP38371) 115/69/13.2KV TRANSFORMER CKT 1	44.37	44.4	1	107.5791	BASE CASE
FDNS	06ALL	5	17G	G15_075	FROM->TO	CARLISLE INTERCHANGE (WH RLP38371) 115/69/13.2KV TRANSFORMER CKT 1	44.37	44.4	1	106.3851	BASE CASE
FDNS	00NR	5	20WP	G15_075	FROM->TO	CARLISLE INTERCHANGE (WH RLP38371) 115/69/13.2KV TRANSFORMER CKT 1	44.37	44.4	1	106.3641	BASE CASE
FDNS	00NR	5	16WP	G15_075	FROM->TO	CARLISLE INTERCHANGE (WH RLP38371) 115/69/13.2KV TRANSFORMER CKT 1	44.37	44.4	1	106.2394	BASE CASE
FDNS	06ALL	5	20WP	G15_075	FROM->TO	CARLISLE INTERCHANGE (WH RLP38371) 115/69/13.2KV TRANSFORMER CKT 1	44.37	44.4	1	105.882	BASE CASE
FDNS	00NR	5	20WP	G15_075	FROM->TO	CARLISLE INTERCHANGE (WH RLP38371) 115/69/13.2KV TRANSFORMER CKT 1	44.37	44.4	1	105.2668	BASE CASE
FDNS	06NR	5	17G	G15_075	FROM->TO	CARLISLE INTERCHANGE (WH RLP38371) 115/69/13.2KV TRANSFORMER CKT 1	44.37	44.4	1	104.443	BASE CASE
FDNS	06ALL	5	17G	G15_075	FROM->TO	CARLISLE INTERCHANGE (WH RLP38371) 115/69/13.2KV TRANSFORMER CKT 1	44.37	44.4	1	103.419	BASE CASE
FDNS	06NR	5	17G	G15_075	FROM->TO	CARLISLE INTERCHANGE (WH RLP38371) 115/69/13.2KV TRANSFORMER CKT 1	44.37	44.4	1	102.4115	BASE CASE
FDNS	00NR	5	17SP	G15_075	FROM->TO	CARLISLE INTERCHANGE (WH RLP38371) 115/69/13.2KV TRANSFORMER CKT 1	44.37	44.4	1	100.2315	BASE CASE
FDNS	00NR	5	20SP	G15_075	FROM->TO	CARLISLE INTERCHANGE (WH RLP38371) 115/69/13.2KV TRANSFORMER CKT 1	44.37	44.4	1	100.0788	BASE CASE
FDNS	06ALL	5	17SP	G15_075	FROM->TO	CARLISLE INTERCHANGE (WH RLP38371) 115/69/13.2KV TRANSFORMER CKT 1	44.37	44.4	1	99.8	BASE CASE
FDNS	06ALL	5	20SP	G15_075	FROM->TO	CHISHOLM6 230.00 - ELK CITY 230KV 230KV CKT 1	353	353	0.06583	107.7212	BASE CASE
FDNS	06ALL	5	17SP	G15_075	FROM->TO	CHISHOLM6 230.00 - ELK CITY 230KV 230KV CKT 1	353	353	0.06614	105.7594	BASE CASE
FDNS	06ALL	5	20L	G15_075	TO->FROM	CIMARRON - MINCO 345KV CKT 1	956	956	0.21505	139.1694	G14-057T 345.00 - SUNNYSIDE 345KV CKT 1
FDNS	06ALL	5	20L	G15_075	TO->FROM	CIMARRON - MINCO 345KV CKT 1	956	956	0.21505	133.4583	G14-057T 345.00 - LAWTON EASTSIDE 345KV CKT 1
FDNS	06ALL	5	17G	G15_075	TO->FROM	CIMARRON - MINCO 345KV CKT 1	956	956	0.24428	132.5137	G14-057T 345.00 - SUNNYSIDE 345KV CKT 1
FDNS	06ALL	5	20WP	G15_075	TO->FROM	CIMARRON - MINCO 345KV CKT 1	956	956	0.24019	131.4126	G14-057T 345.00 - SUNNYSIDE 345KV CKT 1
FDNS	06ALL	5	17G	G15_075	TO->FROM	CIMARRON - MINCO 345KV CKT 1	956	956	0.24428	127.0859	G14-057T 345.00 - LAWTON EASTSIDE 345KV CKT 1
FDNS	06ALL	5	20WP	G15_075	TO->FROM	CIMARRON - MINCO 345KV CKT 1	956	956	0.24019	126.0182	G14-057T 345.00 - LAWTON EASTSIDE 345KV CKT 1
FDNS	06ALL	5	16WP	G15_075	TO->FROM	CIMARRON - MINCO 345KV CKT 1	956	956	0.25104	125.0103	G14-057T 345.00 - SUNNYSIDE 345KV CKT 1
FDNS	06ALL	5	17SP	G15_075	TO->FROM	CIMARRON - MINCO 345KV CKT 1	956	956	0.247	123.5221	G14-057T 345.00 - SUNNYSIDE 345KV CKT 1
FDNS	06ALL	5	20SP	G15_075	TO->FROM	CIMARRON - MINCO 345KV CKT 1	956	956	0.24639	120.476	G14-057T 345.00 - SUNNYSIDE 345KV CKT 1
FDNS	06ALL	5	16WP	G15_075	TO->FROM	CIMARRON - MINCO 345KV CKT 1	956	956	0.25104	119.6144	G14-057T 345.00 - LAWTON EASTSIDE 345KV CKT 1
FDNS	06ALL	5	17SP	G15_075	TO->FROM	CIMARRON - MINCO 345KV CKT 1	956	956	0.247	118.2604	G14-057T 345.00 - LAWTON EASTSIDE 345KV CKT 1
FDNS	06ALL	5	20SP	G15_075	TO->FROM	CIMARRON - MINCO 345KV CKT 1	956	956	0.24639	115.0864	G14-057T 345.00 - LAWTON EASTSIDE 345KV CKT 1
FDNS	06ALL	5	17G	G15_075	TO->FROM	CIMARRON - MINCO 345KV CKT 1	956	956	0.20905	113.1247	MATHWSN7 345.00 - TATONGA7 345.00 345KV CKT 1
FDNS	06ALL	5	20WP	G15_075	TO->FROM	CIMARRON - MINCO 345KV CKT 1	956	956	0.20441	112.7231	MATHWSN7 345.00 - TATONGA7 345.00 345KV CKT 1
FDNS	06ALL	5	20L	G15_075	TO->FROM	CIMARRON - MINCO 345KV CKT 1	956	956	0.21512	110.4804	CHISHOLM7 345.00 - WOODWARD DISTRICT EHV 345KV CKT 1
FDNS	06ALL	5	17G	G15_075	TO->FROM	CIMARRON - MINCO 345KV CKT 1	956	956	0.23847	110.4087	CHISHOLM7 345.00 - WOODWARD DISTRICT EHV 345KV CKT 1
FDNS	06ALL	5	20WP	G15_075	TO->FROM	CIMARRON - MINCO 345KV CKT 1	956	956	0.20441	107.3503	G11_051T 345.00 - TATONGA7 345.00 345KV CKT 1
FDNS	06ALL	5	17G	G15_075	TO->FROM	CIMARRON - MINCO 345KV CKT 1	956	956	0.20905	107.1655	G11_051T 345.00 - TATONGA7 345.00 345KV CKT 1

SOLUTION	GROUP	SCENARIO	SEASON	SOURCE	DIRECTION	MONITORED ELEMENT	RATEA (MVA)	RATEB(MVA)	TDF	TC%LOADING (% MVA)	CONTINGENCY
FDNS	06ALL	5	20WP	G15_075	TO->FROM	CIMARRON - MINCO 345KV CKT 1	956	956	0.23649	106.6912	CHISHOLM7 345.00 - WOODWARD DISTRICT EHV 345KV CKT 1
FDNS	06ALL	5	16WP	G15_075	TO->FROM	CIMARRON - MINCO 345KV CKT 1	956	956	0.21427	106.1194	MATHWSN7 345.00 - TATONGA7 345.00 345KV CKT 1
FDNS	06ALL	5	17SP	G15_075	TO->FROM	CIMARRON - MINCO 345KV CKT 1	956	956	0.21177	106.0588	MATHWSN7 345.00 - TATONGA7 345.00 345KV CKT 1
FDNS	06ALL	5	20WP	G15_075	TO->FROM	CIMARRON - MINCO 345KV CKT 1	956	956	0.20441	105.6974	G11_051T 345.00 - WOODWARD DISTRICT EHV 345KV CKT 1
FDNS	06ALL	5	17G	G15_075	TO->FROM	CIMARRON - MINCO 345KV CKT 1	956	956	0.20905	105.5499	G11_051T 345.00 - WOODWARD DISTRICT EHV 345KV CKT 1
FDNS	06ALL	5	20SP	G15_075	TO->FROM	CIMARRON - MINCO 345KV CKT 1	956	956	0.21118	105.1459	MATHWSN7 345.00 - TATONGA7 345.00 345KV CKT 1
FDNS	06ALL	5	20SP	G15_075	TO->FROM	CIMARRON - MINCO 345KV CKT 1	956	956	0.24353	102.6282	CHISHOLM7 345.00 - WOODWARD DISTRICT EHV 345KV CKT 1
FDNS	06ALL	5	17SP	G15_075	TO->FROM	CIMARRON - MINCO 345KV CKT 1	956	956	0.24407	102.3712	CHISHOLM7 345.00 - WOODWARD DISTRICT EHV 345KV CKT 1
FDNS	06ALL	5	17G	G15_075	TO->FROM	CIMARRON - MINCO 345KV CKT 1	956	956	0.19725	102.1215	P12:138:WFEC:MSL03
FDNS	06ALL	5	17SP	G15_075	TO->FROM	CIMARRON - MINCO 345KV CKT 1	956	956	0.21177	100.8538	G11_051T 345.00 - TATONGA7 345.00 345KV CKT 1
FDNS	06ALL	5	16WP	G15_075	TO->FROM	CIMARRON - MINCO 345KV CKT 1	956	956	0.21427	100.7286	G11_051T 345.00 - TATONGA7 345.00 345KV CKT 1
FDNS	06ALL	5	20SP	G15_075	TO->FROM	CIMARRON - MINCO 345KV CKT 1	956	956	0.21118	100	G11_051T 345.00 - TATONGA7 345.00 345KV CKT 1
FDNS	06ALL	5	16WP	G15_075	TO->FROM	CIMARRON - MINCO 345KV CKT 1	956	956	0.24662	99.9	CHISHOLM7 345.00 - WOODWARD DISTRICT EHV 345KV CKT 1
FDNS	06ALL	5	17SP	G15_075	TO->FROM	CIMARRON - MINCO 345KV CKT 1	956	956	0.20102	99.5	P12:138:WFEC:MSL03
FDNS	06ALL	5	20L	G15_075	TO->FROM	G14-057T 345.00 - LAWTON EASTSIDE 345KV CKT 1	717	789	0.10379	104.5834	BASE CASE
FDNS	06ALL	5	20L	G15_075	FROM->TO	G14-057T 345.00 - SUNNYSIDE 345KV CKT 1	717	789	0.10379	117.7866	BASE CASE
FDNS	06ALL	5	20WP	G15_075	FROM->TO	G14-057T 345.00 - SUNNYSIDE 345KV CKT 1	717	789	0.12576	105.6059	BASE CASE
FDNS	06ALL	5	17G	G15_075	FROM->TO	G14-057T 345.00 - SUNNYSIDE 345KV CKT 1	717	789	0.12822	105.2883	BASE CASE
FDNS	06ALL	5	16WP	G15_075	FROM->TO	G14-057T 345.00 - SUNNYSIDE 345KV CKT 1	717	789	0.13148	103.9305	BASE CASE
FDNS	06ALL	5	20L	G15_075	FROM->TO	GRACEMONT - MINCO 345KV CKT 1	1195	1195	0.21505	100.3039	G14-057T 345.00 - SUNNYSIDE 345KV CKT 1
FDNS	00NR	5	25SP	G15_075	FROM->TO	Hitchland Interchange (SIEM 8743067) 345/230/13.2KV TRANSFORMER CKT 2	560	644	0.03238	99.8	Hitchland Interchange (H TB80155502) 345/230/13.2KV TRANSFORMER CKT 1
FDNS	00NR	5	25SP	G15_075	FROM->TO	Hitchland Interchange (SIEM 8743067) 345/230/13.2KV TRANSFORMER CKT 2	560	644	0.03238	99.8	Hitchland Interchange (H TB80155502) 345/230/13.2KV TRANSFORMER CKT 1
FDNS	00NR	5	25SP	G15_075	FROM->TO	LUBBOCK POWER & LIGHT-HOLLY PLANT (SHIH T101039) 230/69/13.5KV TRANSFORMER CKT 1	224	224	0.03342	104.6927	LUBBOCK POWER & LIGHT-SOUTHEAST - LUBBOCK SOUTH INTERCHANGE 230KV CKT 1
FDNS	00NR	5	25SP	G15_075	FROM->TO	LUBBOCK POWER & LIGHT-HOLLY PLANT (SHIH T101039) 230/69/13.5KV TRANSFORMER CKT 1	224	224	0.03342	104.6925	P12:LPL:SPS:K64.1.LP-SE.LUBBS
FDNS	00NR	5	25SP	G15_075	FROM->TO	LUBBOCK POWER & LIGHT-HOLLY PLANT (SHIH T101039) 230/69/13.5KV TRANSFORMER CKT 1	224	224	0.0308	101.9351	LUBBOCK EAST INTERCHANGE - LUBBOCK POWER & LIGHT-WADSWORTH 230KV CKT 1
FDNS	00NR	5	25SP	G15_075	FROM->TO	LUBBOCK POWER & LIGHT-HOLLY PLANT (SHIH T101039) 230/69/13.5KV TRANSFORMER CKT 1	224	224	0.0308	101.9204	P12:230:LPL:K57.1.LP-WADS.LUBBE
FDNS	00NR	5	25SP	G15_075	FROM->TO	LUBBOCK POWER & LIGHT-HOLLY PLANT (SHIH T101039) 230/69/13.5KV TRANSFORMER CKT 1	224	224	0.0308	101.9203	LUBBOCK POWER & LIGHT-WADSWORTH (SHIH T101038) 230/69/13.5KV TRANSFORMER CKT 1
FDNS	00NR	5	25SP	G15_075	FROM->TO	LUBBOCK POWER & LIGHT-HOLLY PLANT (SHIH T101039) 230/69/13.5KV TRANSFORMER CKT 1	224	224	0.0308	101.9203	LUBBOCK POWER & LIGHT-WADSWORTH (SHIH T101038) 230/69/13.5KV TRANSFORMER CKT 1
FDNS	06ALL	5	17G	G15_075	FROM->TO	TUCO INTERCHANGE - TUCO_2 230.00 230KV CKT 1	497	547	0.37217	99.8	TUCO INTERCHANGE - TUCO_2 345.00 345KV CKT 1
FDNS	06ALL	5	17G	G15_075	FROM->TO	TUCO_2 345.00 (TUCO_2 XFMR) 345/230/13.2KV TRANSFORMER CKT 1	560	560	0.28914	105.5369	TUCO INTERCHANGE - TUCO_2 345.00 345KV CKT 1
FDNS	06ALL	5	20L	G15_075	FROM->TO	TUCO_2 345.00 (TUCO_2 XFMR) 345/230/13.2KV TRANSFORMER CKT 1	560	560	0.27166	104.6777	TUCO INTERCHANGE - TUCO_2 345.00 345KV CKT 1
FDNS	06ALL	5	17G	G15_075	FROM->TO	TUCO_2 345.00 (TUCO_2 XFMR) 345/230/13.2KV TRANSFORMER CKT 1	560	560	0.28914	104.079	TUCO INTERCHANGE - TUCO_2 345.00 345KV CKT 1
FDNS	06ALL	5	20L	G15_075	FROM->TO	TUCO_2 345.00 (TUCO_2 XFMR) 345/230/13.2KV TRANSFORMER CKT 1	560	560	0.27166	103.3194	TUCO INTERCHANGE - TUCO_2 345.00 345KV CKT 1
FDNS	06ALL	5	20WP	G15_075	FROM->TO	TUCO_2 345.00 (TUCO_2 XFMR) 345/230/13.2KV TRANSFORMER CKT 1	560	560	0.28839	99.7	TUCO INTERCHANGE - TUCO_2 345.00 345KV CKT 1
FDNS	00NR	5	25SP	G15_075	FROM->TO	WOLFFORTH INTERCHANGE (WH 7001668) 230/115/13.2KV TRANSFORMER CKT 1	168	168	0.05249	105.4473	CARLISLE INTERCHANGE - LP-DOUD_TP 3115.00 115KV CKT 1
FDNS	00NR	5	25SP	G15_075	FROM->TO	WOLFFORTH INTERCHANGE (WH 7001668) 230/115/13.2KV TRANSFORMER CKT 1	168	168	0.05249	100.211	CARLISLE INTERCHANGE - LP-DOUD_TP 3115.00 115KV CKT 1
FDNS	00NR	6	25SP	G15_075	FROM->TO	CARLISLE INTERCHANGE - LP-DOUD_TP 3115.00 115KV CKT 1	159	160	0.17831	103.9948	WOLFFORTH INTERCHANGE (WH 7001668) 230/115/13.2KV TRANSFORMER CKT 1
FDNS	00NR	6	25SP	G15_075	FROM->TO	CARLISLE INTERCHANGE - LP-DOUD_TP 3115.00 115KV CKT 1	159	160	0.17831	103.9948	WOLFFORTH INTERCHANGE (WH 7001668) 230/115/13.2KV TRANSFORMER CKT 1
FDNS	06ALL	6	20L	G15_075	FROM->TO	CARLISLE INTERCHANGE (WH RLP38371) 115/69/13.2KV TRANSFORMER CKT 1	44.37	44.4	1	112.3093	BASE CASE
FDNS	06NR	6	20L	G15_075	FROM->TO	CARLISLE INTERCHANGE (WH RLP38371) 115/69/13.2KV TRANSFORMER CKT 1	44.37	44.4	1	111.8966	BASE CASE
FDNS	06ALL	6	16WP	G15_075	FROM->TO	CARLISLE INTERCHANGE (WH RLP38371) 115/69/13.2KV TRANSFORMER CKT 1	44.37	44.4	1	110.8178	BASE CASE
FDNS	06ALL	6	20L	G15_075	FROM->TO	CARLISLE INTERCHANGE (WH RLP38371) 115/69/13.2KV TRANSFORMER CKT 1	44.37	44.4	1	110.0141	BASE CASE
FDNS	06NR	6	20L	G15_075	FROM->TO	CARLISLE INTERCHANGE (WH RLP38371) 115/69/13.2KV TRANSFORMER CKT 1	44.37	44.4	1	109.8368	BASE CASE
FDNS	06ALL	6	20WP	G15_075	FROM->TO	CARLISLE INTERCHANGE (WH RLP38371) 115/69/13.2KV TRANSFORMER CKT 1	44.37	44.4	1	108.0866	BASE CASE
FDNS	00NR	6	16WP	G15_075	FROM->TO	CARLISLE INTERCHANGE (WH RLP38371) 115/69/13.2KV TRANSFORMER CKT 1	44.37	44.4	1	107.928	BASE CASE
FDNS	06ALL	6	16WP	G15_075	FROM->TO	CARLISLE INTERCHANGE (WH RLP38371) 115/69/13.2KV TRANSFORMER CKT 1	44.37	44.4	1	107.612	BASE CASE
FDNS	06ALL	6	17G	G15_075	FROM->TO	CARLISLE INTERCHANGE (WH RLP38371) 115/69/13.2KV TRANSFORMER CKT 1	44.37	44.4	1	106.453	BASE CASE
FDNS	00NR	6	20WP	G15_075	FROM->TO	CARLISLE INTERCHANGE (WH RLP38371) 115/69/13.2KV TRANSFORMER CKT 1	44.37	44.4	1	106.3647	BASE CASE
FDNS	00NR	6	16WP	G15_075	FROM->TO	CARLISLE INTERCHANGE (WH RLP38371) 115/69/13.2KV TRANSFORMER CKT 1	44.37	44.4	1	106.234	BASE CASE
FDNS	06ALL	6	20WP	G15_075	FROM->TO	CARLISLE INTERCHANGE (WH RLP38371) 115/69/13.2KV TRANSFORMER CKT 1	44.37	44.4	1	105.899	BASE CASE
FDNS	00NR	6	20WP	G15_075	FROM->TO	CARLISLE INTERCHANGE (WH RLP38371) 115/69/13.2KV TRANSFORMER CKT 1	44.37	44.4	1	105.2669	BASE CASE
FDNS	06NR	6	17G	G15_075	FROM->TO	CARLISLE INTERCHANGE (WH RLP38371) 115/69/13.2KV TRANSFORMER CKT 1	44.37	44.4	1	104.4737	BASE CASE
FDNS	06ALL	6	17G	G15_075	FROM->TO	CARLISLE INTERCHANGE (WH RLP38371) 115/69/13.2KV TRANSFORMER CKT 1	44.37	44.4	1	103.4588	BASE CASE
FDNS	06NR	6	17G	G15_075	FROM->TO	CARLISLE INTERCHANGE (WH RLP38371) 115/69/13.2KV TRANSFORMER CKT 1	44.37	44.4	1	102.4266	BASE CASE
FDNS	00NR	6	17SP	G15_075	FROM->TO	CARLISLE INTERCHANGE (WH RLP38371) 115/69/13.2KV TRANSFORMER CKT 1	44.37	44.4	1	100.2317	BASE CASE
FDNS	00NR	6	20SP	G15_075	FROM->TO	CARLISLE INTERCHANGE (WH RLP38371) 115/69/13.2KV TRANSFORMER CKT 1	44.37	44.4	1	100.0907	BASE CASE
FDNS	06ALL	6	17SP	G15_075	FROM->TO	CARLISLE INTERCHANGE (WH RLP38371) 115/69/13.2KV TRANSFORMER CKT 1	44.37	44.4	1	99.8	BASE CASE
FDNS	06ALL	6	20SP	G15_075	FROM->TO	CHISHOLM6 230.00 - ELK CITY 230KV 230KV CKT 1	353	353	0.05911	102.8848	BASE CASE
FDNS	06ALL	6	17SP	G15_075	FROM->TO	CHISHOLM6 230.00 - ELK CITY 230KV 230KV CKT 1	353	353	0.05936	100.6562	BASE CASE
FDNS	06ALL	6	17G	G15_075	TO->FROM	CIMARRON - MINCO 345KV CKT 1	956	956	0.21859	121.6178	G14-057T 345.00 - SUNNYSIDE 345KV CKT 1
FDNS	06ALL	6	20WP	G15_075	TO->FROM	CIMARRON - MINCO 345KV CKT 1	956	956	0.21516	119.7395	G14-057T 345.00 - SUNNYSIDE 345KV CKT 1
FDNS	06ALL	6	17G	G15_075	TO->FROM	CIMARRON - MINCO 345KV CKT 1	956	956	0.21859	116.437	G14-057T 345.00 - LAWTON EASTSIDE 345KV CKT 1
FDNS	06ALL	6	20WP	G15_075	TO->FROM	CIMARRON - MINCO 345KV CKT 1	956	956	0.21516	114.5016	G14-057T 345.00 - LAWTON EASTSIDE 345KV CKT 1
FDNS	06ALL	6	17SP	G15_075	TO->FROM	CIMARRON - MINCO 345KV CKT 1	956	956	0.22097	114.4047	G14-057T 345.00 - SUNNYSIDE 345KV CKT 1
FDNS	06ALL	6	16WP	G15_075	TO->FROM	CIMARRON - MINCO 345KV CKT 1	956	956	0.22473	114.352	G14-057T 345.00 - SUNNYSIDE 345KV CKT 1
FDNS	06ALL	6	20SP	G15_075	TO->FROM	CIMARRON - MINCO 345KV CKT 1	956	956	0.22058	111.5632	G14-057T 345.00 - SUNNYSIDE 345KV CKT 1
FDNS	06ALL	6	17SP	G15_075	TO->FROM	CIMARRON - MINCO 345KV CKT 1	956	956	0.22097	109.1774	G14-057T 345.00 - LAWTON EASTSIDE 345KV CKT 1
FDNS	06ALL	6	16WP	G15_075	TO->FROM	CIMARRON - MINCO 345KV CKT 1	956	956	0.22473	108.975	G14-057T 345.00 - LAWTON EASTSIDE 345KV CKT 1
FDNS	06ALL	6	20SP	G15_075	TO->FROM	CIMARRON - MINCO 345KV CKT 1	956	956	0.22058	106.5254	G14-057T 345.00 - LAWTON EASTSIDE 345KV CKT 1
FDNS	06ALL	6	17G	G15_075	TO->FROM	CIMARRON - MINCO 345KV CKT 1	956	956	0.20827	105.9404	CHISHOLM7 345.00 - WOODWARD DISTRICT EHV 345KV CKT 1
FDNS	06ALL	6	20WP	G15_075	TO->FROM	CIMARRON - MINCO 345KV CKT 1	956	956	0.20638	101.5954	CHISHOLM7 345.00 - WOODWARD DISTRICT EHV 345KV CKT 1
FDNS	06ALL	6	20L	G15_075	TO->FROM	G14-057T 345.00 - LAWTON EASTSIDE 345KV CKT 1	717	789	0.09925	102.0743	BASE CASE
FDNS	06ALL	6	20L	G15_075	FROM->TO	G14-057T 345.00 - SUNNYSIDE 345KV CKT 1	717	789	0.09925	115.279	BASE CASE
FDNS	06ALL	6	20WP	G15_075	FROM->TO	G14-057T 345.00 - SUNNYSIDE 345KV CKT 1	717	789	0.12074	103.5944	BASE CASE
FDNS	06ALL	6	17G	G15_075	FROM->TO	G14-057T 345.00 - SUNNYSIDE 345KV CKT 1	717	789	0.12317	103.4014	BASE CASE
FDNS	06ALL	6	16WP	G15_075	FROM->TO	G14-057T 345.00 - SUNNYSIDE 345KV CKT 1	717	789	0.12628	102.0868	BASE CASE
FDNS	00NR	6	25SP	G15_075	FROM->TO	Hitchland Interchange (SIEM 8743067) 345/230/13.2KV TRANSFORMER CKT 2	560	644	0.03147	100.0805	Hitchland Interchange (H TB80155502) 345/230/13.2KV TRANSFORMER CKT 1
FDNS	00NR	6	25SP	G15_075	FROM->TO	Hitchland Interchange (SIEM 8743067) 345/230/13.2KV TRANSFORMER CKT 2	560	644	0.03147	100.0805	Hitchland Interchange (H TB80155502) 345/230/13.2KV TRANSFORMER CKT 1
FDNS	00NR	6	25SP	G15_075	FROM->TO	LUBBOCK POWER & LIGHT-HOLLY PLANT (SHIH T101039) 230/69/13.5KV TRANSFORMER CKT 1	224	224	0.03342	104.6926	LUBBOCK POWER & LIGHT-SOUTHEAST - LUBBOCK SOUTH INTERCHANGE 230KV CKT 1

SOLUTION	GROUP	SCENARIO	SEASON	SOURCE	DIRECTION	MONITORED ELEMENT	RATEA (MVA)	RATEB(MVA)	TDF	TC%LOADING (% MVA)	CONTINGENCY
FDNS	00NR	6	25SP	G15_075	FROM->TO	LUBBOCK POWER & LIGHT-HOLLY PLANT (SHIH T101039) 230/69/13.5KV TRANSFORMER CKT 1	224	224	0.03342	104.6924	P12:LPL:SPS:K64.1.LP-SE.LUBBS
FDNS	00NR	6	25SP	G15_075	FROM->TO	LUBBOCK POWER & LIGHT-HOLLY PLANT (SHIH T101039) 230/69/13.5KV TRANSFORMER CKT 1	224	224	0.0308	101.9349	LUBBOCK EAST INTERCHANGE - LUBBOCK POWER & LIGHT-WADSWORTH 230KV CKT 1
FDNS	00NR	6	25SP	G15_075	FROM->TO	LUBBOCK POWER & LIGHT-HOLLY PLANT (SHIH T101039) 230/69/13.5KV TRANSFORMER CKT 1	224	224	0.0308	101.9202	LUBBOCK POWER & LIGHT-WADSWORTH (SHIH T101038) 230/69/13.5KV TRANSFORMER CKT 1
FDNS	00NR	6	25SP	G15_075	FROM->TO	LUBBOCK POWER & LIGHT-HOLLY PLANT (SHIH T101039) 230/69/13.5KV TRANSFORMER CKT 1	224	224	0.0308	101.9202	LUBBOCK POWER & LIGHT-WADSWORTH (SHIH T101038) 230/69/13.5KV TRANSFORMER CKT 1
FDNS	00NR	6	25SP	G15_075	FROM->TO	LUBBOCK POWER & LIGHT-HOLLY PLANT (SHIH T101039) 230/69/13.5KV TRANSFORMER CKT 1	224	224	0.0308	101.9202	P12:230:LPL:K57.1.LP-WADS.LUBBE
FDNS	06ALL	6	17G	G15_075	FROM->TO	TUCO INTERCHANGE - TUCO_2 230.00 230KV CKT 1	497	547	0.37611	102.3804	TUCO INTERCHANGE - TUCO_2 345.00 345KV CKT 1
FDNS	06ALL	6	17G	G15_075	FROM->TO	TUCO_2 345.00 (TUCO_2 XFMR) 345/230/13.2KV TRANSFORMER CKT 1	560	560	0.29255	107.102	TUCO INTERCHANGE - TUCO_2 345.00 345KV CKT 1
FDNS	06ALL	6	20L	G15_075	FROM->TO	TUCO_2 345.00 (TUCO_2 XFMR) 345/230/13.2KV TRANSFORMER CKT 1	560	560	0.27424	106.4088	TUCO INTERCHANGE - TUCO_2 345.00 345KV CKT 1
FDNS	06ALL	6	17G	G15_075	FROM->TO	TUCO_2 345.00 (TUCO_2 XFMR) 345/230/13.2KV TRANSFORMER CKT 1	560	560	0.29255	105.5988	TUCO INTERCHANGE - TUCO_2 345.00 345KV CKT 1
FDNS	06ALL	6	20L	G15_075	FROM->TO	TUCO_2 345.00 (TUCO_2 XFMR) 345/230/13.2KV TRANSFORMER CKT 1	560	560	0.27424	105.0837	TUCO INTERCHANGE - TUCO_2 345.00 345KV CKT 1
FDNS	06ALL	6	20WP	G15_075	FROM->TO	TUCO_2 345.00 (TUCO_2 XFMR) 345/230/13.2KV TRANSFORMER CKT 1	560	560	0.29146	101.28	TUCO INTERCHANGE - TUCO_2 345.00 345KV CKT 1
FDNS	06ALL	6	20WP	G15_075	FROM->TO	TUCO_2 345.00 (TUCO_2 XFMR) 345/230/13.2KV TRANSFORMER CKT 1	560	560	0.29146	99.8	TUCO INTERCHANGE - TUCO_2 345.00 345KV CKT 1
FDNS	00NR	6	25SP	G15_075	FROM->TO	WOLFFORTH INTERCHANGE (WH 7001668) 230/115/13.2KV TRANSFORMER CKT 1	168	168	0.05249	105.4454	CARLISLE INTERCHANGE - LP-DOUD_TP 3115.00 115KV CKT 1
FDNS	00NR	6	25SP	G15_075	FROM->TO	WOLFFORTH INTERCHANGE (WH 7001668) 230/115/13.2KV TRANSFORMER CKT 1	168	168	0.05249	100.2092	CARLISLE INTERCHANGE - LP-DOUD_TP 3115.00 115KV CKT 1
FDNS	00NR	7	25SP	G15_075	FROM->TO	CARLISLE INTERCHANGE - LP-DOUD_TP 3115.00 115KV CKT 1	159	160	0.17831	103.754	WOLFFORTH INTERCHANGE (WH 7001668) 230/115/13.2KV TRANSFORMER CKT 1
FDNS	00NR	7	25SP	G15_075	FROM->TO	CARLISLE INTERCHANGE - LP-DOUD_TP 3115.00 115KV CKT 1	159	160	0.17831	103.754	WOLFFORTH INTERCHANGE (WH 7001668) 230/115/13.2KV TRANSFORMER CKT 1
FDNS	06ALL	7	20L	G15_075	FROM->TO	CARLISLE INTERCHANGE (WH RLP38371) 115/69/13.2KV TRANSFORMER CKT 1	44.37	44.4	1	112.3845	BASE CASE
FDNS	06NR	7	20L	G15_075	FROM->TO	CARLISLE INTERCHANGE (WH RLP38371) 115/69/13.2KV TRANSFORMER CKT 1	44.37	44.4	1	111.9302	BASE CASE
FDNS	06ALL	7	16WP	G15_075	FROM->TO	CARLISLE INTERCHANGE (WH RLP38371) 115/69/13.2KV TRANSFORMER CKT 1	44.37	44.4	1	110.8803	BASE CASE
FDNS	06ALL	7	20L	G15_075	FROM->TO	CARLISLE INTERCHANGE (WH RLP38371) 115/69/13.2KV TRANSFORMER CKT 1	44.37	44.4	1	110.0479	BASE CASE
FDNS	06NR	7	20L	G15_075	FROM->TO	CARLISLE INTERCHANGE (WH RLP38371) 115/69/13.2KV TRANSFORMER CKT 1	44.37	44.4	1	109.8506	BASE CASE
FDNS	06ALL	7	20WP	G15_075	FROM->TO	CARLISLE INTERCHANGE (WH RLP38371) 115/69/13.2KV TRANSFORMER CKT 1	44.37	44.4	1	108.1181	BASE CASE
FDNS	00NR	7	16WP	G15_075	FROM->TO	CARLISLE INTERCHANGE (WH RLP38371) 115/69/13.2KV TRANSFORMER CKT 1	44.37	44.4	1	107.9444	BASE CASE
FDNS	06ALL	7	16WP	G15_075	FROM->TO	CARLISLE INTERCHANGE (WH RLP38371) 115/69/13.2KV TRANSFORMER CKT 1	44.37	44.4	1	107.6478	BASE CASE
FDNS	06ALL	7	17G	G15_075	FROM->TO	CARLISLE INTERCHANGE (WH RLP38371) 115/69/13.2KV TRANSFORMER CKT 1	44.37	44.4	1	106.4909	BASE CASE
FDNS	00NR	7	20WP	G15_075	FROM->TO	CARLISLE INTERCHANGE (WH RLP38371) 115/69/13.2KV TRANSFORMER CKT 1	44.37	44.4	1	106.3654	BASE CASE
FDNS	00NR	7	16WP	G15_075	FROM->TO	CARLISLE INTERCHANGE (WH RLP38371) 115/69/13.2KV TRANSFORMER CKT 1	44.37	44.4	1	106.2408	BASE CASE
FDNS	06ALL	7	20WP	G15_075	FROM->TO	CARLISLE INTERCHANGE (WH RLP38371) 115/69/13.2KV TRANSFORMER CKT 1	44.37	44.4	1	105.9139	BASE CASE
FDNS	00NR	7	20WP	G15_075	FROM->TO	CARLISLE INTERCHANGE (WH RLP38371) 115/69/13.2KV TRANSFORMER CKT 1	44.37	44.4	1	105.2671	BASE CASE
FDNS	06NR	7	17G	G15_075	FROM->TO	CARLISLE INTERCHANGE (WH RLP38371) 115/69/13.2KV TRANSFORMER CKT 1	44.37	44.4	1	104.5645	BASE CASE
FDNS	06ALL	7	17G	G15_075	FROM->TO	CARLISLE INTERCHANGE (WH RLP38371) 115/69/13.2KV TRANSFORMER CKT 1	44.37	44.4	1	103.4811	BASE CASE
FDNS	06NR	7	17G	G15_075	FROM->TO	CARLISLE INTERCHANGE (WH RLP38371) 115/69/13.2KV TRANSFORMER CKT 1	44.37	44.4	1	102.4714	BASE CASE
FDNS	00NR	7	17SP	G15_075	FROM->TO	CARLISLE INTERCHANGE (WH RLP38371) 115/69/13.2KV TRANSFORMER CKT 1	44.37	44.4	1	100.226	BASE CASE
FDNS	00NR	7	20SP	G15_075	FROM->TO	CARLISLE INTERCHANGE (WH RLP38371) 115/69/13.2KV TRANSFORMER CKT 1	44.37	44.4	1	100.0812	BASE CASE
FDNS	06ALL	7	17SP	G15_075	FROM->TO	CARLISLE INTERCHANGE (WH RLP38371) 115/69/13.2KV TRANSFORMER CKT 1	44.37	44.4	1	99.8	BASE CASE
FDNS	06ALL	7	20SP	G15_075	FROM->TO	CHISHOLM6 230.00 - ELK CITY 230KV 230KV CKT 1	353	353	0.05911	100.158	BASE CASE
FDNS	06ALL	7	17G	G15_075	TO->FROM	CIMARRON - MINCO 345KV CKT 1	956	956	0.21862	117.9395	G14-057T 345.00 - SUNNYSIDE 345KV CKT 1
FDNS	06ALL	7	20WP	G15_075	TO->FROM	CIMARRON - MINCO 345KV CKT 1	956	956	0.21516	116.4002	G14-057T 345.00 - SUNNYSIDE 345KV CKT 1
FDNS	06ALL	7	17G	G15_075	TO->FROM	CIMARRON - MINCO 345KV CKT 1	956	956	0.21862	112.8925	G14-057T 345.00 - LAWTON EASTSIDE 345KV CKT 1
FDNS	06ALL	7	16WP	G15_075	TO->FROM	CIMARRON - MINCO 345KV CKT 1	956	956	0.22475	111.0593	G14-057T 345.00 - SUNNYSIDE 345KV CKT 1
FDNS	06ALL	7	20WP	G15_075	TO->FROM	CIMARRON - MINCO 345KV CKT 1	956	956	0.21516	111.0342	G14-057T 345.00 - LAWTON EASTSIDE 345KV CKT 1
FDNS	06ALL	7	17SP	G15_075	TO->FROM	CIMARRON - MINCO 345KV CKT 1	956	956	0.22098	111.0288	G14-057T 345.00 - SUNNYSIDE 345KV CKT 1
FDNS	06ALL	7	20SP	G15_075	TO->FROM	CIMARRON - MINCO 345KV CKT 1	956	956	0.22059	108.4281	G14-057T 345.00 - SUNNYSIDE 345KV CKT 1
FDNS	06ALL	7	17SP	G15_075	TO->FROM	CIMARRON - MINCO 345KV CKT 1	956	956	0.22098	106.172	G14-057T 345.00 - LAWTON EASTSIDE 345KV CKT 1
FDNS	06ALL	7	16WP	G15_075	TO->FROM	CIMARRON - MINCO 345KV CKT 1	956	956	0.22475	105.9627	G14-057T 345.00 - LAWTON EASTSIDE 345KV CKT 1
FDNS	06ALL	7	20SP	G15_075	TO->FROM	CIMARRON - MINCO 345KV CKT 1	956	956	0.22059	103.5061	G14-057T 345.00 - LAWTON EASTSIDE 345KV CKT 1
FDNS	06ALL	7	20L	G15_075	TO->FROM	G14-057T 345.00 - LAWTON EASTSIDE 345KV CKT 1	717	789	0.09927	100.7791	BASE CASE
FDNS	06ALL	7	20L	G15_075	FROM->TO	G14-057T 345.00 - SUNNYSIDE 345KV CKT 1	717	789	0.09927	114.0012	BASE CASE
FDNS	06ALL	7	20WP	G15_075	FROM->TO	G14-057T 345.00 - SUNNYSIDE 345KV CKT 1	717	789	0.12074	102.5888	BASE CASE
FDNS	06ALL	7	17G	G15_075	FROM->TO	G14-057T 345.00 - SUNNYSIDE 345KV CKT 1	717	789	0.12318	102.2119	BASE CASE
FDNS	06ALL	7	16WP	G15_075	FROM->TO	G14-057T 345.00 - SUNNYSIDE 345KV CKT 1	717	789	0.12629	101.1576	BASE CASE
FDNS	00NR	7	25SP	G15_075	FROM->TO	LUBBOCK POWER & LIGHT-HOLLY PLANT (SHIH T101039) 230/69/13.5KV TRANSFORMER CKT 1	224	224	0.03342	104.7009	LUBBOCK POWER & LIGHT-SOUTHEAST - LUBBOCK SOUTH INTERCHANGE 230KV CKT 1
FDNS	00NR	7	25SP	G15_075	FROM->TO	LUBBOCK POWER & LIGHT-HOLLY PLANT (SHIH T101039) 230/69/13.5KV TRANSFORMER CKT 1	224	224	0.03342	104.6879	P12:LPL:SPS:K64.1.LP-SE.LUBBS
FDNS	00NR	7	25SP	G15_075	FROM->TO	LUBBOCK POWER & LIGHT-HOLLY PLANT (SHIH T101039) 230/69/13.5KV TRANSFORMER CKT 1	224	224	0.0308	101.9255	LUBBOCK EAST INTERCHANGE - LUBBOCK POWER & LIGHT-WADSWORTH 230KV CKT 1
FDNS	00NR	7	25SP	G15_075	FROM->TO	LUBBOCK POWER & LIGHT-HOLLY PLANT (SHIH T101039) 230/69/13.5KV TRANSFORMER CKT 1	224	224	0.0308	101.9108	P12:230:LPL:K57.1.LP-WADS.LUBBE
FDNS	00NR	7	25SP	G15_075	FROM->TO	LUBBOCK POWER & LIGHT-HOLLY PLANT (SHIH T101039) 230/69/13.5KV TRANSFORMER CKT 1	224	224	0.0308	101.9107	LUBBOCK POWER & LIGHT-WADSWORTH (SHIH T101038) 230/69/13.5KV TRANSFORMER CKT 1
FDNS	00NR	7	25SP	G15_075	FROM->TO	LUBBOCK POWER & LIGHT-HOLLY PLANT (SHIH T101039) 230/69/13.5KV TRANSFORMER CKT 1	224	224	0.0308	101.9107	LUBBOCK POWER & LIGHT-WADSWORTH (SHIH T101038) 230/69/13.5KV TRANSFORMER CKT 1
FDNS	00NR	7	25SP	G15_075	FROM->TO	POTTER COUNTY INTERCHANGE (WAUK 90343-A) 345/230/13.2KV TRANSFORMER CKT 1	560	560	0.04542	100.2945	P12:345:SPS:J15.1.XRDS.TOLK
FDNS	00NR	7	25SP	G15_075	FROM->TO	POTTER COUNTY INTERCHANGE (WAUK 90343-A) 345/230/13.2KV TRANSFORMER CKT 1	560	560	0.04542	100.0757	P12:345:SPS:J15.1.XRDS.TOLK
FDNS	06ALL	7	17G	G15_075	FROM->TO	TUCO INTERCHANGE - TUCO_2 230.00 230KV CKT 1	497	547	0.37612	102.9465	TUCO INTERCHANGE - TUCO_2 345.00 345KV CKT 1
FDNS	06ALL	7	17G	G15_075	FROM->TO	TUCO_2 345.00 (TUCO_2 XFMR) 345/230/13.2KV TRANSFORMER CKT 1	560	560	0.29256	107.5448	TUCO INTERCHANGE - TUCO_2 345.00 345KV CKT 1
FDNS	06ALL	7	20L	G15_075	FROM->TO	TUCO_2 345.00 (TUCO_2 XFMR) 345/230/13.2KV TRANSFORMER CKT 1	560	560	0.27426	106.6951	TUCO INTERCHANGE - TUCO_2 345.00 345KV CKT 1
FDNS	06ALL	7	17G	G15_075	FROM->TO	TUCO_2 345.00 (TUCO_2 XFMR) 345/230/13.2KV TRANSFORMER CKT 1	560	560	0.29256	106.1214	TUCO INTERCHANGE - TUCO_2 345.00 345KV CKT 1
FDNS	06ALL	7	20L	G15_075	FROM->TO	TUCO_2 345.00 (TUCO_2 XFMR) 345/230/13.2KV TRANSFORMER CKT 1	560	560	0.27426	105.4896	TUCO INTERCHANGE - TUCO_2 345.00 345KV CKT 1
FDNS	06ALL	7	20WP	G15_075	FROM->TO	TUCO_2 345.00 (TUCO_2 XFMR) 345/230/13.2KV TRANSFORMER CKT 1	560	560	0.29146	101.2891	TUCO INTERCHANGE - TUCO_2 345.00 345KV CKT 1
FDNS	06ALL	7	20WP	G15_075	FROM->TO	TUCO_2 345.00 (TUCO_2 XFMR) 345/230/13.2KV TRANSFORMER CKT 1	560	560	0.29146	99.9	TUCO INTERCHANGE - TUCO_2 345.00 345KV CKT 1
FDNS	00NR	7	25SP	G15_075	FROM->TO	WOLFFORTH INTERCHANGE (WH 7001668) 230/115/13.2KV TRANSFORMER CKT 1	168	168	0.05249	105.2652	CARLISLE INTERCHANGE - LP-DOUD_TP 3115.00 115KV CKT 1
FDNS	00NR	7	25SP	G15_075	FROM->TO	WOLFFORTH INTERCHANGE (WH 7001668) 230/115/13.2KV TRANSFORMER CKT 1	168	168	0.05249	100	CARLISLE INTERCHANGE - LP-DOUD_TP 3115.00 115KV CKT 1
FDNS	00NR	8	25SP	G15_075	FROM->TO	CARLISLE INTERCHANGE - LP-DOUD_TP 3115.00 115KV CKT 1	159	160	0.1784	103.763	WOLFFORTH INTERCHANGE (WH 7001668) 230/115/13.2KV TRANSFORMER CKT 1
FDNS	00NR	8	25SP	G15_075	FROM->TO	CARLISLE INTERCHANGE - LP-DOUD_TP 3115.00 115KV CKT 1	159	160	0.1784	103.763	WOLFFORTH INTERCHANGE (WH 7001668) 230/115/13.2KV TRANSFORMER CKT 1
FDNS	00NR	8	25SP	G15_075	FROM->TO	LUBBOCK POWER & LIGHT-HOLLY PLANT (SHIH T101039) 230/69/13.5KV TRANSFORMER CKT 1	224	224	0.03342	104.7109	LUBBOCK POWER & LIGHT-SOUTHEAST - LUBBOCK SOUTH INTERCHANGE 230KV CKT 1
FDNS	00NR	8	25SP	G15_075	FROM->TO	LUBBOCK POWER & LIGHT-HOLLY PLANT (SHIH T101039) 230/69/13.5KV TRANSFORMER CKT 1	224	224	0.03342	104.6979	P12:LPL:SPS:K64.1.LP-SE.LUBBS
FDNS	00NR	8	25SP	G15_075	FROM->TO	LUBBOCK POWER & LIGHT-HOLLY PLANT (SHIH T101039) 230/69/13.5KV TRANSFORMER CKT 1	224	224	0.03079	101.953	LUBBOCK EAST INTERCHANGE - LUBBOCK POWER & LIGHT-WADSWORTH 230KV CKT 1
FDNS	00NR	8	25SP	G15_075	FROM->TO	LUBBOCK POWER & LIGHT-HOLLY PLANT (SHIH T101039) 230/69/13.5KV TRANSFORMER CKT 1	224	224	0.03079	101.9381	P12:230:LPL:K57.1.LP-WADS.LUBBE
FDNS	00NR	8	25SP	G15_075	FROM->TO	LUBBOCK POWER & LIGHT-HOLLY PLANT (SHIH T101039) 230/69/13.5KV TRANSFORMER CKT 1	224	224	0.03079	101.938	LUBBOCK POWER & LIGHT-WADSWORTH (SHIH T101038) 230/69/13.5KV TRANSFORMER CKT 1
FDNS	00NR	8	25SP	G15_075	FROM->TO	LUBBOCK POWER & LIGHT-HOLLY PLANT (SHIH T101039) 230/69/13.5KV TRANSFORMER CKT 1	224	224	0.03079	101.938	LUBBOCK POWER & LIGHT-WADSWORTH (SHIH T101038) 230/69/13.5KV TRANSFORMER CKT 1
FDNS	00NR	8	25SP	G15_075	FROM->TO	WOLFFORTH INTERCHANGE (WH 7001668) 230/115/13.2KV TRANSFORMER CKT 1	168	168	0.05259	105.267	CARLISLE INTERCHANGE - LP-DOUD_TP 3115.00 115KV CKT 1
FDNS	00NR	8	25SP	G15_075	FROM->TO	WOLFFORTH INTERCHANGE (WH 7001668) 230/115/13.2KV TRANSFORMER CKT 1	168	168	0.05259	100	CARLISLE INTERCHANGE - LP-DOUD_TP 3115.00 115KV CKT 1
FDNS	00NR	9	25SP	G15_075	FROM->TO	LUBBOCK POWER & LIGHT-HOLLY PLANT (SHIH T101039) 230/69/13.5KV TRANSFORMER CKT 1	224	224	0.03343	104.6637	LUBBOCK POWER & LIGHT-SOUTHEAST - LUBBOCK SOUTH INTERCHANGE 230KV CKT 1

SOLUTION	GROUP	SCENARIO	SEASON	SOURCE	DIRECTION	MONITORED ELEMENT	RATEA (MVA)	RATEB(MVA)	TDF	TC%LOADING (% MVA)	CONTINGENCY
FDNS	00NR	9	25SP	G15_075	FROM->TO	LUBBOCK POWER & LIGHT-HOLLY PLANT (SHIH T101039) 230/69/13.5KV TRANSFORMER CKT 1	224	224	0.03343	104.6507	P12:LPL:SPS:K64.1.LP-SE.LUBBS
FDNS	00NR	9	25SP	G15_075	FROM->TO	LUBBOCK POWER & LIGHT-HOLLY PLANT (SHIH T101039) 230/69/13.5KV TRANSFORMER CKT 1	224	224	0.0308	101.7729	LUBBOCK EAST INTERCHANGE - LUBBOCK POWER & LIGHT-WADSWORTH 230KV CKT 1
FDNS	00NR	9	25SP	G15_075	FROM->TO	LUBBOCK POWER & LIGHT-HOLLY PLANT (SHIH T101039) 230/69/13.5KV TRANSFORMER CKT 1	224	224	0.0308	101.758	P12:230:LPL:K57.1.LP-WADS.LUBBE
FDNS	00NR	9	25SP	G15_075	FROM->TO	LUBBOCK POWER & LIGHT-HOLLY PLANT (SHIH T101039) 230/69/13.5KV TRANSFORMER CKT 1	224	224	0.0308	101.7579	LUBBOCK POWER & LIGHT-WADSWORTH (SHIH T101038) 230/69/13.5KV TRANSFORMER CKT 1
FDNS	00NR	9	25SP	G15_075	FROM->TO	LUBBOCK POWER & LIGHT-HOLLY PLANT (SHIH T101039) 230/69/13.5KV TRANSFORMER CKT 1	224	224	0.0308	101.7579	LUBBOCK POWER & LIGHT-WADSWORTH (SHIH T101038) 230/69/13.5KV TRANSFORMER CKT 1
FDNSLock-Blown up	00NR	0	16WP	G15_076		Non-Converged Contingency	720	720	0.07301	-	GR ISLD-LNX3345.00 - GRAND ISLAND 345KV CKT Z
FDNSLock-Blown up	00NR	0	16WP	G15_076		Non-Converged Contingency	720	720	0.07301	-	GR ISLD-LNX3345.00 - HOLT.CO3 345.00 345KV CKT 1
FDNSLock-Blown up	09NR	0	17G	G15_076		Non-Converged Contingency	720	720	0.07263	-	GR ISLD-LNX3345.00 - GRAND ISLAND 345KV CKT Z
FDNSLock-Blown up	09NR	0	17G	G15_076		Non-Converged Contingency	720	720	0.07263	-	GR ISLD-LNX3345.00 - HOLT.CO3 345.00 345KV CKT 1
FDNSLock-Blown up	00NR	0	17SP	G15_076		Non-Converged Contingency	720	720	0.07429	-	GR ISLD-LNX3345.00 - GRAND ISLAND 345KV CKT Z
FDNSLock-Blown up	00NR	0	17SP	G15_076		Non-Converged Contingency	720	720	0.07429	-	GR ISLD-LNX3345.00 - HOLT.CO3 345.00 345KV CKT 1
FDNSLock-Blown up	00NR	2	17SP	G15_076		Non-Converged Contingency	720	720	0.09777	-	GRPRAR1-LNX3345.00 - GRPRAR 345KV CKT Z
FDNSLock-Blown up	00NR	2	17SP	G15_076		Non-Converged Contingency	720	720	0.09777	-	GRPRAR1-LNX3345.00 - HOLT.CO3 345.00 345KV CKT 1
FDNS	00NR	0	16WP	G15_076	FROM->TO	BELDEN - HOSKINS 115KV CKT 1	115	115	0.5926	110.1082	BELDEN - TWIN CHURCH 115KV CKT 1
FDNS	00NR	0	20WP	G15_076	FROM->TO	BELDEN - HOSKINS 115KV CKT 1	115	115	0.59208	107.7977	BELDEN - TWIN CHURCH 115KV CKT 1
FDNS	00NR	0	20SP	G15_076	FROM->TO	BELDEN - HOSKINS 115KV CKT 1	115	115	0.42527	106.5641	DIXONCO 230.00 - HOSKINS 230KV CKT 1
FDNS	00NR	0	20SP	G15_076	FROM->TO	BELDEN - HOSKINS 115KV CKT 1	115	115	0.59205	104.3138	BELDEN - TWIN CHURCH 115KV CKT 1
FDNS	00NR	0	25SP	G15_076	FROM->TO	BELDEN - HOSKINS 115KV CKT 1	115	115	0.42531	104.1678	DIXONCO 230.00 - HOSKINS 230KV CKT 1
FDNS	00NR	0	17SP	G15_076	FROM->TO	BELDEN - HOSKINS 115KV CKT 1	115	115	0.42576	101.0384	DIXONCO 230.00 - HOSKINS 230KV CKT 1
FDNS	00NR	0	25SP	G15_076	FROM->TO	BELDEN - HOSKINS 115KV CKT 1	115	115	0.59207	100.766	BELDEN - TWIN CHURCH 115KV CKT 1
FDNS	00NR	0	16WP	G15_076	FROM->TO	BELDEN - HOSKINS 115KV CKT 1	115	115	0.42576	100.2775	DIXONCO 230.00 - HOSKINS 230KV CKT 1
FDNS	09NR	0	20L	G15_076	FROM->TO	DIXONCO 230.00 - HOSKINS 230KV CKT 1	320	320	0.16413	139.9353	SIOUX CITY - TWIN CHURCH 230KV CKT 1
FDNS	09NR	0	17G	G15_076	FROM->TO	DIXONCO 230.00 - HOSKINS 230KV CKT 1	320	320	0.16507	131.6304	SIOUX CITY - TWIN CHURCH 230KV CKT 1
FDNS	00NR	0	20WP	G15_076	FROM->TO	DIXONCO 230.00 - HOSKINS 230KV CKT 1	320	320	0.16446	101.2165	SIOUX CITY - TWIN CHURCH 230KV CKT 1
FDNS	00NR	0	20SP	G15_076	FROM->TO	DIXONCO 230.00 - HOSKINS 230KV CKT 1	320	320	0.16451	100.8881	SIOUX CITY - TWIN CHURCH 230KV CKT 1
FDNS	00NR	0	16WP	G15_076	FROM->TO	DIXONCO 230.00 - HOSKINS 230KV CKT 1	320	320	0.16514	100.3746	SIOUX CITY - TWIN CHURCH 230KV CKT 1
FDNS	00NR	0	25SP	G15_076	FROM->TO	DIXONCO 230.00 - HOSKINS 230KV CKT 1	320	320	0.16454	100.2558	SIOUX CITY - TWIN CHURCH 230KV CKT 1
FDNS	00NR	0	17SP	G15_076	FROM->TO	DIXONCO 230.00 - HOSKINS 230KV CKT 1	320	320	0.16517	99.7	SIOUX CITY - TWIN CHURCH 230KV CKT 1
FDNS	09NR	0	17G	G15_076	FROM->TO	DIXONCO 230.00 - TWIN CHURCH 230KV CKT 1	320	320	0.06114	115.541	BELDEN - TWIN CHURCH 115KV CKT 1
FDNS	09NR	0	20L	G15_076	FROM->TO	DIXONCO 230.00 - TWIN CHURCH 230KV CKT 1	320	320	0.06222	114.3537	BELDEN - TWIN CHURCH 115KV CKT 1
FDNS	00NR	0	17SP	G15_076	FROM->TO	G14-059T 230.00 - OGALLALA 230KV CKT 1	320	320	0.03513	169.5112	SIDNEY - SIDNEY1-LNX3345.00 345KV CKT Z
FDNS	00NR	0	17SP	G15_076	FROM->TO	G14-059T 230.00 - OGALLALA 230KV CKT 1	320	320	0.03513	169.4494	KEYSTONE - SIDNEY1-LNX3345.00 345KV CKT 1
FDNSLock	00NR	0	20SP	G15_076	FROM->TO	G14-059T 230.00 - OGALLALA 230KV CKT 1	320	320	0.0304	158.627	KEYSTONE - SIDNEY1-LNX3345.00 345KV CKT 1
FDNS	00NR	0	20SP	G15_076	FROM->TO	G14-059T 230.00 - OGALLALA 230KV CKT 1	320	320	0.0304	158.2466	SIDNEY - SIDNEY1-LNX3345.00 345KV CKT Z
FDNS	00NR	0	25SP	G15_076	FROM->TO	G14-059T 230.00 - OGALLALA 230KV CKT 1	320	320	0.0302	157.6276	SIDNEY - SIDNEY1-LNX3345.00 345KV CKT Z
FDNS	00NR	0	25SP	G15_076	FROM->TO	G14-059T 230.00 - OGALLALA 230KV CKT 1	320	320	0.0302	157.369	KEYSTONE - SIDNEY1-LNX3345.00 345KV CKT 1
FDNS	09NR	0	17G	G15_076	FROM->TO	G14-059T 230.00 - OGALLALA 230KV CKT 1	320	320	0.03459	148.0014	KEYSTONE - SIDNEY1-LNX3345.00 345KV CKT 1
FDNS	09NR	0	17G	G15_076	FROM->TO	G14-059T 230.00 - OGALLALA 230KV CKT 1	320	320	0.03459	147.9713	SIDNEY - SIDNEY1-LNX3345.00 345KV CKT Z
FDNSLock	00NR	0	16WP	G15_076	FROM->TO	G14-059T 230.00 - OGALLALA 230KV CKT 1	320	320	0.03419	141.3538	KEYSTONE - SIDNEY1-LNX3345.00 345KV CKT 1
FDNSLock	00NR	0	16WP	G15_076	FROM->TO	G14-059T 230.00 - OGALLALA 230KV CKT 1	320	320	0.03419	141.3219	SIDNEY - SIDNEY1-LNX3345.00 345KV CKT Z
FDNS	00NR	0	20WP	G15_076	FROM->TO	G14-059T 230.00 - OGALLALA 230KV CKT 1	320	320	0.03011	134.2017	KEYSTONE - SIDNEY1-LNX3345.00 345KV CKT 1
FDNS	00NR	0	20WP	G15_076	FROM->TO	G14-059T 230.00 - OGALLALA 230KV CKT 1	320	320	0.03011	134.1981	SIDNEY - SIDNEY1-LNX3345.00 345KV CKT Z
FDNS	00NR	0	17SP	G15_076	TO->FROM	G14-059T 230.00 - SIDNEY 230KV CKT 1	320	320	0.03513	118.5049	SIDNEY - SIDNEY1-LNX3345.00 345KV CKT Z
FDNS	00NR	0	17SP	G15_076	TO->FROM	G14-059T 230.00 - SIDNEY 230KV CKT 1	320	320	0.03513	118.4199	KEYSTONE - SIDNEY1-LNX3345.00 345KV CKT 1
FDNSLock	00NR	0	20SP	G15_076	TO->FROM	G14-059T 230.00 - SIDNEY 230KV CKT 1	320	320	0.0304	107.9039	KEYSTONE - SIDNEY1-LNX3345.00 345KV CKT 1
FDNS	00NR	0	20SP	G15_076	TO->FROM	G14-059T 230.00 - SIDNEY 230KV CKT 1	320	320	0.0304	107.36	SIDNEY - SIDNEY1-LNX3345.00 345KV CKT Z
FDNS	00NR	0	25SP	G15_076	TO->FROM	G14-059T 230.00 - SIDNEY 230KV CKT 1	320	320	0.0302	106.544	SIDNEY - SIDNEY1-LNX3345.00 345KV CKT Z
FDNS	00NR	0	25SP	G15_076	TO->FROM	G14-059T 230.00 - SIDNEY 230KV CKT 1	320	320	0.0302	106.2859	KEYSTONE - SIDNEY1-LNX3345.00 345KV CKT 1
FDNS	09ALL	0	20WP	G15_076	FROM->TO	GAVINS POINT - YANKON JCT 115KV CKT 1	120	120	0.21684	123.3832	GAVINS POINT - SPIRIT MOUND 115KV CKT 1
FDNS	09ALL	0	20L	G15_076	FROM->TO	GAVINS POINT - YANKON JCT 115KV CKT 1	120	120	0.21412	122.3059	GAVINS POINT - SPIRIT MOUND 115KV CKT 1
FDNS	09ALL	0	16WP	G15_076	FROM->TO	GAVINS POINT - YANKON JCT 115KV CKT 1	120	120	0.21644	120.8842	GAVINS POINT - SPIRIT MOUND 115KV CKT 1
FDNS	09ALL	0	20SP	G15_076	FROM->TO	GAVINS POINT - YANKON JCT 115KV CKT 1	120	120	0.21565	120.0013	MANNING - SPIRIT MOUND 115KV CKT 1
FDNS	09ALL	0	17G	G15_076	FROM->TO	GAVINS POINT - YANKON JCT 115KV CKT 1	120	120	0.21527	118.3589	GAVINS POINT - SPIRIT MOUND 115KV CKT 1
FDNS	09ALL	0	25SP	G15_076	FROM->TO	GAVINS POINT - YANKON JCT 115KV CKT 1	120	120	0.2157	117.5158	MANNING - SPIRIT MOUND 115KV CKT 1
FDNS	09ALL	0	20L	G15_076	FROM->TO	GAVINS POINT - YANKON JCT 115KV CKT 1	120	120	0.20745	116.5465	SIOUX CITY - TWIN CHURCH 230KV CKT 1
FDNS	09ALL	0	20SP	G15_076	FROM->TO	GAVINS POINT - YANKON JCT 115KV CKT 1	120	120	0.21565	115.353	BERSFORD - MANNING 115KV CKT 1
FDNS	09ALL	0	20L	G15_076	FROM->TO	GAVINS POINT - YANKON JCT 115KV CKT 1	120	120	0.21412	115.012	MANNING - SPIRIT MOUND 115KV CKT 1
FDNS	09ALL	0	20SP	G15_076	FROM->TO	GAVINS POINT - YANKON JCT 115KV CKT 1	120	120	0.21769	113.5242	BLOOMFIELD - CREIGHTON 115KV CKT 1
FDNS	09ALL	0	25SP	G15_076	FROM->TO	GAVINS POINT - YANKON JCT 115KV CKT 1	120	120	0.21778	113.0086	BLOOMFIELD - CREIGHTON 115KV CKT 1
FDNS	09ALL	0	25SP	G15_076	FROM->TO	GAVINS POINT - YANKON JCT 115KV CKT 1	120	120	0.2157	112.8788	BERSFORD - MANNING 115KV CKT 1
FDNS	09ALL	0	20WP	G15_076	FROM->TO	GAVINS POINT - YANKON JCT 115KV CKT 1	120	120	0.21684	112.3141	MANNING - SPIRIT MOUND 115KV CKT 1
FDNS	09ALL	0	20L	G15_076	FROM->TO	GAVINS POINT - YANKON JCT 115KV CKT 1	120	120	0.21412	111.5932	BERSFORD - MANNING 115KV CKT 1
FDNS	09ALL	0	16WP	G15_076	FROM->TO	GAVINS POINT - YANKON JCT 115KV CKT 1	120	120	0.21644	110.9413	MANNING - SPIRIT MOUND 115KV CKT 1
FDNS	09ALL	0	20WP	G15_076	FROM->TO	GAVINS POINT - YANKON JCT 115KV CKT 1	120	120	0.21684	108.0507	BERSFORD - MANNING 115KV CKT 1
FDNS	09ALL	0	20WP	G15_076	FROM->TO	GAVINS POINT - YANKON JCT 115KV CKT 1	120	120	0.20942	107.8168	SIOUX CITY - TWIN CHURCH 230KV CKT 1
FDNS	09NR	0	20L	G15_076	FROM->TO	GAVINS POINT - YANKON JCT 115KV CKT 1	120	120	0.21362	107.6807	GAVINS POINT - SPIRIT MOUND 115KV CKT 1
FDNS	09ALL	0	17G	G15_076	FROM->TO	GAVINS POINT - YANKON JCT 115KV CKT 1	120	120	0.21527	107.5676	MANNING - SPIRIT MOUND 115KV CKT 1
FDNS	09ALL	0	16WP	G15_076	FROM->TO	GAVINS POINT - YANKON JCT 115KV CKT 1	120	120	0.21644	106.6537	BERSFORD - MANNING 115KV CKT 1
FDNS	09ALL	0	20L	G15_076	FROM->TO	GAVINS POINT - YANKON JCT 115KV CKT 1	120	120	0.19557	105.3836	HOSKINS - RAUN 345KV CKT 1
FDNS	09ALL	0	16WP	G15_076	FROM->TO	GAVINS POINT - YANKON JCT 115KV CKT 1	120	120	0.20919	105.3287	SIOUX CITY - TWIN CHURCH 230KV CKT 1
FDNS	09NR	0	17G	G15_076	FROM->TO	GAVINS POINT - YANKON JCT 115KV CKT 1	120	120	0.21358	105.2073	GAVINS POINT - SPIRIT MOUND 115KV CKT 1
FDNS	09ALL	0	20SP	G15_076	FROM->TO	GAVINS POINT - YANKON JCT 115KV CKT 1	120	120	0.21565	104.8135	BERSFORD - SIOUX FALLS 115KV CKT 1
FDNS	09ALL	0	20SP	G15_076	FROM->TO	GAVINS POINT - YANKON JCT 115KV CKT 1	120	120	0.20859	104.5835	SIOUX CITY - TWIN CHURCH 230KV CKT 1
FDNS	09ALL	0	20L	G15_076	FROM->TO	GAVINS POINT - YANKON JCT 115KV CKT 1	120	120	0.21412	104.2155	BERSFORD - SIOUX FALLS 115KV CKT 1
FDNS	09ALL	0	17G	G15_076	FROM->TO	GAVINS POINT - YANKON JCT 115KV CKT 1	120	120	0.20807	103.8762	SIOUX CITY - TWIN CHURCH 230KV CKT 1
FDNS	09ALL	0	25SP	G15_076	FROM->TO	GAVINS POINT - YANKON JCT 115KV CKT 1	120	120	0.2157	103.6725	BERSFORD - SIOUX FALLS 115KV CKT 1
FDNS	09ALL	0	17G	G15_076	FROM->TO	GAVINS POINT - YANKON JCT 115KV CKT 1	120	120	0.21527	103.4678	BERSFORD - MANNING 115KV CKT 1
FDNS	09ALL	0	20L	G15_076	FROM->TO	GAVINS POINT - YANKON JCT 115KV CKT 1	120	120	0.30484	103.1361	BELDEN - HOSKINS 115KV CKT 1
FDNS	09ALL	0	25SP	G15_076	FROM->TO	GAVINS POINT - YANKON JCT 115KV CKT 1	120	120	0.20858	102.8888	SIOUX CITY - TWIN CHURCH 230KV CKT 1

SOLUTION	GROUP	SCENARIO	SEASON	SOURCE	DIRECTION	MONITORED ELEMENT	RATEA (MVA)	RATEB(MVA)	TDF	TC%LOADING (% MVA)	CONTINGENCY
FDNS	09ALL	0	20L	G15_076	FROM->TO	GAVINS POINT - YANKON JCT 115KV CKT 1	120	120	0.26011	102.3746	BELDEN - TWIN CHURCH 115KV CKT 1
FDNS	09ALL	0	20SP	G15_076	FROM->TO	GAVINS POINT - YANKON JCT 115KV CKT 1	120	120	0.30658	102.1062	BELDEN - HOSKINS 115KV CKT 1
FDNS	09NR	0	20L	G15_076	FROM->TO	GAVINS POINT - YANKON JCT 115KV CKT 1	120	120	0.20578	101.7605	SIOUX CITY - TWIN CHURCH 230KV CKT 1
FDNS	09ALL	0	25SP	G15_076	FROM->TO	GAVINS POINT - YANKON JCT 115KV CKT 1	120	120	0.30662	100.8478	BELDEN - HOSKINS 115KV CKT 1
FDNS	09NR	0	20L	G15_076	FROM->TO	GAVINS POINT - YANKON JCT 115KV CKT 1	120	120	0.21362	100.412	MANNING - SPIRIT MOUND 115KV CKT 1
FDNS	09ALL	0	20WP	G15_076	FROM->TO	GAVINS POINT - YANKON JCT 115KV CKT 1	120	120	0.3072	99.8	BELDEN - HOSKINS 115KV CKT 1
FDNS	09ALL	0	20WP	G15_076	FROM->TO	GAVINS POINT - YANKON JCT 115KV CKT 1	120	120	0.26232	99.7	BELDEN - TWIN CHURCH 115KV CKT 1
FDNS	09ALL	0	20WP	G15_076	FROM->TO	GAVINS POINT - YANKON JCT 115KV CKT 1	120	120	0.19767	99.6	HOSKINS - RAUN 345KV CKT 1
FDNS	09ALL	0	20WP	G15_076	FROM->TO	GAVINS POINT - YANKON JCT 115KV CKT 1	120	120	0.19767	99.6	HOSKINS - RAUN 345KV CKT 1
FDNS	09NR	0	17G	G15_076	TO->FROM	GERALD GENTLEMAN STATION - OGALLALA 230KV CKT 1	320	320	0.04815	119.5022	GERALD GENTLEMAN STATION - KEYSTONE 345KV CKT 1
FDNSLock	00NR	0	16WP	G15_076	TO->FROM	GERALD GENTLEMAN STATION - OGALLALA 230KV CKT 1	320	320	0.04729	113.6765	GERALD GENTLEMAN STATION - KEYSTONE 345KV CKT 1
FDNS	00NR	0	17SP	G15_076	TO->FROM	GERALD GENTLEMAN STATION - OGALLALA 230KV CKT 1	320	320	0.03786	112.452	GERALD GENTLEMAN STATION - KEYSTONE 345KV CKT 1
FDNS	00NR	0	20WP	G15_076	TO->FROM	GERALD GENTLEMAN STATION - OGALLALA 230KV CKT 1	320	320	0.04154	107.125	GERALD GENTLEMAN STATION - KEYSTONE 345KV CKT 1
FDNS	00NR	0	20SP	G15_076	TO->FROM	GERALD GENTLEMAN STATION - OGALLALA 230KV CKT 1	320	320	0.03143	101.6888	GERALD GENTLEMAN STATION - KEYSTONE 345KV CKT 1
FDNS	00NR	0	17SP	G15_076	FROM->TO	GR ISLD-LNX3345.00 - GRAND ISLAND 345KV CKT Z	720	720	0.07399	139.3799	G09_001IST 345.00 - WATERTOWN 345KV CKT 1
FDNS	00NR	0	17SP	G15_076	FROM->TO	GR ISLD-LNX3345.00 - GRAND ISLAND 345KV CKT Z	720	720	0.07811	139.0637	KELLY - MEADOWGROVE4230.00 230KV CKT 1
FDNS	00NR	0	17SP	G15_076	FROM->TO	GR ISLD-LNX3345.00 - GRAND ISLAND 345KV CKT Z	720	720	0.07195	138.6319	P12:230:UMZB:# 116 #: ST IN SD. WSG-ST-VH
FDNS	00NR	0	17SP	G15_076	FROM->TO	GR ISLD-LNX3345.00 - GRAND ISLAND 345KV CKT Z	720	720	0.07341	137.8128	WATERTN-LNX3345.00 - WATERTOWN 345KV CKT Z
FDNS	00NR	0	17SP	G15_076	FROM->TO	GR ISLD-LNX3345.00 - GRAND ISLAND 345KV CKT Z	720	720	0.07341	137.7489	P12:345:UMZW:# 1747 #: WT2 IN SD. WT2-WHT LINE FAULT
FDNS	00NR	0	17SP	G15_076	FROM->TO	GR ISLD-LNX3345.00 - GRAND ISLAND 345KV CKT Z	720	720	0.07219	137.7133	STORLA - WESSINGTON 230KV CKT 1
FDNS	00NR	0	17SP	G15_076	FROM->TO	GR ISLD-LNX3345.00 - GRAND ISLAND 345KV CKT Z	720	720	0.07341	137.6553	WATERTN-LNX3345.00 - WHITE 345KV CKT 1
FDNS	00NR	0	17SP	G15_076	FROM->TO	GR ISLD-LNX3345.00 - GRAND ISLAND 345KV CKT Z	720	720	0.07254	136.3519	HANLON - STORLA 230KV CKT 1
FDNS	00NR	0	17SP	G15_076	FROM->TO	GR ISLD-LNX3345.00 - GRAND ISLAND 345KV CKT Z	720	720	0.07149	136.0759	FT THOMPSON - LETCHER 230KV CKT 1
FDNS	00NR	0	17SP	G15_076	FROM->TO	GR ISLD-LNX3345.00 - GRAND ISLAND 345KV CKT Z	720	720	0.07149	136.0759	FT THOMPSON - LETCHER 230KV CKT 1
FDNS	00NR	0	17SP	G15_076	FROM->TO	GR ISLD-LNX3345.00 - GRAND ISLAND 345KV CKT Z	720	720	0.0707	134.743	FT RANDAL - FT THOMPSON 230KV CKT 1
FDNS	00NR	0	17SP	G15_076	FROM->TO	GR ISLD-LNX3345.00 - GRAND ISLAND 345KV CKT Z	720	720	0.0707	134.743	FT RANDAL - FT THOMPSON 230KV CKT 1
FDNS	00NR	0	17SP	G15_076	FROM->TO	GR ISLD-LNX3345.00 - GRAND ISLAND 345KV CKT Z	720	720	0.07079	134.7138	FT RANDAL - G12_009IST 230.00 230KV CKT 1
FDNS	00NR	0	17SP	G15_076	FROM->TO	GR ISLD-LNX3345.00 - GRAND ISLAND 345KV CKT Z	720	720	0.07079	134.6259	FT THOMPSON - LAKE PLATT 230KV CKT 1
FDNS	00NR	0	17SP	G15_076	FROM->TO	GR ISLD-LNX3345.00 - GRAND ISLAND 345KV CKT Z	720	720	0.07079	134.6259	FT THOMPSON - LAKE PLATT 230KV CKT 1
FDNS	00NR	0	17SP	G15_076	FROM->TO	GR ISLD-LNX3345.00 - GRAND ISLAND 345KV CKT Z	720	720	0.07617	134.543	KEYSTONE - SIDNEY1-LNX3345.00 345KV CKT 1
FDNS	00NR	0	17SP	G15_076	FROM->TO	GR ISLD-LNX3345.00 - GRAND ISLAND 345KV CKT Z	720	720	0.07617	134.5216	SIDNEY - SIDNEY1-LNX3345.00 345KV CKT Z
FDNS	00NR	0	17SP	G15_076	FROM->TO	GR ISLD-LNX3345.00 - GRAND ISLAND 345KV CKT Z	720	720	0.08345	134.4768	NUNDRWD - WAYSIDE 230KV CKT 1
FDNS	00NR	0	17SP	G15_076	FROM->TO	GR ISLD-LNX3345.00 - GRAND ISLAND 345KV CKT Z	720	720	0.07399	134.3905	G09_001IST 345.00 - GROTON 345KV CKT 1
FDNS	00NR	0	17SP	G15_076	FROM->TO	GR ISLD-LNX3345.00 - GRAND ISLAND 345KV CKT Z	720	720	0.07079	134.2326	G12_009IST 230.00 - LAKE PLATT 230KV CKT 1
FDNS	00NR	0	17SP	G15_076	FROM->TO	GR ISLD-LNX3345.00 - GRAND ISLAND 345KV CKT Z	720	720	0.07427	134.2197	CHISAGO COUNTY - FORBES 500KV CKT 1
FDNS	00NR	0	17SP	G15_076	FROM->TO	GR ISLD-LNX3345.00 - GRAND ISLAND 345KV CKT Z	720	720	0.07429	134.1473	GEN336821 1-GRAND GULF UNIT
FDNS	00NR	0	17SP	G15_076	FROM->TO	GR ISLD-LNX3345.00 - GRAND ISLAND 345KV CKT Z	720	720	0.07811	134.0228	FT RANDAL - MEADOWGROVE4230.00 230KV CKT 1
FDNS	00NR	0	17SP	G15_076	FROM->TO	GR ISLD-LNX3345.00 - GRAND ISLAND 345KV CKT Z	720	720	0.08279	133.952	RAUN - SUB 3451 FT CAL 345KV CKT 1
FDNS	00NR	0	17SP	G15_076	FROM->TO	GR ISLD-LNX3345.00 - GRAND ISLAND 345KV CKT Z	720	720	0.08279	133.952	RAUN - SUB 3451 FT CAL 345KV CKT 1
FDNS	00NR	0	17SP	G15_076	FROM->TO	GR ISLD-LNX3345.00 - GRAND ISLAND 345KV CKT Z	720	720	0.07426	133.8744	CENTER - JAMESTOWN 345KV CKT 1
FDNS	00NR	0	17SP	G15_076	FROM->TO	GR ISLD-LNX3345.00 - GRAND ISLAND 345KV CKT Z	720	720	0.07333	133.7167	LETCHER - SIOUX FALLS 230KV CKT 1
FDNS	00NR	0	17SP	G15_076	FROM->TO	GR ISLD-LNX3345.00 - GRAND ISLAND 345KV CKT Z	720	720	0.07429	133.6199	GEN344225 1-1CAL G1 25.000
FDNS	00NR	0	17SP	G15_076	FROM->TO	GR ISLD-LNX3345.00 - GRAND ISLAND 345KV CKT Z	720	720	0.07429	133.5098	GEN635024 4-WALTER SCOTT UNIT 4
FDNS	00NR	0	17SP	G15_076	FROM->TO	GR ISLD-LNX3345.00 - GRAND ISLAND 345KV CKT Z	720	720	0.07429	133.4039	GEN337911 1-ARKANSAS NUCLEAR ONE UNIT #2
FDNS	00NR	0	17SP	G15_076	FROM->TO	GR ISLD-LNX3345.00 - GRAND ISLAND 345KV CKT Z	720	720	0.06043	133.3888	GRAND ISLAND - SWEETWATER 345KV CKT 1
FDNS	00NR	0	17SP	G15_076	FROM->TO	GR ISLD-LNX3345.00 - GRAND ISLAND 345KV CKT Z	720	720	0.07429	133.3552	GEN336153 1-WATERFORD UNIT#3
FDNS	00NR	0	17SP	G15_076	FROM->TO	GR ISLD-LNX3345.00 - GRAND ISLAND 345KV CKT Z	720	720	0.07427	133.3286	BISON 3 345.00 - BUFFALO 345KV CKT 1
FDNS	00NR	0	17SP	G15_076	FROM->TO	GR ISLD-LNX3345.00 - GRAND ISLAND 345KV CKT Z	720	720	0.07429	132.9715	GEN635023 3-WALTER SCOTT UNIT 3
FDNS	00NR	0	17SP	G15_076	FROM->TO	GR ISLD-LNX3345.00 - GRAND ISLAND 345KV CKT Z	720	720	0.07429	132.9227	GEN335831 1-RIVERBEND UNIT#1
FDNS	00NR	0	17SP	G15_076	FROM->TO	GR ISLD-LNX3345.00 - GRAND ISLAND 345KV CKT Z	720	720	0.07302	132.9171	SPLIT ROCK - WHITE 345KV CKT 1
FDNS	00NR	0	17SP	G15_076	FROM->TO	GR ISLD-LNX3345.00 - GRAND ISLAND 345KV CKT Z	720	720	0.07302	132.9171	SPLIT ROCK - WHITE 345KV CKT 1
FDNS	00NR	0	17SP	G15_076	FROM->TO	GR ISLD-LNX3345.00 - GRAND ISLAND 345KV CKT Z	720	720	0.07429	132.8237	GEN337910 1-ARKANSAS NUCLEAR ONE UNIT #1
FDNS	00NR	0	17SP	G15_076	FROM->TO	GR ISLD-LNX3345.00 - GRAND ISLAND 345KV CKT Z	720	720	0.07458	132.7285	ARROWHEAD - ARROWHEAD 230 230KV CKT 1
FDNS	00NR	0	17SP	G15_076	FROM->TO	GR ISLD-LNX3345.00 - GRAND ISLAND 345KV CKT Z	720	720	0.07397	132.6142	FT RANDAL - SIOUX CITY 230KV CKT 1
FDNS	00NR	0	17SP	G15_076	FROM->TO	GR ISLD-LNX3345.00 - GRAND ISLAND 345KV CKT Z	720	720	0.074	132.6078	GROTON-LNX3 345.00 - LELAND1-LNX3345.00 345KV CKT 1
FDNS	00NR	0	17SP	G15_076	FROM->TO	GR ISLD-LNX3345.00 - GRAND ISLAND 345KV CKT Z	720	720	0.074	132.5676	GROTON - GROTON-LNX3 345.00 345KV CKT Z
FDNS	00NR	0	17SP	G15_076	FROM->TO	GR ISLD-LNX3345.00 - GRAND ISLAND 345KV CKT Z	720	720	0.074	132.5669	P12:345:UMZB:# 109 #: LOS GRT IN ND. LOS GRT
FDNS	00NR	0	17SP	G15_076	FROM->TO	GR ISLD-LNX3345.00 - GRAND ISLAND 345KV CKT Z	720	720	0.074	132.551	LELAND OLDS - LELAND1-LNX3345.00 345KV CKT Z
FDNS	00NR	0	17SP	G15_076	FROM->TO	GR ISLD-LNX3345.00 - GRAND ISLAND 345KV CKT Z	720	720	0.07429	132.5069	GEN640010 1-GERALD GENTLEMAN STATION UNIT 1
FDNS	00NR	0	17SP	G15_076	FROM->TO	GR ISLD-LNX3345.00 - GRAND ISLAND 345KV CKT Z	720	720	0.07355	132.4993	HANLON - SIOUX FALLS 230KV CKT 1
FDNSLock	00NR	0	17SP	G15_076	FROM->TO	GR ISLD-LNX3345.00 - GRAND ISLAND 345KV CKT Z	720	720	0.07451	132.4756	P12:115:NPPD:1091:VALENTN7:MISSION7:BTB
FDNS	00NR	0	17SP	G15_076	FROM->TO	GR ISLD-LNX3345.00 - GRAND ISLAND 345KV CKT Z	720	720	0.07515	132.4608	HAZLETON - MITCHLCO3 345.00 345KV CKT 1
FDNS	00NR	0	17SP	G15_076	FROM->TO	GR ISLD-LNX3345.00 - GRAND ISLAND 345KV CKT Z	720	720	0.07521	132.4529	GERALD GENTLEMAN STATION - KEYSTONE 345KV CKT 1
FDNS	00NR	0	17SP	G15_076	FROM->TO	GR ISLD-LNX3345.00 - GRAND ISLAND 345KV CKT Z	720	720	0.07431	132.3179	ALEXMRES3 345.00 - BISON 3 345.00 345KV CKT 1
FDNS	00NR	0	17SP	G15_076	FROM->TO	GR ISLD-LNX3345.00 - GRAND ISLAND 345KV CKT Z	720	720	0.07429	132.2633	GEN337653 1-WHITE BLUFF UNIT #2
FDNS	00NR	0	17SP	G15_076	FROM->TO	GR ISLD-LNX3345.00 - GRAND ISLAND 345KV CKT Z	720	720	0.07429	132.2476	GEN337652 1-WHITE BLUFF UNIT #1
FDNS	00NR	0	17SP	G15_076	FROM->TO	GR ISLD-LNX3345.00 - GRAND ISLAND 345KV CKT Z	720	720	0.07429	132.1956	GEN640011 2-GERALD GENTLEMAN STATION UNIT 2
FDNS	00NR	0	17SP	G15_076	FROM->TO	GR ISLD-LNX3345.00 - GRAND ISLAND 345KV CKT Z	720	720	0.07451	132.1757	MISSION - ST FRANCIS 115KV CKT 1
FDNS	00NR	0	17SP	G15_076	FROM->TO	GR ISLD-LNX3345.00 - GRAND ISLAND 345KV CKT Z	720	720	0.07429	132.1606	GEN338146 1-INDEPENDENCE UNIT #2
FDNS	00NR	0	17SP	G15_076	FROM->TO	GR ISLD-LNX3345.00 - GRAND ISLAND 345KV CKT Z	720	720	0.07429	132.159	GEN338143 1-INDEPENDENCE UNIT #1
FDNS	00NR	0	17SP	G15_076	FROM->TO	GR ISLD-LNX3345.00 - GRAND ISLAND 345KV CKT Z	720	720	0.07332	132.159	SIOUXCY-LNX3345.00 - SPLIT ROCK 345KV CKT 1
FDNS	00NR	0	17SP	G15_076	FROM->TO	GR ISLD-LNX3345.00 - GRAND ISLAND 345KV CKT Z	720	720	0.07332	132.159	SIOUXCY-LNX3345.00 - SPLIT ROCK 345KV CKT 1
FDNS	00NR	0	17SP	G15_076	FROM->TO	GR ISLD-LNX3345.00 - GRAND ISLAND 345KV CKT Z	720	720	0.07428	132.1475	ELLENDALE - OAKES 230KV CKT 1
FDNS	00NR	0	17SP	G15_076	FROM->TO	GR ISLD-LNX3345.00 - GRAND ISLAND 345KV CKT Z	720	720	0.07428	132.1475	ELLENDALE - OAKES 230KV CKT 1
FDNS	00NR	0	17SP	G15_076	FROM->TO	GR ISLD-LNX3345.00 - GRAND ISLAND 345KV CKT Z	720	720	0.07464	132.1414	AS KING - EAU CLAIRE 345KV CKT 1
FDNS	00NR	0	17SP	G15_076	FROM->TO	GR ISLD-LNX3345.00 - GRAND ISLAND 345KV CKT Z	720	720	0.07429	132.1185	GEN501801 1-DOLET HILLS UNIT1
FDNS	00NR	0	17SP	G15_076	FROM->TO	GR ISLD-LNX3345.00 - GRAND ISLAND 345KV CKT Z	720	720	0.07332	132.104	P12:345:UMZW:# 907 #: SC2-SR IN IA. SC2-SR 345 KV LINE
FDNS	00NR	0	17SP	G15_076	FROM->TO	GR ISLD-LNX3345.00 - GRAND ISLAND 345KV CKT Z	720	720	0.07332	132.065	SIOUX CITY - SIOUXCY-LNX3345.00 345KV CKT Z
FDNS	00NR	0	17SP	G15_076	FROM->TO	GR ISLD-LNX3345.00 - GRAND ISLAND 345KV CKT Z	720	720	0.07427	132.0539	FORMAN - OAKES 230KV CKT 1

SOLUTION	GROUP	SCENARIO	SEASON	SOURCE	DIRECTION	MONITORED ELEMENT	RATEA (MVA)	RATEB(MVA)	TDF	TC%LOADING (% MVA)	CONTINGENCY
FDNSLock	00NR	0	17SP	G15_076	FROM->TO	GR ISLD-LNX3345.00 - GRAND ISLAND 345KV CKT Z	720	720	0.07451	132.0406	HARMONY - VALENTINE 115KV CKT 1
FDNS	00NR	0	17SP	G15_076	FROM->TO	GR ISLD-LNX3345.00 - GRAND ISLAND 345KV CKT Z	720	720	0.07589	132.0395	SIDNEY - STEGALL 345KV CKT 1
FDNS	00NR	0	17SP	G15_076	FROM->TO	GR ISLD-LNX3345.00 - GRAND ISLAND 345KV CKT Z	720	720	0.07451	132.0391	HARMONY - ST FRANCIS 115KV CKT 1
FDNS	00NR	0	17SP	G15_076	FROM->TO	GR ISLD-LNX3345.00 - GRAND ISLAND 345KV CKT Z	720	720	0.072	132.0318	FT RANDAL - UTICA JCT 230KV CKT 1
FDNS	00NR	0	17SP	G15_076	FROM->TO	GR ISLD-LNX3345.00 - GRAND ISLAND 345KV CKT Z	720	720	0.07421	132.0241	CARPENTER - HURON 230KV CKT 1
FDNS	00NR	0	17SP	G15_076	FROM->TO	GR ISLD-LNX3345.00 - GRAND ISLAND 345KV CKT Z	720	720	0.07421	131.9553	HURON - WATERTOWN 230KV CKT 2
FDNS	00NR	0	17SP	G15_076	FROM->TO	GR ISLD-LNX3345.00 - GRAND ISLAND 345KV CKT Z	720	720	0.07421	131.9553	HURON - WATERTOWN 230KV CKT 2
FDNS	00NR	0	17SP	G15_076	FROM->TO	GR ISLD-LNX3345.00 - GRAND ISLAND 345KV CKT Z	720	720	0.07479	131.95	ARPIN B4 345.00 - EAU CLAIRE 345KV CKT 1
FDNS	00NR	0	17SP	G15_076	FROM->TO	GR ISLD-LNX3345.00 - GRAND ISLAND 345KV CKT Z	720	720	0.07421	131.8923	CARPENTER - WATERTOWN 230KV CKT 1
FDNS	00NR	0	17SP	G15_076	FROM->TO	GR ISLD-LNX3345.00 - GRAND ISLAND 345KV CKT Z	720	720	0.07421	131.8923	CARPENTER - WATERTOWN 230KV CKT 1
FDNS	00NR	0	17SP	G15_076	FROM->TO	GR ISLD-LNX3345.00 - GRAND ISLAND 345KV CKT Z	720	720	0.07219	131.8395	FT THOMPSON - WESSINGTON 230KV CKT 1
FDNS	00NR	0	17SP	G15_076	FROM->TO	GR ISLD-LNX3345.00 - GRAND ISLAND 345KV CKT Z	720	720	0.07219	131.8395	FT THOMPSON - WESSINGTON 230KV CKT 1
FDNS	00NR	0	17SP	G15_076	FROM->TO	GR ISLD-LNX3345.00 - GRAND ISLAND 345KV CKT Z	720	720	0.07429	131.7723	GEN336252 1-NINEMILE POINT UNIT#5
FDNS	00NR	0	17SP	G15_076	FROM->TO	GR ISLD-LNX3345.00 - GRAND ISLAND 345KV CKT Z	720	720	0.07398	131.7334	PAHOJA - SIOUX FALLS 230KV CKT 1
FDNS	00NR	0	17SP	G15_076	FROM->TO	GR ISLD-LNX3345.00 - GRAND ISLAND 345KV CKT Z	720	720	0.07429	131.7305	GEN501813 1-RODEMACHER UNIT 3
FDNS	00NR	0	17SP	G15_076	FROM->TO	GR ISLD-LNX3345.00 - GRAND ISLAND 345KV CKT Z	720	720	0.07465	131.7068	P12:115:NPPD:WAPA6:FTRANDL7:ONEILL 7:BTB
FDNS	00NR	0	17SP	G15_076	FROM->TO	GR ISLD-LNX3345.00 - GRAND ISLAND 345KV CKT Z	720	720	0.07465	131.7068	P12:115:UMZB:# 115 #: SE IN NE. FR-SE-ON
FDNS	00NR	0	17SP	G15_076	FROM->TO	GR ISLD-LNX3345.00 - GRAND ISLAND 345KV CKT Z	720	720	0.07046	131.7007	GERALD GENTLEMAN STATION - SWEETWATER 345KV CKT 1
FDNS	00NR	0	17SP	G15_076	FROM->TO	GR ISLD-LNX3345.00 - GRAND ISLAND 345KV CKT Z	720	720	0.07515	131.6728	ADAMS - MITCHLCO3 345.00 345KV CKT 1
FDNS	00NR	0	17SP	G15_076	FROM->TO	GR ISLD-LNX3345.00 - GRAND ISLAND 345KV CKT Z	720	720	0.07465	131.6656	FT RANDAL - SPENCER 115KV CKT 1
FDNS	00NR	0	17SP	G15_076	FROM->TO	GR ISLD-LNX3345.00 - GRAND ISLAND 345KV CKT Z	720	720	0.07429	131.6347	GEN336831 1-BAXTER WILSON SES
FDNS	00NR	0	17SP	G15_076	FROM->TO	GR ISLD-LNX3345.00 - GRAND ISLAND 345KV CKT Z	720	720	0.07429	131.622	GEN336251 1-NINEMILE POINT UNIT#4
FDNSLock	00NR	0	17SP	G15_076	FROM->TO	GR ISLD-LNX3345.00 - GRAND ISLAND 345KV CKT Z	720	720	0.07451	131.6073	AINSWORTH - VALENTINE 115KV CKT 1
FDNS	00NR	0	17SP	G15_076	FROM->TO	GR ISLD-LNX3345.00 - GRAND ISLAND 345KV CKT Z	720	720	0.07465	131.5743	ONEILL - SPENCER 115KV CKT 1
FDNS	00NR	0	17SP	G15_076	FROM->TO	GR ISLD-LNX3345.00 - GRAND ISLAND 345KV CKT Z	720	720	0.07429	131.5582	CNTSHNT3 345.00 - PRAIRIE3 345.00 345KV CKT 1
FDNS	00NR	0	17SP	G15_076	FROM->TO	GR ISLD-LNX3345.00 - GRAND ISLAND 345KV CKT Z	720	720	0.07429	131.5472	GEN337041 1-GERALD ANDRUS
FDNS	00NR	0	17SP	G15_076	FROM->TO	GR ISLD-LNX3345.00 - GRAND ISLAND 345KV CKT Z	720	720	0.07429	131.5304	GEN335206 1-NELSON UNIT 6
FDNS	00NR	0	17SP	G15_076	FROM->TO	GR ISLD-LNX3345.00 - GRAND ISLAND 345KV CKT Z	720	720	0.09048	131.5123	HOSKINS - SHELL CREEK 345KV CKT 1
FDNS	00NR	0	17SP	G15_076	FROM->TO	GR ISLD-LNX3345.00 - GRAND ISLAND 345KV CKT Z	720	720	0.07429	131.5063	GEN344897 4-1LAB G4 20.000
FDNS	00NR	0	17SP	G15_076	FROM->TO	GR ISLD-LNX3345.00 - GRAND ISLAND 345KV CKT Z	720	720	0.07429	131.503	GEN344894 1-1LAB G1 20.000
FDNS	00NR	0	17SP	G15_076	FROM->TO	GR ISLD-LNX3345.00 - GRAND ISLAND 345KV CKT Z	720	720	0.07429	131.5029	GEN344896 3-1LAB G3 20.000
FDNS	00NR	0	17SP	G15_076	FROM->TO	GR ISLD-LNX3345.00 - GRAND ISLAND 345KV CKT Z	720	720	0.07459	131.4564	G15094_T 345.00 - SIDNEY2-LNX3345.00 345KV CKT 1
FDNS	00NR	0	17SP	G15_076	FROM->TO	GR ISLD-LNX3345.00 - GRAND ISLAND 345KV CKT Z	720	720	0.07459	131.4525	SIDNEY - SIDNEY2-LNX3345.00 345KV CKT Z
FDNS	00NR	0	17SP	G15_076	FROM->TO	GR ISLD-LNX3345.00 - GRAND ISLAND 345KV CKT Z	720	720	0.0743	131.4521	FORMAN - HANKINSON 230KV CKT 1
FDNS	00NR	0	17SP	G15_076	FROM->TO	GR ISLD-LNX3345.00 - GRAND ISLAND 345KV CKT Z	720	720	0.07429	131.4478	GEN344895 2-1LAB G2 20.000
FDNS	00NR	0	17SP	G15_076	FROM->TO	GR ISLD-LNX3345.00 - GRAND ISLAND 345KV CKT Z	720	720	0.07488	131.4449	ADAMS - PLEASANT VALLEY 345KV CKT 1
FDNS	00NR	0	17SP	G15_076	FROM->TO	GR ISLD-LNX3345.00 - GRAND ISLAND 345KV CKT Z	720	720	0.07429	131.4361	GEN345670 1-1RUSH G1 18.000
FDNS	00NR	0	17SP	G15_076	FROM->TO	GR ISLD-LNX3345.00 - GRAND ISLAND 345KV CKT Z	720	720	0.07429	131.4357	GEN345671 2-1RUSH G2 18.000
FDNS	00NR	0	17SP	G15_076	FROM->TO	GR ISLD-LNX3345.00 - GRAND ISLAND 345KV CKT Z	720	720	0.07565	131.409	RASMUSN - UTICA JCT 230KV CKT 1
FDNS	00NR	0	17SP	G15_076	FROM->TO	GR ISLD-LNX3345.00 - GRAND ISLAND 345KV CKT Z	720	720	0.07657	131.3849	GRIMES - LEHIGH 345KV CKT 1
FDNS	00NR	0	17SP	G15_076	FROM->TO	GR ISLD-LNX3345.00 - GRAND ISLAND 345KV CKT Z	720	720	0.07429	131.3743	GEN501812 1-RODEMACHER UNIT 2
FDNS	00NR	0	17SP	G15_076	FROM->TO	GR ISLD-LNX3345.00 - GRAND ISLAND 345KV CKT Z	720	720	0.07398	131.3737	EAGLE 4 230.00 - PAHOJA 230KV CKT 1
FDNS	00NR	0	17SP	G15_076	FROM->TO	GR ISLD-LNX3345.00 - GRAND ISLAND 345KV CKT Z	720	720	0.07429	131.3518	GEN334440 1-SABINE UNIT 4
FDNS	00NR	0	17SP	G15_076	FROM->TO	GR ISLD-LNX3345.00 - GRAND ISLAND 345KV CKT Z	720	720	0.07429	131.3209	GEN563222 1-G15088_3 0.6900
FDNS	00NR	0	17SP	G15_076	FROM->TO	GR ISLD-LNX3345.00 - GRAND ISLAND 345KV CKT Z	720	720	0.07565	131.2572	RASMUSN - SIOUX CITY 230KV CKT 1
FDNS	00NR	0	17SP	G15_076	FROM->TO	GR ISLD-LNX3345.00 - GRAND ISLAND 345KV CKT Z	720	720	0.07429	131.1949	GEN336191 1-LITTLE GYPSY UNIT#3
FDNS	00NR	0	17SP	G15_076	FROM->TO	GR ISLD-LNX3345.00 - GRAND ISLAND 345KV CKT Z	720	720	0.07523	131.1823	LAKEFIELD 3 - NOBLES 345KV CKT 1
FDNS	00NR	0	17SP	G15_076	FROM->TO	GR ISLD-LNX3345.00 - GRAND ISLAND 345KV CKT Z	720	720	0.07526	131.1645	DIXONCO 230.00 - HOSKINS 230KV CKT 1
FDNS	00NR	0	17SP	G15_076	FROM->TO	GR ISLD-LNX3345.00 - GRAND ISLAND 345KV CKT Z	720	720	0.07145	131.1533	GERALD GENTLEMAN STATION - SWEETWATER 345KV CKT 2
FDNS	00NR	0	17SP	G15_076	FROM->TO	GR ISLD-LNX3345.00 - GRAND ISLAND 345KV CKT Z	720	720	0.07776	131.1447	RAUN - SIOUX CITY 345KV CKT 1
FDNS	00NR	0	17SP	G15_076	FROM->TO	GR ISLD-LNX3345.00 - GRAND ISLAND 345KV CKT Z	720	720	0.07776	131.1447	RAUN - SIOUX CITY 345KV CKT 1
FDNS	00NR	0	17SP	G15_076	FROM->TO	GR ISLD-LNX3345.00 - GRAND ISLAND 345KV CKT Z	720	720	0.07429	131.1356	GEN641089 2-ENERGY CENTER 2
FDNS	00NR	0	17SP	G15_076	FROM->TO	GR ISLD-LNX3345.00 - GRAND ISLAND 345KV CKT Z	720	720	0.07429	131.1315	GEN338388 1-1PLUM PT U1 23.000
FDNS	00NR	0	17SP	G15_076	FROM->TO	GR ISLD-LNX3345.00 - GRAND ISLAND 345KV CKT Z	720	720	0.07429	131.115	GEN336801 1-BAXTER WILSON UNIT #1
FDNS	00NR	0	17SP	G15_076	FROM->TO	GR ISLD-LNX3345.00 - GRAND ISLAND 345KV CKT Z	720	720	0.07429	131.089	GEN335614 1-WILLOW GLENN UNIT#4
FDNS	00NR	0	17SP	G15_076	FROM->TO	GR ISLD-LNX3345.00 - GRAND ISLAND 345KV CKT Z	720	720	0.07429	131.0813	GEN334441 1-SABINE UNIT 5
FDNS	00NR	0	17SP	G15_076	FROM->TO	GR ISLD-LNX3345.00 - GRAND ISLAND 345KV CKT Z	720	720	0.07429	131.0738	GEN336464 1-MICHOUD UNIT #3
FDNS	00NR	0	17SP	G15_076	FROM->TO	GR ISLD-LNX3345.00 - GRAND ISLAND 345KV CKT Z	720	720	0.07503	131.068	KOSSUTH 3 345.00 - OBRIEN 3 345.00 345KV CKT 1
FDNS	00NR	0	17SP	G15_076	FROM->TO	GR ISLD-LNX3345.00 - GRAND ISLAND 345KV CKT Z	720	720	0.07435	131.0671	ALEXMRES3 345.00 - WAITE PARK 345KV CKT 1
FDNS	00NR	0	17SP	G15_076	FROM->TO	GR ISLD-LNX3345.00 - GRAND ISLAND 345KV CKT Z	720	720	0.07429	131.0606	GEN335204 1-NELSON UNIT 4
FDNS	00NR	0	17SP	G15_076	FROM->TO	GR ISLD-LNX3345.00 - GRAND ISLAND 345KV CKT Z	720	720	0.08033	131.0579	COLUMEAST - SHELL CREEK 345KV CKT 1
FDNS	00NR	0	17SP	G15_076	FROM->TO	GR ISLD-LNX3345.00 - GRAND ISLAND 345KV CKT Z	720	720	0.07467	131.0518	BROOKING COUNTY - LYON COUNTY 345KV CKT 1
FDNS	00NR	0	17SP	G15_076	FROM->TO	GR ISLD-LNX3345.00 - GRAND ISLAND 345KV CKT Z	720	720	0.07503	131.0399	KOSSUTH 3 345.00 - WEBSTER 345KV CKT 1
FDNS	00NR	0	17SP	G15_076	FROM->TO	GR ISLD-LNX3345.00 - GRAND ISLAND 345KV CKT Z	720	720	0.07432	131.0392	GLENBORO SOUTH - RUGBY 230KV CKT 1
FDNS	00NR	0	17SP	G15_076	FROM->TO	GR ISLD-LNX3345.00 - GRAND ISLAND 345KV CKT Z	720	720	0.07428	131.0135	CENTER - COYOTE 345KV CKT 1
FDNS	00NR	0	17SP	G15_076	FROM->TO	GR ISLD-LNX3345.00 - GRAND ISLAND 345KV CKT Z	720	720	0.07433	131.0096	BLAIR - GRANITE FALLS 230KV CKT 1
FDNS	00NR	0	17SP	G15_076	FROM->TO	GR ISLD-LNX3345.00 - GRAND ISLAND 345KV CKT Z	720	720	0.07433	131.0096	BLAIR - GRANITE FALLS 230KV CKT 1
FDNS	00NR	0	17SP	G15_076	FROM->TO	GR ISLD-LNX3345.00 - GRAND ISLAND 345KV CKT Z	720	720	0.08023	130.9663	COLUMEAST - NW68TH & HOLDREGE 345KV CKT 1
FDNS	00NR	0	17SP	G15_076	FROM->TO	GR ISLD-LNX3345.00 - GRAND ISLAND 345KV CKT Z	720	720	0.08023	130.9663	COLUMEAST - NW68TH & HOLDREGE 345KV CKT 1
FDNS	00NR	0	17SP	G15_076	FROM->TO	GR ISLD-LNX3345.00 - GRAND ISLAND 345KV CKT Z	720	720	0.0775	130.9429	STEGALL - STEGALL TRANSFORMER 230KV CKT 1
FDNS	00NR	0	17SP	G15_076	FROM->TO	GR ISLD-LNX3345.00 - GRAND ISLAND 345KV CKT Z	720	720	0.0775	130.9211	P13:230-345:NPPD:STEGALL3:KV3A
FDNS	00NR	0	17SP	G15_076	FROM->TO	GR ISLD-LNX3345.00 - GRAND ISLAND 345KV CKT Z	720	720	0.0775	130.9098	STEGALL (SGQ KV3A) 345/230/13.8KV TRANSFORMER CKT 1
FDNS	00NR	0	17SP	G15_076	FROM->TO	GR ISLD-LNX3345.00 - GRAND ISLAND 345KV CKT Z	720	720	0.07429	130.9025	GEN334433 1-SABINE UNIT 3
FDNS	00NR	0	17SP	G15_076	FROM->TO	GR ISLD-LNX3345.00 - GRAND ISLAND 345KV CKT Z	720	720	0.0747	130.9021	BYRON - NORTH ROCHESTER 345KV CKT 1
FDNS	00NR	0	17SP	G15_076	FROM->TO	GR ISLD-LNX3345.00 - GRAND ISLAND 345KV CKT Z	720	720	0.07463	130.8661	G14-059T 230.00 - OGALLALA 230KV CKT 1
FDNS	00NR	0	17SP	G15_076	FROM->TO	GR ISLD-LNX3345.00 - GRAND ISLAND 345KV CKT Z	720	720	0.07959	130.8533	STEGALL-LNX3230.00 - WAYSIDE 230KV CKT 1
FDNS	00NR	0	17SP	G15_076	FROM->TO	GR ISLD-LNX3345.00 - GRAND ISLAND 345KV CKT Z	720	720	0.07289	130.8524	MENNO JCT - TRIPP JCT 115KV CKT 1
FDNS	00NR	0	17SP	G15_076	FROM->TO	GR ISLD-LNX3345.00 - GRAND ISLAND 345KV CKT Z	720	720	0.07429	130.8515	GEN629075 1-OTTUMWA GENERATOR FOR OTTUMWA UNIT NO 1
FDNS	00NR	0	17SP	G15_076	FROM->TO	GR ISLD-LNX3345.00 - GRAND ISLAND 345KV CKT Z	720	720	0.07429	130.847	GEN336222 1-LITTLE GYPSY UNIT#2

SOLUTION	GROUP	SCENARIO	SEASON	SOURCE	DIRECTION	MONITORED ELEMENT	RATEA (MVA)	RATEB(MVA)	TDF	TC%LOADING (% MVA)	CONTINGENCY
FDNS	00NR	0	17SP	G15_076	FROM->TO	GR ISLD-LNX3345.00 - GRAND ISLAND 345KV CKT Z	720	720	0.07429	130.8418	P13:230-345:NPPD:NUCOR-1
FDNS	00NR	0	17SP	G15_076	FROM->TO	GR ISLD-LNX3345.00 - GRAND ISLAND 345KV CKT Z	720	720	0.07959	130.8411	STEGALL - STEGALL-LNX3230.00 230KV CKT Z
FDNS	00NR	0	17SP	G15_076	FROM->TO	GR ISLD-LNX3345.00 - GRAND ISLAND 345KV CKT Z	720	720	0.07429	130.841	P12:115:UMZW:# 162 #: NEL IN ND. FAULT ON ML-NEL-MX-GA 115 KV
FDNS	00NR	0	17SP	G15_076	FROM->TO	GR ISLD-LNX3345.00 - GRAND ISLAND 345KV CKT Z	720	720	0.07429	130.8288	GEN303007 1-1BC2 U2
FDNS	00NR	0	17SP	G15_076	FROM->TO	GR ISLD-LNX3345.00 - GRAND ISLAND 345KV CKT Z	720	720	0.07429	130.8224	GEN303006 1-1BC2 U1
FDNS	00NR	0	17SP	G15_076	FROM->TO	GR ISLD-LNX3345.00 - GRAND ISLAND 345KV CKT Z	720	720	0.07394	130.7801	FT THOMPSON - HURON 230KV CKT 1
FDNS	00NR	0	17SP	G15_076	FROM->TO	GR ISLD-LNX3345.00 - GRAND ISLAND 345KV CKT Z	720	720	0.07394	130.7801	FT THOMPSON - HURON 230KV CKT 1
FDNS	00NR	0	17SP	G15_076	FROM->TO	GR ISLD-LNX3345.00 - GRAND ISLAND 345KV CKT Z	720	720	0.07394	130.7801	FT THOMPSON - HURON 230KV CKT 2
FDNS	00NR	0	17SP	G15_076	FROM->TO	GR ISLD-LNX3345.00 - GRAND ISLAND 345KV CKT Z	720	720	0.07394	130.7801	FT THOMPSON - HURON 230KV CKT 2
FDNS	00NR	0	17SP	G15_076	FROM->TO	GR ISLD-LNX3345.00 - GRAND ISLAND 345KV CKT Z	720	720	0.07429	130.7598	GEN336152 1-WATERFORD UNIT#2
FDNS	00NR	0	17SP	G15_076	FROM->TO	GR ISLD-LNX3345.00 - GRAND ISLAND 345KV CKT Z	720	720	0.07429	130.7593	GEN336151 1-WATERFORD UNIT#1
FDNS	00NR	0	17SP	G15_076	FROM->TO	GR ISLD-LNX3345.00 - GRAND ISLAND 345KV CKT Z	720	720	0.07429	130.7462	GEN303008 1-1BC2 U3
FDNS	00NR	0	17SP	G15_076	FROM->TO	GR ISLD-LNX3345.00 - GRAND ISLAND 345KV CKT Z	720	720	0.07428	130.7358	GARRISON - JAMES TOWN 230KV CKT 1
FDNS	00NR	0	17SP	G15_076	FROM->TO	GR ISLD-LNX3345.00 - GRAND ISLAND 345KV CKT Z	720	720	0.07429	130.7309	GEN336170 1-GULF OXY U4
FDNS	00NR	0	17SP	G15_076	FROM->TO	GR ISLD-LNX3345.00 - GRAND ISLAND 345KV CKT Z	720	720	0.07289	130.7232	MENNO JCT - UTICA 115KV CKT 1
FDNS	00NR	0	17SP	G15_076	FROM->TO	GR ISLD-LNX3345.00 - GRAND ISLAND 345KV CKT Z	720	720	0.07435	130.7184	HANKINSON - WAHPETON 230KV CKT 1
FDNS	00NR	0	17SP	G15_076	FROM->TO	GR ISLD-LNX3345.00 - GRAND ISLAND 345KV CKT Z	720	720	0.07634	130.6984	PETERSBRG.N7115.00 - PETERSBURG 115KV CKT Z1
FDNS	00NR	0	17SP	G15_076	FROM->TO	GR ISLD-LNX3345.00 - GRAND ISLAND 345KV CKT Z	720	720	0.07444	130.6981	NORTH ROCHESTER - PRAIRIE ISLAND 345KV CKT 1
FDNS	00NR	0	17SP	G15_076	FROM->TO	GR ISLD-LNX3345.00 - GRAND ISLAND 345KV CKT Z	720	720	0.07438	130.6902	APPLEDORN 4 230.00 - WATERTOWN 230KV CKT 1
FDNS	00NR	0	17SP	G15_076	FROM->TO	GR ISLD-LNX3345.00 - GRAND ISLAND 345KV CKT Z	720	720	0.07438	130.6902	APPLEDORN 4 230.00 - WATERTOWN 230KV CKT 1
FDNS	00NR	0	17SP	G15_076	FROM->TO	GR ISLD-LNX3345.00 - GRAND ISLAND 345KV CKT Z	720	720	0.07289	130.6816	P12:115:UMZZ:# 237 #: MEN IN SD. MENNO JUNCTION IS A TAP (UJ-MEN-TP).
FDNS	00NR	0	17SP	G15_076	FROM->TO	GR ISLD-LNX3345.00 - GRAND ISLAND 345KV CKT Z	720	720	0.07634	130.6743	P12:115:NPPD:1168B:ALBION 7:PETERSBRG.N7:BTB
FDNS	00NR	0	17SP	G15_076	FROM->TO	GR ISLD-LNX3345.00 - GRAND ISLAND 345KV CKT Z	720	720	0.07432	130.6654	FERGSFL4 230.00 - WAHPETON 230KV CKT 1
FDNS	00NR	0	17SP	G15_076	FROM->TO	GR ISLD-LNX3345.00 - GRAND ISLAND 345KV CKT Z	720	720	0.07047	130.6641	FT THOMPSON (FT2 KU1B) 345/230/13.8KV TRANSFORMER CKT 1
FDNS	00NR	0	17SP	G15_076	FROM->TO	GR ISLD-LNX3345.00 - GRAND ISLAND 345KV CKT Z	720	720	0.07048	130.6623	FT THOMPSON (FT2 KU1A) 345/230/13.8KV TRANSFORMER CKT 1
FDNS	00NR	0	17SP	G15_076	FROM->TO	GR ISLD-LNX3345.00 - GRAND ISLAND 345KV CKT Z	720	720	0.07428	130.6495	FARGO - JAMES TOWN 230KV CKT 1
FDNS	00NR	0	17SP	G15_076	FROM->TO	GR ISLD-LNX3345.00 - GRAND ISLAND 345KV CKT Z	720	720	0.07429	130.6446	GEN501811 1-RODEMACHER UNIT 1
FDNS	00NR	0	17SP	G15_076	FROM->TO	GR ISLD-LNX3345.00 - GRAND ISLAND 345KV CKT Z	720	720	0.07459	130.6428	G15094_T 345.00 - LARAMIE RIVER 345KV CKT 1
FDNS	00NR	0	17SP	G15_076	FROM->TO	GR ISLD-LNX3345.00 - GRAND ISLAND 345KV CKT Z	720	720	0.07444	130.6372	ARKANSAS NUCLEAR ONE - FT SMITH 500KV CKT 1
FDNS	00NR	0	17SP	G15_076	FROM->TO	GR ISLD-LNX3345.00 - GRAND ISLAND 345KV CKT Z	720	720	0.07444	130.6372	ARKANSAS NUCLEAR ONE - FT SMITH 500KV CKT 1
FDNS	00NR	0	17SP	G15_076	FROM->TO	GR ISLD-LNX3345.00 - GRAND ISLAND 345KV CKT Z	720	720	0.07438	130.634	APPLEDORN 4 230.00 - GRANITE FALLS 230KV CKT 1
FDNS	00NR	0	17SP	G15_076	FROM->TO	GR ISLD-LNX3345.00 - GRAND ISLAND 345KV CKT Z	720	720	0.07438	130.634	APPLEDORN 4 230.00 - GRANITE FALLS 230KV CKT 1
FDNS	00NR	0	17SP	G15_076	FROM->TO	GR ISLD-LNX3345.00 - GRAND ISLAND 345KV CKT Z	720	720	0.07471	130.6325	BYRON - PLEASANT VALLEY 345KV CKT 1
FDNS	00NR	0	17SP	G15_076	FROM->TO	GR ISLD-LNX3345.00 - GRAND ISLAND 345KV CKT Z	720	720	0.07634	130.6282	ALBION - PETERSBURG 115KV CKT 1
FDNS	00NR	0	17SP	G15_076	FROM->TO	GR ISLD-LNX3345.00 - GRAND ISLAND 345KV CKT Z	720	720	0.07429	130.6122	P13:115-230:NPPD:NUCOR-3
FDNS	00NR	0	17SP	G15_076	FROM->TO	GR ISLD-LNX3345.00 - GRAND ISLAND 345KV CKT Z	720	720	0.07428	130.6056	FARGO - JAMES TOWN 230KV CKT 2
FDNS	00NR	0	17SP	G15_076	FROM->TO	GR ISLD-LNX3345.00 - GRAND ISLAND 345KV CKT Z	720	720	0.07531	130.6004	DENISON - SIOUX CITY 230KV CKT 1
FDNS	00NR	0	17SP	G15_076	FROM->TO	GR ISLD-LNX3345.00 - GRAND ISLAND 345KV CKT Z	720	720	0.07429	130.5697	P13:230:UMZW:# 2218 #: FP IN MT. LOSS OF TRANSFORMER (AT2).
FDNS	00NR	0	17SP	G15_076	FROM->TO	GR ISLD-LNX3345.00 - GRAND ISLAND 345KV CKT Z	720	720	0.07458	130.5585	ARPIN B3 345.00 - ROCKY RN B8 345.00 345KV CKT 1
FDNS	00NR	0	17SP	G15_076	FROM->TO	GR ISLD-LNX3345.00 - GRAND ISLAND 345KV CKT Z	720	720	0.07325	130.5401	P12:115:NPPD:1164:ONEILL 7:JEFFREY9:BTB
FDNS	00NR	0	17SP	G15_076	FROM->TO	GR ISLD-LNX3345.00 - GRAND ISLAND 345KV CKT Z	720	720	0.07428	130.5333	BISMARK - WEBER 230KV CKT 1
FDNS	00NR	0	17SP	G15_076	FROM->TO	GR ISLD-LNX3345.00 - GRAND ISLAND 345KV CKT Z	720	720	0.0737	130.528	LAKEFIELD 3 - LKFLDXL3 345KV CKT 1
FDNS	00NR	0	17SP	G15_076	FROM->TO	GR ISLD-LNX3345.00 - GRAND ISLAND 345KV CKT Z	720	720	0.07428	130.5229	BISMARK - JAMES TOWN 230KV CKT 1
FDNS	00NR	0	17SP	G15_076	FROM->TO	GR ISLD-LNX3345.00 - GRAND ISLAND 345KV CKT Z	720	720	0.07429	130.5208	GEN334071 1-LEWIS CREEK 2
FDNS	00NR	0	17SP	G15_076	FROM->TO	GR ISLD-LNX3345.00 - GRAND ISLAND 345KV CKT Z	720	720	0.07429	130.5152	GEN334070 1-LEWIS CREEK 1
FDNS	00NR	0	17SP	G15_076	FROM->TO	GR ISLD-LNX3345.00 - GRAND ISLAND 345KV CKT Z	720	720	0.07429	130.5119	GEN337766 1-TRACTEBEL UNIT S1
FDNS	00NR	0	17SP	G15_076	FROM->TO	GR ISLD-LNX3345.00 - GRAND ISLAND 345KV CKT Z	720	720	0.07428	130.4965	JAMES TOWN - WEBER 230KV CKT 1
FDNS	00NR	0	17SP	G15_076	FROM->TO	GR ISLD-LNX3345.00 - GRAND ISLAND 345KV CKT Z	720	720	0.07429	130.4889	P13:115-345:NPPD:NUCOR-2
FDNS	00NR	0	17SP	G15_076	FROM->TO	GR ISLD-LNX3345.00 - GRAND ISLAND 345KV CKT Z	720	720	0.0743	130.488	AUDUBON - SHEYNNE 230KV CKT 1
FDNS	00NR	0	17SP	G15_076	FROM->TO	GR ISLD-LNX3345.00 - GRAND ISLAND 345KV CKT Z	720	720	0.07478	130.4834	7PALM TAP 345.00 - SUB T 345KV CKT 1
FDNS	00NR	0	17SP	G15_076	FROM->TO	GR ISLD-LNX3345.00 - GRAND ISLAND 345KV CKT Z	720	720	0.07478	130.4831	PALXFRASBTHI
FDNS	00NR	0	17SP	G15_076	FROM->TO	GR ISLD-LNX3345.00 - GRAND ISLAND 345KV CKT Z	720	720	0.07325	130.476	CLEARWATER - ONEILL 115KV CKT 1
FDNS	00NR	0	17SP	G15_076	FROM->TO	GR ISLD-LNX3345.00 - GRAND ISLAND 345KV CKT Z	720	720	0.07429	130.4719	BALTA - RAMSEY 230KV CKT 1
FDNS	00NR	0	17SP	G15_076	FROM->TO	GR ISLD-LNX3345.00 - GRAND ISLAND 345KV CKT Z	720	720	0.07432	130.4695	FERGSFL4 230.00 - GRE-SILVRLK4230.00 230KV CKT 1
FDNS	00NR	0	17SP	G15_076	FROM->TO	GR ISLD-LNX3345.00 - GRAND ISLAND 345KV CKT Z	720	720	0.07429	130.4666	GEN501910 1-ACADIA UNIT ST1
FDNS	00NR	0	17SP	G15_076	FROM->TO	GR ISLD-LNX3345.00 - GRAND ISLAND 345KV CKT Z	720	720	0.07506	130.458	NOBLES - SPLIT ROCK 345KV CKT 1
FDNS	00NR	0	17SP	G15_076	FROM->TO	GR ISLD-LNX3345.00 - GRAND ISLAND 345KV CKT Z	720	720	0.07428	130.4485	ELM CREEK - MONTICELLO 345KV CKT 1
FDNS	00NR	0	17SP	G15_076	FROM->TO	GR ISLD-LNX3345.00 - GRAND ISLAND 345KV CKT Z	720	720	0.0749	130.4452	P12:115:NPPD:WAPA1:CHADRON7:BOXBUTE7:BTB
FDNS	00NR	0	17SP	G15_076	FROM->TO	GR ISLD-LNX3345.00 - GRAND ISLAND 345KV CKT Z	720	720	0.07429	130.4429	PRAIRIE ISLAND 345/20.0KV TRANSFORMER CKT 1
FDNS	00NR	0	17SP	G15_076	FROM->TO	GR ISLD-LNX3345.00 - GRAND ISLAND 345KV CKT Z	720	720	0.07386	130.4422	MT VERN - STORLA 115KV CKT 1
FDNS	00NR	0	17SP	G15_076	FROM->TO	GR ISLD-LNX3345.00 - GRAND ISLAND 345KV CKT Z	720	720	0.07429	130.4383	PRAIRIE ISLAND 345/20.0KV TRANSFORMER CKT 2
FDNS	00NR	0	17SP	G15_076	FROM->TO	GR ISLD-LNX3345.00 - GRAND ISLAND 345KV CKT Z	720	720	0.07429	130.4343	GEN562596 1-G14_059_3 0.6900
FDNS	00NR	0	17SP	G15_076	FROM->TO	GR ISLD-LNX3345.00 - GRAND ISLAND 345KV CKT Z	720	720	0.07429	130.4332	GEN345765 H-1SIOUX 2 18.000
FDNS	00NR	0	17SP	G15_076	FROM->TO	GR ISLD-LNX3345.00 - GRAND ISLAND 345KV CKT Z	720	720	0.06262	130.4255	GAVINS POINT - YANKON JCT 115KV CKT 1
FDNS	00NR	0	17SP	G15_076	FROM->TO	GR ISLD-LNX3345.00 - GRAND ISLAND 345KV CKT Z	720	720	0.06262	130.4255	GAVINS POINT - YANKON JCT 115KV CKT 1
FDNS	00NR	0	17SP	G15_076	FROM->TO	GR ISLD-LNX3345.00 - GRAND ISLAND 345KV CKT Z	720	720	0.07464	130.4241	P13:230-345:NPPD:SIDNEY 3:KV2A
FDNS	00NR	0	17SP	G15_076	FROM->TO	GR ISLD-LNX3345.00 - GRAND ISLAND 345KV CKT Z	720	720	0.07464	130.424	SIDNEY (SDQ KV2A) 345/230/13.8KV TRANSFORMER CKT 1
FDNS	00NR	0	17SP	G15_076	FROM->TO	GR ISLD-LNX3345.00 - GRAND ISLAND 345KV CKT Z	720	720	0.07432	130.424	GRE-SILVRLK4230.00 - HENNING 230KV CKT 1
FDNS	00NR	0	17SP	G15_076	FROM->TO	GR ISLD-LNX3345.00 - GRAND ISLAND 345KV CKT Z	720	720	0.07464	130.4236	SIDNEY - SIDNEY TRANSFORMER 230KV CKT 1
FDNS	00NR	0	17SP	G15_076	FROM->TO	GR ISLD-LNX3345.00 - GRAND ISLAND 345KV CKT Z	720	720	0.07458	130.4099	CHADRON - WAYSIDE 115KV CKT 1
FDNS	00NR	0	17SP	G15_076	FROM->TO	GR ISLD-LNX3345.00 - GRAND ISLAND 345KV CKT Z	720	720	0.07458	130.4099	P13:115-230:NPPD:WAYSIDE4:T1
FDNS	00NR	0	17SP	G15_076	FROM->TO	GR ISLD-LNX3345.00 - GRAND ISLAND 345KV CKT Z	720	720	0.07425	130.4085	DKSN_CO5 161.00 - TRIBOJI NO1 + NO2 161KV CKT 1
FDNS	00NR	0	17SP	G15_076	FROM->TO	GR ISLD-LNX3345.00 - GRAND ISLAND 345KV CKT Z	720	720	0.07458	130.4072	WAYSIDE (WAYSIDE T1) 230/115/13.8KV TRANSFORMER CKT 1
FDNS	00NR	0	17SP	G15_076	FROM->TO	GR ISLD-LNX3345.00 - GRAND ISLAND 345KV CKT Z	720	720	0.07466	130.407	P13:115-230:TSGT:SIDNEY-KV1A
FDNS	00NR	0	17SP	G15_076	FROM->TO	GR ISLD-LNX3345.00 - GRAND ISLAND 345KV CKT Z	720	720	0.07634	130.4021	NELIGH - PETERSBRG.N7115.00 115KV CKT 1
FDNS	00NR	0	17SP	G15_076	FROM->TO	GR ISLD-LNX3345.00 - GRAND ISLAND 345KV CKT Z	720	720	0.07429	130.3993	GEN345756 H-1SIOUX 1 18.000
FDNS	00NR	0	17SP	G15_076	FROM->TO	GR ISLD-LNX3345.00 - GRAND ISLAND 345KV CKT Z	720	720	0.07429	130.399	GEN337764 1-TRACTEBEL UNIT C1
FDNS	00NR	0	17SP	G15_076	FROM->TO	GR ISLD-LNX3345.00 - GRAND ISLAND 345KV CKT Z	720	720	0.07429	130.399	GEN337765 1-TRACTEBEL UNIT C2
FDNS	00NR	0	17SP	G15_076	FROM->TO	GR ISLD-LNX3345.00 - GRAND ISLAND 345KV CKT Z	720	720	0.0743	130.3913	LELAND OLDS - STANTON 230KV CKT 1

SOLUTION	GROUP	SCENARIO	SEASON	SOURCE	DIRECTION	MONITORED ELEMENT	RATEA (MVA)	RATEB(MVA)	TDF	TC%LOADING (% MVA)	CONTINGENCY
FDNS	00NR	0	17SP	G15_076	FROM->TO	GR ISLD-LNX3345.00 - GRAND ISLAND 345KV CKT Z	720	720	0.0743	130.3913	LELAND OLDS - STANTON 230KV CKT 1
FDNS	00NR	0	17SP	G15_076	FROM->TO	GR ISLD-LNX3345.00 - GRAND ISLAND 345KV CKT Z	720	720	0.07429	130.386	GRAND GULF 500/22.0KV TRANSFORMER CKT 1
FDNS	00NR	0	17SP	G15_076	FROM->TO	GR ISLD-LNX3345.00 - GRAND ISLAND 345KV CKT Z	720	720	0.07429	130.3716	PRAIRIE - WINGER 230KV CKT 1
FDNS	00NR	0	17SP	G15_076	FROM->TO	GR ISLD-LNX3345.00 - GRAND ISLAND 345KV CKT Z	720	720	0.07443	130.3698	FRANKS - HUBEN 345KV CKT 1
FDNS	00NR	0	17SP	G15_076	FROM->TO	GR ISLD-LNX3345.00 - GRAND ISLAND 345KV CKT Z	720	720	0.07432	130.3677	HENNING - INMANN 230KV CKT 1
FDNS	00NR	0	17SP	G15_076	FROM->TO	GR ISLD-LNX3345.00 - GRAND ISLAND 345KV CKT Z	720	720	0.07429	130.3564	GEN336221 1-LITTLE GYPSY UNIT#1
FDNS	00NR	0	17SP	G15_076	FROM->TO	GR ISLD-LNX3345.00 - GRAND ISLAND 345KV CKT Z	720	720	0.07463	130.3552	EAGLE - PHILIP 115KV CKT 1
FDNS	00NR	0	17SP	G15_076	FROM->TO	GR ISLD-LNX3345.00 - GRAND ISLAND 345KV CKT Z	720	720	0.0743	130.3524	BIG STONE (230/115) 230/115/13.8KV TRANSFORMER CKT 1
FDNS	00NR	0	17SP	G15_076	FROM->TO	GR ISLD-LNX3345.00 - GRAND ISLAND 345KV CKT Z	720	720	0.07439	130.3512	GENOA 161 - SENECA 161 161KV CKT 1
FDNS	00NR	0	17SP	G15_076	FROM->TO	GR ISLD-LNX3345.00 - GRAND ISLAND 345KV CKT Z	720	720	0.0749	130.3498	CHADRON - DUNLAP 115KV CKT 1
FDNS	00NR	0	17SP	G15_076	FROM->TO	GR ISLD-LNX3345.00 - GRAND ISLAND 345KV CKT Z	720	720	0.07428	130.3485	GROTON (GROTON KU2A) 345/115/13.8KV TRANSFORMER CKT 1
FDNS	00NR	0	17SP	G15_076	FROM->TO	GR ISLD-LNX3345.00 - GRAND ISLAND 345KV CKT Z	720	720	0.07429	130.3483	GEN337757 1-DUKE HOTSPRINGS STG1
FDNS	00NR	0	17SP	G15_076	FROM->TO	GR ISLD-LNX3345.00 - GRAND ISLAND 345KV CKT Z	720	720	0.07429	130.3481	GEN336242 1-1NMIL ST1 18.000
FDNS	00NR	0	17SP	G15_076	FROM->TO	GR ISLD-LNX3345.00 - GRAND ISLAND 345KV CKT Z	720	720	0.07429	130.3436	GEN334431 1-SABINE UNIT 1
FDNS	00NR	0	17SP	G15_076	FROM->TO	GR ISLD-LNX3345.00 - GRAND ISLAND 345KV CKT Z	720	720	0.07429	130.3436	GEN334432 1-SABINE UNIT 2
FDNS	00NR	0	17SP	G15_076	FROM->TO	GR ISLD-LNX3345.00 - GRAND ISLAND 345KV CKT Z	720	720	0.07429	130.3223	GEN334030 1-FRONTIER UNIT 1
FDNS	00NR	0	17SP	G15_076	FROM->TO	GR ISLD-LNX3345.00 - GRAND ISLAND 345KV CKT Z	720	720	0.07429	130.3218	GEN334031 1-FRONTIER UNIT 2
FDNS	00NR	0	17SP	G15_076	FROM->TO	GR ISLD-LNX3345.00 - GRAND ISLAND 345KV CKT Z	720	720	0.07436	130.3196	NORTH LA CROSSE - NORTH ROCHESTER 345KV CKT 1
FDNS	00NR	0	17SP	G15_076	FROM->TO	GR ISLD-LNX3345.00 - GRAND ISLAND 345KV CKT Z	720	720	0.07429	130.318	GEN336446 1-MICHOUD UNIT #2
FDNS	00NR	0	17SP	G15_076	FROM->TO	GR ISLD-LNX3345.00 - GRAND ISLAND 345KV CKT Z	720	720	0.07431	130.313	KARLSTAD - WINGER 230KV CKT 1
FDNS	00NR	0	17SP	G15_076	FROM->TO	GR ISLD-LNX3345.00 - GRAND ISLAND 345KV CKT Z	720	720	0.07429	130.3064	GEN345832 1-1TS G1 13.800
FDNS	00NR	0	17SP	G15_076	FROM->TO	GR ISLD-LNX3345.00 - GRAND ISLAND 345KV CKT Z	720	720	0.07429	130.3061	GEN345841 2-1TS G2 13.800
FDNS	00NR	0	17SP	G15_076	FROM->TO	GR ISLD-LNX3345.00 - GRAND ISLAND 345KV CKT Z	720	720	0.07446	130.3053	HAMPTON CORNER - NORTH ROCHESTER 345KV CKT 1
FDNS	00NR	0	17SP	G15_076	FROM->TO	GR ISLD-LNX3345.00 - GRAND ISLAND 345KV CKT Z	720	720	0.07431	130.3047	AUDUBON - HUBBARD 230KV CKT 1
FDNS	00NR	0	17SP	G15_076	FROM->TO	GR ISLD-LNX3345.00 - GRAND ISLAND 345KV CKT Z	720	720	0.07429	130.3033	GEN501970 1-EVANGELINE UNIT 7
FDNS	00NR	0	17SP	G15_076	FROM->TO	GR ISLD-LNX3345.00 - GRAND ISLAND 345KV CKT Z	720	720	0.07463	130.2956	EAGLE - MARTIN 115KV CKT 1
FDNS	00NR	0	17SP	G15_076	FROM->TO	GR ISLD-LNX3345.00 - GRAND ISLAND 345KV CKT Z	720	720	0.07764	130.2955	BLOOMFIELD - CREIGHTON 115KV CKT 1
FDNS	00NR	0	17SP	G15_076	FROM->TO	GR ISLD-LNX3345.00 - GRAND ISLAND 345KV CKT Z	720	720	0.07317	130.2935	P13:230:UMZW:# 253 #: FR IN SD. LOSS OF TRANSFORMER (E
FDNS	00NR	0	17SP	G15_076	FROM->TO	GR ISLD-LNX3345.00 - GRAND ISLAND 345KV CKT Z	720	720	0.07444	130.2911	GRANT - MITCHELL 115KV CKT 1
FDNS	00NR	0	17SP	G15_076	FROM->TO	GR ISLD-LNX3345.00 - GRAND ISLAND 345KV CKT Z	720	720	0.07444	130.2911	GRANT - MITCHELL 115KV CKT 1
FDNS	00NR	0	17SP	G15_076	FROM->TO	GR ISLD-LNX3345.00 - GRAND ISLAND 345KV CKT Z	720	720	0.06889	130.2902	NAPA JCT7 115.00 - UTICA 115KV CKT 1
FDNS	00NR	0	17SP	G15_076	FROM->TO	GR ISLD-LNX3345.00 - GRAND ISLAND 345KV CKT Z	720	720	0.06889	130.2902	NAPA JCT7 115.00 - UTICA 115KV CKT 1
FDNS	00NR	0	17SP	G15_076	FROM->TO	GR ISLD-LNX3345.00 - GRAND ISLAND 345KV CKT Z	720	720	0.06889	130.2893	P12:115:UMZW:# 1910 #: YJ IN SD. YJ-UJ LINE FAULT
FDNS	00NR	0	17SP	G15_076	FROM->TO	GR ISLD-LNX3345.00 - GRAND ISLAND 345KV CKT Z	720	720	0.06889	130.2868	NAPA JCT7 115.00 - YANKON JCT 115KV CKT 1
FDNS	00NR	0	17SP	G15_076	FROM->TO	GR ISLD-LNX3345.00 - GRAND ISLAND 345KV CKT Z	720	720	0.06889	130.2868	NAPA JCT7 115.00 - YANKON JCT 115KV CKT 1
FDNS	00NR	0	17SP	G15_076	FROM->TO	GR ISLD-LNX3345.00 - GRAND ISLAND 345KV CKT Z	720	720	0.07429	130.2841	P12:345:GRDA:CHOUTEAU-SPORTSMANACRES
FDNS	00NR	0	17SP	G15_076	FROM->TO	GR ISLD-LNX3345.00 - GRAND ISLAND 345KV CKT Z	720	720	0.07429	130.2838	GEN337430 1-PERYVILLE UNIT #3
FDNS	00NR	0	17SP	G15_076	FROM->TO	GR ISLD-LNX3345.00 - GRAND ISLAND 345KV CKT Z	720	720	0.07429	130.2835	GEN337428 1-PERYVILLE UNIT #1
FDNS	00NR	0	17SP	G15_076	FROM->TO	GR ISLD-LNX3345.00 - GRAND ISLAND 345KV CKT Z	720	720	0.07429	130.281	GEN531447 1-HOLCOMB GENERATOR
FDNS	00NR	0	17SP	G15_076	FROM->TO	GR ISLD-LNX3345.00 - GRAND ISLAND 345KV CKT Z	720	720	0.07429	130.2564	GEN336240 1-1NMIL CT1 18.000
FDNS	00NR	0	17SP	G15_076	FROM->TO	GR ISLD-LNX3345.00 - GRAND ISLAND 345KV CKT Z	720	720	0.07429	130.2564	GEN336241 1-1NMIL CT2 18.000
FDNS	00NR	0	17SP	G15_076	FROM->TO	GR ISLD-LNX3345.00 - GRAND ISLAND 345KV CKT Z	720	720	0.07429	130.2562	GEN501912 1-ACADIA UNIT CT1B
FDNS	00NR	0	17SP	G15_076	FROM->TO	GR ISLD-LNX3345.00 - GRAND ISLAND 345KV CKT Z	720	720	0.07429	130.256	GEN501911 1-ACADIA UNIT CT1A
FDNS	00NR	0	17SP	G15_076	FROM->TO	GR ISLD-LNX3345.00 - GRAND ISLAND 345KV CKT Z	720	720	0.0749	130.2556	BOXBUTE7 115.00 - DUNLAP 115KV CKT 1
FDNS	00NR	0	17SP	G15_076	FROM->TO	GR ISLD-LNX3345.00 - GRAND ISLAND 345KV CKT Z	720	720	0.07429	130.249	WHITE BLUFF 500/26.0KV TRANSFORMER CKT 1
FDNS	00NR	0	17SP	G15_076	FROM->TO	GR ISLD-LNX3345.00 - GRAND ISLAND 345KV CKT Z	720	720	0.07429	130.2482	GEN501971 1-EVANGELINE UNIT 7-1
FDNS	00NR	0	17SP	G15_076	FROM->TO	GR ISLD-LNX3345.00 - GRAND ISLAND 345KV CKT Z	720	720	0.07429	130.2482	GEN501972 1-EVANGELINE UNIT 7-2
FDNS	00NR	0	17SP	G15_076	FROM->TO	GR ISLD-LNX3345.00 - GRAND ISLAND 345KV CKT Z	720	720	0.07429	130.2442	FINNEY SWITCHING STATION - PSCO LAMAR DC TIE 345KV CKT 1
FDNS	00NR	0	17SP	G15_076	FROM->TO	GR ISLD-LNX3345.00 - GRAND ISLAND 345KV CKT Z	720	720	0.07429	130.2442	FINNEY SWITCHING STATION - PSCO LAMAR DC TIE 345KV CKT 1
FDNS	00NR	0	17SP	G15_076	FROM->TO	GR ISLD-LNX3345.00 - GRAND ISLAND 345KV CKT Z	720	720	0.07464	130.2048	MAURINE - NUNDRWD-LNX3230.00 230KV CKT 1
FDNS	00NR	0	17SP	G15_076	FROM->TO	GR ISLD-LNX3345.00 - GRAND ISLAND 345KV CKT Z	720	720	0.07528	130.2037	MARTIN - SHANNON 115KV CKT 1
FDNS	00NR	0	17SP	G15_076	FROM->TO	GR ISLD-LNX3345.00 - GRAND ISLAND 345KV CKT Z	720	720	0.07429	130.1693	GEN562983 1-G15061_4 0.6900
FDNS	00NR	0	17SP	G15_076	FROM->TO	GR ISLD-LNX3345.00 - GRAND ISLAND 345KV CKT Z	720	720	0.07429	130.1693	GEN562984 1-G15061_5 0.6900
FDNS	00NR	0	17SP	G15_076	FROM->TO	GR ISLD-LNX3345.00 - GRAND ISLAND 345KV CKT Z	720	720	0.07429	130.0907	GEN659118 1-LARAMIE RIVER UNIT1
FDNS	00NR	0	17SP	G15_076	FROM->TO	GR ISLD-LNX3345.00 - GRAND ISLAND 345KV CKT Z	720	720	0.07429	129.9632	GEN563282 1-G15094_3 0.6900
FDNS	00NR	0	17SP	G15_076	FROM->TO	GR ISLD-LNX3345.00 - GRAND ISLAND 345KV CKT Z	720	720	0.07553	129.8288	KELLY - SHELL CREEK 230KV CKT 1
FDNS	00NR	0	17SP	G15_076	FROM->TO	GR ISLD-LNX3345.00 - GRAND ISLAND 345KV CKT Z	720	720	0.07406	129.8279	103RD & ROKEBY - SUB 3458 NEB CTY 345KV CKT 1
FDNS	00NR	0	17SP	G15_076	FROM->TO	GR ISLD-LNX3345.00 - GRAND ISLAND 345KV CKT Z	720	720	0.07406	129.8279	103RD & ROKEBY - SUB 3458 NEB CTY 345KV CKT 1
FDNS	00NR	0	17SP	G15_076	FROM->TO	GR ISLD-LNX3345.00 - GRAND ISLAND 345KV CKT Z	720	720	0.07553	129.8127	SHELL CREEK (SHELLCREEKT1) 345/230/13.8KV TRANSFORMER CKT 1
FDNS	00NR	0	17SP	G15_076	FROM->TO	GR ISLD-LNX3345.00 - GRAND ISLAND 345KV CKT Z	720	720	0.07553	129.8127	SHELL CREEK (SHELLCREEKT1) 345/230/13.8KV TRANSFORMER CKT 1
FDNS	00NR	0	17SP	G15_076	FROM->TO	GR ISLD-LNX3345.00 - GRAND ISLAND 345KV CKT Z	720	720	0.07429	129.748	BASE CASE
FDNS	00NR	0	17SP	G15_076	FROM->TO	GR ISLD-LNX3345.00 - GRAND ISLAND 345KV CKT Z	720	720	0.08618	129.7147	COLUMWEST - KELLY 230KV CKT 1
FDNS	00NR	0	17SP	G15_076	FROM->TO	GR ISLD-LNX3345.00 - GRAND ISLAND 345KV CKT Z	720	720	0.07205	129.6918	GRAND ISLAND - RIVERDALE 230KV CKT 1
FDNS	00NR	0	17SP	G15_076	FROM->TO	GR ISLD-LNX3345.00 - GRAND ISLAND 345KV CKT Z	720	720	0.07448	129.6347	BUCKNER7 345.00 - SPEARVILLE 345KV CKT 1
FDNS	00NR	0	17SP	G15_076	FROM->TO	GR ISLD-LNX3345.00 - GRAND ISLAND 345KV CKT Z	720	720	0.07448	129.6347	BUCKNER7 345.00 - SPEARVILLE 345KV CKT 1
FDNS	00NR	0	17SP	G15_076	FROM->TO	GR ISLD-LNX3345.00 - GRAND ISLAND 345KV CKT Z	720	720	0.07444	129.5842	MINGO (MINGO) 345/115/13.8KV TRANSFORMER CKT 1
FDNS	00NR	0	17SP	G15_076	FROM->TO	GR ISLD-LNX3345.00 - GRAND ISLAND 345KV CKT Z	720	720	0.07444	129.5842	MINGO (MINGO) 345/115/13.8KV TRANSFORMER CKT 1
FDNS	00NR	0	17SP	G15_076	FROM->TO	GR ISLD-LNX3345.00 - GRAND ISLAND 345KV CKT Z	720	720	0.07429	129.5465	GEN645001 1-FORT CALHOUN 1
FDNS	00NR	0	17SP	G15_076	FROM->TO	GR ISLD-LNX3345.00 - GRAND ISLAND 345KV CKT Z	720	720	0.07564	129.4815	HOLCOMB - SETAB 345KV CKT 1
FDNS	00NR	0	17SP	G15_076	FROM->TO	GR ISLD-LNX3345.00 - GRAND ISLAND 345KV CKT Z	720	720	0.07564	129.4815	HOLCOMB - SETAB 345KV CKT 1
FDNS	00NR	0	17SP	G15_076	FROM->TO	GR ISLD-LNX3345.00 - GRAND ISLAND 345KV CKT Z	720	720	0.07434	129.4092	G15074_T 345.00 - HOYT 345KV CKT 1
FDNS	00NR	0	17SP	G15_076	FROM->TO	GR ISLD-LNX3345.00 - GRAND ISLAND 345KV CKT Z	720	720	0.07583	129.3905	AXTELL - PAULINE 345KV CKT 1
FDNS	00NR	0	17SP	G15_076	FROM->TO	GR ISLD-LNX3345.00 - GRAND ISLAND 345KV CKT Z	720	720	0.07467	129.3553	AURORA - GRAND ISLAND 115KV CKT 1
FDNS	00NR	0	17SP	G15_076	FROM->TO	GR ISLD-LNX3345.00 - GRAND ISLAND 345KV CKT Z	720	720	0.07676	129.3454	MOORE - NW68TH & HOLDREGE 345KV CKT 1
FDNS	00NR	0	17SP	G15_076	FROM->TO	GR ISLD-LNX3345.00 - GRAND ISLAND 345KV CKT Z	720	720	0.07676	129.3454	MOORE - NW68TH & HOLDREGE 345KV CKT 1
FDNS	00NR	0	17SP	G15_076	FROM->TO	GR ISLD-LNX3345.00 - GRAND ISLAND 345KV CKT Z	720	720	0.07408	129.3302	GRAND ISLAND (GRAND.ISD T5) 230/115/13.8KV TRANSFORMER CKT 2
FDNS	00NR	0	17SP	G15_076	FROM->TO	GR ISLD-LNX3345.00 - GRAND ISLAND 345KV CKT Z	720	720	0.07408	129.3302	GRAND ISLAND (GRAND.ISD T5) 230/115/13.8KV TRANSFORMER CKT 2
FDNS	00NR	0	17SP	G15_076	FROM->TO	GR ISLD-LNX3345.00 - GRAND ISLAND 345KV CKT Z	720	720	0.07408	129.3278	GRAND ISLAND (GRAND.ISD T2) 230/115/13.8KV TRANSFORMER CKT 1
FDNS	00NR	0	17SP	G15_076	FROM->TO	GR ISLD-LNX3345.00 - GRAND ISLAND 345KV CKT Z	720	720	0.07408	129.3278	GRAND ISLAND (GRAND.ISD T2) 230/115/13.8KV TRANSFORMER CKT 1

SOLUTION	GROUP	SCENARIO	SEASON	SOURCE	DIRECTION	MONITORED ELEMENT	RATEA (MVA)	RATEB(MVA)	TDF	TC%LOADING (% MVA)	CONTINGENCY
FDNS	00NR	0	17SP	G15_076	FROM->TO	GR ISLD-LNX3345.00 - GRAND ISLAND 345KV CKT Z	720	720	0.07465	129.3116	MISSION - WITTEN 115KV CKT 1
FDNS	00NR	0	17SP	G15_076	FROM->TO	GR ISLD-LNX3345.00 - GRAND ISLAND 345KV CKT Z	720	720	0.07465	129.3003	P12:115:UMZW:# 173 #: WI-WE-MS IN SD. WITTEN IS A TAP
FDNS	00NR	0	17SP	G15_076	FROM->TO	GR ISLD-LNX3345.00 - GRAND ISLAND 345KV CKT Z	720	720	0.07435	129.2893	G14-074T 345.00 - OKLAUNION 345KV CKT 1
FDNS	00NR	0	17SP	G15_076	FROM->TO	GR ISLD-LNX3345.00 - GRAND ISLAND 345KV CKT Z	720	720	0.07434	129.2879	G15066_T 345.00 - SOONER 345KV CKT 1
FDNS	00NR	0	17SP	G15_076	FROM->TO	GR ISLD-LNX3345.00 - GRAND ISLAND 345KV CKT Z	720	720	0.07548	129.2729	MAXWELL - NORTH PLATTE 115KV CKT 1
FDNS	00NR	0	17SP	G15_076	FROM->TO	GR ISLD-LNX3345.00 - GRAND ISLAND 345KV CKT Z	720	720	0.07434	129.2555	CLEVELAND - G15066_T 345.00 345KV CKT 1
FDNS	00NR	0	17SP	G15_076	FROM->TO	GR ISLD-LNX3345.00 - GRAND ISLAND 345KV CKT Z	720	720	0.07426	129.2453	GRAND ISLAND (GI KU1B) 345/230/13.8KV TRANSFORMER CKT 2
FDNS	00NR	0	17SP	G15_076	FROM->TO	GR ISLD-LNX3345.00 - GRAND ISLAND 345KV CKT Z	720	720	0.07426	129.2453	GRAND ISLAND (GI KU1B) 345/230/13.8KV TRANSFORMER CKT 2
FDNS	00NR	0	17SP	G15_076	FROM->TO	GR ISLD-LNX3345.00 - GRAND ISLAND 345KV CKT Z	720	720	0.07426	129.2443	GRAND ISLAND (GI KU1A) 345/230/13.8KV TRANSFORMER CKT 1
FDNS	00NR	0	17SP	G15_076	FROM->TO	GR ISLD-LNX3345.00 - GRAND ISLAND 345KV CKT Z	720	720	0.07426	129.2443	GRAND ISLAND (GI KU1A) 345/230/13.8KV TRANSFORMER CKT 1
FDNS	00NR	0	17SP	G15_076	FROM->TO	GR ISLD-LNX3345.00 - GRAND ISLAND 345KV CKT Z	720	720	0.07454	129.2437	SMOKYHL6 230.00 - SUMMIT 230KV CKT 1
FDNS	00NR	0	17SP	G15_076	FROM->TO	GR ISLD-LNX3345.00 - GRAND ISLAND 345KV CKT Z	720	720	0.07429	129.2296	GEN562003 1-G11_027_3 0.6900
FDNS	00NR	0	17SP	G15_076	FROM->TO	GR ISLD-LNX3345.00 - GRAND ISLAND 345KV CKT Z	720	720	0.07439	129.2276	ANTELOP-LNX3345.00 - BRDLAND-LNX3345.00 345KV CKT 1
FDNS	00NR	0	17SP	G15_076	FROM->TO	GR ISLD-LNX3345.00 - GRAND ISLAND 345KV CKT Z	720	720	0.07433	129.224	G14-057T 345.00 - SUNNYSIDE 345KV CKT 1
FDNS	00NR	0	17SP	G15_076	FROM->TO	GR ISLD-LNX3345.00 - GRAND ISLAND 345KV CKT Z	720	720	0.07676	129.2202	SUB 3454 - WAGENER 345KV CKT 1
FDNS	00NR	0	17SP	G15_076	FROM->TO	GR ISLD-LNX3345.00 - GRAND ISLAND 345KV CKT Z	720	720	0.07676	129.2202	SUB 3454 - WAGENER 345KV CKT 1
FDNS	00NR	0	17SP	G15_076	FROM->TO	GR ISLD-LNX3345.00 - GRAND ISLAND 345KV CKT Z	720	720	0.07701	129.2154	MAXWELL - STAPLETON 115KV CKT 1
FDNS	00NR	0	17SP	G15_076	FROM->TO	GR ISLD-LNX3345.00 - GRAND ISLAND 345KV CKT Z	720	720	0.07429	129.2072	GEN652546 1-FT RANDAL
FDNS	00NR	0	17SP	G15_076	FROM->TO	GR ISLD-LNX3345.00 - GRAND ISLAND 345KV CKT Z	720	720	0.07429	129.2036	GEN600125 2-FEP ST G 13.800
FDNS	00NR	0	17SP	G15_076	FROM->TO	GR ISLD-LNX3345.00 - GRAND ISLAND 345KV CKT Z	720	720	0.07429	129.1924	GEN615031 1-PLEASANT VALLEY
FDNS	00NR	0	17SP	G15_076	FROM->TO	GR ISLD-LNX3345.00 - GRAND ISLAND 345KV CKT Z	720	720	0.07429	129.1874	GEN615032 2-PLEASANT VALLEY
FDNS	00NR	0	17SP	G15_076	FROM->TO	GR ISLD-LNX3345.00 - GRAND ISLAND 345KV CKT Z	720	720	0.07429	129.1856	GEN659158 2-PIONEER G213.800
FDNS	00NR	0	17SP	G15_076	FROM->TO	GR ISLD-LNX3345.00 - GRAND ISLAND 345KV CKT Z	720	720	0.07429	129.1856	GEN659159 3-PIONEER G313.800
FDNS	00NR	0	17SP	G15_076	FROM->TO	GR ISLD-LNX3345.00 - GRAND ISLAND 345KV CKT Z	720	720	0.07459	129.1851	LARAMIE RIVER - STEGALL 345KV CKT 1
FDNS	00NR	0	17SP	G15_076	FROM->TO	GR ISLD-LNX3345.00 - GRAND ISLAND 345KV CKT Z	720	720	0.07429	129.1782	GEN659156 2-LONESMCRK 2G13.800
FDNS	00NR	0	17SP	G15_076	FROM->TO	GR ISLD-LNX3345.00 - GRAND ISLAND 345KV CKT Z	720	720	0.07429	129.1782	GEN659157 3-LONESMCRK 3G13.800
FDNS	00NR	0	17SP	G15_076	FROM->TO	GR ISLD-LNX3345.00 - GRAND ISLAND 345KV CKT Z	720	720	0.07429	129.1728	GEN600018 S-LS POWER STEAM
FDNS	00NR	0	17SP	G15_076	FROM->TO	GR ISLD-LNX3345.00 - GRAND ISLAND 345KV CKT Z	720	720	0.07429	129.1726	MITCHLCO3 345.00 345/34.5KV TRANSFORMER CKT 1
FDNS	00NR	0	17SP	G15_076	FROM->TO	GR ISLD-LNX3345.00 - GRAND ISLAND 345KV CKT Z	720	720	0.07429	129.1672	GEN672367 1-MERIDIAN GENERATOR 1 GT1
FDNS	00NR	0	17SP	G15_076	FROM->TO	GR ISLD-LNX3345.00 - GRAND ISLAND 345KV CKT Z	720	720	0.07429	129.1672	GEN672368 2-MERIDIAN GENERATOR 2 GT2
FDNS	00NR	0	17SP	G15_076	FROM->TO	GR ISLD-LNX3345.00 - GRAND ISLAND 345KV CKT Z	720	720	0.07429	129.1607	GEN657964 1-ASH2GEN9 0.5750
FDNS	00NR	0	17SP	G15_076	FROM->TO	GR ISLD-LNX3345.00 - GRAND ISLAND 345KV CKT Z	720	720	0.07619	129.1599	GERALD GENTLEMAN STATION - RED WILLOW 345KV CKT 1
FDNS	00NR	0	17SP	G15_076	FROM->TO	GR ISLD-LNX3345.00 - GRAND ISLAND 345KV CKT Z	720	720	0.07429	129.1561	GEN652548 5-FT RANDAL
FDNS	00NR	0	17SP	G15_076	FROM->TO	GR ISLD-LNX3345.00 - GRAND ISLAND 345KV CKT Z	720	720	0.07429	129.1561	GEN652549 7-FT RANDAL
FDNS	00NR	0	17SP	G15_076	FROM->TO	GR ISLD-LNX3345.00 - GRAND ISLAND 345KV CKT Z	720	720	0.07429	129.1535	GEN672350 1-NIPAWIN GENERATOR 1
FDNS	00NR	0	17SP	G15_076	FROM->TO	GR ISLD-LNX3345.00 - GRAND ISLAND 345KV CKT Z	720	720	0.07429	129.1535	GEN672351 2-NIPAWIN GENERATOR 2
FDNS	00NR	0	17SP	G15_076	FROM->TO	GR ISLD-LNX3345.00 - GRAND ISLAND 345KV CKT Z	720	720	0.07429	129.1534	GEN672352 3-NIPAWIN GENERATOR 3
FDNS	00NR	0	17SP	G15_076	FROM->TO	GR ISLD-LNX3345.00 - GRAND ISLAND 345KV CKT Z	720	720	0.07429	129.1517	GEN620324 3-HOOT LAKE 3 GEN
FDNS	00NR	0	17SP	G15_076	FROM->TO	GR ISLD-LNX3345.00 - GRAND ISLAND 345KV CKT Z	720	720	0.07424	129.1512	BISMARK - L3 HAWDON 230KV CKT 1
FDNS	00NR	0	17SP	G15_076	FROM->TO	GR ISLD-LNX3345.00 - GRAND ISLAND 345KV CKT Z	720	720	0.07465	129.1479	P12:115:UMZW:# 172 #: WI IN SD.
FDNS	00NR	0	17SP	G15_076	FROM->TO	GR ISLD-LNX3345.00 - GRAND ISLAND 345KV CKT Z	720	720	0.07806	129.1465	MINGO - RED WILLOW 345KV CKT 1
FDNS	00NR	0	17SP	G15_076	FROM->TO	GR ISLD-LNX3345.00 - GRAND ISLAND 345KV CKT Z	720	720	0.07806	129.1465	MINGO - RED WILLOW 345KV CKT 1
FDNS	00NR	0	17SP	G15_076	FROM->TO	GR ISLD-LNX3345.00 - GRAND ISLAND 345KV CKT Z	720	720	0.07429	129.1434	GEN652547 3-FT RANDAL
FDNS	00NR	0	17SP	G15_076	FROM->TO	GR ISLD-LNX3345.00 - GRAND ISLAND 345KV CKT Z	720	720	0.07429	129.1383	GEN672349 3-CORY COGEN GENERATOR 3 ST
FDNS	00NR	0	17SP	G15_076	FROM->TO	GR ISLD-LNX3345.00 - GRAND ISLAND 345KV CKT Z	720	720	0.07429	129.1345	GEN660003 3-HURON WEST PARK
FDNS	00NR	0	17SP	G15_076	FROM->TO	GR ISLD-LNX3345.00 - GRAND ISLAND 345KV CKT Z	720	720	0.07446	129.129	G11_051T 345.00 - WOODWARD DISTRICT EHV 345KV CKT 1
FDNS	00NR	0	17SP	G15_076	FROM->TO	GR ISLD-LNX3345.00 - GRAND ISLAND 345KV CKT Z	720	720	0.07429	129.1057	GEN600020 2-ANGUS ANSON1
FDNS	00NR	0	17SP	G15_076	FROM->TO	GR ISLD-LNX3345.00 - GRAND ISLAND 345KV CKT Z	720	720	0.07651	129.1049	LOUP CITY - NORTH LOUP 115KV CKT 1
FDNS	00NR	0	17SP	G15_076	FROM->TO	GR ISLD-LNX3345.00 - GRAND ISLAND 345KV CKT Z	720	720	0.07429	129.0989	GEN600021 3-ANGUS ANSON2
FDNS	00NR	0	17SP	G15_076	FROM->TO	GR ISLD-LNX3345.00 - GRAND ISLAND 345KV CKT Z	720	720	0.07429	129.0698	GEN600012 2-BLACK DOG GEN 2
FDNS	00NR	0	17SP	G15_076	FROM->TO	GR ISLD-LNX3345.00 - GRAND ISLAND 345KV CKT Z	720	720	0.07429	129.0667	GEN590010 1-ERCOT EQUIVALENCE
FDNS	00NR	0	17SP	G15_076	FROM->TO	GR ISLD-LNX3345.00 - GRAND ISLAND 345KV CKT Z	720	720	0.07647	129.0563	MINGO - SETAB 345KV CKT 1
FDNS	00NR	0	17SP	G15_076	FROM->TO	GR ISLD-LNX3345.00 - GRAND ISLAND 345KV CKT Z	720	720	0.07647	129.0563	MINGO - SETAB 345KV CKT 1
FDNS	00NR	0	17SP	G15_076	FROM->TO	GR ISLD-LNX3345.00 - GRAND ISLAND 345KV CKT Z	720	720	0.07429	129.0557	GEN672339 16-QE 16G 13.800
FDNS	00NR	0	17SP	G15_076	FROM->TO	GR ISLD-LNX3345.00 - GRAND ISLAND 345KV CKT Z	720	720	0.07429	129.0557	GEN672342 3-QUEEN ELIZABETH GENERATOR 3
FDNS	00NR	0	17SP	G15_076	FROM->TO	GR ISLD-LNX3345.00 - GRAND ISLAND 345KV CKT Z	720	720	0.07429	129.0517	GEN652410 3-FT PECK
FDNS	00NR	0	17SP	G15_076	FROM->TO	GR ISLD-LNX3345.00 - GRAND ISLAND 345KV CKT Z	720	720	0.07429	129.0503	GEN659290 1-EDGECOL
FDNS	00NR	0	17SP	G15_076	FROM->TO	GR ISLD-LNX3345.00 - GRAND ISLAND 345KV CKT Z	720	720	0.07429	129.0414	GEN672393 2-NBECST2G 13.800
FDNS	00NR	0	17SP	G15_076	FROM->TO	GR ISLD-LNX3345.00 - GRAND ISLAND 345KV CKT Z	720	720	0.07429	129.0367	GEN300003 1-THOMAS HILL UNIT 3
FDNS	00NR	0	17SP	G15_076	FROM->TO	GR ISLD-LNX3345.00 - GRAND ISLAND 345KV CKT Z	720	720	0.07429	129.0351	EASTDC - ERCOT EQUIVALENCE 345KV CKT 1
FDNS	00NR	0	17SP	G15_076	FROM->TO	GR ISLD-LNX3345.00 - GRAND ISLAND 345KV CKT Z	720	720	0.07429	129.0346	GEN590011 2-ERCOT EQUIVALENCE
FDNS	00NR	0	17SP	G15_076	FROM->TO	GR ISLD-LNX3345.00 - GRAND ISLAND 345KV CKT Z	720	720	0.07429	129.034	GEN629072 4-LANSING GENERATOR FOR UNITS NO4 EIA CODE 1
FDNS	00NR	0	17SP	G15_076	FROM->TO	GR ISLD-LNX3345.00 - GRAND ISLAND 345KV CKT Z	720	720	0.07425	129.0019	GRAND ISLAND (GI KU3A) 345/230/13.8KV TRANSFORMER CKT 3
FDNS	00NR	0	17SP	G15_076	FROM->TO	GR ISLD-LNX3345.00 - GRAND ISLAND 345KV CKT Z	720	720	0.07425	129.0019	GRAND ISLAND (GI KU3A) 345/230/13.8KV TRANSFORMER CKT 3
FDNS	00NR	0	17SP	G15_076	FROM->TO	GR ISLD-LNX3345.00 - GRAND ISLAND 345KV CKT Z	720	720	0.07429	128.9842	GEN652414 4-FT PECK
FDNS	00NR	0	17SP	G15_076	FROM->TO	GR ISLD-LNX3345.00 - GRAND ISLAND 345KV CKT Z	720	720	0.07429	128.9842	GEN652415 5-FT PECK
FDNS	00NR	0	17SP	G15_076	FROM->TO	GR ISLD-LNX3345.00 - GRAND ISLAND 345KV CKT Z	720	720	0.07429	128.9829	LADISH 115/13.2KV TRANSFORMER CKT 1
FDNS	00NR	0	17SP	G15_076	FROM->TO	GR ISLD-LNX3345.00 - GRAND ISLAND 345KV CKT Z	720	720	0.07429	128.9733	GEN660001 2-ABERDEEN SIEBRECHT
FDNS	00NR	0	17SP	G15_076	FROM->TO	GR ISLD-LNX3345.00 - GRAND ISLAND 345KV CKT Z	720	720	0.07526	128.9595	DIXONCO 230.00 - TWIN CHURCH 230KV CKT 1
FDNSLock	00NR	0	17SP	G15_076	FROM->TO	GR ISLD-LNX3345.00 - GRAND ISLAND 345KV CKT Z	720	720	0.07633	128.9476	CENTRAL CITY - GRAND ISLAND 115KV CKT 1
FDNS	00NR	0	17SP	G15_076	FROM->TO	GR ISLD-LNX3345.00 - GRAND ISLAND 345KV CKT Z	720	720	0.07429	128.9469	EMERY 161/18.0KV TRANSFORMER CKT 1
FDNS	00NR	0	17SP	G15_076	FROM->TO	GR ISLD-LNX3345.00 - GRAND ISLAND 345KV CKT Z	720	720	0.07429	128.9278	GEN600050 1-FEP
FDNS	00NR	0	17SP	G15_076	FROM->TO	GR ISLD-LNX3345.00 - GRAND ISLAND 345KV CKT Z	720	720	0.07429	128.9271	GEN652345 W-G07_023IS_2 0.6900
FDNS	00NR	0	17SP	G15_076	FROM->TO	GR ISLD-LNX3345.00 - GRAND ISLAND 345KV CKT Z	720	720	0.07824	128.9218	G15088_T 345.00 - PAULINE 345KV CKT 1
FDNS	00NR	0	17SP	G15_076	FROM->TO	GR ISLD-LNX3345.00 - GRAND ISLAND 345KV CKT Z	720	720	0.07429	128.9081	GEN 11104 1-J262_GEN 0.6000
FDNS	00NR	0	17SP	G15_076	FROM->TO	GR ISLD-LNX3345.00 - GRAND ISLAND 345KV CKT Z	720	720	0.07429	128.9081	GEN 11108 1-J263_GEN 0.6000
FDNS	00NR	0	17SP	G15_076	FROM->TO	GR ISLD-LNX3345.00 - GRAND ISLAND 345KV CKT Z	720	720	0.07429	128.8843	GEN600046 1-MECST
FDNS	00NR	0	17SP	G15_076	FROM->TO	GR ISLD-LNX3345.00 - GRAND ISLAND 345KV CKT Z	720	720	0.07429	128.8832	GEN300007 1-NEW MADRID UNIT 2
FDNS	00NR	0	17SP	G15_076	FROM->TO	GR ISLD-LNX3345.00 - GRAND ISLAND 345KV CKT Z	720	720	0.07429	128.8827	G830_SUB 115.00 - GRE-MCHENRY7115.00 115KV CKT 1

SOLUTION	GROUP	SCENARIO	SEASON	SOURCE	DIRECTION	MONITORED ELEMENT	RATEA (MVA)	RATEB(MVA)	TDF	TC%LOADING (% MVA)	CONTINGENCY
FDNS	00NR	0	17SP	G15_076	FROM->TO	GR ISLD-LNX3345.00 - GRAND ISLAND 345KV CKT Z	720	720	0.07429	128.8809	G830_SUB 115.00 115/34.5KV TRANSFORMER CKT 1
FDNS	00NR	0	17SP	G15_076	FROM->TO	GR ISLD-LNX3345.00 - GRAND ISLAND 345KV CKT Z	720	720	0.07429	128.8766	GEN300006 1-NEW MADRID UNIT 1
FDNS	00NR	0	17SP	G15_076	FROM->TO	GR ISLD-LNX3345.00 - GRAND ISLAND 345KV CKT Z	720	720	0.07439	128.8681	P12:345:UMZB:# 102 #: AVS BD IN ND. AVS BRD LR
FDNS	00NR	0	17SP	G15_076	FROM->TO	GR ISLD-LNX3345.00 - GRAND ISLAND 345KV CKT Z	720	720	0.07439	128.8667	BRDLAND-LNX3345.00 - HURON 345KV CKT Z
FDNS	00NR	0	17SP	G15_076	FROM->TO	GR ISLD-LNX3345.00 - GRAND ISLAND 345KV CKT Z	720	720	0.07439	128.8664	P12:345:UMZB:# 103 #: BD IN SD. LOSS OF LINE
FDNS	00NR	0	17SP	G15_076	FROM->TO	GR ISLD-LNX3345.00 - GRAND ISLAND 345KV CKT Z	720	720	0.07439	128.8652	BROADLAND - HURON 230KV CKT 1
FDNS	00NR	0	17SP	G15_076	FROM->TO	GR ISLD-LNX3345.00 - GRAND ISLAND 345KV CKT Z	720	720	0.07439	128.8651	HURON (BD KU2A) 345/230/13.8KV TRANSFORMER CKT 1
FDNS	00NR	0	17SP	G15_076	FROM->TO	GR ISLD-LNX3345.00 - GRAND ISLAND 345KV CKT Z	720	720	0.07439	128.8651	HURON (BD KU2A) 345/230/13.8KV TRANSFORMER CKT 1
FDNS	00NR	0	17SP	G15_076	FROM->TO	GR ISLD-LNX3345.00 - GRAND ISLAND 345KV CKT Z	720	720	0.0746	128.8644	POST ROCK (POSTROCK T1) 345/230/13.8KV TRANSFORMER CKT 1
FDNS	00NR	0	17SP	G15_076	FROM->TO	GR ISLD-LNX3345.00 - GRAND ISLAND 345KV CKT Z	720	720	0.07432	128.863	DRAYTON - LETELLIER 230KV CKT 1
FDNS	00NR	0	17SP	G15_076	FROM->TO	GR ISLD-LNX3345.00 - GRAND ISLAND 345KV CKT Z	720	720	0.07429	128.8584	GEN600047 1-MECCT1
FDNS	00NR	0	17SP	G15_076	FROM->TO	GR ISLD-LNX3345.00 - GRAND ISLAND 345KV CKT Z	720	720	0.07429	128.8437	GEN600063 1-COLVILLE GEN 1
FDNS	00NR	0	17SP	G15_076	FROM->TO	GR ISLD-LNX3345.00 - GRAND ISLAND 345KV CKT Z	720	720	0.07429	128.8437	GEN600064 2-COLVILLE GEN 2
FDNS	00NR	0	17SP	G15_076	FROM->TO	GR ISLD-LNX3345.00 - GRAND ISLAND 345KV CKT Z	720	720	0.07429	128.8401	GEN600043 7-BLUE LAKE5
FDNS	00NR	0	17SP	G15_076	FROM->TO	GR ISLD-LNX3345.00 - GRAND ISLAND 345KV CKT Z	720	720	0.07429	128.8401	GEN600044 8-BLUE LAKE6
FDNS	00NR	0	17SP	G15_076	FROM->TO	GR ISLD-LNX3345.00 - GRAND ISLAND 345KV CKT Z	720	720	0.07273	128.8215	COOPER - MOORE 345KV CKT 1
FDNS	00NR	0	17SP	G15_076	FROM->TO	GR ISLD-LNX3345.00 - GRAND ISLAND 345KV CKT Z	720	720	0.07429	128.8013	GEN600065 7-HIGH BRIDGE
FDNS	00NR	0	17SP	G15_076	FROM->TO	GR ISLD-LNX3345.00 - GRAND ISLAND 345KV CKT Z	720	720	0.07429	128.8013	GEN600066 8-HIGH BRIDGE
FDNS	00NR	0	17SP	G15_076	FROM->TO	GR ISLD-LNX3345.00 - GRAND ISLAND 345KV CKT Z	720	720	0.07429	128.7991	GEN600014 4-BLACK DOG GEN 4
FDNS	00NR	0	17SP	G15_076	FROM->TO	GR ISLD-LNX3345.00 - GRAND ISLAND 345KV CKT Z	720	720	0.07429	128.7947	GEN600011 5-BLACK DOG GEN 1
FDNS	00NR	0	17SP	G15_076	FROM->TO	GR ISLD-LNX3345.00 - GRAND ISLAND 345KV CKT Z	720	720	0.07429	128.7871	GEN600071 10-RIVER SIDE
FDNS	00NR	0	17SP	G15_076	FROM->TO	GR ISLD-LNX3345.00 - GRAND ISLAND 345KV CKT Z	720	720	0.07429	128.787	GEN600070 9-RIVER SIDE
FDNS	00NR	0	17SP	G15_076	FROM->TO	GR ISLD-LNX3345.00 - GRAND ISLAND 345KV CKT Z	720	720	0.07627	128.783	103RD & ROKEBY - MOORE 345KV CKT 1
FDNS	00NR	0	17SP	G15_076	FROM->TO	GR ISLD-LNX3345.00 - GRAND ISLAND 345KV CKT Z	720	720	0.07627	128.783	103RD & ROKEBY - MOORE 345KV CKT 1
FDNS	00NR	0	17SP	G15_076	FROM->TO	GR ISLD-LNX3345.00 - GRAND ISLAND 345KV CKT Z	720	720	0.07429	128.7773	GEN659273 2-GROTON SYNC COND
FDNS	00NR	0	17SP	G15_076	FROM->TO	GR ISLD-LNX3345.00 - GRAND ISLAND 345KV CKT Z	720	720	0.07429	128.7773	GEN659294 1-WILTONCOL9
FDNS	00NR	0	17SP	G15_076	FROM->TO	GR ISLD-LNX3345.00 - GRAND ISLAND 345KV CKT Z	720	720	0.08618	128.775	COLUMWEST - GRAND ISLAND 230KV CKT 1
FDNS	00NR	0	17SP	G15_076	FROM->TO	GR ISLD-LNX3345.00 - GRAND ISLAND 345KV CKT Z	720	720	0.07429	128.7731	GEN600007 7-RIVERSIDE GEN 7
FDNS	00NR	0	17SP	G15_076	FROM->TO	GR ISLD-LNX3345.00 - GRAND ISLAND 345KV CKT Z	720	720	0.07429	128.7645	GEN600045 4-ANSON
FDNS	00NR	0	17SP	G15_076	FROM->TO	GR ISLD-LNX3345.00 - GRAND ISLAND 345KV CKT Z	720	720	0.07429	128.744	GEN600017 C-LS POWER CT
FDNS	00NR	0	17SP	G15_076	FROM->TO	GR ISLD-LNX3345.00 - GRAND ISLAND 345KV CKT Z	720	720	0.07429	128.7425	GEN659192 6-LYNN
FDNS	00NR	0	17SP	G15_076	FROM->TO	GR ISLD-LNX3345.00 - GRAND ISLAND 345KV CKT Z	720	720	0.07429	128.7422	LANSING WEST 161/22.0KV TRANSFORMER CKT 1
FDNS	00NR	0	17SP	G15_076	FROM->TO	GR ISLD-LNX3345.00 - GRAND ISLAND 345KV CKT Z	720	720	0.07429	128.7417	GEN659162 4-RED WLCK
FDNS	00NR	0	17SP	G15_076	FROM->TO	GR ISLD-LNX3345.00 - GRAND ISLAND 345KV CKT Z	720	720	0.07429	128.7417	GEN659163 5-BLACK WDCK
FDNS	00NR	0	17SP	G15_076	FROM->TO	GR ISLD-LNX3345.00 - GRAND ISLAND 345KV CKT Z	720	720	0.07446	128.7337	G11_051T 345.00 - TATONGA7 345.00 345KV CKT 1
FDNS	00NR	0	17SP	G15_076	FROM->TO	GR ISLD-LNX3345.00 - GRAND ISLAND 345KV CKT Z	720	720	0.07429	128.7217	GEN 10648 1-G830_GEN 0.6900
FDNS	00NR	0	17SP	G15_076	FROM->TO	GR ISLD-LNX3345.00 - GRAND ISLAND 345KV CKT Z	720	720	0.07429	128.715	CENTER 230/22.0KV TRANSFORMER CKT 1
FDNS	00NR	0	17SP	G15_076	FROM->TO	GR ISLD-LNX3345.00 - GRAND ISLAND 345KV CKT Z	720	720	0.07429	128.6917	GEN615021 1-GRE-ER 14G 16.000
FDNS	00NR	0	17SP	G15_076	FROM->TO	GR ISLD-LNX3345.00 - GRAND ISLAND 345KV CKT Z	720	720	0.07424	128.6902	OAHE - SULLEY BUTTE 230KV CKT 1
FDNS	00NR	0	17SP	G15_076	FROM->TO	GR ISLD-LNX3345.00 - GRAND ISLAND 345KV CKT Z	720	720	0.07429	128.6878	GEN659031 1-G12_014IS_4 0.6900
FDNS	00NR	0	17SP	G15_076	FROM->TO	GR ISLD-LNX3345.00 - GRAND ISLAND 345KV CKT Z	720	720	0.07429	128.6746	GEN615052 1-CAMBRIDGE GENERATING STATION
FDNS	00NR	0	17SP	G15_076	FROM->TO	GR ISLD-LNX3345.00 - GRAND ISLAND 345KV CKT Z	720	720	0.07429	128.6403	GEN615015 1-GRE-SPRITWDG13.200
FDNS	00NR	0	17SP	G15_076	FROM->TO	GR ISLD-LNX3345.00 - GRAND ISLAND 345KV CKT Z	720	720	0.07429	128.6366	GEN681522 3-GENOA 3
FDNS	00NR	0	17SP	G15_076	FROM->TO	GR ISLD-LNX3345.00 - GRAND ISLAND 345KV CKT Z	720	720	0.07577	128.5948	AXTELL - POST ROCK 345KV CKT 1
FDNS	00NR	0	17SP	G15_076	FROM->TO	GR ISLD-LNX3345.00 - GRAND ISLAND 345KV CKT Z	720	720	0.07439	128.5499	ANTELOP-LNX3345.00 - ANTELOPE VALLEY 345KV CKT Z
FDNS	00NR	0	17SP	G15_076	FROM->TO	GR ISLD-LNX3345.00 - GRAND ISLAND 345KV CKT Z	720	720	0.07424	128.5499	SULLYBT-LNX3230.00 - WHITLOK 230KV CKT 1
FDNS	00NR	0	17SP	G15_076	FROM->TO	GR ISLD-LNX3345.00 - GRAND ISLAND 345KV CKT Z	720	720	0.07424	128.5447	SULLEY BUTTE - SULLYBT-LNX3230.00 230KV CKT Z
FDNS	00NR	0	17SP	G15_076	FROM->TO	GR ISLD-LNX3345.00 - GRAND ISLAND 345KV CKT Z	720	720	0.07429	128.5334	GEN660016 1-B_H WIND 0.7000
FDNS	00NR	0	17SP	G15_076	FROM->TO	GR ISLD-LNX3345.00 - GRAND ISLAND 345KV CKT Z	720	720	0.07429	128.5203	GEN659353 1-DEERCREK CTG18.000
FDNS	00NR	0	17SP	G15_076	FROM->TO	GR ISLD-LNX3345.00 - GRAND ISLAND 345KV CKT Z	720	720	0.07429	128.5161	GEN659354 1-DEERCREK STG18.000
FDNS	00NR	0	17SP	G15_076	FROM->TO	GR ISLD-LNX3345.00 - GRAND ISLAND 345KV CKT Z	720	720	0.07446	128.4847	MATHWSN7 345.00 - TATONGA7 345.00 345KV CKT 1
FDNS	00NR	0	17SP	G15_076	FROM->TO	GR ISLD-LNX3345.00 - GRAND ISLAND 345KV CKT Z	720	720	0.07424	128.484	P12:230:UMZB:# 114 #: SB IN SD. SB-WK-GH
FDNS	00NR	0	17SP	G15_076	FROM->TO	GR ISLD-LNX3345.00 - GRAND ISLAND 345KV CKT Z	720	720	0.07424	128.484	P12:230:UMZB:# 117 #: WK IN SD. SB-WK-GH
FDNS	00NR	0	17SP	G15_076	FROM->TO	GR ISLD-LNX3345.00 - GRAND ISLAND 345KV CKT Z	720	720	0.07429	128.4601	GEN672303 3-BOUNDARY DAM GENERATOR 3
FDNS	00NR	0	17SP	G15_076	FROM->TO	GR ISLD-LNX3345.00 - GRAND ISLAND 345KV CKT Z	720	720	0.07429	128.46	GEN672305 5-BOUNDARY DAM GENERATOR 5
FDNS	00NR	0	17SP	G15_076	FROM->TO	GR ISLD-LNX3345.00 - GRAND ISLAND 345KV CKT Z	720	720	0.07424	128.4518	GLENHAM - WHITLOK 230KV CKT 1
FDNS	00NR	0	17SP	G15_076	FROM->TO	GR ISLD-LNX3345.00 - GRAND ISLAND 345KV CKT Z	720	720	0.07429	128.4513	GEN652906 1-G09_006IS_3 0.6900
FDNS	00NR	0	17SP	G15_076	FROM->TO	GR ISLD-LNX3345.00 - GRAND ISLAND 345KV CKT Z	720	720	0.07429	128.4355	GEN672392 1-NBECGT1G 18.000
FDNS	00NR	0	17SP	G15_076	FROM->TO	GR ISLD-LNX3345.00 - GRAND ISLAND 345KV CKT Z	720	720	0.07429	128.4103	GEN600067 9-HIGH BRIDGE
FDNS	00NR	0	17SP	G15_076	FROM->TO	GR ISLD-LNX3345.00 - GRAND ISLAND 345KV CKT Z	720	720	0.07429	128.4061	GEN562832 1-G15042_3 0.6900
FDNS	00NR	0	17SP	G15_076	FROM->TO	GR ISLD-LNX3345.00 - GRAND ISLAND 345KV CKT Z	720	720	0.07429	128.3967	BISONMP4 230.00 - SQUARE BUTTE 230KV CKT 1
FDNS	00NR	0	17SP	G15_076	FROM->TO	GR ISLD-LNX3345.00 - GRAND ISLAND 345KV CKT Z	720	720	0.07429	128.3626	GEN910006 1-G12_012IS_3 0.6900
FDNS	00NR	0	17SP	G15_076	FROM->TO	GR ISLD-LNX3345.00 - GRAND ISLAND 345KV CKT Z	720	720	0.07429	128.3497	GEN662101 1-WESSINGTON190.5750
FDNS	00NR	0	17SP	G15_076	FROM->TO	GR ISLD-LNX3345.00 - GRAND ISLAND 345KV CKT Z	720	720	0.07429	128.3177	COYOTE 345/24.0KV TRANSFORMER CKT 1
FDNS	00NR	0	17SP	G15_076	FROM->TO	GR ISLD-LNX3345.00 - GRAND ISLAND 345KV CKT Z	720	720	0.07429	128.3029	GEN652907 1-G09_007IS_3 0.6900
FDNS	00NR	0	17SP	G15_076	FROM->TO	GR ISLD-LNX3345.00 - GRAND ISLAND 345KV CKT Z	720	720	0.07429	128.1346	GEN652543 3-BIG BEND
FDNS	00NR	0	17SP	G15_076	FROM->TO	GR ISLD-LNX3345.00 - GRAND ISLAND 345KV CKT Z	720	720	0.07429	128.1149	SQUARE BUTTE - YNG2 4 230.00 230KV CKT 1
FDNS	00NR	0	17SP	G15_076	FROM->TO	GR ISLD-LNX3345.00 - GRAND ISLAND 345KV CKT Z	720	720	0.07429	128.1139	YNG2 4 230.00 230/20.0KV TRANSFORMER CKT 1
FDNS	00NR	0	17SP	G15_076	FROM->TO	GR ISLD-LNX3345.00 - GRAND ISLAND 345KV CKT Z	720	720	0.07429	128.0003	GEN659018 1-G14_003IS_3 0.6900
FDNS	00NR	0	17SP	G15_076	FROM->TO	GR ISLD-LNX3345.00 - GRAND ISLAND 345KV CKT Z	720	720	0.07429	127.9985	GEN659289 1-DAYCNTYWND W0.6900
FDNS	00NR	0	17SP	G15_076	FROM->TO	GR ISLD-LNX3345.00 - GRAND ISLAND 345KV CKT Z	720	720	0.07429	127.9636	GEN681542 6-JP MADGETT
FDNS	00NR	0	17SP	G15_076	FROM->TO	GR ISLD-LNX3345.00 - GRAND ISLAND 345KV CKT Z	720	720	0.07429	127.9625	GEN563312 1-G15097_3 0.6900
FDNS	00NR	0	17SP	G15_076	FROM->TO	GR ISLD-LNX3345.00 - GRAND ISLAND 345KV CKT Z	720	720	0.07424	127.9036	GLENHAM - L3 HAWDON 230KV CKT 1
FDNS	00NR	0	17SP	G15_076	FROM->TO	GR ISLD-LNX3345.00 - GRAND ISLAND 345KV CKT Z	720	720	0.07429	127.8236	GEN659194 1-NDPRAIRWND1W0.6900
FDNS	00NR	0	17SP	G15_076	FROM->TO	GR ISLD-LNX3345.00 - GRAND ISLAND 345KV CKT Z	720	720	0.07429	127.8095	GEN659010 4-G07_027IS_2 0.6900
FDNS	00NR	0	17SP	G15_076	FROM->TO	GR ISLD-LNX3345.00 - GRAND ISLAND 345KV CKT Z	720	720	0.07429	127.7982	GEN652460 4-GARRISON
FDNS	00NR	0	17SP	G15_076	FROM->TO	GR ISLD-LNX3345.00 - GRAND ISLAND 345KV CKT Z	720	720	0.07429	127.7982	GEN652461 5-GARRISON
FDNS	00NR	0	17SP	G15_076	FROM->TO	GR ISLD-LNX3345.00 - GRAND ISLAND 345KV CKT Z	720	720	0.07429	127.7958	GEN652542 1-BIG BEND
FDNS	00NR	0	17SP	G15_076	FROM->TO	GR ISLD-LNX3345.00 - GRAND ISLAND 345KV CKT Z	720	720	0.07429	127.7569	GEN563342 1-G15098_3 0.6900

SOLUTION	GROUP	SCENARIO	SEASON	SOURCE	DIRECTION	MONITORED ELEMENT	RATEA (MVA)	RATEB(MVA)	TDF	TC%LOADING (% MVA)	CONTINGENCY
FDNS	00NR	0	17SP	G15_076	FROM->TO	GR ISLD-LNX3345.00 - GRAND ISLAND 345KV CKT Z	720	720	0.07429	127.7395	GEN652458 2-GARRISON
FDNS	00NR	0	17SP	G15_076	FROM->TO	GR ISLD-LNX3345.00 - GRAND ISLAND 345KV CKT Z	720	720	0.07429	127.7395	GEN652459 3-GARRISON
FDNS	00NR	0	17SP	G15_076	FROM->TO	GR ISLD-LNX3345.00 - GRAND ISLAND 345KV CKT Z	720	720	0.07429	127.7394	GEN652457 1-GARRISON
FDNS	00NR	0	17SP	G15_076	FROM->TO	GR ISLD-LNX3345.00 - GRAND ISLAND 345KV CKT Z	720	720	0.07429	127.6794	GEN659403 1-NDSUNFLWR W0.6900
FDNS	00NR	0	17SP	G15_076	FROM->TO	GR ISLD-LNX3345.00 - GRAND ISLAND 345KV CKT Z	720	720	0.07794	127.6104	AXTELL - SWEETWATER 345KV CKT 1
FDNS	00NR	0	17SP	G15_076	FROM->TO	GR ISLD-LNX3345.00 - GRAND ISLAND 345KV CKT Z	720	720	0.07429	127.5812	STANTON 230/18.0KV TRANSFORMER CKT 1
FDNS	00NR	0	17SP	G15_076	FROM->TO	GR ISLD-LNX3345.00 - GRAND ISLAND 345KV CKT Z	720	720	0.07429	127.5081	GR ISLD-LNX3345.00 345KV SWITCHED SHUNT
FDNS	00NR	0	17SP	G15_076	FROM->TO	GR ISLD-LNX3345.00 - GRAND ISLAND 345KV CKT Z	720	720	0.07429	127.4175	CLAY BOSWELL 230/20.9KV TRANSFORMER CKT 1
FDNS	00NR	0	17SP	G15_076	FROM->TO	GR ISLD-LNX3345.00 - GRAND ISLAND 345KV CKT Z	720	720	0.07429	127.3162	GEN659411 1-CAMPBLCNTY W0.6900
FDNS	00NR	0	17SP	G15_076	FROM->TO	GR ISLD-LNX3345.00 - GRAND ISLAND 345KV CKT Z	720	720	0.07429	127.1606	GEN652559 1-OAHE
FDNS	00NR	0	17SP	G15_076	FROM->TO	GR ISLD-LNX3345.00 - GRAND ISLAND 345KV CKT Z	720	720	0.07429	127.1593	ALMA 161 161/24.0KV TRANSFORMER CKT 1
FDNS	00NR	0	17SP	G15_076	FROM->TO	GR ISLD-LNX3345.00 - GRAND ISLAND 345KV CKT Z	720	720	0.07429	127.112	GEN659296 2-SDPRAIRWND1W0.6900
FDNS	00NR	0	17SP	G15_076	FROM->TO	GR ISLD-LNX3345.00 - GRAND ISLAND 345KV CKT Z	720	720	0.07429	126.9705	RCDC EAST 4230.00 - RED CEDAR DC 230KV CKT 1
FDNS	00NR	0	17SP	G15_076	FROM->TO	GR ISLD-LNX3345.00 - GRAND ISLAND 345KV CKT Z	720	720	0.07824	126.9658	G15088_T 345.00 - MOORE 345KV CKT 1
FDNS	00NR	0	17SP	G15_076	FROM->TO	GR ISLD-LNX3345.00 - GRAND ISLAND 345KV CKT Z	720	720	0.07429	126.9519	GEN672321 1-SHAND GENERATOR 1
FDNS	00NR	0	17SP	G15_076	FROM->TO	GR ISLD-LNX3345.00 - GRAND ISLAND 345KV CKT Z	720	720	0.07429	126.9491	P12:230:UMZB:# 112 #: NU IN SD. NU-RCDC & DRY CREEK XFMR
FDNS	00NR	0	17SP	G15_076	FROM->TO	GR ISLD-LNX3345.00 - GRAND ISLAND 345KV CKT Z	720	720	0.07429	126.9338	GEN615010 1-STANTON4
FDNS	00NR	0	17SP	G15_076	FROM->TO	GR ISLD-LNX3345.00 - GRAND ISLAND 345KV CKT Z	720	720	0.07429	126.9296	GEN672310 1-POPLAR RIVER GENERATOR 1
FDNS	00NR	0	17SP	G15_076	FROM->TO	GR ISLD-LNX3345.00 - GRAND ISLAND 345KV CKT Z	720	720	0.07429	126.9296	GEN672311 2-POPLAR RIVER GENERATOR 2
FDNS	00NR	0	17SP	G15_076	FROM->TO	GR ISLD-LNX3345.00 - GRAND ISLAND 345KV CKT Z	720	720	0.07429	126.8554	GEN672306 6-BOUNDARY DAM GENERATOR 6
FDNS	00NR	0	17SP	G15_076	FROM->TO	GR ISLD-LNX3345.00 - GRAND ISLAND 345KV CKT Z	720	720	0.07429	126.8183	GEN659453 1-GI1414GEN W0.6900
FDNS	00NR	0	17SP	G15_076	FROM->TO	GR ISLD-LNX3345.00 - GRAND ISLAND 345KV CKT Z	720	720	0.07429	126.8171	GEN563302 1-G15096_3 0.6900
FDNS	00NR	0	17SP	G15_076	FROM->TO	GR ISLD-LNX3345.00 - GRAND ISLAND 345KV CKT Z	720	720	0.07429	126.7913	GEN652556 2-OAHE
FDNS	00NR	0	17SP	G15_076	FROM->TO	GR ISLD-LNX3345.00 - GRAND ISLAND 345KV CKT Z	720	720	0.07429	126.7913	GEN652557 4-OAHE
FDNS	00NR	0	17SP	G15_076	FROM->TO	GR ISLD-LNX3345.00 - GRAND ISLAND 345KV CKT Z	720	720	0.07429	126.7913	GEN652558 6-OAHE
FDNS	00NR	0	17SP	G15_076	FROM->TO	GR ISLD-LNX3345.00 - GRAND ISLAND 345KV CKT Z	720	720	0.07429	126.7785	GEN600004 2-PRAIRIE ISLAND G2
FDNS	00NR	0	17SP	G15_076	FROM->TO	GR ISLD-LNX3345.00 - GRAND ISLAND 345KV CKT Z	720	720	0.07429	126.774	GEN600003 1-PRAIRIE ISLAND G1
FDNS	00NR	0	17SP	G15_076	FROM->TO	GR ISLD-LNX3345.00 - GRAND ISLAND 345KV CKT Z	720	720	0.07429	126.7102	GEN659141 1-K10215A
FDNS	00NR	0	17SP	G15_076	FROM->TO	GR ISLD-LNX3345.00 - GRAND ISLAND 345KV CKT Z	720	720	0.07429	126.6583	GEN659110 1-LELAND OLDS UNIT1
FDNS	00NR	0	17SP	G15_076	FROM->TO	GR ISLD-LNX3345.00 - GRAND ISLAND 345KV CKT Z	720	720	0.07429	126.6517	GEN657749 1-YOUNG 1 GENERATOR
FDNS	00NR	0	17SP	G15_076	FROM->TO	GR ISLD-LNX3345.00 - GRAND ISLAND 345KV CKT Z	720	720	0.07429	126.4545	GEN652173 1-G09_001IS_2 0.6900
FDNS	00NR	0	17SP	G15_076	FROM->TO	GR ISLD-LNX3345.00 - GRAND ISLAND 345KV CKT Z	720	720	0.07429	126.4491	GEN600006 1-AS KING
FDNS	00NR	0	17SP	G15_076	FROM->TO	GR ISLD-LNX3345.00 - GRAND ISLAND 345KV CKT Z	720	720	0.07429	126.1483	GEN659407 1-ANTELPHILLSW0.6900
FDNS	00NR	0	17SP	G15_076	FROM->TO	GR ISLD-LNX3345.00 - GRAND ISLAND 345KV CKT Z	720	720	0.07429	125.8488	GEN600005 1-MONTICELLO
FDNS	00NR	0	17SP	G15_076	FROM->TO	GR ISLD-LNX3345.00 - GRAND ISLAND 345KV CKT Z	720	720	0.07429	125.1533	GEN600000 1-SHERBURNECNTY G1
FDNS	00NR	0	17SP	G15_076	FROM->TO	GR ISLD-LNX3345.00 - GRAND ISLAND 345KV CKT Z	720	720	0.07429	124.7391	GEN600001 2-SHERBURNE CNTY G2
FDNS	00NR	0	17SP	G15_076	FROM->TO	GR ISLD-LNX3345.00 - GRAND ISLAND 345KV CKT Z	720	720	0.07429	124.5328	GEN620315 1-BIG STONE GEN
FDNS	00NR	0	17SP	G15_076	FROM->TO	GR ISLD-LNX3345.00 - GRAND ISLAND 345KV CKT Z	720	720	0.07429	124.4986	GEN661015 1-COYOTE
FDNS	00NR	0	17SP	G15_076	FROM->TO	GR ISLD-LNX3345.00 - GRAND ISLAND 345KV CKT Z	720	720	0.07429	124.0797	GEN657748 1-YOUNG 2 GENERATOR
FDNS	00NR	0	17SP	G15_076	FROM->TO	GR ISLD-LNX3345.00 - GRAND ISLAND 345KV CKT Z	720	720	0.07429	123.9345	GEN600002 3-SHERBURNE CNTY G3
FDNS	00NR	0	17SP	G15_076	FROM->TO	GR ISLD-LNX3345.00 - GRAND ISLAND 345KV CKT Z	720	720	0.07429	123.6949	GEN562872 1-G15046_3 0.6900
FDNS	00NR	0	17SP	G15_076	FROM->TO	GR ISLD-LNX3345.00 - GRAND ISLAND 345KV CKT Z	720	720	0.08341	123.5972	MCCOOL - MOORE 345KV CKT 1
FDNS	00NR	0	17SP	G15_076	FROM->TO	GR ISLD-LNX3345.00 - GRAND ISLAND 345KV CKT Z	720	720	0.07429	123.3944	GEN659111 2-LELAND OLDS UNIT2
FDNS	00NR	0	17SP	G15_076	FROM->TO	GR ISLD-LNX3345.00 - GRAND ISLAND 345KV CKT Z	720	720	0.07429	122.9194	GEN659103 1-ANTELOPE VALLEY UNIT1
FDNS	00NR	0	17SP	G15_076	FROM->TO	GR ISLD-LNX3345.00 - GRAND ISLAND 345KV CKT Z	720	720	0.07429	122.9194	GEN659107 2-ANTELOPE VALLEY UNIT2
FDNS	00NR	0	17SP	G15_076	FROM->TO	GR ISLD-LNX3345.00 - GRAND ISLAND 345KV CKT Z	720	720	0.07429	121.9558	GEN659125 1-COVEY
FDNS	00NR	0	17SP	G15_076	FROM->TO	GR ISLD-LNX3345.00 - GRAND ISLAND 345KV CKT Z	720	720	0.07381	121.922	FTTHOM1-LNX3345.00 - LELAND2-LNX3345.00 345KV CKT 1
FDNS	00NR	0	20SP	G15_076	FROM->TO	GR ISLD-LNX3345.00 - GRAND ISLAND 345KV CKT Z	720	720	0.07066	121.6983	HOLT.CO3 345.00 - THEDFRD3 345.00 345KV CKT 1
FDNS	00NR	0	17SP	G15_076	FROM->TO	GR ISLD-LNX3345.00 - GRAND ISLAND 345KV CKT Z	720	720	0.07381	121.67	P12:345:UMZB:# 108 #: LOS FT IN ND. LOS FT
FDNS	00NR	0	17SP	G15_076	FROM->TO	GR ISLD-LNX3345.00 - GRAND ISLAND 345KV CKT Z	720	720	0.07381	121.6593	FT THOMPSON - FTTHOM1-LNX3345.00 345KV CKT Z
FDNS	00NR	0	25SP	G15_076	FROM->TO	GR ISLD-LNX3345.00 - GRAND ISLAND 345KV CKT Z	720	720	0.07154	121.5104	HOLT.CO3 345.00 - THEDFRD3 345.00 345KV CKT 1
FDNS	00NR	0	17SP	G15_076	FROM->TO	GR ISLD-LNX3345.00 - GRAND ISLAND 345KV CKT Z	720	720	0.07381	121.4254	LELAND OLDS - LELAND2-LNX3345.00 345KV CKT Z
FDNS	00NR	0	17SP	G15_076	FROM->TO	GR ISLD-LNX3345.00 - GRAND ISLAND 345KV CKT Z	720	720	0.07429	121.232	GEN615001 1-COAL CREEK
FDNS	00NR	0	17SP	G15_076	FROM->TO	GR ISLD-LNX3345.00 - GRAND ISLAND 345KV CKT Z	720	720	0.07429	121.1067	GEN615002 2-COAL CREEK
FDNS	00NR	0	17SP	G15_076	FROM->TO	GR ISLD-LNX3345.00 - GRAND ISLAND 345KV CKT Z	720	720	0.08402	120.1904	GRAND ISLAND - MCCOOL 345KV CKT 1
FDNS	00NR	0	17SP	G15_076	FROM->TO	GR ISLD-LNX3345.00 - GRAND ISLAND 345KV CKT Z	720	720	0.07429	114.2696	GEN562714 1-G15_023_4 0.6900
FDNS	00NR	0	17SP	G15_076	FROM->TO	GR ISLD-LNX3345.00 - GRAND ISLAND 345KV CKT Z	720	720	0.07429	114.2696	GEN562715 1-G15_023_5 0.6900
FDNS	00NR	0	20SP	G15_076	FROM->TO	GR ISLD-LNX3345.00 - GRAND ISLAND 345KV CKT Z	720	720	0.06578	111.9689	GERALD GENTLEMAN STATION - THEDFRD3 345.00 345KV CKT 1
FDNS	00NR	0	25SP	G15_076	FROM->TO	GR ISLD-LNX3345.00 - GRAND ISLAND 345KV CKT Z	720	720	0.06693	111.3329	GERALD GENTLEMAN STATION - THEDFRD3 345.00 345KV CKT 1
FDNS	00NR	0	20SP	G15_076	FROM->TO	GR ISLD-LNX3345.00 - GRAND ISLAND 345KV CKT Z	720	720	0.02969	110.3843	HOSKINS - SHELL CREEK 345KV CKT 1
FDNS	00NR	0	25SP	G15_076	FROM->TO	GR ISLD-LNX3345.00 - GRAND ISLAND 345KV CKT Z	720	720	0.0318	109.7031	HOSKINS - SHELL CREEK 345KV CKT 1
FDNS	00NR	0	17SP	G15_076	FROM->TO	GR ISLD-LNX3345.00 - GRAND ISLAND 345KV CKT Z	720	720	0.07429	108.1649	GEN652353 2-GR PRAIRIEG 0.6900
FDNS	00NR	0	16WP	G15_076	FROM->TO	GR ISLD-LNX3345.00 - GRAND ISLAND 345KV CKT Z	720	720	0.07684	102.4932	KELLY - MEADOWGROVE4230.00 230KV CKT 1
FDNS	00NR	0	16WP	G15_076	FROM->TO	GR ISLD-LNX3345.00 - GRAND ISLAND 345KV CKT Z	720	720	0.07071	101.8942	P12:230:UMZB:# 116 #: ST IN SD. WSG-ST-VH
FDNS	00NR	0	16WP	G15_076	FROM->TO	GR ISLD-LNX3345.00 - GRAND ISLAND 345KV CKT Z	720	720	0.07094	101.2943	STORLA - WESSINGTON 230KV CKT 1
FDNS	00NR	0	16WP	G15_076	FROM->TO	GR ISLD-LNX3345.00 - GRAND ISLAND 345KV CKT Z	720	720	0.07308	100.8674	ROSEAU - ROSEAUM 2 500.00 500KV CKT 1
FDNS	00NR	0	16WP	G15_076	FROM->TO	GR ISLD-LNX3345.00 - GRAND ISLAND 345KV CKT Z	720	720	0.07129	100.313	HANLON - STORLA 230KV CKT 1
FDNS	00NR	0	16WP	G15_076	FROM->TO	GR ISLD-LNX3345.00 - GRAND ISLAND 345KV CKT Z	720	720	0.05898	100	GRAND ISLAND - SWEETWATER 345KV CKT 1
FDNS	00NR	0	16WP	G15_076	FROM->TO	GR ISLD-LNX3345.00 - GRAND ISLAND 345KV CKT Z	720	720	0.07216	99.9	P12:345:UMZW:# 1747 #: WT2 IN SD. WT2-WHT LINE FAULT
FDNS	00NR	0	16WP	G15_076	FROM->TO	GR ISLD-LNX3345.00 - GRAND ISLAND 345KV CKT Z	720	720	0.07216	99.9	WATERTN-LNX3345.00 - WATERTOWN 345KV CKT Z
FDNS	00NR	0	16WP	G15_076	FROM->TO	GR ISLD-LNX3345.00 - GRAND ISLAND 345KV CKT Z	720	720	0.07216	99.9	WATERTN-LNX3345.00 - WHITE 345KV CKT 1
FDNS	00NR	0	16WP	G15_076	FROM->TO	GR ISLD-LNX3345.00 - GRAND ISLAND 345KV CKT Z	720	720	0.07026	99.8	FT THOMPSON - LETCHER 230KV CKT 1
FDNS	00NR	0	16WP	G15_076	FROM->TO	GR ISLD-LNX3345.00 - GRAND ISLAND 345KV CKT Z	720	720	0.07026	99.8	FT THOMPSON - LETCHER 230KV CKT 1
FDNSLock	00NR	0	16WP	G15_076	FROM->TO	GR ISLD-LNX3345.00 - GRAND ISLAND 345KV CKT Z	720	720	0.07483	99.5	KEYSTONE - SIDNEY1-LNX3345.00 345KV CKT 1
FDNSLock	00NR	0	16WP	G15_076	FROM->TO	GR ISLD-LNX3345.00 - GRAND ISLAND 345KV CKT Z	720	720	0.07483	99.5	SIDNEY - SIDNEY1-LNX3345.00 345KV CKT Z
FDNS	00NR	0	17SP	G15_076	TO->FROM	GR ISLD-LNX3345.00 - HOLT.CO3 345.00 345KV CKT 1	720	720	0.07399	138.4828	G09_001IST 345.00 - WATERTOWN 345KV CKT 1
FDNS	00NR	0	17SP	G15_076	TO->FROM	GR ISLD-LNX3345.00 - HOLT.CO3 345.00 345KV CKT 1	720	720	0.07811	138.0694	KELLY - MEADOWGROVE4230.00 230KV CKT 1
FDNS	00NR	0	17SP	G15_076	TO->FROM	GR ISLD-LNX3345.00 - HOLT.CO3 345.00 345KV CKT 1	720	720	0.07195	137.65	P12:230:UMZB:# 116 #: ST IN SD. WSG-ST-VH
FDNS	00NR	0	17SP	G15_076	TO->FROM	GR ISLD-LNX3345.00 - HOLT.CO3 345.00 345KV CKT 1	720	720	0.07341	136.8472	WATERTN-LNX3345.00 - WATERTOWN 345KV CKT Z

SOLUTION	GROUP	SCENARIO	SEASON	SOURCE	DIRECTION	MONITORED ELEMENT	RATEA (MVA)	RATEB(MVA)	TDF	TC%LOADING (% MVA)	CONTINGENCY
FDNS	00NR	0	17SP	G15_076	TO->FROM	GR ISLD-LNX3345.00 - HOLT.CO3 345.00 345KV CKT 1	720	720	0.07341	136.7798	P12:345:UMZW:# 1747 #: WT2 IN SD. WT2-WHT LINE FAULT
FDNS	00NR	0	17SP	G15_076	TO->FROM	GR ISLD-LNX3345.00 - HOLT.CO3 345.00 345KV CKT 1	720	720	0.07219	136.7283	STORLA - WESSINGTON 230KV CKT 1
FDNS	00NR	0	17SP	G15_076	TO->FROM	GR ISLD-LNX3345.00 - HOLT.CO3 345.00 345KV CKT 1	720	720	0.07341	136.676	WATERTN-LNX3345.00 - WHITE 345KV CKT 1
FDNS	00NR	0	17SP	G15_076	TO->FROM	GR ISLD-LNX3345.00 - HOLT.CO3 345.00 345KV CKT 1	720	720	0.07254	135.3597	HANLON - STORLA 230KV CKT 1
FDNS	00NR	0	17SP	G15_076	TO->FROM	GR ISLD-LNX3345.00 - HOLT.CO3 345.00 345KV CKT 1	720	720	0.07149	135.0789	FT THOMPSON - LETCHER 230KV CKT 1
FDNS	00NR	0	17SP	G15_076	TO->FROM	GR ISLD-LNX3345.00 - HOLT.CO3 345.00 345KV CKT 1	720	720	0.07149	135.0789	FT THOMPSON - LETCHER 230KV CKT 1
FDNS	00NR	0	17SP	G15_076	TO->FROM	GR ISLD-LNX3345.00 - HOLT.CO3 345.00 345KV CKT 1	720	720	0.0707	133.7629	FT RANDAL - FT THOMPSON 230KV CKT 1
FDNS	00NR	0	17SP	G15_076	TO->FROM	GR ISLD-LNX3345.00 - HOLT.CO3 345.00 345KV CKT 1	720	720	0.0707	133.7629	FT RANDAL - FT THOMPSON 230KV CKT 1
FDNS	00NR	0	17SP	G15_076	TO->FROM	GR ISLD-LNX3345.00 - HOLT.CO3 345.00 345KV CKT 1	720	720	0.07079	133.7265	FT RANDAL - G12_009IST 230.00 230KV CKT 1
FDNS	00NR	0	17SP	G15_076	TO->FROM	GR ISLD-LNX3345.00 - HOLT.CO3 345.00 345KV CKT 1	720	720	0.07079	133.6464	FT THOMPSON - LAKE PLATT 230KV CKT 1
FDNS	00NR	0	17SP	G15_076	TO->FROM	GR ISLD-LNX3345.00 - HOLT.CO3 345.00 345KV CKT 1	720	720	0.07079	133.6464	FT THOMPSON - LAKE PLATT 230KV CKT 1
FDNS	00NR	0	17SP	G15_076	TO->FROM	GR ISLD-LNX3345.00 - HOLT.CO3 345.00 345KV CKT 1	720	720	0.07617	133.5696	KEYSTONE - SIDNEY1-LNX3345.00 345KV CKT 1
FDNS	00NR	0	17SP	G15_076	TO->FROM	GR ISLD-LNX3345.00 - HOLT.CO3 345.00 345KV CKT 1	720	720	0.07617	133.5488	SIDNEY - SIDNEY1-LNX3345.00 345KV CKT Z
FDNS	00NR	0	17SP	G15_076	TO->FROM	GR ISLD-LNX3345.00 - HOLT.CO3 345.00 345KV CKT 1	720	720	0.08345	133.5085	NUNDRWD - WAYSIDE 230KV CKT 1
FDNS	00NR	0	17SP	G15_076	TO->FROM	GR ISLD-LNX3345.00 - HOLT.CO3 345.00 345KV CKT 1	720	720	0.07399	133.4449	G09_001IST 345.00 - GROTON 345KV CKT 1
FDNS	00NR	0	17SP	G15_076	TO->FROM	GR ISLD-LNX3345.00 - HOLT.CO3 345.00 345KV CKT 1	720	720	0.07427	133.2589	CHISAGO COUNTY - FORBES 500KV CKT 1
FDNS	00NR	0	17SP	G15_076	TO->FROM	GR ISLD-LNX3345.00 - HOLT.CO3 345.00 345KV CKT 1	720	720	0.07079	133.2456	G12_009IST 230.00 - LAKE PLATT 230KV CKT 1
FDNS	00NR	0	17SP	G15_076	TO->FROM	GR ISLD-LNX3345.00 - HOLT.CO3 345.00 345KV CKT 1	720	720	0.07429	133.1666	GEN336821 1-GRAND GULF UNIT
FDNS	00NR	0	17SP	G15_076	TO->FROM	GR ISLD-LNX3345.00 - HOLT.CO3 345.00 345KV CKT 1	720	720	0.07811	133.0352	FT RANDAL - MEADOWGROVE4230.00 230KV CKT 1
FDNS	00NR	0	17SP	G15_076	TO->FROM	GR ISLD-LNX3345.00 - HOLT.CO3 345.00 345KV CKT 1	720	720	0.08279	132.9558	RAUN - SUB 3451 FT CAL 345KV CKT 1
FDNS	00NR	0	17SP	G15_076	TO->FROM	GR ISLD-LNX3345.00 - HOLT.CO3 345.00 345KV CKT 1	720	720	0.08279	132.9558	RAUN - SUB 3451 FT CAL 345KV CKT 1
FDNS	00NR	0	17SP	G15_076	TO->FROM	GR ISLD-LNX3345.00 - HOLT.CO3 345.00 345KV CKT 1	720	720	0.07426	132.9142	CENTER - JAMESTOWN 345KV CKT 1
FDNS	00NR	0	17SP	G15_076	TO->FROM	GR ISLD-LNX3345.00 - HOLT.CO3 345.00 345KV CKT 1	720	720	0.07333	132.7255	LETCHER - SIOUX FALLS 230KV CKT 1
FDNS	00NR	0	17SP	G15_076	TO->FROM	GR ISLD-LNX3345.00 - HOLT.CO3 345.00 345KV CKT 1	720	720	0.07429	132.6387	GEN344225 1-1CAL G1 25.000
FDNS	00NR	0	17SP	G15_076	TO->FROM	GR ISLD-LNX3345.00 - HOLT.CO3 345.00 345KV CKT 1	720	720	0.07429	132.5268	GEN635024 4-WALTER SCOTT UNIT 4
FDNS	00NR	0	17SP	G15_076	TO->FROM	GR ISLD-LNX3345.00 - HOLT.CO3 345.00 345KV CKT 1	720	720	0.07429	132.4226	GEN337911 1-ARKANSAS NUCLEAR ONE UNIT #2
FDNS	00NR	0	17SP	G15_076	TO->FROM	GR ISLD-LNX3345.00 - HOLT.CO3 345.00 345KV CKT 1	720	720	0.07429	132.3742	GEN336153 1-WATERFORD UNIT#3
FDNS	00NR	0	17SP	G15_076	TO->FROM	GR ISLD-LNX3345.00 - HOLT.CO3 345.00 345KV CKT 1	720	720	0.07427	132.3654	BISON 3 345.00 - BUFFALO 345KV CKT 1
FDNS	00NR	0	17SP	G15_076	TO->FROM	GR ISLD-LNX3345.00 - HOLT.CO3 345.00 345KV CKT 1	720	720	0.06043	132.3519	GRAND ISLAND - SWEETWATER 345KV CKT 1
FDNS	00NR	0	17SP	G15_076	TO->FROM	GR ISLD-LNX3345.00 - HOLT.CO3 345.00 345KV CKT 1	720	720	0.07429	131.9888	GEN635023 3-WALTER SCOTT UNIT 3
FDNS	00NR	0	17SP	G15_076	TO->FROM	GR ISLD-LNX3345.00 - HOLT.CO3 345.00 345KV CKT 1	720	720	0.07302	131.9463	SPLIT ROCK - WHITE 345KV CKT 1
FDNS	00NR	0	17SP	G15_076	TO->FROM	GR ISLD-LNX3345.00 - HOLT.CO3 345.00 345KV CKT 1	720	720	0.07302	131.9463	SPLIT ROCK - WHITE 345KV CKT 1
FDNS	00NR	0	17SP	G15_076	TO->FROM	GR ISLD-LNX3345.00 - HOLT.CO3 345.00 345KV CKT 1	720	720	0.07429	131.9415	GEN335831 1-RIVERBEND UNIT#1
FDNS	00NR	0	17SP	G15_076	TO->FROM	GR ISLD-LNX3345.00 - HOLT.CO3 345.00 345KV CKT 1	720	720	0.07429	131.8426	GEN337910 1-ARKANSAS NUCLEAR ONE UNIT #1
FDNS	00NR	0	17SP	G15_076	TO->FROM	GR ISLD-LNX3345.00 - HOLT.CO3 345.00 345KV CKT 1	720	720	0.07458	131.7508	ARROWHEAD - ARROWHEAD 230 230KV CKT 1
FDNS	00NR	0	17SP	G15_076	TO->FROM	GR ISLD-LNX3345.00 - HOLT.CO3 345.00 345KV CKT 1	720	720	0.074	131.6562	GROTON-LNX3 345.00 - LELAND1-LNX3345.00 345KV CKT 1
FDNS	00NR	0	17SP	G15_076	TO->FROM	GR ISLD-LNX3345.00 - HOLT.CO3 345.00 345KV CKT 1	720	720	0.07397	131.6275	FT RANDAL - SIOUX CITY 230KV CKT 1
FDNS	00NR	0	17SP	G15_076	TO->FROM	GR ISLD-LNX3345.00 - HOLT.CO3 345.00 345KV CKT 1	720	720	0.074	131.6129	GROTON - GROTON-LNX3 345.00 345KV CKT Z
FDNS	00NR	0	17SP	G15_076	TO->FROM	GR ISLD-LNX3345.00 - HOLT.CO3 345.00 345KV CKT 1	720	720	0.074	131.612	P12:345:UMZB:# 109 #: LOS GRT IN ND. LOS GRT
FDNS	00NR	0	17SP	G15_076	TO->FROM	GR ISLD-LNX3345.00 - HOLT.CO3 345.00 345KV CKT 1	720	720	0.074	131.5963	LELAND OLDS - LELAND1-LNX3345.00 345KV CKT Z
FDNS	00NR	0	17SP	G15_076	TO->FROM	GR ISLD-LNX3345.00 - HOLT.CO3 345.00 345KV CKT 1	720	720	0.07429	131.5476	GEN640010 1-GERALD GENTLEMAN STATION UNIT 1
FDNS	00NR	0	17SP	G15_076	TO->FROM	GR ISLD-LNX3345.00 - HOLT.CO3 345.00 345KV CKT 1	720	720	0.07355	131.5162	HANLON - SIOUX FALLS 230KV CKT 1
FDNSLock	00NR	0	17SP	G15_076	TO->FROM	GR ISLD-LNX3345.00 - HOLT.CO3 345.00 345KV CKT 1	720	720	0.07451	131.5045	P12:115:NPPD:1091:VALENTN7:MISSION7:BTB
FDNS	00NR	0	17SP	G15_076	TO->FROM	GR ISLD-LNX3345.00 - HOLT.CO3 345.00 345KV CKT 1	720	720	0.07521	131.4818	GERALD GENTLEMAN STATION - KEYSTONE 345KV CKT 1
FDNS	00NR	0	17SP	G15_076	TO->FROM	GR ISLD-LNX3345.00 - HOLT.CO3 345.00 345KV CKT 1	720	720	0.07515	131.4797	HAZLETON - MITCHLCO3 345.00 345KV CKT 1
FDNS	00NR	0	17SP	G15_076	TO->FROM	GR ISLD-LNX3345.00 - HOLT.CO3 345.00 345KV CKT 1	720	720	0.07431	131.3441	ALEXMRES3 345.00 - BISON 3 345.00 345KV CKT 1
FDNS	00NR	0	17SP	G15_076	TO->FROM	GR ISLD-LNX3345.00 - HOLT.CO3 345.00 345KV CKT 1	720	720	0.07429	131.2848	GEN337653 1-WHITE BLUFF UNIT #2
FDNS	00NR	0	17SP	G15_076	TO->FROM	GR ISLD-LNX3345.00 - HOLT.CO3 345.00 345KV CKT 1	720	720	0.07429	131.2692	GEN337652 1-WHITE BLUFF UNIT #1
FDNS	00NR	0	17SP	G15_076	TO->FROM	GR ISLD-LNX3345.00 - HOLT.CO3 345.00 345KV CKT 1	720	720	0.07429	131.2327	GEN640011 2-GERALD GENTLEMAN STATION UNIT 2
FDNS	00NR	0	17SP	G15_076	TO->FROM	GR ISLD-LNX3345.00 - HOLT.CO3 345.00 345KV CKT 1	720	720	0.07451	131.2016	MISSION - ST FRANCIS 115KV CKT 1
FDNS	00NR	0	17SP	G15_076	TO->FROM	GR ISLD-LNX3345.00 - HOLT.CO3 345.00 345KV CKT 1	720	720	0.07429	131.1837	GEN338146 1-INDEPENDENCE UNIT #2
FDNS	00NR	0	17SP	G15_076	TO->FROM	GR ISLD-LNX3345.00 - HOLT.CO3 345.00 345KV CKT 1	720	720	0.07429	131.181	GEN338143 1-INDEPENDENCE UNIT #1
FDNS	00NR	0	17SP	G15_076	TO->FROM	GR ISLD-LNX3345.00 - HOLT.CO3 345.00 345KV CKT 1	720	720	0.07428	131.1786	ELLENDALE - OAKES 230KV CKT 1
FDNS	00NR	0	17SP	G15_076	TO->FROM	GR ISLD-LNX3345.00 - HOLT.CO3 345.00 345KV CKT 1	720	720	0.07428	131.1786	ELLENDALE - OAKES 230KV CKT 1
FDNS	00NR	0	17SP	G15_076	TO->FROM	GR ISLD-LNX3345.00 - HOLT.CO3 345.00 345KV CKT 1	720	720	0.07332	131.1785	SIOUXCY-LNX3345.00 - SPLIT ROCK 345KV CKT 1
FDNS	00NR	0	17SP	G15_076	TO->FROM	GR ISLD-LNX3345.00 - HOLT.CO3 345.00 345KV CKT 1	720	720	0.07332	131.1785	SIOUXCY-LNX3345.00 - SPLIT ROCK 345KV CKT 1
FDNS	00NR	0	17SP	G15_076	TO->FROM	GR ISLD-LNX3345.00 - HOLT.CO3 345.00 345KV CKT 1	720	720	0.07464	131.1626	AS KING - EAU CLAIRE 345KV CKT 1
FDNS	00NR	0	17SP	G15_076	TO->FROM	GR ISLD-LNX3345.00 - HOLT.CO3 345.00 345KV CKT 1	720	720	0.07429	131.1409	GEN501801 1-DOLET HILLS UNIT1
FDNS	00NR	0	17SP	G15_076	TO->FROM	GR ISLD-LNX3345.00 - HOLT.CO3 345.00 345KV CKT 1	720	720	0.07332	131.1238	P12:345:UMZW:# 907 #: SC2-SR IN IA. SC2-SR 345 KV LINE
FDNS	00NR	0	17SP	G15_076	TO->FROM	GR ISLD-LNX3345.00 - HOLT.CO3 345.00 345KV CKT 1	720	720	0.07427	131.087	FORMAN - OAKES 230KV CKT 1
FDNS	00NR	0	17SP	G15_076	TO->FROM	GR ISLD-LNX3345.00 - HOLT.CO3 345.00 345KV CKT 1	720	720	0.07332	131.0841	SIOUX CITY - SIOUXCY-LNX3345.00 345KV CKT Z
FDNSLock	00NR	0	17SP	G15_076	TO->FROM	GR ISLD-LNX3345.00 - HOLT.CO3 345.00 345KV CKT 1	720	720	0.07451	131.0689	HARMONY - VALENTINE 115KV CKT 1
FDNS	00NR	0	17SP	G15_076	TO->FROM	GR ISLD-LNX3345.00 - HOLT.CO3 345.00 345KV CKT 1	720	720	0.07589	131.0686	SIDNEY - STEGALL 345KV CKT 1
FDNS	00NR	0	17SP	G15_076	TO->FROM	GR ISLD-LNX3345.00 - HOLT.CO3 345.00 345KV CKT 1	720	720	0.07451	131.0664	HARMONY - ST FRANCIS 115KV CKT 1
FDNS	00NR	0	17SP	G15_076	TO->FROM	GR ISLD-LNX3345.00 - HOLT.CO3 345.00 345KV CKT 1	720	720	0.072	131.0516	FT RANDAL - UTICA JCT 230KV CKT 1
FDNS	00NR	0	17SP	G15_076	TO->FROM	GR ISLD-LNX3345.00 - HOLT.CO3 345.00 345KV CKT 1	720	720	0.07421	131.0475	CARPENTER - HURON 230KV CKT 1
FDNS	00NR	0	17SP	G15_076	TO->FROM	GR ISLD-LNX3345.00 - HOLT.CO3 345.00 345KV CKT 1	720	720	0.07421	130.9793	HURON - WATERTOWN 230KV CKT 2
FDNS	00NR	0	17SP	G15_076	TO->FROM	GR ISLD-LNX3345.00 - HOLT.CO3 345.00 345KV CKT 1	720	720	0.07421	130.9793	HURON - WATERTOWN 230KV CKT 2
FDNS	00NR	0	17SP	G15_076	TO->FROM	GR ISLD-LNX3345.00 - HOLT.CO3 345.00 345KV CKT 1	720	720	0.07479	130.9716	ARPIN B4 345.00 - EAU CLAIRE 345KV CKT 1
FDNS	00NR	0	17SP	G15_076	TO->FROM	GR ISLD-LNX3345.00 - HOLT.CO3 345.00 345KV CKT 1	720	720	0.07421	130.9164	CARPENTER - WATERTOWN 230KV CKT 1
FDNS	00NR	0	17SP	G15_076	TO->FROM	GR ISLD-LNX3345.00 - HOLT.CO3 345.00 345KV CKT 1	720	720	0.07421	130.9164	CARPENTER - WATERTOWN 230KV CKT 1
FDNS	00NR	0	17SP	G15_076	TO->FROM	GR ISLD-LNX3345.00 - HOLT.CO3 345.00 345KV CKT 1	720	720	0.07219	130.86	FT THOMPSON - WESSINGTON 230KV CKT 1
FDNS	00NR	0	17SP	G15_076	TO->FROM	GR ISLD-LNX3345.00 - HOLT.CO3 345.00 345KV CKT 1	720	720	0.07219	130.86	FT THOMPSON - WESSINGTON 230KV CKT 1
FDNS	00NR	0	17SP	G15_076	TO->FROM	GR ISLD-LNX3345.00 - HOLT.CO3 345.00 345KV CKT 1	720	720	0.07429	130.7962	GEN336252 1-NINEMILE POINT UNIT#5
FDNS	00NR	0	17SP	G15_076	TO->FROM	GR ISLD-LNX3345.00 - HOLT.CO3 345.00 345KV CKT 1	720	720	0.07429	130.7546	GEN501813 1-RODEMACHER UNIT 3
FDNS	00NR	0	17SP	G15_076	TO->FROM	GR ISLD-LNX3345.00 - HOLT.CO3 345.00 345KV CKT 1	720	720	0.07398	130.7522	PAHOJA - SIOUX FALLS 230KV CKT 1
FDNS	00NR	0	17SP	G15_076	TO->FROM	GR ISLD-LNX3345.00 - HOLT.CO3 345.00 345KV CKT 1	720	720	0.07465	130.7281	P12:115:NPPD:WAPA6:FTRANDL7:ONEILL 7:BTB
FDNS	00NR	0	17SP	G15_076	TO->FROM	GR ISLD-LNX3345.00 - HOLT.CO3 345.00 345KV CKT 1	720	720	0.07465	130.7281	P12:115:UMZB:# 115 #: SE IN NE. FR-SE-ON
FDNS	00NR	0	17SP	G15_076	TO->FROM	GR ISLD-LNX3345.00 - HOLT.CO3 345.00 345KV CKT 1	720	720	0.07046	130.7061	GERALD GENTLEMAN STATION - SWEETWATER 345KV CKT 1

SOLUTION	GROUP	SCENARIO	SEASON	SOURCE	DIRECTION	MONITORED ELEMENT	RATEA (MVA)	RATEB(MVA)	TDF	TC%LOADING (% MVA)	CONTINGENCY
FDNS	00NR	0	17SP	G15_076	TO->FROM	GR ISLD-LNX3345.00 - HOLT.CO3 345.00 345KV CKT 1	720	720	0.07515	130.696	ADAMS - MITCHLCO3 345.00 345KV CKT 1
FDNS	00NR	0	17SP	G15_076	TO->FROM	GR ISLD-LNX3345.00 - HOLT.CO3 345.00 345KV CKT 1	720	720	0.07465	130.6873	FT RANDAL - SPENCER 115KV CKT 1
FDNS	00NR	0	17SP	G15_076	TO->FROM	GR ISLD-LNX3345.00 - HOLT.CO3 345.00 345KV CKT 1	720	720	0.07429	130.6593	GEN336831 1-BAXTER WILSON SES
FDNS	00NR	0	17SP	G15_076	TO->FROM	GR ISLD-LNX3345.00 - HOLT.CO3 345.00 345KV CKT 1	720	720	0.07429	130.6466	GEN336251 1-NINEMILE POINT UNIT#4
FDNSLock	00NR	0	17SP	G15_076	TO->FROM	GR ISLD-LNX3345.00 - HOLT.CO3 345.00 345KV CKT 1	720	720	0.07451	130.6365	AINSWORTH - VALENTINE 115KV CKT 1
FDNS	00NR	0	17SP	G15_076	TO->FROM	GR ISLD-LNX3345.00 - HOLT.CO3 345.00 345KV CKT 1	720	720	0.07465	130.5966	ONEILL - SPENCER 115KV CKT 1
FDNS	00NR	0	17SP	G15_076	TO->FROM	GR ISLD-LNX3345.00 - HOLT.CO3 345.00 345KV CKT 1	720	720	0.07429	130.5874	CNTSHNT3 345.00 - PRAIRIE3 345.00 345KV CKT 1
FDNS	00NR	0	17SP	G15_076	TO->FROM	GR ISLD-LNX3345.00 - HOLT.CO3 345.00 345KV CKT 1	720	720	0.07429	130.5722	GEN337041 1-GERALD ANDRUS
FDNS	00NR	0	17SP	G15_076	TO->FROM	GR ISLD-LNX3345.00 - HOLT.CO3 345.00 345KV CKT 1	720	720	0.07429	130.5555	GEN335206 1-NELSON UNIT 6
FDNS	00NR	0	17SP	G15_076	TO->FROM	GR ISLD-LNX3345.00 - HOLT.CO3 345.00 345KV CKT 1	720	720	0.07429	130.5309	GEN344897 4-1LAB G4 20.000
FDNS	00NR	0	17SP	G15_076	TO->FROM	GR ISLD-LNX3345.00 - HOLT.CO3 345.00 345KV CKT 1	720	720	0.07429	130.5275	GEN344894 1-1LAB G1 20.000
FDNS	00NR	0	17SP	G15_076	TO->FROM	GR ISLD-LNX3345.00 - HOLT.CO3 345.00 345KV CKT 1	720	720	0.07429	130.5274	GEN344896 3-1LAB G3 20.000
FDNS	00NR	0	17SP	G15_076	TO->FROM	GR ISLD-LNX3345.00 - HOLT.CO3 345.00 345KV CKT 1	720	720	0.09048	130.5252	HOSKINS - SHELL CREEK 345KV CKT 1
FDNS	00NR	0	17SP	G15_076	TO->FROM	GR ISLD-LNX3345.00 - HOLT.CO3 345.00 345KV CKT 1	720	720	0.07459	130.4853	SIDNEY - SIDNEY2-LNX3345.00 345KV CKT Z
FDNS	00NR	0	17SP	G15_076	TO->FROM	GR ISLD-LNX3345.00 - HOLT.CO3 345.00 345KV CKT 1	720	720	0.07459	130.4839	G15094_T 345.00 - SIDNEY2-LNX3345.00 345KV CKT 1
FDNS	00NR	0	17SP	G15_076	TO->FROM	GR ISLD-LNX3345.00 - HOLT.CO3 345.00 345KV CKT 1	720	720	0.0743	130.4809	FORMAN - HANKINSON 230KV CKT 1
FDNS	00NR	0	17SP	G15_076	TO->FROM	GR ISLD-LNX3345.00 - HOLT.CO3 345.00 345KV CKT 1	720	720	0.07488	130.4733	ADAMS - PLEASANT VALLEY 345KV CKT 1
FDNS	00NR	0	17SP	G15_076	TO->FROM	GR ISLD-LNX3345.00 - HOLT.CO3 345.00 345KV CKT 1	720	720	0.07429	130.4727	GEN344895 2-1LAB G2 20.000
FDNS	00NR	0	17SP	G15_076	TO->FROM	GR ISLD-LNX3345.00 - HOLT.CO3 345.00 345KV CKT 1	720	720	0.07429	130.461	GEN345670 1-1RUSH G1 18.000
FDNS	00NR	0	17SP	G15_076	TO->FROM	GR ISLD-LNX3345.00 - HOLT.CO3 345.00 345KV CKT 1	720	720	0.07429	130.4607	GEN345671 2-1RUSH G2 18.000
FDNS	00NR	0	17SP	G15_076	TO->FROM	GR ISLD-LNX3345.00 - HOLT.CO3 345.00 345KV CKT 1	720	720	0.07565	130.431	RASMUSN - UTICA JCT 230KV CKT 1
FDNS	00NR	0	17SP	G15_076	TO->FROM	GR ISLD-LNX3345.00 - HOLT.CO3 345.00 345KV CKT 1	720	720	0.07657	130.4055	GRIMES - LEHIGH 345KV CKT 1
FDNS	00NR	0	17SP	G15_076	TO->FROM	GR ISLD-LNX3345.00 - HOLT.CO3 345.00 345KV CKT 1	720	720	0.07429	130.4001	GEN501812 1-RODEMACHER UNIT 2
FDNS	00NR	0	17SP	G15_076	TO->FROM	GR ISLD-LNX3345.00 - HOLT.CO3 345.00 345KV CKT 1	720	720	0.07398	130.3955	EAGLE 4 230.00 - PAHOJA 230KV CKT 1
FDNS	00NR	0	17SP	G15_076	TO->FROM	GR ISLD-LNX3345.00 - HOLT.CO3 345.00 345KV CKT 1	720	720	0.07429	130.3774	GEN334440 1-SABINE UNIT 4
FDNS	00NR	0	17SP	G15_076	TO->FROM	GR ISLD-LNX3345.00 - HOLT.CO3 345.00 345KV CKT 1	720	720	0.07429	130.3431	GEN563222 1-G15088_3 0.6900
FDNS	00NR	0	17SP	G15_076	TO->FROM	GR ISLD-LNX3345.00 - HOLT.CO3 345.00 345KV CKT 1	720	720	0.07565	130.2798	RASMUSN - SIOUX CITY 230KV CKT 1
FDNS	00NR	0	17SP	G15_076	TO->FROM	GR ISLD-LNX3345.00 - HOLT.CO3 345.00 345KV CKT 1	720	720	0.07429	130.2216	GEN336191 1-LITTLE GYPSY UNIT#3
FDNS	00NR	0	17SP	G15_076	TO->FROM	GR ISLD-LNX3345.00 - HOLT.CO3 345.00 345KV CKT 1	720	720	0.07523	130.2052	LAKEFIELD 3 - NOBLES 345KV CKT 1
FDNS	00NR	0	17SP	G15_076	TO->FROM	GR ISLD-LNX3345.00 - HOLT.CO3 345.00 345KV CKT 1	720	720	0.07526	130.1874	DIXONCO 230.00 - HOSKINS 230KV CKT 1
FDNS	00NR	0	17SP	G15_076	TO->FROM	GR ISLD-LNX3345.00 - HOLT.CO3 345.00 345KV CKT 1	720	720	0.07776	130.1689	RAUN - SIOUX CITY 345KV CKT 1
FDNS	00NR	0	17SP	G15_076	TO->FROM	GR ISLD-LNX3345.00 - HOLT.CO3 345.00 345KV CKT 1	720	720	0.07776	130.1689	RAUN - SIOUX CITY 345KV CKT 1
FDNS	00NR	0	17SP	G15_076	TO->FROM	GR ISLD-LNX3345.00 - HOLT.CO3 345.00 345KV CKT 1	720	720	0.07145	130.1686	GERALD GENTLEMAN STATION - SWEETWATER 345KV CKT 2
FDNS	00NR	0	17SP	G15_076	TO->FROM	GR ISLD-LNX3345.00 - HOLT.CO3 345.00 345KV CKT 1	720	720	0.07429	130.1584	GEN641089 2-ENERGY CENTER 2
FDNS	00NR	0	17SP	G15_076	TO->FROM	GR ISLD-LNX3345.00 - HOLT.CO3 345.00 345KV CKT 1	720	720	0.07429	130.1576	GEN338388 1-1PLUM PT U1 23.000
FDNS	00NR	0	17SP	G15_076	TO->FROM	GR ISLD-LNX3345.00 - HOLT.CO3 345.00 345KV CKT 1	720	720	0.07429	130.1417	GEN336801 1-BAXTER WILSON UNIT #1
FDNS	00NR	0	17SP	G15_076	TO->FROM	GR ISLD-LNX3345.00 - HOLT.CO3 345.00 345KV CKT 1	720	720	0.07429	130.1167	GEN335614 1-WILLOW GLENN UNIT#4
FDNS	00NR	0	17SP	G15_076	TO->FROM	GR ISLD-LNX3345.00 - HOLT.CO3 345.00 345KV CKT 1	720	720	0.07429	130.109	GEN334441 1-SABINE UNIT 5
FDNS	00NR	0	17SP	G15_076	TO->FROM	GR ISLD-LNX3345.00 - HOLT.CO3 345.00 345KV CKT 1	720	720	0.07429	130.1016	GEN336464 1-MICHOUD UNIT #3
FDNS	00NR	0	17SP	G15_076	TO->FROM	GR ISLD-LNX3345.00 - HOLT.CO3 345.00 345KV CKT 1	720	720	0.07435	130.0948	ALEXMRES3 345.00 - WAITE PARK 345KV CKT 1
FDNS	00NR	0	17SP	G15_076	TO->FROM	GR ISLD-LNX3345.00 - HOLT.CO3 345.00 345KV CKT 1	720	720	0.07503	130.0928	KOSSUTH 3 345.00 - OBRIEN 3 345.00 345KV CKT 1
FDNS	00NR	0	17SP	G15_076	TO->FROM	GR ISLD-LNX3345.00 - HOLT.CO3 345.00 345KV CKT 1	720	720	0.07429	130.0884	GEN335204 1-NELSON UNIT 4
FDNS	00NR	0	17SP	G15_076	TO->FROM	GR ISLD-LNX3345.00 - HOLT.CO3 345.00 345KV CKT 1	720	720	0.08033	130.0811	COLUMEAST - SHELL CREEK 345KV CKT 1
FDNS	00NR	0	17SP	G15_076	TO->FROM	GR ISLD-LNX3345.00 - HOLT.CO3 345.00 345KV CKT 1	720	720	0.07467	130.0756	BROOKING COUNTY - LYON COUNTY 345KV CKT 1
FDNS	00NR	0	17SP	G15_076	TO->FROM	GR ISLD-LNX3345.00 - HOLT.CO3 345.00 345KV CKT 1	720	720	0.07432	130.0688	GLENBORO SOUTH - RUGBY 230KV CKT 1
FDNS	00NR	0	17SP	G15_076	TO->FROM	GR ISLD-LNX3345.00 - HOLT.CO3 345.00 345KV CKT 1	720	720	0.07503	130.0591	KOSSUTH 3 345.00 - WEBSTER 345KV CKT 1
FDNS	00NR	0	17SP	G15_076	TO->FROM	GR ISLD-LNX3345.00 - HOLT.CO3 345.00 345KV CKT 1	720	720	0.07428	130.0431	CENTER - COYOTE 345KV CKT 1
FDNS	00NR	0	17SP	G15_076	TO->FROM	GR ISLD-LNX3345.00 - HOLT.CO3 345.00 345KV CKT 1	720	720	0.07433	130.0358	BLAIR - GRANITE FALLS 230KV CKT 1
FDNS	00NR	0	17SP	G15_076	TO->FROM	GR ISLD-LNX3345.00 - HOLT.CO3 345.00 345KV CKT 1	720	720	0.07433	130.0358	BLAIR - GRANITE FALLS 230KV CKT 1
FDNS	00NR	0	17SP	G15_076	TO->FROM	GR ISLD-LNX3345.00 - HOLT.CO3 345.00 345KV CKT 1	720	720	0.08023	129.9869	COLUMEAST - NW68TH & HOLDREGE 345KV CKT 1
FDNS	00NR	0	17SP	G15_076	TO->FROM	GR ISLD-LNX3345.00 - HOLT.CO3 345.00 345KV CKT 1	720	720	0.08023	129.9869	COLUMEAST - NW68TH & HOLDREGE 345KV CKT 1
FDNS	00NR	0	17SP	G15_076	TO->FROM	GR ISLD-LNX3345.00 - HOLT.CO3 345.00 345KV CKT 1	720	720	0.0775	129.9757	STEGALL - STEGALL TRANSFORMER 230KV CKT 1
FDNS	00NR	0	17SP	G15_076	TO->FROM	GR ISLD-LNX3345.00 - HOLT.CO3 345.00 345KV CKT 1	720	720	0.0775	129.954	P13:230-345:NPPD:STEGALL3:KV3A
FDNS	00NR	0	17SP	G15_076	TO->FROM	GR ISLD-LNX3345.00 - HOLT.CO3 345.00 345KV CKT 1	720	720	0.0775	129.9444	STEGALL (SGQ KV3A) 345/230/13.8KV TRANSFORMER CKT 1
FDNS	00NR	0	17SP	G15_076	TO->FROM	GR ISLD-LNX3345.00 - HOLT.CO3 345.00 345KV CKT 1	720	720	0.07429	129.932	GEN334433 1-SABINE UNIT 3
FDNS	00NR	0	17SP	G15_076	TO->FROM	GR ISLD-LNX3345.00 - HOLT.CO3 345.00 345KV CKT 1	720	720	0.0747	129.9294	BYRON - NORTH ROCHESTER 345KV CKT 1
FDNS	00NR	0	17SP	G15_076	TO->FROM	GR ISLD-LNX3345.00 - HOLT.CO3 345.00 345KV CKT 1	720	720	0.07463	129.8959	G14-059T 230.00 - OGALLALA 230KV CKT 1
FDNS	00NR	0	17SP	G15_076	TO->FROM	GR ISLD-LNX3345.00 - HOLT.CO3 345.00 345KV CKT 1	720	720	0.07959	129.8863	STEGALL-LNX3230.00 - WAYSIDE 230KV CKT 1
FDNS	00NR	0	17SP	G15_076	TO->FROM	GR ISLD-LNX3345.00 - HOLT.CO3 345.00 345KV CKT 1	720	720	0.07289	129.8852	MENNO JCT - TRIPP JCT 115KV CKT 1
FDNS	00NR	0	17SP	G15_076	TO->FROM	GR ISLD-LNX3345.00 - HOLT.CO3 345.00 345KV CKT 1	720	720	0.07429	129.879	GEN629075 1-OTTUMWA GENERATOR FOR OTTUMWA UNIT NO 1
FDNS	00NR	0	17SP	G15_076	TO->FROM	GR ISLD-LNX3345.00 - HOLT.CO3 345.00 345KV CKT 1	720	720	0.07429	129.8763	GEN336222 1-LITTLE GYPSY UNIT#2
FDNS	00NR	0	17SP	G15_076	TO->FROM	GR ISLD-LNX3345.00 - HOLT.CO3 345.00 345KV CKT 1	720	720	0.07959	129.8744	STEGALL - STEGALL-LNX3230.00 230KV CKT Z
FDNS	00NR	0	17SP	G15_076	TO->FROM	GR ISLD-LNX3345.00 - HOLT.CO3 345.00 345KV CKT 1	720	720	0.07429	129.8681	P13:230-345:NPPD:NUCOR-1
FDNS	00NR	0	17SP	G15_076	TO->FROM	GR ISLD-LNX3345.00 - HOLT.CO3 345.00 345KV CKT 1	720	720	0.07429	129.8656	P12:115:UMZW:# 162 #: NEL IN ND. FAULT ON ML-NEL-MX-GA 115 KV
FDNS	00NR	0	17SP	G15_076	TO->FROM	GR ISLD-LNX3345.00 - HOLT.CO3 345.00 345KV CKT 1	720	720	0.07429	129.8586	GEN303007 1-1BC2 U2
FDNS	00NR	0	17SP	G15_076	TO->FROM	GR ISLD-LNX3345.00 - HOLT.CO3 345.00 345KV CKT 1	720	720	0.07429	129.8521	GEN303006 1-1BC2 U1
FDNS	00NR	0	17SP	G15_076	TO->FROM	GR ISLD-LNX3345.00 - HOLT.CO3 345.00 345KV CKT 1	720	720	0.07394	129.8079	FT THOMPSON - HURON 230KV CKT 1
FDNS	00NR	0	17SP	G15_076	TO->FROM	GR ISLD-LNX3345.00 - HOLT.CO3 345.00 345KV CKT 1	720	720	0.07394	129.8079	FT THOMPSON - HURON 230KV CKT 1
FDNS	00NR	0	17SP	G15_076	TO->FROM	GR ISLD-LNX3345.00 - HOLT.CO3 345.00 345KV CKT 1	720	720	0.07394	129.8079	FT THOMPSON - HURON 230KV CKT 2
FDNS	00NR	0	17SP	G15_076	TO->FROM	GR ISLD-LNX3345.00 - HOLT.CO3 345.00 345KV CKT 1	720	720	0.07394	129.8079	FT THOMPSON - HURON 230KV CKT 2
FDNS	00NR	0	17SP	G15_076	TO->FROM	GR ISLD-LNX3345.00 - HOLT.CO3 345.00 345KV CKT 1	720	720	0.07429	129.7903	GEN336152 1-WATERFORD UNIT#2
FDNS	00NR	0	17SP	G15_076	TO->FROM	GR ISLD-LNX3345.00 - HOLT.CO3 345.00 345KV CKT 1	720	720	0.07429	129.7898	GEN336151 1-WATERFORD UNIT#1
FDNS	00NR	0	17SP	G15_076	TO->FROM	GR ISLD-LNX3345.00 - HOLT.CO3 345.00 345KV CKT 1	720	720	0.07429	129.7763	GEN303008 1-1BC2 U3
FDNS	00NR	0	17SP	G15_076	TO->FROM	GR ISLD-LNX3345.00 - HOLT.CO3 345.00 345KV CKT 1	720	720	0.07428	129.768	GARRISON - JAMES TOWN 230KV CKT 1
FDNS	00NR	0	17SP	G15_076	TO->FROM	GR ISLD-LNX3345.00 - HOLT.CO3 345.00 345KV CKT 1	720	720	0.07429	129.7616	GEN336170 1-GULF OXY U4
FDNS	00NR	0	17SP	G15_076	TO->FROM	GR ISLD-LNX3345.00 - HOLT.CO3 345.00 345KV CKT 1	720	720	0.07289	129.7547	MENNO JCT - UTICA 115KV CKT 1
FDNS	00NR	0	17SP	G15_076	TO->FROM	GR ISLD-LNX3345.00 - HOLT.CO3 345.00 345KV CKT 1	720	720	0.07435	129.7464	HANKINSON - WAHPETON 230KV CKT 1
FDNS	00NR	0	17SP	G15_076	TO->FROM	GR ISLD-LNX3345.00 - HOLT.CO3 345.00 345KV CKT 1	720	720	0.07444	129.7276	NORTH ROCHESTER - PRAIRIE ISLAND 345KV CKT 1
FDNS	00NR	0	17SP	G15_076	TO->FROM	GR ISLD-LNX3345.00 - HOLT.CO3 345.00 345KV CKT 1	720	720	0.07634	129.7224	PETERSBRG.N7115.00 - PETERSBURG 115KV CKT Z1

SOLUTION	GROUP	SCENARIO	SEASON	SOURCE	DIRECTION	MONITORED ELEMENT	RATEA (MVA)	RATEB(MVA)	TDF	TC%LOADING (% MVA)	CONTINGENCY
FDNS	00NR	0	17SP	G15_076	TO->FROM	GR ISLD-LNX3345.00 - HOLT.CO3 345.00 345KV CKT 1	720	720	0.07438	129.7193	APPLEDORN 4 230.00 - WATERTOWN 230KV CKT 1
FDNS	00NR	0	17SP	G15_076	TO->FROM	GR ISLD-LNX3345.00 - HOLT.CO3 345.00 345KV CKT 1	720	720	0.07438	129.7193	APPLEDORN 4 230.00 - WATERTOWN 230KV CKT 1
FDNS	00NR	0	17SP	G15_076	TO->FROM	GR ISLD-LNX3345.00 - HOLT.CO3 345.00 345KV CKT 1	720	720	0.07289	129.713	P12:115:UMZZ:# 237 #: MEN IN SD. MENNO JUNCTION IS A TAP (UJ-MEN-TP).
FDNS	00NR	0	17SP	G15_076	TO->FROM	GR ISLD-LNX3345.00 - HOLT.CO3 345.00 345KV CKT 1	720	720	0.07634	129.6992	P12:115:NPPD:1168B:ALBION 7:PETERSBRG.N7:BTB
FDNS	00NR	0	17SP	G15_076	TO->FROM	GR ISLD-LNX3345.00 - HOLT.CO3 345.00 345KV CKT 1	720	720	0.07432	129.6955	FERGSFL4 230.00 - WAHPETON 230KV CKT 1
FDNS	00NR	0	17SP	G15_076	TO->FROM	GR ISLD-LNX3345.00 - HOLT.CO3 345.00 345KV CKT 1	720	720	0.07428	129.681	FARGO - JAMES TOWN 230KV CKT 1
FDNS	00NR	0	17SP	G15_076	TO->FROM	GR ISLD-LNX3345.00 - HOLT.CO3 345.00 345KV CKT 1	720	720	0.07459	129.6758	G15094_T 345.00 - LARAMIE RIVER 345KV CKT 1
FDNS	00NR	0	17SP	G15_076	TO->FROM	GR ISLD-LNX3345.00 - HOLT.CO3 345.00 345KV CKT 1	720	720	0.07429	129.6756	GEN501811 1-RODEMACHER UNIT 1
FDNS	00NR	0	17SP	G15_076	TO->FROM	GR ISLD-LNX3345.00 - HOLT.CO3 345.00 345KV CKT 1	720	720	0.07444	129.6691	ARKANSAS NUCLEAR ONE - FT SMITH 500KV CKT 1
FDNS	00NR	0	17SP	G15_076	TO->FROM	GR ISLD-LNX3345.00 - HOLT.CO3 345.00 345KV CKT 1	720	720	0.07444	129.6691	ARKANSAS NUCLEAR ONE - FT SMITH 500KV CKT 1
FDNS	00NR	0	17SP	G15_076	TO->FROM	GR ISLD-LNX3345.00 - HOLT.CO3 345.00 345KV CKT 1	720	720	0.07438	129.6632	APPLEDORN 4 230.00 - GRANITE FALLS 230KV CKT 1
FDNS	00NR	0	17SP	G15_076	TO->FROM	GR ISLD-LNX3345.00 - HOLT.CO3 345.00 345KV CKT 1	720	720	0.07438	129.6632	APPLEDORN 4 230.00 - GRANITE FALLS 230KV CKT 1
FDNS	00NR	0	17SP	G15_076	TO->FROM	GR ISLD-LNX3345.00 - HOLT.CO3 345.00 345KV CKT 1	720	720	0.07471	129.6631	BYRON - PLEASANT VALLEY 345KV CKT 1
FDNS	00NR	0	17SP	G15_076	TO->FROM	GR ISLD-LNX3345.00 - HOLT.CO3 345.00 345KV CKT 1	720	720	0.07634	129.653	ALBION - PETERSBURG 115KV CKT 1
FDNS	00NR	0	17SP	G15_076	TO->FROM	GR ISLD-LNX3345.00 - HOLT.CO3 345.00 345KV CKT 1	720	720	0.07429	129.6381	P13:115-230:NPPD:NUCOR-3
FDNS	00NR	0	17SP	G15_076	TO->FROM	GR ISLD-LNX3345.00 - HOLT.CO3 345.00 345KV CKT 1	720	720	0.07428	129.6381	FARGO - JAMES TOWN 230KV CKT 2
FDNS	00NR	0	17SP	G15_076	TO->FROM	GR ISLD-LNX3345.00 - HOLT.CO3 345.00 345KV CKT 1	720	720	0.07531	129.6266	DENISON - SIOUX CITY 230KV CKT 1
FDNS	00NR	0	17SP	G15_076	TO->FROM	GR ISLD-LNX3345.00 - HOLT.CO3 345.00 345KV CKT 1	720	720	0.07429	129.5995	P13:230:UMZW:# 2218 #: FP IN MT. LOSS OF TRANSFORMER (AT2).
FDNS	00NR	0	17SP	G15_076	TO->FROM	GR ISLD-LNX3345.00 - HOLT.CO3 345.00 345KV CKT 1	720	720	0.07458	129.5894	ARPIN B3 345.00 - ROCKY RN B8 345.00 345KV CKT 1
FDNS	00NR	0	17SP	G15_076	TO->FROM	GR ISLD-LNX3345.00 - HOLT.CO3 345.00 345KV CKT 1	720	720	0.07325	129.5716	P12:115:NPPD:1164:ONEILL 7:JEFFREY9:BTB
FDNS	00NR	0	17SP	G15_076	TO->FROM	GR ISLD-LNX3345.00 - HOLT.CO3 345.00 345KV CKT 1	720	720	0.07429	129.5522	GEN334071 1-LEWIS CREEK 2
FDNS	00NR	0	17SP	G15_076	TO->FROM	GR ISLD-LNX3345.00 - HOLT.CO3 345.00 345KV CKT 1	720	720	0.07429	129.5466	GEN334070 1-LEWIS CREEK 1
FDNS	00NR	0	17SP	G15_076	TO->FROM	GR ISLD-LNX3345.00 - HOLT.CO3 345.00 345KV CKT 1	720	720	0.07429	129.5428	GEN337766 1-TRACTEBEL UNIT S1
FDNS	00NR	0	17SP	G15_076	TO->FROM	GR ISLD-LNX3345.00 - HOLT.CO3 345.00 345KV CKT 1	720	720	0.07429	129.5165	P13:115-345:NPPD:NUCOR-2
FDNS	00NR	0	17SP	G15_076	TO->FROM	GR ISLD-LNX3345.00 - HOLT.CO3 345.00 345KV CKT 1	720	720	0.07478	129.5142	PALXFRASBTHI
FDNS	00NR	0	17SP	G15_076	TO->FROM	GR ISLD-LNX3345.00 - HOLT.CO3 345.00 345KV CKT 1	720	720	0.07478	129.514	7PALM TAP 345.00 - SUB T 345KV CKT 1
FDNS	00NR	0	17SP	G15_076	TO->FROM	GR ISLD-LNX3345.00 - HOLT.CO3 345.00 345KV CKT 1	720	720	0.07325	129.5074	CLEARWATER - ONEILL 115KV CKT 1
FDNS	00NR	0	17SP	G15_076	TO->FROM	GR ISLD-LNX3345.00 - HOLT.CO3 345.00 345KV CKT 1	720	720	0.07429	129.4982	GEN501910 1-ACADIA UNIT ST1
FDNS	00NR	0	17SP	G15_076	TO->FROM	GR ISLD-LNX3345.00 - HOLT.CO3 345.00 345KV CKT 1	720	720	0.07506	129.4883	NOBLES - SPLIT ROCK 345KV CKT 1
FDNS	00NR	0	17SP	G15_076	TO->FROM	GR ISLD-LNX3345.00 - HOLT.CO3 345.00 345KV CKT 1	720	720	0.0749	129.4778	P12:115:NPPD:WAPA1:CHADRON7:BOXBUTE7:BTB
FDNS	00NR	0	17SP	G15_076	TO->FROM	GR ISLD-LNX3345.00 - HOLT.CO3 345.00 345KV CKT 1	720	720	0.07429	129.4766	GEN562596 1-G14_059_3 0.6900
FDNS	00NR	0	17SP	G15_076	TO->FROM	GR ISLD-LNX3345.00 - HOLT.CO3 345.00 345KV CKT 1	720	720	0.07386	129.476	MT VERN - STORLA 115KV CKT 1
FDNS	00NR	0	17SP	G15_076	TO->FROM	GR ISLD-LNX3345.00 - HOLT.CO3 345.00 345KV CKT 1	720	720	0.07429	129.465	GEN345765 H-1SIOUX 2 18.000
FDNS	00NR	0	17SP	G15_076	TO->FROM	GR ISLD-LNX3345.00 - HOLT.CO3 345.00 345KV CKT 1	720	720	0.07458	129.4437	CHADRON - WAYSIDE 115KV CKT 1
FDNS	00NR	0	17SP	G15_076	TO->FROM	GR ISLD-LNX3345.00 - HOLT.CO3 345.00 345KV CKT 1	720	720	0.07458	129.4437	P13:115-230:NPPD:WAYSIDE4:T1
FDNS	00NR	0	17SP	G15_076	TO->FROM	GR ISLD-LNX3345.00 - HOLT.CO3 345.00 345KV CKT 1	720	720	0.07458	129.4411	WAYSIDE (WAYSIDE T1) 230/115/13.8KV TRANSFORMER CKT 1
FDNS	00NR	0	17SP	G15_076	TO->FROM	GR ISLD-LNX3345.00 - HOLT.CO3 345.00 345KV CKT 1	720	720	0.07634	129.4326	NELIGH - PETERSBRG.N7115.00 115KV CKT 1
FDNS	00NR	0	17SP	G15_076	TO->FROM	GR ISLD-LNX3345.00 - HOLT.CO3 345.00 345KV CKT 1	720	720	0.07429	129.4305	GEN337764 1-TRACTEBEL UNIT C1
FDNS	00NR	0	17SP	G15_076	TO->FROM	GR ISLD-LNX3345.00 - HOLT.CO3 345.00 345KV CKT 1	720	720	0.07429	129.4305	GEN337765 1-TRACTEBEL UNIT C2
FDNS	00NR	0	17SP	G15_076	TO->FROM	GR ISLD-LNX3345.00 - HOLT.CO3 345.00 345KV CKT 1	720	720	0.07429	129.4182	GRAND GULF 500/22.0KV TRANSFORMER CKT 1
FDNS	00NR	0	17SP	G15_076	TO->FROM	GR ISLD-LNX3345.00 - HOLT.CO3 345.00 345KV CKT 1	720	720	0.07443	129.4022	FRANKS - HUBEN 345KV CKT 1
FDNS	00NR	0	17SP	G15_076	TO->FROM	GR ISLD-LNX3345.00 - HOLT.CO3 345.00 345KV CKT 1	720	720	0.0749	129.3835	CHADRON - DUNLAP 115KV CKT 1
FDNS	00NR	0	17SP	G15_076	TO->FROM	GR ISLD-LNX3345.00 - HOLT.CO3 345.00 345KV CKT 1	720	720	0.07429	129.1445	GEN659118 1-LARAMIE RIVER UNIT1
FDNS	00NR	0	17SP	G15_076	TO->FROM	GR ISLD-LNX3345.00 - HOLT.CO3 345.00 345KV CKT 1	720	720	0.07429	129.0069	GEN563282 1-G15094_3 0.6900
FDNS	00NR	0	17SP	G15_076	TO->FROM	GR ISLD-LNX3345.00 - HOLT.CO3 345.00 345KV CKT 1	720	720	0.07429	128.7833	BASE CASE
FDNS	00NR	0	17SP	G15_076	TO->FROM	GR ISLD-LNX3345.00 - HOLT.CO3 345.00 345KV CKT 1	720	720	0.08618	128.7328	COLUMWEST - KELLY 230KV CKT 1
FDNS	00NR	0	17SP	G15_076	TO->FROM	GR ISLD-LNX3345.00 - HOLT.CO3 345.00 345KV CKT 1	720	720	0.07429	128.6085	GR ISLD-LNX3345.00 345KV SWITCHED SHUNT
FDNS	00NR	0	17SP	G15_076	TO->FROM	GR ISLD-LNX3345.00 - HOLT.CO3 345.00 345KV CKT 1	720	720	0.07429	128.5741	GEN645001 1-FORT CALHOUN 1
FDNS	00NR	0	17SP	G15_076	TO->FROM	GR ISLD-LNX3345.00 - HOLT.CO3 345.00 345KV CKT 1	720	720	0.07447	128.523	FT THOMPSON - OAHE 230KV CKT 1
FDNS	00NR	0	17SP	G15_076	TO->FROM	GR ISLD-LNX3345.00 - HOLT.CO3 345.00 345KV CKT 1	720	720	0.07447	128.523	FT THOMPSON - OAHE 230KV CKT 1
FDNS	00NR	0	17SP	G15_076	TO->FROM	GR ISLD-LNX3345.00 - HOLT.CO3 345.00 345KV CKT 1	720	720	0.07447	128.523	FT THOMPSON - OAHE 230KV CKT 2
FDNS	00NR	0	17SP	G15_076	TO->FROM	GR ISLD-LNX3345.00 - HOLT.CO3 345.00 345KV CKT 1	720	720	0.07447	128.523	FT THOMPSON - OAHE 230KV CKT 2
FDNS	00NR	0	17SP	G15_076	TO->FROM	GR ISLD-LNX3345.00 - HOLT.CO3 345.00 345KV CKT 1	720	720	0.07447	128.4833	FT THOMPSON - OAHE 230KV CKT 3
FDNS	00NR	0	17SP	G15_076	TO->FROM	GR ISLD-LNX3345.00 - HOLT.CO3 345.00 345KV CKT 1	720	720	0.07447	128.4833	FT THOMPSON - OAHE 230KV CKT 3
FDNS	00NR	0	17SP	G15_076	TO->FROM	GR ISLD-LNX3345.00 - HOLT.CO3 345.00 345KV CKT 1	720	720	0.07447	128.4833	FT THOMPSON - OAHE 230KV CKT 4
FDNS	00NR	0	17SP	G15_076	TO->FROM	GR ISLD-LNX3345.00 - HOLT.CO3 345.00 345KV CKT 1	720	720	0.07447	128.4833	FT THOMPSON - OAHE 230KV CKT 4
FDNS	00NR	0	17SP	G15_076	TO->FROM	GR ISLD-LNX3345.00 - HOLT.CO3 345.00 345KV CKT 1	720	720	0.07429	128.4448	FTTHOM2-LNX3345.00 345KV SWITCHED SHUNT
FDNS	00NR	0	17SP	G15_076	TO->FROM	GR ISLD-LNX3345.00 - HOLT.CO3 345.00 345KV CKT 1	720	720	0.07583	128.4156	AXTELL - PAULINE 345KV CKT 1
FDNS	00NR	0	17SP	G15_076	TO->FROM	GR ISLD-LNX3345.00 - HOLT.CO3 345.00 345KV CKT 1	720	720	0.07408	128.3602	GRAND ISLAND (GRAND.ISD T5) 230/115/13.8KV TRANSFORMER CKT 2
FDNS	00NR	0	17SP	G15_076	TO->FROM	GR ISLD-LNX3345.00 - HOLT.CO3 345.00 345KV CKT 1	720	720	0.07408	128.3602	GRAND ISLAND (GRAND.ISD T5) 230/115/13.8KV TRANSFORMER CKT 2
FDNS	00NR	0	17SP	G15_076	TO->FROM	GR ISLD-LNX3345.00 - HOLT.CO3 345.00 345KV CKT 1	720	720	0.07408	128.3578	GRAND ISLAND (GRAND.ISD T2) 230/115/13.8KV TRANSFORMER CKT 1
FDNS	00NR	0	17SP	G15_076	TO->FROM	GR ISLD-LNX3345.00 - HOLT.CO3 345.00 345KV CKT 1	720	720	0.07408	128.3578	GRAND ISLAND (GRAND.ISD T2) 230/115/13.8KV TRANSFORMER CKT 1
FDNS	00NR	0	17SP	G15_076	TO->FROM	GR ISLD-LNX3345.00 - HOLT.CO3 345.00 345KV CKT 1	720	720	0.07548	128.3033	MAXWELL - NORTH PLATTE 115KV CKT 1
FDNS	00NR	0	17SP	G15_076	TO->FROM	GR ISLD-LNX3345.00 - HOLT.CO3 345.00 345KV CKT 1	720	720	0.07439	128.2897	ANTELOP-LNX3345.00 - BRDLAND-LNX3345.00 345KV CKT 1
FDNS	00NR	0	17SP	G15_076	TO->FROM	GR ISLD-LNX3345.00 - HOLT.CO3 345.00 345KV CKT 1	720	720	0.07426	128.28	GRAND ISLAND (GI KU1B) 345/230/13.8KV TRANSFORMER CKT 2
FDNS	00NR	0	17SP	G15_076	TO->FROM	GR ISLD-LNX3345.00 - HOLT.CO3 345.00 345KV CKT 1	720	720	0.07426	128.28	GRAND ISLAND (GI KU1B) 345/230/13.8KV TRANSFORMER CKT 2
FDNS	00NR	0	17SP	G15_076	TO->FROM	GR ISLD-LNX3345.00 - HOLT.CO3 345.00 345KV CKT 1	720	720	0.07426	128.279	GRAND ISLAND (GI KU1A) 345/230/13.8KV TRANSFORMER CKT 1
FDNS	00NR	0	17SP	G15_076	TO->FROM	GR ISLD-LNX3345.00 - HOLT.CO3 345.00 345KV CKT 1	720	720	0.07426	128.279	GRAND ISLAND (GI KU1A) 345/230/13.8KV TRANSFORMER CKT 1
FDNS	00NR	0	17SP	G15_076	TO->FROM	GR ISLD-LNX3345.00 - HOLT.CO3 345.00 345KV CKT 1	720	720	0.07676	128.2493	SUB 3454 - WAGENER 345KV CKT 1
FDNS	00NR	0	17SP	G15_076	TO->FROM	GR ISLD-LNX3345.00 - HOLT.CO3 345.00 345KV CKT 1	720	720	0.07676	128.2493	SUB 3454 - WAGENER 345KV CKT 1
FDNS	00NR	0	17SP	G15_076	TO->FROM	GR ISLD-LNX3345.00 - HOLT.CO3 345.00 345KV CKT 1	720	720	0.07429	128.1978	GEN652548 5-FT RANDAL
FDNS	00NR	0	17SP	G15_076	TO->FROM	GR ISLD-LNX3345.00 - HOLT.CO3 345.00 345KV CKT 1	720	720	0.07429	128.1978	GEN652549 7-FT RANDAL
FDNS	00NR	0	17SP	G15_076	TO->FROM	GR ISLD-LNX3345.00 - HOLT.CO3 345.00 345KV CKT 1	720	720	0.07429	128.1853	GEN652547 3-FT RANDAL
FDNS	00NR	0	17SP	G15_076	TO->FROM	GR ISLD-LNX3345.00 - HOLT.CO3 345.00 345KV CKT 1	720	720	0.07465	128.1852	P12:115:UMZW:# 172 #: WI IN SD.
FDNS	00NR	0	17SP	G15_076	TO->FROM	GR ISLD-LNX3345.00 - HOLT.CO3 345.00 345KV CKT 1	720	720	0.07619	128.1808	GERALD GENTLEMAN STATION - RED WILLOW 345KV CKT 1
FDNS	00NR	0	17SP	G15_076	TO->FROM	GR ISLD-LNX3345.00 - HOLT.CO3 345.00 345KV CKT 1	720	720	0.07429	128.1766	GEN660003 3-HURON WEST PARK
FDNS	00NR	0	17SP	G15_076	TO->FROM	GR ISLD-LNX3345.00 - HOLT.CO3 345.00 345KV CKT 1	720	720	0.07806	128.1703	MINGO - RED WILLOW 345KV CKT 1
FDNS	00NR	0	17SP	G15_076	TO->FROM	GR ISLD-LNX3345.00 - HOLT.CO3 345.00 345KV CKT 1	720	720	0.07806	128.1703	MINGO - RED WILLOW 345KV CKT 1
FDNS	00NR	0	17SP	G15_076	TO->FROM	GR ISLD-LNX3345.00 - HOLT.CO3 345.00 345KV CKT 1	720	720	0.07446	128.1617	G11_051T 345.00 - WOODWARD DISTRICT EHV 345KV CKT 1

SOLUTION	GROUP	SCENARIO	SEASON	SOURCE	DIRECTION	MONITORED ELEMENT	RATEA (MVA)	RATEB(MVA)	TDF	TC%LOADING (% MVA)	CONTINGENCY
FDNS	00NR	0	17SP	G15_076	TO->FROM	GR ISLD-LNX3345.00 - HOLT.CO3 345.00 345KV CKT 1	720	720	0.07429	128.1458	GEN600020 2-ANGUS ANSON1
FDNS	00NR	0	17SP	G15_076	TO->FROM	GR ISLD-LNX3345.00 - HOLT.CO3 345.00 345KV CKT 1	720	720	0.07651	128.1417	LOUP CITY - NORTH LOUP 115KV CKT 1
FDNS	00NR	0	17SP	G15_076	TO->FROM	GR ISLD-LNX3345.00 - HOLT.CO3 345.00 345KV CKT 1	720	720	0.07429	128.1392	GEN600021 3-ANGUS ANSON2
FDNS	00NR	0	17SP	G15_076	TO->FROM	GR ISLD-LNX3345.00 - HOLT.CO3 345.00 345KV CKT 1	720	720	0.07429	128.1088	GEN600012 2-BLACK DOG GEN 2
FDNS	00NR	0	17SP	G15_076	TO->FROM	GR ISLD-LNX3345.00 - HOLT.CO3 345.00 345KV CKT 1	720	720	0.07429	128.1041	GEN590010 1-ERCOT EQUIVALENCE
FDNS	00NR	0	17SP	G15_076	TO->FROM	GR ISLD-LNX3345.00 - HOLT.CO3 345.00 345KV CKT 1	720	720	0.07429	128.0882	GEN659290 1-EDGECOL
FDNS	00NR	0	17SP	G15_076	TO->FROM	GR ISLD-LNX3345.00 - HOLT.CO3 345.00 345KV CKT 1	720	720	0.07647	128.0814	MINGO - SETAB 345KV CKT 1
FDNS	00NR	0	17SP	G15_076	TO->FROM	GR ISLD-LNX3345.00 - HOLT.CO3 345.00 345KV CKT 1	720	720	0.07647	128.0814	MINGO - SETAB 345KV CKT 1
FDNS	00NR	0	17SP	G15_076	TO->FROM	GR ISLD-LNX3345.00 - HOLT.CO3 345.00 345KV CKT 1	720	720	0.07429	128.0735	EASTDC - ERCOT EQUIVALENCE 345KV CKT 1
FDNS	00NR	0	17SP	G15_076	TO->FROM	GR ISLD-LNX3345.00 - HOLT.CO3 345.00 345KV CKT 1	720	720	0.07429	128.0735	GEN629072 4-LANSING GENERATOR FOR UNITS NO4 EIA CODE 1
FDNS	00NR	0	17SP	G15_076	TO->FROM	GR ISLD-LNX3345.00 - HOLT.CO3 345.00 345KV CKT 1	720	720	0.07429	128.0722	GEN590011 2-ERCOT EQUIVALENCE
FDNS	00NR	0	17SP	G15_076	TO->FROM	GR ISLD-LNX3345.00 - HOLT.CO3 345.00 345KV CKT 1	720	720	0.07429	128.0699	GEN300003 1-THOMAS HILL UNIT 3
FDNS	00NR	0	17SP	G15_076	TO->FROM	GR ISLD-LNX3345.00 - HOLT.CO3 345.00 345KV CKT 1	720	720	0.07425	128.0352	GRAND ISLAND (GI KU3A) 345/230/13.8KV TRANSFORMER CKT 3
FDNS	00NR	0	17SP	G15_076	TO->FROM	GR ISLD-LNX3345.00 - HOLT.CO3 345.00 345KV CKT 1	720	720	0.07425	128.0352	GRAND ISLAND (GI KU3A) 345/230/13.8KV TRANSFORMER CKT 3
FDNS	00NR	0	17SP	G15_076	TO->FROM	GR ISLD-LNX3345.00 - HOLT.CO3 345.00 345KV CKT 1	720	720	0.07429	128.0217	GEN652414 4-FT PECK
FDNS	00NR	0	17SP	G15_076	TO->FROM	GR ISLD-LNX3345.00 - HOLT.CO3 345.00 345KV CKT 1	720	720	0.07429	128.0217	GEN652415 5-FT PECK
FDNS	00NR	0	17SP	G15_076	TO->FROM	GR ISLD-LNX3345.00 - HOLT.CO3 345.00 345KV CKT 1	720	720	0.07429	128.0199	LADISH 115/13.2KV TRANSFORMER CKT 1
FDNS	00NR	0	17SP	G15_076	TO->FROM	GR ISLD-LNX3345.00 - HOLT.CO3 345.00 345KV CKT 1	720	720	0.07429	128.0124	GEN660001 2-ABERDEEN SIEBRECHT
FDNS	00NR	0	17SP	G15_076	TO->FROM	GR ISLD-LNX3345.00 - HOLT.CO3 345.00 345KV CKT 1	720	720	0.07526	127.9985	DIXONCO 230.00 - TWIN CHURCH 230KV CKT 1
FDNSLock	00NR	0	17SP	G15_076	TO->FROM	GR ISLD-LNX3345.00 - HOLT.CO3 345.00 345KV CKT 1	720	720	0.07633	127.9874	CENTRAL CITY - GRAND ISLAND 115KV CKT 1
FDNS	00NR	0	17SP	G15_076	TO->FROM	GR ISLD-LNX3345.00 - HOLT.CO3 345.00 345KV CKT 1	720	720	0.07429	127.9869	EMERY 161/18.0KV TRANSFORMER CKT 1
FDNS	00NR	0	17SP	G15_076	TO->FROM	GR ISLD-LNX3345.00 - HOLT.CO3 345.00 345KV CKT 1	720	720	0.07429	127.9678	GEN600050 1-FEP
FDNS	00NR	0	17SP	G15_076	TO->FROM	GR ISLD-LNX3345.00 - HOLT.CO3 345.00 345KV CKT 1	720	720	0.07429	127.9662	GEN652345 W-G07_023IS_2 0.6900
FDNS	00NR	0	17SP	G15_076	TO->FROM	GR ISLD-LNX3345.00 - HOLT.CO3 345.00 345KV CKT 1	720	720	0.07824	127.9535	G15088_T 345.00 - PAULINE 345KV CKT 1
FDNS	00NR	0	17SP	G15_076	TO->FROM	GR ISLD-LNX3345.00 - HOLT.CO3 345.00 345KV CKT 1	720	720	0.07429	127.9461	GEN 11104 1-J262_GEN 0.6000
FDNS	00NR	0	17SP	G15_076	TO->FROM	GR ISLD-LNX3345.00 - HOLT.CO3 345.00 345KV CKT 1	720	720	0.07429	127.9461	GEN 11108 1-J263_GEN 0.6000
FDNS	00NR	0	17SP	G15_076	TO->FROM	GR ISLD-LNX3345.00 - HOLT.CO3 345.00 345KV CKT 1	720	720	0.07429	127.925	GEN600046 1-MECST
FDNS	00NR	0	17SP	G15_076	TO->FROM	GR ISLD-LNX3345.00 - HOLT.CO3 345.00 345KV CKT 1	720	720	0.07439	127.9234	P12:345:UMZB:# 102 #: AVS BD IN ND. AVS BRD LR
FDNS	00NR	0	17SP	G15_076	TO->FROM	GR ISLD-LNX3345.00 - HOLT.CO3 345.00 345KV CKT 1	720	720	0.07439	127.9218	P12:345:UMZB:# 103 #: BD IN SD. LOSS OF LINE
FDNS	00NR	0	17SP	G15_076	TO->FROM	GR ISLD-LNX3345.00 - HOLT.CO3 345.00 345KV CKT 1	720	720	0.07439	127.9214	BRDLAND-LNX3345.00 - HURON 345KV CKT Z
FDNS	00NR	0	17SP	G15_076	TO->FROM	GR ISLD-LNX3345.00 - HOLT.CO3 345.00 345KV CKT 1	720	720	0.07429	127.9202	GEN300007 1-NEW MADRID UNIT 2
FDNS	00NR	0	17SP	G15_076	TO->FROM	GR ISLD-LNX3345.00 - HOLT.CO3 345.00 345KV CKT 1	720	720	0.07439	127.9198	BROADLAND - HURON 230KV CKT 1
FDNS	00NR	0	17SP	G15_076	TO->FROM	GR ISLD-LNX3345.00 - HOLT.CO3 345.00 345KV CKT 1	720	720	0.07439	127.9197	HURON (BD KU2A) 345/230/13.8KV TRANSFORMER CKT 1
FDNS	00NR	0	17SP	G15_076	TO->FROM	GR ISLD-LNX3345.00 - HOLT.CO3 345.00 345KV CKT 1	720	720	0.07439	127.9197	HURON (BD KU2A) 345/230/13.8KV TRANSFORMER CKT 1
FDNS	00NR	0	17SP	G15_076	TO->FROM	GR ISLD-LNX3345.00 - HOLT.CO3 345.00 345KV CKT 1	720	720	0.07429	127.9196	G830_SUB 115.00 - GRE-MCHENRY7115.00 115KV CKT 1
FDNS	00NR	0	17SP	G15_076	TO->FROM	GR ISLD-LNX3345.00 - HOLT.CO3 345.00 345KV CKT 1	720	720	0.07429	127.9178	G830_SUB 115.00 115/34.5KV TRANSFORMER CKT 1
FDNS	00NR	0	17SP	G15_076	TO->FROM	GR ISLD-LNX3345.00 - HOLT.CO3 345.00 345KV CKT 1	720	720	0.07429	127.9136	GEN300006 1-NEW MADRID UNIT 1
FDNS	00NR	0	17SP	G15_076	TO->FROM	GR ISLD-LNX3345.00 - HOLT.CO3 345.00 345KV CKT 1	720	720	0.0746	127.9045	POST ROCK (POSTROCK T1) 345/230/13.8KV TRANSFORMER CKT 1
FDNS	00NR	0	17SP	G15_076	TO->FROM	GR ISLD-LNX3345.00 - HOLT.CO3 345.00 345KV CKT 1	720	720	0.07432	127.8995	DRAYTON - LETELLIER 230KV CKT 1
FDNS	00NR	0	17SP	G15_076	TO->FROM	GR ISLD-LNX3345.00 - HOLT.CO3 345.00 345KV CKT 1	720	720	0.07429	127.8994	GEN600047 1-MECCT1
FDNS	00NR	0	17SP	G15_076	TO->FROM	GR ISLD-LNX3345.00 - HOLT.CO3 345.00 345KV CKT 1	720	720	0.07429	127.8839	GEN600063 1-COLVILLE GEN 1
FDNS	00NR	0	17SP	G15_076	TO->FROM	GR ISLD-LNX3345.00 - HOLT.CO3 345.00 345KV CKT 1	720	720	0.07429	127.8839	GEN600064 2-COLVILLE GEN 2
FDNS	00NR	0	17SP	G15_076	TO->FROM	GR ISLD-LNX3345.00 - HOLT.CO3 345.00 345KV CKT 1	720	720	0.07429	127.8805	GEN600043 7-BLUE LAKE5
FDNS	00NR	0	17SP	G15_076	TO->FROM	GR ISLD-LNX3345.00 - HOLT.CO3 345.00 345KV CKT 1	720	720	0.07429	127.8805	GEN600044 8-BLUE LAKE6
FDNS	00NR	0	17SP	G15_076	TO->FROM	GR ISLD-LNX3345.00 - HOLT.CO3 345.00 345KV CKT 1	720	720	0.07273	127.8493	COOPER - MOORE 345KV CKT 1
FDNS	00NR	0	17SP	G15_076	TO->FROM	GR ISLD-LNX3345.00 - HOLT.CO3 345.00 345KV CKT 1	720	720	0.07429	127.8416	GEN600065 7-HIGH BRIDGE
FDNS	00NR	0	17SP	G15_076	TO->FROM	GR ISLD-LNX3345.00 - HOLT.CO3 345.00 345KV CKT 1	720	720	0.07429	127.8416	GEN600066 8-HIGH BRIDGE
FDNS	00NR	0	17SP	G15_076	TO->FROM	GR ISLD-LNX3345.00 - HOLT.CO3 345.00 345KV CKT 1	720	720	0.07429	127.8396	GEN600014 4-BLACK DOG GEN 4
FDNS	00NR	0	17SP	G15_076	TO->FROM	GR ISLD-LNX3345.00 - HOLT.CO3 345.00 345KV CKT 1	720	720	0.07429	127.8352	GEN600011 5-BLACK DOG GEN 1
FDNS	00NR	0	17SP	G15_076	TO->FROM	GR ISLD-LNX3345.00 - HOLT.CO3 345.00 345KV CKT 1	720	720	0.07429	127.8275	GEN600071 10-RIVER SIDE
FDNS	00NR	0	17SP	G15_076	TO->FROM	GR ISLD-LNX3345.00 - HOLT.CO3 345.00 345KV CKT 1	720	720	0.07429	127.8274	GEN600070 9-RIVER SIDE
FDNS	00NR	0	17SP	G15_076	TO->FROM	GR ISLD-LNX3345.00 - HOLT.CO3 345.00 345KV CKT 1	720	720	0.07429	127.8156	GEN659273 2-GROTON SYNC COND
FDNS	00NR	0	17SP	G15_076	TO->FROM	GR ISLD-LNX3345.00 - HOLT.CO3 345.00 345KV CKT 1	720	720	0.07429	127.8156	GEN659294 1-WILTONCOL9
FDNS	00NR	0	17SP	G15_076	TO->FROM	GR ISLD-LNX3345.00 - HOLT.CO3 345.00 345KV CKT 1	720	720	0.07429	127.8136	GEN600007 7-RIVERSIDE GEN 7
FDNS	00NR	0	17SP	G15_076	TO->FROM	GR ISLD-LNX3345.00 - HOLT.CO3 345.00 345KV CKT 1	720	720	0.07627	127.8127	103RD & ROKEBY - MOORE 345KV CKT 1
FDNS	00NR	0	17SP	G15_076	TO->FROM	GR ISLD-LNX3345.00 - HOLT.CO3 345.00 345KV CKT 1	720	720	0.07627	127.8127	103RD & ROKEBY - MOORE 345KV CKT 1
FDNS	00NR	0	17SP	G15_076	TO->FROM	GR ISLD-LNX3345.00 - HOLT.CO3 345.00 345KV CKT 1	720	720	0.07429	127.8082	GEN600045 4-ANSON
FDNS	00NR	0	17SP	G15_076	TO->FROM	GR ISLD-LNX3345.00 - HOLT.CO3 345.00 345KV CKT 1	720	720	0.08618	127.8005	COLUMWEST - GRAND ISLAND 230KV CKT 1
FDNS	00NR	0	17SP	G15_076	TO->FROM	GR ISLD-LNX3345.00 - HOLT.CO3 345.00 345KV CKT 1	720	720	0.07429	127.7847	GEN600017 C-LS POWER CT
FDNS	00NR	0	17SP	G15_076	TO->FROM	GR ISLD-LNX3345.00 - HOLT.CO3 345.00 345KV CKT 1	720	720	0.07429	127.783	LANSING WEST 161/22.0KV TRANSFORMER CKT 1
FDNS	00NR	0	17SP	G15_076	TO->FROM	GR ISLD-LNX3345.00 - HOLT.CO3 345.00 345KV CKT 1	720	720	0.07429	127.7806	GEN659192 6-LYNN
FDNS	00NR	0	17SP	G15_076	TO->FROM	GR ISLD-LNX3345.00 - HOLT.CO3 345.00 345KV CKT 1	720	720	0.07429	127.7798	GEN659162 4-RED WLCK
FDNS	00NR	0	17SP	G15_076	TO->FROM	GR ISLD-LNX3345.00 - HOLT.CO3 345.00 345KV CKT 1	720	720	0.07429	127.7798	GEN659163 5-BLACK WDCK
FDNS	00NR	0	17SP	G15_076	TO->FROM	GR ISLD-LNX3345.00 - HOLT.CO3 345.00 345KV CKT 1	720	720	0.07446	127.7672	G11_051T 345.00 - TATONGA7 345.00 345KV CKT 1
FDNS	00NR	0	17SP	G15_076	TO->FROM	GR ISLD-LNX3345.00 - HOLT.CO3 345.00 345KV CKT 1	720	720	0.07429	127.7597	GEN 10648 1-G830_GEN 0.6900
FDNS	00NR	0	17SP	G15_076	TO->FROM	GR ISLD-LNX3345.00 - HOLT.CO3 345.00 345KV CKT 1	720	720	0.07429	127.7506	CENTER 230/22.0KV TRANSFORMER CKT 1
FDNS	00NR	0	17SP	G15_076	TO->FROM	GR ISLD-LNX3345.00 - HOLT.CO3 345.00 345KV CKT 1	720	720	0.07429	127.7325	GEN615021 1-GRE-ER 14G 16.000
FDNS	00NR	0	17SP	G15_076	TO->FROM	GR ISLD-LNX3345.00 - HOLT.CO3 345.00 345KV CKT 1	720	720	0.07424	127.7317	OAHE - SULLEY BUTTE 230KV CKT 1
FDNS	00NR	0	17SP	G15_076	TO->FROM	GR ISLD-LNX3345.00 - HOLT.CO3 345.00 345KV CKT 1	720	720	0.07429	127.7276	GEN659031 1-G12_014IS_4 0.6900
FDNS	00NR	0	17SP	G15_076	TO->FROM	GR ISLD-LNX3345.00 - HOLT.CO3 345.00 345KV CKT 1	720	720	0.07429	127.7153	GEN615052 1-CAMBRIDGE GENERATING STATION
FDNS	00NR	0	17SP	G15_076	TO->FROM	GR ISLD-LNX3345.00 - HOLT.CO3 345.00 345KV CKT 1	720	720	0.07429	127.6794	GEN615015 1-GRE-SPRITWDG13.200
FDNS	00NR	0	17SP	G15_076	TO->FROM	GR ISLD-LNX3345.00 - HOLT.CO3 345.00 345KV CKT 1	720	720	0.07429	127.6783	GEN681522 3-GENOA 3
FDNS	00NR	0	17SP	G15_076	TO->FROM	GR ISLD-LNX3345.00 - HOLT.CO3 345.00 345KV CKT 1	720	720	0.07577	127.6289	AXTELL - POST ROCK 345KV CKT 1
FDNS	00NR	0	17SP	G15_076	TO->FROM	GR ISLD-LNX3345.00 - HOLT.CO3 345.00 345KV CKT 1	720	720	0.07439	127.6025	ANTELOP-LNX3345.00 - ANTELOPE VALLEY 345KV CKT Z
FDNS	00NR	0	17SP	G15_076	TO->FROM	GR ISLD-LNX3345.00 - HOLT.CO3 345.00 345KV CKT 1	720	720	0.07424	127.592	SULLYBT-LNX3230.00 - WHITLOK 230KV CKT 1
FDNS	00NR	0	17SP	G15_076	TO->FROM	GR ISLD-LNX3345.00 - HOLT.CO3 345.00 345KV CKT 1	720	720	0.07424	127.5874	SULLEY BUTTE - SULLYBT-LNX3230.00 230KV CKT Z
FDNS	00NR	0	17SP	G15_076	TO->FROM	GR ISLD-LNX3345.00 - HOLT.CO3 345.00 345KV CKT 1	720	720	0.07429	127.5764	GEN660016 1-B_H WIND 0.7000
FDNS	00NR	0	17SP	G15_076	TO->FROM	GR ISLD-LNX3345.00 - HOLT.CO3 345.00 345KV CKT 1	720	720	0.07429	127.5654	GEN659353 1-DEERCREK CTG18.000
FDNS	00NR	0	17SP	G15_076	TO->FROM	GR ISLD-LNX3345.00 - HOLT.CO3 345.00 345KV CKT 1	720	720	0.07429	127.5612	GEN659354 1-DEERCREK STG18.000

SOLUTION	GROUP	SCENARIO	SEASON	SOURCE	DIRECTION	MONITORED ELEMENT	RATEA (MVA)	RATEB(MVA)	TDF	TC%LOADING (% MVA)	CONTINGENCY
FDNS	00NR	0	17SP	G15_076	TO->FROM	GR ISLD-LNX3345.00 - HOLT.CO3 345.00 345KV CKT 1	720	720	0.07424	127.5282	P12:230:UMZB:# 114 #: SB IN SD. SB-WK-GH
FDNS	00NR	0	17SP	G15_076	TO->FROM	GR ISLD-LNX3345.00 - HOLT.CO3 345.00 345KV CKT 1	720	720	0.07424	127.5282	P12:230:UMZB:# 117 #: WK IN SD. SB-WK-GH
FDNS	00NR	0	17SP	G15_076	TO->FROM	GR ISLD-LNX3345.00 - HOLT.CO3 345.00 345KV CKT 1	720	720	0.07446	127.5177	MATHWSN7 345.00 - TATONGA7 345.00 345KV CKT 1
FDNS	00NR	0	17SP	G15_076	TO->FROM	GR ISLD-LNX3345.00 - HOLT.CO3 345.00 345KV CKT 1	720	720	0.07429	127.5002	GEN672303 3-BOUNDARY DAM GENERATOR 3
FDNS	00NR	0	17SP	G15_076	TO->FROM	GR ISLD-LNX3345.00 - HOLT.CO3 345.00 345KV CKT 1	720	720	0.07429	127.5002	GEN672305 5-BOUNDARY DAM GENERATOR 5
FDNS	00NR	0	17SP	G15_076	TO->FROM	GR ISLD-LNX3345.00 - HOLT.CO3 345.00 345KV CKT 1	720	720	0.07424	127.4951	GLENHAM - WHITLOK 230KV CKT 1
FDNS	00NR	0	17SP	G15_076	TO->FROM	GR ISLD-LNX3345.00 - HOLT.CO3 345.00 345KV CKT 1	720	720	0.07429	127.4941	GEN652906 1-G09_006IS_3 0.6900
FDNS	00NR	0	17SP	G15_076	TO->FROM	GR ISLD-LNX3345.00 - HOLT.CO3 345.00 345KV CKT 1	720	720	0.07429	127.4759	GEN672392 1-NBECGT1G 18.000
FDNS	00NR	0	17SP	G15_076	TO->FROM	GR ISLD-LNX3345.00 - HOLT.CO3 345.00 345KV CKT 1	720	720	0.07429	127.4527	GEN600067 9-HIGH BRIDGE
FDNS	00NR	0	17SP	G15_076	TO->FROM	GR ISLD-LNX3345.00 - HOLT.CO3 345.00 345KV CKT 1	720	720	0.07429	127.4505	GEN562832 1-G15042_3 0.6900
FDNS	00NR	0	17SP	G15_076	TO->FROM	GR ISLD-LNX3345.00 - HOLT.CO3 345.00 345KV CKT 1	720	720	0.07429	127.435	BISONMP4 230.00 - SQUARE BUTTE 230KV CKT 1
FDNS	00NR	0	17SP	G15_076	TO->FROM	GR ISLD-LNX3345.00 - HOLT.CO3 345.00 345KV CKT 1	720	720	0.07429	127.402	GEN910006 1-G12_012IS_3 0.6900
FDNS	00NR	0	17SP	G15_076	TO->FROM	GR ISLD-LNX3345.00 - HOLT.CO3 345.00 345KV CKT 1	720	720	0.07429	127.3922	GEN662101 1-WESSINGTON190.5750
FDNS	00NR	0	17SP	G15_076	TO->FROM	GR ISLD-LNX3345.00 - HOLT.CO3 345.00 345KV CKT 1	720	720	0.07429	127.3534	COYOTE 345/24.0KV TRANSFORMER CKT 1
FDNS	00NR	0	17SP	G15_076	TO->FROM	GR ISLD-LNX3345.00 - HOLT.CO3 345.00 345KV CKT 1	720	720	0.07429	127.3465	GEN652907 1-G09_007IS_3 0.6900
FDNS	00NR	0	17SP	G15_076	TO->FROM	GR ISLD-LNX3345.00 - HOLT.CO3 345.00 345KV CKT 1	720	720	0.07429	127.1817	GEN652543 3-BIG BEND
FDNS	00NR	0	17SP	G15_076	TO->FROM	GR ISLD-LNX3345.00 - HOLT.CO3 345.00 345KV CKT 1	720	720	0.07429	127.1499	SQUARE BUTTE - YNG2 4 230.00 230KV CKT 1
FDNS	00NR	0	17SP	G15_076	TO->FROM	GR ISLD-LNX3345.00 - HOLT.CO3 345.00 345KV CKT 1	720	720	0.07429	127.149	YNG2 4 230.00 230/20.0KV TRANSFORMER CKT 1
FDNS	00NR	0	17SP	G15_076	TO->FROM	GR ISLD-LNX3345.00 - HOLT.CO3 345.00 345KV CKT 1	720	720	0.07429	127.041	GEN659289 1-DAYCNTYWND W0.6900
FDNS	00NR	0	17SP	G15_076	TO->FROM	GR ISLD-LNX3345.00 - HOLT.CO3 345.00 345KV CKT 1	720	720	0.07429	127.0406	GEN659018 1-G14_003IS_3 0.6900
FDNS	00NR	0	17SP	G15_076	TO->FROM	GR ISLD-LNX3345.00 - HOLT.CO3 345.00 345KV CKT 1	720	720	0.07429	127.0088	GEN681542 6-JP MADGETT
FDNS	00NR	0	17SP	G15_076	TO->FROM	GR ISLD-LNX3345.00 - HOLT.CO3 345.00 345KV CKT 1	720	720	0.07429	127.0055	GEN563312 1-G15097_3 0.6900
FDNS	00NR	0	17SP	G15_076	TO->FROM	GR ISLD-LNX3345.00 - HOLT.CO3 345.00 345KV CKT 1	720	720	0.07424	126.9505	GLENHAM - L3 HAWDON 230KV CKT 1
FDNS	00NR	0	17SP	G15_076	TO->FROM	GR ISLD-LNX3345.00 - HOLT.CO3 345.00 345KV CKT 1	720	720	0.07429	126.8646	GEN659194 1-NDPRAIRWND1W0.6900
FDNS	00NR	0	17SP	G15_076	TO->FROM	GR ISLD-LNX3345.00 - HOLT.CO3 345.00 345KV CKT 1	720	720	0.07429	126.8507	GEN659010 4-G07_027IS_2 0.6900
FDNS	00NR	0	17SP	G15_076	TO->FROM	GR ISLD-LNX3345.00 - HOLT.CO3 345.00 345KV CKT 1	720	720	0.07429	126.8433	GEN652542 1-BIG BEND
FDNS	00NR	0	17SP	G15_076	TO->FROM	GR ISLD-LNX3345.00 - HOLT.CO3 345.00 345KV CKT 1	720	720	0.07429	126.8393	GEN652461 5-GARRISON
FDNS	00NR	0	17SP	G15_076	TO->FROM	GR ISLD-LNX3345.00 - HOLT.CO3 345.00 345KV CKT 1	720	720	0.07429	126.8392	GEN652460 4-GARRISON
FDNS	00NR	0	17SP	G15_076	TO->FROM	GR ISLD-LNX3345.00 - HOLT.CO3 345.00 345KV CKT 1	720	720	0.07429	126.7982	GEN563342 1-G15098_3 0.6900
FDNS	00NR	0	17SP	G15_076	TO->FROM	GR ISLD-LNX3345.00 - HOLT.CO3 345.00 345KV CKT 1	720	720	0.07429	126.7806	GEN652457 1-GARRISON
FDNS	00NR	0	17SP	G15_076	TO->FROM	GR ISLD-LNX3345.00 - HOLT.CO3 345.00 345KV CKT 1	720	720	0.07429	126.7806	GEN652458 2-GARRISON
FDNS	00NR	0	17SP	G15_076	TO->FROM	GR ISLD-LNX3345.00 - HOLT.CO3 345.00 345KV CKT 1	720	720	0.07429	126.7806	GEN652459 3-GARRISON
FDNS	00NR	0	17SP	G15_076	TO->FROM	GR ISLD-LNX3345.00 - HOLT.CO3 345.00 345KV CKT 1	720	720	0.07429	126.721	GEN659403 1-NDSUNFLWR W0.6900
FDNS	00NR	0	17SP	G15_076	TO->FROM	GR ISLD-LNX3345.00 - HOLT.CO3 345.00 345KV CKT 1	720	720	0.07429	126.6214	STANTON 230/18.0KV TRANSFORMER CKT 1
FDNS	00NR	0	17SP	G15_076	TO->FROM	GR ISLD-LNX3345.00 - HOLT.CO3 345.00 345KV CKT 1	720	720	0.07794	126.6156	AXTELL - SWEETWATER 345KV CKT 1
FDNS	00NR	0	17SP	G15_076	TO->FROM	GR ISLD-LNX3345.00 - HOLT.CO3 345.00 345KV CKT 1	720	720	0.07429	126.4632	CLAY BOSWELL 230/20.9KV TRANSFORMER CKT 1
FDNS	00NR	0	17SP	G15_076	TO->FROM	GR ISLD-LNX3345.00 - HOLT.CO3 345.00 345KV CKT 1	720	720	0.07429	126.3605	GEN659411 1-CAMPBLCNTY W0.6900
FDNS	00NR	0	17SP	G15_076	TO->FROM	GR ISLD-LNX3345.00 - HOLT.CO3 345.00 345KV CKT 1	720	720	0.07429	126.2074	ALMA 161 161/24.0KV TRANSFORMER CKT 1
FDNS	00NR	0	17SP	G15_076	TO->FROM	GR ISLD-LNX3345.00 - HOLT.CO3 345.00 345KV CKT 1	720	720	0.07429	126.2066	GEN652559 1-OAHE
FDNS	00NR	0	17SP	G15_076	TO->FROM	GR ISLD-LNX3345.00 - HOLT.CO3 345.00 345KV CKT 1	720	720	0.07429	126.1625	GEN659296 2-SDPRAIRWND1W0.6900
FDNS	00NR	0	17SP	G15_076	TO->FROM	GR ISLD-LNX3345.00 - HOLT.CO3 345.00 345KV CKT 1	720	720	0.07429	126.0189	RCDC EAST 4230.00 - RED CEDAR DC 230KV CKT 1
FDNS	00NR	0	17SP	G15_076	TO->FROM	GR ISLD-LNX3345.00 - HOLT.CO3 345.00 345KV CKT 1	720	720	0.07429	125.9988	P12:230:UMZB:# 112 #: NU IN SD. NU-RCDC & DRY CREEK XFMR
FDNS	00NR	0	17SP	G15_076	TO->FROM	GR ISLD-LNX3345.00 - HOLT.CO3 345.00 345KV CKT 1	720	720	0.07429	125.9981	GEN672321 1-SHAND GENERATOR 1
FDNS	00NR	0	17SP	G15_076	TO->FROM	GR ISLD-LNX3345.00 - HOLT.CO3 345.00 345KV CKT 1	720	720	0.07824	125.9869	G15088_T 345.00 - MOORE 345KV CKT 1
FDNS	00NR	0	17SP	G15_076	TO->FROM	GR ISLD-LNX3345.00 - HOLT.CO3 345.00 345KV CKT 1	720	720	0.07429	125.9773	GEN615010 1-STANTON4
FDNS	00NR	0	17SP	G15_076	TO->FROM	GR ISLD-LNX3345.00 - HOLT.CO3 345.00 345KV CKT 1	720	720	0.07429	125.9758	GEN672310 1-POPLAR RIVER GENERATOR 1
FDNS	00NR	0	17SP	G15_076	TO->FROM	GR ISLD-LNX3345.00 - HOLT.CO3 345.00 345KV CKT 1	720	720	0.07429	125.9758	GEN672311 2-POPLAR RIVER GENERATOR 2
FDNS	00NR	0	17SP	G15_076	TO->FROM	GR ISLD-LNX3345.00 - HOLT.CO3 345.00 345KV CKT 1	720	720	0.07429	125.902	GEN672306 6-BOUNDARY DAM GENERATOR 6
FDNS	00NR	0	17SP	G15_076	TO->FROM	GR ISLD-LNX3345.00 - HOLT.CO3 345.00 345KV CKT 1	720	720	0.07429	125.8623	GEN659453 1-GI1414GEN W0.6900
FDNS	00NR	0	17SP	G15_076	TO->FROM	GR ISLD-LNX3345.00 - HOLT.CO3 345.00 345KV CKT 1	720	720	0.07429	125.8611	GEN563302 1-G15096_3 0.6900
FDNS	00NR	0	17SP	G15_076	TO->FROM	GR ISLD-LNX3345.00 - HOLT.CO3 345.00 345KV CKT 1	720	720	0.07429	125.8387	GEN652557 4-OAHE
FDNS	00NR	0	17SP	G15_076	TO->FROM	GR ISLD-LNX3345.00 - HOLT.CO3 345.00 345KV CKT 1	720	720	0.07429	125.8386	GEN652556 2-OAHE
FDNS	00NR	0	17SP	G15_076	TO->FROM	GR ISLD-LNX3345.00 - HOLT.CO3 345.00 345KV CKT 1	720	720	0.07429	125.8386	GEN652558 6-OAHE
FDNS	00NR	0	17SP	G15_076	TO->FROM	GR ISLD-LNX3345.00 - HOLT.CO3 345.00 345KV CKT 1	720	720	0.07429	125.8302	GEN600004 2-PRAIRIE ISLAND G2
FDNS	00NR	0	17SP	G15_076	TO->FROM	GR ISLD-LNX3345.00 - HOLT.CO3 345.00 345KV CKT 1	720	720	0.07429	125.8258	GEN600003 1-PRAIRIE ISLAND G1
FDNS	00NR	0	17SP	G15_076	TO->FROM	GR ISLD-LNX3345.00 - HOLT.CO3 345.00 345KV CKT 1	720	720	0.07429	125.7543	GEN659141 1-K10215A
FDNS	00NR	0	17SP	G15_076	TO->FROM	GR ISLD-LNX3345.00 - HOLT.CO3 345.00 345KV CKT 1	720	720	0.07429	125.7028	GEN659110 1-LELAND OLDS UNIT1
FDNS	00NR	0	17SP	G15_076	TO->FROM	GR ISLD-LNX3345.00 - HOLT.CO3 345.00 345KV CKT 1	720	720	0.07429	125.6962	GEN657749 1-YOUNG 1 GENERATOR
FDNS	00NR	0	17SP	G15_076	TO->FROM	GR ISLD-LNX3345.00 - HOLT.CO3 345.00 345KV CKT 1	720	720	0.07429	125.5053	GEN652173 1-G09_001IS_2 0.6900
FDNS	00NR	0	17SP	G15_076	TO->FROM	GR ISLD-LNX3345.00 - HOLT.CO3 345.00 345KV CKT 1	720	720	0.07429	125.5016	GEN600006 1-AS KING
FDNS	00NR	0	17SP	G15_076	TO->FROM	GR ISLD-LNX3345.00 - HOLT.CO3 345.00 345KV CKT 1	720	720	0.07429	125.1933	GEN659407 1-ANTELPHILLSW0.6900
FDNS	00NR	0	17SP	G15_076	TO->FROM	GR ISLD-LNX3345.00 - HOLT.CO3 345.00 345KV CKT 1	720	720	0.07429	124.9041	GEN600005 1-MONTICELLO
FDNS	00NR	0	17SP	G15_076	TO->FROM	GR ISLD-LNX3345.00 - HOLT.CO3 345.00 345KV CKT 1	720	720	0.07429	124.2121	GEN600000 1-SHERBURNECNTY G1
FDNS	00NR	0	17SP	G15_076	TO->FROM	GR ISLD-LNX3345.00 - HOLT.CO3 345.00 345KV CKT 1	720	720	0.07429	123.8	GEN600001 2-SHERBURNE CNTY G2
FDNS	00NR	0	17SP	G15_076	TO->FROM	GR ISLD-LNX3345.00 - HOLT.CO3 345.00 345KV CKT 1	720	720	0.07429	123.5969	GEN620315 1-BIG STONE GEN
FDNS	00NR	0	17SP	G15_076	TO->FROM	GR ISLD-LNX3345.00 - HOLT.CO3 345.00 345KV CKT 1	720	720	0.07429	123.5494	GEN661015 1-COYOTE
FDNS	00NR	0	17SP	G15_076	TO->FROM	GR ISLD-LNX3345.00 - HOLT.CO3 345.00 345KV CKT 1	720	720	0.07429	123.1323	GEN657748 1-YOUNG 2 GENERATOR
FDNS	00NR	0	17SP	G15_076	TO->FROM	GR ISLD-LNX3345.00 - HOLT.CO3 345.00 345KV CKT 1	720	720	0.07429	122.9992	GEN600002 3-SHERBURNE CNTY G3
FDNS	00NR	0	17SP	G15_076	TO->FROM	GR ISLD-LNX3345.00 - HOLT.CO3 345.00 345KV CKT 1	720	720	0.07429	122.7475	GEN562872 1-G15046_3 0.6900
FDNS	00NR	0	17SP	G15_076	TO->FROM	GR ISLD-LNX3345.00 - HOLT.CO3 345.00 345KV CKT 1	720	720	0.08341	122.5669	MCCOOL - MOORE 345KV CKT 1
FDNS	00NR	0	17SP	G15_076	TO->FROM	GR ISLD-LNX3345.00 - HOLT.CO3 345.00 345KV CKT 1	720	720	0.07429	122.4481	GEN659111 2-LELAND OLDS UNIT2
FDNS	00NR	0	17SP	G15_076	TO->FROM	GR ISLD-LNX3345.00 - HOLT.CO3 345.00 345KV CKT 1	720	720	0.07429	121.9741	GEN659103 1-ANTELOPE VALLEY UNIT1
FDNS	00NR	0	17SP	G15_076	TO->FROM	GR ISLD-LNX3345.00 - HOLT.CO3 345.00 345KV CKT 1	720	720	0.07429	121.9741	GEN659107 2-ANTELOPE VALLEY UNIT2
FDNS	00NR	0	17SP	G15_076	TO->FROM	GR ISLD-LNX3345.00 - HOLT.CO3 345.00 345KV CKT 1	720	720	0.07429	121.0129	GEN659125 1-COVEY
FDNS	00NR	0	17SP	G15_076	TO->FROM	GR ISLD-LNX3345.00 - HOLT.CO3 345.00 345KV CKT 1	720	720	0.07381	121.0104	FTTHOM1-LNX3345.00 - LELAND2-LNX3345.00 345KV CKT 1
FDNS	00NR	0	20SP	G15_076	TO->FROM	GR ISLD-LNX3345.00 - HOLT.CO3 345.00 345KV CKT 1	720	720	0.07066	120.7555	HOLT.CO3 345.00 - THEDFRD3 345.00 345KV CKT 1
FDNS	00NR	0	17SP	G15_076	TO->FROM	GR ISLD-LNX3345.00 - HOLT.CO3 345.00 345KV CKT 1	720	720	0.07381	120.734	P12:345:UMZB:# 108 #: LOS FT IN ND. LOS FT
FDNS	00NR	0	17SP	G15_076	TO->FROM	GR ISLD-LNX3345.00 - HOLT.CO3 345.00 345KV CKT 1	720	720	0.07381	120.7228	FT THOMPSON - FTTHOM1-LNX3345.00 345KV CKT Z
FDNS	00NR	0	25SP	G15_076	TO->FROM	GR ISLD-LNX3345.00 - HOLT.CO3 345.00 345KV CKT 1	720	720	0.07154	120.5692	HOLT.CO3 345.00 - THEDFRD3 345.00 345KV CKT 1

SOLUTION	GROUP	SCENARIO	SEASON	SOURCE	DIRECTION	MONITORED ELEMENT	RATEA (MVA)	RATEB(MVA)	TDF	TC%LOADING (% MVA)	CONTINGENCY
FDNS	00NR	0	17SP	G15_076	TO->FROM	GR ISLD-LNX3345.00 - HOLT.CO3 345.00 345KV CKT 1	720	720	0.07381	120.4702	LELAND OLDS - LELAND2-LNX3345.00 345KV CKT Z
FDNS	00NR	0	17SP	G15_076	TO->FROM	GR ISLD-LNX3345.00 - HOLT.CO3 345.00 345KV CKT 1	720	720	0.07429	120.2926	GEN615001 1-COAL CREEK
FDNS	00NR	0	17SP	G15_076	TO->FROM	GR ISLD-LNX3345.00 - HOLT.CO3 345.00 345KV CKT 1	720	720	0.07429	120.1676	GEN615002 2-COAL CREEK
FDNS	00NR	0	17SP	G15_076	TO->FROM	GR ISLD-LNX3345.00 - HOLT.CO3 345.00 345KV CKT 1	720	720	0.08402	119.171	GRAND ISLAND - MCCOOL 345KV CKT 1
FDNS	00NR	0	17SP	G15_076	TO->FROM	GR ISLD-LNX3345.00 - HOLT.CO3 345.00 345KV CKT 1	720	720	0.07429	113.5207	GEN562714 1-G15_023_4 0.6900
FDNS	00NR	0	17SP	G15_076	TO->FROM	GR ISLD-LNX3345.00 - HOLT.CO3 345.00 345KV CKT 1	720	720	0.07429	113.5207	GEN562715 1-G15_023_5 0.6900
FDNS	00NR	0	20SP	G15_076	TO->FROM	GR ISLD-LNX3345.00 - HOLT.CO3 345.00 345KV CKT 1	720	720	0.06578	111.0854	GERALD GENTLEMAN STATION - THEDFRD3 345.00 345KV CKT 1
FDNS	00NR	0	25SP	G15_076	TO->FROM	GR ISLD-LNX3345.00 - HOLT.CO3 345.00 345KV CKT 1	720	720	0.06693	110.4541	GERALD GENTLEMAN STATION - THEDFRD3 345.00 345KV CKT 1
FDNS	00NR	0	20SP	G15_076	TO->FROM	GR ISLD-LNX3345.00 - HOLT.CO3 345.00 345KV CKT 1	720	720	0.02969	109.541	HOSKINS - SHELL CREEK 345KV CKT 1
FDNS	00NR	0	25SP	G15_076	TO->FROM	GR ISLD-LNX3345.00 - HOLT.CO3 345.00 345KV CKT 1	720	720	0.0318	108.8605	HOSKINS - SHELL CREEK 345KV CKT 1
FDNS	00NR	0	17SP	G15_076	TO->FROM	GR ISLD-LNX3345.00 - HOLT.CO3 345.00 345KV CKT 1	720	720	0.07429	107.2839	GEN652353 2-GR PRAIRIEG 0.6900
FDNS	00NR	0	16WP	G15_076	TO->FROM	GR ISLD-LNX3345.00 - HOLT.CO3 345.00 345KV CKT 1	720	720	0.07684	101.7905	KELLY - MEADOWGROVE4230.00 230KV CKT 1
FDNS	00NR	0	16WP	G15_076	TO->FROM	GR ISLD-LNX3345.00 - HOLT.CO3 345.00 345KV CKT 1	720	720	0.07071	101.2023	P12:230:UMZB:# 116 #: ST IN SD. WSG-ST-VH
FDNS	00NR	0	16WP	G15_076	TO->FROM	GR ISLD-LNX3345.00 - HOLT.CO3 345.00 345KV CKT 1	720	720	0.07094	100.6073	STORLA - WESSINGTON 230KV CKT 1
FDNS	00NR	0	16WP	G15_076	TO->FROM	GR ISLD-LNX3345.00 - HOLT.CO3 345.00 345KV CKT 1	720	720	0.07308	100.1903	ROSEAU - ROSEAUM 2 500.00 500KV CKT 1
FDNS	00NR	0	16WP	G15_076	TO->FROM	GR ISLD-LNX3345.00 - HOLT.CO3 345.00 345KV CKT 1	720	720	0.07129	99.6	HANLON - STORLA 230KV CKT 1
FDNS	09NR	0	20L	G15_076	FROM->TO	HOSKINS (HOSKINS T2) 345/230/13.8KV TRANSFORMER CKT 1	336	336	0.10081	113.1446	DIXONCO 230.00 - TWIN CHURCH 230KV CKT 1
FDNS	09NR	0	17G	G15_076	FROM->TO	HOSKINS (HOSKINS T2) 345/230/13.8KV TRANSFORMER CKT 1	336	336	0.10116	110.8905	DIXONCO 230.00 - TWIN CHURCH 230KV CKT 1
FDNS	09NR	0	20L	G15_076	FROM->TO	HOSKINS (HOSKINS T2) 345/230/13.8KV TRANSFORMER CKT 1	336	336	0.10081	109.5802	DIXONCO 230.00 - TWIN CHURCH 230KV CKT 1
FDNS	09NR	0	17G	G15_076	FROM->TO	HOSKINS (HOSKINS T2) 345/230/13.8KV TRANSFORMER CKT 1	336	336	0.10116	107.4867	DIXONCO 230.00 - TWIN CHURCH 230KV CKT 1
FDNS	00NR	0	17SP	G15_076	TO->FROM	KELLY - MEADOWGROVE4230.00 230KV CKT 1	368	368	0.03281	106.098	GRPRAR1-LNX3345.00 - HOLT.CO3 345.00 345KV CKT 1
FDNS	00NR	0	17SP	G15_076	TO->FROM	KELLY - MEADOWGROVE4230.00 230KV CKT 1	368	368	0.03281	106.0886	GRPRAR1-LNX3345.00 - GRPRAR 345KV CKT Z
FDNS	00NR	0	17SP	G15_076	TO->FROM	SIDNEY - SIDNEY TRANSFORMER 230KV CKT 1	400	400	0.03997	120.8827	KEYSTONE - SIDNEY1-LNX3345.00 345KV CKT 1
FDNS	00NR	0	17SP	G15_076	TO->FROM	SIDNEY - SIDNEY TRANSFORMER 230KV CKT 1	400	400	0.03997	120.2355	SIDNEY - SIDNEY1-LNX3345.00 345KV CKT Z
FDNSLock	00NR	0	20SP	G15_076	TO->FROM	SIDNEY - SIDNEY TRANSFORMER 230KV CKT 1	400	400	0.03449	111.0053	KEYSTONE - SIDNEY1-LNX3345.00 345KV CKT 1
FDNS	00NR	0	20SP	G15_076	TO->FROM	SIDNEY - SIDNEY TRANSFORMER 230KV CKT 1	400	400	0.03449	109.8896	SIDNEY - SIDNEY1-LNX3345.00 345KV CKT Z
FDNS	00NR	0	25SP	G15_076	TO->FROM	SIDNEY - SIDNEY TRANSFORMER 230KV CKT 1	400	400	0.03427	109.6285	KEYSTONE - SIDNEY1-LNX3345.00 345KV CKT 1
FDNS	00NR	0	25SP	G15_076	TO->FROM	SIDNEY - SIDNEY TRANSFORMER 230KV CKT 1	400	400	0.03427	109.1934	SIDNEY - SIDNEY1-LNX3345.00 345KV CKT Z
FDNS	00NR	0	17SP	G15_076	FROM->TO	SIDNEY (SDQ KV2A) 345/230/13.8KV TRANSFORMER CKT 1	400	480	0.03997	102.6537	KEYSTONE - SIDNEY1-LNX3345.00 345KV CKT 1
FDNS	00NR	0	17SP	G15_076	FROM->TO	SIDNEY (SDQ KV2A) 345/230/13.8KV TRANSFORMER CKT 1	400	480	0.03997	102.2384	SIDNEY - SIDNEY1-LNX3345.00 345KV CKT Z
FDNS	00NR	0	17SP	G15_076	FROM->TO	SIDNEY (SDQ KV2A) 345/230/13.8KV TRANSFORMER CKT 1	400	480	0.03997	102.023	KEYSTONE - SIDNEY1-LNX3345.00 345KV CKT 1
FDNS	00NR	0	17SP	G15_076	FROM->TO	SIDNEY (SDQ KV2A) 345/230/13.8KV TRANSFORMER CKT 1	400	480	0.03997	101.9841	SIDNEY - SIDNEY1-LNX3345.00 345KV CKT Z
FDNS	09ALL	0	20L	G15_076	TO->FROM	SIOUX CITY - TWIN CHURCH 230KV CKT 1	320	320	0.23667	171.7946	DIXONCO 230.00 - HOSKINS 230KV CKT 1
FDNS	09NR	0	20L	G15_076	TO->FROM	SIOUX CITY - TWIN CHURCH 230KV CKT 1	320	320	0.23174	158.4999	DIXONCO 230.00 - HOSKINS 230KV CKT 1
FDNS	09ALL	0	17G	G15_076	TO->FROM	SIOUX CITY - TWIN CHURCH 230KV CKT 1	320	320	0.23738	158.1352	DIXONCO 230.00 - HOSKINS 230KV CKT 1
FDNS	09ALL	0	20WP	G15_076	TO->FROM	SIOUX CITY - TWIN CHURCH 230KV CKT 1	320	320	0.23719	151.3342	DIXONCO 230.00 - HOSKINS 230KV CKT 1
FDNS	09ALL	0	16WP	G15_076	TO->FROM	SIOUX CITY - TWIN CHURCH 230KV CKT 1	320	320	0.23756	150.6998	DIXONCO 230.00 - HOSKINS 230KV CKT 1
FDNS	09ALL	0	20SP	G15_076	TO->FROM	SIOUX CITY - TWIN CHURCH 230KV CKT 1	320	320	0.23679	146.1796	DIXONCO 230.00 - HOSKINS 230KV CKT 1
FDNS	09NR	0	17G	G15_076	TO->FROM	SIOUX CITY - TWIN CHURCH 230KV CKT 1	320	320	0.23211	145.8761	DIXONCO 230.00 - HOSKINS 230KV CKT 1
FDNS	09ALL	0	25SP	G15_076	TO->FROM	SIOUX CITY - TWIN CHURCH 230KV CKT 1	320	320	0.23675	144.592	DIXONCO 230.00 - HOSKINS 230KV CKT 1
FDNS	09ALL	0	17SP	G15_076	TO->FROM	SIOUX CITY - TWIN CHURCH 230KV CKT 1	320	320	0.23725	144.0882	DIXONCO 230.00 - HOSKINS 230KV CKT 1
FDNS	09ALL	0	20L	G15_076	TO->FROM	SIOUX CITY - TWIN CHURCH 230KV CKT 1	320	320	0.26383	133.6835	HOSKINS - RAUN 345KV CKT 1
FDNS	09ALL	0	20L	G15_076	TO->FROM	SIOUX CITY - TWIN CHURCH 230KV CKT 1	320	320	0.22234	127.924	P13:230-345:NPPD:NUCOR-1
FDNS	09ALL	0	20L	G15_076	TO->FROM	SIOUX CITY - TWIN CHURCH 230KV CKT 1	320	320	0.25834	120.276	HOSKINS (HOSKINS T2) 345/230/13.8KV TRANSFORMER CKT 1
FDNS	09ALL	0	20L	G15_076	TO->FROM	SIOUX CITY - TWIN CHURCH 230KV CKT 1	320	320	0.25834	120.276	HOSKINS (HOSKINS T2) 345/230/13.8KV TRANSFORMER CKT 1
FDNS	09ALL	0	17G	G15_076	TO->FROM	SIOUX CITY - TWIN CHURCH 230KV CKT 1	320	320	0.26488	119.2562	HOSKINS - RAUN 345KV CKT 1
FDNS	09NR	0	20L	G15_076	TO->FROM	SIOUX CITY - TWIN CHURCH 230KV CKT 1	320	320	0.24309	118.8338	HOSKINS - RAUN 345KV CKT 1
FDNS	09NR	0	20L	G15_076	TO->FROM	SIOUX CITY - TWIN CHURCH 230KV CKT 1	320	320	0.24309	118.8338	HOSKINS - RAUN 345KV CKT 1
FDNS	09NR	0	20L	G15_076	TO->FROM	SIOUX CITY - TWIN CHURCH 230KV CKT 1	320	320	0.20953	116.7538	P13:230-345:NPPD:NUCOR-1
FDNS	09ALL	0	20L	G15_076	TO->FROM	SIOUX CITY - TWIN CHURCH 230KV CKT 1	320	320	0.24757	115.0244	EMERSON - TWIN CHURCH 115KV CKT 1
FDNS	09ALL	0	20L	G15_076	TO->FROM	SIOUX CITY - TWIN CHURCH 230KV CKT 1	320	320	0.26114	114.5367	GAVINS POINT - YANKON JCT 115KV CKT 1
FDNS	09ALL	0	20L	G15_076	TO->FROM	SIOUX CITY - TWIN CHURCH 230KV CKT 1	320	320	0.26114	114.5367	GAVINS POINT - YANKON JCT 115KV CKT 1
FDNS	09ALL	0	20L	G15_076	TO->FROM	SIOUX CITY - TWIN CHURCH 230KV CKT 1	320	320	0.21375	113.964	RAUN - SIOUX CITY 345KV CKT 1
FDNS	09ALL	0	20L	G15_076	TO->FROM	SIOUX CITY - TWIN CHURCH 230KV CKT 1	320	320	0.2464	113.7965	HOSKINS - SHELL CREEK 345KV CKT 1
FDNS	09ALL	0	17G	G15_076	TO->FROM	SIOUX CITY - TWIN CHURCH 230KV CKT 1	320	320	0.22221	113.3368	P13:230-345:NPPD:NUCOR-1
FDNS	09ALL	0	20L	G15_076	TO->FROM	SIOUX CITY - TWIN CHURCH 230KV CKT 1	320	320	0.23458	113.0749	COLUMEAST - NW68TH & HOLDREGE 345KV CKT 1
FDNS	09ALL	0	20L	G15_076	TO->FROM	SIOUX CITY - TWIN CHURCH 230KV CKT 1	320	320	0.23458	113.0749	COLUMEAST - NW68TH & HOLDREGE 345KV CKT 1
FDNS	09ALL	0	20L	G15_076	TO->FROM	SIOUX CITY - TWIN CHURCH 230KV CKT 1	320	320	0.22234	112.9679	P13:115-230:NPPD:NUCOR-3
FDNS	09ALL	0	20L	G15_076	TO->FROM	SIOUX CITY - TWIN CHURCH 230KV CKT 1	320	320	0.232	111.9272	COLUMEAST - SHELL CREEK 345KV CKT 1
FDNS	09ALL	0	20L	G15_076	TO->FROM	SIOUX CITY - TWIN CHURCH 230KV CKT 1	320	320	0.24757	111.6016	P12:115:NPPD:1193:OAKLAND7:EMERSON7:BTB
FDNS	09ALL	0	20L	G15_076	TO->FROM	SIOUX CITY - TWIN CHURCH 230KV CKT 1	320	320	0.24757	111.5722	BANCROFT - EMERSON 115KV CKT 1
FDNS	09ALL	0	20L	G15_076	TO->FROM	SIOUX CITY - TWIN CHURCH 230KV CKT 1	320	320	0.24466	111.1189	NAPA JCT7 115.00 - YANKON JCT 115KV CKT 1
FDNS	09ALL	0	20L	G15_076	TO->FROM	SIOUX CITY - TWIN CHURCH 230KV CKT 1	320	320	0.24466	111.1189	NAPA JCT7 115.00 - YANKON JCT 115KV CKT 1
FDNS	09ALL	0	20L	G15_076	TO->FROM	SIOUX CITY - TWIN CHURCH 230KV CKT 1	320	320	0.24466	111.1163	NAPA JCT7 115.00 - UTICA 115KV CKT 1
FDNS	09ALL	0	20L	G15_076	TO->FROM	SIOUX CITY - TWIN CHURCH 230KV CKT 1	320	320	0.24466	111.1163	NAPA JCT7 115.00 - UTICA 115KV CKT 1
FDNS	09ALL	0	20L	G15_076	TO->FROM	SIOUX CITY - TWIN CHURCH 230KV CKT 1	320	320	0.24466	111.1163	P12:115:UMZW:# 1910 #: YJ IN SD. YJ-UJ LINE FAULT
FDNS	09ALL	0	20L	G15_076	TO->FROM	SIOUX CITY - TWIN CHURCH 230KV CKT 1	320	320	0.2212	111.0554	FT THOMPSON - FTTHOM2-LNX3345.00 345KV CKT Z
FDNS	09ALL	0	20L	G15_076	TO->FROM	SIOUX CITY - TWIN CHURCH 230KV CKT 1	320	320	0.2212	111.0456	FTTHOM2-LNX3345.00 - GRPRAR2-LNX3345.00 345KV CKT 1
FDNS	09ALL	0	20L	G15_076	TO->FROM	SIOUX CITY - TWIN CHURCH 230KV CKT 1	320	320	0.2212	111.0417	GRPRAR2-LNX3345.00 - YANKTON 345KV CKT Z
FDNS	09ALL	0	20L	G15_076	TO->FROM	SIOUX CITY - TWIN CHURCH 230KV CKT 1	320	320	0.32226	110.8974	BELDEN - HARTINGTON 115KV CKT 1
FDNS	09ALL	0	20L	G15_076	TO->FROM	SIOUX CITY - TWIN CHURCH 230KV CKT 1	320	320	0.22234	110.8927	P13:115-345:NPPD:NUCOR-2
FDNS	09ALL	0	20L	G15_076	TO->FROM	SIOUX CITY - TWIN CHURCH 230KV CKT 1	320	320	0.24757	110.6561	BANCROFT - OAKLAND 115KV CKT 1
FDNS	09ALL	0	20L	G15_076	TO->FROM	SIOUX CITY - TWIN CHURCH 230KV CKT 1	320	320	0.23503	110.2309	TEKAMAH (TEKAMAH T1) 161/115/13.8KV TRANSFORMER CKT 1
FDNS	09ALL	0	20L	G15_076	TO->FROM	SIOUX CITY - TWIN CHURCH 230KV CKT 1	320	320	0.23503	110.2309	TEKAMAH (TEKAMAH T1) 161/115/13.8KV TRANSFORMER CKT 1
FDNS	09ALL	0	20L	G15_076	TO->FROM	SIOUX CITY - TWIN CHURCH 230KV CKT 1	320	320	0.29326	109.9424	BELDEN - HOSKINS 115KV CKT 1
FDNS	09ALL	0	20L	G15_076	TO->FROM	SIOUX CITY - TWIN CHURCH 230KV CKT 1	320	320	0.22234	109.9346	SHERBURNE CO 345/24.0KV TRANSFORMER CKT 1
FDNS	09ALL	0	20L	G15_076	TO->FROM	SIOUX CITY - TWIN CHURCH 230KV CKT 1	320	320	0.22234	109.9247	GEN600002 3-SHERBURNE CNTY G3
FDNS	09ALL	0	20L	G15_076	TO->FROM	SIOUX CITY - TWIN CHURCH 230KV CKT 1	320	320	0.23503	109.7769	OAKLAND - TEKAMAH 115KV CKT 1
FDNS	09ALL	0	20L	G15_076	TO->FROM	SIOUX CITY - TWIN CHURCH 230KV CKT 1	320	320	0.22229	109.669	FT RANDAL - MEADOWGROVE4230.00 230KV CKT 1

SOLUTION	GROUP	SCENARIO	SEASON	SOURCE	DIRECTION	MONITORED ELEMENT	RATEA (MVA)	RATEB(MVA)	TDF	TC%LOADING (% MVA)	CONTINGENCY
FDNS	09ALL	0	20L	G15_076	TO->FROM	SIOUX CITY - TWIN CHURCH 230KV CKT 1	320	320	0.22111	109.633	FT RANDAL - SIOUX CITY 230KV CKT 1
FDNS	09ALL	0	20L	G15_076	TO->FROM	SIOUX CITY - TWIN CHURCH 230KV CKT 1	320	320	0.22234	109.5676	BIG STONE 230/24.0KV TRANSFORMER CKT 1
FDNS	09ALL	0	20L	G15_076	TO->FROM	SIOUX CITY - TWIN CHURCH 230KV CKT 1	320	320	0.22234	109.5299	GEN600001 2-SHERBURNE CNTY G2
FDNS	09ALL	0	20L	G15_076	TO->FROM	SIOUX CITY - TWIN CHURCH 230KV CKT 1	320	320	0.22234	109.4992	GEN600005 1-MONTICELLO
FDNS	09ALL	0	20L	G15_076	TO->FROM	SIOUX CITY - TWIN CHURCH 230KV CKT 1	320	320	0.22811	109.4453	GAVINS POINT - SPIRIT MOUND 115KV CKT 1
FDNS	09ALL	0	20L	G15_076	TO->FROM	SIOUX CITY - TWIN CHURCH 230KV CKT 1	320	320	0.22234	109.3645	GEN635214 4-NEAL UNIT 4
FDNS	09ALL	0	20L	G15_076	TO->FROM	SIOUX CITY - TWIN CHURCH 230KV CKT 1	320	320	0.22234	109.341	GEN600000 1-SHERBURNECNTY G1
FDNS	09ALL	0	20L	G15_076	TO->FROM	SIOUX CITY - TWIN CHURCH 230KV CKT 1	320	320	0.22234	109.2835	GEN615002 2-COAL CREEK
FDNS	09ALL	0	20L	G15_076	TO->FROM	SIOUX CITY - TWIN CHURCH 230KV CKT 1	320	320	0.23636	109.2788	UTICA JCT (UJ KV3A) 230/115/13.2KV TRANSFORMER CKT 1
FDNS	09ALL	0	20L	G15_076	TO->FROM	SIOUX CITY - TWIN CHURCH 230KV CKT 1	320	320	0.22234	109.2678	GEN620315 1-BIG STONE GEN
FDNS	09NR	0	20L	G15_076	TO->FROM	SIOUX CITY - TWIN CHURCH 230KV CKT 1	320	320	0.24805	109.1989	HOSKINS (HOSKINS T2) 345/230/13.8KV TRANSFORMER CKT 1
FDNS	09NR	0	20L	G15_076	TO->FROM	SIOUX CITY - TWIN CHURCH 230KV CKT 1	320	320	0.24805	109.1989	HOSKINS (HOSKINS T2) 345/230/13.8KV TRANSFORMER CKT 1
FDNS	09ALL	0	20L	G15_076	TO->FROM	SIOUX CITY - TWIN CHURCH 230KV CKT 1	320	320	0.22255	109.0511	FALLOW 3 345.00 - GRIMES 345KV CKT 1
FDNS	09ALL	0	20L	G15_076	TO->FROM	SIOUX CITY - TWIN CHURCH 230KV CKT 1	320	320	0.22234	108.9571	GEN600003 1-PRAIRIE ISLAND G1
FDNS	09ALL	0	20L	G15_076	TO->FROM	SIOUX CITY - TWIN CHURCH 230KV CKT 1	320	320	0.22234	108.9543	GEN600004 2-PRAIRIE ISLAND G2
FDNS	09ALL	0	20L	G15_076	TO->FROM	SIOUX CITY - TWIN CHURCH 230KV CKT 1	320	320	0.2243	108.8739	RASMUSN - UTICA JCT 230KV CKT 1
FDNS	09ALL	0	20L	G15_076	TO->FROM	SIOUX CITY - TWIN CHURCH 230KV CKT 1	320	320	0.32226	108.8585	GAVINS POINT - HARTINGTON 115KV CKT 1
FDNS	09ALL	0	20L	G15_076	TO->FROM	SIOUX CITY - TWIN CHURCH 230KV CKT 1	320	320	0.22811	108.8536	MANNING - SPIRIT MOUND 115KV CKT 1
FDNS	09ALL	0	20L	G15_076	TO->FROM	SIOUX CITY - TWIN CHURCH 230KV CKT 1	320	320	0.21198	108.7873	HOSKINS (HOSKINS T1) 230/115/13.8KV TRANSFORMER CKT 1
FDNS	09ALL	0	20L	G15_076	TO->FROM	SIOUX CITY - TWIN CHURCH 230KV CKT 1	320	320	0.21198	108.7873	HOSKINS (HOSKINS T1) 230/115/13.8KV TRANSFORMER CKT 1
FDNS	09ALL	0	20L	G15_076	TO->FROM	SIOUX CITY - TWIN CHURCH 230KV CKT 1	320	320	0.22234	108.7802	GEN635213 3-NEAL UNIT 3
FDNS	09ALL	0	20L	G15_076	TO->FROM	SIOUX CITY - TWIN CHURCH 230KV CKT 1	320	320	0.22256	108.7412	MADISON COUNTY - RLHILLS3 345.00 345KV CKT 1
FDNS	09ALL	0	20L	G15_076	TO->FROM	SIOUX CITY - TWIN CHURCH 230KV CKT 1	320	320	0.22358	108.6531	COOPER - MOORE 345KV CKT 1
FDNS	09ALL	0	20L	G15_076	TO->FROM	SIOUX CITY - TWIN CHURCH 230KV CKT 1	320	320	0.22811	108.5639	BERSFORD - MANNING 115KV CKT 1
FDNS	09ALL	0	20L	G15_076	TO->FROM	SIOUX CITY - TWIN CHURCH 230KV CKT 1	320	320	0.22234	108.5608	GEN659103 1-ANTELOPE VALLEY UNIT1
FDNS	09ALL	0	20L	G15_076	TO->FROM	SIOUX CITY - TWIN CHURCH 230KV CKT 1	320	320	0.22234	108.5608	GEN659107 2-ANTELOPE VALLEY UNIT2
FDNS	09ALL	0	20L	G15_076	TO->FROM	SIOUX CITY - TWIN CHURCH 230KV CKT 1	320	320	0.22234	108.5552	GEN600006 1-AS KING
FDNS	09ALL	0	20L	G15_076	TO->FROM	SIOUX CITY - TWIN CHURCH 230KV CKT 1	320	320	0.22255	108.5296	FALLOW 3 345.00 - POTTCO 3 345.00 345KV CKT 1
FDNS	09ALL	0	20L	G15_076	TO->FROM	SIOUX CITY - TWIN CHURCH 230KV CKT 1	320	320	0.2243	108.456	RASMUSN - SIOUX CITY 230KV CKT 1
FDNS	09ALL	0	20L	G15_076	TO->FROM	SIOUX CITY - TWIN CHURCH 230KV CKT 1	320	320	0.22349	108.3963	P12:115:NPPD:1168B:ALBION 7:PETERSBRG.N7:BTB
FDNS	09ALL	0	20L	G15_076	TO->FROM	SIOUX CITY - TWIN CHURCH 230KV CKT 1	320	320	0.22349	108.3887	PETERSBRG.N7115.00 - PETERSBURG 115KV CKT Z1
FDNS	09ALL	0	20L	G15_076	TO->FROM	SIOUX CITY - TWIN CHURCH 230KV CKT 1	320	320	0.22349	108.3771	ALBION - PETERSBURG 115KV CKT 1
FDNS	09ALL	0	20L	G15_076	TO->FROM	SIOUX CITY - TWIN CHURCH 230KV CKT 1	320	320	0.19786	108.352	TWIN CHURCH (TWNCHURCH T4) 230/115/13.8KV TRANSFORMER CKT 1
FDNS	09ALL	0	20L	G15_076	TO->FROM	SIOUX CITY - TWIN CHURCH 230KV CKT 1	320	320	0.19786	108.352	TWIN CHURCH (TWNCHURCH T4) 230/115/13.8KV TRANSFORMER CKT 1
FDNS	09ALL	0	20L	G15_076	TO->FROM	SIOUX CITY - TWIN CHURCH 230KV CKT 1	320	320	0.22169	108.3173	ATCHSNT3 345.00 - BOONEVILLE 345KV CKT 1
FDNS	09ALL	0	20L	G15_076	TO->FROM	SIOUX CITY - TWIN CHURCH 230KV CKT 1	320	320	0.22234	108.1343	GEN672310 1-POPLAR RIVER GENERATOR 1
FDNS	09ALL	0	20L	G15_076	TO->FROM	SIOUX CITY - TWIN CHURCH 230KV CKT 1	320	320	0.22192	108.1336	NEAL NORTH - SALIX 161KV CKT 1
FDNS	09ALL	0	20L	G15_076	TO->FROM	SIOUX CITY - TWIN CHURCH 230KV CKT 1	320	320	0.22256	108.0685	PONY CREEK - RLHILLS3 345.00 345KV CKT 1
FDNS	09ALL	0	20L	G15_076	TO->FROM	SIOUX CITY - TWIN CHURCH 230KV CKT 1	320	320	0.22073	108.0586	BLOOMFIELD - GAVINS POINT 115KV CKT 1
FDNS	09ALL	0	20L	G15_076	TO->FROM	SIOUX CITY - TWIN CHURCH 230KV CKT 1	320	320	0.22234	108.053	GEN672306 6-BOUNDARY DAM GENERATOR 6
FDNS	09ALL	0	20L	G15_076	TO->FROM	SIOUX CITY - TWIN CHURCH 230KV CKT 1	320	320	0.22411	108.0489	CLEARWATER - NELIGH 115KV CKT 1
FDNS	09ALL	0	20L	G15_076	TO->FROM	SIOUX CITY - TWIN CHURCH 230KV CKT 1	320	320	0.22411	108.0381	P12:115:NPPD:1164:ONEILL 7:JEFFREY9:BTB
FDNS	09ALL	0	20L	G15_076	TO->FROM	SIOUX CITY - TWIN CHURCH 230KV CKT 1	320	320	0.223	108.0279	103RD & ROKEBY - SUB 3458 NEB CTY 345KV CKT 1
FDNS	09ALL	0	20L	G15_076	TO->FROM	SIOUX CITY - TWIN CHURCH 230KV CKT 1	320	320	0.223	108.0279	103RD & ROKEBY - SUB 3458 NEB CTY 345KV CKT 1
FDNS	09ALL	0	20L	G15_076	TO->FROM	SIOUX CITY - TWIN CHURCH 230KV CKT 1	320	320	0.22411	108.0086	CLEARWATER - ONEILL 115KV CKT 1
FDNS	09ALL	0	20L	G15_076	TO->FROM	SIOUX CITY - TWIN CHURCH 230KV CKT 1	320	320	0.22169	108.0019	ATCHSNT3 345.00 - COOPER 345KV CKT 1
FDNS	09ALL	0	20L	G15_076	TO->FROM	SIOUX CITY - TWIN CHURCH 230KV CKT 1	320	320	0.22201	107.9902	LIBERTY5 161.00 - RAUN 161KV CKT 1
FDNS	09ALL	0	20L	G15_076	TO->FROM	SIOUX CITY - TWIN CHURCH 230KV CKT 1	320	320	0.22811	107.9774	BERSFORD - SIOUX FALLS 115KV CKT 1
FDNS	09ALL	0	20L	G15_076	TO->FROM	SIOUX CITY - TWIN CHURCH 230KV CKT 1	320	320	0.22234	107.9754	GEN659111 2-LELAND OLDS UNIT2
FDNS	09ALL	0	20L	G15_076	TO->FROM	SIOUX CITY - TWIN CHURCH 230KV CKT 1	320	320	0.22288	107.9266	G15-005T 345.00 - SIBLEY 345KV CKT 1
FDNS	09ALL	0	20L	G15_076	TO->FROM	SIOUX CITY - TWIN CHURCH 230KV CKT 1	320	320	0.22081	107.9109	FT RANDAL - UTICA JCT 230KV CKT 1
FDNS	09ALL	0	20L	G15_076	TO->FROM	SIOUX CITY - TWIN CHURCH 230KV CKT 1	320	320	0.2235	107.9102	AXTELL - POST ROCK 345KV CKT 1
FDNS	09ALL	0	20L	G15_076	TO->FROM	SIOUX CITY - TWIN CHURCH 230KV CKT 1	320	320	0.22469	107.8426	P12:69:OPPD:S976-FREM D-FREM E
FDNS	09ALL	0	20L	G15_076	TO->FROM	SIOUX CITY - TWIN CHURCH 230KV CKT 1	320	320	0.22469	107.8424	FREMONT SUB D - SUB 976 69KV CKT 1
FDNS	09NR	0	17G	G15_076	TO->FROM	SIOUX CITY - TWIN CHURCH 230KV CKT 1	320	320	0.24205	107.634	HOSKINS - RAUN 345KV CKT 1
FDNS	09ALL	0	16WP	G15_076	TO->FROM	SIOUX CITY - TWIN CHURCH 230KV CKT 1	320	320	0.2653	106.9479	HOSKINS - RAUN 345KV CKT 1
FDNS	09ALL	0	16WP	G15_076	TO->FROM	SIOUX CITY - TWIN CHURCH 230KV CKT 1	320	320	0.2653	106.9479	HOSKINS - RAUN 345KV CKT 1
FDNS	09ALL	0	20L	G15_076	TO->FROM	SIOUX CITY - TWIN CHURCH 230KV CKT 1	320	320	0.22234	106.9	BASE CASE
FDNS	09ALL	0	20WP	G15_076	TO->FROM	SIOUX CITY - TWIN CHURCH 230KV CKT 1	320	320	0.26503	106.423	HOSKINS - RAUN 345KV CKT 1
FDNS	09ALL	0	20WP	G15_076	TO->FROM	SIOUX CITY - TWIN CHURCH 230KV CKT 1	320	320	0.26503	106.423	HOSKINS - RAUN 345KV CKT 1
FDNS	09ALL	0	20L	G15_076	TO->FROM	SIOUX CITY - TWIN CHURCH 230KV CKT 1	320	320	0.22172	105.8864	LAKEFIELD 3 - NOBLES 345KV CKT 1
FDNS	09ALL	0	20L	G15_076	TO->FROM	SIOUX CITY - TWIN CHURCH 230KV CKT 1	320	320	0.22234	105.8723	GEN640009 1-COOPER NUCLEAR STATION
FDNS	09ALL	0	20L	G15_076	TO->FROM	SIOUX CITY - TWIN CHURCH 230KV CKT 1	320	320	0.22189	105.7884	POCAHONTAS COUNTY - POMEROY 161KV CKT 1
FDNS	09ALL	0	20L	G15_076	TO->FROM	SIOUX CITY - TWIN CHURCH 230KV CKT 1	320	320	0.22234	105.7493	GEN338143 1-INDEPENDENCE UNIT #1
FDNS	09ALL	0	20L	G15_076	TO->FROM	SIOUX CITY - TWIN CHURCH 230KV CKT 1	320	320	0.22234	105.7444	GEN338146 1-INDEPENDENCE UNIT #2
FDNS	09ALL	0	20L	G15_076	TO->FROM	SIOUX CITY - TWIN CHURCH 230KV CKT 1	320	320	0.22234	105.7118	GEN501801 1-DOLET HILLS UNIT1
FDNS	09ALL	0	20L	G15_076	TO->FROM	SIOUX CITY - TWIN CHURCH 230KV CKT 1	320	320	0.22193	105.7097	HAYES - POMEROY 161KV CKT 1
FDNS	09ALL	0	20WP	G15_076	TO->FROM	SIOUX CITY - TWIN CHURCH 230KV CKT 1	320	320	0.22272	105.6965	P13:230-345:NPPD:NUCOR-1
FDNS	09ALL	0	20L	G15_076	TO->FROM	SIOUX CITY - TWIN CHURCH 230KV CKT 1	320	320	0.22234	105.6923	GEN337653 1-WHITE BLUFF UNIT #2
FDNS	09ALL	0	17G	G15_076	TO->FROM	SIOUX CITY - TWIN CHURCH 230KV CKT 1	320	320	0.25881	105.6641	HOSKINS (HOSKINS T2) 345/230/13.8KV TRANSFORMER CKT 1
FDNS	09ALL	0	17G	G15_076	TO->FROM	SIOUX CITY - TWIN CHURCH 230KV CKT 1	320	320	0.25881	105.6641	HOSKINS (HOSKINS T2) 345/230/13.8KV TRANSFORMER CKT 1
FDNS	09ALL	0	20L	G15_076	TO->FROM	SIOUX CITY - TWIN CHURCH 230KV CKT 1	320	320	0.22234	105.6631	GEN337652 1-WHITE BLUFF UNIT #1
FDNS	09ALL	0	20L	G15_076	TO->FROM	SIOUX CITY - TWIN CHURCH 230KV CKT 1	320	320	0.2243	105.6524	P12:115:NPPD:1163B:NELIGH 7:NORFK.N7:BTB
FDNS	09ALL	0	20L	G15_076	TO->FROM	SIOUX CITY - TWIN CHURCH 230KV CKT 1	320	320	0.22159	105.5606	ANTELOPE 3345.00 - HOSKINS 345KV CKT 1
FDNS	09ALL	0	20L	G15_076	TO->FROM	SIOUX CITY - TWIN CHURCH 230KV CKT 1	320	320	0.22234	105.517	GEN562912 1-G15053_3 0.6900
FDNS	09ALL	0	20L	G15_076	TO->FROM	SIOUX CITY - TWIN CHURCH 230KV CKT 1	320	320	0.22412	105.5003	BATTLE CREEK - NORTH NORFOLK 115KV CKT 1
FDNS	09ALL	0	20L	G15_076	TO->FROM	SIOUX CITY - TWIN CHURCH 230KV CKT 1	320	320	0.22234	105.4732	GEN563222 1-G15088_3 0.6900
FDNS	09ALL	0	20L	G15_076	TO->FROM	SIOUX CITY - TWIN CHURCH 230KV CKT 1	320	320	0.22412	105.4392	BATTLE CREEK - COUNTY LINE 115KV CKT 1
FDNS	09ALL	0	20L	G15_076	TO->FROM	SIOUX CITY - TWIN CHURCH 230KV CKT 1	320	320	0.22412	105.4262	ANTELOPE 7115.00 - COUNTY LINE 115KV CKT 1

SOLUTION	GROUP	SCENARIO	SEASON	SOURCE	DIRECTION	MONITORED ELEMENT	RATEA (MVA)	RATEB(MVA)	TDF	TC%LOADING (% MVA)	CONTINGENCY
FDNS	09ALL	0	20L	G15_076	TO->FROM	SIOUX CITY - TWIN CHURCH 230KV CKT 1	320	320	0.22234	105.4227	GEN335831 1-RIVERBEND UNIT#1
FDNS	09ALL	0	20L	G15_076	TO->FROM	SIOUX CITY - TWIN CHURCH 230KV CKT 1	320	320	0.22234	105.3739	GEN337910 1-ARKANSAS NUCLEAR ONE UNIT #1
FDNS	09ALL	0	20L	G15_076	TO->FROM	SIOUX CITY - TWIN CHURCH 230KV CKT 1	320	320	0.2212	105.2703	GRPRAR1-LNX3345.00 - GRPRAR 345KV CKT Z
FDNS	09ALL	0	20L	G15_076	TO->FROM	SIOUX CITY - TWIN CHURCH 230KV CKT 1	320	320	0.2212	105.2658	GRPRAR1-LNX3345.00 - HOLT.CO3 345.00 345KV CKT 1
FDNS	09ALL	0	20L	G15_076	TO->FROM	SIOUX CITY - TWIN CHURCH 230KV CKT 1	320	320	0.22234	105.2474	GEN640431 1-LAREDO.GEN1W0.6900
FDNS	09ALL	0	20L	G15_076	TO->FROM	SIOUX CITY - TWIN CHURCH 230KV CKT 1	320	320	0.22234	105.2444	GEN344225 1-1CAL G1 25.000
FDNS	09ALL	0	20L	G15_076	TO->FROM	SIOUX CITY - TWIN CHURCH 230KV CKT 1	320	320	0.22234	105.2354	GEN336153 1-WATERFORD UNIT#3
FDNS	09ALL	0	16WP	G15_076	TO->FROM	SIOUX CITY - TWIN CHURCH 230KV CKT 1	320	320	0.22272	105.234	P13:230-345:NPPD:NUCOR-1
FDNS	09ALL	0	20L	G15_076	TO->FROM	SIOUX CITY - TWIN CHURCH 230KV CKT 1	320	320	0.22074	105.2171	SIOUX CITY (SC KV1A) 230/161/13.8KV TRANSFORMER CKT 1
FDNS	09ALL	0	20L	G15_076	TO->FROM	SIOUX CITY - TWIN CHURCH 230KV CKT 1	320	320	0.22159	105.2091	ANTELOPE 3345.00 (ANTELOPE T1) 345/115/13.8KV TRANSFORMER CKT 1
FDNS	09ALL	0	20L	G15_076	TO->FROM	SIOUX CITY - TWIN CHURCH 230KV CKT 1	320	320	0.22073	105.2053	SIOUX CITY (SC KV5A) 230/161/13.8KV TRANSFORMER CKT 1
FDNS	09ALL	0	20L	G15_076	TO->FROM	SIOUX CITY - TWIN CHURCH 230KV CKT 1	320	320	0.22234	105.1213	GEN640418 1-ELKHORN RIDGE WIND
FDNS	09ALL	0	20L	G15_076	TO->FROM	SIOUX CITY - TWIN CHURCH 230KV CKT 1	320	320	0.22093	105.1029	GRIMES - LEHIGH 345KV CKT 1
FDNS	09ALL	0	20L	G15_076	TO->FROM	SIOUX CITY - TWIN CHURCH 230KV CKT 1	320	320	0.22234	105.1017	GEN337911 1-ARKANSAS NUCLEAR ONE UNIT #2
FDNS	09ALL	0	20L	G15_076	TO->FROM	SIOUX CITY - TWIN CHURCH 230KV CKT 1	320	320	0.22075	105.1011	ANITA TAP POINT TO CRESTON AND DENISON - EXIRA 161KV CKT 1
FDNS	09ALL	0	20L	G15_076	TO->FROM	SIOUX CITY - TWIN CHURCH 230KV CKT 1	320	320	0.22075	105.0466	DENISON - EXIRA 161KV CKT 1
FDNS	09ALL	0	20L	G15_076	TO->FROM	SIOUX CITY - TWIN CHURCH 230KV CKT 1	320	320	0.22075	105.0461	DENISON (DN KV1A) 230/161/13.8KV TRANSFORMER CKT 1
FDNS	09ALL	0	20L	G15_076	TO->FROM	SIOUX CITY - TWIN CHURCH 230KV CKT 1	320	320	0.21647	104.9776	RAUN - SUB 3451 FT CAL 345KV CKT 1
FDNS	09ALL	0	20L	G15_076	TO->FROM	SIOUX CITY - TWIN CHURCH 230KV CKT 1	320	320	0.21647	104.9776	RAUN - SUB 3451 FT CAL 345KV CKT 1
FDNS	09ALL	0	20L	G15_076	TO->FROM	SIOUX CITY - TWIN CHURCH 230KV CKT 1	320	320	0.22234	104.909	GEN336821 1-GRAND GULF UNIT
FDNS	09ALL	0	20L	G15_076	TO->FROM	SIOUX CITY - TWIN CHURCH 230KV CKT 1	320	320	0.22042	104.893	SIOUX CITY - SIOUXCY-LNX3345.00 345KV CKT Z
FDNS	09ALL	0	20L	G15_076	TO->FROM	SIOUX CITY - TWIN CHURCH 230KV CKT 1	320	320	0.22042	104.8743	P12:345:UMZW:# 907 #: SC2-SR IN IA. SC2-SR 345 KV LINE
FDNS	09ALL	0	20L	G15_076	TO->FROM	SIOUX CITY - TWIN CHURCH 230KV CKT 1	320	320	0.22234	104.8535	GEN562921 1-G15054_2 0.6900
FDNS	09ALL	0	20L	G15_076	TO->FROM	SIOUX CITY - TWIN CHURCH 230KV CKT 1	320	320	0.22042	104.6054	SIOUXCY-LNX3345.00 - SPLIT ROCK 345KV CKT 1
FDNS	09ALL	0	20L	G15_076	TO->FROM	SIOUX CITY - TWIN CHURCH 230KV CKT 1	320	320	0.22042	104.6054	SIOUXCY-LNX3345.00 - SPLIT ROCK 345KV CKT 1
FDNS	09NR	0	20L	G15_076	TO->FROM	SIOUX CITY - TWIN CHURCH 230KV CKT 1	320	320	0.23668	104.5829	EMERSON - TWIN CHURCH 115KV CKT 1
FDNS	09ALL	0	20L	G15_076	TO->FROM	SIOUX CITY - TWIN CHURCH 230KV CKT 1	320	320	0.22224	104.1001	GR ISLD-LNX3345.00 - HOLT.CO3 345.00 345KV CKT 1
FDNS	09ALL	0	20L	G15_076	TO->FROM	SIOUX CITY - TWIN CHURCH 230KV CKT 1	320	320	0.22234	104.0842	GEN635023 3-WALTER SCOTT UNIT 3
FDNS	09ALL	0	20L	G15_076	TO->FROM	SIOUX CITY - TWIN CHURCH 230KV CKT 1	320	320	0.22224	104.0455	GR ISLD-LNX3345.00 - GRAND ISLAND 345KV CKT Z
FDNS	09NR	0	20L	G15_076	TO->FROM	SIOUX CITY - TWIN CHURCH 230KV CKT 1	320	320	0.19716	103.9487	RAUN - SIOUX CITY 345KV CKT 1
FDNS	09NR	0	20L	G15_076	TO->FROM	SIOUX CITY - TWIN CHURCH 230KV CKT 1	320	320	0.19716	103.9487	RAUN - SIOUX CITY 345KV CKT 1
FDNS	09NR	0	17G	G15_076	TO->FROM	SIOUX CITY - TWIN CHURCH 230KV CKT 1	320	320	0.20914	103.8597	P13:230-345:NPPD:NUCOR-1
FDNS	09ALL	0	20L	G15_076	TO->FROM	SIOUX CITY - TWIN CHURCH 230KV CKT 1	320	320	0.22076	103.7922	EAGLE 4 230.00 - SIOUX CITY 230KV CKT 1
FDNS	09ALL	0	20L	G15_076	TO->FROM	SIOUX CITY - TWIN CHURCH 230KV CKT 1	320	320	0.22234	103.6471	GEN635024 4-WALTER SCOTT UNIT 4
FDNS	09ALL	0	20L	G15_076	TO->FROM	SIOUX CITY - TWIN CHURCH 230KV CKT 1	320	320	0.21842	103.6379	PLYMOUTH - SIOUX CITY 161KV CKT 1
FDNS	09NR	0	20L	G15_076	TO->FROM	SIOUX CITY - TWIN CHURCH 230KV CKT 1	320	320	0.24822	103.2762	GAVINS POINT - YANKON JCT 115KV CKT 1
FDNS	09NR	0	20L	G15_076	TO->FROM	SIOUX CITY - TWIN CHURCH 230KV CKT 1	320	320	0.24822	103.2762	GAVINS POINT - YANKON JCT 115KV CKT 1
FDNS	09ALL	0	17G	G15_076	TO->FROM	SIOUX CITY - TWIN CHURCH 230KV CKT 1	320	320	0.24748	102.9266	EMERSON - TWIN CHURCH 115KV CKT 1
FDNS	09NR	0	20L	G15_076	TO->FROM	SIOUX CITY - TWIN CHURCH 230KV CKT 1	320	320	0.23864	102.8531	HOSKINS - SHELL CREEK 345KV CKT 1
FDNS	09NR	0	20L	G15_076	TO->FROM	SIOUX CITY - TWIN CHURCH 230KV CKT 1	320	320	0.20953	102.8276	P13:115-230:NPPD:NUCOR-3
FDNS	09ALL	0	20L	G15_076	TO->FROM	SIOUX CITY - TWIN CHURCH 230KV CKT 1	320	320	0.21916	102.5734	DENISON - SIOUX CITY 230KV CKT 1
FDNS	09ALL	0	20L	G15_076	TO->FROM	SIOUX CITY - TWIN CHURCH 230KV CKT 1	320	320	0.22234	102.4396	GEN562673 1-G15_007_3 0.6900
FDNS	09NR	0	20L	G15_076	TO->FROM	SIOUX CITY - TWIN CHURCH 230KV CKT 1	320	320	0.22276	102.0204	COLUMEAST - NW68TH & HOLDREGE 345KV CKT 1
FDNS	09NR	0	20L	G15_076	TO->FROM	SIOUX CITY - TWIN CHURCH 230KV CKT 1	320	320	0.22276	102.0204	COLUMEAST - NW68TH & HOLDREGE 345KV CKT 1
FDNS	09ALL	0	20L	G15_076	TO->FROM	SIOUX CITY - TWIN CHURCH 230KV CKT 1	320	320	0.22234	101.3716	GEN563113 1-G15076_4 0.6500
FDNS	09ALL	0	20L	G15_076	TO->FROM	SIOUX CITY - TWIN CHURCH 230KV CKT 1	320	320	0.22234	101.3716	GEN563114 1-G15076_5 0.6500
FDNS	09NR	0	20L	G15_076	TO->FROM	SIOUX CITY - TWIN CHURCH 230KV CKT 1	320	320	0.22107	101.2752	COLUMEAST - SHELL CREEK 345KV CKT 1
FDNS	09ALL	0	20L	G15_076	TO->FROM	SIOUX CITY - TWIN CHURCH 230KV CKT 1	320	320	0.22234	101.2116	GEN562438 1-G13-032 0.6900
FDNS	09NR	0	20L	G15_076	TO->FROM	SIOUX CITY - TWIN CHURCH 230KV CKT 1	320	320	0.23668	101.1718	P12:115:NPPD:1193:OAKLAND7:EMERSON7:BTB
FDNS	09NR	0	20L	G15_076	TO->FROM	SIOUX CITY - TWIN CHURCH 230KV CKT 1	320	320	0.23668	101.1409	BANCROFT - EMERSON 115KV CKT 1
FDNS	09NR	0	20L	G15_076	TO->FROM	SIOUX CITY - TWIN CHURCH 230KV CKT 1	320	320	0.3071	101.055	BELDEN - HARTINGTON 115KV CKT 1
FDNS	09ALL	0	20L	G15_076	TO->FROM	SIOUX CITY - TWIN CHURCH 230KV CKT 1	320	320	0.22229	101.0355	KELLY - MEADOWGROVE4230.00 230KV CKT 1
FDNS	09NR	0	20L	G15_076	TO->FROM	SIOUX CITY - TWIN CHURCH 230KV CKT 1	320	320	0.20562	100.9543	FT THOMPSON - FTTHOM2-LNX3345.00 345KV CKT Z
FDNS	09NR	0	20L	G15_076	TO->FROM	SIOUX CITY - TWIN CHURCH 230KV CKT 1	320	320	0.20562	100.9451	GRPRAR2-LNX3345.00 - YANKTON 345KV CKT Z
FDNS	09NR	0	20L	G15_076	TO->FROM	SIOUX CITY - TWIN CHURCH 230KV CKT 1	320	320	0.20562	100.9421	FTTHOM2-LNX3345.00 - GRPRAR2-LNX3345.00 345KV CKT 1
FDNS	09NR	0	20L	G15_076	TO->FROM	SIOUX CITY - TWIN CHURCH 230KV CKT 1	320	320	0.20953	100.655	P13:115-345:NPPD:NUCOR-2
FDNS	09ALL	0	17G	G15_076	TO->FROM	SIOUX CITY - TWIN CHURCH 230KV CKT 1	320	320	0.23578	100.4236	COLUMEAST - NW68TH & HOLDREGE 345KV CKT 1
FDNS	09ALL	0	17G	G15_076	TO->FROM	SIOUX CITY - TWIN CHURCH 230KV CKT 1	320	320	0.23578	100.4236	COLUMEAST - NW68TH & HOLDREGE 345KV CKT 1
FDNS	09NR	0	20L	G15_076	TO->FROM	SIOUX CITY - TWIN CHURCH 230KV CKT 1	320	320	0.23185	100.3978	NAPA JCT7 115.00 - YANKON JCT 115KV CKT 1
FDNS	09NR	0	20L	G15_076	TO->FROM	SIOUX CITY - TWIN CHURCH 230KV CKT 1	320	320	0.23185	100.3978	NAPA JCT7 115.00 - YANKON JCT 115KV CKT 1
FDNS	09NR	0	20L	G15_076	TO->FROM	SIOUX CITY - TWIN CHURCH 230KV CKT 1	320	320	0.23185	100.3953	P12:115:UMZW:# 1910 #: YJ IN SD. YJ-UJ LINE FAULT
FDNS	09NR	0	20L	G15_076	TO->FROM	SIOUX CITY - TWIN CHURCH 230KV CKT 1	320	320	0.23185	100.3952	NAPA JCT7 115.00 - UTICA 115KV CKT 1
FDNS	09NR	0	20L	G15_076	TO->FROM	SIOUX CITY - TWIN CHURCH 230KV CKT 1	320	320	0.23185	100.3952	NAPA JCT7 115.00 - UTICA 115KV CKT 1
FDNS	09ALL	0	17G	G15_076	TO->FROM	SIOUX CITY - TWIN CHURCH 230KV CKT 1	320	320	0.24685	100.2833	HOSKINS - SHELL CREEK 345KV CKT 1
FDNS	09NR	0	20L	G15_076	TO->FROM	SIOUX CITY - TWIN CHURCH 230KV CKT 1	320	320	0.23668	100.2298	BANCROFT - OAKLAND 115KV CKT 1
FDNS	09NR	0	20L	G15_076	TO->FROM	SIOUX CITY - TWIN CHURCH 230KV CKT 1	320	320	0.20953	99.9	SHERBURNE CO 345/24.0KV TRANSFORMER CKT 1
FDNS	09ALL	0	17G	G15_076	TO->FROM	SIOUX CITY - TWIN CHURCH 230KV CKT 1	320	320	0.26121	99.8	GAVINS POINT - YANKON JCT 115KV CKT 1
FDNS	09ALL	0	17G	G15_076	TO->FROM	SIOUX CITY - TWIN CHURCH 230KV CKT 1	320	320	0.26121	99.8	GAVINS POINT - YANKON JCT 115KV CKT 1
FDNS	09NR	0	20L	G15_076	TO->FROM	SIOUX CITY - TWIN CHURCH 230KV CKT 1	320	320	0.28153	99.8	BELDEN - HOSKINS 115KV CKT 1
FDNS	09NR	0	20L	G15_076	TO->FROM	SIOUX CITY - TWIN CHURCH 230KV CKT 1	320	320	0.20953	99.8	GEN600002 3-SHERBURNE CNTY G3
FDNS	09ALL	0	17G	G15_076	TO->FROM	SIOUX CITY - TWIN CHURCH 230KV CKT 1	320	320	0.24748	99.5	P12:115:NPPD:1193:OAKLAND7:EMERSON7:BTB
FDNS	09NR	0	20L	G15_076	TO->FROM	SIOUX CITY - TWIN CHURCH 230KV CKT 1	320	320	0.20953	99.5	BIG STONE 230/24.0KV TRANSFORMER CKT 1
FDNS	00NR	2	17SP	G15_076	FROM->TO	BELDEN - HOSKINS 115KV CKT 1	115	115	0.24749	123.538	DIXONCO 230.00 - HOSKINS 230KV CKT 1
FDNS	09ALL	2	25SP	G15_076	FROM->TO	DIXONCO 230.00 - HOSKINS 230KV CKT 1	320	320	0.23683	123.9673	DIXONCO 230.00 - TWIN CHURCH 230KV CKT 1
FDNS	09ALL	2	20SP	G15_076	FROM->TO	DIXONCO 230.00 - HOSKINS 230KV CKT 1	320	320	0.23666	123.6685	DIXONCO 230.00 - TWIN CHURCH 230KV CKT 1
FDNS	09ALL	2	17SP	G15_076	FROM->TO	DIXONCO 230.00 - HOSKINS 230KV CKT 1	320	320	0.23718	122.9036	DIXONCO 230.00 - TWIN CHURCH 230KV CKT 1
FDNS	09ALL	2	17G	G15_076	FROM->TO	DIXONCO 230.00 - HOSKINS 230KV CKT 1	320	320	0.23678	116.5225	DIXONCO 230.00 - TWIN CHURCH 230KV CKT 1
FDNS	09ALL	2	16WP	G15_076	FROM->TO	DIXONCO 230.00 - HOSKINS 230KV CKT 1	320	320	0.23619	116.3473	DIXONCO 230.00 - TWIN CHURCH 230KV CKT 1
FDNS	09ALL	2	20WP	G15_076	FROM->TO	DIXONCO 230.00 - HOSKINS 230KV CKT 1	320	320	0.23589	116.0792	DIXONCO 230.00 - TWIN CHURCH 230KV CKT 1

SOLUTION	GROUP	SCENARIO	SEASON	SOURCE	DIRECTION	MONITORED ELEMENT	RATEA (MVA)	RATEB(MVA)	TDF	TC%LOADING (% MVA)	CONTINGENCY
FDNS	00NR	2	17SP	G15_076	FROM->TO	DIXONCO 230.00 - HOSKINS 230KV CKT 1	320	320	0.24491	114.79	DIXONCO 230.00 - TWIN CHURCH 230KV CKT 1
FDNS	09ALL	2	20L	G15_076	FROM->TO	DIXONCO 230.00 - HOSKINS 230KV CKT 1	320	320	0.2344	113.5444	DIXONCO 230.00 - TWIN CHURCH 230KV CKT 1
FDNS	09ALL	2	20SP	G15_076	FROM->TO	DIXONCO 230.00 - HOSKINS 230KV CKT 1	320	320	0.26189	99.7	SIOUX CITY - TWIN CHURCH 230KV CKT 1
FDNS	09ALL	2	25SP	G15_076	FROM->TO	DIXONCO 230.00 - HOSKINS 230KV CKT 1	320	320	0.26204	99.6	SIOUX CITY - TWIN CHURCH 230KV CKT 1
FDNS	09ALL	2	17G	G15_076	FROM->TO	DIXONCO 230.00 - TWIN CHURCH 230KV CKT 1	320	320	0.21295	133.7254	DIXONCO 230.00 - HOSKINS 230KV CKT 1
FDNS	09ALL	2	16WP	G15_076	FROM->TO	DIXONCO 230.00 - TWIN CHURCH 230KV CKT 1	320	320	0.21267	133.06	DIXONCO 230.00 - HOSKINS 230KV CKT 1
FDNS	09ALL	2	20WP	G15_076	FROM->TO	DIXONCO 230.00 - TWIN CHURCH 230KV CKT 1	320	320	0.21279	132.2703	DIXONCO 230.00 - HOSKINS 230KV CKT 1
FDNS	09ALL	2	20SP	G15_076	FROM->TO	DIXONCO 230.00 - TWIN CHURCH 230KV CKT 1	320	320	0.21297	131.6666	DIXONCO 230.00 - HOSKINS 230KV CKT 1
FDNS	09ALL	2	25SP	G15_076	FROM->TO	DIXONCO 230.00 - TWIN CHURCH 230KV CKT 1	320	320	0.21304	130.9551	DIXONCO 230.00 - HOSKINS 230KV CKT 1
FDNS	09ALL	2	20L	G15_076	FROM->TO	DIXONCO 230.00 - TWIN CHURCH 230KV CKT 1	320	320	0.21145	130.9336	DIXONCO 230.00 - HOSKINS 230KV CKT 1
FDNS	09ALL	2	17SP	G15_076	FROM->TO	DIXONCO 230.00 - TWIN CHURCH 230KV CKT 1	320	320	0.21297	130.6713	DIXONCO 230.00 - HOSKINS 230KV CKT 1
FDNS	09ALL	2	20L	G15_076	FROM->TO	DIXONCO 230.00 - TWIN CHURCH 230KV CKT 1	320	320	0.1968	114.6142	BELDEN 4 230.00 - RASMUSN 230KV CKT 1
FDNS	09ALL	2	17G	G15_076	FROM->TO	DIXONCO 230.00 - TWIN CHURCH 230KV CKT 1	320	320	0.19675	114.1601	BELDEN 4 230.00 - RASMUSN 230KV CKT 1
FDNS	09ALL	2	16WP	G15_076	FROM->TO	DIXONCO 230.00 - TWIN CHURCH 230KV CKT 1	320	320	0.19703	111.9923	BELDEN 4 230.00 - RASMUSN 230KV CKT 1
FDNS	09ALL	2	20WP	G15_076	FROM->TO	DIXONCO 230.00 - TWIN CHURCH 230KV CKT 1	320	320	0.19741	111.3001	BELDEN 4 230.00 - RASMUSN 230KV CKT 1
FDNS	00NR	2	17SP	G15_076	FROM->TO	DIXONCO 230.00 - TWIN CHURCH 230KV CKT 1	320	320	0.21123	102.1304	DIXONCO 230.00 - HOSKINS 230KV CKT 1
FDNS	09ALL	2	20SP	G15_076	FROM->TO	DIXONCO 230.00 - TWIN CHURCH 230KV CKT 1	320	320	0.19687	102.0318	BELDEN 4 230.00 - RASMUSN 230KV CKT 1
FDNS	09ALL	2	25SP	G15_076	FROM->TO	DIXONCO 230.00 - TWIN CHURCH 230KV CKT 1	320	320	0.1968	100.7447	BELDEN 4 230.00 - RASMUSN 230KV CKT 1
FDNS	09ALL	2	17SP	G15_076	FROM->TO	DIXONCO 230.00 - TWIN CHURCH 230KV CKT 1	320	320	0.1965	100.7275	BELDEN 4 230.00 - RASMUSN 230KV CKT 1
FDNS	00NR	2	17SP	G15_076	FROM->TO	G14-059T 230.00 - OGALLALA 230KV CKT 1	320	320	0.03078	167.2434	SIDNEY - SIDNEY1-LNX3345.00 345KV CKT Z
FDNS	00NR	2	17SP	G15_076	FROM->TO	G14-059T 230.00 - OGALLALA 230KV CKT 1	320	320	0.03078	167.0441	KEYSTONE - SIDNEY1-LNX3345.00 345KV CKT 1
FDNS	00NR	2	17SP	G15_076	TO->FROM	G14-059T 230.00 - SIDNEY 230KV CKT 1	320	320	0.03078	116.2551	SIDNEY - SIDNEY1-LNX3345.00 345KV CKT Z
FDNS	00NR	2	17SP	G15_076	TO->FROM	G14-059T 230.00 - SIDNEY 230KV CKT 1	320	320	0.03078	116.042	KEYSTONE - SIDNEY1-LNX3345.00 345KV CKT 1
FDNS	00NR	2	17SP	G15_076	TO->FROM	GERALD GENTLEMAN STATION - OGALLALA 230KV CKT 1	320	320	0.0318	109.9012	GERALD GENTLEMAN STATION - KEYSTONE 345KV CKT 1
FDNS	00NR	2	17SP	G15_076	FROM->TO	GR ISLD-LNX3345.00 - GRAND ISLAND 345KV CKT Z	720	720	0.07494	130.1603	CHERRYC3 345.00 - HOLT.CO3 345.00 345KV CKT 1
FDNS	00NR	2	17SP	G15_076	FROM->TO	GR ISLD-LNX3345.00 - GRAND ISLAND 345KV CKT Z	720	720	0.06869	120.1656	CHERRYC3 345.00 - GERALD GENTLEMAN STATION 345KV CKT 1
FDNS	00NR	2	17SP	G15_076	FROM->TO	GR ISLD-LNX3345.00 - GRAND ISLAND 345KV CKT Z	720	720	0.03318	115.8314	HOSKINS - SHELL CREEK 345KV CKT 1
FDNS	00NR	2	17SP	G15_076	FROM->TO	GR ISLD-LNX3345.00 - GRAND ISLAND 345KV CKT Z	720	720	0.02977	114.2396	COLUMWEST - KELLY 230KV CKT 1
FDNS	00NR	2	17SP	G15_076	FROM->TO	GR ISLD-LNX3345.00 - GRAND ISLAND 345KV CKT Z	720	720	0.02977	113.3233	COLUMWEST - GRAND ISLAND 230KV CKT 1
FDNS	00NR	2	17SP	G15_076	FROM->TO	GR ISLD-LNX3345.00 - GRAND ISLAND 345KV CKT Z	720	720	0.02993	106.7971	MCCOOL - MOORE 345KV CKT 1
FDNS	00NR	2	17SP	G15_076	FROM->TO	GR ISLD-LNX3345.00 - GRAND ISLAND 345KV CKT Z	720	720	0.03112	102.7159	GRAND ISLAND - MCCOOL 345KV CKT 1
FDNS	00NR	2	17SP	G15_076	TO->FROM	GR ISLD-LNX3345.00 - HOLT.CO3 345.00 345KV CKT 1	720	720	0.07494	129.1944	CHERRYC3 345.00 - HOLT.CO3 345.00 345KV CKT 1
FDNS	00NR	2	17SP	G15_076	TO->FROM	GR ISLD-LNX3345.00 - HOLT.CO3 345.00 345KV CKT 1	720	720	0.06869	119.2756	CHERRYC3 345.00 - GERALD GENTLEMAN STATION 345KV CKT 1
FDNS	00NR	2	17SP	G15_076	TO->FROM	GR ISLD-LNX3345.00 - HOLT.CO3 345.00 345KV CKT 1	720	720	0.03318	114.8933	HOSKINS - SHELL CREEK 345KV CKT 1
FDNS	00NR	2	17SP	G15_076	TO->FROM	GR ISLD-LNX3345.00 - HOLT.CO3 345.00 345KV CKT 1	720	720	0.02977	112.3991	COLUMWEST - GRAND ISLAND 230KV CKT 1
FDNS	00NR	2	17SP	G15_076	TO->FROM	GR ISLD-LNX3345.00 - HOLT.CO3 345.00 345KV CKT 1	720	720	0.02993	105.8139	MCCOOL - MOORE 345KV CKT 1
FDNS	00NR	2	17SP	G15_076	TO->FROM	GR ISLD-LNX3345.00 - HOLT.CO3 345.00 345KV CKT 1	720	720	0.03112	101.7546	GRAND ISLAND - MCCOOL 345KV CKT 1
FDNS	00NR	2	17SP	G15_076	TO->FROM	SIDNEY - SIDNEY TRANSFORMER 230KV CKT 1	400	400	0.03494	118.7101	KEYSTONE - SIDNEY1-LNX3345.00 345KV CKT 1
FDNS	00NR	2	17SP	G15_076	TO->FROM	SIDNEY - SIDNEY TRANSFORMER 230KV CKT 1	400	400	0.03494	118.2146	SIDNEY - SIDNEY1-LNX3345.00 345KV CKT Z
FDNS	00NR	2	17SP	G15_076	FROM->TO	SIDNEY (SDQ KV2A) 345/230/13.8KV TRANSFORMER CKT 1	400	480	0.03494	100.8156	KEYSTONE - SIDNEY1-LNX3345.00 345KV CKT 1
FDNS	00NR	2	17SP	G15_076	FROM->TO	SIDNEY (SDQ KV2A) 345/230/13.8KV TRANSFORMER CKT 1	400	480	0.03494	100.5215	SIDNEY - SIDNEY1-LNX3345.00 345KV CKT Z
FDNS	00NR	2	17SP	G15_076	FROM->TO	SIDNEY (SDQ KV2A) 345/230/13.8KV TRANSFORMER CKT 1	400	480	0.03494	100.2736	SIDNEY - SIDNEY1-LNX3345.00 345KV CKT Z
FDNS	00NR	2	17SP	G15_076	FROM->TO	SIDNEY (SDQ KV2A) 345/230/13.8KV TRANSFORMER CKT 1	400	480	0.03494	100.213	KEYSTONE - SIDNEY1-LNX3345.00 345KV CKT 1
FDNS	09ALL	2	20L	G15_076	TO->FROM	SIOUX CITY - TWIN CHURCH 230KV CKT 1	320	320	0.28582	112.5767	DIXONCO 230.00 - HOSKINS 230KV CKT 1
FDNS	09ALL	2	20L	G15_076	TO->FROM	SIOUX CITY - TWIN CHURCH 230KV CKT 1	320	320	0.30158	105.0652	BELDEN 4 230.00 - RASMUSN 230KV CKT 1
FDNS	09ALL	2	20L	G15_076	TO->FROM	SIOUX CITY - TWIN CHURCH 230KV CKT 1	320	320	0.23269	103.4616	HOSKINS - RAUN 345KV CKT 1
FDNS	09ALL	2	20L	G15_076	TO->FROM	SIOUX CITY - TWIN CHURCH 230KV CKT 1	320	320	0.23269	103.4616	HOSKINS - RAUN 345KV CKT 1
FDNS	09ALL	2	17G	G15_076	TO->FROM	SIOUX CITY - TWIN CHURCH 230KV CKT 1	320	320	0.28745	102.5424	DIXONCO 230.00 - HOSKINS 230KV CKT 1
FDNS	00NR	3	17SP	G15_076	FROM->TO	COLUMEAST (COL.EAST T3) 230/115/13.8KV TRANSFORMER CKT 1	187	187	0.0376	109.6271	COLUMEAST - SHELL CREEK 345KV CKT 1
FDNS	00NR	3	17SP	G15_076	FROM->TO	COLUMEAST (COL.EAST T3) 230/115/13.8KV TRANSFORMER CKT 1	187	187	0.0376	108.958	COLUMEAST - SHELL CREEK 345KV CKT 1
FDNS	00NR	3	20SP	G15_076	FROM->TO	COLUMEAST (COL.EAST T3) 230/115/13.8KV TRANSFORMER CKT 1	187	187	0.038	106.2219	COLUMEAST - SHELL CREEK 345KV CKT 1
FDNS	00NR	3	20SP	G15_076	FROM->TO	COLUMEAST (COL.EAST T3) 230/115/13.8KV TRANSFORMER CKT 1	187	187	0.038	105.4771	COLUMEAST - SHELL CREEK 345KV CKT 1
FDNS	00NR	3	25SP	G15_076	FROM->TO	COLUMEAST (COL.EAST T3) 230/115/13.8KV TRANSFORMER CKT 1	187	187	0.03758	102.789	COLUMEAST - SHELL CREEK 345KV CKT 1
FDNS	00NR	3	16WP	G15_076	FROM->TO	COLUMEAST (COL.EAST T3) 230/115/13.8KV TRANSFORMER CKT 1	187	187	0.0386	102.2317	COLUMEAST - SHELL CREEK 345KV CKT 1
FDNS	00NR	3	25SP	G15_076	FROM->TO	COLUMEAST (COL.EAST T3) 230/115/13.8KV TRANSFORMER CKT 1	187	187	0.03758	102.1579	COLUMEAST - SHELL CREEK 345KV CKT 1
FDNS	00NR	3	16WP	G15_076	FROM->TO	COLUMEAST (COL.EAST T3) 230/115/13.8KV TRANSFORMER CKT 1	187	187	0.0386	100.6408	COLUMEAST - SHELL CREEK 345KV CKT 1
FDNS	09ALL	3	25SP	G15_076	FROM->TO	DIXONCO 230.00 - HOSKINS 230KV CKT 1	320	320	0.24602	114.4603	DIXONCO 230.00 - TWIN CHURCH 230KV CKT 1
FDNS	09ALL	3	20SP	G15_076	FROM->TO	DIXONCO 230.00 - HOSKINS 230KV CKT 1	320	320	0.24581	114.0922	DIXONCO 230.00 - TWIN CHURCH 230KV CKT 1
FDNS	09ALL	3	17SP	G15_076	FROM->TO	DIXONCO 230.00 - HOSKINS 230KV CKT 1	320	320	0.24653	112.8474	DIXONCO 230.00 - TWIN CHURCH 230KV CKT 1
FDNS	09ALL	3	17G	G15_076	FROM->TO	DIXONCO 230.00 - HOSKINS 230KV CKT 1	320	320	0.24593	109.0048	DIXONCO 230.00 - TWIN CHURCH 230KV CKT 1
FDNS	09ALL	3	20L	G15_076	FROM->TO	DIXONCO 230.00 - HOSKINS 230KV CKT 1	320	320	0.24352	107.9291	DIXONCO 230.00 - TWIN CHURCH 230KV CKT 1
FDNS	09ALL	3	16WP	G15_076	FROM->TO	DIXONCO 230.00 - HOSKINS 230KV CKT 1	320	320	0.24547	107.224	DIXONCO 230.00 - TWIN CHURCH 230KV CKT 1
FDNS	09ALL	3	20WP	G15_076	FROM->TO	DIXONCO 230.00 - HOSKINS 230KV CKT 1	320	320	0.24499	106.9936	DIXONCO 230.00 - TWIN CHURCH 230KV CKT 1
FDNS	00NR	3	20SP	G15_076	FROM->TO	DIXONCO 230.00 - HOSKINS 230KV CKT 1	320	320	0.25693	103.6842	DIXONCO 230.00 - TWIN CHURCH 230KV CKT 1
FDNS	00NR	3	25SP	G15_076	FROM->TO	DIXONCO 230.00 - HOSKINS 230KV CKT 1	320	320	0.25702	103.2887	DIXONCO 230.00 - TWIN CHURCH 230KV CKT 1
FDNS	00NR	3	17SP	G15_076	FROM->TO	DIXONCO 230.00 - HOSKINS 230KV CKT 1	320	320	0.25726	103.0438	DIXONCO 230.00 - TWIN CHURCH 230KV CKT 1
FDNS	09NR	3	17G	G15_076	FROM->TO	DIXONCO 230.00 - HOSKINS 230KV CKT 1	320	320	0.25676	101.9865	DIXONCO 230.00 - TWIN CHURCH 230KV CKT 1
FDNS	09NR	3	20L	G15_076	FROM->TO	DIXONCO 230.00 - HOSKINS 230KV CKT 1	320	320	0.25549	101.9723	DIXONCO 230.00 - TWIN CHURCH 230KV CKT 1
FDNS	09ALL	3	17G	G15_076	FROM->TO	DIXONCO 230.00 - TWIN CHURCH 230KV CKT 1	320	320	0.21142	131.4393	DIXONCO 230.00 - HOSKINS 230KV CKT 1
FDNS	09ALL	3	16WP	G15_076	FROM->TO	DIXONCO 230.00 - TWIN CHURCH 230KV CKT 1	320	320	0.21113	131.0941	DIXONCO 230.00 - HOSKINS 230KV CKT 1
FDNS	09ALL	3	20WP	G15_076	FROM->TO	DIXONCO 230.00 - TWIN CHURCH 230KV CKT 1	320	320	0.21128	130.3484	DIXONCO 230.00 - HOSKINS 230KV CKT 1
FDNS	09ALL	3	20SP	G15_076	FROM->TO	DIXONCO 230.00 - TWIN CHURCH 230KV CKT 1	320	320	0.21145	129.6495	DIXONCO 230.00 - HOSKINS 230KV CKT 1
FDNS	09ALL	3	25SP	G15_076	FROM->TO	DIXONCO 230.00 - TWIN CHURCH 230KV CKT 1	320	320	0.21151	128.9014	DIXONCO 230.00 - HOSKINS 230KV CKT 1
FDNS	09ALL	3	17SP	G15_076	FROM->TO	DIXONCO 230.00 - TWIN CHURCH 230KV CKT 1	320	320	0.2114	128.8414	DIXONCO 230.00 - HOSKINS 230KV CKT 1
FDNS	09ALL	3	20L	G15_076	FROM->TO	DIXONCO 230.00 - TWIN CHURCH 230KV CKT 1	320	320	0.20993	128.2726	DIXONCO 230.00 - HOSKINS 230KV CKT 1
FDNS	09NR	3	17G	G15_076	FROM->TO	DIXONCO 230.00 - TWIN CHURCH 230KV CKT 1	320	320	0.2093	124.0291	DIXONCO 230.00 - HOSKINS 230KV CKT 1
FDNS	09NR	3	20L	G15_076	FROM->TO	DIXONCO 230.00 - TWIN CHURCH 230KV CKT 1	320	320	0.21016	120.4141	DIXONCO 230.00 - HOSKINS 230KV CKT 1
FDNS	09NR	3	17G	G15_076	FROM->TO	DIXONCO 230.00 - TWIN CHURCH 230KV CKT 1	320	320	0.1049	112.169	HOSKINS - RAUN 345KV CKT 1
FDNS	09NR	3	17G	G15_076	FROM->TO	DIXONCO 230.00 - TWIN CHURCH 230KV CKT 1	320	320	0.17097	110.7771	BELDEN 4 230.00 - RASMUSN 230KV CKT 1

SOLUTION	GROUP	SCENARIO	SEASON	SOURCE	DIRECTION	MONITORED ELEMENT	RATEA (MVA)	RATEB(MVA)	TDF	TC%LOADING (% MVA)	CONTINGENCY
FDNS	09NR	3	17G	G15_076	FROM->TO	DIXONCO 230.00 - TWIN CHURCH 230KV CKT 1	320	320	0.13477	108.3686	RASMUSN - SIOUX CITY 230KV CKT 1
FDNS	00NR	3	16WP	G15_076	FROM->TO	DIXONCO 230.00 - TWIN CHURCH 230KV CKT 1	320	320	0.20912	107.3794	DIXONCO 230.00 - HOSKINS 230KV CKT 1
FDNS	09NR	3	20L	G15_076	FROM->TO	DIXONCO 230.00 - TWIN CHURCH 230KV CKT 1	320	320	0.17338	107.0534	BELDEN 4 230.00 - RASMUSN 230KV CKT 1
FDNS	09NR	3	17G	G15_076	FROM->TO	DIXONCO 230.00 - TWIN CHURCH 230KV CKT 1	320	320	0.10058	106.1555	P13:230-345:NPPD:NUCOR-1
FDNS	00NR	3	20WP	G15_076	FROM->TO	DIXONCO 230.00 - TWIN CHURCH 230KV CKT 1	320	320	0.20923	106.1193	DIXONCO 230.00 - HOSKINS 230KV CKT 1
FDNS	09NR	3	20L	G15_076	FROM->TO	DIXONCO 230.00 - TWIN CHURCH 230KV CKT 1	320	320	0.10872	105.1297	HOSKINS - RAUN 345KV CKT 1
FDNS	09NR	3	20L	G15_076	FROM->TO	DIXONCO 230.00 - TWIN CHURCH 230KV CKT 1	320	320	0.10872	105.1297	HOSKINS - RAUN 345KV CKT 1
FDNS	09NR	3	17G	G15_076	FROM->TO	DIXONCO 230.00 - TWIN CHURCH 230KV CKT 1	320	320	0.1597	104.3736	BELDEN - TWIN CHURCH 115KV CKT 1
FDNS	00NR	3	20SP	G15_076	FROM->TO	DIXONCO 230.00 - TWIN CHURCH 230KV CKT 1	320	320	0.20911	102.8986	DIXONCO 230.00 - HOSKINS 230KV CKT 1
FDNS	09ALL	3	16WP	G15_076	FROM->TO	DIXONCO 230.00 - TWIN CHURCH 230KV CKT 1	320	320	0.11139	102.408	BASE CASE
FDNS	09NR	3	20L	G15_076	FROM->TO	DIXONCO 230.00 - TWIN CHURCH 230KV CKT 1	320	320	0.10272	102.3299	P13:230-345:NPPD:NUCOR-1
FDNS	00NR	3	17SP	G15_076	FROM->TO	DIXONCO 230.00 - TWIN CHURCH 230KV CKT 1	320	320	0.20901	102.2135	DIXONCO 230.00 - HOSKINS 230KV CKT 1
FDNS	00NR	3	25SP	G15_076	FROM->TO	DIXONCO 230.00 - TWIN CHURCH 230KV CKT 1	320	320	0.20907	101.8894	DIXONCO 230.00 - HOSKINS 230KV CKT 1
FDNS	09ALL	3	17G	G15_076	FROM->TO	DIXONCO 230.00 - TWIN CHURCH 230KV CKT 1	320	320	0.11145	101.8514	BASE CASE
FDNS	09NR	3	20L	G15_076	FROM->TO	DIXONCO 230.00 - TWIN CHURCH 230KV CKT 1	320	320	0.13737	101.8276	RASMUSN - SIOUX CITY 230KV CKT 1
FDNS	09NR	3	17G	G15_076	FROM->TO	DIXONCO 230.00 - TWIN CHURCH 230KV CKT 1	320	320	0.10058	101.647	P13:115-230:NPPD:NUCOR-3
FDNS	09NR	3	17G	G15_076	FROM->TO	DIXONCO 230.00 - TWIN CHURCH 230KV CKT 1	320	320	0.11194	101.5943	HOSKINS - SHELL CREEK 345KV CKT 1
FDNS	09ALL	3	20WP	G15_076	FROM->TO	DIXONCO 230.00 - TWIN CHURCH 230KV CKT 1	320	320	0.11195	101.541	BASE CASE
FDNS	09NR	3	17G	G15_076	FROM->TO	DIXONCO 230.00 - TWIN CHURCH 230KV CKT 1	320	320	0.10625	100.857	COLUMEAST - NW68TH & HOLDREGE 345KV CKT 1
FDNS	09NR	3	17G	G15_076	FROM->TO	DIXONCO 230.00 - TWIN CHURCH 230KV CKT 1	320	320	0.10625	100.857	COLUMEAST - NW68TH & HOLDREGE 345KV CKT 1
FDNS	09NR	3	17G	G15_076	FROM->TO	DIXONCO 230.00 - TWIN CHURCH 230KV CKT 1	320	320	0.15248	100.4443	HOSKINS (HOSKINS T2) 345/230/13.8KV TRANSFORMER CKT 1
FDNS	09NR	3	17G	G15_076	FROM->TO	DIXONCO 230.00 - TWIN CHURCH 230KV CKT 1	320	320	0.15248	100.4443	HOSKINS (HOSKINS T2) 345/230/13.8KV TRANSFORMER CKT 1
FDNS	09NR	3	17G	G15_076	FROM->TO	DIXONCO 230.00 - TWIN CHURCH 230KV CKT 1	320	320	0.10585	100.3584	COLUMEAST - SHELL CREEK 345KV CKT 1
FDNS	09NR	3	17G	G15_076	FROM->TO	DIXONCO 230.00 - TWIN CHURCH 230KV CKT 1	320	320	0.09964	99.7	FT RANDAL - SIOUX CITY 230KV CKT 1
FDNS	09NR	3	17G	G15_076	FROM->TO	DIXONCO 230.00 - TWIN CHURCH 230KV CKT 1	320	320	0.08978	99.5	RAUN - SIOUX CITY 345KV CKT 1
FDNS	09NR	3	17G	G15_076	FROM->TO	GAVINS POINT - YANKON JCT 115KV CKT 1	120	120	0.09276	100.9065	GAVINS POINT - SPIRIT MOUND 115KV CKT 1
FDNS	09NR	3	17G	G15_076	TO->FROM	GERALD GENTLEMAN STATION - OGALLALA 230KV CKT 1	320	320	0.04059	124.6748	GERALD GENTLEMAN STATION - KEYSTONE 345KV CKT 1
FDNS	00NR	3	16WP	G15_076	TO->FROM	GERALD GENTLEMAN STATION - OGALLALA 230KV CKT 1	320	320	0.03988	119.0451	GERALD GENTLEMAN STATION - KEYSTONE 345KV CKT 1
FDNS	00NR	3	17SP	G15_076	TO->FROM	GERALD GENTLEMAN STATION - OGALLALA 230KV CKT 1	320	320	0.0303	116.6787	GERALD GENTLEMAN STATION - KEYSTONE 345KV CKT 1
FDNS	00NR	3	20WP	G15_076	TO->FROM	GERALD GENTLEMAN STATION - OGALLALA 230KV CKT 1	320	320	0.04068	113.4992	GERALD GENTLEMAN STATION - KEYSTONE 345KV CKT 1
FDNS	00NR	3	20SP	G15_076	TO->FROM	GERALD GENTLEMAN STATION - OGALLALA 230KV CKT 1	320	320	0.03041	107.7175	GERALD GENTLEMAN STATION - KEYSTONE 345KV CKT 1
FDNS	00NR	3	25SP	G15_076	TO->FROM	GERALD GENTLEMAN STATION - OGALLALA 230KV CKT 1	320	320	0.03025	103.1092	GERALD GENTLEMAN STATION - KEYSTONE 345KV CKT 1
FDNS	00NR	3	17SP	G15_076	TO->FROM	GRPRAR1-LNX3345.00 - GRPRAR 345KV CKT Z	720	720	0.0393	120.4019	P12:230:UMZB:# 116 #: ST IN SD. WSG-ST-VH
FDNS	00NR	3	17SP	G15_076	TO->FROM	GRPRAR1-LNX3345.00 - GRPRAR 345KV CKT Z	720	720	0.04695	120.1824	KELLY - MEADOWGROVE4230.00 230KV CKT 1
FDNS	00NR	3	17SP	G15_076	TO->FROM	GRPRAR1-LNX3345.00 - GRPRAR 345KV CKT Z	720	720	0.04084	119.5799	WATERTN-LNX3345.00 - WATERTOWN 345KV CKT Z
FDNS	00NR	3	17SP	G15_076	TO->FROM	GRPRAR1-LNX3345.00 - GRPRAR 345KV CKT Z	720	720	0.04084	119.5469	P12:345:UMZW:# 1747 #: WT2 IN SD. WT2-WHT LINE FAULT
FDNS	00NR	3	17SP	G15_076	TO->FROM	GRPRAR1-LNX3345.00 - GRPRAR 345KV CKT Z	720	720	0.04084	119.5349	WATERTN-LNX3345.00 - WHITE 345KV CKT 1
FDNS	00NR	3	17SP	G15_076	TO->FROM	GRPRAR1-LNX3345.00 - GRPRAR 345KV CKT Z	720	720	0.03965	119.4581	STORLA - WESSINGTON 230KV CKT 1
FDNS	00NR	3	17SP	G15_076	TO->FROM	GRPRAR1-LNX3345.00 - GRPRAR 345KV CKT Z	720	720	0.04143	118.7839	G09_001IST 345.00 - WATERTOWN 345KV CKT 1
FDNS	00NR	3	17SP	G15_076	TO->FROM	GRPRAR1-LNX3345.00 - GRPRAR 345KV CKT Z	720	720	0.03975	118.3592	HANLON - STORLA 230KV CKT 1
FDNS	00NR	3	17SP	G15_076	TO->FROM	GRPRAR1-LNX3345.00 - GRPRAR 345KV CKT Z	720	720	0.03899	117.7272	FT THOMPSON - LETCHER 230KV CKT 1
FDNS	00NR	3	17SP	G15_076	TO->FROM	GRPRAR1-LNX3345.00 - GRPRAR 345KV CKT Z	720	720	0.03899	117.7272	FT THOMPSON - LETCHER 230KV CKT 1
FDNS	00NR	3	17SP	G15_076	TO->FROM	GRPRAR1-LNX3345.00 - GRPRAR 345KV CKT Z	720	720	0.04174	117.3359	BUFFALO - JAMESTOWN 345KV CKT 1
FDNS	00NR	3	17SP	G15_076	TO->FROM	GRPRAR1-LNX3345.00 - GRPRAR 345KV CKT Z	720	720	0.03836	116.3154	FT RANDAL - G12_009IST 230.00 230KV CKT 1
FDNS	00NR	3	17SP	G15_076	TO->FROM	GRPRAR1-LNX3345.00 - GRPRAR 345KV CKT Z	720	720	0.03828	116.281	FT RANDAL - FT THOMPSON 230KV CKT 1
FDNS	00NR	3	17SP	G15_076	TO->FROM	GRPRAR1-LNX3345.00 - GRPRAR 345KV CKT Z	720	720	0.03828	116.281	FT RANDAL - FT THOMPSON 230KV CKT 1
FDNS	00NR	3	17SP	G15_076	TO->FROM	GRPRAR1-LNX3345.00 - GRPRAR 345KV CKT Z	720	720	0.04174	116.2451	CHISAGO COUNTY - FORBES 500KV CKT 1
FDNS	00NR	3	17SP	G15_076	TO->FROM	GRPRAR1-LNX3345.00 - GRPRAR 345KV CKT Z	720	720	0.03836	116.2018	FT THOMPSON - LAKE PLATT 230KV CKT 1
FDNS	00NR	3	17SP	G15_076	TO->FROM	GRPRAR1-LNX3345.00 - GRPRAR 345KV CKT Z	720	720	0.03836	116.2018	FT THOMPSON - LAKE PLATT 230KV CKT 1
FDNS	00NR	3	17SP	G15_076	TO->FROM	GRPRAR1-LNX3345.00 - GRPRAR 345KV CKT Z	720	720	0.04143	116.1752	G09_001IST 345.00 - GROTON 345KV CKT 1
FDNS	00NR	3	17SP	G15_076	TO->FROM	GRPRAR1-LNX3345.00 - GRPRAR 345KV CKT Z	720	720	0.05017	116.1304	NUNDRWD - WAYSIDE 230KV CKT 1
FDNS	00NR	3	17SP	G15_076	TO->FROM	GRPRAR1-LNX3345.00 - GRPRAR 345KV CKT Z	720	720	0.03836	115.8251	G12_009IST 230.00 - LAKE PLATT 230KV CKT 1
FDNS	00NR	3	17SP	G15_076	TO->FROM	GRPRAR1-LNX3345.00 - GRPRAR 345KV CKT Z	720	720	0.04174	115.7673	CENTER - JAMESTOWN 345KV CKT 1
FDNS	00NR	3	17SP	G15_076	TO->FROM	GRPRAR1-LNX3345.00 - GRPRAR 345KV CKT Z	720	720	0.04695	115.6425	FT RANDAL - MEADOWGROVE4230.00 230KV CKT 1
FDNS	00NR	3	17SP	G15_076	TO->FROM	GRPRAR1-LNX3345.00 - GRPRAR 345KV CKT Z	720	720	0.04054	115.5115	LETCHER - SIOUX FALLS 230KV CKT 1
FDNS	00NR	3	17SP	G15_076	TO->FROM	GRPRAR1-LNX3345.00 - GRPRAR 345KV CKT Z	720	720	0.04173	115.2817	GEN336821 1-GRAND GULF UNIT
FDNS	00NR	3	17SP	G15_076	TO->FROM	GRPRAR1-LNX3345.00 - GRPRAR 345KV CKT Z	720	720	0.04174	115.2469	BISON 3 345.00 - BUFFALO 345KV CKT 1
FDNS	00NR	3	17SP	G15_076	TO->FROM	GRPRAR1-LNX3345.00 - GRPRAR 345KV CKT Z	720	720	0.04173	115.1516	GEN635024 4-WALTER SCOTT UNIT 4
FDNS	00NR	3	17SP	G15_076	TO->FROM	GRPRAR1-LNX3345.00 - GRPRAR 345KV CKT Z	720	720	0.04009	115.0878	SPLIT ROCK - WHITE 345KV CKT 1
FDNS	00NR	3	17SP	G15_076	TO->FROM	GRPRAR1-LNX3345.00 - GRPRAR 345KV CKT Z	720	720	0.04009	115.0878	SPLIT ROCK - WHITE 345KV CKT 1
FDNS	00NR	3	17SP	G15_076	TO->FROM	GRPRAR1-LNX3345.00 - GRPRAR 345KV CKT Z	720	720	0.04173	114.8938	GEN344225 1-1CAL G1 25.000
FDNS	00NR	3	17SP	G15_076	TO->FROM	GRPRAR1-LNX3345.00 - GRPRAR 345KV CKT Z	720	720	0.04274	114.8176	KEYSTONE - SIDNEY1-LNX3345.00 345KV CKT 1
FDNS	00NR	3	17SP	G15_076	TO->FROM	GRPRAR1-LNX3345.00 - GRPRAR 345KV CKT Z	720	720	0.04274	114.8025	SIDNEY - SIDNEY1-LNX3345.00 345KV CKT Z
FDNS	00NR	3	17SP	G15_076	TO->FROM	GRPRAR1-LNX3345.00 - GRPRAR 345KV CKT Z	720	720	0.04173	114.7121	GEN562714 1-G15_023_4 0.6900
FDNS	00NR	3	17SP	G15_076	TO->FROM	GRPRAR1-LNX3345.00 - GRPRAR 345KV CKT Z	720	720	0.04173	114.7121	GEN562715 1-G15_023_5 0.6900
FDNS	00NR	3	17SP	G15_076	TO->FROM	GRPRAR1-LNX3345.00 - GRPRAR 345KV CKT Z	720	720	0.04173	114.6777	GEN635023 3-WALTER SCOTT UNIT 3
FDNS	00NR	3	17SP	G15_076	TO->FROM	GRPRAR1-LNX3345.00 - GRPRAR 345KV CKT Z	720	720	0.04173	114.646	GEN337911 1-ARKANSAS NUCLEAR ONE UNIT #2
FDNS	00NR	3	17SP	G15_076	TO->FROM	GRPRAR1-LNX3345.00 - GRPRAR 345KV CKT Z	720	720	0.04173	114.6162	GEN336153 1-WATERFORD UNIT#3
FDNS	00NR	3	17SP	G15_076	TO->FROM	GRPRAR1-LNX3345.00 - GRPRAR 345KV CKT Z	720	720	0.04061	114.6052	FT RANDAL - SIOUX CITY 230KV CKT 1
FDNS	00NR	3	17SP	G15_076	TO->FROM	GRPRAR1-LNX3345.00 - GRPRAR 345KV CKT Z	720	720	0.04144	114.5303	GROTON-LNX3 345.00 - LELAND1-LNX3345.00 345KV CKT 1
FDNS	00NR	3	17SP	G15_076	TO->FROM	GRPRAR1-LNX3345.00 - GRPRAR 345KV CKT Z	720	720	0.04144	114.4254	P12:345:UMZB:# 109 #: LOS GRT IN ND. LOS GRT
FDNS	00NR	3	17SP	G15_076	TO->FROM	GRPRAR1-LNX3345.00 - GRPRAR 345KV CKT Z	720	720	0.04144	114.4252	LELAND OLDS - LELAND1-LNX3345.00 345KV CKT Z
FDNS	00NR	3	17SP	G15_076	TO->FROM	GRPRAR1-LNX3345.00 - GRPRAR 345KV CKT Z	720	720	0.04144	114.4024	GROTON - GROTON-LNX3 345.00 345KV CKT Z
FDNS	00NR	3	17SP	G15_076	TO->FROM	GRPRAR1-LNX3345.00 - GRPRAR 345KV CKT Z	720	720	0.04204	114.3622	ARROWHEAD - ARROWHEAD 230 230KV CKT 1
FDNS	00NR	3	17SP	G15_076	TO->FROM	GRPRAR1-LNX3345.00 - GRPRAR 345KV CKT Z	720	720	0.04097	114.3417	HANLON - SIOUX FALLS 230KV CKT 1
FDNS	00NR	3	17SP	G15_076	TO->FROM	GRPRAR1-LNX3345.00 - GRPRAR 345KV CKT Z	720	720	0.04237	114.2948	MISSION - ST FRANCIS 115KV CKT 1
FDNS	00NR	3	17SP	G15_076	TO->FROM	GRPRAR1-LNX3345.00 - GRPRAR 345KV CKT Z	720	720	0.04237	114.2842	P12:115:NPPD:1091:VALENTN7:MISSION7:BTB
FDNS	00NR	3	17SP	G15_076	TO->FROM	GRPRAR1-LNX3345.00 - GRPRAR 345KV CKT Z	720	720	0.04173	114.2812	GEN640010 1-GERALD GENTLEMAN STATION UNIT 1
FDNS	00NR	3	17SP	G15_076	TO->FROM	GRPRAR1-LNX3345.00 - GRPRAR 345KV CKT Z	720	720	0.04173	114.2698	GEN335831 1-RIVERBEND UNIT#1

SOLUTION	GROUP	SCENARIO	SEASON	SOURCE	DIRECTION	MONITORED ELEMENT	RATEA (MVA)	RATEB(MVA)	TDF	TC%LOADING (% MVA)	CONTINGENCY
FDNS	00NR	3	17SP	G15_076	TO->FROM	GRPRAR1-LNX3345.00 - GRPRAR 345KV CKT Z	720	720	0.04173	114.1789	GEN337910 1-ARKANSAS NUCLEAR ONE UNIT #1
FDNS	00NR	3	17SP	G15_076	TO->FROM	GRPRAR1-LNX3345.00 - GRPRAR 345KV CKT Z	720	720	0.0377	114.1675	FT RANDAL - UTICA JCT 230KV CKT 1
FDNS	00NR	3	17SP	G15_076	TO->FROM	GRPRAR1-LNX3345.00 - GRPRAR 345KV CKT Z	720	720	0.04237	114.1321	HARMONY - ST FRANCIS 115KV CKT 1
FDNS	00NR	3	17SP	G15_076	TO->FROM	GRPRAR1-LNX3345.00 - GRPRAR 345KV CKT Z	720	720	0.0418	114.1027	ALEXMRES3 345.00 - BISON 3 345.00 345KV CKT 1
FDNS	00NR	3	17SP	G15_076	TO->FROM	GRPRAR1-LNX3345.00 - GRPRAR 345KV CKT Z	720	720	0.04261	114.083	HAZLETON - MITCHLCO3 345.00 345KV CKT 1
FDNS	00NR	3	17SP	G15_076	TO->FROM	GRPRAR1-LNX3345.00 - GRPRAR 345KV CKT Z	720	720	0.04001	114.0389	SIOUXCY-LNX3345.00 - SPLIT ROCK 345KV CKT 1
FDNS	00NR	3	17SP	G15_076	TO->FROM	GRPRAR1-LNX3345.00 - GRPRAR 345KV CKT Z	720	720	0.04001	114.0389	SIOUXCY-LNX3345.00 - SPLIT ROCK 345KV CKT 1
FDNS	00NR	3	17SP	G15_076	TO->FROM	GRPRAR1-LNX3345.00 - GRPRAR 345KV CKT Z	720	720	0.04173	114.0237	ELLENDALE - OAKES 230KV CKT 1
FDNS	00NR	3	17SP	G15_076	TO->FROM	GRPRAR1-LNX3345.00 - GRPRAR 345KV CKT Z	720	720	0.04173	114.0237	ELLENDALE - OAKES 230KV CKT 1
FDNS	00NR	3	17SP	G15_076	TO->FROM	GRPRAR1-LNX3345.00 - GRPRAR 345KV CKT Z	720	720	0.04001	114.0208	P12:345:UMZW:# 907 #: SC2-SR IN IA. SC2-SR 345 KV LINE
FDNS	00NR	3	17SP	G15_076	TO->FROM	GRPRAR1-LNX3345.00 - GRPRAR 345KV CKT Z	720	720	0.04173	113.989	GEN640011 2-GERALD GENTLEMAN STATION UNIT 2
FDNS	00NR	3	17SP	G15_076	TO->FROM	GRPRAR1-LNX3345.00 - GRPRAR 345KV CKT Z	720	720	0.04001	113.9704	SIOUX CITY - SIOUXCY-LNX3345.00 345KV CKT Z
FDNS	00NR	3	17SP	G15_076	TO->FROM	GRPRAR1-LNX3345.00 - GRPRAR 345KV CKT Z	720	720	0.04634	113.9615	RAUN - SUB 3451 FT CAL 345KV CKT 1
FDNS	00NR	3	17SP	G15_076	TO->FROM	GRPRAR1-LNX3345.00 - GRPRAR 345KV CKT Z	720	720	0.04634	113.9615	RAUN - SUB 3451 FT CAL 345KV CKT 1
FDNS	00NR	3	17SP	G15_076	TO->FROM	GRPRAR1-LNX3345.00 - GRPRAR 345KV CKT Z	720	720	0.04365	113.9549	FT RANDAL - SPENCER 115KV CKT 1
FDNS	00NR	3	17SP	G15_076	TO->FROM	GRPRAR1-LNX3345.00 - GRPRAR 345KV CKT Z	720	720	0.04237	113.9459	HARMONY - VALENTINE 115KV CKT 1
FDNS	00NR	3	17SP	G15_076	TO->FROM	GRPRAR1-LNX3345.00 - GRPRAR 345KV CKT Z	720	720	0.04173	113.934	FORMAN - OAKES 230KV CKT 1
FDNS	00NR	3	17SP	G15_076	TO->FROM	GRPRAR1-LNX3345.00 - GRPRAR 345KV CKT Z	720	720	0.04206	113.9305	GERALD GENTLEMAN STATION - KEYSTONE 345KV CKT 1
FDNS	00NR	3	17SP	G15_076	TO->FROM	GRPRAR1-LNX3345.00 - GRPRAR 345KV CKT Z	720	720	0.04365	113.9285	P12:115:NPPD:WAPA6:FTRANDL7:ONEILL 7:BTB
FDNS	00NR	3	17SP	G15_076	TO->FROM	GRPRAR1-LNX3345.00 - GRPRAR 345KV CKT Z	720	720	0.04365	113.9285	P12:115:UMZB:# 115 #: SE IN NE. FR-SE-ON
FDNS	00NR	3	17SP	G15_076	TO->FROM	GRPRAR1-LNX3345.00 - GRPRAR 345KV CKT Z	720	720	0.04317	113.9119	SIDNEY - STEGALL 345KV CKT 1
FDNS	00NR	3	17SP	G15_076	TO->FROM	GRPRAR1-LNX3345.00 - GRPRAR 345KV CKT Z	720	720	0.0572	113.8221	DIXONCO 230.00 - HOSKINS 230KV CKT 1
FDNS	00NR	3	17SP	G15_076	TO->FROM	GRPRAR1-LNX3345.00 - GRPRAR 345KV CKT Z	720	720	0.04365	113.8071	ONEILL - SPENCER 115KV CKT 1
FDNS	00NR	3	17SP	G15_076	TO->FROM	GRPRAR1-LNX3345.00 - GRPRAR 345KV CKT Z	720	720	0.04208	113.7864	AS KING - EAU CLAIRE 345KV CKT 1
FDNS	00NR	3	17SP	G15_076	TO->FROM	GRPRAR1-LNX3345.00 - GRPRAR 345KV CKT Z	720	720	0.04174	113.7674	CARPENTER - HURON 230KV CKT 1
FDNS	00NR	3	17SP	G15_076	TO->FROM	GRPRAR1-LNX3345.00 - GRPRAR 345KV CKT Z	720	720	0.04075	113.7632	PAHOJA - SIOUX FALLS 230KV CKT 1
FDNS	00NR	3	17SP	G15_076	TO->FROM	GRPRAR1-LNX3345.00 - GRPRAR 345KV CKT Z	720	720	0.04173	113.6932	GEN337653 1-WHITE BLUFF UNIT #2
FDNS	00NR	3	17SP	G15_076	TO->FROM	GRPRAR1-LNX3345.00 - GRPRAR 345KV CKT Z	720	720	0.04173	113.6798	GEN337652 1-WHITE BLUFF UNIT #1
FDNS	00NR	3	17SP	G15_076	TO->FROM	GRPRAR1-LNX3345.00 - GRPRAR 345KV CKT Z	720	720	0.04174	113.6747	HURON - WATERTOWN 230KV CKT 2
FDNS	00NR	3	17SP	G15_076	TO->FROM	GRPRAR1-LNX3345.00 - GRPRAR 345KV CKT Z	720	720	0.04174	113.6747	HURON - WATERTOWN 230KV CKT 2
FDNS	00NR	3	17SP	G15_076	TO->FROM	GRPRAR1-LNX3345.00 - GRPRAR 345KV CKT Z	720	720	0.04173	113.6273	GEN338146 1-INDEPENDENCE UNIT #2
FDNS	00NR	3	17SP	G15_076	TO->FROM	GRPRAR1-LNX3345.00 - GRPRAR 345KV CKT Z	720	720	0.04173	113.6209	GEN338143 1-INDEPENDENCE UNIT #1
FDNS	00NR	3	17SP	G15_076	TO->FROM	GRPRAR1-LNX3345.00 - GRPRAR 345KV CKT Z	720	720	0.04174	113.6141	CARPENTER - WATERTOWN 230KV CKT 1
FDNS	00NR	3	17SP	G15_076	TO->FROM	GRPRAR1-LNX3345.00 - GRPRAR 345KV CKT Z	720	720	0.04174	113.6141	CARPENTER - WATERTOWN 230KV CKT 1
FDNS	00NR	3	17SP	G15_076	TO->FROM	GRPRAR1-LNX3345.00 - GRPRAR 345KV CKT Z	720	720	0.04222	113.5763	ARPIN B4 345.00 - EAU CLAIRE 345KV CKT 1
FDNS	00NR	3	17SP	G15_076	TO->FROM	GRPRAR1-LNX3345.00 - GRPRAR 345KV CKT Z	720	720	0.04173	113.5596	GEN501801 1-DOLET HILLS UNIT1
FDNS	00NR	3	17SP	G15_076	TO->FROM	GRPRAR1-LNX3345.00 - GRPRAR 345KV CKT Z	720	720	0.04175	113.5189	FORMAN - HANKINSON 230KV CKT 1
FDNS	00NR	3	17SP	G15_076	TO->FROM	GRPRAR1-LNX3345.00 - GRPRAR 345KV CKT Z	720	720	0.03706	113.4938	RASMUSN - UTICA JCT 230KV CKT 1
FDNS	00NR	3	17SP	G15_076	TO->FROM	GRPRAR1-LNX3345.00 - GRPRAR 345KV CKT Z	720	720	0.04237	113.4231	AINSWORTH - VALENTINE 115KV CKT 1
FDNS	00NR	3	17SP	G15_076	TO->FROM	GRPRAR1-LNX3345.00 - GRPRAR 345KV CKT Z	720	720	0.03965	113.3735	FT THOMPSON - WESSINGTON 230KV CKT 1
FDNS	00NR	3	17SP	G15_076	TO->FROM	GRPRAR1-LNX3345.00 - GRPRAR 345KV CKT Z	720	720	0.03965	113.3735	FT THOMPSON - WESSINGTON 230KV CKT 1
FDNS	00NR	3	17SP	G15_076	TO->FROM	GRPRAR1-LNX3345.00 - GRPRAR 345KV CKT Z	720	720	0.04075	113.3415	EAGLE 4 230.00 - PAHOJA 230KV CKT 1
FDNS	00NR	3	17SP	G15_076	TO->FROM	GRPRAR1-LNX3345.00 - GRPRAR 345KV CKT Z	720	720	0.042	113.3331	G15094_T 345.00 - SIDNEY2-LNX3345.00 345KV CKT 1
FDNS	00NR	3	17SP	G15_076	TO->FROM	GRPRAR1-LNX3345.00 - GRPRAR 345KV CKT Z	720	720	0.04174	113.3301	CNTSHNT3 345.00 - PRAIRIE3 345.00 345KV CKT 1
FDNS	00NR	3	17SP	G15_076	TO->FROM	GRPRAR1-LNX3345.00 - GRPRAR 345KV CKT Z	720	720	0.04261	113.3217	ADAMS - MITCHLCO3 345.00 345KV CKT 1
FDNS	00NR	3	17SP	G15_076	TO->FROM	GRPRAR1-LNX3345.00 - GRPRAR 345KV CKT Z	720	720	0.042	113.3086	SIDNEY - SIDNEY2-LNX3345.00 345KV CKT Z
FDNS	00NR	3	17SP	G15_076	TO->FROM	GRPRAR1-LNX3345.00 - GRPRAR 345KV CKT Z	720	720	0.04173	113.2754	GEN336252 1-NINEMILE POINT UNIT#5
FDNS	00NR	3	17SP	G15_076	TO->FROM	GRPRAR1-LNX3345.00 - GRPRAR 345KV CKT Z	720	720	0.04173	113.2354	GEN501813 1-RODEMACHER UNIT 3
FDNS	00NR	3	17SP	G15_076	TO->FROM	GRPRAR1-LNX3345.00 - GRPRAR 345KV CKT Z	720	720	0.04173	113.158	GEN336831 1-BAXTER WILSON SES
FDNS	00NR	3	17SP	G15_076	TO->FROM	GRPRAR1-LNX3345.00 - GRPRAR 345KV CKT Z	720	720	0.04235	113.1539	ADAMS - PLEASANT VALLEY 345KV CKT 1
FDNS	00NR	3	17SP	G15_076	TO->FROM	GRPRAR1-LNX3345.00 - GRPRAR 345KV CKT Z	720	720	0.04173	113.1467	GEN336251 1-NINEMILE POINT UNIT#4
FDNS	00NR	3	17SP	G15_076	TO->FROM	GRPRAR1-LNX3345.00 - GRPRAR 345KV CKT Z	720	720	0.04173	113.0842	GEN337041 1-GERALD ANDRUS
FDNS	00NR	3	17SP	G15_076	TO->FROM	GRPRAR1-LNX3345.00 - GRPRAR 345KV CKT Z	720	720	0.04173	113.0724	GEN344897 4-1LAB G4 20.000
FDNS	00NR	3	17SP	G15_076	TO->FROM	GRPRAR1-LNX3345.00 - GRPRAR 345KV CKT Z	720	720	0.04173	113.0695	GEN344894 1-1LAB G1 20.000
FDNS	00NR	3	17SP	G15_076	TO->FROM	GRPRAR1-LNX3345.00 - GRPRAR 345KV CKT Z	720	720	0.04173	113.0692	GEN344896 3-1LAB G3 20.000
FDNS	00NR	3	17SP	G15_076	TO->FROM	GRPRAR1-LNX3345.00 - GRPRAR 345KV CKT Z	720	720	0.04173	113.0637	GEN335206 1-NELSON UNIT 6
FDNS	00NR	3	17SP	G15_076	TO->FROM	GRPRAR1-LNX3345.00 - GRPRAR 345KV CKT Z	720	720	0.04173	113.0214	GEN344895 2-1LAB G2 20.000
FDNS	00NR	3	17SP	G15_076	TO->FROM	GRPRAR1-LNX3345.00 - GRPRAR 345KV CKT Z	720	720	0.04173	113.0093	GEN345670 1-1RUSH G1 18.000
FDNS	00NR	3	17SP	G15_076	TO->FROM	GRPRAR1-LNX3345.00 - GRPRAR 345KV CKT Z	720	720	0.04173	113.0089	GEN345671 2-1RUSH G2 18.000
FDNS	00NR	3	17SP	G15_076	TO->FROM	GRPRAR1-LNX3345.00 - GRPRAR 345KV CKT Z	720	720	0.04282	112.9343	LAKEFIELD 3 - NOBLES 345KV CKT 1
FDNS	00NR	3	17SP	G15_076	TO->FROM	GRPRAR1-LNX3345.00 - GRPRAR 345KV CKT Z	720	720	0.04173	112.9339	GEN501812 1-RODEMACHER UNIT 2
FDNS	00NR	3	17SP	G15_076	TO->FROM	GRPRAR1-LNX3345.00 - GRPRAR 345KV CKT Z	720	720	0.04173	112.9147	GEN334440 1-SABINE UNIT 4
FDNS	00NR	3	17SP	G15_076	TO->FROM	GRPRAR1-LNX3345.00 - GRPRAR 345KV CKT Z	720	720	0.04184	112.9105	ALEXMRES3 345.00 - WAITE PARK 345KV CKT 1
FDNS	00NR	3	17SP	G15_076	TO->FROM	GRPRAR1-LNX3345.00 - GRPRAR 345KV CKT Z	720	720	0.04179	112.9021	BLAIR - GRANITE FALLS 230KV CKT 1
FDNS	00NR	3	17SP	G15_076	TO->FROM	GRPRAR1-LNX3345.00 - GRPRAR 345KV CKT Z	720	720	0.04179	112.9021	BLAIR - GRANITE FALLS 230KV CKT 1
FDNS	00NR	3	17SP	G15_076	TO->FROM	GRPRAR1-LNX3345.00 - GRPRAR 345KV CKT Z	720	720	0.04173	112.8812	GEN635214 4-NEAL UNIT 4
FDNS	00NR	3	17SP	G15_076	TO->FROM	GRPRAR1-LNX3345.00 - GRPRAR 345KV CKT Z	720	720	0.04172	112.8561	CENTER - COYOTE 345KV CKT 1
FDNS	00NR	3	17SP	G15_076	TO->FROM	GRPRAR1-LNX3345.00 - GRPRAR 345KV CKT Z	720	720	0.04212	112.8263	BROOKING COUNTY - LYON COUNTY 345KV CKT 1
FDNS	00NR	3	17SP	G15_076	TO->FROM	GRPRAR1-LNX3345.00 - GRPRAR 345KV CKT Z	720	720	0.04462	112.8037	STEGALL - STEGALL TRANSFORMER 230KV CKT 1
FDNS	00NR	3	17SP	G15_076	TO->FROM	GRPRAR1-LNX3345.00 - GRPRAR 345KV CKT Z	720	720	0.04037	112.7961	MENNO JCT - TRIPP JCT 115KV CKT 1
FDNS	00NR	3	17SP	G15_076	TO->FROM	GRPRAR1-LNX3345.00 - GRPRAR 345KV CKT Z	720	720	0.04179	112.7889	GLENBORO SOUTH - RUGBY 230KV CKT 1
FDNS	00NR	3	17SP	G15_076	TO->FROM	GRPRAR1-LNX3345.00 - GRPRAR 345KV CKT Z	720	720	0.04462	112.7888	P13:230-345:NPPD:STEGALL3:KV3A
FDNS	00NR	3	17SP	G15_076	TO->FROM	GRPRAR1-LNX3345.00 - GRPRAR 345KV CKT Z	720	720	0.04173	112.7874	GEN629075 1-OTTUMWA GENERATOR FOR OTTUMWA UNIT NO 1
FDNS	00NR	3	17SP	G15_076	TO->FROM	GRPRAR1-LNX3345.00 - GRPRAR 345KV CKT Z	720	720	0.04173	112.787	GEN336191 1-LITTLE GYPSY UNIT#3
FDNS	00NR	3	17SP	G15_076	TO->FROM	GRPRAR1-LNX3345.00 - GRPRAR 345KV CKT Z	720	720	0.04462	112.781	STEGALL (SGQ KV3A) 345/230/13.8KV TRANSFORMER CKT 1
FDNS	00NR	3	17SP	G15_076	TO->FROM	GRPRAR1-LNX3345.00 - GRPRAR 345KV CKT Z	720	720	0.0418	112.7418	HANKINSON - WAHPETON 230KV CKT 1
FDNS	00NR	3	17SP	G15_076	TO->FROM	GRPRAR1-LNX3345.00 - GRPRAR 345KV CKT Z	720	720	0.04173	112.7369	GEN338388 1-1PLUM PT U1 23.000
FDNS	00NR	3	17SP	G15_076	TO->FROM	GRPRAR1-LNX3345.00 - GRPRAR 345KV CKT Z	720	720	0.04173	112.7133	P12:115:UMZW:# 162 #: NEL IN ND. FAULT ON ML-NEL-MX-GA 115 KV
FDNS	00NR	3	17SP	G15_076	TO->FROM	GRPRAR1-LNX3345.00 - GRPRAR 345KV CKT Z	720	720	0.04173	112.7108	GEN336801 1-BAXTER WILSON UNIT #1

SOLUTION	GROUP	SCENARIO	SEASON	SOURCE	DIRECTION	MONITORED ELEMENT	RATEA (MVA)	RATEB(MVA)	TDF	TC%LOADING (% MVA)	CONTINGENCY
FDNS	00NR	3	17SP	G15_076	TO->FROM	GRPRAR1-LNX3345.00 - GRPRAR 345KV CKT Z	720	720	0.04651	112.6987	STEGALL-LNX3230.00 - WAYSIDE 230KV CKT 1
FDNS	00NR	3	17SP	G15_076	TO->FROM	GRPRAR1-LNX3345.00 - GRPRAR 345KV CKT Z	720	720	0.04173	112.6967	GEN335614 1-WILLOW GLENN UNIT#4
FDNS	00NR	3	17SP	G15_076	TO->FROM	GRPRAR1-LNX3345.00 - GRPRAR 345KV CKT Z	720	720	0.0424	112.6915	KOSSUTH 3 345.00 - OBRIEN 3 345.00 345KV CKT 1
FDNS	00NR	3	17SP	G15_076	TO->FROM	GRPRAR1-LNX3345.00 - GRPRAR 345KV CKT Z	720	720	0.04651	112.6907	STEGALL - STEGALL-LNX3230.00 230KV CKT Z
FDNS	00NR	3	17SP	G15_076	TO->FROM	GRPRAR1-LNX3345.00 - GRPRAR 345KV CKT Z	720	720	0.04173	112.6866	GEN334441 1-SABINE UNIT 5
FDNS	00NR	3	17SP	G15_076	TO->FROM	GRPRAR1-LNX3345.00 - GRPRAR 345KV CKT Z	720	720	0.04173	112.6839	GEN336464 1-MICHOUD UNIT #3
FDNS	00NR	3	17SP	G15_076	TO->FROM	GRPRAR1-LNX3345.00 - GRPRAR 345KV CKT Z	720	720	0.04037	112.6802	MENNO JCT - UTICA 115KV CKT 1
FDNS	00NR	3	17SP	G15_076	TO->FROM	GRPRAR1-LNX3345.00 - GRPRAR 345KV CKT Z	720	720	0.04173	112.676	GEN563222 1-G15088_3 0.6900
FDNS	00NR	3	17SP	G15_076	TO->FROM	GRPRAR1-LNX3345.00 - GRPRAR 345KV CKT Z	720	720	0.0424	112.6699	KOSSUTH 3 345.00 - WEBSTER 345KV CKT 1
FDNS	00NR	3	17SP	G15_076	TO->FROM	GRPRAR1-LNX3345.00 - GRPRAR 345KV CKT Z	720	720	0.04173	112.6698	GEN335204 1-NELSON UNIT 4
FDNS	00NR	3	17SP	G15_076	TO->FROM	GRPRAR1-LNX3345.00 - GRPRAR 345KV CKT Z	720	720	0.04832	112.6692	RAUN - SIOUX CITY 345KV CKT 1
FDNS	00NR	3	17SP	G15_076	TO->FROM	GRPRAR1-LNX3345.00 - GRPRAR 345KV CKT Z	720	720	0.04832	112.6692	RAUN - SIOUX CITY 345KV CKT 1
FDNS	00NR	3	17SP	G15_076	TO->FROM	GRPRAR1-LNX3345.00 - GRPRAR 345KV CKT Z	720	720	0.04173	112.656	GARRISON - JAMES TOWN 230KV CKT 1
FDNS	00NR	3	17SP	G15_076	TO->FROM	GRPRAR1-LNX3345.00 - GRPRAR 345KV CKT Z	720	720	0.04218	112.635	BYRON - NORTH ROCHESTER 345KV CKT 1
FDNS	00NR	3	17SP	G15_076	TO->FROM	GRPRAR1-LNX3345.00 - GRPRAR 345KV CKT Z	720	720	0.04319	112.6227	GRIMES - LEHIGH 345KV CKT 1
FDNS	00NR	3	17SP	G15_076	TO->FROM	GRPRAR1-LNX3345.00 - GRPRAR 345KV CKT Z	720	720	0.04037	112.6105	P12:115:UMZZ:# 237 #: MEN IN SD. MENNO JUNCTION IS A TAP (UJ-MEN-TP).
FDNS	00NR	3	17SP	G15_076	TO->FROM	GRPRAR1-LNX3345.00 - GRPRAR 345KV CKT Z	720	720	0.04173	112.5461	GEN334433 1-SABINE UNIT 3
FDNS	00NR	3	17SP	G15_076	TO->FROM	GRPRAR1-LNX3345.00 - GRPRAR 345KV CKT Z	720	720	0.04173	112.5455	GEN635213 3-NEAL UNIT 3
FDNS	00NR	3	17SP	G15_076	TO->FROM	GRPRAR1-LNX3345.00 - GRPRAR 345KV CKT Z	720	720	0.04185	112.5156	APPLEDORN 4 230.00 - WATERTOWN 230KV CKT 1
FDNS	00NR	3	17SP	G15_076	TO->FROM	GRPRAR1-LNX3345.00 - GRPRAR 345KV CKT Z	720	720	0.04185	112.5156	APPLEDORN 4 230.00 - WATERTOWN 230KV CKT 1
FDNS	00NR	3	17SP	G15_076	TO->FROM	GRPRAR1-LNX3345.00 - GRPRAR 345KV CKT Z	720	720	0.04173	112.491	GEN336222 1-LITTLE GYPSY UNIT#2
FDNS	00NR	3	17SP	G15_076	TO->FROM	GRPRAR1-LNX3345.00 - GRPRAR 345KV CKT Z	720	720	0.04173	112.4807	GEN303007 1-1BC2 U2
FDNS	00NR	3	17SP	G15_076	TO->FROM	GRPRAR1-LNX3345.00 - GRPRAR 345KV CKT Z	720	720	0.04173	112.4751	GEN303006 1-1BC2 U1
FDNS	00NR	3	17SP	G15_076	TO->FROM	GRPRAR1-LNX3345.00 - GRPRAR 345KV CKT Z	720	720	0.04173	112.465	FARGO - JAMES TOWN 230KV CKT 1
FDNS	00NR	3	17SP	G15_076	TO->FROM	GRPRAR1-LNX3345.00 - GRPRAR 345KV CKT Z	720	720	0.04173	112.453	GEN640009 1-COOPER NUCLEAR STATION
FDNS	00NR	3	17SP	G15_076	TO->FROM	GRPRAR1-LNX3345.00 - GRPRAR 345KV CKT Z	720	720	0.0419	112.4503	NORTH ROCHESTER - PRAIRIE ISLAND 345KV CKT 1
FDNS	00NR	3	17SP	G15_076	TO->FROM	GRPRAR1-LNX3345.00 - GRPRAR 345KV CKT Z	720	720	0.042	112.4448	G15094_T 345.00 - LARAMIE RIVER 345KV CKT 1
FDNS	00NR	3	17SP	G15_076	TO->FROM	GRPRAR1-LNX3345.00 - GRPRAR 345KV CKT Z	720	720	0.04173	112.4425	P13:230:UMZW:# 2218 #: FP IN MT. LOSS OF TRANSFORMER (AT2).
FDNS	00NR	3	17SP	G15_076	TO->FROM	GRPRAR1-LNX3345.00 - GRPRAR 345KV CKT Z	720	720	0.04173	112.4408	FARGO - JAMES TOWN 230KV CKT 2
FDNS	00NR	3	17SP	G15_076	TO->FROM	GRPRAR1-LNX3345.00 - GRPRAR 345KV CKT Z	720	720	0.04185	112.4379	APPLEDORN 4 230.00 - GRANITE FALLS 230KV CKT 1
FDNS	00NR	3	17SP	G15_076	TO->FROM	GRPRAR1-LNX3345.00 - GRPRAR 345KV CKT Z	720	720	0.04185	112.4379	APPLEDORN 4 230.00 - GRANITE FALLS 230KV CKT 1
FDNS	00NR	3	17SP	G15_076	TO->FROM	GRPRAR1-LNX3345.00 - GRPRAR 345KV CKT Z	720	720	0.04173	112.4296	GEN336152 1-WATERFORD UNIT#2
FDNS	00NR	3	17SP	G15_076	TO->FROM	GRPRAR1-LNX3345.00 - GRPRAR 345KV CKT Z	720	720	0.04173	112.4293	GEN336151 1-WATERFORD UNIT#1
FDNS	00NR	3	17SP	G15_076	TO->FROM	GRPRAR1-LNX3345.00 - GRPRAR 345KV CKT Z	720	720	0.04177	112.4152	FERGSFL4 230.00 - WAHPETON 230KV CKT 1
FDNS	00NR	3	17SP	G15_076	TO->FROM	GRPRAR1-LNX3345.00 - GRPRAR 345KV CKT Z	720	720	0.04173	112.4095	GEN303008 1-1BC2 U3
FDNS	00NR	3	17SP	G15_076	TO->FROM	GRPRAR1-LNX3345.00 - GRPRAR 345KV CKT Z	720	720	0.04173	112.4049	GEN336170 1-GULF OXY U4
FDNS	00NR	3	17SP	G15_076	TO->FROM	GRPRAR1-LNX3345.00 - GRPRAR 345KV CKT Z	720	720	0.04218	112.3877	BYRON - PLEASANT VALLEY 345KV CKT 1
FDNS	00NR	3	17SP	G15_076	TO->FROM	GRPRAR1-LNX3345.00 - GRPRAR 345KV CKT Z	720	720	0.04173	112.3838	BISMARK - JAMES TOWN 230KV CKT 1
FDNS	00NR	3	17SP	G15_076	TO->FROM	GRPRAR1-LNX3345.00 - GRPRAR 345KV CKT Z	720	720	0.04173	112.3816	GEN641089 2-ENERGY CENTER 2
FDNS	00NR	3	17SP	G15_076	TO->FROM	GRPRAR1-LNX3345.00 - GRPRAR 345KV CKT Z	720	720	0.04725	112.3792	BLOOMFIELD - CREIGHTON 115KV CKT 1
FDNS	00NR	3	17SP	G15_076	TO->FROM	GRPRAR1-LNX3345.00 - GRPRAR 345KV CKT Z	720	720	0.0422	112.3791	P13:230-345:NPPD:SIDNEY 3:KV2A
FDNS	00NR	3	17SP	G15_076	TO->FROM	GRPRAR1-LNX3345.00 - GRPRAR 345KV CKT Z	720	720	0.0422	112.379	SIDNEY (SDQ KV2A) 345/230/13.8KV TRANSFORMER CKT 1
FDNS	00NR	3	17SP	G15_076	TO->FROM	GRPRAR1-LNX3345.00 - GRPRAR 345KV CKT Z	720	720	0.04223	112.3785	P13:115-230:TSGT:SIDNEY-KV1A
FDNS	00NR	3	17SP	G15_076	TO->FROM	GRPRAR1-LNX3345.00 - GRPRAR 345KV CKT Z	720	720	0.0422	112.3768	SIDNEY - SIDNEY TRANSFORMER 230KV CKT 1
FDNS	00NR	3	17SP	G15_076	TO->FROM	GRPRAR1-LNX3345.00 - GRPRAR 345KV CKT Z	720	720	0.04173	112.3733	BISMARK - WEBER 230KV CKT 1
FDNS	00NR	3	17SP	G15_076	TO->FROM	GRPRAR1-LNX3345.00 - GRPRAR 345KV CKT Z	720	720	0.04095	112.366	LAKEFIELD 3 - LKFLDXL3 345KV CKT 1
FDNS	00NR	3	17SP	G15_076	TO->FROM	GRPRAR1-LNX3345.00 - GRPRAR 345KV CKT Z	720	720	0.04173	112.3586	JAMES TOWN - WEBER 230KV CKT 1
FDNS	00NR	3	17SP	G15_076	TO->FROM	GRPRAR1-LNX3345.00 - GRPRAR 345KV CKT Z	720	720	0.04172	112.3248	ELM CREEK - MONTICELLO 345KV CKT 1
FDNS	00NR	3	17SP	G15_076	TO->FROM	GRPRAR1-LNX3345.00 - GRPRAR 345KV CKT Z	720	720	0.04173	112.3222	GEN562596 1-G14_059_3 0.6900
FDNS	00NR	3	17SP	G15_076	TO->FROM	GRPRAR1-LNX3345.00 - GRPRAR 345KV CKT Z	720	720	0.04725	112.2986	BLOOMFIELD - GAVINS POINT 115KV CKT 1
FDNS	00NR	3	17SP	G15_076	TO->FROM	GRPRAR1-LNX3345.00 - GRPRAR 345KV CKT Z	720	720	0.04173	112.2966	GEN501811 1-RODEMACHER UNIT 1
FDNS	00NR	3	17SP	G15_076	TO->FROM	GRPRAR1-LNX3345.00 - GRPRAR 345KV CKT Z	720	720	0.04184	112.2952	ARKANSAS NUCLEAR ONE - FT SMITH 500KV CKT 1
FDNS	00NR	3	17SP	G15_076	TO->FROM	GRPRAR1-LNX3345.00 - GRPRAR 345KV CKT Z	720	720	0.04184	112.2952	ARKANSAS NUCLEAR ONE - FT SMITH 500KV CKT 1
FDNS	00NR	3	17SP	G15_076	TO->FROM	GRPRAR1-LNX3345.00 - GRPRAR 345KV CKT Z	720	720	0.0414	112.2893	MT VERN - STORLA 115KV CKT 1
FDNS	00NR	3	17SP	G15_076	TO->FROM	GRPRAR1-LNX3345.00 - GRPRAR 345KV CKT Z	720	720	0.04175	112.2818	AUDUBON - SHEYNNE 230KV CKT 1
FDNS	00NR	3	17SP	G15_076	TO->FROM	GRPRAR1-LNX3345.00 - GRPRAR 345KV CKT Z	720	720	0.04177	112.2707	FERGSFL4 230.00 - GRE-SILVRLK4230.00 230KV CKT 1
FDNS	00NR	3	17SP	G15_076	TO->FROM	GRPRAR1-LNX3345.00 - GRPRAR 345KV CKT Z	720	720	0.04173	112.2673	PRAIRIE ISLAND 345/20.0KV TRANSFORMER CKT 1
FDNS	00NR	3	17SP	G15_076	TO->FROM	GRPRAR1-LNX3345.00 - GRPRAR 345KV CKT Z	720	720	0.04156	112.2656	FT THOMPSON - HURON 230KV CKT 1
FDNS	00NR	3	17SP	G15_076	TO->FROM	GRPRAR1-LNX3345.00 - GRPRAR 345KV CKT Z	720	720	0.04156	112.2656	FT THOMPSON - HURON 230KV CKT 1
FDNS	00NR	3	17SP	G15_076	TO->FROM	GRPRAR1-LNX3345.00 - GRPRAR 345KV CKT Z	720	720	0.04156	112.2656	FT THOMPSON - HURON 230KV CKT 2
FDNS	00NR	3	17SP	G15_076	TO->FROM	GRPRAR1-LNX3345.00 - GRPRAR 345KV CKT Z	720	720	0.04156	112.2656	FT THOMPSON - HURON 230KV CKT 2
FDNS	00NR	3	17SP	G15_076	TO->FROM	GRPRAR1-LNX3345.00 - GRPRAR 345KV CKT Z	720	720	0.04173	112.2649	PRAIRIE ISLAND 345/20.0KV TRANSFORMER CKT 2
FDNS	00NR	3	17SP	G15_076	TO->FROM	GRPRAR1-LNX3345.00 - GRPRAR 345KV CKT Z	720	720	0.04173	112.2641	BALTA - RAMSEY 230KV CKT 1
FDNS	00NR	3	17SP	G15_076	TO->FROM	GRPRAR1-LNX3345.00 - GRPRAR 345KV CKT Z	720	720	0.04165	112.257	DKSN_CO5 161.00 - TRIBOJI NO1 + NO2 161KV CKT 1
FDNS	00NR	3	17SP	G15_076	TO->FROM	GRPRAR1-LNX3345.00 - GRPRAR 345KV CKT Z	720	720	0.04173	112.2528	GEN532751 1-WOLF CREEK GENERATING STATION UNIT 1
FDNS	00NR	3	17SP	G15_076	TO->FROM	GRPRAR1-LNX3345.00 - GRPRAR 345KV CKT Z	720	720	0.04226	112.2467	P12:115:NPPD:WAPA1:CHADRON7:BOXBUTE7:BTB
FDNS	00NR	3	17SP	G15_076	TO->FROM	GRPRAR1-LNX3345.00 - GRPRAR 345KV CKT Z	720	720	0.04173	112.2339	GEN562921 1-G15054_2 0.6900
FDNS	00NR	3	17SP	G15_076	TO->FROM	GRPRAR1-LNX3345.00 - GRPRAR 345KV CKT Z	720	720	0.04203	112.2288	CHADRON - WAYSIDE 115KV CKT 1
FDNS	00NR	3	17SP	G15_076	TO->FROM	GRPRAR1-LNX3345.00 - GRPRAR 345KV CKT Z	720	720	0.04203	112.2288	P13:115-230:NPPD:WAYSIDE4:T1
FDNS	00NR	3	17SP	G15_076	TO->FROM	GRPRAR1-LNX3345.00 - GRPRAR 345KV CKT Z	720	720	0.04203	112.2279	WAYSIDE (WAYSIDE T1) 230/115/13.8KV TRANSFORMER CKT 1
FDNS	00NR	3	17SP	G15_076	TO->FROM	GRPRAR1-LNX3345.00 - GRPRAR 345KV CKT Z	720	720	0.04177	112.2269	GRE-SILVRLK4230.00 - HENNING 230KV CKT 1
FDNS	00NR	3	17SP	G15_076	TO->FROM	GRPRAR1-LNX3345.00 - GRPRAR 345KV CKT Z	720	720	0.04173	112.219	GEN334071 1-LEWIS CREEK 2
FDNS	00NR	3	17SP	G15_076	TO->FROM	GRPRAR1-LNX3345.00 - GRPRAR 345KV CKT Z	720	720	0.04174	112.2181	BIG STONE (230/115) 230/115/13.8KV TRANSFORMER CKT 1
FDNS	00NR	3	17SP	G15_076	TO->FROM	GRPRAR1-LNX3345.00 - GRPRAR 345KV CKT Z	720	720	0.04173	112.2141	GEN334070 1-LEWIS CREEK 1
FDNS	00NR	3	17SP	G15_076	TO->FROM	GRPRAR1-LNX3345.00 - GRPRAR 345KV CKT Z	720	720	0.04173	112.2137	GEN337766 1-TRACTEBEL UNIT S1
FDNS	00NR	3	17SP	G15_076	TO->FROM	GRPRAR1-LNX3345.00 - GRPRAR 345KV CKT Z	720	720	0.04257	112.2033	NOBLES - SPLIT ROCK 345KV CKT 1
FDNS	00NR	3	17SP	G15_076	TO->FROM	GRPRAR1-LNX3345.00 - GRPRAR 345KV CKT Z	720	720	0.04173	112.2001	GEN659118 1-LARAMIE RIVER UNIT1
FDNS	00NR	3	17SP	G15_076	TO->FROM	GRPRAR1-LNX3345.00 - GRPRAR 345KV CKT Z	720	720	0.04226	112.1949	CHADRON - DUNLAP 115KV CKT 1
FDNS	00NR	3	17SP	G15_076	TO->FROM	GRPRAR1-LNX3345.00 - GRPRAR 345KV CKT Z	720	720	0.04173	112.1896	PRAIRIE - WINGER 230KV CKT 1

SOLUTION	GROUP	SCENARIO	SEASON	SOURCE	DIRECTION	MONITORED ELEMENT	RATEA (MVA)	RATEB(MVA)	TDF	TC%LOADING (% MVA)	CONTINGENCY
FDNS	00NR	3	17SP	G15_076	TO->FROM	GRPRAR1-LNX3345.00 - GRPRAR 345KV CKT Z	720	720	0.04226	112.176	P12:115:NPPD:WAPA2:HEMINGF7:SNAKECK7:BTB
FDNS	00NR	3	17SP	G15_076	TO->FROM	GRPRAR1-LNX3345.00 - GRPRAR 345KV CKT Z	720	720	0.04173	112.1741	GEN501910 1-ACADIA UNIT ST1
FDNS	00NR	3	17SP	G15_076	TO->FROM	GRPRAR1-LNX3345.00 - GRPRAR 345KV CKT Z	720	720	0.04134	112.1705	HURON WEST PARK - MITCHELL NW 115KV CKT 1
FDNS	00NR	3	17SP	G15_076	TO->FROM	GRPRAR1-LNX3345.00 - GRPRAR 345KV CKT Z	720	720	0.04134	112.1705	HURON WEST PARK - MITCHELL NW 115KV CKT 1
FDNS	00NR	3	17SP	G15_076	TO->FROM	GRPRAR1-LNX3345.00 - GRPRAR 345KV CKT Z	720	720	0.04177	112.1676	HENNING - INMANN 230KV CKT 1
FDNS	00NR	3	17SP	G15_076	TO->FROM	GRPRAR1-LNX3345.00 - GRPRAR 345KV CKT Z	720	720	0.04177	112.166	LELAND OLDS - STANTON 230KV CKT 1
FDNS	00NR	3	17SP	G15_076	TO->FROM	GRPRAR1-LNX3345.00 - GRPRAR 345KV CKT Z	720	720	0.04177	112.166	LELAND OLDS - STANTON 230KV CKT 1
FDNS	00NR	3	17SP	G15_076	TO->FROM	GRPRAR1-LNX3345.00 - GRPRAR 345KV CKT Z	720	720	0.04212	112.156	PALXFRASBTHI
FDNS	00NR	3	17SP	G15_076	TO->FROM	GRPRAR1-LNX3345.00 - GRPRAR 345KV CKT Z	720	720	0.04229	112.1486	EAGLE - PHILIP 115KV CKT 1
FDNS	00NR	3	17SP	G15_076	TO->FROM	GRPRAR1-LNX3345.00 - GRPRAR 345KV CKT Z	720	720	0.03999	112.1445	FT RANDAL - WHITE SWAN 115KV CKT 1
FDNS	00NR	3	17SP	G15_076	TO->FROM	GRPRAR1-LNX3345.00 - GRPRAR 345KV CKT Z	720	720	0.04142	112.1399	CLEARWATER - ONEILL 115KV CKT 1
FDNS	00NR	3	17SP	G15_076	TO->FROM	GRPRAR1-LNX3345.00 - GRPRAR 345KV CKT Z	720	720	0.04212	112.1383	7PALM TAP 345.00 - SUB T 345KV CKT 1
FDNS	00NR	3	17SP	G15_076	TO->FROM	GRPRAR1-LNX3345.00 - GRPRAR 345KV CKT Z	720	720	0.04173	112.1341	GEN345765 H-1SIOUX 2 18.000
FDNS	00NR	3	17SP	G15_076	TO->FROM	GRPRAR1-LNX3345.00 - GRPRAR 345KV CKT Z	720	720	0.04172	112.1339	GROTON (GROTON KU2A) 345/115/13.8KV TRANSFORMER CKT 1
FDNS	00NR	3	17SP	G15_076	TO->FROM	GRPRAR1-LNX3345.00 - GRPRAR 345KV CKT Z	720	720	0.04183	112.1302	GRANT - MITCHELL 115KV CKT 1
FDNS	00NR	3	17SP	G15_076	TO->FROM	GRPRAR1-LNX3345.00 - GRPRAR 345KV CKT Z	720	720	0.04183	112.1302	GRANT - MITCHELL 115KV CKT 1
FDNS	00NR	3	17SP	G15_076	TO->FROM	GRPRAR1-LNX3345.00 - GRPRAR 345KV CKT Z	720	720	0.04173	112.1166	GEN337764 1-TRACTEBEL UNIT C1
FDNS	00NR	3	17SP	G15_076	TO->FROM	GRPRAR1-LNX3345.00 - GRPRAR 345KV CKT Z	720	720	0.04173	112.1166	GEN337765 1-TRACTEBEL UNIT C2
FDNS	00NR	3	17SP	G15_076	TO->FROM	GRPRAR1-LNX3345.00 - GRPRAR 345KV CKT Z	720	720	0.03999	112.1146	TYNDALL - WHITE SWAN 115KV CKT 1
FDNS	00NR	3	17SP	G15_076	TO->FROM	GRPRAR1-LNX3345.00 - GRPRAR 345KV CKT Z	720	720	0.04176	112.1138	AUDUBON - HUBBARD 230KV CKT 1
FDNS	00NR	3	17SP	G15_076	TO->FROM	GRPRAR1-LNX3345.00 - GRPRAR 345KV CKT Z	720	720	0.04182	112.1075	GENOA 161 - SENECA 161 161KV CKT 1
FDNS	00NR	3	17SP	G15_076	TO->FROM	GRPRAR1-LNX3345.00 - GRPRAR 345KV CKT Z	720	720	0.04176	112.1073	KARLSTAD - WINGER 230KV CKT 1
FDNS	00NR	3	17SP	G15_076	TO->FROM	GRPRAR1-LNX3345.00 - GRPRAR 345KV CKT Z	720	720	0.04173	112.1068	GEN345756 H-1SIOUX 1 18.000
FDNS	00NR	3	17SP	G15_076	TO->FROM	GRPRAR1-LNX3345.00 - GRPRAR 345KV CKT Z	720	720	0.05413	112.0968	BELDEN - HOSKINS 115KV CKT 1
FDNS	00NR	3	17SP	G15_076	TO->FROM	GRPRAR1-LNX3345.00 - GRPRAR 345KV CKT Z	720	720	0.04165	112.0953	DKSN_CO5 161.00 - LAKEFIELD 5 NO1 + NO 2 161KV CKT 1
FDNS	00NR	3	17SP	G15_076	TO->FROM	GRPRAR1-LNX3345.00 - GRPRAR 345KV CKT Z	720	720	0.0418	112.0835	NORTH LA CROSSE - NORTH ROCHESTER 345KV CKT 1
FDNS	00NR	3	17SP	G15_076	TO->FROM	GRPRAR1-LNX3345.00 - GRPRAR 345KV CKT Z	720	720	0.04173	112.0806	GEN336221 1-LITTLE GYPSY UNIT#1
FDNS	00NR	3	17SP	G15_076	TO->FROM	GRPRAR1-LNX3345.00 - GRPRAR 345KV CKT Z	720	720	0.04191	112.0805	HAMPTON CORNER - NORTH ROCHESTER 345KV CKT 1
FDNS	00NR	3	17SP	G15_076	TO->FROM	GRPRAR1-LNX3345.00 - GRPRAR 345KV CKT Z	720	720	0.04173	112.0795	GRAND GULF 500/22.0KV TRANSFORMER CKT 1
FDNS	00NR	3	17SP	G15_076	TO->FROM	GRPRAR1-LNX3345.00 - GRPRAR 345KV CKT Z	720	720	0.03818	112.0773	P12:115:UMZW:# 1910 #: YJ IN SD. YJ-UJ LINE FAULT
FDNS	00NR	3	17SP	G15_076	TO->FROM	GRPRAR1-LNX3345.00 - GRPRAR 345KV CKT Z	720	720	0.03818	112.0772	NAPA JCT7 115.00 - UTICA 115KV CKT 1
FDNS	00NR	3	17SP	G15_076	TO->FROM	GRPRAR1-LNX3345.00 - GRPRAR 345KV CKT Z	720	720	0.03818	112.0772	NAPA JCT7 115.00 - UTICA 115KV CKT 1
FDNS	00NR	3	17SP	G15_076	TO->FROM	GRPRAR1-LNX3345.00 - GRPRAR 345KV CKT Z	720	720	0.04173	112.0757	GEN636641 1-LOUISA UNIT 1
FDNS	00NR	3	17SP	G15_076	TO->FROM	GRPRAR1-LNX3345.00 - GRPRAR 345KV CKT Z	720	720	0.04229	112.0748	EAGLE - MARTIN 115KV CKT 1
FDNS	00NR	3	17SP	G15_076	TO->FROM	GRPRAR1-LNX3345.00 - GRPRAR 345KV CKT Z	720	720	0.03818	112.0741	NAPA JCT7 115.00 - YANKON JCT 115KV CKT 1
FDNS	00NR	3	17SP	G15_076	TO->FROM	GRPRAR1-LNX3345.00 - GRPRAR 345KV CKT Z	720	720	0.03818	112.0741	NAPA JCT7 115.00 - YANKON JCT 115KV CKT 1
FDNS	00NR	3	17SP	G15_076	TO->FROM	GRPRAR1-LNX3345.00 - GRPRAR 345KV CKT Z	720	720	0.04173	112.0729	GEN337757 1-DUKE HOTSPRINGS STG1
FDNS	00NR	3	17SP	G15_076	TO->FROM	GRPRAR1-LNX3345.00 - GRPRAR 345KV CKT Z	720	720	0.04173	112.0728	GEN336242 1-1NMIL ST1 18.000
FDNS	00NR	3	17SP	G15_076	TO->FROM	GRPRAR1-LNX3345.00 - GRPRAR 345KV CKT Z	720	720	0.04173	112.0679	GEN334432 1-SABINE UNIT 2
FDNS	00NR	3	17SP	G15_076	TO->FROM	GRPRAR1-LNX3345.00 - GRPRAR 345KV CKT Z	720	720	0.04173	112.0678	GEN334431 1-SABINE UNIT 1
FDNS	00NR	3	17SP	G15_076	TO->FROM	GRPRAR1-LNX3345.00 - GRPRAR 345KV CKT Z	720	720	0.04183	112.0629	FRANKS - HUBEN 345KV CKT 1
FDNS	00NR	3	17SP	G15_076	TO->FROM	GRPRAR1-LNX3345.00 - GRPRAR 345KV CKT Z	720	720	0.04226	112.0601	BOXBUTE7 115.00 - DUNLAP 115KV CKT 1
FDNS	00NR	3	17SP	G15_076	TO->FROM	GRPRAR1-LNX3345.00 - GRPRAR 345KV CKT Z	720	720	0.04251	112.0583	DENISON - SIOUX CITY 230KV CKT 1
FDNS	00NR	3	17SP	G15_076	TO->FROM	GRPRAR1-LNX3345.00 - GRPRAR 345KV CKT Z	720	720	0.04142	112.0544	P12:115:NPPD:1164:ONEILL 7:JEFFREY9:BTB
FDNS	00NR	3	17SP	G15_076	TO->FROM	GRPRAR1-LNX3345.00 - GRPRAR 345KV CKT Z	720	720	0.04173	112.048	GEN334030 1-FRONTIER UNIT 1
FDNS	00NR	3	17SP	G15_076	TO->FROM	GRPRAR1-LNX3345.00 - GRPRAR 345KV CKT Z	720	720	0.04173	112.0477	GEN334031 1-FRONTIER UNIT 2
FDNS	00NR	3	17SP	G15_076	TO->FROM	GRPRAR1-LNX3345.00 - GRPRAR 345KV CKT Z	720	720	0.04173	112.047	GEN336446 1-MICHOUD UNIT #2
FDNS	00NR	3	17SP	G15_076	TO->FROM	GRPRAR1-LNX3345.00 - GRPRAR 345KV CKT Z	720	720	0.04173	112.0469	GEN345832 1-1TS G1 13.800
FDNS	00NR	3	17SP	G15_076	TO->FROM	GRPRAR1-LNX3345.00 - GRPRAR 345KV CKT Z	720	720	0.04173	112.0465	GEN345841 2-1TS G2 13.800
FDNS	00NR	3	17SP	G15_076	TO->FROM	GRPRAR1-LNX3345.00 - GRPRAR 345KV CKT Z	720	720	0.04173	112.0336	GEN501970 1-EVANGELINE UNIT 7
FDNS	00NR	3	17SP	G15_076	TO->FROM	GRPRAR1-LNX3345.00 - GRPRAR 345KV CKT Z	720	720	0.04173	112.0251	GEN531447 1-HOLCOMB GENERATOR
FDNS	00NR	3	17SP	G15_076	TO->FROM	GRPRAR1-LNX3345.00 - GRPRAR 345KV CKT Z	720	720	0.04173	112.0148	GEN562912 1-G15053_3 0.6900
FDNS	00NR	3	17SP	G15_076	TO->FROM	GRPRAR1-LNX3345.00 - GRPRAR 345KV CKT Z	720	720	0.04173	111.9176	GEN563282 1-G15094_3 0.6900
FDNS	00NR	3	20SP	G15_076	TO->FROM	GRPRAR1-LNX3345.00 - GRPRAR 345KV CKT Z	720	720	0.04536	111.9165	KELLY - MEADOWGROVE4230.00 230KV CKT 1
FDNS	00NR	3	17SP	G15_076	TO->FROM	GRPRAR1-LNX3345.00 - GRPRAR 345KV CKT Z	720	720	0.04173	111.5569	BASE CASE
FDNS	00NR	3	20SP	G15_076	TO->FROM	GRPRAR1-LNX3345.00 - GRPRAR 345KV CKT Z	720	720	0.03787	111.3433	P12:230:UMZB:# 116 #: ST IN SD. WSG-ST-VH
FDNS	00NR	3	17SP	G15_076	TO->FROM	GRPRAR1-LNX3345.00 - GRPRAR 345KV CKT Z	720	720	0.04125	111.191	NELIGH - PETERSBRG.N7115.00 115KV CKT 1
FDNS	00NR	3	17SP	G15_076	TO->FROM	GRPRAR1-LNX3345.00 - GRPRAR 345KV CKT Z	720	720	0.04125	111.1392	ALBION - PETERSBURG 115KV CKT 1
FDNS	00NR	3	17SP	G15_076	TO->FROM	GRPRAR1-LNX3345.00 - GRPRAR 345KV CKT Z	720	720	0.04125	111.1197	PETERSBRG.N7115.00 - PETERSBURG 115KV CKT Z1
FDNS	00NR	3	17SP	G15_076	TO->FROM	GRPRAR1-LNX3345.00 - GRPRAR 345KV CKT Z	720	720	0.04263	111.1145	103RD & ROKEBY - MOORE 345KV CKT 1
FDNS	00NR	3	17SP	G15_076	TO->FROM	GRPRAR1-LNX3345.00 - GRPRAR 345KV CKT Z	720	720	0.04263	111.1145	103RD & ROKEBY - MOORE 345KV CKT 1
FDNS	00NR	3	17SP	G15_076	TO->FROM	GRPRAR1-LNX3345.00 - GRPRAR 345KV CKT Z	720	720	0.04308	111.1106	BATTLE CREEK - COUNTY LINE 115KV CKT 1
FDNS	00NR	3	17SP	G15_076	TO->FROM	GRPRAR1-LNX3345.00 - GRPRAR 345KV CKT Z	720	720	0.04192	111.1061	FT THOMPSON - OAHE 230KV CKT 1
FDNS	00NR	3	17SP	G15_076	TO->FROM	GRPRAR1-LNX3345.00 - GRPRAR 345KV CKT Z	720	720	0.04192	111.1061	FT THOMPSON - OAHE 230KV CKT 1
FDNS	00NR	3	17SP	G15_076	TO->FROM	GRPRAR1-LNX3345.00 - GRPRAR 345KV CKT Z	720	720	0.04192	111.1061	FT THOMPSON - OAHE 230KV CKT 2
FDNS	00NR	3	17SP	G15_076	TO->FROM	GRPRAR1-LNX3345.00 - GRPRAR 345KV CKT Z	720	720	0.04192	111.1061	FT THOMPSON - OAHE 230KV CKT 2
FDNS	00NR	3	17SP	G15_076	TO->FROM	GRPRAR1-LNX3345.00 - GRPRAR 345KV CKT Z	720	720	0.04125	111.0807	P12:115:NPPD:1168B:ALBION 7:PETERSBRG.N7:BTB
FDNS	00NR	3	17SP	G15_076	TO->FROM	GRPRAR1-LNX3345.00 - GRPRAR 345KV CKT Z	720	720	0.04173	111.0804	GEN652546 1-FT RANDAL
FDNS	00NR	3	17SP	G15_076	TO->FROM	GRPRAR1-LNX3345.00 - GRPRAR 345KV CKT Z	720	720	0.03286	111.0735	SIOUX CITY - TWIN CHURCH 230KV CKT 1
FDNS	00NR	3	17SP	G15_076	TO->FROM	GRPRAR1-LNX3345.00 - GRPRAR 345KV CKT Z	720	720	0.04308	111.06	ANTELOPE 7115.00 - COUNTY LINE 115KV CKT 1
FDNS	00NR	3	17SP	G15_076	TO->FROM	GRPRAR1-LNX3345.00 - GRPRAR 345KV CKT Z	720	720	0.04356	111.0546	NUNDRWD - PHILIP TAP 230KV CKT 1
FDNS	00NR	3	17SP	G15_076	TO->FROM	GRPRAR1-LNX3345.00 - GRPRAR 345KV CKT Z	720	720	0.04193	111.0486	FT THOMPSON - OAHE 230KV CKT 3
FDNS	00NR	3	17SP	G15_076	TO->FROM	GRPRAR1-LNX3345.00 - GRPRAR 345KV CKT Z	720	720	0.04193	111.0486	FT THOMPSON - OAHE 230KV CKT 3
FDNS	00NR	3	17SP	G15_076	TO->FROM	GRPRAR1-LNX3345.00 - GRPRAR 345KV CKT Z	720	720	0.04193	111.0486	FT THOMPSON - OAHE 230KV CKT 4
FDNS	00NR	3	17SP	G15_076	TO->FROM	GRPRAR1-LNX3345.00 - GRPRAR 345KV CKT Z	720	720	0.04193	111.0486	FT THOMPSON - OAHE 230KV CKT 4
FDNS	00NR	3	17SP	G15_076	TO->FROM	GRPRAR1-LNX3345.00 - GRPRAR 345KV CKT Z	720	720	0.04173	111.0472	MITCHLCO3 345.00 345/34.5KV TRANSFORMER CKT 1
FDNS	00NR	3	25SP	G15_076	TO->FROM	GRPRAR1-LNX3345.00 - GRPRAR 345KV CKT Z	720	720	0.04572	111.0411	KELLY - MEADOWGROVE4230.00 230KV CKT 1
FDNS	00NR	3	17SP	G15_076	TO->FROM	GRPRAR1-LNX3345.00 - GRPRAR 345KV CKT Z	720	720	0.04173	111.0405	GEN672348 2-CORY COGEN GENERATOR 2 GT2
FDNS	00NR	3	17SP	G15_076	TO->FROM	GRPRAR1-LNX3345.00 - GRPRAR 345KV CKT Z	720	720	0.04173	111.0404	GEN672347 1-CORY COGEN GENERATOR 1 GT1

SOLUTION	GROUP	SCENARIO	SEASON	SOURCE	DIRECTION	MONITORED ELEMENT	RATEA (MVA)	RATEB(MVA)	TDF	TC%LOADING (% MVA)	CONTINGENCY
FDNS	00NR	3	17SP	G15_076	TO->FROM	GRPRAR1-LNX3345.00 - GRPRAR 345KV CKT Z	720	720	0.04173	111.0319	GEN600018 S-LS POWER STEAM
FDNS	00NR	3	17SP	G15_076	TO->FROM	GRPRAR1-LNX3345.00 - GRPRAR 345KV CKT Z	720	720	0.04188	111.0255	POST ROCK (POSTROCK T1) 345/230/13.8KV TRANSFORMER CKT 1
FDNS	00NR	3	17SP	G15_076	TO->FROM	GRPRAR1-LNX3345.00 - GRPRAR 345KV CKT Z	720	720	0.04184	111.0225	G11_051T 345.00 - WOODWARD DISTRICT EHV 345KV CKT 1
FDNS	00NR	3	17SP	G15_076	TO->FROM	GRPRAR1-LNX3345.00 - GRPRAR 345KV CKT Z	720	720	0.04173	111.0217	GEN659158 2-PIONEER G213.800
FDNS	00NR	3	17SP	G15_076	TO->FROM	GRPRAR1-LNX3345.00 - GRPRAR 345KV CKT Z	720	720	0.04173	111.0217	GEN659159 3-PIONEER G313.800
FDNS	00NR	3	17SP	G15_076	TO->FROM	GRPRAR1-LNX3345.00 - GRPRAR 345KV CKT Z	720	720	0.04173	111.0205	GEN300003 1-THOMAS HILL UNIT 3
FDNS	00NR	3	17SP	G15_076	TO->FROM	GRPRAR1-LNX3345.00 - GRPRAR 345KV CKT Z	720	720	0.04173	111.0141	GEN659156 2-LONESMCRK 2G13.800
FDNS	00NR	3	17SP	G15_076	TO->FROM	GRPRAR1-LNX3345.00 - GRPRAR 345KV CKT Z	720	720	0.04173	111.0141	GEN659157 3-LONESMCRK 3G13.800
FDNS	00NR	3	17SP	G15_076	TO->FROM	GRPRAR1-LNX3345.00 - GRPRAR 345KV CKT Z	720	720	0.04168	111.0092	G14-021T 345.00 - MULLNCR7 345.00 345KV CKT 1
FDNS	00NR	3	17SP	G15_076	TO->FROM	GRPRAR1-LNX3345.00 - GRPRAR 345KV CKT Z	720	720	0.04168	111.0092	G15-005T 345.00 - MULLNCR7 345.00 345KV CKT 1
FDNS	00NR	3	17SP	G15_076	TO->FROM	GRPRAR1-LNX3345.00 - GRPRAR 345KV CKT Z	720	720	0.04173	111.0047	GEN652548 5-FT RANDAL
FDNS	00NR	3	17SP	G15_076	TO->FROM	GRPRAR1-LNX3345.00 - GRPRAR 345KV CKT Z	720	720	0.04173	111.0047	GEN652549 7-FT RANDAL
FDNS	00NR	3	17SP	G15_076	TO->FROM	GRPRAR1-LNX3345.00 - GRPRAR 345KV CKT Z	720	720	0.04212	111.003	P12:115:UMZW:# 172 #: WI IN SD.
FDNS	00NR	3	17SP	G15_076	TO->FROM	GRPRAR1-LNX3345.00 - GRPRAR 345KV CKT Z	720	720	0.04173	110.9998	GEN590010 1-ERCOT EQUIVALENCE
FDNS	00NR	3	17SP	G15_076	TO->FROM	GRPRAR1-LNX3345.00 - GRPRAR 345KV CKT Z	720	720	0.04173	110.9992	GEN672367 1-MERIDIAN GENERATOR 1 GT1
FDNS	00NR	3	17SP	G15_076	TO->FROM	GRPRAR1-LNX3345.00 - GRPRAR 345KV CKT Z	720	720	0.04173	110.9992	GEN672368 2-MERIDIAN GENERATOR 2 GT2
FDNS	00NR	3	17SP	G15_076	TO->FROM	GRPRAR1-LNX3345.00 - GRPRAR 345KV CKT Z	720	720	0.04175	110.9957	P12:115:UMZZ:# 232 #: AB IN SD. ABERDEEN A TAP BETWEEN ELLENDALE AND ABERDEEN-SIEBRECHT.
FDNS	00NR	3	17SP	G15_076	TO->FROM	GRPRAR1-LNX3345.00 - GRPRAR 345KV CKT Z	720	720	0.042	110.994	LARAMIE RIVER - STEGALL 345KV CKT 1
FDNS	00NR	3	17SP	G15_076	TO->FROM	GRPRAR1-LNX3345.00 - GRPRAR 345KV CKT Z	720	720	0.04173	110.9934	GEN652547 3-FT RANDAL
FDNS	00NR	3	17SP	G15_076	TO->FROM	GRPRAR1-LNX3345.00 - GRPRAR 345KV CKT Z	720	720	0.04173	110.9923	GEN600021 3-ANGUS ANSON2
FDNS	00NR	3	17SP	G15_076	TO->FROM	GRPRAR1-LNX3345.00 - GRPRAR 345KV CKT Z	720	720	0.04173	110.9894	GEN600020 2-ANGUS ANSON1
FDNS	00NR	3	17SP	G15_076	TO->FROM	GRPRAR1-LNX3345.00 - GRPRAR 345KV CKT Z	720	720	0.04173	110.9878	GEN657964 1-ASH2GEN9 0.5750
FDNS	00NR	3	17SP	G15_076	TO->FROM	GRPRAR1-LNX3345.00 - GRPRAR 345KV CKT Z	720	720	0.04173	110.9864	GEN672352 3-NIPAWIN GENERATOR 3
FDNS	00NR	3	17SP	G15_076	TO->FROM	GRPRAR1-LNX3345.00 - GRPRAR 345KV CKT Z	720	720	0.04173	110.9862	GEN672350 1-NIPAWIN GENERATOR 1
FDNS	00NR	3	17SP	G15_076	TO->FROM	GRPRAR1-LNX3345.00 - GRPRAR 345KV CKT Z	720	720	0.04173	110.9862	GEN672351 2-NIPAWIN GENERATOR 2
FDNS	00NR	3	17SP	G15_076	TO->FROM	GRPRAR1-LNX3345.00 - GRPRAR 345KV CKT Z	720	720	0.04173	110.9742	GEN590011 2-ERCOT EQUIVALENCE
FDNS	00NR	3	17SP	G15_076	TO->FROM	GRPRAR1-LNX3345.00 - GRPRAR 345KV CKT Z	720	720	0.04173	110.9728	GEN672349 3-CORY COGEN GENERATOR 3 ST
FDNS	00NR	3	17SP	G15_076	TO->FROM	GRPRAR1-LNX3345.00 - GRPRAR 345KV CKT Z	720	720	0.04173	110.9681	GEN620324 3-HOOT LAKE 3 GEN
FDNS	00NR	3	17SP	G15_076	TO->FROM	GRPRAR1-LNX3345.00 - GRPRAR 345KV CKT Z	720	720	0.04173	110.9636	EASTDC - ERCOT EQUIVALENCE 345KV CKT 1
FDNS	00NR	3	17SP	G15_076	TO->FROM	GRPRAR1-LNX3345.00 - GRPRAR 345KV CKT Z	720	720	0.04168	110.9628	G15-005T 345.00 - SIBLEY 345KV CKT 1
FDNS	00NR	3	17SP	G15_076	TO->FROM	GRPRAR1-LNX3345.00 - GRPRAR 345KV CKT Z	720	720	0.04182	110.9482	ANTELOP-LNX3345.00 - BRDLAND-LNX3345.00 345KV CKT 1
FDNS	00NR	3	17SP	G15_076	TO->FROM	GRPRAR1-LNX3345.00 - GRPRAR 345KV CKT Z	720	720	0.04173	110.9445	GEN629072 4-LANSING GENERATOR FOR UNITS NO4 EIA CODE 1
FDNS	00NR	3	17SP	G15_076	TO->FROM	GRPRAR1-LNX3345.00 - GRPRAR 345KV CKT Z	720	720	0.04173	110.9413	GEN660003 3-HURON WEST PARK
FDNS	00NR	3	17SP	G15_076	TO->FROM	GRPRAR1-LNX3345.00 - GRPRAR 345KV CKT Z	720	720	0.04173	110.936	GEN600012 2-BLACK DOG GEN 2
FDNS	00NR	3	17SP	G15_076	TO->FROM	GRPRAR1-LNX3345.00 - GRPRAR 345KV CKT Z	720	720	0.04244	110.9323	AXTELL - POST ROCK 345KV CKT 1
FDNS	00NR	3	17SP	G15_076	TO->FROM	GRPRAR1-LNX3345.00 - GRPRAR 345KV CKT Z	720	720	0.03982	110.9189	COLUMEAST - NW68TH & HOLDREGE 345KV CKT 1
FDNS	00NR	3	17SP	G15_076	TO->FROM	GRPRAR1-LNX3345.00 - GRPRAR 345KV CKT Z	720	720	0.03982	110.9189	COLUMEAST - NW68TH & HOLDREGE 345KV CKT 1
FDNS	00NR	3	17SP	G15_076	TO->FROM	GRPRAR1-LNX3345.00 - GRPRAR 345KV CKT Z	720	720	0.04055	110.9069	COOPER - MOORE 345KV CKT 1
FDNS	00NR	3	17SP	G15_076	TO->FROM	GRPRAR1-LNX3345.00 - GRPRAR 345KV CKT Z	720	720	0.04173	110.9009	GEN659290 1-EDGECOL
FDNS	00NR	3	17SP	G15_076	TO->FROM	GRPRAR1-LNX3345.00 - GRPRAR 345KV CKT Z	720	720	0.04173	110.8992	EMERY 161/18.0KV TRANSFORMER CKT 1
FDNS	00NR	3	17SP	G15_076	TO->FROM	GRPRAR1-LNX3345.00 - GRPRAR 345KV CKT Z	720	720	0.04173	110.8949	GEN652410 3-FT PECK
FDNS	00NR	3	17SP	G15_076	TO->FROM	GRPRAR1-LNX3345.00 - GRPRAR 345KV CKT Z	720	720	0.04173	110.8936	GEN672339 16-QE 16G 13.800
FDNS	00NR	3	17SP	G15_076	TO->FROM	GRPRAR1-LNX3345.00 - GRPRAR 345KV CKT Z	720	720	0.04173	110.8936	GEN672342 3-QUEEN ELIZABETH GENERATOR 3
FDNS	00NR	3	17SP	G15_076	TO->FROM	GRPRAR1-LNX3345.00 - GRPRAR 345KV CKT Z	720	720	0.04449	110.8829	MINGO - RED WILLOW 345KV CKT 1
FDNS	00NR	3	17SP	G15_076	TO->FROM	GRPRAR1-LNX3345.00 - GRPRAR 345KV CKT Z	720	720	0.04449	110.8829	MINGO - RED WILLOW 345KV CKT 1
FDNS	00NR	3	17SP	G15_076	TO->FROM	GRPRAR1-LNX3345.00 - GRPRAR 345KV CKT Z	720	720	0.04173	110.8809	GEN672393 2-NBECST2G 13.800
FDNS	00NR	3	17SP	G15_076	TO->FROM	GRPRAR1-LNX3345.00 - GRPRAR 345KV CKT Z	720	720	0.04298	110.8751	P12:115:NPPD:1163B:NELIGH 7:NORFK.N7:BTB
FDNS	00NR	3	17SP	G15_076	TO->FROM	GRPRAR1-LNX3345.00 - GRPRAR 345KV CKT Z	720	720	0.04173	110.864	GEN600046 1-MECST
FDNS	00NR	3	17SP	G15_076	TO->FROM	GRPRAR1-LNX3345.00 - GRPRAR 345KV CKT Z	720	720	0.04173	110.8527	GEN300007 1-NEW MADRID UNIT 2
FDNS	00NR	3	17SP	G15_076	TO->FROM	GRPRAR1-LNX3345.00 - GRPRAR 345KV CKT Z	720	720	0.04173	110.847	GEN300006 1-NEW MADRID UNIT 1
FDNS	00NR	3	17SP	G15_076	TO->FROM	GRPRAR1-LNX3345.00 - GRPRAR 345KV CKT Z	720	720	0.03982	110.8458	COLUMEAST - SHELL CREEK 345KV CKT 1
FDNS	00NR	3	17SP	G15_076	TO->FROM	GRPRAR1-LNX3345.00 - GRPRAR 345KV CKT Z	720	720	0.04173	110.8394	GEN600047 1-MECCT1
FDNS	00NR	3	17SP	G15_076	TO->FROM	GRPRAR1-LNX3345.00 - GRPRAR 345KV CKT Z	720	720	0.04173	110.8309	GEN652414 4-FT PECK
FDNS	00NR	3	17SP	G15_076	TO->FROM	GRPRAR1-LNX3345.00 - GRPRAR 345KV CKT Z	720	720	0.04173	110.8309	GEN652415 5-FT PECK
FDNS	00NR	3	17SP	G15_076	TO->FROM	GRPRAR1-LNX3345.00 - GRPRAR 345KV CKT Z	720	720	0.04173	110.8254	GEN600050 1-FEP
FDNS	00NR	3	17SP	G15_076	TO->FROM	GRPRAR1-LNX3345.00 - GRPRAR 345KV CKT Z	720	720	0.04173	110.8141	GEN660001 2-ABERDEEN SIEBRECHT
FDNS	00NR	3	17SP	G15_076	TO->FROM	GRPRAR1-LNX3345.00 - GRPRAR 345KV CKT Z	720	720	0.04173	110.8019	LADISH 115/13.2KV TRANSFORMER CKT 1
FDNS	00NR	3	17SP	G15_076	TO->FROM	GRPRAR1-LNX3345.00 - GRPRAR 345KV CKT Z	720	720	0.04173	110.7811	GEN652345 W-G07_023IS_2 0.6900
FDNS	00NR	3	17SP	G15_076	TO->FROM	GRPRAR1-LNX3345.00 - GRPRAR 345KV CKT Z	720	720	0.04332	110.7558	G15061_T 345.00 - SETAB 345KV CKT 1
FDNS	00NR	3	17SP	G15_076	TO->FROM	GRPRAR1-LNX3345.00 - GRPRAR 345KV CKT Z	720	720	0.04176	110.7464	BISMARK - L3 HAWDON 230KV CKT 1
FDNS	00NR	3	17SP	G15_076	TO->FROM	GRPRAR1-LNX3345.00 - GRPRAR 345KV CKT Z	720	720	0.04173	110.743	GEN 11104 1-J262_GEN 0.6000
FDNS	00NR	3	17SP	G15_076	TO->FROM	GRPRAR1-LNX3345.00 - GRPRAR 345KV CKT Z	720	720	0.04173	110.743	GEN 11108 1-J263_GEN 0.6000
FDNS	00NR	3	17SP	G15_076	TO->FROM	GRPRAR1-LNX3345.00 - GRPRAR 345KV CKT Z	720	720	0.04173	110.7356	GEN600063 1-COLVILLE GEN 1
FDNS	00NR	3	17SP	G15_076	TO->FROM	GRPRAR1-LNX3345.00 - GRPRAR 345KV CKT Z	720	720	0.04173	110.7356	GEN600064 2-COLVILLE GEN 2
FDNS	00NR	3	17SP	G15_076	TO->FROM	GRPRAR1-LNX3345.00 - GRPRAR 345KV CKT Z	720	720	0.0432	110.7246	GERALD GENTLEMAN STATION - RED WILLOW 345KV CKT 1
FDNS	00NR	3	17SP	G15_076	TO->FROM	GRPRAR1-LNX3345.00 - GRPRAR 345KV CKT Z	720	720	0.04173	110.7232	GEN600043 7-BLUE LAKE5
FDNS	00NR	3	17SP	G15_076	TO->FROM	GRPRAR1-LNX3345.00 - GRPRAR 345KV CKT Z	720	720	0.04173	110.7232	GEN600044 8-BLUE LAKE6
FDNS	00NR	3	17SP	G15_076	TO->FROM	GRPRAR1-LNX3345.00 - GRPRAR 345KV CKT Z	720	720	0.04173	110.7226	GEN600045 4-ANSON
FDNS	00NR	3	17SP	G15_076	TO->FROM	GRPRAR1-LNX3345.00 - GRPRAR 345KV CKT Z	720	720	0.04173	110.7124	G830_SUB 115.00 - GRE-MCHENRY7115.00 115KV CKT 1
FDNS	00NR	3	17SP	G15_076	TO->FROM	GRPRAR1-LNX3345.00 - GRPRAR 345KV CKT Z	720	720	0.04178	110.7042	DRAYTON - LETELLIER 230KV CKT 1
FDNS	00NR	3	17SP	G15_076	TO->FROM	GRPRAR1-LNX3345.00 - GRPRAR 345KV CKT Z	720	720	0.04173	110.7017	G830_SUB 115.00 115/34.5KV TRANSFORMER CKT 1
FDNS	00NR	3	17SP	G15_076	TO->FROM	GRPRAR1-LNX3345.00 - GRPRAR 345KV CKT Z	720	720	0.04173	110.691	GEN600014 4-BLACK DOG GEN 4
FDNS	00NR	3	17SP	G15_076	TO->FROM	GRPRAR1-LNX3345.00 - GRPRAR 345KV CKT Z	720	720	0.04184	110.6904	G11_051T 345.00 - TATONGA7 345.00 345KV CKT 1
FDNS	00NR	3	17SP	G15_076	TO->FROM	GRPRAR1-LNX3345.00 - GRPRAR 345KV CKT Z	720	720	0.04173	110.6891	GEN600065 7-HIGH BRIDGE
FDNS	00NR	3	17SP	G15_076	TO->FROM	GRPRAR1-LNX3345.00 - GRPRAR 345KV CKT Z	720	720	0.04173	110.6891	GEN600066 8-HIGH BRIDGE
FDNS	00NR	3	17SP	G15_076	TO->FROM	GRPRAR1-LNX3345.00 - GRPRAR 345KV CKT Z	720	720	0.04173	110.6844	GEN600011 5-BLACK DOG GEN 1
FDNS	00NR	3	17SP	G15_076	TO->FROM	GRPRAR1-LNX3345.00 - GRPRAR 345KV CKT Z	720	720	0.04173	110.6729	GEN600071 10-RIVER SIDE
FDNS	00NR	3	17SP	G15_076	TO->FROM	GRPRAR1-LNX3345.00 - GRPRAR 345KV CKT Z	720	720	0.04173	110.6728	GEN600070 9-RIVER SIDE
FDNS	00NR	3	17SP	G15_076	TO->FROM	GRPRAR1-LNX3345.00 - GRPRAR 345KV CKT Z	720	720	0.04173	110.66	GEN600007 7-RIVERSIDE GEN 7

SOLUTION	GROUP	SCENARIO	SEASON	SOURCE	DIRECTION	MONITORED ELEMENT	RATEA (MVA)	RATEB(MVA)	TDF	TC%LOADING (% MVA)	CONTINGENCY
FDNS	00NR	3	17SP	G15_076	TO->FROM	GRPRAR1-LNX3345.00 - GRPRAR 345KV CKT Z	720	720	0.03881	110.6568	FT THOMPSON (FT2 KU1A) 345/230/13.8KV TRANSFORMER CKT 1
FDNS	00NR	3	17SP	G15_076	TO->FROM	GRPRAR1-LNX3345.00 - GRPRAR 345KV CKT Z	720	720	0.0388	110.6536	FT THOMPSON (FT2 KU1B) 345/230/13.8KV TRANSFORMER CKT 1
FDNS	00NR	3	17SP	G15_076	TO->FROM	GRPRAR1-LNX3345.00 - GRPRAR 345KV CKT Z	720	720	0.04173	110.644	GEN652906 1-G09_006IS_3 0.6900
FDNS	00NR	3	17SP	G15_076	TO->FROM	GRPRAR1-LNX3345.00 - GRPRAR 345KV CKT Z	720	720	0.04173	110.64	GEN600017 C-LS POWER CT
FDNS	00NR	3	17SP	G15_076	TO->FROM	GRPRAR1-LNX3345.00 - GRPRAR 345KV CKT Z	720	720	0.04173	110.6351	GEN659273 2-GROTON SYNC COND
FDNS	00NR	3	17SP	G15_076	TO->FROM	GRPRAR1-LNX3345.00 - GRPRAR 345KV CKT Z	720	720	0.04173	110.6351	GEN659294 1-WILTONCOL9
FDNS	00NR	3	17SP	G15_076	TO->FROM	GRPRAR1-LNX3345.00 - GRPRAR 345KV CKT Z	720	720	0.04173	110.6154	LANSING WEST 161/22.0KV TRANSFORMER CKT 1
FDNS	00NR	3	17SP	G15_076	TO->FROM	GRPRAR1-LNX3345.00 - GRPRAR 345KV CKT Z	720	720	0.04173	110.6	GEN659192 6-LYNN
FDNS	00NR	3	17SP	G15_076	TO->FROM	GRPRAR1-LNX3345.00 - GRPRAR 345KV CKT Z	720	720	0.04173	110.599	GEN659162 4-RED WLCK
FDNS	00NR	3	17SP	G15_076	TO->FROM	GRPRAR1-LNX3345.00 - GRPRAR 345KV CKT Z	720	720	0.04173	110.599	GEN659163 5-BLACK WDCK
FDNS	00NR	3	17SP	G15_076	TO->FROM	GRPRAR1-LNX3345.00 - GRPRAR 345KV CKT Z	720	720	0.04173	110.5835	GEN681522 3-GENOA 3
FDNS	00NR	3	17SP	G15_076	TO->FROM	GRPRAR1-LNX3345.00 - GRPRAR 345KV CKT Z	720	720	0.04173	110.5775	GEN615021 1-GRE-ER 14G 16.000
FDNS	00NR	3	25SP	G15_076	TO->FROM	GRPRAR1-LNX3345.00 - GRPRAR 345KV CKT Z	720	720	0.03818	110.5692	P12:230:UMZB:# 116 #: ST IN SD. WSG-ST-VH
FDNS	00NR	3	17SP	G15_076	TO->FROM	GRPRAR1-LNX3345.00 - GRPRAR 345KV CKT Z	720	720	0.04173	110.5642	GEN615052 1-CAMBRIDGE GENERATING STATION
FDNS	00NR	3	17SP	G15_076	TO->FROM	GRPRAR1-LNX3345.00 - GRPRAR 345KV CKT Z	720	720	0.04182	110.5631	BRDLAND-LNX3345.00 - HURON 345KV CKT Z
FDNS	00NR	3	17SP	G15_076	TO->FROM	GRPRAR1-LNX3345.00 - GRPRAR 345KV CKT Z	720	720	0.04182	110.5627	HURON (BD KU2A) 345/230/13.8KV TRANSFORMER CKT 1
FDNS	00NR	3	17SP	G15_076	TO->FROM	GRPRAR1-LNX3345.00 - GRPRAR 345KV CKT Z	720	720	0.04182	110.5627	HURON (BD KU2A) 345/230/13.8KV TRANSFORMER CKT 1
FDNS	00NR	3	17SP	G15_076	TO->FROM	GRPRAR1-LNX3345.00 - GRPRAR 345KV CKT Z	720	720	0.04182	110.5624	BROADLAND - HURON 230KV CKT 1
FDNS	00NR	3	17SP	G15_076	TO->FROM	GRPRAR1-LNX3345.00 - GRPRAR 345KV CKT Z	720	720	0.04173	110.561	CENTER 230/22.0KV TRANSFORMER CKT 1
FDNS	00NR	3	17SP	G15_076	TO->FROM	GRPRAR1-LNX3345.00 - GRPRAR 345KV CKT Z	720	720	0.04173	110.5598	GEN659031 1-G12_014IS_4 0.6900
FDNS	00NR	3	17SP	G15_076	TO->FROM	GRPRAR1-LNX3345.00 - GRPRAR 345KV CKT Z	720	720	0.04182	110.5568	P12:345:UMZB:# 103 #: BD IN SD. LOSS OF LINE
FDNS	00NR	3	17SP	G15_076	TO->FROM	GRPRAR1-LNX3345.00 - GRPRAR 345KV CKT Z	720	720	0.04182	110.5557	P12:345:UMZB:# 102 #: AVS BD IN ND. AVS BRD LR
FDNS	00NR	3	17SP	G15_076	TO->FROM	GRPRAR1-LNX3345.00 - GRPRAR 345KV CKT Z	720	720	0.04173	110.5548	GEN 10648 1-G830_GEN 0.6900
FDNS	00NR	3	20SP	G15_076	TO->FROM	GRPRAR1-LNX3345.00 - GRPRAR 345KV CKT Z	720	720	0.0382	110.5501	STORLA - WESSINGTON 230KV CKT 1
FDNS	00NR	3	17SP	G15_076	TO->FROM	GRPRAR1-LNX3345.00 - GRPRAR 345KV CKT Z	720	720	0.04173	110.5488	GEN652907 1-G09_007IS_3 0.6900
FDNS	00NR	3	17SP	G15_076	TO->FROM	GRPRAR1-LNX3345.00 - GRPRAR 345KV CKT Z	720	720	0.04173	110.5395	GEN660016 1-B_H WIND 0.7000
FDNS	00NR	3	17SP	G15_076	TO->FROM	GRPRAR1-LNX3345.00 - GRPRAR 345KV CKT Z	720	720	0.03764	110.4986	DIXONCO 230.00 - TWIN CHURCH 230KV CKT 1
FDNS	00NR	3	17SP	G15_076	TO->FROM	GRPRAR1-LNX3345.00 - GRPRAR 345KV CKT Z	720	720	0.04173	110.4842	GEN615015 1-GRE-SPRITWDG13.200
FDNS	00NR	3	17SP	G15_076	TO->FROM	GRPRAR1-LNX3345.00 - GRPRAR 345KV CKT Z	720	720	0.04184	110.4708	MATHWSN7 345.00 - TATONGA7 345.00 345KV CKT 1
FDNS	00NR	3	17SP	G15_076	TO->FROM	GRPRAR1-LNX3345.00 - GRPRAR 345KV CKT Z	720	720	0.03891	110.4494	HOSKINS - RAUN 345KV CKT 1
FDNS	00NR	3	17SP	G15_076	TO->FROM	GRPRAR1-LNX3345.00 - GRPRAR 345KV CKT Z	720	720	0.03891	110.4494	HOSKINS - RAUN 345KV CKT 1
FDNS	00NR	3	17SP	G15_076	TO->FROM	GRPRAR1-LNX3345.00 - GRPRAR 345KV CKT Z	720	720	0.04173	110.4173	GEN659353 1-DEERCREK CTG18.000
FDNS	00NR	3	17SP	G15_076	TO->FROM	GRPRAR1-LNX3345.00 - GRPRAR 345KV CKT Z	720	720	0.04173	110.4156	GEN659354 1-DEERCREK STG18.000
FDNS	00NR	3	17SP	G15_076	TO->FROM	GRPRAR1-LNX3345.00 - GRPRAR 345KV CKT Z	720	720	0.04182	110.4038	ANTELOP-LNX3345.00 - ANTELOPE VALLEY 345KV CKT Z
FDNS	00NR	3	17SP	G15_076	TO->FROM	GRPRAR1-LNX3345.00 - GRPRAR 345KV CKT Z	720	720	0.04173	110.3285	GEN600067 9-HIGH BRIDGE
FDNS	00NR	3	17SP	G15_076	TO->FROM	GRPRAR1-LNX3345.00 - GRPRAR 345KV CKT Z	720	720	0.04173	110.3278	GEN672303 3-BOUNDARY DAM GENERATOR 3
FDNS	00NR	3	17SP	G15_076	TO->FROM	GRPRAR1-LNX3345.00 - GRPRAR 345KV CKT Z	720	720	0.04173	110.3278	GEN672305 5-BOUNDARY DAM GENERATOR 5
FDNS	00NR	3	17SP	G15_076	TO->FROM	GRPRAR1-LNX3345.00 - GRPRAR 345KV CKT Z	720	720	0.04744	110.3176	ANTELOPE 3345.00 (ANTELOPE T1) 345/115/13.8KV TRANSFORMER CKT 1
FDNS	00NR	3	17SP	G15_076	TO->FROM	GRPRAR1-LNX3345.00 - GRPRAR 345KV CKT Z	720	720	0.04173	110.3034	GEN672392 1-NBECGT1G 18.000
FDNS	00NR	3	17SP	G15_076	TO->FROM	GRPRAR1-LNX3345.00 - GRPRAR 345KV CKT Z	720	720	0.04176	110.2716	OAHE - SULLEY BUTTE 230KV CKT 1
FDNS	00NR	3	17SP	G15_076	TO->FROM	GRPRAR1-LNX3345.00 - GRPRAR 345KV CKT Z	720	720	0.04173	110.2403	GEN910006 1-G12_012IS_3 0.6900
FDNS	00NR	3	17SP	G15_076	TO->FROM	GRPRAR1-LNX3345.00 - GRPRAR 345KV CKT Z	720	720	0.04173	110.2319	BISONMP4 230.00 - SQUARE BUTTE 230KV CKT 1
FDNS	00NR	3	17SP	G15_076	TO->FROM	GRPRAR1-LNX3345.00 - GRPRAR 345KV CKT Z	720	720	0.04173	110.187	GEN662101 1-WESSINGTON190.5750
FDNS	00NR	3	17SP	G15_076	TO->FROM	GRPRAR1-LNX3345.00 - GRPRAR 345KV CKT Z	720	720	0.04328	110.1346	AXTELL - SWEETWATER 345KV CKT 1
FDNS	00NR	3	17SP	G15_076	TO->FROM	GRPRAR1-LNX3345.00 - GRPRAR 345KV CKT Z	720	720	0.04176	110.1161	SULLEY BUTTE - SULLYBT-LNX3230.00 230KV CKT Z
FDNS	00NR	3	17SP	G15_076	TO->FROM	GRPRAR1-LNX3345.00 - GRPRAR 345KV CKT Z	720	720	0.04176	110.1159	SULLYBT-LNX3230.00 - WHITLOK 230KV CKT 1
FDNS	00NR	3	17SP	G15_076	TO->FROM	GRPRAR1-LNX3345.00 - GRPRAR 345KV CKT Z	720	720	0.04331	110.1006	G15088_T 345.00 - MOORE 345KV CKT 1
FDNS	00NR	3	17SP	G15_076	TO->FROM	GRPRAR1-LNX3345.00 - GRPRAR 345KV CKT Z	720	720	0.04176	110.07	P12:230:UMZB:# 114 #: SB IN SD. SB-WK-GH
FDNS	00NR	3	17SP	G15_076	TO->FROM	GRPRAR1-LNX3345.00 - GRPRAR 345KV CKT Z	720	720	0.04176	110.07	P12:230:UMZB:# 117 #: WK IN SD. SB-WK-GH
FDNS	00NR	3	17SP	G15_076	TO->FROM	GRPRAR1-LNX3345.00 - GRPRAR 345KV CKT Z	720	720	0.04173	110.0453	SQUARE BUTTE - YNG2 4 230.00 230KV CKT 1
FDNS	00NR	3	17SP	G15_076	TO->FROM	GRPRAR1-LNX3345.00 - GRPRAR 345KV CKT Z	720	720	0.04176	110.0173	GLENHAM - WHITLOK 230KV CKT 1
FDNS	00NR	3	17SP	G15_076	TO->FROM	GRPRAR1-LNX3345.00 - GRPRAR 345KV CKT Z	720	720	0.0361	109.9984	HOSKINS - SHELL CREEK 345KV CKT 1
FDNS	00NR	3	17SP	G15_076	TO->FROM	GRPRAR1-LNX3345.00 - GRPRAR 345KV CKT Z	720	720	0.04173	109.9578	GEN681542 6-JP MADGETT
FDNS	00NR	3	17SP	G15_076	TO->FROM	GRPRAR1-LNX3345.00 - GRPRAR 345KV CKT Z	720	720	0.04173	109.9119	GEN659289 1-DAYCNTYWND W0.6900
FDNS	00NR	3	17SP	G15_076	TO->FROM	GRPRAR1-LNX3345.00 - GRPRAR 345KV CKT Z	720	720	0.04173	109.8951	GEN659018 1-G14_003IS_3 0.6900
FDNS	00NR	3	17SP	G15_076	TO->FROM	GRPRAR1-LNX3345.00 - GRPRAR 345KV CKT Z	720	720	0.04173	109.8752	GEN652543 3-BIG BEND
FDNS	00NR	3	17SP	G15_076	TO->FROM	GRPRAR1-LNX3345.00 - GRPRAR 345KV CKT Z	720	720	0.04173	109.8737	GEN563312 1-G15097_3 0.6900
FDNS	00NR	3	25SP	G15_076	TO->FROM	GRPRAR1-LNX3345.00 - GRPRAR 345KV CKT Z	720	720	0.03852	109.8057	STORLA - WESSINGTON 230KV CKT 1
FDNS	00NR	3	17SP	G15_076	TO->FROM	GRPRAR1-LNX3345.00 - GRPRAR 345KV CKT Z	720	720	0.04173	109.73	GEN659194 1-NDPRAIRWND1W0.6900
FDNS	00NR	3	17SP	G15_076	TO->FROM	GRPRAR1-LNX3345.00 - GRPRAR 345KV CKT Z	720	720	0.04173	109.7134	GEN659010 4-G07_027IS_2 0.6900
FDNS	00NR	3	17SP	G15_076	TO->FROM	GRPRAR1-LNX3345.00 - GRPRAR 345KV CKT Z	720	720	0.04173	109.7062	GEN652460 4-GARRISON
FDNS	00NR	3	17SP	G15_076	TO->FROM	GRPRAR1-LNX3345.00 - GRPRAR 345KV CKT Z	720	720	0.04173	109.7062	GEN652461 5-GARRISON
FDNS	00NR	3	17SP	G15_076	TO->FROM	GRPRAR1-LNX3345.00 - GRPRAR 345KV CKT Z	720	720	0.04173	109.6839	GEN563342 1-G15098_3 0.6900
FDNS	00NR	3	17SP	G15_076	TO->FROM	GRPRAR1-LNX3345.00 - GRPRAR 345KV CKT Z	720	720	0.04173	109.6472	GEN652457 1-GARRISON
FDNS	00NR	3	17SP	G15_076	TO->FROM	GRPRAR1-LNX3345.00 - GRPRAR 345KV CKT Z	720	720	0.04173	109.6472	GEN652458 2-GARRISON
FDNS	00NR	3	17SP	G15_076	TO->FROM	GRPRAR1-LNX3345.00 - GRPRAR 345KV CKT Z	720	720	0.04173	109.6472	GEN652459 3-GARRISON
FDNS	00NR	3	17SP	G15_076	TO->FROM	GRPRAR1-LNX3345.00 - GRPRAR 345KV CKT Z	720	720	0.04173	109.594	GEN659403 1-NDSUNFLWR W0.6900
FDNS	00NR	3	20SP	G15_076	TO->FROM	GRPRAR1-LNX3345.00 - GRPRAR 345KV CKT Z	720	720	0.0383	109.5791	HANLON - STORLA 230KV CKT 1
FDNS	00NR	3	17SP	G15_076	TO->FROM	GRPRAR1-LNX3345.00 - GRPRAR 345KV CKT Z	720	720	0.04173	109.5465	GEN652542 1-BIG BEND
FDNS	00NR	3	17SP	G15_076	TO->FROM	GRPRAR1-LNX3345.00 - GRPRAR 345KV CKT Z	720	720	0.04389	109.49	MCCOOL - MOORE 345KV CKT 1
FDNS	00NR	3	17SP	G15_076	TO->FROM	GRPRAR1-LNX3345.00 - GRPRAR 345KV CKT Z	720	720	0.04173	109.4321	GEN652559 1-OAHE
FDNS	00NR	3	17SP	G15_076	TO->FROM	GRPRAR1-LNX3345.00 - GRPRAR 345KV CKT Z	720	720	0.04173	109.4316	STANTON 230/18.0KV TRANSFORMER CKT 1
FDNS	00NR	3	17SP	G15_076	TO->FROM	GRPRAR1-LNX3345.00 - GRPRAR 345KV CKT Z	720	720	0.04173	109.4276	CLAY BOSWELL 230/20.9KV TRANSFORMER CKT 1
FDNS	00NR	3	17SP	G15_076	TO->FROM	GRPRAR1-LNX3345.00 - GRPRAR 345KV CKT Z	720	720	0.04176	109.4061	GLENHAM - L3 HAWDON 230KV CKT 1
FDNS	00NR	3	17SP	G15_076	TO->FROM	GRPRAR1-LNX3345.00 - GRPRAR 345KV CKT Z	720	720	0.04173	109.1778	GEN659411 1-CAMPBLCNTY W0.6900
FDNS	00NR	3	20SP	G15_076	TO->FROM	GRPRAR1-LNX3345.00 - GRPRAR 345KV CKT Z	720	720	0.0402	108.9991	BUFFALO - JAMESTOWN 345KV CKT 1
FDNS	00NR	3	20SP	G15_076	TO->FROM	GRPRAR1-LNX3345.00 - GRPRAR 345KV CKT Z	720	720	0.03997	108.9501	G09_001IST 345.00 - WATERTOWN 345KV CKT 1
FDNS	00NR	3	17SP	G15_076	TO->FROM	GRPRAR1-LNX3345.00 - GRPRAR 345KV CKT Z	720	720	0.04173	108.9498	GEN659296 2-SDPRAIRWND1W0.6900
FDNS	00NR	3	20SP	G15_076	TO->FROM	GRPRAR1-LNX3345.00 - GRPRAR 345KV CKT Z	720	720	0.03757	108.938	FT THOMPSON - LETCHER 230KV CKT 1

SOLUTION	GROUP	SCENARIO	SEASON	SOURCE	DIRECTION	MONITORED ELEMENT	RATEA (MVA)	RATEB(MVA)	TDF	TC%LOADING (% MVA)	CONTINGENCY
FDNS	00NR	3	20SP	G15_076	TO->FROM	GRPRAR1-LNX3345.00 - GRPRAR 345KV CKT Z	720	720	0.03757	108.938	FT THOMPSON - LETCHER 230KV CKT 1
FDNS	00NR	3	17SP	G15_076	TO->FROM	GRPRAR1-LNX3345.00 - GRPRAR 345KV CKT Z	720	720	0.04173	108.9347	GEN672321 1-SHAND GENERATOR 1
FDNS	00NR	3	17SP	G15_076	TO->FROM	GRPRAR1-LNX3345.00 - GRPRAR 345KV CKT Z	720	720	0.04173	108.9246	GEN672310 1-POPLAR RIVER GENERATOR 1
FDNS	00NR	3	17SP	G15_076	TO->FROM	GRPRAR1-LNX3345.00 - GRPRAR 345KV CKT Z	720	720	0.04173	108.9245	GEN672311 2-POPLAR RIVER GENERATOR 2
FDNS	00NR	3	17SP	G15_076	TO->FROM	GRPRAR1-LNX3345.00 - GRPRAR 345KV CKT Z	720	720	0.04173	108.8787	P12:230:UMZB:# 112 #: NU IN SD. NU-RCDC & DRY CREEK XFMR
FDNS	00NR	3	17SP	G15_076	TO->FROM	GRPRAR1-LNX3345.00 - GRPRAR 345KV CKT Z	720	720	0.04173	108.8726	RCDC EAST 4230.00 - RED CEDAR DC 230KV CKT 1
FDNS	00NR	3	17SP	G15_076	TO->FROM	GRPRAR1-LNX3345.00 - GRPRAR 345KV CKT Z	720	720	0.04173	108.8524	GEN600004 2-PRAIRIE ISLAND G2
FDNS	00NR	3	17SP	G15_076	TO->FROM	GRPRAR1-LNX3345.00 - GRPRAR 345KV CKT Z	720	720	0.04173	108.8482	GEN600003 1-PRAIRIE ISLAND G1
FDNS	00NR	3	17SP	G15_076	TO->FROM	GRPRAR1-LNX3345.00 - GRPRAR 345KV CKT Z	720	720	0.04173	108.8255	GEN672306 6-BOUNDARY DAM GENERATOR 6
FDNS	00NR	3	25SP	G15_076	TO->FROM	GRPRAR1-LNX3345.00 - GRPRAR 345KV CKT Z	720	720	0.03862	108.8019	HANLON - STORLA 230KV CKT 1
FDNS	00NR	3	17SP	G15_076	TO->FROM	GRPRAR1-LNX3345.00 - GRPRAR 345KV CKT Z	720	720	0.04173	108.7996	GEN615010 1-STANTON4
FDNS	00NR	3	17SP	G15_076	TO->FROM	GRPRAR1-LNX3345.00 - GRPRAR 345KV CKT Z	720	720	0.04173	108.7876	GEN659453 1-GI1414GEN W0.6900
FDNS	00NR	3	17SP	G15_076	TO->FROM	GRPRAR1-LNX3345.00 - GRPRAR 345KV CKT Z	720	720	0.04173	108.7859	GEN563302 1-G15096_3 0.6900
FDNS	00NR	3	17SP	G15_076	TO->FROM	GRPRAR1-LNX3345.00 - GRPRAR 345KV CKT Z	720	720	0.04173	108.6806	GEN659141 1-K10215A
FDNS	00NR	3	17SP	G15_076	TO->FROM	GRPRAR1-LNX3345.00 - GRPRAR 345KV CKT Z	720	720	0.04173	108.5993	GEN652556 2-OAHE
FDNS	00NR	3	17SP	G15_076	TO->FROM	GRPRAR1-LNX3345.00 - GRPRAR 345KV CKT Z	720	720	0.04173	108.5993	GEN652557 4-OAHE
FDNS	00NR	3	17SP	G15_076	TO->FROM	GRPRAR1-LNX3345.00 - GRPRAR 345KV CKT Z	720	720	0.04173	108.5993	GEN652558 6-OAHE
FDNS	00NR	3	17SP	G15_076	TO->FROM	GRPRAR1-LNX3345.00 - GRPRAR 345KV CKT Z	720	720	0.04173	108.5969	GEN659110 1-LELAND OLDS UNIT1
FDNS	00NR	3	25SP	G15_076	TO->FROM	GRPRAR1-LNX3345.00 - GRPRAR 345KV CKT Z	720	720	0.04052	108.5322	BUFFALO - JAMESTOWN 345KV CKT 1
FDNS	00NR	3	17SP	G15_076	TO->FROM	GRPRAR1-LNX3345.00 - GRPRAR 345KV CKT Z	720	720	0.04173	108.5302	GEN657749 1-YOUNG 1 GENERATOR
FDNS	00NR	3	17SP	G15_076	TO->FROM	GRPRAR1-LNX3345.00 - GRPRAR 345KV CKT Z	720	720	0.04173	108.5102	GEN600006 1-AS KING
FDNS	00NR	3	17SP	G15_076	TO->FROM	GRPRAR1-LNX3345.00 - GRPRAR 345KV CKT Z	720	720	0.04173	108.4342	GEN652173 1-G09_001IS_2 0.6900
FDNS	00NR	3	17SP	G15_076	TO->FROM	GRPRAR1-LNX3345.00 - GRPRAR 345KV CKT Z	720	720	0.04373	108.352	GRAND ISLAND - MCCOOL 345KV CKT 1
FDNS	00NR	3	25SP	G15_076	TO->FROM	GRPRAR1-LNX3345.00 - GRPRAR 345KV CKT Z	720	720	0.03789	108.1573	FT THOMPSON - LETCHER 230KV CKT 1
FDNS	00NR	3	25SP	G15_076	TO->FROM	GRPRAR1-LNX3345.00 - GRPRAR 345KV CKT Z	720	720	0.03789	108.1573	FT THOMPSON - LETCHER 230KV CKT 1
FDNS	00NR	3	17SP	G15_076	TO->FROM	GRPRAR1-LNX3345.00 - GRPRAR 345KV CKT Z	720	720	0.04173	108.1468	GEN659407 1-ANTELPHILLSW0.6900
FDNS	00NR	3	25SP	G15_076	TO->FROM	GRPRAR1-LNX3345.00 - GRPRAR 345KV CKT Z	720	720	0.04029	108.1206	G09_001IST 345.00 - WATERTOWN 345KV CKT 1
FDNS	00NR	3	17SP	G15_076	TO->FROM	GRPRAR1-LNX3345.00 - GRPRAR 345KV CKT Z	720	720	0.04173	107.9563	GEN600005 1-MONTICELLO
FDNS	00NR	3	20SP	G15_076	TO->FROM	GRPRAR1-LNX3345.00 - GRPRAR 345KV CKT Z	720	720	0.03971	107.8283	WATERTN-LNX3345.00 - WHITE 345KV CKT 1
FDNS	00NR	3	20SP	G15_076	TO->FROM	GRPRAR1-LNX3345.00 - GRPRAR 345KV CKT Z	720	720	0.03696	107.7647	FT RANDAL - G12_009IST 230.00 230KV CKT 1
FDNS	00NR	3	20SP	G15_076	TO->FROM	GRPRAR1-LNX3345.00 - GRPRAR 345KV CKT Z	720	720	0.03971	107.7298	WATERTN-LNX3345.00 - WATERTOWN 345KV CKT Z
FDNS	00NR	3	20SP	G15_076	TO->FROM	GRPRAR1-LNX3345.00 - GRPRAR 345KV CKT Z	720	720	0.03971	107.7187	P12:345:UMZW:# 1747 #: WT2 IN SD. WT2-WHT LINE FAULT
FDNS	00NR	3	20SP	G15_076	TO->FROM	GRPRAR1-LNX3345.00 - GRPRAR 345KV CKT Z	720	720	0.03696	107.6756	FT THOMPSON - LAKE PLATT 230KV CKT 1
FDNS	00NR	3	20SP	G15_076	TO->FROM	GRPRAR1-LNX3345.00 - GRPRAR 345KV CKT Z	720	720	0.03696	107.6756	FT THOMPSON - LAKE PLATT 230KV CKT 1
FDNS	00NR	3	20SP	G15_076	TO->FROM	GRPRAR1-LNX3345.00 - GRPRAR 345KV CKT Z	720	720	0.03688	107.6695	FT RANDAL - FT THOMPSON 230KV CKT 1
FDNS	00NR	3	20SP	G15_076	TO->FROM	GRPRAR1-LNX3345.00 - GRPRAR 345KV CKT Z	720	720	0.03688	107.6695	FT RANDAL - FT THOMPSON 230KV CKT 1
FDNS	00NR	3	20SP	G15_076	TO->FROM	GRPRAR1-LNX3345.00 - GRPRAR 345KV CKT Z	720	720	0.04018	107.6029	GEN336821 1-GRAND GULF UNIT
FDNS	00NR	3	20SP	G15_076	TO->FROM	GRPRAR1-LNX3345.00 - GRPRAR 345KV CKT Z	720	720	0.04018	107.5901	GEN635024 4-WALTER SCOTT UNIT 4
FDNS	00NR	3	20SP	G15_076	TO->FROM	GRPRAR1-LNX3345.00 - GRPRAR 345KV CKT Z	720	720	0.04536	107.5652	FT RANDAL - MEADOWGROVE4230.00 230KV CKT 1
FDNS	00NR	3	20SP	G15_076	TO->FROM	GRPRAR1-LNX3345.00 - GRPRAR 345KV CKT Z	720	720	0.04019	107.5291	CENTER - JAMESTOWN 345KV CKT 1
FDNS	00NR	3	20SP	G15_076	TO->FROM	GRPRAR1-LNX3345.00 - GRPRAR 345KV CKT Z	720	720	0.03844	107.4473	SPLIT ROCK - WHITE 345KV CKT 1
FDNS	00NR	3	20SP	G15_076	TO->FROM	GRPRAR1-LNX3345.00 - GRPRAR 345KV CKT Z	720	720	0.03844	107.4473	SPLIT ROCK - WHITE 345KV CKT 1
FDNS	00NR	3	20SP	G15_076	TO->FROM	GRPRAR1-LNX3345.00 - GRPRAR 345KV CKT Z	720	720	0.03696	107.3091	G12_009IST 230.00 - LAKE PLATT 230KV CKT 1
FDNS	00NR	3	17SP	G15_076	TO->FROM	GRPRAR1-LNX3345.00 - GRPRAR 345KV CKT Z	720	720	0.04173	107.2973	GEN600000 1-SHERBURNECNTY G1
FDNS	00NR	3	20SP	G15_076	TO->FROM	GRPRAR1-LNX3345.00 - GRPRAR 345KV CKT Z	720	720	0.04022	107.2685	CHISAGO COUNTY - CHISAGO COUNTY 500KV CKT 1
FDNS	00NR	3	20SP	G15_076	TO->FROM	GRPRAR1-LNX3345.00 - GRPRAR 345KV CKT Z	720	720	0.04022	107.2448	CHISAGO COUNTY - FORBES 500KV CKT 1
FDNS	00NR	3	20SP	G15_076	TO->FROM	GRPRAR1-LNX3345.00 - GRPRAR 345KV CKT Z	720	720	0.0402	107.1332	BISON 3 345.00 - BUFFALO 345KV CKT 1
FDNS	00NR	3	20SP	G15_076	TO->FROM	GRPRAR1-LNX3345.00 - GRPRAR 345KV CKT Z	720	720	0.04018	107.1005	GEN635023 3-WALTER SCOTT UNIT 3
FDNS	00NR	3	20SP	G15_076	TO->FROM	GRPRAR1-LNX3345.00 - GRPRAR 345KV CKT Z	720	720	0.03906	107.0996	LETCHER - SIOUX FALLS 230KV CKT 1
FDNS	00NR	3	20SP	G15_076	TO->FROM	GRPRAR1-LNX3345.00 - GRPRAR 345KV CKT Z	720	720	0.04018	107.0769	GEN562714 1-G15_023_4 0.6900
FDNS	00NR	3	20SP	G15_076	TO->FROM	GRPRAR1-LNX3345.00 - GRPRAR 345KV CKT Z	720	720	0.04018	107.0769	GEN562715 1-G15_023_5 0.6900
FDNS	00NR	3	20SP	G15_076	TO->FROM	GRPRAR1-LNX3345.00 - GRPRAR 345KV CKT Z	720	720	0.04018	107.0433	GEN344225 1-1CAL G1 25.000
FDNS	00NR	3	20SP	G15_076	TO->FROM	GRPRAR1-LNX3345.00 - GRPRAR 345KV CKT Z	720	720	0.04018	106.961	GEN337911 1-ARKANSAS NUCLEAR ONE UNIT #2
FDNS	00NR	3	17SP	G15_076	TO->FROM	GRPRAR1-LNX3345.00 - GRPRAR 345KV CKT Z	720	720	0.04173	106.9464	GEN600001 2-SHERBURNE CNTY G2
FDNS	00NR	3	25SP	G15_076	TO->FROM	GRPRAR1-LNX3345.00 - GRPRAR 345KV CKT Z	720	720	0.03729	106.9359	FT RANDAL - G12_009IST 230.00 230KV CKT 1
FDNS	00NR	3	20SP	G15_076	TO->FROM	GRPRAR1-LNX3345.00 - GRPRAR 345KV CKT Z	720	720	0.04018	106.9313	GEN336153 1-WATERFORD UNIT#3
FDNS	00NR	3	25SP	G15_076	TO->FROM	GRPRAR1-LNX3345.00 - GRPRAR 345KV CKT Z	720	720	0.04003	106.9293	WATERTN-LNX3345.00 - WHITE 345KV CKT 1
FDNS	00NR	3	25SP	G15_076	TO->FROM	GRPRAR1-LNX3345.00 - GRPRAR 345KV CKT Z	720	720	0.04051	106.9072	CENTER - JAMESTOWN 345KV CKT 1
FDNS	00NR	3	20SP	G15_076	TO->FROM	GRPRAR1-LNX3345.00 - GRPRAR 345KV CKT Z	720	720	0.04124	106.8926	MISSION - ST FRANCIS 115KV CKT 1
FDNS	00NR	3	20SP	G15_076	TO->FROM	GRPRAR1-LNX3345.00 - GRPRAR 345KV CKT Z	720	720	0.04124	106.8699	P12:115:NPPD:1091:VALENTN7:MISSION7:BTB
FDNS	00NR	3	25SP	G15_076	TO->FROM	GRPRAR1-LNX3345.00 - GRPRAR 345KV CKT Z	720	720	0.03729	106.8643	FT THOMPSON - LAKE PLATT 230KV CKT 1
FDNS	00NR	3	25SP	G15_076	TO->FROM	GRPRAR1-LNX3345.00 - GRPRAR 345KV CKT Z	720	720	0.03729	106.8643	FT THOMPSON - LAKE PLATT 230KV CKT 1
FDNS	00NR	3	20SP	G15_076	TO->FROM	GRPRAR1-LNX3345.00 - GRPRAR 345KV CKT Z	720	720	0.04122	106.8533	SIDNEY - SIDNEY1-LNX3345.00 345KV CKT Z
FDNS	00NR	3	25SP	G15_076	TO->FROM	GRPRAR1-LNX3345.00 - GRPRAR 345KV CKT Z	720	720	0.03721	106.8527	FT RANDAL - FT THOMPSON 230KV CKT 1
FDNS	00NR	3	25SP	G15_076	TO->FROM	GRPRAR1-LNX3345.00 - GRPRAR 345KV CKT Z	720	720	0.03721	106.8527	FT RANDAL - FT THOMPSON 230KV CKT 1
FDNS	00NR	3	20SP	G15_076	TO->FROM	GRPRAR1-LNX3345.00 - GRPRAR 345KV CKT Z	720	720	0.04122	106.833	KEYSTONE - SIDNEY1-LNX3345.00 345KV CKT 1
FDNS	00NR	3	25SP	G15_076	TO->FROM	GRPRAR1-LNX3345.00 - GRPRAR 345KV CKT Z	720	720	0.04003	106.8275	WATERTN-LNX3345.00 - WATERTOWN 345KV CKT Z
FDNS	00NR	3	25SP	G15_076	TO->FROM	GRPRAR1-LNX3345.00 - GRPRAR 345KV CKT Z	720	720	0.04003	106.819	P12:345:UMZW:# 1747 #: WT2 IN SD. WT2-WHT LINE FAULT
FDNS	00NR	3	20SP	G15_076	TO->FROM	GRPRAR1-LNX3345.00 - GRPRAR 345KV CKT Z	720	720	0.04825	106.7396	NUNDRWD - WAYSIDE 230KV CKT 1
FDNS	00NR	3	20SP	G15_076	TO->FROM	GRPRAR1-LNX3345.00 - GRPRAR 345KV CKT Z	720	720	0.04124	106.7207	HARMONY - ST FRANCIS 115KV CKT 1
FDNS	00NR	3	20SP	G15_076	TO->FROM	GRPRAR1-LNX3345.00 - GRPRAR 345KV CKT Z	720	720	0.03997	106.7041	G09_001IST 345.00 - GROTON 345KV CKT 1
FDNS	00NR	3	25SP	G15_076	TO->FROM	GRPRAR1-LNX3345.00 - GRPRAR 345KV CKT Z	720	720	0.04572	106.6899	FT RANDAL - MEADOWGROVE4230.00 230KV CKT 1
FDNS	00NR	3	20SP	G15_076	TO->FROM	GRPRAR1-LNX3345.00 - GRPRAR 345KV CKT Z	720	720	0.03907	106.6425	FT RANDAL - SIOUX CITY 230KV CKT 1
FDNS	00NR	3	25SP	G15_076	TO->FROM	GRPRAR1-LNX3345.00 - GRPRAR 345KV CKT Z	720	720	0.0405	106.6294	GEN635024 4-WALTER SCOTT UNIT 4
FDNS	00NR	3	20SP	G15_076	TO->FROM	GRPRAR1-LNX3345.00 - GRPRAR 345KV CKT Z	720	720	0.04018	106.6061	GEN640010 1-GERALD GENTLEMAN STATION UNIT 1
FDNS	00NR	3	20SP	G15_076	TO->FROM	GRPRAR1-LNX3345.00 - GRPRAR 345KV CKT Z	720	720	0.04018	106.585	GEN335831 1-RIVERBEND UNIT#1
FDNS	00NR	3	25SP	G15_076	TO->FROM	GRPRAR1-LNX3345.00 - GRPRAR 345KV CKT Z	720	720	0.0405	106.5624	GEN336821 1-GRAND GULF UNIT
FDNS	00NR	3	25SP	G15_076	TO->FROM	GRPRAR1-LNX3345.00 - GRPRAR 345KV CKT Z	720	720	0.04051	106.5371	BISON 3 345.00 - BUFFALO 345KV CKT 1
FDNS	00NR	3	25SP	G15_076	TO->FROM	GRPRAR1-LNX3345.00 - GRPRAR 345KV CKT Z	720	720	0.04054	106.5263	CHISAGO COUNTY - CHISAGO COUNTY 500KV CKT 1

SOLUTION	GROUP	SCENARIO	SEASON	SOURCE	DIRECTION	MONITORED ELEMENT	RATEA (MVA)	RATEB(MVA)	TDF	TC%LOADING (% MVA)	CONTINGENCY
FDNS	00NR	3	20SP	G15_076	TO->FROM	GRPRAR1-LNX3345.00 - GRPRAR 345KV CKT Z	720	720	0.04018	106.5198	GEN640011 2-GERALD GENTLEMAN STATION UNIT 2
FDNS	00NR	3	25SP	G15_076	TO->FROM	GRPRAR1-LNX3345.00 - GRPRAR 345KV CKT Z	720	720	0.0405	106.5154	GEN640010 1-GERALD GENTLEMAN STATION UNIT 1
FDNS	00NR	3	20SP	G15_076	TO->FROM	GRPRAR1-LNX3345.00 - GRPRAR 345KV CKT Z	720	720	0.04018	106.4909	GEN337910 1-ARKANSAS NUCLEAR ONE UNIT #1
FDNS	00NR	3	17SP	G15_076	TO->FROM	GRPRAR1-LNX3345.00 - GRPRAR 345KV CKT Z	720	720	0.04173	106.4753	GEN620315 1-BIG STONE GEN
FDNS	00NR	3	25SP	G15_076	TO->FROM	GRPRAR1-LNX3345.00 - GRPRAR 345KV CKT Z	720	720	0.03729	106.4748	G12_009IST 230.00 - LAKE PLATT 230KV CKT 1
FDNS	00NR	3	25SP	G15_076	TO->FROM	GRPRAR1-LNX3345.00 - GRPRAR 345KV CKT Z	720	720	0.04054	106.4747	CHISAGO COUNTY - FORBES 500KV CKT 1
FDNS	00NR	3	20SP	G15_076	TO->FROM	GRPRAR1-LNX3345.00 - GRPRAR 345KV CKT Z	720	720	0.04124	106.4627	HARMONY - VALENTINE 115KV CKT 1
FDNS	00NR	3	25SP	G15_076	TO->FROM	GRPRAR1-LNX3345.00 - GRPRAR 345KV CKT Z	720	720	0.03877	106.4622	SPLIT ROCK - WHITE 345KV CKT 1
FDNS	00NR	3	25SP	G15_076	TO->FROM	GRPRAR1-LNX3345.00 - GRPRAR 345KV CKT Z	720	720	0.03877	106.4622	SPLIT ROCK - WHITE 345KV CKT 1
FDNS	00NR	3	17SP	G15_076	TO->FROM	GRPRAR1-LNX3345.00 - GRPRAR 345KV CKT Z	720	720	0.04173	106.4576	GEN661015 1-COYOTE
FDNS	00NR	3	25SP	G15_076	TO->FROM	GRPRAR1-LNX3345.00 - GRPRAR 345KV CKT Z	720	720	0.0405	106.3274	GEN562714 1-G15_023_4 0.6900
FDNS	00NR	3	25SP	G15_076	TO->FROM	GRPRAR1-LNX3345.00 - GRPRAR 345KV CKT Z	720	720	0.0405	106.3274	GEN562715 1-G15_023_5 0.6900
FDNS	00NR	3	20SP	G15_076	TO->FROM	GRPRAR1-LNX3345.00 - GRPRAR 345KV CKT Z	720	720	0.04207	106.3216	FT RANDAL - SPENCER 115KV CKT 1
FDNS	00NR	3	20SP	G15_076	TO->FROM	GRPRAR1-LNX3345.00 - GRPRAR 345KV CKT Z	720	720	0.03827	106.3189	SIOUXCY-LNX3345.00 - SPLIT ROCK 345KV CKT 1
FDNS	00NR	3	20SP	G15_076	TO->FROM	GRPRAR1-LNX3345.00 - GRPRAR 345KV CKT Z	720	720	0.03827	106.3189	SIOUXCY-LNX3345.00 - SPLIT ROCK 345KV CKT 1
FDNS	00NR	3	20SP	G15_076	TO->FROM	GRPRAR1-LNX3345.00 - GRPRAR 345KV CKT Z	720	720	0.04207	106.3013	P12:115:NPPD:WAPA6:FTRANDL7:ONEILL 7:BTB
FDNS	00NR	3	20SP	G15_076	TO->FROM	GRPRAR1-LNX3345.00 - GRPRAR 345KV CKT Z	720	720	0.04207	106.3013	P12:115:UMZB:# 115 #: SE IN NE. FR-SE-ON
FDNS	00NR	3	25SP	G15_076	TO->FROM	GRPRAR1-LNX3345.00 - GRPRAR 345KV CKT Z	720	720	0.03938	106.287	LETCHER - SIOUX FALLS 230KV CKT 1
FDNS	00NR	3	20SP	G15_076	TO->FROM	GRPRAR1-LNX3345.00 - GRPRAR 345KV CKT Z	720	720	0.03827	106.2781	P12:345:UMZW:# 907 #: SC2-SR IN IA. SC2-SR 345 KV LINE
FDNS	00NR	3	17SP	G15_076	TO->FROM	GRPRAR1-LNX3345.00 - GRPRAR 345KV CKT Z	720	720	0.04173	106.254	GEN600002 3-SHERBURNE CNTY G3
FDNS	00NR	3	20SP	G15_076	TO->FROM	GRPRAR1-LNX3345.00 - GRPRAR 345KV CKT Z	720	720	0.03827	106.247	SIOUX CITY - SIOUXCY-LNX3345.00 345KV CKT Z
FDNS	00NR	3	25SP	G15_076	TO->FROM	GRPRAR1-LNX3345.00 - GRPRAR 345KV CKT Z	720	720	0.0405	106.2148	GEN640011 2-GERALD GENTLEMAN STATION UNIT 2
FDNS	00NR	3	25SP	G15_076	TO->FROM	GRPRAR1-LNX3345.00 - GRPRAR 345KV CKT Z	720	720	0.04156	106.1907	MISSION - ST FRANCIS 115KV CKT 1
FDNS	00NR	3	20SP	G15_076	TO->FROM	GRPRAR1-LNX3345.00 - GRPRAR 345KV CKT Z	720	720	0.04207	106.1784	ONEILL - SPENCER 115KV CKT 1
FDNS	00NR	3	20SP	G15_076	TO->FROM	GRPRAR1-LNX3345.00 - GRPRAR 345KV CKT Z	720	720	0.03993	106.1748	GROTON-LNX3 345.00 - LELAND1-LNX3345.00 345KV CKT 1
FDNS	00NR	3	25SP	G15_076	TO->FROM	GRPRAR1-LNX3345.00 - GRPRAR 345KV CKT Z	720	720	0.0405	106.1647	GEN635023 3-WALTER SCOTT UNIT 3
FDNS	00NR	3	20SP	G15_076	TO->FROM	GRPRAR1-LNX3345.00 - GRPRAR 345KV CKT Z	720	720	0.05555	106.1556	DIXONCO 230.00 - HOSKINS 230KV CKT 1
FDNS	00NR	3	20SP	G15_076	TO->FROM	GRPRAR1-LNX3345.00 - GRPRAR 345KV CKT Z	720	720	0.03608	106.1495	FT RANDAL - UTICA JCT 230KV CKT 1
FDNS	00NR	3	20SP	G15_076	TO->FROM	GRPRAR1-LNX3345.00 - GRPRAR 345KV CKT Z	720	720	0.03948	106.123	HANLON - SIOUX FALLS 230KV CKT 1
FDNS	00NR	3	20SP	G15_076	TO->FROM	GRPRAR1-LNX3345.00 - GRPRAR 345KV CKT Z	720	720	0.03993	106.1223	GROTON - GROTON-LNX3 345.00 345KV CKT Z
FDNS	00NR	3	20SP	G15_076	TO->FROM	GRPRAR1-LNX3345.00 - GRPRAR 345KV CKT Z	720	720	0.03993	106.1203	P12:345:UMZB:# 109 #: LOS GRT IN ND. LOS GRT
FDNS	00NR	3	20SP	G15_076	TO->FROM	GRPRAR1-LNX3345.00 - GRPRAR 345KV CKT Z	720	720	0.03993	106.1141	LELAND OLDS - LELAND1-LNX3345.00 345KV CKT Z
FDNS	00NR	3	25SP	G15_076	TO->FROM	GRPRAR1-LNX3345.00 - GRPRAR 345KV CKT Z	720	720	0.04153	106.1084	KEYSTONE - SIDNEY1-LNX3345.00 345KV CKT 1
FDNS	00NR	3	25SP	G15_076	TO->FROM	GRPRAR1-LNX3345.00 - GRPRAR 345KV CKT Z	720	720	0.04153	106.1049	SIDNEY - SIDNEY1-LNX3345.00 345KV CKT Z
FDNS	00NR	3	25SP	G15_076	TO->FROM	GRPRAR1-LNX3345.00 - GRPRAR 345KV CKT Z	720	720	0.0405	106.1	GEN337911 1-ARKANSAS NUCLEAR ONE UNIT #2
FDNS	00NR	3	25SP	G15_076	TO->FROM	GRPRAR1-LNX3345.00 - GRPRAR 345KV CKT Z	720	720	0.0405	106.027	GEN344225 1-1CAL G1 25.000
FDNS	00NR	3	20SP	G15_076	TO->FROM	GRPRAR1-LNX3345.00 - GRPRAR 345KV CKT Z	720	720	0.04139	106.0216	LAKEFIELD 3 - NOBLES 345KV CKT 1
FDNS	00NR	3	20SP	G15_076	TO->FROM	GRPRAR1-LNX3345.00 - GRPRAR 345KV CKT Z	720	720	0.04052	106.0204	GERALD GENTLEMAN STATION - KEYSTONE 345KV CKT 1
FDNS	00NR	3	17SP	G15_076	TO->FROM	GRPRAR1-LNX3345.00 - GRPRAR 345KV CKT Z	720	720	0.04173	106.0089	GEN657748 1-YOUNG 2 GENERATOR
FDNS	00NR	3	25SP	G15_076	TO->FROM	GRPRAR1-LNX3345.00 - GRPRAR 345KV CKT Z	720	720	0.04156	106.0031	HARMONY - ST FRANCIS 115KV CKT 1
FDNS	00NR	3	20SP	G15_076	TO->FROM	GRPRAR1-LNX3345.00 - GRPRAR 345KV CKT Z	720	720	0.04018	105.9995	GEN337653 1-WHITE BLUFF UNIT #2
FDNS	00NR	3	20SP	G15_076	TO->FROM	GRPRAR1-LNX3345.00 - GRPRAR 345KV CKT Z	720	720	0.03917	105.9691	PAHOJA - SIOUX FALLS 230KV CKT 1
FDNS	00NR	3	25SP	G15_076	TO->FROM	GRPRAR1-LNX3345.00 - GRPRAR 345KV CKT Z	720	720	0.04029	105.9611	G09_001IST 345.00 - GROTON 345KV CKT 1
FDNS	00NR	3	20SP	G15_076	TO->FROM	GRPRAR1-LNX3345.00 - GRPRAR 345KV CKT Z	720	720	0.04439	105.9562	RAUN - SUB 3451 FT CAL 345KV CKT 1
FDNS	00NR	3	20SP	G15_076	TO->FROM	GRPRAR1-LNX3345.00 - GRPRAR 345KV CKT Z	720	720	0.04439	105.9562	RAUN - SUB 3451 FT CAL 345KV CKT 1
FDNS	00NR	3	20SP	G15_076	TO->FROM	GRPRAR1-LNX3345.00 - GRPRAR 345KV CKT Z	720	720	0.04018	105.9465	GEN337652 1-WHITE BLUFF UNIT #1
FDNS	00NR	3	25SP	G15_076	TO->FROM	GRPRAR1-LNX3345.00 - GRPRAR 345KV CKT Z	720	720	0.0405	105.9373	GEN336153 1-WATERFORD UNIT#3
FDNS	00NR	3	20SP	G15_076	TO->FROM	GRPRAR1-LNX3345.00 - GRPRAR 345KV CKT Z	720	720	0.04166	105.921	SIDNEY - STEGALL 345KV CKT 1
FDNS	00NR	3	20SP	G15_076	TO->FROM	GRPRAR1-LNX3345.00 - GRPRAR 345KV CKT Z	720	720	0.04044	105.9137	ARROWHEAD - ARROWHEAD 230 230KV CKT 1
FDNS	00NR	3	20SP	G15_076	TO->FROM	GRPRAR1-LNX3345.00 - GRPRAR 345KV CKT Z	720	720	0.04124	105.9054	AINSWORTH - VALENTINE 115KV CKT 1
FDNS	00NR	3	25SP	G15_076	TO->FROM	GRPRAR1-LNX3345.00 - GRPRAR 345KV CKT Z	720	720	0.04853	105.8999	NUNDRWD - WAYSIDE 230KV CKT 1
FDNS	00NR	3	20SP	G15_076	TO->FROM	GRPRAR1-LNX3345.00 - GRPRAR 345KV CKT Z	720	720	0.04018	105.8912	GEN338146 1-INDEPENDENCE UNIT #2
FDNS	00NR	3	20SP	G15_076	TO->FROM	GRPRAR1-LNX3345.00 - GRPRAR 345KV CKT Z	720	720	0.04018	105.888	GEN338143 1-INDEPENDENCE UNIT #1
FDNS	00NR	3	20SP	G15_076	TO->FROM	GRPRAR1-LNX3345.00 - GRPRAR 345KV CKT Z	720	720	0.04018	105.8659	GEN501801 1-DOLET HILLS UNIT1
FDNS	00NR	3	20SP	G15_076	TO->FROM	GRPRAR1-LNX3345.00 - GRPRAR 345KV CKT Z	720	720	0.0406	105.8365	BROOKING COUNTY - LYON COUNTY 345KV CKT 1
FDNS	00NR	3	20SP	G15_076	TO->FROM	GRPRAR1-LNX3345.00 - GRPRAR 345KV CKT Z	720	720	0.04027	105.8142	ALEXMRES3 345.00 - BISON 3 345.00 345KV CKT 1
FDNS	00NR	3	25SP	G15_076	TO->FROM	GRPRAR1-LNX3345.00 - GRPRAR 345KV CKT Z	720	720	0.03938	105.7828	FT RANDAL - SIOUX CITY 230KV CKT 1
FDNS	00NR	3	17SP	G15_076	TO->FROM	GRPRAR1-LNX3345.00 - GRPRAR 345KV CKT Z	720	720	0.04173	105.7583	GEN562872 1-G15046_3 0.6900
FDNS	00NR	3	20SP	G15_076	TO->FROM	GRPRAR1-LNX3345.00 - GRPRAR 345KV CKT Z	720	720	0.04047	105.7451	AS KING - EAU CLAIRE 345KV CKT 1
FDNS	00NR	3	20SP	G15_076	TO->FROM	GRPRAR1-LNX3345.00 - GRPRAR 345KV CKT Z	720	720	0.04018	105.7262	GEN336252 1-NINEMILE POINT UNIT#5
FDNS	00NR	3	25SP	G15_076	TO->FROM	GRPRAR1-LNX3345.00 - GRPRAR 345KV CKT Z	720	720	0.04156	105.7249	HARMONY - VALENTINE 115KV CKT 1
FDNS	00NR	3	20SP	G15_076	TO->FROM	GRPRAR1-LNX3345.00 - GRPRAR 345KV CKT Z	720	720	0.04021	105.7087	CARPENTER - HURON 230KV CKT 1
FDNS	00NR	3	20SP	G15_076	TO->FROM	GRPRAR1-LNX3345.00 - GRPRAR 345KV CKT Z	720	720	0.04018	105.6456	GEN336251 1-NINEMILE POINT UNIT#4
FDNS	00NR	3	25SP	G15_076	TO->FROM	GRPRAR1-LNX3345.00 - GRPRAR 345KV CKT Z	720	720	0.04239	105.6402	FT RANDAL - SPENCER 115KV CKT 1
FDNS	00NR	3	20SP	G15_076	TO->FROM	GRPRAR1-LNX3345.00 - GRPRAR 345KV CKT Z	720	720	0.03548	105.6348	RASMUSN - UTICA JCT 230KV CKT 1
FDNS	00NR	3	20SP	G15_076	TO->FROM	GRPRAR1-LNX3345.00 - GRPRAR 345KV CKT Z	720	720	0.04018	105.6272	GEN336831 1-BAXTER WILSON SES
FDNS	00NR	3	25SP	G15_076	TO->FROM	GRPRAR1-LNX3345.00 - GRPRAR 345KV CKT Z	720	720	0.0405	105.6166	GEN335831 1-RIVERBEND UNIT#1
FDNS	00NR	3	25SP	G15_076	TO->FROM	GRPRAR1-LNX3345.00 - GRPRAR 345KV CKT Z	720	720	0.04239	105.6087	P12:115:NPPD:WAPA6:FTRANDL7:ONEILL 7:BTB
FDNS	00NR	3	25SP	G15_076	TO->FROM	GRPRAR1-LNX3345.00 - GRPRAR 345KV CKT Z	720	720	0.04239	105.6087	P12:115:UMZB:# 115 #: SE IN NE. FR-SE-ON
FDNS	00NR	3	20SP	G15_076	TO->FROM	GRPRAR1-LNX3345.00 - GRPRAR 345KV CKT Z	720	720	0.04021	105.6039	HURON - WATERTOWN 230KV CKT 2
FDNS	00NR	3	20SP	G15_076	TO->FROM	GRPRAR1-LNX3345.00 - GRPRAR 345KV CKT Z	720	720	0.04021	105.6039	HURON - WATERTOWN 230KV CKT 2
FDNS	00NR	3	20SP	G15_076	TO->FROM	GRPRAR1-LNX3345.00 - GRPRAR 345KV CKT Z	720	720	0.04018	105.5746	GEN337041 1-GERALD ANDRUS
FDNS	00NR	3	20SP	G15_076	TO->FROM	GRPRAR1-LNX3345.00 - GRPRAR 345KV CKT Z	720	720	0.04021	105.5647	CARPENTER - WATERTOWN 230KV CKT 1
FDNS	00NR	3	20SP	G15_076	TO->FROM	GRPRAR1-LNX3345.00 - GRPRAR 345KV CKT Z	720	720	0.04021	105.5647	CARPENTER - WATERTOWN 230KV CKT 1
FDNS	00NR	3	25SP	G15_076	TO->FROM	GRPRAR1-LNX3345.00 - GRPRAR 345KV CKT Z	720	720	0.0405	105.5553	GEN337910 1-ARKANSAS NUCLEAR ONE UNIT #1
FDNS	00NR	3	20SP	G15_076	TO->FROM	GRPRAR1-LNX3345.00 - GRPRAR 345KV CKT Z	720	720	0.04018	105.5416	GEN501813 1-RODEMACHER UNIT 3
FDNS	00NR	3	20SP	G15_076	TO->FROM	GRPRAR1-LNX3345.00 - GRPRAR 345KV CKT Z	720	720	0.04081	105.5399	HAZLETON - MITCHLCO3 345.00 345KV CKT 1
FDNS	00NR	3	20SP	G15_076	TO->FROM	GRPRAR1-LNX3345.00 - GRPRAR 345KV CKT Z	720	720	0.03917	105.525	EAGLE 4 230.00 - PAHOJA 230KV CKT 1
FDNS	00NR	3	25SP	G15_076	TO->FROM	GRPRAR1-LNX3345.00 - GRPRAR 345KV CKT Z	720	720	0.04239	105.4947	ONEILL - SPENCER 115KV CKT 1

SOLUTION	GROUP	SCENARIO	SEASON	SOURCE	DIRECTION	MONITORED ELEMENT	RATEA (MVA)	RATEB(MVA)	TDF	TC%LOADING (% MVA)	CONTINGENCY
FDNS	00NR	3	20SP	G15_076	TO->FROM	GRPRAR1-LNX3345.00 - GRPRAR 345KV CKT Z	720	720	0.04047	105.4739	G15094_T 345.00 - SIDNEY2-LNX3345.00 345KV CKT 1
FDNS	00NR	3	20SP	G15_076	TO->FROM	GRPRAR1-LNX3345.00 - GRPRAR 345KV CKT Z	720	720	0.04047	105.4662	SIDNEY - SIDNEY2-LNX3345.00 345KV CKT Z
FDNS	00NR	3	20SP	G15_076	TO->FROM	GRPRAR1-LNX3345.00 - GRPRAR 345KV CKT Z	720	720	0.0402	105.4662	CNTSHNT3 345.00 - PRAIRIE3 345.00 345KV CKT 1
FDNS	00NR	3	17SP	G15_076	TO->FROM	GRPRAR1-LNX3345.00 - GRPRAR 345KV CKT Z	720	720	0.04173	105.458	GEN659111 2-LELAND OLDS UNIT2
FDNS	00NR	3	25SP	G15_076	TO->FROM	GRPRAR1-LNX3345.00 - GRPRAR 345KV CKT Z	720	720	0.04025	105.4543	GROTON-LNX3 345.00 - LELAND1-LNX3345.00 345KV CKT 1
FDNS	00NR	3	25SP	G15_076	TO->FROM	GRPRAR1-LNX3345.00 - GRPRAR 345KV CKT Z	720	720	0.0386	105.424	SIOUXCY-LNX3345.00 - SPLIT ROCK 345KV CKT 1
FDNS	00NR	3	25SP	G15_076	TO->FROM	GRPRAR1-LNX3345.00 - GRPRAR 345KV CKT Z	720	720	0.0386	105.424	SIOUXCY-LNX3345.00 - SPLIT ROCK 345KV CKT 1
FDNS	00NR	3	25SP	G15_076	TO->FROM	GRPRAR1-LNX3345.00 - GRPRAR 345KV CKT Z	720	720	0.04025	105.4123	GROTON - GROTON-LNX3 345.00 345KV CKT Z
FDNS	00NR	3	25SP	G15_076	TO->FROM	GRPRAR1-LNX3345.00 - GRPRAR 345KV CKT Z	720	720	0.04025	105.4088	P12:345:UMZB:# 109 #: LOS GRT IN ND. LOS GRT
FDNS	00NR	3	25SP	G15_076	TO->FROM	GRPRAR1-LNX3345.00 - GRPRAR 345KV CKT Z	720	720	0.04025	105.4042	LELAND OLDS - LELAND1-LNX3345.00 345KV CKT Z
FDNS	00NR	3	25SP	G15_076	TO->FROM	GRPRAR1-LNX3345.00 - GRPRAR 345KV CKT Z	720	720	0.05588	105.3876	DIXONCO 230.00 - HOSKINS 230KV CKT 1
FDNS	00NR	3	25SP	G15_076	TO->FROM	GRPRAR1-LNX3345.00 - GRPRAR 345KV CKT Z	720	720	0.03639	105.3843	FT RANDAL - UTICA JCT 230KV CKT 1
FDNS	00NR	3	25SP	G15_076	TO->FROM	GRPRAR1-LNX3345.00 - GRPRAR 345KV CKT Z	720	720	0.0386	105.3819	P12:345:UMZW:# 907 #: SC2-SR IN IA. SC2-SR 345 KV LINE
FDNS	00NR	3	20SP	G15_076	TO->FROM	GRPRAR1-LNX3345.00 - GRPRAR 345KV CKT Z	720	720	0.04018	105.3729	GEN335206 1-NELSON UNIT 6
FDNS	00NR	3	25SP	G15_076	TO->FROM	GRPRAR1-LNX3345.00 - GRPRAR 345KV CKT Z	720	720	0.0386	105.3533	SIOUX CITY - SIOUXCY-LNX3345.00 345KV CKT Z
FDNS	00NR	3	20SP	G15_076	TO->FROM	GRPRAR1-LNX3345.00 - GRPRAR 345KV CKT Z	720	720	0.04018	105.3361	GEN344897 4-1LAB G4 20.000
FDNS	00NR	3	20SP	G15_076	TO->FROM	GRPRAR1-LNX3345.00 - GRPRAR 345KV CKT Z	720	720	0.04018	105.3345	GEN344894 1-1LAB G1 20.000
FDNS	00NR	3	20SP	G15_076	TO->FROM	GRPRAR1-LNX3345.00 - GRPRAR 345KV CKT Z	720	720	0.04018	105.3345	GEN344895 2-1LAB G2 20.000
FDNS	00NR	3	20SP	G15_076	TO->FROM	GRPRAR1-LNX3345.00 - GRPRAR 345KV CKT Z	720	720	0.04018	105.3344	GEN344896 3-1LAB G3 20.000
FDNS	00NR	3	20SP	G15_076	TO->FROM	GRPRAR1-LNX3345.00 - GRPRAR 345KV CKT Z	720	720	0.04018	105.331	GEN635214 4-NEAL UNIT 4
FDNS	00NR	3	20SP	G15_076	TO->FROM	GRPRAR1-LNX3345.00 - GRPRAR 345KV CKT Z	720	720	0.04018	105.3292	GEN334440 1-SABINE UNIT 4
FDNS	00NR	3	20SP	G15_076	TO->FROM	GRPRAR1-LNX3345.00 - GRPRAR 345KV CKT Z	720	720	0.04052	105.3041	ARPIN B4 345.00 - EAU CLAIRE 345KV CKT 1
FDNS	00NR	3	20SP	G15_076	TO->FROM	GRPRAR1-LNX3345.00 - GRPRAR 345KV CKT Z	720	720	0.04018	105.282	GEN345671 2-1RUSH G2 18.000
FDNS	00NR	3	25SP	G15_076	TO->FROM	GRPRAR1-LNX3345.00 - GRPRAR 345KV CKT Z	720	720	0.04171	105.2797	LAKEFIELD 3 - NOBLES 345KV CKT 1
FDNS	00NR	3	20SP	G15_076	TO->FROM	GRPRAR1-LNX3345.00 - GRPRAR 345KV CKT Z	720	720	0.04018	105.2774	GEN345670 1-1RUSH G1 18.000
FDNS	00NR	3	25SP	G15_076	TO->FROM	GRPRAR1-LNX3345.00 - GRPRAR 345KV CKT Z	720	720	0.03979	105.2752	HANLON - SIOUX FALLS 230KV CKT 1
FDNS	00NR	3	25SP	G15_076	TO->FROM	GRPRAR1-LNX3345.00 - GRPRAR 345KV CKT Z	720	720	0.04085	105.2451	GERALD GENTLEMAN STATION - KEYSTONE 345KV CKT 1
FDNS	00NR	3	20SP	G15_076	TO->FROM	GRPRAR1-LNX3345.00 - GRPRAR 345KV CKT Z	720	720	0.04018	105.2381	GEN501812 1-RODEMACHER UNIT 2
FDNS	00NR	3	20SP	G15_076	TO->FROM	GRPRAR1-LNX3345.00 - GRPRAR 345KV CKT Z	720	720	0.04018	105.205	GEN336191 1-LITTLE GYPSY UNIT#3
FDNS	00NR	3	25SP	G15_076	TO->FROM	GRPRAR1-LNX3345.00 - GRPRAR 345KV CKT Z	720	720	0.0405	105.2	GEN338143 1-INDEPENDENCE UNIT #1
FDNS	00NR	3	25SP	G15_076	TO->FROM	GRPRAR1-LNX3345.00 - GRPRAR 345KV CKT Z	720	720	0.0405	105.2	GEN338146 1-INDEPENDENCE UNIT #2
FDNS	00NR	3	20SP	G15_076	TO->FROM	GRPRAR1-LNX3345.00 - GRPRAR 345KV CKT Z	720	720	0.0382	105.1872	FT THOMPSON - WESSINGTON 230KV CKT 1
FDNS	00NR	3	20SP	G15_076	TO->FROM	GRPRAR1-LNX3345.00 - GRPRAR 345KV CKT Z	720	720	0.0382	105.1872	FT THOMPSON - WESSINGTON 230KV CKT 1
FDNS	00NR	3	20SP	G15_076	TO->FROM	GRPRAR1-LNX3345.00 - GRPRAR 345KV CKT Z	720	720	0.04018	105.1819	GEN338388 1-1PLUM PT U1 23.000
FDNS	00NR	3	20SP	G15_076	TO->FROM	GRPRAR1-LNX3345.00 - GRPRAR 345KV CKT Z	720	720	0.04018	105.1768	GEN629075 1-OTTUMWA GENERATOR FOR OTTUMWA UNIT NO 1
FDNS	00NR	3	25SP	G15_076	TO->FROM	GRPRAR1-LNX3345.00 - GRPRAR 345KV CKT Z	720	720	0.04469	105.1685	RAUN - SUB 3451 FT CAL 345KV CKT 1
FDNS	00NR	3	25SP	G15_076	TO->FROM	GRPRAR1-LNX3345.00 - GRPRAR 345KV CKT Z	720	720	0.04469	105.1685	RAUN - SUB 3451 FT CAL 345KV CKT 1
FDNS	00NR	3	25SP	G15_076	TO->FROM	GRPRAR1-LNX3345.00 - GRPRAR 345KV CKT Z	720	720	0.03949	105.1548	PAHOJA - SIOUX FALLS 230KV CKT 1
FDNS	00NR	3	25SP	G15_076	TO->FROM	GRPRAR1-LNX3345.00 - GRPRAR 345KV CKT Z	720	720	0.04091	105.1406	BROOKING COUNTY - LYON COUNTY 345KV CKT 1
FDNS	00NR	3	20SP	G15_076	TO->FROM	GRPRAR1-LNX3345.00 - GRPRAR 345KV CKT Z	720	720	0.04018	105.1388	GEN335614 1-WILLOW GLENN UNIT#4
FDNS	00NR	3	25SP	G15_076	TO->FROM	GRPRAR1-LNX3345.00 - GRPRAR 345KV CKT Z	720	720	0.04198	105.138	SIDNEY - STEGALL 345KV CKT 1
FDNS	00NR	3	25SP	G15_076	TO->FROM	GRPRAR1-LNX3345.00 - GRPRAR 345KV CKT Z	720	720	0.04156	105.1323	AINSWORTH - VALENTINE 115KV CKT 1
FDNS	00NR	3	20SP	G15_076	TO->FROM	GRPRAR1-LNX3345.00 - GRPRAR 345KV CKT Z	720	720	0.04018	105.1267	GEN336801 1-BAXTER WILSON UNIT #1
FDNS	00NR	3	20SP	G15_076	TO->FROM	GRPRAR1-LNX3345.00 - GRPRAR 345KV CKT Z	720	720	0.04018	105.1236	GEN336464 1-MICHOUD UNIT #3
FDNS	00NR	3	20SP	G15_076	TO->FROM	GRPRAR1-LNX3345.00 - GRPRAR 345KV CKT Z	720	720	0.04018	105.1127	GEN335204 1-NELSON UNIT 4
FDNS	00NR	3	20SP	G15_076	TO->FROM	GRPRAR1-LNX3345.00 - GRPRAR 345KV CKT Z	720	720	0.04018	105.103	GEN334441 1-SABINE UNIT 5
FDNS	00NR	3	20SP	G15_076	TO->FROM	GRPRAR1-LNX3345.00 - GRPRAR 345KV CKT Z	720	720	0.04173	105.093	GRIMES - LEHIGH 345KV CKT 1
FDNS	00NR	3	25SP	G15_076	TO->FROM	GRPRAR1-LNX3345.00 - GRPRAR 345KV CKT Z	720	720	0.0405	105.0833	GEN337653 1-WHITE BLUFF UNIT #2
FDNS	00NR	3	20SP	G15_076	TO->FROM	GRPRAR1-LNX3345.00 - GRPRAR 345KV CKT Z	720	720	0.04042	105.0778	NORTH LA CROSSE - NORTH ROCHESTER 345KV CKT 1
FDNS	00NR	3	25SP	G15_076	TO->FROM	GRPRAR1-LNX3345.00 - GRPRAR 345KV CKT Z	720	720	0.04059	105.0727	ALEXMRES3 345.00 - BISON 3 345.00 345KV CKT 1
FDNS	00NR	3	25SP	G15_076	TO->FROM	GRPRAR1-LNX3345.00 - GRPRAR 345KV CKT Z	720	720	0.04075	105.0338	ARROWHEAD - ARROWHEAD 230 230KV CKT 1
FDNS	00NR	3	20SP	G15_076	TO->FROM	GRPRAR1-LNX3345.00 - GRPRAR 345KV CKT Z	720	720	0.0408	105.0225	KOSSUTH 3 345.00 - WEBSTER 345KV CKT 1
FDNS	00NR	3	17SP	G15_076	TO->FROM	GRPRAR1-LNX3345.00 - GRPRAR 345KV CKT Z	720	720	0.04173	105.0043	GEN659103 1-ANTELOPE VALLEY UNIT1
FDNS	00NR	3	17SP	G15_076	TO->FROM	GRPRAR1-LNX3345.00 - GRPRAR 345KV CKT Z	720	720	0.04173	105.0043	GEN659107 2-ANTELOPE VALLEY UNIT2
FDNS	00NR	3	20SP	G15_076	TO->FROM	GRPRAR1-LNX3345.00 - GRPRAR 345KV CKT Z	720	720	0.04018	104.9845	GEN563222 1-G15088_3 0.6900
FDNS	00NR	3	20SP	G15_076	TO->FROM	GRPRAR1-LNX3345.00 - GRPRAR 345KV CKT Z	720	720	0.04018	104.9831	P12:115:UMZW:# 162 #: NEL IN ND. FAULT ON ML-NEL-MX-GA 115 KV
FDNS	00NR	3	25SP	G15_076	TO->FROM	GRPRAR1-LNX3345.00 - GRPRAR 345KV CKT Z	720	720	0.0405	104.98	GEN501801 1-DOLET HILLS UNIT1
FDNS	00NR	3	17SP	G15_076	TO->FROM	GRPRAR1-LNX3345.00 - GRPRAR 345KV CKT Z	720	720	0.04173	104.9737	BIG STONE 230/24.0KV TRANSFORMER CKT 1
FDNS	00NR	3	20SP	G15_076	TO->FROM	GRPRAR1-LNX3345.00 - GRPRAR 345KV CKT Z	720	720	0.04018	104.9684	GEN334433 1-SABINE UNIT 3
FDNS	00NR	3	20SP	G15_076	TO->FROM	GRPRAR1-LNX3345.00 - GRPRAR 345KV CKT Z	720	720	0.03999	104.9558	BROOKING COUNTY - BSSOUTH3 345.00 345KV CKT 1
FDNS	00NR	3	20SP	G15_076	TO->FROM	GRPRAR1-LNX3345.00 - GRPRAR 345KV CKT Z	720	720	0.04018	104.9533	GEN635213 3-NEAL UNIT 3
FDNS	00NR	3	25SP	G15_076	TO->FROM	GRPRAR1-LNX3345.00 - GRPRAR 345KV CKT Z	720	720	0.04052	104.952	CARPENTER - HURON 230KV CKT 1
FDNS	00NR	3	20SP	G15_076	TO->FROM	GRPRAR1-LNX3345.00 - GRPRAR 345KV CKT Z	720	720	0.04051	104.916	NMA B3 345 345.00 - NORTH LA CROSSE 345KV CKT 1
FDNS	00NR	3	20SP	G15_076	TO->FROM	GRPRAR1-LNX3345.00 - GRPRAR 345KV CKT Z	720	720	0.04008	104.9116	HESKETT - WISHEK 230KV CKT 1
FDNS	00NR	3	20SP	G15_076	TO->FROM	GRPRAR1-LNX3345.00 - GRPRAR 345KV CKT Z	720	720	0.03888	104.9109	MENNO JCT - TRIPP JCT 115KV CKT 1
FDNS	00NR	3	20SP	G15_076	TO->FROM	GRPRAR1-LNX3345.00 - GRPRAR 345KV CKT Z	720	720	0.04081	104.9097	ADAMS - MITCHLCO3 345.00 345KV CKT 1
FDNS	00NR	3	25SP	G15_076	TO->FROM	GRPRAR1-LNX3345.00 - GRPRAR 345KV CKT Z	720	720	0.04079	104.9045	AS KING - EAU CLAIRE 345KV CKT 1
FDNS	00NR	3	20SP	G15_076	TO->FROM	GRPRAR1-LNX3345.00 - GRPRAR 345KV CKT Z	720	720	0.04676	104.9009	RAUN - SIOUX CITY 345KV CKT 1
FDNS	00NR	3	20SP	G15_076	TO->FROM	GRPRAR1-LNX3345.00 - GRPRAR 345KV CKT Z	720	720	0.04676	104.9009	RAUN - SIOUX CITY 345KV CKT 1
FDNS	00NR	3	20SP	G15_076	TO->FROM	GRPRAR1-LNX3345.00 - GRPRAR 345KV CKT Z	720	720	0.04017	104.8986	CENTER - COYOTE 345KV CKT 1
FDNS	00NR	3	20SP	G15_076	TO->FROM	GRPRAR1-LNX3345.00 - GRPRAR 345KV CKT Z	720	720	0.04018	104.8976	GEN336222 1-LITTLE GYPSY UNIT#2
FDNS	00NR	3	20SP	G15_076	TO->FROM	GRPRAR1-LNX3345.00 - GRPRAR 345KV CKT Z	720	720	0.04568	104.8961	BLOOMFIELD - CREIGHTON 115KV CKT 1
FDNS	00NR	3	20SP	G15_076	TO->FROM	GRPRAR1-LNX3345.00 - GRPRAR 345KV CKT Z	720	720	0.04025	104.8672	GLENBORO SOUTH - RUGBY 230KV CKT 1
FDNS	00NR	3	25SP	G15_076	TO->FROM	GRPRAR1-LNX3345.00 - GRPRAR 345KV CKT Z	720	720	0.04052	104.859	CNTSHNT3 345.00 - PRAIRIE3 345.00 345KV CKT 1
FDNS	00NR	3	20SP	G15_076	TO->FROM	GRPRAR1-LNX3345.00 - GRPRAR 345KV CKT Z	720	720	0.04018	104.8587	GARRISON - JAMES TOWN 230KV CKT 1
FDNS	00NR	3	25SP	G15_076	TO->FROM	GRPRAR1-LNX3345.00 - GRPRAR 345KV CKT Z	720	720	0.04111	104.8576	HAZLETON - MITCHLCO3 345.00 345KV CKT 1
FDNS	00NR	3	20SP	G15_076	TO->FROM	GRPRAR1-LNX3345.00 - GRPRAR 345KV CKT Z	720	720	0.04018	104.8484	GEN336152 1-WATERFORD UNIT#2
FDNS	00NR	3	20SP	G15_076	TO->FROM	GRPRAR1-LNX3345.00 - GRPRAR 345KV CKT Z	720	720	0.04018	104.8481	GEN336151 1-WATERFORD UNIT#1
FDNS	00NR	3	20SP	G15_076	TO->FROM	GRPRAR1-LNX3345.00 - GRPRAR 345KV CKT Z	720	720	0.04008	104.8465	MERRCRT4 230.00 - WISHEK 230KV CKT 1

SOLUTION	GROUP	SCENARIO	SEASON	SOURCE	DIRECTION	MONITORED ELEMENT	RATEA (MVA)	RATEB(MVA)	TDF	TC%LOADING (% MVA)	CONTINGENCY
FDNS	00NR	3	25SP	G15_076	TO->FROM	GRPRAR1-LNX3345.00 - GRPRAR 345KV CKT Z	720	720	0.04052	104.8454	HURON - WATERTOWN 230KV CKT 2
FDNS	00NR	3	25SP	G15_076	TO->FROM	GRPRAR1-LNX3345.00 - GRPRAR 345KV CKT Z	720	720	0.04052	104.8454	HURON - WATERTOWN 230KV CKT 2
FDNS	00NR	3	20SP	G15_076	TO->FROM	GRPRAR1-LNX3345.00 - GRPRAR 345KV CKT Z	720	720	0.04018	104.8228	GEN531447 1-HOLCOMB GENERATOR
FDNS	00NR	3	20SP	G15_076	TO->FROM	GRPRAR1-LNX3345.00 - GRPRAR 345KV CKT Z	720	720	0.04018	104.8129	GEN640009 1-COOPER NUCLEAR STATION
FDNS	00NR	3	20SP	G15_076	TO->FROM	GRPRAR1-LNX3345.00 - GRPRAR 345KV CKT Z	720	720	0.04568	104.8074	BLOOMFIELD - GAVINS POINT 115KV CKT 1
FDNS	00NR	3	20SP	G15_076	TO->FROM	GRPRAR1-LNX3345.00 - GRPRAR 345KV CKT Z	720	720	0.0406	104.8043	ADAMS - PLEASANT VALLEY 345KV CKT 1
FDNS	00NR	3	25SP	G15_076	TO->FROM	GRPRAR1-LNX3345.00 - GRPRAR 345KV CKT Z	720	720	0.04052	104.8034	CARPENTER - WATERTOWN 230KV CKT 1
FDNS	00NR	3	25SP	G15_076	TO->FROM	GRPRAR1-LNX3345.00 - GRPRAR 345KV CKT Z	720	720	0.04052	104.8034	CARPENTER - WATERTOWN 230KV CKT 1
FDNS	00NR	3	20SP	G15_076	TO->FROM	GRPRAR1-LNX3345.00 - GRPRAR 345KV CKT Z	720	720	0.0403	104.7926	APPLEDORN 4 230.00 - WATERTOWN 230KV CKT 1
FDNS	00NR	3	20SP	G15_076	TO->FROM	GRPRAR1-LNX3345.00 - GRPRAR 345KV CKT Z	720	720	0.0403	104.7926	APPLEDORN 4 230.00 - WATERTOWN 230KV CKT 1
FDNS	00NR	3	20SP	G15_076	TO->FROM	GRPRAR1-LNX3345.00 - GRPRAR 345KV CKT Z	720	720	0.03888	104.7887	MENNO JCT - UTICA 115KV CKT 1
FDNS	00NR	3	20SP	G15_076	TO->FROM	GRPRAR1-LNX3345.00 - GRPRAR 345KV CKT Z	720	720	0.04018	104.7817	GEN303007 1-1BC2 U2
FDNS	00NR	3	20SP	G15_076	TO->FROM	GRPRAR1-LNX3345.00 - GRPRAR 345KV CKT Z	720	720	0.04018	104.7756	GEN303006 1-1BC2 U1
FDNS	00NR	3	20SP	G15_076	TO->FROM	GRPRAR1-LNX3345.00 - GRPRAR 345KV CKT Z	720	720	0.0401	104.7717	BSSOUTH3 345.00 - ELLENDLMVP3 345.00 345KV CKT 1
FDNS	00NR	3	20SP	G15_076	TO->FROM	GRPRAR1-LNX3345.00 - GRPRAR 345KV CKT Z	720	720	0.0401	104.7717	BSSOUTH3 345.00 - ELLENDLMVP3 345.00 345KV CKT 1
FDNS	00NR	3	25SP	G15_076	TO->FROM	GRPRAR1-LNX3345.00 - GRPRAR 345KV CKT Z	720	720	0.0405	104.7708	GEN336251 1-NINEMILE POINT UNIT#4
FDNS	00NR	3	20SP	G15_076	TO->FROM	GRPRAR1-LNX3345.00 - GRPRAR 345KV CKT Z	720	720	0.04031	104.7589	ARKANSAS NUCLEAR ONE - FT SMITH 500KV CKT 1
FDNS	00NR	3	20SP	G15_076	TO->FROM	GRPRAR1-LNX3345.00 - GRPRAR 345KV CKT Z	720	720	0.04031	104.7589	ARKANSAS NUCLEAR ONE - FT SMITH 500KV CKT 1
FDNS	00NR	3	25SP	G15_076	TO->FROM	GRPRAR1-LNX3345.00 - GRPRAR 345KV CKT Z	720	720	0.0358	104.7586	RASMUSN - UTICA JCT 230KV CKT 1
FDNS	00NR	3	20SP	G15_076	TO->FROM	GRPRAR1-LNX3345.00 - GRPRAR 345KV CKT Z	720	720	0.0401	104.7508	ELLENDLMVP3 345.00 (1) 345/230/34.5KV TRANSFORMER CKT 1
FDNS	00NR	3	20SP	G15_076	TO->FROM	GRPRAR1-LNX3345.00 - GRPRAR 345KV CKT Z	720	720	0.04032	104.7478	ALEXMRES3 345.00 - WAITE PARK 345KV CKT 1
FDNS	00NR	3	20SP	G15_076	TO->FROM	GRPRAR1-LNX3345.00 - GRPRAR 345KV CKT Z	720	720	0.03888	104.7415	P12:115:UMZZ:# 237 #: MEN IN SD. MENNO JUNCTION IS A TAP (UJ-MEN-TP).
FDNS	00NR	3	25SP	G15_076	TO->FROM	GRPRAR1-LNX3345.00 - GRPRAR 345KV CKT Z	720	720	0.04078	104.7361	G15094_T 345.00 - SIDNEY2-LNX3345.00 345KV CKT 1
FDNS	00NR	3	25SP	G15_076	TO->FROM	GRPRAR1-LNX3345.00 - GRPRAR 345KV CKT Z	720	720	0.0405	104.7356	GEN336831 1-BAXTER WILSON SES
FDNS	00NR	3	25SP	G15_076	TO->FROM	GRPRAR1-LNX3345.00 - GRPRAR 345KV CKT Z	720	720	0.04078	104.7352	SIDNEY - SIDNEY2-LNX3345.00 345KV CKT Z
FDNS	00NR	3	20SP	G15_076	TO->FROM	GRPRAR1-LNX3345.00 - GRPRAR 345KV CKT Z	720	720	0.0403	104.7318	APPLEDORN 4 230.00 - GRANITE FALLS 230KV CKT 1
FDNS	00NR	3	20SP	G15_076	TO->FROM	GRPRAR1-LNX3345.00 - GRPRAR 345KV CKT Z	720	720	0.0403	104.7318	APPLEDORN 4 230.00 - GRANITE FALLS 230KV CKT 1
FDNS	00NR	3	20SP	G15_076	TO->FROM	GRPRAR1-LNX3345.00 - GRPRAR 345KV CKT Z	720	720	0.04026	104.7193	BLAIR - GRANITE FALLS 230KV CKT 1
FDNS	00NR	3	20SP	G15_076	TO->FROM	GRPRAR1-LNX3345.00 - GRPRAR 345KV CKT Z	720	720	0.04026	104.7193	BLAIR - GRANITE FALLS 230KV CKT 1
FDNS	00NR	3	20SP	G15_076	TO->FROM	GRPRAR1-LNX3345.00 - GRPRAR 345KV CKT Z	720	720	0.03957	104.7189	WINNER - WITTEN 115KV CKT 1
FDNS	00NR	3	20SP	G15_076	TO->FROM	GRPRAR1-LNX3345.00 - GRPRAR 345KV CKT Z	720	720	0.04036	104.7169	NORTH ROCHESTER - PRAIRIE ISLAND 345KV CKT 1
FDNS	00NR	3	20SP	G15_076	TO->FROM	GRPRAR1-LNX3345.00 - GRPRAR 345KV CKT Z	720	720	0.04018	104.7096	GEN303008 1-1BC2 U3
FDNS	00NR	3	20SP	G15_076	TO->FROM	GRPRAR1-LNX3345.00 - GRPRAR 345KV CKT Z	720	720	0.04018	104.7044	GEN336170 1-GULF OXY U4
FDNS	00NR	3	20SP	G15_076	TO->FROM	GRPRAR1-LNX3345.00 - GRPRAR 345KV CKT Z	720	720	0.04018	104.6918	GEN641089 2-ENERGY CENTER 2
FDNS	00NR	3	25SP	G15_076	TO->FROM	GRPRAR1-LNX3345.00 - GRPRAR 345KV CKT Z	720	720	0.03949	104.6889	EAGLE 4 230.00 - PAHOJA 230KV CKT 1
FDNS	00NR	3	25SP	G15_076	TO->FROM	GRPRAR1-LNX3345.00 - GRPRAR 345KV CKT Z	720	720	0.0405	104.6774	GEN337041 1-GERALD ANDRUS
FDNS	00NR	3	20SP	G15_076	TO->FROM	GRPRAR1-LNX3345.00 - GRPRAR 345KV CKT Z	720	720	0.04312	104.6611	STEGALL - STEGALL TRANSFORMER 230KV CKT 1
FDNS	00NR	3	20SP	G15_076	TO->FROM	GRPRAR1-LNX3345.00 - GRPRAR 345KV CKT Z	720	720	0.04047	104.6587	G15094_T 345.00 - LARAMIE RIVER 345KV CKT 1
FDNS	00NR	3	25SP	G15_076	TO->FROM	GRPRAR1-LNX3345.00 - GRPRAR 345KV CKT Z	720	720	0.0405	104.6572	GEN501813 1-RODEMACHER UNIT 3
FDNS	00NR	3	20SP	G15_076	TO->FROM	GRPRAR1-LNX3345.00 - GRPRAR 345KV CKT Z	720	720	0.04312	104.6539	P13:230-345:NPPD:STEGALL3:KV3A
FDNS	00NR	3	20SP	G15_076	TO->FROM	GRPRAR1-LNX3345.00 - GRPRAR 345KV CKT Z	720	720	0.04069	104.6463	HUNTLEY3 345.00 - LEDYARD3 345.00 345KV CKT 1
FDNS	00NR	3	20SP	G15_076	TO->FROM	GRPRAR1-LNX3345.00 - GRPRAR 345KV CKT Z	720	720	0.04019	104.6446	FARGO - JAMES TOWN 230KV CKT 1
FDNSLock	00NR	3	20SP	G15_076	TO->FROM	GRPRAR1-LNX3345.00 - GRPRAR 345KV CKT Z	720	720	0.04312	104.632	STEGALL (SGQ KV3A) 345/230/13.8KV TRANSFORMER CKT 1
FDNS	00NR	3	20SP	G15_076	TO->FROM	GRPRAR1-LNX3345.00 - GRPRAR 345KV CKT Z	720	720	0.04018	104.6247	GEN501811 1-RODEMACHER UNIT 1
FDNS	00NR	3	20SP	G15_076	TO->FROM	GRPRAR1-LNX3345.00 - GRPRAR 345KV CKT Z	720	720	0.04019	104.6235	FARGO - JAMES TOWN 230KV CKT 2
FDNS	00NR	3	20SP	G15_076	TO->FROM	GRPRAR1-LNX3345.00 - GRPRAR 345KV CKT Z	720	720	0.04018	104.6142	GEN562596 1-G14_059_3 0.6900
FDNS	00NR	3	20SP	G15_076	TO->FROM	GRPRAR1-LNX3345.00 - GRPRAR 345KV CKT Z	720	720	0.04018	104.6088	P13:230:UMZW:# 2218 #: FP IN MT. LOSS OF TRANSFORMER (AT2).
FDNS	00NR	3	20SP	G15_076	TO->FROM	GRPRAR1-LNX3345.00 - GRPRAR 345KV CKT Z	720	720	0.04067	104.6033	P13:230-345:NPPD:SIDNEY 3:KV2A
FDNS	00NR	3	20SP	G15_076	TO->FROM	GRPRAR1-LNX3345.00 - GRPRAR 345KV CKT Z	720	720	0.04067	104.6032	SIDNEY (SDQ KV2A) 345/230/13.8KV TRANSFORMER CKT 1
FDNS	00NR	3	20SP	G15_076	TO->FROM	GRPRAR1-LNX3345.00 - GRPRAR 345KV CKT Z	720	720	0.04067	104.6031	SIDNEY - SIDNEY TRANSFORMER 230KV CKT 1
FDNS	00NR	3	20SP	G15_076	TO->FROM	GRPRAR1-LNX3345.00 - GRPRAR 345KV CKT Z	720	720	0.04018	104.5968	BISMARK - JAMES TOWN 230KV CKT 1
FDNS	00NR	3	20SP	G15_076	TO->FROM	GRPRAR1-LNX3345.00 - GRPRAR 345KV CKT Z	720	720	0.04018	104.5881	BISMARK - WEBER 230KV CKT 1
FDNS	00NR	3	20SP	G15_076	TO->FROM	GRPRAR1-LNX3345.00 - GRPRAR 345KV CKT Z	720	720	0.0407	104.58	P13:115-230:TSGT:SIDNEY-KV1A
FDNS	00NR	3	20SP	G15_076	TO->FROM	GRPRAR1-LNX3345.00 - GRPRAR 345KV CKT Z	720	720	0.04112	104.577	NOBLES - SPLIT ROCK 345KV CKT 1
FDNS	00NR	3	20SP	G15_076	TO->FROM	GRPRAR1-LNX3345.00 - GRPRAR 345KV CKT Z	720	720	0.04018	104.5732	GEN334071 1-LEWIS CREEK 2
FDNS	00NR	3	20SP	G15_076	TO->FROM	GRPRAR1-LNX3345.00 - GRPRAR 345KV CKT Z	720	720	0.04018	104.5727	JAMES TOWN - WEBER 230KV CKT 1
FDNS	00NR	3	20SP	G15_076	TO->FROM	GRPRAR1-LNX3345.00 - GRPRAR 345KV CKT Z	720	720	0.04058	104.5718	HUNTLEY3 345.00 - LAKEFIELD 3 345KV CKT 1
FDNS	00NR	3	20SP	G15_076	TO->FROM	GRPRAR1-LNX3345.00 - GRPRAR 345KV CKT Z	720	720	0.04078	104.5707	P12:230:UMZW:# 733 #: FT IN SD. FT-BG2 LINE FAULT
FDNS	00NR	3	20SP	G15_076	TO->FROM	GRPRAR1-LNX3345.00 - GRPRAR 345KV CKT Z	720	720	0.04018	104.5699	GEN334070 1-LEWIS CREEK 1
FDNS	00NR	3	20SP	G15_076	TO->FROM	GRPRAR1-LNX3345.00 - GRPRAR 345KV CKT Z	720	720	0.04018	104.5605	GEN532751 1-WOLF CREEK GENERATING STATION UNIT 1
FDNS	00NR	3	20SP	G15_076	TO->FROM	GRPRAR1-LNX3345.00 - GRPRAR 345KV CKT Z	720	720	0.04002	104.5599	FT THOMPSON - HURON 230KV CKT 1
FDNS	00NR	3	20SP	G15_076	TO->FROM	GRPRAR1-LNX3345.00 - GRPRAR 345KV CKT Z	720	720	0.04002	104.5599	FT THOMPSON - HURON 230KV CKT 1
FDNS	00NR	3	20SP	G15_076	TO->FROM	GRPRAR1-LNX3345.00 - GRPRAR 345KV CKT Z	720	720	0.04002	104.5599	FT THOMPSON - HURON 230KV CKT 2
FDNS	00NR	3	20SP	G15_076	TO->FROM	GRPRAR1-LNX3345.00 - GRPRAR 345KV CKT Z	720	720	0.04002	104.5599	FT THOMPSON - HURON 230KV CKT 2
FDNS	00NR	3	20SP	G15_076	TO->FROM	GRPRAR1-LNX3345.00 - GRPRAR 345KV CKT Z	720	720	0.04018	104.5468	GEN562921 1-G15054_2 0.6900
FDNS	00NR	3	20SP	G15_076	TO->FROM	GRPRAR1-LNX3345.00 - GRPRAR 345KV CKT Z	720	720	0.04018	104.5379	GEN337766 1-TRACTEBEL UNIT S1
FDNS	00NR	3	20SP	G15_076	TO->FROM	GRPRAR1-LNX3345.00 - GRPRAR 345KV CKT Z	720	720	0.04018	104.5339	GEN636641 1-LOUISA UNIT 1
FDNS	00NR	3	20SP	G15_076	TO->FROM	GRPRAR1-LNX3345.00 - GRPRAR 345KV CKT Z	720	720	0.04018	104.5322	BALTA - RAMSEY 230KV CKT 1
FDNS	00NR	3	20SP	G15_076	TO->FROM	GRPRAR1-LNX3345.00 - GRPRAR 345KV CKT Z	720	720	0.04018	104.5322	PRAIRIE ISLAND 345/20.0KV TRANSFORMER CKT 1
FDNS	00NR	3	20SP	G15_076	TO->FROM	GRPRAR1-LNX3345.00 - GRPRAR 345KV CKT Z	720	720	0.03957	104.5315	GREGORY - WINNER 115KV CKT 1
FDNS	00NR	3	20SP	G15_076	TO->FROM	GRPRAR1-LNX3345.00 - GRPRAR 345KV CKT Z	720	720	0.04018	104.5309	PRAIRIE ISLAND 345/20.0KV TRANSFORMER CKT 2
FDNS	00NR	3	20SP	G15_076	TO->FROM	GRPRAR1-LNX3345.00 - GRPRAR 345KV CKT Z	720	720	0.04078	104.5297	LOWERBRULE 4230.00 - RELIANCE 4 230.00 230KV CKT 1
FDNS	00NR	3	20SP	G15_076	TO->FROM	GRPRAR1-LNX3345.00 - GRPRAR 345KV CKT Z	720	720	0.03957	104.5226	P12:115:UMZW:# 172 #: WI IN SD.
FDNS	00NR	3	20SP	G15_076	TO->FROM	GRPRAR1-LNX3345.00 - GRPRAR 345KV CKT Z	720	720	0.04018	104.5217	GEN659118 1-LARAMIE RIVER UNIT1
FDNS	00NR	3	20SP	G15_076	TO->FROM	GRPRAR1-LNX3345.00 - GRPRAR 345KV CKT Z	720	720	0.04021	104.5073	FORMAN - HANKINSON 230KV CKT 1
FDNS	00NR	3	20SP	G15_076	TO->FROM	GRPRAR1-LNX3345.00 - GRPRAR 345KV CKT Z	720	720	0.04018	104.5025	GEN501910 1-ACADIA UNIT ST1
FDNS	00NR	3	25SP	G15_076	TO->FROM	GRPRAR1-LNX3345.00 - GRPRAR 345KV CKT Z	720	720	0.0405	104.4985	GEN335206 1-NELSON UNIT 6
FDNS	00NR	3	25SP	G15_076	TO->FROM	GRPRAR1-LNX3345.00 - GRPRAR 345KV CKT Z	720	720	0.04084	104.4907	ARPIN B4 345.00 - EAU CLAIRE 345KV CKT 1
FDNS	00NR	3	20SP	G15_076	TO->FROM	GRPRAR1-LNX3345.00 - GRPRAR 345KV CKT Z	720	720	0.04018	104.4882	ELM CREEK - MONTICELLO 345KV CKT 1

SOLUTION	GROUP	SCENARIO	SEASON	SOURCE	DIRECTION	MONITORED ELEMENT	RATEA (MVA)	RATEB(MVA)	TDF	TC%LOADING (% MVA)	CONTINGENCY
FDNS	00NR	3	25SP	G15_076	TO->FROM	GRPRAR1-LNX3345.00 - GRPRAR 345KV CKT Z	720	720	0.0405	104.4755	GEN334440 1-SABINE UNIT 4
FDNS	00NR	3	20SP	G15_076	TO->FROM	GRPRAR1-LNX3345.00 - GRPRAR 345KV CKT Z	720	720	0.04018	104.4724	GEN336221 1-LITTLE GYPSY UNIT#1
FDNS	00NR	3	20SP	G15_076	TO->FROM	GRPRAR1-LNX3345.00 - GRPRAR 345KV CKT Z	720	720	0.04018	104.4709	GEN337757 1-DUKE HOTSPRINGS STG1
FDNS	00NR	3	20SP	G15_076	TO->FROM	GRPRAR1-LNX3345.00 - GRPRAR 345KV CKT Z	720	720	0.04018	104.4506	GEN345765 H-1SIOUX 2 18.000
FDNS	00NR	3	20SP	G15_076	TO->FROM	GRPRAR1-LNX3345.00 - GRPRAR 345KV CKT Z	720	720	0.04021	104.4505	AUDUBON - SHEYNNE 230KV CKT 1
FDNS	00NR	3	25SP	G15_076	TO->FROM	GRPRAR1-LNX3345.00 - GRPRAR 345KV CKT Z	720	720	0.0405	104.4428	GEN344897 4-1LAB G4 20.000
FDNS	00NR	3	25SP	G15_076	TO->FROM	GRPRAR1-LNX3345.00 - GRPRAR 345KV CKT Z	720	720	0.0405	104.4414	GEN344894 1-1LAB G1 20.000
FDNS	00NR	3	25SP	G15_076	TO->FROM	GRPRAR1-LNX3345.00 - GRPRAR 345KV CKT Z	720	720	0.0405	104.4414	GEN344895 2-1LAB G2 20.000
FDNS	00NR	3	25SP	G15_076	TO->FROM	GRPRAR1-LNX3345.00 - GRPRAR 345KV CKT Z	720	720	0.0405	104.4413	GEN344896 3-1LAB G3 20.000
FDNS	00NR	3	20SP	G15_076	TO->FROM	GRPRAR1-LNX3345.00 - GRPRAR 345KV CKT Z	720	720	0.04075	104.4397	P12:115:NPPD:WAPA1:CHADRON7:BOXBUTE7:BTB
FDNS	00NR	3	20SP	G15_076	TO->FROM	GRPRAR1-LNX3345.00 - GRPRAR 345KV CKT Z	720	720	0.04018	104.4365	GEN337764 1-TRACTEBEL UNIT C1
FDNS	00NR	3	20SP	G15_076	TO->FROM	GRPRAR1-LNX3345.00 - GRPRAR 345KV CKT Z	720	720	0.04018	104.4365	GEN337765 1-TRACTEBEL UNIT C2
FDNS	00NR	3	20SP	G15_076	TO->FROM	GRPRAR1-LNX3345.00 - GRPRAR 345KV CKT Z	720	720	0.0403	104.4355	FRANKS - HUBEN 345KV CKT 1
FDNS	00NR	3	20SP	G15_076	TO->FROM	GRPRAR1-LNX3345.00 - GRPRAR 345KV CKT Z	720	720	0.05254	104.435	BELDEN - HOSKINS 115KV CKT 1
FDNS	00NR	3	20SP	G15_076	TO->FROM	GRPRAR1-LNX3345.00 - GRPRAR 345KV CKT Z	720	720	0.04018	104.4335	GEN334431 1-SABINE UNIT 1
FDNS	00NR	3	20SP	G15_076	TO->FROM	GRPRAR1-LNX3345.00 - GRPRAR 345KV CKT Z	720	720	0.04018	104.4334	GEN334432 1-SABINE UNIT 2
FDNS	00NR	3	20SP	G15_076	TO->FROM	GRPRAR1-LNX3345.00 - GRPRAR 345KV CKT Z	720	720	0.03989	104.4308	MT VERN - STORLA 115KV CKT 1
FDNS	00NR	3	20SP	G15_076	TO->FROM	GRPRAR1-LNX3345.00 - GRPRAR 345KV CKT Z	720	720	0.04018	104.4293	GEN336446 1-MICHOUD UNIT #2
FDNS	00NR	3	20SP	G15_076	TO->FROM	GRPRAR1-LNX3345.00 - GRPRAR 345KV CKT Z	720	720	0.04022	104.4229	LELAND OLDS - STANTON 230KV CKT 1
FDNS	00NR	3	20SP	G15_076	TO->FROM	GRPRAR1-LNX3345.00 - GRPRAR 345KV CKT Z	720	720	0.04022	104.4229	LELAND OLDS - STANTON 230KV CKT 1
FDNS	00NR	3	20SP	G15_076	TO->FROM	GRPRAR1-LNX3345.00 - GRPRAR 345KV CKT Z	720	720	0.04041	104.4211	OVEXFRMCCOVE
FDNS	00NR	3	25SP	G15_076	TO->FROM	GRPRAR1-LNX3345.00 - GRPRAR 345KV CKT Z	720	720	0.0405	104.4194	GEN635214 4-NEAL UNIT 4
FDNS	00NR	3	25SP	G15_076	TO->FROM	GRPRAR1-LNX3345.00 - GRPRAR 345KV CKT Z	720	720	0.03852	104.4155	FT THOMPSON - WESSINGTON 230KV CKT 1
FDNS	00NR	3	25SP	G15_076	TO->FROM	GRPRAR1-LNX3345.00 - GRPRAR 345KV CKT Z	720	720	0.03852	104.4155	FT THOMPSON - WESSINGTON 230KV CKT 1
FDNS	00NR	3	25SP	G15_076	TO->FROM	GRPRAR1-LNX3345.00 - GRPRAR 345KV CKT Z	720	720	0.04056	104.4073	GLENBORO SOUTH - RUGBY 230KV CKT 1
FDNS	00NR	3	20SP	G15_076	TO->FROM	GRPRAR1-LNX3345.00 - GRPRAR 345KV CKT Z	720	720	0.04018	104.4054	GRAND GULF 500/22.0KV TRANSFORMER CKT 1
FDNS	00NR	3	20SP	G15_076	TO->FROM	GRPRAR1-LNX3345.00 - GRPRAR 345KV CKT Z	720	720	0.04023	104.3976	FERGSFL4 230.00 - WAHPETON 230KV CKT 1
FDNS	00NR	3	20SP	G15_076	TO->FROM	GRPRAR1-LNX3345.00 - GRPRAR 345KV CKT Z	720	720	0.04018	104.3975	GEN336242 1-1NMIL ST1 18.000
FDNS	00NR	3	20SP	G15_076	TO->FROM	GRPRAR1-LNX3345.00 - GRPRAR 345KV CKT Z	720	720	0.04018	104.3962	GEN501823 1-TECHE UNIT 3
FDNS	00NR	3	25SP	G15_076	TO->FROM	GRPRAR1-LNX3345.00 - GRPRAR 345KV CKT Z	720	720	0.0405	104.3942	GEN338388 1-1PLUM PT U1 23.000
FDNS	00NR	3	25SP	G15_076	TO->FROM	GRPRAR1-LNX3345.00 - GRPRAR 345KV CKT Z	720	720	0.0405	104.3896	GEN345671 2-1RUSH G2 18.000
FDNS	00NR	3	20SP	G15_076	TO->FROM	GRPRAR1-LNX3345.00 - GRPRAR 345KV CKT Z	720	720	0.0402	104.3882	ELLENDLMVP4 230.00 - OAKES 230KV CKT 1
FDNS	00NR	3	20SP	G15_076	TO->FROM	GRPRAR1-LNX3345.00 - GRPRAR 345KV CKT Z	720	720	0.0402	104.3882	ELLENDLMVP4 230.00 - OAKES 230KV CKT 1
FDNS	00NR	3	20SP	G15_076	TO->FROM	GRPRAR1-LNX3345.00 - GRPRAR 345KV CKT Z	720	720	0.0402	104.3869	FORMAN - OAKES 230KV CKT 1
FDNS	00NR	3	25SP	G15_076	TO->FROM	GRPRAR1-LNX3345.00 - GRPRAR 345KV CKT Z	720	720	0.0405	104.3857	GEN345670 1-1RUSH G1 18.000
FDNS	00NR	3	20SP	G15_076	TO->FROM	GRPRAR1-LNX3345.00 - GRPRAR 345KV CKT Z	720	720	0.04019	104.3791	PRAIRIE - WINGER 230KV CKT 1
FDNS	00NR	3	20SP	G15_076	TO->FROM	GRPRAR1-LNX3345.00 - GRPRAR 345KV CKT Z	720	720	0.04018	104.3788	GEN345756 H-1SIOUX 1 18.000
FDNS	00NR	3	20SP	G15_076	TO->FROM	GRPRAR1-LNX3345.00 - GRPRAR 345KV CKT Z	720	720	0.04075	104.3764	CHADRON - DUNLAP 115KV CKT 1
FDNS	00NR	3	25SP	G15_076	TO->FROM	GRPRAR1-LNX3345.00 - GRPRAR 345KV CKT Z	720	720	0.0405	104.3737	GEN501812 1-RODEMACHER UNIT 2
FDNS	00NR	3	20SP	G15_076	TO->FROM	GRPRAR1-LNX3345.00 - GRPRAR 345KV CKT Z	720	720	0.04078	104.3727	RELIANCE 4 230.00 - WITTEN 4 230.00 230KV CKT 1
FDNS	00NR	3	20SP	G15_076	TO->FROM	GRPRAR1-LNX3345.00 - GRPRAR 345KV CKT Z	720	720	0.04024	104.3702	HANKINSON - WAHPETON 230KV CKT 1
FDNS	00NR	3	20SP	G15_076	TO->FROM	GRPRAR1-LNX3345.00 - GRPRAR 345KV CKT Z	720	720	0.04037	104.3694	HAMPTON CORNER - NORTH ROCHESTER 345KV CKT 1
FDNS	00NR	3	20SP	G15_076	TO->FROM	GRPRAR1-LNX3345.00 - GRPRAR 345KV CKT Z	720	720	0.04023	104.3636	FERGSFL4 230.00 - GRE-SILVRLK4230.00 230KV CKT 1
FDNS	00NR	3	20SP	G15_076	TO->FROM	GRPRAR1-LNX3345.00 - GRPRAR 345KV CKT Z	720	720	0.04018	104.3629	P13:230-345:NPPD:NUCOR-1
FDNS	00NR	3	20SP	G15_076	TO->FROM	GRPRAR1-LNX3345.00 - GRPRAR 345KV CKT Z	720	720	0.04018	104.3623	GEN345832 1-1TS G1 13.800
FDNS	00NR	3	20SP	G15_076	TO->FROM	GRPRAR1-LNX3345.00 - GRPRAR 345KV CKT Z	720	720	0.04018	104.362	GEN345841 2-1TS G2 13.800
FDNS	00NR	3	20SP	G15_076	TO->FROM	GRPRAR1-LNX3345.00 - GRPRAR 345KV CKT Z	720	720	0.04018	104.3606	GEN334031 1-FRONTIER UNIT 2
FDNS	00NR	3	20SP	G15_076	TO->FROM	GRPRAR1-LNX3345.00 - GRPRAR 345KV CKT Z	720	720	0.04018	104.36	GEN334030 1-FRONTIER UNIT 1
FDNS	00NR	3	20SP	G15_076	TO->FROM	GRPRAR1-LNX3345.00 - GRPRAR 345KV CKT Z	720	720	0.04018	104.3557	GEN336944 1-REX BROWN
FDNS	00NR	3	20SP	G15_076	TO->FROM	GRPRAR1-LNX3345.00 - GRPRAR 345KV CKT Z	720	720	0.04018	104.353	GEN501970 1-EVANGELINE UNIT 7
FDNS	00NR	3	20SP	G15_076	TO->FROM	GRPRAR1-LNX3345.00 - GRPRAR 345KV CKT Z	720	720	0.04092	104.3525	DENISON - SIOUX CITY 230KV CKT 1
FDNS	00NR	3	25SP	G15_076	TO->FROM	GRPRAR1-LNX3345.00 - GRPRAR 345KV CKT Z	720	720	0.0405	104.3515	GEN336191 1-LITTLE GYPSY UNIT#3
FDNS	00NR	3	25SP	G15_076	TO->FROM	GRPRAR1-LNX3345.00 - GRPRAR 345KV CKT Z	720	720	0.04204	104.347	GRIMES - LEHIGH 345KV CKT 1
FDNS	00NR	3	20SP	G15_076	TO->FROM	GRPRAR1-LNX3345.00 - GRPRAR 345KV CKT Z	720	720	0.04018	104.345	GEN335612 1-WILLOW GLENN UNIT#2
FDNS	00NR	3	20SP	G15_076	TO->FROM	GRPRAR1-LNX3345.00 - GRPRAR 345KV CKT Z	720	720	0.04123	104.3429	MARTIN - SHANNON 115KV CKT 1
FDNS	00NR	3	20SP	G15_076	TO->FROM	GRPRAR1-LNX3345.00 - GRPRAR 345KV CKT Z	720	720	0.04018	104.3425	GEN635693 3-GREATER DES MOINES ENERGY CENTER ST
FDNS	00NR	3	20SP	G15_076	TO->FROM	GRPRAR1-LNX3345.00 - GRPRAR 345KV CKT Z	720	720	0.04047	104.3408	BYRON - NORTH ROCHESTER 345KV CKT 1
FDNS	00NR	3	20SP	G15_076	TO->FROM	GRPRAR1-LNX3345.00 - GRPRAR 345KV CKT Z	720	720	0.04032	104.3391	GRE-CEDARMT3345.00 - HELENA 345KV CKT 1
FDNS	00NR	3	20SP	G15_076	TO->FROM	GRPRAR1-LNX3345.00 - GRPRAR 345KV CKT Z	720	720	0.04032	104.3391	GRE-CEDARMT3345.00 - HELENA 345KV CKT 2
FDNS	00NR	3	20SP	G15_076	TO->FROM	GRPRAR1-LNX3345.00 - GRPRAR 345KV CKT Z	720	720	0.04131	104.3376	PLYMOUTH - SIOUX CITY 161KV CKT 1
FDNS	00NR	3	20SP	G15_076	TO->FROM	GRPRAR1-LNX3345.00 - GRPRAR 345KV CKT Z	720	720	0.04131	104.3376	PLYMOUTH - SIOUX CITY 161KV CKT 1
FDNS	00NR	3	20SP	G15_076	TO->FROM	GRPRAR1-LNX3345.00 - GRPRAR 345KV CKT Z	720	720	0.04018	104.3351	GEN337430 1-PERYVILLE UNIT #3
FDNS	00NR	3	20SP	G15_076	TO->FROM	GRPRAR1-LNX3345.00 - GRPRAR 345KV CKT Z	720	720	0.04018	104.3349	GEN337428 1-PERYVILLE UNIT #1
FDNS	00NR	3	25SP	G15_076	TO->FROM	GRPRAR1-LNX3345.00 - GRPRAR 345KV CKT Z	720	720	0.04112	104.3255	KOSSUTH 3 345.00 - WEBSTER 345KV CKT 1
FDNS	00NR	3	20SP	G15_076	TO->FROM	GRPRAR1-LNX3345.00 - GRPRAR 345KV CKT Z	720	720	0.04018	104.3215	GEN562912 1-G15053_3 0.6900
FDNS	00NR	3	20SP	G15_076	TO->FROM	GRPRAR1-LNX3345.00 - GRPRAR 345KV CKT Z	720	720	0.04078	104.3213	WITTEN 4 230.00 () 230/115/13.8KV TRANSFORMER CKT 1
FDNS	00NR	3	20SP	G15_076	TO->FROM	GRPRAR1-LNX3345.00 - GRPRAR 345KV CKT Z	720	720	0.03828	104.3209	FT RANDAL - WHITE SWAN 115KV CKT 1
FDNS	00NR	3	20SP	G15_076	TO->FROM	GRPRAR1-LNX3345.00 - GRPRAR 345KV CKT Z	720	720	0.04018	104.3166	GEN338443 1-PANDA S1
FDNS	00NR	3	20SP	G15_076	TO->FROM	GRPRAR1-LNX3345.00 - GRPRAR 345KV CKT Z	720	720	0.04018	104.3144	GEN336240 1-1NMIL CT1 18.000
FDNS	00NR	3	20SP	G15_076	TO->FROM	GRPRAR1-LNX3345.00 - GRPRAR 345KV CKT Z	720	720	0.04018	104.3144	GEN336241 1-1NMIL CT2 18.000
FDNS	00NR	3	20SP	G15_076	TO->FROM	GRPRAR1-LNX3345.00 - GRPRAR 345KV CKT Z	720	720	0.04018	104.3122	GEN501912 1-ACADIA UNIT CT1B
FDNS	00NR	3	20SP	G15_076	TO->FROM	GRPRAR1-LNX3345.00 - GRPRAR 345KV CKT Z	720	720	0.04018	104.312	GEN501911 1-ACADIA UNIT CT1A
FDNS	00NR	3	20SP	G15_076	TO->FROM	GRPRAR1-LNX3345.00 - GRPRAR 345KV CKT Z	720	720	0.04018	104.3118	P12:345:GRDA:CHOUTEAU-SPORTSMANACRES
FDNS	00NR	3	25SP	G15_076	TO->FROM	GRPRAR1-LNX3345.00 - GRPRAR 345KV CKT Z	720	720	0.0405	104.301	P12:115:UMZW:# 162 #: NEL IN ND. FAULT ON ML-NEL-MX-GA 115 KV
FDNS	00NR	3	25SP	G15_076	TO->FROM	GRPRAR1-LNX3345.00 - GRPRAR 345KV CKT Z	720	720	0.0405	104.3	GEN629075 1-OTTUMWA GENERATOR FOR OTTUMWA UNIT NO 1
FDNS	00NR	3	25SP	G15_076	TO->FROM	GRPRAR1-LNX3345.00 - GRPRAR 345KV CKT Z	720	720	0.0405	104.278	GEN335614 1-WILLOW GLENN UNIT#4
FDNS	00NR	3	25SP	G15_076	TO->FROM	GRPRAR1-LNX3345.00 - GRPRAR 345KV CKT Z	720	720	0.0405	104.2731	GEN336801 1-BAXTER WILSON UNIT #1
FDNS	00NR	3	25SP	G15_076	TO->FROM	GRPRAR1-LNX3345.00 - GRPRAR 345KV CKT Z	720	720	0.0405	104.2681	GEN334441 1-SABINE UNIT 5
FDNS	00NR	3	25SP	G15_076	TO->FROM	GRPRAR1-LNX3345.00 - GRPRAR 345KV CKT Z	720	720	0.0405	104.2628	GEN336464 1-MICHOUD UNIT #3

SOLUTION	GROUP	SCENARIO	SEASON	SOURCE	DIRECTION	MONITORED ELEMENT	RATEA (MVA)	RATEB(MVA)	TDF	TC%LOADING (% MVA)	CONTINGENCY
FDNS	00NR	3	25SP	G15_076	TO->FROM	GRPRAR1-LNX3345.00 - GRPRAR 345KV CKT Z	720	720	0.0405	104.2598	GEN563222 1-G15088_3 0.6900
FDNS	00NR	3	25SP	G15_076	TO->FROM	GRPRAR1-LNX3345.00 - GRPRAR 345KV CKT Z	720	720	0.0405	104.2525	GEN335204 1-NELSON UNIT 4
FDNS	00NR	3	25SP	G15_076	TO->FROM	GRPRAR1-LNX3345.00 - GRPRAR 345KV CKT Z	720	720	0.04072	104.2413	NORTH LA CROSSE - NORTH ROCHESTER 345KV CKT 1
FDNS	00NR	3	25SP	G15_076	TO->FROM	GRPRAR1-LNX3345.00 - GRPRAR 345KV CKT Z	720	720	0.0404	104.2334	HESKETT - WISHEK 230KV CKT 1
FDNS	00NR	3	25SP	G15_076	TO->FROM	GRPRAR1-LNX3345.00 - GRPRAR 345KV CKT Z	720	720	0.04111	104.2219	ADAMS - MITCHLCO3 345.00 345KV CKT 1
FDNS	00NR	3	20SP	G15_076	TO->FROM	GRPRAR1-LNX3345.00 - GRPRAR 345KV CKT Z	720	720	0.04018	104.2029	GEN563282 1-G15094_3 0.6900
FDNS	00NR	3	25SP	G15_076	TO->FROM	GRPRAR1-LNX3345.00 - GRPRAR 345KV CKT Z	720	720	0.0405	104.171	GEN640009 1-COOPER NUCLEAR STATION
FDNS	00NR	3	25SP	G15_076	TO->FROM	GRPRAR1-LNX3345.00 - GRPRAR 345KV CKT Z	720	720	0.04049	104.1609	CENTER - COYOTE 345KV CKT 1
FDNS	00NR	3	25SP	G15_076	TO->FROM	GRPRAR1-LNX3345.00 - GRPRAR 345KV CKT Z	720	720	0.0404	104.1588	MERRCRT4 230.00 - WISHEK 230KV CKT 1
FDNS	00NR	3	25SP	G15_076	TO->FROM	GRPRAR1-LNX3345.00 - GRPRAR 345KV CKT Z	720	720	0.04601	104.1334	BLOOMFIELD - CREIGHTON 115KV CKT 1
FDNS	00NR	3	25SP	G15_076	TO->FROM	GRPRAR1-LNX3345.00 - GRPRAR 345KV CKT Z	720	720	0.0405	104.1331	GEN334433 1-SABINE UNIT 3
FDNS	00NR	3	25SP	G15_076	TO->FROM	GRPRAR1-LNX3345.00 - GRPRAR 345KV CKT Z	720	720	0.0392	104.1291	MENNO JCT - TRIPP JCT 115KV CKT 1
FDNS	00NR	3	25SP	G15_076	TO->FROM	GRPRAR1-LNX3345.00 - GRPRAR 345KV CKT Z	720	720	0.0405	104.1234	GARRISON - JAMES TOWN 230KV CKT 1
FDNS	00NR	3	25SP	G15_076	TO->FROM	GRPRAR1-LNX3345.00 - GRPRAR 345KV CKT Z	720	720	0.04031	104.1227	BROOKING COUNTY - BSSOUTH3 345.00 345KV CKT 1
FDNS	00NR	3	25SP	G15_076	TO->FROM	GRPRAR1-LNX3345.00 - GRPRAR 345KV CKT Z	720	720	0.0405	104.0991	GEN531447 1-HOLCOMB GENERATOR
FDNS	00NR	3	25SP	G15_076	TO->FROM	GRPRAR1-LNX3345.00 - GRPRAR 345KV CKT Z	720	720	0.04601	104.0946	BLOOMFIELD - GAVINS POINT 115KV CKT 1
FDNS	00NR	3	25SP	G15_076	TO->FROM	GRPRAR1-LNX3345.00 - GRPRAR 345KV CKT Z	720	720	0.0405	104.078	GEN635213 3-NEAL UNIT 3
FDNS	00NR	3	25SP	G15_076	TO->FROM	GRPRAR1-LNX3345.00 - GRPRAR 345KV CKT Z	720	720	0.0405	104.0699	GEN336222 1-LITTLE GYPSY UNIT#2
FDNS	00NR	3	17SP	G15_076	TO->FROM	GRPRAR1-LNX3345.00 - GRPRAR 345KV CKT Z	720	720	0.04173	104.0691	GEN659125 1-COVEY
FDNS	00NR	3	25SP	G15_076	TO->FROM	GRPRAR1-LNX3345.00 - GRPRAR 345KV CKT Z	720	720	0.04062	104.0445	APPLEDORN 4 230.00 - WATERTOWN 230KV CKT 1
FDNS	00NR	3	25SP	G15_076	TO->FROM	GRPRAR1-LNX3345.00 - GRPRAR 345KV CKT Z	720	720	0.04062	104.0445	APPLEDORN 4 230.00 - WATERTOWN 230KV CKT 1
FDNS	00NR	3	25SP	G15_076	TO->FROM	GRPRAR1-LNX3345.00 - GRPRAR 345KV CKT Z	720	720	0.04063	104.0303	ARKANSAS NUCLEAR ONE - FT SMITH 500KV CKT 1
FDNS	00NR	3	25SP	G15_076	TO->FROM	GRPRAR1-LNX3345.00 - GRPRAR 345KV CKT Z	720	720	0.04063	104.0303	ARKANSAS NUCLEAR ONE - FT SMITH 500KV CKT 1
FDNS	00NR	3	25SP	G15_076	TO->FROM	GRPRAR1-LNX3345.00 - GRPRAR 345KV CKT Z	720	720	0.0405	104.0169	GEN336151 1-WATERFORD UNIT#1
FDNS	00NR	3	25SP	G15_076	TO->FROM	GRPRAR1-LNX3345.00 - GRPRAR 345KV CKT Z	720	720	0.0405	104.0169	GEN336152 1-WATERFORD UNIT#2
FDNS	00NR	3	25SP	G15_076	TO->FROM	GRPRAR1-LNX3345.00 - GRPRAR 345KV CKT Z	720	720	0.04042	104.0075	BSSOUTH3 345.00 - ELLENDLMVP3 345.00 345KV CKT 1
FDNS	00NR	3	25SP	G15_076	TO->FROM	GRPRAR1-LNX3345.00 - GRPRAR 345KV CKT Z	720	720	0.04042	104.0075	BSSOUTH3 345.00 - ELLENDLMVP3 345.00 345KV CKT 1
FDNS	00NR	3	25SP	G15_076	TO->FROM	GRPRAR1-LNX3345.00 - GRPRAR 345KV CKT Z	720	720	0.04091	104	ADAMS - PLEASANT VALLEY 345KV CKT 1
FDNS	00NR	3	25SP	G15_076	TO->FROM	GRPRAR1-LNX3345.00 - GRPRAR 345KV CKT Z	720	720	0.0392	103.9992	MENNO JCT - UTICA 115KV CKT 1
FDNS	00NR	3	25SP	G15_076	TO->FROM	GRPRAR1-LNX3345.00 - GRPRAR 345KV CKT Z	720	720	0.04042	103.9866	ELLENDLMVP3 345.00 (1) 345/230/34.5KV TRANSFORMER CKT 1
FDNS	00NR	3	25SP	G15_076	TO->FROM	GRPRAR1-LNX3345.00 - GRPRAR 345KV CKT Z	720	720	0.04062	103.9802	APPLEDORN 4 230.00 - GRANITE FALLS 230KV CKT 1
FDNS	00NR	3	25SP	G15_076	TO->FROM	GRPRAR1-LNX3345.00 - GRPRAR 345KV CKT Z	720	720	0.04062	103.9802	APPLEDORN 4 230.00 - GRANITE FALLS 230KV CKT 1
FDNS	00NR	3	25SP	G15_076	TO->FROM	GRPRAR1-LNX3345.00 - GRPRAR 345KV CKT Z	720	720	0.04063	103.9791	ALEXMRES3 345.00 - WAITE PARK 345KV CKT 1
FDNS	00NR	3	25SP	G15_076	TO->FROM	GRPRAR1-LNX3345.00 - GRPRAR 345KV CKT Z	720	720	0.04058	103.9744	BLAIR - GRANITE FALLS 230KV CKT 1
FDNS	00NR	3	25SP	G15_076	TO->FROM	GRPRAR1-LNX3345.00 - GRPRAR 345KV CKT Z	720	720	0.04058	103.9744	BLAIR - GRANITE FALLS 230KV CKT 1
FDNS	00NR	3	25SP	G15_076	TO->FROM	GRPRAR1-LNX3345.00 - GRPRAR 345KV CKT Z	720	720	0.04081	103.9619	NMA B3 345 345.00 - NORTH LA CROSSE 345KV CKT 1
FDNS	00NR	3	25SP	G15_076	TO->FROM	GRPRAR1-LNX3345.00 - GRPRAR 345KV CKT Z	720	720	0.0405	103.959	GEN641089 2-ENERGY CENTER 2
FDNS	00NR	3	25SP	G15_076	TO->FROM	GRPRAR1-LNX3345.00 - GRPRAR 345KV CKT Z	720	720	0.0405	103.9458	GEN303007 1-1BC2 U2
FDNS	00NR	3	25SP	G15_076	TO->FROM	GRPRAR1-LNX3345.00 - GRPRAR 345KV CKT Z	720	720	0.03989	103.9444	WINNER - WITTEN 115KV CKT 1
FDNS	00NR	3	25SP	G15_076	TO->FROM	GRPRAR1-LNX3345.00 - GRPRAR 345KV CKT Z	720	720	0.0405	103.9403	GEN303006 1-1BC2 U1
FDNS	00NR	3	25SP	G15_076	TO->FROM	GRPRAR1-LNX3345.00 - GRPRAR 345KV CKT Z	720	720	0.0392	103.9317	P12:115:UMZZ:# 237 #: MEN IN SD. MENNO JUNCTION IS A TAP (UJ-MEN-TP).
FDNS	00NR	3	25SP	G15_076	TO->FROM	GRPRAR1-LNX3345.00 - GRPRAR 345KV CKT Z	720	720	0.0405	103.9235	P13:230:UMZW:# 2218 #: FP IN MT. LOSS OF TRANSFORMER (AT2).
FDNS	00NR	3	25SP	G15_076	TO->FROM	GRPRAR1-LNX3345.00 - GRPRAR 345KV CKT Z	720	720	0.0405	103.9136	GEN532751 1-WOLF CREEK GENERATING STATION UNIT 1
FDNS	00NR	3	25SP	G15_076	TO->FROM	GRPRAR1-LNX3345.00 - GRPRAR 345KV CKT Z	720	720	0.04051	103.9093	FARGO - JAMES TOWN 230KV CKT 1
FDNS	00NR	3	25SP	G15_076	TO->FROM	GRPRAR1-LNX3345.00 - GRPRAR 345KV CKT Z	720	720	0.04068	103.9029	NORTH ROCHESTER - PRAIRIE ISLAND 345KV CKT 1
FDNS	00NR	3	25SP	G15_076	TO->FROM	GRPRAR1-LNX3345.00 - GRPRAR 345KV CKT Z	720	720	0.04707	103.8999	RAUN - SIOUX CITY 345KV CKT 1
FDNS	00NR	3	25SP	G15_076	TO->FROM	GRPRAR1-LNX3345.00 - GRPRAR 345KV CKT Z	720	720	0.04707	103.8999	RAUN - SIOUX CITY 345KV CKT 1
FDNS	00NR	3	25SP	G15_076	TO->FROM	GRPRAR1-LNX3345.00 - GRPRAR 345KV CKT Z	720	720	0.04078	103.8987	G15094_T 345.00 - LARAMIE RIVER 345KV CKT 1
FDNS	00NR	3	25SP	G15_076	TO->FROM	GRPRAR1-LNX3345.00 - GRPRAR 345KV CKT Z	720	720	0.04051	103.8874	FARGO - JAMES TOWN 230KV CKT 2
FDNS	00NR	3	25SP	G15_076	TO->FROM	GRPRAR1-LNX3345.00 - GRPRAR 345KV CKT Z	720	720	0.0405	103.879	GEN303008 1-1BC2 U3
FDNS	00NR	3	25SP	G15_076	TO->FROM	GRPRAR1-LNX3345.00 - GRPRAR 345KV CKT Z	720	720	0.04101	103.8782	HUNTLEY3 345.00 - LEDYARD3 345.00 345KV CKT 1
FDNS	00NR	3	25SP	G15_076	TO->FROM	GRPRAR1-LNX3345.00 - GRPRAR 345KV CKT Z	720	720	0.0405	103.8736	GEN336170 1-GULF OXY U4
FDNS	00NR	3	25SP	G15_076	TO->FROM	GRPRAR1-LNX3345.00 - GRPRAR 345KV CKT Z	720	720	0.0405	103.8665	BISMARK - JAMES TOWN 230KV CKT 1
FDNS	00NR	3	25SP	G15_076	TO->FROM	GRPRAR1-LNX3345.00 - GRPRAR 345KV CKT Z	720	720	0.0405	103.8571	GEN562596 1-G14_059_3 0.6900
FDNS	00NR	3	25SP	G15_076	TO->FROM	GRPRAR1-LNX3345.00 - GRPRAR 345KV CKT Z	720	720	0.0405	103.8569	BISMARK - WEBER 230KV CKT 1
FDNS	00NR	3	20SP	G15_076	TO->FROM	GRPRAR1-LNX3345.00 - GRPRAR 345KV CKT Z	720	720	0.04018	103.8498	BASE CASE
FDNS	00NR	3	25SP	G15_076	TO->FROM	GRPRAR1-LNX3345.00 - GRPRAR 345KV CKT Z	720	720	0.0405	103.8412	JAMES TOWN - WEBER 230KV CKT 1
FDNS	00NR	3	25SP	G15_076	TO->FROM	GRPRAR1-LNX3345.00 - GRPRAR 345KV CKT Z	720	720	0.04343	103.8381	P13:230-345:NPPD:STEGALL3:KV3A
FDNS	00NR	3	25SP	G15_076	TO->FROM	GRPRAR1-LNX3345.00 - GRPRAR 345KV CKT Z	720	720	0.04343	103.8362	STEGALL (SGQ KV3A) 345/230/13.8KV TRANSFORMER CKT 1
FDNS	00NR	3	25SP	G15_076	TO->FROM	GRPRAR1-LNX3345.00 - GRPRAR 345KV CKT Z	720	720	0.04089	103.8324	HUNTLEY3 345.00 - LAKEFIELD 3 345KV CKT 1
FDNS	00NR	3	25SP	G15_076	TO->FROM	GRPRAR1-LNX3345.00 - GRPRAR 345KV CKT Z	720	720	0.04099	103.8318	P13:230-345:NPPD:SIDNEY 3:KV2A
FDNS	00NR	3	25SP	G15_076	TO->FROM	GRPRAR1-LNX3345.00 - GRPRAR 345KV CKT Z	720	720	0.04099	103.8317	SIDNEY (SDQ KV2A) 345/230/13.8KV TRANSFORMER CKT 1
FDNS	00NR	3	25SP	G15_076	TO->FROM	GRPRAR1-LNX3345.00 - GRPRAR 345KV CKT Z	720	720	0.04099	103.8316	SIDNEY - SIDNEY TRANSFORMER 230KV CKT 1
FDNS	00NR	3	25SP	G15_076	TO->FROM	GRPRAR1-LNX3345.00 - GRPRAR 345KV CKT Z	720	720	0.04033	103.8302	FT THOMPSON - HURON 230KV CKT 1
FDNS	00NR	3	25SP	G15_076	TO->FROM	GRPRAR1-LNX3345.00 - GRPRAR 345KV CKT Z	720	720	0.04033	103.8302	FT THOMPSON - HURON 230KV CKT 1
FDNS	00NR	3	25SP	G15_076	TO->FROM	GRPRAR1-LNX3345.00 - GRPRAR 345KV CKT Z	720	720	0.04033	103.8302	FT THOMPSON - HURON 230KV CKT 2
FDNS	00NR	3	25SP	G15_076	TO->FROM	GRPRAR1-LNX3345.00 - GRPRAR 345KV CKT Z	720	720	0.04033	103.8302	FT THOMPSON - HURON 230KV CKT 2
FDNS	00NR	3	25SP	G15_076	TO->FROM	GRPRAR1-LNX3345.00 - GRPRAR 345KV CKT Z	720	720	0.04343	103.8258	STEGALL - STEGALL TRANSFORMER 230KV CKT 1
FDNS	00NR	3	25SP	G15_076	TO->FROM	GRPRAR1-LNX3345.00 - GRPRAR 345KV CKT Z	720	720	0.0405	103.8214	BALTA - RAMSEY 230KV CKT 1
FDNS	00NR	3	25SP	G15_076	TO->FROM	GRPRAR1-LNX3345.00 - GRPRAR 345KV CKT Z	720	720	0.04108	103.8188	P12:230:UMZW:# 733 #: FT IN SD. FT-BG2 LINE FAULT
FDNS	00NR	3	25SP	G15_076	TO->FROM	GRPRAR1-LNX3345.00 - GRPRAR 345KV CKT Z	720	720	0.04108	103.8184	FT THOMPSON - LOWERBRULE 4230.00 230KV CKT 1
FDNS	00NR	3	25SP	G15_076	TO->FROM	GRPRAR1-LNX3345.00 - GRPRAR 345KV CKT Z	720	720	0.04108	103.8184	FT THOMPSON - LOWERBRULE 4230.00 230KV CKT 1
FDNS	00NR	3	25SP	G15_076	TO->FROM	GRPRAR1-LNX3345.00 - GRPRAR 345KV CKT Z	720	720	0.04108	103.8148	LOWERBRULE 4230.00 - RELIANCE 4 230.00 230KV CKT 1
FDNS	00NR	3	25SP	G15_076	TO->FROM	GRPRAR1-LNX3345.00 - GRPRAR 345KV CKT Z	720	720	0.04101	103.8051	P13:115-230:TSGT:SIDNEY-KV1A
FDNS	00NR	3	25SP	G15_076	TO->FROM	GRPRAR1-LNX3345.00 - GRPRAR 345KV CKT Z	720	720	0.0405	103.8043	GEN501811 1-RODEMACHER UNIT 1
FDNS	00NR	3	25SP	G15_076	TO->FROM	GRPRAR1-LNX3345.00 - GRPRAR 345KV CKT Z	720	720	0.0405	103.7844	GEN562921 1-G15054_2 0.6900
FDNS	00NR	3	25SP	G15_076	TO->FROM	GRPRAR1-LNX3345.00 - GRPRAR 345KV CKT Z	720	720	0.04053	103.7713	FORMAN - HANKINSON 230KV CKT 1
FDNS	00NR	3	25SP	G15_076	TO->FROM	GRPRAR1-LNX3345.00 - GRPRAR 345KV CKT Z	720	720	0.0405	103.7651	GEN659118 1-LARAMIE RIVER UNIT1
FDNS	00NR	3	25SP	G15_076	TO->FROM	GRPRAR1-LNX3345.00 - GRPRAR 345KV CKT Z	720	720	0.0405	103.7592	GEN334070 1-LEWIS CREEK 1

SOLUTION	GROUP	SCENARIO	SEASON	SOURCE	DIRECTION	MONITORED ELEMENT	RATEA (MVA)	RATEB(MVA)	TDF	TC%LOADING (% MVA)	CONTINGENCY
FDNS	00NR	3	25SP	G15_076	TO->FROM	GRPRAR1-LNX3345.00 - GRPRAR 345KV CKT Z	720	720	0.0405	103.7591	GEN334071 1-LEWIS CREEK 2
FDNS	00NR	3	25SP	G15_076	TO->FROM	GRPRAR1-LNX3345.00 - GRPRAR 345KV CKT Z	720	720	0.03989	103.7562	GREGORY - WINNER 115KV CKT 1
FDNS	00NR	3	25SP	G15_076	TO->FROM	GRPRAR1-LNX3345.00 - GRPRAR 345KV CKT Z	720	720	0.0405	103.7554	PRAIRIE ISLAND 345/20.0KV TRANSFORMER CKT 1
FDNS	00NR	3	25SP	G15_076	TO->FROM	GRPRAR1-LNX3345.00 - GRPRAR 345KV CKT Z	720	720	0.0405	103.7542	PRAIRIE ISLAND 345/20.0KV TRANSFORMER CKT 2
FDNS	00NR	3	25SP	G15_076	TO->FROM	GRPRAR1-LNX3345.00 - GRPRAR 345KV CKT Z	720	720	0.03989	103.7291	P12:115:UMZW:# 172 #: WI IN SD.
FDNS	00NR	3	25SP	G15_076	TO->FROM	GRPRAR1-LNX3345.00 - GRPRAR 345KV CKT Z	720	720	0.0405	103.7229	GEN337766 1-TRACTEBEL UNIT S1
FDNS	00NR	3	25SP	G15_076	TO->FROM	GRPRAR1-LNX3345.00 - GRPRAR 345KV CKT Z	720	720	0.0405	103.7169	GEN645012 2-NEBRASKA CITY 2
FDNS	00NR	3	25SP	G15_076	TO->FROM	GRPRAR1-LNX3345.00 - GRPRAR 345KV CKT Z	720	720	0.0405	103.7099	GEN337757 1-DUKE HOTSPRINGS STG1
FDNS	00NR	3	25SP	G15_076	TO->FROM	GRPRAR1-LNX3345.00 - GRPRAR 345KV CKT Z	720	720	0.0405	103.6973	ELM CREEK - MONTICELLO 345KV CKT 1
FDNS	00NR	3	25SP	G15_076	TO->FROM	GRPRAR1-LNX3345.00 - GRPRAR 345KV CKT Z	720	720	0.0405	103.6881	GEN501910 1-ACADIA UNIT ST1
FDNS	00NR	3	25SP	G15_076	TO->FROM	GRPRAR1-LNX3345.00 - GRPRAR 345KV CKT Z	720	720	0.04056	103.6855	HANKINSON - WAHPETON 230KV CKT 1
FDNS	00NR	3	25SP	G15_076	TO->FROM	GRPRAR1-LNX3345.00 - GRPRAR 345KV CKT Z	720	720	0.04053	103.6821	AUDUBON - SHEYNNE 230KV CKT 1
FDNS	00NR	3	25SP	G15_076	TO->FROM	GRPRAR1-LNX3345.00 - GRPRAR 345KV CKT Z	720	720	0.0405	103.6811	GEN645011 1-NEBRASKA CITY 1
FDNS	00NR	3	25SP	G15_076	TO->FROM	GRPRAR1-LNX3345.00 - GRPRAR 345KV CKT Z	720	720	0.0402	103.6756	MT VERN - STORLA 115KV CKT 1
FDNS	00NR	3	25SP	G15_076	TO->FROM	GRPRAR1-LNX3345.00 - GRPRAR 345KV CKT Z	720	720	0.04107	103.6752	P12:115:NPPD:WAPA1:CHADRON7:BOXBUTE7:BTB
FDNS	00NR	3	25SP	G15_076	TO->FROM	GRPRAR1-LNX3345.00 - GRPRAR 345KV CKT Z	720	720	0.04073	103.674	OVEXFRMCCOVE
FDNS	00NR	3	25SP	G15_076	TO->FROM	GRPRAR1-LNX3345.00 - GRPRAR 345KV CKT Z	720	720	0.04051	103.6694	ELLENDLMVP4 230.00 - OAKES 230KV CKT 1
FDNS	00NR	3	25SP	G15_076	TO->FROM	GRPRAR1-LNX3345.00 - GRPRAR 345KV CKT Z	720	720	0.04051	103.6694	ELLENDLMVP4 230.00 - OAKES 230KV CKT 1
FDNS	00NR	3	25SP	G15_076	TO->FROM	GRPRAR1-LNX3345.00 - GRPRAR 345KV CKT Z	720	720	0.04051	103.6671	FORMAN - OAKES 230KV CKT 1
FDNS	00NR	3	25SP	G15_076	TO->FROM	GRPRAR1-LNX3345.00 - GRPRAR 345KV CKT Z	720	720	0.0405	103.6651	GEN336221 1-LITTLE GYPSY UNIT#1
FDNS	00NR	3	25SP	G15_076	TO->FROM	GRPRAR1-LNX3345.00 - GRPRAR 345KV CKT Z	720	720	0.05286	103.6598	BELDEN - HOSKINS 115KV CKT 1
FDNS	00NR	3	25SP	G15_076	TO->FROM	GRPRAR1-LNX3345.00 - GRPRAR 345KV CKT Z	720	720	0.04108	103.6518	RELIANCE 4 230.00 - WITTEN 4 230.00 230KV CKT 1
FDNS	00NR	3	25SP	G15_076	TO->FROM	GRPRAR1-LNX3345.00 - GRPRAR 345KV CKT Z	720	720	0.04055	103.6518	FERGSFL4 230.00 - WAHPETON 230KV CKT 1
FDNS	00NR	3	25SP	G15_076	TO->FROM	GRPRAR1-LNX3345.00 - GRPRAR 345KV CKT Z	720	720	0.04062	103.649	FRANKS - HUBEN 345KV CKT 1
FDNS	00NR	3	25SP	G15_076	TO->FROM	GRPRAR1-LNX3345.00 - GRPRAR 345KV CKT Z	720	720	0.0405	103.6484	GEN532651 1-JEFFREY ENERGY CENTER UNIT 1
FDNS	00NR	3	25SP	G15_076	TO->FROM	GRPRAR1-LNX3345.00 - GRPRAR 345KV CKT Z	720	720	0.04051	103.6472	PRAIRIE - WINGER 230KV CKT 1
FDNS	00NR	3	25SP	G15_076	TO->FROM	GRPRAR1-LNX3345.00 - GRPRAR 345KV CKT Z	720	720	0.0405	103.643	GEN532652 1-JEFFREY ENERGY CENTER UNIT 2
FDNS	00NR	3	25SP	G15_076	TO->FROM	GRPRAR1-LNX3345.00 - GRPRAR 345KV CKT Z	720	720	0.0405	103.6429	GEN532653 1-JEFFREY ENERGY CENTER UNIT 3
FDNS	00NR	3	25SP	G15_076	TO->FROM	GRPRAR1-LNX3345.00 - GRPRAR 345KV CKT Z	720	720	0.04143	103.6391	NOBLES - SPLIT ROCK 345KV CKT 1
FDNS	00NR	3	25SP	G15_076	TO->FROM	GRPRAR1-LNX3345.00 - GRPRAR 345KV CKT Z	720	720	0.0405	103.6369	GRAND GULF 500/22.0KV TRANSFORMER CKT 1
FDNS	00NR	3	25SP	G15_076	TO->FROM	GRPRAR1-LNX3345.00 - GRPRAR 345KV CKT Z	720	720	0.0405	103.6319	GEN334431 1-SABINE UNIT 1
FDNS	00NR	3	25SP	G15_076	TO->FROM	GRPRAR1-LNX3345.00 - GRPRAR 345KV CKT Z	720	720	0.0405	103.6319	GEN334432 1-SABINE UNIT 2
FDNS	00NR	3	25SP	G15_076	TO->FROM	GRPRAR1-LNX3345.00 - GRPRAR 345KV CKT Z	720	720	0.0405	103.6281	GEN345765 H-1SIOUX 2 18.000
FDNS	00NR	3	25SP	G15_076	TO->FROM	GRPRAR1-LNX3345.00 - GRPRAR 345KV CKT Z	720	720	0.0405	103.6278	GEN337764 1-TRACTEBEL UNIT C1
FDNS	00NR	3	25SP	G15_076	TO->FROM	GRPRAR1-LNX3345.00 - GRPRAR 345KV CKT Z	720	720	0.0405	103.6278	GEN337765 1-TRACTEBEL UNIT C2
FDNS	00NR	3	25SP	G15_076	TO->FROM	GRPRAR1-LNX3345.00 - GRPRAR 345KV CKT Z	720	720	0.0405	103.6275	GEN336446 1-MICHOUD UNIT #2
FDNS	00NR	3	25SP	G15_076	TO->FROM	GRPRAR1-LNX3345.00 - GRPRAR 345KV CKT Z	720	720	0.04107	103.6258	CHADRON - DUNLAP 115KV CKT 1
FDNS	00NR	3	25SP	G15_076	TO->FROM	GRPRAR1-LNX3345.00 - GRPRAR 345KV CKT Z	720	720	0.04108	103.6184	WITTEN 4 230.00 () 230/115/13.8KV TRANSFORMER CKT 1
FDNS	00NR	3	25SP	G15_076	TO->FROM	GRPRAR1-LNX3345.00 - GRPRAR 345KV CKT Z	720	720	0.04054	103.6004	FERGSFL4 230.00 - GRE-SILVRLK4230.00 230KV CKT 1
FDNS	00NR	3	25SP	G15_076	TO->FROM	GRPRAR1-LNX3345.00 - GRPRAR 345KV CKT Z	720	720	0.04051	103.5991	BALTA - MCHENRY 230KV CKT 1
FDNS	00NR	3	25SP	G15_076	TO->FROM	GRPRAR1-LNX3345.00 - GRPRAR 345KV CKT Z	720	720	0.04155	103.5943	MARTIN - SHANNON 115KV CKT 1
FDNS	00NR	3	25SP	G15_076	TO->FROM	GRPRAR1-LNX3345.00 - GRPRAR 345KV CKT Z	720	720	0.0405	103.5894	GEN501823 1-TECHE UNIT 3
FDNS	00NR	3	25SP	G15_076	TO->FROM	GRPRAR1-LNX3345.00 - GRPRAR 345KV CKT Z	720	720	0.04064	103.5892	GRE-CEDARMT3345.00 - HELENA 345KV CKT 1
FDNS	00NR	3	25SP	G15_076	TO->FROM	GRPRAR1-LNX3345.00 - GRPRAR 345KV CKT Z	720	720	0.04064	103.5892	GRE-CEDARMT3345.00 - HELENA 345KV CKT 2
FDNS	00NR	3	25SP	G15_076	TO->FROM	GRPRAR1-LNX3345.00 - GRPRAR 345KV CKT Z	720	720	0.0405	103.5886	GEN336242 1-1NMIL ST1 18.000
FDNS	00NR	3	25SP	G15_076	TO->FROM	GRPRAR1-LNX3345.00 - GRPRAR 345KV CKT Z	720	720	0.0405	103.5802	GEN636641 1-LOUISA UNIT 1
FDNS	00NR	3	25SP	G15_076	TO->FROM	GRPRAR1-LNX3345.00 - GRPRAR 345KV CKT Z	720	720	0.04069	103.578	HAMPTON CORNER - NORTH ROCHESTER 345KV CKT 1
FDNS	00NR	3	25SP	G15_076	TO->FROM	GRPRAR1-LNX3345.00 - GRPRAR 345KV CKT Z	720	720	0.0405	103.5772	P13:230-345:NPPD:NUCOR-1
FDNS	00NR	3	25SP	G15_076	TO->FROM	GRPRAR1-LNX3345.00 - GRPRAR 345KV CKT Z	720	720	0.04299	103.5731	OAHE - PHILIP TAP 230KV CKT 1
FDNS	00NR	3	25SP	G15_076	TO->FROM	GRPRAR1-LNX3345.00 - GRPRAR 345KV CKT Z	720	720	0.04124	103.5722	DENISON - SIOUX CITY 230KV CKT 1
FDNS	00NR	3	25SP	G15_076	TO->FROM	GRPRAR1-LNX3345.00 - GRPRAR 345KV CKT Z	720	720	0.04163	103.5616	PLYMOUTH - SIOUX CITY 161KV CKT 1
FDNS	00NR	3	25SP	G15_076	TO->FROM	GRPRAR1-LNX3345.00 - GRPRAR 345KV CKT Z	720	720	0.04163	103.5616	PLYMOUTH - SIOUX CITY 161KV CKT 1
FDNS	00NR	3	25SP	G15_076	TO->FROM	GRPRAR1-LNX3345.00 - GRPRAR 345KV CKT Z	720	720	0.0405	103.5616	GEN334030 1-FRONTIER UNIT 1
FDNS	00NR	3	25SP	G15_076	TO->FROM	GRPRAR1-LNX3345.00 - GRPRAR 345KV CKT Z	720	720	0.0405	103.5613	GEN334031 1-FRONTIER UNIT 2
FDNS	00NR	3	25SP	G15_076	TO->FROM	GRPRAR1-LNX3345.00 - GRPRAR 345KV CKT Z	720	720	0.0405	103.5595	GEN345756 H-1SIOUX 1 18.000
FDNS	00NR	3	25SP	G15_076	TO->FROM	GRPRAR1-LNX3345.00 - GRPRAR 345KV CKT Z	720	720	0.04061	103.5581	GRE-CEDARMT3345.00 - LYON COUNTY 345KV CKT 2
FDNS	00NR	3	25SP	G15_076	TO->FROM	GRPRAR1-LNX3345.00 - GRPRAR 345KV CKT Z	720	720	0.0405	103.557	GEN562912 1-G15053_3 0.6900
FDNS	00NR	3	25SP	G15_076	TO->FROM	GRPRAR1-LNX3345.00 - GRPRAR 345KV CKT Z	720	720	0.0405	103.5557	GEN338443 1-PANDA S1
FDNS	00NR	3	25SP	G15_076	TO->FROM	GRPRAR1-LNX3345.00 - GRPRAR 345KV CKT Z	720	720	0.04061	103.5555	GRE-CEDARMT3345.00 - LYON COUNTY 345KV CKT 1
FDNS	00NR	3	25SP	G15_076	TO->FROM	GRPRAR1-LNX3345.00 - GRPRAR 345KV CKT Z	720	720	0.04074	103.5546	WAYSIDE (WAYSIDE T1) 230/115/13.8KV TRANSFORMER CKT 1
FDNS	00NR	3	25SP	G15_076	TO->FROM	GRPRAR1-LNX3345.00 - GRPRAR 345KV CKT Z	720	720	0.04074	103.5543	CHADRON - WAYSIDE 115KV CKT 1
FDNS	00NR	3	25SP	G15_076	TO->FROM	GRPRAR1-LNX3345.00 - GRPRAR 345KV CKT Z	720	720	0.04074	103.5543	P13:115-230:NPPD:WAYSIDE4:T1
FDNS	00NR	3	25SP	G15_076	TO->FROM	GRPRAR1-LNX3345.00 - GRPRAR 345KV CKT Z	720	720	0.0405	103.551	GEN336944 1-REX BROWN
FDNS	00NR	3	25SP	G15_076	TO->FROM	GRPRAR1-LNX3345.00 - GRPRAR 345KV CKT Z	720	720	0.0405	103.5493	GEN345832 1-1TS G1 13.800
FDNS	00NR	3	25SP	G15_076	TO->FROM	GRPRAR1-LNX3345.00 - GRPRAR 345KV CKT Z	720	720	0.0405	103.549	P12:345:GRDA:CHOUTEAU-SPORTSMANACRES
FDNS	00NR	3	25SP	G15_076	TO->FROM	GRPRAR1-LNX3345.00 - GRPRAR 345KV CKT Z	720	720	0.0405	103.5489	GEN345841 2-1TS G2 13.800
FDNS	00NR	3	25SP	G15_076	TO->FROM	GRPRAR1-LNX3345.00 - GRPRAR 345KV CKT Z	720	720	0.0405	103.5487	GEN501970 1-EVANGELINE UNIT 7
FDNS	00NR	3	25SP	G15_076	TO->FROM	GRPRAR1-LNX3345.00 - GRPRAR 345KV CKT Z	720	720	0.0386	103.5483	FT RANDAL - WHITE SWAN 115KV CKT 1
FDNS	00NR	3	25SP	G15_076	TO->FROM	GRPRAR1-LNX3345.00 - GRPRAR 345KV CKT Z	720	720	0.0405	103.5414	GEN335612 1-WILLOW GLENN UNIT#2
FDNS	00NR	3	20SP	G15_076	TO->FROM	GRPRAR1-LNX3345.00 - GRPRAR 345KV CKT Z	720	720	0.03969	103.5229	NELIGH - PETERSBRG.N7115.00 115KV CKT 1
FDNS	00NR	3	20SP	G15_076	TO->FROM	GRPRAR1-LNX3345.00 - GRPRAR 345KV CKT Z	720	720	0.03969	103.4689	PETERSBRG.N7115.00 - PETERSBURG 115KV CKT Z1
FDNS	00NR	3	20SP	G15_076	TO->FROM	GRPRAR1-LNX3345.00 - GRPRAR 345KV CKT Z	720	720	0.03969	103.4667	P12:115:NPPD:1168B:ALBION 7:PETERSBRG.N7:BTB
FDNS	00NR	3	20SP	G15_076	TO->FROM	GRPRAR1-LNX3345.00 - GRPRAR 345KV CKT Z	720	720	0.04037	103.4657	BUCKNER7 345.00 - SPEARVILLE 345KV CKT 1
FDNS	00NR	3	20SP	G15_076	TO->FROM	GRPRAR1-LNX3345.00 - GRPRAR 345KV CKT Z	720	720	0.04037	103.4657	BUCKNER7 345.00 - SPEARVILLE 345KV CKT 1
FDNS	00NR	3	25SP	G15_076	TO->FROM	GRPRAR1-LNX3345.00 - GRPRAR 345KV CKT Z	720	720	0.0405	103.4398	GEN563282 1-G15094_3 0.6900
FDNS	00NR	3	20SP	G15_076	TO->FROM	GRPRAR1-LNX3345.00 - GRPRAR 345KV CKT Z	720	720	0.04299	103.4196	MINGO - RED WILLOW 345KV CKT 1
FDNS	00NR	3	20SP	G15_076	TO->FROM	GRPRAR1-LNX3345.00 - GRPRAR 345KV CKT Z	720	720	0.04299	103.4196	MINGO - RED WILLOW 345KV CKT 1
FDNS	00NR	3	20SP	G15_076	TO->FROM	GRPRAR1-LNX3345.00 - GRPRAR 345KV CKT Z	720	720	0.04104	103.4178	103RD & ROKEBY - MOORE 345KV CKT 1
FDNS	00NR	3	20SP	G15_076	TO->FROM	GRPRAR1-LNX3345.00 - GRPRAR 345KV CKT Z	720	720	0.04104	103.4178	103RD & ROKEBY - MOORE 345KV CKT 1

SOLUTION	GROUP	SCENARIO	SEASON	SOURCE	DIRECTION	MONITORED ELEMENT	RATEA (MVA)	RATEB(MVA)	TDF	TC%LOADING (% MVA)	CONTINGENCY
FDNS	00NR	3	20SP	G15_076	TO->FROM	GRPRAR1-LNX3345.00 - GRPRAR 345KV CKT Z	720	720	0.04319	103.402	AINSWORTH - AINSWORTH 115KV CKT 1
FDNS	00NR	3	20SP	G15_076	TO->FROM	GRPRAR1-LNX3345.00 - GRPRAR 345KV CKT Z	720	720	0.04036	103.4005	FT THOMPSON - OAHE 230KV CKT 1
FDNS	00NR	3	20SP	G15_076	TO->FROM	GRPRAR1-LNX3345.00 - GRPRAR 345KV CKT Z	720	720	0.04036	103.4005	FT THOMPSON - OAHE 230KV CKT 1
FDNS	00NR	3	20SP	G15_076	TO->FROM	GRPRAR1-LNX3345.00 - GRPRAR 345KV CKT Z	720	720	0.04036	103.4005	FT THOMPSON - OAHE 230KV CKT 2
FDNS	00NR	3	20SP	G15_076	TO->FROM	GRPRAR1-LNX3345.00 - GRPRAR 345KV CKT Z	720	720	0.04036	103.4005	FT THOMPSON - OAHE 230KV CKT 2
FDNS	00NR	3	20SP	G15_076	TO->FROM	GRPRAR1-LNX3345.00 - GRPRAR 345KV CKT Z	720	720	0.04152	103.3872	ANTELOPE 7115.00 - COUNTY LINE 115KV CKT 1
FDNS	00NR	3	20SP	G15_076	TO->FROM	GRPRAR1-LNX3345.00 - GRPRAR 345KV CKT Z	720	720	0.04037	103.3737	FT THOMPSON - OAHE 230KV CKT 3
FDNS	00NR	3	20SP	G15_076	TO->FROM	GRPRAR1-LNX3345.00 - GRPRAR 345KV CKT Z	720	720	0.04037	103.3737	FT THOMPSON - OAHE 230KV CKT 3
FDNS	00NR	3	20SP	G15_076	TO->FROM	GRPRAR1-LNX3345.00 - GRPRAR 345KV CKT Z	720	720	0.04037	103.3737	FT THOMPSON - OAHE 230KV CKT 4
FDNS	00NR	3	20SP	G15_076	TO->FROM	GRPRAR1-LNX3345.00 - GRPRAR 345KV CKT Z	720	720	0.04037	103.3737	FT THOMPSON - OAHE 230KV CKT 4
FDNS	00NR	3	20SP	G15_076	TO->FROM	GRPRAR1-LNX3345.00 - GRPRAR 345KV CKT Z	720	720	0.04089	103.3519	AXTELL - POST ROCK 345KV CKT 1
FDNS	00NR	3	20SP	G15_076	TO->FROM	GRPRAR1-LNX3345.00 - GRPRAR 345KV CKT Z	720	720	0.0402	103.3485	BISMARK - L3 HAWDON 230KV CKT 1
FDNS	00NR	3	20SP	G15_076	TO->FROM	GRPRAR1-LNX3345.00 - GRPRAR 345KV CKT Z	720	720	0.04045	103.3449	FALLOW 3 345.00 - GRIMES 345KV CKT 1
FDNS	00NR	3	20SP	G15_076	TO->FROM	GRPRAR1-LNX3345.00 - GRPRAR 345KV CKT Z	720	720	0.0403	103.3448	G11_051T 345.00 - WOODWARD DISTRICT EHV 345KV CKT 1
FDNS	00NR	3	20SP	G15_076	TO->FROM	GRPRAR1-LNX3345.00 - GRPRAR 345KV CKT Z	720	720	0.04018	103.3344	GEN659147 1-PIONEER 1G13.800
FDNS	00NR	3	20SP	G15_076	TO->FROM	GRPRAR1-LNX3345.00 - GRPRAR 345KV CKT Z	720	720	0.04018	103.3344	GEN659158 2-PIONEER G213.800
FDNS	00NR	3	20SP	G15_076	TO->FROM	GRPRAR1-LNX3345.00 - GRPRAR 345KV CKT Z	720	720	0.04018	103.3344	GEN659159 3-PIONEER G313.800
FDNS	00NR	3	20SP	G15_076	TO->FROM	GRPRAR1-LNX3345.00 - GRPRAR 345KV CKT Z	720	720	0.04018	103.3339	GEN659148 1-LONESMCRK 1G13.800
FDNS	00NR	3	20SP	G15_076	TO->FROM	GRPRAR1-LNX3345.00 - GRPRAR 345KV CKT Z	720	720	0.04018	103.3339	GEN659156 2-LONESMCRK 2G13.800
FDNS	00NR	3	20SP	G15_076	TO->FROM	GRPRAR1-LNX3345.00 - GRPRAR 345KV CKT Z	720	720	0.04018	103.3339	GEN659157 3-LONESMCRK 3G13.800
FDNS	00NR	3	20SP	G15_076	TO->FROM	GRPRAR1-LNX3345.00 - GRPRAR 345KV CKT Z	720	720	0.03145	103.3281	SIOUX CITY - TWIN CHURCH 230KV CKT 1
FDNS	00NR	3	20SP	G15_076	TO->FROM	GRPRAR1-LNX3345.00 - GRPRAR 345KV CKT Z	720	720	0.04018	103.3274	GEN657964 1-ASH2GEN9 0.5750
FDNS	00NR	3	20SP	G15_076	TO->FROM	GRPRAR1-LNX3345.00 - GRPRAR 345KV CKT Z	720	720	0.04018	103.3266	GEN672367 1-MERIDIAN GENERATOR 1 GT1
FDNS	00NR	3	20SP	G15_076	TO->FROM	GRPRAR1-LNX3345.00 - GRPRAR 345KV CKT Z	720	720	0.04018	103.3265	GEN672368 2-MERIDIAN GENERATOR 2 GT2
FDNS	00NR	3	20SP	G15_076	TO->FROM	GRPRAR1-LNX3345.00 - GRPRAR 345KV CKT Z	720	720	0.04018	103.3256	GEN672358 1-CHAPLN1W 0.6900
FDNS	00NR	3	20SP	G15_076	TO->FROM	GRPRAR1-LNX3345.00 - GRPRAR 345KV CKT Z	720	720	0.04015	103.3063	G14-021T 345.00 - MULLNCR7 345.00 345KV CKT 1
FDNS	00NR	3	20SP	G15_076	TO->FROM	GRPRAR1-LNX3345.00 - GRPRAR 345KV CKT Z	720	720	0.04015	103.3037	G15-005T 345.00 - MULLNCR7 345.00 345KV CKT 1
FDNS	00NR	3	20SP	G15_076	TO->FROM	GRPRAR1-LNX3345.00 - GRPRAR 345KV CKT Z	720	720	0.04018	103.303	GEN672349 3-CORY COGEN GENERATOR 3 ST
FDNS	00NR	3	20SP	G15_076	TO->FROM	GRPRAR1-LNX3345.00 - GRPRAR 345KV CKT Z	720	720	0.04018	103.3007	GEN672350 1-NIPAWIN GENERATOR 1
FDNS	00NR	3	20SP	G15_076	TO->FROM	GRPRAR1-LNX3345.00 - GRPRAR 345KV CKT Z	720	720	0.04018	103.3007	GEN672351 2-NIPAWIN GENERATOR 2
FDNS	00NR	3	20SP	G15_076	TO->FROM	GRPRAR1-LNX3345.00 - GRPRAR 345KV CKT Z	720	720	0.04018	103.3007	GEN672352 3-NIPAWIN GENERATOR 3
FDNSLock	00NR	3	20SP	G15_076	TO->FROM	GRPRAR1-LNX3345.00 - GRPRAR 345KV CKT Z	720	720	0.04006	103.2962	WATERTOWN (WT2 KU1A) 345/230/13.8KV TRANSFORMER CKT 1
FDNS	00NR	3	20SP	G15_076	TO->FROM	GRPRAR1-LNX3345.00 - GRPRAR 345KV CKT Z	720	720	0.04033	103.2949	POST ROCK (POSTROCK T1) 345/230/13.8KV TRANSFORMER CKT 1
FDNS	00NR	3	20SP	G15_076	TO->FROM	GRPRAR1-LNX3345.00 - GRPRAR 345KV CKT Z	720	720	0.04018	103.2934	GEN600012 2-BLACK DOG GEN 2
FDNS	00NR	3	20SP	G15_076	TO->FROM	GRPRAR1-LNX3345.00 - GRPRAR 345KV CKT Z	720	720	0.04174	103.2839	G15061_T 345.00 - SETAB 345KV CKT 1
FDNS	00NR	3	20SP	G15_076	TO->FROM	GRPRAR1-LNX3345.00 - GRPRAR 345KV CKT Z	720	720	0.03895	103.2807	COOPER - MOORE 345KV CKT 1
FDNS	00NR	3	20SP	G15_076	TO->FROM	GRPRAR1-LNX3345.00 - GRPRAR 345KV CKT Z	720	720	0.04018	103.2748	GEN590010 1-ERCOT EQUIVALENCE
FDNS	00NR	3	20SP	G15_076	TO->FROM	GRPRAR1-LNX3345.00 - GRPRAR 345KV CKT Z	720	720	0.04018	103.2613	GEN652548 5-FT RANDAL
FDNS	00NR	3	20SP	G15_076	TO->FROM	GRPRAR1-LNX3345.00 - GRPRAR 345KV CKT Z	720	720	0.04018	103.2613	GEN652549 7-FT RANDAL
FDNS	00NR	3	20SP	G15_076	TO->FROM	GRPRAR1-LNX3345.00 - GRPRAR 345KV CKT Z	720	720	0.04018	103.2612	GEN652546 1-FT RANDAL
FDNS	00NR	3	20SP	G15_076	TO->FROM	GRPRAR1-LNX3345.00 - GRPRAR 345KV CKT Z	720	720	0.04018	103.2586	EMERY 161/18.0KV TRANSFORMER CKT 1
FDNS	00NR	3	20SP	G15_076	TO->FROM	GRPRAR1-LNX3345.00 - GRPRAR 345KV CKT Z	720	720	0.04015	103.2569	G15-005T 345.00 - SIBLEY 345KV CKT 1
FDNS	00NR	3	20SP	G15_076	TO->FROM	GRPRAR1-LNX3345.00 - GRPRAR 345KV CKT Z	720	720	0.03828	103.2569	COLUMEAST - NW68TH & HOLDREGE 345KV CKT 1
FDNS	00NR	3	20SP	G15_076	TO->FROM	GRPRAR1-LNX3345.00 - GRPRAR 345KV CKT Z	720	720	0.03828	103.2569	COLUMEAST - NW68TH & HOLDREGE 345KV CKT 1
FDNS	00NR	3	20SP	G15_076	TO->FROM	GRPRAR1-LNX3345.00 - GRPRAR 345KV CKT Z	720	720	0.04018	103.2567	GEN652547 3-FT RANDAL
FDNS	00NR	3	20SP	G15_076	TO->FROM	GRPRAR1-LNX3345.00 - GRPRAR 345KV CKT Z	720	720	0.04018	103.2481	GEN590011 2-ERCOT EQUIVALENCE
FDNS	00NR	3	20SP	G15_076	TO->FROM	GRPRAR1-LNX3345.00 - GRPRAR 345KV CKT Z	720	720	0.04047	103.2386	LARAMIE RIVER - STEGALL 345KV CKT 1
FDNS	00NR	3	20SP	G15_076	TO->FROM	GRPRAR1-LNX3345.00 - GRPRAR 345KV CKT Z	720	720	0.04018	103.2384	GEN300003 1-THOMAS HILL UNIT 3
FDNS	00NR	3	20SP	G15_076	TO->FROM	GRPRAR1-LNX3345.00 - GRPRAR 345KV CKT Z	720	720	0.04018	103.2296	GEN672339 16-QE 16G 13.800
FDNS	00NR	3	20SP	G15_076	TO->FROM	GRPRAR1-LNX3345.00 - GRPRAR 345KV CKT Z	720	720	0.04018	103.2295	GEN659290 1-EDGECOL
FDNS	00NR	3	20SP	G15_076	TO->FROM	GRPRAR1-LNX3345.00 - GRPRAR 345KV CKT Z	720	720	0.04018	103.227	GEN600046 1-MECST
FDNS	00NR	3	20SP	G15_076	TO->FROM	GRPRAR1-LNX3345.00 - GRPRAR 345KV CKT Z	720	720	0.04024	103.2162	DRAYTON - LETELLIER 230KV CKT 1
FDNS	00NR	3	20SP	G15_076	TO->FROM	GRPRAR1-LNX3345.00 - GRPRAR 345KV CKT Z	720	720	0.04018	103.2157	GEN672393 2-NBECST2G 13.800
FDNS	00NR	3	20SP	G15_076	TO->FROM	GRPRAR1-LNX3345.00 - GRPRAR 345KV CKT Z	720	720	0.04018	103.2105	GEN600050 1-FEP
FDNS	00NR	3	20SP	G15_076	TO->FROM	GRPRAR1-LNX3345.00 - GRPRAR 345KV CKT Z	720	720	0.04018	103.2001	GEN620324 3-HOOT LAKE 3 GEN
FDNS	00NR	3	20SP	G15_076	TO->FROM	GRPRAR1-LNX3345.00 - GRPRAR 345KV CKT Z	720	720	0.0414	103.1946	P12:115:NPPD:1163B:NELIGH 7:NORFK.N7:BTB
FDNS	00NR	3	20SP	G15_076	TO->FROM	GRPRAR1-LNX3345.00 - GRPRAR 345KV CKT Z	720	720	0.04018	103.1944	GEN672342 3-QUEEN ELIZABETH GENERATOR 3
FDNS	00NR	3	20SP	G15_076	TO->FROM	GRPRAR1-LNX3345.00 - GRPRAR 345KV CKT Z	720	720	0.03735	103.1943	FT THOMPSON (FT2 KU1A) 345/230/13.8KV TRANSFORMER CKT 1
FDNS	00NR	3	20SP	G15_076	TO->FROM	GRPRAR1-LNX3345.00 - GRPRAR 345KV CKT Z	720	720	0.04027	103.1937	ANTELOP-LNX3345.00 - BRDLAND-LNX3345.00 345KV CKT 1
FDNS	00NR	3	20SP	G15_076	TO->FROM	GRPRAR1-LNX3345.00 - GRPRAR 345KV CKT Z	720	720	0.03734	103.1917	FT THOMPSON (FT2 KU1B) 345/230/13.8KV TRANSFORMER CKT 1
FDNS	00NR	3	20SP	G15_076	TO->FROM	GRPRAR1-LNX3345.00 - GRPRAR 345KV CKT Z	720	720	0.04018	103.1871	GEN652410 3-FT PECK
FDNS	00NR	3	20SP	G15_076	TO->FROM	GRPRAR1-LNX3345.00 - GRPRAR 345KV CKT Z	720	720	0.04018	103.1835	LADISH 115/13.2KV TRANSFORMER CKT 1
FDNS	00NR	3	20SP	G15_076	TO->FROM	GRPRAR1-LNX3345.00 - GRPRAR 345KV CKT Z	720	720	0.04083	103.1811	THEDFRD3 345.00 (THEDFORDT2) 345/115/13.8KV TRANSFORMER CKT 1
FDNS	00NR	3	20SP	G15_076	TO->FROM	GRPRAR1-LNX3345.00 - GRPRAR 345KV CKT Z	720	720	0.04018	103.1741	GEN600047 1-MECCT1
FDNS	00NR	3	20SP	G15_076	TO->FROM	GRPRAR1-LNX3345.00 - GRPRAR 345KV CKT Z	720	720	0.03822	103.1686	COLUMEAST - SHELL CREEK 345KV CKT 1
FDNS	00NR	3	20SP	G15_076	TO->FROM	GRPRAR1-LNX3345.00 - GRPRAR 345KV CKT Z	720	720	0.04018	103.1616	GEN660003 3-HURON WEST PARK
FDNS	00NR	3	20SP	G15_076	TO->FROM	GRPRAR1-LNX3345.00 - GRPRAR 345KV CKT Z	720	720	0.04018	103.1506	GEN660001 2-ABERDEEN SIEBRECHT
FDNS	00NR	3	20SP	G15_076	TO->FROM	GRPRAR1-LNX3345.00 - GRPRAR 345KV CKT Z	720	720	0.04018	103.1267	GEN600063 1-COLVILLE GEN 1
FDNS	00NR	3	20SP	G15_076	TO->FROM	GRPRAR1-LNX3345.00 - GRPRAR 345KV CKT Z	720	720	0.04018	103.1267	GEN600064 2-COLVILLE GEN 2
FDNS	00NR	3	20SP	G15_076	TO->FROM	GRPRAR1-LNX3345.00 - GRPRAR 345KV CKT Z	720	720	0.04018	103.1243	GEN652414 4-FT PECK
FDNS	00NR	3	20SP	G15_076	TO->FROM	GRPRAR1-LNX3345.00 - GRPRAR 345KV CKT Z	720	720	0.04018	103.1243	GEN652415 5-FT PECK
FDNS	00NR	3	20SP	G15_076	TO->FROM	GRPRAR1-LNX3345.00 - GRPRAR 345KV CKT Z	720	720	0.04169	103.1221	GERALD GENTLEMAN STATION - RED WILLOW 345KV CKT 1
FDNS	00NR	3	20SP	G15_076	TO->FROM	GRPRAR1-LNX3345.00 - GRPRAR 345KV CKT Z	720	720	0.04018	103.1131	GEN681522 3-GENOA 3
FDNS	00NR	3	20SP	G15_076	TO->FROM	GRPRAR1-LNX3345.00 - GRPRAR 345KV CKT Z	720	720	0.04018	103.1129	GEN652345 W-G07_023IS_2 0.6900
FDNS	00NR	3	20SP	G15_076	TO->FROM	GRPRAR1-LNX3345.00 - GRPRAR 345KV CKT Z	720	720	0.04018	103.1121	GEN300007 1-NEW MADRID UNIT 2
FDNS	00NR	3	20SP	G15_076	TO->FROM	GRPRAR1-LNX3345.00 - GRPRAR 345KV CKT Z	720	720	0.04018	103.108	GEN 11104 1-J262_GEN 0.6000
FDNS	00NR	3	20SP	G15_076	TO->FROM	GRPRAR1-LNX3345.00 - GRPRAR 345KV CKT Z	720	720	0.04018	103.108	GEN 11108 1-J263_GEN 0.6000
FDNS	00NR	3	20SP	G15_076	TO->FROM	GRPRAR1-LNX3345.00 - GRPRAR 345KV CKT Z	720	720	0.04018	103.107	GEN300006 1-NEW MADRID UNIT 1
FDNS	00NR	3	17SP	G15_076	TO->FROM	GRPRAR1-LNX3345.00 - GRPRAR 345KV CKT Z	720	720	0.04173	103.1052	GEN615001 1-COAL CREEK

SOLUTION	GROUP	SCENARIO	SEASON	SOURCE	DIRECTION	MONITORED ELEMENT	RATEA (MVA)	RATEB(MVA)	TDF	TC%LOADING (% MVA)	CONTINGENCY
FDNS	00NR	3	20SP	G15_076	TO->FROM	GRPRAR1-LNX3345.00 - GRPRAR 345KV CKT Z	720	720	0.04018	103.1001	GEN600043 7-BLUE LAKE5
FDNS	00NR	3	20SP	G15_076	TO->FROM	GRPRAR1-LNX3345.00 - GRPRAR 345KV CKT Z	720	720	0.04018	103.1001	GEN600044 8-BLUE LAKE6
FDNS	00NR	3	20SP	G15_076	TO->FROM	GRPRAR1-LNX3345.00 - GRPRAR 345KV CKT Z	720	720	0.04018	103.0859	G830_SUB 115.00 - GRE-MCHENRY7115.00 115KV CKT 1
FDNS	00NR	3	25SP	G15_076	TO->FROM	GRPRAR1-LNX3345.00 - GRPRAR 345KV CKT Z	720	720	0.0405	103.0801	BASE CASE
FDNS	00NR	3	20SP	G15_076	TO->FROM	GRPRAR1-LNX3345.00 - GRPRAR 345KV CKT Z	720	720	0.04018	103.0751	G830_SUB 115.00 115/34.5KV TRANSFORMER CKT 1
FDNS	00NR	3	20SP	G15_076	TO->FROM	GRPRAR1-LNX3345.00 - GRPRAR 345KV CKT Z	720	720	0.04018	103.0749	GEN600014 4-BLACK DOG GEN 4
FDNS	00NR	3	20SP	G15_076	TO->FROM	GRPRAR1-LNX3345.00 - GRPRAR 345KV CKT Z	720	720	0.04018	103.0713	GEN600065 7-HIGH BRIDGE
FDNS	00NR	3	20SP	G15_076	TO->FROM	GRPRAR1-LNX3345.00 - GRPRAR 345KV CKT Z	720	720	0.04018	103.0713	GEN600066 8-HIGH BRIDGE
FDNS	00NR	3	20SP	G15_076	TO->FROM	GRPRAR1-LNX3345.00 - GRPRAR 345KV CKT Z	720	720	0.04018	103.0683	GEN600011 5-BLACK DOG GEN 1
FDNS	00NR	3	20SP	G15_076	TO->FROM	GRPRAR1-LNX3345.00 - GRPRAR 345KV CKT Z	720	720	0.04018	103.058	GEN600071 10-RIVER SIDE
FDNS	00NR	3	20SP	G15_076	TO->FROM	GRPRAR1-LNX3345.00 - GRPRAR 345KV CKT Z	720	720	0.04018	103.0578	GEN600070 9-RIVER SIDE
FDNS	00NR	3	20SP	G15_076	TO->FROM	GRPRAR1-LNX3345.00 - GRPRAR 345KV CKT Z	720	720	0.04018	103.0556	LANSING WEST 161/22.0KV TRANSFORMER CKT 1
FDNS	00NR	3	20SP	G15_076	TO->FROM	GRPRAR1-LNX3345.00 - GRPRAR 345KV CKT Z	720	720	0.04018	103.0467	GEN600007 7-RIVERSIDE GEN 7
FDNS	00NR	3	20SP	G15_076	TO->FROM	GRPRAR1-LNX3345.00 - GRPRAR 345KV CKT Z	720	720	0.04018	103.0328	GEN600017 C-LS POWER CT
FDNS	00NR	3	20SP	G15_076	TO->FROM	GRPRAR1-LNX3345.00 - GRPRAR 345KV CKT Z	720	720	0.04018	103.0228	GEN600045 4-ANSON
FDNS	00NR	3	20SP	G15_076	TO->FROM	GRPRAR1-LNX3345.00 - GRPRAR 345KV CKT Z	720	720	0.0403	103.009	G11_051T 345.00 - TATONGA7 345.00 345KV CKT 1
FDNS	00NR	3	17SP	G15_076	TO->FROM	GRPRAR1-LNX3345.00 - GRPRAR 345KV CKT Z	720	720	0.04173	102.9742	GEN615002 2-COAL CREEK
FDNS	00NR	3	20SP	G15_076	TO->FROM	GRPRAR1-LNX3345.00 - GRPRAR 345KV CKT Z	720	720	0.04027	102.9732	BRDLAND-LNX3345.00 - HURON 345KV CKT Z
FDNS	00NR	3	20SP	G15_076	TO->FROM	GRPRAR1-LNX3345.00 - GRPRAR 345KV CKT Z	720	720	0.04027	102.9726	BROADLAND - HURON 230KV CKT 1
FDNS	00NR	3	20SP	G15_076	TO->FROM	GRPRAR1-LNX3345.00 - GRPRAR 345KV CKT Z	720	720	0.04027	102.9726	HURON (BD KU2A) 345/230/13.8KV TRANSFORMER CKT 1
FDNS	00NR	3	20SP	G15_076	TO->FROM	GRPRAR1-LNX3345.00 - GRPRAR 345KV CKT Z	720	720	0.04027	102.9726	HURON (BD KU2A) 345/230/13.8KV TRANSFORMER CKT 1
FDNS	00NR	3	20SP	G15_076	TO->FROM	GRPRAR1-LNX3345.00 - GRPRAR 345KV CKT Z	720	720	0.04018	102.9722	GEN659294 1-WILTONCOL9
FDNS	00NR	3	20SP	G15_076	TO->FROM	GRPRAR1-LNX3345.00 - GRPRAR 345KV CKT Z	720	720	0.04018	102.9721	GEN659273 2-GROTON SYNC COND
FDNS	00NR	3	20SP	G15_076	TO->FROM	GRPRAR1-LNX3345.00 - GRPRAR 345KV CKT Z	720	720	0.04027	102.9675	P12:345:UMZB:# 103 #: BD IN SD. LOSS OF LINE
FDNS	00NR	3	20SP	G15_076	TO->FROM	GRPRAR1-LNX3345.00 - GRPRAR 345KV CKT Z	720	720	0.04027	102.966	P12:345:UMZB:# 102 #: AVS BD IN ND. AVS BRD LR
FDNS	00NR	3	20SP	G15_076	TO->FROM	GRPRAR1-LNX3345.00 - GRPRAR 345KV CKT Z	720	720	0.04018	102.9651	GEN615052 1-CAMBRIDGE GENERATING STATION
FDNS	00NR	3	20SP	G15_076	TO->FROM	GRPRAR1-LNX3345.00 - GRPRAR 345KV CKT Z	720	720	0.04018	102.9501	GEN615021 1-GRE-ER 14G 16.000
FDNS	00NR	3	20SP	G15_076	TO->FROM	GRPRAR1-LNX3345.00 - GRPRAR 345KV CKT Z	720	720	0.04027	102.927	ANTELOP-LNX3345.00 - ANTELOPE VALLEY 345KV CKT Z
FDNS	00NR	3	20SP	G15_076	TO->FROM	GRPRAR1-LNX3345.00 - GRPRAR 345KV CKT Z	720	720	0.0402	102.918	OAHE - SULLEY BUTTE 230KV CKT 1
FDNS	00NR	3	20SP	G15_076	TO->FROM	GRPRAR1-LNX3345.00 - GRPRAR 345KV CKT Z	720	720	0.04018	102.9135	GEN 10648 1-G830_GEN 0.6900
FDNS	00NR	3	20SP	G15_076	TO->FROM	GRPRAR1-LNX3345.00 - GRPRAR 345KV CKT Z	720	720	0.04018	102.9116	GEN659192 6-LYNN
FDNS	00NR	3	20SP	G15_076	TO->FROM	GRPRAR1-LNX3345.00 - GRPRAR 345KV CKT Z	720	720	0.04018	102.9104	GEN659162 4-RED WLCK
FDNS	00NR	3	20SP	G15_076	TO->FROM	GRPRAR1-LNX3345.00 - GRPRAR 345KV CKT Z	720	720	0.04018	102.9104	GEN659163 5-BLACK WDCK
FDNS	00NR	3	20SP	G15_076	TO->FROM	GRPRAR1-LNX3345.00 - GRPRAR 345KV CKT Z	720	720	0.04018	102.906	GEN659031 1-G12_014IS_4 0.6900
FDNS	00NR	3	20SP	G15_076	TO->FROM	GRPRAR1-LNX3345.00 - GRPRAR 345KV CKT Z	720	720	0.03908	102.8776	HIGHLND 3 345.00 - OBRIEN 3 345.00 345KV CKT 1
FDNS	00NR	3	20SP	G15_076	TO->FROM	GRPRAR1-LNX3345.00 - GRPRAR 345KV CKT Z	720	720	0.04018	102.8744	GEN615015 1-GRE-SPRITWDG13.200
FDNS	00NR	3	20SP	G15_076	TO->FROM	GRPRAR1-LNX3345.00 - GRPRAR 345KV CKT Z	720	720	0.04018	102.8685	GEN660016 1-B_H WIND 0.7000
FDNS	00NR	3	20SP	G15_076	TO->FROM	GRPRAR1-LNX3345.00 - GRPRAR 345KV CKT Z	720	720	0.04018	102.7857	BISONMP4 230.00 - SQUARE BUTTE 230KV CKT 1
FDNS	00NR	3	20SP	G15_076	TO->FROM	GRPRAR1-LNX3345.00 - GRPRAR 345KV CKT Z	720	720	0.0403	102.7809	MATHWSN7 345.00 - TATONGA7 345.00 345KV CKT 1
FDNS	00NR	3	25SP	G15_076	TO->FROM	GRPRAR1-LNX3345.00 - GRPRAR 345KV CKT Z	720	720	0.04	102.7802	NELIGH - PETERSBRG.N7115.00 115KV CKT 1
FDNS	00NR	3	20SP	G15_076	TO->FROM	GRPRAR1-LNX3345.00 - GRPRAR 345KV CKT Z	720	720	0.0402	102.7569	SULLEY BUTTE - SULLYBT-LNX3230.00 230KV CKT Z
FDNS	00NR	3	20SP	G15_076	TO->FROM	GRPRAR1-LNX3345.00 - GRPRAR 345KV CKT Z	720	720	0.0402	102.7564	SULLYBT-LNX3230.00 - WHITLOK 230KV CKT 1
FDNS	00NR	3	20SP	G15_076	TO->FROM	GRPRAR1-LNX3345.00 - GRPRAR 345KV CKT Z	720	720	0.04018	102.7517	GEN600067 9-HIGH BRIDGE
FDNS	00NR	3	20SP	G15_076	TO->FROM	GRPRAR1-LNX3345.00 - GRPRAR 345KV CKT Z	720	720	0.03729	102.7473	HOSKINS - RAUN 345KV CKT 1
FDNS	00NR	3	20SP	G15_076	TO->FROM	GRPRAR1-LNX3345.00 - GRPRAR 345KV CKT Z	720	720	0.03729	102.7473	HOSKINS - RAUN 345KV CKT 1
FDNS	00NR	3	20SP	G15_076	TO->FROM	GRPRAR1-LNX3345.00 - GRPRAR 345KV CKT Z	720	720	0.03612	102.7426	DIXONCO 230.00 - TWIN CHURCH 230KV CKT 1
FDNS	00NR	3	20SP	G15_076	TO->FROM	GRPRAR1-LNX3345.00 - GRPRAR 345KV CKT Z	720	720	0.04018	102.732	GEN672304 4-BOUNDARY DAM GENERATOR 4
FDNS	00NR	3	20SP	G15_076	TO->FROM	GRPRAR1-LNX3345.00 - GRPRAR 345KV CKT Z	720	720	0.04018	102.732	GEN672305 5-BOUNDARY DAM GENERATOR 5
FDNS	00NR	3	20SP	G15_076	TO->FROM	GRPRAR1-LNX3345.00 - GRPRAR 345KV CKT Z	720	720	0.04018	102.7319	GEN672303 3-BOUNDARY DAM GENERATOR 3
FDNS	00NR	3	20SP	G15_076	TO->FROM	GRPRAR1-LNX3345.00 - GRPRAR 345KV CKT Z	720	720	0.0402	102.7075	P12:230:UMZB:# 114 #: SB IN SD. SB-WK-GH
FDNS	00NR	3	20SP	G15_076	TO->FROM	GRPRAR1-LNX3345.00 - GRPRAR 345KV CKT Z	720	720	0.0402	102.7075	P12:230:UMZB:# 117 #: WK IN SD. SB-WK-GH
FDNS	00NR	3	20SP	G15_076	TO->FROM	GRPRAR1-LNX3345.00 - GRPRAR 345KV CKT Z	720	720	0.04018	102.705	GEN659353 1-DEERCREK CTG18.000
FDNS	00NR	3	20SP	G15_076	TO->FROM	GRPRAR1-LNX3345.00 - GRPRAR 345KV CKT Z	720	720	0.04018	102.7042	GEN659354 1-DEERCREK STG18.000
FDNS	00NR	3	25SP	G15_076	TO->FROM	GRPRAR1-LNX3345.00 - GRPRAR 345KV CKT Z	720	720	0.04	102.7002	PETERSBRG.N7115.00 - PETERSBURG 115KV CKT Z1
FDNS	00NR	3	25SP	G15_076	TO->FROM	GRPRAR1-LNX3345.00 - GRPRAR 345KV CKT Z	720	720	0.04	102.6865	P12:115:NPPD:1168B:ALBION 7:PETERSBRG.N7:BTB
FDNS	00NR	3	20SP	G15_076	TO->FROM	GRPRAR1-LNX3345.00 - GRPRAR 345KV CKT Z	720	720	0.04018	102.6802	GEN672392 1-NBECGT1G 18.000
FDNS	00NR	3	25SP	G15_076	TO->FROM	GRPRAR1-LNX3345.00 - GRPRAR 345KV CKT Z	720	720	0.03933	102.6647	COOPER - MOORE 345KV CKT 1
FDNS	00NR	3	20SP	G15_076	TO->FROM	GRPRAR1-LNX3345.00 - GRPRAR 345KV CKT Z	720	720	0.0402	102.6547	GLENHAM - WHITLOK 230KV CKT 1
FDNS	00NR	3	25SP	G15_076	TO->FROM	GRPRAR1-LNX3345.00 - GRPRAR 345KV CKT Z	720	720	0.04068	102.6453	FT THOMPSON - OAHE 230KV CKT 1
FDNS	00NR	3	25SP	G15_076	TO->FROM	GRPRAR1-LNX3345.00 - GRPRAR 345KV CKT Z	720	720	0.04068	102.6453	FT THOMPSON - OAHE 230KV CKT 1
FDNS	00NR	3	25SP	G15_076	TO->FROM	GRPRAR1-LNX3345.00 - GRPRAR 345KV CKT Z	720	720	0.04068	102.6453	FT THOMPSON - OAHE 230KV CKT 2
FDNS	00NR	3	25SP	G15_076	TO->FROM	GRPRAR1-LNX3345.00 - GRPRAR 345KV CKT Z	720	720	0.04068	102.6453	FT THOMPSON - OAHE 230KV CKT 2
FDNS	00NR	3	25SP	G15_076	TO->FROM	GRPRAR1-LNX3345.00 - GRPRAR 345KV CKT Z	720	720	0.04184	102.6254	ANTELOPE 7115.00 - COUNTY LINE 115KV CKT 1
FDNS	00NR	3	25SP	G15_076	TO->FROM	GRPRAR1-LNX3345.00 - GRPRAR 345KV CKT Z	720	720	0.04068	102.6182	FT THOMPSON - OAHE 230KV CKT 3
FDNS	00NR	3	25SP	G15_076	TO->FROM	GRPRAR1-LNX3345.00 - GRPRAR 345KV CKT Z	720	720	0.04068	102.6182	FT THOMPSON - OAHE 230KV CKT 3
FDNS	00NR	3	25SP	G15_076	TO->FROM	GRPRAR1-LNX3345.00 - GRPRAR 345KV CKT Z	720	720	0.04068	102.6182	FT THOMPSON - OAHE 230KV CKT 4
FDNS	00NR	3	25SP	G15_076	TO->FROM	GRPRAR1-LNX3345.00 - GRPRAR 345KV CKT Z	720	720	0.04068	102.6182	FT THOMPSON - OAHE 230KV CKT 4
FDNS	00NR	3	25SP	G15_076	TO->FROM	GRPRAR1-LNX3345.00 - GRPRAR 345KV CKT Z	720	720	0.03178	102.5964	SIOUX CITY - TWIN CHURCH 230KV CKT 1
FDNS	00NR	3	25SP	G15_076	TO->FROM	GRPRAR1-LNX3345.00 - GRPRAR 345KV CKT Z	720	720	0.04075	102.5915	7MAYWOOD 345.00 - 7SPENCER 345.00 345KV CKT 1
FDNS	00NR	3	25SP	G15_076	TO->FROM	GRPRAR1-LNX3345.00 - GRPRAR 345KV CKT Z	720	720	0.04052	102.5876	P12:115:UMZZ:# 232 #: AB IN SD. ABERDEEN A TAP BETWEEN ELLENDALE AND ABERDEEN-SIEBRECHT.
FDNS	00NR	3	25SP	G15_076	TO->FROM	GRPRAR1-LNX3345.00 - GRPRAR 345KV CKT Z	720	720	0.0405	102.5746	GEN672347 1-CORY COGEN GENERATOR 1 GT1
FDNS	00NR	3	25SP	G15_076	TO->FROM	GRPRAR1-LNX3345.00 - GRPRAR 345KV CKT Z	720	720	0.0405	102.5746	GEN672348 2-CORY COGEN GENERATOR 2 GT2
FDNS	00NR	3	25SP	G15_076	TO->FROM	GRPRAR1-LNX3345.00 - GRPRAR 345KV CKT Z	720	720	0.04047	102.5736	G14-021T 345.00 - MULLNCR7 345.00 345KV CKT 1
FDNS	00NR	3	25SP	G15_076	TO->FROM	GRPRAR1-LNX3345.00 - GRPRAR 345KV CKT Z	720	720	0.04051	102.5727	BISMARK - L3 HAWDON 230KV CKT 1
FDNS	00NR	3	25SP	G15_076	TO->FROM	GRPRAR1-LNX3345.00 - GRPRAR 345KV CKT Z	720	720	0.04047	102.5711	G15-005T 345.00 - MULLNCR7 345.00 345KV CKT 1
FDNS	00NR	3	25SP	G15_076	TO->FROM	GRPRAR1-LNX3345.00 - GRPRAR 345KV CKT Z	720	720	0.0405	102.5709	GEN629072 4-LANSING GENERATOR FOR UNITS NO4 EIA CODE 1
FDNS	00NR	3	25SP	G15_076	TO->FROM	GRPRAR1-LNX3345.00 - GRPRAR 345KV CKT Z	720	720	0.0405	102.5676	GEN300003 1-THOMAS HILL UNIT 3
FDNS	00NR	3	20SP	G15_076	TO->FROM	GRPRAR1-LNX3345.00 - GRPRAR 345KV CKT Z	720	720	0.04018	102.5662	GEN681542 6-JP MADGETT
FDNS	00NR	3	25SP	G15_076	TO->FROM	GRPRAR1-LNX3345.00 - GRPRAR 345KV CKT Z	720	720	0.04349	102.5642	AINSWORTH - AINSWORTH 115KV CKT 1

SOLUTION	GROUP	SCENARIO	SEASON	SOURCE	DIRECTION	MONITORED ELEMENT	RATEA (MVA)	RATEB(MVA)	TDF	TC%LOADING (% MVA)	CONTINGENCY
FDNS	00NR	3	25SP	G15_076	TO->FROM	GRPRAR1-LNX3345.00 - GRPRAR 345KV CKT Z	720	720	0.04229	102.5585	ATCHSNT3 345.00 - BOONEVILLE 345KV CKT 1
FDNS	00NR	3	25SP	G15_076	TO->FROM	GRPRAR1-LNX3345.00 - GRPRAR 345KV CKT Z	720	720	0.0405	102.5578	GEN659147 1-PIONEER 1G13.800
FDNS	00NR	3	25SP	G15_076	TO->FROM	GRPRAR1-LNX3345.00 - GRPRAR 345KV CKT Z	720	720	0.0405	102.5578	GEN659158 2-PIONEER G213.800
FDNS	00NR	3	25SP	G15_076	TO->FROM	GRPRAR1-LNX3345.00 - GRPRAR 345KV CKT Z	720	720	0.0405	102.5578	GEN659159 3-PIONEER G313.800
FDNS	00NR	3	25SP	G15_076	TO->FROM	GRPRAR1-LNX3345.00 - GRPRAR 345KV CKT Z	720	720	0.0405	102.5562	GEN672358 1-CHAPLN1W 0.6900
FDNS	00NR	3	25SP	G15_076	TO->FROM	GRPRAR1-LNX3345.00 - GRPRAR 345KV CKT Z	720	720	0.0405	102.5557	GEN659148 1-LONESMCRK 1G13.800
FDNS	00NR	3	25SP	G15_076	TO->FROM	GRPRAR1-LNX3345.00 - GRPRAR 345KV CKT Z	720	720	0.0405	102.5557	GEN659156 2-LONESMCRK 2G13.800
FDNS	00NR	3	25SP	G15_076	TO->FROM	GRPRAR1-LNX3345.00 - GRPRAR 345KV CKT Z	720	720	0.0405	102.5557	GEN659157 3-LONESMCRK 3G13.800
FDNS	00NR	3	20SP	G15_076	TO->FROM	GRPRAR1-LNX3345.00 - GRPRAR 345KV CKT Z	720	720	0.04018	102.5533	GEN662101 1-WESSINGTON190.5750
FDNS	00NR	3	25SP	G15_076	TO->FROM	GRPRAR1-LNX3345.00 - GRPRAR 345KV CKT Z	720	720	0.0405	102.553	GEN659417 1X-BEPCPKFT 1GX13.800
FDNS	00NR	3	25SP	G15_076	TO->FROM	GRPRAR1-LNX3345.00 - GRPRAR 345KV CKT Z	720	720	0.0405	102.553	GEN659418 2X-BEPCPKFT 2GX13.800
FDNS	00NR	3	25SP	G15_076	TO->FROM	GRPRAR1-LNX3345.00 - GRPRAR 345KV CKT Z	720	720	0.0405	102.553	GEN659419 3X-BEPCPKFT 3GX13.800
FDNS	00NR	3	25SP	G15_076	TO->FROM	GRPRAR1-LNX3345.00 - GRPRAR 345KV CKT Z	720	720	0.04076	102.5463	FALLOW 3 345.00 - GRIMES 345KV CKT 1
FDNS	00NR	3	25SP	G15_076	TO->FROM	GRPRAR1-LNX3345.00 - GRPRAR 345KV CKT Z	720	720	0.0405	102.5463	GEN657964 1-ASH2GEN9 0.5750
FDNS	00NR	3	20SP	G15_076	TO->FROM	GRPRAR1-LNX3345.00 - GRPRAR 345KV CKT Z	720	720	0.04018	102.5461	CENTER 230/22.0KV TRANSFORMER CKT 1
FDNS	00NR	3	25SP	G15_076	TO->FROM	GRPRAR1-LNX3345.00 - GRPRAR 345KV CKT Z	720	720	0.0386	102.5417	COLUMEAST - NW68TH & HOLDREGE 345KV CKT 1
FDNS	00NR	3	25SP	G15_076	TO->FROM	GRPRAR1-LNX3345.00 - GRPRAR 345KV CKT Z	720	720	0.0386	102.5417	COLUMEAST - NW68TH & HOLDREGE 345KV CKT 1
FDNS	00NR	3	20SP	G15_076	TO->FROM	GRPRAR1-LNX3345.00 - GRPRAR 345KV CKT Z	720	720	0.04174	102.5308	MISSION - WITTEN 115KV CKT 1
FDNS	00NR	3	25SP	G15_076	TO->FROM	GRPRAR1-LNX3345.00 - GRPRAR 345KV CKT Z	720	720	0.0405	102.5286	GEN672367 1-MERIDIAN GENERATOR 1 GT1
FDNS	00NR	3	25SP	G15_076	TO->FROM	GRPRAR1-LNX3345.00 - GRPRAR 345KV CKT Z	720	720	0.0405	102.5286	GEN672368 2-MERIDIAN GENERATOR 2 GT2
FDNS	00NR	3	25SP	G15_076	TO->FROM	GRPRAR1-LNX3345.00 - GRPRAR 345KV CKT Z	720	720	0.04047	102.5235	G15-005T 345.00 - SIBLEY 345KV CKT 1
FDNS	00NR	3	25SP	G15_076	TO->FROM	GRPRAR1-LNX3345.00 - GRPRAR 345KV CKT Z	720	720	0.04059	102.5189	ANTELOP-LNX3345.00 - BRDLAND-LNX3345.00 345KV CKT 1
FDNS	00NR	3	25SP	G15_076	TO->FROM	GRPRAR1-LNX3345.00 - GRPRAR 345KV CKT Z	720	720	0.0405	102.5159	GEN672350 1-NIPAWIN GENERATOR 1
FDNS	00NR	3	25SP	G15_076	TO->FROM	GRPRAR1-LNX3345.00 - GRPRAR 345KV CKT Z	720	720	0.0405	102.5159	GEN672351 2-NIPAWIN GENERATOR 2
FDNS	00NR	3	25SP	G15_076	TO->FROM	GRPRAR1-LNX3345.00 - GRPRAR 345KV CKT Z	720	720	0.0405	102.5159	GEN672352 3-NIPAWIN GENERATOR 3
FDNS	00NR	3	20SP	G15_076	TO->FROM	GRPRAR1-LNX3345.00 - GRPRAR 345KV CKT Z	720	720	0.04018	102.5147	GEN910006 1-G12_012IS_3 0.6900
FDNS	00NR	3	25SP	G15_076	TO->FROM	GRPRAR1-LNX3345.00 - GRPRAR 345KV CKT Z	720	720	0.04151	102.5102	HOLCOMB - SETAB 345KV CKT 1
FDNS	00NR	3	25SP	G15_076	TO->FROM	GRPRAR1-LNX3345.00 - GRPRAR 345KV CKT Z	720	720	0.04151	102.5102	HOLCOMB - SETAB 345KV CKT 1
FDNS	00NR	3	25SP	G15_076	TO->FROM	GRPRAR1-LNX3345.00 - GRPRAR 345KV CKT Z	720	720	0.0405	102.5084	GEN672349 3-CORY COGEN GENERATOR 3 ST
FDNS	00NR	3	25SP	G15_076	TO->FROM	GRPRAR1-LNX3345.00 - GRPRAR 345KV CKT Z	720	720	0.0405	102.5013	GEN600012 2-BLACK DOG GEN 2
FDNS	00NR	3	25SP	G15_076	TO->FROM	GRPRAR1-LNX3345.00 - GRPRAR 345KV CKT Z	720	720	0.0405	102.4967	GEN652546 1-FT RANDAL
FDNS	00NR	3	25SP	G15_076	TO->FROM	GRPRAR1-LNX3345.00 - GRPRAR 345KV CKT Z	720	720	0.0405	102.4962	GEN652548 5-FT RANDAL
FDNS	00NR	3	25SP	G15_076	TO->FROM	GRPRAR1-LNX3345.00 - GRPRAR 345KV CKT Z	720	720	0.0405	102.4962	GEN652549 7-FT RANDAL
FDNS	00NR	3	25SP	G15_076	TO->FROM	GRPRAR1-LNX3345.00 - GRPRAR 345KV CKT Z	720	720	0.0405	102.4917	GEN652547 3-FT RANDAL
FDNS	00NR	3	20SP	G15_076	TO->FROM	GRPRAR1-LNX3345.00 - GRPRAR 345KV CKT Z	720	720	0.04585	102.4887	ANTELOPE 3345.00 (ANTELOPE T1) 345/115/13.8KV TRANSFORMER CKT 1
FDNS	00NR	3	25SP	G15_076	TO->FROM	GRPRAR1-LNX3345.00 - GRPRAR 345KV CKT Z	720	720	0.0405	102.4884	EMERY 161/18.0KV TRANSFORMER CKT 1
FDNSLock	00NR	3	25SP	G15_076	TO->FROM	GRPRAR1-LNX3345.00 - GRPRAR 345KV CKT Z	720	720	0.04037	102.4708	WATERTOWN (WT2 KU1A) 345/230/13.8KV TRANSFORMER CKT 1
FDNS	00NR	3	25SP	G15_076	TO->FROM	GRPRAR1-LNX3345.00 - GRPRAR 345KV CKT Z	720	720	0.0405	102.4648	GEN659290 1-EDGECOL
FDNS	00NR	3	25SP	G15_076	TO->FROM	GRPRAR1-LNX3345.00 - GRPRAR 345KV CKT Z	720	720	0.04081	102.4449	FINNEY SWITCHING STATION - WALKTAP7 345.00 345KV CKT 1
FDNS	00NR	3	25SP	G15_076	TO->FROM	GRPRAR1-LNX3345.00 - GRPRAR 345KV CKT Z	720	720	0.04081	102.4449	FINNEY SWITCHING STATION - WALKTAP7 345.00 345KV CKT 1
FDNS	00NR	3	25SP	G15_076	TO->FROM	GRPRAR1-LNX3345.00 - GRPRAR 345KV CKT Z	720	720	0.04078	102.4414	LARAMIE RIVER - STEGALL 345KV CKT 1
FDNS	00NR	3	25SP	G15_076	TO->FROM	GRPRAR1-LNX3345.00 - GRPRAR 345KV CKT Z	720	720	0.04171	102.4315	P12:115:NPPD:1163B:NELIGH 7:NORFK.N7:BTB
FDNS	00NR	3	25SP	G15_076	TO->FROM	GRPRAR1-LNX3345.00 - GRPRAR 345KV CKT Z	720	720	0.03765	102.4299	FT THOMPSON (FT2 KU1A) 345/230/13.8KV TRANSFORMER CKT 1
FDNS	00NR	3	20SP	G15_076	TO->FROM	GRPRAR1-LNX3345.00 - GRPRAR 345KV CKT Z	720	720	0.04181	102.4292	AXTELL - SWEETWATER 345KV CKT 1
FDNS	00NR	3	25SP	G15_076	TO->FROM	GRPRAR1-LNX3345.00 - GRPRAR 345KV CKT Z	720	720	0.03854	102.4281	COLUMEAST - SHELL CREEK 345KV CKT 1
FDNS	00NR	3	25SP	G15_076	TO->FROM	GRPRAR1-LNX3345.00 - GRPRAR 345KV CKT Z	720	720	0.03765	102.4274	FT THOMPSON (FT2 KU1B) 345/230/13.8KV TRANSFORMER CKT 1
FDNS	00NR	3	25SP	G15_076	TO->FROM	GRPRAR1-LNX3345.00 - GRPRAR 345KV CKT Z	720	720	0.0405	102.4256	GEN300007 1-NEW MADRID UNIT 2
FDNS	00NR	3	25SP	G15_076	TO->FROM	GRPRAR1-LNX3345.00 - GRPRAR 345KV CKT Z	720	720	0.0405	102.4256	GEN672357 2-FUT-WL2X 13.800
FDNS	00NR	3	25SP	G15_076	TO->FROM	GRPRAR1-LNX3345.00 - GRPRAR 345KV CKT Z	720	720	0.0405	102.4208	GEN300006 1-NEW MADRID UNIT 1
FDNS	00NR	3	25SP	G15_076	TO->FROM	GRPRAR1-LNX3345.00 - GRPRAR 345KV CKT Z	720	720	0.0405	102.4154	GEN672393 2-NBECST2G 13.800
FDNS	00NR	3	25SP	G15_076	TO->FROM	GRPRAR1-LNX3345.00 - GRPRAR 345KV CKT Z	720	720	0.0405	102.4115	GEN652410 3-FT PECK
FDNS	00NR	3	25SP	G15_076	TO->FROM	GRPRAR1-LNX3345.00 - GRPRAR 345KV CKT Z	720	720	0.0405	102.4113	GEN672390 2-FUT-SW2X 13.800
FDNS	00NR	3	25SP	G15_076	TO->FROM	GRPRAR1-LNX3345.00 - GRPRAR 345KV CKT Z	720	720	0.0405	102.4095	GEN620324 3-HOOT LAKE 3 GEN
FDNS	00NR	3	25SP	G15_076	TO->FROM	GRPRAR1-LNX3345.00 - GRPRAR 345KV CKT Z	720	720	0.0405	102.4069	GEN600050 1-FEP
FDNS	00NR	3	25SP	G15_076	TO->FROM	GRPRAR1-LNX3345.00 - GRPRAR 345KV CKT Z	720	720	0.04004	102.4045	HELENA - SHEAS LK3 345.00 345KV CKT 1
FDNS	00NR	3	20SP	G15_076	TO->FROM	GRPRAR1-LNX3345.00 - GRPRAR 345KV CKT Z	720	720	0.04018	102.4041	CLAY BOSWELL 230/20.9KV TRANSFORMER CKT 1
FDNS	00NR	3	25SP	G15_076	TO->FROM	GRPRAR1-LNX3345.00 - GRPRAR 345KV CKT Z	720	720	0.0405	102.3981	GEN660003 3-HURON WEST PARK
FDNS	00NR	3	25SP	G15_076	TO->FROM	GRPRAR1-LNX3345.00 - GRPRAR 345KV CKT Z	720	720	0.03767	102.3963	HOSKINS - RAUN 345KV CKT 1
FDNS	00NR	3	25SP	G15_076	TO->FROM	GRPRAR1-LNX3345.00 - GRPRAR 345KV CKT Z	720	720	0.03767	102.3963	HOSKINS - RAUN 345KV CKT 1
FDNS	00NR	3	25SP	G15_076	TO->FROM	GRPRAR1-LNX3345.00 - GRPRAR 345KV CKT Z	720	720	0.0405	102.3955	GEN600046 1-MECST
FDNS	00NR	3	20SP	G15_076	TO->FROM	GRPRAR1-LNX3345.00 - GRPRAR 345KV CKT Z	720	720	0.04164	102.3893	G15088_T 345.00 - MOORE 345KV CKT 1
FDNS	00NR	3	25SP	G15_076	TO->FROM	GRPRAR1-LNX3345.00 - GRPRAR 345KV CKT Z	720	720	0.0405	102.3834	LADISH 115/13.2KV TRANSFORMER CKT 1
FDNS	00NR	3	25SP	G15_076	TO->FROM	GRPRAR1-LNX3345.00 - GRPRAR 345KV CKT Z	720	720	0.04097	102.382	Hitchland Interchange - WALKTAP7 345.00 345KV CKT 1
FDNS	00NR	3	25SP	G15_076	TO->FROM	GRPRAR1-LNX3345.00 - GRPRAR 345KV CKT Z	720	720	0.04097	102.382	Hitchland Interchange - WALKTAP7 345.00 345KV CKT 1
FDNS	00NR	3	25SP	G15_076	TO->FROM	GRPRAR1-LNX3345.00 - GRPRAR 345KV CKT Z	720	720	0.04097	102.3738	P12:345:SPS:J07.1.FINN.HITCH
FDNS	00NR	3	25SP	G15_076	TO->FROM	GRPRAR1-LNX3345.00 - GRPRAR 345KV CKT Z	720	720	0.0405	102.3699	GEN660001 2-ABERDEEN SIEBRECHT
FDNS	00NR	3	25SP	G15_076	TO->FROM	GRPRAR1-LNX3345.00 - GRPRAR 345KV CKT Z	720	720	0.0405	102.3648	GEN600047 1-MECCT1
FDNS	00NR	3	25SP	G15_076	TO->FROM	GRPRAR1-LNX3345.00 - GRPRAR 345KV CKT Z	720	720	0.0405	102.3497	GEN652345 W-G07_023IS_2 0.6900
FDNS	00NR	3	25SP	G15_076	TO->FROM	GRPRAR1-LNX3345.00 - GRPRAR 345KV CKT Z	720	720	0.0405	102.3477	GEN652414 4-FT PECK
FDNS	00NR	3	25SP	G15_076	TO->FROM	GRPRAR1-LNX3345.00 - GRPRAR 345KV CKT Z	720	720	0.0405	102.3477	GEN652415 5-FT PECK
FDNS	00NR	3	25SP	G15_076	TO->FROM	GRPRAR1-LNX3345.00 - GRPRAR 345KV CKT Z	720	720	0.04114	102.3442	THEDFRD3 345.00 (THEDFORDT2) 345/115/13.8KV TRANSFORMER CKT 1
FDNS	00NR	3	25SP	G15_076	TO->FROM	GRPRAR1-LNX3345.00 - GRPRAR 345KV CKT Z	720	720	0.04009	102.3347	SHEAS LK3 345.00 - WILMARTH 345KV CKT 1
FDNS	00NR	3	25SP	G15_076	TO->FROM	GRPRAR1-LNX3345.00 - GRPRAR 345KV CKT Z	720	720	0.0405	102.3216	GEN600063 1-COLVILLE GEN 1
FDNS	00NR	3	25SP	G15_076	TO->FROM	GRPRAR1-LNX3345.00 - GRPRAR 345KV CKT Z	720	720	0.0405	102.3216	GEN600064 2-COLVILLE GEN 2
FDNS	00NR	3	25SP	G15_076	TO->FROM	GRPRAR1-LNX3345.00 - GRPRAR 345KV CKT Z	720	720	0.0405	102.3205	GEN590010 1-ERCOT EQUIVALENCE
FDNS	00NR	3	25SP	G15_076	TO->FROM	GRPRAR1-LNX3345.00 - GRPRAR 345KV CKT Z	720	720	0.0405	102.3204	GEN 11104 1-J262_GEN 0.6000
FDNS	00NR	3	25SP	G15_076	TO->FROM	GRPRAR1-LNX3345.00 - GRPRAR 345KV CKT Z	720	720	0.0405	102.3204	GEN 11108 1-J263_GEN 0.6000
FDNS	00NR	3	25SP	G15_076	TO->FROM	GRPRAR1-LNX3345.00 - GRPRAR 345KV CKT Z	720	720	0.03994	102.3148	FIELD NORTH - LKFLDXL3 345KV CKT 1
FDNS	00NR	3	25SP	G15_076	TO->FROM	GRPRAR1-LNX3345.00 - GRPRAR 345KV CKT Z	720	720	0.03994	102.314	FIELD SOUTH - WILMARTH 345KV CKT 1

SOLUTION	GROUP	SCENARIO	SEASON	SOURCE	DIRECTION	MONITORED ELEMENT	RATEA (MVA)	RATEB(MVA)	TDF	TC%LOADING (% MVA)	CONTINGENCY
FDNS	00NR	3	20SP	G15_076	TO->FROM	GRPRAR1-LNX3345.00 - GRPRAR 345KV CKT Z	720	720	0.03441	102.3091	HOSKINS - SHELL CREEK 345KV CKT 1
FDNS	00NR	3	25SP	G15_076	TO->FROM	GRPRAR1-LNX3345.00 - GRPRAR 345KV CKT Z	720	720	0.03994	102.3068	FIELD NORTH - FIELD SOUTH 345KV CKT 1
FDNS	00NR	3	25SP	G15_076	TO->FROM	GRPRAR1-LNX3345.00 - GRPRAR 345KV CKT Z	720	720	0.0405	102.3007	GEN600043 7-BLUE LAKE5
FDNS	00NR	3	25SP	G15_076	TO->FROM	GRPRAR1-LNX3345.00 - GRPRAR 345KV CKT Z	720	720	0.0405	102.3007	GEN600044 8-BLUE LAKE6
FDNS	00NR	3	25SP	G15_076	TO->FROM	GRPRAR1-LNX3345.00 - GRPRAR 345KV CKT Z	720	720	0.0405	102.3004	G830_SUB 115.00 - GRE-MCHENRY7115.00 115KV CKT 1
FDNS	00NR	3	25SP	G15_076	TO->FROM	GRPRAR1-LNX3345.00 - GRPRAR 345KV CKT Z	720	720	0.0405	102.2998	G830_SUB 115.00 115/34.5KV TRANSFORMER CKT 1
FDNS	00NR	3	25SP	G15_076	TO->FROM	GRPRAR1-LNX3345.00 - GRPRAR 345KV CKT Z	720	720	0.0405	102.2979	GEN590011 2-ERCOT EQUIVALENCE
FDNS	00NR	3	20SP	G15_076	TO->FROM	GRPRAR1-LNX3345.00 - GRPRAR 345KV CKT Z	720	720	0.04018	102.2933	GEN659289 1-DAYCNTYWND W0.6900
FDNS	00NR	3	25SP	G15_076	TO->FROM	GRPRAR1-LNX3345.00 - GRPRAR 345KV CKT Z	720	720	0.04059	102.292	BRDLAND-LNX3345.00 - HURON 345KV CKT Z
FDNS	00NR	3	25SP	G15_076	TO->FROM	GRPRAR1-LNX3345.00 - GRPRAR 345KV CKT Z	720	720	0.0405	102.2916	LANSING WEST 161/22.0KV TRANSFORMER CKT 1
FDNS	00NR	3	25SP	G15_076	TO->FROM	GRPRAR1-LNX3345.00 - GRPRAR 345KV CKT Z	720	720	0.04059	102.2915	BROADLAND - HURON 230KV CKT 1
FDNS	00NR	3	25SP	G15_076	TO->FROM	GRPRAR1-LNX3345.00 - GRPRAR 345KV CKT Z	720	720	0.04059	102.2896	HURON (BD KU2A) 345/230/13.8KV TRANSFORMER CKT 1
FDNS	00NR	3	25SP	G15_076	TO->FROM	GRPRAR1-LNX3345.00 - GRPRAR 345KV CKT Z	720	720	0.04059	102.2896	HURON (BD KU2A) 345/230/13.8KV TRANSFORMER CKT 1
FDNS	00NR	3	25SP	G15_076	TO->FROM	GRPRAR1-LNX3345.00 - GRPRAR 345KV CKT Z	720	720	0.04059	102.2887	P12:345:UMZB:# 102 #: AVS BD IN ND. AVS BRD LR
FDNS	00NR	3	25SP	G15_076	TO->FROM	GRPRAR1-LNX3345.00 - GRPRAR 345KV CKT Z	720	720	0.04059	102.2862	P12:345:UMZB:# 103 #: BD IN SD. LOSS OF LINE
FDNS	00NR	3	25SP	G15_076	TO->FROM	GRPRAR1-LNX3345.00 - GRPRAR 345KV CKT Z	720	720	0.0405	102.2778	GEN681522 3-GENOA 3
FDNS	00NR	3	25SP	G15_076	TO->FROM	GRPRAR1-LNX3345.00 - GRPRAR 345KV CKT Z	720	720	0.0405	102.2721	GEN600014 4-BLACK DOG GEN 4
FDNS	00NR	3	25SP	G15_076	TO->FROM	GRPRAR1-LNX3345.00 - GRPRAR 345KV CKT Z	720	720	0.0405	102.2696	GEN600065 7-HIGH BRIDGE
FDNS	00NR	3	25SP	G15_076	TO->FROM	GRPRAR1-LNX3345.00 - GRPRAR 345KV CKT Z	720	720	0.0405	102.2696	GEN600066 8-HIGH BRIDGE
FDNS	00NR	3	25SP	G15_076	TO->FROM	GRPRAR1-LNX3345.00 - GRPRAR 345KV CKT Z	720	720	0.0405	102.2665	GEN600011 5-BLACK DOG GEN 1
FDNS	00NR	3	25SP	G15_076	TO->FROM	GRPRAR1-LNX3345.00 - GRPRAR 345KV CKT Z	720	720	0.0405	102.2569	GEN600071 10-RIVER SIDE
FDNS	00NR	3	25SP	G15_076	TO->FROM	GRPRAR1-LNX3345.00 - GRPRAR 345KV CKT Z	720	720	0.0405	102.2567	GEN600070 9-RIVER SIDE
FDNS	00NR	3	20SP	G15_076	TO->FROM	GRPRAR1-LNX3345.00 - GRPRAR 345KV CKT Z	720	720	0.04018	102.2559	GEN563312 1-G15097_3 0.6900
FDNS	00NR	3	25SP	G15_076	TO->FROM	GRPRAR1-LNX3345.00 - GRPRAR 345KV CKT Z	720	720	0.0405	102.245	GEN600007 7-RIVERSIDE GEN 7
FDNS	00NR	3	25SP	G15_076	TO->FROM	GRPRAR1-LNX3345.00 - GRPRAR 345KV CKT Z	720	720	0.0405	102.2276	GEN600017 C-LS POWER CT
FDNS	00NR	3	20SP	G15_076	TO->FROM	GRPRAR1-LNX3345.00 - GRPRAR 345KV CKT Z	720	720	0.04018	102.2252	GEN659018 1-G14_003IS_3 0.6900
FDNS	00NR	3	25SP	G15_076	TO->FROM	GRPRAR1-LNX3345.00 - GRPRAR 345KV CKT Z	720	720	0.0405	102.2234	GEN600045 4-ANSON
FDNS	00NR	3	20SP	G15_076	TO->FROM	GRPRAR1-LNX3345.00 - GRPRAR 345KV CKT Z	720	720	0.04018	102.2014	GEN652906 1-G09_006IS_3 0.6900
FDNS	00NR	3	25SP	G15_076	TO->FROM	GRPRAR1-LNX3345.00 - GRPRAR 345KV CKT Z	720	720	0.0405	102.2013	GEN659273 2-GROTON SYNC COND
FDNS	00NR	3	25SP	G15_076	TO->FROM	GRPRAR1-LNX3345.00 - GRPRAR 345KV CKT Z	720	720	0.0405	102.2013	GEN659294 1-WILTONCOL9
FDNS	00NR	3	25SP	G15_076	TO->FROM	GRPRAR1-LNX3345.00 - GRPRAR 345KV CKT Z	720	720	0.04051	102.1888	OAHE - SULLEY BUTTE 230KV CKT 1
FDNS	00NR	3	25SP	G15_076	TO->FROM	GRPRAR1-LNX3345.00 - GRPRAR 345KV CKT Z	720	720	0.04126	102.1708	AXTELL - POST ROCK 345KV CKT 1
FDNS	00NR	3	20SP	G15_076	TO->FROM	GRPRAR1-LNX3345.00 - GRPRAR 345KV CKT Z	720	720	0.04018	102.1634	GEN652543 3-BIG BEND
FDNS	00NR	3	25SP	G15_076	TO->FROM	GRPRAR1-LNX3345.00 - GRPRAR 345KV CKT Z	720	720	0.0405	102.1568	GEN615052 1-CAMBRIDGE GENERATING STATION
FDNS	00NR	3	25SP	G15_076	TO->FROM	GRPRAR1-LNX3345.00 - GRPRAR 345KV CKT Z	720	720	0.04059	102.1541	ANTELOP-LNX3345.00 - ANTELOPE VALLEY 345KV CKT Z
FDNS	00NR	3	25SP	G15_076	TO->FROM	GRPRAR1-LNX3345.00 - GRPRAR 345KV CKT Z	720	720	0.0405	102.1393	GEN659031 1-G12_014IS_4 0.6900
FDNS	00NR	3	25SP	G15_076	TO->FROM	GRPRAR1-LNX3345.00 - GRPRAR 345KV CKT Z	720	720	0.0405	102.1251	GEN 10648 1-G830_GEN 0.6900
FDNS	00NR	3	20SP	G15_076	TO->FROM	GRPRAR1-LNX3345.00 - GRPRAR 345KV CKT Z	720	720	0.04018	102.1227	COYOTE 345/24.0KV TRANSFORMER CKT 1
FDNS	00NR	3	25SP	G15_076	TO->FROM	GRPRAR1-LNX3345.00 - GRPRAR 345KV CKT Z	720	720	0.0405	102.1207	GEN659192 6-LYNN
FDNS	00NR	3	25SP	G15_076	TO->FROM	GRPRAR1-LNX3345.00 - GRPRAR 345KV CKT Z	720	720	0.0405	102.1191	GEN659162 4-RED WLCK
FDNS	00NR	3	25SP	G15_076	TO->FROM	GRPRAR1-LNX3345.00 - GRPRAR 345KV CKT Z	720	720	0.0405	102.1191	GEN659163 5-BLACK WDCK
FDNS	00NR	3	25SP	G15_076	TO->FROM	GRPRAR1-LNX3345.00 - GRPRAR 345KV CKT Z	720	720	0.0405	102.1082	GEN660016 1-B_H WIND 0.7000
FDNS	00NR	3	20SP	G15_076	TO->FROM	GRPRAR1-LNX3345.00 - GRPRAR 345KV CKT Z	720	720	0.04018	102.0965	GEN659194 1-NDPRAIRWND1W0.6900
FDNS	00NR	3	20SP	G15_076	TO->FROM	GRPRAR1-LNX3345.00 - GRPRAR 345KV CKT Z	720	720	0.04018	102.0936	GEN659010 4-G07_027IS_2 0.6900
FDNS	00NR	3	25SP	G15_076	TO->FROM	GRPRAR1-LNX3345.00 - GRPRAR 345KV CKT Z	720	720	0.0405	102.089	GEN615021 1-GRE-ER 14G 16.000
FDNS	00NR	3	20SP	G15_076	TO->FROM	GRPRAR1-LNX3345.00 - GRPRAR 345KV CKT Z	720	720	0.04018	102.0801	GEN652460 4-GARRISON
FDNS	00NR	3	20SP	G15_076	TO->FROM	GRPRAR1-LNX3345.00 - GRPRAR 345KV CKT Z	720	720	0.04018	102.0801	GEN652461 5-GARRISON
FDNS	00NR	3	25SP	G15_076	TO->FROM	GRPRAR1-LNX3345.00 - GRPRAR 345KV CKT Z	720	720	0.0405	102.0582	GEN615015 1-GRE-SPRITWDG13.200
FDNS	00NR	3	20SP	G15_076	TO->FROM	GRPRAR1-LNX3345.00 - GRPRAR 345KV CKT Z	720	720	0.04018	102.0362	GEN652559 1-OAHE
FDNS	00NR	3	20SP	G15_076	TO->FROM	GRPRAR1-LNX3345.00 - GRPRAR 345KV CKT Z	720	720	0.0402	102.0329	GLENHAM - L3 HAWDON 230KV CKT 1
FDNS	00NR	3	25SP	G15_076	TO->FROM	GRPRAR1-LNX3345.00 - GRPRAR 345KV CKT Z	720	720	0.0405	102.0284	GEN657705 X-DRAYTON
FDNS	00NR	3	20SP	G15_076	TO->FROM	GRPRAR1-LNX3345.00 - GRPRAR 345KV CKT Z	720	720	0.04018	102.023	GEN652459 3-GARRISON
FDNS	00NR	3	20SP	G15_076	TO->FROM	GRPRAR1-LNX3345.00 - GRPRAR 345KV CKT Z	720	720	0.04018	102.0229	GEN652457 1-GARRISON
FDNS	00NR	3	20SP	G15_076	TO->FROM	GRPRAR1-LNX3345.00 - GRPRAR 345KV CKT Z	720	720	0.04018	102.0229	GEN652458 2-GARRISON
FDNS	00NR	3	25SP	G15_076	TO->FROM	GRPRAR1-LNX3345.00 - GRPRAR 345KV CKT Z	720	720	0.04051	102.0206	SULLEY BUTTE - SULLYBT-LNX3230.00 230KV CKT Z
FDNS	00NR	3	25SP	G15_076	TO->FROM	GRPRAR1-LNX3345.00 - GRPRAR 345KV CKT Z	720	720	0.04051	102.0205	SULLYBT-LNX3230.00 - WHITLOK 230KV CKT 1
FDNS	00NR	3	20SP	G15_076	TO->FROM	GRPRAR1-LNX3345.00 - GRPRAR 345KV CKT Z	720	720	0.04018	102.0128	GEN652907 1-G09_007IS_3 0.6900
FDNS	00NR	3	20SP	G15_076	TO->FROM	GRPRAR1-LNX3345.00 - GRPRAR 345KV CKT Z	720	720	0.04018	101.9957	GEN563342 1-G15098_3 0.6900
FDNS	00NR	3	25SP	G15_076	TO->FROM	GRPRAR1-LNX3345.00 - GRPRAR 345KV CKT Z	720	720	0.03644	101.9944	DIXONCO 230.00 - TWIN CHURCH 230KV CKT 1
FDNS	00NR	3	25SP	G15_076	TO->FROM	GRPRAR1-LNX3345.00 - GRPRAR 345KV CKT Z	720	720	0.0405	101.9911	BISONMP4 230.00 - SQUARE BUTTE 230KV CKT 1
FDNS	00NR	3	20SP	G15_076	TO->FROM	GRPRAR1-LNX3345.00 - GRPRAR 345KV CKT Z	720	720	0.04018	101.9667	GEN659403 1-NDSUNFLWR W0.6900
FDNS	00NR	3	25SP	G15_076	TO->FROM	GRPRAR1-LNX3345.00 - GRPRAR 345KV CKT Z	720	720	0.04051	101.9646	P12:230:UMZB:# 114 #: SB IN SD. SB-WK-GH
FDNS	00NR	3	25SP	G15_076	TO->FROM	GRPRAR1-LNX3345.00 - GRPRAR 345KV CKT Z	720	720	0.04051	101.9646	P12:230:UMZB:# 117 #: WK IN SD. SB-WK-GH
FDNS	00NR	3	20SP	G15_076	TO->FROM	GRPRAR1-LNX3345.00 - GRPRAR 345KV CKT Z	720	720	0.04018	101.9441	GEN652542 1-BIG BEND
FDNS	00NR	3	25SP	G15_076	TO->FROM	GRPRAR1-LNX3345.00 - GRPRAR 345KV CKT Z	720	720	0.0405	101.9345	GEN600067 9-HIGH BRIDGE
FDNS	00NR	3	25SP	G15_076	TO->FROM	GRPRAR1-LNX3345.00 - GRPRAR 345KV CKT Z	720	720	0.0405	101.934	GEN659353 1-DEERCREK CTG18.000
FDNS	00NR	3	25SP	G15_076	TO->FROM	GRPRAR1-LNX3345.00 - GRPRAR 345KV CKT Z	720	720	0.0405	101.9329	GEN659354 1-DEERCREK STG18.000
FDNS	00NR	3	25SP	G15_076	TO->FROM	GRPRAR1-LNX3345.00 - GRPRAR 345KV CKT Z	720	720	0.04206	101.9185	G15061_T 345.00 - SETAB 345KV CKT 1
FDNS	00NR	3	20SP	G15_076	TO->FROM	GRPRAR1-LNX3345.00 - GRPRAR 345KV CKT Z	720	720	0.04222	101.9181	MCCOOL - MOORE 345KV CKT 1
FDNS	00NR	3	25SP	G15_076	TO->FROM	GRPRAR1-LNX3345.00 - GRPRAR 345KV CKT Z	720	720	0.042	101.918	GERALD GENTLEMAN STATION - RED WILLOW 345KV CKT 1
FDNS	00NR	3	25SP	G15_076	TO->FROM	GRPRAR1-LNX3345.00 - GRPRAR 345KV CKT Z	720	720	0.0405	101.9179	GEN672303 3-BOUNDARY DAM GENERATOR 3
FDNS	00NR	3	25SP	G15_076	TO->FROM	GRPRAR1-LNX3345.00 - GRPRAR 345KV CKT Z	720	720	0.0405	101.9179	GEN672304 4-BOUNDARY DAM GENERATOR 4
FDNS	00NR	3	25SP	G15_076	TO->FROM	GRPRAR1-LNX3345.00 - GRPRAR 345KV CKT Z	720	720	0.0405	101.9178	GEN672305 5-BOUNDARY DAM GENERATOR 5
FDNS	00NR	3	25SP	G15_076	TO->FROM	GRPRAR1-LNX3345.00 - GRPRAR 345KV CKT Z	720	720	0.04051	101.9128	GLENHAM - WHITLOK 230KV CKT 1
FDNS	00NR	3	25SP	G15_076	TO->FROM	GRPRAR1-LNX3345.00 - GRPRAR 345KV CKT Z	720	720	0.0405	101.887	GEN672356 1-FUT-WL1X 18.000
FDNS	00NR	3	20SP	G15_076	TO->FROM	GRPRAR1-LNX3345.00 - GRPRAR 345KV CKT Z	720	720	0.04018	101.8758	STANTON 230/18.0KV TRANSFORMER CKT 1
FDNS	00NR	3	25SP	G15_076	TO->FROM	GRPRAR1-LNX3345.00 - GRPRAR 345KV CKT Z	720	720	0.0405	101.8561	GEN672389 1-FUT-SW1X 18.000
FDNS	00NR	3	25SP	G15_076	TO->FROM	GRPRAR1-LNX3345.00 - GRPRAR 345KV CKT Z	720	720	0.0405	101.8473	GEN672392 1-NBECGT1G 18.000
FDNS	00NR	3	17SP	G15_076	TO->FROM	GRPRAR1-LNX3345.00 - GRPRAR 345KV CKT Z	720	720	0.04188	101.8428	FTTHOM1-LNX3345.00 - LELAND2-LNX3345.00 345KV CKT 1

SOLUTION	GROUP	SCENARIO	SEASON	SOURCE	DIRECTION	MONITORED ELEMENT	RATEA (MVA)	RATEB(MVA)	TDF	TC%LOADING (% MVA)	CONTINGENCY
FDNS	00NR	3	25SP	G15_076	TO->FROM	GRPRAR1-LNX3345.00 - GRPRAR 345KV CKT Z	720	720	0.04204	101.8341	MISSION - WITTEN 115KV CKT 1
FDNS	00NR	3	20SP	G15_076	TO->FROM	GRPRAR1-LNX3345.00 - GRPRAR 345KV CKT Z	720	720	0.04018	101.8227	SQUARE BUTTE - YNG2 4 230.00 230KV CKT 1
FDNS	00NR	3	20SP	G15_076	TO->FROM	GRPRAR1-LNX3345.00 - GRPRAR 345KV CKT Z	720	720	0.04018	101.8222	YNG2 4 230.00 230/20.0KV TRANSFORMER CKT 1
FDNS	00NR	3	25SP	G15_076	TO->FROM	GRPRAR1-LNX3345.00 - GRPRAR 345KV CKT Z	720	720	0.0433	101.8204	MINGO - RED WILLOW 345KV CKT 1
FDNS	00NR	3	25SP	G15_076	TO->FROM	GRPRAR1-LNX3345.00 - GRPRAR 345KV CKT Z	720	720	0.0433	101.8204	MINGO - RED WILLOW 345KV CKT 1
FDNS	00NR	3	25SP	G15_076	TO->FROM	GRPRAR1-LNX3345.00 - GRPRAR 345KV CKT Z	720	720	0.04198	101.8165	G15088_T 345.00 - MOORE 345KV CKT 1
FDNS	00NR	3	25SP	G15_076	TO->FROM	GRPRAR1-LNX3345.00 - GRPRAR 345KV CKT Z	720	720	0.0405	101.783	GEN662101 1-WESSINGTON190.5750
FDNS	00NR	3	25SP	G15_076	TO->FROM	GRPRAR1-LNX3345.00 - GRPRAR 345KV CKT Z	720	720	0.0405	101.7437	GEN681542 6-JP MADGETT
FDNS	00NR	3	25SP	G15_076	TO->FROM	GRPRAR1-LNX3345.00 - GRPRAR 345KV CKT Z	720	720	0.0405	101.7275	GEN910006 1-G12_012IS_3 0.6900
FDNS	00NR	3	25SP	G15_076	TO->FROM	GRPRAR1-LNX3345.00 - GRPRAR 345KV CKT Z	720	720	0.0405	101.7081	CENTER 230/22.0KV TRANSFORMER CKT 1
FDNS	00NR	3	17SP	G15_076	TO->FROM	GRPRAR1-LNX3345.00 - GRPRAR 345KV CKT Z	720	720	0.04188	101.6789	P12:345:UMZB:# 108 #: LOS FT IN ND. LOS FT
FDNS	00NR	3	17SP	G15_076	TO->FROM	GRPRAR1-LNX3345.00 - GRPRAR 345KV CKT Z	720	720	0.04188	101.6699	FT THOMPSON - FTTHOM1-LNX3345.00 345KV CKT Z
FDNS	00NR	3	20SP	G15_076	TO->FROM	GRPRAR1-LNX3345.00 - GRPRAR 345KV CKT Z	720	720	0.04018	101.5847	GEN659411 1-CAMPBLCNTY W0.6900
FDNS	00NR	3	17SP	G15_076	TO->FROM	GRPRAR1-LNX3345.00 - GRPRAR 345KV CKT Z	720	720	0.04188	101.5841	LELAND OLDS - LELAND2-LNX3345.00 345KV CKT Z
FDNS	00NR	3	25SP	G15_076	TO->FROM	GRPRAR1-LNX3345.00 - GRPRAR 345KV CKT Z	720	720	0.04616	101.5839	ANTELOPE 3345.00 (ANTELOPE T1) 345/115/13.8KV TRANSFORMER CKT 1
FDNS	00NR	3	25SP	G15_076	TO->FROM	GRPRAR1-LNX3345.00 - GRPRAR 345KV CKT Z	720	720	0.03471	101.5722	HOSKINS - SHELL CREEK 345KV CKT 1
FDNS	00NR	3	25SP	G15_076	TO->FROM	GRPRAR1-LNX3345.00 - GRPRAR 345KV CKT Z	720	720	0.0421	101.5374	AXTELL - SWEETWATER 345KV CKT 1
FDNS	00NR	3	25SP	G15_076	TO->FROM	GRPRAR1-LNX3345.00 - GRPRAR 345KV CKT Z	720	720	0.0405	101.5249	GEN659289 1-DAYCNTYWND W0.6900
FDNS	00NR	3	20SP	G15_076	TO->FROM	GRPRAR1-LNX3345.00 - GRPRAR 345KV CKT Z	720	720	0.04018	101.5017	GEN600004 2-PRAIRIE ISLAND G2
FDNS	00NR	3	20SP	G15_076	TO->FROM	GRPRAR1-LNX3345.00 - GRPRAR 345KV CKT Z	720	720	0.04018	101.4978	GEN600003 1-PRAIRIE ISLAND G1
FDNS	00NR	3	25SP	G15_076	TO->FROM	GRPRAR1-LNX3345.00 - GRPRAR 345KV CKT Z	720	720	0.04272	101.4929	MCCOOL - MOORE 345KV CKT 1
FDNS	00NR	3	25SP	G15_076	TO->FROM	GRPRAR1-LNX3345.00 - GRPRAR 345KV CKT Z	720	720	0.0405	101.4882	GEN563312 1-G15097_3 0.6900
FDNS	00NR	3	20SP	G15_076	TO->FROM	GRPRAR1-LNX3345.00 - GRPRAR 345KV CKT Z	720	720	0.04018	101.4524	GEN672321 1-SHAND GENERATOR 1
FDNS	00NR	3	25SP	G15_076	TO->FROM	GRPRAR1-LNX3345.00 - GRPRAR 345KV CKT Z	720	720	0.0405	101.4411	GEN659018 1-G14_003IS_3 0.6900
FDNS	00NR	3	25SP	G15_076	TO->FROM	GRPRAR1-LNX3345.00 - GRPRAR 345KV CKT Z	720	720	0.0405	101.4241	GEN652906 1-G09_006IS_3 0.6900
FDNS	00NR	3	20SP	G15_076	TO->FROM	GRPRAR1-LNX3345.00 - GRPRAR 345KV CKT Z	720	720	0.04018	101.3919	GEN672310 1-POPLAR RIVER GENERATOR 1
FDNS	00NR	3	20SP	G15_076	TO->FROM	GRPRAR1-LNX3345.00 - GRPRAR 345KV CKT Z	720	720	0.04018	101.3919	GEN672311 2-POPLAR RIVER GENERATOR 2
FDNS	00NR	3	20SP	G15_076	TO->FROM	GRPRAR1-LNX3345.00 - GRPRAR 345KV CKT Z	720	720	0.04018	101.374	GEN672306 6-BOUNDARY DAM GENERATOR 6
FDNS	00NR	3	20SP	G15_076	TO->FROM	GRPRAR1-LNX3345.00 - GRPRAR 345KV CKT Z	720	720	0.04018	101.3486	GEN659296 2-SDPRAIRWND1W0.6900
FDNS	00NR	3	20SP	G15_076	TO->FROM	GRPRAR1-LNX3345.00 - GRPRAR 345KV CKT Z	720	720	0.04018	101.3346	RCDC EAST 4230.00 - RED CEDAR DC 230KV CKT 1
FDNS	00NR	3	20SP	G15_076	TO->FROM	GRPRAR1-LNX3345.00 - GRPRAR 345KV CKT Z	720	720	0.04019	101.3266	P12:230:UMZB:# 112 #: NU IN SD. NU-RCDC & DRY CREEK XFMR
FDNS	00NR	3	25SP	G15_076	TO->FROM	GRPRAR1-LNX3345.00 - GRPRAR 345KV CKT Z	720	720	0.0405	101.318	GEN659010 4-G07_027IS_2 0.6900
FDNS	00NR	3	25SP	G15_076	TO->FROM	GRPRAR1-LNX3345.00 - GRPRAR 345KV CKT Z	720	720	0.0405	101.313	GEN659194 1-NDPRAIRWND1W0.6900
FDNS	00NR	3	25SP	G15_076	TO->FROM	GRPRAR1-LNX3345.00 - GRPRAR 345KV CKT Z	720	720	0.0405	101.3014	GEN652460 4-GARRISON
FDNS	00NR	3	25SP	G15_076	TO->FROM	GRPRAR1-LNX3345.00 - GRPRAR 345KV CKT Z	720	720	0.0405	101.3011	GEN652461 5-GARRISON
FDNS	00NR	3	25SP	G15_076	TO->FROM	GRPRAR1-LNX3345.00 - GRPRAR 345KV CKT Z	720	720	0.04051	101.2623	GLENHAM - L3 HAWDON 230KV CKT 1
FDNS	00NR	3	20SP	G15_076	TO->FROM	GRPRAR1-LNX3345.00 - GRPRAR 345KV CKT Z	720	720	0.04018	101.2471	GEN615010 1-STANTON4
FDNS	00NR	3	25SP	G15_076	TO->FROM	GRPRAR1-LNX3345.00 - GRPRAR 345KV CKT Z	720	720	0.0405	101.2449	GEN652457 1-GARRISON
FDNS	00NR	3	25SP	G15_076	TO->FROM	GRPRAR1-LNX3345.00 - GRPRAR 345KV CKT Z	720	720	0.0405	101.2449	GEN652458 2-GARRISON
FDNS	00NR	3	25SP	G15_076	TO->FROM	GRPRAR1-LNX3345.00 - GRPRAR 345KV CKT Z	720	720	0.0405	101.2449	GEN652459 3-GARRISON
FDNS	00NR	3	25SP	G15_076	TO->FROM	GRPRAR1-LNX3345.00 - GRPRAR 345KV CKT Z	720	720	0.0405	101.236	GEN652907 1-G09_007IS_3 0.6900
FDNS	00NR	3	25SP	G15_076	TO->FROM	GRPRAR1-LNX3345.00 - GRPRAR 345KV CKT Z	720	720	0.0394	101.2198	HIGHLND 3 345.00 - OBRIEN 3 345.00 345KV CKT 1
FDNS	00NR	3	25SP	G15_076	TO->FROM	GRPRAR1-LNX3345.00 - GRPRAR 345KV CKT Z	720	720	0.0405	101.2043	GEN563342 1-G15098_3 0.6900
FDNS	00NR	3	25SP	G15_076	TO->FROM	GRPRAR1-LNX3345.00 - GRPRAR 345KV CKT Z	720	720	0.0405	101.1869	GEN659403 1-NDSUNFLWR W0.6900
FDNS	00NR	3	25SP	G15_076	TO->FROM	GRPRAR1-LNX3345.00 - GRPRAR 345KV CKT Z	720	720	0.0405	101.1801	GEN652543 3-BIG BEND
FDNS	00NR	3	25SP	G15_076	TO->FROM	GRPRAR1-LNX3345.00 - GRPRAR 345KV CKT Z	720	720	0.0405	101.1738	GEN652542 1-BIG BEND
FDNS	00NR	3	20SP	G15_076	TO->FROM	GRPRAR1-LNX3345.00 - GRPRAR 345KV CKT Z	720	720	0.04018	101.1527	GEN600006 1-AS KING
FDNS	00NR	3	20SP	G15_076	TO->FROM	GRPRAR1-LNX3345.00 - GRPRAR 345KV CKT Z	720	720	0.04018	101.1495	GEN659453 1-GI1414GEN W0.6900
FDNS	00NR	3	20SP	G15_076	TO->FROM	GRPRAR1-LNX3345.00 - GRPRAR 345KV CKT Z	720	720	0.04018	101.148	GEN563302 1-G15096_3 0.6900
FDNS	00NR	3	25SP	G15_076	TO->FROM	GRPRAR1-LNX3345.00 - GRPRAR 345KV CKT Z	720	720	0.0405	101.0461	STANTON 230/18.0KV TRANSFORMER CKT 1
FDNS	00NR	3	20SP	G15_076	TO->FROM	GRPRAR1-LNX3345.00 - GRPRAR 345KV CKT Z	720	720	0.04018	101.0432	GEN659141 1-K10215A
FDNS	00NR	3	20SP	G15_076	TO->FROM	GRPRAR1-LNX3345.00 - GRPRAR 345KV CKT Z	720	720	0.04018	101.0421	GEN652556 2-OAHE
FDNS	00NR	3	20SP	G15_076	TO->FROM	GRPRAR1-LNX3345.00 - GRPRAR 345KV CKT Z	720	720	0.04018	101.0421	GEN652557 4-OAHE
FDNS	00NR	3	20SP	G15_076	TO->FROM	GRPRAR1-LNX3345.00 - GRPRAR 345KV CKT Z	720	720	0.04018	101.0421	GEN652558 6-OAHE
FDNS	00NR	3	20SP	G15_076	TO->FROM	GRPRAR1-LNX3345.00 - GRPRAR 345KV CKT Z	720	720	0.04018	101.0146	GEN659110 1-LELAND OLDS UNIT1
FDNS	00NR	3	25SP	G15_076	TO->FROM	GRPRAR1-LNX3345.00 - GRPRAR 345KV CKT Z	720	720	0.0405	100.8673	GEN652559 1-OAHE
FDNS	00NR	3	20SP	G15_076	TO->FROM	GRPRAR1-LNX3345.00 - GRPRAR 345KV CKT Z	720	720	0.04018	100.8527	GEN652173 1-G09_001IS_2 0.6900
FDNS	00NR	3	25SP	G15_076	TO->FROM	GRPRAR1-LNX3345.00 - GRPRAR 345KV CKT Z	720	720	0.0405	100.8105	GEN659411 1-CAMPBLCNTY W0.6900
FDNS	00NR	3	25SP	G15_076	TO->FROM	GRPRAR1-LNX3345.00 - GRPRAR 345KV CKT Z	720	720	0.0405	100.6656	SQUARE BUTTE - YNG2 4 230.00 230KV CKT 1
FDNS	00NR	3	20SP	G15_076	TO->FROM	GRPRAR1-LNX3345.00 - GRPRAR 345KV CKT Z	720	720	0.04018	100.6412	GEN657749 1-YOUNG 1 GENERATOR
FDNS	00NR	3	20SP	G15_076	TO->FROM	GRPRAR1-LNX3345.00 - GRPRAR 345KV CKT Z	720	720	0.04215	100.6335	GRAND ISLAND - MCCOOL 345KV CKT 1
FDNS	00NR	3	25SP	G15_076	TO->FROM	GRPRAR1-LNX3345.00 - GRPRAR 345KV CKT Z	720	720	0.0405	100.6064	GEN600004 2-PRAIRIE ISLAND G2
FDNS	00NR	3	25SP	G15_076	TO->FROM	GRPRAR1-LNX3345.00 - GRPRAR 345KV CKT Z	720	720	0.0405	100.6022	GEN600003 1-PRAIRIE ISLAND G1
FDNS	00NR	3	25SP	G15_076	TO->FROM	GRPRAR1-LNX3345.00 - GRPRAR 345KV CKT Z	720	720	0.0405	100.5929	GEN672310 1-POPLAR RIVER GENERATOR 1
FDNS	00NR	3	25SP	G15_076	TO->FROM	GRPRAR1-LNX3345.00 - GRPRAR 345KV CKT Z	720	720	0.0405	100.5928	GEN672311 2-POPLAR RIVER GENERATOR 2
FDNS	00NR	3	25SP	G15_076	TO->FROM	GRPRAR1-LNX3345.00 - GRPRAR 345KV CKT Z	720	720	0.0405	100.5818	GEN659296 2-SDPRAIRWND1W0.6900
FDNS	00NR	3	25SP	G15_076	TO->FROM	GRPRAR1-LNX3345.00 - GRPRAR 345KV CKT Z	720	720	0.0405	100.5804	GEN672321 1-SHAND GENERATOR 1
FDNS	00NR	3	20SP	G15_076	TO->FROM	GRPRAR1-LNX3345.00 - GRPRAR 345KV CKT Z	720	720	0.04018	100.5434	GEN659407 1-ANTELPHILLSW0.6900
FDNS	00NR	3	25SP	G15_076	TO->FROM	GRPRAR1-LNX3345.00 - GRPRAR 345KV CKT Z	720	720	0.0405	100.5327	P12:230:UMZB:# 112 #: NU IN SD. NU-RCDC & DRY CREEK XFMR
FDNS	00NR	3	25SP	G15_076	TO->FROM	GRPRAR1-LNX3345.00 - GRPRAR 345KV CKT Z	720	720	0.0405	100.524	RCDC EAST 4230.00 - RED CEDAR DC 230KV CKT 1
FDNS	00NR	3	25SP	G15_076	TO->FROM	GRPRAR1-LNX3345.00 - GRPRAR 345KV CKT Z	720	720	0.0405	100.4985	GEN672306 6-BOUNDARY DAM GENERATOR 6
FDNS	00NR	3	25SP	G15_076	TO->FROM	GRPRAR1-LNX3345.00 - GRPRAR 345KV CKT Z	720	720	0.0405	100.3879	GEN615010 1-STANTON4
FDNS	00NR	3	25SP	G15_076	TO->FROM	GRPRAR1-LNX3345.00 - GRPRAR 345KV CKT Z	720	720	0.0405	100.3611	GEN659453 1-GI1414GEN W0.6900
FDNS	00NR	3	25SP	G15_076	TO->FROM	GRPRAR1-LNX3345.00 - GRPRAR 345KV CKT Z	720	720	0.0405	100.3591	GEN563302 1-G15096_3 0.6900
FDNS	00NR	3	25SP	G15_076	TO->FROM	GRPRAR1-LNX3345.00 - GRPRAR 345KV CKT Z	720	720	0.0405	100.2695	GEN652557 4-OAHE
FDNS	00NR	3	25SP	G15_076	TO->FROM	GRPRAR1-LNX3345.00 - GRPRAR 345KV CKT Z	720	720	0.0405	100.2695	GEN652558 6-OAHE
FDNS	00NR	3	25SP	G15_076	TO->FROM	GRPRAR1-LNX3345.00 - GRPRAR 345KV CKT Z	720	720	0.0405	100.2694	GEN652556 2-OAHE
FDNS	00NR	3	25SP	G15_076	TO->FROM	GRPRAR1-LNX3345.00 - GRPRAR 345KV CKT Z	720	720	0.0405	100.2557	GEN600006 1-AS KING
FDNS	00NR	3	25SP	G15_076	TO->FROM	GRPRAR1-LNX3345.00 - GRPRAR 345KV CKT Z	720	720	0.0405	100.2432	GEN659141 1-K10215A

SOLUTION	GROUP	SCENARIO	SEASON	SOURCE	DIRECTION	MONITORED ELEMENT	RATEA (MVA)	RATEB(MVA)	TDF	TC%LOADING (% MVA)	CONTINGENCY
FDNS	00NR	3	20SP	G15_076	TO->FROM	GRPRAR1-LNX3345.00 - GRPRAR 345KV CKT Z	720	720	0.04018	100.2235	GEN600005 1-MONTICELLO
FDNS	00NR	3	25SP	G15_076	TO->FROM	GRPRAR1-LNX3345.00 - GRPRAR 345KV CKT Z	720	720	0.0405	100.197	GEN659110 1-LELAND OLDS UNIT1
FDNS	00NR	3	25SP	G15_076	TO->FROM	GRPRAR1-LNX3345.00 - GRPRAR 345KV CKT Z	720	720	0.04263	100.181	GRAND ISLAND - MCCOOL 345KV CKT 1
FDNS	00NR	3	20SP	G15_076	TO->FROM	GRPRAR1-LNX3345.00 - GRPRAR 345KV CKT Z	720	720	0.04018	100.1	GEN600000 1-SHERBURNECNTY G1
FDNS	00NR	3	25SP	G15_076	TO->FROM	GRPRAR1-LNX3345.00 - GRPRAR 345KV CKT Z	720	720	0.0405	100.0899	GEN652173 1-G09_001IS_2 0.6900
FDNS	00NR	3	20SP	G15_076	TO->FROM	GRPRAR1-LNX3345.00 - GRPRAR 345KV CKT Z	720	720	0.04018	99.8	GEN600001 2-SHERBURNE CNTY G2
FDNS	00NR	3	25SP	G15_076	TO->FROM	GRPRAR1-LNX3345.00 - GRPRAR 345KV CKT Z	720	720	0.0405	99.8	CLAY BOSWELL 230/20.9KV TRANSFORMER CKT 1
FDNS	00NR	3	25SP	G15_076	TO->FROM	GRPRAR1-LNX3345.00 - GRPRAR 345KV CKT Z	720	720	0.0405	99.8	GEN657749 1-YOUNG 1 GENERATOR
FDNS	00NR	3	25SP	G15_076	TO->FROM	GRPRAR1-LNX3345.00 - GRPRAR 345KV CKT Z	720	720	0.0405	99.8	GEN659407 1-ANTELPHILLSW0.6900
FDNS	00NR	3	20SP	G15_076	TO->FROM	GRPRAR1-LNX3345.00 - GRPRAR 345KV CKT Z	720	720	0.04018	99.7	GEN661015 1-COYOTE
FDNS	00NR	3	20SP	G15_076	TO->FROM	GRPRAR1-LNX3345.00 - GRPRAR 345KV CKT Z	720	720	0.04018	99.5	GEN620315 1-BIG STONE GEN
FDNS	00NR	3	17SP	G15_076	FROM->TO	GRPRAR1-LNX3345.00 - HOLT.CO3 345.00 345KV CKT 1	720	720	0.0393	120.402	P12:230:UMZB:# 116 #: ST IN SD. WSG-ST-VH
FDNS	00NR	3	17SP	G15_076	FROM->TO	GRPRAR1-LNX3345.00 - HOLT.CO3 345.00 345KV CKT 1	720	720	0.04695	120.18	KELLY - MEADOWGROVE4230.00 230KV CKT 1
FDNS	00NR	3	17SP	G15_076	FROM->TO	GRPRAR1-LNX3345.00 - HOLT.CO3 345.00 345KV CKT 1	720	720	0.04084	119.5799	WATERTN-LNX3345.00 - WATERTOWN 345KV CKT Z
FDNS	00NR	3	17SP	G15_076	FROM->TO	GRPRAR1-LNX3345.00 - HOLT.CO3 345.00 345KV CKT 1	720	720	0.04084	119.5469	P12:345:UMZW:# 1747 #: WT2 IN SD. WT2-WHT LINE FAULT
FDNS	00NR	3	17SP	G15_076	FROM->TO	GRPRAR1-LNX3345.00 - HOLT.CO3 345.00 345KV CKT 1	720	720	0.04084	119.5349	WATERTN-LNX3345.00 - WHITE 345KV CKT 1
FDNS	00NR	3	17SP	G15_076	FROM->TO	GRPRAR1-LNX3345.00 - HOLT.CO3 345.00 345KV CKT 1	720	720	0.03965	119.4581	STORLA - WESSINGTON 230KV CKT 1
FDNS	00NR	3	17SP	G15_076	FROM->TO	GRPRAR1-LNX3345.00 - HOLT.CO3 345.00 345KV CKT 1	720	720	0.04143	118.7842	G09_001IST 345.00 - WATERTOWN 345KV CKT 1
FDNS	00NR	3	17SP	G15_076	FROM->TO	GRPRAR1-LNX3345.00 - HOLT.CO3 345.00 345KV CKT 1	720	720	0.03975	118.3592	HANLON - STORLA 230KV CKT 1
FDNS	00NR	3	17SP	G15_076	FROM->TO	GRPRAR1-LNX3345.00 - HOLT.CO3 345.00 345KV CKT 1	720	720	0.03899	117.7273	FT THOMPSON - LETCHER 230KV CKT 1
FDNS	00NR	3	17SP	G15_076	FROM->TO	GRPRAR1-LNX3345.00 - HOLT.CO3 345.00 345KV CKT 1	720	720	0.03899	117.7273	FT THOMPSON - LETCHER 230KV CKT 1
FDNS	00NR	3	17SP	G15_076	FROM->TO	GRPRAR1-LNX3345.00 - HOLT.CO3 345.00 345KV CKT 1	720	720	0.04174	117.336	BUFFALO - JAMESTOWN 345KV CKT 1
FDNS	00NR	3	17SP	G15_076	FROM->TO	GRPRAR1-LNX3345.00 - HOLT.CO3 345.00 345KV CKT 1	720	720	0.03836	116.3154	FT RANDAL - G12_009IST 230.00 230KV CKT 1
FDNS	00NR	3	17SP	G15_076	FROM->TO	GRPRAR1-LNX3345.00 - HOLT.CO3 345.00 345KV CKT 1	720	720	0.03828	116.281	FT RANDAL - FT THOMPSON 230KV CKT 1
FDNS	00NR	3	17SP	G15_076	FROM->TO	GRPRAR1-LNX3345.00 - HOLT.CO3 345.00 345KV CKT 1	720	720	0.03828	116.281	FT RANDAL - FT THOMPSON 230KV CKT 1
FDNS	00NR	3	17SP	G15_076	FROM->TO	GRPRAR1-LNX3345.00 - HOLT.CO3 345.00 345KV CKT 1	720	720	0.04174	116.2451	CHISAGO COUNTY - FORBES 500KV CKT 1
FDNS	00NR	3	17SP	G15_076	FROM->TO	GRPRAR1-LNX3345.00 - HOLT.CO3 345.00 345KV CKT 1	720	720	0.03836	116.2018	FT THOMPSON - LAKE PLATT 230KV CKT 1
FDNS	00NR	3	17SP	G15_076	FROM->TO	GRPRAR1-LNX3345.00 - HOLT.CO3 345.00 345KV CKT 1	720	720	0.03836	116.2018	FT THOMPSON - LAKE PLATT 230KV CKT 1
FDNS	00NR	3	17SP	G15_076	FROM->TO	GRPRAR1-LNX3345.00 - HOLT.CO3 345.00 345KV CKT 1	720	720	0.04143	116.1752	G09_001IST 345.00 - GROTON 345KV CKT 1
FDNS	00NR	3	17SP	G15_076	FROM->TO	GRPRAR1-LNX3345.00 - HOLT.CO3 345.00 345KV CKT 1	720	720	0.05017	116.1304	NUNDRWD - WAYSIDE 230KV CKT 1
FDNS	00NR	3	17SP	G15_076	FROM->TO	GRPRAR1-LNX3345.00 - HOLT.CO3 345.00 345KV CKT 1	720	720	0.03836	115.8251	G12_009IST 230.00 - LAKE PLATT 230KV CKT 1
FDNS	00NR	3	17SP	G15_076	FROM->TO	GRPRAR1-LNX3345.00 - HOLT.CO3 345.00 345KV CKT 1	720	720	0.04174	115.7675	CENTER - JAMESTOWN 345KV CKT 1
FDNS	00NR	3	17SP	G15_076	FROM->TO	GRPRAR1-LNX3345.00 - HOLT.CO3 345.00 345KV CKT 1	720	720	0.04695	115.6425	FT RANDAL - MEADOWGROVE4230.00 230KV CKT 1
FDNS	00NR	3	17SP	G15_076	FROM->TO	GRPRAR1-LNX3345.00 - HOLT.CO3 345.00 345KV CKT 1	720	720	0.04054	115.5114	LETCHER - SIOUX FALLS 230KV CKT 1
FDNS	00NR	3	17SP	G15_076	FROM->TO	GRPRAR1-LNX3345.00 - HOLT.CO3 345.00 345KV CKT 1	720	720	0.04173	115.2817	GEN336821 1-GRAND GULF UNIT
FDNS	00NR	3	17SP	G15_076	FROM->TO	GRPRAR1-LNX3345.00 - HOLT.CO3 345.00 345KV CKT 1	720	720	0.04174	115.2469	BISON 3 345.00 - BUFFALO 345KV CKT 1
FDNS	00NR	3	17SP	G15_076	FROM->TO	GRPRAR1-LNX3345.00 - HOLT.CO3 345.00 345KV CKT 1	720	720	0.04173	115.1516	GEN635024 4-WALTER SCOTT UNIT 4
FDNS	00NR	3	17SP	G15_076	FROM->TO	GRPRAR1-LNX3345.00 - HOLT.CO3 345.00 345KV CKT 1	720	720	0.04009	115.0879	SPLIT ROCK - WHITE 345KV CKT 1
FDNS	00NR	3	17SP	G15_076	FROM->TO	GRPRAR1-LNX3345.00 - HOLT.CO3 345.00 345KV CKT 1	720	720	0.04009	115.0879	SPLIT ROCK - WHITE 345KV CKT 1
FDNS	00NR	3	17SP	G15_076	FROM->TO	GRPRAR1-LNX3345.00 - HOLT.CO3 345.00 345KV CKT 1	720	720	0.04173	114.8938	GEN344225 1-1CAL G1 25.000
FDNS	00NR	3	17SP	G15_076	FROM->TO	GRPRAR1-LNX3345.00 - HOLT.CO3 345.00 345KV CKT 1	720	720	0.04274	114.8176	KEYSTONE - SIDNEY1-LNX3345.00 345KV CKT 1
FDNS	00NR	3	17SP	G15_076	FROM->TO	GRPRAR1-LNX3345.00 - HOLT.CO3 345.00 345KV CKT 1	720	720	0.04274	114.8025	SIDNEY - SIDNEY1-LNX3345.00 345KV CKT Z
FDNS	00NR	3	17SP	G15_076	FROM->TO	GRPRAR1-LNX3345.00 - HOLT.CO3 345.00 345KV CKT 1	720	720	0.04173	114.7121	GEN562714 1-G15_023_4 0.6900
FDNS	00NR	3	17SP	G15_076	FROM->TO	GRPRAR1-LNX3345.00 - HOLT.CO3 345.00 345KV CKT 1	720	720	0.04173	114.7121	GEN562715 1-G15_023_5 0.6900
FDNS	00NR	3	17SP	G15_076	FROM->TO	GRPRAR1-LNX3345.00 - HOLT.CO3 345.00 345KV CKT 1	720	720	0.04173	114.6777	GEN635023 3-WALTER SCOTT UNIT 3
FDNS	00NR	3	17SP	G15_076	FROM->TO	GRPRAR1-LNX3345.00 - HOLT.CO3 345.00 345KV CKT 1	720	720	0.04173	114.646	GEN337911 1-ARKANSAS NUCLEAR ONE UNIT #2
FDNS	00NR	3	17SP	G15_076	FROM->TO	GRPRAR1-LNX3345.00 - HOLT.CO3 345.00 345KV CKT 1	720	720	0.04173	114.6162	GEN336153 1-WATERFORD UNIT#3
FDNS	00NR	3	17SP	G15_076	FROM->TO	GRPRAR1-LNX3345.00 - HOLT.CO3 345.00 345KV CKT 1	720	720	0.04061	114.6052	FT RANDAL - SIOUX CITY 230KV CKT 1
FDNS	00NR	3	17SP	G15_076	FROM->TO	GRPRAR1-LNX3345.00 - HOLT.CO3 345.00 345KV CKT 1	720	720	0.04144	114.5305	GROTON-LNX3 345.00 - LELAND1-LNX3345.00 345KV CKT 1
FDNS	00NR	3	17SP	G15_076	FROM->TO	GRPRAR1-LNX3345.00 - HOLT.CO3 345.00 345KV CKT 1	720	720	0.04144	114.4255	P12:345:UMZB:# 109 #: LOS GRT IN ND. LOS GRT
FDNS	00NR	3	17SP	G15_076	FROM->TO	GRPRAR1-LNX3345.00 - HOLT.CO3 345.00 345KV CKT 1	720	720	0.04144	114.4253	LELAND OLDS - LELAND1-LNX3345.00 345KV CKT Z
FDNS	00NR	3	17SP	G15_076	FROM->TO	GRPRAR1-LNX3345.00 - HOLT.CO3 345.00 345KV CKT 1	720	720	0.04144	114.4024	GROTON - GROTON-LNX3 345.00 345KV CKT Z
FDNS	00NR	3	17SP	G15_076	FROM->TO	GRPRAR1-LNX3345.00 - HOLT.CO3 345.00 345KV CKT 1	720	720	0.04204	114.3623	ARROWHEAD - ARROWHEAD 230 230KV CKT 1
FDNS	00NR	3	17SP	G15_076	FROM->TO	GRPRAR1-LNX3345.00 - HOLT.CO3 345.00 345KV CKT 1	720	720	0.04097	114.3416	HANLON - SIOUX FALLS 230KV CKT 1
FDNS	00NR	3	17SP	G15_076	FROM->TO	GRPRAR1-LNX3345.00 - HOLT.CO3 345.00 345KV CKT 1	720	720	0.04237	114.2948	MISSION - ST FRANCIS 115KV CKT 1
FDNS	00NR	3	17SP	G15_076	FROM->TO	GRPRAR1-LNX3345.00 - HOLT.CO3 345.00 345KV CKT 1	720	720	0.04237	114.2842	P12:115:NPPD:1091:VALENTN7:MISSION7:BTB
FDNS	00NR	3	17SP	G15_076	FROM->TO	GRPRAR1-LNX3345.00 - HOLT.CO3 345.00 345KV CKT 1	720	720	0.04173	114.2812	GEN640010 1-GERALD GENTLEMAN STATION UNIT 1
FDNS	00NR	3	17SP	G15_076	FROM->TO	GRPRAR1-LNX3345.00 - HOLT.CO3 345.00 345KV CKT 1	720	720	0.04173	114.2698	GEN335831 1-RIVERBEND UNIT#1
FDNS	00NR	3	17SP	G15_076	FROM->TO	GRPRAR1-LNX3345.00 - HOLT.CO3 345.00 345KV CKT 1	720	720	0.04173	114.1789	GEN337910 1-ARKANSAS NUCLEAR ONE UNIT #1
FDNS	00NR	3	17SP	G15_076	FROM->TO	GRPRAR1-LNX3345.00 - HOLT.CO3 345.00 345KV CKT 1	720	720	0.0377	114.1675	FT RANDAL - UTICA JCT 230KV CKT 1
FDNS	00NR	3	17SP	G15_076	FROM->TO	GRPRAR1-LNX3345.00 - HOLT.CO3 345.00 345KV CKT 1	720	720	0.04237	114.1321	HARMONY - ST FRANCIS 115KV CKT 1
FDNS	00NR	3	17SP	G15_076	FROM->TO	GRPRAR1-LNX3345.00 - HOLT.CO3 345.00 345KV CKT 1	720	720	0.0418	114.1027	ALEXMRES3 345.00 - BISON 3 345.00 345KV CKT 1
FDNS	00NR	3	17SP	G15_076	FROM->TO	GRPRAR1-LNX3345.00 - HOLT.CO3 345.00 345KV CKT 1	720	720	0.04261	114.083	HAZLETON - MITCHLCO3 345.00 345KV CKT 1
FDNS	00NR	3	17SP	G15_076	FROM->TO	GRPRAR1-LNX3345.00 - HOLT.CO3 345.00 345KV CKT 1	720	720	0.04001	114.0389	SIOUXCY-LNX3345.00 - SPLIT ROCK 345KV CKT 1
FDNS	00NR	3	17SP	G15_076	FROM->TO	GRPRAR1-LNX3345.00 - HOLT.CO3 345.00 345KV CKT 1	720	720	0.04001	114.0389	SIOUXCY-LNX3345.00 - SPLIT ROCK 345KV CKT 1
FDNS	00NR	3	17SP	G15_076	FROM->TO	GRPRAR1-LNX3345.00 - HOLT.CO3 345.00 345KV CKT 1	720	720	0.04173	114.0237	ELLENDALE - OAKES 230KV CKT 1
FDNS	00NR	3	17SP	G15_076	FROM->TO	GRPRAR1-LNX3345.00 - HOLT.CO3 345.00 345KV CKT 1	720	720	0.04173	114.0237	ELLENDALE - OAKES 230KV CKT 1
FDNS	00NR	3	17SP	G15_076	FROM->TO	GRPRAR1-LNX3345.00 - HOLT.CO3 345.00 345KV CKT 1	720	720	0.04001	114.0208	P12:345:UMZW:# 907 #: SC2-SR IN IA. SC2-SR 345 KV LINE
FDNS	00NR	3	17SP	G15_076	FROM->TO	GRPRAR1-LNX3345.00 - HOLT.CO3 345.00 345KV CKT 1	720	720	0.04173	113.989	GEN640011 2-GERALD GENTLEMAN STATION UNIT 2
FDNS	00NR	3	17SP	G15_076	FROM->TO	GRPRAR1-LNX3345.00 - HOLT.CO3 345.00 345KV CKT 1	720	720	0.04001	113.9705	SIOUX CITY - SIOUXCY-LNX3345.00 345KV CKT Z
FDNS	00NR	3	17SP	G15_076	FROM->TO	GRPRAR1-LNX3345.00 - HOLT.CO3 345.00 345KV CKT 1	720	720	0.04634	113.9615	RAUN - SUB 3451 FT CAL 345KV CKT 1
FDNS	00NR	3	17SP	G15_076	FROM->TO	GRPRAR1-LNX3345.00 - HOLT.CO3 345.00 345KV CKT 1	720	720	0.04634	113.9615	RAUN - SUB 3451 FT CAL 345KV CKT 1
FDNS	00NR	3	17SP	G15_076	FROM->TO	GRPRAR1-LNX3345.00 - HOLT.CO3 345.00 345KV CKT 1	720	720	0.04365	113.9549	FT RANDAL - SPENCER 115KV CKT 1
FDNS	00NR	3	17SP	G15_076	FROM->TO	GRPRAR1-LNX3345.00 - HOLT.CO3 345.00 345KV CKT 1	720	720	0.04237	113.9459	HARMONY - VALENTINE 115KV CKT 1
FDNS	00NR	3	17SP	G15_076	FROM->TO	GRPRAR1-LNX3345.00 - HOLT.CO3 345.00 345KV CKT 1	720	720	0.04173	113.934	FORMAN - OAKES 230KV CKT 1
FDNS	00NR	3	17SP	G15_076	FROM->TO	GRPRAR1-LNX3345.00 - HOLT.CO3 345.00 345KV CKT 1	720	720	0.04206	113.9305	GERALD GENTLEMAN STATION - KEYSTONE 345KV CKT 1
FDNS	00NR	3	17SP	G15_076	FROM->TO	GRPRAR1-LNX3345.00 - HOLT.CO3 345.00 345KV CKT 1	720	720	0.04365	113.9284	P12:115:NPPD:WAPA6:FTRANDL7:ONEILL 7:BTB
FDNS	00NR	3	17SP	G15_076	FROM->TO	GRPRAR1-LNX3345.00 - HOLT.CO3 345.00 345KV CKT 1	720	720	0.04365	113.9284	P12:115:UMZB:# 115 #: SE IN NE. FR-SE-ON
FDNS	00NR	3	17SP	G15_076	FROM->TO	GRPRAR1-LNX3345.00 - HOLT.CO3 345.00 345KV CKT 1	720	720	0.04317	113.9119	SIDNEY - STEGALL 345KV CKT 1

SOLUTION	GROUP	SCENARIO	SEASON	SOURCE	DIRECTION	MONITORED ELEMENT	RATEA (MVA)	RATEB(MVA)	TDF	TC%LOADING (% MVA)	CONTINGENCY
FDNS	00NR	3	17SP	G15_076	FROM->TO	GRPRAR1-LNX3345.00 - HOLT.CO3 345.00 345KV CKT 1	720	720	0.0572	113.8221	DIXONCO 230.00 - HOSKINS 230KV CKT 1
FDNS	00NR	3	17SP	G15_076	FROM->TO	GRPRAR1-LNX3345.00 - HOLT.CO3 345.00 345KV CKT 1	720	720	0.04365	113.8071	ONEILL - SPENCER 115KV CKT 1
FDNS	00NR	3	17SP	G15_076	FROM->TO	GRPRAR1-LNX3345.00 - HOLT.CO3 345.00 345KV CKT 1	720	720	0.04208	113.7864	AS KING - EAU CLAIRE 345KV CKT 1
FDNS	00NR	3	17SP	G15_076	FROM->TO	GRPRAR1-LNX3345.00 - HOLT.CO3 345.00 345KV CKT 1	720	720	0.04174	113.7674	CARPENTER - HURON 230KV CKT 1
FDNS	00NR	3	17SP	G15_076	FROM->TO	GRPRAR1-LNX3345.00 - HOLT.CO3 345.00 345KV CKT 1	720	720	0.04075	113.7632	PAHOJA - SIOUX FALLS 230KV CKT 1
FDNS	00NR	3	17SP	G15_076	FROM->TO	GRPRAR1-LNX3345.00 - HOLT.CO3 345.00 345KV CKT 1	720	720	0.04173	113.6932	GEN337653 1-WHITE BLUFF UNIT #2
FDNS	00NR	3	17SP	G15_076	FROM->TO	GRPRAR1-LNX3345.00 - HOLT.CO3 345.00 345KV CKT 1	720	720	0.04173	113.6798	GEN337652 1-WHITE BLUFF UNIT #1
FDNS	00NR	3	17SP	G15_076	FROM->TO	GRPRAR1-LNX3345.00 - HOLT.CO3 345.00 345KV CKT 1	720	720	0.04174	113.6747	HURON - WATERTOWN 230KV CKT 2
FDNS	00NR	3	17SP	G15_076	FROM->TO	GRPRAR1-LNX3345.00 - HOLT.CO3 345.00 345KV CKT 1	720	720	0.04174	113.6747	HURON - WATERTOWN 230KV CKT 2
FDNS	00NR	3	17SP	G15_076	FROM->TO	GRPRAR1-LNX3345.00 - HOLT.CO3 345.00 345KV CKT 1	720	720	0.04173	113.6273	GEN338146 1-INDEPENDENCE UNIT #2
FDNS	00NR	3	17SP	G15_076	FROM->TO	GRPRAR1-LNX3345.00 - HOLT.CO3 345.00 345KV CKT 1	720	720	0.04173	113.6209	GEN338143 1-INDEPENDENCE UNIT #1
FDNS	00NR	3	17SP	G15_076	FROM->TO	GRPRAR1-LNX3345.00 - HOLT.CO3 345.00 345KV CKT 1	720	720	0.04174	113.6141	CARPENTER - WATERTOWN 230KV CKT 1
FDNS	00NR	3	17SP	G15_076	FROM->TO	GRPRAR1-LNX3345.00 - HOLT.CO3 345.00 345KV CKT 1	720	720	0.04174	113.6141	CARPENTER - WATERTOWN 230KV CKT 1
FDNS	00NR	3	17SP	G15_076	FROM->TO	GRPRAR1-LNX3345.00 - HOLT.CO3 345.00 345KV CKT 1	720	720	0.04222	113.5763	ARPIN B4 345.00 - EAU CLAIRE 345KV CKT 1
FDNS	00NR	3	17SP	G15_076	FROM->TO	GRPRAR1-LNX3345.00 - HOLT.CO3 345.00 345KV CKT 1	720	720	0.04173	113.5596	GEN501801 1-DOLET HILLS UNIT1
FDNS	00NR	3	17SP	G15_076	FROM->TO	GRPRAR1-LNX3345.00 - HOLT.CO3 345.00 345KV CKT 1	720	720	0.04175	113.519	FORMAN - HANKINSON 230KV CKT 1
FDNS	00NR	3	17SP	G15_076	FROM->TO	GRPRAR1-LNX3345.00 - HOLT.CO3 345.00 345KV CKT 1	720	720	0.03706	113.4938	RASMUSN - UTICA JCT 230KV CKT 1
FDNS	00NR	3	17SP	G15_076	FROM->TO	GRPRAR1-LNX3345.00 - HOLT.CO3 345.00 345KV CKT 1	720	720	0.04237	113.4231	AINSWORTH - VALENTINE 115KV CKT 1
FDNS	00NR	3	17SP	G15_076	FROM->TO	GRPRAR1-LNX3345.00 - HOLT.CO3 345.00 345KV CKT 1	720	720	0.03965	113.3735	FT THOMPSON - WESSINGTON 230KV CKT 1
FDNS	00NR	3	17SP	G15_076	FROM->TO	GRPRAR1-LNX3345.00 - HOLT.CO3 345.00 345KV CKT 1	720	720	0.03965	113.3735	FT THOMPSON - WESSINGTON 230KV CKT 1
FDNS	00NR	3	17SP	G15_076	FROM->TO	GRPRAR1-LNX3345.00 - HOLT.CO3 345.00 345KV CKT 1	720	720	0.04075	113.3415	EAGLE 4 230.00 - PAHOJA 230KV CKT 1
FDNS	00NR	3	17SP	G15_076	FROM->TO	GRPRAR1-LNX3345.00 - HOLT.CO3 345.00 345KV CKT 1	720	720	0.042	113.333	G15094_T 345.00 - SIDNEY2-LNX3345.00 345KV CKT 1
FDNS	00NR	3	17SP	G15_076	FROM->TO	GRPRAR1-LNX3345.00 - HOLT.CO3 345.00 345KV CKT 1	720	720	0.04174	113.3301	CNTSHNT3 345.00 - PRAIRIE3 345.00 345KV CKT 1
FDNS	00NR	3	17SP	G15_076	FROM->TO	GRPRAR1-LNX3345.00 - HOLT.CO3 345.00 345KV CKT 1	720	720	0.04261	113.3217	ADAMS - MITCHLCO3 345.00 345KV CKT 1
FDNS	00NR	3	17SP	G15_076	FROM->TO	GRPRAR1-LNX3345.00 - HOLT.CO3 345.00 345KV CKT 1	720	720	0.042	113.3086	SIDNEY - SIDNEY2-LNX3345.00 345KV CKT Z
FDNS	00NR	3	17SP	G15_076	FROM->TO	GRPRAR1-LNX3345.00 - HOLT.CO3 345.00 345KV CKT 1	720	720	0.04173	113.2754	GEN336252 1-NINEMILE POINT UNIT#5
FDNS	00NR	3	17SP	G15_076	FROM->TO	GRPRAR1-LNX3345.00 - HOLT.CO3 345.00 345KV CKT 1	720	720	0.04173	113.2354	GEN501813 1-RODEMACHER UNIT 3
FDNS	00NR	3	17SP	G15_076	FROM->TO	GRPRAR1-LNX3345.00 - HOLT.CO3 345.00 345KV CKT 1	720	720	0.04173	113.158	GEN336831 1-BAXTER WILSON SES
FDNS	00NR	3	17SP	G15_076	FROM->TO	GRPRAR1-LNX3345.00 - HOLT.CO3 345.00 345KV CKT 1	720	720	0.04235	113.1539	ADAMS - PLEASANT VALLEY 345KV CKT 1
FDNS	00NR	3	17SP	G15_076	FROM->TO	GRPRAR1-LNX3345.00 - HOLT.CO3 345.00 345KV CKT 1	720	720	0.04173	113.1468	GEN336251 1-NINEMILE POINT UNIT#4
FDNS	00NR	3	17SP	G15_076	FROM->TO	GRPRAR1-LNX3345.00 - HOLT.CO3 345.00 345KV CKT 1	720	720	0.04173	113.0842	GEN337041 1-GERALD ANDRUS
FDNS	00NR	3	17SP	G15_076	FROM->TO	GRPRAR1-LNX3345.00 - HOLT.CO3 345.00 345KV CKT 1	720	720	0.04173	113.0724	GEN344897 4-1LAB G4 20.000
FDNS	00NR	3	17SP	G15_076	FROM->TO	GRPRAR1-LNX3345.00 - HOLT.CO3 345.00 345KV CKT 1	720	720	0.04173	113.0695	GEN344894 1-1LAB G1 20.000
FDNS	00NR	3	17SP	G15_076	FROM->TO	GRPRAR1-LNX3345.00 - HOLT.CO3 345.00 345KV CKT 1	720	720	0.04173	113.0692	GEN344896 3-1LAB G3 20.000
FDNS	00NR	3	17SP	G15_076	FROM->TO	GRPRAR1-LNX3345.00 - HOLT.CO3 345.00 345KV CKT 1	720	720	0.04173	113.0637	GEN335206 1-NELSON UNIT 6
FDNS	00NR	3	17SP	G15_076	FROM->TO	GRPRAR1-LNX3345.00 - HOLT.CO3 345.00 345KV CKT 1	720	720	0.04173	113.0214	GEN344895 2-1LAB G2 20.000
FDNS	00NR	3	17SP	G15_076	FROM->TO	GRPRAR1-LNX3345.00 - HOLT.CO3 345.00 345KV CKT 1	720	720	0.04173	113.0093	GEN345670 1-1RUSH G1 18.000
FDNS	00NR	3	17SP	G15_076	FROM->TO	GRPRAR1-LNX3345.00 - HOLT.CO3 345.00 345KV CKT 1	720	720	0.04173	113.009	GEN345671 2-1RUSH G2 18.000
FDNS	00NR	3	17SP	G15_076	FROM->TO	GRPRAR1-LNX3345.00 - HOLT.CO3 345.00 345KV CKT 1	720	720	0.04282	112.9343	LAKEFIELD 3 - NOBLES 345KV CKT 1
FDNS	00NR	3	17SP	G15_076	FROM->TO	GRPRAR1-LNX3345.00 - HOLT.CO3 345.00 345KV CKT 1	720	720	0.04173	112.9339	GEN501812 1-RODEMACHER UNIT 2
FDNS	00NR	3	17SP	G15_076	FROM->TO	GRPRAR1-LNX3345.00 - HOLT.CO3 345.00 345KV CKT 1	720	720	0.04173	112.9147	GEN334440 1-SABINE UNIT 4
FDNS	00NR	3	17SP	G15_076	FROM->TO	GRPRAR1-LNX3345.00 - HOLT.CO3 345.00 345KV CKT 1	720	720	0.04184	112.9105	ALEXMRES3 345.00 - WAITE PARK 345KV CKT 1
FDNS	00NR	3	17SP	G15_076	FROM->TO	GRPRAR1-LNX3345.00 - HOLT.CO3 345.00 345KV CKT 1	720	720	0.04179	112.9021	BLAIR - GRANITE FALLS 230KV CKT 1
FDNS	00NR	3	17SP	G15_076	FROM->TO	GRPRAR1-LNX3345.00 - HOLT.CO3 345.00 345KV CKT 1	720	720	0.04179	112.9021	BLAIR - GRANITE FALLS 230KV CKT 1
FDNS	00NR	3	17SP	G15_076	FROM->TO	GRPRAR1-LNX3345.00 - HOLT.CO3 345.00 345KV CKT 1	720	720	0.04173	112.8812	GEN635214 4-NEAL UNIT 4
FDNS	00NR	3	17SP	G15_076	FROM->TO	GRPRAR1-LNX3345.00 - HOLT.CO3 345.00 345KV CKT 1	720	720	0.04172	112.8561	CENTER - COYOTE 345KV CKT 1
FDNS	00NR	3	17SP	G15_076	FROM->TO	GRPRAR1-LNX3345.00 - HOLT.CO3 345.00 345KV CKT 1	720	720	0.04212	112.8263	BROOKING COUNTY - LYON COUNTY 345KV CKT 1
FDNS	00NR	3	17SP	G15_076	FROM->TO	GRPRAR1-LNX3345.00 - HOLT.CO3 345.00 345KV CKT 1	720	720	0.04462	112.8037	STEGALL - STEGALL TRANSFORMER 230KV CKT 1
FDNS	00NR	3	17SP	G15_076	FROM->TO	GRPRAR1-LNX3345.00 - HOLT.CO3 345.00 345KV CKT 1	720	720	0.04037	112.7961	MENNO JCT - TRIPP JCT 115KV CKT 1
FDNS	00NR	3	17SP	G15_076	FROM->TO	GRPRAR1-LNX3345.00 - HOLT.CO3 345.00 345KV CKT 1	720	720	0.04179	112.7889	GLENBORO SOUTH - RUGBY 230KV CKT 1
FDNS	00NR	3	17SP	G15_076	FROM->TO	GRPRAR1-LNX3345.00 - HOLT.CO3 345.00 345KV CKT 1	720	720	0.04462	112.7887	P13:230-345:NPPD:STEGALL3:KV3A
FDNS	00NR	3	17SP	G15_076	FROM->TO	GRPRAR1-LNX3345.00 - HOLT.CO3 345.00 345KV CKT 1	720	720	0.04173	112.7874	GEN629075 1-OTTUMWA GENERATOR FOR OTTUMWA UNIT NO 1
FDNS	00NR	3	17SP	G15_076	FROM->TO	GRPRAR1-LNX3345.00 - HOLT.CO3 345.00 345KV CKT 1	720	720	0.04173	112.787	GEN336191 1-LITTLE GYPSY UNIT#3
FDNS	00NR	3	17SP	G15_076	FROM->TO	GRPRAR1-LNX3345.00 - HOLT.CO3 345.00 345KV CKT 1	720	720	0.04462	112.781	STEGALL (SGQ KV3A) 345/230/13.8KV TRANSFORMER CKT 1
FDNS	00NR	3	17SP	G15_076	FROM->TO	GRPRAR1-LNX3345.00 - HOLT.CO3 345.00 345KV CKT 1	720	720	0.0418	112.7418	HANKINSON - WAHPETON 230KV CKT 1
FDNS	00NR	3	17SP	G15_076	FROM->TO	GRPRAR1-LNX3345.00 - HOLT.CO3 345.00 345KV CKT 1	720	720	0.04173	112.7369	GEN338388 1-1PLUM PT U1 23.000
FDNS	00NR	3	17SP	G15_076	FROM->TO	GRPRAR1-LNX3345.00 - HOLT.CO3 345.00 345KV CKT 1	720	720	0.04173	112.7134	P12:115:UMZW:# 162 #: NEL IN ND. FAULT ON ML-NEL-MX-GA 115 KV
FDNS	00NR	3	17SP	G15_076	FROM->TO	GRPRAR1-LNX3345.00 - HOLT.CO3 345.00 345KV CKT 1	720	720	0.04173	112.7108	GEN336801 1-BAXTER WILSON UNIT #1
FDNS	00NR	3	17SP	G15_076	FROM->TO	GRPRAR1-LNX3345.00 - HOLT.CO3 345.00 345KV CKT 1	720	720	0.04651	112.6987	STEGALL-LNX3230.00 - WAYSIDE 230KV CKT 1
FDNS	00NR	3	17SP	G15_076	FROM->TO	GRPRAR1-LNX3345.00 - HOLT.CO3 345.00 345KV CKT 1	720	720	0.04173	112.6967	GEN335614 1-WILLOW GLENN UNIT#4
FDNS	00NR	3	17SP	G15_076	FROM->TO	GRPRAR1-LNX3345.00 - HOLT.CO3 345.00 345KV CKT 1	720	720	0.0424	112.6915	KOSSUTH 3 345.00 - OBRIEN 3 345.00 345KV CKT 1
FDNS	00NR	3	17SP	G15_076	FROM->TO	GRPRAR1-LNX3345.00 - HOLT.CO3 345.00 345KV CKT 1	720	720	0.04651	112.6907	STEGALL - STEGALL-LNX3230.00 230KV CKT Z
FDNS	00NR	3	17SP	G15_076	FROM->TO	GRPRAR1-LNX3345.00 - HOLT.CO3 345.00 345KV CKT 1	720	720	0.04173	112.6866	GEN334441 1-SABINE UNIT 5
FDNS	00NR	3	17SP	G15_076	FROM->TO	GRPRAR1-LNX3345.00 - HOLT.CO3 345.00 345KV CKT 1	720	720	0.04173	112.6839	GEN336464 1-MICHOUD UNIT #3
FDNS	00NR	3	17SP	G15_076	FROM->TO	GRPRAR1-LNX3345.00 - HOLT.CO3 345.00 345KV CKT 1	720	720	0.04037	112.6802	MENNO JCT - UTICA 115KV CKT 1
FDNS	00NR	3	17SP	G15_076	FROM->TO	GRPRAR1-LNX3345.00 - HOLT.CO3 345.00 345KV CKT 1	720	720	0.04173	112.6759	GEN563222 1-G15088_3 0.6900
FDNS	00NR	3	17SP	G15_076	FROM->TO	GRPRAR1-LNX3345.00 - HOLT.CO3 345.00 345KV CKT 1	720	720	0.0424	112.67	KOSSUTH 3 345.00 - WEBSTER 345KV CKT 1
FDNS	00NR	3	17SP	G15_076	FROM->TO	GRPRAR1-LNX3345.00 - HOLT.CO3 345.00 345KV CKT 1	720	720	0.04173	112.6698	GEN335204 1-NELSON UNIT 4
FDNS	00NR	3	17SP	G15_076	FROM->TO	GRPRAR1-LNX3345.00 - HOLT.CO3 345.00 345KV CKT 1	720	720	0.04832	112.6692	RAUN - SIOUX CITY 345KV CKT 1
FDNS	00NR	3	17SP	G15_076	FROM->TO	GRPRAR1-LNX3345.00 - HOLT.CO3 345.00 345KV CKT 1	720	720	0.04832	112.6692	RAUN - SIOUX CITY 345KV CKT 1
FDNS	00NR	3	17SP	G15_076	FROM->TO	GRPRAR1-LNX3345.00 - HOLT.CO3 345.00 345KV CKT 1	720	720	0.04173	112.656	GARRISON - JAMES TOWN 230KV CKT 1
FDNS	00NR	3	17SP	G15_076	FROM->TO	GRPRAR1-LNX3345.00 - HOLT.CO3 345.00 345KV CKT 1	720	720	0.04218	112.635	BYRON - NORTH ROCHESTER 345KV CKT 1
FDNS	00NR	3	17SP	G15_076	FROM->TO	GRPRAR1-LNX3345.00 - HOLT.CO3 345.00 345KV CKT 1	720	720	0.04319	112.6227	GRIMES - LEHIGH 345KV CKT 1
FDNS	00NR	3	17SP	G15_076	FROM->TO	GRPRAR1-LNX3345.00 - HOLT.CO3 345.00 345KV CKT 1	720	720	0.04037	112.6106	P12:115:UMZZ:# 237 #: MEN IN SD. MENNO JUNCTION IS A TAP (UJ-MEN-TP).
FDNS	00NR	3	17SP	G15_076	FROM->TO	GRPRAR1-LNX3345.00 - HOLT.CO3 345.00 345KV CKT 1	720	720	0.04173	112.5462	GEN334433 1-SABINE UNIT 3
FDNS	00NR	3	17SP	G15_076	FROM->TO	GRPRAR1-LNX3345.00 - HOLT.CO3 345.00 345KV CKT 1	720	720	0.04173	112.5455	GEN635213 3-NEAL UNIT 3
FDNS	00NR	3	17SP	G15_076	FROM->TO	GRPRAR1-LNX3345.00 - HOLT.CO3 345.00 345KV CKT 1	720	720	0.04185	112.5156	APPLEDORN 4 230.00 - WATERTOWN 230KV CKT 1
FDNS	00NR	3	17SP	G15_076	FROM->TO	GRPRAR1-LNX3345.00 - HOLT.CO3 345.00 345KV CKT 1	720	720	0.04185	112.5156	APPLEDORN 4 230.00 - WATERTOWN 230KV CKT 1
FDNS	00NR	3	17SP	G15_076	FROM->TO	GRPRAR1-LNX3345.00 - HOLT.CO3 345.00 345KV CKT 1	720	720	0.04173	112.491	GEN336222 1-LITTLE GYPSY UNIT#2

SOLUTION	GROUP	SCENARIO	SEASON	SOURCE	DIRECTION	MONITORED ELEMENT	RATEA (MVA)	RATEB(MVA)	TDF	TC%LOADING (% MVA)	CONTINGENCY
FDNS	00NR	3	17SP	G15_076	FROM->TO	GRPRAR1-LNX3345.00 - HOLT.CO3 345.00 345KV CKT 1	720	720	0.04173	112.4807	GEN303007 1-1BC2 U2
FDNS	00NR	3	17SP	G15_076	FROM->TO	GRPRAR1-LNX3345.00 - HOLT.CO3 345.00 345KV CKT 1	720	720	0.04173	112.4751	GEN303006 1-1BC2 U1
FDNS	00NR	3	17SP	G15_076	FROM->TO	GRPRAR1-LNX3345.00 - HOLT.CO3 345.00 345KV CKT 1	720	720	0.04173	112.465	FARGO - JAMES TOWN 230KV CKT 1
FDNS	00NR	3	17SP	G15_076	FROM->TO	GRPRAR1-LNX3345.00 - HOLT.CO3 345.00 345KV CKT 1	720	720	0.04173	112.453	GEN640009 1-COOPER NUCLEAR STATION
FDNS	00NR	3	17SP	G15_076	FROM->TO	GRPRAR1-LNX3345.00 - HOLT.CO3 345.00 345KV CKT 1	720	720	0.0419	112.4503	NORTH ROCHESTER - PRAIRIE ISLAND 345KV CKT 1
FDNS	00NR	3	17SP	G15_076	FROM->TO	GRPRAR1-LNX3345.00 - HOLT.CO3 345.00 345KV CKT 1	720	720	0.042	112.4448	G15094_T 345.00 - LARAMIE RIVER 345KV CKT 1
FDNS	00NR	3	17SP	G15_076	FROM->TO	GRPRAR1-LNX3345.00 - HOLT.CO3 345.00 345KV CKT 1	720	720	0.04173	112.4425	P13:230:UMZW:# 2218 #: FP IN MT. LOSS OF TRANSFORMER (AT2).
FDNS	00NR	3	17SP	G15_076	FROM->TO	GRPRAR1-LNX3345.00 - HOLT.CO3 345.00 345KV CKT 1	720	720	0.04173	112.4408	FARGO - JAMES TOWN 230KV CKT 2
FDNS	00NR	3	17SP	G15_076	FROM->TO	GRPRAR1-LNX3345.00 - HOLT.CO3 345.00 345KV CKT 1	720	720	0.04185	112.4379	APPLEDORN 4 230.00 - GRANITE FALLS 230KV CKT 1
FDNS	00NR	3	17SP	G15_076	FROM->TO	GRPRAR1-LNX3345.00 - HOLT.CO3 345.00 345KV CKT 1	720	720	0.04185	112.4379	APPLEDORN 4 230.00 - GRANITE FALLS 230KV CKT 1
FDNS	00NR	3	17SP	G15_076	FROM->TO	GRPRAR1-LNX3345.00 - HOLT.CO3 345.00 345KV CKT 1	720	720	0.04173	112.4296	GEN336152 1-WATERFORD UNIT#2
FDNS	00NR	3	17SP	G15_076	FROM->TO	GRPRAR1-LNX3345.00 - HOLT.CO3 345.00 345KV CKT 1	720	720	0.04173	112.4294	GEN336151 1-WATERFORD UNIT#1
FDNS	00NR	3	17SP	G15_076	FROM->TO	GRPRAR1-LNX3345.00 - HOLT.CO3 345.00 345KV CKT 1	720	720	0.04177	112.4152	FERGSFL4 230.00 - WAHPETON 230KV CKT 1
FDNS	00NR	3	17SP	G15_076	FROM->TO	GRPRAR1-LNX3345.00 - HOLT.CO3 345.00 345KV CKT 1	720	720	0.04173	112.4095	GEN303008 1-1BC2 U3
FDNS	00NR	3	17SP	G15_076	FROM->TO	GRPRAR1-LNX3345.00 - HOLT.CO3 345.00 345KV CKT 1	720	720	0.04173	112.4049	GEN336170 1-GULF OXY U4
FDNS	00NR	3	17SP	G15_076	FROM->TO	GRPRAR1-LNX3345.00 - HOLT.CO3 345.00 345KV CKT 1	720	720	0.04218	112.3877	BYRON - PLEASANT VALLEY 345KV CKT 1
FDNS	00NR	3	17SP	G15_076	FROM->TO	GRPRAR1-LNX3345.00 - HOLT.CO3 345.00 345KV CKT 1	720	720	0.04173	112.3838	BISMARK - JAMES TOWN 230KV CKT 1
FDNS	00NR	3	17SP	G15_076	FROM->TO	GRPRAR1-LNX3345.00 - HOLT.CO3 345.00 345KV CKT 1	720	720	0.04173	112.3816	GEN641089 2-ENERGY CENTER 2
FDNS	00NR	3	17SP	G15_076	FROM->TO	GRPRAR1-LNX3345.00 - HOLT.CO3 345.00 345KV CKT 1	720	720	0.04725	112.3791	BLOOMFIELD - CREIGHTON 115KV CKT 1
FDNS	00NR	3	17SP	G15_076	FROM->TO	GRPRAR1-LNX3345.00 - HOLT.CO3 345.00 345KV CKT 1	720	720	0.0422	112.3791	P13:230-345:NPPD:SIDNEY 3:KV2A
FDNS	00NR	3	17SP	G15_076	FROM->TO	GRPRAR1-LNX3345.00 - HOLT.CO3 345.00 345KV CKT 1	720	720	0.0422	112.379	SIDNEY (SDQ KV2A) 345/230/13.8KV TRANSFORMER CKT 1
FDNS	00NR	3	17SP	G15_076	FROM->TO	GRPRAR1-LNX3345.00 - HOLT.CO3 345.00 345KV CKT 1	720	720	0.04223	112.3785	P13:115-230:TSGT:SIDNEY-KV1A
FDNS	00NR	3	17SP	G15_076	FROM->TO	GRPRAR1-LNX3345.00 - HOLT.CO3 345.00 345KV CKT 1	720	720	0.0422	112.3768	SIDNEY - SIDNEY TRANSFORMER 230KV CKT 1
FDNS	00NR	3	17SP	G15_076	FROM->TO	GRPRAR1-LNX3345.00 - HOLT.CO3 345.00 345KV CKT 1	720	720	0.04173	112.3733	BISMARK - WEBER 230KV CKT 1
FDNS	00NR	3	17SP	G15_076	FROM->TO	GRPRAR1-LNX3345.00 - HOLT.CO3 345.00 345KV CKT 1	720	720	0.04095	112.366	LAKEFIELD 3 - LKFLDXL3 345KV CKT 1
FDNS	00NR	3	17SP	G15_076	FROM->TO	GRPRAR1-LNX3345.00 - HOLT.CO3 345.00 345KV CKT 1	720	720	0.04173	112.3586	JAMES TOWN - WEBER 230KV CKT 1
FDNS	00NR	3	20SP	G15_076	FROM->TO	GRPRAR1-LNX3345.00 - HOLT.CO3 345.00 345KV CKT 1	720	720	0.04536	112.3504	KELLY - MEADOWGROVE4230.00 230KV CKT 1
FDNS	00NR	3	17SP	G15_076	FROM->TO	GRPRAR1-LNX3345.00 - HOLT.CO3 345.00 345KV CKT 1	720	720	0.04172	112.3248	ELM CREEK - MONTICELLO 345KV CKT 1
FDNS	00NR	3	17SP	G15_076	FROM->TO	GRPRAR1-LNX3345.00 - HOLT.CO3 345.00 345KV CKT 1	720	720	0.04173	112.3222	GEN562596 1-G14_059_3 0.6900
FDNS	00NR	3	17SP	G15_076	FROM->TO	GRPRAR1-LNX3345.00 - HOLT.CO3 345.00 345KV CKT 1	720	720	0.04725	112.2982	BLOOMFIELD - GAVINS POINT 115KV CKT 1
FDNS	00NR	3	17SP	G15_076	FROM->TO	GRPRAR1-LNX3345.00 - HOLT.CO3 345.00 345KV CKT 1	720	720	0.04173	112.2966	GEN501811 1-RODEMACHER UNIT 1
FDNS	00NR	3	17SP	G15_076	FROM->TO	GRPRAR1-LNX3345.00 - HOLT.CO3 345.00 345KV CKT 1	720	720	0.04184	112.2952	ARKANSAS NUCLEAR ONE - FT SMITH 500KV CKT 1
FDNS	00NR	3	17SP	G15_076	FROM->TO	GRPRAR1-LNX3345.00 - HOLT.CO3 345.00 345KV CKT 1	720	720	0.04184	112.2952	ARKANSAS NUCLEAR ONE - FT SMITH 500KV CKT 1
FDNS	00NR	3	17SP	G15_076	FROM->TO	GRPRAR1-LNX3345.00 - HOLT.CO3 345.00 345KV CKT 1	720	720	0.0414	112.2894	MT VERN - STORLA 115KV CKT 1
FDNS	00NR	3	17SP	G15_076	FROM->TO	GRPRAR1-LNX3345.00 - HOLT.CO3 345.00 345KV CKT 1	720	720	0.04175	112.2818	AUDUBON - SHEYNNE 230KV CKT 1
FDNS	00NR	3	17SP	G15_076	FROM->TO	GRPRAR1-LNX3345.00 - HOLT.CO3 345.00 345KV CKT 1	720	720	0.04177	112.2708	FERGSFL4 230.00 - GRE-SILVRLK4230.00 230KV CKT 1
FDNS	00NR	3	17SP	G15_076	FROM->TO	GRPRAR1-LNX3345.00 - HOLT.CO3 345.00 345KV CKT 1	720	720	0.04173	112.2673	PRAIRIE ISLAND 345/20.0KV TRANSFORMER CKT 1
FDNS	00NR	3	17SP	G15_076	FROM->TO	GRPRAR1-LNX3345.00 - HOLT.CO3 345.00 345KV CKT 1	720	720	0.04156	112.2656	FT THOMPSON - HURON 230KV CKT 1
FDNS	00NR	3	17SP	G15_076	FROM->TO	GRPRAR1-LNX3345.00 - HOLT.CO3 345.00 345KV CKT 1	720	720	0.04156	112.2656	FT THOMPSON - HURON 230KV CKT 1
FDNS	00NR	3	17SP	G15_076	FROM->TO	GRPRAR1-LNX3345.00 - HOLT.CO3 345.00 345KV CKT 1	720	720	0.04156	112.2656	FT THOMPSON - HURON 230KV CKT 2
FDNS	00NR	3	17SP	G15_076	FROM->TO	GRPRAR1-LNX3345.00 - HOLT.CO3 345.00 345KV CKT 1	720	720	0.04156	112.2656	FT THOMPSON - HURON 230KV CKT 2
FDNS	00NR	3	17SP	G15_076	FROM->TO	GRPRAR1-LNX3345.00 - HOLT.CO3 345.00 345KV CKT 1	720	720	0.04173	112.2649	PRAIRIE ISLAND 345/20.0KV TRANSFORMER CKT 2
FDNS	00NR	3	17SP	G15_076	FROM->TO	GRPRAR1-LNX3345.00 - HOLT.CO3 345.00 345KV CKT 1	720	720	0.04173	112.2641	BALTA - RAMSEY 230KV CKT 1
FDNS	00NR	3	17SP	G15_076	FROM->TO	GRPRAR1-LNX3345.00 - HOLT.CO3 345.00 345KV CKT 1	720	720	0.04165	112.257	DKSN_CO5 161.00 - TRIBOJI NO1 + NO2 161KV CKT 1
FDNS	00NR	3	17SP	G15_076	FROM->TO	GRPRAR1-LNX3345.00 - HOLT.CO3 345.00 345KV CKT 1	720	720	0.04173	112.2528	GEN532751 1-WOLF CREEK GENERATING STATION UNIT 1
FDNS	00NR	3	17SP	G15_076	FROM->TO	GRPRAR1-LNX3345.00 - HOLT.CO3 345.00 345KV CKT 1	720	720	0.04226	112.2467	P12:115:NPPD:WAPA1:CHADRON7:BOXBUTE7:BTB
FDNS	00NR	3	17SP	G15_076	FROM->TO	GRPRAR1-LNX3345.00 - HOLT.CO3 345.00 345KV CKT 1	720	720	0.04173	112.2339	GEN562921 1-G15054_2 0.6900
FDNS	00NR	3	17SP	G15_076	FROM->TO	GRPRAR1-LNX3345.00 - HOLT.CO3 345.00 345KV CKT 1	720	720	0.04203	112.2288	CHADRON - WAYSIDE 115KV CKT 1
FDNS	00NR	3	17SP	G15_076	FROM->TO	GRPRAR1-LNX3345.00 - HOLT.CO3 345.00 345KV CKT 1	720	720	0.04203	112.2288	P13:115-230:NPPD:WAYSIDE4:T1
FDNS	00NR	3	17SP	G15_076	FROM->TO	GRPRAR1-LNX3345.00 - HOLT.CO3 345.00 345KV CKT 1	720	720	0.04203	112.2279	WAYSIDE (WAYSIDE T1) 230/115/13.8KV TRANSFORMER CKT 1
FDNS	00NR	3	17SP	G15_076	FROM->TO	GRPRAR1-LNX3345.00 - HOLT.CO3 345.00 345KV CKT 1	720	720	0.04177	112.227	GRE-SILVRLK4230.00 - HENNING 230KV CKT 1
FDNS	00NR	3	17SP	G15_076	FROM->TO	GRPRAR1-LNX3345.00 - HOLT.CO3 345.00 345KV CKT 1	720	720	0.04173	112.219	GEN334071 1-LEWIS CREEK 2
FDNS	00NR	3	17SP	G15_076	FROM->TO	GRPRAR1-LNX3345.00 - HOLT.CO3 345.00 345KV CKT 1	720	720	0.04174	112.2181	BIG STONE (230/115) 230/115/13.8KV TRANSFORMER CKT 1
FDNS	00NR	3	17SP	G15_076	FROM->TO	GRPRAR1-LNX3345.00 - HOLT.CO3 345.00 345KV CKT 1	720	720	0.04173	112.2142	GEN334070 1-LEWIS CREEK 1
FDNS	00NR	3	17SP	G15_076	FROM->TO	GRPRAR1-LNX3345.00 - HOLT.CO3 345.00 345KV CKT 1	720	720	0.04173	112.2137	GEN337766 1-TRACTEBEL UNIT S1
FDNS	00NR	3	17SP	G15_076	FROM->TO	GRPRAR1-LNX3345.00 - HOLT.CO3 345.00 345KV CKT 1	720	720	0.04257	112.2033	NOBLES - SPLIT ROCK 345KV CKT 1
FDNS	00NR	3	17SP	G15_076	FROM->TO	GRPRAR1-LNX3345.00 - HOLT.CO3 345.00 345KV CKT 1	720	720	0.04173	112.2001	GEN659118 1-LARAMIE RIVER UNIT1
FDNS	00NR	3	17SP	G15_076	FROM->TO	GRPRAR1-LNX3345.00 - HOLT.CO3 345.00 345KV CKT 1	720	720	0.04226	112.1949	CHADRON - DUNLAP 115KV CKT 1
FDNS	00NR	3	17SP	G15_076	FROM->TO	GRPRAR1-LNX3345.00 - HOLT.CO3 345.00 345KV CKT 1	720	720	0.04173	112.1896	PRAIRIE - WINGER 230KV CKT 1
FDNS	00NR	3	17SP	G15_076	FROM->TO	GRPRAR1-LNX3345.00 - HOLT.CO3 345.00 345KV CKT 1	720	720	0.04226	112.176	P12:115:NPPD:WAPA2:HEMINGF7:SNAKECK7:BTB
FDNS	00NR	3	17SP	G15_076	FROM->TO	GRPRAR1-LNX3345.00 - HOLT.CO3 345.00 345KV CKT 1	720	720	0.04173	112.1741	GEN501910 1-ACADIA UNIT ST1
FDNS	00NR	3	17SP	G15_076	FROM->TO	GRPRAR1-LNX3345.00 - HOLT.CO3 345.00 345KV CKT 1	720	720	0.04134	112.1705	HURON WEST PARK - MITCHELL NW 115KV CKT 1
FDNS	00NR	3	17SP	G15_076	FROM->TO	GRPRAR1-LNX3345.00 - HOLT.CO3 345.00 345KV CKT 1	720	720	0.04134	112.1705	HURON WEST PARK - MITCHELL NW 115KV CKT 1
FDNS	00NR	3	17SP	G15_076	FROM->TO	GRPRAR1-LNX3345.00 - HOLT.CO3 345.00 345KV CKT 1	720	720	0.04177	112.1676	HENNING - INMANN 230KV CKT 1
FDNS	00NR	3	17SP	G15_076	FROM->TO	GRPRAR1-LNX3345.00 - HOLT.CO3 345.00 345KV CKT 1	720	720	0.04177	112.166	LELAND OLDS - STANTON 230KV CKT 1
FDNS	00NR	3	17SP	G15_076	FROM->TO	GRPRAR1-LNX3345.00 - HOLT.CO3 345.00 345KV CKT 1	720	720	0.04177	112.166	LELAND OLDS - STANTON 230KV CKT 1
FDNS	00NR	3	17SP	G15_076	FROM->TO	GRPRAR1-LNX3345.00 - HOLT.CO3 345.00 345KV CKT 1	720	720	0.04212	112.156	PALXFRASBTHI
FDNS	00NR	3	17SP	G15_076	FROM->TO	GRPRAR1-LNX3345.00 - HOLT.CO3 345.00 345KV CKT 1	720	720	0.04229	112.1486	EAGLE - PHILIP 115KV CKT 1
FDNS	00NR	3	17SP	G15_076	FROM->TO	GRPRAR1-LNX3345.00 - HOLT.CO3 345.00 345KV CKT 1	720	720	0.03999	112.1446	FT RANDAL - WHITE SWAN 115KV CKT 1
FDNS	00NR	3	17SP	G15_076	FROM->TO	GRPRAR1-LNX3345.00 - HOLT.CO3 345.00 345KV CKT 1	720	720	0.04142	112.14	CLEARWATER - ONEILL 115KV CKT 1
FDNS	00NR	3	17SP	G15_076	FROM->TO	GRPRAR1-LNX3345.00 - HOLT.CO3 345.00 345KV CKT 1	720	720	0.04212	112.1383	7PALM TAP 345.00 - SUB T 345KV CKT 1
FDNS	00NR	3	17SP	G15_076	FROM->TO	GRPRAR1-LNX3345.00 - HOLT.CO3 345.00 345KV CKT 1	720	720	0.04173	112.1341	GEN345765 H-1SIOUX 2 18.000
FDNS	00NR	3	17SP	G15_076	FROM->TO	GRPRAR1-LNX3345.00 - HOLT.CO3 345.00 345KV CKT 1	720	720	0.04172	112.134	GROTON (GROTON KU2A) 345/115/13.8KV TRANSFORMER CKT 1
FDNS	00NR	3	17SP	G15_076	FROM->TO	GRPRAR1-LNX3345.00 - HOLT.CO3 345.00 345KV CKT 1	720	720	0.04183	112.1302	GRANT - MITCHELL 115KV CKT 1
FDNS	00NR	3	17SP	G15_076	FROM->TO	GRPRAR1-LNX3345.00 - HOLT.CO3 345.00 345KV CKT 1	720	720	0.04183	112.1302	GRANT - MITCHELL 115KV CKT 1
FDNS	00NR	3	17SP	G15_076	FROM->TO	GRPRAR1-LNX3345.00 - HOLT.CO3 345.00 345KV CKT 1	720	720	0.04173	112.1166	GEN337764 1-TRACTEBEL UNIT C1
FDNS	00NR	3	17SP	G15_076	FROM->TO	GRPRAR1-LNX3345.00 - HOLT.CO3 345.00 345KV CKT 1	720	720	0.04173	112.1166	GEN337765 1-TRACTEBEL UNIT C2
FDNS	00NR	3	17SP	G15_076	FROM->TO	GRPRAR1-LNX3345.00 - HOLT.CO3 345.00 345KV CKT 1	720	720	0.03999	112.1146	TYNDALL - WHITE SWAN 115KV CKT 1
FDNS	00NR	3	17SP	G15_076	FROM->TO	GRPRAR1-LNX3345.00 - HOLT.CO3 345.00 345KV CKT 1	720	720	0.04176	112.1138	AUDUBON - HUBBARD 230KV CKT 1

SOLUTION	GROUP	SCENARIO	SEASON	SOURCE	DIRECTION	MONITORED ELEMENT	RATEA (MVA)	RATEB(MVA)	TDF	TC%LOADING (% MVA)	CONTINGENCY
FDNS	00NR	3	17SP	G15_076	FROM->TO	GRPRAR1-LNX3345.00 - HOLT.CO3 345.00 345KV CKT 1	720	720	0.04182	112.1075	GENOA 161 - SENECA 161 161KV CKT 1
FDNS	00NR	3	17SP	G15_076	FROM->TO	GRPRAR1-LNX3345.00 - HOLT.CO3 345.00 345KV CKT 1	720	720	0.04176	112.1073	KARLSTAD - WINGER 230KV CKT 1
FDNS	00NR	3	17SP	G15_076	FROM->TO	GRPRAR1-LNX3345.00 - HOLT.CO3 345.00 345KV CKT 1	720	720	0.04173	112.1068	GEN345756 H-1SIOUX 1 18.000
FDNS	00NR	3	17SP	G15_076	FROM->TO	GRPRAR1-LNX3345.00 - HOLT.CO3 345.00 345KV CKT 1	720	720	0.05413	112.0968	BELDEN - HOSKINS 115KV CKT 1
FDNS	00NR	3	17SP	G15_076	FROM->TO	GRPRAR1-LNX3345.00 - HOLT.CO3 345.00 345KV CKT 1	720	720	0.04165	112.0953	DKSN_CO5 161.00 - LAKEFIELD 5 NO1 + NO 2 161KV CKT 1
FDNS	00NR	3	17SP	G15_076	FROM->TO	GRPRAR1-LNX3345.00 - HOLT.CO3 345.00 345KV CKT 1	720	720	0.0418	112.0835	NORTH LA CROSSE - NORTH ROCHESTER 345KV CKT 1
FDNS	00NR	3	17SP	G15_076	FROM->TO	GRPRAR1-LNX3345.00 - HOLT.CO3 345.00 345KV CKT 1	720	720	0.04173	112.0806	GEN336221 1-LITTLE GYPSY UNIT#1
FDNS	00NR	3	17SP	G15_076	FROM->TO	GRPRAR1-LNX3345.00 - HOLT.CO3 345.00 345KV CKT 1	720	720	0.04191	112.0805	HAMPTON CORNER - NORTH ROCHESTER 345KV CKT 1
FDNS	00NR	3	17SP	G15_076	FROM->TO	GRPRAR1-LNX3345.00 - HOLT.CO3 345.00 345KV CKT 1	720	720	0.04173	112.0795	GRAND GULF 500/22.0KV TRANSFORMER CKT 1
FDNS	00NR	3	17SP	G15_076	FROM->TO	GRPRAR1-LNX3345.00 - HOLT.CO3 345.00 345KV CKT 1	720	720	0.03818	112.0773	NAPA JCT7 115.00 - UTICA 115KV CKT 1
FDNS	00NR	3	17SP	G15_076	FROM->TO	GRPRAR1-LNX3345.00 - HOLT.CO3 345.00 345KV CKT 1	720	720	0.03818	112.0773	NAPA JCT7 115.00 - UTICA 115KV CKT 1
FDNS	00NR	3	17SP	G15_076	FROM->TO	GRPRAR1-LNX3345.00 - HOLT.CO3 345.00 345KV CKT 1	720	720	0.03818	112.0773	P12:115:UMZW:# 1910 #: YJ IN SD. YJ-UJ LINE FAULT
FDNS	00NR	3	17SP	G15_076	FROM->TO	GRPRAR1-LNX3345.00 - HOLT.CO3 345.00 345KV CKT 1	720	720	0.04173	112.0757	GEN636641 1-LOUISA UNIT 1
FDNS	00NR	3	17SP	G15_076	FROM->TO	GRPRAR1-LNX3345.00 - HOLT.CO3 345.00 345KV CKT 1	720	720	0.04229	112.0748	EAGLE - MARTIN 115KV CKT 1
FDNS	00NR	3	17SP	G15_076	FROM->TO	GRPRAR1-LNX3345.00 - HOLT.CO3 345.00 345KV CKT 1	720	720	0.03818	112.0741	NAPA JCT7 115.00 - YANKON JCT 115KV CKT 1
FDNS	00NR	3	17SP	G15_076	FROM->TO	GRPRAR1-LNX3345.00 - HOLT.CO3 345.00 345KV CKT 1	720	720	0.03818	112.0741	NAPA JCT7 115.00 - YANKON JCT 115KV CKT 1
FDNS	00NR	3	17SP	G15_076	FROM->TO	GRPRAR1-LNX3345.00 - HOLT.CO3 345.00 345KV CKT 1	720	720	0.04173	112.0729	GEN337757 1-DUKE HOTSPRINGS STG1
FDNS	00NR	3	17SP	G15_076	FROM->TO	GRPRAR1-LNX3345.00 - HOLT.CO3 345.00 345KV CKT 1	720	720	0.04173	112.0728	GEN336242 1-1NMIL ST1 18.000
FDNS	00NR	3	17SP	G15_076	FROM->TO	GRPRAR1-LNX3345.00 - HOLT.CO3 345.00 345KV CKT 1	720	720	0.04173	112.0679	GEN334432 1-SABINE UNIT 2
FDNS	00NR	3	17SP	G15_076	FROM->TO	GRPRAR1-LNX3345.00 - HOLT.CO3 345.00 345KV CKT 1	720	720	0.04173	112.0678	GEN334431 1-SABINE UNIT 1
FDNS	00NR	3	17SP	G15_076	FROM->TO	GRPRAR1-LNX3345.00 - HOLT.CO3 345.00 345KV CKT 1	720	720	0.04183	112.0629	FRANKS - HUBEN 345KV CKT 1
FDNS	00NR	3	17SP	G15_076	FROM->TO	GRPRAR1-LNX3345.00 - HOLT.CO3 345.00 345KV CKT 1	720	720	0.04226	112.0599	BOXBUTE7 115.00 - DUNLAP 115KV CKT 1
FDNS	00NR	3	17SP	G15_076	FROM->TO	GRPRAR1-LNX3345.00 - HOLT.CO3 345.00 345KV CKT 1	720	720	0.04251	112.0583	DENISON - SIOUX CITY 230KV CKT 1
FDNS	00NR	3	17SP	G15_076	FROM->TO	GRPRAR1-LNX3345.00 - HOLT.CO3 345.00 345KV CKT 1	720	720	0.04142	112.0544	P12:115:NPPD:1164:ONEILL 7:JEFFREY9:BTB
FDNS	00NR	3	17SP	G15_076	FROM->TO	GRPRAR1-LNX3345.00 - HOLT.CO3 345.00 345KV CKT 1	720	720	0.04173	112.0479	GEN334030 1-FRONTIER UNIT 1
FDNS	00NR	3	17SP	G15_076	FROM->TO	GRPRAR1-LNX3345.00 - HOLT.CO3 345.00 345KV CKT 1	720	720	0.04173	112.0477	GEN334031 1-FRONTIER UNIT 2
FDNS	00NR	3	17SP	G15_076	FROM->TO	GRPRAR1-LNX3345.00 - HOLT.CO3 345.00 345KV CKT 1	720	720	0.04173	112.047	GEN336446 1-MICHOUD UNIT #2
FDNS	00NR	3	17SP	G15_076	FROM->TO	GRPRAR1-LNX3345.00 - HOLT.CO3 345.00 345KV CKT 1	720	720	0.04173	112.0469	GEN345832 1-1TS G1 13.800
FDNS	00NR	3	17SP	G15_076	FROM->TO	GRPRAR1-LNX3345.00 - HOLT.CO3 345.00 345KV CKT 1	720	720	0.04173	112.0465	GEN345841 2-1TS G2 13.800
FDNS	00NR	3	17SP	G15_076	FROM->TO	GRPRAR1-LNX3345.00 - HOLT.CO3 345.00 345KV CKT 1	720	720	0.04173	112.0336	GEN501970 1-EVANGELINE UNIT 7
FDNS	00NR	3	17SP	G15_076	FROM->TO	GRPRAR1-LNX3345.00 - HOLT.CO3 345.00 345KV CKT 1	720	720	0.04173	112.025	GEN531447 1-HOLCOMB GENERATOR
FDNS	00NR	3	17SP	G15_076	FROM->TO	GRPRAR1-LNX3345.00 - HOLT.CO3 345.00 345KV CKT 1	720	720	0.04173	112.0148	GEN562912 1-G15053_3 0.6900
FDNS	00NR	3	17SP	G15_076	FROM->TO	GRPRAR1-LNX3345.00 - HOLT.CO3 345.00 345KV CKT 1	720	720	0.04173	111.9176	GEN563282 1-G15094_3 0.6900
FDNS	00NR	3	20SP	G15_076	FROM->TO	GRPRAR1-LNX3345.00 - HOLT.CO3 345.00 345KV CKT 1	720	720	0.03787	111.8037	P12:230:UMZB:# 116 #: ST IN SD. WSG-ST-VH
FDNS	00NR	3	17SP	G15_076	FROM->TO	GRPRAR1-LNX3345.00 - HOLT.CO3 345.00 345KV CKT 1	720	720	0.04173	111.5569	BASE CASE
FDNS	00NR	3	25SP	G15_076	FROM->TO	GRPRAR1-LNX3345.00 - HOLT.CO3 345.00 345KV CKT 1	720	720	0.04572	111.4615	KELLY - MEADOWGROVE4230.00 230KV CKT 1
FDNS	00NR	3	17SP	G15_076	FROM->TO	GRPRAR1-LNX3345.00 - HOLT.CO3 345.00 345KV CKT 1	720	720	0.04125	111.191	NELIGH - PETERSBRG.N7115.00 115KV CKT 1
FDNS	00NR	3	17SP	G15_076	FROM->TO	GRPRAR1-LNX3345.00 - HOLT.CO3 345.00 345KV CKT 1	720	720	0.04125	111.1389	ALBION - PETERSBURG 115KV CKT 1
FDNS	00NR	3	17SP	G15_076	FROM->TO	GRPRAR1-LNX3345.00 - HOLT.CO3 345.00 345KV CKT 1	720	720	0.04125	111.1194	PETERSBRG.N7115.00 - PETERSBURG 115KV CKT Z1
FDNS	00NR	3	17SP	G15_076	FROM->TO	GRPRAR1-LNX3345.00 - HOLT.CO3 345.00 345KV CKT 1	720	720	0.04263	111.1145	103RD & ROKEBY - MOORE 345KV CKT 1
FDNS	00NR	3	17SP	G15_076	FROM->TO	GRPRAR1-LNX3345.00 - HOLT.CO3 345.00 345KV CKT 1	720	720	0.04263	111.1145	103RD & ROKEBY - MOORE 345KV CKT 1
FDNS	00NR	3	17SP	G15_076	FROM->TO	GRPRAR1-LNX3345.00 - HOLT.CO3 345.00 345KV CKT 1	720	720	0.04308	111.1106	BATTLE CREEK - COUNTY LINE 115KV CKT 1
FDNS	00NR	3	17SP	G15_076	FROM->TO	GRPRAR1-LNX3345.00 - HOLT.CO3 345.00 345KV CKT 1	720	720	0.04192	111.1061	FT THOMPSON - OAHE 230KV CKT 1
FDNS	00NR	3	17SP	G15_076	FROM->TO	GRPRAR1-LNX3345.00 - HOLT.CO3 345.00 345KV CKT 1	720	720	0.04192	111.1061	FT THOMPSON - OAHE 230KV CKT 1
FDNS	00NR	3	17SP	G15_076	FROM->TO	GRPRAR1-LNX3345.00 - HOLT.CO3 345.00 345KV CKT 1	720	720	0.04192	111.1061	FT THOMPSON - OAHE 230KV CKT 2
FDNS	00NR	3	17SP	G15_076	FROM->TO	GRPRAR1-LNX3345.00 - HOLT.CO3 345.00 345KV CKT 1	720	720	0.04192	111.1061	FT THOMPSON - OAHE 230KV CKT 2
FDNS	00NR	3	17SP	G15_076	FROM->TO	GRPRAR1-LNX3345.00 - HOLT.CO3 345.00 345KV CKT 1	720	720	0.04125	111.0805	P12:115:NPPD:1168B:ALBION 7:PETERSBRG.N7:BTB
FDNS	00NR	3	17SP	G15_076	FROM->TO	GRPRAR1-LNX3345.00 - HOLT.CO3 345.00 345KV CKT 1	720	720	0.04173	111.0804	GEN652546 1-FT RANDAL
FDNS	00NR	3	17SP	G15_076	FROM->TO	GRPRAR1-LNX3345.00 - HOLT.CO3 345.00 345KV CKT 1	720	720	0.03286	111.0735	SIOUX CITY - TWIN CHURCH 230KV CKT 1
FDNS	00NR	3	17SP	G15_076	FROM->TO	GRPRAR1-LNX3345.00 - HOLT.CO3 345.00 345KV CKT 1	720	720	0.04308	111.06	ANTELOPE 7115.00 - COUNTY LINE 115KV CKT 1
FDNS	00NR	3	17SP	G15_076	FROM->TO	GRPRAR1-LNX3345.00 - HOLT.CO3 345.00 345KV CKT 1	720	720	0.04356	111.0546	NUNDRWD - PHILIP TAP 230KV CKT 1
FDNS	00NR	3	17SP	G15_076	FROM->TO	GRPRAR1-LNX3345.00 - HOLT.CO3 345.00 345KV CKT 1	720	720	0.04193	111.0486	FT THOMPSON - OAHE 230KV CKT 3
FDNS	00NR	3	17SP	G15_076	FROM->TO	GRPRAR1-LNX3345.00 - HOLT.CO3 345.00 345KV CKT 1	720	720	0.04193	111.0486	FT THOMPSON - OAHE 230KV CKT 3
FDNS	00NR	3	17SP	G15_076	FROM->TO	GRPRAR1-LNX3345.00 - HOLT.CO3 345.00 345KV CKT 1	720	720	0.04193	111.0486	FT THOMPSON - OAHE 230KV CKT 4
FDNS	00NR	3	17SP	G15_076	FROM->TO	GRPRAR1-LNX3345.00 - HOLT.CO3 345.00 345KV CKT 1	720	720	0.04193	111.0486	FT THOMPSON - OAHE 230KV CKT 4
FDNS	00NR	3	17SP	G15_076	FROM->TO	GRPRAR1-LNX3345.00 - HOLT.CO3 345.00 345KV CKT 1	720	720	0.04173	111.0472	MITCHLCO3 345.00 345/34.5KV TRANSFORMER CKT 1
FDNS	00NR	3	17SP	G15_076	FROM->TO	GRPRAR1-LNX3345.00 - HOLT.CO3 345.00 345KV CKT 1	720	720	0.04173	111.0405	GEN672348 2-CORY COGEN GENERATOR 2 GT2
FDNS	00NR	3	17SP	G15_076	FROM->TO	GRPRAR1-LNX3345.00 - HOLT.CO3 345.00 345KV CKT 1	720	720	0.04173	111.0404	GEN672347 1-CORY COGEN GENERATOR 1 GT1
FDNS	00NR	3	17SP	G15_076	FROM->TO	GRPRAR1-LNX3345.00 - HOLT.CO3 345.00 345KV CKT 1	720	720	0.04173	111.0319	GEN600018 S-LS POWER STEAM
FDNS	00NR	3	17SP	G15_076	FROM->TO	GRPRAR1-LNX3345.00 - HOLT.CO3 345.00 345KV CKT 1	720	720	0.04188	111.0255	POST ROCK (POSTROCK T1) 345/230/13.8KV TRANSFORMER CKT 1
FDNS	00NR	3	17SP	G15_076	FROM->TO	GRPRAR1-LNX3345.00 - HOLT.CO3 345.00 345KV CKT 1	720	720	0.04184	111.0225	G11_051T 345.00 - WOODWARD DISTRICT EHV 345KV CKT 1
FDNS	00NR	3	17SP	G15_076	FROM->TO	GRPRAR1-LNX3345.00 - HOLT.CO3 345.00 345KV CKT 1	720	720	0.04173	111.0217	GEN659158 2-PIONEER G213.800
FDNS	00NR	3	17SP	G15_076	FROM->TO	GRPRAR1-LNX3345.00 - HOLT.CO3 345.00 345KV CKT 1	720	720	0.04173	111.0217	GEN659159 3-PIONEER G313.800
FDNS	00NR	3	17SP	G15_076	FROM->TO	GRPRAR1-LNX3345.00 - HOLT.CO3 345.00 345KV CKT 1	720	720	0.04173	111.0205	GEN300003 1-THOMAS HILL UNIT 3
FDNS	00NR	3	25SP	G15_076	FROM->TO	GRPRAR1-LNX3345.00 - HOLT.CO3 345.00 345KV CKT 1	720	720	0.03818	111.0171	P12:230:UMZB:# 116 #: ST IN SD. WSG-ST-VH
FDNS	00NR	3	17SP	G15_076	FROM->TO	GRPRAR1-LNX3345.00 - HOLT.CO3 345.00 345KV CKT 1	720	720	0.04173	111.0141	GEN659156 2-LONESMCRK 2G13.800
FDNS	00NR	3	17SP	G15_076	FROM->TO	GRPRAR1-LNX3345.00 - HOLT.CO3 345.00 345KV CKT 1	720	720	0.04173	111.0141	GEN659157 3-LONESMCRK 3G13.800
FDNS	00NR	3	20SP	G15_076	FROM->TO	GRPRAR1-LNX3345.00 - HOLT.CO3 345.00 345KV CKT 1	720	720	0.0382	111.0113	STORLA - WESSINGTON 230KV CKT 1
FDNS	00NR	3	17SP	G15_076	FROM->TO	GRPRAR1-LNX3345.00 - HOLT.CO3 345.00 345KV CKT 1	720	720	0.04168	111.0093	G15-005T 345.00 - MULLNCR7 345.00 345KV CKT 1
FDNS	00NR	3	17SP	G15_076	FROM->TO	GRPRAR1-LNX3345.00 - HOLT.CO3 345.00 345KV CKT 1	720	720	0.04168	111.0092	G14-021T 345.00 - MULLNCR7 345.00 345KV CKT 1
FDNS	00NR	3	17SP	G15_076	FROM->TO	GRPRAR1-LNX3345.00 - HOLT.CO3 345.00 345KV CKT 1	720	720	0.04173	111.0049	GEN652548 5-FT RANDAL
FDNS	00NR	3	17SP	G15_076	FROM->TO	GRPRAR1-LNX3345.00 - HOLT.CO3 345.00 345KV CKT 1	720	720	0.04173	111.0049	GEN652549 7-FT RANDAL
FDNS	00NR	3	17SP	G15_076	FROM->TO	GRPRAR1-LNX3345.00 - HOLT.CO3 345.00 345KV CKT 1	720	720	0.04212	111.0031	P12:115:UMZW:# 172 #: WI IN SD.
FDNS	00NR	3	17SP	G15_076	FROM->TO	GRPRAR1-LNX3345.00 - HOLT.CO3 345.00 345KV CKT 1	720	720	0.04173	110.9998	GEN590010 1-ERCOT EQUIVALENCE
FDNS	00NR	3	17SP	G15_076	FROM->TO	GRPRAR1-LNX3345.00 - HOLT.CO3 345.00 345KV CKT 1	720	720	0.04173	110.9992	GEN672367 1-MERIDIAN GENERATOR 1 GT1
FDNS	00NR	3	17SP	G15_076	FROM->TO	GRPRAR1-LNX3345.00 - HOLT.CO3 345.00 345KV CKT 1	720	720	0.04173	110.9992	GEN672368 2-MERIDIAN GENERATOR 2 GT2
FDNS	00NR	3	17SP	G15_076	FROM->TO	GRPRAR1-LNX3345.00 - HOLT.CO3 345.00 345KV CKT 1	720	720	0.04175	110.9957	P12:115:UMZZ:# 232 #: AB IN SD. ABERDEEN A TAP BETWEEN ELLENDALE AND ABERDEEN-SIEBRECHT.
FDNS	00NR	3	17SP	G15_076	FROM->TO	GRPRAR1-LNX3345.00 - HOLT.CO3 345.00 345KV CKT 1	720	720	0.042	110.994	LARAMIE RIVER - STEGALL 345KV CKT 1
FDNS	00NR	3	17SP	G15_076	FROM->TO	GRPRAR1-LNX3345.00 - HOLT.CO3 345.00 345KV CKT 1	720	720	0.04173	110.9934	GEN652547 3-FT RANDAL

SOLUTION	GROUP	SCENARIO	SEASON	SOURCE	DIRECTION	MONITORED ELEMENT	RATEA (MVA)	RATEB(MVA)	TDF	TC%LOADING (% MVA)	CONTINGENCY
FDNS	00NR	3	17SP	G15_076	FROM->TO	GRPRAR1-LNX3345.00 - HOLT.CO3 345.00 345KV CKT 1	720	720	0.04173	110.9923	GEN600021 3-ANGUS ANSON2
FDNS	00NR	3	17SP	G15_076	FROM->TO	GRPRAR1-LNX3345.00 - HOLT.CO3 345.00 345KV CKT 1	720	720	0.04173	110.9894	GEN600020 2-ANGUS ANSON1
FDNS	00NR	3	17SP	G15_076	FROM->TO	GRPRAR1-LNX3345.00 - HOLT.CO3 345.00 345KV CKT 1	720	720	0.04173	110.9878	GEN657964 1-ASH2GEN9 0.5750
FDNS	00NR	3	17SP	G15_076	FROM->TO	GRPRAR1-LNX3345.00 - HOLT.CO3 345.00 345KV CKT 1	720	720	0.04173	110.9864	GEN672352 3-NIPAWIN GENERATOR 3
FDNS	00NR	3	17SP	G15_076	FROM->TO	GRPRAR1-LNX3345.00 - HOLT.CO3 345.00 345KV CKT 1	720	720	0.04173	110.9862	GEN672350 1-NIPAWIN GENERATOR 1
FDNS	00NR	3	17SP	G15_076	FROM->TO	GRPRAR1-LNX3345.00 - HOLT.CO3 345.00 345KV CKT 1	720	720	0.04173	110.9862	GEN672351 2-NIPAWIN GENERATOR 2
FDNS	00NR	3	17SP	G15_076	FROM->TO	GRPRAR1-LNX3345.00 - HOLT.CO3 345.00 345KV CKT 1	720	720	0.04173	110.9742	GEN590011 2-ERCOT EQUIVALENCE
FDNS	00NR	3	17SP	G15_076	FROM->TO	GRPRAR1-LNX3345.00 - HOLT.CO3 345.00 345KV CKT 1	720	720	0.04173	110.9728	GEN672349 3-CORY COGEN GENERATOR 3 ST
FDNS	00NR	3	17SP	G15_076	FROM->TO	GRPRAR1-LNX3345.00 - HOLT.CO3 345.00 345KV CKT 1	720	720	0.04173	110.9681	GEN620324 3-HOOT LAKE 3 GEN
FDNS	00NR	3	17SP	G15_076	FROM->TO	GRPRAR1-LNX3345.00 - HOLT.CO3 345.00 345KV CKT 1	720	720	0.04173	110.9636	EASTDC - ERCOT EQUIVALENCE 345KV CKT 1
FDNS	00NR	3	17SP	G15_076	FROM->TO	GRPRAR1-LNX3345.00 - HOLT.CO3 345.00 345KV CKT 1	720	720	0.04168	110.9628	G15-005T 345.00 - SIBLEY 345KV CKT 1
FDNS	00NR	3	17SP	G15_076	FROM->TO	GRPRAR1-LNX3345.00 - HOLT.CO3 345.00 345KV CKT 1	720	720	0.04182	110.9482	ANTELOP-LNX3345.00 - BRDLAND-LNX3345.00 345KV CKT 1
FDNS	00NR	3	17SP	G15_076	FROM->TO	GRPRAR1-LNX3345.00 - HOLT.CO3 345.00 345KV CKT 1	720	720	0.04173	110.9445	GEN629072 4-LANSING GENERATOR FOR UNITS NO4 EIA CODE 1
FDNS	00NR	3	17SP	G15_076	FROM->TO	GRPRAR1-LNX3345.00 - HOLT.CO3 345.00 345KV CKT 1	720	720	0.04173	110.9414	GEN660003 3-HURON WEST PARK
FDNS	00NR	3	17SP	G15_076	FROM->TO	GRPRAR1-LNX3345.00 - HOLT.CO3 345.00 345KV CKT 1	720	720	0.04173	110.936	GEN600012 2-BLACK DOG GEN 2
FDNS	00NR	3	17SP	G15_076	FROM->TO	GRPRAR1-LNX3345.00 - HOLT.CO3 345.00 345KV CKT 1	720	720	0.04244	110.9323	AXTELL - POST ROCK 345KV CKT 1
FDNS	00NR	3	17SP	G15_076	FROM->TO	GRPRAR1-LNX3345.00 - HOLT.CO3 345.00 345KV CKT 1	720	720	0.03982	110.9189	COLUMEAST - NW68TH & HOLDREGE 345KV CKT 1
FDNS	00NR	3	17SP	G15_076	FROM->TO	GRPRAR1-LNX3345.00 - HOLT.CO3 345.00 345KV CKT 1	720	720	0.03982	110.9189	COLUMEAST - NW68TH & HOLDREGE 345KV CKT 1
FDNS	00NR	3	17SP	G15_076	FROM->TO	GRPRAR1-LNX3345.00 - HOLT.CO3 345.00 345KV CKT 1	720	720	0.04055	110.9069	COOPER - MOORE 345KV CKT 1
FDNS	00NR	3	17SP	G15_076	FROM->TO	GRPRAR1-LNX3345.00 - HOLT.CO3 345.00 345KV CKT 1	720	720	0.04173	110.9009	GEN659290 1-EDGECOL
FDNS	00NR	3	17SP	G15_076	FROM->TO	GRPRAR1-LNX3345.00 - HOLT.CO3 345.00 345KV CKT 1	720	720	0.04173	110.8992	EMERY 161/18.0KV TRANSFORMER CKT 1
FDNS	00NR	3	17SP	G15_076	FROM->TO	GRPRAR1-LNX3345.00 - HOLT.CO3 345.00 345KV CKT 1	720	720	0.04173	110.8949	GEN652410 3-FT PECK
FDNS	00NR	3	17SP	G15_076	FROM->TO	GRPRAR1-LNX3345.00 - HOLT.CO3 345.00 345KV CKT 1	720	720	0.04173	110.8937	GEN672339 16-QE 16G 13.800
FDNS	00NR	3	17SP	G15_076	FROM->TO	GRPRAR1-LNX3345.00 - HOLT.CO3 345.00 345KV CKT 1	720	720	0.04173	110.8937	GEN672342 3-QUEEN ELIZABETH GENERATOR 3
FDNS	00NR	3	17SP	G15_076	FROM->TO	GRPRAR1-LNX3345.00 - HOLT.CO3 345.00 345KV CKT 1	720	720	0.04449	110.8829	MINGO - RED WILLOW 345KV CKT 1
FDNS	00NR	3	17SP	G15_076	FROM->TO	GRPRAR1-LNX3345.00 - HOLT.CO3 345.00 345KV CKT 1	720	720	0.04449	110.8829	MINGO - RED WILLOW 345KV CKT 1
FDNS	00NR	3	17SP	G15_076	FROM->TO	GRPRAR1-LNX3345.00 - HOLT.CO3 345.00 345KV CKT 1	720	720	0.04173	110.8809	GEN672393 2-NBECST2G 13.800
FDNS	00NR	3	17SP	G15_076	FROM->TO	GRPRAR1-LNX3345.00 - HOLT.CO3 345.00 345KV CKT 1	720	720	0.04298	110.8751	P12:115:NPPD:1163B:NELIGH 7:NORFK.N7:BTB
FDNS	00NR	3	17SP	G15_076	FROM->TO	GRPRAR1-LNX3345.00 - HOLT.CO3 345.00 345KV CKT 1	720	720	0.04173	110.8641	GEN600046 1-MECST
FDNS	00NR	3	17SP	G15_076	FROM->TO	GRPRAR1-LNX3345.00 - HOLT.CO3 345.00 345KV CKT 1	720	720	0.04173	110.8527	GEN300007 1-NEW MADRID UNIT 2
FDNS	00NR	3	17SP	G15_076	FROM->TO	GRPRAR1-LNX3345.00 - HOLT.CO3 345.00 345KV CKT 1	720	720	0.04173	110.847	GEN300006 1-NEW MADRID UNIT 1
FDNS	00NR	3	17SP	G15_076	FROM->TO	GRPRAR1-LNX3345.00 - HOLT.CO3 345.00 345KV CKT 1	720	720	0.03982	110.8458	COLUMEAST - SHELL CREEK 345KV CKT 1
FDNS	00NR	3	17SP	G15_076	FROM->TO	GRPRAR1-LNX3345.00 - HOLT.CO3 345.00 345KV CKT 1	720	720	0.04173	110.8394	GEN600047 1-MECCT1
FDNS	00NR	3	17SP	G15_076	FROM->TO	GRPRAR1-LNX3345.00 - HOLT.CO3 345.00 345KV CKT 1	720	720	0.04173	110.8309	GEN652414 4-FT PECK
FDNS	00NR	3	17SP	G15_076	FROM->TO	GRPRAR1-LNX3345.00 - HOLT.CO3 345.00 345KV CKT 1	720	720	0.04173	110.8309	GEN652415 5-FT PECK
FDNS	00NR	3	17SP	G15_076	FROM->TO	GRPRAR1-LNX3345.00 - HOLT.CO3 345.00 345KV CKT 1	720	720	0.04173	110.8254	GEN600050 1-FEP
FDNS	00NR	3	17SP	G15_076	FROM->TO	GRPRAR1-LNX3345.00 - HOLT.CO3 345.00 345KV CKT 1	720	720	0.04173	110.8141	GEN660001 2-ABERDEEN SIEBRECHT
FDNS	00NR	3	17SP	G15_076	FROM->TO	GRPRAR1-LNX3345.00 - HOLT.CO3 345.00 345KV CKT 1	720	720	0.04173	110.8019	LADISH 115/13.2KV TRANSFORMER CKT 1
FDNS	00NR	3	17SP	G15_076	FROM->TO	GRPRAR1-LNX3345.00 - HOLT.CO3 345.00 345KV CKT 1	720	720	0.04173	110.7811	GEN652345 W-G07_023IS_2 0.6900
FDNS	00NR	3	17SP	G15_076	FROM->TO	GRPRAR1-LNX3345.00 - HOLT.CO3 345.00 345KV CKT 1	720	720	0.04332	110.7558	G15061_T 345.00 - SETAB 345KV CKT 1
FDNS	00NR	3	17SP	G15_076	FROM->TO	GRPRAR1-LNX3345.00 - HOLT.CO3 345.00 345KV CKT 1	720	720	0.04176	110.7464	BISMARK - L3 HAWDON 230KV CKT 1
FDNS	00NR	3	17SP	G15_076	FROM->TO	GRPRAR1-LNX3345.00 - HOLT.CO3 345.00 345KV CKT 1	720	720	0.04173	110.743	GEN 11104 1-J262_GEN 0.6000
FDNS	00NR	3	17SP	G15_076	FROM->TO	GRPRAR1-LNX3345.00 - HOLT.CO3 345.00 345KV CKT 1	720	720	0.04173	110.743	GEN 11108 1-J263_GEN 0.6000
FDNS	00NR	3	17SP	G15_076	FROM->TO	GRPRAR1-LNX3345.00 - HOLT.CO3 345.00 345KV CKT 1	720	720	0.04173	110.7356	GEN600063 1-COLVILLE GEN 1
FDNS	00NR	3	17SP	G15_076	FROM->TO	GRPRAR1-LNX3345.00 - HOLT.CO3 345.00 345KV CKT 1	720	720	0.04173	110.7356	GEN600064 2-COLVILLE GEN 2
FDNS	00NR	3	17SP	G15_076	FROM->TO	GRPRAR1-LNX3345.00 - HOLT.CO3 345.00 345KV CKT 1	720	720	0.0432	110.7246	GERALD GENTLEMAN STATION - RED WILLOW 345KV CKT 1
FDNS	00NR	3	17SP	G15_076	FROM->TO	GRPRAR1-LNX3345.00 - HOLT.CO3 345.00 345KV CKT 1	720	720	0.04173	110.7232	GEN600043 7-BLUE LAKE5
FDNS	00NR	3	17SP	G15_076	FROM->TO	GRPRAR1-LNX3345.00 - HOLT.CO3 345.00 345KV CKT 1	720	720	0.04173	110.7232	GEN600044 8-BLUE LAKE6
FDNS	00NR	3	17SP	G15_076	FROM->TO	GRPRAR1-LNX3345.00 - HOLT.CO3 345.00 345KV CKT 1	720	720	0.04173	110.7226	GEN600045 4-ANSON
FDNS	00NR	3	17SP	G15_076	FROM->TO	GRPRAR1-LNX3345.00 - HOLT.CO3 345.00 345KV CKT 1	720	720	0.04173	110.7124	G830_SUB 115.00 - GRE-MCHENRY7115.00 115KV CKT 1
FDNS	00NR	3	17SP	G15_076	FROM->TO	GRPRAR1-LNX3345.00 - HOLT.CO3 345.00 345KV CKT 1	720	720	0.04178	110.7042	DRAYTON - LETELLIER 230KV CKT 1
FDNS	00NR	3	17SP	G15_076	FROM->TO	GRPRAR1-LNX3345.00 - HOLT.CO3 345.00 345KV CKT 1	720	720	0.04173	110.7017	G830_SUB 115.00 115/34.5KV TRANSFORMER CKT 1
FDNS	00NR	3	17SP	G15_076	FROM->TO	GRPRAR1-LNX3345.00 - HOLT.CO3 345.00 345KV CKT 1	720	720	0.04173	110.691	GEN600014 4-BLACK DOG GEN 4
FDNS	00NR	3	17SP	G15_076	FROM->TO	GRPRAR1-LNX3345.00 - HOLT.CO3 345.00 345KV CKT 1	720	720	0.04184	110.6904	G11_051T 345.00 - TATONGA7 345.00 345KV CKT 1
FDNS	00NR	3	17SP	G15_076	FROM->TO	GRPRAR1-LNX3345.00 - HOLT.CO3 345.00 345KV CKT 1	720	720	0.04173	110.6891	GEN600065 7-HIGH BRIDGE
FDNS	00NR	3	17SP	G15_076	FROM->TO	GRPRAR1-LNX3345.00 - HOLT.CO3 345.00 345KV CKT 1	720	720	0.04173	110.6891	GEN600066 8-HIGH BRIDGE
FDNS	00NR	3	17SP	G15_076	FROM->TO	GRPRAR1-LNX3345.00 - HOLT.CO3 345.00 345KV CKT 1	720	720	0.04173	110.6844	GEN600011 5-BLACK DOG GEN 1
FDNS	00NR	3	17SP	G15_076	FROM->TO	GRPRAR1-LNX3345.00 - HOLT.CO3 345.00 345KV CKT 1	720	720	0.04173	110.6729	GEN600071 10-RIVER SIDE
FDNS	00NR	3	17SP	G15_076	FROM->TO	GRPRAR1-LNX3345.00 - HOLT.CO3 345.00 345KV CKT 1	720	720	0.04173	110.6728	GEN600070 9-RIVER SIDE
FDNS	00NR	3	17SP	G15_076	FROM->TO	GRPRAR1-LNX3345.00 - HOLT.CO3 345.00 345KV CKT 1	720	720	0.04173	110.6601	GEN600007 7-RIVERSIDE GEN 7
FDNS	00NR	3	17SP	G15_076	FROM->TO	GRPRAR1-LNX3345.00 - HOLT.CO3 345.00 345KV CKT 1	720	720	0.03881	110.6569	FT THOMPSON (FT2 KU1A) 345/230/13.8KV TRANSFORMER CKT 1
FDNS	00NR	3	17SP	G15_076	FROM->TO	GRPRAR1-LNX3345.00 - HOLT.CO3 345.00 345KV CKT 1	720	720	0.0388	110.6537	FT THOMPSON (FT2 KU1B) 345/230/13.8KV TRANSFORMER CKT 1
FDNS	00NR	3	17SP	G15_076	FROM->TO	GRPRAR1-LNX3345.00 - HOLT.CO3 345.00 345KV CKT 1	720	720	0.04173	110.644	GEN652906 1-G09_006IS_3 0.6900
FDNS	00NR	3	17SP	G15_076	FROM->TO	GRPRAR1-LNX3345.00 - HOLT.CO3 345.00 345KV CKT 1	720	720	0.04173	110.64	GEN600017 C-LS POWER CT
FDNS	00NR	3	17SP	G15_076	FROM->TO	GRPRAR1-LNX3345.00 - HOLT.CO3 345.00 345KV CKT 1	720	720	0.04173	110.6351	GEN659273 2-GROTON SYNC COND
FDNS	00NR	3	17SP	G15_076	FROM->TO	GRPRAR1-LNX3345.00 - HOLT.CO3 345.00 345KV CKT 1	720	720	0.04173	110.6351	GEN659294 1-WILTONCOL9
FDNS	00NR	3	17SP	G15_076	FROM->TO	GRPRAR1-LNX3345.00 - HOLT.CO3 345.00 345KV CKT 1	720	720	0.04173	110.6154	LANSING WEST 161/22.0KV TRANSFORMER CKT 1
FDNS	00NR	3	17SP	G15_076	FROM->TO	GRPRAR1-LNX3345.00 - HOLT.CO3 345.00 345KV CKT 1	720	720	0.04173	110.6	GEN659192 6-LYNN
FDNS	00NR	3	17SP	G15_076	FROM->TO	GRPRAR1-LNX3345.00 - HOLT.CO3 345.00 345KV CKT 1	720	720	0.04173	110.599	GEN659162 4-RED WLCK
FDNS	00NR	3	17SP	G15_076	FROM->TO	GRPRAR1-LNX3345.00 - HOLT.CO3 345.00 345KV CKT 1	720	720	0.04173	110.599	GEN659163 5-BLACK WDCK
FDNS	00NR	3	17SP	G15_076	FROM->TO	GRPRAR1-LNX3345.00 - HOLT.CO3 345.00 345KV CKT 1	720	720	0.04173	110.5835	GEN681522 3-GENOA 3
FDNS	00NR	3	17SP	G15_076	FROM->TO	GRPRAR1-LNX3345.00 - HOLT.CO3 345.00 345KV CKT 1	720	720	0.04173	110.5775	GEN615021 1-GRE-ER 14G 16.000
FDNS	00NR	3	17SP	G15_076	FROM->TO	GRPRAR1-LNX3345.00 - HOLT.CO3 345.00 345KV CKT 1	720	720	0.04173	110.5642	GEN615052 1-CAMBRIDGE GENERATING STATION
FDNS	00NR	3	17SP	G15_076	FROM->TO	GRPRAR1-LNX3345.00 - HOLT.CO3 345.00 345KV CKT 1	720	720	0.04182	110.5631	BRDLAND-LNX3345.00 - HURON 345KV CKT Z
FDNS	00NR	3	17SP	G15_076	FROM->TO	GRPRAR1-LNX3345.00 - HOLT.CO3 345.00 345KV CKT 1	720	720	0.04182	110.5627	HURON (BD KU2A) 345/230/13.8KV TRANSFORMER CKT 1
FDNS	00NR	3	17SP	G15_076	FROM->TO	GRPRAR1-LNX3345.00 - HOLT.CO3 345.00 345KV CKT 1	720	720	0.04182	110.5627	HURON (BD KU2A) 345/230/13.8KV TRANSFORMER CKT 1
FDNS	00NR	3	17SP	G15_076	FROM->TO	GRPRAR1-LNX3345.00 - HOLT.CO3 345.00 345KV CKT 1	720	720	0.04182	110.5624	BROADLAND - HURON 230KV CKT 1
FDNS	00NR	3	17SP	G15_076	FROM->TO	GRPRAR1-LNX3345.00 - HOLT.CO3 345.00 345KV CKT 1	720	720	0.04173	110.561	CENTER 230/22.0KV TRANSFORMER CKT 1
FDNS	00NR	3	17SP	G15_076	FROM->TO	GRPRAR1-LNX3345.00 - HOLT.CO3 345.00 345KV CKT 1	720	720	0.04173	110.5599	GEN659031 1-G12_014IS_4 0.6900

SOLUTION	GROUP	SCENARIO	SEASON	SOURCE	DIRECTION	MONITORED ELEMENT	RATEA (MVA)	RATEB(MVA)	TDF	TC%LOADING (% MVA)	CONTINGENCY
FDNS	00NR	3	17SP	G15_076	FROM->TO	GRPRAR1-LNX3345.00 - HOLT.CO3 345.00 345KV CKT 1	720	720	0.04182	110.5568	P12:345:UMZB:# 103 #: BD IN SD. LOSS OF LINE
FDNS	00NR	3	17SP	G15_076	FROM->TO	GRPRAR1-LNX3345.00 - HOLT.CO3 345.00 345KV CKT 1	720	720	0.04182	110.5557	P12:345:UMZB:# 102 #: AVS BD IN ND. AVS BRD LR
FDNS	00NR	3	17SP	G15_076	FROM->TO	GRPRAR1-LNX3345.00 - HOLT.CO3 345.00 345KV CKT 1	720	720	0.04173	110.5548	GEN 10648 1-G830_GEN 0.6900
FDNS	00NR	3	17SP	G15_076	FROM->TO	GRPRAR1-LNX3345.00 - HOLT.CO3 345.00 345KV CKT 1	720	720	0.04173	110.5488	GEN652907 1-G09_007IS_3 0.6900
FDNS	00NR	3	17SP	G15_076	FROM->TO	GRPRAR1-LNX3345.00 - HOLT.CO3 345.00 345KV CKT 1	720	720	0.04173	110.5395	GEN660016 1-B_H WIND 0.7000
FDNS	00NR	3	17SP	G15_076	FROM->TO	GRPRAR1-LNX3345.00 - HOLT.CO3 345.00 345KV CKT 1	720	720	0.03764	110.4986	DIXONCO 230.00 - TWIN CHURCH 230KV CKT 1
FDNS	00NR	3	17SP	G15_076	FROM->TO	GRPRAR1-LNX3345.00 - HOLT.CO3 345.00 345KV CKT 1	720	720	0.04173	110.4842	GEN615015 1-GRE-SPRITWDG13.200
FDNS	00NR	3	17SP	G15_076	FROM->TO	GRPRAR1-LNX3345.00 - HOLT.CO3 345.00 345KV CKT 1	720	720	0.04184	110.4708	MATHWSN7 345.00 - TATONGA7 345.00 345KV CKT 1
FDNS	00NR	3	17SP	G15_076	FROM->TO	GRPRAR1-LNX3345.00 - HOLT.CO3 345.00 345KV CKT 1	720	720	0.03891	110.4494	HOSKINS - RAUN 345KV CKT 1
FDNS	00NR	3	17SP	G15_076	FROM->TO	GRPRAR1-LNX3345.00 - HOLT.CO3 345.00 345KV CKT 1	720	720	0.03891	110.4494	HOSKINS - RAUN 345KV CKT 1
FDNS	00NR	3	17SP	G15_076	FROM->TO	GRPRAR1-LNX3345.00 - HOLT.CO3 345.00 345KV CKT 1	720	720	0.04173	110.4172	GEN659353 1-DEERCREK CTG18.000
FDNS	00NR	3	17SP	G15_076	FROM->TO	GRPRAR1-LNX3345.00 - HOLT.CO3 345.00 345KV CKT 1	720	720	0.04173	110.4154	GEN659354 1-DEERCREK STG18.000
FDNS	00NR	3	17SP	G15_076	FROM->TO	GRPRAR1-LNX3345.00 - HOLT.CO3 345.00 345KV CKT 1	720	720	0.04182	110.4038	ANTELOP-LNX3345.00 - ANTELOPE VALLEY 345KV CKT Z
FDNS	00NR	3	17SP	G15_076	FROM->TO	GRPRAR1-LNX3345.00 - HOLT.CO3 345.00 345KV CKT 1	720	720	0.04173	110.3285	GEN600067 9-HIGH BRIDGE
FDNS	00NR	3	17SP	G15_076	FROM->TO	GRPRAR1-LNX3345.00 - HOLT.CO3 345.00 345KV CKT 1	720	720	0.04173	110.3278	GEN672303 3-BOUNDARY DAM GENERATOR 3
FDNS	00NR	3	17SP	G15_076	FROM->TO	GRPRAR1-LNX3345.00 - HOLT.CO3 345.00 345KV CKT 1	720	720	0.04173	110.3278	GEN672305 5-BOUNDARY DAM GENERATOR 5
FDNS	00NR	3	17SP	G15_076	FROM->TO	GRPRAR1-LNX3345.00 - HOLT.CO3 345.00 345KV CKT 1	720	720	0.04744	110.3178	ANTELOPE 3345.00 (ANTELOPE T1) 345/115/13.8KV TRANSFORMER CKT 1
FDNS	00NR	3	17SP	G15_076	FROM->TO	GRPRAR1-LNX3345.00 - HOLT.CO3 345.00 345KV CKT 1	720	720	0.04173	110.3034	GEN672392 1-NBECGT1G 18.000
FDNS	00NR	3	17SP	G15_076	FROM->TO	GRPRAR1-LNX3345.00 - HOLT.CO3 345.00 345KV CKT 1	720	720	0.04176	110.2716	OAHE - SULLEY BUTTE 230KV CKT 1
FDNS	00NR	3	25SP	G15_076	FROM->TO	GRPRAR1-LNX3345.00 - HOLT.CO3 345.00 345KV CKT 1	720	720	0.03852	110.2541	STORLA - WESSINGTON 230KV CKT 1
FDNS	00NR	3	17SP	G15_076	FROM->TO	GRPRAR1-LNX3345.00 - HOLT.CO3 345.00 345KV CKT 1	720	720	0.04173	110.2403	GEN910006 1-G12_012IS_3 0.6900
FDNS	00NR	3	17SP	G15_076	FROM->TO	GRPRAR1-LNX3345.00 - HOLT.CO3 345.00 345KV CKT 1	720	720	0.04173	110.2319	BISONMP4 230.00 - SQUARE BUTTE 230KV CKT 1
FDNS	00NR	3	17SP	G15_076	FROM->TO	GRPRAR1-LNX3345.00 - HOLT.CO3 345.00 345KV CKT 1	720	720	0.04173	110.1871	GEN662101 1-WESSINGTON190.5750
FDNS	00NR	3	17SP	G15_076	FROM->TO	GRPRAR1-LNX3345.00 - HOLT.CO3 345.00 345KV CKT 1	720	720	0.04328	110.1346	AXTELL - SWEETWATER 345KV CKT 1
FDNS	00NR	3	17SP	G15_076	FROM->TO	GRPRAR1-LNX3345.00 - HOLT.CO3 345.00 345KV CKT 1	720	720	0.04176	110.1161	SULLEY BUTTE - SULLYBT-LNX3230.00 230KV CKT Z
FDNS	00NR	3	17SP	G15_076	FROM->TO	GRPRAR1-LNX3345.00 - HOLT.CO3 345.00 345KV CKT 1	720	720	0.04176	110.1159	SULLYBT-LNX3230.00 - WHITLOK 230KV CKT 1
FDNS	00NR	3	17SP	G15_076	FROM->TO	GRPRAR1-LNX3345.00 - HOLT.CO3 345.00 345KV CKT 1	720	720	0.04331	110.1006	G15088_T 345.00 - MOORE 345KV CKT 1
FDNS	00NR	3	17SP	G15_076	FROM->TO	GRPRAR1-LNX3345.00 - HOLT.CO3 345.00 345KV CKT 1	720	720	0.04176	110.07	P12:230:UMZB:# 114 #: SB IN SD. SB-WK-GH
FDNS	00NR	3	17SP	G15_076	FROM->TO	GRPRAR1-LNX3345.00 - HOLT.CO3 345.00 345KV CKT 1	720	720	0.04176	110.07	P12:230:UMZB:# 117 #: WK IN SD. SB-WK-GH
FDNS	00NR	3	17SP	G15_076	FROM->TO	GRPRAR1-LNX3345.00 - HOLT.CO3 345.00 345KV CKT 1	720	720	0.04173	110.0454	SQUARE BUTTE - YNG2 4 230.00 230KV CKT 1
FDNS	00NR	3	20SP	G15_076	FROM->TO	GRPRAR1-LNX3345.00 - HOLT.CO3 345.00 345KV CKT 1	720	720	0.0383	110.031	HANLON - STORLA 230KV CKT 1
FDNS	00NR	3	17SP	G15_076	FROM->TO	GRPRAR1-LNX3345.00 - HOLT.CO3 345.00 345KV CKT 1	720	720	0.04176	110.0173	GLENHAM - WHITLOK 230KV CKT 1
FDNS	00NR	3	17SP	G15_076	FROM->TO	GRPRAR1-LNX3345.00 - HOLT.CO3 345.00 345KV CKT 1	720	720	0.0361	109.9984	HOSKINS - SHELL CREEK 345KV CKT 1
FDNS	00NR	3	17SP	G15_076	FROM->TO	GRPRAR1-LNX3345.00 - HOLT.CO3 345.00 345KV CKT 1	720	720	0.04173	109.9578	GEN681542 6-JP MADGETT
FDNS	00NR	3	17SP	G15_076	FROM->TO	GRPRAR1-LNX3345.00 - HOLT.CO3 345.00 345KV CKT 1	720	720	0.04173	109.9119	GEN659289 1-DAYCNTYWND W0.6900
FDNS	00NR	3	17SP	G15_076	FROM->TO	GRPRAR1-LNX3345.00 - HOLT.CO3 345.00 345KV CKT 1	720	720	0.04173	109.8951	GEN659018 1-G14_003IS_3 0.6900
FDNS	00NR	3	17SP	G15_076	FROM->TO	GRPRAR1-LNX3345.00 - HOLT.CO3 345.00 345KV CKT 1	720	720	0.04173	109.8752	GEN652543 3-BIG BEND
FDNS	00NR	3	17SP	G15_076	FROM->TO	GRPRAR1-LNX3345.00 - HOLT.CO3 345.00 345KV CKT 1	720	720	0.04173	109.8737	GEN563312 1-G15097_3 0.6900
FDNS	00NR	3	17SP	G15_076	FROM->TO	GRPRAR1-LNX3345.00 - HOLT.CO3 345.00 345KV CKT 1	720	720	0.04173	109.73	GEN659194 1-NDPRAIRWND1W0.6900
FDNS	00NR	3	17SP	G15_076	FROM->TO	GRPRAR1-LNX3345.00 - HOLT.CO3 345.00 345KV CKT 1	720	720	0.04173	109.7134	GEN659010 4-G07_027IS_2 0.6900
FDNS	00NR	3	17SP	G15_076	FROM->TO	GRPRAR1-LNX3345.00 - HOLT.CO3 345.00 345KV CKT 1	720	720	0.04173	109.7062	GEN652460 4-GARRISON
FDNS	00NR	3	17SP	G15_076	FROM->TO	GRPRAR1-LNX3345.00 - HOLT.CO3 345.00 345KV CKT 1	720	720	0.04173	109.7062	GEN652461 5-GARRISON
FDNS	00NR	3	17SP	G15_076	FROM->TO	GRPRAR1-LNX3345.00 - HOLT.CO3 345.00 345KV CKT 1	720	720	0.04173	109.6839	GEN563342 1-G15098_3 0.6900
FDNS	00NR	3	17SP	G15_076	FROM->TO	GRPRAR1-LNX3345.00 - HOLT.CO3 345.00 345KV CKT 1	720	720	0.04173	109.6472	GEN652457 1-GARRISON
FDNS	00NR	3	17SP	G15_076	FROM->TO	GRPRAR1-LNX3345.00 - HOLT.CO3 345.00 345KV CKT 1	720	720	0.04173	109.6472	GEN652458 2-GARRISON
FDNS	00NR	3	17SP	G15_076	FROM->TO	GRPRAR1-LNX3345.00 - HOLT.CO3 345.00 345KV CKT 1	720	720	0.04173	109.6472	GEN652459 3-GARRISON
FDNS	00NR	3	17SP	G15_076	FROM->TO	GRPRAR1-LNX3345.00 - HOLT.CO3 345.00 345KV CKT 1	720	720	0.04173	109.594	GEN659403 1-NDSUNFLWR W0.6900
FDNS	00NR	3	17SP	G15_076	FROM->TO	GRPRAR1-LNX3345.00 - HOLT.CO3 345.00 345KV CKT 1	720	720	0.04173	109.5465	GEN652542 1-BIG BEND
FDNS	00NR	3	17SP	G15_076	FROM->TO	GRPRAR1-LNX3345.00 - HOLT.CO3 345.00 345KV CKT 1	720	720	0.04389	109.49	MCCOOL - MOORE 345KV CKT 1
FDNS	00NR	3	20SP	G15_076	FROM->TO	GRPRAR1-LNX3345.00 - HOLT.CO3 345.00 345KV CKT 1	720	720	0.0402	109.4837	BUFFALO - JAMESTOWN 345KV CKT 1
FDNS	00NR	3	20SP	G15_076	FROM->TO	GRPRAR1-LNX3345.00 - HOLT.CO3 345.00 345KV CKT 1	720	720	0.03997	109.4491	G09_001IST 345.00 - WATERTOWN 345KV CKT 1
FDNS	00NR	3	17SP	G15_076	FROM->TO	GRPRAR1-LNX3345.00 - HOLT.CO3 345.00 345KV CKT 1	720	720	0.04173	109.4321	GEN652559 1-OAHE
FDNS	00NR	3	17SP	G15_076	FROM->TO	GRPRAR1-LNX3345.00 - HOLT.CO3 345.00 345KV CKT 1	720	720	0.04173	109.4316	STANTON 230/18.0KV TRANSFORMER CKT 1
FDNS	00NR	3	17SP	G15_076	FROM->TO	GRPRAR1-LNX3345.00 - HOLT.CO3 345.00 345KV CKT 1	720	720	0.04173	109.4276	CLAY BOSWELL 230/20.9KV TRANSFORMER CKT 1
FDNS	00NR	3	17SP	G15_076	FROM->TO	GRPRAR1-LNX3345.00 - HOLT.CO3 345.00 345KV CKT 1	720	720	0.04176	109.4061	GLENHAM - L3 HAWDON 230KV CKT 1
FDNS	00NR	3	20SP	G15_076	FROM->TO	GRPRAR1-LNX3345.00 - HOLT.CO3 345.00 345KV CKT 1	720	720	0.03757	109.382	FT THOMPSON - LETCHER 230KV CKT 1
FDNS	00NR	3	20SP	G15_076	FROM->TO	GRPRAR1-LNX3345.00 - HOLT.CO3 345.00 345KV CKT 1	720	720	0.03757	109.382	FT THOMPSON - LETCHER 230KV CKT 1
FDNS	00NR	3	25SP	G15_076	FROM->TO	GRPRAR1-LNX3345.00 - HOLT.CO3 345.00 345KV CKT 1	720	720	0.03862	109.2408	HANLON - STORLA 230KV CKT 1
FDNS	00NR	3	17SP	G15_076	FROM->TO	GRPRAR1-LNX3345.00 - HOLT.CO3 345.00 345KV CKT 1	720	720	0.04173	109.1778	GEN659411 1-CAMPBLCNTY W0.6900
FDNS	00NR	3	25SP	G15_076	FROM->TO	GRPRAR1-LNX3345.00 - HOLT.CO3 345.00 345KV CKT 1	720	720	0.04052	109.0052	BUFFALO - JAMESTOWN 345KV CKT 1
FDNS	00NR	3	17SP	G15_076	FROM->TO	GRPRAR1-LNX3345.00 - HOLT.CO3 345.00 345KV CKT 1	720	720	0.04173	108.9498	GEN659296 2-SDPRAIRWND1W0.6900
FDNS	00NR	3	17SP	G15_076	FROM->TO	GRPRAR1-LNX3345.00 - HOLT.CO3 345.00 345KV CKT 1	720	720	0.04173	108.9347	GEN672321 1-SHAND GENERATOR 1
FDNS	00NR	3	17SP	G15_076	FROM->TO	GRPRAR1-LNX3345.00 - HOLT.CO3 345.00 345KV CKT 1	720	720	0.04173	108.9246	GEN672310 1-POPLAR RIVER GENERATOR 1
FDNS	00NR	3	17SP	G15_076	FROM->TO	GRPRAR1-LNX3345.00 - HOLT.CO3 345.00 345KV CKT 1	720	720	0.04173	108.9245	GEN672311 2-POPLAR RIVER GENERATOR 2
FDNS	00NR	3	17SP	G15_076	FROM->TO	GRPRAR1-LNX3345.00 - HOLT.CO3 345.00 345KV CKT 1	720	720	0.04173	108.8786	P12:230:UMZB:# 112 #: NU IN SD. NU-RCDC & DRY CREEK XFMR
FDNS	00NR	3	17SP	G15_076	FROM->TO	GRPRAR1-LNX3345.00 - HOLT.CO3 345.00 345KV CKT 1	720	720	0.04173	108.8727	RCDC EAST 4230.00 - RED CEDAR DC 230KV CKT 1
FDNS	00NR	3	17SP	G15_076	FROM->TO	GRPRAR1-LNX3345.00 - HOLT.CO3 345.00 345KV CKT 1	720	720	0.04173	108.8524	GEN600004 2-PRAIRIE ISLAND G2
FDNS	00NR	3	17SP	G15_076	FROM->TO	GRPRAR1-LNX3345.00 - HOLT.CO3 345.00 345KV CKT 1	720	720	0.04173	108.8482	GEN600003 1-PRAIRIE ISLAND G1
FDNS	00NR	3	17SP	G15_076	FROM->TO	GRPRAR1-LNX3345.00 - HOLT.CO3 345.00 345KV CKT 1	720	720	0.04173	108.8255	GEN672306 6-BOUNDARY DAM GENERATOR 6
FDNS	00NR	3	17SP	G15_076	FROM->TO	GRPRAR1-LNX3345.00 - HOLT.CO3 345.00 345KV CKT 1	720	720	0.04173	108.7995	GEN615010 1-STANTON4
FDNS	00NR	3	17SP	G15_076	FROM->TO	GRPRAR1-LNX3345.00 - HOLT.CO3 345.00 345KV CKT 1	720	720	0.04173	108.7876	GEN659453 1-GI1414GEN W0.6900
FDNS	00NR	3	17SP	G15_076	FROM->TO	GRPRAR1-LNX3345.00 - HOLT.CO3 345.00 345KV CKT 1	720	720	0.04173	108.7859	GEN563302 1-G15096_3 0.6900
FDNS	00NR	3	17SP	G15_076	FROM->TO	GRPRAR1-LNX3345.00 - HOLT.CO3 345.00 345KV CKT 1	720	720	0.04173	108.6806	GEN659141 1-K10215A
FDNS	00NR	3	25SP	G15_076	FROM->TO	GRPRAR1-LNX3345.00 - HOLT.CO3 345.00 345KV CKT 1	720	720	0.04029	108.605	G09_001IST 345.00 - WATERTOWN 345KV CKT 1
FDNS	00NR	3	17SP	G15_076	FROM->TO	GRPRAR1-LNX3345.00 - HOLT.CO3 345.00 345KV CKT 1	720	720	0.04173	108.5993	GEN652556 2-OAHE
FDNS	00NR	3	17SP	G15_076	FROM->TO	GRPRAR1-LNX3345.00 - HOLT.CO3 345.00 345KV CKT 1	720	720	0.04173	108.5993	GEN652557 4-OAHE
FDNS	00NR	3	17SP	G15_076	FROM->TO	GRPRAR1-LNX3345.00 - HOLT.CO3 345.00 345KV CKT 1	720	720	0.04173	108.5993	GEN652558 6-OAHE
FDNS	00NR	3	17SP	G15_076	FROM->TO	GRPRAR1-LNX3345.00 - HOLT.CO3 345.00 345KV CKT 1	720	720	0.04173	108.5969	GEN659110 1-LELAND OLDS UNIT1
FDNS	00NR	3	25SP	G15_076	FROM->TO	GRPRAR1-LNX3345.00 - HOLT.CO3 345.00 345KV CKT 1	720	720	0.03789	108.5884	FT THOMPSON - LETCHER 230KV CKT 1

SOLUTION	GROUP	SCENARIO	SEASON	SOURCE	DIRECTION	MONITORED ELEMENT	RATEA (MVA)	RATEB(MVA)	TDF	TC%LOADING (% MVA)	CONTINGENCY
FDNS	00NR	3	25SP	G15_076	FROM->TO	GRPRAR1-LNX3345.00 - HOLT.CO3 345.00 345KV CKT 1	720	720	0.03789	108.5884	FT THOMPSON - LETCHER 230KV CKT 1
FDNS	00NR	3	17SP	G15_076	FROM->TO	GRPRAR1-LNX3345.00 - HOLT.CO3 345.00 345KV CKT 1	720	720	0.04173	108.5302	GEN657749 1-YOUNG 1 GENERATOR
FDNS	00NR	3	17SP	G15_076	FROM->TO	GRPRAR1-LNX3345.00 - HOLT.CO3 345.00 345KV CKT 1	720	720	0.04173	108.5102	GEN600006 1-AS KING
FDNS	00NR	3	17SP	G15_076	FROM->TO	GRPRAR1-LNX3345.00 - HOLT.CO3 345.00 345KV CKT 1	720	720	0.04173	108.4342	GEN652173 1-G09_001IS_2 0.6900
FDNS	00NR	3	17SP	G15_076	FROM->TO	GRPRAR1-LNX3345.00 - HOLT.CO3 345.00 345KV CKT 1	720	720	0.04373	108.352	GRAND ISLAND - MCCOOL 345KV CKT 1
FDNS	00NR	3	20SP	G15_076	FROM->TO	GRPRAR1-LNX3345.00 - HOLT.CO3 345.00 345KV CKT 1	720	720	0.03971	108.2912	WATERTN-LNX3345.00 - WHITE 345KV CKT 1
FDNS	00NR	3	20SP	G15_076	FROM->TO	GRPRAR1-LNX3345.00 - HOLT.CO3 345.00 345KV CKT 1	720	720	0.03696	108.2257	FT RANDAL - G12_009IST 230.00 230KV CKT 1
FDNS	00NR	3	20SP	G15_076	FROM->TO	GRPRAR1-LNX3345.00 - HOLT.CO3 345.00 345KV CKT 1	720	720	0.03971	108.1903	WATERTN-LNX3345.00 - WATERTOWN 345KV CKT Z
FDNS	00NR	3	20SP	G15_076	FROM->TO	GRPRAR1-LNX3345.00 - HOLT.CO3 345.00 345KV CKT 1	720	720	0.03971	108.1791	P12:345:UMZW:# 1747 #: WT2 IN SD. WT2-WHT LINE FAULT
FDNS	00NR	3	17SP	G15_076	FROM->TO	GRPRAR1-LNX3345.00 - HOLT.CO3 345.00 345KV CKT 1	720	720	0.04173	108.1468	GEN659407 1-ANTELPHILLSW0.6900
FDNS	00NR	3	20SP	G15_076	FROM->TO	GRPRAR1-LNX3345.00 - HOLT.CO3 345.00 345KV CKT 1	720	720	0.03696	108.1427	FT THOMPSON - LAKE PLATT 230KV CKT 1
FDNS	00NR	3	20SP	G15_076	FROM->TO	GRPRAR1-LNX3345.00 - HOLT.CO3 345.00 345KV CKT 1	720	720	0.03696	108.1427	FT THOMPSON - LAKE PLATT 230KV CKT 1
FDNS	00NR	3	20SP	G15_076	FROM->TO	GRPRAR1-LNX3345.00 - HOLT.CO3 345.00 345KV CKT 1	720	720	0.03688	108.1353	FT RANDAL - FT THOMPSON 230KV CKT 1
FDNS	00NR	3	20SP	G15_076	FROM->TO	GRPRAR1-LNX3345.00 - HOLT.CO3 345.00 345KV CKT 1	720	720	0.03688	108.1353	FT RANDAL - FT THOMPSON 230KV CKT 1
FDNS	00NR	3	20SP	G15_076	FROM->TO	GRPRAR1-LNX3345.00 - HOLT.CO3 345.00 345KV CKT 1	720	720	0.04018	108.06	GEN336821 1-GRAND GULF UNIT
FDNS	00NR	3	20SP	G15_076	FROM->TO	GRPRAR1-LNX3345.00 - HOLT.CO3 345.00 345KV CKT 1	720	720	0.04018	108.0372	GEN635024 4-WALTER SCOTT UNIT 4
FDNS	00NR	3	20SP	G15_076	FROM->TO	GRPRAR1-LNX3345.00 - HOLT.CO3 345.00 345KV CKT 1	720	720	0.04536	108.0157	FT RANDAL - MEADOWGROVE4230.00 230KV CKT 1
FDNS	00NR	3	20SP	G15_076	FROM->TO	GRPRAR1-LNX3345.00 - HOLT.CO3 345.00 345KV CKT 1	720	720	0.04019	108.0056	CENTER - JAMESTOWN 345KV CKT 1
FDNS	00NR	3	17SP	G15_076	FROM->TO	GRPRAR1-LNX3345.00 - HOLT.CO3 345.00 345KV CKT 1	720	720	0.04173	107.9563	GEN600005 1-MONTICELLO
FDNS	00NR	3	20SP	G15_076	FROM->TO	GRPRAR1-LNX3345.00 - HOLT.CO3 345.00 345KV CKT 1	720	720	0.03844	107.9182	SPLIT ROCK - WHITE 345KV CKT 1
FDNS	00NR	3	20SP	G15_076	FROM->TO	GRPRAR1-LNX3345.00 - HOLT.CO3 345.00 345KV CKT 1	720	720	0.03844	107.9182	SPLIT ROCK - WHITE 345KV CKT 1
FDNS	00NR	3	20SP	G15_076	FROM->TO	GRPRAR1-LNX3345.00 - HOLT.CO3 345.00 345KV CKT 1	720	720	0.03696	107.7728	G12_009IST 230.00 - LAKE PLATT 230KV CKT 1
FDNS	00NR	3	20SP	G15_076	FROM->TO	GRPRAR1-LNX3345.00 - HOLT.CO3 345.00 345KV CKT 1	720	720	0.04022	107.7409	CHISAGO COUNTY - CHISAGO COUNTY 500KV CKT 1
FDNS	00NR	3	20SP	G15_076	FROM->TO	GRPRAR1-LNX3345.00 - HOLT.CO3 345.00 345KV CKT 1	720	720	0.04022	107.717	CHISAGO COUNTY - FORBES 500KV CKT 1
FDNS	00NR	3	20SP	G15_076	FROM->TO	GRPRAR1-LNX3345.00 - HOLT.CO3 345.00 345KV CKT 1	720	720	0.0402	107.6068	BISON 3 345.00 - BUFFALO 345KV CKT 1
FDNS	00NR	3	20SP	G15_076	FROM->TO	GRPRAR1-LNX3345.00 - HOLT.CO3 345.00 345KV CKT 1	720	720	0.04018	107.5488	GEN635023 3-WALTER SCOTT UNIT 3
FDNS	00NR	3	20SP	G15_076	FROM->TO	GRPRAR1-LNX3345.00 - HOLT.CO3 345.00 345KV CKT 1	720	720	0.04018	107.546	GEN562714 1-G15_023_4 0.6900
FDNS	00NR	3	20SP	G15_076	FROM->TO	GRPRAR1-LNX3345.00 - HOLT.CO3 345.00 345KV CKT 1	720	720	0.04018	107.546	GEN562715 1-G15_023_5 0.6900
FDNS	00NR	3	20SP	G15_076	FROM->TO	GRPRAR1-LNX3345.00 - HOLT.CO3 345.00 345KV CKT 1	720	720	0.03906	107.5454	LETCHER - SIOUX FALLS 230KV CKT 1
FDNS	00NR	3	20SP	G15_076	FROM->TO	GRPRAR1-LNX3345.00 - HOLT.CO3 345.00 345KV CKT 1	720	720	0.04018	107.4984	GEN344225 1-1CAL G1 25.000
FDNS	00NR	3	20SP	G15_076	FROM->TO	GRPRAR1-LNX3345.00 - HOLT.CO3 345.00 345KV CKT 1	720	720	0.04018	107.4173	GEN337911 1-ARKANSAS NUCLEAR ONE UNIT #2
FDNS	00NR	3	20SP	G15_076	FROM->TO	GRPRAR1-LNX3345.00 - HOLT.CO3 345.00 345KV CKT 1	720	720	0.04018	107.3881	GEN336153 1-WATERFORD UNIT#3
FDNS	00NR	3	25SP	G15_076	FROM->TO	GRPRAR1-LNX3345.00 - HOLT.CO3 345.00 345KV CKT 1	720	720	0.03729	107.3841	FT RANDAL - G12_009IST 230.00 230KV CKT 1
FDNS	00NR	3	25SP	G15_076	FROM->TO	GRPRAR1-LNX3345.00 - HOLT.CO3 345.00 345KV CKT 1	720	720	0.04003	107.379	WATERTN-LNX3345.00 - WHITE 345KV CKT 1
FDNS	00NR	3	25SP	G15_076	FROM->TO	GRPRAR1-LNX3345.00 - HOLT.CO3 345.00 345KV CKT 1	720	720	0.04051	107.3707	CENTER - JAMESTOWN 345KV CKT 1
FDNS	00NR	3	20SP	G15_076	FROM->TO	GRPRAR1-LNX3345.00 - HOLT.CO3 345.00 345KV CKT 1	720	720	0.04124	107.3623	MISSION - ST FRANCIS 115KV CKT 1
FDNS	00NR	3	20SP	G15_076	FROM->TO	GRPRAR1-LNX3345.00 - HOLT.CO3 345.00 345KV CKT 1	720	720	0.04124	107.3395	P12:115:NPPD:1091:VALENTN7:MISSION7:BTB
FDNS	00NR	3	20SP	G15_076	FROM->TO	GRPRAR1-LNX3345.00 - HOLT.CO3 345.00 345KV CKT 1	720	720	0.04122	107.3201	SIDNEY - SIDNEY1-LNX3345.00 345KV CKT Z
FDNS	00NR	3	25SP	G15_076	FROM->TO	GRPRAR1-LNX3345.00 - HOLT.CO3 345.00 345KV CKT 1	720	720	0.03729	107.3187	FT THOMPSON - LAKE PLATT 230KV CKT 1
FDNS	00NR	3	25SP	G15_076	FROM->TO	GRPRAR1-LNX3345.00 - HOLT.CO3 345.00 345KV CKT 1	720	720	0.03729	107.3187	FT THOMPSON - LAKE PLATT 230KV CKT 1
FDNS	00NR	3	25SP	G15_076	FROM->TO	GRPRAR1-LNX3345.00 - HOLT.CO3 345.00 345KV CKT 1	720	720	0.03721	107.3059	FT RANDAL - FT THOMPSON 230KV CKT 1
FDNS	00NR	3	25SP	G15_076	FROM->TO	GRPRAR1-LNX3345.00 - HOLT.CO3 345.00 345KV CKT 1	720	720	0.03721	107.3059	FT RANDAL - FT THOMPSON 230KV CKT 1
FDNS	00NR	3	17SP	G15_076	FROM->TO	GRPRAR1-LNX3345.00 - HOLT.CO3 345.00 345KV CKT 1	720	720	0.04173	107.2973	GEN600000 1-SHERBURNECNTY G1
FDNS	00NR	3	20SP	G15_076	FROM->TO	GRPRAR1-LNX3345.00 - HOLT.CO3 345.00 345KV CKT 1	720	720	0.04122	107.2968	KEYSTONE - SIDNEY1-LNX3345.00 345KV CKT 1
FDNS	00NR	3	25SP	G15_076	FROM->TO	GRPRAR1-LNX3345.00 - HOLT.CO3 345.00 345KV CKT 1	720	720	0.04003	107.2748	WATERTN-LNX3345.00 - WATERTOWN 345KV CKT Z
FDNS	00NR	3	25SP	G15_076	FROM->TO	GRPRAR1-LNX3345.00 - HOLT.CO3 345.00 345KV CKT 1	720	720	0.04003	107.2663	P12:345:UMZW:# 1747 #: WT2 IN SD. WT2-WHT LINE FAULT
FDNS	00NR	3	20SP	G15_076	FROM->TO	GRPRAR1-LNX3345.00 - HOLT.CO3 345.00 345KV CKT 1	720	720	0.04825	107.2071	NUNDRWD - WAYSIDE 230KV CKT 1
FDNS	00NR	3	20SP	G15_076	FROM->TO	GRPRAR1-LNX3345.00 - HOLT.CO3 345.00 345KV CKT 1	720	720	0.04124	107.1904	HARMONY - ST FRANCIS 115KV CKT 1
FDNS	00NR	3	20SP	G15_076	FROM->TO	GRPRAR1-LNX3345.00 - HOLT.CO3 345.00 345KV CKT 1	720	720	0.03997	107.1798	G09_001IST 345.00 - GROTON 345KV CKT 1
FDNS	00NR	3	25SP	G15_076	FROM->TO	GRPRAR1-LNX3345.00 - HOLT.CO3 345.00 345KV CKT 1	720	720	0.04572	107.1267	FT RANDAL - MEADOWGROVE4230.00 230KV CKT 1
FDNS	00NR	3	20SP	G15_076	FROM->TO	GRPRAR1-LNX3345.00 - HOLT.CO3 345.00 345KV CKT 1	720	720	0.03907	107.0879	FT RANDAL - SIOUX CITY 230KV CKT 1
FDNS	00NR	3	20SP	G15_076	FROM->TO	GRPRAR1-LNX3345.00 - HOLT.CO3 345.00 345KV CKT 1	720	720	0.04018	107.0863	GEN640010 1-GERALD GENTLEMAN STATION UNIT 1
FDNS	00NR	3	25SP	G15_076	FROM->TO	GRPRAR1-LNX3345.00 - HOLT.CO3 345.00 345KV CKT 1	720	720	0.0405	107.0638	GEN635024 4-WALTER SCOTT UNIT 4
FDNS	00NR	3	20SP	G15_076	FROM->TO	GRPRAR1-LNX3345.00 - HOLT.CO3 345.00 345KV CKT 1	720	720	0.04018	107.0416	GEN335831 1-RIVERBEND UNIT#1
FDNS	00NR	3	25SP	G15_076	FROM->TO	GRPRAR1-LNX3345.00 - HOLT.CO3 345.00 345KV CKT 1	720	720	0.0405	107.0048	GEN336821 1-GRAND GULF UNIT
FDNS	00NR	3	25SP	G15_076	FROM->TO	GRPRAR1-LNX3345.00 - HOLT.CO3 345.00 345KV CKT 1	720	720	0.04051	106.9982	BISON 3 345.00 - BUFFALO 345KV CKT 1
FDNS	00NR	3	20SP	G15_076	FROM->TO	GRPRAR1-LNX3345.00 - HOLT.CO3 345.00 345KV CKT 1	720	720	0.04018	106.9953	GEN640011 2-GERALD GENTLEMAN STATION UNIT 2
FDNS	00NR	3	25SP	G15_076	FROM->TO	GRPRAR1-LNX3345.00 - HOLT.CO3 345.00 345KV CKT 1	720	720	0.04054	106.9854	CHISAGO COUNTY - CHISAGO COUNTY 500KV CKT 1
FDNS	00NR	3	25SP	G15_076	FROM->TO	GRPRAR1-LNX3345.00 - HOLT.CO3 345.00 345KV CKT 1	720	720	0.0405	106.9847	GEN640010 1-GERALD GENTLEMAN STATION UNIT 1
FDNS	00NR	3	20SP	G15_076	FROM->TO	GRPRAR1-LNX3345.00 - HOLT.CO3 345.00 345KV CKT 1	720	720	0.04018	106.9472	GEN337910 1-ARKANSAS NUCLEAR ONE UNIT #1
FDNS	00NR	3	17SP	G15_076	FROM->TO	GRPRAR1-LNX3345.00 - HOLT.CO3 345.00 345KV CKT 1	720	720	0.04173	106.9464	GEN600001 2-SHERBURNE CNTY G2
FDNS	00NR	3	25SP	G15_076	FROM->TO	GRPRAR1-LNX3345.00 - HOLT.CO3 345.00 345KV CKT 1	720	720	0.04054	106.9335	CHISAGO COUNTY - FORBES 500KV CKT 1
FDNS	00NR	3	20SP	G15_076	FROM->TO	GRPRAR1-LNX3345.00 - HOLT.CO3 345.00 345KV CKT 1	720	720	0.04124	106.9323	HARMONY - VALENTINE 115KV CKT 1
FDNS	00NR	3	25SP	G15_076	FROM->TO	GRPRAR1-LNX3345.00 - HOLT.CO3 345.00 345KV CKT 1	720	720	0.03729	106.9259	G12_009IST 230.00 - LAKE PLATT 230KV CKT 1
FDNS	00NR	3	25SP	G15_076	FROM->TO	GRPRAR1-LNX3345.00 - HOLT.CO3 345.00 345KV CKT 1	720	720	0.03877	106.9194	SPLIT ROCK - WHITE 345KV CKT 1
FDNS	00NR	3	25SP	G15_076	FROM->TO	GRPRAR1-LNX3345.00 - HOLT.CO3 345.00 345KV CKT 1	720	720	0.03877	106.9194	SPLIT ROCK - WHITE 345KV CKT 1
FDNS	00NR	3	25SP	G15_076	FROM->TO	GRPRAR1-LNX3345.00 - HOLT.CO3 345.00 345KV CKT 1	720	720	0.0405	106.7795	GEN562714 1-G15_023_4 0.6900
FDNS	00NR	3	25SP	G15_076	FROM->TO	GRPRAR1-LNX3345.00 - HOLT.CO3 345.00 345KV CKT 1	720	720	0.0405	106.7795	GEN562715 1-G15_023_5 0.6900
FDNS	00NR	3	20SP	G15_076	FROM->TO	GRPRAR1-LNX3345.00 - HOLT.CO3 345.00 345KV CKT 1	720	720	0.04207	106.7766	FT RANDAL - SPENCER 115KV CKT 1
FDNS	00NR	3	20SP	G15_076	FROM->TO	GRPRAR1-LNX3345.00 - HOLT.CO3 345.00 345KV CKT 1	720	720	0.03827	106.773	SIOUXCY-LNX3345.00 - SPLIT ROCK 345KV CKT 1
FDNS	00NR	3	20SP	G15_076	FROM->TO	GRPRAR1-LNX3345.00 - HOLT.CO3 345.00 345KV CKT 1	720	720	0.03827	106.773	SIOUXCY-LNX3345.00 - SPLIT ROCK 345KV CKT 1
FDNS	00NR	3	20SP	G15_076	FROM->TO	GRPRAR1-LNX3345.00 - HOLT.CO3 345.00 345KV CKT 1	720	720	0.04207	106.7571	P12:115:NPPD:WAPA6:FTRANDL7:ONEILL 7:BTB
FDNS	00NR	3	20SP	G15_076	FROM->TO	GRPRAR1-LNX3345.00 - HOLT.CO3 345.00 345KV CKT 1	720	720	0.04207	106.7571	P12:115:UMZB:# 115 #: SE IN NE. FR-SE-ON
FDNS	00NR	3	20SP	G15_076	FROM->TO	GRPRAR1-LNX3345.00 - HOLT.CO3 345.00 345KV CKT 1	720	720	0.03827	106.7322	P12:345:UMZW:# 907 #: SC2-SR IN IA. SC2-SR 345 KV LINE
FDNS	00NR	3	25SP	G15_076	FROM->TO	GRPRAR1-LNX3345.00 - HOLT.CO3 345.00 345KV CKT 1	720	720	0.03938	106.7198	LETCHER - SIOUX FALLS 230KV CKT 1
FDNS	00NR	3	20SP	G15_076	FROM->TO	GRPRAR1-LNX3345.00 - HOLT.CO3 345.00 345KV CKT 1	720	720	0.03827	106.7006	SIOUX CITY - SIOUXCY-LNX3345.00 345KV CKT Z
FDNS	00NR	3	25SP	G15_076	FROM->TO	GRPRAR1-LNX3345.00 - HOLT.CO3 345.00 345KV CKT 1	720	720	0.0405	106.6751	GEN640011 2-GERALD GENTLEMAN STATION UNIT 2
FDNS	00NR	3	20SP	G15_076	FROM->TO	GRPRAR1-LNX3345.00 - HOLT.CO3 345.00 345KV CKT 1	720	720	0.03993	106.6616	GROTON-LNX3 345.00 - LELAND1-LNX3345.00 345KV CKT 1
FDNS	00NR	3	25SP	G15_076	FROM->TO	GRPRAR1-LNX3345.00 - HOLT.CO3 345.00 345KV CKT 1	720	720	0.04156	106.645	MISSION - ST FRANCIS 115KV CKT 1

SOLUTION	GROUP	SCENARIO	SEASON	SOURCE	DIRECTION	MONITORED ELEMENT	RATEA (MVA)	RATEB(MVA)	TDF	TC%LOADING (% MVA)	CONTINGENCY
FDNS	00NR	3	20SP	G15_076	FROM->TO	GRPRAR1-LNX3345.00 - HOLT.CO3 345.00 345KV CKT 1	720	720	0.04207	106.6346	ONEILL - SPENCER 115KV CKT 1
FDNS	00NR	3	20SP	G15_076	FROM->TO	GRPRAR1-LNX3345.00 - HOLT.CO3 345.00 345KV CKT 1	720	720	0.03993	106.6051	GROTON - GROTON-LNX3 345.00 345KV CKT Z
FDNS	00NR	3	20SP	G15_076	FROM->TO	GRPRAR1-LNX3345.00 - HOLT.CO3 345.00 345KV CKT 1	720	720	0.03993	106.6034	P12:345:UMZB:# 109 #: LOS GRT IN ND. LOS GRT
FDNS	00NR	3	25SP	G15_076	FROM->TO	GRPRAR1-LNX3345.00 - HOLT.CO3 345.00 345KV CKT 1	720	720	0.0405	106.6008	GEN635023 3-WALTER SCOTT UNIT 3
FDNS	00NR	3	25SP	G15_076	FROM->TO	GRPRAR1-LNX3345.00 - HOLT.CO3 345.00 345KV CKT 1	720	720	0.0405	106.6	GEN337911 1-ARKANSAS NUCLEAR ONE UNIT #2
FDNS	00NR	3	20SP	G15_076	FROM->TO	GRPRAR1-LNX3345.00 - HOLT.CO3 345.00 345KV CKT 1	720	720	0.03608	106.5979	FT RANDAL - UTICA JCT 230KV CKT 1
FDNS	00NR	3	20SP	G15_076	FROM->TO	GRPRAR1-LNX3345.00 - HOLT.CO3 345.00 345KV CKT 1	720	720	0.03993	106.5971	LELAND OLDS - LELAND1-LNX3345.00 345KV CKT Z
FDNS	00NR	3	20SP	G15_076	FROM->TO	GRPRAR1-LNX3345.00 - HOLT.CO3 345.00 345KV CKT 1	720	720	0.05555	106.5772	DIXONCO 230.00 - HOSKINS 230KV CKT 1
FDNS	00NR	3	20SP	G15_076	FROM->TO	GRPRAR1-LNX3345.00 - HOLT.CO3 345.00 345KV CKT 1	720	720	0.03948	106.576	HANLON - SIOUX FALLS 230KV CKT 1
FDNS	00NR	3	25SP	G15_076	FROM->TO	GRPRAR1-LNX3345.00 - HOLT.CO3 345.00 345KV CKT 1	720	720	0.04153	106.5582	KEYSTONE - SIDNEY1-LNX3345.00 345KV CKT 1
FDNS	00NR	3	25SP	G15_076	FROM->TO	GRPRAR1-LNX3345.00 - HOLT.CO3 345.00 345KV CKT 1	720	720	0.04153	106.558	SIDNEY - SIDNEY1-LNX3345.00 345KV CKT Z
FDNS	00NR	3	20SP	G15_076	FROM->TO	GRPRAR1-LNX3345.00 - HOLT.CO3 345.00 345KV CKT 1	720	720	0.04052	106.4866	GERALD GENTLEMAN STATION - KEYSTONE 345KV CKT 1
FDNS	00NR	3	17SP	G15_076	FROM->TO	GRPRAR1-LNX3345.00 - HOLT.CO3 345.00 345KV CKT 1	720	720	0.04173	106.4753	GEN620315 1-BIG STONE GEN
FDNS	00NR	3	20SP	G15_076	FROM->TO	GRPRAR1-LNX3345.00 - HOLT.CO3 345.00 345KV CKT 1	720	720	0.04139	106.4689	LAKEFIELD 3 - NOBLES 345KV CKT 1
FDNS	00NR	3	25SP	G15_076	FROM->TO	GRPRAR1-LNX3345.00 - HOLT.CO3 345.00 345KV CKT 1	720	720	0.0405	106.4684	GEN344225 1-1CAL G1 25.000
FDNS	00NR	3	17SP	G15_076	FROM->TO	GRPRAR1-LNX3345.00 - HOLT.CO3 345.00 345KV CKT 1	720	720	0.04173	106.4576	GEN661015 1-COYOTE
FDNS	00NR	3	25SP	G15_076	FROM->TO	GRPRAR1-LNX3345.00 - HOLT.CO3 345.00 345KV CKT 1	720	720	0.04156	106.4572	HARMONY - ST FRANCIS 115KV CKT 1
FDNS	00NR	3	20SP	G15_076	FROM->TO	GRPRAR1-LNX3345.00 - HOLT.CO3 345.00 345KV CKT 1	720	720	0.04018	106.4558	GEN337653 1-WHITE BLUFF UNIT #2
FDNS	00NR	3	25SP	G15_076	FROM->TO	GRPRAR1-LNX3345.00 - HOLT.CO3 345.00 345KV CKT 1	720	720	0.04029	106.423	G09_001IST 345.00 - GROTON 345KV CKT 1
FDNS	00NR	3	20SP	G15_076	FROM->TO	GRPRAR1-LNX3345.00 - HOLT.CO3 345.00 345KV CKT 1	720	720	0.03917	106.4187	PAHOJA - SIOUX FALLS 230KV CKT 1
FDNS	00NR	3	20SP	G15_076	FROM->TO	GRPRAR1-LNX3345.00 - HOLT.CO3 345.00 345KV CKT 1	720	720	0.04018	106.4028	GEN337652 1-WHITE BLUFF UNIT #1
FDNS	00NR	3	20SP	G15_076	FROM->TO	GRPRAR1-LNX3345.00 - HOLT.CO3 345.00 345KV CKT 1	720	720	0.04439	106.3892	RAUN - SUB 3451 FT CAL 345KV CKT 1
FDNS	00NR	3	20SP	G15_076	FROM->TO	GRPRAR1-LNX3345.00 - HOLT.CO3 345.00 345KV CKT 1	720	720	0.04439	106.3892	RAUN - SUB 3451 FT CAL 345KV CKT 1
FDNS	00NR	3	20SP	G15_076	FROM->TO	GRPRAR1-LNX3345.00 - HOLT.CO3 345.00 345KV CKT 1	720	720	0.04166	106.3831	SIDNEY - STEGALL 345KV CKT 1
FDNS	00NR	3	25SP	G15_076	FROM->TO	GRPRAR1-LNX3345.00 - HOLT.CO3 345.00 345KV CKT 1	720	720	0.0405	106.3797	GEN336153 1-WATERFORD UNIT#3
FDNS	00NR	3	20SP	G15_076	FROM->TO	GRPRAR1-LNX3345.00 - HOLT.CO3 345.00 345KV CKT 1	720	720	0.04044	106.3719	ARROWHEAD - ARROWHEAD 230 230KV CKT 1
FDNS	00NR	3	20SP	G15_076	FROM->TO	GRPRAR1-LNX3345.00 - HOLT.CO3 345.00 345KV CKT 1	720	720	0.04124	106.3715	AINSWORTH - VALENTINE 115KV CKT 1
FDNS	00NR	3	25SP	G15_076	FROM->TO	GRPRAR1-LNX3345.00 - HOLT.CO3 345.00 345KV CKT 1	720	720	0.04853	106.3526	NUNDRWD - WAYSIDE 230KV CKT 1
FDNS	00NR	3	20SP	G15_076	FROM->TO	GRPRAR1-LNX3345.00 - HOLT.CO3 345.00 345KV CKT 1	720	720	0.04018	106.3474	GEN338146 1-INDEPENDENCE UNIT #2
FDNS	00NR	3	20SP	G15_076	FROM->TO	GRPRAR1-LNX3345.00 - HOLT.CO3 345.00 345KV CKT 1	720	720	0.04018	106.3442	GEN338143 1-INDEPENDENCE UNIT #1
FDNS	00NR	3	20SP	G15_076	FROM->TO	GRPRAR1-LNX3345.00 - HOLT.CO3 345.00 345KV CKT 1	720	720	0.04018	106.3222	GEN501801 1-DOLET HILLS UNIT1
FDNS	00NR	3	20SP	G15_076	FROM->TO	GRPRAR1-LNX3345.00 - HOLT.CO3 345.00 345KV CKT 1	720	720	0.0406	106.2895	BROOKING COUNTY - LYON COUNTY 345KV CKT 1
FDNS	00NR	3	20SP	G15_076	FROM->TO	GRPRAR1-LNX3345.00 - HOLT.CO3 345.00 345KV CKT 1	720	720	0.04027	106.2787	ALEXMRES3 345.00 - BISON 3 345.00 345KV CKT 1
FDNS	00NR	3	17SP	G15_076	FROM->TO	GRPRAR1-LNX3345.00 - HOLT.CO3 345.00 345KV CKT 1	720	720	0.04173	106.254	GEN600002 3-SHERBURNE CNTY G3
FDNS	00NR	3	25SP	G15_076	FROM->TO	GRPRAR1-LNX3345.00 - HOLT.CO3 345.00 345KV CKT 1	720	720	0.03938	106.2155	FT RANDAL - SIOUX CITY 230KV CKT 1
FDNS	00NR	3	20SP	G15_076	FROM->TO	GRPRAR1-LNX3345.00 - HOLT.CO3 345.00 345KV CKT 1	720	720	0.04047	106.2007	AS KING - EAU CLAIRE 345KV CKT 1
FDNS	00NR	3	20SP	G15_076	FROM->TO	GRPRAR1-LNX3345.00 - HOLT.CO3 345.00 345KV CKT 1	720	720	0.04018	106.1826	GEN336252 1-NINEMILE POINT UNIT#5
FDNS	00NR	3	25SP	G15_076	FROM->TO	GRPRAR1-LNX3345.00 - HOLT.CO3 345.00 345KV CKT 1	720	720	0.04156	106.1803	HARMONY - VALENTINE 115KV CKT 1
FDNS	00NR	3	20SP	G15_076	FROM->TO	GRPRAR1-LNX3345.00 - HOLT.CO3 345.00 345KV CKT 1	720	720	0.04021	106.1642	CARPENTER - HURON 230KV CKT 1
FDNS	00NR	3	20SP	G15_076	FROM->TO	GRPRAR1-LNX3345.00 - HOLT.CO3 345.00 345KV CKT 1	720	720	0.04018	106.1019	GEN336251 1-NINEMILE POINT UNIT#4
FDNS	00NR	3	20SP	G15_076	FROM->TO	GRPRAR1-LNX3345.00 - HOLT.CO3 345.00 345KV CKT 1	720	720	0.03548	106.0855	RASMUSN - UTICA JCT 230KV CKT 1
FDNS	00NR	3	20SP	G15_076	FROM->TO	GRPRAR1-LNX3345.00 - HOLT.CO3 345.00 345KV CKT 1	720	720	0.04018	106.0835	GEN336831 1-BAXTER WILSON SES
FDNS	00NR	3	25SP	G15_076	FROM->TO	GRPRAR1-LNX3345.00 - HOLT.CO3 345.00 345KV CKT 1	720	720	0.04239	106.0794	FT RANDAL - SPENCER 115KV CKT 1
FDNS	00NR	3	20SP	G15_076	FROM->TO	GRPRAR1-LNX3345.00 - HOLT.CO3 345.00 345KV CKT 1	720	720	0.04021	106.0605	HURON - WATERTOWN 230KV CKT 2
FDNS	00NR	3	20SP	G15_076	FROM->TO	GRPRAR1-LNX3345.00 - HOLT.CO3 345.00 345KV CKT 1	720	720	0.04021	106.0605	HURON - WATERTOWN 230KV CKT 2
FDNS	00NR	3	25SP	G15_076	FROM->TO	GRPRAR1-LNX3345.00 - HOLT.CO3 345.00 345KV CKT 1	720	720	0.0405	106.0591	GEN335831 1-RIVERBEND UNIT#1
FDNS	00NR	3	25SP	G15_076	FROM->TO	GRPRAR1-LNX3345.00 - HOLT.CO3 345.00 345KV CKT 1	720	720	0.04239	106.049	P12:115:NPPD:WAPA6:FTRANDL7:ONEILL 7:BTB
FDNS	00NR	3	25SP	G15_076	FROM->TO	GRPRAR1-LNX3345.00 - HOLT.CO3 345.00 345KV CKT 1	720	720	0.04239	106.049	P12:115:UMZB:# 115 #: SE IN NE. FR-SE-ON
FDNS	00NR	3	20SP	G15_076	FROM->TO	GRPRAR1-LNX3345.00 - HOLT.CO3 345.00 345KV CKT 1	720	720	0.04018	106.0309	GEN337041 1-GERALD ANDRUS
FDNS	00NR	3	20SP	G15_076	FROM->TO	GRPRAR1-LNX3345.00 - HOLT.CO3 345.00 345KV CKT 1	720	720	0.04021	106.0207	CARPENTER - WATERTOWN 230KV CKT 1
FDNS	00NR	3	20SP	G15_076	FROM->TO	GRPRAR1-LNX3345.00 - HOLT.CO3 345.00 345KV CKT 1	720	720	0.04021	106.0207	CARPENTER - WATERTOWN 230KV CKT 1
FDNS	00NR	3	17SP	G15_076	FROM->TO	GRPRAR1-LNX3345.00 - HOLT.CO3 345.00 345KV CKT 1	720	720	0.04173	106.0089	GEN657748 1-YOUNG 2 GENERATOR
FDNS	00NR	3	20SP	G15_076	FROM->TO	GRPRAR1-LNX3345.00 - HOLT.CO3 345.00 345KV CKT 1	720	720	0.04018	105.9979	GEN501813 1-RODEMACHER UNIT 3
FDNS	00NR	3	25SP	G15_076	FROM->TO	GRPRAR1-LNX3345.00 - HOLT.CO3 345.00 345KV CKT 1	720	720	0.0405	105.9973	GEN337910 1-ARKANSAS NUCLEAR ONE UNIT #1
FDNS	00NR	3	20SP	G15_076	FROM->TO	GRPRAR1-LNX3345.00 - HOLT.CO3 345.00 345KV CKT 1	720	720	0.04081	105.9948	HAZLETON - MITCHLCO3 345.00 345KV CKT 1
FDNS	00NR	3	20SP	G15_076	FROM->TO	GRPRAR1-LNX3345.00 - HOLT.CO3 345.00 345KV CKT 1	720	720	0.03917	105.9761	EAGLE 4 230.00 - PAHOJA 230KV CKT 1
FDNS	00NR	3	25SP	G15_076	FROM->TO	GRPRAR1-LNX3345.00 - HOLT.CO3 345.00 345KV CKT 1	720	720	0.04239	105.9354	ONEILL - SPENCER 115KV CKT 1
FDNS	00NR	3	20SP	G15_076	FROM->TO	GRPRAR1-LNX3345.00 - HOLT.CO3 345.00 345KV CKT 1	720	720	0.04047	105.9339	G15094_T 345.00 - SIDNEY2-LNX3345.00 345KV CKT 1
FDNS	00NR	3	20SP	G15_076	FROM->TO	GRPRAR1-LNX3345.00 - HOLT.CO3 345.00 345KV CKT 1	720	720	0.0402	105.9298	CNTSHNT3 345.00 - PRAIRIE3 345.00 345KV CKT 1
FDNS	00NR	3	25SP	G15_076	FROM->TO	GRPRAR1-LNX3345.00 - HOLT.CO3 345.00 345KV CKT 1	720	720	0.04025	105.9277	GROTON-LNX3 345.00 - LELAND1-LNX3345.00 345KV CKT 1
FDNS	00NR	3	20SP	G15_076	FROM->TO	GRPRAR1-LNX3345.00 - HOLT.CO3 345.00 345KV CKT 1	720	720	0.04047	105.9267	SIDNEY - SIDNEY2-LNX3345.00 345KV CKT Z
FDNS	00NR	3	25SP	G15_076	FROM->TO	GRPRAR1-LNX3345.00 - HOLT.CO3 345.00 345KV CKT 1	720	720	0.04025	105.8818	GROTON - GROTON-LNX3 345.00 345KV CKT Z
FDNS	00NR	3	25SP	G15_076	FROM->TO	GRPRAR1-LNX3345.00 - HOLT.CO3 345.00 345KV CKT 1	720	720	0.04025	105.8785	P12:345:UMZB:# 109 #: LOS GRT IN ND. LOS GRT
FDNS	00NR	3	25SP	G15_076	FROM->TO	GRPRAR1-LNX3345.00 - HOLT.CO3 345.00 345KV CKT 1	720	720	0.04025	105.8738	LELAND OLDS - LELAND1-LNX3345.00 345KV CKT Z
FDNS	00NR	3	25SP	G15_076	FROM->TO	GRPRAR1-LNX3345.00 - HOLT.CO3 345.00 345KV CKT 1	720	720	0.0386	105.8654	SIOUXCY-LNX3345.00 - SPLIT ROCK 345KV CKT 1
FDNS	00NR	3	25SP	G15_076	FROM->TO	GRPRAR1-LNX3345.00 - HOLT.CO3 345.00 345KV CKT 1	720	720	0.0386	105.8654	SIOUXCY-LNX3345.00 - SPLIT ROCK 345KV CKT 1
FDNS	00NR	3	20SP	G15_076	FROM->TO	GRPRAR1-LNX3345.00 - HOLT.CO3 345.00 345KV CKT 1	720	720	0.04018	105.8292	GEN335206 1-NELSON UNIT 6
FDNS	00NR	3	25SP	G15_076	FROM->TO	GRPRAR1-LNX3345.00 - HOLT.CO3 345.00 345KV CKT 1	720	720	0.0386	105.8232	P12:345:UMZW:# 907 #: SC2-SR IN IA. SC2-SR 345 KV LINE
FDNS	00NR	3	25SP	G15_076	FROM->TO	GRPRAR1-LNX3345.00 - HOLT.CO3 345.00 345KV CKT 1	720	720	0.03639	105.8197	FT RANDAL - UTICA JCT 230KV CKT 1
FDNS	00NR	3	20SP	G15_076	FROM->TO	GRPRAR1-LNX3345.00 - HOLT.CO3 345.00 345KV CKT 1	720	720	0.04018	105.7943	GEN635214 4-NEAL UNIT 4
FDNS	00NR	3	25SP	G15_076	FROM->TO	GRPRAR1-LNX3345.00 - HOLT.CO3 345.00 345KV CKT 1	720	720	0.0386	105.7942	SIOUX CITY - SIOUXCY-LNX3345.00 345KV CKT Z
FDNS	00NR	3	25SP	G15_076	FROM->TO	GRPRAR1-LNX3345.00 - HOLT.CO3 345.00 345KV CKT 1	720	720	0.05588	105.7933	DIXONCO 230.00 - HOSKINS 230KV CKT 1
FDNS	00NR	3	20SP	G15_076	FROM->TO	GRPRAR1-LNX3345.00 - HOLT.CO3 345.00 345KV CKT 1	720	720	0.04018	105.7917	GEN344897 4-1LAB G4 20.000
FDNS	00NR	3	20SP	G15_076	FROM->TO	GRPRAR1-LNX3345.00 - HOLT.CO3 345.00 345KV CKT 1	720	720	0.04018	105.7901	GEN344894 1-1LAB G1 20.000
FDNS	00NR	3	20SP	G15_076	FROM->TO	GRPRAR1-LNX3345.00 - HOLT.CO3 345.00 345KV CKT 1	720	720	0.04018	105.7901	GEN344895 2-1LAB G2 20.000
FDNS	00NR	3	20SP	G15_076	FROM->TO	GRPRAR1-LNX3345.00 - HOLT.CO3 345.00 345KV CKT 1	720	720	0.04018	105.79	GEN344896 3-1LAB G3 20.000
FDNS	00NR	3	20SP	G15_076	FROM->TO	GRPRAR1-LNX3345.00 - HOLT.CO3 345.00 345KV CKT 1	720	720	0.04018	105.7855	GEN334440 1-SABINE UNIT 4
FDNS	00NR	3	20SP	G15_076	FROM->TO	GRPRAR1-LNX3345.00 - HOLT.CO3 345.00 345KV CKT 1	720	720	0.04052	105.7592	ARPIN B4 345.00 - EAU CLAIRE 345KV CKT 1
FDNS	00NR	3	17SP	G15_076	FROM->TO	GRPRAR1-LNX3345.00 - HOLT.CO3 345.00 345KV CKT 1	720	720	0.04173	105.7583	GEN562872 1-G15046_3 0.6900

SOLUTION	GROUP	SCENARIO	SEASON	SOURCE	DIRECTION	MONITORED ELEMENT	RATEA (MVA)	RATEB(MVA)	TDF	TC%LOADING (% MVA)	CONTINGENCY
FDNS	00NR	3	20SP	G15_076	FROM->TO	GRPRAR1-LNX3345.00 - HOLT.CO3 345.00 345KV CKT 1	720	720	0.04018	105.7378	GEN345671 2-1RUSH G2 18.000
FDNS	00NR	3	20SP	G15_076	FROM->TO	GRPRAR1-LNX3345.00 - HOLT.CO3 345.00 345KV CKT 1	720	720	0.04018	105.7332	GEN345670 1-1RUSH G1 18.000
FDNS	00NR	3	25SP	G15_076	FROM->TO	GRPRAR1-LNX3345.00 - HOLT.CO3 345.00 345KV CKT 1	720	720	0.03979	105.7156	HANLON - SIOUX FALLS 230KV CKT 1
FDNS	00NR	3	25SP	G15_076	FROM->TO	GRPRAR1-LNX3345.00 - HOLT.CO3 345.00 345KV CKT 1	720	720	0.04171	105.714	LAKEFIELD 3 - NOBLES 345KV CKT 1
FDNS	00NR	3	25SP	G15_076	FROM->TO	GRPRAR1-LNX3345.00 - HOLT.CO3 345.00 345KV CKT 1	720	720	0.0405	105.7	GEN338143 1-INDEPENDENCE UNIT #1
FDNS	00NR	3	25SP	G15_076	FROM->TO	GRPRAR1-LNX3345.00 - HOLT.CO3 345.00 345KV CKT 1	720	720	0.0405	105.7	GEN338146 1-INDEPENDENCE UNIT #2
FDNS	00NR	3	25SP	G15_076	FROM->TO	GRPRAR1-LNX3345.00 - HOLT.CO3 345.00 345KV CKT 1	720	720	0.04085	105.6973	GERALD GENTLEMAN STATION - KEYSTONE 345KV CKT 1
FDNS	00NR	3	20SP	G15_076	FROM->TO	GRPRAR1-LNX3345.00 - HOLT.CO3 345.00 345KV CKT 1	720	720	0.04018	105.6943	GEN501812 1-RODEMACHER UNIT 2
FDNS	00NR	3	20SP	G15_076	FROM->TO	GRPRAR1-LNX3345.00 - HOLT.CO3 345.00 345KV CKT 1	720	720	0.04018	105.6612	GEN336191 1-LITTLE GYPSY UNIT#3
FDNS	00NR	3	20SP	G15_076	FROM->TO	GRPRAR1-LNX3345.00 - HOLT.CO3 345.00 345KV CKT 1	720	720	0.0382	105.6414	FT THOMPSON - WESSINGTON 230KV CKT 1
FDNS	00NR	3	20SP	G15_076	FROM->TO	GRPRAR1-LNX3345.00 - HOLT.CO3 345.00 345KV CKT 1	720	720	0.0382	105.6414	FT THOMPSON - WESSINGTON 230KV CKT 1
FDNS	00NR	3	20SP	G15_076	FROM->TO	GRPRAR1-LNX3345.00 - HOLT.CO3 345.00 345KV CKT 1	720	720	0.04018	105.6381	GEN338388 1-1PLUM PT U1 23.000
FDNS	00NR	3	20SP	G15_076	FROM->TO	GRPRAR1-LNX3345.00 - HOLT.CO3 345.00 345KV CKT 1	720	720	0.04018	105.6332	GEN629075 1-OTTUMWA GENERATOR FOR OTTUMWA UNIT NO 1
FDNS	00NR	3	20SP	G15_076	FROM->TO	GRPRAR1-LNX3345.00 - HOLT.CO3 345.00 345KV CKT 1	720	720	0.04018	105.595	GEN335614 1-WILLOW GLENN UNIT#4
FDNS	00NR	3	25SP	G15_076	FROM->TO	GRPRAR1-LNX3345.00 - HOLT.CO3 345.00 345KV CKT 1	720	720	0.03949	105.5913	PAHOJA - SIOUX FALLS 230KV CKT 1
FDNS	00NR	3	25SP	G15_076	FROM->TO	GRPRAR1-LNX3345.00 - HOLT.CO3 345.00 345KV CKT 1	720	720	0.04469	105.5872	RAUN - SUB 3451 FT CAL 345KV CKT 1
FDNS	00NR	3	25SP	G15_076	FROM->TO	GRPRAR1-LNX3345.00 - HOLT.CO3 345.00 345KV CKT 1	720	720	0.04469	105.5872	RAUN - SUB 3451 FT CAL 345KV CKT 1
FDNS	00NR	3	25SP	G15_076	FROM->TO	GRPRAR1-LNX3345.00 - HOLT.CO3 345.00 345KV CKT 1	720	720	0.04198	105.5865	SIDNEY - STEGALL 345KV CKT 1
FDNS	00NR	3	25SP	G15_076	FROM->TO	GRPRAR1-LNX3345.00 - HOLT.CO3 345.00 345KV CKT 1	720	720	0.04156	105.5835	AINSWORTH - VALENTINE 115KV CKT 1
FDNS	00NR	3	20SP	G15_076	FROM->TO	GRPRAR1-LNX3345.00 - HOLT.CO3 345.00 345KV CKT 1	720	720	0.04018	105.5829	GEN336801 1-BAXTER WILSON UNIT #1
FDNS	00NR	3	25SP	G15_076	FROM->TO	GRPRAR1-LNX3345.00 - HOLT.CO3 345.00 345KV CKT 1	720	720	0.04091	105.5802	BROOKING COUNTY - LYON COUNTY 345KV CKT 1
FDNS	00NR	3	20SP	G15_076	FROM->TO	GRPRAR1-LNX3345.00 - HOLT.CO3 345.00 345KV CKT 1	720	720	0.04018	105.5798	GEN336464 1-MICHOUD UNIT #3
FDNS	00NR	3	20SP	G15_076	FROM->TO	GRPRAR1-LNX3345.00 - HOLT.CO3 345.00 345KV CKT 1	720	720	0.04018	105.5689	GEN335204 1-NELSON UNIT 4
FDNS	00NR	3	20SP	G15_076	FROM->TO	GRPRAR1-LNX3345.00 - HOLT.CO3 345.00 345KV CKT 1	720	720	0.04018	105.5592	GEN334441 1-SABINE UNIT 5
FDNS	00NR	3	20SP	G15_076	FROM->TO	GRPRAR1-LNX3345.00 - HOLT.CO3 345.00 345KV CKT 1	720	720	0.04173	105.5413	GRIMES - LEHIGH 345KV CKT 1
FDNS	00NR	3	20SP	G15_076	FROM->TO	GRPRAR1-LNX3345.00 - HOLT.CO3 345.00 345KV CKT 1	720	720	0.04042	105.5322	NORTH LA CROSSE - NORTH ROCHESTER 345KV CKT 1
FDNS	00NR	3	25SP	G15_076	FROM->TO	GRPRAR1-LNX3345.00 - HOLT.CO3 345.00 345KV CKT 1	720	720	0.0405	105.5255	GEN337653 1-WHITE BLUFF UNIT #2
FDNS	00NR	3	25SP	G15_076	FROM->TO	GRPRAR1-LNX3345.00 - HOLT.CO3 345.00 345KV CKT 1	720	720	0.04059	105.5241	ALEXMRES3 345.00 - BISON 3 345.00 345KV CKT 1
FDNS	00NR	3	25SP	G15_076	FROM->TO	GRPRAR1-LNX3345.00 - HOLT.CO3 345.00 345KV CKT 1	720	720	0.04075	105.4785	ARROWHEAD - ARROWHEAD 230 230KV CKT 1
FDNS	00NR	3	20SP	G15_076	FROM->TO	GRPRAR1-LNX3345.00 - HOLT.CO3 345.00 345KV CKT 1	720	720	0.0408	105.4762	KOSSUTH 3 345.00 - WEBSTER 345KV CKT 1
FDNS	00NR	3	17SP	G15_076	FROM->TO	GRPRAR1-LNX3345.00 - HOLT.CO3 345.00 345KV CKT 1	720	720	0.04173	105.458	GEN659111 2-LELAND OLDS UNIT2
FDNS	00NR	3	20SP	G15_076	FROM->TO	GRPRAR1-LNX3345.00 - HOLT.CO3 345.00 345KV CKT 1	720	720	0.04018	105.4365	GEN563222 1-G15088_3 0.6900
FDNS	00NR	3	20SP	G15_076	FROM->TO	GRPRAR1-LNX3345.00 - HOLT.CO3 345.00 345KV CKT 1	720	720	0.04018	105.436	P12:115:UMZW:# 162 #: NEL IN ND. FAULT ON ML-NEL-MX-GA 115 KV
FDNS	00NR	3	20SP	G15_076	FROM->TO	GRPRAR1-LNX3345.00 - HOLT.CO3 345.00 345KV CKT 1	720	720	0.04018	105.4246	GEN334433 1-SABINE UNIT 3
FDNS	00NR	3	25SP	G15_076	FROM->TO	GRPRAR1-LNX3345.00 - HOLT.CO3 345.00 345KV CKT 1	720	720	0.0405	105.4222	GEN501801 1-DOLET HILLS UNIT1
FDNS	00NR	3	20SP	G15_076	FROM->TO	GRPRAR1-LNX3345.00 - HOLT.CO3 345.00 345KV CKT 1	720	720	0.03999	105.4183	BROOKING COUNTY - BSSOUTH3 345.00 345KV CKT 1
FDNS	00NR	3	20SP	G15_076	FROM->TO	GRPRAR1-LNX3345.00 - HOLT.CO3 345.00 345KV CKT 1	720	720	0.04018	105.4147	GEN635213 3-NEAL UNIT 3
FDNS	00NR	3	25SP	G15_076	FROM->TO	GRPRAR1-LNX3345.00 - HOLT.CO3 345.00 345KV CKT 1	720	720	0.04052	105.3943	CARPENTER - HURON 230KV CKT 1
FDNS	00NR	3	20SP	G15_076	FROM->TO	GRPRAR1-LNX3345.00 - HOLT.CO3 345.00 345KV CKT 1	720	720	0.04008	105.376	HESKETT - WISHEK 230KV CKT 1
FDNS	00NR	3	20SP	G15_076	FROM->TO	GRPRAR1-LNX3345.00 - HOLT.CO3 345.00 345KV CKT 1	720	720	0.04051	105.3707	NMA B3 345 345.00 - NORTH LA CROSSE 345KV CKT 1
FDNS	00NR	3	20SP	G15_076	FROM->TO	GRPRAR1-LNX3345.00 - HOLT.CO3 345.00 345KV CKT 1	720	720	0.03888	105.3702	MENNO JCT - TRIPP JCT 115KV CKT 1
FDNS	00NR	3	20SP	G15_076	FROM->TO	GRPRAR1-LNX3345.00 - HOLT.CO3 345.00 345KV CKT 1	720	720	0.04081	105.3648	ADAMS - MITCHLCO3 345.00 345KV CKT 1
FDNS	00NR	3	20SP	G15_076	FROM->TO	GRPRAR1-LNX3345.00 - HOLT.CO3 345.00 345KV CKT 1	720	720	0.04017	105.3602	CENTER - COYOTE 345KV CKT 1
FDNS	00NR	3	20SP	G15_076	FROM->TO	GRPRAR1-LNX3345.00 - HOLT.CO3 345.00 345KV CKT 1	720	720	0.04018	105.3538	GEN336222 1-LITTLE GYPSY UNIT#2
FDNS	00NR	3	20SP	G15_076	FROM->TO	GRPRAR1-LNX3345.00 - HOLT.CO3 345.00 345KV CKT 1	720	720	0.04676	105.3531	RAUN - SIOUX CITY 345KV CKT 1
FDNS	00NR	3	20SP	G15_076	FROM->TO	GRPRAR1-LNX3345.00 - HOLT.CO3 345.00 345KV CKT 1	720	720	0.04676	105.3531	RAUN - SIOUX CITY 345KV CKT 1
FDNS	00NR	3	20SP	G15_076	FROM->TO	GRPRAR1-LNX3345.00 - HOLT.CO3 345.00 345KV CKT 1	720	720	0.04568	105.3531	BLOOMFIELD - CREIGHTON 115KV CKT 1
FDNS	00NR	3	25SP	G15_076	FROM->TO	GRPRAR1-LNX3345.00 - HOLT.CO3 345.00 345KV CKT 1	720	720	0.04079	105.3468	AS KING - EAU CLAIRE 345KV CKT 1
FDNS	00NR	3	20SP	G15_076	FROM->TO	GRPRAR1-LNX3345.00 - HOLT.CO3 345.00 345KV CKT 1	720	720	0.04025	105.328	GLENBORO SOUTH - RUGBY 230KV CKT 1
FDNS	00NR	3	20SP	G15_076	FROM->TO	GRPRAR1-LNX3345.00 - HOLT.CO3 345.00 345KV CKT 1	720	720	0.04018	105.3225	GARRISON - JAMES TOWN 230KV CKT 1
FDNS	00NR	3	20SP	G15_076	FROM->TO	GRPRAR1-LNX3345.00 - HOLT.CO3 345.00 345KV CKT 1	720	720	0.04008	105.3103	MERRCRT4 230.00 - WISHEK 230KV CKT 1
FDNS	00NR	3	25SP	G15_076	FROM->TO	GRPRAR1-LNX3345.00 - HOLT.CO3 345.00 345KV CKT 1	720	720	0.04052	105.3099	CNTSHNT3 345.00 - PRAIRIE3 345.00 345KV CKT 1
FDNS	00NR	3	20SP	G15_076	FROM->TO	GRPRAR1-LNX3345.00 - HOLT.CO3 345.00 345KV CKT 1	720	720	0.04018	105.3045	GEN336152 1-WATERFORD UNIT#2
FDNS	00NR	3	20SP	G15_076	FROM->TO	GRPRAR1-LNX3345.00 - HOLT.CO3 345.00 345KV CKT 1	720	720	0.04018	105.3042	GEN336151 1-WATERFORD UNIT#1
FDNS	00NR	3	25SP	G15_076	FROM->TO	GRPRAR1-LNX3345.00 - HOLT.CO3 345.00 345KV CKT 1	720	720	0.04111	105.2989	HAZLETON - MITCHLCO3 345.00 345KV CKT 1
FDNS	00NR	3	25SP	G15_076	FROM->TO	GRPRAR1-LNX3345.00 - HOLT.CO3 345.00 345KV CKT 1	720	720	0.04052	105.2887	HURON - WATERTOWN 230KV CKT 2
FDNS	00NR	3	25SP	G15_076	FROM->TO	GRPRAR1-LNX3345.00 - HOLT.CO3 345.00 345KV CKT 1	720	720	0.04052	105.2887	HURON - WATERTOWN 230KV CKT 2
FDNS	00NR	3	20SP	G15_076	FROM->TO	GRPRAR1-LNX3345.00 - HOLT.CO3 345.00 345KV CKT 1	720	720	0.04018	105.2847	GEN531447 1-HOLCOMB GENERATOR
FDNS	00NR	3	20SP	G15_076	FROM->TO	GRPRAR1-LNX3345.00 - HOLT.CO3 345.00 345KV CKT 1	720	720	0.04568	105.2667	BLOOMFIELD - GAVINS POINT 115KV CKT 1
FDNS	00NR	3	20SP	G15_076	FROM->TO	GRPRAR1-LNX3345.00 - HOLT.CO3 345.00 345KV CKT 1	720	720	0.0406	105.26	ADAMS - PLEASANT VALLEY 345KV CKT 1
FDNS	00NR	3	20SP	G15_076	FROM->TO	GRPRAR1-LNX3345.00 - HOLT.CO3 345.00 345KV CKT 1	720	720	0.04018	105.251	GEN640009 1-COOPER NUCLEAR STATION
FDNS	00NR	3	20SP	G15_076	FROM->TO	GRPRAR1-LNX3345.00 - HOLT.CO3 345.00 345KV CKT 1	720	720	0.03888	105.2474	MENNO JCT - UTICA 115KV CKT 1
FDNS	00NR	3	20SP	G15_076	FROM->TO	GRPRAR1-LNX3345.00 - HOLT.CO3 345.00 345KV CKT 1	720	720	0.0403	105.247	APPLEDORN 4 230.00 - WATERTOWN 230KV CKT 1
FDNS	00NR	3	20SP	G15_076	FROM->TO	GRPRAR1-LNX3345.00 - HOLT.CO3 345.00 345KV CKT 1	720	720	0.0403	105.247	APPLEDORN 4 230.00 - WATERTOWN 230KV CKT 1
FDNS	00NR	3	25SP	G15_076	FROM->TO	GRPRAR1-LNX3345.00 - HOLT.CO3 345.00 345KV CKT 1	720	720	0.04052	105.2461	CARPENTER - WATERTOWN 230KV CKT 1
FDNS	00NR	3	25SP	G15_076	FROM->TO	GRPRAR1-LNX3345.00 - HOLT.CO3 345.00 345KV CKT 1	720	720	0.04052	105.2461	CARPENTER - WATERTOWN 230KV CKT 1
FDNS	00NR	3	20SP	G15_076	FROM->TO	GRPRAR1-LNX3345.00 - HOLT.CO3 345.00 345KV CKT 1	720	720	0.04018	105.2378	GEN303007 1-1BC2 U2
FDNS	00NR	3	20SP	G15_076	FROM->TO	GRPRAR1-LNX3345.00 - HOLT.CO3 345.00 345KV CKT 1	720	720	0.0401	105.234	BSSOUTH3 345.00 - ELLENDLMVP3 345.00 345KV CKT 1
FDNS	00NR	3	20SP	G15_076	FROM->TO	GRPRAR1-LNX3345.00 - HOLT.CO3 345.00 345KV CKT 1	720	720	0.0401	105.234	BSSOUTH3 345.00 - ELLENDLMVP3 345.00 345KV CKT 1
FDNS	00NR	3	20SP	G15_076	FROM->TO	GRPRAR1-LNX3345.00 - HOLT.CO3 345.00 345KV CKT 1	720	720	0.04018	105.2317	GEN303006 1-1BC2 U1
FDNS	00NR	3	20SP	G15_076	FROM->TO	GRPRAR1-LNX3345.00 - HOLT.CO3 345.00 345KV CKT 1	720	720	0.04031	105.2147	ARKANSAS NUCLEAR ONE - FT SMITH 500KV CKT 1
FDNS	00NR	3	20SP	G15_076	FROM->TO	GRPRAR1-LNX3345.00 - HOLT.CO3 345.00 345KV CKT 1	720	720	0.04031	105.2147	ARKANSAS NUCLEAR ONE - FT SMITH 500KV CKT 1
FDNS	00NR	3	25SP	G15_076	FROM->TO	GRPRAR1-LNX3345.00 - HOLT.CO3 345.00 345KV CKT 1	720	720	0.0405	105.2133	GEN336251 1-NINEMILE POINT UNIT#4
FDNS	00NR	3	20SP	G15_076	FROM->TO	GRPRAR1-LNX3345.00 - HOLT.CO3 345.00 345KV CKT 1	720	720	0.0401	105.2128	ELLENDLMVP3 345.00 (1) 345/230/34.5KV TRANSFORMER CKT 1
FDNS	00NR	3	20SP	G15_076	FROM->TO	GRPRAR1-LNX3345.00 - HOLT.CO3 345.00 345KV CKT 1	720	720	0.04032	105.2071	ALEXMRES3 345.00 - WAITE PARK 345KV CKT 1
FDNS	00NR	3	20SP	G15_076	FROM->TO	GRPRAR1-LNX3345.00 - HOLT.CO3 345.00 345KV CKT 1	720	720	0.03888	105.2001	P12:115:UMZZ:# 237 #: MEN IN SD. MENNO JUNCTION IS A TAP (UJ-MEN-TP).
FDNS	00NR	3	25SP	G15_076	FROM->TO	GRPRAR1-LNX3345.00 - HOLT.CO3 345.00 345KV CKT 1	720	720	0.0358	105.1968	RASMUSN - UTICA JCT 230KV CKT 1
FDNS	00NR	3	20SP	G15_076	FROM->TO	GRPRAR1-LNX3345.00 - HOLT.CO3 345.00 345KV CKT 1	720	720	0.0403	105.1857	APPLEDORN 4 230.00 - GRANITE FALLS 230KV CKT 1
FDNS	00NR	3	20SP	G15_076	FROM->TO	GRPRAR1-LNX3345.00 - HOLT.CO3 345.00 345KV CKT 1	720	720	0.0403	105.1857	APPLEDORN 4 230.00 - GRANITE FALLS 230KV CKT 1

SOLUTION	GROUP	SCENARIO	SEASON	SOURCE	DIRECTION	MONITORED ELEMENT	RATEA (MVA)	RATEB(MVA)	TDF	TC%LOADING (% MVA)	CONTINGENCY
FDNS	00NR	3	25SP	G15_076	FROM->TO	GRPRAR1-LNX3345.00 - HOLT.CO3 345.00 345KV CKT 1	720	720	0.04078	105.1824	G15094_T 345.00 - SIDNEY2-LNX3345.00 345KV CKT 1
FDNS	00NR	3	25SP	G15_076	FROM->TO	GRPRAR1-LNX3345.00 - HOLT.CO3 345.00 345KV CKT 1	720	720	0.04078	105.1819	SIDNEY - SIDNEY2-LNX3345.00 345KV CKT Z
FDNS	00NR	3	20SP	G15_076	FROM->TO	GRPRAR1-LNX3345.00 - HOLT.CO3 345.00 345KV CKT 1	720	720	0.03957	105.1784	WINNER - WITTEN 115KV CKT 1
FDNS	00NR	3	25SP	G15_076	FROM->TO	GRPRAR1-LNX3345.00 - HOLT.CO3 345.00 345KV CKT 1	720	720	0.0405	105.178	GEN336831 1-BAXTER WILSON SES
FDNS	00NR	3	20SP	G15_076	FROM->TO	GRPRAR1-LNX3345.00 - HOLT.CO3 345.00 345KV CKT 1	720	720	0.04026	105.1746	BLAIR - GRANITE FALLS 230KV CKT 1
FDNS	00NR	3	20SP	G15_076	FROM->TO	GRPRAR1-LNX3345.00 - HOLT.CO3 345.00 345KV CKT 1	720	720	0.04026	105.1746	BLAIR - GRANITE FALLS 230KV CKT 1
FDNS	00NR	3	20SP	G15_076	FROM->TO	GRPRAR1-LNX3345.00 - HOLT.CO3 345.00 345KV CKT 1	720	720	0.04036	105.1729	NORTH ROCHESTER - PRAIRIE ISLAND 345KV CKT 1
FDNS	00NR	3	20SP	G15_076	FROM->TO	GRPRAR1-LNX3345.00 - HOLT.CO3 345.00 345KV CKT 1	720	720	0.04018	105.1657	GEN303008 1-1BC2 U3
FDNS	00NR	3	20SP	G15_076	FROM->TO	GRPRAR1-LNX3345.00 - HOLT.CO3 345.00 345KV CKT 1	720	720	0.04018	105.1604	GEN336170 1-GULF OXY U4
FDNS	00NR	3	20SP	G15_076	FROM->TO	GRPRAR1-LNX3345.00 - HOLT.CO3 345.00 345KV CKT 1	720	720	0.04018	105.1451	GEN641089 2-ENERGY CENTER 2
FDNS	00NR	3	25SP	G15_076	FROM->TO	GRPRAR1-LNX3345.00 - HOLT.CO3 345.00 345KV CKT 1	720	720	0.03949	105.1272	EAGLE 4 230.00 - PAHOJA 230KV CKT 1
FDNS	00NR	3	20SP	G15_076	FROM->TO	GRPRAR1-LNX3345.00 - HOLT.CO3 345.00 345KV CKT 1	720	720	0.04312	105.1201	STEGALL - STEGALL TRANSFORMER 230KV CKT 1
FDNS	00NR	3	25SP	G15_076	FROM->TO	GRPRAR1-LNX3345.00 - HOLT.CO3 345.00 345KV CKT 1	720	720	0.0405	105.1198	GEN337041 1-GERALD ANDRUS
FDNS	00NR	3	20SP	G15_076	FROM->TO	GRPRAR1-LNX3345.00 - HOLT.CO3 345.00 345KV CKT 1	720	720	0.04047	105.1167	G15094_T 345.00 - LARAMIE RIVER 345KV CKT 1
FDNS	00NR	3	20SP	G15_076	FROM->TO	GRPRAR1-LNX3345.00 - HOLT.CO3 345.00 345KV CKT 1	720	720	0.04312	105.113	P13:230-345:NPPD:STEGALL3:KV3A
FDNS	00NR	3	20SP	G15_076	FROM->TO	GRPRAR1-LNX3345.00 - HOLT.CO3 345.00 345KV CKT 1	720	720	0.04019	105.1047	FARGO - JAMES TOWN 230KV CKT 1
FDNS	00NR	3	20SP	G15_076	FROM->TO	GRPRAR1-LNX3345.00 - HOLT.CO3 345.00 345KV CKT 1	720	720	0.04069	105.1004	HUNTLEY3 345.00 - LEDYARD3 345.00 345KV CKT 1
FDNS	00NR	3	25SP	G15_076	FROM->TO	GRPRAR1-LNX3345.00 - HOLT.CO3 345.00 345KV CKT 1	720	720	0.0405	105.0995	GEN501813 1-RODEMACHER UNIT 3
FDNSLock	00NR	3	20SP	G15_076	FROM->TO	GRPRAR1-LNX3345.00 - HOLT.CO3 345.00 345KV CKT 1	720	720	0.04312	105.0912	STEGALL (SGQ KV3A) 345/230/13.8KV TRANSFORMER CKT 1
FDNS	00NR	3	20SP	G15_076	FROM->TO	GRPRAR1-LNX3345.00 - HOLT.CO3 345.00 345KV CKT 1	720	720	0.04018	105.0866	GEN562596 1-G14_059_3 0.6900
FDNS	00NR	3	20SP	G15_076	FROM->TO	GRPRAR1-LNX3345.00 - HOLT.CO3 345.00 345KV CKT 1	720	720	0.04019	105.0835	FARGO - JAMES TOWN 230KV CKT 2
FDNS	00NR	3	20SP	G15_076	FROM->TO	GRPRAR1-LNX3345.00 - HOLT.CO3 345.00 345KV CKT 1	720	720	0.04018	105.0808	GEN501811 1-RODEMACHER UNIT 1
FDNS	00NR	3	20SP	G15_076	FROM->TO	GRPRAR1-LNX3345.00 - HOLT.CO3 345.00 345KV CKT 1	720	720	0.04018	105.0617	P13:230:UMZW:# 2218 #: FP IN MT. LOSS OF TRANSFORMER (AT2).
FDNS	00NR	3	20SP	G15_076	FROM->TO	GRPRAR1-LNX3345.00 - HOLT.CO3 345.00 345KV CKT 1	720	720	0.04067	105.0577	P13:230-345:NPPD:SIDNEY 3:KV2A
FDNS	00NR	3	20SP	G15_076	FROM->TO	GRPRAR1-LNX3345.00 - HOLT.CO3 345.00 345KV CKT 1	720	720	0.04067	105.0577	SIDNEY (SDQ KV2A) 345/230/13.8KV TRANSFORMER CKT 1
FDNS	00NR	3	20SP	G15_076	FROM->TO	GRPRAR1-LNX3345.00 - HOLT.CO3 345.00 345KV CKT 1	720	720	0.04067	105.0576	SIDNEY - SIDNEY TRANSFORMER 230KV CKT 1
FDNS	00NR	3	20SP	G15_076	FROM->TO	GRPRAR1-LNX3345.00 - HOLT.CO3 345.00 345KV CKT 1	720	720	0.04018	105.0566	BISMARK - JAMES TOWN 230KV CKT 1
FDNS	00NR	3	20SP	G15_076	FROM->TO	GRPRAR1-LNX3345.00 - HOLT.CO3 345.00 345KV CKT 1	720	720	0.04018	105.0477	BISMARK - WEBER 230KV CKT 1
FDNS	00NR	3	20SP	G15_076	FROM->TO	GRPRAR1-LNX3345.00 - HOLT.CO3 345.00 345KV CKT 1	720	720	0.04078	105.0472	P12:230:UMZW:# 733 #: FT IN SD. FT-BG2 LINE FAULT
FDNS	00NR	3	20SP	G15_076	FROM->TO	GRPRAR1-LNX3345.00 - HOLT.CO3 345.00 345KV CKT 1	720	720	0.0407	105.0342	P13:115-230:TSGT:SIDNEY-KV1A
FDNS	00NR	3	20SP	G15_076	FROM->TO	GRPRAR1-LNX3345.00 - HOLT.CO3 345.00 345KV CKT 1	720	720	0.04018	105.0323	JAMES TOWN - WEBER 230KV CKT 1
FDNS	00NR	3	20SP	G15_076	FROM->TO	GRPRAR1-LNX3345.00 - HOLT.CO3 345.00 345KV CKT 1	720	720	0.04112	105.0295	NOBLES - SPLIT ROCK 345KV CKT 1
FDNS	00NR	3	20SP	G15_076	FROM->TO	GRPRAR1-LNX3345.00 - HOLT.CO3 345.00 345KV CKT 1	720	720	0.04018	105.0292	GEN334071 1-LEWIS CREEK 2
FDNS	00NR	3	20SP	G15_076	FROM->TO	GRPRAR1-LNX3345.00 - HOLT.CO3 345.00 345KV CKT 1	720	720	0.04018	105.0259	GEN334070 1-LEWIS CREEK 1
FDNS	00NR	3	20SP	G15_076	FROM->TO	GRPRAR1-LNX3345.00 - HOLT.CO3 345.00 345KV CKT 1	720	720	0.04058	105.0255	HUNTLEY3 345.00 - LAKEFIELD 3 345KV CKT 1
FDNS	00NR	3	20SP	G15_076	FROM->TO	GRPRAR1-LNX3345.00 - HOLT.CO3 345.00 345KV CKT 1	720	720	0.04002	105.0164	FT THOMPSON - HURON 230KV CKT 1
FDNS	00NR	3	20SP	G15_076	FROM->TO	GRPRAR1-LNX3345.00 - HOLT.CO3 345.00 345KV CKT 1	720	720	0.04002	105.0164	FT THOMPSON - HURON 230KV CKT 1
FDNS	00NR	3	20SP	G15_076	FROM->TO	GRPRAR1-LNX3345.00 - HOLT.CO3 345.00 345KV CKT 1	720	720	0.04002	105.0164	FT THOMPSON - HURON 230KV CKT 2
FDNS	00NR	3	20SP	G15_076	FROM->TO	GRPRAR1-LNX3345.00 - HOLT.CO3 345.00 345KV CKT 1	720	720	0.04002	105.0164	FT THOMPSON - HURON 230KV CKT 2
FDNS	00NR	3	20SP	G15_076	FROM->TO	GRPRAR1-LNX3345.00 - HOLT.CO3 345.00 345KV CKT 1	720	720	0.04018	105.0128	GEN532751 1-WOLF CREEK GENERATING STATION UNIT 1
FDNS	00NR	3	20SP	G15_076	FROM->TO	GRPRAR1-LNX3345.00 - HOLT.CO3 345.00 345KV CKT 1	720	720	0.04018	105.0127	GEN659118 1-LARAMIE RIVER UNIT1
FDNS	00NR	3	20SP	G15_076	FROM->TO	GRPRAR1-LNX3345.00 - HOLT.CO3 345.00 345KV CKT 1	720	720	0.04018	105.008	GEN562921 1-G15054_2 0.6900
FDNS	00NR	3	17SP	G15_076	FROM->TO	GRPRAR1-LNX3345.00 - HOLT.CO3 345.00 345KV CKT 1	720	720	0.04173	105.0043	GEN659103 1-ANTELOPE VALLEY UNIT1
FDNS	00NR	3	17SP	G15_076	FROM->TO	GRPRAR1-LNX3345.00 - HOLT.CO3 345.00 345KV CKT 1	720	720	0.04173	105.0043	GEN659107 2-ANTELOPE VALLEY UNIT2
FDNS	00NR	3	20SP	G15_076	FROM->TO	GRPRAR1-LNX3345.00 - HOLT.CO3 345.00 345KV CKT 1	720	720	0.04018	104.9939	GEN337766 1-TRACTEBEL UNIT S1
FDNS	00NR	3	20SP	G15_076	FROM->TO	GRPRAR1-LNX3345.00 - HOLT.CO3 345.00 345KV CKT 1	720	720	0.04018	104.9924	PRAIRIE ISLAND 345/20.0KV TRANSFORMER CKT 1
FDNS	00NR	3	20SP	G15_076	FROM->TO	GRPRAR1-LNX3345.00 - HOLT.CO3 345.00 345KV CKT 1	720	720	0.04018	104.9915	GEN636641 1-LOUISA UNIT 1
FDNS	00NR	3	20SP	G15_076	FROM->TO	GRPRAR1-LNX3345.00 - HOLT.CO3 345.00 345KV CKT 1	720	720	0.04018	104.9913	BALTA - RAMSEY 230KV CKT 1
FDNS	00NR	3	20SP	G15_076	FROM->TO	GRPRAR1-LNX3345.00 - HOLT.CO3 345.00 345KV CKT 1	720	720	0.04018	104.9911	PRAIRIE ISLAND 345/20.0KV TRANSFORMER CKT 2
FDNS	00NR	3	20SP	G15_076	FROM->TO	GRPRAR1-LNX3345.00 - HOLT.CO3 345.00 345KV CKT 1	720	720	0.04078	104.9907	LOWERBRULE 4230.00 - RELIANCE 4 230.00 230KV CKT 1
FDNS	00NR	3	20SP	G15_076	FROM->TO	GRPRAR1-LNX3345.00 - HOLT.CO3 345.00 345KV CKT 1	720	720	0.03957	104.99	GREGORY - WINNER 115KV CKT 1
FDNS	00NR	3	20SP	G15_076	FROM->TO	GRPRAR1-LNX3345.00 - HOLT.CO3 345.00 345KV CKT 1	720	720	0.03957	104.9806	P12:115:UMZW:# 172 #: WI IN SD.
FDNS	00NR	3	17SP	G15_076	FROM->TO	GRPRAR1-LNX3345.00 - HOLT.CO3 345.00 345KV CKT 1	720	720	0.04173	104.9737	BIG STONE 230/24.0KV TRANSFORMER CKT 1
FDNS	00NR	3	20SP	G15_076	FROM->TO	GRPRAR1-LNX3345.00 - HOLT.CO3 345.00 345KV CKT 1	720	720	0.04021	104.9651	FORMAN - HANKINSON 230KV CKT 1
FDNS	00NR	3	20SP	G15_076	FROM->TO	GRPRAR1-LNX3345.00 - HOLT.CO3 345.00 345KV CKT 1	720	720	0.04018	104.9585	GEN501910 1-ACADIA UNIT ST1
FDNS	00NR	3	20SP	G15_076	FROM->TO	GRPRAR1-LNX3345.00 - HOLT.CO3 345.00 345KV CKT 1	720	720	0.04018	104.9466	ELM CREEK - MONTICELLO 345KV CKT 1
FDNS	00NR	3	25SP	G15_076	FROM->TO	GRPRAR1-LNX3345.00 - HOLT.CO3 345.00 345KV CKT 1	720	720	0.0405	104.9408	GEN335206 1-NELSON UNIT 6
FDNS	00NR	3	25SP	G15_076	FROM->TO	GRPRAR1-LNX3345.00 - HOLT.CO3 345.00 345KV CKT 1	720	720	0.04084	104.9324	ARPIN B4 345.00 - EAU CLAIRE 345KV CKT 1
FDNS	00NR	3	20SP	G15_076	FROM->TO	GRPRAR1-LNX3345.00 - HOLT.CO3 345.00 345KV CKT 1	720	720	0.04018	104.9284	GEN336221 1-LITTLE GYPSY UNIT#1
FDNS	00NR	3	20SP	G15_076	FROM->TO	GRPRAR1-LNX3345.00 - HOLT.CO3 345.00 345KV CKT 1	720	720	0.04018	104.9268	GEN337757 1-DUKE HOTSPRINGS STG1
FDNS	00NR	3	25SP	G15_076	FROM->TO	GRPRAR1-LNX3345.00 - HOLT.CO3 345.00 345KV CKT 1	720	720	0.0405	104.9179	GEN334440 1-SABINE UNIT 4
FDNS	00NR	3	20SP	G15_076	FROM->TO	GRPRAR1-LNX3345.00 - HOLT.CO3 345.00 345KV CKT 1	720	720	0.04021	104.9084	AUDUBON - SHEYNNE 230KV CKT 1
FDNS	00NR	3	20SP	G15_076	FROM->TO	GRPRAR1-LNX3345.00 - HOLT.CO3 345.00 345KV CKT 1	720	720	0.04018	104.9063	GEN345765 H-1SIOUX 2 18.000
FDNS	00NR	3	20SP	G15_076	FROM->TO	GRPRAR1-LNX3345.00 - HOLT.CO3 345.00 345KV CKT 1	720	720	0.04075	104.8961	P12:115:NPPD:WAPA1:CHADRON7:BOXBUTE7:BTB
FDNS	00NR	3	20SP	G15_076	FROM->TO	GRPRAR1-LNX3345.00 - HOLT.CO3 345.00 345KV CKT 1	720	720	0.05254	104.8936	BELDEN - HOSKINS 115KV CKT 1
FDNS	00NR	3	20SP	G15_076	FROM->TO	GRPRAR1-LNX3345.00 - HOLT.CO3 345.00 345KV CKT 1	720	720	0.04018	104.8925	GEN337764 1-TRACTEBEL UNIT C1
FDNS	00NR	3	20SP	G15_076	FROM->TO	GRPRAR1-LNX3345.00 - HOLT.CO3 345.00 345KV CKT 1	720	720	0.04018	104.8924	GEN337765 1-TRACTEBEL UNIT C2
FDNS	00NR	3	20SP	G15_076	FROM->TO	GRPRAR1-LNX3345.00 - HOLT.CO3 345.00 345KV CKT 1	720	720	0.0403	104.8911	FRANKS - HUBEN 345KV CKT 1
FDNS	00NR	3	20SP	G15_076	FROM->TO	GRPRAR1-LNX3345.00 - HOLT.CO3 345.00 345KV CKT 1	720	720	0.04018	104.8894	GEN334431 1-SABINE UNIT 1
FDNS	00NR	3	20SP	G15_076	FROM->TO	GRPRAR1-LNX3345.00 - HOLT.CO3 345.00 345KV CKT 1	720	720	0.04018	104.8894	GEN334432 1-SABINE UNIT 2
FDNS	00NR	3	20SP	G15_076	FROM->TO	GRPRAR1-LNX3345.00 - HOLT.CO3 345.00 345KV CKT 1	720	720	0.03989	104.8892	MT VERN - STORLA 115KV CKT 1
FDNS	00NR	3	20SP	G15_076	FROM->TO	GRPRAR1-LNX3345.00 - HOLT.CO3 345.00 345KV CKT 1	720	720	0.04018	104.8853	GEN336446 1-MICHOUD UNIT #2
FDNS	00NR	3	25SP	G15_076	FROM->TO	GRPRAR1-LNX3345.00 - HOLT.CO3 345.00 345KV CKT 1	720	720	0.0405	104.8849	GEN344897 4-1LAB G4 20.000
FDNS	00NR	3	25SP	G15_076	FROM->TO	GRPRAR1-LNX3345.00 - HOLT.CO3 345.00 345KV CKT 1	720	720	0.0405	104.8836	GEN344894 1-1LAB G1 20.000
FDNS	00NR	3	25SP	G15_076	FROM->TO	GRPRAR1-LNX3345.00 - HOLT.CO3 345.00 345KV CKT 1	720	720	0.0405	104.8836	GEN344895 2-1LAB G2 20.000
FDNS	00NR	3	25SP	G15_076	FROM->TO	GRPRAR1-LNX3345.00 - HOLT.CO3 345.00 345KV CKT 1	720	720	0.0405	104.8835	GEN344896 3-1LAB G3 20.000
FDNS	00NR	3	20SP	G15_076	FROM->TO	GRPRAR1-LNX3345.00 - HOLT.CO3 345.00 345KV CKT 1	720	720	0.04022	104.8833	LELAND OLDS - STANTON 230KV CKT 1
FDNS	00NR	3	20SP	G15_076	FROM->TO	GRPRAR1-LNX3345.00 - HOLT.CO3 345.00 345KV CKT 1	720	720	0.04022	104.8833	LELAND OLDS - STANTON 230KV CKT 1
FDNS	00NR	3	20SP	G15_076	FROM->TO	GRPRAR1-LNX3345.00 - HOLT.CO3 345.00 345KV CKT 1	720	720	0.04041	104.875	OVEXFRMCCOVE

SOLUTION	GROUP	SCENARIO	SEASON	SOURCE	DIRECTION	MONITORED ELEMENT	RATEA (MVA)	RATEB(MVA)	TDF	TC%LOADING (% MVA)	CONTINGENCY
FDNS	00NR	3	25SP	G15_076	FROM->TO	GRPRAR1-LNX3345.00 - HOLT.CO3 345.00 345KV CKT 1	720	720	0.0405	104.8695	GEN635214 4-NEAL UNIT 4
FDNS	00NR	3	20SP	G15_076	FROM->TO	GRPRAR1-LNX3345.00 - HOLT.CO3 345.00 345KV CKT 1	720	720	0.04018	104.8613	GRAND GULF 500/22.0KV TRANSFORMER CKT 1
FDNS	00NR	3	25SP	G15_076	FROM->TO	GRPRAR1-LNX3345.00 - HOLT.CO3 345.00 345KV CKT 1	720	720	0.03852	104.8565	FT THOMPSON - WESSINGTON 230KV CKT 1
FDNS	00NR	3	25SP	G15_076	FROM->TO	GRPRAR1-LNX3345.00 - HOLT.CO3 345.00 345KV CKT 1	720	720	0.03852	104.8565	FT THOMPSON - WESSINGTON 230KV CKT 1
FDNS	00NR	3	25SP	G15_076	FROM->TO	GRPRAR1-LNX3345.00 - HOLT.CO3 345.00 345KV CKT 1	720	720	0.04056	104.8563	GLENBORO SOUTH - RUGBY 230KV CKT 1
FDNS	00NR	3	20SP	G15_076	FROM->TO	GRPRAR1-LNX3345.00 - HOLT.CO3 345.00 345KV CKT 1	720	720	0.04023	104.8543	FERGSFL4 230.00 - WAHPETON 230KV CKT 1
FDNS	00NR	3	20SP	G15_076	FROM->TO	GRPRAR1-LNX3345.00 - HOLT.CO3 345.00 345KV CKT 1	720	720	0.04018	104.8535	GEN336242 1-1NMIL ST1 18.000
FDNS	00NR	3	20SP	G15_076	FROM->TO	GRPRAR1-LNX3345.00 - HOLT.CO3 345.00 345KV CKT 1	720	720	0.04018	104.8522	GEN501823 1-TECHE UNIT 3
FDNS	00NR	3	20SP	G15_076	FROM->TO	GRPRAR1-LNX3345.00 - HOLT.CO3 345.00 345KV CKT 1	720	720	0.0402	104.8452	ELLENDLMVP4 230.00 - OAKES 230KV CKT 1
FDNS	00NR	3	20SP	G15_076	FROM->TO	GRPRAR1-LNX3345.00 - HOLT.CO3 345.00 345KV CKT 1	720	720	0.0402	104.8452	ELLENDLMVP4 230.00 - OAKES 230KV CKT 1
FDNS	00NR	3	20SP	G15_076	FROM->TO	GRPRAR1-LNX3345.00 - HOLT.CO3 345.00 345KV CKT 1	720	720	0.0402	104.8442	FORMAN - OAKES 230KV CKT 1
FDNS	00NR	3	20SP	G15_076	FROM->TO	GRPRAR1-LNX3345.00 - HOLT.CO3 345.00 345KV CKT 1	720	720	0.04019	104.8378	PRAIRIE - WINGER 230KV CKT 1
FDNS	00NR	3	25SP	G15_076	FROM->TO	GRPRAR1-LNX3345.00 - HOLT.CO3 345.00 345KV CKT 1	720	720	0.0405	104.8367	GEN338388 1-1PLUM PT U1 23.000
FDNS	00NR	3	20SP	G15_076	FROM->TO	GRPRAR1-LNX3345.00 - HOLT.CO3 345.00 345KV CKT 1	720	720	0.04075	104.8349	CHADRON - DUNLAP 115KV CKT 1
FDNS	00NR	3	20SP	G15_076	FROM->TO	GRPRAR1-LNX3345.00 - HOLT.CO3 345.00 345KV CKT 1	720	720	0.04018	104.8345	GEN345756 H-1SIOUX 1 18.000
FDNS	00NR	3	20SP	G15_076	FROM->TO	GRPRAR1-LNX3345.00 - HOLT.CO3 345.00 345KV CKT 1	720	720	0.04078	104.8319	RELIANCE 4 230.00 - WITTEN 4 230.00 230KV CKT 1
FDNS	00NR	3	25SP	G15_076	FROM->TO	GRPRAR1-LNX3345.00 - HOLT.CO3 345.00 345KV CKT 1	720	720	0.0405	104.8319	GEN345671 2-1RUSH G2 18.000
FDNS	00NR	3	25SP	G15_076	FROM->TO	GRPRAR1-LNX3345.00 - HOLT.CO3 345.00 345KV CKT 1	720	720	0.0405	104.828	GEN345670 1-1RUSH G1 18.000
FDNS	00NR	3	20SP	G15_076	FROM->TO	GRPRAR1-LNX3345.00 - HOLT.CO3 345.00 345KV CKT 1	720	720	0.04037	104.8248	HAMPTON CORNER - NORTH ROCHESTER 345KV CKT 1
FDNS	00NR	3	20SP	G15_076	FROM->TO	GRPRAR1-LNX3345.00 - HOLT.CO3 345.00 345KV CKT 1	720	720	0.04024	104.824	HANKINSON - WAHPETON 230KV CKT 1
FDNS	00NR	3	20SP	G15_076	FROM->TO	GRPRAR1-LNX3345.00 - HOLT.CO3 345.00 345KV CKT 1	720	720	0.04023	104.8202	FERGSFL4 230.00 - GRE-SILVRLK4230.00 230KV CKT 1
FDNS	00NR	3	20SP	G15_076	FROM->TO	GRPRAR1-LNX3345.00 - HOLT.CO3 345.00 345KV CKT 1	720	720	0.04018	104.8181	GEN345832 1-1TS G1 13.800
FDNS	00NR	3	20SP	G15_076	FROM->TO	GRPRAR1-LNX3345.00 - HOLT.CO3 345.00 345KV CKT 1	720	720	0.04018	104.8178	GEN345841 2-1TS G2 13.800
FDNS	00NR	3	20SP	G15_076	FROM->TO	GRPRAR1-LNX3345.00 - HOLT.CO3 345.00 345KV CKT 1	720	720	0.04018	104.8173	P13:230-345:NPPD:NUCOR-1
FDNS	00NR	3	20SP	G15_076	FROM->TO	GRPRAR1-LNX3345.00 - HOLT.CO3 345.00 345KV CKT 1	720	720	0.04018	104.8166	GEN334031 1-FRONTIER UNIT 2
FDNS	00NR	3	25SP	G15_076	FROM->TO	GRPRAR1-LNX3345.00 - HOLT.CO3 345.00 345KV CKT 1	720	720	0.0405	104.8161	GEN501812 1-RODEMACHER UNIT 2
FDNS	00NR	3	20SP	G15_076	FROM->TO	GRPRAR1-LNX3345.00 - HOLT.CO3 345.00 345KV CKT 1	720	720	0.04018	104.8159	GEN334030 1-FRONTIER UNIT 1
FDNS	00NR	3	20SP	G15_076	FROM->TO	GRPRAR1-LNX3345.00 - HOLT.CO3 345.00 345KV CKT 1	720	720	0.04018	104.8117	GEN336944 1-REX BROWN
FDNS	00NR	3	20SP	G15_076	FROM->TO	GRPRAR1-LNX3345.00 - HOLT.CO3 345.00 345KV CKT 1	720	720	0.04018	104.8089	GEN501970 1-EVANGELINE UNIT 7
FDNS	00NR	3	20SP	G15_076	FROM->TO	GRPRAR1-LNX3345.00 - HOLT.CO3 345.00 345KV CKT 1	720	720	0.04092	104.802	DENISON - SIOUX CITY 230KV CKT 1
FDNS	00NR	3	20SP	G15_076	FROM->TO	GRPRAR1-LNX3345.00 - HOLT.CO3 345.00 345KV CKT 1	720	720	0.04018	104.801	GEN335612 1-WILLOW GLENN UNIT#2
FDNS	00NR	3	20SP	G15_076	FROM->TO	GRPRAR1-LNX3345.00 - HOLT.CO3 345.00 345KV CKT 1	720	720	0.04123	104.8001	MARTIN - SHANNON 115KV CKT 1
FDNS	00NR	3	25SP	G15_076	FROM->TO	GRPRAR1-LNX3345.00 - HOLT.CO3 345.00 345KV CKT 1	720	720	0.0405	104.8	GEN629075 1-OTTUMWA GENERATOR FOR OTTUMWA UNIT NO 1
FDNS	00NR	3	20SP	G15_076	FROM->TO	GRPRAR1-LNX3345.00 - HOLT.CO3 345.00 345KV CKT 1	720	720	0.04018	104.7981	GEN635693 3-GREATER DES MOINES ENERGY CENTER ST
FDNS	00NR	3	20SP	G15_076	FROM->TO	GRPRAR1-LNX3345.00 - HOLT.CO3 345.00 345KV CKT 1	720	720	0.04047	104.7967	BYRON - NORTH ROCHESTER 345KV CKT 1
FDNS	00NR	3	25SP	G15_076	FROM->TO	GRPRAR1-LNX3345.00 - HOLT.CO3 345.00 345KV CKT 1	720	720	0.0405	104.794	GEN336191 1-LITTLE GYPSY UNIT#3
FDNS	00NR	3	20SP	G15_076	FROM->TO	GRPRAR1-LNX3345.00 - HOLT.CO3 345.00 345KV CKT 1	720	720	0.04032	104.7939	GRE-CEDARMT3345.00 - HELENA 345KV CKT 1
FDNS	00NR	3	20SP	G15_076	FROM->TO	GRPRAR1-LNX3345.00 - HOLT.CO3 345.00 345KV CKT 1	720	720	0.04032	104.7939	GRE-CEDARMT3345.00 - HELENA 345KV CKT 2
FDNS	00NR	3	20SP	G15_076	FROM->TO	GRPRAR1-LNX3345.00 - HOLT.CO3 345.00 345KV CKT 1	720	720	0.04018	104.791	GEN337430 1-PERYVILLE UNIT #3
FDNS	00NR	3	20SP	G15_076	FROM->TO	GRPRAR1-LNX3345.00 - HOLT.CO3 345.00 345KV CKT 1	720	720	0.04018	104.7908	GEN337428 1-PERYVILLE UNIT #1
FDNS	00NR	3	20SP	G15_076	FROM->TO	GRPRAR1-LNX3345.00 - HOLT.CO3 345.00 345KV CKT 1	720	720	0.04131	104.7898	PLYMOUTH - SIOUX CITY 161KV CKT 1
FDNS	00NR	3	20SP	G15_076	FROM->TO	GRPRAR1-LNX3345.00 - HOLT.CO3 345.00 345KV CKT 1	720	720	0.04131	104.7898	PLYMOUTH - SIOUX CITY 161KV CKT 1
FDNS	00NR	3	25SP	G15_076	FROM->TO	GRPRAR1-LNX3345.00 - HOLT.CO3 345.00 345KV CKT 1	720	720	0.04204	104.782	GRIMES - LEHIGH 345KV CKT 1
FDNS	00NR	3	20SP	G15_076	FROM->TO	GRPRAR1-LNX3345.00 - HOLT.CO3 345.00 345KV CKT 1	720	720	0.04018	104.781	GEN562912 1-G15053_3 0.6900
FDNS	00NR	3	20SP	G15_076	FROM->TO	GRPRAR1-LNX3345.00 - HOLT.CO3 345.00 345KV CKT 1	720	720	0.03828	104.7758	FT RANDAL - WHITE SWAN 115KV CKT 1
FDNS	00NR	3	20SP	G15_076	FROM->TO	GRPRAR1-LNX3345.00 - HOLT.CO3 345.00 345KV CKT 1	720	720	0.04078	104.7754	WITTEN 4 230.00 () 230/115/13.8KV TRANSFORMER CKT 1
FDNS	00NR	3	20SP	G15_076	FROM->TO	GRPRAR1-LNX3345.00 - HOLT.CO3 345.00 345KV CKT 1	720	720	0.04018	104.7726	GEN338443 1-PANDA S1
FDNS	00NR	3	20SP	G15_076	FROM->TO	GRPRAR1-LNX3345.00 - HOLT.CO3 345.00 345KV CKT 1	720	720	0.04018	104.7704	GEN336240 1-1NMIL CT1 18.000
FDNS	00NR	3	20SP	G15_076	FROM->TO	GRPRAR1-LNX3345.00 - HOLT.CO3 345.00 345KV CKT 1	720	720	0.04018	104.7703	GEN336241 1-1NMIL CT2 18.000
FDNS	00NR	3	20SP	G15_076	FROM->TO	GRPRAR1-LNX3345.00 - HOLT.CO3 345.00 345KV CKT 1	720	720	0.04018	104.7684	P12:345:GRDA:CHOUTEAU-SPORTSMANACRES
FDNS	00NR	3	20SP	G15_076	FROM->TO	GRPRAR1-LNX3345.00 - HOLT.CO3 345.00 345KV CKT 1	720	720	0.04018	104.7681	GEN501912 1-ACADIA UNIT CT1B
FDNS	00NR	3	20SP	G15_076	FROM->TO	GRPRAR1-LNX3345.00 - HOLT.CO3 345.00 345KV CKT 1	720	720	0.04018	104.768	GEN501911 1-ACADIA UNIT CT1A
FDNS	00NR	3	25SP	G15_076	FROM->TO	GRPRAR1-LNX3345.00 - HOLT.CO3 345.00 345KV CKT 1	720	720	0.04112	104.7659	KOSSUTH 3 345.00 - WEBSTER 345KV CKT 1
FDNS	00NR	3	25SP	G15_076	FROM->TO	GRPRAR1-LNX3345.00 - HOLT.CO3 345.00 345KV CKT 1	720	720	0.0405	104.7414	P12:115:UMZW:# 162 #: NEL IN ND. FAULT ON ML-NEL-MX-GA 115 KV
FDNS	00NR	3	25SP	G15_076	FROM->TO	GRPRAR1-LNX3345.00 - HOLT.CO3 345.00 345KV CKT 1	720	720	0.0405	104.7204	GEN335614 1-WILLOW GLENN UNIT#4
FDNS	00NR	3	25SP	G15_076	FROM->TO	GRPRAR1-LNX3345.00 - HOLT.CO3 345.00 345KV CKT 1	720	720	0.0405	104.7155	GEN336801 1-BAXTER WILSON UNIT #1
FDNS	00NR	3	25SP	G15_076	FROM->TO	GRPRAR1-LNX3345.00 - HOLT.CO3 345.00 345KV CKT 1	720	720	0.0405	104.7104	GEN334441 1-SABINE UNIT 5
FDNS	00NR	3	25SP	G15_076	FROM->TO	GRPRAR1-LNX3345.00 - HOLT.CO3 345.00 345KV CKT 1	720	720	0.0405	104.7052	GEN336464 1-MICHOUD UNIT #3
FDNS	00NR	3	25SP	G15_076	FROM->TO	GRPRAR1-LNX3345.00 - HOLT.CO3 345.00 345KV CKT 1	720	720	0.0405	104.6993	GEN563222 1-G15088_3 0.6900
FDNS	00NR	3	25SP	G15_076	FROM->TO	GRPRAR1-LNX3345.00 - HOLT.CO3 345.00 345KV CKT 1	720	720	0.0405	104.6949	GEN335204 1-NELSON UNIT 4
FDNS	00NR	3	25SP	G15_076	FROM->TO	GRPRAR1-LNX3345.00 - HOLT.CO3 345.00 345KV CKT 1	720	720	0.0404	104.6851	HESKETT - WISHEK 230KV CKT 1
FDNS	00NR	3	25SP	G15_076	FROM->TO	GRPRAR1-LNX3345.00 - HOLT.CO3 345.00 345KV CKT 1	720	720	0.04072	104.6824	NORTH LA CROSSE - NORTH ROCHESTER 345KV CKT 1
FDNS	00NR	3	20SP	G15_076	FROM->TO	GRPRAR1-LNX3345.00 - HOLT.CO3 345.00 345KV CKT 1	720	720	0.04018	104.6745	GEN563282 1-G15094_3 0.6900
FDNS	00NR	3	25SP	G15_076	FROM->TO	GRPRAR1-LNX3345.00 - HOLT.CO3 345.00 345KV CKT 1	720	720	0.04111	104.6636	ADAMS - MITCHLCO3 345.00 345KV CKT 1
FDNS	00NR	3	25SP	G15_076	FROM->TO	GRPRAR1-LNX3345.00 - HOLT.CO3 345.00 345KV CKT 1	720	720	0.0404	104.6098	MERRCRT4 230.00 - WISHEK 230KV CKT 1
FDNS	00NR	3	25SP	G15_076	FROM->TO	GRPRAR1-LNX3345.00 - HOLT.CO3 345.00 345KV CKT 1	720	720	0.04049	104.6093	CENTER - COYOTE 345KV CKT 1
FDNS	00NR	3	25SP	G15_076	FROM->TO	GRPRAR1-LNX3345.00 - HOLT.CO3 345.00 345KV CKT 1	720	720	0.0405	104.5982	GEN640009 1-COOPER NUCLEAR STATION
FDNS	00NR	3	25SP	G15_076	FROM->TO	GRPRAR1-LNX3345.00 - HOLT.CO3 345.00 345KV CKT 1	720	720	0.04601	104.5757	BLOOMFIELD - CREIGHTON 115KV CKT 1
FDNS	00NR	3	25SP	G15_076	FROM->TO	GRPRAR1-LNX3345.00 - HOLT.CO3 345.00 345KV CKT 1	720	720	0.0405	104.5755	GEN334433 1-SABINE UNIT 3
FDNS	00NR	3	25SP	G15_076	FROM->TO	GRPRAR1-LNX3345.00 - HOLT.CO3 345.00 345KV CKT 1	720	720	0.0392	104.575	MENNO JCT - TRIPP JCT 115KV CKT 1
FDNS	00NR	3	25SP	G15_076	FROM->TO	GRPRAR1-LNX3345.00 - HOLT.CO3 345.00 345KV CKT 1	720	720	0.0405	104.5739	GARRISON - JAMES TOWN 230KV CKT 1
FDNS	00NR	3	25SP	G15_076	FROM->TO	GRPRAR1-LNX3345.00 - HOLT.CO3 345.00 345KV CKT 1	720	720	0.04031	104.5713	BROOKING COUNTY - BSSOUTH3 345.00 345KV CKT 1
FDNS	00NR	3	25SP	G15_076	FROM->TO	GRPRAR1-LNX3345.00 - HOLT.CO3 345.00 345KV CKT 1	720	720	0.0405	104.5452	GEN531447 1-HOLCOMB GENERATOR
FDNS	00NR	3	25SP	G15_076	FROM->TO	GRPRAR1-LNX3345.00 - HOLT.CO3 345.00 345KV CKT 1	720	720	0.04601	104.5419	BLOOMFIELD - GAVINS POINT 115KV CKT 1
FDNS	00NR	3	25SP	G15_076	FROM->TO	GRPRAR1-LNX3345.00 - HOLT.CO3 345.00 345KV CKT 1	720	720	0.0405	104.5258	GEN635213 3-NEAL UNIT 3
FDNS	00NR	3	25SP	G15_076	FROM->TO	GRPRAR1-LNX3345.00 - HOLT.CO3 345.00 345KV CKT 1	720	720	0.0405	104.5123	GEN336222 1-LITTLE GYPSY UNIT#2
FDNS	00NR	3	25SP	G15_076	FROM->TO	GRPRAR1-LNX3345.00 - HOLT.CO3 345.00 345KV CKT 1	720	720	0.04091	104.5	ADAMS - PLEASANT VALLEY 345KV CKT 1
FDNS	00NR	3	25SP	G15_076	FROM->TO	GRPRAR1-LNX3345.00 - HOLT.CO3 345.00 345KV CKT 1	720	720	0.04062	104.4855	APPLEDORN 4 230.00 - WATERTOWN 230KV CKT 1
FDNS	00NR	3	25SP	G15_076	FROM->TO	GRPRAR1-LNX3345.00 - HOLT.CO3 345.00 345KV CKT 1	720	720	0.04062	104.4855	APPLEDORN 4 230.00 - WATERTOWN 230KV CKT 1

SOLUTION	GROUP	SCENARIO	SEASON	SOURCE	DIRECTION	MONITORED ELEMENT	RATEA (MVA)	RATEB(MVA)	TDF	TC%LOADING (% MVA)	CONTINGENCY
FDNS	00NR	3	25SP	G15_076	FROM->TO	GRPRAR1-LNX3345.00 - HOLT.CO3 345.00 345KV CKT 1	720	720	0.04063	104.472	ARKANSAS NUCLEAR ONE - FT SMITH 500KV CKT 1
FDNS	00NR	3	25SP	G15_076	FROM->TO	GRPRAR1-LNX3345.00 - HOLT.CO3 345.00 345KV CKT 1	720	720	0.04063	104.472	ARKANSAS NUCLEAR ONE - FT SMITH 500KV CKT 1
FDNS	00NR	3	25SP	G15_076	FROM->TO	GRPRAR1-LNX3345.00 - HOLT.CO3 345.00 345KV CKT 1	720	720	0.0405	104.4594	GEN336151 1-WATERFORD UNIT#1
FDNS	00NR	3	25SP	G15_076	FROM->TO	GRPRAR1-LNX3345.00 - HOLT.CO3 345.00 345KV CKT 1	720	720	0.0405	104.4594	GEN336152 1-WATERFORD UNIT#2
FDNS	00NR	3	25SP	G15_076	FROM->TO	GRPRAR1-LNX3345.00 - HOLT.CO3 345.00 345KV CKT 1	720	720	0.04042	104.4563	BSSOUTH3 345.00 - ELLENDLMVP3 345.00 345KV CKT 1
FDNS	00NR	3	25SP	G15_076	FROM->TO	GRPRAR1-LNX3345.00 - HOLT.CO3 345.00 345KV CKT 1	720	720	0.04042	104.4563	BSSOUTH3 345.00 - ELLENDLMVP3 345.00 345KV CKT 1
FDNS	00NR	3	25SP	G15_076	FROM->TO	GRPRAR1-LNX3345.00 - HOLT.CO3 345.00 345KV CKT 1	720	720	0.0392	104.4444	MENNO JCT - UTICA 115KV CKT 1
FDNS	00NR	3	25SP	G15_076	FROM->TO	GRPRAR1-LNX3345.00 - HOLT.CO3 345.00 345KV CKT 1	720	720	0.04042	104.4352	ELLENDLMVP3 345.00 (1) 345/230/34.5KV TRANSFORMER CKT 1
FDNS	00NR	3	25SP	G15_076	FROM->TO	GRPRAR1-LNX3345.00 - HOLT.CO3 345.00 345KV CKT 1	720	720	0.04063	104.4249	ALEXMRES3 345.00 - WAITE PARK 345KV CKT 1
FDNS	00NR	3	25SP	G15_076	FROM->TO	GRPRAR1-LNX3345.00 - HOLT.CO3 345.00 345KV CKT 1	720	720	0.04062	104.4206	APPLEDORN 4 230.00 - GRANITE FALLS 230KV CKT 1
FDNS	00NR	3	25SP	G15_076	FROM->TO	GRPRAR1-LNX3345.00 - HOLT.CO3 345.00 345KV CKT 1	720	720	0.04062	104.4206	APPLEDORN 4 230.00 - GRANITE FALLS 230KV CKT 1
FDNS	00NR	3	25SP	G15_076	FROM->TO	GRPRAR1-LNX3345.00 - HOLT.CO3 345.00 345KV CKT 1	720	720	0.04058	104.4164	BLAIR - GRANITE FALLS 230KV CKT 1
FDNS	00NR	3	25SP	G15_076	FROM->TO	GRPRAR1-LNX3345.00 - HOLT.CO3 345.00 345KV CKT 1	720	720	0.04058	104.4164	BLAIR - GRANITE FALLS 230KV CKT 1
FDNS	00NR	3	25SP	G15_076	FROM->TO	GRPRAR1-LNX3345.00 - HOLT.CO3 345.00 345KV CKT 1	720	720	0.04081	104.4034	NMA B3 345 345.00 - NORTH LA CROSSE 345KV CKT 1
FDNS	00NR	3	25SP	G15_076	FROM->TO	GRPRAR1-LNX3345.00 - HOLT.CO3 345.00 345KV CKT 1	720	720	0.0405	104.3981	GEN641089 2-ENERGY CENTER 2
FDNS	00NR	3	25SP	G15_076	FROM->TO	GRPRAR1-LNX3345.00 - HOLT.CO3 345.00 345KV CKT 1	720	720	0.03989	104.3905	WINNER - WITTEN 115KV CKT 1
FDNS	00NR	3	25SP	G15_076	FROM->TO	GRPRAR1-LNX3345.00 - HOLT.CO3 345.00 345KV CKT 1	720	720	0.0405	104.3882	GEN303007 1-1BC2 U2
FDNS	00NR	3	25SP	G15_076	FROM->TO	GRPRAR1-LNX3345.00 - HOLT.CO3 345.00 345KV CKT 1	720	720	0.0405	104.3827	GEN303006 1-1BC2 U1
FDNS	00NR	3	25SP	G15_076	FROM->TO	GRPRAR1-LNX3345.00 - HOLT.CO3 345.00 345KV CKT 1	720	720	0.0392	104.3767	P12:115:UMZZ:# 237 #: MEN IN SD. MENNO JUNCTION IS A TAP (UJ-MEN-TP).
FDNS	00NR	3	25SP	G15_076	FROM->TO	GRPRAR1-LNX3345.00 - HOLT.CO3 345.00 345KV CKT 1	720	720	0.0405	104.3635	P13:230:UMZW:# 2218 #: FP IN MT. LOSS OF TRANSFORMER (AT2).
FDNS	00NR	3	25SP	G15_076	FROM->TO	GRPRAR1-LNX3345.00 - HOLT.CO3 345.00 345KV CKT 1	720	720	0.04051	104.3562	FARGO - JAMES TOWN 230KV CKT 1
FDNS	00NR	3	25SP	G15_076	FROM->TO	GRPRAR1-LNX3345.00 - HOLT.CO3 345.00 345KV CKT 1	720	720	0.0405	104.3534	GEN532751 1-WOLF CREEK GENERATING STATION UNIT 1
FDNS	00NR	3	25SP	G15_076	FROM->TO	GRPRAR1-LNX3345.00 - HOLT.CO3 345.00 345KV CKT 1	720	720	0.04068	104.3455	NORTH ROCHESTER - PRAIRIE ISLAND 345KV CKT 1
FDNS	00NR	3	25SP	G15_076	FROM->TO	GRPRAR1-LNX3345.00 - HOLT.CO3 345.00 345KV CKT 1	720	720	0.04078	104.3433	G15094_T 345.00 - LARAMIE RIVER 345KV CKT 1
FDNS	00NR	3	25SP	G15_076	FROM->TO	GRPRAR1-LNX3345.00 - HOLT.CO3 345.00 345KV CKT 1	720	720	0.04707	104.3401	RAUN - SIOUX CITY 345KV CKT 1
FDNS	00NR	3	25SP	G15_076	FROM->TO	GRPRAR1-LNX3345.00 - HOLT.CO3 345.00 345KV CKT 1	720	720	0.04707	104.3401	RAUN - SIOUX CITY 345KV CKT 1
FDNS	00NR	3	25SP	G15_076	FROM->TO	GRPRAR1-LNX3345.00 - HOLT.CO3 345.00 345KV CKT 1	720	720	0.04051	104.3342	FARGO - JAMES TOWN 230KV CKT 2
FDNS	00NR	3	25SP	G15_076	FROM->TO	GRPRAR1-LNX3345.00 - HOLT.CO3 345.00 345KV CKT 1	720	720	0.0405	104.3214	GEN303008 1-1BC2 U3
FDNS	00NR	3	25SP	G15_076	FROM->TO	GRPRAR1-LNX3345.00 - HOLT.CO3 345.00 345KV CKT 1	720	720	0.04101	104.319	HUNTLEY3 345.00 - LEDYARD3 345.00 345KV CKT 1
FDNS	00NR	3	25SP	G15_076	FROM->TO	GRPRAR1-LNX3345.00 - HOLT.CO3 345.00 345KV CKT 1	720	720	0.0405	104.316	GEN336170 1-GULF OXY U4
FDNS	00NR	3	25SP	G15_076	FROM->TO	GRPRAR1-LNX3345.00 - HOLT.CO3 345.00 345KV CKT 1	720	720	0.0405	104.3131	BISMARK - JAMES TOWN 230KV CKT 1
FDNS	00NR	3	25SP	G15_076	FROM->TO	GRPRAR1-LNX3345.00 - HOLT.CO3 345.00 345KV CKT 1	720	720	0.0405	104.3118	GEN562596 1-G14_059_3 0.6900
FDNS	00NR	3	20SP	G15_076	FROM->TO	GRPRAR1-LNX3345.00 - HOLT.CO3 345.00 345KV CKT 1	720	720	0.04018	104.3055	BASE CASE
FDNS	00NR	3	25SP	G15_076	FROM->TO	GRPRAR1-LNX3345.00 - HOLT.CO3 345.00 345KV CKT 1	720	720	0.0405	104.3034	BISMARK - WEBER 230KV CKT 1
FDNS	00NR	3	25SP	G15_076	FROM->TO	GRPRAR1-LNX3345.00 - HOLT.CO3 345.00 345KV CKT 1	720	720	0.0405	104.2877	JAMES TOWN - WEBER 230KV CKT 1
FDNS	00NR	3	25SP	G15_076	FROM->TO	GRPRAR1-LNX3345.00 - HOLT.CO3 345.00 345KV CKT 1	720	720	0.04343	104.2836	P13:230-345:NPPD:STEGALL3:KV3A
FDNS	00NR	3	25SP	G15_076	FROM->TO	GRPRAR1-LNX3345.00 - HOLT.CO3 345.00 345KV CKT 1	720	720	0.04343	104.2816	STEGALL (SGQ KV3A) 345/230/13.8KV TRANSFORMER CKT 1
FDNS	00NR	3	25SP	G15_076	FROM->TO	GRPRAR1-LNX3345.00 - HOLT.CO3 345.00 345KV CKT 1	720	720	0.04033	104.2736	FT THOMPSON - HURON 230KV CKT 1
FDNS	00NR	3	25SP	G15_076	FROM->TO	GRPRAR1-LNX3345.00 - HOLT.CO3 345.00 345KV CKT 1	720	720	0.04033	104.2736	FT THOMPSON - HURON 230KV CKT 1
FDNS	00NR	3	25SP	G15_076	FROM->TO	GRPRAR1-LNX3345.00 - HOLT.CO3 345.00 345KV CKT 1	720	720	0.04033	104.2736	FT THOMPSON - HURON 230KV CKT 2
FDNS	00NR	3	25SP	G15_076	FROM->TO	GRPRAR1-LNX3345.00 - HOLT.CO3 345.00 345KV CKT 1	720	720	0.04033	104.2736	FT THOMPSON - HURON 230KV CKT 2
FDNS	00NR	3	25SP	G15_076	FROM->TO	GRPRAR1-LNX3345.00 - HOLT.CO3 345.00 345KV CKT 1	720	720	0.04099	104.2727	P13:230-345:NPPD:SIDNEY 3:KV2A
FDNS	00NR	3	25SP	G15_076	FROM->TO	GRPRAR1-LNX3345.00 - HOLT.CO3 345.00 345KV CKT 1	720	720	0.04099	104.2726	SIDNEY - SIDNEY TRANSFORMER 230KV CKT 1
FDNS	00NR	3	25SP	G15_076	FROM->TO	GRPRAR1-LNX3345.00 - HOLT.CO3 345.00 345KV CKT 1	720	720	0.04099	104.2726	SIDNEY (SDQ KV2A) 345/230/13.8KV TRANSFORMER CKT 1
FDNS	00NR	3	25SP	G15_076	FROM->TO	GRPRAR1-LNX3345.00 - HOLT.CO3 345.00 345KV CKT 1	720	720	0.04089	104.2726	HUNTLEY3 345.00 - LAKEFIELD 3 345KV CKT 1
FDNS	00NR	3	25SP	G15_076	FROM->TO	GRPRAR1-LNX3345.00 - HOLT.CO3 345.00 345KV CKT 1	720	720	0.04343	104.2711	STEGALL - STEGALL TRANSFORMER 230KV CKT 1
FDNS	00NR	3	25SP	G15_076	FROM->TO	GRPRAR1-LNX3345.00 - HOLT.CO3 345.00 345KV CKT 1	720	720	0.04108	104.2687	P12:230:UMZW:# 733 #: FT IN SD. FT-BG2 LINE FAULT
FDNS	00NR	3	25SP	G15_076	FROM->TO	GRPRAR1-LNX3345.00 - HOLT.CO3 345.00 345KV CKT 1	720	720	0.04108	104.2683	FT THOMPSON - LOWERBRULE 4230.00 230KV CKT 1
FDNS	00NR	3	25SP	G15_076	FROM->TO	GRPRAR1-LNX3345.00 - HOLT.CO3 345.00 345KV CKT 1	720	720	0.04108	104.2683	FT THOMPSON - LOWERBRULE 4230.00 230KV CKT 1
FDNS	00NR	3	25SP	G15_076	FROM->TO	GRPRAR1-LNX3345.00 - HOLT.CO3 345.00 345KV CKT 1	720	720	0.0405	104.2676	BALTA - RAMSEY 230KV CKT 1
FDNS	00NR	3	25SP	G15_076	FROM->TO	GRPRAR1-LNX3345.00 - HOLT.CO3 345.00 345KV CKT 1	720	720	0.04108	104.2634	LOWERBRULE 4230.00 - RELIANCE 4 230.00 230KV CKT 1
FDNS	00NR	3	25SP	G15_076	FROM->TO	GRPRAR1-LNX3345.00 - HOLT.CO3 345.00 345KV CKT 1	720	720	0.0405	104.2467	GEN501811 1-RODEMACHER UNIT 1
FDNS	00NR	3	25SP	G15_076	FROM->TO	GRPRAR1-LNX3345.00 - HOLT.CO3 345.00 345KV CKT 1	720	720	0.04101	104.2454	P13:115-230:TSGT:SIDNEY-KV1A
FDNS	00NR	3	25SP	G15_076	FROM->TO	GRPRAR1-LNX3345.00 - HOLT.CO3 345.00 345KV CKT 1	720	720	0.0405	104.2411	GEN659118 1-LARAMIE RIVER UNIT1
FDNS	00NR	3	25SP	G15_076	FROM->TO	GRPRAR1-LNX3345.00 - HOLT.CO3 345.00 345KV CKT 1	720	720	0.0405	104.2324	GEN562921 1-G15054_2 0.6900
FDNS	00NR	3	25SP	G15_076	FROM->TO	GRPRAR1-LNX3345.00 - HOLT.CO3 345.00 345KV CKT 1	720	720	0.04053	104.2159	FORMAN - HANKINSON 230KV CKT 1
FDNS	00NR	3	25SP	G15_076	FROM->TO	GRPRAR1-LNX3345.00 - HOLT.CO3 345.00 345KV CKT 1	720	720	0.0405	104.2015	GEN334070 1-LEWIS CREEK 1
FDNS	00NR	3	25SP	G15_076	FROM->TO	GRPRAR1-LNX3345.00 - HOLT.CO3 345.00 345KV CKT 1	720	720	0.0405	104.2015	GEN334071 1-LEWIS CREEK 2
FDNS	00NR	3	25SP	G15_076	FROM->TO	GRPRAR1-LNX3345.00 - HOLT.CO3 345.00 345KV CKT 1	720	720	0.03989	104.2014	GREGORY - WINNER 115KV CKT 1
FDNS	00NR	3	25SP	G15_076	FROM->TO	GRPRAR1-LNX3345.00 - HOLT.CO3 345.00 345KV CKT 1	720	720	0.0405	104.1998	PRAIRIE ISLAND 345/20.0KV TRANSFORMER CKT 1
FDNS	00NR	3	25SP	G15_076	FROM->TO	GRPRAR1-LNX3345.00 - HOLT.CO3 345.00 345KV CKT 1	720	720	0.0405	104.1986	PRAIRIE ISLAND 345/20.0KV TRANSFORMER CKT 2
FDNS	00NR	3	25SP	G15_076	FROM->TO	GRPRAR1-LNX3345.00 - HOLT.CO3 345.00 345KV CKT 1	720	720	0.03989	104.1737	P12:115:UMZW:# 172 #: WI IN SD.
FDNS	00NR	3	25SP	G15_076	FROM->TO	GRPRAR1-LNX3345.00 - HOLT.CO3 345.00 345KV CKT 1	720	720	0.0405	104.1652	GEN337766 1-TRACTEBEL UNIT S1
FDNS	00NR	3	25SP	G15_076	FROM->TO	GRPRAR1-LNX3345.00 - HOLT.CO3 345.00 345KV CKT 1	720	720	0.0405	104.1523	GEN337757 1-DUKE HOTSPRINGS STG1
FDNS	00NR	3	25SP	G15_076	FROM->TO	GRPRAR1-LNX3345.00 - HOLT.CO3 345.00 345KV CKT 1	720	720	0.0405	104.1512	GEN645012 2-NEBRASKA CITY 2
FDNS	00NR	3	25SP	G15_076	FROM->TO	GRPRAR1-LNX3345.00 - HOLT.CO3 345.00 345KV CKT 1	720	720	0.0405	104.1422	ELM CREEK - MONTICELLO 345KV CKT 1
FDNS	00NR	3	25SP	G15_076	FROM->TO	GRPRAR1-LNX3345.00 - HOLT.CO3 345.00 345KV CKT 1	720	720	0.0405	104.1305	GEN501910 1-ACADIA UNIT ST1
FDNS	00NR	3	25SP	G15_076	FROM->TO	GRPRAR1-LNX3345.00 - HOLT.CO3 345.00 345KV CKT 1	720	720	0.04053	104.1267	AUDUBON - SHEYNNE 230KV CKT 1
FDNS	00NR	3	25SP	G15_076	FROM->TO	GRPRAR1-LNX3345.00 - HOLT.CO3 345.00 345KV CKT 1	720	720	0.04056	104.1261	HANKINSON - WAHPETON 230KV CKT 1
FDNS	00NR	3	25SP	G15_076	FROM->TO	GRPRAR1-LNX3345.00 - HOLT.CO3 345.00 345KV CKT 1	720	720	0.0402	104.1206	MT VERN - STORLA 115KV CKT 1
FDNS	00NR	3	25SP	G15_076	FROM->TO	GRPRAR1-LNX3345.00 - HOLT.CO3 345.00 345KV CKT 1	720	720	0.04107	104.1184	P12:115:NPPD:WAPA1:CHADRON7:BOXBUTE7:BTB
FDNS	00NR	3	25SP	G15_076	FROM->TO	GRPRAR1-LNX3345.00 - HOLT.CO3 345.00 345KV CKT 1	720	720	0.04073	104.1146	OVEXFRMCCOVE
FDNS	00NR	3	25SP	G15_076	FROM->TO	GRPRAR1-LNX3345.00 - HOLT.CO3 345.00 345KV CKT 1	720	720	0.04051	104.1133	ELLENDLMVP4 230.00 - OAKES 230KV CKT 1
FDNS	00NR	3	25SP	G15_076	FROM->TO	GRPRAR1-LNX3345.00 - HOLT.CO3 345.00 345KV CKT 1	720	720	0.04051	104.1133	ELLENDLMVP4 230.00 - OAKES 230KV CKT 1
FDNS	00NR	3	25SP	G15_076	FROM->TO	GRPRAR1-LNX3345.00 - HOLT.CO3 345.00 345KV CKT 1	720	720	0.04051	104.1113	FORMAN - OAKES 230KV CKT 1
FDNS	00NR	3	25SP	G15_076	FROM->TO	GRPRAR1-LNX3345.00 - HOLT.CO3 345.00 345KV CKT 1	720	720	0.0405	104.1075	GEN336221 1-LITTLE GYPSY UNIT#1
FDNS	00NR	3	25SP	G15_076	FROM->TO	GRPRAR1-LNX3345.00 - HOLT.CO3 345.00 345KV CKT 1	720	720	0.05286	104.1056	BELDEN - HOSKINS 115KV CKT 1
FDNS	00NR	3	25SP	G15_076	FROM->TO	GRPRAR1-LNX3345.00 - HOLT.CO3 345.00 345KV CKT 1	720	720	0.04108	104.0986	RELIANCE 4 230.00 - WITTEN 4 230.00 230KV CKT 1
FDNS	00NR	3	25SP	G15_076	FROM->TO	GRPRAR1-LNX3345.00 - HOLT.CO3 345.00 345KV CKT 1	720	720	0.04055	104.0952	FERGSFL4 230.00 - WAHPETON 230KV CKT 1

SOLUTION	GROUP	SCENARIO	SEASON	SOURCE	DIRECTION	MONITORED ELEMENT	RATEA (MVA)	RATEB(MVA)	TDF	TC%LOADING (% MVA)	CONTINGENCY
FDNS	00NR	3	25SP	G15_076	FROM->TO	GRPRAR1-LNX3345.00 - HOLT.CO3 345.00 345KV CKT 1	720	720	0.04051	104.0925	PRAIRIE - WINGER 230KV CKT 1
FDNS	00NR	3	25SP	G15_076	FROM->TO	GRPRAR1-LNX3345.00 - HOLT.CO3 345.00 345KV CKT 1	720	720	0.04062	104.0908	FRANKS - HUBEN 345KV CKT 1
FDNS	00NR	3	25SP	G15_076	FROM->TO	GRPRAR1-LNX3345.00 - HOLT.CO3 345.00 345KV CKT 1	720	720	0.0405	104.0884	GEN532651 1-JEFFREY ENERGY CENTER UNIT 1
FDNS	00NR	3	25SP	G15_076	FROM->TO	GRPRAR1-LNX3345.00 - HOLT.CO3 345.00 345KV CKT 1	720	720	0.0405	104.083	GEN532652 1-JEFFREY ENERGY CENTER UNIT 2
FDNS	00NR	3	25SP	G15_076	FROM->TO	GRPRAR1-LNX3345.00 - HOLT.CO3 345.00 345KV CKT 1	720	720	0.0405	104.0829	GEN532653 1-JEFFREY ENERGY CENTER UNIT 3
FDNS	00NR	3	25SP	G15_076	FROM->TO	GRPRAR1-LNX3345.00 - HOLT.CO3 345.00 345KV CKT 1	720	720	0.04143	104.0795	NOBLES - SPLIT ROCK 345KV CKT 1
FDNS	00NR	3	25SP	G15_076	FROM->TO	GRPRAR1-LNX3345.00 - HOLT.CO3 345.00 345KV CKT 1	720	720	0.0405	104.0789	GRAND GULF 500/22.0KV TRANSFORMER CKT 1
FDNS	00NR	3	25SP	G15_076	FROM->TO	GRPRAR1-LNX3345.00 - HOLT.CO3 345.00 345KV CKT 1	720	720	0.0405	104.0743	GEN334431 1-SABINE UNIT 1
FDNS	00NR	3	25SP	G15_076	FROM->TO	GRPRAR1-LNX3345.00 - HOLT.CO3 345.00 345KV CKT 1	720	720	0.0405	104.0743	GEN334432 1-SABINE UNIT 2
FDNS	00NR	3	25SP	G15_076	FROM->TO	GRPRAR1-LNX3345.00 - HOLT.CO3 345.00 345KV CKT 1	720	720	0.04107	104.0704	CHADRON - DUNLAP 115KV CKT 1
FDNS	00NR	3	25SP	G15_076	FROM->TO	GRPRAR1-LNX3345.00 - HOLT.CO3 345.00 345KV CKT 1	720	720	0.0405	104.0704	GEN345765 H-1SIOUX 2 18.000
FDNS	00NR	3	25SP	G15_076	FROM->TO	GRPRAR1-LNX3345.00 - HOLT.CO3 345.00 345KV CKT 1	720	720	0.0405	104.0702	GEN337764 1-TRACTEBEL UNIT C1
FDNS	00NR	3	25SP	G15_076	FROM->TO	GRPRAR1-LNX3345.00 - HOLT.CO3 345.00 345KV CKT 1	720	720	0.0405	104.0702	GEN337765 1-TRACTEBEL UNIT C2
FDNS	00NR	3	25SP	G15_076	FROM->TO	GRPRAR1-LNX3345.00 - HOLT.CO3 345.00 345KV CKT 1	720	720	0.0405	104.0699	GEN336446 1-MICHOUD UNIT #2
FDNS	00NR	3	17SP	G15_076	FROM->TO	GRPRAR1-LNX3345.00 - HOLT.CO3 345.00 345KV CKT 1	720	720	0.04173	104.0691	GEN659125 1-COVEY
FDNS	00NR	3	25SP	G15_076	FROM->TO	GRPRAR1-LNX3345.00 - HOLT.CO3 345.00 345KV CKT 1	720	720	0.04108	104.06	WITTEN 4 230.00 () 230/115/13.8KV TRANSFORMER CKT 1
FDNS	00NR	3	25SP	G15_076	FROM->TO	GRPRAR1-LNX3345.00 - HOLT.CO3 345.00 345KV CKT 1	720	720	0.04051	104.0439	BALTA - MCHENRY 230KV CKT 1
FDNS	00NR	3	25SP	G15_076	FROM->TO	GRPRAR1-LNX3345.00 - HOLT.CO3 345.00 345KV CKT 1	720	720	0.04054	104.0436	FERGSFL4 230.00 - GRE-SILVRLK4230.00 230KV CKT 1
FDNS	00NR	3	25SP	G15_076	FROM->TO	GRPRAR1-LNX3345.00 - HOLT.CO3 345.00 345KV CKT 1	720	720	0.04155	104.0381	MARTIN - SHANNON 115KV CKT 1
FDNS	00NR	3	25SP	G15_076	FROM->TO	GRPRAR1-LNX3345.00 - HOLT.CO3 345.00 345KV CKT 1	720	720	0.0405	104.0318	GEN501823 1-TECHE UNIT 3
FDNS	00NR	3	25SP	G15_076	FROM->TO	GRPRAR1-LNX3345.00 - HOLT.CO3 345.00 345KV CKT 1	720	720	0.0405	104.031	GEN336242 1-1NMIL ST1 18.000
FDNS	00NR	3	25SP	G15_076	FROM->TO	GRPRAR1-LNX3345.00 - HOLT.CO3 345.00 345KV CKT 1	720	720	0.04064	104.0307	GRE-CEDARMT3345.00 - HELENA 345KV CKT 1
FDNS	00NR	3	25SP	G15_076	FROM->TO	GRPRAR1-LNX3345.00 - HOLT.CO3 345.00 345KV CKT 1	720	720	0.04064	104.0307	GRE-CEDARMT3345.00 - HELENA 345KV CKT 2
FDNS	00NR	3	25SP	G15_076	FROM->TO	GRPRAR1-LNX3345.00 - HOLT.CO3 345.00 345KV CKT 1	720	720	0.0405	104.0248	GEN636641 1-LOUISA UNIT 1
FDNS	00NR	3	25SP	G15_076	FROM->TO	GRPRAR1-LNX3345.00 - HOLT.CO3 345.00 345KV CKT 1	720	720	0.04069	104.0201	HAMPTON CORNER - NORTH ROCHESTER 345KV CKT 1
FDNS	00NR	3	25SP	G15_076	FROM->TO	GRPRAR1-LNX3345.00 - HOLT.CO3 345.00 345KV CKT 1	720	720	0.0405	104.0188	P13:230-345:NPPD:NUCOR-1
FDNS	00NR	3	25SP	G15_076	FROM->TO	GRPRAR1-LNX3345.00 - HOLT.CO3 345.00 345KV CKT 1	720	720	0.04014	104.0185	HURON WEST PARK - MITCHELL NW 115KV CKT 1
FDNS	00NR	3	25SP	G15_076	FROM->TO	GRPRAR1-LNX3345.00 - HOLT.CO3 345.00 345KV CKT 1	720	720	0.04014	104.0185	HURON WEST PARK - MITCHELL NW 115KV CKT 1
FDNS	00NR	3	25SP	G15_076	FROM->TO	GRPRAR1-LNX3345.00 - HOLT.CO3 345.00 345KV CKT 1	720	720	0.04299	104.0169	OAHE - PHILIP TAP 230KV CKT 1
FDNS	00NR	3	25SP	G15_076	FROM->TO	GRPRAR1-LNX3345.00 - HOLT.CO3 345.00 345KV CKT 1	720	720	0.0405	104.0039	GEN334030 1-FRONTIER UNIT 1
FDNS	00NR	3	25SP	G15_076	FROM->TO	GRPRAR1-LNX3345.00 - HOLT.CO3 345.00 345KV CKT 1	720	720	0.0405	104.0036	GEN334031 1-FRONTIER UNIT 2
FDNS	00NR	3	25SP	G15_076	FROM->TO	GRPRAR1-LNX3345.00 - HOLT.CO3 345.00 345KV CKT 1	720	720	0.0405	104.0034	GEN562912 1-G15053_3 0.6900
FDNS	00NR	3	25SP	G15_076	FROM->TO	GRPRAR1-LNX3345.00 - HOLT.CO3 345.00 345KV CKT 1	720	720	0.0405	104.0018	GEN345756 H-1SIOUX 1 18.000
FDNS	00NR	3	25SP	G15_076	FROM->TO	GRPRAR1-LNX3345.00 - HOLT.CO3 345.00 345KV CKT 1	720	720	0.04061	103.9998	GRE-CEDARMT3345.00 - LYON COUNTY 345KV CKT 2
FDNS	00NR	3	25SP	G15_076	FROM->TO	GRPRAR1-LNX3345.00 - HOLT.CO3 345.00 345KV CKT 1	720	720	0.04074	103.9994	WAYSIDE (WAYSIDE T1) 230/115/13.8KV TRANSFORMER CKT 1
FDNS	00NR	3	25SP	G15_076	FROM->TO	GRPRAR1-LNX3345.00 - HOLT.CO3 345.00 345KV CKT 1	720	720	0.04074	103.9991	CHADRON - WAYSIDE 115KV CKT 1
FDNS	00NR	3	25SP	G15_076	FROM->TO	GRPRAR1-LNX3345.00 - HOLT.CO3 345.00 345KV CKT 1	720	720	0.04074	103.9991	P13:115-230:NPPD:WAYSIDE4:T1
FDNS	00NR	3	25SP	G15_076	FROM->TO	GRPRAR1-LNX3345.00 - HOLT.CO3 345.00 345KV CKT 1	720	720	0.0405	103.9981	GEN338443 1-PANDA S1
FDNS	00NR	3	25SP	G15_076	FROM->TO	GRPRAR1-LNX3345.00 - HOLT.CO3 345.00 345KV CKT 1	720	720	0.0405	103.9935	GEN336944 1-REX BROWN
FDNS	00NR	3	25SP	G15_076	FROM->TO	GRPRAR1-LNX3345.00 - HOLT.CO3 345.00 345KV CKT 1	720	720	0.0405	103.9916	GEN345832 1-1TS G1 13.800
FDNS	00NR	3	25SP	G15_076	FROM->TO	GRPRAR1-LNX3345.00 - HOLT.CO3 345.00 345KV CKT 1	720	720	0.0405	103.9915	P12:345:GRDA:CHOUTEAU-SPORTSMANACRES
FDNS	00NR	3	25SP	G15_076	FROM->TO	GRPRAR1-LNX3345.00 - HOLT.CO3 345.00 345KV CKT 1	720	720	0.0405	103.9913	GEN345841 2-1TS G2 13.800
FDNS	00NR	3	25SP	G15_076	FROM->TO	GRPRAR1-LNX3345.00 - HOLT.CO3 345.00 345KV CKT 1	720	720	0.0405	103.9911	GEN501970 1-EVANGELINE UNIT 7
FDNS	00NR	3	25SP	G15_076	FROM->TO	GRPRAR1-LNX3345.00 - HOLT.CO3 345.00 345KV CKT 1	720	720	0.0386	103.99	FT RANDAL - WHITE SWAN 115KV CKT 1
FDNS	00NR	3	25SP	G15_076	FROM->TO	GRPRAR1-LNX3345.00 - HOLT.CO3 345.00 345KV CKT 1	720	720	0.0405	103.9838	GEN335612 1-WILLOW GLENN UNIT#2
FDNS	00NR	3	20SP	G15_076	FROM->TO	GRPRAR1-LNX3345.00 - HOLT.CO3 345.00 345KV CKT 1	720	720	0.03969	103.9525	NELIGH - PETERSBRG.N7115.00 115KV CKT 1
FDNS	00NR	3	25SP	G15_076	FROM->TO	GRPRAR1-LNX3345.00 - HOLT.CO3 345.00 345KV CKT 1	720	720	0.0405	103.9347	GEN562438 1-G13-032 0.6900
FDNS	00NR	3	20SP	G15_076	FROM->TO	GRPRAR1-LNX3345.00 - HOLT.CO3 345.00 345KV CKT 1	720	720	0.03969	103.9124	PETERSBRG.N7115.00 - PETERSBURG 115KV CKT Z1
FDNS	00NR	3	20SP	G15_076	FROM->TO	GRPRAR1-LNX3345.00 - HOLT.CO3 345.00 345KV CKT 1	720	720	0.03969	103.9109	P12:115:NPPD:1168B:ALBION 7:PETERSBRG.N7:BTB
FDNS	00NR	3	20SP	G15_076	FROM->TO	GRPRAR1-LNX3345.00 - HOLT.CO3 345.00 345KV CKT 1	720	720	0.04037	103.9103	BUCKNER7 345.00 - SPEARVILLE 345KV CKT 1
FDNS	00NR	3	20SP	G15_076	FROM->TO	GRPRAR1-LNX3345.00 - HOLT.CO3 345.00 345KV CKT 1	720	720	0.04037	103.9103	BUCKNER7 345.00 - SPEARVILLE 345KV CKT 1
FDNS	00NR	3	25SP	G15_076	FROM->TO	GRPRAR1-LNX3345.00 - HOLT.CO3 345.00 345KV CKT 1	720	720	0.0405	103.8936	GEN563282 1-G15094_3 0.6900
FDNS	00NR	3	20SP	G15_076	FROM->TO	GRPRAR1-LNX3345.00 - HOLT.CO3 345.00 345KV CKT 1	720	720	0.04036	103.8719	FT THOMPSON - OAHE 230KV CKT 1
FDNS	00NR	3	20SP	G15_076	FROM->TO	GRPRAR1-LNX3345.00 - HOLT.CO3 345.00 345KV CKT 1	720	720	0.04036	103.8719	FT THOMPSON - OAHE 230KV CKT 1
FDNS	00NR	3	20SP	G15_076	FROM->TO	GRPRAR1-LNX3345.00 - HOLT.CO3 345.00 345KV CKT 1	720	720	0.04036	103.8719	FT THOMPSON - OAHE 230KV CKT 2
FDNS	00NR	3	20SP	G15_076	FROM->TO	GRPRAR1-LNX3345.00 - HOLT.CO3 345.00 345KV CKT 1	720	720	0.04036	103.8719	FT THOMPSON - OAHE 230KV CKT 2
FDNS	00NR	3	20SP	G15_076	FROM->TO	GRPRAR1-LNX3345.00 - HOLT.CO3 345.00 345KV CKT 1	720	720	0.04104	103.8698	103RD & ROKEBY - MOORE 345KV CKT 1
FDNS	00NR	3	20SP	G15_076	FROM->TO	GRPRAR1-LNX3345.00 - HOLT.CO3 345.00 345KV CKT 1	720	720	0.04104	103.8698	103RD & ROKEBY - MOORE 345KV CKT 1
FDNS	00NR	3	20SP	G15_076	FROM->TO	GRPRAR1-LNX3345.00 - HOLT.CO3 345.00 345KV CKT 1	720	720	0.04299	103.867	MINGO - RED WILLOW 345KV CKT 1
FDNS	00NR	3	20SP	G15_076	FROM->TO	GRPRAR1-LNX3345.00 - HOLT.CO3 345.00 345KV CKT 1	720	720	0.04299	103.867	MINGO - RED WILLOW 345KV CKT 1
FDNS	00NR	3	20SP	G15_076	FROM->TO	GRPRAR1-LNX3345.00 - HOLT.CO3 345.00 345KV CKT 1	720	720	0.04319	103.8548	AINSWORTH - AINSWORTH 115KV CKT 1
FDNS	00NR	3	20SP	G15_076	FROM->TO	GRPRAR1-LNX3345.00 - HOLT.CO3 345.00 345KV CKT 1	720	720	0.04037	103.8437	FT THOMPSON - OAHE 230KV CKT 3
FDNS	00NR	3	20SP	G15_076	FROM->TO	GRPRAR1-LNX3345.00 - HOLT.CO3 345.00 345KV CKT 1	720	720	0.04037	103.8437	FT THOMPSON - OAHE 230KV CKT 3
FDNS	00NR	3	20SP	G15_076	FROM->TO	GRPRAR1-LNX3345.00 - HOLT.CO3 345.00 345KV CKT 1	720	720	0.04037	103.8437	FT THOMPSON - OAHE 230KV CKT 4
FDNS	00NR	3	20SP	G15_076	FROM->TO	GRPRAR1-LNX3345.00 - HOLT.CO3 345.00 345KV CKT 1	720	720	0.04037	103.8437	FT THOMPSON - OAHE 230KV CKT 4
FDNS	00NR	3	20SP	G15_076	FROM->TO	GRPRAR1-LNX3345.00 - HOLT.CO3 345.00 345KV CKT 1	720	720	0.04152	103.839	ANTELOPE 7115.00 - COUNTY LINE 115KV CKT 1
FDNS	00NR	3	20SP	G15_076	FROM->TO	GRPRAR1-LNX3345.00 - HOLT.CO3 345.00 345KV CKT 1	720	720	0.04089	103.8087	AXTELL - POST ROCK 345KV CKT 1
FDNS	00NR	3	20SP	G15_076	FROM->TO	GRPRAR1-LNX3345.00 - HOLT.CO3 345.00 345KV CKT 1	720	720	0.0402	103.8056	BISMARK - L3 HAWDON 230KV CKT 1
FDNS	00NR	3	20SP	G15_076	FROM->TO	GRPRAR1-LNX3345.00 - HOLT.CO3 345.00 345KV CKT 1	720	720	0.04045	103.8029	FALLOW 3 345.00 - GRIMES 345KV CKT 1
FDNS	00NR	3	20SP	G15_076	FROM->TO	GRPRAR1-LNX3345.00 - HOLT.CO3 345.00 345KV CKT 1	720	720	0.0403	103.7972	G11_051T 345.00 - WOODWARD DISTRICT EHV 345KV CKT 1
FDNS	00NR	3	20SP	G15_076	FROM->TO	GRPRAR1-LNX3345.00 - HOLT.CO3 345.00 345KV CKT 1	720	720	0.04018	103.7883	GEN659147 1-PIONEER 1G13.800
FDNS	00NR	3	20SP	G15_076	FROM->TO	GRPRAR1-LNX3345.00 - HOLT.CO3 345.00 345KV CKT 1	720	720	0.04018	103.7883	GEN659158 2-PIONEER G213.800
FDNS	00NR	3	20SP	G15_076	FROM->TO	GRPRAR1-LNX3345.00 - HOLT.CO3 345.00 345KV CKT 1	720	720	0.04018	103.7883	GEN659159 3-PIONEER G313.800
FDNS	00NR	3	20SP	G15_076	FROM->TO	GRPRAR1-LNX3345.00 - HOLT.CO3 345.00 345KV CKT 1	720	720	0.04018	103.7878	GEN659148 1-LONESMCRK 1G13.800
FDNS	00NR	3	20SP	G15_076	FROM->TO	GRPRAR1-LNX3345.00 - HOLT.CO3 345.00 345KV CKT 1	720	720	0.04018	103.7878	GEN659156 2-LONESMCRK 2G13.800
FDNS	00NR	3	20SP	G15_076	FROM->TO	GRPRAR1-LNX3345.00 - HOLT.CO3 345.00 345KV CKT 1	720	720	0.04018	103.7878	GEN659157 3-LONESMCRK 3G13.800
FDNS	00NR	3	20SP	G15_076	FROM->TO	GRPRAR1-LNX3345.00 - HOLT.CO3 345.00 345KV CKT 1	720	720	0.04018	103.7822	GEN657964 1-ASH2GEN9 0.5750
FDNS	00NR	3	20SP	G15_076	FROM->TO	GRPRAR1-LNX3345.00 - HOLT.CO3 345.00 345KV CKT 1	720	720	0.03145	103.7818	SIOUX CITY - TWIN CHURCH 230KV CKT 1
FDNS	00NR	3	20SP	G15_076	FROM->TO	GRPRAR1-LNX3345.00 - HOLT.CO3 345.00 345KV CKT 1	720	720	0.04018	103.7814	GEN672367 1-MERIDIAN GENERATOR 1 GT1

SOLUTION	GROUP	SCENARIO	SEASON	SOURCE	DIRECTION	MONITORED ELEMENT	RATEA (MVA)	RATEB(MVA)	TDF	TC%LOADING (% MVA)	CONTINGENCY
FDNS	00NR	3	20SP	G15_076	FROM->TO	GRPRAR1-LNX3345.00 - HOLT.CO3 345.00 345KV CKT 1	720	720	0.04018	103.7814	GEN672368 2-MERIDIAN GENERATOR 2 GT2
FDNS	00NR	3	20SP	G15_076	FROM->TO	GRPRAR1-LNX3345.00 - HOLT.CO3 345.00 345KV CKT 1	720	720	0.04018	103.7805	GEN672358 1-CHAPLN1W 0.6900
FDNS	00NR	3	20SP	G15_076	FROM->TO	GRPRAR1-LNX3345.00 - HOLT.CO3 345.00 345KV CKT 1	720	720	0.04015	103.7659	G14-021T 345.00 - MULLNCR7 345.00 345KV CKT 1
FDNS	00NR	3	20SP	G15_076	FROM->TO	GRPRAR1-LNX3345.00 - HOLT.CO3 345.00 345KV CKT 1	720	720	0.04015	103.7627	G15-005T 345.00 - MULLNCR7 345.00 345KV CKT 1
FDNS	00NR	3	20SP	G15_076	FROM->TO	GRPRAR1-LNX3345.00 - HOLT.CO3 345.00 345KV CKT 1	720	720	0.04018	103.7578	GEN672349 3-CORY COGEN GENERATOR 3 ST
FDNS	00NR	3	20SP	G15_076	FROM->TO	GRPRAR1-LNX3345.00 - HOLT.CO3 345.00 345KV CKT 1	720	720	0.04018	103.7555	GEN672350 1-NIPAWIN GENERATOR 1
FDNS	00NR	3	20SP	G15_076	FROM->TO	GRPRAR1-LNX3345.00 - HOLT.CO3 345.00 345KV CKT 1	720	720	0.04018	103.7555	GEN672351 2-NIPAWIN GENERATOR 2
FDNS	00NR	3	20SP	G15_076	FROM->TO	GRPRAR1-LNX3345.00 - HOLT.CO3 345.00 345KV CKT 1	720	720	0.04018	103.7555	GEN672352 3-NIPAWIN GENERATOR 3
FDNS	00NR	3	20SP	G15_076	FROM->TO	GRPRAR1-LNX3345.00 - HOLT.CO3 345.00 345KV CKT 1	720	720	0.04033	103.7553	POST ROCK (POSTROCK T1) 345/230/13.8KV TRANSFORMER CKT 1
FDNSLock	00NR	3	20SP	G15_076	FROM->TO	GRPRAR1-LNX3345.00 - HOLT.CO3 345.00 345KV CKT 1	720	720	0.04006	103.7503	WATERTOWN (WT2 KU1A) 345/230/13.8KV TRANSFORMER CKT 1
FDNS	00NR	3	20SP	G15_076	FROM->TO	GRPRAR1-LNX3345.00 - HOLT.CO3 345.00 345KV CKT 1	720	720	0.04018	103.75	GEN600012 2-BLACK DOG GEN 2
FDNS	00NR	3	20SP	G15_076	FROM->TO	GRPRAR1-LNX3345.00 - HOLT.CO3 345.00 345KV CKT 1	720	720	0.04174	103.7304	G15061_T 345.00 - SETAB 345KV CKT 1
FDNS	00NR	3	20SP	G15_076	FROM->TO	GRPRAR1-LNX3345.00 - HOLT.CO3 345.00 345KV CKT 1	720	720	0.04018	103.73	GEN590010 1-ERCOT EQUIVALENCE
FDNS	00NR	3	20SP	G15_076	FROM->TO	GRPRAR1-LNX3345.00 - HOLT.CO3 345.00 345KV CKT 1	720	720	0.03895	103.7293	COOPER - MOORE 345KV CKT 1
FDNS	00NR	3	20SP	G15_076	FROM->TO	GRPRAR1-LNX3345.00 - HOLT.CO3 345.00 345KV CKT 1	720	720	0.04018	103.7209	GEN652548 5-FT RANDAL
FDNS	00NR	3	20SP	G15_076	FROM->TO	GRPRAR1-LNX3345.00 - HOLT.CO3 345.00 345KV CKT 1	720	720	0.04018	103.7209	GEN652549 7-FT RANDAL
FDNS	00NR	3	20SP	G15_076	FROM->TO	GRPRAR1-LNX3345.00 - HOLT.CO3 345.00 345KV CKT 1	720	720	0.04018	103.7199	GEN652546 1-FT RANDAL
FDNS	00NR	3	20SP	G15_076	FROM->TO	GRPRAR1-LNX3345.00 - HOLT.CO3 345.00 345KV CKT 1	720	720	0.04015	103.7164	G15-005T 345.00 - SIBLEY 345KV CKT 1
FDNS	00NR	3	20SP	G15_076	FROM->TO	GRPRAR1-LNX3345.00 - HOLT.CO3 345.00 345KV CKT 1	720	720	0.04018	103.7163	GEN652547 3-FT RANDAL
FDNS	00NR	3	20SP	G15_076	FROM->TO	GRPRAR1-LNX3345.00 - HOLT.CO3 345.00 345KV CKT 1	720	720	0.04018	103.7161	EMERY 161/18.0KV TRANSFORMER CKT 1
FDNS	00NR	3	20SP	G15_076	FROM->TO	GRPRAR1-LNX3345.00 - HOLT.CO3 345.00 345KV CKT 1	720	720	0.04018	103.7033	GEN590011 2-ERCOT EQUIVALENCE
FDNS	00NR	3	20SP	G15_076	FROM->TO	GRPRAR1-LNX3345.00 - HOLT.CO3 345.00 345KV CKT 1	720	720	0.03735	103.7012	FT THOMPSON (FT2 KU1A) 345/230/13.8KV TRANSFORMER CKT 1
FDNS	00NR	3	20SP	G15_076	FROM->TO	GRPRAR1-LNX3345.00 - HOLT.CO3 345.00 345KV CKT 1	720	720	0.03734	103.6987	FT THOMPSON (FT2 KU1B) 345/230/13.8KV TRANSFORMER CKT 1
FDNS	00NR	3	20SP	G15_076	FROM->TO	GRPRAR1-LNX3345.00 - HOLT.CO3 345.00 345KV CKT 1	720	720	0.04027	103.6984	ANTELOP-LNX3345.00 - BRDLAND-LNX3345.00 345KV CKT 1
FDNS	00NR	3	20SP	G15_076	FROM->TO	GRPRAR1-LNX3345.00 - HOLT.CO3 345.00 345KV CKT 1	720	720	0.03828	103.6981	COLUMEAST - NW68TH & HOLDREGE 345KV CKT 1
FDNS	00NR	3	20SP	G15_076	FROM->TO	GRPRAR1-LNX3345.00 - HOLT.CO3 345.00 345KV CKT 1	720	720	0.03828	103.6981	COLUMEAST - NW68TH & HOLDREGE 345KV CKT 1
FDNS	00NR	3	20SP	G15_076	FROM->TO	GRPRAR1-LNX3345.00 - HOLT.CO3 345.00 345KV CKT 1	720	720	0.04018	103.6906	GEN300003 1-THOMAS HILL UNIT 3
FDNS	00NR	3	20SP	G15_076	FROM->TO	GRPRAR1-LNX3345.00 - HOLT.CO3 345.00 345KV CKT 1	720	720	0.04047	103.6905	LARAMIE RIVER - STEGALL 345KV CKT 1
FDNS	00NR	3	20SP	G15_076	FROM->TO	GRPRAR1-LNX3345.00 - HOLT.CO3 345.00 345KV CKT 1	720	720	0.04018	103.6849	GEN600046 1-MECST
FDNS	00NR	3	20SP	G15_076	FROM->TO	GRPRAR1-LNX3345.00 - HOLT.CO3 345.00 345KV CKT 1	720	720	0.04018	103.6844	GEN659290 1-EDGECOL
FDNS	00NR	3	20SP	G15_076	FROM->TO	GRPRAR1-LNX3345.00 - HOLT.CO3 345.00 345KV CKT 1	720	720	0.04018	103.6843	GEN672339 16-QE 16G 13.800
FDNS	00NR	3	20SP	G15_076	FROM->TO	GRPRAR1-LNX3345.00 - HOLT.CO3 345.00 345KV CKT 1	720	720	0.04018	103.6703	GEN672393 2-NBECST2G 13.800
FDNS	00NR	3	20SP	G15_076	FROM->TO	GRPRAR1-LNX3345.00 - HOLT.CO3 345.00 345KV CKT 1	720	720	0.04024	103.6696	DRAYTON - LETELLIER 230KV CKT 1
FDNS	00NR	3	20SP	G15_076	FROM->TO	GRPRAR1-LNX3345.00 - HOLT.CO3 345.00 345KV CKT 1	720	720	0.04018	103.6676	GEN600050 1-FEP
FDNS	00NR	3	20SP	G15_076	FROM->TO	GRPRAR1-LNX3345.00 - HOLT.CO3 345.00 345KV CKT 1	720	720	0.04018	103.6557	GEN620324 3-HOOT LAKE 3 GEN
FDNS	00NR	3	20SP	G15_076	FROM->TO	GRPRAR1-LNX3345.00 - HOLT.CO3 345.00 345KV CKT 1	720	720	0.04018	103.649	GEN672342 3-QUEEN ELIZABETH GENERATOR 3
FDNS	00NR	3	20SP	G15_076	FROM->TO	GRPRAR1-LNX3345.00 - HOLT.CO3 345.00 345KV CKT 1	720	720	0.0414	103.6443	P12:115:NPPD:1163B:NELIGH 7:NORFK.N7:BTB
FDNS	00NR	3	20SP	G15_076	FROM->TO	GRPRAR1-LNX3345.00 - HOLT.CO3 345.00 345KV CKT 1	720	720	0.04018	103.6407	GEN652410 3-FT PECK
FDNS	00NR	3	20SP	G15_076	FROM->TO	GRPRAR1-LNX3345.00 - HOLT.CO3 345.00 345KV CKT 1	720	720	0.04018	103.6365	LADISH 115/13.2KV TRANSFORMER CKT 1
FDNS	00NR	3	20SP	G15_076	FROM->TO	GRPRAR1-LNX3345.00 - HOLT.CO3 345.00 345KV CKT 1	720	720	0.04083	103.6352	THEDFRD3 345.00 (THEDFORDT2) 345/115/13.8KV TRANSFORMER CKT 1
FDNS	00NR	3	20SP	G15_076	FROM->TO	GRPRAR1-LNX3345.00 - HOLT.CO3 345.00 345KV CKT 1	720	720	0.04018	103.632	GEN600047 1-MECCT1
FDNS	00NR	3	20SP	G15_076	FROM->TO	GRPRAR1-LNX3345.00 - HOLT.CO3 345.00 345KV CKT 1	720	720	0.04018	103.6192	GEN660003 3-HURON WEST PARK
FDNS	00NR	3	20SP	G15_076	FROM->TO	GRPRAR1-LNX3345.00 - HOLT.CO3 345.00 345KV CKT 1	720	720	0.03822	103.6098	COLUMEAST - SHELL CREEK 345KV CKT 1
FDNS	00NR	3	20SP	G15_076	FROM->TO	GRPRAR1-LNX3345.00 - HOLT.CO3 345.00 345KV CKT 1	720	720	0.04018	103.6069	GEN660001 2-ABERDEEN SIEBRECHT
FDNS	00NR	3	20SP	G15_076	FROM->TO	GRPRAR1-LNX3345.00 - HOLT.CO3 345.00 345KV CKT 1	720	720	0.04018	103.5835	GEN600063 1-COLVILLE GEN 1
FDNS	00NR	3	20SP	G15_076	FROM->TO	GRPRAR1-LNX3345.00 - HOLT.CO3 345.00 345KV CKT 1	720	720	0.04018	103.5835	GEN600064 2-COLVILLE GEN 2
FDNS	00NR	3	20SP	G15_076	FROM->TO	GRPRAR1-LNX3345.00 - HOLT.CO3 345.00 345KV CKT 1	720	720	0.04018	103.5778	GEN652414 4-FT PECK
FDNS	00NR	3	20SP	G15_076	FROM->TO	GRPRAR1-LNX3345.00 - HOLT.CO3 345.00 345KV CKT 1	720	720	0.04018	103.5778	GEN652415 5-FT PECK
FDNS	00NR	3	20SP	G15_076	FROM->TO	GRPRAR1-LNX3345.00 - HOLT.CO3 345.00 345KV CKT 1	720	720	0.04018	103.5707	GEN681522 3-GENOA 3
FDNS	00NR	3	20SP	G15_076	FROM->TO	GRPRAR1-LNX3345.00 - HOLT.CO3 345.00 345KV CKT 1	720	720	0.04018	103.5687	GEN652345 W-G07_023IS_2 0.6900
FDNS	00NR	3	20SP	G15_076	FROM->TO	GRPRAR1-LNX3345.00 - HOLT.CO3 345.00 345KV CKT 1	720	720	0.04018	103.5667	GEN300007 1-NEW MADRID UNIT 2
FDNS	00NR	3	20SP	G15_076	FROM->TO	GRPRAR1-LNX3345.00 - HOLT.CO3 345.00 345KV CKT 1	720	720	0.04018	103.5619	GEN 11104 1-J262_GEN 0.6000
FDNS	00NR	3	20SP	G15_076	FROM->TO	GRPRAR1-LNX3345.00 - HOLT.CO3 345.00 345KV CKT 1	720	720	0.04018	103.5619	GEN 11108 1-J263_GEN 0.6000
FDNS	00NR	3	20SP	G15_076	FROM->TO	GRPRAR1-LNX3345.00 - HOLT.CO3 345.00 345KV CKT 1	720	720	0.04018	103.5616	GEN300006 1-NEW MADRID UNIT 1
FDNS	00NR	3	20SP	G15_076	FROM->TO	GRPRAR1-LNX3345.00 - HOLT.CO3 345.00 345KV CKT 1	720	720	0.04169	103.561	GERALD GENTLEMAN STATION - RED WILLOW 345KV CKT 1
FDNS	00NR	3	20SP	G15_076	FROM->TO	GRPRAR1-LNX3345.00 - HOLT.CO3 345.00 345KV CKT 1	720	720	0.04018	103.5569	GEN600043 7-BLUE LAKE5
FDNS	00NR	3	20SP	G15_076	FROM->TO	GRPRAR1-LNX3345.00 - HOLT.CO3 345.00 345KV CKT 1	720	720	0.04018	103.5569	GEN600044 8-BLUE LAKE6
FDNS	00NR	3	20SP	G15_076	FROM->TO	GRPRAR1-LNX3345.00 - HOLT.CO3 345.00 345KV CKT 1	720	720	0.04018	103.5379	G830_SUB 115.00 - GRE-MCHENRY7115.00 115KV CKT 1
FDNS	00NR	3	20SP	G15_076	FROM->TO	GRPRAR1-LNX3345.00 - HOLT.CO3 345.00 345KV CKT 1	720	720	0.04018	103.5318	GEN600014 4-BLACK DOG GEN 4
FDNS	00NR	3	20SP	G15_076	FROM->TO	GRPRAR1-LNX3345.00 - HOLT.CO3 345.00 345KV CKT 1	720	720	0.04018	103.5279	GEN600065 7-HIGH BRIDGE
FDNS	00NR	3	20SP	G15_076	FROM->TO	GRPRAR1-LNX3345.00 - HOLT.CO3 345.00 345KV CKT 1	720	720	0.04018	103.5279	GEN600066 8-HIGH BRIDGE
FDNS	00NR	3	20SP	G15_076	FROM->TO	GRPRAR1-LNX3345.00 - HOLT.CO3 345.00 345KV CKT 1	720	720	0.04018	103.5272	G830_SUB 115.00 115/34.5KV TRANSFORMER CKT 1
FDNS	00NR	3	20SP	G15_076	FROM->TO	GRPRAR1-LNX3345.00 - HOLT.CO3 345.00 345KV CKT 1	720	720	0.04018	103.5251	GEN600011 5-BLACK DOG GEN 1
FDNS	00NR	3	25SP	G15_076	FROM->TO	GRPRAR1-LNX3345.00 - HOLT.CO3 345.00 345KV CKT 1	720	720	0.0405	103.5225	BASE CASE
FDNS	00NR	3	20SP	G15_076	FROM->TO	GRPRAR1-LNX3345.00 - HOLT.CO3 345.00 345KV CKT 1	720	720	0.04018	103.5146	GEN600071 10-RIVER SIDE
FDNS	00NR	3	20SP	G15_076	FROM->TO	GRPRAR1-LNX3345.00 - HOLT.CO3 345.00 345KV CKT 1	720	720	0.04018	103.5144	GEN600070 9-RIVER SIDE
FDNS	00NR	3	20SP	G15_076	FROM->TO	GRPRAR1-LNX3345.00 - HOLT.CO3 345.00 345KV CKT 1	720	720	0.04018	103.5123	LANSING WEST 161/22.0KV TRANSFORMER CKT 1
FDNS	00NR	3	20SP	G15_076	FROM->TO	GRPRAR1-LNX3345.00 - HOLT.CO3 345.00 345KV CKT 1	720	720	0.04018	103.5033	GEN600007 7-RIVERSIDE GEN 7
FDNS	00NR	3	20SP	G15_076	FROM->TO	GRPRAR1-LNX3345.00 - HOLT.CO3 345.00 345KV CKT 1	720	720	0.04018	103.4896	GEN600017 C-LS POWER CT
FDNS	00NR	3	20SP	G15_076	FROM->TO	GRPRAR1-LNX3345.00 - HOLT.CO3 345.00 345KV CKT 1	720	720	0.04018	103.4852	GEN600045 4-ANSON
FDNS	00NR	3	20SP	G15_076	FROM->TO	GRPRAR1-LNX3345.00 - HOLT.CO3 345.00 345KV CKT 1	720	720	0.04027	103.4592	BRDLAND-LNX3345.00 - HURON 345KV CKT Z
FDNS	00NR	3	20SP	G15_076	FROM->TO	GRPRAR1-LNX3345.00 - HOLT.CO3 345.00 345KV CKT 1	720	720	0.0403	103.4588	G11_051T 345.00 - TATONGA7 345.00 345KV CKT 1
FDNS	00NR	3	20SP	G15_076	FROM->TO	GRPRAR1-LNX3345.00 - HOLT.CO3 345.00 345KV CKT 1	720	720	0.04027	103.4585	BROADLAND - HURON 230KV CKT 1
FDNS	00NR	3	20SP	G15_076	FROM->TO	GRPRAR1-LNX3345.00 - HOLT.CO3 345.00 345KV CKT 1	720	720	0.04027	103.4585	HURON (BD KU2A) 345/230/13.8KV TRANSFORMER CKT 1
FDNS	00NR	3	20SP	G15_076	FROM->TO	GRPRAR1-LNX3345.00 - HOLT.CO3 345.00 345KV CKT 1	720	720	0.04027	103.4585	HURON (BD KU2A) 345/230/13.8KV TRANSFORMER CKT 1
FDNS	00NR	3	20SP	G15_076	FROM->TO	GRPRAR1-LNX3345.00 - HOLT.CO3 345.00 345KV CKT 1	720	720	0.04027	103.4544	P12:345:UMZB:# 103 #: BD IN SD. LOSS OF LINE
FDNS	00NR	3	20SP	G15_076	FROM->TO	GRPRAR1-LNX3345.00 - HOLT.CO3 345.00 345KV CKT 1	720	720	0.04027	103.453	P12:345:UMZB:# 102 #: AVS BD IN ND. AVS BRD LR
FDNS	00NR	3	20SP	G15_076	FROM->TO	GRPRAR1-LNX3345.00 - HOLT.CO3 345.00 345KV CKT 1	720	720	0.04018	103.4254	GEN659273 2-GROTON SYNC COND
FDNS	00NR	3	20SP	G15_076	FROM->TO	GRPRAR1-LNX3345.00 - HOLT.CO3 345.00 345KV CKT 1	720	720	0.04018	103.4254	GEN659294 1-WILTONCOL9

SOLUTION	GROUP	SCENARIO	SEASON	SOURCE	DIRECTION	MONITORED ELEMENT	RATEA (MVA)	RATEB(MVA)	TDF	TC%LOADING (% MVA)	CONTINGENCY
FDNS	00NR	3	20SP	G15_076	FROM->TO	GRPRAR1-LNX3345.00 - HOLT.CO3 345.00 345KV CKT 1	720	720	0.04018	103.4215	GEN615052 1-CAMBRIDGE GENERATING STATION
FDNS	00NR	3	20SP	G15_076	FROM->TO	GRPRAR1-LNX3345.00 - HOLT.CO3 345.00 345KV CKT 1	720	720	0.04018	103.4065	GEN615021 1-GRE-ER 14G 16.000
FDNS	00NR	3	20SP	G15_076	FROM->TO	GRPRAR1-LNX3345.00 - HOLT.CO3 345.00 345KV CKT 1	720	720	0.04027	103.4054	ANTELOP-LNX3345.00 - ANTELOPE VALLEY 345KV CKT Z
FDNS	00NR	3	20SP	G15_076	FROM->TO	GRPRAR1-LNX3345.00 - HOLT.CO3 345.00 345KV CKT 1	720	720	0.0402	103.3763	OAHE - SULLEY BUTTE 230KV CKT 1
FDNS	00NR	3	20SP	G15_076	FROM->TO	GRPRAR1-LNX3345.00 - HOLT.CO3 345.00 345KV CKT 1	720	720	0.04018	103.366	GEN 10648 1-G830_GEN 0.6900
FDNS	00NR	3	20SP	G15_076	FROM->TO	GRPRAR1-LNX3345.00 - HOLT.CO3 345.00 345KV CKT 1	720	720	0.04018	103.3642	GEN659192 6-LYNN
FDNS	00NR	3	20SP	G15_076	FROM->TO	GRPRAR1-LNX3345.00 - HOLT.CO3 345.00 345KV CKT 1	720	720	0.04018	103.3631	GEN659162 4-RED WLCK
FDNS	00NR	3	20SP	G15_076	FROM->TO	GRPRAR1-LNX3345.00 - HOLT.CO3 345.00 345KV CKT 1	720	720	0.04018	103.3631	GEN659163 5-BLACK WDCK
FDNS	00NR	3	20SP	G15_076	FROM->TO	GRPRAR1-LNX3345.00 - HOLT.CO3 345.00 345KV CKT 1	720	720	0.04018	103.3612	GEN659031 1-G12_014IS_4 0.6900
FDNS	00NR	3	20SP	G15_076	FROM->TO	GRPRAR1-LNX3345.00 - HOLT.CO3 345.00 345KV CKT 1	720	720	0.03908	103.333	HIGHLND 3 345.00 - OBRIEN 3 345.00 345KV CKT 1
FDNS	00NR	3	20SP	G15_076	FROM->TO	GRPRAR1-LNX3345.00 - HOLT.CO3 345.00 345KV CKT 1	720	720	0.04018	103.3283	GEN660016 1-B_H WIND 0.7000
FDNS	00NR	3	20SP	G15_076	FROM->TO	GRPRAR1-LNX3345.00 - HOLT.CO3 345.00 345KV CKT 1	720	720	0.04018	103.3279	GEN615015 1-GRE-SPRITWDG13.200
FDNS	00NR	3	20SP	G15_076	FROM->TO	GRPRAR1-LNX3345.00 - HOLT.CO3 345.00 345KV CKT 1	720	720	0.04018	103.2369	BISONMP4 230.00 - SQUARE BUTTE 230KV CKT 1
FDNS	00NR	3	20SP	G15_076	FROM->TO	GRPRAR1-LNX3345.00 - HOLT.CO3 345.00 345KV CKT 1	720	720	0.0403	103.229	MATHWSN7 345.00 - TATONGA7 345.00 345KV CKT 1
FDNS	00NR	3	20SP	G15_076	FROM->TO	GRPRAR1-LNX3345.00 - HOLT.CO3 345.00 345KV CKT 1	720	720	0.0402	103.2158	SULLEY BUTTE - SULLYBT-LNX3230.00 230KV CKT Z
FDNS	00NR	3	20SP	G15_076	FROM->TO	GRPRAR1-LNX3345.00 - HOLT.CO3 345.00 345KV CKT 1	720	720	0.0402	103.2153	SULLYBT-LNX3230.00 - WHITLOK 230KV CKT 1
FDNS	00NR	3	20SP	G15_076	FROM->TO	GRPRAR1-LNX3345.00 - HOLT.CO3 345.00 345KV CKT 1	720	720	0.04018	103.2088	GEN600067 9-HIGH BRIDGE
FDNS	00NR	3	25SP	G15_076	FROM->TO	GRPRAR1-LNX3345.00 - HOLT.CO3 345.00 345KV CKT 1	720	720	0.04	103.1971	NELIGH - PETERSBRG.N7115.00 115KV CKT 1
FDNS	00NR	3	20SP	G15_076	FROM->TO	GRPRAR1-LNX3345.00 - HOLT.CO3 345.00 345KV CKT 1	720	720	0.03612	103.1931	DIXONCO 230.00 - TWIN CHURCH 230KV CKT 1
FDNS	00NR	3	20SP	G15_076	FROM->TO	GRPRAR1-LNX3345.00 - HOLT.CO3 345.00 345KV CKT 1	720	720	0.04018	103.1861	GEN672305 5-BOUNDARY DAM GENERATOR 5
FDNS	00NR	3	20SP	G15_076	FROM->TO	GRPRAR1-LNX3345.00 - HOLT.CO3 345.00 345KV CKT 1	720	720	0.04018	103.186	GEN672303 3-BOUNDARY DAM GENERATOR 3
FDNS	00NR	3	20SP	G15_076	FROM->TO	GRPRAR1-LNX3345.00 - HOLT.CO3 345.00 345KV CKT 1	720	720	0.04018	103.186	GEN672304 4-BOUNDARY DAM GENERATOR 4
FDNS	00NR	3	20SP	G15_076	FROM->TO	GRPRAR1-LNX3345.00 - HOLT.CO3 345.00 345KV CKT 1	720	720	0.0402	103.1666	P12:230:UMZB:# 114 #: SB IN SD. SB-WK-GH
FDNS	00NR	3	20SP	G15_076	FROM->TO	GRPRAR1-LNX3345.00 - HOLT.CO3 345.00 345KV CKT 1	720	720	0.0402	103.1666	P12:230:UMZB:# 117 #: WK IN SD. SB-WK-GH
FDNS	00NR	3	20SP	G15_076	FROM->TO	GRPRAR1-LNX3345.00 - HOLT.CO3 345.00 345KV CKT 1	720	720	0.04018	103.1625	GEN659353 1-DEERCREK CTG18.000
FDNS	00NR	3	20SP	G15_076	FROM->TO	GRPRAR1-LNX3345.00 - HOLT.CO3 345.00 345KV CKT 1	720	720	0.04018	103.1616	GEN659354 1-DEERCREK STG18.000
FDNS	00NR	3	25SP	G15_076	FROM->TO	GRPRAR1-LNX3345.00 - HOLT.CO3 345.00 345KV CKT 1	720	720	0.04	103.1505	ALBION - PETERSBURG 115KV CKT 1
FDNS	00NR	3	20SP	G15_076	FROM->TO	GRPRAR1-LNX3345.00 - HOLT.CO3 345.00 345KV CKT 1	720	720	0.04018	103.1342	GEN672392 1-NBECGT1G 18.000
FDNS	00NR	3	20SP	G15_076	FROM->TO	GRPRAR1-LNX3345.00 - HOLT.CO3 345.00 345KV CKT 1	720	720	0.03729	103.1335	HOSKINS - RAUN 345KV CKT 1
FDNS	00NR	3	20SP	G15_076	FROM->TO	GRPRAR1-LNX3345.00 - HOLT.CO3 345.00 345KV CKT 1	720	720	0.03729	103.1335	HOSKINS - RAUN 345KV CKT 1
FDNS	00NR	3	25SP	G15_076	FROM->TO	GRPRAR1-LNX3345.00 - HOLT.CO3 345.00 345KV CKT 1	720	720	0.04	103.1295	PETERSBRG.N7115.00 - PETERSBURG 115KV CKT Z1
FDNS	00NR	3	25SP	G15_076	FROM->TO	GRPRAR1-LNX3345.00 - HOLT.CO3 345.00 345KV CKT 1	720	720	0.04	103.1167	P12:115:NPPD:1168B:ALBION 7:PETERSBRG.N7:BTB
FDNS	00NR	3	20SP	G15_076	FROM->TO	GRPRAR1-LNX3345.00 - HOLT.CO3 345.00 345KV CKT 1	720	720	0.0402	103.1139	GLENHAM - WHITLOK 230KV CKT 1
FDNS	00NR	3	17SP	G15_076	FROM->TO	GRPRAR1-LNX3345.00 - HOLT.CO3 345.00 345KV CKT 1	720	720	0.04173	103.1052	GEN615001 1-COAL CREEK
FDNS	00NR	3	25SP	G15_076	FROM->TO	GRPRAR1-LNX3345.00 - HOLT.CO3 345.00 345KV CKT 1	720	720	0.04068	103.1042	FT THOMPSON - OAHE 230KV CKT 1
FDNS	00NR	3	25SP	G15_076	FROM->TO	GRPRAR1-LNX3345.00 - HOLT.CO3 345.00 345KV CKT 1	720	720	0.04068	103.1042	FT THOMPSON - OAHE 230KV CKT 1
FDNS	00NR	3	25SP	G15_076	FROM->TO	GRPRAR1-LNX3345.00 - HOLT.CO3 345.00 345KV CKT 1	720	720	0.04068	103.1042	FT THOMPSON - OAHE 230KV CKT 2
FDNS	00NR	3	25SP	G15_076	FROM->TO	GRPRAR1-LNX3345.00 - HOLT.CO3 345.00 345KV CKT 1	720	720	0.04068	103.1042	FT THOMPSON - OAHE 230KV CKT 2
FDNS	00NR	3	25SP	G15_076	FROM->TO	GRPRAR1-LNX3345.00 - HOLT.CO3 345.00 345KV CKT 1	720	720	0.03933	103.0979	COOPER - MOORE 345KV CKT 1
FDNS	00NR	3	25SP	G15_076	FROM->TO	GRPRAR1-LNX3345.00 - HOLT.CO3 345.00 345KV CKT 1	720	720	0.04068	103.0757	FT THOMPSON - OAHE 230KV CKT 3
FDNS	00NR	3	25SP	G15_076	FROM->TO	GRPRAR1-LNX3345.00 - HOLT.CO3 345.00 345KV CKT 1	720	720	0.04068	103.0757	FT THOMPSON - OAHE 230KV CKT 3
FDNS	00NR	3	25SP	G15_076	FROM->TO	GRPRAR1-LNX3345.00 - HOLT.CO3 345.00 345KV CKT 1	720	720	0.04068	103.0757	FT THOMPSON - OAHE 230KV CKT 4
FDNS	00NR	3	25SP	G15_076	FROM->TO	GRPRAR1-LNX3345.00 - HOLT.CO3 345.00 345KV CKT 1	720	720	0.04068	103.0757	FT THOMPSON - OAHE 230KV CKT 4
FDNS	00NR	3	25SP	G15_076	FROM->TO	GRPRAR1-LNX3345.00 - HOLT.CO3 345.00 345KV CKT 1	720	720	0.04184	103.0639	ANTELOPE 7115.00 - COUNTY LINE 115KV CKT 1
FDNS	00NR	3	25SP	G15_076	FROM->TO	GRPRAR1-LNX3345.00 - HOLT.CO3 345.00 345KV CKT 1	720	720	0.03178	103.0369	SIOUX CITY - TWIN CHURCH 230KV CKT 1
FDNS	00NR	3	25SP	G15_076	FROM->TO	GRPRAR1-LNX3345.00 - HOLT.CO3 345.00 345KV CKT 1	720	720	0.04075	103.0349	7MAYWOOD 345.00 - 7SPENCER 345.00 345KV CKT 1
FDNS	00NR	3	25SP	G15_076	FROM->TO	GRPRAR1-LNX3345.00 - HOLT.CO3 345.00 345KV CKT 1	720	720	0.04052	103.0291	P12:115:UMZZ:# 232 #: AB IN SD. ABERDEEN A TAP BETWEEN ELLENDALE AND ABERDEEN-SIEBRECHT.
FDNS	00NR	3	20SP	G15_076	FROM->TO	GRPRAR1-LNX3345.00 - HOLT.CO3 345.00 345KV CKT 1	720	720	0.04018	103.024	GEN681542 6-JP MADGETT
FDNS	00NR	3	25SP	G15_076	FROM->TO	GRPRAR1-LNX3345.00 - HOLT.CO3 345.00 345KV CKT 1	720	720	0.04047	103.0183	G14-021T 345.00 - MULLNCR7 345.00 345KV CKT 1
FDNS	00NR	3	25SP	G15_076	FROM->TO	GRPRAR1-LNX3345.00 - HOLT.CO3 345.00 345KV CKT 1	720	720	0.04051	103.0163	BISMARK - L3 HAWDON 230KV CKT 1
FDNS	00NR	3	25SP	G15_076	FROM->TO	GRPRAR1-LNX3345.00 - HOLT.CO3 345.00 345KV CKT 1	720	720	0.0405	103.0162	GEN672347 1-CORY COGEN GENERATOR 1 GT1
FDNS	00NR	3	25SP	G15_076	FROM->TO	GRPRAR1-LNX3345.00 - HOLT.CO3 345.00 345KV CKT 1	720	720	0.0405	103.0162	GEN672348 2-CORY COGEN GENERATOR 2 GT2
FDNS	00NR	3	25SP	G15_076	FROM->TO	GRPRAR1-LNX3345.00 - HOLT.CO3 345.00 345KV CKT 1	720	720	0.04047	103.0153	G15-005T 345.00 - MULLNCR7 345.00 345KV CKT 1
FDNS	00NR	3	20SP	G15_076	FROM->TO	GRPRAR1-LNX3345.00 - HOLT.CO3 345.00 345KV CKT 1	720	720	0.04018	103.0111	GEN662101 1-WESSINGTON190.5750
FDNS	00NR	3	25SP	G15_076	FROM->TO	GRPRAR1-LNX3345.00 - HOLT.CO3 345.00 345KV CKT 1	720	720	0.04059	103.0099	ANTELOP-LNX3345.00 - BRDLAND-LNX3345.00 345KV CKT 1
FDNS	00NR	3	25SP	G15_076	FROM->TO	GRPRAR1-LNX3345.00 - HOLT.CO3 345.00 345KV CKT 1	720	720	0.0405	103.0083	GEN300003 1-THOMAS HILL UNIT 3
FDNS	00NR	3	25SP	G15_076	FROM->TO	GRPRAR1-LNX3345.00 - HOLT.CO3 345.00 345KV CKT 1	720	720	0.04229	103.0031	ATCHSNT3 345.00 - BOONEVILLE 345KV CKT 1
FDNS	00NR	3	25SP	G15_076	FROM->TO	GRPRAR1-LNX3345.00 - HOLT.CO3 345.00 345KV CKT 1	720	720	0.04349	103.0026	AINSWORTH - AINSWORTH 115KV CKT 1
FDNS	00NR	3	25SP	G15_076	FROM->TO	GRPRAR1-LNX3345.00 - HOLT.CO3 345.00 345KV CKT 1	720	720	0.0405	102.9984	GEN659147 1-PIONEER 1G13.800
FDNS	00NR	3	25SP	G15_076	FROM->TO	GRPRAR1-LNX3345.00 - HOLT.CO3 345.00 345KV CKT 1	720	720	0.0405	102.9984	GEN659158 2-PIONEER G213.800
FDNS	00NR	3	25SP	G15_076	FROM->TO	GRPRAR1-LNX3345.00 - HOLT.CO3 345.00 345KV CKT 1	720	720	0.0405	102.9984	GEN659159 3-PIONEER G313.800
FDNS	00NR	3	25SP	G15_076	FROM->TO	GRPRAR1-LNX3345.00 - HOLT.CO3 345.00 345KV CKT 1	720	720	0.0405	102.9978	GEN672358 1-CHAPLN1W 0.6900
FDNS	00NR	3	25SP	G15_076	FROM->TO	GRPRAR1-LNX3345.00 - HOLT.CO3 345.00 345KV CKT 1	720	720	0.0405	102.9964	GEN659148 1-LONESMCRK 1G13.800
FDNS	00NR	3	25SP	G15_076	FROM->TO	GRPRAR1-LNX3345.00 - HOLT.CO3 345.00 345KV CKT 1	720	720	0.0405	102.9964	GEN659156 2-LONESMCRK 2G13.800
FDNS	00NR	3	25SP	G15_076	FROM->TO	GRPRAR1-LNX3345.00 - HOLT.CO3 345.00 345KV CKT 1	720	720	0.0405	102.9964	GEN659157 3-LONESMCRK 3G13.800
FDNS	00NR	3	20SP	G15_076	FROM->TO	GRPRAR1-LNX3345.00 - HOLT.CO3 345.00 345KV CKT 1	720	720	0.04018	102.9943	CENTER 230/22.0KV TRANSFORMER CKT 1
FDNS	00NR	3	25SP	G15_076	FROM->TO	GRPRAR1-LNX3345.00 - HOLT.CO3 345.00 345KV CKT 1	720	720	0.0405	102.9937	GEN659417 1X-BEPCPKFT 1GX13.800
FDNS	00NR	3	25SP	G15_076	FROM->TO	GRPRAR1-LNX3345.00 - HOLT.CO3 345.00 345KV CKT 1	720	720	0.0405	102.9937	GEN659418 2X-BEPCPKFT 2GX13.800
FDNS	00NR	3	25SP	G15_076	FROM->TO	GRPRAR1-LNX3345.00 - HOLT.CO3 345.00 345KV CKT 1	720	720	0.0405	102.9937	GEN659419 3X-BEPCPKFT 3GX13.800
FDNS	00NR	3	25SP	G15_076	FROM->TO	GRPRAR1-LNX3345.00 - HOLT.CO3 345.00 345KV CKT 1	720	720	0.04076	102.991	FALLOW 3 345.00 - GRIMES 345KV CKT 1
FDNS	00NR	3	25SP	G15_076	FROM->TO	GRPRAR1-LNX3345.00 - HOLT.CO3 345.00 345KV CKT 1	720	720	0.0405	102.9879	GEN657964 1-ASH2GEN9 0.5750
FDNS	00NR	3	20SP	G15_076	FROM->TO	GRPRAR1-LNX3345.00 - HOLT.CO3 345.00 345KV CKT 1	720	720	0.04174	102.9822	MISSION - WITTEN 115KV CKT 1
FDNS	00NR	3	17SP	G15_076	FROM->TO	GRPRAR1-LNX3345.00 - HOLT.CO3 345.00 345KV CKT 1	720	720	0.04173	102.9742	GEN615002 2-COAL CREEK
FDNS	00NR	3	25SP	G15_076	FROM->TO	GRPRAR1-LNX3345.00 - HOLT.CO3 345.00 345KV CKT 1	720	720	0.0405	102.9701	GEN672367 1-MERIDIAN GENERATOR 1 GT1
FDNS	00NR	3	25SP	G15_076	FROM->TO	GRPRAR1-LNX3345.00 - HOLT.CO3 345.00 345KV CKT 1	720	720	0.0405	102.9701	GEN672368 2-MERIDIAN GENERATOR 2 GT2
FDNS	00NR	3	25SP	G15_076	FROM->TO	GRPRAR1-LNX3345.00 - HOLT.CO3 345.00 345KV CKT 1	720	720	0.04047	102.9681	G15-005T 345.00 - SIBLEY 345KV CKT 1
FDNS	00NR	3	25SP	G15_076	FROM->TO	GRPRAR1-LNX3345.00 - HOLT.CO3 345.00 345KV CKT 1	720	720	0.0386	102.9677	COLUMEAST - NW68TH & HOLDREGE 345KV CKT 1
FDNS	00NR	3	25SP	G15_076	FROM->TO	GRPRAR1-LNX3345.00 - HOLT.CO3 345.00 345KV CKT 1	720	720	0.0386	102.9677	COLUMEAST - NW68TH & HOLDREGE 345KV CKT 1
FDNS	00NR	3	20SP	G15_076	FROM->TO	GRPRAR1-LNX3345.00 - HOLT.CO3 345.00 345KV CKT 1	720	720	0.04018	102.9665	GEN910006 1-G12_012IS_3 0.6900

SOLUTION	GROUP	SCENARIO	SEASON	SOURCE	DIRECTION	MONITORED ELEMENT	RATEA (MVA)	RATEB(MVA)	TDF	TC%LOADING (% MVA)	CONTINGENCY
FDNS	00NR	3	25SP	G15_076	FROM->TO	GRPRAR1-LNX3345.00 - HOLT.CO3 345.00 345KV CKT 1	720	720	0.0405	102.9574	GEN672350 1-NIPAWIN GENERATOR 1
FDNS	00NR	3	25SP	G15_076	FROM->TO	GRPRAR1-LNX3345.00 - HOLT.CO3 345.00 345KV CKT 1	720	720	0.0405	102.9574	GEN672351 2-NIPAWIN GENERATOR 2
FDNS	00NR	3	25SP	G15_076	FROM->TO	GRPRAR1-LNX3345.00 - HOLT.CO3 345.00 345KV CKT 1	720	720	0.0405	102.9574	GEN672352 3-NIPAWIN GENERATOR 3
FDNS	00NR	3	25SP	G15_076	FROM->TO	GRPRAR1-LNX3345.00 - HOLT.CO3 345.00 345KV CKT 1	720	720	0.0405	102.9499	GEN672349 3-CORY COGEN GENERATOR 3 ST
FDNS	00NR	3	25SP	G15_076	FROM->TO	GRPRAR1-LNX3345.00 - HOLT.CO3 345.00 345KV CKT 1	720	720	0.04151	102.9446	HOLCOMB - SETAB 345KV CKT 1
FDNS	00NR	3	25SP	G15_076	FROM->TO	GRPRAR1-LNX3345.00 - HOLT.CO3 345.00 345KV CKT 1	720	720	0.04151	102.9446	HOLCOMB - SETAB 345KV CKT 1
FDNS	00NR	3	25SP	G15_076	FROM->TO	GRPRAR1-LNX3345.00 - HOLT.CO3 345.00 345KV CKT 1	720	720	0.0405	102.9445	GEN600012 2-BLACK DOG GEN 2
FDNS	00NR	3	25SP	G15_076	FROM->TO	GRPRAR1-LNX3345.00 - HOLT.CO3 345.00 345KV CKT 1	720	720	0.0405	102.9428	GEN652548 5-FT RANDAL
FDNS	00NR	3	25SP	G15_076	FROM->TO	GRPRAR1-LNX3345.00 - HOLT.CO3 345.00 345KV CKT 1	720	720	0.0405	102.9428	GEN652549 7-FT RANDAL
FDNS	00NR	3	25SP	G15_076	FROM->TO	GRPRAR1-LNX3345.00 - HOLT.CO3 345.00 345KV CKT 1	720	720	0.0405	102.9425	GEN652546 1-FT RANDAL
FDNS	00NR	3	20SP	G15_076	FROM->TO	GRPRAR1-LNX3345.00 - HOLT.CO3 345.00 345KV CKT 1	720	720	0.04585	102.942	ANTELOPE 3345.00 (ANTELOPE T1) 345/115/13.8KV TRANSFORMER CKT 1
FDNS	00NR	3	25SP	G15_076	FROM->TO	GRPRAR1-LNX3345.00 - HOLT.CO3 345.00 345KV CKT 1	720	720	0.0405	102.9381	GEN652547 3-FT RANDAL
FDNS	00NR	3	25SP	G15_076	FROM->TO	GRPRAR1-LNX3345.00 - HOLT.CO3 345.00 345KV CKT 1	720	720	0.0405	102.9327	EMERY 161/18.0KV TRANSFORMER CKT 1
FDNS	00NR	3	25SP	G15_076	FROM->TO	GRPRAR1-LNX3345.00 - HOLT.CO3 345.00 345KV CKT 1	720	720	0.03765	102.9219	FT THOMPSON (FT2 KU1A) 345/230/13.8KV TRANSFORMER CKT 1
FDNS	00NR	3	25SP	G15_076	FROM->TO	GRPRAR1-LNX3345.00 - HOLT.CO3 345.00 345KV CKT 1	720	720	0.03765	102.9195	FT THOMPSON (FT2 KU1B) 345/230/13.8KV TRANSFORMER CKT 1
FDNSLock	00NR	3	25SP	G15_076	FROM->TO	GRPRAR1-LNX3345.00 - HOLT.CO3 345.00 345KV CKT 1	720	720	0.04037	102.9118	WATERTOWN (WT2 KU1A) 345/230/13.8KV TRANSFORMER CKT 1
FDNS	00NR	3	25SP	G15_076	FROM->TO	GRPRAR1-LNX3345.00 - HOLT.CO3 345.00 345KV CKT 1	720	720	0.0405	102.9065	GEN659290 1-EDGECOL
FDNS	00NR	3	25SP	G15_076	FROM->TO	GRPRAR1-LNX3345.00 - HOLT.CO3 345.00 345KV CKT 1	720	720	0.04081	102.8826	FINNEY SWITCHING STATION - WALKTAP7 345.00 345KV CKT 1
FDNS	00NR	3	25SP	G15_076	FROM->TO	GRPRAR1-LNX3345.00 - HOLT.CO3 345.00 345KV CKT 1	720	720	0.04081	102.8826	FINNEY SWITCHING STATION - WALKTAP7 345.00 345KV CKT 1
FDNS	00NR	3	25SP	G15_076	FROM->TO	GRPRAR1-LNX3345.00 - HOLT.CO3 345.00 345KV CKT 1	720	720	0.04078	102.8799	LARAMIE RIVER - STEGALL 345KV CKT 1
FDNS	00NR	3	25SP	G15_076	FROM->TO	GRPRAR1-LNX3345.00 - HOLT.CO3 345.00 345KV CKT 1	720	720	0.04171	102.8692	P12:115:NPPD:1163B:NELIGH 7:NORFK.N7:BTB
FDNS	00NR	3	25SP	G15_076	FROM->TO	GRPRAR1-LNX3345.00 - HOLT.CO3 345.00 345KV CKT 1	720	720	0.0405	102.868	GEN300007 1-NEW MADRID UNIT 2
FDNS	00NR	3	25SP	G15_076	FROM->TO	GRPRAR1-LNX3345.00 - HOLT.CO3 345.00 345KV CKT 1	720	720	0.0405	102.867	GEN672357 2-FUT-WL2X 13.800
FDNS	00NR	3	25SP	G15_076	FROM->TO	GRPRAR1-LNX3345.00 - HOLT.CO3 345.00 345KV CKT 1	720	720	0.0405	102.8632	GEN300006 1-NEW MADRID UNIT 1
FDNS	00NR	3	20SP	G15_076	FROM->TO	GRPRAR1-LNX3345.00 - HOLT.CO3 345.00 345KV CKT 1	720	720	0.04018	102.8593	CLAY BOSWELL 230/20.9KV TRANSFORMER CKT 1
FDNS	00NR	3	20SP	G15_076	FROM->TO	GRPRAR1-LNX3345.00 - HOLT.CO3 345.00 345KV CKT 1	720	720	0.04181	102.8567	AXTELL - SWEETWATER 345KV CKT 1
FDNS	00NR	3	25SP	G15_076	FROM->TO	GRPRAR1-LNX3345.00 - HOLT.CO3 345.00 345KV CKT 1	720	720	0.0405	102.8567	GEN672393 2-NBECST2G 13.800
FDNS	00NR	3	25SP	G15_076	FROM->TO	GRPRAR1-LNX3345.00 - HOLT.CO3 345.00 345KV CKT 1	720	720	0.03854	102.8556	COLUMEAST - SHELL CREEK 345KV CKT 1
FDNS	00NR	3	25SP	G15_076	FROM->TO	GRPRAR1-LNX3345.00 - HOLT.CO3 345.00 345KV CKT 1	720	720	0.0405	102.8526	GEN672390 2-FUT-SW2X 13.800
FDNS	00NR	3	25SP	G15_076	FROM->TO	GRPRAR1-LNX3345.00 - HOLT.CO3 345.00 345KV CKT 1	720	720	0.0405	102.8519	GEN620324 3-HOOT LAKE 3 GEN
FDNS	00NR	3	25SP	G15_076	FROM->TO	GRPRAR1-LNX3345.00 - HOLT.CO3 345.00 345KV CKT 1	720	720	0.0405	102.8519	GEN652410 3-FT PECK
FDNS	00NR	3	25SP	G15_076	FROM->TO	GRPRAR1-LNX3345.00 - HOLT.CO3 345.00 345KV CKT 1	720	720	0.0405	102.8507	GEN600050 1-FEP
FDNS	00NR	3	25SP	G15_076	FROM->TO	GRPRAR1-LNX3345.00 - HOLT.CO3 345.00 345KV CKT 1	720	720	0.04004	102.8448	HELENA - SHEAS LK3 345.00 345KV CKT 1
FDNS	00NR	3	25SP	G15_076	FROM->TO	GRPRAR1-LNX3345.00 - HOLT.CO3 345.00 345KV CKT 1	720	720	0.0405	102.8432	GEN660003 3-HURON WEST PARK
FDNS	00NR	3	25SP	G15_076	FROM->TO	GRPRAR1-LNX3345.00 - HOLT.CO3 345.00 345KV CKT 1	720	720	0.0405	102.8402	GEN600046 1-MECST
FDNS	00NR	3	20SP	G15_076	FROM->TO	GRPRAR1-LNX3345.00 - HOLT.CO3 345.00 345KV CKT 1	720	720	0.04164	102.8248	G15088_T 345.00 - MOORE 345KV CKT 1
FDNS	00NR	3	25SP	G15_076	FROM->TO	GRPRAR1-LNX3345.00 - HOLT.CO3 345.00 345KV CKT 1	720	720	0.0405	102.823	LADISH 115/13.2KV TRANSFORMER CKT 1
FDNS	00NR	3	25SP	G15_076	FROM->TO	GRPRAR1-LNX3345.00 - HOLT.CO3 345.00 345KV CKT 1	720	720	0.04097	102.819	Hitchland Interchange - WALKTAP7 345.00 345KV CKT 1
FDNS	00NR	3	25SP	G15_076	FROM->TO	GRPRAR1-LNX3345.00 - HOLT.CO3 345.00 345KV CKT 1	720	720	0.04097	102.819	Hitchland Interchange - WALKTAP7 345.00 345KV CKT 1
FDNS	00NR	3	25SP	G15_076	FROM->TO	GRPRAR1-LNX3345.00 - HOLT.CO3 345.00 345KV CKT 1	720	720	0.0405	102.8125	GEN660001 2-ABERDEEN SIEBRECHT
FDNS	00NR	3	25SP	G15_076	FROM->TO	GRPRAR1-LNX3345.00 - HOLT.CO3 345.00 345KV CKT 1	720	720	0.04097	102.8108	P12:345:SPS:J07.1.FINN.HITCH
FDNS	00NR	3	25SP	G15_076	FROM->TO	GRPRAR1-LNX3345.00 - HOLT.CO3 345.00 345KV CKT 1	720	720	0.0405	102.8095	GEN600047 1-MECCT1
FDNS	00NR	3	25SP	G15_076	FROM->TO	GRPRAR1-LNX3345.00 - HOLT.CO3 345.00 345KV CKT 1	720	720	0.0405	102.7923	GEN652345 W-G07_023IS_2 0.6900
FDNS	00NR	3	25SP	G15_076	FROM->TO	GRPRAR1-LNX3345.00 - HOLT.CO3 345.00 345KV CKT 1	720	720	0.0405	102.7879	GEN652414 4-FT PECK
FDNS	00NR	3	25SP	G15_076	FROM->TO	GRPRAR1-LNX3345.00 - HOLT.CO3 345.00 345KV CKT 1	720	720	0.0405	102.7879	GEN652415 5-FT PECK
FDNS	00NR	3	25SP	G15_076	FROM->TO	GRPRAR1-LNX3345.00 - HOLT.CO3 345.00 345KV CKT 1	720	720	0.04114	102.7847	THEDFRD3 345.00 (THEDFORDT2) 345/115/13.8KV TRANSFORMER CKT 1
FDNS	00NR	3	25SP	G15_076	FROM->TO	GRPRAR1-LNX3345.00 - HOLT.CO3 345.00 345KV CKT 1	720	720	0.04009	102.7748	SHEAS LK3 345.00 - WILMARTH 345KV CKT 1
FDNS	00NR	3	25SP	G15_076	FROM->TO	GRPRAR1-LNX3345.00 - HOLT.CO3 345.00 345KV CKT 1	720	720	0.03767	102.7664	HOSKINS - RAUN 345KV CKT 1
FDNS	00NR	3	25SP	G15_076	FROM->TO	GRPRAR1-LNX3345.00 - HOLT.CO3 345.00 345KV CKT 1	720	720	0.03767	102.7664	HOSKINS - RAUN 345KV CKT 1
FDNS	00NR	3	25SP	G15_076	FROM->TO	GRPRAR1-LNX3345.00 - HOLT.CO3 345.00 345KV CKT 1	720	720	0.0405	102.7652	GEN600063 1-COLVILLE GEN 1
FDNS	00NR	3	25SP	G15_076	FROM->TO	GRPRAR1-LNX3345.00 - HOLT.CO3 345.00 345KV CKT 1	720	720	0.0405	102.7652	GEN600064 2-COLVILLE GEN 2
FDNS	00NR	3	25SP	G15_076	FROM->TO	GRPRAR1-LNX3345.00 - HOLT.CO3 345.00 345KV CKT 1	720	720	0.04059	102.7643	BRDLAND-LNX3345.00 - HURON 345KV CKT Z
FDNS	00NR	3	25SP	G15_076	FROM->TO	GRPRAR1-LNX3345.00 - HOLT.CO3 345.00 345KV CKT 1	720	720	0.04059	102.7637	BROADLAND - HURON 230KV CKT 1
FDNS	00NR	3	25SP	G15_076	FROM->TO	GRPRAR1-LNX3345.00 - HOLT.CO3 345.00 345KV CKT 1	720	720	0.0405	102.7631	GEN590010 1-ERCOT EQUIVALENCE
FDNS	00NR	3	25SP	G15_076	FROM->TO	GRPRAR1-LNX3345.00 - HOLT.CO3 345.00 345KV CKT 1	720	720	0.04059	102.762	P12:345:UMZB:# 102 #: AVS BD IN ND. AVS BRD LR
FDNS	00NR	3	25SP	G15_076	FROM->TO	GRPRAR1-LNX3345.00 - HOLT.CO3 345.00 345KV CKT 1	720	720	0.04059	102.7619	HURON (BD KU2A) 345/230/13.8KV TRANSFORMER CKT 1
FDNS	00NR	3	25SP	G15_076	FROM->TO	GRPRAR1-LNX3345.00 - HOLT.CO3 345.00 345KV CKT 1	720	720	0.04059	102.7619	HURON (BD KU2A) 345/230/13.8KV TRANSFORMER CKT 1
FDNS	00NR	3	25SP	G15_076	FROM->TO	GRPRAR1-LNX3345.00 - HOLT.CO3 345.00 345KV CKT 1	720	720	0.0405	102.7609	GEN 11104 1-J262_GEN 0.6000
FDNS	00NR	3	25SP	G15_076	FROM->TO	GRPRAR1-LNX3345.00 - HOLT.CO3 345.00 345KV CKT 1	720	720	0.0405	102.7609	GEN 11108 1-J263_GEN 0.6000
FDNS	00NR	3	25SP	G15_076	FROM->TO	GRPRAR1-LNX3345.00 - HOLT.CO3 345.00 345KV CKT 1	720	720	0.04059	102.7595	P12:345:UMZB:# 103 #: BD IN SD. LOSS OF LINE
FDNS	00NR	3	25SP	G15_076	FROM->TO	GRPRAR1-LNX3345.00 - HOLT.CO3 345.00 345KV CKT 1	720	720	0.03994	102.7547	FIELD NORTH - LKFLDXL3 345KV CKT 1
FDNS	00NR	3	25SP	G15_076	FROM->TO	GRPRAR1-LNX3345.00 - HOLT.CO3 345.00 345KV CKT 1	720	720	0.03994	102.7539	FIELD SOUTH - WILMARTH 345KV CKT 1
FDNS	00NR	3	20SP	G15_076	FROM->TO	GRPRAR1-LNX3345.00 - HOLT.CO3 345.00 345KV CKT 1	720	720	0.03441	102.7529	HOSKINS - SHELL CREEK 345KV CKT 1
FDNS	00NR	3	20SP	G15_076	FROM->TO	GRPRAR1-LNX3345.00 - HOLT.CO3 345.00 345KV CKT 1	720	720	0.04018	102.7482	GEN659289 1-DAYCNTYWND W0.6900
FDNS	00NR	3	25SP	G15_076	FROM->TO	GRPRAR1-LNX3345.00 - HOLT.CO3 345.00 345KV CKT 1	720	720	0.03994	102.7467	FIELD NORTH - FIELD SOUTH 345KV CKT 1
FDNS	00NR	3	25SP	G15_076	FROM->TO	GRPRAR1-LNX3345.00 - HOLT.CO3 345.00 345KV CKT 1	720	720	0.0405	102.7443	GEN600043 7-BLUE LAKE5
FDNS	00NR	3	25SP	G15_076	FROM->TO	GRPRAR1-LNX3345.00 - HOLT.CO3 345.00 345KV CKT 1	720	720	0.0405	102.7443	GEN600044 8-BLUE LAKE6
FDNS	00NR	3	25SP	G15_076	FROM->TO	GRPRAR1-LNX3345.00 - HOLT.CO3 345.00 345KV CKT 1	720	720	0.0405	102.7405	GEN590011 2-ERCOT EQUIVALENCE
FDNS	00NR	3	25SP	G15_076	FROM->TO	GRPRAR1-LNX3345.00 - HOLT.CO3 345.00 345KV CKT 1	720	720	0.0405	102.739	G830_SUB 115.00 - GRE-MCHENRY7115.00 115KV CKT 1
FDNS	00NR	3	25SP	G15_076	FROM->TO	GRPRAR1-LNX3345.00 - HOLT.CO3 345.00 345KV CKT 1	720	720	0.0405	102.7384	G830_SUB 115.00 115/34.5KV TRANSFORMER CKT 1
FDNS	00NR	3	25SP	G15_076	FROM->TO	GRPRAR1-LNX3345.00 - HOLT.CO3 345.00 345KV CKT 1	720	720	0.0405	102.7351	LANSING WEST 161/22.0KV TRANSFORMER CKT 1
FDNS	00NR	3	25SP	G15_076	FROM->TO	GRPRAR1-LNX3345.00 - HOLT.CO3 345.00 345KV CKT 1	720	720	0.0405	102.7223	GEN681522 3-GENOA 3
FDNS	00NR	3	25SP	G15_076	FROM->TO	GRPRAR1-LNX3345.00 - HOLT.CO3 345.00 345KV CKT 1	720	720	0.0405	102.7158	GEN600014 4-BLACK DOG GEN 4
FDNS	00NR	3	25SP	G15_076	FROM->TO	GRPRAR1-LNX3345.00 - HOLT.CO3 345.00 345KV CKT 1	720	720	0.0405	102.713	GEN600065 7-HIGH BRIDGE
FDNS	00NR	3	25SP	G15_076	FROM->TO	GRPRAR1-LNX3345.00 - HOLT.CO3 345.00 345KV CKT 1	720	720	0.0405	102.713	GEN600066 8-HIGH BRIDGE
FDNS	00NR	3	20SP	G15_076	FROM->TO	GRPRAR1-LNX3345.00 - HOLT.CO3 345.00 345KV CKT 1	720	720	0.04018	102.711	GEN563312 1-G15097_3 0.6900
FDNS	00NR	3	25SP	G15_076	FROM->TO	GRPRAR1-LNX3345.00 - HOLT.CO3 345.00 345KV CKT 1	720	720	0.0405	102.7102	GEN600011 5-BLACK DOG GEN 1
FDNS	00NR	3	25SP	G15_076	FROM->TO	GRPRAR1-LNX3345.00 - HOLT.CO3 345.00 345KV CKT 1	720	720	0.0405	102.7003	GEN600071 10-RIVER SIDE
FDNS	00NR	3	25SP	G15_076	FROM->TO	GRPRAR1-LNX3345.00 - HOLT.CO3 345.00 345KV CKT 1	720	720	0.0405	102.7001	GEN600070 9-RIVER SIDE

SOLUTION	GROUP	SCENARIO	SEASON	SOURCE	DIRECTION	MONITORED ELEMENT	RATEA (MVA)	RATEB(MVA)	TDF	TC%LOADING (% MVA)	CONTINGENCY
FDNS	00NR	3	25SP	G15_076	FROM->TO	GRPRAR1-LNX3345.00 - HOLT.CO3 345.00 345KV CKT 1	720	720	0.0405	102.6884	GEN600007 7-RIVERSIDE GEN 7
FDNS	00NR	3	20SP	G15_076	FROM->TO	GRPRAR1-LNX3345.00 - HOLT.CO3 345.00 345KV CKT 1	720	720	0.04018	102.6758	GEN659018 1-G14_003IS_3 0.6900
FDNS	00NR	3	25SP	G15_076	FROM->TO	GRPRAR1-LNX3345.00 - HOLT.CO3 345.00 345KV CKT 1	720	720	0.0405	102.6725	GEN600045 4-ANSON
FDNS	00NR	3	25SP	G15_076	FROM->TO	GRPRAR1-LNX3345.00 - HOLT.CO3 345.00 345KV CKT 1	720	720	0.0405	102.6713	GEN600017 C-LS POWER CT
FDNS	00NR	3	20SP	G15_076	FROM->TO	GRPRAR1-LNX3345.00 - HOLT.CO3 345.00 345KV CKT 1	720	720	0.04018	102.6654	GEN652906 1-G09_006IS_3 0.6900
FDNS	00NR	3	25SP	G15_076	FROM->TO	GRPRAR1-LNX3345.00 - HOLT.CO3 345.00 345KV CKT 1	720	720	0.0405	102.6412	GEN659273 2-GROTON SYNC COND
FDNS	00NR	3	25SP	G15_076	FROM->TO	GRPRAR1-LNX3345.00 - HOLT.CO3 345.00 345KV CKT 1	720	720	0.0405	102.6412	GEN659294 1-WILTONCOL9
FDNS	00NR	3	25SP	G15_076	FROM->TO	GRPRAR1-LNX3345.00 - HOLT.CO3 345.00 345KV CKT 1	720	720	0.04051	102.6333	OAHE - SULLEY BUTTE 230KV CKT 1
FDNS	00NR	3	20SP	G15_076	FROM->TO	GRPRAR1-LNX3345.00 - HOLT.CO3 345.00 345KV CKT 1	720	720	0.04018	102.6292	GEN652543 3-BIG BEND
FDNS	00NR	3	25SP	G15_076	FROM->TO	GRPRAR1-LNX3345.00 - HOLT.CO3 345.00 345KV CKT 1	720	720	0.04059	102.618	ANTELOP-LNX3345.00 - ANTELOPE VALLEY 345KV CKT Z
FDNS	00NR	3	25SP	G15_076	FROM->TO	GRPRAR1-LNX3345.00 - HOLT.CO3 345.00 345KV CKT 1	720	720	0.04126	102.6138	AXTELL - POST ROCK 345KV CKT 1
FDNS	00NR	3	25SP	G15_076	FROM->TO	GRPRAR1-LNX3345.00 - HOLT.CO3 345.00 345KV CKT 1	720	720	0.0405	102.6	GEN615052 1-CAMBRIDGE GENERATING STATION
FDNS	00NR	3	25SP	G15_076	FROM->TO	GRPRAR1-LNX3345.00 - HOLT.CO3 345.00 345KV CKT 1	720	720	0.0405	102.5811	GEN659031 1-G12_014IS_4 0.6900
FDNS	00NR	3	20SP	G15_076	FROM->TO	GRPRAR1-LNX3345.00 - HOLT.CO3 345.00 345KV CKT 1	720	720	0.04018	102.5671	COYOTE 345/24.0KV TRANSFORMER CKT 1
FDNS	00NR	3	25SP	G15_076	FROM->TO	GRPRAR1-LNX3345.00 - HOLT.CO3 345.00 345KV CKT 1	720	720	0.0405	102.5642	GEN 10648 1-G830_GEN 0.6900
FDNS	00NR	3	25SP	G15_076	FROM->TO	GRPRAR1-LNX3345.00 - HOLT.CO3 345.00 345KV CKT 1	720	720	0.0405	102.5599	GEN659192 6-LYNN
FDNS	00NR	3	25SP	G15_076	FROM->TO	GRPRAR1-LNX3345.00 - HOLT.CO3 345.00 345KV CKT 1	720	720	0.0405	102.5584	GEN659162 4-RED WLCK
FDNS	00NR	3	25SP	G15_076	FROM->TO	GRPRAR1-LNX3345.00 - HOLT.CO3 345.00 345KV CKT 1	720	720	0.0405	102.5584	GEN659163 5-BLACK WDCK
FDNS	00NR	3	25SP	G15_076	FROM->TO	GRPRAR1-LNX3345.00 - HOLT.CO3 345.00 345KV CKT 1	720	720	0.0405	102.5549	GEN660016 1-B_H WIND 0.7000
FDNS	00NR	3	20SP	G15_076	FROM->TO	GRPRAR1-LNX3345.00 - HOLT.CO3 345.00 345KV CKT 1	720	720	0.04018	102.547	GEN659194 1-NDPRAIRWND1W0.6900
FDNS	00NR	3	20SP	G15_076	FROM->TO	GRPRAR1-LNX3345.00 - HOLT.CO3 345.00 345KV CKT 1	720	720	0.04018	102.5445	GEN659010 4-G07_027IS_2 0.6900
FDNS	00NR	3	25SP	G15_076	FROM->TO	GRPRAR1-LNX3345.00 - HOLT.CO3 345.00 345KV CKT 1	720	720	0.0405	102.5322	GEN615021 1-GRE-ER 14G 16.000
FDNS	00NR	3	20SP	G15_076	FROM->TO	GRPRAR1-LNX3345.00 - HOLT.CO3 345.00 345KV CKT 1	720	720	0.04018	102.5306	GEN652460 4-GARRISON
FDNS	00NR	3	20SP	G15_076	FROM->TO	GRPRAR1-LNX3345.00 - HOLT.CO3 345.00 345KV CKT 1	720	720	0.04018	102.5305	GEN652461 5-GARRISON
FDNS	00NR	3	25SP	G15_076	FROM->TO	GRPRAR1-LNX3345.00 - HOLT.CO3 345.00 345KV CKT 1	720	720	0.0405	102.4982	GEN615015 1-GRE-SPRITWDG13.200
FDNS	00NR	3	20SP	G15_076	FROM->TO	GRPRAR1-LNX3345.00 - HOLT.CO3 345.00 345KV CKT 1	720	720	0.0402	102.4947	GLENHAM - L3 HAWDON 230KV CKT 1
FDNS	00NR	3	20SP	G15_076	FROM->TO	GRPRAR1-LNX3345.00 - HOLT.CO3 345.00 345KV CKT 1	720	720	0.04018	102.4909	GEN652559 1-OAHE
FDNS	00NR	3	20SP	G15_076	FROM->TO	GRPRAR1-LNX3345.00 - HOLT.CO3 345.00 345KV CKT 1	720	720	0.04018	102.4774	GEN652907 1-G09_007IS_3 0.6900
FDNS	00NR	3	20SP	G15_076	FROM->TO	GRPRAR1-LNX3345.00 - HOLT.CO3 345.00 345KV CKT 1	720	720	0.04018	102.4731	GEN652459 3-GARRISON
FDNS	00NR	3	20SP	G15_076	FROM->TO	GRPRAR1-LNX3345.00 - HOLT.CO3 345.00 345KV CKT 1	720	720	0.04018	102.473	GEN652457 1-GARRISON
FDNS	00NR	3	20SP	G15_076	FROM->TO	GRPRAR1-LNX3345.00 - HOLT.CO3 345.00 345KV CKT 1	720	720	0.04018	102.473	GEN652458 2-GARRISON
FDNS	00NR	3	25SP	G15_076	FROM->TO	GRPRAR1-LNX3345.00 - HOLT.CO3 345.00 345KV CKT 1	720	720	0.0405	102.4688	GEN657705 X-DRAYTON
FDNS	00NR	3	25SP	G15_076	FROM->TO	GRPRAR1-LNX3345.00 - HOLT.CO3 345.00 345KV CKT 1	720	720	0.04051	102.4656	SULLEY BUTTE - SULLYBT-LNX3230.00 230KV CKT Z
FDNS	00NR	3	25SP	G15_076	FROM->TO	GRPRAR1-LNX3345.00 - HOLT.CO3 345.00 345KV CKT 1	720	720	0.04051	102.4655	SULLYBT-LNX3230.00 - WHITLOK 230KV CKT 1
FDNS	00NR	3	20SP	G15_076	FROM->TO	GRPRAR1-LNX3345.00 - HOLT.CO3 345.00 345KV CKT 1	720	720	0.04018	102.446	GEN563342 1-G15098_3 0.6900
FDNS	00NR	3	25SP	G15_076	FROM->TO	GRPRAR1-LNX3345.00 - HOLT.CO3 345.00 345KV CKT 1	720	720	0.03644	102.4316	DIXONCO 230.00 - TWIN CHURCH 230KV CKT 1
FDNS	00NR	3	25SP	G15_076	FROM->TO	GRPRAR1-LNX3345.00 - HOLT.CO3 345.00 345KV CKT 1	720	720	0.0405	102.4286	BISONMP4 230.00 - SQUARE BUTTE 230KV CKT 1
FDNS	00NR	3	20SP	G15_076	FROM->TO	GRPRAR1-LNX3345.00 - HOLT.CO3 345.00 345KV CKT 1	720	720	0.04018	102.4173	GEN659403 1-NDSUNFLWR W0.6900
FDNS	00NR	3	25SP	G15_076	FROM->TO	GRPRAR1-LNX3345.00 - HOLT.CO3 345.00 345KV CKT 1	720	720	0.04051	102.4098	P12:230:UMZB:# 114 #: SB IN SD. SB-WK-GH
FDNS	00NR	3	25SP	G15_076	FROM->TO	GRPRAR1-LNX3345.00 - HOLT.CO3 345.00 345KV CKT 1	720	720	0.04051	102.4098	P12:230:UMZB:# 117 #: WK IN SD. SB-WK-GH
FDNS	00NR	3	20SP	G15_076	FROM->TO	GRPRAR1-LNX3345.00 - HOLT.CO3 345.00 345KV CKT 1	720	720	0.04018	102.4077	GEN652542 1-BIG BEND
FDNS	00NR	3	25SP	G15_076	FROM->TO	GRPRAR1-LNX3345.00 - HOLT.CO3 345.00 345KV CKT 1	720	720	0.0405	102.3785	GEN659353 1-DEERCREK CTG18.000
FDNS	00NR	3	25SP	G15_076	FROM->TO	GRPRAR1-LNX3345.00 - HOLT.CO3 345.00 345KV CKT 1	720	720	0.0405	102.3784	GEN600067 9-HIGH BRIDGE
FDNS	00NR	3	25SP	G15_076	FROM->TO	GRPRAR1-LNX3345.00 - HOLT.CO3 345.00 345KV CKT 1	720	720	0.0405	102.3774	GEN659354 1-DEERCREK STG18.000
FDNS	00NR	3	25SP	G15_076	FROM->TO	GRPRAR1-LNX3345.00 - HOLT.CO3 345.00 345KV CKT 1	720	720	0.0405	102.3586	GEN672303 3-BOUNDARY DAM GENERATOR 3
FDNS	00NR	3	25SP	G15_076	FROM->TO	GRPRAR1-LNX3345.00 - HOLT.CO3 345.00 345KV CKT 1	720	720	0.0405	102.3586	GEN672304 4-BOUNDARY DAM GENERATOR 4
FDNS	00NR	3	25SP	G15_076	FROM->TO	GRPRAR1-LNX3345.00 - HOLT.CO3 345.00 345KV CKT 1	720	720	0.0405	102.3586	GEN672305 5-BOUNDARY DAM GENERATOR 5
FDNS	00NR	3	25SP	G15_076	FROM->TO	GRPRAR1-LNX3345.00 - HOLT.CO3 345.00 345KV CKT 1	720	720	0.04051	102.3581	GLENHAM - WHITLOK 230KV CKT 1
FDNS	00NR	3	25SP	G15_076	FROM->TO	GRPRAR1-LNX3345.00 - HOLT.CO3 345.00 345KV CKT 1	720	720	0.04206	102.342	G15061_T 345.00 - SETAB 345KV CKT 1
FDNS	00NR	3	20SP	G15_076	FROM->TO	GRPRAR1-LNX3345.00 - HOLT.CO3 345.00 345KV CKT 1	720	720	0.04222	102.3361	MCCOOL - MOORE 345KV CKT 1
FDNS	00NR	3	25SP	G15_076	FROM->TO	GRPRAR1-LNX3345.00 - HOLT.CO3 345.00 345KV CKT 1	720	720	0.042	102.3351	GERALD GENTLEMAN STATION - RED WILLOW 345KV CKT 1
FDNS	00NR	3	25SP	G15_076	FROM->TO	GRPRAR1-LNX3345.00 - HOLT.CO3 345.00 345KV CKT 1	720	720	0.0405	102.3277	GEN672356 1-FUT-WL1X 18.000
FDNS	00NR	3	20SP	G15_076	FROM->TO	GRPRAR1-LNX3345.00 - HOLT.CO3 345.00 345KV CKT 1	720	720	0.04018	102.3231	STANTON 230/18.0KV TRANSFORMER CKT 1
FDNS	00NR	3	25SP	G15_076	FROM->TO	GRPRAR1-LNX3345.00 - HOLT.CO3 345.00 345KV CKT 1	720	720	0.0405	102.2967	GEN672389 1-FUT-SW1X 18.000
FDNS	00NR	3	25SP	G15_076	FROM->TO	GRPRAR1-LNX3345.00 - HOLT.CO3 345.00 345KV CKT 1	720	720	0.0405	102.2879	GEN672392 1-NBECGT1G 18.000
FDNS	00NR	3	25SP	G15_076	FROM->TO	GRPRAR1-LNX3345.00 - HOLT.CO3 345.00 345KV CKT 1	720	720	0.04204	102.2727	MISSION - WITTEN 115KV CKT 1
FDNS	00NR	3	20SP	G15_076	FROM->TO	GRPRAR1-LNX3345.00 - HOLT.CO3 345.00 345KV CKT 1	720	720	0.04018	102.2649	SQUARE BUTTE - YNG2 4 230.00 230KV CKT 1
FDNS	00NR	3	20SP	G15_076	FROM->TO	GRPRAR1-LNX3345.00 - HOLT.CO3 345.00 345KV CKT 1	720	720	0.04018	102.2644	YNG2 4 230.00 230/20.0KV TRANSFORMER CKT 1
FDNS	00NR	3	25SP	G15_076	FROM->TO	GRPRAR1-LNX3345.00 - HOLT.CO3 345.00 345KV CKT 1	720	720	0.04198	102.2433	G15088_T 345.00 - MOORE 345KV CKT 1
FDNS	00NR	3	25SP	G15_076	FROM->TO	GRPRAR1-LNX3345.00 - HOLT.CO3 345.00 345KV CKT 1	720	720	0.0433	102.2398	MINGO - RED WILLOW 345KV CKT 1
FDNS	00NR	3	25SP	G15_076	FROM->TO	GRPRAR1-LNX3345.00 - HOLT.CO3 345.00 345KV CKT 1	720	720	0.0433	102.2398	MINGO - RED WILLOW 345KV CKT 1
FDNS	00NR	3	25SP	G15_076	FROM->TO	GRPRAR1-LNX3345.00 - HOLT.CO3 345.00 345KV CKT 1	720	720	0.0405	102.2274	GEN662101 1-WESSINGTON190.5750
FDNS	00NR	3	25SP	G15_076	FROM->TO	GRPRAR1-LNX3345.00 - HOLT.CO3 345.00 345KV CKT 1	720	720	0.0405	102.1885	GEN681542 6-JP MADGETT
FDNS	00NR	3	25SP	G15_076	FROM->TO	GRPRAR1-LNX3345.00 - HOLT.CO3 345.00 345KV CKT 1	720	720	0.0405	102.1658	GEN910006 1-G12_012IS_3 0.6900
FDNS	00NR	3	25SP	G15_076	FROM->TO	GRPRAR1-LNX3345.00 - HOLT.CO3 345.00 345KV CKT 1	720	720	0.0405	102.1391	CENTER 230/22.0KV TRANSFORMER CKT 1
FDNS	00NR	3	20SP	G15_076	FROM->TO	GRPRAR1-LNX3345.00 - HOLT.CO3 345.00 345KV CKT 1	720	720	0.04018	102.0373	GEN659411 1-CAMPBLCNTY W0.6900
FDNS	00NR	3	25SP	G15_076	FROM->TO	GRPRAR1-LNX3345.00 - HOLT.CO3 345.00 345KV CKT 1	720	720	0.04616	102.0297	ANTELOPE 3345.00 (ANTELOPE T1) 345/115/13.8KV TRANSFORMER CKT 1
FDNS	00NR	3	25SP	G15_076	FROM->TO	GRPRAR1-LNX3345.00 - HOLT.CO3 345.00 345KV CKT 1	720	720	0.03471	102.0025	HOSKINS - SHELL CREEK 345KV CKT 1
FDNS	00NR	3	25SP	G15_076	FROM->TO	GRPRAR1-LNX3345.00 - HOLT.CO3 345.00 345KV CKT 1	720	720	0.0405	101.9666	GEN659289 1-DAYCNTYWND W0.6900
FDNS	00NR	3	20SP	G15_076	FROM->TO	GRPRAR1-LNX3345.00 - HOLT.CO3 345.00 345KV CKT 1	720	720	0.04018	101.9635	GEN600004 2-PRAIRIE ISLAND G2
FDNS	00NR	3	20SP	G15_076	FROM->TO	GRPRAR1-LNX3345.00 - HOLT.CO3 345.00 345KV CKT 1	720	720	0.04018	101.9597	GEN600003 1-PRAIRIE ISLAND G1
FDNS	00NR	3	25SP	G15_076	FROM->TO	GRPRAR1-LNX3345.00 - HOLT.CO3 345.00 345KV CKT 1	720	720	0.0421	101.9503	AXTELL - SWEETWATER 345KV CKT 1
FDNS	00NR	3	25SP	G15_076	FROM->TO	GRPRAR1-LNX3345.00 - HOLT.CO3 345.00 345KV CKT 1	720	720	0.0405	101.93	GEN563312 1-G15097_3 0.6900
FDNS	00NR	3	20SP	G15_076	FROM->TO	GRPRAR1-LNX3345.00 - HOLT.CO3 345.00 345KV CKT 1	720	720	0.04018	101.9082	GEN672321 1-SHAND GENERATOR 1
FDNS	00NR	3	25SP	G15_076	FROM->TO	GRPRAR1-LNX3345.00 - HOLT.CO3 345.00 345KV CKT 1	720	720	0.04272	101.896	MCCOOL - MOORE 345KV CKT 1
FDNS	00NR	3	25SP	G15_076	FROM->TO	GRPRAR1-LNX3345.00 - HOLT.CO3 345.00 345KV CKT 1	720	720	0.0405	101.8782	GEN659018 1-G14_003IS_3 0.6900
FDNS	00NR	3	25SP	G15_076	FROM->TO	GRPRAR1-LNX3345.00 - HOLT.CO3 345.00 345KV CKT 1	720	720	0.0405	101.8713	GEN652906 1-G09_006IS_3 0.6900
FDNS	00NR	3	20SP	G15_076	FROM->TO	GRPRAR1-LNX3345.00 - HOLT.CO3 345.00 345KV CKT 1	720	720	0.04018	101.8477	GEN672310 1-POPLAR RIVER GENERATOR 1
FDNS	00NR	3	20SP	G15_076	FROM->TO	GRPRAR1-LNX3345.00 - HOLT.CO3 345.00 345KV CKT 1	720	720	0.04018	101.8476	GEN672311 2-POPLAR RIVER GENERATOR 2

SOLUTION	GROUP	SCENARIO	SEASON	SOURCE	DIRECTION	MONITORED ELEMENT	RATEA (MVA)	RATEB(MVA)	TDF	TC%LOADING (% MVA)	CONTINGENCY
FDNS	00NR	3	17SP	G15_076	FROM->TO	GRPRAR1-LNX3345.00 - HOLT.CO3 345.00 345KV CKT 1	720	720	0.04188	101.8428	FTTHOM1-LNX3345.00 - LELAND2-LNX3345.00 345KV CKT 1
FDNS	00NR	3	20SP	G15_076	FROM->TO	GRPRAR1-LNX3345.00 - HOLT.CO3 345.00 345KV CKT 1	720	720	0.04018	101.8297	GEN672306 6-BOUNDARY DAM GENERATOR 6
FDNS	00NR	3	20SP	G15_076	FROM->TO	GRPRAR1-LNX3345.00 - HOLT.CO3 345.00 345KV CKT 1	720	720	0.04018	101.8116	GEN659296 2-SDPRAIRWND1W0.6900
FDNS	00NR	3	20SP	G15_076	FROM->TO	GRPRAR1-LNX3345.00 - HOLT.CO3 345.00 345KV CKT 1	720	720	0.04018	101.7944	RCDC EAST 4230.00 - RED CEDAR DC 230KV CKT 1
FDNS	00NR	3	20SP	G15_076	FROM->TO	GRPRAR1-LNX3345.00 - HOLT.CO3 345.00 345KV CKT 1	720	720	0.04019	101.7864	P12:230:UMZB:# 112 #: NU IN SD. NU-RCDC & DRY CREEK XFMR
FDNS	00NR	3	25SP	G15_076	FROM->TO	GRPRAR1-LNX3345.00 - HOLT.CO3 345.00 345KV CKT 1	720	720	0.0405	101.7555	GEN659010 4-G07_027IS_2 0.6900
FDNS	00NR	3	25SP	G15_076	FROM->TO	GRPRAR1-LNX3345.00 - HOLT.CO3 345.00 345KV CKT 1	720	720	0.0405	101.7502	GEN659194 1-NDPRAIRWND1W0.6900
FDNS	00NR	3	25SP	G15_076	FROM->TO	GRPRAR1-LNX3345.00 - HOLT.CO3 345.00 345KV CKT 1	720	720	0.0405	101.7385	GEN652460 4-GARRISON
FDNS	00NR	3	25SP	G15_076	FROM->TO	GRPRAR1-LNX3345.00 - HOLT.CO3 345.00 345KV CKT 1	720	720	0.0405	101.7381	GEN652461 5-GARRISON
FDNS	00NR	3	25SP	G15_076	FROM->TO	GRPRAR1-LNX3345.00 - HOLT.CO3 345.00 345KV CKT 1	720	720	0.04051	101.7102	GLENHAM - L3 HAWDON 230KV CKT 1
FDNS	00NR	3	20SP	G15_076	FROM->TO	GRPRAR1-LNX3345.00 - HOLT.CO3 345.00 345KV CKT 1	720	720	0.04018	101.6972	GEN615010 1-STANTON4
FDNS	00NR	3	25SP	G15_076	FROM->TO	GRPRAR1-LNX3345.00 - HOLT.CO3 345.00 345KV CKT 1	720	720	0.0405	101.6837	GEN652907 1-G09_007IS_3 0.6900
FDNS	00NR	3	25SP	G15_076	FROM->TO	GRPRAR1-LNX3345.00 - HOLT.CO3 345.00 345KV CKT 1	720	720	0.0405	101.6817	GEN652458 2-GARRISON
FDNS	00NR	3	25SP	G15_076	FROM->TO	GRPRAR1-LNX3345.00 - HOLT.CO3 345.00 345KV CKT 1	720	720	0.0405	101.6816	GEN652457 1-GARRISON
FDNS	00NR	3	25SP	G15_076	FROM->TO	GRPRAR1-LNX3345.00 - HOLT.CO3 345.00 345KV CKT 1	720	720	0.0405	101.6816	GEN652459 3-GARRISON
FDNS	00NR	3	17SP	G15_076	FROM->TO	GRPRAR1-LNX3345.00 - HOLT.CO3 345.00 345KV CKT 1	720	720	0.04188	101.6789	P12:345:UMZB:# 108 #: LOS FT IN ND. LOS FT
FDNS	00NR	3	17SP	G15_076	FROM->TO	GRPRAR1-LNX3345.00 - HOLT.CO3 345.00 345KV CKT 1	720	720	0.04188	101.6699	FT THOMPSON - FTTHOM1-LNX3345.00 345KV CKT Z
FDNS	00NR	3	25SP	G15_076	FROM->TO	GRPRAR1-LNX3345.00 - HOLT.CO3 345.00 345KV CKT 1	720	720	0.0394	101.6608	HIGHLND 3 345.00 - OBRIEN 3 345.00 345KV CKT 1
FDNS	00NR	3	25SP	G15_076	FROM->TO	GRPRAR1-LNX3345.00 - HOLT.CO3 345.00 345KV CKT 1	720	720	0.0405	101.6413	GEN563342 1-G15098_3 0.6900
FDNS	00NR	3	25SP	G15_076	FROM->TO	GRPRAR1-LNX3345.00 - HOLT.CO3 345.00 345KV CKT 1	720	720	0.0405	101.6319	GEN652543 3-BIG BEND
FDNS	00NR	3	25SP	G15_076	FROM->TO	GRPRAR1-LNX3345.00 - HOLT.CO3 345.00 345KV CKT 1	720	720	0.0405	101.6241	GEN659403 1-NDSUNFLWR W0.6900
FDNS	00NR	3	25SP	G15_076	FROM->TO	GRPRAR1-LNX3345.00 - HOLT.CO3 345.00 345KV CKT 1	720	720	0.0405	101.6238	GEN652542 1-BIG BEND
FDNS	00NR	3	20SP	G15_076	FROM->TO	GRPRAR1-LNX3345.00 - HOLT.CO3 345.00 345KV CKT 1	720	720	0.04018	101.6138	GEN600006 1-AS KING
FDNS	00NR	3	20SP	G15_076	FROM->TO	GRPRAR1-LNX3345.00 - HOLT.CO3 345.00 345KV CKT 1	720	720	0.04018	101.5995	GEN659453 1-GI1414GEN W0.6900
FDNS	00NR	3	20SP	G15_076	FROM->TO	GRPRAR1-LNX3345.00 - HOLT.CO3 345.00 345KV CKT 1	720	720	0.04018	101.598	GEN563302 1-G15096_3 0.6900
FDNS	00NR	3	17SP	G15_076	FROM->TO	GRPRAR1-LNX3345.00 - HOLT.CO3 345.00 345KV CKT 1	720	720	0.04188	101.5841	LELAND OLDS - LELAND2-LNX3345.00 345KV CKT Z
FDNS	00NR	3	20SP	G15_076	FROM->TO	GRPRAR1-LNX3345.00 - HOLT.CO3 345.00 345KV CKT 1	720	720	0.04018	101.4986	GEN652556 2-OAHE
FDNS	00NR	3	20SP	G15_076	FROM->TO	GRPRAR1-LNX3345.00 - HOLT.CO3 345.00 345KV CKT 1	720	720	0.04018	101.4986	GEN652557 4-OAHE
FDNS	00NR	3	20SP	G15_076	FROM->TO	GRPRAR1-LNX3345.00 - HOLT.CO3 345.00 345KV CKT 1	720	720	0.04018	101.4986	GEN652558 6-OAHE
FDNS	00NR	3	20SP	G15_076	FROM->TO	GRPRAR1-LNX3345.00 - HOLT.CO3 345.00 345KV CKT 1	720	720	0.04018	101.4926	GEN659141 1-K10215A
FDNS	00NR	3	25SP	G15_076	FROM->TO	GRPRAR1-LNX3345.00 - HOLT.CO3 345.00 345KV CKT 1	720	720	0.0405	101.4795	STANTON 230/18.0KV TRANSFORMER CKT 1
FDNS	00NR	3	20SP	G15_076	FROM->TO	GRPRAR1-LNX3345.00 - HOLT.CO3 345.00 345KV CKT 1	720	720	0.04018	101.4639	GEN659110 1-LELAND OLDS UNIT1
FDNS	00NR	3	20SP	G15_076	FROM->TO	GRPRAR1-LNX3345.00 - HOLT.CO3 345.00 345KV CKT 1	720	720	0.04018	101.3112	GEN652173 1-G09_001IS_2 0.6900
FDNS	00NR	3	25SP	G15_076	FROM->TO	GRPRAR1-LNX3345.00 - HOLT.CO3 345.00 345KV CKT 1	720	720	0.0405	101.3083	GEN652559 1-OAHE
FDNS	00NR	3	25SP	G15_076	FROM->TO	GRPRAR1-LNX3345.00 - HOLT.CO3 345.00 345KV CKT 1	720	720	0.0405	101.2496	GEN659411 1-CAMPBLCNTY W0.6900
FDNS	00NR	3	20SP	G15_076	FROM->TO	GRPRAR1-LNX3345.00 - HOLT.CO3 345.00 345KV CKT 1	720	720	0.04018	101.0909	GEN657749 1-YOUNG 1 GENERATOR
FDNS	00NR	3	25SP	G15_076	FROM->TO	GRPRAR1-LNX3345.00 - HOLT.CO3 345.00 345KV CKT 1	720	720	0.0405	101.0895	SQUARE BUTTE - YNG2 4 230.00 230KV CKT 1
FDNS	00NR	3	20SP	G15_076	FROM->TO	GRPRAR1-LNX3345.00 - HOLT.CO3 345.00 345KV CKT 1	720	720	0.04215	101.0535	GRAND ISLAND - MCCOOL 345KV CKT 1
FDNS	00NR	3	25SP	G15_076	FROM->TO	GRPRAR1-LNX3345.00 - HOLT.CO3 345.00 345KV CKT 1	720	720	0.0405	101.0529	GEN600004 2-PRAIRIE ISLAND G2
FDNS	00NR	3	25SP	G15_076	FROM->TO	GRPRAR1-LNX3345.00 - HOLT.CO3 345.00 345KV CKT 1	720	720	0.0405	101.0487	GEN600003 1-PRAIRIE ISLAND G1
FDNS	00NR	3	25SP	G15_076	FROM->TO	GRPRAR1-LNX3345.00 - HOLT.CO3 345.00 345KV CKT 1	720	720	0.0405	101.0322	GEN672310 1-POPLAR RIVER GENERATOR 1
FDNS	00NR	3	25SP	G15_076	FROM->TO	GRPRAR1-LNX3345.00 - HOLT.CO3 345.00 345KV CKT 1	720	720	0.0405	101.0321	GEN672311 2-POPLAR RIVER GENERATOR 2
FDNS	00NR	3	25SP	G15_076	FROM->TO	GRPRAR1-LNX3345.00 - HOLT.CO3 345.00 345KV CKT 1	720	720	0.0405	101.0295	GEN659296 2-SDPRAIRWND1W0.6900
FDNS	00NR	3	25SP	G15_076	FROM->TO	GRPRAR1-LNX3345.00 - HOLT.CO3 345.00 345KV CKT 1	720	720	0.0405	101.0196	GEN672321 1-SHAND GENERATOR 1
FDNS	00NR	3	20SP	G15_076	FROM->TO	GRPRAR1-LNX3345.00 - HOLT.CO3 345.00 345KV CKT 1	720	720	0.04018	100.9897	GEN659407 1-ANTELPHILLSW0.6900
FDNS	00NR	3	25SP	G15_076	FROM->TO	GRPRAR1-LNX3345.00 - HOLT.CO3 345.00 345KV CKT 1	720	720	0.0405	100.9754	P12:230:UMZB:# 112 #: NU IN SD. NU-RCDC & DRY CREEK XFMR
FDNS	00NR	3	25SP	G15_076	FROM->TO	GRPRAR1-LNX3345.00 - HOLT.CO3 345.00 345KV CKT 1	720	720	0.0405	100.9666	RCDC EAST 4230.00 - RED CEDAR DC 230KV CKT 1
FDNS	00NR	3	25SP	G15_076	FROM->TO	GRPRAR1-LNX3345.00 - HOLT.CO3 345.00 345KV CKT 1	720	720	0.0405	100.9376	GEN672306 6-BOUNDARY DAM GENERATOR 6
FDNS	00NR	3	25SP	G15_076	FROM->TO	GRPRAR1-LNX3345.00 - HOLT.CO3 345.00 345KV CKT 1	720	720	0.0405	100.8219	GEN615010 1-STANTON4
FDNS	00NR	3	25SP	G15_076	FROM->TO	GRPRAR1-LNX3345.00 - HOLT.CO3 345.00 345KV CKT 1	720	720	0.0405	100.7955	GEN659453 1-GI1414GEN W0.6900
FDNS	00NR	3	25SP	G15_076	FROM->TO	GRPRAR1-LNX3345.00 - HOLT.CO3 345.00 345KV CKT 1	720	720	0.0405	100.7936	GEN563302 1-G15096_3 0.6900
FDNS	00NR	3	25SP	G15_076	FROM->TO	GRPRAR1-LNX3345.00 - HOLT.CO3 345.00 345KV CKT 1	720	720	0.0405	100.7102	GEN652557 4-OAHE
FDNS	00NR	3	25SP	G15_076	FROM->TO	GRPRAR1-LNX3345.00 - HOLT.CO3 345.00 345KV CKT 1	720	720	0.0405	100.7102	GEN652558 6-OAHE
FDNS	00NR	3	25SP	G15_076	FROM->TO	GRPRAR1-LNX3345.00 - HOLT.CO3 345.00 345KV CKT 1	720	720	0.0405	100.7101	GEN652556 2-OAHE
FDNS	00NR	3	25SP	G15_076	FROM->TO	GRPRAR1-LNX3345.00 - HOLT.CO3 345.00 345KV CKT 1	720	720	0.0405	100.7014	GEN600006 1-AS KING
FDNS	00NR	3	20SP	G15_076	FROM->TO	GRPRAR1-LNX3345.00 - HOLT.CO3 345.00 345KV CKT 1	720	720	0.04018	100.6857	GEN600005 1-MONTICELLO
FDNS	00NR	3	25SP	G15_076	FROM->TO	GRPRAR1-LNX3345.00 - HOLT.CO3 345.00 345KV CKT 1	720	720	0.0405	100.677	GEN659141 1-K10215A
FDNS	00NR	3	25SP	G15_076	FROM->TO	GRPRAR1-LNX3345.00 - HOLT.CO3 345.00 345KV CKT 1	720	720	0.0405	100.6307	GEN659110 1-LELAND OLDS UNIT1
FDNS	00NR	3	25SP	G15_076	FROM->TO	GRPRAR1-LNX3345.00 - HOLT.CO3 345.00 345KV CKT 1	720	720	0.04263	100.5883	GRAND ISLAND - MCCOOL 345KV CKT 1
FDNS	00NR	3	25SP	G15_076	FROM->TO	GRPRAR1-LNX3345.00 - HOLT.CO3 345.00 345KV CKT 1	720	720	0.0405	100.5331	GEN652173 1-G09_001IS_2 0.6900
FDNS	00NR	3	20SP	G15_076	FROM->TO	GRPRAR1-LNX3345.00 - HOLT.CO3 345.00 345KV CKT 1	720	720	0.04018	100.4508	GEN600000 1-SHERBURNECNTY G1
FDNS	00NR	3	25SP	G15_076	FROM->TO	GRPRAR1-LNX3345.00 - HOLT.CO3 345.00 345KV CKT 1	720	720	0.0405	100.2063	CLAY BOSWELL 230/20.9KV TRANSFORMER CKT 1
FDNS	00NR	3	20SP	G15_076	FROM->TO	GRPRAR1-LNX3345.00 - HOLT.CO3 345.00 345KV CKT 1	720	720	0.04018	100.1932	GEN600001 2-SHERBURNE CNTY G2
FDNS	00NR	3	25SP	G15_076	FROM->TO	GRPRAR1-LNX3345.00 - HOLT.CO3 345.00 345KV CKT 1	720	720	0.0405	100.1915	GEN659407 1-ANTELPHILLSW0.6900
FDNS	00NR	3	25SP	G15_076	FROM->TO	GRPRAR1-LNX3345.00 - HOLT.CO3 345.00 345KV CKT 1	720	720	0.0405	100.1747	GEN657749 1-YOUNG 1 GENERATOR
FDNS	00NR	3	20SP	G15_076	FROM->TO	GRPRAR1-LNX3345.00 - HOLT.CO3 345.00 345KV CKT 1	720	720	0.04018	100.056	GEN661015 1-COYOTE
FDNS	00NR	3	20SP	G15_076	FROM->TO	GRPRAR1-LNX3345.00 - HOLT.CO3 345.00 345KV CKT 1	720	720	0.04018	100	GEN620315 1-BIG STONE GEN
FDNS	00NR	3	25SP	G15_076	FROM->TO	GRPRAR1-LNX3345.00 - HOLT.CO3 345.00 345KV CKT 1	720	720	0.0405	99.9	GEN600005 1-MONTICELLO
FDNS	00NR	3	20SP	G15_076	FROM->TO	GRPRAR1-LNX3345.00 - HOLT.CO3 345.00 345KV CKT 1	720	720	0.04018	99.6	GEN600002 3-SHERBURNE CNTY G3
FDNS	00NR	3	25SP	G15_076	FROM->TO	GRPRAR1-LNX3345.00 - HOLT.CO3 345.00 345KV CKT 1	720	720	0.0405	99.6	GEN600000 1-SHERBURNECNTY G1
FDNS	00NR	3	17SP	G15_076	TO->FROM	KELLY - MEADOWGROVE4230.00 230KV CKT 1	368	368	0.03349	105.585	GRPRAR1-LNX3345.00 - HOLT.CO3 345.00 345KV CKT 1
FDNS	00NR	3	17SP	G15_076	TO->FROM	KELLY - MEADOWGROVE4230.00 230KV CKT 1	368	368	0.03349	105.5519	GRPRAR1-LNX3345.00 - GRPRAR 345KV CKT Z
FDNS	00NR	3	17SP	G15_076	TO->FROM	SIDNEY - SIDNEY TRANSFORMER 230KV CKT 1	496	496	0.03566	106.2829	KEYSTONE - SIDNEY1-LNX3345.00 345KV CKT 1
FDNS	00NR	3	17SP	G15_076	TO->FROM	SIDNEY - SIDNEY TRANSFORMER 230KV CKT 1	496	496	0.03566	105.6764	SIDNEY - SIDNEY1-LNX3345.00 345KV CKT Z
FDNS	00NR	3	17SP	G15_076	FROM->TO	SIDNEY (SDQ KV2A) 345/230/13.8KV TRANSFORMER CKT 1	400	480	0.03566	111.8609	KEYSTONE - SIDNEY1-LNX3345.00 345KV CKT 1
FDNS	00NR	3	17SP	G15_076	FROM->TO	SIDNEY (SDQ KV2A) 345/230/13.8KV TRANSFORMER CKT 1	400	480	0.03566	111.3728	SIDNEY - SIDNEY1-LNX3345.00 345KV CKT Z
FDNS	00NR	3	17SP	G15_076	FROM->TO	SIDNEY (SDQ KV2A) 345/230/13.8KV TRANSFORMER CKT 1	400	480	0.03566	111.0342	KEYSTONE - SIDNEY1-LNX3345.00 345KV CKT 1
FDNS	00NR	3	17SP	G15_076	FROM->TO	SIDNEY (SDQ KV2A) 345/230/13.8KV TRANSFORMER CKT 1	400	480	0.03566	110.968	SIDNEY - SIDNEY1-LNX3345.00 345KV CKT Z
FDNS	00NR	3	20SP	G15_076	FROM->TO	SIDNEY (SDQ KV2A) 345/230/13.8KV TRANSFORMER CKT 1	400	480	0.0357	104.1696	KEYSTONE - SIDNEY1-LNX3345.00 345KV CKT 1

SOLUTION	GROUP	SCENARIO	SEASON	SOURCE	DIRECTION	MONITORED ELEMENT	RATEA (MVA)	RATEB(MVA)	TDF	TC%LOADING (% MVA)	CONTINGENCY
FDNS	00NR	3	20SP	G15_076	FROM->TO	SIDNEY (SDQ KV2A) 345/230/13.8KV TRANSFORMER CKT 1	400	480	0.0357	103.7549	SIDNEY - SIDNEY1-LNX3345.00 345KV CKT Z
FDNS	00NR	3	20SP	G15_076	FROM->TO	SIDNEY (SDQ KV2A) 345/230/13.8KV TRANSFORMER CKT 1	400	480	0.0357	103.543	KEYSTONE - SIDNEY1-LNX3345.00 345KV CKT 1
FDNS	00NR	3	20SP	G15_076	FROM->TO	SIDNEY (SDQ KV2A) 345/230/13.8KV TRANSFORMER CKT 1	400	480	0.0357	103.5202	SIDNEY - SIDNEY1-LNX3345.00 345KV CKT Z
FDNS	00NR	3	25SP	G15_076	FROM->TO	SIDNEY (SDQ KV2A) 345/230/13.8KV TRANSFORMER CKT 1	400	480	0.03547	103.5176	KEYSTONE - SIDNEY1-LNX3345.00 345KV CKT 1
FDNS	00NR	3	25SP	G15_076	FROM->TO	SIDNEY (SDQ KV2A) 345/230/13.8KV TRANSFORMER CKT 1	400	480	0.03547	103.0728	SIDNEY - SIDNEY1-LNX3345.00 345KV CKT Z
FDNS	00NR	3	25SP	G15_076	FROM->TO	SIDNEY (SDQ KV2A) 345/230/13.8KV TRANSFORMER CKT 1	400	480	0.03547	102.9056	KEYSTONE - SIDNEY1-LNX3345.00 345KV CKT 1
FDNS	00NR	3	25SP	G15_076	FROM->TO	SIDNEY (SDQ KV2A) 345/230/13.8KV TRANSFORMER CKT 1	400	480	0.03547	102.8515	SIDNEY - SIDNEY1-LNX3345.00 345KV CKT Z
FDNS	09ALL	3	20L	G15_076	TO->FROM	SIOUX CITY - TWIN CHURCH 230KV CKT 1	320	320	0.28307	110.304	DIXONCO 230.00 - HOSKINS 230KV CKT 1
FDNS	09ALL	3	20L	G15_076	TO->FROM	SIOUX CITY - TWIN CHURCH 230KV CKT 1	320	320	0.28817	104.9943	BELDEN 4 230.00 - RASMUSN 230KV CKT 1
FDNS	09NR	3	20L	G15_076	TO->FROM	SIOUX CITY - TWIN CHURCH 230KV CKT 1	320	320	0.27883	102.4013	DIXONCO 230.00 - HOSKINS 230KV CKT 1
FDNS	09ALL	3	20L	G15_076	TO->FROM	SIOUX CITY - TWIN CHURCH 230KV CKT 1	320	320	0.2123	101.9668	HOSKINS - RAUN 345KV CKT 1
FDNS	09ALL	3	20L	G15_076	TO->FROM	SIOUX CITY - TWIN CHURCH 230KV CKT 1	320	320	0.2123	101.9668	HOSKINS - RAUN 345KV CKT 1
FDNS	09ALL	3	17G	G15_076	TO->FROM	SIOUX CITY - TWIN CHURCH 230KV CKT 1	320	320	0.28465	101.6185	DIXONCO 230.00 - HOSKINS 230KV CKT 1
FDNS	00NR	4	17SP	G15_076	FROM->TO	COLUMEAST (COL.EAST T3) 230/115/13.8KV TRANSFORMER CKT 1	187	187	0.03789	109.4328	COLUMEAST - SHELL CREEK 345KV CKT 1
FDNS	00NR	4	17SP	G15_076	FROM->TO	COLUMEAST (COL.EAST T3) 230/115/13.8KV TRANSFORMER CKT 1	187	187	0.03789	108.7373	COLUMEAST - SHELL CREEK 345KV CKT 1
FDNS	00NR	4	20SP	G15_076	FROM->TO	COLUMEAST (COL.EAST T3) 230/115/13.8KV TRANSFORMER CKT 1	187	187	0.03827	105.9831	COLUMEAST - SHELL CREEK 345KV CKT 1
FDNS	00NR	4	20SP	G15_076	FROM->TO	COLUMEAST (COL.EAST T3) 230/115/13.8KV TRANSFORMER CKT 1	187	187	0.03827	105.2227	COLUMEAST - SHELL CREEK 345KV CKT 1
FDNS	00NR	4	25SP	G15_076	FROM->TO	COLUMEAST (COL.EAST T3) 230/115/13.8KV TRANSFORMER CKT 1	187	187	0.03786	102.5369	COLUMEAST - SHELL CREEK 345KV CKT 1
FDNS	00NR	4	16WP	G15_076	FROM->TO	COLUMEAST (COL.EAST T3) 230/115/13.8KV TRANSFORMER CKT 1	187	187	0.03888	102.2883	COLUMEAST - SHELL CREEK 345KV CKT 1
FDNS	00NR	4	25SP	G15_076	FROM->TO	COLUMEAST (COL.EAST T3) 230/115/13.8KV TRANSFORMER CKT 1	187	187	0.03786	101.8868	COLUMEAST - SHELL CREEK 345KV CKT 1
FDNS	00NR	4	16WP	G15_076	FROM->TO	COLUMEAST (COL.EAST T3) 230/115/13.8KV TRANSFORMER CKT 1	187	187	0.03888	100.7006	COLUMEAST - SHELL CREEK 345KV CKT 1
FDNS	00NR	4	20SP	G15_076	FROM->TO	DIXONCO 230.00 - HOSKINS 230KV CKT 1	320	320	0.25659	103.842	DIXONCO 230.00 - TWIN CHURCH 230KV CKT 1
FDNS	00NR	4	25SP	G15_076	FROM->TO	DIXONCO 230.00 - HOSKINS 230KV CKT 1	320	320	0.25669	103.4566	DIXONCO 230.00 - TWIN CHURCH 230KV CKT 1
FDNS	00NR	4	17SP	G15_076	FROM->TO	DIXONCO 230.00 - HOSKINS 230KV CKT 1	320	320	0.25692	103.1889	DIXONCO 230.00 - TWIN CHURCH 230KV CKT 1
FDNS	09NR	4	17G	G15_076	FROM->TO	DIXONCO 230.00 - HOSKINS 230KV CKT 1	320	320	0.25642	101.65	DIXONCO 230.00 - TWIN CHURCH 230KV CKT 1
FDNS	09NR	4	20L	G15_076	FROM->TO	DIXONCO 230.00 - HOSKINS 230KV CKT 1	320	320	0.25516	101.6345	DIXONCO 230.00 - TWIN CHURCH 230KV CKT 1
FDNS	09NR	4	17G	G15_076	FROM->TO	DIXONCO 230.00 - TWIN CHURCH 230KV CKT 1	320	320	0.20905	123.8102	DIXONCO 230.00 - HOSKINS 230KV CKT 1
FDNS	09NR	4	20L	G15_076	FROM->TO	DIXONCO 230.00 - TWIN CHURCH 230KV CKT 1	320	320	0.20993	120.1962	DIXONCO 230.00 - HOSKINS 230KV CKT 1
FDNS	09NR	4	17G	G15_076	FROM->TO	DIXONCO 230.00 - TWIN CHURCH 230KV CKT 1	320	320	0.10496	112.2247	HOSKINS - RAUN 345KV CKT 1
FDNS	09NR	4	17G	G15_076	FROM->TO	DIXONCO 230.00 - TWIN CHURCH 230KV CKT 1	320	320	0.17089	110.701	BELDEN 4 230.00 - RASMUSN 230KV CKT 1
FDNS	09NR	4	17G	G15_076	FROM->TO	DIXONCO 230.00 - TWIN CHURCH 230KV CKT 1	320	320	0.13464	108.2497	RASMUSN - SIOUX CITY 230KV CKT 1
FDNS	00NR	4	16WP	G15_076	FROM->TO	DIXONCO 230.00 - TWIN CHURCH 230KV CKT 1	320	320	0.20888	107.3303	DIXONCO 230.00 - HOSKINS 230KV CKT 1
FDNS	09NR	4	20L	G15_076	FROM->TO	DIXONCO 230.00 - TWIN CHURCH 230KV CKT 1	320	320	0.1733	106.9756	BELDEN 4 230.00 - RASMUSN 230KV CKT 1
FDNS	00NR	4	20WP	G15_076	FROM->TO	DIXONCO 230.00 - TWIN CHURCH 230KV CKT 1	320	320	0.20899	106.089	DIXONCO 230.00 - HOSKINS 230KV CKT 1
FDNS	09NR	4	17G	G15_076	FROM->TO	DIXONCO 230.00 - TWIN CHURCH 230KV CKT 1	320	320	0.10053	105.7984	P13:230-345:NPPD:NUCOR-1
FDNS	09NR	4	20L	G15_076	FROM->TO	DIXONCO 230.00 - TWIN CHURCH 230KV CKT 1	320	320	0.10879	105.1851	HOSKINS - RAUN 345KV CKT 1
FDNS	09NR	4	20L	G15_076	FROM->TO	DIXONCO 230.00 - TWIN CHURCH 230KV CKT 1	320	320	0.10879	105.1851	HOSKINS - RAUN 345KV CKT 1
FDNS	09NR	4	17G	G15_076	FROM->TO	DIXONCO 230.00 - TWIN CHURCH 230KV CKT 1	320	320	0.1596	104.2743	BELDEN - TWIN CHURCH 115KV CKT 1
FDNS	00NR	4	20SP	G15_076	FROM->TO	DIXONCO 230.00 - TWIN CHURCH 230KV CKT 1	320	320	0.20887	103.0115	DIXONCO 230.00 - HOSKINS 230KV CKT 1
FDNS	09ALL	4	16WP	G15_076	FROM->TO	DIXONCO 230.00 - TWIN CHURCH 230KV CKT 1	320	320	0.11135	102.3663	BASE CASE
FDNS	00NR	4	17SP	G15_076	FROM->TO	DIXONCO 230.00 - TWIN CHURCH 230KV CKT 1	320	320	0.20877	102.3272	DIXONCO 230.00 - HOSKINS 230KV CKT 1
FDNS	00NR	4	25SP	G15_076	FROM->TO	DIXONCO 230.00 - TWIN CHURCH 230KV CKT 1	320	320	0.20883	102.0177	DIXONCO 230.00 - HOSKINS 230KV CKT 1
FDNS	09NR	4	20L	G15_076	FROM->TO	DIXONCO 230.00 - TWIN CHURCH 230KV CKT 1	320	320	0.10268	101.968	P13:230-345:NPPD:NUCOR-1
FDNS	09ALL	4	17G	G15_076	FROM->TO	DIXONCO 230.00 - TWIN CHURCH 230KV CKT 1	320	320	0.11141	101.7781	BASE CASE
FDNS	09NR	4	20L	G15_076	FROM->TO	DIXONCO 230.00 - TWIN CHURCH 230KV CKT 1	320	320	0.13725	101.711	RASMUSN - SIOUX CITY 230KV CKT 1
FDNS	09NR	4	17G	G15_076	FROM->TO	DIXONCO 230.00 - TWIN CHURCH 230KV CKT 1	320	320	0.10053	101.6959	P13:115-230:NPPD:NUCOR-3
FDNS	09NR	4	17G	G15_076	FROM->TO	DIXONCO 230.00 - TWIN CHURCH 230KV CKT 1	320	320	0.11195	101.6058	HOSKINS - SHELL CREEK 345KV CKT 1
FDNS	09ALL	4	20WP	G15_076	FROM->TO	DIXONCO 230.00 - TWIN CHURCH 230KV CKT 1	320	320	0.11192	101.5031	BASE CASE
FDNS	09NR	4	17G	G15_076	FROM->TO	DIXONCO 230.00 - TWIN CHURCH 230KV CKT 1	320	320	0.1062	100.8084	COLUMEAST - NW68TH & HOLDREGE 345KV CKT 1
FDNS	09NR	4	17G	G15_076	FROM->TO	DIXONCO 230.00 - TWIN CHURCH 230KV CKT 1	320	320	0.1062	100.8084	COLUMEAST - NW68TH & HOLDREGE 345KV CKT 1
FDNS	09NR	4	17G	G15_076	FROM->TO	DIXONCO 230.00 - TWIN CHURCH 230KV CKT 1	320	320	0.10582	100.3324	COLUMEAST - SHELL CREEK 345KV CKT 1
FDNS	09NR	4	17G	G15_076	FROM->TO	DIXONCO 230.00 - TWIN CHURCH 230KV CKT 1	320	320	0.15201	100.0983	HOSKINS (HOSKINS T2) 345/230/13.8KV TRANSFORMER CKT 1
FDNS	09NR	4	17G	G15_076	FROM->TO	DIXONCO 230.00 - TWIN CHURCH 230KV CKT 1	320	320	0.15201	100.0983	HOSKINS (HOSKINS T2) 345/230/13.8KV TRANSFORMER CKT 1
FDNS	09NR	4	17G	G15_076	FROM->TO	DIXONCO 230.00 - TWIN CHURCH 230KV CKT 1	320	320	0.09958	99.7	FT RANDAL - SIOUX CITY 230KV CKT 1
FDNS	09NR	4	17G	G15_076	FROM->TO	DIXONCO 230.00 - TWIN CHURCH 230KV CKT 1	320	320	0.08977	99.5	RAUN - SIOUX CITY 345KV CKT 1
FDNS	00NR	4	17SP	G15_076	TO->FROM	GRPRAR1-LNX3345.00 - GRPRAR 345KV CKT Z	720	720	0.03842	120.62	P12:230:UMZB:# 116 #: ST IN SD. WSG-ST-VH
FDNS	00NR	4	17SP	G15_076	TO->FROM	GRPRAR1-LNX3345.00 - GRPRAR 345KV CKT Z	720	720	0.04601	120.3709	KELLY - MEADOWGROVE4230.00 230KV CKT 1
FDNS	00NR	4	17SP	G15_076	TO->FROM	GRPRAR1-LNX3345.00 - GRPRAR 345KV CKT Z	720	720	0.03996	119.7691	WATERTN-LNX3345.00 - WATERTOWN 345KV CKT Z
FDNS	00NR	4	17SP	G15_076	TO->FROM	GRPRAR1-LNX3345.00 - GRPRAR 345KV CKT Z	720	720	0.03996	119.7542	P12:345:UMZW:# 1747 #: WT2 IN SD. WT2-WHT LINE FAULT
FDNS	00NR	4	17SP	G15_076	TO->FROM	GRPRAR1-LNX3345.00 - GRPRAR 345KV CKT Z	720	720	0.03996	119.7141	WATERTN-LNX3345.00 - WHITE 345KV CKT 1
FDNS	00NR	4	17SP	G15_076	TO->FROM	GRPRAR1-LNX3345.00 - GRPRAR 345KV CKT Z	720	720	0.03877	119.6795	STORLA - WESSINGTON 230KV CKT 1
FDNS	00NR	4	17SP	G15_076	TO->FROM	GRPRAR1-LNX3345.00 - GRPRAR 345KV CKT Z	720	720	0.04054	119.0162	G09_001IST 345.00 - WATERTOWN 345KV CKT 1
FDNS	00NR	4	17SP	G15_076	TO->FROM	GRPRAR1-LNX3345.00 - GRPRAR 345KV CKT Z	720	720	0.03886	118.5761	HANLON - STORLA 230KV CKT 1
FDNS	00NR	4	17SP	G15_076	TO->FROM	GRPRAR1-LNX3345.00 - GRPRAR 345KV CKT Z	720	720	0.03811	117.9434	FT THOMPSON - LETCHER 230KV CKT 1
FDNS	00NR	4	17SP	G15_076	TO->FROM	GRPRAR1-LNX3345.00 - GRPRAR 345KV CKT Z	720	720	0.03811	117.9434	FT THOMPSON - LETCHER 230KV CKT 1
FDNS	00NR	4	17SP	G15_076	TO->FROM	GRPRAR1-LNX3345.00 - GRPRAR 345KV CKT Z	720	720	0.04085	117.5447	BUFFALO - JAMESTOWN 345KV CKT 1
FDNS	00NR	4	17SP	G15_076	TO->FROM	GRPRAR1-LNX3345.00 - GRPRAR 345KV CKT Z	720	720	0.03751	116.5247	FT RANDAL - G12_009IST 230.00 230KV CKT 1
FDNS	00NR	4	17SP	G15_076	TO->FROM	GRPRAR1-LNX3345.00 - GRPRAR 345KV CKT Z	720	720	0.03742	116.49	FT RANDAL - FT THOMPSON 230KV CKT 1
FDNS	00NR	4	17SP	G15_076	TO->FROM	GRPRAR1-LNX3345.00 - GRPRAR 345KV CKT Z	720	720	0.03742	116.49	FT RANDAL - FT THOMPSON 230KV CKT 1
FDNS	00NR	4	17SP	G15_076	TO->FROM	GRPRAR1-LNX3345.00 - GRPRAR 345KV CKT Z	720	720	0.04085	116.4579	CHISAGO COUNTY - FORBES 500KV CKT 1
FDNS	00NR	4	17SP	G15_076	TO->FROM	GRPRAR1-LNX3345.00 - GRPRAR 345KV CKT Z	720	720	0.03751	116.4106	FT THOMPSON - LAKE PLATT 230KV CKT 1
FDNS	00NR	4	17SP	G15_076	TO->FROM	GRPRAR1-LNX3345.00 - GRPRAR 345KV CKT Z	720	720	0.03751	116.4106	FT THOMPSON - LAKE PLATT 230KV CKT 1
FDNS	00NR	4	17SP	G15_076	TO->FROM	GRPRAR1-LNX3345.00 - GRPRAR 345KV CKT Z	720	720	0.04054	116.3859	G09_001IST 345.00 - GROTON 345KV CKT 1
FDNS	00NR	4	17SP	G15_076	TO->FROM	GRPRAR1-LNX3345.00 - GRPRAR 345KV CKT Z	720	720	0.04926	116.3368	NUNDRWD - WAYSIDE 230KV CKT 1
FDNS	00NR	4	17SP	G15_076	TO->FROM	GRPRAR1-LNX3345.00 - GRPRAR 345KV CKT Z	720	720	0.03751	116.0324	G12_009IST 230.00 - LAKE PLATT 230KV CKT 1
FDNS	00NR	4	17SP	G15_076	TO->FROM	GRPRAR1-LNX3345.00 - GRPRAR 345KV CKT Z	720	720	0.04085	115.9557	CENTER - JAMESTOWN 345KV CKT 1
FDNS	00NR	4	17SP	G15_076	TO->FROM	GRPRAR1-LNX3345.00 - GRPRAR 345KV CKT Z	720	720	0.04601	115.8442	FT RANDAL - MEADOWGROVE4230.00 230KV CKT 1
FDNS	00NR	4	17SP	G15_076	TO->FROM	GRPRAR1-LNX3345.00 - GRPRAR 345KV CKT Z	720	720	0.03965	115.7193	LETCHER - SIOUX FALLS 230KV CKT 1
FDNS	00NR	4	17SP	G15_076	TO->FROM	GRPRAR1-LNX3345.00 - GRPRAR 345KV CKT Z	720	720	0.04084	115.4811	GEN336821 1-GRAND GULF UNIT

SOLUTION	GROUP	SCENARIO	SEASON	SOURCE	DIRECTION	MONITORED ELEMENT	RATEA (MVA)	RATEB(MVA)	TDF	TC%LOADING (% MVA)	CONTINGENCY
FDNS	00NR	4	17SP	G15_076	TO->FROM	GRPRAR1-LNX3345.00 - GRPRAR 345KV CKT Z	720	720	0.04085	115.4547	BISON 3 345.00 - BUFFALO 345KV CKT 1
FDNS	00NR	4	17SP	G15_076	TO->FROM	GRPRAR1-LNX3345.00 - GRPRAR 345KV CKT Z	720	720	0.04084	115.3562	GEN635024 4-WALTER SCOTT UNIT 4
FDNS	00NR	4	17SP	G15_076	TO->FROM	GRPRAR1-LNX3345.00 - GRPRAR 345KV CKT Z	720	720	0.0392	115.2852	SPLIT ROCK - WHITE 345KV CKT 1
FDNS	00NR	4	17SP	G15_076	TO->FROM	GRPRAR1-LNX3345.00 - GRPRAR 345KV CKT Z	720	720	0.0392	115.2852	SPLIT ROCK - WHITE 345KV CKT 1
FDNS	00NR	4	17SP	G15_076	TO->FROM	GRPRAR1-LNX3345.00 - GRPRAR 345KV CKT Z	720	720	0.04084	115.0893	GEN344225 1-1CAL G1 25.000
FDNS	00NR	4	17SP	G15_076	TO->FROM	GRPRAR1-LNX3345.00 - GRPRAR 345KV CKT Z	720	720	0.04184	115.017	KEYSTONE - SIDNEY1-LNX3345.00 345KV CKT 1
FDNS	00NR	4	17SP	G15_076	TO->FROM	GRPRAR1-LNX3345.00 - GRPRAR 345KV CKT Z	720	720	0.04184	115.0048	SIDNEY - SIDNEY1-LNX3345.00 345KV CKT Z
FDNS	00NR	4	17SP	G15_076	TO->FROM	GRPRAR1-LNX3345.00 - GRPRAR 345KV CKT Z	720	720	0.04084	114.8836	GEN562714 1-G15_023_4 0.6900
FDNS	00NR	4	17SP	G15_076	TO->FROM	GRPRAR1-LNX3345.00 - GRPRAR 345KV CKT Z	720	720	0.04084	114.8836	GEN562715 1-G15_023_5 0.6900
FDNS	00NR	4	17SP	G15_076	TO->FROM	GRPRAR1-LNX3345.00 - GRPRAR 345KV CKT Z	720	720	0.04084	114.8826	GEN635023 3-WALTER SCOTT UNIT 3
FDNS	00NR	4	17SP	G15_076	TO->FROM	GRPRAR1-LNX3345.00 - GRPRAR 345KV CKT Z	720	720	0.04084	114.8453	GEN337911 1-ARKANSAS NUCLEAR ONE UNIT #2
FDNS	00NR	4	17SP	G15_076	TO->FROM	GRPRAR1-LNX3345.00 - GRPRAR 345KV CKT Z	720	720	0.04084	114.8157	GEN336153 1-WATERFORD UNIT#3
FDNS	00NR	4	17SP	G15_076	TO->FROM	GRPRAR1-LNX3345.00 - GRPRAR 345KV CKT Z	720	720	0.03972	114.8098	FT RANDAL - SIOUX CITY 230KV CKT 1
FDNS	00NR	4	17SP	G15_076	TO->FROM	GRPRAR1-LNX3345.00 - GRPRAR 345KV CKT Z	720	720	0.04055	114.7423	GROTON-LNX3 345.00 - LELAND1-LNX3345.00 345KV CKT 1
FDNS	00NR	4	17SP	G15_076	TO->FROM	GRPRAR1-LNX3345.00 - GRPRAR 345KV CKT Z	720	720	0.04055	114.6496	GROTON - GROTON-LNX3 345.00 345KV CKT Z
FDNS	00NR	4	17SP	G15_076	TO->FROM	GRPRAR1-LNX3345.00 - GRPRAR 345KV CKT Z	720	720	0.04055	114.6478	P12:345:UMZB:# 109 #: LOS GRT IN ND. LOS GRT
FDNS	00NR	4	17SP	G15_076	TO->FROM	GRPRAR1-LNX3345.00 - GRPRAR 345KV CKT Z	720	720	0.04055	114.6062	LELAND OLDS - LELAND1-LNX3345.00 345KV CKT Z
FDNS	00NR	4	17SP	G15_076	TO->FROM	GRPRAR1-LNX3345.00 - GRPRAR 345KV CKT Z	720	720	0.04116	114.564	ARROWHEAD - ARROWHEAD 230 230KV CKT 1
FDNS	00NR	4	17SP	G15_076	TO->FROM	GRPRAR1-LNX3345.00 - GRPRAR 345KV CKT Z	720	720	0.04009	114.5479	HANLON - SIOUX FALLS 230KV CKT 1
FDNS	00NR	4	17SP	G15_076	TO->FROM	GRPRAR1-LNX3345.00 - GRPRAR 345KV CKT Z	720	720	0.0415	114.5154	MISSION - ST FRANCIS 115KV CKT 1
FDNS	00NR	4	17SP	G15_076	TO->FROM	GRPRAR1-LNX3345.00 - GRPRAR 345KV CKT Z	720	720	0.0415	114.5007	P12:115:NPPD:1091:VALENTN7:MISSION7:BTB
FDNS	00NR	4	17SP	G15_076	TO->FROM	GRPRAR1-LNX3345.00 - GRPRAR 345KV CKT Z	720	720	0.04084	114.4704	GEN640010 1-GERALD GENTLEMAN STATION UNIT 1
FDNS	00NR	4	17SP	G15_076	TO->FROM	GRPRAR1-LNX3345.00 - GRPRAR 345KV CKT Z	720	720	0.04084	114.4695	GEN335831 1-RIVERBEND UNIT#1
FDNS	00NR	4	17SP	G15_076	TO->FROM	GRPRAR1-LNX3345.00 - GRPRAR 345KV CKT Z	720	720	0.04084	114.3791	GEN337910 1-ARKANSAS NUCLEAR ONE UNIT #1
FDNS	00NR	4	17SP	G15_076	TO->FROM	GRPRAR1-LNX3345.00 - GRPRAR 345KV CKT Z	720	720	0.03681	114.378	FT RANDAL - UTICA JCT 230KV CKT 1
FDNS	00NR	4	17SP	G15_076	TO->FROM	GRPRAR1-LNX3345.00 - GRPRAR 345KV CKT Z	720	720	0.0415	114.3516	HARMONY - ST FRANCIS 115KV CKT 1
FDNS	00NR	4	17SP	G15_076	TO->FROM	GRPRAR1-LNX3345.00 - GRPRAR 345KV CKT Z	720	720	0.04172	114.318	HAZLETON - MITCHLCO3 345.00 345KV CKT 1
FDNS	00NR	4	17SP	G15_076	TO->FROM	GRPRAR1-LNX3345.00 - GRPRAR 345KV CKT Z	720	720	0.04091	114.3084	ALEXMRES3 345.00 - BISON 3 345.00 345KV CKT 1
FDNS	00NR	4	17SP	G15_076	TO->FROM	GRPRAR1-LNX3345.00 - GRPRAR 345KV CKT Z	720	720	0.03912	114.2417	SIOUXCY-LNX3345.00 - SPLIT ROCK 345KV CKT 1
FDNS	00NR	4	17SP	G15_076	TO->FROM	GRPRAR1-LNX3345.00 - GRPRAR 345KV CKT Z	720	720	0.03912	114.2417	SIOUXCY-LNX3345.00 - SPLIT ROCK 345KV CKT 1
FDNS	00NR	4	17SP	G15_076	TO->FROM	GRPRAR1-LNX3345.00 - GRPRAR 345KV CKT Z	720	720	0.04084	114.2281	ELLENDALE - OAKES 230KV CKT 1
FDNS	00NR	4	17SP	G15_076	TO->FROM	GRPRAR1-LNX3345.00 - GRPRAR 345KV CKT Z	720	720	0.04084	114.2281	ELLENDALE - OAKES 230KV CKT 1
FDNS	00NR	4	17SP	G15_076	TO->FROM	GRPRAR1-LNX3345.00 - GRPRAR 345KV CKT Z	720	720	0.03912	114.2261	P12:345:UMZW:# 907 #: SC2-SR IN IA. SC2-SR 345 KV LINE
FDNS	00NR	4	17SP	G15_076	TO->FROM	GRPRAR1-LNX3345.00 - GRPRAR 345KV CKT Z	720	720	0.04298	114.208	FT RANDAL - SPENCER 115KV CKT 1
FDNS	00NR	4	17SP	G15_076	TO->FROM	GRPRAR1-LNX3345.00 - GRPRAR 345KV CKT Z	720	720	0.04084	114.1785	GEN640011 2-GERALD GENTLEMAN STATION UNIT 2
FDNS	00NR	4	17SP	G15_076	TO->FROM	GRPRAR1-LNX3345.00 - GRPRAR 345KV CKT Z	720	720	0.03912	114.1756	SIOUX CITY - SIOUXCY-LNX3345.00 345KV CKT Z
FDNS	00NR	4	17SP	G15_076	TO->FROM	GRPRAR1-LNX3345.00 - GRPRAR 345KV CKT Z	720	720	0.04298	114.1729	P12:115:NPPD:WAPA6:FTRANDL7:ONEILL 7:BTB
FDNS	00NR	4	17SP	G15_076	TO->FROM	GRPRAR1-LNX3345.00 - GRPRAR 345KV CKT Z	720	720	0.04298	114.1729	P12:115:UMZB:# 115 #: SE IN NE. FR-SE-ON
FDNS	00NR	4	17SP	G15_076	TO->FROM	GRPRAR1-LNX3345.00 - GRPRAR 345KV CKT Z	720	720	0.04544	114.1646	RAUN - SUB 3451 FT CAL 345KV CKT 1
FDNS	00NR	4	17SP	G15_076	TO->FROM	GRPRAR1-LNX3345.00 - GRPRAR 345KV CKT Z	720	720	0.04544	114.1646	RAUN - SUB 3451 FT CAL 345KV CKT 1
FDNS	00NR	4	17SP	G15_076	TO->FROM	GRPRAR1-LNX3345.00 - GRPRAR 345KV CKT Z	720	720	0.0415	114.1626	HARMONY - VALENTINE 115KV CKT 1
FDNS	00NR	4	17SP	G15_076	TO->FROM	GRPRAR1-LNX3345.00 - GRPRAR 345KV CKT Z	720	720	0.04084	114.1208	FORMAN - OAKES 230KV CKT 1
FDNS	00NR	4	17SP	G15_076	TO->FROM	GRPRAR1-LNX3345.00 - GRPRAR 345KV CKT Z	720	720	0.04228	114.1122	SIDNEY - STEGALL 345KV CKT 1
FDNS	00NR	4	17SP	G15_076	TO->FROM	GRPRAR1-LNX3345.00 - GRPRAR 345KV CKT Z	720	720	0.04117	114.1085	GERALD GENTLEMAN STATION - KEYSTONE 345KV CKT 1
FDNS	00NR	4	17SP	G15_076	TO->FROM	GRPRAR1-LNX3345.00 - GRPRAR 345KV CKT Z	720	720	0.04298	114.0512	ONEILL - SPENCER 115KV CKT 1
FDNS	00NR	4	17SP	G15_076	TO->FROM	GRPRAR1-LNX3345.00 - GRPRAR 345KV CKT Z	720	720	0.05616	114.0212	DIXONCO 230.00 - HOSKINS 230KV CKT 1
FDNS	00NR	4	17SP	G15_076	TO->FROM	GRPRAR1-LNX3345.00 - GRPRAR 345KV CKT Z	720	720	0.0412	113.9888	AS KING - EAU CLAIRE 345KV CKT 1
FDNS	00NR	4	17SP	G15_076	TO->FROM	GRPRAR1-LNX3345.00 - GRPRAR 345KV CKT Z	720	720	0.04085	113.9738	CARPENTER - HURON 230KV CKT 1
FDNS	00NR	4	17SP	G15_076	TO->FROM	GRPRAR1-LNX3345.00 - GRPRAR 345KV CKT Z	720	720	0.03986	113.9649	PAHOJA - SIOUX FALLS 230KV CKT 1
FDNS	00NR	4	17SP	G15_076	TO->FROM	GRPRAR1-LNX3345.00 - GRPRAR 345KV CKT Z	720	720	0.04084	113.8935	GEN337653 1-WHITE BLUFF UNIT #2
FDNS	00NR	4	17SP	G15_076	TO->FROM	GRPRAR1-LNX3345.00 - GRPRAR 345KV CKT Z	720	720	0.04084	113.8802	GEN337652 1-WHITE BLUFF UNIT #1
FDNS	00NR	4	17SP	G15_076	TO->FROM	GRPRAR1-LNX3345.00 - GRPRAR 345KV CKT Z	720	720	0.04085	113.8783	HURON - WATERTOWN 230KV CKT 2
FDNS	00NR	4	17SP	G15_076	TO->FROM	GRPRAR1-LNX3345.00 - GRPRAR 345KV CKT Z	720	720	0.04085	113.8783	HURON - WATERTOWN 230KV CKT 2
FDNS	00NR	4	17SP	G15_076	TO->FROM	GRPRAR1-LNX3345.00 - GRPRAR 345KV CKT Z	720	720	0.04084	113.828	GEN338146 1-INDEPENDENCE UNIT #2
FDNS	00NR	4	17SP	G15_076	TO->FROM	GRPRAR1-LNX3345.00 - GRPRAR 345KV CKT Z	720	720	0.04084	113.8216	GEN338143 1-INDEPENDENCE UNIT #1
FDNS	00NR	4	17SP	G15_076	TO->FROM	GRPRAR1-LNX3345.00 - GRPRAR 345KV CKT Z	720	720	0.04085	113.8207	CARPENTER - WATERTOWN 230KV CKT 1
FDNS	00NR	4	17SP	G15_076	TO->FROM	GRPRAR1-LNX3345.00 - GRPRAR 345KV CKT Z	720	720	0.04085	113.8207	CARPENTER - WATERTOWN 230KV CKT 1
FDNS	00NR	4	17SP	G15_076	TO->FROM	GRPRAR1-LNX3345.00 - GRPRAR 345KV CKT Z	720	720	0.04133	113.7783	ARPIN B4 345.00 - EAU CLAIRE 345KV CKT 1
FDNS	00NR	4	17SP	G15_076	TO->FROM	GRPRAR1-LNX3345.00 - GRPRAR 345KV CKT Z	720	720	0.04084	113.7601	GEN501801 1-DOLET HILLS UNIT1
FDNS	00NR	4	17SP	G15_076	TO->FROM	GRPRAR1-LNX3345.00 - GRPRAR 345KV CKT Z	720	720	0.04086	113.7243	FORMAN - HANKINSON 230KV CKT 1
FDNS	00NR	4	17SP	G15_076	TO->FROM	GRPRAR1-LNX3345.00 - GRPRAR 345KV CKT Z	720	720	0.03619	113.6894	RASMUSN - UTICA JCT 230KV CKT 1
FDNS	00NR	4	17SP	G15_076	TO->FROM	GRPRAR1-LNX3345.00 - GRPRAR 345KV CKT Z	720	720	0.0415	113.6346	AINSWORTH - VALENTINE 115KV CKT 1
FDNS	00NR	4	17SP	G15_076	TO->FROM	GRPRAR1-LNX3345.00 - GRPRAR 345KV CKT Z	720	720	0.03877	113.5771	FT THOMPSON - WESSINGTON 230KV CKT 1
FDNS	00NR	4	17SP	G15_076	TO->FROM	GRPRAR1-LNX3345.00 - GRPRAR 345KV CKT Z	720	720	0.03877	113.5771	FT THOMPSON - WESSINGTON 230KV CKT 1
FDNS	00NR	4	17SP	G15_076	TO->FROM	GRPRAR1-LNX3345.00 - GRPRAR 345KV CKT Z	720	720	0.03986	113.5436	EAGLE 4 230.00 - PAHOJA 230KV CKT 1
FDNS	00NR	4	17SP	G15_076	TO->FROM	GRPRAR1-LNX3345.00 - GRPRAR 345KV CKT Z	720	720	0.04111	113.5353	G15094_T 345.00 - SIDNEY2-LNX3345.00 345KV CKT 1
FDNS	00NR	4	17SP	G15_076	TO->FROM	GRPRAR1-LNX3345.00 - GRPRAR 345KV CKT Z	720	720	0.04085	113.5353	CNTSHNT3 345.00 - PRAIRIE3 345.00 345KV CKT 1
FDNS	00NR	4	17SP	G15_076	TO->FROM	GRPRAR1-LNX3345.00 - GRPRAR 345KV CKT Z	720	720	0.04172	113.5244	ADAMS - MITCHLCO3 345.00 345KV CKT 1
FDNS	00NR	4	17SP	G15_076	TO->FROM	GRPRAR1-LNX3345.00 - GRPRAR 345KV CKT Z	720	720	0.04111	113.5107	SIDNEY - SIDNEY2-LNX3345.00 345KV CKT Z
FDNS	00NR	4	17SP	G15_076	TO->FROM	GRPRAR1-LNX3345.00 - GRPRAR 345KV CKT Z	720	720	0.04084	113.4766	GEN336252 1-NINEMILE POINT UNIT#5
FDNS	00NR	4	17SP	G15_076	TO->FROM	GRPRAR1-LNX3345.00 - GRPRAR 345KV CKT Z	720	720	0.04084	113.4365	GEN501813 1-RODEMACHER UNIT 3
FDNS	00NR	4	17SP	G15_076	TO->FROM	GRPRAR1-LNX3345.00 - GRPRAR 345KV CKT Z	720	720	0.04084	113.3593	GEN336831 1-BAXTER WILSON SES
FDNS	00NR	4	17SP	G15_076	TO->FROM	GRPRAR1-LNX3345.00 - GRPRAR 345KV CKT Z	720	720	0.04146	113.3551	ADAMS - PLEASANT VALLEY 345KV CKT 1
FDNS	00NR	4	17SP	G15_076	TO->FROM	GRPRAR1-LNX3345.00 - GRPRAR 345KV CKT Z	720	720	0.04084	113.348	GEN336251 1-NINEMILE POINT UNIT#4
FDNS	00NR	4	17SP	G15_076	TO->FROM	GRPRAR1-LNX3345.00 - GRPRAR 345KV CKT Z	720	720	0.04084	113.2857	GEN337041 1-GERALD ANDRUS
FDNS	00NR	4	17SP	G15_076	TO->FROM	GRPRAR1-LNX3345.00 - GRPRAR 345KV CKT Z	720	720	0.04084	113.2746	GEN344897 4-1LAB G4 20.000
FDNS	00NR	4	17SP	G15_076	TO->FROM	GRPRAR1-LNX3345.00 - GRPRAR 345KV CKT Z	720	720	0.04084	113.2718	GEN344894 1-1LAB G1 20.000
FDNS	00NR	4	17SP	G15_076	TO->FROM	GRPRAR1-LNX3345.00 - GRPRAR 345KV CKT Z	720	720	0.04084	113.2717	GEN344896 3-1LAB G3 20.000
FDNS	00NR	4	17SP	G15_076	TO->FROM	GRPRAR1-LNX3345.00 - GRPRAR 345KV CKT Z	720	720	0.04084	113.265	GEN335206 1-NELSON UNIT 6

SOLUTION	GROUP	SCENARIO	SEASON	SOURCE	DIRECTION	MONITORED ELEMENT	RATEA (MVA)	RATEB(MVA)	TDF	TC%LOADING (% MVA)	CONTINGENCY
FDNS	00NR	4	17SP	G15_076	TO->FROM	GRPRAR1-LNX3345.00 - GRPRAR 345KV CKT Z	720	720	0.04084	113.2237	GEN344895 2-1LAB G2 20.000
FDNS	00NR	4	17SP	G15_076	TO->FROM	GRPRAR1-LNX3345.00 - GRPRAR 345KV CKT Z	720	720	0.04084	113.2113	GEN345670 1-1RUSH G1 18.000
FDNS	00NR	4	17SP	G15_076	TO->FROM	GRPRAR1-LNX3345.00 - GRPRAR 345KV CKT Z	720	720	0.04084	113.211	GEN345671 2-1RUSH G2 18.000
FDNS	00NR	4	17SP	G15_076	TO->FROM	GRPRAR1-LNX3345.00 - GRPRAR 345KV CKT Z	720	720	0.04084	113.1354	GEN501812 1-RODEMACHER UNIT 2
FDNS	00NR	4	17SP	G15_076	TO->FROM	GRPRAR1-LNX3345.00 - GRPRAR 345KV CKT Z	720	720	0.04192	113.1342	LAKEFIELD 3 - NOBLES 345KV CKT 1
FDNS	00NR	4	17SP	G15_076	TO->FROM	GRPRAR1-LNX3345.00 - GRPRAR 345KV CKT Z	720	720	0.04095	113.1228	ALEXMRES3 345.00 - WAITE PARK 345KV CKT 1
FDNS	00NR	4	17SP	G15_076	TO->FROM	GRPRAR1-LNX3345.00 - GRPRAR 345KV CKT Z	720	720	0.04084	113.1161	GEN334440 1-SABINE UNIT 4
FDNS	00NR	4	17SP	G15_076	TO->FROM	GRPRAR1-LNX3345.00 - GRPRAR 345KV CKT Z	720	720	0.0409	113.1123	BLAIR - GRANITE FALLS 230KV CKT 1
FDNS	00NR	4	17SP	G15_076	TO->FROM	GRPRAR1-LNX3345.00 - GRPRAR 345KV CKT Z	720	720	0.0409	113.1123	BLAIR - GRANITE FALLS 230KV CKT 1
FDNS	00NR	4	17SP	G15_076	TO->FROM	GRPRAR1-LNX3345.00 - GRPRAR 345KV CKT Z	720	720	0.04084	113.0884	GEN635214 4-NEAL UNIT 4
FDNS	00NR	4	17SP	G15_076	TO->FROM	GRPRAR1-LNX3345.00 - GRPRAR 345KV CKT Z	720	720	0.04083	113.0616	CENTER - COYOTE 345KV CKT 1
FDNS	00NR	4	17SP	G15_076	TO->FROM	GRPRAR1-LNX3345.00 - GRPRAR 345KV CKT Z	720	720	0.04123	113.0284	BROOKING COUNTY - LYON COUNTY 345KV CKT 1
FDNS	00NR	4	17SP	G15_076	TO->FROM	GRPRAR1-LNX3345.00 - GRPRAR 345KV CKT Z	720	720	0.03948	113.0097	MENNO JCT - TRIPP JCT 115KV CKT 1
FDNS	00NR	4	17SP	G15_076	TO->FROM	GRPRAR1-LNX3345.00 - GRPRAR 345KV CKT Z	720	720	0.04372	113.0061	STEGALL - STEGALL TRANSFORMER 230KV CKT 1
FDNS	00NR	4	17SP	G15_076	TO->FROM	GRPRAR1-LNX3345.00 - GRPRAR 345KV CKT Z	720	720	0.0409	112.9964	GLENBORO SOUTH - RUGBY 230KV CKT 1
FDNS	00NR	4	17SP	G15_076	TO->FROM	GRPRAR1-LNX3345.00 - GRPRAR 345KV CKT Z	720	720	0.04084	112.9925	GEN629075 1-OTTUMWA GENERATOR FOR OTTUMWA UNIT NO 1
FDNS	00NR	4	17SP	G15_076	TO->FROM	GRPRAR1-LNX3345.00 - GRPRAR 345KV CKT Z	720	720	0.04372	112.991	P13:230-345:NPPD:STEGALL3:KV3A
FDNS	00NR	4	17SP	G15_076	TO->FROM	GRPRAR1-LNX3345.00 - GRPRAR 345KV CKT Z	720	720	0.04084	112.9889	GEN336191 1-LITTLE GYPSY UNIT#3
FDNS	00NR	4	17SP	G15_076	TO->FROM	GRPRAR1-LNX3345.00 - GRPRAR 345KV CKT Z	720	720	0.04372	112.9833	STEGALL (SGQ KV3A) 345/230/13.8KV TRANSFORMER CKT 1
FDNS	00NR	4	17SP	G15_076	TO->FROM	GRPRAR1-LNX3345.00 - GRPRAR 345KV CKT Z	720	720	0.04091	112.9458	HANKINSON - WAHPETON 230KV CKT 1
FDNS	00NR	4	17SP	G15_076	TO->FROM	GRPRAR1-LNX3345.00 - GRPRAR 345KV CKT Z	720	720	0.04084	112.9389	GEN338388 1-1PLUM PT U1 23.000
FDNS	00NR	4	17SP	G15_076	TO->FROM	GRPRAR1-LNX3345.00 - GRPRAR 345KV CKT Z	720	720	0.04084	112.9214	P12:115:UMZW:# 162 #: NEL IN ND. FAULT ON ML-NEL-MX-GA 115 KV
FDNS	00NR	4	17SP	G15_076	TO->FROM	GRPRAR1-LNX3345.00 - GRPRAR 345KV CKT Z	720	720	0.04084	112.9126	GEN336801 1-BAXTER WILSON UNIT #1
FDNS	00NR	4	17SP	G15_076	TO->FROM	GRPRAR1-LNX3345.00 - GRPRAR 345KV CKT Z	720	720	0.04561	112.9015	STEGALL-LNX3230.00 - WAYSIDE 230KV CKT 1
FDNS	00NR	4	17SP	G15_076	TO->FROM	GRPRAR1-LNX3345.00 - GRPRAR 345KV CKT Z	720	720	0.04084	112.8986	GEN335614 1-WILLOW GLENN UNIT#4
FDNS	00NR	4	17SP	G15_076	TO->FROM	GRPRAR1-LNX3345.00 - GRPRAR 345KV CKT Z	720	720	0.04561	112.8959	STEGALL - STEGALL-LNX3230.00 230KV CKT Z
FDNS	00NR	4	17SP	G15_076	TO->FROM	GRPRAR1-LNX3345.00 - GRPRAR 345KV CKT Z	720	720	0.04151	112.895	KOSSUTH 3 345.00 - OBRIEN 3 345.00 345KV CKT 1
FDNS	00NR	4	17SP	G15_076	TO->FROM	GRPRAR1-LNX3345.00 - GRPRAR 345KV CKT Z	720	720	0.03948	112.8925	MENNO JCT - UTICA 115KV CKT 1
FDNS	00NR	4	17SP	G15_076	TO->FROM	GRPRAR1-LNX3345.00 - GRPRAR 345KV CKT Z	720	720	0.04084	112.8886	GEN334441 1-SABINE UNIT 5
FDNS	00NR	4	17SP	G15_076	TO->FROM	GRPRAR1-LNX3345.00 - GRPRAR 345KV CKT Z	720	720	0.04084	112.8859	GEN336464 1-MICHOUD UNIT #3
FDNS	00NR	4	17SP	G15_076	TO->FROM	GRPRAR1-LNX3345.00 - GRPRAR 345KV CKT Z	720	720	0.04084	112.8781	GEN563222 1-G15088_3 0.6900
FDNS	00NR	4	17SP	G15_076	TO->FROM	GRPRAR1-LNX3345.00 - GRPRAR 345KV CKT Z	720	720	0.04151	112.8753	KOSSUTH 3 345.00 - WEBSTER 345KV CKT 1
FDNS	00NR	4	17SP	G15_076	TO->FROM	GRPRAR1-LNX3345.00 - GRPRAR 345KV CKT Z	720	720	0.04084	112.8717	GEN335204 1-NELSON UNIT 4
FDNS	00NR	4	17SP	G15_076	TO->FROM	GRPRAR1-LNX3345.00 - GRPRAR 345KV CKT Z	720	720	0.04737	112.8713	RAUN - SIOUX CITY 345KV CKT 1
FDNS	00NR	4	17SP	G15_076	TO->FROM	GRPRAR1-LNX3345.00 - GRPRAR 345KV CKT Z	720	720	0.04737	112.8713	RAUN - SIOUX CITY 345KV CKT 1
FDNS	00NR	4	17SP	G15_076	TO->FROM	GRPRAR1-LNX3345.00 - GRPRAR 345KV CKT Z	720	720	0.04084	112.8589	GARRISON - JAMES TOWN 230KV CKT 1
FDNS	00NR	4	17SP	G15_076	TO->FROM	GRPRAR1-LNX3345.00 - GRPRAR 345KV CKT Z	720	720	0.04129	112.8382	BYRON - NORTH ROCHESTER 345KV CKT 1
FDNS	00NR	4	17SP	G15_076	TO->FROM	GRPRAR1-LNX3345.00 - GRPRAR 345KV CKT Z	720	720	0.0423	112.8244	GRIMES - LEHIGH 345KV CKT 1
FDNS	00NR	4	17SP	G15_076	TO->FROM	GRPRAR1-LNX3345.00 - GRPRAR 345KV CKT Z	720	720	0.03948	112.8227	P12:115:UMZZ:# 237 #: MEN IN SD. MENNO JUNCTION IS A TAP (UJ-MEN-TP).
FDNS	00NR	4	17SP	G15_076	TO->FROM	GRPRAR1-LNX3345.00 - GRPRAR 345KV CKT Z	720	720	0.04084	112.7515	GEN635213 3-NEAL UNIT 3
FDNS	00NR	4	17SP	G15_076	TO->FROM	GRPRAR1-LNX3345.00 - GRPRAR 345KV CKT Z	720	720	0.04096	112.7198	APPLEDORN 4 230.00 - WATERTOWN 230KV CKT 1
FDNS	00NR	4	17SP	G15_076	TO->FROM	GRPRAR1-LNX3345.00 - GRPRAR 345KV CKT Z	720	720	0.04096	112.7198	APPLEDORN 4 230.00 - WATERTOWN 230KV CKT 1
FDNS	00NR	4	17SP	G15_076	TO->FROM	GRPRAR1-LNX3345.00 - GRPRAR 345KV CKT Z	720	720	0.04084	112.7087	GEN334433 1-SABINE UNIT 3
FDNS	00NR	4	17SP	G15_076	TO->FROM	GRPRAR1-LNX3345.00 - GRPRAR 345KV CKT Z	720	720	0.04084	112.6929	GEN336222 1-LITTLE GYPSY UNIT#2
FDNS	00NR	4	17SP	G15_076	TO->FROM	GRPRAR1-LNX3345.00 - GRPRAR 345KV CKT Z	720	720	0.04084	112.6826	GEN303007 1-1BC2 U2
FDNS	00NR	4	17SP	G15_076	TO->FROM	GRPRAR1-LNX3345.00 - GRPRAR 345KV CKT Z	720	720	0.04084	112.6772	GEN303006 1-1BC2 U1
FDNS	00NR	4	17SP	G15_076	TO->FROM	GRPRAR1-LNX3345.00 - GRPRAR 345KV CKT Z	720	720	0.04085	112.6701	FARGO - JAMES TOWN 230KV CKT 1
FDNS	00NR	4	17SP	G15_076	TO->FROM	GRPRAR1-LNX3345.00 - GRPRAR 345KV CKT Z	720	720	0.04084	112.6624	GEN640009 1-COOPER NUCLEAR STATION
FDNS	00NR	4	17SP	G15_076	TO->FROM	GRPRAR1-LNX3345.00 - GRPRAR 345KV CKT Z	720	720	0.04101	112.654	NORTH ROCHESTER - PRAIRIE ISLAND 345KV CKT 1
FDNS	00NR	4	17SP	G15_076	TO->FROM	GRPRAR1-LNX3345.00 - GRPRAR 345KV CKT Z	720	720	0.04089	112.6495	FERGSFL4 230.00 - WAHPETON 230KV CKT 1
FDNS	00NR	4	17SP	G15_076	TO->FROM	GRPRAR1-LNX3345.00 - GRPRAR 345KV CKT Z	720	720	0.04111	112.6468	G15094_T 345.00 - LARAMIE RIVER 345KV CKT 1
FDNS	00NR	4	17SP	G15_076	TO->FROM	GRPRAR1-LNX3345.00 - GRPRAR 345KV CKT Z	720	720	0.04084	112.6467	P13:230:UMZW:# 2218 #: FP IN MT. LOSS OF TRANSFORMER (AT2).
FDNS	00NR	4	17SP	G15_076	TO->FROM	GRPRAR1-LNX3345.00 - GRPRAR 345KV CKT Z	720	720	0.04085	112.6458	FARGO - JAMES TOWN 230KV CKT 2
FDNS	00NR	4	17SP	G15_076	TO->FROM	GRPRAR1-LNX3345.00 - GRPRAR 345KV CKT Z	720	720	0.04096	112.6419	APPLEDORN 4 230.00 - GRANITE FALLS 230KV CKT 1
FDNS	00NR	4	17SP	G15_076	TO->FROM	GRPRAR1-LNX3345.00 - GRPRAR 345KV CKT Z	720	720	0.04096	112.6419	APPLEDORN 4 230.00 - GRANITE FALLS 230KV CKT 1
FDNS	00NR	4	17SP	G15_076	TO->FROM	GRPRAR1-LNX3345.00 - GRPRAR 345KV CKT Z	720	720	0.04084	112.6316	GEN336152 1-WATERFORD UNIT#2
FDNS	00NR	4	17SP	G15_076	TO->FROM	GRPRAR1-LNX3345.00 - GRPRAR 345KV CKT Z	720	720	0.04084	112.6313	GEN336151 1-WATERFORD UNIT#1
FDNS	00NR	4	17SP	G15_076	TO->FROM	GRPRAR1-LNX3345.00 - GRPRAR 345KV CKT Z	720	720	0.04084	112.6115	GEN303008 1-1BC2 U3
FDNS	00NR	4	17SP	G15_076	TO->FROM	GRPRAR1-LNX3345.00 - GRPRAR 345KV CKT Z	720	720	0.04084	112.607	GEN336170 1-GULF OXY U4
FDNS	00NR	4	17SP	G15_076	TO->FROM	GRPRAR1-LNX3345.00 - GRPRAR 345KV CKT Z	720	720	0.0413	112.6043	BYRON - PLEASANT VALLEY 345KV CKT 1
FDNS	00NR	4	17SP	G15_076	TO->FROM	GRPRAR1-LNX3345.00 - GRPRAR 345KV CKT Z	720	720	0.04084	112.5936	BISMARK - WEBER 230KV CKT 1
FDNS	00NR	4	17SP	G15_076	TO->FROM	GRPRAR1-LNX3345.00 - GRPRAR 345KV CKT Z	720	720	0.04084	112.5884	BISMARK - JAMES TOWN 230KV CKT 1
FDNS	00NR	4	17SP	G15_076	TO->FROM	GRPRAR1-LNX3345.00 - GRPRAR 345KV CKT Z	720	720	0.04084	112.5831	GEN641089 2-ENERGY CENTER 2
FDNS	00NR	4	17SP	G15_076	TO->FROM	GRPRAR1-LNX3345.00 - GRPRAR 345KV CKT Z	720	720	0.04132	112.5823	P13:230-345:NPPD:SIDNEY 3:KV2A
FDNS	00NR	4	17SP	G15_076	TO->FROM	GRPRAR1-LNX3345.00 - GRPRAR 345KV CKT Z	720	720	0.04132	112.5822	SIDNEY (SDQ KV2A) 345/230/13.8KV TRANSFORMER CKT 1
FDNS	00NR	4	17SP	G15_076	TO->FROM	GRPRAR1-LNX3345.00 - GRPRAR 345KV CKT Z	720	720	0.04693	112.5813	BLOOMFIELD - CREIGHTON 115KV CKT 1
FDNS	00NR	4	17SP	G15_076	TO->FROM	GRPRAR1-LNX3345.00 - GRPRAR 345KV CKT Z	720	720	0.04132	112.5799	SIDNEY - SIDNEY TRANSFORMER 230KV CKT 1
FDNS	00NR	4	17SP	G15_076	TO->FROM	GRPRAR1-LNX3345.00 - GRPRAR 345KV CKT Z	720	720	0.04134	112.5758	P13:115-230:TSGT:SIDNEY-KV1A
FDNS	00NR	4	17SP	G15_076	TO->FROM	GRPRAR1-LNX3345.00 - GRPRAR 345KV CKT Z	720	720	0.04006	112.5748	LAKEFIELD 3 - LKFLDXL3 345KV CKT 1
FDNS	00NR	4	17SP	G15_076	TO->FROM	GRPRAR1-LNX3345.00 - GRPRAR 345KV CKT Z	720	720	0.04084	112.5631	JAMES TOWN - WEBER 230KV CKT 1
FDNS	00NR	4	17SP	G15_076	TO->FROM	GRPRAR1-LNX3345.00 - GRPRAR 345KV CKT Z	720	720	0.04084	112.5547	GEN562921 1-G15054_2 0.6900
FDNS	00NR	4	17SP	G15_076	TO->FROM	GRPRAR1-LNX3345.00 - GRPRAR 345KV CKT Z	720	720	0.04083	112.522	ELM CREEK - MONTICELLO 345KV CKT 1
FDNS	00NR	4	17SP	G15_076	TO->FROM	GRPRAR1-LNX3345.00 - GRPRAR 345KV CKT Z	720	720	0.04084	112.5195	GEN562596 1-G14_059_3 0.6900
FDNS	00NR	4	17SP	G15_076	TO->FROM	GRPRAR1-LNX3345.00 - GRPRAR 345KV CKT Z	720	720	0.04693	112.5	BLOOMFIELD - GAVINS POINT 115KV CKT 1
FDNS	00NR	4	17SP	G15_076	TO->FROM	GRPRAR1-LNX3345.00 - GRPRAR 345KV CKT Z	720	720	0.04084	112.4988	GEN501811 1-RODEMACHER UNIT 1
FDNS	00NR	4	17SP	G15_076	TO->FROM	GRPRAR1-LNX3345.00 - GRPRAR 345KV CKT Z	720	720	0.04096	112.4962	ARKANSAS NUCLEAR ONE - FT SMITH 500KV CKT 1
FDNS	00NR	4	17SP	G15_076	TO->FROM	GRPRAR1-LNX3345.00 - GRPRAR 345KV CKT Z	720	720	0.04096	112.4962	ARKANSAS NUCLEAR ONE - FT SMITH 500KV CKT 1
FDNS	00NR	4	17SP	G15_076	TO->FROM	GRPRAR1-LNX3345.00 - GRPRAR 345KV CKT Z	720	720	0.04052	112.4854	MT VERN - STORLA 115KV CKT 1
FDNS	00NR	4	17SP	G15_076	TO->FROM	GRPRAR1-LNX3345.00 - GRPRAR 345KV CKT Z	720	720	0.04086	112.4852	AUDUBON - SHEYNNE 230KV CKT 1

SOLUTION	GROUP	SCENARIO	SEASON	SOURCE	DIRECTION	MONITORED ELEMENT	RATEA (MVA)	RATEB(MVA)	TDF	TC%LOADING (% MVA)	CONTINGENCY
FDNS	00NR	4	17SP	G15_076	TO->FROM	GRPRAR1-LNX3345.00 - GRPRAR 345KV CKT Z	720	720	0.04084	112.474	PRAIRIE ISLAND 345/20.0KV TRANSFORMER CKT 1
FDNS	00NR	4	17SP	G15_076	TO->FROM	GRPRAR1-LNX3345.00 - GRPRAR 345KV CKT Z	720	720	0.04088	112.4739	FERGSFL4 230.00 - GRE-SILVRLK4230.00 230KV CKT 1
FDNS	00NR	4	17SP	G15_076	TO->FROM	GRPRAR1-LNX3345.00 - GRPRAR 345KV CKT Z	720	720	0.04084	112.4706	PRAIRIE ISLAND 345/20.0KV TRANSFORMER CKT 2
FDNS	00NR	4	17SP	G15_076	TO->FROM	GRPRAR1-LNX3345.00 - GRPRAR 345KV CKT Z	720	720	0.04068	112.4682	FT THOMPSON - HURON 230KV CKT 1
FDNS	00NR	4	17SP	G15_076	TO->FROM	GRPRAR1-LNX3345.00 - GRPRAR 345KV CKT Z	720	720	0.04068	112.4682	FT THOMPSON - HURON 230KV CKT 1
FDNS	00NR	4	17SP	G15_076	TO->FROM	GRPRAR1-LNX3345.00 - GRPRAR 345KV CKT Z	720	720	0.04068	112.4682	FT THOMPSON - HURON 230KV CKT 2
FDNS	00NR	4	17SP	G15_076	TO->FROM	GRPRAR1-LNX3345.00 - GRPRAR 345KV CKT Z	720	720	0.04068	112.4682	FT THOMPSON - HURON 230KV CKT 2
FDNS	00NR	4	17SP	G15_076	TO->FROM	GRPRAR1-LNX3345.00 - GRPRAR 345KV CKT Z	720	720	0.04084	112.4677	BALTA - RAMSEY 230KV CKT 1
FDNS	00NR	4	17SP	G15_076	TO->FROM	GRPRAR1-LNX3345.00 - GRPRAR 345KV CKT Z	720	720	0.04076	112.4607	DKSN_CO5 161.00 - TRIBOJI NO1 + NO2 161KV CKT 1
FDNS	00NR	4	17SP	G15_076	TO->FROM	GRPRAR1-LNX3345.00 - GRPRAR 345KV CKT Z	720	720	0.04084	112.4578	GEN532751 1-WOLF CREEK GENERATING STATION UNIT 1
FDNS	00NR	4	17SP	G15_076	TO->FROM	GRPRAR1-LNX3345.00 - GRPRAR 345KV CKT Z	720	720	0.04137	112.4492	P12:115:NPPD:WAPA1:CHADRON7:BOXBUTE7:BTB
FDNS	00NR	4	17SP	G15_076	TO->FROM	GRPRAR1-LNX3345.00 - GRPRAR 345KV CKT Z	720	720	0.04084	112.4363	TOLK STATION EAST 230/24.0KV TRANSFORMER CKT 1
FDNS	00NR	4	17SP	G15_076	TO->FROM	GRPRAR1-LNX3345.00 - GRPRAR 345KV CKT Z	720	720	0.04088	112.4329	GRE-SILVRLK4230.00 - HENNING 230KV CKT 1
FDNS	00NR	4	17SP	G15_076	TO->FROM	GRPRAR1-LNX3345.00 - GRPRAR 345KV CKT Z	720	720	0.04114	112.4319	P13:115-230:NPPD:WAYSIDE4:T1
FDNS	00NR	4	17SP	G15_076	TO->FROM	GRPRAR1-LNX3345.00 - GRPRAR 345KV CKT Z	720	720	0.04114	112.4318	CHADRON - WAYSIDE 115KV CKT 1
FDNS	00NR	4	17SP	G15_076	TO->FROM	GRPRAR1-LNX3345.00 - GRPRAR 345KV CKT Z	720	720	0.04114	112.4309	WAYSIDE (WAYSIDE T1) 230/115/13.8KV TRANSFORMER CKT 1
FDNS	00NR	4	17SP	G15_076	TO->FROM	GRPRAR1-LNX3345.00 - GRPRAR 345KV CKT Z	720	720	0.04085	112.4213	BIG STONE (230/115) 230/115/13.8KV TRANSFORMER CKT 1
FDNS	00NR	4	17SP	G15_076	TO->FROM	GRPRAR1-LNX3345.00 - GRPRAR 345KV CKT Z	720	720	0.04084	112.4212	GEN334071 1-LEWIS CREEK 2
FDNS	00NR	4	17SP	G15_076	TO->FROM	GRPRAR1-LNX3345.00 - GRPRAR 345KV CKT Z	720	720	0.04084	112.4164	GEN334070 1-LEWIS CREEK 1
FDNS	00NR	4	17SP	G15_076	TO->FROM	GRPRAR1-LNX3345.00 - GRPRAR 345KV CKT Z	720	720	0.04084	112.416	GEN337766 1-TRACTEBEL UNIT S1
FDNS	00NR	4	17SP	G15_076	TO->FROM	GRPRAR1-LNX3345.00 - GRPRAR 345KV CKT Z	720	720	0.04084	112.4135	LAWRENCE ENERGY CENTER UNIT 5 - LAWRENCE HILL 230KV CKT 1
FDNS	00NR	4	17SP	G15_076	TO->FROM	GRPRAR1-LNX3345.00 - GRPRAR 345KV CKT Z	720	720	0.04084	112.4135	LAWRENCE ENERGY CENTER UNIT 5 230/24.0KV TRANSFORMER CKT 1
FDNS	00NR	4	17SP	G15_076	TO->FROM	GRPRAR1-LNX3345.00 - GRPRAR 345KV CKT Z	720	720	0.04167	112.4041	NOBLES - SPLIT ROCK 345KV CKT 1
FDNS	00NR	4	17SP	G15_076	TO->FROM	GRPRAR1-LNX3345.00 - GRPRAR 345KV CKT Z	720	720	0.04137	112.397	CHADRON - DUNLAP 115KV CKT 1
FDNS	00NR	4	17SP	G15_076	TO->FROM	GRPRAR1-LNX3345.00 - GRPRAR 345KV CKT Z	720	720	0.04084	112.3938	GEN659118 1-LARAMIE RIVER UNIT1
FDNS	00NR	4	17SP	G15_076	TO->FROM	GRPRAR1-LNX3345.00 - GRPRAR 345KV CKT Z	720	720	0.04084	112.3931	PRAIRIE - WINGER 230KV CKT 1
FDNS	00NR	4	17SP	G15_076	TO->FROM	GRPRAR1-LNX3345.00 - GRPRAR 345KV CKT Z	720	720	0.04137	112.3811	P12:115:NPPD:WAPA2:HEMINGF7:SNAKECK7:BTB
FDNS	00NR	4	17SP	G15_076	TO->FROM	GRPRAR1-LNX3345.00 - GRPRAR 345KV CKT Z	720	720	0.04045	112.3768	HURON WEST PARK - MITCHELL NW 115KV CKT 1
FDNS	00NR	4	17SP	G15_076	TO->FROM	GRPRAR1-LNX3345.00 - GRPRAR 345KV CKT Z	720	720	0.04045	112.3768	HURON WEST PARK - MITCHELL NW 115KV CKT 1
FDNS	00NR	4	17SP	G15_076	TO->FROM	GRPRAR1-LNX3345.00 - GRPRAR 345KV CKT Z	720	720	0.04084	112.3764	GEN501910 1-ACADIA UNIT ST1
FDNS	00NR	4	17SP	G15_076	TO->FROM	GRPRAR1-LNX3345.00 - GRPRAR 345KV CKT Z	720	720	0.04088	112.3708	HENNING - INMANN 230KV CKT 1
FDNS	00NR	4	17SP	G15_076	TO->FROM	GRPRAR1-LNX3345.00 - GRPRAR 345KV CKT Z	720	720	0.04089	112.3693	LELAND OLDS - STANTON 230KV CKT 1
FDNS	00NR	4	17SP	G15_076	TO->FROM	GRPRAR1-LNX3345.00 - GRPRAR 345KV CKT Z	720	720	0.04089	112.3693	LELAND OLDS - STANTON 230KV CKT 1
FDNS	00NR	4	17SP	G15_076	TO->FROM	GRPRAR1-LNX3345.00 - GRPRAR 345KV CKT Z	720	720	0.04123	112.3605	PALXFRASBTHI
FDNS	00NR	4	17SP	G15_076	TO->FROM	GRPRAR1-LNX3345.00 - GRPRAR 345KV CKT Z	720	720	0.03908	112.3551	FT RANDAL - WHITE SWAN 115KV CKT 1
FDNS	00NR	4	17SP	G15_076	TO->FROM	GRPRAR1-LNX3345.00 - GRPRAR 345KV CKT Z	720	720	0.04141	112.3412	EAGLE - PHILIP 115KV CKT 1
FDNS	00NR	4	17SP	G15_076	TO->FROM	GRPRAR1-LNX3345.00 - GRPRAR 345KV CKT Z	720	720	0.04123	112.3394	7PALM TAP 345.00 - SUB T 345KV CKT 1
FDNS	00NR	4	17SP	G15_076	TO->FROM	GRPRAR1-LNX3345.00 - GRPRAR 345KV CKT Z	720	720	0.04084	112.3368	GEN345765 H-1SIOUX 2 18.000
FDNS	00NR	4	17SP	G15_076	TO->FROM	GRPRAR1-LNX3345.00 - GRPRAR 345KV CKT Z	720	720	0.04095	112.3323	GRANT - MITCHELL 115KV CKT 1
FDNS	00NR	4	17SP	G15_076	TO->FROM	GRPRAR1-LNX3345.00 - GRPRAR 345KV CKT Z	720	720	0.04095	112.3323	GRANT - MITCHELL 115KV CKT 1
FDNS	00NR	4	17SP	G15_076	TO->FROM	GRPRAR1-LNX3345.00 - GRPRAR 345KV CKT Z	720	720	0.03908	112.3252	TYNDALL - WHITE SWAN 115KV CKT 1
FDNS	00NR	4	17SP	G15_076	TO->FROM	GRPRAR1-LNX3345.00 - GRPRAR 345KV CKT Z	720	720	0.04083	112.3244	GROTON (GROTON KU2A) 345/115/13.8KV TRANSFORMER CKT 1
FDNS	00NR	4	17SP	G15_076	TO->FROM	GRPRAR1-LNX3345.00 - GRPRAR 345KV CKT Z	720	720	0.04084	112.319	GEN337764 1-TRACTEBEL UNIT C1
FDNS	00NR	4	17SP	G15_076	TO->FROM	GRPRAR1-LNX3345.00 - GRPRAR 345KV CKT Z	720	720	0.04084	112.319	GEN337765 1-TRACTEBEL UNIT C2
FDNS	00NR	4	17SP	G15_076	TO->FROM	GRPRAR1-LNX3345.00 - GRPRAR 345KV CKT Z	720	720	0.04087	112.318	AUDUBON - HUBBARD 230KV CKT 1
FDNS	00NR	4	17SP	G15_076	TO->FROM	GRPRAR1-LNX3345.00 - GRPRAR 345KV CKT Z	720	720	0.04071	112.3143	CLEARWATER - ONEILL 115KV CKT 1
FDNS	00NR	4	17SP	G15_076	TO->FROM	GRPRAR1-LNX3345.00 - GRPRAR 345KV CKT Z	720	720	0.04087	112.3114	KARLSTAD - WINGER 230KV CKT 1
FDNS	00NR	4	17SP	G15_076	TO->FROM	GRPRAR1-LNX3345.00 - GRPRAR 345KV CKT Z	720	720	0.04094	112.3097	GENOA 161 - SENECA 161 161KV CKT 1
FDNS	00NR	4	17SP	G15_076	TO->FROM	GRPRAR1-LNX3345.00 - GRPRAR 345KV CKT Z	720	720	0.04084	112.3095	GEN345756 H-1SIOUX 1 18.000
FDNS	00NR	4	17SP	G15_076	TO->FROM	GRPRAR1-LNX3345.00 - GRPRAR 345KV CKT Z	720	720	0.05329	112.3008	BELDEN - HOSKINS 115KV CKT 1
FDNS	00NR	4	17SP	G15_076	TO->FROM	GRPRAR1-LNX3345.00 - GRPRAR 345KV CKT Z	720	720	0.04076	112.2988	DKSN_CO5 161.00 - LAKEFIELD 5 NO1 + NO 2 161KV CKT 1
FDNS	00NR	4	17SP	G15_076	TO->FROM	GRPRAR1-LNX3345.00 - GRPRAR 345KV CKT Z	720	720	0.04084	112.2978	GEN562912 1-G15053_3 0.6900
FDNS	00NR	4	17SP	G15_076	TO->FROM	GRPRAR1-LNX3345.00 - GRPRAR 345KV CKT Z	720	720	0.04084	112.2972	GRAND GULF 500/22.0KV TRANSFORMER CKT 1
FDNS	00NR	4	17SP	G15_076	TO->FROM	GRPRAR1-LNX3345.00 - GRPRAR 345KV CKT Z	720	720	0.04084	112.2896	PRAIRIE - RAMSEY 230KV CKT 1
FDNS	00NR	4	17SP	G15_076	TO->FROM	GRPRAR1-LNX3345.00 - GRPRAR 345KV CKT Z	720	720	0.0372	112.2882	P12:115:UMZW:# 1910 #: YJ IN SD. YJ-UJ LINE FAULT
FDNS	00NR	4	17SP	G15_076	TO->FROM	GRPRAR1-LNX3345.00 - GRPRAR 345KV CKT Z	720	720	0.0372	112.2881	NAPA JCT7 115.00 - UTICA 115KV CKT 1
FDNS	00NR	4	17SP	G15_076	TO->FROM	GRPRAR1-LNX3345.00 - GRPRAR 345KV CKT Z	720	720	0.0372	112.2881	NAPA JCT7 115.00 - UTICA 115KV CKT 1
FDNS	00NR	4	17SP	G15_076	TO->FROM	GRPRAR1-LNX3345.00 - GRPRAR 345KV CKT Z	720	720	0.04091	112.2857	NORTH LA CROSSE - NORTH ROCHESTER 345KV CKT 1
FDNS	00NR	4	17SP	G15_076	TO->FROM	GRPRAR1-LNX3345.00 - GRPRAR 345KV CKT Z	720	720	0.0372	112.285	NAPA JCT7 115.00 - YANKON JCT 115KV CKT 1
FDNS	00NR	4	17SP	G15_076	TO->FROM	GRPRAR1-LNX3345.00 - GRPRAR 345KV CKT Z	720	720	0.0372	112.285	NAPA JCT7 115.00 - YANKON JCT 115KV CKT 1
FDNS	00NR	4	17SP	G15_076	TO->FROM	GRPRAR1-LNX3345.00 - GRPRAR 345KV CKT Z	720	720	0.04084	112.2831	GEN336221 1-LITTLE GYPSY UNIT#1
FDNS	00NR	4	17SP	G15_076	TO->FROM	GRPRAR1-LNX3345.00 - GRPRAR 345KV CKT Z	720	720	0.04084	112.2804	GEN636641 1-LOUISA UNIT 1
FDNS	00NR	4	17SP	G15_076	TO->FROM	GRPRAR1-LNX3345.00 - GRPRAR 345KV CKT Z	720	720	0.04084	112.2803	JUDSON LARGE 115/15.0KV TRANSFORMER CKT 1
FDNS	00NR	4	17SP	G15_076	TO->FROM	GRPRAR1-LNX3345.00 - GRPRAR 345KV CKT Z	720	720	0.04084	112.2803	JUDSON LARGE 115/15.0KV TRANSFORMER CKT 1
FDNS	00NR	4	17SP	G15_076	TO->FROM	GRPRAR1-LNX3345.00 - GRPRAR 345KV CKT Z	720	720	0.04102	112.2788	HAMPTON CORNER - NORTH ROCHESTER 345KV CKT 1
FDNS	00NR	4	17SP	G15_076	TO->FROM	GRPRAR1-LNX3345.00 - GRPRAR 345KV CKT Z	720	720	0.04141	112.2765	EAGLE - MARTIN 115KV CKT 1
FDNS	00NR	4	17SP	G15_076	TO->FROM	GRPRAR1-LNX3345.00 - GRPRAR 345KV CKT Z	720	720	0.04084	112.2754	GEN337757 1-DUKE HOTSPRINGS STG1
FDNS	00NR	4	17SP	G15_076	TO->FROM	GRPRAR1-LNX3345.00 - GRPRAR 345KV CKT Z	720	720	0.04084	112.2753	GEN336242 1-1NMIL ST1 18.000
FDNS	00NR	4	17SP	G15_076	TO->FROM	GRPRAR1-LNX3345.00 - GRPRAR 345KV CKT Z	720	720	0.04084	112.2704	GEN334432 1-SABINE UNIT 2
FDNS	00NR	4	17SP	G15_076	TO->FROM	GRPRAR1-LNX3345.00 - GRPRAR 345KV CKT Z	720	720	0.04084	112.2703	GEN334431 1-SABINE UNIT 1
FDNS	00NR	4	17SP	G15_076	TO->FROM	GRPRAR1-LNX3345.00 - GRPRAR 345KV CKT Z	720	720	0.04094	112.2642	FRANKS - HUBEN 345KV CKT 1
FDNS	00NR	4	17SP	G15_076	TO->FROM	GRPRAR1-LNX3345.00 - GRPRAR 345KV CKT Z	720	720	0.04137	112.2627	BOXBUTE7 115.00 - DUNLAP 115KV CKT 1
FDNS	00NR	4	17SP	G15_076	TO->FROM	GRPRAR1-LNX3345.00 - GRPRAR 345KV CKT Z	720	720	0.04091	112.2528	NORTH LA CROSSE (10008630_001) 345/161/34.5KV TRANSFORMER CKT 9
FDNS	00NR	4	17SP	G15_076	TO->FROM	GRPRAR1-LNX3345.00 - GRPRAR 345KV CKT Z	720	720	0.04084	112.2504	GEN334030 1-FRONTIER UNIT 1
FDNS	00NR	4	17SP	G15_076	TO->FROM	GRPRAR1-LNX3345.00 - GRPRAR 345KV CKT Z	720	720	0.04084	112.2502	GEN334031 1-FRONTIER UNIT 2
FDNS	00NR	4	17SP	G15_076	TO->FROM	GRPRAR1-LNX3345.00 - GRPRAR 345KV CKT Z	720	720	0.04084	112.2496	GEN345832 1-1TS G1 13.800
FDNS	00NR	4	17SP	G15_076	TO->FROM	GRPRAR1-LNX3345.00 - GRPRAR 345KV CKT Z	720	720	0.04084	112.2495	GEN336446 1-MICHOUD UNIT #2
FDNS	00NR	4	17SP	G15_076	TO->FROM	GRPRAR1-LNX3345.00 - GRPRAR 345KV CKT Z	720	720	0.04084	112.2492	GEN345841 2-1TS G2 13.800
FDNS	00NR	4	17SP	G15_076	TO->FROM	GRPRAR1-LNX3345.00 - GRPRAR 345KV CKT Z	720	720	0.04084	112.2433	OKLAUN 345/24.0KV TRANSFORMER CKT 1

SOLUTION	GROUP	SCENARIO	SEASON	SOURCE	DIRECTION	MONITORED ELEMENT	RATEA (MVA)	RATEB(MVA)	TDF	TC%LOADING (% MVA)	CONTINGENCY
FDNS	00NR	4	17SP	G15_076	TO->FROM	GRPRAR1-LNX3345.00 - GRPRAR 345KV CKT Z	720	720	0.04084	112.2361	GEN501970 1-EVANGELINE UNIT 7
FDNS	00NR	4	17SP	G15_076	TO->FROM	GRPRAR1-LNX3345.00 - GRPRAR 345KV CKT Z	720	720	0.04084	112.214	GEN562438 1-G13-032 0.6900
FDNS	00NR	4	17SP	G15_076	TO->FROM	GRPRAR1-LNX3345.00 - GRPRAR 345KV CKT Z	720	720	0.04071	112.21	P12:115:NPPD:1164:ONEILL 7:JEFFREY9:BTB
FDNS	00NR	4	20SP	G15_076	TO->FROM	GRPRAR1-LNX3345.00 - GRPRAR 345KV CKT Z	720	720	0.04443	112.1191	KELLY - MEADOWGROVE4230.00 230KV CKT 1
FDNS	00NR	4	17SP	G15_076	TO->FROM	GRPRAR1-LNX3345.00 - GRPRAR 345KV CKT Z	720	720	0.04084	112.1156	GEN563282 1-G15094_3 0.6900
FDNS	00NR	4	17SP	G15_076	TO->FROM	GRPRAR1-LNX3345.00 - GRPRAR 345KV CKT Z	720	720	0.04084	111.7591	BASE CASE
FDNS	00NR	4	20SP	G15_076	TO->FROM	GRPRAR1-LNX3345.00 - GRPRAR 345KV CKT Z	720	720	0.03699	111.572	P12:230:UMZB:# 116 #: ST IN SD. WSG-ST-VH
FDNS	00NR	4	17SP	G15_076	TO->FROM	GRPRAR1-LNX3345.00 - GRPRAR 345KV CKT Z	720	720	0.04103	111.4229	BUCKNER7 345.00 - SPEARVILLE 345KV CKT 1
FDNS	00NR	4	17SP	G15_076	TO->FROM	GRPRAR1-LNX3345.00 - GRPRAR 345KV CKT Z	720	720	0.04103	111.4229	BUCKNER7 345.00 - SPEARVILLE 345KV CKT 1
FDNS	00NR	4	17SP	G15_076	TO->FROM	GRPRAR1-LNX3345.00 - GRPRAR 345KV CKT Z	720	720	0.04173	111.3203	103RD & ROKEBY - MOORE 345KV CKT 1
FDNS	00NR	4	17SP	G15_076	TO->FROM	GRPRAR1-LNX3345.00 - GRPRAR 345KV CKT Z	720	720	0.04173	111.3203	103RD & ROKEBY - MOORE 345KV CKT 1
FDNS	00NR	4	17SP	G15_076	TO->FROM	GRPRAR1-LNX3345.00 - GRPRAR 345KV CKT Z	720	720	0.04104	111.31	FT THOMPSON - OAHE 230KV CKT 1
FDNS	00NR	4	17SP	G15_076	TO->FROM	GRPRAR1-LNX3345.00 - GRPRAR 345KV CKT Z	720	720	0.04104	111.31	FT THOMPSON - OAHE 230KV CKT 1
FDNS	00NR	4	17SP	G15_076	TO->FROM	GRPRAR1-LNX3345.00 - GRPRAR 345KV CKT Z	720	720	0.04104	111.31	FT THOMPSON - OAHE 230KV CKT 2
FDNS	00NR	4	17SP	G15_076	TO->FROM	GRPRAR1-LNX3345.00 - GRPRAR 345KV CKT Z	720	720	0.04104	111.31	FT THOMPSON - OAHE 230KV CKT 2
FDNS	00NR	4	17SP	G15_076	TO->FROM	GRPRAR1-LNX3345.00 - GRPRAR 345KV CKT Z	720	720	0.04084	111.2899	GEN652546 1-FT RANDAL
FDNS	00NR	4	25SP	G15_076	TO->FROM	GRPRAR1-LNX3345.00 - GRPRAR 345KV CKT Z	720	720	0.04478	111.2748	KELLY - MEADOWGROVE4230.00 230KV CKT 1
FDNS	00NR	4	17SP	G15_076	TO->FROM	GRPRAR1-LNX3345.00 - GRPRAR 345KV CKT Z	720	720	0.03193	111.2718	SIOUX CITY - TWIN CHURCH 230KV CKT 1
FDNS	00NR	4	17SP	G15_076	TO->FROM	GRPRAR1-LNX3345.00 - GRPRAR 345KV CKT Z	720	720	0.04267	111.2576	NUNDRWD - PHILIP TAP 230KV CKT 1
FDNS	00NR	4	17SP	G15_076	TO->FROM	GRPRAR1-LNX3345.00 - GRPRAR 345KV CKT Z	720	720	0.04104	111.2521	FT THOMPSON - OAHE 230KV CKT 3
FDNS	00NR	4	17SP	G15_076	TO->FROM	GRPRAR1-LNX3345.00 - GRPRAR 345KV CKT Z	720	720	0.04104	111.2521	FT THOMPSON - OAHE 230KV CKT 3
FDNS	00NR	4	17SP	G15_076	TO->FROM	GRPRAR1-LNX3345.00 - GRPRAR 345KV CKT Z	720	720	0.04104	111.2521	FT THOMPSON - OAHE 230KV CKT 4
FDNS	00NR	4	17SP	G15_076	TO->FROM	GRPRAR1-LNX3345.00 - GRPRAR 345KV CKT Z	720	720	0.04104	111.2521	FT THOMPSON - OAHE 230KV CKT 4
FDNS	00NR	4	17SP	G15_076	TO->FROM	GRPRAR1-LNX3345.00 - GRPRAR 345KV CKT Z	720	720	0.04084	111.2493	MITCHLCO3 345.00 345/34.5KV TRANSFORMER CKT 1
FDNS	00NR	4	17SP	G15_076	TO->FROM	GRPRAR1-LNX3345.00 - GRPRAR 345KV CKT Z	720	720	0.04084	111.2424	GEN672347 1-CORY COGEN GENERATOR 1 GT1
FDNS	00NR	4	17SP	G15_076	TO->FROM	GRPRAR1-LNX3345.00 - GRPRAR 345KV CKT Z	720	720	0.04084	111.2424	GEN672348 2-CORY COGEN GENERATOR 2 GT2
FDNS	00NR	4	17SP	G15_076	TO->FROM	GRPRAR1-LNX3345.00 - GRPRAR 345KV CKT Z	720	720	0.04023	111.2364	NELIGH - PETERSBRG.N7115.00 115KV CKT 1
FDNS	00NR	4	17SP	G15_076	TO->FROM	GRPRAR1-LNX3345.00 - GRPRAR 345KV CKT Z	720	720	0.04084	111.2344	GEN600018 S-LS POWER STEAM
FDNS	00NR	4	17SP	G15_076	TO->FROM	GRPRAR1-LNX3345.00 - GRPRAR 345KV CKT Z	720	720	0.04099	111.2304	POST ROCK (POSTROCK T1) 345/230/13.8KV TRANSFORMER CKT 1
FDNS	00NR	4	17SP	G15_076	TO->FROM	GRPRAR1-LNX3345.00 - GRPRAR 345KV CKT Z	720	720	0.04084	111.2284	GEN300003 1-THOMAS HILL UNIT 3
FDNS	00NR	4	17SP	G15_076	TO->FROM	GRPRAR1-LNX3345.00 - GRPRAR 345KV CKT Z	720	720	0.04095	111.2276	G11_051T 345.00 - WOODWARD DISTRICT EHV 345KV CKT 1
FDNS	00NR	4	17SP	G15_076	TO->FROM	GRPRAR1-LNX3345.00 - GRPRAR 345KV CKT Z	720	720	0.04084	111.2235	GEN659158 2-PIONEER G213.800
FDNS	00NR	4	17SP	G15_076	TO->FROM	GRPRAR1-LNX3345.00 - GRPRAR 345KV CKT Z	720	720	0.04084	111.2235	GEN659159 3-PIONEER G313.800
FDNS	00NR	4	17SP	G15_076	TO->FROM	GRPRAR1-LNX3345.00 - GRPRAR 345KV CKT Z	720	720	0.04084	111.216	GEN659156 2-LONESMCRK 2G13.800
FDNS	00NR	4	17SP	G15_076	TO->FROM	GRPRAR1-LNX3345.00 - GRPRAR 345KV CKT Z	720	720	0.04084	111.216	GEN659157 3-LONESMCRK 3G13.800
FDNS	00NR	4	17SP	G15_076	TO->FROM	GRPRAR1-LNX3345.00 - GRPRAR 345KV CKT Z	720	720	0.04084	111.2115	GEN652548 5-FT RANDAL
FDNS	00NR	4	17SP	G15_076	TO->FROM	GRPRAR1-LNX3345.00 - GRPRAR 345KV CKT Z	720	720	0.04084	111.2115	GEN652549 7-FT RANDAL
FDNS	00NR	4	17SP	G15_076	TO->FROM	GRPRAR1-LNX3345.00 - GRPRAR 345KV CKT Z	720	720	0.04123	111.2109	P12:115:UMZW:# 172 #: WI IN SD.
FDNS	00NR	4	17SP	G15_076	TO->FROM	GRPRAR1-LNX3345.00 - GRPRAR 345KV CKT Z	720	720	0.04079	111.2091	G14-021T 345.00 - MULLNCR7 345.00 345KV CKT 1
FDNS	00NR	4	17SP	G15_076	TO->FROM	GRPRAR1-LNX3345.00 - GRPRAR 345KV CKT Z	720	720	0.04079	111.209	G15-005T 345.00 - MULLNCR7 345.00 345KV CKT 1
FDNS	00NR	4	17SP	G15_076	TO->FROM	GRPRAR1-LNX3345.00 - GRPRAR 345KV CKT Z	720	720	0.04084	111.2053	GEN590010 1-ERCOT EQUIVALENCE
FDNS	00NR	4	17SP	G15_076	TO->FROM	GRPRAR1-LNX3345.00 - GRPRAR 345KV CKT Z	720	720	0.04084	111.2012	GEN672367 1-MERIDIAN GENERATOR 1 GT1
FDNS	00NR	4	17SP	G15_076	TO->FROM	GRPRAR1-LNX3345.00 - GRPRAR 345KV CKT Z	720	720	0.04084	111.2012	GEN672368 2-MERIDIAN GENERATOR 2 GT2
FDNS	00NR	4	17SP	G15_076	TO->FROM	GRPRAR1-LNX3345.00 - GRPRAR 345KV CKT Z	720	720	0.04084	111.2002	GEN652547 3-FT RANDAL
FDNS	00NR	4	17SP	G15_076	TO->FROM	GRPRAR1-LNX3345.00 - GRPRAR 345KV CKT Z	720	720	0.04086	111.1995	P12:115:UMZZ:# 232 #: AB IN SD. ABERDEEN A TAP BETWEEN ELLENDALE AND ABERDEEN-SIEBRECHT.
FDNS	00NR	4	17SP	G15_076	TO->FROM	GRPRAR1-LNX3345.00 - GRPRAR 345KV CKT Z	720	720	0.04111	111.1988	LARAMIE RIVER - STEGALL 345KV CKT 1
FDNS	00NR	4	17SP	G15_076	TO->FROM	GRPRAR1-LNX3345.00 - GRPRAR 345KV CKT Z	720	720	0.04084	111.1966	GEN600021 3-ANGUS ANSON2
FDNS	00NR	4	17SP	G15_076	TO->FROM	GRPRAR1-LNX3345.00 - GRPRAR 345KV CKT Z	720	720	0.04084	111.1936	GEN600020 2-ANGUS ANSON1
FDNS	00NR	4	17SP	G15_076	TO->FROM	GRPRAR1-LNX3345.00 - GRPRAR 345KV CKT Z	720	720	0.04084	111.1898	GEN657964 1-ASH2GEN9 0.5750
FDNS	00NR	4	17SP	G15_076	TO->FROM	GRPRAR1-LNX3345.00 - GRPRAR 345KV CKT Z	720	720	0.04084	111.1886	GEN672352 3-NIPAWIN GENERATOR 3
FDNS	00NR	4	17SP	G15_076	TO->FROM	GRPRAR1-LNX3345.00 - GRPRAR 345KV CKT Z	720	720	0.04084	111.1885	GEN672350 1-NIPAWIN GENERATOR 1
FDNS	00NR	4	17SP	G15_076	TO->FROM	GRPRAR1-LNX3345.00 - GRPRAR 345KV CKT Z	720	720	0.04084	111.1885	GEN672351 2-NIPAWIN GENERATOR 2
FDNS	00NR	4	17SP	G15_076	TO->FROM	GRPRAR1-LNX3345.00 - GRPRAR 345KV CKT Z	720	720	0.04084	111.1798	GEN590011 2-ERCOT EQUIVALENCE
FDNS	00NR	4	17SP	G15_076	TO->FROM	GRPRAR1-LNX3345.00 - GRPRAR 345KV CKT Z	720	720	0.04084	111.1748	GEN672349 3-CORY COGEN GENERATOR 3 ST
FDNS	00NR	4	17SP	G15_076	TO->FROM	GRPRAR1-LNX3345.00 - GRPRAR 345KV CKT Z	720	720	0.04084	111.1703	GEN620324 3-HOOT LAKE 3 GEN
FDNS	00NR	4	17SP	G15_076	TO->FROM	GRPRAR1-LNX3345.00 - GRPRAR 345KV CKT Z	720	720	0.04084	111.1669	EASTDC - ERCOT EQUIVALENCE 345KV CKT 1
FDNS	00NR	4	17SP	G15_076	TO->FROM	GRPRAR1-LNX3345.00 - GRPRAR 345KV CKT Z	720	720	0.04084	111.1669	ERCOT EQUIVALENCE 345/24.0KV TRANSFORMER CKT 1
FDNS	00NR	4	17SP	G15_076	TO->FROM	GRPRAR1-LNX3345.00 - GRPRAR 345KV CKT Z	720	720	0.0427	111.1664	BATTLE CREEK - COUNTY LINE 115KV CKT 1
FDNS	00NR	4	17SP	G15_076	TO->FROM	GRPRAR1-LNX3345.00 - GRPRAR 345KV CKT Z	720	720	0.04079	111.1626	G15-005T 345.00 - SIBLEY 345KV CKT 1
FDNS	00NR	4	17SP	G15_076	TO->FROM	GRPRAR1-LNX3345.00 - GRPRAR 345KV CKT Z	720	720	0.04093	111.1553	ANTELOP-LNX3345.00 - BRDLAND-LNX3345.00 345KV CKT 1
FDNS	00NR	4	17SP	G15_076	TO->FROM	GRPRAR1-LNX3345.00 - GRPRAR 345KV CKT Z	720	720	0.04084	111.1477	GEN629072 4-LANSING GENERATOR FOR UNITS NO4 EIA CODE 1
FDNS	00NR	4	17SP	G15_076	TO->FROM	GRPRAR1-LNX3345.00 - GRPRAR 345KV CKT Z	720	720	0.04023	111.1469	ALBION - PETERSBURG 115KV CKT 1
FDNS	00NR	4	17SP	G15_076	TO->FROM	GRPRAR1-LNX3345.00 - GRPRAR 345KV CKT Z	720	720	0.04084	111.1455	GEN660003 3-HURON WEST PARK
FDNS	00NR	4	17SP	G15_076	TO->FROM	GRPRAR1-LNX3345.00 - GRPRAR 345KV CKT Z	720	720	0.04084	111.1384	GEN600012 2-BLACK DOG GEN 2
FDNS	00NR	4	17SP	G15_076	TO->FROM	GRPRAR1-LNX3345.00 - GRPRAR 345KV CKT Z	720	720	0.04154	111.1379	AXTELL - POST ROCK 345KV CKT 1
FDNS	00NR	4	17SP	G15_076	TO->FROM	GRPRAR1-LNX3345.00 - GRPRAR 345KV CKT Z	720	720	0.03893	111.1187	COLUMEAST - NW68TH & HOLDREGE 345KV CKT 1
FDNS	00NR	4	17SP	G15_076	TO->FROM	GRPRAR1-LNX3345.00 - GRPRAR 345KV CKT Z	720	720	0.03893	111.1187	COLUMEAST - NW68TH & HOLDREGE 345KV CKT 1
FDNS	00NR	4	17SP	G15_076	TO->FROM	GRPRAR1-LNX3345.00 - GRPRAR 345KV CKT Z	720	720	0.04023	111.1177	PETERSBRG.N7115.00 - PETERSBURG 115KV CKT Z1
FDNS	00NR	4	17SP	G15_076	TO->FROM	GRPRAR1-LNX3345.00 - GRPRAR 345KV CKT Z	720	720	0.03966	111.1148	COOPER - MOORE 345KV CKT 1
FDNS	00NR	4	17SP	G15_076	TO->FROM	GRPRAR1-LNX3345.00 - GRPRAR 345KV CKT Z	720	720	0.0427	111.1044	ANTELOPE 7115.00 - COUNTY LINE 115KV CKT 1
FDNS	00NR	4	17SP	G15_076	TO->FROM	GRPRAR1-LNX3345.00 - GRPRAR 345KV CKT Z	720	720	0.04084	111.1031	GEN659290 1-EDGECOL
FDNS	00NR	4	17SP	G15_076	TO->FROM	GRPRAR1-LNX3345.00 - GRPRAR 345KV CKT Z	720	720	0.04084	111.1012	EMERY 161/18.0KV TRANSFORMER CKT 1
FDNS	00NR	4	17SP	G15_076	TO->FROM	GRPRAR1-LNX3345.00 - GRPRAR 345KV CKT Z	720	720	0.04084	111.0982	GEN672339 16-QE 16G 13.800
FDNS	00NR	4	17SP	G15_076	TO->FROM	GRPRAR1-LNX3345.00 - GRPRAR 345KV CKT Z	720	720	0.04084	111.0982	GEN672342 3-QUEEN ELIZABETH GENERATOR 3
FDNS	00NR	4	17SP	G15_076	TO->FROM	GRPRAR1-LNX3345.00 - GRPRAR 345KV CKT Z	720	720	0.04084	111.097	GEN652410 3-FT PECK
FDNS	00NR	4	17SP	G15_076	TO->FROM	GRPRAR1-LNX3345.00 - GRPRAR 345KV CKT Z	720	720	0.04358	111.0922	MINGO - RED WILLOW 345KV CKT 1
FDNS	00NR	4	17SP	G15_076	TO->FROM	GRPRAR1-LNX3345.00 - GRPRAR 345KV CKT Z	720	720	0.04358	111.0922	MINGO - RED WILLOW 345KV CKT 1
FDNS	00NR	4	17SP	G15_076	TO->FROM	GRPRAR1-LNX3345.00 - GRPRAR 345KV CKT Z	720	720	0.04084	111.0829	GEN672393 2-NBECST2G 13.800
FDNS	00NR	4	17SP	G15_076	TO->FROM	GRPRAR1-LNX3345.00 - GRPRAR 345KV CKT Z	720	720	0.04023	111.0789	P12:115:NPPD:1168B:ALBION 7:PETERSBRG.N7:BTB

SOLUTION	GROUP	SCENARIO	SEASON	SOURCE	DIRECTION	MONITORED ELEMENT	RATEA (MVA)	RATEB(MVA)	TDF	TC%LOADING (% MVA)	CONTINGENCY
FDNS	00NR	4	17SP	G15_076	TO->FROM	GRPRAR1-LNX3345.00 - GRPRAR 345KV CKT Z	720	720	0.03898	111.0732	COLUMEAST - SHELL CREEK 345KV CKT 1
FDNS	00NR	4	17SP	G15_076	TO->FROM	GRPRAR1-LNX3345.00 - GRPRAR 345KV CKT Z	720	720	0.04084	111.0673	GEN600046 1-MECST
FDNS	00NR	4	17SP	G15_076	TO->FROM	GRPRAR1-LNX3345.00 - GRPRAR 345KV CKT Z	720	720	0.04084	111.0591	GEN300007 1-NEW MADRID UNIT 2
FDNS	00NR	4	17SP	G15_076	TO->FROM	GRPRAR1-LNX3345.00 - GRPRAR 345KV CKT Z	720	720	0.04084	111.0535	GEN300006 1-NEW MADRID UNIT 1
FDNS	00NR	4	17SP	G15_076	TO->FROM	GRPRAR1-LNX3345.00 - GRPRAR 345KV CKT Z	720	720	0.04084	111.043	GEN600047 1-MECCT1
FDNS	00NR	4	17SP	G15_076	TO->FROM	GRPRAR1-LNX3345.00 - GRPRAR 345KV CKT Z	720	720	0.04084	111.0331	GEN652414 4-FT PECK
FDNS	00NR	4	17SP	G15_076	TO->FROM	GRPRAR1-LNX3345.00 - GRPRAR 345KV CKT Z	720	720	0.04084	111.0331	GEN652415 5-FT PECK
FDNS	00NR	4	17SP	G15_076	TO->FROM	GRPRAR1-LNX3345.00 - GRPRAR 345KV CKT Z	720	720	0.04084	111.0281	GEN600050 1-FEP
FDNS	00NR	4	17SP	G15_076	TO->FROM	GRPRAR1-LNX3345.00 - GRPRAR 345KV CKT Z	720	720	0.04084	111.0165	GEN660001 2-ABERDEEN SIEBRECHT
FDNS	00NR	4	17SP	G15_076	TO->FROM	GRPRAR1-LNX3345.00 - GRPRAR 345KV CKT Z	720	720	0.04084	111.0032	LADISH 115/13.2KV TRANSFORMER CKT 1
FDNS	00NR	4	17SP	G15_076	TO->FROM	GRPRAR1-LNX3345.00 - GRPRAR 345KV CKT Z	720	720	0.04084	110.9836	GEN652345 W-G07_023IS_2 0.6900
FDNS	00NR	4	17SP	G15_076	TO->FROM	GRPRAR1-LNX3345.00 - GRPRAR 345KV CKT Z	720	720	0.04243	110.9662	G15061_T 345.00 - SETAB 345KV CKT 1
FDNS	00NR	4	17SP	G15_076	TO->FROM	GRPRAR1-LNX3345.00 - GRPRAR 345KV CKT Z	720	720	0.04087	110.9466	BISMARK - L3 HAWDON 230KV CKT 1
FDNS	00NR	4	17SP	G15_076	TO->FROM	GRPRAR1-LNX3345.00 - GRPRAR 345KV CKT Z	720	720	0.04084	110.945	GEN 11104 1-J262_GEN 0.6000
FDNS	00NR	4	17SP	G15_076	TO->FROM	GRPRAR1-LNX3345.00 - GRPRAR 345KV CKT Z	720	720	0.04084	110.945	GEN 11108 1-J263_GEN 0.6000
FDNS	00NR	4	17SP	G15_076	TO->FROM	GRPRAR1-LNX3345.00 - GRPRAR 345KV CKT Z	720	720	0.04084	110.9385	GEN600063 1-COLVILLE GEN 1
FDNS	00NR	4	17SP	G15_076	TO->FROM	GRPRAR1-LNX3345.00 - GRPRAR 345KV CKT Z	720	720	0.04084	110.9385	GEN600064 2-COLVILLE GEN 2
FDNS	00NR	4	17SP	G15_076	TO->FROM	GRPRAR1-LNX3345.00 - GRPRAR 345KV CKT Z	720	720	0.0423	110.936	GERALD GENTLEMAN STATION - RED WILLOW 345KV CKT 1
FDNS	00NR	4	17SP	G15_076	TO->FROM	GRPRAR1-LNX3345.00 - GRPRAR 345KV CKT Z	720	720	0.04084	110.93	GEN600045 4-ANSON
FDNS	00NR	4	17SP	G15_076	TO->FROM	GRPRAR1-LNX3345.00 - GRPRAR 345KV CKT Z	720	720	0.04084	110.926	GEN600043 7-BLUE LAKE5
FDNS	00NR	4	17SP	G15_076	TO->FROM	GRPRAR1-LNX3345.00 - GRPRAR 345KV CKT Z	720	720	0.04084	110.926	GEN600044 8-BLUE LAKE6
FDNS	00NR	4	17SP	G15_076	TO->FROM	GRPRAR1-LNX3345.00 - GRPRAR 345KV CKT Z	720	720	0.04084	110.9133	G830_SUB 115.00 - GRE-MCHENRY7115.00 115KV CKT 1
FDNS	00NR	4	17SP	G15_076	TO->FROM	GRPRAR1-LNX3345.00 - GRPRAR 345KV CKT Z	720	720	0.04084	110.8992	G830_SUB 115.00 115/34.5KV TRANSFORMER CKT 1
FDNS	00NR	4	17SP	G15_076	TO->FROM	GRPRAR1-LNX3345.00 - GRPRAR 345KV CKT Z	720	720	0.04095	110.8971	G11_051T 345.00 - TATONGA7 345.00 345KV CKT 1
FDNS	00NR	4	17SP	G15_076	TO->FROM	GRPRAR1-LNX3345.00 - GRPRAR 345KV CKT Z	720	720	0.04084	110.8939	GEN600014 4-BLACK DOG GEN 4
FDNS	00NR	4	17SP	G15_076	TO->FROM	GRPRAR1-LNX3345.00 - GRPRAR 345KV CKT Z	720	720	0.04259	110.8923	P12:115:NPPD:1163B:NELIGH 7:NORFK.N7:BTB
FDNS	00NR	4	17SP	G15_076	TO->FROM	GRPRAR1-LNX3345.00 - GRPRAR 345KV CKT Z	720	720	0.04084	110.892	GEN600065 7-HIGH BRIDGE
FDNS	00NR	4	17SP	G15_076	TO->FROM	GRPRAR1-LNX3345.00 - GRPRAR 345KV CKT Z	720	720	0.04084	110.892	GEN600066 8-HIGH BRIDGE
FDNS	00NR	4	17SP	G15_076	TO->FROM	GRPRAR1-LNX3345.00 - GRPRAR 345KV CKT Z	720	720	0.04084	110.8871	GEN600011 5-BLACK DOG GEN 1
FDNS	00NR	4	17SP	G15_076	TO->FROM	GRPRAR1-LNX3345.00 - GRPRAR 345KV CKT Z	720	720	0.04084	110.8758	GEN600071 10-RIVER SIDE
FDNS	00NR	4	17SP	G15_076	TO->FROM	GRPRAR1-LNX3345.00 - GRPRAR 345KV CKT Z	720	720	0.04084	110.8756	GEN600070 9-RIVER SIDE
FDNS	00NR	4	17SP	G15_076	TO->FROM	GRPRAR1-LNX3345.00 - GRPRAR 345KV CKT Z	720	720	0.04084	110.863	GEN600007 7-RIVERSIDE GEN 7
FDNS	00NR	4	17SP	G15_076	TO->FROM	GRPRAR1-LNX3345.00 - GRPRAR 345KV CKT Z	720	720	0.04084	110.8555	GEN652906 1-G09_006IS_3 0.6900
FDNS	00NR	4	17SP	G15_076	TO->FROM	GRPRAR1-LNX3345.00 - GRPRAR 345KV CKT Z	720	720	0.03797	110.8433	FT THOMPSON (FT2 KU1A) 345/230/13.8KV TRANSFORMER CKT 1
FDNS	00NR	4	17SP	G15_076	TO->FROM	GRPRAR1-LNX3345.00 - GRPRAR 345KV CKT Z	720	720	0.04084	110.8431	GEN600017 C-LS POWER CT
FDNS	00NR	4	17SP	G15_076	TO->FROM	GRPRAR1-LNX3345.00 - GRPRAR 345KV CKT Z	720	720	0.03796	110.8401	FT THOMPSON (FT2 KU1B) 345/230/13.8KV TRANSFORMER CKT 1
FDNS	00NR	4	17SP	G15_076	TO->FROM	GRPRAR1-LNX3345.00 - GRPRAR 345KV CKT Z	720	720	0.04084	110.8373	GEN659273 2-GROTON SYNC COND
FDNS	00NR	4	17SP	G15_076	TO->FROM	GRPRAR1-LNX3345.00 - GRPRAR 345KV CKT Z	720	720	0.04084	110.8373	GEN659294 1-WILTONCOL9
FDNS	00NR	4	25SP	G15_076	TO->FROM	GRPRAR1-LNX3345.00 - GRPRAR 345KV CKT Z	720	720	0.03731	110.8215	P12:230:UMZB:# 116 #: ST IN SD. WSG-ST-VH
FDNS	00NR	4	17SP	G15_076	TO->FROM	GRPRAR1-LNX3345.00 - GRPRAR 345KV CKT Z	720	720	0.04084	110.8192	LANSING WEST 161/22.0KV TRANSFORMER CKT 1
FDNS	00NR	4	17SP	G15_076	TO->FROM	GRPRAR1-LNX3345.00 - GRPRAR 345KV CKT Z	720	720	0.04084	110.8022	GEN659192 6-LYNN
FDNS	00NR	4	17SP	G15_076	TO->FROM	GRPRAR1-LNX3345.00 - GRPRAR 345KV CKT Z	720	720	0.04084	110.8012	GEN659162 4-RED WLCK
FDNS	00NR	4	17SP	G15_076	TO->FROM	GRPRAR1-LNX3345.00 - GRPRAR 345KV CKT Z	720	720	0.04084	110.8012	GEN659163 5-BLACK WDCK
FDNS	00NR	4	17SP	G15_076	TO->FROM	GRPRAR1-LNX3345.00 - GRPRAR 345KV CKT Z	720	720	0.04084	110.7873	GEN681522 3-GENOA 3
FDNS	00NR	4	17SP	G15_076	TO->FROM	GRPRAR1-LNX3345.00 - GRPRAR 345KV CKT Z	720	720	0.04084	110.7802	GEN615021 1-GRE-ER 14G 16.000
FDNS	00NR	4	20SP	G15_076	TO->FROM	GRPRAR1-LNX3345.00 - GRPRAR 345KV CKT Z	720	720	0.03733	110.779	STORLA - WESSINGTON 230KV CKT 1
FDNS	00NR	4	17SP	G15_076	TO->FROM	GRPRAR1-LNX3345.00 - GRPRAR 345KV CKT Z	720	720	0.04093	110.7689	BRDLAND-LNX3345.00 - HURON 345KV CKT Z
FDNS	00NR	4	17SP	G15_076	TO->FROM	GRPRAR1-LNX3345.00 - GRPRAR 345KV CKT Z	720	720	0.04093	110.7681	BROADLAND - HURON 230KV CKT 1
FDNS	00NR	4	17SP	G15_076	TO->FROM	GRPRAR1-LNX3345.00 - GRPRAR 345KV CKT Z	720	720	0.04093	110.7678	HURON (BD KU2A) 345/230/13.8KV TRANSFORMER CKT 1
FDNS	00NR	4	17SP	G15_076	TO->FROM	GRPRAR1-LNX3345.00 - GRPRAR 345KV CKT Z	720	720	0.04093	110.7678	HURON (BD KU2A) 345/230/13.8KV TRANSFORMER CKT 1
FDNS	00NR	4	17SP	G15_076	TO->FROM	GRPRAR1-LNX3345.00 - GRPRAR 345KV CKT Z	720	720	0.04084	110.7669	GEN615052 1-CAMBRIDGE GENERATING STATION
FDNS	00NR	4	17SP	G15_076	TO->FROM	GRPRAR1-LNX3345.00 - GRPRAR 345KV CKT Z	720	720	0.04093	110.763	P12:345:UMZB:# 102 #: AVS BD IN ND. AVS BRD LR
FDNS	00NR	4	17SP	G15_076	TO->FROM	GRPRAR1-LNX3345.00 - GRPRAR 345KV CKT Z	720	720	0.04084	110.763	CENTER 230/22.0KV TRANSFORMER CKT 1
FDNS	00NR	4	17SP	G15_076	TO->FROM	GRPRAR1-LNX3345.00 - GRPRAR 345KV CKT Z	720	720	0.04084	110.7626	GEN659031 1-G12_014IS_4 0.6900
FDNS	00NR	4	17SP	G15_076	TO->FROM	GRPRAR1-LNX3345.00 - GRPRAR 345KV CKT Z	720	720	0.04093	110.7624	P12:345:UMZB:# 103 #: BD IN SD. LOSS OF LINE
FDNS	00NR	4	17SP	G15_076	TO->FROM	GRPRAR1-LNX3345.00 - GRPRAR 345KV CKT Z	720	720	0.04084	110.7595	GEN652907 1-G09_007IS_3 0.6900
FDNS	00NR	4	17SP	G15_076	TO->FROM	GRPRAR1-LNX3345.00 - GRPRAR 345KV CKT Z	720	720	0.04084	110.7565	GEN 10648 1-G830_GEN 0.6900
FDNS	00NR	4	17SP	G15_076	TO->FROM	GRPRAR1-LNX3345.00 - GRPRAR 345KV CKT Z	720	720	0.04084	110.7502	GEN660016 1-B_H WIND 0.7000
FDNS	00NR	4	17SP	G15_076	TO->FROM	GRPRAR1-LNX3345.00 - GRPRAR 345KV CKT Z	720	720	0.03797	110.7042	HOSKINS - RAUN 345KV CKT 1
FDNS	00NR	4	17SP	G15_076	TO->FROM	GRPRAR1-LNX3345.00 - GRPRAR 345KV CKT Z	720	720	0.03797	110.7042	HOSKINS - RAUN 345KV CKT 1
FDNS	00NR	4	17SP	G15_076	TO->FROM	GRPRAR1-LNX3345.00 - GRPRAR 345KV CKT Z	720	720	0.03675	110.6997	DIXONCO 230.00 - TWIN CHURCH 230KV CKT 1
FDNS	00NR	4	17SP	G15_076	TO->FROM	GRPRAR1-LNX3345.00 - GRPRAR 345KV CKT Z	720	720	0.04084	110.6862	GEN615015 1-GRE-SPRITWDG13.200
FDNS	00NR	4	17SP	G15_076	TO->FROM	GRPRAR1-LNX3345.00 - GRPRAR 345KV CKT Z	720	720	0.04095	110.6786	MATHWSN7 345.00 - TATONGA7 345.00 345KV CKT 1
FDNS	00NR	4	17SP	G15_076	TO->FROM	GRPRAR1-LNX3345.00 - GRPRAR 345KV CKT Z	720	720	0.04084	110.6215	GEN659353 1-DEERCREK CTG18.000
FDNS	00NR	4	17SP	G15_076	TO->FROM	GRPRAR1-LNX3345.00 - GRPRAR 345KV CKT Z	720	720	0.04084	110.6197	GEN659354 1-DEERCREK STG18.000
FDNS	00NR	4	17SP	G15_076	TO->FROM	GRPRAR1-LNX3345.00 - GRPRAR 345KV CKT Z	720	720	0.04093	110.6087	ANTELOP-LNX3345.00 - ANTELOPE VALLEY 345KV CKT Z
FDNS	00NR	4	17SP	G15_076	TO->FROM	GRPRAR1-LNX3345.00 - GRPRAR 345KV CKT Z	720	720	0.04084	110.5314	GEN600067 9-HIGH BRIDGE
FDNS	00NR	4	17SP	G15_076	TO->FROM	GRPRAR1-LNX3345.00 - GRPRAR 345KV CKT Z	720	720	0.04084	110.531	GEN672303 3-BOUNDARY DAM GENERATOR 3
FDNS	00NR	4	17SP	G15_076	TO->FROM	GRPRAR1-LNX3345.00 - GRPRAR 345KV CKT Z	720	720	0.04084	110.5309	GEN672305 5-BOUNDARY DAM GENERATOR 5
FDNS	00NR	4	17SP	G15_076	TO->FROM	GRPRAR1-LNX3345.00 - GRPRAR 345KV CKT Z	720	720	0.04084	110.5056	GEN672392 1-NBECGT1G 18.000
FDNS	00NR	4	17SP	G15_076	TO->FROM	GRPRAR1-LNX3345.00 - GRPRAR 345KV CKT Z	720	720	0.04087	110.4708	OAHE - SULLEY BUTTE 230KV CKT 1
FDNS	00NR	4	17SP	G15_076	TO->FROM	GRPRAR1-LNX3345.00 - GRPRAR 345KV CKT Z	720	720	0.04084	110.4425	GEN910006 1-G12_012IS_3 0.6900
FDNS	00NR	4	17SP	G15_076	TO->FROM	GRPRAR1-LNX3345.00 - GRPRAR 345KV CKT Z	720	720	0.04084	110.4315	BISONMP4 230.00 - SQUARE BUTTE 230KV CKT 1
FDNS	00NR	4	17SP	G15_076	TO->FROM	GRPRAR1-LNX3345.00 - GRPRAR 345KV CKT Z	720	720	0.04084	110.3899	GEN662101 1-WESSINGTON190.5750
FDNS	00NR	4	17SP	G15_076	TO->FROM	GRPRAR1-LNX3345.00 - GRPRAR 345KV CKT Z	720	720	0.04237	110.3555	AXTELL - SWEETWATER 345KV CKT 1
FDNS	00NR	4	17SP	G15_076	TO->FROM	GRPRAR1-LNX3345.00 - GRPRAR 345KV CKT Z	720	720	0.04087	110.3182	SULLEY BUTTE - SULLYBT-LNX3230.00 230KV CKT Z
FDNS	00NR	4	17SP	G15_076	TO->FROM	GRPRAR1-LNX3345.00 - GRPRAR 345KV CKT Z	720	720	0.04242	110.3163	G15088_T 345.00 - MOORE 345KV CKT 1
FDNS	00NR	4	17SP	G15_076	TO->FROM	GRPRAR1-LNX3345.00 - GRPRAR 345KV CKT Z	720	720	0.04087	110.3162	SULLYBT-LNX3230.00 - WHITLOK 230KV CKT 1
FDNS	00NR	4	17SP	G15_076	TO->FROM	GRPRAR1-LNX3345.00 - GRPRAR 345KV CKT Z	720	720	0.04087	110.2687	P12:230:UMZB:# 114 #: SB IN SD. SB-WK-GH

SOLUTION	GROUP	SCENARIO	SEASON	SOURCE	DIRECTION	MONITORED ELEMENT	RATEA (MVA)	RATEB(MVA)	TDF	TC%LOADING (% MVA)	CONTINGENCY
FDNS	00NR	4	17SP	G15_076	TO->FROM	GRPRAR1-LNX3345.00 - GRPRAR 345KV CKT Z	720	720	0.04087	110.2687	P12:230:UMZB:# 117 #: WK IN SD. SB-WK-GH
FDNS	00NR	4	17SP	G15_076	TO->FROM	GRPRAR1-LNX3345.00 - GRPRAR 345KV CKT Z	720	720	0.04084	110.2654	SQUARE BUTTE - YNG2 4 230.00 230KV CKT 1
FDNS	00NR	4	17SP	G15_076	TO->FROM	GRPRAR1-LNX3345.00 - GRPRAR 345KV CKT Z	720	720	0.03535	110.2344	HOSKINS - SHELL CREEK 345KV CKT 1
FDNS	00NR	4	17SP	G15_076	TO->FROM	GRPRAR1-LNX3345.00 - GRPRAR 345KV CKT Z	720	720	0.04087	110.2162	GLENHAM - WHITLOK 230KV CKT 1
FDNS	00NR	4	17SP	G15_076	TO->FROM	GRPRAR1-LNX3345.00 - GRPRAR 345KV CKT Z	720	720	0.04084	110.2062	HESKETT 115/13.8KV TRANSFORMER CKT 1
FDNS	00NR	4	17SP	G15_076	TO->FROM	GRPRAR1-LNX3345.00 - GRPRAR 345KV CKT Z	720	720	0.04084	110.1611	GEN681542 6-JP MADGETT
FDNS	00NR	4	17SP	G15_076	TO->FROM	GRPRAR1-LNX3345.00 - GRPRAR 345KV CKT Z	720	720	0.04084	110.115	GEN659289 1-DAYCNTYWND W0.6900
FDNS	00NR	4	17SP	G15_076	TO->FROM	GRPRAR1-LNX3345.00 - GRPRAR 345KV CKT Z	720	720	0.04084	110.0973	GEN659018 1-G14_003IS_3 0.6900
FDNS	00NR	4	17SP	G15_076	TO->FROM	GRPRAR1-LNX3345.00 - GRPRAR 345KV CKT Z	720	720	0.04084	110.077	GEN652543 3-BIG BEND
FDNS	00NR	4	17SP	G15_076	TO->FROM	GRPRAR1-LNX3345.00 - GRPRAR 345KV CKT Z	720	720	0.04084	110.0767	GEN563312 1-G15097_3 0.6900
FDNS	00NR	4	25SP	G15_076	TO->FROM	GRPRAR1-LNX3345.00 - GRPRAR 345KV CKT Z	720	720	0.03764	110.0599	STORLA - WESSINGTON 230KV CKT 1
FDNS	00NR	4	17SP	G15_076	TO->FROM	GRPRAR1-LNX3345.00 - GRPRAR 345KV CKT Z	720	720	0.04084	109.9316	GEN659194 1-NDPRAIRWND1W0.6900
FDNS	00NR	4	17SP	G15_076	TO->FROM	GRPRAR1-LNX3345.00 - GRPRAR 345KV CKT Z	720	720	0.04084	109.9152	GEN659010 4-G07_027IS_2 0.6900
FDNS	00NR	4	17SP	G15_076	TO->FROM	GRPRAR1-LNX3345.00 - GRPRAR 345KV CKT Z	720	720	0.04084	109.9079	GEN652460 4-GARRISON
FDNS	00NR	4	17SP	G15_076	TO->FROM	GRPRAR1-LNX3345.00 - GRPRAR 345KV CKT Z	720	720	0.04084	109.9078	GEN652461 5-GARRISON
FDNS	00NR	4	17SP	G15_076	TO->FROM	GRPRAR1-LNX3345.00 - GRPRAR 345KV CKT Z	720	720	0.04084	109.8861	GEN563342 1-G15098_3 0.6900
FDNS	00NR	4	17SP	G15_076	TO->FROM	GRPRAR1-LNX3345.00 - GRPRAR 345KV CKT Z	720	720	0.04084	109.8495	GEN652458 2-GARRISON
FDNS	00NR	4	17SP	G15_076	TO->FROM	GRPRAR1-LNX3345.00 - GRPRAR 345KV CKT Z	720	720	0.04084	109.8495	GEN652459 3-GARRISON
FDNS	00NR	4	17SP	G15_076	TO->FROM	GRPRAR1-LNX3345.00 - GRPRAR 345KV CKT Z	720	720	0.04084	109.8494	GEN652457 1-GARRISON
FDNS	00NR	4	20SP	G15_076	TO->FROM	GRPRAR1-LNX3345.00 - GRPRAR 345KV CKT Z	720	720	0.03742	109.8043	HANLON - STORLA 230KV CKT 1
FDNS	00NR	4	17SP	G15_076	TO->FROM	GRPRAR1-LNX3345.00 - GRPRAR 345KV CKT Z	720	720	0.04084	109.7956	GEN659403 1-NDSUNFLWR W0.6900
FDNS	00NR	4	17SP	G15_076	TO->FROM	GRPRAR1-LNX3345.00 - GRPRAR 345KV CKT Z	720	720	0.04084	109.7485	GEN652542 1-BIG BEND
FDNS	00NR	4	17SP	G15_076	TO->FROM	GRPRAR1-LNX3345.00 - GRPRAR 345KV CKT Z	720	720	0.04297	109.7158	MCCOOL - MOORE 345KV CKT 1
FDNS	00NR	4	17SP	G15_076	TO->FROM	GRPRAR1-LNX3345.00 - GRPRAR 345KV CKT Z	720	720	0.04084	109.6357	GEN652559 1-OAHE
FDNS	00NR	4	17SP	G15_076	TO->FROM	GRPRAR1-LNX3345.00 - GRPRAR 345KV CKT Z	720	720	0.04084	109.6344	STANTON 230/18.0KV TRANSFORMER CKT 1
FDNS	00NR	4	17SP	G15_076	TO->FROM	GRPRAR1-LNX3345.00 - GRPRAR 345KV CKT Z	720	720	0.04084	109.6331	CLAY BOSWELL 230/20.9KV TRANSFORMER CKT 1
FDNS	00NR	4	17SP	G15_076	TO->FROM	GRPRAR1-LNX3345.00 - GRPRAR 345KV CKT Z	720	720	0.04087	109.6064	GLENHAM - L3 HAWDON 230KV CKT 1
FDNS	00NR	4	17SP	G15_076	TO->FROM	GRPRAR1-LNX3345.00 - GRPRAR 345KV CKT Z	720	720	0.04084	109.3797	GEN659411 1-CAMPBLCNTY W0.6900
FDNS	00NR	4	20SP	G15_076	TO->FROM	GRPRAR1-LNX3345.00 - GRPRAR 345KV CKT Z	720	720	0.03931	109.2208	BUFFALO - JAMESTOWN 345KV CKT 1
FDNS	00NR	4	20SP	G15_076	TO->FROM	GRPRAR1-LNX3345.00 - GRPRAR 345KV CKT Z	720	720	0.03909	109.1737	G09_001IST 345.00 - WATERTOWN 345KV CKT 1
FDNS	00NR	4	20SP	G15_076	TO->FROM	GRPRAR1-LNX3345.00 - GRPRAR 345KV CKT Z	720	720	0.0367	109.1639	FT THOMPSON - LETCHER 230KV CKT 1
FDNS	00NR	4	20SP	G15_076	TO->FROM	GRPRAR1-LNX3345.00 - GRPRAR 345KV CKT Z	720	720	0.0367	109.1639	FT THOMPSON - LETCHER 230KV CKT 1
FDNS	00NR	4	17SP	G15_076	TO->FROM	GRPRAR1-LNX3345.00 - GRPRAR 345KV CKT Z	720	720	0.04084	109.1532	GEN659296 2-SDPRAIRWND1W0.6900
FDNS	00NR	4	17SP	G15_076	TO->FROM	GRPRAR1-LNX3345.00 - GRPRAR 345KV CKT Z	720	720	0.04084	109.1385	GEN672321 1-SHAND GENERATOR 1
FDNS	00NR	4	17SP	G15_076	TO->FROM	GRPRAR1-LNX3345.00 - GRPRAR 345KV CKT Z	720	720	0.04084	109.1286	GEN672311 2-POPLAR RIVER GENERATOR 2
FDNS	00NR	4	17SP	G15_076	TO->FROM	GRPRAR1-LNX3345.00 - GRPRAR 345KV CKT Z	720	720	0.04084	109.1282	GEN672310 1-POPLAR RIVER GENERATOR 1
FDNS	00NR	4	17SP	G15_076	TO->FROM	GRPRAR1-LNX3345.00 - GRPRAR 345KV CKT Z	720	720	0.04084	109.074	RCDC EAST 4230.00 - RED CEDAR DC 230KV CKT 1
FDNS	00NR	4	17SP	G15_076	TO->FROM	GRPRAR1-LNX3345.00 - GRPRAR 345KV CKT Z	720	720	0.04084	109.0588	GEN600004 2-PRAIRIE ISLAND G2
FDNS	00NR	4	17SP	G15_076	TO->FROM	GRPRAR1-LNX3345.00 - GRPRAR 345KV CKT Z	720	720	0.04084	109.055	P12:230:UMZB:# 112 #: NU IN SD. NU-RCDC & DRY CREEK XFMR
FDNS	00NR	4	17SP	G15_076	TO->FROM	GRPRAR1-LNX3345.00 - GRPRAR 345KV CKT Z	720	720	0.04084	109.0546	GEN600003 1-PRAIRIE ISLAND G1
FDNS	00NR	4	25SP	G15_076	TO->FROM	GRPRAR1-LNX3345.00 - GRPRAR 345KV CKT Z	720	720	0.03774	109.0508	HANLON - STORLA 230KV CKT 1
FDNS	00NR	4	17SP	G15_076	TO->FROM	GRPRAR1-LNX3345.00 - GRPRAR 345KV CKT Z	720	720	0.04084	109.0336	GEN672306 6-BOUNDARY DAM GENERATOR 6
FDNS	00NR	4	17SP	G15_076	TO->FROM	GRPRAR1-LNX3345.00 - GRPRAR 345KV CKT Z	720	720	0.04084	109.0008	GEN615010 1-STANTON4
FDNS	00NR	4	17SP	G15_076	TO->FROM	GRPRAR1-LNX3345.00 - GRPRAR 345KV CKT Z	720	720	0.04084	108.992	GEN659453 1-GI1414GEN W0.6900
FDNS	00NR	4	17SP	G15_076	TO->FROM	GRPRAR1-LNX3345.00 - GRPRAR 345KV CKT Z	720	720	0.04084	108.9901	GEN563302 1-G15096_3 0.6900
FDNS	00NR	4	17SP	G15_076	TO->FROM	GRPRAR1-LNX3345.00 - GRPRAR 345KV CKT Z	720	720	0.04084	108.885	GEN659141 1-K10215A
FDNS	00NR	4	17SP	G15_076	TO->FROM	GRPRAR1-LNX3345.00 - GRPRAR 345KV CKT Z	720	720	0.04084	108.8034	GEN652556 2-OAHE
FDNS	00NR	4	17SP	G15_076	TO->FROM	GRPRAR1-LNX3345.00 - GRPRAR 345KV CKT Z	720	720	0.04084	108.8034	GEN652557 4-OAHE
FDNS	00NR	4	17SP	G15_076	TO->FROM	GRPRAR1-LNX3345.00 - GRPRAR 345KV CKT Z	720	720	0.04084	108.8034	GEN652558 6-OAHE
FDNS	00NR	4	17SP	G15_076	TO->FROM	GRPRAR1-LNX3345.00 - GRPRAR 345KV CKT Z	720	720	0.04084	108.8021	GEN659110 1-LELAND OLDS UNIT1
FDNS	00NR	4	25SP	G15_076	TO->FROM	GRPRAR1-LNX3345.00 - GRPRAR 345KV CKT Z	720	720	0.03963	108.7781	BUFFALO - JAMESTOWN 345KV CKT 1
FDNS	00NR	4	17SP	G15_076	TO->FROM	GRPRAR1-LNX3345.00 - GRPRAR 345KV CKT Z	720	720	0.04084	108.7323	GEN657749 1-YOUNG 1 GENERATOR
FDNS	00NR	4	17SP	G15_076	TO->FROM	GRPRAR1-LNX3345.00 - GRPRAR 345KV CKT Z	720	720	0.04084	108.7154	GEN600006 1-AS KING
FDNS	00NR	4	17SP	G15_076	TO->FROM	GRPRAR1-LNX3345.00 - GRPRAR 345KV CKT Z	720	720	0.04084	108.6418	GEN652173 1-G09_001IS_2 0.6900
FDNS	00NR	4	17SP	G15_076	TO->FROM	GRPRAR1-LNX3345.00 - GRPRAR 345KV CKT Z	720	720	0.04281	108.59	GRAND ISLAND - MCCOOL 345KV CKT 1
FDNS	00NR	4	25SP	G15_076	TO->FROM	GRPRAR1-LNX3345.00 - GRPRAR 345KV CKT Z	720	720	0.03701	108.4052	FT THOMPSON - LETCHER 230KV CKT 1
FDNS	00NR	4	25SP	G15_076	TO->FROM	GRPRAR1-LNX3345.00 - GRPRAR 345KV CKT Z	720	720	0.03701	108.4052	FT THOMPSON - LETCHER 230KV CKT 1
FDNS	00NR	4	25SP	G15_076	TO->FROM	GRPRAR1-LNX3345.00 - GRPRAR 345KV CKT Z	720	720	0.03941	108.3682	G09_001IST 345.00 - WATERTOWN 345KV CKT 1
FDNS	00NR	4	17SP	G15_076	TO->FROM	GRPRAR1-LNX3345.00 - GRPRAR 345KV CKT Z	720	720	0.04084	108.3513	GEN659407 1-ANTELPHILLSW0.6900
FDNS	00NR	4	17SP	G15_076	TO->FROM	GRPRAR1-LNX3345.00 - GRPRAR 345KV CKT Z	720	720	0.04084	108.1623	GEN600005 1-MONTICELLO
FDNS	00NR	4	20SP	G15_076	TO->FROM	GRPRAR1-LNX3345.00 - GRPRAR 345KV CKT Z	720	720	0.03883	108.0505	WATERTN-LNX3345.00 - WHITE 345KV CKT 1
FDNS	00NR	4	20SP	G15_076	TO->FROM	GRPRAR1-LNX3345.00 - GRPRAR 345KV CKT Z	720	720	0.0361	107.9889	FT RANDAL - G12_009IST 230.00 230KV CKT 1
FDNS	00NR	4	20SP	G15_076	TO->FROM	GRPRAR1-LNX3345.00 - GRPRAR 345KV CKT Z	720	720	0.03883	107.9519	WATERTN-LNX3345.00 - WATERTOWN 345KV CKT Z
FDNS	00NR	4	20SP	G15_076	TO->FROM	GRPRAR1-LNX3345.00 - GRPRAR 345KV CKT Z	720	720	0.03883	107.9408	P12:345:UMZW:# 1747 #: WT2 IN SD. WT2-WHT LINE FAULT
FDNS	00NR	4	20SP	G15_076	TO->FROM	GRPRAR1-LNX3345.00 - GRPRAR 345KV CKT Z	720	720	0.0361	107.8994	FT THOMPSON - LAKE PLATT 230KV CKT 1
FDNS	00NR	4	20SP	G15_076	TO->FROM	GRPRAR1-LNX3345.00 - GRPRAR 345KV CKT Z	720	720	0.0361	107.8994	FT THOMPSON - LAKE PLATT 230KV CKT 1
FDNS	00NR	4	20SP	G15_076	TO->FROM	GRPRAR1-LNX3345.00 - GRPRAR 345KV CKT Z	720	720	0.03602	107.893	FT RANDAL - FT THOMPSON 230KV CKT 1
FDNS	00NR	4	20SP	G15_076	TO->FROM	GRPRAR1-LNX3345.00 - GRPRAR 345KV CKT Z	720	720	0.03602	107.893	FT RANDAL - FT THOMPSON 230KV CKT 1
FDNS	00NR	4	20SP	G15_076	TO->FROM	GRPRAR1-LNX3345.00 - GRPRAR 345KV CKT Z	720	720	0.0393	107.8146	GEN336821 1-GRAND GULF UNIT
FDNS	00NR	4	20SP	G15_076	TO->FROM	GRPRAR1-LNX3345.00 - GRPRAR 345KV CKT Z	720	720	0.0393	107.8063	GEN635024 4-WALTER SCOTT UNIT 4
FDNS	00NR	4	20SP	G15_076	TO->FROM	GRPRAR1-LNX3345.00 - GRPRAR 345KV CKT Z	720	720	0.04443	107.7836	FT RANDAL - MEADOWGROVE4230.00 230KV CKT 1
FDNS	00NR	4	20SP	G15_076	TO->FROM	GRPRAR1-LNX3345.00 - GRPRAR 345KV CKT Z	720	720	0.03931	107.7485	CENTER - JAMESTOWN 345KV CKT 1
FDNS	00NR	4	20SP	G15_076	TO->FROM	GRPRAR1-LNX3345.00 - GRPRAR 345KV CKT Z	720	720	0.03756	107.6738	SPLIT ROCK - WHITE 345KV CKT 1
FDNS	00NR	4	20SP	G15_076	TO->FROM	GRPRAR1-LNX3345.00 - GRPRAR 345KV CKT Z	720	720	0.03756	107.6738	SPLIT ROCK - WHITE 345KV CKT 1
FDNS	00NR	4	20SP	G15_076	TO->FROM	GRPRAR1-LNX3345.00 - GRPRAR 345KV CKT Z	720	720	0.0361	107.5328	G12_009IST 230.00 - LAKE PLATT 230KV CKT 1
FDNS	00NR	4	17SP	G15_076	TO->FROM	GRPRAR1-LNX3345.00 - GRPRAR 345KV CKT Z	720	720	0.04084	107.5077	GEN600000 1-SHERBURNECNTY G1
FDNS	00NR	4	20SP	G15_076	TO->FROM	GRPRAR1-LNX3345.00 - GRPRAR 345KV CKT Z	720	720	0.03933	107.4895	CHISAGO COUNTY - CHISAGO COUNTY 500KV CKT 1
FDNS	00NR	4	20SP	G15_076	TO->FROM	GRPRAR1-LNX3345.00 - GRPRAR 345KV CKT Z	720	720	0.03933	107.4656	CHISAGO COUNTY - FORBES 500KV CKT 1
FDNS	00NR	4	20SP	G15_076	TO->FROM	GRPRAR1-LNX3345.00 - GRPRAR 345KV CKT Z	720	720	0.03931	107.3545	BISON 3 345.00 - BUFFALO 345KV CKT 1

SOLUTION	GROUP	SCENARIO	SEASON	SOURCE	DIRECTION	MONITORED ELEMENT	RATEA (MVA)	RATEB(MVA)	TDF	TC%LOADING (% MVA)	CONTINGENCY
FDNS	00NR	4	20SP	G15_076	TO->FROM	GRPRAR1-LNX3345.00 - GRPRAR 345KV CKT Z	720	720	0.03818	107.3211	LETCHER - SIOUX FALLS 230KV CKT 1
FDNS	00NR	4	20SP	G15_076	TO->FROM	GRPRAR1-LNX3345.00 - GRPRAR 345KV CKT Z	720	720	0.0393	107.317	GEN635023 3-WALTER SCOTT UNIT 3
FDNS	00NR	4	20SP	G15_076	TO->FROM	GRPRAR1-LNX3345.00 - GRPRAR 345KV CKT Z	720	720	0.0393	107.2647	GEN562714 1-G15_023_4 0.6900
FDNS	00NR	4	20SP	G15_076	TO->FROM	GRPRAR1-LNX3345.00 - GRPRAR 345KV CKT Z	720	720	0.0393	107.2647	GEN562715 1-G15_023_5 0.6900
FDNS	00NR	4	20SP	G15_076	TO->FROM	GRPRAR1-LNX3345.00 - GRPRAR 345KV CKT Z	720	720	0.0393	107.2571	GEN344225 1-1CAL G1 25.000
FDNS	00NR	4	25SP	G15_076	TO->FROM	GRPRAR1-LNX3345.00 - GRPRAR 345KV CKT Z	720	720	0.03643	107.1812	FT RANDAL - G12_009IST 230.00 230KV CKT 1
FDNS	00NR	4	25SP	G15_076	TO->FROM	GRPRAR1-LNX3345.00 - GRPRAR 345KV CKT Z	720	720	0.03915	107.1739	WATERTN-LNX3345.00 - WHITE 345KV CKT 1
FDNS	00NR	4	20SP	G15_076	TO->FROM	GRPRAR1-LNX3345.00 - GRPRAR 345KV CKT Z	720	720	0.0393	107.1735	GEN337911 1-ARKANSAS NUCLEAR ONE UNIT #2
FDNS	00NR	4	17SP	G15_076	TO->FROM	GRPRAR1-LNX3345.00 - GRPRAR 345KV CKT Z	720	720	0.04084	107.1544	GEN600001 2-SHERBURNE CNTY G2
FDNS	00NR	4	25SP	G15_076	TO->FROM	GRPRAR1-LNX3345.00 - GRPRAR 345KV CKT Z	720	720	0.03963	107.1523	CENTER - JAMESTOWN 345KV CKT 1
FDNS	00NR	4	20SP	G15_076	TO->FROM	GRPRAR1-LNX3345.00 - GRPRAR 345KV CKT Z	720	720	0.0393	107.1444	GEN336153 1-WATERFORD UNIT#3
FDNS	00NR	4	20SP	G15_076	TO->FROM	GRPRAR1-LNX3345.00 - GRPRAR 345KV CKT Z	720	720	0.04039	107.13	MISSION - ST FRANCIS 115KV CKT 1
FDNS	00NR	4	25SP	G15_076	TO->FROM	GRPRAR1-LNX3345.00 - GRPRAR 345KV CKT Z	720	720	0.03643	107.1093	FT THOMPSON - LAKE PLATT 230KV CKT 1
FDNS	00NR	4	25SP	G15_076	TO->FROM	GRPRAR1-LNX3345.00 - GRPRAR 345KV CKT Z	720	720	0.03643	107.1093	FT THOMPSON - LAKE PLATT 230KV CKT 1
FDNS	00NR	4	20SP	G15_076	TO->FROM	GRPRAR1-LNX3345.00 - GRPRAR 345KV CKT Z	720	720	0.04039	107.1005	P12:115:NPPD:1091:VALENTN7:MISSION7:BTB
FDNS	00NR	4	25SP	G15_076	TO->FROM	GRPRAR1-LNX3345.00 - GRPRAR 345KV CKT Z	720	720	0.03635	107.0973	FT RANDAL - FT THOMPSON 230KV CKT 1
FDNS	00NR	4	25SP	G15_076	TO->FROM	GRPRAR1-LNX3345.00 - GRPRAR 345KV CKT Z	720	720	0.03635	107.0973	FT RANDAL - FT THOMPSON 230KV CKT 1
FDNS	00NR	4	25SP	G15_076	TO->FROM	GRPRAR1-LNX3345.00 - GRPRAR 345KV CKT Z	720	720	0.03915	107.0721	WATERTN-LNX3345.00 - WATERTOWN 345KV CKT Z
FDNS	00NR	4	20SP	G15_076	TO->FROM	GRPRAR1-LNX3345.00 - GRPRAR 345KV CKT Z	720	720	0.04033	107.0672	SIDNEY - SIDNEY1-LNX3345.00 345KV CKT Z
FDNS	00NR	4	25SP	G15_076	TO->FROM	GRPRAR1-LNX3345.00 - GRPRAR 345KV CKT Z	720	720	0.03915	107.0636	P12:345:UMZW:# 1747 #: WT2 IN SD. WT2-WHT LINE FAULT
FDNS	00NR	4	20SP	G15_076	TO->FROM	GRPRAR1-LNX3345.00 - GRPRAR 345KV CKT Z	720	720	0.04033	107.0471	KEYSTONE - SIDNEY1-LNX3345.00 345KV CKT 1
FDNS	00NR	4	20SP	G15_076	TO->FROM	GRPRAR1-LNX3345.00 - GRPRAR 345KV CKT Z	720	720	0.04735	106.9575	NUNDRWD - WAYSIDE 230KV CKT 1
FDNS	00NR	4	20SP	G15_076	TO->FROM	GRPRAR1-LNX3345.00 - GRPRAR 345KV CKT Z	720	720	0.04039	106.9547	HARMONY - ST FRANCIS 115KV CKT 1
FDNS	00NR	4	25SP	G15_076	TO->FROM	GRPRAR1-LNX3345.00 - GRPRAR 345KV CKT Z	720	720	0.04478	106.93	FT RANDAL - MEADOWGROVE4230.00 230KV CKT 1
FDNS	00NR	4	20SP	G15_076	TO->FROM	GRPRAR1-LNX3345.00 - GRPRAR 345KV CKT Z	720	720	0.03909	106.9266	G09_001IST 345.00 - GROTON 345KV CKT 1
FDNS	00NR	4	25SP	G15_076	TO->FROM	GRPRAR1-LNX3345.00 - GRPRAR 345KV CKT Z	720	720	0.03962	106.8632	GEN635024 4-WALTER SCOTT UNIT 4
FDNS	00NR	4	20SP	G15_076	TO->FROM	GRPRAR1-LNX3345.00 - GRPRAR 345KV CKT Z	720	720	0.03817	106.8541	FT RANDAL - SIOUX CITY 230KV CKT 1
FDNS	00NR	4	20SP	G15_076	TO->FROM	GRPRAR1-LNX3345.00 - GRPRAR 345KV CKT Z	720	720	0.0393	106.8133	GEN640010 1-GERALD GENTLEMAN STATION UNIT 1
FDNS	00NR	4	20SP	G15_076	TO->FROM	GRPRAR1-LNX3345.00 - GRPRAR 345KV CKT Z	720	720	0.0393	106.7987	GEN335831 1-RIVERBEND UNIT#1
FDNS	00NR	4	25SP	G15_076	TO->FROM	GRPRAR1-LNX3345.00 - GRPRAR 345KV CKT Z	720	720	0.03962	106.791	GEN336821 1-GRAND GULF UNIT
FDNS	00NR	4	25SP	G15_076	TO->FROM	GRPRAR1-LNX3345.00 - GRPRAR 345KV CKT Z	720	720	0.03963	106.7818	BISON 3 345.00 - BUFFALO 345KV CKT 1
FDNS	00NR	4	25SP	G15_076	TO->FROM	GRPRAR1-LNX3345.00 - GRPRAR 345KV CKT Z	720	720	0.03965	106.7702	CHISAGO COUNTY - CHISAGO COUNTY 500KV CKT 1
FDNS	00NR	4	25SP	G15_076	TO->FROM	GRPRAR1-LNX3345.00 - GRPRAR 345KV CKT Z	720	720	0.03962	106.7356	GEN640010 1-GERALD GENTLEMAN STATION UNIT 1
FDNS	00NR	4	20SP	G15_076	TO->FROM	GRPRAR1-LNX3345.00 - GRPRAR 345KV CKT Z	720	720	0.0393	106.7254	GEN640011 2-GERALD GENTLEMAN STATION UNIT 2
FDNS	00NR	4	25SP	G15_076	TO->FROM	GRPRAR1-LNX3345.00 - GRPRAR 345KV CKT Z	720	720	0.03965	106.7191	CHISAGO COUNTY - FORBES 500KV CKT 1
FDNS	00NR	4	25SP	G15_076	TO->FROM	GRPRAR1-LNX3345.00 - GRPRAR 345KV CKT Z	720	720	0.03643	106.7183	G12_009IST 230.00 - LAKE PLATT 230KV CKT 1
FDNS	00NR	4	25SP	G15_076	TO->FROM	GRPRAR1-LNX3345.00 - GRPRAR 345KV CKT Z	720	720	0.03788	106.7104	SPLIT ROCK - WHITE 345KV CKT 1
FDNS	00NR	4	25SP	G15_076	TO->FROM	GRPRAR1-LNX3345.00 - GRPRAR 345KV CKT Z	720	720	0.03788	106.7104	SPLIT ROCK - WHITE 345KV CKT 1
FDNS	00NR	4	20SP	G15_076	TO->FROM	GRPRAR1-LNX3345.00 - GRPRAR 345KV CKT Z	720	720	0.0393	106.7045	GEN337910 1-ARKANSAS NUCLEAR ONE UNIT #1
FDNS	00NR	4	20SP	G15_076	TO->FROM	GRPRAR1-LNX3345.00 - GRPRAR 345KV CKT Z	720	720	0.04039	106.6937	HARMONY - VALENTINE 115KV CKT 1
FDNS	00NR	4	17SP	G15_076	TO->FROM	GRPRAR1-LNX3345.00 - GRPRAR 345KV CKT Z	720	720	0.04084	106.6817	GEN620315 1-BIG STONE GEN
FDNS	00NR	4	17SP	G15_076	TO->FROM	GRPRAR1-LNX3345.00 - GRPRAR 345KV CKT Z	720	720	0.04084	106.6605	GEN661015 1-COYOTE
FDNS	00NR	4	20SP	G15_076	TO->FROM	GRPRAR1-LNX3345.00 - GRPRAR 345KV CKT Z	720	720	0.0414	106.5894	FT RANDAL - SPENCER 115KV CKT 1
FDNS	00NR	4	20SP	G15_076	TO->FROM	GRPRAR1-LNX3345.00 - GRPRAR 345KV CKT Z	720	720	0.0414	106.564	P12:115:NPPD:WAPA6:FTRANDL7:ONEILL 7:BTB
FDNS	00NR	4	20SP	G15_076	TO->FROM	GRPRAR1-LNX3345.00 - GRPRAR 345KV CKT Z	720	720	0.0414	106.564	P12:115:UMZB:# 115 #: SE IN NE. FR-SE-ON
FDNS	00NR	4	20SP	G15_076	TO->FROM	GRPRAR1-LNX3345.00 - GRPRAR 345KV CKT Z	720	720	0.03739	106.5361	SIOUXCY-LNX3345.00 - SPLIT ROCK 345KV CKT 1
FDNS	00NR	4	20SP	G15_076	TO->FROM	GRPRAR1-LNX3345.00 - GRPRAR 345KV CKT Z	720	720	0.03739	106.5361	SIOUXCY-LNX3345.00 - SPLIT ROCK 345KV CKT 1
FDNS	00NR	4	25SP	G15_076	TO->FROM	GRPRAR1-LNX3345.00 - GRPRAR 345KV CKT Z	720	720	0.0385	106.5307	LETCHER - SIOUX FALLS 230KV CKT 1
FDNS	00NR	4	25SP	G15_076	TO->FROM	GRPRAR1-LNX3345.00 - GRPRAR 345KV CKT Z	720	720	0.03962	106.5301	GEN562714 1-G15_023_4 0.6900
FDNS	00NR	4	25SP	G15_076	TO->FROM	GRPRAR1-LNX3345.00 - GRPRAR 345KV CKT Z	720	720	0.03962	106.5301	GEN562715 1-G15_023_5 0.6900
FDNS	00NR	4	20SP	G15_076	TO->FROM	GRPRAR1-LNX3345.00 - GRPRAR 345KV CKT Z	720	720	0.03739	106.4954	P12:345:UMZW:# 907 #: SC2-SR IN IA. SC2-SR 345 KV LINE
FDNS	00NR	4	20SP	G15_076	TO->FROM	GRPRAR1-LNX3345.00 - GRPRAR 345KV CKT Z	720	720	0.03739	106.4643	SIOUX CITY - SIOUXCY-LNX3345.00 345KV CKT Z
FDNS	00NR	4	17SP	G15_076	TO->FROM	GRPRAR1-LNX3345.00 - GRPRAR 345KV CKT Z	720	720	0.04084	106.4545	GEN600002 3-SHERBURNE CNTY G3
FDNS	00NR	4	25SP	G15_076	TO->FROM	GRPRAR1-LNX3345.00 - GRPRAR 345KV CKT Z	720	720	0.0407	106.4492	MISSION - ST FRANCIS 115KV CKT 1
FDNS	00NR	4	20SP	G15_076	TO->FROM	GRPRAR1-LNX3345.00 - GRPRAR 345KV CKT Z	720	720	0.0414	106.4455	ONEILL - SPENCER 115KV CKT 1
FDNS	00NR	4	25SP	G15_076	TO->FROM	GRPRAR1-LNX3345.00 - GRPRAR 345KV CKT Z	720	720	0.03962	106.4336	GEN640011 2-GERALD GENTLEMAN STATION UNIT 2
FDNS	00NR	4	25SP	G15_076	TO->FROM	GRPRAR1-LNX3345.00 - GRPRAR 345KV CKT Z	720	720	0.03962	106.4	GEN337911 1-ARKANSAS NUCLEAR ONE UNIT #2
FDNS	00NR	4	25SP	G15_076	TO->FROM	GRPRAR1-LNX3345.00 - GRPRAR 345KV CKT Z	720	720	0.03962	106.3988	GEN635023 3-WALTER SCOTT UNIT 3
FDNS	00NR	4	20SP	G15_076	TO->FROM	GRPRAR1-LNX3345.00 - GRPRAR 345KV CKT Z	720	720	0.03905	106.3977	GROTON-LNX3 345.00 - LELAND1-LNX3345.00 345KV CKT 1
FDNS	00NR	4	20SP	G15_076	TO->FROM	GRPRAR1-LNX3345.00 - GRPRAR 345KV CKT Z	720	720	0.03519	106.374	FT RANDAL - UTICA JCT 230KV CKT 1
FDNS	00NR	4	20SP	G15_076	TO->FROM	GRPRAR1-LNX3345.00 - GRPRAR 345KV CKT Z	720	720	0.05452	106.3707	DIXONCO 230.00 - HOSKINS 230KV CKT 1
FDNS	00NR	4	25SP	G15_076	TO->FROM	GRPRAR1-LNX3345.00 - GRPRAR 345KV CKT Z	720	720	0.04064	106.3453	KEYSTONE - SIDNEY1-LNX3345.00 345KV CKT 1
FDNS	00NR	4	20SP	G15_076	TO->FROM	GRPRAR1-LNX3345.00 - GRPRAR 345KV CKT Z	720	720	0.03905	106.3452	GROTON - GROTON-LNX3 345.00 345KV CKT Z
FDNS	00NR	4	20SP	G15_076	TO->FROM	GRPRAR1-LNX3345.00 - GRPRAR 345KV CKT Z	720	720	0.03859	106.3434	HANLON - SIOUX FALLS 230KV CKT 1
FDNS	00NR	4	20SP	G15_076	TO->FROM	GRPRAR1-LNX3345.00 - GRPRAR 345KV CKT Z	720	720	0.03905	106.3432	P12:345:UMZB:# 109 #: LOS GRT IN ND. LOS GRT
FDNS	00NR	4	25SP	G15_076	TO->FROM	GRPRAR1-LNX3345.00 - GRPRAR 345KV CKT Z	720	720	0.04064	106.3415	SIDNEY - SIDNEY1-LNX3345.00 345KV CKT Z
FDNS	00NR	4	20SP	G15_076	TO->FROM	GRPRAR1-LNX3345.00 - GRPRAR 345KV CKT Z	720	720	0.03905	106.337	LELAND OLDS - LELAND1-LNX3345.00 345KV CKT Z
FDNS	00NR	4	25SP	G15_076	TO->FROM	GRPRAR1-LNX3345.00 - GRPRAR 345KV CKT Z	720	720	0.0407	106.2594	HARMONY - ST FRANCIS 115KV CKT 1
FDNS	00NR	4	25SP	G15_076	TO->FROM	GRPRAR1-LNX3345.00 - GRPRAR 345KV CKT Z	720	720	0.03962	106.2573	GEN344225 1-1CAL G1 25.000
FDNS	00NR	4	20SP	G15_076	TO->FROM	GRPRAR1-LNX3345.00 - GRPRAR 345KV CKT Z	720	720	0.0405	106.2348	LAKEFIELD 3 - NOBLES 345KV CKT 1
FDNS	00NR	4	20SP	G15_076	TO->FROM	GRPRAR1-LNX3345.00 - GRPRAR 345KV CKT Z	720	720	0.03963	106.2342	GERALD GENTLEMAN STATION - KEYSTONE 345KV CKT 1
FDNS	00NR	4	20SP	G15_076	TO->FROM	GRPRAR1-LNX3345.00 - GRPRAR 345KV CKT Z	720	720	0.0393	106.2133	GEN337653 1-WHITE BLUFF UNIT #2
FDNS	00NR	4	17SP	G15_076	TO->FROM	GRPRAR1-LNX3345.00 - GRPRAR 345KV CKT Z	720	720	0.04084	106.2118	GEN657748 1-YOUNG 2 GENERATOR
FDNS	00NR	4	25SP	G15_076	TO->FROM	GRPRAR1-LNX3345.00 - GRPRAR 345KV CKT Z	720	720	0.03941	106.2062	G09_001IST 345.00 - GROTON 345KV CKT 1
FDNS	00NR	4	20SP	G15_076	TO->FROM	GRPRAR1-LNX3345.00 - GRPRAR 345KV CKT Z	720	720	0.03829	106.1857	PAHOJA - SIOUX FALLS 230KV CKT 1
FDNS	00NR	4	20SP	G15_076	TO->FROM	GRPRAR1-LNX3345.00 - GRPRAR 345KV CKT Z	720	720	0.04349	106.1744	RAUN - SUB 3451 FT CAL 345KV CKT 1
FDNS	00NR	4	20SP	G15_076	TO->FROM	GRPRAR1-LNX3345.00 - GRPRAR 345KV CKT Z	720	720	0.04349	106.1744	RAUN - SUB 3451 FT CAL 345KV CKT 1
FDNS	00NR	4	25SP	G15_076	TO->FROM	GRPRAR1-LNX3345.00 - GRPRAR 345KV CKT Z	720	720	0.03962	106.1669	GEN336153 1-WATERFORD UNIT#3
FDNS	00NR	4	20SP	G15_076	TO->FROM	GRPRAR1-LNX3345.00 - GRPRAR 345KV CKT Z	720	720	0.0393	106.1609	GEN337652 1-WHITE BLUFF UNIT #1

SOLUTION	GROUP	SCENARIO	SEASON	SOURCE	DIRECTION	MONITORED ELEMENT	RATEA (MVA)	RATEB(MVA)	TDF	TC%LOADING (% MVA)	CONTINGENCY
FDNS	00NR	4	25SP	G15_076	TO->FROM	GRPRAR1-LNX3345.00 - GRPRAR 345KV CKT Z	720	720	0.04763	106.1409	NUNDRWD - WAYSIDE 230KV CKT 1
FDNS	00NR	4	20SP	G15_076	TO->FROM	GRPRAR1-LNX3345.00 - GRPRAR 345KV CKT Z	720	720	0.04077	106.1377	SIDNEY - STEGALL 345KV CKT 1
FDNS	00NR	4	20SP	G15_076	TO->FROM	GRPRAR1-LNX3345.00 - GRPRAR 345KV CKT Z	720	720	0.03955	106.1321	ARROWHEAD - ARROWHEAD 230 230KV CKT 1
FDNS	00NR	4	20SP	G15_076	TO->FROM	GRPRAR1-LNX3345.00 - GRPRAR 345KV CKT Z	720	720	0.04039	106.1319	AINSWORTH - VALENTINE 115KV CKT 1
FDNS	00NR	4	20SP	G15_076	TO->FROM	GRPRAR1-LNX3345.00 - GRPRAR 345KV CKT Z	720	720	0.0393	106.106	GEN338146 1-INDEPENDENCE UNIT #2
FDNS	00NR	4	20SP	G15_076	TO->FROM	GRPRAR1-LNX3345.00 - GRPRAR 345KV CKT Z	720	720	0.0393	106.1025	GEN338143 1-INDEPENDENCE UNIT #1
FDNS	00NR	4	20SP	G15_076	TO->FROM	GRPRAR1-LNX3345.00 - GRPRAR 345KV CKT Z	720	720	0.0393	106.0798	GEN501801 1-DOLET HILLS UNIT1
FDNS	00NR	4	20SP	G15_076	TO->FROM	GRPRAR1-LNX3345.00 - GRPRAR 345KV CKT Z	720	720	0.03971	106.0534	BROOKING COUNTY - LYON COUNTY 345KV CKT 1
FDNS	00NR	4	20SP	G15_076	TO->FROM	GRPRAR1-LNX3345.00 - GRPRAR 345KV CKT Z	720	720	0.03939	106.0341	ALEXMRES3 345.00 - BISON 3 345.00 345KV CKT 1
FDNS	00NR	4	25SP	G15_076	TO->FROM	GRPRAR1-LNX3345.00 - GRPRAR 345KV CKT Z	720	720	0.03849	106.0191	FT RANDAL - SIOUX CITY 230KV CKT 1
FDNS	00NR	4	20SP	G15_076	TO->FROM	GRPRAR1-LNX3345.00 - GRPRAR 345KV CKT Z	720	720	0.03959	105.9681	AS KING - EAU CLAIRE 345KV CKT 1
FDNS	00NR	4	17SP	G15_076	TO->FROM	GRPRAR1-LNX3345.00 - GRPRAR 345KV CKT Z	720	720	0.04084	105.9629	GEN562872 1-G15046_3 0.6900
FDNS	00NR	4	20SP	G15_076	TO->FROM	GRPRAR1-LNX3345.00 - GRPRAR 345KV CKT Z	720	720	0.0393	105.9408	GEN336252 1-NINEMILE POINT UNIT#5
FDNS	00NR	4	25SP	G15_076	TO->FROM	GRPRAR1-LNX3345.00 - GRPRAR 345KV CKT Z	720	720	0.04172	105.9381	FT RANDAL - SPENCER 115KV CKT 1
FDNS	00NR	4	20SP	G15_076	TO->FROM	GRPRAR1-LNX3345.00 - GRPRAR 345KV CKT Z	720	720	0.03932	105.9284	CARPENTER - HURON 230KV CKT 1
FDNS	00NR	4	25SP	G15_076	TO->FROM	GRPRAR1-LNX3345.00 - GRPRAR 345KV CKT Z	720	720	0.04172	105.9077	P12:115:NPPD:WAPA6:FTRANDL7:ONEILL 7:BTB
FDNS	00NR	4	25SP	G15_076	TO->FROM	GRPRAR1-LNX3345.00 - GRPRAR 345KV CKT Z	720	720	0.04172	105.9077	P12:115:UMZB:# 115 #: SE IN NE. FR-SE-ON
FDNS	00NR	4	20SP	G15_076	TO->FROM	GRPRAR1-LNX3345.00 - GRPRAR 345KV CKT Z	720	720	0.0393	105.8607	GEN336251 1-NINEMILE POINT UNIT#4
FDNS	00NR	4	20SP	G15_076	TO->FROM	GRPRAR1-LNX3345.00 - GRPRAR 345KV CKT Z	720	720	0.03461	105.8481	RASMUSN - UTICA JCT 230KV CKT 1
FDNS	00NR	4	25SP	G15_076	TO->FROM	GRPRAR1-LNX3345.00 - GRPRAR 345KV CKT Z	720	720	0.03962	105.8463	GEN335831 1-RIVERBEND UNIT#1
FDNS	00NR	4	20SP	G15_076	TO->FROM	GRPRAR1-LNX3345.00 - GRPRAR 345KV CKT Z	720	720	0.0393	105.8422	GEN336831 1-BAXTER WILSON SES
FDNS	00NR	4	20SP	G15_076	TO->FROM	GRPRAR1-LNX3345.00 - GRPRAR 345KV CKT Z	720	720	0.03932	105.8249	HURON - WATERTOWN 230KV CKT 2
FDNS	00NR	4	20SP	G15_076	TO->FROM	GRPRAR1-LNX3345.00 - GRPRAR 345KV CKT Z	720	720	0.03932	105.8249	HURON - WATERTOWN 230KV CKT 2
FDNS	00NR	4	20SP	G15_076	TO->FROM	GRPRAR1-LNX3345.00 - GRPRAR 345KV CKT Z	720	720	0.0393	105.7892	GEN337041 1-GERALD ANDRUS
FDNS	00NR	4	25SP	G15_076	TO->FROM	GRPRAR1-LNX3345.00 - GRPRAR 345KV CKT Z	720	720	0.03962	105.7847	GEN337910 1-ARKANSAS NUCLEAR ONE UNIT #1
FDNS	00NR	4	20SP	G15_076	TO->FROM	GRPRAR1-LNX3345.00 - GRPRAR 345KV CKT Z	720	720	0.03932	105.7843	CARPENTER - WATERTOWN 230KV CKT 1
FDNS	00NR	4	20SP	G15_076	TO->FROM	GRPRAR1-LNX3345.00 - GRPRAR 345KV CKT Z	720	720	0.03932	105.7843	CARPENTER - WATERTOWN 230KV CKT 1
FDNS	00NR	4	25SP	G15_076	TO->FROM	GRPRAR1-LNX3345.00 - GRPRAR 345KV CKT Z	720	720	0.04172	105.7826	ONEILL - SPENCER 115KV CKT 1
FDNS	00NR	4	20SP	G15_076	TO->FROM	GRPRAR1-LNX3345.00 - GRPRAR 345KV CKT Z	720	720	0.03992	105.7574	HAZLETON - MITCHLCO3 345.00 345KV CKT 1
FDNS	00NR	4	20SP	G15_076	TO->FROM	GRPRAR1-LNX3345.00 - GRPRAR 345KV CKT Z	720	720	0.0393	105.7565	GEN501813 1-RODEMACHER UNIT 3
FDNS	00NR	4	20SP	G15_076	TO->FROM	GRPRAR1-LNX3345.00 - GRPRAR 345KV CKT Z	720	720	0.03829	105.7428	EAGLE 4 230.00 - PAHOJA 230KV CKT 1
FDNS	00NR	4	25SP	G15_076	TO->FROM	GRPRAR1-LNX3345.00 - GRPRAR 345KV CKT Z	720	720	0.03937	105.6998	GROTON-LNX3 345.00 - LELAND1-LNX3345.00 345KV CKT 1
FDNS	00NR	4	20SP	G15_076	TO->FROM	GRPRAR1-LNX3345.00 - GRPRAR 345KV CKT Z	720	720	0.03958	105.6908	G15094_T 345.00 - SIDNEY2-LNX3345.00 345KV CKT 1
FDNS	00NR	4	20SP	G15_076	TO->FROM	GRPRAR1-LNX3345.00 - GRPRAR 345KV CKT Z	720	720	0.03931	105.6861	CNTSHNT3 345.00 - PRAIRIE3 345.00 345KV CKT 1
FDNS	00NR	4	20SP	G15_076	TO->FROM	GRPRAR1-LNX3345.00 - GRPRAR 345KV CKT Z	720	720	0.03958	105.6831	SIDNEY - SIDNEY2-LNX3345.00 345KV CKT Z
FDNS	00NR	4	25SP	G15_076	TO->FROM	GRPRAR1-LNX3345.00 - GRPRAR 345KV CKT Z	720	720	0.03771	105.6639	SIOUXCY-LNX3345.00 - SPLIT ROCK 345KV CKT 1
FDNS	00NR	4	25SP	G15_076	TO->FROM	GRPRAR1-LNX3345.00 - GRPRAR 345KV CKT Z	720	720	0.03771	105.6639	SIOUXCY-LNX3345.00 - SPLIT ROCK 345KV CKT 1
FDNS	00NR	4	17SP	G15_076	TO->FROM	GRPRAR1-LNX3345.00 - GRPRAR 345KV CKT Z	720	720	0.04084	105.6626	GEN659111 2-LELAND OLDS UNIT2
FDNS	00NR	4	25SP	G15_076	TO->FROM	GRPRAR1-LNX3345.00 - GRPRAR 345KV CKT Z	720	720	0.03937	105.6577	GROTON - GROTON-LNX3 345.00 345KV CKT Z
FDNS	00NR	4	25SP	G15_076	TO->FROM	GRPRAR1-LNX3345.00 - GRPRAR 345KV CKT Z	720	720	0.03937	105.656	P12:345:UMZB:# 109 #: LOS GRT IN ND. LOS GRT
FDNS	00NR	4	25SP	G15_076	TO->FROM	GRPRAR1-LNX3345.00 - GRPRAR 345KV CKT Z	720	720	0.03937	105.6496	LELAND OLDS - LELAND1-LNX3345.00 345KV CKT Z
FDNS	00NR	4	25SP	G15_076	TO->FROM	GRPRAR1-LNX3345.00 - GRPRAR 345KV CKT Z	720	720	0.03551	105.6315	FT RANDAL - UTICA JCT 230KV CKT 1
FDNS	00NR	4	25SP	G15_076	TO->FROM	GRPRAR1-LNX3345.00 - GRPRAR 345KV CKT Z	720	720	0.05484	105.6268	DIXONCO 230.00 - HOSKINS 230KV CKT 1
FDNS	00NR	4	25SP	G15_076	TO->FROM	GRPRAR1-LNX3345.00 - GRPRAR 345KV CKT Z	720	720	0.03771	105.6218	P12:345:UMZW:# 907 #: SC2-SR IN IA. SC2-SR 345 KV LINE
FDNS	00NR	4	25SP	G15_076	TO->FROM	GRPRAR1-LNX3345.00 - GRPRAR 345KV CKT Z	720	720	0.03771	105.5925	SIOUX CITY - SIOUXCY-LNX3345.00 345KV CKT Z
FDNS	00NR	4	20SP	G15_076	TO->FROM	GRPRAR1-LNX3345.00 - GRPRAR 345KV CKT Z	720	720	0.0393	105.5878	GEN335206 1-NELSON UNIT 6
FDNS	00NR	4	20SP	G15_076	TO->FROM	GRPRAR1-LNX3345.00 - GRPRAR 345KV CKT Z	720	720	0.0393	105.5519	GEN344897 4-1LAB G4 20.000
FDNS	00NR	4	20SP	G15_076	TO->FROM	GRPRAR1-LNX3345.00 - GRPRAR 345KV CKT Z	720	720	0.0393	105.5503	GEN344894 1-1LAB G1 20.000
FDNS	00NR	4	20SP	G15_076	TO->FROM	GRPRAR1-LNX3345.00 - GRPRAR 345KV CKT Z	720	720	0.0393	105.5502	GEN344895 2-1LAB G2 20.000
FDNS	00NR	4	20SP	G15_076	TO->FROM	GRPRAR1-LNX3345.00 - GRPRAR 345KV CKT Z	720	720	0.0393	105.5501	GEN344896 3-1LAB G3 20.000
FDNS	00NR	4	20SP	G15_076	TO->FROM	GRPRAR1-LNX3345.00 - GRPRAR 345KV CKT Z	720	720	0.0393	105.5501	GEN635214 4-NEAL UNIT 4
FDNS	00NR	4	20SP	G15_076	TO->FROM	GRPRAR1-LNX3345.00 - GRPRAR 345KV CKT Z	720	720	0.0393	105.5443	GEN334440 1-SABINE UNIT 4
FDNS	00NR	4	20SP	G15_076	TO->FROM	GRPRAR1-LNX3345.00 - GRPRAR 345KV CKT Z	720	720	0.03963	105.5217	ARPIN B4 345.00 - EAU CLAIRE 345KV CKT 1
FDNS	00NR	4	25SP	G15_076	TO->FROM	GRPRAR1-LNX3345.00 - GRPRAR 345KV CKT Z	720	720	0.03891	105.518	HANLON - SIOUX FALLS 230KV CKT 1
FDNS	00NR	4	25SP	G15_076	TO->FROM	GRPRAR1-LNX3345.00 - GRPRAR 345KV CKT Z	720	720	0.04081	105.5154	LAKEFIELD 3 - NOBLES 345KV CKT 1
FDNS	00NR	4	20SP	G15_076	TO->FROM	GRPRAR1-LNX3345.00 - GRPRAR 345KV CKT Z	720	720	0.0393	105.4975	GEN345671 2-1RUSH G2 18.000
FDNS	00NR	4	20SP	G15_076	TO->FROM	GRPRAR1-LNX3345.00 - GRPRAR 345KV CKT Z	720	720	0.0393	105.4932	GEN345670 1-1RUSH G1 18.000
FDNS	00NR	4	25SP	G15_076	TO->FROM	GRPRAR1-LNX3345.00 - GRPRAR 345KV CKT Z	720	720	0.03996	105.4819	GERALD GENTLEMAN STATION - KEYSTONE 345KV CKT 1
FDNS	00NR	4	20SP	G15_076	TO->FROM	GRPRAR1-LNX3345.00 - GRPRAR 345KV CKT Z	720	720	0.0393	105.4531	GEN501812 1-RODEMACHER UNIT 2
FDNS	00NR	4	20SP	G15_076	TO->FROM	GRPRAR1-LNX3345.00 - GRPRAR 345KV CKT Z	720	720	0.0393	105.4202	GEN336191 1-LITTLE GYPSY UNIT#3
FDNS	00NR	4	25SP	G15_076	TO->FROM	GRPRAR1-LNX3345.00 - GRPRAR 345KV CKT Z	720	720	0.0438	105.4106	RAUN - SUB 3451 FT CAL 345KV CKT 1
FDNS	00NR	4	25SP	G15_076	TO->FROM	GRPRAR1-LNX3345.00 - GRPRAR 345KV CKT Z	720	720	0.0438	105.4106	RAUN - SUB 3451 FT CAL 345KV CKT 1
FDNS	00NR	4	20SP	G15_076	TO->FROM	GRPRAR1-LNX3345.00 - GRPRAR 345KV CKT Z	720	720	0.03733	105.4051	FT THOMPSON - WESSINGTON 230KV CKT 1
FDNS	00NR	4	20SP	G15_076	TO->FROM	GRPRAR1-LNX3345.00 - GRPRAR 345KV CKT Z	720	720	0.03733	105.4051	FT THOMPSON - WESSINGTON 230KV CKT 1
FDNS	00NR	4	25SP	G15_076	TO->FROM	GRPRAR1-LNX3345.00 - GRPRAR 345KV CKT Z	720	720	0.03962	105.4	GEN338143 1-INDEPENDENCE UNIT #1
FDNS	00NR	4	25SP	G15_076	TO->FROM	GRPRAR1-LNX3345.00 - GRPRAR 345KV CKT Z	720	720	0.03962	105.4	GEN338146 1-INDEPENDENCE UNIT #2
FDNS	00NR	4	20SP	G15_076	TO->FROM	GRPRAR1-LNX3345.00 - GRPRAR 345KV CKT Z	720	720	0.0393	105.3972	GEN338388 1-1PLUM PT U1 23.000
FDNS	00NR	4	20SP	G15_076	TO->FROM	GRPRAR1-LNX3345.00 - GRPRAR 345KV CKT Z	720	720	0.0393	105.3945	GEN629075 1-OTTUMWA GENERATOR FOR OTTUMWA UNIT NO 1
FDNS	00NR	4	25SP	G15_076	TO->FROM	GRPRAR1-LNX3345.00 - GRPRAR 345KV CKT Z	720	720	0.03861	105.394	PAHOJA - SIOUX FALLS 230KV CKT 1
FDNS	00NR	4	25SP	G15_076	TO->FROM	GRPRAR1-LNX3345.00 - GRPRAR 345KV CKT Z	720	720	0.0407	105.3802	AINSWORTH - VALENTINE 115KV CKT 1
FDNS	00NR	4	25SP	G15_076	TO->FROM	GRPRAR1-LNX3345.00 - GRPRAR 345KV CKT Z	720	720	0.04003	105.3795	BROOKING COUNTY - LYON COUNTY 345KV CKT 1
FDNS	00NR	4	25SP	G15_076	TO->FROM	GRPRAR1-LNX3345.00 - GRPRAR 345KV CKT Z	720	720	0.04109	105.3773	SIDNEY - STEGALL 345KV CKT 1
FDNS	00NR	4	20SP	G15_076	TO->FROM	GRPRAR1-LNX3345.00 - GRPRAR 345KV CKT Z	720	720	0.0393	105.3541	GEN335614 1-WILLOW GLENN UNIT#4
FDNS	00NR	4	20SP	G15_076	TO->FROM	GRPRAR1-LNX3345.00 - GRPRAR 345KV CKT Z	720	720	0.0393	105.3421	GEN336801 1-BAXTER WILSON UNIT #1
FDNS	00NR	4	20SP	G15_076	TO->FROM	GRPRAR1-LNX3345.00 - GRPRAR 345KV CKT Z	720	720	0.0393	105.3389	GEN336464 1-MICHOUD UNIT #3
FDNS	00NR	4	20SP	G15_076	TO->FROM	GRPRAR1-LNX3345.00 - GRPRAR 345KV CKT Z	720	720	0.0393	105.3279	GEN335204 1-NELSON UNIT 4
FDNS	00NR	4	20SP	G15_076	TO->FROM	GRPRAR1-LNX3345.00 - GRPRAR 345KV CKT Z	720	720	0.0393	105.3183	GEN334441 1-SABINE UNIT 5
FDNS	00NR	4	25SP	G15_076	TO->FROM	GRPRAR1-LNX3345.00 - GRPRAR 345KV CKT Z	720	720	0.03971	105.3153	ALEXMRES3 345.00 - BISON 3 345.00 345KV CKT 1
FDNS	00NR	4	25SP	G15_076	TO->FROM	GRPRAR1-LNX3345.00 - GRPRAR 345KV CKT Z	720	720	0.03962	105.3125	GEN337653 1-WHITE BLUFF UNIT #2

SOLUTION	GROUP	SCENARIO	SEASON	SOURCE	DIRECTION	MONITORED ELEMENT	RATEA (MVA)	RATEB(MVA)	TDF	TC%LOADING (% MVA)	CONTINGENCY
FDNS	00NR	4	20SP	G15_076	TO->FROM	GRPRAR1-LNX3345.00 - GRPRAR 345KV CKT Z	720	720	0.04084	105.3107	GRIMES - LEHIGH 345KV CKT 1
FDNS	00NR	4	20SP	G15_076	TO->FROM	GRPRAR1-LNX3345.00 - GRPRAR 345KV CKT Z	720	720	0.03953	105.2951	NORTH LA CROSSE - NORTH ROCHESTER 345KV CKT 1
FDNS	00NR	4	25SP	G15_076	TO->FROM	GRPRAR1-LNX3345.00 - GRPRAR 345KV CKT Z	720	720	0.03987	105.2748	ARROWHEAD - ARROWHEAD 230 230KV CKT 1
FDNS	00NR	4	20SP	G15_076	TO->FROM	GRPRAR1-LNX3345.00 - GRPRAR 345KV CKT Z	720	720	0.03992	105.2404	KOSSUTH 3 345.00 - WEBSTER 345KV CKT 1
FDNS	00NR	4	25SP	G15_076	TO->FROM	GRPRAR1-LNX3345.00 - GRPRAR 345KV CKT Z	720	720	0.03962	105.21	GEN501801 1-DOLET HILLS UNIT1
FDNS	00NR	4	17SP	G15_076	TO->FROM	GRPRAR1-LNX3345.00 - GRPRAR 345KV CKT Z	720	720	0.04084	105.2093	GEN659103 1-ANTELOPE VALLEY UNIT1
FDNS	00NR	4	17SP	G15_076	TO->FROM	GRPRAR1-LNX3345.00 - GRPRAR 345KV CKT Z	720	720	0.04084	105.2093	GEN659107 2-ANTELOPE VALLEY UNIT2
FDNS	00NR	4	20SP	G15_076	TO->FROM	GRPRAR1-LNX3345.00 - GRPRAR 345KV CKT Z	720	720	0.0393	105.2026	P12:115:UMZW:# 162 #: NEL IN ND. FAULT ON ML-NEL-MX-GA 115 KV
FDNS	00NR	4	20SP	G15_076	TO->FROM	GRPRAR1-LNX3345.00 - GRPRAR 345KV CKT Z	720	720	0.0393	105.2003	GEN563222 1-G15088_3 0.6900
FDNS	00NR	4	25SP	G15_076	TO->FROM	GRPRAR1-LNX3345.00 - GRPRAR 345KV CKT Z	720	720	0.03964	105.1942	CARPENTER - HURON 230KV CKT 1
FDNS	00NR	4	20SP	G15_076	TO->FROM	GRPRAR1-LNX3345.00 - GRPRAR 345KV CKT Z	720	720	0.0393	105.1838	GEN334433 1-SABINE UNIT 3
FDNS	00NR	4	20SP	G15_076	TO->FROM	GRPRAR1-LNX3345.00 - GRPRAR 345KV CKT Z	720	720	0.03911	105.1764	BROOKING COUNTY - BSSOUTH3 345.00 345KV CKT 1
FDNS	00NR	4	20SP	G15_076	TO->FROM	GRPRAR1-LNX3345.00 - GRPRAR 345KV CKT Z	720	720	0.0393	105.1715	GEN635213 3-NEAL UNIT 3
FDNS	00NR	4	17SP	G15_076	TO->FROM	GRPRAR1-LNX3345.00 - GRPRAR 345KV CKT Z	720	720	0.04084	105.1674	BIG STONE 230/24.0KV TRANSFORMER CKT 1
FDNS	00NR	4	25SP	G15_076	TO->FROM	GRPRAR1-LNX3345.00 - GRPRAR 345KV CKT Z	720	720	0.0399	105.1447	AS KING - EAU CLAIRE 345KV CKT 1
FDNS	00NR	4	20SP	G15_076	TO->FROM	GRPRAR1-LNX3345.00 - GRPRAR 345KV CKT Z	720	720	0.03799	105.1391	MENNO JCT - TRIPP JCT 115KV CKT 1
FDNS	00NR	4	20SP	G15_076	TO->FROM	GRPRAR1-LNX3345.00 - GRPRAR 345KV CKT Z	720	720	0.04537	105.1349	BLOOMFIELD - CREIGHTON 115KV CKT 1
FDNS	00NR	4	20SP	G15_076	TO->FROM	GRPRAR1-LNX3345.00 - GRPRAR 345KV CKT Z	720	720	0.03963	105.1337	NMA B3 345 345.00 - NORTH LA CROSSE 345KV CKT 1
FDNS	00NR	4	20SP	G15_076	TO->FROM	GRPRAR1-LNX3345.00 - GRPRAR 345KV CKT Z	720	720	0.0392	105.1316	HESKETT - WISHEK 230KV CKT 1
FDNS	00NR	4	20SP	G15_076	TO->FROM	GRPRAR1-LNX3345.00 - GRPRAR 345KV CKT Z	720	720	0.03992	105.1277	ADAMS - MITCHLCO3 345.00 345KV CKT 1
FDNS	00NR	4	20SP	G15_076	TO->FROM	GRPRAR1-LNX3345.00 - GRPRAR 345KV CKT Z	720	720	0.04581	105.1186	RAUN - SIOUX CITY 345KV CKT 1
FDNS	00NR	4	20SP	G15_076	TO->FROM	GRPRAR1-LNX3345.00 - GRPRAR 345KV CKT Z	720	720	0.04581	105.1186	RAUN - SIOUX CITY 345KV CKT 1
FDNS	00NR	4	20SP	G15_076	TO->FROM	GRPRAR1-LNX3345.00 - GRPRAR 345KV CKT Z	720	720	0.03929	105.1183	CENTER - COYOTE 345KV CKT 1
FDNS	00NR	4	20SP	G15_076	TO->FROM	GRPRAR1-LNX3345.00 - GRPRAR 345KV CKT Z	720	720	0.0393	105.1133	GEN336222 1-LITTLE GYPSY UNIT#2
FDNS	00NR	4	25SP	G15_076	TO->FROM	GRPRAR1-LNX3345.00 - GRPRAR 345KV CKT Z	720	720	0.03963	105.1016	CNTSHNT3 345.00 - PRAIRIE3 345.00 345KV CKT 1
FDNS	00NR	4	25SP	G15_076	TO->FROM	GRPRAR1-LNX3345.00 - GRPRAR 345KV CKT Z	720	720	0.04022	105.0977	HAZLETON - MITCHLCO3 345.00 345KV CKT 1
FDNS	00NR	4	25SP	G15_076	TO->FROM	GRPRAR1-LNX3345.00 - GRPRAR 345KV CKT Z	720	720	0.03964	105.0875	HURON - WATERTOWN 230KV CKT 2
FDNS	00NR	4	25SP	G15_076	TO->FROM	GRPRAR1-LNX3345.00 - GRPRAR 345KV CKT Z	720	720	0.03964	105.0875	HURON - WATERTOWN 230KV CKT 2
FDNS	00NR	4	20SP	G15_076	TO->FROM	GRPRAR1-LNX3345.00 - GRPRAR 345KV CKT Z	720	720	0.03936	105.0866	GLENBORO SOUTH - RUGBY 230KV CKT 1
FDNS	00NR	4	20SP	G15_076	TO->FROM	GRPRAR1-LNX3345.00 - GRPRAR 345KV CKT Z	720	720	0.0393	105.0784	GARRISON - JAMES TOWN 230KV CKT 1
FDNS	00NR	4	20SP	G15_076	TO->FROM	GRPRAR1-LNX3345.00 - GRPRAR 345KV CKT Z	720	720	0.0392	105.0665	MERRCRT4 230.00 - WISHEK 230KV CKT 1
FDNS	00NR	4	20SP	G15_076	TO->FROM	GRPRAR1-LNX3345.00 - GRPRAR 345KV CKT Z	720	720	0.0393	105.0639	GEN336152 1-WATERFORD UNIT#2
FDNS	00NR	4	20SP	G15_076	TO->FROM	GRPRAR1-LNX3345.00 - GRPRAR 345KV CKT Z	720	720	0.0393	105.0638	GEN336151 1-WATERFORD UNIT#1
FDNS	00NR	4	25SP	G15_076	TO->FROM	GRPRAR1-LNX3345.00 - GRPRAR 345KV CKT Z	720	720	0.03964	105.0455	CARPENTER - WATERTOWN 230KV CKT 1
FDNS	00NR	4	25SP	G15_076	TO->FROM	GRPRAR1-LNX3345.00 - GRPRAR 345KV CKT Z	720	720	0.03964	105.0455	CARPENTER - WATERTOWN 230KV CKT 1
FDNS	00NR	4	20SP	G15_076	TO->FROM	GRPRAR1-LNX3345.00 - GRPRAR 345KV CKT Z	720	720	0.0393	105.041	GEN531447 1-HOLCOMB GENERATOR
FDNS	00NR	4	20SP	G15_076	TO->FROM	GRPRAR1-LNX3345.00 - GRPRAR 345KV CKT Z	720	720	0.04537	105.0391	BLOOMFIELD - GAVINS POINT 115KV CKT 1
FDNS	00NR	4	20SP	G15_076	TO->FROM	GRPRAR1-LNX3345.00 - GRPRAR 345KV CKT Z	720	720	0.0393	105.034	GEN640009 1-COOPER NUCLEAR STATION
FDNS	00NR	4	20SP	G15_076	TO->FROM	GRPRAR1-LNX3345.00 - GRPRAR 345KV CKT Z	720	720	0.03972	105.0224	ADAMS - PLEASANT VALLEY 345KV CKT 1
FDNS	00NR	4	20SP	G15_076	TO->FROM	GRPRAR1-LNX3345.00 - GRPRAR 345KV CKT Z	720	720	0.03799	105.0156	MENNO JCT - UTICA 115KV CKT 1
FDNS	00NR	4	20SP	G15_076	TO->FROM	GRPRAR1-LNX3345.00 - GRPRAR 345KV CKT Z	720	720	0.03941	105.0114	APPLEDORN 4 230.00 - WATERTOWN 230KV CKT 1
FDNS	00NR	4	20SP	G15_076	TO->FROM	GRPRAR1-LNX3345.00 - GRPRAR 345KV CKT Z	720	720	0.03941	105.0114	APPLEDORN 4 230.00 - WATERTOWN 230KV CKT 1
FDNS	00NR	4	25SP	G15_076	TO->FROM	GRPRAR1-LNX3345.00 - GRPRAR 345KV CKT Z	720	720	0.03962	105.0017	GEN336251 1-NINEMILE POINT UNIT#4
FDNS	00NR	4	20SP	G15_076	TO->FROM	GRPRAR1-LNX3345.00 - GRPRAR 345KV CKT Z	720	720	0.0393	104.9975	GEN303007 1-1BC2 U2
FDNS	00NR	4	25SP	G15_076	TO->FROM	GRPRAR1-LNX3345.00 - GRPRAR 345KV CKT Z	720	720	0.03493	104.9939	RASMUSN - UTICA JCT 230KV CKT 1
FDNS	00NR	4	20SP	G15_076	TO->FROM	GRPRAR1-LNX3345.00 - GRPRAR 345KV CKT Z	720	720	0.03922	104.9914	BSSOUTH3 345.00 - ELLENDLMVP3 345.00 345KV CKT 1
FDNS	00NR	4	20SP	G15_076	TO->FROM	GRPRAR1-LNX3345.00 - GRPRAR 345KV CKT Z	720	720	0.03922	104.9914	BSSOUTH3 345.00 - ELLENDLMVP3 345.00 345KV CKT 1
FDNS	00NR	4	20SP	G15_076	TO->FROM	GRPRAR1-LNX3345.00 - GRPRAR 345KV CKT Z	720	720	0.0393	104.9913	GEN303006 1-1BC2 U1
FDNS	00NR	4	25SP	G15_076	TO->FROM	GRPRAR1-LNX3345.00 - GRPRAR 345KV CKT Z	720	720	0.0399	104.9756	G15094_T 345.00 - SIDNEY2-LNX3345.00 345KV CKT 1
FDNS	00NR	4	20SP	G15_076	TO->FROM	GRPRAR1-LNX3345.00 - GRPRAR 345KV CKT Z	720	720	0.03943	104.9753	ARKANSAS NUCLEAR ONE - FT SMITH 500KV CKT 1
FDNS	00NR	4	20SP	G15_076	TO->FROM	GRPRAR1-LNX3345.00 - GRPRAR 345KV CKT Z	720	720	0.03943	104.9753	ARKANSAS NUCLEAR ONE - FT SMITH 500KV CKT 1
FDNS	00NR	4	25SP	G15_076	TO->FROM	GRPRAR1-LNX3345.00 - GRPRAR 345KV CKT Z	720	720	0.0399	104.9749	SIDNEY - SIDNEY2-LNX3345.00 345KV CKT Z
FDNS	00NR	4	20SP	G15_076	TO->FROM	GRPRAR1-LNX3345.00 - GRPRAR 345KV CKT Z	720	720	0.03922	104.9707	ELLENDLMVP3 345.00 (1) 345/230/34.5KV TRANSFORMER CKT 1
FDNS	00NR	4	20SP	G15_076	TO->FROM	GRPRAR1-LNX3345.00 - GRPRAR 345KV CKT Z	720	720	0.03943	104.9665	ALEXMRES3 345.00 - WAITE PARK 345KV CKT 1
FDNS	00NR	4	25SP	G15_076	TO->FROM	GRPRAR1-LNX3345.00 - GRPRAR 345KV CKT Z	720	720	0.03962	104.9661	GEN336831 1-BAXTER WILSON SES
FDNS	00NR	4	20SP	G15_076	TO->FROM	GRPRAR1-LNX3345.00 - GRPRAR 345KV CKT Z	720	720	0.03799	104.9535	P12:115:UMZZ:# 237 #: MEN IN SD. MENNO JUNCTION IS A TAP (UJ-MEN-TP).
FDNS	00NR	4	20SP	G15_076	TO->FROM	GRPRAR1-LNX3345.00 - GRPRAR 345KV CKT Z	720	720	0.03941	104.9505	APPLEDORN 4 230.00 - GRANITE FALLS 230KV CKT 1
FDNS	00NR	4	20SP	G15_076	TO->FROM	GRPRAR1-LNX3345.00 - GRPRAR 345KV CKT Z	720	720	0.03941	104.9505	APPLEDORN 4 230.00 - GRANITE FALLS 230KV CKT 1
FDNS	00NR	4	20SP	G15_076	TO->FROM	GRPRAR1-LNX3345.00 - GRPRAR 345KV CKT Z	720	720	0.03869	104.9435	WINNER - WITTEN 115KV CKT 1
FDNS	00NR	4	20SP	G15_076	TO->FROM	GRPRAR1-LNX3345.00 - GRPRAR 345KV CKT Z	720	720	0.03938	104.9379	BLAIR - GRANITE FALLS 230KV CKT 1
FDNS	00NR	4	20SP	G15_076	TO->FROM	GRPRAR1-LNX3345.00 - GRPRAR 345KV CKT Z	720	720	0.03938	104.9379	BLAIR - GRANITE FALLS 230KV CKT 1
FDNS	00NR	4	20SP	G15_076	TO->FROM	GRPRAR1-LNX3345.00 - GRPRAR 345KV CKT Z	720	720	0.03948	104.9352	NORTH ROCHESTER - PRAIRIE ISLAND 345KV CKT 1
FDNS	00NR	4	25SP	G15_076	TO->FROM	GRPRAR1-LNX3345.00 - GRPRAR 345KV CKT Z	720	720	0.03861	104.9287	EAGLE 4 230.00 - PAHOJA 230KV CKT 1
FDNS	00NR	4	20SP	G15_076	TO->FROM	GRPRAR1-LNX3345.00 - GRPRAR 345KV CKT Z	720	720	0.0393	104.9253	GEN303008 1-1BC2 U3
FDNS	00NR	4	20SP	G15_076	TO->FROM	GRPRAR1-LNX3345.00 - GRPRAR 345KV CKT Z	720	720	0.0393	104.9203	GEN336170 1-GULF OXY U4
FDNS	00NR	4	25SP	G15_076	TO->FROM	GRPRAR1-LNX3345.00 - GRPRAR 345KV CKT Z	720	720	0.03962	104.9079	GEN337041 1-GERALD ANDRUS
FDNS	00NR	4	20SP	G15_076	TO->FROM	GRPRAR1-LNX3345.00 - GRPRAR 345KV CKT Z	720	720	0.0393	104.9072	GEN641089 2-ENERGY CENTER 2
FDNS	00NR	4	25SP	G15_076	TO->FROM	GRPRAR1-LNX3345.00 - GRPRAR 345KV CKT Z	720	720	0.03962	104.8877	GEN501813 1-RODEMACHER UNIT 3
FDNS	00NR	4	20SP	G15_076	TO->FROM	GRPRAR1-LNX3345.00 - GRPRAR 345KV CKT Z	720	720	0.0393	104.8859	GEN562921 1-G15054_2 0.6900
FDNS	00NR	4	20SP	G15_076	TO->FROM	GRPRAR1-LNX3345.00 - GRPRAR 345KV CKT Z	720	720	0.04223	104.8796	STEGALL - STEGALL TRANSFORMER 230KV CKT 1
FDNS	00NR	4	20SP	G15_076	TO->FROM	GRPRAR1-LNX3345.00 - GRPRAR 345KV CKT Z	720	720	0.03958	104.8764	G15094_T 345.00 - LARAMIE RIVER 345KV CKT 1
FDNS	00NR	4	20SP	G15_076	TO->FROM	GRPRAR1-LNX3345.00 - GRPRAR 345KV CKT Z	720	720	0.04223	104.8723	P13:230-345:NPPD:STEGALL3:KV3A
FDNS	00NR	4	20SP	G15_076	TO->FROM	GRPRAR1-LNX3345.00 - GRPRAR 345KV CKT Z	720	720	0.0398	104.8638	HUNTLEY3 345.00 - LEDYARD3 345.00 345KV CKT 1
FDNS	00NR	4	20SP	G15_076	TO->FROM	GRPRAR1-LNX3345.00 - GRPRAR 345KV CKT Z	720	720	0.0393	104.8638	FARGO - JAMES TOWN 230KV CKT 1
FDNSLock	00NR	4	20SP	G15_076	TO->FROM	GRPRAR1-LNX3345.00 - GRPRAR 345KV CKT Z	720	720	0.04223	104.8511	STEGALL (SGQ KV3A) 345/230/13.8KV TRANSFORMER CKT 1
FDNS	00NR	4	20SP	G15_076	TO->FROM	GRPRAR1-LNX3345.00 - GRPRAR 345KV CKT Z	720	720	0.0393	104.8427	FARGO - JAMES TOWN 230KV CKT 2
FDNS	00NR	4	20SP	G15_076	TO->FROM	GRPRAR1-LNX3345.00 - GRPRAR 345KV CKT Z	720	720	0.0393	104.8405	GEN501811 1-RODEMACHER UNIT 1
FDNS	00NR	4	20SP	G15_076	TO->FROM	GRPRAR1-LNX3345.00 - GRPRAR 345KV CKT Z	720	720	0.0393	104.8306	P13:230:UMZW:# 2218 #: FP IN MT. LOSS OF TRANSFORMER (AT2).
FDNS	00NR	4	20SP	G15_076	TO->FROM	GRPRAR1-LNX3345.00 - GRPRAR 345KV CKT Z	720	720	0.0393	104.828	GEN562596 1-G14_059_3 0.6900

SOLUTION	GROUP	SCENARIO	SEASON	SOURCE	DIRECTION	MONITORED ELEMENT	RATEA (MVA)	RATEB(MVA)	TDF	TC%LOADING (% MVA)	CONTINGENCY
FDNS	00NR	4	20SP	G15_076	TO->FROM	GRPRAR1-LNX3345.00 - GRPRAR 345KV CKT Z	720	720	0.03979	104.8218	P13:230-345:NPPD:SIDNEY 3:KV2A
FDNS	00NR	4	20SP	G15_076	TO->FROM	GRPRAR1-LNX3345.00 - GRPRAR 345KV CKT Z	720	720	0.03979	104.8218	SIDNEY (SDQ KV2A) 345/230/13.8KV TRANSFORMER CKT 1
FDNS	00NR	4	20SP	G15_076	TO->FROM	GRPRAR1-LNX3345.00 - GRPRAR 345KV CKT Z	720	720	0.03979	104.8216	SIDNEY - SIDNEY TRANSFORMER 230KV CKT 1
FDNS	00NR	4	20SP	G15_076	TO->FROM	GRPRAR1-LNX3345.00 - GRPRAR 345KV CKT Z	720	720	0.0393	104.8137	BISMARK - JAMES TOWN 230KV CKT 1
FDNS	00NR	4	20SP	G15_076	TO->FROM	GRPRAR1-LNX3345.00 - GRPRAR 345KV CKT Z	720	720	0.0393	104.805	BISMARK - WEBER 230KV CKT 1
FDNS	00NR	4	20SP	G15_076	TO->FROM	GRPRAR1-LNX3345.00 - GRPRAR 345KV CKT Z	720	720	0.03981	104.7984	P13:115-230:TSGT:SIDNEY-KV1A
FDNS	00NR	4	20SP	G15_076	TO->FROM	GRPRAR1-LNX3345.00 - GRPRAR 345KV CKT Z	720	720	0.0393	104.7957	TOLK STATION EAST 230/24.0KV TRANSFORMER CKT 1
FDNS	00NR	4	20SP	G15_076	TO->FROM	GRPRAR1-LNX3345.00 - GRPRAR 345KV CKT Z	720	720	0.04022	104.7935	NOBLES - SPLIT ROCK 345KV CKT 1
FDNS	00NR	4	20SP	G15_076	TO->FROM	GRPRAR1-LNX3345.00 - GRPRAR 345KV CKT Z	720	720	0.0393	104.7899	JAMES TOWN - WEBER 230KV CKT 1
FDNS	00NR	4	20SP	G15_076	TO->FROM	GRPRAR1-LNX3345.00 - GRPRAR 345KV CKT Z	720	720	0.03969	104.7891	HUNTLEY3 345.00 - LAKEFIELD 3 345KV CKT 1
FDNS	00NR	4	20SP	G15_076	TO->FROM	GRPRAR1-LNX3345.00 - GRPRAR 345KV CKT Z	720	720	0.0393	104.7891	GEN334071 1-LEWIS CREEK 2
FDNS	00NR	4	20SP	G15_076	TO->FROM	GRPRAR1-LNX3345.00 - GRPRAR 345KV CKT Z	720	720	0.03992	104.7873	P12:230:UMZW:# 733 #: FT IN SD. FT-BG2 LINE FAULT
FDNS	00NR	4	20SP	G15_076	TO->FROM	GRPRAR1-LNX3345.00 - GRPRAR 345KV CKT Z	720	720	0.0393	104.7858	GEN334070 1-LEWIS CREEK 1
FDNS	00NR	4	20SP	G15_076	TO->FROM	GRPRAR1-LNX3345.00 - GRPRAR 345KV CKT Z	720	720	0.0393	104.7788	GEN532751 1-WOLF CREEK GENERATING STATION UNIT 1
FDNS	00NR	4	20SP	G15_076	TO->FROM	GRPRAR1-LNX3345.00 - GRPRAR 345KV CKT Z	720	720	0.03914	104.778	FT THOMPSON - HURON 230KV CKT 1
FDNS	00NR	4	20SP	G15_076	TO->FROM	GRPRAR1-LNX3345.00 - GRPRAR 345KV CKT Z	720	720	0.03914	104.778	FT THOMPSON - HURON 230KV CKT 1
FDNS	00NR	4	20SP	G15_076	TO->FROM	GRPRAR1-LNX3345.00 - GRPRAR 345KV CKT Z	720	720	0.03914	104.778	FT THOMPSON - HURON 230KV CKT 2
FDNS	00NR	4	20SP	G15_076	TO->FROM	GRPRAR1-LNX3345.00 - GRPRAR 345KV CKT Z	720	720	0.03914	104.778	FT THOMPSON - HURON 230KV CKT 2
FDNS	00NR	4	20SP	G15_076	TO->FROM	GRPRAR1-LNX3345.00 - GRPRAR 345KV CKT Z	720	720	0.0393	104.7692	LAWRENCE ENERGY CENTER UNIT 5 - LAWRENCE HILL 230KV CKT 1
FDNS	00NR	4	20SP	G15_076	TO->FROM	GRPRAR1-LNX3345.00 - GRPRAR 345KV CKT Z	720	720	0.0393	104.7692	LAWRENCE ENERGY CENTER UNIT 5 230/24.0KV TRANSFORMER CKT 1
FDNS	00NR	4	20SP	G15_076	TO->FROM	GRPRAR1-LNX3345.00 - GRPRAR 345KV CKT Z	720	720	0.03869	104.7551	GREGORY - WINNER 115KV CKT 1
FDNS	00NR	4	20SP	G15_076	TO->FROM	GRPRAR1-LNX3345.00 - GRPRAR 345KV CKT Z	720	720	0.0393	104.754	GEN337766 1-TRACTEBEL UNIT S1
FDNS	00NR	4	20SP	G15_076	TO->FROM	GRPRAR1-LNX3345.00 - GRPRAR 345KV CKT Z	720	720	0.0393	104.7517	GEN636641 1-LOUISA UNIT 1
FDNS	00NR	4	20SP	G15_076	TO->FROM	GRPRAR1-LNX3345.00 - GRPRAR 345KV CKT Z	720	720	0.0393	104.7514	BALTA - RAMSEY 230KV CKT 1
FDNS	00NR	4	20SP	G15_076	TO->FROM	GRPRAR1-LNX3345.00 - GRPRAR 345KV CKT Z	720	720	0.0393	104.7512	PRAIRIE ISLAND 345/20.0KV TRANSFORMER CKT 1
FDNS	00NR	4	20SP	G15_076	TO->FROM	GRPRAR1-LNX3345.00 - GRPRAR 345KV CKT Z	720	720	0.0393	104.7499	PRAIRIE ISLAND 345/20.0KV TRANSFORMER CKT 2
FDNS	00NR	4	20SP	G15_076	TO->FROM	GRPRAR1-LNX3345.00 - GRPRAR 345KV CKT Z	720	720	0.03869	104.7454	P12:115:UMZW:# 172 #: WI IN SD.
FDNS	00NR	4	20SP	G15_076	TO->FROM	GRPRAR1-LNX3345.00 - GRPRAR 345KV CKT Z	720	720	0.03992	104.7414	LOWERBRULE 4230.00 - RELIANCE 4 230.00 230KV CKT 1
FDNS	00NR	4	20SP	G15_076	TO->FROM	GRPRAR1-LNX3345.00 - GRPRAR 345KV CKT Z	720	720	0.0393	104.7312	GEN659118 1-LARAMIE RIVER UNIT1
FDNS	00NR	4	25SP	G15_076	TO->FROM	GRPRAR1-LNX3345.00 - GRPRAR 345KV CKT Z	720	720	0.03995	104.7307	ARPIN B4 345.00 - EAU CLAIRE 345KV CKT 1
FDNS	00NR	4	25SP	G15_076	TO->FROM	GRPRAR1-LNX3345.00 - GRPRAR 345KV CKT Z	720	720	0.03962	104.7292	GEN335206 1-NELSON UNIT 6
FDNS	00NR	4	20SP	G15_076	TO->FROM	GRPRAR1-LNX3345.00 - GRPRAR 345KV CKT Z	720	720	0.03932	104.7262	FORMAN - HANKINSON 230KV CKT 1
FDNS	00NR	4	20SP	G15_076	TO->FROM	GRPRAR1-LNX3345.00 - GRPRAR 345KV CKT Z	720	720	0.0393	104.7185	GEN501910 1-ACADIA UNIT ST1
FDNS	00NR	4	25SP	G15_076	TO->FROM	GRPRAR1-LNX3345.00 - GRPRAR 345KV CKT Z	720	720	0.03962	104.7063	GEN334440 1-SABINE UNIT 4
FDNS	00NR	4	20SP	G15_076	TO->FROM	GRPRAR1-LNX3345.00 - GRPRAR 345KV CKT Z	720	720	0.0393	104.7054	ELM CREEK - MONTICELLO 345KV CKT 1
FDNS	00NR	4	20SP	G15_076	TO->FROM	GRPRAR1-LNX3345.00 - GRPRAR 345KV CKT Z	720	720	0.0393	104.6979	TATANKA 230/34.5KV TRANSFORMER CKT 1
FDNS	00NR	4	20SP	G15_076	TO->FROM	GRPRAR1-LNX3345.00 - GRPRAR 345KV CKT Z	720	720	0.0393	104.6884	GEN336221 1-LITTLE GYPSY UNIT#1
FDNS	00NR	4	20SP	G15_076	TO->FROM	GRPRAR1-LNX3345.00 - GRPRAR 345KV CKT Z	720	720	0.0393	104.6868	GEN337757 1-DUKE HOTSPRINGS STG1
FDNS	00NR	4	25SP	G15_076	TO->FROM	GRPRAR1-LNX3345.00 - GRPRAR 345KV CKT Z	720	720	0.03962	104.6742	GEN344897 4-1LAB G4 20.000
FDNS	00NR	4	25SP	G15_076	TO->FROM	GRPRAR1-LNX3345.00 - GRPRAR 345KV CKT Z	720	720	0.03962	104.6729	GEN344894 1-1LAB G1 20.000
FDNS	00NR	4	25SP	G15_076	TO->FROM	GRPRAR1-LNX3345.00 - GRPRAR 345KV CKT Z	720	720	0.03962	104.6729	GEN344895 2-1LAB G2 20.000
FDNS	00NR	4	25SP	G15_076	TO->FROM	GRPRAR1-LNX3345.00 - GRPRAR 345KV CKT Z	720	720	0.03962	104.6727	GEN344896 3-1LAB G3 20.000
FDNS	00NR	4	20SP	G15_076	TO->FROM	GRPRAR1-LNX3345.00 - GRPRAR 345KV CKT Z	720	720	0.03932	104.6693	AUDUBON - SHEYNNE 230KV CKT 1
FDNS	00NR	4	20SP	G15_076	TO->FROM	GRPRAR1-LNX3345.00 - GRPRAR 345KV CKT Z	720	720	0.03987	104.6581	P12:115:NPPD:WAPA1:CHADRON7:BOXBUTE7:BTB
FDNS	00NR	4	25SP	G15_076	TO->FROM	GRPRAR1-LNX3345.00 - GRPRAR 345KV CKT Z	720	720	0.03764	104.6554	FT THOMPSON - WESSINGTON 230KV CKT 1
FDNS	00NR	4	25SP	G15_076	TO->FROM	GRPRAR1-LNX3345.00 - GRPRAR 345KV CKT Z	720	720	0.03764	104.6554	FT THOMPSON - WESSINGTON 230KV CKT 1
FDNS	00NR	4	20SP	G15_076	TO->FROM	GRPRAR1-LNX3345.00 - GRPRAR 345KV CKT Z	720	720	0.0517	104.6548	BELDEN - HOSKINS 115KV CKT 1
FDNS	00NR	4	25SP	G15_076	TO->FROM	GRPRAR1-LNX3345.00 - GRPRAR 345KV CKT Z	720	720	0.03962	104.6546	GEN635214 4-NEAL UNIT 4
FDNS	00NR	4	20SP	G15_076	TO->FROM	GRPRAR1-LNX3345.00 - GRPRAR 345KV CKT Z	720	720	0.039	104.6542	MT VERN - STORLA 115KV CKT 1
FDNS	00NR	4	20SP	G15_076	TO->FROM	GRPRAR1-LNX3345.00 - GRPRAR 345KV CKT Z	720	720	0.03942	104.6527	FRANKS - HUBEN 345KV CKT 1
FDNS	00NR	4	20SP	G15_076	TO->FROM	GRPRAR1-LNX3345.00 - GRPRAR 345KV CKT Z	720	720	0.0393	104.6525	GEN337764 1-TRACTEBEL UNIT C1
FDNS	00NR	4	20SP	G15_076	TO->FROM	GRPRAR1-LNX3345.00 - GRPRAR 345KV CKT Z	720	720	0.0393	104.6525	GEN337765 1-TRACTEBEL UNIT C2
FDNS	00NR	4	20SP	G15_076	TO->FROM	GRPRAR1-LNX3345.00 - GRPRAR 345KV CKT Z	720	720	0.0393	104.6495	GEN334431 1-SABINE UNIT 1
FDNS	00NR	4	20SP	G15_076	TO->FROM	GRPRAR1-LNX3345.00 - GRPRAR 345KV CKT Z	720	720	0.0393	104.6495	GEN334432 1-SABINE UNIT 2
FDNS	00NR	4	25SP	G15_076	TO->FROM	GRPRAR1-LNX3345.00 - GRPRAR 345KV CKT Z	720	720	0.03968	104.6495	GLENBORO SOUTH - RUGBY 230KV CKT 1
FDNS	00NR	4	20SP	G15_076	TO->FROM	GRPRAR1-LNX3345.00 - GRPRAR 345KV CKT Z	720	720	0.0393	104.6454	GEN336446 1-MICHOUD UNIT #2
FDNS	00NR	4	20SP	G15_076	TO->FROM	GRPRAR1-LNX3345.00 - GRPRAR 345KV CKT Z	720	720	0.0393	104.6437	GEN345765 H-1SIOUX 2 18.000
FDNS	00NR	4	20SP	G15_076	TO->FROM	GRPRAR1-LNX3345.00 - GRPRAR 345KV CKT Z	720	720	0.03934	104.6419	LELAND OLDS - STANTON 230KV CKT 1
FDNS	00NR	4	20SP	G15_076	TO->FROM	GRPRAR1-LNX3345.00 - GRPRAR 345KV CKT Z	720	720	0.03934	104.6419	LELAND OLDS - STANTON 230KV CKT 1
FDNS	00NR	4	20SP	G15_076	TO->FROM	GRPRAR1-LNX3345.00 - GRPRAR 345KV CKT Z	720	720	0.03953	104.6391	OVEXFRMCCOVE
FDNS	00NR	4	25SP	G15_076	TO->FROM	GRPRAR1-LNX3345.00 - GRPRAR 345KV CKT Z	720	720	0.03962	104.6257	GEN338388 1-1PLUM PT U1 23.000
FDNS	00NR	4	20SP	G15_076	TO->FROM	GRPRAR1-LNX3345.00 - GRPRAR 345KV CKT Z	720	720	0.0393	104.6225	GRAND GULF 500/22.0KV TRANSFORMER CKT 1
FDNS	00NR	4	20SP	G15_076	TO->FROM	GRPRAR1-LNX3345.00 - GRPRAR 345KV CKT Z	720	720	0.0393	104.6214	GEN562912 1-G15053_3 0.6900
FDNS	00NR	4	25SP	G15_076	TO->FROM	GRPRAR1-LNX3345.00 - GRPRAR 345KV CKT Z	720	720	0.03962	104.6212	GEN345671 2-1RUSH G2 18.000
FDNS	00NR	4	25SP	G15_076	TO->FROM	GRPRAR1-LNX3345.00 - GRPRAR 345KV CKT Z	720	720	0.03962	104.6173	GEN345670 1-1RUSH G1 18.000
FDNS	00NR	4	20SP	G15_076	TO->FROM	GRPRAR1-LNX3345.00 - GRPRAR 345KV CKT Z	720	720	0.03935	104.6163	FERGSFL4 230.00 - WAHPETON 230KV CKT 1
FDNS	00NR	4	20SP	G15_076	TO->FROM	GRPRAR1-LNX3345.00 - GRPRAR 345KV CKT Z	720	720	0.0393	104.6136	GEN336242 1-1NMIL ST1 18.000
FDNS	00NR	4	20SP	G15_076	TO->FROM	GRPRAR1-LNX3345.00 - GRPRAR 345KV CKT Z	720	720	0.0393	104.6124	GEN501823 1-TECHE UNIT 3
FDNS	00NR	4	20SP	G15_076	TO->FROM	GRPRAR1-LNX3345.00 - GRPRAR 345KV CKT Z	720	720	0.03931	104.6078	FORMAN - OAKES 230KV CKT 1
FDNS	00NR	4	20SP	G15_076	TO->FROM	GRPRAR1-LNX3345.00 - GRPRAR 345KV CKT Z	720	720	0.03931	104.607	ELLENDLMVP4 230.00 - OAKES 230KV CKT 1
FDNS	00NR	4	20SP	G15_076	TO->FROM	GRPRAR1-LNX3345.00 - GRPRAR 345KV CKT Z	720	720	0.03931	104.607	ELLENDLMVP4 230.00 - OAKES 230KV CKT 1
FDNS	00NR	4	25SP	G15_076	TO->FROM	GRPRAR1-LNX3345.00 - GRPRAR 345KV CKT Z	720	720	0.03962	104.6047	GEN501812 1-RODEMACHER UNIT 2
FDNS	00NR	4	25SP	G15_076	TO->FROM	GRPRAR1-LNX3345.00 - GRPRAR 345KV CKT Z	720	720	0.03962	104.6	GEN629075 1-OTTUMWA GENERATOR FOR OTTUMWA UNIT NO 1
FDNS	00NR	4	20SP	G15_076	TO->FROM	GRPRAR1-LNX3345.00 - GRPRAR 345KV CKT Z	720	720	0.0393	104.598	PRAIRIE - WINGER 230KV CKT 1
FDNS	00NR	4	20SP	G15_076	TO->FROM	GRPRAR1-LNX3345.00 - GRPRAR 345KV CKT Z	720	720	0.0393	104.5953	GEN345756 H-1SIOUX 1 18.000
FDNS	00NR	4	20SP	G15_076	TO->FROM	GRPRAR1-LNX3345.00 - GRPRAR 345KV CKT Z	720	720	0.03987	104.5939	CHADRON - DUNLAP 115KV CKT 1
FDNS	00NR	4	20SP	G15_076	TO->FROM	GRPRAR1-LNX3345.00 - GRPRAR 345KV CKT Z	720	720	0.03992	104.5913	RELIANCE 4 230.00 - WITTEN 4 230.00 230KV CKT 1
FDNS	00NR	4	20SP	G15_076	TO->FROM	GRPRAR1-LNX3345.00 - GRPRAR 345KV CKT Z	720	720	0.03935	104.5882	HANKINSON - WAHPETON 230KV CKT 1
FDNS	00NR	4	20SP	G15_076	TO->FROM	GRPRAR1-LNX3345.00 - GRPRAR 345KV CKT Z	720	720	0.0393	104.5878	J316_SUB 230.00 230/34.5KV TRANSFORMER CKT 1

SOLUTION	GROUP	SCENARIO	SEASON	SOURCE	DIRECTION	MONITORED ELEMENT	RATEA (MVA)	RATEB(MVA)	TDF	TC%LOADING (% MVA)	CONTINGENCY
FDNS	00NR	4	20SP	G15_076	TO->FROM	GRPRAR1-LNX3345.00 - GRPRAR 345KV CKT Z	720	720	0.03948	104.5874	HAMPTON CORNER - NORTH ROCHESTER 345KV CKT 1
FDNS	00NR	4	25SP	G15_076	TO->FROM	GRPRAR1-LNX3345.00 - GRPRAR 345KV CKT Z	720	720	0.04115	104.5868	GRIMES - LEHIGH 345KV CKT 1
FDNS	00NR	4	25SP	G15_076	TO->FROM	GRPRAR1-LNX3345.00 - GRPRAR 345KV CKT Z	720	720	0.03962	104.5825	GEN336191 1-LITTLE GYPSY UNIT#3
FDNS	00NR	4	20SP	G15_076	TO->FROM	GRPRAR1-LNX3345.00 - GRPRAR 345KV CKT Z	720	720	0.03934	104.5822	FERGSFL4 230.00 - GRE-SILVRLK4230.00 230KV CKT 1
FDNS	00NR	4	20SP	G15_076	TO->FROM	GRPRAR1-LNX3345.00 - GRPRAR 345KV CKT Z	720	720	0.0393	104.5787	GEN345832 1-1TS G1 13.800
FDNS	00NR	4	20SP	G15_076	TO->FROM	GRPRAR1-LNX3345.00 - GRPRAR 345KV CKT Z	720	720	0.0393	104.5784	GEN345841 2-1TS G2 13.800
FDNS	00NR	4	20SP	G15_076	TO->FROM	GRPRAR1-LNX3345.00 - GRPRAR 345KV CKT Z	720	720	0.0393	104.5768	GEN334031 1-FRONTIER UNIT 2
FDNS	00NR	4	20SP	G15_076	TO->FROM	GRPRAR1-LNX3345.00 - GRPRAR 345KV CKT Z	720	720	0.0393	104.5761	GEN334030 1-FRONTIER UNIT 1
FDNS	00NR	4	20SP	G15_076	TO->FROM	GRPRAR1-LNX3345.00 - GRPRAR 345KV CKT Z	720	720	0.0393	104.5746	JUDSON LARGE 115/15.0KV TRANSFORMER CKT 1
FDNS	00NR	4	20SP	G15_076	TO->FROM	GRPRAR1-LNX3345.00 - GRPRAR 345KV CKT Z	720	720	0.0393	104.5746	JUDSON LARGE 115/15.0KV TRANSFORMER CKT 1
FDNS	00NR	4	20SP	G15_076	TO->FROM	GRPRAR1-LNX3345.00 - GRPRAR 345KV CKT Z	720	720	0.0393	104.5719	GEN336944 1-REX BROWN
FDNS	00NR	4	20SP	G15_076	TO->FROM	GRPRAR1-LNX3345.00 - GRPRAR 345KV CKT Z	720	720	0.0393	104.5692	P13:230-345:NPPD:NUCOR-1
FDNS	00NR	4	20SP	G15_076	TO->FROM	GRPRAR1-LNX3345.00 - GRPRAR 345KV CKT Z	720	720	0.0393	104.5691	GEN501970 1-EVANGELINE UNIT 7
FDNS	00NR	4	20SP	G15_076	TO->FROM	GRPRAR1-LNX3345.00 - GRPRAR 345KV CKT Z	720	720	0.04003	104.5673	DENISON - SIOUX CITY 230KV CKT 1
FDNS	00NR	4	20SP	G15_076	TO->FROM	GRPRAR1-LNX3345.00 - GRPRAR 345KV CKT Z	720	720	0.0393	104.5659	OKLAUN 345/24.0KV TRANSFORMER CKT 1
FDNS	00NR	4	25SP	G15_076	TO->FROM	GRPRAR1-LNX3345.00 - GRPRAR 345KV CKT Z	720	720	0.04023	104.5658	KOSSUTH 3 345.00 - WEBSTER 345KV CKT 1
FDNS	00NR	4	20SP	G15_076	TO->FROM	GRPRAR1-LNX3345.00 - GRPRAR 345KV CKT Z	720	720	0.0393	104.5613	GEN335612 1-WILLOW GLENN UNIT#2
FDNS	00NR	4	20SP	G15_076	TO->FROM	GRPRAR1-LNX3345.00 - GRPRAR 345KV CKT Z	720	720	0.04034	104.5607	MARTIN - SHANNON 115KV CKT 1
FDNS	00NR	4	20SP	G15_076	TO->FROM	GRPRAR1-LNX3345.00 - GRPRAR 345KV CKT Z	720	720	0.0393	104.5598	GEN635693 3-GREATER DES MOINES ENERGY CENTER ST
FDNS	00NR	4	20SP	G15_076	TO->FROM	GRPRAR1-LNX3345.00 - GRPRAR 345KV CKT Z	720	720	0.03958	104.5593	BYRON - NORTH ROCHESTER 345KV CKT 1
FDNS	00NR	4	20SP	G15_076	TO->FROM	GRPRAR1-LNX3345.00 - GRPRAR 345KV CKT Z	720	720	0.03944	104.5573	GRE-CEDARMT3345.00 - HELENA 345KV CKT 1
FDNS	00NR	4	20SP	G15_076	TO->FROM	GRPRAR1-LNX3345.00 - GRPRAR 345KV CKT Z	720	720	0.03944	104.5573	GRE-CEDARMT3345.00 - HELENA 345KV CKT 2
FDNS	00NR	4	20SP	G15_076	TO->FROM	GRPRAR1-LNX3345.00 - GRPRAR 345KV CKT Z	720	720	0.03992	104.5548	WITTEN 4 230.00 () 230/115/13.8KV TRANSFORMER CKT 1
FDNS	00NR	4	20SP	G15_076	TO->FROM	GRPRAR1-LNX3345.00 - GRPRAR 345KV CKT Z	720	720	0.04041	104.5524	PLYMOUTH - SIOUX CITY 161KV CKT 1
FDNS	00NR	4	20SP	G15_076	TO->FROM	GRPRAR1-LNX3345.00 - GRPRAR 345KV CKT Z	720	720	0.04041	104.5524	PLYMOUTH - SIOUX CITY 161KV CKT 1
FDNS	00NR	4	20SP	G15_076	TO->FROM	GRPRAR1-LNX3345.00 - GRPRAR 345KV CKT Z	720	720	0.0393	104.5514	GEN337430 1-PERYVILLE UNIT #3
FDNS	00NR	4	20SP	G15_076	TO->FROM	GRPRAR1-LNX3345.00 - GRPRAR 345KV CKT Z	720	720	0.0393	104.5511	GEN337428 1-PERYVILLE UNIT #1
FDNS	00NR	4	20SP	G15_076	TO->FROM	GRPRAR1-LNX3345.00 - GRPRAR 345KV CKT Z	720	720	0.03737	104.5431	FT RANDAL - WHITE SWAN 115KV CKT 1
FDNS	00NR	4	25SP	G15_076	TO->FROM	GRPRAR1-LNX3345.00 - GRPRAR 345KV CKT Z	720	720	0.03962	104.5429	P12:115:UMZW:# 162 #: NEL IN ND. FAULT ON ML-NEL-MX-GA 115 KV
FDNS	00NR	4	20SP	G15_076	TO->FROM	GRPRAR1-LNX3345.00 - GRPRAR 345KV CKT Z	720	720	0.0393	104.5377	GEN562438 1-G13-032 0.6900
FDNS	00NR	4	20SP	G15_076	TO->FROM	GRPRAR1-LNX3345.00 - GRPRAR 345KV CKT Z	720	720	0.0393	104.5329	GEN338443 1-PANDA S1
FDNS	00NR	4	20SP	G15_076	TO->FROM	GRPRAR1-LNX3345.00 - GRPRAR 345KV CKT Z	720	720	0.0393	104.5306	GEN336240 1-1NMIL CT1 18.000
FDNS	00NR	4	20SP	G15_076	TO->FROM	GRPRAR1-LNX3345.00 - GRPRAR 345KV CKT Z	720	720	0.0393	104.5306	GEN336241 1-1NMIL CT2 18.000
FDNS	00NR	4	20SP	G15_076	TO->FROM	GRPRAR1-LNX3345.00 - GRPRAR 345KV CKT Z	720	720	0.0393	104.5286	P12:345:GRDA:CHOUTEAU-SPORTSMANACRES
FDNS	00NR	4	20SP	G15_076	TO->FROM	GRPRAR1-LNX3345.00 - GRPRAR 345KV CKT Z	720	720	0.0393	104.5284	GEN501912 1-ACADIA UNIT CT1B
FDNS	00NR	4	20SP	G15_076	TO->FROM	GRPRAR1-LNX3345.00 - GRPRAR 345KV CKT Z	720	720	0.0393	104.5282	GEN501911 1-ACADIA UNIT CT1A
FDNS	00NR	4	25SP	G15_076	TO->FROM	GRPRAR1-LNX3345.00 - GRPRAR 345KV CKT Z	720	720	0.03962	104.509	GEN335614 1-WILLOW GLENN UNIT#4
FDNS	00NR	4	25SP	G15_076	TO->FROM	GRPRAR1-LNX3345.00 - GRPRAR 345KV CKT Z	720	720	0.03962	104.5041	GEN336801 1-BAXTER WILSON UNIT #1
FDNS	00NR	4	25SP	G15_076	TO->FROM	GRPRAR1-LNX3345.00 - GRPRAR 345KV CKT Z	720	720	0.03962	104.4992	GEN334441 1-SABINE UNIT 5
FDNS	00NR	4	25SP	G15_076	TO->FROM	GRPRAR1-LNX3345.00 - GRPRAR 345KV CKT Z	720	720	0.03962	104.494	GEN336464 1-MICHOUD UNIT #3
FDNS	00NR	4	25SP	G15_076	TO->FROM	GRPRAR1-LNX3345.00 - GRPRAR 345KV CKT Z	720	720	0.03962	104.4915	GEN563222 1-G15088_3 0.6900
FDNS	00NR	4	25SP	G15_076	TO->FROM	GRPRAR1-LNX3345.00 - GRPRAR 345KV CKT Z	720	720	0.03962	104.4836	GEN335204 1-NELSON UNIT 4
FDNS	00NR	4	25SP	G15_076	TO->FROM	GRPRAR1-LNX3345.00 - GRPRAR 345KV CKT Z	720	720	0.03984	104.483	NORTH LA CROSSE - NORTH ROCHESTER 345KV CKT 1
FDNS	00NR	4	25SP	G15_076	TO->FROM	GRPRAR1-LNX3345.00 - GRPRAR 345KV CKT Z	720	720	0.03952	104.4737	HESKETT - WISHEK 230KV CKT 1
FDNS	00NR	4	25SP	G15_076	TO->FROM	GRPRAR1-LNX3345.00 - GRPRAR 345KV CKT Z	720	720	0.04022	104.4625	ADAMS - MITCHLCO3 345.00 345KV CKT 1
FDNS	00NR	4	20SP	G15_076	TO->FROM	GRPRAR1-LNX3345.00 - GRPRAR 345KV CKT Z	720	720	0.0393	104.4174	GEN563282 1-G15094_3 0.6900
FDNS	00NR	4	25SP	G15_076	TO->FROM	GRPRAR1-LNX3345.00 - GRPRAR 345KV CKT Z	720	720	0.03962	104.409	GEN640009 1-COOPER NUCLEAR STATION
FDNS	00NR	4	25SP	G15_076	TO->FROM	GRPRAR1-LNX3345.00 - GRPRAR 345KV CKT Z	720	720	0.03961	104.4033	CENTER - COYOTE 345KV CKT 1
FDNS	00NR	4	25SP	G15_076	TO->FROM	GRPRAR1-LNX3345.00 - GRPRAR 345KV CKT Z	720	720	0.03952	104.399	MERRCRT4 230.00 - WISHEK 230KV CKT 1
FDNS	00NR	4	25SP	G15_076	TO->FROM	GRPRAR1-LNX3345.00 - GRPRAR 345KV CKT Z	720	720	0.0457	104.3912	BLOOMFIELD - CREIGHTON 115KV CKT 1
FDNS	00NR	4	25SP	G15_076	TO->FROM	GRPRAR1-LNX3345.00 - GRPRAR 345KV CKT Z	720	720	0.03831	104.3797	MENNO JCT - TRIPP JCT 115KV CKT 1
FDNS	00NR	4	25SP	G15_076	TO->FROM	GRPRAR1-LNX3345.00 - GRPRAR 345KV CKT Z	720	720	0.03962	104.3657	GARRISON - JAMES TOWN 230KV CKT 1
FDNS	00NR	4	25SP	G15_076	TO->FROM	GRPRAR1-LNX3345.00 - GRPRAR 345KV CKT Z	720	720	0.03943	104.3656	BROOKING COUNTY - BSSOUTH3 345.00 345KV CKT 1
FDNS	00NR	4	25SP	G15_076	TO->FROM	GRPRAR1-LNX3345.00 - GRPRAR 345KV CKT Z	720	720	0.03962	104.3644	GEN334433 1-SABINE UNIT 3
FDNS	00NR	4	25SP	G15_076	TO->FROM	GRPRAR1-LNX3345.00 - GRPRAR 345KV CKT Z	720	720	0.0457	104.3435	BLOOMFIELD - GAVINS POINT 115KV CKT 1
FDNS	00NR	4	25SP	G15_076	TO->FROM	GRPRAR1-LNX3345.00 - GRPRAR 345KV CKT Z	720	720	0.03962	104.3288	GEN531447 1-HOLCOMB GENERATOR
FDNS	00NR	4	25SP	G15_076	TO->FROM	GRPRAR1-LNX3345.00 - GRPRAR 345KV CKT Z	720	720	0.03962	104.3121	GEN635213 3-NEAL UNIT 3
FDNS	00NR	4	25SP	G15_076	TO->FROM	GRPRAR1-LNX3345.00 - GRPRAR 345KV CKT Z	720	720	0.03962	104.3013	GEN336222 1-LITTLE GYPSY UNIT#2
FDNS	00NR	4	25SP	G15_076	TO->FROM	GRPRAR1-LNX3345.00 - GRPRAR 345KV CKT Z	720	720	0.04003	104.3	ADAMS - PLEASANT VALLEY 345KV CKT 1
FDNS	00NR	4	25SP	G15_076	TO->FROM	GRPRAR1-LNX3345.00 - GRPRAR 345KV CKT Z	720	720	0.03973	104.2859	APPLEDORN 4 230.00 - WATERTOWN 230KV CKT 1
FDNS	00NR	4	25SP	G15_076	TO->FROM	GRPRAR1-LNX3345.00 - GRPRAR 345KV CKT Z	720	720	0.03973	104.2859	APPLEDORN 4 230.00 - WATERTOWN 230KV CKT 1
FDNS	00NR	4	17SP	G15_076	TO->FROM	GRPRAR1-LNX3345.00 - GRPRAR 345KV CKT Z	720	720	0.04084	104.2743	GEN659125 1-COVEY
FDNS	00NR	4	25SP	G15_076	TO->FROM	GRPRAR1-LNX3345.00 - GRPRAR 345KV CKT Z	720	720	0.03975	104.2693	ARKANSAS NUCLEAR ONE - FT SMITH 500KV CKT 1
FDNS	00NR	4	25SP	G15_076	TO->FROM	GRPRAR1-LNX3345.00 - GRPRAR 345KV CKT Z	720	720	0.03975	104.2693	ARKANSAS NUCLEAR ONE - FT SMITH 500KV CKT 1
FDNS	00NR	4	25SP	G15_076	TO->FROM	GRPRAR1-LNX3345.00 - GRPRAR 345KV CKT Z	720	720	0.03953	104.25	BSSOUTH3 345.00 - ELLENDLMVP3 345.00 345KV CKT 1
FDNS	00NR	4	25SP	G15_076	TO->FROM	GRPRAR1-LNX3345.00 - GRPRAR 345KV CKT Z	720	720	0.03953	104.25	BSSOUTH3 345.00 - ELLENDLMVP3 345.00 345KV CKT 1
FDNS	00NR	4	25SP	G15_076	TO->FROM	GRPRAR1-LNX3345.00 - GRPRAR 345KV CKT Z	720	720	0.03831	104.2484	MENNO JCT - UTICA 115KV CKT 1
FDNS	00NR	4	25SP	G15_076	TO->FROM	GRPRAR1-LNX3345.00 - GRPRAR 345KV CKT Z	720	720	0.03962	104.2483	GEN336151 1-WATERFORD UNIT#1
FDNS	00NR	4	25SP	G15_076	TO->FROM	GRPRAR1-LNX3345.00 - GRPRAR 345KV CKT Z	720	720	0.03962	104.2483	GEN336152 1-WATERFORD UNIT#2
FDNS	00NR	4	25SP	G15_076	TO->FROM	GRPRAR1-LNX3345.00 - GRPRAR 345KV CKT Z	720	720	0.03953	104.229	ELLENDLMVP3 345.00 (1) 345/230/34.5KV TRANSFORMER CKT 1
FDNS	00NR	4	25SP	G15_076	TO->FROM	GRPRAR1-LNX3345.00 - GRPRAR 345KV CKT Z	720	720	0.03973	104.2214	APPLEDORN 4 230.00 - GRANITE FALLS 230KV CKT 1
FDNS	00NR	4	25SP	G15_076	TO->FROM	GRPRAR1-LNX3345.00 - GRPRAR 345KV CKT Z	720	720	0.03973	104.2214	APPLEDORN 4 230.00 - GRANITE FALLS 230KV CKT 1
FDNS	00NR	4	25SP	G15_076	TO->FROM	GRPRAR1-LNX3345.00 - GRPRAR 345KV CKT Z	720	720	0.03975	104.2207	ALEXMRES3 345.00 - WAITE PARK 345KV CKT 1
FDNS	00NR	4	25SP	G15_076	TO->FROM	GRPRAR1-LNX3345.00 - GRPRAR 345KV CKT Z	720	720	0.0397	104.2156	BLAIR - GRANITE FALLS 230KV CKT 1
FDNS	00NR	4	25SP	G15_076	TO->FROM	GRPRAR1-LNX3345.00 - GRPRAR 345KV CKT Z	720	720	0.0397	104.2156	BLAIR - GRANITE FALLS 230KV CKT 1
FDNS	00NR	4	25SP	G15_076	TO->FROM	GRPRAR1-LNX3345.00 - GRPRAR 345KV CKT Z	720	720	0.03992	104.2023	NMA B3 345 345.00 - NORTH LA CROSSE 345KV CKT 1
FDNS	00NR	4	25SP	G15_076	TO->FROM	GRPRAR1-LNX3345.00 - GRPRAR 345KV CKT Z	720	720	0.03901	104.1912	WINNER - WITTEN 115KV CKT 1
FDNS	00NR	4	25SP	G15_076	TO->FROM	GRPRAR1-LNX3345.00 - GRPRAR 345KV CKT Z	720	720	0.03962	104.1902	GEN641089 2-ENERGY CENTER 2
FDNS	00NR	4	25SP	G15_076	TO->FROM	GRPRAR1-LNX3345.00 - GRPRAR 345KV CKT Z	720	720	0.03831	104.1799	P12:115:UMZZ:# 237 #: MEN IN SD. MENNO JUNCTION IS A TAP (UJ-MEN-TP).

SOLUTION	GROUP	SCENARIO	SEASON	SOURCE	DIRECTION	MONITORED ELEMENT	RATEA (MVA)	RATEB(MVA)	TDF	TC%LOADING (% MVA)	CONTINGENCY
FDNS	00NR	4	25SP	G15_076	TO->FROM	GRPRAR1-LNX3345.00 - GRPRAR 345KV CKT Z	720	720	0.03962	104.1773	GEN303007 1-1BC2 U2
FDNS	00NR	4	25SP	G15_076	TO->FROM	GRPRAR1-LNX3345.00 - GRPRAR 345KV CKT Z	720	720	0.03962	104.1719	GEN303006 1-1BC2 U1
FDNS	00NR	4	25SP	G15_076	TO->FROM	GRPRAR1-LNX3345.00 - GRPRAR 345KV CKT Z	720	720	0.03962	104.1586	P13:230:UMZW:# 2218 #: FP IN MT. LOSS OF TRANSFORMER (AT2).
FDNS	00NR	4	25SP	G15_076	TO->FROM	GRPRAR1-LNX3345.00 - GRPRAR 345KV CKT Z	720	720	0.03962	104.1511	FARGO - JAMES TOWN 230KV CKT 1
FDNS	00NR	4	25SP	G15_076	TO->FROM	GRPRAR1-LNX3345.00 - GRPRAR 345KV CKT Z	720	720	0.03962	104.1477	GEN532751 1-WOLF CREEK GENERATING STATION UNIT 1
FDNS	00NR	4	25SP	G15_076	TO->FROM	GRPRAR1-LNX3345.00 - GRPRAR 345KV CKT Z	720	720	0.03979	104.1438	NORTH ROCHESTER - PRAIRIE ISLAND 345KV CKT 1
FDNS	00NR	4	25SP	G15_076	TO->FROM	GRPRAR1-LNX3345.00 - GRPRAR 345KV CKT Z	720	720	0.04612	104.1412	RAUN - SIOUX CITY 345KV CKT 1
FDNS	00NR	4	25SP	G15_076	TO->FROM	GRPRAR1-LNX3345.00 - GRPRAR 345KV CKT Z	720	720	0.04612	104.1412	RAUN - SIOUX CITY 345KV CKT 1
FDNS	00NR	4	25SP	G15_076	TO->FROM	GRPRAR1-LNX3345.00 - GRPRAR 345KV CKT Z	720	720	0.03962	104.14	GEN562921 1-G15054_2 0.6900
FDNS	00NR	4	25SP	G15_076	TO->FROM	GRPRAR1-LNX3345.00 - GRPRAR 345KV CKT Z	720	720	0.0399	104.1389	G15094_T 345.00 - LARAMIE RIVER 345KV CKT 1
FDNS	00NR	4	25SP	G15_076	TO->FROM	GRPRAR1-LNX3345.00 - GRPRAR 345KV CKT Z	720	720	0.03962	104.1293	FARGO - JAMES TOWN 230KV CKT 2
FDNS	00NR	4	25SP	G15_076	TO->FROM	GRPRAR1-LNX3345.00 - GRPRAR 345KV CKT Z	720	720	0.04012	104.1182	HUNTLEY3 345.00 - LEDYARD3 345.00 345KV CKT 1
FDNS	00NR	4	25SP	G15_076	TO->FROM	GRPRAR1-LNX3345.00 - GRPRAR 345KV CKT Z	720	720	0.03962	104.1107	GEN303008 1-1BC2 U3
FDNS	00NR	4	25SP	G15_076	TO->FROM	GRPRAR1-LNX3345.00 - GRPRAR 345KV CKT Z	720	720	0.03962	104.1083	BISMARK - JAMES TOWN 230KV CKT 1
FDNS	00NR	4	25SP	G15_076	TO->FROM	GRPRAR1-LNX3345.00 - GRPRAR 345KV CKT Z	720	720	0.03962	104.1052	GEN336170 1-GULF OXY U4
FDNS	00NR	4	25SP	G15_076	TO->FROM	GRPRAR1-LNX3345.00 - GRPRAR 345KV CKT Z	720	720	0.03962	104.0988	BISMARK - WEBER 230KV CKT 1
FDNS	00NR	4	25SP	G15_076	TO->FROM	GRPRAR1-LNX3345.00 - GRPRAR 345KV CKT Z	720	720	0.03962	104.0858	GEN562596 1-G14_059_3 0.6900
FDNS	00NR	4	25SP	G15_076	TO->FROM	GRPRAR1-LNX3345.00 - GRPRAR 345KV CKT Z	720	720	0.03962	104.0829	JAMES TOWN - WEBER 230KV CKT 1
FDNS	00NR	4	25SP	G15_076	TO->FROM	GRPRAR1-LNX3345.00 - GRPRAR 345KV CKT Z	720	720	0.04254	104.0787	P13:230-345:NPPD:STEGALL3:KV3A
FDNS	00NR	4	25SP	G15_076	TO->FROM	GRPRAR1-LNX3345.00 - GRPRAR 345KV CKT Z	720	720	0.04254	104.0751	STEGALL (SGQ KV3A) 345/230/13.8KV TRANSFORMER CKT 1
FDNS	00NR	4	25SP	G15_076	TO->FROM	GRPRAR1-LNX3345.00 - GRPRAR 345KV CKT Z	720	720	0.0401	104.0728	SIDNEY - SIDNEY TRANSFORMER 230KV CKT 1
FDNS	00NR	4	25SP	G15_076	TO->FROM	GRPRAR1-LNX3345.00 - GRPRAR 345KV CKT Z	720	720	0.04001	104.0716	HUNTLEY3 345.00 - LAKEFIELD 3 345KV CKT 1
FDNS	00NR	4	25SP	G15_076	TO->FROM	GRPRAR1-LNX3345.00 - GRPRAR 345KV CKT Z	720	720	0.0401	104.0712	P13:230-345:NPPD:SIDNEY 3:KV2A
FDNS	00NR	4	25SP	G15_076	TO->FROM	GRPRAR1-LNX3345.00 - GRPRAR 345KV CKT Z	720	720	0.0401	104.0712	SIDNEY (SDQ KV2A) 345/230/13.8KV TRANSFORMER CKT 1
FDNS	00NR	4	25SP	G15_076	TO->FROM	GRPRAR1-LNX3345.00 - GRPRAR 345KV CKT Z	720	720	0.03945	104.0711	FT THOMPSON - HURON 230KV CKT 1
FDNS	00NR	4	25SP	G15_076	TO->FROM	GRPRAR1-LNX3345.00 - GRPRAR 345KV CKT Z	720	720	0.03945	104.0711	FT THOMPSON - HURON 230KV CKT 1
FDNS	00NR	4	25SP	G15_076	TO->FROM	GRPRAR1-LNX3345.00 - GRPRAR 345KV CKT Z	720	720	0.03945	104.0711	FT THOMPSON - HURON 230KV CKT 2
FDNS	00NR	4	25SP	G15_076	TO->FROM	GRPRAR1-LNX3345.00 - GRPRAR 345KV CKT Z	720	720	0.03945	104.0711	FT THOMPSON - HURON 230KV CKT 2
FDNS	00NR	4	25SP	G15_076	TO->FROM	GRPRAR1-LNX3345.00 - GRPRAR 345KV CKT Z	720	720	0.04254	104.0671	STEGALL - STEGALL TRANSFORMER 230KV CKT 1
FDNS	00NR	4	20SP	G15_076	TO->FROM	GRPRAR1-LNX3345.00 - GRPRAR 345KV CKT Z	720	720	0.0393	104.0666	BASE CASE
FDNS	00NR	4	25SP	G15_076	TO->FROM	GRPRAR1-LNX3345.00 - GRPRAR 345KV CKT Z	720	720	0.03962	104.0631	BALTA - RAMSEY 230KV CKT 1
FDNS	00NR	4	25SP	G15_076	TO->FROM	GRPRAR1-LNX3345.00 - GRPRAR 345KV CKT Z	720	720	0.04022	104.0566	P12:230:UMZW:# 733 #: FT IN SD. FT-BG2 LINE FAULT
FDNS	00NR	4	25SP	G15_076	TO->FROM	GRPRAR1-LNX3345.00 - GRPRAR 345KV CKT Z	720	720	0.04022	104.0561	FT THOMPSON - LOWERBRULE 4230.00 230KV CKT 1
FDNS	00NR	4	25SP	G15_076	TO->FROM	GRPRAR1-LNX3345.00 - GRPRAR 345KV CKT Z	720	720	0.04022	104.0561	FT THOMPSON - LOWERBRULE 4230.00 230KV CKT 1
FDNS	00NR	4	25SP	G15_076	TO->FROM	GRPRAR1-LNX3345.00 - GRPRAR 345KV CKT Z	720	720	0.04022	104.0526	LOWERBRULE 4230.00 - RELIANCE 4 230.00 230KV CKT 1
FDNS	00NR	4	25SP	G15_076	TO->FROM	GRPRAR1-LNX3345.00 - GRPRAR 345KV CKT Z	720	720	0.04013	104.0461	P13:115-230:TSGT:SIDNEY-KV1A
FDNS	00NR	4	25SP	G15_076	TO->FROM	GRPRAR1-LNX3345.00 - GRPRAR 345KV CKT Z	720	720	0.03962	104.0359	GEN501811 1-RODEMACHER UNIT 1
FDNS	00NR	4	25SP	G15_076	TO->FROM	GRPRAR1-LNX3345.00 - GRPRAR 345KV CKT Z	720	720	0.03964	104.0128	FORMAN - HANKINSON 230KV CKT 1
FDNS	00NR	4	25SP	G15_076	TO->FROM	GRPRAR1-LNX3345.00 - GRPRAR 345KV CKT Z	720	720	0.03962	104.0069	LAWRENCE ENERGY CENTER UNIT 5 - LAWRENCE HILL 230KV CKT 1
FDNS	00NR	4	25SP	G15_076	TO->FROM	GRPRAR1-LNX3345.00 - GRPRAR 345KV CKT Z	720	720	0.03962	104.0069	LAWRENCE ENERGY CENTER UNIT 5 230/24.0KV TRANSFORMER CKT 1
FDNS	00NR	4	25SP	G15_076	TO->FROM	GRPRAR1-LNX3345.00 - GRPRAR 345KV CKT Z	720	720	0.03962	103.9971	PRAIRIE ISLAND 345/20.0KV TRANSFORMER CKT 1
FDNS	00NR	4	25SP	G15_076	TO->FROM	GRPRAR1-LNX3345.00 - GRPRAR 345KV CKT Z	720	720	0.03962	103.9958	PRAIRIE ISLAND 345/20.0KV TRANSFORMER CKT 2
FDNS	00NR	4	25SP	G15_076	TO->FROM	GRPRAR1-LNX3345.00 - GRPRAR 345KV CKT Z	720	720	0.03901	103.993	GREGORY - WINNER 115KV CKT 1
FDNS	00NR	4	25SP	G15_076	TO->FROM	GRPRAR1-LNX3345.00 - GRPRAR 345KV CKT Z	720	720	0.03962	103.9922	GEN659118 1-LARAMIE RIVER UNIT1
FDNS	00NR	4	25SP	G15_076	TO->FROM	GRPRAR1-LNX3345.00 - GRPRAR 345KV CKT Z	720	720	0.03962	103.9909	GEN334070 1-LEWIS CREEK 1
FDNS	00NR	4	25SP	G15_076	TO->FROM	GRPRAR1-LNX3345.00 - GRPRAR 345KV CKT Z	720	720	0.03962	103.9909	GEN334071 1-LEWIS CREEK 2
FDNS	00NR	4	25SP	G15_076	TO->FROM	GRPRAR1-LNX3345.00 - GRPRAR 345KV CKT Z	720	720	0.03901	103.9742	P12:115:UMZW:# 172 #: WI IN SD.
FDNS	00NR	4	25SP	G15_076	TO->FROM	GRPRAR1-LNX3345.00 - GRPRAR 345KV CKT Z	720	720	0.03962	103.9738	SEMINOLE 138/20.9KV TRANSFORMER CKT 1
FDNS	00NR	4	25SP	G15_076	TO->FROM	GRPRAR1-LNX3345.00 - GRPRAR 345KV CKT Z	720	720	0.03962	103.9721	TATANKA 230/34.5KV TRANSFORMER CKT 1
FDNS	00NR	4	25SP	G15_076	TO->FROM	GRPRAR1-LNX3345.00 - GRPRAR 345KV CKT Z	720	720	0.03962	103.9546	GEN337766 1-TRACTEBEL UNIT S1
FDNS	00NR	4	25SP	G15_076	TO->FROM	GRPRAR1-LNX3345.00 - GRPRAR 345KV CKT Z	720	720	0.03962	103.953	GEN645012 2-NEBRASKA CITY 2
FDNS	00NR	4	25SP	G15_076	TO->FROM	GRPRAR1-LNX3345.00 - GRPRAR 345KV CKT Z	720	720	0.03962	103.9417	GEN337757 1-DUKE HOTSPRINGS STG1
FDNS	00NR	4	25SP	G15_076	TO->FROM	GRPRAR1-LNX3345.00 - GRPRAR 345KV CKT Z	720	720	0.03961	103.9389	ELM CREEK - MONTICELLO 345KV CKT 1
FDNS	00NR	4	25SP	G15_076	TO->FROM	GRPRAR1-LNX3345.00 - GRPRAR 345KV CKT Z	720	720	0.03967	103.9261	HANKINSON - WAHPETON 230KV CKT 1
FDNS	00NR	4	25SP	G15_076	TO->FROM	GRPRAR1-LNX3345.00 - GRPRAR 345KV CKT Z	720	720	0.03964	103.9236	AUDUBON - SHEYNNE 230KV CKT 1
FDNS	00NR	4	25SP	G15_076	TO->FROM	GRPRAR1-LNX3345.00 - GRPRAR 345KV CKT Z	720	720	0.03962	103.92	GEN501910 1-ACADIA UNIT ST1
FDNS	00NR	4	25SP	G15_076	TO->FROM	GRPRAR1-LNX3345.00 - GRPRAR 345KV CKT Z	720	720	0.03932	103.9199	MT VERN - STORLA 115KV CKT 1
FDNS	00NR	4	25SP	G15_076	TO->FROM	GRPRAR1-LNX3345.00 - GRPRAR 345KV CKT Z	720	720	0.04018	103.9182	P12:115:NPPD:WAPA1:CHADRON7:BOXBUTE7:BTB
FDNS	00NR	4	25SP	G15_076	TO->FROM	GRPRAR1-LNX3345.00 - GRPRAR 345KV CKT Z	720	720	0.03962	103.9168	GEN645011 1-NEBRASKA CITY 1
FDNS	00NR	4	25SP	G15_076	TO->FROM	GRPRAR1-LNX3345.00 - GRPRAR 345KV CKT Z	720	720	0.03984	103.9145	OVEXFRMCCOVE
FDNS	00NR	4	25SP	G15_076	TO->FROM	GRPRAR1-LNX3345.00 - GRPRAR 345KV CKT Z	720	720	0.03963	103.911	ELLENDLMVP4 230.00 - OAKES 230KV CKT 1
FDNS	00NR	4	25SP	G15_076	TO->FROM	GRPRAR1-LNX3345.00 - GRPRAR 345KV CKT Z	720	720	0.03963	103.911	ELLENDLMVP4 230.00 - OAKES 230KV CKT 1
FDNS	00NR	4	25SP	G15_076	TO->FROM	GRPRAR1-LNX3345.00 - GRPRAR 345KV CKT Z	720	720	0.03963	103.9106	FORMAN - OAKES 230KV CKT 1
FDNS	00NR	4	25SP	G15_076	TO->FROM	GRPRAR1-LNX3345.00 - GRPRAR 345KV CKT Z	720	720	0.05202	103.9048	BELDEN - HOSKINS 115KV CKT 1
FDNS	00NR	4	25SP	G15_076	TO->FROM	GRPRAR1-LNX3345.00 - GRPRAR 345KV CKT Z	720	720	0.03962	103.897	GEN336221 1-LITTLE GYPSY UNIT#1
FDNS	00NR	4	25SP	G15_076	TO->FROM	GRPRAR1-LNX3345.00 - GRPRAR 345KV CKT Z	720	720	0.03967	103.893	FERGSFL4 230.00 - WAHPETON 230KV CKT 1
FDNS	00NR	4	25SP	G15_076	TO->FROM	GRPRAR1-LNX3345.00 - GRPRAR 345KV CKT Z	720	720	0.03973	103.891	FRANKS - HUBEN 345KV CKT 1
FDNS	00NR	4	25SP	G15_076	TO->FROM	GRPRAR1-LNX3345.00 - GRPRAR 345KV CKT Z	720	720	0.03962	103.8889	PRAIRIE - WINGER 230KV CKT 1
FDNS	00NR	4	25SP	G15_076	TO->FROM	GRPRAR1-LNX3345.00 - GRPRAR 345KV CKT Z	720	720	0.04022	103.8883	RELIANCE 4 230.00 - WITTEN 4 230.00 230KV CKT 1
FDNS	00NR	4	25SP	G15_076	TO->FROM	GRPRAR1-LNX3345.00 - GRPRAR 345KV CKT Z	720	720	0.03962	103.882	GEN532651 1-JEFFREY ENERGY CENTER UNIT 1
FDNS	00NR	4	25SP	G15_076	TO->FROM	GRPRAR1-LNX3345.00 - GRPRAR 345KV CKT Z	720	720	0.04054	103.8791	NOBLES - SPLIT ROCK 345KV CKT 1
FDNS	00NR	4	25SP	G15_076	TO->FROM	GRPRAR1-LNX3345.00 - GRPRAR 345KV CKT Z	720	720	0.03962	103.8766	GEN532652 1-JEFFREY ENERGY CENTER UNIT 2
FDNS	00NR	4	25SP	G15_076	TO->FROM	GRPRAR1-LNX3345.00 - GRPRAR 345KV CKT Z	720	720	0.03962	103.8765	GEN532653 1-JEFFREY ENERGY CENTER UNIT 3
FDNS	00NR	4	25SP	G15_076	TO->FROM	GRPRAR1-LNX3345.00 - GRPRAR 345KV CKT Z	720	720	0.03962	103.873	GEN562912 1-G15053_3 0.6900
FDNS	00NR	4	25SP	G15_076	TO->FROM	GRPRAR1-LNX3345.00 - GRPRAR 345KV CKT Z	720	720	0.03962	103.8688	GRAND GULF 500/22.0KV TRANSFORMER CKT 1
FDNS	00NR	4	25SP	G15_076	TO->FROM	GRPRAR1-LNX3345.00 - GRPRAR 345KV CKT Z	720	720	0.03962	103.868	J316_SUB 230.00 230/34.5KV TRANSFORMER CKT 1
FDNS	00NR	4	25SP	G15_076	TO->FROM	GRPRAR1-LNX3345.00 - GRPRAR 345KV CKT Z	720	720	0.03962	103.8638	GEN334431 1-SABINE UNIT 1
FDNS	00NR	4	25SP	G15_076	TO->FROM	GRPRAR1-LNX3345.00 - GRPRAR 345KV CKT Z	720	720	0.03962	103.8638	GEN334432 1-SABINE UNIT 2
FDNS	00NR	4	25SP	G15_076	TO->FROM	GRPRAR1-LNX3345.00 - GRPRAR 345KV CKT Z	720	720	0.04018	103.8629	CHADRON - DUNLAP 115KV CKT 1

SOLUTION	GROUP	SCENARIO	SEASON	SOURCE	DIRECTION	MONITORED ELEMENT	RATEA (MVA)	RATEB(MVA)	TDF	TC%LOADING (% MVA)	CONTINGENCY
FDNS	00NR	4	25SP	G15_076	TO->FROM	GRPRAR1-LNX3345.00 - GRPRAR 345KV CKT Z	720	720	0.03962	103.8603	GEN345765 H-1SIOUX 2 18.000
FDNS	00NR	4	25SP	G15_076	TO->FROM	GRPRAR1-LNX3345.00 - GRPRAR 345KV CKT Z	720	720	0.03962	103.8597	GEN337764 1-TRACTEBEL UNIT C1
FDNS	00NR	4	25SP	G15_076	TO->FROM	GRPRAR1-LNX3345.00 - GRPRAR 345KV CKT Z	720	720	0.03962	103.8597	GEN337765 1-TRACTEBEL UNIT C2
FDNS	00NR	4	25SP	G15_076	TO->FROM	GRPRAR1-LNX3345.00 - GRPRAR 345KV CKT Z	720	720	0.03962	103.8593	GEN336446 1-MICHOUD UNIT #2
FDNS	00NR	4	25SP	G15_076	TO->FROM	GRPRAR1-LNX3345.00 - GRPRAR 345KV CKT Z	720	720	0.04022	103.8548	WITTEN 4 230.00 () 230/115/13.8KV TRANSFORMER CKT 1
FDNS	00NR	4	25SP	G15_076	TO->FROM	GRPRAR1-LNX3345.00 - GRPRAR 345KV CKT Z	720	720	0.04018	103.844	P12:115:NPPD:WAPA2:HEMINGF7:SNAKECK7:BTB
FDNS	00NR	4	25SP	G15_076	TO->FROM	GRPRAR1-LNX3345.00 - GRPRAR 345KV CKT Z	720	720	0.03966	103.8414	FERGSFL4 230.00 - GRE-SILVRLK4230.00 230KV CKT 1
FDNS	00NR	4	25SP	G15_076	TO->FROM	GRPRAR1-LNX3345.00 - GRPRAR 345KV CKT Z	720	720	0.03962	103.8405	BALTA - MCHENRY 230KV CKT 1
FDNS	00NR	4	25SP	G15_076	TO->FROM	GRPRAR1-LNX3345.00 - GRPRAR 345KV CKT Z	720	720	0.04065	103.8341	MARTIN - SHANNON 115KV CKT 1
FDNS	00NR	4	25SP	G15_076	TO->FROM	GRPRAR1-LNX3345.00 - GRPRAR 345KV CKT Z	720	720	0.03975	103.83	GRE-CEDARMT3345.00 - HELENA 345KV CKT 1
FDNS	00NR	4	25SP	G15_076	TO->FROM	GRPRAR1-LNX3345.00 - GRPRAR 345KV CKT Z	720	720	0.03975	103.83	GRE-CEDARMT3345.00 - HELENA 345KV CKT 2
FDNS	00NR	4	25SP	G15_076	TO->FROM	GRPRAR1-LNX3345.00 - GRPRAR 345KV CKT Z	720	720	0.03962	103.8298	TOLK STATION EAST 230/24.0KV TRANSFORMER CKT 1
FDNS	00NR	4	25SP	G15_076	TO->FROM	GRPRAR1-LNX3345.00 - GRPRAR 345KV CKT Z	720	720	0.03962	103.8214	GEN501823 1-TECHE UNIT 3
FDNS	00NR	4	25SP	G15_076	TO->FROM	GRPRAR1-LNX3345.00 - GRPRAR 345KV CKT Z	720	720	0.03962	103.8206	GEN336242 1-1NMIL ST1 18.000
FDNS	00NR	4	25SP	G15_076	TO->FROM	GRPRAR1-LNX3345.00 - GRPRAR 345KV CKT Z	720	720	0.0398	103.8194	HAMPTON CORNER - NORTH ROCHESTER 345KV CKT 1
FDNS	00NR	4	25SP	G15_076	TO->FROM	GRPRAR1-LNX3345.00 - GRPRAR 345KV CKT Z	720	720	0.04211	103.8157	OAHE - PHILIP TAP 230KV CKT 1
FDNS	00NR	4	25SP	G15_076	TO->FROM	GRPRAR1-LNX3345.00 - GRPRAR 345KV CKT Z	720	720	0.03925	103.8155	HURON WEST PARK - MITCHELL NW 115KV CKT 1
FDNS	00NR	4	25SP	G15_076	TO->FROM	GRPRAR1-LNX3345.00 - GRPRAR 345KV CKT Z	720	720	0.03925	103.8155	HURON WEST PARK - MITCHELL NW 115KV CKT 1
FDNS	00NR	4	25SP	G15_076	TO->FROM	GRPRAR1-LNX3345.00 - GRPRAR 345KV CKT Z	720	720	0.03962	103.8139	GEN636641 1-LOUISA UNIT 1
FDNS	00NR	4	25SP	G15_076	TO->FROM	GRPRAR1-LNX3345.00 - GRPRAR 345KV CKT Z	720	720	0.03962	103.8095	JUDSON LARGE 115/15.0KV TRANSFORMER CKT 1
FDNS	00NR	4	25SP	G15_076	TO->FROM	GRPRAR1-LNX3345.00 - GRPRAR 345KV CKT Z	720	720	0.03962	103.8095	JUDSON LARGE 115/15.0KV TRANSFORMER CKT 1
FDNS	00NR	4	25SP	G15_076	TO->FROM	GRPRAR1-LNX3345.00 - GRPRAR 345KV CKT Z	720	720	0.04035	103.8091	DENISON - SIOUX CITY 230KV CKT 1
FDNS	00NR	4	25SP	G15_076	TO->FROM	GRPRAR1-LNX3345.00 - GRPRAR 345KV CKT Z	720	720	0.03962	103.8079	OKLAUN 345/24.0KV TRANSFORMER CKT 1
FDNS	00NR	4	25SP	G15_076	TO->FROM	GRPRAR1-LNX3345.00 - GRPRAR 345KV CKT Z	720	720	0.03962	103.8034	P13:230-345:NPPD:NUCOR-1
FDNS	00NR	4	25SP	G15_076	TO->FROM	GRPRAR1-LNX3345.00 - GRPRAR 345KV CKT Z	720	720	0.03966	103.8014	GRE-SILVRLK4230.00 - HENNING 230KV CKT 1
FDNS	00NR	4	25SP	G15_076	TO->FROM	GRPRAR1-LNX3345.00 - GRPRAR 345KV CKT Z	720	720	0.03973	103.8008	GRE-CEDARMT3345.00 - LYON COUNTY 345KV CKT 2
FDNS	00NR	4	25SP	G15_076	TO->FROM	GRPRAR1-LNX3345.00 - GRPRAR 345KV CKT Z	720	720	0.04073	103.7991	PLYMOUTH - SIOUX CITY 161KV CKT 1
FDNS	00NR	4	25SP	G15_076	TO->FROM	GRPRAR1-LNX3345.00 - GRPRAR 345KV CKT Z	720	720	0.04073	103.7991	PLYMOUTH - SIOUX CITY 161KV CKT 1
FDNS	00NR	4	25SP	G15_076	TO->FROM	GRPRAR1-LNX3345.00 - GRPRAR 345KV CKT Z	720	720	0.03973	103.7982	GRE-CEDARMT3345.00 - LYON COUNTY 345KV CKT 1
FDNS	00NR	4	25SP	G15_076	TO->FROM	GRPRAR1-LNX3345.00 - GRPRAR 345KV CKT Z	720	720	0.03985	103.7959	WAYSIDE (WAYSIDE T1) 230/115/13.8KV TRANSFORMER CKT 1
FDNS	00NR	4	25SP	G15_076	TO->FROM	GRPRAR1-LNX3345.00 - GRPRAR 345KV CKT Z	720	720	0.03962	103.7935	GEN334030 1-FRONTIER UNIT 1
FDNS	00NR	4	25SP	G15_076	TO->FROM	GRPRAR1-LNX3345.00 - GRPRAR 345KV CKT Z	720	720	0.03962	103.7932	GEN334031 1-FRONTIER UNIT 2
FDNS	00NR	4	25SP	G15_076	TO->FROM	GRPRAR1-LNX3345.00 - GRPRAR 345KV CKT Z	720	720	0.03962	103.7919	GEN345756 H-1SIOUX 1 18.000
FDNS	00NR	4	25SP	G15_076	TO->FROM	GRPRAR1-LNX3345.00 - GRPRAR 345KV CKT Z	720	720	0.03962	103.788	GEN562438 1-G13-032 0.6900
FDNS	00NR	4	25SP	G15_076	TO->FROM	GRPRAR1-LNX3345.00 - GRPRAR 345KV CKT Z	720	720	0.03962	103.7878	GEN338443 1-PANDA S1
FDNS	00NR	4	25SP	G15_076	TO->FROM	GRPRAR1-LNX3345.00 - GRPRAR 345KV CKT Z	720	720	0.03962	103.7871	P12:345:GRDA:CHOUTEAU-SPORTSMANACRES
FDNS	00NR	4	25SP	G15_076	TO->FROM	GRPRAR1-LNX3345.00 - GRPRAR 345KV CKT Z	720	720	0.03769	103.7862	FT RANDAL - WHITE SWAN 115KV CKT 1
FDNS	00NR	4	25SP	G15_076	TO->FROM	GRPRAR1-LNX3345.00 - GRPRAR 345KV CKT Z	720	720	0.03985	103.7851	CHADRON - WAYSIDE 115KV CKT 1
FDNS	00NR	4	25SP	G15_076	TO->FROM	GRPRAR1-LNX3345.00 - GRPRAR 345KV CKT Z	720	720	0.03985	103.7851	P13:115-230:NPPD:WAYSIDE4:T1
FDNS	00NR	4	25SP	G15_076	TO->FROM	GRPRAR1-LNX3345.00 - GRPRAR 345KV CKT Z	720	720	0.03962	103.7831	GEN336944 1-REX BROWN
FDNS	00NR	4	25SP	G15_076	TO->FROM	GRPRAR1-LNX3345.00 - GRPRAR 345KV CKT Z	720	720	0.03962	103.7815	GEN345832 1-1TS G1 13.800
FDNS	00NR	4	25SP	G15_076	TO->FROM	GRPRAR1-LNX3345.00 - GRPRAR 345KV CKT Z	720	720	0.03962	103.7811	GEN345841 2-1TS G2 13.800
FDNS	00NR	4	25SP	G15_076	TO->FROM	GRPRAR1-LNX3345.00 - GRPRAR 345KV CKT Z	720	720	0.03962	103.7807	GEN501970 1-EVANGELINE UNIT 7
FDNS	00NR	4	25SP	G15_076	TO->FROM	GRPRAR1-LNX3345.00 - GRPRAR 345KV CKT Z	720	720	0.03962	103.7735	GEN335612 1-WILLOW GLENN UNIT#2
FDNS	00NR	4	20SP	G15_076	TO->FROM	GRPRAR1-LNX3345.00 - GRPRAR 345KV CKT Z	720	720	0.03949	103.6877	BUCKNER7 345.00 - SPEARVILLE 345KV CKT 1
FDNS	00NR	4	20SP	G15_076	TO->FROM	GRPRAR1-LNX3345.00 - GRPRAR 345KV CKT Z	720	720	0.03949	103.6877	BUCKNER7 345.00 - SPEARVILLE 345KV CKT 1
FDNS	00NR	4	25SP	G15_076	TO->FROM	GRPRAR1-LNX3345.00 - GRPRAR 345KV CKT Z	720	720	0.03962	103.6706	GEN563282 1-G15094_3 0.6900
FDNS	00NR	4	20SP	G15_076	TO->FROM	GRPRAR1-LNX3345.00 - GRPRAR 345KV CKT Z	720	720	0.04209	103.6465	MINGO - RED WILLOW 345KV CKT 1
FDNS	00NR	4	20SP	G15_076	TO->FROM	GRPRAR1-LNX3345.00 - GRPRAR 345KV CKT Z	720	720	0.04209	103.6465	MINGO - RED WILLOW 345KV CKT 1
FDNS	00NR	4	20SP	G15_076	TO->FROM	GRPRAR1-LNX3345.00 - GRPRAR 345KV CKT Z	720	720	0.03947	103.6193	FT THOMPSON - OAHE 230KV CKT 1
FDNS	00NR	4	20SP	G15_076	TO->FROM	GRPRAR1-LNX3345.00 - GRPRAR 345KV CKT Z	720	720	0.03947	103.6193	FT THOMPSON - OAHE 230KV CKT 1
FDNS	00NR	4	20SP	G15_076	TO->FROM	GRPRAR1-LNX3345.00 - GRPRAR 345KV CKT Z	720	720	0.03947	103.6193	FT THOMPSON - OAHE 230KV CKT 2
FDNS	00NR	4	20SP	G15_076	TO->FROM	GRPRAR1-LNX3345.00 - GRPRAR 345KV CKT Z	720	720	0.03947	103.6193	FT THOMPSON - OAHE 230KV CKT 2
FDNS	00NR	4	20SP	G15_076	TO->FROM	GRPRAR1-LNX3345.00 - GRPRAR 345KV CKT Z	720	720	0.03864	103.597	NELIGH - PETERSBRG.N7115.00 115KV CKT 1
FDNS	00NR	4	20SP	G15_076	TO->FROM	GRPRAR1-LNX3345.00 - GRPRAR 345KV CKT Z	720	720	0.03948	103.5925	FT THOMPSON - OAHE 230KV CKT 3
FDNS	00NR	4	20SP	G15_076	TO->FROM	GRPRAR1-LNX3345.00 - GRPRAR 345KV CKT Z	720	720	0.03948	103.5925	FT THOMPSON - OAHE 230KV CKT 3
FDNS	00NR	4	20SP	G15_076	TO->FROM	GRPRAR1-LNX3345.00 - GRPRAR 345KV CKT Z	720	720	0.03948	103.5925	FT THOMPSON - OAHE 230KV CKT 4
FDNS	00NR	4	20SP	G15_076	TO->FROM	GRPRAR1-LNX3345.00 - GRPRAR 345KV CKT Z	720	720	0.03948	103.5925	FT THOMPSON - OAHE 230KV CKT 4
FDNS	00NR	4	20SP	G15_076	TO->FROM	GRPRAR1-LNX3345.00 - GRPRAR 345KV CKT Z	720	720	0.04	103.573	AXTELL - POST ROCK 345KV CKT 1
FDNS	00NR	4	20SP	G15_076	TO->FROM	GRPRAR1-LNX3345.00 - GRPRAR 345KV CKT Z	720	720	0.03931	103.567	BISMARK - L3 HAWDON 230KV CKT 1
FDNS	00NR	4	20SP	G15_076	TO->FROM	GRPRAR1-LNX3345.00 - GRPRAR 345KV CKT Z	720	720	0.03941	103.5655	G11_051T 345.00 - WOODWARD DISTRICT EHV 345KV CKT 1
FDNS	00NR	4	20SP	G15_076	TO->FROM	GRPRAR1-LNX3345.00 - GRPRAR 345KV CKT Z	720	720	0.03956	103.5643	FALLOW 3 345.00 - GRIMES 345KV CKT 1
FDNS	00NR	4	20SP	G15_076	TO->FROM	GRPRAR1-LNX3345.00 - GRPRAR 345KV CKT Z	720	720	0.0393	103.5517	GEN659147 1-PIONEER 1G13.800
FDNS	00NR	4	20SP	G15_076	TO->FROM	GRPRAR1-LNX3345.00 - GRPRAR 345KV CKT Z	720	720	0.0393	103.5517	GEN659158 2-PIONEER G213.800
FDNS	00NR	4	20SP	G15_076	TO->FROM	GRPRAR1-LNX3345.00 - GRPRAR 345KV CKT Z	720	720	0.0393	103.5517	GEN659159 3-PIONEER G313.800
FDNS	00NR	4	20SP	G15_076	TO->FROM	GRPRAR1-LNX3345.00 - GRPRAR 345KV CKT Z	720	720	0.0393	103.5513	GEN659148 1-LONESMCRK 1G13.800
FDNS	00NR	4	20SP	G15_076	TO->FROM	GRPRAR1-LNX3345.00 - GRPRAR 345KV CKT Z	720	720	0.0393	103.5513	GEN659156 2-LONESMCRK 2G13.800
FDNS	00NR	4	20SP	G15_076	TO->FROM	GRPRAR1-LNX3345.00 - GRPRAR 345KV CKT Z	720	720	0.0393	103.5513	GEN659157 3-LONESMCRK 3G13.800
FDNS	00NR	4	20SP	G15_076	TO->FROM	GRPRAR1-LNX3345.00 - GRPRAR 345KV CKT Z	720	720	0.0393	103.5449	GEN657964 1-ASH2GEN9 0.5750
FDNS	00NR	4	20SP	G15_076	TO->FROM	GRPRAR1-LNX3345.00 - GRPRAR 345KV CKT Z	720	720	0.0393	103.5441	GEN672367 1-MERIDIAN GENERATOR 1 GT1
FDNS	00NR	4	20SP	G15_076	TO->FROM	GRPRAR1-LNX3345.00 - GRPRAR 345KV CKT Z	720	720	0.0393	103.544	GEN672368 2-MERIDIAN GENERATOR 2 GT2
FDNS	00NR	4	20SP	G15_076	TO->FROM	GRPRAR1-LNX3345.00 - GRPRAR 345KV CKT Z	720	720	0.0393	103.5433	GEN672358 1-CHAPLN1W 0.6900
FDNS	00NR	4	20SP	G15_076	TO->FROM	GRPRAR1-LNX3345.00 - GRPRAR 345KV CKT Z	720	720	0.03052	103.5421	SIOUX CITY - TWIN CHURCH 230KV CKT 1
FDNS	00NR	4	20SP	G15_076	TO->FROM	GRPRAR1-LNX3345.00 - GRPRAR 345KV CKT Z	720	720	0.03864	103.5396	ALBION - PETERSBURG 115KV CKT 1
FDNS	00NR	4	20SP	G15_076	TO->FROM	GRPRAR1-LNX3345.00 - GRPRAR 345KV CKT Z	720	720	0.03926	103.5249	G14-021T 345.00 - MULLNCR7 345.00 345KV CKT 1
FDNS	00NR	4	20SP	G15_076	TO->FROM	GRPRAR1-LNX3345.00 - GRPRAR 345KV CKT Z	720	720	0.03926	103.5223	G15-005T 345.00 - MULLNCR7 345.00 345KV CKT 1
FDNS	00NR	4	20SP	G15_076	TO->FROM	GRPRAR1-LNX3345.00 - GRPRAR 345KV CKT Z	720	720	0.0393	103.5203	GEN672349 3-CORY COGEN GENERATOR 3 ST
FDNS	00NR	4	20SP	G15_076	TO->FROM	GRPRAR1-LNX3345.00 - GRPRAR 345KV CKT Z	720	720	0.0393	103.5182	GEN672350 1-NIPAWIN GENERATOR 1
FDNS	00NR	4	20SP	G15_076	TO->FROM	GRPRAR1-LNX3345.00 - GRPRAR 345KV CKT Z	720	720	0.0393	103.5182	GEN672351 2-NIPAWIN GENERATOR 2

SOLUTION	GROUP	SCENARIO	SEASON	SOURCE	DIRECTION	MONITORED ELEMENT	RATEA (MVA)	RATEB(MVA)	TDF	TC%LOADING (% MVA)	CONTINGENCY
FDNS	00NR	4	20SP	G15_076	TO->FROM	GRPRAR1-LNX3345.00 - GRPRAR 345KV CKT Z	720	720	0.0393	103.5182	GEN672352 3-NIPAWIN GENERATOR 3
FDNS	00NR	4	20SP	G15_076	TO->FROM	GRPRAR1-LNX3345.00 - GRPRAR 345KV CKT Z	720	720	0.03944	103.5159	POST ROCK (POSTROCK T1) 345/230/13.8KV TRANSFORMER CKT 1
FDNS	00NR	4	20SP	G15_076	TO->FROM	GRPRAR1-LNX3345.00 - GRPRAR 345KV CKT Z	720	720	0.0393	103.5111	GEN600012 2-BLACK DOG GEN 2
FDNS	00NR	4	20SP	G15_076	TO->FROM	GRPRAR1-LNX3345.00 - GRPRAR 345KV CKT Z	720	720	0.04114	103.5086	BATTLE CREEK - COUNTY LINE 115KV CKT 1
FDNS	00NR	4	20SP	G15_076	TO->FROM	GRPRAR1-LNX3345.00 - GRPRAR 345KV CKT Z	720	720	0.04085	103.5067	G15061_T 345.00 - SETAB 345KV CKT 1
FDNS	00NR	4	20SP	G15_076	TO->FROM	GRPRAR1-LNX3345.00 - GRPRAR 345KV CKT Z	720	720	0.03807	103.5024	COOPER - MOORE 345KV CKT 1
FDNS	00NR	4	20SP	G15_076	TO->FROM	GRPRAR1-LNX3345.00 - GRPRAR 345KV CKT Z	720	720	0.03864	103.4992	P12:115:NPPD:1168B:ALBION 7:PETERSBRG.N7:BTB
FDNS	00NR	4	20SP	G15_076	TO->FROM	GRPRAR1-LNX3345.00 - GRPRAR 345KV CKT Z	720	720	0.03864	103.4968	PETERSBRG.N7115.00 - PETERSBURG 115KV CKT Z1
FDNS	00NR	4	20SP	G15_076	TO->FROM	GRPRAR1-LNX3345.00 - GRPRAR 345KV CKT Z	720	720	0.0393	103.4937	GEN590010 1-ERCOT EQUIVALENCE
FDNS	00NR	4	20SP	G15_076	TO->FROM	GRPRAR1-LNX3345.00 - GRPRAR 345KV CKT Z	720	720	0.0393	103.4845	GEN652546 1-FT RANDAL
FDNS	00NR	4	20SP	G15_076	TO->FROM	GRPRAR1-LNX3345.00 - GRPRAR 345KV CKT Z	720	720	0.0393	103.4818	GEN652548 5-FT RANDAL
FDNS	00NR	4	20SP	G15_076	TO->FROM	GRPRAR1-LNX3345.00 - GRPRAR 345KV CKT Z	720	720	0.0393	103.4818	GEN652549 7-FT RANDAL
FDNS	00NR	4	20SP	G15_076	TO->FROM	GRPRAR1-LNX3345.00 - GRPRAR 345KV CKT Z	720	720	0.0393	103.4807	EMERY 161/18.0KV TRANSFORMER CKT 1
FDNS	00NR	4	20SP	G15_076	TO->FROM	GRPRAR1-LNX3345.00 - GRPRAR 345KV CKT Z	720	720	0.0393	103.4772	GEN652547 3-FT RANDAL
FDNS	00NR	4	20SP	G15_076	TO->FROM	GRPRAR1-LNX3345.00 - GRPRAR 345KV CKT Z	720	720	0.03926	103.4736	G15-005T 345.00 - SIBLEY 345KV CKT 1
FDNS	00NR	4	20SP	G15_076	TO->FROM	GRPRAR1-LNX3345.00 - GRPRAR 345KV CKT Z	720	720	0.03739	103.4734	COLUMEAST - NW68TH & HOLDREGE 345KV CKT 1
FDNS	00NR	4	20SP	G15_076	TO->FROM	GRPRAR1-LNX3345.00 - GRPRAR 345KV CKT Z	720	720	0.03739	103.4734	COLUMEAST - NW68TH & HOLDREGE 345KV CKT 1
FDNS	00NR	4	20SP	G15_076	TO->FROM	GRPRAR1-LNX3345.00 - GRPRAR 345KV CKT Z	720	720	0.0393	103.4671	GEN590011 2-ERCOT EQUIVALENCE
FDNS	00NR	4	20SP	G15_076	TO->FROM	GRPRAR1-LNX3345.00 - GRPRAR 345KV CKT Z	720	720	0.0393	103.4598	GEN300003 1-THOMAS HILL UNIT 3
FDNS	00NR	4	20SP	G15_076	TO->FROM	GRPRAR1-LNX3345.00 - GRPRAR 345KV CKT Z	720	720	0.03958	103.4583	LARAMIE RIVER - STEGALL 345KV CKT 1
FDNS	00NR	4	20SP	G15_076	TO->FROM	GRPRAR1-LNX3345.00 - GRPRAR 345KV CKT Z	720	720	0.0393	103.4474	GEN672339 16-QE 16G 13.800
FDNS	00NR	4	20SP	G15_076	TO->FROM	GRPRAR1-LNX3345.00 - GRPRAR 345KV CKT Z	720	720	0.0393	103.4472	GEN659290 1-EDGECOL
FDNS	00NR	4	20SP	G15_076	TO->FROM	GRPRAR1-LNX3345.00 - GRPRAR 345KV CKT Z	720	720	0.04114	103.4458	ANTELOPE 7115.00 - COUNTY LINE 115KV CKT 1
FDNS	00NR	4	20SP	G15_076	TO->FROM	GRPRAR1-LNX3345.00 - GRPRAR 345KV CKT Z	720	720	0.0393	103.4454	GEN600046 1-MECST
FDNS	00NR	4	20SP	G15_076	TO->FROM	GRPRAR1-LNX3345.00 - GRPRAR 345KV CKT Z	720	720	0.03936	103.4353	DRAYTON - LETELLIER 230KV CKT 1
FDNS	00NR	4	20SP	G15_076	TO->FROM	GRPRAR1-LNX3345.00 - GRPRAR 345KV CKT Z	720	720	0.0393	103.4334	GEN672393 2-NBECST2G 13.800
FDNS	00NR	4	20SP	G15_076	TO->FROM	GRPRAR1-LNX3345.00 - GRPRAR 345KV CKT Z	720	720	0.0393	103.4284	GEN600050 1-FEP
FDNS	00NR	4	20SP	G15_076	TO->FROM	GRPRAR1-LNX3345.00 - GRPRAR 345KV CKT Z	720	720	0.0399	103.4232	THEDFRD3 345.00 (THEDFORDT2) 345/115/13.8KV TRANSFORMER CKT 1
FDNS	00NR	4	20SP	G15_076	TO->FROM	GRPRAR1-LNX3345.00 - GRPRAR 345KV CKT Z	720	720	0.0393	103.4179	GEN620324 3-HOOT LAKE 3 GEN
FDNS	00NR	4	20SP	G15_076	TO->FROM	GRPRAR1-LNX3345.00 - GRPRAR 345KV CKT Z	720	720	0.03939	103.4152	ANTELOP-LNX3345.00 - BRDLAND-LNX3345.00 345KV CKT 1
FDNS	00NR	4	20SP	G15_076	TO->FROM	GRPRAR1-LNX3345.00 - GRPRAR 345KV CKT Z	720	720	0.03739	103.4128	COLUMEAST - SHELL CREEK 345KV CKT 1
FDNS	00NR	4	20SP	G15_076	TO->FROM	GRPRAR1-LNX3345.00 - GRPRAR 345KV CKT Z	720	720	0.0393	103.4119	GEN672342 3-QUEEN ELIZABETH GENERATOR 3
FDNS	00NR	4	20SP	G15_076	TO->FROM	GRPRAR1-LNX3345.00 - GRPRAR 345KV CKT Z	720	720	0.0393	103.4045	GEN652410 3-FT PECK
FDNS	00NR	4	20SP	G15_076	TO->FROM	GRPRAR1-LNX3345.00 - GRPRAR 345KV CKT Z	720	720	0.0393	103.4013	LADISH 115/13.2KV TRANSFORMER CKT 1
FDNS	00NR	4	20SP	G15_076	TO->FROM	GRPRAR1-LNX3345.00 - GRPRAR 345KV CKT Z	720	720	0.03652	103.3957	FT THOMPSON (FT2 KU1A) 345/230/13.8KV TRANSFORMER CKT 1
FDNS	00NR	4	20SP	G15_076	TO->FROM	GRPRAR1-LNX3345.00 - GRPRAR 345KV CKT Z	720	720	0.03651	103.3931	FT THOMPSON (FT2 KU1B) 345/230/13.8KV TRANSFORMER CKT 1
FDNS	00NR	4	20SP	G15_076	TO->FROM	GRPRAR1-LNX3345.00 - GRPRAR 345KV CKT Z	720	720	0.0393	103.3926	GEN600047 1-MECCT1
FDNS	00NR	4	20SP	G15_076	TO->FROM	GRPRAR1-LNX3345.00 - GRPRAR 345KV CKT Z	720	720	0.0393	103.3791	GEN660003 3-HURON WEST PARK
FDNS	00NR	4	20SP	G15_076	TO->FROM	GRPRAR1-LNX3345.00 - GRPRAR 345KV CKT Z	720	720	0.0393	103.3685	GEN660001 2-ABERDEEN SIEBRECHT
FDNS	00NR	4	20SP	G15_076	TO->FROM	GRPRAR1-LNX3345.00 - GRPRAR 345KV CKT Z	720	720	0.0408	103.348	GERALD GENTLEMAN STATION - RED WILLOW 345KV CKT 1
FDNS	00NR	4	20SP	G15_076	TO->FROM	GRPRAR1-LNX3345.00 - GRPRAR 345KV CKT Z	720	720	0.0393	103.3446	GEN600063 1-COLVILLE GEN 1
FDNS	00NR	4	20SP	G15_076	TO->FROM	GRPRAR1-LNX3345.00 - GRPRAR 345KV CKT Z	720	720	0.0393	103.3446	GEN600064 2-COLVILLE GEN 2
FDNS	00NR	4	20SP	G15_076	TO->FROM	GRPRAR1-LNX3345.00 - GRPRAR 345KV CKT Z	720	720	0.0393	103.342	GEN652414 4-FT PECK
FDNS	00NR	4	20SP	G15_076	TO->FROM	GRPRAR1-LNX3345.00 - GRPRAR 345KV CKT Z	720	720	0.0393	103.342	GEN652415 5-FT PECK
FDNS	00NR	4	20SP	G15_076	TO->FROM	GRPRAR1-LNX3345.00 - GRPRAR 345KV CKT Z	720	720	0.0393	103.3319	GEN300007 1-NEW MADRID UNIT 2
FDNS	00NR	4	20SP	G15_076	TO->FROM	GRPRAR1-LNX3345.00 - GRPRAR 345KV CKT Z	720	720	0.0393	103.3315	GEN681522 3-GENOA 3
FDNS	00NR	4	20SP	G15_076	TO->FROM	GRPRAR1-LNX3345.00 - GRPRAR 345KV CKT Z	720	720	0.0393	103.3309	GEN652345 W-G07_023IS_2 0.6900
FDNS	00NR	4	20SP	G15_076	TO->FROM	GRPRAR1-LNX3345.00 - GRPRAR 345KV CKT Z	720	720	0.0393	103.3269	GEN300006 1-NEW MADRID UNIT 1
FDNS	00NR	4	20SP	G15_076	TO->FROM	GRPRAR1-LNX3345.00 - GRPRAR 345KV CKT Z	720	720	0.0393	103.3256	GEN 11104 1-J262_GEN 0.6000
FDNS	00NR	4	20SP	G15_076	TO->FROM	GRPRAR1-LNX3345.00 - GRPRAR 345KV CKT Z	720	720	0.0393	103.3256	GEN 11108 1-J263_GEN 0.6000
FDNS	00NR	4	20SP	G15_076	TO->FROM	GRPRAR1-LNX3345.00 - GRPRAR 345KV CKT Z	720	720	0.0393	103.3181	GEN600043 7-BLUE LAKE5
FDNS	00NR	4	20SP	G15_076	TO->FROM	GRPRAR1-LNX3345.00 - GRPRAR 345KV CKT Z	720	720	0.0393	103.3181	GEN600044 8-BLUE LAKE6
FDNS	00NR	4	25SP	G15_076	TO->FROM	GRPRAR1-LNX3345.00 - GRPRAR 345KV CKT Z	720	720	0.03962	103.3129	BASE CASE
FDNS	00NR	4	17SP	G15_076	TO->FROM	GRPRAR1-LNX3345.00 - GRPRAR 345KV CKT Z	720	720	0.04084	103.3083	GEN615001 1-COAL CREEK
FDNS	00NR	4	20SP	G15_076	TO->FROM	GRPRAR1-LNX3345.00 - GRPRAR 345KV CKT Z	720	720	0.0393	103.3047	G830_SUB 115.00 - GRE-MCHENRY7115.00 115KV CKT 1
FDNS	00NR	4	20SP	G15_076	TO->FROM	GRPRAR1-LNX3345.00 - GRPRAR 345KV CKT Z	720	720	0.0393	103.2944	G830_SUB 115.00 115/34.5KV TRANSFORMER CKT 1
FDNS	00NR	4	20SP	G15_076	TO->FROM	GRPRAR1-LNX3345.00 - GRPRAR 345KV CKT Z	720	720	0.0393	103.2931	GEN600014 4-BLACK DOG GEN 4
FDNS	00NR	4	20SP	G15_076	TO->FROM	GRPRAR1-LNX3345.00 - GRPRAR 345KV CKT Z	720	720	0.0393	103.2896	GEN600065 7-HIGH BRIDGE
FDNS	00NR	4	20SP	G15_076	TO->FROM	GRPRAR1-LNX3345.00 - GRPRAR 345KV CKT Z	720	720	0.0393	103.2896	GEN600066 8-HIGH BRIDGE
FDNS	00NR	4	20SP	G15_076	TO->FROM	GRPRAR1-LNX3345.00 - GRPRAR 345KV CKT Z	720	720	0.0393	103.2864	GEN600011 5-BLACK DOG GEN 1
FDNS	00NR	4	20SP	G15_076	TO->FROM	GRPRAR1-LNX3345.00 - GRPRAR 345KV CKT Z	720	720	0.0393	103.2764	GEN600070 9-RIVER SIDE
FDNS	00NR	4	20SP	G15_076	TO->FROM	GRPRAR1-LNX3345.00 - GRPRAR 345KV CKT Z	720	720	0.0393	103.2764	GEN600071 10-RIVER SIDE
FDNS	00NR	4	20SP	G15_076	TO->FROM	GRPRAR1-LNX3345.00 - GRPRAR 345KV CKT Z	720	720	0.0393	103.2742	LANSING WEST 161/22.0KV TRANSFORMER CKT 1
FDNS	00NR	4	20SP	G15_076	TO->FROM	GRPRAR1-LNX3345.00 - GRPRAR 345KV CKT Z	720	720	0.0393	103.2651	GEN600007 7-RIVERSIDE GEN 7
FDNS	00NR	4	20SP	G15_076	TO->FROM	GRPRAR1-LNX3345.00 - GRPRAR 345KV CKT Z	720	720	0.0393	103.2515	GEN600017 C-LS POWER CT
FDNS	00NR	4	20SP	G15_076	TO->FROM	GRPRAR1-LNX3345.00 - GRPRAR 345KV CKT Z	720	720	0.0393	103.244	GEN600045 4-ANSON
FDNS	00NR	4	20SP	G15_076	TO->FROM	GRPRAR1-LNX3345.00 - GRPRAR 345KV CKT Z	720	720	0.04102	103.2333	P12:115:NPPD:1163B:NELIGH 7:NORFK.N7:BTB
FDNS	00NR	4	20SP	G15_076	TO->FROM	GRPRAR1-LNX3345.00 - GRPRAR 345KV CKT Z	720	720	0.03941	103.2312	G11_051T 345.00 - TATONGA7 345.00 345KV CKT 1
FDNS	00NR	4	20SP	G15_076	TO->FROM	GRPRAR1-LNX3345.00 - GRPRAR 345KV CKT Z	720	720	0.03939	103.1943	BRDLAND-LNX3345.00 - HURON 345KV CKT Z
FDNS	00NR	4	20SP	G15_076	TO->FROM	GRPRAR1-LNX3345.00 - GRPRAR 345KV CKT Z	720	720	0.03939	103.1936	HURON (BD KU2A) 345/230/13.8KV TRANSFORMER CKT 1
FDNS	00NR	4	20SP	G15_076	TO->FROM	GRPRAR1-LNX3345.00 - GRPRAR 345KV CKT Z	720	720	0.03939	103.1936	HURON (BD KU2A) 345/230/13.8KV TRANSFORMER CKT 1
FDNS	00NR	4	20SP	G15_076	TO->FROM	GRPRAR1-LNX3345.00 - GRPRAR 345KV CKT Z	720	720	0.03939	103.192	BROADLAND - HURON 230KV CKT 1
FDNS	00NR	4	20SP	G15_076	TO->FROM	GRPRAR1-LNX3345.00 - GRPRAR 345KV CKT Z	720	720	0.0393	103.19	GEN659273 2-GROTON SYNC COND
FDNS	00NR	4	20SP	G15_076	TO->FROM	GRPRAR1-LNX3345.00 - GRPRAR 345KV CKT Z	720	720	0.0393	103.19	GEN659294 1-WILTONCOL9
FDNS	00NR	4	20SP	G15_076	TO->FROM	GRPRAR1-LNX3345.00 - GRPRAR 345KV CKT Z	720	720	0.03939	103.1891	P12:345:UMZB:# 103 #: BD IN SD. LOSS OF LINE
FDNS	00NR	4	20SP	G15_076	TO->FROM	GRPRAR1-LNX3345.00 - GRPRAR 345KV CKT Z	720	720	0.03939	103.1875	P12:345:UMZB:# 102 #: AVS BD IN ND. AVS BRD LR
FDNS	00NR	4	20SP	G15_076	TO->FROM	GRPRAR1-LNX3345.00 - GRPRAR 345KV CKT Z	720	720	0.0393	103.1836	GEN615052 1-CAMBRIDGE GENERATING STATION
FDNS	00NR	4	17SP	G15_076	TO->FROM	GRPRAR1-LNX3345.00 - GRPRAR 345KV CKT Z	720	720	0.04084	103.1764	GEN615002 2-COAL CREEK
FDNS	00NR	4	20SP	G15_076	TO->FROM	GRPRAR1-LNX3345.00 - GRPRAR 345KV CKT Z	720	720	0.0393	103.1686	GEN615021 1-GRE-ER 14G 16.000

SOLUTION	GROUP	SCENARIO	SEASON	SOURCE	DIRECTION	MONITORED ELEMENT	RATEA (MVA)	RATEB(MVA)	TDF	TC%LOADING (% MVA)	CONTINGENCY
FDNS	00NR	4	20SP	G15_076	TO->FROM	GRPRAR1-LNX3345.00 - GRPRAR 345KV CKT Z	720	720	0.03939	103.1485	ANTELOP-LNX3345.00 - ANTELOPE VALLEY 345KV CKT Z
FDNS	00NR	4	20SP	G15_076	TO->FROM	GRPRAR1-LNX3345.00 - GRPRAR 345KV CKT Z	720	720	0.03931	103.1367	OAHE - SULLEY BUTTE 230KV CKT 1
FDNS	00NR	4	20SP	G15_076	TO->FROM	GRPRAR1-LNX3345.00 - GRPRAR 345KV CKT Z	720	720	0.0393	103.131	GEN 10648 1-G830_GEN 0.6900
FDNS	00NR	4	20SP	G15_076	TO->FROM	GRPRAR1-LNX3345.00 - GRPRAR 345KV CKT Z	720	720	0.0393	103.1294	GEN659192 6-LYNN
FDNS	00NR	4	20SP	G15_076	TO->FROM	GRPRAR1-LNX3345.00 - GRPRAR 345KV CKT Z	720	720	0.0393	103.1282	GEN659162 4-RED WLCK
FDNS	00NR	4	20SP	G15_076	TO->FROM	GRPRAR1-LNX3345.00 - GRPRAR 345KV CKT Z	720	720	0.0393	103.1282	GEN659163 5-BLACK WDCK
FDNS	00NR	4	20SP	G15_076	TO->FROM	GRPRAR1-LNX3345.00 - GRPRAR 345KV CKT Z	720	720	0.0393	103.1244	GEN659031 1-G12_014IS_4 0.6900
FDNS	00NR	4	20SP	G15_076	TO->FROM	GRPRAR1-LNX3345.00 - GRPRAR 345KV CKT Z	720	720	0.03819	103.1005	HIGHLND 3 345.00 - OBRIEN 3 345.00 345KV CKT 1
FDNS	00NR	4	20SP	G15_076	TO->FROM	GRPRAR1-LNX3345.00 - GRPRAR 345KV CKT Z	720	720	0.0393	103.096	GEN660016 1-B_H WIND 0.7000
FDNS	00NR	4	20SP	G15_076	TO->FROM	GRPRAR1-LNX3345.00 - GRPRAR 345KV CKT Z	720	720	0.0393	103.0921	GEN615015 1-GRE-SPRITWDG13.200
FDNS	00NR	4	20SP	G15_076	TO->FROM	GRPRAR1-LNX3345.00 - GRPRAR 345KV CKT Z	720	720	0.03941	103.0046	MATHWSN7 345.00 - TATONGA7 345.00 345KV CKT 1
FDNS	00NR	4	20SP	G15_076	TO->FROM	GRPRAR1-LNX3345.00 - GRPRAR 345KV CKT Z	720	720	0.0393	103.004	BISONMP4 230.00 - SQUARE BUTTE 230KV CKT 1
FDNS	00NR	4	20SP	G15_076	TO->FROM	GRPRAR1-LNX3345.00 - GRPRAR 345KV CKT Z	720	720	0.03635	102.9985	HOSKINS - RAUN 345KV CKT 1
FDNS	00NR	4	20SP	G15_076	TO->FROM	GRPRAR1-LNX3345.00 - GRPRAR 345KV CKT Z	720	720	0.03635	102.9985	HOSKINS - RAUN 345KV CKT 1
FDNS	00NR	4	20SP	G15_076	TO->FROM	GRPRAR1-LNX3345.00 - GRPRAR 345KV CKT Z	720	720	0.03931	102.9756	SULLEY BUTTE - SULLYBT-LNX3230.00 230KV CKT Z
FDNS	00NR	4	20SP	G15_076	TO->FROM	GRPRAR1-LNX3345.00 - GRPRAR 345KV CKT Z	720	720	0.03931	102.9751	SULLYBT-LNX3230.00 - WHITLOK 230KV CKT 1
FDNS	00NR	4	20SP	G15_076	TO->FROM	GRPRAR1-LNX3345.00 - GRPRAR 345KV CKT Z	720	720	0.0393	102.9708	GEN600067 9-HIGH BRIDGE
FDNS	00NR	4	20SP	G15_076	TO->FROM	GRPRAR1-LNX3345.00 - GRPRAR 345KV CKT Z	720	720	0.03522	102.9586	DIXONCO 230.00 - TWIN CHURCH 230KV CKT 1
FDNS	00NR	4	20SP	G15_076	TO->FROM	GRPRAR1-LNX3345.00 - GRPRAR 345KV CKT Z	720	720	0.0393	102.9501	GEN672303 3-BOUNDARY DAM GENERATOR 3
FDNS	00NR	4	20SP	G15_076	TO->FROM	GRPRAR1-LNX3345.00 - GRPRAR 345KV CKT Z	720	720	0.0393	102.9501	GEN672304 4-BOUNDARY DAM GENERATOR 4
FDNS	00NR	4	20SP	G15_076	TO->FROM	GRPRAR1-LNX3345.00 - GRPRAR 345KV CKT Z	720	720	0.0393	102.9501	GEN672305 5-BOUNDARY DAM GENERATOR 5
FDNS	00NR	4	20SP	G15_076	TO->FROM	GRPRAR1-LNX3345.00 - GRPRAR 345KV CKT Z	720	720	0.03931	102.9281	P12:230:UMZB:# 114 #: SB IN SD. SB-WK-GH
FDNS	00NR	4	20SP	G15_076	TO->FROM	GRPRAR1-LNX3345.00 - GRPRAR 345KV CKT Z	720	720	0.03931	102.9281	P12:230:UMZB:# 117 #: WK IN SD. SB-WK-GH
FDNS	00NR	4	20SP	G15_076	TO->FROM	GRPRAR1-LNX3345.00 - GRPRAR 345KV CKT Z	720	720	0.0393	102.925	GEN659353 1-DEERCREK CTG18.000
FDNS	00NR	4	20SP	G15_076	TO->FROM	GRPRAR1-LNX3345.00 - GRPRAR 345KV CKT Z	720	720	0.0393	102.9241	GEN659354 1-DEERCREK STG18.000
FDNS	00NR	4	25SP	G15_076	TO->FROM	GRPRAR1-LNX3345.00 - GRPRAR 345KV CKT Z	720	720	0.03845	102.9081	COOPER - MOORE 345KV CKT 1
FDNS	00NR	4	20SP	G15_076	TO->FROM	GRPRAR1-LNX3345.00 - GRPRAR 345KV CKT Z	720	720	0.0393	102.8983	GEN672392 1-NBECGT1G 18.000
FDNS	00NR	4	25SP	G15_076	TO->FROM	GRPRAR1-LNX3345.00 - GRPRAR 345KV CKT Z	720	720	0.03979	102.887	FT THOMPSON - OAHE 230KV CKT 1
FDNS	00NR	4	25SP	G15_076	TO->FROM	GRPRAR1-LNX3345.00 - GRPRAR 345KV CKT Z	720	720	0.03979	102.887	FT THOMPSON - OAHE 230KV CKT 1
FDNS	00NR	4	25SP	G15_076	TO->FROM	GRPRAR1-LNX3345.00 - GRPRAR 345KV CKT Z	720	720	0.03979	102.887	FT THOMPSON - OAHE 230KV CKT 2
FDNS	00NR	4	25SP	G15_076	TO->FROM	GRPRAR1-LNX3345.00 - GRPRAR 345KV CKT Z	720	720	0.03979	102.887	FT THOMPSON - OAHE 230KV CKT 2
FDNS	00NR	4	20SP	G15_076	TO->FROM	GRPRAR1-LNX3345.00 - GRPRAR 345KV CKT Z	720	720	0.03931	102.8734	GLENHAM - WHITLOK 230KV CKT 1
FDNS	00NR	4	25SP	G15_076	TO->FROM	GRPRAR1-LNX3345.00 - GRPRAR 345KV CKT Z	720	720	0.03895	102.8612	NELIGH - PETERSBRG.N7115.00 115KV CKT 1
FDNS	00NR	4	25SP	G15_076	TO->FROM	GRPRAR1-LNX3345.00 - GRPRAR 345KV CKT Z	720	720	0.0398	102.8596	FT THOMPSON - OAHE 230KV CKT 3
FDNS	00NR	4	25SP	G15_076	TO->FROM	GRPRAR1-LNX3345.00 - GRPRAR 345KV CKT Z	720	720	0.0398	102.8596	FT THOMPSON - OAHE 230KV CKT 3
FDNS	00NR	4	25SP	G15_076	TO->FROM	GRPRAR1-LNX3345.00 - GRPRAR 345KV CKT Z	720	720	0.0398	102.8596	FT THOMPSON - OAHE 230KV CKT 4
FDNS	00NR	4	25SP	G15_076	TO->FROM	GRPRAR1-LNX3345.00 - GRPRAR 345KV CKT Z	720	720	0.0398	102.8596	FT THOMPSON - OAHE 230KV CKT 4
FDNS	00NR	4	25SP	G15_076	TO->FROM	GRPRAR1-LNX3345.00 - GRPRAR 345KV CKT Z	720	720	0.04248	102.8436	AINSWORTH - AINSWORTH 115KV CKT 1
FDNS	00NR	4	25SP	G15_076	TO->FROM	GRPRAR1-LNX3345.00 - GRPRAR 345KV CKT Z	720	720	0.03987	102.834	7MAYWOOD 345.00 - 7SPENCER 345.00 345KV CKT 1
FDNS	00NR	4	25SP	G15_076	TO->FROM	GRPRAR1-LNX3345.00 - GRPRAR 345KV CKT Z	720	720	0.03085	102.833	SIOUX CITY - TWIN CHURCH 230KV CKT 1
FDNS	00NR	4	25SP	G15_076	TO->FROM	GRPRAR1-LNX3345.00 - GRPRAR 345KV CKT Z	720	720	0.03963	102.8134	BISMARK - L3 HAWDON 230KV CKT 1
FDNS	00NR	4	25SP	G15_076	TO->FROM	GRPRAR1-LNX3345.00 - GRPRAR 345KV CKT Z	720	720	0.03958	102.8119	G15-005T 345.00 - MULLNCR7 345.00 345KV CKT 1
FDNS	00NR	4	25SP	G15_076	TO->FROM	GRPRAR1-LNX3345.00 - GRPRAR 345KV CKT Z	720	720	0.03962	102.8075	GEN672348 2-CORY COGEN GENERATOR 2 GT2
FDNS	00NR	4	25SP	G15_076	TO->FROM	GRPRAR1-LNX3345.00 - GRPRAR 345KV CKT Z	720	720	0.03962	102.8074	GEN672347 1-CORY COGEN GENERATOR 1 GT1
FDNS	00NR	4	25SP	G15_076	TO->FROM	GRPRAR1-LNX3345.00 - GRPRAR 345KV CKT Z	720	720	0.03962	102.8045	GEN300003 1-THOMAS HILL UNIT 3
FDNS	00NR	4	25SP	G15_076	TO->FROM	GRPRAR1-LNX3345.00 - GRPRAR 345KV CKT Z	720	720	0.0414	102.8006	ATCHSNT3 345.00 - BOONEVILLE 345KV CKT 1
FDNS	00NR	4	25SP	G15_076	TO->FROM	GRPRAR1-LNX3345.00 - GRPRAR 345KV CKT Z	720	720	0.03962	102.7905	GEN659147 1-PIONEER 1G13.800
FDNS	00NR	4	25SP	G15_076	TO->FROM	GRPRAR1-LNX3345.00 - GRPRAR 345KV CKT Z	720	720	0.03962	102.7905	GEN659158 2-PIONEER G213.800
FDNS	00NR	4	25SP	G15_076	TO->FROM	GRPRAR1-LNX3345.00 - GRPRAR 345KV CKT Z	720	720	0.03962	102.7905	GEN659159 3-PIONEER G313.800
FDNS	00NR	4	25SP	G15_076	TO->FROM	GRPRAR1-LNX3345.00 - GRPRAR 345KV CKT Z	720	720	0.03962	102.7891	GEN672358 1-CHAPLN1W 0.6900
FDNS	00NR	4	25SP	G15_076	TO->FROM	GRPRAR1-LNX3345.00 - GRPRAR 345KV CKT Z	720	720	0.03962	102.7886	GEN659148 1-LONESMCRK 1G13.800
FDNS	00NR	4	25SP	G15_076	TO->FROM	GRPRAR1-LNX3345.00 - GRPRAR 345KV CKT Z	720	720	0.03962	102.7886	GEN659156 2-LONESMCRK 2G13.800
FDNS	00NR	4	25SP	G15_076	TO->FROM	GRPRAR1-LNX3345.00 - GRPRAR 345KV CKT Z	720	720	0.03962	102.7886	GEN659157 3-LONESMCRK 3G13.800
FDNS	00NR	4	25SP	G15_076	TO->FROM	GRPRAR1-LNX3345.00 - GRPRAR 345KV CKT Z	720	720	0.03988	102.7883	FALLOW 3 345.00 - GRIMES 345KV CKT 1
FDNS	00NR	4	20SP	G15_076	TO->FROM	GRPRAR1-LNX3345.00 - GRPRAR 345KV CKT Z	720	720	0.0393	102.786	GEN681542 6-JP MADGETT
FDNS	00NR	4	25SP	G15_076	TO->FROM	GRPRAR1-LNX3345.00 - GRPRAR 345KV CKT Z	720	720	0.03962	102.7858	GEN659417 1X-BEPCPKFT 1GX13.800
FDNS	00NR	4	25SP	G15_076	TO->FROM	GRPRAR1-LNX3345.00 - GRPRAR 345KV CKT Z	720	720	0.03962	102.7858	GEN659418 2X-BEPCPKFT 2GX13.800
FDNS	00NR	4	25SP	G15_076	TO->FROM	GRPRAR1-LNX3345.00 - GRPRAR 345KV CKT Z	720	720	0.03962	102.7858	GEN659419 3X-BEPCPKFT 3GX13.800
FDNS	00NR	4	25SP	G15_076	TO->FROM	GRPRAR1-LNX3345.00 - GRPRAR 345KV CKT Z	720	720	0.04146	102.7822	BATTLE CREEK - COUNTY LINE 115KV CKT 1
FDNS	00NR	4	25SP	G15_076	TO->FROM	GRPRAR1-LNX3345.00 - GRPRAR 345KV CKT Z	720	720	0.03771	102.7806	COLUMEAST - NW68TH & HOLDREGE 345KV CKT 1
FDNS	00NR	4	25SP	G15_076	TO->FROM	GRPRAR1-LNX3345.00 - GRPRAR 345KV CKT Z	720	720	0.03771	102.7806	COLUMEAST - NW68TH & HOLDREGE 345KV CKT 1
FDNS	00NR	4	25SP	G15_076	TO->FROM	GRPRAR1-LNX3345.00 - GRPRAR 345KV CKT Z	720	720	0.03962	102.7793	GEN657964 1-ASH2GEN9 0.5750
FDNS	00NR	4	25SP	G15_076	TO->FROM	GRPRAR1-LNX3345.00 - GRPRAR 345KV CKT Z	720	720	0.03895	102.7758	ALBION - PETERSBURG 115KV CKT 1
FDNS	00NR	4	20SP	G15_076	TO->FROM	GRPRAR1-LNX3345.00 - GRPRAR 345KV CKT Z	720	720	0.0393	102.7721	GEN662101 1-WESSINGTON190.5750
FDNS	00NR	4	25SP	G15_076	TO->FROM	GRPRAR1-LNX3345.00 - GRPRAR 345KV CKT Z	720	720	0.03958	102.7661	G15-005T 345.00 - SIBLEY 345KV CKT 1
FDNS	00NR	4	25SP	G15_076	TO->FROM	GRPRAR1-LNX3345.00 - GRPRAR 345KV CKT Z	720	720	0.03971	102.7633	ANTELOP-LNX3345.00 - BRDLAND-LNX3345.00 345KV CKT 1
FDNS	00NR	4	20SP	G15_076	TO->FROM	GRPRAR1-LNX3345.00 - GRPRAR 345KV CKT Z	720	720	0.0393	102.7618	CENTER 230/22.0KV TRANSFORMER CKT 1
FDNS	00NR	4	25SP	G15_076	TO->FROM	GRPRAR1-LNX3345.00 - GRPRAR 345KV CKT Z	720	720	0.03962	102.7618	GEN672368 2-MERIDIAN GENERATOR 2 GT2
FDNS	00NR	4	25SP	G15_076	TO->FROM	GRPRAR1-LNX3345.00 - GRPRAR 345KV CKT Z	720	720	0.03962	102.7617	GEN672367 1-MERIDIAN GENERATOR 1 GT1
FDNS	00NR	4	25SP	G15_076	TO->FROM	GRPRAR1-LNX3345.00 - GRPRAR 345KV CKT Z	720	720	0.04062	102.7553	HOLCOMB - SETAB 345KV CKT 1
FDNS	00NR	4	25SP	G15_076	TO->FROM	GRPRAR1-LNX3345.00 - GRPRAR 345KV CKT Z	720	720	0.04062	102.7553	HOLCOMB - SETAB 345KV CKT 1
FDNS	00NR	4	25SP	G15_076	TO->FROM	GRPRAR1-LNX3345.00 - GRPRAR 345KV CKT Z	720	720	0.03962	102.7488	GEN672350 1-NIPAWIN GENERATOR 1
FDNS	00NR	4	25SP	G15_076	TO->FROM	GRPRAR1-LNX3345.00 - GRPRAR 345KV CKT Z	720	720	0.03962	102.7488	GEN672351 2-NIPAWIN GENERATOR 2
FDNS	00NR	4	25SP	G15_076	TO->FROM	GRPRAR1-LNX3345.00 - GRPRAR 345KV CKT Z	720	720	0.03962	102.7488	GEN672352 3-NIPAWIN GENERATOR 3
FDNS	00NR	4	20SP	G15_076	TO->FROM	GRPRAR1-LNX3345.00 - GRPRAR 345KV CKT Z	720	720	0.04087	102.7471	MISSION - WITTEN 115KV CKT 1
FDNS	00NR	4	25SP	G15_076	TO->FROM	GRPRAR1-LNX3345.00 - GRPRAR 345KV CKT Z	720	720	0.03895	102.7456	PETERSBRG.N7115.00 - PETERSBURG 115KV CKT Z1
FDNS	00NR	4	25SP	G15_076	TO->FROM	GRPRAR1-LNX3345.00 - GRPRAR 345KV CKT Z	720	720	0.03962	102.7414	GEN672349 3-CORY COGEN GENERATOR 3 ST
FDNS	00NR	4	25SP	G15_076	TO->FROM	GRPRAR1-LNX3345.00 - GRPRAR 345KV CKT Z	720	720	0.03962	102.7351	GEN652546 1-FT RANDAL
FDNS	00NR	4	25SP	G15_076	TO->FROM	GRPRAR1-LNX3345.00 - GRPRAR 345KV CKT Z	720	720	0.03962	102.7347	GEN600012 2-BLACK DOG GEN 2

SOLUTION	GROUP	SCENARIO	SEASON	SOURCE	DIRECTION	MONITORED ELEMENT	RATEA (MVA)	RATEB(MVA)	TDF	TC%LOADING (% MVA)	CONTINGENCY
FDNS	00NR	4	25SP	G15_076	TO->FROM	GRPRAR1-LNX3345.00 - GRPRAR 345KV CKT Z	720	720	0.03962	102.7335	EMERY 161/18.0KV TRANSFORMER CKT 1
FDNS	00NR	4	20SP	G15_076	TO->FROM	GRPRAR1-LNX3345.00 - GRPRAR 345KV CKT Z	720	720	0.0393	102.7328	GEN910006 1-G12_012IS_3 0.6900
FDNS	00NR	4	25SP	G15_076	TO->FROM	GRPRAR1-LNX3345.00 - GRPRAR 345KV CKT Z	720	720	0.03962	102.7324	GEN652548 5-FT RANDAL
FDNS	00NR	4	25SP	G15_076	TO->FROM	GRPRAR1-LNX3345.00 - GRPRAR 345KV CKT Z	720	720	0.03962	102.7324	GEN652549 7-FT RANDAL
FDNS	00NR	4	25SP	G15_076	TO->FROM	GRPRAR1-LNX3345.00 - GRPRAR 345KV CKT Z	720	720	0.03895	102.7319	P12:115:NPPD:1168B:ALBION 7:PETERSBRG.N7:BTB
FDNS	00NR	4	25SP	G15_076	TO->FROM	GRPRAR1-LNX3345.00 - GRPRAR 345KV CKT Z	720	720	0.03962	102.7278	GEN652547 3-FT RANDAL
FDNS	00NR	4	25SP	G15_076	TO->FROM	GRPRAR1-LNX3345.00 - GRPRAR 345KV CKT Z	720	720	0.04146	102.7117	ANTELOPE 7115.00 - COUNTY LINE 115KV CKT 1
FDNSLock	00NR	4	25SP	G15_076	TO->FROM	GRPRAR1-LNX3345.00 - GRPRAR 345KV CKT Z	720	720	0.03949	102.7106	WATERTOWN (WT2 KU1A) 345/230/13.8KV TRANSFORMER CKT 1
FDNS	00NR	4	25SP	G15_076	TO->FROM	GRPRAR1-LNX3345.00 - GRPRAR 345KV CKT Z	720	720	0.03962	102.6981	GEN659290 1-EDGECOL
FDNS	00NR	4	25SP	G15_076	TO->FROM	GRPRAR1-LNX3345.00 - GRPRAR 345KV CKT Z	720	720	0.0399	102.6957	LARAMIE RIVER - STEGALL 345KV CKT 1
FDNS	00NR	4	25SP	G15_076	TO->FROM	GRPRAR1-LNX3345.00 - GRPRAR 345KV CKT Z	720	720	0.03771	102.6939	COLUMEAST - SHELL CREEK 345KV CKT 1
FDNS	00NR	4	25SP	G15_076	TO->FROM	GRPRAR1-LNX3345.00 - GRPRAR 345KV CKT Z	720	720	0.03992	102.6895	FINNEY SWITCHING STATION - WALKTAP7 345.00 345KV CKT 1
FDNS	00NR	4	25SP	G15_076	TO->FROM	GRPRAR1-LNX3345.00 - GRPRAR 345KV CKT Z	720	720	0.03992	102.6895	FINNEY SWITCHING STATION - WALKTAP7 345.00 345KV CKT 1
FDNS	00NR	4	25SP	G15_076	TO->FROM	GRPRAR1-LNX3345.00 - GRPRAR 345KV CKT Z	720	720	0.03674	102.6746	HOSKINS - RAUN 345KV CKT 1
FDNS	00NR	4	25SP	G15_076	TO->FROM	GRPRAR1-LNX3345.00 - GRPRAR 345KV CKT Z	720	720	0.03674	102.6746	HOSKINS - RAUN 345KV CKT 1
FDNS	00NR	4	20SP	G15_076	TO->FROM	GRPRAR1-LNX3345.00 - GRPRAR 345KV CKT Z	720	720	0.04091	102.6642	AXTELL - SWEETWATER 345KV CKT 1
FDNS	00NR	4	25SP	G15_076	TO->FROM	GRPRAR1-LNX3345.00 - GRPRAR 345KV CKT Z	720	720	0.03962	102.6616	GEN300007 1-NEW MADRID UNIT 2
FDNS	00NR	4	25SP	G15_076	TO->FROM	GRPRAR1-LNX3345.00 - GRPRAR 345KV CKT Z	720	720	0.03962	102.6586	GEN672357 2-FUT-WL2X 13.800
FDNS	00NR	4	25SP	G15_076	TO->FROM	GRPRAR1-LNX3345.00 - GRPRAR 345KV CKT Z	720	720	0.03962	102.6567	GEN300006 1-NEW MADRID UNIT 1
FDNS	00NR	4	25SP	G15_076	TO->FROM	GRPRAR1-LNX3345.00 - GRPRAR 345KV CKT Z	720	720	0.03962	102.6483	GEN672393 2-NBECST2G 13.800
FDNS	00NR	4	25SP	G15_076	TO->FROM	GRPRAR1-LNX3345.00 - GRPRAR 345KV CKT Z	720	720	0.03682	102.6458	FT THOMPSON (FT2 KU1A) 345/230/13.8KV TRANSFORMER CKT 1
FDNS	00NR	4	25SP	G15_076	TO->FROM	GRPRAR1-LNX3345.00 - GRPRAR 345KV CKT Z	720	720	0.03916	102.6448	HELENA - SHEAS LK3 345.00 345KV CKT 1
FDNS	00NR	4	25SP	G15_076	TO->FROM	GRPRAR1-LNX3345.00 - GRPRAR 345KV CKT Z	720	720	0.03962	102.6444	GEN652410 3-FT PECK
FDNS	00NR	4	25SP	G15_076	TO->FROM	GRPRAR1-LNX3345.00 - GRPRAR 345KV CKT Z	720	720	0.03962	102.6441	GEN672390 2-FUT-SW2X 13.800
FDNS	00NR	4	25SP	G15_076	TO->FROM	GRPRAR1-LNX3345.00 - GRPRAR 345KV CKT Z	720	720	0.03681	102.6433	FT THOMPSON (FT2 KU1B) 345/230/13.8KV TRANSFORMER CKT 1
FDNS	00NR	4	25SP	G15_076	TO->FROM	GRPRAR1-LNX3345.00 - GRPRAR 345KV CKT Z	720	720	0.03962	102.6429	GEN620324 3-HOOT LAKE 3 GEN
FDNS	00NR	4	25SP	G15_076	TO->FROM	GRPRAR1-LNX3345.00 - GRPRAR 345KV CKT Z	720	720	0.03962	102.6405	GEN600050 1-FEP
FDNS	00NR	4	25SP	G15_076	TO->FROM	GRPRAR1-LNX3345.00 - GRPRAR 345KV CKT Z	720	720	0.03962	102.6313	GEN660003 3-HURON WEST PARK
FDNS	00NR	4	25SP	G15_076	TO->FROM	GRPRAR1-LNX3345.00 - GRPRAR 345KV CKT Z	720	720	0.03962	102.6298	GEN600046 1-MECST
FDNS	00NR	4	25SP	G15_076	TO->FROM	GRPRAR1-LNX3345.00 - GRPRAR 345KV CKT Z	720	720	0.04008	102.627	Hitchland Interchange - WALKTAP7 345.00 345KV CKT 1
FDNS	00NR	4	25SP	G15_076	TO->FROM	GRPRAR1-LNX3345.00 - GRPRAR 345KV CKT Z	720	720	0.04008	102.627	Hitchland Interchange - WALKTAP7 345.00 345KV CKT 1
FDNS	00NR	4	20SP	G15_076	TO->FROM	GRPRAR1-LNX3345.00 - GRPRAR 345KV CKT Z	720	720	0.0393	102.6249	CLAY BOSWELL 230/20.9KV TRANSFORMER CKT 1
FDNS	00NR	4	25SP	G15_076	TO->FROM	GRPRAR1-LNX3345.00 - GRPRAR 345KV CKT Z	720	720	0.03962	102.6246	LADISH 115/13.2KV TRANSFORMER CKT 1
FDNS	00NR	4	20SP	G15_076	TO->FROM	GRPRAR1-LNX3345.00 - GRPRAR 345KV CKT Z	720	720	0.04074	102.6191	G15088_T 345.00 - MOORE 345KV CKT 1
FDNS	00NR	4	25SP	G15_076	TO->FROM	GRPRAR1-LNX3345.00 - GRPRAR 345KV CKT Z	720	720	0.04008	102.6188	P12:345:SPS:J07.1.FINN.HITCH
FDNS	00NR	4	25SP	G15_076	TO->FROM	GRPRAR1-LNX3345.00 - GRPRAR 345KV CKT Z	720	720	0.04021	102.6108	THEDFRD3 345.00 (THEDFORDT2) 345/115/13.8KV TRANSFORMER CKT 1
FDNS	00NR	4	25SP	G15_076	TO->FROM	GRPRAR1-LNX3345.00 - GRPRAR 345KV CKT Z	720	720	0.03962	102.6033	GEN660001 2-ABERDEEN SIEBRECHT
FDNS	00NR	4	25SP	G15_076	TO->FROM	GRPRAR1-LNX3345.00 - GRPRAR 345KV CKT Z	720	720	0.03962	102.5991	GEN600047 1-MECCT1
FDNS	00NR	4	20SP	G15_076	TO->FROM	GRPRAR1-LNX3345.00 - GRPRAR 345KV CKT Z	720	720	0.03367	102.5866	HOSKINS - SHELL CREEK 345KV CKT 1
FDNS	00NR	4	25SP	G15_076	TO->FROM	GRPRAR1-LNX3345.00 - GRPRAR 345KV CKT Z	720	720	0.03962	102.5832	GEN652345 W-G07_023IS_2 0.6900
FDNS	00NR	4	25SP	G15_076	TO->FROM	GRPRAR1-LNX3345.00 - GRPRAR 345KV CKT Z	720	720	0.03962	102.5806	GEN652414 4-FT PECK
FDNS	00NR	4	25SP	G15_076	TO->FROM	GRPRAR1-LNX3345.00 - GRPRAR 345KV CKT Z	720	720	0.03962	102.5806	GEN652415 5-FT PECK
FDNS	00NR	4	20SP	G15_076	TO->FROM	GRPRAR1-LNX3345.00 - GRPRAR 345KV CKT Z	720	720	0.0393	102.5803	HESKETT 115/13.8KV TRANSFORMER CKT 1
FDNS	00NR	4	25SP	G15_076	TO->FROM	GRPRAR1-LNX3345.00 - GRPRAR 345KV CKT Z	720	720	0.0392	102.575	SHEAS LK3 345.00 - WILMARTH 345KV CKT 1
FDNS	00NR	4	25SP	G15_076	TO->FROM	GRPRAR1-LNX3345.00 - GRPRAR 345KV CKT Z	720	720	0.03905	102.557	FIELD NORTH - LKFLDXL3 345KV CKT 1
FDNS	00NR	4	25SP	G15_076	TO->FROM	GRPRAR1-LNX3345.00 - GRPRAR 345KV CKT Z	720	720	0.03962	102.5562	GEN590010 1-ERCOT EQUIVALENCE
FDNS	00NR	4	25SP	G15_076	TO->FROM	GRPRAR1-LNX3345.00 - GRPRAR 345KV CKT Z	720	720	0.03905	102.5557	FIELD SOUTH - WILMARTH 345KV CKT 1
FDNS	00NR	4	25SP	G15_076	TO->FROM	GRPRAR1-LNX3345.00 - GRPRAR 345KV CKT Z	720	720	0.03962	102.5554	GEN600063 1-COLVILLE GEN 1
FDNS	00NR	4	25SP	G15_076	TO->FROM	GRPRAR1-LNX3345.00 - GRPRAR 345KV CKT Z	720	720	0.03962	102.5554	GEN600064 2-COLVILLE GEN 2
FDNS	00NR	4	25SP	G15_076	TO->FROM	GRPRAR1-LNX3345.00 - GRPRAR 345KV CKT Z	720	720	0.03962	102.5532	GEN 11104 1-J262_GEN 0.6000
FDNS	00NR	4	25SP	G15_076	TO->FROM	GRPRAR1-LNX3345.00 - GRPRAR 345KV CKT Z	720	720	0.03962	102.5532	GEN 11108 1-J263_GEN 0.6000
FDNS	00NR	4	25SP	G15_076	TO->FROM	GRPRAR1-LNX3345.00 - GRPRAR 345KV CKT Z	720	720	0.03905	102.549	FIELD NORTH - FIELD SOUTH 345KV CKT 1
FDNS	00NR	4	25SP	G15_076	TO->FROM	GRPRAR1-LNX3345.00 - GRPRAR 345KV CKT Z	720	720	0.03962	102.5421	G830_SUB 115.00 - GRE-MCHENRY7115.00 115KV CKT 1
FDNS	00NR	4	25SP	G15_076	TO->FROM	GRPRAR1-LNX3345.00 - GRPRAR 345KV CKT Z	720	720	0.03962	102.5416	G830_SUB 115.00 115/34.5KV TRANSFORMER CKT 1
FDNS	00NR	4	25SP	G15_076	TO->FROM	GRPRAR1-LNX3345.00 - GRPRAR 345KV CKT Z	720	720	0.03971	102.536	BRDLAND-LNX3345.00 - HURON 345KV CKT Z
FDNS	00NR	4	25SP	G15_076	TO->FROM	GRPRAR1-LNX3345.00 - GRPRAR 345KV CKT Z	720	720	0.03971	102.5355	BROADLAND - HURON 230KV CKT 1
FDNS	00NR	4	25SP	G15_076	TO->FROM	GRPRAR1-LNX3345.00 - GRPRAR 345KV CKT Z	720	720	0.03962	102.5344	GEN600043 7-BLUE LAKE5
FDNS	00NR	4	25SP	G15_076	TO->FROM	GRPRAR1-LNX3345.00 - GRPRAR 345KV CKT Z	720	720	0.03962	102.5344	GEN600044 8-BLUE LAKE6
FDNS	00NR	4	25SP	G15_076	TO->FROM	GRPRAR1-LNX3345.00 - GRPRAR 345KV CKT Z	720	720	0.03962	102.5344	LANSING WEST 161/22.0KV TRANSFORMER CKT 1
FDNS	00NR	4	25SP	G15_076	TO->FROM	GRPRAR1-LNX3345.00 - GRPRAR 345KV CKT Z	720	720	0.03962	102.5339	GEN590011 2-ERCOT EQUIVALENCE
FDNS	00NR	4	25SP	G15_076	TO->FROM	GRPRAR1-LNX3345.00 - GRPRAR 345KV CKT Z	720	720	0.03971	102.5335	HURON (BD KU2A) 345/230/13.8KV TRANSFORMER CKT 1
FDNS	00NR	4	25SP	G15_076	TO->FROM	GRPRAR1-LNX3345.00 - GRPRAR 345KV CKT Z	720	720	0.03971	102.5335	HURON (BD KU2A) 345/230/13.8KV TRANSFORMER CKT 1
FDNS	00NR	4	25SP	G15_076	TO->FROM	GRPRAR1-LNX3345.00 - GRPRAR 345KV CKT Z	720	720	0.03971	102.5326	P12:345:UMZB:# 102 #: AVS BD IN ND. AVS BRD LR
FDNS	00NR	4	25SP	G15_076	TO->FROM	GRPRAR1-LNX3345.00 - GRPRAR 345KV CKT Z	720	720	0.03971	102.5302	P12:345:UMZB:# 103 #: BD IN SD. LOSS OF LINE
FDNS	00NR	4	20SP	G15_076	TO->FROM	GRPRAR1-LNX3345.00 - GRPRAR 345KV CKT Z	720	720	0.0393	102.5126	GEN659289 1-DAYCNTYWND W0.6900
FDNS	00NR	4	25SP	G15_076	TO->FROM	GRPRAR1-LNX3345.00 - GRPRAR 345KV CKT Z	720	720	0.03962	102.5121	GEN681522 3-GENOA 3
FDNS	00NR	4	25SP	G15_076	TO->FROM	GRPRAR1-LNX3345.00 - GRPRAR 345KV CKT Z	720	720	0.03962	102.5061	GEN600014 4-BLACK DOG GEN 4
FDNS	00NR	4	25SP	G15_076	TO->FROM	GRPRAR1-LNX3345.00 - GRPRAR 345KV CKT Z	720	720	0.03962	102.5032	GEN600065 7-HIGH BRIDGE
FDNS	00NR	4	25SP	G15_076	TO->FROM	GRPRAR1-LNX3345.00 - GRPRAR 345KV CKT Z	720	720	0.03962	102.5032	GEN600066 8-HIGH BRIDGE
FDNS	00NR	4	25SP	G15_076	TO->FROM	GRPRAR1-LNX3345.00 - GRPRAR 345KV CKT Z	720	720	0.03962	102.5002	GEN600011 5-BLACK DOG GEN 1
FDNS	00NR	4	25SP	G15_076	TO->FROM	GRPRAR1-LNX3345.00 - GRPRAR 345KV CKT Z	720	720	0.04134	102.4915	P12:115:NPPD:1163B:NELIGH 7:NORFK.N7:BTB
FDNS	00NR	4	25SP	G15_076	TO->FROM	GRPRAR1-LNX3345.00 - GRPRAR 345KV CKT Z	720	720	0.03962	102.4906	GEN600070 9-RIVER SIDE
FDNS	00NR	4	25SP	G15_076	TO->FROM	GRPRAR1-LNX3345.00 - GRPRAR 345KV CKT Z	720	720	0.03962	102.4906	GEN600071 10-RIVER SIDE
FDNS	00NR	4	25SP	G15_076	TO->FROM	GRPRAR1-LNX3345.00 - GRPRAR 345KV CKT Z	720	720	0.03962	102.4788	GEN600007 7-RIVERSIDE GEN 7
FDNS	00NR	4	20SP	G15_076	TO->FROM	GRPRAR1-LNX3345.00 - GRPRAR 345KV CKT Z	720	720	0.0393	102.4752	GEN563312 1-G15097_3 0.6900
FDNS	00NR	4	25SP	G15_076	TO->FROM	GRPRAR1-LNX3345.00 - GRPRAR 345KV CKT Z	720	720	0.03962	102.4615	GEN600017 C-LS POWER CT
FDNS	00NR	4	25SP	G15_076	TO->FROM	GRPRAR1-LNX3345.00 - GRPRAR 345KV CKT Z	720	720	0.03962	102.4603	GEN600045 4-ANSON
FDNS	00NR	4	20SP	G15_076	TO->FROM	GRPRAR1-LNX3345.00 - GRPRAR 345KV CKT Z	720	720	0.0393	102.4438	GEN659018 1-G14_003IS_3 0.6900
FDNS	00NR	4	25SP	G15_076	TO->FROM	GRPRAR1-LNX3345.00 - GRPRAR 345KV CKT Z	720	720	0.03962	102.4344	GEN659273 2-GROTON SYNC COND

SOLUTION	GROUP	SCENARIO	SEASON	SOURCE	DIRECTION	MONITORED ELEMENT	RATEA (MVA)	RATEB(MVA)	TDF	TC%LOADING (% MVA)	CONTINGENCY
FDNS	00NR	4	25SP	G15_076	TO->FROM	GRPRAR1-LNX3345.00 - GRPRAR 345KV CKT Z	720	720	0.03962	102.4344	GEN659294 1-WILTONCOL9
FDNS	00NR	4	25SP	G15_076	TO->FROM	GRPRAR1-LNX3345.00 - GRPRAR 345KV CKT Z	720	720	0.03963	102.4297	OAHE - SULLEY BUTTE 230KV CKT 1
FDNS	00NR	4	20SP	G15_076	TO->FROM	GRPRAR1-LNX3345.00 - GRPRAR 345KV CKT Z	720	720	0.0393	102.4253	GEN652906 1-G09_006IS_3 0.6900
FDNS	00NR	4	25SP	G15_076	TO->FROM	GRPRAR1-LNX3345.00 - GRPRAR 345KV CKT Z	720	720	0.04037	102.4162	AXTELL - POST ROCK 345KV CKT 1
FDNS	00NR	4	25SP	G15_076	TO->FROM	GRPRAR1-LNX3345.00 - GRPRAR 345KV CKT Z	720	720	0.03971	102.3967	ANTELOP-LNX3345.00 - ANTELOPE VALLEY 345KV CKT Z
FDNS	00NR	4	25SP	G15_076	TO->FROM	GRPRAR1-LNX3345.00 - GRPRAR 345KV CKT Z	720	720	0.03962	102.3906	GEN615052 1-CAMBRIDGE GENERATING STATION
FDNS	00NR	4	20SP	G15_076	TO->FROM	GRPRAR1-LNX3345.00 - GRPRAR 345KV CKT Z	720	720	0.0393	102.3814	GEN652543 3-BIG BEND
FDNS	00NR	4	25SP	G15_076	TO->FROM	GRPRAR1-LNX3345.00 - GRPRAR 345KV CKT Z	720	720	0.03962	102.3728	GEN659031 1-G12_014IS_4 0.6900
FDNS	00NR	4	25SP	G15_076	TO->FROM	GRPRAR1-LNX3345.00 - GRPRAR 345KV CKT Z	720	720	0.03962	102.3579	GEN 10648 1-G830_GEN 0.6900
FDNS	00NR	4	25SP	G15_076	TO->FROM	GRPRAR1-LNX3345.00 - GRPRAR 345KV CKT Z	720	720	0.03962	102.3537	GEN659192 6-LYNN
FDNS	00NR	4	25SP	G15_076	TO->FROM	GRPRAR1-LNX3345.00 - GRPRAR 345KV CKT Z	720	720	0.03962	102.3522	GEN659162 4-RED WLCK
FDNS	00NR	4	25SP	G15_076	TO->FROM	GRPRAR1-LNX3345.00 - GRPRAR 345KV CKT Z	720	720	0.03962	102.3522	GEN659163 5-BLACK WDCK
FDNS	00NR	4	25SP	G15_076	TO->FROM	GRPRAR1-LNX3345.00 - GRPRAR 345KV CKT Z	720	720	0.03962	102.3507	GEN660016 1-B_H WIND 0.7000
FDNS	00NR	4	20SP	G15_076	TO->FROM	GRPRAR1-LNX3345.00 - GRPRAR 345KV CKT Z	720	720	0.0393	102.3418	COYOTE 345/24.0KV TRANSFORMER CKT 1
FDNS	00NR	4	25SP	G15_076	TO->FROM	GRPRAR1-LNX3345.00 - GRPRAR 345KV CKT Z	720	720	0.03962	102.3228	GEN615021 1-GRE-ER 14G 16.000
FDNS	00NR	4	20SP	G15_076	TO->FROM	GRPRAR1-LNX3345.00 - GRPRAR 345KV CKT Z	720	720	0.0393	102.3155	GEN659194 1-NDPRAIRWND1W0.6900
FDNS	00NR	4	20SP	G15_076	TO->FROM	GRPRAR1-LNX3345.00 - GRPRAR 345KV CKT Z	720	720	0.0393	102.3121	GEN659010 4-G07_027IS_2 0.6900
FDNS	00NR	4	20SP	G15_076	TO->FROM	GRPRAR1-LNX3345.00 - GRPRAR 345KV CKT Z	720	720	0.0393	102.2987	GEN652460 4-GARRISON
FDNS	00NR	4	20SP	G15_076	TO->FROM	GRPRAR1-LNX3345.00 - GRPRAR 345KV CKT Z	720	720	0.0393	102.2987	GEN652461 5-GARRISON
FDNS	00NR	4	25SP	G15_076	TO->FROM	GRPRAR1-LNX3345.00 - GRPRAR 345KV CKT Z	720	720	0.03962	102.2913	GEN615015 1-GRE-SPRITWDG13.200
FDNS	00NR	4	25SP	G15_076	TO->FROM	GRPRAR1-LNX3345.00 - GRPRAR 345KV CKT Z	720	720	0.03963	102.262	SULLEY BUTTE - SULLYBT-LNX3230.00 230KV CKT Z
FDNS	00NR	4	25SP	G15_076	TO->FROM	GRPRAR1-LNX3345.00 - GRPRAR 345KV CKT Z	720	720	0.03962	102.2619	GEN657705 X-DRAYTON
FDNS	00NR	4	25SP	G15_076	TO->FROM	GRPRAR1-LNX3345.00 - GRPRAR 345KV CKT Z	720	720	0.03963	102.2618	SULLYBT-LNX3230.00 - WHITLOK 230KV CKT 1
FDNS	00NR	4	20SP	G15_076	TO->FROM	GRPRAR1-LNX3345.00 - GRPRAR 345KV CKT Z	720	720	0.0393	102.2577	GEN652559 1-OAHE
FDNS	00NR	4	20SP	G15_076	TO->FROM	GRPRAR1-LNX3345.00 - GRPRAR 345KV CKT Z	720	720	0.03931	102.2516	GLENHAM - L3 HAWDON 230KV CKT 1
FDNS	00NR	4	20SP	G15_076	TO->FROM	GRPRAR1-LNX3345.00 - GRPRAR 345KV CKT Z	720	720	0.0393	102.2416	GEN652457 1-GARRISON
FDNS	00NR	4	20SP	G15_076	TO->FROM	GRPRAR1-LNX3345.00 - GRPRAR 345KV CKT Z	720	720	0.0393	102.2416	GEN652458 2-GARRISON
FDNS	00NR	4	20SP	G15_076	TO->FROM	GRPRAR1-LNX3345.00 - GRPRAR 345KV CKT Z	720	720	0.0393	102.2416	GEN652459 3-GARRISON
FDNS	00NR	4	20SP	G15_076	TO->FROM	GRPRAR1-LNX3345.00 - GRPRAR 345KV CKT Z	720	720	0.0393	102.237	GEN652907 1-G09_007IS_3 0.6900
FDNS	00NR	4	25SP	G15_076	TO->FROM	GRPRAR1-LNX3345.00 - GRPRAR 345KV CKT Z	720	720	0.03555	102.2332	DIXONCO 230.00 - TWIN CHURCH 230KV CKT 1
FDNS	00NR	4	25SP	G15_076	TO->FROM	GRPRAR1-LNX3345.00 - GRPRAR 345KV CKT Z	720	720	0.03962	102.2287	BISONMP4 230.00 - SQUARE BUTTE 230KV CKT 1
FDNS	00NR	4	20SP	G15_076	TO->FROM	GRPRAR1-LNX3345.00 - GRPRAR 345KV CKT Z	720	720	0.0393	102.2142	GEN563342 1-G15098_3 0.6900
FDNS	00NR	4	25SP	G15_076	TO->FROM	GRPRAR1-LNX3345.00 - GRPRAR 345KV CKT Z	720	720	0.03963	102.2076	P12:230:UMZB:# 114 #: SB IN SD. SB-WK-GH
FDNS	00NR	4	25SP	G15_076	TO->FROM	GRPRAR1-LNX3345.00 - GRPRAR 345KV CKT Z	720	720	0.03963	102.2076	P12:230:UMZB:# 117 #: WK IN SD. SB-WK-GH
FDNS	00NR	4	20SP	G15_076	TO->FROM	GRPRAR1-LNX3345.00 - GRPRAR 345KV CKT Z	720	720	0.0393	102.1853	GEN659403 1-NDSUNFLWR W0.6900
FDNS	00NR	4	25SP	G15_076	TO->FROM	GRPRAR1-LNX3345.00 - GRPRAR 345KV CKT Z	720	720	0.04111	102.1706	GERALD GENTLEMAN STATION - RED WILLOW 345KV CKT 1
FDNS	00NR	4	25SP	G15_076	TO->FROM	GRPRAR1-LNX3345.00 - GRPRAR 345KV CKT Z	720	720	0.03962	102.1691	GEN600067 9-HIGH BRIDGE
FDNS	00NR	4	25SP	G15_076	TO->FROM	GRPRAR1-LNX3345.00 - GRPRAR 345KV CKT Z	720	720	0.03962	102.1688	GEN659353 1-DEERCREK CTG18.000
FDNS	00NR	4	25SP	G15_076	TO->FROM	GRPRAR1-LNX3345.00 - GRPRAR 345KV CKT Z	720	720	0.03962	102.1682	GEN659354 1-DEERCREK STG18.000
FDNS	00NR	4	25SP	G15_076	TO->FROM	GRPRAR1-LNX3345.00 - GRPRAR 345KV CKT Z	720	720	0.04117	102.1663	G15061_T 345.00 - SETAB 345KV CKT 1
FDNS	00NR	4	20SP	G15_076	TO->FROM	GRPRAR1-LNX3345.00 - GRPRAR 345KV CKT Z	720	720	0.0393	102.1624	GEN652542 1-BIG BEND
FDNS	00NR	4	20SP	G15_076	TO->FROM	GRPRAR1-LNX3345.00 - GRPRAR 345KV CKT Z	720	720	0.04131	102.1576	MCCOOL - MOORE 345KV CKT 1
FDNS	00NR	4	25SP	G15_076	TO->FROM	GRPRAR1-LNX3345.00 - GRPRAR 345KV CKT Z	720	720	0.03963	102.154	GLENHAM - WHITLOK 230KV CKT 1
FDNS	00NR	4	25SP	G15_076	TO->FROM	GRPRAR1-LNX3345.00 - GRPRAR 345KV CKT Z	720	720	0.03962	102.1514	GEN672303 3-BOUNDARY DAM GENERATOR 3
FDNS	00NR	4	25SP	G15_076	TO->FROM	GRPRAR1-LNX3345.00 - GRPRAR 345KV CKT Z	720	720	0.03962	102.1514	GEN672304 4-BOUNDARY DAM GENERATOR 4
FDNS	00NR	4	25SP	G15_076	TO->FROM	GRPRAR1-LNX3345.00 - GRPRAR 345KV CKT Z	720	720	0.03962	102.1514	GEN672305 5-BOUNDARY DAM GENERATOR 5
FDNS	00NR	4	25SP	G15_076	TO->FROM	GRPRAR1-LNX3345.00 - GRPRAR 345KV CKT Z	720	720	0.03962	102.1205	GEN672356 1-FUT-WL1X 18.000
FDNS	00NR	4	20SP	G15_076	TO->FROM	GRPRAR1-LNX3345.00 - GRPRAR 345KV CKT Z	720	720	0.0393	102.099	STANTON 230/18.0KV TRANSFORMER CKT 1
FDNS	00NR	4	25SP	G15_076	TO->FROM	GRPRAR1-LNX3345.00 - GRPRAR 345KV CKT Z	720	720	0.03962	102.0901	GEN672389 1-FUT-SW1X 18.000
FDNS	00NR	4	25SP	G15_076	TO->FROM	GRPRAR1-LNX3345.00 - GRPRAR 345KV CKT Z	720	720	0.03962	102.0808	GEN672392 1-NBECGT1G 18.000
FDNS	00NR	4	25SP	G15_076	TO->FROM	GRPRAR1-LNX3345.00 - GRPRAR 345KV CKT Z	720	720	0.04117	102.0713	MISSION - WITTEN 115KV CKT 1
FDNS	00NR	4	25SP	G15_076	TO->FROM	GRPRAR1-LNX3345.00 - GRPRAR 345KV CKT Z	720	720	0.0424	102.0712	MINGO - RED WILLOW 345KV CKT 1
FDNS	00NR	4	25SP	G15_076	TO->FROM	GRPRAR1-LNX3345.00 - GRPRAR 345KV CKT Z	720	720	0.0424	102.0712	MINGO - RED WILLOW 345KV CKT 1
FDNS	00NR	4	25SP	G15_076	TO->FROM	GRPRAR1-LNX3345.00 - GRPRAR 345KV CKT Z	720	720	0.04108	102.0683	G15088_T 345.00 - MOORE 345KV CKT 1
FDNS	00NR	4	20SP	G15_076	TO->FROM	GRPRAR1-LNX3345.00 - GRPRAR 345KV CKT Z	720	720	0.0393	102.0397	SQUARE BUTTE - YNG2 4 230.00 230KV CKT 1
FDNS	00NR	4	20SP	G15_076	TO->FROM	GRPRAR1-LNX3345.00 - GRPRAR 345KV CKT Z	720	720	0.0393	102.0392	YNG2 4 230.00 230/20.0KV TRANSFORMER CKT 1
FDNS	00NR	4	17SP	G15_076	TO->FROM	GRPRAR1-LNX3345.00 - GRPRAR 345KV CKT Z	720	720	0.04101	102.0292	FTTHOM1-LNX3345.00 - LELAND2-LNX3345.00 345KV CKT 1
FDNS	00NR	4	25SP	G15_076	TO->FROM	GRPRAR1-LNX3345.00 - GRPRAR 345KV CKT Z	720	720	0.03962	102.0172	GEN662101 1-WESSINGTON190.5750
FDNS	00NR	4	25SP	G15_076	TO->FROM	GRPRAR1-LNX3345.00 - GRPRAR 345KV CKT Z	720	720	0.03962	101.9789	GEN681542 6-JP MADGETT
FDNS	00NR	4	25SP	G15_076	TO->FROM	GRPRAR1-LNX3345.00 - GRPRAR 345KV CKT Z	720	720	0.03962	101.9608	GEN910006 1-G12_012IS_3 0.6900
FDNS	00NR	4	25SP	G15_076	TO->FROM	GRPRAR1-LNX3345.00 - GRPRAR 345KV CKT Z	720	720	0.03962	101.9483	CENTER 230/22.0KV TRANSFORMER CKT 1
FDNS	00NR	4	25SP	G15_076	TO->FROM	GRPRAR1-LNX3345.00 - GRPRAR 345KV CKT Z	720	720	0.03397	101.8716	HOSKINS - SHELL CREEK 345KV CKT 1
FDNS	00NR	4	17SP	G15_076	TO->FROM	GRPRAR1-LNX3345.00 - GRPRAR 345KV CKT Z	720	720	0.04101	101.8648	P12:345:UMZB:# 108 #: LOS FT IN ND. LOS FT
FDNS	00NR	4	17SP	G15_076	TO->FROM	GRPRAR1-LNX3345.00 - GRPRAR 345KV CKT Z	720	720	0.04101	101.8558	FT THOMPSON - FTTHOM1-LNX3345.00 345KV CKT Z
FDNS	00NR	4	25SP	G15_076	TO->FROM	GRPRAR1-LNX3345.00 - GRPRAR 345KV CKT Z	720	720	0.03962	101.846	HESKETT 115/13.8KV TRANSFORMER CKT 1
FDNS	00NR	4	20SP	G15_076	TO->FROM	GRPRAR1-LNX3345.00 - GRPRAR 345KV CKT Z	720	720	0.0393	101.8081	GEN659411 1-CAMPBLCNTY W0.6900
FDNS	00NR	4	25SP	G15_076	TO->FROM	GRPRAR1-LNX3345.00 - GRPRAR 345KV CKT Z	720	720	0.04119	101.7974	AXTELL - SWEETWATER 345KV CKT 1
FDNS	00NR	4	17SP	G15_076	TO->FROM	GRPRAR1-LNX3345.00 - GRPRAR 345KV CKT Z	720	720	0.04101	101.7676	LELAND OLDS - LELAND2-LNX3345.00 345KV CKT Z
FDNS	00NR	4	25SP	G15_076	TO->FROM	GRPRAR1-LNX3345.00 - GRPRAR 345KV CKT Z	720	720	0.03962	101.7593	GEN659289 1-DAYCNTYWND W0.6900
FDNS	00NR	4	25SP	G15_076	TO->FROM	GRPRAR1-LNX3345.00 - GRPRAR 345KV CKT Z	720	720	0.0418	101.7521	MCCOOL - MOORE 345KV CKT 1
FDNS	00NR	4	20SP	G15_076	TO->FROM	GRPRAR1-LNX3345.00 - GRPRAR 345KV CKT Z	720	720	0.0393	101.7233	GEN600004 2-PRAIRIE ISLAND G2
FDNS	00NR	4	25SP	G15_076	TO->FROM	GRPRAR1-LNX3345.00 - GRPRAR 345KV CKT Z	720	720	0.03962	101.7225	GEN563312 1-G15097_3 0.6900
FDNS	00NR	4	20SP	G15_076	TO->FROM	GRPRAR1-LNX3345.00 - GRPRAR 345KV CKT Z	720	720	0.0393	101.7193	GEN600003 1-PRAIRIE ISLAND G1
FDNS	00NR	4	25SP	G15_076	TO->FROM	GRPRAR1-LNX3345.00 - GRPRAR 345KV CKT Z	720	720	0.03962	101.6753	GEN659018 1-G14_003IS_3 0.6900
FDNS	00NR	4	20SP	G15_076	TO->FROM	GRPRAR1-LNX3345.00 - GRPRAR 345KV CKT Z	720	720	0.0393	101.6714	GEN672321 1-SHAND GENERATOR 1
FDNS	00NR	4	25SP	G15_076	TO->FROM	GRPRAR1-LNX3345.00 - GRPRAR 345KV CKT Z	720	720	0.03962	101.6634	GEN652906 1-G09_006IS_3 0.6900
FDNS	00NR	4	20SP	G15_076	TO->FROM	GRPRAR1-LNX3345.00 - GRPRAR 345KV CKT Z	720	720	0.0393	101.6115	GEN672310 1-POPLAR RIVER GENERATOR 1
FDNS	00NR	4	20SP	G15_076	TO->FROM	GRPRAR1-LNX3345.00 - GRPRAR 345KV CKT Z	720	720	0.0393	101.6115	GEN672311 2-POPLAR RIVER GENERATOR 2
FDNS	00NR	4	20SP	G15_076	TO->FROM	GRPRAR1-LNX3345.00 - GRPRAR 345KV CKT Z	720	720	0.0393	101.5936	GEN672306 6-BOUNDARY DAM GENERATOR 6

SOLUTION	GROUP	SCENARIO	SEASON	SOURCE	DIRECTION	MONITORED ELEMENT	RATEA (MVA)	RATEB(MVA)	TDF	TC%LOADING (% MVA)	CONTINGENCY
FDNS	00NR	4	20SP	G15_076	TO->FROM	GRPRAR1-LNX3345.00 - GRPRAR 345KV CKT Z	720	720	0.0393	101.5689	GEN659296 2-SDPRAIRWND1W0.6900
FDNS	00NR	4	25SP	G15_076	TO->FROM	GRPRAR1-LNX3345.00 - GRPRAR 345KV CKT Z	720	720	0.03962	101.5524	GEN659010 4-G07_027IS_2 0.6900
FDNS	00NR	4	20SP	G15_076	TO->FROM	GRPRAR1-LNX3345.00 - GRPRAR 345KV CKT Z	720	720	0.0393	101.5517	RCDC EAST 4230.00 - RED CEDAR DC 230KV CKT 1
FDNS	00NR	4	20SP	G15_076	TO->FROM	GRPRAR1-LNX3345.00 - GRPRAR 345KV CKT Z	720	720	0.0393	101.5487	P12:230:UMZB:# 112 #: NU IN SD. NU-RCDC & DRY CREEK XFMR
FDNS	00NR	4	25SP	G15_076	TO->FROM	GRPRAR1-LNX3345.00 - GRPRAR 345KV CKT Z	720	720	0.03962	101.5476	GEN659194 1-NDPRAIRWND1W0.6900
FDNS	00NR	4	25SP	G15_076	TO->FROM	GRPRAR1-LNX3345.00 - GRPRAR 345KV CKT Z	720	720	0.03962	101.5359	GEN652460 4-GARRISON
FDNS	00NR	4	25SP	G15_076	TO->FROM	GRPRAR1-LNX3345.00 - GRPRAR 345KV CKT Z	720	720	0.03962	101.5356	GEN652461 5-GARRISON
FDNS	00NR	4	25SP	G15_076	TO->FROM	GRPRAR1-LNX3345.00 - GRPRAR 345KV CKT Z	720	720	0.03963	101.502	GLENHAM - L3 HAWDON 230KV CKT 1
FDNS	00NR	4	25SP	G15_076	TO->FROM	GRPRAR1-LNX3345.00 - GRPRAR 345KV CKT Z	720	720	0.03962	101.4794	GEN652457 1-GARRISON
FDNS	00NR	4	25SP	G15_076	TO->FROM	GRPRAR1-LNX3345.00 - GRPRAR 345KV CKT Z	720	720	0.03962	101.4794	GEN652458 2-GARRISON
FDNS	00NR	4	25SP	G15_076	TO->FROM	GRPRAR1-LNX3345.00 - GRPRAR 345KV CKT Z	720	720	0.03962	101.4794	GEN652459 3-GARRISON
FDNS	00NR	4	25SP	G15_076	TO->FROM	GRPRAR1-LNX3345.00 - GRPRAR 345KV CKT Z	720	720	0.03962	101.476	GEN652907 1-G09_007IS_3 0.6900
FDNS	00NR	4	20SP	G15_076	TO->FROM	GRPRAR1-LNX3345.00 - GRPRAR 345KV CKT Z	720	720	0.0393	101.4654	GEN615010 1-STANTON4
FDNS	00NR	4	25SP	G15_076	TO->FROM	GRPRAR1-LNX3345.00 - GRPRAR 345KV CKT Z	720	720	0.03852	101.464	HIGHLND 3 345.00 - OBRIEN 3 345.00 345KV CKT 1
FDNS	00NR	4	25SP	G15_076	TO->FROM	GRPRAR1-LNX3345.00 - GRPRAR 345KV CKT Z	720	720	0.03962	101.4387	GEN563342 1-G15098_3 0.6900
FDNS	00NR	4	25SP	G15_076	TO->FROM	GRPRAR1-LNX3345.00 - GRPRAR 345KV CKT Z	720	720	0.03962	101.4215	GEN659403 1-NDSUNFLWR W0.6900
FDNS	00NR	4	25SP	G15_076	TO->FROM	GRPRAR1-LNX3345.00 - GRPRAR 345KV CKT Z	720	720	0.03962	101.4135	GEN652543 3-BIG BEND
FDNS	00NR	4	25SP	G15_076	TO->FROM	GRPRAR1-LNX3345.00 - GRPRAR 345KV CKT Z	720	720	0.03962	101.4072	GEN652542 1-BIG BEND
FDNS	00NR	4	20SP	G15_076	TO->FROM	GRPRAR1-LNX3345.00 - GRPRAR 345KV CKT Z	720	720	0.0393	101.3748	GEN600006 1-AS KING
FDNS	00NR	4	20SP	G15_076	TO->FROM	GRPRAR1-LNX3345.00 - GRPRAR 345KV CKT Z	720	720	0.0393	101.3688	GEN659453 1-GI1414GEN W0.6900
FDNS	00NR	4	20SP	G15_076	TO->FROM	GRPRAR1-LNX3345.00 - GRPRAR 345KV CKT Z	720	720	0.0393	101.3671	GEN563302 1-G15096_3 0.6900
FDNS	00NR	4	25SP	G15_076	TO->FROM	GRPRAR1-LNX3345.00 - GRPRAR 345KV CKT Z	720	720	0.03962	101.2875	STANTON 230/18.0KV TRANSFORMER CKT 1
FDNS	00NR	4	20SP	G15_076	TO->FROM	GRPRAR1-LNX3345.00 - GRPRAR 345KV CKT Z	720	720	0.0393	101.2628	GEN659141 1-K10215A
FDNS	00NR	4	20SP	G15_076	TO->FROM	GRPRAR1-LNX3345.00 - GRPRAR 345KV CKT Z	720	720	0.0393	101.2609	GEN652556 2-OAHE
FDNS	00NR	4	20SP	G15_076	TO->FROM	GRPRAR1-LNX3345.00 - GRPRAR 345KV CKT Z	720	720	0.0393	101.2608	GEN652557 4-OAHE
FDNS	00NR	4	20SP	G15_076	TO->FROM	GRPRAR1-LNX3345.00 - GRPRAR 345KV CKT Z	720	720	0.0393	101.2608	GEN652558 6-OAHE
FDNS	00NR	4	20SP	G15_076	TO->FROM	GRPRAR1-LNX3345.00 - GRPRAR 345KV CKT Z	720	720	0.0393	101.234	GEN659110 1-LELAND OLDS UNIT1
FDNS	00NR	4	25SP	G15_076	TO->FROM	GRPRAR1-LNX3345.00 - GRPRAR 345KV CKT Z	720	720	0.03962	101.1111	GEN652559 1-OAHE
FDNS	00NR	4	20SP	G15_076	TO->FROM	GRPRAR1-LNX3345.00 - GRPRAR 345KV CKT Z	720	720	0.0393	101.0748	GEN652173 1-G09_001IS_2 0.6900
FDNS	00NR	4	25SP	G15_076	TO->FROM	GRPRAR1-LNX3345.00 - GRPRAR 345KV CKT Z	720	720	0.03962	101.0447	GEN659411 1-CAMPBLCNTY W0.6900
FDNS	00NR	4	25SP	G15_076	TO->FROM	GRPRAR1-LNX3345.00 - GRPRAR 345KV CKT Z	720	720	0.03962	100.9031	SQUARE BUTTE - YNG2 4 230.00 230KV CKT 1
FDNS	00NR	4	20SP	G15_076	TO->FROM	GRPRAR1-LNX3345.00 - GRPRAR 345KV CKT Z	720	720	0.04123	100.8857	GRAND ISLAND - MCCOOL 345KV CKT 1
FDNS	00NR	4	20SP	G15_076	TO->FROM	GRPRAR1-LNX3345.00 - GRPRAR 345KV CKT Z	720	720	0.0393	100.8598	GEN657749 1-YOUNG 1 GENERATOR
FDNS	00NR	4	25SP	G15_076	TO->FROM	GRPRAR1-LNX3345.00 - GRPRAR 345KV CKT Z	720	720	0.03962	100.845	GEN600004 2-PRAIRIE ISLAND G2
FDNS	00NR	4	25SP	G15_076	TO->FROM	GRPRAR1-LNX3345.00 - GRPRAR 345KV CKT Z	720	720	0.03962	100.8411	GEN600003 1-PRAIRIE ISLAND G1
FDNS	00NR	4	25SP	G15_076	TO->FROM	GRPRAR1-LNX3345.00 - GRPRAR 345KV CKT Z	720	720	0.03962	100.8286	GEN672310 1-POPLAR RIVER GENERATOR 1
FDNS	00NR	4	25SP	G15_076	TO->FROM	GRPRAR1-LNX3345.00 - GRPRAR 345KV CKT Z	720	720	0.03962	100.8286	GEN672311 2-POPLAR RIVER GENERATOR 2
FDNS	00NR	4	25SP	G15_076	TO->FROM	GRPRAR1-LNX3345.00 - GRPRAR 345KV CKT Z	720	720	0.03962	100.8181	GEN659296 2-SDPRAIRWND1W0.6900
FDNS	00NR	4	25SP	G15_076	TO->FROM	GRPRAR1-LNX3345.00 - GRPRAR 345KV CKT Z	720	720	0.03962	100.8159	GEN672321 1-SHAND GENERATOR 1
FDNS	00NR	4	25SP	G15_076	TO->FROM	GRPRAR1-LNX3345.00 - GRPRAR 345KV CKT Z	720	720	0.03962	100.7747	P12:230:UMZB:# 112 #: NU IN SD. NU-RCDC & DRY CREEK XFMR
FDNS	00NR	4	25SP	G15_076	TO->FROM	GRPRAR1-LNX3345.00 - GRPRAR 345KV CKT Z	720	720	0.03962	100.7662	RCDC EAST 4230.00 - RED CEDAR DC 230KV CKT 1
FDNS	00NR	4	20SP	G15_076	TO->FROM	GRPRAR1-LNX3345.00 - GRPRAR 345KV CKT Z	720	720	0.0393	100.7592	GEN659407 1-ANTELPHILLSW0.6900
FDNS	00NR	4	25SP	G15_076	TO->FROM	GRPRAR1-LNX3345.00 - GRPRAR 345KV CKT Z	720	720	0.03962	100.734	GEN672306 6-BOUNDARY DAM GENERATOR 6
FDNS	00NR	4	25SP	G15_076	TO->FROM	GRPRAR1-LNX3345.00 - GRPRAR 345KV CKT Z	720	720	0.03962	100.622	GEN615010 1-STANTON4
FDNS	00NR	4	25SP	G15_076	TO->FROM	GRPRAR1-LNX3345.00 - GRPRAR 345KV CKT Z	720	720	0.03962	100.5962	GEN659453 1-GI1414GEN W0.6900
FDNS	00NR	4	25SP	G15_076	TO->FROM	GRPRAR1-LNX3345.00 - GRPRAR 345KV CKT Z	720	720	0.03962	100.5944	GEN563302 1-G15096_3 0.6900
FDNS	00NR	4	25SP	G15_076	TO->FROM	GRPRAR1-LNX3345.00 - GRPRAR 345KV CKT Z	720	720	0.03962	100.5041	GEN652557 4-OAHE
FDNS	00NR	4	25SP	G15_076	TO->FROM	GRPRAR1-LNX3345.00 - GRPRAR 345KV CKT Z	720	720	0.03962	100.5041	GEN652558 6-OAHE
FDNS	00NR	4	25SP	G15_076	TO->FROM	GRPRAR1-LNX3345.00 - GRPRAR 345KV CKT Z	720	720	0.03962	100.504	GEN652556 2-OAHE
FDNS	00NR	4	25SP	G15_076	TO->FROM	GRPRAR1-LNX3345.00 - GRPRAR 345KV CKT Z	720	720	0.03962	100.4934	GEN600006 1-AS KING
FDNS	00NR	4	25SP	G15_076	TO->FROM	GRPRAR1-LNX3345.00 - GRPRAR 345KV CKT Z	720	720	0.03962	100.4786	GEN659141 1-K10215A
FDNS	00NR	4	25SP	G15_076	TO->FROM	GRPRAR1-LNX3345.00 - GRPRAR 345KV CKT Z	720	720	0.04171	100.4552	GRAND ISLAND - MCCOOL 345KV CKT 1
FDNS	00NR	4	20SP	G15_076	TO->FROM	GRPRAR1-LNX3345.00 - GRPRAR 345KV CKT Z	720	720	0.0393	100.4463	GEN600005 1-MONTICELLO
FDNS	00NR	4	25SP	G15_076	TO->FROM	GRPRAR1-LNX3345.00 - GRPRAR 345KV CKT Z	720	720	0.03962	100.4321	GEN659110 1-LELAND OLDS UNIT1
FDNS	00NR	4	25SP	G15_076	TO->FROM	GRPRAR1-LNX3345.00 - GRPRAR 345KV CKT Z	720	720	0.03962	100.3275	GEN652173 1-G09_001IS_2 0.6900
FDNS	00NR	4	20SP	G15_076	TO->FROM	GRPRAR1-LNX3345.00 - GRPRAR 345KV CKT Z	720	720	0.0393	100.2115	GEN600000 1-SHERBURNECNTY G1
FDNS	00NR	4	20SP	G15_076	TO->FROM	GRPRAR1-LNX3345.00 - GRPRAR 345KV CKT Z	720	720	0.0393	100.1	GEN600001 2-SHERBURNE CNTY G2
FDNS	00NR	4	17SP	G15_076	TO->FROM	GRPRAR1-LNX3345.00 - GRPRAR 345KV CKT Z	720	720	0.06676	100	ANTELOPE 3345.00 - HOSKINS 345KV CKT 1
FDNS	00NR	4	25SP	G15_076	TO->FROM	GRPRAR1-LNX3345.00 - GRPRAR 345KV CKT Z	720	720	0.03962	100	CLAY BOSWELL 230/20.9KV TRANSFORMER CKT 1
FDNS	00NR	4	25SP	G15_076	TO->FROM	GRPRAR1-LNX3345.00 - GRPRAR 345KV CKT Z	720	720	0.03962	100	GEN657749 1-YOUNG 1 GENERATOR
FDNS	00NR	4	25SP	G15_076	TO->FROM	GRPRAR1-LNX3345.00 - GRPRAR 345KV CKT Z	720	720	0.03962	100	GEN659407 1-ANTELPHILLSW0.6900
FDNS	00NR	4	20SP	G15_076	TO->FROM	GRPRAR1-LNX3345.00 - GRPRAR 345KV CKT Z	720	720	0.0393	99.9	GEN661015 1-COYOTE
FDNS	00NR	4	20SP	G15_076	TO->FROM	GRPRAR1-LNX3345.00 - GRPRAR 345KV CKT Z	720	720	0.0393	99.7	GEN620315 1-BIG STONE GEN
FDNS	00NR	4	25SP	G15_076	TO->FROM	GRPRAR1-LNX3345.00 - GRPRAR 345KV CKT Z	720	720	0.03962	99.6	GEN600005 1-MONTICELLO
FDNS	00NR	4	17SP	G15_076	FROM->TO	GRPRAR1-LNX3345.00 - HOLT.CO3 345.00 345KV CKT 1	720	720	0.03842	120.62	P12:230:UMZB:# 116 #: ST IN SD. WSG-ST-VH
FDNS	00NR	4	17SP	G15_076	FROM->TO	GRPRAR1-LNX3345.00 - HOLT.CO3 345.00 345KV CKT 1	720	720	0.04601	120.3647	KELLY - MEADOWGROVE4230.00 230KV CKT 1
FDNS	00NR	4	17SP	G15_076	FROM->TO	GRPRAR1-LNX3345.00 - HOLT.CO3 345.00 345KV CKT 1	720	720	0.03996	119.7692	WATERTN-LNX3345.00 - WATERTOWN 345KV CKT Z
FDNS	00NR	4	17SP	G15_076	FROM->TO	GRPRAR1-LNX3345.00 - HOLT.CO3 345.00 345KV CKT 1	720	720	0.03996	119.7543	P12:345:UMZW:# 1747 #: WT2 IN SD. WT2-WHT LINE FAULT
FDNS	00NR	4	17SP	G15_076	FROM->TO	GRPRAR1-LNX3345.00 - HOLT.CO3 345.00 345KV CKT 1	720	720	0.03996	119.7143	WATERTN-LNX3345.00 - WHITE 345KV CKT 1
FDNS	00NR	4	17SP	G15_076	FROM->TO	GRPRAR1-LNX3345.00 - HOLT.CO3 345.00 345KV CKT 1	720	720	0.03877	119.6795	STORLA - WESSINGTON 230KV CKT 1
FDNS	00NR	4	17SP	G15_076	FROM->TO	GRPRAR1-LNX3345.00 - HOLT.CO3 345.00 345KV CKT 1	720	720	0.04054	119.016	G09_001IST 345.00 - WATERTOWN 345KV CKT 1
FDNS	00NR	4	17SP	G15_076	FROM->TO	GRPRAR1-LNX3345.00 - HOLT.CO3 345.00 345KV CKT 1	720	720	0.03886	118.5761	HANLON - STORLA 230KV CKT 1
FDNS	00NR	4	17SP	G15_076	FROM->TO	GRPRAR1-LNX3345.00 - HOLT.CO3 345.00 345KV CKT 1	720	720	0.03811	117.9434	FT THOMPSON - LETCHER 230KV CKT 1
FDNS	00NR	4	17SP	G15_076	FROM->TO	GRPRAR1-LNX3345.00 - HOLT.CO3 345.00 345KV CKT 1	720	720	0.03811	117.9434	FT THOMPSON - LETCHER 230KV CKT 1
FDNS	00NR	4	17SP	G15_076	FROM->TO	GRPRAR1-LNX3345.00 - HOLT.CO3 345.00 345KV CKT 1	720	720	0.04085	117.5447	BUFFALO - JAMESTOWN 345KV CKT 1
FDNS	00NR	4	17SP	G15_076	FROM->TO	GRPRAR1-LNX3345.00 - HOLT.CO3 345.00 345KV CKT 1	720	720	0.03751	116.5247	FT RANDAL - G12_009IST 230.00 230KV CKT 1
FDNS	00NR	4	17SP	G15_076	FROM->TO	GRPRAR1-LNX3345.00 - HOLT.CO3 345.00 345KV CKT 1	720	720	0.03742	116.4901	FT RANDAL - FT THOMPSON 230KV CKT 1
FDNS	00NR	4	17SP	G15_076	FROM->TO	GRPRAR1-LNX3345.00 - HOLT.CO3 345.00 345KV CKT 1	720	720	0.03742	116.4901	FT RANDAL - FT THOMPSON 230KV CKT 1
FDNS	00NR	4	17SP	G15_076	FROM->TO	GRPRAR1-LNX3345.00 - HOLT.CO3 345.00 345KV CKT 1	720	720	0.04085	116.4579	CHISAGO COUNTY - FORBES 500KV CKT 1

SOLUTION	GROUP	SCENARIO	SEASON	SOURCE	DIRECTION	MONITORED ELEMENT	RATEA (MVA)	RATEB(MVA)	TDF	TC%LOADING (% MVA)	CONTINGENCY
FDNS	00NR	4	17SP	G15_076	FROM->TO	GRPRAR1-LNX3345.00 - HOLT.CO3 345.00 345KV CKT 1	720	720	0.03751	116.4106	FT THOMPSON - LAKE PLATT 230KV CKT 1
FDNS	00NR	4	17SP	G15_076	FROM->TO	GRPRAR1-LNX3345.00 - HOLT.CO3 345.00 345KV CKT 1	720	720	0.03751	116.4106	FT THOMPSON - LAKE PLATT 230KV CKT 1
FDNS	00NR	4	17SP	G15_076	FROM->TO	GRPRAR1-LNX3345.00 - HOLT.CO3 345.00 345KV CKT 1	720	720	0.04054	116.3859	G09_001IST 345.00 - GROTON 345KV CKT 1
FDNS	00NR	4	17SP	G15_076	FROM->TO	GRPRAR1-LNX3345.00 - HOLT.CO3 345.00 345KV CKT 1	720	720	0.04926	116.3368	NUNDRWD - WAYSIDE 230KV CKT 1
FDNS	00NR	4	17SP	G15_076	FROM->TO	GRPRAR1-LNX3345.00 - HOLT.CO3 345.00 345KV CKT 1	720	720	0.03751	116.0325	G12_009IST 230.00 - LAKE PLATT 230KV CKT 1
FDNS	00NR	4	17SP	G15_076	FROM->TO	GRPRAR1-LNX3345.00 - HOLT.CO3 345.00 345KV CKT 1	720	720	0.04085	115.9559	CENTER - JAMESTOWN 345KV CKT 1
FDNS	00NR	4	17SP	G15_076	FROM->TO	GRPRAR1-LNX3345.00 - HOLT.CO3 345.00 345KV CKT 1	720	720	0.04601	115.8441	FT RANDAL - MEADOWGROVE4230.00 230KV CKT 1
FDNS	00NR	4	17SP	G15_076	FROM->TO	GRPRAR1-LNX3345.00 - HOLT.CO3 345.00 345KV CKT 1	720	720	0.03965	115.7193	LETCHER - SIOUX FALLS 230KV CKT 1
FDNS	00NR	4	17SP	G15_076	FROM->TO	GRPRAR1-LNX3345.00 - HOLT.CO3 345.00 345KV CKT 1	720	720	0.04084	115.4811	GEN336821 1-GRAND GULF UNIT
FDNS	00NR	4	17SP	G15_076	FROM->TO	GRPRAR1-LNX3345.00 - HOLT.CO3 345.00 345KV CKT 1	720	720	0.04085	115.4548	BISON 3 345.00 - BUFFALO 345KV CKT 1
FDNS	00NR	4	17SP	G15_076	FROM->TO	GRPRAR1-LNX3345.00 - HOLT.CO3 345.00 345KV CKT 1	720	720	0.04084	115.3562	GEN635024 4-WALTER SCOTT UNIT 4
FDNS	00NR	4	17SP	G15_076	FROM->TO	GRPRAR1-LNX3345.00 - HOLT.CO3 345.00 345KV CKT 1	720	720	0.0392	115.2823	SPLIT ROCK - WHITE 345KV CKT 1
FDNS	00NR	4	17SP	G15_076	FROM->TO	GRPRAR1-LNX3345.00 - HOLT.CO3 345.00 345KV CKT 1	720	720	0.0392	115.2823	SPLIT ROCK - WHITE 345KV CKT 1
FDNS	00NR	4	17SP	G15_076	FROM->TO	GRPRAR1-LNX3345.00 - HOLT.CO3 345.00 345KV CKT 1	720	720	0.04084	115.0893	GEN344225 1-1CAL G1 25.000
FDNS	00NR	4	17SP	G15_076	FROM->TO	GRPRAR1-LNX3345.00 - HOLT.CO3 345.00 345KV CKT 1	720	720	0.04184	115.017	KEYSTONE - SIDNEY1-LNX3345.00 345KV CKT 1
FDNS	00NR	4	17SP	G15_076	FROM->TO	GRPRAR1-LNX3345.00 - HOLT.CO3 345.00 345KV CKT 1	720	720	0.04184	115.0048	SIDNEY - SIDNEY1-LNX3345.00 345KV CKT Z
FDNS	00NR	4	17SP	G15_076	FROM->TO	GRPRAR1-LNX3345.00 - HOLT.CO3 345.00 345KV CKT 1	720	720	0.04084	114.8836	GEN562714 1-G15_023_4 0.6900
FDNS	00NR	4	17SP	G15_076	FROM->TO	GRPRAR1-LNX3345.00 - HOLT.CO3 345.00 345KV CKT 1	720	720	0.04084	114.8836	GEN562715 1-G15_023_5 0.6900
FDNS	00NR	4	17SP	G15_076	FROM->TO	GRPRAR1-LNX3345.00 - HOLT.CO3 345.00 345KV CKT 1	720	720	0.04084	114.8826	GEN635023 3-WALTER SCOTT UNIT 3
FDNS	00NR	4	17SP	G15_076	FROM->TO	GRPRAR1-LNX3345.00 - HOLT.CO3 345.00 345KV CKT 1	720	720	0.04084	114.8453	GEN337911 1-ARKANSAS NUCLEAR ONE UNIT #2
FDNS	00NR	4	17SP	G15_076	FROM->TO	GRPRAR1-LNX3345.00 - HOLT.CO3 345.00 345KV CKT 1	720	720	0.04084	114.8157	GEN336153 1-WATERFORD UNIT#3
FDNS	00NR	4	17SP	G15_076	FROM->TO	GRPRAR1-LNX3345.00 - HOLT.CO3 345.00 345KV CKT 1	720	720	0.03972	114.8098	FT RANDAL - SIOUX CITY 230KV CKT 1
FDNS	00NR	4	17SP	G15_076	FROM->TO	GRPRAR1-LNX3345.00 - HOLT.CO3 345.00 345KV CKT 1	720	720	0.04055	114.7425	GROTON-LNX3 345.00 - LELAND1-LNX3345.00 345KV CKT 1
FDNS	00NR	4	17SP	G15_076	FROM->TO	GRPRAR1-LNX3345.00 - HOLT.CO3 345.00 345KV CKT 1	720	720	0.04055	114.6496	GROTON - GROTON-LNX3 345.00 345KV CKT Z
FDNS	00NR	4	17SP	G15_076	FROM->TO	GRPRAR1-LNX3345.00 - HOLT.CO3 345.00 345KV CKT 1	720	720	0.04055	114.6478	P12:345:UMZB:# 109 #: LOS GRT IN ND. LOS GRT
FDNS	00NR	4	17SP	G15_076	FROM->TO	GRPRAR1-LNX3345.00 - HOLT.CO3 345.00 345KV CKT 1	720	720	0.04055	114.6062	LELAND OLDS - LELAND1-LNX3345.00 345KV CKT Z
FDNS	00NR	4	17SP	G15_076	FROM->TO	GRPRAR1-LNX3345.00 - HOLT.CO3 345.00 345KV CKT 1	720	720	0.04116	114.564	ARROWHEAD - ARROWHEAD 230 230KV CKT 1
FDNS	00NR	4	17SP	G15_076	FROM->TO	GRPRAR1-LNX3345.00 - HOLT.CO3 345.00 345KV CKT 1	720	720	0.04009	114.5479	HANLON - SIOUX FALLS 230KV CKT 1
FDNS	00NR	4	17SP	G15_076	FROM->TO	GRPRAR1-LNX3345.00 - HOLT.CO3 345.00 345KV CKT 1	720	720	0.0415	114.5154	MISSION - ST FRANCIS 115KV CKT 1
FDNS	00NR	4	17SP	G15_076	FROM->TO	GRPRAR1-LNX3345.00 - HOLT.CO3 345.00 345KV CKT 1	720	720	0.0415	114.5007	P12:115:NPPD:1091:VALENTN7:MISSION7:BTB
FDNS	00NR	4	17SP	G15_076	FROM->TO	GRPRAR1-LNX3345.00 - HOLT.CO3 345.00 345KV CKT 1	720	720	0.04084	114.4704	GEN640010 1-GERALD GENTLEMAN STATION UNIT 1
FDNS	00NR	4	17SP	G15_076	FROM->TO	GRPRAR1-LNX3345.00 - HOLT.CO3 345.00 345KV CKT 1	720	720	0.04084	114.4695	GEN335831 1-RIVERBEND UNIT#1
FDNS	00NR	4	17SP	G15_076	FROM->TO	GRPRAR1-LNX3345.00 - HOLT.CO3 345.00 345KV CKT 1	720	720	0.04084	114.3791	GEN337910 1-ARKANSAS NUCLEAR ONE UNIT #1
FDNS	00NR	4	17SP	G15_076	FROM->TO	GRPRAR1-LNX3345.00 - HOLT.CO3 345.00 345KV CKT 1	720	720	0.03681	114.378	FT RANDAL - UTICA JCT 230KV CKT 1
FDNS	00NR	4	17SP	G15_076	FROM->TO	GRPRAR1-LNX3345.00 - HOLT.CO3 345.00 345KV CKT 1	720	720	0.0415	114.3515	HARMONY - ST FRANCIS 115KV CKT 1
FDNS	00NR	4	17SP	G15_076	FROM->TO	GRPRAR1-LNX3345.00 - HOLT.CO3 345.00 345KV CKT 1	720	720	0.04172	114.318	HAZLETON - MITCHLCO3 345.00 345KV CKT 1
FDNS	00NR	4	17SP	G15_076	FROM->TO	GRPRAR1-LNX3345.00 - HOLT.CO3 345.00 345KV CKT 1	720	720	0.04091	114.3084	ALEXMRES3 345.00 - BISON 3 345.00 345KV CKT 1
FDNS	00NR	4	17SP	G15_076	FROM->TO	GRPRAR1-LNX3345.00 - HOLT.CO3 345.00 345KV CKT 1	720	720	0.03912	114.2417	SIOUXCY-LNX3345.00 - SPLIT ROCK 345KV CKT 1
FDNS	00NR	4	17SP	G15_076	FROM->TO	GRPRAR1-LNX3345.00 - HOLT.CO3 345.00 345KV CKT 1	720	720	0.03912	114.2417	SIOUXCY-LNX3345.00 - SPLIT ROCK 345KV CKT 1
FDNS	00NR	4	17SP	G15_076	FROM->TO	GRPRAR1-LNX3345.00 - HOLT.CO3 345.00 345KV CKT 1	720	720	0.04084	114.2281	ELLENDALE - OAKES 230KV CKT 1
FDNS	00NR	4	17SP	G15_076	FROM->TO	GRPRAR1-LNX3345.00 - HOLT.CO3 345.00 345KV CKT 1	720	720	0.04084	114.2281	ELLENDALE - OAKES 230KV CKT 1
FDNS	00NR	4	17SP	G15_076	FROM->TO	GRPRAR1-LNX3345.00 - HOLT.CO3 345.00 345KV CKT 1	720	720	0.03912	114.2261	P12:345:UMZW:# 907 #: SC2-SR IN IA. SC2-SR 345 KV LINE
FDNS	00NR	4	17SP	G15_076	FROM->TO	GRPRAR1-LNX3345.00 - HOLT.CO3 345.00 345KV CKT 1	720	720	0.04298	114.208	FT RANDAL - SPENCER 115KV CKT 1
FDNS	00NR	4	17SP	G15_076	FROM->TO	GRPRAR1-LNX3345.00 - HOLT.CO3 345.00 345KV CKT 1	720	720	0.04084	114.1785	GEN640011 2-GERALD GENTLEMAN STATION UNIT 2
FDNS	00NR	4	17SP	G15_076	FROM->TO	GRPRAR1-LNX3345.00 - HOLT.CO3 345.00 345KV CKT 1	720	720	0.03912	114.1756	SIOUX CITY - SIOUXCY-LNX3345.00 345KV CKT Z
FDNS	00NR	4	17SP	G15_076	FROM->TO	GRPRAR1-LNX3345.00 - HOLT.CO3 345.00 345KV CKT 1	720	720	0.04298	114.1729	P12:115:NPPD:WAPA6:FTRANDL7:ONEILL 7:BTB
FDNS	00NR	4	17SP	G15_076	FROM->TO	GRPRAR1-LNX3345.00 - HOLT.CO3 345.00 345KV CKT 1	720	720	0.04298	114.1729	P12:115:UMZB:# 115 #: SE IN NE. FR-SE-ON
FDNS	00NR	4	17SP	G15_076	FROM->TO	GRPRAR1-LNX3345.00 - HOLT.CO3 345.00 345KV CKT 1	720	720	0.04544	114.1646	RAUN - SUB 3451 FT CAL 345KV CKT 1
FDNS	00NR	4	17SP	G15_076	FROM->TO	GRPRAR1-LNX3345.00 - HOLT.CO3 345.00 345KV CKT 1	720	720	0.04544	114.1646	RAUN - SUB 3451 FT CAL 345KV CKT 1
FDNS	00NR	4	17SP	G15_076	FROM->TO	GRPRAR1-LNX3345.00 - HOLT.CO3 345.00 345KV CKT 1	720	720	0.0415	114.1626	HARMONY - VALENTINE 115KV CKT 1
FDNS	00NR	4	17SP	G15_076	FROM->TO	GRPRAR1-LNX3345.00 - HOLT.CO3 345.00 345KV CKT 1	720	720	0.04084	114.121	FORMAN - OAKES 230KV CKT 1
FDNS	00NR	4	17SP	G15_076	FROM->TO	GRPRAR1-LNX3345.00 - HOLT.CO3 345.00 345KV CKT 1	720	720	0.04228	114.1122	SIDNEY - STEGALL 345KV CKT 1
FDNS	00NR	4	17SP	G15_076	FROM->TO	GRPRAR1-LNX3345.00 - HOLT.CO3 345.00 345KV CKT 1	720	720	0.04117	114.1085	GERALD GENTLEMAN STATION - KEYSTONE 345KV CKT 1
FDNS	00NR	4	17SP	G15_076	FROM->TO	GRPRAR1-LNX3345.00 - HOLT.CO3 345.00 345KV CKT 1	720	720	0.04298	114.0512	ONEILL - SPENCER 115KV CKT 1
FDNS	00NR	4	17SP	G15_076	FROM->TO	GRPRAR1-LNX3345.00 - HOLT.CO3 345.00 345KV CKT 1	720	720	0.05616	114.0212	DIXONCO 230.00 - HOSKINS 230KV CKT 1
FDNS	00NR	4	17SP	G15_076	FROM->TO	GRPRAR1-LNX3345.00 - HOLT.CO3 345.00 345KV CKT 1	720	720	0.0412	113.9888	AS KING - EAU CLAIRE 345KV CKT 1
FDNS	00NR	4	17SP	G15_076	FROM->TO	GRPRAR1-LNX3345.00 - HOLT.CO3 345.00 345KV CKT 1	720	720	0.04085	113.9738	CARPENTER - HURON 230KV CKT 1
FDNS	00NR	4	17SP	G15_076	FROM->TO	GRPRAR1-LNX3345.00 - HOLT.CO3 345.00 345KV CKT 1	720	720	0.03986	113.9649	PAHOJA - SIOUX FALLS 230KV CKT 1
FDNS	00NR	4	17SP	G15_076	FROM->TO	GRPRAR1-LNX3345.00 - HOLT.CO3 345.00 345KV CKT 1	720	720	0.04084	113.8935	GEN337653 1-WHITE BLUFF UNIT #2
FDNS	00NR	4	17SP	G15_076	FROM->TO	GRPRAR1-LNX3345.00 - HOLT.CO3 345.00 345KV CKT 1	720	720	0.04084	113.8802	GEN337652 1-WHITE BLUFF UNIT #1
FDNS	00NR	4	17SP	G15_076	FROM->TO	GRPRAR1-LNX3345.00 - HOLT.CO3 345.00 345KV CKT 1	720	720	0.04085	113.8783	HURON - WATERTOWN 230KV CKT 2
FDNS	00NR	4	17SP	G15_076	FROM->TO	GRPRAR1-LNX3345.00 - HOLT.CO3 345.00 345KV CKT 1	720	720	0.04085	113.8783	HURON - WATERTOWN 230KV CKT 2
FDNS	00NR	4	17SP	G15_076	FROM->TO	GRPRAR1-LNX3345.00 - HOLT.CO3 345.00 345KV CKT 1	720	720	0.04084	113.828	GEN338146 1-INDEPENDENCE UNIT #2
FDNS	00NR	4	17SP	G15_076	FROM->TO	GRPRAR1-LNX3345.00 - HOLT.CO3 345.00 345KV CKT 1	720	720	0.04084	113.8216	GEN338143 1-INDEPENDENCE UNIT #1
FDNS	00NR	4	17SP	G15_076	FROM->TO	GRPRAR1-LNX3345.00 - HOLT.CO3 345.00 345KV CKT 1	720	720	0.04085	113.8207	CARPENTER - WATERTOWN 230KV CKT 1
FDNS	00NR	4	17SP	G15_076	FROM->TO	GRPRAR1-LNX3345.00 - HOLT.CO3 345.00 345KV CKT 1	720	720	0.04085	113.8207	CARPENTER - WATERTOWN 230KV CKT 1
FDNS	00NR	4	17SP	G15_076	FROM->TO	GRPRAR1-LNX3345.00 - HOLT.CO3 345.00 345KV CKT 1	720	720	0.04133	113.7783	ARPIN B4 345.00 - EAU CLAIRE 345KV CKT 1
FDNS	00NR	4	17SP	G15_076	FROM->TO	GRPRAR1-LNX3345.00 - HOLT.CO3 345.00 345KV CKT 1	720	720	0.04084	113.7601	GEN501801 1-DOLET HILLS UNIT1
FDNS	00NR	4	17SP	G15_076	FROM->TO	GRPRAR1-LNX3345.00 - HOLT.CO3 345.00 345KV CKT 1	720	720	0.04086	113.7244	FORMAN - HANKINSON 230KV CKT 1
FDNS	00NR	4	17SP	G15_076	FROM->TO	GRPRAR1-LNX3345.00 - HOLT.CO3 345.00 345KV CKT 1	720	720	0.03619	113.6894	RASMUSN - UTICA JCT 230KV CKT 1
FDNS	00NR	4	17SP	G15_076	FROM->TO	GRPRAR1-LNX3345.00 - HOLT.CO3 345.00 345KV CKT 1	720	720	0.0415	113.6346	AINSWORTH - VALENTINE 115KV CKT 1
FDNS	00NR	4	17SP	G15_076	FROM->TO	GRPRAR1-LNX3345.00 - HOLT.CO3 345.00 345KV CKT 1	720	720	0.03877	113.5771	FT THOMPSON - WESSINGTON 230KV CKT 1
FDNS	00NR	4	17SP	G15_076	FROM->TO	GRPRAR1-LNX3345.00 - HOLT.CO3 345.00 345KV CKT 1	720	720	0.03877	113.5771	FT THOMPSON - WESSINGTON 230KV CKT 1
FDNS	00NR	4	17SP	G15_076	FROM->TO	GRPRAR1-LNX3345.00 - HOLT.CO3 345.00 345KV CKT 1	720	720	0.03986	113.5436	EAGLE 4 230.00 - PAHOJA 230KV CKT 1
FDNS	00NR	4	17SP	G15_076	FROM->TO	GRPRAR1-LNX3345.00 - HOLT.CO3 345.00 345KV CKT 1	720	720	0.04111	113.5353	G15094_T 345.00 - SIDNEY2-LNX3345.00 345KV CKT 1
FDNS	00NR	4	17SP	G15_076	FROM->TO	GRPRAR1-LNX3345.00 - HOLT.CO3 345.00 345KV CKT 1	720	720	0.04085	113.5353	CNTSHNT3 345.00 - PRAIRIE3 345.00 345KV CKT 1
FDNS	00NR	4	17SP	G15_076	FROM->TO	GRPRAR1-LNX3345.00 - HOLT.CO3 345.00 345KV CKT 1	720	720	0.04172	113.5244	ADAMS - MITCHLCO3 345.00 345KV CKT 1
FDNS	00NR	4	17SP	G15_076	FROM->TO	GRPRAR1-LNX3345.00 - HOLT.CO3 345.00 345KV CKT 1	720	720	0.04111	113.5107	SIDNEY - SIDNEY2-LNX3345.00 345KV CKT Z
FDNS	00NR	4	17SP	G15_076	FROM->TO	GRPRAR1-LNX3345.00 - HOLT.CO3 345.00 345KV CKT 1	720	720	0.04084	113.4766	GEN336252 1-NINEMILE POINT UNIT#5

SOLUTION	GROUP	SCENARIO	SEASON	SOURCE	DIRECTION	MONITORED ELEMENT	RATEA (MVA)	RATEB(MVA)	TDF	TC%LOADING (% MVA)	CONTINGENCY
FDNS	00NR	4	17SP	G15_076	FROM->TO	GRPRAR1-LNX3345.00 - HOLT.CO3 345.00 345KV CKT 1	720	720	0.04084	113.4365	GEN501813 1-RODEMACHER UNIT 3
FDNS	00NR	4	17SP	G15_076	FROM->TO	GRPRAR1-LNX3345.00 - HOLT.CO3 345.00 345KV CKT 1	720	720	0.04084	113.3593	GEN336831 1-BAXTER WILSON SES
FDNS	00NR	4	17SP	G15_076	FROM->TO	GRPRAR1-LNX3345.00 - HOLT.CO3 345.00 345KV CKT 1	720	720	0.04146	113.3551	ADAMS - PLEASANT VALLEY 345KV CKT 1
FDNS	00NR	4	17SP	G15_076	FROM->TO	GRPRAR1-LNX3345.00 - HOLT.CO3 345.00 345KV CKT 1	720	720	0.04084	113.348	GEN336251 1-NINEMILE POINT UNIT#4
FDNS	00NR	4	17SP	G15_076	FROM->TO	GRPRAR1-LNX3345.00 - HOLT.CO3 345.00 345KV CKT 1	720	720	0.04084	113.2857	GEN337041 1-GERALD ANDRUS
FDNS	00NR	4	17SP	G15_076	FROM->TO	GRPRAR1-LNX3345.00 - HOLT.CO3 345.00 345KV CKT 1	720	720	0.04084	113.2746	GEN344897 4-1LAB G4 20.000
FDNS	00NR	4	17SP	G15_076	FROM->TO	GRPRAR1-LNX3345.00 - HOLT.CO3 345.00 345KV CKT 1	720	720	0.04084	113.2718	GEN344894 1-1LAB G1 20.000
FDNS	00NR	4	17SP	G15_076	FROM->TO	GRPRAR1-LNX3345.00 - HOLT.CO3 345.00 345KV CKT 1	720	720	0.04084	113.2717	GEN344896 3-1LAB G3 20.000
FDNS	00NR	4	17SP	G15_076	FROM->TO	GRPRAR1-LNX3345.00 - HOLT.CO3 345.00 345KV CKT 1	720	720	0.04084	113.265	GEN335206 1-NELSON UNIT 6
FDNS	00NR	4	17SP	G15_076	FROM->TO	GRPRAR1-LNX3345.00 - HOLT.CO3 345.00 345KV CKT 1	720	720	0.04084	113.2237	GEN344895 2-1LAB G2 20.000
FDNS	00NR	4	17SP	G15_076	FROM->TO	GRPRAR1-LNX3345.00 - HOLT.CO3 345.00 345KV CKT 1	720	720	0.04084	113.2113	GEN345670 1-1RUSH G1 18.000
FDNS	00NR	4	17SP	G15_076	FROM->TO	GRPRAR1-LNX3345.00 - HOLT.CO3 345.00 345KV CKT 1	720	720	0.04084	113.211	GEN345671 2-1RUSH G2 18.000
FDNS	00NR	4	17SP	G15_076	FROM->TO	GRPRAR1-LNX3345.00 - HOLT.CO3 345.00 345KV CKT 1	720	720	0.04084	113.1354	GEN501812 1-RODEMACHER UNIT 2
FDNS	00NR	4	17SP	G15_076	FROM->TO	GRPRAR1-LNX3345.00 - HOLT.CO3 345.00 345KV CKT 1	720	720	0.04192	113.1342	LAKEFIELD 3 - NOBLES 345KV CKT 1
FDNS	00NR	4	17SP	G15_076	FROM->TO	GRPRAR1-LNX3345.00 - HOLT.CO3 345.00 345KV CKT 1	720	720	0.04095	113.1228	ALEXMRES3 345.00 - WAITE PARK 345KV CKT 1
FDNS	00NR	4	17SP	G15_076	FROM->TO	GRPRAR1-LNX3345.00 - HOLT.CO3 345.00 345KV CKT 1	720	720	0.04084	113.1161	GEN334440 1-SABINE UNIT 4
FDNS	00NR	4	17SP	G15_076	FROM->TO	GRPRAR1-LNX3345.00 - HOLT.CO3 345.00 345KV CKT 1	720	720	0.0409	113.1124	BLAIR - GRANITE FALLS 230KV CKT 1
FDNS	00NR	4	17SP	G15_076	FROM->TO	GRPRAR1-LNX3345.00 - HOLT.CO3 345.00 345KV CKT 1	720	720	0.0409	113.1124	BLAIR - GRANITE FALLS 230KV CKT 1
FDNS	00NR	4	17SP	G15_076	FROM->TO	GRPRAR1-LNX3345.00 - HOLT.CO3 345.00 345KV CKT 1	720	720	0.04084	113.0884	GEN635214 4-NEAL UNIT 4
FDNS	00NR	4	17SP	G15_076	FROM->TO	GRPRAR1-LNX3345.00 - HOLT.CO3 345.00 345KV CKT 1	720	720	0.04083	113.0616	CENTER - COYOTE 345KV CKT 1
FDNS	00NR	4	17SP	G15_076	FROM->TO	GRPRAR1-LNX3345.00 - HOLT.CO3 345.00 345KV CKT 1	720	720	0.04123	113.0284	BROOKING COUNTY - LYON COUNTY 345KV CKT 1
FDNS	00NR	4	17SP	G15_076	FROM->TO	GRPRAR1-LNX3345.00 - HOLT.CO3 345.00 345KV CKT 1	720	720	0.03948	113.0096	MENNO JCT - TRIPP JCT 115KV CKT 1
FDNS	00NR	4	17SP	G15_076	FROM->TO	GRPRAR1-LNX3345.00 - HOLT.CO3 345.00 345KV CKT 1	720	720	0.04372	113.0061	STEGALL - STEGALL TRANSFORMER 230KV CKT 1
FDNS	00NR	4	17SP	G15_076	FROM->TO	GRPRAR1-LNX3345.00 - HOLT.CO3 345.00 345KV CKT 1	720	720	0.0409	112.9964	GLENBORO SOUTH - RUGBY 230KV CKT 1
FDNS	00NR	4	17SP	G15_076	FROM->TO	GRPRAR1-LNX3345.00 - HOLT.CO3 345.00 345KV CKT 1	720	720	0.04084	112.9925	GEN629075 1-OTTUMWA GENERATOR FOR OTTUMWA UNIT NO 1
FDNS	00NR	4	17SP	G15_076	FROM->TO	GRPRAR1-LNX3345.00 - HOLT.CO3 345.00 345KV CKT 1	720	720	0.04372	112.991	P13:230-345:NPPD:STEGALL3:KV3A
FDNS	00NR	4	17SP	G15_076	FROM->TO	GRPRAR1-LNX3345.00 - HOLT.CO3 345.00 345KV CKT 1	720	720	0.04084	112.9889	GEN336191 1-LITTLE GYPSY UNIT#3
FDNS	00NR	4	17SP	G15_076	FROM->TO	GRPRAR1-LNX3345.00 - HOLT.CO3 345.00 345KV CKT 1	720	720	0.04372	112.9833	STEGALL (SGQ KV3A) 345/230/13.8KV TRANSFORMER CKT 1
FDNS	00NR	4	17SP	G15_076	FROM->TO	GRPRAR1-LNX3345.00 - HOLT.CO3 345.00 345KV CKT 1	720	720	0.04091	112.9459	HANKINSON - WAHPETON 230KV CKT 1
FDNS	00NR	4	17SP	G15_076	FROM->TO	GRPRAR1-LNX3345.00 - HOLT.CO3 345.00 345KV CKT 1	720	720	0.04084	112.9389	GEN338388 1-1PLUM PT U1 23.000
FDNS	00NR	4	17SP	G15_076	FROM->TO	GRPRAR1-LNX3345.00 - HOLT.CO3 345.00 345KV CKT 1	720	720	0.04084	112.9214	P12:115:UMZW:# 162 #: NEL IN ND. FAULT ON ML-NEL-MX-GA 115 KV
FDNS	00NR	4	17SP	G15_076	FROM->TO	GRPRAR1-LNX3345.00 - HOLT.CO3 345.00 345KV CKT 1	720	720	0.04084	112.9126	GEN336801 1-BAXTER WILSON UNIT #1
FDNS	00NR	4	17SP	G15_076	FROM->TO	GRPRAR1-LNX3345.00 - HOLT.CO3 345.00 345KV CKT 1	720	720	0.04561	112.9015	STEGALL-LNX3230.00 - WAYSIDE 230KV CKT 1
FDNS	00NR	4	17SP	G15_076	FROM->TO	GRPRAR1-LNX3345.00 - HOLT.CO3 345.00 345KV CKT 1	720	720	0.04084	112.8986	GEN335614 1-WILLOW GLENN UNIT#4
FDNS	00NR	4	17SP	G15_076	FROM->TO	GRPRAR1-LNX3345.00 - HOLT.CO3 345.00 345KV CKT 1	720	720	0.04561	112.8959	STEGALL - STEGALL-LNX3230.00 230KV CKT Z
FDNS	00NR	4	17SP	G15_076	FROM->TO	GRPRAR1-LNX3345.00 - HOLT.CO3 345.00 345KV CKT 1	720	720	0.04151	112.895	KOSSUTH 3 345.00 - OBRIEN 3 345.00 345KV CKT 1
FDNS	00NR	4	17SP	G15_076	FROM->TO	GRPRAR1-LNX3345.00 - HOLT.CO3 345.00 345KV CKT 1	720	720	0.03948	112.8925	MENNO JCT - UTICA 115KV CKT 1
FDNS	00NR	4	17SP	G15_076	FROM->TO	GRPRAR1-LNX3345.00 - HOLT.CO3 345.00 345KV CKT 1	720	720	0.04084	112.8886	GEN334441 1-SABINE UNIT 5
FDNS	00NR	4	17SP	G15_076	FROM->TO	GRPRAR1-LNX3345.00 - HOLT.CO3 345.00 345KV CKT 1	720	720	0.04084	112.8859	GEN336464 1-MICHOUD UNIT #3
FDNS	00NR	4	17SP	G15_076	FROM->TO	GRPRAR1-LNX3345.00 - HOLT.CO3 345.00 345KV CKT 1	720	720	0.04084	112.8779	GEN563222 1-G15088_3 0.6900
FDNS	00NR	4	17SP	G15_076	FROM->TO	GRPRAR1-LNX3345.00 - HOLT.CO3 345.00 345KV CKT 1	720	720	0.04151	112.8754	KOSSUTH 3 345.00 - WEBSTER 345KV CKT 1
FDNS	00NR	4	17SP	G15_076	FROM->TO	GRPRAR1-LNX3345.00 - HOLT.CO3 345.00 345KV CKT 1	720	720	0.04084	112.8717	GEN335204 1-NELSON UNIT 4
FDNS	00NR	4	17SP	G15_076	FROM->TO	GRPRAR1-LNX3345.00 - HOLT.CO3 345.00 345KV CKT 1	720	720	0.04737	112.8713	RAUN - SIOUX CITY 345KV CKT 1
FDNS	00NR	4	17SP	G15_076	FROM->TO	GRPRAR1-LNX3345.00 - HOLT.CO3 345.00 345KV CKT 1	720	720	0.04737	112.8713	RAUN - SIOUX CITY 345KV CKT 1
FDNS	00NR	4	17SP	G15_076	FROM->TO	GRPRAR1-LNX3345.00 - HOLT.CO3 345.00 345KV CKT 1	720	720	0.04084	112.8589	GARRISON - JAMES TOWN 230KV CKT 1
FDNS	00NR	4	17SP	G15_076	FROM->TO	GRPRAR1-LNX3345.00 - HOLT.CO3 345.00 345KV CKT 1	720	720	0.04129	112.8382	BYRON - NORTH ROCHESTER 345KV CKT 1
FDNS	00NR	4	17SP	G15_076	FROM->TO	GRPRAR1-LNX3345.00 - HOLT.CO3 345.00 345KV CKT 1	720	720	0.0423	112.8244	GRIMES - LEHIGH 345KV CKT 1
FDNS	00NR	4	17SP	G15_076	FROM->TO	GRPRAR1-LNX3345.00 - HOLT.CO3 345.00 345KV CKT 1	720	720	0.03948	112.8227	P12:115:UMZZ:# 237 #: MEN IN SD. MENNO JUNCTION IS A TAP (UJ-MEN-TP).
FDNS	00NR	4	17SP	G15_076	FROM->TO	GRPRAR1-LNX3345.00 - HOLT.CO3 345.00 345KV CKT 1	720	720	0.04084	112.7515	GEN635213 3-NEAL UNIT 3
FDNS	00NR	4	17SP	G15_076	FROM->TO	GRPRAR1-LNX3345.00 - HOLT.CO3 345.00 345KV CKT 1	720	720	0.04096	112.7198	APPLEDORN 4 230.00 - WATERTOWN 230KV CKT 1
FDNS	00NR	4	17SP	G15_076	FROM->TO	GRPRAR1-LNX3345.00 - HOLT.CO3 345.00 345KV CKT 1	720	720	0.04096	112.7198	APPLEDORN 4 230.00 - WATERTOWN 230KV CKT 1
FDNS	00NR	4	17SP	G15_076	FROM->TO	GRPRAR1-LNX3345.00 - HOLT.CO3 345.00 345KV CKT 1	720	720	0.04084	112.7086	GEN334433 1-SABINE UNIT 3
FDNS	00NR	4	17SP	G15_076	FROM->TO	GRPRAR1-LNX3345.00 - HOLT.CO3 345.00 345KV CKT 1	720	720	0.04084	112.6929	GEN336222 1-LITTLE GYPSY UNIT#2
FDNS	00NR	4	17SP	G15_076	FROM->TO	GRPRAR1-LNX3345.00 - HOLT.CO3 345.00 345KV CKT 1	720	720	0.04084	112.6826	GEN303007 1-1BC2 U2
FDNS	00NR	4	17SP	G15_076	FROM->TO	GRPRAR1-LNX3345.00 - HOLT.CO3 345.00 345KV CKT 1	720	720	0.04084	112.6772	GEN303006 1-1BC2 U1
FDNS	00NR	4	17SP	G15_076	FROM->TO	GRPRAR1-LNX3345.00 - HOLT.CO3 345.00 345KV CKT 1	720	720	0.04085	112.6699	FARGO - JAMES TOWN 230KV CKT 1
FDNS	00NR	4	17SP	G15_076	FROM->TO	GRPRAR1-LNX3345.00 - HOLT.CO3 345.00 345KV CKT 1	720	720	0.04084	112.6624	GEN640009 1-COOPER NUCLEAR STATION
FDNS	00NR	4	17SP	G15_076	FROM->TO	GRPRAR1-LNX3345.00 - HOLT.CO3 345.00 345KV CKT 1	720	720	0.04101	112.654	NORTH ROCHESTER - PRAIRIE ISLAND 345KV CKT 1
FDNS	00NR	4	17SP	G15_076	FROM->TO	GRPRAR1-LNX3345.00 - HOLT.CO3 345.00 345KV CKT 1	720	720	0.04089	112.6496	FERGSFL4 230.00 - WAHPETON 230KV CKT 1
FDNS	00NR	4	17SP	G15_076	FROM->TO	GRPRAR1-LNX3345.00 - HOLT.CO3 345.00 345KV CKT 1	720	720	0.04111	112.6467	G15094_T 345.00 - LARAMIE RIVER 345KV CKT 1
FDNS	00NR	4	17SP	G15_076	FROM->TO	GRPRAR1-LNX3345.00 - HOLT.CO3 345.00 345KV CKT 1	720	720	0.04084	112.6467	P13:230:UMZW:# 2218 #: FP IN MT. LOSS OF TRANSFORMER (AT2).
FDNS	00NR	4	17SP	G15_076	FROM->TO	GRPRAR1-LNX3345.00 - HOLT.CO3 345.00 345KV CKT 1	720	720	0.04085	112.6457	FARGO - JAMES TOWN 230KV CKT 2
FDNS	00NR	4	17SP	G15_076	FROM->TO	GRPRAR1-LNX3345.00 - HOLT.CO3 345.00 345KV CKT 1	720	720	0.04096	112.6419	APPLEDORN 4 230.00 - GRANITE FALLS 230KV CKT 1
FDNS	00NR	4	17SP	G15_076	FROM->TO	GRPRAR1-LNX3345.00 - HOLT.CO3 345.00 345KV CKT 1	720	720	0.04096	112.6419	APPLEDORN 4 230.00 - GRANITE FALLS 230KV CKT 1
FDNS	00NR	4	17SP	G15_076	FROM->TO	GRPRAR1-LNX3345.00 - HOLT.CO3 345.00 345KV CKT 1	720	720	0.04084	112.6316	GEN336152 1-WATERFORD UNIT#2
FDNS	00NR	4	17SP	G15_076	FROM->TO	GRPRAR1-LNX3345.00 - HOLT.CO3 345.00 345KV CKT 1	720	720	0.04084	112.6313	GEN336151 1-WATERFORD UNIT#1
FDNS	00NR	4	17SP	G15_076	FROM->TO	GRPRAR1-LNX3345.00 - HOLT.CO3 345.00 345KV CKT 1	720	720	0.04084	112.6115	GEN303008 1-1BC2 U3
FDNS	00NR	4	17SP	G15_076	FROM->TO	GRPRAR1-LNX3345.00 - HOLT.CO3 345.00 345KV CKT 1	720	720	0.04084	112.607	GEN336170 1-GULF OXY U4
FDNS	00NR	4	17SP	G15_076	FROM->TO	GRPRAR1-LNX3345.00 - HOLT.CO3 345.00 345KV CKT 1	720	720	0.0413	112.6042	BYRON - PLEASANT VALLEY 345KV CKT 1
FDNS	00NR	4	17SP	G15_076	FROM->TO	GRPRAR1-LNX3345.00 - HOLT.CO3 345.00 345KV CKT 1	720	720	0.04084	112.5935	BISMARK - WEBER 230KV CKT 1
FDNS	00NR	4	17SP	G15_076	FROM->TO	GRPRAR1-LNX3345.00 - HOLT.CO3 345.00 345KV CKT 1	720	720	0.04084	112.5882	BISMARK - JAMES TOWN 230KV CKT 1
FDNS	00NR	4	17SP	G15_076	FROM->TO	GRPRAR1-LNX3345.00 - HOLT.CO3 345.00 345KV CKT 1	720	720	0.04084	112.5831	GEN641089 2-ENERGY CENTER 2
FDNS	00NR	4	17SP	G15_076	FROM->TO	GRPRAR1-LNX3345.00 - HOLT.CO3 345.00 345KV CKT 1	720	720	0.04132	112.5823	P13:230-345:NPPD:SIDNEY 3:KV2A
FDNS	00NR	4	17SP	G15_076	FROM->TO	GRPRAR1-LNX3345.00 - HOLT.CO3 345.00 345KV CKT 1	720	720	0.04132	112.5822	SIDNEY (SDQ KV2A) 345/230/13.8KV TRANSFORMER CKT 1
FDNS	00NR	4	17SP	G15_076	FROM->TO	GRPRAR1-LNX3345.00 - HOLT.CO3 345.00 345KV CKT 1	720	720	0.04693	112.5813	BLOOMFIELD - CREIGHTON 115KV CKT 1
FDNS	00NR	4	17SP	G15_076	FROM->TO	GRPRAR1-LNX3345.00 - HOLT.CO3 345.00 345KV CKT 1	720	720	0.04132	112.5799	SIDNEY - SIDNEY TRANSFORMER 230KV CKT 1
FDNS	00NR	4	17SP	G15_076	FROM->TO	GRPRAR1-LNX3345.00 - HOLT.CO3 345.00 345KV CKT 1	720	720	0.04134	112.5758	P13:115-230:TSGT:SIDNEY-KV1A
FDNS	00NR	4	17SP	G15_076	FROM->TO	GRPRAR1-LNX3345.00 - HOLT.CO3 345.00 345KV CKT 1	720	720	0.04006	112.5748	LAKEFIELD 3 - LKFLDXL3 345KV CKT 1
FDNS	00NR	4	17SP	G15_076	FROM->TO	GRPRAR1-LNX3345.00 - HOLT.CO3 345.00 345KV CKT 1	720	720	0.04084	112.563	JAMES TOWN - WEBER 230KV CKT 1

SOLUTION	GROUP	SCENARIO	SEASON	SOURCE	DIRECTION	MONITORED ELEMENT	RATEA (MVA)	RATEB(MVA)	TDF	TC%LOADING (% MVA)	CONTINGENCY
FDNS	00NR	4	17SP	G15_076	FROM->TO	GRPRAR1-LNX3345.00 - HOLT.CO3 345.00 345KV CKT 1	720	720	0.04084	112.5547	GEN562921 1-G15054_2 0.6900
FDNS	00NR	4	20SP	G15_076	FROM->TO	GRPRAR1-LNX3345.00 - HOLT.CO3 345.00 345KV CKT 1	720	720	0.04443	112.5533	KELLY - MEADOWGROVE4230.00 230KV CKT 1
FDNS	00NR	4	17SP	G15_076	FROM->TO	GRPRAR1-LNX3345.00 - HOLT.CO3 345.00 345KV CKT 1	720	720	0.04083	112.5202	ELM CREEK - MONTICELLO 345KV CKT 1
FDNS	00NR	4	17SP	G15_076	FROM->TO	GRPRAR1-LNX3345.00 - HOLT.CO3 345.00 345KV CKT 1	720	720	0.04084	112.5195	GEN562596 1-G14_059_3 0.6900
FDNS	00NR	4	17SP	G15_076	FROM->TO	GRPRAR1-LNX3345.00 - HOLT.CO3 345.00 345KV CKT 1	720	720	0.04693	112.5	BLOOMFIELD - GAVINS POINT 115KV CKT 1
FDNS	00NR	4	17SP	G15_076	FROM->TO	GRPRAR1-LNX3345.00 - HOLT.CO3 345.00 345KV CKT 1	720	720	0.04084	112.4988	GEN501811 1-RODEMACHER UNIT 1
FDNS	00NR	4	17SP	G15_076	FROM->TO	GRPRAR1-LNX3345.00 - HOLT.CO3 345.00 345KV CKT 1	720	720	0.04096	112.4962	ARKANSAS NUCLEAR ONE - FT SMITH 500KV CKT 1
FDNS	00NR	4	17SP	G15_076	FROM->TO	GRPRAR1-LNX3345.00 - HOLT.CO3 345.00 345KV CKT 1	720	720	0.04096	112.4962	ARKANSAS NUCLEAR ONE - FT SMITH 500KV CKT 1
FDNS	00NR	4	17SP	G15_076	FROM->TO	GRPRAR1-LNX3345.00 - HOLT.CO3 345.00 345KV CKT 1	720	720	0.04052	112.4859	MT VERN - STORLA 115KV CKT 1
FDNS	00NR	4	17SP	G15_076	FROM->TO	GRPRAR1-LNX3345.00 - HOLT.CO3 345.00 345KV CKT 1	720	720	0.04086	112.4852	AUDUBON - SHEYNNE 230KV CKT 1
FDNS	00NR	4	17SP	G15_076	FROM->TO	GRPRAR1-LNX3345.00 - HOLT.CO3 345.00 345KV CKT 1	720	720	0.04084	112.474	PRAIRIE ISLAND 345/20.0KV TRANSFORMER CKT 1
FDNS	00NR	4	17SP	G15_076	FROM->TO	GRPRAR1-LNX3345.00 - HOLT.CO3 345.00 345KV CKT 1	720	720	0.04088	112.4739	FERGSFL4 230.00 - GRE-SILVRLK4230.00 230KV CKT 1
FDNS	00NR	4	17SP	G15_076	FROM->TO	GRPRAR1-LNX3345.00 - HOLT.CO3 345.00 345KV CKT 1	720	720	0.04084	112.4706	PRAIRIE ISLAND 345/20.0KV TRANSFORMER CKT 2
FDNS	00NR	4	17SP	G15_076	FROM->TO	GRPRAR1-LNX3345.00 - HOLT.CO3 345.00 345KV CKT 1	720	720	0.04068	112.4681	FT THOMPSON - HURON 230KV CKT 1
FDNS	00NR	4	17SP	G15_076	FROM->TO	GRPRAR1-LNX3345.00 - HOLT.CO3 345.00 345KV CKT 1	720	720	0.04068	112.4681	FT THOMPSON - HURON 230KV CKT 1
FDNS	00NR	4	17SP	G15_076	FROM->TO	GRPRAR1-LNX3345.00 - HOLT.CO3 345.00 345KV CKT 1	720	720	0.04068	112.4681	FT THOMPSON - HURON 230KV CKT 2
FDNS	00NR	4	17SP	G15_076	FROM->TO	GRPRAR1-LNX3345.00 - HOLT.CO3 345.00 345KV CKT 1	720	720	0.04068	112.4681	FT THOMPSON - HURON 230KV CKT 2
FDNS	00NR	4	17SP	G15_076	FROM->TO	GRPRAR1-LNX3345.00 - HOLT.CO3 345.00 345KV CKT 1	720	720	0.04084	112.4677	BALTA - RAMSEY 230KV CKT 1
FDNS	00NR	4	17SP	G15_076	FROM->TO	GRPRAR1-LNX3345.00 - HOLT.CO3 345.00 345KV CKT 1	720	720	0.04076	112.4607	DKSN_CO5 161.00 - TRIBOJI NO1 + NO2 161KV CKT 1
FDNS	00NR	4	17SP	G15_076	FROM->TO	GRPRAR1-LNX3345.00 - HOLT.CO3 345.00 345KV CKT 1	720	720	0.04084	112.4578	GEN532751 1-WOLF CREEK GENERATING STATION UNIT 1
FDNS	00NR	4	17SP	G15_076	FROM->TO	GRPRAR1-LNX3345.00 - HOLT.CO3 345.00 345KV CKT 1	720	720	0.04137	112.4492	P12:115:NPPD:WAPA1:CHADRON7:BOXBUTE7:BTB
FDNS	00NR	4	17SP	G15_076	FROM->TO	GRPRAR1-LNX3345.00 - HOLT.CO3 345.00 345KV CKT 1	720	720	0.04084	112.4363	TOLK STATION EAST 230/24.0KV TRANSFORMER CKT 1
FDNS	00NR	4	17SP	G15_076	FROM->TO	GRPRAR1-LNX3345.00 - HOLT.CO3 345.00 345KV CKT 1	720	720	0.04088	112.4328	GRE-SILVRLK4230.00 - HENNING 230KV CKT 1
FDNS	00NR	4	17SP	G15_076	FROM->TO	GRPRAR1-LNX3345.00 - HOLT.CO3 345.00 345KV CKT 1	720	720	0.04114	112.4319	P13:115-230:NPPD:WAYSIDE4:T1
FDNS	00NR	4	17SP	G15_076	FROM->TO	GRPRAR1-LNX3345.00 - HOLT.CO3 345.00 345KV CKT 1	720	720	0.04114	112.4318	CHADRON - WAYSIDE 115KV CKT 1
FDNS	00NR	4	17SP	G15_076	FROM->TO	GRPRAR1-LNX3345.00 - HOLT.CO3 345.00 345KV CKT 1	720	720	0.04114	112.4309	WAYSIDE (WAYSIDE T1) 230/115/13.8KV TRANSFORMER CKT 1
FDNS	00NR	4	17SP	G15_076	FROM->TO	GRPRAR1-LNX3345.00 - HOLT.CO3 345.00 345KV CKT 1	720	720	0.04085	112.4213	BIG STONE (230/115) 230/115/13.8KV TRANSFORMER CKT 1
FDNS	00NR	4	17SP	G15_076	FROM->TO	GRPRAR1-LNX3345.00 - HOLT.CO3 345.00 345KV CKT 1	720	720	0.04084	112.4212	GEN334071 1-LEWIS CREEK 2
FDNS	00NR	4	17SP	G15_076	FROM->TO	GRPRAR1-LNX3345.00 - HOLT.CO3 345.00 345KV CKT 1	720	720	0.04084	112.4164	GEN334070 1-LEWIS CREEK 1
FDNS	00NR	4	17SP	G15_076	FROM->TO	GRPRAR1-LNX3345.00 - HOLT.CO3 345.00 345KV CKT 1	720	720	0.04084	112.416	GEN337766 1-TRACTEBEL UNIT S1
FDNS	00NR	4	17SP	G15_076	FROM->TO	GRPRAR1-LNX3345.00 - HOLT.CO3 345.00 345KV CKT 1	720	720	0.04084	112.4135	LAWRENCE ENERGY CENTER UNIT 5 - LAWRENCE HILL 230KV CKT 1
FDNS	00NR	4	17SP	G15_076	FROM->TO	GRPRAR1-LNX3345.00 - HOLT.CO3 345.00 345KV CKT 1	720	720	0.04084	112.4135	LAWRENCE ENERGY CENTER UNIT 5 230/24.0KV TRANSFORMER CKT 1
FDNS	00NR	4	17SP	G15_076	FROM->TO	GRPRAR1-LNX3345.00 - HOLT.CO3 345.00 345KV CKT 1	720	720	0.04167	112.4041	NOBLES - SPLIT ROCK 345KV CKT 1
FDNS	00NR	4	17SP	G15_076	FROM->TO	GRPRAR1-LNX3345.00 - HOLT.CO3 345.00 345KV CKT 1	720	720	0.04137	112.397	CHADRON - DUNLAP 115KV CKT 1
FDNS	00NR	4	17SP	G15_076	FROM->TO	GRPRAR1-LNX3345.00 - HOLT.CO3 345.00 345KV CKT 1	720	720	0.04084	112.3938	GEN659118 1-LARAMIE RIVER UNIT1
FDNS	00NR	4	17SP	G15_076	FROM->TO	GRPRAR1-LNX3345.00 - HOLT.CO3 345.00 345KV CKT 1	720	720	0.04084	112.3931	PRAIRIE - WINGER 230KV CKT 1
FDNS	00NR	4	17SP	G15_076	FROM->TO	GRPRAR1-LNX3345.00 - HOLT.CO3 345.00 345KV CKT 1	720	720	0.04137	112.3811	P12:115:NPPD:WAPA2:HEMINGF7:SNAKECK7:BTB
FDNS	00NR	4	17SP	G15_076	FROM->TO	GRPRAR1-LNX3345.00 - HOLT.CO3 345.00 345KV CKT 1	720	720	0.04045	112.3768	HURON WEST PARK - MITCHELL NW 115KV CKT 1
FDNS	00NR	4	17SP	G15_076	FROM->TO	GRPRAR1-LNX3345.00 - HOLT.CO3 345.00 345KV CKT 1	720	720	0.04045	112.3768	HURON WEST PARK - MITCHELL NW 115KV CKT 1
FDNS	00NR	4	17SP	G15_076	FROM->TO	GRPRAR1-LNX3345.00 - HOLT.CO3 345.00 345KV CKT 1	720	720	0.04084	112.3764	GEN501910 1-ACADIA UNIT ST1
FDNS	00NR	4	17SP	G15_076	FROM->TO	GRPRAR1-LNX3345.00 - HOLT.CO3 345.00 345KV CKT 1	720	720	0.04088	112.3707	HENNING - INMANN 230KV CKT 1
FDNS	00NR	4	17SP	G15_076	FROM->TO	GRPRAR1-LNX3345.00 - HOLT.CO3 345.00 345KV CKT 1	720	720	0.04089	112.3694	LELAND OLDS - STANTON 230KV CKT 1
FDNS	00NR	4	17SP	G15_076	FROM->TO	GRPRAR1-LNX3345.00 - HOLT.CO3 345.00 345KV CKT 1	720	720	0.04089	112.3694	LELAND OLDS - STANTON 230KV CKT 1
FDNS	00NR	4	17SP	G15_076	FROM->TO	GRPRAR1-LNX3345.00 - HOLT.CO3 345.00 345KV CKT 1	720	720	0.04123	112.3605	PALXFRASBTHI
FDNS	00NR	4	17SP	G15_076	FROM->TO	GRPRAR1-LNX3345.00 - HOLT.CO3 345.00 345KV CKT 1	720	720	0.03908	112.3551	FT RANDAL - WHITE SWAN 115KV CKT 1
FDNS	00NR	4	17SP	G15_076	FROM->TO	GRPRAR1-LNX3345.00 - HOLT.CO3 345.00 345KV CKT 1	720	720	0.04141	112.3413	EAGLE - PHILIP 115KV CKT 1
FDNS	00NR	4	17SP	G15_076	FROM->TO	GRPRAR1-LNX3345.00 - HOLT.CO3 345.00 345KV CKT 1	720	720	0.04123	112.3394	7PALM TAP 345.00 - SUB T 345KV CKT 1
FDNS	00NR	4	17SP	G15_076	FROM->TO	GRPRAR1-LNX3345.00 - HOLT.CO3 345.00 345KV CKT 1	720	720	0.04084	112.3368	GEN345765 H-1SIOUX 2 18.000
FDNS	00NR	4	17SP	G15_076	FROM->TO	GRPRAR1-LNX3345.00 - HOLT.CO3 345.00 345KV CKT 1	720	720	0.04095	112.3323	GRANT - MITCHELL 115KV CKT 1
FDNS	00NR	4	17SP	G15_076	FROM->TO	GRPRAR1-LNX3345.00 - HOLT.CO3 345.00 345KV CKT 1	720	720	0.04095	112.3323	GRANT - MITCHELL 115KV CKT 1
FDNS	00NR	4	17SP	G15_076	FROM->TO	GRPRAR1-LNX3345.00 - HOLT.CO3 345.00 345KV CKT 1	720	720	0.03908	112.3252	TYNDALL - WHITE SWAN 115KV CKT 1
FDNS	00NR	4	17SP	G15_076	FROM->TO	GRPRAR1-LNX3345.00 - HOLT.CO3 345.00 345KV CKT 1	720	720	0.04083	112.3245	GROTON (GROTON KU2A) 345/115/13.8KV TRANSFORMER CKT 1
FDNS	00NR	4	17SP	G15_076	FROM->TO	GRPRAR1-LNX3345.00 - HOLT.CO3 345.00 345KV CKT 1	720	720	0.04084	112.319	GEN337764 1-TRACTEBEL UNIT C1
FDNS	00NR	4	17SP	G15_076	FROM->TO	GRPRAR1-LNX3345.00 - HOLT.CO3 345.00 345KV CKT 1	720	720	0.04084	112.319	GEN337765 1-TRACTEBEL UNIT C2
FDNS	00NR	4	17SP	G15_076	FROM->TO	GRPRAR1-LNX3345.00 - HOLT.CO3 345.00 345KV CKT 1	720	720	0.04087	112.318	AUDUBON - HUBBARD 230KV CKT 1
FDNS	00NR	4	17SP	G15_076	FROM->TO	GRPRAR1-LNX3345.00 - HOLT.CO3 345.00 345KV CKT 1	720	720	0.04071	112.3143	CLEARWATER - ONEILL 115KV CKT 1
FDNS	00NR	4	17SP	G15_076	FROM->TO	GRPRAR1-LNX3345.00 - HOLT.CO3 345.00 345KV CKT 1	720	720	0.04087	112.3114	KARLSTAD - WINGER 230KV CKT 1
FDNS	00NR	4	17SP	G15_076	FROM->TO	GRPRAR1-LNX3345.00 - HOLT.CO3 345.00 345KV CKT 1	720	720	0.04094	112.3097	GENOA 161 - SENECA 161 161KV CKT 1
FDNS	00NR	4	17SP	G15_076	FROM->TO	GRPRAR1-LNX3345.00 - HOLT.CO3 345.00 345KV CKT 1	720	720	0.04084	112.3095	GEN345756 H-1SIOUX 1 18.000
FDNS	00NR	4	17SP	G15_076	FROM->TO	GRPRAR1-LNX3345.00 - HOLT.CO3 345.00 345KV CKT 1	720	720	0.05329	112.3008	BELDEN - HOSKINS 115KV CKT 1
FDNS	00NR	4	17SP	G15_076	FROM->TO	GRPRAR1-LNX3345.00 - HOLT.CO3 345.00 345KV CKT 1	720	720	0.04076	112.2988	DKSN_CO5 161.00 - LAKEFIELD 5 NO1 + NO 2 161KV CKT 1
FDNS	00NR	4	17SP	G15_076	FROM->TO	GRPRAR1-LNX3345.00 - HOLT.CO3 345.00 345KV CKT 1	720	720	0.04084	112.2978	GEN562912 1-G15053_3 0.6900
FDNS	00NR	4	17SP	G15_076	FROM->TO	GRPRAR1-LNX3345.00 - HOLT.CO3 345.00 345KV CKT 1	720	720	0.04084	112.2972	GRAND GULF 500/22.0KV TRANSFORMER CKT 1
FDNS	00NR	4	17SP	G15_076	FROM->TO	GRPRAR1-LNX3345.00 - HOLT.CO3 345.00 345KV CKT 1	720	720	0.04084	112.2896	PRAIRIE - RAMSEY 230KV CKT 1
FDNS	00NR	4	17SP	G15_076	FROM->TO	GRPRAR1-LNX3345.00 - HOLT.CO3 345.00 345KV CKT 1	720	720	0.0372	112.2882	NAPA JCT7 115.00 - UTICA 115KV CKT 1
FDNS	00NR	4	17SP	G15_076	FROM->TO	GRPRAR1-LNX3345.00 - HOLT.CO3 345.00 345KV CKT 1	720	720	0.0372	112.2882	NAPA JCT7 115.00 - UTICA 115KV CKT 1
FDNS	00NR	4	17SP	G15_076	FROM->TO	GRPRAR1-LNX3345.00 - HOLT.CO3 345.00 345KV CKT 1	720	720	0.0372	112.2882	P12:115:UMZW:# 1910 #: YJ IN SD. YJ-UJ LINE FAULT
FDNS	00NR	4	17SP	G15_076	FROM->TO	GRPRAR1-LNX3345.00 - HOLT.CO3 345.00 345KV CKT 1	720	720	0.04091	112.2857	NORTH LA CROSSE - NORTH ROCHESTER 345KV CKT 1
FDNS	00NR	4	17SP	G15_076	FROM->TO	GRPRAR1-LNX3345.00 - HOLT.CO3 345.00 345KV CKT 1	720	720	0.0372	112.285	NAPA JCT7 115.00 - YANKON JCT 115KV CKT 1
FDNS	00NR	4	17SP	G15_076	FROM->TO	GRPRAR1-LNX3345.00 - HOLT.CO3 345.00 345KV CKT 1	720	720	0.0372	112.285	NAPA JCT7 115.00 - YANKON JCT 115KV CKT 1
FDNS	00NR	4	17SP	G15_076	FROM->TO	GRPRAR1-LNX3345.00 - HOLT.CO3 345.00 345KV CKT 1	720	720	0.04084	112.2831	GEN336221 1-LITTLE GYPSY UNIT#1
FDNS	00NR	4	17SP	G15_076	FROM->TO	GRPRAR1-LNX3345.00 - HOLT.CO3 345.00 345KV CKT 1	720	720	0.04084	112.2804	GEN636641 1-LOUISA UNIT 1
FDNS	00NR	4	17SP	G15_076	FROM->TO	GRPRAR1-LNX3345.00 - HOLT.CO3 345.00 345KV CKT 1	720	720	0.04084	112.2803	JUDSON LARGE 115/15.0KV TRANSFORMER CKT 1
FDNS	00NR	4	17SP	G15_076	FROM->TO	GRPRAR1-LNX3345.00 - HOLT.CO3 345.00 345KV CKT 1	720	720	0.04084	112.2803	JUDSON LARGE 115/15.0KV TRANSFORMER CKT 1
FDNS	00NR	4	17SP	G15_076	FROM->TO	GRPRAR1-LNX3345.00 - HOLT.CO3 345.00 345KV CKT 1	720	720	0.04102	112.2788	HAMPTON CORNER - NORTH ROCHESTER 345KV CKT 1
FDNS	00NR	4	17SP	G15_076	FROM->TO	GRPRAR1-LNX3345.00 - HOLT.CO3 345.00 345KV CKT 1	720	720	0.04141	112.2765	EAGLE - MARTIN 115KV CKT 1
FDNS	00NR	4	17SP	G15_076	FROM->TO	GRPRAR1-LNX3345.00 - HOLT.CO3 345.00 345KV CKT 1	720	720	0.04084	112.2754	GEN337757 1-DUKE HOTSPRINGS STG1
FDNS	00NR	4	17SP	G15_076	FROM->TO	GRPRAR1-LNX3345.00 - HOLT.CO3 345.00 345KV CKT 1	720	720	0.04084	112.2753	GEN336242 1-1NMIL ST1 18.000
FDNS	00NR	4	17SP	G15_076	FROM->TO	GRPRAR1-LNX3345.00 - HOLT.CO3 345.00 345KV CKT 1	720	720	0.04084	112.2704	GEN334432 1-SABINE UNIT 2

SOLUTION	GROUP	SCENARIO	SEASON	SOURCE	DIRECTION	MONITORED ELEMENT	RATEA (MVA)	RATEB(MVA)	TDF	TC%LOADING (% MVA)	CONTINGENCY
FDNS	00NR	4	17SP	G15_076	FROM->TO	GRPRAR1-LNX3345.00 - HOLT.CO3 345.00 345KV CKT 1	720	720	0.04084	112.2703	GEN334431 1-SABINE UNIT 1
FDNS	00NR	4	17SP	G15_076	FROM->TO	GRPRAR1-LNX3345.00 - HOLT.CO3 345.00 345KV CKT 1	720	720	0.04094	112.2642	FRANKS - HUBEN 345KV CKT 1
FDNS	00NR	4	17SP	G15_076	FROM->TO	GRPRAR1-LNX3345.00 - HOLT.CO3 345.00 345KV CKT 1	720	720	0.04137	112.2624	BOXBUTE7 115.00 - DUNLAP 115KV CKT 1
FDNS	00NR	4	17SP	G15_076	FROM->TO	GRPRAR1-LNX3345.00 - HOLT.CO3 345.00 345KV CKT 1	720	720	0.04091	112.2529	NORTH LA CROSSE (10008630_001) 345/161/34.5KV TRANSFORMER CKT 9
FDNS	00NR	4	17SP	G15_076	FROM->TO	GRPRAR1-LNX3345.00 - HOLT.CO3 345.00 345KV CKT 1	720	720	0.04084	112.2504	GEN334030 1-FRONTIER UNIT 1
FDNS	00NR	4	17SP	G15_076	FROM->TO	GRPRAR1-LNX3345.00 - HOLT.CO3 345.00 345KV CKT 1	720	720	0.04084	112.2502	GEN334031 1-FRONTIER UNIT 2
FDNS	00NR	4	17SP	G15_076	FROM->TO	GRPRAR1-LNX3345.00 - HOLT.CO3 345.00 345KV CKT 1	720	720	0.04084	112.2496	GEN345832 1-1TS G1 13.800
FDNS	00NR	4	17SP	G15_076	FROM->TO	GRPRAR1-LNX3345.00 - HOLT.CO3 345.00 345KV CKT 1	720	720	0.04084	112.2495	GEN336446 1-MICHOUD UNIT #2
FDNS	00NR	4	17SP	G15_076	FROM->TO	GRPRAR1-LNX3345.00 - HOLT.CO3 345.00 345KV CKT 1	720	720	0.04084	112.2493	GEN345841 2-1TS G2 13.800
FDNS	00NR	4	17SP	G15_076	FROM->TO	GRPRAR1-LNX3345.00 - HOLT.CO3 345.00 345KV CKT 1	720	720	0.04084	112.2433	OKLAUN 345/24.0KV TRANSFORMER CKT 1
FDNS	00NR	4	17SP	G15_076	FROM->TO	GRPRAR1-LNX3345.00 - HOLT.CO3 345.00 345KV CKT 1	720	720	0.04084	112.2361	GEN501970 1-EVANGELINE UNIT 7
FDNS	00NR	4	17SP	G15_076	FROM->TO	GRPRAR1-LNX3345.00 - HOLT.CO3 345.00 345KV CKT 1	720	720	0.04084	112.2141	GEN562438 1-G13-032 0.6900
FDNS	00NR	4	17SP	G15_076	FROM->TO	GRPRAR1-LNX3345.00 - HOLT.CO3 345.00 345KV CKT 1	720	720	0.04071	112.21	P12:115:NPPD:1164:ONEILL 7:JEFFREY9:BTB
FDNS	00NR	4	17SP	G15_076	FROM->TO	GRPRAR1-LNX3345.00 - HOLT.CO3 345.00 345KV CKT 1	720	720	0.04084	112.1157	GEN563282 1-G15094_3 0.6900
FDNS	00NR	4	20SP	G15_076	FROM->TO	GRPRAR1-LNX3345.00 - HOLT.CO3 345.00 345KV CKT 1	720	720	0.03699	112.0353	P12:230:UMZB:# 116 #: ST IN SD. WSG-ST-VH
FDNS	00NR	4	17SP	G15_076	FROM->TO	GRPRAR1-LNX3345.00 - HOLT.CO3 345.00 345KV CKT 1	720	720	0.04084	111.7591	BASE CASE
FDNS	00NR	4	25SP	G15_076	FROM->TO	GRPRAR1-LNX3345.00 - HOLT.CO3 345.00 345KV CKT 1	720	720	0.04478	111.6974	KELLY - MEADOWGROVE4230.00 230KV CKT 1
FDNS	00NR	4	17SP	G15_076	FROM->TO	GRPRAR1-LNX3345.00 - HOLT.CO3 345.00 345KV CKT 1	720	720	0.04103	111.4229	BUCKNER7 345.00 - SPEARVILLE 345KV CKT 1
FDNS	00NR	4	17SP	G15_076	FROM->TO	GRPRAR1-LNX3345.00 - HOLT.CO3 345.00 345KV CKT 1	720	720	0.04103	111.4229	BUCKNER7 345.00 - SPEARVILLE 345KV CKT 1
FDNS	00NR	4	17SP	G15_076	FROM->TO	GRPRAR1-LNX3345.00 - HOLT.CO3 345.00 345KV CKT 1	720	720	0.04173	111.3202	103RD & ROKEBY - MOORE 345KV CKT 1
FDNS	00NR	4	17SP	G15_076	FROM->TO	GRPRAR1-LNX3345.00 - HOLT.CO3 345.00 345KV CKT 1	720	720	0.04173	111.3202	103RD & ROKEBY - MOORE 345KV CKT 1
FDNS	00NR	4	17SP	G15_076	FROM->TO	GRPRAR1-LNX3345.00 - HOLT.CO3 345.00 345KV CKT 1	720	720	0.04104	111.31	FT THOMPSON - OAHE 230KV CKT 1
FDNS	00NR	4	17SP	G15_076	FROM->TO	GRPRAR1-LNX3345.00 - HOLT.CO3 345.00 345KV CKT 1	720	720	0.04104	111.31	FT THOMPSON - OAHE 230KV CKT 1
FDNS	00NR	4	17SP	G15_076	FROM->TO	GRPRAR1-LNX3345.00 - HOLT.CO3 345.00 345KV CKT 1	720	720	0.04104	111.31	FT THOMPSON - OAHE 230KV CKT 2
FDNS	00NR	4	17SP	G15_076	FROM->TO	GRPRAR1-LNX3345.00 - HOLT.CO3 345.00 345KV CKT 1	720	720	0.04104	111.31	FT THOMPSON - OAHE 230KV CKT 2
FDNS	00NR	4	17SP	G15_076	FROM->TO	GRPRAR1-LNX3345.00 - HOLT.CO3 345.00 345KV CKT 1	720	720	0.04084	111.2899	GEN652546 1-FT RANDAL
FDNS	00NR	4	25SP	G15_076	FROM->TO	GRPRAR1-LNX3345.00 - HOLT.CO3 345.00 345KV CKT 1	720	720	0.03731	111.2743	P12:230:UMZB:# 116 #: ST IN SD. WSG-ST-VH
FDNS	00NR	4	17SP	G15_076	FROM->TO	GRPRAR1-LNX3345.00 - HOLT.CO3 345.00 345KV CKT 1	720	720	0.03193	111.2718	SIOUX CITY - TWIN CHURCH 230KV CKT 1
FDNS	00NR	4	17SP	G15_076	FROM->TO	GRPRAR1-LNX3345.00 - HOLT.CO3 345.00 345KV CKT 1	720	720	0.04267	111.2576	NUNDRWD - PHILIP TAP 230KV CKT 1
FDNS	00NR	4	17SP	G15_076	FROM->TO	GRPRAR1-LNX3345.00 - HOLT.CO3 345.00 345KV CKT 1	720	720	0.04104	111.2521	FT THOMPSON - OAHE 230KV CKT 3
FDNS	00NR	4	17SP	G15_076	FROM->TO	GRPRAR1-LNX3345.00 - HOLT.CO3 345.00 345KV CKT 1	720	720	0.04104	111.2521	FT THOMPSON - OAHE 230KV CKT 3
FDNS	00NR	4	17SP	G15_076	FROM->TO	GRPRAR1-LNX3345.00 - HOLT.CO3 345.00 345KV CKT 1	720	720	0.04104	111.2521	FT THOMPSON - OAHE 230KV CKT 4
FDNS	00NR	4	17SP	G15_076	FROM->TO	GRPRAR1-LNX3345.00 - HOLT.CO3 345.00 345KV CKT 1	720	720	0.04104	111.2521	FT THOMPSON - OAHE 230KV CKT 4
FDNS	00NR	4	17SP	G15_076	FROM->TO	GRPRAR1-LNX3345.00 - HOLT.CO3 345.00 345KV CKT 1	720	720	0.04084	111.2493	MITCHLCO3 345.00 345/34.5KV TRANSFORMER CKT 1
FDNS	00NR	4	20SP	G15_076	FROM->TO	GRPRAR1-LNX3345.00 - HOLT.CO3 345.00 345KV CKT 1	720	720	0.03733	111.2431	STORLA - WESSINGTON 230KV CKT 1
FDNS	00NR	4	17SP	G15_076	FROM->TO	GRPRAR1-LNX3345.00 - HOLT.CO3 345.00 345KV CKT 1	720	720	0.04084	111.2424	GEN672347 1-CORY COGEN GENERATOR 1 GT1
FDNS	00NR	4	17SP	G15_076	FROM->TO	GRPRAR1-LNX3345.00 - HOLT.CO3 345.00 345KV CKT 1	720	720	0.04084	111.2424	GEN672348 2-CORY COGEN GENERATOR 2 GT2
FDNS	00NR	4	17SP	G15_076	FROM->TO	GRPRAR1-LNX3345.00 - HOLT.CO3 345.00 345KV CKT 1	720	720	0.04023	111.2358	NELIGH - PETERSBRG.N7115.00 115KV CKT 1
FDNS	00NR	4	17SP	G15_076	FROM->TO	GRPRAR1-LNX3345.00 - HOLT.CO3 345.00 345KV CKT 1	720	720	0.04084	111.2344	GEN600018 S-LS POWER STEAM
FDNS	00NR	4	17SP	G15_076	FROM->TO	GRPRAR1-LNX3345.00 - HOLT.CO3 345.00 345KV CKT 1	720	720	0.04099	111.2304	POST ROCK (POSTROCK T1) 345/230/13.8KV TRANSFORMER CKT 1
FDNS	00NR	4	17SP	G15_076	FROM->TO	GRPRAR1-LNX3345.00 - HOLT.CO3 345.00 345KV CKT 1	720	720	0.04084	111.2284	GEN300003 1-THOMAS HILL UNIT 3
FDNS	00NR	4	17SP	G15_076	FROM->TO	GRPRAR1-LNX3345.00 - HOLT.CO3 345.00 345KV CKT 1	720	720	0.04095	111.2276	G11_051T 345.00 - WOODWARD DISTRICT EHV 345KV CKT 1
FDNS	00NR	4	17SP	G15_076	FROM->TO	GRPRAR1-LNX3345.00 - HOLT.CO3 345.00 345KV CKT 1	720	720	0.04084	111.2235	GEN659158 2-PIONEER G213.800
FDNS	00NR	4	17SP	G15_076	FROM->TO	GRPRAR1-LNX3345.00 - HOLT.CO3 345.00 345KV CKT 1	720	720	0.04084	111.2235	GEN659159 3-PIONEER G313.800
FDNS	00NR	4	17SP	G15_076	FROM->TO	GRPRAR1-LNX3345.00 - HOLT.CO3 345.00 345KV CKT 1	720	720	0.04084	111.216	GEN659156 2-LONESMCRK 2G13.800
FDNS	00NR	4	17SP	G15_076	FROM->TO	GRPRAR1-LNX3345.00 - HOLT.CO3 345.00 345KV CKT 1	720	720	0.04084	111.216	GEN659157 3-LONESMCRK 3G13.800
FDNS	00NR	4	17SP	G15_076	FROM->TO	GRPRAR1-LNX3345.00 - HOLT.CO3 345.00 345KV CKT 1	720	720	0.04084	111.2116	GEN652548 5-FT RANDAL
FDNS	00NR	4	17SP	G15_076	FROM->TO	GRPRAR1-LNX3345.00 - HOLT.CO3 345.00 345KV CKT 1	720	720	0.04084	111.2116	GEN652549 7-FT RANDAL
FDNS	00NR	4	17SP	G15_076	FROM->TO	GRPRAR1-LNX3345.00 - HOLT.CO3 345.00 345KV CKT 1	720	720	0.04123	111.211	P12:115:UMZW:# 172 #: WI IN SD.
FDNS	00NR	4	17SP	G15_076	FROM->TO	GRPRAR1-LNX3345.00 - HOLT.CO3 345.00 345KV CKT 1	720	720	0.04079	111.2091	G14-021T 345.00 - MULLNCR7 345.00 345KV CKT 1
FDNS	00NR	4	17SP	G15_076	FROM->TO	GRPRAR1-LNX3345.00 - HOLT.CO3 345.00 345KV CKT 1	720	720	0.04079	111.209	G15-005T 345.00 - MULLNCR7 345.00 345KV CKT 1
FDNS	00NR	4	17SP	G15_076	FROM->TO	GRPRAR1-LNX3345.00 - HOLT.CO3 345.00 345KV CKT 1	720	720	0.04084	111.2053	GEN590010 1-ERCOT EQUIVALENCE
FDNS	00NR	4	17SP	G15_076	FROM->TO	GRPRAR1-LNX3345.00 - HOLT.CO3 345.00 345KV CKT 1	720	720	0.04084	111.2012	GEN672367 1-MERIDIAN GENERATOR 1 GT1
FDNS	00NR	4	17SP	G15_076	FROM->TO	GRPRAR1-LNX3345.00 - HOLT.CO3 345.00 345KV CKT 1	720	720	0.04084	111.2012	GEN672368 2-MERIDIAN GENERATOR 2 GT2
FDNS	00NR	4	17SP	G15_076	FROM->TO	GRPRAR1-LNX3345.00 - HOLT.CO3 345.00 345KV CKT 1	720	720	0.04084	111.2002	GEN652547 3-FT RANDAL
FDNS	00NR	4	17SP	G15_076	FROM->TO	GRPRAR1-LNX3345.00 - HOLT.CO3 345.00 345KV CKT 1	720	720	0.04086	111.1995	P12:115:UMZZ:# 232 #: AB IN SD. ABERDEEN A TAP BETWEEN ELLENDALE AND ABERDEEN-SIEBRECHT.
FDNS	00NR	4	17SP	G15_076	FROM->TO	GRPRAR1-LNX3345.00 - HOLT.CO3 345.00 345KV CKT 1	720	720	0.04111	111.1988	LARAMIE RIVER - STEGALL 345KV CKT 1
FDNS	00NR	4	17SP	G15_076	FROM->TO	GRPRAR1-LNX3345.00 - HOLT.CO3 345.00 345KV CKT 1	720	720	0.04084	111.1966	GEN600021 3-ANGUS ANSON2
FDNS	00NR	4	17SP	G15_076	FROM->TO	GRPRAR1-LNX3345.00 - HOLT.CO3 345.00 345KV CKT 1	720	720	0.04084	111.1936	GEN600020 2-ANGUS ANSON1
FDNS	00NR	4	17SP	G15_076	FROM->TO	GRPRAR1-LNX3345.00 - HOLT.CO3 345.00 345KV CKT 1	720	720	0.04084	111.1898	GEN657964 1-ASH2GEN9 0.5750
FDNS	00NR	4	17SP	G15_076	FROM->TO	GRPRAR1-LNX3345.00 - HOLT.CO3 345.00 345KV CKT 1	720	720	0.04084	111.1886	GEN672352 3-NIPAWIN GENERATOR 3
FDNS	00NR	4	17SP	G15_076	FROM->TO	GRPRAR1-LNX3345.00 - HOLT.CO3 345.00 345KV CKT 1	720	720	0.04084	111.1885	GEN672350 1-NIPAWIN GENERATOR 1
FDNS	00NR	4	17SP	G15_076	FROM->TO	GRPRAR1-LNX3345.00 - HOLT.CO3 345.00 345KV CKT 1	720	720	0.04084	111.1885	GEN672351 2-NIPAWIN GENERATOR 2
FDNS	00NR	4	17SP	G15_076	FROM->TO	GRPRAR1-LNX3345.00 - HOLT.CO3 345.00 345KV CKT 1	720	720	0.04084	111.1798	GEN590011 2-ERCOT EQUIVALENCE
FDNS	00NR	4	17SP	G15_076	FROM->TO	GRPRAR1-LNX3345.00 - HOLT.CO3 345.00 345KV CKT 1	720	720	0.04084	111.1748	GEN672349 3-CORY COGEN GENERATOR 3 ST
FDNS	00NR	4	17SP	G15_076	FROM->TO	GRPRAR1-LNX3345.00 - HOLT.CO3 345.00 345KV CKT 1	720	720	0.04084	111.1704	GEN620324 3-HOOT LAKE 3 GEN
FDNS	00NR	4	17SP	G15_076	FROM->TO	GRPRAR1-LNX3345.00 - HOLT.CO3 345.00 345KV CKT 1	720	720	0.04084	111.1669	EASTDC - ERCOT EQUIVALENCE 345KV CKT 1
FDNS	00NR	4	17SP	G15_076	FROM->TO	GRPRAR1-LNX3345.00 - HOLT.CO3 345.00 345KV CKT 1	720	720	0.04084	111.1669	ERCOT EQUIVALENCE 345/24.0KV TRANSFORMER CKT 1
FDNS	00NR	4	17SP	G15_076	FROM->TO	GRPRAR1-LNX3345.00 - HOLT.CO3 345.00 345KV CKT 1	720	720	0.0427	111.1664	BATTLE CREEK - COUNTY LINE 115KV CKT 1
FDNS	00NR	4	17SP	G15_076	FROM->TO	GRPRAR1-LNX3345.00 - HOLT.CO3 345.00 345KV CKT 1	720	720	0.04079	111.1626	G15-005T 345.00 - SIBLEY 345KV CKT 1
FDNS	00NR	4	17SP	G15_076	FROM->TO	GRPRAR1-LNX3345.00 - HOLT.CO3 345.00 345KV CKT 1	720	720	0.04093	111.1553	ANTELOP-LNX3345.00 - BRDLAND-LNX3345.00 345KV CKT 1
FDNS	00NR	4	17SP	G15_076	FROM->TO	GRPRAR1-LNX3345.00 - HOLT.CO3 345.00 345KV CKT 1	720	720	0.04084	111.1477	GEN629072 4-LANSING GENERATOR FOR UNITS NO4 EIA CODE 1
FDNS	00NR	4	17SP	G15_076	FROM->TO	GRPRAR1-LNX3345.00 - HOLT.CO3 345.00 345KV CKT 1	720	720	0.04023	111.1465	ALBION - PETERSBURG 115KV CKT 1
FDNS	00NR	4	17SP	G15_076	FROM->TO	GRPRAR1-LNX3345.00 - HOLT.CO3 345.00 345KV CKT 1	720	720	0.04084	111.1456	GEN660003 3-HURON WEST PARK
FDNS	00NR	4	17SP	G15_076	FROM->TO	GRPRAR1-LNX3345.00 - HOLT.CO3 345.00 345KV CKT 1	720	720	0.04084	111.1384	GEN600012 2-BLACK DOG GEN 2
FDNS	00NR	4	17SP	G15_076	FROM->TO	GRPRAR1-LNX3345.00 - HOLT.CO3 345.00 345KV CKT 1	720	720	0.04154	111.1379	AXTELL - POST ROCK 345KV CKT 1
FDNS	00NR	4	17SP	G15_076	FROM->TO	GRPRAR1-LNX3345.00 - HOLT.CO3 345.00 345KV CKT 1	720	720	0.03893	111.1187	COLUMEAST - NW68TH & HOLDREGE 345KV CKT 1
FDNS	00NR	4	17SP	G15_076	FROM->TO	GRPRAR1-LNX3345.00 - HOLT.CO3 345.00 345KV CKT 1	720	720	0.03893	111.1187	COLUMEAST - NW68TH & HOLDREGE 345KV CKT 1
FDNS	00NR	4	17SP	G15_076	FROM->TO	GRPRAR1-LNX3345.00 - HOLT.CO3 345.00 345KV CKT 1	720	720	0.04023	111.1175	PETERSBRG.N7115.00 - PETERSBURG 115KV CKT Z1

SOLUTION	GROUP	SCENARIO	SEASON	SOURCE	DIRECTION	MONITORED ELEMENT	RATEA (MVA)	RATEB(MVA)	TDF	TC%LOADING (% MVA)	CONTINGENCY
FDNS	00NR	4	17SP	G15_076	FROM->TO	GRPRAR1-LNX3345.00 - HOLT.CO3 345.00 345KV CKT 1	720	720	0.03966	111.1148	COOPER - MOORE 345KV CKT 1
FDNS	00NR	4	17SP	G15_076	FROM->TO	GRPRAR1-LNX3345.00 - HOLT.CO3 345.00 345KV CKT 1	720	720	0.0427	111.1044	ANTELOPE 7115.00 - COUNTY LINE 115KV CKT 1
FDNS	00NR	4	17SP	G15_076	FROM->TO	GRPRAR1-LNX3345.00 - HOLT.CO3 345.00 345KV CKT 1	720	720	0.04084	111.1031	GEN659290 1-EDGECOL
FDNS	00NR	4	17SP	G15_076	FROM->TO	GRPRAR1-LNX3345.00 - HOLT.CO3 345.00 345KV CKT 1	720	720	0.04084	111.1012	EMERY 161/18.0KV TRANSFORMER CKT 1
FDNS	00NR	4	17SP	G15_076	FROM->TO	GRPRAR1-LNX3345.00 - HOLT.CO3 345.00 345KV CKT 1	720	720	0.04084	111.0982	GEN672339 16-QE 16G 13.800
FDNS	00NR	4	17SP	G15_076	FROM->TO	GRPRAR1-LNX3345.00 - HOLT.CO3 345.00 345KV CKT 1	720	720	0.04084	111.0982	GEN672342 3-QUEEN ELIZABETH GENERATOR 3
FDNS	00NR	4	17SP	G15_076	FROM->TO	GRPRAR1-LNX3345.00 - HOLT.CO3 345.00 345KV CKT 1	720	720	0.04084	111.097	GEN652410 3-FT PECK
FDNS	00NR	4	17SP	G15_076	FROM->TO	GRPRAR1-LNX3345.00 - HOLT.CO3 345.00 345KV CKT 1	720	720	0.04358	111.0922	MINGO - RED WILLOW 345KV CKT 1
FDNS	00NR	4	17SP	G15_076	FROM->TO	GRPRAR1-LNX3345.00 - HOLT.CO3 345.00 345KV CKT 1	720	720	0.04358	111.0922	MINGO - RED WILLOW 345KV CKT 1
FDNS	00NR	4	17SP	G15_076	FROM->TO	GRPRAR1-LNX3345.00 - HOLT.CO3 345.00 345KV CKT 1	720	720	0.04084	111.0829	GEN672393 2-NBECST2G 13.800
FDNS	00NR	4	17SP	G15_076	FROM->TO	GRPRAR1-LNX3345.00 - HOLT.CO3 345.00 345KV CKT 1	720	720	0.04023	111.0788	P12:115:NPPD:1168B:ALBION 7:PETERSBRG.N7:BTB
FDNS	00NR	4	17SP	G15_076	FROM->TO	GRPRAR1-LNX3345.00 - HOLT.CO3 345.00 345KV CKT 1	720	720	0.03898	111.0732	COLUMEAST - SHELL CREEK 345KV CKT 1
FDNS	00NR	4	17SP	G15_076	FROM->TO	GRPRAR1-LNX3345.00 - HOLT.CO3 345.00 345KV CKT 1	720	720	0.04084	111.0674	GEN600046 1-MECST
FDNS	00NR	4	17SP	G15_076	FROM->TO	GRPRAR1-LNX3345.00 - HOLT.CO3 345.00 345KV CKT 1	720	720	0.04084	111.0591	GEN300007 1-NEW MADRID UNIT 2
FDNS	00NR	4	17SP	G15_076	FROM->TO	GRPRAR1-LNX3345.00 - HOLT.CO3 345.00 345KV CKT 1	720	720	0.04084	111.0535	GEN300006 1-NEW MADRID UNIT 1
FDNS	00NR	4	17SP	G15_076	FROM->TO	GRPRAR1-LNX3345.00 - HOLT.CO3 345.00 345KV CKT 1	720	720	0.04084	111.043	GEN600047 1-MECCT1
FDNS	00NR	4	17SP	G15_076	FROM->TO	GRPRAR1-LNX3345.00 - HOLT.CO3 345.00 345KV CKT 1	720	720	0.04084	111.0331	GEN652414 4-FT PECK
FDNS	00NR	4	17SP	G15_076	FROM->TO	GRPRAR1-LNX3345.00 - HOLT.CO3 345.00 345KV CKT 1	720	720	0.04084	111.0331	GEN652415 5-FT PECK
FDNS	00NR	4	17SP	G15_076	FROM->TO	GRPRAR1-LNX3345.00 - HOLT.CO3 345.00 345KV CKT 1	720	720	0.04084	111.0281	GEN600050 1-FEP
FDNS	00NR	4	17SP	G15_076	FROM->TO	GRPRAR1-LNX3345.00 - HOLT.CO3 345.00 345KV CKT 1	720	720	0.04084	111.0165	GEN660001 2-ABERDEEN SIEBRECHT
FDNS	00NR	4	17SP	G15_076	FROM->TO	GRPRAR1-LNX3345.00 - HOLT.CO3 345.00 345KV CKT 1	720	720	0.04084	111.0032	LADISH 115/13.2KV TRANSFORMER CKT 1
FDNS	00NR	4	17SP	G15_076	FROM->TO	GRPRAR1-LNX3345.00 - HOLT.CO3 345.00 345KV CKT 1	720	720	0.04084	110.9836	GEN652345 W-G07_023IS_2 0.6900
FDNS	00NR	4	17SP	G15_076	FROM->TO	GRPRAR1-LNX3345.00 - HOLT.CO3 345.00 345KV CKT 1	720	720	0.04243	110.9662	G15061_T 345.00 - SETAB 345KV CKT 1
FDNS	00NR	4	17SP	G15_076	FROM->TO	GRPRAR1-LNX3345.00 - HOLT.CO3 345.00 345KV CKT 1	720	720	0.04087	110.9466	BISMARK - L3 HAWDON 230KV CKT 1
FDNS	00NR	4	17SP	G15_076	FROM->TO	GRPRAR1-LNX3345.00 - HOLT.CO3 345.00 345KV CKT 1	720	720	0.04084	110.945	GEN 11104 1-J262_GEN 0.6000
FDNS	00NR	4	17SP	G15_076	FROM->TO	GRPRAR1-LNX3345.00 - HOLT.CO3 345.00 345KV CKT 1	720	720	0.04084	110.945	GEN 11108 1-J263_GEN 0.6000
FDNS	00NR	4	17SP	G15_076	FROM->TO	GRPRAR1-LNX3345.00 - HOLT.CO3 345.00 345KV CKT 1	720	720	0.04084	110.9385	GEN600063 1-COLVILLE GEN 1
FDNS	00NR	4	17SP	G15_076	FROM->TO	GRPRAR1-LNX3345.00 - HOLT.CO3 345.00 345KV CKT 1	720	720	0.04084	110.9385	GEN600064 2-COLVILLE GEN 2
FDNS	00NR	4	17SP	G15_076	FROM->TO	GRPRAR1-LNX3345.00 - HOLT.CO3 345.00 345KV CKT 1	720	720	0.0423	110.936	GERALD GENTLEMAN STATION - RED WILLOW 345KV CKT 1
FDNS	00NR	4	17SP	G15_076	FROM->TO	GRPRAR1-LNX3345.00 - HOLT.CO3 345.00 345KV CKT 1	720	720	0.04084	110.93	GEN600045 4-ANSON
FDNS	00NR	4	17SP	G15_076	FROM->TO	GRPRAR1-LNX3345.00 - HOLT.CO3 345.00 345KV CKT 1	720	720	0.04084	110.926	GEN600043 7-BLUE LAKE5
FDNS	00NR	4	17SP	G15_076	FROM->TO	GRPRAR1-LNX3345.00 - HOLT.CO3 345.00 345KV CKT 1	720	720	0.04084	110.926	GEN600044 8-BLUE LAKE6
FDNS	00NR	4	17SP	G15_076	FROM->TO	GRPRAR1-LNX3345.00 - HOLT.CO3 345.00 345KV CKT 1	720	720	0.04084	110.9133	G830_SUB 115.00 - GRE-MCHENRY7115.00 115KV CKT 1
FDNS	00NR	4	17SP	G15_076	FROM->TO	GRPRAR1-LNX3345.00 - HOLT.CO3 345.00 345KV CKT 1	720	720	0.04084	110.8992	G830_SUB 115.00 115/34.5KV TRANSFORMER CKT 1
FDNS	00NR	4	17SP	G15_076	FROM->TO	GRPRAR1-LNX3345.00 - HOLT.CO3 345.00 345KV CKT 1	720	720	0.04095	110.8971	G11_051T 345.00 - TATONGA7 345.00 345KV CKT 1
FDNS	00NR	4	17SP	G15_076	FROM->TO	GRPRAR1-LNX3345.00 - HOLT.CO3 345.00 345KV CKT 1	720	720	0.04084	110.8939	GEN600014 4-BLACK DOG GEN 4
FDNS	00NR	4	17SP	G15_076	FROM->TO	GRPRAR1-LNX3345.00 - HOLT.CO3 345.00 345KV CKT 1	720	720	0.04259	110.8923	P12:115:NPPD:1163B:NELIGH 7:NORFK.N7:BTB
FDNS	00NR	4	17SP	G15_076	FROM->TO	GRPRAR1-LNX3345.00 - HOLT.CO3 345.00 345KV CKT 1	720	720	0.04084	110.892	GEN600065 7-HIGH BRIDGE
FDNS	00NR	4	17SP	G15_076	FROM->TO	GRPRAR1-LNX3345.00 - HOLT.CO3 345.00 345KV CKT 1	720	720	0.04084	110.892	GEN600066 8-HIGH BRIDGE
FDNS	00NR	4	17SP	G15_076	FROM->TO	GRPRAR1-LNX3345.00 - HOLT.CO3 345.00 345KV CKT 1	720	720	0.04084	110.8871	GEN600011 5-BLACK DOG GEN 1
FDNS	00NR	4	17SP	G15_076	FROM->TO	GRPRAR1-LNX3345.00 - HOLT.CO3 345.00 345KV CKT 1	720	720	0.04084	110.8758	GEN600071 10-RIVER SIDE
FDNS	00NR	4	17SP	G15_076	FROM->TO	GRPRAR1-LNX3345.00 - HOLT.CO3 345.00 345KV CKT 1	720	720	0.04084	110.8756	GEN600070 9-RIVER SIDE
FDNS	00NR	4	17SP	G15_076	FROM->TO	GRPRAR1-LNX3345.00 - HOLT.CO3 345.00 345KV CKT 1	720	720	0.04084	110.863	GEN600007 7-RIVERSIDE GEN 7
FDNS	00NR	4	17SP	G15_076	FROM->TO	GRPRAR1-LNX3345.00 - HOLT.CO3 345.00 345KV CKT 1	720	720	0.04084	110.8555	GEN652906 1-G09_006IS_3 0.6900
FDNS	00NR	4	17SP	G15_076	FROM->TO	GRPRAR1-LNX3345.00 - HOLT.CO3 345.00 345KV CKT 1	720	720	0.03797	110.8434	FT THOMPSON (FT2 KU1A) 345/230/13.8KV TRANSFORMER CKT 1
FDNS	00NR	4	17SP	G15_076	FROM->TO	GRPRAR1-LNX3345.00 - HOLT.CO3 345.00 345KV CKT 1	720	720	0.04084	110.8431	GEN600017 C-LS POWER CT
FDNS	00NR	4	17SP	G15_076	FROM->TO	GRPRAR1-LNX3345.00 - HOLT.CO3 345.00 345KV CKT 1	720	720	0.03796	110.8402	FT THOMPSON (FT2 KU1B) 345/230/13.8KV TRANSFORMER CKT 1
FDNS	00NR	4	17SP	G15_076	FROM->TO	GRPRAR1-LNX3345.00 - HOLT.CO3 345.00 345KV CKT 1	720	720	0.04084	110.8373	GEN659273 2-GROTON SYNC COND
FDNS	00NR	4	17SP	G15_076	FROM->TO	GRPRAR1-LNX3345.00 - HOLT.CO3 345.00 345KV CKT 1	720	720	0.04084	110.8373	GEN659294 1-WILTONCOL9
FDNS	00NR	4	17SP	G15_076	FROM->TO	GRPRAR1-LNX3345.00 - HOLT.CO3 345.00 345KV CKT 1	720	720	0.04084	110.8192	LANSING WEST 161/22.0KV TRANSFORMER CKT 1
FDNS	00NR	4	17SP	G15_076	FROM->TO	GRPRAR1-LNX3345.00 - HOLT.CO3 345.00 345KV CKT 1	720	720	0.04084	110.8022	GEN659192 6-LYNN
FDNS	00NR	4	17SP	G15_076	FROM->TO	GRPRAR1-LNX3345.00 - HOLT.CO3 345.00 345KV CKT 1	720	720	0.04084	110.8012	GEN659162 4-RED WLCK
FDNS	00NR	4	17SP	G15_076	FROM->TO	GRPRAR1-LNX3345.00 - HOLT.CO3 345.00 345KV CKT 1	720	720	0.04084	110.8012	GEN659163 5-BLACK WDCK
FDNS	00NR	4	17SP	G15_076	FROM->TO	GRPRAR1-LNX3345.00 - HOLT.CO3 345.00 345KV CKT 1	720	720	0.04084	110.7873	GEN681522 3-GENOA 3
FDNS	00NR	4	17SP	G15_076	FROM->TO	GRPRAR1-LNX3345.00 - HOLT.CO3 345.00 345KV CKT 1	720	720	0.04084	110.7802	GEN615021 1-GRE-ER 14G 16.000
FDNS	00NR	4	17SP	G15_076	FROM->TO	GRPRAR1-LNX3345.00 - HOLT.CO3 345.00 345KV CKT 1	720	720	0.04093	110.7689	BRDLAND-LNX3345.00 - HURON 345KV CKT Z
FDNS	00NR	4	17SP	G15_076	FROM->TO	GRPRAR1-LNX3345.00 - HOLT.CO3 345.00 345KV CKT 1	720	720	0.04093	110.7681	BROADLAND - HURON 230KV CKT 1
FDNS	00NR	4	17SP	G15_076	FROM->TO	GRPRAR1-LNX3345.00 - HOLT.CO3 345.00 345KV CKT 1	720	720	0.04093	110.7678	HURON (BD KU2A) 345/230/13.8KV TRANSFORMER CKT 1
FDNS	00NR	4	17SP	G15_076	FROM->TO	GRPRAR1-LNX3345.00 - HOLT.CO3 345.00 345KV CKT 1	720	720	0.04093	110.7678	HURON (BD KU2A) 345/230/13.8KV TRANSFORMER CKT 1
FDNS	00NR	4	17SP	G15_076	FROM->TO	GRPRAR1-LNX3345.00 - HOLT.CO3 345.00 345KV CKT 1	720	720	0.04084	110.7669	GEN615052 1-CAMBRIDGE GENERATING STATION
FDNS	00NR	4	17SP	G15_076	FROM->TO	GRPRAR1-LNX3345.00 - HOLT.CO3 345.00 345KV CKT 1	720	720	0.04093	110.763	P12:345:UMZB:# 102 #: AVS BD IN ND. AVS BRD LR
FDNS	00NR	4	17SP	G15_076	FROM->TO	GRPRAR1-LNX3345.00 - HOLT.CO3 345.00 345KV CKT 1	720	720	0.04084	110.763	CENTER 230/22.0KV TRANSFORMER CKT 1
FDNS	00NR	4	17SP	G15_076	FROM->TO	GRPRAR1-LNX3345.00 - HOLT.CO3 345.00 345KV CKT 1	720	720	0.04084	110.7626	GEN659031 1-G12_014IS_4 0.6900
FDNS	00NR	4	17SP	G15_076	FROM->TO	GRPRAR1-LNX3345.00 - HOLT.CO3 345.00 345KV CKT 1	720	720	0.04093	110.7624	P12:345:UMZB:# 103 #: BD IN SD. LOSS OF LINE
FDNS	00NR	4	17SP	G15_076	FROM->TO	GRPRAR1-LNX3345.00 - HOLT.CO3 345.00 345KV CKT 1	720	720	0.04084	110.7595	GEN652907 1-G09_007IS_3 0.6900
FDNS	00NR	4	17SP	G15_076	FROM->TO	GRPRAR1-LNX3345.00 - HOLT.CO3 345.00 345KV CKT 1	720	720	0.04084	110.7565	GEN 10648 1-G830_GEN 0.6900
FDNS	00NR	4	17SP	G15_076	FROM->TO	GRPRAR1-LNX3345.00 - HOLT.CO3 345.00 345KV CKT 1	720	720	0.04084	110.7502	GEN660016 1-B_H WIND 0.7000
FDNS	00NR	4	17SP	G15_076	FROM->TO	GRPRAR1-LNX3345.00 - HOLT.CO3 345.00 345KV CKT 1	720	720	0.03797	110.7041	HOSKINS - RAUN 345KV CKT 1
FDNS	00NR	4	17SP	G15_076	FROM->TO	GRPRAR1-LNX3345.00 - HOLT.CO3 345.00 345KV CKT 1	720	720	0.03797	110.7041	HOSKINS - RAUN 345KV CKT 1
FDNS	00NR	4	17SP	G15_076	FROM->TO	GRPRAR1-LNX3345.00 - HOLT.CO3 345.00 345KV CKT 1	720	720	0.03675	110.6997	DIXONCO 230.00 - TWIN CHURCH 230KV CKT 1
FDNS	00NR	4	17SP	G15_076	FROM->TO	GRPRAR1-LNX3345.00 - HOLT.CO3 345.00 345KV CKT 1	720	720	0.04084	110.6862	GEN615015 1-GRE-SPRITWDG13.200
FDNS	00NR	4	17SP	G15_076	FROM->TO	GRPRAR1-LNX3345.00 - HOLT.CO3 345.00 345KV CKT 1	720	720	0.04095	110.6786	MATHWSN7 345.00 - TATONGA7 345.00 345KV CKT 1
FDNS	00NR	4	17SP	G15_076	FROM->TO	GRPRAR1-LNX3345.00 - HOLT.CO3 345.00 345KV CKT 1	720	720	0.04084	110.6215	GEN659353 1-DEERCREK CTG18.000
FDNS	00NR	4	17SP	G15_076	FROM->TO	GRPRAR1-LNX3345.00 - HOLT.CO3 345.00 345KV CKT 1	720	720	0.04084	110.6197	GEN659354 1-DEERCREK STG18.000
FDNS	00NR	4	17SP	G15_076	FROM->TO	GRPRAR1-LNX3345.00 - HOLT.CO3 345.00 345KV CKT 1	720	720	0.04093	110.6087	ANTELOP-LNX3345.00 - ANTELOPE VALLEY 345KV CKT Z
FDNS	00NR	4	17SP	G15_076	FROM->TO	GRPRAR1-LNX3345.00 - HOLT.CO3 345.00 345KV CKT 1	720	720	0.04084	110.5314	GEN600067 9-HIGH BRIDGE
FDNS	00NR	4	17SP	G15_076	FROM->TO	GRPRAR1-LNX3345.00 - HOLT.CO3 345.00 345KV CKT 1	720	720	0.04084	110.531	GEN672303 3-BOUNDARY DAM GENERATOR 3
FDNS	00NR	4	17SP	G15_076	FROM->TO	GRPRAR1-LNX3345.00 - HOLT.CO3 345.00 345KV CKT 1	720	720	0.04084	110.5309	GEN672305 5-BOUNDARY DAM GENERATOR 5
FDNS	00NR	4	25SP	G15_076	FROM->TO	GRPRAR1-LNX3345.00 - HOLT.CO3 345.00 345KV CKT 1	720	720	0.03764	110.513	STORLA - WESSINGTON 230KV CKT 1

SOLUTION	GROUP	SCENARIO	SEASON	SOURCE	DIRECTION	MONITORED ELEMENT	RATEA (MVA)	RATEB(MVA)	TDF	TC%LOADING (% MVA)	CONTINGENCY
FDNS	00NR	4	17SP	G15_076	FROM->TO	GRPRAR1-LNX3345.00 - HOLT.CO3 345.00 345KV CKT 1	720	720	0.04084	110.5056	GEN672392 1-NBECGT1G 18.000
FDNS	00NR	4	17SP	G15_076	FROM->TO	GRPRAR1-LNX3345.00 - HOLT.CO3 345.00 345KV CKT 1	720	720	0.04087	110.4708	OAHE - SULLEY BUTTE 230KV CKT 1
FDNS	00NR	4	17SP	G15_076	FROM->TO	GRPRAR1-LNX3345.00 - HOLT.CO3 345.00 345KV CKT 1	720	720	0.04084	110.4425	GEN910006 1-G12_012IS_3 0.6900
FDNS	00NR	4	17SP	G15_076	FROM->TO	GRPRAR1-LNX3345.00 - HOLT.CO3 345.00 345KV CKT 1	720	720	0.04084	110.4315	BISONMP4 230.00 - SQUARE BUTTE 230KV CKT 1
FDNS	00NR	4	17SP	G15_076	FROM->TO	GRPRAR1-LNX3345.00 - HOLT.CO3 345.00 345KV CKT 1	720	720	0.04084	110.3899	GEN662101 1-WESSINGTON190.5750
FDNS	00NR	4	17SP	G15_076	FROM->TO	GRPRAR1-LNX3345.00 - HOLT.CO3 345.00 345KV CKT 1	720	720	0.04237	110.3555	AXTELL - SWEETWATER 345KV CKT 1
FDNS	00NR	4	17SP	G15_076	FROM->TO	GRPRAR1-LNX3345.00 - HOLT.CO3 345.00 345KV CKT 1	720	720	0.04087	110.3182	SULLEY BUTTE - SULLYBT-LNX3230.00 230KV CKT Z
FDNS	00NR	4	17SP	G15_076	FROM->TO	GRPRAR1-LNX3345.00 - HOLT.CO3 345.00 345KV CKT 1	720	720	0.04242	110.3163	G15088_T 345.00 - MOORE 345KV CKT 1
FDNS	00NR	4	17SP	G15_076	FROM->TO	GRPRAR1-LNX3345.00 - HOLT.CO3 345.00 345KV CKT 1	720	720	0.04087	110.3162	SULLYBT-LNX3230.00 - WHITLOK 230KV CKT 1
FDNS	00NR	4	17SP	G15_076	FROM->TO	GRPRAR1-LNX3345.00 - HOLT.CO3 345.00 345KV CKT 1	720	720	0.04087	110.2687	P12:230:UMZB:# 114 #: SB IN SD. SB-WK-GH
FDNS	00NR	4	17SP	G15_076	FROM->TO	GRPRAR1-LNX3345.00 - HOLT.CO3 345.00 345KV CKT 1	720	720	0.04087	110.2687	P12:230:UMZB:# 117 #: WK IN SD. SB-WK-GH
FDNS	00NR	4	17SP	G15_076	FROM->TO	GRPRAR1-LNX3345.00 - HOLT.CO3 345.00 345KV CKT 1	720	720	0.04084	110.2655	SQUARE BUTTE - YNG2_4 230.00 230KV CKT 1
FDNS	00NR	4	20SP	G15_076	FROM->TO	GRPRAR1-LNX3345.00 - HOLT.CO3 345.00 345KV CKT 1	720	720	0.03742	110.2587	HANLON - STORLA 230KV CKT 1
FDNS	00NR	4	17SP	G15_076	FROM->TO	GRPRAR1-LNX3345.00 - HOLT.CO3 345.00 345KV CKT 1	720	720	0.03535	110.2344	HOSKINS - SHELL CREEK 345KV CKT 1
FDNS	00NR	4	17SP	G15_076	FROM->TO	GRPRAR1-LNX3345.00 - HOLT.CO3 345.00 345KV CKT 1	720	720	0.04087	110.2162	GLENHAM - WHITLOK 230KV CKT 1
FDNS	00NR	4	17SP	G15_076	FROM->TO	GRPRAR1-LNX3345.00 - HOLT.CO3 345.00 345KV CKT 1	720	720	0.04084	110.2062	HESKETT 115/13.8KV TRANSFORMER CKT 1
FDNS	00NR	4	17SP	G15_076	FROM->TO	GRPRAR1-LNX3345.00 - HOLT.CO3 345.00 345KV CKT 1	720	720	0.04084	110.1611	GEN681542 6-JP MADGETT
FDNS	00NR	4	17SP	G15_076	FROM->TO	GRPRAR1-LNX3345.00 - HOLT.CO3 345.00 345KV CKT 1	720	720	0.04084	110.115	GEN659289 1-DAYCNTYWND W0.6900
FDNS	00NR	4	17SP	G15_076	FROM->TO	GRPRAR1-LNX3345.00 - HOLT.CO3 345.00 345KV CKT 1	720	720	0.04084	110.0973	GEN659018 1-G14_003IS_3 0.6900
FDNS	00NR	4	17SP	G15_076	FROM->TO	GRPRAR1-LNX3345.00 - HOLT.CO3 345.00 345KV CKT 1	720	720	0.04084	110.077	GEN652543 3-BIG BEND
FDNS	00NR	4	17SP	G15_076	FROM->TO	GRPRAR1-LNX3345.00 - HOLT.CO3 345.00 345KV CKT 1	720	720	0.04084	110.0767	GEN563312 1-G15097_3 0.6900
FDNS	00NR	4	17SP	G15_076	FROM->TO	GRPRAR1-LNX3345.00 - HOLT.CO3 345.00 345KV CKT 1	720	720	0.04084	109.9316	GEN659194 1-NDPRAIRWND1W0.6900
FDNS	00NR	4	17SP	G15_076	FROM->TO	GRPRAR1-LNX3345.00 - HOLT.CO3 345.00 345KV CKT 1	720	720	0.04084	109.9152	GEN659010 4-G07_027IS_2 0.6900
FDNS	00NR	4	17SP	G15_076	FROM->TO	GRPRAR1-LNX3345.00 - HOLT.CO3 345.00 345KV CKT 1	720	720	0.04084	109.9079	GEN652460 4-GARRISON
FDNS	00NR	4	17SP	G15_076	FROM->TO	GRPRAR1-LNX3345.00 - HOLT.CO3 345.00 345KV CKT 1	720	720	0.04084	109.9078	GEN652461 5-GARRISON
FDNS	00NR	4	17SP	G15_076	FROM->TO	GRPRAR1-LNX3345.00 - HOLT.CO3 345.00 345KV CKT 1	720	720	0.04084	109.8861	GEN563342 1-G15098_3 0.6900
FDNS	00NR	4	17SP	G15_076	FROM->TO	GRPRAR1-LNX3345.00 - HOLT.CO3 345.00 345KV CKT 1	720	720	0.04084	109.8495	GEN652458 2-GARRISON
FDNS	00NR	4	17SP	G15_076	FROM->TO	GRPRAR1-LNX3345.00 - HOLT.CO3 345.00 345KV CKT 1	720	720	0.04084	109.8495	GEN652459 3-GARRISON
FDNS	00NR	4	17SP	G15_076	FROM->TO	GRPRAR1-LNX3345.00 - HOLT.CO3 345.00 345KV CKT 1	720	720	0.04084	109.8494	GEN652457 1-GARRISON
FDNS	00NR	4	17SP	G15_076	FROM->TO	GRPRAR1-LNX3345.00 - HOLT.CO3 345.00 345KV CKT 1	720	720	0.04084	109.7956	GEN659403 1-NDSUNFLWR W0.6900
FDNS	00NR	4	17SP	G15_076	FROM->TO	GRPRAR1-LNX3345.00 - HOLT.CO3 345.00 345KV CKT 1	720	720	0.04084	109.7485	GEN652542 1-BIG BEND
FDNS	00NR	4	17SP	G15_076	FROM->TO	GRPRAR1-LNX3345.00 - HOLT.CO3 345.00 345KV CKT 1	720	720	0.04297	109.7158	MCCOOL - MOORE 345KV CKT 1
FDNS	00NR	4	20SP	G15_076	FROM->TO	GRPRAR1-LNX3345.00 - HOLT.CO3 345.00 345KV CKT 1	720	720	0.03931	109.7078	BUFFALO - JAMESTOWN 345KV CKT 1
FDNS	00NR	4	20SP	G15_076	FROM->TO	GRPRAR1-LNX3345.00 - HOLT.CO3 345.00 345KV CKT 1	720	720	0.03909	109.6751	G09_001IST 345.00 - WATERTOWN 345KV CKT 1
FDNS	00NR	4	17SP	G15_076	FROM->TO	GRPRAR1-LNX3345.00 - HOLT.CO3 345.00 345KV CKT 1	720	720	0.04084	109.6357	GEN652559 1-OAHE
FDNS	00NR	4	17SP	G15_076	FROM->TO	GRPRAR1-LNX3345.00 - HOLT.CO3 345.00 345KV CKT 1	720	720	0.04084	109.6344	STANTON 230/18.0KV TRANSFORMER CKT 1
FDNS	00NR	4	17SP	G15_076	FROM->TO	GRPRAR1-LNX3345.00 - HOLT.CO3 345.00 345KV CKT 1	720	720	0.04084	109.6331	CLAY BOSWELL 230/20.9KV TRANSFORMER CKT 1
FDNS	00NR	4	20SP	G15_076	FROM->TO	GRPRAR1-LNX3345.00 - HOLT.CO3 345.00 345KV CKT 1	720	720	0.0367	109.6139	FT THOMPSON - LETCHER 230KV CKT 1
FDNS	00NR	4	20SP	G15_076	FROM->TO	GRPRAR1-LNX3345.00 - HOLT.CO3 345.00 345KV CKT 1	720	720	0.0367	109.6139	FT THOMPSON - LETCHER 230KV CKT 1
FDNS	00NR	4	17SP	G15_076	FROM->TO	GRPRAR1-LNX3345.00 - HOLT.CO3 345.00 345KV CKT 1	720	720	0.04087	109.6064	GLENHAM - L3 HAWDON 230KV CKT 1
FDNS	00NR	4	25SP	G15_076	FROM->TO	GRPRAR1-LNX3345.00 - HOLT.CO3 345.00 345KV CKT 1	720	720	0.03774	109.4941	HANLON - STORLA 230KV CKT 1
FDNS	00NR	4	17SP	G15_076	FROM->TO	GRPRAR1-LNX3345.00 - HOLT.CO3 345.00 345KV CKT 1	720	720	0.04084	109.3797	GEN659411 1-CAMPBLCNTY W0.6900
FDNS	00NR	4	25SP	G15_076	FROM->TO	GRPRAR1-LNX3345.00 - HOLT.CO3 345.00 345KV CKT 1	720	720	0.03963	109.2556	BUFFALO - JAMESTOWN 345KV CKT 1
FDNS	00NR	4	17SP	G15_076	FROM->TO	GRPRAR1-LNX3345.00 - HOLT.CO3 345.00 345KV CKT 1	720	720	0.04084	109.1532	GEN659296 2-SDPRAIRWND1W0.6900
FDNS	00NR	4	17SP	G15_076	FROM->TO	GRPRAR1-LNX3345.00 - HOLT.CO3 345.00 345KV CKT 1	720	720	0.04084	109.1385	GEN672321 1-SHAND GENERATOR 1
FDNS	00NR	4	17SP	G15_076	FROM->TO	GRPRAR1-LNX3345.00 - HOLT.CO3 345.00 345KV CKT 1	720	720	0.04084	109.1286	GEN672311 2-POPLAR RIVER GENERATOR 2
FDNS	00NR	4	17SP	G15_076	FROM->TO	GRPRAR1-LNX3345.00 - HOLT.CO3 345.00 345KV CKT 1	720	720	0.04084	109.1282	GEN672310 1-POPLAR RIVER GENERATOR 1
FDNS	00NR	4	17SP	G15_076	FROM->TO	GRPRAR1-LNX3345.00 - HOLT.CO3 345.00 345KV CKT 1	720	720	0.04084	109.074	RCDC EAST 4230.00 - RED CEDAR DC 230KV CKT 1
FDNS	00NR	4	17SP	G15_076	FROM->TO	GRPRAR1-LNX3345.00 - HOLT.CO3 345.00 345KV CKT 1	720	720	0.04084	109.0588	GEN600004 2-PRAIRIE ISLAND G2
FDNS	00NR	4	17SP	G15_076	FROM->TO	GRPRAR1-LNX3345.00 - HOLT.CO3 345.00 345KV CKT 1	720	720	0.04084	109.055	P12:230:UMZB:# 112 #: NU IN SD. NU-RCDC & DRY CREEK XFMR
FDNS	00NR	4	17SP	G15_076	FROM->TO	GRPRAR1-LNX3345.00 - HOLT.CO3 345.00 345KV CKT 1	720	720	0.04084	109.0546	GEN600003 1-PRAIRIE ISLAND G1
FDNS	00NR	4	17SP	G15_076	FROM->TO	GRPRAR1-LNX3345.00 - HOLT.CO3 345.00 345KV CKT 1	720	720	0.04084	109.0336	GEN672306 6-BOUNDARY DAM GENERATOR 6
FDNS	00NR	4	17SP	G15_076	FROM->TO	GRPRAR1-LNX3345.00 - HOLT.CO3 345.00 345KV CKT 1	720	720	0.04084	109.0008	GEN615010 1-STANTON4
FDNS	00NR	4	17SP	G15_076	FROM->TO	GRPRAR1-LNX3345.00 - HOLT.CO3 345.00 345KV CKT 1	720	720	0.04084	108.992	GEN659453 1-GI1414GEN W0.6900
FDNS	00NR	4	17SP	G15_076	FROM->TO	GRPRAR1-LNX3345.00 - HOLT.CO3 345.00 345KV CKT 1	720	720	0.04084	108.9902	GEN563302 1-G15096_3 0.6900
FDNS	00NR	4	17SP	G15_076	FROM->TO	GRPRAR1-LNX3345.00 - HOLT.CO3 345.00 345KV CKT 1	720	720	0.04084	108.885	GEN659141 1-K10215A
FDNS	00NR	4	25SP	G15_076	FROM->TO	GRPRAR1-LNX3345.00 - HOLT.CO3 345.00 345KV CKT 1	720	720	0.03941	108.8571	G09_001IST 345.00 - WATERTOWN 345KV CKT 1
FDNS	00NR	4	25SP	G15_076	FROM->TO	GRPRAR1-LNX3345.00 - HOLT.CO3 345.00 345KV CKT 1	720	720	0.03701	108.8442	FT THOMPSON - LETCHER 230KV CKT 1
FDNS	00NR	4	25SP	G15_076	FROM->TO	GRPRAR1-LNX3345.00 - HOLT.CO3 345.00 345KV CKT 1	720	720	0.03701	108.8442	FT THOMPSON - LETCHER 230KV CKT 1
FDNS	00NR	4	17SP	G15_076	FROM->TO	GRPRAR1-LNX3345.00 - HOLT.CO3 345.00 345KV CKT 1	720	720	0.04084	108.8034	GEN652556 2-OAHE
FDNS	00NR	4	17SP	G15_076	FROM->TO	GRPRAR1-LNX3345.00 - HOLT.CO3 345.00 345KV CKT 1	720	720	0.04084	108.8034	GEN652557 4-OAHE
FDNS	00NR	4	17SP	G15_076	FROM->TO	GRPRAR1-LNX3345.00 - HOLT.CO3 345.00 345KV CKT 1	720	720	0.04084	108.8034	GEN652558 6-OAHE
FDNS	00NR	4	17SP	G15_076	FROM->TO	GRPRAR1-LNX3345.00 - HOLT.CO3 345.00 345KV CKT 1	720	720	0.04084	108.8021	GEN659110 1-LELAND OLDS UNIT1
FDNS	00NR	4	17SP	G15_076	FROM->TO	GRPRAR1-LNX3345.00 - HOLT.CO3 345.00 345KV CKT 1	720	720	0.04084	108.7323	GEN657749 1-YOUNG 1 GENERATOR
FDNS	00NR	4	17SP	G15_076	FROM->TO	GRPRAR1-LNX3345.00 - HOLT.CO3 345.00 345KV CKT 1	720	720	0.04084	108.7154	GEN600006 1-AS KING
FDNS	00NR	4	17SP	G15_076	FROM->TO	GRPRAR1-LNX3345.00 - HOLT.CO3 345.00 345KV CKT 1	720	720	0.04084	108.6418	GEN652173 1-G09_001IS_2 0.6900
FDNS	00NR	4	17SP	G15_076	FROM->TO	GRPRAR1-LNX3345.00 - HOLT.CO3 345.00 345KV CKT 1	720	720	0.04281	108.59	GRAND ISLAND - MCCOOL 345KV CKT 1
FDNS	00NR	4	20SP	G15_076	FROM->TO	GRPRAR1-LNX3345.00 - HOLT.CO3 345.00 345KV CKT 1	720	720	0.03883	108.5192	WATERTN-LNX3345.00 - WHITE 345KV CKT 1
FDNS	00NR	4	20SP	G15_076	FROM->TO	GRPRAR1-LNX3345.00 - HOLT.CO3 345.00 345KV CKT 1	720	720	0.0361	108.4556	FT RANDAL - G12_009IST 230.00 230KV CKT 1
FDNS	00NR	4	20SP	G15_076	FROM->TO	GRPRAR1-LNX3345.00 - HOLT.CO3 345.00 345KV CKT 1	720	720	0.03883	108.4183	WATERTN-LNX3345.00 - WATERTOWN 345KV CKT Z
FDNS	00NR	4	20SP	G15_076	FROM->TO	GRPRAR1-LNX3345.00 - HOLT.CO3 345.00 345KV CKT 1	720	720	0.03883	108.4071	P12:345:UMZW:# 1747 #: WT2 IN SD. WT2-WHT LINE FAULT
FDNS	00NR	4	20SP	G15_076	FROM->TO	GRPRAR1-LNX3345.00 - HOLT.CO3 345.00 345KV CKT 1	720	720	0.0361	108.3722	FT THOMPSON - LAKE PLATT 230KV CKT 1
FDNS	00NR	4	20SP	G15_076	FROM->TO	GRPRAR1-LNX3345.00 - HOLT.CO3 345.00 345KV CKT 1	720	720	0.0361	108.3722	FT THOMPSON - LAKE PLATT 230KV CKT 1
FDNS	00NR	4	20SP	G15_076	FROM->TO	GRPRAR1-LNX3345.00 - HOLT.CO3 345.00 345KV CKT 1	720	720	0.03602	108.3645	FT RANDAL - FT THOMPSON 230KV CKT 1
FDNS	00NR	4	20SP	G15_076	FROM->TO	GRPRAR1-LNX3345.00 - HOLT.CO3 345.00 345KV CKT 1	720	720	0.03602	108.3645	FT RANDAL - FT THOMPSON 230KV CKT 1
FDNS	00NR	4	17SP	G15_076	FROM->TO	GRPRAR1-LNX3345.00 - HOLT.CO3 345.00 345KV CKT 1	720	720	0.04084	108.3513	GEN659407 1-ANTELPHILLSW0.6900
FDNS	00NR	4	20SP	G15_076	FROM->TO	GRPRAR1-LNX3345.00 - HOLT.CO3 345.00 345KV CKT 1	720	720	0.0393	108.2736	GEN336821 1-GRAND GULF UNIT
FDNS	00NR	4	20SP	G15_076	FROM->TO	GRPRAR1-LNX3345.00 - HOLT.CO3 345.00 345KV CKT 1	720	720	0.0393	108.2558	GEN635024 4-WALTER SCOTT UNIT 4
FDNS	00NR	4	20SP	G15_076	FROM->TO	GRPRAR1-LNX3345.00 - HOLT.CO3 345.00 345KV CKT 1	720	720	0.04443	108.2393	FT RANDAL - MEADOWGROVE4230.00 230KV CKT 1

SOLUTION	GROUP	SCENARIO	SEASON	SOURCE	DIRECTION	MONITORED ELEMENT	RATEA (MVA)	RATEB(MVA)	TDF	TC%LOADING (% MVA)	CONTINGENCY
FDNS	00NR	4	20SP	G15_076	FROM->TO	GRPRAR1-LNX3345.00 - HOLT.CO3 345.00 345KV CKT 1	720	720	0.03931	108.2271	CENTER - JAMESTOWN 345KV CKT 1
FDNS	00NR	4	17SP	G15_076	FROM->TO	GRPRAR1-LNX3345.00 - HOLT.CO3 345.00 345KV CKT 1	720	720	0.04084	108.1623	GEN600005 1-MONTICELLO
FDNS	00NR	4	20SP	G15_076	FROM->TO	GRPRAR1-LNX3345.00 - HOLT.CO3 345.00 345KV CKT 1	720	720	0.03756	108.1507	SPLIT ROCK - WHITE 345KV CKT 1
FDNS	00NR	4	20SP	G15_076	FROM->TO	GRPRAR1-LNX3345.00 - HOLT.CO3 345.00 345KV CKT 1	720	720	0.03756	108.1507	SPLIT ROCK - WHITE 345KV CKT 1
FDNS	00NR	4	20SP	G15_076	FROM->TO	GRPRAR1-LNX3345.00 - HOLT.CO3 345.00 345KV CKT 1	720	720	0.0361	108.0021	G12_009IST 230.00 - LAKE PLATT 230KV CKT 1
FDNS	00NR	4	20SP	G15_076	FROM->TO	GRPRAR1-LNX3345.00 - HOLT.CO3 345.00 345KV CKT 1	720	720	0.03933	107.9678	CHISAGO COUNTY - CHISAGO COUNTY 500KV CKT 1
FDNS	00NR	4	20SP	G15_076	FROM->TO	GRPRAR1-LNX3345.00 - HOLT.CO3 345.00 345KV CKT 1	720	720	0.03933	107.9399	CHISAGO COUNTY - FORBES 500KV CKT 1
FDNS	00NR	4	20SP	G15_076	FROM->TO	GRPRAR1-LNX3345.00 - HOLT.CO3 345.00 345KV CKT 1	720	720	0.03931	107.834	BISON 3 345.00 - BUFFALO 345KV CKT 1
FDNS	00NR	4	20SP	G15_076	FROM->TO	GRPRAR1-LNX3345.00 - HOLT.CO3 345.00 345KV CKT 1	720	720	0.03818	107.7725	LETCHER - SIOUX FALLS 230KV CKT 1
FDNS	00NR	4	20SP	G15_076	FROM->TO	GRPRAR1-LNX3345.00 - HOLT.CO3 345.00 345KV CKT 1	720	720	0.0393	107.7675	GEN635023 3-WALTER SCOTT UNIT 3
FDNS	00NR	4	20SP	G15_076	FROM->TO	GRPRAR1-LNX3345.00 - HOLT.CO3 345.00 345KV CKT 1	720	720	0.0393	107.7383	GEN562714 1-G15_023_4 0.6900
FDNS	00NR	4	20SP	G15_076	FROM->TO	GRPRAR1-LNX3345.00 - HOLT.CO3 345.00 345KV CKT 1	720	720	0.0393	107.7383	GEN562715 1-G15_023_5 0.6900
FDNS	00NR	4	20SP	G15_076	FROM->TO	GRPRAR1-LNX3345.00 - HOLT.CO3 345.00 345KV CKT 1	720	720	0.0393	107.7179	GEN344225 1-1CAL G1 25.000
FDNS	00NR	4	25SP	G15_076	FROM->TO	GRPRAR1-LNX3345.00 - HOLT.CO3 345.00 345KV CKT 1	720	720	0.03643	107.6368	FT RANDAL - G12_009IST 230.00 230KV CKT 1
FDNS	00NR	4	20SP	G15_076	FROM->TO	GRPRAR1-LNX3345.00 - HOLT.CO3 345.00 345KV CKT 1	720	720	0.0393	107.6355	GEN337911 1-ARKANSAS NUCLEAR ONE UNIT #2
FDNS	00NR	4	25SP	G15_076	FROM->TO	GRPRAR1-LNX3345.00 - HOLT.CO3 345.00 345KV CKT 1	720	720	0.03915	107.6314	WATERTN-LNX3345.00 - WHITE 345KV CKT 1
FDNS	00NR	4	25SP	G15_076	FROM->TO	GRPRAR1-LNX3345.00 - HOLT.CO3 345.00 345KV CKT 1	720	720	0.03963	107.62	CENTER - JAMESTOWN 345KV CKT 1
FDNS	00NR	4	20SP	G15_076	FROM->TO	GRPRAR1-LNX3345.00 - HOLT.CO3 345.00 345KV CKT 1	720	720	0.0393	107.6068	GEN336153 1-WATERFORD UNIT#3
FDNS	00NR	4	20SP	G15_076	FROM->TO	GRPRAR1-LNX3345.00 - HOLT.CO3 345.00 345KV CKT 1	720	720	0.04039	107.6049	MISSION - ST FRANCIS 115KV CKT 1
FDNS	00NR	4	20SP	G15_076	FROM->TO	GRPRAR1-LNX3345.00 - HOLT.CO3 345.00 345KV CKT 1	720	720	0.04039	107.5754	P12:115:NPPD:1091:VALENTN7:MISSION7:BTB
FDNS	00NR	4	25SP	G15_076	FROM->TO	GRPRAR1-LNX3345.00 - HOLT.CO3 345.00 345KV CKT 1	720	720	0.03643	107.5712	FT THOMPSON - LAKE PLATT 230KV CKT 1
FDNS	00NR	4	25SP	G15_076	FROM->TO	GRPRAR1-LNX3345.00 - HOLT.CO3 345.00 345KV CKT 1	720	720	0.03643	107.5712	FT THOMPSON - LAKE PLATT 230KV CKT 1
FDNS	00NR	4	25SP	G15_076	FROM->TO	GRPRAR1-LNX3345.00 - HOLT.CO3 345.00 345KV CKT 1	720	720	0.03635	107.5579	FT RANDAL - FT THOMPSON 230KV CKT 1
FDNS	00NR	4	25SP	G15_076	FROM->TO	GRPRAR1-LNX3345.00 - HOLT.CO3 345.00 345KV CKT 1	720	720	0.03635	107.5579	FT RANDAL - FT THOMPSON 230KV CKT 1
FDNS	00NR	4	20SP	G15_076	FROM->TO	GRPRAR1-LNX3345.00 - HOLT.CO3 345.00 345KV CKT 1	720	720	0.04033	107.5392	SIDNEY - SIDNEY1-LNX3345.00 345KV CKT Z
FDNS	00NR	4	25SP	G15_076	FROM->TO	GRPRAR1-LNX3345.00 - HOLT.CO3 345.00 345KV CKT 1	720	720	0.03915	107.5271	WATERTN-LNX3345.00 - WATERTOWN 345KV CKT Z
FDNS	00NR	4	25SP	G15_076	FROM->TO	GRPRAR1-LNX3345.00 - HOLT.CO3 345.00 345KV CKT 1	720	720	0.03915	107.5185	P12:345:UMZW:# 1747 #: WT2 IN SD. WT2-WHT LINE FAULT
FDNS	00NR	4	20SP	G15_076	FROM->TO	GRPRAR1-LNX3345.00 - HOLT.CO3 345.00 345KV CKT 1	720	720	0.04033	107.5162	KEYSTONE - SIDNEY1-LNX3345.00 345KV CKT 1
FDNS	00NR	4	17SP	G15_076	FROM->TO	GRPRAR1-LNX3345.00 - HOLT.CO3 345.00 345KV CKT 1	720	720	0.04084	107.5077	GEN600000 1-SHERBURNECNTY G1
FDNS	00NR	4	20SP	G15_076	FROM->TO	GRPRAR1-LNX3345.00 - HOLT.CO3 345.00 345KV CKT 1	720	720	0.04735	107.4302	NUNDRWD - WAYSIDE 230KV CKT 1
FDNS	00NR	4	20SP	G15_076	FROM->TO	GRPRAR1-LNX3345.00 - HOLT.CO3 345.00 345KV CKT 1	720	720	0.04039	107.4296	HARMONY - ST FRANCIS 115KV CKT 1
FDNS	00NR	4	20SP	G15_076	FROM->TO	GRPRAR1-LNX3345.00 - HOLT.CO3 345.00 345KV CKT 1	720	720	0.03909	107.4081	G09_001IST 345.00 - GROTON 345KV CKT 1
FDNS	00NR	4	25SP	G15_076	FROM->TO	GRPRAR1-LNX3345.00 - HOLT.CO3 345.00 345KV CKT 1	720	720	0.04478	107.3742	FT RANDAL - MEADOWGROVE4230.00 230KV CKT 1
FDNS	00NR	4	25SP	G15_076	FROM->TO	GRPRAR1-LNX3345.00 - HOLT.CO3 345.00 345KV CKT 1	720	720	0.03962	107.3021	GEN635024 4-WALTER SCOTT UNIT 4
FDNS	00NR	4	20SP	G15_076	FROM->TO	GRPRAR1-LNX3345.00 - HOLT.CO3 345.00 345KV CKT 1	720	720	0.03817	107.3011	FT RANDAL - SIOUX CITY 230KV CKT 1
FDNS	00NR	4	20SP	G15_076	FROM->TO	GRPRAR1-LNX3345.00 - HOLT.CO3 345.00 345KV CKT 1	720	720	0.0393	107.2978	GEN640010 1-GERALD GENTLEMAN STATION UNIT 1
FDNS	00NR	4	20SP	G15_076	FROM->TO	GRPRAR1-LNX3345.00 - HOLT.CO3 345.00 345KV CKT 1	720	720	0.0393	107.2609	GEN335831 1-RIVERBEND UNIT#1
FDNS	00NR	4	25SP	G15_076	FROM->TO	GRPRAR1-LNX3345.00 - HOLT.CO3 345.00 345KV CKT 1	720	720	0.03963	107.2469	BISON 3 345.00 - BUFFALO 345KV CKT 1
FDNS	00NR	4	25SP	G15_076	FROM->TO	GRPRAR1-LNX3345.00 - HOLT.CO3 345.00 345KV CKT 1	720	720	0.03962	107.241	GEN336821 1-GRAND GULF UNIT
FDNS	00NR	4	25SP	G15_076	FROM->TO	GRPRAR1-LNX3345.00 - HOLT.CO3 345.00 345KV CKT 1	720	720	0.03965	107.2371	CHISAGO COUNTY - CHISAGO COUNTY 500KV CKT 1
FDNS	00NR	4	25SP	G15_076	FROM->TO	GRPRAR1-LNX3345.00 - HOLT.CO3 345.00 345KV CKT 1	720	720	0.03962	107.2108	GEN640010 1-GERALD GENTLEMAN STATION UNIT 1
FDNS	00NR	4	20SP	G15_076	FROM->TO	GRPRAR1-LNX3345.00 - HOLT.CO3 345.00 345KV CKT 1	720	720	0.0393	107.2053	GEN640011 2-GERALD GENTLEMAN STATION UNIT 2
FDNS	00NR	4	25SP	G15_076	FROM->TO	GRPRAR1-LNX3345.00 - HOLT.CO3 345.00 345KV CKT 1	720	720	0.03965	107.1818	CHISAGO COUNTY - FORBES 500KV CKT 1
FDNS	00NR	4	25SP	G15_076	FROM->TO	GRPRAR1-LNX3345.00 - HOLT.CO3 345.00 345KV CKT 1	720	720	0.03643	107.1768	G12_009IST 230.00 - LAKE PLATT 230KV CKT 1
FDNS	00NR	4	25SP	G15_076	FROM->TO	GRPRAR1-LNX3345.00 - HOLT.CO3 345.00 345KV CKT 1	720	720	0.03788	107.1751	SPLIT ROCK - WHITE 345KV CKT 1
FDNS	00NR	4	25SP	G15_076	FROM->TO	GRPRAR1-LNX3345.00 - HOLT.CO3 345.00 345KV CKT 1	720	720	0.03788	107.1751	SPLIT ROCK - WHITE 345KV CKT 1
FDNS	00NR	4	20SP	G15_076	FROM->TO	GRPRAR1-LNX3345.00 - HOLT.CO3 345.00 345KV CKT 1	720	720	0.04039	107.1687	HARMONY - VALENTINE 115KV CKT 1
FDNS	00NR	4	20SP	G15_076	FROM->TO	GRPRAR1-LNX3345.00 - HOLT.CO3 345.00 345KV CKT 1	720	720	0.0393	107.1663	GEN337910 1-ARKANSAS NUCLEAR ONE UNIT #1
FDNS	00NR	4	17SP	G15_076	FROM->TO	GRPRAR1-LNX3345.00 - HOLT.CO3 345.00 345KV CKT 1	720	720	0.04084	107.1544	GEN600001 2-SHERBURNE CNTY G2
FDNS	00NR	4	20SP	G15_076	FROM->TO	GRPRAR1-LNX3345.00 - HOLT.CO3 345.00 345KV CKT 1	720	720	0.0414	107.0505	FT RANDAL - SPENCER 115KV CKT 1
FDNS	00NR	4	20SP	G15_076	FROM->TO	GRPRAR1-LNX3345.00 - HOLT.CO3 345.00 345KV CKT 1	720	720	0.0414	107.0257	P12:115:NPPD:WAPA6:FTRANDL7:ONEILL 7:BTB
FDNS	00NR	4	20SP	G15_076	FROM->TO	GRPRAR1-LNX3345.00 - HOLT.CO3 345.00 345KV CKT 1	720	720	0.0414	107.0257	P12:115:UMZB:# 115 #: SE IN NE. FR-SE-ON
FDNS	00NR	4	20SP	G15_076	FROM->TO	GRPRAR1-LNX3345.00 - HOLT.CO3 345.00 345KV CKT 1	720	720	0.03739	106.9957	SIOUXCY-LNX3345.00 - SPLIT ROCK 345KV CKT 1
FDNS	00NR	4	20SP	G15_076	FROM->TO	GRPRAR1-LNX3345.00 - HOLT.CO3 345.00 345KV CKT 1	720	720	0.03739	106.9957	SIOUXCY-LNX3345.00 - SPLIT ROCK 345KV CKT 1
FDNS	00NR	4	25SP	G15_076	FROM->TO	GRPRAR1-LNX3345.00 - HOLT.CO3 345.00 345KV CKT 1	720	720	0.03962	106.9886	GEN562714 1-G15_023_4 0.6900
FDNS	00NR	4	25SP	G15_076	FROM->TO	GRPRAR1-LNX3345.00 - HOLT.CO3 345.00 345KV CKT 1	720	720	0.03962	106.9886	GEN562715 1-G15_023_5 0.6900
FDNS	00NR	4	25SP	G15_076	FROM->TO	GRPRAR1-LNX3345.00 - HOLT.CO3 345.00 345KV CKT 1	720	720	0.0385	106.9709	LETCHER - SIOUX FALLS 230KV CKT 1
FDNS	00NR	4	20SP	G15_076	FROM->TO	GRPRAR1-LNX3345.00 - HOLT.CO3 345.00 345KV CKT 1	720	720	0.03739	106.9549	P12:345:UMZW:# 907 #: SC2-SR IN IA. SC2-SR 345 KV LINE
FDNS	00NR	4	20SP	G15_076	FROM->TO	GRPRAR1-LNX3345.00 - HOLT.CO3 345.00 345KV CKT 1	720	720	0.03739	106.9235	SIOUX CITY - SIOUXCY-LNX3345.00 345KV CKT Z
FDNS	00NR	4	25SP	G15_076	FROM->TO	GRPRAR1-LNX3345.00 - HOLT.CO3 345.00 345KV CKT 1	720	720	0.0407	106.9107	MISSION - ST FRANCIS 115KV CKT 1
FDNS	00NR	4	20SP	G15_076	FROM->TO	GRPRAR1-LNX3345.00 - HOLT.CO3 345.00 345KV CKT 1	720	720	0.0414	106.9077	ONEILL - SPENCER 115KV CKT 1
FDNS	00NR	4	25SP	G15_076	FROM->TO	GRPRAR1-LNX3345.00 - HOLT.CO3 345.00 345KV CKT 1	720	720	0.03962	106.9001	GEN640011 2-GERALD GENTLEMAN STATION UNIT 2
FDNS	00NR	4	20SP	G15_076	FROM->TO	GRPRAR1-LNX3345.00 - HOLT.CO3 345.00 345KV CKT 1	720	720	0.03905	106.8903	GROTON-LNX3 345.00 - LELAND1-LNX3345.00 345KV CKT 1
FDNS	00NR	4	25SP	G15_076	FROM->TO	GRPRAR1-LNX3345.00 - HOLT.CO3 345.00 345KV CKT 1	720	720	0.03962	106.8391	GEN635023 3-WALTER SCOTT UNIT 3
FDNS	00NR	4	20SP	G15_076	FROM->TO	GRPRAR1-LNX3345.00 - HOLT.CO3 345.00 345KV CKT 1	720	720	0.03905	106.8337	GROTON - GROTON-LNX3 345.00 345KV CKT Z
FDNS	00NR	4	20SP	G15_076	FROM->TO	GRPRAR1-LNX3345.00 - HOLT.CO3 345.00 345KV CKT 1	720	720	0.03905	106.832	P12:345:UMZB:# 109 #: LOS GRT IN ND. LOS GRT
FDNS	00NR	4	20SP	G15_076	FROM->TO	GRPRAR1-LNX3345.00 - HOLT.CO3 345.00 345KV CKT 1	720	720	0.03519	106.828	FT RANDAL - UTICA JCT 230KV CKT 1
FDNS	00NR	4	20SP	G15_076	FROM->TO	GRPRAR1-LNX3345.00 - HOLT.CO3 345.00 345KV CKT 1	720	720	0.03905	106.8257	LELAND OLDS - LELAND1-LNX3345.00 345KV CKT Z
FDNS	00NR	4	25SP	G15_076	FROM->TO	GRPRAR1-LNX3345.00 - HOLT.CO3 345.00 345KV CKT 1	720	720	0.04064	106.8022	KEYSTONE - SIDNEY1-LNX3345.00 345KV CKT 1
FDNS	00NR	4	20SP	G15_076	FROM->TO	GRPRAR1-LNX3345.00 - HOLT.CO3 345.00 345KV CKT 1	720	720	0.03859	106.8019	HANLON - SIOUX FALLS 230KV CKT 1
FDNS	00NR	4	25SP	G15_076	FROM->TO	GRPRAR1-LNX3345.00 - HOLT.CO3 345.00 345KV CKT 1	720	720	0.04064	106.8016	SIDNEY - SIDNEY1-LNX3345.00 345KV CKT Z
FDNS	00NR	4	25SP	G15_076	FROM->TO	GRPRAR1-LNX3345.00 - HOLT.CO3 345.00 345KV CKT 1	720	720	0.03962	106.8	GEN337911 1-ARKANSAS NUCLEAR ONE UNIT #2
FDNS	00NR	4	20SP	G15_076	FROM->TO	GRPRAR1-LNX3345.00 - HOLT.CO3 345.00 345KV CKT 1	720	720	0.05452	106.7929	DIXONCO 230.00 - HOSKINS 230KV CKT 1
FDNS	00NR	4	25SP	G15_076	FROM->TO	GRPRAR1-LNX3345.00 - HOLT.CO3 345.00 345KV CKT 1	720	720	0.0407	106.7206	HARMONY - ST FRANCIS 115KV CKT 1
FDNS	00NR	4	25SP	G15_076	FROM->TO	GRPRAR1-LNX3345.00 - HOLT.CO3 345.00 345KV CKT 1	720	720	0.03962	106.7064	GEN344225 1-1CAL G1 25.000
FDNS	00NR	4	20SP	G15_076	FROM->TO	GRPRAR1-LNX3345.00 - HOLT.CO3 345.00 345KV CKT 1	720	720	0.03963	106.7053	GERALD GENTLEMAN STATION - KEYSTONE 345KV CKT 1
FDNS	00NR	4	20SP	G15_076	FROM->TO	GRPRAR1-LNX3345.00 - HOLT.CO3 345.00 345KV CKT 1	720	720	0.0405	106.6875	LAKEFIELD 3 - NOBLES 345KV CKT 1
FDNS	00NR	4	17SP	G15_076	FROM->TO	GRPRAR1-LNX3345.00 - HOLT.CO3 345.00 345KV CKT 1	720	720	0.04084	106.6817	GEN620315 1-BIG STONE GEN
FDNS	00NR	4	25SP	G15_076	FROM->TO	GRPRAR1-LNX3345.00 - HOLT.CO3 345.00 345KV CKT 1	720	720	0.03941	106.6757	G09_001IST 345.00 - GROTON 345KV CKT 1

SOLUTION	GROUP	SCENARIO	SEASON	SOURCE	DIRECTION	MONITORED ELEMENT	RATEA (MVA)	RATEB(MVA)	TDF	TC%LOADING (% MVA)	CONTINGENCY
FDNS	00NR	4	20SP	G15_076	FROM->TO	GRPRAR1-LNX3345.00 - HOLT.CO3 345.00 345KV CKT 1	720	720	0.0393	106.675	GEN337653 1-WHITE BLUFF UNIT #2
FDNS	00NR	4	17SP	G15_076	FROM->TO	GRPRAR1-LNX3345.00 - HOLT.CO3 345.00 345KV CKT 1	720	720	0.04084	106.6605	GEN661015 1-COYOTE
FDNS	00NR	4	20SP	G15_076	FROM->TO	GRPRAR1-LNX3345.00 - HOLT.CO3 345.00 345KV CKT 1	720	720	0.03829	106.6406	PAHOJA - SIOUX FALLS 230KV CKT 1
FDNS	00NR	4	20SP	G15_076	FROM->TO	GRPRAR1-LNX3345.00 - HOLT.CO3 345.00 345KV CKT 1	720	720	0.0393	106.6226	GEN337652 1-WHITE BLUFF UNIT #1
FDNS	00NR	4	25SP	G15_076	FROM->TO	GRPRAR1-LNX3345.00 - HOLT.CO3 345.00 345KV CKT 1	720	720	0.03962	106.6168	GEN336153 1-WATERFORD UNIT#3
FDNS	00NR	4	20SP	G15_076	FROM->TO	GRPRAR1-LNX3345.00 - HOLT.CO3 345.00 345KV CKT 1	720	720	0.04349	106.6095	RAUN - SUB 3451 FT CAL 345KV CKT 1
FDNS	00NR	4	20SP	G15_076	FROM->TO	GRPRAR1-LNX3345.00 - HOLT.CO3 345.00 345KV CKT 1	720	720	0.04349	106.6095	RAUN - SUB 3451 FT CAL 345KV CKT 1
FDNS	00NR	4	20SP	G15_076	FROM->TO	GRPRAR1-LNX3345.00 - HOLT.CO3 345.00 345KV CKT 1	720	720	0.04077	106.6049	SIDNEY - STEGALL 345KV CKT 1
FDNS	00NR	4	20SP	G15_076	FROM->TO	GRPRAR1-LNX3345.00 - HOLT.CO3 345.00 345KV CKT 1	720	720	0.04039	106.6031	AINSWORTH - VALENTINE 115KV CKT 1
FDNS	00NR	4	25SP	G15_076	FROM->TO	GRPRAR1-LNX3345.00 - HOLT.CO3 345.00 345KV CKT 1	720	720	0.04763	106.6006	NUNDRWD - WAYSIDE 230KV CKT 1
FDNS	00NR	4	20SP	G15_076	FROM->TO	GRPRAR1-LNX3345.00 - HOLT.CO3 345.00 345KV CKT 1	720	720	0.03955	106.5958	ARROWHEAD - ARROWHEAD 230 230KV CKT 1
FDNS	00NR	4	20SP	G15_076	FROM->TO	GRPRAR1-LNX3345.00 - HOLT.CO3 345.00 345KV CKT 1	720	720	0.0393	106.5676	GEN338146 1-INDEPENDENCE UNIT #2
FDNS	00NR	4	20SP	G15_076	FROM->TO	GRPRAR1-LNX3345.00 - HOLT.CO3 345.00 345KV CKT 1	720	720	0.0393	106.5641	GEN338143 1-INDEPENDENCE UNIT #1
FDNS	00NR	4	20SP	G15_076	FROM->TO	GRPRAR1-LNX3345.00 - HOLT.CO3 345.00 345KV CKT 1	720	720	0.0393	106.5416	GEN501801 1-DOLET HILLS UNIT1
FDNS	00NR	4	20SP	G15_076	FROM->TO	GRPRAR1-LNX3345.00 - HOLT.CO3 345.00 345KV CKT 1	720	720	0.03971	106.5118	BROOKING COUNTY - LYON COUNTY 345KV CKT 1
FDNS	00NR	4	20SP	G15_076	FROM->TO	GRPRAR1-LNX3345.00 - HOLT.CO3 345.00 345KV CKT 1	720	720	0.03939	106.5041	ALEXMRES3 345.00 - BISON 3 345.00 345KV CKT 1
FDNS	00NR	4	25SP	G15_076	FROM->TO	GRPRAR1-LNX3345.00 - HOLT.CO3 345.00 345KV CKT 1	720	720	0.03849	106.4554	FT RANDAL - SIOUX CITY 230KV CKT 1
FDNS	00NR	4	17SP	G15_076	FROM->TO	GRPRAR1-LNX3345.00 - HOLT.CO3 345.00 345KV CKT 1	720	720	0.04084	106.4545	GEN600002 3-SHERBURNE CNTY G3
FDNS	00NR	4	20SP	G15_076	FROM->TO	GRPRAR1-LNX3345.00 - HOLT.CO3 345.00 345KV CKT 1	720	720	0.03959	106.4291	AS KING - EAU CLAIRE 345KV CKT 1
FDNS	00NR	4	20SP	G15_076	FROM->TO	GRPRAR1-LNX3345.00 - HOLT.CO3 345.00 345KV CKT 1	720	720	0.0393	106.4026	GEN336252 1-NINEMILE POINT UNIT#5
FDNS	00NR	4	20SP	G15_076	FROM->TO	GRPRAR1-LNX3345.00 - HOLT.CO3 345.00 345KV CKT 1	720	720	0.03932	106.3892	CARPENTER - HURON 230KV CKT 1
FDNS	00NR	4	25SP	G15_076	FROM->TO	GRPRAR1-LNX3345.00 - HOLT.CO3 345.00 345KV CKT 1	720	720	0.04172	106.3855	FT RANDAL - SPENCER 115KV CKT 1
FDNS	00NR	4	25SP	G15_076	FROM->TO	GRPRAR1-LNX3345.00 - HOLT.CO3 345.00 345KV CKT 1	720	720	0.04172	106.356	P12:115:NPPD:WAPA6:FTRANDL7:ONEILL 7:BTB
FDNS	00NR	4	25SP	G15_076	FROM->TO	GRPRAR1-LNX3345.00 - HOLT.CO3 345.00 345KV CKT 1	720	720	0.04172	106.356	P12:115:UMZB:# 115 #: SE IN NE. FR-SE-ON
FDNS	00NR	4	20SP	G15_076	FROM->TO	GRPRAR1-LNX3345.00 - HOLT.CO3 345.00 345KV CKT 1	720	720	0.0393	106.3224	GEN336251 1-NINEMILE POINT UNIT#4
FDNS	00NR	4	20SP	G15_076	FROM->TO	GRPRAR1-LNX3345.00 - HOLT.CO3 345.00 345KV CKT 1	720	720	0.03461	106.3041	RASMUSN - UTICA JCT 230KV CKT 1
FDNS	00NR	4	20SP	G15_076	FROM->TO	GRPRAR1-LNX3345.00 - HOLT.CO3 345.00 345KV CKT 1	720	720	0.0393	106.3039	GEN336831 1-BAXTER WILSON SES
FDNS	00NR	4	25SP	G15_076	FROM->TO	GRPRAR1-LNX3345.00 - HOLT.CO3 345.00 345KV CKT 1	720	720	0.03962	106.2961	GEN335831 1-RIVERBEND UNIT#1
FDNS	00NR	4	20SP	G15_076	FROM->TO	GRPRAR1-LNX3345.00 - HOLT.CO3 345.00 345KV CKT 1	720	720	0.03932	106.2868	HURON - WATERTOWN 230KV CKT 2
FDNS	00NR	4	20SP	G15_076	FROM->TO	GRPRAR1-LNX3345.00 - HOLT.CO3 345.00 345KV CKT 1	720	720	0.03932	106.2868	HURON - WATERTOWN 230KV CKT 2
FDNS	00NR	4	20SP	G15_076	FROM->TO	GRPRAR1-LNX3345.00 - HOLT.CO3 345.00 345KV CKT 1	720	720	0.0393	106.2508	GEN337041 1-GERALD ANDRUS
FDNS	00NR	4	20SP	G15_076	FROM->TO	GRPRAR1-LNX3345.00 - HOLT.CO3 345.00 345KV CKT 1	720	720	0.03932	106.2456	CARPENTER - WATERTOWN 230KV CKT 1
FDNS	00NR	4	20SP	G15_076	FROM->TO	GRPRAR1-LNX3345.00 - HOLT.CO3 345.00 345KV CKT 1	720	720	0.03932	106.2456	CARPENTER - WATERTOWN 230KV CKT 1
FDNS	00NR	4	25SP	G15_076	FROM->TO	GRPRAR1-LNX3345.00 - HOLT.CO3 345.00 345KV CKT 1	720	720	0.03962	106.234	GEN337910 1-ARKANSAS NUCLEAR ONE UNIT #1
FDNS	00NR	4	25SP	G15_076	FROM->TO	GRPRAR1-LNX3345.00 - HOLT.CO3 345.00 345KV CKT 1	720	720	0.04172	106.2313	ONEILL - SPENCER 115KV CKT 1
FDNS	00NR	4	20SP	G15_076	FROM->TO	GRPRAR1-LNX3345.00 - HOLT.CO3 345.00 345KV CKT 1	720	720	0.0393	106.2181	GEN501813 1-RODEMACHER UNIT 3
FDNS	00NR	4	20SP	G15_076	FROM->TO	GRPRAR1-LNX3345.00 - HOLT.CO3 345.00 345KV CKT 1	720	720	0.03992	106.2176	HAZLETON - MITCHLCO3 345.00 345KV CKT 1
FDNS	00NR	4	17SP	G15_076	FROM->TO	GRPRAR1-LNX3345.00 - HOLT.CO3 345.00 345KV CKT 1	720	720	0.04084	106.2118	GEN657748 1-YOUNG 2 GENERATOR
FDNS	00NR	4	20SP	G15_076	FROM->TO	GRPRAR1-LNX3345.00 - HOLT.CO3 345.00 345KV CKT 1	720	720	0.03829	106.1992	EAGLE 4 230.00 - PAHOJA 230KV CKT 1
FDNS	00NR	4	25SP	G15_076	FROM->TO	GRPRAR1-LNX3345.00 - HOLT.CO3 345.00 345KV CKT 1	720	720	0.03937	106.1808	GROTON-LNX3 345.00 - LELAND1-LNX3345.00 345KV CKT 1
FDNS	00NR	4	20SP	G15_076	FROM->TO	GRPRAR1-LNX3345.00 - HOLT.CO3 345.00 345KV CKT 1	720	720	0.03958	106.156	G15094_T 345.00 - SIDNEY2-LNX3345.00 345KV CKT 1
FDNS	00NR	4	20SP	G15_076	FROM->TO	GRPRAR1-LNX3345.00 - HOLT.CO3 345.00 345KV CKT 1	720	720	0.03931	106.1551	CNTSHNT3 345.00 - PRAIRIE3 345.00 345KV CKT 1
FDNS	00NR	4	20SP	G15_076	FROM->TO	GRPRAR1-LNX3345.00 - HOLT.CO3 345.00 345KV CKT 1	720	720	0.03958	106.1486	SIDNEY - SIDNEY2-LNX3345.00 345KV CKT Z
FDNS	00NR	4	25SP	G15_076	FROM->TO	GRPRAR1-LNX3345.00 - HOLT.CO3 345.00 345KV CKT 1	720	720	0.03937	106.1347	GROTON - GROTON-LNX3 345.00 345KV CKT Z
FDNS	00NR	4	25SP	G15_076	FROM->TO	GRPRAR1-LNX3345.00 - HOLT.CO3 345.00 345KV CKT 1	720	720	0.03937	106.1332	P12:345:UMZB:# 109 #: LOS GRT IN ND. LOS GRT
FDNS	00NR	4	25SP	G15_076	FROM->TO	GRPRAR1-LNX3345.00 - HOLT.CO3 345.00 345KV CKT 1	720	720	0.03937	106.1267	LELAND OLDS - LELAND1-LNX3345.00 345KV CKT Z
FDNS	00NR	4	25SP	G15_076	FROM->TO	GRPRAR1-LNX3345.00 - HOLT.CO3 345.00 345KV CKT 1	720	720	0.03771	106.1126	SIOUXCY-LNX3345.00 - SPLIT ROCK 345KV CKT 1
FDNS	00NR	4	25SP	G15_076	FROM->TO	GRPRAR1-LNX3345.00 - HOLT.CO3 345.00 345KV CKT 1	720	720	0.03771	106.1126	SIOUXCY-LNX3345.00 - SPLIT ROCK 345KV CKT 1
FDNS	00NR	4	25SP	G15_076	FROM->TO	GRPRAR1-LNX3345.00 - HOLT.CO3 345.00 345KV CKT 1	720	720	0.03551	106.0743	FT RANDAL - UTICA JCT 230KV CKT 1
FDNS	00NR	4	25SP	G15_076	FROM->TO	GRPRAR1-LNX3345.00 - HOLT.CO3 345.00 345KV CKT 1	720	720	0.03771	106.0703	P12:345:UMZW:# 907 #: SC2-SR IN IA. SC2-SR 345 KV LINE
FDNS	00NR	4	20SP	G15_076	FROM->TO	GRPRAR1-LNX3345.00 - HOLT.CO3 345.00 345KV CKT 1	720	720	0.0393	106.0493	GEN335206 1-NELSON UNIT 6
FDNS	00NR	4	25SP	G15_076	FROM->TO	GRPRAR1-LNX3345.00 - HOLT.CO3 345.00 345KV CKT 1	720	720	0.03771	106.0406	SIOUX CITY - SIOUXCY-LNX3345.00 345KV CKT Z
FDNS	00NR	4	25SP	G15_076	FROM->TO	GRPRAR1-LNX3345.00 - HOLT.CO3 345.00 345KV CKT 1	720	720	0.05484	106.0353	DIXONCO 230.00 - HOSKINS 230KV CKT 1
FDNS	00NR	4	20SP	G15_076	FROM->TO	GRPRAR1-LNX3345.00 - HOLT.CO3 345.00 345KV CKT 1	720	720	0.0393	106.0192	GEN635214 4-NEAL UNIT 4
FDNS	00NR	4	20SP	G15_076	FROM->TO	GRPRAR1-LNX3345.00 - HOLT.CO3 345.00 345KV CKT 1	720	720	0.0393	106.0128	GEN344897 4-1LAB G4 20.000
FDNS	00NR	4	20SP	G15_076	FROM->TO	GRPRAR1-LNX3345.00 - HOLT.CO3 345.00 345KV CKT 1	720	720	0.0393	106.0113	GEN344894 1-1LAB G1 20.000
FDNS	00NR	4	20SP	G15_076	FROM->TO	GRPRAR1-LNX3345.00 - HOLT.CO3 345.00 345KV CKT 1	720	720	0.0393	106.0112	GEN344895 2-1LAB G2 20.000
FDNS	00NR	4	20SP	G15_076	FROM->TO	GRPRAR1-LNX3345.00 - HOLT.CO3 345.00 345KV CKT 1	720	720	0.0393	106.011	GEN344896 3-1LAB G3 20.000
FDNS	00NR	4	20SP	G15_076	FROM->TO	GRPRAR1-LNX3345.00 - HOLT.CO3 345.00 345KV CKT 1	720	720	0.0393	106.0057	GEN334440 1-SABINE UNIT 4
FDNS	00NR	4	20SP	G15_076	FROM->TO	GRPRAR1-LNX3345.00 - HOLT.CO3 345.00 345KV CKT 1	720	720	0.03963	105.982	ARPIN B4 345.00 - EAU CLAIRE 345KV CKT 1
FDNS	00NR	4	25SP	G15_076	FROM->TO	GRPRAR1-LNX3345.00 - HOLT.CO3 345.00 345KV CKT 1	720	720	0.03891	105.9656	HANLON - SIOUX FALLS 230KV CKT 1
FDNS	00NR	4	17SP	G15_076	FROM->TO	GRPRAR1-LNX3345.00 - HOLT.CO3 345.00 345KV CKT 1	720	720	0.04084	105.9629	GEN562872 1-G15046_3 0.6900
FDNS	00NR	4	20SP	G15_076	FROM->TO	GRPRAR1-LNX3345.00 - HOLT.CO3 345.00 345KV CKT 1	720	720	0.0393	105.9586	GEN345671 2-1RUSH G2 18.000
FDNS	00NR	4	25SP	G15_076	FROM->TO	GRPRAR1-LNX3345.00 - HOLT.CO3 345.00 345KV CKT 1	720	720	0.04081	105.957	LAKEFIELD 3 - NOBLES 345KV CKT 1
FDNS	00NR	4	20SP	G15_076	FROM->TO	GRPRAR1-LNX3345.00 - HOLT.CO3 345.00 345KV CKT 1	720	720	0.0393	105.9543	GEN345670 1-1RUSH G1 18.000
FDNS	00NR	4	25SP	G15_076	FROM->TO	GRPRAR1-LNX3345.00 - HOLT.CO3 345.00 345KV CKT 1	720	720	0.03996	105.9408	GERALD GENTLEMAN STATION - KEYSTONE 345KV CKT 1
FDNS	00NR	4	20SP	G15_076	FROM->TO	GRPRAR1-LNX3345.00 - HOLT.CO3 345.00 345KV CKT 1	720	720	0.0393	105.9145	GEN501812 1-RODEMACHER UNIT 2
FDNS	00NR	4	25SP	G15_076	FROM->TO	GRPRAR1-LNX3345.00 - HOLT.CO3 345.00 345KV CKT 1	720	720	0.03962	105.9	GEN338143 1-INDEPENDENCE UNIT #1
FDNS	00NR	4	25SP	G15_076	FROM->TO	GRPRAR1-LNX3345.00 - HOLT.CO3 345.00 345KV CKT 1	720	720	0.03962	105.9	GEN338146 1-INDEPENDENCE UNIT #2
FDNS	00NR	4	20SP	G15_076	FROM->TO	GRPRAR1-LNX3345.00 - HOLT.CO3 345.00 345KV CKT 1	720	720	0.0393	105.8817	GEN336191 1-LITTLE GYPSY UNIT#3
FDNS	00NR	4	20SP	G15_076	FROM->TO	GRPRAR1-LNX3345.00 - HOLT.CO3 345.00 345KV CKT 1	720	720	0.03733	105.8645	FT THOMPSON - WESSINGTON 230KV CKT 1
FDNS	00NR	4	20SP	G15_076	FROM->TO	GRPRAR1-LNX3345.00 - HOLT.CO3 345.00 345KV CKT 1	720	720	0.03733	105.8645	FT THOMPSON - WESSINGTON 230KV CKT 1
FDNS	00NR	4	20SP	G15_076	FROM->TO	GRPRAR1-LNX3345.00 - HOLT.CO3 345.00 345KV CKT 1	720	720	0.0393	105.8585	GEN338388 1-1PLUM PT U1 23.000
FDNS	00NR	4	20SP	G15_076	FROM->TO	GRPRAR1-LNX3345.00 - HOLT.CO3 345.00 345KV CKT 1	720	720	0.0393	105.8564	GEN629075 1-OTTUMWA GENERATOR FOR OTTUMWA UNIT NO 1
FDNS	00NR	4	25SP	G15_076	FROM->TO	GRPRAR1-LNX3345.00 - HOLT.CO3 345.00 345KV CKT 1	720	720	0.0407	105.8384	AINSWORTH - VALENTINE 115KV CKT 1
FDNS	00NR	4	25SP	G15_076	FROM->TO	GRPRAR1-LNX3345.00 - HOLT.CO3 345.00 345KV CKT 1	720	720	0.03861	105.8377	PAHOJA - SIOUX FALLS 230KV CKT 1
FDNS	00NR	4	25SP	G15_076	FROM->TO	GRPRAR1-LNX3345.00 - HOLT.CO3 345.00 345KV CKT 1	720	720	0.0438	105.8335	RAUN - SUB 3451 FT CAL 345KV CKT 1
FDNS	00NR	4	25SP	G15_076	FROM->TO	GRPRAR1-LNX3345.00 - HOLT.CO3 345.00 345KV CKT 1	720	720	0.0438	105.8335	RAUN - SUB 3451 FT CAL 345KV CKT 1
FDNS	00NR	4	25SP	G15_076	FROM->TO	GRPRAR1-LNX3345.00 - HOLT.CO3 345.00 345KV CKT 1	720	720	0.04109	105.8328	SIDNEY - STEGALL 345KV CKT 1

SOLUTION	GROUP	SCENARIO	SEASON	SOURCE	DIRECTION	MONITORED ELEMENT	RATEA (MVA)	RATEB(MVA)	TDF	TC%LOADING (% MVA)	CONTINGENCY
FDNS	00NR	4	25SP	G15_076	FROM->TO	GRPRAR1-LNX3345.00 - HOLT.CO3 345.00 345KV CKT 1	720	720	0.04003	105.8264	BROOKING COUNTY - LYON COUNTY 345KV CKT 1
FDNS	00NR	4	20SP	G15_076	FROM->TO	GRPRAR1-LNX3345.00 - HOLT.CO3 345.00 345KV CKT 1	720	720	0.0393	105.8156	GEN335614 1-WILLOW GLENN UNIT#4
FDNS	00NR	4	20SP	G15_076	FROM->TO	GRPRAR1-LNX3345.00 - HOLT.CO3 345.00 345KV CKT 1	720	720	0.0393	105.8035	GEN336801 1-BAXTER WILSON UNIT #1
FDNS	00NR	4	20SP	G15_076	FROM->TO	GRPRAR1-LNX3345.00 - HOLT.CO3 345.00 345KV CKT 1	720	720	0.0393	105.8003	GEN336464 1-MICHOUD UNIT #3
FDNS	00NR	4	20SP	G15_076	FROM->TO	GRPRAR1-LNX3345.00 - HOLT.CO3 345.00 345KV CKT 1	720	720	0.0393	105.7893	GEN335204 1-NELSON UNIT 4
FDNS	00NR	4	20SP	G15_076	FROM->TO	GRPRAR1-LNX3345.00 - HOLT.CO3 345.00 345KV CKT 1	720	720	0.0393	105.7796	GEN334441 1-SABINE UNIT 5
FDNS	00NR	4	25SP	G15_076	FROM->TO	GRPRAR1-LNX3345.00 - HOLT.CO3 345.00 345KV CKT 1	720	720	0.03971	105.7739	ALEXMRES3 345.00 - BISON 3 345.00 345KV CKT 1
FDNS	00NR	4	20SP	G15_076	FROM->TO	GRPRAR1-LNX3345.00 - HOLT.CO3 345.00 345KV CKT 1	720	720	0.04084	105.7644	GRIMES - LEHIGH 345KV CKT 1
FDNS	00NR	4	25SP	G15_076	FROM->TO	GRPRAR1-LNX3345.00 - HOLT.CO3 345.00 345KV CKT 1	720	720	0.03962	105.762	GEN337653 1-WHITE BLUFF UNIT #2
FDNS	00NR	4	20SP	G15_076	FROM->TO	GRPRAR1-LNX3345.00 - HOLT.CO3 345.00 345KV CKT 1	720	720	0.03953	105.7548	NORTH LA CROSSE - NORTH ROCHESTER 345KV CKT 1
FDNS	00NR	4	25SP	G15_076	FROM->TO	GRPRAR1-LNX3345.00 - HOLT.CO3 345.00 345KV CKT 1	720	720	0.03987	105.7268	ARROWHEAD - ARROWHEAD 230 230KV CKT 1
FDNS	00NR	4	20SP	G15_076	FROM->TO	GRPRAR1-LNX3345.00 - HOLT.CO3 345.00 345KV CKT 1	720	720	0.03992	105.6993	KOSSUTH 3 345.00 - WEBSTER 345KV CKT 1
FDNS	00NR	4	17SP	G15_076	FROM->TO	GRPRAR1-LNX3345.00 - HOLT.CO3 345.00 345KV CKT 1	720	720	0.04084	105.6626	GEN659111 2-LELAND OLDS UNIT2
FDNS	00NR	4	20SP	G15_076	FROM->TO	GRPRAR1-LNX3345.00 - HOLT.CO3 345.00 345KV CKT 1	720	720	0.0393	105.6609	P12:115:UMZW:# 162 #: NEL IN ND. FAULT ON ML-NEL-MX-GA 115 KV
FDNS	00NR	4	25SP	G15_076	FROM->TO	GRPRAR1-LNX3345.00 - HOLT.CO3 345.00 345KV CKT 1	720	720	0.03962	105.6593	GEN501801 1-DOLET HILLS UNIT1
FDNS	00NR	4	20SP	G15_076	FROM->TO	GRPRAR1-LNX3345.00 - HOLT.CO3 345.00 345KV CKT 1	720	720	0.0393	105.6576	GEN563222 1-G15088_3 0.6900
FDNS	00NR	4	20SP	G15_076	FROM->TO	GRPRAR1-LNX3345.00 - HOLT.CO3 345.00 345KV CKT 1	720	720	0.0393	105.6451	GEN334433 1-SABINE UNIT 3
FDNS	00NR	4	20SP	G15_076	FROM->TO	GRPRAR1-LNX3345.00 - HOLT.CO3 345.00 345KV CKT 1	720	720	0.03911	105.6441	BROOKING COUNTY - BSSOUTH3 345.00 345KV CKT 1
FDNS	00NR	4	25SP	G15_076	FROM->TO	GRPRAR1-LNX3345.00 - HOLT.CO3 345.00 345KV CKT 1	720	720	0.03964	105.6436	CARPENTER - HURON 230KV CKT 1
FDNS	00NR	4	20SP	G15_076	FROM->TO	GRPRAR1-LNX3345.00 - HOLT.CO3 345.00 345KV CKT 1	720	720	0.0393	105.6385	GEN635213 3-NEAL UNIT 3
FDNS	00NR	4	20SP	G15_076	FROM->TO	GRPRAR1-LNX3345.00 - HOLT.CO3 345.00 345KV CKT 1	720	720	0.03799	105.6035	MENNO JCT - TRIPP JCT 115KV CKT 1
FDNS	00NR	4	20SP	G15_076	FROM->TO	GRPRAR1-LNX3345.00 - HOLT.CO3 345.00 345KV CKT 1	720	720	0.0392	105.6013	HESKETT - WISHEK 230KV CKT 1
FDNS	00NR	4	20SP	G15_076	FROM->TO	GRPRAR1-LNX3345.00 - HOLT.CO3 345.00 345KV CKT 1	720	720	0.04537	105.5975	BLOOMFIELD - CREIGHTON 115KV CKT 1
FDNS	00NR	4	25SP	G15_076	FROM->TO	GRPRAR1-LNX3345.00 - HOLT.CO3 345.00 345KV CKT 1	720	720	0.0399	105.5942	AS KING - EAU CLAIRE 345KV CKT 1
FDNS	00NR	4	20SP	G15_076	FROM->TO	GRPRAR1-LNX3345.00 - HOLT.CO3 345.00 345KV CKT 1	720	720	0.03963	105.5935	NMA B3 345 345.00 - NORTH LA CROSSE 345KV CKT 1
FDNS	00NR	4	20SP	G15_076	FROM->TO	GRPRAR1-LNX3345.00 - HOLT.CO3 345.00 345KV CKT 1	720	720	0.03992	105.588	ADAMS - MITCHLCO3 345.00 345KV CKT 1
FDNS	00NR	4	20SP	G15_076	FROM->TO	GRPRAR1-LNX3345.00 - HOLT.CO3 345.00 345KV CKT 1	720	720	0.03929	105.5851	CENTER - COYOTE 345KV CKT 1
FDNS	00NR	4	20SP	G15_076	FROM->TO	GRPRAR1-LNX3345.00 - HOLT.CO3 345.00 345KV CKT 1	720	720	0.04581	105.576	RAUN - SIOUX CITY 345KV CKT 1
FDNS	00NR	4	20SP	G15_076	FROM->TO	GRPRAR1-LNX3345.00 - HOLT.CO3 345.00 345KV CKT 1	720	720	0.04581	105.576	RAUN - SIOUX CITY 345KV CKT 1
FDNS	00NR	4	20SP	G15_076	FROM->TO	GRPRAR1-LNX3345.00 - HOLT.CO3 345.00 345KV CKT 1	720	720	0.0393	105.5745	GEN336222 1-LITTLE GYPSY UNIT#2
FDNS	00NR	4	25SP	G15_076	FROM->TO	GRPRAR1-LNX3345.00 - HOLT.CO3 345.00 345KV CKT 1	720	720	0.03963	105.5597	CNTSHNT3 345.00 - PRAIRIE3 345.00 345KV CKT 1
FDNS	00NR	4	20SP	G15_076	FROM->TO	GRPRAR1-LNX3345.00 - HOLT.CO3 345.00 345KV CKT 1	720	720	0.03936	105.5526	GLENBORO SOUTH - RUGBY 230KV CKT 1
FDNS	00NR	4	20SP	G15_076	FROM->TO	GRPRAR1-LNX3345.00 - HOLT.CO3 345.00 345KV CKT 1	720	720	0.0393	105.5473	GARRISON - JAMES TOWN 230KV CKT 1
FDNS	00NR	4	25SP	G15_076	FROM->TO	GRPRAR1-LNX3345.00 - HOLT.CO3 345.00 345KV CKT 1	720	720	0.04022	105.5463	HAZLETON - MITCHLCO3 345.00 345KV CKT 1
FDNS	00NR	4	25SP	G15_076	FROM->TO	GRPRAR1-LNX3345.00 - HOLT.CO3 345.00 345KV CKT 1	720	720	0.03964	105.538	HURON - WATERTOWN 230KV CKT 2
FDNS	00NR	4	25SP	G15_076	FROM->TO	GRPRAR1-LNX3345.00 - HOLT.CO3 345.00 345KV CKT 1	720	720	0.03964	105.538	HURON - WATERTOWN 230KV CKT 2
FDNS	00NR	4	20SP	G15_076	FROM->TO	GRPRAR1-LNX3345.00 - HOLT.CO3 345.00 345KV CKT 1	720	720	0.0392	105.5355	MERRCRT4 230.00 - WISHEK 230KV CKT 1
FDNS	00NR	4	20SP	G15_076	FROM->TO	GRPRAR1-LNX3345.00 - HOLT.CO3 345.00 345KV CKT 1	720	720	0.0393	105.5251	GEN336152 1-WATERFORD UNIT#2
FDNS	00NR	4	20SP	G15_076	FROM->TO	GRPRAR1-LNX3345.00 - HOLT.CO3 345.00 345KV CKT 1	720	720	0.0393	105.525	GEN336151 1-WATERFORD UNIT#1
FDNS	00NR	4	20SP	G15_076	FROM->TO	GRPRAR1-LNX3345.00 - HOLT.CO3 345.00 345KV CKT 1	720	720	0.0393	105.5097	GEN531447 1-HOLCOMB GENERATOR
FDNS	00NR	4	20SP	G15_076	FROM->TO	GRPRAR1-LNX3345.00 - HOLT.CO3 345.00 345KV CKT 1	720	720	0.04537	105.5049	BLOOMFIELD - GAVINS POINT 115KV CKT 1
FDNS	00NR	4	25SP	G15_076	FROM->TO	GRPRAR1-LNX3345.00 - HOLT.CO3 345.00 345KV CKT 1	720	720	0.03964	105.4953	CARPENTER - WATERTOWN 230KV CKT 1
FDNS	00NR	4	25SP	G15_076	FROM->TO	GRPRAR1-LNX3345.00 - HOLT.CO3 345.00 345KV CKT 1	720	720	0.03964	105.4953	CARPENTER - WATERTOWN 230KV CKT 1
FDNS	00NR	4	20SP	G15_076	FROM->TO	GRPRAR1-LNX3345.00 - HOLT.CO3 345.00 345KV CKT 1	720	720	0.03972	105.4832	ADAMS - PLEASANT VALLEY 345KV CKT 1
FDNS	00NR	4	20SP	G15_076	FROM->TO	GRPRAR1-LNX3345.00 - HOLT.CO3 345.00 345KV CKT 1	720	720	0.03799	105.4794	MENNO JCT - UTICA 115KV CKT 1
FDNS	00NR	4	20SP	G15_076	FROM->TO	GRPRAR1-LNX3345.00 - HOLT.CO3 345.00 345KV CKT 1	720	720	0.0393	105.4744	GEN640009 1-COOPER NUCLEAR STATION
FDNS	00NR	4	20SP	G15_076	FROM->TO	GRPRAR1-LNX3345.00 - HOLT.CO3 345.00 345KV CKT 1	720	720	0.03941	105.4708	APPLEDORN 4 230.00 - WATERTOWN 230KV CKT 1
FDNS	00NR	4	20SP	G15_076	FROM->TO	GRPRAR1-LNX3345.00 - HOLT.CO3 345.00 345KV CKT 1	720	720	0.03941	105.4708	APPLEDORN 4 230.00 - WATERTOWN 230KV CKT 1
FDNS	00NR	4	20SP	G15_076	FROM->TO	GRPRAR1-LNX3345.00 - HOLT.CO3 345.00 345KV CKT 1	720	720	0.03922	105.4589	BSSOUTH3 345.00 - ELLENDLMVP3 345.00 345KV CKT 1
FDNS	00NR	4	20SP	G15_076	FROM->TO	GRPRAR1-LNX3345.00 - HOLT.CO3 345.00 345KV CKT 1	720	720	0.03922	105.4589	BSSOUTH3 345.00 - ELLENDLMVP3 345.00 345KV CKT 1
FDNS	00NR	4	20SP	G15_076	FROM->TO	GRPRAR1-LNX3345.00 - HOLT.CO3 345.00 345KV CKT 1	720	720	0.0393	105.4587	GEN303007 1-1BC2 U2
FDNS	00NR	4	20SP	G15_076	FROM->TO	GRPRAR1-LNX3345.00 - HOLT.CO3 345.00 345KV CKT 1	720	720	0.0393	105.4525	GEN303006 1-1BC2 U1
FDNS	00NR	4	25SP	G15_076	FROM->TO	GRPRAR1-LNX3345.00 - HOLT.CO3 345.00 345KV CKT 1	720	720	0.03962	105.4512	GEN336251 1-NINEMILE POINT UNIT#4
FDNS	00NR	4	25SP	G15_076	FROM->TO	GRPRAR1-LNX3345.00 - HOLT.CO3 345.00 345KV CKT 1	720	720	0.03493	105.4391	RASMUSN - UTICA JCT 230KV CKT 1
FDNS	00NR	4	20SP	G15_076	FROM->TO	GRPRAR1-LNX3345.00 - HOLT.CO3 345.00 345KV CKT 1	720	720	0.03922	105.4379	ELLENDLMVP3 345.00 (1) 345/230/34.5KV TRANSFORMER CKT 1
FDNS	00NR	4	20SP	G15_076	FROM->TO	GRPRAR1-LNX3345.00 - HOLT.CO3 345.00 345KV CKT 1	720	720	0.03943	105.4361	ARKANSAS NUCLEAR ONE - FT SMITH 500KV CKT 1
FDNS	00NR	4	20SP	G15_076	FROM->TO	GRPRAR1-LNX3345.00 - HOLT.CO3 345.00 345KV CKT 1	720	720	0.03943	105.4361	ARKANSAS NUCLEAR ONE - FT SMITH 500KV CKT 1
FDNS	00NR	4	20SP	G15_076	FROM->TO	GRPRAR1-LNX3345.00 - HOLT.CO3 345.00 345KV CKT 1	720	720	0.03943	105.431	ALEXMRES3 345.00 - WAITE PARK 345KV CKT 1
FDNS	00NR	4	25SP	G15_076	FROM->TO	GRPRAR1-LNX3345.00 - HOLT.CO3 345.00 345KV CKT 1	720	720	0.0399	105.4288	G15094_T 345.00 - SIDNEY2-LNX3345.00 345KV CKT 1
FDNS	00NR	4	25SP	G15_076	FROM->TO	GRPRAR1-LNX3345.00 - HOLT.CO3 345.00 345KV CKT 1	720	720	0.0399	105.4286	SIDNEY - SIDNEY2-LNX3345.00 345KV CKT Z
FDNS	00NR	4	20SP	G15_076	FROM->TO	GRPRAR1-LNX3345.00 - HOLT.CO3 345.00 345KV CKT 1	720	720	0.03799	105.4171	P12:115:UMZZ:# 237 #: MEN IN SD. MENNO JUNCTION IS A TAP (UJ-MEN-TP).
FDNS	00NR	4	25SP	G15_076	FROM->TO	GRPRAR1-LNX3345.00 - HOLT.CO3 345.00 345KV CKT 1	720	720	0.03962	105.4157	GEN336831 1-BAXTER WILSON SES
FDNS	00NR	4	20SP	G15_076	FROM->TO	GRPRAR1-LNX3345.00 - HOLT.CO3 345.00 345KV CKT 1	720	720	0.03941	105.4094	APPLEDORN 4 230.00 - GRANITE FALLS 230KV CKT 1
FDNS	00NR	4	20SP	G15_076	FROM->TO	GRPRAR1-LNX3345.00 - HOLT.CO3 345.00 345KV CKT 1	720	720	0.03941	105.4094	APPLEDORN 4 230.00 - GRANITE FALLS 230KV CKT 1
FDNS	00NR	4	20SP	G15_076	FROM->TO	GRPRAR1-LNX3345.00 - HOLT.CO3 345.00 345KV CKT 1	720	720	0.03869	105.4081	WINNER - WITTEN 115KV CKT 1
FDNS	00NR	4	20SP	G15_076	FROM->TO	GRPRAR1-LNX3345.00 - HOLT.CO3 345.00 345KV CKT 1	720	720	0.03938	105.3983	BLAIR - GRANITE FALLS 230KV CKT 1
FDNS	00NR	4	20SP	G15_076	FROM->TO	GRPRAR1-LNX3345.00 - HOLT.CO3 345.00 345KV CKT 1	720	720	0.03938	105.3983	BLAIR - GRANITE FALLS 230KV CKT 1
FDNS	00NR	4	20SP	G15_076	FROM->TO	GRPRAR1-LNX3345.00 - HOLT.CO3 345.00 345KV CKT 1	720	720	0.03948	105.3964	NORTH ROCHESTER - PRAIRIE ISLAND 345KV CKT 1
FDNS	00NR	4	20SP	G15_076	FROM->TO	GRPRAR1-LNX3345.00 - HOLT.CO3 345.00 345KV CKT 1	720	720	0.0393	105.3865	GEN303008 1-1BC2 U3
FDNS	00NR	4	20SP	G15_076	FROM->TO	GRPRAR1-LNX3345.00 - HOLT.CO3 345.00 345KV CKT 1	720	720	0.0393	105.3814	GEN336170 1-GULF OXY U4
FDNS	00NR	4	25SP	G15_076	FROM->TO	GRPRAR1-LNX3345.00 - HOLT.CO3 345.00 345KV CKT 1	720	720	0.03861	105.374	EAGLE 4 230.00 - PAHOJA 230KV CKT 1
FDNS	00NR	4	20SP	G15_076	FROM->TO	GRPRAR1-LNX3345.00 - HOLT.CO3 345.00 345KV CKT 1	720	720	0.0393	105.3654	GEN641089 2-ENERGY CENTER 2
FDNS	00NR	4	25SP	G15_076	FROM->TO	GRPRAR1-LNX3345.00 - HOLT.CO3 345.00 345KV CKT 1	720	720	0.03962	105.3575	GEN337041 1-GERALD ANDRUS
FDNS	00NR	4	20SP	G15_076	FROM->TO	GRPRAR1-LNX3345.00 - HOLT.CO3 345.00 345KV CKT 1	720	720	0.0393	105.354	GEN562921 1-G15054_2 0.6900
FDNS	00NR	4	20SP	G15_076	FROM->TO	GRPRAR1-LNX3345.00 - HOLT.CO3 345.00 345KV CKT 1	720	720	0.04223	105.3435	STEGALL - STEGALL TRANSFORMER 230KV CKT 1
FDNS	00NR	4	20SP	G15_076	FROM->TO	GRPRAR1-LNX3345.00 - HOLT.CO3 345.00 345KV CKT 1	720	720	0.03958	105.3394	G15094_T 345.00 - LARAMIE RIVER 345KV CKT 1
FDNS	00NR	4	25SP	G15_076	FROM->TO	GRPRAR1-LNX3345.00 - HOLT.CO3 345.00 345KV CKT 1	720	720	0.03962	105.3372	GEN501813 1-RODEMACHER UNIT 3
FDNS	00NR	4	20SP	G15_076	FROM->TO	GRPRAR1-LNX3345.00 - HOLT.CO3 345.00 345KV CKT 1	720	720	0.04223	105.3364	P13:230-345:NPPD:STEGALL3:KV3A
FDNS	00NR	4	20SP	G15_076	FROM->TO	GRPRAR1-LNX3345.00 - HOLT.CO3 345.00 345KV CKT 1	720	720	0.0393	105.3291	FARGO - JAMES TOWN 230KV CKT 1

SOLUTION	GROUP	SCENARIO	SEASON	SOURCE	DIRECTION	MONITORED ELEMENT	RATEA (MVA)	RATEB(MVA)	TDF	TC%LOADING (% MVA)	CONTINGENCY
FDNS	00NR	4	20SP	G15_076	FROM->TO	GRPRAR1-LNX3345.00 - HOLT.CO3 345.00 345KV CKT 1	720	720	0.0398	105.323	HUNTLEY3 345.00 - LEDYARD3 345.00 345KV CKT 1
FDNSLock	00NR	4	20SP	G15_076	FROM->TO	GRPRAR1-LNX3345.00 - HOLT.CO3 345.00 345KV CKT 1	720	720	0.04223	105.3152	STEGALL (SGQ KV3A) 345/230/13.8KV TRANSFORMER CKT 1
FDNS	00NR	4	20SP	G15_076	FROM->TO	GRPRAR1-LNX3345.00 - HOLT.CO3 345.00 345KV CKT 1	720	720	0.0393	105.3078	FARGO - JAMES TOWN 230KV CKT 2
FDNS	00NR	4	20SP	G15_076	FROM->TO	GRPRAR1-LNX3345.00 - HOLT.CO3 345.00 345KV CKT 1	720	720	0.0393	105.305	GEN562596 1-G14_059_3 0.6900
FDNS	00NR	4	20SP	G15_076	FROM->TO	GRPRAR1-LNX3345.00 - HOLT.CO3 345.00 345KV CKT 1	720	720	0.0393	105.3016	GEN501811 1-RODEMACHER UNIT 1
FDNS	00NR	4	20SP	G15_076	FROM->TO	GRPRAR1-LNX3345.00 - HOLT.CO3 345.00 345KV CKT 1	720	720	0.0393	105.2886	P13:230:UMZW:# 2218 #: FP IN MT. LOSS OF TRANSFORMER (AT2).
FDNS	00NR	4	20SP	G15_076	FROM->TO	GRPRAR1-LNX3345.00 - HOLT.CO3 345.00 345KV CKT 1	720	720	0.03979	105.2814	P13:230-345:NPPD:SIDNEY 3:KV2A
FDNS	00NR	4	20SP	G15_076	FROM->TO	GRPRAR1-LNX3345.00 - HOLT.CO3 345.00 345KV CKT 1	720	720	0.03979	105.2813	SIDNEY (SDQ KV2A) 345/230/13.8KV TRANSFORMER CKT 1
FDNS	00NR	4	20SP	G15_076	FROM->TO	GRPRAR1-LNX3345.00 - HOLT.CO3 345.00 345KV CKT 1	720	720	0.03979	105.2812	SIDNEY - SIDNEY TRANSFORMER 230KV CKT 1
FDNS	00NR	4	20SP	G15_076	FROM->TO	GRPRAR1-LNX3345.00 - HOLT.CO3 345.00 345KV CKT 1	720	720	0.0393	105.2785	BISMARK - JAMES TOWN 230KV CKT 1
FDNS	00NR	4	20SP	G15_076	FROM->TO	GRPRAR1-LNX3345.00 - HOLT.CO3 345.00 345KV CKT 1	720	720	0.0393	105.2697	BISMARK - WEBER 230KV CKT 1
FDNS	00NR	4	20SP	G15_076	FROM->TO	GRPRAR1-LNX3345.00 - HOLT.CO3 345.00 345KV CKT 1	720	720	0.03992	105.2689	P12:230:UMZW:# 733 #: FT IN SD. FT-BG2 LINE FAULT
FDNS	00NR	4	20SP	G15_076	FROM->TO	GRPRAR1-LNX3345.00 - HOLT.CO3 345.00 345KV CKT 1	720	720	0.0393	105.2579	TOLK STATION EAST 230/24.0KV TRANSFORMER CKT 1
FDNS	00NR	4	20SP	G15_076	FROM->TO	GRPRAR1-LNX3345.00 - HOLT.CO3 345.00 345KV CKT 1	720	720	0.03981	105.2576	P13:115-230:TSGT:SIDNEY-KV1A
FDNS	00NR	4	20SP	G15_076	FROM->TO	GRPRAR1-LNX3345.00 - HOLT.CO3 345.00 345KV CKT 1	720	720	0.0393	105.2545	JAMES TOWN - WEBER 230KV CKT 1
FDNS	00NR	4	20SP	G15_076	FROM->TO	GRPRAR1-LNX3345.00 - HOLT.CO3 345.00 345KV CKT 1	720	720	0.04022	105.2511	NOBLES - SPLIT ROCK 345KV CKT 1
FDNS	00NR	4	20SP	G15_076	FROM->TO	GRPRAR1-LNX3345.00 - HOLT.CO3 345.00 345KV CKT 1	720	720	0.0393	105.2502	GEN334071 1-LEWIS CREEK 2
FDNS	00NR	4	20SP	G15_076	FROM->TO	GRPRAR1-LNX3345.00 - HOLT.CO3 345.00 345KV CKT 1	720	720	0.03969	105.2478	HUNTLEY3 345.00 - LAKEFIELD 3 345KV CKT 1
FDNS	00NR	4	20SP	G15_076	FROM->TO	GRPRAR1-LNX3345.00 - HOLT.CO3 345.00 345KV CKT 1	720	720	0.0393	105.2468	GEN334070 1-LEWIS CREEK 1
FDNS	00NR	4	20SP	G15_076	FROM->TO	GRPRAR1-LNX3345.00 - HOLT.CO3 345.00 345KV CKT 1	720	720	0.03914	105.2395	FT THOMPSON - HURON 230KV CKT 1
FDNS	00NR	4	20SP	G15_076	FROM->TO	GRPRAR1-LNX3345.00 - HOLT.CO3 345.00 345KV CKT 1	720	720	0.03914	105.2395	FT THOMPSON - HURON 230KV CKT 1
FDNS	00NR	4	20SP	G15_076	FROM->TO	GRPRAR1-LNX3345.00 - HOLT.CO3 345.00 345KV CKT 1	720	720	0.03914	105.2395	FT THOMPSON - HURON 230KV CKT 2
FDNS	00NR	4	20SP	G15_076	FROM->TO	GRPRAR1-LNX3345.00 - HOLT.CO3 345.00 345KV CKT 1	720	720	0.03914	105.2395	FT THOMPSON - HURON 230KV CKT 2
FDNS	00NR	4	20SP	G15_076	FROM->TO	GRPRAR1-LNX3345.00 - HOLT.CO3 345.00 345KV CKT 1	720	720	0.0393	105.2366	GEN532751 1-WOLF CREEK GENERATING STATION UNIT 1
FDNS	00NR	4	20SP	G15_076	FROM->TO	GRPRAR1-LNX3345.00 - HOLT.CO3 345.00 345KV CKT 1	720	720	0.0393	105.2281	LAWRENCE ENERGY CENTER UNIT 5 - LAWRENCE HILL 230KV CKT 1
FDNS	00NR	4	20SP	G15_076	FROM->TO	GRPRAR1-LNX3345.00 - HOLT.CO3 345.00 345KV CKT 1	720	720	0.0393	105.2281	LAWRENCE ENERGY CENTER UNIT 5 230/24.0KV TRANSFORMER CKT 1
FDNS	00NR	4	20SP	G15_076	FROM->TO	GRPRAR1-LNX3345.00 - HOLT.CO3 345.00 345KV CKT 1	720	720	0.0393	105.2263	GEN659118 1-LARAMIE RIVER UNIT1
FDNS	00NR	4	20SP	G15_076	FROM->TO	GRPRAR1-LNX3345.00 - HOLT.CO3 345.00 345KV CKT 1	720	720	0.03869	105.2187	GREGORY - WINNER 115KV CKT 1
FDNS	00NR	4	20SP	G15_076	FROM->TO	GRPRAR1-LNX3345.00 - HOLT.CO3 345.00 345KV CKT 1	720	720	0.0393	105.2164	PRAIRIE ISLAND 345/20.0KV TRANSFORMER CKT 1
FDNS	00NR	4	20SP	G15_076	FROM->TO	GRPRAR1-LNX3345.00 - HOLT.CO3 345.00 345KV CKT 1	720	720	0.0393	105.2156	BALTA - RAMSEY 230KV CKT 1
FDNS	00NR	4	20SP	G15_076	FROM->TO	GRPRAR1-LNX3345.00 - HOLT.CO3 345.00 345KV CKT 1	720	720	0.0393	105.2151	PRAIRIE ISLAND 345/20.0KV TRANSFORMER CKT 2
FDNS	00NR	4	20SP	G15_076	FROM->TO	GRPRAR1-LNX3345.00 - HOLT.CO3 345.00 345KV CKT 1	720	720	0.0393	105.215	GEN337766 1-TRACTEBEL UNIT S1
FDNS	00NR	4	20SP	G15_076	FROM->TO	GRPRAR1-LNX3345.00 - HOLT.CO3 345.00 345KV CKT 1	720	720	0.0393	105.2145	GEN636641 1-LOUISA UNIT 1
FDNS	00NR	4	17SP	G15_076	FROM->TO	GRPRAR1-LNX3345.00 - HOLT.CO3 345.00 345KV CKT 1	720	720	0.04084	105.2093	GEN659103 1-ANTELOPE VALLEY UNIT1
FDNS	00NR	4	17SP	G15_076	FROM->TO	GRPRAR1-LNX3345.00 - HOLT.CO3 345.00 345KV CKT 1	720	720	0.04084	105.2093	GEN659107 2-ANTELOPE VALLEY UNIT2
FDNS	00NR	4	20SP	G15_076	FROM->TO	GRPRAR1-LNX3345.00 - HOLT.CO3 345.00 345KV CKT 1	720	720	0.03869	105.2085	P12:115:UMZW:# 172 #: WI IN SD.
FDNS	00NR	4	20SP	G15_076	FROM->TO	GRPRAR1-LNX3345.00 - HOLT.CO3 345.00 345KV CKT 1	720	720	0.03992	105.2073	LOWERBRULE 4230.00 - RELIANCE 4 230.00 230KV CKT 1
FDNS	00NR	4	20SP	G15_076	FROM->TO	GRPRAR1-LNX3345.00 - HOLT.CO3 345.00 345KV CKT 1	720	720	0.03932	105.1891	FORMAN - HANKINSON 230KV CKT 1
FDNS	00NR	4	20SP	G15_076	FROM->TO	GRPRAR1-LNX3345.00 - HOLT.CO3 345.00 345KV CKT 1	720	720	0.0393	105.1795	GEN501910 1-ACADIA UNIT ST1
FDNS	00NR	4	25SP	G15_076	FROM->TO	GRPRAR1-LNX3345.00 - HOLT.CO3 345.00 345KV CKT 1	720	720	0.03995	105.1795	ARPIN B4 345.00 - EAU CLAIRE 345KV CKT 1
FDNS	00NR	4	25SP	G15_076	FROM->TO	GRPRAR1-LNX3345.00 - HOLT.CO3 345.00 345KV CKT 1	720	720	0.03962	105.1786	GEN335206 1-NELSON UNIT 6
FDNS	00NR	4	20SP	G15_076	FROM->TO	GRPRAR1-LNX3345.00 - HOLT.CO3 345.00 345KV CKT 1	720	720	0.0393	105.1689	ELM CREEK - MONTICELLO 345KV CKT 1
FDNS	00NR	4	17SP	G15_076	FROM->TO	GRPRAR1-LNX3345.00 - HOLT.CO3 345.00 345KV CKT 1	720	720	0.04084	105.1673	BIG STONE 230/24.0KV TRANSFORMER CKT 1
FDNS	00NR	4	20SP	G15_076	FROM->TO	GRPRAR1-LNX3345.00 - HOLT.CO3 345.00 345KV CKT 1	720	720	0.0393	105.164	TATANKA 230/34.5KV TRANSFORMER CKT 1
FDNS	00NR	4	25SP	G15_076	FROM->TO	GRPRAR1-LNX3345.00 - HOLT.CO3 345.00 345KV CKT 1	720	720	0.03962	105.1557	GEN334440 1-SABINE UNIT 4
FDNS	00NR	4	20SP	G15_076	FROM->TO	GRPRAR1-LNX3345.00 - HOLT.CO3 345.00 345KV CKT 1	720	720	0.0393	105.1495	GEN336221 1-LITTLE GYPSY UNIT#1
FDNS	00NR	4	20SP	G15_076	FROM->TO	GRPRAR1-LNX3345.00 - HOLT.CO3 345.00 345KV CKT 1	720	720	0.0393	105.1478	GEN337757 1-DUKE HOTSPRINGS STG1
FDNS	00NR	4	20SP	G15_076	FROM->TO	GRPRAR1-LNX3345.00 - HOLT.CO3 345.00 345KV CKT 1	720	720	0.03932	105.1323	AUDUBON - SHEYNNE 230KV CKT 1
FDNS	00NR	4	25SP	G15_076	FROM->TO	GRPRAR1-LNX3345.00 - HOLT.CO3 345.00 345KV CKT 1	720	720	0.03962	105.1235	GEN344897 4-1LAB G4 20.000
FDNS	00NR	4	25SP	G15_076	FROM->TO	GRPRAR1-LNX3345.00 - HOLT.CO3 345.00 345KV CKT 1	720	720	0.03962	105.1222	GEN344894 1-1LAB G1 20.000
FDNS	00NR	4	25SP	G15_076	FROM->TO	GRPRAR1-LNX3345.00 - HOLT.CO3 345.00 345KV CKT 1	720	720	0.03962	105.1222	GEN344895 2-1LAB G2 20.000
FDNS	00NR	4	25SP	G15_076	FROM->TO	GRPRAR1-LNX3345.00 - HOLT.CO3 345.00 345KV CKT 1	720	720	0.03962	105.122	GEN344896 3-1LAB G3 20.000
FDNS	00NR	4	20SP	G15_076	FROM->TO	GRPRAR1-LNX3345.00 - HOLT.CO3 345.00 345KV CKT 1	720	720	0.03987	105.1195	P12:115:NPPD:WAPA1:CHADRON7:BOXBUTE7:BTB
FDNS	00NR	4	20SP	G15_076	FROM->TO	GRPRAR1-LNX3345.00 - HOLT.CO3 345.00 345KV CKT 1	720	720	0.0517	105.118	BELDEN - HOSKINS 115KV CKT 1
FDNS	00NR	4	20SP	G15_076	FROM->TO	GRPRAR1-LNX3345.00 - HOLT.CO3 345.00 345KV CKT 1	720	720	0.039	105.1176	MT VERN - STORLA 115KV CKT 1
FDNS	00NR	4	20SP	G15_076	FROM->TO	GRPRAR1-LNX3345.00 - HOLT.CO3 345.00 345KV CKT 1	720	720	0.0393	105.1134	GEN337764 1-TRACTEBEL UNIT C1
FDNS	00NR	4	20SP	G15_076	FROM->TO	GRPRAR1-LNX3345.00 - HOLT.CO3 345.00 345KV CKT 1	720	720	0.0393	105.1134	GEN337765 1-TRACTEBEL UNIT C2
FDNS	00NR	4	20SP	G15_076	FROM->TO	GRPRAR1-LNX3345.00 - HOLT.CO3 345.00 345KV CKT 1	720	720	0.03942	105.1132	FRANKS - HUBEN 345KV CKT 1
FDNS	00NR	4	25SP	G15_076	FROM->TO	GRPRAR1-LNX3345.00 - HOLT.CO3 345.00 345KV CKT 1	720	720	0.03962	105.1122	GEN635214 4-NEAL UNIT 4
FDNS	00NR	4	20SP	G15_076	FROM->TO	GRPRAR1-LNX3345.00 - HOLT.CO3 345.00 345KV CKT 1	720	720	0.0393	105.1105	GEN334432 1-SABINE UNIT 2
FDNS	00NR	4	20SP	G15_076	FROM->TO	GRPRAR1-LNX3345.00 - HOLT.CO3 345.00 345KV CKT 1	720	720	0.0393	105.1104	GEN334431 1-SABINE UNIT 1
FDNS	00NR	4	20SP	G15_076	FROM->TO	GRPRAR1-LNX3345.00 - HOLT.CO3 345.00 345KV CKT 1	720	720	0.03934	105.1074	LELAND OLDS - STANTON 230KV CKT 1
FDNS	00NR	4	20SP	G15_076	FROM->TO	GRPRAR1-LNX3345.00 - HOLT.CO3 345.00 345KV CKT 1	720	720	0.03934	105.1074	LELAND OLDS - STANTON 230KV CKT 1
FDNS	00NR	4	20SP	G15_076	FROM->TO	GRPRAR1-LNX3345.00 - HOLT.CO3 345.00 345KV CKT 1	720	720	0.0393	105.1064	GEN336446 1-MICHOUD UNIT #2
FDNS	00NR	4	25SP	G15_076	FROM->TO	GRPRAR1-LNX3345.00 - HOLT.CO3 345.00 345KV CKT 1	720	720	0.03968	105.1056	GLENBORO SOUTH - RUGBY 230KV CKT 1
FDNS	00NR	4	20SP	G15_076	FROM->TO	GRPRAR1-LNX3345.00 - HOLT.CO3 345.00 345KV CKT 1	720	720	0.0393	105.1045	GEN345765 H-1SIOUX 2 18.000
FDNS	00NR	4	25SP	G15_076	FROM->TO	GRPRAR1-LNX3345.00 - HOLT.CO3 345.00 345KV CKT 1	720	720	0.03764	105.1034	FT THOMPSON - WESSINGTON 230KV CKT 1
FDNS	00NR	4	25SP	G15_076	FROM->TO	GRPRAR1-LNX3345.00 - HOLT.CO3 345.00 345KV CKT 1	720	720	0.03764	105.1034	FT THOMPSON - WESSINGTON 230KV CKT 1
FDNS	00NR	4	20SP	G15_076	FROM->TO	GRPRAR1-LNX3345.00 - HOLT.CO3 345.00 345KV CKT 1	720	720	0.03953	105.0981	OVEXFRMCCOVE
FDNS	00NR	4	20SP	G15_076	FROM->TO	GRPRAR1-LNX3345.00 - HOLT.CO3 345.00 345KV CKT 1	720	720	0.0393	105.0872	GEN562912 1-G15053_3 0.6900
FDNS	00NR	4	20SP	G15_076	FROM->TO	GRPRAR1-LNX3345.00 - HOLT.CO3 345.00 345KV CKT 1	720	720	0.0393	105.0833	GRAND GULF 500/22.0KV TRANSFORMER CKT 1
FDNS	00NR	4	20SP	G15_076	FROM->TO	GRPRAR1-LNX3345.00 - HOLT.CO3 345.00 345KV CKT 1	720	720	0.03935	105.078	FERGSFL4 230.00 - WAHPETON 230KV CKT 1
FDNS	00NR	4	25SP	G15_076	FROM->TO	GRPRAR1-LNX3345.00 - HOLT.CO3 345.00 345KV CKT 1	720	720	0.03962	105.0751	GEN338388 1-1PLUM PT U1 23.000
FDNS	00NR	4	20SP	G15_076	FROM->TO	GRPRAR1-LNX3345.00 - HOLT.CO3 345.00 345KV CKT 1	720	720	0.0393	105.0746	GEN336242 1-1NMIL ST1 18.000
FDNS	00NR	4	20SP	G15_076	FROM->TO	GRPRAR1-LNX3345.00 - HOLT.CO3 345.00 345KV CKT 1	720	720	0.0393	105.0733	GEN501823 1-TECHE UNIT 3
FDNS	00NR	4	25SP	G15_076	FROM->TO	GRPRAR1-LNX3345.00 - HOLT.CO3 345.00 345KV CKT 1	720	720	0.03962	105.0706	GEN345671 2-1RUSH G2 18.000
FDNS	00NR	4	20SP	G15_076	FROM->TO	GRPRAR1-LNX3345.00 - HOLT.CO3 345.00 345KV CKT 1	720	720	0.03931	105.07	FORMAN - OAKES 230KV CKT 1
FDNS	00NR	4	20SP	G15_076	FROM->TO	GRPRAR1-LNX3345.00 - HOLT.CO3 345.00 345KV CKT 1	720	720	0.03931	105.069	ELLENDLMVP4 230.00 - OAKES 230KV CKT 1
FDNS	00NR	4	20SP	G15_076	FROM->TO	GRPRAR1-LNX3345.00 - HOLT.CO3 345.00 345KV CKT 1	720	720	0.03931	105.069	ELLENDLMVP4 230.00 - OAKES 230KV CKT 1

SOLUTION	GROUP	SCENARIO	SEASON	SOURCE	DIRECTION	MONITORED ELEMENT	RATEA (MVA)	RATEB(MVA)	TDF	TC%LOADING (% MVA)	CONTINGENCY
FDNS	00NR	4	25SP	G15_076	FROM->TO	GRPRAR1-LNX3345.00 - HOLT.CO3 345.00 345KV CKT 1	720	720	0.03962	105.0667	GEN345670 1-1RUSH G1 18.000
FDNS	00NR	4	20SP	G15_076	FROM->TO	GRPRAR1-LNX3345.00 - HOLT.CO3 345.00 345KV CKT 1	720	720	0.0393	105.0617	PRAIRIE - WINGER 230KV CKT 1
FDNS	00NR	4	20SP	G15_076	FROM->TO	GRPRAR1-LNX3345.00 - HOLT.CO3 345.00 345KV CKT 1	720	720	0.03987	105.0574	CHADRON - DUNLAP 115KV CKT 1
FDNS	00NR	4	20SP	G15_076	FROM->TO	GRPRAR1-LNX3345.00 - HOLT.CO3 345.00 345KV CKT 1	720	720	0.0393	105.056	GEN345756 H-1SIOUX 1 18.000
FDNS	00NR	4	20SP	G15_076	FROM->TO	GRPRAR1-LNX3345.00 - HOLT.CO3 345.00 345KV CKT 1	720	720	0.03992	105.0557	RELIANCE 4 230.00 - WITTEN 4 230.00 230KV CKT 1
FDNS	00NR	4	25SP	G15_076	FROM->TO	GRPRAR1-LNX3345.00 - HOLT.CO3 345.00 345KV CKT 1	720	720	0.03962	105.0541	GEN501812 1-RODEMACHER UNIT 2
FDNS	00NR	4	20SP	G15_076	FROM->TO	GRPRAR1-LNX3345.00 - HOLT.CO3 345.00 345KV CKT 1	720	720	0.0393	105.0529	J316_SUB 230.00 230/34.5KV TRANSFORMER CKT 1
FDNS	00NR	4	20SP	G15_076	FROM->TO	GRPRAR1-LNX3345.00 - HOLT.CO3 345.00 345KV CKT 1	720	720	0.03948	105.0479	HAMPTON CORNER - NORTH ROCHESTER 345KV CKT 1
FDNS	00NR	4	20SP	G15_076	FROM->TO	GRPRAR1-LNX3345.00 - HOLT.CO3 345.00 345KV CKT 1	720	720	0.03935	105.0471	HANKINSON - WAHPETON 230KV CKT 1
FDNS	00NR	4	20SP	G15_076	FROM->TO	GRPRAR1-LNX3345.00 - HOLT.CO3 345.00 345KV CKT 1	720	720	0.03934	105.0438	FERGSFL4 230.00 - GRE-SILVRLK4230.00 230KV CKT 1
FDNS	00NR	4	20SP	G15_076	FROM->TO	GRPRAR1-LNX3345.00 - HOLT.CO3 345.00 345KV CKT 1	720	720	0.0393	105.0395	GEN345832 1-1TS G1 13.800
FDNS	00NR	4	20SP	G15_076	FROM->TO	GRPRAR1-LNX3345.00 - HOLT.CO3 345.00 345KV CKT 1	720	720	0.0393	105.0392	GEN345841 2-1TS G2 13.800
FDNS	00NR	4	20SP	G15_076	FROM->TO	GRPRAR1-LNX3345.00 - HOLT.CO3 345.00 345KV CKT 1	720	720	0.0393	105.0377	GEN334031 1-FRONTIER UNIT 2
FDNS	00NR	4	20SP	G15_076	FROM->TO	GRPRAR1-LNX3345.00 - HOLT.CO3 345.00 345KV CKT 1	720	720	0.0393	105.037	GEN334030 1-FRONTIER UNIT 1
FDNS	00NR	4	20SP	G15_076	FROM->TO	GRPRAR1-LNX3345.00 - HOLT.CO3 345.00 345KV CKT 1	720	720	0.0393	105.036	JUDSON LARGE 115/15.0KV TRANSFORMER CKT 1
FDNS	00NR	4	20SP	G15_076	FROM->TO	GRPRAR1-LNX3345.00 - HOLT.CO3 345.00 345KV CKT 1	720	720	0.0393	105.036	JUDSON LARGE 115/15.0KV TRANSFORMER CKT 1
FDNS	00NR	4	20SP	G15_076	FROM->TO	GRPRAR1-LNX3345.00 - HOLT.CO3 345.00 345KV CKT 1	720	720	0.0393	105.0328	GEN336944 1-REX BROWN
FDNS	00NR	4	25SP	G15_076	FROM->TO	GRPRAR1-LNX3345.00 - HOLT.CO3 345.00 345KV CKT 1	720	720	0.03962	105.032	GEN336191 1-LITTLE GYPSY UNIT#3
FDNS	00NR	4	20SP	G15_076	FROM->TO	GRPRAR1-LNX3345.00 - HOLT.CO3 345.00 345KV CKT 1	720	720	0.0393	105.03	GEN501970 1-EVANGELINE UNIT 7
FDNS	00NR	4	25SP	G15_076	FROM->TO	GRPRAR1-LNX3345.00 - HOLT.CO3 345.00 345KV CKT 1	720	720	0.04115	105.0289	GRIMES - LEHIGH 345KV CKT 1
FDNS	00NR	4	20SP	G15_076	FROM->TO	GRPRAR1-LNX3345.00 - HOLT.CO3 345.00 345KV CKT 1	720	720	0.0393	105.0284	P13:230-345:NPPD:NUCOR-1
FDNS	00NR	4	20SP	G15_076	FROM->TO	GRPRAR1-LNX3345.00 - HOLT.CO3 345.00 345KV CKT 1	720	720	0.0393	105.0273	OKLAUN 345/24.0KV TRANSFORMER CKT 1
FDNS	00NR	4	20SP	G15_076	FROM->TO	GRPRAR1-LNX3345.00 - HOLT.CO3 345.00 345KV CKT 1	720	720	0.04034	105.0228	MARTIN - SHANNON 115KV CKT 1
FDNS	00NR	4	20SP	G15_076	FROM->TO	GRPRAR1-LNX3345.00 - HOLT.CO3 345.00 345KV CKT 1	720	720	0.0393	105.0222	GEN335612 1-WILLOW GLENN UNIT#2
FDNS	00NR	4	20SP	G15_076	FROM->TO	GRPRAR1-LNX3345.00 - HOLT.CO3 345.00 345KV CKT 1	720	720	0.04003	105.022	DENISON - SIOUX CITY 230KV CKT 1
FDNS	00NR	4	20SP	G15_076	FROM->TO	GRPRAR1-LNX3345.00 - HOLT.CO3 345.00 345KV CKT 1	720	720	0.0393	105.0205	GEN635693 3-GREATER DES MOINES ENERGY CENTER ST
FDNS	00NR	4	20SP	G15_076	FROM->TO	GRPRAR1-LNX3345.00 - HOLT.CO3 345.00 345KV CKT 1	720	720	0.03958	105.0202	BYRON - NORTH ROCHESTER 345KV CKT 1
FDNS	00NR	4	20SP	G15_076	FROM->TO	GRPRAR1-LNX3345.00 - HOLT.CO3 345.00 345KV CKT 1	720	720	0.03944	105.0171	GRE-CEDARMT3345.00 - HELENA 345KV CKT 1
FDNS	00NR	4	20SP	G15_076	FROM->TO	GRPRAR1-LNX3345.00 - HOLT.CO3 345.00 345KV CKT 1	720	720	0.03944	105.0171	GRE-CEDARMT3345.00 - HELENA 345KV CKT 2
FDNS	00NR	4	20SP	G15_076	FROM->TO	GRPRAR1-LNX3345.00 - HOLT.CO3 345.00 345KV CKT 1	720	720	0.03992	105.0138	WITTEN 4 230.00 () 230/115/13.8KV TRANSFORMER CKT 1
FDNS	00NR	4	25SP	G15_076	FROM->TO	GRPRAR1-LNX3345.00 - HOLT.CO3 345.00 345KV CKT 1	720	720	0.04023	105.0133	KOSSUTH 3 345.00 - WEBSTER 345KV CKT 1
FDNS	00NR	4	20SP	G15_076	FROM->TO	GRPRAR1-LNX3345.00 - HOLT.CO3 345.00 345KV CKT 1	720	720	0.0393	105.0123	GEN337430 1-PERYVILLE UNIT #3
FDNS	00NR	4	20SP	G15_076	FROM->TO	GRPRAR1-LNX3345.00 - HOLT.CO3 345.00 345KV CKT 1	720	720	0.0393	105.012	GEN337428 1-PERYVILLE UNIT #1
FDNS	00NR	4	20SP	G15_076	FROM->TO	GRPRAR1-LNX3345.00 - HOLT.CO3 345.00 345KV CKT 1	720	720	0.04041	105.0096	PLYMOUTH - SIOUX CITY 161KV CKT 1
FDNS	00NR	4	20SP	G15_076	FROM->TO	GRPRAR1-LNX3345.00 - HOLT.CO3 345.00 345KV CKT 1	720	720	0.04041	105.0096	PLYMOUTH - SIOUX CITY 161KV CKT 1
FDNS	00NR	4	20SP	G15_076	FROM->TO	GRPRAR1-LNX3345.00 - HOLT.CO3 345.00 345KV CKT 1	720	720	0.0393	105.0067	GEN562438 1-G13-032 0.6900
FDNS	00NR	4	20SP	G15_076	FROM->TO	GRPRAR1-LNX3345.00 - HOLT.CO3 345.00 345KV CKT 1	720	720	0.03737	105.0031	FT RANDAL - WHITE SWAN 115KV CKT 1
FDNS	00NR	4	25SP	G15_076	FROM->TO	GRPRAR1-LNX3345.00 - HOLT.CO3 345.00 345KV CKT 1	720	720	0.03962	105	GEN629075 1-OTTUMWA GENERATOR FOR OTTUMWA UNIT NO 1
FDNS	00NR	4	20SP	G15_076	FROM->TO	GRPRAR1-LNX3345.00 - HOLT.CO3 345.00 345KV CKT 1	720	720	0.0393	104.9938	GEN338443 1-PANDA S1
FDNS	00NR	4	20SP	G15_076	FROM->TO	GRPRAR1-LNX3345.00 - HOLT.CO3 345.00 345KV CKT 1	720	720	0.0393	104.9915	GEN336240 1-1NMIL CT1 18.000
FDNS	00NR	4	20SP	G15_076	FROM->TO	GRPRAR1-LNX3345.00 - HOLT.CO3 345.00 345KV CKT 1	720	720	0.0393	104.9915	GEN336241 1-1NMIL CT2 18.000
FDNS	00NR	4	25SP	G15_076	FROM->TO	GRPRAR1-LNX3345.00 - HOLT.CO3 345.00 345KV CKT 1	720	720	0.03962	104.9904	P12:115:UMZW:# 162 #: NEL IN ND. FAULT ON ML-NEL-MX-GA 115 KV
FDNS	00NR	4	20SP	G15_076	FROM->TO	GRPRAR1-LNX3345.00 - HOLT.CO3 345.00 345KV CKT 1	720	720	0.0393	104.9901	P12:345:GRDA:CHOUTEAU-SPORTSMANACRES
FDNS	00NR	4	20SP	G15_076	FROM->TO	GRPRAR1-LNX3345.00 - HOLT.CO3 345.00 345KV CKT 1	720	720	0.0393	104.9893	GEN501912 1-ACADIA UNIT CT1B
FDNS	00NR	4	20SP	G15_076	FROM->TO	GRPRAR1-LNX3345.00 - HOLT.CO3 345.00 345KV CKT 1	720	720	0.0393	104.9891	GEN501911 1-ACADIA UNIT CT1A
FDNS	00NR	4	25SP	G15_076	FROM->TO	GRPRAR1-LNX3345.00 - HOLT.CO3 345.00 345KV CKT 1	720	720	0.03962	104.9585	GEN335614 1-WILLOW GLENN UNIT#4
FDNS	00NR	4	25SP	G15_076	FROM->TO	GRPRAR1-LNX3345.00 - HOLT.CO3 345.00 345KV CKT 1	720	720	0.03962	104.9535	GEN336801 1-BAXTER WILSON UNIT #1
FDNS	00NR	4	25SP	G15_076	FROM->TO	GRPRAR1-LNX3345.00 - HOLT.CO3 345.00 345KV CKT 1	720	720	0.03962	104.9486	GEN334441 1-SABINE UNIT 5
FDNS	00NR	4	25SP	G15_076	FROM->TO	GRPRAR1-LNX3345.00 - HOLT.CO3 345.00 345KV CKT 1	720	720	0.03962	104.9434	GEN336464 1-MICHOUD UNIT #3
FDNS	00NR	4	25SP	G15_076	FROM->TO	GRPRAR1-LNX3345.00 - HOLT.CO3 345.00 345KV CKT 1	720	720	0.03962	104.9381	GEN563222 1-G15088_3 0.6900
FDNS	00NR	4	25SP	G15_076	FROM->TO	GRPRAR1-LNX3345.00 - HOLT.CO3 345.00 345KV CKT 1	720	720	0.03962	104.9329	GEN335204 1-NELSON UNIT 4
FDNS	00NR	4	25SP	G15_076	FROM->TO	GRPRAR1-LNX3345.00 - HOLT.CO3 345.00 345KV CKT 1	720	720	0.03952	104.9324	HESKETT - WISHEK 230KV CKT 1
FDNS	00NR	4	25SP	G15_076	FROM->TO	GRPRAR1-LNX3345.00 - HOLT.CO3 345.00 345KV CKT 1	720	720	0.03984	104.9312	NORTH LA CROSSE - NORTH ROCHESTER 345KV CKT 1
FDNS	00NR	4	25SP	G15_076	FROM->TO	GRPRAR1-LNX3345.00 - HOLT.CO3 345.00 345KV CKT 1	720	720	0.04022	104.9112	ADAMS - MITCHLCO3 345.00 345KV CKT 1
FDNS	00NR	4	20SP	G15_076	FROM->TO	GRPRAR1-LNX3345.00 - HOLT.CO3 345.00 345KV CKT 1	720	720	0.0393	104.8935	GEN563282 1-G15094_3 0.6900
FDNS	00NR	4	25SP	G15_076	FROM->TO	GRPRAR1-LNX3345.00 - HOLT.CO3 345.00 345KV CKT 1	720	720	0.03961	104.8587	CENTER - COYOTE 345KV CKT 1
FDNS	00NR	4	25SP	G15_076	FROM->TO	GRPRAR1-LNX3345.00 - HOLT.CO3 345.00 345KV CKT 1	720	720	0.03952	104.8571	MERRCRT4 230.00 - WISHEK 230KV CKT 1
FDNS	00NR	4	25SP	G15_076	FROM->TO	GRPRAR1-LNX3345.00 - HOLT.CO3 345.00 345KV CKT 1	720	720	0.03962	104.8406	GEN640009 1-COOPER NUCLEAR STATION
FDNS	00NR	4	25SP	G15_076	FROM->TO	GRPRAR1-LNX3345.00 - HOLT.CO3 345.00 345KV CKT 1	720	720	0.0457	104.8405	BLOOMFIELD - CREIGHTON 115KV CKT 1
FDNS	00NR	4	25SP	G15_076	FROM->TO	GRPRAR1-LNX3345.00 - HOLT.CO3 345.00 345KV CKT 1	720	720	0.03831	104.8325	MENNO JCT - TRIPP JCT 115KV CKT 1
FDNS	00NR	4	25SP	G15_076	FROM->TO	GRPRAR1-LNX3345.00 - HOLT.CO3 345.00 345KV CKT 1	720	720	0.03962	104.8232	GARRISON - JAMES TOWN 230KV CKT 1
FDNS	00NR	4	25SP	G15_076	FROM->TO	GRPRAR1-LNX3345.00 - HOLT.CO3 345.00 345KV CKT 1	720	720	0.03943	104.8213	BROOKING COUNTY - BSSOUTH3 345.00 345KV CKT 1
FDNS	00NR	4	25SP	G15_076	FROM->TO	GRPRAR1-LNX3345.00 - HOLT.CO3 345.00 345KV CKT 1	720	720	0.03962	104.8137	GEN334433 1-SABINE UNIT 3
FDNS	00NR	4	25SP	G15_076	FROM->TO	GRPRAR1-LNX3345.00 - HOLT.CO3 345.00 345KV CKT 1	720	720	0.0457	104.7976	BLOOMFIELD - GAVINS POINT 115KV CKT 1
FDNS	00NR	4	25SP	G15_076	FROM->TO	GRPRAR1-LNX3345.00 - HOLT.CO3 345.00 345KV CKT 1	720	720	0.03962	104.7815	GEN531447 1-HOLCOMB GENERATOR
FDNS	00NR	4	25SP	G15_076	FROM->TO	GRPRAR1-LNX3345.00 - HOLT.CO3 345.00 345KV CKT 1	720	720	0.03962	104.7672	GEN635213 3-NEAL UNIT 3
FDNS	00NR	4	25SP	G15_076	FROM->TO	GRPRAR1-LNX3345.00 - HOLT.CO3 345.00 345KV CKT 1	720	720	0.03962	104.7507	GEN336222 1-LITTLE GYPSY UNIT#2
FDNS	00NR	4	25SP	G15_076	FROM->TO	GRPRAR1-LNX3345.00 - HOLT.CO3 345.00 345KV CKT 1	720	720	0.03973	104.7337	APPLEDORN 4 230.00 - WATERTOWN 230KV CKT 1
FDNS	00NR	4	25SP	G15_076	FROM->TO	GRPRAR1-LNX3345.00 - HOLT.CO3 345.00 345KV CKT 1	720	720	0.03973	104.7337	APPLEDORN 4 230.00 - WATERTOWN 230KV CKT 1
FDNS	00NR	4	25SP	G15_076	FROM->TO	GRPRAR1-LNX3345.00 - HOLT.CO3 345.00 345KV CKT 1	720	720	0.03975	104.7179	ARKANSAS NUCLEAR ONE - FT SMITH 500KV CKT 1
FDNS	00NR	4	25SP	G15_076	FROM->TO	GRPRAR1-LNX3345.00 - HOLT.CO3 345.00 345KV CKT 1	720	720	0.03975	104.7179	ARKANSAS NUCLEAR ONE - FT SMITH 500KV CKT 1
FDNS	00NR	4	25SP	G15_076	FROM->TO	GRPRAR1-LNX3345.00 - HOLT.CO3 345.00 345KV CKT 1	720	720	0.03953	104.7058	BSSOUTH3 345.00 - ELLENDLMVP3 345.00 345KV CKT 1
FDNS	00NR	4	25SP	G15_076	FROM->TO	GRPRAR1-LNX3345.00 - HOLT.CO3 345.00 345KV CKT 1	720	720	0.03953	104.7058	BSSOUTH3 345.00 - ELLENDLMVP3 345.00 345KV CKT 1
FDNS	00NR	4	25SP	G15_076	FROM->TO	GRPRAR1-LNX3345.00 - HOLT.CO3 345.00 345KV CKT 1	720	720	0.03831	104.7006	MENNO JCT - UTICA 115KV CKT 1
FDNS	00NR	4	25SP	G15_076	FROM->TO	GRPRAR1-LNX3345.00 - HOLT.CO3 345.00 345KV CKT 1	720	720	0.04003	104.7	ADAMS - PLEASANT VALLEY 345KV CKT 1
FDNS	00NR	4	25SP	G15_076	FROM->TO	GRPRAR1-LNX3345.00 - HOLT.CO3 345.00 345KV CKT 1	720	720	0.03962	104.6977	GEN336151 1-WATERFORD UNIT#1
FDNS	00NR	4	25SP	G15_076	FROM->TO	GRPRAR1-LNX3345.00 - HOLT.CO3 345.00 345KV CKT 1	720	720	0.03962	104.6977	GEN336152 1-WATERFORD UNIT#2
FDNS	00NR	4	25SP	G15_076	FROM->TO	GRPRAR1-LNX3345.00 - HOLT.CO3 345.00 345KV CKT 1	720	720	0.03953	104.6845	ELLENDLMVP3 345.00 (1) 345/230/34.5KV TRANSFORMER CKT 1
FDNS	00NR	4	25SP	G15_076	FROM->TO	GRPRAR1-LNX3345.00 - HOLT.CO3 345.00 345KV CKT 1	720	720	0.03975	104.6735	ALEXMRES3 345.00 - WAITE PARK 345KV CKT 1

SOLUTION	GROUP	SCENARIO	SEASON	SOURCE	DIRECTION	MONITORED ELEMENT	RATEA (MVA)	RATEB(MVA)	TDF	TC%LOADING (% MVA)	CONTINGENCY
FDNS	00NR	4	25SP	G15_076	FROM->TO	GRPRAR1-LNX3345.00 - HOLT.CO3 345.00 345KV CKT 1	720	720	0.03973	104.6688	APPLEDORN 4 230.00 - GRANITE FALLS 230KV CKT 1
FDNS	00NR	4	25SP	G15_076	FROM->TO	GRPRAR1-LNX3345.00 - HOLT.CO3 345.00 345KV CKT 1	720	720	0.03973	104.6688	APPLEDORN 4 230.00 - GRANITE FALLS 230KV CKT 1
FDNS	00NR	4	25SP	G15_076	FROM->TO	GRPRAR1-LNX3345.00 - HOLT.CO3 345.00 345KV CKT 1	720	720	0.0397	104.6645	BLAIR - GRANITE FALLS 230KV CKT 1
FDNS	00NR	4	25SP	G15_076	FROM->TO	GRPRAR1-LNX3345.00 - HOLT.CO3 345.00 345KV CKT 1	720	720	0.0397	104.6645	BLAIR - GRANITE FALLS 230KV CKT 1
FDNS	00NR	4	25SP	G15_076	FROM->TO	GRPRAR1-LNX3345.00 - HOLT.CO3 345.00 345KV CKT 1	720	720	0.03992	104.6507	NMA B3 345 345.00 - NORTH LA CROSSE 345KV CKT 1
FDNS	00NR	4	25SP	G15_076	FROM->TO	GRPRAR1-LNX3345.00 - HOLT.CO3 345.00 345KV CKT 1	720	720	0.03901	104.6443	WINNER - WITTEN 115KV CKT 1
FDNS	00NR	4	25SP	G15_076	FROM->TO	GRPRAR1-LNX3345.00 - HOLT.CO3 345.00 345KV CKT 1	720	720	0.03962	104.6363	GEN641089 2-ENERGY CENTER 2
FDNS	00NR	4	25SP	G15_076	FROM->TO	GRPRAR1-LNX3345.00 - HOLT.CO3 345.00 345KV CKT 1	720	720	0.03831	104.6318	P12:115:UMZZ:# 237 #: MEN IN SD. MENNO JUNCTION IS A TAP (UJ-MEN-TP).
FDNS	00NR	4	25SP	G15_076	FROM->TO	GRPRAR1-LNX3345.00 - HOLT.CO3 345.00 345KV CKT 1	720	720	0.03962	104.6267	GEN303007 1-1BC2 U2
FDNS	00NR	4	25SP	G15_076	FROM->TO	GRPRAR1-LNX3345.00 - HOLT.CO3 345.00 345KV CKT 1	720	720	0.03962	104.6212	GEN303006 1-1BC2 U1
FDNS	00NR	4	25SP	G15_076	FROM->TO	GRPRAR1-LNX3345.00 - HOLT.CO3 345.00 345KV CKT 1	720	720	0.03962	104.6054	P13:230:UMZW:# 2218 #: FP IN MT. LOSS OF TRANSFORMER (AT2).
FDNS	00NR	4	25SP	G15_076	FROM->TO	GRPRAR1-LNX3345.00 - HOLT.CO3 345.00 345KV CKT 1	720	720	0.03962	104.605	FARGO - JAMES TOWN 230KV CKT 1
FDNS	00NR	4	25SP	G15_076	FROM->TO	GRPRAR1-LNX3345.00 - HOLT.CO3 345.00 345KV CKT 1	720	720	0.03962	104.5966	GEN562921 1-G15054_2 0.6900
FDNS	00NR	4	25SP	G15_076	FROM->TO	GRPRAR1-LNX3345.00 - HOLT.CO3 345.00 345KV CKT 1	720	720	0.03962	104.5948	GEN532751 1-WOLF CREEK GENERATING STATION UNIT 1
FDNS	00NR	4	25SP	G15_076	FROM->TO	GRPRAR1-LNX3345.00 - HOLT.CO3 345.00 345KV CKT 1	720	720	0.03979	104.5934	NORTH ROCHESTER - PRAIRIE ISLAND 345KV CKT 1
FDNS	00NR	4	25SP	G15_076	FROM->TO	GRPRAR1-LNX3345.00 - HOLT.CO3 345.00 345KV CKT 1	720	720	0.0399	104.5903	G15094_T 345.00 - LARAMIE RIVER 345KV CKT 1
FDNS	00NR	4	25SP	G15_076	FROM->TO	GRPRAR1-LNX3345.00 - HOLT.CO3 345.00 345KV CKT 1	720	720	0.04612	104.5885	RAUN - SIOUX CITY 345KV CKT 1
FDNS	00NR	4	25SP	G15_076	FROM->TO	GRPRAR1-LNX3345.00 - HOLT.CO3 345.00 345KV CKT 1	720	720	0.04612	104.5885	RAUN - SIOUX CITY 345KV CKT 1
FDNS	00NR	4	25SP	G15_076	FROM->TO	GRPRAR1-LNX3345.00 - HOLT.CO3 345.00 345KV CKT 1	720	720	0.03962	104.583	FARGO - JAMES TOWN 230KV CKT 2
FDNS	00NR	4	25SP	G15_076	FROM->TO	GRPRAR1-LNX3345.00 - HOLT.CO3 345.00 345KV CKT 1	720	720	0.04012	104.566	HUNTLEY3 345.00 - LEDYARD3 345.00 345KV CKT 1
FDNS	00NR	4	25SP	G15_076	FROM->TO	GRPRAR1-LNX3345.00 - HOLT.CO3 345.00 345KV CKT 1	720	720	0.03962	104.5618	BISMARK - JAMES TOWN 230KV CKT 1
FDNS	00NR	4	25SP	G15_076	FROM->TO	GRPRAR1-LNX3345.00 - HOLT.CO3 345.00 345KV CKT 1	720	720	0.03962	104.56	GEN303008 1-1BC2 U3
FDNS	00NR	4	25SP	G15_076	FROM->TO	GRPRAR1-LNX3345.00 - HOLT.CO3 345.00 345KV CKT 1	720	720	0.03962	104.5546	GEN336170 1-GULF OXY U4
FDNS	00NR	4	25SP	G15_076	FROM->TO	GRPRAR1-LNX3345.00 - HOLT.CO3 345.00 345KV CKT 1	720	720	0.03962	104.5523	BISMARK - WEBER 230KV CKT 1
FDNS	00NR	4	25SP	G15_076	FROM->TO	GRPRAR1-LNX3345.00 - HOLT.CO3 345.00 345KV CKT 1	720	720	0.03962	104.547	GEN562596 1-G14_059_3 0.6900
FDNS	00NR	4	25SP	G15_076	FROM->TO	GRPRAR1-LNX3345.00 - HOLT.CO3 345.00 345KV CKT 1	720	720	0.03962	104.5363	JAMES TOWN - WEBER 230KV CKT 1
FDNS	00NR	4	25SP	G15_076	FROM->TO	GRPRAR1-LNX3345.00 - HOLT.CO3 345.00 345KV CKT 1	720	720	0.04254	104.531	P13:230-345:NPPD:STEGALL3:KV3A
FDNS	00NR	4	25SP	G15_076	FROM->TO	GRPRAR1-LNX3345.00 - HOLT.CO3 345.00 345KV CKT 1	720	720	0.04254	104.5274	STEGALL (SGQ KV3A) 345/230/13.8KV TRANSFORMER CKT 1
FDNS	00NR	4	20SP	G15_076	FROM->TO	GRPRAR1-LNX3345.00 - HOLT.CO3 345.00 345KV CKT 1	720	720	0.0393	104.5272	BASE CASE
FDNS	00NR	4	25SP	G15_076	FROM->TO	GRPRAR1-LNX3345.00 - HOLT.CO3 345.00 345KV CKT 1	720	720	0.03945	104.5214	FT THOMPSON - HURON 230KV CKT 1
FDNS	00NR	4	25SP	G15_076	FROM->TO	GRPRAR1-LNX3345.00 - HOLT.CO3 345.00 345KV CKT 1	720	720	0.03945	104.5214	FT THOMPSON - HURON 230KV CKT 1
FDNS	00NR	4	25SP	G15_076	FROM->TO	GRPRAR1-LNX3345.00 - HOLT.CO3 345.00 345KV CKT 1	720	720	0.03945	104.5214	FT THOMPSON - HURON 230KV CKT 2
FDNS	00NR	4	25SP	G15_076	FROM->TO	GRPRAR1-LNX3345.00 - HOLT.CO3 345.00 345KV CKT 1	720	720	0.03945	104.5214	FT THOMPSON - HURON 230KV CKT 2
FDNS	00NR	4	25SP	G15_076	FROM->TO	GRPRAR1-LNX3345.00 - HOLT.CO3 345.00 345KV CKT 1	720	720	0.0401	104.5207	SIDNEY - SIDNEY TRANSFORMER 230KV CKT 1
FDNS	00NR	4	25SP	G15_076	FROM->TO	GRPRAR1-LNX3345.00 - HOLT.CO3 345.00 345KV CKT 1	720	720	0.0401	104.5193	P13:230-345:NPPD:SIDNEY 3:KV2A
FDNS	00NR	4	25SP	G15_076	FROM->TO	GRPRAR1-LNX3345.00 - HOLT.CO3 345.00 345KV CKT 1	720	720	0.0401	104.5193	SIDNEY (SDQ KV2A) 345/230/13.8KV TRANSFORMER CKT 1
FDNS	00NR	4	25SP	G15_076	FROM->TO	GRPRAR1-LNX3345.00 - HOLT.CO3 345.00 345KV CKT 1	720	720	0.04254	104.5191	STEGALL - STEGALL TRANSFORMER 230KV CKT 1
FDNS	00NR	4	25SP	G15_076	FROM->TO	GRPRAR1-LNX3345.00 - HOLT.CO3 345.00 345KV CKT 1	720	720	0.04001	104.5188	HUNTLEY3 345.00 - LAKEFIELD 3 345KV CKT 1
FDNS	00NR	4	25SP	G15_076	FROM->TO	GRPRAR1-LNX3345.00 - HOLT.CO3 345.00 345KV CKT 1	720	720	0.03962	104.5162	BALTA - RAMSEY 230KV CKT 1
FDNS	00NR	4	25SP	G15_076	FROM->TO	GRPRAR1-LNX3345.00 - HOLT.CO3 345.00 345KV CKT 1	720	720	0.04022	104.5133	P12:230:UMZW:# 733 #: FT IN SD. FT-BG2 LINE FAULT
FDNS	00NR	4	25SP	G15_076	FROM->TO	GRPRAR1-LNX3345.00 - HOLT.CO3 345.00 345KV CKT 1	720	720	0.04022	104.5129	FT THOMPSON - LOWERBRULE 4230.00 230KV CKT 1
FDNS	00NR	4	25SP	G15_076	FROM->TO	GRPRAR1-LNX3345.00 - HOLT.CO3 345.00 345KV CKT 1	720	720	0.04022	104.5129	FT THOMPSON - LOWERBRULE 4230.00 230KV CKT 1
FDNS	00NR	4	25SP	G15_076	FROM->TO	GRPRAR1-LNX3345.00 - HOLT.CO3 345.00 345KV CKT 1	720	720	0.04022	104.5081	LOWERBRULE 4230.00 - RELIANCE 4 230.00 230KV CKT 1
FDNS	00NR	4	25SP	G15_076	FROM->TO	GRPRAR1-LNX3345.00 - HOLT.CO3 345.00 345KV CKT 1	720	720	0.04013	104.4934	P13:115-230:TSGT:SIDNEY-KV1A
FDNS	00NR	4	25SP	G15_076	FROM->TO	GRPRAR1-LNX3345.00 - HOLT.CO3 345.00 345KV CKT 1	720	720	0.03962	104.4852	GEN501811 1-RODEMACHER UNIT 1
FDNS	00NR	4	25SP	G15_076	FROM->TO	GRPRAR1-LNX3345.00 - HOLT.CO3 345.00 345KV CKT 1	720	720	0.03962	104.4739	GEN659118 1-LARAMIE RIVER UNIT1
FDNS	00NR	4	25SP	G15_076	FROM->TO	GRPRAR1-LNX3345.00 - HOLT.CO3 345.00 345KV CKT 1	720	720	0.03964	104.4643	FORMAN - HANKINSON 230KV CKT 1
FDNS	00NR	4	25SP	G15_076	FROM->TO	GRPRAR1-LNX3345.00 - HOLT.CO3 345.00 345KV CKT 1	720	720	0.03962	104.4544	LAWRENCE ENERGY CENTER UNIT 5 - LAWRENCE HILL 230KV CKT 1
FDNS	00NR	4	25SP	G15_076	FROM->TO	GRPRAR1-LNX3345.00 - HOLT.CO3 345.00 345KV CKT 1	720	720	0.03962	104.4544	LAWRENCE ENERGY CENTER UNIT 5 230/24.0KV TRANSFORMER CKT 1
FDNS	00NR	4	25SP	G15_076	FROM->TO	GRPRAR1-LNX3345.00 - HOLT.CO3 345.00 345KV CKT 1	720	720	0.03962	104.4483	PRAIRIE ISLAND 345/20.0KV TRANSFORMER CKT 1
FDNS	00NR	4	25SP	G15_076	FROM->TO	GRPRAR1-LNX3345.00 - HOLT.CO3 345.00 345KV CKT 1	720	720	0.03962	104.447	PRAIRIE ISLAND 345/20.0KV TRANSFORMER CKT 2
FDNS	00NR	4	25SP	G15_076	FROM->TO	GRPRAR1-LNX3345.00 - HOLT.CO3 345.00 345KV CKT 1	720	720	0.03901	104.4451	GREGORY - WINNER 115KV CKT 1
FDNS	00NR	4	25SP	G15_076	FROM->TO	GRPRAR1-LNX3345.00 - HOLT.CO3 345.00 345KV CKT 1	720	720	0.03962	104.4401	GEN334070 1-LEWIS CREEK 1
FDNS	00NR	4	25SP	G15_076	FROM->TO	GRPRAR1-LNX3345.00 - HOLT.CO3 345.00 345KV CKT 1	720	720	0.03962	104.4401	GEN334071 1-LEWIS CREEK 2
FDNS	00NR	4	25SP	G15_076	FROM->TO	GRPRAR1-LNX3345.00 - HOLT.CO3 345.00 345KV CKT 1	720	720	0.03962	104.4268	TATANKA 230/34.5KV TRANSFORMER CKT 1
FDNS	00NR	4	25SP	G15_076	FROM->TO	GRPRAR1-LNX3345.00 - HOLT.CO3 345.00 345KV CKT 1	720	720	0.03901	104.4258	P12:115:UMZW:# 172 #: WI IN SD.
FDNS	00NR	4	25SP	G15_076	FROM->TO	GRPRAR1-LNX3345.00 - HOLT.CO3 345.00 345KV CKT 1	720	720	0.03962	104.4226	SEMINOLE 138/20.9KV TRANSFORMER CKT 1
FDNS	00NR	4	25SP	G15_076	FROM->TO	GRPRAR1-LNX3345.00 - HOLT.CO3 345.00 345KV CKT 1	720	720	0.03962	104.4038	GEN337766 1-TRACTEBEL UNIT S1
FDNS	00NR	4	25SP	G15_076	FROM->TO	GRPRAR1-LNX3345.00 - HOLT.CO3 345.00 345KV CKT 1	720	720	0.03962	104.3948	GEN645012 2-NEBRASKA CITY 2
FDNS	00NR	4	25SP	G15_076	FROM->TO	GRPRAR1-LNX3345.00 - HOLT.CO3 345.00 345KV CKT 1	720	720	0.03962	104.3909	GEN337757 1-DUKE HOTSPRINGS STG1
FDNS	00NR	4	25SP	G15_076	FROM->TO	GRPRAR1-LNX3345.00 - HOLT.CO3 345.00 345KV CKT 1	720	720	0.03961	104.3907	ELM CREEK - MONTICELLO 345KV CKT 1
FDNS	00NR	4	25SP	G15_076	FROM->TO	GRPRAR1-LNX3345.00 - HOLT.CO3 345.00 345KV CKT 1	720	720	0.03964	104.3751	AUDUBON - SHEYNNE 230KV CKT 1
FDNS	00NR	4	25SP	G15_076	FROM->TO	GRPRAR1-LNX3345.00 - HOLT.CO3 345.00 345KV CKT 1	720	720	0.03967	104.3736	HANKINSON - WAHPETON 230KV CKT 1
FDNS	00NR	4	25SP	G15_076	FROM->TO	GRPRAR1-LNX3345.00 - HOLT.CO3 345.00 345KV CKT 1	720	720	0.03932	104.3716	MT VERN - STORLA 115KV CKT 1
FDNS	00NR	4	25SP	G15_076	FROM->TO	GRPRAR1-LNX3345.00 - HOLT.CO3 345.00 345KV CKT 1	720	720	0.03962	104.3692	GEN501910 1-ACADIA UNIT ST1
FDNS	00NR	4	25SP	G15_076	FROM->TO	GRPRAR1-LNX3345.00 - HOLT.CO3 345.00 345KV CKT 1	720	720	0.04018	104.3682	P12:115:NPPD:WAPA1:CHADRON7:BOXBUTE7:BTB
FDNS	00NR	4	25SP	G15_076	FROM->TO	GRPRAR1-LNX3345.00 - HOLT.CO3 345.00 345KV CKT 1	720	720	0.03984	104.362	OVEXFRMCCOVE
FDNS	00NR	4	25SP	G15_076	FROM->TO	GRPRAR1-LNX3345.00 - HOLT.CO3 345.00 345KV CKT 1	720	720	0.03963	104.3617	ELLENDLMVP4 230.00 - OAKES 230KV CKT 1
FDNS	00NR	4	25SP	G15_076	FROM->TO	GRPRAR1-LNX3345.00 - HOLT.CO3 345.00 345KV CKT 1	720	720	0.03963	104.3617	ELLENDLMVP4 230.00 - OAKES 230KV CKT 1
FDNS	00NR	4	25SP	G15_076	FROM->TO	GRPRAR1-LNX3345.00 - HOLT.CO3 345.00 345KV CKT 1	720	720	0.03963	104.3615	FORMAN - OAKES 230KV CKT 1
FDNS	00NR	4	25SP	G15_076	FROM->TO	GRPRAR1-LNX3345.00 - HOLT.CO3 345.00 345KV CKT 1	720	720	0.03962	104.3595	GEN645011 1-NEBRASKA CITY 1
FDNS	00NR	4	25SP	G15_076	FROM->TO	GRPRAR1-LNX3345.00 - HOLT.CO3 345.00 345KV CKT 1	720	720	0.05202	104.357	BELDEN - HOSKINS 115KV CKT 1
FDNS	00NR	4	25SP	G15_076	FROM->TO	GRPRAR1-LNX3345.00 - HOLT.CO3 345.00 345KV CKT 1	720	720	0.03962	104.3463	GEN336221 1-LITTLE GYPSY UNIT#1
FDNS	00NR	4	25SP	G15_076	FROM->TO	GRPRAR1-LNX3345.00 - HOLT.CO3 345.00 345KV CKT 1	720	720	0.03967	104.3433	FERGSFL4 230.00 - WAHPETON 230KV CKT 1
FDNS	00NR	4	25SP	G15_076	FROM->TO	GRPRAR1-LNX3345.00 - HOLT.CO3 345.00 345KV CKT 1	720	720	0.04022	104.3419	RELIANCE 4 230.00 - WITTEN 4 230.00 230KV CKT 1
FDNS	00NR	4	25SP	G15_076	FROM->TO	GRPRAR1-LNX3345.00 - HOLT.CO3 345.00 345KV CKT 1	720	720	0.03962	104.3411	PRAIRIE - WINGER 230KV CKT 1
FDNS	00NR	4	25SP	G15_076	FROM->TO	GRPRAR1-LNX3345.00 - HOLT.CO3 345.00 345KV CKT 1	720	720	0.03973	104.3396	FRANKS - HUBEN 345KV CKT 1
FDNS	00NR	4	25SP	G15_076	FROM->TO	GRPRAR1-LNX3345.00 - HOLT.CO3 345.00 345KV CKT 1	720	720	0.03962	104.329	GEN532651 1-JEFFREY ENERGY CENTER UNIT 1
FDNS	00NR	4	25SP	G15_076	FROM->TO	GRPRAR1-LNX3345.00 - HOLT.CO3 345.00 345KV CKT 1	720	720	0.03962	104.3273	GEN562912 1-G15053_3 0.6900

SOLUTION	GROUP	SCENARIO	SEASON	SOURCE	DIRECTION	MONITORED ELEMENT	RATEA (MVA)	RATEB(MVA)	TDF	TC%LOADING (% MVA)	CONTINGENCY
FDNS	00NR	4	25SP	G15_076	FROM->TO	GRPRAR1-LNX3345.00 - HOLT.CO3 345.00 345KV CKT 1	720	720	0.04054	104.3263	NOBLES - SPLIT ROCK 345KV CKT 1
FDNS	00NR	4	25SP	G15_076	FROM->TO	GRPRAR1-LNX3345.00 - HOLT.CO3 345.00 345KV CKT 1	720	720	0.03962	104.3236	GEN532652 1-JEFFREY ENERGY CENTER UNIT 2
FDNS	00NR	4	25SP	G15_076	FROM->TO	GRPRAR1-LNX3345.00 - HOLT.CO3 345.00 345KV CKT 1	720	720	0.03962	104.3235	GEN532653 1-JEFFREY ENERGY CENTER UNIT 3
FDNS	00NR	4	25SP	G15_076	FROM->TO	GRPRAR1-LNX3345.00 - HOLT.CO3 345.00 345KV CKT 1	720	720	0.03962	104.3217	J316_SUB 230.00 230/34.5KV TRANSFORMER CKT 1
FDNS	00NR	4	25SP	G15_076	FROM->TO	GRPRAR1-LNX3345.00 - HOLT.CO3 345.00 345KV CKT 1	720	720	0.03962	104.3175	GRAND GULF 500/22.0KV TRANSFORMER CKT 1
FDNS	00NR	4	25SP	G15_076	FROM->TO	GRPRAR1-LNX3345.00 - HOLT.CO3 345.00 345KV CKT 1	720	720	0.04018	104.3142	CHADRON - DUNLAP 115KV CKT 1
FDNS	00NR	4	25SP	G15_076	FROM->TO	GRPRAR1-LNX3345.00 - HOLT.CO3 345.00 345KV CKT 1	720	720	0.03962	104.3131	GEN334432 1-SABINE UNIT 2
FDNS	00NR	4	25SP	G15_076	FROM->TO	GRPRAR1-LNX3345.00 - HOLT.CO3 345.00 345KV CKT 1	720	720	0.03962	104.313	GEN334431 1-SABINE UNIT 1
FDNS	00NR	4	25SP	G15_076	FROM->TO	GRPRAR1-LNX3345.00 - HOLT.CO3 345.00 345KV CKT 1	720	720	0.03962	104.3095	GEN345765 H-1SIOUX 2 18.000
FDNS	00NR	4	25SP	G15_076	FROM->TO	GRPRAR1-LNX3345.00 - HOLT.CO3 345.00 345KV CKT 1	720	720	0.03962	104.3089	GEN337764 1-TRACTEBEL UNIT C1
FDNS	00NR	4	25SP	G15_076	FROM->TO	GRPRAR1-LNX3345.00 - HOLT.CO3 345.00 345KV CKT 1	720	720	0.03962	104.3089	GEN337765 1-TRACTEBEL UNIT C2
FDNS	00NR	4	25SP	G15_076	FROM->TO	GRPRAR1-LNX3345.00 - HOLT.CO3 345.00 345KV CKT 1	720	720	0.03962	104.3086	GEN336446 1-MICHOUD UNIT #2
FDNS	00NR	4	25SP	G15_076	FROM->TO	GRPRAR1-LNX3345.00 - HOLT.CO3 345.00 345KV CKT 1	720	720	0.04022	104.3031	WITTEN 4 230.00 () 230/115/13.8KV TRANSFORMER CKT 1
FDNS	00NR	4	25SP	G15_076	FROM->TO	GRPRAR1-LNX3345.00 - HOLT.CO3 345.00 345KV CKT 1	720	720	0.03962	104.2922	BALTA - MCHENRY 230KV CKT 1
FDNS	00NR	4	25SP	G15_076	FROM->TO	GRPRAR1-LNX3345.00 - HOLT.CO3 345.00 345KV CKT 1	720	720	0.03966	104.2914	FERGSFL4 230.00 - GRE-SILVRLK4230.00 230KV CKT 1
FDNS	00NR	4	25SP	G15_076	FROM->TO	GRPRAR1-LNX3345.00 - HOLT.CO3 345.00 345KV CKT 1	720	720	0.04065	104.2847	MARTIN - SHANNON 115KV CKT 1
FDNS	00NR	4	25SP	G15_076	FROM->TO	GRPRAR1-LNX3345.00 - HOLT.CO3 345.00 345KV CKT 1	720	720	0.03962	104.2791	TOLK STATION EAST 230/24.0KV TRANSFORMER CKT 1
FDNS	00NR	4	25SP	G15_076	FROM->TO	GRPRAR1-LNX3345.00 - HOLT.CO3 345.00 345KV CKT 1	720	720	0.03975	104.2783	GRE-CEDARMT3345.00 - HELENA 345KV CKT 1
FDNS	00NR	4	25SP	G15_076	FROM->TO	GRPRAR1-LNX3345.00 - HOLT.CO3 345.00 345KV CKT 1	720	720	0.03975	104.2783	GRE-CEDARMT3345.00 - HELENA 345KV CKT 2
FDNS	00NR	4	17SP	G15_076	FROM->TO	GRPRAR1-LNX3345.00 - HOLT.CO3 345.00 345KV CKT 1	720	720	0.04084	104.2743	GEN659125 1-COVEY
FDNS	00NR	4	25SP	G15_076	FROM->TO	GRPRAR1-LNX3345.00 - HOLT.CO3 345.00 345KV CKT 1	720	720	0.03962	104.2706	GEN501823 1-TECHE UNIT 3
FDNS	00NR	4	25SP	G15_076	FROM->TO	GRPRAR1-LNX3345.00 - HOLT.CO3 345.00 345KV CKT 1	720	720	0.03962	104.2699	GEN336242 1-1NMIL ST1 18.000
FDNS	00NR	4	25SP	G15_076	FROM->TO	GRPRAR1-LNX3345.00 - HOLT.CO3 345.00 345KV CKT 1	720	720	0.03925	104.2688	HURON WEST PARK - MITCHELL NW 115KV CKT 1
FDNS	00NR	4	25SP	G15_076	FROM->TO	GRPRAR1-LNX3345.00 - HOLT.CO3 345.00 345KV CKT 1	720	720	0.03925	104.2688	HURON WEST PARK - MITCHELL NW 115KV CKT 1
FDNS	00NR	4	25SP	G15_076	FROM->TO	GRPRAR1-LNX3345.00 - HOLT.CO3 345.00 345KV CKT 1	720	720	0.0398	104.2683	HAMPTON CORNER - NORTH ROCHESTER 345KV CKT 1
FDNS	00NR	4	25SP	G15_076	FROM->TO	GRPRAR1-LNX3345.00 - HOLT.CO3 345.00 345KV CKT 1	720	720	0.04211	104.2661	OAHE - PHILIP TAP 230KV CKT 1
FDNS	00NR	4	25SP	G15_076	FROM->TO	GRPRAR1-LNX3345.00 - HOLT.CO3 345.00 345KV CKT 1	720	720	0.03962	104.2654	GEN636641 1-LOUISA UNIT 1
FDNS	00NR	4	25SP	G15_076	FROM->TO	GRPRAR1-LNX3345.00 - HOLT.CO3 345.00 345KV CKT 1	720	720	0.03962	104.2587	JUDSON LARGE 115/15.0KV TRANSFORMER CKT 1
FDNS	00NR	4	25SP	G15_076	FROM->TO	GRPRAR1-LNX3345.00 - HOLT.CO3 345.00 345KV CKT 1	720	720	0.03962	104.2587	JUDSON LARGE 115/15.0KV TRANSFORMER CKT 1
FDNS	00NR	4	25SP	G15_076	FROM->TO	GRPRAR1-LNX3345.00 - HOLT.CO3 345.00 345KV CKT 1	720	720	0.03962	104.257	OKLAUN 345/24.0KV TRANSFORMER CKT 1
FDNS	00NR	4	25SP	G15_076	FROM->TO	GRPRAR1-LNX3345.00 - HOLT.CO3 345.00 345KV CKT 1	720	720	0.04035	104.2525	DENISON - SIOUX CITY 230KV CKT 1
FDNS	00NR	4	25SP	G15_076	FROM->TO	GRPRAR1-LNX3345.00 - HOLT.CO3 345.00 345KV CKT 1	720	720	0.03962	104.2517	P13:230-345:NPPD:NUCOR-1
FDNS	00NR	4	25SP	G15_076	FROM->TO	GRPRAR1-LNX3345.00 - HOLT.CO3 345.00 345KV CKT 1	720	720	0.03966	104.2514	GRE-SILVRLK4230.00 - HENNING 230KV CKT 1
FDNS	00NR	4	25SP	G15_076	FROM->TO	GRPRAR1-LNX3345.00 - HOLT.CO3 345.00 345KV CKT 1	720	720	0.03973	104.2494	GRE-CEDARMT3345.00 - LYON COUNTY 345KV CKT 2
FDNS	00NR	4	25SP	G15_076	FROM->TO	GRPRAR1-LNX3345.00 - HOLT.CO3 345.00 345KV CKT 1	720	720	0.03985	104.2474	WAYSIDE (WAYSIDE T1) 230/115/13.8KV TRANSFORMER CKT 1
FDNS	00NR	4	25SP	G15_076	FROM->TO	GRPRAR1-LNX3345.00 - HOLT.CO3 345.00 345KV CKT 1	720	720	0.03973	104.2468	GRE-CEDARMT3345.00 - LYON COUNTY 345KV CKT 1
FDNS	00NR	4	25SP	G15_076	FROM->TO	GRPRAR1-LNX3345.00 - HOLT.CO3 345.00 345KV CKT 1	720	720	0.03962	104.2456	GEN562438 1-G13-032 0.6900
FDNS	00NR	4	25SP	G15_076	FROM->TO	GRPRAR1-LNX3345.00 - HOLT.CO3 345.00 345KV CKT 1	720	720	0.04073	104.2451	PLYMOUTH - SIOUX CITY 161KV CKT 1
FDNS	00NR	4	25SP	G15_076	FROM->TO	GRPRAR1-LNX3345.00 - HOLT.CO3 345.00 345KV CKT 1	720	720	0.04073	104.2451	PLYMOUTH - SIOUX CITY 161KV CKT 1
FDNS	00NR	4	25SP	G15_076	FROM->TO	GRPRAR1-LNX3345.00 - HOLT.CO3 345.00 345KV CKT 1	720	720	0.03962	104.2427	GEN334030 1-FRONTIER UNIT 1
FDNS	00NR	4	25SP	G15_076	FROM->TO	GRPRAR1-LNX3345.00 - HOLT.CO3 345.00 345KV CKT 1	720	720	0.03962	104.2424	GEN334031 1-FRONTIER UNIT 2
FDNS	00NR	4	25SP	G15_076	FROM->TO	GRPRAR1-LNX3345.00 - HOLT.CO3 345.00 345KV CKT 1	720	720	0.03962	104.2411	GEN345756 H-1SIOUX 1 18.000
FDNS	00NR	4	25SP	G15_076	FROM->TO	GRPRAR1-LNX3345.00 - HOLT.CO3 345.00 345KV CKT 1	720	720	0.03962	104.237	GEN338443 1-PANDA S1
FDNS	00NR	4	25SP	G15_076	FROM->TO	GRPRAR1-LNX3345.00 - HOLT.CO3 345.00 345KV CKT 1	720	720	0.03985	104.2366	CHADRON - WAYSIDE 115KV CKT 1
FDNS	00NR	4	25SP	G15_076	FROM->TO	GRPRAR1-LNX3345.00 - HOLT.CO3 345.00 345KV CKT 1	720	720	0.03985	104.2366	P13:115-230:NPPD:WAYSIDE4:T1
FDNS	00NR	4	25SP	G15_076	FROM->TO	GRPRAR1-LNX3345.00 - HOLT.CO3 345.00 345KV CKT 1	720	720	0.03962	104.2363	P12:345:GRDA:CHOUTEAU-SPORTSMANACRES
FDNS	00NR	4	25SP	G15_076	FROM->TO	GRPRAR1-LNX3345.00 - HOLT.CO3 345.00 345KV CKT 1	720	720	0.03769	104.2347	FT RANDAL - WHITE SWAN 115KV CKT 1
FDNS	00NR	4	25SP	G15_076	FROM->TO	GRPRAR1-LNX3345.00 - HOLT.CO3 345.00 345KV CKT 1	720	720	0.03962	104.2323	GEN336944 1-REX BROWN
FDNS	00NR	4	25SP	G15_076	FROM->TO	GRPRAR1-LNX3345.00 - HOLT.CO3 345.00 345KV CKT 1	720	720	0.03962	104.2307	GEN345832 1-1TS G1 13.800
FDNS	00NR	4	25SP	G15_076	FROM->TO	GRPRAR1-LNX3345.00 - HOLT.CO3 345.00 345KV CKT 1	720	720	0.03962	104.2303	GEN345841 2-1TS G2 13.800
FDNS	00NR	4	25SP	G15_076	FROM->TO	GRPRAR1-LNX3345.00 - HOLT.CO3 345.00 345KV CKT 1	720	720	0.03962	104.2299	GEN501970 1-EVANGELINE UNIT 7
FDNS	00NR	4	25SP	G15_076	FROM->TO	GRPRAR1-LNX3345.00 - HOLT.CO3 345.00 345KV CKT 1	720	720	0.03962	104.2227	GEN335612 1-WILLOW GLENN UNIT#2
FDNS	00NR	4	20SP	G15_076	FROM->TO	GRPRAR1-LNX3345.00 - HOLT.CO3 345.00 345KV CKT 1	720	720	0.03949	104.1377	BUCKNER7 345.00 - SPEARVILLE 345KV CKT 1
FDNS	00NR	4	20SP	G15_076	FROM->TO	GRPRAR1-LNX3345.00 - HOLT.CO3 345.00 345KV CKT 1	720	720	0.03949	104.1377	BUCKNER7 345.00 - SPEARVILLE 345KV CKT 1
FDNS	00NR	4	25SP	G15_076	FROM->TO	GRPRAR1-LNX3345.00 - HOLT.CO3 345.00 345KV CKT 1	720	720	0.03962	104.1314	GEN563282 1-G15094_3 0.6900
FDNS	00NR	4	20SP	G15_076	FROM->TO	GRPRAR1-LNX3345.00 - HOLT.CO3 345.00 345KV CKT 1	720	720	0.04209	104.0992	MINGO - RED WILLOW 345KV CKT 1
FDNS	00NR	4	20SP	G15_076	FROM->TO	GRPRAR1-LNX3345.00 - HOLT.CO3 345.00 345KV CKT 1	720	720	0.04209	104.0992	MINGO - RED WILLOW 345KV CKT 1
FDNS	00NR	4	20SP	G15_076	FROM->TO	GRPRAR1-LNX3345.00 - HOLT.CO3 345.00 345KV CKT 1	720	720	0.04015	104.0968	103RD & ROKEBY - MOORE 345KV CKT 1
FDNS	00NR	4	20SP	G15_076	FROM->TO	GRPRAR1-LNX3345.00 - HOLT.CO3 345.00 345KV CKT 1	720	720	0.04015	104.0968	103RD & ROKEBY - MOORE 345KV CKT 1
FDNS	00NR	4	20SP	G15_076	FROM->TO	GRPRAR1-LNX3345.00 - HOLT.CO3 345.00 345KV CKT 1	720	720	0.03947	104.0956	FT THOMPSON - OAHE 230KV CKT 1
FDNS	00NR	4	20SP	G15_076	FROM->TO	GRPRAR1-LNX3345.00 - HOLT.CO3 345.00 345KV CKT 1	720	720	0.03947	104.0956	FT THOMPSON - OAHE 230KV CKT 1
FDNS	00NR	4	20SP	G15_076	FROM->TO	GRPRAR1-LNX3345.00 - HOLT.CO3 345.00 345KV CKT 1	720	720	0.03947	104.0956	FT THOMPSON - OAHE 230KV CKT 2
FDNS	00NR	4	20SP	G15_076	FROM->TO	GRPRAR1-LNX3345.00 - HOLT.CO3 345.00 345KV CKT 1	720	720	0.03947	104.0956	FT THOMPSON - OAHE 230KV CKT 2
FDNS	00NR	4	20SP	G15_076	FROM->TO	GRPRAR1-LNX3345.00 - HOLT.CO3 345.00 345KV CKT 1	720	720	0.03948	104.0673	FT THOMPSON - OAHE 230KV CKT 3
FDNS	00NR	4	20SP	G15_076	FROM->TO	GRPRAR1-LNX3345.00 - HOLT.CO3 345.00 345KV CKT 1	720	720	0.03948	104.0673	FT THOMPSON - OAHE 230KV CKT 3
FDNS	00NR	4	20SP	G15_076	FROM->TO	GRPRAR1-LNX3345.00 - HOLT.CO3 345.00 345KV CKT 1	720	720	0.03948	104.0673	FT THOMPSON - OAHE 230KV CKT 4
FDNS	00NR	4	20SP	G15_076	FROM->TO	GRPRAR1-LNX3345.00 - HOLT.CO3 345.00 345KV CKT 1	720	720	0.03948	104.0673	FT THOMPSON - OAHE 230KV CKT 4
FDNS	00NR	4	20SP	G15_076	FROM->TO	GRPRAR1-LNX3345.00 - HOLT.CO3 345.00 345KV CKT 1	720	720	0.04	104.0348	AXTELL - POST ROCK 345KV CKT 1
FDNS	00NR	4	20SP	G15_076	FROM->TO	GRPRAR1-LNX3345.00 - HOLT.CO3 345.00 345KV CKT 1	720	720	0.03931	104.0289	BISMARK - L3 HAWDON 230KV CKT 1
FDNS	00NR	4	20SP	G15_076	FROM->TO	GRPRAR1-LNX3345.00 - HOLT.CO3 345.00 345KV CKT 1	720	720	0.03864	104.0283	NELIGH - PETERSBRG.N7115.00 115KV CKT 1
FDNS	00NR	4	20SP	G15_076	FROM->TO	GRPRAR1-LNX3345.00 - HOLT.CO3 345.00 345KV CKT 1	720	720	0.03956	104.0271	FALLOW 3 345.00 - GRIMES 345KV CKT 1
FDNS	00NR	4	20SP	G15_076	FROM->TO	GRPRAR1-LNX3345.00 - HOLT.CO3 345.00 345KV CKT 1	720	720	0.03941	104.023	G11_051T 345.00 - WOODWARD DISTRICT EHV 345KV CKT 1
FDNS	00NR	4	20SP	G15_076	FROM->TO	GRPRAR1-LNX3345.00 - HOLT.CO3 345.00 345KV CKT 1	720	720	0.0393	104.0104	GEN659147 1-PIONEER 1G13.800
FDNS	00NR	4	20SP	G15_076	FROM->TO	GRPRAR1-LNX3345.00 - HOLT.CO3 345.00 345KV CKT 1	720	720	0.0393	104.0104	GEN659158 2-PIONEER G213.800
FDNS	00NR	4	20SP	G15_076	FROM->TO	GRPRAR1-LNX3345.00 - HOLT.CO3 345.00 345KV CKT 1	720	720	0.0393	104.0104	GEN659159 3-PIONEER G313.800
FDNS	00NR	4	20SP	G15_076	FROM->TO	GRPRAR1-LNX3345.00 - HOLT.CO3 345.00 345KV CKT 1	720	720	0.0393	104.0101	GEN659148 1-LONESMCRK 1G13.800
FDNS	00NR	4	20SP	G15_076	FROM->TO	GRPRAR1-LNX3345.00 - HOLT.CO3 345.00 345KV CKT 1	720	720	0.0393	104.0101	GEN659156 2-LONESMCRK 2G13.800
FDNS	00NR	4	20SP	G15_076	FROM->TO	GRPRAR1-LNX3345.00 - HOLT.CO3 345.00 345KV CKT 1	720	720	0.0393	104.0101	GEN659157 3-LONESMCRK 3G13.800
FDNS	00NR	4	20SP	G15_076	FROM->TO	GRPRAR1-LNX3345.00 - HOLT.CO3 345.00 345KV CKT 1	720	720	0.0393	104.0045	GEN657964 1-ASH2GEN9 0.5750

SOLUTION	GROUP	SCENARIO	SEASON	SOURCE	DIRECTION	MONITORED ELEMENT	RATEA (MVA)	RATEB(MVA)	TDF	TC%LOADING (% MVA)	CONTINGENCY
FDNS	00NR	4	20SP	G15_076	FROM->TO	GRPRAR1-LNX3345.00 - HOLT.CO3 345.00 345KV CKT 1	720	720	0.0393	104.0037	GEN672367 1-MERIDIAN GENERATOR 1 GT1
FDNS	00NR	4	20SP	G15_076	FROM->TO	GRPRAR1-LNX3345.00 - HOLT.CO3 345.00 345KV CKT 1	720	720	0.0393	104.0036	GEN672368 2-MERIDIAN GENERATOR 2 GT2
FDNS	00NR	4	20SP	G15_076	FROM->TO	GRPRAR1-LNX3345.00 - HOLT.CO3 345.00 345KV CKT 1	720	720	0.0393	104.0029	GEN672358 1-CHAPLN1W 0.6900
FDNS	00NR	4	20SP	G15_076	FROM->TO	GRPRAR1-LNX3345.00 - HOLT.CO3 345.00 345KV CKT 1	720	720	0.03052	104.0007	SIOUX CITY - TWIN CHURCH 230KV CKT 1
FDNS	00NR	4	20SP	G15_076	FROM->TO	GRPRAR1-LNX3345.00 - HOLT.CO3 345.00 345KV CKT 1	720	720	0.03926	103.9893	G14-021T 345.00 - MULLNCR7 345.00 345KV CKT 1
FDNS	00NR	4	20SP	G15_076	FROM->TO	GRPRAR1-LNX3345.00 - HOLT.CO3 345.00 345KV CKT 1	720	720	0.03926	103.9861	G15-005T 345.00 - MULLNCR7 345.00 345KV CKT 1
FDNS	00NR	4	20SP	G15_076	FROM->TO	GRPRAR1-LNX3345.00 - HOLT.CO3 345.00 345KV CKT 1	720	720	0.03864	103.9836	ALBION - PETERSBURG 115KV CKT 1
FDNS	00NR	4	20SP	G15_076	FROM->TO	GRPRAR1-LNX3345.00 - HOLT.CO3 345.00 345KV CKT 1	720	720	0.03944	103.9811	POST ROCK (POSTROCK T1) 345/230/13.8KV TRANSFORMER CKT 1
FDNS	00NR	4	20SP	G15_076	FROM->TO	GRPRAR1-LNX3345.00 - HOLT.CO3 345.00 345KV CKT 1	720	720	0.0393	103.9799	GEN672349 3-CORY COGEN GENERATOR 3 ST
FDNS	00NR	4	20SP	G15_076	FROM->TO	GRPRAR1-LNX3345.00 - HOLT.CO3 345.00 345KV CKT 1	720	720	0.0393	103.9778	GEN672350 1-NIPAWIN GENERATOR 1
FDNS	00NR	4	20SP	G15_076	FROM->TO	GRPRAR1-LNX3345.00 - HOLT.CO3 345.00 345KV CKT 1	720	720	0.0393	103.9778	GEN672351 2-NIPAWIN GENERATOR 2
FDNS	00NR	4	20SP	G15_076	FROM->TO	GRPRAR1-LNX3345.00 - HOLT.CO3 345.00 345KV CKT 1	720	720	0.0393	103.9778	GEN672352 3-NIPAWIN GENERATOR 3
FDNS	00NR	4	20SP	G15_076	FROM->TO	GRPRAR1-LNX3345.00 - HOLT.CO3 345.00 345KV CKT 1	720	720	0.0393	103.9725	GEN600012 2-BLACK DOG GEN 2
FDNS	00NR	4	20SP	G15_076	FROM->TO	GRPRAR1-LNX3345.00 - HOLT.CO3 345.00 345KV CKT 1	720	720	0.04114	103.9645	BATTLE CREEK - COUNTY LINE 115KV CKT 1
FDNS	00NR	4	20SP	G15_076	FROM->TO	GRPRAR1-LNX3345.00 - HOLT.CO3 345.00 345KV CKT 1	720	720	0.04085	103.9586	G15061_T 345.00 - SETAB 345KV CKT 1
FDNS	00NR	4	20SP	G15_076	FROM->TO	GRPRAR1-LNX3345.00 - HOLT.CO3 345.00 345KV CKT 1	720	720	0.03807	103.9563	COOPER - MOORE 345KV CKT 1
FDNS	00NR	4	20SP	G15_076	FROM->TO	GRPRAR1-LNX3345.00 - HOLT.CO3 345.00 345KV CKT 1	720	720	0.0393	103.9538	GEN590010 1-ERCOT EQUIVALENCE
FDNS	00NR	4	20SP	G15_076	FROM->TO	GRPRAR1-LNX3345.00 - HOLT.CO3 345.00 345KV CKT 1	720	720	0.0393	103.9484	GEN652546 1-FT RANDAL
FDNS	00NR	4	20SP	G15_076	FROM->TO	GRPRAR1-LNX3345.00 - HOLT.CO3 345.00 345KV CKT 1	720	720	0.0393	103.9465	GEN652548 5-FT RANDAL
FDNS	00NR	4	20SP	G15_076	FROM->TO	GRPRAR1-LNX3345.00 - HOLT.CO3 345.00 345KV CKT 1	720	720	0.0393	103.9465	GEN652549 7-FT RANDAL
FDNS	00NR	4	20SP	G15_076	FROM->TO	GRPRAR1-LNX3345.00 - HOLT.CO3 345.00 345KV CKT 1	720	720	0.0393	103.943	EMERY 161/18.0KV TRANSFORMER CKT 1
FDNS	00NR	4	20SP	G15_076	FROM->TO	GRPRAR1-LNX3345.00 - HOLT.CO3 345.00 345KV CKT 1	720	720	0.03864	103.9429	P12:115:NPPD:1168B:ALBION 7:PETERSBRG.N7:BTB
FDNS	00NR	4	20SP	G15_076	FROM->TO	GRPRAR1-LNX3345.00 - HOLT.CO3 345.00 345KV CKT 1	720	720	0.0393	103.9417	GEN652547 3-FT RANDAL
FDNS	00NR	4	20SP	G15_076	FROM->TO	GRPRAR1-LNX3345.00 - HOLT.CO3 345.00 345KV CKT 1	720	720	0.03864	103.9397	PETERSBRG.N7115.00 - PETERSBURG 115KV CKT Z1
FDNS	00NR	4	20SP	G15_076	FROM->TO	GRPRAR1-LNX3345.00 - HOLT.CO3 345.00 345KV CKT 1	720	720	0.03926	103.938	G15-005T 345.00 - SIBLEY 345KV CKT 1
FDNS	00NR	4	20SP	G15_076	FROM->TO	GRPRAR1-LNX3345.00 - HOLT.CO3 345.00 345KV CKT 1	720	720	0.0393	103.9272	GEN590011 2-ERCOT EQUIVALENCE
FDNS	00NR	4	20SP	G15_076	FROM->TO	GRPRAR1-LNX3345.00 - HOLT.CO3 345.00 345KV CKT 1	720	720	0.03939	103.9249	ANTELOP-LNX3345.00 - BRDLAND-LNX3345.00 345KV CKT 1
FDNS	00NR	4	20SP	G15_076	FROM->TO	GRPRAR1-LNX3345.00 - HOLT.CO3 345.00 345KV CKT 1	720	720	0.03739	103.9199	COLUMEAST - NW68TH & HOLDREGE 345KV CKT 1
FDNS	00NR	4	20SP	G15_076	FROM->TO	GRPRAR1-LNX3345.00 - HOLT.CO3 345.00 345KV CKT 1	720	720	0.03739	103.9199	COLUMEAST - NW68TH & HOLDREGE 345KV CKT 1
FDNS	00NR	4	20SP	G15_076	FROM->TO	GRPRAR1-LNX3345.00 - HOLT.CO3 345.00 345KV CKT 1	720	720	0.0393	103.9172	GEN300003 1-THOMAS HILL UNIT 3
FDNS	00NR	4	20SP	G15_076	FROM->TO	GRPRAR1-LNX3345.00 - HOLT.CO3 345.00 345KV CKT 1	720	720	0.03958	103.9151	LARAMIE RIVER - STEGALL 345KV CKT 1
FDNS	00NR	4	20SP	G15_076	FROM->TO	GRPRAR1-LNX3345.00 - HOLT.CO3 345.00 345KV CKT 1	720	720	0.0393	103.9082	GEN600046 1-MECST
FDNS	00NR	4	20SP	G15_076	FROM->TO	GRPRAR1-LNX3345.00 - HOLT.CO3 345.00 345KV CKT 1	720	720	0.03652	103.9077	FT THOMPSON (FT2 KU1A) 345/230/13.8KV TRANSFORMER CKT 1
FDNS	00NR	4	20SP	G15_076	FROM->TO	GRPRAR1-LNX3345.00 - HOLT.CO3 345.00 345KV CKT 1	720	720	0.0393	103.9069	GEN659290 1-EDGECOL
FDNS	00NR	4	20SP	G15_076	FROM->TO	GRPRAR1-LNX3345.00 - HOLT.CO3 345.00 345KV CKT 1	720	720	0.0393	103.9069	GEN672339 16-QE 16G 13.800
FDNS	00NR	4	20SP	G15_076	FROM->TO	GRPRAR1-LNX3345.00 - HOLT.CO3 345.00 345KV CKT 1	720	720	0.03651	103.9053	FT THOMPSON (FT2 KU1B) 345/230/13.8KV TRANSFORMER CKT 1
FDNS	00NR	4	20SP	G15_076	FROM->TO	GRPRAR1-LNX3345.00 - HOLT.CO3 345.00 345KV CKT 1	720	720	0.04114	103.9014	ANTELOPE 7115.00 - COUNTY LINE 115KV CKT 1
FDNS	00NR	4	20SP	G15_076	FROM->TO	GRPRAR1-LNX3345.00 - HOLT.CO3 345.00 345KV CKT 1	720	720	0.03936	103.8935	DRAYTON - LETELLIER 230KV CKT 1
FDNS	00NR	4	20SP	G15_076	FROM->TO	GRPRAR1-LNX3345.00 - HOLT.CO3 345.00 345KV CKT 1	720	720	0.0393	103.8929	GEN672393 2-NBECST2G 13.800
FDNS	00NR	4	20SP	G15_076	FROM->TO	GRPRAR1-LNX3345.00 - HOLT.CO3 345.00 345KV CKT 1	720	720	0.0393	103.8903	GEN600050 1-FEP
FDNS	00NR	4	20SP	G15_076	FROM->TO	GRPRAR1-LNX3345.00 - HOLT.CO3 345.00 345KV CKT 1	720	720	0.0399	103.8824	THEDFRD3 345.00 (THEDFORDT2) 345/115/13.8KV TRANSFORMER CKT 1
FDNS	00NR	4	20SP	G15_076	FROM->TO	GRPRAR1-LNX3345.00 - HOLT.CO3 345.00 345KV CKT 1	720	720	0.0393	103.8783	GEN620324 3-HOOT LAKE 3 GEN
FDNS	00NR	4	20SP	G15_076	FROM->TO	GRPRAR1-LNX3345.00 - HOLT.CO3 345.00 345KV CKT 1	720	720	0.0393	103.8714	GEN672342 3-QUEEN ELIZABETH GENERATOR 3
FDNS	00NR	4	20SP	G15_076	FROM->TO	GRPRAR1-LNX3345.00 - HOLT.CO3 345.00 345KV CKT 1	720	720	0.0393	103.8629	GEN652410 3-FT PECK
FDNS	00NR	4	20SP	G15_076	FROM->TO	GRPRAR1-LNX3345.00 - HOLT.CO3 345.00 345KV CKT 1	720	720	0.03739	103.8597	COLUMEAST - SHELL CREEK 345KV CKT 1
FDNS	00NR	4	20SP	G15_076	FROM->TO	GRPRAR1-LNX3345.00 - HOLT.CO3 345.00 345KV CKT 1	720	720	0.0393	103.8592	LADISH 115/13.2KV TRANSFORMER CKT 1
FDNS	00NR	4	20SP	G15_076	FROM->TO	GRPRAR1-LNX3345.00 - HOLT.CO3 345.00 345KV CKT 1	720	720	0.0393	103.8554	GEN600047 1-MECCT1
FDNS	00NR	4	20SP	G15_076	FROM->TO	GRPRAR1-LNX3345.00 - HOLT.CO3 345.00 345KV CKT 1	720	720	0.0393	103.8415	GEN660003 3-HURON WEST PARK
FDNS	00NR	4	20SP	G15_076	FROM->TO	GRPRAR1-LNX3345.00 - HOLT.CO3 345.00 345KV CKT 1	720	720	0.0393	103.8296	GEN660001 2-ABERDEEN SIEBRECHT
FDNS	00NR	4	20SP	G15_076	FROM->TO	GRPRAR1-LNX3345.00 - HOLT.CO3 345.00 345KV CKT 1	720	720	0.0393	103.8063	GEN600063 1-COLVILLE GEN 1
FDNS	00NR	4	20SP	G15_076	FROM->TO	GRPRAR1-LNX3345.00 - HOLT.CO3 345.00 345KV CKT 1	720	720	0.0393	103.8063	GEN600064 2-COLVILLE GEN 2
FDNS	00NR	4	20SP	G15_076	FROM->TO	GRPRAR1-LNX3345.00 - HOLT.CO3 345.00 345KV CKT 1	720	720	0.0393	103.8003	GEN652414 4-FT PECK
FDNS	00NR	4	20SP	G15_076	FROM->TO	GRPRAR1-LNX3345.00 - HOLT.CO3 345.00 345KV CKT 1	720	720	0.0393	103.8003	GEN652415 5-FT PECK
FDNS	00NR	4	20SP	G15_076	FROM->TO	GRPRAR1-LNX3345.00 - HOLT.CO3 345.00 345KV CKT 1	720	720	0.0393	103.794	GEN681522 3-GENOA 3
FDNS	00NR	4	20SP	G15_076	FROM->TO	GRPRAR1-LNX3345.00 - HOLT.CO3 345.00 345KV CKT 1	720	720	0.0408	103.7926	GERALD GENTLEMAN STATION - RED WILLOW 345KV CKT 1
FDNS	00NR	4	20SP	G15_076	FROM->TO	GRPRAR1-LNX3345.00 - HOLT.CO3 345.00 345KV CKT 1	720	720	0.0393	103.7915	GEN300007 1-NEW MADRID UNIT 2
FDNS	00NR	4	20SP	G15_076	FROM->TO	GRPRAR1-LNX3345.00 - HOLT.CO3 345.00 345KV CKT 1	720	720	0.0393	103.7915	GEN652345 W-G07_023IS_2 0.6900
FDNS	00NR	4	20SP	G15_076	FROM->TO	GRPRAR1-LNX3345.00 - HOLT.CO3 345.00 345KV CKT 1	720	720	0.0393	103.7865	GEN300006 1-NEW MADRID UNIT 1
FDNS	00NR	4	20SP	G15_076	FROM->TO	GRPRAR1-LNX3345.00 - HOLT.CO3 345.00 345KV CKT 1	720	720	0.0393	103.7843	GEN 11104 1-J262_GEN 0.6000
FDNS	00NR	4	20SP	G15_076	FROM->TO	GRPRAR1-LNX3345.00 - HOLT.CO3 345.00 345KV CKT 1	720	720	0.0393	103.7843	GEN 11108 1-J263_GEN 0.6000
FDNS	00NR	4	20SP	G15_076	FROM->TO	GRPRAR1-LNX3345.00 - HOLT.CO3 345.00 345KV CKT 1	720	720	0.0393	103.7798	GEN600043 7-BLUE LAKE5
FDNS	00NR	4	20SP	G15_076	FROM->TO	GRPRAR1-LNX3345.00 - HOLT.CO3 345.00 345KV CKT 1	720	720	0.0393	103.7798	GEN600044 8-BLUE LAKE6
FDNS	00NR	4	25SP	G15_076	FROM->TO	GRPRAR1-LNX3345.00 - HOLT.CO3 345.00 345KV CKT 1	720	720	0.03962	103.7619	BASE CASE
FDNS	00NR	4	20SP	G15_076	FROM->TO	GRPRAR1-LNX3345.00 - HOLT.CO3 345.00 345KV CKT 1	720	720	0.0393	103.7616	G830_SUB 115.00 - GRE-MCHENRY7115.00 115KV CKT 1
FDNS	00NR	4	20SP	G15_076	FROM->TO	GRPRAR1-LNX3345.00 - HOLT.CO3 345.00 345KV CKT 1	720	720	0.0393	103.7548	GEN600014 4-BLACK DOG GEN 4
FDNS	00NR	4	20SP	G15_076	FROM->TO	GRPRAR1-LNX3345.00 - HOLT.CO3 345.00 345KV CKT 1	720	720	0.0393	103.7513	G830_SUB 115.00 115/34.5KV TRANSFORMER CKT 1
FDNS	00NR	4	20SP	G15_076	FROM->TO	GRPRAR1-LNX3345.00 - HOLT.CO3 345.00 345KV CKT 1	720	720	0.0393	103.751	GEN600065 7-HIGH BRIDGE
FDNS	00NR	4	20SP	G15_076	FROM->TO	GRPRAR1-LNX3345.00 - HOLT.CO3 345.00 345KV CKT 1	720	720	0.0393	103.751	GEN600066 8-HIGH BRIDGE
FDNS	00NR	4	20SP	G15_076	FROM->TO	GRPRAR1-LNX3345.00 - HOLT.CO3 345.00 345KV CKT 1	720	720	0.0393	103.7481	GEN600011 5-BLACK DOG GEN 1
FDNS	00NR	4	20SP	G15_076	FROM->TO	GRPRAR1-LNX3345.00 - HOLT.CO3 345.00 345KV CKT 1	720	720	0.0393	103.7378	GEN600070 9-RIVER SIDE
FDNS	00NR	4	20SP	G15_076	FROM->TO	GRPRAR1-LNX3345.00 - HOLT.CO3 345.00 345KV CKT 1	720	720	0.0393	103.7378	GEN600071 10-RIVER SIDE
FDNS	00NR	4	20SP	G15_076	FROM->TO	GRPRAR1-LNX3345.00 - HOLT.CO3 345.00 345KV CKT 1	720	720	0.0393	103.7358	LANSING WEST 161/22.0KV TRANSFORMER CKT 1
FDNS	00NR	4	20SP	G15_076	FROM->TO	GRPRAR1-LNX3345.00 - HOLT.CO3 345.00 345KV CKT 1	720	720	0.0393	103.7265	GEN600007 7-RIVERSIDE GEN 7
FDNS	00NR	4	20SP	G15_076	FROM->TO	GRPRAR1-LNX3345.00 - HOLT.CO3 345.00 345KV CKT 1	720	720	0.0393	103.7131	GEN600017 C-LS POWER CT
FDNS	00NR	4	20SP	G15_076	FROM->TO	GRPRAR1-LNX3345.00 - HOLT.CO3 345.00 345KV CKT 1	720	720	0.0393	103.7113	GEN600045 4-ANSON
FDNS	00NR	4	20SP	G15_076	FROM->TO	GRPRAR1-LNX3345.00 - HOLT.CO3 345.00 345KV CKT 1	720	720	0.03941	103.6862	G11_051T 345.00 - TATONGA7 345.00 345KV CKT 1
FDNS	00NR	4	20SP	G15_076	FROM->TO	GRPRAR1-LNX3345.00 - HOLT.CO3 345.00 345KV CKT 1	720	720	0.03939	103.6852	BRDLAND-LNX3345.00 - HURON 345KV CKT Z
FDNS	00NR	4	20SP	G15_076	FROM->TO	GRPRAR1-LNX3345.00 - HOLT.CO3 345.00 345KV CKT 1	720	720	0.03939	103.6844	HURON (BD KU2A) 345/230/13.8KV TRANSFORMER CKT 1
FDNS	00NR	4	20SP	G15_076	FROM->TO	GRPRAR1-LNX3345.00 - HOLT.CO3 345.00 345KV CKT 1	720	720	0.03939	103.6844	HURON (BD KU2A) 345/230/13.8KV TRANSFORMER CKT 1

SOLUTION	GROUP	SCENARIO	SEASON	SOURCE	DIRECTION	MONITORED ELEMENT	RATEA (MVA)	RATEB(MVA)	TDF	TC%LOADING (% MVA)	CONTINGENCY
FDNS	00NR	4	20SP	G15_076	FROM->TO	GRPRAR1-LNX3345.00 - HOLT.CO3 345.00 345KV CKT 1	720	720	0.03939	103.6828	BROADLAND - HURON 230KV CKT 1
FDNS	00NR	4	20SP	G15_076	FROM->TO	GRPRAR1-LNX3345.00 - HOLT.CO3 345.00 345KV CKT 1	720	720	0.04102	103.6823	P12:115:NPPD:1163B:NELIGH 7:NORFK.N7:BTB
FDNS	00NR	4	20SP	G15_076	FROM->TO	GRPRAR1-LNX3345.00 - HOLT.CO3 345.00 345KV CKT 1	720	720	0.03939	103.6809	P12:345:UMZB:# 103 #: BD IN SD. LOSS OF LINE
FDNS	00NR	4	20SP	G15_076	FROM->TO	GRPRAR1-LNX3345.00 - HOLT.CO3 345.00 345KV CKT 1	720	720	0.03939	103.6794	P12:345:UMZB:# 102 #: AVS BD IN ND. AVS BRD LR
FDNS	00NR	4	20SP	G15_076	FROM->TO	GRPRAR1-LNX3345.00 - HOLT.CO3 345.00 345KV CKT 1	720	720	0.0393	103.6481	GEN659273 2-GROTON SYNC COND
FDNS	00NR	4	20SP	G15_076	FROM->TO	GRPRAR1-LNX3345.00 - HOLT.CO3 345.00 345KV CKT 1	720	720	0.0393	103.6481	GEN659294 1-WILTONCOL9
FDNS	00NR	4	20SP	G15_076	FROM->TO	GRPRAR1-LNX3345.00 - HOLT.CO3 345.00 345KV CKT 1	720	720	0.0393	103.6448	GEN615052 1-CAMBRIDGE GENERATING STATION
FDNS	00NR	4	20SP	G15_076	FROM->TO	GRPRAR1-LNX3345.00 - HOLT.CO3 345.00 345KV CKT 1	720	720	0.03939	103.6319	ANTELOP-LNX3345.00 - ANTELOPE VALLEY 345KV CKT Z
FDNS	00NR	4	20SP	G15_076	FROM->TO	GRPRAR1-LNX3345.00 - HOLT.CO3 345.00 345KV CKT 1	720	720	0.0393	103.6298	GEN615021 1-GRE-ER 14G 16.000
FDNS	00NR	4	20SP	G15_076	FROM->TO	GRPRAR1-LNX3345.00 - HOLT.CO3 345.00 345KV CKT 1	720	720	0.03931	103.5998	OAHE - SULLEY BUTTE 230KV CKT 1
FDNS	00NR	4	20SP	G15_076	FROM->TO	GRPRAR1-LNX3345.00 - HOLT.CO3 345.00 345KV CKT 1	720	720	0.0393	103.5883	GEN 10648 1-G830_GEN 0.6900
FDNS	00NR	4	20SP	G15_076	FROM->TO	GRPRAR1-LNX3345.00 - HOLT.CO3 345.00 345KV CKT 1	720	720	0.0393	103.5868	GEN659192 6-LYNN
FDNS	00NR	4	20SP	G15_076	FROM->TO	GRPRAR1-LNX3345.00 - HOLT.CO3 345.00 345KV CKT 1	720	720	0.0393	103.5857	GEN659162 4-RED WLCK
FDNS	00NR	4	20SP	G15_076	FROM->TO	GRPRAR1-LNX3345.00 - HOLT.CO3 345.00 345KV CKT 1	720	720	0.0393	103.5857	GEN659163 5-BLACK WDCK
FDNS	00NR	4	20SP	G15_076	FROM->TO	GRPRAR1-LNX3345.00 - HOLT.CO3 345.00 345KV CKT 1	720	720	0.0393	103.5843	GEN659031 1-G12_014IS_4 0.6900
FDNS	00NR	4	20SP	G15_076	FROM->TO	GRPRAR1-LNX3345.00 - HOLT.CO3 345.00 345KV CKT 1	720	720	0.0393	103.5608	GEN660016 1-B_H WIND 0.7000
FDNS	00NR	4	20SP	G15_076	FROM->TO	GRPRAR1-LNX3345.00 - HOLT.CO3 345.00 345KV CKT 1	720	720	0.03819	103.5607	HIGHLND 3 345.00 - OBRIEN 3 345.00 345KV CKT 1
FDNS	00NR	4	20SP	G15_076	FROM->TO	GRPRAR1-LNX3345.00 - HOLT.CO3 345.00 345KV CKT 1	720	720	0.0393	103.5504	GEN615015 1-GRE-SPRITWDG13.200
FDNS	00NR	4	20SP	G15_076	FROM->TO	GRPRAR1-LNX3345.00 - HOLT.CO3 345.00 345KV CKT 1	720	720	0.0393	103.46	BISONMP4 230.00 - SQUARE BUTTE 230KV CKT 1
FDNS	00NR	4	20SP	G15_076	FROM->TO	GRPRAR1-LNX3345.00 - HOLT.CO3 345.00 345KV CKT 1	720	720	0.03941	103.4579	MATHWSN7 345.00 - TATONGA7 345.00 345KV CKT 1
FDNS	00NR	4	20SP	G15_076	FROM->TO	GRPRAR1-LNX3345.00 - HOLT.CO3 345.00 345KV CKT 1	720	720	0.03931	103.4393	SULLEY BUTTE - SULLYBT-LNX3230.00 230KV CKT Z
FDNS	00NR	4	20SP	G15_076	FROM->TO	GRPRAR1-LNX3345.00 - HOLT.CO3 345.00 345KV CKT 1	720	720	0.03931	103.4388	SULLYBT-LNX3230.00 - WHITLOK 230KV CKT 1
FDNS	00NR	4	20SP	G15_076	FROM->TO	GRPRAR1-LNX3345.00 - HOLT.CO3 345.00 345KV CKT 1	720	720	0.0393	103.4327	GEN600067 9-HIGH BRIDGE
FDNS	00NR	4	20SP	G15_076	FROM->TO	GRPRAR1-LNX3345.00 - HOLT.CO3 345.00 345KV CKT 1	720	720	0.03522	103.4143	DIXONCO 230.00 - TWIN CHURCH 230KV CKT 1
FDNS	00NR	4	20SP	G15_076	FROM->TO	GRPRAR1-LNX3345.00 - HOLT.CO3 345.00 345KV CKT 1	720	720	0.0393	103.409	GEN672303 3-BOUNDARY DAM GENERATOR 3
FDNS	00NR	4	20SP	G15_076	FROM->TO	GRPRAR1-LNX3345.00 - HOLT.CO3 345.00 345KV CKT 1	720	720	0.0393	103.409	GEN672305 5-BOUNDARY DAM GENERATOR 5
FDNS	00NR	4	20SP	G15_076	FROM->TO	GRPRAR1-LNX3345.00 - HOLT.CO3 345.00 345KV CKT 1	720	720	0.0393	103.4089	GEN672304 4-BOUNDARY DAM GENERATOR 4
FDNS	00NR	4	20SP	G15_076	FROM->TO	GRPRAR1-LNX3345.00 - HOLT.CO3 345.00 345KV CKT 1	720	720	0.03931	103.392	P12:230:UMZB:# 114 #: SB IN SD. SB-WK-GH
FDNS	00NR	4	20SP	G15_076	FROM->TO	GRPRAR1-LNX3345.00 - HOLT.CO3 345.00 345KV CKT 1	720	720	0.03931	103.392	P12:230:UMZB:# 117 #: WK IN SD. SB-WK-GH
FDNS	00NR	4	20SP	G15_076	FROM->TO	GRPRAR1-LNX3345.00 - HOLT.CO3 345.00 345KV CKT 1	720	720	0.03635	103.3901	HOSKINS - RAUN 345KV CKT 1
FDNS	00NR	4	20SP	G15_076	FROM->TO	GRPRAR1-LNX3345.00 - HOLT.CO3 345.00 345KV CKT 1	720	720	0.03635	103.3901	HOSKINS - RAUN 345KV CKT 1
FDNS	00NR	4	20SP	G15_076	FROM->TO	GRPRAR1-LNX3345.00 - HOLT.CO3 345.00 345KV CKT 1	720	720	0.0393	103.3872	GEN659353 1-DEERCREK CTG18.000
FDNS	00NR	4	20SP	G15_076	FROM->TO	GRPRAR1-LNX3345.00 - HOLT.CO3 345.00 345KV CKT 1	720	720	0.0393	103.3863	GEN659354 1-DEERCREK STG18.000
FDNS	00NR	4	20SP	G15_076	FROM->TO	GRPRAR1-LNX3345.00 - HOLT.CO3 345.00 345KV CKT 1	720	720	0.0393	103.3572	GEN672392 1-NBECGT1G 18.000
FDNS	00NR	4	25SP	G15_076	FROM->TO	GRPRAR1-LNX3345.00 - HOLT.CO3 345.00 345KV CKT 1	720	720	0.03979	103.3527	FT THOMPSON - OAHE 230KV CKT 1
FDNS	00NR	4	25SP	G15_076	FROM->TO	GRPRAR1-LNX3345.00 - HOLT.CO3 345.00 345KV CKT 1	720	720	0.03979	103.3527	FT THOMPSON - OAHE 230KV CKT 1
FDNS	00NR	4	25SP	G15_076	FROM->TO	GRPRAR1-LNX3345.00 - HOLT.CO3 345.00 345KV CKT 1	720	720	0.03979	103.3527	FT THOMPSON - OAHE 230KV CKT 2
FDNS	00NR	4	25SP	G15_076	FROM->TO	GRPRAR1-LNX3345.00 - HOLT.CO3 345.00 345KV CKT 1	720	720	0.03979	103.3527	FT THOMPSON - OAHE 230KV CKT 2
FDNS	00NR	4	25SP	G15_076	FROM->TO	GRPRAR1-LNX3345.00 - HOLT.CO3 345.00 345KV CKT 1	720	720	0.03845	103.3486	COOPER - MOORE 345KV CKT 1
FDNS	00NR	4	20SP	G15_076	FROM->TO	GRPRAR1-LNX3345.00 - HOLT.CO3 345.00 345KV CKT 1	720	720	0.03931	103.3374	GLENHAM - WHITLOK 230KV CKT 1
FDNS	00NR	4	25SP	G15_076	FROM->TO	GRPRAR1-LNX3345.00 - HOLT.CO3 345.00 345KV CKT 1	720	720	0.0398	103.3238	FT THOMPSON - OAHE 230KV CKT 3
FDNS	00NR	4	25SP	G15_076	FROM->TO	GRPRAR1-LNX3345.00 - HOLT.CO3 345.00 345KV CKT 1	720	720	0.0398	103.3238	FT THOMPSON - OAHE 230KV CKT 3
FDNS	00NR	4	25SP	G15_076	FROM->TO	GRPRAR1-LNX3345.00 - HOLT.CO3 345.00 345KV CKT 1	720	720	0.0398	103.3238	FT THOMPSON - OAHE 230KV CKT 4
FDNS	00NR	4	25SP	G15_076	FROM->TO	GRPRAR1-LNX3345.00 - HOLT.CO3 345.00 345KV CKT 1	720	720	0.0398	103.3238	FT THOMPSON - OAHE 230KV CKT 4
FDNS	00NR	4	17SP	G15_076	FROM->TO	GRPRAR1-LNX3345.00 - HOLT.CO3 345.00 345KV CKT 1	720	720	0.04084	103.3083	GEN615001 1-COAL CREEK
FDNS	00NR	4	25SP	G15_076	FROM->TO	GRPRAR1-LNX3345.00 - HOLT.CO3 345.00 345KV CKT 1	720	720	0.04248	103.2848	AINSWORTH - AINSWORTH 115KV CKT 1
FDNS	00NR	4	25SP	G15_076	FROM->TO	GRPRAR1-LNX3345.00 - HOLT.CO3 345.00 345KV CKT 1	720	720	0.03987	103.284	7MAYWOOD 345.00 - 7SPENCER 345.00 345KV CKT 1
FDNS	00NR	4	25SP	G15_076	FROM->TO	GRPRAR1-LNX3345.00 - HOLT.CO3 345.00 345KV CKT 1	720	720	0.03895	103.2816	NELIGH - PETERSBRG.N7115.00 115KV CKT 1
FDNS	00NR	4	25SP	G15_076	FROM->TO	GRPRAR1-LNX3345.00 - HOLT.CO3 345.00 345KV CKT 1	720	720	0.03085	103.2802	SIOUX CITY - TWIN CHURCH 230KV CKT 1
FDNS	00NR	4	25SP	G15_076	FROM->TO	GRPRAR1-LNX3345.00 - HOLT.CO3 345.00 345KV CKT 1	720	720	0.03964	103.279	P12:115:UMZZ:# 232 #: AB IN SD. ABERDEEN A TAP BETWEEN ELLENDALE AND ABERDEEN-SIEBRECHT.
FDNS	00NR	4	25SP	G15_076	FROM->TO	GRPRAR1-LNX3345.00 - HOLT.CO3 345.00 345KV CKT 1	720	720	0.03963	103.2637	BISMARK - L3 HAWDON 230KV CKT 1
FDNS	00NR	4	25SP	G15_076	FROM->TO	GRPRAR1-LNX3345.00 - HOLT.CO3 345.00 345KV CKT 1	720	720	0.03958	103.2626	G15-005T 345.00 - MULLNCR7 345.00 345KV CKT 1
FDNS	00NR	4	25SP	G15_076	FROM->TO	GRPRAR1-LNX3345.00 - HOLT.CO3 345.00 345KV CKT 1	720	720	0.03971	103.2613	ANTELOP-LNX3345.00 - BRDLAND-LNX3345.00 345KV CKT 1
FDNS	00NR	4	25SP	G15_076	FROM->TO	GRPRAR1-LNX3345.00 - HOLT.CO3 345.00 345KV CKT 1	720	720	0.03962	103.2557	GEN672347 1-CORY COGEN GENERATOR 1 GT1
FDNS	00NR	4	25SP	G15_076	FROM->TO	GRPRAR1-LNX3345.00 - HOLT.CO3 345.00 345KV CKT 1	720	720	0.03962	103.2557	GEN672348 2-CORY COGEN GENERATOR 2 GT2
FDNS	00NR	4	25SP	G15_076	FROM->TO	GRPRAR1-LNX3345.00 - HOLT.CO3 345.00 345KV CKT 1	720	720	0.03962	103.2523	GEN300003 1-THOMAS HILL UNIT 3
FDNS	00NR	4	25SP	G15_076	FROM->TO	GRPRAR1-LNX3345.00 - HOLT.CO3 345.00 345KV CKT 1	720	720	0.0414	103.2518	ATCHSNT3 345.00 - BOONEVILLE 345KV CKT 1
FDNS	00NR	4	20SP	G15_076	FROM->TO	GRPRAR1-LNX3345.00 - HOLT.CO3 345.00 345KV CKT 1	720	720	0.0393	103.2488	GEN681542 6-JP MADGETT
FDNS	00NR	4	25SP	G15_076	FROM->TO	GRPRAR1-LNX3345.00 - HOLT.CO3 345.00 345KV CKT 1	720	720	0.03988	103.2395	FALLOW 3 345.00 - GRIMES 345KV CKT 1
FDNS	00NR	4	25SP	G15_076	FROM->TO	GRPRAR1-LNX3345.00 - HOLT.CO3 345.00 345KV CKT 1	720	720	0.03962	103.2378	GEN659147 1-PIONEER 1G13.800
FDNS	00NR	4	25SP	G15_076	FROM->TO	GRPRAR1-LNX3345.00 - HOLT.CO3 345.00 345KV CKT 1	720	720	0.03962	103.2378	GEN659158 2-PIONEER G213.800
FDNS	00NR	4	25SP	G15_076	FROM->TO	GRPRAR1-LNX3345.00 - HOLT.CO3 345.00 345KV CKT 1	720	720	0.03962	103.2378	GEN659159 3-PIONEER G313.800
FDNS	00NR	4	25SP	G15_076	FROM->TO	GRPRAR1-LNX3345.00 - HOLT.CO3 345.00 345KV CKT 1	720	720	0.03962	103.2373	GEN672358 1-CHAPLN1W 0.6900
FDNS	00NR	4	25SP	G15_076	FROM->TO	GRPRAR1-LNX3345.00 - HOLT.CO3 345.00 345KV CKT 1	720	720	0.03962	103.2359	GEN659148 1-LONESMCRK 1G13.800
FDNS	00NR	4	25SP	G15_076	FROM->TO	GRPRAR1-LNX3345.00 - HOLT.CO3 345.00 345KV CKT 1	720	720	0.03962	103.2359	GEN659156 2-LONESMCRK 2G13.800
FDNS	00NR	4	25SP	G15_076	FROM->TO	GRPRAR1-LNX3345.00 - HOLT.CO3 345.00 345KV CKT 1	720	720	0.03962	103.2359	GEN659157 3-LONESMCRK 3G13.800
FDNS	00NR	4	20SP	G15_076	FROM->TO	GRPRAR1-LNX3345.00 - HOLT.CO3 345.00 345KV CKT 1	720	720	0.0393	103.2348	GEN662101 1-WESSINGTON190.5750
FDNS	00NR	4	25SP	G15_076	FROM->TO	GRPRAR1-LNX3345.00 - HOLT.CO3 345.00 345KV CKT 1	720	720	0.03962	103.2331	GEN659417 1X-BEPCPKFT 1GX13.800
FDNS	00NR	4	25SP	G15_076	FROM->TO	GRPRAR1-LNX3345.00 - HOLT.CO3 345.00 345KV CKT 1	720	720	0.03962	103.2331	GEN659418 2X-BEPCPKFT 2GX13.800
FDNS	00NR	4	25SP	G15_076	FROM->TO	GRPRAR1-LNX3345.00 - HOLT.CO3 345.00 345KV CKT 1	720	720	0.03962	103.2331	GEN659419 3X-BEPCPKFT 3GX13.800
FDNS	00NR	4	25SP	G15_076	FROM->TO	GRPRAR1-LNX3345.00 - HOLT.CO3 345.00 345KV CKT 1	720	720	0.03962	103.2275	GEN657964 1-ASH2GEN9 0.5750
FDNS	00NR	4	25SP	G15_076	FROM->TO	GRPRAR1-LNX3345.00 - HOLT.CO3 345.00 345KV CKT 1	720	720	0.04146	103.2265	BATTLE CREEK - COUNTY LINE 115KV CKT 1
FDNS	00NR	4	25SP	G15_076	FROM->TO	GRPRAR1-LNX3345.00 - HOLT.CO3 345.00 345KV CKT 1	720	720	0.03958	103.2172	G15-005T 345.00 - SIBLEY 345KV CKT 1
FDNS	00NR	4	20SP	G15_076	FROM->TO	GRPRAR1-LNX3345.00 - HOLT.CO3 345.00 345KV CKT 1	720	720	0.0393	103.2146	CENTER 230/22.0KV TRANSFORMER CKT 1
FDNS	00NR	4	25SP	G15_076	FROM->TO	GRPRAR1-LNX3345.00 - HOLT.CO3 345.00 345KV CKT 1	720	720	0.03771	103.2141	COLUMEAST - NW68TH & HOLDREGE 345KV CKT 1
FDNS	00NR	4	25SP	G15_076	FROM->TO	GRPRAR1-LNX3345.00 - HOLT.CO3 345.00 345KV CKT 1	720	720	0.03771	103.2141	COLUMEAST - NW68TH & HOLDREGE 345KV CKT 1
FDNS	00NR	4	25SP	G15_076	FROM->TO	GRPRAR1-LNX3345.00 - HOLT.CO3 345.00 345KV CKT 1	720	720	0.03962	103.21	GEN672368 2-MERIDIAN GENERATOR 2 GT2
FDNS	00NR	4	25SP	G15_076	FROM->TO	GRPRAR1-LNX3345.00 - HOLT.CO3 345.00 345KV CKT 1	720	720	0.03962	103.2099	GEN672367 1-MERIDIAN GENERATOR 1 GT1
FDNS	00NR	4	25SP	G15_076	FROM->TO	GRPRAR1-LNX3345.00 - HOLT.CO3 345.00 345KV CKT 1	720	720	0.03895	103.2083	ALBION - PETERSBURG 115KV CKT 1

SOLUTION	GROUP	SCENARIO	SEASON	SOURCE	DIRECTION	MONITORED ELEMENT	RATEA (MVA)	RATEB(MVA)	TDF	TC%LOADING (% MVA)	CONTINGENCY
FDNS	00NR	4	20SP	G15_076	FROM->TO	GRPRAR1-LNX3345.00 - HOLT.CO3 345.00 345KV CKT 1	720	720	0.04087	103.2034	MISSION - WITTEN 115KV CKT 1
FDNS	00NR	4	25SP	G15_076	FROM->TO	GRPRAR1-LNX3345.00 - HOLT.CO3 345.00 345KV CKT 1	720	720	0.03962	103.197	GEN672350 1-NIPAWIN GENERATOR 1
FDNS	00NR	4	25SP	G15_076	FROM->TO	GRPRAR1-LNX3345.00 - HOLT.CO3 345.00 345KV CKT 1	720	720	0.03962	103.197	GEN672351 2-NIPAWIN GENERATOR 2
FDNS	00NR	4	25SP	G15_076	FROM->TO	GRPRAR1-LNX3345.00 - HOLT.CO3 345.00 345KV CKT 1	720	720	0.03962	103.197	GEN672352 3-NIPAWIN GENERATOR 3
FDNS	00NR	4	25SP	G15_076	FROM->TO	GRPRAR1-LNX3345.00 - HOLT.CO3 345.00 345KV CKT 1	720	720	0.04062	103.1969	HOLCOMB - SETAB 345KV CKT 1
FDNS	00NR	4	25SP	G15_076	FROM->TO	GRPRAR1-LNX3345.00 - HOLT.CO3 345.00 345KV CKT 1	720	720	0.04062	103.1969	HOLCOMB - SETAB 345KV CKT 1
FDNS	00NR	4	25SP	G15_076	FROM->TO	GRPRAR1-LNX3345.00 - HOLT.CO3 345.00 345KV CKT 1	720	720	0.03962	103.1895	GEN672349 3-CORY COGEN GENERATOR 3 ST
FDNS	00NR	4	20SP	G15_076	FROM->TO	GRPRAR1-LNX3345.00 - HOLT.CO3 345.00 345KV CKT 1	720	720	0.0393	103.1893	GEN910006 1-G12_012IS_3 0.6900
FDNS	00NR	4	25SP	G15_076	FROM->TO	GRPRAR1-LNX3345.00 - HOLT.CO3 345.00 345KV CKT 1	720	720	0.03962	103.1876	GEN652546 1-FT RANDAL
FDNS	00NR	4	25SP	G15_076	FROM->TO	GRPRAR1-LNX3345.00 - HOLT.CO3 345.00 345KV CKT 1	720	720	0.03962	103.1856	GEN652548 5-FT RANDAL
FDNS	00NR	4	25SP	G15_076	FROM->TO	GRPRAR1-LNX3345.00 - HOLT.CO3 345.00 345KV CKT 1	720	720	0.03962	103.1856	GEN652549 7-FT RANDAL
FDNS	00NR	4	25SP	G15_076	FROM->TO	GRPRAR1-LNX3345.00 - HOLT.CO3 345.00 345KV CKT 1	720	720	0.03962	103.1846	GEN600012 2-BLACK DOG GEN 2
FDNS	00NR	4	25SP	G15_076	FROM->TO	GRPRAR1-LNX3345.00 - HOLT.CO3 345.00 345KV CKT 1	720	720	0.03962	103.1844	EMERY 161/18.0KV TRANSFORMER CKT 1
FDNS	00NR	4	25SP	G15_076	FROM->TO	GRPRAR1-LNX3345.00 - HOLT.CO3 345.00 345KV CKT 1	720	720	0.03962	103.181	GEN652547 3-FT RANDAL
FDNS	00NR	4	25SP	G15_076	FROM->TO	GRPRAR1-LNX3345.00 - HOLT.CO3 345.00 345KV CKT 1	720	720	0.03895	103.1767	PETERSBRG.N7115.00 - PETERSBURG 115KV CKT Z1
FDNS	00NR	4	17SP	G15_076	FROM->TO	GRPRAR1-LNX3345.00 - HOLT.CO3 345.00 345KV CKT 1	720	720	0.04084	103.1764	GEN615002 2-COAL CREEK
FDNS	00NR	4	25SP	G15_076	FROM->TO	GRPRAR1-LNX3345.00 - HOLT.CO3 345.00 345KV CKT 1	720	720	0.03895	103.1639	P12:115:NPPD:1168B:ALBION 7:PETERSBRG.N7:BTB
FDNSLock	00NR	4	25SP	G15_076	FROM->TO	GRPRAR1-LNX3345.00 - HOLT.CO3 345.00 345KV CKT 1	720	720	0.03949	103.1583	WATERTOWN (WT2 KU1A) 345/230/13.8KV TRANSFORMER CKT 1
FDNS	00NR	4	25SP	G15_076	FROM->TO	GRPRAR1-LNX3345.00 - HOLT.CO3 345.00 345KV CKT 1	720	720	0.04146	103.1557	ANTELOPE 7115.00 - COUNTY LINE 115KV CKT 1
FDNS	00NR	4	25SP	G15_076	FROM->TO	GRPRAR1-LNX3345.00 - HOLT.CO3 345.00 345KV CKT 1	720	720	0.03962	103.1464	GEN659290 1-EDGECOL
FDNS	00NR	4	25SP	G15_076	FROM->TO	GRPRAR1-LNX3345.00 - HOLT.CO3 345.00 345KV CKT 1	720	720	0.03682	103.1448	FT THOMPSON (FT2 KU1A) 345/230/13.8KV TRANSFORMER CKT 1
FDNS	00NR	4	25SP	G15_076	FROM->TO	GRPRAR1-LNX3345.00 - HOLT.CO3 345.00 345KV CKT 1	720	720	0.03681	103.1423	FT THOMPSON (FT2 KU1B) 345/230/13.8KV TRANSFORMER CKT 1
FDNS	00NR	4	25SP	G15_076	FROM->TO	GRPRAR1-LNX3345.00 - HOLT.CO3 345.00 345KV CKT 1	720	720	0.0399	103.1409	LARAMIE RIVER - STEGALL 345KV CKT 1
FDNS	00NR	4	25SP	G15_076	FROM->TO	GRPRAR1-LNX3345.00 - HOLT.CO3 345.00 345KV CKT 1	720	720	0.03992	103.1341	FINNEY SWITCHING STATION - WALKTAP7 345.00 345KV CKT 1
FDNS	00NR	4	25SP	G15_076	FROM->TO	GRPRAR1-LNX3345.00 - HOLT.CO3 345.00 345KV CKT 1	720	720	0.03992	103.1341	FINNEY SWITCHING STATION - WALKTAP7 345.00 345KV CKT 1
FDNS	00NR	4	25SP	G15_076	FROM->TO	GRPRAR1-LNX3345.00 - HOLT.CO3 345.00 345KV CKT 1	720	720	0.03771	103.129	COLUMEAST - SHELL CREEK 345KV CKT 1
FDNS	00NR	4	25SP	G15_076	FROM->TO	GRPRAR1-LNX3345.00 - HOLT.CO3 345.00 345KV CKT 1	720	720	0.03962	103.1108	GEN300007 1-NEW MADRID UNIT 2
FDNS	00NR	4	25SP	G15_076	FROM->TO	GRPRAR1-LNX3345.00 - HOLT.CO3 345.00 345KV CKT 1	720	720	0.03962	103.1067	GEN672357 2-FUT-WL2X 13.800
FDNS	00NR	4	25SP	G15_076	FROM->TO	GRPRAR1-LNX3345.00 - HOLT.CO3 345.00 345KV CKT 1	720	720	0.03962	103.1059	GEN300006 1-NEW MADRID UNIT 1
FDNS	00NR	4	25SP	G15_076	FROM->TO	GRPRAR1-LNX3345.00 - HOLT.CO3 345.00 345KV CKT 1	720	720	0.03962	103.0963	GEN672393 2-NBECST2G 13.800
FDNS	00NR	4	20SP	G15_076	FROM->TO	GRPRAR1-LNX3345.00 - HOLT.CO3 345.00 345KV CKT 1	720	720	0.04091	103.094	AXTELL - SWEETWATER 345KV CKT 1
FDNS	00NR	4	25SP	G15_076	FROM->TO	GRPRAR1-LNX3345.00 - HOLT.CO3 345.00 345KV CKT 1	720	720	0.03962	103.092	GEN672390 2-FUT-SW2X 13.800
FDNS	00NR	4	25SP	G15_076	FROM->TO	GRPRAR1-LNX3345.00 - HOLT.CO3 345.00 345KV CKT 1	720	720	0.03962	103.0919	GEN620324 3-HOOT LAKE 3 GEN
FDNS	00NR	4	25SP	G15_076	FROM->TO	GRPRAR1-LNX3345.00 - HOLT.CO3 345.00 345KV CKT 1	720	720	0.03916	103.0917	HELENA - SHEAS LK3 345.00 345KV CKT 1
FDNS	00NR	4	25SP	G15_076	FROM->TO	GRPRAR1-LNX3345.00 - HOLT.CO3 345.00 345KV CKT 1	720	720	0.03962	103.0914	GEN652410 3-FT PECK
FDNS	00NR	4	25SP	G15_076	FROM->TO	GRPRAR1-LNX3345.00 - HOLT.CO3 345.00 345KV CKT 1	720	720	0.03962	103.091	GEN600050 1-FEP
FDNS	00NR	4	20SP	G15_076	FROM->TO	GRPRAR1-LNX3345.00 - HOLT.CO3 345.00 345KV CKT 1	720	720	0.0393	103.0849	CLAY BOSWELL 230/20.9KV TRANSFORMER CKT 1
FDNS	00NR	4	25SP	G15_076	FROM->TO	GRPRAR1-LNX3345.00 - HOLT.CO3 345.00 345KV CKT 1	720	720	0.03962	103.083	GEN660003 3-HURON WEST PARK
FDNS	00NR	4	25SP	G15_076	FROM->TO	GRPRAR1-LNX3345.00 - HOLT.CO3 345.00 345KV CKT 1	720	720	0.03962	103.0812	GEN600046 1-MECST
FDNS	00NR	4	25SP	G15_076	FROM->TO	GRPRAR1-LNX3345.00 - HOLT.CO3 345.00 345KV CKT 1	720	720	0.04008	103.0709	Hitchland Interchange - WALKTAP7 345.00 345KV CKT 1
FDNS	00NR	4	25SP	G15_076	FROM->TO	GRPRAR1-LNX3345.00 - HOLT.CO3 345.00 345KV CKT 1	720	720	0.04008	103.0709	Hitchland Interchange - WALKTAP7 345.00 345KV CKT 1
FDNS	00NR	4	25SP	G15_076	FROM->TO	GRPRAR1-LNX3345.00 - HOLT.CO3 345.00 345KV CKT 1	720	720	0.03962	103.0708	LADISH 115/13.2KV TRANSFORMER CKT 1
FDNS	00NR	4	25SP	G15_076	FROM->TO	GRPRAR1-LNX3345.00 - HOLT.CO3 345.00 345KV CKT 1	720	720	0.04008	103.0628	P12:345:SPS:J07.1.FINN.HITCH
FDNS	00NR	4	20SP	G15_076	FROM->TO	GRPRAR1-LNX3345.00 - HOLT.CO3 345.00 345KV CKT 1	720	720	0.04074	103.0608	G15088_T 345.00 - MOORE 345KV CKT 1
FDNS	00NR	4	25SP	G15_076	FROM->TO	GRPRAR1-LNX3345.00 - HOLT.CO3 345.00 345KV CKT 1	720	720	0.04021	103.0582	THEDFRD3 345.00 (THEDFORDT2) 345/115/13.8KV TRANSFORMER CKT 1
FDNS	00NR	4	25SP	G15_076	FROM->TO	GRPRAR1-LNX3345.00 - HOLT.CO3 345.00 345KV CKT 1	720	720	0.03962	103.0525	GEN660001 2-ABERDEEN SIEBRECHT
FDNS	00NR	4	25SP	G15_076	FROM->TO	GRPRAR1-LNX3345.00 - HOLT.CO3 345.00 345KV CKT 1	720	720	0.03962	103.0504	GEN600047 1-MECCT1
FDNS	00NR	4	25SP	G15_076	FROM->TO	GRPRAR1-LNX3345.00 - HOLT.CO3 345.00 345KV CKT 1	720	720	0.03674	103.0484	HOSKINS - RAUN 345KV CKT 1
FDNS	00NR	4	25SP	G15_076	FROM->TO	GRPRAR1-LNX3345.00 - HOLT.CO3 345.00 345KV CKT 1	720	720	0.03674	103.0484	HOSKINS - RAUN 345KV CKT 1
FDNS	00NR	4	20SP	G15_076	FROM->TO	GRPRAR1-LNX3345.00 - HOLT.CO3 345.00 345KV CKT 1	720	720	0.0393	103.0376	HESKETT 115/13.8KV TRANSFORMER CKT 1
FDNS	00NR	4	20SP	G15_076	FROM->TO	GRPRAR1-LNX3345.00 - HOLT.CO3 345.00 345KV CKT 1	720	720	0.03367	103.0358	HOSKINS - SHELL CREEK 345KV CKT 1
FDNS	00NR	4	25SP	G15_076	FROM->TO	GRPRAR1-LNX3345.00 - HOLT.CO3 345.00 345KV CKT 1	720	720	0.03962	103.0324	GEN652345 W-G07_023IS_2 0.6900
FDNS	00NR	4	25SP	G15_076	FROM->TO	GRPRAR1-LNX3345.00 - HOLT.CO3 345.00 345KV CKT 1	720	720	0.03962	103.0274	GEN652414 4-FT PECK
FDNS	00NR	4	25SP	G15_076	FROM->TO	GRPRAR1-LNX3345.00 - HOLT.CO3 345.00 345KV CKT 1	720	720	0.03962	103.0274	GEN652415 5-FT PECK
FDNS	00NR	4	25SP	G15_076	FROM->TO	GRPRAR1-LNX3345.00 - HOLT.CO3 345.00 345KV CKT 1	720	720	0.0392	103.0217	SHEAS LK3 345.00 - WILMARTH 345KV CKT 1
FDNS	00NR	4	25SP	G15_076	FROM->TO	GRPRAR1-LNX3345.00 - HOLT.CO3 345.00 345KV CKT 1	720	720	0.03971	103.015	BRDLAND-LNX3345.00 - HURON 345KV CKT Z
FDNS	00NR	4	25SP	G15_076	FROM->TO	GRPRAR1-LNX3345.00 - HOLT.CO3 345.00 345KV CKT 1	720	720	0.03971	103.0144	BROADLAND - HURON 230KV CKT 1
FDNS	00NR	4	25SP	G15_076	FROM->TO	GRPRAR1-LNX3345.00 - HOLT.CO3 345.00 345KV CKT 1	720	720	0.03971	103.0127	P12:345:UMZB:# 102 #: AVS BD IN ND. AVS BRD LR
FDNS	00NR	4	25SP	G15_076	FROM->TO	GRPRAR1-LNX3345.00 - HOLT.CO3 345.00 345KV CKT 1	720	720	0.03971	103.0125	HURON (BD KU2A) 345/230/13.8KV TRANSFORMER CKT 1
FDNS	00NR	4	25SP	G15_076	FROM->TO	GRPRAR1-LNX3345.00 - HOLT.CO3 345.00 345KV CKT 1	720	720	0.03971	103.0125	HURON (BD KU2A) 345/230/13.8KV TRANSFORMER CKT 1
FDNS	00NR	4	25SP	G15_076	FROM->TO	GRPRAR1-LNX3345.00 - HOLT.CO3 345.00 345KV CKT 1	720	720	0.03971	103.0102	P12:345:UMZB:# 103 #: BD IN SD. LOSS OF LINE
FDNS	00NR	4	25SP	G15_076	FROM->TO	GRPRAR1-LNX3345.00 - HOLT.CO3 345.00 345KV CKT 1	720	720	0.03962	103.0056	GEN600063 1-COLVILLE GEN 1
FDNS	00NR	4	25SP	G15_076	FROM->TO	GRPRAR1-LNX3345.00 - HOLT.CO3 345.00 345KV CKT 1	720	720	0.03962	103.0056	GEN600064 2-COLVILLE GEN 2
FDNS	00NR	4	25SP	G15_076	FROM->TO	GRPRAR1-LNX3345.00 - HOLT.CO3 345.00 345KV CKT 1	720	720	0.03962	103.0055	GEN590010 1-ERCOT EQUIVALENCE
FDNS	00NR	4	25SP	G15_076	FROM->TO	GRPRAR1-LNX3345.00 - HOLT.CO3 345.00 345KV CKT 1	720	720	0.03905	103.0035	FIELD NORTH - LKFLDXL3 345KV CKT 1
FDNS	00NR	4	25SP	G15_076	FROM->TO	GRPRAR1-LNX3345.00 - HOLT.CO3 345.00 345KV CKT 1	720	720	0.03905	103.0022	FIELD SOUTH - WILMARTH 345KV CKT 1
FDNS	00NR	4	25SP	G15_076	FROM->TO	GRPRAR1-LNX3345.00 - HOLT.CO3 345.00 345KV CKT 1	720	720	0.03962	103.0003	GEN 11104 1-J262_GEN 0.6000
FDNS	00NR	4	25SP	G15_076	FROM->TO	GRPRAR1-LNX3345.00 - HOLT.CO3 345.00 345KV CKT 1	720	720	0.03962	103.0003	GEN 11108 1-J263_GEN 0.6000
FDNS	00NR	4	25SP	G15_076	FROM->TO	GRPRAR1-LNX3345.00 - HOLT.CO3 345.00 345KV CKT 1	720	720	0.03905	102.9954	FIELD NORTH - FIELD SOUTH 345KV CKT 1
FDNS	00NR	4	25SP	G15_076	FROM->TO	GRPRAR1-LNX3345.00 - HOLT.CO3 345.00 345KV CKT 1	720	720	0.03962	102.9873	G830_SUB 115.00 - GRE-MCHENRY7115.00 115KV CKT 1
FDNS	00NR	4	25SP	G15_076	FROM->TO	GRPRAR1-LNX3345.00 - HOLT.CO3 345.00 345KV CKT 1	720	720	0.03962	102.9868	G830_SUB 115.00 115/34.5KV TRANSFORMER CKT 1
FDNS	00NR	4	25SP	G15_076	FROM->TO	GRPRAR1-LNX3345.00 - HOLT.CO3 345.00 345KV CKT 1	720	720	0.03962	102.9847	GEN600043 7-BLUE LAKE5
FDNS	00NR	4	25SP	G15_076	FROM->TO	GRPRAR1-LNX3345.00 - HOLT.CO3 345.00 345KV CKT 1	720	720	0.03962	102.9847	GEN600044 8-BLUE LAKE6
FDNS	00NR	4	25SP	G15_076	FROM->TO	GRPRAR1-LNX3345.00 - HOLT.CO3 345.00 345KV CKT 1	720	720	0.03962	102.9845	LANSING WEST 161/22.0KV TRANSFORMER CKT 1
FDNS	00NR	4	25SP	G15_076	FROM->TO	GRPRAR1-LNX3345.00 - HOLT.CO3 345.00 345KV CKT 1	720	720	0.03962	102.9832	GEN590011 2-ERCOT EQUIVALENCE
FDNS	00NR	4	20SP	G15_076	FROM->TO	GRPRAR1-LNX3345.00 - HOLT.CO3 345.00 345KV CKT 1	720	720	0.0393	102.9724	GEN659289 1-DAYCNTYWND W0.6900
FDNS	00NR	4	25SP	G15_076	FROM->TO	GRPRAR1-LNX3345.00 - HOLT.CO3 345.00 345KV CKT 1	720	720	0.03962	102.9632	GEN681522 3-GENOA 3
FDNS	00NR	4	25SP	G15_076	FROM->TO	GRPRAR1-LNX3345.00 - HOLT.CO3 345.00 345KV CKT 1	720	720	0.03962	102.9563	GEN600014 4-BLACK DOG GEN 4
FDNS	00NR	4	25SP	G15_076	FROM->TO	GRPRAR1-LNX3345.00 - HOLT.CO3 345.00 345KV CKT 1	720	720	0.03962	102.9532	GEN600065 7-HIGH BRIDGE

SOLUTION	GROUP	SCENARIO	SEASON	SOURCE	DIRECTION	MONITORED ELEMENT	RATEA (MVA)	RATEB(MVA)	TDF	TC%LOADING (% MVA)	CONTINGENCY
FDNS	00NR	4	25SP	G15_076	FROM->TO	GRPRAR1-LNX3345.00 - HOLT.CO3 345.00 345KV CKT 1	720	720	0.03962	102.9532	GEN600066 8-HIGH BRIDGE
FDNS	00NR	4	25SP	G15_076	FROM->TO	GRPRAR1-LNX3345.00 - HOLT.CO3 345.00 345KV CKT 1	720	720	0.03962	102.9505	GEN600011 5-BLACK DOG GEN 1
FDNS	00NR	4	25SP	G15_076	FROM->TO	GRPRAR1-LNX3345.00 - HOLT.CO3 345.00 345KV CKT 1	720	720	0.03962	102.9407	GEN600070 9-RIVER SIDE
FDNS	00NR	4	25SP	G15_076	FROM->TO	GRPRAR1-LNX3345.00 - HOLT.CO3 345.00 345KV CKT 1	720	720	0.03962	102.9407	GEN600071 10-RIVER SIDE
FDNS	00NR	4	20SP	G15_076	FROM->TO	GRPRAR1-LNX3345.00 - HOLT.CO3 345.00 345KV CKT 1	720	720	0.0393	102.9352	GEN563312 1-G15097_3 0.6900
FDNS	00NR	4	25SP	G15_076	FROM->TO	GRPRAR1-LNX3345.00 - HOLT.CO3 345.00 345KV CKT 1	720	720	0.04134	102.9303	P12:115:NPPD:1163B:NELIGH 7:NORFK.N7:BTB
FDNS	00NR	4	25SP	G15_076	FROM->TO	GRPRAR1-LNX3345.00 - HOLT.CO3 345.00 345KV CKT 1	720	720	0.03962	102.9288	GEN600007 7-RIVERSIDE GEN 7
FDNS	00NR	4	25SP	G15_076	FROM->TO	GRPRAR1-LNX3345.00 - HOLT.CO3 345.00 345KV CKT 1	720	720	0.03962	102.9161	GEN600045 4-ANSON
FDNS	00NR	4	25SP	G15_076	FROM->TO	GRPRAR1-LNX3345.00 - HOLT.CO3 345.00 345KV CKT 1	720	720	0.03962	102.9118	GEN600017 C-LS POWER CT
FDNS	00NR	4	20SP	G15_076	FROM->TO	GRPRAR1-LNX3345.00 - HOLT.CO3 345.00 345KV CKT 1	720	720	0.0393	102.8992	GEN659018 1-G14_003IS_3 0.6900
FDNS	00NR	4	20SP	G15_076	FROM->TO	GRPRAR1-LNX3345.00 - HOLT.CO3 345.00 345KV CKT 1	720	720	0.0393	102.8942	GEN652906 1-G09_006IS_3 0.6900
FDNS	00NR	4	25SP	G15_076	FROM->TO	GRPRAR1-LNX3345.00 - HOLT.CO3 345.00 345KV CKT 1	720	720	0.03962	102.881	GEN659273 2-GROTON SYNC COND
FDNS	00NR	4	25SP	G15_076	FROM->TO	GRPRAR1-LNX3345.00 - HOLT.CO3 345.00 345KV CKT 1	720	720	0.03962	102.881	GEN659294 1-WILTONCOL9
FDNS	00NR	4	25SP	G15_076	FROM->TO	GRPRAR1-LNX3345.00 - HOLT.CO3 345.00 345KV CKT 1	720	720	0.03963	102.8808	OAHE - SULLEY BUTTE 230KV CKT 1
FDNS	00NR	4	25SP	G15_076	FROM->TO	GRPRAR1-LNX3345.00 - HOLT.CO3 345.00 345KV CKT 1	720	720	0.03971	102.8675	ANTELOP-LNX3345.00 - ANTELOPE VALLEY 345KV CKT Z
FDNS	00NR	4	25SP	G15_076	FROM->TO	GRPRAR1-LNX3345.00 - HOLT.CO3 345.00 345KV CKT 1	720	720	0.04037	102.8659	AXTELL - POST ROCK 345KV CKT 1
FDNS	00NR	4	20SP	G15_076	FROM->TO	GRPRAR1-LNX3345.00 - HOLT.CO3 345.00 345KV CKT 1	720	720	0.0393	102.8519	GEN652543 3-BIG BEND
FDNS	00NR	4	25SP	G15_076	FROM->TO	GRPRAR1-LNX3345.00 - HOLT.CO3 345.00 345KV CKT 1	720	720	0.03962	102.8403	GEN615052 1-CAMBRIDGE GENERATING STATION
FDNS	00NR	4	25SP	G15_076	FROM->TO	GRPRAR1-LNX3345.00 - HOLT.CO3 345.00 345KV CKT 1	720	720	0.03962	102.8213	GEN659031 1-G12_014IS_4 0.6900
FDNS	00NR	4	25SP	G15_076	FROM->TO	GRPRAR1-LNX3345.00 - HOLT.CO3 345.00 345KV CKT 1	720	720	0.03962	102.8042	GEN660016 1-B_H WIND 0.7000
FDNS	00NR	4	25SP	G15_076	FROM->TO	GRPRAR1-LNX3345.00 - HOLT.CO3 345.00 345KV CKT 1	720	720	0.03962	102.8035	GEN 10648 1-G830_GEN 0.6900
FDNS	00NR	4	25SP	G15_076	FROM->TO	GRPRAR1-LNX3345.00 - HOLT.CO3 345.00 345KV CKT 1	720	720	0.03962	102.7996	GEN659192 6-LYNN
FDNS	00NR	4	25SP	G15_076	FROM->TO	GRPRAR1-LNX3345.00 - HOLT.CO3 345.00 345KV CKT 1	720	720	0.03962	102.7981	GEN659162 4-RED WLCK
FDNS	00NR	4	25SP	G15_076	FROM->TO	GRPRAR1-LNX3345.00 - HOLT.CO3 345.00 345KV CKT 1	720	720	0.03962	102.7981	GEN659163 5-BLACK WDCK
FDNS	00NR	4	20SP	G15_076	FROM->TO	GRPRAR1-LNX3345.00 - HOLT.CO3 345.00 345KV CKT 1	720	720	0.0393	102.7908	COYOTE 345/24.0KV TRANSFORMER CKT 1
FDNS	00NR	4	25SP	G15_076	FROM->TO	GRPRAR1-LNX3345.00 - HOLT.CO3 345.00 345KV CKT 1	720	720	0.03962	102.7727	GEN615021 1-GRE-ER 14G 16.000
FDNS	00NR	4	20SP	G15_076	FROM->TO	GRPRAR1-LNX3345.00 - HOLT.CO3 345.00 345KV CKT 1	720	720	0.0393	102.7708	GEN659194 1-NDPRAIRWND1W0.6900
FDNS	00NR	4	20SP	G15_076	FROM->TO	GRPRAR1-LNX3345.00 - HOLT.CO3 345.00 345KV CKT 1	720	720	0.0393	102.7678	GEN659010 4-G07_027IS_2 0.6900
FDNS	00NR	4	20SP	G15_076	FROM->TO	GRPRAR1-LNX3345.00 - HOLT.CO3 345.00 345KV CKT 1	720	720	0.0393	102.7539	GEN652460 4-GARRISON
FDNS	00NR	4	20SP	G15_076	FROM->TO	GRPRAR1-LNX3345.00 - HOLT.CO3 345.00 345KV CKT 1	720	720	0.0393	102.7539	GEN652461 5-GARRISON
FDNS	00NR	4	25SP	G15_076	FROM->TO	GRPRAR1-LNX3345.00 - HOLT.CO3 345.00 345KV CKT 1	720	720	0.03962	102.7379	GEN615015 1-GRE-SPRITWDG13.200
FDNS	00NR	4	20SP	G15_076	FROM->TO	GRPRAR1-LNX3345.00 - HOLT.CO3 345.00 345KV CKT 1	720	720	0.03931	102.7181	GLENHAM - L3 HAWDON 230KV CKT 1
FDNS	00NR	4	20SP	G15_076	FROM->TO	GRPRAR1-LNX3345.00 - HOLT.CO3 345.00 345KV CKT 1	720	720	0.0393	102.7172	GEN652559 1-OAHE
FDNS	00NR	4	25SP	G15_076	FROM->TO	GRPRAR1-LNX3345.00 - HOLT.CO3 345.00 345KV CKT 1	720	720	0.03963	102.7136	SULLEY BUTTE - SULLYBT-LNX3230.00 230KV CKT Z
FDNS	00NR	4	25SP	G15_076	FROM->TO	GRPRAR1-LNX3345.00 - HOLT.CO3 345.00 345KV CKT 1	720	720	0.03963	102.7134	SULLYBT-LNX3230.00 - WHITLOK 230KV CKT 1
FDNS	00NR	4	25SP	G15_076	FROM->TO	GRPRAR1-LNX3345.00 - HOLT.CO3 345.00 345KV CKT 1	720	720	0.03962	102.7088	GEN657705 X-DRAYTON
FDNS	00NR	4	20SP	G15_076	FROM->TO	GRPRAR1-LNX3345.00 - HOLT.CO3 345.00 345KV CKT 1	720	720	0.0393	102.7065	GEN652907 1-G09_007IS_3 0.6900
FDNS	00NR	4	20SP	G15_076	FROM->TO	GRPRAR1-LNX3345.00 - HOLT.CO3 345.00 345KV CKT 1	720	720	0.0393	102.6965	GEN652457 1-GARRISON
FDNS	00NR	4	20SP	G15_076	FROM->TO	GRPRAR1-LNX3345.00 - HOLT.CO3 345.00 345KV CKT 1	720	720	0.0393	102.6965	GEN652458 2-GARRISON
FDNS	00NR	4	20SP	G15_076	FROM->TO	GRPRAR1-LNX3345.00 - HOLT.CO3 345.00 345KV CKT 1	720	720	0.0393	102.6965	GEN652459 3-GARRISON
FDNS	00NR	4	25SP	G15_076	FROM->TO	GRPRAR1-LNX3345.00 - HOLT.CO3 345.00 345KV CKT 1	720	720	0.03555	102.6774	DIXONCO 230.00 - TWIN CHURCH 230KV CKT 1
FDNS	00NR	4	25SP	G15_076	FROM->TO	GRPRAR1-LNX3345.00 - HOLT.CO3 345.00 345KV CKT 1	720	720	0.03962	102.6728	BISONMP4 230.00 - SQUARE BUTTE 230KV CKT 1
FDNS	00NR	4	20SP	G15_076	FROM->TO	GRPRAR1-LNX3345.00 - HOLT.CO3 345.00 345KV CKT 1	720	720	0.0393	102.6693	GEN563342 1-G15098_3 0.6900
FDNS	00NR	4	25SP	G15_076	FROM->TO	GRPRAR1-LNX3345.00 - HOLT.CO3 345.00 345KV CKT 1	720	720	0.03963	102.6592	P12:230:UMZB:# 114 #: SB IN SD. SB-WK-GH
FDNS	00NR	4	25SP	G15_076	FROM->TO	GRPRAR1-LNX3345.00 - HOLT.CO3 345.00 345KV CKT 1	720	720	0.03963	102.6592	P12:230:UMZB:# 117 #: WK IN SD. SB-WK-GH
FDNS	00NR	4	20SP	G15_076	FROM->TO	GRPRAR1-LNX3345.00 - HOLT.CO3 345.00 345KV CKT 1	720	720	0.0393	102.6407	GEN659403 1-NDSUNFLWR W0.6900
FDNS	00NR	4	20SP	G15_076	FROM->TO	GRPRAR1-LNX3345.00 - HOLT.CO3 345.00 345KV CKT 1	720	720	0.0393	102.6308	GEN652542 1-BIG BEND
FDNS	00NR	4	25SP	G15_076	FROM->TO	GRPRAR1-LNX3345.00 - HOLT.CO3 345.00 345KV CKT 1	720	720	0.03962	102.6199	GEN659353 1-DEERCREK CTG18.000
FDNS	00NR	4	25SP	G15_076	FROM->TO	GRPRAR1-LNX3345.00 - HOLT.CO3 345.00 345KV CKT 1	720	720	0.03962	102.6196	GEN600067 9-HIGH BRIDGE
FDNS	00NR	4	25SP	G15_076	FROM->TO	GRPRAR1-LNX3345.00 - HOLT.CO3 345.00 345KV CKT 1	720	720	0.03962	102.6193	GEN659354 1-DEERCREK STG18.000
FDNS	00NR	4	25SP	G15_076	FROM->TO	GRPRAR1-LNX3345.00 - HOLT.CO3 345.00 345KV CKT 1	720	720	0.03963	102.606	GLENHAM - WHITLOK 230KV CKT 1
FDNS	00NR	4	25SP	G15_076	FROM->TO	GRPRAR1-LNX3345.00 - HOLT.CO3 345.00 345KV CKT 1	720	720	0.03962	102.5987	GEN672303 3-BOUNDARY DAM GENERATOR 3
FDNS	00NR	4	25SP	G15_076	FROM->TO	GRPRAR1-LNX3345.00 - HOLT.CO3 345.00 345KV CKT 1	720	720	0.03962	102.5987	GEN672304 4-BOUNDARY DAM GENERATOR 4
FDNS	00NR	4	25SP	G15_076	FROM->TO	GRPRAR1-LNX3345.00 - HOLT.CO3 345.00 345KV CKT 1	720	720	0.03962	102.5987	GEN672305 5-BOUNDARY DAM GENERATOR 5
FDNS	00NR	4	25SP	G15_076	FROM->TO	GRPRAR1-LNX3345.00 - HOLT.CO3 345.00 345KV CKT 1	720	720	0.04117	102.5976	G15061_T 345.00 - SETAB 345KV CKT 1
FDNS	00NR	4	25SP	G15_076	FROM->TO	GRPRAR1-LNX3345.00 - HOLT.CO3 345.00 345KV CKT 1	720	720	0.04111	102.5958	GERALD GENTLEMAN STATION - RED WILLOW 345KV CKT 1
FDNS	00NR	4	20SP	G15_076	FROM->TO	GRPRAR1-LNX3345.00 - HOLT.CO3 345.00 345KV CKT 1	720	720	0.04131	102.5782	MCCOOL - MOORE 345KV CKT 1
FDNS	00NR	4	25SP	G15_076	FROM->TO	GRPRAR1-LNX3345.00 - HOLT.CO3 345.00 345KV CKT 1	720	720	0.03962	102.5678	GEN672356 1-FUT-WL1X 18.000
FDNS	00NR	4	20SP	G15_076	FROM->TO	GRPRAR1-LNX3345.00 - HOLT.CO3 345.00 345KV CKT 1	720	720	0.0393	102.5533	STANTON 230/18.0KV TRANSFORMER CKT 1
FDNS	00NR	4	25SP	G15_076	FROM->TO	GRPRAR1-LNX3345.00 - HOLT.CO3 345.00 345KV CKT 1	720	720	0.03962	102.5373	GEN672389 1-FUT-SW1X 18.000
FDNS	00NR	4	25SP	G15_076	FROM->TO	GRPRAR1-LNX3345.00 - HOLT.CO3 345.00 345KV CKT 1	720	720	0.03962	102.528	GEN672392 1-NBECGT1G 18.000
FDNS	00NR	4	25SP	G15_076	FROM->TO	GRPRAR1-LNX3345.00 - HOLT.CO3 345.00 345KV CKT 1	720	720	0.04117	102.5165	MISSION - WITTEN 115KV CKT 1
FDNS	00NR	4	25SP	G15_076	FROM->TO	GRPRAR1-LNX3345.00 - HOLT.CO3 345.00 345KV CKT 1	720	720	0.04108	102.5029	G15088_T 345.00 - MOORE 345KV CKT 1
FDNS	00NR	4	25SP	G15_076	FROM->TO	GRPRAR1-LNX3345.00 - HOLT.CO3 345.00 345KV CKT 1	720	720	0.0424	102.4986	MINGO - RED WILLOW 345KV CKT 1
FDNS	00NR	4	25SP	G15_076	FROM->TO	GRPRAR1-LNX3345.00 - HOLT.CO3 345.00 345KV CKT 1	720	720	0.0424	102.4986	MINGO - RED WILLOW 345KV CKT 1
FDNS	00NR	4	20SP	G15_076	FROM->TO	GRPRAR1-LNX3345.00 - HOLT.CO3 345.00 345KV CKT 1	720	720	0.0393	102.4864	SQUARE BUTTE - YNG2 4 230.00 230KV CKT 1
FDNS	00NR	4	20SP	G15_076	FROM->TO	GRPRAR1-LNX3345.00 - HOLT.CO3 345.00 345KV CKT 1	720	720	0.0393	102.486	YNG2 4 230.00 230/20.0KV TRANSFORMER CKT 1
FDNS	00NR	4	25SP	G15_076	FROM->TO	GRPRAR1-LNX3345.00 - HOLT.CO3 345.00 345KV CKT 1	720	720	0.03962	102.4682	GEN662101 1-WESSINGTON190.5750
FDNS	00NR	4	25SP	G15_076	FROM->TO	GRPRAR1-LNX3345.00 - HOLT.CO3 345.00 345KV CKT 1	720	720	0.03962	102.4303	GEN681542 6-JP MADGETT
FDNS	00NR	4	25SP	G15_076	FROM->TO	GRPRAR1-LNX3345.00 - HOLT.CO3 345.00 345KV CKT 1	720	720	0.03962	102.4057	GEN910006 1-G12_012IS_3 0.6900
FDNS	00NR	4	25SP	G15_076	FROM->TO	GRPRAR1-LNX3345.00 - HOLT.CO3 345.00 345KV CKT 1	720	720	0.03962	102.3859	CENTER 230/22.0KV TRANSFORMER CKT 1
FDNS	00NR	4	25SP	G15_076	FROM->TO	GRPRAR1-LNX3345.00 - HOLT.CO3 345.00 345KV CKT 1	720	720	0.03397	102.3094	HOSKINS - SHELL CREEK 345KV CKT 1
FDNS	00NR	4	25SP	G15_076	FROM->TO	GRPRAR1-LNX3345.00 - HOLT.CO3 345.00 345KV CKT 1	720	720	0.03962	102.2916	HESKETT 115/13.8KV TRANSFORMER CKT 1
FDNS	00NR	4	20SP	G15_076	FROM->TO	GRPRAR1-LNX3345.00 - HOLT.CO3 345.00 345KV CKT 1	720	720	0.0393	102.2676	GEN659411 1-CAMPBLCNTY W0.6900
FDNS	00NR	4	25SP	G15_076	FROM->TO	GRPRAR1-LNX3345.00 - HOLT.CO3 345.00 345KV CKT 1	720	720	0.04119	102.2148	AXTELL - SWEETWATER 345KV CKT 1
FDNS	00NR	4	25SP	G15_076	FROM->TO	GRPRAR1-LNX3345.00 - HOLT.CO3 345.00 345KV CKT 1	720	720	0.03962	102.2076	GEN659289 1-DAYCNTYWND W0.6900
FDNS	00NR	4	20SP	G15_076	FROM->TO	GRPRAR1-LNX3345.00 - HOLT.CO3 345.00 345KV CKT 1	720	720	0.0393	102.1899	GEN600004 2-PRAIRIE ISLAND G2
FDNS	00NR	4	20SP	G15_076	FROM->TO	GRPRAR1-LNX3345.00 - HOLT.CO3 345.00 345KV CKT 1	720	720	0.0393	102.1859	GEN600003 1-PRAIRIE ISLAND G1
FDNS	00NR	4	25SP	G15_076	FROM->TO	GRPRAR1-LNX3345.00 - HOLT.CO3 345.00 345KV CKT 1	720	720	0.03962	102.171	GEN563312 1-G15097_3 0.6900

SOLUTION	GROUP	SCENARIO	SEASON	SOURCE	DIRECTION	MONITORED ELEMENT	RATEA (MVA)	RATEB(MVA)	TDF	TC%LOADING (% MVA)	CONTINGENCY
FDNS	00NR	4	25SP	G15_076	FROM->TO	GRPRAR1-LNX3345.00 - HOLT.CO3 345.00 345KV CKT 1	720	720	0.0418	102.1598	MCCOOL - MOORE 345KV CKT 1
FDNS	00NR	4	20SP	G15_076	FROM->TO	GRPRAR1-LNX3345.00 - HOLT.CO3 345.00 345KV CKT 1	720	720	0.0393	102.1318	GEN672321 1-SHAND GENERATOR 1
FDNS	00NR	4	25SP	G15_076	FROM->TO	GRPRAR1-LNX3345.00 - HOLT.CO3 345.00 345KV CKT 1	720	720	0.03962	102.1191	GEN659018 1-G14_003IS_3 0.6900
FDNS	00NR	4	25SP	G15_076	FROM->TO	GRPRAR1-LNX3345.00 - HOLT.CO3 345.00 345KV CKT 1	720	720	0.03962	102.1173	GEN652906 1-G09_006IS_3 0.6900
FDNS	00NR	4	20SP	G15_076	FROM->TO	GRPRAR1-LNX3345.00 - HOLT.CO3 345.00 345KV CKT 1	720	720	0.0393	102.072	GEN672310 1-POPLAR RIVER GENERATOR 1
FDNS	00NR	4	20SP	G15_076	FROM->TO	GRPRAR1-LNX3345.00 - HOLT.CO3 345.00 345KV CKT 1	720	720	0.0393	102.0719	GEN672311 2-POPLAR RIVER GENERATOR 2
FDNS	00NR	4	20SP	G15_076	FROM->TO	GRPRAR1-LNX3345.00 - HOLT.CO3 345.00 345KV CKT 1	720	720	0.0393	102.0539	GEN672306 6-BOUNDARY DAM GENERATOR 6
FDNS	00NR	4	20SP	G15_076	FROM->TO	GRPRAR1-LNX3345.00 - HOLT.CO3 345.00 345KV CKT 1	720	720	0.0393	102.0368	GEN659296 2-SDPRAIRWND1W0.6900
FDNS	00NR	4	17SP	G15_076	FROM->TO	GRPRAR1-LNX3345.00 - HOLT.CO3 345.00 345KV CKT 1	720	720	0.04101	102.0292	FTTHOM1-LNX3345.00 - LELAND2-LNX3345.00 345KV CKT 1
FDNS	00NR	4	20SP	G15_076	FROM->TO	GRPRAR1-LNX3345.00 - HOLT.CO3 345.00 345KV CKT 1	720	720	0.0393	102.0161	RCDC EAST 4230.00 - RED CEDAR DC 230KV CKT 1
FDNS	00NR	4	20SP	G15_076	FROM->TO	GRPRAR1-LNX3345.00 - HOLT.CO3 345.00 345KV CKT 1	720	720	0.0393	102.0132	P12:230:UMZB:# 112 #: NU IN SD. NU-RCDC & DRY CREEK XFMR
FDNS	00NR	4	25SP	G15_076	FROM->TO	GRPRAR1-LNX3345.00 - HOLT.CO3 345.00 345KV CKT 1	720	720	0.03962	101.9965	GEN659010 4-G07_027IS_2 0.6900
FDNS	00NR	4	25SP	G15_076	FROM->TO	GRPRAR1-LNX3345.00 - HOLT.CO3 345.00 345KV CKT 1	720	720	0.03962	101.9914	GEN659194 1-NDPRAIRWND1W0.6900
FDNS	00NR	4	25SP	G15_076	FROM->TO	GRPRAR1-LNX3345.00 - HOLT.CO3 345.00 345KV CKT 1	720	720	0.03962	101.9795	GEN652460 4-GARRISON
FDNS	00NR	4	25SP	G15_076	FROM->TO	GRPRAR1-LNX3345.00 - HOLT.CO3 345.00 345KV CKT 1	720	720	0.03962	101.9793	GEN652461 5-GARRISON
FDNS	00NR	4	25SP	G15_076	FROM->TO	GRPRAR1-LNX3345.00 - HOLT.CO3 345.00 345KV CKT 1	720	720	0.03963	101.9564	GLENHAM - L3 HAWDON 230KV CKT 1
FDNS	00NR	4	25SP	G15_076	FROM->TO	GRPRAR1-LNX3345.00 - HOLT.CO3 345.00 345KV CKT 1	720	720	0.03962	101.9306	GEN652907 1-G09_007IS_3 0.6900
FDNS	00NR	4	25SP	G15_076	FROM->TO	GRPRAR1-LNX3345.00 - HOLT.CO3 345.00 345KV CKT 1	720	720	0.03962	101.9227	GEN652457 1-GARRISON
FDNS	00NR	4	25SP	G15_076	FROM->TO	GRPRAR1-LNX3345.00 - HOLT.CO3 345.00 345KV CKT 1	720	720	0.03962	101.9227	GEN652458 2-GARRISON
FDNS	00NR	4	25SP	G15_076	FROM->TO	GRPRAR1-LNX3345.00 - HOLT.CO3 345.00 345KV CKT 1	720	720	0.03962	101.9227	GEN652459 3-GARRISON
FDNS	00NR	4	20SP	G15_076	FROM->TO	GRPRAR1-LNX3345.00 - HOLT.CO3 345.00 345KV CKT 1	720	720	0.0393	101.9202	GEN615010 1-STANTON4
FDNS	00NR	4	25SP	G15_076	FROM->TO	GRPRAR1-LNX3345.00 - HOLT.CO3 345.00 345KV CKT 1	720	720	0.03852	101.9117	HIGHLND 3 345.00 - OBRIEN 3 345.00 345KV CKT 1
FDNS	00NR	4	25SP	G15_076	FROM->TO	GRPRAR1-LNX3345.00 - HOLT.CO3 345.00 345KV CKT 1	720	720	0.03962	101.8823	GEN563342 1-G15098_3 0.6900
FDNS	00NR	4	25SP	G15_076	FROM->TO	GRPRAR1-LNX3345.00 - HOLT.CO3 345.00 345KV CKT 1	720	720	0.03962	101.8718	GEN652543 3-BIG BEND
FDNS	00NR	4	25SP	G15_076	FROM->TO	GRPRAR1-LNX3345.00 - HOLT.CO3 345.00 345KV CKT 1	720	720	0.03962	101.8653	GEN659403 1-NDSUNFLWR W0.6900
FDNS	00NR	4	17SP	G15_076	FROM->TO	GRPRAR1-LNX3345.00 - HOLT.CO3 345.00 345KV CKT 1	720	720	0.04101	101.8649	P12:345:UMZB:# 108 #: LOS FT IN ND. LOS FT
FDNS	00NR	4	25SP	G15_076	FROM->TO	GRPRAR1-LNX3345.00 - HOLT.CO3 345.00 345KV CKT 1	720	720	0.03962	101.8637	GEN652542 1-BIG BEND
FDNS	00NR	4	17SP	G15_076	FROM->TO	GRPRAR1-LNX3345.00 - HOLT.CO3 345.00 345KV CKT 1	720	720	0.04101	101.8558	FT THOMPSON - FTTHOM1-LNX3345.00 345KV CKT Z
FDNS	00NR	4	20SP	G15_076	FROM->TO	GRPRAR1-LNX3345.00 - HOLT.CO3 345.00 345KV CKT 1	720	720	0.0393	101.8406	GEN600006 1-AS KING
FDNS	00NR	4	20SP	G15_076	FROM->TO	GRPRAR1-LNX3345.00 - HOLT.CO3 345.00 345KV CKT 1	720	720	0.0393	101.8235	GEN659453 1-GI1414GEN W0.6900
FDNS	00NR	4	20SP	G15_076	FROM->TO	GRPRAR1-LNX3345.00 - HOLT.CO3 345.00 345KV CKT 1	720	720	0.0393	101.8218	GEN563302 1-G15096_3 0.6900
FDNS	00NR	4	17SP	G15_076	FROM->TO	GRPRAR1-LNX3345.00 - HOLT.CO3 345.00 345KV CKT 1	720	720	0.04101	101.7676	LELAND OLDS - LELAND2-LNX3345.00 345KV CKT Z
FDNS	00NR	4	25SP	G15_076	FROM->TO	GRPRAR1-LNX3345.00 - HOLT.CO3 345.00 345KV CKT 1	720	720	0.03962	101.7274	STANTON 230/18.0KV TRANSFORMER CKT 1
FDNS	00NR	4	20SP	G15_076	FROM->TO	GRPRAR1-LNX3345.00 - HOLT.CO3 345.00 345KV CKT 1	720	720	0.0393	101.7221	GEN652556 2-OAHE
FDNS	00NR	4	20SP	G15_076	FROM->TO	GRPRAR1-LNX3345.00 - HOLT.CO3 345.00 345KV CKT 1	720	720	0.0393	101.722	GEN652557 4-OAHE
FDNS	00NR	4	20SP	G15_076	FROM->TO	GRPRAR1-LNX3345.00 - HOLT.CO3 345.00 345KV CKT 1	720	720	0.0393	101.722	GEN652558 6-OAHE
FDNS	00NR	4	20SP	G15_076	FROM->TO	GRPRAR1-LNX3345.00 - HOLT.CO3 345.00 345KV CKT 1	720	720	0.0393	101.7168	GEN659141 1-K10215A
FDNS	00NR	4	20SP	G15_076	FROM->TO	GRPRAR1-LNX3345.00 - HOLT.CO3 345.00 345KV CKT 1	720	720	0.0393	101.688	GEN659110 1-LELAND OLDS UNIT1
FDNS	00NR	4	25SP	G15_076	FROM->TO	GRPRAR1-LNX3345.00 - HOLT.CO3 345.00 345KV CKT 1	720	720	0.03962	101.5586	GEN652559 1-OAHE
FDNS	00NR	4	20SP	G15_076	FROM->TO	GRPRAR1-LNX3345.00 - HOLT.CO3 345.00 345KV CKT 1	720	720	0.0393	101.538	GEN652173 1-G09_001IS_2 0.6900
FDNS	00NR	4	25SP	G15_076	FROM->TO	GRPRAR1-LNX3345.00 - HOLT.CO3 345.00 345KV CKT 1	720	720	0.03962	101.4904	GEN659411 1-CAMPBLCNTY W0.6900
FDNS	00NR	4	25SP	G15_076	FROM->TO	GRPRAR1-LNX3345.00 - HOLT.CO3 345.00 345KV CKT 1	720	720	0.03962	101.3332	SQUARE BUTTE - YNG2 4 230.00 230KV CKT 1
FDNS	00NR	4	20SP	G15_076	FROM->TO	GRPRAR1-LNX3345.00 - HOLT.CO3 345.00 345KV CKT 1	720	720	0.0393	101.3142	GEN657749 1-YOUNG 1 GENERATOR
FDNS	00NR	4	20SP	G15_076	FROM->TO	GRPRAR1-LNX3345.00 - HOLT.CO3 345.00 345KV CKT 1	720	720	0.04123	101.3085	GRAND ISLAND - MCCOOL 345KV CKT 1
FDNS	00NR	4	25SP	G15_076	FROM->TO	GRPRAR1-LNX3345.00 - HOLT.CO3 345.00 345KV CKT 1	720	720	0.03962	101.2982	GEN600004 2-PRAIRIE ISLAND G2
FDNS	00NR	4	25SP	G15_076	FROM->TO	GRPRAR1-LNX3345.00 - HOLT.CO3 345.00 345KV CKT 1	720	720	0.03962	101.2943	GEN600003 1-PRAIRIE ISLAND G1
FDNS	00NR	4	25SP	G15_076	FROM->TO	GRPRAR1-LNX3345.00 - HOLT.CO3 345.00 345KV CKT 1	720	720	0.03962	101.2745	GEN672310 1-POPLAR RIVER GENERATOR 1
FDNS	00NR	4	25SP	G15_076	FROM->TO	GRPRAR1-LNX3345.00 - HOLT.CO3 345.00 345KV CKT 1	720	720	0.03962	101.2745	GEN672311 2-POPLAR RIVER GENERATOR 2
FDNS	00NR	4	25SP	G15_076	FROM->TO	GRPRAR1-LNX3345.00 - HOLT.CO3 345.00 345KV CKT 1	720	720	0.03962	101.2724	GEN659296 2-SDPRAIRWND1W0.6900
FDNS	00NR	4	25SP	G15_076	FROM->TO	GRPRAR1-LNX3345.00 - HOLT.CO3 345.00 345KV CKT 1	720	720	0.03962	101.2618	GEN672321 1-SHAND GENERATOR 1
FDNS	00NR	4	25SP	G15_076	FROM->TO	GRPRAR1-LNX3345.00 - HOLT.CO3 345.00 345KV CKT 1	720	720	0.03962	101.224	P12:230:UMZB:# 112 #: NU IN SD. NU-RCDC & DRY CREEK XFMR
FDNS	00NR	4	25SP	G15_076	FROM->TO	GRPRAR1-LNX3345.00 - HOLT.CO3 345.00 345KV CKT 1	720	720	0.03962	101.2154	RCDC EAST 4230.00 - RED CEDAR DC 230KV CKT 1
FDNS	00NR	4	20SP	G15_076	FROM->TO	GRPRAR1-LNX3345.00 - HOLT.CO3 345.00 345KV CKT 1	720	720	0.0393	101.2112	GEN659407 1-ANTELPHILLSW0.6900
FDNS	00NR	4	25SP	G15_076	FROM->TO	GRPRAR1-LNX3345.00 - HOLT.CO3 345.00 345KV CKT 1	720	720	0.03962	101.1798	GEN672306 6-BOUNDARY DAM GENERATOR 6
FDNS	00NR	4	25SP	G15_076	FROM->TO	GRPRAR1-LNX3345.00 - HOLT.CO3 345.00 345KV CKT 1	720	720	0.03962	101.0627	GEN615010 1-STANTON4
FDNS	00NR	4	25SP	G15_076	FROM->TO	GRPRAR1-LNX3345.00 - HOLT.CO3 345.00 345KV CKT 1	720	720	0.03962	101.0372	GEN659453 1-GI1414GEN W0.6900
FDNS	00NR	4	25SP	G15_076	FROM->TO	GRPRAR1-LNX3345.00 - HOLT.CO3 345.00 345KV CKT 1	720	720	0.03962	101.0354	GEN563302 1-G15096_3 0.6900
FDNS	00NR	4	25SP	G15_076	FROM->TO	GRPRAR1-LNX3345.00 - HOLT.CO3 345.00 345KV CKT 1	720	720	0.03962	100.9513	GEN652556 2-OAHE
FDNS	00NR	4	25SP	G15_076	FROM->TO	GRPRAR1-LNX3345.00 - HOLT.CO3 345.00 345KV CKT 1	720	720	0.03962	100.9513	GEN652557 4-OAHE
FDNS	00NR	4	25SP	G15_076	FROM->TO	GRPRAR1-LNX3345.00 - HOLT.CO3 345.00 345KV CKT 1	720	720	0.03962	100.9513	GEN652558 6-OAHE
FDNS	00NR	4	25SP	G15_076	FROM->TO	GRPRAR1-LNX3345.00 - HOLT.CO3 345.00 345KV CKT 1	720	720	0.03962	100.9458	GEN600006 1-AS KING
FDNS	00NR	4	25SP	G15_076	FROM->TO	GRPRAR1-LNX3345.00 - HOLT.CO3 345.00 345KV CKT 1	720	720	0.03962	100.919	GEN659141 1-K10215A
FDNS	00NR	4	20SP	G15_076	FROM->TO	GRPRAR1-LNX3345.00 - HOLT.CO3 345.00 345KV CKT 1	720	720	0.0393	100.9131	GEN600005 1-MONTICELLO
FDNS	00NR	4	25SP	G15_076	FROM->TO	GRPRAR1-LNX3345.00 - HOLT.CO3 345.00 345KV CKT 1	720	720	0.03962	100.8724	GEN659110 1-LELAND OLDS UNIT1
FDNS	00NR	4	25SP	G15_076	FROM->TO	GRPRAR1-LNX3345.00 - HOLT.CO3 345.00 345KV CKT 1	720	720	0.04171	100.8673	GRAND ISLAND - MCCOOL 345KV CKT 1
FDNS	00NR	4	25SP	G15_076	FROM->TO	GRPRAR1-LNX3345.00 - HOLT.CO3 345.00 345KV CKT 1	720	720	0.03962	100.7773	GEN652173 1-G09_001IS_2 0.6900
FDNS	00NR	4	20SP	G15_076	FROM->TO	GRPRAR1-LNX3345.00 - HOLT.CO3 345.00 345KV CKT 1	720	720	0.0393	100.6786	GEN600000 1-SHERBURNECNTY G1
FDNS	00NR	4	25SP	G15_076	FROM->TO	GRPRAR1-LNX3345.00 - HOLT.CO3 345.00 345KV CKT 1	720	720	0.03962	100.4593	CLAY BOSWELL 230/20.9KV TRANSFORMER CKT 1
FDNS	00NR	4	25SP	G15_076	FROM->TO	GRPRAR1-LNX3345.00 - HOLT.CO3 345.00 345KV CKT 1	720	720	0.03962	100.4336	GEN659407 1-ANTELPHILLSW0.6900
FDNS	00NR	4	20SP	G15_076	FROM->TO	GRPRAR1-LNX3345.00 - HOLT.CO3 345.00 345KV CKT 1	720	720	0.0393	100.4219	GEN600001 2-SHERBURNE CNTY G2
FDNS	00NR	4	25SP	G15_076	FROM->TO	GRPRAR1-LNX3345.00 - HOLT.CO3 345.00 345KV CKT 1	720	720	0.03962	100.4177	GEN657749 1-YOUNG 1 GENERATOR
FDNS	00NR	4	20SP	G15_076	FROM->TO	GRPRAR1-LNX3345.00 - HOLT.CO3 345.00 345KV CKT 1	720	720	0.0393	100.28	GEN661015 1-COYOTE
FDNS	00NR	4	20SP	G15_076	FROM->TO	GRPRAR1-LNX3345.00 - HOLT.CO3 345.00 345KV CKT 1	720	720	0.0393	100.1247	GEN620315 1-BIG STONE GEN
FDNS	00NR	4	25SP	G15_076	FROM->TO	GRPRAR1-LNX3345.00 - HOLT.CO3 345.00 345KV CKT 1	720	720	0.03962	100.1	GEN600005 1-MONTICELLO
FDNS	00NR	4	17SP	G15_076	FROM->TO	GRPRAR1-LNX3345.00 - HOLT.CO3 345.00 345KV CKT 1	720	720	0.06676	100	ANTELOPE 3345.00 - HOSKINS 345KV CKT 1
FDNS	00NR	4	25SP	G15_076	FROM->TO	GRPRAR1-LNX3345.00 - HOLT.CO3 345.00 345KV CKT 1	720	720	0.03962	99.9	GEN600000 1-SHERBURNECNTY G1
FDNS	00NR	4	20SP	G15_076	FROM->TO	GRPRAR1-LNX3345.00 - HOLT.CO3 345.00 345KV CKT 1	720	720	0.0393	99.8	GEN600002 3-SHERBURNE CNTY G3
FDNS	00NR	4	25SP	G15_076	FROM->TO	GRPRAR1-LNX3345.00 - HOLT.CO3 345.00 345KV CKT 1	720	720	0.03962	99.6	GEN600001 2-SHERBURNE CNTY G2
FDNS	00NR	4	20SP	G15_076	FROM->TO	GRPRAR1-LNX3345.00 - HOLT.CO3 345.00 345KV CKT 1	720	720	0.0393	99.5	GEN657748 1-YOUNG 2 GENERATOR

SOLUTION	GROUP	SCENARIO	SEASON	SOURCE	DIRECTION	MONITORED ELEMENT	RATEA (MVA)	RATEB(MVA)	TDF	TC%LOADING (% MVA)	CONTINGENCY
FDNS	00NR	4	17SP	G15_076	TO->FROM	KELLY - MEADOWGROVE4230.00 230KV CKT 1	368	368	0.03321	105.579	GRPRAR1-LNX3345.00 - HOLT.CO3 345.00 345KV CKT 1
FDNS	00NR	4	17SP	G15_076	TO->FROM	KELLY - MEADOWGROVE4230.00 230KV CKT 1	368	368	0.03321	105.5444	GRPRAR1-LNX3345.00 - GRPRAR 345KV CKT Z
FDNS	00NR	4	17SP	G15_076	TO->FROM	SIDNEY - SIDNEY TRANSFORMER 230KV CKT 1	496	496	0.03559	106.3008	KEYSTONE - SIDNEY1-LNX3345.00 345KV CKT 1
FDNS	00NR	4	17SP	G15_076	TO->FROM	SIDNEY - SIDNEY TRANSFORMER 230KV CKT 1	496	496	0.03559	105.6956	SIDNEY - SIDNEY1-LNX3345.00 345KV CKT Z
FDNS	00NR	4	17SP	G15_076	FROM->TO	SIDNEY (SDQ KV2A) 345/230/13.8KV TRANSFORMER CKT 1	400	480	0.03559	111.8796	KEYSTONE - SIDNEY1-LNX3345.00 345KV CKT 1
FDNS	00NR	4	17SP	G15_076	FROM->TO	SIDNEY (SDQ KV2A) 345/230/13.8KV TRANSFORMER CKT 1	400	480	0.03559	111.3929	SIDNEY - SIDNEY1-LNX3345.00 345KV CKT Z
FDNS	00NR	4	17SP	G15_076	FROM->TO	SIDNEY (SDQ KV2A) 345/230/13.8KV TRANSFORMER CKT 1	400	480	0.03559	111.0525	KEYSTONE - SIDNEY1-LNX3345.00 345KV CKT 1
FDNS	00NR	4	17SP	G15_076	FROM->TO	SIDNEY (SDQ KV2A) 345/230/13.8KV TRANSFORMER CKT 1	400	480	0.03559	110.9877	SIDNEY - SIDNEY1-LNX3345.00 345KV CKT Z
FDNS	00NR	4	20SP	G15_076	FROM->TO	SIDNEY (SDQ KV2A) 345/230/13.8KV TRANSFORMER CKT 1	400	480	0.03565	104.1852	KEYSTONE - SIDNEY1-LNX3345.00 345KV CKT 1
FDNS	00NR	4	20SP	G15_076	FROM->TO	SIDNEY (SDQ KV2A) 345/230/13.8KV TRANSFORMER CKT 1	400	480	0.03565	103.7706	SIDNEY - SIDNEY1-LNX3345.00 345KV CKT Z
FDNS	00NR	4	20SP	G15_076	FROM->TO	SIDNEY (SDQ KV2A) 345/230/13.8KV TRANSFORMER CKT 1	400	480	0.03565	103.5584	KEYSTONE - SIDNEY1-LNX3345.00 345KV CKT 1
FDNS	00NR	4	20SP	G15_076	FROM->TO	SIDNEY (SDQ KV2A) 345/230/13.8KV TRANSFORMER CKT 1	400	480	0.03565	103.5357	SIDNEY - SIDNEY1-LNX3345.00 345KV CKT Z
FDNS	00NR	4	25SP	G15_076	FROM->TO	SIDNEY (SDQ KV2A) 345/230/13.8KV TRANSFORMER CKT 1	400	480	0.03542	103.5347	KEYSTONE - SIDNEY1-LNX3345.00 345KV CKT 1
FDNS	00NR	4	25SP	G15_076	FROM->TO	SIDNEY (SDQ KV2A) 345/230/13.8KV TRANSFORMER CKT 1	400	480	0.03542	103.0899	SIDNEY - SIDNEY1-LNX3345.00 345KV CKT Z
FDNS	00NR	4	25SP	G15_076	FROM->TO	SIDNEY (SDQ KV2A) 345/230/13.8KV TRANSFORMER CKT 1	400	480	0.03542	102.9223	KEYSTONE - SIDNEY1-LNX3345.00 345KV CKT 1
FDNS	00NR	4	25SP	G15_076	FROM->TO	SIDNEY (SDQ KV2A) 345/230/13.8KV TRANSFORMER CKT 1	400	480	0.03542	102.8684	SIDNEY - SIDNEY1-LNX3345.00 345KV CKT Z
FDNS	09NR	4	20L	G15_076	TO->FROM	SIOUX CITY - TWIN CHURCH 230KV CKT 1	320	320	0.27851	102.1108	DIXONCO 230.00 - HOSKINS 230KV CKT 1
FDNS	09ALL	4	20L	G15_076	TO->FROM	SIOUX CITY - TWIN CHURCH 230KV CKT 1	320	320	0.21229	101.9413	HOSKINS - RAUN 345KV CKT 1
FDNS	00NR	5	17SP	G15_076	FROM->TO	COLUMEAST (COL.EAST T3) 230/115/13.8KV TRANSFORMER CKT 1	187	187	0.03653	109.3787	COLUMEAST - SHELL CREEK 345KV CKT 1
FDNS	00NR	5	17SP	G15_076	FROM->TO	COLUMEAST (COL.EAST T3) 230/115/13.8KV TRANSFORMER CKT 1	187	187	0.03653	108.6827	COLUMEAST - SHELL CREEK 345KV CKT 1
FDNS	00NR	5	20SP	G15_076	FROM->TO	COLUMEAST (COL.EAST T3) 230/115/13.8KV TRANSFORMER CKT 1	187	187	0.03686	105.8952	COLUMEAST - SHELL CREEK 345KV CKT 1
FDNS	00NR	5	20SP	G15_076	FROM->TO	COLUMEAST (COL.EAST T3) 230/115/13.8KV TRANSFORMER CKT 1	187	187	0.03686	105.1342	COLUMEAST - SHELL CREEK 345KV CKT 1
FDNS	00NR	5	25SP	G15_076	FROM->TO	COLUMEAST (COL.EAST T3) 230/115/13.8KV TRANSFORMER CKT 1	187	187	0.03645	102.482	COLUMEAST - SHELL CREEK 345KV CKT 1
FDNS	00NR	5	16WP	G15_076	FROM->TO	COLUMEAST (COL.EAST T3) 230/115/13.8KV TRANSFORMER CKT 1	187	187	0.03752	102.0346	COLUMEAST - SHELL CREEK 345KV CKT 1
FDNS	00NR	5	25SP	G15_076	FROM->TO	COLUMEAST (COL.EAST T3) 230/115/13.8KV TRANSFORMER CKT 1	187	187	0.03645	101.8314	COLUMEAST - SHELL CREEK 345KV CKT 1
FDNS	00NR	5	16WP	G15_076	FROM->TO	COLUMEAST (COL.EAST T3) 230/115/13.8KV TRANSFORMER CKT 1	187	187	0.03752	100.4516	COLUMEAST - SHELL CREEK 345KV CKT 1
FDNS	09ALL	5	25SP	G15_076	FROM->TO	DIXONCO 230.00 - HOSKINS 230KV CKT 1	320	320	0.24321	114.7947	DIXONCO 3 345.00 - TWINCH 3 345.00 345KV CKT 1
FDNS	09ALL	5	25SP	G15_076	FROM->TO	DIXONCO 230.00 - HOSKINS 230KV CKT 1	320	320	0.24321	114.7735	DIXONCO 3 345.00 (DIXON1) 345/230/13.8KV TRANSFORMER CKT 1
FDNS	09ALL	5	20SP	G15_076	FROM->TO	DIXONCO 230.00 - HOSKINS 230KV CKT 1	320	320	0.24301	114.3921	DIXONCO 3 345.00 - TWINCH 3 345.00 345KV CKT 1
FDNS	09ALL	5	20SP	G15_076	FROM->TO	DIXONCO 230.00 - HOSKINS 230KV CKT 1	320	320	0.24301	114.3341	DIXONCO 3 345.00 (DIXON1) 345/230/13.8KV TRANSFORMER CKT 1
FDNS	09ALL	5	17SP	G15_076	FROM->TO	DIXONCO 230.00 - HOSKINS 230KV CKT 1	320	320	0.24374	113.0887	DIXONCO 3 345.00 - TWINCH 3 345.00 345KV CKT 1
FDNS	09ALL	5	17SP	G15_076	FROM->TO	DIXONCO 230.00 - HOSKINS 230KV CKT 1	320	320	0.24374	113.0703	DIXONCO 3 345.00 (DIXON1) 345/230/13.8KV TRANSFORMER CKT 1
FDNS	09ALL	5	17G	G15_076	FROM->TO	DIXONCO 230.00 - HOSKINS 230KV CKT 1	320	320	0.24317	108.6753	DIXONCO 3 345.00 - TWINCH 3 345.00 345KV CKT 1
FDNS	09ALL	5	17G	G15_076	FROM->TO	DIXONCO 230.00 - HOSKINS 230KV CKT 1	320	320	0.24317	108.6439	DIXONCO 3 345.00 (DIXON1) 345/230/13.8KV TRANSFORMER CKT 1
FDNS	09ALL	5	20L	G15_076	FROM->TO	DIXONCO 230.00 - HOSKINS 230KV CKT 1	320	320	0.24079	107.4997	DIXONCO 3 345.00 - TWINCH 3 345.00 345KV CKT 1
FDNS	09ALL	5	20L	G15_076	FROM->TO	DIXONCO 230.00 - HOSKINS 230KV CKT 1	320	320	0.24079	107.464	DIXONCO 3 345.00 (DIXON1) 345/230/13.8KV TRANSFORMER CKT 1
FDNS	09ALL	5	16WP	G15_076	FROM->TO	DIXONCO 230.00 - HOSKINS 230KV CKT 1	320	320	0.24268	107.2001	DIXONCO 3 345.00 - TWINCH 3 345.00 345KV CKT 1
FDNS	09ALL	5	16WP	G15_076	FROM->TO	DIXONCO 230.00 - HOSKINS 230KV CKT 1	320	320	0.24268	107.1724	DIXONCO 3 345.00 (DIXON1) 345/230/13.8KV TRANSFORMER CKT 1
FDNS	09ALL	5	20WP	G15_076	FROM->TO	DIXONCO 230.00 - HOSKINS 230KV CKT 1	320	320	0.2422	107.041	DIXONCO 3 345.00 - TWINCH 3 345.00 345KV CKT 1
FDNS	09ALL	5	20WP	G15_076	FROM->TO	DIXONCO 230.00 - HOSKINS 230KV CKT 1	320	320	0.2422	106.9772	DIXONCO 3 345.00 (DIXON1) 345/230/13.8KV TRANSFORMER CKT 1
FDNS	00NR	5	20SP	G15_076	FROM->TO	DIXONCO 230.00 - HOSKINS 230KV CKT 1	320	320	0.25418	104.4844	DIXONCO 3 345.00 - TWINCH 3 345.00 345KV CKT 1
FDNS	00NR	5	20SP	G15_076	FROM->TO	DIXONCO 230.00 - HOSKINS 230KV CKT 1	320	320	0.25418	104.471	DIXONCO 3 345.00 (DIXON1) 345/230/13.8KV TRANSFORMER CKT 1
FDNS	00NR	5	25SP	G15_076	FROM->TO	DIXONCO 230.00 - HOSKINS 230KV CKT 1	320	320	0.25428	104.164	DIXONCO 3 345.00 - TWINCH 3 345.00 345KV CKT 1
FDNS	00NR	5	25SP	G15_076	FROM->TO	DIXONCO 230.00 - HOSKINS 230KV CKT 1	320	320	0.25428	104.1158	DIXONCO 3 345.00 (DIXON1) 345/230/13.8KV TRANSFORMER CKT 1
FDNS	00NR	5	17SP	G15_076	FROM->TO	DIXONCO 230.00 - HOSKINS 230KV CKT 1	320	320	0.25451	103.8364	DIXONCO 3 345.00 - TWINCH 3 345.00 345KV CKT 1
FDNS	00NR	5	17SP	G15_076	FROM->TO	DIXONCO 230.00 - HOSKINS 230KV CKT 1	320	320	0.25451	103.8215	DIXONCO 3 345.00 (DIXON1) 345/230/13.8KV TRANSFORMER CKT 1
FDNS	09NR	5	17G	G15_076	FROM->TO	DIXONCO 230.00 - HOSKINS 230KV CKT 1	320	320	0.25404	101.8097	DIXONCO 3 345.00 - TWINCH 3 345.00 345KV CKT 1
FDNS	09NR	5	17G	G15_076	FROM->TO	DIXONCO 230.00 - HOSKINS 230KV CKT 1	320	320	0.25404	101.7848	DIXONCO 3 345.00 (DIXON1) 345/230/13.8KV TRANSFORMER CKT 1
FDNS	09NR	5	20L	G15_076	FROM->TO	DIXONCO 230.00 - HOSKINS 230KV CKT 1	320	320	0.25272	101.7172	DIXONCO 3 345.00 - TWINCH 3 345.00 345KV CKT 1
FDNS	09NR	5	20L	G15_076	FROM->TO	DIXONCO 230.00 - HOSKINS 230KV CKT 1	320	320	0.25272	101.6524	DIXONCO 3 345.00 (DIXON1) 345/230/13.8KV TRANSFORMER CKT 1
FDNS	09ALL	5	17G	G15_076	FROM->TO	DIXONCO 3 345.00 (DIXON1) 345/230/13.8KV TRANSFORMER CKT 1	336	420	0.16991	114.6377	BASE CASE
FDNS	09ALL	5	17G	G15_076	FROM->TO	DIXONCO 3 345.00 (DIXON1) 345/230/13.8KV TRANSFORMER CKT 1	336	420	0.16991	114.3071	BASE CASE
FDNS	09ALL	5	17G	G15_076	FROM->TO	DIXONCO 3 345.00 (DIXON1) 345/230/13.8KV TRANSFORMER CKT 1	336	420	0.26074	112.698	DIXONCO 230.00 - HOSKINS 230KV CKT 1
FDNS	09ALL	5	17G	G15_076	FROM->TO	DIXONCO 3 345.00 (DIXON1) 345/230/13.8KV TRANSFORMER CKT 1	336	420	0.26074	112.5884	DIXONCO 230.00 - HOSKINS 230KV CKT 1
FDNS	09ALL	5	16WP	G15_076	FROM->TO	DIXONCO 3 345.00 (DIXON1) 345/230/13.8KV TRANSFORMER CKT 1	336	420	0.1699	112.2161	BASE CASE
FDNS	09ALL	5	16WP	G15_076	FROM->TO	DIXONCO 3 345.00 (DIXON1) 345/230/13.8KV TRANSFORMER CKT 1	336	420	0.1699	112.0272	BASE CASE
FDNS	09ALL	5	20L	G15_076	FROM->TO	DIXONCO 3 345.00 (DIXON1) 345/230/13.8KV TRANSFORMER CKT 1	336	420	0.16914	112.0004	BASE CASE
FDNS	09ALL	5	20L	G15_076	FROM->TO	DIXONCO 3 345.00 (DIXON1) 345/230/13.8KV TRANSFORMER CKT 1	336	420	0.16914	111.7535	BASE CASE
FDNS	09ALL	5	20WP	G15_076	FROM->TO	DIXONCO 3 345.00 (DIXON1) 345/230/13.8KV TRANSFORMER CKT 1	336	420	0.17071	111.2556	BASE CASE
FDNS	09ALL	5	20WP	G15_076	FROM->TO	DIXONCO 3 345.00 (DIXON1) 345/230/13.8KV TRANSFORMER CKT 1	336	420	0.17071	110.9944	BASE CASE
FDNS	09ALL	5	16WP	G15_076	FROM->TO	DIXONCO 3 345.00 (DIXON1) 345/230/13.8KV TRANSFORMER CKT 1	336	420	0.26045	110.8401	DIXONCO 230.00 - HOSKINS 230KV CKT 1
FDNS	09ALL	5	16WP	G15_076	FROM->TO	DIXONCO 3 345.00 (DIXON1) 345/230/13.8KV TRANSFORMER CKT 1	336	420	0.26045	110.8245	DIXONCO 230.00 - HOSKINS 230KV CKT 1
FDNS	09ALL	5	20L	G15_076	FROM->TO	DIXONCO 3 345.00 (DIXON1) 345/230/13.8KV TRANSFORMER CKT 1	336	420	0.25881	110.6597	DIXONCO 230.00 - HOSKINS 230KV CKT 1
FDNS	09ALL	5	20L	G15_076	FROM->TO	DIXONCO 3 345.00 (DIXON1) 345/230/13.8KV TRANSFORMER CKT 1	336	420	0.25881	110.6229	DIXONCO 230.00 - HOSKINS 230KV CKT 1
FDNS	09ALL	5	20WP	G15_076	FROM->TO	DIXONCO 3 345.00 (DIXON1) 345/230/13.8KV TRANSFORMER CKT 1	336	420	0.26071	110.2558	DIXONCO 230.00 - HOSKINS 230KV CKT 1
FDNS	09ALL	5	20WP	G15_076	FROM->TO	DIXONCO 3 345.00 (DIXON1) 345/230/13.8KV TRANSFORMER CKT 1	336	420	0.26071	110.1969	DIXONCO 230.00 - HOSKINS 230KV CKT 1
FDNS	09ALL	5	20SP	G15_076	FROM->TO	DIXONCO 3 345.00 (DIXON1) 345/230/13.8KV TRANSFORMER CKT 1	336	420	0.26094	108.8521	DIXONCO 230.00 - HOSKINS 230KV CKT 1
FDNS	09ALL	5	20SP	G15_076	FROM->TO	DIXONCO 3 345.00 (DIXON1) 345/230/13.8KV TRANSFORMER CKT 1	336	420	0.26094	108.6883	DIXONCO 230.00 - HOSKINS 230KV CKT 1
FDNS	09NR	5	17G	G15_076	FROM->TO	DIXONCO 3 345.00 (DIXON1) 345/230/13.8KV TRANSFORMER CKT 1	336	420	0.15581	108.2757	BASE CASE
FDNS	09ALL	5	17SP	G15_076	FROM->TO	DIXONCO 3 345.00 (DIXON1) 345/230/13.8KV TRANSFORMER CKT 1	336	420	0.26082	108.0729	DIXONCO 230.00 - HOSKINS 230KV CKT 1
FDNS	09NR	5	17G	G15_076	FROM->TO	DIXONCO 3 345.00 (DIXON1) 345/230/13.8KV TRANSFORMER CKT 1	336	420	0.15581	107.917	BASE CASE
FDNS	09ALL	5	17SP	G15_076	FROM->TO	DIXONCO 3 345.00 (DIXON1) 345/230/13.8KV TRANSFORMER CKT 1	336	420	0.26082	107.9068	DIXONCO 230.00 - HOSKINS 230KV CKT 1
FDNS	09ALL	5	25SP	G15_076	FROM->TO	DIXONCO 3 345.00 (DIXON1) 345/230/13.8KV TRANSFORMER CKT 1	336	420	0.26102	107.7406	DIXONCO 230.00 - HOSKINS 230KV CKT 1
FDNS	09ALL	5	25SP	G15_076	FROM->TO	DIXONCO 3 345.00 (DIXON1) 345/230/13.8KV TRANSFORMER CKT 1	336	420	0.26102	107.5579	DIXONCO 230.00 - HOSKINS 230KV CKT 1
FDNS	09NR	5	17G	G15_076	FROM->TO	DIXONCO 3 345.00 (DIXON1) 345/230/13.8KV TRANSFORMER CKT 1	336	420	0.25779	106.1828	DIXONCO 230.00 - HOSKINS 230KV CKT 1
FDNS	09NR	5	17G	G15_076	FROM->TO	DIXONCO 3 345.00 (DIXON1) 345/230/13.8KV TRANSFORMER CKT 1	336	420	0.25779	106.0015	DIXONCO 230.00 - HOSKINS 230KV CKT 1
FDNS	09ALL	5	17G	G15_076	FROM->TO	DIXONCO 3 345.00 (DIXON1) 345/230/13.8KV TRANSFORMER CKT 1	336	420	0.25029	104.3068	BELDEN 4 230.00 - RASMUSN 230KV CKT 1
FDNS	09ALL	5	17G	G15_076	FROM->TO	DIXONCO 3 345.00 (DIXON1) 345/230/13.8KV TRANSFORMER CKT 1	336	420	0.25029	104.1444	BELDEN 4 230.00 - RASMUSN 230KV CKT 1
FDNS	09NR	5	20L	G15_076	FROM->TO	DIXONCO 3 345.00 (DIXON1) 345/230/13.8KV TRANSFORMER CKT 1	336	420	0.1588	103.7279	BASE CASE

SOLUTION	GROUP	SCENARIO	SEASON	SOURCE	DIRECTION	MONITORED ELEMENT	RATEA (MVA)	RATEB(MVA)	TDF	TC%LOADING (% MVA)	CONTINGENCY
FDNS	09NR	5	20L	G15_076	FROM->TO	DIXONCO 3 345.00 (DIXON1) 345/230/13.8KV TRANSFORMER CKT 1	336	420	0.25903	103.6134	DIXONCO 230.00 - HOSKINS 230KV CKT 1
FDNS	09ALL	5	20L	G15_076	FROM->TO	DIXONCO 3 345.00 (DIXON1) 345/230/13.8KV TRANSFORMER CKT 1	336	420	0.25003	103.5378	BELDEN 4 230.00 - RASMUSN 230KV CKT 1
FDNS	09NR	5	20L	G15_076	FROM->TO	DIXONCO 3 345.00 (DIXON1) 345/230/13.8KV TRANSFORMER CKT 1	336	420	0.25903	103.5299	DIXONCO 230.00 - HOSKINS 230KV CKT 1
FDNS	09NR	5	20L	G15_076	FROM->TO	DIXONCO 3 345.00 (DIXON1) 345/230/13.8KV TRANSFORMER CKT 1	336	420	0.1588	103.475	BASE CASE
FDNS	09ALL	5	20L	G15_076	FROM->TO	DIXONCO 3 345.00 (DIXON1) 345/230/13.8KV TRANSFORMER CKT 1	336	420	0.25003	103.4601	BELDEN 4 230.00 - RASMUSN 230KV CKT 1
FDNS	09ALL	5	20SP	G15_076	FROM->TO	DIXONCO 3 345.00 (DIXON1) 345/230/13.8KV TRANSFORMER CKT 1	336	420	0.17033	102.2126	BASE CASE
FDNS	09ALL	5	20SP	G15_076	FROM->TO	DIXONCO 3 345.00 (DIXON1) 345/230/13.8KV TRANSFORMER CKT 1	336	420	0.17033	102.1467	BASE CASE
FDNS	09ALL	5	16WP	G15_076	FROM->TO	DIXONCO 3 345.00 (DIXON1) 345/230/13.8KV TRANSFORMER CKT 1	336	420	0.25049	102.1442	BELDEN 4 230.00 - RASMUSN 230KV CKT 1
FDNS	09ALL	5	16WP	G15_076	FROM->TO	DIXONCO 3 345.00 (DIXON1) 345/230/13.8KV TRANSFORMER CKT 1	336	420	0.25049	102.1094	BELDEN 4 230.00 - RASMUSN 230KV CKT 1
FDNS	09ALL	5	17SP	G15_076	FROM->TO	DIXONCO 3 345.00 (DIXON1) 345/230/13.8KV TRANSFORMER CKT 1	336	420	0.16951	102.0451	BASE CASE
FDNS	09ALL	5	17SP	G15_076	FROM->TO	DIXONCO 3 345.00 (DIXON1) 345/230/13.8KV TRANSFORMER CKT 1	336	420	0.16951	101.9875	BASE CASE
FDNS	09ALL	5	17G	G15_076	FROM->TO	DIXONCO 3 345.00 (DIXON1) 345/230/13.8KV TRANSFORMER CKT 1	336	420	0.20688	101.9535	RASMUSN - SIOUX CITY 230KV CKT 1
FDNS	09ALL	5	17G	G15_076	FROM->TO	DIXONCO 3 345.00 (DIXON1) 345/230/13.8KV TRANSFORMER CKT 1	336	420	0.20688	101.7737	RASMUSN - SIOUX CITY 230KV CKT 1
FDNS	09NR	5	17G	G15_076	FROM->TO	DIXONCO 3 345.00 (DIXON1) 345/230/13.8KV TRANSFORMER CKT 1	336	420	0.15652	101.5656	HOSKINS - RAUN 345KV CKT 1
FDNS	09ALL	5	20WP	G15_076	FROM->TO	DIXONCO 3 345.00 (DIXON1) 345/230/13.8KV TRANSFORMER CKT 1	336	420	0.25134	101.5393	BELDEN 4 230.00 - RASMUSN 230KV CKT 1
FDNS	09ALL	5	20WP	G15_076	FROM->TO	DIXONCO 3 345.00 (DIXON1) 345/230/13.8KV TRANSFORMER CKT 1	336	420	0.25134	101.438	BELDEN 4 230.00 - RASMUSN 230KV CKT 1
FDNS	09NR	5	17G	G15_076	FROM->TO	DIXONCO 3 345.00 (DIXON1) 345/230/13.8KV TRANSFORMER CKT 1	336	420	0.15652	101.3922	HOSKINS - RAUN 345KV CKT 1
FDNS	09ALL	5	25SP	G15_076	FROM->TO	DIXONCO 3 345.00 (DIXON1) 345/230/13.8KV TRANSFORMER CKT 1	336	420	0.17025	99.9	BASE CASE
FDNS	09ALL	5	25SP	G15_076	FROM->TO	DIXONCO 3 345.00 (DIXON1) 345/230/13.8KV TRANSFORMER CKT 1	336	420	0.17025	99.9	BASE CASE
FDNS	09ALL	5	16WP	G15_076	FROM->TO	DIXONCO 3 345.00 (DIXON1) 345/230/13.8KV TRANSFORMER CKT 1	336	420	0.20662	99.5	RASMUSN - SIOUX CITY 230KV CKT 1
FDNS	09ALL	5	16WP	G15_076	FROM->TO	DIXONCO 3 345.00 (DIXON1) 345/230/13.8KV TRANSFORMER CKT 1	336	420	0.20662	99.5	RASMUSN - SIOUX CITY 230KV CKT 1
FDNS	00NR	5	17SP	G15_076	TO->FROM	GRPRAR1-LNX3345.00 - GRPRAR 345KV CKT Z	720	720	0.04034	120.6396	P12:230:UMZB:# 116 #: ST IN SD. WSG-ST-VH
FDNS	00NR	5	17SP	G15_076	TO->FROM	GRPRAR1-LNX3345.00 - GRPRAR 345KV CKT Z	720	720	0.04798	120.4174	KELLY - MEADOWGROVE4230.00 230KV CKT 1
FDNS	00NR	5	17SP	G15_076	TO->FROM	GRPRAR1-LNX3345.00 - GRPRAR 345KV CKT Z	720	720	0.04174	119.7925	P12:345:UMZW:# 1747 #: WT2 IN SD. WT2-WHT LINE FAULT
FDNS	00NR	5	17SP	G15_076	TO->FROM	GRPRAR1-LNX3345.00 - GRPRAR 345KV CKT Z	720	720	0.04174	119.7914	WATERTN-LNX3345.00 - WATERTOWN 345KV CKT Z
FDNS	00NR	5	17SP	G15_076	TO->FROM	GRPRAR1-LNX3345.00 - GRPRAR 345KV CKT Z	720	720	0.04174	119.748	WATERTN-LNX3345.00 - WHITE 345KV CKT 1
FDNS	00NR	5	17SP	G15_076	TO->FROM	GRPRAR1-LNX3345.00 - GRPRAR 345KV CKT Z	720	720	0.04072	119.6977	STORLA - WESSINGTON 230KV CKT 1
FDNS	00NR	5	17SP	G15_076	TO->FROM	GRPRAR1-LNX3345.00 - GRPRAR 345KV CKT Z	720	720	0.04249	119.0473	G09_001IST 345.00 - WATERTOWN 345KV CKT 1
FDNS	00NR	5	17SP	G15_076	TO->FROM	GRPRAR1-LNX3345.00 - GRPRAR 345KV CKT Z	720	720	0.04078	118.5732	HANLON - STORLA 230KV CKT 1
FDNS	00NR	5	17SP	G15_076	TO->FROM	GRPRAR1-LNX3345.00 - GRPRAR 345KV CKT Z	720	720	0.04003	117.9634	FT THOMPSON - LETCHER 230KV CKT 1
FDNS	00NR	5	17SP	G15_076	TO->FROM	GRPRAR1-LNX3345.00 - GRPRAR 345KV CKT Z	720	720	0.04003	117.9634	FT THOMPSON - LETCHER 230KV CKT 1
FDNS	00NR	5	17SP	G15_076	TO->FROM	GRPRAR1-LNX3345.00 - GRPRAR 345KV CKT Z	720	720	0.04284	117.5677	BUFFALO - JAMESTOWN 345KV CKT 1
FDNS	00NR	5	17SP	G15_076	TO->FROM	GRPRAR1-LNX3345.00 - GRPRAR 345KV CKT Z	720	720	0.03981	116.5515	FT RANDAL - G12_009IST 230.00 230KV CKT 1
FDNS	00NR	5	17SP	G15_076	TO->FROM	GRPRAR1-LNX3345.00 - GRPRAR 345KV CKT Z	720	720	0.03973	116.5158	FT RANDAL - FT THOMPSON 230KV CKT 1
FDNS	00NR	5	17SP	G15_076	TO->FROM	GRPRAR1-LNX3345.00 - GRPRAR 345KV CKT Z	720	720	0.03973	116.5158	FT RANDAL - FT THOMPSON 230KV CKT 1
FDNS	00NR	5	17SP	G15_076	TO->FROM	GRPRAR1-LNX3345.00 - GRPRAR 345KV CKT Z	720	720	0.04284	116.4833	CHISAGO COUNTY - FORBES 500KV CKT 1
FDNS	00NR	5	17SP	G15_076	TO->FROM	GRPRAR1-LNX3345.00 - GRPRAR 345KV CKT Z	720	720	0.03981	116.4364	FT THOMPSON - LAKE PLATT 230KV CKT 1
FDNS	00NR	5	17SP	G15_076	TO->FROM	GRPRAR1-LNX3345.00 - GRPRAR 345KV CKT Z	720	720	0.03981	116.4364	FT THOMPSON - LAKE PLATT 230KV CKT 1
FDNS	00NR	5	17SP	G15_076	TO->FROM	GRPRAR1-LNX3345.00 - GRPRAR 345KV CKT Z	720	720	0.04249	116.4139	G09_001IST 345.00 - GROTON 345KV CKT 1
FDNS	00NR	5	17SP	G15_076	TO->FROM	GRPRAR1-LNX3345.00 - GRPRAR 345KV CKT Z	720	720	0.05131	116.359	NUNDRWD - WAYSIDE 230KV CKT 1
FDNS	00NR	5	17SP	G15_076	TO->FROM	GRPRAR1-LNX3345.00 - GRPRAR 345KV CKT Z	720	720	0.03981	116.062	G12_009IST 230.00 - LAKE PLATT 230KV CKT 1
FDNS	00NR	5	17SP	G15_076	TO->FROM	GRPRAR1-LNX3345.00 - GRPRAR 345KV CKT Z	720	720	0.04283	116.0003	CENTER - JAMESTOWN 345KV CKT 1
FDNS	00NR	5	17SP	G15_076	TO->FROM	GRPRAR1-LNX3345.00 - GRPRAR 345KV CKT Z	720	720	0.04798	115.8701	FT RANDAL - MEADOWGROVE4230.00 230KV CKT 1
FDNS	00NR	5	17SP	G15_076	TO->FROM	GRPRAR1-LNX3345.00 - GRPRAR 345KV CKT Z	720	720	0.04157	115.7398	LETCHER - SIOUX FALLS 230KV CKT 1
FDNS	00NR	5	17SP	G15_076	TO->FROM	GRPRAR1-LNX3345.00 - GRPRAR 345KV CKT Z	720	720	0.04284	115.4947	GEN336821 1-GRAND GULF UNIT
FDNS	00NR	5	17SP	G15_076	TO->FROM	GRPRAR1-LNX3345.00 - GRPRAR 345KV CKT Z	720	720	0.04284	115.479	BISON 3 345.00 - BUFFALO 345KV CKT 1
FDNS	00NR	5	17SP	G15_076	TO->FROM	GRPRAR1-LNX3345.00 - GRPRAR 345KV CKT Z	720	720	0.04284	115.3763	GEN635024 4-WALTER SCOTT UNIT 4
FDNS	00NR	5	17SP	G15_076	TO->FROM	GRPRAR1-LNX3345.00 - GRPRAR 345KV CKT Z	720	720	0.04095	115.3364	SPLIT ROCK - WHITE 345KV CKT 1
FDNS	00NR	5	17SP	G15_076	TO->FROM	GRPRAR1-LNX3345.00 - GRPRAR 345KV CKT Z	720	720	0.04095	115.3364	SPLIT ROCK - WHITE 345KV CKT 1
FDNS	00NR	5	17SP	G15_076	TO->FROM	GRPRAR1-LNX3345.00 - GRPRAR 345KV CKT Z	720	720	0.04284	115.1049	GEN344225 1-1CAL G1 25.000
FDNS	00NR	5	17SP	G15_076	TO->FROM	GRPRAR1-LNX3345.00 - GRPRAR 345KV CKT Z	720	720	0.04385	115.0424	KEYSTONE - SIDNEY1-LNX3345.00 345KV CKT 1
FDNS	00NR	5	17SP	G15_076	TO->FROM	GRPRAR1-LNX3345.00 - GRPRAR 345KV CKT Z	720	720	0.04385	115.0268	SIDNEY - SIDNEY1-LNX3345.00 345KV CKT Z
FDNS	00NR	5	17SP	G15_076	TO->FROM	GRPRAR1-LNX3345.00 - GRPRAR 345KV CKT Z	720	720	0.04284	114.9039	GEN635023 3-WALTER SCOTT UNIT 3
FDNS	00NR	5	17SP	G15_076	TO->FROM	GRPRAR1-LNX3345.00 - GRPRAR 345KV CKT Z	720	720	0.04284	114.9004	GEN562714 1-G15_023_4 0.6900
FDNS	00NR	5	17SP	G15_076	TO->FROM	GRPRAR1-LNX3345.00 - GRPRAR 345KV CKT Z	720	720	0.04284	114.9004	GEN562715 1-G15_023_5 0.6900
FDNS	00NR	5	17SP	G15_076	TO->FROM	GRPRAR1-LNX3345.00 - GRPRAR 345KV CKT Z	720	720	0.04284	114.8601	GEN337911 1-ARKANSAS NUCLEAR ONE UNIT #2
FDNS	00NR	5	17SP	G15_076	TO->FROM	GRPRAR1-LNX3345.00 - GRPRAR 345KV CKT Z	720	720	0.04284	114.8311	GEN336153 1-WATERFORD UNIT#3
FDNS	00NR	5	17SP	G15_076	TO->FROM	GRPRAR1-LNX3345.00 - GRPRAR 345KV CKT Z	720	720	0.04191	114.8147	FT RANDAL - SIOUX CITY 230KV CKT 1
FDNS	00NR	5	17SP	G15_076	TO->FROM	GRPRAR1-LNX3345.00 - GRPRAR 345KV CKT Z	720	720	0.04252	114.7701	GROTON-LNX3 345.00 - LELAND1-LNX3345.00 345KV CKT 1
FDNS	00NR	5	17SP	G15_076	TO->FROM	GRPRAR1-LNX3345.00 - GRPRAR 345KV CKT Z	720	720	0.04252	114.6504	LELAND OLDS - LELAND1-LNX3345.00 345KV CKT Z
FDNS	00NR	5	17SP	G15_076	TO->FROM	GRPRAR1-LNX3345.00 - GRPRAR 345KV CKT Z	720	720	0.04252	114.6392	GROTON - GROTON-LNX3 345.00 345KV CKT Z
FDNS	00NR	5	17SP	G15_076	TO->FROM	GRPRAR1-LNX3345.00 - GRPRAR 345KV CKT Z	720	720	0.04252	114.6374	P12:345:UMZB:# 109 #: LOS GRT IN ND. LOS GRT
FDNS	00NR	5	17SP	G15_076	TO->FROM	GRPRAR1-LNX3345.00 - GRPRAR 345KV CKT Z	720	720	0.04316	114.5848	ARROWHEAD - ARROWHEAD 230 230KV CKT 1
FDNS	00NR	5	17SP	G15_076	TO->FROM	GRPRAR1-LNX3345.00 - GRPRAR 345KV CKT Z	720	720	0.042	114.5742	HANLON - SIOUX FALLS 230KV CKT 1
FDNS	00NR	5	17SP	G15_076	TO->FROM	GRPRAR1-LNX3345.00 - GRPRAR 345KV CKT Z	720	720	0.04351	114.538	MISSION - ST FRANCIS 115KV CKT 1
FDNS	00NR	5	17SP	G15_076	TO->FROM	GRPRAR1-LNX3345.00 - GRPRAR 345KV CKT Z	720	720	0.04351	114.5239	P12:115:NPPD:1091:VALENTN7:MISSION7:BTB
FDNS	00NR	5	17SP	G15_076	TO->FROM	GRPRAR1-LNX3345.00 - GRPRAR 345KV CKT Z	720	720	0.04284	114.486	GEN335831 1-RIVERBEND UNIT#1
FDNS	00NR	5	17SP	G15_076	TO->FROM	GRPRAR1-LNX3345.00 - GRPRAR 345KV CKT Z	720	720	0.04284	114.483	GEN640010 1-GERALD GENTLEMAN STATION UNIT 1
FDNS	00NR	5	17SP	G15_076	TO->FROM	GRPRAR1-LNX3345.00 - GRPRAR 345KV CKT Z	720	720	0.04351	114.3978	HARMONY - ST FRANCIS 115KV CKT 1
FDNS	00NR	5	17SP	G15_076	TO->FROM	GRPRAR1-LNX3345.00 - GRPRAR 345KV CKT Z	720	720	0.04284	114.3951	GEN337910 1-ARKANSAS NUCLEAR ONE UNIT #1
FDNS	00NR	5	17SP	G15_076	TO->FROM	GRPRAR1-LNX3345.00 - GRPRAR 345KV CKT Z	720	720	0.03898	114.3942	FT RANDAL - UTICA JCT 230KV CKT 1
FDNS	00NR	5	17SP	G15_076	TO->FROM	GRPRAR1-LNX3345.00 - GRPRAR 345KV CKT Z	720	720	0.04375	114.3356	HAZLETON - MITCHLCO3 345.00 345KV CKT 1
FDNS	00NR	5	17SP	G15_076	TO->FROM	GRPRAR1-LNX3345.00 - GRPRAR 345KV CKT Z	720	720	0.0429	114.3315	ALEXMRES3 345.00 - BISON 3 345.00 345KV CKT 1
FDNS	00NR	5	17SP	G15_076	TO->FROM	GRPRAR1-LNX3345.00 - GRPRAR 345KV CKT Z	720	720	0.04284	114.274	ELLENDALE - OAKES 230KV CKT 1
FDNS	00NR	5	17SP	G15_076	TO->FROM	GRPRAR1-LNX3345.00 - GRPRAR 345KV CKT Z	720	720	0.04284	114.274	ELLENDALE - OAKES 230KV CKT 1
FDNS	00NR	5	17SP	G15_076	TO->FROM	GRPRAR1-LNX3345.00 - GRPRAR 345KV CKT Z	720	720	0.03954	114.2592	SIOUXCY-LNX3345.00 - SPLIT ROCK 345KV CKT 1
FDNS	00NR	5	17SP	G15_076	TO->FROM	GRPRAR1-LNX3345.00 - GRPRAR 345KV CKT Z	720	720	0.03954	114.2592	SIOUXCY-LNX3345.00 - SPLIT ROCK 345KV CKT 1
FDNS	00NR	5	17SP	G15_076	TO->FROM	GRPRAR1-LNX3345.00 - GRPRAR 345KV CKT Z	720	720	0.03954	114.2577	P12:345:UMZW:# 907 #: SC2-SR IN IA. SC2-SR 345 KV LINE
FDNS	00NR	5	17SP	G15_076	TO->FROM	GRPRAR1-LNX3345.00 - GRPRAR 345KV CKT Z	720	720	0.04499	114.2135	FT RANDAL - SPENCER 115KV CKT 1

SOLUTION	GROUP	SCENARIO	SEASON	SOURCE	DIRECTION	MONITORED ELEMENT	RATEA (MVA)	RATEB(MVA)	TDF	TC%LOADING (% MVA)	CONTINGENCY
FDNS	00NR	5	17SP	G15_076	TO->FROM	GRPRAR1-LNX3345.00 - GRPRAR 345KV CKT Z	720	720	0.03954	114.1953	SIOUX CITY - SIOUXCY-LNX3345.00 345KV CKT Z
FDNS	00NR	5	17SP	G15_076	TO->FROM	GRPRAR1-LNX3345.00 - GRPRAR 345KV CKT Z	720	720	0.04284	114.1926	GEN640011 2-GERALD GENTLEMAN STATION UNIT 2
FDNS	00NR	5	17SP	G15_076	TO->FROM	GRPRAR1-LNX3345.00 - GRPRAR 345KV CKT Z	720	720	0.04351	114.1855	HARMONY - VALENTINE 115KV CKT 1
FDNS	00NR	5	17SP	G15_076	TO->FROM	GRPRAR1-LNX3345.00 - GRPRAR 345KV CKT Z	720	720	0.04283	114.1827	FORMAN - OAKES 230KV CKT 1
FDNS	00NR	5	17SP	G15_076	TO->FROM	GRPRAR1-LNX3345.00 - GRPRAR 345KV CKT Z	720	720	0.04499	114.1739	P12:115:NPPD:WAPA6:FTRANDL7:ONEILL 7:BTB
FDNS	00NR	5	17SP	G15_076	TO->FROM	GRPRAR1-LNX3345.00 - GRPRAR 345KV CKT Z	720	720	0.04499	114.1739	P12:115:UMZB:# 115 #: SE IN NE. FR-SE-ON
FDNS	00NR	5	17SP	G15_076	TO->FROM	GRPRAR1-LNX3345.00 - GRPRAR 345KV CKT Z	720	720	0.04429	114.1351	SIDNEY - STEGALL 345KV CKT 1
FDNS	00NR	5	17SP	G15_076	TO->FROM	GRPRAR1-LNX3345.00 - GRPRAR 345KV CKT Z	720	720	0.04318	114.1312	GERALD GENTLEMAN STATION - KEYSTONE 345KV CKT 1
FDNS	00NR	5	17SP	G15_076	TO->FROM	GRPRAR1-LNX3345.00 - GRPRAR 345KV CKT Z	720	720	0.04758	114.1281	RAUN - SUB 3451 FT CAL 345KV CKT 1
FDNS	00NR	5	17SP	G15_076	TO->FROM	GRPRAR1-LNX3345.00 - GRPRAR 345KV CKT Z	720	720	0.04758	114.1281	RAUN - SUB 3451 FT CAL 345KV CKT 1
FDNS	00NR	5	17SP	G15_076	TO->FROM	GRPRAR1-LNX3345.00 - GRPRAR 345KV CKT Z	720	720	0.04499	114.0523	ONEILL - SPENCER 115KV CKT 1
FDNS	00NR	5	17SP	G15_076	TO->FROM	GRPRAR1-LNX3345.00 - GRPRAR 345KV CKT Z	720	720	0.04321	114.0075	AS KING - EAU CLAIRE 345KV CKT 1
FDNS	00NR	5	17SP	G15_076	TO->FROM	GRPRAR1-LNX3345.00 - GRPRAR 345KV CKT Z	720	720	0.04275	113.9954	CARPENTER - HURON 230KV CKT 1
FDNS	00NR	5	17SP	G15_076	TO->FROM	GRPRAR1-LNX3345.00 - GRPRAR 345KV CKT Z	720	720	0.04227	113.9555	PAHOJA - SIOUX FALLS 230KV CKT 1
FDNS	00NR	5	17SP	G15_076	TO->FROM	GRPRAR1-LNX3345.00 - GRPRAR 345KV CKT Z	720	720	0.05543	113.914	DIXONCO 230.00 - HOSKINS 230KV CKT 1
FDNS	00NR	5	17SP	G15_076	TO->FROM	GRPRAR1-LNX3345.00 - GRPRAR 345KV CKT Z	720	720	0.04284	113.9112	GEN337653 1-WHITE BLUFF UNIT #2
FDNS	00NR	5	17SP	G15_076	TO->FROM	GRPRAR1-LNX3345.00 - GRPRAR 345KV CKT Z	720	720	0.04275	113.9022	HURON - WATERTOWN 230KV CKT 2
FDNS	00NR	5	17SP	G15_076	TO->FROM	GRPRAR1-LNX3345.00 - GRPRAR 345KV CKT Z	720	720	0.04275	113.9022	HURON - WATERTOWN 230KV CKT 2
FDNS	00NR	5	17SP	G15_076	TO->FROM	GRPRAR1-LNX3345.00 - GRPRAR 345KV CKT Z	720	720	0.04284	113.8977	GEN337652 1-WHITE BLUFF UNIT #1
FDNS	00NR	5	17SP	G15_076	TO->FROM	GRPRAR1-LNX3345.00 - GRPRAR 345KV CKT Z	720	720	0.04284	113.8459	GEN338146 1-INDEPENDENCE UNIT #2
FDNS	00NR	5	17SP	G15_076	TO->FROM	GRPRAR1-LNX3345.00 - GRPRAR 345KV CKT Z	720	720	0.04275	113.8422	CARPENTER - WATERTOWN 230KV CKT 1
FDNS	00NR	5	17SP	G15_076	TO->FROM	GRPRAR1-LNX3345.00 - GRPRAR 345KV CKT Z	720	720	0.04275	113.8422	CARPENTER - WATERTOWN 230KV CKT 1
FDNS	00NR	5	17SP	G15_076	TO->FROM	GRPRAR1-LNX3345.00 - GRPRAR 345KV CKT Z	720	720	0.04284	113.8395	GEN338143 1-INDEPENDENCE UNIT #1
FDNS	00NR	5	17SP	G15_076	TO->FROM	GRPRAR1-LNX3345.00 - GRPRAR 345KV CKT Z	720	720	0.04335	113.7968	ARPIN B4 345.00 - EAU CLAIRE 345KV CKT 1
FDNS	00NR	5	17SP	G15_076	TO->FROM	GRPRAR1-LNX3345.00 - GRPRAR 345KV CKT Z	720	720	0.04286	113.7491	FORMAN - HANKINSON 230KV CKT 1
FDNS	00NR	5	17SP	G15_076	TO->FROM	GRPRAR1-LNX3345.00 - GRPRAR 345KV CKT Z	720	720	0.04284	113.721	GEN501801 1-DOLET HILLS UNIT1
FDNS	00NR	5	17SP	G15_076	TO->FROM	GRPRAR1-LNX3345.00 - GRPRAR 345KV CKT Z	720	720	0.03878	113.6913	RASMUSN - UTICA JCT 230KV CKT 1
FDNS	00NR	5	17SP	G15_076	TO->FROM	GRPRAR1-LNX3345.00 - GRPRAR 345KV CKT Z	720	720	0.04351	113.657	AINSWORTH - VALENTINE 115KV CKT 1
FDNS	00NR	5	17SP	G15_076	TO->FROM	GRPRAR1-LNX3345.00 - GRPRAR 345KV CKT Z	720	720	0.04072	113.6156	FT THOMPSON - WESSINGTON 230KV CKT 1
FDNS	00NR	5	17SP	G15_076	TO->FROM	GRPRAR1-LNX3345.00 - GRPRAR 345KV CKT Z	720	720	0.04072	113.6156	FT THOMPSON - WESSINGTON 230KV CKT 1
FDNS	00NR	5	17SP	G15_076	TO->FROM	GRPRAR1-LNX3345.00 - GRPRAR 345KV CKT Z	720	720	0.04312	113.563	G15094_T 345.00 - SIDNEY2-LNX3345.00 345KV CKT 1
FDNS	00NR	5	17SP	G15_076	TO->FROM	GRPRAR1-LNX3345.00 - GRPRAR 345KV CKT Z	720	720	0.04285	113.5601	CNTSHNT3 345.00 - PRAIRIE3 345.00 345KV CKT 1
FDNS	00NR	5	17SP	G15_076	TO->FROM	GRPRAR1-LNX3345.00 - GRPRAR 345KV CKT Z	720	720	0.04312	113.5468	SIDNEY - SIDNEY2-LNX3345.00 345KV CKT Z
FDNS	00NR	5	17SP	G15_076	TO->FROM	GRPRAR1-LNX3345.00 - GRPRAR 345KV CKT Z	720	720	0.04227	113.545	EAGLE 4 230.00 - PAHOJA 230KV CKT 1
FDNS	00NR	5	17SP	G15_076	TO->FROM	GRPRAR1-LNX3345.00 - GRPRAR 345KV CKT Z	720	720	0.04375	113.5439	ADAMS - MITCHLCO3 345.00 345KV CKT 1
FDNS	00NR	5	17SP	G15_076	TO->FROM	GRPRAR1-LNX3345.00 - GRPRAR 345KV CKT Z	720	720	0.04284	113.4953	GEN336252 1-NINEMILE POINT UNIT#5
FDNS	00NR	5	17SP	G15_076	TO->FROM	GRPRAR1-LNX3345.00 - GRPRAR 345KV CKT Z	720	720	0.04284	113.4552	GEN501813 1-RODEMACHER UNIT 3
FDNS	00NR	5	17SP	G15_076	TO->FROM	GRPRAR1-LNX3345.00 - GRPRAR 345KV CKT Z	720	720	0.04284	113.3781	GEN336831 1-BAXTER WILSON SES
FDNS	00NR	5	17SP	G15_076	TO->FROM	GRPRAR1-LNX3345.00 - GRPRAR 345KV CKT Z	720	720	0.04348	113.3749	ADAMS - PLEASANT VALLEY 345KV CKT 1
FDNS	00NR	5	17SP	G15_076	TO->FROM	GRPRAR1-LNX3345.00 - GRPRAR 345KV CKT Z	720	720	0.04284	113.367	GEN336251 1-NINEMILE POINT UNIT#4
FDNS	00NR	5	17SP	G15_076	TO->FROM	GRPRAR1-LNX3345.00 - GRPRAR 345KV CKT Z	720	720	0.04284	113.3049	GEN337041 1-GERALD ANDRUS
FDNS	00NR	5	17SP	G15_076	TO->FROM	GRPRAR1-LNX3345.00 - GRPRAR 345KV CKT Z	720	720	0.04284	113.2942	GEN344897 4-1LAB G4 20.000
FDNS	00NR	5	17SP	G15_076	TO->FROM	GRPRAR1-LNX3345.00 - GRPRAR 345KV CKT Z	720	720	0.04284	113.2913	GEN344894 1-1LAB G1 20.000
FDNS	00NR	5	17SP	G15_076	TO->FROM	GRPRAR1-LNX3345.00 - GRPRAR 345KV CKT Z	720	720	0.04284	113.2912	GEN344896 3-1LAB G3 20.000
FDNS	00NR	5	17SP	G15_076	TO->FROM	GRPRAR1-LNX3345.00 - GRPRAR 345KV CKT Z	720	720	0.04284	113.284	GEN335206 1-NELSON UNIT 6
FDNS	00NR	5	17SP	G15_076	TO->FROM	GRPRAR1-LNX3345.00 - GRPRAR 345KV CKT Z	720	720	0.04284	113.2435	GEN344895 2-1LAB G2 20.000
FDNS	00NR	5	17SP	G15_076	TO->FROM	GRPRAR1-LNX3345.00 - GRPRAR 345KV CKT Z	720	720	0.04284	113.231	GEN345670 1-1RUSH G1 18.000
FDNS	00NR	5	17SP	G15_076	TO->FROM	GRPRAR1-LNX3345.00 - GRPRAR 345KV CKT Z	720	720	0.04284	113.2309	GEN345671 2-1RUSH G2 18.000
FDNS	00NR	5	17SP	G15_076	TO->FROM	GRPRAR1-LNX3345.00 - GRPRAR 345KV CKT Z	720	720	0.04284	113.1548	GEN501812 1-RODEMACHER UNIT 2
FDNS	00NR	5	17SP	G15_076	TO->FROM	GRPRAR1-LNX3345.00 - GRPRAR 345KV CKT Z	720	720	0.04284	113.1546	GEN635214 4-NEAL UNIT 4
FDNS	00NR	5	17SP	G15_076	TO->FROM	GRPRAR1-LNX3345.00 - GRPRAR 345KV CKT Z	720	720	0.04399	113.1478	LAKEFIELD 3 - NOBLES 345KV CKT 1
FDNS	00NR	5	17SP	G15_076	TO->FROM	GRPRAR1-LNX3345.00 - GRPRAR 345KV CKT Z	720	720	0.04294	113.1378	ALEXMRES3 345.00 - WAITE PARK 345KV CKT 1
FDNS	00NR	5	17SP	G15_076	TO->FROM	GRPRAR1-LNX3345.00 - GRPRAR 345KV CKT Z	720	720	0.04284	113.1357	GEN334440 1-SABINE UNIT 4
FDNS	00NR	5	17SP	G15_076	TO->FROM	GRPRAR1-LNX3345.00 - GRPRAR 345KV CKT Z	720	720	0.0429	113.1305	BLAIR - GRANITE FALLS 230KV CKT 1
FDNS	00NR	5	17SP	G15_076	TO->FROM	GRPRAR1-LNX3345.00 - GRPRAR 345KV CKT Z	720	720	0.0429	113.1305	BLAIR - GRANITE FALLS 230KV CKT 1
FDNS	00NR	5	17SP	G15_076	TO->FROM	GRPRAR1-LNX3345.00 - GRPRAR 345KV CKT Z	720	720	0.04283	113.0868	CENTER - COYOTE 345KV CKT 1
FDNS	00NR	5	17SP	G15_076	TO->FROM	GRPRAR1-LNX3345.00 - GRPRAR 345KV CKT Z	720	720	0.04325	113.0438	BROOKING COUNTY - LYON COUNTY 345KV CKT 1
FDNS	00NR	5	17SP	G15_076	TO->FROM	GRPRAR1-LNX3345.00 - GRPRAR 345KV CKT Z	720	720	0.04574	113.0283	STEGALL - STEGALL TRANSFORMER 230KV CKT 1
FDNS	00NR	5	17SP	G15_076	TO->FROM	GRPRAR1-LNX3345.00 - GRPRAR 345KV CKT Z	720	720	0.04159	113.0242	MENNO JCT - TRIPP JCT 115KV CKT 1
FDNS	00NR	5	17SP	G15_076	TO->FROM	GRPRAR1-LNX3345.00 - GRPRAR 345KV CKT Z	720	720	0.04289	113.0197	GLENBORO SOUTH - RUGBY 230KV CKT 1
FDNS	00NR	5	17SP	G15_076	TO->FROM	GRPRAR1-LNX3345.00 - GRPRAR 345KV CKT Z	720	720	0.04284	113.015	GEN629075 1-OTTUMWA GENERATOR FOR OTTUMWA UNIT NO 1
FDNS	00NR	5	17SP	G15_076	TO->FROM	GRPRAR1-LNX3345.00 - GRPRAR 345KV CKT Z	720	720	0.04574	113.0135	P13:230-345:NPPD:STEGALL3:KV3A
FDNS	00NR	5	17SP	G15_076	TO->FROM	GRPRAR1-LNX3345.00 - GRPRAR 345KV CKT Z	720	720	0.04284	113.0086	GEN336191 1-LITTLE GYPSY UNIT#3
FDNS	00NR	5	17SP	G15_076	TO->FROM	GRPRAR1-LNX3345.00 - GRPRAR 345KV CKT Z	720	720	0.04574	113.0058	STEGALL (SGQ KV3A) 345/230/13.8KV TRANSFORMER CKT 1
FDNS	00NR	5	17SP	G15_076	TO->FROM	GRPRAR1-LNX3345.00 - GRPRAR 345KV CKT Z	720	720	0.04291	112.9673	HANKINSON - WAHPETON 230KV CKT 1
FDNS	00NR	5	17SP	G15_076	TO->FROM	GRPRAR1-LNX3345.00 - GRPRAR 345KV CKT Z	720	720	0.04284	112.9589	GEN338388 1-1PLUM PT U1 23.000
FDNS	00NR	5	17SP	G15_076	TO->FROM	GRPRAR1-LNX3345.00 - GRPRAR 345KV CKT Z	720	720	0.04284	112.9433	P12:115:UMZW:# 162 #: NEL IN ND. FAULT ON ML-NEL-MX-GA 115 KV
FDNS	00NR	5	17SP	G15_076	TO->FROM	GRPRAR1-LNX3345.00 - GRPRAR 345KV CKT Z	720	720	0.04284	112.9325	GEN336801 1-BAXTER WILSON UNIT #1
FDNS	00NR	5	17SP	G15_076	TO->FROM	GRPRAR1-LNX3345.00 - GRPRAR 345KV CKT Z	720	720	0.04763	112.9242	STEGALL-LNX3230.00 - WAYSIDE 230KV CKT 1
FDNS	00NR	5	17SP	G15_076	TO->FROM	GRPRAR1-LNX3345.00 - GRPRAR 345KV CKT Z	720	720	0.04355	112.9215	KOSSUTH 3 345.00 - OBRIEN 3 345.00 345KV CKT 1
FDNS	00NR	5	17SP	G15_076	TO->FROM	GRPRAR1-LNX3345.00 - GRPRAR 345KV CKT Z	720	720	0.04284	112.9184	GEN335614 1-WILLOW GLENN UNIT#4
FDNS	00NR	5	17SP	G15_076	TO->FROM	GRPRAR1-LNX3345.00 - GRPRAR 345KV CKT Z	720	720	0.04763	112.9162	STEGALL - STEGALL-LNX3230.00 230KV CKT Z
FDNS	00NR	5	17SP	G15_076	TO->FROM	GRPRAR1-LNX3345.00 - GRPRAR 345KV CKT Z	720	720	0.04159	112.9106	MENNO JCT - UTICA 115KV CKT 1
FDNS	00NR	5	17SP	G15_076	TO->FROM	GRPRAR1-LNX3345.00 - GRPRAR 345KV CKT Z	720	720	0.04284	112.9057	GEN336464 1-MICHOUD UNIT #3
FDNS	00NR	5	17SP	G15_076	TO->FROM	GRPRAR1-LNX3345.00 - GRPRAR 345KV CKT Z	720	720	0.04284	112.8972	GEN563222 1-G15088_3 0.6900
FDNS	00NR	5	17SP	G15_076	TO->FROM	GRPRAR1-LNX3345.00 - GRPRAR 345KV CKT Z	720	720	0.04355	112.8897	KOSSUTH 3 345.00 - WEBSTER 345KV CKT 1
FDNS	00NR	5	17SP	G15_076	TO->FROM	GRPRAR1-LNX3345.00 - GRPRAR 345KV CKT Z	720	720	0.04284	112.8846	GARRISON - JAMES TOWN 230KV CKT 1
FDNS	00NR	5	17SP	G15_076	TO->FROM	GRPRAR1-LNX3345.00 - GRPRAR 345KV CKT Z	720	720	0.04284	112.8644	GEN334441 1-SABINE UNIT 5
FDNS	00NR	5	17SP	G15_076	TO->FROM	GRPRAR1-LNX3345.00 - GRPRAR 345KV CKT Z	720	720	0.04331	112.8596	BYRON - NORTH ROCHESTER 345KV CKT 1

SOLUTION	GROUP	SCENARIO	SEASON	SOURCE	DIRECTION	MONITORED ELEMENT	RATEA (MVA)	RATEB(MVA)	TDF	TC%LOADING (% MVA)	CONTINGENCY
FDNS	00NR	5	17SP	G15_076	TO->FROM	GRPRAR1-LNX3345.00 - GRPRAR 345KV CKT Z	720	720	0.04284	112.8462	GEN335204 1-NELSON UNIT 4
FDNS	00NR	5	17SP	G15_076	TO->FROM	GRPRAR1-LNX3345.00 - GRPRAR 345KV CKT Z	720	720	0.04435	112.8353	GRIMES - LEHIGH 345KV CKT 1
FDNS	00NR	5	17SP	G15_076	TO->FROM	GRPRAR1-LNX3345.00 - GRPRAR 345KV CKT Z	720	720	0.04159	112.8276	P12:115:UMZZ:# 237 #: MEN IN SD. MENNO JUNCTION IS A TAP (UJ-MEN-TP).
FDNS	00NR	5	17SP	G15_076	TO->FROM	GRPRAR1-LNX3345.00 - GRPRAR 345KV CKT Z	720	720	0.04284	112.8031	GEN635213 3-NEAL UNIT 3
FDNS	00NR	5	17SP	G15_076	TO->FROM	GRPRAR1-LNX3345.00 - GRPRAR 345KV CKT Z	720	720	0.05067	112.7752	RAUN - SIOUX CITY 345KV CKT 1
FDNS	00NR	5	17SP	G15_076	TO->FROM	GRPRAR1-LNX3345.00 - GRPRAR 345KV CKT Z	720	720	0.05067	112.7752	RAUN - SIOUX CITY 345KV CKT 1
FDNS	00NR	5	17SP	G15_076	TO->FROM	GRPRAR1-LNX3345.00 - GRPRAR 345KV CKT Z	720	720	0.04295	112.7423	APPLEDORN 4 230.00 - WATERTOWN 230KV CKT 1
FDNS	00NR	5	17SP	G15_076	TO->FROM	GRPRAR1-LNX3345.00 - GRPRAR 345KV CKT Z	720	720	0.04295	112.7423	APPLEDORN 4 230.00 - WATERTOWN 230KV CKT 1
FDNS	00NR	5	17SP	G15_076	TO->FROM	GRPRAR1-LNX3345.00 - GRPRAR 345KV CKT Z	720	720	0.04284	112.7294	GEN334433 1-SABINE UNIT 3
FDNS	00NR	5	17SP	G15_076	TO->FROM	GRPRAR1-LNX3345.00 - GRPRAR 345KV CKT Z	720	720	0.04284	112.7135	GEN336222 1-LITTLE GYPSY UNIT#2
FDNS	00NR	5	17SP	G15_076	TO->FROM	GRPRAR1-LNX3345.00 - GRPRAR 345KV CKT Z	720	720	0.04284	112.6926	FARGO - JAMES TOWN 230KV CKT 1
FDNS	00NR	5	17SP	G15_076	TO->FROM	GRPRAR1-LNX3345.00 - GRPRAR 345KV CKT Z	720	720	0.04284	112.686	GEN640009 1-COOPER NUCLEAR STATION
FDNS	00NR	5	17SP	G15_076	TO->FROM	GRPRAR1-LNX3345.00 - GRPRAR 345KV CKT Z	720	720	0.04302	112.6743	NORTH ROCHESTER - PRAIRIE ISLAND 345KV CKT 1
FDNS	00NR	5	17SP	G15_076	TO->FROM	GRPRAR1-LNX3345.00 - GRPRAR 345KV CKT Z	720	720	0.04284	112.6716	P13:230:UMZW:# 2218 #: FP IN MT. LOSS OF TRANSFORMER (AT2).
FDNS	00NR	5	17SP	G15_076	TO->FROM	GRPRAR1-LNX3345.00 - GRPRAR 345KV CKT Z	720	720	0.04312	112.669	G15094_T 345.00 - LARAMIE RIVER 345KV CKT 1
FDNS	00NR	5	17SP	G15_076	TO->FROM	GRPRAR1-LNX3345.00 - GRPRAR 345KV CKT Z	720	720	0.04284	112.6674	FARGO - JAMES TOWN 230KV CKT 2
FDNS	00NR	5	17SP	G15_076	TO->FROM	GRPRAR1-LNX3345.00 - GRPRAR 345KV CKT Z	720	720	0.04295	112.6644	APPLEDORN 4 230.00 - GRANITE FALLS 230KV CKT 1
FDNS	00NR	5	17SP	G15_076	TO->FROM	GRPRAR1-LNX3345.00 - GRPRAR 345KV CKT Z	720	720	0.04295	112.6644	APPLEDORN 4 230.00 - GRANITE FALLS 230KV CKT 1
FDNS	00NR	5	17SP	G15_076	TO->FROM	GRPRAR1-LNX3345.00 - GRPRAR 345KV CKT Z	720	720	0.04284	112.6592	GEN303007 1-1BC2 U2
FDNS	00NR	5	17SP	G15_076	TO->FROM	GRPRAR1-LNX3345.00 - GRPRAR 345KV CKT Z	720	720	0.04284	112.6539	GEN303006 1-1BC2 U1
FDNS	00NR	5	17SP	G15_076	TO->FROM	GRPRAR1-LNX3345.00 - GRPRAR 345KV CKT Z	720	720	0.04289	112.6415	FERGSFL4 230.00 - WAHPETON 230KV CKT 1
FDNS	00NR	5	17SP	G15_076	TO->FROM	GRPRAR1-LNX3345.00 - GRPRAR 345KV CKT Z	720	720	0.04284	112.6159	BISMARK - JAMES TOWN 230KV CKT 1
FDNS	00NR	5	17SP	G15_076	TO->FROM	GRPRAR1-LNX3345.00 - GRPRAR 345KV CKT Z	720	720	0.04331	112.6118	BYRON - PLEASANT VALLEY 345KV CKT 1
FDNS	00NR	5	17SP	G15_076	TO->FROM	GRPRAR1-LNX3345.00 - GRPRAR 345KV CKT Z	720	720	0.04284	112.6099	GEN336152 1-WATERFORD UNIT#2
FDNS	00NR	5	17SP	G15_076	TO->FROM	GRPRAR1-LNX3345.00 - GRPRAR 345KV CKT Z	720	720	0.04284	112.6096	GEN336151 1-WATERFORD UNIT#1
FDNS	00NR	5	17SP	G15_076	TO->FROM	GRPRAR1-LNX3345.00 - GRPRAR 345KV CKT Z	720	720	0.04284	112.6035	BISMARK - WEBER 230KV CKT 1
FDNS	00NR	5	17SP	G15_076	TO->FROM	GRPRAR1-LNX3345.00 - GRPRAR 345KV CKT Z	720	720	0.04284	112.6031	GEN641089 2-ENERGY CENTER 2
FDNS	00NR	5	17SP	G15_076	TO->FROM	GRPRAR1-LNX3345.00 - GRPRAR 345KV CKT Z	720	720	0.04332	112.6028	SIDNEY - SIDNEY TRANSFORMER 230KV CKT 1
FDNS	00NR	5	17SP	G15_076	TO->FROM	GRPRAR1-LNX3345.00 - GRPRAR 345KV CKT Z	720	720	0.04332	112.6027	SIDNEY (SDQ KV2A) 345/230/13.8KV TRANSFORMER CKT 1
FDNS	00NR	5	17SP	G15_076	TO->FROM	GRPRAR1-LNX3345.00 - GRPRAR 345KV CKT Z	720	720	0.04332	112.6026	P13:230-345:NPPD:SIDNEY 3:KV2A
FDNS	00NR	5	17SP	G15_076	TO->FROM	GRPRAR1-LNX3345.00 - GRPRAR 345KV CKT Z	720	720	0.04885	112.5991	BLOOMFIELD - CREIGHTON 115KV CKT 1
FDNS	00NR	5	17SP	G15_076	TO->FROM	GRPRAR1-LNX3345.00 - GRPRAR 345KV CKT Z	720	720	0.04335	112.598	P13:115-230:TSGT:SIDNEY-KV1A
FDNS	00NR	5	17SP	G15_076	TO->FROM	GRPRAR1-LNX3345.00 - GRPRAR 345KV CKT Z	720	720	0.04199	112.5976	LAKEFIELD 3 - LKFLDXL3 345KV CKT 1
FDNS	00NR	5	17SP	G15_076	TO->FROM	GRPRAR1-LNX3345.00 - GRPRAR 345KV CKT Z	720	720	0.04284	112.5917	GEN303008 1-1BC2 U3
FDNS	00NR	5	17SP	G15_076	TO->FROM	GRPRAR1-LNX3345.00 - GRPRAR 345KV CKT Z	720	720	0.04284	112.5902	JAMES TOWN - WEBER 230KV CKT 1
FDNS	00NR	5	17SP	G15_076	TO->FROM	GRPRAR1-LNX3345.00 - GRPRAR 345KV CKT Z	720	720	0.04284	112.5864	GEN336170 1-GULF OXY U4
FDNS	00NR	5	17SP	G15_076	TO->FROM	GRPRAR1-LNX3345.00 - GRPRAR 345KV CKT Z	720	720	0.04284	112.574	GEN562921 1-G15054_2 0.6900
FDNS	00NR	5	17SP	G15_076	TO->FROM	GRPRAR1-LNX3345.00 - GRPRAR 345KV CKT Z	720	720	0.04283	112.5529	ELM CREEK - MONTICELLO 345KV CKT 1
FDNS	00NR	5	17SP	G15_076	TO->FROM	GRPRAR1-LNX3345.00 - GRPRAR 345KV CKT Z	720	720	0.04284	112.5394	GEN562596 1-G14_059_3 0.6900
FDNS	00NR	5	17SP	G15_076	TO->FROM	GRPRAR1-LNX3345.00 - GRPRAR 345KV CKT Z	720	720	0.04284	112.5201	GEN501811 1-RODEMACHER UNIT 1
FDNS	00NR	5	17SP	G15_076	TO->FROM	GRPRAR1-LNX3345.00 - GRPRAR 345KV CKT Z	720	720	0.04258	112.5192	MT VERN - STORLA 115KV CKT 1
FDNS	00NR	5	17SP	G15_076	TO->FROM	GRPRAR1-LNX3345.00 - GRPRAR 345KV CKT Z	720	720	0.04296	112.5171	ARKANSAS NUCLEAR ONE - FT SMITH 500KV CKT 1
FDNS	00NR	5	17SP	G15_076	TO->FROM	GRPRAR1-LNX3345.00 - GRPRAR 345KV CKT Z	720	720	0.04296	112.5171	ARKANSAS NUCLEAR ONE - FT SMITH 500KV CKT 1
FDNS	00NR	5	17SP	G15_076	TO->FROM	GRPRAR1-LNX3345.00 - GRPRAR 345KV CKT Z	720	720	0.04885	112.516	BLOOMFIELD - GAVINS POINT 115KV CKT 1
FDNS	00NR	5	17SP	G15_076	TO->FROM	GRPRAR1-LNX3345.00 - GRPRAR 345KV CKT Z	720	720	0.04286	112.5085	AUDUBON - SHEYNNE 230KV CKT 1
FDNS	00NR	5	17SP	G15_076	TO->FROM	GRPRAR1-LNX3345.00 - GRPRAR 345KV CKT Z	720	720	0.04288	112.4972	FERGSFL4 230.00 - GRE-SILVRLK4230.00 230KV CKT 1
FDNS	00NR	5	17SP	G15_076	TO->FROM	GRPRAR1-LNX3345.00 - GRPRAR 345KV CKT Z	720	720	0.04284	112.4939	PRAIRIE ISLAND 345/20.0KV TRANSFORMER CKT 1
FDNS	00NR	5	17SP	G15_076	TO->FROM	GRPRAR1-LNX3345.00 - GRPRAR 345KV CKT Z	720	720	0.04284	112.4927	PRAIRIE ISLAND 345/20.0KV TRANSFORMER CKT 2
FDNS	00NR	5	17SP	G15_076	TO->FROM	GRPRAR1-LNX3345.00 - GRPRAR 345KV CKT Z	720	720	0.04284	112.4912	BALTA - RAMSEY 230KV CKT 1
FDNS	00NR	5	17SP	G15_076	TO->FROM	GRPRAR1-LNX3345.00 - GRPRAR 345KV CKT Z	720	720	0.04256	112.4849	FT THOMPSON - HURON 230KV CKT 1
FDNS	00NR	5	17SP	G15_076	TO->FROM	GRPRAR1-LNX3345.00 - GRPRAR 345KV CKT Z	720	720	0.04256	112.4849	FT THOMPSON - HURON 230KV CKT 1
FDNS	00NR	5	17SP	G15_076	TO->FROM	GRPRAR1-LNX3345.00 - GRPRAR 345KV CKT Z	720	720	0.04256	112.4849	FT THOMPSON - HURON 230KV CKT 2
FDNS	00NR	5	17SP	G15_076	TO->FROM	GRPRAR1-LNX3345.00 - GRPRAR 345KV CKT Z	720	720	0.04256	112.4849	FT THOMPSON - HURON 230KV CKT 2
FDNS	00NR	5	17SP	G15_076	TO->FROM	GRPRAR1-LNX3345.00 - GRPRAR 345KV CKT Z	720	720	0.04284	112.4804	GEN532751 1-WOLF CREEK GENERATING STATION UNIT 1
FDNS	00NR	5	17SP	G15_076	TO->FROM	GRPRAR1-LNX3345.00 - GRPRAR 345KV CKT Z	720	720	0.04337	112.4723	P12:115:NPPD:WAPA1:CHADRON7:BOXBUTE7:BTB
FDNS	00NR	5	17SP	G15_076	TO->FROM	GRPRAR1-LNX3345.00 - GRPRAR 345KV CKT Z	720	720	0.04284	112.4584	TOLK STATION EAST 230/24.0KV TRANSFORMER CKT 1
FDNS	00NR	5	17SP	G15_076	TO->FROM	GRPRAR1-LNX3345.00 - GRPRAR 345KV CKT Z	720	720	0.04281	112.457	DKSN_CO5 161.00 - TRIBOJI NO1 + NO2 161KV CKT 1
FDNS	00NR	5	17SP	G15_076	TO->FROM	GRPRAR1-LNX3345.00 - GRPRAR 345KV CKT Z	720	720	0.04315	112.4548	CHADRON - WAYSIDE 115KV CKT 1
FDNS	00NR	5	17SP	G15_076	TO->FROM	GRPRAR1-LNX3345.00 - GRPRAR 345KV CKT Z	720	720	0.04315	112.4548	P13:115-230:NPPD:WAYSIDE4:T1
FDNS	00NR	5	17SP	G15_076	TO->FROM	GRPRAR1-LNX3345.00 - GRPRAR 345KV CKT Z	720	720	0.04315	112.454	WAYSIDE (WAYSIDE T1) 230/115/13.8KV TRANSFORMER CKT 1
FDNS	00NR	5	17SP	G15_076	TO->FROM	GRPRAR1-LNX3345.00 - GRPRAR 345KV CKT Z	720	720	0.04288	112.4532	GRE-SILVRLK4230.00 - HENNING 230KV CKT 1
FDNS	00NR	5	17SP	G15_076	TO->FROM	GRPRAR1-LNX3345.00 - GRPRAR 345KV CKT Z	720	720	0.04285	112.4449	BIG STONE (230/115) 230/115/13.8KV TRANSFORMER CKT 1
FDNS	00NR	5	17SP	G15_076	TO->FROM	GRPRAR1-LNX3345.00 - GRPRAR 345KV CKT Z	720	720	0.04284	112.4427	GEN334071 1-LEWIS CREEK 2
FDNS	00NR	5	17SP	G15_076	TO->FROM	GRPRAR1-LNX3345.00 - GRPRAR 345KV CKT Z	720	720	0.04284	112.4379	GEN334070 1-LEWIS CREEK 1
FDNS	00NR	5	17SP	G15_076	TO->FROM	GRPRAR1-LNX3345.00 - GRPRAR 345KV CKT Z	720	720	0.04284	112.4375	GEN337766 1-TRACTEBEL UNIT S1
FDNS	00NR	5	17SP	G15_076	TO->FROM	GRPRAR1-LNX3345.00 - GRPRAR 345KV CKT Z	720	720	0.04284	112.4345	LAWRENCE ENERGY CENTER UNIT 5 230/24.0KV TRANSFORMER CKT 1
FDNS	00NR	5	17SP	G15_076	TO->FROM	GRPRAR1-LNX3345.00 - GRPRAR 345KV CKT Z	720	720	0.04284	112.4344	LAWRENCE ENERGY CENTER UNIT 5 - LAWRENCE HILL 230KV CKT 1
FDNS	00NR	5	17SP	G15_076	TO->FROM	GRPRAR1-LNX3345.00 - GRPRAR 345KV CKT Z	720	720	0.04373	112.4216	NOBLES - SPLIT ROCK 345KV CKT 1
FDNS	00NR	5	17SP	G15_076	TO->FROM	GRPRAR1-LNX3345.00 - GRPRAR 345KV CKT Z	720	720	0.04285	112.4199	PRAIRIE - WINGER 230KV CKT 1
FDNS	00NR	5	17SP	G15_076	TO->FROM	GRPRAR1-LNX3345.00 - GRPRAR 345KV CKT Z	720	720	0.04284	112.4095	GEN659118 1-LARAMIE RIVER UNIT1
FDNS	00NR	5	17SP	G15_076	TO->FROM	GRPRAR1-LNX3345.00 - GRPRAR 345KV CKT Z	720	720	0.04337	112.4045	P12:115:NPPD:WAPA2:HEMINGF7:SNAKECK7:BTB
FDNS	00NR	5	17SP	G15_076	TO->FROM	GRPRAR1-LNX3345.00 - GRPRAR 345KV CKT Z	720	720	0.04337	112.3992	CHADRON - DUNLAP 115KV CKT 1
FDNS	00NR	5	17SP	G15_076	TO->FROM	GRPRAR1-LNX3345.00 - GRPRAR 345KV CKT Z	720	720	0.04247	112.3983	HURON WEST PARK - MITCHELL NW 115KV CKT 1
FDNS	00NR	5	17SP	G15_076	TO->FROM	GRPRAR1-LNX3345.00 - GRPRAR 345KV CKT Z	720	720	0.04247	112.3983	HURON WEST PARK - MITCHELL NW 115KV CKT 1
FDNS	00NR	5	17SP	G15_076	TO->FROM	GRPRAR1-LNX3345.00 - GRPRAR 345KV CKT Z	720	720	0.04284	112.3981	GEN501910 1-ACADIA UNIT ST1
FDNS	00NR	5	17SP	G15_076	TO->FROM	GRPRAR1-LNX3345.00 - GRPRAR 345KV CKT Z	720	720	0.04288	112.3921	HENNING - INMANN 230KV CKT 1
FDNS	00NR	5	17SP	G15_076	TO->FROM	GRPRAR1-LNX3345.00 - GRPRAR 345KV CKT Z	720	720	0.04288	112.3921	LELAND OLDS - STANTON 230KV CKT 1
FDNS	00NR	5	17SP	G15_076	TO->FROM	GRPRAR1-LNX3345.00 - GRPRAR 345KV CKT Z	720	720	0.04288	112.3921	LELAND OLDS - STANTON 230KV CKT 1
FDNS	00NR	5	17SP	G15_076	TO->FROM	GRPRAR1-LNX3345.00 - GRPRAR 345KV CKT Z	720	720	0.04324	112.3814	PALXFRASBTHI

SOLUTION	GROUP	SCENARIO	SEASON	SOURCE	DIRECTION	MONITORED ELEMENT	RATEA (MVA)	RATEB(MVA)	TDF	TC%LOADING (% MVA)	CONTINGENCY
FDNS	00NR	5	17SP	G15_076	TO->FROM	GRPRAR1-LNX3345.00 - GRPRAR 345KV CKT Z	720	720	0.04115	112.3806	FT RANDAL - WHITE SWAN 115KV CKT 1
FDNS	00NR	5	17SP	G15_076	TO->FROM	GRPRAR1-LNX3345.00 - GRPRAR 345KV CKT Z	720	720	0.04344	112.3665	EAGLE - PHILIP 115KV CKT 1
FDNS	00NR	5	17SP	G15_076	TO->FROM	GRPRAR1-LNX3345.00 - GRPRAR 345KV CKT Z	720	720	0.04282	112.3613	GROTON (GROTON KU2A) 345/115/13.8KV TRANSFORMER CKT 1
FDNS	00NR	5	17SP	G15_076	TO->FROM	GRPRAR1-LNX3345.00 - GRPRAR 345KV CKT Z	720	720	0.04324	112.361	7PALM TAP 345.00 - SUB T 345KV CKT 1
FDNS	00NR	5	17SP	G15_076	TO->FROM	GRPRAR1-LNX3345.00 - GRPRAR 345KV CKT Z	720	720	0.04284	112.3588	GEN345765 H-1SIOUX 2 18.000
FDNS	00NR	5	17SP	G15_076	TO->FROM	GRPRAR1-LNX3345.00 - GRPRAR 345KV CKT Z	720	720	0.04115	112.3489	TYNDALL - WHITE SWAN 115KV CKT 1
FDNS	00NR	5	17SP	G15_076	TO->FROM	GRPRAR1-LNX3345.00 - GRPRAR 345KV CKT Z	720	720	0.04291	112.3431	GRANT - MITCHELL 115KV CKT 1
FDNS	00NR	5	17SP	G15_076	TO->FROM	GRPRAR1-LNX3345.00 - GRPRAR 345KV CKT Z	720	720	0.04291	112.3431	GRANT - MITCHELL 115KV CKT 1
FDNS	00NR	5	17SP	G15_076	TO->FROM	GRPRAR1-LNX3345.00 - GRPRAR 345KV CKT Z	720	720	0.04362	112.3421	DENISON - SIOUX CITY 230KV CKT 1
FDNS	00NR	5	17SP	G15_076	TO->FROM	GRPRAR1-LNX3345.00 - GRPRAR 345KV CKT Z	720	720	0.04284	112.3408	GEN337764 1-TRACTEBEL UNIT C1
FDNS	00NR	5	17SP	G15_076	TO->FROM	GRPRAR1-LNX3345.00 - GRPRAR 345KV CKT Z	720	720	0.04284	112.3408	GEN337765 1-TRACTEBEL UNIT C2
FDNS	00NR	5	17SP	G15_076	TO->FROM	GRPRAR1-LNX3345.00 - GRPRAR 345KV CKT Z	720	720	0.04287	112.3401	AUDUBON - HUBBARD 230KV CKT 1
FDNS	00NR	5	17SP	G15_076	TO->FROM	GRPRAR1-LNX3345.00 - GRPRAR 345KV CKT Z	720	720	0.04275	112.3372	CLEARWATER - ONEILL 115KV CKT 1
FDNS	00NR	5	17SP	G15_076	TO->FROM	GRPRAR1-LNX3345.00 - GRPRAR 345KV CKT Z	720	720	0.04287	112.3335	KARLSTAD - WINGER 230KV CKT 1
FDNS	00NR	5	17SP	G15_076	TO->FROM	GRPRAR1-LNX3345.00 - GRPRAR 345KV CKT Z	720	720	0.04294	112.333	GENOA 161 - SENECA 161 161KV CKT 1
FDNS	00NR	5	17SP	G15_076	TO->FROM	GRPRAR1-LNX3345.00 - GRPRAR 345KV CKT Z	720	720	0.04284	112.3317	GEN345756 H-1SIOUX 1 18.000
FDNS	00NR	5	17SP	G15_076	TO->FROM	GRPRAR1-LNX3345.00 - GRPRAR 345KV CKT Z	720	720	0.05532	112.3186	BELDEN - HOSKINS 115KV CKT 1
FDNS	00NR	5	17SP	G15_076	TO->FROM	GRPRAR1-LNX3345.00 - GRPRAR 345KV CKT Z	720	720	0.04284	112.3186	GEN562912 1-G15053_3 0.6900
FDNS	00NR	5	17SP	G15_076	TO->FROM	GRPRAR1-LNX3345.00 - GRPRAR 345KV CKT Z	720	720	0.04384	112.3165	PLYMOUTH - SIOUX CITY 161KV CKT 1
FDNS	00NR	5	17SP	G15_076	TO->FROM	GRPRAR1-LNX3345.00 - GRPRAR 345KV CKT Z	720	720	0.04384	112.3165	PLYMOUTH - SIOUX CITY 161KV CKT 1
FDNS	00NR	5	17SP	G15_076	TO->FROM	GRPRAR1-LNX3345.00 - GRPRAR 345KV CKT Z	720	720	0.03933	112.3154	P12:115:UMZW:# 1910 #: YJ IN SD. YJ-UJ LINE FAULT
FDNS	00NR	5	17SP	G15_076	TO->FROM	GRPRAR1-LNX3345.00 - GRPRAR 345KV CKT Z	720	720	0.03933	112.3153	NAPA JCT7 115.00 - UTICA 115KV CKT 1
FDNS	00NR	5	17SP	G15_076	TO->FROM	GRPRAR1-LNX3345.00 - GRPRAR 345KV CKT Z	720	720	0.03933	112.3153	NAPA JCT7 115.00 - UTICA 115KV CKT 1
FDNS	00NR	5	17SP	G15_076	TO->FROM	GRPRAR1-LNX3345.00 - GRPRAR 345KV CKT Z	720	720	0.03933	112.3121	NAPA JCT7 115.00 - YANKON JCT 115KV CKT 1
FDNS	00NR	5	17SP	G15_076	TO->FROM	GRPRAR1-LNX3345.00 - GRPRAR 345KV CKT Z	720	720	0.03933	112.3121	NAPA JCT7 115.00 - YANKON JCT 115KV CKT 1
FDNS	00NR	5	17SP	G15_076	TO->FROM	GRPRAR1-LNX3345.00 - GRPRAR 345KV CKT Z	720	720	0.04284	112.3101	PRAIRIE - RAMSEY 230KV CKT 1
FDNS	00NR	5	17SP	G15_076	TO->FROM	GRPRAR1-LNX3345.00 - GRPRAR 345KV CKT Z	720	720	0.04292	112.3071	NORTH LA CROSSE - NORTH ROCHESTER 345KV CKT 1
FDNS	00NR	5	17SP	G15_076	TO->FROM	GRPRAR1-LNX3345.00 - GRPRAR 345KV CKT Z	720	720	0.04281	112.3057	DKSN_CO5 161.00 - LAKEFIELD 5 NO1 + NO 2 161KV CKT 1
FDNS	00NR	5	17SP	G15_076	TO->FROM	GRPRAR1-LNX3345.00 - GRPRAR 345KV CKT Z	720	720	0.04284	112.305	GEN336221 1-LITTLE GYPSY UNIT#1
FDNS	00NR	5	17SP	G15_076	TO->FROM	GRPRAR1-LNX3345.00 - GRPRAR 345KV CKT Z	720	720	0.04284	112.305	GEN636641 1-LOUISA UNIT 1
FDNS	00NR	5	17SP	G15_076	TO->FROM	GRPRAR1-LNX3345.00 - GRPRAR 345KV CKT Z	720	720	0.04303	112.3039	HAMPTON CORNER - NORTH ROCHESTER 345KV CKT 1
FDNS	00NR	5	17SP	G15_076	TO->FROM	GRPRAR1-LNX3345.00 - GRPRAR 345KV CKT Z	720	720	0.04284	112.3031	JUDSON LARGE 115/15.0KV TRANSFORMER CKT 1
FDNS	00NR	5	17SP	G15_076	TO->FROM	GRPRAR1-LNX3345.00 - GRPRAR 345KV CKT Z	720	720	0.04284	112.3031	JUDSON LARGE 115/15.0KV TRANSFORMER CKT 1
FDNS	00NR	5	17SP	G15_076	TO->FROM	GRPRAR1-LNX3345.00 - GRPRAR 345KV CKT Z	720	720	0.04284	112.302	GRAND GULF 500/22.0KV TRANSFORMER CKT 1
FDNS	00NR	5	17SP	G15_076	TO->FROM	GRPRAR1-LNX3345.00 - GRPRAR 345KV CKT Z	720	720	0.04344	112.3018	EAGLE - MARTIN 115KV CKT 1
FDNS	00NR	5	17SP	G15_076	TO->FROM	GRPRAR1-LNX3345.00 - GRPRAR 345KV CKT Z	720	720	0.04284	112.2973	GEN336242 1-1NMIL ST1 18.000
FDNS	00NR	5	17SP	G15_076	TO->FROM	GRPRAR1-LNX3345.00 - GRPRAR 345KV CKT Z	720	720	0.04284	112.2973	GEN337757 1-DUKE HOTSPRINGS STG1
FDNS	00NR	5	17SP	G15_076	TO->FROM	GRPRAR1-LNX3345.00 - GRPRAR 345KV CKT Z	720	720	0.04284	112.2923	GEN334432 1-SABINE UNIT 2
FDNS	00NR	5	17SP	G15_076	TO->FROM	GRPRAR1-LNX3345.00 - GRPRAR 345KV CKT Z	720	720	0.04284	112.2922	GEN334431 1-SABINE UNIT 1
FDNS	00NR	5	17SP	G15_076	TO->FROM	GRPRAR1-LNX3345.00 - GRPRAR 345KV CKT Z	720	720	0.04295	112.286	FRANKS - HUBEN 345KV CKT 1
FDNS	00NR	5	17SP	G15_076	TO->FROM	GRPRAR1-LNX3345.00 - GRPRAR 345KV CKT Z	720	720	0.04337	112.2825	BOXBUTE7 115.00 - DUNLAP 115KV CKT 1
FDNS	00NR	5	17SP	G15_076	TO->FROM	GRPRAR1-LNX3345.00 - GRPRAR 345KV CKT Z	720	720	0.04284	112.2723	GEN334030 1-FRONTIER UNIT 1
FDNS	00NR	5	17SP	G15_076	TO->FROM	GRPRAR1-LNX3345.00 - GRPRAR 345KV CKT Z	720	720	0.04284	112.2721	GEN334031 1-FRONTIER UNIT 2
FDNS	00NR	5	17SP	G15_076	TO->FROM	GRPRAR1-LNX3345.00 - GRPRAR 345KV CKT Z	720	720	0.04284	112.2718	GEN345832 1-1TS G1 13.800
FDNS	00NR	5	17SP	G15_076	TO->FROM	GRPRAR1-LNX3345.00 - GRPRAR 345KV CKT Z	720	720	0.04284	112.2715	GEN336446 1-MICHOUD UNIT #2
FDNS	00NR	5	17SP	G15_076	TO->FROM	GRPRAR1-LNX3345.00 - GRPRAR 345KV CKT Z	720	720	0.04284	112.2715	GEN345841 2-1TS G2 13.800
FDNS	00NR	5	17SP	G15_076	TO->FROM	GRPRAR1-LNX3345.00 - GRPRAR 345KV CKT Z	720	720	0.04284	112.2658	OKLAUN 345/24.0KV TRANSFORMER CKT 1
FDNS	00NR	5	17SP	G15_076	TO->FROM	GRPRAR1-LNX3345.00 - GRPRAR 345KV CKT Z	720	720	0.04284	112.2581	GEN501970 1-EVANGELINE UNIT 7
FDNS	00NR	5	17SP	G15_076	TO->FROM	GRPRAR1-LNX3345.00 - GRPRAR 345KV CKT Z	720	720	0.04284	112.2365	GEN562438 1-G13-032 0.6900
FDNS	00NR	5	17SP	G15_076	TO->FROM	GRPRAR1-LNX3345.00 - GRPRAR 345KV CKT Z	720	720	0.04275	112.2336	P12:115:NPPD:1164:ONEILL 7:JEFFREY9:BTB
FDNS	00NR	5	20SP	G15_076	TO->FROM	GRPRAR1-LNX3345.00 - GRPRAR 345KV CKT Z	720	720	0.04633	112.1553	KELLY - MEADOWGROVE4230.00 230KV CKT 1
FDNS	00NR	5	17SP	G15_076	TO->FROM	GRPRAR1-LNX3345.00 - GRPRAR 345KV CKT Z	720	720	0.04284	112.1362	GEN563282 1-G15094_3 0.6900
FDNS	00NR	5	17SP	G15_076	TO->FROM	GRPRAR1-LNX3345.00 - GRPRAR 345KV CKT Z	720	720	0.04284	111.7843	BASE CASE
FDNS	00NR	5	20SP	G15_076	TO->FROM	GRPRAR1-LNX3345.00 - GRPRAR 345KV CKT Z	720	720	0.03885	111.5734	P12:230:UMZB:# 116 #: ST IN SD. WSG-ST-VH
FDNS	00NR	5	17SP	G15_076	TO->FROM	GRPRAR1-LNX3345.00 - GRPRAR 345KV CKT Z	720	720	0.04303	111.4483	BUCKNER7 345.00 - SPEARVILLE 345KV CKT 1
FDNS	00NR	5	17SP	G15_076	TO->FROM	GRPRAR1-LNX3345.00 - GRPRAR 345KV CKT Z	720	720	0.04303	111.4483	BUCKNER7 345.00 - SPEARVILLE 345KV CKT 1
FDNS	00NR	5	17SP	G15_076	TO->FROM	GRPRAR1-LNX3345.00 - GRPRAR 345KV CKT Z	720	720	0.04377	111.3486	103RD & ROKEBY - MOORE 345KV CKT 1
FDNS	00NR	5	17SP	G15_076	TO->FROM	GRPRAR1-LNX3345.00 - GRPRAR 345KV CKT Z	720	720	0.04377	111.3486	103RD & ROKEBY - MOORE 345KV CKT 1
FDNS	00NR	5	17SP	G15_076	TO->FROM	GRPRAR1-LNX3345.00 - GRPRAR 345KV CKT Z	720	720	0.04304	111.3312	FT THOMPSON - OAHE 230KV CKT 1
FDNS	00NR	5	17SP	G15_076	TO->FROM	GRPRAR1-LNX3345.00 - GRPRAR 345KV CKT Z	720	720	0.04304	111.3312	FT THOMPSON - OAHE 230KV CKT 1
FDNS	00NR	5	17SP	G15_076	TO->FROM	GRPRAR1-LNX3345.00 - GRPRAR 345KV CKT Z	720	720	0.04304	111.3312	FT THOMPSON - OAHE 230KV CKT 2
FDNS	00NR	5	17SP	G15_076	TO->FROM	GRPRAR1-LNX3345.00 - GRPRAR 345KV CKT Z	720	720	0.04304	111.3312	FT THOMPSON - OAHE 230KV CKT 2
FDNS	00NR	5	17SP	G15_076	TO->FROM	GRPRAR1-LNX3345.00 - GRPRAR 345KV CKT Z	720	720	0.04284	111.3097	GEN652546 1-FT RANDAL
FDNS	00NR	5	25SP	G15_076	TO->FROM	GRPRAR1-LNX3345.00 - GRPRAR 345KV CKT Z	720	720	0.04668	111.2876	KELLY - MEADOWGROVE4230.00 230KV CKT 1
FDNS	00NR	5	17SP	G15_076	TO->FROM	GRPRAR1-LNX3345.00 - GRPRAR 345KV CKT Z	720	720	0.04284	111.2767	MITCHLCO3 345.00 345/34.5KV TRANSFORMER CKT 1
FDNS	00NR	5	17SP	G15_076	TO->FROM	GRPRAR1-LNX3345.00 - GRPRAR 345KV CKT Z	720	720	0.04304	111.2737	FT THOMPSON - OAHE 230KV CKT 3
FDNS	00NR	5	17SP	G15_076	TO->FROM	GRPRAR1-LNX3345.00 - GRPRAR 345KV CKT Z	720	720	0.04304	111.2737	FT THOMPSON - OAHE 230KV CKT 3
FDNS	00NR	5	17SP	G15_076	TO->FROM	GRPRAR1-LNX3345.00 - GRPRAR 345KV CKT Z	720	720	0.04304	111.2737	FT THOMPSON - OAHE 230KV CKT 4
FDNS	00NR	5	17SP	G15_076	TO->FROM	GRPRAR1-LNX3345.00 - GRPRAR 345KV CKT Z	720	720	0.04304	111.2737	FT THOMPSON - OAHE 230KV CKT 4
FDNS	00NR	5	17SP	G15_076	TO->FROM	GRPRAR1-LNX3345.00 - GRPRAR 345KV CKT Z	720	720	0.04284	111.2676	GEN672347 1-CORY COGEN GENERATOR 1 GT1
FDNS	00NR	5	17SP	G15_076	TO->FROM	GRPRAR1-LNX3345.00 - GRPRAR 345KV CKT Z	720	720	0.04284	111.2676	GEN672348 2-CORY COGEN GENERATOR 2 GT2
FDNS	00NR	5	17SP	G15_076	TO->FROM	GRPRAR1-LNX3345.00 - GRPRAR 345KV CKT Z	720	720	0.04225	111.263	NELIGH - PETERSBRG.N7115.00 115KV CKT 1
FDNS	00NR	5	17SP	G15_076	TO->FROM	GRPRAR1-LNX3345.00 - GRPRAR 345KV CKT Z	720	720	0.04284	111.2612	GEN600018 S-LS POWER STEAM
FDNS	00NR	5	17SP	G15_076	TO->FROM	GRPRAR1-LNX3345.00 - GRPRAR 345KV CKT Z	720	720	0.043	111.2574	POST ROCK (POSTROCK T1) 345/230/13.8KV TRANSFORMER CKT 1
FDNS	00NR	5	17SP	G15_076	TO->FROM	GRPRAR1-LNX3345.00 - GRPRAR 345KV CKT Z	720	720	0.04467	111.2569	NUNDRWD - PHILIP TAP 230KV CKT 1
FDNS	00NR	5	17SP	G15_076	TO->FROM	GRPRAR1-LNX3345.00 - GRPRAR 345KV CKT Z	720	720	0.04284	111.2553	GEN300003 1-THOMAS HILL UNIT 3
FDNS	00NR	5	17SP	G15_076	TO->FROM	GRPRAR1-LNX3345.00 - GRPRAR 345KV CKT Z	720	720	0.03196	111.2534	SIOUX CITY - TWINCH 3 345.00 345KV CKT 1
FDNS	00NR	5	17SP	G15_076	TO->FROM	GRPRAR1-LNX3345.00 - GRPRAR 345KV CKT Z	720	720	0.04296	111.2522	G11_051T 345.00 - WOODWARD DISTRICT EHV 345KV CKT 1
FDNS	00NR	5	17SP	G15_076	TO->FROM	GRPRAR1-LNX3345.00 - GRPRAR 345KV CKT Z	720	720	0.04284	111.2487	GEN659158 2-PIONEER G213.800

SOLUTION	GROUP	SCENARIO	SEASON	SOURCE	DIRECTION	MONITORED ELEMENT	RATEA (MVA)	RATEB(MVA)	TDF	TC%LOADING (% MVA)	CONTINGENCY
FDNS	00NR	5	17SP	G15_076	TO->FROM	GRPRAR1-LNX3345.00 - GRPRAR 345KV CKT Z	720	720	0.04284	111.2487	GEN659159 3-PIONEER G313.800
FDNS	00NR	5	17SP	G15_076	TO->FROM	GRPRAR1-LNX3345.00 - GRPRAR 345KV CKT Z	720	720	0.04284	111.2412	GEN659156 2-LONESMCRK 2G13.800
FDNS	00NR	5	17SP	G15_076	TO->FROM	GRPRAR1-LNX3345.00 - GRPRAR 345KV CKT Z	720	720	0.04284	111.2412	GEN659157 3-LONESMCRK 3G13.800
FDNS	00NR	5	17SP	G15_076	TO->FROM	GRPRAR1-LNX3345.00 - GRPRAR 345KV CKT Z	720	720	0.04323	111.2329	P12:115:UMZW:# 172 #: WI IN SD.
FDNS	00NR	5	17SP	G15_076	TO->FROM	GRPRAR1-LNX3345.00 - GRPRAR 345KV CKT Z	720	720	0.0428	111.2323	G14-021T 345.00 - MULLNCR7 345.00 345KV CKT 1
FDNS	00NR	5	17SP	G15_076	TO->FROM	GRPRAR1-LNX3345.00 - GRPRAR 345KV CKT Z	720	720	0.0428	111.232	G15-005T 345.00 - MULLNCR7 345.00 345KV CKT 1
FDNS	00NR	5	17SP	G15_076	TO->FROM	GRPRAR1-LNX3345.00 - GRPRAR 345KV CKT Z	720	720	0.04284	111.2311	GEN590010 1-ERCOT EQUIVALENCE
FDNS	00NR	5	17SP	G15_076	TO->FROM	GRPRAR1-LNX3345.00 - GRPRAR 345KV CKT Z	720	720	0.04284	111.2298	GEN652548 5-FT RANDAL
FDNS	00NR	5	17SP	G15_076	TO->FROM	GRPRAR1-LNX3345.00 - GRPRAR 345KV CKT Z	720	720	0.04284	111.2298	GEN652549 7-FT RANDAL
FDNS	00NR	5	17SP	G15_076	TO->FROM	GRPRAR1-LNX3345.00 - GRPRAR 345KV CKT Z	720	720	0.04284	111.2265	GEN672367 1-MERIDIAN GENERATOR 1 GT1
FDNS	00NR	5	17SP	G15_076	TO->FROM	GRPRAR1-LNX3345.00 - GRPRAR 345KV CKT Z	720	720	0.04284	111.2265	GEN672368 2-MERIDIAN GENERATOR 2 GT2
FDNS	00NR	5	17SP	G15_076	TO->FROM	GRPRAR1-LNX3345.00 - GRPRAR 345KV CKT Z	720	720	0.04284	111.2234	GEN600021 3-ANGUS ANSON2
FDNS	00NR	5	17SP	G15_076	TO->FROM	GRPRAR1-LNX3345.00 - GRPRAR 345KV CKT Z	720	720	0.04312	111.2213	LARAMIE RIVER - STEGALL 345KV CKT 1
FDNS	00NR	5	17SP	G15_076	TO->FROM	GRPRAR1-LNX3345.00 - GRPRAR 345KV CKT Z	720	720	0.04287	111.2198	P12:115:UMZZ:# 232 #: AB IN SD. ABERDEEN A TAP BETWEEN ELLENDALE AND ABERDEEN-SIEBRECHT.
FDNS	00NR	5	17SP	G15_076	TO->FROM	GRPRAR1-LNX3345.00 - GRPRAR 345KV CKT Z	720	720	0.04284	111.2198	GEN600020 2-ANGUS ANSON1
FDNS	00NR	5	17SP	G15_076	TO->FROM	GRPRAR1-LNX3345.00 - GRPRAR 345KV CKT Z	720	720	0.04284	111.2195	GEN652547 3-FT RANDAL
FDNS	00NR	5	17SP	G15_076	TO->FROM	GRPRAR1-LNX3345.00 - GRPRAR 345KV CKT Z	720	720	0.04284	111.2136	GEN672352 3-NIPAWIN GENERATOR 3
FDNS	00NR	5	17SP	G15_076	TO->FROM	GRPRAR1-LNX3345.00 - GRPRAR 345KV CKT Z	720	720	0.04284	111.2135	GEN672350 1-NIPAWIN GENERATOR 1
FDNS	00NR	5	17SP	G15_076	TO->FROM	GRPRAR1-LNX3345.00 - GRPRAR 345KV CKT Z	720	720	0.04284	111.2135	GEN672351 2-NIPAWIN GENERATOR 2
FDNS	00NR	5	17SP	G15_076	TO->FROM	GRPRAR1-LNX3345.00 - GRPRAR 345KV CKT Z	720	720	0.04284	111.2055	GEN590011 2-ERCOT EQUIVALENCE
FDNS	00NR	5	17SP	G15_076	TO->FROM	GRPRAR1-LNX3345.00 - GRPRAR 345KV CKT Z	720	720	0.04284	111.2002	GEN672349 3-CORY COGEN GENERATOR 3 ST
FDNS	00NR	5	17SP	G15_076	TO->FROM	GRPRAR1-LNX3345.00 - GRPRAR 345KV CKT Z	720	720	0.04284	111.1963	GEN620324 3-HOOT LAKE 3 GEN
FDNS	00NR	5	17SP	G15_076	TO->FROM	GRPRAR1-LNX3345.00 - GRPRAR 345KV CKT Z	720	720	0.04284	111.1935	EASTDC - ERCOT EQUIVALENCE 345KV CKT 1
FDNS	00NR	5	17SP	G15_076	TO->FROM	GRPRAR1-LNX3345.00 - GRPRAR 345KV CKT Z	720	720	0.04284	111.1935	ERCOT EQUIVALENCE 345/24.0KV TRANSFORMER CKT 1
FDNS	00NR	5	17SP	G15_076	TO->FROM	GRPRAR1-LNX3345.00 - GRPRAR 345KV CKT Z	720	720	0.04284	111.1916	GEN657964 1-ASH2GEN9 0.5750
FDNS	00NR	5	17SP	G15_076	TO->FROM	GRPRAR1-LNX3345.00 - GRPRAR 345KV CKT Z	720	720	0.0428	111.1855	G15-005T 345.00 - SIBLEY 345KV CKT 1
FDNS	00NR	5	17SP	G15_076	TO->FROM	GRPRAR1-LNX3345.00 - GRPRAR 345KV CKT Z	720	720	0.04462	111.1831	BATTLE CREEK - COUNTY LINE 115KV CKT 1
FDNS	00NR	5	17SP	G15_076	TO->FROM	GRPRAR1-LNX3345.00 - GRPRAR 345KV CKT Z	720	720	0.04284	111.1756	GEN629072 4-LANSING GENERATOR FOR UNITS NO4 EIA CODE 1
FDNS	00NR	5	17SP	G15_076	TO->FROM	GRPRAR1-LNX3345.00 - GRPRAR 345KV CKT Z	720	720	0.04225	111.1738	ALBION - PETERSBURG 115KV CKT 1
FDNS	00NR	5	17SP	G15_076	TO->FROM	GRPRAR1-LNX3345.00 - GRPRAR 345KV CKT Z	720	720	0.04293	111.1694	ANTELOP-LNX3345.00 - BRDLAND-LNX3345.00 345KV CKT 1
FDNS	00NR	5	17SP	G15_076	TO->FROM	GRPRAR1-LNX3345.00 - GRPRAR 345KV CKT Z	720	720	0.04284	111.1684	GEN660003 3-HURON WEST PARK
FDNS	00NR	5	17SP	G15_076	TO->FROM	GRPRAR1-LNX3345.00 - GRPRAR 345KV CKT Z	720	720	0.04284	111.1658	GEN600012 2-BLACK DOG GEN 2
FDNS	00NR	5	17SP	G15_076	TO->FROM	GRPRAR1-LNX3345.00 - GRPRAR 345KV CKT Z	720	720	0.04358	111.1657	AXTELL - POST ROCK 345KV CKT 1
FDNS	00NR	5	17SP	G15_076	TO->FROM	GRPRAR1-LNX3345.00 - GRPRAR 345KV CKT Z	720	720	0.04109	111.1645	COLUMEAST - NW68TH & HOLDREGE 345KV CKT 1
FDNS	00NR	5	17SP	G15_076	TO->FROM	GRPRAR1-LNX3345.00 - GRPRAR 345KV CKT Z	720	720	0.04109	111.1645	COLUMEAST - NW68TH & HOLDREGE 345KV CKT 1
FDNS	00NR	5	17SP	G15_076	TO->FROM	GRPRAR1-LNX3345.00 - GRPRAR 345KV CKT Z	720	720	0.04225	111.1447	PETERSBRG.N7115.00 - PETERSBURG 115KV CKT Z1
FDNS	00NR	5	17SP	G15_076	TO->FROM	GRPRAR1-LNX3345.00 - GRPRAR 345KV CKT Z	720	720	0.04284	111.1282	GEN659290 1-EDGECOL
FDNS	00NR	5	17SP	G15_076	TO->FROM	GRPRAR1-LNX3345.00 - GRPRAR 345KV CKT Z	720	720	0.04284	111.1279	EMERY 161/18.0KV TRANSFORMER CKT 1
FDNS	00NR	5	17SP	G15_076	TO->FROM	GRPRAR1-LNX3345.00 - GRPRAR 345KV CKT Z	720	720	0.04172	111.1251	COOPER - MOORE 345KV CKT 1
FDNS	00NR	5	17SP	G15_076	TO->FROM	GRPRAR1-LNX3345.00 - GRPRAR 345KV CKT Z	720	720	0.04284	111.1227	GEN652410 3-FT PECK
FDNS	00NR	5	17SP	G15_076	TO->FROM	GRPRAR1-LNX3345.00 - GRPRAR 345KV CKT Z	720	720	0.04284	111.1212	GEN672339 16-QE 16G 13.800
FDNS	00NR	5	17SP	G15_076	TO->FROM	GRPRAR1-LNX3345.00 - GRPRAR 345KV CKT Z	720	720	0.04284	111.1212	GEN672342 3-QUEEN ELIZABETH GENERATOR 3
FDNS	00NR	5	17SP	G15_076	TO->FROM	GRPRAR1-LNX3345.00 - GRPRAR 345KV CKT Z	720	720	0.04462	111.1206	ANTELOPE 7115.00 - COUNTY LINE 115KV CKT 1
FDNS	00NR	5	17SP	G15_076	TO->FROM	GRPRAR1-LNX3345.00 - GRPRAR 345KV CKT Z	720	720	0.04562	111.1198	MINGO - RED WILLOW 345KV CKT 1
FDNS	00NR	5	17SP	G15_076	TO->FROM	GRPRAR1-LNX3345.00 - GRPRAR 345KV CKT Z	720	720	0.04562	111.1198	MINGO - RED WILLOW 345KV CKT 1
FDNS	00NR	5	17SP	G15_076	TO->FROM	GRPRAR1-LNX3345.00 - GRPRAR 345KV CKT Z	720	720	0.04111	111.1126	COLUMEAST - SHELL CREEK 345KV CKT 1
FDNS	00NR	5	17SP	G15_076	TO->FROM	GRPRAR1-LNX3345.00 - GRPRAR 345KV CKT Z	720	720	0.04284	111.1086	GEN672393 2-NBECST2G 13.800
FDNS	00NR	5	17SP	G15_076	TO->FROM	GRPRAR1-LNX3345.00 - GRPRAR 345KV CKT Z	720	720	0.04225	111.1064	P12:115:NPPD:1168B:ALBION 7:PETERSBRG.N7:BTB
FDNS	00NR	5	17SP	G15_076	TO->FROM	GRPRAR1-LNX3345.00 - GRPRAR 345KV CKT Z	720	720	0.04284	111.0979	GEN600046 1-MECST
FDNS	00NR	5	17SP	G15_076	TO->FROM	GRPRAR1-LNX3345.00 - GRPRAR 345KV CKT Z	720	720	0.04284	111.0861	GEN300007 1-NEW MADRID UNIT 2
FDNS	00NR	5	17SP	G15_076	TO->FROM	GRPRAR1-LNX3345.00 - GRPRAR 345KV CKT Z	720	720	0.04284	111.0806	GEN300006 1-NEW MADRID UNIT 1
FDNS	00NR	5	17SP	G15_076	TO->FROM	GRPRAR1-LNX3345.00 - GRPRAR 345KV CKT Z	720	720	0.04284	111.0736	GEN600047 1-MECCT1
FDNS	00NR	5	17SP	G15_076	TO->FROM	GRPRAR1-LNX3345.00 - GRPRAR 345KV CKT Z	720	720	0.04284	111.0588	GEN652414 4-FT PECK
FDNS	00NR	5	17SP	G15_076	TO->FROM	GRPRAR1-LNX3345.00 - GRPRAR 345KV CKT Z	720	720	0.04284	111.0588	GEN652415 5-FT PECK
FDNS	00NR	5	17SP	G15_076	TO->FROM	GRPRAR1-LNX3345.00 - GRPRAR 345KV CKT Z	720	720	0.04284	111.0566	GEN600050 1-FEP
FDNS	00NR	5	17SP	G15_076	TO->FROM	GRPRAR1-LNX3345.00 - GRPRAR 345KV CKT Z	720	720	0.04284	111.0417	GEN660001 2-ABERDEEN SIEBRECHT
FDNS	00NR	5	17SP	G15_076	TO->FROM	GRPRAR1-LNX3345.00 - GRPRAR 345KV CKT Z	720	720	0.04284	111.028	LADISH 115/13.2KV TRANSFORMER CKT 1
FDNS	00NR	5	17SP	G15_076	TO->FROM	GRPRAR1-LNX3345.00 - GRPRAR 345KV CKT Z	720	720	0.04284	111.009	GEN652345 W-G07_023IS_2 0.6900
FDNS	00NR	5	17SP	G15_076	TO->FROM	GRPRAR1-LNX3345.00 - GRPRAR 345KV CKT Z	720	720	0.04445	110.9937	G15061_T 345.00 - SETAB 345KV CKT 1
FDNS	00NR	5	17SP	G15_076	TO->FROM	GRPRAR1-LNX3345.00 - GRPRAR 345KV CKT Z	720	720	0.04284	110.9715	GEN 11104 1-J262_GEN 0.6000
FDNS	00NR	5	17SP	G15_076	TO->FROM	GRPRAR1-LNX3345.00 - GRPRAR 345KV CKT Z	720	720	0.04284	110.9715	GEN 11108 1-J263_GEN 0.6000
FDNS	00NR	5	17SP	G15_076	TO->FROM	GRPRAR1-LNX3345.00 - GRPRAR 345KV CKT Z	720	720	0.04284	110.9668	GEN600063 1-COLVILLE GEN 1
FDNS	00NR	5	17SP	G15_076	TO->FROM	GRPRAR1-LNX3345.00 - GRPRAR 345KV CKT Z	720	720	0.04284	110.9668	GEN600064 2-COLVILLE GEN 2
FDNS	00NR	5	17SP	G15_076	TO->FROM	GRPRAR1-LNX3345.00 - GRPRAR 345KV CKT Z	720	720	0.04282	110.9655	BISMARK - L3 HAWDON 230KV CKT 1
FDNS	00NR	5	17SP	G15_076	TO->FROM	GRPRAR1-LNX3345.00 - GRPRAR 345KV CKT Z	720	720	0.04432	110.9631	GERALD GENTLEMAN STATION - RED WILLOW 345KV CKT 1
FDNS	00NR	5	17SP	G15_076	TO->FROM	GRPRAR1-LNX3345.00 - GRPRAR 345KV CKT Z	720	720	0.04284	110.9553	GEN600045 4-ANSON
FDNS	00NR	5	17SP	G15_076	TO->FROM	GRPRAR1-LNX3345.00 - GRPRAR 345KV CKT Z	720	720	0.04284	110.9541	GEN600043 7-BLUE LAKE5
FDNS	00NR	5	17SP	G15_076	TO->FROM	GRPRAR1-LNX3345.00 - GRPRAR 345KV CKT Z	720	720	0.04284	110.9541	GEN600044 8-BLUE LAKE6
FDNS	00NR	5	17SP	G15_076	TO->FROM	GRPRAR1-LNX3345.00 - GRPRAR 345KV CKT Z	720	720	0.04284	110.938	G830_SUB 115.00 - GRE-MCHENRY7115.00 115KV CKT 1
FDNS	00NR	5	17SP	G15_076	TO->FROM	GRPRAR1-LNX3345.00 - GRPRAR 345KV CKT Z	720	720	0.04284	110.9294	G830_SUB 115.00 115/34.5KV TRANSFORMER CKT 1
FDNS	00NR	5	17SP	G15_076	TO->FROM	GRPRAR1-LNX3345.00 - GRPRAR 345KV CKT Z	720	720	0.04296	110.9231	G11_051T 345.00 - TATONGA7 345.00 345KV CKT 1
FDNS	00NR	5	17SP	G15_076	TO->FROM	GRPRAR1-LNX3345.00 - GRPRAR 345KV CKT Z	720	720	0.04284	110.9221	GEN600014 4-BLACK DOG GEN 4
FDNS	00NR	5	17SP	G15_076	TO->FROM	GRPRAR1-LNX3345.00 - GRPRAR 345KV CKT Z	720	720	0.04284	110.9198	GEN600065 7-HIGH BRIDGE
FDNS	00NR	5	17SP	G15_076	TO->FROM	GRPRAR1-LNX3345.00 - GRPRAR 345KV CKT Z	720	720	0.04284	110.9198	GEN600066 8-HIGH BRIDGE
FDNS	00NR	5	17SP	G15_076	TO->FROM	GRPRAR1-LNX3345.00 - GRPRAR 345KV CKT Z	720	720	0.04284	110.9155	GEN600011 5-BLACK DOG GEN 1
FDNS	00NR	5	17SP	G15_076	TO->FROM	GRPRAR1-LNX3345.00 - GRPRAR 345KV CKT Z	720	720	0.04452	110.9117	P12:115:NPPD:1163B:NELIGH 7:NORFK.N7:BTB
FDNS	00NR	5	17SP	G15_076	TO->FROM	GRPRAR1-LNX3345.00 - GRPRAR 345KV CKT Z	720	720	0.04284	110.9037	GEN600070 9-RIVER SIDE
FDNS	00NR	5	17SP	G15_076	TO->FROM	GRPRAR1-LNX3345.00 - GRPRAR 345KV CKT Z	720	720	0.04284	110.9037	GEN600071 10-RIVER SIDE
FDNS	00NR	5	17SP	G15_076	TO->FROM	GRPRAR1-LNX3345.00 - GRPRAR 345KV CKT Z	720	720	0.04284	110.8909	GEN600007 7-RIVERSIDE GEN 7

SOLUTION	GROUP	SCENARIO	SEASON	SOURCE	DIRECTION	MONITORED ELEMENT	RATEA (MVA)	RATEB(MVA)	TDF	TC%LOADING (% MVA)	CONTINGENCY
FDNS	00NR	5	17SP	G15_076	TO->FROM	GRPRAR1-LNX3345.00 - GRPRAR 345KV CKT Z	720	720	0.04284	110.8763	GEN652906 1-G09_006IS_3 0.6900
FDNS	00NR	5	17SP	G15_076	TO->FROM	GRPRAR1-LNX3345.00 - GRPRAR 345KV CKT Z	720	720	0.04284	110.8716	GEN600017 C-LS POWER CT
FDNS	00NR	5	17SP	G15_076	TO->FROM	GRPRAR1-LNX3345.00 - GRPRAR 345KV CKT Z	720	720	0.04276	110.8701	HOSKINS - RAUN 345KV CKT 1
FDNS	00NR	5	17SP	G15_076	TO->FROM	GRPRAR1-LNX3345.00 - GRPRAR 345KV CKT Z	720	720	0.04276	110.8701	HOSKINS - RAUN 345KV CKT 1
FDNS	00NR	5	17SP	G15_076	TO->FROM	GRPRAR1-LNX3345.00 - GRPRAR 345KV CKT Z	720	720	0.03991	110.8692	FT THOMPSON (FT2 KU1A) 345/230/13.8KV TRANSFORMER CKT 1
FDNS	00NR	5	17SP	G15_076	TO->FROM	GRPRAR1-LNX3345.00 - GRPRAR 345KV CKT Z	720	720	0.03991	110.866	FT THOMPSON (FT2 KU1B) 345/230/13.8KV TRANSFORMER CKT 1
FDNS	00NR	5	17SP	G15_076	TO->FROM	GRPRAR1-LNX3345.00 - GRPRAR 345KV CKT Z	720	720	0.04284	110.8633	GEN659273 2-GROTON SYNC COND
FDNS	00NR	5	17SP	G15_076	TO->FROM	GRPRAR1-LNX3345.00 - GRPRAR 345KV CKT Z	720	720	0.04284	110.8633	GEN659294 1-WILTONCOL9
FDNS	00NR	5	17SP	G15_076	TO->FROM	GRPRAR1-LNX3345.00 - GRPRAR 345KV CKT Z	720	720	0.04284	110.8467	LANSING WEST 161/22.0KV TRANSFORMER CKT 1
FDNS	00NR	5	17SP	G15_076	TO->FROM	GRPRAR1-LNX3345.00 - GRPRAR 345KV CKT Z	720	720	0.04284	110.828	GEN659192 6-LYNN
FDNS	00NR	5	17SP	G15_076	TO->FROM	GRPRAR1-LNX3345.00 - GRPRAR 345KV CKT Z	720	720	0.04284	110.827	GEN659162 4-RED WLCK
FDNS	00NR	5	17SP	G15_076	TO->FROM	GRPRAR1-LNX3345.00 - GRPRAR 345KV CKT Z	720	720	0.04284	110.827	GEN659163 5-BLACK WDCK
FDNS	00NR	5	25SP	G15_076	TO->FROM	GRPRAR1-LNX3345.00 - GRPRAR 345KV CKT Z	720	720	0.03916	110.8194	P12:230:UMZB:# 116 #: ST IN SD. WSG-ST-VH
FDNS	00NR	5	17SP	G15_076	TO->FROM	GRPRAR1-LNX3345.00 - GRPRAR 345KV CKT Z	720	720	0.04284	110.8168	GEN681522 3-GENOA 3
FDNS	00NR	5	17SP	G15_076	TO->FROM	GRPRAR1-LNX3345.00 - GRPRAR 345KV CKT Z	720	720	0.04284	110.8079	GEN615021 1-GRE-ER 14G 16.000
FDNS	00NR	5	20SP	G15_076	TO->FROM	GRPRAR1-LNX3345.00 - GRPRAR 345KV CKT Z	720	720	0.0392	110.8007	STORLA - WESSINGTON 230KV CKT 1
FDNS	00NR	5	17SP	G15_076	TO->FROM	GRPRAR1-LNX3345.00 - GRPRAR 345KV CKT Z	720	720	0.04284	110.7945	GEN615052 1-CAMBRIDGE GENERATING STATION
FDNS	00NR	5	17SP	G15_076	TO->FROM	GRPRAR1-LNX3345.00 - GRPRAR 345KV CKT Z	720	720	0.04293	110.7895	BRDLAND-LNX3345.00 - HURON 345KV CKT Z
FDNS	00NR	5	17SP	G15_076	TO->FROM	GRPRAR1-LNX3345.00 - GRPRAR 345KV CKT Z	720	720	0.04284	110.7894	GEN659031 1-G12_014IS_4 0.6900
FDNS	00NR	5	17SP	G15_076	TO->FROM	GRPRAR1-LNX3345.00 - GRPRAR 345KV CKT Z	720	720	0.04293	110.7887	BROADLAND - HURON 230KV CKT 1
FDNS	00NR	5	17SP	G15_076	TO->FROM	GRPRAR1-LNX3345.00 - GRPRAR 345KV CKT Z	720	720	0.04293	110.7884	HURON (BD KU2A) 345/230/13.8KV TRANSFORMER CKT 1
FDNS	00NR	5	17SP	G15_076	TO->FROM	GRPRAR1-LNX3345.00 - GRPRAR 345KV CKT Z	720	720	0.04293	110.7884	HURON (BD KU2A) 345/230/13.8KV TRANSFORMER CKT 1
FDNS	00NR	5	17SP	G15_076	TO->FROM	GRPRAR1-LNX3345.00 - GRPRAR 345KV CKT Z	720	720	0.04284	110.7848	CENTER 230/22.0KV TRANSFORMER CKT 1
FDNS	00NR	5	17SP	G15_076	TO->FROM	GRPRAR1-LNX3345.00 - GRPRAR 345KV CKT Z	720	720	0.04293	110.7831	P12:345:UMZB:# 103 #: BD IN SD. LOSS OF LINE
FDNS	00NR	5	17SP	G15_076	TO->FROM	GRPRAR1-LNX3345.00 - GRPRAR 345KV CKT Z	720	720	0.04284	110.782	GEN 10648 1-G830_GEN 0.6900
FDNS	00NR	5	17SP	G15_076	TO->FROM	GRPRAR1-LNX3345.00 - GRPRAR 345KV CKT Z	720	720	0.04293	110.7819	P12:345:UMZB:# 102 #: AVS BD IN ND. AVS BRD LR
FDNS	00NR	5	17SP	G15_076	TO->FROM	GRPRAR1-LNX3345.00 - GRPRAR 345KV CKT Z	720	720	0.04284	110.781	GEN652907 1-G09_007IS_3 0.6900
FDNS	00NR	5	17SP	G15_076	TO->FROM	GRPRAR1-LNX3345.00 - GRPRAR 345KV CKT Z	720	720	0.04284	110.768	GEN660016 1-B_H WIND 0.7000
FDNS	00NR	5	17SP	G15_076	TO->FROM	GRPRAR1-LNX3345.00 - GRPRAR 345KV CKT Z	720	720	0.04284	110.7123	GEN615015 1-GRE-SPRITWDG13.200
FDNS	00NR	5	17SP	G15_076	TO->FROM	GRPRAR1-LNX3345.00 - GRPRAR 345KV CKT Z	720	720	0.04296	110.7054	MATHWSN7 345.00 - TATONGA7 345.00 345KV CKT 1
FDNS	00NR	5	17SP	G15_076	TO->FROM	GRPRAR1-LNX3345.00 - GRPRAR 345KV CKT Z	720	720	0.03643	110.6706	DIXONCO 3 345.00 - TWINCH 3 345.00 345KV CKT 1
FDNS	00NR	5	17SP	G15_076	TO->FROM	GRPRAR1-LNX3345.00 - GRPRAR 345KV CKT Z	720	720	0.04284	110.6508	GEN659353 1-DEERCREK CTG18.000
FDNS	00NR	5	17SP	G15_076	TO->FROM	GRPRAR1-LNX3345.00 - GRPRAR 345KV CKT Z	720	720	0.04284	110.6491	GEN659354 1-DEERCREK STG18.000
FDNS	00NR	5	17SP	G15_076	TO->FROM	GRPRAR1-LNX3345.00 - GRPRAR 345KV CKT Z	720	720	0.03643	110.6418	DIXONCO 3 345.00 (DIXON1) 345/230/13.8KV TRANSFORMER CKT 1
FDNS	00NR	5	17SP	G15_076	TO->FROM	GRPRAR1-LNX3345.00 - GRPRAR 345KV CKT Z	720	720	0.04293	110.6302	ANTELOP-LNX3345.00 - ANTELOPE VALLEY 345KV CKT Z
FDNS	00NR	5	17SP	G15_076	TO->FROM	GRPRAR1-LNX3345.00 - GRPRAR 345KV CKT Z	720	720	0.04284	110.5607	GEN600067 9-HIGH BRIDGE
FDNS	00NR	5	17SP	G15_076	TO->FROM	GRPRAR1-LNX3345.00 - GRPRAR 345KV CKT Z	720	720	0.04284	110.5574	GEN672303 3-BOUNDARY DAM GENERATOR 3
FDNS	00NR	5	17SP	G15_076	TO->FROM	GRPRAR1-LNX3345.00 - GRPRAR 345KV CKT Z	720	720	0.04284	110.5574	GEN672305 5-BOUNDARY DAM GENERATOR 5
FDNS	00NR	5	17SP	G15_076	TO->FROM	GRPRAR1-LNX3345.00 - GRPRAR 345KV CKT Z	720	720	0.04284	110.5328	GEN672392 1-NBECGT1G 18.000
FDNS	00NR	5	17SP	G15_076	TO->FROM	GRPRAR1-LNX3345.00 - GRPRAR 345KV CKT Z	720	720	0.04282	110.4891	OAHE - SULLEY BUTTE 230KV CKT 1
FDNS	00NR	5	17SP	G15_076	TO->FROM	GRPRAR1-LNX3345.00 - GRPRAR 345KV CKT Z	720	720	0.04284	110.4686	GEN910006 1-G12_012IS_3 0.6900
FDNS	00NR	5	17SP	G15_076	TO->FROM	GRPRAR1-LNX3345.00 - GRPRAR 345KV CKT Z	720	720	0.04284	110.4611	BISONMP4 230.00 - SQUARE BUTTE 230KV CKT 1
FDNS	00NR	5	17SP	G15_076	TO->FROM	GRPRAR1-LNX3345.00 - GRPRAR 345KV CKT Z	720	720	0.04284	110.4132	GEN662101 1-WESSINGTON190.5750
FDNS	00NR	5	17SP	G15_076	TO->FROM	GRPRAR1-LNX3345.00 - GRPRAR 345KV CKT Z	720	720	0.0444	110.3851	AXTELL - SWEETWATER 345KV CKT 1
FDNS	00NR	5	17SP	G15_076	TO->FROM	GRPRAR1-LNX3345.00 - GRPRAR 345KV CKT Z	720	720	0.04444	110.3459	G15088_T 345.00 - MOORE 345KV CKT 1
FDNS	00NR	5	17SP	G15_076	TO->FROM	GRPRAR1-LNX3345.00 - GRPRAR 345KV CKT Z	720	720	0.04282	110.3348	SULLEY BUTTE - SULLYBT-LNX3230.00 230KV CKT Z
FDNS	00NR	5	17SP	G15_076	TO->FROM	GRPRAR1-LNX3345.00 - GRPRAR 345KV CKT Z	720	720	0.04282	110.3319	SULLYBT-LNX3230.00 - WHITLOK 230KV CKT 1
FDNS	00NR	5	17SP	G15_076	TO->FROM	GRPRAR1-LNX3345.00 - GRPRAR 345KV CKT Z	720	720	0.04282	110.2858	P12:230:UMZB:# 114 #: SB IN SD. SB-WK-GH
FDNS	00NR	5	17SP	G15_076	TO->FROM	GRPRAR1-LNX3345.00 - GRPRAR 345KV CKT Z	720	720	0.04282	110.2858	P12:230:UMZB:# 117 #: WK IN SD. SB-WK-GH
FDNS	00NR	5	17SP	G15_076	TO->FROM	GRPRAR1-LNX3345.00 - GRPRAR 345KV CKT Z	720	720	0.03763	110.2775	HOSKINS - SHELL CREEK 345KV CKT 1
FDNS	00NR	5	17SP	G15_076	TO->FROM	GRPRAR1-LNX3345.00 - GRPRAR 345KV CKT Z	720	720	0.04284	110.2641	SQUARE BUTTE - YNG2_4 230.00 230KV CKT 1
FDNS	00NR	5	17SP	G15_076	TO->FROM	GRPRAR1-LNX3345.00 - GRPRAR 345KV CKT Z	720	720	0.04282	110.235	GLENHAM - WHITLOK 230KV CKT 1
FDNS	00NR	5	17SP	G15_076	TO->FROM	GRPRAR1-LNX3345.00 - GRPRAR 345KV CKT Z	720	720	0.04284	110.2327	HESKETT 115/13.8KV TRANSFORMER CKT 1
FDNS	00NR	5	17SP	G15_076	TO->FROM	GRPRAR1-LNX3345.00 - GRPRAR 345KV CKT Z	720	720	0.04284	110.1927	GEN681542 6-JP MADGETT
FDNS	00NR	5	17SP	G15_076	TO->FROM	GRPRAR1-LNX3345.00 - GRPRAR 345KV CKT Z	720	720	0.04284	110.1429	GEN659289 1-DAYCNTYWND W0.6900
FDNS	00NR	5	17SP	G15_076	TO->FROM	GRPRAR1-LNX3345.00 - GRPRAR 345KV CKT Z	720	720	0.04284	110.1242	GEN659018 1-G14_003IS_3 0.6900
FDNS	00NR	5	17SP	G15_076	TO->FROM	GRPRAR1-LNX3345.00 - GRPRAR 345KV CKT Z	720	720	0.04284	110.1046	GEN563312 1-G15097_3 0.6900
FDNS	00NR	5	17SP	G15_076	TO->FROM	GRPRAR1-LNX3345.00 - GRPRAR 345KV CKT Z	720	720	0.04284	110.1001	GEN652543 3-BIG BEND
FDNS	00NR	5	25SP	G15_076	TO->FROM	GRPRAR1-LNX3345.00 - GRPRAR 345KV CKT Z	720	720	0.03952	110.0579	STORLA - WESSINGTON 230KV CKT 1
FDNS	00NR	5	17SP	G15_076	TO->FROM	GRPRAR1-LNX3345.00 - GRPRAR 345KV CKT Z	720	720	0.04284	109.9591	GEN659194 1-NDPRAIRWND1W0.6900
FDNS	00NR	5	17SP	G15_076	TO->FROM	GRPRAR1-LNX3345.00 - GRPRAR 345KV CKT Z	720	720	0.04284	109.9425	GEN659010 4-G07_027IS_2 0.6900
FDNS	00NR	5	17SP	G15_076	TO->FROM	GRPRAR1-LNX3345.00 - GRPRAR 345KV CKT Z	720	720	0.04284	109.9353	GEN652461 5-GARRISON
FDNS	00NR	5	17SP	G15_076	TO->FROM	GRPRAR1-LNX3345.00 - GRPRAR 345KV CKT Z	720	720	0.04284	109.9352	GEN652460 4-GARRISON
FDNS	00NR	5	17SP	G15_076	TO->FROM	GRPRAR1-LNX3345.00 - GRPRAR 345KV CKT Z	720	720	0.04284	109.9132	GEN563342 1-G15098_3 0.6900
FDNS	00NR	5	17SP	G15_076	TO->FROM	GRPRAR1-LNX3345.00 - GRPRAR 345KV CKT Z	720	720	0.04284	109.8769	GEN652459 3-GARRISON
FDNS	00NR	5	17SP	G15_076	TO->FROM	GRPRAR1-LNX3345.00 - GRPRAR 345KV CKT Z	720	720	0.04284	109.8768	GEN652457 1-GARRISON
FDNS	00NR	5	17SP	G15_076	TO->FROM	GRPRAR1-LNX3345.00 - GRPRAR 345KV CKT Z	720	720	0.04284	109.8768	GEN652458 2-GARRISON
FDNS	00NR	5	20SP	G15_076	TO->FROM	GRPRAR1-LNX3345.00 - GRPRAR 345KV CKT Z	720	720	0.03927	109.8238	HANLON - STORLA 230KV CKT 1
FDNS	00NR	5	17SP	G15_076	TO->FROM	GRPRAR1-LNX3345.00 - GRPRAR 345KV CKT Z	720	720	0.04284	109.823	GEN659403 1-NDSUNFLWR W0.6900
FDNS	00NR	5	17SP	G15_076	TO->FROM	GRPRAR1-LNX3345.00 - GRPRAR 345KV CKT Z	720	720	0.04284	109.7713	GEN652542 1-BIG BEND
FDNS	00NR	5	17SP	G15_076	TO->FROM	GRPRAR1-LNX3345.00 - GRPRAR 345KV CKT Z	720	720	0.04511	109.7493	MCCOOL - MOORE 345KV CKT 1
FDNS	00NR	5	17SP	G15_076	TO->FROM	GRPRAR1-LNX3345.00 - GRPRAR 345KV CKT Z	720	720	0.04284	109.672	GEN652559 1-OAHE
FDNS	00NR	5	17SP	G15_076	TO->FROM	GRPRAR1-LNX3345.00 - GRPRAR 345KV CKT Z	720	720	0.04284	109.6561	CLAY BOSWELL 230/20.9KV TRANSFORMER CKT 1
FDNS	00NR	5	17SP	G15_076	TO->FROM	GRPRAR1-LNX3345.00 - GRPRAR 345KV CKT Z	720	720	0.04284	109.6232	STANTON 230/18.0KV TRANSFORMER CKT 1
FDNS	00NR	5	17SP	G15_076	TO->FROM	GRPRAR1-LNX3345.00 - GRPRAR 345KV CKT Z	720	720	0.04282	109.6214	GLENHAM - L3 HAWDON 230KV CKT 1
FDNS	00NR	5	17SP	G15_076	TO->FROM	GRPRAR1-LNX3345.00 - GRPRAR 345KV CKT Z	720	720	0.04284	109.4059	GEN659411 1-CAMPBLCNTY W0.6900
FDNS	00NR	5	20SP	G15_076	TO->FROM	GRPRAR1-LNX3345.00 - GRPRAR 345KV CKT Z	720	720	0.04123	109.2506	BUFFALO - JAMESTOWN 345KV CKT 1
FDNS	00NR	5	20SP	G15_076	TO->FROM	GRPRAR1-LNX3345.00 - GRPRAR 345KV CKT Z	720	720	0.04098	109.2034	G09_001IST 345.00 - WATERTOWN 345KV CKT 1
FDNS	00NR	5	20SP	G15_076	TO->FROM	GRPRAR1-LNX3345.00 - GRPRAR 345KV CKT Z	720	720	0.03855	109.184	FT THOMPSON - LETCHER 230KV CKT 1

SOLUTION	GROUP	SCENARIO	SEASON	SOURCE	DIRECTION	MONITORED ELEMENT	RATEA (MVA)	RATEB(MVA)	TDF	TC%LOADING (% MVA)	CONTINGENCY
FDNS	00NR	5	20SP	G15_076	TO->FROM	GRPRAR1-LNX3345.00 - GRPRAR 345KV CKT Z	720	720	0.03855	109.184	FT THOMPSON - LETCHER 230KV CKT 1
FDNS	00NR	5	17SP	G15_076	TO->FROM	GRPRAR1-LNX3345.00 - GRPRAR 345KV CKT Z	720	720	0.04284	109.1754	GEN659296 2-SDPRAIRWND1W0.6900
FDNS	00NR	5	17SP	G15_076	TO->FROM	GRPRAR1-LNX3345.00 - GRPRAR 345KV CKT Z	720	720	0.04284	109.1678	GEN672321 1-SHAND GENERATOR 1
FDNS	00NR	5	17SP	G15_076	TO->FROM	GRPRAR1-LNX3345.00 - GRPRAR 345KV CKT Z	720	720	0.04284	109.1578	GEN672310 1-POPLAR RIVER GENERATOR 1
FDNS	00NR	5	17SP	G15_076	TO->FROM	GRPRAR1-LNX3345.00 - GRPRAR 345KV CKT Z	720	720	0.04284	109.1577	GEN672311 2-POPLAR RIVER GENERATOR 2
FDNS	00NR	5	17SP	G15_076	TO->FROM	GRPRAR1-LNX3345.00 - GRPRAR 345KV CKT Z	720	720	0.04284	109.0969	RCDC EAST 4230.00 - RED CEDAR DC 230KV CKT 1
FDNS	00NR	5	17SP	G15_076	TO->FROM	GRPRAR1-LNX3345.00 - GRPRAR 345KV CKT Z	720	720	0.04284	109.0946	GEN600004 2-PRAIRIE ISLAND G2
FDNS	00NR	5	17SP	G15_076	TO->FROM	GRPRAR1-LNX3345.00 - GRPRAR 345KV CKT Z	720	720	0.04284	109.0905	GEN600003 1-PRAIRIE ISLAND G1
FDNS	00NR	5	17SP	G15_076	TO->FROM	GRPRAR1-LNX3345.00 - GRPRAR 345KV CKT Z	720	720	0.04285	109.0764	P12:230:UMZB:# 112 #: NU IN SD. NU-RCDC & DRY CREEK XFMR
FDNS	00NR	5	17SP	G15_076	TO->FROM	GRPRAR1-LNX3345.00 - GRPRAR 345KV CKT Z	720	720	0.04284	109.063	GEN672306 6-BOUNDARY DAM GENERATOR 6
FDNS	00NR	5	25SP	G15_076	TO->FROM	GRPRAR1-LNX3345.00 - GRPRAR 345KV CKT Z	720	720	0.03959	109.0484	HANLON - STORLA 230KV CKT 1
FDNS	00NR	5	17SP	G15_076	TO->FROM	GRPRAR1-LNX3345.00 - GRPRAR 345KV CKT Z	720	720	0.04284	109.0275	GEN615010 1-STANTON4
FDNS	00NR	5	17SP	G15_076	TO->FROM	GRPRAR1-LNX3345.00 - GRPRAR 345KV CKT Z	720	720	0.04284	109.0194	GEN659453 1-GI1414GEN W0.6900
FDNS	00NR	5	17SP	G15_076	TO->FROM	GRPRAR1-LNX3345.00 - GRPRAR 345KV CKT Z	720	720	0.04284	109.0175	GEN563302 1-G15096_3 0.6900
FDNS	00NR	5	17SP	G15_076	TO->FROM	GRPRAR1-LNX3345.00 - GRPRAR 345KV CKT Z	720	720	0.04284	108.9132	GEN659141 1-K10215A
FDNS	00NR	5	17SP	G15_076	TO->FROM	GRPRAR1-LNX3345.00 - GRPRAR 345KV CKT Z	720	720	0.04284	108.8299	GEN659110 1-LELAND OLDS UNIT1
FDNS	00NR	5	17SP	G15_076	TO->FROM	GRPRAR1-LNX3345.00 - GRPRAR 345KV CKT Z	720	720	0.04284	108.8276	GEN652556 2-OAHE
FDNS	00NR	5	17SP	G15_076	TO->FROM	GRPRAR1-LNX3345.00 - GRPRAR 345KV CKT Z	720	720	0.04284	108.8275	GEN652557 4-OAHE
FDNS	00NR	5	17SP	G15_076	TO->FROM	GRPRAR1-LNX3345.00 - GRPRAR 345KV CKT Z	720	720	0.04284	108.8275	GEN652558 6-OAHE
FDNS	00NR	5	25SP	G15_076	TO->FROM	GRPRAR1-LNX3345.00 - GRPRAR 345KV CKT Z	720	720	0.04155	108.7845	BUFFALO - JAMESTOWN 345KV CKT 1
FDNS	00NR	5	17SP	G15_076	TO->FROM	GRPRAR1-LNX3345.00 - GRPRAR 345KV CKT Z	720	720	0.04284	108.7599	GEN657749 1-YOUNG 1 GENERATOR
FDNS	00NR	5	17SP	G15_076	TO->FROM	GRPRAR1-LNX3345.00 - GRPRAR 345KV CKT Z	720	720	0.04284	108.7501	GEN600006 1-AS KING
FDNS	00NR	5	17SP	G15_076	TO->FROM	GRPRAR1-LNX3345.00 - GRPRAR 345KV CKT Z	720	720	0.04284	108.6753	GEN652173 1-G09_001IS_2 0.6900
FDNS	00NR	5	17SP	G15_076	TO->FROM	GRPRAR1-LNX3345.00 - GRPRAR 345KV CKT Z	720	720	0.04495	108.6266	GRAND ISLAND - MCCOOL 345KV CKT 1
FDNS	00NR	5	25SP	G15_076	TO->FROM	GRPRAR1-LNX3345.00 - GRPRAR 345KV CKT Z	720	720	0.03886	108.4037	FT THOMPSON - LETCHER 230KV CKT 1
FDNS	00NR	5	25SP	G15_076	TO->FROM	GRPRAR1-LNX3345.00 - GRPRAR 345KV CKT Z	720	720	0.03886	108.4037	FT THOMPSON - LETCHER 230KV CKT 1
FDNS	00NR	5	17SP	G15_076	TO->FROM	GRPRAR1-LNX3345.00 - GRPRAR 345KV CKT Z	720	720	0.04284	108.3788	GEN659407 1-ANTELPHILLSW0.6900
FDNS	00NR	5	25SP	G15_076	TO->FROM	GRPRAR1-LNX3345.00 - GRPRAR 345KV CKT Z	720	720	0.0413	108.3775	G09_001IST 345.00 - WATERTOWN 345KV CKT 1
FDNS	00NR	5	17SP	G15_076	TO->FROM	GRPRAR1-LNX3345.00 - GRPRAR 345KV CKT Z	720	720	0.04284	108.1988	GEN600005 1-MONTICELLO
FDNS	00NR	5	20SP	G15_076	TO->FROM	GRPRAR1-LNX3345.00 - GRPRAR 345KV CKT Z	720	720	0.04062	108.0777	WATERTN-LNX3345.00 - WHITE 345KV CKT 1
FDNS	00NR	5	20SP	G15_076	TO->FROM	GRPRAR1-LNX3345.00 - GRPRAR 345KV CKT Z	720	720	0.03831	108.0146	FT RANDAL - G12_009IST 230.00 230KV CKT 1
FDNS	00NR	5	20SP	G15_076	TO->FROM	GRPRAR1-LNX3345.00 - GRPRAR 345KV CKT Z	720	720	0.04062	107.9794	WATERTN-LNX3345.00 - WATERTOWN 345KV CKT Z
FDNS	00NR	5	20SP	G15_076	TO->FROM	GRPRAR1-LNX3345.00 - GRPRAR 345KV CKT Z	720	720	0.04062	107.9704	P12:345:UMZW:# 1747 #: WT2 IN SD. WT2-WHT LINE FAULT
FDNS	00NR	5	20SP	G15_076	TO->FROM	GRPRAR1-LNX3345.00 - GRPRAR 345KV CKT Z	720	720	0.03831	107.9273	FT THOMPSON - LAKE PLATT 230KV CKT 1
FDNS	00NR	5	20SP	G15_076	TO->FROM	GRPRAR1-LNX3345.00 - GRPRAR 345KV CKT Z	720	720	0.03831	107.9273	FT THOMPSON - LAKE PLATT 230KV CKT 1
FDNS	00NR	5	20SP	G15_076	TO->FROM	GRPRAR1-LNX3345.00 - GRPRAR 345KV CKT Z	720	720	0.03824	107.9215	FT RANDAL - FT THOMPSON 230KV CKT 1
FDNS	00NR	5	20SP	G15_076	TO->FROM	GRPRAR1-LNX3345.00 - GRPRAR 345KV CKT Z	720	720	0.03824	107.9215	FT RANDAL - FT THOMPSON 230KV CKT 1
FDNS	00NR	5	20SP	G15_076	TO->FROM	GRPRAR1-LNX3345.00 - GRPRAR 345KV CKT Z	720	720	0.04123	107.8312	GEN336821 1-GRAND GULF UNIT
FDNS	00NR	5	20SP	G15_076	TO->FROM	GRPRAR1-LNX3345.00 - GRPRAR 345KV CKT Z	720	720	0.04123	107.826	GEN635024 4-WALTER SCOTT UNIT 4
FDNS	00NR	5	20SP	G15_076	TO->FROM	GRPRAR1-LNX3345.00 - GRPRAR 345KV CKT Z	720	720	0.04633	107.8097	FT RANDAL - MEADOWGROVE4230.00 230KV CKT 1
FDNS	00NR	5	20SP	G15_076	TO->FROM	GRPRAR1-LNX3345.00 - GRPRAR 345KV CKT Z	720	720	0.04123	107.7766	CENTER - JAMESTOWN 345KV CKT 1
FDNS	00NR	5	20SP	G15_076	TO->FROM	GRPRAR1-LNX3345.00 - GRPRAR 345KV CKT Z	720	720	0.03923	107.7141	SPLIT ROCK - WHITE 345KV CKT 1
FDNS	00NR	5	20SP	G15_076	TO->FROM	GRPRAR1-LNX3345.00 - GRPRAR 345KV CKT Z	720	720	0.03923	107.7141	SPLIT ROCK - WHITE 345KV CKT 1
FDNS	00NR	5	20SP	G15_076	TO->FROM	GRPRAR1-LNX3345.00 - GRPRAR 345KV CKT Z	720	720	0.03831	107.5527	G12_009IST 230.00 - LAKE PLATT 230KV CKT 1
FDNS	00NR	5	17SP	G15_076	TO->FROM	GRPRAR1-LNX3345.00 - GRPRAR 345KV CKT Z	720	720	0.04284	107.5491	GEN600000 1-SHERBURNECNTY G1
FDNS	00NR	5	20SP	G15_076	TO->FROM	GRPRAR1-LNX3345.00 - GRPRAR 345KV CKT Z	720	720	0.04126	107.5152	CHISAGO COUNTY - CHISAGO COUNTY 500KV CKT 1
FDNS	00NR	5	20SP	G15_076	TO->FROM	GRPRAR1-LNX3345.00 - GRPRAR 345KV CKT Z	720	720	0.04126	107.4928	CHISAGO COUNTY - FORBES 500KV CKT 1
FDNS	00NR	5	20SP	G15_076	TO->FROM	GRPRAR1-LNX3345.00 - GRPRAR 345KV CKT Z	720	720	0.04124	107.3803	BISON 3 345.00 - BUFFALO 345KV CKT 1
FDNS	00NR	5	20SP	G15_076	TO->FROM	GRPRAR1-LNX3345.00 - GRPRAR 345KV CKT Z	720	720	0.04003	107.3412	LETCHER - SIOUX FALLS 230KV CKT 1
FDNS	00NR	5	20SP	G15_076	TO->FROM	GRPRAR1-LNX3345.00 - GRPRAR 345KV CKT Z	720	720	0.04123	107.3374	GEN635023 3-WALTER SCOTT UNIT 3
FDNS	00NR	5	20SP	G15_076	TO->FROM	GRPRAR1-LNX3345.00 - GRPRAR 345KV CKT Z	720	720	0.04123	107.2828	GEN562714 1-G15_023_4 0.6900
FDNS	00NR	5	20SP	G15_076	TO->FROM	GRPRAR1-LNX3345.00 - GRPRAR 345KV CKT Z	720	720	0.04123	107.2828	GEN562715 1-G15_023_5 0.6900
FDNS	00NR	5	20SP	G15_076	TO->FROM	GRPRAR1-LNX3345.00 - GRPRAR 345KV CKT Z	720	720	0.04123	107.2752	GEN344225 1-1CAL G1 25.000
FDNS	00NR	5	17SP	G15_076	TO->FROM	GRPRAR1-LNX3345.00 - GRPRAR 345KV CKT Z	720	720	0.04284	107.1955	GEN600001 2-SHERBURNE CNTY G2
FDNS	00NR	5	20SP	G15_076	TO->FROM	GRPRAR1-LNX3345.00 - GRPRAR 345KV CKT Z	720	720	0.04123	107.1904	GEN337911 1-ARKANSAS NUCLEAR ONE UNIT #2
FDNS	00NR	5	25SP	G15_076	TO->FROM	GRPRAR1-LNX3345.00 - GRPRAR 345KV CKT Z	720	720	0.03863	107.187	FT RANDAL - G12_009IST 230.00 230KV CKT 1
FDNS	00NR	5	25SP	G15_076	TO->FROM	GRPRAR1-LNX3345.00 - GRPRAR 345KV CKT Z	720	720	0.04094	107.1795	WATERTN-LNX3345.00 - WHITE 345KV CKT 1
FDNS	00NR	5	25SP	G15_076	TO->FROM	GRPRAR1-LNX3345.00 - GRPRAR 345KV CKT Z	720	720	0.04154	107.1639	CENTER - JAMESTOWN 345KV CKT 1
FDNS	00NR	5	20SP	G15_076	TO->FROM	GRPRAR1-LNX3345.00 - GRPRAR 345KV CKT Z	720	720	0.04123	107.1622	GEN336153 1-WATERFORD UNIT#3
FDNS	00NR	5	20SP	G15_076	TO->FROM	GRPRAR1-LNX3345.00 - GRPRAR 345KV CKT Z	720	720	0.04235	107.1499	MISSION - ST FRANCIS 115KV CKT 1
FDNS	00NR	5	20SP	G15_076	TO->FROM	GRPRAR1-LNX3345.00 - GRPRAR 345KV CKT Z	720	720	0.04235	107.1232	P12:115:NPPD:1091:VALENTN7:MISSION7:BTB
FDNS	00NR	5	25SP	G15_076	TO->FROM	GRPRAR1-LNX3345.00 - GRPRAR 345KV CKT Z	720	720	0.03863	107.1151	FT THOMPSON - LAKE PLATT 230KV CKT 1
FDNS	00NR	5	25SP	G15_076	TO->FROM	GRPRAR1-LNX3345.00 - GRPRAR 345KV CKT Z	720	720	0.03863	107.1151	FT THOMPSON - LAKE PLATT 230KV CKT 1
FDNS	00NR	5	25SP	G15_076	TO->FROM	GRPRAR1-LNX3345.00 - GRPRAR 345KV CKT Z	720	720	0.03856	107.1038	FT RANDAL - FT THOMPSON 230KV CKT 1
FDNS	00NR	5	25SP	G15_076	TO->FROM	GRPRAR1-LNX3345.00 - GRPRAR 345KV CKT Z	720	720	0.03856	107.1038	FT RANDAL - FT THOMPSON 230KV CKT 1
FDNS	00NR	5	20SP	G15_076	TO->FROM	GRPRAR1-LNX3345.00 - GRPRAR 345KV CKT Z	720	720	0.04227	107.0889	SIDNEY - SIDNEY1-LNX3345.00 345KV CKT Z
FDNS	00NR	5	25SP	G15_076	TO->FROM	GRPRAR1-LNX3345.00 - GRPRAR 345KV CKT Z	720	720	0.04094	107.0799	WATERTN-LNX3345.00 - WATERTOWN 345KV CKT Z
FDNS	00NR	5	25SP	G15_076	TO->FROM	GRPRAR1-LNX3345.00 - GRPRAR 345KV CKT Z	720	720	0.04094	107.0712	P12:345:UMZW:# 1747 #: WT2 IN SD. WT2-WHT LINE FAULT
FDNS	00NR	5	20SP	G15_076	TO->FROM	GRPRAR1-LNX3345.00 - GRPRAR 345KV CKT Z	720	720	0.04227	107.0693	KEYSTONE - SIDNEY1-LNX3345.00 345KV CKT 1
FDNS	00NR	5	20SP	G15_076	TO->FROM	GRPRAR1-LNX3345.00 - GRPRAR 345KV CKT Z	720	720	0.04933	106.9791	NUNDRWD - WAYSIDE 230KV CKT 1
FDNS	00NR	5	20SP	G15_076	TO->FROM	GRPRAR1-LNX3345.00 - GRPRAR 345KV CKT Z	720	720	0.04235	106.9762	HARMONY - ST FRANCIS 115KV CKT 1
FDNS	00NR	5	20SP	G15_076	TO->FROM	GRPRAR1-LNX3345.00 - GRPRAR 345KV CKT Z	720	720	0.04098	106.9559	G09_001IST 345.00 - GROTON 345KV CKT 1
FDNS	00NR	5	25SP	G15_076	TO->FROM	GRPRAR1-LNX3345.00 - GRPRAR 345KV CKT Z	720	720	0.04668	106.9297	FT RANDAL - MEADOWGROVE4230.00 230KV CKT 1
FDNS	00NR	5	25SP	G15_076	TO->FROM	GRPRAR1-LNX3345.00 - GRPRAR 345KV CKT Z	720	720	0.04155	106.8697	GEN635024 4-WALTER SCOTT UNIT 4
FDNS	00NR	5	20SP	G15_076	TO->FROM	GRPRAR1-LNX3345.00 - GRPRAR 345KV CKT Z	720	720	0.0403	106.8586	FT RANDAL - SIOUX CITY 230KV CKT 1
FDNS	00NR	5	20SP	G15_076	TO->FROM	GRPRAR1-LNX3345.00 - GRPRAR 345KV CKT Z	720	720	0.04123	106.8283	GEN640010 1-GERALD GENTLEMAN STATION UNIT 1
FDNS	00NR	5	20SP	G15_076	TO->FROM	GRPRAR1-LNX3345.00 - GRPRAR 345KV CKT Z	720	720	0.04123	106.8172	GEN335831 1-RIVERBEND UNIT#1
FDNS	00NR	5	25SP	G15_076	TO->FROM	GRPRAR1-LNX3345.00 - GRPRAR 345KV CKT Z	720	720	0.04155	106.7943	GEN336821 1-GRAND GULF UNIT
FDNS	00NR	5	25SP	G15_076	TO->FROM	GRPRAR1-LNX3345.00 - GRPRAR 345KV CKT Z	720	720	0.04155	106.7856	BISON 3 345.00 - BUFFALO 345KV CKT 1

SOLUTION	GROUP	SCENARIO	SEASON	SOURCE	DIRECTION	MONITORED ELEMENT	RATEA (MVA)	RATEB(MVA)	TDF	TC%LOADING (% MVA)	CONTINGENCY
FDNS	00NR	5	25SP	G15_076	TO->FROM	GRPRAR1-LNX3345.00 - GRPRAR 345KV CKT Z	720	720	0.04157	106.7737	CHISAGO COUNTY - CHISAGO COUNTY 500KV CKT 1
FDNS	00NR	5	20SP	G15_076	TO->FROM	GRPRAR1-LNX3345.00 - GRPRAR 345KV CKT Z	720	720	0.04123	106.7414	GEN640011 2-GERALD GENTLEMAN STATION UNIT 2
FDNS	00NR	5	25SP	G15_076	TO->FROM	GRPRAR1-LNX3345.00 - GRPRAR 345KV CKT Z	720	720	0.04155	106.7313	GEN640010 1-GERALD GENTLEMAN STATION UNIT 1
FDNS	00NR	5	25SP	G15_076	TO->FROM	GRPRAR1-LNX3345.00 - GRPRAR 345KV CKT Z	720	720	0.03955	106.7265	SPLIT ROCK - WHITE 345KV CKT 1
FDNS	00NR	5	25SP	G15_076	TO->FROM	GRPRAR1-LNX3345.00 - GRPRAR 345KV CKT Z	720	720	0.03955	106.7265	SPLIT ROCK - WHITE 345KV CKT 1
FDNS	00NR	5	25SP	G15_076	TO->FROM	GRPRAR1-LNX3345.00 - GRPRAR 345KV CKT Z	720	720	0.03863	106.7246	G12_009IST 230.00 - LAKE PLATT 230KV CKT 1
FDNS	00NR	5	20SP	G15_076	TO->FROM	GRPRAR1-LNX3345.00 - GRPRAR 345KV CKT Z	720	720	0.04123	106.7224	GEN337910 1-ARKANSAS NUCLEAR ONE UNIT #1
FDNS	00NR	5	25SP	G15_076	TO->FROM	GRPRAR1-LNX3345.00 - GRPRAR 345KV CKT Z	720	720	0.04157	106.7224	CHISAGO COUNTY - FORBES 500KV CKT 1
FDNS	00NR	5	17SP	G15_076	TO->FROM	GRPRAR1-LNX3345.00 - GRPRAR 345KV CKT Z	720	720	0.04284	106.716	GEN620315 1-BIG STONE GEN
FDNS	00NR	5	20SP	G15_076	TO->FROM	GRPRAR1-LNX3345.00 - GRPRAR 345KV CKT Z	720	720	0.04235	106.7158	HARMONY - VALENTINE 115KV CKT 1
FDNS	00NR	5	17SP	G15_076	TO->FROM	GRPRAR1-LNX3345.00 - GRPRAR 345KV CKT Z	720	720	0.04284	106.6876	GEN661015 1-COYOTE
FDNS	00NR	5	20SP	G15_076	TO->FROM	GRPRAR1-LNX3345.00 - GRPRAR 345KV CKT Z	720	720	0.04334	106.605	FT RANDAL - SPENCER 115KV CKT 1
FDNS	00NR	5	20SP	G15_076	TO->FROM	GRPRAR1-LNX3345.00 - GRPRAR 345KV CKT Z	720	720	0.04334	106.5708	P12:115:NPPD:WAPA6:FTRANDL7:ONEILL 7:BTB
FDNS	00NR	5	20SP	G15_076	TO->FROM	GRPRAR1-LNX3345.00 - GRPRAR 345KV CKT Z	720	720	0.04334	106.5708	P12:115:UMZB:# 115 #: SE IN NE. FR-SE-ON
FDNS	00NR	5	20SP	G15_076	TO->FROM	GRPRAR1-LNX3345.00 - GRPRAR 345KV CKT Z	720	720	0.03772	106.543	SIOUXCY-LNX3345.00 - SPLIT ROCK 345KV CKT 1
FDNS	00NR	5	20SP	G15_076	TO->FROM	GRPRAR1-LNX3345.00 - GRPRAR 345KV CKT Z	720	720	0.03772	106.543	SIOUXCY-LNX3345.00 - SPLIT ROCK 345KV CKT 1
FDNS	00NR	5	25SP	G15_076	TO->FROM	GRPRAR1-LNX3345.00 - GRPRAR 345KV CKT Z	720	720	0.04155	106.5327	GEN562714 1-G15_023_4 0.6900
FDNS	00NR	5	25SP	G15_076	TO->FROM	GRPRAR1-LNX3345.00 - GRPRAR 345KV CKT Z	720	720	0.04155	106.5327	GEN562715 1-G15_023_5 0.6900
FDNS	00NR	5	25SP	G15_076	TO->FROM	GRPRAR1-LNX3345.00 - GRPRAR 345KV CKT Z	720	720	0.04034	106.5291	LETCHER - SIOUX FALLS 230KV CKT 1
FDNS	00NR	5	20SP	G15_076	TO->FROM	GRPRAR1-LNX3345.00 - GRPRAR 345KV CKT Z	720	720	0.03772	106.5062	P12:345:UMZW:# 907 #: SC2-SR IN IA. SC2-SR 345 KV LINE
FDNS	00NR	5	17SP	G15_076	TO->FROM	GRPRAR1-LNX3345.00 - GRPRAR 345KV CKT Z	720	720	0.04284	106.5051	GEN600002 3-SHERBURNE CNTY G3
FDNS	00NR	5	20SP	G15_076	TO->FROM	GRPRAR1-LNX3345.00 - GRPRAR 345KV CKT Z	720	720	0.03772	106.4729	SIOUX CITY - SIOUXCY-LNX3345.00 345KV CKT Z
FDNS	00NR	5	20SP	G15_076	TO->FROM	GRPRAR1-LNX3345.00 - GRPRAR 345KV CKT Z	720	720	0.04334	106.4515	ONEILL - SPENCER 115KV CKT 1
FDNS	00NR	5	25SP	G15_076	TO->FROM	GRPRAR1-LNX3345.00 - GRPRAR 345KV CKT Z	720	720	0.04266	106.4476	MISSION - ST FRANCIS 115KV CKT 1
FDNS	00NR	5	25SP	G15_076	TO->FROM	GRPRAR1-LNX3345.00 - GRPRAR 345KV CKT Z	720	720	0.04155	106.4311	GEN640011 2-GERALD GENTLEMAN STATION UNIT 2
FDNS	00NR	5	20SP	G15_076	TO->FROM	GRPRAR1-LNX3345.00 - GRPRAR 345KV CKT Z	720	720	0.04095	106.4243	GROTON-LNX3 345.00 - LELAND1-LNX3345.00 345KV CKT 1
FDNS	00NR	5	25SP	G15_076	TO->FROM	GRPRAR1-LNX3345.00 - GRPRAR 345KV CKT Z	720	720	0.04155	106.4059	GEN635023 3-WALTER SCOTT UNIT 3
FDNS	00NR	5	25SP	G15_076	TO->FROM	GRPRAR1-LNX3345.00 - GRPRAR 345KV CKT Z	720	720	0.04155	106.4	GEN337911 1-ARKANSAS NUCLEAR ONE UNIT #2
FDNS	00NR	5	20SP	G15_076	TO->FROM	GRPRAR1-LNX3345.00 - GRPRAR 345KV CKT Z	720	720	0.0373	106.3915	FT RANDAL - UTICA JCT 230KV CKT 1
FDNS	00NR	5	20SP	G15_076	TO->FROM	GRPRAR1-LNX3345.00 - GRPRAR 345KV CKT Z	720	720	0.04095	106.3839	GROTON - GROTON-LNX3 345.00 345KV CKT Z
FDNS	00NR	5	20SP	G15_076	TO->FROM	GRPRAR1-LNX3345.00 - GRPRAR 345KV CKT Z	720	720	0.04095	106.3756	LELAND OLDS - LELAND1-LNX3345.00 345KV CKT Z
FDNS	00NR	5	20SP	G15_076	TO->FROM	GRPRAR1-LNX3345.00 - GRPRAR 345KV CKT Z	720	720	0.04095	106.3705	P12:345:UMZB:# 109 #: LOS GRT IN ND. LOS GRT
FDNS	00NR	5	20SP	G15_076	TO->FROM	GRPRAR1-LNX3345.00 - GRPRAR 345KV CKT Z	720	720	0.04044	106.3648	HANLON - SIOUX FALLS 230KV CKT 1
FDNS	00NR	5	25SP	G15_076	TO->FROM	GRPRAR1-LNX3345.00 - GRPRAR 345KV CKT Z	720	720	0.04258	106.3443	KEYSTONE - SIDNEY1-LNX3345.00 345KV CKT 1
FDNS	00NR	5	25SP	G15_076	TO->FROM	GRPRAR1-LNX3345.00 - GRPRAR 345KV CKT Z	720	720	0.04258	106.3405	SIDNEY - SIDNEY1-LNX3345.00 345KV CKT Z
FDNS	00NR	5	25SP	G15_076	TO->FROM	GRPRAR1-LNX3345.00 - GRPRAR 345KV CKT Z	720	720	0.04155	106.2625	GEN344225 1-1CAL G1 25.000
FDNS	00NR	5	25SP	G15_076	TO->FROM	GRPRAR1-LNX3345.00 - GRPRAR 345KV CKT Z	720	720	0.04266	106.2572	HARMONY - ST FRANCIS 115KV CKT 1
FDNS	00NR	5	20SP	G15_076	TO->FROM	GRPRAR1-LNX3345.00 - GRPRAR 345KV CKT Z	720	720	0.05369	106.2567	DIXONCO 230.00 - HOSKINS 230KV CKT 1
FDNS	00NR	5	20SP	G15_076	TO->FROM	GRPRAR1-LNX3345.00 - GRPRAR 345KV CKT Z	720	720	0.04157	106.2561	GERALD GENTLEMAN STATION - KEYSTONE 345KV CKT 1
FDNS	00NR	5	20SP	G15_076	TO->FROM	GRPRAR1-LNX3345.00 - GRPRAR 345KV CKT Z	720	720	0.04251	106.2409	LAKEFIELD 3 - NOBLES 345KV CKT 1
FDNS	00NR	5	17SP	G15_076	TO->FROM	GRPRAR1-LNX3345.00 - GRPRAR 345KV CKT Z	720	720	0.04284	106.2382	GEN657748 1-YOUNG 2 GENERATOR
FDNS	00NR	5	20SP	G15_076	TO->FROM	GRPRAR1-LNX3345.00 - GRPRAR 345KV CKT Z	720	720	0.04123	106.2334	GEN337653 1-WHITE BLUFF UNIT #2
FDNS	00NR	5	25SP	G15_076	TO->FROM	GRPRAR1-LNX3345.00 - GRPRAR 345KV CKT Z	720	720	0.0413	106.2118	G09_001IST 345.00 - GROTON 345KV CKT 1
FDNS	00NR	5	20SP	G15_076	TO->FROM	GRPRAR1-LNX3345.00 - GRPRAR 345KV CKT Z	720	720	0.04123	106.1807	GEN337652 1-WHITE BLUFF UNIT #1
FDNS	00NR	5	20SP	G15_076	TO->FROM	GRPRAR1-LNX3345.00 - GRPRAR 345KV CKT Z	720	720	0.04062	106.1768	PAHOJA - SIOUX FALLS 230KV CKT 1
FDNS	00NR	5	25SP	G15_076	TO->FROM	GRPRAR1-LNX3345.00 - GRPRAR 345KV CKT Z	720	720	0.04155	106.1715	GEN336153 1-WATERFORD UNIT#3
FDNS	00NR	5	20SP	G15_076	TO->FROM	GRPRAR1-LNX3345.00 - GRPRAR 345KV CKT Z	720	720	0.04272	106.1582	SIDNEY - STEGALL 345KV CKT 1
FDNS	00NR	5	20SP	G15_076	TO->FROM	GRPRAR1-LNX3345.00 - GRPRAR 345KV CKT Z	720	720	0.04235	106.1542	AINSWORTH - VALENTINE 115KV CKT 1
FDNS	00NR	5	20SP	G15_076	TO->FROM	GRPRAR1-LNX3345.00 - GRPRAR 345KV CKT Z	720	720	0.04149	106.1524	ARROWHEAD - ARROWHEAD 230 230KV CKT 1
FDNS	00NR	5	20SP	G15_076	TO->FROM	GRPRAR1-LNX3345.00 - GRPRAR 345KV CKT Z	720	720	0.04556	106.1469	RAUN - SUB 3451 FT CAL 345KV CKT 1
FDNS	00NR	5	20SP	G15_076	TO->FROM	GRPRAR1-LNX3345.00 - GRPRAR 345KV CKT Z	720	720	0.04556	106.1469	RAUN - SUB 3451 FT CAL 345KV CKT 1
FDNS	00NR	5	25SP	G15_076	TO->FROM	GRPRAR1-LNX3345.00 - GRPRAR 345KV CKT Z	720	720	0.04961	106.1393	NUNDRWD - WAYSIDE 230KV CKT 1
FDNS	00NR	5	20SP	G15_076	TO->FROM	GRPRAR1-LNX3345.00 - GRPRAR 345KV CKT Z	720	720	0.04123	106.1258	GEN338146 1-INDEPENDENCE UNIT #2
FDNS	00NR	5	20SP	G15_076	TO->FROM	GRPRAR1-LNX3345.00 - GRPRAR 345KV CKT Z	720	720	0.04123	106.1224	GEN338143 1-INDEPENDENCE UNIT #1
FDNS	00NR	5	20SP	G15_076	TO->FROM	GRPRAR1-LNX3345.00 - GRPRAR 345KV CKT Z	720	720	0.04123	106.0994	GEN501801 1-DOLET HILLS UNIT1
FDNS	00NR	5	20SP	G15_076	TO->FROM	GRPRAR1-LNX3345.00 - GRPRAR 345KV CKT Z	720	720	0.04166	106.0654	BROOKING COUNTY - LYON COUNTY 345KV CKT 1
FDNS	00NR	5	20SP	G15_076	TO->FROM	GRPRAR1-LNX3345.00 - GRPRAR 345KV CKT Z	720	720	0.04131	106.058	ALEXMRES3 345.00 - BISON 3 345.00 345KV CKT 1
FDNS	00NR	5	17SP	G15_076	TO->FROM	GRPRAR1-LNX3345.00 - GRPRAR 345KV CKT Z	720	720	0.04284	106.0255	GEN562872 1-G15046_3 0.6900
FDNS	00NR	5	25SP	G15_076	TO->FROM	GRPRAR1-LNX3345.00 - GRPRAR 345KV CKT Z	720	720	0.04061	106.0043	FT RANDAL - SIOUX CITY 230KV CKT 1
FDNS	00NR	5	20SP	G15_076	TO->FROM	GRPRAR1-LNX3345.00 - GRPRAR 345KV CKT Z	720	720	0.04153	105.988	AS KING - EAU CLAIRE 345KV CKT 1
FDNS	00NR	5	20SP	G15_076	TO->FROM	GRPRAR1-LNX3345.00 - GRPRAR 345KV CKT Z	720	720	0.04123	105.961	GEN336252 1-NINEMILE POINT UNIT#5
FDNS	00NR	5	20SP	G15_076	TO->FROM	GRPRAR1-LNX3345.00 - GRPRAR 345KV CKT Z	720	720	0.04116	105.9503	CARPENTER - HURON 230KV CKT 1
FDNS	00NR	5	25SP	G15_076	TO->FROM	GRPRAR1-LNX3345.00 - GRPRAR 345KV CKT Z	720	720	0.04365	105.9186	FT RANDAL - SPENCER 115KV CKT 1
FDNS	00NR	5	25SP	G15_076	TO->FROM	GRPRAR1-LNX3345.00 - GRPRAR 345KV CKT Z	720	720	0.04365	105.8882	P12:115:NPPD:WAPA6:FTRANDL7:ONEILL 7:BTB
FDNS	00NR	5	25SP	G15_076	TO->FROM	GRPRAR1-LNX3345.00 - GRPRAR 345KV CKT Z	720	720	0.04365	105.8882	P12:115:UMZB:# 115 #: SE IN NE. FR-SE-ON
FDNS	00NR	5	20SP	G15_076	TO->FROM	GRPRAR1-LNX3345.00 - GRPRAR 345KV CKT Z	720	720	0.04123	105.8808	GEN336251 1-NINEMILE POINT UNIT#4
FDNS	00NR	5	20SP	G15_076	TO->FROM	GRPRAR1-LNX3345.00 - GRPRAR 345KV CKT Z	720	720	0.04123	105.8626	GEN336831 1-BAXTER WILSON SES
FDNS	00NR	5	20SP	G15_076	TO->FROM	GRPRAR1-LNX3345.00 - GRPRAR 345KV CKT Z	720	720	0.03715	105.8534	RASMUSN - UTICA JCT 230KV CKT 1
FDNS	00NR	5	25SP	G15_076	TO->FROM	GRPRAR1-LNX3345.00 - GRPRAR 345KV CKT Z	720	720	0.04155	105.8512	GEN335831 1-RIVERBEND UNIT#1
FDNS	00NR	5	20SP	G15_076	TO->FROM	GRPRAR1-LNX3345.00 - GRPRAR 345KV CKT Z	720	720	0.04116	105.8447	HURON - WATERTOWN 230KV CKT 2
FDNS	00NR	5	20SP	G15_076	TO->FROM	GRPRAR1-LNX3345.00 - GRPRAR 345KV CKT Z	720	720	0.04116	105.8447	HURON - WATERTOWN 230KV CKT 2
FDNS	00NR	5	20SP	G15_076	TO->FROM	GRPRAR1-LNX3345.00 - GRPRAR 345KV CKT Z	720	720	0.04123	105.8096	GEN337041 1-GERALD ANDRUS
FDNS	00NR	5	20SP	G15_076	TO->FROM	GRPRAR1-LNX3345.00 - GRPRAR 345KV CKT Z	720	720	0.04116	105.8037	CARPENTER - WATERTOWN 230KV CKT 1
FDNS	00NR	5	20SP	G15_076	TO->FROM	GRPRAR1-LNX3345.00 - GRPRAR 345KV CKT Z	720	720	0.04116	105.8037	CARPENTER - WATERTOWN 230KV CKT 1
FDNS	00NR	5	20SP	G15_076	TO->FROM	GRPRAR1-LNX3345.00 - GRPRAR 345KV CKT Z	720	720	0.04123	105.7772	GEN501813 1-RODEMACHER UNIT 3
FDNS	00NR	5	20SP	G15_076	TO->FROM	GRPRAR1-LNX3345.00 - GRPRAR 345KV CKT Z	720	720	0.04187	105.7764	HAZLETON - MITCHLCO3 345.00 345KV CKT 1
FDNS	00NR	5	25SP	G15_076	TO->FROM	GRPRAR1-LNX3345.00 - GRPRAR 345KV CKT Z	720	720	0.04365	105.7656	ONEILL - SPENCER 115KV CKT 1
FDNS	00NR	5	20SP	G15_076	TO->FROM	GRPRAR1-LNX3345.00 - GRPRAR 345KV CKT Z	720	720	0.04062	105.7533	EAGLE 4 230.00 - PAHOJA 230KV CKT 1
FDNS	00NR	5	20SP	G15_076	TO->FROM	GRPRAR1-LNX3345.00 - GRPRAR 345KV CKT Z	720	720	0.04152	105.7111	G15094_T 345.00 - SIDNEY2-LNX3345.00 345KV CKT 1

SOLUTION	GROUP	SCENARIO	SEASON	SOURCE	DIRECTION	MONITORED ELEMENT	RATEA (MVA)	RATEB(MVA)	TDF	TC%LOADING (% MVA)	CONTINGENCY
FDNS	00NR	5	20SP	G15_076	TO->FROM	GRPRAR1-LNX3345.00 - GRPRAR 345KV CKT Z	720	720	0.04125	105.7103	CNTSHNT3 345.00 - PRAIRIE3 345.00 345KV CKT 1
FDNS	00NR	5	20SP	G15_076	TO->FROM	GRPRAR1-LNX3345.00 - GRPRAR 345KV CKT Z	720	720	0.04152	105.7053	SIDNEY - SIDNEY2-LNX3345.00 345KV CKT Z
FDNS	00NR	5	25SP	G15_076	TO->FROM	GRPRAR1-LNX3345.00 - GRPRAR 345KV CKT Z	720	720	0.04127	105.7044	GROTON-LNX3 345.00 - LELAND1-LNX3345.00 345KV CKT 1
FDNS	00NR	5	17SP	G15_076	TO->FROM	GRPRAR1-LNX3345.00 - GRPRAR 345KV CKT Z	720	720	0.04284	105.6897	GEN659111 2-LELAND OLDS UNIT2
FDNS	00NR	5	25SP	G15_076	TO->FROM	GRPRAR1-LNX3345.00 - GRPRAR 345KV CKT Z	720	720	0.04127	105.6627	GROTON - GROTON-LNX3 345.00 345KV CKT Z
FDNS	00NR	5	25SP	G15_076	TO->FROM	GRPRAR1-LNX3345.00 - GRPRAR 345KV CKT Z	720	720	0.04127	105.6609	P12:345:UMZB:# 109 #: LOS GRT IN ND. LOS GRT
FDNS	00NR	5	25SP	G15_076	TO->FROM	GRPRAR1-LNX3345.00 - GRPRAR 345KV CKT Z	720	720	0.04127	105.6545	LELAND OLDS - LELAND1-LNX3345.00 345KV CKT Z
FDNS	00NR	5	25SP	G15_076	TO->FROM	GRPRAR1-LNX3345.00 - GRPRAR 345KV CKT Z	720	720	0.03805	105.653	SIOUXCY-LNX3345.00 - SPLIT ROCK 345KV CKT 1
FDNS	00NR	5	25SP	G15_076	TO->FROM	GRPRAR1-LNX3345.00 - GRPRAR 345KV CKT Z	720	720	0.03805	105.653	SIOUXCY-LNX3345.00 - SPLIT ROCK 345KV CKT 1
FDNS	00NR	5	25SP	G15_076	TO->FROM	GRPRAR1-LNX3345.00 - GRPRAR 345KV CKT Z	720	720	0.03761	105.6251	FT RANDAL - UTICA JCT 230KV CKT 1
FDNS	00NR	5	20SP	G15_076	TO->FROM	GRPRAR1-LNX3345.00 - GRPRAR 345KV CKT Z	720	720	0.04123	105.6214	GEN635214 4-NEAL UNIT 4
FDNS	00NR	5	25SP	G15_076	TO->FROM	GRPRAR1-LNX3345.00 - GRPRAR 345KV CKT Z	720	720	0.03805	105.6162	P12:345:UMZW:# 907 #: SC2-SR IN IA. SC2-SR 345 KV LINE
FDNS	00NR	5	20SP	G15_076	TO->FROM	GRPRAR1-LNX3345.00 - GRPRAR 345KV CKT Z	720	720	0.04123	105.6087	GEN335206 1-NELSON UNIT 6
FDNS	00NR	5	25SP	G15_076	TO->FROM	GRPRAR1-LNX3345.00 - GRPRAR 345KV CKT Z	720	720	0.03805	105.5866	SIOUX CITY - SIOUXCY-LNX3345.00 345KV CKT Z
FDNS	00NR	5	20SP	G15_076	TO->FROM	GRPRAR1-LNX3345.00 - GRPRAR 345KV CKT Z	720	720	0.04123	105.5733	GEN344897 4-1LAB G4 20.000
FDNS	00NR	5	20SP	G15_076	TO->FROM	GRPRAR1-LNX3345.00 - GRPRAR 345KV CKT Z	720	720	0.04123	105.5719	GEN344894 1-1LAB G1 20.000
FDNS	00NR	5	20SP	G15_076	TO->FROM	GRPRAR1-LNX3345.00 - GRPRAR 345KV CKT Z	720	720	0.04123	105.5719	GEN344895 2-1LAB G2 20.000
FDNS	00NR	5	20SP	G15_076	TO->FROM	GRPRAR1-LNX3345.00 - GRPRAR 345KV CKT Z	720	720	0.04123	105.5718	GEN344896 3-1LAB G3 20.000
FDNS	00NR	5	20SP	G15_076	TO->FROM	GRPRAR1-LNX3345.00 - GRPRAR 345KV CKT Z	720	720	0.04123	105.5653	GEN334440 1-SABINE UNIT 4
FDNS	00NR	5	20SP	G15_076	TO->FROM	GRPRAR1-LNX3345.00 - GRPRAR 345KV CKT Z	720	720	0.04158	105.5428	ARPIN B4 345.00 - EAU CLAIRE 345KV CKT 1
FDNS	00NR	5	20SP	G15_076	TO->FROM	GRPRAR1-LNX3345.00 - GRPRAR 345KV CKT Z	720	720	0.04123	105.5192	GEN345671 2-1RUSH G2 18.000
FDNS	00NR	5	25SP	G15_076	TO->FROM	GRPRAR1-LNX3345.00 - GRPRAR 345KV CKT Z	720	720	0.04076	105.5176	HANLON - SIOUX FALLS 230KV CKT 1
FDNS	00NR	5	20SP	G15_076	TO->FROM	GRPRAR1-LNX3345.00 - GRPRAR 345KV CKT Z	720	720	0.04123	105.5149	GEN345670 1-1RUSH G1 18.000
FDNS	00NR	5	25SP	G15_076	TO->FROM	GRPRAR1-LNX3345.00 - GRPRAR 345KV CKT Z	720	720	0.05401	105.5047	DIXONCO 230.00 - HOSKINS 230KV CKT 1
FDNS	00NR	5	25SP	G15_076	TO->FROM	GRPRAR1-LNX3345.00 - GRPRAR 345KV CKT Z	720	720	0.04155	105.5	GEN338146 1-INDEPENDENCE UNIT #2
FDNS	00NR	5	25SP	G15_076	TO->FROM	GRPRAR1-LNX3345.00 - GRPRAR 345KV CKT Z	720	720	0.04282	105.4981	LAKEFIELD 3 - NOBLES 345KV CKT 1
FDNS	00NR	5	25SP	G15_076	TO->FROM	GRPRAR1-LNX3345.00 - GRPRAR 345KV CKT Z	720	720	0.0419	105.481	GERALD GENTLEMAN STATION - KEYSTONE 345KV CKT 1
FDNS	00NR	5	20SP	G15_076	TO->FROM	GRPRAR1-LNX3345.00 - GRPRAR 345KV CKT Z	720	720	0.04123	105.4742	GEN501812 1-RODEMACHER UNIT 2
FDNS	00NR	5	20SP	G15_076	TO->FROM	GRPRAR1-LNX3345.00 - GRPRAR 345KV CKT Z	720	720	0.04123	105.4416	GEN336191 1-LITTLE GYPSY UNIT#3
FDNS	00NR	5	20SP	G15_076	TO->FROM	GRPRAR1-LNX3345.00 - GRPRAR 345KV CKT Z	720	720	0.0392	105.4263	FT THOMPSON - WESSINGTON 230KV CKT 1
FDNS	00NR	5	20SP	G15_076	TO->FROM	GRPRAR1-LNX3345.00 - GRPRAR 345KV CKT Z	720	720	0.0392	105.4263	FT THOMPSON - WESSINGTON 230KV CKT 1
FDNS	00NR	5	20SP	G15_076	TO->FROM	GRPRAR1-LNX3345.00 - GRPRAR 345KV CKT Z	720	720	0.04123	105.4189	GEN338388 1-1PLUM PT U1 23.000
FDNS	00NR	5	20SP	G15_076	TO->FROM	GRPRAR1-LNX3345.00 - GRPRAR 345KV CKT Z	720	720	0.04123	105.4179	GEN629075 1-OTTUMWA GENERATOR FOR OTTUMWA UNIT NO 1
FDNS	00NR	5	25SP	G15_076	TO->FROM	GRPRAR1-LNX3345.00 - GRPRAR 345KV CKT Z	720	720	0.04155	105.4	GEN338143 1-INDEPENDENCE UNIT #1
FDNS	00NR	5	25SP	G15_076	TO->FROM	GRPRAR1-LNX3345.00 - GRPRAR 345KV CKT Z	720	720	0.04266	105.3796	AINSWORTH - VALENTINE 115KV CKT 1
FDNS	00NR	5	20SP	G15_076	TO->FROM	GRPRAR1-LNX3345.00 - GRPRAR 345KV CKT Z	720	720	0.04123	105.3755	GEN335614 1-WILLOW GLENN UNIT#4
FDNS	00NR	5	25SP	G15_076	TO->FROM	GRPRAR1-LNX3345.00 - GRPRAR 345KV CKT Z	720	720	0.04303	105.375	SIDNEY - STEGALL 345KV CKT 1
FDNS	00NR	5	25SP	G15_076	TO->FROM	GRPRAR1-LNX3345.00 - GRPRAR 345KV CKT Z	720	720	0.04198	105.3726	BROOKING COUNTY - LYON COUNTY 345KV CKT 1
FDNS	00NR	5	25SP	G15_076	TO->FROM	GRPRAR1-LNX3345.00 - GRPRAR 345KV CKT Z	720	720	0.04093	105.3652	PAHOJA - SIOUX FALLS 230KV CKT 1
FDNS	00NR	5	20SP	G15_076	TO->FROM	GRPRAR1-LNX3345.00 - GRPRAR 345KV CKT Z	720	720	0.04123	105.3638	GEN336801 1-BAXTER WILSON UNIT #1
FDNS	00NR	5	20SP	G15_076	TO->FROM	GRPRAR1-LNX3345.00 - GRPRAR 345KV CKT Z	720	720	0.04123	105.3604	GEN336464 1-MICHOUD UNIT #3
FDNS	00NR	5	25SP	G15_076	TO->FROM	GRPRAR1-LNX3345.00 - GRPRAR 345KV CKT Z	720	720	0.04586	105.3554	RAUN - SUB 3451 FT CAL 345KV CKT 1
FDNS	00NR	5	25SP	G15_076	TO->FROM	GRPRAR1-LNX3345.00 - GRPRAR 345KV CKT Z	720	720	0.04586	105.3554	RAUN - SUB 3451 FT CAL 345KV CKT 1
FDNS	00NR	5	20SP	G15_076	TO->FROM	GRPRAR1-LNX3345.00 - GRPRAR 345KV CKT Z	720	720	0.04123	105.3494	GEN335204 1-NELSON UNIT 4
FDNS	00NR	5	20SP	G15_076	TO->FROM	GRPRAR1-LNX3345.00 - GRPRAR 345KV CKT Z	720	720	0.04123	105.3397	GEN334441 1-SABINE UNIT 5
FDNS	00NR	5	20SP	G15_076	TO->FROM	GRPRAR1-LNX3345.00 - GRPRAR 345KV CKT Z	720	720	0.04283	105.3219	GRIMES - LEHIGH 345KV CKT 1
FDNS	00NR	5	25SP	G15_076	TO->FROM	GRPRAR1-LNX3345.00 - GRPRAR 345KV CKT Z	720	720	0.04155	105.3193	GEN337653 1-WHITE BLUFF UNIT #2
FDNS	00NR	5	25SP	G15_076	TO->FROM	GRPRAR1-LNX3345.00 - GRPRAR 345KV CKT Z	720	720	0.04163	105.3167	ALEXMRES3 345.00 - BISON 3 345.00 345KV CKT 1
FDNS	00NR	5	20SP	G15_076	TO->FROM	GRPRAR1-LNX3345.00 - GRPRAR 345KV CKT Z	720	720	0.04148	105.3146	NORTH LA CROSSE - NORTH ROCHESTER 345KV CKT 1
FDNS	00NR	5	25SP	G15_076	TO->FROM	GRPRAR1-LNX3345.00 - GRPRAR 345KV CKT Z	720	720	0.04181	105.2724	ARROWHEAD - ARROWHEAD 230 230KV CKT 1
FDNS	00NR	5	20SP	G15_076	TO->FROM	GRPRAR1-LNX3345.00 - GRPRAR 345KV CKT Z	720	720	0.04188	105.2592	KOSSUTH 3 345.00 - WEBSTER 345KV CKT 1
FDNS	00NR	5	17SP	G15_076	TO->FROM	GRPRAR1-LNX3345.00 - GRPRAR 345KV CKT Z	720	720	0.04284	105.2385	GEN659103 1-ANTELOPE VALLEY UNIT1
FDNS	00NR	5	17SP	G15_076	TO->FROM	GRPRAR1-LNX3345.00 - GRPRAR 345KV CKT Z	720	720	0.04284	105.2385	GEN659107 2-ANTELOPE VALLEY UNIT2
FDNS	00NR	5	20SP	G15_076	TO->FROM	GRPRAR1-LNX3345.00 - GRPRAR 345KV CKT Z	720	720	0.04123	105.2324	P12:115:UMZW:# 162 #: NEL IN ND. FAULT ON ML-NEL-MX-GA 115 KV
FDNS	00NR	5	20SP	G15_076	TO->FROM	GRPRAR1-LNX3345.00 - GRPRAR 345KV CKT Z	720	720	0.04123	105.2298	GEN635213 3-NEAL UNIT 3
FDNS	00NR	5	20SP	G15_076	TO->FROM	GRPRAR1-LNX3345.00 - GRPRAR 345KV CKT Z	720	720	0.04123	105.2203	GEN563222 1-G15088_3 0.6900
FDNS	00NR	5	17SP	G15_076	TO->FROM	GRPRAR1-LNX3345.00 - GRPRAR 345KV CKT Z	720	720	0.04284	105.2176	BIG STONE 230/24.0KV TRANSFORMER CKT 1
FDNS	00NR	5	25SP	G15_076	TO->FROM	GRPRAR1-LNX3345.00 - GRPRAR 345KV CKT Z	720	720	0.04155	105.2157	GEN501801 1-DOLET HILLS UNIT1
FDNS	00NR	5	20SP	G15_076	TO->FROM	GRPRAR1-LNX3345.00 - GRPRAR 345KV CKT Z	720	720	0.04123	105.2056	GEN334433 1-SABINE UNIT 3
FDNS	00NR	5	20SP	G15_076	TO->FROM	GRPRAR1-LNX3345.00 - GRPRAR 345KV CKT Z	720	720	0.04102	105.2025	BROOKING COUNTY - BSSOUTH3 345.00 345KV CKT 1
FDNS	00NR	5	25SP	G15_076	TO->FROM	GRPRAR1-LNX3345.00 - GRPRAR 345KV CKT Z	720	720	0.04147	105.1944	CARPENTER - HURON 230KV CKT 1
FDNS	00NR	5	20SP	G15_076	TO->FROM	GRPRAR1-LNX3345.00 - GRPRAR 345KV CKT Z	720	720	0.04003	105.1572	MENNO JCT - TRIPP JCT 115KV CKT 1
FDNS	00NR	5	20SP	G15_076	TO->FROM	GRPRAR1-LNX3345.00 - GRPRAR 345KV CKT Z	720	720	0.04112	105.1565	HESKETT - WISHEK 230KV CKT 1
FDNS	00NR	5	20SP	G15_076	TO->FROM	GRPRAR1-LNX3345.00 - GRPRAR 345KV CKT Z	720	720	0.04157	105.1538	NMA B3 345 345.00 - NORTH LA CROSSE 345KV CKT 1
FDNS	00NR	5	20SP	G15_076	TO->FROM	GRPRAR1-LNX3345.00 - GRPRAR 345KV CKT Z	720	720	0.04722	105.1524	BLOOMFIELD - CREIGHTON 115KV CKT 1
FDNS	00NR	5	20SP	G15_076	TO->FROM	GRPRAR1-LNX3345.00 - GRPRAR 345KV CKT Z	720	720	0.04187	105.1485	ADAMS - MITCHLCO3 345.00 345KV CKT 1
FDNS	00NR	5	20SP	G15_076	TO->FROM	GRPRAR1-LNX3345.00 - GRPRAR 345KV CKT Z	720	720	0.04122	105.1428	CENTER - COYOTE 345KV CKT 1
FDNS	00NR	5	25SP	G15_076	TO->FROM	GRPRAR1-LNX3345.00 - GRPRAR 345KV CKT Z	720	720	0.04184	105.141	AS KING - EAU CLAIRE 345KV CKT 1
FDNS	00NR	5	20SP	G15_076	TO->FROM	GRPRAR1-LNX3345.00 - GRPRAR 345KV CKT Z	720	720	0.04123	105.1353	GEN336222 1-LITTLE GYPSY UNIT#2
FDNS	00NR	5	25SP	G15_076	TO->FROM	GRPRAR1-LNX3345.00 - GRPRAR 345KV CKT Z	720	720	0.04156	105.1093	CNTSHNT3 345.00 - PRAIRIE3 345.00 345KV CKT 1
FDNS	00NR	5	20SP	G15_076	TO->FROM	GRPRAR1-LNX3345.00 - GRPRAR 345KV CKT Z	720	720	0.04129	105.1092	GLENBORO SOUTH - RUGBY 230KV CKT 1
FDNS	00NR	5	20SP	G15_076	TO->FROM	GRPRAR1-LNX3345.00 - GRPRAR 345KV CKT Z	720	720	0.04123	105.102	GARRISON - JAMES TOWN 230KV CKT 1
FDNS	00NR	5	25SP	G15_076	TO->FROM	GRPRAR1-LNX3345.00 - GRPRAR 345KV CKT Z	720	720	0.04217	105.0934	HAZLETON - MITCHLCO3 345.00 345KV CKT 1
FDNS	00NR	5	20SP	G15_076	TO->FROM	GRPRAR1-LNX3345.00 - GRPRAR 345KV CKT Z	720	720	0.04112	105.0909	MERRCRT4 230.00 - WISHEK 230KV CKT 1
FDNS	00NR	5	25SP	G15_076	TO->FROM	GRPRAR1-LNX3345.00 - GRPRAR 345KV CKT Z	720	720	0.04147	105.0873	HURON - WATERTOWN 230KV CKT 2
FDNS	00NR	5	25SP	G15_076	TO->FROM	GRPRAR1-LNX3345.00 - GRPRAR 345KV CKT Z	720	720	0.04147	105.0873	HURON - WATERTOWN 230KV CKT 2
FDNS	00NR	5	20SP	G15_076	TO->FROM	GRPRAR1-LNX3345.00 - GRPRAR 345KV CKT Z	720	720	0.04123	105.0861	GEN336152 1-WATERFORD UNIT#2
FDNS	00NR	5	20SP	G15_076	TO->FROM	GRPRAR1-LNX3345.00 - GRPRAR 345KV CKT Z	720	720	0.04123	105.086	GEN336151 1-WATERFORD UNIT#1
FDNS	00NR	5	20SP	G15_076	TO->FROM	GRPRAR1-LNX3345.00 - GRPRAR 345KV CKT Z	720	720	0.04123	105.0624	GEN531447 1-HOLCOMB GENERATOR

SOLUTION	GROUP	SCENARIO	SEASON	SOURCE	DIRECTION	MONITORED ELEMENT	RATEA (MVA)	RATEB(MVA)	TDF	TC%LOADING (% MVA)	CONTINGENCY
FDNS	00NR	5	20SP	G15_076	TO->FROM	GRPRAR1-LNX3345.00 - GRPRAR 345KV CKT Z	720	720	0.04722	105.0593	BLOOMFIELD - GAVINS POINT 115KV CKT 1
FDNS	00NR	5	20SP	G15_076	TO->FROM	GRPRAR1-LNX3345.00 - GRPRAR 345KV CKT Z	720	720	0.04911	105.0586	RAUN - SIOUX CITY 345KV CKT 1
FDNS	00NR	5	20SP	G15_076	TO->FROM	GRPRAR1-LNX3345.00 - GRPRAR 345KV CKT Z	720	720	0.04911	105.0586	RAUN - SIOUX CITY 345KV CKT 1
FDNS	00NR	5	20SP	G15_076	TO->FROM	GRPRAR1-LNX3345.00 - GRPRAR 345KV CKT Z	720	720	0.04123	105.0581	GEN640009 1-COOPER NUCLEAR STATION
FDNS	00NR	5	25SP	G15_076	TO->FROM	GRPRAR1-LNX3345.00 - GRPRAR 345KV CKT Z	720	720	0.04147	105.0451	CARPENTER - WATERTOWN 230KV CKT 1
FDNS	00NR	5	25SP	G15_076	TO->FROM	GRPRAR1-LNX3345.00 - GRPRAR 345KV CKT Z	720	720	0.04147	105.0451	CARPENTER - WATERTOWN 230KV CKT 1
FDNS	00NR	5	20SP	G15_076	TO->FROM	GRPRAR1-LNX3345.00 - GRPRAR 345KV CKT Z	720	720	0.04166	105.0369	ADAMS - PLEASANT VALLEY 345KV CKT 1
FDNS	00NR	5	20SP	G15_076	TO->FROM	GRPRAR1-LNX3345.00 - GRPRAR 345KV CKT Z	720	720	0.04134	105.0346	APPLEDORN 4 230.00 - WATERTOWN 230KV CKT 1
FDNS	00NR	5	20SP	G15_076	TO->FROM	GRPRAR1-LNX3345.00 - GRPRAR 345KV CKT Z	720	720	0.04134	105.0346	APPLEDORN 4 230.00 - WATERTOWN 230KV CKT 1
FDNS	00NR	5	20SP	G15_076	TO->FROM	GRPRAR1-LNX3345.00 - GRPRAR 345KV CKT Z	720	720	0.04003	105.0267	MENNO JCT - UTICA 115KV CKT 1
FDNS	00NR	5	20SP	G15_076	TO->FROM	GRPRAR1-LNX3345.00 - GRPRAR 345KV CKT Z	720	720	0.04123	105.0199	GEN303007 1-1BC2 U2
FDNS	00NR	5	20SP	G15_076	TO->FROM	GRPRAR1-LNX3345.00 - GRPRAR 345KV CKT Z	720	720	0.04114	105.0168	BSSOUTH3 345.00 - ELLENDLMVP3 345.00 345KV CKT 1
FDNS	00NR	5	20SP	G15_076	TO->FROM	GRPRAR1-LNX3345.00 - GRPRAR 345KV CKT Z	720	720	0.04114	105.0168	BSSOUTH3 345.00 - ELLENDLMVP3 345.00 345KV CKT 1
FDNS	00NR	5	20SP	G15_076	TO->FROM	GRPRAR1-LNX3345.00 - GRPRAR 345KV CKT Z	720	720	0.04123	105.0136	GEN303006 1-1BC2 U1
FDNS	00NR	5	25SP	G15_076	TO->FROM	GRPRAR1-LNX3345.00 - GRPRAR 345KV CKT Z	720	720	0.04155	105.0081	GEN336251 1-NINEMILE POINT UNIT#4
FDNS	00NR	5	20SP	G15_076	TO->FROM	GRPRAR1-LNX3345.00 - GRPRAR 345KV CKT Z	720	720	0.04136	104.9955	ARKANSAS NUCLEAR ONE - FT SMITH 500KV CKT 1
FDNS	00NR	5	20SP	G15_076	TO->FROM	GRPRAR1-LNX3345.00 - GRPRAR 345KV CKT Z	720	720	0.04136	104.9955	ARKANSAS NUCLEAR ONE - FT SMITH 500KV CKT 1
FDNS	00NR	5	20SP	G15_076	TO->FROM	GRPRAR1-LNX3345.00 - GRPRAR 345KV CKT Z	720	720	0.04114	104.9955	ELLENDLMVP3 345.00 (1) 345/230/34.5KV TRANSFORMER CKT 1
FDNS	00NR	5	20SP	G15_076	TO->FROM	GRPRAR1-LNX3345.00 - GRPRAR 345KV CKT Z	720	720	0.04136	104.9886	ALEXMRES3 345.00 - WAITE PARK 345KV CKT 1
FDNS	00NR	5	25SP	G15_076	TO->FROM	GRPRAR1-LNX3345.00 - GRPRAR 345KV CKT Z	720	720	0.03746	104.9798	RASMUSN - UTICA JCT 230KV CKT 1
FDNS	00NR	5	25SP	G15_076	TO->FROM	GRPRAR1-LNX3345.00 - GRPRAR 345KV CKT Z	720	720	0.04183	104.9752	G15094_T 345.00 - SIDNEY2-LNX3345.00 345KV CKT 1
FDNS	00NR	5	25SP	G15_076	TO->FROM	GRPRAR1-LNX3345.00 - GRPRAR 345KV CKT Z	720	720	0.04183	104.9745	SIDNEY - SIDNEY2-LNX3345.00 345KV CKT Z
FDNS	00NR	5	25SP	G15_076	TO->FROM	GRPRAR1-LNX3345.00 - GRPRAR 345KV CKT Z	720	720	0.04155	104.973	GEN336831 1-BAXTER WILSON SES
FDNS	00NR	5	20SP	G15_076	TO->FROM	GRPRAR1-LNX3345.00 - GRPRAR 345KV CKT Z	720	720	0.04003	104.9729	P12:115:UMZZ:# 237 #: MEN IN SD. MENNO JUNCTION IS A TAP (UJ-MEN-TP).
FDNS	00NR	5	20SP	G15_076	TO->FROM	GRPRAR1-LNX3345.00 - GRPRAR 345KV CKT Z	720	720	0.04134	104.9713	APPLEDORN 4 230.00 - GRANITE FALLS 230KV CKT 1
FDNS	00NR	5	20SP	G15_076	TO->FROM	GRPRAR1-LNX3345.00 - GRPRAR 345KV CKT Z	720	720	0.04134	104.9713	APPLEDORN 4 230.00 - GRANITE FALLS 230KV CKT 1
FDNS	00NR	5	20SP	G15_076	TO->FROM	GRPRAR1-LNX3345.00 - GRPRAR 345KV CKT Z	720	720	0.04131	104.9634	BLAIR - GRANITE FALLS 230KV CKT 1
FDNS	00NR	5	20SP	G15_076	TO->FROM	GRPRAR1-LNX3345.00 - GRPRAR 345KV CKT Z	720	720	0.04131	104.9634	BLAIR - GRANITE FALLS 230KV CKT 1
FDNS	00NR	5	20SP	G15_076	TO->FROM	GRPRAR1-LNX3345.00 - GRPRAR 345KV CKT Z	720	720	0.04142	104.9565	NORTH ROCHESTER - PRAIRIE ISLAND 345KV CKT 1
FDNS	00NR	5	20SP	G15_076	TO->FROM	GRPRAR1-LNX3345.00 - GRPRAR 345KV CKT Z	720	720	0.04065	104.9503	WINNER - WITTEN 115KV CKT 1
FDNS	00NR	5	20SP	G15_076	TO->FROM	GRPRAR1-LNX3345.00 - GRPRAR 345KV CKT Z	720	720	0.04123	104.9478	GEN303008 1-1BC2 U3
FDNS	00NR	5	20SP	G15_076	TO->FROM	GRPRAR1-LNX3345.00 - GRPRAR 345KV CKT Z	720	720	0.04123	104.9426	GEN336170 1-GULF OXY U4
FDNS	00NR	5	20SP	G15_076	TO->FROM	GRPRAR1-LNX3345.00 - GRPRAR 345KV CKT Z	720	720	0.04123	104.9285	GEN641089 2-ENERGY CENTER 2
FDNS	00NR	5	25SP	G15_076	TO->FROM	GRPRAR1-LNX3345.00 - GRPRAR 345KV CKT Z	720	720	0.04155	104.9151	GEN337041 1-GERALD ANDRUS
FDNS	00NR	5	25SP	G15_076	TO->FROM	GRPRAR1-LNX3345.00 - GRPRAR 345KV CKT Z	720	720	0.04093	104.9088	EAGLE 4 230.00 - PAHOJA 230KV CKT 1
FDNS	00NR	5	20SP	G15_076	TO->FROM	GRPRAR1-LNX3345.00 - GRPRAR 345KV CKT Z	720	720	0.04152	104.9066	G15094_T 345.00 - LARAMIE RIVER 345KV CKT 1
FDNS	00NR	5	20SP	G15_076	TO->FROM	GRPRAR1-LNX3345.00 - GRPRAR 345KV CKT Z	720	720	0.04123	104.9055	GEN562921 1-G15054_2 0.6900
FDNS	00NR	5	20SP	G15_076	TO->FROM	GRPRAR1-LNX3345.00 - GRPRAR 345KV CKT Z	720	720	0.04418	104.9017	STEGALL - STEGALL TRANSFORMER 230KV CKT 1
FDNS	00NR	5	25SP	G15_076	TO->FROM	GRPRAR1-LNX3345.00 - GRPRAR 345KV CKT Z	720	720	0.04155	104.8946	GEN501813 1-RODEMACHER UNIT 3
FDNS	00NR	5	20SP	G15_076	TO->FROM	GRPRAR1-LNX3345.00 - GRPRAR 345KV CKT Z	720	720	0.04418	104.8944	P13:230-345:NPPD:STEGALL3:KV3A
FDNS	00NR	5	20SP	G15_076	TO->FROM	GRPRAR1-LNX3345.00 - GRPRAR 345KV CKT Z	720	720	0.04124	104.8872	FARGO - JAMES TOWN 230KV CKT 1
FDNS	00NR	5	20SP	G15_076	TO->FROM	GRPRAR1-LNX3345.00 - GRPRAR 345KV CKT Z	720	720	0.04175	104.886	HUNTLEY3 345.00 - LEDYARD3 345.00 345KV CKT 1
FDNSLock	00NR	5	20SP	G15_076	TO->FROM	GRPRAR1-LNX3345.00 - GRPRAR 345KV CKT Z	720	720	0.04418	104.8731	STEGALL (SGQ KV3A) 345/230/13.8KV TRANSFORMER CKT 1
FDNS	00NR	5	20SP	G15_076	TO->FROM	GRPRAR1-LNX3345.00 - GRPRAR 345KV CKT Z	720	720	0.04123	104.8693	P13:230:UMZW:# 2218 #: FP IN MT. LOSS OF TRANSFORMER (AT2).
FDNS	00NR	5	20SP	G15_076	TO->FROM	GRPRAR1-LNX3345.00 - GRPRAR 345KV CKT Z	720	720	0.04124	104.8661	FARGO - JAMES TOWN 230KV CKT 2
FDNS	00NR	5	20SP	G15_076	TO->FROM	GRPRAR1-LNX3345.00 - GRPRAR 345KV CKT Z	720	720	0.04123	104.8632	GEN501811 1-RODEMACHER UNIT 1
FDNS	00NR	5	20SP	G15_076	TO->FROM	GRPRAR1-LNX3345.00 - GRPRAR 345KV CKT Z	720	720	0.04123	104.8505	GEN562596 1-G14_059_3 0.6900
FDNS	00NR	5	20SP	G15_076	TO->FROM	GRPRAR1-LNX3345.00 - GRPRAR 345KV CKT Z	720	720	0.04172	104.8442	P13:230-345:NPPD:SIDNEY 3:KV2A
FDNS	00NR	5	20SP	G15_076	TO->FROM	GRPRAR1-LNX3345.00 - GRPRAR 345KV CKT Z	720	720	0.04172	104.8441	SIDNEY (SDQ KV2A) 345/230/13.8KV TRANSFORMER CKT 1
FDNS	00NR	5	20SP	G15_076	TO->FROM	GRPRAR1-LNX3345.00 - GRPRAR 345KV CKT Z	720	720	0.04172	104.844	SIDNEY - SIDNEY TRANSFORMER 230KV CKT 1
FDNS	00NR	5	20SP	G15_076	TO->FROM	GRPRAR1-LNX3345.00 - GRPRAR 345KV CKT Z	720	720	0.04123	104.8371	BISMARK - JAMES TOWN 230KV CKT 1
FDNS	00NR	5	20SP	G15_076	TO->FROM	GRPRAR1-LNX3345.00 - GRPRAR 345KV CKT Z	720	720	0.04123	104.8285	BISMARK - WEBER 230KV CKT 1
FDNS	00NR	5	20SP	G15_076	TO->FROM	GRPRAR1-LNX3345.00 - GRPRAR 345KV CKT Z	720	720	0.04175	104.8196	P13:115-230:TSGT:SIDNEY-KV1A
FDNS	00NR	5	20SP	G15_076	TO->FROM	GRPRAR1-LNX3345.00 - GRPRAR 345KV CKT Z	720	720	0.04123	104.8178	TOLK STATION EAST 230/24.0KV TRANSFORMER CKT 1
FDNS	00NR	5	20SP	G15_076	TO->FROM	GRPRAR1-LNX3345.00 - GRPRAR 345KV CKT Z	720	720	0.04123	104.8133	JAMES TOWN - WEBER 230KV CKT 1
FDNS	00NR	5	20SP	G15_076	TO->FROM	GRPRAR1-LNX3345.00 - GRPRAR 345KV CKT Z	720	720	0.0419	104.812	P12:230:UMZW:# 733 #: FT IN SD. FT-BG2 LINE FAULT
FDNS	00NR	5	20SP	G15_076	TO->FROM	GRPRAR1-LNX3345.00 - GRPRAR 345KV CKT Z	720	720	0.04123	104.8116	GEN334071 1-LEWIS CREEK 2
FDNS	00NR	5	20SP	G15_076	TO->FROM	GRPRAR1-LNX3345.00 - GRPRAR 345KV CKT Z	720	720	0.04164	104.8094	HUNTLEY3 345.00 - LAKEFIELD 3 345KV CKT 1
FDNS	00NR	5	20SP	G15_076	TO->FROM	GRPRAR1-LNX3345.00 - GRPRAR 345KV CKT Z	720	720	0.04123	104.8083	GEN334070 1-LEWIS CREEK 1
FDNS	00NR	5	20SP	G15_076	TO->FROM	GRPRAR1-LNX3345.00 - GRPRAR 345KV CKT Z	720	720	0.04222	104.8066	NOBLES - SPLIT ROCK 345KV CKT 1
FDNS	00NR	5	20SP	G15_076	TO->FROM	GRPRAR1-LNX3345.00 - GRPRAR 345KV CKT Z	720	720	0.04123	104.8028	GEN532751 1-WOLF CREEK GENERATING STATION UNIT 1
FDNS	00NR	5	20SP	G15_076	TO->FROM	GRPRAR1-LNX3345.00 - GRPRAR 345KV CKT Z	720	720	0.04095	104.7949	FT THOMPSON - HURON 230KV CKT 1
FDNS	00NR	5	20SP	G15_076	TO->FROM	GRPRAR1-LNX3345.00 - GRPRAR 345KV CKT Z	720	720	0.04095	104.7949	FT THOMPSON - HURON 230KV CKT 1
FDNS	00NR	5	20SP	G15_076	TO->FROM	GRPRAR1-LNX3345.00 - GRPRAR 345KV CKT Z	720	720	0.04095	104.7949	FT THOMPSON - HURON 230KV CKT 2
FDNS	00NR	5	20SP	G15_076	TO->FROM	GRPRAR1-LNX3345.00 - GRPRAR 345KV CKT Z	720	720	0.04095	104.7949	FT THOMPSON - HURON 230KV CKT 2
FDNS	00NR	5	20SP	G15_076	TO->FROM	GRPRAR1-LNX3345.00 - GRPRAR 345KV CKT Z	720	720	0.04123	104.7914	LAWRENCE ENERGY CENTER UNIT 5 - LAWRENCE HILL 230KV CKT 1
FDNS	00NR	5	20SP	G15_076	TO->FROM	GRPRAR1-LNX3345.00 - GRPRAR 345KV CKT Z	720	720	0.04123	104.7914	LAWRENCE ENERGY CENTER UNIT 5 230/24.0KV TRANSFORMER CKT 1
FDNS	00NR	5	20SP	G15_076	TO->FROM	GRPRAR1-LNX3345.00 - GRPRAR 345KV CKT Z	720	720	0.04123	104.778	GEN636641 1-LOUISA UNIT 1
FDNS	00NR	5	20SP	G15_076	TO->FROM	GRPRAR1-LNX3345.00 - GRPRAR 345KV CKT Z	720	720	0.04065	104.7769	GREGORY - WINNER 115KV CKT 1
FDNS	00NR	5	20SP	G15_076	TO->FROM	GRPRAR1-LNX3345.00 - GRPRAR 345KV CKT Z	720	720	0.04123	104.7767	GEN337766 1-TRACTEBEL UNIT S1
FDNS	00NR	5	20SP	G15_076	TO->FROM	GRPRAR1-LNX3345.00 - GRPRAR 345KV CKT Z	720	720	0.04123	104.7747	BALTA - RAMSEY 230KV CKT 1
FDNS	00NR	5	20SP	G15_076	TO->FROM	GRPRAR1-LNX3345.00 - GRPRAR 345KV CKT Z	720	720	0.04123	104.7737	PRAIRIE ISLAND 345/20.0KV TRANSFORMER CKT 1
FDNS	00NR	5	20SP	G15_076	TO->FROM	GRPRAR1-LNX3345.00 - GRPRAR 345KV CKT Z	720	720	0.04123	104.7722	PRAIRIE ISLAND 345/20.0KV TRANSFORMER CKT 2
FDNS	00NR	5	20SP	G15_076	TO->FROM	GRPRAR1-LNX3345.00 - GRPRAR 345KV CKT Z	720	720	0.04065	104.7677	P12:115:UMZW:# 172 #: WI IN SD.
FDNS	00NR	5	20SP	G15_076	TO->FROM	GRPRAR1-LNX3345.00 - GRPRAR 345KV CKT Z	720	720	0.0419	104.7665	LOWERBRULE 4230.00 - RELIANCE 4 230.00 230KV CKT 1
FDNS	00NR	5	20SP	G15_076	TO->FROM	GRPRAR1-LNX3345.00 - GRPRAR 345KV CKT Z	720	720	0.04126	104.7493	FORMAN - HANKINSON 230KV CKT 1
FDNS	00NR	5	20SP	G15_076	TO->FROM	GRPRAR1-LNX3345.00 - GRPRAR 345KV CKT Z	720	720	0.04123	104.7475	GEN659118 1-LARAMIE RIVER UNIT1
FDNS	00NR	5	20SP	G15_076	TO->FROM	GRPRAR1-LNX3345.00 - GRPRAR 345KV CKT Z	720	720	0.04123	104.7413	GEN501910 1-ACADIA UNIT ST1
FDNS	00NR	5	25SP	G15_076	TO->FROM	GRPRAR1-LNX3345.00 - GRPRAR 345KV CKT Z	720	720	0.04155	104.7364	GEN335206 1-NELSON UNIT 6

SOLUTION	GROUP	SCENARIO	SEASON	SOURCE	DIRECTION	MONITORED ELEMENT	RATEA (MVA)	RATEB(MVA)	TDF	TC%LOADING (% MVA)	CONTINGENCY
FDNS	00NR	5	20SP	G15_076	TO->FROM	GRPRAR1-LNX3345.00 - GRPRAR 345KV CKT Z	720	720	0.04123	104.729	ELM CREEK - MONTICELLO 345KV CKT 1
FDNS	00NR	5	25SP	G15_076	TO->FROM	GRPRAR1-LNX3345.00 - GRPRAR 345KV CKT Z	720	720	0.04189	104.7274	ARPIN B4 345.00 - EAU CLAIRE 345KV CKT 1
FDNS	00NR	5	20SP	G15_076	TO->FROM	GRPRAR1-LNX3345.00 - GRPRAR 345KV CKT Z	720	720	0.04123	104.7223	TATANKA 230/34.5KV TRANSFORMER CKT 1
FDNS	00NR	5	25SP	G15_076	TO->FROM	GRPRAR1-LNX3345.00 - GRPRAR 345KV CKT Z	720	720	0.04155	104.7136	GEN334440 1-SABINE UNIT 4
FDNS	00NR	5	25SP	G15_076	TO->FROM	GRPRAR1-LNX3345.00 - GRPRAR 345KV CKT Z	720	720	0.04155	104.7122	GEN635214 4-NEAL UNIT 4
FDNS	00NR	5	20SP	G15_076	TO->FROM	GRPRAR1-LNX3345.00 - GRPRAR 345KV CKT Z	720	720	0.04123	104.7114	GEN336221 1-LITTLE GYPSY UNIT#1
FDNS	00NR	5	20SP	G15_076	TO->FROM	GRPRAR1-LNX3345.00 - GRPRAR 345KV CKT Z	720	720	0.04123	104.7096	GEN337757 1-DUKE HOTSPRINGS STG1
FDNS	00NR	5	20SP	G15_076	TO->FROM	GRPRAR1-LNX3345.00 - GRPRAR 345KV CKT Z	720	720	0.04126	104.6921	AUDUBON - SHEYNNE 230KV CKT 1
FDNS	00NR	5	20SP	G15_076	TO->FROM	GRPRAR1-LNX3345.00 - GRPRAR 345KV CKT Z	720	720	0.04123	104.6902	GEN345765 H-1SIOUX 2 18.000
FDNS	00NR	5	25SP	G15_076	TO->FROM	GRPRAR1-LNX3345.00 - GRPRAR 345KV CKT Z	720	720	0.04155	104.6822	GEN344897 4-1LAB G4 20.000
FDNS	00NR	5	25SP	G15_076	TO->FROM	GRPRAR1-LNX3345.00 - GRPRAR 345KV CKT Z	720	720	0.04155	104.6809	GEN344894 1-1LAB G1 20.000
FDNS	00NR	5	25SP	G15_076	TO->FROM	GRPRAR1-LNX3345.00 - GRPRAR 345KV CKT Z	720	720	0.04155	104.6809	GEN344895 2-1LAB G2 20.000
FDNS	00NR	5	25SP	G15_076	TO->FROM	GRPRAR1-LNX3345.00 - GRPRAR 345KV CKT Z	720	720	0.04155	104.6808	GEN344896 3-1LAB G3 20.000
FDNS	00NR	5	20SP	G15_076	TO->FROM	GRPRAR1-LNX3345.00 - GRPRAR 345KV CKT Z	720	720	0.04099	104.6764	MT VERN - STORLA 115KV CKT 1
FDNS	00NR	5	20SP	G15_076	TO->FROM	GRPRAR1-LNX3345.00 - GRPRAR 345KV CKT Z	720	720	0.04123	104.6754	GEN337764 1-TRACTEBEL UNIT C1
FDNS	00NR	5	20SP	G15_076	TO->FROM	GRPRAR1-LNX3345.00 - GRPRAR 345KV CKT Z	720	720	0.04123	104.6754	GEN337765 1-TRACTEBEL UNIT C2
FDNS	00NR	5	20SP	G15_076	TO->FROM	GRPRAR1-LNX3345.00 - GRPRAR 345KV CKT Z	720	720	0.04135	104.6736	FRANKS - HUBEN 345KV CKT 1
FDNS	00NR	5	20SP	G15_076	TO->FROM	GRPRAR1-LNX3345.00 - GRPRAR 345KV CKT Z	720	720	0.04123	104.6725	GEN334431 1-SABINE UNIT 1
FDNS	00NR	5	20SP	G15_076	TO->FROM	GRPRAR1-LNX3345.00 - GRPRAR 345KV CKT Z	720	720	0.04123	104.6725	GEN334432 1-SABINE UNIT 2
FDNS	00NR	5	20SP	G15_076	TO->FROM	GRPRAR1-LNX3345.00 - GRPRAR 345KV CKT Z	720	720	0.04123	104.6684	GEN336446 1-MICHOUD UNIT #2
FDNS	00NR	5	20SP	G15_076	TO->FROM	GRPRAR1-LNX3345.00 - GRPRAR 345KV CKT Z	720	720	0.04181	104.6678	P12:115:NPPD:WAPA1:CHADRON7:BOXBUTE7:BTB
FDNS	00NR	5	20SP	G15_076	TO->FROM	GRPRAR1-LNX3345.00 - GRPRAR 345KV CKT Z	720	720	0.05365	104.6661	BELDEN - HOSKINS 115KV CKT 1
FDNS	00NR	5	20SP	G15_076	TO->FROM	GRPRAR1-LNX3345.00 - GRPRAR 345KV CKT Z	720	720	0.04126	104.6644	LELAND OLDS - STANTON 230KV CKT 1
FDNS	00NR	5	20SP	G15_076	TO->FROM	GRPRAR1-LNX3345.00 - GRPRAR 345KV CKT Z	720	720	0.04126	104.6644	LELAND OLDS - STANTON 230KV CKT 1
FDNS	00NR	5	20SP	G15_076	TO->FROM	GRPRAR1-LNX3345.00 - GRPRAR 345KV CKT Z	720	720	0.04147	104.6605	OVEXFRMCCOVE
FDNS	00NR	5	25SP	G15_076	TO->FROM	GRPRAR1-LNX3345.00 - GRPRAR 345KV CKT Z	720	720	0.03952	104.6547	FT THOMPSON - WESSINGTON 230KV CKT 1
FDNS	00NR	5	25SP	G15_076	TO->FROM	GRPRAR1-LNX3345.00 - GRPRAR 345KV CKT Z	720	720	0.03952	104.6547	FT THOMPSON - WESSINGTON 230KV CKT 1
FDNS	00NR	5	25SP	G15_076	TO->FROM	GRPRAR1-LNX3345.00 - GRPRAR 345KV CKT Z	720	720	0.0416	104.6497	GLENBORO SOUTH - RUGBY 230KV CKT 1
FDNS	00NR	5	20SP	G15_076	TO->FROM	GRPRAR1-LNX3345.00 - GRPRAR 345KV CKT Z	720	720	0.04197	104.6487	DENISON - SIOUX CITY 230KV CKT 1
FDNS	00NR	5	20SP	G15_076	TO->FROM	GRPRAR1-LNX3345.00 - GRPRAR 345KV CKT Z	720	720	0.04123	104.6437	GRAND GULF 500/22.0KV TRANSFORMER CKT 1
FDNS	00NR	5	20SP	G15_076	TO->FROM	GRPRAR1-LNX3345.00 - GRPRAR 345KV CKT Z	720	720	0.04123	104.6426	GEN562912 1-G15053_3 0.6900
FDNS	00NR	5	20SP	G15_076	TO->FROM	GRPRAR1-LNX3345.00 - GRPRAR 345KV CKT Z	720	720	0.04222	104.642	PLYMOUTH - SIOUX CITY 161KV CKT 1
FDNS	00NR	5	20SP	G15_076	TO->FROM	GRPRAR1-LNX3345.00 - GRPRAR 345KV CKT Z	720	720	0.04222	104.642	PLYMOUTH - SIOUX CITY 161KV CKT 1
FDNS	00NR	5	20SP	G15_076	TO->FROM	GRPRAR1-LNX3345.00 - GRPRAR 345KV CKT Z	720	720	0.04128	104.6386	FERGSFL4 230.00 - WAHPETON 230KV CKT 1
FDNS	00NR	5	20SP	G15_076	TO->FROM	GRPRAR1-LNX3345.00 - GRPRAR 345KV CKT Z	720	720	0.04123	104.6367	GEN336242 1-1NMIL ST1 18.000
FDNS	00NR	5	20SP	G15_076	TO->FROM	GRPRAR1-LNX3345.00 - GRPRAR 345KV CKT Z	720	720	0.04123	104.6354	GEN501823 1-TECHE UNIT 3
FDNS	00NR	5	25SP	G15_076	TO->FROM	GRPRAR1-LNX3345.00 - GRPRAR 345KV CKT Z	720	720	0.04155	104.6333	GEN338388 1-1PLUM PT U1 23.000
FDNS	00NR	5	20SP	G15_076	TO->FROM	GRPRAR1-LNX3345.00 - GRPRAR 345KV CKT Z	720	720	0.04125	104.6306	FORMAN - OAKES 230KV CKT 1
FDNS	00NR	5	25SP	G15_076	TO->FROM	GRPRAR1-LNX3345.00 - GRPRAR 345KV CKT Z	720	720	0.04155	104.6293	GEN345671 2-1RUSH G2 18.000
FDNS	00NR	5	20SP	G15_076	TO->FROM	GRPRAR1-LNX3345.00 - GRPRAR 345KV CKT Z	720	720	0.04125	104.6279	ELLENDLMVP4 230.00 - OAKES 230KV CKT 1
FDNS	00NR	5	20SP	G15_076	TO->FROM	GRPRAR1-LNX3345.00 - GRPRAR 345KV CKT Z	720	720	0.04125	104.6279	ELLENDLMVP4 230.00 - OAKES 230KV CKT 1
FDNS	00NR	5	25SP	G15_076	TO->FROM	GRPRAR1-LNX3345.00 - GRPRAR 345KV CKT Z	720	720	0.04155	104.6254	GEN345670 1-1RUSH G1 18.000
FDNS	00NR	5	20SP	G15_076	TO->FROM	GRPRAR1-LNX3345.00 - GRPRAR 345KV CKT Z	720	720	0.04124	104.622	PRAIRIE - WINGER 230KV CKT 1
FDNS	00NR	5	20SP	G15_076	TO->FROM	GRPRAR1-LNX3345.00 - GRPRAR 345KV CKT Z	720	720	0.04123	104.6191	GEN345756 H-1SIOUX 1 18.000
FDNS	00NR	5	20SP	G15_076	TO->FROM	GRPRAR1-LNX3345.00 - GRPRAR 345KV CKT Z	720	720	0.04181	104.6171	CHADRON - DUNLAP 115KV CKT 1
FDNS	00NR	5	20SP	G15_076	TO->FROM	GRPRAR1-LNX3345.00 - GRPRAR 345KV CKT Z	720	720	0.0419	104.6136	RELIANCE 4 230.00 - WITTEN 4 230.00 230KV CKT 1
FDNS	00NR	5	25SP	G15_076	TO->FROM	GRPRAR1-LNX3345.00 - GRPRAR 345KV CKT Z	720	720	0.04155	104.6122	GEN501812 1-RODEMACHER UNIT 2
FDNS	00NR	5	20SP	G15_076	TO->FROM	GRPRAR1-LNX3345.00 - GRPRAR 345KV CKT Z	720	720	0.04123	104.6114	J316_SUB 230.00 230/34.5KV TRANSFORMER CKT 1
FDNS	00NR	5	20SP	G15_076	TO->FROM	GRPRAR1-LNX3345.00 - GRPRAR 345KV CKT Z	720	720	0.04129	104.6098	HANKINSON - WAHPETON 230KV CKT 1
FDNS	00NR	5	20SP	G15_076	TO->FROM	GRPRAR1-LNX3345.00 - GRPRAR 345KV CKT Z	720	720	0.04142	104.6093	HAMPTON CORNER - NORTH ROCHESTER 345KV CKT 1
FDNS	00NR	5	20SP	G15_076	TO->FROM	GRPRAR1-LNX3345.00 - GRPRAR 345KV CKT Z	720	720	0.04128	104.6055	FERGSFL4 230.00 - GRE-SILVRLK4230.00 230KV CKT 1
FDNS	00NR	5	20SP	G15_076	TO->FROM	GRPRAR1-LNX3345.00 - GRPRAR 345KV CKT Z	720	720	0.04123	104.602	GEN345832 1-1TS G1 13.800
FDNS	00NR	5	20SP	G15_076	TO->FROM	GRPRAR1-LNX3345.00 - GRPRAR 345KV CKT Z	720	720	0.04123	104.6017	GEN345841 2-1TS G2 13.800
FDNS	00NR	5	25SP	G15_076	TO->FROM	GRPRAR1-LNX3345.00 - GRPRAR 345KV CKT Z	720	720	0.04155	104.6	GEN629075 1-OTTUMWA GENERATOR FOR OTTUMWA UNIT NO 1
FDNS	00NR	5	20SP	G15_076	TO->FROM	GRPRAR1-LNX3345.00 - GRPRAR 345KV CKT Z	720	720	0.04123	104.5997	GEN334031 1-FRONTIER UNIT 2
FDNS	00NR	5	20SP	G15_076	TO->FROM	GRPRAR1-LNX3345.00 - GRPRAR 345KV CKT Z	720	720	0.04123	104.5991	GEN334030 1-FRONTIER UNIT 1
FDNS	00NR	5	20SP	G15_076	TO->FROM	GRPRAR1-LNX3345.00 - GRPRAR 345KV CKT Z	720	720	0.04123	104.5956	JUDSON LARGE 115/15.0KV TRANSFORMER CKT 1
FDNS	00NR	5	20SP	G15_076	TO->FROM	GRPRAR1-LNX3345.00 - GRPRAR 345KV CKT Z	720	720	0.04123	104.5956	JUDSON LARGE 115/15.0KV TRANSFORMER CKT 1
FDNS	00NR	5	20SP	G15_076	TO->FROM	GRPRAR1-LNX3345.00 - GRPRAR 345KV CKT Z	720	720	0.04123	104.5951	GEN336944 1-REX BROWN
FDNS	00NR	5	20SP	G15_076	TO->FROM	GRPRAR1-LNX3345.00 - GRPRAR 345KV CKT Z	720	720	0.04123	104.5922	GEN501970 1-EVANGELINE UNIT 7
FDNS	00NR	5	25SP	G15_076	TO->FROM	GRPRAR1-LNX3345.00 - GRPRAR 345KV CKT Z	720	720	0.04155	104.5901	GEN336191 1-LITTLE GYPSY UNIT#3
FDNS	00NR	5	20SP	G15_076	TO->FROM	GRPRAR1-LNX3345.00 - GRPRAR 345KV CKT Z	720	720	0.04123	104.5895	OKLAUN 345/24.0KV TRANSFORMER CKT 1
FDNS	00NR	5	20SP	G15_076	TO->FROM	GRPRAR1-LNX3345.00 - GRPRAR 345KV CKT Z	720	720	0.04123	104.5845	GEN335612 1-WILLOW GLENN UNIT#2
FDNS	00NR	5	20SP	G15_076	TO->FROM	GRPRAR1-LNX3345.00 - GRPRAR 345KV CKT Z	720	720	0.04123	104.5841	GEN635693 3-GREATER DES MOINES ENERGY CENTER ST
FDNS	00NR	5	20SP	G15_076	TO->FROM	GRPRAR1-LNX3345.00 - GRPRAR 345KV CKT Z	720	720	0.04227	104.5839	MARTIN - SHANNON 115KV CKT 1
FDNS	00NR	5	20SP	G15_076	TO->FROM	GRPRAR1-LNX3345.00 - GRPRAR 345KV CKT Z	720	720	0.04153	104.5813	BYRON - NORTH ROCHESTER 345KV CKT 1
FDNS	00NR	5	20SP	G15_076	TO->FROM	GRPRAR1-LNX3345.00 - GRPRAR 345KV CKT Z	720	720	0.04137	104.5789	GRE-CEDARMT3345.00 - HELENA 345KV CKT 1
FDNS	00NR	5	20SP	G15_076	TO->FROM	GRPRAR1-LNX3345.00 - GRPRAR 345KV CKT Z	720	720	0.04137	104.5789	GRE-CEDARMT3345.00 - HELENA 345KV CKT 2
FDNS	00NR	5	25SP	G15_076	TO->FROM	GRPRAR1-LNX3345.00 - GRPRAR 345KV CKT Z	720	720	0.04314	104.5754	GRIMES - LEHIGH 345KV CKT 1
FDNS	00NR	5	20SP	G15_076	TO->FROM	GRPRAR1-LNX3345.00 - GRPRAR 345KV CKT Z	720	720	0.04123	104.5745	GEN337430 1-PERYVILLE UNIT #3
FDNS	00NR	5	20SP	G15_076	TO->FROM	GRPRAR1-LNX3345.00 - GRPRAR 345KV CKT Z	720	720	0.04123	104.5743	GEN337428 1-PERYVILLE UNIT #1
FDNS	00NR	5	20SP	G15_076	TO->FROM	GRPRAR1-LNX3345.00 - GRPRAR 345KV CKT Z	720	720	0.04123	104.5708	P13:230-345:NPPD:NUCOR-1
FDNS	00NR	5	20SP	G15_076	TO->FROM	GRPRAR1-LNX3345.00 - GRPRAR 345KV CKT Z	720	720	0.03938	104.568	FT RANDAL - WHITE SWAN 115KV CKT 1
FDNS	00NR	5	20SP	G15_076	TO->FROM	GRPRAR1-LNX3345.00 - GRPRAR 345KV CKT Z	720	720	0.0419	104.5624	WITTEN 4 230.00 () 230/115/13.8KV TRANSFORMER CKT 1
FDNS	00NR	5	25SP	G15_076	TO->FROM	GRPRAR1-LNX3345.00 - GRPRAR 345KV CKT Z	720	720	0.04219	104.5612	KOSSUTH 3 345.00 - WEBSTER 345KV CKT 1
FDNS	00NR	5	20SP	G15_076	TO->FROM	GRPRAR1-LNX3345.00 - GRPRAR 345KV CKT Z	720	720	0.04123	104.5596	GEN562438 1-G13-032 0.6900
FDNS	00NR	5	20SP	G15_076	TO->FROM	GRPRAR1-LNX3345.00 - GRPRAR 345KV CKT Z	720	720	0.04123	104.556	GEN338443 1-PANDA S1
FDNS	00NR	5	20SP	G15_076	TO->FROM	GRPRAR1-LNX3345.00 - GRPRAR 345KV CKT Z	720	720	0.04123	104.5539	GEN336240 1-1NMIL CT1 18.000
FDNS	00NR	5	20SP	G15_076	TO->FROM	GRPRAR1-LNX3345.00 - GRPRAR 345KV CKT Z	720	720	0.04123	104.5539	GEN336241 1-1NMIL CT2 18.000

SOLUTION	GROUP	SCENARIO	SEASON	SOURCE	DIRECTION	MONITORED ELEMENT	RATEA (MVA)	RATEB(MVA)	TDF	TC%LOADING (% MVA)	CONTINGENCY
FDNS	00NR	5	20SP	G15_076	TO->FROM	GRPRAR1-LNX3345.00 - GRPRAR 345KV CKT Z	720	720	0.04123	104.5516	GEN501912 1-ACADIA UNIT CT1B
FDNS	00NR	5	20SP	G15_076	TO->FROM	GRPRAR1-LNX3345.00 - GRPRAR 345KV CKT Z	720	720	0.04123	104.5514	GEN501911 1-ACADIA UNIT CT1A
FDNS	00NR	5	25SP	G15_076	TO->FROM	GRPRAR1-LNX3345.00 - GRPRAR 345KV CKT Z	720	720	0.04155	104.5501	P12:115:UMZW:# 162 #: NEL IN ND. FAULT ON ML-NEL-MX-GA 115 KV
FDNS	00NR	5	20SP	G15_076	TO->FROM	GRPRAR1-LNX3345.00 - GRPRAR 345KV CKT Z	720	720	0.04123	104.5498	P12:345:GRDA:CHOUTEAU-SPORTSMANACRES
FDNS	00NR	5	25SP	G15_076	TO->FROM	GRPRAR1-LNX3345.00 - GRPRAR 345KV CKT Z	720	720	0.04155	104.5169	GEN335614 1-WILLOW GLENN UNIT#4
FDNS	00NR	5	25SP	G15_076	TO->FROM	GRPRAR1-LNX3345.00 - GRPRAR 345KV CKT Z	720	720	0.04155	104.5118	GEN336801 1-BAXTER WILSON UNIT #1
FDNS	00NR	5	25SP	G15_076	TO->FROM	GRPRAR1-LNX3345.00 - GRPRAR 345KV CKT Z	720	720	0.04155	104.5068	GEN334441 1-SABINE UNIT 5
FDNS	00NR	5	25SP	G15_076	TO->FROM	GRPRAR1-LNX3345.00 - GRPRAR 345KV CKT Z	720	720	0.04155	104.5015	GEN336464 1-MICHOUD UNIT #3
FDNS	00NR	5	25SP	G15_076	TO->FROM	GRPRAR1-LNX3345.00 - GRPRAR 345KV CKT Z	720	720	0.04155	104.4978	GEN563222 1-G15088_3 0.6900
FDNS	00NR	5	25SP	G15_076	TO->FROM	GRPRAR1-LNX3345.00 - GRPRAR 345KV CKT Z	720	720	0.04155	104.4912	GEN335204 1-NELSON UNIT 4
FDNS	00NR	5	25SP	G15_076	TO->FROM	GRPRAR1-LNX3345.00 - GRPRAR 345KV CKT Z	720	720	0.04144	104.4882	HESKETT - WISHEK 230KV CKT 1
FDNS	00NR	5	25SP	G15_076	TO->FROM	GRPRAR1-LNX3345.00 - GRPRAR 345KV CKT Z	720	720	0.04178	104.4789	NORTH LA CROSSE - NORTH ROCHESTER 345KV CKT 1
FDNS	00NR	5	25SP	G15_076	TO->FROM	GRPRAR1-LNX3345.00 - GRPRAR 345KV CKT Z	720	720	0.04217	104.4598	ADAMS - MITCHLCO3 345.00 345KV CKT 1
FDNS	00NR	5	20SP	G15_076	TO->FROM	GRPRAR1-LNX3345.00 - GRPRAR 345KV CKT Z	720	720	0.04123	104.4404	GEN563282 1-G15094_3 0.6900
FDNS	00NR	5	25SP	G15_076	TO->FROM	GRPRAR1-LNX3345.00 - GRPRAR 345KV CKT Z	720	720	0.04155	104.4191	GEN640009 1-COOPER NUCLEAR STATION
FDNS	00NR	5	25SP	G15_076	TO->FROM	GRPRAR1-LNX3345.00 - GRPRAR 345KV CKT Z	720	720	0.04154	104.4057	CENTER - COYOTE 345KV CKT 1
FDNS	00NR	5	25SP	G15_076	TO->FROM	GRPRAR1-LNX3345.00 - GRPRAR 345KV CKT Z	720	720	0.04144	104.4028	MERRCRT4 230.00 - WISHEK 230KV CKT 1
FDNS	00NR	5	25SP	G15_076	TO->FROM	GRPRAR1-LNX3345.00 - GRPRAR 345KV CKT Z	720	720	0.04754	104.3867	BLOOMFIELD - CREIGHTON 115KV CKT 1
FDNS	00NR	5	25SP	G15_076	TO->FROM	GRPRAR1-LNX3345.00 - GRPRAR 345KV CKT Z	720	720	0.04035	104.3742	MENNO JCT - TRIPP JCT 115KV CKT 1
FDNS	00NR	5	25SP	G15_076	TO->FROM	GRPRAR1-LNX3345.00 - GRPRAR 345KV CKT Z	720	720	0.04155	104.3723	GEN334433 1-SABINE UNIT 3
FDNS	00NR	5	25SP	G15_076	TO->FROM	GRPRAR1-LNX3345.00 - GRPRAR 345KV CKT Z	720	720	0.04134	104.3669	BROOKING COUNTY - BSSOUTH3 345.00 345KV CKT 1
FDNS	00NR	5	25SP	G15_076	TO->FROM	GRPRAR1-LNX3345.00 - GRPRAR 345KV CKT Z	720	720	0.04155	104.3667	GARRISON - JAMES TOWN 230KV CKT 1
FDNS	00NR	5	25SP	G15_076	TO->FROM	GRPRAR1-LNX3345.00 - GRPRAR 345KV CKT Z	720	720	0.04155	104.3568	GEN635213 3-NEAL UNIT 3
FDNS	00NR	5	25SP	G15_076	TO->FROM	GRPRAR1-LNX3345.00 - GRPRAR 345KV CKT Z	720	720	0.04754	104.3403	BLOOMFIELD - GAVINS POINT 115KV CKT 1
FDNS	00NR	5	25SP	G15_076	TO->FROM	GRPRAR1-LNX3345.00 - GRPRAR 345KV CKT Z	720	720	0.04155	104.336	GEN531447 1-HOLCOMB GENERATOR
FDNS	00NR	5	25SP	G15_076	TO->FROM	GRPRAR1-LNX3345.00 - GRPRAR 345KV CKT Z	720	720	0.04155	104.3095	GEN336222 1-LITTLE GYPSY UNIT#2
FDNS	00NR	5	17SP	G15_076	TO->FROM	GRPRAR1-LNX3345.00 - GRPRAR 345KV CKT Z	720	720	0.04284	104.3052	GEN659125 1-COVEY
FDNS	00NR	5	25SP	G15_076	TO->FROM	GRPRAR1-LNX3345.00 - GRPRAR 345KV CKT Z	720	720	0.04197	104.3	ADAMS - PLEASANT VALLEY 345KV CKT 1
FDNS	00NR	5	25SP	G15_076	TO->FROM	GRPRAR1-LNX3345.00 - GRPRAR 345KV CKT Z	720	720	0.04165	104.2865	APPLEDORN 4 230.00 - WATERTOWN 230KV CKT 1
FDNS	00NR	5	25SP	G15_076	TO->FROM	GRPRAR1-LNX3345.00 - GRPRAR 345KV CKT Z	720	720	0.04165	104.2865	APPLEDORN 4 230.00 - WATERTOWN 230KV CKT 1
FDNS	00NR	5	25SP	G15_076	TO->FROM	GRPRAR1-LNX3345.00 - GRPRAR 345KV CKT Z	720	720	0.04168	104.2664	ARKANSAS NUCLEAR ONE - FT SMITH 500KV CKT 1
FDNS	00NR	5	25SP	G15_076	TO->FROM	GRPRAR1-LNX3345.00 - GRPRAR 345KV CKT Z	720	720	0.04168	104.2664	ARKANSAS NUCLEAR ONE - FT SMITH 500KV CKT 1
FDNS	00NR	5	25SP	G15_076	TO->FROM	GRPRAR1-LNX3345.00 - GRPRAR 345KV CKT Z	720	720	0.04155	104.2567	GEN336152 1-WATERFORD UNIT#2
FDNS	00NR	5	25SP	G15_076	TO->FROM	GRPRAR1-LNX3345.00 - GRPRAR 345KV CKT Z	720	720	0.04155	104.2566	GEN336151 1-WATERFORD UNIT#1
FDNS	00NR	5	25SP	G15_076	TO->FROM	GRPRAR1-LNX3345.00 - GRPRAR 345KV CKT Z	720	720	0.04146	104.2527	BSSOUTH3 345.00 - ELLENDLMVP3 345.00 345KV CKT 1
FDNS	00NR	5	25SP	G15_076	TO->FROM	GRPRAR1-LNX3345.00 - GRPRAR 345KV CKT Z	720	720	0.04146	104.2527	BSSOUTH3 345.00 - ELLENDLMVP3 345.00 345KV CKT 1
FDNS	00NR	5	25SP	G15_076	TO->FROM	GRPRAR1-LNX3345.00 - GRPRAR 345KV CKT Z	720	720	0.04035	104.2404	MENNO JCT - UTICA 115KV CKT 1
FDNS	00NR	5	25SP	G15_076	TO->FROM	GRPRAR1-LNX3345.00 - GRPRAR 345KV CKT Z	720	720	0.04146	104.2313	ELLENDLMVP3 345.00 (1) 345/230/34.5KV TRANSFORMER CKT 1
FDNS	00NR	5	25SP	G15_076	TO->FROM	GRPRAR1-LNX3345.00 - GRPRAR 345KV CKT Z	720	720	0.04165	104.2219	APPLEDORN 4 230.00 - GRANITE FALLS 230KV CKT 1
FDNS	00NR	5	25SP	G15_076	TO->FROM	GRPRAR1-LNX3345.00 - GRPRAR 345KV CKT Z	720	720	0.04165	104.2219	APPLEDORN 4 230.00 - GRANITE FALLS 230KV CKT 1
FDNS	00NR	5	25SP	G15_076	TO->FROM	GRPRAR1-LNX3345.00 - GRPRAR 345KV CKT Z	720	720	0.04167	104.2206	ALEXMRES3 345.00 - WAITE PARK 345KV CKT 1
FDNS	00NR	5	25SP	G15_076	TO->FROM	GRPRAR1-LNX3345.00 - GRPRAR 345KV CKT Z	720	720	0.04163	104.2156	BLAIR - GRANITE FALLS 230KV CKT 1
FDNS	00NR	5	25SP	G15_076	TO->FROM	GRPRAR1-LNX3345.00 - GRPRAR 345KV CKT Z	720	720	0.04163	104.2156	BLAIR - GRANITE FALLS 230KV CKT 1
FDNS	00NR	5	25SP	G15_076	TO->FROM	GRPRAR1-LNX3345.00 - GRPRAR 345KV CKT Z	720	720	0.04186	104.1998	NMA B3 345 345.00 - NORTH LA CROSSE 345KV CKT 1
FDNS	00NR	5	25SP	G15_076	TO->FROM	GRPRAR1-LNX3345.00 - GRPRAR 345KV CKT Z	720	720	0.04155	104.1973	GEN641089 2-ENERGY CENTER 2
FDNS	00NR	5	25SP	G15_076	TO->FROM	GRPRAR1-LNX3345.00 - GRPRAR 345KV CKT Z	720	720	0.04155	104.1854	GEN303007 1-1BC2 U2
FDNS	00NR	5	25SP	G15_076	TO->FROM	GRPRAR1-LNX3345.00 - GRPRAR 345KV CKT Z	720	720	0.04155	104.1801	GEN303006 1-1BC2 U1
FDNS	00NR	5	25SP	G15_076	TO->FROM	GRPRAR1-LNX3345.00 - GRPRAR 345KV CKT Z	720	720	0.04097	104.1754	WINNER - WITTEN 115KV CKT 1
FDNS	00NR	5	25SP	G15_076	TO->FROM	GRPRAR1-LNX3345.00 - GRPRAR 345KV CKT Z	720	720	0.04155	104.1692	P13:230:UMZW:# 2218 #: FP IN MT. LOSS OF TRANSFORMER (AT2).
FDNS	00NR	5	25SP	G15_076	TO->FROM	GRPRAR1-LNX3345.00 - GRPRAR 345KV CKT Z	720	720	0.04155	104.1576	GEN532751 1-WOLF CREEK GENERATING STATION UNIT 1
FDNS	00NR	5	25SP	G15_076	TO->FROM	GRPRAR1-LNX3345.00 - GRPRAR 345KV CKT Z	720	720	0.04155	104.1518	FARGO - JAMES TOWN 230KV CKT 1
FDNS	00NR	5	25SP	G15_076	TO->FROM	GRPRAR1-LNX3345.00 - GRPRAR 345KV CKT Z	720	720	0.04155	104.1454	GEN562921 1-G15054_2 0.6900
FDNS	00NR	5	25SP	G15_076	TO->FROM	GRPRAR1-LNX3345.00 - GRPRAR 345KV CKT Z	720	720	0.04035	104.1412	P12:115:UMZZ:# 237 #: MEN IN SD. MENNO JUNCTION IS A TAP (UJ-MEN-TP).
FDNS	00NR	5	25SP	G15_076	TO->FROM	GRPRAR1-LNX3345.00 - GRPRAR 345KV CKT Z	720	720	0.04173	104.1405	NORTH ROCHESTER - PRAIRIE ISLAND 345KV CKT 1
FDNS	00NR	5	25SP	G15_076	TO->FROM	GRPRAR1-LNX3345.00 - GRPRAR 345KV CKT Z	720	720	0.04183	104.1391	G15094_T 345.00 - LARAMIE RIVER 345KV CKT 1
FDNS	00NR	5	25SP	G15_076	TO->FROM	GRPRAR1-LNX3345.00 - GRPRAR 345KV CKT Z	720	720	0.04155	104.1299	FARGO - JAMES TOWN 230KV CKT 2
FDNS	00NR	5	25SP	G15_076	TO->FROM	GRPRAR1-LNX3345.00 - GRPRAR 345KV CKT Z	720	720	0.04155	104.1192	GEN303008 1-1BC2 U3
FDNS	00NR	5	25SP	G15_076	TO->FROM	GRPRAR1-LNX3345.00 - GRPRAR 345KV CKT Z	720	720	0.04207	104.1173	HUNTLEY3 345.00 - LEDYARD3 345.00 345KV CKT 1
FDNS	00NR	5	25SP	G15_076	TO->FROM	GRPRAR1-LNX3345.00 - GRPRAR 345KV CKT Z	720	720	0.04155	104.1137	GEN336170 1-GULF OXY U4
FDNS	00NR	5	25SP	G15_076	TO->FROM	GRPRAR1-LNX3345.00 - GRPRAR 345KV CKT Z	720	720	0.04155	104.1122	BISMARK - JAMES TOWN 230KV CKT 1
FDNS	00NR	5	25SP	G15_076	TO->FROM	GRPRAR1-LNX3345.00 - GRPRAR 345KV CKT Z	720	720	0.04155	104.0997	BISMARK - WEBER 230KV CKT 1
FDNS	00NR	5	25SP	G15_076	TO->FROM	GRPRAR1-LNX3345.00 - GRPRAR 345KV CKT Z	720	720	0.04942	104.0953	RAUN - SIOUX CITY 345KV CKT 1
FDNS	00NR	5	25SP	G15_076	TO->FROM	GRPRAR1-LNX3345.00 - GRPRAR 345KV CKT Z	720	720	0.04942	104.0953	RAUN - SIOUX CITY 345KV CKT 1
FDNS	00NR	5	25SP	G15_076	TO->FROM	GRPRAR1-LNX3345.00 - GRPRAR 345KV CKT Z	720	720	0.04155	104.092	GEN562596 1-G14_059_3 0.6900
FDNS	00NR	5	20SP	G15_076	TO->FROM	GRPRAR1-LNX3345.00 - GRPRAR 345KV CKT Z	720	720	0.04123	104.0913	BASE CASE
FDNS	00NR	5	25SP	G15_076	TO->FROM	GRPRAR1-LNX3345.00 - GRPRAR 345KV CKT Z	720	720	0.04155	104.0865	JAMES TOWN - WEBER 230KV CKT 1
FDNS	00NR	5	25SP	G15_076	TO->FROM	GRPRAR1-LNX3345.00 - GRPRAR 345KV CKT Z	720	720	0.04448	104.0785	P13:230-345:NPPD:STEGALL3:KV3A
FDNS	00NR	5	25SP	G15_076	TO->FROM	GRPRAR1-LNX3345.00 - GRPRAR 345KV CKT Z	720	720	0.04448	104.0744	STEGALL (SGQ KV3A) 345/230/13.8KV TRANSFORMER CKT 1
FDNS	00NR	5	25SP	G15_076	TO->FROM	GRPRAR1-LNX3345.00 - GRPRAR 345KV CKT Z	720	720	0.04204	104.0708	SIDNEY - SIDNEY TRANSFORMER 230KV CKT 1
FDNS	00NR	5	25SP	G15_076	TO->FROM	GRPRAR1-LNX3345.00 - GRPRAR 345KV CKT Z	720	720	0.04204	104.0707	P13:230-345:NPPD:SIDNEY 3:KV2A
FDNS	00NR	5	25SP	G15_076	TO->FROM	GRPRAR1-LNX3345.00 - GRPRAR 345KV CKT Z	720	720	0.04204	104.0707	SIDNEY (SDQ KV2A) 345/230/13.8KV TRANSFORMER CKT 1
FDNS	00NR	5	25SP	G15_076	TO->FROM	GRPRAR1-LNX3345.00 - GRPRAR 345KV CKT Z	720	720	0.04196	104.0692	HUNTLEY3 345.00 - LAKEFIELD 3 345KV CKT 1
FDNS	00NR	5	25SP	G15_076	TO->FROM	GRPRAR1-LNX3345.00 - GRPRAR 345KV CKT Z	720	720	0.04126	104.0662	FT THOMPSON - HURON 230KV CKT 1
FDNS	00NR	5	25SP	G15_076	TO->FROM	GRPRAR1-LNX3345.00 - GRPRAR 345KV CKT Z	720	720	0.04126	104.0662	FT THOMPSON - HURON 230KV CKT 1
FDNS	00NR	5	25SP	G15_076	TO->FROM	GRPRAR1-LNX3345.00 - GRPRAR 345KV CKT Z	720	720	0.04126	104.0662	FT THOMPSON - HURON 230KV CKT 2
FDNS	00NR	5	25SP	G15_076	TO->FROM	GRPRAR1-LNX3345.00 - GRPRAR 345KV CKT Z	720	720	0.04126	104.0662	FT THOMPSON - HURON 230KV CKT 2
FDNS	00NR	5	25SP	G15_076	TO->FROM	GRPRAR1-LNX3345.00 - GRPRAR 345KV CKT Z	720	720	0.04448	104.0659	STEGALL - STEGALL TRANSFORMER 230KV CKT 1
FDNS	00NR	5	25SP	G15_076	TO->FROM	GRPRAR1-LNX3345.00 - GRPRAR 345KV CKT Z	720	720	0.04155	104.0637	BALTA - RAMSEY 230KV CKT 1
FDNS	00NR	5	25SP	G15_076	TO->FROM	GRPRAR1-LNX3345.00 - GRPRAR 345KV CKT Z	720	720	0.0422	104.0589	P12:230:UMZW:# 733 #: FT IN SD. FT-BG2 LINE FAULT

SOLUTION	GROUP	SCENARIO	SEASON	SOURCE	DIRECTION	MONITORED ELEMENT	RATEA (MVA)	RATEB(MVA)	TDF	TC%LOADING (% MVA)	CONTINGENCY
FDNS	00NR	5	25SP	G15_076	TO->FROM	GRPRAR1-LNX3345.00 - GRPRAR 345KV CKT Z	720	720	0.0422	104.0584	FT THOMPSON - LOWERBRULE 4230.00 230KV CKT 1
FDNS	00NR	5	25SP	G15_076	TO->FROM	GRPRAR1-LNX3345.00 - GRPRAR 345KV CKT Z	720	720	0.0422	104.0584	FT THOMPSON - LOWERBRULE 4230.00 230KV CKT 1
FDNS	00NR	5	25SP	G15_076	TO->FROM	GRPRAR1-LNX3345.00 - GRPRAR 345KV CKT Z	720	720	0.0422	104.0548	LOWERBRULE 4230.00 - RELIANCE 4 230.00 230KV CKT 1
FDNS	00NR	5	25SP	G15_076	TO->FROM	GRPRAR1-LNX3345.00 - GRPRAR 345KV CKT Z	720	720	0.04206	104.0454	P13:115-230:TSGT:SIDNEY-KV1A
FDNS	00NR	5	25SP	G15_076	TO->FROM	GRPRAR1-LNX3345.00 - GRPRAR 345KV CKT Z	720	720	0.04155	104.0444	GEN501811 1-RODEMACHER UNIT 1
FDNS	00NR	5	25SP	G15_076	TO->FROM	GRPRAR1-LNX3345.00 - GRPRAR 345KV CKT Z	720	720	0.04157	104.0131	FORMAN - HANKINSON 230KV CKT 1
FDNS	00NR	5	25SP	G15_076	TO->FROM	GRPRAR1-LNX3345.00 - GRPRAR 345KV CKT Z	720	720	0.04155	104.0047	LAWRENCE ENERGY CENTER UNIT 5 - LAWRENCE HILL 230KV CKT 1
FDNS	00NR	5	25SP	G15_076	TO->FROM	GRPRAR1-LNX3345.00 - GRPRAR 345KV CKT Z	720	720	0.04155	104.0047	LAWRENCE ENERGY CENTER UNIT 5 230/24.0KV TRANSFORMER CKT 1
FDNS	00NR	5	25SP	G15_076	TO->FROM	GRPRAR1-LNX3345.00 - GRPRAR 345KV CKT Z	720	720	0.04155	103.9994	GEN334070 1-LEWIS CREEK 1
FDNS	00NR	5	25SP	G15_076	TO->FROM	GRPRAR1-LNX3345.00 - GRPRAR 345KV CKT Z	720	720	0.04155	103.9993	GEN334071 1-LEWIS CREEK 2
FDNS	00NR	5	25SP	G15_076	TO->FROM	GRPRAR1-LNX3345.00 - GRPRAR 345KV CKT Z	720	720	0.04155	103.997	PRAIRIE ISLAND 345/20.0KV TRANSFORMER CKT 1
FDNS	00NR	5	25SP	G15_076	TO->FROM	GRPRAR1-LNX3345.00 - GRPRAR 345KV CKT Z	720	720	0.04155	103.9958	PRAIRIE ISLAND 345/20.0KV TRANSFORMER CKT 2
FDNS	00NR	5	25SP	G15_076	TO->FROM	GRPRAR1-LNX3345.00 - GRPRAR 345KV CKT Z	720	720	0.04155	103.9925	GEN659118 1-LARAMIE RIVER UNIT1
FDNS	00NR	5	25SP	G15_076	TO->FROM	GRPRAR1-LNX3345.00 - GRPRAR 345KV CKT Z	720	720	0.04097	103.9923	GREGORY - WINNER 115KV CKT 1
FDNS	00NR	5	25SP	G15_076	TO->FROM	GRPRAR1-LNX3345.00 - GRPRAR 345KV CKT Z	720	720	0.04155	103.9792	SEMINOLE 138/20.9KV TRANSFORMER CKT 1
FDNS	00NR	5	25SP	G15_076	TO->FROM	GRPRAR1-LNX3345.00 - GRPRAR 345KV CKT Z	720	720	0.04155	103.9741	TATANKA 230/34.5KV TRANSFORMER CKT 1
FDNS	00NR	5	25SP	G15_076	TO->FROM	GRPRAR1-LNX3345.00 - GRPRAR 345KV CKT Z	720	720	0.04097	103.9705	P12:115:UMZW:# 172 #: WI IN SD.
FDNS	00NR	5	25SP	G15_076	TO->FROM	GRPRAR1-LNX3345.00 - GRPRAR 345KV CKT Z	720	720	0.04155	103.9637	GEN645012 2-NEBRASKA CITY 2
FDNS	00NR	5	25SP	G15_076	TO->FROM	GRPRAR1-LNX3345.00 - GRPRAR 345KV CKT Z	720	720	0.04155	103.9633	GEN337766 1-TRACTEBEL UNIT S1
FDNS	00NR	5	25SP	G15_076	TO->FROM	GRPRAR1-LNX3345.00 - GRPRAR 345KV CKT Z	720	720	0.04155	103.9505	GEN337757 1-DUKE HOTSPRINGS STG1
FDNS	00NR	5	25SP	G15_076	TO->FROM	GRPRAR1-LNX3345.00 - GRPRAR 345KV CKT Z	720	720	0.04155	103.9396	ELM CREEK - MONTICELLO 345KV CKT 1
FDNS	00NR	5	25SP	G15_076	TO->FROM	GRPRAR1-LNX3345.00 - GRPRAR 345KV CKT Z	720	720	0.04155	103.9287	GEN501910 1-ACADIA UNIT ST1
FDNS	00NR	5	25SP	G15_076	TO->FROM	GRPRAR1-LNX3345.00 - GRPRAR 345KV CKT Z	720	720	0.04155	103.9275	GEN645011 1-NEBRASKA CITY 1
FDNS	00NR	5	25SP	G15_076	TO->FROM	GRPRAR1-LNX3345.00 - GRPRAR 345KV CKT Z	720	720	0.04161	103.9241	HANKINSON - WAHPETON 230KV CKT 1
FDNS	00NR	5	25SP	G15_076	TO->FROM	GRPRAR1-LNX3345.00 - GRPRAR 345KV CKT Z	720	720	0.04157	103.9235	AUDUBON - SHEYNNE 230KV CKT 1
FDNS	00NR	5	25SP	G15_076	TO->FROM	GRPRAR1-LNX3345.00 - GRPRAR 345KV CKT Z	720	720	0.0413	103.9201	MT VERN - STORLA 115KV CKT 1
FDNS	00NR	5	25SP	G15_076	TO->FROM	GRPRAR1-LNX3345.00 - GRPRAR 345KV CKT Z	720	720	0.04212	103.9179	P12:115:NPPD:WAPA1:CHADRON7:BOXBUTE7:BTB
FDNS	00NR	5	25SP	G15_076	TO->FROM	GRPRAR1-LNX3345.00 - GRPRAR 345KV CKT Z	720	720	0.04178	103.913	OVEXFRMCCOVE
FDNS	00NR	5	25SP	G15_076	TO->FROM	GRPRAR1-LNX3345.00 - GRPRAR 345KV CKT Z	720	720	0.04156	103.911	ELLENDLMVP4 230.00 - OAKES 230KV CKT 1
FDNS	00NR	5	25SP	G15_076	TO->FROM	GRPRAR1-LNX3345.00 - GRPRAR 345KV CKT Z	720	720	0.04156	103.911	ELLENDLMVP4 230.00 - OAKES 230KV CKT 1
FDNS	00NR	5	25SP	G15_076	TO->FROM	GRPRAR1-LNX3345.00 - GRPRAR 345KV CKT Z	720	720	0.04156	103.9108	FORMAN - OAKES 230KV CKT 1
FDNS	00NR	5	25SP	G15_076	TO->FROM	GRPRAR1-LNX3345.00 - GRPRAR 345KV CKT Z	720	720	0.04155	103.9059	GEN336221 1-LITTLE GYPSY UNIT#1
FDNS	00NR	5	25SP	G15_076	TO->FROM	GRPRAR1-LNX3345.00 - GRPRAR 345KV CKT Z	720	720	0.05396	103.8948	BELDEN - HOSKINS 115KV CKT 1
FDNS	00NR	5	25SP	G15_076	TO->FROM	GRPRAR1-LNX3345.00 - GRPRAR 345KV CKT Z	720	720	0.0416	103.8926	FERGSFL4 230.00 - WAHPETON 230KV CKT 1
FDNS	00NR	5	25SP	G15_076	TO->FROM	GRPRAR1-LNX3345.00 - GRPRAR 345KV CKT Z	720	720	0.0422	103.8918	RELIANCE 4 230.00 - WITTEN 4 230.00 230KV CKT 1
FDNS	00NR	5	25SP	G15_076	TO->FROM	GRPRAR1-LNX3345.00 - GRPRAR 345KV CKT Z	720	720	0.04155	103.8915	GEN532651 1-JEFFREY ENERGY CENTER UNIT 1
FDNS	00NR	5	25SP	G15_076	TO->FROM	GRPRAR1-LNX3345.00 - GRPRAR 345KV CKT Z	720	720	0.04167	103.8892	FRANKS - HUBEN 345KV CKT 1
FDNS	00NR	5	25SP	G15_076	TO->FROM	GRPRAR1-LNX3345.00 - GRPRAR 345KV CKT Z	720	720	0.04155	103.8892	PRAIRIE - WINGER 230KV CKT 1
FDNS	00NR	5	25SP	G15_076	TO->FROM	GRPRAR1-LNX3345.00 - GRPRAR 345KV CKT Z	720	720	0.04155	103.8862	GEN532652 1-JEFFREY ENERGY CENTER UNIT 2
FDNS	00NR	5	25SP	G15_076	TO->FROM	GRPRAR1-LNX3345.00 - GRPRAR 345KV CKT Z	720	720	0.04155	103.8861	GEN532653 1-JEFFREY ENERGY CENTER UNIT 3
FDNS	00NR	5	25SP	G15_076	TO->FROM	GRPRAR1-LNX3345.00 - GRPRAR 345KV CKT Z	720	720	0.04155	103.88	GEN562912 1-G15053_3 0.6900
FDNS	00NR	5	25SP	G15_076	TO->FROM	GRPRAR1-LNX3345.00 - GRPRAR 345KV CKT Z	720	720	0.04254	103.8734	NOBLES - SPLIT ROCK 345KV CKT 1
FDNS	00NR	5	25SP	G15_076	TO->FROM	GRPRAR1-LNX3345.00 - GRPRAR 345KV CKT Z	720	720	0.04155	103.8727	GEN334431 1-SABINE UNIT 1
FDNS	00NR	5	25SP	G15_076	TO->FROM	GRPRAR1-LNX3345.00 - GRPRAR 345KV CKT Z	720	720	0.04155	103.8727	GEN334432 1-SABINE UNIT 2
FDNS	00NR	5	25SP	G15_076	TO->FROM	GRPRAR1-LNX3345.00 - GRPRAR 345KV CKT Z	720	720	0.04155	103.8695	GEN345765 H-1SIOUX 2 18.000
FDNS	00NR	5	25SP	G15_076	TO->FROM	GRPRAR1-LNX3345.00 - GRPRAR 345KV CKT Z	720	720	0.04155	103.8691	J316_SUB 230.00 230/34.5KV TRANSFORMER CKT 1
FDNS	00NR	5	25SP	G15_076	TO->FROM	GRPRAR1-LNX3345.00 - GRPRAR 345KV CKT Z	720	720	0.04155	103.8686	GEN337764 1-TRACTEBEL UNIT C1
FDNS	00NR	5	25SP	G15_076	TO->FROM	GRPRAR1-LNX3345.00 - GRPRAR 345KV CKT Z	720	720	0.04155	103.8686	GEN337765 1-TRACTEBEL UNIT C2
FDNS	00NR	5	25SP	G15_076	TO->FROM	GRPRAR1-LNX3345.00 - GRPRAR 345KV CKT Z	720	720	0.04155	103.8684	GEN336446 1-MICHOUD UNIT #2
FDNS	00NR	5	25SP	G15_076	TO->FROM	GRPRAR1-LNX3345.00 - GRPRAR 345KV CKT Z	720	720	0.04155	103.8681	GRAND GULF 500/22.0KV TRANSFORMER CKT 1
FDNS	00NR	5	25SP	G15_076	TO->FROM	GRPRAR1-LNX3345.00 - GRPRAR 345KV CKT Z	720	720	0.04212	103.8639	CHADRON - DUNLAP 115KV CKT 1
FDNS	00NR	5	25SP	G15_076	TO->FROM	GRPRAR1-LNX3345.00 - GRPRAR 345KV CKT Z	720	720	0.04254	103.8626	PLYMOUTH - SIOUX CITY 161KV CKT 1
FDNS	00NR	5	25SP	G15_076	TO->FROM	GRPRAR1-LNX3345.00 - GRPRAR 345KV CKT Z	720	720	0.04254	103.8626	PLYMOUTH - SIOUX CITY 161KV CKT 1
FDNS	00NR	5	25SP	G15_076	TO->FROM	GRPRAR1-LNX3345.00 - GRPRAR 345KV CKT Z	720	720	0.04228	103.8618	DENISON - SIOUX CITY 230KV CKT 1
FDNS	00NR	5	25SP	G15_076	TO->FROM	GRPRAR1-LNX3345.00 - GRPRAR 345KV CKT Z	720	720	0.0422	103.8584	WITTEN 4 230.00 () 230/115/13.8KV TRANSFORMER CKT 1
FDNS	00NR	5	25SP	G15_076	TO->FROM	GRPRAR1-LNX3345.00 - GRPRAR 345KV CKT Z	720	720	0.04159	103.8408	FERGSFL4 230.00 - GRE-SILVRLK4230.00 230KV CKT 1
FDNS	00NR	5	25SP	G15_076	TO->FROM	GRPRAR1-LNX3345.00 - GRPRAR 345KV CKT Z	720	720	0.04156	103.8408	BALTA - MCHENRY 230KV CKT 1
FDNS	00NR	5	25SP	G15_076	TO->FROM	GRPRAR1-LNX3345.00 - GRPRAR 345KV CKT Z	720	720	0.04259	103.835	MARTIN - SHANNON 115KV CKT 1
FDNS	00NR	5	25SP	G15_076	TO->FROM	GRPRAR1-LNX3345.00 - GRPRAR 345KV CKT Z	720	720	0.04155	103.8305	TOLK STATION EAST 230/24.0KV TRANSFORMER CKT 1
FDNS	00NR	5	25SP	G15_076	TO->FROM	GRPRAR1-LNX3345.00 - GRPRAR 345KV CKT Z	720	720	0.04155	103.8303	GEN501823 1-TECHE UNIT 3
FDNS	00NR	5	25SP	G15_076	TO->FROM	GRPRAR1-LNX3345.00 - GRPRAR 345KV CKT Z	720	720	0.04155	103.8296	GEN336242 1-1NMIL ST1 18.000
FDNS	00NR	5	25SP	G15_076	TO->FROM	GRPRAR1-LNX3345.00 - GRPRAR 345KV CKT Z	720	720	0.04169	103.8288	GRE-CEDARMT3345.00 - HELENA 345KV CKT 1
FDNS	00NR	5	25SP	G15_076	TO->FROM	GRPRAR1-LNX3345.00 - GRPRAR 345KV CKT Z	720	720	0.04169	103.8288	GRE-CEDARMT3345.00 - HELENA 345KV CKT 2
FDNS	00NR	5	25SP	G15_076	TO->FROM	GRPRAR1-LNX3345.00 - GRPRAR 345KV CKT Z	720	720	0.04155	103.8267	GEN636641 1-LOUISA UNIT 1
FDNS	00NR	5	25SP	G15_076	TO->FROM	GRPRAR1-LNX3345.00 - GRPRAR 345KV CKT Z	720	720	0.04174	103.8178	HAMPTON CORNER - NORTH ROCHESTER 345KV CKT 1
FDNS	00NR	5	25SP	G15_076	TO->FROM	GRPRAR1-LNX3345.00 - GRPRAR 345KV CKT Z	720	720	0.04404	103.8168	OAHE - PHILIP TAP 230KV CKT 1
FDNS	00NR	5	25SP	G15_076	TO->FROM	GRPRAR1-LNX3345.00 - GRPRAR 345KV CKT Z	720	720	0.04155	103.8121	JUDSON LARGE 115/15.0KV TRANSFORMER CKT 1
FDNS	00NR	5	25SP	G15_076	TO->FROM	GRPRAR1-LNX3345.00 - GRPRAR 345KV CKT Z	720	720	0.04155	103.8121	JUDSON LARGE 115/15.0KV TRANSFORMER CKT 1
FDNS	00NR	5	25SP	G15_076	TO->FROM	GRPRAR1-LNX3345.00 - GRPRAR 345KV CKT Z	720	720	0.04155	103.8059	OKLAUN 345/24.0KV TRANSFORMER CKT 1
FDNS	00NR	5	25SP	G15_076	TO->FROM	GRPRAR1-LNX3345.00 - GRPRAR 345KV CKT Z	720	720	0.04155	103.8024	GEN334030 1-FRONTIER UNIT 1
FDNS	00NR	5	25SP	G15_076	TO->FROM	GRPRAR1-LNX3345.00 - GRPRAR 345KV CKT Z	720	720	0.04155	103.8021	GEN334031 1-FRONTIER UNIT 2
FDNS	00NR	5	25SP	G15_076	TO->FROM	GRPRAR1-LNX3345.00 - GRPRAR 345KV CKT Z	720	720	0.04155	103.8016	GEN345756 H-1SIOUX 1 18.000
FDNS	00NR	5	25SP	G15_076	TO->FROM	GRPRAR1-LNX3345.00 - GRPRAR 345KV CKT Z	720	720	0.04166	103.7995	GRE-CEDARMT3345.00 - LYON COUNTY 345KV CKT 2
FDNS	00NR	5	25SP	G15_076	TO->FROM	GRPRAR1-LNX3345.00 - GRPRAR 345KV CKT Z	720	720	0.04155	103.7974	P13:230-345:NPPD:NUCOR-1
FDNS	00NR	5	25SP	G15_076	TO->FROM	GRPRAR1-LNX3345.00 - GRPRAR 345KV CKT Z	720	720	0.04155	103.7968	GEN338443 1-PANDA S1
FDNS	00NR	5	25SP	G15_076	TO->FROM	GRPRAR1-LNX3345.00 - GRPRAR 345KV CKT Z	720	720	0.04179	103.7963	CHADRON - WAYSIDE 115KV CKT 1
FDNS	00NR	5	25SP	G15_076	TO->FROM	GRPRAR1-LNX3345.00 - GRPRAR 345KV CKT Z	720	720	0.04179	103.7963	P13:115-230:NPPD:WAYSIDE4:T1
FDNS	00NR	5	25SP	G15_076	TO->FROM	GRPRAR1-LNX3345.00 - GRPRAR 345KV CKT Z	720	720	0.04155	103.7957	GEN562438 1-G13-032 0.6900
FDNS	00NR	5	25SP	G15_076	TO->FROM	GRPRAR1-LNX3345.00 - GRPRAR 345KV CKT Z	720	720	0.03969	103.7938	FT RANDAL - WHITE SWAN 115KV CKT 1

SOLUTION	GROUP	SCENARIO	SEASON	SOURCE	DIRECTION	MONITORED ELEMENT	RATEA (MVA)	RATEB(MVA)	TDF	TC%LOADING (% MVA)	CONTINGENCY
FDNS	00NR	5	25SP	G15_076	TO->FROM	GRPRAR1-LNX3345.00 - GRPRAR 345KV CKT Z	720	720	0.04179	103.7929	WAYSIDE (WAYSIDE T1) 230/115/13.8KV TRANSFORMER CKT 1
FDNS	00NR	5	25SP	G15_076	TO->FROM	GRPRAR1-LNX3345.00 - GRPRAR 345KV CKT Z	720	720	0.04155	103.7922	GEN336944 1-REX BROWN
FDNS	00NR	5	25SP	G15_076	TO->FROM	GRPRAR1-LNX3345.00 - GRPRAR 345KV CKT Z	720	720	0.04155	103.7908	GEN345832 1-1TS G1 13.800
FDNS	00NR	5	25SP	G15_076	TO->FROM	GRPRAR1-LNX3345.00 - GRPRAR 345KV CKT Z	720	720	0.04155	103.7905	GEN345841 2-1TS G2 13.800
FDNS	00NR	5	25SP	G15_076	TO->FROM	GRPRAR1-LNX3345.00 - GRPRAR 345KV CKT Z	720	720	0.04155	103.7898	GEN501970 1-EVANGELINE UNIT 7
FDNS	00NR	5	25SP	G15_076	TO->FROM	GRPRAR1-LNX3345.00 - GRPRAR 345KV CKT Z	720	720	0.04155	103.7826	GEN335612 1-WILLOW GLENN UNIT#2
FDNS	00NR	5	20SP	G15_076	TO->FROM	GRPRAR1-LNX3345.00 - GRPRAR 345KV CKT Z	720	720	0.04142	103.7091	BUCKNER7 345.00 - SPEARVILLE 345KV CKT 1
FDNS	00NR	5	20SP	G15_076	TO->FROM	GRPRAR1-LNX3345.00 - GRPRAR 345KV CKT Z	720	720	0.04142	103.7091	BUCKNER7 345.00 - SPEARVILLE 345KV CKT 1
FDNS	00NR	5	25SP	G15_076	TO->FROM	GRPRAR1-LNX3345.00 - GRPRAR 345KV CKT Z	720	720	0.04155	103.6772	GEN563282 1-G15094_3 0.6900
FDNS	00NR	5	20SP	G15_076	TO->FROM	GRPRAR1-LNX3345.00 - GRPRAR 345KV CKT Z	720	720	0.04405	103.6521	MINGO - RED WILLOW 345KV CKT 1
FDNS	00NR	5	20SP	G15_076	TO->FROM	GRPRAR1-LNX3345.00 - GRPRAR 345KV CKT Z	720	720	0.04405	103.6521	MINGO - RED WILLOW 345KV CKT 1
FDNS	00NR	5	20SP	G15_076	TO->FROM	GRPRAR1-LNX3345.00 - GRPRAR 345KV CKT Z	720	720	0.04141	103.6407	FT THOMPSON - OAHE 230KV CKT 1
FDNS	00NR	5	20SP	G15_076	TO->FROM	GRPRAR1-LNX3345.00 - GRPRAR 345KV CKT Z	720	720	0.04141	103.6407	FT THOMPSON - OAHE 230KV CKT 1
FDNS	00NR	5	20SP	G15_076	TO->FROM	GRPRAR1-LNX3345.00 - GRPRAR 345KV CKT Z	720	720	0.04141	103.6407	FT THOMPSON - OAHE 230KV CKT 2
FDNS	00NR	5	20SP	G15_076	TO->FROM	GRPRAR1-LNX3345.00 - GRPRAR 345KV CKT Z	720	720	0.04141	103.6407	FT THOMPSON - OAHE 230KV CKT 2
FDNS	00NR	5	20SP	G15_076	TO->FROM	GRPRAR1-LNX3345.00 - GRPRAR 345KV CKT Z	720	720	0.0406	103.6193	NELIGH - PETERSBRG.N7115.00 115KV CKT 1
FDNS	00NR	5	20SP	G15_076	TO->FROM	GRPRAR1-LNX3345.00 - GRPRAR 345KV CKT Z	720	720	0.04141	103.6157	FT THOMPSON - OAHE 230KV CKT 3
FDNS	00NR	5	20SP	G15_076	TO->FROM	GRPRAR1-LNX3345.00 - GRPRAR 345KV CKT Z	720	720	0.04141	103.6157	FT THOMPSON - OAHE 230KV CKT 3
FDNS	00NR	5	20SP	G15_076	TO->FROM	GRPRAR1-LNX3345.00 - GRPRAR 345KV CKT Z	720	720	0.04141	103.6157	FT THOMPSON - OAHE 230KV CKT 4
FDNS	00NR	5	20SP	G15_076	TO->FROM	GRPRAR1-LNX3345.00 - GRPRAR 345KV CKT Z	720	720	0.04141	103.6157	FT THOMPSON - OAHE 230KV CKT 4
FDNS	00NR	5	20SP	G15_076	TO->FROM	GRPRAR1-LNX3345.00 - GRPRAR 345KV CKT Z	720	720	0.04197	103.6004	AXTELL - POST ROCK 345KV CKT 1
FDNS	00NR	5	20SP	G15_076	TO->FROM	GRPRAR1-LNX3345.00 - GRPRAR 345KV CKT Z	720	720	0.04135	103.5904	G11_051T 345.00 - WOODWARD DISTRICT EHV 345KV CKT 1
FDNS	00NR	5	20SP	G15_076	TO->FROM	GRPRAR1-LNX3345.00 - GRPRAR 345KV CKT Z	720	720	0.04119	103.5847	BISMARK - L3 HAWDON 230KV CKT 1
FDNS	00NR	5	20SP	G15_076	TO->FROM	GRPRAR1-LNX3345.00 - GRPRAR 345KV CKT Z	720	720	0.04151	103.58	FALLOW 3 345.00 - GRIMES 345KV CKT 1
FDNS	00NR	5	20SP	G15_076	TO->FROM	GRPRAR1-LNX3345.00 - GRPRAR 345KV CKT Z	720	720	0.04123	103.5788	GEN659147 1-PIONEER 1G13.800
FDNS	00NR	5	20SP	G15_076	TO->FROM	GRPRAR1-LNX3345.00 - GRPRAR 345KV CKT Z	720	720	0.04123	103.5788	GEN659158 2-PIONEER G213.800
FDNS	00NR	5	20SP	G15_076	TO->FROM	GRPRAR1-LNX3345.00 - GRPRAR 345KV CKT Z	720	720	0.04123	103.5788	GEN659159 3-PIONEER G313.800
FDNS	00NR	5	20SP	G15_076	TO->FROM	GRPRAR1-LNX3345.00 - GRPRAR 345KV CKT Z	720	720	0.04123	103.5783	GEN659148 1-LONESMCRK 1G13.800
FDNS	00NR	5	20SP	G15_076	TO->FROM	GRPRAR1-LNX3345.00 - GRPRAR 345KV CKT Z	720	720	0.04123	103.5783	GEN659156 2-LONESMCRK 2G13.800
FDNS	00NR	5	20SP	G15_076	TO->FROM	GRPRAR1-LNX3345.00 - GRPRAR 345KV CKT Z	720	720	0.04123	103.5783	GEN659157 3-LONESMCRK 3G13.800
FDNS	00NR	5	20SP	G15_076	TO->FROM	GRPRAR1-LNX3345.00 - GRPRAR 345KV CKT Z	720	720	0.04123	103.5728	GEN657964 1-ASH2GEN9 0.5750
FDNS	00NR	5	20SP	G15_076	TO->FROM	GRPRAR1-LNX3345.00 - GRPRAR 345KV CKT Z	720	720	0.04123	103.5718	GEN672367 1-MERIDIAN GENERATOR 1 GT1
FDNS	00NR	5	20SP	G15_076	TO->FROM	GRPRAR1-LNX3345.00 - GRPRAR 345KV CKT Z	720	720	0.04123	103.5718	GEN672368 2-MERIDIAN GENERATOR 2 GT2
FDNS	00NR	5	20SP	G15_076	TO->FROM	GRPRAR1-LNX3345.00 - GRPRAR 345KV CKT Z	720	720	0.04123	103.571	GEN672358 1-CHAPLN1W 0.6900
FDNS	00NR	5	20SP	G15_076	TO->FROM	GRPRAR1-LNX3345.00 - GRPRAR 345KV CKT Z	720	720	0.0406	103.5661	ALBION - PETERSBURG 115KV CKT 1
FDNS	00NR	5	20SP	G15_076	TO->FROM	GRPRAR1-LNX3345.00 - GRPRAR 345KV CKT Z	720	720	0.0412	103.5539	G14-021T 345.00 - MULLNCR7 345.00 345KV CKT 1
FDNS	00NR	5	20SP	G15_076	TO->FROM	GRPRAR1-LNX3345.00 - GRPRAR 345KV CKT Z	720	720	0.04123	103.5483	GEN672349 3-CORY COGEN GENERATOR 3 ST
FDNS	00NR	5	20SP	G15_076	TO->FROM	GRPRAR1-LNX3345.00 - GRPRAR 345KV CKT Z	720	720	0.0412	103.5463	G15-005T 345.00 - MULLNCR7 345.00 345KV CKT 1
FDNS	00NR	5	20SP	G15_076	TO->FROM	GRPRAR1-LNX3345.00 - GRPRAR 345KV CKT Z	720	720	0.04123	103.5459	GEN672350 1-NIPAWIN GENERATOR 1
FDNS	00NR	5	20SP	G15_076	TO->FROM	GRPRAR1-LNX3345.00 - GRPRAR 345KV CKT Z	720	720	0.04123	103.5459	GEN672351 2-NIPAWIN GENERATOR 2
FDNS	00NR	5	20SP	G15_076	TO->FROM	GRPRAR1-LNX3345.00 - GRPRAR 345KV CKT Z	720	720	0.04123	103.5459	GEN672352 3-NIPAWIN GENERATOR 3
FDNS	00NR	5	20SP	G15_076	TO->FROM	GRPRAR1-LNX3345.00 - GRPRAR 345KV CKT Z	720	720	0.04139	103.54	POST ROCK (POSTROCK T1) 345/230/13.8KV TRANSFORMER CKT 1
FDNS	00NR	5	20SP	G15_076	TO->FROM	GRPRAR1-LNX3345.00 - GRPRAR 345KV CKT Z	720	720	0.04123	103.5388	GEN600012 2-BLACK DOG GEN 2
FDNSLock	00NR	5	20SP	G15_076	TO->FROM	GRPRAR1-LNX3345.00 - GRPRAR 345KV CKT Z	720	720	0.04106	103.5353	WATERTOWN (WT2 KU1A) 345/230/13.8KV TRANSFORMER CKT 1
FDNS	00NR	5	20SP	G15_076	TO->FROM	GRPRAR1-LNX3345.00 - GRPRAR 345KV CKT Z	720	720	0.0428	103.5327	G15061_T 345.00 - SETAB 345KV CKT 1
FDNS	00NR	5	20SP	G15_076	TO->FROM	GRPRAR1-LNX3345.00 - GRPRAR 345KV CKT Z	720	720	0.04007	103.5312	COOPER - MOORE 345KV CKT 1
FDNS	00NR	5	20SP	G15_076	TO->FROM	GRPRAR1-LNX3345.00 - GRPRAR 345KV CKT Z	720	720	0.0406	103.5259	P12:115:NPPD:1168B:ALBION 7:PETERSBRG.N7:BTB
FDNS	00NR	5	20SP	G15_076	TO->FROM	GRPRAR1-LNX3345.00 - GRPRAR 345KV CKT Z	720	720	0.04299	103.5248	BATTLE CREEK - COUNTY LINE 115KV CKT 1
FDNS	00NR	5	20SP	G15_076	TO->FROM	GRPRAR1-LNX3345.00 - GRPRAR 345KV CKT Z	720	720	0.0406	103.5233	PETERSBRG.N7115.00 - PETERSBURG 115KV CKT Z1
FDNS	00NR	5	20SP	G15_076	TO->FROM	GRPRAR1-LNX3345.00 - GRPRAR 345KV CKT Z	720	720	0.03055	103.5231	SIOUX CITY - TWINCH 3 345.00 345KV CKT 1
FDNS	00NR	5	20SP	G15_076	TO->FROM	GRPRAR1-LNX3345.00 - GRPRAR 345KV CKT Z	720	720	0.04123	103.5215	GEN590010 1-ERCOT EQUIVALENCE
FDNS	00NR	5	20SP	G15_076	TO->FROM	GRPRAR1-LNX3345.00 - GRPRAR 345KV CKT Z	720	720	0.03948	103.5146	COLUMEAST - NW68TH & HOLDREGE 345KV CKT 1
FDNS	00NR	5	20SP	G15_076	TO->FROM	GRPRAR1-LNX3345.00 - GRPRAR 345KV CKT Z	720	720	0.03948	103.5146	COLUMEAST - NW68TH & HOLDREGE 345KV CKT 1
FDNS	00NR	5	20SP	G15_076	TO->FROM	GRPRAR1-LNX3345.00 - GRPRAR 345KV CKT Z	720	720	0.04123	103.5031	GEN652548 5-FT RANDAL
FDNS	00NR	5	20SP	G15_076	TO->FROM	GRPRAR1-LNX3345.00 - GRPRAR 345KV CKT Z	720	720	0.04123	103.5031	GEN652549 7-FT RANDAL
FDNS	00NR	5	20SP	G15_076	TO->FROM	GRPRAR1-LNX3345.00 - GRPRAR 345KV CKT Z	720	720	0.0412	103.5026	G15-005T 345.00 - SIBLEY 345KV CKT 1
FDNS	00NR	5	20SP	G15_076	TO->FROM	GRPRAR1-LNX3345.00 - GRPRAR 345KV CKT Z	720	720	0.04123	103.4992	EMERY 161/18.0KV TRANSFORMER CKT 1
FDNS	00NR	5	20SP	G15_076	TO->FROM	GRPRAR1-LNX3345.00 - GRPRAR 345KV CKT Z	720	720	0.04123	103.4985	GEN652547 3-FT RANDAL
FDNS	00NR	5	20SP	G15_076	TO->FROM	GRPRAR1-LNX3345.00 - GRPRAR 345KV CKT Z	720	720	0.04123	103.4976	GEN652546 1-FT RANDAL
FDNS	00NR	5	20SP	G15_076	TO->FROM	GRPRAR1-LNX3345.00 - GRPRAR 345KV CKT Z	720	720	0.04123	103.4951	GEN590011 2-ERCOT EQUIVALENCE
FDNS	00NR	5	20SP	G15_076	TO->FROM	GRPRAR1-LNX3345.00 - GRPRAR 345KV CKT Z	720	720	0.04123	103.4888	GEN300003 1-THOMAS HILL UNIT 3
FDNS	00NR	5	20SP	G15_076	TO->FROM	GRPRAR1-LNX3345.00 - GRPRAR 345KV CKT Z	720	720	0.04129	103.484	DRAYTON - LETELLIER 230KV CKT 1
FDNS	00NR	5	20SP	G15_076	TO->FROM	GRPRAR1-LNX3345.00 - GRPRAR 345KV CKT Z	720	720	0.04152	103.4836	LARAMIE RIVER - STEGALL 345KV CKT 1
FDNS	00NR	5	20SP	G15_076	TO->FROM	GRPRAR1-LNX3345.00 - GRPRAR 345KV CKT Z	720	720	0.04123	103.4752	GEN600046 1-MECST
FDNS	00NR	5	20SP	G15_076	TO->FROM	GRPRAR1-LNX3345.00 - GRPRAR 345KV CKT Z	720	720	0.04123	103.4751	GEN672339 16-QE 16G 13.800
FDNS	00NR	5	20SP	G15_076	TO->FROM	GRPRAR1-LNX3345.00 - GRPRAR 345KV CKT Z	720	720	0.04123	103.4749	GEN659290 1-EDGECOL
FDNS	00NR	5	20SP	G15_076	TO->FROM	GRPRAR1-LNX3345.00 - GRPRAR 345KV CKT Z	720	720	0.04299	103.4616	ANTELOPE 7115.00 - COUNTY LINE 115KV CKT 1
FDNS	00NR	5	20SP	G15_076	TO->FROM	GRPRAR1-LNX3345.00 - GRPRAR 345KV CKT Z	720	720	0.04123	103.4611	GEN672393 2-NBECST2G 13.800
FDNS	00NR	5	20SP	G15_076	TO->FROM	GRPRAR1-LNX3345.00 - GRPRAR 345KV CKT Z	720	720	0.04123	103.457	GEN600050 1-FEP
FDNS	00NR	5	20SP	G15_076	TO->FROM	GRPRAR1-LNX3345.00 - GRPRAR 345KV CKT Z	720	720	0.03945	103.4509	COLUMEAST - SHELL CREEK 345KV CKT 1
FDNS	00NR	5	20SP	G15_076	TO->FROM	GRPRAR1-LNX3345.00 - GRPRAR 345KV CKT Z	720	720	0.04123	103.4466	GEN620324 3-HOOT LAKE 3 GEN
FDNS	00NR	5	20SP	G15_076	TO->FROM	GRPRAR1-LNX3345.00 - GRPRAR 345KV CKT Z	720	720	0.04183	103.4458	THEDFRD3 345.00 (THEDFORDT2) 345/115/13.8KV TRANSFORMER CKT 1
FDNS	00NR	5	20SP	G15_076	TO->FROM	GRPRAR1-LNX3345.00 - GRPRAR 345KV CKT Z	720	720	0.04123	103.4399	GEN672342 3-QUEEN ELIZABETH GENERATOR 3
FDNS	00NR	5	20SP	G15_076	TO->FROM	GRPRAR1-LNX3345.00 - GRPRAR 345KV CKT Z	720	720	0.04123	103.4317	GEN652410 3-FT PECK
FDNS	00NR	5	20SP	G15_076	TO->FROM	GRPRAR1-LNX3345.00 - GRPRAR 345KV CKT Z	720	720	0.04132	103.4316	ANTELOP-LNX3345.00 - BRDLAND-LNX3345.00 345KV CKT 1
FDNS	00NR	5	20SP	G15_076	TO->FROM	GRPRAR1-LNX3345.00 - GRPRAR 345KV CKT Z	720	720	0.04123	103.4271	LADISH 115/13.2KV TRANSFORMER CKT 1
FDNS	00NR	5	20SP	G15_076	TO->FROM	GRPRAR1-LNX3345.00 - GRPRAR 345KV CKT Z	720	720	0.0384	103.4243	FT THOMPSON (FT2 KU1A) 345/230/13.8KV TRANSFORMER CKT 1
FDNS	00NR	5	20SP	G15_076	TO->FROM	GRPRAR1-LNX3345.00 - GRPRAR 345KV CKT Z	720	720	0.04123	103.4221	GEN600047 1-MECCT1
FDNS	00NR	5	20SP	G15_076	TO->FROM	GRPRAR1-LNX3345.00 - GRPRAR 345KV CKT Z	720	720	0.03839	103.4217	FT THOMPSON (FT2 KU1B) 345/230/13.8KV TRANSFORMER CKT 1

SOLUTION	GROUP	SCENARIO	SEASON	SOURCE	DIRECTION	MONITORED ELEMENT	RATEA (MVA)	RATEB(MVA)	TDF	TC%LOADING (% MVA)	CONTINGENCY
FDNS	00NR	5	20SP	G15_076	TO->FROM	GRPRAR1-LNX3345.00 - GRPRAR 345KV CKT Z	720	720	0.04123	103.4051	GEN660003 3-HURON WEST PARK
FDNS	00NR	5	20SP	G15_076	TO->FROM	GRPRAR1-LNX3345.00 - GRPRAR 345KV CKT Z	720	720	0.04123	103.3962	GEN660001 2-ABERDEEN SIEBRECHT
FDNS	00NR	5	20SP	G15_076	TO->FROM	GRPRAR1-LNX3345.00 - GRPRAR 345KV CKT Z	720	720	0.04123	103.3744	GEN600063 1-COLVILLE GEN 1
FDNS	00NR	5	20SP	G15_076	TO->FROM	GRPRAR1-LNX3345.00 - GRPRAR 345KV CKT Z	720	720	0.04123	103.3744	GEN600064 2-COLVILLE GEN 2
FDNS	00NR	5	20SP	G15_076	TO->FROM	GRPRAR1-LNX3345.00 - GRPRAR 345KV CKT Z	720	720	0.04275	103.3739	GERALD GENTLEMAN STATION - RED WILLOW 345KV CKT 1
FDNS	00NR	5	20SP	G15_076	TO->FROM	GRPRAR1-LNX3345.00 - GRPRAR 345KV CKT Z	720	720	0.04123	103.3692	GEN652414 4-FT PECK
FDNS	00NR	5	20SP	G15_076	TO->FROM	GRPRAR1-LNX3345.00 - GRPRAR 345KV CKT Z	720	720	0.04123	103.3692	GEN652415 5-FT PECK
FDNS	00NR	5	20SP	G15_076	TO->FROM	GRPRAR1-LNX3345.00 - GRPRAR 345KV CKT Z	720	720	0.04123	103.361	GEN300007 1-NEW MADRID UNIT 2
FDNS	00NR	5	20SP	G15_076	TO->FROM	GRPRAR1-LNX3345.00 - GRPRAR 345KV CKT Z	720	720	0.04123	103.3606	GEN681522 3-GENOA 3
FDNS	00NR	5	20SP	G15_076	TO->FROM	GRPRAR1-LNX3345.00 - GRPRAR 345KV CKT Z	720	720	0.04123	103.3592	GEN652345 W-G07_023IS_2 0.6900
FDNS	00NR	5	20SP	G15_076	TO->FROM	GRPRAR1-LNX3345.00 - GRPRAR 345KV CKT Z	720	720	0.04123	103.3559	GEN300006 1-NEW MADRID UNIT 1
FDNS	00NR	5	20SP	G15_076	TO->FROM	GRPRAR1-LNX3345.00 - GRPRAR 345KV CKT Z	720	720	0.04123	103.3531	GEN 11104 1-J262_GEN 0.6000
FDNS	00NR	5	20SP	G15_076	TO->FROM	GRPRAR1-LNX3345.00 - GRPRAR 345KV CKT Z	720	720	0.04123	103.3531	GEN 11108 1-J263_GEN 0.6000
FDNS	00NR	5	20SP	G15_076	TO->FROM	GRPRAR1-LNX3345.00 - GRPRAR 345KV CKT Z	720	720	0.04123	103.348	GEN600043 7-BLUE LAKE5
FDNS	00NR	5	20SP	G15_076	TO->FROM	GRPRAR1-LNX3345.00 - GRPRAR 345KV CKT Z	720	720	0.04123	103.348	GEN600044 8-BLUE LAKE6
FDNS	00NR	5	17SP	G15_076	TO->FROM	GRPRAR1-LNX3345.00 - GRPRAR 345KV CKT Z	720	720	0.04284	103.3379	GEN615001 1-COAL CREEK
FDNS	00NR	5	20SP	G15_076	TO->FROM	GRPRAR1-LNX3345.00 - GRPRAR 345KV CKT Z	720	720	0.04123	103.3305	G830_SUB 115.00 - GRE-MCHENRY7115.00 115KV CKT 1
FDNS	00NR	5	25SP	G15_076	TO->FROM	GRPRAR1-LNX3345.00 - GRPRAR 345KV CKT Z	720	720	0.04155	103.3234	BASE CASE
FDNS	00NR	5	20SP	G15_076	TO->FROM	GRPRAR1-LNX3345.00 - GRPRAR 345KV CKT Z	720	720	0.04123	103.3232	GEN600014 4-BLACK DOG GEN 4
FDNS	00NR	5	20SP	G15_076	TO->FROM	GRPRAR1-LNX3345.00 - GRPRAR 345KV CKT Z	720	720	0.04123	103.3196	GEN600065 7-HIGH BRIDGE
FDNS	00NR	5	20SP	G15_076	TO->FROM	GRPRAR1-LNX3345.00 - GRPRAR 345KV CKT Z	720	720	0.04123	103.3196	GEN600066 8-HIGH BRIDGE
FDNS	00NR	5	20SP	G15_076	TO->FROM	GRPRAR1-LNX3345.00 - GRPRAR 345KV CKT Z	720	720	0.04123	103.3188	G830_SUB 115.00 115/34.5KV TRANSFORMER CKT 1
FDNS	00NR	5	20SP	G15_076	TO->FROM	GRPRAR1-LNX3345.00 - GRPRAR 345KV CKT Z	720	720	0.04123	103.3165	GEN600011 5-BLACK DOG GEN 1
FDNS	00NR	5	20SP	G15_076	TO->FROM	GRPRAR1-LNX3345.00 - GRPRAR 345KV CKT Z	720	720	0.04123	103.3064	GEN600071 10-RIVER SIDE
FDNS	00NR	5	20SP	G15_076	TO->FROM	GRPRAR1-LNX3345.00 - GRPRAR 345KV CKT Z	720	720	0.04123	103.3063	GEN600070 9-RIVER SIDE
FDNS	00NR	5	20SP	G15_076	TO->FROM	GRPRAR1-LNX3345.00 - GRPRAR 345KV CKT Z	720	720	0.04123	103.3034	LANSING WEST 161/22.0KV TRANSFORMER CKT 1
FDNS	00NR	5	20SP	G15_076	TO->FROM	GRPRAR1-LNX3345.00 - GRPRAR 345KV CKT Z	720	720	0.04123	103.295	GEN600007 7-RIVERSIDE GEN 7
FDNS	00NR	5	20SP	G15_076	TO->FROM	GRPRAR1-LNX3345.00 - GRPRAR 345KV CKT Z	720	720	0.04123	103.2818	GEN600017 C-LS POWER CT
FDNS	00NR	5	20SP	G15_076	TO->FROM	GRPRAR1-LNX3345.00 - GRPRAR 345KV CKT Z	720	720	0.04123	103.2708	GEN600045 4-ANSON
FDNS	00NR	5	20SP	G15_076	TO->FROM	GRPRAR1-LNX3345.00 - GRPRAR 345KV CKT Z	720	720	0.04135	103.2567	G11_051T 345.00 - TATONGA7 345.00 345KV CKT 1
FDNS	00NR	5	20SP	G15_076	TO->FROM	GRPRAR1-LNX3345.00 - GRPRAR 345KV CKT Z	720	720	0.04287	103.2479	P12:115:NPPD:1163B:NELIGH 7:NORFK.N7:BTB
FDNS	00NR	5	20SP	G15_076	TO->FROM	GRPRAR1-LNX3345.00 - GRPRAR 345KV CKT Z	720	720	0.04123	103.2176	GEN659273 2-GROTON SYNC COND
FDNS	00NR	5	20SP	G15_076	TO->FROM	GRPRAR1-LNX3345.00 - GRPRAR 345KV CKT Z	720	720	0.04123	103.2176	GEN659294 1-WILTONCOL9
FDNS	00NR	5	20SP	G15_076	TO->FROM	GRPRAR1-LNX3345.00 - GRPRAR 345KV CKT Z	720	720	0.04132	103.2149	BRDLAND-LNX3345.00 - HURON 345KV CKT Z
FDNS	00NR	5	20SP	G15_076	TO->FROM	GRPRAR1-LNX3345.00 - GRPRAR 345KV CKT Z	720	720	0.04132	103.214	HURON (BD KU2A) 345/230/13.8KV TRANSFORMER CKT 1
FDNS	00NR	5	20SP	G15_076	TO->FROM	GRPRAR1-LNX3345.00 - GRPRAR 345KV CKT Z	720	720	0.04132	103.214	HURON (BD KU2A) 345/230/13.8KV TRANSFORMER CKT 1
FDNS	00NR	5	20SP	G15_076	TO->FROM	GRPRAR1-LNX3345.00 - GRPRAR 345KV CKT Z	720	720	0.04123	103.2136	GEN615052 1-CAMBRIDGE GENERATING STATION
FDNS	00NR	5	20SP	G15_076	TO->FROM	GRPRAR1-LNX3345.00 - GRPRAR 345KV CKT Z	720	720	0.04132	103.2124	BROADLAND - HURON 230KV CKT 1
FDNS	00NR	5	20SP	G15_076	TO->FROM	GRPRAR1-LNX3345.00 - GRPRAR 345KV CKT Z	720	720	0.04132	103.2095	P12:345:UMZB:# 103 #: BD IN SD. LOSS OF LINE
FDNS	00NR	5	20SP	G15_076	TO->FROM	GRPRAR1-LNX3345.00 - GRPRAR 345KV CKT Z	720	720	0.04132	103.2086	P12:345:UMZB:# 102 #: AVS BD IN ND. AVS BRD LR
FDNS	00NR	5	17SP	G15_076	TO->FROM	GRPRAR1-LNX3345.00 - GRPRAR 345KV CKT Z	720	720	0.04284	103.2062	GEN615002 2-COAL CREEK
FDNS	00NR	5	20SP	G15_076	TO->FROM	GRPRAR1-LNX3345.00 - GRPRAR 345KV CKT Z	720	720	0.04123	103.1986	GEN615021 1-GRE-ER 14G 16.000
FDNS	00NR	5	20SP	G15_076	TO->FROM	GRPRAR1-LNX3345.00 - GRPRAR 345KV CKT Z	720	720	0.04103	103.1777	HOSKINS - RAUN 345KV CKT 1
FDNS	00NR	5	20SP	G15_076	TO->FROM	GRPRAR1-LNX3345.00 - GRPRAR 345KV CKT Z	720	720	0.04103	103.1777	HOSKINS - RAUN 345KV CKT 1
FDNS	00NR	5	20SP	G15_076	TO->FROM	GRPRAR1-LNX3345.00 - GRPRAR 345KV CKT Z	720	720	0.04132	103.1678	ANTELOP-LNX3345.00 - ANTELOPE VALLEY 345KV CKT Z
FDNS	00NR	5	20SP	G15_076	TO->FROM	GRPRAR1-LNX3345.00 - GRPRAR 345KV CKT Z	720	720	0.04123	103.1582	GEN 10648 1-G830_GEN 0.6900
FDNS	00NR	5	20SP	G15_076	TO->FROM	GRPRAR1-LNX3345.00 - GRPRAR 345KV CKT Z	720	720	0.04123	103.1568	GEN659192 6-LYNN
FDNS	00NR	5	20SP	G15_076	TO->FROM	GRPRAR1-LNX3345.00 - GRPRAR 345KV CKT Z	720	720	0.04123	103.1556	GEN659162 4-RED WLCK
FDNS	00NR	5	20SP	G15_076	TO->FROM	GRPRAR1-LNX3345.00 - GRPRAR 345KV CKT Z	720	720	0.04123	103.1556	GEN659163 5-BLACK WDCK
FDNS	00NR	5	20SP	G15_076	TO->FROM	GRPRAR1-LNX3345.00 - GRPRAR 345KV CKT Z	720	720	0.04119	103.1549	OAHE - SULLEY BUTTE 230KV CKT 1
FDNS	00NR	5	20SP	G15_076	TO->FROM	GRPRAR1-LNX3345.00 - GRPRAR 345KV CKT Z	720	720	0.04123	103.1529	GEN659031 1-G12_014IS_4 0.6900
FDNS	00NR	5	20SP	G15_076	TO->FROM	GRPRAR1-LNX3345.00 - GRPRAR 345KV CKT Z	720	720	0.04123	103.1198	GEN615015 1-GRE-SPRITWDG13.200
FDNS	00NR	5	20SP	G15_076	TO->FROM	GRPRAR1-LNX3345.00 - GRPRAR 345KV CKT Z	720	720	0.04123	103.116	GEN660016 1-B_H WIND 0.7000
FDNS	00NR	5	20SP	G15_076	TO->FROM	GRPRAR1-LNX3345.00 - GRPRAR 345KV CKT Z	720	720	0.03993	103.1047	HIGHLND 3 345.00 - OBRIEN 3 345.00 345KV CKT 1
FDNS	00NR	5	20SP	G15_076	TO->FROM	GRPRAR1-LNX3345.00 - GRPRAR 345KV CKT Z	720	720	0.04123	103.0349	BISONMP4 230.00 - SQUARE BUTTE 230KV CKT 1
FDNS	00NR	5	20SP	G15_076	TO->FROM	GRPRAR1-LNX3345.00 - GRPRAR 345KV CKT Z	720	720	0.04135	103.0308	MATHWSN7 345.00 - TATONGA7 345.00 345KV CKT 1
FDNS	00NR	5	20SP	G15_076	TO->FROM	GRPRAR1-LNX3345.00 - GRPRAR 345KV CKT Z	720	720	0.04123	103.0019	GEN600067 9-HIGH BRIDGE
FDNS	00NR	5	20SP	G15_076	TO->FROM	GRPRAR1-LNX3345.00 - GRPRAR 345KV CKT Z	720	720	0.04119	102.9933	SULLEY BUTTE - SULLYBT-LNX3230.00 230KV CKT Z
FDNS	00NR	5	20SP	G15_076	TO->FROM	GRPRAR1-LNX3345.00 - GRPRAR 345KV CKT Z	720	720	0.04119	102.9929	SULLYBT-LNX3230.00 - WHITLOK 230KV CKT 1
FDNS	00NR	5	20SP	G15_076	TO->FROM	GRPRAR1-LNX3345.00 - GRPRAR 345KV CKT Z	720	720	0.04123	102.9796	GEN672303 3-BOUNDARY DAM GENERATOR 3
FDNS	00NR	5	20SP	G15_076	TO->FROM	GRPRAR1-LNX3345.00 - GRPRAR 345KV CKT Z	720	720	0.04123	102.9795	GEN672304 4-BOUNDARY DAM GENERATOR 4
FDNS	00NR	5	20SP	G15_076	TO->FROM	GRPRAR1-LNX3345.00 - GRPRAR 345KV CKT Z	720	720	0.04123	102.9795	GEN672305 5-BOUNDARY DAM GENERATOR 5
FDNS	00NR	5	20SP	G15_076	TO->FROM	GRPRAR1-LNX3345.00 - GRPRAR 345KV CKT Z	720	720	0.04123	102.9564	GEN659353 1-DEERCREK CTG18.000
FDNS	00NR	5	20SP	G15_076	TO->FROM	GRPRAR1-LNX3345.00 - GRPRAR 345KV CKT Z	720	720	0.04123	102.9556	GEN659354 1-DEERCREK STG18.000
FDNS	00NR	5	20SP	G15_076	TO->FROM	GRPRAR1-LNX3345.00 - GRPRAR 345KV CKT Z	720	720	0.03489	102.9475	DIXONCO 3 345.00 - TWINCH 3 345.00 345KV CKT 1
FDNS	00NR	5	20SP	G15_076	TO->FROM	GRPRAR1-LNX3345.00 - GRPRAR 345KV CKT Z	720	720	0.04119	102.9455	P12:230:UMZB:# 114 #: SB IN SD. SB-WK-GH
FDNS	00NR	5	20SP	G15_076	TO->FROM	GRPRAR1-LNX3345.00 - GRPRAR 345KV CKT Z	720	720	0.04119	102.9455	P12:230:UMZB:# 117 #: WK IN SD. SB-WK-GH
FDNS	00NR	5	20SP	G15_076	TO->FROM	GRPRAR1-LNX3345.00 - GRPRAR 345KV CKT Z	720	720	0.04123	102.9272	GEN672392 1-NBECGT1G 18.000
FDNS	00NR	5	20SP	G15_076	TO->FROM	GRPRAR1-LNX3345.00 - GRPRAR 345KV CKT Z	720	720	0.03489	102.921	DIXONCO 3 345.00 (DIXON1) 345/230/13.8KV TRANSFORMER CKT 1
FDNS	00NR	5	25SP	G15_076	TO->FROM	GRPRAR1-LNX3345.00 - GRPRAR 345KV CKT Z	720	720	0.04044	102.9007	COOPER - MOORE 345KV CKT 1
FDNS	00NR	5	20SP	G15_076	TO->FROM	GRPRAR1-LNX3345.00 - GRPRAR 345KV CKT Z	720	720	0.04119	102.8927	GLENHAM - WHITLOK 230KV CKT 1
FDNS	00NR	5	25SP	G15_076	TO->FROM	GRPRAR1-LNX3345.00 - GRPRAR 345KV CKT Z	720	720	0.04172	102.886	FT THOMPSON - OAHE 230KV CKT 1
FDNS	00NR	5	25SP	G15_076	TO->FROM	GRPRAR1-LNX3345.00 - GRPRAR 345KV CKT Z	720	720	0.04172	102.886	FT THOMPSON - OAHE 230KV CKT 1
FDNS	00NR	5	25SP	G15_076	TO->FROM	GRPRAR1-LNX3345.00 - GRPRAR 345KV CKT Z	720	720	0.04172	102.886	FT THOMPSON - OAHE 230KV CKT 2
FDNS	00NR	5	25SP	G15_076	TO->FROM	GRPRAR1-LNX3345.00 - GRPRAR 345KV CKT Z	720	720	0.04172	102.886	FT THOMPSON - OAHE 230KV CKT 2
FDNS	00NR	5	25SP	G15_076	TO->FROM	GRPRAR1-LNX3345.00 - GRPRAR 345KV CKT Z	720	720	0.04091	102.8622	NELIGH - PETERSBRG.N7115.00 115KV CKT 1
FDNS	00NR	5	25SP	G15_076	TO->FROM	GRPRAR1-LNX3345.00 - GRPRAR 345KV CKT Z	720	720	0.04173	102.8607	FT THOMPSON - OAHE 230KV CKT 3
FDNS	00NR	5	25SP	G15_076	TO->FROM	GRPRAR1-LNX3345.00 - GRPRAR 345KV CKT Z	720	720	0.04173	102.8607	FT THOMPSON - OAHE 230KV CKT 3
FDNS	00NR	5	25SP	G15_076	TO->FROM	GRPRAR1-LNX3345.00 - GRPRAR 345KV CKT Z	720	720	0.04173	102.8607	FT THOMPSON - OAHE 230KV CKT 4

SOLUTION	GROUP	SCENARIO	SEASON	SOURCE	DIRECTION	MONITORED ELEMENT	RATEA (MVA)	RATEB(MVA)	TDF	TC%LOADING (% MVA)	CONTINGENCY
FDNS	00NR	5	25SP	G15_076	TO->FROM	GRPRAR1-LNX3345.00 - GRPRAR 345KV CKT Z	720	720	0.04173	102.8607	FT THOMPSON - OAHE 230KV CKT 4
FDNS	00NR	5	25SP	G15_076	TO->FROM	GRPRAR1-LNX3345.00 - GRPRAR 345KV CKT Z	720	720	0.0444	102.8452	AINSWORTH - AINSWORTH 115KV CKT 1
FDNS	00NR	5	25SP	G15_076	TO->FROM	GRPRAR1-LNX3345.00 - GRPRAR 345KV CKT Z	720	720	0.0418	102.8375	7MAYWOOD 345.00 - 7SPENCER 345.00 345KV CKT 1
FDNS	00NR	5	25SP	G15_076	TO->FROM	GRPRAR1-LNX3345.00 - GRPRAR 345KV CKT Z	720	720	0.04189	102.8372	P13:345:UMZW:# 260 #: SC2 IN IA. LOSS OF TRANSFORMER (KU1A
FDNS	00NR	5	25SP	G15_076	TO->FROM	GRPRAR1-LNX3345.00 - GRPRAR 345KV CKT Z	720	720	0.04157	102.8288	P12:115:UMZZ:# 232 #: AB IN SD. ABERDEEN A TAP BETWEEN ELLENDALE AND ABERDEEN-SIEBRECHT.
FDNS	00NR	5	25SP	G15_076	TO->FROM	GRPRAR1-LNX3345.00 - GRPRAR 345KV CKT Z	720	720	0.04155	102.8194	GEN300003 1-THOMAS HILL UNIT 3
FDNS	00NR	5	20SP	G15_076	TO->FROM	GRPRAR1-LNX3345.00 - GRPRAR 345KV CKT Z	720	720	0.04123	102.8187	GEN681542 6-JP MADGETT
FDNS	00NR	5	25SP	G15_076	TO->FROM	GRPRAR1-LNX3345.00 - GRPRAR 345KV CKT Z	720	720	0.04155	102.8186	GEN672348 2-CORY COGEN GENERATOR 2 GT2
FDNS	00NR	5	25SP	G15_076	TO->FROM	GRPRAR1-LNX3345.00 - GRPRAR 345KV CKT Z	720	720	0.04155	102.8185	GEN672347 1-CORY COGEN GENERATOR 1 GT1
FDNS	00NR	5	25SP	G15_076	TO->FROM	GRPRAR1-LNX3345.00 - GRPRAR 345KV CKT Z	720	720	0.03088	102.8134	SIOUX CITY - TWINCH 3 345.00 345KV CKT 1
FDNS	00NR	5	25SP	G15_076	TO->FROM	GRPRAR1-LNX3345.00 - GRPRAR 345KV CKT Z	720	720	0.04152	102.813	G14-021T 345.00 - MULLNCR7 345.00 345KV CKT 1
FDNS	00NR	5	25SP	G15_076	TO->FROM	GRPRAR1-LNX3345.00 - GRPRAR 345KV CKT Z	720	720	0.04152	102.8105	G15-005T 345.00 - MULLNCR7 345.00 345KV CKT 1
FDNS	00NR	5	25SP	G15_076	TO->FROM	GRPRAR1-LNX3345.00 - GRPRAR 345KV CKT Z	720	720	0.0415	102.8082	BISMARK - L3 HAWDON 230KV CKT 1
FDNS	00NR	5	25SP	G15_076	TO->FROM	GRPRAR1-LNX3345.00 - GRPRAR 345KV CKT Z	720	720	0.04336	102.8051	ATCHSNT3 345.00 - BOONEVILLE 345KV CKT 1
FDNS	00NR	5	25SP	G15_076	TO->FROM	GRPRAR1-LNX3345.00 - GRPRAR 345KV CKT Z	720	720	0.04155	102.8012	GEN659147 1-PIONEER 1G13.800
FDNS	00NR	5	25SP	G15_076	TO->FROM	GRPRAR1-LNX3345.00 - GRPRAR 345KV CKT Z	720	720	0.04155	102.8012	GEN659158 2-PIONEER G213.800
FDNS	00NR	5	25SP	G15_076	TO->FROM	GRPRAR1-LNX3345.00 - GRPRAR 345KV CKT Z	720	720	0.04155	102.8012	GEN659159 3-PIONEER G313.800
FDNS	00NR	5	25SP	G15_076	TO->FROM	GRPRAR1-LNX3345.00 - GRPRAR 345KV CKT Z	720	720	0.04155	102.8002	GEN672358 1-CHAPLN1W 0.6900
FDNS	00NR	5	25SP	G15_076	TO->FROM	GRPRAR1-LNX3345.00 - GRPRAR 345KV CKT Z	720	720	0.04141	102.7998	HOSKINS - RAUN 345KV CKT 1
FDNS	00NR	5	25SP	G15_076	TO->FROM	GRPRAR1-LNX3345.00 - GRPRAR 345KV CKT Z	720	720	0.04141	102.7998	HOSKINS - RAUN 345KV CKT 1
FDNS	00NR	5	25SP	G15_076	TO->FROM	GRPRAR1-LNX3345.00 - GRPRAR 345KV CKT Z	720	720	0.04155	102.7992	GEN659148 1-LONESMCRK 1G13.800
FDNS	00NR	5	25SP	G15_076	TO->FROM	GRPRAR1-LNX3345.00 - GRPRAR 345KV CKT Z	720	720	0.04155	102.7992	GEN659156 2-LONESMCRK 2G13.800
FDNS	00NR	5	25SP	G15_076	TO->FROM	GRPRAR1-LNX3345.00 - GRPRAR 345KV CKT Z	720	720	0.04155	102.7992	GEN659157 3-LONESMCRK 3G13.800
FDNS	00NR	5	20SP	G15_076	TO->FROM	GRPRAR1-LNX3345.00 - GRPRAR 345KV CKT Z	720	720	0.04123	102.7976	GEN662101 1-WESSINGTON190.5750
FDNS	00NR	5	25SP	G15_076	TO->FROM	GRPRAR1-LNX3345.00 - GRPRAR 345KV CKT Z	720	720	0.04155	102.7964	GEN659417 1X-BEPCPKFT 1GX13.800
FDNS	00NR	5	25SP	G15_076	TO->FROM	GRPRAR1-LNX3345.00 - GRPRAR 345KV CKT Z	720	720	0.04155	102.7964	GEN659418 2X-BEPCPKFT 2GX13.800
FDNS	00NR	5	25SP	G15_076	TO->FROM	GRPRAR1-LNX3345.00 - GRPRAR 345KV CKT Z	720	720	0.04155	102.7964	GEN659419 3X-BEPCPKFT 3GX13.800
FDNS	00NR	5	25SP	G15_076	TO->FROM	GRPRAR1-LNX3345.00 - GRPRAR 345KV CKT Z	720	720	0.0398	102.794	COLUMEAST - NW68TH & HOLDREGE 345KV CKT 1
FDNS	00NR	5	25SP	G15_076	TO->FROM	GRPRAR1-LNX3345.00 - GRPRAR 345KV CKT Z	720	720	0.0398	102.794	COLUMEAST - NW68TH & HOLDREGE 345KV CKT 1
FDNS	00NR	5	25SP	G15_076	TO->FROM	GRPRAR1-LNX3345.00 - GRPRAR 345KV CKT Z	720	720	0.04155	102.7908	GEN657964 1-ASH2GEN9 0.5750
FDNS	00NR	5	20SP	G15_076	TO->FROM	GRPRAR1-LNX3345.00 - GRPRAR 345KV CKT Z	720	720	0.04123	102.7845	CENTER 230/22.0KV TRANSFORMER CKT 1
FDNS	00NR	5	25SP	G15_076	TO->FROM	GRPRAR1-LNX3345.00 - GRPRAR 345KV CKT Z	720	720	0.04091	102.7803	ALBION - PETERSBURG 115KV CKT 1
FDNS	00NR	5	25SP	G15_076	TO->FROM	GRPRAR1-LNX3345.00 - GRPRAR 345KV CKT Z	720	720	0.04183	102.7796	FALLOW 3 345.00 - GRIMES 345KV CKT 1
FDNS	00NR	5	25SP	G15_076	TO->FROM	GRPRAR1-LNX3345.00 - GRPRAR 345KV CKT Z	720	720	0.04331	102.7765	BATTLE CREEK - COUNTY LINE 115KV CKT 1
FDNS	00NR	5	25SP	G15_076	TO->FROM	GRPRAR1-LNX3345.00 - GRPRAR 345KV CKT Z	720	720	0.04155	102.773	GEN672367 1-MERIDIAN GENERATOR 1 GT1
FDNS	00NR	5	25SP	G15_076	TO->FROM	GRPRAR1-LNX3345.00 - GRPRAR 345KV CKT Z	720	720	0.04155	102.7729	GEN672368 2-MERIDIAN GENERATOR 2 GT2
FDNS	00NR	5	20SP	G15_076	TO->FROM	GRPRAR1-LNX3345.00 - GRPRAR 345KV CKT Z	720	720	0.04281	102.7714	MISSION - WITTEN 115KV CKT 1
FDNS	00NR	5	25SP	G15_076	TO->FROM	GRPRAR1-LNX3345.00 - GRPRAR 345KV CKT Z	720	720	0.04152	102.7646	G15-005T 345.00 - SIBLEY 345KV CKT 1
FDNS	00NR	5	20SP	G15_076	TO->FROM	GRPRAR1-LNX3345.00 - GRPRAR 345KV CKT Z	720	720	0.04123	102.7605	GEN910006 1-G12_012IS_3 0.6900
FDNS	00NR	5	25SP	G15_076	TO->FROM	GRPRAR1-LNX3345.00 - GRPRAR 345KV CKT Z	720	720	0.04155	102.7602	GEN672352 3-NIPAWIN GENERATOR 3
FDNS	00NR	5	25SP	G15_076	TO->FROM	GRPRAR1-LNX3345.00 - GRPRAR 345KV CKT Z	720	720	0.04155	102.76	GEN672350 1-NIPAWIN GENERATOR 1
FDNS	00NR	5	25SP	G15_076	TO->FROM	GRPRAR1-LNX3345.00 - GRPRAR 345KV CKT Z	720	720	0.04155	102.76	GEN672351 2-NIPAWIN GENERATOR 2
FDNS	00NR	5	25SP	G15_076	TO->FROM	GRPRAR1-LNX3345.00 - GRPRAR 345KV CKT Z	720	720	0.04256	102.758	HOLCOMB - SETAB 345KV CKT 1
FDNS	00NR	5	25SP	G15_076	TO->FROM	GRPRAR1-LNX3345.00 - GRPRAR 345KV CKT Z	720	720	0.04256	102.758	HOLCOMB - SETAB 345KV CKT 1
FDNS	00NR	5	25SP	G15_076	TO->FROM	GRPRAR1-LNX3345.00 - GRPRAR 345KV CKT Z	720	720	0.04164	102.7577	ANTELOP-LNX3345.00 - BRDLAND-LNX3345.00 345KV CKT 1
FDNS	00NR	5	25SP	G15_076	TO->FROM	GRPRAR1-LNX3345.00 - GRPRAR 345KV CKT Z	720	720	0.04155	102.7526	GEN672349 3-CORY COGEN GENERATOR 3 ST
FDNS	00NR	5	25SP	G15_076	TO->FROM	GRPRAR1-LNX3345.00 - GRPRAR 345KV CKT Z	720	720	0.04091	102.7502	PETERSBRG.N7115.00 - PETERSBURG 115KV CKT Z1
FDNS	00NR	5	25SP	G15_076	TO->FROM	GRPRAR1-LNX3345.00 - GRPRAR 345KV CKT Z	720	720	0.04155	102.7474	GEN600012 2-BLACK DOG GEN 2
FDNS	00NR	5	25SP	G15_076	TO->FROM	GRPRAR1-LNX3345.00 - GRPRAR 345KV CKT Z	720	720	0.04155	102.7394	GEN652548 5-FT RANDAL
FDNS	00NR	5	25SP	G15_076	TO->FROM	GRPRAR1-LNX3345.00 - GRPRAR 345KV CKT Z	720	720	0.04155	102.7394	GEN652549 7-FT RANDAL
FDNS	00NR	5	25SP	G15_076	TO->FROM	GRPRAR1-LNX3345.00 - GRPRAR 345KV CKT Z	720	720	0.04091	102.7366	P12:115:NPPD:1168B:ALBION 7:PETERSBRG.N7:BTB
FDNS	00NR	5	25SP	G15_076	TO->FROM	GRPRAR1-LNX3345.00 - GRPRAR 345KV CKT Z	720	720	0.04155	102.7349	GEN652547 3-FT RANDAL
FDNS	00NR	5	25SP	G15_076	TO->FROM	GRPRAR1-LNX3345.00 - GRPRAR 345KV CKT Z	720	720	0.04155	102.7347	EMERY 161/18.0KV TRANSFORMER CKT 1
FDNS	00NR	5	25SP	G15_076	TO->FROM	GRPRAR1-LNX3345.00 - GRPRAR 345KV CKT Z	720	720	0.04155	102.7346	GEN652546 1-FT RANDAL
FDNS	00NR	5	25SP	G15_076	TO->FROM	GRPRAR1-LNX3345.00 - GRPRAR 345KV CKT Z	720	720	0.04155	102.7093	GEN659290 1-EDGECOL
FDNS	00NR	5	25SP	G15_076	TO->FROM	GRPRAR1-LNX3345.00 - GRPRAR 345KV CKT Z	720	720	0.03977	102.708	COLUMEAST - SHELL CREEK 345KV CKT 1
FDNSLock	00NR	5	25SP	G15_076	TO->FROM	GRPRAR1-LNX3345.00 - GRPRAR 345KV CKT Z	720	720	0.04137	102.7065	WATERTOWN (WT2 KU1A) 345/230/13.8KV TRANSFORMER CKT 1
FDNS	00NR	5	25SP	G15_076	TO->FROM	GRPRAR1-LNX3345.00 - GRPRAR 345KV CKT Z	720	720	0.04331	102.7057	ANTELOPE 7115.00 - COUNTY LINE 115KV CKT 1
FDNS	00NR	5	25SP	G15_076	TO->FROM	GRPRAR1-LNX3345.00 - GRPRAR 345KV CKT Z	720	720	0.04183	102.6957	LARAMIE RIVER - STEGALL 345KV CKT 1
FDNS	00NR	5	20SP	G15_076	TO->FROM	GRPRAR1-LNX3345.00 - GRPRAR 345KV CKT Z	720	720	0.04287	102.6922	AXTELL - SWEETWATER 345KV CKT 1
FDNS	00NR	5	25SP	G15_076	TO->FROM	GRPRAR1-LNX3345.00 - GRPRAR 345KV CKT Z	720	720	0.04186	102.6918	FINNEY SWITCHING STATION - WALKTAP7 345.00 345KV CKT 1
FDNS	00NR	5	25SP	G15_076	TO->FROM	GRPRAR1-LNX3345.00 - GRPRAR 345KV CKT Z	720	720	0.04186	102.6918	FINNEY SWITCHING STATION - WALKTAP7 345.00 345KV CKT 1
FDNS	00NR	5	25SP	G15_076	TO->FROM	GRPRAR1-LNX3345.00 - GRPRAR 345KV CKT Z	720	720	0.04155	102.6763	GEN300007 1-NEW MADRID UNIT 2
FDNS	00NR	5	25SP	G15_076	TO->FROM	GRPRAR1-LNX3345.00 - GRPRAR 345KV CKT Z	720	720	0.04155	102.6714	GEN300006 1-NEW MADRID UNIT 1
FDNS	00NR	5	25SP	G15_076	TO->FROM	GRPRAR1-LNX3345.00 - GRPRAR 345KV CKT Z	720	720	0.04155	102.6701	GEN672357 2-FUT-WL2X 13.800
FDNS	00NR	5	25SP	G15_076	TO->FROM	GRPRAR1-LNX3345.00 - GRPRAR 345KV CKT Z	720	720	0.04155	102.6695	GEN600046 1-MECST
FDNS	00NR	5	25SP	G15_076	TO->FROM	GRPRAR1-LNX3345.00 - GRPRAR 345KV CKT Z	720	720	0.04155	102.6598	GEN672393 2-NBECST2G 13.800
FDNS	00NR	5	25SP	G15_076	TO->FROM	GRPRAR1-LNX3345.00 - GRPRAR 345KV CKT Z	720	720	0.0387	102.6586	FT THOMPSON (FT2 KU1A) 345/230/13.8KV TRANSFORMER CKT 1
FDNS	00NR	5	20SP	G15_076	TO->FROM	GRPRAR1-LNX3345.00 - GRPRAR 345KV CKT Z	720	720	0.04123	102.6571	CLAY BOSWELL 230/20.9KV TRANSFORMER CKT 1
FDNS	00NR	5	25SP	G15_076	TO->FROM	GRPRAR1-LNX3345.00 - GRPRAR 345KV CKT Z	720	720	0.03869	102.6561	FT THOMPSON (FT2 KU1B) 345/230/13.8KV TRANSFORMER CKT 1
FDNS	00NR	5	25SP	G15_076	TO->FROM	GRPRAR1-LNX3345.00 - GRPRAR 345KV CKT Z	720	720	0.04155	102.6557	GEN672390 2-FUT-SW2X 13.800
FDNS	00NR	5	25SP	G15_076	TO->FROM	GRPRAR1-LNX3345.00 - GRPRAR 345KV CKT Z	720	720	0.04155	102.6551	GEN620324 3-HOOT LAKE 3 GEN
FDNS	00NR	5	25SP	G15_076	TO->FROM	GRPRAR1-LNX3345.00 - GRPRAR 345KV CKT Z	720	720	0.04155	102.655	GEN652410 3-FT PECK
FDNS	00NR	5	25SP	G15_076	TO->FROM	GRPRAR1-LNX3345.00 - GRPRAR 345KV CKT Z	720	720	0.04155	102.6542	GEN600050 1-FEP
FDNS	00NR	5	20SP	G15_076	TO->FROM	GRPRAR1-LNX3345.00 - GRPRAR 345KV CKT Z	720	720	0.04269	102.648	G15088_T 345.00 - MOORE 345KV CKT 1
FDNS	00NR	5	25SP	G15_076	TO->FROM	GRPRAR1-LNX3345.00 - GRPRAR 345KV CKT Z	720	720	0.04155	102.6409	GEN660003 3-HURON WEST PARK
FDNS	00NR	5	25SP	G15_076	TO->FROM	GRPRAR1-LNX3345.00 - GRPRAR 345KV CKT Z	720	720	0.04155	102.6394	GEN600047 1-MECCT1
FDNS	00NR	5	25SP	G15_076	TO->FROM	GRPRAR1-LNX3345.00 - GRPRAR 345KV CKT Z	720	720	0.04104	102.6381	HELENA - SHEAS LK3 345.00 345KV CKT 1
FDNS	00NR	5	25SP	G15_076	TO->FROM	GRPRAR1-LNX3345.00 - GRPRAR 345KV CKT Z	720	720	0.04202	102.6296	Hitchland Interchange - WALKTAP7 345.00 345KV CKT 1

SOLUTION	GROUP	SCENARIO	SEASON	SOURCE	DIRECTION	MONITORED ELEMENT	RATEA (MVA)	RATEB(MVA)	TDF	TC%LOADING (% MVA)	CONTINGENCY
FDNS	00NR	5	25SP	G15_076	TO->FROM	GRPRAR1-LNX3345.00 - GRPRAR 345KV CKT Z	720	720	0.04202	102.6296	Hitchland Interchange - WALKTAP7 345.00 345KV CKT 1
FDNS	00NR	5	25SP	G15_076	TO->FROM	GRPRAR1-LNX3345.00 - GRPRAR 345KV CKT Z	720	720	0.04155	102.6237	LADISH 115/13.2KV TRANSFORMER CKT 1
FDNS	00NR	5	25SP	G15_076	TO->FROM	GRPRAR1-LNX3345.00 - GRPRAR 345KV CKT Z	720	720	0.04202	102.6216	P12:345:SPS:J07.1.FINN.HITCH
FDNS	00NR	5	25SP	G15_076	TO->FROM	GRPRAR1-LNX3345.00 - GRPRAR 345KV CKT Z	720	720	0.04155	102.6145	GEN660001 2-ABERDEEN SIEBRECHT
FDNS	00NR	5	25SP	G15_076	TO->FROM	GRPRAR1-LNX3345.00 - GRPRAR 345KV CKT Z	720	720	0.04214	102.611	THEDFRD3 345.00 (THEDFORDT2) 345/115/13.8KV TRANSFORMER CKT 1
FDNS	00NR	5	20SP	G15_076	TO->FROM	GRPRAR1-LNX3345.00 - GRPRAR 345KV CKT Z	720	720	0.03589	102.6087	HOSKINS - SHELL CREEK 345KV CKT 1
FDNS	00NR	5	20SP	G15_076	TO->FROM	GRPRAR1-LNX3345.00 - GRPRAR 345KV CKT Z	720	720	0.04123	102.6061	HESKETT 115/13.8KV TRANSFORMER CKT 1
FDNS	00NR	5	25SP	G15_076	TO->FROM	GRPRAR1-LNX3345.00 - GRPRAR 345KV CKT Z	720	720	0.04155	102.5948	GEN652345 W-G07_023IS_2 0.6900
FDNS	00NR	5	25SP	G15_076	TO->FROM	GRPRAR1-LNX3345.00 - GRPRAR 345KV CKT Z	720	720	0.04155	102.5912	GEN652414 4-FT PECK
FDNS	00NR	5	25SP	G15_076	TO->FROM	GRPRAR1-LNX3345.00 - GRPRAR 345KV CKT Z	720	720	0.04155	102.5912	GEN652415 5-FT PECK
FDNS	00NR	5	25SP	G15_076	TO->FROM	GRPRAR1-LNX3345.00 - GRPRAR 345KV CKT Z	720	720	0.04155	102.5716	GEN590010 1-ERCOT EQUIVALENCE
FDNS	00NR	5	25SP	G15_076	TO->FROM	GRPRAR1-LNX3345.00 - GRPRAR 345KV CKT Z	720	720	0.04155	102.569	GEN600063 1-COLVILLE GEN 1
FDNS	00NR	5	25SP	G15_076	TO->FROM	GRPRAR1-LNX3345.00 - GRPRAR 345KV CKT Z	720	720	0.04155	102.569	GEN600064 2-COLVILLE GEN 2
FDNS	00NR	5	25SP	G15_076	TO->FROM	GRPRAR1-LNX3345.00 - GRPRAR 345KV CKT Z	720	720	0.0411	102.5685	SHEAS LK3 345.00 - WILMARTH 345KV CKT 1
FDNS	00NR	5	25SP	G15_076	TO->FROM	GRPRAR1-LNX3345.00 - GRPRAR 345KV CKT Z	720	720	0.04155	102.5641	GEN 11104 1-J262_GEN 0.6000
FDNS	00NR	5	25SP	G15_076	TO->FROM	GRPRAR1-LNX3345.00 - GRPRAR 345KV CKT Z	720	720	0.04155	102.5641	GEN 11108 1-J263_GEN 0.6000
FDNS	00NR	5	25SP	G15_076	TO->FROM	GRPRAR1-LNX3345.00 - GRPRAR 345KV CKT Z	720	720	0.04155	102.5492	GEN590011 2-ERCOT EQUIVALENCE
FDNS	00NR	5	25SP	G15_076	TO->FROM	GRPRAR1-LNX3345.00 - GRPRAR 345KV CKT Z	720	720	0.04093	102.5487	FIELD NORTH - LKFLDXL3 345KV CKT 1
FDNS	00NR	5	25SP	G15_076	TO->FROM	GRPRAR1-LNX3345.00 - GRPRAR 345KV CKT Z	720	720	0.04155	102.5479	GEN600043 7-BLUE LAKE5
FDNS	00NR	5	25SP	G15_076	TO->FROM	GRPRAR1-LNX3345.00 - GRPRAR 345KV CKT Z	720	720	0.04155	102.5479	GEN600044 8-BLUE LAKE6
FDNS	00NR	5	25SP	G15_076	TO->FROM	GRPRAR1-LNX3345.00 - GRPRAR 345KV CKT Z	720	720	0.04093	102.5479	FIELD SOUTH - WILMARTH 345KV CKT 1
FDNS	00NR	5	25SP	G15_076	TO->FROM	GRPRAR1-LNX3345.00 - GRPRAR 345KV CKT Z	720	720	0.04155	102.5424	G830_SUB 115.00 - GRE-MCHENRY7115.00 115KV CKT 1
FDNS	00NR	5	25SP	G15_076	TO->FROM	GRPRAR1-LNX3345.00 - GRPRAR 345KV CKT Z	720	720	0.04155	102.5422	G830_SUB 115.00 115/34.5KV TRANSFORMER CKT 1
FDNS	00NR	5	20SP	G15_076	TO->FROM	GRPRAR1-LNX3345.00 - GRPRAR 345KV CKT Z	720	720	0.04123	102.5419	GEN659289 1-DAYCNTYWND W0.6900
FDNS	00NR	5	25SP	G15_076	TO->FROM	GRPRAR1-LNX3345.00 - GRPRAR 345KV CKT Z	720	720	0.04093	102.5408	FIELD NORTH - FIELD SOUTH 345KV CKT 1
FDNS	00NR	5	25SP	G15_076	TO->FROM	GRPRAR1-LNX3345.00 - GRPRAR 345KV CKT Z	720	720	0.04155	102.5368	LANSING WEST 161/22.0KV TRANSFORMER CKT 1
FDNS	00NR	5	25SP	G15_076	TO->FROM	GRPRAR1-LNX3345.00 - GRPRAR 345KV CKT Z	720	720	0.04164	102.5306	HURON (BD KU2A) 345/230/13.8KV TRANSFORMER CKT 1
FDNS	00NR	5	25SP	G15_076	TO->FROM	GRPRAR1-LNX3345.00 - GRPRAR 345KV CKT Z	720	720	0.04164	102.5306	HURON (BD KU2A) 345/230/13.8KV TRANSFORMER CKT 1
FDNS	00NR	5	25SP	G15_076	TO->FROM	GRPRAR1-LNX3345.00 - GRPRAR 345KV CKT Z	720	720	0.04164	102.5297	BRDLAND-LNX3345.00 - HURON 345KV CKT Z
FDNS	00NR	5	25SP	G15_076	TO->FROM	GRPRAR1-LNX3345.00 - GRPRAR 345KV CKT Z	720	720	0.04164	102.5291	BROADLAND - HURON 230KV CKT 1
FDNS	00NR	5	25SP	G15_076	TO->FROM	GRPRAR1-LNX3345.00 - GRPRAR 345KV CKT Z	720	720	0.04164	102.5282	P12:345:UMZB:# 102 #: AVS BD IN ND. AVS BRD LR
FDNS	00NR	5	25SP	G15_076	TO->FROM	GRPRAR1-LNX3345.00 - GRPRAR 345KV CKT Z	720	720	0.04155	102.5273	GEN681522 3-GENOA 3
FDNS	00NR	5	25SP	G15_076	TO->FROM	GRPRAR1-LNX3345.00 - GRPRAR 345KV CKT Z	720	720	0.04164	102.5256	P12:345:UMZB:# 103 #: BD IN SD. LOSS OF LINE
FDNS	00NR	5	25SP	G15_076	TO->FROM	GRPRAR1-LNX3345.00 - GRPRAR 345KV CKT Z	720	720	0.04155	102.5196	GEN600014 4-BLACK DOG GEN 4
FDNS	00NR	5	25SP	G15_076	TO->FROM	GRPRAR1-LNX3345.00 - GRPRAR 345KV CKT Z	720	720	0.04155	102.5169	GEN600065 7-HIGH BRIDGE
FDNS	00NR	5	25SP	G15_076	TO->FROM	GRPRAR1-LNX3345.00 - GRPRAR 345KV CKT Z	720	720	0.04155	102.5169	GEN600066 8-HIGH BRIDGE
FDNS	00NR	5	25SP	G15_076	TO->FROM	GRPRAR1-LNX3345.00 - GRPRAR 345KV CKT Z	720	720	0.04155	102.514	GEN600011 5-BLACK DOG GEN 1
FDNS	00NR	5	20SP	G15_076	TO->FROM	GRPRAR1-LNX3345.00 - GRPRAR 345KV CKT Z	720	720	0.04123	102.5046	GEN563312 1-G15097_3 0.6900
FDNS	00NR	5	25SP	G15_076	TO->FROM	GRPRAR1-LNX3345.00 - GRPRAR 345KV CKT Z	720	720	0.04155	102.5042	GEN600071 10-RIVER SIDE
FDNS	00NR	5	25SP	G15_076	TO->FROM	GRPRAR1-LNX3345.00 - GRPRAR 345KV CKT Z	720	720	0.04155	102.5041	GEN600070 9-RIVER SIDE
FDNS	00NR	5	25SP	G15_076	TO->FROM	GRPRAR1-LNX3345.00 - GRPRAR 345KV CKT Z	720	720	0.04155	102.4925	GEN600007 7-RIVERSIDE GEN 7
FDNS	00NR	5	25SP	G15_076	TO->FROM	GRPRAR1-LNX3345.00 - GRPRAR 345KV CKT Z	720	720	0.04319	102.4889	P12:115:NPPD:1163B:NELIGH 7:NORFK.N7:BTB
FDNS	00NR	5	25SP	G15_076	TO->FROM	GRPRAR1-LNX3345.00 - GRPRAR 345KV CKT Z	720	720	0.04155	102.4755	GEN600017 C-LS POWER CT
FDNS	00NR	5	25SP	G15_076	TO->FROM	GRPRAR1-LNX3345.00 - GRPRAR 345KV CKT Z	720	720	0.04155	102.4731	GEN600045 4-ANSON
FDNS	00NR	5	20SP	G15_076	TO->FROM	GRPRAR1-LNX3345.00 - GRPRAR 345KV CKT Z	720	720	0.04123	102.4716	GEN659018 1-G14_003IS_3 0.6900
FDNS	00NR	5	20SP	G15_076	TO->FROM	GRPRAR1-LNX3345.00 - GRPRAR 345KV CKT Z	720	720	0.04123	102.4492	GEN652906 1-G09_006IS_3 0.6900
FDNS	00NR	5	25SP	G15_076	TO->FROM	GRPRAR1-LNX3345.00 - GRPRAR 345KV CKT Z	720	720	0.04155	102.4454	GEN659273 2-GROTON SYNC COND
FDNS	00NR	5	25SP	G15_076	TO->FROM	GRPRAR1-LNX3345.00 - GRPRAR 345KV CKT Z	720	720	0.04155	102.4454	GEN659294 1-WILTONCOL9
FDNS	00NR	5	25SP	G15_076	TO->FROM	GRPRAR1-LNX3345.00 - GRPRAR 345KV CKT Z	720	720	0.0415	102.4269	OAHE - SULLEY BUTTE 230KV CKT 1
FDNS	00NR	5	25SP	G15_076	TO->FROM	GRPRAR1-LNX3345.00 - GRPRAR 345KV CKT Z	720	720	0.04234	102.4206	AXTELL - POST ROCK 345KV CKT 1
FDNS	00NR	5	20SP	G15_076	TO->FROM	GRPRAR1-LNX3345.00 - GRPRAR 345KV CKT Z	720	720	0.04123	102.4067	GEN652543 3-BIG BEND
FDNS	00NR	5	25SP	G15_076	TO->FROM	GRPRAR1-LNX3345.00 - GRPRAR 345KV CKT Z	720	720	0.04155	102.4042	GEN615052 1-CAMBRIDGE GENERATING STATION
FDNS	00NR	5	25SP	G15_076	TO->FROM	GRPRAR1-LNX3345.00 - GRPRAR 345KV CKT Z	720	720	0.04164	102.3949	ANTELOP-LNX3345.00 - ANTELOPE VALLEY 345KV CKT Z
FDNS	00NR	5	25SP	G15_076	TO->FROM	GRPRAR1-LNX3345.00 - GRPRAR 345KV CKT Z	720	720	0.04155	102.3845	GEN659031 1-G12_014IS_4 0.6900
FDNS	00NR	5	25SP	G15_076	TO->FROM	GRPRAR1-LNX3345.00 - GRPRAR 345KV CKT Z	720	720	0.04155	102.3684	GEN 10648 1-G830_GEN 0.6900
FDNS	00NR	5	25SP	G15_076	TO->FROM	GRPRAR1-LNX3345.00 - GRPRAR 345KV CKT Z	720	720	0.04155	102.3645	GEN659192 6-LYNN
FDNS	00NR	5	25SP	G15_076	TO->FROM	GRPRAR1-LNX3345.00 - GRPRAR 345KV CKT Z	720	720	0.04155	102.3629	GEN659162 4-RED WLCK
FDNS	00NR	5	25SP	G15_076	TO->FROM	GRPRAR1-LNX3345.00 - GRPRAR 345KV CKT Z	720	720	0.04155	102.3629	GEN659163 5-BLACK WDCK
FDNS	00NR	5	20SP	G15_076	TO->FROM	GRPRAR1-LNX3345.00 - GRPRAR 345KV CKT Z	720	720	0.04123	102.3594	COYOTE 345/24.0KV TRANSFORMER CKT 1
FDNS	00NR	5	25SP	G15_076	TO->FROM	GRPRAR1-LNX3345.00 - GRPRAR 345KV CKT Z	720	720	0.04155	102.3542	GEN660016 1-B_H WIND 0.7000
FDNS	00NR	5	20SP	G15_076	TO->FROM	GRPRAR1-LNX3345.00 - GRPRAR 345KV CKT Z	720	720	0.04123	102.3434	GEN659194 1-NDPRAIRWND1W0.6900
FDNS	00NR	5	20SP	G15_076	TO->FROM	GRPRAR1-LNX3345.00 - GRPRAR 345KV CKT Z	720	720	0.04123	102.3405	GEN659010 4-G07_027IS_2 0.6900
FDNS	00NR	5	25SP	G15_076	TO->FROM	GRPRAR1-LNX3345.00 - GRPRAR 345KV CKT Z	720	720	0.04155	102.3367	GEN615021 1-GRE-ER 14G 16.000
FDNS	00NR	5	20SP	G15_076	TO->FROM	GRPRAR1-LNX3345.00 - GRPRAR 345KV CKT Z	720	720	0.04123	102.3272	GEN652461 5-GARRISON
FDNS	00NR	5	20SP	G15_076	TO->FROM	GRPRAR1-LNX3345.00 - GRPRAR 345KV CKT Z	720	720	0.04123	102.3271	GEN652460 4-GARRISON
FDNS	00NR	5	25SP	G15_076	TO->FROM	GRPRAR1-LNX3345.00 - GRPRAR 345KV CKT Z	720	720	0.04155	102.3027	GEN615015 1-GRE-SPRITWDG13.200
FDNS	00NR	5	20SP	G15_076	TO->FROM	GRPRAR1-LNX3345.00 - GRPRAR 345KV CKT Z	720	720	0.04123	102.301	GEN652559 1-OAHE
FDNS	00NR	5	25SP	G15_076	TO->FROM	GRPRAR1-LNX3345.00 - GRPRAR 345KV CKT Z	720	720	0.04155	102.2733	GEN657705 X-DRAYTON
FDNS	00NR	5	20SP	G15_076	TO->FROM	GRPRAR1-LNX3345.00 - GRPRAR 345KV CKT Z	720	720	0.04123	102.2704	GEN652457 1-GARRISON
FDNS	00NR	5	20SP	G15_076	TO->FROM	GRPRAR1-LNX3345.00 - GRPRAR 345KV CKT Z	720	720	0.04123	102.2704	GEN652458 2-GARRISON
FDNS	00NR	5	20SP	G15_076	TO->FROM	GRPRAR1-LNX3345.00 - GRPRAR 345KV CKT Z	720	720	0.04123	102.2704	GEN652459 3-GARRISON
FDNS	00NR	5	20SP	G15_076	TO->FROM	GRPRAR1-LNX3345.00 - GRPRAR 345KV CKT Z	720	720	0.04119	102.267	GLENHAM - L3 HAWDON 230KV CKT 1
FDNS	00NR	5	20SP	G15_076	TO->FROM	GRPRAR1-LNX3345.00 - GRPRAR 345KV CKT Z	720	720	0.04123	102.2607	GEN652907 1-G09_007IS_3 0.6900
FDNS	00NR	5	25SP	G15_076	TO->FROM	GRPRAR1-LNX3345.00 - GRPRAR 345KV CKT Z	720	720	0.0415	102.2596	SULLEY BUTTE - SULLYBT-LNX3230.00 230KV CKT Z
FDNS	00NR	5	25SP	G15_076	TO->FROM	GRPRAR1-LNX3345.00 - GRPRAR 345KV CKT Z	720	720	0.0415	102.2595	SULLYBT-LNX3230.00 - WHITLOK 230KV CKT 1
FDNS	00NR	5	20SP	G15_076	TO->FROM	GRPRAR1-LNX3345.00 - GRPRAR 345KV CKT Z	720	720	0.04123	102.2469	GEN563342 1-G15098_3 0.6900
FDNS	00NR	5	25SP	G15_076	TO->FROM	GRPRAR1-LNX3345.00 - GRPRAR 345KV CKT Z	720	720	0.04155	102.2273	BISONMP4 230.00 - SQUARE BUTTE 230KV CKT 1
FDNS	00NR	5	20SP	G15_076	TO->FROM	GRPRAR1-LNX3345.00 - GRPRAR 345KV CKT Z	720	720	0.04123	102.2134	GEN659403 1-NDSUNFLWR W0.6900
FDNS	00NR	5	25SP	G15_076	TO->FROM	GRPRAR1-LNX3345.00 - GRPRAR 345KV CKT Z	720	720	0.03521	102.2108	DIXONCO 3 345.00 - TWINCH 3 345.00 345KV CKT 1

SOLUTION	GROUP	SCENARIO	SEASON	SOURCE	DIRECTION	MONITORED ELEMENT	RATEA (MVA)	RATEB(MVA)	TDF	TC%LOADING (% MVA)	CONTINGENCY
FDNS	00NR	5	25SP	G15_076	TO->FROM	GRPRAR1-LNX3345.00 - GRPRAR 345KV CKT Z	720	720	0.0415	102.2029	P12:230:UMZB:# 114 #: SB IN SD. SB-WK-GH
FDNS	00NR	5	25SP	G15_076	TO->FROM	GRPRAR1-LNX3345.00 - GRPRAR 345KV CKT Z	720	720	0.0415	102.2029	P12:230:UMZB:# 117 #: WK IN SD. SB-WK-GH
FDNS	00NR	5	25SP	G15_076	TO->FROM	GRPRAR1-LNX3345.00 - GRPRAR 345KV CKT Z	720	720	0.03521	102.1916	DIXONCO 3 345.00 (DIXON1) 345/230/13.8KV TRANSFORMER CKT 1
FDNS	00NR	5	20SP	G15_076	TO->FROM	GRPRAR1-LNX3345.00 - GRPRAR 345KV CKT Z	720	720	0.04337	102.19	MCCOOL - MOORE 345KV CKT 1
FDNS	00NR	5	20SP	G15_076	TO->FROM	GRPRAR1-LNX3345.00 - GRPRAR 345KV CKT Z	720	720	0.04123	102.1874	GEN652542 1-BIG BEND
FDNS	00NR	5	25SP	G15_076	TO->FROM	GRPRAR1-LNX3345.00 - GRPRAR 345KV CKT Z	720	720	0.04155	102.1843	GEN659353 1-DEERCREK CTG18.000
FDNS	00NR	5	25SP	G15_076	TO->FROM	GRPRAR1-LNX3345.00 - GRPRAR 345KV CKT Z	720	720	0.04155	102.184	GEN600067 9-HIGH BRIDGE
FDNS	00NR	5	25SP	G15_076	TO->FROM	GRPRAR1-LNX3345.00 - GRPRAR 345KV CKT Z	720	720	0.04155	102.1833	GEN659354 1-DEERCREK STG18.000
FDNS	00NR	5	25SP	G15_076	TO->FROM	GRPRAR1-LNX3345.00 - GRPRAR 345KV CKT Z	720	720	0.04306	102.1755	GERALD GENTLEMAN STATION - RED WILLOW 345KV CKT 1
FDNS	00NR	5	25SP	G15_076	TO->FROM	GRPRAR1-LNX3345.00 - GRPRAR 345KV CKT Z	720	720	0.04312	102.1718	G15061_T 345.00 - SETAB 345KV CKT 1
FDNS	00NR	5	25SP	G15_076	TO->FROM	GRPRAR1-LNX3345.00 - GRPRAR 345KV CKT Z	720	720	0.04155	102.1637	GEN672303 3-BOUNDARY DAM GENERATOR 3
FDNS	00NR	5	25SP	G15_076	TO->FROM	GRPRAR1-LNX3345.00 - GRPRAR 345KV CKT Z	720	720	0.04155	102.1637	GEN672304 4-BOUNDARY DAM GENERATOR 4
FDNS	00NR	5	25SP	G15_076	TO->FROM	GRPRAR1-LNX3345.00 - GRPRAR 345KV CKT Z	720	720	0.04155	102.1637	GEN672305 5-BOUNDARY DAM GENERATOR 5
FDNS	00NR	5	25SP	G15_076	TO->FROM	GRPRAR1-LNX3345.00 - GRPRAR 345KV CKT Z	720	720	0.0415	102.1492	GLENHAM - WHITLOK 230KV CKT 1
FDNS	00NR	5	20SP	G15_076	TO->FROM	GRPRAR1-LNX3345.00 - GRPRAR 345KV CKT Z	720	720	0.04123	102.1483	ALMA 161 161/24.0KV TRANSFORMER CKT 1
FDNS	00NR	5	25SP	G15_076	TO->FROM	GRPRAR1-LNX3345.00 - GRPRAR 345KV CKT Z	720	720	0.04155	102.1329	GEN672356 1-FUT-WL1X 18.000
FDNS	00NR	5	25SP	G15_076	TO->FROM	GRPRAR1-LNX3345.00 - GRPRAR 345KV CKT Z	720	720	0.04155	102.1024	GEN672389 1-FUT-SW1X 18.000
FDNS	00NR	5	25SP	G15_076	TO->FROM	GRPRAR1-LNX3345.00 - GRPRAR 345KV CKT Z	720	720	0.04155	102.0932	GEN672392 1-NBECGT1G 18.000
FDNS	00NR	5	25SP	G15_076	TO->FROM	GRPRAR1-LNX3345.00 - GRPRAR 345KV CKT Z	720	720	0.04437	102.0777	MINGO - RED WILLOW 345KV CKT 1
FDNS	00NR	5	25SP	G15_076	TO->FROM	GRPRAR1-LNX3345.00 - GRPRAR 345KV CKT Z	720	720	0.04437	102.0777	MINGO - RED WILLOW 345KV CKT 1
FDNS	00NR	5	25SP	G15_076	TO->FROM	GRPRAR1-LNX3345.00 - GRPRAR 345KV CKT Z	720	720	0.04303	102.073	G15088_T 345.00 - MOORE 345KV CKT 1
FDNS	00NR	5	25SP	G15_076	TO->FROM	GRPRAR1-LNX3345.00 - GRPRAR 345KV CKT Z	720	720	0.0431	102.0706	MISSION - WITTEN 115KV CKT 1
FDNS	00NR	5	20SP	G15_076	TO->FROM	GRPRAR1-LNX3345.00 - GRPRAR 345KV CKT Z	720	720	0.04123	102.0592	SQUARE BUTTE - YNG2 4 230.00 230KV CKT 1
FDNS	00NR	5	20SP	G15_076	TO->FROM	GRPRAR1-LNX3345.00 - GRPRAR 345KV CKT Z	720	720	0.04123	102.0587	YNG2 4 230.00 230/20.0KV TRANSFORMER CKT 1
FDNS	00NR	5	17SP	G15_076	TO->FROM	GRPRAR1-LNX3345.00 - GRPRAR 345KV CKT Z	720	720	0.04277	102.0298	FTTHOM1-LNX3345.00 - LELAND2-LNX3345.00 345KV CKT 1
FDNS	00NR	5	25SP	G15_076	TO->FROM	GRPRAR1-LNX3345.00 - GRPRAR 345KV CKT Z	720	720	0.04155	102.0262	GEN662101 1-WESSINGTON190.5750
FDNS	00NR	5	25SP	G15_076	TO->FROM	GRPRAR1-LNX3345.00 - GRPRAR 345KV CKT Z	720	720	0.04155	101.9953	GEN681542 6-JP MADGETT
FDNS	00NR	5	25SP	G15_076	TO->FROM	GRPRAR1-LNX3345.00 - GRPRAR 345KV CKT Z	720	720	0.04155	101.9734	GEN910006 1-G12_012IS_3 0.6900
FDNS	00NR	5	25SP	G15_076	TO->FROM	GRPRAR1-LNX3345.00 - GRPRAR 345KV CKT Z	720	720	0.04155	101.946	CENTER 230/22.0KV TRANSFORMER CKT 1
FDNS	00NR	5	25SP	G15_076	TO->FROM	GRPRAR1-LNX3345.00 - GRPRAR 345KV CKT Z	720	720	0.03619	101.869	HOSKINS - SHELL CREEK 345KV CKT 1
FDNS	00NR	5	17SP	G15_076	TO->FROM	GRPRAR1-LNX3345.00 - GRPRAR 345KV CKT Z	720	720	0.04277	101.8619	P12:345:UMZB:# 108 #: LOS FT IN ND. LOS FT
FDNS	00NR	5	17SP	G15_076	TO->FROM	GRPRAR1-LNX3345.00 - GRPRAR 345KV CKT Z	720	720	0.04277	101.8531	FT THOMPSON - FTTHOM1-LNX3345.00 345KV CKT Z
FDNS	00NR	5	25SP	G15_076	TO->FROM	GRPRAR1-LNX3345.00 - GRPRAR 345KV CKT Z	720	720	0.04155	101.8501	HESKETT 115/13.8KV TRANSFORMER CKT 1
FDNS	00NR	5	20SP	G15_076	TO->FROM	GRPRAR1-LNX3345.00 - GRPRAR 345KV CKT Z	720	720	0.04123	101.8344	GEN659411 1-CAMPBLCNTY W0.6900
FDNS	00NR	5	25SP	G15_076	TO->FROM	GRPRAR1-LNX3345.00 - GRPRAR 345KV CKT Z	720	720	0.04315	101.8023	AXTELL - SWEETWATER 345KV CKT 1
FDNS	00NR	5	25SP	G15_076	TO->FROM	GRPRAR1-LNX3345.00 - GRPRAR 345KV CKT Z	720	720	0.04155	101.7731	GEN659289 1-DAYCNTYWND W0.6900
FDNS	00NR	5	17SP	G15_076	TO->FROM	GRPRAR1-LNX3345.00 - GRPRAR 345KV CKT Z	720	720	0.04277	101.7689	LELAND OLDS - LELAND2-LNX3345.00 345KV CKT Z
FDNS	00NR	5	25SP	G15_076	TO->FROM	GRPRAR1-LNX3345.00 - GRPRAR 345KV CKT Z	720	720	0.04387	101.7614	MCCOOL - MOORE 345KV CKT 1
FDNS	00NR	5	20SP	G15_076	TO->FROM	GRPRAR1-LNX3345.00 - GRPRAR 345KV CKT Z	720	720	0.04123	101.7604	GEN600004 2-PRAIRIE ISLAND G2
FDNS	00NR	5	20SP	G15_076	TO->FROM	GRPRAR1-LNX3345.00 - GRPRAR 345KV CKT Z	720	720	0.04123	101.7565	GEN600003 1-PRAIRIE ISLAND G1
FDNS	00NR	5	25SP	G15_076	TO->FROM	GRPRAR1-LNX3345.00 - GRPRAR 345KV CKT Z	720	720	0.04155	101.7365	GEN563312 1-G15097_3 0.6900
FDNS	00NR	5	20SP	G15_076	TO->FROM	GRPRAR1-LNX3345.00 - GRPRAR 345KV CKT Z	720	720	0.04123	101.7025	GEN672321 1-SHAND GENERATOR 1
FDNS	00NR	5	25SP	G15_076	TO->FROM	GRPRAR1-LNX3345.00 - GRPRAR 345KV CKT Z	720	720	0.04155	101.6887	GEN659018 1-G14_003IS_3 0.6900
FDNS	00NR	5	25SP	G15_076	TO->FROM	GRPRAR1-LNX3345.00 - GRPRAR 345KV CKT Z	720	720	0.04155	101.6729	GEN652906 1-G09_006IS_3 0.6900
FDNS	00NR	5	20SP	G15_076	TO->FROM	GRPRAR1-LNX3345.00 - GRPRAR 345KV CKT Z	720	720	0.04123	101.6422	GEN672311 2-POPLAR RIVER GENERATOR 2
FDNS	00NR	5	20SP	G15_076	TO->FROM	GRPRAR1-LNX3345.00 - GRPRAR 345KV CKT Z	720	720	0.04123	101.6421	GEN672310 1-POPLAR RIVER GENERATOR 1
FDNS	00NR	5	20SP	G15_076	TO->FROM	GRPRAR1-LNX3345.00 - GRPRAR 345KV CKT Z	720	720	0.04123	101.6249	GEN672306 6-BOUNDARY DAM GENERATOR 6
FDNS	00NR	5	20SP	G15_076	TO->FROM	GRPRAR1-LNX3345.00 - GRPRAR 345KV CKT Z	720	720	0.04123	101.5931	GEN659296 2-SDPRAIRWND1W0.6900
FDNS	00NR	5	20SP	G15_076	TO->FROM	GRPRAR1-LNX3345.00 - GRPRAR 345KV CKT Z	720	720	0.04123	101.5763	RCDC EAST 4230.00 - RED CEDAR DC 230KV CKT 1
FDNS	00NR	5	20SP	G15_076	TO->FROM	GRPRAR1-LNX3345.00 - GRPRAR 345KV CKT Z	720	720	0.04124	101.5707	P12:230:UMZB:# 112 #: NU IN SD. NU-RCDC & DRY CREEK XFMR
FDNS	00NR	5	25SP	G15_076	TO->FROM	GRPRAR1-LNX3345.00 - GRPRAR 345KV CKT Z	720	720	0.04155	101.5662	GEN659010 4-G07_027IS_2 0.6900
FDNS	00NR	5	25SP	G15_076	TO->FROM	GRPRAR1-LNX3345.00 - GRPRAR 345KV CKT Z	720	720	0.04155	101.5613	GEN659194 1-NDPRAIRWND1W0.6900
FDNS	00NR	5	25SP	G15_076	TO->FROM	GRPRAR1-LNX3345.00 - GRPRAR 345KV CKT Z	720	720	0.04155	101.5495	GEN652460 4-GARRISON
FDNS	00NR	5	25SP	G15_076	TO->FROM	GRPRAR1-LNX3345.00 - GRPRAR 345KV CKT Z	720	720	0.04155	101.5494	GEN652461 5-GARRISON
FDNS	00NR	5	25SP	G15_076	TO->FROM	GRPRAR1-LNX3345.00 - GRPRAR 345KV CKT Z	720	720	0.0415	101.4953	GLENHAM - L3 HAWDON 230KV CKT 1
FDNS	00NR	5	25SP	G15_076	TO->FROM	GRPRAR1-LNX3345.00 - GRPRAR 345KV CKT Z	720	720	0.04155	101.4932	GEN652457 1-GARRISON
FDNS	00NR	5	25SP	G15_076	TO->FROM	GRPRAR1-LNX3345.00 - GRPRAR 345KV CKT Z	720	720	0.04155	101.4932	GEN652458 2-GARRISON
FDNS	00NR	5	25SP	G15_076	TO->FROM	GRPRAR1-LNX3345.00 - GRPRAR 345KV CKT Z	720	720	0.04155	101.4932	GEN652459 3-GARRISON
FDNS	00NR	5	20SP	G15_076	TO->FROM	GRPRAR1-LNX3345.00 - GRPRAR 345KV CKT Z	720	720	0.04123	101.4928	GEN615010 1-STANTON4
FDNS	00NR	5	25SP	G15_076	TO->FROM	GRPRAR1-LNX3345.00 - GRPRAR 345KV CKT Z	720	720	0.04155	101.4852	GEN652907 1-G09_007IS_3 0.6900
FDNS	00NR	5	25SP	G15_076	TO->FROM	GRPRAR1-LNX3345.00 - GRPRAR 345KV CKT Z	720	720	0.04155	101.4519	GEN563342 1-G15098_3 0.6900
FDNS	00NR	5	25SP	G15_076	TO->FROM	GRPRAR1-LNX3345.00 - GRPRAR 345KV CKT Z	720	720	0.04155	101.4351	GEN659403 1-NDSUNFLWR W0.6900
FDNS	00NR	5	25SP	G15_076	TO->FROM	GRPRAR1-LNX3345.00 - GRPRAR 345KV CKT Z	720	720	0.04026	101.4347	HIGHLND 3 345.00 - OBRIEN 3 345.00 345KV CKT 1
FDNS	00NR	5	25SP	G15_076	TO->FROM	GRPRAR1-LNX3345.00 - GRPRAR 345KV CKT Z	720	720	0.04155	101.4221	GEN652543 3-BIG BEND
FDNS	00NR	5	25SP	G15_076	TO->FROM	GRPRAR1-LNX3345.00 - GRPRAR 345KV CKT Z	720	720	0.04155	101.4167	GEN652542 1-BIG BEND
FDNS	00NR	5	20SP	G15_076	TO->FROM	GRPRAR1-LNX3345.00 - GRPRAR 345KV CKT Z	720	720	0.04123	101.4117	GEN600006 1-AS KING
FDNS	00NR	5	20SP	G15_076	TO->FROM	GRPRAR1-LNX3345.00 - GRPRAR 345KV CKT Z	720	720	0.04123	101.3974	GEN659453 1-GI1414GEN W0.6900
FDNS	00NR	5	20SP	G15_076	TO->FROM	GRPRAR1-LNX3345.00 - GRPRAR 345KV CKT Z	720	720	0.04123	101.3957	GEN563302 1-G15096_3 0.6900
FDNS	00NR	5	20SP	G15_076	TO->FROM	GRPRAR1-LNX3345.00 - GRPRAR 345KV CKT Z	720	720	0.04123	101.2915	GEN659141 1-K10215A
FDNS	00NR	5	25SP	G15_076	TO->FROM	GRPRAR1-LNX3345.00 - GRPRAR 345KV CKT Z	720	720	0.04155	101.2871	STANTON 230/18.0KV TRANSFORMER CKT 1
FDNS	00NR	5	20SP	G15_076	TO->FROM	GRPRAR1-LNX3345.00 - GRPRAR 345KV CKT Z	720	720	0.04123	101.2856	GEN652557 4-OAHE
FDNS	00NR	5	20SP	G15_076	TO->FROM	GRPRAR1-LNX3345.00 - GRPRAR 345KV CKT Z	720	720	0.04123	101.2856	GEN652558 6-OAHE
FDNS	00NR	5	20SP	G15_076	TO->FROM	GRPRAR1-LNX3345.00 - GRPRAR 345KV CKT Z	720	720	0.04123	101.2855	GEN652556 2-OAHE
FDNS	00NR	5	20SP	G15_076	TO->FROM	GRPRAR1-LNX3345.00 - GRPRAR 345KV CKT Z	720	720	0.04123	101.2626	GEN659110 1-LELAND OLDS UNIT1
FDNS	00NR	5	25SP	G15_076	TO->FROM	GRPRAR1-LNX3345.00 - GRPRAR 345KV CKT Z	720	720	0.04155	101.1275	GEN652559 1-OAHE
FDNS	00NR	5	20SP	G15_076	TO->FROM	GRPRAR1-LNX3345.00 - GRPRAR 345KV CKT Z	720	720	0.04123	101.1071	GEN652173 1-G09_001IS_2 0.6900
FDNS	00NR	5	25SP	G15_076	TO->FROM	GRPRAR1-LNX3345.00 - GRPRAR 345KV CKT Z	720	720	0.04155	101.057	GEN659411 1-CAMPBLCNTY W0.6900
FDNS	00NR	5	20SP	G15_076	TO->FROM	GRPRAR1-LNX3345.00 - GRPRAR 345KV CKT Z	720	720	0.04331	100.9218	GRAND ISLAND - MCCOOL 345KV CKT 1
FDNS	00NR	5	25SP	G15_076	TO->FROM	GRPRAR1-LNX3345.00 - GRPRAR 345KV CKT Z	720	720	0.04155	100.8973	SQUARE BUTTE - YNG2 4 230.00 230KV CKT 1

SOLUTION	GROUP	SCENARIO	SEASON	SOURCE	DIRECTION	MONITORED ELEMENT	RATEA (MVA)	RATEB(MVA)	TDF	TC%LOADING (% MVA)	CONTINGENCY
FDNS	00NR	5	20SP	G15_076	TO->FROM	GRPRAR1-LNX3345.00 - GRPRAR 345KV CKT Z	720	720	0.04123	100.8876	GEN657749 1-YOUNG 1 GENERATOR
FDNS	00NR	5	25SP	G15_076	TO->FROM	GRPRAR1-LNX3345.00 - GRPRAR 345KV CKT Z	720	720	0.04155	100.8659	GEN600004 2-PRAIRIE ISLAND G2
FDNS	00NR	5	25SP	G15_076	TO->FROM	GRPRAR1-LNX3345.00 - GRPRAR 345KV CKT Z	720	720	0.04155	100.8618	GEN600003 1-PRAIRIE ISLAND G1
FDNS	00NR	5	25SP	G15_076	TO->FROM	GRPRAR1-LNX3345.00 - GRPRAR 345KV CKT Z	720	720	0.04155	100.8453	GEN672310 1-POPLAR RIVER GENERATOR 1
FDNS	00NR	5	25SP	G15_076	TO->FROM	GRPRAR1-LNX3345.00 - GRPRAR 345KV CKT Z	720	720	0.04155	100.8453	GEN672311 2-POPLAR RIVER GENERATOR 2
FDNS	00NR	5	25SP	G15_076	TO->FROM	GRPRAR1-LNX3345.00 - GRPRAR 345KV CKT Z	720	720	0.04155	100.8302	GEN672321 1-SHAND GENERATOR 1
FDNS	00NR	5	25SP	G15_076	TO->FROM	GRPRAR1-LNX3345.00 - GRPRAR 345KV CKT Z	720	720	0.04155	100.8279	GEN659296 2-SDPRAIRWND1W0.6900
FDNS	00NR	5	20SP	G15_076	TO->FROM	GRPRAR1-LNX3345.00 - GRPRAR 345KV CKT Z	720	720	0.04123	100.7878	GEN659407 1-ANTELPHILLSW0.6900
FDNS	00NR	5	25SP	G15_076	TO->FROM	GRPRAR1-LNX3345.00 - GRPRAR 345KV CKT Z	720	720	0.04155	100.7716	P12:230:UMZB:# 112 #: NU IN SD. NU-RCDC & DRY CREEK XFMR
FDNS	00NR	5	25SP	G15_076	TO->FROM	GRPRAR1-LNX3345.00 - GRPRAR 345KV CKT Z	720	720	0.04155	100.7679	RCDC EAST 4230.00 - RED CEDAR DC 230KV CKT 1
FDNS	00NR	5	25SP	G15_076	TO->FROM	GRPRAR1-LNX3345.00 - GRPRAR 345KV CKT Z	720	720	0.04155	100.7484	GEN672306 6-BOUNDARY DAM GENERATOR 6
FDNS	00NR	5	25SP	G15_076	TO->FROM	GRPRAR1-LNX3345.00 - GRPRAR 345KV CKT Z	720	720	0.04155	100.6326	GEN615010 1-STANTON4
FDNS	00NR	5	25SP	G15_076	TO->FROM	GRPRAR1-LNX3345.00 - GRPRAR 345KV CKT Z	720	720	0.04155	100.6101	GEN659453 1-GI1414GEN W0.6900
FDNS	00NR	5	25SP	G15_076	TO->FROM	GRPRAR1-LNX3345.00 - GRPRAR 345KV CKT Z	720	720	0.04155	100.6082	GEN563302 1-G15096_3 0.6900
FDNS	00NR	5	20SP	G15_076	TO->FROM	GRPRAR1-LNX3345.00 - GRPRAR 345KV CKT Z	720	720	0.04123	100.5516	GEN600005 1-MONTICELLO
FDNS	00NR	5	25SP	G15_076	TO->FROM	GRPRAR1-LNX3345.00 - GRPRAR 345KV CKT Z	720	720	0.04155	100.5148	GEN600006 1-AS KING
FDNS	00NR	5	25SP	G15_076	TO->FROM	GRPRAR1-LNX3345.00 - GRPRAR 345KV CKT Z	720	720	0.04155	100.5142	GEN652556 2-OAHE
FDNS	00NR	5	25SP	G15_076	TO->FROM	GRPRAR1-LNX3345.00 - GRPRAR 345KV CKT Z	720	720	0.04155	100.5142	GEN652557 4-OAHE
FDNS	00NR	5	25SP	G15_076	TO->FROM	GRPRAR1-LNX3345.00 - GRPRAR 345KV CKT Z	720	720	0.04155	100.5142	GEN652558 6-OAHE
FDNS	00NR	5	25SP	G15_076	TO->FROM	GRPRAR1-LNX3345.00 - GRPRAR 345KV CKT Z	720	720	0.04155	100.4928	GEN659141 1-K10215A
FDNS	00NR	5	25SP	G15_076	TO->FROM	GRPRAR1-LNX3345.00 - GRPRAR 345KV CKT Z	720	720	0.04378	100.4662	GRAND ISLAND - MCCOOL 345KV CKT 1
FDNS	00NR	5	25SP	G15_076	TO->FROM	GRPRAR1-LNX3345.00 - GRPRAR 345KV CKT Z	720	720	0.04155	100.4464	GEN659110 1-LELAND OLDS UNIT1
FDNS	00NR	5	25SP	G15_076	TO->FROM	GRPRAR1-LNX3345.00 - GRPRAR 345KV CKT Z	720	720	0.04155	100.3433	GEN652173 1-G09_001IS_2 0.6900
FDNS	00NR	5	20SP	G15_076	TO->FROM	GRPRAR1-LNX3345.00 - GRPRAR 345KV CKT Z	720	720	0.04123	100.2519	GEN600000 1-SHERBURNECNTY G1
FDNS	00NR	5	20SP	G15_076	TO->FROM	GRPRAR1-LNX3345.00 - GRPRAR 345KV CKT Z	720	720	0.04123	100.1	GEN600001 2-SHERBURNE CNTY G2
FDNS	00NR	5	17SP	G15_076	TO->FROM	GRPRAR1-LNX3345.00 - GRPRAR 345KV CKT Z	720	720	0.06807	100	ANTELOPE 3345.00 - HOSKINS 345KV CKT 1
FDNS	00NR	5	25SP	G15_076	TO->FROM	GRPRAR1-LNX3345.00 - GRPRAR 345KV CKT Z	720	720	0.04155	100	CLAY BOSWELL 230/20.9KV TRANSFORMER CKT 1
FDNS	00NR	5	25SP	G15_076	TO->FROM	GRPRAR1-LNX3345.00 - GRPRAR 345KV CKT Z	720	720	0.04155	100	GEN657749 1-YOUNG 1 GENERATOR
FDNS	00NR	5	25SP	G15_076	TO->FROM	GRPRAR1-LNX3345.00 - GRPRAR 345KV CKT Z	720	720	0.04155	100	GEN659407 1-ANTELPHILLSW0.6900
FDNS	00NR	5	20SP	G15_076	TO->FROM	GRPRAR1-LNX3345.00 - GRPRAR 345KV CKT Z	720	720	0.04123	99.9	GEN661015 1-COYOTE
FDNS	00NR	5	20SP	G15_076	TO->FROM	GRPRAR1-LNX3345.00 - GRPRAR 345KV CKT Z	720	720	0.04123	99.8	GEN620315 1-BIG STONE GEN
FDNS	00NR	5	25SP	G15_076	TO->FROM	GRPRAR1-LNX3345.00 - GRPRAR 345KV CKT Z	720	720	0.04155	99.7	GEN600005 1-MONTICELLO
FDNS	00NR	5	17SP	G15_076	FROM->TO	GRPRAR1-LNX3345.00 - HOLT.CO3 345.00 345KV CKT 1	720	720	0.04034	120.6396	P12:230:UMZB:# 116 #: ST IN SD. WSG-ST-VH
FDNS	00NR	5	17SP	G15_076	FROM->TO	GRPRAR1-LNX3345.00 - HOLT.CO3 345.00 345KV CKT 1	720	720	0.04798	120.4167	KELLY - MEADOWGROVE4230.00 230KV CKT 1
FDNS	00NR	5	17SP	G15_076	FROM->TO	GRPRAR1-LNX3345.00 - HOLT.CO3 345.00 345KV CKT 1	720	720	0.04174	119.7926	P12:345:UMZW:# 1747 #: WT2 IN SD. WT2-WHT LINE FAULT
FDNS	00NR	5	17SP	G15_076	FROM->TO	GRPRAR1-LNX3345.00 - HOLT.CO3 345.00 345KV CKT 1	720	720	0.04174	119.7914	WATERTN-LNX3345.00 - WATERTOWN 345KV CKT Z
FDNS	00NR	5	17SP	G15_076	FROM->TO	GRPRAR1-LNX3345.00 - HOLT.CO3 345.00 345KV CKT 1	720	720	0.04174	119.7482	WATERTN-LNX3345.00 - WHITE 345KV CKT 1
FDNS	00NR	5	17SP	G15_076	FROM->TO	GRPRAR1-LNX3345.00 - HOLT.CO3 345.00 345KV CKT 1	720	720	0.04072	119.6977	STORLA - WESSINGTON 230KV CKT 1
FDNS	00NR	5	17SP	G15_076	FROM->TO	GRPRAR1-LNX3345.00 - HOLT.CO3 345.00 345KV CKT 1	720	720	0.04249	119.0471	G09_001IST 345.00 - WATERTOWN 345KV CKT 1
FDNS	00NR	5	17SP	G15_076	FROM->TO	GRPRAR1-LNX3345.00 - HOLT.CO3 345.00 345KV CKT 1	720	720	0.04078	118.5691	HANLON - STORLA 230KV CKT 1
FDNS	00NR	5	17SP	G15_076	FROM->TO	GRPRAR1-LNX3345.00 - HOLT.CO3 345.00 345KV CKT 1	720	720	0.04003	117.9634	FT THOMPSON - LETCHER 230KV CKT 1
FDNS	00NR	5	17SP	G15_076	FROM->TO	GRPRAR1-LNX3345.00 - HOLT.CO3 345.00 345KV CKT 1	720	720	0.04003	117.9634	FT THOMPSON - LETCHER 230KV CKT 1
FDNS	00NR	5	17SP	G15_076	FROM->TO	GRPRAR1-LNX3345.00 - HOLT.CO3 345.00 345KV CKT 1	720	720	0.04284	117.5677	BUFFALO - JAMESTOWN 345KV CKT 1
FDNS	00NR	5	17SP	G15_076	FROM->TO	GRPRAR1-LNX3345.00 - HOLT.CO3 345.00 345KV CKT 1	720	720	0.03981	116.5515	FT RANDAL - G12_009IST 230.00 230KV CKT 1
FDNS	00NR	5	17SP	G15_076	FROM->TO	GRPRAR1-LNX3345.00 - HOLT.CO3 345.00 345KV CKT 1	720	720	0.03973	116.5158	FT RANDAL - FT THOMPSON 230KV CKT 1
FDNS	00NR	5	17SP	G15_076	FROM->TO	GRPRAR1-LNX3345.00 - HOLT.CO3 345.00 345KV CKT 1	720	720	0.03973	116.5158	FT RANDAL - FT THOMPSON 230KV CKT 1
FDNS	00NR	5	17SP	G15_076	FROM->TO	GRPRAR1-LNX3345.00 - HOLT.CO3 345.00 345KV CKT 1	720	720	0.04284	116.4833	CHISAGO COUNTY - FORBES 500KV CKT 1
FDNS	00NR	5	17SP	G15_076	FROM->TO	GRPRAR1-LNX3345.00 - HOLT.CO3 345.00 345KV CKT 1	720	720	0.03981	116.4364	FT THOMPSON - LAKE PLATT 230KV CKT 1
FDNS	00NR	5	17SP	G15_076	FROM->TO	GRPRAR1-LNX3345.00 - HOLT.CO3 345.00 345KV CKT 1	720	720	0.03981	116.4364	FT THOMPSON - LAKE PLATT 230KV CKT 1
FDNS	00NR	5	17SP	G15_076	FROM->TO	GRPRAR1-LNX3345.00 - HOLT.CO3 345.00 345KV CKT 1	720	720	0.04249	116.4139	G09_001IST 345.00 - GROTON 345KV CKT 1
FDNS	00NR	5	17SP	G15_076	FROM->TO	GRPRAR1-LNX3345.00 - HOLT.CO3 345.00 345KV CKT 1	720	720	0.05131	116.359	NUNDRWD - WAYSIDE 230KV CKT 1
FDNS	00NR	5	17SP	G15_076	FROM->TO	GRPRAR1-LNX3345.00 - HOLT.CO3 345.00 345KV CKT 1	720	720	0.03981	116.062	G12_009IST 230.00 - LAKE PLATT 230KV CKT 1
FDNS	00NR	5	17SP	G15_076	FROM->TO	GRPRAR1-LNX3345.00 - HOLT.CO3 345.00 345KV CKT 1	720	720	0.04283	116.0005	CENTER - JAMESTOWN 345KV CKT 1
FDNS	00NR	5	17SP	G15_076	FROM->TO	GRPRAR1-LNX3345.00 - HOLT.CO3 345.00 345KV CKT 1	720	720	0.04798	115.8701	FT RANDAL - MEADOWGROVE4230.00 230KV CKT 1
FDNS	00NR	5	17SP	G15_076	FROM->TO	GRPRAR1-LNX3345.00 - HOLT.CO3 345.00 345KV CKT 1	720	720	0.04157	115.7398	LETCHER - SIOUX FALLS 230KV CKT 1
FDNS	00NR	5	17SP	G15_076	FROM->TO	GRPRAR1-LNX3345.00 - HOLT.CO3 345.00 345KV CKT 1	720	720	0.04284	115.4947	GEN336821 1-GRAND GULF UNIT
FDNS	00NR	5	17SP	G15_076	FROM->TO	GRPRAR1-LNX3345.00 - HOLT.CO3 345.00 345KV CKT 1	720	720	0.04284	115.4791	BISON 3 345.00 - BUFFALO 345KV CKT 1
FDNS	00NR	5	17SP	G15_076	FROM->TO	GRPRAR1-LNX3345.00 - HOLT.CO3 345.00 345KV CKT 1	720	720	0.04284	115.3763	GEN635024 4-WALTER SCOTT UNIT 4
FDNS	00NR	5	17SP	G15_076	FROM->TO	GRPRAR1-LNX3345.00 - HOLT.CO3 345.00 345KV CKT 1	720	720	0.04095	115.3364	SPLIT ROCK - WHITE 345KV CKT 1
FDNS	00NR	5	17SP	G15_076	FROM->TO	GRPRAR1-LNX3345.00 - HOLT.CO3 345.00 345KV CKT 1	720	720	0.04095	115.3364	SPLIT ROCK - WHITE 345KV CKT 1
FDNS	00NR	5	17SP	G15_076	FROM->TO	GRPRAR1-LNX3345.00 - HOLT.CO3 345.00 345KV CKT 1	720	720	0.04284	115.1049	GEN344225 1-1CAL G1 25.000
FDNS	00NR	5	17SP	G15_076	FROM->TO	GRPRAR1-LNX3345.00 - HOLT.CO3 345.00 345KV CKT 1	720	720	0.04385	115.0424	KEYSTONE - SIDNEY1-LNX3345.00 345KV CKT 1
FDNS	00NR	5	17SP	G15_076	FROM->TO	GRPRAR1-LNX3345.00 - HOLT.CO3 345.00 345KV CKT 1	720	720	0.04385	115.0268	SIDNEY - SIDNEY1-LNX3345.00 345KV CKT Z
FDNS	00NR	5	17SP	G15_076	FROM->TO	GRPRAR1-LNX3345.00 - HOLT.CO3 345.00 345KV CKT 1	720	720	0.04284	114.9039	GEN635023 3-WALTER SCOTT UNIT 3
FDNS	00NR	5	17SP	G15_076	FROM->TO	GRPRAR1-LNX3345.00 - HOLT.CO3 345.00 345KV CKT 1	720	720	0.04284	114.9004	GEN562714 1-G15_023_4 0.6900
FDNS	00NR	5	17SP	G15_076	FROM->TO	GRPRAR1-LNX3345.00 - HOLT.CO3 345.00 345KV CKT 1	720	720	0.04284	114.9004	GEN562715 1-G15_023_5 0.6900
FDNS	00NR	5	17SP	G15_076	FROM->TO	GRPRAR1-LNX3345.00 - HOLT.CO3 345.00 345KV CKT 1	720	720	0.04284	114.8601	GEN337911 1-ARKANSAS NUCLEAR ONE UNIT #2
FDNS	00NR	5	17SP	G15_076	FROM->TO	GRPRAR1-LNX3345.00 - HOLT.CO3 345.00 345KV CKT 1	720	720	0.04284	114.8311	GEN336153 1-WATERFORD UNIT#3
FDNS	00NR	5	17SP	G15_076	FROM->TO	GRPRAR1-LNX3345.00 - HOLT.CO3 345.00 345KV CKT 1	720	720	0.04191	114.8146	FT RANDAL - SIOUX CITY 230KV CKT 1
FDNS	00NR	5	17SP	G15_076	FROM->TO	GRPRAR1-LNX3345.00 - HOLT.CO3 345.00 345KV CKT 1	720	720	0.04252	114.7703	GROTON-LNX3 345.00 - LELAND1-LNX3345.00 345KV CKT 1
FDNS	00NR	5	17SP	G15_076	FROM->TO	GRPRAR1-LNX3345.00 - HOLT.CO3 345.00 345KV CKT 1	720	720	0.04252	114.6512	LELAND OLDS - LELAND1-LNX3345.00 345KV CKT Z
FDNS	00NR	5	17SP	G15_076	FROM->TO	GRPRAR1-LNX3345.00 - HOLT.CO3 345.00 345KV CKT 1	720	720	0.04252	114.6392	GROTON - GROTON-LNX3 345.00 345KV CKT Z
FDNS	00NR	5	17SP	G15_076	FROM->TO	GRPRAR1-LNX3345.00 - HOLT.CO3 345.00 345KV CKT 1	720	720	0.04252	114.6374	P12:345:UMZB:# 109 #: LOS GRT IN ND. LOS GRT
FDNS	00NR	5	17SP	G15_076	FROM->TO	GRPRAR1-LNX3345.00 - HOLT.CO3 345.00 345KV CKT 1	720	720	0.04316	114.5848	ARROWHEAD - ARROWHEAD 230 230KV CKT 1
FDNS	00NR	5	17SP	G15_076	FROM->TO	GRPRAR1-LNX3345.00 - HOLT.CO3 345.00 345KV CKT 1	720	720	0.042	114.5742	HANLON - SIOUX FALLS 230KV CKT 1
FDNS	00NR	5	17SP	G15_076	FROM->TO	GRPRAR1-LNX3345.00 - HOLT.CO3 345.00 345KV CKT 1	720	720	0.04351	114.538	MISSION - ST FRANCIS 115KV CKT 1
FDNS	00NR	5	17SP	G15_076	FROM->TO	GRPRAR1-LNX3345.00 - HOLT.CO3 345.00 345KV CKT 1	720	720	0.04351	114.5239	P12:115:NPPD:1091:VALENTN7:MISSION7:BTB
FDNS	00NR	5	17SP	G15_076	FROM->TO	GRPRAR1-LNX3345.00 - HOLT.CO3 345.00 345KV CKT 1	720	720	0.04284	114.486	GEN335831 1-RIVERBEND UNIT#1
FDNS	00NR	5	17SP	G15_076	FROM->TO	GRPRAR1-LNX3345.00 - HOLT.CO3 345.00 345KV CKT 1	720	720	0.04284	114.483	GEN640010 1-GERALD GENTLEMAN STATION UNIT 1

SOLUTION	GROUP	SCENARIO	SEASON	SOURCE	DIRECTION	MONITORED ELEMENT	RATEA (MVA)	RATEB(MVA)	TDF	TC%LOADING (% MVA)	CONTINGENCY
FDNS	00NR	5	17SP	G15_076	FROM->TO	GRPRAR1-LNX3345.00 - HOLT.CO3 345.00 345KV CKT 1	720	720	0.04351	114.3978	HARMONY - ST FRANCIS 115KV CKT 1
FDNS	00NR	5	17SP	G15_076	FROM->TO	GRPRAR1-LNX3345.00 - HOLT.CO3 345.00 345KV CKT 1	720	720	0.04284	114.3951	GEN337910 1-ARKANSAS NUCLEAR ONE UNIT #1
FDNS	00NR	5	17SP	G15_076	FROM->TO	GRPRAR1-LNX3345.00 - HOLT.CO3 345.00 345KV CKT 1	720	720	0.03898	114.3942	FT RANDAL - UTICA JCT 230KV CKT 1
FDNS	00NR	5	17SP	G15_076	FROM->TO	GRPRAR1-LNX3345.00 - HOLT.CO3 345.00 345KV CKT 1	720	720	0.04375	114.3357	HAZLETON - MITCHLCO3 345.00 345KV CKT 1
FDNS	00NR	5	17SP	G15_076	FROM->TO	GRPRAR1-LNX3345.00 - HOLT.CO3 345.00 345KV CKT 1	720	720	0.0429	114.3315	ALEXMRES3 345.00 - BISON 3 345.00 345KV CKT 1
FDNS	00NR	5	17SP	G15_076	FROM->TO	GRPRAR1-LNX3345.00 - HOLT.CO3 345.00 345KV CKT 1	720	720	0.04284	114.2741	ELLENDALE - OAKES 230KV CKT 1
FDNS	00NR	5	17SP	G15_076	FROM->TO	GRPRAR1-LNX3345.00 - HOLT.CO3 345.00 345KV CKT 1	720	720	0.04284	114.2741	ELLENDALE - OAKES 230KV CKT 1
FDNS	00NR	5	17SP	G15_076	FROM->TO	GRPRAR1-LNX3345.00 - HOLT.CO3 345.00 345KV CKT 1	720	720	0.03954	114.2592	SIOUXCY-LNX3345.00 - SPLIT ROCK 345KV CKT 1
FDNS	00NR	5	17SP	G15_076	FROM->TO	GRPRAR1-LNX3345.00 - HOLT.CO3 345.00 345KV CKT 1	720	720	0.03954	114.2592	SIOUXCY-LNX3345.00 - SPLIT ROCK 345KV CKT 1
FDNS	00NR	5	17SP	G15_076	FROM->TO	GRPRAR1-LNX3345.00 - HOLT.CO3 345.00 345KV CKT 1	720	720	0.03954	114.2577	P12:345:UMZW:# 907 #: SC2-SR IN IA. SC2-SR 345 KV LINE
FDNS	00NR	5	17SP	G15_076	FROM->TO	GRPRAR1-LNX3345.00 - HOLT.CO3 345.00 345KV CKT 1	720	720	0.04499	114.213	FT RANDAL - SPENCER 115KV CKT 1
FDNS	00NR	5	17SP	G15_076	FROM->TO	GRPRAR1-LNX3345.00 - HOLT.CO3 345.00 345KV CKT 1	720	720	0.03954	114.1953	SIOUX CITY - SIOUXCY-LNX3345.00 345KV CKT Z
FDNS	00NR	5	17SP	G15_076	FROM->TO	GRPRAR1-LNX3345.00 - HOLT.CO3 345.00 345KV CKT 1	720	720	0.04284	114.1926	GEN640011 2-GERALD GENTLEMAN STATION UNIT 2
FDNS	00NR	5	17SP	G15_076	FROM->TO	GRPRAR1-LNX3345.00 - HOLT.CO3 345.00 345KV CKT 1	720	720	0.04351	114.1855	HARMONY - VALENTINE 115KV CKT 1
FDNS	00NR	5	17SP	G15_076	FROM->TO	GRPRAR1-LNX3345.00 - HOLT.CO3 345.00 345KV CKT 1	720	720	0.04283	114.1827	FORMAN - OAKES 230KV CKT 1
FDNS	00NR	5	17SP	G15_076	FROM->TO	GRPRAR1-LNX3345.00 - HOLT.CO3 345.00 345KV CKT 1	720	720	0.04499	114.1739	P12:115:NPPD:WAPA6:FTRANDL7:ONEILL 7:BTB
FDNS	00NR	5	17SP	G15_076	FROM->TO	GRPRAR1-LNX3345.00 - HOLT.CO3 345.00 345KV CKT 1	720	720	0.04499	114.1739	P12:115:UMZB:# 115 #: SE IN NE. FR-SE-ON
FDNS	00NR	5	17SP	G15_076	FROM->TO	GRPRAR1-LNX3345.00 - HOLT.CO3 345.00 345KV CKT 1	720	720	0.04429	114.1351	SIDNEY - STEGALL 345KV CKT 1
FDNS	00NR	5	17SP	G15_076	FROM->TO	GRPRAR1-LNX3345.00 - HOLT.CO3 345.00 345KV CKT 1	720	720	0.04318	114.1312	GERALD GENTLEMAN STATION - KEYSTONE 345KV CKT 1
FDNS	00NR	5	17SP	G15_076	FROM->TO	GRPRAR1-LNX3345.00 - HOLT.CO3 345.00 345KV CKT 1	720	720	0.04758	114.1281	RAUN - SUB 3451 FT CAL 345KV CKT 1
FDNS	00NR	5	17SP	G15_076	FROM->TO	GRPRAR1-LNX3345.00 - HOLT.CO3 345.00 345KV CKT 1	720	720	0.04758	114.1281	RAUN - SUB 3451 FT CAL 345KV CKT 1
FDNS	00NR	5	17SP	G15_076	FROM->TO	GRPRAR1-LNX3345.00 - HOLT.CO3 345.00 345KV CKT 1	720	720	0.04499	114.052	ONEILL - SPENCER 115KV CKT 1
FDNS	00NR	5	17SP	G15_076	FROM->TO	GRPRAR1-LNX3345.00 - HOLT.CO3 345.00 345KV CKT 1	720	720	0.04321	114.0075	AS KING - EAU CLAIRE 345KV CKT 1
FDNS	00NR	5	17SP	G15_076	FROM->TO	GRPRAR1-LNX3345.00 - HOLT.CO3 345.00 345KV CKT 1	720	720	0.04275	113.9954	CARPENTER - HURON 230KV CKT 1
FDNS	00NR	5	17SP	G15_076	FROM->TO	GRPRAR1-LNX3345.00 - HOLT.CO3 345.00 345KV CKT 1	720	720	0.04227	113.9555	PAHOJA - SIOUX FALLS 230KV CKT 1
FDNS	00NR	5	17SP	G15_076	FROM->TO	GRPRAR1-LNX3345.00 - HOLT.CO3 345.00 345KV CKT 1	720	720	0.05543	113.914	DIXONCO 230.00 - HOSKINS 230KV CKT 1
FDNS	00NR	5	17SP	G15_076	FROM->TO	GRPRAR1-LNX3345.00 - HOLT.CO3 345.00 345KV CKT 1	720	720	0.04284	113.9112	GEN337653 1-WHITE BLUFF UNIT #2
FDNS	00NR	5	17SP	G15_076	FROM->TO	GRPRAR1-LNX3345.00 - HOLT.CO3 345.00 345KV CKT 1	720	720	0.04275	113.9022	HURON - WATERTOWN 230KV CKT 2
FDNS	00NR	5	17SP	G15_076	FROM->TO	GRPRAR1-LNX3345.00 - HOLT.CO3 345.00 345KV CKT 1	720	720	0.04275	113.9022	HURON - WATERTOWN 230KV CKT 2
FDNS	00NR	5	17SP	G15_076	FROM->TO	GRPRAR1-LNX3345.00 - HOLT.CO3 345.00 345KV CKT 1	720	720	0.04284	113.8977	GEN337652 1-WHITE BLUFF UNIT #1
FDNS	00NR	5	17SP	G15_076	FROM->TO	GRPRAR1-LNX3345.00 - HOLT.CO3 345.00 345KV CKT 1	720	720	0.04284	113.846	GEN338146 1-INDEPENDENCE UNIT #2
FDNS	00NR	5	17SP	G15_076	FROM->TO	GRPRAR1-LNX3345.00 - HOLT.CO3 345.00 345KV CKT 1	720	720	0.04275	113.8422	CARPENTER - WATERTOWN 230KV CKT 1
FDNS	00NR	5	17SP	G15_076	FROM->TO	GRPRAR1-LNX3345.00 - HOLT.CO3 345.00 345KV CKT 1	720	720	0.04275	113.8422	CARPENTER - WATERTOWN 230KV CKT 1
FDNS	00NR	5	17SP	G15_076	FROM->TO	GRPRAR1-LNX3345.00 - HOLT.CO3 345.00 345KV CKT 1	720	720	0.04284	113.8395	GEN338143 1-INDEPENDENCE UNIT #1
FDNS	00NR	5	17SP	G15_076	FROM->TO	GRPRAR1-LNX3345.00 - HOLT.CO3 345.00 345KV CKT 1	720	720	0.04335	113.7968	ARPIN B4 345.00 - EAU CLAIRE 345KV CKT 1
FDNS	00NR	5	17SP	G15_076	FROM->TO	GRPRAR1-LNX3345.00 - HOLT.CO3 345.00 345KV CKT 1	720	720	0.04286	113.7491	FORMAN - HANKINSON 230KV CKT 1
FDNS	00NR	5	17SP	G15_076	FROM->TO	GRPRAR1-LNX3345.00 - HOLT.CO3 345.00 345KV CKT 1	720	720	0.04284	113.721	GEN501801 1-DOLET HILLS UNIT1
FDNS	00NR	5	17SP	G15_076	FROM->TO	GRPRAR1-LNX3345.00 - HOLT.CO3 345.00 345KV CKT 1	720	720	0.03878	113.6913	RASMUSN - UTICA JCT 230KV CKT 1
FDNS	00NR	5	17SP	G15_076	FROM->TO	GRPRAR1-LNX3345.00 - HOLT.CO3 345.00 345KV CKT 1	720	720	0.04351	113.657	AINSWORTH - VALENTINE 115KV CKT 1
FDNS	00NR	5	17SP	G15_076	FROM->TO	GRPRAR1-LNX3345.00 - HOLT.CO3 345.00 345KV CKT 1	720	720	0.04072	113.6155	FT THOMPSON - WESSINGTON 230KV CKT 1
FDNS	00NR	5	17SP	G15_076	FROM->TO	GRPRAR1-LNX3345.00 - HOLT.CO3 345.00 345KV CKT 1	720	720	0.04072	113.6155	FT THOMPSON - WESSINGTON 230KV CKT 1
FDNS	00NR	5	17SP	G15_076	FROM->TO	GRPRAR1-LNX3345.00 - HOLT.CO3 345.00 345KV CKT 1	720	720	0.04312	113.5612	G15094_T 345.00 - SIDNEY2-LNX3345.00 345KV CKT 1
FDNS	00NR	5	17SP	G15_076	FROM->TO	GRPRAR1-LNX3345.00 - HOLT.CO3 345.00 345KV CKT 1	720	720	0.04285	113.5601	CNTSHNT3 345.00 - PRAIRIE3 345.00 345KV CKT 1
FDNS	00NR	5	17SP	G15_076	FROM->TO	GRPRAR1-LNX3345.00 - HOLT.CO3 345.00 345KV CKT 1	720	720	0.04312	113.5466	SIDNEY - SIDNEY2-LNX3345.00 345KV CKT Z
FDNS	00NR	5	17SP	G15_076	FROM->TO	GRPRAR1-LNX3345.00 - HOLT.CO3 345.00 345KV CKT 1	720	720	0.04227	113.545	EAGLE 4 230.00 - PAHOJA 230KV CKT 1
FDNS	00NR	5	17SP	G15_076	FROM->TO	GRPRAR1-LNX3345.00 - HOLT.CO3 345.00 345KV CKT 1	720	720	0.04375	113.5439	ADAMS - MITCHLCO3 345.00 345KV CKT 1
FDNS	00NR	5	17SP	G15_076	FROM->TO	GRPRAR1-LNX3345.00 - HOLT.CO3 345.00 345KV CKT 1	720	720	0.04284	113.4954	GEN336252 1-NINEMILE POINT UNIT#5
FDNS	00NR	5	17SP	G15_076	FROM->TO	GRPRAR1-LNX3345.00 - HOLT.CO3 345.00 345KV CKT 1	720	720	0.04284	113.4552	GEN501813 1-RODEMACHER UNIT 3
FDNS	00NR	5	17SP	G15_076	FROM->TO	GRPRAR1-LNX3345.00 - HOLT.CO3 345.00 345KV CKT 1	720	720	0.04284	113.3781	GEN336831 1-BAXTER WILSON SES
FDNS	00NR	5	17SP	G15_076	FROM->TO	GRPRAR1-LNX3345.00 - HOLT.CO3 345.00 345KV CKT 1	720	720	0.04348	113.3749	ADAMS - PLEASANT VALLEY 345KV CKT 1
FDNS	00NR	5	17SP	G15_076	FROM->TO	GRPRAR1-LNX3345.00 - HOLT.CO3 345.00 345KV CKT 1	720	720	0.04284	113.367	GEN336251 1-NINEMILE POINT UNIT#4
FDNS	00NR	5	17SP	G15_076	FROM->TO	GRPRAR1-LNX3345.00 - HOLT.CO3 345.00 345KV CKT 1	720	720	0.04284	113.3049	GEN337041 1-GERALD ANDRUS
FDNS	00NR	5	17SP	G15_076	FROM->TO	GRPRAR1-LNX3345.00 - HOLT.CO3 345.00 345KV CKT 1	720	720	0.04284	113.2942	GEN344897 4-1LAB G4 20.000
FDNS	00NR	5	17SP	G15_076	FROM->TO	GRPRAR1-LNX3345.00 - HOLT.CO3 345.00 345KV CKT 1	720	720	0.04284	113.2913	GEN344894 1-1LAB G1 20.000
FDNS	00NR	5	17SP	G15_076	FROM->TO	GRPRAR1-LNX3345.00 - HOLT.CO3 345.00 345KV CKT 1	720	720	0.04284	113.2912	GEN344896 3-1LAB G3 20.000
FDNS	00NR	5	17SP	G15_076	FROM->TO	GRPRAR1-LNX3345.00 - HOLT.CO3 345.00 345KV CKT 1	720	720	0.04284	113.284	GEN335206 1-NELSON UNIT 6
FDNS	00NR	5	17SP	G15_076	FROM->TO	GRPRAR1-LNX3345.00 - HOLT.CO3 345.00 345KV CKT 1	720	720	0.04284	113.2435	GEN344895 2-1LAB G2 20.000
FDNS	00NR	5	17SP	G15_076	FROM->TO	GRPRAR1-LNX3345.00 - HOLT.CO3 345.00 345KV CKT 1	720	720	0.04284	113.231	GEN345670 1-1RUSH G1 18.000
FDNS	00NR	5	17SP	G15_076	FROM->TO	GRPRAR1-LNX3345.00 - HOLT.CO3 345.00 345KV CKT 1	720	720	0.04284	113.2309	GEN345671 2-1RUSH G2 18.000
FDNS	00NR	5	17SP	G15_076	FROM->TO	GRPRAR1-LNX3345.00 - HOLT.CO3 345.00 345KV CKT 1	720	720	0.04284	113.1548	GEN501812 1-RODEMACHER UNIT 2
FDNS	00NR	5	17SP	G15_076	FROM->TO	GRPRAR1-LNX3345.00 - HOLT.CO3 345.00 345KV CKT 1	720	720	0.04284	113.1546	GEN635214 4-NEAL UNIT 4
FDNS	00NR	5	17SP	G15_076	FROM->TO	GRPRAR1-LNX3345.00 - HOLT.CO3 345.00 345KV CKT 1	720	720	0.04399	113.1478	LAKEFIELD 3 - NOBLES 345KV CKT 1
FDNS	00NR	5	17SP	G15_076	FROM->TO	GRPRAR1-LNX3345.00 - HOLT.CO3 345.00 345KV CKT 1	720	720	0.04294	113.1378	ALEXMRES3 345.00 - WAITE PARK 345KV CKT 1
FDNS	00NR	5	17SP	G15_076	FROM->TO	GRPRAR1-LNX3345.00 - HOLT.CO3 345.00 345KV CKT 1	720	720	0.04284	113.1357	GEN334440 1-SABINE UNIT 4
FDNS	00NR	5	17SP	G15_076	FROM->TO	GRPRAR1-LNX3345.00 - HOLT.CO3 345.00 345KV CKT 1	720	720	0.0429	113.1305	BLAIR - GRANITE FALLS 230KV CKT 1
FDNS	00NR	5	17SP	G15_076	FROM->TO	GRPRAR1-LNX3345.00 - HOLT.CO3 345.00 345KV CKT 1	720	720	0.0429	113.1305	BLAIR - GRANITE FALLS 230KV CKT 1
FDNS	00NR	5	17SP	G15_076	FROM->TO	GRPRAR1-LNX3345.00 - HOLT.CO3 345.00 345KV CKT 1	720	720	0.04283	113.0868	CENTER - COYOTE 345KV CKT 1
FDNS	00NR	5	17SP	G15_076	FROM->TO	GRPRAR1-LNX3345.00 - HOLT.CO3 345.00 345KV CKT 1	720	720	0.04325	113.0439	BROOKING COUNTY - LYON COUNTY 345KV CKT 1
FDNS	00NR	5	17SP	G15_076	FROM->TO	GRPRAR1-LNX3345.00 - HOLT.CO3 345.00 345KV CKT 1	720	720	0.04574	113.0283	STEGALL - STEGALL TRANSFORMER 230KV CKT 1
FDNS	00NR	5	17SP	G15_076	FROM->TO	GRPRAR1-LNX3345.00 - HOLT.CO3 345.00 345KV CKT 1	720	720	0.04159	113.0242	MENNO JCT - TRIPP JCT 115KV CKT 1
FDNS	00NR	5	17SP	G15_076	FROM->TO	GRPRAR1-LNX3345.00 - HOLT.CO3 345.00 345KV CKT 1	720	720	0.04289	113.0197	GLENBORO SOUTH - RUGBY 230KV CKT 1
FDNS	00NR	5	17SP	G15_076	FROM->TO	GRPRAR1-LNX3345.00 - HOLT.CO3 345.00 345KV CKT 1	720	720	0.04284	113.015	GEN629075 1-OTTUMWA GENERATOR FOR OTTUMWA UNIT NO 1
FDNS	00NR	5	17SP	G15_076	FROM->TO	GRPRAR1-LNX3345.00 - HOLT.CO3 345.00 345KV CKT 1	720	720	0.04574	113.0135	P13:230-345:NPPD:STEGALL3:KV3A
FDNS	00NR	5	17SP	G15_076	FROM->TO	GRPRAR1-LNX3345.00 - HOLT.CO3 345.00 345KV CKT 1	720	720	0.04284	113.0086	GEN336191 1-LITTLE GYPSY UNIT#3
FDNS	00NR	5	17SP	G15_076	FROM->TO	GRPRAR1-LNX3345.00 - HOLT.CO3 345.00 345KV CKT 1	720	720	0.04574	113.0058	STEGALL (SGQ KV3A) 345/230/13.8KV TRANSFORMER CKT 1
FDNS	00NR	5	17SP	G15_076	FROM->TO	GRPRAR1-LNX3345.00 - HOLT.CO3 345.00 345KV CKT 1	720	720	0.04291	112.9673	HANKINSON - WAHPETON 230KV CKT 1
FDNS	00NR	5	17SP	G15_076	FROM->TO	GRPRAR1-LNX3345.00 - HOLT.CO3 345.00 345KV CKT 1	720	720	0.04284	112.9589	GEN338388 1-1PLUM PT U1 23.000
FDNS	00NR	5	17SP	G15_076	FROM->TO	GRPRAR1-LNX3345.00 - HOLT.CO3 345.00 345KV CKT 1	720	720	0.04284	112.9433	P12:115:UMZW:# 162 #: NEL IN ND. FAULT ON ML-NEL-MX-GA 115 KV
FDNS	00NR	5	17SP	G15_076	FROM->TO	GRPRAR1-LNX3345.00 - HOLT.CO3 345.00 345KV CKT 1	720	720	0.04284	112.9325	GEN336801 1-BAXTER WILSON UNIT #1

SOLUTION	GROUP	SCENARIO	SEASON	SOURCE	DIRECTION	MONITORED ELEMENT	RATEA (MVA)	RATEB(MVA)	TDF	TC%LOADING (% MVA)	CONTINGENCY
FDNS	00NR	5	17SP	G15_076	FROM->TO	GRPRAR1-LNX3345.00 - HOLT.CO3 345.00 345KV CKT 1	720	720	0.04763	112.9242	STEGALL-LNX3230.00 - WAYSIDE 230KV CKT 1
FDNS	00NR	5	17SP	G15_076	FROM->TO	GRPRAR1-LNX3345.00 - HOLT.CO3 345.00 345KV CKT 1	720	720	0.04355	112.9214	KOSSUTH 3 345.00 - OBRIEN 3 345.00 345KV CKT 1
FDNS	00NR	5	17SP	G15_076	FROM->TO	GRPRAR1-LNX3345.00 - HOLT.CO3 345.00 345KV CKT 1	720	720	0.04284	112.9184	GEN335614 1-WILLOW GLENN UNIT#4
FDNS	00NR	5	17SP	G15_076	FROM->TO	GRPRAR1-LNX3345.00 - HOLT.CO3 345.00 345KV CKT 1	720	720	0.04763	112.9162	STEGALL - STEGALL-LNX3230.00 230KV CKT Z
FDNS	00NR	5	17SP	G15_076	FROM->TO	GRPRAR1-LNX3345.00 - HOLT.CO3 345.00 345KV CKT 1	720	720	0.04159	112.9106	MENNO JCT - UTICA 115KV CKT 1
FDNS	00NR	5	17SP	G15_076	FROM->TO	GRPRAR1-LNX3345.00 - HOLT.CO3 345.00 345KV CKT 1	720	720	0.04284	112.9057	GEN336464 1-MICHOUD UNIT #3
FDNS	00NR	5	17SP	G15_076	FROM->TO	GRPRAR1-LNX3345.00 - HOLT.CO3 345.00 345KV CKT 1	720	720	0.04284	112.8971	GEN563222 1-G15088_3 0.6900
FDNS	00NR	5	17SP	G15_076	FROM->TO	GRPRAR1-LNX3345.00 - HOLT.CO3 345.00 345KV CKT 1	720	720	0.04355	112.8897	KOSSUTH 3 345.00 - WEBSTER 345KV CKT 1
FDNS	00NR	5	17SP	G15_076	FROM->TO	GRPRAR1-LNX3345.00 - HOLT.CO3 345.00 345KV CKT 1	720	720	0.04284	112.8846	GARRISON - JAMES TOWN 230KV CKT 1
FDNS	00NR	5	17SP	G15_076	FROM->TO	GRPRAR1-LNX3345.00 - HOLT.CO3 345.00 345KV CKT 1	720	720	0.04284	112.8644	GEN334441 1-SABINE UNIT 5
FDNS	00NR	5	17SP	G15_076	FROM->TO	GRPRAR1-LNX3345.00 - HOLT.CO3 345.00 345KV CKT 1	720	720	0.04331	112.8596	BYRON - NORTH ROCHESTER 345KV CKT 1
FDNS	00NR	5	17SP	G15_076	FROM->TO	GRPRAR1-LNX3345.00 - HOLT.CO3 345.00 345KV CKT 1	720	720	0.04284	112.8462	GEN335204 1-NELSON UNIT 4
FDNS	00NR	5	17SP	G15_076	FROM->TO	GRPRAR1-LNX3345.00 - HOLT.CO3 345.00 345KV CKT 1	720	720	0.04435	112.8353	GRIMES - LEHIGH 345KV CKT 1
FDNS	00NR	5	17SP	G15_076	FROM->TO	GRPRAR1-LNX3345.00 - HOLT.CO3 345.00 345KV CKT 1	720	720	0.04159	112.8277	P12:115:UMZZ:# 237 #: MEN IN SD. MENNO JUNCTION IS A TAP (UJ-MEN-TP).
FDNS	00NR	5	17SP	G15_076	FROM->TO	GRPRAR1-LNX3345.00 - HOLT.CO3 345.00 345KV CKT 1	720	720	0.04284	112.8031	GEN635213 3-NEAL UNIT 3
FDNS	00NR	5	17SP	G15_076	FROM->TO	GRPRAR1-LNX3345.00 - HOLT.CO3 345.00 345KV CKT 1	720	720	0.05067	112.7752	RAUN - SIOUX CITY 345KV CKT 1
FDNS	00NR	5	17SP	G15_076	FROM->TO	GRPRAR1-LNX3345.00 - HOLT.CO3 345.00 345KV CKT 1	720	720	0.05067	112.7752	RAUN - SIOUX CITY 345KV CKT 1
FDNS	00NR	5	17SP	G15_076	FROM->TO	GRPRAR1-LNX3345.00 - HOLT.CO3 345.00 345KV CKT 1	720	720	0.04295	112.7423	APPLEDORN 4 230.00 - WATERTOWN 230KV CKT 1
FDNS	00NR	5	17SP	G15_076	FROM->TO	GRPRAR1-LNX3345.00 - HOLT.CO3 345.00 345KV CKT 1	720	720	0.04295	112.7423	APPLEDORN 4 230.00 - WATERTOWN 230KV CKT 1
FDNS	00NR	5	17SP	G15_076	FROM->TO	GRPRAR1-LNX3345.00 - HOLT.CO3 345.00 345KV CKT 1	720	720	0.04284	112.7294	GEN334433 1-SABINE UNIT 3
FDNS	00NR	5	17SP	G15_076	FROM->TO	GRPRAR1-LNX3345.00 - HOLT.CO3 345.00 345KV CKT 1	720	720	0.04284	112.7135	GEN336222 1-LITTLE GYPSY UNIT#2
FDNS	00NR	5	17SP	G15_076	FROM->TO	GRPRAR1-LNX3345.00 - HOLT.CO3 345.00 345KV CKT 1	720	720	0.04284	112.6926	FARGO - JAMES TOWN 230KV CKT 1
FDNS	00NR	5	17SP	G15_076	FROM->TO	GRPRAR1-LNX3345.00 - HOLT.CO3 345.00 345KV CKT 1	720	720	0.04284	112.686	GEN640009 1-COOPER NUCLEAR STATION
FDNS	00NR	5	17SP	G15_076	FROM->TO	GRPRAR1-LNX3345.00 - HOLT.CO3 345.00 345KV CKT 1	720	720	0.04302	112.6743	NORTH ROCHESTER - PRAIRIE ISLAND 345KV CKT 1
FDNS	00NR	5	17SP	G15_076	FROM->TO	GRPRAR1-LNX3345.00 - HOLT.CO3 345.00 345KV CKT 1	720	720	0.04284	112.6716	P13:230:UMZW:# 2218 #: FP IN MT. LOSS OF TRANSFORMER (AT2).
FDNS	00NR	5	17SP	G15_076	FROM->TO	GRPRAR1-LNX3345.00 - HOLT.CO3 345.00 345KV CKT 1	720	720	0.04312	112.669	G15094_T 345.00 - LARAMIE RIVER 345KV CKT 1
FDNS	00NR	5	17SP	G15_076	FROM->TO	GRPRAR1-LNX3345.00 - HOLT.CO3 345.00 345KV CKT 1	720	720	0.04284	112.6674	FARGO - JAMES TOWN 230KV CKT 2
FDNS	00NR	5	17SP	G15_076	FROM->TO	GRPRAR1-LNX3345.00 - HOLT.CO3 345.00 345KV CKT 1	720	720	0.04295	112.6644	APPLEDORN 4 230.00 - GRANITE FALLS 230KV CKT 1
FDNS	00NR	5	17SP	G15_076	FROM->TO	GRPRAR1-LNX3345.00 - HOLT.CO3 345.00 345KV CKT 1	720	720	0.04295	112.6644	APPLEDORN 4 230.00 - GRANITE FALLS 230KV CKT 1
FDNS	00NR	5	17SP	G15_076	FROM->TO	GRPRAR1-LNX3345.00 - HOLT.CO3 345.00 345KV CKT 1	720	720	0.04284	112.6592	GEN303007 1-1BC2 U2
FDNS	00NR	5	17SP	G15_076	FROM->TO	GRPRAR1-LNX3345.00 - HOLT.CO3 345.00 345KV CKT 1	720	720	0.04284	112.6539	GEN303006 1-1BC2 U1
FDNS	00NR	5	17SP	G15_076	FROM->TO	GRPRAR1-LNX3345.00 - HOLT.CO3 345.00 345KV CKT 1	720	720	0.04289	112.6415	FERGSFL4 230.00 - WAHPETON 230KV CKT 1
FDNS	00NR	5	17SP	G15_076	FROM->TO	GRPRAR1-LNX3345.00 - HOLT.CO3 345.00 345KV CKT 1	720	720	0.04284	112.6159	BISMARK - JAMES TOWN 230KV CKT 1
FDNS	00NR	5	17SP	G15_076	FROM->TO	GRPRAR1-LNX3345.00 - HOLT.CO3 345.00 345KV CKT 1	720	720	0.04331	112.6119	BYRON - PLEASANT VALLEY 345KV CKT 1
FDNS	00NR	5	17SP	G15_076	FROM->TO	GRPRAR1-LNX3345.00 - HOLT.CO3 345.00 345KV CKT 1	720	720	0.04284	112.6099	GEN336152 1-WATERFORD UNIT#2
FDNS	00NR	5	17SP	G15_076	FROM->TO	GRPRAR1-LNX3345.00 - HOLT.CO3 345.00 345KV CKT 1	720	720	0.04284	112.6096	GEN336151 1-WATERFORD UNIT#1
FDNS	00NR	5	17SP	G15_076	FROM->TO	GRPRAR1-LNX3345.00 - HOLT.CO3 345.00 345KV CKT 1	720	720	0.04284	112.6035	BISMARK - WEBER 230KV CKT 1
FDNS	00NR	5	17SP	G15_076	FROM->TO	GRPRAR1-LNX3345.00 - HOLT.CO3 345.00 345KV CKT 1	720	720	0.04284	112.6031	GEN641089 2-ENERGY CENTER 2
FDNS	00NR	5	17SP	G15_076	FROM->TO	GRPRAR1-LNX3345.00 - HOLT.CO3 345.00 345KV CKT 1	720	720	0.04332	112.6028	SIDNEY - SIDNEY TRANSFORMER 230KV CKT 1
FDNS	00NR	5	17SP	G15_076	FROM->TO	GRPRAR1-LNX3345.00 - HOLT.CO3 345.00 345KV CKT 1	720	720	0.04332	112.6027	SIDNEY (SDQ KV2A) 345/230/13.8KV TRANSFORMER CKT 1
FDNS	00NR	5	17SP	G15_076	FROM->TO	GRPRAR1-LNX3345.00 - HOLT.CO3 345.00 345KV CKT 1	720	720	0.04332	112.6026	P13:230-345:NPPD:SIDNEY 3:KV2A
FDNS	00NR	5	17SP	G15_076	FROM->TO	GRPRAR1-LNX3345.00 - HOLT.CO3 345.00 345KV CKT 1	720	720	0.04885	112.599	BLOOMFIELD - CREIGHTON 115KV CKT 1
FDNS	00NR	5	17SP	G15_076	FROM->TO	GRPRAR1-LNX3345.00 - HOLT.CO3 345.00 345KV CKT 1	720	720	0.04335	112.598	P13:115-230:TSGT:SIDNEY-KV1A
FDNS	00NR	5	17SP	G15_076	FROM->TO	GRPRAR1-LNX3345.00 - HOLT.CO3 345.00 345KV CKT 1	720	720	0.04199	112.5976	LAKEFIELD 3 - LKFLDXL3 345KV CKT 1
FDNS	00NR	5	17SP	G15_076	FROM->TO	GRPRAR1-LNX3345.00 - HOLT.CO3 345.00 345KV CKT 1	720	720	0.04284	112.5917	GEN303008 1-1BC2 U3
FDNS	00NR	5	17SP	G15_076	FROM->TO	GRPRAR1-LNX3345.00 - HOLT.CO3 345.00 345KV CKT 1	720	720	0.04284	112.5902	JAMES TOWN - WEBER 230KV CKT 1
FDNS	00NR	5	20SP	G15_076	FROM->TO	GRPRAR1-LNX3345.00 - HOLT.CO3 345.00 345KV CKT 1	720	720	0.04633	112.5901	KELLY - MEADOWGROVE4230.00 230KV CKT 1
FDNS	00NR	5	17SP	G15_076	FROM->TO	GRPRAR1-LNX3345.00 - HOLT.CO3 345.00 345KV CKT 1	720	720	0.04284	112.5864	GEN336170 1-GULF OXY U4
FDNS	00NR	5	17SP	G15_076	FROM->TO	GRPRAR1-LNX3345.00 - HOLT.CO3 345.00 345KV CKT 1	720	720	0.04284	112.574	GEN562921 1-G15054_2 0.6900
FDNS	00NR	5	17SP	G15_076	FROM->TO	GRPRAR1-LNX3345.00 - HOLT.CO3 345.00 345KV CKT 1	720	720	0.04283	112.5529	ELM CREEK - MONTICELLO 345KV CKT 1
FDNS	00NR	5	17SP	G15_076	FROM->TO	GRPRAR1-LNX3345.00 - HOLT.CO3 345.00 345KV CKT 1	720	720	0.04284	112.5394	GEN562596 1-G14_059_3 0.6900
FDNS	00NR	5	17SP	G15_076	FROM->TO	GRPRAR1-LNX3345.00 - HOLT.CO3 345.00 345KV CKT 1	720	720	0.04284	112.5201	GEN501811 1-RODEMACHER UNIT 1
FDNS	00NR	5	17SP	G15_076	FROM->TO	GRPRAR1-LNX3345.00 - HOLT.CO3 345.00 345KV CKT 1	720	720	0.04258	112.5193	MT VERN - STORLA 115KV CKT 1
FDNS	00NR	5	17SP	G15_076	FROM->TO	GRPRAR1-LNX3345.00 - HOLT.CO3 345.00 345KV CKT 1	720	720	0.04296	112.517	ARKANSAS NUCLEAR ONE - FT SMITH 500KV CKT 1
FDNS	00NR	5	17SP	G15_076	FROM->TO	GRPRAR1-LNX3345.00 - HOLT.CO3 345.00 345KV CKT 1	720	720	0.04296	112.517	ARKANSAS NUCLEAR ONE - FT SMITH 500KV CKT 1
FDNS	00NR	5	17SP	G15_076	FROM->TO	GRPRAR1-LNX3345.00 - HOLT.CO3 345.00 345KV CKT 1	720	720	0.04885	112.516	BLOOMFIELD - GAVINS POINT 115KV CKT 1
FDNS	00NR	5	17SP	G15_076	FROM->TO	GRPRAR1-LNX3345.00 - HOLT.CO3 345.00 345KV CKT 1	720	720	0.04286	112.5085	AUDUBON - SHEYNNE 230KV CKT 1
FDNS	00NR	5	17SP	G15_076	FROM->TO	GRPRAR1-LNX3345.00 - HOLT.CO3 345.00 345KV CKT 1	720	720	0.04288	112.4972	FERGSFL4 230.00 - GRE-SILVRLK4230.00 230KV CKT 1
FDNS	00NR	5	17SP	G15_076	FROM->TO	GRPRAR1-LNX3345.00 - HOLT.CO3 345.00 345KV CKT 1	720	720	0.04284	112.4939	PRAIRIE ISLAND 345/20.0KV TRANSFORMER CKT 1
FDNS	00NR	5	17SP	G15_076	FROM->TO	GRPRAR1-LNX3345.00 - HOLT.CO3 345.00 345KV CKT 1	720	720	0.04284	112.4927	PRAIRIE ISLAND 345/20.0KV TRANSFORMER CKT 2
FDNS	00NR	5	17SP	G15_076	FROM->TO	GRPRAR1-LNX3345.00 - HOLT.CO3 345.00 345KV CKT 1	720	720	0.04284	112.4912	BALTA - RAMSEY 230KV CKT 1
FDNS	00NR	5	17SP	G15_076	FROM->TO	GRPRAR1-LNX3345.00 - HOLT.CO3 345.00 345KV CKT 1	720	720	0.04256	112.4848	FT THOMPSON - HURON 230KV CKT 1
FDNS	00NR	5	17SP	G15_076	FROM->TO	GRPRAR1-LNX3345.00 - HOLT.CO3 345.00 345KV CKT 1	720	720	0.04256	112.4848	FT THOMPSON - HURON 230KV CKT 1
FDNS	00NR	5	17SP	G15_076	FROM->TO	GRPRAR1-LNX3345.00 - HOLT.CO3 345.00 345KV CKT 1	720	720	0.04256	112.4848	FT THOMPSON - HURON 230KV CKT 2
FDNS	00NR	5	17SP	G15_076	FROM->TO	GRPRAR1-LNX3345.00 - HOLT.CO3 345.00 345KV CKT 1	720	720	0.04256	112.4848	FT THOMPSON - HURON 230KV CKT 2
FDNS	00NR	5	17SP	G15_076	FROM->TO	GRPRAR1-LNX3345.00 - HOLT.CO3 345.00 345KV CKT 1	720	720	0.04284	112.4804	GEN532751 1-WOLF CREEK GENERATING STATION UNIT 1
FDNS	00NR	5	17SP	G15_076	FROM->TO	GRPRAR1-LNX3345.00 - HOLT.CO3 345.00 345KV CKT 1	720	720	0.04337	112.4723	P12:115:NPPD:WAPA1:CHADRON7:BOXBUTE7:BTB
FDNS	00NR	5	17SP	G15_076	FROM->TO	GRPRAR1-LNX3345.00 - HOLT.CO3 345.00 345KV CKT 1	720	720	0.04284	112.4584	TOLK STATION EAST 230/24.0KV TRANSFORMER CKT 1
FDNS	00NR	5	17SP	G15_076	FROM->TO	GRPRAR1-LNX3345.00 - HOLT.CO3 345.00 345KV CKT 1	720	720	0.04281	112.457	DKSN_CO5 161.00 - TRIBOJI NO1 + NO2 161KV CKT 1
FDNS	00NR	5	17SP	G15_076	FROM->TO	GRPRAR1-LNX3345.00 - HOLT.CO3 345.00 345KV CKT 1	720	720	0.04315	112.4548	CHADRON - WAYSIDE 115KV CKT 1
FDNS	00NR	5	17SP	G15_076	FROM->TO	GRPRAR1-LNX3345.00 - HOLT.CO3 345.00 345KV CKT 1	720	720	0.04315	112.4548	P13:115-230:NPPD:WAYSIDE4:T1
FDNS	00NR	5	17SP	G15_076	FROM->TO	GRPRAR1-LNX3345.00 - HOLT.CO3 345.00 345KV CKT 1	720	720	0.04315	112.454	WAYSIDE (WAYSIDE T1) 230/115/13.8KV TRANSFORMER CKT 1
FDNS	00NR	5	17SP	G15_076	FROM->TO	GRPRAR1-LNX3345.00 - HOLT.CO3 345.00 345KV CKT 1	720	720	0.04288	112.4532	GRE-SILVRLK4230.00 - HENNING 230KV CKT 1
FDNS	00NR	5	17SP	G15_076	FROM->TO	GRPRAR1-LNX3345.00 - HOLT.CO3 345.00 345KV CKT 1	720	720	0.04285	112.4449	BIG STONE (230/115) 230/115/13.8KV TRANSFORMER CKT 1
FDNS	00NR	5	17SP	G15_076	FROM->TO	GRPRAR1-LNX3345.00 - HOLT.CO3 345.00 345KV CKT 1	720	720	0.04284	112.4427	GEN334071 1-LEWIS CREEK 2
FDNS	00NR	5	17SP	G15_076	FROM->TO	GRPRAR1-LNX3345.00 - HOLT.CO3 345.00 345KV CKT 1	720	720	0.04284	112.4379	GEN334070 1-LEWIS CREEK 1
FDNS	00NR	5	17SP	G15_076	FROM->TO	GRPRAR1-LNX3345.00 - HOLT.CO3 345.00 345KV CKT 1	720	720	0.04284	112.4375	GEN337766 1-TRACTEBEL UNIT S1
FDNS	00NR	5	17SP	G15_076	FROM->TO	GRPRAR1-LNX3345.00 - HOLT.CO3 345.00 345KV CKT 1	720	720	0.04284	112.4345	LAWRENCE ENERGY CENTER UNIT 5 230/24.0KV TRANSFORMER CKT 1
FDNS	00NR	5	17SP	G15_076	FROM->TO	GRPRAR1-LNX3345.00 - HOLT.CO3 345.00 345KV CKT 1	720	720	0.04284	112.4344	LAWRENCE ENERGY CENTER UNIT 5 - LAWRENCE HILL 230KV CKT 1

SOLUTION	GROUP	SCENARIO	SEASON	SOURCE	DIRECTION	MONITORED ELEMENT	RATEA (MVA)	RATEB(MVA)	TDF	TC%LOADING (% MVA)	CONTINGENCY
FDNS	00NR	5	17SP	G15_076	FROM->TO	GRPRAR1-LNX3345.00 - HOLT.CO3 345.00 345KV CKT 1	720	720	0.04373	112.4216	NOBLES - SPLIT ROCK 345KV CKT 1
FDNS	00NR	5	17SP	G15_076	FROM->TO	GRPRAR1-LNX3345.00 - HOLT.CO3 345.00 345KV CKT 1	720	720	0.04285	112.4199	PRAIRIE - WINGER 230KV CKT 1
FDNS	00NR	5	17SP	G15_076	FROM->TO	GRPRAR1-LNX3345.00 - HOLT.CO3 345.00 345KV CKT 1	720	720	0.04284	112.4095	GEN659118 1-LARAMIE RIVER UNIT1
FDNS	00NR	5	17SP	G15_076	FROM->TO	GRPRAR1-LNX3345.00 - HOLT.CO3 345.00 345KV CKT 1	720	720	0.04337	112.4045	P12:115:NPPD:WAPA2:HEMINGF7:SNAKECK7:BTB
FDNS	00NR	5	17SP	G15_076	FROM->TO	GRPRAR1-LNX3345.00 - HOLT.CO3 345.00 345KV CKT 1	720	720	0.04337	112.3999	CHADRON - DUNLAP 115KV CKT 1
FDNS	00NR	5	17SP	G15_076	FROM->TO	GRPRAR1-LNX3345.00 - HOLT.CO3 345.00 345KV CKT 1	720	720	0.04247	112.3983	HURON WEST PARK - MITCHELL NW 115KV CKT 1
FDNS	00NR	5	17SP	G15_076	FROM->TO	GRPRAR1-LNX3345.00 - HOLT.CO3 345.00 345KV CKT 1	720	720	0.04247	112.3983	HURON WEST PARK - MITCHELL NW 115KV CKT 1
FDNS	00NR	5	17SP	G15_076	FROM->TO	GRPRAR1-LNX3345.00 - HOLT.CO3 345.00 345KV CKT 1	720	720	0.04284	112.3981	GEN501910 1-ACADIA UNIT ST1
FDNS	00NR	5	17SP	G15_076	FROM->TO	GRPRAR1-LNX3345.00 - HOLT.CO3 345.00 345KV CKT 1	720	720	0.04288	112.3921	HENNING - INMANN 230KV CKT 1
FDNS	00NR	5	17SP	G15_076	FROM->TO	GRPRAR1-LNX3345.00 - HOLT.CO3 345.00 345KV CKT 1	720	720	0.04288	112.3921	LELAND OLDS - STANTON 230KV CKT 1
FDNS	00NR	5	17SP	G15_076	FROM->TO	GRPRAR1-LNX3345.00 - HOLT.CO3 345.00 345KV CKT 1	720	720	0.04288	112.3921	LELAND OLDS - STANTON 230KV CKT 1
FDNS	00NR	5	17SP	G15_076	FROM->TO	GRPRAR1-LNX3345.00 - HOLT.CO3 345.00 345KV CKT 1	720	720	0.04324	112.3814	PALXFRASBTHI
FDNS	00NR	5	17SP	G15_076	FROM->TO	GRPRAR1-LNX3345.00 - HOLT.CO3 345.00 345KV CKT 1	720	720	0.04115	112.3806	FT RANDAL - WHITE SWAN 115KV CKT 1
FDNS	00NR	5	17SP	G15_076	FROM->TO	GRPRAR1-LNX3345.00 - HOLT.CO3 345.00 345KV CKT 1	720	720	0.04344	112.3666	EAGLE - PHILIP 115KV CKT 1
FDNS	00NR	5	17SP	G15_076	FROM->TO	GRPRAR1-LNX3345.00 - HOLT.CO3 345.00 345KV CKT 1	720	720	0.04282	112.3614	GROTON (GROTON KU2A) 345/115/13.8KV TRANSFORMER CKT 1
FDNS	00NR	5	17SP	G15_076	FROM->TO	GRPRAR1-LNX3345.00 - HOLT.CO3 345.00 345KV CKT 1	720	720	0.04324	112.361	7PALM TAP 345.00 - SUB T 345KV CKT 1
FDNS	00NR	5	17SP	G15_076	FROM->TO	GRPRAR1-LNX3345.00 - HOLT.CO3 345.00 345KV CKT 1	720	720	0.04284	112.3589	GEN345765 H-1SIOUX 2 18.000
FDNS	00NR	5	17SP	G15_076	FROM->TO	GRPRAR1-LNX3345.00 - HOLT.CO3 345.00 345KV CKT 1	720	720	0.04115	112.3489	TYNDALL - WHITE SWAN 115KV CKT 1
FDNS	00NR	5	17SP	G15_076	FROM->TO	GRPRAR1-LNX3345.00 - HOLT.CO3 345.00 345KV CKT 1	720	720	0.04291	112.343	GRANT - MITCHELL 115KV CKT 1
FDNS	00NR	5	17SP	G15_076	FROM->TO	GRPRAR1-LNX3345.00 - HOLT.CO3 345.00 345KV CKT 1	720	720	0.04291	112.343	GRANT - MITCHELL 115KV CKT 1
FDNS	00NR	5	17SP	G15_076	FROM->TO	GRPRAR1-LNX3345.00 - HOLT.CO3 345.00 345KV CKT 1	720	720	0.04362	112.3421	DENISON - SIOUX CITY 230KV CKT 1
FDNS	00NR	5	17SP	G15_076	FROM->TO	GRPRAR1-LNX3345.00 - HOLT.CO3 345.00 345KV CKT 1	720	720	0.04284	112.3408	GEN337764 1-TRACTEBEL UNIT C1
FDNS	00NR	5	17SP	G15_076	FROM->TO	GRPRAR1-LNX3345.00 - HOLT.CO3 345.00 345KV CKT 1	720	720	0.04284	112.3408	GEN337765 1-TRACTEBEL UNIT C2
FDNS	00NR	5	17SP	G15_076	FROM->TO	GRPRAR1-LNX3345.00 - HOLT.CO3 345.00 345KV CKT 1	720	720	0.04287	112.3401	AUDUBON - HUBBARD 230KV CKT 1
FDNS	00NR	5	17SP	G15_076	FROM->TO	GRPRAR1-LNX3345.00 - HOLT.CO3 345.00 345KV CKT 1	720	720	0.04275	112.3372	CLEARWATER - ONEILL 115KV CKT 1
FDNS	00NR	5	17SP	G15_076	FROM->TO	GRPRAR1-LNX3345.00 - HOLT.CO3 345.00 345KV CKT 1	720	720	0.04287	112.3335	KARLSTAD - WINGER 230KV CKT 1
FDNS	00NR	5	17SP	G15_076	FROM->TO	GRPRAR1-LNX3345.00 - HOLT.CO3 345.00 345KV CKT 1	720	720	0.04294	112.333	GENOA 161 - SENECA 161 161KV CKT 1
FDNS	00NR	5	17SP	G15_076	FROM->TO	GRPRAR1-LNX3345.00 - HOLT.CO3 345.00 345KV CKT 1	720	720	0.04284	112.3317	GEN345756 H-1SIOUX 1 18.000
FDNS	00NR	5	17SP	G15_076	FROM->TO	GRPRAR1-LNX3345.00 - HOLT.CO3 345.00 345KV CKT 1	720	720	0.05532	112.3186	BELDEN - HOSKINS 115KV CKT 1
FDNS	00NR	5	17SP	G15_076	FROM->TO	GRPRAR1-LNX3345.00 - HOLT.CO3 345.00 345KV CKT 1	720	720	0.04284	112.3186	GEN562912 1-G15053_3 0.6900
FDNS	00NR	5	17SP	G15_076	FROM->TO	GRPRAR1-LNX3345.00 - HOLT.CO3 345.00 345KV CKT 1	720	720	0.04384	112.3165	PLYMOUTH - SIOUX CITY 161KV CKT 1
FDNS	00NR	5	17SP	G15_076	FROM->TO	GRPRAR1-LNX3345.00 - HOLT.CO3 345.00 345KV CKT 1	720	720	0.04384	112.3165	PLYMOUTH - SIOUX CITY 161KV CKT 1
FDNS	00NR	5	17SP	G15_076	FROM->TO	GRPRAR1-LNX3345.00 - HOLT.CO3 345.00 345KV CKT 1	720	720	0.03933	112.3155	P12:115:UMZW:# 1910 #: YJ IN SD. YJ-UJ LINE FAULT
FDNS	00NR	5	17SP	G15_076	FROM->TO	GRPRAR1-LNX3345.00 - HOLT.CO3 345.00 345KV CKT 1	720	720	0.03933	112.3154	NAPA JCT7 115.00 - UTICA 115KV CKT 1
FDNS	00NR	5	17SP	G15_076	FROM->TO	GRPRAR1-LNX3345.00 - HOLT.CO3 345.00 345KV CKT 1	720	720	0.03933	112.3154	NAPA JCT7 115.00 - UTICA 115KV CKT 1
FDNS	00NR	5	17SP	G15_076	FROM->TO	GRPRAR1-LNX3345.00 - HOLT.CO3 345.00 345KV CKT 1	720	720	0.03933	112.3122	NAPA JCT7 115.00 - YANKON JCT 115KV CKT 1
FDNS	00NR	5	17SP	G15_076	FROM->TO	GRPRAR1-LNX3345.00 - HOLT.CO3 345.00 345KV CKT 1	720	720	0.03933	112.3122	NAPA JCT7 115.00 - YANKON JCT 115KV CKT 1
FDNS	00NR	5	17SP	G15_076	FROM->TO	GRPRAR1-LNX3345.00 - HOLT.CO3 345.00 345KV CKT 1	720	720	0.04284	112.3102	PRAIRIE - RAMSEY 230KV CKT 1
FDNS	00NR	5	17SP	G15_076	FROM->TO	GRPRAR1-LNX3345.00 - HOLT.CO3 345.00 345KV CKT 1	720	720	0.04292	112.3071	NORTH LA CROSSE - NORTH ROCHESTER 345KV CKT 1
FDNS	00NR	5	17SP	G15_076	FROM->TO	GRPRAR1-LNX3345.00 - HOLT.CO3 345.00 345KV CKT 1	720	720	0.04281	112.3057	DKSN_CO5 161.00 - LAKEFIELD 5 NO1 + NO 2 161KV CKT 1
FDNS	00NR	5	17SP	G15_076	FROM->TO	GRPRAR1-LNX3345.00 - HOLT.CO3 345.00 345KV CKT 1	720	720	0.04284	112.305	GEN336221 1-LITTLE GYPSY UNIT#1
FDNS	00NR	5	17SP	G15_076	FROM->TO	GRPRAR1-LNX3345.00 - HOLT.CO3 345.00 345KV CKT 1	720	720	0.04284	112.305	GEN636641 1-LOUISA UNIT 1
FDNS	00NR	5	17SP	G15_076	FROM->TO	GRPRAR1-LNX3345.00 - HOLT.CO3 345.00 345KV CKT 1	720	720	0.04303	112.3039	HAMPTON CORNER - NORTH ROCHESTER 345KV CKT 1
FDNS	00NR	5	17SP	G15_076	FROM->TO	GRPRAR1-LNX3345.00 - HOLT.CO3 345.00 345KV CKT 1	720	720	0.04284	112.3031	JUDSON LARGE 115/15.0KV TRANSFORMER CKT 1
FDNS	00NR	5	17SP	G15_076	FROM->TO	GRPRAR1-LNX3345.00 - HOLT.CO3 345.00 345KV CKT 1	720	720	0.04284	112.3031	JUDSON LARGE 115/15.0KV TRANSFORMER CKT 1
FDNS	00NR	5	17SP	G15_076	FROM->TO	GRPRAR1-LNX3345.00 - HOLT.CO3 345.00 345KV CKT 1	720	720	0.04284	112.302	GRAND GULF 500/22.0KV TRANSFORMER CKT 1
FDNS	00NR	5	17SP	G15_076	FROM->TO	GRPRAR1-LNX3345.00 - HOLT.CO3 345.00 345KV CKT 1	720	720	0.04344	112.3019	EAGLE - MARTIN 115KV CKT 1
FDNS	00NR	5	17SP	G15_076	FROM->TO	GRPRAR1-LNX3345.00 - HOLT.CO3 345.00 345KV CKT 1	720	720	0.04284	112.2973	GEN336242 1-1NMIL ST1 18.000
FDNS	00NR	5	17SP	G15_076	FROM->TO	GRPRAR1-LNX3345.00 - HOLT.CO3 345.00 345KV CKT 1	720	720	0.04284	112.2973	GEN337757 1-DUKE HOTSPRINGS STG1
FDNS	00NR	5	17SP	G15_076	FROM->TO	GRPRAR1-LNX3345.00 - HOLT.CO3 345.00 345KV CKT 1	720	720	0.04284	112.2923	GEN334432 1-SABINE UNIT 2
FDNS	00NR	5	17SP	G15_076	FROM->TO	GRPRAR1-LNX3345.00 - HOLT.CO3 345.00 345KV CKT 1	720	720	0.04284	112.2922	GEN334431 1-SABINE UNIT 1
FDNS	00NR	5	17SP	G15_076	FROM->TO	GRPRAR1-LNX3345.00 - HOLT.CO3 345.00 345KV CKT 1	720	720	0.04295	112.286	FRANKS - HUBEN 345KV CKT 1
FDNS	00NR	5	17SP	G15_076	FROM->TO	GRPRAR1-LNX3345.00 - HOLT.CO3 345.00 345KV CKT 1	720	720	0.04337	112.2823	BOXBUTE7 115.00 - DUNLAP 115KV CKT 1
FDNS	00NR	5	17SP	G15_076	FROM->TO	GRPRAR1-LNX3345.00 - HOLT.CO3 345.00 345KV CKT 1	720	720	0.04284	112.2723	GEN334030 1-FRONTIER UNIT 1
FDNS	00NR	5	17SP	G15_076	FROM->TO	GRPRAR1-LNX3345.00 - HOLT.CO3 345.00 345KV CKT 1	720	720	0.04284	112.2721	GEN334031 1-FRONTIER UNIT 2
FDNS	00NR	5	17SP	G15_076	FROM->TO	GRPRAR1-LNX3345.00 - HOLT.CO3 345.00 345KV CKT 1	720	720	0.04284	112.2718	GEN345832 1-1TS G1 13.800
FDNS	00NR	5	17SP	G15_076	FROM->TO	GRPRAR1-LNX3345.00 - HOLT.CO3 345.00 345KV CKT 1	720	720	0.04284	112.2716	GEN336446 1-MICHOUD UNIT #2
FDNS	00NR	5	17SP	G15_076	FROM->TO	GRPRAR1-LNX3345.00 - HOLT.CO3 345.00 345KV CKT 1	720	720	0.04284	112.2715	GEN345841 2-1TS G2 13.800
FDNS	00NR	5	17SP	G15_076	FROM->TO	GRPRAR1-LNX3345.00 - HOLT.CO3 345.00 345KV CKT 1	720	720	0.04284	112.2658	OKLAUN 345/24.0KV TRANSFORMER CKT 1
FDNS	00NR	5	17SP	G15_076	FROM->TO	GRPRAR1-LNX3345.00 - HOLT.CO3 345.00 345KV CKT 1	720	720	0.04284	112.2582	GEN501970 1-EVANGELINE UNIT 7
FDNS	00NR	5	17SP	G15_076	FROM->TO	GRPRAR1-LNX3345.00 - HOLT.CO3 345.00 345KV CKT 1	720	720	0.04284	112.2365	GEN562438 1-G13-032 0.6900
FDNS	00NR	5	17SP	G15_076	FROM->TO	GRPRAR1-LNX3345.00 - HOLT.CO3 345.00 345KV CKT 1	720	720	0.04275	112.2336	P12:115:NPPD:1164:ONEILL 7:JEFFREY9:BTB
FDNS	00NR	5	17SP	G15_076	FROM->TO	GRPRAR1-LNX3345.00 - HOLT.CO3 345.00 345KV CKT 1	720	720	0.04284	112.1362	GEN563282 1-G15094_3 0.6900
FDNS	00NR	5	20SP	G15_076	FROM->TO	GRPRAR1-LNX3345.00 - HOLT.CO3 345.00 345KV CKT 1	720	720	0.03885	112.0377	P12:230:UMZB:# 116 #: ST IN SD. WSG-ST-VH
FDNS	00NR	5	17SP	G15_076	FROM->TO	GRPRAR1-LNX3345.00 - HOLT.CO3 345.00 345KV CKT 1	720	720	0.04284	111.7843	BASE CASE
FDNS	00NR	5	25SP	G15_076	FROM->TO	GRPRAR1-LNX3345.00 - HOLT.CO3 345.00 345KV CKT 1	720	720	0.04668	111.711	KELLY - MEADOWGROVE4230.00 230KV CKT 1
FDNS	00NR	5	17SP	G15_076	FROM->TO	GRPRAR1-LNX3345.00 - HOLT.CO3 345.00 345KV CKT 1	720	720	0.04303	111.4483	BUCKNER7 345.00 - SPEARVILLE 345KV CKT 1
FDNS	00NR	5	17SP	G15_076	FROM->TO	GRPRAR1-LNX3345.00 - HOLT.CO3 345.00 345KV CKT 1	720	720	0.04303	111.4483	BUCKNER7 345.00 - SPEARVILLE 345KV CKT 1
FDNS	00NR	5	17SP	G15_076	FROM->TO	GRPRAR1-LNX3345.00 - HOLT.CO3 345.00 345KV CKT 1	720	720	0.04377	111.3486	103RD & ROKEBY - MOORE 345KV CKT 1
FDNS	00NR	5	17SP	G15_076	FROM->TO	GRPRAR1-LNX3345.00 - HOLT.CO3 345.00 345KV CKT 1	720	720	0.04377	111.3486	103RD & ROKEBY - MOORE 345KV CKT 1
FDNS	00NR	5	17SP	G15_076	FROM->TO	GRPRAR1-LNX3345.00 - HOLT.CO3 345.00 345KV CKT 1	720	720	0.04304	111.3312	FT THOMPSON - OAHE 230KV CKT 1
FDNS	00NR	5	17SP	G15_076	FROM->TO	GRPRAR1-LNX3345.00 - HOLT.CO3 345.00 345KV CKT 1	720	720	0.04304	111.3312	FT THOMPSON - OAHE 230KV CKT 1
FDNS	00NR	5	17SP	G15_076	FROM->TO	GRPRAR1-LNX3345.00 - HOLT.CO3 345.00 345KV CKT 1	720	720	0.04304	111.3312	FT THOMPSON - OAHE 230KV CKT 2
FDNS	00NR	5	17SP	G15_076	FROM->TO	GRPRAR1-LNX3345.00 - HOLT.CO3 345.00 345KV CKT 1	720	720	0.04304	111.3312	FT THOMPSON - OAHE 230KV CKT 2
FDNS	00NR	5	17SP	G15_076	FROM->TO	GRPRAR1-LNX3345.00 - HOLT.CO3 345.00 345KV CKT 1	720	720	0.04284	111.3097	GEN652546 1-FT RANDAL
FDNS	00NR	5	17SP	G15_076	FROM->TO	GRPRAR1-LNX3345.00 - HOLT.CO3 345.00 345KV CKT 1	720	720	0.04284	111.2767	MITCHLCO3 345.00 345/34.5KV TRANSFORMER CKT 1
FDNS	00NR	5	17SP	G15_076	FROM->TO	GRPRAR1-LNX3345.00 - HOLT.CO3 345.00 345KV CKT 1	720	720	0.04304	111.2737	FT THOMPSON - OAHE 230KV CKT 3
FDNS	00NR	5	17SP	G15_076	FROM->TO	GRPRAR1-LNX3345.00 - HOLT.CO3 345.00 345KV CKT 1	720	720	0.04304	111.2737	FT THOMPSON - OAHE 230KV CKT 3
FDNS	00NR	5	17SP	G15_076	FROM->TO	GRPRAR1-LNX3345.00 - HOLT.CO3 345.00 345KV CKT 1	720	720	0.04304	111.2737	FT THOMPSON - OAHE 230KV CKT 4

SOLUTION	GROUP	SCENARIO	SEASON	SOURCE	DIRECTION	MONITORED ELEMENT	RATEA (MVA)	RATEB(MVA)	TDF	TC%LOADING (% MVA)	CONTINGENCY
FDNS	00NR	5	17SP	G15_076	FROM->TO	GRPRAR1-LNX3345.00 - HOLT.CO3 345.00 345KV CKT 1	720	720	0.04304	111.2737	FT THOMPSON - OAHE 230KV CKT 4
FDNS	00NR	5	25SP	G15_076	FROM->TO	GRPRAR1-LNX3345.00 - HOLT.CO3 345.00 345KV CKT 1	720	720	0.03916	111.273	P12:230:UMZB:# 116 #: ST IN SD. WSG-ST-VH
FDNS	00NR	5	17SP	G15_076	FROM->TO	GRPRAR1-LNX3345.00 - HOLT.CO3 345.00 345KV CKT 1	720	720	0.04284	111.2676	GEN672347 1-CORY COGEN GENERATOR 1 GT1
FDNS	00NR	5	17SP	G15_076	FROM->TO	GRPRAR1-LNX3345.00 - HOLT.CO3 345.00 345KV CKT 1	720	720	0.04284	111.2676	GEN672348 2-CORY COGEN GENERATOR 2 GT2
FDNS	00NR	5	20SP	G15_076	FROM->TO	GRPRAR1-LNX3345.00 - HOLT.CO3 345.00 345KV CKT 1	720	720	0.0392	111.2653	STORLA - WESSINGTON 230KV CKT 1
FDNS	00NR	5	17SP	G15_076	FROM->TO	GRPRAR1-LNX3345.00 - HOLT.CO3 345.00 345KV CKT 1	720	720	0.04225	111.2624	NELIGH - PETERSBRG.N7115.00 115KV CKT 1
FDNS	00NR	5	17SP	G15_076	FROM->TO	GRPRAR1-LNX3345.00 - HOLT.CO3 345.00 345KV CKT 1	720	720	0.04284	111.2612	GEN600018 S-LS POWER STEAM
FDNS	00NR	5	17SP	G15_076	FROM->TO	GRPRAR1-LNX3345.00 - HOLT.CO3 345.00 345KV CKT 1	720	720	0.043	111.2574	POST ROCK (POSTROCK T1) 345/230/13.8KV TRANSFORMER CKT 1
FDNS	00NR	5	17SP	G15_076	FROM->TO	GRPRAR1-LNX3345.00 - HOLT.CO3 345.00 345KV CKT 1	720	720	0.04467	111.2569	NUNDRWD - PHILIP TAP 230KV CKT 1
FDNS	00NR	5	17SP	G15_076	FROM->TO	GRPRAR1-LNX3345.00 - HOLT.CO3 345.00 345KV CKT 1	720	720	0.04284	111.2553	GEN300003 1-THOMAS HILL UNIT 3
FDNS	00NR	5	17SP	G15_076	FROM->TO	GRPRAR1-LNX3345.00 - HOLT.CO3 345.00 345KV CKT 1	720	720	0.03196	111.2534	SIOUX CITY - TWINCH 3 345.00 345KV CKT 1
FDNS	00NR	5	17SP	G15_076	FROM->TO	GRPRAR1-LNX3345.00 - HOLT.CO3 345.00 345KV CKT 1	720	720	0.04296	111.2522	G11_051T 345.00 - WOODWARD DISTRICT EHV 345KV CKT 1
FDNS	00NR	5	17SP	G15_076	FROM->TO	GRPRAR1-LNX3345.00 - HOLT.CO3 345.00 345KV CKT 1	720	720	0.04284	111.2487	GEN659158 2-PIONEER G213.800
FDNS	00NR	5	17SP	G15_076	FROM->TO	GRPRAR1-LNX3345.00 - HOLT.CO3 345.00 345KV CKT 1	720	720	0.04284	111.2487	GEN659159 3-PIONEER G313.800
FDNS	00NR	5	17SP	G15_076	FROM->TO	GRPRAR1-LNX3345.00 - HOLT.CO3 345.00 345KV CKT 1	720	720	0.04284	111.2412	GEN659156 2-LONESMCRK 2G13.800
FDNS	00NR	5	17SP	G15_076	FROM->TO	GRPRAR1-LNX3345.00 - HOLT.CO3 345.00 345KV CKT 1	720	720	0.04284	111.2412	GEN659157 3-LONESMCRK 3G13.800
FDNS	00NR	5	17SP	G15_076	FROM->TO	GRPRAR1-LNX3345.00 - HOLT.CO3 345.00 345KV CKT 1	720	720	0.04323	111.233	P12:115:UMZW:# 172 #: WI IN SD.
FDNS	00NR	5	17SP	G15_076	FROM->TO	GRPRAR1-LNX3345.00 - HOLT.CO3 345.00 345KV CKT 1	720	720	0.0428	111.2323	G14-021T 345.00 - MULLNCR7 345.00 345KV CKT 1
FDNS	00NR	5	17SP	G15_076	FROM->TO	GRPRAR1-LNX3345.00 - HOLT.CO3 345.00 345KV CKT 1	720	720	0.0428	111.232	G15-005T 345.00 - MULLNCR7 345.00 345KV CKT 1
FDNS	00NR	5	17SP	G15_076	FROM->TO	GRPRAR1-LNX3345.00 - HOLT.CO3 345.00 345KV CKT 1	720	720	0.04284	111.2311	GEN590010 1-ERCOT EQUIVALENCE
FDNS	00NR	5	17SP	G15_076	FROM->TO	GRPRAR1-LNX3345.00 - HOLT.CO3 345.00 345KV CKT 1	720	720	0.04284	111.2298	GEN652548 5-FT RANDAL
FDNS	00NR	5	17SP	G15_076	FROM->TO	GRPRAR1-LNX3345.00 - HOLT.CO3 345.00 345KV CKT 1	720	720	0.04284	111.2298	GEN652549 7-FT RANDAL
FDNS	00NR	5	17SP	G15_076	FROM->TO	GRPRAR1-LNX3345.00 - HOLT.CO3 345.00 345KV CKT 1	720	720	0.04284	111.2265	GEN672367 1-MERIDIAN GENERATOR 1 GT1
FDNS	00NR	5	17SP	G15_076	FROM->TO	GRPRAR1-LNX3345.00 - HOLT.CO3 345.00 345KV CKT 1	720	720	0.04284	111.2265	GEN672368 2-MERIDIAN GENERATOR 2 GT2
FDNS	00NR	5	17SP	G15_076	FROM->TO	GRPRAR1-LNX3345.00 - HOLT.CO3 345.00 345KV CKT 1	720	720	0.04284	111.2234	GEN600021 3-ANGUS ANSON2
FDNS	00NR	5	17SP	G15_076	FROM->TO	GRPRAR1-LNX3345.00 - HOLT.CO3 345.00 345KV CKT 1	720	720	0.04312	111.2213	LARAMIE RIVER - STEGALL 345KV CKT 1
FDNS	00NR	5	17SP	G15_076	FROM->TO	GRPRAR1-LNX3345.00 - HOLT.CO3 345.00 345KV CKT 1	720	720	0.04284	111.2198	GEN600020 2-ANGUS ANSON1
FDNS	00NR	5	17SP	G15_076	FROM->TO	GRPRAR1-LNX3345.00 - HOLT.CO3 345.00 345KV CKT 1	720	720	0.04287	111.2197	P12:115:UMZZ:# 232 #: AB IN SD. ABERDEEN A TAP BETWEEN ELLENDALE AND ABERDEEN-SIEBRECHT.
FDNS	00NR	5	17SP	G15_076	FROM->TO	GRPRAR1-LNX3345.00 - HOLT.CO3 345.00 345KV CKT 1	720	720	0.04284	111.2195	GEN652547 3-FT RANDAL
FDNS	00NR	5	17SP	G15_076	FROM->TO	GRPRAR1-LNX3345.00 - HOLT.CO3 345.00 345KV CKT 1	720	720	0.04284	111.2136	GEN672352 3-NIPAWIN GENERATOR 3
FDNS	00NR	5	17SP	G15_076	FROM->TO	GRPRAR1-LNX3345.00 - HOLT.CO3 345.00 345KV CKT 1	720	720	0.04284	111.2135	GEN672350 1-NIPAWIN GENERATOR 1
FDNS	00NR	5	17SP	G15_076	FROM->TO	GRPRAR1-LNX3345.00 - HOLT.CO3 345.00 345KV CKT 1	720	720	0.04284	111.2135	GEN672351 2-NIPAWIN GENERATOR 2
FDNS	00NR	5	17SP	G15_076	FROM->TO	GRPRAR1-LNX3345.00 - HOLT.CO3 345.00 345KV CKT 1	720	720	0.04284	111.2055	GEN590011 2-ERCOT EQUIVALENCE
FDNS	00NR	5	17SP	G15_076	FROM->TO	GRPRAR1-LNX3345.00 - HOLT.CO3 345.00 345KV CKT 1	720	720	0.04284	111.2002	GEN672349 3-CORY COGEN GENERATOR 3 ST
FDNS	00NR	5	17SP	G15_076	FROM->TO	GRPRAR1-LNX3345.00 - HOLT.CO3 345.00 345KV CKT 1	720	720	0.04284	111.1963	GEN620324 3-HOOT LAKE 3 GEN
FDNS	00NR	5	17SP	G15_076	FROM->TO	GRPRAR1-LNX3345.00 - HOLT.CO3 345.00 345KV CKT 1	720	720	0.04284	111.1935	EASTDC - ERCOT EQUIVALENCE 345KV CKT 1
FDNS	00NR	5	17SP	G15_076	FROM->TO	GRPRAR1-LNX3345.00 - HOLT.CO3 345.00 345KV CKT 1	720	720	0.04284	111.1935	ERCOT EQUIVALENCE 345/24.0KV TRANSFORMER CKT 1
FDNS	00NR	5	17SP	G15_076	FROM->TO	GRPRAR1-LNX3345.00 - HOLT.CO3 345.00 345KV CKT 1	720	720	0.04284	111.1916	GEN657964 1-ASH2GEN9 0.5750
FDNS	00NR	5	17SP	G15_076	FROM->TO	GRPRAR1-LNX3345.00 - HOLT.CO3 345.00 345KV CKT 1	720	720	0.0428	111.1855	G15-005T 345.00 - SIBLEY 345KV CKT 1
FDNS	00NR	5	17SP	G15_076	FROM->TO	GRPRAR1-LNX3345.00 - HOLT.CO3 345.00 345KV CKT 1	720	720	0.04462	111.183	BATTLE CREEK - COUNTY LINE 115KV CKT 1
FDNS	00NR	5	17SP	G15_076	FROM->TO	GRPRAR1-LNX3345.00 - HOLT.CO3 345.00 345KV CKT 1	720	720	0.04284	111.1756	GEN629072 4-LANSING GENERATOR FOR UNITS NO4 EIA CODE 1
FDNS	00NR	5	17SP	G15_076	FROM->TO	GRPRAR1-LNX3345.00 - HOLT.CO3 345.00 345KV CKT 1	720	720	0.04225	111.1734	ALBION - PETERSBURG 115KV CKT 1
FDNS	00NR	5	17SP	G15_076	FROM->TO	GRPRAR1-LNX3345.00 - HOLT.CO3 345.00 345KV CKT 1	720	720	0.04293	111.1693	ANTELOP-LNX3345.00 - BRDLAND-LNX3345.00 345KV CKT 1
FDNS	00NR	5	17SP	G15_076	FROM->TO	GRPRAR1-LNX3345.00 - HOLT.CO3 345.00 345KV CKT 1	720	720	0.04284	111.1686	GEN660003 3-HURON WEST PARK
FDNS	00NR	5	17SP	G15_076	FROM->TO	GRPRAR1-LNX3345.00 - HOLT.CO3 345.00 345KV CKT 1	720	720	0.04284	111.1658	GEN600012 2-BLACK DOG GEN 2
FDNS	00NR	5	17SP	G15_076	FROM->TO	GRPRAR1-LNX3345.00 - HOLT.CO3 345.00 345KV CKT 1	720	720	0.04358	111.1657	AXTELL - POST ROCK 345KV CKT 1
FDNS	00NR	5	17SP	G15_076	FROM->TO	GRPRAR1-LNX3345.00 - HOLT.CO3 345.00 345KV CKT 1	720	720	0.04109	111.1646	COLUMEAST - NW68TH & HOLDREGE 345KV CKT 1
FDNS	00NR	5	17SP	G15_076	FROM->TO	GRPRAR1-LNX3345.00 - HOLT.CO3 345.00 345KV CKT 1	720	720	0.04109	111.1646	COLUMEAST - NW68TH & HOLDREGE 345KV CKT 1
FDNS	00NR	5	17SP	G15_076	FROM->TO	GRPRAR1-LNX3345.00 - HOLT.CO3 345.00 345KV CKT 1	720	720	0.04225	111.1445	PETERSBRG.N7115.00 - PETERSBURG 115KV CKT Z1
FDNS	00NR	5	17SP	G15_076	FROM->TO	GRPRAR1-LNX3345.00 - HOLT.CO3 345.00 345KV CKT 1	720	720	0.04284	111.1282	GEN659290 1-EDGECOL
FDNS	00NR	5	17SP	G15_076	FROM->TO	GRPRAR1-LNX3345.00 - HOLT.CO3 345.00 345KV CKT 1	720	720	0.04284	111.1279	EMERY 161/18.0KV TRANSFORMER CKT 1
FDNS	00NR	5	17SP	G15_076	FROM->TO	GRPRAR1-LNX3345.00 - HOLT.CO3 345.00 345KV CKT 1	720	720	0.04172	111.1251	COOPER - MOORE 345KV CKT 1
FDNS	00NR	5	17SP	G15_076	FROM->TO	GRPRAR1-LNX3345.00 - HOLT.CO3 345.00 345KV CKT 1	720	720	0.04284	111.1227	GEN652410 3-FT PECK
FDNS	00NR	5	17SP	G15_076	FROM->TO	GRPRAR1-LNX3345.00 - HOLT.CO3 345.00 345KV CKT 1	720	720	0.04284	111.1212	GEN672339 16-QE 16G 13.800
FDNS	00NR	5	17SP	G15_076	FROM->TO	GRPRAR1-LNX3345.00 - HOLT.CO3 345.00 345KV CKT 1	720	720	0.04284	111.1212	GEN672342 3-QUEEN ELIZABETH GENERATOR 3
FDNS	00NR	5	17SP	G15_076	FROM->TO	GRPRAR1-LNX3345.00 - HOLT.CO3 345.00 345KV CKT 1	720	720	0.04462	111.1206	ANTELOPE 7115.00 - COUNTY LINE 115KV CKT 1
FDNS	00NR	5	17SP	G15_076	FROM->TO	GRPRAR1-LNX3345.00 - HOLT.CO3 345.00 345KV CKT 1	720	720	0.04562	111.1198	MINGO - RED WILLOW 345KV CKT 1
FDNS	00NR	5	17SP	G15_076	FROM->TO	GRPRAR1-LNX3345.00 - HOLT.CO3 345.00 345KV CKT 1	720	720	0.04562	111.1198	MINGO - RED WILLOW 345KV CKT 1
FDNS	00NR	5	17SP	G15_076	FROM->TO	GRPRAR1-LNX3345.00 - HOLT.CO3 345.00 345KV CKT 1	720	720	0.04111	111.1126	COLUMEAST - SHELL CREEK 345KV CKT 1
FDNS	00NR	5	17SP	G15_076	FROM->TO	GRPRAR1-LNX3345.00 - HOLT.CO3 345.00 345KV CKT 1	720	720	0.04284	111.1086	GEN672393 2-NBECST2G 13.800
FDNS	00NR	5	17SP	G15_076	FROM->TO	GRPRAR1-LNX3345.00 - HOLT.CO3 345.00 345KV CKT 1	720	720	0.04225	111.1063	P12:115:NPPD:1168B:ALBION 7:PETERSBRG.N7:BTB
FDNS	00NR	5	17SP	G15_076	FROM->TO	GRPRAR1-LNX3345.00 - HOLT.CO3 345.00 345KV CKT 1	720	720	0.04284	111.0979	GEN600046 1-MECST
FDNS	00NR	5	17SP	G15_076	FROM->TO	GRPRAR1-LNX3345.00 - HOLT.CO3 345.00 345KV CKT 1	720	720	0.04284	111.0861	GEN300007 1-NEW MADRID UNIT 2
FDNS	00NR	5	17SP	G15_076	FROM->TO	GRPRAR1-LNX3345.00 - HOLT.CO3 345.00 345KV CKT 1	720	720	0.04284	111.0806	GEN300006 1-NEW MADRID UNIT 1
FDNS	00NR	5	17SP	G15_076	FROM->TO	GRPRAR1-LNX3345.00 - HOLT.CO3 345.00 345KV CKT 1	720	720	0.04284	111.0736	GEN600047 1-MECCT1
FDNS	00NR	5	17SP	G15_076	FROM->TO	GRPRAR1-LNX3345.00 - HOLT.CO3 345.00 345KV CKT 1	720	720	0.04284	111.0588	GEN652414 4-FT PECK
FDNS	00NR	5	17SP	G15_076	FROM->TO	GRPRAR1-LNX3345.00 - HOLT.CO3 345.00 345KV CKT 1	720	720	0.04284	111.0588	GEN652415 5-FT PECK
FDNS	00NR	5	17SP	G15_076	FROM->TO	GRPRAR1-LNX3345.00 - HOLT.CO3 345.00 345KV CKT 1	720	720	0.04284	111.0566	GEN600050 1-FEP
FDNS	00NR	5	17SP	G15_076	FROM->TO	GRPRAR1-LNX3345.00 - HOLT.CO3 345.00 345KV CKT 1	720	720	0.04284	111.0417	GEN660001 2-ABERDEEN SIEBRECHT
FDNS	00NR	5	17SP	G15_076	FROM->TO	GRPRAR1-LNX3345.00 - HOLT.CO3 345.00 345KV CKT 1	720	720	0.04284	111.028	LADISH 115/13.2KV TRANSFORMER CKT 1
FDNS	00NR	5	17SP	G15_076	FROM->TO	GRPRAR1-LNX3345.00 - HOLT.CO3 345.00 345KV CKT 1	720	720	0.04284	111.009	GEN652345 W-G07_023IS_2 0.6900
FDNS	00NR	5	17SP	G15_076	FROM->TO	GRPRAR1-LNX3345.00 - HOLT.CO3 345.00 345KV CKT 1	720	720	0.04445	110.9937	G15061_T 345.00 - SETAB 345KV CKT 1
FDNS	00NR	5	17SP	G15_076	FROM->TO	GRPRAR1-LNX3345.00 - HOLT.CO3 345.00 345KV CKT 1	720	720	0.04284	110.9715	GEN 11104 1-J262_GEN 0.6000
FDNS	00NR	5	17SP	G15_076	FROM->TO	GRPRAR1-LNX3345.00 - HOLT.CO3 345.00 345KV CKT 1	720	720	0.04284	110.9715	GEN 11108 1-J263_GEN 0.6000
FDNS	00NR	5	17SP	G15_076	FROM->TO	GRPRAR1-LNX3345.00 - HOLT.CO3 345.00 345KV CKT 1	720	720	0.04284	110.9668	GEN600063 1-COLVILLE GEN 1
FDNS	00NR	5	17SP	G15_076	FROM->TO	GRPRAR1-LNX3345.00 - HOLT.CO3 345.00 345KV CKT 1	720	720	0.04284	110.9668	GEN600064 2-COLVILLE GEN 2
FDNS	00NR	5	17SP	G15_076	FROM->TO	GRPRAR1-LNX3345.00 - HOLT.CO3 345.00 345KV CKT 1	720	720	0.04282	110.9655	BISMARK - L3 HAWDON 230KV CKT 1
FDNS	00NR	5	17SP	G15_076	FROM->TO	GRPRAR1-LNX3345.00 - HOLT.CO3 345.00 345KV CKT 1	720	720	0.04432	110.9631	GERALD GENTLEMAN STATION - RED WILLOW 345KV CKT 1
FDNS	00NR	5	17SP	G15_076	FROM->TO	GRPRAR1-LNX3345.00 - HOLT.CO3 345.00 345KV CKT 1	720	720	0.04284	110.9553	GEN600045 4-ANSON

SOLUTION	GROUP	SCENARIO	SEASON	SOURCE	DIRECTION	MONITORED ELEMENT	RATEA (MVA)	RATEB(MVA)	TDF	TC%LOADING (% MVA)	CONTINGENCY
FDNS	00NR	5	17SP	G15_076	FROM->TO	GRPRAR1-LNX3345.00 - HOLT.CO3 345.00 345KV CKT 1	720	720	0.04284	110.9541	GEN600043 7-BLUE LAKE5
FDNS	00NR	5	17SP	G15_076	FROM->TO	GRPRAR1-LNX3345.00 - HOLT.CO3 345.00 345KV CKT 1	720	720	0.04284	110.9541	GEN600044 8-BLUE LAKE6
FDNS	00NR	5	17SP	G15_076	FROM->TO	GRPRAR1-LNX3345.00 - HOLT.CO3 345.00 345KV CKT 1	720	720	0.04284	110.938	G830_SUB 115.00 - GRE-MCHENRY7115.00 115KV CKT 1
FDNS	00NR	5	17SP	G15_076	FROM->TO	GRPRAR1-LNX3345.00 - HOLT.CO3 345.00 345KV CKT 1	720	720	0.04284	110.9294	G830_SUB 115.00 115/34.5KV TRANSFORMER CKT 1
FDNS	00NR	5	17SP	G15_076	FROM->TO	GRPRAR1-LNX3345.00 - HOLT.CO3 345.00 345KV CKT 1	720	720	0.04296	110.9231	G11_051T 345.00 - TATONGA7 345.00 345KV CKT 1
FDNS	00NR	5	17SP	G15_076	FROM->TO	GRPRAR1-LNX3345.00 - HOLT.CO3 345.00 345KV CKT 1	720	720	0.04284	110.9221	GEN600014 4-BLACK DOG GEN 4
FDNS	00NR	5	17SP	G15_076	FROM->TO	GRPRAR1-LNX3345.00 - HOLT.CO3 345.00 345KV CKT 1	720	720	0.04284	110.9198	GEN600065 7-HIGH BRIDGE
FDNS	00NR	5	17SP	G15_076	FROM->TO	GRPRAR1-LNX3345.00 - HOLT.CO3 345.00 345KV CKT 1	720	720	0.04284	110.9198	GEN600066 8-HIGH BRIDGE
FDNS	00NR	5	17SP	G15_076	FROM->TO	GRPRAR1-LNX3345.00 - HOLT.CO3 345.00 345KV CKT 1	720	720	0.04284	110.9155	GEN600011 5-BLACK DOG GEN 1
FDNS	00NR	5	17SP	G15_076	FROM->TO	GRPRAR1-LNX3345.00 - HOLT.CO3 345.00 345KV CKT 1	720	720	0.04452	110.9117	P12:115:NPPD:1163B:NELIGH 7:NORFK.N7:BTB
FDNS	00NR	5	17SP	G15_076	FROM->TO	GRPRAR1-LNX3345.00 - HOLT.CO3 345.00 345KV CKT 1	720	720	0.04284	110.9037	GEN600070 9-RIVER SIDE
FDNS	00NR	5	17SP	G15_076	FROM->TO	GRPRAR1-LNX3345.00 - HOLT.CO3 345.00 345KV CKT 1	720	720	0.04284	110.9037	GEN600071 10-RIVER SIDE
FDNS	00NR	5	17SP	G15_076	FROM->TO	GRPRAR1-LNX3345.00 - HOLT.CO3 345.00 345KV CKT 1	720	720	0.04284	110.8909	GEN600007 7-RIVERSIDE GEN 7
FDNS	00NR	5	17SP	G15_076	FROM->TO	GRPRAR1-LNX3345.00 - HOLT.CO3 345.00 345KV CKT 1	720	720	0.04284	110.8763	GEN652906 1-G09_006IS_3 0.6900
FDNS	00NR	5	17SP	G15_076	FROM->TO	GRPRAR1-LNX3345.00 - HOLT.CO3 345.00 345KV CKT 1	720	720	0.04284	110.8716	GEN600017 C-LS POWER CT
FDNS	00NR	5	17SP	G15_076	FROM->TO	GRPRAR1-LNX3345.00 - HOLT.CO3 345.00 345KV CKT 1	720	720	0.04276	110.87	HOSKINS - RAUN 345KV CKT 1
FDNS	00NR	5	17SP	G15_076	FROM->TO	GRPRAR1-LNX3345.00 - HOLT.CO3 345.00 345KV CKT 1	720	720	0.04276	110.87	HOSKINS - RAUN 345KV CKT 1
FDNS	00NR	5	17SP	G15_076	FROM->TO	GRPRAR1-LNX3345.00 - HOLT.CO3 345.00 345KV CKT 1	720	720	0.03991	110.8693	FT THOMPSON (FT2 KU1A) 345/230/13.8KV TRANSFORMER CKT 1
FDNS	00NR	5	17SP	G15_076	FROM->TO	GRPRAR1-LNX3345.00 - HOLT.CO3 345.00 345KV CKT 1	720	720	0.03991	110.8661	FT THOMPSON (FT2 KU1B) 345/230/13.8KV TRANSFORMER CKT 1
FDNS	00NR	5	17SP	G15_076	FROM->TO	GRPRAR1-LNX3345.00 - HOLT.CO3 345.00 345KV CKT 1	720	720	0.04284	110.8633	GEN659273 2-GROTON SYNC COND
FDNS	00NR	5	17SP	G15_076	FROM->TO	GRPRAR1-LNX3345.00 - HOLT.CO3 345.00 345KV CKT 1	720	720	0.04284	110.8633	GEN659294 1-WILTONCOL9
FDNS	00NR	5	17SP	G15_076	FROM->TO	GRPRAR1-LNX3345.00 - HOLT.CO3 345.00 345KV CKT 1	720	720	0.04284	110.8467	LANSING WEST 161/22.0KV TRANSFORMER CKT 1
FDNS	00NR	5	17SP	G15_076	FROM->TO	GRPRAR1-LNX3345.00 - HOLT.CO3 345.00 345KV CKT 1	720	720	0.04284	110.8281	GEN659192 6-LYNN
FDNS	00NR	5	17SP	G15_076	FROM->TO	GRPRAR1-LNX3345.00 - HOLT.CO3 345.00 345KV CKT 1	720	720	0.04284	110.827	GEN659162 4-RED WLCK
FDNS	00NR	5	17SP	G15_076	FROM->TO	GRPRAR1-LNX3345.00 - HOLT.CO3 345.00 345KV CKT 1	720	720	0.04284	110.827	GEN659163 5-BLACK WDCK
FDNS	00NR	5	17SP	G15_076	FROM->TO	GRPRAR1-LNX3345.00 - HOLT.CO3 345.00 345KV CKT 1	720	720	0.04284	110.8168	GEN681522 3-GENOA 3
FDNS	00NR	5	17SP	G15_076	FROM->TO	GRPRAR1-LNX3345.00 - HOLT.CO3 345.00 345KV CKT 1	720	720	0.04284	110.8079	GEN615021 1-GRE-ER 14G 16.000
FDNS	00NR	5	17SP	G15_076	FROM->TO	GRPRAR1-LNX3345.00 - HOLT.CO3 345.00 345KV CKT 1	720	720	0.04284	110.7946	GEN615052 1-CAMBRIDGE GENERATING STATION
FDNS	00NR	5	17SP	G15_076	FROM->TO	GRPRAR1-LNX3345.00 - HOLT.CO3 345.00 345KV CKT 1	720	720	0.04293	110.7895	BRDLAND-LNX3345.00 - HURON 345KV CKT Z
FDNS	00NR	5	17SP	G15_076	FROM->TO	GRPRAR1-LNX3345.00 - HOLT.CO3 345.00 345KV CKT 1	720	720	0.04284	110.7894	GEN659031 1-G12_014IS_4 0.6900
FDNS	00NR	5	17SP	G15_076	FROM->TO	GRPRAR1-LNX3345.00 - HOLT.CO3 345.00 345KV CKT 1	720	720	0.04293	110.7887	BROADLAND - HURON 230KV CKT 1
FDNS	00NR	5	17SP	G15_076	FROM->TO	GRPRAR1-LNX3345.00 - HOLT.CO3 345.00 345KV CKT 1	720	720	0.04293	110.7884	HURON (BD KU2A) 345/230/13.8KV TRANSFORMER CKT 1
FDNS	00NR	5	17SP	G15_076	FROM->TO	GRPRAR1-LNX3345.00 - HOLT.CO3 345.00 345KV CKT 1	720	720	0.04293	110.7884	HURON (BD KU2A) 345/230/13.8KV TRANSFORMER CKT 1
FDNS	00NR	5	17SP	G15_076	FROM->TO	GRPRAR1-LNX3345.00 - HOLT.CO3 345.00 345KV CKT 1	720	720	0.04284	110.7848	CENTER 230/22.0KV TRANSFORMER CKT 1
FDNS	00NR	5	17SP	G15_076	FROM->TO	GRPRAR1-LNX3345.00 - HOLT.CO3 345.00 345KV CKT 1	720	720	0.04293	110.7831	P12:345:UMZB:# 103 #: BD IN SD. LOSS OF LINE
FDNS	00NR	5	17SP	G15_076	FROM->TO	GRPRAR1-LNX3345.00 - HOLT.CO3 345.00 345KV CKT 1	720	720	0.04284	110.782	GEN 10648 1-G830_GEN 0.6900
FDNS	00NR	5	17SP	G15_076	FROM->TO	GRPRAR1-LNX3345.00 - HOLT.CO3 345.00 345KV CKT 1	720	720	0.04293	110.7819	P12:345:UMZB:# 102 #: AVS BD IN ND. AVS BRD LR
FDNS	00NR	5	17SP	G15_076	FROM->TO	GRPRAR1-LNX3345.00 - HOLT.CO3 345.00 345KV CKT 1	720	720	0.04284	110.781	GEN652907 1-G09_007IS_3 0.6900
FDNS	00NR	5	17SP	G15_076	FROM->TO	GRPRAR1-LNX3345.00 - HOLT.CO3 345.00 345KV CKT 1	720	720	0.04284	110.7681	GEN660016 1-B_H WIND 0.7000
FDNS	00NR	5	17SP	G15_076	FROM->TO	GRPRAR1-LNX3345.00 - HOLT.CO3 345.00 345KV CKT 1	720	720	0.04284	110.7123	GEN615015 1-GRE-SPRITWDG13.200
FDNS	00NR	5	17SP	G15_076	FROM->TO	GRPRAR1-LNX3345.00 - HOLT.CO3 345.00 345KV CKT 1	720	720	0.04296	110.7054	MATHWSN7 345.00 - TATONGA7 345.00 345KV CKT 1
FDNS	00NR	5	17SP	G15_076	FROM->TO	GRPRAR1-LNX3345.00 - HOLT.CO3 345.00 345KV CKT 1	720	720	0.03643	110.6707	DIXONCO 3 345.00 - TWINCH 3 345.00 345KV CKT 1
FDNS	00NR	5	17SP	G15_076	FROM->TO	GRPRAR1-LNX3345.00 - HOLT.CO3 345.00 345KV CKT 1	720	720	0.04284	110.6508	GEN659353 1-DEERCREK CTG18.000
FDNS	00NR	5	17SP	G15_076	FROM->TO	GRPRAR1-LNX3345.00 - HOLT.CO3 345.00 345KV CKT 1	720	720	0.04284	110.6491	GEN659354 1-DEERCREK STG18.000
FDNS	00NR	5	17SP	G15_076	FROM->TO	GRPRAR1-LNX3345.00 - HOLT.CO3 345.00 345KV CKT 1	720	720	0.03643	110.6418	DIXONCO 3 345.00 (DIXON1) 345/230/13.8KV TRANSFORMER CKT 1
FDNS	00NR	5	17SP	G15_076	FROM->TO	GRPRAR1-LNX3345.00 - HOLT.CO3 345.00 345KV CKT 1	720	720	0.04293	110.6302	ANTELOP-LNX3345.00 - ANTELOPE VALLEY 345KV CKT Z
FDNS	00NR	5	17SP	G15_076	FROM->TO	GRPRAR1-LNX3345.00 - HOLT.CO3 345.00 345KV CKT 1	720	720	0.04284	110.5607	GEN600067 9-HIGH BRIDGE
FDNS	00NR	5	17SP	G15_076	FROM->TO	GRPRAR1-LNX3345.00 - HOLT.CO3 345.00 345KV CKT 1	720	720	0.04284	110.5574	GEN672303 3-BOUNDARY DAM GENERATOR 3
FDNS	00NR	5	17SP	G15_076	FROM->TO	GRPRAR1-LNX3345.00 - HOLT.CO3 345.00 345KV CKT 1	720	720	0.04284	110.5574	GEN672305 5-BOUNDARY DAM GENERATOR 5
FDNS	00NR	5	17SP	G15_076	FROM->TO	GRPRAR1-LNX3345.00 - HOLT.CO3 345.00 345KV CKT 1	720	720	0.04284	110.5329	GEN672392 1-NBECGT1G 18.000
FDNS	00NR	5	25SP	G15_076	FROM->TO	GRPRAR1-LNX3345.00 - HOLT.CO3 345.00 345KV CKT 1	720	720	0.03952	110.5116	STORLA - WESSINGTON 230KV CKT 1
FDNS	00NR	5	17SP	G15_076	FROM->TO	GRPRAR1-LNX3345.00 - HOLT.CO3 345.00 345KV CKT 1	720	720	0.04282	110.4891	OAHE - SULLEY BUTTE 230KV CKT 1
FDNS	00NR	5	17SP	G15_076	FROM->TO	GRPRAR1-LNX3345.00 - HOLT.CO3 345.00 345KV CKT 1	720	720	0.04284	110.4686	GEN910006 1-G12_012IS_3 0.6900
FDNS	00NR	5	17SP	G15_076	FROM->TO	GRPRAR1-LNX3345.00 - HOLT.CO3 345.00 345KV CKT 1	720	720	0.04284	110.4611	BISONMP4 230.00 - SQUARE BUTTE 230KV CKT 1
FDNS	00NR	5	17SP	G15_076	FROM->TO	GRPRAR1-LNX3345.00 - HOLT.CO3 345.00 345KV CKT 1	720	720	0.04284	110.4132	GEN662101 1-WESSINGTON190.5750
FDNS	00NR	5	17SP	G15_076	FROM->TO	GRPRAR1-LNX3345.00 - HOLT.CO3 345.00 345KV CKT 1	720	720	0.0444	110.3851	AXTELL - SWEETWATER 345KV CKT 1
FDNS	00NR	5	17SP	G15_076	FROM->TO	GRPRAR1-LNX3345.00 - HOLT.CO3 345.00 345KV CKT 1	720	720	0.04444	110.346	G15088_T 345.00 - MOORE 345KV CKT 1
FDNS	00NR	5	17SP	G15_076	FROM->TO	GRPRAR1-LNX3345.00 - HOLT.CO3 345.00 345KV CKT 1	720	720	0.04282	110.3348	SULLEY BUTTE - SULLYBT-LNX3230.00 230KV CKT Z
FDNS	00NR	5	17SP	G15_076	FROM->TO	GRPRAR1-LNX3345.00 - HOLT.CO3 345.00 345KV CKT 1	720	720	0.04282	110.3319	SULLYBT-LNX3230.00 - WHITLOK 230KV CKT 1
FDNS	00NR	5	17SP	G15_076	FROM->TO	GRPRAR1-LNX3345.00 - HOLT.CO3 345.00 345KV CKT 1	720	720	0.04282	110.2858	P12:230:UMZB:# 114 #: SB IN SD. SB-WK-GH
FDNS	00NR	5	17SP	G15_076	FROM->TO	GRPRAR1-LNX3345.00 - HOLT.CO3 345.00 345KV CKT 1	720	720	0.04282	110.2858	P12:230:UMZB:# 117 #: WK IN SD. SB-WK-GH
FDNS	00NR	5	20SP	G15_076	FROM->TO	GRPRAR1-LNX3345.00 - HOLT.CO3 345.00 345KV CKT 1	720	720	0.03927	110.2788	HANLON - STORLA 230KV CKT 1
FDNS	00NR	5	17SP	G15_076	FROM->TO	GRPRAR1-LNX3345.00 - HOLT.CO3 345.00 345KV CKT 1	720	720	0.03763	110.2775	HOSKINS - SHELL CREEK 345KV CKT 1
FDNS	00NR	5	17SP	G15_076	FROM->TO	GRPRAR1-LNX3345.00 - HOLT.CO3 345.00 345KV CKT 1	720	720	0.04284	110.2641	SQUARE BUTTE - YNG2 4 230.00 230KV CKT 1
FDNS	00NR	5	17SP	G15_076	FROM->TO	GRPRAR1-LNX3345.00 - HOLT.CO3 345.00 345KV CKT 1	720	720	0.04282	110.2349	GLENHAM - WHITLOK 230KV CKT 1
FDNS	00NR	5	17SP	G15_076	FROM->TO	GRPRAR1-LNX3345.00 - HOLT.CO3 345.00 345KV CKT 1	720	720	0.04284	110.2327	HESKETT 115/13.8KV TRANSFORMER CKT 1
FDNS	00NR	5	17SP	G15_076	FROM->TO	GRPRAR1-LNX3345.00 - HOLT.CO3 345.00 345KV CKT 1	720	720	0.04284	110.1927	GEN681542 6-JP MADGETT
FDNS	00NR	5	17SP	G15_076	FROM->TO	GRPRAR1-LNX3345.00 - HOLT.CO3 345.00 345KV CKT 1	720	720	0.04284	110.1429	GEN659289 1-DAYCNTYWND W0.6900
FDNS	00NR	5	17SP	G15_076	FROM->TO	GRPRAR1-LNX3345.00 - HOLT.CO3 345.00 345KV CKT 1	720	720	0.04284	110.1242	GEN659018 1-G14_003IS_3 0.6900
FDNS	00NR	5	17SP	G15_076	FROM->TO	GRPRAR1-LNX3345.00 - HOLT.CO3 345.00 345KV CKT 1	720	720	0.04284	110.1046	GEN563312 1-G15097_3 0.6900
FDNS	00NR	5	17SP	G15_076	FROM->TO	GRPRAR1-LNX3345.00 - HOLT.CO3 345.00 345KV CKT 1	720	720	0.04284	110.1001	GEN652543 3-BIG BEND
FDNS	00NR	5	17SP	G15_076	FROM->TO	GRPRAR1-LNX3345.00 - HOLT.CO3 345.00 345KV CKT 1	720	720	0.04284	109.9591	GEN659194 1-NDPRAIRWND1W0.6900
FDNS	00NR	5	17SP	G15_076	FROM->TO	GRPRAR1-LNX3345.00 - HOLT.CO3 345.00 345KV CKT 1	720	720	0.04284	109.9425	GEN659010 4-G07_027IS_2 0.6900
FDNS	00NR	5	17SP	G15_076	FROM->TO	GRPRAR1-LNX3345.00 - HOLT.CO3 345.00 345KV CKT 1	720	720	0.04284	109.9353	GEN652461 5-GARRISON
FDNS	00NR	5	17SP	G15_076	FROM->TO	GRPRAR1-LNX3345.00 - HOLT.CO3 345.00 345KV CKT 1	720	720	0.04284	109.9352	GEN652460 4-GARRISON
FDNS	00NR	5	17SP	G15_076	FROM->TO	GRPRAR1-LNX3345.00 - HOLT.CO3 345.00 345KV CKT 1	720	720	0.04284	109.9133	GEN563342 1-G15098_3 0.6900
FDNS	00NR	5	17SP	G15_076	FROM->TO	GRPRAR1-LNX3345.00 - HOLT.CO3 345.00 345KV CKT 1	720	720	0.04284	109.8769	GEN652459 3-GARRISON
FDNS	00NR	5	17SP	G15_076	FROM->TO	GRPRAR1-LNX3345.00 - HOLT.CO3 345.00 345KV CKT 1	720	720	0.04284	109.8768	GEN652457 1-GARRISON
FDNS	00NR	5	17SP	G15_076	FROM->TO	GRPRAR1-LNX3345.00 - HOLT.CO3 345.00 345KV CKT 1	720	720	0.04284	109.8768	GEN652458 2-GARRISON

SOLUTION	GROUP	SCENARIO	SEASON	SOURCE	DIRECTION	MONITORED ELEMENT	RATEA (MVA)	RATEB(MVA)	TDF	TC%LOADING (% MVA)	CONTINGENCY
FDNS	00NR	5	17SP	G15_076	FROM->TO	GRPRAR1-LNX3345.00 - HOLT.CO3 345.00 345KV CKT 1	720	720	0.04284	109.823	GEN659403 1-NDSUNFLWR W0.6900
FDNS	00NR	5	17SP	G15_076	FROM->TO	GRPRAR1-LNX3345.00 - HOLT.CO3 345.00 345KV CKT 1	720	720	0.04284	109.7713	GEN652542 1-BIG BEND
FDNS	00NR	5	17SP	G15_076	FROM->TO	GRPRAR1-LNX3345.00 - HOLT.CO3 345.00 345KV CKT 1	720	720	0.04511	109.7493	MCCOOL - MOORE 345KV CKT 1
FDNS	00NR	5	20SP	G15_076	FROM->TO	GRPRAR1-LNX3345.00 - HOLT.CO3 345.00 345KV CKT 1	720	720	0.04123	109.7384	BUFFALO - JAMESTOWN 345KV CKT 1
FDNS	00NR	5	20SP	G15_076	FROM->TO	GRPRAR1-LNX3345.00 - HOLT.CO3 345.00 345KV CKT 1	720	720	0.04098	109.7054	G09_001IST 345.00 - WATERTOWN 345KV CKT 1
FDNS	00NR	5	17SP	G15_076	FROM->TO	GRPRAR1-LNX3345.00 - HOLT.CO3 345.00 345KV CKT 1	720	720	0.04284	109.672	GEN652559 1-OAHE
FDNS	00NR	5	17SP	G15_076	FROM->TO	GRPRAR1-LNX3345.00 - HOLT.CO3 345.00 345KV CKT 1	720	720	0.04284	109.656	CLAY BOSWELL 230/20.9KV TRANSFORMER CKT 1
FDNS	00NR	5	20SP	G15_076	FROM->TO	GRPRAR1-LNX3345.00 - HOLT.CO3 345.00 345KV CKT 1	720	720	0.03855	109.6347	FT THOMPSON - LETCHER 230KV CKT 1
FDNS	00NR	5	20SP	G15_076	FROM->TO	GRPRAR1-LNX3345.00 - HOLT.CO3 345.00 345KV CKT 1	720	720	0.03855	109.6347	FT THOMPSON - LETCHER 230KV CKT 1
FDNS	00NR	5	17SP	G15_076	FROM->TO	GRPRAR1-LNX3345.00 - HOLT.CO3 345.00 345KV CKT 1	720	720	0.04284	109.6232	STANTON 230/18.0KV TRANSFORMER CKT 1
FDNS	00NR	5	17SP	G15_076	FROM->TO	GRPRAR1-LNX3345.00 - HOLT.CO3 345.00 345KV CKT 1	720	720	0.04282	109.6214	GLENHAM - L3 HAWDON 230KV CKT 1
FDNS	00NR	5	25SP	G15_076	FROM->TO	GRPRAR1-LNX3345.00 - HOLT.CO3 345.00 345KV CKT 1	720	720	0.03959	109.4924	HANLON - STORLA 230KV CKT 1
FDNS	00NR	5	17SP	G15_076	FROM->TO	GRPRAR1-LNX3345.00 - HOLT.CO3 345.00 345KV CKT 1	720	720	0.04284	109.406	GEN659411 1-CAMPBLCNTY W0.6900
FDNS	00NR	5	25SP	G15_076	FROM->TO	GRPRAR1-LNX3345.00 - HOLT.CO3 345.00 345KV CKT 1	720	720	0.04155	109.2628	BUFFALO - JAMESTOWN 345KV CKT 1
FDNS	00NR	5	17SP	G15_076	FROM->TO	GRPRAR1-LNX3345.00 - HOLT.CO3 345.00 345KV CKT 1	720	720	0.04284	109.1754	GEN659296 2-SDPRAIRWND1W0.6900
FDNS	00NR	5	17SP	G15_076	FROM->TO	GRPRAR1-LNX3345.00 - HOLT.CO3 345.00 345KV CKT 1	720	720	0.04284	109.1678	GEN672321 1-SHAND GENERATOR 1
FDNS	00NR	5	17SP	G15_076	FROM->TO	GRPRAR1-LNX3345.00 - HOLT.CO3 345.00 345KV CKT 1	720	720	0.04284	109.1578	GEN672310 1-POPLAR RIVER GENERATOR 1
FDNS	00NR	5	17SP	G15_076	FROM->TO	GRPRAR1-LNX3345.00 - HOLT.CO3 345.00 345KV CKT 1	720	720	0.04284	109.1578	GEN672311 2-POPLAR RIVER GENERATOR 2
FDNS	00NR	5	17SP	G15_076	FROM->TO	GRPRAR1-LNX3345.00 - HOLT.CO3 345.00 345KV CKT 1	720	720	0.04284	109.0969	RCDC EAST 4230.00 - RED CEDAR DC 230KV CKT 1
FDNS	00NR	5	17SP	G15_076	FROM->TO	GRPRAR1-LNX3345.00 - HOLT.CO3 345.00 345KV CKT 1	720	720	0.04284	109.0946	GEN600004 2-PRAIRIE ISLAND G2
FDNS	00NR	5	17SP	G15_076	FROM->TO	GRPRAR1-LNX3345.00 - HOLT.CO3 345.00 345KV CKT 1	720	720	0.04284	109.0905	GEN600003 1-PRAIRIE ISLAND G1
FDNS	00NR	5	17SP	G15_076	FROM->TO	GRPRAR1-LNX3345.00 - HOLT.CO3 345.00 345KV CKT 1	720	720	0.04285	109.0764	P12:230:UMZB:# 112 #: NU IN SD. NU-RCDC & DRY CREEK XFMR
FDNS	00NR	5	17SP	G15_076	FROM->TO	GRPRAR1-LNX3345.00 - HOLT.CO3 345.00 345KV CKT 1	720	720	0.04284	109.063	GEN672306 6-BOUNDARY DAM GENERATOR 6
FDNS	00NR	5	17SP	G15_076	FROM->TO	GRPRAR1-LNX3345.00 - HOLT.CO3 345.00 345KV CKT 1	720	720	0.04284	109.0275	GEN615010 1-STANTON4
FDNS	00NR	5	17SP	G15_076	FROM->TO	GRPRAR1-LNX3345.00 - HOLT.CO3 345.00 345KV CKT 1	720	720	0.04284	109.0194	GEN659453 1-GI1414GEN W0.6900
FDNS	00NR	5	17SP	G15_076	FROM->TO	GRPRAR1-LNX3345.00 - HOLT.CO3 345.00 345KV CKT 1	720	720	0.04284	109.0176	GEN563302 1-G15096_3 0.6900
FDNS	00NR	5	17SP	G15_076	FROM->TO	GRPRAR1-LNX3345.00 - HOLT.CO3 345.00 345KV CKT 1	720	720	0.04284	108.9132	GEN659141 1-K10215A
FDNS	00NR	5	25SP	G15_076	FROM->TO	GRPRAR1-LNX3345.00 - HOLT.CO3 345.00 345KV CKT 1	720	720	0.0413	108.8671	G09_001IST 345.00 - WATERTOWN 345KV CKT 1
FDNS	00NR	5	25SP	G15_076	FROM->TO	GRPRAR1-LNX3345.00 - HOLT.CO3 345.00 345KV CKT 1	720	720	0.03886	108.8435	FT THOMPSON - LETCHER 230KV CKT 1
FDNS	00NR	5	25SP	G15_076	FROM->TO	GRPRAR1-LNX3345.00 - HOLT.CO3 345.00 345KV CKT 1	720	720	0.03886	108.8435	FT THOMPSON - LETCHER 230KV CKT 1
FDNS	00NR	5	17SP	G15_076	FROM->TO	GRPRAR1-LNX3345.00 - HOLT.CO3 345.00 345KV CKT 1	720	720	0.04284	108.8298	GEN659110 1-LELAND OLDS UNIT1
FDNS	00NR	5	17SP	G15_076	FROM->TO	GRPRAR1-LNX3345.00 - HOLT.CO3 345.00 345KV CKT 1	720	720	0.04284	108.8276	GEN652556 2-OAHE
FDNS	00NR	5	17SP	G15_076	FROM->TO	GRPRAR1-LNX3345.00 - HOLT.CO3 345.00 345KV CKT 1	720	720	0.04284	108.8275	GEN652557 4-OAHE
FDNS	00NR	5	17SP	G15_076	FROM->TO	GRPRAR1-LNX3345.00 - HOLT.CO3 345.00 345KV CKT 1	720	720	0.04284	108.8275	GEN652558 6-OAHE
FDNS	00NR	5	17SP	G15_076	FROM->TO	GRPRAR1-LNX3345.00 - HOLT.CO3 345.00 345KV CKT 1	720	720	0.04284	108.7599	GEN657749 1-YOUNG 1 GENERATOR
FDNS	00NR	5	17SP	G15_076	FROM->TO	GRPRAR1-LNX3345.00 - HOLT.CO3 345.00 345KV CKT 1	720	720	0.04284	108.7501	GEN600006 1-AS KING
FDNS	00NR	5	17SP	G15_076	FROM->TO	GRPRAR1-LNX3345.00 - HOLT.CO3 345.00 345KV CKT 1	720	720	0.04284	108.6753	GEN652173 1-G09_001IS_2 0.6900
FDNS	00NR	5	17SP	G15_076	FROM->TO	GRPRAR1-LNX3345.00 - HOLT.CO3 345.00 345KV CKT 1	720	720	0.04495	108.6266	GRAND ISLAND - MCCOOL 345KV CKT 1
FDNS	00NR	5	20SP	G15_076	FROM->TO	GRPRAR1-LNX3345.00 - HOLT.CO3 345.00 345KV CKT 1	720	720	0.04062	108.5473	WATERTN-LNX3345.00 - WHITE 345KV CKT 1
FDNS	00NR	5	20SP	G15_076	FROM->TO	GRPRAR1-LNX3345.00 - HOLT.CO3 345.00 345KV CKT 1	720	720	0.03831	108.4819	FT RANDAL - G12_009IST 230.00 230KV CKT 1
FDNS	00NR	5	20SP	G15_076	FROM->TO	GRPRAR1-LNX3345.00 - HOLT.CO3 345.00 345KV CKT 1	720	720	0.04062	108.4466	WATERTN-LNX3345.00 - WATERTOWN 345KV CKT Z
FDNS	00NR	5	20SP	G15_076	FROM->TO	GRPRAR1-LNX3345.00 - HOLT.CO3 345.00 345KV CKT 1	720	720	0.04062	108.4374	P12:345:UMZW:# 1747 #: WT2 IN SD. WT2-WHT LINE FAULT
FDNS	00NR	5	20SP	G15_076	FROM->TO	GRPRAR1-LNX3345.00 - HOLT.CO3 345.00 345KV CKT 1	720	720	0.03831	108.4006	FT THOMPSON - LAKE PLATT 230KV CKT 1
FDNS	00NR	5	20SP	G15_076	FROM->TO	GRPRAR1-LNX3345.00 - HOLT.CO3 345.00 345KV CKT 1	720	720	0.03831	108.4006	FT THOMPSON - LAKE PLATT 230KV CKT 1
FDNS	00NR	5	20SP	G15_076	FROM->TO	GRPRAR1-LNX3345.00 - HOLT.CO3 345.00 345KV CKT 1	720	720	0.03824	108.3935	FT RANDAL - FT THOMPSON 230KV CKT 1
FDNS	00NR	5	20SP	G15_076	FROM->TO	GRPRAR1-LNX3345.00 - HOLT.CO3 345.00 345KV CKT 1	720	720	0.03824	108.3935	FT RANDAL - FT THOMPSON 230KV CKT 1
FDNS	00NR	5	17SP	G15_076	FROM->TO	GRPRAR1-LNX3345.00 - HOLT.CO3 345.00 345KV CKT 1	720	720	0.04284	108.3788	GEN659407 1-ANTELPHILLSW0.6900
FDNS	00NR	5	20SP	G15_076	FROM->TO	GRPRAR1-LNX3345.00 - HOLT.CO3 345.00 345KV CKT 1	720	720	0.04123	108.2945	GEN336821 1-GRAND GULF UNIT
FDNS	00NR	5	20SP	G15_076	FROM->TO	GRPRAR1-LNX3345.00 - HOLT.CO3 345.00 345KV CKT 1	720	720	0.04123	108.2761	GEN635024 4-WALTER SCOTT UNIT 4
FDNS	00NR	5	20SP	G15_076	FROM->TO	GRPRAR1-LNX3345.00 - HOLT.CO3 345.00 345KV CKT 1	720	720	0.04633	108.266	FT RANDAL - MEADOWGROVE4230.00 230KV CKT 1
FDNS	00NR	5	20SP	G15_076	FROM->TO	GRPRAR1-LNX3345.00 - HOLT.CO3 345.00 345KV CKT 1	720	720	0.04123	108.256	CENTER - JAMESTOWN 345KV CKT 1
FDNS	00NR	5	17SP	G15_076	FROM->TO	GRPRAR1-LNX3345.00 - HOLT.CO3 345.00 345KV CKT 1	720	720	0.04284	108.1988	GEN600005 1-MONTICELLO
FDNS	00NR	5	20SP	G15_076	FROM->TO	GRPRAR1-LNX3345.00 - HOLT.CO3 345.00 345KV CKT 1	720	720	0.03923	108.1917	SPLIT ROCK - WHITE 345KV CKT 1
FDNS	00NR	5	20SP	G15_076	FROM->TO	GRPRAR1-LNX3345.00 - HOLT.CO3 345.00 345KV CKT 1	720	720	0.03923	108.1917	SPLIT ROCK - WHITE 345KV CKT 1
FDNS	00NR	5	20SP	G15_076	FROM->TO	GRPRAR1-LNX3345.00 - HOLT.CO3 345.00 345KV CKT 1	720	720	0.03831	108.0227	G12_009IST 230.00 - LAKE PLATT 230KV CKT 1
FDNS	00NR	5	20SP	G15_076	FROM->TO	GRPRAR1-LNX3345.00 - HOLT.CO3 345.00 345KV CKT 1	720	720	0.04126	107.9942	CHISAGO COUNTY - CHISAGO COUNTY 500KV CKT 1
FDNS	00NR	5	20SP	G15_076	FROM->TO	GRPRAR1-LNX3345.00 - HOLT.CO3 345.00 345KV CKT 1	720	720	0.04126	107.9716	CHISAGO COUNTY - FORBES 500KV CKT 1
FDNS	00NR	5	20SP	G15_076	FROM->TO	GRPRAR1-LNX3345.00 - HOLT.CO3 345.00 345KV CKT 1	720	720	0.04124	107.8605	BISON 3 345.00 - BUFFALO 345KV CKT 1
FDNS	00NR	5	20SP	G15_076	FROM->TO	GRPRAR1-LNX3345.00 - HOLT.CO3 345.00 345KV CKT 1	720	720	0.04003	107.7933	LETCHER - SIOUX FALLS 230KV CKT 1
FDNS	00NR	5	20SP	G15_076	FROM->TO	GRPRAR1-LNX3345.00 - HOLT.CO3 345.00 345KV CKT 1	720	720	0.04123	107.7884	GEN635023 3-WALTER SCOTT UNIT 3
FDNS	00NR	5	20SP	G15_076	FROM->TO	GRPRAR1-LNX3345.00 - HOLT.CO3 345.00 345KV CKT 1	720	720	0.04123	107.757	GEN562714 1-G15_023_4 0.6900
FDNS	00NR	5	20SP	G15_076	FROM->TO	GRPRAR1-LNX3345.00 - HOLT.CO3 345.00 345KV CKT 1	720	720	0.04123	107.757	GEN562715 1-G15_023_5 0.6900
FDNS	00NR	5	20SP	G15_076	FROM->TO	GRPRAR1-LNX3345.00 - HOLT.CO3 345.00 345KV CKT 1	720	720	0.04123	107.7366	GEN344225 1-1CAL G1 25.000
FDNS	00NR	5	20SP	G15_076	FROM->TO	GRPRAR1-LNX3345.00 - HOLT.CO3 345.00 345KV CKT 1	720	720	0.04123	107.6529	GEN337911 1-ARKANSAS NUCLEAR ONE UNIT #2
FDNS	00NR	5	25SP	G15_076	FROM->TO	GRPRAR1-LNX3345.00 - HOLT.CO3 345.00 345KV CKT 1	720	720	0.03863	107.6433	FT RANDAL - G12_009IST 230.00 230KV CKT 1
FDNS	00NR	5	25SP	G15_076	FROM->TO	GRPRAR1-LNX3345.00 - HOLT.CO3 345.00 345KV CKT 1	720	720	0.04094	107.6378	WATERTN-LNX3345.00 - WHITE 345KV CKT 1
FDNS	00NR	5	25SP	G15_076	FROM->TO	GRPRAR1-LNX3345.00 - HOLT.CO3 345.00 345KV CKT 1	720	720	0.04154	107.6324	CENTER - JAMESTOWN 345KV CKT 1
FDNS	00NR	5	20SP	G15_076	FROM->TO	GRPRAR1-LNX3345.00 - HOLT.CO3 345.00 345KV CKT 1	720	720	0.04235	107.6256	MISSION - ST FRANCIS 115KV CKT 1
FDNS	00NR	5	20SP	G15_076	FROM->TO	GRPRAR1-LNX3345.00 - HOLT.CO3 345.00 345KV CKT 1	720	720	0.04123	107.6251	GEN336153 1-WATERFORD UNIT#3
FDNS	00NR	5	20SP	G15_076	FROM->TO	GRPRAR1-LNX3345.00 - HOLT.CO3 345.00 345KV CKT 1	720	720	0.04235	107.5987	P12:115:NPPD:1091:VALENTN7:MISSION7:BTB
FDNS	00NR	5	25SP	G15_076	FROM->TO	GRPRAR1-LNX3345.00 - HOLT.CO3 345.00 345KV CKT 1	720	720	0.03863	107.5776	FT THOMPSON - LAKE PLATT 230KV CKT 1
FDNS	00NR	5	25SP	G15_076	FROM->TO	GRPRAR1-LNX3345.00 - HOLT.CO3 345.00 345KV CKT 1	720	720	0.03863	107.5776	FT THOMPSON - LAKE PLATT 230KV CKT 1
FDNS	00NR	5	25SP	G15_076	FROM->TO	GRPRAR1-LNX3345.00 - HOLT.CO3 345.00 345KV CKT 1	720	720	0.03856	107.565	FT RANDAL - FT THOMPSON 230KV CKT 1
FDNS	00NR	5	25SP	G15_076	FROM->TO	GRPRAR1-LNX3345.00 - HOLT.CO3 345.00 345KV CKT 1	720	720	0.03856	107.565	FT RANDAL - FT THOMPSON 230KV CKT 1
FDNS	00NR	5	20SP	G15_076	FROM->TO	GRPRAR1-LNX3345.00 - HOLT.CO3 345.00 345KV CKT 1	720	720	0.04227	107.5615	SIDNEY - SIDNEY1-LNX3345.00 345KV CKT Z
FDNS	00NR	5	17SP	G15_076	FROM->TO	GRPRAR1-LNX3345.00 - HOLT.CO3 345.00 345KV CKT 1	720	720	0.04284	107.5491	GEN600000 1-SHERBURNECNTY G1
FDNS	00NR	5	20SP	G15_076	FROM->TO	GRPRAR1-LNX3345.00 - HOLT.CO3 345.00 345KV CKT 1	720	720	0.04227	107.539	KEYSTONE - SIDNEY1-LNX3345.00 345KV CKT 1
FDNS	00NR	5	25SP	G15_076	FROM->TO	GRPRAR1-LNX3345.00 - HOLT.CO3 345.00 345KV CKT 1	720	720	0.04094	107.5357	WATERTN-LNX3345.00 - WATERTOWN 345KV CKT Z
FDNS	00NR	5	25SP	G15_076	FROM->TO	GRPRAR1-LNX3345.00 - HOLT.CO3 345.00 345KV CKT 1	720	720	0.04094	107.5269	P12:345:UMZW:# 1747 #: WT2 IN SD. WT2-WHT LINE FAULT

SOLUTION	GROUP	SCENARIO	SEASON	SOURCE	DIRECTION	MONITORED ELEMENT	RATEA (MVA)	RATEB(MVA)	TDF	TC%LOADING (% MVA)	CONTINGENCY
FDNS	00NR	5	20SP	G15_076	FROM->TO	GRPRAR1-LNX3345.00 - HOLT.CO3 345.00 345KV CKT 1	720	720	0.04933	107.4524	NUNDRWD - WAYSIDE 230KV CKT 1
FDNS	00NR	5	20SP	G15_076	FROM->TO	GRPRAR1-LNX3345.00 - HOLT.CO3 345.00 345KV CKT 1	720	720	0.04235	107.4518	HARMONY - ST FRANCIS 115KV CKT 1
FDNS	00NR	5	20SP	G15_076	FROM->TO	GRPRAR1-LNX3345.00 - HOLT.CO3 345.00 345KV CKT 1	720	720	0.04098	107.438	G09_001IST 345.00 - GROTON 345KV CKT 1
FDNS	00NR	5	25SP	G15_076	FROM->TO	GRPRAR1-LNX3345.00 - HOLT.CO3 345.00 345KV CKT 1	720	720	0.04668	107.3745	FT RANDAL - MEADOWGROVE4230.00 230KV CKT 1
FDNS	00NR	5	20SP	G15_076	FROM->TO	GRPRAR1-LNX3345.00 - HOLT.CO3 345.00 345KV CKT 1	720	720	0.04123	107.3134	GEN640010 1-GERALD GENTLEMAN STATION UNIT 1
FDNS	00NR	5	25SP	G15_076	FROM->TO	GRPRAR1-LNX3345.00 - HOLT.CO3 345.00 345KV CKT 1	720	720	0.04155	107.3092	GEN635024 4-WALTER SCOTT UNIT 4
FDNS	00NR	5	20SP	G15_076	FROM->TO	GRPRAR1-LNX3345.00 - HOLT.CO3 345.00 345KV CKT 1	720	720	0.0403	107.3061	FT RANDAL - SIOUX CITY 230KV CKT 1
FDNS	00NR	5	20SP	G15_076	FROM->TO	GRPRAR1-LNX3345.00 - HOLT.CO3 345.00 345KV CKT 1	720	720	0.04123	107.28	GEN335831 1-RIVERBEND UNIT#1
FDNS	00NR	5	25SP	G15_076	FROM->TO	GRPRAR1-LNX3345.00 - HOLT.CO3 345.00 345KV CKT 1	720	720	0.04155	107.2514	BISON 3 345.00 - BUFFALO 345KV CKT 1
FDNS	00NR	5	25SP	G15_076	FROM->TO	GRPRAR1-LNX3345.00 - HOLT.CO3 345.00 345KV CKT 1	720	720	0.04155	107.2449	GEN336821 1-GRAND GULF UNIT
FDNS	00NR	5	25SP	G15_076	FROM->TO	GRPRAR1-LNX3345.00 - HOLT.CO3 345.00 345KV CKT 1	720	720	0.04157	107.2413	CHISAGO COUNTY - CHISAGO COUNTY 500KV CKT 1
FDNS	00NR	5	20SP	G15_076	FROM->TO	GRPRAR1-LNX3345.00 - HOLT.CO3 345.00 345KV CKT 1	720	720	0.04123	107.2219	GEN640011 2-GERALD GENTLEMAN STATION UNIT 2
FDNS	00NR	5	25SP	G15_076	FROM->TO	GRPRAR1-LNX3345.00 - HOLT.CO3 345.00 345KV CKT 1	720	720	0.04155	107.2072	GEN640010 1-GERALD GENTLEMAN STATION UNIT 1
FDNS	00NR	5	17SP	G15_076	FROM->TO	GRPRAR1-LNX3345.00 - HOLT.CO3 345.00 345KV CKT 1	720	720	0.04284	107.1955	GEN600001 2-SHERBURNE CNTY G2
FDNS	00NR	5	25SP	G15_076	FROM->TO	GRPRAR1-LNX3345.00 - HOLT.CO3 345.00 345KV CKT 1	720	720	0.03955	107.1921	SPLIT ROCK - WHITE 345KV CKT 1
FDNS	00NR	5	25SP	G15_076	FROM->TO	GRPRAR1-LNX3345.00 - HOLT.CO3 345.00 345KV CKT 1	720	720	0.03955	107.1921	SPLIT ROCK - WHITE 345KV CKT 1
FDNS	00NR	5	20SP	G15_076	FROM->TO	GRPRAR1-LNX3345.00 - HOLT.CO3 345.00 345KV CKT 1	720	720	0.04235	107.1914	HARMONY - VALENTINE 115KV CKT 1
FDNS	00NR	5	25SP	G15_076	FROM->TO	GRPRAR1-LNX3345.00 - HOLT.CO3 345.00 345KV CKT 1	720	720	0.04157	107.1897	CHISAGO COUNTY - FORBES 500KV CKT 1
FDNS	00NR	5	20SP	G15_076	FROM->TO	GRPRAR1-LNX3345.00 - HOLT.CO3 345.00 345KV CKT 1	720	720	0.04123	107.1847	GEN337910 1-ARKANSAS NUCLEAR ONE UNIT #1
FDNS	00NR	5	25SP	G15_076	FROM->TO	GRPRAR1-LNX3345.00 - HOLT.CO3 345.00 345KV CKT 1	720	720	0.03863	107.1837	G12_009IST 230.00 - LAKE PLATT 230KV CKT 1
FDNS	00NR	5	20SP	G15_076	FROM->TO	GRPRAR1-LNX3345.00 - HOLT.CO3 345.00 345KV CKT 1	720	720	0.04334	107.0666	FT RANDAL - SPENCER 115KV CKT 1
FDNS	00NR	5	20SP	G15_076	FROM->TO	GRPRAR1-LNX3345.00 - HOLT.CO3 345.00 345KV CKT 1	720	720	0.04334	107.0332	P12:115:NPPD:WAPA6:FTRANDL7:ONEILL 7:BTB
FDNS	00NR	5	20SP	G15_076	FROM->TO	GRPRAR1-LNX3345.00 - HOLT.CO3 345.00 345KV CKT 1	720	720	0.04334	107.0332	P12:115:UMZB:# 115 #: SE IN NE. FR-SE-ON
FDNS	00NR	5	20SP	G15_076	FROM->TO	GRPRAR1-LNX3345.00 - HOLT.CO3 345.00 345KV CKT 1	720	720	0.03772	107.0039	SIOUXCY-LNX3345.00 - SPLIT ROCK 345KV CKT 1
FDNS	00NR	5	20SP	G15_076	FROM->TO	GRPRAR1-LNX3345.00 - HOLT.CO3 345.00 345KV CKT 1	720	720	0.03772	107.0039	SIOUXCY-LNX3345.00 - SPLIT ROCK 345KV CKT 1
FDNS	00NR	5	25SP	G15_076	FROM->TO	GRPRAR1-LNX3345.00 - HOLT.CO3 345.00 345KV CKT 1	720	720	0.04155	106.992	GEN562714 1-G15_023_4 0.6900
FDNS	00NR	5	25SP	G15_076	FROM->TO	GRPRAR1-LNX3345.00 - HOLT.CO3 345.00 345KV CKT 1	720	720	0.04155	106.992	GEN562715 1-G15_023_5 0.6900
FDNS	00NR	5	25SP	G15_076	FROM->TO	GRPRAR1-LNX3345.00 - HOLT.CO3 345.00 345KV CKT 1	720	720	0.04034	106.9701	LETCHER - SIOUX FALLS 230KV CKT 1
FDNS	00NR	5	20SP	G15_076	FROM->TO	GRPRAR1-LNX3345.00 - HOLT.CO3 345.00 345KV CKT 1	720	720	0.03772	106.9671	P12:345:UMZW:# 907 #: SC2-SR IN IA. SC2-SR 345 KV LINE
FDNS	00NR	5	20SP	G15_076	FROM->TO	GRPRAR1-LNX3345.00 - HOLT.CO3 345.00 345KV CKT 1	720	720	0.03772	106.9334	SIOUX CITY - SIOUXCY-LNX3345.00 345KV CKT Z
FDNS	00NR	5	20SP	G15_076	FROM->TO	GRPRAR1-LNX3345.00 - HOLT.CO3 345.00 345KV CKT 1	720	720	0.04095	106.9176	GROTON-LNX3 345.00 - LELAND1-LNX3345.00 345KV CKT 1
FDNS	00NR	5	20SP	G15_076	FROM->TO	GRPRAR1-LNX3345.00 - HOLT.CO3 345.00 345KV CKT 1	720	720	0.04334	106.9142	ONEILL - SPENCER 115KV CKT 1
FDNS	00NR	5	25SP	G15_076	FROM->TO	GRPRAR1-LNX3345.00 - HOLT.CO3 345.00 345KV CKT 1	720	720	0.04266	106.9097	MISSION - ST FRANCIS 115KV CKT 1
FDNS	00NR	5	25SP	G15_076	FROM->TO	GRPRAR1-LNX3345.00 - HOLT.CO3 345.00 345KV CKT 1	720	720	0.04155	106.8982	GEN640011 2-GERALD GENTLEMAN STATION UNIT 2
FDNS	00NR	5	20SP	G15_076	FROM->TO	GRPRAR1-LNX3345.00 - HOLT.CO3 345.00 345KV CKT 1	720	720	0.04095	106.873	GROTON - GROTON-LNX3 345.00 345KV CKT Z
FDNS	00NR	5	20SP	G15_076	FROM->TO	GRPRAR1-LNX3345.00 - HOLT.CO3 345.00 345KV CKT 1	720	720	0.04095	106.8649	LELAND OLDS - LELAND1-LNX3345.00 345KV CKT Z
FDNS	00NR	5	20SP	G15_076	FROM->TO	GRPRAR1-LNX3345.00 - HOLT.CO3 345.00 345KV CKT 1	720	720	0.04095	106.86	P12:345:UMZB:# 109 #: LOS GRT IN ND. LOS GRT
FDNS	00NR	5	25SP	G15_076	FROM->TO	GRPRAR1-LNX3345.00 - HOLT.CO3 345.00 345KV CKT 1	720	720	0.04155	106.8469	GEN635023 3-WALTER SCOTT UNIT 3
FDNS	00NR	5	20SP	G15_076	FROM->TO	GRPRAR1-LNX3345.00 - HOLT.CO3 345.00 345KV CKT 1	720	720	0.0373	106.846	FT RANDAL - UTICA JCT 230KV CKT 1
FDNS	00NR	5	20SP	G15_076	FROM->TO	GRPRAR1-LNX3345.00 - HOLT.CO3 345.00 345KV CKT 1	720	720	0.04044	106.824	HANLON - SIOUX FALLS 230KV CKT 1
FDNS	00NR	5	25SP	G15_076	FROM->TO	GRPRAR1-LNX3345.00 - HOLT.CO3 345.00 345KV CKT 1	720	720	0.04258	106.8019	KEYSTONE - SIDNEY1-LNX3345.00 345KV CKT 1
FDNS	00NR	5	25SP	G15_076	FROM->TO	GRPRAR1-LNX3345.00 - HOLT.CO3 345.00 345KV CKT 1	720	720	0.04258	106.8013	SIDNEY - SIDNEY1-LNX3345.00 345KV CKT Z
FDNS	00NR	5	25SP	G15_076	FROM->TO	GRPRAR1-LNX3345.00 - HOLT.CO3 345.00 345KV CKT 1	720	720	0.04155	106.8	GEN337911 1-ARKANSAS NUCLEAR ONE UNIT #2
FDNS	00NR	5	20SP	G15_076	FROM->TO	GRPRAR1-LNX3345.00 - HOLT.CO3 345.00 345KV CKT 1	720	720	0.04157	106.7278	GERALD GENTLEMAN STATION - KEYSTONE 345KV CKT 1
FDNS	00NR	5	25SP	G15_076	FROM->TO	GRPRAR1-LNX3345.00 - HOLT.CO3 345.00 345KV CKT 1	720	720	0.04266	106.7191	HARMONY - ST FRANCIS 115KV CKT 1
FDNS	00NR	5	17SP	G15_076	FROM->TO	GRPRAR1-LNX3345.00 - HOLT.CO3 345.00 345KV CKT 1	720	720	0.04284	106.716	GEN620315 1-BIG STONE GEN
FDNS	00NR	5	25SP	G15_076	FROM->TO	GRPRAR1-LNX3345.00 - HOLT.CO3 345.00 345KV CKT 1	720	720	0.04155	106.7122	GEN344225 1-1CAL G1 25.000
FDNS	00NR	5	20SP	G15_076	FROM->TO	GRPRAR1-LNX3345.00 - HOLT.CO3 345.00 345KV CKT 1	720	720	0.04123	106.6956	GEN337653 1-WHITE BLUFF UNIT #2
FDNS	00NR	5	20SP	G15_076	FROM->TO	GRPRAR1-LNX3345.00 - HOLT.CO3 345.00 345KV CKT 1	720	720	0.04251	106.6942	LAKEFIELD 3 - NOBLES 345KV CKT 1
FDNS	00NR	5	17SP	G15_076	FROM->TO	GRPRAR1-LNX3345.00 - HOLT.CO3 345.00 345KV CKT 1	720	720	0.04284	106.6876	GEN661015 1-COYOTE
FDNS	00NR	5	20SP	G15_076	FROM->TO	GRPRAR1-LNX3345.00 - HOLT.CO3 345.00 345KV CKT 1	720	720	0.05369	106.6855	DIXONCO 230.00 - HOSKINS 230KV CKT 1
FDNS	00NR	5	25SP	G15_076	FROM->TO	GRPRAR1-LNX3345.00 - HOLT.CO3 345.00 345KV CKT 1	720	720	0.0413	106.6821	G09_001IST 345.00 - GROTON 345KV CKT 1
FDNS	00NR	5	20SP	G15_076	FROM->TO	GRPRAR1-LNX3345.00 - HOLT.CO3 345.00 345KV CKT 1	720	720	0.04123	106.643	GEN337652 1-WHITE BLUFF UNIT #1
FDNS	00NR	5	20SP	G15_076	FROM->TO	GRPRAR1-LNX3345.00 - HOLT.CO3 345.00 345KV CKT 1	720	720	0.04062	106.6322	PAHOJA - SIOUX FALLS 230KV CKT 1
FDNS	00NR	5	20SP	G15_076	FROM->TO	GRPRAR1-LNX3345.00 - HOLT.CO3 345.00 345KV CKT 1	720	720	0.04235	106.6261	AINSWORTH - VALENTINE 115KV CKT 1
FDNS	00NR	5	20SP	G15_076	FROM->TO	GRPRAR1-LNX3345.00 - HOLT.CO3 345.00 345KV CKT 1	720	720	0.04272	106.626	SIDNEY - STEGALL 345KV CKT 1
FDNS	00NR	5	25SP	G15_076	FROM->TO	GRPRAR1-LNX3345.00 - HOLT.CO3 345.00 345KV CKT 1	720	720	0.04155	106.622	GEN336153 1-WATERFORD UNIT#3
FDNS	00NR	5	20SP	G15_076	FROM->TO	GRPRAR1-LNX3345.00 - HOLT.CO3 345.00 345KV CKT 1	720	720	0.04149	106.6167	ARROWHEAD - ARROWHEAD 230 230KV CKT 1
FDNS	00NR	5	25SP	G15_076	FROM->TO	GRPRAR1-LNX3345.00 - HOLT.CO3 345.00 345KV CKT 1	720	720	0.04961	106.5997	NUNDRWD - WAYSIDE 230KV CKT 1
FDNS	00NR	5	20SP	G15_076	FROM->TO	GRPRAR1-LNX3345.00 - HOLT.CO3 345.00 345KV CKT 1	720	720	0.04123	106.588	GEN338146 1-INDEPENDENCE UNIT #2
FDNS	00NR	5	20SP	G15_076	FROM->TO	GRPRAR1-LNX3345.00 - HOLT.CO3 345.00 345KV CKT 1	720	720	0.04123	106.5845	GEN338143 1-INDEPENDENCE UNIT #1
FDNS	00NR	5	20SP	G15_076	FROM->TO	GRPRAR1-LNX3345.00 - HOLT.CO3 345.00 345KV CKT 1	720	720	0.04556	106.5816	RAUN - SUB 3451 FT CAL 345KV CKT 1
FDNS	00NR	5	20SP	G15_076	FROM->TO	GRPRAR1-LNX3345.00 - HOLT.CO3 345.00 345KV CKT 1	720	720	0.04556	106.5816	RAUN - SUB 3451 FT CAL 345KV CKT 1
FDNS	00NR	5	20SP	G15_076	FROM->TO	GRPRAR1-LNX3345.00 - HOLT.CO3 345.00 345KV CKT 1	720	720	0.04123	106.5617	GEN501801 1-DOLET HILLS UNIT1
FDNS	00NR	5	20SP	G15_076	FROM->TO	GRPRAR1-LNX3345.00 - HOLT.CO3 345.00 345KV CKT 1	720	720	0.04131	106.5287	ALEXMRES3 345.00 - BISON 3 345.00 345KV CKT 1
FDNS	00NR	5	20SP	G15_076	FROM->TO	GRPRAR1-LNX3345.00 - HOLT.CO3 345.00 345KV CKT 1	720	720	0.04166	106.5243	BROOKING COUNTY - LYON COUNTY 345KV CKT 1
FDNS	00NR	5	17SP	G15_076	FROM->TO	GRPRAR1-LNX3345.00 - HOLT.CO3 345.00 345KV CKT 1	720	720	0.04284	106.5052	GEN600002 3-SHERBURNE CNTY G3
FDNS	00NR	5	20SP	G15_076	FROM->TO	GRPRAR1-LNX3345.00 - HOLT.CO3 345.00 345KV CKT 1	720	720	0.04153	106.4497	AS KING - EAU CLAIRE 345KV CKT 1
FDNS	00NR	5	25SP	G15_076	FROM->TO	GRPRAR1-LNX3345.00 - HOLT.CO3 345.00 345KV CKT 1	720	720	0.04061	106.445	FT RANDAL - SIOUX CITY 230KV CKT 1
FDNS	00NR	5	20SP	G15_076	FROM->TO	GRPRAR1-LNX3345.00 - HOLT.CO3 345.00 345KV CKT 1	720	720	0.04123	106.4233	GEN336252 1-NINEMILE POINT UNIT#5
FDNS	00NR	5	20SP	G15_076	FROM->TO	GRPRAR1-LNX3345.00 - HOLT.CO3 345.00 345KV CKT 1	720	720	0.04116	106.4119	CARPENTER - HURON 230KV CKT 1
FDNS	00NR	5	25SP	G15_076	FROM->TO	GRPRAR1-LNX3345.00 - HOLT.CO3 345.00 345KV CKT 1	720	720	0.04365	106.3662	FT RANDAL - SPENCER 115KV CKT 1
FDNS	00NR	5	20SP	G15_076	FROM->TO	GRPRAR1-LNX3345.00 - HOLT.CO3 345.00 345KV CKT 1	720	720	0.04123	106.3431	GEN336251 1-NINEMILE POINT UNIT#4
FDNS	00NR	5	25SP	G15_076	FROM->TO	GRPRAR1-LNX3345.00 - HOLT.CO3 345.00 345KV CKT 1	720	720	0.04365	106.3368	P12:115:NPPD:WAPA6:FTRANDL7:ONEILL 7:BTB
FDNS	00NR	5	25SP	G15_076	FROM->TO	GRPRAR1-LNX3345.00 - HOLT.CO3 345.00 345KV CKT 1	720	720	0.04365	106.3368	P12:115:UMZB:# 115 #: SE IN NE. FR-SE-ON
FDNS	00NR	5	20SP	G15_076	FROM->TO	GRPRAR1-LNX3345.00 - HOLT.CO3 345.00 345KV CKT 1	720	720	0.04123	106.3249	GEN336831 1-BAXTER WILSON SES
FDNS	00NR	5	20SP	G15_076	FROM->TO	GRPRAR1-LNX3345.00 - HOLT.CO3 345.00 345KV CKT 1	720	720	0.03715	106.3097	RASMUSN - UTICA JCT 230KV CKT 1
FDNS	00NR	5	20SP	G15_076	FROM->TO	GRPRAR1-LNX3345.00 - HOLT.CO3 345.00 345KV CKT 1	720	720	0.04116	106.3074	HURON - WATERTOWN 230KV CKT 2
FDNS	00NR	5	20SP	G15_076	FROM->TO	GRPRAR1-LNX3345.00 - HOLT.CO3 345.00 345KV CKT 1	720	720	0.04116	106.3074	HURON - WATERTOWN 230KV CKT 2

SOLUTION	GROUP	SCENARIO	SEASON	SOURCE	DIRECTION	MONITORED ELEMENT	RATEA (MVA)	RATEB(MVA)	TDF	TC%LOADING (% MVA)	CONTINGENCY
FDNS	00NR	5	25SP	G15_076	FROM->TO	GRPRAR1-LNX3345.00 - HOLT.CO3 345.00 345KV CKT 1	720	720	0.04155	106.3016	GEN335831 1-RIVERBEND UNIT#1
FDNS	00NR	5	20SP	G15_076	FROM->TO	GRPRAR1-LNX3345.00 - HOLT.CO3 345.00 345KV CKT 1	720	720	0.04123	106.2718	GEN337041 1-GERALD ANDRUS
FDNS	00NR	5	20SP	G15_076	FROM->TO	GRPRAR1-LNX3345.00 - HOLT.CO3 345.00 345KV CKT 1	720	720	0.04116	106.2658	CARPENTER - WATERTOWN 230KV CKT 1
FDNS	00NR	5	20SP	G15_076	FROM->TO	GRPRAR1-LNX3345.00 - HOLT.CO3 345.00 345KV CKT 1	720	720	0.04116	106.2658	CARPENTER - WATERTOWN 230KV CKT 1
FDNS	00NR	5	20SP	G15_076	FROM->TO	GRPRAR1-LNX3345.00 - HOLT.CO3 345.00 345KV CKT 1	720	720	0.04123	106.2393	GEN501813 1-RODEMACHER UNIT 3
FDNS	00NR	5	17SP	G15_076	FROM->TO	GRPRAR1-LNX3345.00 - HOLT.CO3 345.00 345KV CKT 1	720	720	0.04284	106.2382	GEN657748 1-YOUNG 2 GENERATOR
FDNS	00NR	5	20SP	G15_076	FROM->TO	GRPRAR1-LNX3345.00 - HOLT.CO3 345.00 345KV CKT 1	720	720	0.04187	106.2373	HAZLETON - MITCHLCO3 345.00 345KV CKT 1
FDNS	00NR	5	25SP	G15_076	FROM->TO	GRPRAR1-LNX3345.00 - HOLT.CO3 345.00 345KV CKT 1	720	720	0.04365	106.2146	ONEILL - SPENCER 115KV CKT 1
FDNS	00NR	5	20SP	G15_076	FROM->TO	GRPRAR1-LNX3345.00 - HOLT.CO3 345.00 345KV CKT 1	720	720	0.04062	106.2101	EAGLE 4 230.00 - PAHOJA 230KV CKT 1
FDNS	00NR	5	25SP	G15_076	FROM->TO	GRPRAR1-LNX3345.00 - HOLT.CO3 345.00 345KV CKT 1	720	720	0.04127	106.1861	GROTON-LNX3 345.00 - LELAND1-LNX3345.00 345KV CKT 1
FDNS	00NR	5	20SP	G15_076	FROM->TO	GRPRAR1-LNX3345.00 - HOLT.CO3 345.00 345KV CKT 1	720	720	0.04125	106.18	CNTSHNT3 345.00 - PRAIRIE3 345.00 345KV CKT 1
FDNS	00NR	5	20SP	G15_076	FROM->TO	GRPRAR1-LNX3345.00 - HOLT.CO3 345.00 345KV CKT 1	720	720	0.04152	106.1768	G15094_T 345.00 - SIDNEY2-LNX3345.00 345KV CKT 1
FDNS	00NR	5	20SP	G15_076	FROM->TO	GRPRAR1-LNX3345.00 - HOLT.CO3 345.00 345KV CKT 1	720	720	0.04152	106.1714	SIDNEY - SIDNEY2-LNX3345.00 345KV CKT Z
FDNS	00NR	5	25SP	G15_076	FROM->TO	GRPRAR1-LNX3345.00 - HOLT.CO3 345.00 345KV CKT 1	720	720	0.04127	106.1404	GROTON - GROTON-LNX3 345.00 345KV CKT Z
FDNS	00NR	5	25SP	G15_076	FROM->TO	GRPRAR1-LNX3345.00 - HOLT.CO3 345.00 345KV CKT 1	720	720	0.04127	106.1389	P12:345:UMZB:# 109 #: LOS GRT IN ND. LOS GRT
FDNS	00NR	5	25SP	G15_076	FROM->TO	GRPRAR1-LNX3345.00 - HOLT.CO3 345.00 345KV CKT 1	720	720	0.04127	106.1324	LELAND OLDS - LELAND1-LNX3345.00 345KV CKT Z
FDNS	00NR	5	25SP	G15_076	FROM->TO	GRPRAR1-LNX3345.00 - HOLT.CO3 345.00 345KV CKT 1	720	720	0.03805	106.1029	SIOUXCY-LNX3345.00 - SPLIT ROCK 345KV CKT 1
FDNS	00NR	5	25SP	G15_076	FROM->TO	GRPRAR1-LNX3345.00 - HOLT.CO3 345.00 345KV CKT 1	720	720	0.03805	106.1029	SIOUXCY-LNX3345.00 - SPLIT ROCK 345KV CKT 1
FDNS	00NR	5	20SP	G15_076	FROM->TO	GRPRAR1-LNX3345.00 - HOLT.CO3 345.00 345KV CKT 1	720	720	0.04123	106.0925	GEN635214 4-NEAL UNIT 4
FDNS	00NR	5	20SP	G15_076	FROM->TO	GRPRAR1-LNX3345.00 - HOLT.CO3 345.00 345KV CKT 1	720	720	0.04123	106.0708	GEN335206 1-NELSON UNIT 6
FDNS	00NR	5	25SP	G15_076	FROM->TO	GRPRAR1-LNX3345.00 - HOLT.CO3 345.00 345KV CKT 1	720	720	0.03761	106.0686	FT RANDAL - UTICA JCT 230KV CKT 1
FDNS	00NR	5	25SP	G15_076	FROM->TO	GRPRAR1-LNX3345.00 - HOLT.CO3 345.00 345KV CKT 1	720	720	0.03805	106.066	P12:345:UMZW:# 907 #: SC2-SR IN IA. SC2-SR 345 KV LINE
FDNS	00NR	5	25SP	G15_076	FROM->TO	GRPRAR1-LNX3345.00 - HOLT.CO3 345.00 345KV CKT 1	720	720	0.03805	106.0361	SIOUX CITY - SIOUXCY-LNX3345.00 345KV CKT Z
FDNS	00NR	5	20SP	G15_076	FROM->TO	GRPRAR1-LNX3345.00 - HOLT.CO3 345.00 345KV CKT 1	720	720	0.04123	106.0349	GEN344897 4-1LAB G4 20.000
FDNS	00NR	5	20SP	G15_076	FROM->TO	GRPRAR1-LNX3345.00 - HOLT.CO3 345.00 345KV CKT 1	720	720	0.04123	106.0335	GEN344894 1-1LAB G1 20.000
FDNS	00NR	5	20SP	G15_076	FROM->TO	GRPRAR1-LNX3345.00 - HOLT.CO3 345.00 345KV CKT 1	720	720	0.04123	106.0335	GEN344895 2-1LAB G2 20.000
FDNS	00NR	5	20SP	G15_076	FROM->TO	GRPRAR1-LNX3345.00 - HOLT.CO3 345.00 345KV CKT 1	720	720	0.04123	106.0333	GEN344896 3-1LAB G3 20.000
FDNS	00NR	5	20SP	G15_076	FROM->TO	GRPRAR1-LNX3345.00 - HOLT.CO3 345.00 345KV CKT 1	720	720	0.04123	106.0274	GEN334440 1-SABINE UNIT 4
FDNS	00NR	5	17SP	G15_076	FROM->TO	GRPRAR1-LNX3345.00 - HOLT.CO3 345.00 345KV CKT 1	720	720	0.04284	106.0255	GEN562872 1-G15046_3 0.6900
FDNS	00NR	5	20SP	G15_076	FROM->TO	GRPRAR1-LNX3345.00 - HOLT.CO3 345.00 345KV CKT 1	720	720	0.04158	106.0038	ARPIN B4 345.00 - EAU CLAIRE 345KV CKT 1
FDNS	00NR	5	20SP	G15_076	FROM->TO	GRPRAR1-LNX3345.00 - HOLT.CO3 345.00 345KV CKT 1	720	720	0.04123	105.9809	GEN345671 2-1RUSH G2 18.000
FDNS	00NR	5	20SP	G15_076	FROM->TO	GRPRAR1-LNX3345.00 - HOLT.CO3 345.00 345KV CKT 1	720	720	0.04123	105.9766	GEN345670 1-1RUSH G1 18.000
FDNS	00NR	5	25SP	G15_076	FROM->TO	GRPRAR1-LNX3345.00 - HOLT.CO3 345.00 345KV CKT 1	720	720	0.04076	105.966	HANLON - SIOUX FALLS 230KV CKT 1
FDNS	00NR	5	25SP	G15_076	FROM->TO	GRPRAR1-LNX3345.00 - HOLT.CO3 345.00 345KV CKT 1	720	720	0.0419	105.9406	GERALD GENTLEMAN STATION - KEYSTONE 345KV CKT 1
FDNS	00NR	5	25SP	G15_076	FROM->TO	GRPRAR1-LNX3345.00 - HOLT.CO3 345.00 345KV CKT 1	720	720	0.04282	105.9403	LAKEFIELD 3 - NOBLES 345KV CKT 1
FDNS	00NR	5	20SP	G15_076	FROM->TO	GRPRAR1-LNX3345.00 - HOLT.CO3 345.00 345KV CKT 1	720	720	0.04123	105.9362	GEN501812 1-RODEMACHER UNIT 2
FDNS	00NR	5	25SP	G15_076	FROM->TO	GRPRAR1-LNX3345.00 - HOLT.CO3 345.00 345KV CKT 1	720	720	0.05401	105.9171	DIXONCO 230.00 - HOSKINS 230KV CKT 1
FDNS	00NR	5	20SP	G15_076	FROM->TO	GRPRAR1-LNX3345.00 - HOLT.CO3 345.00 345KV CKT 1	720	720	0.04123	105.9037	GEN336191 1-LITTLE GYPSY UNIT#3
FDNS	00NR	5	25SP	G15_076	FROM->TO	GRPRAR1-LNX3345.00 - HOLT.CO3 345.00 345KV CKT 1	720	720	0.04155	105.9	GEN338143 1-INDEPENDENCE UNIT #1
FDNS	00NR	5	25SP	G15_076	FROM->TO	GRPRAR1-LNX3345.00 - HOLT.CO3 345.00 345KV CKT 1	720	720	0.04155	105.9	GEN338146 1-INDEPENDENCE UNIT #2
FDNS	00NR	5	20SP	G15_076	FROM->TO	GRPRAR1-LNX3345.00 - HOLT.CO3 345.00 345KV CKT 1	720	720	0.0392	105.8863	FT THOMPSON - WESSINGTON 230KV CKT 1
FDNS	00NR	5	20SP	G15_076	FROM->TO	GRPRAR1-LNX3345.00 - HOLT.CO3 345.00 345KV CKT 1	720	720	0.0392	105.8863	FT THOMPSON - WESSINGTON 230KV CKT 1
FDNS	00NR	5	20SP	G15_076	FROM->TO	GRPRAR1-LNX3345.00 - HOLT.CO3 345.00 345KV CKT 1	720	720	0.04123	105.8809	GEN338388 1-1PLUM PT U1 23.000
FDNS	00NR	5	20SP	G15_076	FROM->TO	GRPRAR1-LNX3345.00 - HOLT.CO3 345.00 345KV CKT 1	720	720	0.04123	105.8803	GEN629075 1-OTTUMWA GENERATOR FOR OTTUMWA UNIT NO 1
FDNS	00NR	5	25SP	G15_076	FROM->TO	GRPRAR1-LNX3345.00 - HOLT.CO3 345.00 345KV CKT 1	720	720	0.04266	105.8385	AINSWORTH - VALENTINE 115KV CKT 1
FDNS	00NR	5	20SP	G15_076	FROM->TO	GRPRAR1-LNX3345.00 - HOLT.CO3 345.00 345KV CKT 1	720	720	0.04123	105.8375	GEN335614 1-WILLOW GLENN UNIT#4
FDNS	00NR	5	25SP	G15_076	FROM->TO	GRPRAR1-LNX3345.00 - HOLT.CO3 345.00 345KV CKT 1	720	720	0.04303	105.8311	SIDNEY - STEGALL 345KV CKT 1
FDNS	00NR	5	20SP	G15_076	FROM->TO	GRPRAR1-LNX3345.00 - HOLT.CO3 345.00 345KV CKT 1	720	720	0.04123	105.8258	GEN336801 1-BAXTER WILSON UNIT #1
FDNS	00NR	5	20SP	G15_076	FROM->TO	GRPRAR1-LNX3345.00 - HOLT.CO3 345.00 345KV CKT 1	720	720	0.04123	105.8224	GEN336464 1-MICHOUD UNIT #3
FDNS	00NR	5	25SP	G15_076	FROM->TO	GRPRAR1-LNX3345.00 - HOLT.CO3 345.00 345KV CKT 1	720	720	0.04198	105.8202	BROOKING COUNTY - LYON COUNTY 345KV CKT 1
FDNS	00NR	5	20SP	G15_076	FROM->TO	GRPRAR1-LNX3345.00 - HOLT.CO3 345.00 345KV CKT 1	720	720	0.04123	105.8114	GEN335204 1-NELSON UNIT 4
FDNS	00NR	5	25SP	G15_076	FROM->TO	GRPRAR1-LNX3345.00 - HOLT.CO3 345.00 345KV CKT 1	720	720	0.04093	105.8093	PAHOJA - SIOUX FALLS 230KV CKT 1
FDNS	00NR	5	20SP	G15_076	FROM->TO	GRPRAR1-LNX3345.00 - HOLT.CO3 345.00 345KV CKT 1	720	720	0.04123	105.8016	GEN334441 1-SABINE UNIT 5
FDNS	00NR	5	25SP	G15_076	FROM->TO	GRPRAR1-LNX3345.00 - HOLT.CO3 345.00 345KV CKT 1	720	720	0.04586	105.7784	RAUN - SUB 3451 FT CAL 345KV CKT 1
FDNS	00NR	5	25SP	G15_076	FROM->TO	GRPRAR1-LNX3345.00 - HOLT.CO3 345.00 345KV CKT 1	720	720	0.04586	105.7784	RAUN - SUB 3451 FT CAL 345KV CKT 1
FDNS	00NR	5	25SP	G15_076	FROM->TO	GRPRAR1-LNX3345.00 - HOLT.CO3 345.00 345KV CKT 1	720	720	0.04163	105.7761	ALEXMRES3 345.00 - BISON 3 345.00 345KV CKT 1
FDNS	00NR	5	20SP	G15_076	FROM->TO	GRPRAR1-LNX3345.00 - HOLT.CO3 345.00 345KV CKT 1	720	720	0.04283	105.776	GRIMES - LEHIGH 345KV CKT 1
FDNS	00NR	5	20SP	G15_076	FROM->TO	GRPRAR1-LNX3345.00 - HOLT.CO3 345.00 345KV CKT 1	720	720	0.04148	105.7749	NORTH LA CROSSE - NORTH ROCHESTER 345KV CKT 1
FDNS	00NR	5	25SP	G15_076	FROM->TO	GRPRAR1-LNX3345.00 - HOLT.CO3 345.00 345KV CKT 1	720	720	0.04155	105.7694	GEN337653 1-WHITE BLUFF UNIT #2
FDNS	00NR	5	25SP	G15_076	FROM->TO	GRPRAR1-LNX3345.00 - HOLT.CO3 345.00 345KV CKT 1	720	720	0.04181	105.7251	ARROWHEAD - ARROWHEAD 230 230KV CKT 1
FDNS	00NR	5	20SP	G15_076	FROM->TO	GRPRAR1-LNX3345.00 - HOLT.CO3 345.00 345KV CKT 1	720	720	0.04188	105.7187	KOSSUTH 3 345.00 - WEBSTER 345KV CKT 1
FDNS	00NR	5	20SP	G15_076	FROM->TO	GRPRAR1-LNX3345.00 - HOLT.CO3 345.00 345KV CKT 1	720	720	0.04123	105.6987	GEN635213 3-NEAL UNIT 3
FDNS	00NR	5	20SP	G15_076	FROM->TO	GRPRAR1-LNX3345.00 - HOLT.CO3 345.00 345KV CKT 1	720	720	0.04123	105.6934	P12:115:UMZW:# 162 #: NEL IN ND. FAULT ON ML-NEL-MX-GA 115 KV
FDNS	00NR	5	17SP	G15_076	FROM->TO	GRPRAR1-LNX3345.00 - HOLT.CO3 345.00 345KV CKT 1	720	720	0.04284	105.6897	GEN659111 2-LELAND OLDS UNIT2
FDNS	00NR	5	20SP	G15_076	FROM->TO	GRPRAR1-LNX3345.00 - HOLT.CO3 345.00 345KV CKT 1	720	720	0.04123	105.6782	GEN563222 1-G15088_3 0.6900
FDNS	00NR	5	20SP	G15_076	FROM->TO	GRPRAR1-LNX3345.00 - HOLT.CO3 345.00 345KV CKT 1	720	720	0.04102	105.6708	BROOKING COUNTY - BSSOUTH3 345.00 345KV CKT 1
FDNS	00NR	5	20SP	G15_076	FROM->TO	GRPRAR1-LNX3345.00 - HOLT.CO3 345.00 345KV CKT 1	720	720	0.04123	105.6674	GEN334433 1-SABINE UNIT 3
FDNS	00NR	5	25SP	G15_076	FROM->TO	GRPRAR1-LNX3345.00 - HOLT.CO3 345.00 345KV CKT 1	720	720	0.04155	105.6656	GEN501801 1-DOLET HILLS UNIT1
FDNS	00NR	5	25SP	G15_076	FROM->TO	GRPRAR1-LNX3345.00 - HOLT.CO3 345.00 345KV CKT 1	720	720	0.04147	105.6445	CARPENTER - HURON 230KV CKT 1
FDNS	00NR	5	20SP	G15_076	FROM->TO	GRPRAR1-LNX3345.00 - HOLT.CO3 345.00 345KV CKT 1	720	720	0.04112	105.6268	HESKETT - WISHEK 230KV CKT 1
FDNS	00NR	5	20SP	G15_076	FROM->TO	GRPRAR1-LNX3345.00 - HOLT.CO3 345.00 345KV CKT 1	720	720	0.04003	105.6221	MENNO JCT - TRIPP JCT 115KV CKT 1
FDNS	00NR	5	20SP	G15_076	FROM->TO	GRPRAR1-LNX3345.00 - HOLT.CO3 345.00 345KV CKT 1	720	720	0.04722	105.6158	BLOOMFIELD - CREIGHTON 115KV CKT 1
FDNS	00NR	5	20SP	G15_076	FROM->TO	GRPRAR1-LNX3345.00 - HOLT.CO3 345.00 345KV CKT 1	720	720	0.04157	105.6142	NMA B3 345 345.00 - NORTH LA CROSSE 345KV CKT 1
FDNS	00NR	5	20SP	G15_076	FROM->TO	GRPRAR1-LNX3345.00 - HOLT.CO3 345.00 345KV CKT 1	720	720	0.04122	105.6103	CENTER - COYOTE 345KV CKT 1
FDNS	00NR	5	20SP	G15_076	FROM->TO	GRPRAR1-LNX3345.00 - HOLT.CO3 345.00 345KV CKT 1	720	720	0.04187	105.6095	ADAMS - MITCHLCO3 345.00 345KV CKT 1
FDNS	00NR	5	20SP	G15_076	FROM->TO	GRPRAR1-LNX3345.00 - HOLT.CO3 345.00 345KV CKT 1	720	720	0.04123	105.5972	GEN336222 1-LITTLE GYPSY UNIT#2
FDNS	00NR	5	25SP	G15_076	FROM->TO	GRPRAR1-LNX3345.00 - HOLT.CO3 345.00 345KV CKT 1	720	720	0.04184	105.5911	AS KING - EAU CLAIRE 345KV CKT 1
FDNS	00NR	5	20SP	G15_076	FROM->TO	GRPRAR1-LNX3345.00 - HOLT.CO3 345.00 345KV CKT 1	720	720	0.04129	105.5758	GLENBORO SOUTH - RUGBY 230KV CKT 1
FDNS	00NR	5	20SP	G15_076	FROM->TO	GRPRAR1-LNX3345.00 - HOLT.CO3 345.00 345KV CKT 1	720	720	0.04123	105.5716	GARRISON - JAMES TOWN 230KV CKT 1

SOLUTION	GROUP	SCENARIO	SEASON	SOURCE	DIRECTION	MONITORED ELEMENT	RATEA (MVA)	RATEB(MVA)	TDF	TC%LOADING (% MVA)	CONTINGENCY
FDNS	00NR	5	25SP	G15_076	FROM->TO	GRPRAR1-LNX3345.00 - HOLT.CO3 345.00 345KV CKT 1	720	720	0.04156	105.5683	CNTSHNT3 345.00 - PRAIRIE3 345.00 345KV CKT 1
FDNS	00NR	5	20SP	G15_076	FROM->TO	GRPRAR1-LNX3345.00 - HOLT.CO3 345.00 345KV CKT 1	720	720	0.04112	105.5606	MERRCRT4 230.00 - WISHEK 230KV CKT 1
FDNS	00NR	5	20SP	G15_076	FROM->TO	GRPRAR1-LNX3345.00 - HOLT.CO3 345.00 345KV CKT 1	720	720	0.04123	105.5479	GEN336152 1-WATERFORD UNIT#2
FDNS	00NR	5	20SP	G15_076	FROM->TO	GRPRAR1-LNX3345.00 - HOLT.CO3 345.00 345KV CKT 1	720	720	0.04123	105.5478	GEN336151 1-WATERFORD UNIT#1
FDNS	00NR	5	25SP	G15_076	FROM->TO	GRPRAR1-LNX3345.00 - HOLT.CO3 345.00 345KV CKT 1	720	720	0.04217	105.5427	HAZLETON - MITCHLCO3 345.00 345KV CKT 1
FDNS	00NR	5	25SP	G15_076	FROM->TO	GRPRAR1-LNX3345.00 - HOLT.CO3 345.00 345KV CKT 1	720	720	0.04147	105.5386	HURON - WATERTOWN 230KV CKT 2
FDNS	00NR	5	25SP	G15_076	FROM->TO	GRPRAR1-LNX3345.00 - HOLT.CO3 345.00 345KV CKT 1	720	720	0.04147	105.5386	HURON - WATERTOWN 230KV CKT 2
FDNS	00NR	5	20SP	G15_076	FROM->TO	GRPRAR1-LNX3345.00 - HOLT.CO3 345.00 345KV CKT 1	720	720	0.04123	105.5317	GEN531447 1-HOLCOMB GENERATOR
FDNS	00NR	5	20SP	G15_076	FROM->TO	GRPRAR1-LNX3345.00 - HOLT.CO3 345.00 345KV CKT 1	720	720	0.04722	105.5255	BLOOMFIELD - GAVINS POINT 115KV CKT 1
FDNS	00NR	5	20SP	G15_076	FROM->TO	GRPRAR1-LNX3345.00 - HOLT.CO3 345.00 345KV CKT 1	720	720	0.04911	105.5152	RAUN - SIOUX CITY 345KV CKT 1
FDNS	00NR	5	20SP	G15_076	FROM->TO	GRPRAR1-LNX3345.00 - HOLT.CO3 345.00 345KV CKT 1	720	720	0.04911	105.5152	RAUN - SIOUX CITY 345KV CKT 1
FDNS	00NR	5	20SP	G15_076	FROM->TO	GRPRAR1-LNX3345.00 - HOLT.CO3 345.00 345KV CKT 1	720	720	0.04123	105.4991	GEN640009 1-COOPER NUCLEAR STATION
FDNS	00NR	5	20SP	G15_076	FROM->TO	GRPRAR1-LNX3345.00 - HOLT.CO3 345.00 345KV CKT 1	720	720	0.04166	105.4982	ADAMS - PLEASANT VALLEY 345KV CKT 1
FDNS	00NR	5	25SP	G15_076	FROM->TO	GRPRAR1-LNX3345.00 - HOLT.CO3 345.00 345KV CKT 1	720	720	0.04147	105.4957	CARPENTER - WATERTOWN 230KV CKT 1
FDNS	00NR	5	25SP	G15_076	FROM->TO	GRPRAR1-LNX3345.00 - HOLT.CO3 345.00 345KV CKT 1	720	720	0.04147	105.4957	CARPENTER - WATERTOWN 230KV CKT 1
FDNS	00NR	5	20SP	G15_076	FROM->TO	GRPRAR1-LNX3345.00 - HOLT.CO3 345.00 345KV CKT 1	720	720	0.04134	105.4947	APPLEDORN 4 230.00 - WATERTOWN 230KV CKT 1
FDNS	00NR	5	20SP	G15_076	FROM->TO	GRPRAR1-LNX3345.00 - HOLT.CO3 345.00 345KV CKT 1	720	720	0.04134	105.4947	APPLEDORN 4 230.00 - WATERTOWN 230KV CKT 1
FDNS	00NR	5	20SP	G15_076	FROM->TO	GRPRAR1-LNX3345.00 - HOLT.CO3 345.00 345KV CKT 1	720	720	0.04003	105.4911	MENNO JCT - UTICA 115KV CKT 1
FDNS	00NR	5	20SP	G15_076	FROM->TO	GRPRAR1-LNX3345.00 - HOLT.CO3 345.00 345KV CKT 1	720	720	0.04114	105.4849	BSSOUTH3 345.00 - ELLENDLMVP3 345.00 345KV CKT 1
FDNS	00NR	5	20SP	G15_076	FROM->TO	GRPRAR1-LNX3345.00 - HOLT.CO3 345.00 345KV CKT 1	720	720	0.04114	105.4849	BSSOUTH3 345.00 - ELLENDLMVP3 345.00 345KV CKT 1
FDNS	00NR	5	20SP	G15_076	FROM->TO	GRPRAR1-LNX3345.00 - HOLT.CO3 345.00 345KV CKT 1	720	720	0.04123	105.4817	GEN303007 1-1BC2 U2
FDNS	00NR	5	20SP	G15_076	FROM->TO	GRPRAR1-LNX3345.00 - HOLT.CO3 345.00 345KV CKT 1	720	720	0.04123	105.4754	GEN303006 1-1BC2 U1
FDNS	00NR	5	20SP	G15_076	FROM->TO	GRPRAR1-LNX3345.00 - HOLT.CO3 345.00 345KV CKT 1	720	720	0.04114	105.4633	ELLENDLMVP3 345.00 (1) 345/230/34.5KV TRANSFORMER CKT 1
FDNS	00NR	5	25SP	G15_076	FROM->TO	GRPRAR1-LNX3345.00 - HOLT.CO3 345.00 345KV CKT 1	720	720	0.04155	105.4583	GEN336251 1-NINEMILE POINT UNIT#4
FDNS	00NR	5	20SP	G15_076	FROM->TO	GRPRAR1-LNX3345.00 - HOLT.CO3 345.00 345KV CKT 1	720	720	0.04136	105.457	ARKANSAS NUCLEAR ONE - FT SMITH 500KV CKT 1
FDNS	00NR	5	20SP	G15_076	FROM->TO	GRPRAR1-LNX3345.00 - HOLT.CO3 345.00 345KV CKT 1	720	720	0.04136	105.457	ARKANSAS NUCLEAR ONE - FT SMITH 500KV CKT 1
FDNS	00NR	5	20SP	G15_076	FROM->TO	GRPRAR1-LNX3345.00 - HOLT.CO3 345.00 345KV CKT 1	720	720	0.04136	105.4537	ALEXMRES3 345.00 - WAITE PARK 345KV CKT 1
FDNS	00NR	5	20SP	G15_076	FROM->TO	GRPRAR1-LNX3345.00 - HOLT.CO3 345.00 345KV CKT 1	720	720	0.04003	105.4371	P12:115:UMZZ:# 237 #: MEN IN SD. MENNO JUNCTION IS A TAP (UJ-MEN-TP).
FDNS	00NR	5	20SP	G15_076	FROM->TO	GRPRAR1-LNX3345.00 - HOLT.CO3 345.00 345KV CKT 1	720	720	0.04134	105.4309	APPLEDORN 4 230.00 - GRANITE FALLS 230KV CKT 1
FDNS	00NR	5	20SP	G15_076	FROM->TO	GRPRAR1-LNX3345.00 - HOLT.CO3 345.00 345KV CKT 1	720	720	0.04134	105.4309	APPLEDORN 4 230.00 - GRANITE FALLS 230KV CKT 1
FDNS	00NR	5	25SP	G15_076	FROM->TO	GRPRAR1-LNX3345.00 - HOLT.CO3 345.00 345KV CKT 1	720	720	0.04183	105.4291	G15094_T 345.00 - SIDNEY2-LNX3345.00 345KV CKT 1
FDNS	00NR	5	25SP	G15_076	FROM->TO	GRPRAR1-LNX3345.00 - HOLT.CO3 345.00 345KV CKT 1	720	720	0.04183	105.4289	SIDNEY - SIDNEY2-LNX3345.00 345KV CKT Z
FDNS	00NR	5	25SP	G15_076	FROM->TO	GRPRAR1-LNX3345.00 - HOLT.CO3 345.00 345KV CKT 1	720	720	0.03746	105.4255	RASMUSN - UTICA JCT 230KV CKT 1
FDNS	00NR	5	20SP	G15_076	FROM->TO	GRPRAR1-LNX3345.00 - HOLT.CO3 345.00 345KV CKT 1	720	720	0.04131	105.4244	BLAIR - GRANITE FALLS 230KV CKT 1
FDNS	00NR	5	20SP	G15_076	FROM->TO	GRPRAR1-LNX3345.00 - HOLT.CO3 345.00 345KV CKT 1	720	720	0.04131	105.4244	BLAIR - GRANITE FALLS 230KV CKT 1
FDNS	00NR	5	25SP	G15_076	FROM->TO	GRPRAR1-LNX3345.00 - HOLT.CO3 345.00 345KV CKT 1	720	720	0.04155	105.4232	GEN336831 1-BAXTER WILSON SES
FDNS	00NR	5	20SP	G15_076	FROM->TO	GRPRAR1-LNX3345.00 - HOLT.CO3 345.00 345KV CKT 1	720	720	0.04142	105.4183	NORTH ROCHESTER - PRAIRIE ISLAND 345KV CKT 1
FDNS	00NR	5	20SP	G15_076	FROM->TO	GRPRAR1-LNX3345.00 - HOLT.CO3 345.00 345KV CKT 1	720	720	0.04065	105.4156	WINNER - WITTEN 115KV CKT 1
FDNS	00NR	5	20SP	G15_076	FROM->TO	GRPRAR1-LNX3345.00 - HOLT.CO3 345.00 345KV CKT 1	720	720	0.04123	105.4096	GEN303008 1-1BC2 U3
FDNS	00NR	5	20SP	G15_076	FROM->TO	GRPRAR1-LNX3345.00 - HOLT.CO3 345.00 345KV CKT 1	720	720	0.04123	105.4044	GEN336170 1-GULF OXY U4
FDNS	00NR	5	20SP	G15_076	FROM->TO	GRPRAR1-LNX3345.00 - HOLT.CO3 345.00 345KV CKT 1	720	720	0.04123	105.3874	GEN641089 2-ENERGY CENTER 2
FDNS	00NR	5	20SP	G15_076	FROM->TO	GRPRAR1-LNX3345.00 - HOLT.CO3 345.00 345KV CKT 1	720	720	0.04123	105.3742	GEN562921 1-G15054_2 0.6900
FDNS	00NR	5	20SP	G15_076	FROM->TO	GRPRAR1-LNX3345.00 - HOLT.CO3 345.00 345KV CKT 1	720	720	0.04152	105.3702	G15094_T 345.00 - LARAMIE RIVER 345KV CKT 1
FDNS	00NR	5	20SP	G15_076	FROM->TO	GRPRAR1-LNX3345.00 - HOLT.CO3 345.00 345KV CKT 1	720	720	0.04418	105.3662	STEGALL - STEGALL TRANSFORMER 230KV CKT 1
FDNS	00NR	5	25SP	G15_076	FROM->TO	GRPRAR1-LNX3345.00 - HOLT.CO3 345.00 345KV CKT 1	720	720	0.04155	105.3653	GEN337041 1-GERALD ANDRUS
FDNS	00NR	5	20SP	G15_076	FROM->TO	GRPRAR1-LNX3345.00 - HOLT.CO3 345.00 345KV CKT 1	720	720	0.04418	105.3591	P13:230-345:NPPD:STEGALL3:KV3A
FDNS	00NR	5	25SP	G15_076	FROM->TO	GRPRAR1-LNX3345.00 - HOLT.CO3 345.00 345KV CKT 1	720	720	0.04093	105.3547	EAGLE 4 230.00 - PAHOJA 230KV CKT 1
FDNS	00NR	5	20SP	G15_076	FROM->TO	GRPRAR1-LNX3345.00 - HOLT.CO3 345.00 345KV CKT 1	720	720	0.04124	105.3531	FARGO - JAMES TOWN 230KV CKT 1
FDNS	00NR	5	20SP	G15_076	FROM->TO	GRPRAR1-LNX3345.00 - HOLT.CO3 345.00 345KV CKT 1	720	720	0.04175	105.3458	HUNTLEY3 345.00 - LEDYARD3 345.00 345KV CKT 1
FDNS	00NR	5	25SP	G15_076	FROM->TO	GRPRAR1-LNX3345.00 - HOLT.CO3 345.00 345KV CKT 1	720	720	0.04155	105.3447	GEN501813 1-RODEMACHER UNIT 3
FDNSLock	00NR	5	20SP	G15_076	FROM->TO	GRPRAR1-LNX3345.00 - HOLT.CO3 345.00 345KV CKT 1	720	720	0.04418	105.3378	STEGALL (SGQ KV3A) 345/230/13.8KV TRANSFORMER CKT 1
FDNS	00NR	5	20SP	G15_076	FROM->TO	GRPRAR1-LNX3345.00 - HOLT.CO3 345.00 345KV CKT 1	720	720	0.04124	105.3318	FARGO - JAMES TOWN 230KV CKT 2
FDNS	00NR	5	20SP	G15_076	FROM->TO	GRPRAR1-LNX3345.00 - HOLT.CO3 345.00 345KV CKT 1	720	720	0.04123	105.33	P13:230:UMZW:# 2218 #: FP IN MT. LOSS OF TRANSFORMER (AT2).
FDNS	00NR	5	20SP	G15_076	FROM->TO	GRPRAR1-LNX3345.00 - HOLT.CO3 345.00 345KV CKT 1	720	720	0.04123	105.3281	GEN562596 1-G14_059_3 0.6900
FDNS	00NR	5	20SP	G15_076	FROM->TO	GRPRAR1-LNX3345.00 - HOLT.CO3 345.00 345KV CKT 1	720	720	0.04123	105.3249	GEN501811 1-RODEMACHER UNIT 1
FDNS	00NR	5	20SP	G15_076	FROM->TO	GRPRAR1-LNX3345.00 - HOLT.CO3 345.00 345KV CKT 1	720	720	0.04172	105.3044	P13:230-345:NPPD:SIDNEY 3:KV2A
FDNS	00NR	5	20SP	G15_076	FROM->TO	GRPRAR1-LNX3345.00 - HOLT.CO3 345.00 345KV CKT 1	720	720	0.04172	105.3043	SIDNEY (SDQ KV2A) 345/230/13.8KV TRANSFORMER CKT 1
FDNS	00NR	5	20SP	G15_076	FROM->TO	GRPRAR1-LNX3345.00 - HOLT.CO3 345.00 345KV CKT 1	720	720	0.04172	105.3042	SIDNEY - SIDNEY TRANSFORMER 230KV CKT 1
FDNS	00NR	5	20SP	G15_076	FROM->TO	GRPRAR1-LNX3345.00 - HOLT.CO3 345.00 345KV CKT 1	720	720	0.04123	105.3026	BISMARK - JAMES TOWN 230KV CKT 1
FDNS	00NR	5	20SP	G15_076	FROM->TO	GRPRAR1-LNX3345.00 - HOLT.CO3 345.00 345KV CKT 1	720	720	0.0419	105.2943	P12:230:UMZW:# 733 #: FT IN SD. FT-BG2 LINE FAULT
FDNS	00NR	5	20SP	G15_076	FROM->TO	GRPRAR1-LNX3345.00 - HOLT.CO3 345.00 345KV CKT 1	720	720	0.04123	105.2939	BISMARK - WEBER 230KV CKT 1
FDNS	00NR	5	20SP	G15_076	FROM->TO	GRPRAR1-LNX3345.00 - HOLT.CO3 345.00 345KV CKT 1	720	720	0.04123	105.2804	TOLK STATION EAST 230/24.0KV TRANSFORMER CKT 1
FDNS	00NR	5	20SP	G15_076	FROM->TO	GRPRAR1-LNX3345.00 - HOLT.CO3 345.00 345KV CKT 1	720	720	0.04175	105.2794	P13:115-230:TSGT:SIDNEY-KV1A
FDNS	00NR	5	20SP	G15_076	FROM->TO	GRPRAR1-LNX3345.00 - HOLT.CO3 345.00 345KV CKT 1	720	720	0.04123	105.2786	JAMES TOWN - WEBER 230KV CKT 1
FDNS	00NR	5	20SP	G15_076	FROM->TO	GRPRAR1-LNX3345.00 - HOLT.CO3 345.00 345KV CKT 1	720	720	0.04123	105.2732	GEN334071 1-LEWIS CREEK 2
FDNS	00NR	5	20SP	G15_076	FROM->TO	GRPRAR1-LNX3345.00 - HOLT.CO3 345.00 345KV CKT 1	720	720	0.04123	105.2699	GEN334070 1-LEWIS CREEK 1
FDNS	00NR	5	20SP	G15_076	FROM->TO	GRPRAR1-LNX3345.00 - HOLT.CO3 345.00 345KV CKT 1	720	720	0.04164	105.2688	HUNTLEY3 345.00 - LAKEFIELD 3 345KV CKT 1
FDNS	00NR	5	20SP	G15_076	FROM->TO	GRPRAR1-LNX3345.00 - HOLT.CO3 345.00 345KV CKT 1	720	720	0.04222	105.2647	NOBLES - SPLIT ROCK 345KV CKT 1
FDNS	00NR	5	20SP	G15_076	FROM->TO	GRPRAR1-LNX3345.00 - HOLT.CO3 345.00 345KV CKT 1	720	720	0.04123	105.2612	GEN532751 1-WOLF CREEK GENERATING STATION UNIT 1
FDNS	00NR	5	20SP	G15_076	FROM->TO	GRPRAR1-LNX3345.00 - HOLT.CO3 345.00 345KV CKT 1	720	720	0.04095	105.2571	FT THOMPSON - HURON 230KV CKT 1
FDNS	00NR	5	20SP	G15_076	FROM->TO	GRPRAR1-LNX3345.00 - HOLT.CO3 345.00 345KV CKT 1	720	720	0.04095	105.2571	FT THOMPSON - HURON 230KV CKT 1
FDNS	00NR	5	20SP	G15_076	FROM->TO	GRPRAR1-LNX3345.00 - HOLT.CO3 345.00 345KV CKT 1	720	720	0.04095	105.2571	FT THOMPSON - HURON 230KV CKT 2
FDNS	00NR	5	20SP	G15_076	FROM->TO	GRPRAR1-LNX3345.00 - HOLT.CO3 345.00 345KV CKT 1	720	720	0.04095	105.2571	FT THOMPSON - HURON 230KV CKT 2
FDNS	00NR	5	20SP	G15_076	FROM->TO	GRPRAR1-LNX3345.00 - HOLT.CO3 345.00 345KV CKT 1	720	720	0.04123	105.2509	LAWRENCE ENERGY CENTER UNIT 5 - LAWRENCE HILL 230KV CKT 1
FDNS	00NR	5	20SP	G15_076	FROM->TO	GRPRAR1-LNX3345.00 - HOLT.CO3 345.00 345KV CKT 1	720	720	0.04123	105.2509	LAWRENCE ENERGY CENTER UNIT 5 230/24.0KV TRANSFORMER CKT 1
FDNS	00NR	5	20SP	G15_076	FROM->TO	GRPRAR1-LNX3345.00 - HOLT.CO3 345.00 345KV CKT 1	720	720	0.04123	105.2432	GEN659118 1-LARAMIE RIVER UNIT1
FDNS	00NR	5	20SP	G15_076	FROM->TO	GRPRAR1-LNX3345.00 - HOLT.CO3 345.00 345KV CKT 1	720	720	0.04123	105.2414	GEN636641 1-LOUISA UNIT 1
FDNS	00NR	5	20SP	G15_076	FROM->TO	GRPRAR1-LNX3345.00 - HOLT.CO3 345.00 345KV CKT 1	720	720	0.04065	105.2412	GREGORY - WINNER 115KV CKT 1
FDNS	00NR	5	20SP	G15_076	FROM->TO	GRPRAR1-LNX3345.00 - HOLT.CO3 345.00 345KV CKT 1	720	720	0.04123	105.2395	BALTA - RAMSEY 230KV CKT 1

SOLUTION	GROUP	SCENARIO	SEASON	SOURCE	DIRECTION	MONITORED ELEMENT	RATEA (MVA)	RATEB(MVA)	TDF	TC%LOADING (% MVA)	CONTINGENCY
FDNS	00NR	5	20SP	G15_076	FROM->TO	GRPRAR1-LNX3345.00 - HOLT.CO3 345.00 345KV CKT 1	720	720	0.04123	105.2395	PRAIRIE ISLAND 345/20.0KV TRANSFORMER CKT 1
FDNS	00NR	5	17SP	G15_076	FROM->TO	GRPRAR1-LNX3345.00 - HOLT.CO3 345.00 345KV CKT 1	720	720	0.04284	105.2385	GEN659103 1-ANTELOPE VALLEY UNIT1
FDNS	00NR	5	17SP	G15_076	FROM->TO	GRPRAR1-LNX3345.00 - HOLT.CO3 345.00 345KV CKT 1	720	720	0.04284	105.2385	GEN659107 2-ANTELOPE VALLEY UNIT2
FDNS	00NR	5	20SP	G15_076	FROM->TO	GRPRAR1-LNX3345.00 - HOLT.CO3 345.00 345KV CKT 1	720	720	0.04123	105.2383	GEN337766 1-TRACTEBEL UNIT S1
FDNS	00NR	5	20SP	G15_076	FROM->TO	GRPRAR1-LNX3345.00 - HOLT.CO3 345.00 345KV CKT 1	720	720	0.04123	105.238	PRAIRIE ISLAND 345/20.0KV TRANSFORMER CKT 2
FDNS	00NR	5	20SP	G15_076	FROM->TO	GRPRAR1-LNX3345.00 - HOLT.CO3 345.00 345KV CKT 1	720	720	0.0419	105.233	LOWERBRULE 4230.00 - RELIANCE 4 230.00 230KV CKT 1
FDNS	00NR	5	20SP	G15_076	FROM->TO	GRPRAR1-LNX3345.00 - HOLT.CO3 345.00 345KV CKT 1	720	720	0.04065	105.2314	P12:115:UMZW:# 172 #: WI IN SD.
FDNS	00NR	5	17SP	G15_076	FROM->TO	GRPRAR1-LNX3345.00 - HOLT.CO3 345.00 345KV CKT 1	720	720	0.04284	105.2176	BIG STONE 230/24.0KV TRANSFORMER CKT 1
FDNS	00NR	5	20SP	G15_076	FROM->TO	GRPRAR1-LNX3345.00 - HOLT.CO3 345.00 345KV CKT 1	720	720	0.04126	105.2128	FORMAN - HANKINSON 230KV CKT 1
FDNS	00NR	5	20SP	G15_076	FROM->TO	GRPRAR1-LNX3345.00 - HOLT.CO3 345.00 345KV CKT 1	720	720	0.04123	105.203	GEN501910 1-ACADIA UNIT ST1
FDNS	00NR	5	20SP	G15_076	FROM->TO	GRPRAR1-LNX3345.00 - HOLT.CO3 345.00 345KV CKT 1	720	720	0.04123	105.1931	ELM CREEK - MONTICELLO 345KV CKT 1
FDNS	00NR	5	20SP	G15_076	FROM->TO	GRPRAR1-LNX3345.00 - HOLT.CO3 345.00 345KV CKT 1	720	720	0.04123	105.1891	TATANKA 230/34.5KV TRANSFORMER CKT 1
FDNS	00NR	5	25SP	G15_076	FROM->TO	GRPRAR1-LNX3345.00 - HOLT.CO3 345.00 345KV CKT 1	720	720	0.04155	105.1864	GEN335206 1-NELSON UNIT 6
FDNS	00NR	5	25SP	G15_076	FROM->TO	GRPRAR1-LNX3345.00 - HOLT.CO3 345.00 345KV CKT 1	720	720	0.04189	105.1768	ARPIN B4 345.00 - EAU CLAIRE 345KV CKT 1
FDNS	00NR	5	20SP	G15_076	FROM->TO	GRPRAR1-LNX3345.00 - HOLT.CO3 345.00 345KV CKT 1	720	720	0.04123	105.1731	GEN336221 1-LITTLE GYPSY UNIT#1
FDNS	00NR	5	25SP	G15_076	FROM->TO	GRPRAR1-LNX3345.00 - HOLT.CO3 345.00 345KV CKT 1	720	720	0.04155	105.1719	GEN635214 4-NEAL UNIT 4
FDNS	00NR	5	20SP	G15_076	FROM->TO	GRPRAR1-LNX3345.00 - HOLT.CO3 345.00 345KV CKT 1	720	720	0.04123	105.1712	GEN337757 1-DUKE HOTSPRINGS STG1
FDNS	00NR	5	25SP	G15_076	FROM->TO	GRPRAR1-LNX3345.00 - HOLT.CO3 345.00 345KV CKT 1	720	720	0.04155	105.1636	GEN334440 1-SABINE UNIT 4
FDNS	00NR	5	20SP	G15_076	FROM->TO	GRPRAR1-LNX3345.00 - HOLT.CO3 345.00 345KV CKT 1	720	720	0.04126	105.1558	AUDUBON - SHEYNNE 230KV CKT 1
FDNS	00NR	5	20SP	G15_076	FROM->TO	GRPRAR1-LNX3345.00 - HOLT.CO3 345.00 345KV CKT 1	720	720	0.04123	105.1516	GEN345765 H-1SIOUX 2 18.000
FDNS	00NR	5	20SP	G15_076	FROM->TO	GRPRAR1-LNX3345.00 - HOLT.CO3 345.00 345KV CKT 1	720	720	0.04099	105.1405	MT VERN - STORLA 115KV CKT 1
FDNS	00NR	5	20SP	G15_076	FROM->TO	GRPRAR1-LNX3345.00 - HOLT.CO3 345.00 345KV CKT 1	720	720	0.04123	105.1369	GEN337764 1-TRACTEBEL UNIT C1
FDNS	00NR	5	20SP	G15_076	FROM->TO	GRPRAR1-LNX3345.00 - HOLT.CO3 345.00 345KV CKT 1	720	720	0.04123	105.1369	GEN337765 1-TRACTEBEL UNIT C2
FDNS	00NR	5	20SP	G15_076	FROM->TO	GRPRAR1-LNX3345.00 - HOLT.CO3 345.00 345KV CKT 1	720	720	0.04135	105.1348	FRANKS - HUBEN 345KV CKT 1
FDNS	00NR	5	20SP	G15_076	FROM->TO	GRPRAR1-LNX3345.00 - HOLT.CO3 345.00 345KV CKT 1	720	720	0.04123	105.1341	GEN334431 1-SABINE UNIT 1
FDNS	00NR	5	20SP	G15_076	FROM->TO	GRPRAR1-LNX3345.00 - HOLT.CO3 345.00 345KV CKT 1	720	720	0.04123	105.134	GEN334432 1-SABINE UNIT 2
FDNS	00NR	5	25SP	G15_076	FROM->TO	GRPRAR1-LNX3345.00 - HOLT.CO3 345.00 345KV CKT 1	720	720	0.04155	105.1322	GEN344897 4-1LAB G4 20.000
FDNS	00NR	5	25SP	G15_076	FROM->TO	GRPRAR1-LNX3345.00 - HOLT.CO3 345.00 345KV CKT 1	720	720	0.04155	105.1308	GEN344894 1-1LAB G1 20.000
FDNS	00NR	5	25SP	G15_076	FROM->TO	GRPRAR1-LNX3345.00 - HOLT.CO3 345.00 345KV CKT 1	720	720	0.04155	105.1308	GEN344895 2-1LAB G2 20.000
FDNS	00NR	5	25SP	G15_076	FROM->TO	GRPRAR1-LNX3345.00 - HOLT.CO3 345.00 345KV CKT 1	720	720	0.04155	105.1307	GEN344896 3-1LAB G3 20.000
FDNS	00NR	5	20SP	G15_076	FROM->TO	GRPRAR1-LNX3345.00 - HOLT.CO3 345.00 345KV CKT 1	720	720	0.04126	105.1305	LELAND OLDS - STANTON 230KV CKT 1
FDNS	00NR	5	20SP	G15_076	FROM->TO	GRPRAR1-LNX3345.00 - HOLT.CO3 345.00 345KV CKT 1	720	720	0.04126	105.1305	LELAND OLDS - STANTON 230KV CKT 1
FDNS	00NR	5	20SP	G15_076	FROM->TO	GRPRAR1-LNX3345.00 - HOLT.CO3 345.00 345KV CKT 1	720	720	0.05365	105.13	BELDEN - HOSKINS 115KV CKT 1
FDNS	00NR	5	20SP	G15_076	FROM->TO	GRPRAR1-LNX3345.00 - HOLT.CO3 345.00 345KV CKT 1	720	720	0.04123	105.13	GEN336446 1-MICHOUD UNIT #2
FDNS	00NR	5	20SP	G15_076	FROM->TO	GRPRAR1-LNX3345.00 - HOLT.CO3 345.00 345KV CKT 1	720	720	0.04181	105.1296	P12:115:NPPD:WAPA1:CHADRON7:BOXBUTE7:BTB
FDNS	00NR	5	20SP	G15_076	FROM->TO	GRPRAR1-LNX3345.00 - HOLT.CO3 345.00 345KV CKT 1	720	720	0.04147	105.1201	OVEXFRMCCOVE
FDNS	00NR	5	20SP	G15_076	FROM->TO	GRPRAR1-LNX3345.00 - HOLT.CO3 345.00 345KV CKT 1	720	720	0.04123	105.109	GEN562912 1-G15053_3 0.6900
FDNS	00NR	5	25SP	G15_076	FROM->TO	GRPRAR1-LNX3345.00 - HOLT.CO3 345.00 345KV CKT 1	720	720	0.0416	105.1066	GLENBORO SOUTH - RUGBY 230KV CKT 1
FDNS	00NR	5	20SP	G15_076	FROM->TO	GRPRAR1-LNX3345.00 - HOLT.CO3 345.00 345KV CKT 1	720	720	0.04123	105.1051	GRAND GULF 500/22.0KV TRANSFORMER CKT 1
FDNS	00NR	5	20SP	G15_076	FROM->TO	GRPRAR1-LNX3345.00 - HOLT.CO3 345.00 345KV CKT 1	720	720	0.04197	105.1043	DENISON - SIOUX CITY 230KV CKT 1
FDNS	00NR	5	25SP	G15_076	FROM->TO	GRPRAR1-LNX3345.00 - HOLT.CO3 345.00 345KV CKT 1	720	720	0.03952	105.1035	FT THOMPSON - WESSINGTON 230KV CKT 1
FDNS	00NR	5	25SP	G15_076	FROM->TO	GRPRAR1-LNX3345.00 - HOLT.CO3 345.00 345KV CKT 1	720	720	0.03952	105.1035	FT THOMPSON - WESSINGTON 230KV CKT 1
FDNS	00NR	5	20SP	G15_076	FROM->TO	GRPRAR1-LNX3345.00 - HOLT.CO3 345.00 345KV CKT 1	720	720	0.04128	105.101	FERGSFL4 230.00 - WAHPETON 230KV CKT 1
FDNS	00NR	5	20SP	G15_076	FROM->TO	GRPRAR1-LNX3345.00 - HOLT.CO3 345.00 345KV CKT 1	720	720	0.04222	105.1004	PLYMOUTH - SIOUX CITY 161KV CKT 1
FDNS	00NR	5	20SP	G15_076	FROM->TO	GRPRAR1-LNX3345.00 - HOLT.CO3 345.00 345KV CKT 1	720	720	0.04222	105.1004	PLYMOUTH - SIOUX CITY 161KV CKT 1
FDNS	00NR	5	20SP	G15_076	FROM->TO	GRPRAR1-LNX3345.00 - HOLT.CO3 345.00 345KV CKT 1	720	720	0.04123	105.0983	GEN336242 1-1NMIL ST1 18.000
FDNS	00NR	5	20SP	G15_076	FROM->TO	GRPRAR1-LNX3345.00 - HOLT.CO3 345.00 345KV CKT 1	720	720	0.04123	105.0969	GEN501823 1-TECHE UNIT 3
FDNS	00NR	5	20SP	G15_076	FROM->TO	GRPRAR1-LNX3345.00 - HOLT.CO3 345.00 345KV CKT 1	720	720	0.04125	105.0934	FORMAN - OAKES 230KV CKT 1
FDNS	00NR	5	20SP	G15_076	FROM->TO	GRPRAR1-LNX3345.00 - HOLT.CO3 345.00 345KV CKT 1	720	720	0.04125	105.0908	ELLENDLMVP4 230.00 - OAKES 230KV CKT 1
FDNS	00NR	5	20SP	G15_076	FROM->TO	GRPRAR1-LNX3345.00 - HOLT.CO3 345.00 345KV CKT 1	720	720	0.04125	105.0908	ELLENDLMVP4 230.00 - OAKES 230KV CKT 1
FDNS	00NR	5	20SP	G15_076	FROM->TO	GRPRAR1-LNX3345.00 - HOLT.CO3 345.00 345KV CKT 1	720	720	0.04124	105.0864	PRAIRIE - WINGER 230KV CKT 1
FDNS	00NR	5	25SP	G15_076	FROM->TO	GRPRAR1-LNX3345.00 - HOLT.CO3 345.00 345KV CKT 1	720	720	0.04155	105.0834	GEN338388 1-1PLUM PT U1 23.000
FDNS	00NR	5	20SP	G15_076	FROM->TO	GRPRAR1-LNX3345.00 - HOLT.CO3 345.00 345KV CKT 1	720	720	0.04181	105.0812	CHADRON - DUNLAP 115KV CKT 1
FDNS	00NR	5	20SP	G15_076	FROM->TO	GRPRAR1-LNX3345.00 - HOLT.CO3 345.00 345KV CKT 1	720	720	0.04123	105.0804	GEN345756 H-1SIOUX 1 18.000
FDNS	00NR	5	25SP	G15_076	FROM->TO	GRPRAR1-LNX3345.00 - HOLT.CO3 345.00 345KV CKT 1	720	720	0.04155	105.0794	GEN345671 2-1RUSH G2 18.000
FDNS	00NR	5	20SP	G15_076	FROM->TO	GRPRAR1-LNX3345.00 - HOLT.CO3 345.00 345KV CKT 1	720	720	0.0419	105.0784	RELIANCE 4 230.00 - WITTEN 4 230.00 230KV CKT 1
FDNS	00NR	5	20SP	G15_076	FROM->TO	GRPRAR1-LNX3345.00 - HOLT.CO3 345.00 345KV CKT 1	720	720	0.04123	105.0771	J316_SUB 230.00 230/34.5KV TRANSFORMER CKT 1
FDNS	00NR	5	25SP	G15_076	FROM->TO	GRPRAR1-LNX3345.00 - HOLT.CO3 345.00 345KV CKT 1	720	720	0.04155	105.0754	GEN345670 1-1RUSH G1 18.000
FDNS	00NR	5	20SP	G15_076	FROM->TO	GRPRAR1-LNX3345.00 - HOLT.CO3 345.00 345KV CKT 1	720	720	0.04142	105.0704	HAMPTON CORNER - NORTH ROCHESTER 345KV CKT 1
FDNS	00NR	5	20SP	G15_076	FROM->TO	GRPRAR1-LNX3345.00 - HOLT.CO3 345.00 345KV CKT 1	720	720	0.04129	105.0692	HANKINSON - WAHPETON 230KV CKT 1
FDNS	00NR	5	20SP	G15_076	FROM->TO	GRPRAR1-LNX3345.00 - HOLT.CO3 345.00 345KV CKT 1	720	720	0.04128	105.0676	FERGSFL4 230.00 - GRE-SILVRLK4230.00 230KV CKT 1
FDNS	00NR	5	20SP	G15_076	FROM->TO	GRPRAR1-LNX3345.00 - HOLT.CO3 345.00 345KV CKT 1	720	720	0.04123	105.0634	GEN345832 1-1TS G1 13.800
FDNS	00NR	5	20SP	G15_076	FROM->TO	GRPRAR1-LNX3345.00 - HOLT.CO3 345.00 345KV CKT 1	720	720	0.04123	105.0631	GEN345841 2-1TS G2 13.800
FDNS	00NR	5	25SP	G15_076	FROM->TO	GRPRAR1-LNX3345.00 - HOLT.CO3 345.00 345KV CKT 1	720	720	0.04155	105.0622	GEN501812 1-RODEMACHER UNIT 2
FDNS	00NR	5	20SP	G15_076	FROM->TO	GRPRAR1-LNX3345.00 - HOLT.CO3 345.00 345KV CKT 1	720	720	0.04123	105.0613	GEN334031 1-FRONTIER UNIT 2
FDNS	00NR	5	20SP	G15_076	FROM->TO	GRPRAR1-LNX3345.00 - HOLT.CO3 345.00 345KV CKT 1	720	720	0.04123	105.0607	GEN334030 1-FRONTIER UNIT 1
FDNS	00NR	5	20SP	G15_076	FROM->TO	GRPRAR1-LNX3345.00 - HOLT.CO3 345.00 345KV CKT 1	720	720	0.04123	105.0577	JUDSON LARGE 115/15.0KV TRANSFORMER CKT 1
FDNS	00NR	5	20SP	G15_076	FROM->TO	GRPRAR1-LNX3345.00 - HOLT.CO3 345.00 345KV CKT 1	720	720	0.04123	105.0577	JUDSON LARGE 115/15.0KV TRANSFORMER CKT 1
FDNS	00NR	5	20SP	G15_076	FROM->TO	GRPRAR1-LNX3345.00 - HOLT.CO3 345.00 345KV CKT 1	720	720	0.04123	105.0566	GEN336944 1-REX BROWN
FDNS	00NR	5	20SP	G15_076	FROM->TO	GRPRAR1-LNX3345.00 - HOLT.CO3 345.00 345KV CKT 1	720	720	0.04123	105.0538	GEN501970 1-EVANGELINE UNIT 7
FDNS	00NR	5	20SP	G15_076	FROM->TO	GRPRAR1-LNX3345.00 - HOLT.CO3 345.00 345KV CKT 1	720	720	0.04123	105.0515	OKLAUN 345/24.0KV TRANSFORMER CKT 1
FDNS	00NR	5	20SP	G15_076	FROM->TO	GRPRAR1-LNX3345.00 - HOLT.CO3 345.00 345KV CKT 1	720	720	0.04227	105.0467	MARTIN - SHANNON 115KV CKT 1
FDNS	00NR	5	20SP	G15_076	FROM->TO	GRPRAR1-LNX3345.00 - HOLT.CO3 345.00 345KV CKT 1	720	720	0.04123	105.046	GEN335612 1-WILLOW GLENN UNIT#2
FDNS	00NR	5	20SP	G15_076	FROM->TO	GRPRAR1-LNX3345.00 - HOLT.CO3 345.00 345KV CKT 1	720	720	0.04123	105.0455	GEN635693 3-GREATER DES MOINES ENERGY CENTER ST
FDNS	00NR	5	20SP	G15_076	FROM->TO	GRPRAR1-LNX3345.00 - HOLT.CO3 345.00 345KV CKT 1	720	720	0.04153	105.0428	BYRON - NORTH ROCHESTER 345KV CKT 1
FDNS	00NR	5	25SP	G15_076	FROM->TO	GRPRAR1-LNX3345.00 - HOLT.CO3 345.00 345KV CKT 1	720	720	0.04155	105.0403	GEN336191 1-LITTLE GYPSY UNIT#3
FDNS	00NR	5	20SP	G15_076	FROM->TO	GRPRAR1-LNX3345.00 - HOLT.CO3 345.00 345KV CKT 1	720	720	0.04137	105.0393	GRE-CEDARMT3345.00 - HELENA 345KV CKT 1
FDNS	00NR	5	20SP	G15_076	FROM->TO	GRPRAR1-LNX3345.00 - HOLT.CO3 345.00 345KV CKT 1	720	720	0.04137	105.0393	GRE-CEDARMT3345.00 - HELENA 345KV CKT 2
FDNS	00NR	5	20SP	G15_076	FROM->TO	GRPRAR1-LNX3345.00 - HOLT.CO3 345.00 345KV CKT 1	720	720	0.04123	105.036	GEN337430 1-PERYVILLE UNIT #3

SOLUTION	GROUP	SCENARIO	SEASON	SOURCE	DIRECTION	MONITORED ELEMENT	RATEA (MVA)	RATEB(MVA)	TDF	TC%LOADING (% MVA)	CONTINGENCY
FDNS	00NR	5	20SP	G15_076	FROM->TO	GRPRAR1-LNX3345.00 - HOLT.CO3 345.00 345KV CKT 1	720	720	0.04123	105.0358	GEN337428 1-PERYVILLE UNIT #1
FDNS	00NR	5	20SP	G15_076	FROM->TO	GRPRAR1-LNX3345.00 - HOLT.CO3 345.00 345KV CKT 1	720	720	0.04123	105.0312	P13:230-345:NPPD:NUCOR-1
FDNS	00NR	5	20SP	G15_076	FROM->TO	GRPRAR1-LNX3345.00 - HOLT.CO3 345.00 345KV CKT 1	720	720	0.04123	105.0293	GEN562438 1-G13-032 0.6900
FDNS	00NR	5	20SP	G15_076	FROM->TO	GRPRAR1-LNX3345.00 - HOLT.CO3 345.00 345KV CKT 1	720	720	0.03938	105.0286	FT RANDAL - WHITE SWAN 115KV CKT 1
FDNS	00NR	5	20SP	G15_076	FROM->TO	GRPRAR1-LNX3345.00 - HOLT.CO3 345.00 345KV CKT 1	720	720	0.0419	105.0222	WITTEN 4 230.00 () 230/115/13.8KV TRANSFORMER CKT 1
FDNS	00NR	5	25SP	G15_076	FROM->TO	GRPRAR1-LNX3345.00 - HOLT.CO3 345.00 345KV CKT 1	720	720	0.04314	105.0181	GRIMES - LEHIGH 345KV CKT 1
FDNS	00NR	5	20SP	G15_076	FROM->TO	GRPRAR1-LNX3345.00 - HOLT.CO3 345.00 345KV CKT 1	720	720	0.04123	105.0175	GEN338443 1-PANDA S1
FDNS	00NR	5	20SP	G15_076	FROM->TO	GRPRAR1-LNX3345.00 - HOLT.CO3 345.00 345KV CKT 1	720	720	0.04123	105.0155	GEN336240 1-1NMIL CT1 18.000
FDNS	00NR	5	20SP	G15_076	FROM->TO	GRPRAR1-LNX3345.00 - HOLT.CO3 345.00 345KV CKT 1	720	720	0.04123	105.0155	GEN336241 1-1NMIL CT2 18.000
FDNS	00NR	5	20SP	G15_076	FROM->TO	GRPRAR1-LNX3345.00 - HOLT.CO3 345.00 345KV CKT 1	720	720	0.04123	105.0131	GEN501912 1-ACADIA UNIT CT1B
FDNS	00NR	5	20SP	G15_076	FROM->TO	GRPRAR1-LNX3345.00 - HOLT.CO3 345.00 345KV CKT 1	720	720	0.04123	105.0129	GEN501911 1-ACADIA UNIT CT1A
FDNS	00NR	5	20SP	G15_076	FROM->TO	GRPRAR1-LNX3345.00 - HOLT.CO3 345.00 345KV CKT 1	720	720	0.04123	105.0119	P12:345:GRDA:CHOUTEAU-SPORTSMANACRES
FDNS	00NR	5	25SP	G15_076	FROM->TO	GRPRAR1-LNX3345.00 - HOLT.CO3 345.00 345KV CKT 1	720	720	0.04219	105.0093	KOSSUTH 3 345.00 - WEBSTER 345KV CKT 1
FDNS	00NR	5	25SP	G15_076	FROM->TO	GRPRAR1-LNX3345.00 - HOLT.CO3 345.00 345KV CKT 1	720	720	0.04155	105	GEN629075 1-OTTUMWA GENERATOR FOR OTTUMWA UNIT NO 1
FDNS	00NR	5	25SP	G15_076	FROM->TO	GRPRAR1-LNX3345.00 - HOLT.CO3 345.00 345KV CKT 1	720	720	0.04155	104.9982	P12:115:UMZW:# 162 #: NEL IN ND. FAULT ON ML-NEL-MX-GA 115 KV
FDNS	00NR	5	25SP	G15_076	FROM->TO	GRPRAR1-LNX3345.00 - HOLT.CO3 345.00 345KV CKT 1	720	720	0.04155	104.9669	GEN335614 1-WILLOW GLENN UNIT#4
FDNS	00NR	5	25SP	G15_076	FROM->TO	GRPRAR1-LNX3345.00 - HOLT.CO3 345.00 345KV CKT 1	720	720	0.04155	104.9619	GEN336801 1-BAXTER WILSON UNIT #1
FDNS	00NR	5	25SP	G15_076	FROM->TO	GRPRAR1-LNX3345.00 - HOLT.CO3 345.00 345KV CKT 1	720	720	0.04155	104.9568	GEN334441 1-SABINE UNIT 5
FDNS	00NR	5	25SP	G15_076	FROM->TO	GRPRAR1-LNX3345.00 - HOLT.CO3 345.00 345KV CKT 1	720	720	0.04155	104.9517	GEN336464 1-MICHOUD UNIT #3
FDNS	00NR	5	25SP	G15_076	FROM->TO	GRPRAR1-LNX3345.00 - HOLT.CO3 345.00 345KV CKT 1	720	720	0.04144	104.9477	HESKETT - WISHEK 230KV CKT 1
FDNS	00NR	5	25SP	G15_076	FROM->TO	GRPRAR1-LNX3345.00 - HOLT.CO3 345.00 345KV CKT 1	720	720	0.04155	104.9451	GEN563222 1-G15088_3 0.6900
FDNS	00NR	5	25SP	G15_076	FROM->TO	GRPRAR1-LNX3345.00 - HOLT.CO3 345.00 345KV CKT 1	720	720	0.04155	104.9412	GEN335204 1-NELSON UNIT 4
FDNS	00NR	5	25SP	G15_076	FROM->TO	GRPRAR1-LNX3345.00 - HOLT.CO3 345.00 345KV CKT 1	720	720	0.04178	104.9278	NORTH LA CROSSE - NORTH ROCHESTER 345KV CKT 1
FDNS	00NR	5	20SP	G15_076	FROM->TO	GRPRAR1-LNX3345.00 - HOLT.CO3 345.00 345KV CKT 1	720	720	0.04123	104.9172	GEN563282 1-G15094_3 0.6900
FDNS	00NR	5	25SP	G15_076	FROM->TO	GRPRAR1-LNX3345.00 - HOLT.CO3 345.00 345KV CKT 1	720	720	0.04217	104.9092	ADAMS - MITCHLCO3 345.00 345KV CKT 1
FDNS	00NR	5	25SP	G15_076	FROM->TO	GRPRAR1-LNX3345.00 - HOLT.CO3 345.00 345KV CKT 1	720	720	0.04154	104.8618	CENTER - COYOTE 345KV CKT 1
FDNS	00NR	5	25SP	G15_076	FROM->TO	GRPRAR1-LNX3345.00 - HOLT.CO3 345.00 345KV CKT 1	720	720	0.04144	104.8616	MERRCRT4 230.00 - WISHEK 230KV CKT 1
FDNS	00NR	5	25SP	G15_076	FROM->TO	GRPRAR1-LNX3345.00 - HOLT.CO3 345.00 345KV CKT 1	720	720	0.04155	104.8521	GEN640009 1-COOPER NUCLEAR STATION
FDNS	00NR	5	25SP	G15_076	FROM->TO	GRPRAR1-LNX3345.00 - HOLT.CO3 345.00 345KV CKT 1	720	720	0.04754	104.8367	BLOOMFIELD - CREIGHTON 115KV CKT 1
FDNS	00NR	5	25SP	G15_076	FROM->TO	GRPRAR1-LNX3345.00 - HOLT.CO3 345.00 345KV CKT 1	720	720	0.04035	104.8277	MENNO JCT - TRIPP JCT 115KV CKT 1
FDNS	00NR	5	25SP	G15_076	FROM->TO	GRPRAR1-LNX3345.00 - HOLT.CO3 345.00 345KV CKT 1	720	720	0.04155	104.825	GARRISON - JAMES TOWN 230KV CKT 1
FDNS	00NR	5	25SP	G15_076	FROM->TO	GRPRAR1-LNX3345.00 - HOLT.CO3 345.00 345KV CKT 1	720	720	0.04134	104.8234	BROOKING COUNTY - BSSOUTH3 345.00 345KV CKT 1
FDNS	00NR	5	25SP	G15_076	FROM->TO	GRPRAR1-LNX3345.00 - HOLT.CO3 345.00 345KV CKT 1	720	720	0.04155	104.8223	GEN334433 1-SABINE UNIT 3
FDNS	00NR	5	25SP	G15_076	FROM->TO	GRPRAR1-LNX3345.00 - HOLT.CO3 345.00 345KV CKT 1	720	720	0.04155	104.8139	GEN635213 3-NEAL UNIT 3
FDNS	00NR	5	25SP	G15_076	FROM->TO	GRPRAR1-LNX3345.00 - HOLT.CO3 345.00 345KV CKT 1	720	720	0.04754	104.7951	BLOOMFIELD - GAVINS POINT 115KV CKT 1
FDNS	00NR	5	25SP	G15_076	FROM->TO	GRPRAR1-LNX3345.00 - HOLT.CO3 345.00 345KV CKT 1	720	720	0.04155	104.7895	GEN531447 1-HOLCOMB GENERATOR
FDNS	00NR	5	25SP	G15_076	FROM->TO	GRPRAR1-LNX3345.00 - HOLT.CO3 345.00 345KV CKT 1	720	720	0.04155	104.7595	GEN336222 1-LITTLE GYPSY UNIT#2
FDNS	00NR	5	25SP	G15_076	FROM->TO	GRPRAR1-LNX3345.00 - HOLT.CO3 345.00 345KV CKT 1	720	720	0.04165	104.7351	APPLEDORN 4 230.00 - WATERTOWN 230KV CKT 1
FDNS	00NR	5	25SP	G15_076	FROM->TO	GRPRAR1-LNX3345.00 - HOLT.CO3 345.00 345KV CKT 1	720	720	0.04165	104.7351	APPLEDORN 4 230.00 - WATERTOWN 230KV CKT 1
FDNS	00NR	5	25SP	G15_076	FROM->TO	GRPRAR1-LNX3345.00 - HOLT.CO3 345.00 345KV CKT 1	720	720	0.04168	104.7156	ARKANSAS NUCLEAR ONE - FT SMITH 500KV CKT 1
FDNS	00NR	5	25SP	G15_076	FROM->TO	GRPRAR1-LNX3345.00 - HOLT.CO3 345.00 345KV CKT 1	720	720	0.04168	104.7156	ARKANSAS NUCLEAR ONE - FT SMITH 500KV CKT 1
FDNS	00NR	5	25SP	G15_076	FROM->TO	GRPRAR1-LNX3345.00 - HOLT.CO3 345.00 345KV CKT 1	720	720	0.04146	104.7091	BSSOUTH3 345.00 - ELLENDLMVP3 345.00 345KV CKT 1
FDNS	00NR	5	25SP	G15_076	FROM->TO	GRPRAR1-LNX3345.00 - HOLT.CO3 345.00 345KV CKT 1	720	720	0.04146	104.7091	BSSOUTH3 345.00 - ELLENDLMVP3 345.00 345KV CKT 1
FDNS	00NR	5	25SP	G15_076	FROM->TO	GRPRAR1-LNX3345.00 - HOLT.CO3 345.00 345KV CKT 1	720	720	0.04155	104.7067	GEN336152 1-WATERFORD UNIT#2
FDNS	00NR	5	25SP	G15_076	FROM->TO	GRPRAR1-LNX3345.00 - HOLT.CO3 345.00 345KV CKT 1	720	720	0.04155	104.7066	GEN336151 1-WATERFORD UNIT#1
FDNS	00NR	5	25SP	G15_076	FROM->TO	GRPRAR1-LNX3345.00 - HOLT.CO3 345.00 345KV CKT 1	720	720	0.04197	104.7	ADAMS - PLEASANT VALLEY 345KV CKT 1
FDNS	00NR	5	25SP	G15_076	FROM->TO	GRPRAR1-LNX3345.00 - HOLT.CO3 345.00 345KV CKT 1	720	720	0.04035	104.6932	MENNO JCT - UTICA 115KV CKT 1
FDNS	00NR	5	25SP	G15_076	FROM->TO	GRPRAR1-LNX3345.00 - HOLT.CO3 345.00 345KV CKT 1	720	720	0.04146	104.6875	ELLENDLMVP3 345.00 (1) 345/230/34.5KV TRANSFORMER CKT 1
FDNS	00NR	5	25SP	G15_076	FROM->TO	GRPRAR1-LNX3345.00 - HOLT.CO3 345.00 345KV CKT 1	720	720	0.04167	104.6741	ALEXMRES3 345.00 - WAITE PARK 345KV CKT 1
FDNS	00NR	5	25SP	G15_076	FROM->TO	GRPRAR1-LNX3345.00 - HOLT.CO3 345.00 345KV CKT 1	720	720	0.04165	104.67	APPLEDORN 4 230.00 - GRANITE FALLS 230KV CKT 1
FDNS	00NR	5	25SP	G15_076	FROM->TO	GRPRAR1-LNX3345.00 - HOLT.CO3 345.00 345KV CKT 1	720	720	0.04165	104.67	APPLEDORN 4 230.00 - GRANITE FALLS 230KV CKT 1
FDNS	00NR	5	25SP	G15_076	FROM->TO	GRPRAR1-LNX3345.00 - HOLT.CO3 345.00 345KV CKT 1	720	720	0.04163	104.6652	BLAIR - GRANITE FALLS 230KV CKT 1
FDNS	00NR	5	25SP	G15_076	FROM->TO	GRPRAR1-LNX3345.00 - HOLT.CO3 345.00 345KV CKT 1	720	720	0.04163	104.6652	BLAIR - GRANITE FALLS 230KV CKT 1
FDNS	00NR	5	25SP	G15_076	FROM->TO	GRPRAR1-LNX3345.00 - HOLT.CO3 345.00 345KV CKT 1	720	720	0.04186	104.6489	NMA B3 345 345.00 - NORTH LA CROSSE 345KV CKT 1
FDNS	00NR	5	25SP	G15_076	FROM->TO	GRPRAR1-LNX3345.00 - HOLT.CO3 345.00 345KV CKT 1	720	720	0.04155	104.6441	GEN641089 2-ENERGY CENTER 2
FDNS	00NR	5	25SP	G15_076	FROM->TO	GRPRAR1-LNX3345.00 - HOLT.CO3 345.00 345KV CKT 1	720	720	0.04155	104.6354	GEN303007 1-1BC2 U2
FDNS	00NR	5	25SP	G15_076	FROM->TO	GRPRAR1-LNX3345.00 - HOLT.CO3 345.00 345KV CKT 1	720	720	0.04155	104.6301	GEN303006 1-1BC2 U1
FDNS	00NR	5	25SP	G15_076	FROM->TO	GRPRAR1-LNX3345.00 - HOLT.CO3 345.00 345KV CKT 1	720	720	0.04097	104.6291	WINNER - WITTEN 115KV CKT 1
FDNS	00NR	5	25SP	G15_076	FROM->TO	GRPRAR1-LNX3345.00 - HOLT.CO3 345.00 345KV CKT 1	720	720	0.04155	104.6168	P13:230:UMZW:# 2218 #: FP IN MT. LOSS OF TRANSFORMER (AT2).
FDNS	00NR	5	25SP	G15_076	FROM->TO	GRPRAR1-LNX3345.00 - HOLT.CO3 345.00 345KV CKT 1	720	720	0.04155	104.6064	FARGO - JAMES TOWN 230KV CKT 1
FDNS	00NR	5	25SP	G15_076	FROM->TO	GRPRAR1-LNX3345.00 - HOLT.CO3 345.00 345KV CKT 1	720	720	0.04155	104.6054	GEN532751 1-WOLF CREEK GENERATING STATION UNIT 1
FDNS	00NR	5	25SP	G15_076	FROM->TO	GRPRAR1-LNX3345.00 - HOLT.CO3 345.00 345KV CKT 1	720	720	0.04155	104.6028	GEN562921 1-G15054_2 0.6900
FDNS	00NR	5	25SP	G15_076	FROM->TO	GRPRAR1-LNX3345.00 - HOLT.CO3 345.00 345KV CKT 1	720	720	0.04035	104.5938	P12:115:UMZZ:# 237 #: MEN IN SD. MENNO JUNCTION IS A TAP (UJ-MEN-TP).
FDNS	00NR	5	25SP	G15_076	FROM->TO	GRPRAR1-LNX3345.00 - HOLT.CO3 345.00 345KV CKT 1	720	720	0.04183	104.5911	G15094_T 345.00 - LARAMIE RIVER 345KV CKT 1
FDNS	00NR	5	25SP	G15_076	FROM->TO	GRPRAR1-LNX3345.00 - HOLT.CO3 345.00 345KV CKT 1	720	720	0.04173	104.5908	NORTH ROCHESTER - PRAIRIE ISLAND 345KV CKT 1
FDNS	00NR	5	25SP	G15_076	FROM->TO	GRPRAR1-LNX3345.00 - HOLT.CO3 345.00 345KV CKT 1	720	720	0.04155	104.5844	FARGO - JAMES TOWN 230KV CKT 2
FDNS	00NR	5	25SP	G15_076	FROM->TO	GRPRAR1-LNX3345.00 - HOLT.CO3 345.00 345KV CKT 1	720	720	0.04155	104.5692	GEN303008 1-1BC2 U3
FDNS	00NR	5	25SP	G15_076	FROM->TO	GRPRAR1-LNX3345.00 - HOLT.CO3 345.00 345KV CKT 1	720	720	0.04155	104.5665	BISMARK - JAMES TOWN 230KV CKT 1
FDNS	00NR	5	25SP	G15_076	FROM->TO	GRPRAR1-LNX3345.00 - HOLT.CO3 345.00 345KV CKT 1	720	720	0.04207	104.5657	HUNTLEY3 345.00 - LEDYARD3 345.00 345KV CKT 1
FDNS	00NR	5	25SP	G15_076	FROM->TO	GRPRAR1-LNX3345.00 - HOLT.CO3 345.00 345KV CKT 1	720	720	0.04155	104.5637	GEN336170 1-GULF OXY U4
FDNS	00NR	5	25SP	G15_076	FROM->TO	GRPRAR1-LNX3345.00 - HOLT.CO3 345.00 345KV CKT 1	720	720	0.04155	104.5538	BISMARK - WEBER 230KV CKT 1
FDNS	00NR	5	25SP	G15_076	FROM->TO	GRPRAR1-LNX3345.00 - HOLT.CO3 345.00 345KV CKT 1	720	720	0.04155	104.5538	GEN562596 1-G14_059_3 0.6900
FDNS	00NR	5	20SP	G15_076	FROM->TO	GRPRAR1-LNX3345.00 - HOLT.CO3 345.00 345KV CKT 1	720	720	0.04123	104.5526	BASE CASE
FDNS	00NR	5	25SP	G15_076	FROM->TO	GRPRAR1-LNX3345.00 - HOLT.CO3 345.00 345KV CKT 1	720	720	0.04942	104.5419	RAUN - SIOUX CITY 345KV CKT 1
FDNS	00NR	5	25SP	G15_076	FROM->TO	GRPRAR1-LNX3345.00 - HOLT.CO3 345.00 345KV CKT 1	720	720	0.04942	104.5419	RAUN - SIOUX CITY 345KV CKT 1
FDNS	00NR	5	25SP	G15_076	FROM->TO	GRPRAR1-LNX3345.00 - HOLT.CO3 345.00 345KV CKT 1	720	720	0.04155	104.5406	JAMES TOWN - WEBER 230KV CKT 1
FDNS	00NR	5	25SP	G15_076	FROM->TO	GRPRAR1-LNX3345.00 - HOLT.CO3 345.00 345KV CKT 1	720	720	0.04448	104.5314	P13:230-345:NPPD:STEGALL3:KV3A
FDNS	00NR	5	25SP	G15_076	FROM->TO	GRPRAR1-LNX3345.00 - HOLT.CO3 345.00 345KV CKT 1	720	720	0.04448	104.5273	STEGALL (SGQ KV3A) 345/230/13.8KV TRANSFORMER CKT 1
FDNS	00NR	5	25SP	G15_076	FROM->TO	GRPRAR1-LNX3345.00 - HOLT.CO3 345.00 345KV CKT 1	720	720	0.04204	104.5195	SIDNEY - SIDNEY TRANSFORMER 230KV CKT 1

SOLUTION	GROUP	SCENARIO	SEASON	SOURCE	DIRECTION	MONITORED ELEMENT	RATEA (MVA)	RATEB(MVA)	TDF	TC%LOADING (% MVA)	CONTINGENCY
FDNS	00NR	5	25SP	G15_076	FROM->TO	GRPRAR1-LNX3345.00 - HOLT.CO3 345.00 345KV CKT 1	720	720	0.04204	104.5195	SIDNEY (SDQ KV2A) 345/230/13.8KV TRANSFORMER CKT 1
FDNS	00NR	5	25SP	G15_076	FROM->TO	GRPRAR1-LNX3345.00 - HOLT.CO3 345.00 345KV CKT 1	720	720	0.04204	104.5194	P13:230-345:NPPD:SIDNEY 3:KV2A
FDNS	00NR	5	25SP	G15_076	FROM->TO	GRPRAR1-LNX3345.00 - HOLT.CO3 345.00 345KV CKT 1	720	720	0.04448	104.5186	STEGALL - STEGALL TRANSFORMER 230KV CKT 1
FDNS	00NR	5	25SP	G15_076	FROM->TO	GRPRAR1-LNX3345.00 - HOLT.CO3 345.00 345KV CKT 1	720	720	0.04155	104.5175	BALTA - RAMSEY 230KV CKT 1
FDNS	00NR	5	25SP	G15_076	FROM->TO	GRPRAR1-LNX3345.00 - HOLT.CO3 345.00 345KV CKT 1	720	720	0.04126	104.5172	FT THOMPSON - HURON 230KV CKT 1
FDNS	00NR	5	25SP	G15_076	FROM->TO	GRPRAR1-LNX3345.00 - HOLT.CO3 345.00 345KV CKT 1	720	720	0.04126	104.5172	FT THOMPSON - HURON 230KV CKT 1
FDNS	00NR	5	25SP	G15_076	FROM->TO	GRPRAR1-LNX3345.00 - HOLT.CO3 345.00 345KV CKT 1	720	720	0.04126	104.5172	FT THOMPSON - HURON 230KV CKT 2
FDNS	00NR	5	25SP	G15_076	FROM->TO	GRPRAR1-LNX3345.00 - HOLT.CO3 345.00 345KV CKT 1	720	720	0.04126	104.5172	FT THOMPSON - HURON 230KV CKT 2
FDNS	00NR	5	25SP	G15_076	FROM->TO	GRPRAR1-LNX3345.00 - HOLT.CO3 345.00 345KV CKT 1	720	720	0.04196	104.517	HUNTLEY3 345.00 - LAKEFIELD 3 345KV CKT 1
FDNS	00NR	5	25SP	G15_076	FROM->TO	GRPRAR1-LNX3345.00 - HOLT.CO3 345.00 345KV CKT 1	720	720	0.0422	104.5163	P12:230:UMZW:# 733 #: FT IN SD. FT-BG2 LINE FAULT
FDNS	00NR	5	25SP	G15_076	FROM->TO	GRPRAR1-LNX3345.00 - HOLT.CO3 345.00 345KV CKT 1	720	720	0.0422	104.5158	FT THOMPSON - LOWERBRULE 4230.00 230KV CKT 1
FDNS	00NR	5	25SP	G15_076	FROM->TO	GRPRAR1-LNX3345.00 - HOLT.CO3 345.00 345KV CKT 1	720	720	0.0422	104.5158	FT THOMPSON - LOWERBRULE 4230.00 230KV CKT 1
FDNS	00NR	5	25SP	G15_076	FROM->TO	GRPRAR1-LNX3345.00 - HOLT.CO3 345.00 345KV CKT 1	720	720	0.0422	104.5109	LOWERBRULE 4230.00 - RELIANCE 4 230.00 230KV CKT 1
FDNS	00NR	5	25SP	G15_076	FROM->TO	GRPRAR1-LNX3345.00 - HOLT.CO3 345.00 345KV CKT 1	720	720	0.04155	104.4943	GEN501811 1-RODEMACHER UNIT 1
FDNS	00NR	5	25SP	G15_076	FROM->TO	GRPRAR1-LNX3345.00 - HOLT.CO3 345.00 345KV CKT 1	720	720	0.04206	104.4934	P13:115-230:TSGT:SIDNEY-KV1A
FDNS	00NR	5	25SP	G15_076	FROM->TO	GRPRAR1-LNX3345.00 - HOLT.CO3 345.00 345KV CKT 1	720	720	0.04155	104.4749	GEN659118 1-LARAMIE RIVER UNIT1
FDNS	00NR	5	25SP	G15_076	FROM->TO	GRPRAR1-LNX3345.00 - HOLT.CO3 345.00 345KV CKT 1	720	720	0.04157	104.4653	FORMAN - HANKINSON 230KV CKT 1
FDNS	00NR	5	25SP	G15_076	FROM->TO	GRPRAR1-LNX3345.00 - HOLT.CO3 345.00 345KV CKT 1	720	720	0.04155	104.4529	LAWRENCE ENERGY CENTER UNIT 5 - LAWRENCE HILL 230KV CKT 1
FDNS	00NR	5	25SP	G15_076	FROM->TO	GRPRAR1-LNX3345.00 - HOLT.CO3 345.00 345KV CKT 1	720	720	0.04155	104.4529	LAWRENCE ENERGY CENTER UNIT 5 230/24.0KV TRANSFORMER CKT 1
FDNS	00NR	5	25SP	G15_076	FROM->TO	GRPRAR1-LNX3345.00 - HOLT.CO3 345.00 345KV CKT 1	720	720	0.04155	104.4492	GEN334070 1-LEWIS CREEK 1
FDNS	00NR	5	25SP	G15_076	FROM->TO	GRPRAR1-LNX3345.00 - HOLT.CO3 345.00 345KV CKT 1	720	720	0.04155	104.4492	GEN334071 1-LEWIS CREEK 2
FDNS	00NR	5	25SP	G15_076	FROM->TO	GRPRAR1-LNX3345.00 - HOLT.CO3 345.00 345KV CKT 1	720	720	0.04155	104.4489	PRAIRIE ISLAND 345/20.0KV TRANSFORMER CKT 1
FDNS	00NR	5	25SP	G15_076	FROM->TO	GRPRAR1-LNX3345.00 - HOLT.CO3 345.00 345KV CKT 1	720	720	0.04155	104.4477	PRAIRIE ISLAND 345/20.0KV TRANSFORMER CKT 2
FDNS	00NR	5	25SP	G15_076	FROM->TO	GRPRAR1-LNX3345.00 - HOLT.CO3 345.00 345KV CKT 1	720	720	0.04097	104.4451	GREGORY - WINNER 115KV CKT 1
FDNS	00NR	5	25SP	G15_076	FROM->TO	GRPRAR1-LNX3345.00 - HOLT.CO3 345.00 345KV CKT 1	720	720	0.04155	104.4295	TATANKA 230/34.5KV TRANSFORMER CKT 1
FDNS	00NR	5	25SP	G15_076	FROM->TO	GRPRAR1-LNX3345.00 - HOLT.CO3 345.00 345KV CKT 1	720	720	0.04155	104.4288	SEMINOLE 138/20.9KV TRANSFORMER CKT 1
FDNS	00NR	5	25SP	G15_076	FROM->TO	GRPRAR1-LNX3345.00 - HOLT.CO3 345.00 345KV CKT 1	720	720	0.04097	104.4227	P12:115:UMZW:# 172 #: WI IN SD.
FDNS	00NR	5	25SP	G15_076	FROM->TO	GRPRAR1-LNX3345.00 - HOLT.CO3 345.00 345KV CKT 1	720	720	0.04155	104.4132	GEN337766 1-TRACTEBEL UNIT S1
FDNS	00NR	5	25SP	G15_076	FROM->TO	GRPRAR1-LNX3345.00 - HOLT.CO3 345.00 345KV CKT 1	720	720	0.04155	104.4063	GEN645012 2-NEBRASKA CITY 2
FDNS	00NR	5	25SP	G15_076	FROM->TO	GRPRAR1-LNX3345.00 - HOLT.CO3 345.00 345KV CKT 1	720	720	0.04155	104.4003	GEN337757 1-DUKE HOTSPRINGS STG1
FDNS	00NR	5	25SP	G15_076	FROM->TO	GRPRAR1-LNX3345.00 - HOLT.CO3 345.00 345KV CKT 1	720	720	0.04155	104.3922	ELM CREEK - MONTICELLO 345KV CKT 1
FDNS	00NR	5	25SP	G15_076	FROM->TO	GRPRAR1-LNX3345.00 - HOLT.CO3 345.00 345KV CKT 1	720	720	0.04155	104.3786	GEN501910 1-ACADIA UNIT ST1
FDNS	00NR	5	25SP	G15_076	FROM->TO	GRPRAR1-LNX3345.00 - HOLT.CO3 345.00 345KV CKT 1	720	720	0.04157	104.3757	AUDUBON - SHEYNNE 230KV CKT 1
FDNS	00NR	5	25SP	G15_076	FROM->TO	GRPRAR1-LNX3345.00 - HOLT.CO3 345.00 345KV CKT 1	720	720	0.0413	104.3727	MT VERN - STORLA 115KV CKT 1
FDNS	00NR	5	25SP	G15_076	FROM->TO	GRPRAR1-LNX3345.00 - HOLT.CO3 345.00 345KV CKT 1	720	720	0.04161	104.3722	HANKINSON - WAHPETON 230KV CKT 1
FDNS	00NR	5	25SP	G15_076	FROM->TO	GRPRAR1-LNX3345.00 - HOLT.CO3 345.00 345KV CKT 1	720	720	0.04155	104.3709	GEN645011 1-NEBRASKA CITY 1
FDNS	00NR	5	25SP	G15_076	FROM->TO	GRPRAR1-LNX3345.00 - HOLT.CO3 345.00 345KV CKT 1	720	720	0.04212	104.3685	P12:115:NPPD:WAPA1:CHADRON7:BOXBUTE7:BTB
FDNS	00NR	5	25SP	G15_076	FROM->TO	GRPRAR1-LNX3345.00 - HOLT.CO3 345.00 345KV CKT 1	720	720	0.04156	104.3624	ELLENDLMVP4 230.00 - OAKES 230KV CKT 1
FDNS	00NR	5	25SP	G15_076	FROM->TO	GRPRAR1-LNX3345.00 - HOLT.CO3 345.00 345KV CKT 1	720	720	0.04156	104.3624	ELLENDLMVP4 230.00 - OAKES 230KV CKT 1
FDNS	00NR	5	25SP	G15_076	FROM->TO	GRPRAR1-LNX3345.00 - HOLT.CO3 345.00 345KV CKT 1	720	720	0.04156	104.3623	FORMAN - OAKES 230KV CKT 1
FDNS	00NR	5	25SP	G15_076	FROM->TO	GRPRAR1-LNX3345.00 - HOLT.CO3 345.00 345KV CKT 1	720	720	0.04178	104.3612	OVEXFRMCCOVE
FDNS	00NR	5	25SP	G15_076	FROM->TO	GRPRAR1-LNX3345.00 - HOLT.CO3 345.00 345KV CKT 1	720	720	0.04155	104.3558	GEN336221 1-LITTLE GYPSY UNIT#1
FDNS	00NR	5	25SP	G15_076	FROM->TO	GRPRAR1-LNX3345.00 - HOLT.CO3 345.00 345KV CKT 1	720	720	0.05396	104.3477	BELDEN - HOSKINS 115KV CKT 1
FDNS	00NR	5	25SP	G15_076	FROM->TO	GRPRAR1-LNX3345.00 - HOLT.CO3 345.00 345KV CKT 1	720	720	0.0422	104.3462	RELIANCE 4 230.00 - WITTEN 4 230.00 230KV CKT 1
FDNS	00NR	5	25SP	G15_076	FROM->TO	GRPRAR1-LNX3345.00 - HOLT.CO3 345.00 345KV CKT 1	720	720	0.0416	104.3435	FERGSFL4 230.00 - WAHPETON 230KV CKT 1
FDNS	00NR	5	25SP	G15_076	FROM->TO	GRPRAR1-LNX3345.00 - HOLT.CO3 345.00 345KV CKT 1	720	720	0.04155	104.3421	PRAIRIE - WINGER 230KV CKT 1
FDNS	00NR	5	25SP	G15_076	FROM->TO	GRPRAR1-LNX3345.00 - HOLT.CO3 345.00 345KV CKT 1	720	720	0.04155	104.3393	GEN532651 1-JEFFREY ENERGY CENTER UNIT 1
FDNS	00NR	5	25SP	G15_076	FROM->TO	GRPRAR1-LNX3345.00 - HOLT.CO3 345.00 345KV CKT 1	720	720	0.04167	104.3385	FRANKS - HUBEN 345KV CKT 1
FDNS	00NR	5	25SP	G15_076	FROM->TO	GRPRAR1-LNX3345.00 - HOLT.CO3 345.00 345KV CKT 1	720	720	0.04155	104.3351	GEN562912 1-G15053_3 0.6900
FDNS	00NR	5	25SP	G15_076	FROM->TO	GRPRAR1-LNX3345.00 - HOLT.CO3 345.00 345KV CKT 1	720	720	0.04155	104.3339	GEN532652 1-JEFFREY ENERGY CENTER UNIT 2
FDNS	00NR	5	25SP	G15_076	FROM->TO	GRPRAR1-LNX3345.00 - HOLT.CO3 345.00 345KV CKT 1	720	720	0.04155	104.3338	GEN532653 1-JEFFREY ENERGY CENTER UNIT 3
FDNS	00NR	5	25SP	G15_076	FROM->TO	GRPRAR1-LNX3345.00 - HOLT.CO3 345.00 345KV CKT 1	720	720	0.04155	104.3235	J316_SUB 230.00 230/34.5KV TRANSFORMER CKT 1
FDNS	00NR	5	25SP	G15_076	FROM->TO	GRPRAR1-LNX3345.00 - HOLT.CO3 345.00 345KV CKT 1	720	720	0.04155	104.3226	GEN334431 1-SABINE UNIT 1
FDNS	00NR	5	25SP	G15_076	FROM->TO	GRPRAR1-LNX3345.00 - HOLT.CO3 345.00 345KV CKT 1	720	720	0.04155	104.3226	GEN334432 1-SABINE UNIT 2
FDNS	00NR	5	25SP	G15_076	FROM->TO	GRPRAR1-LNX3345.00 - HOLT.CO3 345.00 345KV CKT 1	720	720	0.04254	104.3212	NOBLES - SPLIT ROCK 345KV CKT 1
FDNS	00NR	5	25SP	G15_076	FROM->TO	GRPRAR1-LNX3345.00 - HOLT.CO3 345.00 345KV CKT 1	720	720	0.04155	104.3194	GEN345765 H-1SIOUX 2 18.000
FDNS	00NR	5	25SP	G15_076	FROM->TO	GRPRAR1-LNX3345.00 - HOLT.CO3 345.00 345KV CKT 1	720	720	0.04155	104.3185	GEN337764 1-TRACTEBEL UNIT C1
FDNS	00NR	5	25SP	G15_076	FROM->TO	GRPRAR1-LNX3345.00 - HOLT.CO3 345.00 345KV CKT 1	720	720	0.04155	104.3185	GEN337765 1-TRACTEBEL UNIT C2
FDNS	00NR	5	25SP	G15_076	FROM->TO	GRPRAR1-LNX3345.00 - HOLT.CO3 345.00 345KV CKT 1	720	720	0.04155	104.3183	GEN336446 1-MICHOUD UNIT #2
FDNS	00NR	5	25SP	G15_076	FROM->TO	GRPRAR1-LNX3345.00 - HOLT.CO3 345.00 345KV CKT 1	720	720	0.04155	104.3175	GRAND GULF 500/22.0KV TRANSFORMER CKT 1
FDNS	00NR	5	25SP	G15_076	FROM->TO	GRPRAR1-LNX3345.00 - HOLT.CO3 345.00 345KV CKT 1	720	720	0.04212	104.3159	CHADRON - DUNLAP 115KV CKT 1
FDNS	00NR	5	25SP	G15_076	FROM->TO	GRPRAR1-LNX3345.00 - HOLT.CO3 345.00 345KV CKT 1	720	720	0.04254	104.3096	PLYMOUTH - SIOUX CITY 161KV CKT 1
FDNS	00NR	5	25SP	G15_076	FROM->TO	GRPRAR1-LNX3345.00 - HOLT.CO3 345.00 345KV CKT 1	720	720	0.04254	104.3096	PLYMOUTH - SIOUX CITY 161KV CKT 1
FDNS	00NR	5	25SP	G15_076	FROM->TO	GRPRAR1-LNX3345.00 - HOLT.CO3 345.00 345KV CKT 1	720	720	0.0422	104.3074	WITTEN 4 230.00 () 230/115/13.8KV TRANSFORMER CKT 1
FDNS	00NR	5	25SP	G15_076	FROM->TO	GRPRAR1-LNX3345.00 - HOLT.CO3 345.00 345KV CKT 1	720	720	0.04228	104.3061	DENISON - SIOUX CITY 230KV CKT 1
FDNS	00NR	5	17SP	G15_076	FROM->TO	GRPRAR1-LNX3345.00 - HOLT.CO3 345.00 345KV CKT 1	720	720	0.04284	104.3052	GEN659125 1-COVEY
FDNS	00NR	5	25SP	G15_076	FROM->TO	GRPRAR1-LNX3345.00 - HOLT.CO3 345.00 345KV CKT 1	720	720	0.04156	104.2932	BALTA - MCHENRY 230KV CKT 1
FDNS	00NR	5	25SP	G15_076	FROM->TO	GRPRAR1-LNX3345.00 - HOLT.CO3 345.00 345KV CKT 1	720	720	0.04159	104.2915	FERGSFL4 230.00 - GRE-SILVRLK4230.00 230KV CKT 1
FDNS	00NR	5	25SP	G15_076	FROM->TO	GRPRAR1-LNX3345.00 - HOLT.CO3 345.00 345KV CKT 1	720	720	0.04259	104.2862	MARTIN - SHANNON 115KV CKT 1
FDNS	00NR	5	25SP	G15_076	FROM->TO	GRPRAR1-LNX3345.00 - HOLT.CO3 345.00 345KV CKT 1	720	720	0.04155	104.2805	TOLK STATION EAST 230/24.0KV TRANSFORMER CKT 1
FDNS	00NR	5	25SP	G15_076	FROM->TO	GRPRAR1-LNX3345.00 - HOLT.CO3 345.00 345KV CKT 1	720	720	0.04155	104.2802	GEN501823 1-TECHE UNIT 3
FDNS	00NR	5	25SP	G15_076	FROM->TO	GRPRAR1-LNX3345.00 - HOLT.CO3 345.00 345KV CKT 1	720	720	0.04155	104.2796	GEN336242 1-1NMIL ST1 18.000
FDNS	00NR	5	25SP	G15_076	FROM->TO	GRPRAR1-LNX3345.00 - HOLT.CO3 345.00 345KV CKT 1	720	720	0.04155	104.279	GEN636641 1-LOUISA UNIT 1
FDNS	00NR	5	25SP	G15_076	FROM->TO	GRPRAR1-LNX3345.00 - HOLT.CO3 345.00 345KV CKT 1	720	720	0.04169	104.2778	GRE-CEDARMT3345.00 - HELENA 345KV CKT 1
FDNS	00NR	5	25SP	G15_076	FROM->TO	GRPRAR1-LNX3345.00 - HOLT.CO3 345.00 345KV CKT 1	720	720	0.04169	104.2778	GRE-CEDARMT3345.00 - HELENA 345KV CKT 2
FDNS	00NR	5	25SP	G15_076	FROM->TO	GRPRAR1-LNX3345.00 - HOLT.CO3 345.00 345KV CKT 1	720	720	0.04404	104.2681	OAHE - PHILIP TAP 230KV CKT 1
FDNS	00NR	5	25SP	G15_076	FROM->TO	GRPRAR1-LNX3345.00 - HOLT.CO3 345.00 345KV CKT 1	720	720	0.04174	104.2674	HAMPTON CORNER - NORTH ROCHESTER 345KV CKT 1
FDNS	00NR	5	25SP	G15_076	FROM->TO	GRPRAR1-LNX3345.00 - HOLT.CO3 345.00 345KV CKT 1	720	720	0.04155	104.262	JUDSON LARGE 115/15.0KV TRANSFORMER CKT 1
FDNS	00NR	5	25SP	G15_076	FROM->TO	GRPRAR1-LNX3345.00 - HOLT.CO3 345.00 345KV CKT 1	720	720	0.04155	104.262	JUDSON LARGE 115/15.0KV TRANSFORMER CKT 1

SOLUTION	GROUP	SCENARIO	SEASON	SOURCE	DIRECTION	MONITORED ELEMENT	RATEA (MVA)	RATEB(MVA)	TDF	TC%LOADING (% MVA)	CONTINGENCY
FDNS	00NR	5	25SP	G15_076	FROM->TO	GRPRAR1-LNX3345.00 - HOLT.CO3 345.00 345KV CKT 1	720	720	0.04155	104.2557	OKLAUN 345/24.0KV TRANSFORMER CKT 1
FDNS	00NR	5	25SP	G15_076	FROM->TO	GRPRAR1-LNX3345.00 - HOLT.CO3 345.00 345KV CKT 1	720	720	0.04155	104.2541	GEN562438 1-G13-032 0.6900
FDNS	00NR	5	25SP	G15_076	FROM->TO	GRPRAR1-LNX3345.00 - HOLT.CO3 345.00 345KV CKT 1	720	720	0.04155	104.2522	GEN334030 1-FRONTIER UNIT 1
FDNS	00NR	5	25SP	G15_076	FROM->TO	GRPRAR1-LNX3345.00 - HOLT.CO3 345.00 345KV CKT 1	720	720	0.04155	104.2519	GEN334031 1-FRONTIER UNIT 2
FDNS	00NR	5	25SP	G15_076	FROM->TO	GRPRAR1-LNX3345.00 - HOLT.CO3 345.00 345KV CKT 1	720	720	0.04155	104.2515	GEN345756 H-1SIOUX 1 18.000
FDNS	00NR	5	25SP	G15_076	FROM->TO	GRPRAR1-LNX3345.00 - HOLT.CO3 345.00 345KV CKT 1	720	720	0.04166	104.2488	GRE-CEDARMT3345.00 - LYON COUNTY 345KV CKT 2
FDNS	00NR	5	25SP	G15_076	FROM->TO	GRPRAR1-LNX3345.00 - HOLT.CO3 345.00 345KV CKT 1	720	720	0.04179	104.2485	CHADRON - WAYSIDE 115KV CKT 1
FDNS	00NR	5	25SP	G15_076	FROM->TO	GRPRAR1-LNX3345.00 - HOLT.CO3 345.00 345KV CKT 1	720	720	0.04179	104.2485	P13:115-230:NPPD:WAYSIDE4:T1
FDNS	00NR	5	25SP	G15_076	FROM->TO	GRPRAR1-LNX3345.00 - HOLT.CO3 345.00 345KV CKT 1	720	720	0.04155	104.2466	GEN338443 1-PANDA S1
FDNS	00NR	5	25SP	G15_076	FROM->TO	GRPRAR1-LNX3345.00 - HOLT.CO3 345.00 345KV CKT 1	720	720	0.04155	104.2466	P13:230-345:NPPD:NUCOR-1
FDNS	00NR	5	25SP	G15_076	FROM->TO	GRPRAR1-LNX3345.00 - HOLT.CO3 345.00 345KV CKT 1	720	720	0.04179	104.2452	WAYSIDE (WAYSIDE T1) 230/115/13.8KV TRANSFORMER CKT 1
FDNS	00NR	5	25SP	G15_076	FROM->TO	GRPRAR1-LNX3345.00 - HOLT.CO3 345.00 345KV CKT 1	720	720	0.03969	104.243	FT RANDAL - WHITE SWAN 115KV CKT 1
FDNS	00NR	5	25SP	G15_076	FROM->TO	GRPRAR1-LNX3345.00 - HOLT.CO3 345.00 345KV CKT 1	720	720	0.04155	104.2421	GEN336944 1-REX BROWN
FDNS	00NR	5	25SP	G15_076	FROM->TO	GRPRAR1-LNX3345.00 - HOLT.CO3 345.00 345KV CKT 1	720	720	0.04155	104.2406	GEN345832 1-1TS G1 13.800
FDNS	00NR	5	25SP	G15_076	FROM->TO	GRPRAR1-LNX3345.00 - HOLT.CO3 345.00 345KV CKT 1	720	720	0.04155	104.2403	GEN345841 2-1TS G2 13.800
FDNS	00NR	5	25SP	G15_076	FROM->TO	GRPRAR1-LNX3345.00 - HOLT.CO3 345.00 345KV CKT 1	720	720	0.04155	104.2397	GEN501970 1-EVANGELINE UNIT 7
FDNS	00NR	5	25SP	G15_076	FROM->TO	GRPRAR1-LNX3345.00 - HOLT.CO3 345.00 345KV CKT 1	720	720	0.04155	104.2325	GEN335612 1-WILLOW GLENN UNIT#2
FDNS	00NR	5	20SP	G15_076	FROM->TO	GRPRAR1-LNX3345.00 - HOLT.CO3 345.00 345KV CKT 1	720	720	0.04142	104.1598	BUCKNER7 345.00 - SPEARVILLE 345KV CKT 1
FDNS	00NR	5	20SP	G15_076	FROM->TO	GRPRAR1-LNX3345.00 - HOLT.CO3 345.00 345KV CKT 1	720	720	0.04142	104.1598	BUCKNER7 345.00 - SPEARVILLE 345KV CKT 1
FDNS	00NR	5	25SP	G15_076	FROM->TO	GRPRAR1-LNX3345.00 - HOLT.CO3 345.00 345KV CKT 1	720	720	0.04155	104.1388	GEN563282 1-G15094_3 0.6900
FDNS	00NR	5	20SP	G15_076	FROM->TO	GRPRAR1-LNX3345.00 - HOLT.CO3 345.00 345KV CKT 1	720	720	0.04141	104.1177	FT THOMPSON - OAHE 230KV CKT 1
FDNS	00NR	5	20SP	G15_076	FROM->TO	GRPRAR1-LNX3345.00 - HOLT.CO3 345.00 345KV CKT 1	720	720	0.04141	104.1177	FT THOMPSON - OAHE 230KV CKT 1
FDNS	00NR	5	20SP	G15_076	FROM->TO	GRPRAR1-LNX3345.00 - HOLT.CO3 345.00 345KV CKT 1	720	720	0.04141	104.1177	FT THOMPSON - OAHE 230KV CKT 2
FDNS	00NR	5	20SP	G15_076	FROM->TO	GRPRAR1-LNX3345.00 - HOLT.CO3 345.00 345KV CKT 1	720	720	0.04141	104.1177	FT THOMPSON - OAHE 230KV CKT 2
FDNS	00NR	5	20SP	G15_076	FROM->TO	GRPRAR1-LNX3345.00 - HOLT.CO3 345.00 345KV CKT 1	720	720	0.04405	104.1054	MINGO - RED WILLOW 345KV CKT 1
FDNS	00NR	5	20SP	G15_076	FROM->TO	GRPRAR1-LNX3345.00 - HOLT.CO3 345.00 345KV CKT 1	720	720	0.04405	104.1054	MINGO - RED WILLOW 345KV CKT 1
FDNS	00NR	5	20SP	G15_076	FROM->TO	GRPRAR1-LNX3345.00 - HOLT.CO3 345.00 345KV CKT 1	720	720	0.04141	104.0911	FT THOMPSON - OAHE 230KV CKT 3
FDNS	00NR	5	20SP	G15_076	FROM->TO	GRPRAR1-LNX3345.00 - HOLT.CO3 345.00 345KV CKT 1	720	720	0.04141	104.0911	FT THOMPSON - OAHE 230KV CKT 3
FDNS	00NR	5	20SP	G15_076	FROM->TO	GRPRAR1-LNX3345.00 - HOLT.CO3 345.00 345KV CKT 1	720	720	0.04141	104.0911	FT THOMPSON - OAHE 230KV CKT 4
FDNS	00NR	5	20SP	G15_076	FROM->TO	GRPRAR1-LNX3345.00 - HOLT.CO3 345.00 345KV CKT 1	720	720	0.04141	104.0911	FT THOMPSON - OAHE 230KV CKT 4
FDNS	00NR	5	20SP	G15_076	FROM->TO	GRPRAR1-LNX3345.00 - HOLT.CO3 345.00 345KV CKT 1	720	720	0.04197	104.063	AXTELL - POST ROCK 345KV CKT 1
FDNS	00NR	5	20SP	G15_076	FROM->TO	GRPRAR1-LNX3345.00 - HOLT.CO3 345.00 345KV CKT 1	720	720	0.0406	104.0513	NELIGH - PETERSBRG.N7115.00 115KV CKT 1
FDNS	00NR	5	20SP	G15_076	FROM->TO	GRPRAR1-LNX3345.00 - HOLT.CO3 345.00 345KV CKT 1	720	720	0.04135	104.0485	G11_051T 345.00 - WOODWARD DISTRICT EHV 345KV CKT 1
FDNS	00NR	5	20SP	G15_076	FROM->TO	GRPRAR1-LNX3345.00 - HOLT.CO3 345.00 345KV CKT 1	720	720	0.04119	104.0474	BISMARK - L3 HAWDON 230KV CKT 1
FDNS	00NR	5	20SP	G15_076	FROM->TO	GRPRAR1-LNX3345.00 - HOLT.CO3 345.00 345KV CKT 1	720	720	0.04151	104.0434	FALLOW 3 345.00 - GRIMES 345KV CKT 1
FDNS	00NR	5	20SP	G15_076	FROM->TO	GRPRAR1-LNX3345.00 - HOLT.CO3 345.00 345KV CKT 1	720	720	0.04123	104.0383	GEN659147 1-PIONEER 1G13.800
FDNS	00NR	5	20SP	G15_076	FROM->TO	GRPRAR1-LNX3345.00 - HOLT.CO3 345.00 345KV CKT 1	720	720	0.04123	104.0383	GEN659158 2-PIONEER G213.800
FDNS	00NR	5	20SP	G15_076	FROM->TO	GRPRAR1-LNX3345.00 - HOLT.CO3 345.00 345KV CKT 1	720	720	0.04123	104.0383	GEN659159 3-PIONEER G313.800
FDNS	00NR	5	20SP	G15_076	FROM->TO	GRPRAR1-LNX3345.00 - HOLT.CO3 345.00 345KV CKT 1	720	720	0.04123	104.0378	GEN659148 1-LONESMCRK 1G13.800
FDNS	00NR	5	20SP	G15_076	FROM->TO	GRPRAR1-LNX3345.00 - HOLT.CO3 345.00 345KV CKT 1	720	720	0.04123	104.0378	GEN659156 2-LONESMCRK 2G13.800
FDNS	00NR	5	20SP	G15_076	FROM->TO	GRPRAR1-LNX3345.00 - HOLT.CO3 345.00 345KV CKT 1	720	720	0.04123	104.0378	GEN659157 3-LONESMCRK 3G13.800
FDNS	00NR	5	20SP	G15_076	FROM->TO	GRPRAR1-LNX3345.00 - HOLT.CO3 345.00 345KV CKT 1	720	720	0.04123	104.0331	GEN657964 1-ASH2GEN9 0.5750
FDNS	00NR	5	20SP	G15_076	FROM->TO	GRPRAR1-LNX3345.00 - HOLT.CO3 345.00 345KV CKT 1	720	720	0.04123	104.0322	GEN672367 1-MERIDIAN GENERATOR 1 GT1
FDNS	00NR	5	20SP	G15_076	FROM->TO	GRPRAR1-LNX3345.00 - HOLT.CO3 345.00 345KV CKT 1	720	720	0.04123	104.0322	GEN672368 2-MERIDIAN GENERATOR 2 GT2
FDNS	00NR	5	20SP	G15_076	FROM->TO	GRPRAR1-LNX3345.00 - HOLT.CO3 345.00 345KV CKT 1	720	720	0.04123	104.0314	GEN672358 1-CHAPLN1W 0.6900
FDNS	00NR	5	20SP	G15_076	FROM->TO	GRPRAR1-LNX3345.00 - HOLT.CO3 345.00 345KV CKT 1	720	720	0.0412	104.0109	G15-005T 345.00 - MULLNCR7 345.00 345KV CKT 1
FDNS	00NR	5	20SP	G15_076	FROM->TO	GRPRAR1-LNX3345.00 - HOLT.CO3 345.00 345KV CKT 1	720	720	0.0406	104.0107	ALBION - PETERSBURG 115KV CKT 1
FDNS	00NR	5	20SP	G15_076	FROM->TO	GRPRAR1-LNX3345.00 - HOLT.CO3 345.00 345KV CKT 1	720	720	0.04123	104.0087	GEN672349 3-CORY COGEN GENERATOR 3 ST
FDNS	00NR	5	20SP	G15_076	FROM->TO	GRPRAR1-LNX3345.00 - HOLT.CO3 345.00 345KV CKT 1	720	720	0.04123	104.0063	GEN672350 1-NIPAWIN GENERATOR 1
FDNS	00NR	5	20SP	G15_076	FROM->TO	GRPRAR1-LNX3345.00 - HOLT.CO3 345.00 345KV CKT 1	720	720	0.04123	104.0063	GEN672351 2-NIPAWIN GENERATOR 2
FDNS	00NR	5	20SP	G15_076	FROM->TO	GRPRAR1-LNX3345.00 - HOLT.CO3 345.00 345KV CKT 1	720	720	0.04123	104.0063	GEN672352 3-NIPAWIN GENERATOR 3
FDNS	00NR	5	20SP	G15_076	FROM->TO	GRPRAR1-LNX3345.00 - HOLT.CO3 345.00 345KV CKT 1	720	720	0.04139	104.0059	POST ROCK (POSTROCK T1) 345/230/13.8KV TRANSFORMER CKT 1
FDNS	00NR	5	20SP	G15_076	FROM->TO	GRPRAR1-LNX3345.00 - HOLT.CO3 345.00 345KV CKT 1	720	720	0.04123	104.0009	GEN600012 2-BLACK DOG GEN 2
FDNSLock	00NR	5	20SP	G15_076	FROM->TO	GRPRAR1-LNX3345.00 - HOLT.CO3 345.00 345KV CKT 1	720	720	0.04106	103.9949	WATERTOWN (WT2 KU1A) 345/230/13.8KV TRANSFORMER CKT 1
FDNS	00NR	5	20SP	G15_076	FROM->TO	GRPRAR1-LNX3345.00 - HOLT.CO3 345.00 345KV CKT 1	720	720	0.04007	103.9857	COOPER - MOORE 345KV CKT 1
FDNS	00NR	5	20SP	G15_076	FROM->TO	GRPRAR1-LNX3345.00 - HOLT.CO3 345.00 345KV CKT 1	720	720	0.0428	103.9853	G15061_T 345.00 - SETAB 345KV CKT 1
FDNS	00NR	5	20SP	G15_076	FROM->TO	GRPRAR1-LNX3345.00 - HOLT.CO3 345.00 345KV CKT 1	720	720	0.04123	103.9823	GEN590010 1-ERCOT EQUIVALENCE
FDNS	00NR	5	20SP	G15_076	FROM->TO	GRPRAR1-LNX3345.00 - HOLT.CO3 345.00 345KV CKT 1	720	720	0.03055	103.9816	SIOUX CITY - TWINCH 3 345.00 345KV CKT 1
FDNS	00NR	5	20SP	G15_076	FROM->TO	GRPRAR1-LNX3345.00 - HOLT.CO3 345.00 345KV CKT 1	720	720	0.04299	103.9812	BATTLE CREEK - COUNTY LINE 115KV CKT 1
FDNS	00NR	5	20SP	G15_076	FROM->TO	GRPRAR1-LNX3345.00 - HOLT.CO3 345.00 345KV CKT 1	720	720	0.0406	103.9703	P12:115:NPPD:1168B:ALBION 7:PETERSBRG.N7:BTB
FDNS	00NR	5	20SP	G15_076	FROM->TO	GRPRAR1-LNX3345.00 - HOLT.CO3 345.00 345KV CKT 1	720	720	0.0412	103.9698	G15-005T 345.00 - SIBLEY 345KV CKT 1
FDNS	00NR	5	20SP	G15_076	FROM->TO	GRPRAR1-LNX3345.00 - HOLT.CO3 345.00 345KV CKT 1	720	720	0.04123	103.9684	GEN652548 5-FT RANDAL
FDNS	00NR	5	20SP	G15_076	FROM->TO	GRPRAR1-LNX3345.00 - HOLT.CO3 345.00 345KV CKT 1	720	720	0.04123	103.9684	GEN652549 7-FT RANDAL
FDNS	00NR	5	20SP	G15_076	FROM->TO	GRPRAR1-LNX3345.00 - HOLT.CO3 345.00 345KV CKT 1	720	720	0.0406	103.9669	PETERSBRG.N7115.00 - PETERSBURG 115KV CKT Z1
FDNS	00NR	5	20SP	G15_076	FROM->TO	GRPRAR1-LNX3345.00 - HOLT.CO3 345.00 345KV CKT 1	720	720	0.04123	103.9638	GEN652547 3-FT RANDAL
FDNS	00NR	5	20SP	G15_076	FROM->TO	GRPRAR1-LNX3345.00 - HOLT.CO3 345.00 345KV CKT 1	720	720	0.04123	103.9623	EMERY 161/18.0KV TRANSFORMER CKT 1
FDNS	00NR	5	20SP	G15_076	FROM->TO	GRPRAR1-LNX3345.00 - HOLT.CO3 345.00 345KV CKT 1	720	720	0.03948	103.9621	COLUMEAST - NW68TH & HOLDREGE 345KV CKT 1
FDNS	00NR	5	20SP	G15_076	FROM->TO	GRPRAR1-LNX3345.00 - HOLT.CO3 345.00 345KV CKT 1	720	720	0.03948	103.9621	COLUMEAST - NW68TH & HOLDREGE 345KV CKT 1
FDNS	00NR	5	20SP	G15_076	FROM->TO	GRPRAR1-LNX3345.00 - HOLT.CO3 345.00 345KV CKT 1	720	720	0.04123	103.962	GEN652546 1-FT RANDAL
FDNS	00NR	5	20SP	G15_076	FROM->TO	GRPRAR1-LNX3345.00 - HOLT.CO3 345.00 345KV CKT 1	720	720	0.04123	103.9558	GEN590011 2-ERCOT EQUIVALENCE
FDNS	00NR	5	20SP	G15_076	FROM->TO	GRPRAR1-LNX3345.00 - HOLT.CO3 345.00 345KV CKT 1	720	720	0.04123	103.9469	GEN300003 1-THOMAS HILL UNIT 3
FDNS	00NR	5	20SP	G15_076	FROM->TO	GRPRAR1-LNX3345.00 - HOLT.CO3 345.00 345KV CKT 1	720	720	0.04129	103.943	DRAYTON - LETELLIER 230KV CKT 1
FDNS	00NR	5	20SP	G15_076	FROM->TO	GRPRAR1-LNX3345.00 - HOLT.CO3 345.00 345KV CKT 1	720	720	0.04132	103.9419	ANTELOP-LNX3345.00 - BRDLAND-LNX3345.00 345KV CKT 1
FDNS	00NR	5	20SP	G15_076	FROM->TO	GRPRAR1-LNX3345.00 - HOLT.CO3 345.00 345KV CKT 1	720	720	0.04152	103.9411	LARAMIE RIVER - STEGALL 345KV CKT 1
FDNS	00NR	5	20SP	G15_076	FROM->TO	GRPRAR1-LNX3345.00 - HOLT.CO3 345.00 345KV CKT 1	720	720	0.04123	103.9386	GEN600046 1-MECST
FDNS	00NR	5	20SP	G15_076	FROM->TO	GRPRAR1-LNX3345.00 - HOLT.CO3 345.00 345KV CKT 1	720	720	0.0384	103.9371	FT THOMPSON (FT2 KU1A) 345/230/13.8KV TRANSFORMER CKT 1
FDNS	00NR	5	20SP	G15_076	FROM->TO	GRPRAR1-LNX3345.00 - HOLT.CO3 345.00 345KV CKT 1	720	720	0.04123	103.9353	GEN659290 1-EDGECOL
FDNS	00NR	5	20SP	G15_076	FROM->TO	GRPRAR1-LNX3345.00 - HOLT.CO3 345.00 345KV CKT 1	720	720	0.04123	103.9353	GEN672339 16-QE 16G 13.800
FDNS	00NR	5	20SP	G15_076	FROM->TO	GRPRAR1-LNX3345.00 - HOLT.CO3 345.00 345KV CKT 1	720	720	0.03839	103.9346	FT THOMPSON (FT2 KU1B) 345/230/13.8KV TRANSFORMER CKT 1

SOLUTION	GROUP	SCENARIO	SEASON	SOURCE	DIRECTION	MONITORED ELEMENT	RATEA (MVA)	RATEB(MVA)	TDF	TC%LOADING (% MVA)	CONTINGENCY
FDNS	00NR	5	20SP	G15_076	FROM->TO	GRPRAR1-LNX3345.00 - HOLT.CO3 345.00 345KV CKT 1	720	720	0.04123	103.9214	GEN672393 2-NBECST2G 13.800
FDNS	00NR	5	20SP	G15_076	FROM->TO	GRPRAR1-LNX3345.00 - HOLT.CO3 345.00 345KV CKT 1	720	720	0.04123	103.9196	GEN600050 1-FEP
FDNS	00NR	5	20SP	G15_076	FROM->TO	GRPRAR1-LNX3345.00 - HOLT.CO3 345.00 345KV CKT 1	720	720	0.04299	103.9177	ANTELOPE 7115.00 - COUNTY LINE 115KV CKT 1
FDNS	00NR	5	20SP	G15_076	FROM->TO	GRPRAR1-LNX3345.00 - HOLT.CO3 345.00 345KV CKT 1	720	720	0.04123	103.9077	GEN620324 3-HOOT LAKE 3 GEN
FDNS	00NR	5	20SP	G15_076	FROM->TO	GRPRAR1-LNX3345.00 - HOLT.CO3 345.00 345KV CKT 1	720	720	0.04183	103.9057	THEDFRD3 345.00 (THEDFORDT2) 345/115/13.8KV TRANSFORMER CKT 1
FDNS	00NR	5	20SP	G15_076	FROM->TO	GRPRAR1-LNX3345.00 - HOLT.CO3 345.00 345KV CKT 1	720	720	0.04123	103.9001	GEN672342 3-QUEEN ELIZABETH GENERATOR 3
FDNS	00NR	5	20SP	G15_076	FROM->TO	GRPRAR1-LNX3345.00 - HOLT.CO3 345.00 345KV CKT 1	720	720	0.03945	103.8986	COLUMEAST - SHELL CREEK 345KV CKT 1
FDNS	00NR	5	20SP	G15_076	FROM->TO	GRPRAR1-LNX3345.00 - HOLT.CO3 345.00 345KV CKT 1	720	720	0.04123	103.8909	GEN652410 3-FT PECK
FDNS	00NR	5	20SP	G15_076	FROM->TO	GRPRAR1-LNX3345.00 - HOLT.CO3 345.00 345KV CKT 1	720	720	0.04123	103.8857	LADISH 115/13.2KV TRANSFORMER CKT 1
FDNS	00NR	5	20SP	G15_076	FROM->TO	GRPRAR1-LNX3345.00 - HOLT.CO3 345.00 345KV CKT 1	720	720	0.04123	103.8856	GEN600047 1-MECCT1
FDNS	00NR	5	20SP	G15_076	FROM->TO	GRPRAR1-LNX3345.00 - HOLT.CO3 345.00 345KV CKT 1	720	720	0.04123	103.8682	GEN660003 3-HURON WEST PARK
FDNS	00NR	5	20SP	G15_076	FROM->TO	GRPRAR1-LNX3345.00 - HOLT.CO3 345.00 345KV CKT 1	720	720	0.04123	103.858	GEN660001 2-ABERDEEN SIEBRECHT
FDNS	00NR	5	20SP	G15_076	FROM->TO	GRPRAR1-LNX3345.00 - HOLT.CO3 345.00 345KV CKT 1	720	720	0.04123	103.8368	GEN600063 1-COLVILLE GEN 1
FDNS	00NR	5	20SP	G15_076	FROM->TO	GRPRAR1-LNX3345.00 - HOLT.CO3 345.00 345KV CKT 1	720	720	0.04123	103.8368	GEN600064 2-COLVILLE GEN 2
FDNS	00NR	5	20SP	G15_076	FROM->TO	GRPRAR1-LNX3345.00 - HOLT.CO3 345.00 345KV CKT 1	720	720	0.04123	103.8282	GEN652414 4-FT PECK
FDNS	00NR	5	20SP	G15_076	FROM->TO	GRPRAR1-LNX3345.00 - HOLT.CO3 345.00 345KV CKT 1	720	720	0.04123	103.8282	GEN652415 5-FT PECK
FDNS	00NR	5	20SP	G15_076	FROM->TO	GRPRAR1-LNX3345.00 - HOLT.CO3 345.00 345KV CKT 1	720	720	0.04123	103.8238	GEN681522 3-GENOA 3
FDNS	00NR	5	20SP	G15_076	FROM->TO	GRPRAR1-LNX3345.00 - HOLT.CO3 345.00 345KV CKT 1	720	720	0.04123	103.8212	GEN300007 1-NEW MADRID UNIT 2
FDNS	00NR	5	20SP	G15_076	FROM->TO	GRPRAR1-LNX3345.00 - HOLT.CO3 345.00 345KV CKT 1	720	720	0.04123	103.8205	GEN652345 W-G07_023IS_2 0.6900
FDNS	00NR	5	20SP	G15_076	FROM->TO	GRPRAR1-LNX3345.00 - HOLT.CO3 345.00 345KV CKT 1	720	720	0.04275	103.8192	GERALD GENTLEMAN STATION - RED WILLOW 345KV CKT 1
FDNS	00NR	5	20SP	G15_076	FROM->TO	GRPRAR1-LNX3345.00 - HOLT.CO3 345.00 345KV CKT 1	720	720	0.04123	103.8161	GEN300006 1-NEW MADRID UNIT 1
FDNS	00NR	5	20SP	G15_076	FROM->TO	GRPRAR1-LNX3345.00 - HOLT.CO3 345.00 345KV CKT 1	720	720	0.04123	103.8126	GEN 11104 1-J262_GEN 0.6000
FDNS	00NR	5	20SP	G15_076	FROM->TO	GRPRAR1-LNX3345.00 - HOLT.CO3 345.00 345KV CKT 1	720	720	0.04123	103.8126	GEN 11108 1-J263_GEN 0.6000
FDNS	00NR	5	20SP	G15_076	FROM->TO	GRPRAR1-LNX3345.00 - HOLT.CO3 345.00 345KV CKT 1	720	720	0.04123	103.8104	GEN600043 7-BLUE LAKE5
FDNS	00NR	5	20SP	G15_076	FROM->TO	GRPRAR1-LNX3345.00 - HOLT.CO3 345.00 345KV CKT 1	720	720	0.04123	103.8104	GEN600044 8-BLUE LAKE6
FDNS	00NR	5	20SP	G15_076	FROM->TO	GRPRAR1-LNX3345.00 - HOLT.CO3 345.00 345KV CKT 1	720	720	0.04123	103.7881	G830_SUB 115.00 - GRE-MCHENRY7115.00 115KV CKT 1
FDNS	00NR	5	20SP	G15_076	FROM->TO	GRPRAR1-LNX3345.00 - HOLT.CO3 345.00 345KV CKT 1	720	720	0.04123	103.7856	GEN600014 4-BLACK DOG GEN 4
FDNS	00NR	5	20SP	G15_076	FROM->TO	GRPRAR1-LNX3345.00 - HOLT.CO3 345.00 345KV CKT 1	720	720	0.04123	103.7818	GEN600065 7-HIGH BRIDGE
FDNS	00NR	5	20SP	G15_076	FROM->TO	GRPRAR1-LNX3345.00 - HOLT.CO3 345.00 345KV CKT 1	720	720	0.04123	103.7818	GEN600066 8-HIGH BRIDGE
FDNS	00NR	5	20SP	G15_076	FROM->TO	GRPRAR1-LNX3345.00 - HOLT.CO3 345.00 345KV CKT 1	720	720	0.04123	103.7789	GEN600011 5-BLACK DOG GEN 1
FDNS	00NR	5	20SP	G15_076	FROM->TO	GRPRAR1-LNX3345.00 - HOLT.CO3 345.00 345KV CKT 1	720	720	0.04123	103.7764	G830_SUB 115.00 115/34.5KV TRANSFORMER CKT 1
FDNS	00NR	5	25SP	G15_076	FROM->TO	GRPRAR1-LNX3345.00 - HOLT.CO3 345.00 345KV CKT 1	720	720	0.04155	103.7732	BASE CASE
FDNS	00NR	5	20SP	G15_076	FROM->TO	GRPRAR1-LNX3345.00 - HOLT.CO3 345.00 345KV CKT 1	720	720	0.04123	103.7686	GEN600071 10-RIVER SIDE
FDNS	00NR	5	20SP	G15_076	FROM->TO	GRPRAR1-LNX3345.00 - HOLT.CO3 345.00 345KV CKT 1	720	720	0.04123	103.7685	GEN600070 9-RIVER SIDE
FDNS	00NR	5	20SP	G15_076	FROM->TO	GRPRAR1-LNX3345.00 - HOLT.CO3 345.00 345KV CKT 1	720	720	0.04123	103.7657	LANSING WEST 161/22.0KV TRANSFORMER CKT 1
FDNS	00NR	5	20SP	G15_076	FROM->TO	GRPRAR1-LNX3345.00 - HOLT.CO3 345.00 345KV CKT 1	720	720	0.04123	103.7572	GEN600007 7-RIVERSIDE GEN 7
FDNS	00NR	5	20SP	G15_076	FROM->TO	GRPRAR1-LNX3345.00 - HOLT.CO3 345.00 345KV CKT 1	720	720	0.04123	103.7442	GEN600017 C-LS POWER CT
FDNS	00NR	5	20SP	G15_076	FROM->TO	GRPRAR1-LNX3345.00 - HOLT.CO3 345.00 345KV CKT 1	720	720	0.04123	103.7387	GEN600045 4-ANSON
FDNS	00NR	5	20SP	G15_076	FROM->TO	GRPRAR1-LNX3345.00 - HOLT.CO3 345.00 345KV CKT 1	720	720	0.04135	103.7123	G11_051T 345.00 - TATONGA7 345.00 345KV CKT 1
FDNS	00NR	5	20SP	G15_076	FROM->TO	GRPRAR1-LNX3345.00 - HOLT.CO3 345.00 345KV CKT 1	720	720	0.04132	103.7064	BRDLAND-LNX3345.00 - HURON 345KV CKT Z
FDNS	00NR	5	20SP	G15_076	FROM->TO	GRPRAR1-LNX3345.00 - HOLT.CO3 345.00 345KV CKT 1	720	720	0.04132	103.7055	HURON (BD KU2A) 345/230/13.8KV TRANSFORMER CKT 1
FDNS	00NR	5	20SP	G15_076	FROM->TO	GRPRAR1-LNX3345.00 - HOLT.CO3 345.00 345KV CKT 1	720	720	0.04132	103.7055	HURON (BD KU2A) 345/230/13.8KV TRANSFORMER CKT 1
FDNS	00NR	5	20SP	G15_076	FROM->TO	GRPRAR1-LNX3345.00 - HOLT.CO3 345.00 345KV CKT 1	720	720	0.04132	103.7039	BROADLAND - HURON 230KV CKT 1
FDNS	00NR	5	20SP	G15_076	FROM->TO	GRPRAR1-LNX3345.00 - HOLT.CO3 345.00 345KV CKT 1	720	720	0.04132	103.7019	P12:345:UMZB:# 103 #: BD IN SD. LOSS OF LINE
FDNS	00NR	5	20SP	G15_076	FROM->TO	GRPRAR1-LNX3345.00 - HOLT.CO3 345.00 345KV CKT 1	720	720	0.04132	103.7011	P12:345:UMZB:# 102 #: AVS BD IN ND. AVS BRD LR
FDNS	00NR	5	20SP	G15_076	FROM->TO	GRPRAR1-LNX3345.00 - HOLT.CO3 345.00 345KV CKT 1	720	720	0.04287	103.6974	P12:115:NPPD:1163B:NELIGH 7:NORFK.N7:BTB
FDNS	00NR	5	20SP	G15_076	FROM->TO	GRPRAR1-LNX3345.00 - HOLT.CO3 345.00 345KV CKT 1	720	720	0.04123	103.6764	GEN659273 2-GROTON SYNC COND
FDNS	00NR	5	20SP	G15_076	FROM->TO	GRPRAR1-LNX3345.00 - HOLT.CO3 345.00 345KV CKT 1	720	720	0.04123	103.6764	GEN659294 1-WILTONCOL9
FDNS	00NR	5	20SP	G15_076	FROM->TO	GRPRAR1-LNX3345.00 - HOLT.CO3 345.00 345KV CKT 1	720	720	0.04123	103.6755	GEN615052 1-CAMBRIDGE GENERATING STATION
FDNS	00NR	5	20SP	G15_076	FROM->TO	GRPRAR1-LNX3345.00 - HOLT.CO3 345.00 345KV CKT 1	720	720	0.04123	103.6606	GEN615021 1-GRE-ER 14G 16.000
FDNS	00NR	5	20SP	G15_076	FROM->TO	GRPRAR1-LNX3345.00 - HOLT.CO3 345.00 345KV CKT 1	720	720	0.04132	103.6519	ANTELOP-LNX3345.00 - ANTELOPE VALLEY 345KV CKT Z
FDNS	00NR	5	20SP	G15_076	FROM->TO	GRPRAR1-LNX3345.00 - HOLT.CO3 345.00 345KV CKT 1	720	720	0.04119	103.6188	OAHE - SULLEY BUTTE 230KV CKT 1
FDNS	00NR	5	20SP	G15_076	FROM->TO	GRPRAR1-LNX3345.00 - HOLT.CO3 345.00 345KV CKT 1	720	720	0.04123	103.6162	GEN 10648 1-G830_GEN 0.6900
FDNS	00NR	5	20SP	G15_076	FROM->TO	GRPRAR1-LNX3345.00 - HOLT.CO3 345.00 345KV CKT 1	720	720	0.04123	103.6149	GEN659192 6-LYNN
FDNS	00NR	5	20SP	G15_076	FROM->TO	GRPRAR1-LNX3345.00 - HOLT.CO3 345.00 345KV CKT 1	720	720	0.04123	103.6138	GEN659162 4-RED WLCK
FDNS	00NR	5	20SP	G15_076	FROM->TO	GRPRAR1-LNX3345.00 - HOLT.CO3 345.00 345KV CKT 1	720	720	0.04123	103.6138	GEN659163 5-BLACK WDCK
FDNS	00NR	5	20SP	G15_076	FROM->TO	GRPRAR1-LNX3345.00 - HOLT.CO3 345.00 345KV CKT 1	720	720	0.04123	103.6135	GEN659031 1-G12_014IS_4 0.6900
FDNS	00NR	5	20SP	G15_076	FROM->TO	GRPRAR1-LNX3345.00 - HOLT.CO3 345.00 345KV CKT 1	720	720	0.04123	103.5815	GEN660016 1-B_H WIND 0.7000
FDNS	00NR	5	20SP	G15_076	FROM->TO	GRPRAR1-LNX3345.00 - HOLT.CO3 345.00 345KV CKT 1	720	720	0.04123	103.5789	GEN615015 1-GRE-SPRITWDG13.200
FDNS	00NR	5	20SP	G15_076	FROM->TO	GRPRAR1-LNX3345.00 - HOLT.CO3 345.00 345KV CKT 1	720	720	0.04103	103.5699	HOSKINS - RAUN 345KV CKT 1
FDNS	00NR	5	20SP	G15_076	FROM->TO	GRPRAR1-LNX3345.00 - HOLT.CO3 345.00 345KV CKT 1	720	720	0.04103	103.5699	HOSKINS - RAUN 345KV CKT 1
FDNS	00NR	5	20SP	G15_076	FROM->TO	GRPRAR1-LNX3345.00 - HOLT.CO3 345.00 345KV CKT 1	720	720	0.03993	103.5656	HIGHLND 3 345.00 - OBRIEN 3 345.00 345KV CKT 1
FDNS	00NR	5	20SP	G15_076	FROM->TO	GRPRAR1-LNX3345.00 - HOLT.CO3 345.00 345KV CKT 1	720	720	0.04123	103.4937	BISONMP4 230.00 - SQUARE BUTTE 230KV CKT 1
FDNS	00NR	5	20SP	G15_076	FROM->TO	GRPRAR1-LNX3345.00 - HOLT.CO3 345.00 345KV CKT 1	720	720	0.04135	103.4848	MATHWSN7 345.00 - TATONGA7 345.00 345KV CKT 1
FDNS	00NR	5	20SP	G15_076	FROM->TO	GRPRAR1-LNX3345.00 - HOLT.CO3 345.00 345KV CKT 1	720	720	0.04123	103.4645	GEN600067 9-HIGH BRIDGE
FDNS	00NR	5	20SP	G15_076	FROM->TO	GRPRAR1-LNX3345.00 - HOLT.CO3 345.00 345KV CKT 1	720	720	0.04119	103.4578	SULLEY BUTTE - SULLYBT-LNX3230.00 230KV CKT Z
FDNS	00NR	5	20SP	G15_076	FROM->TO	GRPRAR1-LNX3345.00 - HOLT.CO3 345.00 345KV CKT 1	720	720	0.04119	103.4573	SULLYBT-LNX3230.00 - WHITLOK 230KV CKT 1
FDNS	00NR	5	20SP	G15_076	FROM->TO	GRPRAR1-LNX3345.00 - HOLT.CO3 345.00 345KV CKT 1	720	720	0.04123	103.4392	GEN672303 3-BOUNDARY DAM GENERATOR 3
FDNS	00NR	5	20SP	G15_076	FROM->TO	GRPRAR1-LNX3345.00 - HOLT.CO3 345.00 345KV CKT 1	720	720	0.04123	103.4392	GEN672304 4-BOUNDARY DAM GENERATOR 4
FDNS	00NR	5	20SP	G15_076	FROM->TO	GRPRAR1-LNX3345.00 - HOLT.CO3 345.00 345KV CKT 1	720	720	0.04123	103.4392	GEN672305 5-BOUNDARY DAM GENERATOR 5
FDNS	00NR	5	20SP	G15_076	FROM->TO	GRPRAR1-LNX3345.00 - HOLT.CO3 345.00 345KV CKT 1	720	720	0.04123	103.4194	GEN659353 1-DEERCREK CTG18.000
FDNS	00NR	5	20SP	G15_076	FROM->TO	GRPRAR1-LNX3345.00 - HOLT.CO3 345.00 345KV CKT 1	720	720	0.04123	103.4186	GEN659354 1-DEERCREK STG18.000
FDNS	00NR	5	20SP	G15_076	FROM->TO	GRPRAR1-LNX3345.00 - HOLT.CO3 345.00 345KV CKT 1	720	720	0.04119	103.4101	P12:230:UMZB:# 114 #: SB IN SD. SB-WK-GH
FDNS	00NR	5	20SP	G15_076	FROM->TO	GRPRAR1-LNX3345.00 - HOLT.CO3 345.00 345KV CKT 1	720	720	0.04119	103.4101	P12:230:UMZB:# 117 #: WK IN SD. SB-WK-GH
FDNS	00NR	5	20SP	G15_076	FROM->TO	GRPRAR1-LNX3345.00 - HOLT.CO3 345.00 345KV CKT 1	720	720	0.03489	103.4022	DIXONCO 3 345.00 - TWINCH 3 345.00 345KV CKT 1
FDNS	00NR	5	20SP	G15_076	FROM->TO	GRPRAR1-LNX3345.00 - HOLT.CO3 345.00 345KV CKT 1	720	720	0.04123	103.3868	GEN672392 1-NBECGT1G 18.000
FDNS	00NR	5	20SP	G15_076	FROM->TO	GRPRAR1-LNX3345.00 - HOLT.CO3 345.00 345KV CKT 1	720	720	0.03489	103.3756	DIXONCO 3 345.00 (DIXON1) 345/230/13.8KV TRANSFORMER CKT 1
FDNS	00NR	5	20SP	G15_076	FROM->TO	GRPRAR1-LNX3345.00 - HOLT.CO3 345.00 345KV CKT 1	720	720	0.04119	103.3575	GLENHAM - WHITLOK 230KV CKT 1
FDNS	00NR	5	25SP	G15_076	FROM->TO	GRPRAR1-LNX3345.00 - HOLT.CO3 345.00 345KV CKT 1	720	720	0.04172	103.3523	FT THOMPSON - OAHE 230KV CKT 1

SOLUTION	GROUP	SCENARIO	SEASON	SOURCE	DIRECTION	MONITORED ELEMENT	RATEA (MVA)	RATEB(MVA)	TDF	TC%LOADING (% MVA)	CONTINGENCY
FDNS	00NR	5	25SP	G15_076	FROM->TO	GRPRAR1-LNX3345.00 - HOLT.CO3 345.00 345KV CKT 1	720	720	0.04172	103.3523	FT THOMPSON - OAHE 230KV CKT 1
FDNS	00NR	5	25SP	G15_076	FROM->TO	GRPRAR1-LNX3345.00 - HOLT.CO3 345.00 345KV CKT 1	720	720	0.04172	103.3523	FT THOMPSON - OAHE 230KV CKT 2
FDNS	00NR	5	25SP	G15_076	FROM->TO	GRPRAR1-LNX3345.00 - HOLT.CO3 345.00 345KV CKT 1	720	720	0.04172	103.3523	FT THOMPSON - OAHE 230KV CKT 2
FDNS	00NR	5	25SP	G15_076	FROM->TO	GRPRAR1-LNX3345.00 - HOLT.CO3 345.00 345KV CKT 1	720	720	0.04044	103.342	COOPER - MOORE 345KV CKT 1
FDNS	00NR	5	17SP	G15_076	FROM->TO	GRPRAR1-LNX3345.00 - HOLT.CO3 345.00 345KV CKT 1	720	720	0.04284	103.3379	GEN615001 1-COAL CREEK
FDNS	00NR	5	25SP	G15_076	FROM->TO	GRPRAR1-LNX3345.00 - HOLT.CO3 345.00 345KV CKT 1	720	720	0.04173	103.3256	FT THOMPSON - OAHE 230KV CKT 3
FDNS	00NR	5	25SP	G15_076	FROM->TO	GRPRAR1-LNX3345.00 - HOLT.CO3 345.00 345KV CKT 1	720	720	0.04173	103.3256	FT THOMPSON - OAHE 230KV CKT 3
FDNS	00NR	5	25SP	G15_076	FROM->TO	GRPRAR1-LNX3345.00 - HOLT.CO3 345.00 345KV CKT 1	720	720	0.04173	103.3256	FT THOMPSON - OAHE 230KV CKT 4
FDNS	00NR	5	25SP	G15_076	FROM->TO	GRPRAR1-LNX3345.00 - HOLT.CO3 345.00 345KV CKT 1	720	720	0.04173	103.3256	FT THOMPSON - OAHE 230KV CKT 4
FDNS	00NR	5	25SP	G15_076	FROM->TO	GRPRAR1-LNX3345.00 - HOLT.CO3 345.00 345KV CKT 1	720	720	0.04189	103.2906	P13:345:UMZW:# 260 #: SC2 IN IA. LOSS OF TRANSFORMER (KU1A
FDNS	00NR	5	25SP	G15_076	FROM->TO	GRPRAR1-LNX3345.00 - HOLT.CO3 345.00 345KV CKT 1	720	720	0.0418	103.2883	7MAYWOOD 345.00 - 7SPENCER 345.00 345KV CKT 1
FDNS	00NR	5	25SP	G15_076	FROM->TO	GRPRAR1-LNX3345.00 - HOLT.CO3 345.00 345KV CKT 1	720	720	0.0444	103.2874	AINSWORTH - AINSWORTH 115KV CKT 1
FDNS	00NR	5	25SP	G15_076	FROM->TO	GRPRAR1-LNX3345.00 - HOLT.CO3 345.00 345KV CKT 1	720	720	0.04091	103.2836	NELIGH - PETERSBRG.N7115.00 115KV CKT 1
FDNS	00NR	5	20SP	G15_076	FROM->TO	GRPRAR1-LNX3345.00 - HOLT.CO3 345.00 345KV CKT 1	720	720	0.04123	103.2822	GEN681542 6-JP MADGETT
FDNS	00NR	5	25SP	G15_076	FROM->TO	GRPRAR1-LNX3345.00 - HOLT.CO3 345.00 345KV CKT 1	720	720	0.04157	103.2775	P12:115:UMZZ:# 232 #: AB IN SD. ABERDEEN A TAP BETWEEN ELLENDALE AND ABERDEEN-SIEBRECHT.
FDNS	00NR	5	25SP	G15_076	FROM->TO	GRPRAR1-LNX3345.00 - HOLT.CO3 345.00 345KV CKT 1	720	720	0.04155	103.2679	GEN300003 1-THOMAS HILL UNIT 3
FDNS	00NR	5	25SP	G15_076	FROM->TO	GRPRAR1-LNX3345.00 - HOLT.CO3 345.00 345KV CKT 1	720	720	0.04155	103.2676	GEN672348 2-CORY COGEN GENERATOR 2 GT2
FDNS	00NR	5	25SP	G15_076	FROM->TO	GRPRAR1-LNX3345.00 - HOLT.CO3 345.00 345KV CKT 1	720	720	0.04155	103.2675	GEN672347 1-CORY COGEN GENERATOR 1 GT1
FDNS	00NR	5	25SP	G15_076	FROM->TO	GRPRAR1-LNX3345.00 - HOLT.CO3 345.00 345KV CKT 1	720	720	0.04152	103.2651	G14-021T 345.00 - MULLNCR7 345.00 345KV CKT 1
FDNS	00NR	5	25SP	G15_076	FROM->TO	GRPRAR1-LNX3345.00 - HOLT.CO3 345.00 345KV CKT 1	720	720	0.04152	103.2621	G15-005T 345.00 - MULLNCR7 345.00 345KV CKT 1
FDNS	00NR	5	20SP	G15_076	FROM->TO	GRPRAR1-LNX3345.00 - HOLT.CO3 345.00 345KV CKT 1	720	720	0.04123	103.261	GEN662101 1-WESSINGTON190.5750
FDNS	00NR	5	25SP	G15_076	FROM->TO	GRPRAR1-LNX3345.00 - HOLT.CO3 345.00 345KV CKT 1	720	720	0.03088	103.2607	SIOUX CITY - TWINCH 3 345.00 345KV CKT 1
FDNS	00NR	5	25SP	G15_076	FROM->TO	GRPRAR1-LNX3345.00 - HOLT.CO3 345.00 345KV CKT 1	720	720	0.0415	103.2593	BISMARK - L3 HAWDON 230KV CKT 1
FDNS	00NR	5	25SP	G15_076	FROM->TO	GRPRAR1-LNX3345.00 - HOLT.CO3 345.00 345KV CKT 1	720	720	0.04336	103.2572	ATCHSNT3 345.00 - BOONEVILLE 345KV CKT 1
FDNS	00NR	5	25SP	G15_076	FROM->TO	GRPRAR1-LNX3345.00 - HOLT.CO3 345.00 345KV CKT 1	720	720	0.04164	103.2563	ANTELOP-LNX3345.00 - BRDLAND-LNX3345.00 345KV CKT 1
FDNS	00NR	5	25SP	G15_076	FROM->TO	GRPRAR1-LNX3345.00 - HOLT.CO3 345.00 345KV CKT 1	720	720	0.04155	103.2492	GEN659147 1-PIONEER 1G13.800
FDNS	00NR	5	25SP	G15_076	FROM->TO	GRPRAR1-LNX3345.00 - HOLT.CO3 345.00 345KV CKT 1	720	720	0.04155	103.2492	GEN659158 2-PIONEER G213.800
FDNS	00NR	5	25SP	G15_076	FROM->TO	GRPRAR1-LNX3345.00 - HOLT.CO3 345.00 345KV CKT 1	720	720	0.04155	103.2492	GEN659159 3-PIONEER G313.800
FDNS	00NR	5	25SP	G15_076	FROM->TO	GRPRAR1-LNX3345.00 - HOLT.CO3 345.00 345KV CKT 1	720	720	0.04155	103.2492	GEN672358 1-CHAPLN1W 0.6900
FDNS	00NR	5	25SP	G15_076	FROM->TO	GRPRAR1-LNX3345.00 - HOLT.CO3 345.00 345KV CKT 1	720	720	0.04155	103.2472	GEN659148 1-LONESMCRK 1G13.800
FDNS	00NR	5	25SP	G15_076	FROM->TO	GRPRAR1-LNX3345.00 - HOLT.CO3 345.00 345KV CKT 1	720	720	0.04155	103.2472	GEN659156 2-LONESMCRK 2G13.800
FDNS	00NR	5	25SP	G15_076	FROM->TO	GRPRAR1-LNX3345.00 - HOLT.CO3 345.00 345KV CKT 1	720	720	0.04155	103.2472	GEN659157 3-LONESMCRK 3G13.800
FDNS	00NR	5	25SP	G15_076	FROM->TO	GRPRAR1-LNX3345.00 - HOLT.CO3 345.00 345KV CKT 1	720	720	0.04155	103.2445	GEN659417 1X-BEPCPKFT 1GX13.800
FDNS	00NR	5	25SP	G15_076	FROM->TO	GRPRAR1-LNX3345.00 - HOLT.CO3 345.00 345KV CKT 1	720	720	0.04155	103.2445	GEN659418 2X-BEPCPKFT 2GX13.800
FDNS	00NR	5	25SP	G15_076	FROM->TO	GRPRAR1-LNX3345.00 - HOLT.CO3 345.00 345KV CKT 1	720	720	0.04155	103.2445	GEN659419 3X-BEPCPKFT 3GX13.800
FDNS	00NR	5	25SP	G15_076	FROM->TO	GRPRAR1-LNX3345.00 - HOLT.CO3 345.00 345KV CKT 1	720	720	0.04155	103.2398	GEN657964 1-ASH2GEN9 0.5750
FDNS	00NR	5	20SP	G15_076	FROM->TO	GRPRAR1-LNX3345.00 - HOLT.CO3 345.00 345KV CKT 1	720	720	0.04123	103.238	CENTER 230/22.0KV TRANSFORMER CKT 1
FDNS	00NR	5	25SP	G15_076	FROM->TO	GRPRAR1-LNX3345.00 - HOLT.CO3 345.00 345KV CKT 1	720	720	0.04183	103.2317	FALLOW 3 345.00 - GRIMES 345KV CKT 1
FDNS	00NR	5	25SP	G15_076	FROM->TO	GRPRAR1-LNX3345.00 - HOLT.CO3 345.00 345KV CKT 1	720	720	0.0398	103.2286	COLUMEAST - NW68TH & HOLDREGE 345KV CKT 1
FDNS	00NR	5	25SP	G15_076	FROM->TO	GRPRAR1-LNX3345.00 - HOLT.CO3 345.00 345KV CKT 1	720	720	0.0398	103.2286	COLUMEAST - NW68TH & HOLDREGE 345KV CKT 1
FDNS	00NR	5	20SP	G15_076	FROM->TO	GRPRAR1-LNX3345.00 - HOLT.CO3 345.00 345KV CKT 1	720	720	0.04281	103.2284	MISSION - WITTEN 115KV CKT 1
FDNS	00NR	5	25SP	G15_076	FROM->TO	GRPRAR1-LNX3345.00 - HOLT.CO3 345.00 345KV CKT 1	720	720	0.04155	103.2219	GEN672367 1-MERIDIAN GENERATOR 1 GT1
FDNS	00NR	5	25SP	G15_076	FROM->TO	GRPRAR1-LNX3345.00 - HOLT.CO3 345.00 345KV CKT 1	720	720	0.04155	103.2219	GEN672368 2-MERIDIAN GENERATOR 2 GT2
FDNS	00NR	5	25SP	G15_076	FROM->TO	GRPRAR1-LNX3345.00 - HOLT.CO3 345.00 345KV CKT 1	720	720	0.04331	103.2215	BATTLE CREEK - COUNTY LINE 115KV CKT 1
FDNS	00NR	5	20SP	G15_076	FROM->TO	GRPRAR1-LNX3345.00 - HOLT.CO3 345.00 345KV CKT 1	720	720	0.04123	103.2178	GEN910006 1-G12_012IS_3 0.6900
FDNS	00NR	5	25SP	G15_076	FROM->TO	GRPRAR1-LNX3345.00 - HOLT.CO3 345.00 345KV CKT 1	720	720	0.04152	103.2165	G15-005T 345.00 - SIBLEY 345KV CKT 1
FDNS	00NR	5	25SP	G15_076	FROM->TO	GRPRAR1-LNX3345.00 - HOLT.CO3 345.00 345KV CKT 1	720	720	0.04091	103.2135	ALBION - PETERSBURG 115KV CKT 1
FDNS	00NR	5	25SP	G15_076	FROM->TO	GRPRAR1-LNX3345.00 - HOLT.CO3 345.00 345KV CKT 1	720	720	0.04155	103.2091	GEN672352 3-NIPAWIN GENERATOR 3
FDNS	00NR	5	25SP	G15_076	FROM->TO	GRPRAR1-LNX3345.00 - HOLT.CO3 345.00 345KV CKT 1	720	720	0.04155	103.209	GEN672350 1-NIPAWIN GENERATOR 1
FDNS	00NR	5	25SP	G15_076	FROM->TO	GRPRAR1-LNX3345.00 - HOLT.CO3 345.00 345KV CKT 1	720	720	0.04155	103.209	GEN672351 2-NIPAWIN GENERATOR 2
FDNS	00NR	5	17SP	G15_076	FROM->TO	GRPRAR1-LNX3345.00 - HOLT.CO3 345.00 345KV CKT 1	720	720	0.04284	103.2062	GEN615002 2-COAL CREEK
FDNS	00NR	5	25SP	G15_076	FROM->TO	GRPRAR1-LNX3345.00 - HOLT.CO3 345.00 345KV CKT 1	720	720	0.04155	103.2015	GEN672349 3-CORY COGEN GENERATOR 3 ST
FDNS	00NR	5	25SP	G15_076	FROM->TO	GRPRAR1-LNX3345.00 - HOLT.CO3 345.00 345KV CKT 1	720	720	0.04256	103.2003	HOLCOMB - SETAB 345KV CKT 1
FDNS	00NR	5	25SP	G15_076	FROM->TO	GRPRAR1-LNX3345.00 - HOLT.CO3 345.00 345KV CKT 1	720	720	0.04256	103.2003	HOLCOMB - SETAB 345KV CKT 1
FDNS	00NR	5	25SP	G15_076	FROM->TO	GRPRAR1-LNX3345.00 - HOLT.CO3 345.00 345KV CKT 1	720	720	0.04155	103.1981	GEN600012 2-BLACK DOG GEN 2
FDNS	00NR	5	25SP	G15_076	FROM->TO	GRPRAR1-LNX3345.00 - HOLT.CO3 345.00 345KV CKT 1	720	720	0.04155	103.1934	GEN652548 5-FT RANDAL
FDNS	00NR	5	25SP	G15_076	FROM->TO	GRPRAR1-LNX3345.00 - HOLT.CO3 345.00 345KV CKT 1	720	720	0.04155	103.1934	GEN652549 7-FT RANDAL
FDNS	00NR	5	25SP	G15_076	FROM->TO	GRPRAR1-LNX3345.00 - HOLT.CO3 345.00 345KV CKT 1	720	720	0.04155	103.1888	GEN652547 3-FT RANDAL
FDNS	00NR	5	25SP	G15_076	FROM->TO	GRPRAR1-LNX3345.00 - HOLT.CO3 345.00 345KV CKT 1	720	720	0.04155	103.1878	GEN652546 1-FT RANDAL
FDNS	00NR	5	25SP	G15_076	FROM->TO	GRPRAR1-LNX3345.00 - HOLT.CO3 345.00 345KV CKT 1	720	720	0.04155	103.1865	EMERY 161/18.0KV TRANSFORMER CKT 1
FDNS	00NR	5	25SP	G15_076	FROM->TO	GRPRAR1-LNX3345.00 - HOLT.CO3 345.00 345KV CKT 1	720	720	0.04091	103.1821	PETERSBRG.N7115.00 - PETERSBURG 115KV CKT Z1
FDNS	00NR	5	25SP	G15_076	FROM->TO	GRPRAR1-LNX3345.00 - HOLT.CO3 345.00 345KV CKT 1	720	720	0.04141	103.1744	HOSKINS - RAUN 345KV CKT 1
FDNS	00NR	5	25SP	G15_076	FROM->TO	GRPRAR1-LNX3345.00 - HOLT.CO3 345.00 345KV CKT 1	720	720	0.04141	103.1744	HOSKINS - RAUN 345KV CKT 1
FDNS	00NR	5	25SP	G15_076	FROM->TO	GRPRAR1-LNX3345.00 - HOLT.CO3 345.00 345KV CKT 1	720	720	0.04091	103.1694	P12:115:NPPD:1168B:ALBION 7:PETERSBRG.N7:BTB
FDNS	00NR	5	25SP	G15_076	FROM->TO	GRPRAR1-LNX3345.00 - HOLT.CO3 345.00 345KV CKT 1	720	720	0.04155	103.1584	GEN659290 1-EDGECOL
FDNS	00NR	5	25SP	G15_076	FROM->TO	GRPRAR1-LNX3345.00 - HOLT.CO3 345.00 345KV CKT 1	720	720	0.0387	103.1583	FT THOMPSON (FT2 KU1A) 345/230/13.8KV TRANSFORMER CKT 1
FDNS	00NR	5	25SP	G15_076	FROM->TO	GRPRAR1-LNX3345.00 - HOLT.CO3 345.00 345KV CKT 1	720	720	0.03869	103.1559	FT THOMPSON (FT2 KU1B) 345/230/13.8KV TRANSFORMER CKT 1
FDNSLock	00NR	5	25SP	G15_076	FROM->TO	GRPRAR1-LNX3345.00 - HOLT.CO3 345.00 345KV CKT 1	720	720	0.04137	103.1549	WATERTOWN (WT2 KU1A) 345/230/13.8KV TRANSFORMER CKT 1
FDNS	00NR	5	25SP	G15_076	FROM->TO	GRPRAR1-LNX3345.00 - HOLT.CO3 345.00 345KV CKT 1	720	720	0.04331	103.1503	ANTELOPE 7115.00 - COUNTY LINE 115KV CKT 1
FDNS	00NR	5	25SP	G15_076	FROM->TO	GRPRAR1-LNX3345.00 - HOLT.CO3 345.00 345KV CKT 1	720	720	0.03977	103.1441	COLUMEAST - SHELL CREEK 345KV CKT 1
FDNS	00NR	5	25SP	G15_076	FROM->TO	GRPRAR1-LNX3345.00 - HOLT.CO3 345.00 345KV CKT 1	720	720	0.04183	103.1417	LARAMIE RIVER - STEGALL 345KV CKT 1
FDNS	00NR	5	25SP	G15_076	FROM->TO	GRPRAR1-LNX3345.00 - HOLT.CO3 345.00 345KV CKT 1	720	720	0.04186	103.1371	FINNEY SWITCHING STATION - WALKTAP7 345.00 345KV CKT 1
FDNS	00NR	5	25SP	G15_076	FROM->TO	GRPRAR1-LNX3345.00 - HOLT.CO3 345.00 345KV CKT 1	720	720	0.04186	103.1371	FINNEY SWITCHING STATION - WALKTAP7 345.00 345KV CKT 1
FDNS	00NR	5	20SP	G15_076	FROM->TO	GRPRAR1-LNX3345.00 - HOLT.CO3 345.00 345KV CKT 1	720	720	0.04287	103.1267	AXTELL - SWEETWATER 345KV CKT 1
FDNS	00NR	5	25SP	G15_076	FROM->TO	GRPRAR1-LNX3345.00 - HOLT.CO3 345.00 345KV CKT 1	720	720	0.04155	103.1262	GEN300007 1-NEW MADRID UNIT 2
FDNS	00NR	5	25SP	G15_076	FROM->TO	GRPRAR1-LNX3345.00 - HOLT.CO3 345.00 345KV CKT 1	720	720	0.04155	103.1217	GEN600046 1-MECST
FDNS	00NR	5	25SP	G15_076	FROM->TO	GRPRAR1-LNX3345.00 - HOLT.CO3 345.00 345KV CKT 1	720	720	0.04155	103.1214	GEN300006 1-NEW MADRID UNIT 1
FDNS	00NR	5	20SP	G15_076	FROM->TO	GRPRAR1-LNX3345.00 - HOLT.CO3 345.00 345KV CKT 1	720	720	0.04123	103.12	CLAY BOSWELL 230/20.9KV TRANSFORMER CKT 1
FDNS	00NR	5	25SP	G15_076	FROM->TO	GRPRAR1-LNX3345.00 - HOLT.CO3 345.00 345KV CKT 1	720	720	0.04155	103.1189	GEN672357 2-FUT-WL2X 13.800

SOLUTION	GROUP	SCENARIO	SEASON	SOURCE	DIRECTION	MONITORED ELEMENT	RATEA (MVA)	RATEB(MVA)	TDF	TC%LOADING (% MVA)	CONTINGENCY
FDNS	00NR	5	25SP	G15_076	FROM->TO	GRPRAR1-LNX3345.00 - HOLT.CO3 345.00 345KV CKT 1	720	720	0.04155	103.1085	GEN672393 2-NBECST2G 13.800
FDNS	00NR	5	25SP	G15_076	FROM->TO	GRPRAR1-LNX3345.00 - HOLT.CO3 345.00 345KV CKT 1	720	720	0.04155	103.1055	GEN600050 1-FEP
FDNS	00NR	5	25SP	G15_076	FROM->TO	GRPRAR1-LNX3345.00 - HOLT.CO3 345.00 345KV CKT 1	720	720	0.04155	103.1048	GEN620324 3-HOOT LAKE 3 GEN
FDNS	00NR	5	25SP	G15_076	FROM->TO	GRPRAR1-LNX3345.00 - HOLT.CO3 345.00 345KV CKT 1	720	720	0.04155	103.1045	GEN672390 2-FUT-SW2X 13.800
FDNS	00NR	5	25SP	G15_076	FROM->TO	GRPRAR1-LNX3345.00 - HOLT.CO3 345.00 345KV CKT 1	720	720	0.04155	103.1028	GEN652410 3-FT PECK
FDNS	00NR	5	25SP	G15_076	FROM->TO	GRPRAR1-LNX3345.00 - HOLT.CO3 345.00 345KV CKT 1	720	720	0.04155	103.0934	GEN660003 3-HURON WEST PARK
FDNS	00NR	5	25SP	G15_076	FROM->TO	GRPRAR1-LNX3345.00 - HOLT.CO3 345.00 345KV CKT 1	720	720	0.04155	103.0915	GEN600047 1-MECCT1
FDNS	00NR	5	20SP	G15_076	FROM->TO	GRPRAR1-LNX3345.00 - HOLT.CO3 345.00 345KV CKT 1	720	720	0.04269	103.0904	G15088_T 345.00 - MOORE 345KV CKT 1
FDNS	00NR	5	25SP	G15_076	FROM->TO	GRPRAR1-LNX3345.00 - HOLT.CO3 345.00 345KV CKT 1	720	720	0.04104	103.0858	HELENA - SHEAS LK3 345.00 345KV CKT 1
FDNS	00NR	5	25SP	G15_076	FROM->TO	GRPRAR1-LNX3345.00 - HOLT.CO3 345.00 345KV CKT 1	720	720	0.04202	103.0743	Hitchland Interchange - WALKTAP7 345.00 345KV CKT 1
FDNS	00NR	5	25SP	G15_076	FROM->TO	GRPRAR1-LNX3345.00 - HOLT.CO3 345.00 345KV CKT 1	720	720	0.04202	103.0743	Hitchland Interchange - WALKTAP7 345.00 345KV CKT 1
FDNS	00NR	5	25SP	G15_076	FROM->TO	GRPRAR1-LNX3345.00 - HOLT.CO3 345.00 345KV CKT 1	720	720	0.04155	103.0706	LADISH 115/13.2KV TRANSFORMER CKT 1
FDNS	00NR	5	25SP	G15_076	FROM->TO	GRPRAR1-LNX3345.00 - HOLT.CO3 345.00 345KV CKT 1	720	720	0.04202	103.0663	P12:345:SPS:J07.1.FINN.HITCH
FDNS	00NR	5	25SP	G15_076	FROM->TO	GRPRAR1-LNX3345.00 - HOLT.CO3 345.00 345KV CKT 1	720	720	0.04155	103.0644	GEN660001 2-ABERDEEN SIEBRECHT
FDNS	00NR	5	20SP	G15_076	FROM->TO	GRPRAR1-LNX3345.00 - HOLT.CO3 345.00 345KV CKT 1	720	720	0.04123	103.0639	HESKETT 115/13.8KV TRANSFORMER CKT 1
FDNS	00NR	5	25SP	G15_076	FROM->TO	GRPRAR1-LNX3345.00 - HOLT.CO3 345.00 345KV CKT 1	720	720	0.04214	103.0592	THEDFRD3 345.00 (THEDFORDT2) 345/115/13.8KV TRANSFORMER CKT 1
FDNS	00NR	5	20SP	G15_076	FROM->TO	GRPRAR1-LNX3345.00 - HOLT.CO3 345.00 345KV CKT 1	720	720	0.03589	103.059	HOSKINS - SHELL CREEK 345KV CKT 1
FDNS	00NR	5	25SP	G15_076	FROM->TO	GRPRAR1-LNX3345.00 - HOLT.CO3 345.00 345KV CKT 1	720	720	0.04155	103.0448	GEN652345 W-G07_023IS_2 0.6900
FDNS	00NR	5	25SP	G15_076	FROM->TO	GRPRAR1-LNX3345.00 - HOLT.CO3 345.00 345KV CKT 1	720	720	0.04155	103.0388	GEN652414 4-FT PECK
FDNS	00NR	5	25SP	G15_076	FROM->TO	GRPRAR1-LNX3345.00 - HOLT.CO3 345.00 345KV CKT 1	720	720	0.04155	103.0388	GEN652415 5-FT PECK
FDNS	00NR	5	25SP	G15_076	FROM->TO	GRPRAR1-LNX3345.00 - HOLT.CO3 345.00 345KV CKT 1	720	720	0.04155	103.0218	GEN590010 1-ERCOT EQUIVALENCE
FDNS	00NR	5	25SP	G15_076	FROM->TO	GRPRAR1-LNX3345.00 - HOLT.CO3 345.00 345KV CKT 1	720	720	0.04155	103.02	GEN600063 1-COLVILLE GEN 1
FDNS	00NR	5	25SP	G15_076	FROM->TO	GRPRAR1-LNX3345.00 - HOLT.CO3 345.00 345KV CKT 1	720	720	0.04155	103.02	GEN600064 2-COLVILLE GEN 2
FDNS	00NR	5	25SP	G15_076	FROM->TO	GRPRAR1-LNX3345.00 - HOLT.CO3 345.00 345KV CKT 1	720	720	0.0411	103.016	SHEAS LK3 345.00 - WILMARTH 345KV CKT 1
FDNS	00NR	5	25SP	G15_076	FROM->TO	GRPRAR1-LNX3345.00 - HOLT.CO3 345.00 345KV CKT 1	720	720	0.04155	103.012	GEN 11104 1-J262_GEN 0.6000
FDNS	00NR	5	25SP	G15_076	FROM->TO	GRPRAR1-LNX3345.00 - HOLT.CO3 345.00 345KV CKT 1	720	720	0.04155	103.012	GEN 11108 1-J263_GEN 0.6000
FDNS	00NR	5	25SP	G15_076	FROM->TO	GRPRAR1-LNX3345.00 - HOLT.CO3 345.00 345KV CKT 1	720	720	0.04164	103.0103	HURON (BD KU2A) 345/230/13.8KV TRANSFORMER CKT 1
FDNS	00NR	5	25SP	G15_076	FROM->TO	GRPRAR1-LNX3345.00 - HOLT.CO3 345.00 345KV CKT 1	720	720	0.04164	103.0103	HURON (BD KU2A) 345/230/13.8KV TRANSFORMER CKT 1
FDNS	00NR	5	25SP	G15_076	FROM->TO	GRPRAR1-LNX3345.00 - HOLT.CO3 345.00 345KV CKT 1	720	720	0.04164	103.0095	BRDLAND-LNX3345.00 - HURON 345KV CKT Z
FDNS	00NR	5	25SP	G15_076	FROM->TO	GRPRAR1-LNX3345.00 - HOLT.CO3 345.00 345KV CKT 1	720	720	0.04164	103.009	P12:345:UMZB:# 102 #: AVS BD IN ND. AVS BRD LR
FDNS	00NR	5	25SP	G15_076	FROM->TO	GRPRAR1-LNX3345.00 - HOLT.CO3 345.00 345KV CKT 1	720	720	0.04164	103.0088	BROADLAND - HURON 230KV CKT 1
FDNS	00NR	5	25SP	G15_076	FROM->TO	GRPRAR1-LNX3345.00 - HOLT.CO3 345.00 345KV CKT 1	720	720	0.04164	103.0064	P12:345:UMZB:# 103 #: BD IN SD. LOSS OF LINE
FDNS	00NR	5	20SP	G15_076	FROM->TO	GRPRAR1-LNX3345.00 - HOLT.CO3 345.00 345KV CKT 1	720	720	0.04123	103.0024	GEN659289 1-DAYCNTYWND W0.6900
FDNS	00NR	5	25SP	G15_076	FROM->TO	GRPRAR1-LNX3345.00 - HOLT.CO3 345.00 345KV CKT 1	720	720	0.04155	102.9994	GEN590011 2-ERCOT EQUIVALENCE
FDNS	00NR	5	25SP	G15_076	FROM->TO	GRPRAR1-LNX3345.00 - HOLT.CO3 345.00 345KV CKT 1	720	720	0.04155	102.999	GEN600043 7-BLUE LAKE5
FDNS	00NR	5	25SP	G15_076	FROM->TO	GRPRAR1-LNX3345.00 - HOLT.CO3 345.00 345KV CKT 1	720	720	0.04155	102.999	GEN600044 8-BLUE LAKE6
FDNS	00NR	5	25SP	G15_076	FROM->TO	GRPRAR1-LNX3345.00 - HOLT.CO3 345.00 345KV CKT 1	720	720	0.04093	102.9959	FIELD NORTH - LKFLDXL3 345KV CKT 1
FDNS	00NR	5	25SP	G15_076	FROM->TO	GRPRAR1-LNX3345.00 - HOLT.CO3 345.00 345KV CKT 1	720	720	0.04093	102.9951	FIELD SOUTH - WILMARTH 345KV CKT 1
FDNS	00NR	5	25SP	G15_076	FROM->TO	GRPRAR1-LNX3345.00 - HOLT.CO3 345.00 345KV CKT 1	720	720	0.04155	102.9883	G830_SUB 115.00 - GRE-MCHENRY7115.00 115KV CKT 1
FDNS	00NR	5	25SP	G15_076	FROM->TO	GRPRAR1-LNX3345.00 - HOLT.CO3 345.00 345KV CKT 1	720	720	0.04155	102.9882	G830_SUB 115.00 115/34.5KV TRANSFORMER CKT 1
FDNS	00NR	5	25SP	G15_076	FROM->TO	GRPRAR1-LNX3345.00 - HOLT.CO3 345.00 345KV CKT 1	720	720	0.04093	102.988	FIELD NORTH - FIELD SOUTH 345KV CKT 1
FDNS	00NR	5	25SP	G15_076	FROM->TO	GRPRAR1-LNX3345.00 - HOLT.CO3 345.00 345KV CKT 1	720	720	0.04155	102.9877	LANSING WEST 161/22.0KV TRANSFORMER CKT 1
FDNS	00NR	5	25SP	G15_076	FROM->TO	GRPRAR1-LNX3345.00 - HOLT.CO3 345.00 345KV CKT 1	720	720	0.04155	102.9792	GEN681522 3-GENOA 3
FDNS	00NR	5	25SP	G15_076	FROM->TO	GRPRAR1-LNX3345.00 - HOLT.CO3 345.00 345KV CKT 1	720	720	0.04155	102.9706	GEN600014 4-BLACK DOG GEN 4
FDNS	00NR	5	25SP	G15_076	FROM->TO	GRPRAR1-LNX3345.00 - HOLT.CO3 345.00 345KV CKT 1	720	720	0.04155	102.9677	GEN600065 7-HIGH BRIDGE
FDNS	00NR	5	25SP	G15_076	FROM->TO	GRPRAR1-LNX3345.00 - HOLT.CO3 345.00 345KV CKT 1	720	720	0.04155	102.9677	GEN600066 8-HIGH BRIDGE
FDNS	00NR	5	20SP	G15_076	FROM->TO	GRPRAR1-LNX3345.00 - HOLT.CO3 345.00 345KV CKT 1	720	720	0.04123	102.9653	GEN563312 1-G15097_3 0.6900
FDNS	00NR	5	25SP	G15_076	FROM->TO	GRPRAR1-LNX3345.00 - HOLT.CO3 345.00 345KV CKT 1	720	720	0.04155	102.965	GEN600011 5-BLACK DOG GEN 1
FDNS	00NR	5	25SP	G15_076	FROM->TO	GRPRAR1-LNX3345.00 - HOLT.CO3 345.00 345KV CKT 1	720	720	0.04155	102.955	GEN600071 10-RIVER SIDE
FDNS	00NR	5	25SP	G15_076	FROM->TO	GRPRAR1-LNX3345.00 - HOLT.CO3 345.00 345KV CKT 1	720	720	0.04155	102.9549	GEN600070 9-RIVER SIDE
FDNS	00NR	5	25SP	G15_076	FROM->TO	GRPRAR1-LNX3345.00 - HOLT.CO3 345.00 345KV CKT 1	720	720	0.04155	102.9433	GEN600007 7-RIVERSIDE GEN 7
FDNS	00NR	5	25SP	G15_076	FROM->TO	GRPRAR1-LNX3345.00 - HOLT.CO3 345.00 345KV CKT 1	720	720	0.04155	102.9298	GEN600045 4-ANSON
FDNS	00NR	5	25SP	G15_076	FROM->TO	GRPRAR1-LNX3345.00 - HOLT.CO3 345.00 345KV CKT 1	720	720	0.04319	102.9283	P12:115:NPPD:1163B:NELIGH 7:NORFK.N7:BTB
FDNS	00NR	5	20SP	G15_076	FROM->TO	GRPRAR1-LNX3345.00 - HOLT.CO3 345.00 345KV CKT 1	720	720	0.04123	102.9277	GEN659018 1-G14_003IS_3 0.6900
FDNS	00NR	5	25SP	G15_076	FROM->TO	GRPRAR1-LNX3345.00 - HOLT.CO3 345.00 345KV CKT 1	720	720	0.04155	102.9265	GEN600017 C-LS POWER CT
FDNS	00NR	5	20SP	G15_076	FROM->TO	GRPRAR1-LNX3345.00 - HOLT.CO3 345.00 345KV CKT 1	720	720	0.04123	102.9187	GEN652906 1-G09_006IS_3 0.6900
FDNS	00NR	5	25SP	G15_076	FROM->TO	GRPRAR1-LNX3345.00 - HOLT.CO3 345.00 345KV CKT 1	720	720	0.04155	102.8927	GEN659273 2-GROTON SYNC COND
FDNS	00NR	5	25SP	G15_076	FROM->TO	GRPRAR1-LNX3345.00 - HOLT.CO3 345.00 345KV CKT 1	720	720	0.04155	102.8927	GEN659294 1-WILTONCOL9
FDNS	00NR	5	25SP	G15_076	FROM->TO	GRPRAR1-LNX3345.00 - HOLT.CO3 345.00 345KV CKT 1	720	720	0.0415	102.8788	OAHE - SULLEY BUTTE 230KV CKT 1
FDNS	00NR	5	20SP	G15_076	FROM->TO	GRPRAR1-LNX3345.00 - HOLT.CO3 345.00 345KV CKT 1	720	720	0.04123	102.878	GEN652543 3-BIG BEND
FDNS	00NR	5	25SP	G15_076	FROM->TO	GRPRAR1-LNX3345.00 - HOLT.CO3 345.00 345KV CKT 1	720	720	0.04234	102.8712	AXTELL - POST ROCK 345KV CKT 1
FDNS	00NR	5	25SP	G15_076	FROM->TO	GRPRAR1-LNX3345.00 - HOLT.CO3 345.00 345KV CKT 1	720	720	0.04164	102.8664	ANTELOP-LNX3345.00 - ANTELOPE VALLEY 345KV CKT Z
FDNS	00NR	5	25SP	G15_076	FROM->TO	GRPRAR1-LNX3345.00 - HOLT.CO3 345.00 345KV CKT 1	720	720	0.04155	102.8547	GEN615052 1-CAMBRIDGE GENERATING STATION
FDNS	00NR	5	25SP	G15_076	FROM->TO	GRPRAR1-LNX3345.00 - HOLT.CO3 345.00 345KV CKT 1	720	720	0.04155	102.8338	GEN659031 1-G12_014IS_4 0.6900
FDNS	00NR	5	25SP	G15_076	FROM->TO	GRPRAR1-LNX3345.00 - HOLT.CO3 345.00 345KV CKT 1	720	720	0.04155	102.8148	GEN 10648 1-G830_GEN 0.6900
FDNS	00NR	5	25SP	G15_076	FROM->TO	GRPRAR1-LNX3345.00 - HOLT.CO3 345.00 345KV CKT 1	720	720	0.04155	102.8112	GEN659192 6-LYNN
FDNS	00NR	5	25SP	G15_076	FROM->TO	GRPRAR1-LNX3345.00 - HOLT.CO3 345.00 345KV CKT 1	720	720	0.04155	102.8096	GEN659162 4-RED WLCK
FDNS	00NR	5	25SP	G15_076	FROM->TO	GRPRAR1-LNX3345.00 - HOLT.CO3 345.00 345KV CKT 1	720	720	0.04155	102.8096	GEN659163 5-BLACK WDCK
FDNS	00NR	5	20SP	G15_076	FROM->TO	GRPRAR1-LNX3345.00 - HOLT.CO3 345.00 345KV CKT 1	720	720	0.04123	102.8091	COYOTE 345/24.0KV TRANSFORMER CKT 1
FDNS	00NR	5	25SP	G15_076	FROM->TO	GRPRAR1-LNX3345.00 - HOLT.CO3 345.00 345KV CKT 1	720	720	0.04155	102.8084	GEN660016 1-B_H WIND 0.7000
FDNS	00NR	5	20SP	G15_076	FROM->TO	GRPRAR1-LNX3345.00 - HOLT.CO3 345.00 345KV CKT 1	720	720	0.04123	102.7995	GEN659194 1-NDPRAIRWND1W0.6900
FDNS	00NR	5	20SP	G15_076	FROM->TO	GRPRAR1-LNX3345.00 - HOLT.CO3 345.00 345KV CKT 1	720	720	0.04123	102.7969	GEN659010 4-G07_027IS_2 0.6900
FDNS	00NR	5	25SP	G15_076	FROM->TO	GRPRAR1-LNX3345.00 - HOLT.CO3 345.00 345KV CKT 1	720	720	0.04155	102.7873	GEN615021 1-GRE-ER 14G 16.000
FDNS	00NR	5	20SP	G15_076	FROM->TO	GRPRAR1-LNX3345.00 - HOLT.CO3 345.00 345KV CKT 1	720	720	0.04123	102.7831	GEN652460 4-GARRISON
FDNS	00NR	5	20SP	G15_076	FROM->TO	GRPRAR1-LNX3345.00 - HOLT.CO3 345.00 345KV CKT 1	720	720	0.04123	102.7831	GEN652461 5-GARRISON
FDNS	00NR	5	20SP	G15_076	FROM->TO	GRPRAR1-LNX3345.00 - HOLT.CO3 345.00 345KV CKT 1	720	720	0.04123	102.7635	GEN652559 1-OAHE
FDNS	00NR	5	25SP	G15_076	FROM->TO	GRPRAR1-LNX3345.00 - HOLT.CO3 345.00 345KV CKT 1	720	720	0.04155	102.75	GEN615015 1-GRE-SPRITWDG13.200
FDNS	00NR	5	20SP	G15_076	FROM->TO	GRPRAR1-LNX3345.00 - HOLT.CO3 345.00 345KV CKT 1	720	720	0.04119	102.7343	GLENHAM - L3 HAWDON 230KV CKT 1
FDNS	00NR	5	20SP	G15_076	FROM->TO	GRPRAR1-LNX3345.00 - HOLT.CO3 345.00 345KV CKT 1	720	720	0.04123	102.7309	GEN652907 1-G09_007IS_3 0.6900

SOLUTION	GROUP	SCENARIO	SEASON	SOURCE	DIRECTION	MONITORED ELEMENT	RATEA (MVA)	RATEB(MVA)	TDF	TC%LOADING (% MVA)	CONTINGENCY
FDNS	00NR	5	20SP	G15_076	FROM->TO	GRPRAR1-LNX3345.00 - HOLT.CO3 345.00 345KV CKT 1	720	720	0.04123	102.726	GEN652457 1-GARRISON
FDNS	00NR	5	20SP	G15_076	FROM->TO	GRPRAR1-LNX3345.00 - HOLT.CO3 345.00 345KV CKT 1	720	720	0.04123	102.726	GEN652458 2-GARRISON
FDNS	00NR	5	20SP	G15_076	FROM->TO	GRPRAR1-LNX3345.00 - HOLT.CO3 345.00 345KV CKT 1	720	720	0.04123	102.726	GEN652459 3-GARRISON
FDNS	00NR	5	25SP	G15_076	FROM->TO	GRPRAR1-LNX3345.00 - HOLT.CO3 345.00 345KV CKT 1	720	720	0.04155	102.7211	GEN657705 X-DRAYTON
FDNS	00NR	5	25SP	G15_076	FROM->TO	GRPRAR1-LNX3345.00 - HOLT.CO3 345.00 345KV CKT 1	720	720	0.0415	102.712	SULLEY BUTTE - SULLYBT-LNX3230.00 230KV CKT Z
FDNS	00NR	5	25SP	G15_076	FROM->TO	GRPRAR1-LNX3345.00 - HOLT.CO3 345.00 345KV CKT 1	720	720	0.0415	102.7119	SULLYBT-LNX3230.00 - WHITLOK 230KV CKT 1
FDNS	00NR	5	20SP	G15_076	FROM->TO	GRPRAR1-LNX3345.00 - HOLT.CO3 345.00 345KV CKT 1	720	720	0.04123	102.7049	GEN563342 1-G15098_3 0.6900
FDNS	00NR	5	25SP	G15_076	FROM->TO	GRPRAR1-LNX3345.00 - HOLT.CO3 345.00 345KV CKT 1	720	720	0.04155	102.6723	BISONMP4 230.00 - SQUARE BUTTE 230KV CKT 1
FDNS	00NR	5	20SP	G15_076	FROM->TO	GRPRAR1-LNX3345.00 - HOLT.CO3 345.00 345KV CKT 1	720	720	0.04123	102.6696	GEN659403 1-NDSUNFLWR W0.6900
FDNS	00NR	5	20SP	G15_076	FROM->TO	GRPRAR1-LNX3345.00 - HOLT.CO3 345.00 345KV CKT 1	720	720	0.04123	102.6565	GEN652542 1-BIG BEND
FDNS	00NR	5	25SP	G15_076	FROM->TO	GRPRAR1-LNX3345.00 - HOLT.CO3 345.00 345KV CKT 1	720	720	0.0415	102.6554	P12:230:UMZB:# 114 #: SB IN SD. SB-WK-GH
FDNS	00NR	5	25SP	G15_076	FROM->TO	GRPRAR1-LNX3345.00 - HOLT.CO3 345.00 345KV CKT 1	720	720	0.0415	102.6554	P12:230:UMZB:# 117 #: WK IN SD. SB-WK-GH
FDNS	00NR	5	25SP	G15_076	FROM->TO	GRPRAR1-LNX3345.00 - HOLT.CO3 345.00 345KV CKT 1	720	720	0.03521	102.6541	DIXONCO 3 345.00 - TWINCH 3 345.00 345KV CKT 1
FDNS	00NR	5	25SP	G15_076	FROM->TO	GRPRAR1-LNX3345.00 - HOLT.CO3 345.00 345KV CKT 1	720	720	0.04155	102.6362	GEN659353 1-DEERCREK CTG18.000
FDNS	00NR	5	25SP	G15_076	FROM->TO	GRPRAR1-LNX3345.00 - HOLT.CO3 345.00 345KV CKT 1	720	720	0.04155	102.6352	GEN600067 9-HIGH BRIDGE
FDNS	00NR	5	25SP	G15_076	FROM->TO	GRPRAR1-LNX3345.00 - HOLT.CO3 345.00 345KV CKT 1	720	720	0.04155	102.6352	GEN659354 1-DEERCREK STG18.000
FDNS	00NR	5	25SP	G15_076	FROM->TO	GRPRAR1-LNX3345.00 - HOLT.CO3 345.00 345KV CKT 1	720	720	0.03521	102.635	DIXONCO 3 345.00 (DIXON1) 345/230/13.8KV TRANSFORMER CKT 1
FDNS	00NR	5	20SP	G15_076	FROM->TO	GRPRAR1-LNX3345.00 - HOLT.CO3 345.00 345KV CKT 1	720	720	0.04123	102.6134	ALMA 161 161/24.0KV TRANSFORMER CKT 1
FDNS	00NR	5	25SP	G15_076	FROM->TO	GRPRAR1-LNX3345.00 - HOLT.CO3 345.00 345KV CKT 1	720	720	0.04155	102.6118	GEN672303 3-BOUNDARY DAM GENERATOR 3
FDNS	00NR	5	25SP	G15_076	FROM->TO	GRPRAR1-LNX3345.00 - HOLT.CO3 345.00 345KV CKT 1	720	720	0.04155	102.6117	GEN672304 4-BOUNDARY DAM GENERATOR 4
FDNS	00NR	5	25SP	G15_076	FROM->TO	GRPRAR1-LNX3345.00 - HOLT.CO3 345.00 345KV CKT 1	720	720	0.04155	102.6117	GEN672305 5-BOUNDARY DAM GENERATOR 5
FDNS	00NR	5	20SP	G15_076	FROM->TO	GRPRAR1-LNX3345.00 - HOLT.CO3 345.00 345KV CKT 1	720	720	0.04337	102.6112	MCCOOL - MOORE 345KV CKT 1
FDNS	00NR	5	25SP	G15_076	FROM->TO	GRPRAR1-LNX3345.00 - HOLT.CO3 345.00 345KV CKT 1	720	720	0.04312	102.6038	G15061_T 345.00 - SETAB 345KV CKT 1
FDNS	00NR	5	25SP	G15_076	FROM->TO	GRPRAR1-LNX3345.00 - HOLT.CO3 345.00 345KV CKT 1	720	720	0.0415	102.602	GLENHAM - WHITLOK 230KV CKT 1
FDNS	00NR	5	25SP	G15_076	FROM->TO	GRPRAR1-LNX3345.00 - HOLT.CO3 345.00 345KV CKT 1	720	720	0.04306	102.6015	GERALD GENTLEMAN STATION - RED WILLOW 345KV CKT 1
FDNS	00NR	5	25SP	G15_076	FROM->TO	GRPRAR1-LNX3345.00 - HOLT.CO3 345.00 345KV CKT 1	720	720	0.04155	102.5809	GEN672356 1-FUT-WL1X 18.000
FDNS	00NR	5	25SP	G15_076	FROM->TO	GRPRAR1-LNX3345.00 - HOLT.CO3 345.00 345KV CKT 1	720	720	0.04155	102.5504	GEN672389 1-FUT-SW1X 18.000
FDNS	00NR	5	25SP	G15_076	FROM->TO	GRPRAR1-LNX3345.00 - HOLT.CO3 345.00 345KV CKT 1	720	720	0.04155	102.5412	GEN672392 1-NBECGT1G 18.000
FDNS	00NR	5	25SP	G15_076	FROM->TO	GRPRAR1-LNX3345.00 - HOLT.CO3 345.00 345KV CKT 1	720	720	0.0431	102.5165	MISSION - WITTEN 115KV CKT 1
FDNS	00NR	5	25SP	G15_076	FROM->TO	GRPRAR1-LNX3345.00 - HOLT.CO3 345.00 345KV CKT 1	720	720	0.04303	102.5083	G15088_T 345.00 - MOORE 345KV CKT 1
FDNS	00NR	5	20SP	G15_076	FROM->TO	GRPRAR1-LNX3345.00 - HOLT.CO3 345.00 345KV CKT 1	720	720	0.04123	102.5065	SQUARE BUTTE - YNG2 4 230.00 230KV CKT 1
FDNS	00NR	5	20SP	G15_076	FROM->TO	GRPRAR1-LNX3345.00 - HOLT.CO3 345.00 345KV CKT 1	720	720	0.04123	102.506	YNG2 4 230.00 230/20.0KV TRANSFORMER CKT 1
FDNS	00NR	5	25SP	G15_076	FROM->TO	GRPRAR1-LNX3345.00 - HOLT.CO3 345.00 345KV CKT 1	720	720	0.04437	102.5058	MINGO - RED WILLOW 345KV CKT 1
FDNS	00NR	5	25SP	G15_076	FROM->TO	GRPRAR1-LNX3345.00 - HOLT.CO3 345.00 345KV CKT 1	720	720	0.04437	102.5058	MINGO - RED WILLOW 345KV CKT 1
FDNS	00NR	5	25SP	G15_076	FROM->TO	GRPRAR1-LNX3345.00 - HOLT.CO3 345.00 345KV CKT 1	720	720	0.04155	102.478	GEN662101 1-WESSINGTON190.5750
FDNS	00NR	5	25SP	G15_076	FROM->TO	GRPRAR1-LNX3345.00 - HOLT.CO3 345.00 345KV CKT 1	720	720	0.04155	102.4476	GEN681542 6-JP MADGETT
FDNS	00NR	5	25SP	G15_076	FROM->TO	GRPRAR1-LNX3345.00 - HOLT.CO3 345.00 345KV CKT 1	720	720	0.04155	102.4191	GEN910006 1-G12_012IS_3 0.6900
FDNS	00NR	5	25SP	G15_076	FROM->TO	GRPRAR1-LNX3345.00 - HOLT.CO3 345.00 345KV CKT 1	720	720	0.04155	102.3843	CENTER 230/22.0KV TRANSFORMER CKT 1
FDNS	00NR	5	25SP	G15_076	FROM->TO	GRPRAR1-LNX3345.00 - HOLT.CO3 345.00 345KV CKT 1	720	720	0.03619	102.3088	HOSKINS - SHELL CREEK 345KV CKT 1
FDNS	00NR	5	25SP	G15_076	FROM->TO	GRPRAR1-LNX3345.00 - HOLT.CO3 345.00 345KV CKT 1	720	720	0.04155	102.2964	HESKETT 115/13.8KV TRANSFORMER CKT 1
FDNS	00NR	5	20SP	G15_076	FROM->TO	GRPRAR1-LNX3345.00 - HOLT.CO3 345.00 345KV CKT 1	720	720	0.04123	102.2947	GEN659411 1-CAMPBLCNTY W0.6900
FDNS	00NR	5	20SP	G15_076	FROM->TO	GRPRAR1-LNX3345.00 - HOLT.CO3 345.00 345KV CKT 1	720	720	0.04123	102.2278	GEN600004 2-PRAIRIE ISLAND G2
FDNS	00NR	5	25SP	G15_076	FROM->TO	GRPRAR1-LNX3345.00 - HOLT.CO3 345.00 345KV CKT 1	720	720	0.04315	102.2243	AXTELL - SWEETWATER 345KV CKT 1
FDNS	00NR	5	20SP	G15_076	FROM->TO	GRPRAR1-LNX3345.00 - HOLT.CO3 345.00 345KV CKT 1	720	720	0.04123	102.2239	GEN600003 1-PRAIRIE ISLAND G1
FDNS	00NR	5	25SP	G15_076	FROM->TO	GRPRAR1-LNX3345.00 - HOLT.CO3 345.00 345KV CKT 1	720	720	0.04155	102.2222	GEN659289 1-DAYCNTYWND W0.6900
FDNS	00NR	5	25SP	G15_076	FROM->TO	GRPRAR1-LNX3345.00 - HOLT.CO3 345.00 345KV CKT 1	720	720	0.04155	102.1858	GEN563312 1-G15097_3 0.6900
FDNS	00NR	5	25SP	G15_076	FROM->TO	GRPRAR1-LNX3345.00 - HOLT.CO3 345.00 345KV CKT 1	720	720	0.04387	102.1698	MCCOOL - MOORE 345KV CKT 1
FDNS	00NR	5	20SP	G15_076	FROM->TO	GRPRAR1-LNX3345.00 - HOLT.CO3 345.00 345KV CKT 1	720	720	0.04123	102.1636	GEN672321 1-SHAND GENERATOR 1
FDNS	00NR	5	25SP	G15_076	FROM->TO	GRPRAR1-LNX3345.00 - HOLT.CO3 345.00 345KV CKT 1	720	720	0.04155	102.1332	GEN659018 1-G14_003IS_3 0.6900
FDNS	00NR	5	25SP	G15_076	FROM->TO	GRPRAR1-LNX3345.00 - HOLT.CO3 345.00 345KV CKT 1	720	720	0.04155	102.1277	GEN652906 1-G09_006IS_3 0.6900
FDNS	00NR	5	20SP	G15_076	FROM->TO	GRPRAR1-LNX3345.00 - HOLT.CO3 345.00 345KV CKT 1	720	720	0.04123	102.1032	GEN672310 1-POPLAR RIVER GENERATOR 1
FDNS	00NR	5	20SP	G15_076	FROM->TO	GRPRAR1-LNX3345.00 - HOLT.CO3 345.00 345KV CKT 1	720	720	0.04123	102.1032	GEN672311 2-POPLAR RIVER GENERATOR 2
FDNS	00NR	5	20SP	G15_076	FROM->TO	GRPRAR1-LNX3345.00 - HOLT.CO3 345.00 345KV CKT 1	720	720	0.04123	102.0859	GEN672306 6-BOUNDARY DAM GENERATOR 6
FDNS	00NR	5	20SP	G15_076	FROM->TO	GRPRAR1-LNX3345.00 - HOLT.CO3 345.00 345KV CKT 1	720	720	0.04123	102.0616	GEN659296 2-SDPRAIRWND1W0.6900
FDNS	00NR	5	20SP	G15_076	FROM->TO	GRPRAR1-LNX3345.00 - HOLT.CO3 345.00 345KV CKT 1	720	720	0.04123	102.0413	RCDC EAST 4230.00 - RED CEDAR DC 230KV CKT 1
FDNS	00NR	5	20SP	G15_076	FROM->TO	GRPRAR1-LNX3345.00 - HOLT.CO3 345.00 345KV CKT 1	720	720	0.04124	102.0358	P12:230:UMZB:# 112 #: NU IN SD. NU-RCDC & DRY CREEK XFMR
FDNS	00NR	5	17SP	G15_076	FROM->TO	GRPRAR1-LNX3345.00 - HOLT.CO3 345.00 345KV CKT 1	720	720	0.04277	102.0299	FTTHOM1-LNX3345.00 - LELAND2-LNX3345.00 345KV CKT 1
FDNS	00NR	5	25SP	G15_076	FROM->TO	GRPRAR1-LNX3345.00 - HOLT.CO3 345.00 345KV CKT 1	720	720	0.04155	102.0112	GEN659010 4-G07_027IS_2 0.6900
FDNS	00NR	5	25SP	G15_076	FROM->TO	GRPRAR1-LNX3345.00 - HOLT.CO3 345.00 345KV CKT 1	720	720	0.04155	102.006	GEN659194 1-NDPRAIRWND1W0.6900
FDNS	00NR	5	25SP	G15_076	FROM->TO	GRPRAR1-LNX3345.00 - HOLT.CO3 345.00 345KV CKT 1	720	720	0.04155	101.994	GEN652460 4-GARRISON
FDNS	00NR	5	25SP	G15_076	FROM->TO	GRPRAR1-LNX3345.00 - HOLT.CO3 345.00 345KV CKT 1	720	720	0.04155	101.9939	GEN652461 5-GARRISON
FDNS	00NR	5	25SP	G15_076	FROM->TO	GRPRAR1-LNX3345.00 - HOLT.CO3 345.00 345KV CKT 1	720	720	0.0415	101.9505	GLENHAM - L3 HAWDON 230KV CKT 1
FDNS	00NR	5	20SP	G15_076	FROM->TO	GRPRAR1-LNX3345.00 - HOLT.CO3 345.00 345KV CKT 1	720	720	0.04123	101.9483	GEN615010 1-STANTON4
FDNS	00NR	5	25SP	G15_076	FROM->TO	GRPRAR1-LNX3345.00 - HOLT.CO3 345.00 345KV CKT 1	720	720	0.04155	101.9406	GEN652907 1-G09_007IS_3 0.6900
FDNS	00NR	5	25SP	G15_076	FROM->TO	GRPRAR1-LNX3345.00 - HOLT.CO3 345.00 345KV CKT 1	720	720	0.04155	101.9374	GEN652457 1-GARRISON
FDNS	00NR	5	25SP	G15_076	FROM->TO	GRPRAR1-LNX3345.00 - HOLT.CO3 345.00 345KV CKT 1	720	720	0.04155	101.9374	GEN652458 2-GARRISON
FDNS	00NR	5	25SP	G15_076	FROM->TO	GRPRAR1-LNX3345.00 - HOLT.CO3 345.00 345KV CKT 1	720	720	0.04155	101.9374	GEN652459 3-GARRISON
FDNS	00NR	5	25SP	G15_076	FROM->TO	GRPRAR1-LNX3345.00 - HOLT.CO3 345.00 345KV CKT 1	720	720	0.04155	101.8964	GEN563342 1-G15098_3 0.6900
FDNS	00NR	5	25SP	G15_076	FROM->TO	GRPRAR1-LNX3345.00 - HOLT.CO3 345.00 345KV CKT 1	720	720	0.04026	101.8831	HIGHLND 3 345.00 - OBRIEN 3 345.00 345KV CKT 1
FDNS	00NR	5	25SP	G15_076	FROM->TO	GRPRAR1-LNX3345.00 - HOLT.CO3 345.00 345KV CKT 1	720	720	0.04155	101.8812	GEN652543 3-BIG BEND
FDNS	00NR	5	25SP	G15_076	FROM->TO	GRPRAR1-LNX3345.00 - HOLT.CO3 345.00 345KV CKT 1	720	720	0.04155	101.8798	GEN659403 1-NDSUNFLWR W0.6900
FDNS	00NR	5	20SP	G15_076	FROM->TO	GRPRAR1-LNX3345.00 - HOLT.CO3 345.00 345KV CKT 1	720	720	0.04123	101.8782	GEN600006 1-AS KING
FDNS	00NR	5	25SP	G15_076	FROM->TO	GRPRAR1-LNX3345.00 - HOLT.CO3 345.00 345KV CKT 1	720	720	0.04155	101.874	GEN652542 1-BIG BEND
FDNS	00NR	5	17SP	G15_076	FROM->TO	GRPRAR1-LNX3345.00 - HOLT.CO3 345.00 345KV CKT 1	720	720	0.04277	101.8619	P12:345:UMZB:# 108 #: LOS FT IN ND. LOS FT
FDNS	00NR	5	17SP	G15_076	FROM->TO	GRPRAR1-LNX3345.00 - HOLT.CO3 345.00 345KV CKT 1	720	720	0.04277	101.8531	FT THOMPSON - FTTHOM1-LNX3345.00 345KV CKT Z
FDNS	00NR	5	20SP	G15_076	FROM->TO	GRPRAR1-LNX3345.00 - HOLT.CO3 345.00 345KV CKT 1	720	720	0.04123	101.8528	GEN659453 1-GI1414GEN W0.6900
FDNS	00NR	5	20SP	G15_076	FROM->TO	GRPRAR1-LNX3345.00 - HOLT.CO3 345.00 345KV CKT 1	720	720	0.04123	101.8512	GEN563302 1-G15096_3 0.6900
FDNS	00NR	5	17SP	G15_076	FROM->TO	GRPRAR1-LNX3345.00 - HOLT.CO3 345.00 345KV CKT 1	720	720	0.04277	101.7689	LELAND OLDS - LELAND2-LNX3345.00 345KV CKT Z
FDNS	00NR	5	20SP	G15_076	FROM->TO	GRPRAR1-LNX3345.00 - HOLT.CO3 345.00 345KV CKT 1	720	720	0.04123	101.7476	GEN652557 4-OAHE

SOLUTION	GROUP	SCENARIO	SEASON	SOURCE	DIRECTION	MONITORED ELEMENT	RATEA (MVA)	RATEB(MVA)	TDF	TC%LOADING (% MVA)	CONTINGENCY
FDNS	00NR	5	20SP	G15_076	FROM->TO	GRPRAR1-LNX3345.00 - HOLT.CO3 345.00 345KV CKT 1	720	720	0.04123	101.7476	GEN652558 6-OAHE
FDNS	00NR	5	20SP	G15_076	FROM->TO	GRPRAR1-LNX3345.00 - HOLT.CO3 345.00 345KV CKT 1	720	720	0.04123	101.7475	GEN652556 2-OAHE
FDNS	00NR	5	20SP	G15_076	FROM->TO	GRPRAR1-LNX3345.00 - HOLT.CO3 345.00 345KV CKT 1	720	720	0.04123	101.7462	GEN659141 1-K10215A
FDNS	00NR	5	25SP	G15_076	FROM->TO	GRPRAR1-LNX3345.00 - HOLT.CO3 345.00 345KV CKT 1	720	720	0.04155	101.7279	STANTON 230/18.0KV TRANSFORMER CKT 1
FDNS	00NR	5	20SP	G15_076	FROM->TO	GRPRAR1-LNX3345.00 - HOLT.CO3 345.00 345KV CKT 1	720	720	0.04123	101.7174	GEN659110 1-LELAND OLDS UNIT1
FDNS	00NR	5	25SP	G15_076	FROM->TO	GRPRAR1-LNX3345.00 - HOLT.CO3 345.00 345KV CKT 1	720	720	0.04155	101.5759	GEN652559 1-OAHE
FDNS	00NR	5	20SP	G15_076	FROM->TO	GRPRAR1-LNX3345.00 - HOLT.CO3 345.00 345KV CKT 1	720	720	0.04123	101.5711	GEN652173 1-G09_001IS_2 0.6900
FDNS	00NR	5	25SP	G15_076	FROM->TO	GRPRAR1-LNX3345.00 - HOLT.CO3 345.00 345KV CKT 1	720	720	0.04155	101.5035	GEN659411 1-CAMPBLCNTY W0.6900
FDNS	00NR	5	20SP	G15_076	FROM->TO	GRPRAR1-LNX3345.00 - HOLT.CO3 345.00 345KV CKT 1	720	720	0.04331	101.3452	GRAND ISLAND - MCCOOL 345KV CKT 1
FDNS	00NR	5	20SP	G15_076	FROM->TO	GRPRAR1-LNX3345.00 - HOLT.CO3 345.00 345KV CKT 1	720	720	0.04123	101.3427	GEN657749 1-YOUNG 1 GENERATOR
FDNS	00NR	5	25SP	G15_076	FROM->TO	GRPRAR1-LNX3345.00 - HOLT.CO3 345.00 345KV CKT 1	720	720	0.04155	101.3281	SQUARE BUTTE - YNG2 4 230.00 230KV CKT 1
FDNS	00NR	5	25SP	G15_076	FROM->TO	GRPRAR1-LNX3345.00 - HOLT.CO3 345.00 345KV CKT 1	720	720	0.04155	101.3204	GEN600004 2-PRAIRIE ISLAND G2
FDNS	00NR	5	25SP	G15_076	FROM->TO	GRPRAR1-LNX3345.00 - HOLT.CO3 345.00 345KV CKT 1	720	720	0.04155	101.3162	GEN600003 1-PRAIRIE ISLAND G1
FDNS	00NR	5	25SP	G15_076	FROM->TO	GRPRAR1-LNX3345.00 - HOLT.CO3 345.00 345KV CKT 1	720	720	0.04155	101.2921	GEN672310 1-POPLAR RIVER GENERATOR 1
FDNS	00NR	5	25SP	G15_076	FROM->TO	GRPRAR1-LNX3345.00 - HOLT.CO3 345.00 345KV CKT 1	720	720	0.04155	101.2921	GEN672311 2-POPLAR RIVER GENERATOR 2
FDNS	00NR	5	25SP	G15_076	FROM->TO	GRPRAR1-LNX3345.00 - HOLT.CO3 345.00 345KV CKT 1	720	720	0.04155	101.2831	GEN659296 2-SDPRAIRWND1W0.6900
FDNS	00NR	5	25SP	G15_076	FROM->TO	GRPRAR1-LNX3345.00 - HOLT.CO3 345.00 345KV CKT 1	720	720	0.04155	101.2773	GEN672321 1-SHAND GENERATOR 1
FDNS	00NR	5	20SP	G15_076	FROM->TO	GRPRAR1-LNX3345.00 - HOLT.CO3 345.00 345KV CKT 1	720	720	0.04123	101.2405	GEN659407 1-ANTELPHILLSW0.6900
FDNS	00NR	5	25SP	G15_076	FROM->TO	GRPRAR1-LNX3345.00 - HOLT.CO3 345.00 345KV CKT 1	720	720	0.04155	101.2217	P12:230:UMZB:# 112 #: NU IN SD. NU-RCDC & DRY CREEK XFMR
FDNS	00NR	5	25SP	G15_076	FROM->TO	GRPRAR1-LNX3345.00 - HOLT.CO3 345.00 345KV CKT 1	720	720	0.04155	101.2178	RCDC EAST 4230.00 - RED CEDAR DC 230KV CKT 1
FDNS	00NR	5	25SP	G15_076	FROM->TO	GRPRAR1-LNX3345.00 - HOLT.CO3 345.00 345KV CKT 1	720	720	0.04155	101.1955	GEN672306 6-BOUNDARY DAM GENERATOR 6
FDNS	00NR	5	25SP	G15_076	FROM->TO	GRPRAR1-LNX3345.00 - HOLT.CO3 345.00 345KV CKT 1	720	720	0.04155	101.0744	GEN615010 1-STANTON4
FDNS	00NR	5	25SP	G15_076	FROM->TO	GRPRAR1-LNX3345.00 - HOLT.CO3 345.00 345KV CKT 1	720	720	0.04155	101.052	GEN659453 1-GI1414GEN W0.6900
FDNS	00NR	5	25SP	G15_076	FROM->TO	GRPRAR1-LNX3345.00 - HOLT.CO3 345.00 345KV CKT 1	720	720	0.04155	101.0501	GEN563302 1-G15096_3 0.6900
FDNS	00NR	5	20SP	G15_076	FROM->TO	GRPRAR1-LNX3345.00 - HOLT.CO3 345.00 345KV CKT 1	720	720	0.04123	101.0196	GEN600005 1-MONTICELLO
FDNS	00NR	5	25SP	G15_076	FROM->TO	GRPRAR1-LNX3345.00 - HOLT.CO3 345.00 345KV CKT 1	720	720	0.04155	100.9684	GEN600006 1-AS KING
FDNS	00NR	5	25SP	G15_076	FROM->TO	GRPRAR1-LNX3345.00 - HOLT.CO3 345.00 345KV CKT 1	720	720	0.04155	100.9623	GEN652556 2-OAHE
FDNS	00NR	5	25SP	G15_076	FROM->TO	GRPRAR1-LNX3345.00 - HOLT.CO3 345.00 345KV CKT 1	720	720	0.04155	100.9623	GEN652557 4-OAHE
FDNS	00NR	5	25SP	G15_076	FROM->TO	GRPRAR1-LNX3345.00 - HOLT.CO3 345.00 345KV CKT 1	720	720	0.04155	100.9623	GEN652558 6-OAHE
FDNS	00NR	5	25SP	G15_076	FROM->TO	GRPRAR1-LNX3345.00 - HOLT.CO3 345.00 345KV CKT 1	720	720	0.04155	100.9341	GEN659141 1-K10215A
FDNS	00NR	5	25SP	G15_076	FROM->TO	GRPRAR1-LNX3345.00 - HOLT.CO3 345.00 345KV CKT 1	720	720	0.04155	100.8875	GEN659110 1-LELAND OLDS UNIT1
FDNS	00NR	5	25SP	G15_076	FROM->TO	GRPRAR1-LNX3345.00 - HOLT.CO3 345.00 345KV CKT 1	720	720	0.04378	100.8791	GRAND ISLAND - MCCOOL 345KV CKT 1
FDNS	00NR	5	25SP	G15_076	FROM->TO	GRPRAR1-LNX3345.00 - HOLT.CO3 345.00 345KV CKT 1	720	720	0.04155	100.7944	GEN652173 1-G09_001IS_2 0.6900
FDNS	00NR	5	20SP	G15_076	FROM->TO	GRPRAR1-LNX3345.00 - HOLT.CO3 345.00 345KV CKT 1	720	720	0.04123	100.7199	GEN600000 1-SHERBURNECNTY G1
FDNS	00NR	5	25SP	G15_076	FROM->TO	GRPRAR1-LNX3345.00 - HOLT.CO3 345.00 345KV CKT 1	720	720	0.04155	100.4699	CLAY BOSWELL 230/20.9KV TRANSFORMER CKT 1
FDNS	00NR	5	20SP	G15_076	FROM->TO	GRPRAR1-LNX3345.00 - HOLT.CO3 345.00 345KV CKT 1	720	720	0.04123	100.4635	GEN600001 2-SHERBURNE CNTY G2
FDNS	00NR	5	25SP	G15_076	FROM->TO	GRPRAR1-LNX3345.00 - HOLT.CO3 345.00 345KV CKT 1	720	720	0.04155	100.4465	GEN659407 1-ANTELPHILLSW0.6900
FDNS	00NR	5	25SP	G15_076	FROM->TO	GRPRAR1-LNX3345.00 - HOLT.CO3 345.00 345KV CKT 1	720	720	0.04155	100.43	GEN657749 1-YOUNG 1 GENERATOR
FDNS	00NR	5	20SP	G15_076	FROM->TO	GRPRAR1-LNX3345.00 - HOLT.CO3 345.00 345KV CKT 1	720	720	0.04123	100.3088	GEN661015 1-COYOTE
FDNS	00NR	5	20SP	G15_076	FROM->TO	GRPRAR1-LNX3345.00 - HOLT.CO3 345.00 345KV CKT 1	720	720	0.04123	100.1637	GEN620315 1-BIG STONE GEN
FDNS	00NR	5	25SP	G15_076	FROM->TO	GRPRAR1-LNX3345.00 - HOLT.CO3 345.00 345KV CKT 1	720	720	0.04155	100.1	GEN600005 1-MONTICELLO
FDNS	00NR	5	17SP	G15_076	FROM->TO	GRPRAR1-LNX3345.00 - HOLT.CO3 345.00 345KV CKT 1	720	720	0.06807	100	ANTELOPE 3345.00 - HOSKINS 345KV CKT 1
FDNS	00NR	5	20SP	G15_076	FROM->TO	GRPRAR1-LNX3345.00 - HOLT.CO3 345.00 345KV CKT 1	720	720	0.04123	99.9	GEN600002 3-SHERBURNE CNTY G3
FDNS	00NR	5	25SP	G15_076	FROM->TO	GRPRAR1-LNX3345.00 - HOLT.CO3 345.00 345KV CKT 1	720	720	0.04155	99.9	GEN600000 1-SHERBURNECNTY G1
FDNS	00NR	5	25SP	G15_076	FROM->TO	GRPRAR1-LNX3345.00 - HOLT.CO3 345.00 345KV CKT 1	720	720	0.04155	99.7	GEN600001 2-SHERBURNE CNTY G2
FDNS	00NR	5	20SP	G15_076	FROM->TO	GRPRAR1-LNX3345.00 - HOLT.CO3 345.00 345KV CKT 1	720	720	0.04123	99.5	GEN657748 1-YOUNG 2 GENERATOR
FDNS	00NR	5	17SP	G15_076	TO->FROM	KELLY - MEADOWGROVE4230.00 230KV CKT 1	368	368	0.03316	105.5567	GRPRAR1-LNX3345.00 - GRPRAR 345KV CKT Z
FDNS	00NR	5	17SP	G15_076	TO->FROM	KELLY - MEADOWGROVE4230.00 230KV CKT 1	368	368	0.03316	105.5495	GRPRAR1-LNX3345.00 - HOLT.CO3 345.00 345KV CKT 1
FDNS	00NR	5	17SP	G15_076	TO->FROM	SIDNEY - SIDNEY TRANSFORMER 230KV CKT 1	496	496	0.03573	106.2973	KEYSTONE - SIDNEY1-LNX3345.00 345KV CKT 1
FDNS	00NR	5	17SP	G15_076	TO->FROM	SIDNEY - SIDNEY TRANSFORMER 230KV CKT 1	496	496	0.03573	105.6907	SIDNEY - SIDNEY1-LNX3345.00 345KV CKT Z
FDNS	00NR	5	17SP	G15_076	FROM->TO	SIDNEY (SDQ KV2A) 345/230/13.8KV TRANSFORMER CKT 1	400	480	0.03573	111.876	KEYSTONE - SIDNEY1-LNX3345.00 345KV CKT 1
FDNS	00NR	5	17SP	G15_076	FROM->TO	SIDNEY (SDQ KV2A) 345/230/13.8KV TRANSFORMER CKT 1	400	480	0.03573	111.3877	SIDNEY - SIDNEY1-LNX3345.00 345KV CKT Z
FDNS	00NR	5	17SP	G15_076	FROM->TO	SIDNEY (SDQ KV2A) 345/230/13.8KV TRANSFORMER CKT 1	400	480	0.03573	111.0489	KEYSTONE - SIDNEY1-LNX3345.00 345KV CKT 1
FDNS	00NR	5	17SP	G15_076	FROM->TO	SIDNEY (SDQ KV2A) 345/230/13.8KV TRANSFORMER CKT 1	400	480	0.03573	110.9826	SIDNEY - SIDNEY1-LNX3345.00 345KV CKT Z
FDNS	00NR	5	20SP	G15_076	FROM->TO	SIDNEY (SDQ KV2A) 345/230/13.8KV TRANSFORMER CKT 1	400	480	0.0358	104.1809	KEYSTONE - SIDNEY1-LNX3345.00 345KV CKT 1
FDNS	00NR	5	20SP	G15_076	FROM->TO	SIDNEY (SDQ KV2A) 345/230/13.8KV TRANSFORMER CKT 1	400	480	0.0358	103.7661	SIDNEY - SIDNEY1-LNX3345.00 345KV CKT Z
FDNS	00NR	5	20SP	G15_076	FROM->TO	SIDNEY (SDQ KV2A) 345/230/13.8KV TRANSFORMER CKT 1	400	480	0.0358	103.5541	KEYSTONE - SIDNEY1-LNX3345.00 345KV CKT 1
FDNS	00NR	5	20SP	G15_076	FROM->TO	SIDNEY (SDQ KV2A) 345/230/13.8KV TRANSFORMER CKT 1	400	480	0.0358	103.5311	SIDNEY - SIDNEY1-LNX3345.00 345KV CKT Z
FDNS	00NR	5	25SP	G15_076	FROM->TO	SIDNEY (SDQ KV2A) 345/230/13.8KV TRANSFORMER CKT 1	400	480	0.03557	103.5279	KEYSTONE - SIDNEY1-LNX3345.00 345KV CKT 1
FDNS	00NR	5	25SP	G15_076	FROM->TO	SIDNEY (SDQ KV2A) 345/230/13.8KV TRANSFORMER CKT 1	400	480	0.03557	103.0832	SIDNEY - SIDNEY1-LNX3345.00 345KV CKT Z
FDNS	00NR	5	25SP	G15_076	FROM->TO	SIDNEY (SDQ KV2A) 345/230/13.8KV TRANSFORMER CKT 1	400	480	0.03557	102.9157	KEYSTONE - SIDNEY1-LNX3345.00 345KV CKT 1
FDNS	00NR	5	25SP	G15_076	FROM->TO	SIDNEY (SDQ KV2A) 345/230/13.8KV TRANSFORMER CKT 1	400	480	0.03557	102.8617	SIDNEY - SIDNEY1-LNX3345.00 345KV CKT Z
FDNS	00NR	6	20SP	G15_076	FROM->TO	DIXONCO 230.00 - HOSKINS 230KV CKT 1	320	320	0.25411	103.9591	DIXONCO 3 345.00 - TWINCH 3 345.00 345KV CKT 1
FDNS	00NR	6	20SP	G15_076	FROM->TO	DIXONCO 230.00 - HOSKINS 230KV CKT 1	320	320	0.25411	103.947	DIXONCO 3 345.00 (DIXON1) 345/230/13.8KV TRANSFORMER CKT 1
FDNS	00NR	6	25SP	G15_076	FROM->TO	DIXONCO 230.00 - HOSKINS 230KV CKT 1	320	320	0.2542	103.6518	DIXONCO 3 345.00 - TWINCH 3 345.00 345KV CKT 1
FDNS	00NR	6	25SP	G15_076	FROM->TO	DIXONCO 230.00 - HOSKINS 230KV CKT 1	320	320	0.2542	103.5899	DIXONCO 3 345.00 (DIXON1) 345/230/13.8KV TRANSFORMER CKT 1
FDNS	00NR	6	17SP	G15_076	FROM->TO	DIXONCO 230.00 - HOSKINS 230KV CKT 1	320	320	0.25446	103.2436	DIXONCO 3 345.00 (DIXON1) 345/230/13.8KV TRANSFORMER CKT 1
FDNS	00NR	6	17SP	G15_076	FROM->TO	DIXONCO 230.00 - HOSKINS 230KV CKT 1	320	320	0.25446	103.2419	DIXONCO 3 345.00 - TWINCH 3 345.00 345KV CKT 1
FDNS	09NR	6	17G	G15_076	FROM->TO	DIXONCO 230.00 - HOSKINS 230KV CKT 1	320	320	0.25399	101.7592	DIXONCO 3 345.00 - TWINCH 3 345.00 345KV CKT 1
FDNS	09NR	6	17G	G15_076	FROM->TO	DIXONCO 230.00 - HOSKINS 230KV CKT 1	320	320	0.25399	101.7308	DIXONCO 3 345.00 (DIXON1) 345/230/13.8KV TRANSFORMER CKT 1
FDNS	09NR	6	20L	G15_076	FROM->TO	DIXONCO 230.00 - HOSKINS 230KV CKT 1	320	320	0.25268	101.6954	DIXONCO 3 345.00 - TWINCH 3 345.00 345KV CKT 1
FDNS	09NR	6	20L	G15_076	FROM->TO	DIXONCO 230.00 - HOSKINS 230KV CKT 1	320	320	0.25268	101.6622	DIXONCO 3 345.00 (DIXON1) 345/230/13.8KV TRANSFORMER CKT 1
FDNS	09NR	6	17G	G15_076	FROM->TO	DIXONCO 3 345.00 (DIXON1) 345/230/13.8KV TRANSFORMER CKT 1	336	420	0.15587	108.3463	BASE CASE
FDNS	09NR	6	17G	G15_076	FROM->TO	DIXONCO 3 345.00 (DIXON1) 345/230/13.8KV TRANSFORMER CKT 1	336	420	0.15587	107.9901	BASE CASE
FDNS	09NR	6	17G	G15_076	FROM->TO	DIXONCO 3 345.00 (DIXON1) 345/230/13.8KV TRANSFORMER CKT 1	336	420	0.25779	106.1774	DIXONCO 230.00 - HOSKINS 230KV CKT 1
FDNS	09NR	6	17G	G15_076	FROM->TO	DIXONCO 3 345.00 (DIXON1) 345/230/13.8KV TRANSFORMER CKT 1	336	420	0.25779	105.9985	DIXONCO 230.00 - HOSKINS 230KV CKT 1
FDNS	09NR	6	20L	G15_076	FROM->TO	DIXONCO 3 345.00 (DIXON1) 345/230/13.8KV TRANSFORMER CKT 1	336	420	0.15885	103.7394	BASE CASE
FDNS	09NR	6	20L	G15_076	FROM->TO	DIXONCO 3 345.00 (DIXON1) 345/230/13.8KV TRANSFORMER CKT 1	336	420	0.25903	103.6037	DIXONCO 230.00 - HOSKINS 230KV CKT 1
FDNS	09NR	6	20L	G15_076	FROM->TO	DIXONCO 3 345.00 (DIXON1) 345/230/13.8KV TRANSFORMER CKT 1	336	420	0.25903	103.5214	DIXONCO 230.00 - HOSKINS 230KV CKT 1

SOLUTION	GROUP	SCENARIO	SEASON	SOURCE	DIRECTION	MONITORED ELEMENT	RATEA (MVA)	RATEB(MVA)	TDF	TC%LOADING (% MVA)	CONTINGENCY
FDNS	09NR	6	20L	G15_076	FROM->TO	DIXONCO 3 345.00 (DIXON1) 345/230/13.8KV TRANSFORMER CKT 1	336	420	0.15885	103.488	BASE CASE
FDNS	09NR	6	17G	G15_076	FROM->TO	DIXONCO 3 345.00 (DIXON1) 345/230/13.8KV TRANSFORMER CKT 1	336	420	0.15662	101.625	HOSKINS - RAUN 345KV CKT 1
FDNS	09NR	6	17G	G15_076	FROM->TO	DIXONCO 3 345.00 (DIXON1) 345/230/13.8KV TRANSFORMER CKT 1	336	420	0.15662	101.454	HOSKINS - RAUN 345KV CKT 1
FDNS	00NR	6	17SP	G15_076	TO->FROM	SIDNEY - SIDNEY TRANSFORMER 230KV CKT 1	496	496	0.0365	108.2092	KEYSTONE - SIDNEY1-LNX3345.00 345KV CKT 1
FDNS	00NR	6	17SP	G15_076	TO->FROM	SIDNEY - SIDNEY TRANSFORMER 230KV CKT 1	496	496	0.0365	107.559	SIDNEY - SIDNEY1-LNX3345.00 345KV CKT Z
FDNS	00NR	6	20SP	G15_076	TO->FROM	SIDNEY - SIDNEY TRANSFORMER 230KV CKT 1	496	496	0.03656	100.7153	KEYSTONE - SIDNEY1-LNX3345.00 345KV CKT 1
FDNS	00NR	6	20SP	G15_076	TO->FROM	SIDNEY - SIDNEY TRANSFORMER 230KV CKT 1	496	496	0.03656	100.1554	SIDNEY - SIDNEY1-LNX3345.00 345KV CKT Z
FDNS	00NR	6	25SP	G15_076	TO->FROM	SIDNEY - SIDNEY TRANSFORMER 230KV CKT 1	496	496	0.03632	100.0541	KEYSTONE - SIDNEY1-LNX3345.00 345KV CKT 1
FDNS	00NR	6	25SP	G15_076	TO->FROM	SIDNEY - SIDNEY TRANSFORMER 230KV CKT 1	496	496	0.03632	99.6	SIDNEY - SIDNEY1-LNX3345.00 345KV CKT Z
FDNSLock-Blown up	06ALL	0	16WP	G15_077		Non-Converged Contingency	1022	1124	0.20707	-	G14-074T 345.00 - OKLAUNION 345KV CKT 1
FDNSLock-Blown up	06ALL	0	16WP	G15_077		Non-Converged Contingency	1022	1124	0.20707	-	G14-074T 345.00 - TUCO INTERCHANGE 345KV CKT 1
FDNSLock-Blown up	06ALL	0	16WP	G15_077		Non-Converged Contingency	1022	1124	0.20707	-	GEN509403 1-PIRKEY GENERATION
FDNSLock-Blown up	06ALL	0	16WP	G15_077		Non-Converged Contingency	1022	1124	0.20707	-	GEN509404 1-WELSH #1
FDNSLock-Blown up	06ALL	0	16WP	G15_077		Non-Converged Contingency	1022	1124	0.20707	-	GEN509406 1-WELSH #3
FDNSLock-Blown up	06ALL	0	16WP	G15_077		Non-Converged Contingency	1022	1124	0.20707	-	GEN509416 1-TURK GENERATION
FDNSLock-Blown up	06ALL	0	16WP	G15_077		Non-Converged Contingency	1022	1124	0.20707	-	GEN511848 1-SOUTHWESTERN STATION #3
FDNSLock-Blown up	06ALL	0	16WP	G15_077		Non-Converged Contingency	427.05	427.05	0.2037	-	JONES STATION - TUCO INTERCHANGE 230KV CKT 1
FDNSLock-Blown up	06ALL	0	16WP	G15_077		Non-Converged Contingency	560	560	0.19772	-	TUCO INTERCHANGE (GE M1022338) 345/230/13.2KV TRANSFORMER CKT 1
FDNSLock-Blown up	06ALL	0	16WP	G15_077		Non-Converged Contingency	143.02	173.09	0.18266	-	WOLFFORTH INTERCHANGE - YUMA INTERCHANGE 115KV CKT 1
FDNSLock-Blown up	06ALL	0	16WP	G15_077		Non-Converged Contingency	956	956	0.1807	-	CIMARRON - MINCO 345KV CKT 1
FDNSLock-Blown up	06ALL	0	16WP	G15_077		Non-Converged Contingency	1195	1195	0.1807	-	GRACEMONT - MINCO 345KV CKT 1
FDNSLock-Blown up	06ALL	0	16WP	G15_077		Non-Converged Contingency	552	608	0.17549	-	TUCO INTERCHANGE - TUCO_2 230.00 230KV CKT 1
FDNSLock-Blown up	06ALL	0	16WP	G15_077		Non-Converged Contingency	616	700	0.17231	-	TUCO INTERCHANGE (SIEM 8743066) 345/230/13.2KV TRANSFORMER CKT 2
FDNSLock-Blown up	06ALL	0	16WP	G15_077		Non-Converged Contingency	1792	1792	0.16675	-	CHISHOLM7 345.00 - WOODWARD DISTRICT EHV 345KV CKT 1
FDNSLock-Blown up	06ALL	0	16WP	G15_077		Non-Converged Contingency	560	560	0.16462	-	TUCO_2 345.00 (TUCO_2 XFMR) 345/230/13.2KV TRANSFORMER CKT 1
FDNSLock-Blown up	06ALL	0	16WP	G15_077		Non-Converged Contingency	1792	1792	0.16379	-	BORDER 7345.00 - CHISHOLM7 345.00 345KV CKT 1
FDNSLock-Blown up	06ALL	0	16WP	G15_077		Non-Converged Contingency	1792	1792	0.16379	-	BORDER 7345.00 - CHISHOLM7 345.00 345KV CKT 2
FDNSLock-Blown up	06ALL	0	16WP	G15_077		Non-Converged Contingency	1792	1972	0.16379	-	BORDER 7345.00 - TUCO_2 345.00 345KV CKT 1
FDNSLock-Blown up	06ALL	0	16WP	G15_077		Non-Converged Contingency	1420	1775	0.16379	-	BORDER 7345.00 - TUCO_2 345.00 345KV CKT 2
FDNSLock-Blown up	06ALL	0	16WP	G15_077		Non-Converged Contingency	1792	1972	0.16296	-	TUCO INTERCHANGE - TUCO_2 345.00 345KV CKT 1
FDNSLock-Blown up	06ALL	0	16WP	G15_077		Non-Converged Contingency	1330	1940	0.1616	-	CHISHOLM7 345.00 - GRACEMONT 345KV CKT 1
FDNSLock-Blown up	06ALL	0	16WP	G15_077		Non-Converged Contingency	987.16	1082.8	0.16025	-	G14_038T 345.00 - Hitchland Interchange 345KV CKT 1
FDNSLock-Blown up	06ALL	0	16WP	G15_077		Non-Converged Contingency	987.16	1082.8	0.16025	-	G14_038T 345.00 - POTTER COUNTY INTERCHANGE 345KV CKT 1
FDNSLock-Blown up	06ALL	0	16WP	G15_077		Non-Converged Contingency	560	560	0.16025	-	POTTER COUNTY INTERCHANGE (WAUK 90343-A) 345/230/13.2KV TRANSFORMER CKT 1
FDNSLock-Blown up	06ALL	0	16WP	G15_077		Non-Converged Contingency	556.53	611.5	0.14655	-	NEWHART 230 - PLANT X STATION 230KV CKT 1
FDNSLock-Blown up	06ALL	0	16WP	G15_077		Non-Converged Contingency	557	557	0.14259	-	BUSHLAND INTERCHANGE - DEAF SMITH COUNTY INTERCHANGE 230KV CKT 1
FDNSLock-Blown up	06ALL	0	16WP	G15_077		Non-Converged Contingency	987.16	1082.8	0.13513	-	FINNEY SWITCHING STATION - Hitchland Interchange 345KV CKT 1
FDNSLock-Blown up	06ALL	0	16WP	G15_077		Non-Converged Contingency	956.09	1051.7	0.13513	-	FINNEY SWITCHING STATION - HOLCOMB 345KV CKT 1
FDNSLock-Blown up	06ALL	0	16WP	G15_077		Non-Converged Contingency	717	789	0.12982	-	G14-057T 345.00 - LAWTON EASTSIDE 345KV CKT 1
FDNSLock-Blown up	06ALL	0	16WP	G15_077		Non-Converged Contingency	717	789	0.12982	-	G14-057T 345.00 - SUNNYSIDE 345KV CKT 1
FDNSLock-Blown up	06ALL	0	16WP	G15_077		Non-Converged Contingency	329.05	360.92	0.12912	-	DEAF SMITH COUNTY INTERCHANGE - G15039_T 230.00 230KV CKT 1
FDNSLock-Blown up	06ALL	0	16WP	G15_077		Non-Converged Contingency	329.05	360.92	0.12912	-	G15039_T 230.00 - PLANT X STATION 230KV CKT 1
FDNSLock-Blown up	06ALL	0	16WP	G15_077		Non-Converged Contingency	329.05	360.92	0.12661	-	BUSHLAND INTERCHANGE - POTTER COUNTY INTERCHANGE 230KV CKT 1
FDNSLock-Blown up	06ALL	0	16WP	G15_077		Non-Converged Contingency	552.14	607.52	0.12181	-	TOLK STATION EAST - TUCO INTERCHANGE 230KV CKT 1
FDNSLock-Blown up	06ALL	0	16WP	G15_077		Non-Converged Contingency	557	557	0.11278	-	NEWHART 230 - POTTER COUNTY INTERCHANGE 230KV CKT 1
FDNSLock-Blown up	06ALL	0	16WP	G15_077		Non-Converged Contingency	1420	1775	0.09829	-	G11_051T 345.00 - TATONGA7 345.00 345KV CKT 1
FDNSLock-Blown up	06ALL	0	16WP	G15_077		Non-Converged Contingency	1420	1775	0.09829	-	G11_051T 345.00 - WOODWARD DISTRICT EHV 345KV CKT 1
FDNSLock-Blown up	06ALL	0	16WP	G15_077		Non-Converged Contingency	1195	1195	0.09829	-	MATHWSN7 345.00 - TATONGA7 345.00 345KV CKT 1
FDNSLock-Blown up	06ALL	0	16WP	G15_077		Non-Converged Contingency	1561	1793	0.09397	-	THISTLE7 345.00 - WOODWARD DISTRICT EHV 345KV CKT 1
FDNSLock-Blown up	06ALL	0	16WP	G15_077		Non-Converged Contingency	1561	1793	0.09397	-	THISTLE7 345.00 - WOODWARD DISTRICT EHV 345KV CKT 2
FDNSLock-Blown up	06ALL	0	16WP	G15_077		Non-Converged Contingency	329.05	360.92	0.08949	-	AMARILLO SOUTH INTERCHANGE - G15031_T 230.00 230KV CKT 1
FDNSLock-Blown up	06ALL	0	16WP	G15_077		Non-Converged Contingency	1793	1793	0.07518	-	BVRCNTY7 345.00 - G11-14T 345.00 345KV CKT 1
FDNSLock-Blown up	06ALL	0	16WP	G15_077		Non-Converged Contingency	1716	1793	0.07518	-	BVRCNTY7 345.00 - G11-14T 345.00 345KV CKT 2
FDNSLock-Blown up	06ALL	0	16WP	G15_077		Non-Converged Contingency	1792	1792	0.07518	-	BVRCNTY7 345.00 - OPTIMA 345.00 345KV CKT 1
FDNSLock-Blown up	06ALL	0	16WP	G15_077		Non-Converged Contingency	1792	1792	0.07518	-	BVRCNTY7 345.00 - OPTIMA 345.00 345KV CKT 2
FDNSLock-Blown up	06ALL	0	16WP	G15_077		Non-Converged Contingency	1793	1793	0.07518	-	G11-14T 345.00 - WOODWARD DISTRICT EHV 345KV CKT 1
FDNSLock-Blown up	06ALL	0	16WP	G15_077		Non-Converged Contingency	1716	1793	0.07518	-	G11-14T 345.00 - WOODWARD DISTRICT EHV 345KV CKT 2
FDNSLock-Blown up	06ALL	0	16WP	G15_077		Non-Converged Contingency	1532	1793	0.07482	-	G1524G1525 345.00 - THISTLE7 345.00 345KV CKT 1
FDNSLock-Blown up	06ALL	0	16WP	G15_077		Non-Converged Contingency	1532	1793	0.07482	-	G1524G1525 345.00 - THISTLE7 345.00 345KV CKT 2
FDNSLock-Blown up	06ALL	0	16WP	G15_077		Non-Converged Contingency	1532	1793	0.07482	-	GEN532751 1-WOLF CREEK GENERATING STATION UNIT 1
FDNSLock-Blown up	06ALL	0	16WP	G15_077		Non-Converged Contingency	483	483	0.0684	-	AMOCO SWITCHING STATION - YOAKUM COUNTY INTERCHANGE 230KV CKT 1
FDNSLock-Blown up	06ALL	0	16WP	G15_077		Non-Converged Contingency	556.92	556.92	0.06808	-	HITCHLAND INTERCHANGE - MOORE COUNTY INTERCHANGE 230KV CKT 1
FDNSLock-Blown up	06ALL	0	16WP	G15_077		Non-Converged Contingency	717.1	717.1	0.06566	-	HOLCOMB - SETAB 345KV CKT 1
FDNSLock-Blown up	06ALL	0	16WP	G15_077		Non-Converged Contingency	785	785	0.0648	-	MINGO - RED WILLOW 345KV CKT 1
FDNSLock-Blown up	06ALL	0	16WP	G15_077		Non-Converged Contingency	439	439	0.0647	-	CHISHOLM6 230.00 - SWEETWATER 230KV CKT 1
FDNSLock-Blown up	06ALL	0	16WP	G15_077		Non-Converged Contingency	435.02	457.73	0.0647	-	STATELINE INTERCHANGE - STLN-DEMARC6 230KV CKT 1
FDNSLock-Blown up	06ALL	0	16WP	G15_077		Non-Converged Contingency	439	439	0.0647	-	STLN-DEMARC6 - SWEETWATER 230KV CKT 1
FDNSLock-Blown up	06ALL	0	16WP	G15_077		Non-Converged Contingency	762.5	762.5	0.06461	-	MINGO - SETAB 345KV CKT 1
FDNSLock-Blown up	06ALL	0	16WP	G15_077		Non-Converged Contingency	439	439	0.06393	-	CHISHOLM6 230.00 - ELK CITY 230KV 230KV CKT 1
FDNSLock-Blown up	06ALL	0	16WP	G15_077		Non-Converged Contingency	450	450	0.06393	-	ELK CITY 230KV (ELKCTY-6) 230/138/13.8KV TRANSFORMER CKT 1
FDNSLock-Blown up	06ALL	0	16WP	G15_077		Non-Converged Contingency	717	717	0.06341	-	CIMARRON - DRAPER LAKE 345KV CKT 1
FDNSLock-Blown up	06ALL	0	16WP	G15_077		Non-Converged Contingency	1195	1195	0.05791	-	GEN520947 1-HUGO1
FDNSLock-Blown up	06ALL	0	16WP	G15_077		Non-Converged Contingency	329.05	360.92	0.05791	-	MOORE COUNTY INTERCHANGE - POTTER COUNTY INTERCHANGE 230KV CKT 1
FDNSLock-Blown up	06ALL	0	16WP	G15_077		Non-Converged Contingency	1793	1793	0.05618	-	G13-010T 345.00 - POST ROCK 345KV CKT 1
FDNSLock-Blown up	06ALL	0	16WP	G15_077		Non-Converged Contingency	1793	1793	0.05618	-	G13-010T 345.00 - SPEARVILLE 345KV CKT 1
FDNSLock-Blown up	06ALL	0	16WP	G15_077		Non-Converged Contingency	442	752	0.05586	-	PLANT X STATION - TOLK STATION WEST 230KV CKT 1
FDNSLock-Blown up	06ALL	0	16WP	G15_077		Non-Converged Contingency	557	557	0.05517	-	GRAPEVINE INTERCHANGE - NICHOLS STATION 230KV CKT 1
FDNSLock-Blown up	06ALL	0	16WP	G15_077		Non-Converged Contingency	557	557	0.05503	-	GRAPEVINE INTERCHANGE - STATELINE INTERCHANGE 230KV CKT 1
FDNSLock-Blown up	06ALL	0	16WP	G15_077		Non-Converged Contingency	442	752	0.05431	-	PLANT X STATION - TOLK STATION EAST 230KV CKT 2

SOLUTION	GROUP	SCENARIO	SEASON	SOURCE	DIRECTION	MONITORED ELEMENT	RATEA (MVA)	RATEB(MVA)	TDF	TC%LOADING (% MVA)	CONTINGENCY
FDNSLock-Blown up	06ALL	0	16WP	G15_077		Non-Converged Contingency	726.6	726.6	0.05402	-	BUCKNER7 345.00 - HOLCOMB 345KV CKT 1
FDNSLock-Blown up	06ALL	0	16WP	G15_077		Non-Converged Contingency	1413	1517	0.05402	-	BUCKNER7 345.00 - SPEARVILLE 345KV CKT 1
FDNSLock-Blown up	06ALL	0	16WP	G15_077		Non-Converged Contingency	717	789	0.04505	-	GRACEMONT - LAWTON EASTSIDE 345KV CKT 1
FDNSLock-Blown up	06NR	0	17G	G15_077		Non-Converged Contingency	478	502	0.07972	-	BUSHLAND INTERCHANGE - DEAF SMITH COUNTY INTERCHANGE 230KV CKT 1
FDNSLock-Blown up	06NR	0	17G	G15_077		Non-Converged Contingency	318.7	350.57	0.07656	-	AMARILLO SOUTH INTERCHANGE - G15031_T 230.00 230KV CKT 1
FDNSLock-Blown up	06NR	0	17G	G15_077		Non-Converged Contingency	318.7	350.57	0.07224	-	DEAF SMITH COUNTY INTERCHANGE - G15039_T 230.00 230KV CKT 1
FDNSLock-Blown up	06NR	0	17G	G15_077		Non-Converged Contingency	318.7	350.57	0.07224	-	G15039_T 230.00 - PLANT X STATION 230KV CKT 1
FDNSLock-Blown up	06NR	0	17G	G15_077		Non-Converged Contingency	478	502	0.07092	-	NEWHART 230 - POTTER COUNTY INTERCHANGE 230KV CKT 1
FDNSLock-Blown up	06NR	0	17G	G15_077		Non-Converged Contingency	318.7	350.57	0.06588	-	BUSHLAND INTERCHANGE - POTTER COUNTY INTERCHANGE 230KV CKT 1
FDNSLock-Blown up	06NR	0	17G	G15_077		Non-Converged Contingency	1022	1124	0.04595	-	G14-074T 345.00 - OKLAUNION 345KV CKT 1
FDNSLock-Blown up	06NR	0	17G	G15_077		Non-Converged Contingency	1022	1124	0.04595	-	G14-074T 345.00 - TUCO INTERCHANGE 345KV CKT 1
FDNSLock-Blown up	06NR	0	17G	G15_077		Non-Converged Contingency	1792	1972	0.04385	-	BORDER 7345.00 - TUCO_2 345.00 345KV CKT 1
FDNSLock-Blown up	06NR	0	17G	G15_077		Non-Converged Contingency	1792	1792	0.04385	-	BORDER 7345.00 - WOODWARD DISTRICT EHV 345KV CKT 1
FDNSLock-Blown up	06ALL	0	17SP	G15_077		Non-Converged Contingency	956	1042	0.20696	-	G14-074T 345.00 - OKLAUNION 345KV CKT 1
FDNSLock-Blown up	06ALL	0	17SP	G15_077		Non-Converged Contingency	956	1042	0.20696	-	G14-074T 345.00 - TUCO INTERCHANGE 345KV CKT 1
FDNSLock-Blown up	06ALL	0	17SP	G15_077		Non-Converged Contingency	1792	1972	0.16493	-	BORDER 7345.00 - TUCO_2 345.00 345KV CKT 1
FDNSLock-Blown up	06ALL	0	17SP	G15_077		Non-Converged Contingency	1420	1775	0.16493	-	BORDER 7345.00 - TUCO_2 345.00 345KV CKT 2
FDNSLock-Blown up	06ALL	0	17SP	G15_077		Non-Converged Contingency	956.09	1051.7	0.1578	-	G14_038T 345.00 - Hitchland Interchange 345KV CKT 1
FDNSLock-Blown up	06ALL	0	17SP	G15_077		Non-Converged Contingency	956.09	1051.7	0.1578	-	G14_038T 345.00 - POTTER COUNTY INTERCHANGE 345KV CKT 1
FDNSLock-Blown up	06ALL	0	17SP	G15_077		Non-Converged Contingency	560	560	0.1578	-	POTTER COUNTY INTERCHANGE (WAUK 90343-A) 345/230/13.2KV TRANSFORMER CKT 1
FDNSLock-Blown up	06ALL	0	20L	G15_077		Non-Converged Contingency	0	0	0.37074	-	P12:115:SPS:T71.1.CRLSLE.YUMA
FDNSLock-Blown up	06ALL	0	20L	G15_077		Non-Converged Contingency	1792	1972	0.20847	-	TUCO INTERCHANGE - TUCO_2 345.00 345KV CKT 1
FDNSLock-Blown up	06ALL	0	20L	G15_077		Non-Converged Contingency	0	0	0.20086	-	P12:345:SPS:J07.1.FINN.HITCH
FDNSLock-Blown up	06ALL	0	20L	G15_077		Non-Converged Contingency	1792	1792	0.18041	-	TUCO INTERCHANGE - YOAKUM_345 345.00 345KV CKT 1
FDNSLock-Blown up	06ALL	0	20L	G15_077		Non-Converged Contingency	1022	1124	0.18028	-	G14-074T 345.00 - OKLAUNION 345KV CKT 1
FDNSLock-Blown up	06ALL	0	20L	G15_077		Non-Converged Contingency	1022	1124	0.18028	-	G14-074T 345.00 - TUCO INTERCHANGE 345KV CKT 1
FDNSLock-Blown up	06ALL	0	20L	G15_077		Non-Converged Contingency	1022	1124	0.18028	-	GEN506754 1-LEBROCK STEAM 1
FDNSLock-Blown up	06ALL	0	20L	G15_077		Non-Converged Contingency	1022	1124	0.18028	-	GEN509394 1-FLINT CREEK
FDNSLock-Blown up	06ALL	0	20L	G15_077		Non-Converged Contingency	1022	1124	0.18028	-	GEN509403 1-PIRKEY GENERATION
FDNSLock-Blown up	06ALL	0	20L	G15_077		Non-Converged Contingency	1022	1124	0.18028	-	GEN509404 1-WELSH #1
FDNSLock-Blown up	06ALL	0	20L	G15_077		Non-Converged Contingency	1022	1124	0.18028	-	GEN509406 1-WELSH #3
FDNSLock-Blown up	06ALL	0	20L	G15_077		Non-Converged Contingency	1022	1124	0.18028	-	GEN509408 1-WILKES #2
FDNSLock-Blown up	06ALL	0	20L	G15_077		Non-Converged Contingency	1022	1124	0.18028	-	GEN509416 1-TURK GENERATION
FDNSLock-Blown up	06ALL	0	20L	G15_077		Non-Converged Contingency	1022	1124	0.18028	-	GEN511840 1-NORTHEASTERN STATION #3
FDNSLock-Blown up	06ALL	0	20L	G15_077		Non-Converged Contingency	1022	1124	0.18028	-	GEN511960 1-ROARK1 0.7000
FDNSLock-Blown up	06ALL	0	20L	G15_077		Non-Converged Contingency	1022	1124	0.18028	-	GEN562590 1-G14_057_3 0.6900
FDNSLock-Blown up	06ALL	0	20L	G15_077		Non-Converged Contingency	1022	1124	0.18028	-	OKLAUNION 345KV SWITCHED SHUNT
FDNSLock-Blown up	06ALL	0	20L	G15_077		Non-Converged Contingency	956	956	0.16234	-	CIMARRON - MINCO 345KV CKT 1
FDNSLock-Blown up	06ALL	0	20L	G15_077		Non-Converged Contingency	1195	1195	0.16234	-	GRACEMONT - MINCO 345KV CKT 1
FDNSLock-Blown up	06ALL	0	20L	G15_077		Non-Converged Contingency	1792	1792	0.15295	-	CHISHOLM7 345.00 - WOODWARD DISTRICT EHV 345KV CKT 1
FDNSLock-Blown up	06ALL	0	20L	G15_077		Non-Converged Contingency	1792	1792	0.14852	-	BORDER 7345.00 - CHISHOLM7 345.00 345KV CKT 1
FDNSLock-Blown up	06ALL	0	20L	G15_077		Non-Converged Contingency	1792	1792	0.14852	-	BORDER 7345.00 - CHISHOLM7 345.00 345KV CKT 2
FDNSLock-Blown up	06ALL	0	20L	G15_077		Non-Converged Contingency	1792	1972	0.14852	-	BORDER 7345.00 - TUCO_2 345.00 345KV CKT 1
FDNSLock-Blown up	06ALL	0	20L	G15_077		Non-Converged Contingency	1420	1775	0.14852	-	BORDER 7345.00 - TUCO_2 345.00 345KV CKT 2
FDNSLock-Blown up	06ALL	0	20L	G15_077		Non-Converged Contingency	1792	1972	0.14852	-	BORDER 7345.00 345KV SWITCHED SHUNT
FDNSLock-Blown up	06ALL	0	20L	G15_077		Non-Converged Contingency	478	502	0.14242	-	CARLISLE INTERCHANGE - TUCO INTERCHANGE 230KV CKT 1
FDNSLock-Blown up	06ALL	0	20L	G15_077		Non-Converged Contingency	478	502	0.14242	-	CARLISLE INTERCHANGE - TUCO INTERCHANGE 230KV CKT 1
FDNSLock-Blown up	06ALL	0	20L	G15_077		Non-Converged Contingency	497	547	0.14228	-	TUCO INTERCHANGE - TUCO_2 230.00 230KV CKT 1
FDNSLock-Blown up	06ALL	0	20L	G15_077		Non-Converged Contingency	1584	2098	0.12934	-	CHISHOLM7 345.00 - GRACEMONT 345KV CKT 1
FDNSLock-Blown up	06ALL	0	20L	G15_077		Non-Converged Contingency	1584	2098	0.12934	-	GEN514805 1-SOONER UNIT 1
FDNSLock-Blown up	06ALL	0	20L	G15_077		Non-Converged Contingency	1584	2098	0.12934	-	GEN514806 1-SOONER UNIT 2
FDNSLock-Blown up	06ALL	0	20L	G15_077		Non-Converged Contingency	1584	2098	0.12934	-	GEN515040 1-SEMINOLE 1G
FDNSLock-Blown up	06ALL	0	20L	G15_077		Non-Converged Contingency	1584	2098	0.12934	-	GEN515223 1-MUSKOGEE 4G
FDNSLock-Blown up	06ALL	0	20L	G15_077		Non-Converged Contingency	318.7	350.57	0.12604	-	LUBBOCK SOUTH INTERCHANGE - WOLFFORTH INTERCHANGE 230KV CKT 1
FDNSLock-Blown up	06ALL	0	20L	G15_077		Non-Converged Contingency	318.7	350.57	0.12604	-	LUBBOCK SOUTH INTERCHANGE - WOLFFORTH INTERCHANGE 230KV CKT 1
FDNSLock-Blown up	06ALL	0	20L	G15_077		Non-Converged Contingency	318.7	350.57	0.12604	-	LUBBOCK SOUTH INTERCHANGE 230KV SWITCHED SHUNT
FDNSLock-Blown up	06ALL	0	20L	G15_077		Non-Converged Contingency	956.09	1051.7	0.1121	-	G14_038T 345.00 - Hitchland Interchange 345KV CKT 1
FDNSLock-Blown up	06ALL	0	20L	G15_077		Non-Converged Contingency	956.09	1051.7	0.1121	-	G14_038T 345.00 - POTTER COUNTY INTERCHANGE 345KV CKT 1
FDNSLock-Blown up	06ALL	0	20L	G15_077		Non-Converged Contingency	560	560	0.1121	-	POTTER COUNTY INTERCHANGE (WAUK 90343-A) 345/230/13.2KV TRANSFORMER CKT 1
FDNSLock-Blown up	06ALL	0	20L	G15_077		Non-Converged Contingency	560	560	0.1121	-	POTTER COUNTY INTERCHANGE (WAUK 90343-A) 345/230/13.2KV TRANSFORMER CKT 1
FDNSLock-Blown up	06ALL	0	20L	G15_077		Non-Converged Contingency	560	560	0.11132	-	TUCO INTERCHANGE (GE M1022338) 345/230/13.2KV TRANSFORMER CKT 1
FDNSLock-Blown up	06ALL	0	20L	G15_077		Non-Converged Contingency	560	560	0.11132	-	TUCO INTERCHANGE (GE M1022338) 345/230/13.2KV TRANSFORMER CKT 1
FDNSLock-Blown up	06ALL	0	20L	G15_077		Non-Converged Contingency	478	502	0.10896	-	BUSHLAND INTERCHANGE - DEAF SMITH COUNTY INTERCHANGE 230KV CKT 1
FDNSLock-Blown up	06ALL	0	20L	G15_077		Non-Converged Contingency	478	502	0.10896	-	BUSHLAND INTERCHANGE - DEAF SMITH COUNTY INTERCHANGE 230KV CKT 1
FDNSLock-Blown up	06ALL	0	20L	G15_077		Non-Converged Contingency	478	502	0.10896	-	BUSHLAND INTERCHANGE 230KV SWITCHED SHUNT
FDNSLock-Blown up	06ALL	0	20L	G15_077		Non-Converged Contingency	0	0	0.10844	-	P12:115:SPS:V15.1.TUCO.INDANA
FDNSLock-Blown up	06ALL	0	20L	G15_077		Non-Converged Contingency	343.79	343.79	0.10826	-	JONES STATION - TUCO INTERCHANGE 230KV CKT 1
FDNSLock-Blown up	06ALL	0	20L	G15_077		Non-Converged Contingency	343.79	343.79	0.10826	-	JONES STATION - TUCO INTERCHANGE 230KV CKT 1
FDNSLock-Blown up	06ALL	0	20L	G15_077		Non-Converged Contingency	956.09	1051.7	0.10726	-	Hitchland Interchange - WALKTAP7 345.00 345KV CKT 1
FDNSLock-Blown up	06ALL	0	20L	G15_077		Non-Converged Contingency	956.09	1051.7	0.10726	-	Hitchland Interchange - WALKTAP7 345.00 345KV CKT 1
FDNSLock-Blown up	06ALL	0	20L	G15_077		Non-Converged Contingency	478	478	0.10426	-	CARLISLE INTERCHANGE - WOLFFORTH INTERCHANGE 230KV CKT 1
FDNSLock-Blown up	06ALL	0	20L	G15_077		Non-Converged Contingency	717	789	0.10404	-	G14-057T 345.00 - LAWTON EASTSIDE 345KV CKT 1
FDNSLock-Blown up	06ALL	0	20L	G15_077		Non-Converged Contingency	717	789	0.10404	-	G14-057T 345.00 - SUNNYSIDE 345KV CKT 1
FDNSLock-Blown up	06ALL	0	20L	G15_077		Non-Converged Contingency	318.7	350.57	0.09804	-	DEAF SMITH COUNTY INTERCHANGE - G15039_T 230.00 230KV CKT 1
FDNSLock-Blown up	06ALL	0	20L	G15_077		Non-Converged Contingency	318.7	350.57	0.09804	-	G15039_T 230.00 - PLANT X STATION 230KV CKT 1
FDNSLock-Blown up	06ALL	0	20L	G15_077		Non-Converged Contingency	560	644	0.09701	-	TUCO INTERCHANGE (SIEM 8743066) 345/230/13.2KV TRANSFORMER CKT 2
FDNSLock-Blown up	06ALL	0	20L	G15_077		Non-Converged Contingency	560	644	0.09701	-	TUCO INTERCHANGE (SIEM 8743066) 345/230/13.2KV TRANSFORMER CKT 2
FDNSLock-Blown up	06ALL	0	20L	G15_077		Non-Converged Contingency	318.7	350.57	0.09695	-	BUSHLAND INTERCHANGE - POTTER COUNTY INTERCHANGE 230KV CKT 1
FDNSLock-Blown up	06ALL	0	20L	G15_077		Non-Converged Contingency	318.7	350.57	0.09695	-	BUSHLAND INTERCHANGE - POTTER COUNTY INTERCHANGE 230KV CKT 1

SOLUTION	GROUP	SCENARIO	SEASON	SOURCE	DIRECTION	MONITORED ELEMENT	RATEA (MVA)	RATEB(MVA)	TDF	TC%LOADING (% MVA)	CONTINGENCY
FDNSLock-Blown up	06ALL	0	20L	G15_077		Non-Converged Contingency	478	502	0.09586	-	NEWHART 230 - POTTER COUNTY INTERCHANGE 230KV CKT 1
FDNSLock-Blown up	06ALL	0	20L	G15_077		Non-Converged Contingency	478.05	547.36	0.09491	-	NEWHART 230 - PLANT X STATION 230KV CKT 1
FDNSLock-Blown up	06ALL	0	20L	G15_077		Non-Converged Contingency	956.09	1051.7	0.09361	-	FINNEY SWITCHING STATION - HOLCOMB 345KV CKT 1
FDNSLock-Blown up	06ALL	0	20L	G15_077		Non-Converged Contingency	956.09	1051.7	0.09361	-	FINNEY SWITCHING STATION - HOLCOMB 345KV CKT 1
FDNSLock-Blown up	06ALL	0	20L	G15_077		Non-Converged Contingency	956.09	1051.7	0.09361	-	FINNEY SWITCHING STATION - WALKTAP7 345.00 345KV CKT 1
FDNSLock-Blown up	06ALL	0	20L	G15_077		Non-Converged Contingency	956.09	1051.7	0.09361	-	FINNEY SWITCHING STATION - WALKTAP7 345.00 345KV CKT 1
FDNSLock-Blown up	06ALL	0	20L	G15_077		Non-Converged Contingency	560	560	0.08858	-	TUCO_2 345.00 (TUCO_2 XFMR) 345/230/13.2KV TRANSFORMER CKT 1
FDNSLock-Blown up	06ALL	0	20L	G15_077		Non-Converged Contingency	0	0	0.08797	-	P12:115:SPS:T89.1.DC_N.HIGG
FDNSLock-Blown up	06ALL	0	20L	G15_077		Non-Converged Contingency	478	502	0.08679	-	AMARILLO SOUTH INTERCHANGE - G15031_T 230.00 230KV CKT 1
FDNSLock-Blown up	06ALL	0	20L	G15_077		Non-Converged Contingency	0	0	0.08541	-	P12:230:AEPW:ELKCITY6:SWEETWT6
FDNSLock-Blown up	06NR	0	20L	G15_077		Non-Converged Contingency	478	502	0.08212	-	AMARILLO SOUTH INTERCHANGE - G15031_T 230.00 230KV CKT 1
FDNSLock-Blown up	06ALL	0	20L	G15_077		Non-Converged Contingency	0	0	0.07677	-	P12:115:SPS:W40.1.WCANYON.DFSMTH
FDNSLock-Blown up	06ALL	0	20L	G15_077		Non-Converged Contingency	1561	1793	0.07542	-	THISTLE7 345.00 - WOODWARD DISTRICT EHV 345KV CKT 1
FDNSLock-Blown up	06ALL	0	20L	G15_077		Non-Converged Contingency	1561	1793	0.07542	-	THISTLE7 345.00 - WOODWARD DISTRICT EHV 345KV CKT 1
FDNSLock-Blown up	06ALL	0	20L	G15_077		Non-Converged Contingency	1561	1793	0.07542	-	THISTLE7 345.00 - WOODWARD DISTRICT EHV 345KV CKT 2
FDNSLock-Blown up	06ALL	0	20L	G15_077		Non-Converged Contingency	1561	1793	0.07542	-	THISTLE7 345.00 - WOODWARD DISTRICT EHV 345KV CKT 2
FDNSLock-Blown up	06ALL	0	20L	G15_077		Non-Converged Contingency	1420	1775	0.07465	-	G11_051T 345.00 - TATONGA7 345.00 345KV CKT 1
FDNSLock-Blown up	06ALL	0	20L	G15_077		Non-Converged Contingency	1420	1775	0.07465	-	G11_051T 345.00 - WOODWARD DISTRICT EHV 345KV CKT 1
FDNSLock-Blown up	06ALL	0	20L	G15_077		Non-Converged Contingency	1195	1195	0.07465	-	MATHWSN7 345.00 - TATONGA7 345.00 345KV CKT 1
FDNSLock-Blown up	06ALL	0	20L	G15_077		Non-Converged Contingency	0	0	0.07272	-	P12:115:SPS:T59.1.CARGIL.CURRY
FDNSLock-Blown up	06NR	0	20L	G15_077		Non-Converged Contingency	478	502	0.07211	-	NEWHART 230 - POTTER COUNTY INTERCHANGE 230KV CKT 1
FDNSLock-Blown up	06ALL	0	20L	G15_077		Non-Converged Contingency	1195	1195	0.07187	-	ARCADIA - NORTHWEST 345KV CKT 1
FDNSLock-Blown up	06ALL	0	20L	G15_077		Non-Converged Contingency	0	0	0.07066	-	P12:230:AEPW-SPS:SWEETWT6:WHEELER 6
FDNSLock-Blown up	06ALL	0	20L	G15_077		Non-Converged Contingency	956	956	0.06975	-	CIMARRON - NORTHWEST 345KV CKT 1
FDNSLock-Blown up	06NR	0	20L	G15_077		Non-Converged Contingency	318.7	350.57	0.06706	-	DEAF SMITH COUNTY INTERCHANGE - G15039_T 230.00 230KV CKT 1
FDNSLock-Blown up	06ALL	0	20L	G15_077		Non-Converged Contingency	0	0	0.06621	-	P12:115:SPS:W11.1.DC_S.SMINLE
FDNSLock-Blown up	06ALL	0	20L	G15_077		Non-Converged Contingency	1195	1195	0.06383	-	MATHWSN7 345.00 - NORTHWEST 345KV CKT 1
FDNSLock-Blown up	06NR	0	20L	G15_077		Non-Converged Contingency	318.7	350.57	0.06219	-	BUSHLAND INTERCHANGE - POTTER COUNTY INTERCHANGE 230KV CKT 1
FDNSLock-Blown up	06NR	0	20L	G15_077		Non-Converged Contingency	318.7	350.57	0.06219	-	BUSHLAND INTERCHANGE - POTTER COUNTY INTERCHANGE 230KV CKT 1
FDNSLock-Blown up	06ALL	0	20L	G15_077		Non-Converged Contingency	0	0	0.06001	-	P12:138:AEPW-OGE:WTH_JCT4:JENSEN4
FDNSLock-Blown up	06ALL	0	20L	G15_077		Non-Converged Contingency	956	956	0.05872	-	G15063_T 345.00 - MATHWSN7 345.00 345KV CKT 1
FDNSLock-Blown up	06ALL	0	20L	G15_077		Non-Converged Contingency	956	956	0.05872	-	G15063_T 345.00 - WOODRING 345KV CKT 1
FDNSLock-Blown up	06ALL	0	20L	G15_077		Non-Converged Contingency	435.82	501.55	0.05749	-	Harrington Station Mid Bus - RANDALL COUNTY INTERCHANGE 230KV CKT 1
FDNSLock-Blown up	06ALL	0	20L	G15_077		Non-Converged Contingency	435.82	501.55	0.05749	-	Harrington Station Mid Bus - RANDALL COUNTY INTERCHANGE 230KV CKT 1
FDNSLock-Blown up	06ALL	0	20L	G15_077		Non-Converged Contingency	1532	1793	0.0567	-	G1524G1525 345.00 - THISTLE7 345.00 345KV CKT 1
FDNSLock-Blown up	06ALL	0	20L	G15_077		Non-Converged Contingency	1532	1793	0.0567	-	G1524G1525 345.00 - THISTLE7 345.00 345KV CKT 2
FDNSLock-Blown up	06ALL	0	20L	G15_077		Non-Converged Contingency	1532	1793	0.0567	-	G1524G1525 345.00 - WICHITA 345KV CKT 1
FDNSLock-Blown up	06ALL	0	20L	G15_077		Non-Converged Contingency	1532	1793	0.0567	-	G1524G1525 345.00 - WICHITA 345KV CKT 2
FDNSLock-Blown up	06ALL	0	20L	G15_077		Non-Converged Contingency	1532	1793	0.0567	-	GEN532653 1-JEFFREY ENERGY CENTER UNIT 3
FDNSLock-Blown up	06ALL	0	20L	G15_077		Non-Converged Contingency	1532	1793	0.0567	-	GEN532663 1-LAWRENCE ENERGY CENTER UNIT 5
FDNSLock-Blown up	06ALL	0	20L	G15_077		Non-Converged Contingency	1532	1793	0.0567	-	GEN532751 1-WOLF CREEK GENERATING STATION UNIT 1
FDNSLock-Blown up	06ALL	0	20L	G15_077		Non-Converged Contingency	1039	1195	0.05662	-	NORTHWEST - SPRING CREEK 345KV CKT 1
FDNSLock-Blown up	06ALL	0	20L	G15_077		Non-Converged Contingency	1039	1195	0.05662	-	SOONER - SPRING CREEK 345KV CKT 1
FDNSLock-Blown up	06NR	0	20L	G15_077		Non-Converged Contingency	1022	1124	0.05487	-	G14-074T 345.00 - OKLAUNION 345KV CKT 1
FDNSLock-Blown up	06NR	0	20L	G15_077		Non-Converged Contingency	1022	1124	0.05487	-	G14-074T 345.00 - TUCO INTERCHANGE 345KV CKT 1
FDNSLock-Blown up	06NR	0	20L	G15_077		Non-Converged Contingency	1022	1124	0.05487	-	OKLAUNION 345KV SWITCHED SHUNT
FDNSLock-Blown up	06ALL	0	20L	G15_077		Non-Converged Contingency	0	0	0.05454	-	P12:115:SPS:T58.1.HERFRD.CARGIL
FDNSLock-Blown up	06ALL	0	20L	G15_077		Non-Converged Contingency	0	0	0.05367	-	P12:115:SPS:T66.1.RNDALL.HAPPY
FDNSLock-Blown up	06ALL	0	20L	G15_077		Non-Converged Contingency	0	0	0.05367	-	P12:115:SPS:T67.1.HAPPY.KRESS
FDNSLock-Blown up	06ALL	0	20L	G15_077		Non-Converged Contingency	785	785	0.0526	-	GEN640009 1-COOPER NUCLEAR STATION
FDNSLock-Blown up	06ALL	0	20L	G15_077		Non-Converged Contingency	785	785	0.0526	-	MINGO - RED WILLOW 345KV CKT 1
FDNSLock-Blown up	06ALL	0	20L	G15_077		Non-Converged Contingency	785	785	0.0526	-	MINGO - RED WILLOW 345KV CKT 1
FDNSLock-Blown up	06NR	0	20L	G15_077		Non-Converged Contingency	1792	1972	0.05243	-	BORDER 7345.00 - TUCO_2 345.00 345KV CKT 1
FDNSLock-Blown up	06NR	0	20L	G15_077		Non-Converged Contingency	1792	1792	0.05243	-	BORDER 7345.00 - WOODWARD DISTRICT EHV 345KV CKT 1
FDNSLock-Blown up	06NR	0	20L	G15_077		Non-Converged Contingency	1792	1972	0.05243	-	BORDER 7345.00 345KV SWITCHED SHUNT
FDNSLock-Blown up	06ALL	0	20L	G15_077		Non-Converged Contingency	0	0	0.05236	-	P12:138:AEPW:S.W.S.-4:L.E.S.-4
FDNSLock-Blown up	06ALL	0	20L	G15_077		Non-Converged Contingency	0	0	0.05227	-	P12:115:SPS:T28.1.LAMTON.PLANTX
FDNSLock-Blown up	06ALL	0	20L	G15_077		Non-Converged Contingency	0	0	0.05175	-	P12:115:SPS:V80.1.DC_STH.LE-WAIT
FDNSLock-Blown up	06ALL	0	20L	G15_077		Non-Converged Contingency	762.5	762.5	0.05119	-	MINGO - SETAB 345KV CKT 1
FDNSLock-Blown up	06ALL	0	20L	G15_077		Non-Converged Contingency	762.5	762.5	0.05119	-	MINGO - SETAB 345KV CKT 1
FDNSLock-Blown up	06ALL	0	20L	G15_077		Non-Converged Contingency	0	0	0.05118	-	P12:115:SPS:V05.1.OSAGE.WCANYON
FDNSLock-Blown up	06ALL	0	20L	G15_077		Non-Converged Contingency	717.1	717.1	0.0507	-	HOLCOMB - SETAB 345KV CKT 1
FDNSLock-Blown up	06ALL	0	20L	G15_077		Non-Converged Contingency	717.1	717.1	0.0507	-	HOLCOMB - SETAB 345KV CKT 1
FDNSLock-Blown up	06ALL	0	20L	G15_077		Non-Converged Contingency	1195	1195	0.05055	-	SOONER - WOODRING 345KV CKT 1
FDNSLock-Blown up	06ALL	0	20L	G15_077		Non-Converged Contingency	717	789	0.05011	-	GRACEMONT - LAWTON EASTSIDE 345KV CKT 1
FDNSLock-Blown up	06ALL	0	20L	G15_077		Non-Converged Contingency	717	789	0.05011	-	GRACEMONT - LAWTON EASTSIDE 345KV CKT 1
FDNSLock-Blown up	06ALL	0	20L	G15_077		Non-Converged Contingency	439	439	0.05008	-	CHISHOLM6 230.00 - ELK CITY 230KV 230KV CKT 1
FDNSLock-Blown up	06ALL	0	20L	G15_077		Non-Converged Contingency	450	450	0.05008	-	ELK CITY 230KV (ELKCTY-6) 230/138/13.8KV TRANSFORMER CKT 1
FDNSLock-Blown up	06ALL	0	20L	G15_077		Non-Converged Contingency	450	450	0.05008	-	ELK CITY 230KV (ELKCTY-6) 230/138/13.8KV TRANSFORMER CKT 1
FDNSLock-Blown up	06ALL	0	20L	G15_077		Non-Converged Contingency	478.05	501.55	0.04871	-	AMARILLO SOUTH INTERCHANGE - NICHOLS STATION 230KV CKT 1
FDNSLock-Blown up	06ALL	0	20L	G15_077		Non-Converged Contingency	478.05	501.55	0.04871	-	AMARILLO SOUTH INTERCHANGE - NICHOLS STATION 230KV CKT 1
FDNSLock-Blown up	06ALL	0	20L	G15_077		Non-Converged Contingency	1195	1195	0.04776	-	JOHNSON COUNTY - SUNNYSIDE 345KV CKT 1
FDNSLock-Blown up	06ALL	0	20L	G15_077		Non-Converged Contingency	501.95	501.95	0.04747	-	HITCHLAND INTERCHANGE - MOORE COUNTY INTERCHANGE 230KV CKT 1
FDNSLock-Blown up	06ALL	0	20L	G15_077		Non-Converged Contingency	501.95	501.95	0.04747	-	HITCHLAND INTERCHANGE - MOORE COUNTY INTERCHANGE 230KV CKT 1
FDNSLock-Blown up	06ALL	0	20L	G15_077		Non-Converged Contingency	560	644	0.04639	-	Hitchland Interchange (SIEM 8743067) 345/230/13.2KV TRANSFORMER CKT 2
FDNSLock-Blown up	06ALL	0	20L	G15_077		Non-Converged Contingency	560	644	0.04639	-	Hitchland Interchange (SIEM 8743067) 345/230/13.2KV TRANSFORMER CKT 2
FDNSLock-Blown up	06ALL	0	20L	G15_077		Non-Converged Contingency	1793	1793	0.0458	-	BVRCNTY7 345.00 - G11-14T 345.00 345KV CKT 1
FDNSLock-Blown up	06ALL	0	20L	G15_077		Non-Converged Contingency	1716	1793	0.0458	-	BVRCNTY7 345.00 - G11-14T 345.00 345KV CKT 2
FDNSLock-Blown up	06ALL	0	20L	G15_077		Non-Converged Contingency	1792	1792	0.0458	-	BVRCNTY7 345.00 - OPTIMA 345.00 345KV CKT 1

SOLUTION	GROUP	SCENARIO	SEASON	SOURCE	DIRECTION	MONITORED ELEMENT	RATEA (MVA)	RATEB(MVA)	TDF	TC%LOADING (% MVA)	CONTINGENCY
FDNSLock-Blown up	06ALL	0	20L	G15_077		Non-Converged Contingency	1792	1792	0.0458	-	BVRCNTY7 345.00 - OPTIMA 345.00 345KV CKT 2
FDNSLock-Blown up	06ALL	0	20L	G15_077		Non-Converged Contingency	1793	1793	0.0458	-	G11-14T 345.00 - WOODWARD DISTRICT EHV 345KV CKT 1
FDNSLock-Blown up	06ALL	0	20L	G15_077		Non-Converged Contingency	1716	1793	0.0458	-	G11-14T 345.00 - WOODWARD DISTRICT EHV 345KV CKT 2
FDNSLock-Blown up	06ALL	0	20L	G15_077		Non-Converged Contingency	1792	1792	0.0458	-	Hitchland Interchange - OPTIMA 345.00 345KV CKT 1
FDNSLock-Blown up	06ALL	0	20L	G15_077		Non-Converged Contingency	1792	1792	0.0458	-	Hitchland Interchange - OPTIMA 345.00 345KV CKT 2
FDNSLock-Blown up	06ALL	0	20L	G15_077		Non-Converged Contingency	1504	1792	0.04515	-	AXTELL - POST ROCK 345KV CKT 1
FDNSLock-Blown up	06ALL	0	20L	G15_077		Non-Converged Contingency	0	0	0.0451	-	P12:138:WFEC-AEPW:WASHITA4:CLINTJC4
FDNSLock-Blown up	06ALL	0	20L	G15_077		Non-Converged Contingency	878	956	0.04462	-	BENTON - WICHITA 345KV CKT 1
FDNSLock-Blown up	06ALL	0	20L	G15_077		Non-Converged Contingency	159	160	0.04439	-	G15-014T 115.00 - LEHMAN SUB 115KV CKT 1
FDNSLock-Blown up	06ALL	0	20L	G15_077		Non-Converged Contingency	160	160	0.04439	-	LEHMAN SUB - LYNTEGAR REC-PLAINS 115KV CKT 1
FDNSLock-Blown up	06ALL	0	20L	G15_077		Non-Converged Contingency	1505	1793	0.04423	-	G13-010T 345.00 - POST ROCK 345KV CKT 1
FDNSLock-Blown up	06ALL	0	20L	G15_077		Non-Converged Contingency	1505	1793	0.04423	-	G13-010T 345.00 - SPEARVILLE 345KV CKT 1
FDNSLock-Blown up	06ALL	0	20L	G15_077		Non-Converged Contingency	1195	1195	0.04402	-	CIMARRON - DRAPER LAKE 345KV CKT 1
FDNSLock-Blown up	06ALL	0	20L	G15_077		Non-Converged Contingency	1151	1195	0.04397	-	JOHNSON COUNTY - PITTSBURG 345KV CKT 1
FDNSLock-Blown up	06ALL	0	20L	G15_077		Non-Converged Contingency	1151	1195	0.04397	-	JOHNSON COUNTY - PITTSBURG 345KV CKT 1
FDNSLock-Blown up	06ALL	0	20L	G15_077		Non-Converged Contingency	956	956	0.04123	-	GERALD GENTLEMAN STATION - RED WILLOW 345KV CKT 1
FDNSLock-Blown up	06ALL	0	20L	G15_077		Non-Converged Contingency	0	0	0.04113	-	P12:115:SPS:V03.1.NICHLS.EPLANT
FDNSLock-Blown up	06ALL	0	20L	G15_077		Non-Converged Contingency	318.7	350.57	0.04083	-	MOORE COUNTY INTERCHANGE - POTTER COUNTY INTERCHANGE 230KV CKT 1
FDNSLock-Blown up	06ALL	0	20L	G15_077		Non-Converged Contingency	318.7	350.57	0.04083	-	MOORE COUNTY INTERCHANGE - POTTER COUNTY INTERCHANGE 230KV CKT 1
FDNSLock-Blown up	06ALL	0	20L	G15_077		Non-Converged Contingency	1035	1035	0.04052	-	EMPORIA ENERGY CENTER - G14_001T 345.00 345KV CKT 1
FDNSLock-Blown up	06ALL	0	20L	G15_077		Non-Converged Contingency	1035	1035	0.04052	-	G14_001T 345.00 - WICHITA 345KV CKT 1
FDNSLock-Blown up	06ALL	0	20L	G15_077		Non-Converged Contingency	0	0	0.04041	-	P12:138:AEPW-OGE:CORNVIL4:CIMARON4
FDNSLock-Blown up	06ALL	0	20L	G15_077		Non-Converged Contingency	560	644	0.04036	-	Hitchland Interchange (H TB80155502) 345/230/13.2KV TRANSFORMER CKT 1
FDNSLock-Blown up	06ALL	0	20L	G15_077		Non-Converged Contingency	560	644	0.04036	-	Hitchland Interchange (H TB80155502) 345/230/13.2KV TRANSFORMER CKT 1
FDNSLock-Blown up	06ALL	0	20L	G15_077		Non-Converged Contingency	1195	1195	0.03962	-	GEN520811 1-ANADRK4
FDNSLock-Blown up	06ALL	0	20L	G15_077		Non-Converged Contingency	1195	1195	0.03962	-	HUGO - SUNNYSIDE 345KV CKT 1
FDNSLock-Blown up	06ALL	0	20L	G15_077		Non-Converged Contingency	1141	1195	0.03784	-	GEN542951 5-HAWTHORN UNIT #5
FDNSLock-Blown up	06ALL	0	20L	G15_077		Non-Converged Contingency	1141	1195	0.03784	-	LACYGNE - WAVERLY7 345.00 345KV CKT 1
FDNSLock-Blown up	06ALL	0	20L	G15_077		Non-Converged Contingency	1141	1195	0.03784	-	WAVERLY7 345.00 - WOLF CREEK 345KV CKT 1
FDNSLock-Blown up	06ALL	0	20L	G15_077		Non-Converged Contingency	478.05	546.96	0.03696	-	TOLK STATION EAST - TUCO INTERCHANGE 230KV CKT 1
FDNSLock-Blown up	06ALL	0	20L	G15_077		Non-Converged Contingency	478.05	546.96	0.03696	-	TOLK STATION EAST - TUCO INTERCHANGE 230KV CKT 1
FDNSLock-Blown up	06ALL	0	20L	G15_077		Non-Converged Contingency	0	0	0.03667	-	P12:115:SPS:T04.1.DFSMTH.CASTRO
FDNSLock-Blown up	06ALL	0	20L	G15_077		Non-Converged Contingency	1195	1195	0.03597	-	MUSKOGEE - SEMINOLE 345KV CKT 1
FDNSLock-Blown up	06ALL	0	20L	G15_077		Non-Converged Contingency	1076	1076	0.03539	-	G15074_T 345.00 - HOYT 345KV CKT 1
FDNSLock-Blown up	06ALL	0	20L	G15_077		Non-Converged Contingency	1076	1076	0.03539	-	G15074_T 345.00 - JEFFREY ENERGY CENTER 345KV CKT 1
FDNSLock-Blown up	06ALL	0	20L	G15_077		Non-Converged Contingency	421	439	0.03533	-	CHISHOLM6 230.00 - SWEETWATER 230KV CKT 1
FDNSLock-Blown up	06ALL	0	20L	G15_077		Non-Converged Contingency	348.58	381.24	0.03533	-	STATELINE INTERCHANGE - STLN-DEMARC6 230KV CKT 1
FDNSLock-Blown up	06ALL	0	20L	G15_077		Non-Converged Contingency	353	353	0.03533	-	STLN-DEMARC6 - SWEETWATER 230KV CKT 1
FDNSLock-Blown up	06ALL	0	20L	G15_077		Non-Converged Contingency	1036	1195	0.03521	-	HOYT - STRANGER CREEK 345KV CKT 1
FDNSLock-Blown up	06ALL	0	20L	G15_077		Non-Converged Contingency	497.17	546.96	0.03515	-	AMARILLO SOUTH INTERCHANGE - RANDALL COUNTY INTERCHANGE 230KV CKT 1
FDNSLock-Blown up	06ALL	0	20L	G15_077		Non-Converged Contingency	497.17	546.96	0.03515	-	AMARILLO SOUTH INTERCHANGE - RANDALL COUNTY INTERCHANGE 230KV CKT 1
FDNSLock-Blown up	06ALL	0	20L	G15_077		Non-Converged Contingency	726.6	726.6	0.03478	-	BUCKNER7 345.00 - HOLCOMB 345KV CKT 1
FDNSLock-Blown up	06ALL	0	20L	G15_077		Non-Converged Contingency	726.6	726.6	0.03478	-	BUCKNER7 345.00 - HOLCOMB 345KV CKT 1
FDNSLock-Blown up	06ALL	0	20L	G15_077		Non-Converged Contingency	1413	1517	0.03478	-	BUCKNER7 345.00 - SPEARVILLE 345KV CKT 1
FDNSLock-Blown up	06ALL	0	20L	G15_077		Non-Converged Contingency	1413	1517	0.03478	-	BUCKNER7 345.00 - SPEARVILLE 345KV CKT 1
FDNSLock-Blown up	06ALL	0	20L	G15_077		Non-Converged Contingency	717	926	0.03312	-	CROSSROADS 7345.00 - TOLK STATION 345KV CKT 1
FDNSLock-Blown up	06ALL	0	20L	G15_077		Non-Converged Contingency	560	560	0.03312	-	TOLK STATION (ABBXNL844501) 345/230/13.2KV TRANSFORMER CKT 1
FDNSLock-Blown up	06ALL	0	20L	G15_077		Non-Converged Contingency	560	560	0.03312	-	TOLK STATION (ABBXNL844501) 345/230/13.2KV TRANSFORMER CKT 1
FDNSLock-Blown up	06ALL	0	20L	G15_077		Non-Converged Contingency	0	0	0.0325	-	P12:138:OKGE:3TERM10
FDNSLock-Blown up	06ALL	0	20L	G15_077		Non-Converged Contingency	717	717	0.03172	-	EMPORIA ENERGY CENTER - SWISSVALE 345KV CKT 1
FDNSLock-Blown up	06ALL	0	20L	G15_077		Non-Converged Contingency	0	0	0.03136	-	P12:115:SPS:W29.1.OCLTRE.SPRMN
FDNSLock-Blown up	06ALL	0	20L	G15_077		Non-Converged Contingency	0	0	0.03086	-	P12:115:SPS:W08.1.HITCH.LASLEY
FDNSLock-Blown up	06ALL	0	20L	G15_077		Non-Converged Contingency	502	502	0.03069	-	GRAPEVINE INTERCHANGE - NICHOLS STATION 230KV CKT 1
FDNSLock-Blown up	06ALL	0	20L	G15_077		Non-Converged Contingency	502	502	0.03069	-	GRAPEVINE INTERCHANGE - NICHOLS STATION 230KV CKT 1
FDNSLock-Blown up	06ALL	0	20L	G15_077		Non-Converged Contingency	0	0	0.03048	-	P12:138:AEPW:REDROCKRD4:WTH_JCT4
FDNSLock-Blown up	06ALL	0	20L	G15_077		Non-Converged Contingency	502	502	0.03012	-	GRAPEVINE INTERCHANGE - STATELINE INTERCHANGE 230KV CKT 1
FDNSLock-Blown up	06ALL	0	20L	G15_077		Non-Converged Contingency	502	502	0.03012	-	GRAPEVINE INTERCHANGE - STATELINE INTERCHANGE 230KV CKT 1
FDNSLock-Blown up	06ALL	0	20L	G15_077		Non-Converged Contingency	0	0	0.02975	-	P12:230:SPS:K43.1.PRNGLE.HARR_E
FDNSLock-Blown up	06ALL	0	20L	G15_077		Non-Converged Contingency	717	717	0.02973	-	SWISSVALE - WEST GARDNER 345KV CKT 1
FDNSLock-Blown up	06ALL	0	20L	G15_077		Non-Converged Contingency	0	0	0.0297	-	P12:138:AEPW:DUNCAN-4:L.E.S.-4
FDNSLock-Blown up	06ALL	0	20L	G15_077		Non-Converged Contingency	0	0	0.02952	-	P12:138:OKGE-AEPW:JENSEN4:REDROCKRD4
FDNSLock-Blown up	06ALL	0	20SP	G15_077		Non-Converged Contingency	956	1042	0.21507	-	G14-074T 345.00 - OKLAUNION 345KV CKT 1
FDNSLock-Blown up	06ALL	0	20SP	G15_077		Non-Converged Contingency	1792	1972	0.17338	-	BORDER 7345.00 - TUCO_2 345.00 345KV CKT 1
FDNSLock-Blown up	06ALL	0	20SP	G15_077		Non-Converged Contingency	1420	1775	0.17338	-	BORDER 7345.00 - TUCO_2 345.00 345KV CKT 2
FDNSLock-Blown up	06ALL	0	20SP	G15_077		Non-Converged Contingency	956.09	1051.7	0.14637	-	G14_038T 345.00 - Hitchland Interchange 345KV CKT 1
FDNSLock-Blown up	06ALL	0	20SP	G15_077		Non-Converged Contingency	956.09	1051.7	0.14637	-	G14_038T 345.00 - POTTER COUNTY INTERCHANGE 345KV CKT 1
FDNSLock-Blown up	06ALL	0	20WP	G15_077		Non-Converged Contingency	0	0	0.24276	-	P12:345:SPS:J07.1.FINN.HITCH
FDNSLock-Blown up	06ALL	0	20WP	G15_077		Non-Converged Contingency	1792	1972	0.2367	-	TUCO INTERCHANGE - TUCO_2 345.00 345KV CKT 1
FDNSLock-Blown up	06ALL	0	20WP	G15_077		Non-Converged Contingency	1792	1792	0.21079	-	TUCO INTERCHANGE - YOAKUM_345 345.00 345KV CKT 1
FDNSLock-Blown up	06ALL	0	20WP	G15_077		Non-Converged Contingency	1022	1124	0.21022	-	G14-074T 345.00 - OKLAUNION 345KV CKT 1
FDNSLock-Blown up	06ALL	0	20WP	G15_077		Non-Converged Contingency	1022	1124	0.21022	-	G14-074T 345.00 - TUCO INTERCHANGE 345KV CKT 1
FDNSLock-Blown up	06ALL	0	20WP	G15_077		Non-Converged Contingency	1022	1124	0.21022	-	OKLAUNION 345KV SWITCHED SHUNT
FDNSLock-Blown up	06ALL	0	20WP	G15_077		Non-Converged Contingency	956	956	0.17907	-	CIMARRON - MINCO 345KV CKT 1
FDNSLock-Blown up	06ALL	0	20WP	G15_077		Non-Converged Contingency	1195	1195	0.17907	-	GRACEMONT - MINCO 345KV CKT 1
FDNSLock-Blown up	06ALL	0	20WP	G15_077		Non-Converged Contingency	1792	1792	0.17307	-	CHISHOLM7 345.00 - WOODWARD DISTRICT EHV 345KV CKT 1
FDNSLock-Blown up	06ALL	0	20WP	G15_077		Non-Converged Contingency	1792	1972	0.16971	-	BORDER 7345.00 - TUCO_2 345.00 345KV CKT 1
FDNSLock-Blown up	06ALL	0	20WP	G15_077		Non-Converged Contingency	1420	1775	0.16971	-	BORDER 7345.00 - TUCO_2 345.00 345KV CKT 2
FDNSLock-Blown up	06ALL	0	20WP	G15_077		Non-Converged Contingency	1792	1972	0.16971	-	BORDER 7345.00 345KV SWITCHED SHUNT
FDNSLock-Blown up	06ALL	0	20WP	G15_077		Non-Converged Contingency	1584	2098	0.15546	-	CHISHOLM7 345.00 - GRACEMONT 345KV CKT 1

SOLUTION	GROUP	SCENARIO	SEASON	SOURCE	DIRECTION	MONITORED ELEMENT	RATEA (MVA)	RATEB(MVA)	TDF	TC%LOADING (% MVA)	CONTINGENCY
FDNSLock-Blown up	06ALL	0	20WP	G15_077		Non-Converged Contingency	987.16	1082.8	0.14129	-	G14_038T 345.00 - Hitchland Interchange 345KV CKT 1
FDNSLock-Blown up	06ALL	0	20WP	G15_077		Non-Converged Contingency	987.16	1082.8	0.14129	-	G14_038T 345.00 - POTTER COUNTY INTERCHANGE 345KV CKT 1
FDNSLock-Blown up	06ALL	0	20WP	G15_077		Non-Converged Contingency	560	560	0.14129	-	POTTER COUNTY INTERCHANGE (WAUK 90343-A) 345/230/13.2KV TRANSFORMER CKT 1
FDNSLock-Blown up	06ALL	0	20WP	G15_077		Non-Converged Contingency	560	560	0.14129	-	POTTER COUNTY INTERCHANGE (WAUK 90343-A) 345/230/13.2KV TRANSFORMER CKT 1
FDNSLock-Blown up	06ALL	0	20WP	G15_077		Non-Converged Contingency	987.16	1082.8	0.12939	-	Hitchland Interchange - WALKTAP7 345.00 345KV CKT 1
FDNSLock-Blown up	06ALL	0	20WP	G15_077		Non-Converged Contingency	987.16	1082.8	0.12939	-	Hitchland Interchange - WALKTAP7 345.00 345KV CKT 1
FDNSLock-Blown up	06ALL	0	20WP	G15_077		Non-Converged Contingency	717	789	0.12779	-	G14-057T 345.00 - LAWTON EASTSIDE 345KV CKT 1
FDNSLock-Blown up	06ALL	0	20WP	G15_077		Non-Converged Contingency	717	789	0.12779	-	G14-057T 345.00 - SUNNYSIDE 345KV CKT 1
FDNSLock-Blown up	06ALL	0	20WP	G15_077		Non-Converged Contingency	557	557	0.11739	-	BUSHLAND INTERCHANGE - DEAF SMITH COUNTY INTERCHANGE 230KV CKT 1
FDNSLock-Blown up	06ALL	0	20WP	G15_077		Non-Converged Contingency	557	557	0.11739	-	BUSHLAND INTERCHANGE - DEAF SMITH COUNTY INTERCHANGE 230KV CKT 1
FDNSLock-Blown up	06ALL	0	20WP	G15_077		Non-Converged Contingency	956.09	1051.7	0.11337	-	FINNEY SWITCHING STATION - HOLCOMB 345KV CKT 1
FDNSLock-Blown up	06ALL	0	20WP	G15_077		Non-Converged Contingency	956.09	1051.7	0.11337	-	FINNEY SWITCHING STATION - HOLCOMB 345KV CKT 1
FDNSLock-Blown up	06ALL	0	20WP	G15_077		Non-Converged Contingency	987.16	1082.8	0.11337	-	FINNEY SWITCHING STATION - WALKTAP7 345.00 345KV CKT 1
FDNSLock-Blown up	06ALL	0	20WP	G15_077		Non-Converged Contingency	987.16	1082.8	0.11337	-	FINNEY SWITCHING STATION - WALKTAP7 345.00 345KV CKT 1
FDNSLock-Blown up	06ALL	0	20WP	G15_077		Non-Converged Contingency	0	0	0.11253	-	P12:230:AEPW:ELKCITY6:SWEETWT6
FDNSLock-Blown up	06ALL	0	20WP	G15_077		Non-Converged Contingency	329.05	360.92	0.10581	-	DEAF SMITH COUNTY INTERCHANGE - G15039_T 230.00 230KV CKT 1
FDNSLock-Blown up	06ALL	0	20WP	G15_077		Non-Converged Contingency	329.05	360.92	0.10581	-	G15039_T 230.00 - PLANT X STATION 230KV CKT 1
FDNSLock-Blown up	06ALL	0	20WP	G15_077		Non-Converged Contingency	329.05	360.92	0.10509	-	BUSHLAND INTERCHANGE - POTTER COUNTY INTERCHANGE 230KV CKT 1
FDNSLock-Blown up	06ALL	0	20WP	G15_077		Non-Converged Contingency	329.05	360.92	0.10509	-	BUSHLAND INTERCHANGE - POTTER COUNTY INTERCHANGE 230KV CKT 1
FDNSLock-Blown up	06ALL	0	20WP	G15_077		Non-Converged Contingency	557	557	0.10168	-	NEWHART 230 - POTTER COUNTY INTERCHANGE 230KV CKT 1
FDNSLock-Blown up	06ALL	0	20WP	G15_077		Non-Converged Contingency	0	0	0.10164	-	P12:230:AEPW-SPS:SWEETWT6:WHEELER 6
FDNSLock-Blown up	06ALL	0	20WP	G15_077		Non-Converged Contingency	1561	1793	0.08928	-	THISTLE7 345.00 - WOODWARD DISTRICT EHV 345KV CKT 1
FDNSLock-Blown up	06ALL	0	20WP	G15_077		Non-Converged Contingency	1561	1793	0.08928	-	THISTLE7 345.00 - WOODWARD DISTRICT EHV 345KV CKT 1
FDNSLock-Blown up	06ALL	0	20WP	G15_077		Non-Converged Contingency	1561	1793	0.08928	-	THISTLE7 345.00 - WOODWARD DISTRICT EHV 345KV CKT 2
FDNSLock-Blown up	06ALL	0	20WP	G15_077		Non-Converged Contingency	1561	1793	0.08928	-	THISTLE7 345.00 - WOODWARD DISTRICT EHV 345KV CKT 2
FDNSLock-Blown up	06ALL	0	20WP	G15_077		Non-Converged Contingency	1420	1775	0.08909	-	G11_051T 345.00 - TATONGA7 345.00 345KV CKT 1
FDNSLock-Blown up	06ALL	0	20WP	G15_077		Non-Converged Contingency	1420	1775	0.08909	-	G11_051T 345.00 - WOODWARD DISTRICT EHV 345KV CKT 1
FDNSLock-Blown up	06ALL	0	20WP	G15_077		Non-Converged Contingency	1195	1195	0.08909	-	MATHWSN7 345.00 - TATONGA7 345.00 345KV CKT 1
FDNSLock-Blown up	06ALL	0	20WP	G15_077		Non-Converged Contingency	478	502	0.08862	-	AMARILLO SOUTH INTERCHANGE - G15031_T 230.00 230KV CKT 1
FDNSLock-Blown up	06ALL	0	20WP	G15_077		Non-Converged Contingency	1793	1793	0.06123	-	G11-14T 345.00 - WOODWARD DISTRICT EHV 345KV CKT 1
FDNSLock-Blown up	06ALL	0	20WP	G15_077		Non-Converged Contingency	1716	1793	0.06123	-	G11-14T 345.00 - WOODWARD DISTRICT EHV 345KV CKT 2
FDNSLock-Blown up	06ALL	0	20WP	G15_077		Non-Converged Contingency	556.92	556.92	0.06002	-	HITCHLAND INTERCHANGE - MOORE COUNTY INTERCHANGE 230KV CKT 1
FDNSLock-Blown up	06ALL	0	20WP	G15_077		Non-Converged Contingency	556.92	556.92	0.06002	-	HITCHLAND INTERCHANGE - MOORE COUNTY INTERCHANGE 230KV CKT 1
FDNSLock-Blown up	06ALL	0	20WP	G15_077		Non-Converged Contingency	329.05	360.92	0.05105	-	MOORE COUNTY INTERCHANGE - POTTER COUNTY INTERCHANGE 230KV CKT 1
FDNSLock-Blown up	06ALL	0	20WP	G15_077		Non-Converged Contingency	329.05	360.92	0.05105	-	MOORE COUNTY INTERCHANGE - POTTER COUNTY INTERCHANGE 230KV CKT 1
FDNSLock-Blown up	06ALL	0	20WP	G15_077		Non-Converged Contingency	421	439	0.05082	-	CHISHOLM6 230.00 - SWEETWATER 230KV CKT 1
FDNSLock-Blown up	06ALL	0	20WP	G15_077		Non-Converged Contingency	435.02	457.73	0.05082	-	STATELINE INTERCHANGE - STLN-DEMARC6 230KV CKT 1
FDNSLock-Blown up	06ALL	0	20WP	G15_077		Non-Converged Contingency	439	439	0.05082	-	STLN-DEMARC6 - SWEETWATER 230KV CKT 1
FDNSLock-Blown up	06ALL	0	20WP	G15_077		Non-Converged Contingency	557	557	0.04405	-	GRAPEVINE INTERCHANGE - NICHOLS STATION 230KV CKT 1
FDNSLock-Blown up	06ALL	0	20WP	G15_077		Non-Converged Contingency	557	557	0.04405	-	GRAPEVINE INTERCHANGE - NICHOLS STATION 230KV CKT 1
FDNSLock-Blown up	06ALL	0	20WP	G15_077		Non-Converged Contingency	557	557	0.04332	-	GRAPEVINE INTERCHANGE - STATELINE INTERCHANGE 230KV CKT 1
FDNSLock-Blown up	06ALL	0	20WP	G15_077		Non-Converged Contingency	557	557	0.04332	-	GRAPEVINE INTERCHANGE - STATELINE INTERCHANGE 230KV CKT 1
FDNSLock-Blown up	06ALL	2	16WP	G15_077		Non-Converged Contingency	1022	1124	0.20741	-	G14-074T 345.00 - OKLAUNION 345KV CKT 1
FDNSLock-Blown up	06ALL	2	16WP	G15_077		Non-Converged Contingency	1022	1124	0.20741	-	G14-074T 345.00 - TUCO INTERCHANGE 345KV CKT 1
FDNSLock-Blown up	06ALL	2	16WP	G15_077		Non-Converged Contingency	1792	1972	0.16407	-	BORDER 7345.00 - TUCO_2 345.00 345KV CKT 1
FDNSLock-Blown up	06ALL	2	16WP	G15_077		Non-Converged Contingency	1420	1775	0.16407	-	BORDER 7345.00 - TUCO_2 345.00 345KV CKT 2
FDNSLock-Blown up	06ALL	2	16WP	G15_077		Non-Converged Contingency	987.16	1082.8	0.16058	-	G14_038T 345.00 - Hitchland Interchange 345KV CKT 1
FDNSLock-Blown up	06ALL	2	16WP	G15_077		Non-Converged Contingency	987.16	1082.8	0.16058	-	G14_038T 345.00 - POTTER COUNTY INTERCHANGE 345KV CKT 1
FDNSLock-Blown up	06ALL	2	16WP	G15_077		Non-Converged Contingency	560	560	0.16058	-	POTTER COUNTY INTERCHANGE (WAUK 90343-A) 345/230/13.2KV TRANSFORMER CKT 1
FDNSLock-Blown up	06ALL	2	17G	G15_077		Non-Converged Contingency	1022	1124	0.20087	-	G14-074T 345.00 - OKLAUNION 345KV CKT 1
FDNSLock-Blown up	06ALL	2	17G	G15_077		Non-Converged Contingency	1022	1124	0.20087	-	G14-074T 345.00 - TUCO INTERCHANGE 345KV CKT 1
FDNSLock-Blown up	06ALL	2	17G	G15_077		Non-Converged Contingency	1792	1972	0.15833	-	BORDER 7345.00 - TUCO_2 345.00 345KV CKT 1
FDNSLock-Blown up	06ALL	2	17G	G15_077		Non-Converged Contingency	1420	1775	0.15833	-	BORDER 7345.00 - TUCO_2 345.00 345KV CKT 2
FDNSLock-Blown up	06ALL	2	17G	G15_077		Non-Converged Contingency	956.09	1051.7	0.15136	-	G14_038T 345.00 - Hitchland Interchange 345KV CKT 1
FDNSLock-Blown up	06ALL	2	17G	G15_077		Non-Converged Contingency	956.09	1051.7	0.15136	-	G14_038T 345.00 - POTTER COUNTY INTERCHANGE 345KV CKT 1
FDNSLock-Blown up	06ALL	2	17G	G15_077		Non-Converged Contingency	560	560	0.15136	-	POTTER COUNTY INTERCHANGE (WAUK 90343-A) 345/230/13.2KV TRANSFORMER CKT 1
FDNSLock-Blown up	06NR	2	17G	G15_077		Non-Converged Contingency	1022	1124	0.04595	-	G14-074T 345.00 - OKLAUNION 345KV CKT 1
FDNSLock-Blown up	06NR	2	17G	G15_077		Non-Converged Contingency	1022	1124	0.04595	-	G14-074T 345.00 - TUCO INTERCHANGE 345KV CKT 1
FDNSLock-Blown up	06NR	2	17G	G15_077		Non-Converged Contingency	1792	1972	0.04385	-	BORDER 7345.00 - TUCO_2 345.00 345KV CKT 1
FDNSLock-Blown up	06NR	2	17G	G15_077		Non-Converged Contingency	1792	1792	0.04385	-	BORDER 7345.00 - WOODWARD DISTRICT EHV 345KV CKT 1
FDNSLock-Blown up	06ALL	2	17SP	G15_077		Non-Converged Contingency	956	1042	0.20705	-	G14-074T 345.00 - OKLAUNION 345KV CKT 1
FDNSLock-Blown up	06ALL	2	20L	G15_077		Non-Converged Contingency	0	0	0.20217	-	P12:345:SPS:J07.1.FINN.HITCH
FDNSLock-Blown up	06ALL	2	20L	G15_077		Non-Converged Contingency	1022	1124	0.18102	-	G14-074T 345.00 - OKLAUNION 345KV CKT 1
FDNSLock-Blown up	06ALL	2	20L	G15_077		Non-Converged Contingency	1022	1124	0.18102	-	G14-074T 345.00 - TUCO INTERCHANGE 345KV CKT 1
FDNSLock-Blown up	06ALL	2	20L	G15_077		Non-Converged Contingency	1022	1124	0.18102	-	OKLAUNION 345KV SWITCHED SHUNT
FDNSLock-Blown up	06ALL	2	20L	G15_077		Non-Converged Contingency	1792	1972	0.14919	-	BORDER 7345.00 - TUCO_2 345.00 345KV CKT 1
FDNSLock-Blown up	06ALL	2	20L	G15_077		Non-Converged Contingency	1420	1775	0.14919	-	BORDER 7345.00 - TUCO_2 345.00 345KV CKT 2
FDNSLock-Blown up	06ALL	2	20L	G15_077		Non-Converged Contingency	1584	2098	0.12979	-	CHISHOLM7 345.00 - GRACEMONT 345KV CKT 1
FDNSLock-Blown up	06ALL	2	20L	G15_077		Non-Converged Contingency	956.09	1051.7	0.11274	-	G14_038T 345.00 - Hitchland Interchange 345KV CKT 1
FDNSLock-Blown up	06ALL	2	20L	G15_077		Non-Converged Contingency	956.09	1051.7	0.11274	-	G14_038T 345.00 - POTTER COUNTY INTERCHANGE 345KV CKT 1
FDNSLock-Blown up	06ALL	2	20L	G15_077		Non-Converged Contingency	560	560	0.11274	-	POTTER COUNTY INTERCHANGE (WAUK 90343-A) 345/230/13.2KV TRANSFORMER CKT 1
FDNSLock-Blown up	06ALL	2	20L	G15_077		Non-Converged Contingency	560	560	0.11274	-	POTTER COUNTY INTERCHANGE (WAUK 90343-A) 345/230/13.2KV TRANSFORMER CKT 1
FDNSLock-Blown up	06ALL	2	20L	G15_077		Non-Converged Contingency	956.09	1051.7	0.10794	-	Hitchland Interchange - WALKTAP7 345.00 345KV CKT 1
FDNSLock-Blown up	06ALL	2	20L	G15_077		Non-Converged Contingency	956.09	1051.7	0.10794	-	Hitchland Interchange - WALKTAP7 345.00 345KV CKT 1
FDNSLock-Blown up	06ALL	2	20L	G15_077		Non-Converged Contingency	0	0	0.08577	-	P12:230:AEPW:ELKCITY6:SWEETWT6
FDNSLock-Blown up	06NR	2	20L	G15_077		Non-Converged Contingency	478	502	0.08212	-	AMARILLO SOUTH INTERCHANGE - G15031_T 230.00 230KV CKT 1
FDNSLock-Blown up	06ALL	2	20L	G15_077		Non-Converged Contingency	1195	1195	0.07492	-	MATHWSN7 345.00 - TATONGA7 345.00 345KV CKT 1
FDNSLock-Blown up	06NR	2	20L	G15_077		Non-Converged Contingency	478	502	0.07211	-	NEWHART 230 - POTTER COUNTY INTERCHANGE 230KV CKT 1
FDNSLock-Blown up	06NR	2	20L	G15_077		Non-Converged Contingency	318.7	350.57	0.06706	-	DEAF SMITH COUNTY INTERCHANGE - G15039_T 230.00 230KV CKT 1

SOLUTION	GROUP	SCENARIO	SEASON	SOURCE	DIRECTION	MONITORED ELEMENT	RATEA (MVA)	RATEB(MVA)	TDF	TC%LOADING (% MVA)	CONTINGENCY
FDNSLock-Blown up	06NR	2	20L	G15_077		Non-Converged Contingency	318.7	350.57	0.06219	-	BUSHLAND INTERCHANGE - POTTER COUNTY INTERCHANGE 230KV CKT 1
FDNSLock-Blown up	06NR	2	20L	G15_077		Non-Converged Contingency	318.7	350.57	0.06219	-	BUSHLAND INTERCHANGE - POTTER COUNTY INTERCHANGE 230KV CKT 1
FDNSLock-Blown up	06NR	2	20L	G15_077		Non-Converged Contingency	1022	1124	0.05487	-	G14-074T 345.00 - OKLAUNION 345KV CKT 1
FDNSLock-Blown up	06NR	2	20L	G15_077		Non-Converged Contingency	1022	1124	0.05487	-	G14-074T 345.00 - TUCO INTERCHANGE 345KV CKT 1
FDNSLock-Blown up	06NR	2	20L	G15_077		Non-Converged Contingency	1022	1124	0.05487	-	OKLAUNION 345KV SWITCHED SHUNT
FDNSLock-Blown up	06NR	2	20L	G15_077		Non-Converged Contingency	1792	1972	0.05243	-	BORDER 7345.00 - TUCO_2 345.00 345KV CKT 1
FDNSLock-Blown up	06NR	2	20L	G15_077		Non-Converged Contingency	1792	1792	0.05243	-	BORDER 7345.00 - WOODWARD DISTRICT EHV 345KV CKT 1
FDNSLock-Blown up	06NR	2	20L	G15_077		Non-Converged Contingency	1792	1972	0.05243	-	BORDER 7345.00 345KV SWITCHED SHUNT
FDNSLock-Blown up	06ALL	2	20L	G15_077		Non-Converged Contingency	421	439	0.0355	-	CHISHOLM6 230.00 - SWEETWATER 230KV CKT 1
FDNSLock-Blown up	06ALL	2	20SP	G15_077		Non-Converged Contingency	956	1042	0.21516	-	G14-074T 345.00 - OKLAUNION 345KV CKT 1
FDNSLock-Blown up	06ALL	2	20WP	G15_077		Non-Converged Contingency	1022	1124	0.21045	-	G14-074T 345.00 - OKLAUNION 345KV CKT 1
FDNSLock-Blown up	06ALL	2	20WP	G15_077		Non-Converged Contingency	1022	1124	0.21045	-	G14-074T 345.00 - TUCO INTERCHANGE 345KV CKT 1
FDNSLock-Blown up	06ALL	2	20WP	G15_077		Non-Converged Contingency	1792	1972	0.16991	-	BORDER 7345.00 - TUCO_2 345.00 345KV CKT 1
FDNSLock-Blown up	06ALL	2	20WP	G15_077		Non-Converged Contingency	1420	1775	0.16991	-	BORDER 7345.00 - TUCO_2 345.00 345KV CKT 2
FDNSLock-Blown up	06ALL	2	20WP	G15_077		Non-Converged Contingency	987.16	1082.8	0.14151	-	G14_038T 345.00 - Hitchland Interchange 345KV CKT 1
FDNSLock-Blown up	06ALL	2	20WP	G15_077		Non-Converged Contingency	987.16	1082.8	0.14151	-	G14_038T 345.00 - POTTER COUNTY INTERCHANGE 345KV CKT 1
FDNSLock-Blown up	06ALL	2	20WP	G15_077		Non-Converged Contingency	560	560	0.14151	-	POTTER COUNTY INTERCHANGE (WAUK 90343-A) 345/230/13.2KV TRANSFORMER CKT 1
FDNSLock-Blown up	06ALL	2	20WP	G15_077		Non-Converged Contingency	560	560	0.14151	-	POTTER COUNTY INTERCHANGE (WAUK 90343-A) 345/230/13.2KV TRANSFORMER CKT 1
FDNSLock-Blown up	06ALL	3	16WP	G15_077		Non-Converged Contingency	1022	1124	0.21686	-	G14-074T 345.00 - OKLAUNION 345KV CKT 1
FDNSLock-Blown up	06ALL	3	16WP	G15_077		Non-Converged Contingency	1022	1124	0.21686	-	G14-074T 345.00 - TUCO INTERCHANGE 345KV CKT 1
FDNSLock-Blown up	06NR	3	17G	G15_077		Non-Converged Contingency	1022	1124	0.04711	-	G14-074T 345.00 - OKLAUNION 345KV CKT 1
FDNSLock-Blown up	06NR	3	17G	G15_077		Non-Converged Contingency	1022	1124	0.04711	-	G14-074T 345.00 - TUCO INTERCHANGE 345KV CKT 1
FDNSLock-Blown up	06NR	3	17G	G15_077		Non-Converged Contingency	1792	1972	0.04504	-	BORDER 7345.00 - TUCO_2 345.00 345KV CKT 1
FDNSLock-Blown up	06NR	3	17G	G15_077		Non-Converged Contingency	1792	1792	0.04504	-	BORDER 7345.00 - WOODWARD DISTRICT EHV 345KV CKT 1
FDNSLock-Blown up	06ALL	3	17SP	G15_077		Non-Converged Contingency	956	1042	0.21514	-	G14-074T 345.00 - OKLAUNION 345KV CKT 1
FDNSLock-Blown up	06ALL	3	20L	G15_077		Non-Converged Contingency	1022	1124	0.18492	-	G14-074T 345.00 - OKLAUNION 345KV CKT 1
FDNSLock-Blown up	06ALL	3	20L	G15_077		Non-Converged Contingency	1022	1124	0.18492	-	G14-074T 345.00 - TUCO INTERCHANGE 345KV CKT 1
FDNSLock-Blown up	06ALL	3	20L	G15_077		Non-Converged Contingency	1792	1972	0.15356	-	BORDER 7345.00 - TUCO_2 345.00 345KV CKT 1
FDNSLock-Blown up	06ALL	3	20L	G15_077		Non-Converged Contingency	1420	1775	0.15356	-	BORDER 7345.00 - TUCO_2 345.00 345KV CKT 2
FDNSLock-Blown up	06ALL	3	20L	G15_077		Non-Converged Contingency	1584	2098	0.13115	-	CHISHOLM7 345.00 - GRACEMONT 345KV CKT 1
FDNSLock-Blown up	06ALL	3	20L	G15_077		Non-Converged Contingency	956.09	1051.7	0.10973	-	G14_038T 345.00 - Hitchland Interchange 345KV CKT 1
FDNSLock-Blown up	06ALL	3	20L	G15_077		Non-Converged Contingency	956.09	1051.7	0.10973	-	G14_038T 345.00 - POTTER COUNTY INTERCHANGE 345KV CKT 1
FDNSLock-Blown up	06ALL	3	20L	G15_077		Non-Converged Contingency	560	560	0.10973	-	POTTER COUNTY INTERCHANGE (WAUK 90343-A) 345/230/13.2KV TRANSFORMER CKT 1
FDNSLock-Blown up	06ALL	3	20L	G15_077		Non-Converged Contingency	956.09	1051.7	0.10692	-	Hitchland Interchange - WALKTAP7 345.00 345KV CKT 1
FDNSLock-Blown up	06ALL	3	20L	G15_077		Non-Converged Contingency	1195	1195	0.07443	-	MATHWSN7 345.00 - TATONGA7 345.00 345KV CKT 1
FDNSLock-Blown up	06NR	3	20L	G15_077		Non-Converged Contingency	1022	1124	0.05393	-	G14-074T 345.00 - OKLAUNION 345KV CKT 1
FDNSLock-Blown up	06NR	3	20L	G15_077		Non-Converged Contingency	1022	1124	0.05393	-	G14-074T 345.00 - TUCO INTERCHANGE 345KV CKT 1
FDNSLock-Blown up	06NR	3	20L	G15_077		Non-Converged Contingency	1022	1124	0.05393	-	OKLAUNION 345KV SWITCHED SHUNT
FDNSLock-Blown up	06NR	3	20L	G15_077		Non-Converged Contingency	1792	1972	0.05145	-	BORDER 7345.00 - TUCO_2 345.00 345KV CKT 1
FDNSLock-Blown up	06NR	3	20L	G15_077		Non-Converged Contingency	1792	1792	0.05145	-	BORDER 7345.00 - WOODWARD DISTRICT EHV 345KV CKT 1
FDNSLock-Blown up	06NR	3	20L	G15_077		Non-Converged Contingency	1792	1972	0.05145	-	BORDER 7345.00 345KV SWITCHED SHUNT
FDNSLock-Blown up	06ALL	3	20L	G15_077		Non-Converged Contingency	421	439	0.03281	-	CHISHOLM6 230.00 - SWEETWATER 230KV CKT 1
FDNSLock-Blown up	06ALL	3	20SP	G15_077		Non-Converged Contingency	956	1042	0.21918	-	G14-074T 345.00 - OKLAUNION 345KV CKT 1
FDNSLock-Blown up	06ALL	3	20WP	G15_077		Non-Converged Contingency	1022	1124	0.21459	-	G14-074T 345.00 - OKLAUNION 345KV CKT 1
FDNSLock-Blown up	06ALL	3	20WP	G15_077		Non-Converged Contingency	1022	1124	0.21459	-	G14-074T 345.00 - TUCO INTERCHANGE 345KV CKT 1
FDNSLock-Blown up	06ALL	3	20WP	G15_077		Non-Converged Contingency	1792	1972	0.17476	-	BORDER 7345.00 - TUCO_2 345.00 345KV CKT 1
FDNSLock-Blown up	06ALL	3	20WP	G15_077		Non-Converged Contingency	1420	1775	0.17476	-	BORDER 7345.00 - TUCO_2 345.00 345KV CKT 2
FDNSLock-Blown up	06ALL	3	20WP	G15_077		Non-Converged Contingency	987.16	1082.8	0.13717	-	G14_038T 345.00 - Hitchland Interchange 345KV CKT 1
FDNSLock-Blown up	06ALL	3	20WP	G15_077		Non-Converged Contingency	987.16	1082.8	0.13717	-	G14_038T 345.00 - POTTER COUNTY INTERCHANGE 345KV CKT 1
FDNSLock-Blown up	06ALL	4	16WP	G15_077		Non-Converged Contingency	1022	1124	0.19753	-	G14-074T 345.00 - OKLAUNION 345KV CKT 1
FDNSLock-Blown up	06ALL	4	17G	G15_077		Non-Converged Contingency	956.09	1051.7	0.19105	-	G14_038T 345.00 - Hitchland Interchange 345KV CKT 1
FDNSLock-Blown up	06ALL	4	17G	G15_077		Non-Converged Contingency	956.09	1051.7	0.19105	-	G14_038T 345.00 - POTTER COUNTY INTERCHANGE 345KV CKT 1
FDNSLock-Blown up	06ALL	4	17G	G15_077		Non-Converged Contingency	1022	1124	0.19102	-	G14-074T 345.00 - OKLAUNION 345KV CKT 1
FDNSLock-Blown up	06ALL	4	17G	G15_077		Non-Converged Contingency	1022	1124	0.19102	-	G14-074T 345.00 - TUCO INTERCHANGE 345KV CKT 1
FDNSLock-Blown up	06NR	4	17G	G15_077		Non-Converged Contingency	1022	1124	0.03392	-	G14-074T 345.00 - OKLAUNION 345KV CKT 1
FDNSLock-Blown up	06NR	4	17G	G15_077		Non-Converged Contingency	1022	1124	0.03392	-	G14-074T 345.00 - TUCO INTERCHANGE 345KV CKT 1
FDNSLock-Blown up	06NR	4	17G	G15_077		Non-Converged Contingency	1792	1972	0.03135	-	BORDER 7345.00 - TUCO_2 345.00 345KV CKT 1
FDNSLock-Blown up	06NR	4	17G	G15_077		Non-Converged Contingency	1792	1792	0.03135	-	BORDER 7345.00 - WOODWARD DISTRICT EHV 345KV CKT 1
FDNSLock-Blown up	06ALL	4	20L	G15_077		Non-Converged Contingency	0	0	0.22191	-	P12:345:SPS:J07.1.FINN.HITCH
FDNSLock-Blown up	06ALL	4	20L	G15_077		Non-Converged Contingency	1022	1124	0.16844	-	G14-074T 345.00 - OKLAUNION 345KV CKT 1
FDNSLock-Blown up	06ALL	4	20L	G15_077		Non-Converged Contingency	1022	1124	0.16844	-	G14-074T 345.00 - TUCO INTERCHANGE 345KV CKT 1
FDNSLock-Blown up	06ALL	4	20L	G15_077		Non-Converged Contingency	956.09	1051.7	0.1545	-	G14_038T 345.00 - Hitchland Interchange 345KV CKT 1
FDNSLock-Blown up	06ALL	4	20L	G15_077		Non-Converged Contingency	956.09	1051.7	0.1545	-	G14_038T 345.00 - POTTER COUNTY INTERCHANGE 345KV CKT 1
FDNSLock-Blown up	06ALL	4	20L	G15_077		Non-Converged Contingency	1792	1972	0.13578	-	BORDER 7345.00 - TUCO_2 345.00 345KV CKT 1
FDNSLock-Blown up	06ALL	4	20L	G15_077		Non-Converged Contingency	1420	1775	0.13578	-	BORDER 7345.00 - TUCO_2 345.00 345KV CKT 2
FDNSLock-Blown up	06ALL	4	20L	G15_077		Non-Converged Contingency	1584	2098	0.1277	-	CHISHOLM7 345.00 - GRACEMONT 345KV CKT 1
FDNSLock-Blown up	06ALL	4	20L	G15_077		Non-Converged Contingency	956.09	1051.7	0.11847	-	Hitchland Interchange - WALKTAP7 345.00 345KV CKT 1
FDNSLock-Blown up	06ALL	4	20L	G15_077		Non-Converged Contingency	956.09	1051.7	0.11847	-	Hitchland Interchange - WALKTAP7 345.00 345KV CKT 1
FDNSLock-Blown up	06ALL	4	20L	G15_077		Non-Converged Contingency	0	0	0.09094	-	P12:230:AEPW:ELKCITY6:SWEETWT6
FDNSLock-Blown up	06NR	4	20L	G15_077		Non-Converged Contingency	1022	1124	0.04029	-	G14-074T 345.00 - OKLAUNION 345KV CKT 1
FDNSLock-Blown up	06NR	4	20L	G15_077		Non-Converged Contingency	1022	1124	0.04029	-	G14-074T 345.00 - TUCO INTERCHANGE 345KV CKT 1
FDNSLock-Blown up	06NR	4	20L	G15_077		Non-Converged Contingency	1022	1124	0.04029	-	OKLAUNION 345KV SWITCHED SHUNT
FDNSLock-Blown up	06NR	4	20L	G15_077		Non-Converged Contingency	1792	1972	0.03732	-	BORDER 7345.00 - TUCO_2 345.00 345KV CKT 1
FDNSLock-Blown up	06NR	4	20L	G15_077		Non-Converged Contingency	1792	1792	0.03732	-	BORDER 7345.00 - WOODWARD DISTRICT EHV 345KV CKT 1
FDNSLock-Blown up	06ALL	4	20WP	G15_077		Non-Converged Contingency	1022	1124	0.19637	-	G14-074T 345.00 - OKLAUNION 345KV CKT 1
FDNSLock-Blown up	06ALL	4	20WP	G15_077		Non-Converged Contingency	1022	1124	0.19637	-	G14-074T 345.00 - TUCO INTERCHANGE 345KV CKT 1
FDNSLock-Blown up	06ALL	4	20WP	G15_077		Non-Converged Contingency	987.16	1082.8	0.18502	-	G14_038T 345.00 - Hitchland Interchange 345KV CKT 1
FDNSLock-Blown up	06ALL	5	16WP	G15_077		Non-Converged Contingency	1022	1124	0.19043	-	G14-074T 345.00 - OKLAUNION 345KV CKT 1
FDNSLock-Blown up	06ALL	5	17G	G15_077		Non-Converged Contingency	1022	1124	0.1844	-	G14-074T 345.00 - OKLAUNION 345KV CKT 1

SOLUTION	GROUP	SCENARIO	SEASON	SOURCE	DIRECTION	MONITORED ELEMENT	RATEA (MVA)	RATEB(MVA)	TDF	TC%LOADING (% MVA)	CONTINGENCY
FDNSLock-Blown up	06NR	5	17G	G15_077		Non-Converged Contingency	1022	1124	0.03451	-	G14-074T 345.00 - OKLAUNION 345KV CKT 1
FDNSLock-Blown up	06NR	5	17G	G15_077		Non-Converged Contingency	1792	1792	0.03157	-	BORDER 7345.00 - WOODWARD DISTRICT EHV 345KV CKT 1
FDNSLock-Blown up	06ALL	5	20L	G15_077		Non-Converged Contingency	1022	1124	0.16476	-	G14-074T 345.00 - OKLAUNION 345KV CKT 1
FDNSLock-Blown up	06NR	5	20L	G15_077		Non-Converged Contingency	1022	1124	0.04141	-	G14-074T 345.00 - OKLAUNION 345KV CKT 1
FDNSLock-Blown up	06NR	5	20L	G15_077		Non-Converged Contingency	1022	1124	0.04141	-	G14-074T 345.00 - TUCO INTERCHANGE 345KV CKT 1
FDNSLock-Blown up	06NR	5	20L	G15_077		Non-Converged Contingency	1792	1972	0.03775	-	BORDER 7345.00 - TUCO_2 345.00 345KV CKT 1
FDNSLock-Blown up	06NR	5	20L	G15_077		Non-Converged Contingency	1792	1792	0.03775	-	BORDER 7345.00 - WOODWARD DISTRICT EHV 345KV CKT 1
FDNSLock-Blown up	06ALL	5	20WP	G15_077		Non-Converged Contingency	1022	1124	0.18987	-	G14-074T 345.00 - OKLAUNION 345KV CKT 1
FDNSLock-Blown up	06ALL	6	17G	G15_077		Non-Converged Contingency	1022	1124	0.17742	-	G14-074T 345.00 - OKLAUNION 345KV CKT 1
FDNSLock-Blown up	06NR	6	17G	G15_077		Non-Converged Contingency	1022	1124	0.03458	-	G14-074T 345.00 - OKLAUNION 345KV CKT 1
FDNSLock-Blown up	06ALL	6	20L	G15_077		Non-Converged Contingency	1022	1124	0.15878	-	G14-074T 345.00 - OKLAUNION 345KV CKT 1
FDNSLock-Blown up	06NR	6	20L	G15_077		Non-Converged Contingency	1022	1124	0.0415	-	G14-074T 345.00 - OKLAUNION 345KV CKT 1
FDNSLock-Blown up	06NR	6	20L	G15_077		Non-Converged Contingency	1792	1972	0.03781	-	BORDER 7345.00 - TUCO_2 345.00 345KV CKT 1
FDNSLock-Blown up	06NR	6	20L	G15_077		Non-Converged Contingency	1792	1792	0.03781	-	BORDER 7345.00 - WOODWARD DISTRICT EHV 345KV CKT 1
FDNSLock-Blown up	06ALL	6	20WP	G15_077		Non-Converged Contingency	1022	1124	0.18307	-	G14-074T 345.00 - OKLAUNION 345KV CKT 1
FDNSLock-Blown up	06NR	7	20L	G15_077		Non-Converged Contingency	1022	1124	0.0415	-	G14-074T 345.00 - OKLAUNION 345KV CKT 1
FDNS	06ALL	0	16WP	G15_077	FROM->TO	BUSHLAND INTERCHANGE - POTTER COUNTY INTERCHANGE 230KV CKT 1	329.05	360.92	0.12661	103.4995	BASE CASE
FDNS	06NR	0	17G	G15_077	FROM->TO	BUSHLAND INTERCHANGE - POTTER COUNTY INTERCHANGE 230KV CKT 1	318.7	350.57	0.07656	101.2444	BUSHLAND INTERCHANGE - HILLSIDE 115KV CKT 1
FDNS	06NR	0	17G	G15_077	FROM->TO	BUSHLAND INTERCHANGE - POTTER COUNTY INTERCHANGE 230KV CKT 1	318.7	350.57	0.07656	101.1735	BUSHLAND INTERCHANGE (WH 7001795) 230/115/13.2KV TRANSFORMER CKT 1
FDNS	06NR	0	17G	G15_077	FROM->TO	BUSHLAND INTERCHANGE - POTTER COUNTY INTERCHANGE 230KV CKT 1	318.7	350.57	0.07656	101.1735	BUSHLAND INTERCHANGE (WH 7001795) 230/115/13.2KV TRANSFORMER CKT 1
FDNS	06NR	0	17G	G15_077	FROM->TO	BUSHLAND INTERCHANGE - POTTER COUNTY INTERCHANGE 230KV CKT 1	318.7	350.57	0.07656	100.4335	P12:115:SPS:V52.1.COLTR.BSHLND
FDNS	06ALL	0	20SP	G15_077	FROM->TO	CHISHOLM6 230.00 - ELK CITY 230KV 230KV CKT 1	353	353	0.0634	106.4803	BASE CASE
FDNS	06ALL	0	17SP	G15_077	FROM->TO	CHISHOLM6 230.00 - ELK CITY 230KV 230KV CKT 1	353	353	0.0635	104.7427	BASE CASE
FDNS	06ALL	0	17SP	G15_077	TO->FROM	CIMARRON - MINCO 345KV CKT 1	956	956	0.24294	123.2446	G14-057T 345.00 - SUNNYSIDE 345KV CKT 1
FDNS	06ALL	0	20SP	G15_077	TO->FROM	CIMARRON - MINCO 345KV CKT 1	956	956	0.24765	120.5642	G14-057T 345.00 - SUNNYSIDE 345KV CKT 1
FDNS	06ALL	0	17SP	G15_077	TO->FROM	CIMARRON - MINCO 345KV CKT 1	956	956	0.24294	117.8925	G14-057T 345.00 - LAWTON EASTSIDE 345KV CKT 1
FDNS	06ALL	0	20SP	G15_077	TO->FROM	CIMARRON - MINCO 345KV CKT 1	956	956	0.24765	115.1699	G14-057T 345.00 - LAWTON EASTSIDE 345KV CKT 1
FDNS	06ALL	0	17SP	G15_077	TO->FROM	CIMARRON - MINCO 345KV CKT 1	956	956	0.20701	105.5731	MATHWSN7 345.00 - TATONGA7 345.00 345KV CKT 1
FDNS	06ALL	0	20SP	G15_077	TO->FROM	CIMARRON - MINCO 345KV CKT 1	956	956	0.20996	104.5241	MATHWSN7 345.00 - TATONGA7 345.00 345KV CKT 1
FDNS	06ALL	0	20SP	G15_077	TO->FROM	CIMARRON - MINCO 345KV CKT 1	956	956	0.24919	102.9387	CHISHOLM7 345.00 - WOODWARD DISTRICT EHV 345KV CKT 1
FDNS	06ALL	0	17SP	G15_077	TO->FROM	CIMARRON - MINCO 345KV CKT 1	956	956	0.24267	102.0892	CHISHOLM7 345.00 - WOODWARD DISTRICT EHV 345KV CKT 1
FDNS	06ALL	0	17SP	G15_077	TO->FROM	CIMARRON - MINCO 345KV CKT 1	956	956	0.20701	100.3376	G11_051T 345.00 - TATONGA7 345.00 345KV CKT 1
FDNS	06ALL	0	20SP	G15_077	TO->FROM	DEAF SMITH COUNTY INTERCHANGE - G15039_T 230.00 230KV CKT 1	318.7	350.57	0.10709	110.3343	BASE CASE
FDNS	06NR	0	17G	G15_077	TO->FROM	DEAF SMITH COUNTY INTERCHANGE - G15039_T 230.00 230KV CKT 1	318.7	350.57	0.08961	110.3216	NEWHART 230 - PLANT X STATION 230KV CKT 1
FDNS	06ALL	0	17SP	G15_077	TO->FROM	DEAF SMITH COUNTY INTERCHANGE - G15039_T 230.00 230KV CKT 1	318.7	350.57	0.12417	108.4885	BASE CASE
FDNS	06NR	0	17G	G15_077	TO->FROM	DEAF SMITH COUNTY INTERCHANGE - G15039_T 230.00 230KV CKT 1	318.7	350.57	0.07873	103.1436	P12:115:SPS:T04.1.DFSMTH.CASTRO
FDNS	06NR	0	17G	G15_077	TO->FROM	DEAF SMITH COUNTY INTERCHANGE - G15039_T 230.00 230KV CKT 1	318.7	350.57	0.07765	101.0528	CURRY COUNTY INTERCHANGE - DEAF SMITH REC-#20 115KV CKT 1
FDNS	06NR	0	17G	G15_077	TO->FROM	DEAF SMITH COUNTY INTERCHANGE - G15039_T 230.00 230KV CKT 1	318.7	350.57	0.07331	100.4761	TOLK STATION EAST - TUCO INTERCHANGE 230KV CKT 1
FDNS	06NR	0	17G	G15_077	TO->FROM	DEAF SMITH COUNTY INTERCHANGE - G15039_T 230.00 230KV CKT 1	318.7	350.57	0.07331	100.4761	TOLK STATION EAST - TUCO INTERCHANGE 230KV CKT 1
FDNS	06NR	0	17G	G15_077	TO->FROM	DEAF SMITH COUNTY INTERCHANGE - G15039_T 230.00 230KV CKT 1	318.7	350.57	0.07224	99.9	P12:230:SPS:CL.1.BSHLND.WLDRDO
FDNS	06NR	0	17G	G15_077	TO->FROM	DEAF SMITH COUNTY INTERCHANGE - G15039_T 230.00 230KV CKT 1	318.7	350.57	0.07765	99.6	DEAF SMITH REC-#20 - PARMER COUNTY SUB 115KV CKT 1
FDNSLock	06ALL	0	20WP	G15_077		ELK CITY 230KV (ELKCTY-6) 230/138/13.8KV TRANSFORMER CKT 1	450	450	0.06171	87.66341	BASE CASE
FDNSLock	06ALL	0	20WP	G15_077		ELK CITY 230KV (ELKCTY-6) 230/138/13.8KV TRANSFORMER CKT 1	450	450	0.06171	87.66341	BASE CASE
FDNS	06ALL	0	20L	G15_077	TO->FROM	G14-057T 345.00 - LAWTON EASTSIDE 345KV CKT 1	717	789	0.10404	108.0268	BASE CASE
FDNS	06ALL	0	20L	G15_077	FROM->TO	G14-057T 345.00 - SUNNYSIDE 345KV CKT 1	717	789	0.10404	120.8788	BASE CASE
FDNS	06ALL	0	20WP	G15_077	FROM->TO	G14-057T 345.00 - SUNNYSIDE 345KV CKT 1	717	789	0.12779	107.5634	BASE CASE
FDNS	06ALL	0	17G	G15_077	FROM->TO	G14-057T 345.00 - SUNNYSIDE 345KV CKT 1	717	789	0.12654	106.9763	BASE CASE
FDNS	06ALL	0	16WP	G15_077	FROM->TO	G14-057T 345.00 - SUNNYSIDE 345KV CKT 1	717	789	0.12982	105.0999	BASE CASE
FDNS	06NR	0	20L	G15_077	FROM->TO	G14-074T 345.00 - OKLAUNION 345KV CKT 1	1022	1124	0.05487	106.9322	BASE CASE
FDNS	06NR	0	17G	G15_077	FROM->TO	G14-074T 345.00 - OKLAUNION 345KV CKT 1	1022	1124	0.04595	102.2735	BASE CASE
FDNS	06NR	0	20L	G15_077	FROM->TO	G14-074T 345.00 - OKLAUNION 345KV CKT 1	1022	1124	0.05228	102.2532	CHISHOLM7 345.00 - GRACEMONT 345KV CKT 1
FDNS	06NR	0	20L	G15_077	FROM->TO	G14-074T 345.00 - OKLAUNION 345KV CKT 1	1022	1124	0.05228	101.8896	CHISHOLM7 345.00 () 345/230/13.2KV TRANSFORMER CKT 1
FDNS	06NR	0	20L	G15_077	FROM->TO	G14-074T 345.00 - OKLAUNION 345KV CKT 1	1022	1124	0.05799	101.4902	TUCO INTERCHANGE - TUCO_2 345.00 345KV CKT 1
FDNS	06NR	0	20L	G15_077	FROM->TO	G14-074T 345.00 - OKLAUNION 345KV CKT 1	1022	1124	0.06373	101.2851	BUSHLAND INTERCHANGE - DEAF SMITH COUNTY INTERCHANGE 230KV CKT 1
FDNS	06NR	0	20L	G15_077	FROM->TO	G14-074T 345.00 - OKLAUNION 345KV CKT 1	1022	1124	0.06373	101.2851	BUSHLAND INTERCHANGE - DEAF SMITH COUNTY INTERCHANGE 230KV CKT 1
FDNS	06NR	0	20L	G15_077	FROM->TO	G14-074T 345.00 - OKLAUNION 345KV CKT 1	1022	1124	0.05462	101.2671	MOORE COUNTY INTERCHANGE - POTTER COUNTY INTERCHANGE 230KV CKT 1
FDNS	06NR	0	20L	G15_077	FROM->TO	G14-074T 345.00 - OKLAUNION 345KV CKT 1	1022	1124	0.05462	101.2671	MOORE COUNTY INTERCHANGE - POTTER COUNTY INTERCHANGE 230KV CKT 1
FDNS	06NR	0	20L	G15_077	FROM->TO	G14-074T 345.00 - OKLAUNION 345KV CKT 1	1022	1124	0.05397	101.2654	G11-14T 345.00 - WOODWARD DISTRICT EHV 345KV CKT 1
FDNS	06NR	0	20L	G15_077	FROM->TO	G14-074T 345.00 - OKLAUNION 345KV CKT 1	1022	1124	0.05397	101.2654	G11-14T 345.00 - WOODWARD DISTRICT EHV 345KV CKT 2
FDNS	00NR	0	25SP	G15_077	FROM->TO	Hitchland Interchange (SIEM 8743067) 345/230/13.2KV TRANSFORMER CKT 2	560	644	0.02991	102.3531	Hitchland Interchange (H TB80155502) 345/230/13.2KV TRANSFORMER CKT 1
FDNS	00NR	0	25SP	G15_077	FROM->TO	Hitchland Interchange (SIEM 8743067) 345/230/13.2KV TRANSFORMER CKT 2	560	644	0.02991	102.3531	Hitchland Interchange (H TB80155502) 345/230/13.2KV TRANSFORMER CKT 1
FDNS	00NR	0	25SP	G15_077	FROM->TO	Hitchland Interchange (SIEM 8743067) 345/230/13.2KV TRANSFORMER CKT 2	560	644	0.02991	100.5303	Hitchland Interchange (H TB80155502) 345/230/13.2KV TRANSFORMER CKT 1
FDNS	00NR	0	25SP	G15_077	FROM->TO	Hitchland Interchange (SIEM 8743067) 345/230/13.2KV TRANSFORMER CKT 2	560	644	0.02991	100.5303	Hitchland Interchange (H TB80155502) 345/230/13.2KV TRANSFORMER CKT 1
FDNS	00NR	0	25SP	G15_077	FROM->TO	LUBBOCK POWER & LIGHT-HOLLY PLANT (SHIH T101039) 230/69/13.5KV TRANSFORMER CKT 1	224	224	0.0355	104.8294	LUBBOCK POWER & LIGHT-SOUTHEAST - LUBBOCK SOUTH INTERCHANGE 230KV CKT 1
FDNS	00NR	0	25SP	G15_077	FROM->TO	LUBBOCK POWER & LIGHT-HOLLY PLANT (SHIH T101039) 230/69/13.5KV TRANSFORMER CKT 1	224	224	0.0355	104.8165	P12:LPL:SPS:K64.1.LP-SE.LUBBS
FDNS	00NR	0	25SP	G15_077	FROM->TO	LUBBOCK POWER & LIGHT-HOLLY PLANT (SHIH T101039) 230/69/13.5KV TRANSFORMER CKT 1	224	224	0.03267	101.9053	LUBBOCK EAST INTERCHANGE - LUBBOCK POWER & LIGHT-WADSWORTH 230KV CKT 1
FDNS	00NR	0	25SP	G15_077	FROM->TO	LUBBOCK POWER & LIGHT-HOLLY PLANT (SHIH T101039) 230/69/13.5KV TRANSFORMER CKT 1	224	224	0.03267	101.8957	P12:230:LPL:K57.1.LP-WADS.LUBBE
FDNS	00NR	0	25SP	G15_077	FROM->TO	LUBBOCK POWER & LIGHT-HOLLY PLANT (SHIH T101039) 230/69/13.5KV TRANSFORMER CKT 1	224	224	0.03267	101.8956	LUBBOCK POWER & LIGHT-WADSWORTH (SHIH T101038) 230/69/13.5KV TRANSFORMER CKT 1
FDNS	00NR	0	25SP	G15_077	FROM->TO	LUBBOCK POWER & LIGHT-HOLLY PLANT (SHIH T101039) 230/69/13.5KV TRANSFORMER CKT 1	224	224	0.03267	101.8956	LUBBOCK POWER & LIGHT-WADSWORTH (SHIH T101038) 230/69/13.5KV TRANSFORMER CKT 1
FDNSLock	06ALL	0	20WP	G15_077		Non-Converged Contingency	1792	1792	0.16971	-	BORDER 7345.00 - CHISHOLM7 345.00 345KV CKT 1
FDNSLock	06ALL	0	20WP	G15_077		Non-Converged Contingency	1792	1792	0.16971	-	BORDER 7345.00 - CHISHOLM7 345.00 345KV CKT 2
FDNSLock	06ALL	0	20WP	G15_077		Non-Converged Contingency	439	439	0.06171	-	CHISHOLM6 230.00 - ELK CITY 230KV 230KV CKT 1
FDNS	06ALL	0	20WP	G15_077	FROM->TO	POTTER COUNTY INTERCHANGE (WAUK 90343-A) 345/230/13.2KV TRANSFORMER CKT 1	560	560	0.14129	101.9937	BASE CASE
FDNS	06ALL	0	20WP	G15_077	FROM->TO	POTTER COUNTY INTERCHANGE (WAUK 90343-A) 345/230/13.2KV TRANSFORMER CKT 1	560	560	0.14129	100.9471	BASE CASE
FDNS	06ALL	0	17SP	G15_077	FROM->TO	SUNDOWN INTERCHANGE - WOLFFORTH INTERCHANGE 230KV CKT 1	318.7	350.57	0.24897	100	TOLK STATION EAST - TUCO INTERCHANGE 230KV CKT 1
FDNS	06ALL	0	17SP	G15_077	FROM->TO	SUNDOWN INTERCHANGE - WOLFFORTH INTERCHANGE 230KV CKT 1	318.7	350.57	0.24897	100	TOLK STATION EAST - TUCO INTERCHANGE 230KV CKT 1
FDNS	06ALL	0	20SP	G15_077	FROM->TO	TUCO INTERCHANGE - TUCO_2 230.00 230KV CKT 1	497	547	0.35143	176.1131	TUCO INTERCHANGE - TUCO_2 345.00 345KV CKT 1
FDNS	06ALL	0	17SP	G15_077	FROM->TO	TUCO INTERCHANGE - TUCO_2 230.00 230KV CKT 1	497	547	0.32347	172.1789	TUCO INTERCHANGE - TUCO_2 345.00 345KV CKT 1
FDNS	06NR	0	17G	G15_077	FROM->TO	TUCO INTERCHANGE - TUCO_2 230.00 230KV CKT 1	497	547	0.09813	120.0923	TUCO INTERCHANGE - TUCO_2 345.00 345KV CKT 1

SOLUTION	GROUP	SCENARIO	SEASON	SOURCE	DIRECTION	MONITORED ELEMENT	RATEA (MVA)	RATEB(MVA)	TDF	TC%LOADING (% MVA)	CONTINGENCY
FDNS	06NR	0	20L	G15_077	FROM->TO	TUCO INTERCHANGE - TUCO_2 230.00 230KV CKT 1	497	547	0.1255	110.6573	TUCO INTERCHANGE - TUCO_2 345.00 345KV CKT 1
FDNS	06ALL	0	25SP	G15_077	FROM->TO	TUCO INTERCHANGE - TUCO_2 230.00 230KV CKT 1	497	547	0.36201	101.2227615	TUCO INTERCHANGE - TUCO_2 345.00 345KV CKT 1
FDNS	06ALL	0	20SP	G15_077	FROM->TO	TUCO_2 345.00 (TUCO_2 XFMR) 345/230/13.2KV TRANSFORMER CKT 1	560	560	0.30625	168.9327	TUCO INTERCHANGE - TUCO_2 345.00 345KV CKT 1
FDNS	06ALL	0	17SP	G15_077	FROM->TO	TUCO_2 345.00 (TUCO_2 XFMR) 345/230/13.2KV TRANSFORMER CKT 1	560	560	0.30241	168.0719	TUCO INTERCHANGE - TUCO_2 345.00 345KV CKT 1
FDNS	06ALL	0	20SP	G15_077	FROM->TO	TUCO_2 345.00 (TUCO_2 XFMR) 345/230/13.2KV TRANSFORMER CKT 1	560	560	0.30625	162.4281	TUCO INTERCHANGE - TUCO_2 345.00 345KV CKT 1
FDNS	06ALL	0	17SP	G15_077	FROM->TO	TUCO_2 345.00 (TUCO_2 XFMR) 345/230/13.2KV TRANSFORMER CKT 1	560	560	0.30241	161.5424	TUCO INTERCHANGE - TUCO_2 345.00 345KV CKT 1
FDNS	06NR	0	17G	G15_077	FROM->TO	TUCO_2 345.00 (TUCO_2 XFMR) 345/230/13.2KV TRANSFORMER CKT 1	560	560	0.04143	114.7643	TUCO INTERCHANGE - TUCO_2 345.00 345KV CKT 1
FDNS	06NR	0	17G	G15_077	FROM->TO	TUCO_2 345.00 (TUCO_2 XFMR) 345/230/13.2KV TRANSFORMER CKT 1	560	560	0.04143	111.8684	TUCO INTERCHANGE - TUCO_2 345.00 345KV CKT 1
FDNS	06NR	0	20L	G15_077	FROM->TO	TUCO_2 345.00 (TUCO_2 XFMR) 345/230/13.2KV TRANSFORMER CKT 1	560	560	0.04813	110.8936	TUCO INTERCHANGE - TUCO_2 345.00 345KV CKT 1
FDNS	06NR	0	20L	G15_077	FROM->TO	TUCO_2 345.00 (TUCO_2 XFMR) 345/230/13.2KV TRANSFORMER CKT 1	560	560	0.04813	108.3383	TUCO INTERCHANGE - TUCO_2 345.00 345KV CKT 1
FDNS	06ALL	0	17G	G15_077	FROM->TO	WOLFFORTH INTERCHANGE - YUMA INTERCHANGE 115KV CKT 1	119.51	153.97	0.29061	103.043	LUBBOCK SOUTH INTERCHANGE - WOLFFORTH INTERCHANGE 230KV CKT 1
FDNS	06ALL	0	17G	G15_077	FROM->TO	WOLFFORTH INTERCHANGE - YUMA INTERCHANGE 115KV CKT 1	119.51	153.97	0.29061	103.043	LUBBOCK SOUTH INTERCHANGE - WOLFFORTH INTERCHANGE 230KV CKT 1
FDNS	06NR	2	17G	G15_077	TO->FROM	AMARILLO SOUTH INTERCHANGE - G15031_T 230.00 230KV CKT 1	318.7	350.57	0.10022	103.4449	NEWHART 230 - POTTER COUNTY INTERCHANGE 230KV CKT 1
FDNS	06NR	2	17G	G15_077	FROM->TO	BUSHLAND INTERCHANGE - HILLSIDE 115KV CKT 1	159	160	0.04215	118.1849	BUSHLAND INTERCHANGE - POTTER COUNTY INTERCHANGE 230KV CKT 1
FDNS	06NR	2	17G	G15_077	FROM->TO	BUSHLAND INTERCHANGE - HILLSIDE 115KV CKT 1	159	160	0.04215	118.1849	BUSHLAND INTERCHANGE - POTTER COUNTY INTERCHANGE 230KV CKT 1
FDNS	06NR	2	17G	G15_077	FROM->TO	BUSHLAND INTERCHANGE - POTTER COUNTY INTERCHANGE 230KV CKT 1	318.7	350.57	0.0859	103.6906	NEWHART 230 - POTTER COUNTY INTERCHANGE 230KV CKT 1
FDNS	06NR	2	17G	G15_077	FROM->TO	BUSHLAND INTERCHANGE (WH 7001795) 230/115/13.2KV TRANSFORMER CKT 1	168	168	0.04215	116.5462	BUSHLAND INTERCHANGE - POTTER COUNTY INTERCHANGE 230KV CKT 1
FDNS	06NR	2	17G	G15_077	FROM->TO	BUSHLAND INTERCHANGE (WH 7001795) 230/115/13.2KV TRANSFORMER CKT 1	168	168	0.04215	116.5462	BUSHLAND INTERCHANGE - POTTER COUNTY INTERCHANGE 230KV CKT 1
FDNS	06NR	2	17G	G15_077	FROM->TO	BUSHLAND INTERCHANGE (WH 7001795) 230/115/13.2KV TRANSFORMER CKT 1	168	168	0.04215	114.0422	BUSHLAND INTERCHANGE - POTTER COUNTY INTERCHANGE 230KV CKT 1
FDNS	06NR	2	17G	G15_077	FROM->TO	BUSHLAND INTERCHANGE (WH 7001795) 230/115/13.2KV TRANSFORMER CKT 1	168	168	0.04215	114.0422	BUSHLAND INTERCHANGE - POTTER COUNTY INTERCHANGE 230KV CKT 1
FDNS	06NR	2	17G	G15_077	FROM->TO	CANYON E_TP3115.00 - RANDALL COUNTY INTERCHANGE 115KV CKT 1	96	96	0.03476	100.8119	BUSHLAND INTERCHANGE - DEAF SMITH COUNTY INTERCHANGE 230KV CKT 1
FDNS	06NR	2	17G	G15_077	FROM->TO	CANYON E_TP3115.00 - RANDALL COUNTY INTERCHANGE 115KV CKT 1	96	96	0.03476	100.8119	BUSHLAND INTERCHANGE - DEAF SMITH COUNTY INTERCHANGE 230KV CKT 1
FDNS	06NR	2	17G	G15_077	TO->FROM	CANYON WEST SUB - DAWN SUB 115KV CKT 1	96	96	0.03476	127.5172	BUSHLAND INTERCHANGE - DEAF SMITH COUNTY INTERCHANGE 230KV CKT 1
FDNS	06NR	2	17G	G15_077	TO->FROM	CANYON WEST SUB - DAWN SUB 115KV CKT 1	96	96	0.03476	127.5172	BUSHLAND INTERCHANGE - DEAF SMITH COUNTY INTERCHANGE 230KV CKT 1
FDNS	06NR	2	17G	G15_077	FROM->TO	CASTRO COUNTY INTERCHANGE - DEAF SMITH REC-#21 115KV CKT 1	159	174	0.03251	106.0645	DEAF SMITH COUNTY INTERCHANGE - G15039_T 230.00 230KV CKT 1
FDNS	06ALL	2	20SP	G15_077	FROM->TO	CHISHOLM6 230.00 - ELK CITY 230KV 230KV CKT 1	353	353	0.06343	103.9805	BASE CASE
FDNS	06ALL	2	17SP	G15_077	FROM->TO	CHISHOLM6 230.00 - ELK CITY 230KV 230KV CKT 1	353	353	0.06353	101.7938	BASE CASE
FDNS	06ALL	2	20L	G15_077	TO->FROM	CIMARRON - MINCO 345KV CKT 1	956	956	0.21411	140.1322	G14-057T 345.00 - SUNNYSIDE 345KV CKT 1
FDNS	06ALL	2	20L	G15_077	TO->FROM	CIMARRON - MINCO 345KV CKT 1	956	956	0.21411	133.5433	G14-057T 345.00 - LAWTON EASTSIDE 345KV CKT 1
FDNS	06ALL	2	17G	G15_077	TO->FROM	CIMARRON - MINCO 345KV CKT 1	956	956	0.23788	131.7687	G14-057T 345.00 - SUNNYSIDE 345KV CKT 1
FDNS	06ALL	2	20WP	G15_077	TO->FROM	CIMARRON - MINCO 345KV CKT 1	956	956	0.24157	130.9595	G14-057T 345.00 - SUNNYSIDE 345KV CKT 1
FDNS	06ALL	2	17G	G15_077	TO->FROM	CIMARRON - MINCO 345KV CKT 1	956	956	0.23788	126.2954	G14-057T 345.00 - LAWTON EASTSIDE 345KV CKT 1
FDNS	06ALL	2	20WP	G15_077	TO->FROM	CIMARRON - MINCO 345KV CKT 1	956	956	0.24157	125.3296	G14-057T 345.00 - LAWTON EASTSIDE 345KV CKT 1
FDNS	06ALL	2	16WP	G15_077	TO->FROM	CIMARRON - MINCO 345KV CKT 1	956	956	0.24443	123.9324	G14-057T 345.00 - SUNNYSIDE 345KV CKT 1
FDNS	06ALL	2	17SP	G15_077	TO->FROM	CIMARRON - MINCO 345KV CKT 1	956	956	0.24306	123.0412	G14-057T 345.00 - SUNNYSIDE 345KV CKT 1
FDNS	06ALL	2	20SP	G15_077	TO->FROM	CIMARRON - MINCO 345KV CKT 1	956	956	0.24777	120.4683	G14-057T 345.00 - SUNNYSIDE 345KV CKT 1
FDNS	06ALL	2	16WP	G15_077	TO->FROM	CIMARRON - MINCO 345KV CKT 1	956	956	0.24443	118.3934	G14-057T 345.00 - LAWTON EASTSIDE 345KV CKT 1
FDNS	06ALL	2	17SP	G15_077	TO->FROM	CIMARRON - MINCO 345KV CKT 1	956	956	0.24306	117.7499	G14-057T 345.00 - LAWTON EASTSIDE 345KV CKT 1
FDNS	06ALL	2	20SP	G15_077	TO->FROM	CIMARRON - MINCO 345KV CKT 1	956	956	0.24777	115.0256	G14-057T 345.00 - LAWTON EASTSIDE 345KV CKT 1
FDNS	06ALL	2	17G	G15_077	TO->FROM	CIMARRON - MINCO 345KV CKT 1	956	956	0.2027	111.0722	MATHWSN7 345.00 - TATONGA7 345.00 345KV CKT 1
FDNS	06ALL	2	20WP	G15_077	TO->FROM	CIMARRON - MINCO 345KV CKT 1	956	956	0.20335	110.8109	MATHWSN7 345.00 - TATONGA7 345.00 345KV CKT 1
FDNS	06ALL	2	20L	G15_077	TO->FROM	CIMARRON - MINCO 345KV CKT 1	956	956	0.21931	107.6011	CHISHOLM7 345.00 - WOODWARD DISTRICT EHV 345KV CKT 1
FDNS	06ALL	2	17G	G15_077	TO->FROM	CIMARRON - MINCO 345KV CKT 1	956	956	0.23402	107.4004	CHISHOLM7 345.00 - WOODWARD DISTRICT EHV 345KV CKT 1
FDNS	06ALL	2	20WP	G15_077	TO->FROM	CIMARRON - MINCO 345KV CKT 1	956	956	0.20335	105.5266	G11_051T 345.00 - TATONGA7 345.00 345KV CKT 1
FDNSLock	06ALL	2	17G	G15_077	TO->FROM	CIMARRON - MINCO 345KV CKT 1	956	956	0.2027	105.1772	G11_051T 345.00 - TATONGA7 345.00 345KV CKT 1
FDNS	06ALL	2	17SP	G15_077	TO->FROM	CIMARRON - MINCO 345KV CKT 1	956	956	0.20713	104.7953	MATHWSN7 345.00 - TATONGA7 345.00 345KV CKT 1
FDNS	06ALL	2	20SP	G15_077	TO->FROM	CIMARRON - MINCO 345KV CKT 1	956	956	0.21008	104.2231	MATHWSN7 345.00 - TATONGA7 345.00 345KV CKT 1
FDNS	06ALL	2	16WP	G15_077	TO->FROM	CIMARRON - MINCO 345KV CKT 1	956	956	0.20769	104.0692	MATHWSN7 345.00 - TATONGA7 345.00 345KV CKT 1
FDNS	06ALL	2	20WP	G15_077	TO->FROM	CIMARRON - MINCO 345KV CKT 1	956	956	0.20335	103.9402	G11_051T 345.00 - WOODWARD DISTRICT EHV 345KV CKT 1
FDNS	06ALL	2	20WP	G15_077	TO->FROM	CIMARRON - MINCO 345KV CKT 1	956	956	0.24239	103.712	CHISHOLM7 345.00 - WOODWARD DISTRICT EHV 345KV CKT 1
FDNSLock	06ALL	2	17G	G15_077	TO->FROM	CIMARRON - MINCO 345KV CKT 1	956	956	0.2027	103.655	G11_051T 345.00 - WOODWARD DISTRICT EHV 345KV CKT 1
FDNS	06ALL	2	20SP	G15_077	TO->FROM	CIMARRON - MINCO 345KV CKT 1	956	956	0.24933	102.1101	CHISHOLM7 345.00 - WOODWARD DISTRICT EHV 345KV CKT 1
FDNS	06ALL	2	17SP	G15_077	TO->FROM	CIMARRON - MINCO 345KV CKT 1	956	956	0.24281	100.969	CHISHOLM7 345.00 - WOODWARD DISTRICT EHV 345KV CKT 1
FDNS	06ALL	2	17SP	G15_077	TO->FROM	CIMARRON - MINCO 345KV CKT 1	956	956	0.20713	99.6	G11_051T 345.00 - TATONGA7 345.00 345KV CKT 1
FDNS	06NR	2	17G	G15_077	TO->FROM	COULTER INTERCHANGE - HILLSIDE 115KV CKT 1	159	159	0.04215	113.2181	BUSHLAND INTERCHANGE - POTTER COUNTY INTERCHANGE 230KV CKT 1
FDNS	06NR	2	17G	G15_077	TO->FROM	COULTER INTERCHANGE - HILLSIDE 115KV CKT 1	159	159	0.04215	113.2181	BUSHLAND INTERCHANGE - POTTER COUNTY INTERCHANGE 230KV CKT 1
FDNS	06NR	2	17G	G15_077	TO->FROM	DAWN SUB - Panda Energy Substation Hereford 115KV CKT 1	96	96	0.03476	130.9313	BUSHLAND INTERCHANGE - DEAF SMITH COUNTY INTERCHANGE 230KV CKT 1
FDNS	06NR	2	17G	G15_077	TO->FROM	DAWN SUB - Panda Energy Substation Hereford 115KV CKT 1	96	96	0.03476	130.9313	BUSHLAND INTERCHANGE - DEAF SMITH COUNTY INTERCHANGE 230KV CKT 1
FDNS	06NR	2	17G	G15_077	TO->FROM	DEAF SMITH COUNTY INTERCHANGE - DEAF SMITH REC-#21 115KV CKT 1	159	174	0.03251	100.9586	DEAF SMITH COUNTY INTERCHANGE - G15039_T 230.00 230KV CKT 1
FDNS	06ALL	2	20SP	G15_077	TO->FROM	DEAF SMITH COUNTY INTERCHANGE - G15039_T 230.00 230KV CKT 1	318.7	350.57	0.10717	106.1518	BASE CASE
FDNS	06NR	2	17G	G15_077	TO->FROM	DEAF SMITH COUNTY INTERCHANGE - G15039_T 230.00 230KV CKT 1	318.7	350.57	0.08961	104.2484	NEWHART 230 - PLANT X STATION 230KV CKT 1
FDNS	06ALL	2	17SP	G15_077	TO->FROM	DEAF SMITH COUNTY INTERCHANGE - G15039_T 230.00 230KV CKT 1	318.7	350.57	0.12425	104.2255	BASE CASE
FDNS	06NR	2	17G	G15_077	TO->FROM	DEAF SMITH COUNTY INTERCHANGE - G15039_T 230.00 230KV CKT 1	318.7	350.57	0.08688	103.9799	NEWHART 230 - POTTER COUNTY INTERCHANGE 230KV CKT 1
FDNS	06NR	2	17G	G15_077	TO->FROM	DEAF SMITH COUNTY INTERCHANGE - G15039_T 230.00 230KV CKT 1	318.7	350.57	0.08554	102.5424	AMARILLO SOUTH INTERCHANGE - G15031_T 230.00 230KV CKT 1
FDNS	06NR	2	17G	G15_077	FROM->TO	DEAF SMITH COUNTY INTERCHANGE - Panda Energy Substation Hereford 115KV CKT 1	96	96	0.03476	136.0663	BUSHLAND INTERCHANGE - DEAF SMITH COUNTY INTERCHANGE 230KV CKT 1
FDNS	06NR	2	17G	G15_077	FROM->TO	DEAF SMITH COUNTY INTERCHANGE - Panda Energy Substation Hereford 115KV CKT 1	96	96	0.03476	136.0663	BUSHLAND INTERCHANGE - DEAF SMITH COUNTY INTERCHANGE 230KV CKT 1
FDNS	06ALL	2	20L	G15_077	TO->FROM	G14-057T 345.00 - LAWTON EASTSIDE 345KV CKT 1	717	789	0.10432	105.4406	BASE CASE
FDNS	06ALL	2	20L	G15_077	FROM->TO	G14-057T 345.00 - SUNNYSIDE 345KV CKT 1	717	789	0.10432	118.6576	BASE CASE
FDNS	06ALL	2	20WP	G15_077	FROM->TO	G14-057T 345.00 - SUNNYSIDE 345KV CKT 1	717	789	0.12792	106.4822	BASE CASE
FDNS	06ALL	2	17G	G15_077	FROM->TO	G14-057T 345.00 - SUNNYSIDE 345KV CKT 1	717	789	0.12671	105.8626	BASE CASE
FDNS	06ALL	2	16WP	G15_077	FROM->TO	G14-057T 345.00 - SUNNYSIDE 345KV CKT 1	717	789	0.13001	104.4384	BASE CASE
FDNS	06NR	2	20L	G15_077	FROM->TO	G14-074T 345.00 - OKLAUNION 345KV CKT 1	1022	1124	0.05487	106.9322	BASE CASE
FDNS	06NR	2	17G	G15_077	FROM->TO	G14-074T 345.00 - OKLAUNION 345KV CKT 1	1022	1124	0.04595	102.9455	BASE CASE
FDNS	06NR	2	20L	G15_077	FROM->TO	G14-074T 345.00 - OKLAUNION 345KV CKT 1	1022	1124	0.05228	102.2532	CHISHOLM7 345.00 - GRACEMONT 345KV CKT 1
FDNS	06NR	2	20L	G15_077	FROM->TO	G14-074T 345.00 - OKLAUNION 345KV CKT 1	1022	1124	0.05228	101.8896	CHISHOLM7 345.00 () 345/230/13.2KV TRANSFORMER CKT 1
FDNS	06NR	2	20L	G15_077	FROM->TO	G14-074T 345.00 - OKLAUNION 345KV CKT 1	1022	1124	0.05799	101.4902	TUCO INTERCHANGE - TUCO_2 345.00 345KV CKT 1
FDNS	06NR	2	20L	G15_077	FROM->TO	G14-074T 345.00 - OKLAUNION 345KV CKT 1	1022	1124	0.06373	101.2851	BUSHLAND INTERCHANGE - DEAF SMITH COUNTY INTERCHANGE 230KV CKT 1
FDNS	06NR	2	20L	G15_077	FROM->TO	G14-074T 345.00 - OKLAUNION 345KV CKT 1	1022	1124	0.06373	101.2851	BUSHLAND INTERCHANGE - DEAF SMITH COUNTY INTERCHANGE 230KV CKT 1
FDNS	06NR	2	20L	G15_077	FROM->TO	G14-074T 345.00 - OKLAUNION 345KV CKT 1	1022	1124	0.05462	101.2671	MOORE COUNTY INTERCHANGE - POTTER COUNTY INTERCHANGE 230KV CKT 1

SOLUTION	GROUP	SCENARIO	SEASON	SOURCE	DIRECTION	MONITORED ELEMENT	RATEA (MVA)	RATEB(MVA)	TDF	TC%LOADING (% MVA)	CONTINGENCY
FDNS	06NR	2	20L	G15_077	FROM->TO	G14-074T 345.00 - OKLAUNION 345KV CKT 1	1022	1124	0.05462	101.2671	MOORE COUNTY INTERCHANGE - POTTER COUNTY INTERCHANGE 230KV CKT 1
FDNS	06NR	2	20L	G15_077	FROM->TO	G14-074T 345.00 - OKLAUNION 345KV CKT 1	1022	1124	0.05397	101.2654	G11-14T 345.00 - WOODWARD DISTRICT EHV 345KV CKT 1
FDNS	06NR	2	20L	G15_077	FROM->TO	G14-074T 345.00 - OKLAUNION 345KV CKT 1	1022	1124	0.05397	101.2654	G11-14T 345.00 - WOODWARD DISTRICT EHV 345KV CKT 2
FDNS	06ALL	2	20L	G15_077	FROM->TO	GRACEMONT - MINCO 345KV CKT 1	1195	1195	0.21411	101.0673	G14-057T 345.00 - SUNNYSIDE 345KV CKT 1
FDNS	00NR	2	25SP	G15_077	FROM->TO	Hitchland Interchange (SIEM 8743067) 345/230/13.2KV TRANSFORMER CKT 2	560	644	0.02991	101.9783	Hitchland Interchange (H TB80155502) 345/230/13.2KV TRANSFORMER CKT 1
FDNS	00NR	2	25SP	G15_077	FROM->TO	Hitchland Interchange (SIEM 8743067) 345/230/13.2KV TRANSFORMER CKT 2	560	644	0.02991	101.9783	Hitchland Interchange (H TB80155502) 345/230/13.2KV TRANSFORMER CKT 1
FDNS	00NR	2	25SP	G15_077	FROM->TO	Hitchland Interchange (SIEM 8743067) 345/230/13.2KV TRANSFORMER CKT 2	560	644	0.02991	100.1637	Hitchland Interchange (H TB80155502) 345/230/13.2KV TRANSFORMER CKT 1
FDNS	00NR	2	25SP	G15_077	FROM->TO	Hitchland Interchange (SIEM 8743067) 345/230/13.2KV TRANSFORMER CKT 2	560	644	0.02991	100.1637	Hitchland Interchange (H TB80155502) 345/230/13.2KV TRANSFORMER CKT 1
FDNS	00NR	2	25SP	G15_077	FROM->TO	LUBBOCK POWER & LIGHT-HOLLY PLANT (SHIH T101039) 230/69/13.5KV TRANSFORMER CKT 1	224	224	0.0355	104.7613	LUBBOCK POWER & LIGHT-SOUTHEAST - LUBBOCK SOUTH INTERCHANGE 230KV CKT 1
FDNS	00NR	2	25SP	G15_077	FROM->TO	LUBBOCK POWER & LIGHT-HOLLY PLANT (SHIH T101039) 230/69/13.5KV TRANSFORMER CKT 1	224	224	0.0355	104.7484	P12:LPL:SPS:K64.1.LP-SE.LUBBS
FDNS	00NR	2	25SP	G15_077	FROM->TO	LUBBOCK POWER & LIGHT-HOLLY PLANT (SHIH T101039) 230/69/13.5KV TRANSFORMER CKT 1	224	224	0.03267	102.133	P12:230:LPL:K57.1.LP-WADS.LUBBE
FDNS	00NR	2	25SP	G15_077	FROM->TO	LUBBOCK POWER & LIGHT-HOLLY PLANT (SHIH T101039) 230/69/13.5KV TRANSFORMER CKT 1	224	224	0.03267	102.1329	LUBBOCK POWER & LIGHT-WADSWORTH (SHIH T101038) 230/69/13.5KV TRANSFORMER CKT 1
FDNS	00NR	2	25SP	G15_077	FROM->TO	LUBBOCK POWER & LIGHT-HOLLY PLANT (SHIH T101039) 230/69/13.5KV TRANSFORMER CKT 1	224	224	0.03267	102.1329	LUBBOCK POWER & LIGHT-WADSWORTH (SHIH T101038) 230/69/13.5KV TRANSFORMER CKT 1
FDNS	00NR	2	25SP	G15_077	FROM->TO	LUBBOCK POWER & LIGHT-HOLLY PLANT (SHIH T101039) 230/69/13.5KV TRANSFORMER CKT 1	224	224	0.03267	101.829	LUBBOCK EAST INTERCHANGE - LUBBOCK POWER & LIGHT-WADSWORTH 230KV CKT 1
FDNSLock	06ALL	2	20WP	G15_077		P12:230:AEPW:ELKCITY6:SWEETWT6	0	0	0.11267	9999	BASE CASE
FDNS	06ALL	2	17SP	G15_077	FROM->TO	SUNDOWN INTERCHANGE - WOLFFORTH INTERCHANGE 230KV CKT 1	318.7	350.57	0.24909	101.6908	TOLK STATION EAST - TUCO INTERCHANGE 230KV CKT 1
FDNS	06ALL	2	17SP	G15_077	FROM->TO	SUNDOWN INTERCHANGE - WOLFFORTH INTERCHANGE 230KV CKT 1	318.7	350.57	0.24909	101.6908	TOLK STATION EAST - TUCO INTERCHANGE 230KV CKT 1
FDNS	06ALL	2	20L	G15_077	FROM->TO	TUCO INTERCHANGE - TUCO_2 230.00 230KV CKT 1	497	547	0.31442	181.2199	TUCO INTERCHANGE - TUCO_2 345.00 345KV CKT 1
FDNS	06ALL	2	17G	G15_077	FROM->TO	TUCO INTERCHANGE - TUCO_2 230.00 230KV CKT 1	497	547	0.30208	176.0864	TUCO INTERCHANGE - TUCO_2 345.00 345KV CKT 1
FDNS	06ALL	2	20SP	G15_077	FROM->TO	TUCO INTERCHANGE - TUCO_2 230.00 230KV CKT 1	497	547	0.35156	166.2483	TUCO INTERCHANGE - TUCO_2 345.00 345KV CKT 1
FDNS	06ALL	2	17SP	G15_077	FROM->TO	TUCO INTERCHANGE - TUCO_2 230.00 230KV CKT 1	497	547	0.3236	159.9768	TUCO INTERCHANGE - TUCO_2 345.00 345KV CKT 1
FDNS	06ALL	2	20WP	G15_077	FROM->TO	TUCO INTERCHANGE - TUCO_2 230.00 230KV CKT 1	552	608	0.34608	155.2742	TUCO INTERCHANGE - TUCO_2 345.00 345KV CKT 1
FDNS	06ALL	2	16WP	G15_077	FROM->TO	TUCO INTERCHANGE - TUCO_2 230.00 230KV CKT 1	552	608	0.31171	142.7524	TUCO INTERCHANGE - TUCO_2 345.00 345KV CKT 1
FDNS	06NR	2	20L	G15_077	FROM->TO	TUCO INTERCHANGE - TUCO_2 230.00 230KV CKT 1	497	547	0.1255	110.6574	TUCO INTERCHANGE - TUCO_2 345.00 345KV CKT 1
FDNS	06NR	2	17G	G15_077	FROM->TO	TUCO INTERCHANGE - TUCO_2 230.00 230KV CKT 1	497	547	0.09813	106.5066	TUCO INTERCHANGE - TUCO_2 345.00 345KV CKT 1
FDNS	06ALL	2	25SP	G15_077	FROM->TO	TUCO INTERCHANGE - TUCO_2 230.00 230KV CKT 1	497	547	0.36202	102.0482993	TUCO INTERCHANGE - TUCO_2 345.00 345KV CKT 1
FDNS	06ALL	2	16WP	G15_077	FROM->TO	TUCO INTERCHANGE (GE M1022338) 345/230/13.2KV TRANSFORMER CKT 1	560	560	0.29028	120.5418	TUCO INTERCHANGE (SIEM 8743066) 345/230/13.2KV TRANSFORMER CKT 2
FDNS	06ALL	2	16WP	G15_077	FROM->TO	TUCO INTERCHANGE (GE M1022338) 345/230/13.2KV TRANSFORMER CKT 1	560	560	0.29028	120.5418	TUCO INTERCHANGE (SIEM 8743066) 345/230/13.2KV TRANSFORMER CKT 2
FDNS	06ALL	2	16WP	G15_077	FROM->TO	TUCO INTERCHANGE (GE M1022338) 345/230/13.2KV TRANSFORMER CKT 1	560	560	0.27967	120.3223	TUCO_2 345.00 (TUCO_2 XFMR) 345/230/13.2KV TRANSFORMER CKT 1
FDNS	06ALL	2	16WP	G15_077	FROM->TO	TUCO INTERCHANGE (GE M1022338) 345/230/13.2KV TRANSFORMER CKT 1	560	560	0.29028	118.6764	TUCO INTERCHANGE (SIEM 8743066) 345/230/13.2KV TRANSFORMER CKT 2
FDNS	06ALL	2	16WP	G15_077	FROM->TO	TUCO INTERCHANGE (GE M1022338) 345/230/13.2KV TRANSFORMER CKT 1	560	560	0.29028	118.6764	TUCO INTERCHANGE (SIEM 8743066) 345/230/13.2KV TRANSFORMER CKT 2
FDNS	06ALL	2	16WP	G15_077	FROM->TO	TUCO INTERCHANGE (GE M1022338) 345/230/13.2KV TRANSFORMER CKT 1	560	560	0.27967	118.6764	TUCO_2 345.00 (TUCO_2 XFMR) 345/230/13.2KV TRANSFORMER CKT 1
FDNS	06ALL	2	17G	G15_077	FROM->TO	TUCO INTERCHANGE (GE M1022338) 345/230/13.2KV TRANSFORMER CKT 1	560	560	0.28065	114.4569	TUCO INTERCHANGE (SIEM 8743066) 345/230/13.2KV TRANSFORMER CKT 2
FDNS	06ALL	2	17G	G15_077	FROM->TO	TUCO INTERCHANGE (GE M1022338) 345/230/13.2KV TRANSFORMER CKT 1	560	560	0.27027	114.4414	TUCO_2 345.00 (TUCO_2 XFMR) 345/230/13.2KV TRANSFORMER CKT 1
FDNS	06ALL	2	17G	G15_077	FROM->TO	TUCO INTERCHANGE (GE M1022338) 345/230/13.2KV TRANSFORMER CKT 1	560	560	0.27027	112.333	TUCO_2 345.00 (TUCO_2 XFMR) 345/230/13.2KV TRANSFORMER CKT 1
FDNS	06ALL	2	17G	G15_077	FROM->TO	TUCO INTERCHANGE (GE M1022338) 345/230/13.2KV TRANSFORMER CKT 1	560	560	0.28065	112.1874	TUCO INTERCHANGE (SIEM 8743066) 345/230/13.2KV TRANSFORMER CKT 2
FDNS	06ALL	2	16WP	G15_077	FROM->TO	TUCO INTERCHANGE (GE M1022338) 345/230/13.2KV TRANSFORMER CKT 1	560	560	0.27635	103.9349	TUCO INTERCHANGE - TUCO_2 230.00 230KV CKT 1
FDNS	06ALL	2	16WP	G15_077	FROM->TO	TUCO INTERCHANGE (GE M1022338) 345/230/13.2KV TRANSFORMER CKT 1	560	560	0.27635	102.2603	TUCO INTERCHANGE - TUCO_2 230.00 230KV CKT 1
FDNS	06ALL	2	17G	G15_077	FROM->TO	TUCO INTERCHANGE (GE M1022338) 345/230/13.2KV TRANSFORMER CKT 1	560	560	0.26762	100.6861	TUCO INTERCHANGE - TUCO_2 230.00 230KV CKT 1
FDNS	06ALL	2	20L	G15_077	FROM->TO	TUCO_2 345.00 (TUCO_2 XFMR) 345/230/13.2KV TRANSFORMER CKT 1	560	560	0.26328	190.1451	TUCO INTERCHANGE - TUCO_2 345.00 345KV CKT 1
FDNS	06ALL	2	20WP	G15_077	FROM->TO	TUCO_2 345.00 (TUCO_2 XFMR) 345/230/13.2KV TRANSFORMER CKT 1	560	560	0.30007	189.4604	TUCO INTERCHANGE - TUCO_2 345.00 345KV CKT 1
FDNS	06ALL	2	17G	G15_077	FROM->TO	TUCO_2 345.00 (TUCO_2 XFMR) 345/230/13.2KV TRANSFORMER CKT 1	560	560	0.29066	187.4581	TUCO INTERCHANGE - TUCO_2 345.00 345KV CKT 1
FDNS	06ALL	2	20WP	G15_077	FROM->TO	TUCO_2 345.00 (TUCO_2 XFMR) 345/230/13.2KV TRANSFORMER CKT 1	560	560	0.30007	184.0471	TUCO INTERCHANGE - TUCO_2 345.00 345KV CKT 1
FDNS	06ALL	2	20L	G15_077	FROM->TO	TUCO_2 345.00 (TUCO_2 XFMR) 345/230/13.2KV TRANSFORMER CKT 1	560	560	0.26328	184.0031	TUCO INTERCHANGE - TUCO_2 345.00 345KV CKT 1
FDNS	06ALL	2	17G	G15_077	FROM->TO	TUCO_2 345.00 (TUCO_2 XFMR) 345/230/13.2KV TRANSFORMER CKT 1	560	560	0.29066	182.4703	TUCO INTERCHANGE - TUCO_2 345.00 345KV CKT 1
FDNS	06ALL	2	16WP	G15_077	FROM->TO	TUCO_2 345.00 (TUCO_2 XFMR) 345/230/13.2KV TRANSFORMER CKT 1	560	560	0.30118	175.5009	TUCO INTERCHANGE - TUCO_2 345.00 345KV CKT 1
FDNS	06ALL	2	16WP	G15_077	FROM->TO	TUCO_2 345.00 (TUCO_2 XFMR) 345/230/13.2KV TRANSFORMER CKT 1	560	560	0.30118	172.6087	TUCO INTERCHANGE - TUCO_2 345.00 345KV CKT 1
FDNS	06ALL	2	20SP	G15_077	FROM->TO	TUCO_2 345.00 (TUCO_2 XFMR) 345/230/13.2KV TRANSFORMER CKT 1	560	560	0.30639	166.4217	TUCO INTERCHANGE - TUCO_2 345.00 345KV CKT 1
FDNS	06ALL	2	17SP	G15_077	FROM->TO	TUCO_2 345.00 (TUCO_2 XFMR) 345/230/13.2KV TRANSFORMER CKT 1	560	560	0.30256	164.6979	TUCO INTERCHANGE - TUCO_2 345.00 345KV CKT 1
FDNS	06ALL	2	20SP	G15_077	FROM->TO	TUCO_2 345.00 (TUCO_2 XFMR) 345/230/13.2KV TRANSFORMER CKT 1	560	560	0.30639	163.5805	TUCO INTERCHANGE - TUCO_2 345.00 345KV CKT 1
FDNS	06ALL	2	17SP	G15_077	FROM->TO	TUCO_2 345.00 (TUCO_2 XFMR) 345/230/13.2KV TRANSFORMER CKT 1	560	560	0.30256	162.1713	TUCO INTERCHANGE - TUCO_2 345.00 345KV CKT 1
FDNS	06ALL	2	16WP	G15_077	FROM->TO	TUCO_2 345.00 (TUCO_2 XFMR) 345/230/13.2KV TRANSFORMER CKT 1	560	560	0.2521	112.6263	TUCO INTERCHANGE (GE M1022338) 345/230/13.2KV TRANSFORMER CKT 1
FDNS	06ALL	2	16WP	G15_077	FROM->TO	TUCO_2 345.00 (TUCO_2 XFMR) 345/230/13.2KV TRANSFORMER CKT 1	560	560	0.2521	112.6263	TUCO INTERCHANGE (GE M1022338) 345/230/13.2KV TRANSFORMER CKT 1
FDNS	06ALL	2	16WP	G15_077	FROM->TO	TUCO_2 345.00 (TUCO_2 XFMR) 345/230/13.2KV TRANSFORMER CKT 1	560	560	0.2521	111.4972	TUCO INTERCHANGE (GE M1022338) 345/230/13.2KV TRANSFORMER CKT 1
FDNS	06ALL	2	16WP	G15_077	FROM->TO	TUCO_2 345.00 (TUCO_2 XFMR) 345/230/13.2KV TRANSFORMER CKT 1	560	560	0.2521	111.4972	TUCO INTERCHANGE (GE M1022338) 345/230/13.2KV TRANSFORMER CKT 1
FDNS	06NR	2	20L	G15_077	FROM->TO	TUCO_2 345.00 (TUCO_2 XFMR) 345/230/13.2KV TRANSFORMER CKT 1	560	560	0.04813	110.8937	TUCO INTERCHANGE - TUCO_2 345.00 345KV CKT 1
FDNS	06NR	2	20L	G15_077	FROM->TO	TUCO_2 345.00 (TUCO_2 XFMR) 345/230/13.2KV TRANSFORMER CKT 1	560	560	0.04813	108.3383	TUCO INTERCHANGE - TUCO_2 345.00 345KV CKT 1
FDNS	06ALL	2	17G	G15_077	FROM->TO	TUCO_2 345.00 (TUCO_2 XFMR) 345/230/13.2KV TRANSFORMER CKT 1	560	560	0.24348	107.1719	TUCO INTERCHANGE (GE M1022338) 345/230/13.2KV TRANSFORMER CKT 1
FDNS	06NR	2	17G	G15_077	FROM->TO	TUCO_2 345.00 (TUCO_2 XFMR) 345/230/13.2KV TRANSFORMER CKT 1	560	560	0.04143	107.0023	TUCO INTERCHANGE - TUCO_2 345.00 345KV CKT 1
FDNS	06ALL	2	16WP	G15_077	FROM->TO	TUCO_2 345.00 (TUCO_2 XFMR) 345/230/13.2KV TRANSFORMER CKT 1	560	560	0.23567	105.8242	TUCO INTERCHANGE (SIEM 8743066) 345/230/13.2KV TRANSFORMER CKT 2
FDNS	06ALL	2	16WP	G15_077	FROM->TO	TUCO_2 345.00 (TUCO_2 XFMR) 345/230/13.2KV TRANSFORMER CKT 1	560	560	0.23567	105.8242	TUCO INTERCHANGE (SIEM 8743066) 345/230/13.2KV TRANSFORMER CKT 2
FDNS	06ALL	2	17G	G15_077	FROM->TO	TUCO_2 345.00 (TUCO_2 XFMR) 345/230/13.2KV TRANSFORMER CKT 1	560	560	0.24348	105.6097	TUCO INTERCHANGE (GE M1022338) 345/230/13.2KV TRANSFORMER CKT 1
FDNS	06ALL	2	16WP	G15_077	FROM->TO	TUCO_2 345.00 (TUCO_2 XFMR) 345/230/13.2KV TRANSFORMER CKT 1	560	560	0.23567	104.8168	TUCO INTERCHANGE (SIEM 8743066) 345/230/13.2KV TRANSFORMER CKT 2
FDNS	06ALL	2	16WP	G15_077	FROM->TO	TUCO_2 345.00 (TUCO_2 XFMR) 345/230/13.2KV TRANSFORMER CKT 1	560	560	0.23567	104.8168	TUCO INTERCHANGE (SIEM 8743066) 345/230/13.2KV TRANSFORMER CKT 2
FDNS	06NR	2	17G	G15_077	FROM->TO	TUCO_2 345.00 (TUCO_2 XFMR) 345/230/13.2KV TRANSFORMER CKT 1	560	560	0.04143	104.728	TUCO INTERCHANGE - TUCO_2 345.00 345KV CKT 1
FDNS	06ALL	2	17G	G15_077	FROM->TO	TUCO_2 345.00 (TUCO_2 XFMR) 345/230/13.2KV TRANSFORMER CKT 1	560	560	0.2276	100.7205	TUCO INTERCHANGE (SIEM 8743066) 345/230/13.2KV TRANSFORMER CKT 2
FDNS	06ALL	2	17G	G15_077	FROM->TO	WOLFFORTH INTERCHANGE - YUMA INTERCHANGE 115KV CKT 1	119.51	153.97	0.29078	103.3037	LUBBOCK SOUTH INTERCHANGE - WOLFFORTH INTERCHANGE 230KV CKT 1
FDNS	06ALL	2	17G	G15_077	FROM->TO	WOLFFORTH INTERCHANGE - YUMA INTERCHANGE 115KV CKT 1	119.51	153.97	0.29078	103.3037	LUBBOCK SOUTH INTERCHANGE - WOLFFORTH INTERCHANGE 230KV CKT 1
FDNS	06NR	3	17G	G15_077	TO->FROM	AMARILLO SOUTH INTERCHANGE - G15031_T 230.00 230KV CKT 1	318.7	350.57	0.10022	103.2239	NEWHART 230 - POTTER COUNTY INTERCHANGE 230KV CKT 1
FDNS	06NR	3	20L	G15_077	FROM->TO	BUSHLAND INTERCHANGE - HILLSIDE 115KV CKT 1	159	160	0.03923	108.1399	BUSHLAND INTERCHANGE - POTTER COUNTY INTERCHANGE 230KV CKT 1
FDNS	06NR	3	20L	G15_077	FROM->TO	BUSHLAND INTERCHANGE - HILLSIDE 115KV CKT 1	159	160	0.03923	108.1399	BUSHLAND INTERCHANGE - POTTER COUNTY INTERCHANGE 230KV CKT 1
FDNS	06NR	3	17G	G15_077	FROM->TO	BUSHLAND INTERCHANGE - HILLSIDE 115KV CKT 1	159	160	0.041	105.508	BUSHLAND INTERCHANGE - POTTER COUNTY INTERCHANGE 230KV CKT 1
FDNS	06NR	3	17G	G15_077	FROM->TO	BUSHLAND INTERCHANGE - HILLSIDE 115KV CKT 1	159	160	0.041	105.508	BUSHLAND INTERCHANGE - POTTER COUNTY INTERCHANGE 230KV CKT 1
FDNS	06NR	3	20L	G15_077	FROM->TO	BUSHLAND INTERCHANGE - POTTER COUNTY INTERCHANGE 230KV CKT 1	318.7	350.57	0.08313	102.6252	NEWHART 230 - POTTER COUNTY INTERCHANGE 230KV CKT 1
FDNS	06NR	3	20L	G15_077	FROM->TO	BUSHLAND INTERCHANGE (WH 7001795) 230/115/13.2KV TRANSFORMER CKT 1	168	168	0.03923	106.6189	BUSHLAND INTERCHANGE - POTTER COUNTY INTERCHANGE 230KV CKT 1
FDNS	06NR	3	20L	G15_077	FROM->TO	BUSHLAND INTERCHANGE (WH 7001795) 230/115/13.2KV TRANSFORMER CKT 1	168	168	0.03923	106.6189	BUSHLAND INTERCHANGE - POTTER COUNTY INTERCHANGE 230KV CKT 1
FDNS	06NR	3	17G	G15_077	FROM->TO	BUSHLAND INTERCHANGE (WH 7001795) 230/115/13.2KV TRANSFORMER CKT 1	168	168	0.041	104.9286	BUSHLAND INTERCHANGE - POTTER COUNTY INTERCHANGE 230KV CKT 1
FDNS	06NR	3	17G	G15_077	FROM->TO	BUSHLAND INTERCHANGE (WH 7001795) 230/115/13.2KV TRANSFORMER CKT 1	168	168	0.041	104.9286	BUSHLAND INTERCHANGE - POTTER COUNTY INTERCHANGE 230KV CKT 1
FDNS	06NR	3	20L	G15_077	FROM->TO	BUSHLAND INTERCHANGE (WH 7001795) 230/115/13.2KV TRANSFORMER CKT 1	168	168	0.03923	104.4653	BUSHLAND INTERCHANGE - POTTER COUNTY INTERCHANGE 230KV CKT 1

SOLUTION	GROUP	SCENARIO	SEASON	SOURCE	DIRECTION	MONITORED ELEMENT	RATEA (MVA)	RATEB(MVA)	TDF	TC%LOADING (% MVA)	CONTINGENCY
FDNS	06NR	3	20L	G15_077	FROM->TO	BUSHLAND INTERCHANGE (WH 7001795) 230/115/13.2KV TRANSFORMER CKT 1	168	168	0.03923	104.4653	BUSHLAND INTERCHANGE - POTTER COUNTY INTERCHANGE 230KV CKT 1
FDNS	06NR	3	17G	G15_077	FROM->TO	BUSHLAND INTERCHANGE (WH 7001795) 230/115/13.2KV TRANSFORMER CKT 1	168	168	0.041	102.648	BUSHLAND INTERCHANGE - POTTER COUNTY INTERCHANGE 230KV CKT 1
FDNS	06NR	3	17G	G15_077	FROM->TO	BUSHLAND INTERCHANGE (WH 7001795) 230/115/13.2KV TRANSFORMER CKT 1	168	168	0.041	102.648	BUSHLAND INTERCHANGE - POTTER COUNTY INTERCHANGE 230KV CKT 1
FDNS	06NR	3	17G	G15_077	TO->FROM	CANYON WEST SUB - DAWN SUB 115KV CKT 1	96	96	0.03355	109.382	BUSHLAND INTERCHANGE - DEAF SMITH COUNTY INTERCHANGE 230KV CKT 1
FDNS	06NR	3	17G	G15_077	TO->FROM	CANYON WEST SUB - DAWN SUB 115KV CKT 1	96	96	0.03355	109.382	BUSHLAND INTERCHANGE - DEAF SMITH COUNTY INTERCHANGE 230KV CKT 1
FDNS	06NR	3	20L	G15_077	FROM->TO	CASTRO COUNTY INTERCHANGE - DEAF SMITH REC-#21 115KV CKT 1	159	174	0.03273	101.2841	DEAF SMITH COUNTY INTERCHANGE - G15039_T 230.00 230KV CKT 1
FDNS	06NR	3	17G	G15_077	FROM->TO	CASTRO COUNTY INTERCHANGE - DEAF SMITH REC-#21 115KV CKT 1	159	174	0.03194	100.2799	DEAF SMITH COUNTY INTERCHANGE - G15039_T 230.00 230KV CKT 1
FDNS	06ALL	3	20SP	G15_077	FROM->TO	CHISHOLM6 230.00 - ELK CITY 230KV 230KV CKT 1	353	353	0.06362	104.1963	BASE CASE
FDNS	06ALL	3	17SP	G15_077	FROM->TO	CHISHOLM6 230.00 - ELK CITY 230KV 230KV CKT 1	353	353	0.06384	101.9728	BASE CASE
FDNS	06ALL	3	20L	G15_077	TO->FROM	CIMARRON - MINCO 345KV CKT 1	956	956	0.21738	140.6921	G14-057T 345.00 - SUNNYSIDE 345KV CKT 1
FDNS	06ALL	3	20L	G15_077	TO->FROM	CIMARRON - MINCO 345KV CKT 1	956	956	0.21738	134.2883	G14-057T 345.00 - LAWTON EASTSIDE 345KV CKT 1
FDNS	06ALL	3	17G	G15_077	TO->FROM	CIMARRON - MINCO 345KV CKT 1	956	956	0.2444	132.797	G14-057T 345.00 - SUNNYSIDE 345KV CKT 1
FDNS	06ALL	3	20WP	G15_077	TO->FROM	CIMARRON - MINCO 345KV CKT 1	956	956	0.24469	131.9094	G14-057T 345.00 - SUNNYSIDE 345KV CKT 1
FDNS	06ALL	3	17G	G15_077	TO->FROM	CIMARRON - MINCO 345KV CKT 1	956	956	0.2444	127.3481	G14-057T 345.00 - LAWTON EASTSIDE 345KV CKT 1
FDNS	06ALL	3	20WP	G15_077	TO->FROM	CIMARRON - MINCO 345KV CKT 1	956	956	0.24469	126.3057	G14-057T 345.00 - LAWTON EASTSIDE 345KV CKT 1
FDNS	06ALL	3	16WP	G15_077	TO->FROM	CIMARRON - MINCO 345KV CKT 1	956	956	0.25131	125.3645	G14-057T 345.00 - SUNNYSIDE 345KV CKT 1
FDNS	06ALL	3	17SP	G15_077	TO->FROM	CIMARRON - MINCO 345KV CKT 1	956	956	0.24883	124.3731	G14-057T 345.00 - SUNNYSIDE 345KV CKT 1
FDNS	06ALL	3	20SP	G15_077	TO->FROM	CIMARRON - MINCO 345KV CKT 1	956	956	0.2507	121.3286	G14-057T 345.00 - SUNNYSIDE 345KV CKT 1
FDNS	06ALL	3	16WP	G15_077	TO->FROM	CIMARRON - MINCO 345KV CKT 1	956	956	0.25131	119.9255	G14-057T 345.00 - LAWTON EASTSIDE 345KV CKT 1
FDNS	06ALL	3	17SP	G15_077	TO->FROM	CIMARRON - MINCO 345KV CKT 1	956	956	0.24883	118.8978	G14-057T 345.00 - LAWTON EASTSIDE 345KV CKT 1
FDNS	06ALL	3	20SP	G15_077	TO->FROM	CIMARRON - MINCO 345KV CKT 1	956	956	0.2507	116.0894	G14-057T 345.00 - LAWTON EASTSIDE 345KV CKT 1
FDNS	06ALL	3	20WP	G15_077	TO->FROM	CIMARRON - MINCO 345KV CKT 1	956	956	0.20556	111.5734	MATHWSN7 345.00 - TATONGA7 345.00 345KV CKT 1
FDNS	06ALL	3	20L	G15_077	TO->FROM	CIMARRON - MINCO 345KV CKT 1	956	956	0.22316	109.488	CHISHOLM7 345.00 - WOODWARD DISTRICT EHV 345KV CKT 1
FDNS	06ALL	3	17G	G15_077	TO->FROM	CIMARRON - MINCO 345KV CKT 1	956	956	0.24244	109.1031	CHISHOLM7 345.00 - WOODWARD DISTRICT EHV 345KV CKT 1
FDNS	06ALL	3	20WP	G15_077	TO->FROM	CIMARRON - MINCO 345KV CKT 1	956	956	0.20556	106.2571	G11_051T 345.00 - TATONGA7 345.00 345KV CKT 1
FDNS	06ALL	3	17G	G15_077	TO->FROM	CIMARRON - MINCO 345KV CKT 1	956	956	0.20716	106.016	G11_051T 345.00 - TATONGA7 345.00 345KV CKT 1
FDNS	06ALL	3	17SP	G15_077	TO->FROM	CIMARRON - MINCO 345KV CKT 1	956	956	0.21106	105.6361	MATHWSN7 345.00 - TATONGA7 345.00 345KV CKT 1
FDNS	06ALL	3	20WP	G15_077	TO->FROM	CIMARRON - MINCO 345KV CKT 1	956	956	0.24626	105.2058	CHISHOLM7 345.00 - WOODWARD DISTRICT EHV 345KV CKT 1
FDNS	06ALL	3	16WP	G15_077	TO->FROM	CIMARRON - MINCO 345KV CKT 1	956	956	0.21242	105.1594	MATHWSN7 345.00 - TATONGA7 345.00 345KV CKT 1
FDNS	06ALL	3	20SP	G15_077	TO->FROM	CIMARRON - MINCO 345KV CKT 1	956	956	0.21211	104.8651	MATHWSN7 345.00 - TATONGA7 345.00 345KV CKT 1
FDNS	06ALL	3	20WP	G15_077	TO->FROM	CIMARRON - MINCO 345KV CKT 1	956	956	0.20556	104.6601	G11_051T 345.00 - WOODWARD DISTRICT EHV 345KV CKT 1
FDNS	06ALL	3	17G	G15_077	TO->FROM	CIMARRON - MINCO 345KV CKT 1	956	956	0.20716	104.4511	G11_051T 345.00 - WOODWARD DISTRICT EHV 345KV CKT 1
FDNS	06ALL	3	20SP	G15_077	TO->FROM	CIMARRON - MINCO 345KV CKT 1	956	956	0.25304	103.3967	CHISHOLM7 345.00 - WOODWARD DISTRICT EHV 345KV CKT 1
FDNS	06ALL	3	17SP	G15_077	TO->FROM	CIMARRON - MINCO 345KV CKT 1	956	956	0.2503	102.6701	CHISHOLM7 345.00 - WOODWARD DISTRICT EHV 345KV CKT 1
FDNS	06ALL	3	17SP	G15_077	TO->FROM	CIMARRON - MINCO 345KV CKT 1	956	956	0.21106	100.4546	G11_051T 345.00 - TATONGA7 345.00 345KV CKT 1
FDNS	06ALL	3	20WP	G15_077	TO->FROM	CIMARRON - MINCO 345KV CKT 1	956	956	0.1969	100.2954	P12:138:WFEC:MSL03
FDNS	06ALL	3	16WP	G15_077	TO->FROM	CIMARRON - MINCO 345KV CKT 1	956	956	0.21242	99.8	G11_051T 345.00 - TATONGA7 345.00 345KV CKT 1
FDNS	06ALL	3	20SP	G15_077	TO->FROM	CIMARRON - MINCO 345KV CKT 1	956	956	0.21211	99.7	G11_051T 345.00 - TATONGA7 345.00 345KV CKT 1
FDNS	06ALL	3	17SP	G15_077	TO->FROM	CIMARRON - MINCO 345KV CKT 1	956	956	0.20142	99.6	P12:138:WFEC:MSL03
FDNS	06ALL	3	20SP	G15_077	TO->FROM	CIMARRON - MINCO 345KV CKT 1	956	956	0.2031	99.6	P12:138:WFEC:MSL03
FDNS	06NR	3	20L	G15_077	TO->FROM	COULTER INTERCHANGE - HILLSIDE 115KV CKT 1	159	159	0.03923	105.531	BUSHLAND INTERCHANGE - POTTER COUNTY INTERCHANGE 230KV CKT 1
FDNS	06NR	3	20L	G15_077	TO->FROM	COULTER INTERCHANGE - HILLSIDE 115KV CKT 1	159	159	0.03923	105.531	BUSHLAND INTERCHANGE - POTTER COUNTY INTERCHANGE 230KV CKT 1
FDNS	06NR	3	17G	G15_077	TO->FROM	COULTER INTERCHANGE - HILLSIDE 115KV CKT 1	159	159	0.041	100.454	BUSHLAND INTERCHANGE - POTTER COUNTY INTERCHANGE 230KV CKT 1
FDNS	06NR	3	17G	G15_077	TO->FROM	COULTER INTERCHANGE - HILLSIDE 115KV CKT 1	159	159	0.041	100.454	BUSHLAND INTERCHANGE - POTTER COUNTY INTERCHANGE 230KV CKT 1
FDNS	06NR	3	17G	G15_077	TO->FROM	DAWN SUB - Panda Energy Substation Hereford 115KV CKT 1	96	96	0.03355	112.7612	BUSHLAND INTERCHANGE - DEAF SMITH COUNTY INTERCHANGE 230KV CKT 1
FDNS	06NR	3	17G	G15_077	TO->FROM	DAWN SUB - Panda Energy Substation Hereford 115KV CKT 1	96	96	0.03355	112.7612	BUSHLAND INTERCHANGE - DEAF SMITH COUNTY INTERCHANGE 230KV CKT 1
FDNS	06NR	3	17G	G15_077	FROM->TO	DEAF SMITH COUNTY INTERCHANGE - Panda Energy Substation Hereford 115KV CKT 1	96	96	0.03355	117.8354	BUSHLAND INTERCHANGE - DEAF SMITH COUNTY INTERCHANGE 230KV CKT 1
FDNS	06NR	3	17G	G15_077	FROM->TO	DEAF SMITH COUNTY INTERCHANGE - Panda Energy Substation Hereford 115KV CKT 1	96	96	0.03355	117.8354	BUSHLAND INTERCHANGE - DEAF SMITH COUNTY INTERCHANGE 230KV CKT 1
FDNS	06ALL	3	20L	G15_077	TO->FROM	G14-057T 345.00 - LAWTON EASTSIDE 345KV CKT 1	717	789	0.10587	106.0801	BASE CASE
FDNS	06ALL	3	20L	G15_077	FROM->TO	G14-057T 345.00 - SUNNYSIDE 345KV CKT 1	717	789	0.10587	119.3111	BASE CASE
FDNS	06ALL	3	20WP	G15_077	FROM->TO	G14-057T 345.00 - SUNNYSIDE 345KV CKT 1	717	789	0.1294	107.198	BASE CASE
FDNS	06ALL	3	17G	G15_077	FROM->TO	G14-057T 345.00 - SUNNYSIDE 345KV CKT 1	717	789	0.12977	106.7167	BASE CASE
FDNS	06ALL	3	16WP	G15_077	FROM->TO	G14-057T 345.00 - SUNNYSIDE 345KV CKT 1	717	789	0.13324	105.3992	BASE CASE
FDNS	06NR	3	20L	G15_077	FROM->TO	G14-074T 345.00 - OKLAUNION 345KV CKT 1	1022	1124	0.05393	108.2612	BASE CASE
FDNS	06NR	3	17G	G15_077	FROM->TO	G14-074T 345.00 - OKLAUNION 345KV CKT 1	1022	1124	0.04654	106.9843	G11_051T 345.00 - WOODWARD DISTRICT EHV 345KV CKT 1
FDNS	06NR	3	17G	G15_077	FROM->TO	G14-074T 345.00 - OKLAUNION 345KV CKT 1	1022	1124	0.04711	105.0698	BASE CASE
FDNS	06NR	3	20L	G15_077	FROM->TO	G14-074T 345.00 - OKLAUNION 345KV CKT 1	1022	1124	0.05134	103.3966	CHISHOLM7 345.00 - GRACEMONT 345KV CKT 1
FDNS	06NR	3	20L	G15_077	FROM->TO	G14-074T 345.00 - OKLAUNION 345KV CKT 1	1022	1124	0.05134	102.9036	CHISHOLM7 345.00 () 345/230/13.2KV TRANSFORMER CKT 1
FDNS	06NR	3	20L	G15_077	FROM->TO	G14-074T 345.00 - OKLAUNION 345KV CKT 1	1022	1124	0.06481	102.6829	AMARILLO SOUTH INTERCHANGE - G15031_T 230.00 230KV CKT 1
FDNS	06NR	3	20L	G15_077	FROM->TO	G14-074T 345.00 - OKLAUNION 345KV CKT 1	1022	1124	0.06319	102.2907	NEWHART 230 - POTTER COUNTY INTERCHANGE 230KV CKT 1
FDNS	06NR	3	20L	G15_077	FROM->TO	G14-074T 345.00 - OKLAUNION 345KV CKT 1	1022	1124	0.06114	101.9316	DEAF SMITH COUNTY INTERCHANGE - G15039_T 230.00 230KV CKT 1
FDNS	06NR	3	20L	G15_077	FROM->TO	G14-074T 345.00 - OKLAUNION 345KV CKT 1	1022	1124	0.06114	100.8261	G15039_T 230.00 - PLANT X STATION 230KV CKT 1
FDNS	06NR	3	20L	G15_077	FROM->TO	G14-074T 345.00 - OKLAUNION 345KV CKT 1	1022	1124	0.05375	100.637	MINGO - RED WILLOW 345KV CKT 1
FDNS	06NR	3	20L	G15_077	FROM->TO	G14-074T 345.00 - OKLAUNION 345KV CKT 1	1022	1124	0.05375	100.637	MINGO - RED WILLOW 345KV CKT 1
FDNS	06NR	3	20L	G15_077	FROM->TO	G14-074T 345.00 - OKLAUNION 345KV CKT 1	1022	1124	0.05318	100.065	CHILDRESS - LAKE PAULINE 138KV CKT 1
FDNS	06NR	3	20L	G15_077	FROM->TO	G14-074T 345.00 - OKLAUNION 345KV CKT 1	1022	1124	0.05318	100.065	CHILDRESS - LAKE PAULINE 138KV CKT 1
FDNS	06NR	3	20L	G15_077	FROM->TO	G14-074T 345.00 - OKLAUNION 345KV CKT 1	1022	1124	0.05349	100	CONWAY SUB - NICHOLS STATION 115KV CKT 1
FDNS	06NR	3	20L	G15_077	FROM->TO	G14-074T 345.00 - OKLAUNION 345KV CKT 1	1022	1124	0.05349	99.9	CONWAY SUB - KIRBY SWITCHING STATION 115KV CKT 1
FDNS	06NR	3	17G	G15_077	FROM->TO	G14-074T 345.00 - OKLAUNION 345KV CKT 1	1022	1124	0.05735	99.8	AMARILLO SOUTH INTERCHANGE - G15031_T 230.00 230KV CKT 1
FDNS	06NR	3	20L	G15_077	FROM->TO	G14-074T 345.00 - OKLAUNION 345KV CKT 1	1022	1124	0.05349	99.8	P12:115:SPS:T53.1.NICHLS.KIRBY
FDNS	06NR	3	20L	G15_077	FROM->TO	G14-074T 345.00 - OKLAUNION 345KV CKT 1	1022	1124	0.05391	99.7	IODINE - WOODWARD EHV 138KV CKT 1
FDNS	06NR	3	20L	G15_077	FROM->TO	G14-074T 345.00 - OKLAUNION 345KV CKT 1	1022	1124	0.05391	99.6	DEWEY - IODINE 138KV CKT 1
FDNS	06NR	3	20L	G15_077	FROM->TO	G14-074T 345.00 - OKLAUNION 345KV CKT 1	1022	1124	0.05391	99.6	WOODWARD - WWPAR4 138.00 138KV CKT 1
FDNS	06NR	3	20L	G15_077	FROM->TO	G14-074T 345.00 - OKLAUNION 345KV CKT 1	1022	1124	0.05391	99.6	WOODWARD EHV - WWPAR4 138.00 138KV CKT 1
FDNS	06NR	3	17G	G15_077	FROM->TO	G14-074T 345.00 - OKLAUNION 345KV CKT 1	1022	1124	0.04475	99.5	CHISHOLM7 345.00 - GRACEMONT 345KV CKT 1
FDNS	06NR	3	20L	G15_077	FROM->TO	G14-074T 345.00 - OKLAUNION 345KV CKT 1	1022	1124	0.05352	99.5	KIRBY SWITCHING STATION - MCCLELLAN SUB 115KV CKT 1
FDNS	06NR	3	20L	G15_077	FROM->TO	G14-074T 345.00 - OKLAUNION 345KV CKT 1	1022	1124	0.05352	99.5	MCCLELLAN SUB - MCLEAN RURAL SUB 115KV CKT 1
FDNS	06ALL	3	20L	G15_077	FROM->TO	GRACEMONT - MINCO 345KV CKT 1	1195	1195	0.21738	101.53	G14-057T 345.00 - SUNNYSIDE 345KV CKT 1
FDNS	00NR	3	25SP	G15_077	FROM->TO	LUBBOCK POWER & LIGHT-HOLLY PLANT (SHIH T101039) 230/69/13.5KV TRANSFORMER CKT 1	224	224	0.0355	104.7002	LUBBOCK POWER & LIGHT-SOUTHEAST - LUBBOCK SOUTH INTERCHANGE 230KV CKT 1

SOLUTION	GROUP	SCENARIO	SEASON	SOURCE	DIRECTION	MONITORED ELEMENT	RATEA (MVA)	RATEB(MVA)	TDF	TC%LOADING (% MVA)	CONTINGENCY
FDNS	00NR	3	25SP	G15_077	FROM->TO	LUBBOCK POWER & LIGHT-HOLLY PLANT (SHIH T101039) 230/69/13.5KV TRANSFORMER CKT 1	224	224	0.0355	104.6872	P12:LPL:SPS:K64.1.LP-SE.LUBBS
FDNS	00NR	3	25SP	G15_077	FROM->TO	LUBBOCK POWER & LIGHT-HOLLY PLANT (SHIH T101039) 230/69/13.5KV TRANSFORMER CKT 1	224	224	0.03264	101.9683	LUBBOCK EAST INTERCHANGE - LUBBOCK POWER & LIGHT-WADSWORTH 230KV CKT 1
FDNS	00NR	3	25SP	G15_077	FROM->TO	LUBBOCK POWER & LIGHT-HOLLY PLANT (SHIH T101039) 230/69/13.5KV TRANSFORMER CKT 1	224	224	0.03264	101.9535	P12:230:LPL:K57.1.LP-WADS.LUBBE
FDNS	00NR	3	25SP	G15_077	FROM->TO	LUBBOCK POWER & LIGHT-HOLLY PLANT (SHIH T101039) 230/69/13.5KV TRANSFORMER CKT 1	224	224	0.03264	101.9534	LUBBOCK POWER & LIGHT-WADSWORTH (SHIH T101038) 230/69/13.5KV TRANSFORMER CKT 1
FDNS	00NR	3	25SP	G15_077	FROM->TO	LUBBOCK POWER & LIGHT-HOLLY PLANT (SHIH T101039) 230/69/13.5KV TRANSFORMER CKT 1	224	224	0.03264	101.9534	LUBBOCK POWER & LIGHT-WADSWORTH (SHIH T101038) 230/69/13.5KV TRANSFORMER CKT 1
FDNS	06ALL	3	20L	G15_077	FROM->TO	TUCO INTERCHANGE - TUCO_2 230.00 230KV CKT 1	497	547	0.24308	105.0803	TUCO INTERCHANGE - TUCO_2 345.00 345KV CKT 1
FDNS	06ALL	3	20SP	G15_077	FROM->TO	TUCO INTERCHANGE - TUCO_2 230.00 230KV CKT 1	497	547	0.26226	99.5	TUCO INTERCHANGE - TUCO_2 345.00 345KV CKT 1
FDNS	06ALL	4	20SP	G15_077	FROM->TO	CHISHOLM6 230.00 - ELK CITY 230KV 230KV CKT 1	353	353	0.06202	103.152	BASE CASE
FDNS	06ALL	4	17SP	G15_077	FROM->TO	CHISHOLM6 230.00 - ELK CITY 230KV 230KV CKT 1	353	353	0.06216	100.7007	BASE CASE
FDNS	06ALL	4	20L	G15_077	TO->FROM	CIMARRON - MINCO 345KV CKT 1	956	956	0.20462	136.9659	G14-057T 345.00 - SUNNYSIDE 345KV CKT 1
FDNS	06ALL	4	20L	G15_077	TO->FROM	CIMARRON - MINCO 345KV CKT 1	956	956	0.20462	130.9905	G14-057T 345.00 - LAWTON EASTSIDE 345KV CKT 1
FDNS	06ALL	4	17G	G15_077	TO->FROM	CIMARRON - MINCO 345KV CKT 1	956	956	0.22957	129.7974	G14-057T 345.00 - SUNNYSIDE 345KV CKT 1
FDNS	06ALL	4	20WP	G15_077	TO->FROM	CIMARRON - MINCO 345KV CKT 1	956	956	0.23033	128.511	G14-057T 345.00 - SUNNYSIDE 345KV CKT 1
FDNS	06ALL	4	17G	G15_077	TO->FROM	CIMARRON - MINCO 345KV CKT 1	956	956	0.22957	124.286	G14-057T 345.00 - LAWTON EASTSIDE 345KV CKT 1
FDNS	06ALL	4	20WP	G15_077	TO->FROM	CIMARRON - MINCO 345KV CKT 1	956	956	0.23033	123.0537	G14-057T 345.00 - LAWTON EASTSIDE 345KV CKT 1
FDNS	06ALL	4	16WP	G15_077	TO->FROM	CIMARRON - MINCO 345KV CKT 1	956	956	0.23614	122.1275	G14-057T 345.00 - SUNNYSIDE 345KV CKT 1
FDNS	06ALL	4	17SP	G15_077	TO->FROM	CIMARRON - MINCO 345KV CKT 1	956	956	0.23356	121.005	G14-057T 345.00 - SUNNYSIDE 345KV CKT 1
FDNS	06ALL	4	20SP	G15_077	TO->FROM	CIMARRON - MINCO 345KV CKT 1	956	956	0.23607	117.7968	G14-057T 345.00 - SUNNYSIDE 345KV CKT 1
FDNS	06ALL	4	16WP	G15_077	TO->FROM	CIMARRON - MINCO 345KV CKT 1	956	956	0.23614	116.5578	G14-057T 345.00 - LAWTON EASTSIDE 345KV CKT 1
FDNS	06ALL	4	17SP	G15_077	TO->FROM	CIMARRON - MINCO 345KV CKT 1	956	956	0.23356	115.6625	G14-057T 345.00 - LAWTON EASTSIDE 345KV CKT 1
FDNS	06ALL	4	20SP	G15_077	TO->FROM	CIMARRON - MINCO 345KV CKT 1	956	956	0.23607	112.5931	G14-057T 345.00 - LAWTON EASTSIDE 345KV CKT 1
FDNSLock	06ALL	4	17G	G15_077	TO->FROM	CIMARRON - MINCO 345KV CKT 1	956	956	0.19798	110.3749	MATHWSN7 345.00 - TATONGA7 345.00 345KV CKT 1
FDNS	06ALL	4	20WP	G15_077	TO->FROM	CIMARRON - MINCO 345KV CKT 1	956	956	0.19662	109.8635	MATHWSN7 345.00 - TATONGA7 345.00 345KV CKT 1
FDNS	06ALL	4	20WP	G15_077	TO->FROM	CIMARRON - MINCO 345KV CKT 1	956	956	0.19662	104.457	G11_051T 345.00 - TATONGA7 345.00 345KV CKT 1
FDNS	06ALL	4	17G	G15_077	TO->FROM	CIMARRON - MINCO 345KV CKT 1	956	956	0.22001	104.4362	CHISHOLM7 345.00 - WOODWARD DISTRICT EHV 345KV CKT 1
FDNS	06ALL	4	17G	G15_077	TO->FROM	CIMARRON - MINCO 345KV CKT 1	956	956	0.19798	104.3067	G11_051T 345.00 - TATONGA7 345.00 345KV CKT 1
FDNS	06ALL	4	20L	G15_077	TO->FROM	CIMARRON - MINCO 345KV CKT 1	956	956	0.20356	103.7687	CHISHOLM7 345.00 - WOODWARD DISTRICT EHV 345KV CKT 1
FDNS	06ALL	4	17SP	G15_077	TO->FROM	CIMARRON - MINCO 345KV CKT 1	956	956	0.20152	103.6969	MATHWSN7 345.00 - TATONGA7 345.00 345KV CKT 1
FDNS	06ALL	4	16WP	G15_077	TO->FROM	CIMARRON - MINCO 345KV CKT 1	956	956	0.20303	103.3746	MATHWSN7 345.00 - TATONGA7 345.00 345KV CKT 1
FDNS	06ALL	4	20WP	G15_077	TO->FROM	CIMARRON - MINCO 345KV CKT 1	956	956	0.19662	102.8471	G11_051T 345.00 - WOODWARD DISTRICT EHV 345KV CKT 1
FDNS	06ALL	4	20SP	G15_077	TO->FROM	CIMARRON - MINCO 345KV CKT 1	956	956	0.20299	102.8303	MATHWSN7 345.00 - TATONGA7 345.00 345KV CKT 1
FDNS	06ALL	4	17G	G15_077	TO->FROM	CIMARRON - MINCO 345KV CKT 1	956	956	0.19798	102.7262	G11_051T 345.00 - WOODWARD DISTRICT EHV 345KV CKT 1
FDNS	06ALL	4	20WP	G15_077	TO->FROM	CIMARRON - MINCO 345KV CKT 1	956	956	0.22441	100.3052	CHISHOLM7 345.00 - WOODWARD DISTRICT EHV 345KV CKT 1
FDNSLock	06ALL	4	16WP	G15_077		G14_001T 345.00 - WICHITA 345KV CKT 1	1035	1035	0.05395	25.24282	BASE CASE
FDNS	06ALL	4	20L	G15_077	TO->FROM	G14-057T 345.00 - LAWTON EASTSIDE 345KV CKT 1	717	789	0.10029	104.3251	BASE CASE
FDNS	06ALL	4	20L	G15_077	FROM->TO	G14-057T 345.00 - SUNNYSIDE 345KV CKT 1	717	789	0.10029	117.5276	BASE CASE
FDNS	06ALL	4	20WP	G15_077	FROM->TO	G14-057T 345.00 - SUNNYSIDE 345KV CKT 1	717	789	0.12318	105.3579	BASE CASE
FDNS	06ALL	4	17G	G15_077	FROM->TO	G14-057T 345.00 - SUNNYSIDE 345KV CKT 1	717	789	0.12336	105.0325	BASE CASE
FDNS	06ALL	4	16WP	G15_077	FROM->TO	G14-057T 345.00 - SUNNYSIDE 345KV CKT 1	717	789	0.12669	103.6585	BASE CASE
FDNS	06NR	4	20L	G15_077	FROM->TO	G14-074T 345.00 - OKLAUNION 345KV CKT 1	1022	1124	0.03655	103.8229	GRAPEVINE INTERCHANGE - STATELINE INTERCHANGE 230KV CKT 1
FDNS	06NR	4	20L	G15_077	FROM->TO	G14-074T 345.00 - OKLAUNION 345KV CKT 1	1022	1124	0.03655	103.8229	GRAPEVINE INTERCHANGE - STATELINE INTERCHANGE 230KV CKT 1
FDNS	06NR	4	17G	G15_077	FROM->TO	G14-074T 345.00 - OKLAUNION 345KV CKT 1	1022	1124	0.0337	102.9967	MATHWSN7 345.00 - TATONGA7 345.00 345KV CKT 1
FDNS	06NR	4	20L	G15_077	FROM->TO	G14-074T 345.00 - OKLAUNION 345KV CKT 1	1022	1124	0.04029	101.1904	BASE CASE
FDNS	06NR	4	17G	G15_077	FROM->TO	G14-074T 345.00 - OKLAUNION 345KV CKT 1	1022	1124	0.03087	101.0862	GRAPEVINE INTERCHANGE - NICHOLS STATION 230KV CKT 1
FDNS	06NR	4	17G	G15_077	FROM->TO	G14-074T 345.00 - OKLAUNION 345KV CKT 1	1022	1124	0.03087	101.0862	GRAPEVINE INTERCHANGE - NICHOLS STATION 230KV CKT 1
FDNS	06NR	4	17G	G15_077	FROM->TO	G14-074T 345.00 - OKLAUNION 345KV CKT 1	1022	1124	0.0337	99.8	G11_051T 345.00 - TATONGA7 345.00 345KV CKT 1
FDNS	00NR	4	25SP	G15_077	FROM->TO	Hitchland Interchange (SIEM 8743067) 345/230/13.2KV TRANSFORMER CKT 2	560	644	0.02984	100.255	Hitchland Interchange (H TB80155502) 345/230/13.2KV TRANSFORMER CKT 1
FDNS	00NR	4	25SP	G15_077	FROM->TO	Hitchland Interchange (SIEM 8743067) 345/230/13.2KV TRANSFORMER CKT 2	560	644	0.02984	100.255	Hitchland Interchange (H TB80155502) 345/230/13.2KV TRANSFORMER CKT 1
FDNS	00NR	4	25SP	G15_077	FROM->TO	LUBBOCK POWER & LIGHT-HOLLY PLANT (SHIH T101039) 230/69/13.5KV TRANSFORMER CKT 1	224	224	0.0355	104.6928	LUBBOCK POWER & LIGHT-SOUTHEAST - LUBBOCK SOUTH INTERCHANGE 230KV CKT 1
FDNS	00NR	4	25SP	G15_077	FROM->TO	LUBBOCK POWER & LIGHT-HOLLY PLANT (SHIH T101039) 230/69/13.5KV TRANSFORMER CKT 1	224	224	0.0355	104.6926	P12:LPL:SPS:K64.1.LP-SE.LUBBS
FDNS	00NR	4	25SP	G15_077	FROM->TO	LUBBOCK POWER & LIGHT-HOLLY PLANT (SHIH T101039) 230/69/13.5KV TRANSFORMER CKT 1	224	224	0.03266	101.9377	LUBBOCK EAST INTERCHANGE - LUBBOCK POWER & LIGHT-WADSWORTH 230KV CKT 1
FDNS	00NR	4	25SP	G15_077	FROM->TO	LUBBOCK POWER & LIGHT-HOLLY PLANT (SHIH T101039) 230/69/13.5KV TRANSFORMER CKT 1	224	224	0.03266	101.923	P12:230:LPL:K57.1.LP-WADS.LUBBE
FDNS	00NR	4	25SP	G15_077	FROM->TO	LUBBOCK POWER & LIGHT-HOLLY PLANT (SHIH T101039) 230/69/13.5KV TRANSFORMER CKT 1	224	224	0.03266	101.9229	LUBBOCK POWER & LIGHT-WADSWORTH (SHIH T101038) 230/69/13.5KV TRANSFORMER CKT 1
FDNS	00NR	4	25SP	G15_077	FROM->TO	LUBBOCK POWER & LIGHT-HOLLY PLANT (SHIH T101039) 230/69/13.5KV TRANSFORMER CKT 1	224	224	0.03266	101.9229	LUBBOCK POWER & LIGHT-WADSWORTH (SHIH T101038) 230/69/13.5KV TRANSFORMER CKT 1
FDNSLock	06ALL	4	20L	G15_077		OKLAUNION 345KV SWITCHED SHUNT	1022	1124	0.16844	86.37846	BASE CASE
FDNS	06ALL	4	16WP	G15_077	FROM->TO	TOLK STATION (ABBXNL844501) 345/230/13.2KV TRANSFORMER CKT 1	560	560	0.22938	113.0515	CROSSROADS 7345.00 - TOLK STATION 345KV CKT 1
FDNS	06ALL	4	16WP	G15_077	FROM->TO	TOLK STATION (ABBXNL844501) 345/230/13.2KV TRANSFORMER CKT 1	560	560	0.22938	110.3257	CROSSROADS 7345.00 - TOLK STATION 345KV CKT 1
FDNS	06ALL	4	20L	G15_077	FROM->TO	TUCO INTERCHANGE - TUCO_2 230.00 230KV CKT 1	497	547	0.24358	103.1103	TUCO INTERCHANGE - TUCO_2 345.00 345KV CKT 1
FDNS	06ALL	4	20L	G15_077	FROM->TO	TUCO_2 345.00 (TUCO_2 XFMR) 345/230/13.2KV TRANSFORMER CKT 1	560	560	0.19649	116.7572	TUCO INTERCHANGE - TUCO_2 345.00 345KV CKT 1
FDNS	06ALL	4	20L	G15_077	FROM->TO	TUCO_2 345.00 (TUCO_2 XFMR) 345/230/13.2KV TRANSFORMER CKT 1	560	560	0.19649	114.2306	TUCO INTERCHANGE - TUCO_2 345.00 345KV CKT 1
FDNS	06ALL	4	20WP	G15_077	FROM->TO	TUCO_2 345.00 (TUCO_2 XFMR) 345/230/13.2KV TRANSFORMER CKT 1	560	560	0.21604	111.7671	TUCO INTERCHANGE - TUCO_2 345.00 345KV CKT 1
FDNS	06ALL	4	20WP	G15_077	FROM->TO	TUCO_2 345.00 (TUCO_2 XFMR) 345/230/13.2KV TRANSFORMER CKT 1	560	560	0.21604	109.2949	TUCO INTERCHANGE - TUCO_2 345.00 345KV CKT 1
FDNS	06ALL	5	20SP	G15_077	FROM->TO	CHISHOLM6 230.00 - ELK CITY 230KV 230KV CKT 1	353	353	0.06603	107.7212	BASE CASE
FDNS	06ALL	5	17SP	G15_077	FROM->TO	CHISHOLM6 230.00 - ELK CITY 230KV 230KV CKT 1	353	353	0.06653	105.7594	BASE CASE
FDNS	06ALL	5	20L	G15_077	TO->FROM	CIMARRON - MINCO 345KV CKT 1	956	956	0.21164	139.1694	G14-057T 345.00 - SUNNYSIDE 345KV CKT 1
FDNS	06ALL	5	20L	G15_077	TO->FROM	CIMARRON - MINCO 345KV CKT 1	956	956	0.21164	133.4583	G14-057T 345.00 - LAWTON EASTSIDE 345KV CKT 1
FDNS	06ALL	5	17G	G15_077	TO->FROM	CIMARRON - MINCO 345KV CKT 1	956	956	0.23756	132.5137	G14-057T 345.00 - SUNNYSIDE 345KV CKT 1
FDNS	06ALL	5	20WP	G15_077	TO->FROM	CIMARRON - MINCO 345KV CKT 1	956	956	0.23679	131.4126	G14-057T 345.00 - SUNNYSIDE 345KV CKT 1
FDNS	06ALL	5	17G	G15_077	TO->FROM	CIMARRON - MINCO 345KV CKT 1	956	956	0.23756	127.0859	G14-057T 345.00 - LAWTON EASTSIDE 345KV CKT 1
FDNS	06ALL	5	20WP	G15_077	TO->FROM	CIMARRON - MINCO 345KV CKT 1	956	956	0.23679	126.0182	G14-057T 345.00 - LAWTON EASTSIDE 345KV CKT 1
FDNS	06ALL	5	16WP	G15_077	TO->FROM	CIMARRON - MINCO 345KV CKT 1	956	956	0.24432	125.0103	G14-057T 345.00 - SUNNYSIDE 345KV CKT 1
FDNS	06ALL	5	17SP	G15_077	TO->FROM	CIMARRON - MINCO 345KV CKT 1	956	956	0.24121	123.5221	G14-057T 345.00 - SUNNYSIDE 345KV CKT 1
FDNS	06ALL	5	20SP	G15_077	TO->FROM	CIMARRON - MINCO 345KV CKT 1	956	956	0.24299	120.476	G14-057T 345.00 - SUNNYSIDE 345KV CKT 1
FDNS	06ALL	5	16WP	G15_077	TO->FROM	CIMARRON - MINCO 345KV CKT 1	956	956	0.24432	119.6144	G14-057T 345.00 - LAWTON EASTSIDE 345KV CKT 1
FDNS	06ALL	5	17SP	G15_077	TO->FROM	CIMARRON - MINCO 345KV CKT 1	956	956	0.24121	118.2604	G14-057T 345.00 - LAWTON EASTSIDE 345KV CKT 1
FDNS	06ALL	5	20SP	G15_077	TO->FROM	CIMARRON - MINCO 345KV CKT 1	956	956	0.24299	115.0864	G14-057T 345.00 - LAWTON EASTSIDE 345KV CKT 1
FDNS	06ALL	5	17G	G15_077	TO->FROM	CIMARRON - MINCO 345KV CKT 1	956	956	0.205	113.1247	MATHWSN7 345.00 - TATONGA7 345.00 345KV CKT 1
FDNS	06ALL	5	20WP	G15_077	TO->FROM	CIMARRON - MINCO 345KV CKT 1	956	956	0.20235	112.7231	MATHWSN7 345.00 - TATONGA7 345.00 345KV CKT 1
FDNS	06ALL	5	20L	G15_077	TO->FROM	CIMARRON - MINCO 345KV CKT 1	956	956	0.21141	110.4804	CHISHOLM7 345.00 - WOODWARD DISTRICT EHV 345KV CKT 1

SOLUTION	GROUP	SCENARIO	SEASON	SOURCE	DIRECTION	MONITORED ELEMENT	RATEA (MVA)	RATEB(MVA)	TDF	TC%LOADING (% MVA)	CONTINGENCY
FDNS	06ALL	5	17G	G15_077	TO->FROM	CIMARRON - MINCO 345KV CKT 1	956	956	0.2312	110.4087	CHISHOLM7 345.00 - WOODWARD DISTRICT EHV 345KV CKT 1
FDNS	06ALL	5	20WP	G15_077	TO->FROM	CIMARRON - MINCO 345KV CKT 1	956	956	0.20235	107.3503	G11_051T 345.00 - TATONGA7 345.00 345KV CKT 1
FDNS	06ALL	5	17G	G15_077	TO->FROM	CIMARRON - MINCO 345KV CKT 1	956	956	0.205	107.1655	G11_051T 345.00 - TATONGA7 345.00 345KV CKT 1
FDNS	06ALL	5	20WP	G15_077	TO->FROM	CIMARRON - MINCO 345KV CKT 1	956	956	0.23279	106.6912	CHISHOLM7 345.00 - WOODWARD DISTRICT EHV 345KV CKT 1
FDNS	06ALL	5	16WP	G15_077	TO->FROM	CIMARRON - MINCO 345KV CKT 1	956	956	0.21022	106.1194	MATHWSN7 345.00 - TATONGA7 345.00 345KV CKT 1
FDNS	06ALL	5	17SP	G15_077	TO->FROM	CIMARRON - MINCO 345KV CKT 1	956	956	0.20827	106.0588	MATHWSN7 345.00 - TATONGA7 345.00 345KV CKT 1
FDNS	06ALL	5	20WP	G15_077	TO->FROM	CIMARRON - MINCO 345KV CKT 1	956	956	0.20235	105.6974	G11_051T 345.00 - WOODWARD DISTRICT EHV 345KV CKT 1
FDNS	06ALL	5	17G	G15_077	TO->FROM	CIMARRON - MINCO 345KV CKT 1	956	956	0.205	105.5499	G11_051T 345.00 - WOODWARD DISTRICT EHV 345KV CKT 1
FDNS	06ALL	5	20SP	G15_077	TO->FROM	CIMARRON - MINCO 345KV CKT 1	956	956	0.20912	105.1459	MATHWSN7 345.00 - TATONGA7 345.00 345KV CKT 1
FDNS	06ALL	5	20SP	G15_077	TO->FROM	CIMARRON - MINCO 345KV CKT 1	956	956	0.23983	102.6282	CHISHOLM7 345.00 - WOODWARD DISTRICT EHV 345KV CKT 1
FDNS	06ALL	5	17SP	G15_077	TO->FROM	CIMARRON - MINCO 345KV CKT 1	956	956	0.23782	102.3712	CHISHOLM7 345.00 - WOODWARD DISTRICT EHV 345KV CKT 1
FDNS	06ALL	5	17SP	G15_077	TO->FROM	CIMARRON - MINCO 345KV CKT 1	956	956	0.20827	100.8538	G11_051T 345.00 - TATONGA7 345.00 345KV CKT 1
FDNS	06ALL	5	16WP	G15_077	TO->FROM	CIMARRON - MINCO 345KV CKT 1	956	956	0.21022	100.7286	G11_051T 345.00 - TATONGA7 345.00 345KV CKT 1
FDNS	06ALL	5	20SP	G15_077	TO->FROM	CIMARRON - MINCO 345KV CKT 1	956	956	0.20912	100	G11_051T 345.00 - TATONGA7 345.00 345KV CKT 1
FDNS	06ALL	5	16WP	G15_077	TO->FROM	CIMARRON - MINCO 345KV CKT 1	956	956	0.23936	99.9	CHISHOLM7 345.00 - WOODWARD DISTRICT EHV 345KV CKT 1
FDNS	06ALL	5	17SP	G15_077	TO->FROM	CIMARRON - MINCO 345KV CKT 1	956	956	0.19641	99.5	P12:138:WFEC:MSL03
FDNS	06ALL	5	20L	G15_077	TO->FROM	G14-057T 345.00 - LAWTON EASTSIDE 345KV CKT 1	717	789	0.10197	104.5834	BASE CASE
FDNS	06ALL	5	20L	G15_077	FROM->TO	G14-057T 345.00 - SUNNYSIDE 345KV CKT 1	717	789	0.10197	117.7866	BASE CASE
FDNS	06ALL	5	20WP	G15_077	FROM->TO	G14-057T 345.00 - SUNNYSIDE 345KV CKT 1	717	789	0.12394	105.6059	BASE CASE
FDNS	06ALL	5	17G	G15_077	FROM->TO	G14-057T 345.00 - SUNNYSIDE 345KV CKT 1	717	789	0.1246	105.2883	BASE CASE
FDNS	06ALL	5	16WP	G15_077	FROM->TO	G14-057T 345.00 - SUNNYSIDE 345KV CKT 1	717	789	0.12786	103.9305	BASE CASE
FDNS	06ALL	5	20L	G15_077	FROM->TO	GRACEMONT - MINCO 345KV CKT 1	1195	1195	0.21164	100.3039	G14-057T 345.00 - SUNNYSIDE 345KV CKT 1
FDNS	00NR	5	25SP	G15_077	FROM->TO	LUBBOCK POWER & LIGHT-HOLLY PLANT (SHIH T101039) 230/69/13.5KV TRANSFORMER CKT 1	224	224	0.0355	104.6927	LUBBOCK POWER & LIGHT-SOUTHEAST - LUBBOCK SOUTH INTERCHANGE 230KV CKT 1
FDNS	00NR	5	25SP	G15_077	FROM->TO	LUBBOCK POWER & LIGHT-HOLLY PLANT (SHIH T101039) 230/69/13.5KV TRANSFORMER CKT 1	224	224	0.0355	104.6925	P12:LPL:SPS:K64.1.LP-SE.LUBBS
FDNS	00NR	5	25SP	G15_077	FROM->TO	LUBBOCK POWER & LIGHT-HOLLY PLANT (SHIH T101039) 230/69/13.5KV TRANSFORMER CKT 1	224	224	0.03266	101.9351	LUBBOCK EAST INTERCHANGE - LUBBOCK POWER & LIGHT-WADSWORTH 230KV CKT 1
FDNS	00NR	5	25SP	G15_077	FROM->TO	LUBBOCK POWER & LIGHT-HOLLY PLANT (SHIH T101039) 230/69/13.5KV TRANSFORMER CKT 1	224	224	0.03266	101.9204	P12:230:LPL:K57.1.LP-WADS.LUBBE
FDNS	00NR	5	25SP	G15_077	FROM->TO	LUBBOCK POWER & LIGHT-HOLLY PLANT (SHIH T101039) 230/69/13.5KV TRANSFORMER CKT 1	224	224	0.03266	101.9203	LUBBOCK POWER & LIGHT-WADSWORTH (SHIH T101038) 230/69/13.5KV TRANSFORMER CKT 1
FDNS	00NR	5	25SP	G15_077	FROM->TO	LUBBOCK POWER & LIGHT-HOLLY PLANT (SHIH T101039) 230/69/13.5KV TRANSFORMER CKT 1	224	224	0.03266	101.9203	LUBBOCK POWER & LIGHT-WADSWORTH (SHIH T101038) 230/69/13.5KV TRANSFORMER CKT 1
FDNS	06ALL	5	16WP	G15_077	FROM->TO	POTTER COUNTY INTERCHANGE (WAUK 90343-A) 345/230/13.2KV TRANSFORMER CKT 1	560	560	0.19909	123.3278	P12:345:SPS:J15.1.XRDS.TOLK
FDNS	06ALL	5	16WP	G15_077	FROM->TO	POTTER COUNTY INTERCHANGE (WAUK 90343-A) 345/230/13.2KV TRANSFORMER CKT 1	560	560	0.19909	122.0001	P12:345:SPS:J15.1.XRDS.TOLK
FDNS	06ALL	5	16WP	G15_077	FROM->TO	TOLK STATION (ABBXNL844501) 345/230/13.2KV TRANSFORMER CKT 1	560	560	0.23436	113.0248	CROSSROADS 7345.00 - TOLK STATION 345KV CKT 1
FDNS	06ALL	5	16WP	G15_077	FROM->TO	TOLK STATION (ABBXNL844501) 345/230/13.2KV TRANSFORMER CKT 1	560	560	0.23436	110.571	CROSSROADS 7345.00 - TOLK STATION 345KV CKT 1
FDNS	06ALL	5	20WP	G15_077	FROM->TO	TUCO_2 345.00 (TUCO_2 XFMR) 345/230/13.2KV TRANSFORMER CKT 1	560	560	0.20595	99.7	TUCO INTERCHANGE - TUCO_2 345.00 345KV CKT 1
FDNS	06ALL	6	20SP	G15_077	FROM->TO	CHISHOLM6 230.00 - ELK CITY 230KV 230KV CKT 1	353	353	0.05922	102.8848	BASE CASE
FDNS	06ALL	6	17SP	G15_077	FROM->TO	CHISHOLM6 230.00 - ELK CITY 230KV 230KV CKT 1	353	353	0.05961	100.6562	BASE CASE
FDNS	06ALL	6	17G	G15_077	TO->FROM	CIMARRON - MINCO 345KV CKT 1	956	956	0.21126	121.6178	G14-057T 345.00 - SUNNYSIDE 345KV CKT 1
FDNS	06ALL	6	20WP	G15_077	TO->FROM	CIMARRON - MINCO 345KV CKT 1	956	956	0.21143	119.7395	G14-057T 345.00 - SUNNYSIDE 345KV CKT 1
FDNS	06ALL	6	17G	G15_077	TO->FROM	CIMARRON - MINCO 345KV CKT 1	956	956	0.21126	116.437	G14-057T 345.00 - LAWTON EASTSIDE 345KV CKT 1
FDNS	06ALL	6	20WP	G15_077	TO->FROM	CIMARRON - MINCO 345KV CKT 1	956	956	0.21143	114.5016	G14-057T 345.00 - LAWTON EASTSIDE 345KV CKT 1
FDNS	06ALL	6	17SP	G15_077	TO->FROM	CIMARRON - MINCO 345KV CKT 1	956	956	0.21465	114.4047	G14-057T 345.00 - SUNNYSIDE 345KV CKT 1
FDNS	06ALL	6	16WP	G15_077	TO->FROM	CIMARRON - MINCO 345KV CKT 1	956	956	0.2174	114.352	G14-057T 345.00 - SUNNYSIDE 345KV CKT 1
FDNS	06ALL	6	20SP	G15_077	TO->FROM	CIMARRON - MINCO 345KV CKT 1	956	956	0.21686	111.5632	G14-057T 345.00 - SUNNYSIDE 345KV CKT 1
FDNS	06ALL	6	17SP	G15_077	TO->FROM	CIMARRON - MINCO 345KV CKT 1	956	956	0.21465	109.1774	G14-057T 345.00 - LAWTON EASTSIDE 345KV CKT 1
FDNS	06ALL	6	16WP	G15_077	TO->FROM	CIMARRON - MINCO 345KV CKT 1	956	956	0.2174	108.975	G14-057T 345.00 - LAWTON EASTSIDE 345KV CKT 1
FDNS	06ALL	6	20SP	G15_077	TO->FROM	CIMARRON - MINCO 345KV CKT 1	956	956	0.21686	106.5254	G14-057T 345.00 - LAWTON EASTSIDE 345KV CKT 1
FDNS	06ALL	6	17G	G15_077	TO->FROM	CIMARRON - MINCO 345KV CKT 1	956	956	0.20064	105.9404	CHISHOLM7 345.00 - WOODWARD DISTRICT EHV 345KV CKT 1
FDNS	06ALL	6	20WP	G15_077	TO->FROM	CIMARRON - MINCO 345KV CKT 1	956	956	0.20247	101.5954	CHISHOLM7 345.00 - WOODWARD DISTRICT EHV 345KV CKT 1
FDNS	06ALL	6	20L	G15_077	TO->FROM	G14-057T 345.00 - LAWTON EASTSIDE 345KV CKT 1	717	789	0.09736	102.0743	BASE CASE
FDNS	06ALL	6	20L	G15_077	FROM->TO	G14-057T 345.00 - SUNNYSIDE 345KV CKT 1	717	789	0.09736	115.279	BASE CASE
FDNS	06ALL	6	20WP	G15_077	FROM->TO	G14-057T 345.00 - SUNNYSIDE 345KV CKT 1	717	789	0.11886	103.5944	BASE CASE
FDNS	06ALL	6	17G	G15_077	FROM->TO	G14-057T 345.00 - SUNNYSIDE 345KV CKT 1	717	789	0.11943	103.4014	BASE CASE
FDNS	06ALL	6	16WP	G15_077	FROM->TO	G14-057T 345.00 - SUNNYSIDE 345KV CKT 1	717	789	0.12255	102.0868	BASE CASE
FDNS	00NR	6	25SP	G15_077	FROM->TO	LUBBOCK POWER & LIGHT-HOLLY PLANT (SHIH T101039) 230/69/13.5KV TRANSFORMER CKT 1	224	224	0.0355	104.6926	LUBBOCK POWER & LIGHT-SOUTHEAST - LUBBOCK SOUTH INTERCHANGE 230KV CKT 1
FDNS	00NR	6	25SP	G15_077	FROM->TO	LUBBOCK POWER & LIGHT-HOLLY PLANT (SHIH T101039) 230/69/13.5KV TRANSFORMER CKT 1	224	224	0.0355	104.6924	P12:LPL:SPS:K64.1.LP-SE.LUBBS
FDNS	00NR	6	25SP	G15_077	FROM->TO	LUBBOCK POWER & LIGHT-HOLLY PLANT (SHIH T101039) 230/69/13.5KV TRANSFORMER CKT 1	224	224	0.03266	101.9349	LUBBOCK EAST INTERCHANGE - LUBBOCK POWER & LIGHT-WADSWORTH 230KV CKT 1
FDNS	00NR	6	25SP	G15_077	FROM->TO	LUBBOCK POWER & LIGHT-HOLLY PLANT (SHIH T101039) 230/69/13.5KV TRANSFORMER CKT 1	224	224	0.03266	101.9202	LUBBOCK POWER & LIGHT-WADSWORTH (SHIH T101038) 230/69/13.5KV TRANSFORMER CKT 1
FDNS	00NR	6	25SP	G15_077	FROM->TO	LUBBOCK POWER & LIGHT-HOLLY PLANT (SHIH T101039) 230/69/13.5KV TRANSFORMER CKT 1	224	224	0.03266	101.9202	LUBBOCK POWER & LIGHT-WADSWORTH (SHIH T101038) 230/69/13.5KV TRANSFORMER CKT 1
FDNS	00NR	6	25SP	G15_077	FROM->TO	LUBBOCK POWER & LIGHT-HOLLY PLANT (SHIH T101039) 230/69/13.5KV TRANSFORMER CKT 1	224	224	0.03266	101.9202	P12:230:LPL:K57.1.LP-WADS.LUBBE
FDNS	06ALL	6	16WP	G15_077	FROM->TO	POTTER COUNTY INTERCHANGE (WAUK 90343-A) 345/230/13.2KV TRANSFORMER CKT 1	560	560	0.21321	124.5835	P12:345:SPS:J15.1.XRDS.TOLK
FDNS	06ALL	6	16WP	G15_077	FROM->TO	POTTER COUNTY INTERCHANGE (WAUK 90343-A) 345/230/13.2KV TRANSFORMER CKT 1	560	560	0.21321	123.2053	P12:345:SPS:J15.1.XRDS.TOLK
FDNS	06ALL	6	16WP	G15_077	FROM->TO	POTTER COUNTY INTERCHANGE (WAUK 90343-A) 345/230/13.2KV TRANSFORMER CKT 1	560	560	0.19516	116.5159	POTTER COUNTY INTERCHANGE - TOLK STATION 345KV CKT 1
FDNS	06ALL	6	16WP	G15_077	FROM->TO	POTTER COUNTY INTERCHANGE (WAUK 90343-A) 345/230/13.2KV TRANSFORMER CKT 1	560	560	0.19516	115.3558	POTTER COUNTY INTERCHANGE - TOLK STATION 345KV CKT 1
FDNS	06ALL	6	17SP	G15_077	FROM->TO	POTTER COUNTY INTERCHANGE (WAUK 90343-A) 345/230/13.2KV TRANSFORMER CKT 1	560	560	0.20691	109.9868	P12:345:SPS:J15.1.XRDS.TOLK
FDNS	06ALL	6	17SP	G15_077	FROM->TO	POTTER COUNTY INTERCHANGE (WAUK 90343-A) 345/230/13.2KV TRANSFORMER CKT 1	560	560	0.20691	108.4833	P12:345:SPS:J15.1.XRDS.TOLK
FDNS	06ALL	6	16WP	G15_077	FROM->TO	TOLK STATION (ABBXNL844501) 345/230/13.2KV TRANSFORMER CKT 1	560	560	0.23601	112.8509	CROSSROADS 7345.00 - TOLK STATION 345KV CKT 1
FDNS	06ALL	6	16WP	G15_077	FROM->TO	TOLK STATION (ABBXNL844501) 345/230/13.2KV TRANSFORMER CKT 1	560	560	0.23601	110.425	CROSSROADS 7345.00 - TOLK STATION 345KV CKT 1
FDNS	06ALL	6	20WP	G15_077	FROM->TO	TUCO_2 345.00 (TUCO_2 XFMR) 345/230/13.2KV TRANSFORMER CKT 1	560	560	0.20907	101.28	TUCO INTERCHANGE - TUCO_2 345.00 345KV CKT 1
FDNS	06ALL	6	20WP	G15_077	FROM->TO	TUCO_2 345.00 (TUCO_2 XFMR) 345/230/13.2KV TRANSFORMER CKT 1	560	560	0.20907	99.8	TUCO INTERCHANGE - TUCO_2 345.00 345KV CKT 1
FDNS	06ALL	7	20SP	G15_077	FROM->TO	CHISHOLM6 230.00 - ELK CITY 230KV 230KV CKT 1	353	353	0.05922	100.158	BASE CASE
FDNS	06ALL	7	17G	G15_077	TO->FROM	CIMARRON - MINCO 345KV CKT 1	956	956	0.21129	117.9395	G14-057T 345.00 - SUNNYSIDE 345KV CKT 1
FDNS	06ALL	7	20WP	G15_077	TO->FROM	CIMARRON - MINCO 345KV CKT 1	956	956	0.21143	116.4002	G14-057T 345.00 - SUNNYSIDE 345KV CKT 1
FDNS	06ALL	7	17G	G15_077	TO->FROM	CIMARRON - MINCO 345KV CKT 1	956	956	0.21129	112.8925	G14-057T 345.00 - LAWTON EASTSIDE 345KV CKT 1
FDNS	06ALL	7	16WP	G15_077	TO->FROM	CIMARRON - MINCO 345KV CKT 1	956	956	0.21742	111.0593	G14-057T 345.00 - SUNNYSIDE 345KV CKT 1
FDNS	06ALL	7	20WP	G15_077	TO->FROM	CIMARRON - MINCO 345KV CKT 1	956	956	0.21143	111.0342	G14-057T 345.00 - LAWTON EASTSIDE 345KV CKT 1
FDNS	06ALL	7	17SP	G15_077	TO->FROM	CIMARRON - MINCO 345KV CKT 1	956	956	0.21466	111.0288	G14-057T 345.00 - SUNNYSIDE 345KV CKT 1
FDNS	06ALL	7	20SP	G15_077	TO->FROM	CIMARRON - MINCO 345KV CKT 1	956	956	0.21686	108.4281	G14-057T 345.00 - SUNNYSIDE 345KV CKT 1
FDNS	06ALL	7	17SP	G15_077	TO->FROM	CIMARRON - MINCO 345KV CKT 1	956	956	0.21466	106.172	G14-057T 345.00 - LAWTON EASTSIDE 345KV CKT 1
FDNS	06ALL	7	16WP	G15_077	TO->FROM	CIMARRON - MINCO 345KV CKT 1	956	956	0.21742	105.9627	G14-057T 345.00 - LAWTON EASTSIDE 345KV CKT 1
FDNS	06ALL	7	20SP	G15_077	TO->FROM	CIMARRON - MINCO 345KV CKT 1	956	956	0.21686	103.5061	G14-057T 345.00 - LAWTON EASTSIDE 345KV CKT 1

SOLUTION	GROUP	SCENARIO	SEASON	SOURCE	DIRECTION	MONITORED ELEMENT	RATEA (MVA)	RATEB(MVA)	TDF	TC%LOADING (% MVA)	CONTINGENCY
FDNS	06ALL	7	20L	G15_077	TO->FROM	G14-057T 345.00 - LAWTON EASTSIDE 345KV CKT 1	717	789	0.09738	100.7791	BASE CASE
FDNS	06ALL	7	20L	G15_077	FROM->TO	G14-057T 345.00 - SUNNYSIDE 345KV CKT 1	717	789	0.09738	114.0012	BASE CASE
FDNS	06ALL	7	20WP	G15_077	FROM->TO	G14-057T 345.00 - SUNNYSIDE 345KV CKT 1	717	789	0.11885	102.5888	BASE CASE
FDNS	06ALL	7	17G	G15_077	FROM->TO	G14-057T 345.00 - SUNNYSIDE 345KV CKT 1	717	789	0.11944	102.2119	BASE CASE
FDNS	06ALL	7	16WP	G15_077	FROM->TO	G14-057T 345.00 - SUNNYSIDE 345KV CKT 1	717	789	0.12255	101.1576	BASE CASE
FDNS	00NR	7	25SP	G15_077	FROM->TO	LUBBOCK POWER & LIGHT-HOLLY PLANT (SHIH T101039) 230/69/13.5KV TRANSFORMER CKT 1	224	224	0.0355	104.7009	LUBBOCK POWER & LIGHT-SOUTHEAST - LUBBOCK SOUTH INTERCHANGE 230KV CKT 1
FDNS	00NR	7	25SP	G15_077	FROM->TO	LUBBOCK POWER & LIGHT-HOLLY PLANT (SHIH T101039) 230/69/13.5KV TRANSFORMER CKT 1	224	224	0.0355	104.6879	P12:LPL:SPS:K64.1.LP-SE.LUBBS
FDNS	00NR	7	25SP	G15_077	FROM->TO	LUBBOCK POWER & LIGHT-HOLLY PLANT (SHIH T101039) 230/69/13.5KV TRANSFORMER CKT 1	224	224	0.03266	101.9255	LUBBOCK EAST INTERCHANGE - LUBBOCK POWER & LIGHT-WADSWORTH 230KV CKT 1
FDNS	00NR	7	25SP	G15_077	FROM->TO	LUBBOCK POWER & LIGHT-HOLLY PLANT (SHIH T101039) 230/69/13.5KV TRANSFORMER CKT 1	224	224	0.03266	101.9108	P12:230:LPL:K57.1.LP-WADS.LUBBE
FDNS	00NR	7	25SP	G15_077	FROM->TO	LUBBOCK POWER & LIGHT-HOLLY PLANT (SHIH T101039) 230/69/13.5KV TRANSFORMER CKT 1	224	224	0.03266	101.9107	LUBBOCK POWER & LIGHT-WADSWORTH (SHIH T101038) 230/69/13.5KV TRANSFORMER CKT 1
FDNS	00NR	7	25SP	G15_077	FROM->TO	LUBBOCK POWER & LIGHT-HOLLY PLANT (SHIH T101039) 230/69/13.5KV TRANSFORMER CKT 1	224	224	0.03266	101.9107	LUBBOCK POWER & LIGHT-WADSWORTH (SHIH T101038) 230/69/13.5KV TRANSFORMER CKT 1
FDNS	06ALL	7	16WP	G15_077	FROM->TO	POTTER COUNTY INTERCHANGE (WAUK 90343-A) 345/230/13.2KV TRANSFORMER CKT 1	560	560	0.21323	133.795	P12:345:SPS:J15.1.XRDS.TOLK
FDNS	06ALL	7	16WP	G15_077	FROM->TO	POTTER COUNTY INTERCHANGE (WAUK 90343-A) 345/230/13.2KV TRANSFORMER CKT 1	560	560	0.21323	130.8152	P12:345:SPS:J15.1.XRDS.TOLK
FDNS	06ALL	7	16WP	G15_077	FROM->TO	POTTER COUNTY INTERCHANGE (WAUK 90343-A) 345/230/13.2KV TRANSFORMER CKT 1	560	560	0.19518	125.2874	POTTER COUNTY INTERCHANGE - TOLK STATION 345KV CKT 1
FDNS	06ALL	7	16WP	G15_077	FROM->TO	POTTER COUNTY INTERCHANGE (WAUK 90343-A) 345/230/13.2KV TRANSFORMER CKT 1	560	560	0.19518	122.7478	POTTER COUNTY INTERCHANGE - TOLK STATION 345KV CKT 1
FDNS	06ALL	7	17SP	G15_077	FROM->TO	POTTER COUNTY INTERCHANGE (WAUK 90343-A) 345/230/13.2KV TRANSFORMER CKT 1	560	560	0.20693	118.7065	P12:345:SPS:J15.1.XRDS.TOLK
FDNS	06ALL	7	17SP	G15_077	FROM->TO	POTTER COUNTY INTERCHANGE (WAUK 90343-A) 345/230/13.2KV TRANSFORMER CKT 1	560	560	0.20693	115.9022	P12:345:SPS:J15.1.XRDS.TOLK
FDNS	00NR	7	25SP	G15_077	FROM->TO	POTTER COUNTY INTERCHANGE (WAUK 90343-A) 345/230/13.2KV TRANSFORMER CKT 1	560	560	0.03372	100.2945	P12:345:SPS:J15.1.XRDS.TOLK
FDNS	00NR	7	25SP	G15_077	FROM->TO	POTTER COUNTY INTERCHANGE (WAUK 90343-A) 345/230/13.2KV TRANSFORMER CKT 1	560	560	0.03372	100.0757	P12:345:SPS:J15.1.XRDS.TOLK
FDNS	06ALL	7	16WP	G15_077	FROM->TO	TOLK STATION (ABBXNL844501) 345/230/13.2KV TRANSFORMER CKT 1	560	560	0.23604	112.9883	CROSSROADS 7345.00 - TOLK STATION 345KV CKT 1
FDNS	06ALL	7	16WP	G15_077	FROM->TO	TOLK STATION (ABBXNL844501) 345/230/13.2KV TRANSFORMER CKT 1	560	560	0.23604	110.8952	CROSSROADS 7345.00 - TOLK STATION 345KV CKT 1
FDNS	06ALL	7	20WP	G15_077	FROM->TO	TUCO_2 345.00 (TUCO_2 XFMR) 345/230/13.2KV TRANSFORMER CKT 1	560	560	0.20906	101.2891	TUCO INTERCHANGE - TUCO_2 345.00 345KV CKT 1
FDNS	06ALL	7	20WP	G15_077	FROM->TO	TUCO_2 345.00 (TUCO_2 XFMR) 345/230/13.2KV TRANSFORMER CKT 1	560	560	0.20906	99.9	TUCO INTERCHANGE - TUCO_2 345.00 345KV CKT 1
FDNS	00NR	8	25SP	G15_077	FROM->TO	LUBBOCK POWER & LIGHT-HOLLY PLANT (SHIH T101039) 230/69/13.5KV TRANSFORMER CKT 1	224	224	0.0355	104.7109	LUBBOCK POWER & LIGHT-SOUTHEAST - LUBBOCK SOUTH INTERCHANGE 230KV CKT 1
FDNS	00NR	8	25SP	G15_077	FROM->TO	LUBBOCK POWER & LIGHT-HOLLY PLANT (SHIH T101039) 230/69/13.5KV TRANSFORMER CKT 1	224	224	0.0355	104.6979	P12:LPL:SPS:K64.1.LP-SE.LUBBS
FDNS	00NR	8	25SP	G15_077	FROM->TO	LUBBOCK POWER & LIGHT-HOLLY PLANT (SHIH T101039) 230/69/13.5KV TRANSFORMER CKT 1	224	224	0.03266	101.953	LUBBOCK EAST INTERCHANGE - LUBBOCK POWER & LIGHT-WADSWORTH 230KV CKT 1
FDNS	00NR	8	25SP	G15_077	FROM->TO	LUBBOCK POWER & LIGHT-HOLLY PLANT (SHIH T101039) 230/69/13.5KV TRANSFORMER CKT 1	224	224	0.03266	101.9381	P12:230:LPL:K57.1.LP-WADS.LUBBE
FDNS	00NR	8	25SP	G15_077	FROM->TO	LUBBOCK POWER & LIGHT-HOLLY PLANT (SHIH T101039) 230/69/13.5KV TRANSFORMER CKT 1	224	224	0.03266	101.938	LUBBOCK POWER & LIGHT-WADSWORTH (SHIH T101038) 230/69/13.5KV TRANSFORMER CKT 1
FDNS	00NR	8	25SP	G15_077	FROM->TO	LUBBOCK POWER & LIGHT-HOLLY PLANT (SHIH T101039) 230/69/13.5KV TRANSFORMER CKT 1	224	224	0.03266	101.938	LUBBOCK POWER & LIGHT-WADSWORTH (SHIH T101038) 230/69/13.5KV TRANSFORMER CKT 1
FDNS	00NR	9	25SP	G15_077	FROM->TO	LUBBOCK POWER & LIGHT-HOLLY PLANT (SHIH T101039) 230/69/13.5KV TRANSFORMER CKT 1	224	224	0.03549	104.6637	LUBBOCK POWER & LIGHT-SOUTHEAST - LUBBOCK SOUTH INTERCHANGE 230KV CKT 1
FDNS	00NR	9	25SP	G15_077	FROM->TO	LUBBOCK POWER & LIGHT-HOLLY PLANT (SHIH T101039) 230/69/13.5KV TRANSFORMER CKT 1	224	224	0.03549	104.6507	P12:LPL:SPS:K64.1.LP-SE.LUBBS
FDNS	00NR	9	25SP	G15_077	FROM->TO	LUBBOCK POWER & LIGHT-HOLLY PLANT (SHIH T101039) 230/69/13.5KV TRANSFORMER CKT 1	224	224	0.03266	101.7729	LUBBOCK EAST INTERCHANGE - LUBBOCK POWER & LIGHT-WADSWORTH 230KV CKT 1
FDNS	00NR	9	25SP	G15_077	FROM->TO	LUBBOCK POWER & LIGHT-HOLLY PLANT (SHIH T101039) 230/69/13.5KV TRANSFORMER CKT 1	224	224	0.03266	101.758	P12:230:LPL:K57.1.LP-WADS.LUBBE
FDNS	00NR	9	25SP	G15_077	FROM->TO	LUBBOCK POWER & LIGHT-HOLLY PLANT (SHIH T101039) 230/69/13.5KV TRANSFORMER CKT 1	224	224	0.03266	101.7579	LUBBOCK POWER & LIGHT-WADSWORTH (SHIH T101038) 230/69/13.5KV TRANSFORMER CKT 1
FDNS	00NR	9	25SP	G15_077	FROM->TO	LUBBOCK POWER & LIGHT-HOLLY PLANT (SHIH T101039) 230/69/13.5KV TRANSFORMER CKT 1	224	224	0.03266	101.7579	LUBBOCK POWER & LIGHT-WADSWORTH (SHIH T101038) 230/69/13.5KV TRANSFORMER CKT 1
FDNSLock-Blown up	06ALL	0	16WP	G15_078		Non-Converged Contingency	483	483	0.28037	-	AMOCO SWITCHING STATION - YOAKUM COUNTY INTERCHANGE 230KV CKT 1
FDNSLock-Blown up	06ALL	0	16WP	G15_078		Non-Converged Contingency	1022	1124	0.20384	-	G14-074T 345.00 - OKLAUNION 345KV CKT 1
FDNSLock-Blown up	06ALL	0	16WP	G15_078		Non-Converged Contingency	1022	1124	0.20384	-	G14-074T 345.00 - TUCO INTERCHANGE 345KV CKT 1
FDNSLock-Blown up	06ALL	0	16WP	G15_078		Non-Converged Contingency	1022	1124	0.20384	-	GEN509403 1-PIRKEY GENERATION
FDNSLock-Blown up	06ALL	0	16WP	G15_078		Non-Converged Contingency	1022	1124	0.20384	-	GEN509404 1-WELSH #1
FDNSLock-Blown up	06ALL	0	16WP	G15_078		Non-Converged Contingency	1022	1124	0.20384	-	GEN509406 1-WELSH #3
FDNSLock-Blown up	06ALL	0	16WP	G15_078		Non-Converged Contingency	1022	1124	0.20384	-	GEN509416 1-TURK GENERATION
FDNSLock-Blown up	06ALL	0	16WP	G15_078		Non-Converged Contingency	1022	1124	0.20384	-	GEN511848 1-SOUTHWESTERN STATION #3
FDNSLock-Blown up	06ALL	0	16WP	G15_078		Non-Converged Contingency	560	560	0.19302	-	TUCO INTERCHANGE (GE M1022338) 345/230/13.2KV TRANSFORMER CKT 1
FDNSLock-Blown up	06ALL	0	16WP	G15_078		Non-Converged Contingency	427.05	427.05	0.17998	-	JONES STATION - TUCO INTERCHANGE 230KV CKT 1
FDNSLock-Blown up	06ALL	0	16WP	G15_078		Non-Converged Contingency	956	956	0.17902	-	CIMARRON - MINCO 345KV CKT 1
FDNSLock-Blown up	06ALL	0	16WP	G15_078		Non-Converged Contingency	1195	1195	0.17902	-	GRACEMONT - MINCO 345KV CKT 1
FDNSLock-Blown up	06ALL	0	16WP	G15_078		Non-Converged Contingency	616	700	0.16821	-	TUCO INTERCHANGE (SIEM 8743066) 345/230/13.2KV TRANSFORMER CKT 2
FDNSLock-Blown up	06ALL	0	16WP	G15_078		Non-Converged Contingency	987.16	1082.8	0.16409	-	G14_038T 345.00 - Hitchland Interchange 345KV CKT 1
FDNSLock-Blown up	06ALL	0	16WP	G15_078		Non-Converged Contingency	987.16	1082.8	0.16409	-	G14_038T 345.00 - POTTER COUNTY INTERCHANGE 345KV CKT 1
FDNSLock-Blown up	06ALL	0	16WP	G15_078		Non-Converged Contingency	560	560	0.16409	-	POTTER COUNTY INTERCHANGE (WAUK 90343-A) 345/230/13.2KV TRANSFORMER CKT 1
FDNSLock-Blown up	06ALL	0	16WP	G15_078		Non-Converged Contingency	556.53	611.5	0.16388	-	NEWHART 230 - PLANT X STATION 230KV CKT 1
FDNSLock-Blown up	06ALL	0	16WP	G15_078		Non-Converged Contingency	1792	1792	0.16328	-	CHISHOLM7 345.00 - WOODWARD DISTRICT EHV 345KV CKT 1
FDNSLock-Blown up	06ALL	0	16WP	G15_078		Non-Converged Contingency	560	560	0.16323	-	TUCO_2 345.00 (TUCO_2 XFMR) 345/230/13.2KV TRANSFORMER CKT 1
FDNSLock-Blown up	06ALL	0	16WP	G15_078		Non-Converged Contingency	1330	1940	0.16111	-	CHISHOLM7 345.00 - GRACEMONT 345KV CKT 1
FDNSLock-Blown up	06ALL	0	16WP	G15_078		Non-Converged Contingency	552	608	0.16034	-	TUCO INTERCHANGE - TUCO_2 230.00 230KV CKT 1
FDNSLock-Blown up	06ALL	0	16WP	G15_078		Non-Converged Contingency	1792	1792	0.16031	-	BORDER 7345.00 - CHISHOLM7 345.00 345KV CKT 2
FDNSLock-Blown up	06ALL	0	16WP	G15_078		Non-Converged Contingency	1792	1792	0.1603	-	BORDER 7345.00 - CHISHOLM7 345.00 345KV CKT 1
FDNSLock-Blown up	06ALL	0	16WP	G15_078		Non-Converged Contingency	1792	1972	0.1603	-	BORDER 7345.00 - TUCO_2 345.00 345KV CKT 1
FDNSLock-Blown up	06ALL	0	16WP	G15_078		Non-Converged Contingency	1420	1775	0.1603	-	BORDER 7345.00 - TUCO_2 345.00 345KV CKT 2
FDNSLock-Blown up	06ALL	0	16WP	G15_078		Non-Converged Contingency	552.14	607.52	0.15804	-	TOLK STATION EAST - TUCO INTERCHANGE 230KV CKT 1
FDNSLock-Blown up	06ALL	0	16WP	G15_078		Non-Converged Contingency	1792	1972	0.15738	-	TUCO INTERCHANGE - TUCO_2 345.00 345KV CKT 1
FDNSLock-Blown up	06ALL	0	16WP	G15_078		Non-Converged Contingency	557	557	0.15118	-	BUSHLAND INTERCHANGE - DEAF SMITH COUNTY INTERCHANGE 230KV CKT 1
FDNSLock-Blown up	06ALL	0	16WP	G15_078		Non-Converged Contingency	329.05	360.92	0.13749	-	DEAF SMITH COUNTY INTERCHANGE - G15039_T 230.00 230KV CKT 1
FDNSLock-Blown up	06ALL	0	16WP	G15_078		Non-Converged Contingency	329.05	360.92	0.13749	-	G15039_T 230.00 - PLANT X STATION 230KV CKT 1
FDNSLock-Blown up	06ALL	0	16WP	G15_078		Non-Converged Contingency	987.16	1082.8	0.13678	-	FINNEY SWITCHING STATION - Hitchland Interchange 345KV CKT 1
FDNSLock-Blown up	06ALL	0	16WP	G15_078		Non-Converged Contingency	956.09	1051.7	0.13678	-	FINNEY SWITCHING STATION - HOLCOMB 345KV CKT 1
FDNSLock-Blown up	06ALL	0	16WP	G15_078		Non-Converged Contingency	329.05	360.92	0.13379	-	BUSHLAND INTERCHANGE - POTTER COUNTY INTERCHANGE 230KV CKT 1
FDNSLock-Blown up	06ALL	0	16WP	G15_078		Non-Converged Contingency	143.02	173.09	0.13194	-	WOLFFORTH INTERCHANGE - YUMA INTERCHANGE 115KV CKT 1
FDNSLock-Blown up	06ALL	0	16WP	G15_078		Non-Converged Contingency	717	789	0.12881	-	G14-057T 345.00 - LAWTON EASTSIDE 345KV CKT 1
FDNSLock-Blown up	06ALL	0	16WP	G15_078		Non-Converged Contingency	717	789	0.12881	-	G14-057T 345.00 - SUNNYSIDE 345KV CKT 1
FDNSLock-Blown up	06ALL	0	16WP	G15_078		Non-Converged Contingency	557	557	0.11484	-	NEWHART 230 - POTTER COUNTY INTERCHANGE 230KV CKT 1
FDNSLock-Blown up	06ALL	0	16WP	G15_078		Non-Converged Contingency	1420	1775	0.0993	-	G11_051T 345.00 - TATONGA7 345.00 345KV CKT 1
FDNSLock-Blown up	06ALL	0	16WP	G15_078		Non-Converged Contingency	1420	1775	0.0993	-	G11_051T 345.00 - WOODWARD DISTRICT EHV 345KV CKT 1
FDNSLock-Blown up	06ALL	0	16WP	G15_078		Non-Converged Contingency	1195	1195	0.0993	-	MATHWSN7 345.00 - TATONGA7 345.00 345KV CKT 1
FDNSLock-Blown up	06ALL	0	16WP	G15_078		Non-Converged Contingency	442	752	0.09563	-	PLANT X STATION - TOLK STATION WEST 230KV CKT 1
FDNSLock-Blown up	06ALL	0	16WP	G15_078		Non-Converged Contingency	1561	1793	0.09408	-	THISTLE7 345.00 - WOODWARD DISTRICT EHV 345KV CKT 1
FDNSLock-Blown up	06ALL	0	16WP	G15_078		Non-Converged Contingency	1561	1793	0.09408	-	THISTLE7 345.00 - WOODWARD DISTRICT EHV 345KV CKT 2
FDNSLock-Blown up	06ALL	0	16WP	G15_078		Non-Converged Contingency	442	752	0.09369	-	PLANT X STATION - TOLK STATION EAST 230KV CKT 2

SOLUTION	GROUP	SCENARIO	SEASON	SOURCE	DIRECTION	MONITORED ELEMENT	RATEA (MVA)	RATEB(MVA)	TDF	TC%LOADING (% MVA)	CONTINGENCY
FDNSLock-Blown up	06ALL	0	16WP	G15_078		Non-Converged Contingency	329.05	360.92	0.08779	-	AMARILLO SOUTH INTERCHANGE - G15031_T 230.00 230KV CKT 1
FDNSLock-Blown up	06ALL	0	16WP	G15_078		Non-Converged Contingency	1793	1793	0.07769	-	BVRCNTY7 345.00 - G11-14T 345.00 345KV CKT 1
FDNSLock-Blown up	06ALL	0	16WP	G15_078		Non-Converged Contingency	1716	1793	0.07769	-	BVRCNTY7 345.00 - G11-14T 345.00 345KV CKT 2
FDNSLock-Blown up	06ALL	0	16WP	G15_078		Non-Converged Contingency	1792	1792	0.07769	-	BVRCNTY7 345.00 - OPTIMA 345.00 345KV CKT 1
FDNSLock-Blown up	06ALL	0	16WP	G15_078		Non-Converged Contingency	1792	1792	0.07769	-	BVRCNTY7 345.00 - OPTIMA 345.00 345KV CKT 2
FDNSLock-Blown up	06ALL	0	16WP	G15_078		Non-Converged Contingency	1793	1793	0.07769	-	G11-14T 345.00 - WOODWARD DISTRICT EHV 345KV CKT 1
FDNSLock-Blown up	06ALL	0	16WP	G15_078		Non-Converged Contingency	1716	1793	0.07769	-	G11-14T 345.00 - WOODWARD DISTRICT EHV 345KV CKT 2
FDNSLock-Blown up	06ALL	0	16WP	G15_078		Non-Converged Contingency	1532	1793	0.07525	-	G1524G1525 345.00 - THISTLE7 345.00 345KV CKT 1
FDNSLock-Blown up	06ALL	0	16WP	G15_078		Non-Converged Contingency	1532	1793	0.07525	-	G1524G1525 345.00 - THISTLE7 345.00 345KV CKT 2
FDNSLock-Blown up	06ALL	0	16WP	G15_078		Non-Converged Contingency	1532	1793	0.07525	-	GEN532751 1-WOLF CREEK GENERATING STATION UNIT 1
FDNSLock-Blown up	06ALL	0	16WP	G15_078		Non-Converged Contingency	556.92	556.92	0.06968	-	HITCHLAND INTERCHANGE - MOORE COUNTY INTERCHANGE 230KV CKT 1
FDNSLock-Blown up	06ALL	0	16WP	G15_078		Non-Converged Contingency	439	439	0.06764	-	CHISHOLM6 230.00 - SWEETWATER 230KV CKT 1
FDNSLock-Blown up	06ALL	0	16WP	G15_078		Non-Converged Contingency	435.02	457.73	0.06764	-	STATELINE INTERCHANGE - STLN-DEMARC6 230KV CKT 1
FDNSLock-Blown up	06ALL	0	16WP	G15_078		Non-Converged Contingency	439	439	0.06764	-	STLN-DEMARC6 - SWEETWATER 230KV CKT 1
FDNSLock-Blown up	06ALL	0	16WP	G15_078		Non-Converged Contingency	717.1	717.1	0.06615	-	HOLCOMB - SETAB 345KV CKT 1
FDNSLock-Blown up	06ALL	0	16WP	G15_078		Non-Converged Contingency	785	785	0.0652	-	MINGO - RED WILLOW 345KV CKT 1
FDNSLock-Blown up	06ALL	0	16WP	G15_078		Non-Converged Contingency	762.5	762.5	0.06507	-	MINGO - SETAB 345KV CKT 1
FDNSLock-Blown up	06ALL	0	16WP	G15_078		Non-Converged Contingency	439	439	0.06386	-	CHISHOLM6 230.00 - ELK CITY 230KV 230KV CKT 1
FDNSLock-Blown up	06ALL	0	16WP	G15_078		Non-Converged Contingency	450	450	0.06386	-	ELK CITY 230KV (ELKCTY-6) 230/138/13.8KV TRANSFORMER CKT 1
FDNSLock-Blown up	06ALL	0	16WP	G15_078		Non-Converged Contingency	717	717	0.06346	-	CIMARRON - DRAPER LAKE 345KV CKT 1
FDNSLock-Blown up	06ALL	0	16WP	G15_078		Non-Converged Contingency	329.05	360.92	0.05936	-	MOORE COUNTY INTERCHANGE - POTTER COUNTY INTERCHANGE 230KV CKT 1
FDNSLock-Blown up	06ALL	0	16WP	G15_078		Non-Converged Contingency	1195	1195	0.0576	-	GEN520947 1-HUGO1
FDNSLock-Blown up	06ALL	0	16WP	G15_078		Non-Converged Contingency	557	557	0.05753	-	GRAPEVINE INTERCHANGE - NICHOLS STATION 230KV CKT 1
FDNSLock-Blown up	06ALL	0	16WP	G15_078		Non-Converged Contingency	557	557	0.05751	-	GRAPEVINE INTERCHANGE - STATELINE INTERCHANGE 230KV CKT 1
FDNSLock-Blown up	06ALL	0	16WP	G15_078		Non-Converged Contingency	1793	1793	0.05645	-	G13-010T 345.00 - POST ROCK 345KV CKT 1
FDNSLock-Blown up	06ALL	0	16WP	G15_078		Non-Converged Contingency	1793	1793	0.05645	-	G13-010T 345.00 - SPEARVILLE 345KV CKT 1
FDNSLock-Blown up	06ALL	0	16WP	G15_078		Non-Converged Contingency	726.6	726.6	0.05509	-	BUCKNER7 345.00 - HOLCOMB 345KV CKT 1
FDNSLock-Blown up	06ALL	0	16WP	G15_078		Non-Converged Contingency	1413	1517	0.05509	-	BUCKNER7 345.00 - SPEARVILLE 345KV CKT 1
FDNSLock-Blown up	06ALL	0	16WP	G15_078		Non-Converged Contingency	717	789	0.04361	-	GRACEMONT - LAWTON EASTSIDE 345KV CKT 1
FDNSLock-Blown up	06ALL	0	16WP	G15_078		Non-Converged Contingency	286	315	0.03135	-	CANYON E_TP3115.00 - CANYON WEST SUB 115KV CKT 1
FDNSLock-Blown up	06ALL	0	16WP	G15_078		Non-Converged Contingency	106	106	0.03135	-	CANYON WEST SUB - DAWN SUB 115KV CKT 1
FDNSLock-Blown up	06ALL	0	16WP	G15_078		Non-Converged Contingency	106	106	0.03135	-	DAWN SUB - Panda Energy Substation Hereford 115KV CKT 1
FDNSLock-Blown up	06ALL	0	16WP	G15_078		Non-Converged Contingency	106	106	0.03135	-	DEAF SMITH COUNTY INTERCHANGE - Panda Energy Substation Hereford 115KV CKT 1
FDNSLock-Blown up	06ALL	0	16WP	G15_078		Non-Converged Contingency	164.53	177.08	0.02965	-	Hansford County Switch Station - SPEARMAN INTERCHANGE 115KV CKT 1
FDNSLock-Blown up	06ALL	0	16WP	G15_078		Non-Converged Contingency	177.08	177.08	0.02965	-	HITCHLAND INTERCHANGE - Hansford County Switch Station 115KV CKT 1
FDNSLock-Blown up	06NR	0	17G	G15_078		Non-Converged Contingency	478	502	0.08793	-	BUSHLAND INTERCHANGE - DEAF SMITH COUNTY INTERCHANGE 230KV CKT 1
FDNSLock-Blown up	06NR	0	17G	G15_078		Non-Converged Contingency	318.7	350.57	0.08029	-	DEAF SMITH COUNTY INTERCHANGE - G15039_T 230.00 230KV CKT 1
FDNSLock-Blown up	06NR	0	17G	G15_078		Non-Converged Contingency	318.7	350.57	0.08029	-	G15039_T 230.00 - PLANT X STATION 230KV CKT 1
FDNSLock-Blown up	06NR	0	17G	G15_078		Non-Converged Contingency	318.7	350.57	0.07439	-	AMARILLO SOUTH INTERCHANGE - G15031_T 230.00 230KV CKT 1
FDNSLock-Blown up	06NR	0	17G	G15_078		Non-Converged Contingency	318.7	350.57	0.07274	-	BUSHLAND INTERCHANGE - POTTER COUNTY INTERCHANGE 230KV CKT 1
FDNSLock-Blown up	06NR	0	17G	G15_078		Non-Converged Contingency	478	502	0.07258	-	NEWHART 230 - POTTER COUNTY INTERCHANGE 230KV CKT 1
FDNSLock-Blown up	06NR	0	17G	G15_078		Non-Converged Contingency	1022	1124	0.0415	-	G14-074T 345.00 - OKLAUNION 345KV CKT 1
FDNSLock-Blown up	06NR	0	17G	G15_078		Non-Converged Contingency	1022	1124	0.0415	-	G14-074T 345.00 - TUCO INTERCHANGE 345KV CKT 1
FDNSLock-Blown up	06NR	0	17G	G15_078		Non-Converged Contingency	1792	1972	0.03955	-	BORDER 7345.00 - TUCO_2 345.00 345KV CKT 1
FDNSLock-Blown up	06NR	0	17G	G15_078		Non-Converged Contingency	1792	1792	0.03955	-	BORDER 7345.00 - WOODWARD DISTRICT EHV 345KV CKT 1
FDNSLock-Blown up	06ALL	0	17SP	G15_078		Non-Converged Contingency	956	1042	0.2036	-	G14-074T 345.00 - OKLAUNION 345KV CKT 1
FDNSLock-Blown up	06ALL	0	17SP	G15_078		Non-Converged Contingency	956	1042	0.2036	-	G14-074T 345.00 - TUCO INTERCHANGE 345KV CKT 1
FDNSLock-Blown up	06ALL	0	17SP	G15_078		Non-Converged Contingency	956.09	1051.7	0.1618	-	G14_038T 345.00 - Hitchland Interchange 345KV CKT 1
FDNSLock-Blown up	06ALL	0	17SP	G15_078		Non-Converged Contingency	956.09	1051.7	0.1618	-	G14_038T 345.00 - POTTER COUNTY INTERCHANGE 345KV CKT 1
FDNSLock-Blown up	06ALL	0	17SP	G15_078		Non-Converged Contingency	560	560	0.1618	-	POTTER COUNTY INTERCHANGE (WAUK 90343-A) 345/230/13.2KV TRANSFORMER CKT 1
FDNSLock-Blown up	06ALL	0	17SP	G15_078		Non-Converged Contingency	1792	1972	0.16131	-	BORDER 7345.00 - TUCO_2 345.00 345KV CKT 1
FDNSLock-Blown up	06ALL	0	17SP	G15_078		Non-Converged Contingency	1420	1775	0.16131	-	BORDER 7345.00 - TUCO_2 345.00 345KV CKT 2
FDNSLock-Blown up	06ALL	0	20L	G15_078		Non-Converged Contingency	1792	1792	0.28765	-	TUCO INTERCHANGE - YOAKUM_345 345.00 345KV CKT 1
FDNSLock-Blown up	06ALL	0	20L	G15_078		Non-Converged Contingency	1792	1972	0.2411	-	TUCO INTERCHANGE - TUCO_2 345.00 345KV CKT 1
FDNSLock-Blown up	06ALL	0	20L	G15_078		Non-Converged Contingency	0	0	0.21943	-	P12:115:SPS:T89.1.DC_N.HIGG
FDNSLock-Blown up	06ALL	0	20L	G15_078		Non-Converged Contingency	0	0	0.19967	-	P12:345:SPS:J07.1.FINN.HITCH
FDNSLock-Blown up	06ALL	0	20L	G15_078		Non-Converged Contingency	0	0	0.1954	-	P12:115:SPS:T71.1.CRLSLE.YUMA
FDNSLock-Blown up	06ALL	0	20L	G15_078		Non-Converged Contingency	0	0	0.18757	-	P12:115:SPS:W11.1.DC_S.SMINLE
FDNSLock-Blown up	06ALL	0	20L	G15_078		Non-Converged Contingency	1022	1124	0.18163	-	G14-074T 345.00 - OKLAUNION 345KV CKT 1
FDNSLock-Blown up	06ALL	0	20L	G15_078		Non-Converged Contingency	1022	1124	0.18163	-	G14-074T 345.00 - TUCO INTERCHANGE 345KV CKT 1
FDNSLock-Blown up	06ALL	0	20L	G15_078		Non-Converged Contingency	1022	1124	0.18163	-	GEN506754 1-LEBROCK STEAM 1
FDNSLock-Blown up	06ALL	0	20L	G15_078		Non-Converged Contingency	1022	1124	0.18163	-	GEN509394 1-FLINT CREEK
FDNSLock-Blown up	06ALL	0	20L	G15_078		Non-Converged Contingency	1022	1124	0.18163	-	GEN509403 1-PIRKEY GENERATION
FDNSLock-Blown up	06ALL	0	20L	G15_078		Non-Converged Contingency	1022	1124	0.18163	-	GEN509404 1-WELSH #1
FDNSLock-Blown up	06ALL	0	20L	G15_078		Non-Converged Contingency	1022	1124	0.18163	-	GEN509406 1-WELSH #3
FDNSLock-Blown up	06ALL	0	20L	G15_078		Non-Converged Contingency	1022	1124	0.18163	-	GEN509408 1-WILKES #2
FDNSLock-Blown up	06ALL	0	20L	G15_078		Non-Converged Contingency	1022	1124	0.18163	-	GEN509416 1-TURK GENERATION
FDNSLock-Blown up	06ALL	0	20L	G15_078		Non-Converged Contingency	1022	1124	0.18163	-	GEN511840 1-NORTHEASTERN STATION #3
FDNSLock-Blown up	06ALL	0	20L	G15_078		Non-Converged Contingency	1022	1124	0.18163	-	GEN511960 1-ROARK1 0.7000
FDNSLock-Blown up	06ALL	0	20L	G15_078		Non-Converged Contingency	1022	1124	0.18163	-	GEN562590 1-G14_057_3 0.6900
FDNSLock-Blown up	06ALL	0	20L	G15_078		Non-Converged Contingency	1022	1124	0.18163	-	OKLAUNION 345KV SWITCHED SHUNT
FDNSLock-Blown up	06ALL	0	20L	G15_078		Non-Converged Contingency	956	956	0.16298	-	CIMARRON - MINCO 345KV CKT 1
FDNSLock-Blown up	06ALL	0	20L	G15_078		Non-Converged Contingency	1195	1195	0.16298	-	GRACEMONT - MINCO 345KV CKT 1
FDNSLock-Blown up	06ALL	0	20L	G15_078		Non-Converged Contingency	414	414	0.15897	-	AMOCO SWITCHING STATION - YOAKUM COUNTY INTERCHANGE 230KV CKT 1
FDNSLock-Blown up	06ALL	0	20L	G15_078		Non-Converged Contingency	414	414	0.15897	-	AMOCO SWITCHING STATION - YOAKUM COUNTY INTERCHANGE 230KV CKT 1
FDNSLock-Blown up	06ALL	0	20L	G15_078		Non-Converged Contingency	1792	1792	0.15417	-	CHISHOLM7 345.00 - WOODWARD DISTRICT EHV 345KV CKT 1
FDNSLock-Blown up	06ALL	0	20L	G15_078		Non-Converged Contingency	1792	1792	0.14976	-	BORDER 7345.00 - CHISHOLM7 345.00 345KV CKT 1
FDNSLock-Blown up	06ALL	0	20L	G15_078		Non-Converged Contingency	1792	1792	0.14976	-	BORDER 7345.00 - CHISHOLM7 345.00 345KV CKT 2
FDNSLock-Blown up	06ALL	0	20L	G15_078		Non-Converged Contingency	1792	1972	0.14976	-	BORDER 7345.00 - TUCO_2 345.00 345KV CKT 1

SOLUTION	GROUP	SCENARIO	SEASON	SOURCE	DIRECTION	MONITORED ELEMENT	RATEA (MVA)	RATEB(MVA)	TDF	TC%LOADING (% MVA)	CONTINGENCY
FDNSLock-Blown up	06ALL	0	20L	G15_078		Non-Converged Contingency	1420	1775	0.14976	-	BORDER 7345.00 - TUCO_2 345.00 345KV CKT 2
FDNSLock-Blown up	06ALL	0	20L	G15_078		Non-Converged Contingency	1792	1972	0.14976	-	BORDER 7345.00 345KV SWITCHED SHUNT
FDNSLock-Blown up	06ALL	0	20L	G15_078		Non-Converged Contingency	0	0	0.1341	-	P12:115:SPS:V80.1.DC_STH.LE-WAIT
FDNSLock-Blown up	06ALL	0	20L	G15_078		Non-Converged Contingency	1584	2098	0.12945	-	CHISHOLM7 345.00 - GRACEMONT 345KV CKT 1
FDNSLock-Blown up	06ALL	0	20L	G15_078		Non-Converged Contingency	1584	2098	0.12945	-	GEN514805 1-SOONER UNIT 1
FDNSLock-Blown up	06ALL	0	20L	G15_078		Non-Converged Contingency	1584	2098	0.12945	-	GEN514806 1-SOONER UNIT 2
FDNSLock-Blown up	06ALL	0	20L	G15_078		Non-Converged Contingency	1584	2098	0.12945	-	GEN515040 1-SEMINOLE 1G
FDNSLock-Blown up	06ALL	0	20L	G15_078		Non-Converged Contingency	1584	2098	0.12945	-	GEN515223 1-MUSKOGEE 4G
FDNSLock-Blown up	06ALL	0	20L	G15_078		Non-Converged Contingency	497	547	0.11196	-	TUCO INTERCHANGE - TUCO_2 230.00 230KV CKT 1
FDNSLock-Blown up	06ALL	0	20L	G15_078		Non-Converged Contingency	956.09	1051.7	0.11074	-	G14_038T 345.00 - Hitchland Interchange 345KV CKT 1
FDNSLock-Blown up	06ALL	0	20L	G15_078		Non-Converged Contingency	956.09	1051.7	0.11074	-	G14_038T 345.00 - POTTER COUNTY INTERCHANGE 345KV CKT 1
FDNSLock-Blown up	06ALL	0	20L	G15_078		Non-Converged Contingency	560	560	0.11074	-	POTTER COUNTY INTERCHANGE (WAUK 90343-A) 345/230/13.2KV TRANSFORMER CKT 1
FDNSLock-Blown up	06ALL	0	20L	G15_078		Non-Converged Contingency	560	560	0.11074	-	POTTER COUNTY INTERCHANGE (WAUK 90343-A) 345/230/13.2KV TRANSFORMER CKT 1
FDNSLock-Blown up	06ALL	0	20L	G15_078		Non-Converged Contingency	478	502	0.10924	-	BUSHLAND INTERCHANGE - DEAF SMITH COUNTY INTERCHANGE 230KV CKT 1
FDNSLock-Blown up	06ALL	0	20L	G15_078		Non-Converged Contingency	478	502	0.10924	-	BUSHLAND INTERCHANGE - DEAF SMITH COUNTY INTERCHANGE 230KV CKT 1
FDNSLock-Blown up	06ALL	0	20L	G15_078		Non-Converged Contingency	478	502	0.10924	-	BUSHLAND INTERCHANGE 230KV SWITCHED SHUNT
FDNSLock-Blown up	06ALL	0	20L	G15_078		Non-Converged Contingency	956.09	1051.7	0.10662	-	Hitchland Interchange - WALKTAP7 345.00 345KV CKT 1
FDNSLock-Blown up	06ALL	0	20L	G15_078		Non-Converged Contingency	956.09	1051.7	0.10662	-	Hitchland Interchange - WALKTAP7 345.00 345KV CKT 1
FDNSLock-Blown up	06ALL	0	20L	G15_078		Non-Converged Contingency	717	789	0.10444	-	G14-057T 345.00 - LAWTON EASTSIDE 345KV CKT 1
FDNSLock-Blown up	06ALL	0	20L	G15_078		Non-Converged Contingency	717	789	0.10444	-	G14-057T 345.00 - SUNNYSIDE 345KV CKT 1
FDNSLock-Blown up	06ALL	0	20L	G15_078		Non-Converged Contingency	318.7	350.57	0.09872	-	DEAF SMITH COUNTY INTERCHANGE - G15039_T 230.00 230KV CKT 1
FDNSLock-Blown up	06ALL	0	20L	G15_078		Non-Converged Contingency	318.7	350.57	0.09872	-	G15039_T 230.00 - PLANT X STATION 230KV CKT 1
FDNSLock-Blown up	06ALL	0	20L	G15_078		Non-Converged Contingency	478.05	547.36	0.09848	-	NEWHART 230 - PLANT X STATION 230KV CKT 1
FDNSLock-Blown up	06ALL	0	20L	G15_078		Non-Converged Contingency	318.7	350.57	0.09707	-	BUSHLAND INTERCHANGE - POTTER COUNTY INTERCHANGE 230KV CKT 1
FDNSLock-Blown up	06ALL	0	20L	G15_078		Non-Converged Contingency	318.7	350.57	0.09707	-	BUSHLAND INTERCHANGE - POTTER COUNTY INTERCHANGE 230KV CKT 1
FDNSLock-Blown up	06ALL	0	20L	G15_078		Non-Converged Contingency	478	502	0.09441	-	NEWHART 230 - POTTER COUNTY INTERCHANGE 230KV CKT 1
FDNSLock-Blown up	06ALL	0	20L	G15_078		Non-Converged Contingency	478	502	0.09318	-	CARLISLE INTERCHANGE - TUCO INTERCHANGE 230KV CKT 1
FDNSLock-Blown up	06ALL	0	20L	G15_078		Non-Converged Contingency	478	502	0.09318	-	CARLISLE INTERCHANGE - TUCO INTERCHANGE 230KV CKT 1
FDNSLock-Blown up	06ALL	0	20L	G15_078		Non-Converged Contingency	956.09	1051.7	0.09305	-	FINNEY SWITCHING STATION - HOLCOMB 345KV CKT 1
FDNSLock-Blown up	06ALL	0	20L	G15_078		Non-Converged Contingency	956.09	1051.7	0.09305	-	FINNEY SWITCHING STATION - HOLCOMB 345KV CKT 1
FDNSLock-Blown up	06ALL	0	20L	G15_078		Non-Converged Contingency	956.09	1051.7	0.09305	-	FINNEY SWITCHING STATION - WALKTAP7 345.00 345KV CKT 1
FDNSLock-Blown up	06ALL	0	20L	G15_078		Non-Converged Contingency	956.09	1051.7	0.09305	-	FINNEY SWITCHING STATION - WALKTAP7 345.00 345KV CKT 1
FDNSLock-Blown up	06ALL	0	20L	G15_078		Non-Converged Contingency	318.7	350.57	0.09184	-	LUBBOCK SOUTH INTERCHANGE - WOLFFORTH INTERCHANGE 230KV CKT 1
FDNSLock-Blown up	06ALL	0	20L	G15_078		Non-Converged Contingency	318.7	350.57	0.09184	-	LUBBOCK SOUTH INTERCHANGE - WOLFFORTH INTERCHANGE 230KV CKT 1
FDNSLock-Blown up	06ALL	0	20L	G15_078		Non-Converged Contingency	318.7	350.57	0.09184	-	LUBBOCK SOUTH INTERCHANGE 230KV SWITCHED SHUNT
FDNSLock-Blown up	06ALL	0	20L	G15_078		Non-Converged Contingency	478	502	0.08509	-	AMARILLO SOUTH INTERCHANGE - G15031_T 230.00 230KV CKT 1
FDNSLock-Blown up	06ALL	0	20L	G15_078		Non-Converged Contingency	0	0	0.08426	-	P12:230:AEPW:ELKCITY6:SWEETWT6
FDNSLock-Blown up	06ALL	0	20L	G15_078		Non-Converged Contingency	0	0	0.08112	-	P12:115:SPS:T59.1.CARGIL.CURRY
FDNSLock-Blown up	06NR	0	20L	G15_078		Non-Converged Contingency	478	502	0.08059	-	AMARILLO SOUTH INTERCHANGE - G15031_T 230.00 230KV CKT 1
FDNSLock-Blown up	06ALL	0	20L	G15_078		Non-Converged Contingency	0	0	0.07717	-	P12:115:SPS:W40.1.WCANYON.DFSMTH
FDNSLock-Blown up	06ALL	0	20L	G15_078		Non-Converged Contingency	478	478	0.07624	-	CARLISLE INTERCHANGE - WOLFFORTH INTERCHANGE 230KV CKT 1
FDNSLock-Blown up	06ALL	0	20L	G15_078		Non-Converged Contingency	1561	1793	0.07537	-	THISTLE7 345.00 - WOODWARD DISTRICT EHV 345KV CKT 1
FDNSLock-Blown up	06ALL	0	20L	G15_078		Non-Converged Contingency	1561	1793	0.07537	-	THISTLE7 345.00 - WOODWARD DISTRICT EHV 345KV CKT 1
FDNSLock-Blown up	06ALL	0	20L	G15_078		Non-Converged Contingency	1561	1793	0.07537	-	THISTLE7 345.00 - WOODWARD DISTRICT EHV 345KV CKT 2
FDNSLock-Blown up	06ALL	0	20L	G15_078		Non-Converged Contingency	1561	1793	0.07537	-	THISTLE7 345.00 - WOODWARD DISTRICT EHV 345KV CKT 2
FDNSLock-Blown up	06ALL	0	20L	G15_078		Non-Converged Contingency	0	0	0.07524	-	P12:115:SPS:V95.1.DC_N.SHLCO2
FDNSLock-Blown up	06ALL	0	20L	G15_078		Non-Converged Contingency	1420	1775	0.07427	-	G11_051T 345.00 - TATONGA7 345.00 345KV CKT 1
FDNSLock-Blown up	06ALL	0	20L	G15_078		Non-Converged Contingency	1420	1775	0.07427	-	G11_051T 345.00 - WOODWARD DISTRICT EHV 345KV CKT 1
FDNSLock-Blown up	06ALL	0	20L	G15_078		Non-Converged Contingency	1195	1195	0.07427	-	MATHWSN7 345.00 - TATONGA7 345.00 345KV CKT 1
FDNSLock-Blown up	06ALL	0	20L	G15_078		Non-Converged Contingency	717	926	0.07376	-	CROSSROADS 7345.00 - TOLK STATION 345KV CKT 1
FDNSLock-Blown up	06ALL	0	20L	G15_078		Non-Converged Contingency	560	560	0.07376	-	TOLK STATION (ABBXNL844501) 345/230/13.2KV TRANSFORMER CKT 1
FDNSLock-Blown up	06ALL	0	20L	G15_078		Non-Converged Contingency	560	560	0.07376	-	TOLK STATION (ABBXNL844501) 345/230/13.2KV TRANSFORMER CKT 1
FDNSLock-Blown up	06ALL	0	20L	G15_078		Non-Converged Contingency	560	560	0.07218	-	TUCO INTERCHANGE (GE M1022338) 345/230/13.2KV TRANSFORMER CKT 1
FDNSLock-Blown up	06ALL	0	20L	G15_078		Non-Converged Contingency	560	560	0.07218	-	TUCO INTERCHANGE (GE M1022338) 345/230/13.2KV TRANSFORMER CKT 1
FDNSLock-Blown up	06ALL	0	20L	G15_078		Non-Converged Contingency	1195	1195	0.07186	-	ARCADIA - NORTHWEST 345KV CKT 1
FDNSLock-Blown up	06NR	0	20L	G15_078		Non-Converged Contingency	478	502	0.07081	-	NEWHART 230 - POTTER COUNTY INTERCHANGE 230KV CKT 1
FDNSLock-Blown up	06ALL	0	20L	G15_078		Non-Converged Contingency	956	956	0.06993	-	CIMARRON - NORTHWEST 345KV CKT 1
FDNSLock-Blown up	06ALL	0	20L	G15_078		Non-Converged Contingency	343.79	343.79	0.06976	-	JONES STATION - TUCO INTERCHANGE 230KV CKT 1
FDNSLock-Blown up	06ALL	0	20L	G15_078		Non-Converged Contingency	343.79	343.79	0.06976	-	JONES STATION - TUCO INTERCHANGE 230KV CKT 1
FDNSLock-Blown up	06ALL	0	20L	G15_078		Non-Converged Contingency	0	0	0.06837	-	P12:230:AEPW-SPS:SWEETWT6:WHEELER 6
FDNSLock-Blown up	06NR	0	20L	G15_078		Non-Converged Contingency	318.7	350.57	0.06786	-	DEAF SMITH COUNTY INTERCHANGE - G15039_T 230.00 230KV CKT 1
FDNSLock-Blown up	06ALL	0	20L	G15_078		Non-Converged Contingency	0	0	0.06401	-	P12:115:SPS:V15.1.TUCO.INDANA
FDNSLock-Blown up	06ALL	0	20L	G15_078		Non-Converged Contingency	1195	1195	0.06373	-	MATHWSN7 345.00 - NORTHWEST 345KV CKT 1
FDNSLock-Blown up	06ALL	0	20L	G15_078		Non-Converged Contingency	560	644	0.0629	-	TUCO INTERCHANGE (SIEM 8743066) 345/230/13.2KV TRANSFORMER CKT 2
FDNSLock-Blown up	06ALL	0	20L	G15_078		Non-Converged Contingency	560	644	0.0629	-	TUCO INTERCHANGE (SIEM 8743066) 345/230/13.2KV TRANSFORMER CKT 2
FDNSLock-Blown up	06NR	0	20L	G15_078		Non-Converged Contingency	318.7	350.57	0.06243	-	BUSHLAND INTERCHANGE - POTTER COUNTY INTERCHANGE 230KV CKT 1
FDNSLock-Blown up	06NR	0	20L	G15_078		Non-Converged Contingency	318.7	350.57	0.06243	-	BUSHLAND INTERCHANGE - POTTER COUNTY INTERCHANGE 230KV CKT 1
FDNSLock-Blown up	06ALL	0	20L	G15_078		Non-Converged Contingency	1792	1792	0.06124	-	HOBBS - YOAKUM_345 345.00 345KV CKT 1
FDNSLock-Blown up	06ALL	0	20L	G15_078		Non-Converged Contingency	0	0	0.06084	-	P12:115:SPS:T58.1.HERFRD.CARGIL
FDNSLock-Blown up	06ALL	0	20L	G15_078		Non-Converged Contingency	0	0	0.06001	-	P12:138:AEPW-OGE:WTH_JCT4:JENSEN4
FDNSLock-Blown up	06ALL	0	20L	G15_078		Non-Converged Contingency	560	644	0.05921	-	HOBBS (UPDATE DATA) 345/230/13.2KV TRANSFORMER CKT 1
FDNSLock-Blown up	06ALL	0	20L	G15_078		Non-Converged Contingency	956	956	0.0589	-	G15063_T 345.00 - MATHWSN7 345.00 345KV CKT 1
FDNSLock-Blown up	06ALL	0	20L	G15_078		Non-Converged Contingency	956	956	0.0589	-	G15063_T 345.00 - WOODRING 345KV CKT 1
FDNSLock-Blown up	06ALL	0	20L	G15_078		Non-Converged Contingency	560	560	0.05841	-	TUCO_2 345.00 (TUCO_2 XFMR) 345/230/13.2KV TRANSFORMER CKT 1
FDNSLock-Blown up	06ALL	0	20L	G15_078		Non-Converged Contingency	442	752	0.05805	-	PLANT X STATION - TOLK STATION WEST 230KV CKT 1
FDNSLock-Blown up	06ALL	0	20L	G15_078		Non-Converged Contingency	442	752	0.05805	-	PLANT X STATION - TOLK STATION WEST 230KV CKT 1
FDNSLock-Blown up	06ALL	0	20L	G15_078		Non-Converged Contingency	442	752	0.0568	-	PLANT X STATION - TOLK STATION EAST 230KV CKT 2
FDNSLock-Blown up	06ALL	0	20L	G15_078		Non-Converged Contingency	442	752	0.0568	-	PLANT X STATION - TOLK STATION EAST 230KV CKT 2
FDNSLock-Blown up	06ALL	0	20L	G15_078		Non-Converged Contingency	1039	1195	0.05674	-	NORTHWEST - SPRING CREEK 345KV CKT 1

SOLUTION	GROUP	SCENARIO	SEASON	SOURCE	DIRECTION	MONITORED ELEMENT	RATEA (MVA)	RATEB(MVA)	TDF	TC%LOADING (% MVA)	CONTINGENCY
FDNSLock-Blown up	06ALL	0	20L	G15_078		Non-Converged Contingency	1039	1195	0.05674	-	SOONER - SPRING CREEK 345KV CKT 1
FDNSLock-Blown up	06NR	0	20L	G15_078		Non-Converged Contingency	1022	1124	0.05664	-	G14-074T 345.00 - OKLAUNION 345KV CKT 1
FDNSLock-Blown up	06NR	0	20L	G15_078		Non-Converged Contingency	1022	1124	0.05664	-	G14-074T 345.00 - TUCO INTERCHANGE 345KV CKT 1
FDNSLock-Blown up	06NR	0	20L	G15_078		Non-Converged Contingency	1022	1124	0.05664	-	OKLAUNION 345KV SWITCHED SHUNT
FDNSLock-Blown up	06ALL	0	20L	G15_078		Non-Converged Contingency	1532	1793	0.05654	-	G1524G1525 345.00 - THISTLE7 345.00 345KV CKT 1
FDNSLock-Blown up	06ALL	0	20L	G15_078		Non-Converged Contingency	1532	1793	0.05654	-	G1524G1525 345.00 - THISTLE7 345.00 345KV CKT 2
FDNSLock-Blown up	06ALL	0	20L	G15_078		Non-Converged Contingency	1532	1793	0.05654	-	G1524G1525 345.00 - WICHITA 345KV CKT 1
FDNSLock-Blown up	06ALL	0	20L	G15_078		Non-Converged Contingency	1532	1793	0.05654	-	G1524G1525 345.00 - WICHITA 345KV CKT 2
FDNSLock-Blown up	06ALL	0	20L	G15_078		Non-Converged Contingency	1532	1793	0.05654	-	GEN532653 1-JEFFREY ENERGY CENTER UNIT 3
FDNSLock-Blown up	06ALL	0	20L	G15_078		Non-Converged Contingency	1532	1793	0.05654	-	GEN532663 1-LAWRENCE ENERGY CENTER UNIT 5
FDNSLock-Blown up	06ALL	0	20L	G15_078		Non-Converged Contingency	1532	1793	0.05654	-	GEN532751 1-WOLF CREEK GENERATING STATION UNIT 1
FDNSLock-Blown up	06ALL	0	20L	G15_078		Non-Converged Contingency	435.82	501.55	0.05653	-	Harrington Station Mid Bus - RANDALL COUNTY INTERCHANGE 230KV CKT 1
FDNSLock-Blown up	06ALL	0	20L	G15_078		Non-Converged Contingency	435.82	501.55	0.05653	-	Harrington Station Mid Bus - RANDALL COUNTY INTERCHANGE 230KV CKT 1
FDNSLock-Blown up	06NR	0	20L	G15_078		Non-Converged Contingency	1792	1972	0.05395	-	BORDER 7345.00 - TUCO_2 345.00 345KV CKT 1
FDNSLock-Blown up	06NR	0	20L	G15_078		Non-Converged Contingency	1792	1792	0.05395	-	BORDER 7345.00 - WOODWARD DISTRICT EHV 345KV CKT 1
FDNSLock-Blown up	06NR	0	20L	G15_078		Non-Converged Contingency	1792	1972	0.05395	-	BORDER 7345.00 345KV SWITCHED SHUNT
FDNSLock-Blown up	06ALL	0	20L	G15_078		Non-Converged Contingency	0	0	0.05253	-	P12:138:AEPW:S.W.S.-4:L.E.S.-4
FDNSLock-Blown up	06ALL	0	20L	G15_078		Non-Converged Contingency	785	785	0.05244	-	GEN640009 1-COOPER NUCLEAR STATION
FDNSLock-Blown up	06ALL	0	20L	G15_078		Non-Converged Contingency	785	785	0.05244	-	MINGO - RED WILLOW 345KV CKT 1
FDNSLock-Blown up	06ALL	0	20L	G15_078		Non-Converged Contingency	785	785	0.05244	-	MINGO - RED WILLOW 345KV CKT 1
FDNSLock-Blown up	06ALL	0	20L	G15_078		Non-Converged Contingency	0	0	0.0515	-	P12:115:SPS:T66.1.RNDALL.HAPPY
FDNSLock-Blown up	06ALL	0	20L	G15_078		Non-Converged Contingency	0	0	0.0515	-	P12:115:SPS:T67.1.HAPPY.KRESS
FDNSLock-Blown up	06ALL	0	20L	G15_078		Non-Converged Contingency	0	0	0.05145	-	P12:115:SPS:V05.1.OSAGE.WCANYON
FDNSLock-Blown up	06ALL	0	20L	G15_078		Non-Converged Contingency	762.5	762.5	0.05101	-	MINGO - SETAB 345KV CKT 1
FDNSLock-Blown up	06ALL	0	20L	G15_078		Non-Converged Contingency	762.5	762.5	0.05101	-	MINGO - SETAB 345KV CKT 1
FDNSLock-Blown up	06ALL	0	20L	G15_078		Non-Converged Contingency	717	789	0.05073	-	GRACEMONT - LAWTON EASTSIDE 345KV CKT 1
FDNSLock-Blown up	06ALL	0	20L	G15_078		Non-Converged Contingency	717	789	0.05073	-	GRACEMONT - LAWTON EASTSIDE 345KV CKT 1
FDNSLock-Blown up	06ALL	0	20L	G15_078		Non-Converged Contingency	1195	1195	0.05055	-	SOONER - WOODRING 345KV CKT 1
FDNSLock-Blown up	06ALL	0	20L	G15_078		Non-Converged Contingency	717.1	717.1	0.05053	-	HOLCOMB - SETAB 345KV CKT 1
FDNSLock-Blown up	06ALL	0	20L	G15_078		Non-Converged Contingency	717.1	717.1	0.05053	-	HOLCOMB - SETAB 345KV CKT 1
FDNSLock-Blown up	06ALL	0	20L	G15_078		Non-Converged Contingency	439	439	0.05007	-	CHISHOLM6 230.00 - ELK CITY 230KV 230KV CKT 1
FDNSLock-Blown up	06ALL	0	20L	G15_078		Non-Converged Contingency	450	450	0.05007	-	ELK CITY 230KV (ELKCTY-6) 230/138/13.8KV TRANSFORMER CKT 1
FDNSLock-Blown up	06ALL	0	20L	G15_078		Non-Converged Contingency	450	450	0.05007	-	ELK CITY 230KV (ELKCTY-6) 230/138/13.8KV TRANSFORMER CKT 1
FDNSLock-Blown up	06ALL	0	20L	G15_078		Non-Converged Contingency	478.05	546.96	0.0487	-	TOLK STATION EAST - TUCO INTERCHANGE 230KV CKT 1
FDNSLock-Blown up	06ALL	0	20L	G15_078		Non-Converged Contingency	478.05	546.96	0.0487	-	TOLK STATION EAST - TUCO INTERCHANGE 230KV CKT 1
FDNSLock-Blown up	06ALL	0	20L	G15_078		Non-Converged Contingency	0	0	0.04827	-	P12:115:SPS:T28.1.LAMTON.PLANTX
FDNSLock-Blown up	06ALL	0	20L	G15_078		Non-Converged Contingency	1195	1195	0.04796	-	JOHNSON COUNTY - SUNNYSIDE 345KV CKT 1
FDNSLock-Blown up	06ALL	0	20L	G15_078		Non-Converged Contingency	478.05	501.55	0.04785	-	AMARILLO SOUTH INTERCHANGE - NICHOLS STATION 230KV CKT 1
FDNSLock-Blown up	06ALL	0	20L	G15_078		Non-Converged Contingency	478.05	501.55	0.04785	-	AMARILLO SOUTH INTERCHANGE - NICHOLS STATION 230KV CKT 1
FDNSLock-Blown up	06ALL	0	20L	G15_078		Non-Converged Contingency	501.95	501.95	0.04689	-	HITCHLAND INTERCHANGE - MOORE COUNTY INTERCHANGE 230KV CKT 1
FDNSLock-Blown up	06ALL	0	20L	G15_078		Non-Converged Contingency	501.95	501.95	0.04689	-	HITCHLAND INTERCHANGE - MOORE COUNTY INTERCHANGE 230KV CKT 1
FDNSLock-Blown up	06ALL	0	20L	G15_078		Non-Converged Contingency	560	644	0.04581	-	Hitchland Interchange (SIEM 8743067) 345/230/13.2KV TRANSFORMER CKT 2
FDNSLock-Blown up	06ALL	0	20L	G15_078		Non-Converged Contingency	560	644	0.04581	-	Hitchland Interchange (SIEM 8743067) 345/230/13.2KV TRANSFORMER CKT 2
FDNSLock-Blown up	06ALL	0	20L	G15_078		Non-Converged Contingency	0	0	0.04568	-	P12:230:SPS:K51.1.OASIS.RSVLT
FDNSLock-Blown up	06ALL	0	20L	G15_078		Non-Converged Contingency	1504	1792	0.04508	-	AXTELL - POST ROCK 345KV CKT 1
FDNSLock-Blown up	06ALL	0	20L	G15_078		Non-Converged Contingency	1793	1793	0.04489	-	BVRCNTY7 345.00 - G11-14T 345.00 345KV CKT 1
FDNSLock-Blown up	06ALL	0	20L	G15_078		Non-Converged Contingency	1716	1793	0.04489	-	BVRCNTY7 345.00 - G11-14T 345.00 345KV CKT 2
FDNSLock-Blown up	06ALL	0	20L	G15_078		Non-Converged Contingency	1792	1792	0.04489	-	BVRCNTY7 345.00 - OPTIMA 345.00 345KV CKT 1
FDNSLock-Blown up	06ALL	0	20L	G15_078		Non-Converged Contingency	1792	1792	0.04489	-	BVRCNTY7 345.00 - OPTIMA 345.00 345KV CKT 2
FDNSLock-Blown up	06ALL	0	20L	G15_078		Non-Converged Contingency	1793	1793	0.04489	-	G11-14T 345.00 - WOODWARD DISTRICT EHV 345KV CKT 1
FDNSLock-Blown up	06ALL	0	20L	G15_078		Non-Converged Contingency	1716	1793	0.04489	-	G11-14T 345.00 - WOODWARD DISTRICT EHV 345KV CKT 2
FDNSLock-Blown up	06ALL	0	20L	G15_078		Non-Converged Contingency	1792	1792	0.04489	-	Hitchland Interchange - OPTIMA 345.00 345KV CKT 1
FDNSLock-Blown up	06ALL	0	20L	G15_078		Non-Converged Contingency	1792	1792	0.04489	-	Hitchland Interchange - OPTIMA 345.00 345KV CKT 2
FDNSLock-Blown up	06ALL	0	20L	G15_078		Non-Converged Contingency	0	0	0.04482	-	P12:138:WFEC-AEPW:WASHITA4:CLINTJC4
FDNSLock-Blown up	06ALL	0	20L	G15_078		Non-Converged Contingency	878	956	0.04445	-	BENTON - WICHITA 345KV CKT 1
FDNSLock-Blown up	06ALL	0	20L	G15_078		Non-Converged Contingency	1151	1195	0.04414	-	JOHNSON COUNTY - PITTSBURG 345KV CKT 1
FDNSLock-Blown up	06ALL	0	20L	G15_078		Non-Converged Contingency	1151	1195	0.04414	-	JOHNSON COUNTY - PITTSBURG 345KV CKT 1
FDNSLock-Blown up	06ALL	0	20L	G15_078		Non-Converged Contingency	1505	1793	0.04412	-	G13-010T 345.00 - POST ROCK 345KV CKT 1
FDNSLock-Blown up	06ALL	0	20L	G15_078		Non-Converged Contingency	1505	1793	0.04412	-	G13-010T 345.00 - SPEARVILLE 345KV CKT 1
FDNSLock-Blown up	06ALL	0	20L	G15_078		Non-Converged Contingency	1195	1195	0.044	-	CIMARRON - DRAPER LAKE 345KV CKT 1
FDNSLock-Blown up	06ALL	0	20L	G15_078		Non-Converged Contingency	956	956	0.0411	-	GERALD GENTLEMAN STATION - RED WILLOW 345KV CKT 1
FDNSLock-Blown up	06ALL	0	20L	G15_078		Non-Converged Contingency	0	0	0.04059	-	P12:138:AEPW-OGE:CORNVIL4:CIMARON4
FDNSLock-Blown up	06ALL	0	20L	G15_078		Non-Converged Contingency	1035	1035	0.04051	-	EMPORIA ENERGY CENTER - G14_001T 345.00 345KV CKT 1
FDNSLock-Blown up	06ALL	0	20L	G15_078		Non-Converged Contingency	1035	1035	0.04051	-	G14_001T 345.00 - WICHITA 345KV CKT 1
FDNSLock-Blown up	06ALL	0	20L	G15_078		Non-Converged Contingency	0	0	0.04045	-	P12:115:SPS:V03.1.NICHLS.EPLANT
FDNSLock-Blown up	06ALL	0	20L	G15_078		Non-Converged Contingency	318.7	350.57	0.04034	-	MOORE COUNTY INTERCHANGE - POTTER COUNTY INTERCHANGE 230KV CKT 1
FDNSLock-Blown up	06ALL	0	20L	G15_078		Non-Converged Contingency	318.7	350.57	0.04034	-	MOORE COUNTY INTERCHANGE - POTTER COUNTY INTERCHANGE 230KV CKT 1
FDNSLock-Blown up	06ALL	0	20L	G15_078		Non-Converged Contingency	560	644	0.03985	-	Hitchland Interchange (H TB80155502) 345/230/13.2KV TRANSFORMER CKT 1
FDNSLock-Blown up	06ALL	0	20L	G15_078		Non-Converged Contingency	560	644	0.03985	-	Hitchland Interchange (H TB80155502) 345/230/13.2KV TRANSFORMER CKT 1
FDNSLock-Blown up	06ALL	0	20L	G15_078		Non-Converged Contingency	159	160	0.03979	-	COCHRAN INTERCHANGE - G15-014T 115.00 115KV CKT 1
FDNSLock-Blown up	06ALL	0	20L	G15_078		Non-Converged Contingency	159	160	0.03979	-	COCHRAN INTERCHANGE - PACIFIC SUB 115KV CKT 1
FDNSLock-Blown up	06ALL	0	20L	G15_078		Non-Converged Contingency	159	160	0.03979	-	PACIFIC SUB - SUNDOWN INTERCHANGE 115KV CKT 1
FDNSLock-Blown up	06ALL	0	20L	G15_078		Non-Converged Contingency	159	160	0.03979	-	SUNDOWN INTERCHANGE 115KV SWITCHED SHUNT
FDNSLock-Blown up	06ALL	0	20L	G15_078		Non-Converged Contingency	1195	1195	0.03974	-	GEN520811 1-ANADRK4
FDNSLock-Blown up	06ALL	0	20L	G15_078		Non-Converged Contingency	1195	1195	0.03974	-	HUGO - SUNNYSIDE 345KV CKT 1
FDNSLock-Blown up	06ALL	0	20L	G15_078		Non-Converged Contingency	1141	1195	0.03783	-	GEN542951 5-HAWTHORN UNIT #5
FDNSLock-Blown up	06ALL	0	20L	G15_078		Non-Converged Contingency	1141	1195	0.03783	-	LACYGNE - WAVERLY7 345.00 345KV CKT 1
FDNSLock-Blown up	06ALL	0	20L	G15_078		Non-Converged Contingency	1141	1195	0.03783	-	WAVERLY7 345.00 - WOLF CREEK 345KV CKT 1
FDNSLock-Blown up	06ALL	0	20L	G15_078		Non-Converged Contingency	1195	1195	0.03603	-	MUSKOGEE - SEMINOLE 345KV CKT 1

SOLUTION	GROUP	SCENARIO	SEASON	SOURCE	DIRECTION	MONITORED ELEMENT	RATEA (MVA)	RATEB(MVA)	TDF	TC%LOADING (% MVA)	CONTINGENCY
FDNSLock-Blown up	06ALL	0	20L	G15_078		Non-Converged Contingency	1076	1076	0.03535	-	G15074_T 345.00 - HOYT 345KV CKT 1
FDNSLock-Blown up	06ALL	0	20L	G15_078		Non-Converged Contingency	1076	1076	0.03535	-	G15074_T 345.00 - JEFFREY ENERGY CENTER 345KV CKT 1
FDNSLock-Blown up	06ALL	0	20L	G15_078		Non-Converged Contingency	1036	1195	0.03517	-	HOYT - STRANGER CREEK 345KV CKT 1
FDNSLock-Blown up	06ALL	0	20L	G15_078		Non-Converged Contingency	497.17	546.96	0.03448	-	AMARILLO SOUTH INTERCHANGE - RANDALL COUNTY INTERCHANGE 230KV CKT 1
FDNSLock-Blown up	06ALL	0	20L	G15_078		Non-Converged Contingency	497.17	546.96	0.03448	-	AMARILLO SOUTH INTERCHANGE - RANDALL COUNTY INTERCHANGE 230KV CKT 1
FDNSLock-Blown up	06ALL	0	20L	G15_078		Non-Converged Contingency	726.6	726.6	0.0344	-	BUCKNER7 345.00 - HOLCOMB 345KV CKT 1
FDNSLock-Blown up	06ALL	0	20L	G15_078		Non-Converged Contingency	726.6	726.6	0.0344	-	BUCKNER7 345.00 - HOLCOMB 345KV CKT 1
FDNSLock-Blown up	06ALL	0	20L	G15_078		Non-Converged Contingency	1413	1517	0.0344	-	BUCKNER7 345.00 - SPEARVILLE 345KV CKT 1
FDNSLock-Blown up	06ALL	0	20L	G15_078		Non-Converged Contingency	1413	1517	0.0344	-	BUCKNER7 345.00 - SPEARVILLE 345KV CKT 1
FDNSLock-Blown up	06ALL	0	20L	G15_078		Non-Converged Contingency	421	439	0.03419	-	CHISHOLM6 230.00 - SWEETWATER 230KV CKT 1
FDNSLock-Blown up	06ALL	0	20L	G15_078		Non-Converged Contingency	348.58	381.24	0.03419	-	STATELINE INTERCHANGE - STLN-DEMARC6 230KV CKT 1
FDNSLock-Blown up	06ALL	0	20L	G15_078		Non-Converged Contingency	353	353	0.03419	-	STLN-DEMARC6 - SWEETWATER 230KV CKT 1
FDNSLock-Blown up	06ALL	0	20L	G15_078		Non-Converged Contingency	0	0	0.03249	-	P12:138:OKGE:3TERM10
FDNSLock-Blown up	06ALL	0	20L	G15_078		Non-Converged Contingency	0	0	0.03193	-	P12:115:SPS:T04.1.DFSMTH.CASTRO
FDNSLock-Blown up	06ALL	0	20L	G15_078		Non-Converged Contingency	717	717	0.03169	-	EMPORIA ENERGY CENTER - SWISSVALE 345KV CKT 1
FDNSLock-Blown up	06ALL	0	20L	G15_078		Non-Converged Contingency	0	0	0.03094	-	P12:115:SPS:W29.1.OCLTRE.SPRMN
FDNSLock-Blown up	06ALL	0	20L	G15_078		Non-Converged Contingency	0	0	0.03051	-	P12:138:AEPW:REDROCKRD4:WTH_JCT4
FDNSLock-Blown up	06ALL	0	20L	G15_078		Non-Converged Contingency	0	0	0.03048	-	P12:115:SPS:W08.1.HITCH.LASLEY
FDNSLock-Blown up	06ALL	0	20L	G15_078		Non-Converged Contingency	0	0	0.02988	-	P12:138:AEPW:DUNCAN-4:L.E.S.-4
FDNSLock-Blown up	06ALL	0	20L	G15_078		Non-Converged Contingency	502	502	0.02978	-	GRAPEVINE INTERCHANGE - NICHOLS STATION 230KV CKT 1
FDNSLock-Blown up	06ALL	0	20L	G15_078		Non-Converged Contingency	502	502	0.02978	-	GRAPEVINE INTERCHANGE - NICHOLS STATION 230KV CKT 1
FDNSLock-Blown up	06ALL	0	20L	G15_078		Non-Converged Contingency	717	717	0.02968	-	SWISSVALE - WEST GARDNER 345KV CKT 1
FDNSLock-Blown up	06ALL	0	20SP	G15_078		Non-Converged Contingency	956	1042	0.21642	-	G14-074T 345.00 - OKLAUNION 345KV CKT 1
FDNSLock-Blown up	06ALL	0	20SP	G15_078		Non-Converged Contingency	1792	1972	0.17462	-	BORDER 7345.00 - TUCO_2 345.00 345KV CKT 1
FDNSLock-Blown up	06ALL	0	20SP	G15_078		Non-Converged Contingency	1420	1775	0.17462	-	BORDER 7345.00 - TUCO_2 345.00 345KV CKT 2
FDNSLock-Blown up	06ALL	0	20SP	G15_078		Non-Converged Contingency	956.09	1051.7	0.145	-	G14_038T 345.00 - Hitchland Interchange 345KV CKT 1
FDNSLock-Blown up	06ALL	0	20SP	G15_078		Non-Converged Contingency	956.09	1051.7	0.145	-	G14_038T 345.00 - POTTER COUNTY INTERCHANGE 345KV CKT 1
FDNSLock-Blown up	06ALL	0	20WP	G15_078		Non-Converged Contingency	1792	1792	0.31801	-	TUCO INTERCHANGE - YOAKUM_345 345.00 345KV CKT 1
FDNSLock-Blown up	06ALL	0	20WP	G15_078		Non-Converged Contingency	1792	1972	0.26934	-	TUCO INTERCHANGE - TUCO_2 345.00 345KV CKT 1
FDNSLock-Blown up	06ALL	0	20WP	G15_078		Non-Converged Contingency	0	0	0.24156	-	P12:345:SPS:J07.1.FINN.HITCH
FDNSLock-Blown up	06ALL	0	20WP	G15_078		Non-Converged Contingency	1022	1124	0.21156	-	G14-074T 345.00 - OKLAUNION 345KV CKT 1
FDNSLock-Blown up	06ALL	0	20WP	G15_078		Non-Converged Contingency	1022	1124	0.21156	-	G14-074T 345.00 - TUCO INTERCHANGE 345KV CKT 1
FDNSLock-Blown up	06ALL	0	20WP	G15_078		Non-Converged Contingency	1022	1124	0.21156	-	OKLAUNION 345KV SWITCHED SHUNT
FDNSLock-Blown up	06ALL	0	20WP	G15_078		Non-Converged Contingency	956	956	0.17971	-	CIMARRON - MINCO 345KV CKT 1
FDNSLock-Blown up	06ALL	0	20WP	G15_078		Non-Converged Contingency	1195	1195	0.17971	-	GRACEMONT - MINCO 345KV CKT 1
FDNSLock-Blown up	06ALL	0	20WP	G15_078		Non-Converged Contingency	1792	1792	0.1743	-	CHISHOLM7 345.00 - WOODWARD DISTRICT EHV 345KV CKT 1
FDNSLock-Blown up	06ALL	0	20WP	G15_078		Non-Converged Contingency	1792	1972	0.17095	-	BORDER 7345.00 - TUCO_2 345.00 345KV CKT 1
FDNSLock-Blown up	06ALL	0	20WP	G15_078		Non-Converged Contingency	1420	1775	0.17095	-	BORDER 7345.00 - TUCO_2 345.00 345KV CKT 2
FDNSLock-Blown up	06ALL	0	20WP	G15_078		Non-Converged Contingency	1792	1972	0.17095	-	BORDER 7345.00 345KV SWITCHED SHUNT
FDNSLock-Blown up	06ALL	0	20WP	G15_078		Non-Converged Contingency	1584	2098	0.15557	-	CHISHOLM7 345.00 - GRACEMONT 345KV CKT 1
FDNSLock-Blown up	06ALL	0	20WP	G15_078		Non-Converged Contingency	987.16	1082.8	0.13993	-	G14_038T 345.00 - Hitchland Interchange 345KV CKT 1
FDNSLock-Blown up	06ALL	0	20WP	G15_078		Non-Converged Contingency	987.16	1082.8	0.13993	-	G14_038T 345.00 - POTTER COUNTY INTERCHANGE 345KV CKT 1
FDNSLock-Blown up	06ALL	0	20WP	G15_078		Non-Converged Contingency	560	560	0.13993	-	POTTER COUNTY INTERCHANGE (WAUK 90343-A) 345/230/13.2KV TRANSFORMER CKT 1
FDNSLock-Blown up	06ALL	0	20WP	G15_078		Non-Converged Contingency	560	560	0.13993	-	POTTER COUNTY INTERCHANGE (WAUK 90343-A) 345/230/13.2KV TRANSFORMER CKT 1
FDNSLock-Blown up	06ALL	0	20WP	G15_078		Non-Converged Contingency	987.16	1082.8	0.12875	-	Hitchland Interchange - WALKTAP7 345.00 345KV CKT 1
FDNSLock-Blown up	06ALL	0	20WP	G15_078		Non-Converged Contingency	987.16	1082.8	0.12875	-	Hitchland Interchange - WALKTAP7 345.00 345KV CKT 1
FDNSLock-Blown up	06ALL	0	20WP	G15_078		Non-Converged Contingency	717	789	0.12819	-	G14-057T 345.00 - LAWTON EASTSIDE 345KV CKT 1
FDNSLock-Blown up	06ALL	0	20WP	G15_078		Non-Converged Contingency	717	789	0.12819	-	G14-057T 345.00 - SUNNYSIDE 345KV CKT 1
FDNSLock-Blown up	06ALL	0	20WP	G15_078		Non-Converged Contingency	557	557	0.11766	-	BUSHLAND INTERCHANGE - DEAF SMITH COUNTY INTERCHANGE 230KV CKT 1
FDNSLock-Blown up	06ALL	0	20WP	G15_078		Non-Converged Contingency	557	557	0.11766	-	BUSHLAND INTERCHANGE - DEAF SMITH COUNTY INTERCHANGE 230KV CKT 1
FDNSLock-Blown up	06ALL	0	20WP	G15_078		Non-Converged Contingency	956.09	1051.7	0.11281	-	FINNEY SWITCHING STATION - HOLCOMB 345KV CKT 1
FDNSLock-Blown up	06ALL	0	20WP	G15_078		Non-Converged Contingency	956.09	1051.7	0.11281	-	FINNEY SWITCHING STATION - HOLCOMB 345KV CKT 1
FDNSLock-Blown up	06ALL	0	20WP	G15_078		Non-Converged Contingency	987.16	1082.8	0.11281	-	FINNEY SWITCHING STATION - WALKTAP7 345.00 345KV CKT 1
FDNSLock-Blown up	06ALL	0	20WP	G15_078		Non-Converged Contingency	987.16	1082.8	0.11281	-	FINNEY SWITCHING STATION - WALKTAP7 345.00 345KV CKT 1
FDNSLock-Blown up	06ALL	0	20WP	G15_078		Non-Converged Contingency	0	0	0.11138	-	P12:230:AEPW:ELKCITY6:SWEETWT6
FDNSLock-Blown up	06ALL	0	20WP	G15_078		Non-Converged Contingency	329.05	360.92	0.10649	-	DEAF SMITH COUNTY INTERCHANGE - G15039_T 230.00 230KV CKT 1
FDNSLock-Blown up	06ALL	0	20WP	G15_078		Non-Converged Contingency	329.05	360.92	0.10649	-	G15039_T 230.00 - PLANT X STATION 230KV CKT 1
FDNSLock-Blown up	06ALL	0	20WP	G15_078		Non-Converged Contingency	329.05	360.92	0.10521	-	BUSHLAND INTERCHANGE - POTTER COUNTY INTERCHANGE 230KV CKT 1
FDNSLock-Blown up	06ALL	0	20WP	G15_078		Non-Converged Contingency	329.05	360.92	0.10521	-	BUSHLAND INTERCHANGE - POTTER COUNTY INTERCHANGE 230KV CKT 1
FDNSLock-Blown up	06ALL	0	20WP	G15_078		Non-Converged Contingency	557	557	0.10023	-	NEWHART 230 - POTTER COUNTY INTERCHANGE 230KV CKT 1
FDNSLock-Blown up	06ALL	0	20WP	G15_078		Non-Converged Contingency	0	0	0.09934	-	P12:230:AEPW-SPS:SWEETWT6:WHEELER 6
FDNSLock-Blown up	06ALL	0	20WP	G15_078		Non-Converged Contingency	1561	1793	0.08923	-	THISTLE7 345.00 - WOODWARD DISTRICT EHV 345KV CKT 1
FDNSLock-Blown up	06ALL	0	20WP	G15_078		Non-Converged Contingency	1561	1793	0.08923	-	THISTLE7 345.00 - WOODWARD DISTRICT EHV 345KV CKT 1
FDNSLock-Blown up	06ALL	0	20WP	G15_078		Non-Converged Contingency	1561	1793	0.08923	-	THISTLE7 345.00 - WOODWARD DISTRICT EHV 345KV CKT 2
FDNSLock-Blown up	06ALL	0	20WP	G15_078		Non-Converged Contingency	1561	1793	0.08923	-	THISTLE7 345.00 - WOODWARD DISTRICT EHV 345KV CKT 2
FDNSLock-Blown up	06ALL	0	20WP	G15_078		Non-Converged Contingency	1420	1775	0.0887	-	G11_051T 345.00 - TATONGA7 345.00 345KV CKT 1
FDNSLock-Blown up	06ALL	0	20WP	G15_078		Non-Converged Contingency	1420	1775	0.0887	-	G11_051T 345.00 - WOODWARD DISTRICT EHV 345KV CKT 1
FDNSLock-Blown up	06ALL	0	20WP	G15_078		Non-Converged Contingency	1195	1195	0.0887	-	MATHWSN7 345.00 - TATONGA7 345.00 345KV CKT 1
FDNSLock-Blown up	06ALL	0	20WP	G15_078		Non-Converged Contingency	478	502	0.08693	-	AMARILLO SOUTH INTERCHANGE - G15031_T 230.00 230KV CKT 1
FDNSLock-Blown up	06ALL	0	20WP	G15_078		Non-Converged Contingency	1793	1793	0.06032	-	G11-14T 345.00 - WOODWARD DISTRICT EHV 345KV CKT 1
FDNSLock-Blown up	06ALL	0	20WP	G15_078		Non-Converged Contingency	1716	1793	0.06032	-	G11-14T 345.00 - WOODWARD DISTRICT EHV 345KV CKT 2
FDNSLock-Blown up	06ALL	0	20WP	G15_078		Non-Converged Contingency	556.92	556.92	0.05944	-	HITCHLAND INTERCHANGE - MOORE COUNTY INTERCHANGE 230KV CKT 1
FDNSLock-Blown up	06ALL	0	20WP	G15_078		Non-Converged Contingency	556.92	556.92	0.05944	-	HITCHLAND INTERCHANGE - MOORE COUNTY INTERCHANGE 230KV CKT 1
FDNSLock-Blown up	06ALL	0	20WP	G15_078		Non-Converged Contingency	329.05	360.92	0.05056	-	MOORE COUNTY INTERCHANGE - POTTER COUNTY INTERCHANGE 230KV CKT 1
FDNSLock-Blown up	06ALL	0	20WP	G15_078		Non-Converged Contingency	329.05	360.92	0.05056	-	MOORE COUNTY INTERCHANGE - POTTER COUNTY INTERCHANGE 230KV CKT 1
FDNSLock-Blown up	06ALL	0	20WP	G15_078		Non-Converged Contingency	421	439	0.04967	-	CHISHOLM6 230.00 - SWEETWATER 230KV CKT 1
FDNSLock-Blown up	06ALL	0	20WP	G15_078		Non-Converged Contingency	435.02	457.73	0.04967	-	STATELINE INTERCHANGE - STLN-DEMARC6 230KV CKT 1
FDNSLock-Blown up	06ALL	0	20WP	G15_078		Non-Converged Contingency	439	439	0.04967	-	STLN-DEMARC6 - SWEETWATER 230KV CKT 1
FDNSLock-Blown up	06ALL	0	20WP	G15_078		Non-Converged Contingency	557	557	0.04313	-	GRAPEVINE INTERCHANGE - NICHOLS STATION 230KV CKT 1

SOLUTION	GROUP	SCENARIO	SEASON	SOURCE	DIRECTION	MONITORED ELEMENT	RATEA (MVA)	RATEB(MVA)	TDF	TC%LOADING (% MVA)	CONTINGENCY
FDNSLock-Blown up	06ALL	0	20WP	G15_078		Non-Converged Contingency	557	557	0.04313	-	GRAPEVINE INTERCHANGE - NICHOLS STATION 230KV CKT 1
FDNSLock-Blown up	06ALL	0	20WP	G15_078		Non-Converged Contingency	557	557	0.04235	-	GRAPEVINE INTERCHANGE - STATELINE INTERCHANGE 230KV CKT 1
FDNSLock-Blown up	06ALL	0	20WP	G15_078		Non-Converged Contingency	557	557	0.04235	-	GRAPEVINE INTERCHANGE - STATELINE INTERCHANGE 230KV CKT 1
FDNSLock-Blown up	06ALL	2	16WP	G15_078		Non-Converged Contingency	1022	1124	0.20418	-	G14-074T 345.00 - OKLAUNION 345KV CKT 1
FDNSLock-Blown up	06ALL	2	16WP	G15_078		Non-Converged Contingency	1022	1124	0.20418	-	G14-074T 345.00 - TUCO INTERCHANGE 345KV CKT 1
FDNSLock-Blown up	06ALL	2	16WP	G15_078		Non-Converged Contingency	987.16	1082.8	0.16442	-	G14_038T 345.00 - Hitchland Interchange 345KV CKT 1
FDNSLock-Blown up	06ALL	2	16WP	G15_078		Non-Converged Contingency	987.16	1082.8	0.16442	-	G14_038T 345.00 - POTTER COUNTY INTERCHANGE 345KV CKT 1
FDNSLock-Blown up	06ALL	2	16WP	G15_078		Non-Converged Contingency	560	560	0.16442	-	POTTER COUNTY INTERCHANGE (WAUK 90343-A) 345/230/13.2KV TRANSFORMER CKT 1
FDNSLock-Blown up	06ALL	2	16WP	G15_078		Non-Converged Contingency	1792	1972	0.16059	-	BORDER 7345.00 - TUCO_2 345.00 345KV CKT 1
FDNSLock-Blown up	06ALL	2	16WP	G15_078		Non-Converged Contingency	1420	1775	0.16059	-	BORDER 7345.00 - TUCO_2 345.00 345KV CKT 2
FDNSLock-Blown up	06ALL	2	17G	G15_078		Non-Converged Contingency	1022	1124	0.19763	-	G14-074T 345.00 - OKLAUNION 345KV CKT 1
FDNSLock-Blown up	06ALL	2	17G	G15_078		Non-Converged Contingency	1022	1124	0.19763	-	G14-074T 345.00 - TUCO INTERCHANGE 345KV CKT 1
FDNSLock-Blown up	06ALL	2	17G	G15_078		Non-Converged Contingency	956.09	1051.7	0.15519	-	G14_038T 345.00 - Hitchland Interchange 345KV CKT 1
FDNSLock-Blown up	06ALL	2	17G	G15_078		Non-Converged Contingency	956.09	1051.7	0.15519	-	G14_038T 345.00 - POTTER COUNTY INTERCHANGE 345KV CKT 1
FDNSLock-Blown up	06ALL	2	17G	G15_078		Non-Converged Contingency	560	560	0.15519	-	POTTER COUNTY INTERCHANGE (WAUK 90343-A) 345/230/13.2KV TRANSFORMER CKT 1
FDNSLock-Blown up	06ALL	2	17G	G15_078		Non-Converged Contingency	1792	1972	0.15485	-	BORDER 7345.00 - TUCO_2 345.00 345KV CKT 1
FDNSLock-Blown up	06ALL	2	17G	G15_078		Non-Converged Contingency	1420	1775	0.15485	-	BORDER 7345.00 - TUCO_2 345.00 345KV CKT 2
FDNSLock-Blown up	06NR	2	17G	G15_078		Non-Converged Contingency	1022	1124	0.0415	-	G14-074T 345.00 - OKLAUNION 345KV CKT 1
FDNSLock-Blown up	06NR	2	17G	G15_078		Non-Converged Contingency	1022	1124	0.0415	-	G14-074T 345.00 - TUCO INTERCHANGE 345KV CKT 1
FDNSLock-Blown up	06NR	2	17G	G15_078		Non-Converged Contingency	1792	1972	0.03955	-	BORDER 7345.00 - TUCO_2 345.00 345KV CKT 1
FDNSLock-Blown up	06NR	2	17G	G15_078		Non-Converged Contingency	1792	1792	0.03955	-	BORDER 7345.00 - WOODWARD DISTRICT EHV 345KV CKT 1
FDNSLock-Blown up	06ALL	2	17SP	G15_078		Non-Converged Contingency	956	1042	0.20369	-	G14-074T 345.00 - OKLAUNION 345KV CKT 1
FDNSLock-Blown up	06ALL	2	20L	G15_078		Non-Converged Contingency	0	0	0.20098	-	P12:345:SPS:J07.1.FINN.HITCH
FDNSLock-Blown up	06ALL	2	20L	G15_078		Non-Converged Contingency	1022	1124	0.18236	-	G14-074T 345.00 - OKLAUNION 345KV CKT 1
FDNSLock-Blown up	06ALL	2	20L	G15_078		Non-Converged Contingency	1022	1124	0.18236	-	G14-074T 345.00 - TUCO INTERCHANGE 345KV CKT 1
FDNSLock-Blown up	06ALL	2	20L	G15_078		Non-Converged Contingency	1022	1124	0.18236	-	OKLAUNION 345KV SWITCHED SHUNT
FDNSLock-Blown up	06ALL	2	20L	G15_078		Non-Converged Contingency	1792	1972	0.15043	-	BORDER 7345.00 - TUCO_2 345.00 345KV CKT 1
FDNSLock-Blown up	06ALL	2	20L	G15_078		Non-Converged Contingency	1420	1775	0.15043	-	BORDER 7345.00 - TUCO_2 345.00 345KV CKT 2
FDNSLock-Blown up	06ALL	2	20L	G15_078		Non-Converged Contingency	1584	2098	0.1299	-	CHISHOLM7 345.00 - GRACEMONT 345KV CKT 1
FDNSLock-Blown up	06ALL	2	20L	G15_078		Non-Converged Contingency	956.09	1051.7	0.11138	-	G14_038T 345.00 - Hitchland Interchange 345KV CKT 1
FDNSLock-Blown up	06ALL	2	20L	G15_078		Non-Converged Contingency	956.09	1051.7	0.11138	-	G14_038T 345.00 - POTTER COUNTY INTERCHANGE 345KV CKT 1
FDNSLock-Blown up	06ALL	2	20L	G15_078		Non-Converged Contingency	560	560	0.11138	-	POTTER COUNTY INTERCHANGE (WAUK 90343-A) 345/230/13.2KV TRANSFORMER CKT 1
FDNSLock-Blown up	06ALL	2	20L	G15_078		Non-Converged Contingency	560	560	0.11138	-	POTTER COUNTY INTERCHANGE (WAUK 90343-A) 345/230/13.2KV TRANSFORMER CKT 1
FDNSLock-Blown up	06ALL	2	20L	G15_078		Non-Converged Contingency	956.09	1051.7	0.10731	-	Hitchland Interchange - WALKTAP7 345.00 345KV CKT 1
FDNSLock-Blown up	06ALL	2	20L	G15_078		Non-Converged Contingency	956.09	1051.7	0.10731	-	Hitchland Interchange - WALKTAP7 345.00 345KV CKT 1
FDNSLock-Blown up	06ALL	2	20L	G15_078		Non-Converged Contingency	0	0	0.08462	-	P12:230:AEPW:ELKCITY6:SWEETWT6
FDNSLock-Blown up	06NR	2	20L	G15_078		Non-Converged Contingency	478	502	0.08059	-	AMARILLO SOUTH INTERCHANGE - G15031_T 230.00 230KV CKT 1
FDNSLock-Blown up	06ALL	2	20L	G15_078		Non-Converged Contingency	1195	1195	0.07453	-	MATHWSN7 345.00 - TATONGA7 345.00 345KV CKT 1
FDNSLock-Blown up	06NR	2	20L	G15_078		Non-Converged Contingency	478	502	0.07081	-	NEWHART 230 - POTTER COUNTY INTERCHANGE 230KV CKT 1
FDNSLock-Blown up	06NR	2	20L	G15_078		Non-Converged Contingency	318.7	350.57	0.06786	-	DEAF SMITH COUNTY INTERCHANGE - G15039_T 230.00 230KV CKT 1
FDNSLock-Blown up	06NR	2	20L	G15_078		Non-Converged Contingency	318.7	350.57	0.06243	-	BUSHLAND INTERCHANGE - POTTER COUNTY INTERCHANGE 230KV CKT 1
FDNSLock-Blown up	06NR	2	20L	G15_078		Non-Converged Contingency	318.7	350.57	0.06243	-	BUSHLAND INTERCHANGE - POTTER COUNTY INTERCHANGE 230KV CKT 1
FDNSLock-Blown up	06NR	2	20L	G15_078		Non-Converged Contingency	1022	1124	0.05664	-	G14-074T 345.00 - OKLAUNION 345KV CKT 1
FDNSLock-Blown up	06NR	2	20L	G15_078		Non-Converged Contingency	1022	1124	0.05664	-	G14-074T 345.00 - TUCO INTERCHANGE 345KV CKT 1
FDNSLock-Blown up	06NR	2	20L	G15_078		Non-Converged Contingency	1022	1124	0.05664	-	OKLAUNION 345KV SWITCHED SHUNT
FDNSLock-Blown up	06NR	2	20L	G15_078		Non-Converged Contingency	1792	1972	0.05395	-	BORDER 7345.00 - TUCO_2 345.00 345KV CKT 1
FDNSLock-Blown up	06NR	2	20L	G15_078		Non-Converged Contingency	1792	1792	0.05395	-	BORDER 7345.00 - WOODWARD DISTRICT EHV 345KV CKT 1
FDNSLock-Blown up	06NR	2	20L	G15_078		Non-Converged Contingency	1792	1972	0.05395	-	BORDER 7345.00 345KV SWITCHED SHUNT
FDNSLock-Blown up	06ALL	2	20L	G15_078		Non-Converged Contingency	421	439	0.03436	-	CHISHOLM6 230.00 - SWEETWATER 230KV CKT 1
FDNSLock-Blown up	06ALL	2	20SP	G15_078		Non-Converged Contingency	956	1042	0.21651	-	G14-074T 345.00 - OKLAUNION 345KV CKT 1
FDNSLock-Blown up	06ALL	2	20WP	G15_078		Non-Converged Contingency	1022	1124	0.2118	-	G14-074T 345.00 - OKLAUNION 345KV CKT 1
FDNSLock-Blown up	06ALL	2	20WP	G15_078		Non-Converged Contingency	1022	1124	0.2118	-	G14-074T 345.00 - TUCO INTERCHANGE 345KV CKT 1
FDNSLock-Blown up	06ALL	2	20WP	G15_078		Non-Converged Contingency	1792	1972	0.17115	-	BORDER 7345.00 - TUCO_2 345.00 345KV CKT 1
FDNSLock-Blown up	06ALL	2	20WP	G15_078		Non-Converged Contingency	1420	1775	0.17115	-	BORDER 7345.00 - TUCO_2 345.00 345KV CKT 2
FDNSLock-Blown up	06ALL	2	20WP	G15_078		Non-Converged Contingency	987.16	1082.8	0.14015	-	G14_038T 345.00 - Hitchland Interchange 345KV CKT 1
FDNSLock-Blown up	06ALL	2	20WP	G15_078		Non-Converged Contingency	987.16	1082.8	0.14015	-	G14_038T 345.00 - POTTER COUNTY INTERCHANGE 345KV CKT 1
FDNSLock-Blown up	06ALL	2	20WP	G15_078		Non-Converged Contingency	560	560	0.14015	-	POTTER COUNTY INTERCHANGE (WAUK 90343-A) 345/230/13.2KV TRANSFORMER CKT 1
FDNSLock-Blown up	06ALL	2	20WP	G15_078		Non-Converged Contingency	560	560	0.14015	-	POTTER COUNTY INTERCHANGE (WAUK 90343-A) 345/230/13.2KV TRANSFORMER CKT 1
FDNSLock-Blown up	06ALL	3	16WP	G15_078		Non-Converged Contingency	1022	1124	0.21602	-	G14-074T 345.00 - OKLAUNION 345KV CKT 1
FDNSLock-Blown up	06ALL	3	16WP	G15_078		Non-Converged Contingency	1022	1124	0.21602	-	G14-074T 345.00 - TUCO INTERCHANGE 345KV CKT 1
FDNSLock-Blown up	06NR	3	17G	G15_078		Non-Converged Contingency	1022	1124	0.04605	-	G14-074T 345.00 - OKLAUNION 345KV CKT 1
FDNSLock-Blown up	06NR	3	17G	G15_078		Non-Converged Contingency	1022	1124	0.04605	-	G14-074T 345.00 - TUCO INTERCHANGE 345KV CKT 1
FDNSLock-Blown up	06NR	3	17G	G15_078		Non-Converged Contingency	1792	1972	0.04422	-	BORDER 7345.00 - TUCO_2 345.00 345KV CKT 1
FDNSLock-Blown up	06NR	3	17G	G15_078		Non-Converged Contingency	1792	1792	0.04422	-	BORDER 7345.00 - WOODWARD DISTRICT EHV 345KV CKT 1
FDNSLock-Blown up	06ALL	3	17SP	G15_078		Non-Converged Contingency	956	1042	0.21416	-	G14-074T 345.00 - OKLAUNION 345KV CKT 1
FDNSLock-Blown up	06ALL	3	20L	G15_078		Non-Converged Contingency	1022	1124	0.18685	-	G14-074T 345.00 - OKLAUNION 345KV CKT 1
FDNSLock-Blown up	06ALL	3	20L	G15_078		Non-Converged Contingency	1022	1124	0.18685	-	G14-074T 345.00 - TUCO INTERCHANGE 345KV CKT 1
FDNSLock-Blown up	06ALL	3	20L	G15_078		Non-Converged Contingency	1792	1972	0.15551	-	BORDER 7345.00 - TUCO_2 345.00 345KV CKT 1
FDNSLock-Blown up	06ALL	3	20L	G15_078		Non-Converged Contingency	1420	1775	0.15551	-	BORDER 7345.00 - TUCO_2 345.00 345KV CKT 2
FDNSLock-Blown up	06ALL	3	20L	G15_078		Non-Converged Contingency	1584	2098	0.13138	-	CHISHOLM7 345.00 - GRACEMONT 345KV CKT 1
FDNSLock-Blown up	06ALL	3	20L	G15_078		Non-Converged Contingency	956.09	1051.7	0.10762	-	G14_038T 345.00 - Hitchland Interchange 345KV CKT 1
FDNSLock-Blown up	06ALL	3	20L	G15_078		Non-Converged Contingency	956.09	1051.7	0.10762	-	G14_038T 345.00 - POTTER COUNTY INTERCHANGE 345KV CKT 1
FDNSLock-Blown up	06ALL	3	20L	G15_078		Non-Converged Contingency	560	560	0.10762	-	POTTER COUNTY INTERCHANGE (WAUK 90343-A) 345/230/13.2KV TRANSFORMER CKT 1
FDNSLock-Blown up	06ALL	3	20L	G15_078		Non-Converged Contingency	956.09	1051.7	0.10595	-	Hitchland Interchange - WALKTAP7 345.00 345KV CKT 1
FDNSLock-Blown up	06ALL	3	20L	G15_078		Non-Converged Contingency	1195	1195	0.07386	-	MATHWSN7 345.00 - TATONGA7 345.00 345KV CKT 1
FDNSLock-Blown up	06NR	3	20L	G15_078		Non-Converged Contingency	1022	1124	0.05653	-	G14-074T 345.00 - OKLAUNION 345KV CKT 1
FDNSLock-Blown up	06NR	3	20L	G15_078		Non-Converged Contingency	1022	1124	0.05653	-	G14-074T 345.00 - TUCO INTERCHANGE 345KV CKT 1
FDNSLock-Blown up	06NR	3	20L	G15_078		Non-Converged Contingency	1022	1124	0.05653	-	OKLAUNION 345KV SWITCHED SHUNT
FDNSLock-Blown up	06NR	3	20L	G15_078		Non-Converged Contingency	1792	1972	0.05383	-	BORDER 7345.00 - TUCO_2 345.00 345KV CKT 1

SOLUTION	GROUP	SCENARIO	SEASON	SOURCE	DIRECTION	MONITORED ELEMENT	RATEA (MVA)	RATEB(MVA)	TDF	TC%LOADING (% MVA)	CONTINGENCY
FDNSLock-Blown up	06NR	3	20L	G15_078		Non-Converged Contingency	1792	1792	0.05383	-	BORDER 7345.00 - WOODWARD DISTRICT EHV 345KV CKT 1
FDNSLock-Blown up	06NR	3	20L	G15_078		Non-Converged Contingency	1792	1972	0.05383	-	BORDER 7345.00 345KV SWITCHED SHUNT
FDNSLock-Blown up	06ALL	3	20L	G15_078		Non-Converged Contingency	421	439	0.03108	-	CHISHOLM6 230.00 - SWEETWATER 230KV CKT 1
FDNSLock-Blown up	06ALL	3	20SP	G15_078		Non-Converged Contingency	956	1042	0.22111	-	G14-074T 345.00 - OKLAUNION 345KV CKT 1
FDNSLock-Blown up	06ALL	3	20WP	G15_078		Non-Converged Contingency	1022	1124	0.21652	-	G14-074T 345.00 - OKLAUNION 345KV CKT 1
FDNSLock-Blown up	06ALL	3	20WP	G15_078		Non-Converged Contingency	1022	1124	0.21652	-	G14-074T 345.00 - TUCO INTERCHANGE 345KV CKT 1
FDNSLock-Blown up	06ALL	3	20WP	G15_078		Non-Converged Contingency	1792	1972	0.17672	-	BORDER 7345.00 - TUCO_2 345.00 345KV CKT 1
FDNSLock-Blown up	06ALL	3	20WP	G15_078		Non-Converged Contingency	1420	1775	0.17672	-	BORDER 7345.00 - TUCO_2 345.00 345KV CKT 2
FDNSLock-Blown up	06ALL	3	20WP	G15_078		Non-Converged Contingency	987.16	1082.8	0.13505	-	G14_038T 345.00 - Hitchland Interchange 345KV CKT 1
FDNSLock-Blown up	06ALL	3	20WP	G15_078		Non-Converged Contingency	987.16	1082.8	0.13505	-	G14_038T 345.00 - POTTER COUNTY INTERCHANGE 345KV CKT 1
FDNSLock-Blown up	06ALL	4	16WP	G15_078		Non-Converged Contingency	1022	1124	0.19524	-	G14-074T 345.00 - OKLAUNION 345KV CKT 1
FDNSLock-Blown up	06ALL	4	17G	G15_078		Non-Converged Contingency	956.09	1051.7	0.19567	-	G14_038T 345.00 - Hitchland Interchange 345KV CKT 1
FDNSLock-Blown up	06ALL	4	17G	G15_078		Non-Converged Contingency	956.09	1051.7	0.19567	-	G14_038T 345.00 - POTTER COUNTY INTERCHANGE 345KV CKT 1
FDNSLock-Blown up	06ALL	4	17G	G15_078		Non-Converged Contingency	1022	1124	0.18873	-	G14-074T 345.00 - OKLAUNION 345KV CKT 1
FDNSLock-Blown up	06ALL	4	17G	G15_078		Non-Converged Contingency	1022	1124	0.18873	-	G14-074T 345.00 - TUCO INTERCHANGE 345KV CKT 1
FDNSLock-Blown up	06NR	4	17G	G15_078		Non-Converged Contingency	1022	1124	0.03099	-	G14-074T 345.00 - OKLAUNION 345KV CKT 1
FDNSLock-Blown up	06NR	4	17G	G15_078		Non-Converged Contingency	1022	1124	0.03099	-	G14-074T 345.00 - TUCO INTERCHANGE 345KV CKT 1
FDNSLock-Blown up	06ALL	4	20L	G15_078		Non-Converged Contingency	0	0	0.22133	-	P12:345:SPS:J07.1.FINN.HITCH
FDNSLock-Blown up	06ALL	4	20L	G15_078		Non-Converged Contingency	1022	1124	0.16934	-	G14-074T 345.00 - OKLAUNION 345KV CKT 1
FDNSLock-Blown up	06ALL	4	20L	G15_078		Non-Converged Contingency	1022	1124	0.16934	-	G14-074T 345.00 - TUCO INTERCHANGE 345KV CKT 1
FDNSLock-Blown up	06ALL	4	20L	G15_078		Non-Converged Contingency	956.09	1051.7	0.15504	-	G14_038T 345.00 - Hitchland Interchange 345KV CKT 1
FDNSLock-Blown up	06ALL	4	20L	G15_078		Non-Converged Contingency	956.09	1051.7	0.15504	-	G14_038T 345.00 - POTTER COUNTY INTERCHANGE 345KV CKT 1
FDNSLock-Blown up	06ALL	4	20L	G15_078		Non-Converged Contingency	1792	1972	0.13663	-	BORDER 7345.00 - TUCO_2 345.00 345KV CKT 1
FDNSLock-Blown up	06ALL	4	20L	G15_078		Non-Converged Contingency	1420	1775	0.13663	-	BORDER 7345.00 - TUCO_2 345.00 345KV CKT 2
FDNSLock-Blown up	06ALL	4	20L	G15_078		Non-Converged Contingency	1584	2098	0.12769	-	CHISHOLM7 345.00 - GRACEMONT 345KV CKT 1
FDNSLock-Blown up	06ALL	4	20L	G15_078		Non-Converged Contingency	956.09	1051.7	0.11817	-	Hitchland Interchange - WALKTAP7 345.00 345KV CKT 1
FDNSLock-Blown up	06ALL	4	20L	G15_078		Non-Converged Contingency	956.09	1051.7	0.11817	-	Hitchland Interchange - WALKTAP7 345.00 345KV CKT 1
FDNSLock-Blown up	06ALL	4	20L	G15_078		Non-Converged Contingency	0	0	0.08964	-	P12:230:AEPW:ELKCITY6:SWEETWT6
FDNSLock-Blown up	06NR	4	20L	G15_078		Non-Converged Contingency	1022	1124	0.0415	-	G14-074T 345.00 - OKLAUNION 345KV CKT 1
FDNSLock-Blown up	06NR	4	20L	G15_078		Non-Converged Contingency	1022	1124	0.0415	-	G14-074T 345.00 - TUCO INTERCHANGE 345KV CKT 1
FDNSLock-Blown up	06NR	4	20L	G15_078		Non-Converged Contingency	1022	1124	0.0415	-	OKLAUNION 345KV SWITCHED SHUNT
FDNSLock-Blown up	06NR	4	20L	G15_078		Non-Converged Contingency	1792	1972	0.03826	-	BORDER 7345.00 - TUCO_2 345.00 345KV CKT 1
FDNSLock-Blown up	06NR	4	20L	G15_078		Non-Converged Contingency	1792	1792	0.03826	-	BORDER 7345.00 - WOODWARD DISTRICT EHV 345KV CKT 1
FDNSLock-Blown up	06ALL	4	20WP	G15_078		Non-Converged Contingency	1022	1124	0.19727	-	G14-074T 345.00 - OKLAUNION 345KV CKT 1
FDNSLock-Blown up	06ALL	4	20WP	G15_078		Non-Converged Contingency	1022	1124	0.19727	-	G14-074T 345.00 - TUCO INTERCHANGE 345KV CKT 1
FDNSLock-Blown up	06ALL	4	20WP	G15_078		Non-Converged Contingency	987.16	1082.8	0.18556	-	G14_038T 345.00 - Hitchland Interchange 345KV CKT 1
FDNSLock-Blown up	06ALL	5	16WP	G15_078		Non-Converged Contingency	1022	1124	0.18782	-	G14-074T 345.00 - OKLAUNION 345KV CKT 1
FDNSLock-Blown up	06ALL	5	17G	G15_078		Non-Converged Contingency	1022	1124	0.18179	-	G14-074T 345.00 - OKLAUNION 345KV CKT 1
FDNSLock-Blown up	06NR	5	17G	G15_078		Non-Converged Contingency	1022	1124	0.03108	-	G14-074T 345.00 - OKLAUNION 345KV CKT 1
FDNSLock-Blown up	06ALL	5	20L	G15_078		Non-Converged Contingency	1022	1124	0.16567	-	G14-074T 345.00 - OKLAUNION 345KV CKT 1
FDNSLock-Blown up	06NR	5	20L	G15_078		Non-Converged Contingency	1022	1124	0.04255	-	G14-074T 345.00 - OKLAUNION 345KV CKT 1
FDNSLock-Blown up	06NR	5	20L	G15_078		Non-Converged Contingency	1022	1124	0.04255	-	G14-074T 345.00 - TUCO INTERCHANGE 345KV CKT 1
FDNSLock-Blown up	06NR	5	20L	G15_078		Non-Converged Contingency	1792	1972	0.03867	-	BORDER 7345.00 - TUCO_2 345.00 345KV CKT 1
FDNSLock-Blown up	06NR	5	20L	G15_078		Non-Converged Contingency	1792	1792	0.03867	-	BORDER 7345.00 - WOODWARD DISTRICT EHV 345KV CKT 1
FDNSLock-Blown up	06ALL	5	20WP	G15_078		Non-Converged Contingency	1022	1124	0.19079	-	G14-074T 345.00 - OKLAUNION 345KV CKT 1
FDNSLock-Blown up	06ALL	6	17G	G15_078		Non-Converged Contingency	1022	1124	0.17476	-	G14-074T 345.00 - OKLAUNION 345KV CKT 1
FDNSLock-Blown up	06NR	6	17G	G15_078		Non-Converged Contingency	1022	1124	0.03112	-	G14-074T 345.00 - OKLAUNION 345KV CKT 1
FDNSLock-Blown up	06ALL	6	20L	G15_078		Non-Converged Contingency	1022	1124	0.15969	-	G14-074T 345.00 - OKLAUNION 345KV CKT 1
FDNSLock-Blown up	06NR	6	20L	G15_078		Non-Converged Contingency	1022	1124	0.04265	-	G14-074T 345.00 - OKLAUNION 345KV CKT 1
FDNSLock-Blown up	06NR	6	20L	G15_078		Non-Converged Contingency	1792	1972	0.03872	-	BORDER 7345.00 - TUCO_2 345.00 345KV CKT 1
FDNSLock-Blown up	06NR	6	20L	G15_078		Non-Converged Contingency	1792	1792	0.03872	-	BORDER 7345.00 - WOODWARD DISTRICT EHV 345KV CKT 1
FDNSLock-Blown up	06ALL	6	20WP	G15_078		Non-Converged Contingency	1022	1124	0.18398	-	G14-074T 345.00 - OKLAUNION 345KV CKT 1
FDNSLock-Blown up	06NR	7	20L	G15_078		Non-Converged Contingency	1022	1124	0.04265	-	G14-074T 345.00 - OKLAUNION 345KV CKT 1
FDNS	06ALL	0	16WP	G15_078	FROM->TO	BUSHLAND INTERCHANGE - POTTER COUNTY INTERCHANGE 230KV CKT 1	329.05	360.92	0.13379	103.4995	BASE CASE
FDNS	06NR	0	17G	G15_078	FROM->TO	BUSHLAND INTERCHANGE - POTTER COUNTY INTERCHANGE 230KV CKT 1	318.7	350.57	0.08447	101.2444	BUSHLAND INTERCHANGE - HILLSIDE 115KV CKT 1
FDNS	06NR	0	17G	G15_078	FROM->TO	BUSHLAND INTERCHANGE - POTTER COUNTY INTERCHANGE 230KV CKT 1	318.7	350.57	0.08447	101.1735	BUSHLAND INTERCHANGE (WH 7001795) 230/115/13.2KV TRANSFORMER CKT 1
FDNS	06NR	0	17G	G15_078	FROM->TO	BUSHLAND INTERCHANGE - POTTER COUNTY INTERCHANGE 230KV CKT 1	318.7	350.57	0.08447	101.1735	BUSHLAND INTERCHANGE (WH 7001795) 230/115/13.2KV TRANSFORMER CKT 1
FDNS	06NR	0	17G	G15_078	FROM->TO	BUSHLAND INTERCHANGE - POTTER COUNTY INTERCHANGE 230KV CKT 1	318.7	350.57	0.08447	100.4335	P12:115:SPS:V52.1.COLTR.BSHLND
FDNS	06ALL	0	20SP	G15_078	FROM->TO	CHISHOLM6 230.00 - ELK CITY 230KV 230KV CKT 1	353	353	0.0634	106.4803	BASE CASE
FDNS	06ALL	0	17SP	G15_078	FROM->TO	CHISHOLM6 230.00 - ELK CITY 230KV 230KV CKT 1	353	353	0.06344	104.7427	BASE CASE
FDNS	06ALL	0	17SP	G15_078	TO->FROM	CIMARRON - MINCO 345KV CKT 1	956	956	0.24067	123.2446	G14-057T 345.00 - SUNNYSIDE 345KV CKT 1
FDNS	06ALL	0	20SP	G15_078	TO->FROM	CIMARRON - MINCO 345KV CKT 1	956	956	0.24849	120.5642	G14-057T 345.00 - SUNNYSIDE 345KV CKT 1
FDNS	06ALL	0	17SP	G15_078	TO->FROM	CIMARRON - MINCO 345KV CKT 1	956	956	0.24067	117.8925	G14-057T 345.00 - LAWTON EASTSIDE 345KV CKT 1
FDNS	06ALL	0	20SP	G15_078	TO->FROM	CIMARRON - MINCO 345KV CKT 1	956	956	0.24849	115.1699	G14-057T 345.00 - LAWTON EASTSIDE 345KV CKT 1
FDNS	06ALL	0	17SP	G15_078	TO->FROM	CIMARRON - MINCO 345KV CKT 1	956	956	0.20553	105.5731	MATHWSN7 345.00 - TATONGA7 345.00 345KV CKT 1
FDNS	06ALL	0	20SP	G15_078	TO->FROM	CIMARRON - MINCO 345KV CKT 1	956	956	0.2105	104.5241	MATHWSN7 345.00 - TATONGA7 345.00 345KV CKT 1
FDNS	06ALL	0	20SP	G15_078	TO->FROM	CIMARRON - MINCO 345KV CKT 1	956	956	0.25028	102.9387	CHISHOLM7 345.00 - WOODWARD DISTRICT EHV 345KV CKT 1
FDNS	06ALL	0	17SP	G15_078	TO->FROM	CIMARRON - MINCO 345KV CKT 1	956	956	0.2396	102.0892	CHISHOLM7 345.00 - WOODWARD DISTRICT EHV 345KV CKT 1
FDNS	06ALL	0	17SP	G15_078	TO->FROM	CIMARRON - MINCO 345KV CKT 1	956	956	0.20553	100.3376	G11_051T 345.00 - TATONGA7 345.00 345KV CKT 1
FDNS	06ALL	0	20SP	G15_078	TO->FROM	DEAF SMITH COUNTY INTERCHANGE - G15039_T 230.00 230KV CKT 1	318.7	350.57	0.10777	110.3343	BASE CASE
FDNS	06NR	0	17G	G15_078	TO->FROM	DEAF SMITH COUNTY INTERCHANGE - G15039_T 230.00 230KV CKT 1	318.7	350.57	0.10216	110.3216	NEWHART 230 - PLANT X STATION 230KV CKT 1
FDNS	06ALL	0	17SP	G15_078	TO->FROM	DEAF SMITH COUNTY INTERCHANGE - G15039_T 230.00 230KV CKT 1	318.7	350.57	0.13282	108.4885	BASE CASE
FDNS	06NR	0	17G	G15_078	TO->FROM	DEAF SMITH COUNTY INTERCHANGE - G15039_T 230.00 230KV CKT 1	318.7	350.57	0.08571	103.1436	P12:115:SPS:T04.1.DFSMTH.CASTRO
FDNS	06NR	0	17G	G15_078	TO->FROM	DEAF SMITH COUNTY INTERCHANGE - G15039_T 230.00 230KV CKT 1	318.7	350.57	0.08779	101.0528	CURRY COUNTY INTERCHANGE - DEAF SMITH REC-#20 115KV CKT 1
FDNS	06NR	0	17G	G15_078	TO->FROM	DEAF SMITH COUNTY INTERCHANGE - G15039_T 230.00 230KV CKT 1	318.7	350.57	0.08654	100.4761	TOLK STATION EAST - TUCO INTERCHANGE 230KV CKT 1
FDNS	06NR	0	17G	G15_078	TO->FROM	DEAF SMITH COUNTY INTERCHANGE - G15039_T 230.00 230KV CKT 1	318.7	350.57	0.08654	100.4761	TOLK STATION EAST - TUCO INTERCHANGE 230KV CKT 1
FDNS	06NR	0	17G	G15_078	TO->FROM	DEAF SMITH COUNTY INTERCHANGE - G15039_T 230.00 230KV CKT 1	318.7	350.57	0.08029	99.9	P12:230:SPS:CL.1.BSHLND.WLDRDO
FDNS	06NR	0	17G	G15_078	TO->FROM	DEAF SMITH COUNTY INTERCHANGE - G15039_T 230.00 230KV CKT 1	318.7	350.57	0.08779	99.6	DEAF SMITH REC-#20 - PARMER COUNTY SUB 115KV CKT 1
FDNS	00NR	0	25SP	G15_078	FROM->TO	DENVER CITY INTERCHANGE S. - SAN_ANDS_TP3115.00 115KV CKT 1	159	160	0.05377	132.1826	MUSTANG STATION - SEMINOLE 230KV CKT 1

SOLUTION	GROUP	SCENARIO	SEASON	SOURCE	DIRECTION	MONITORED ELEMENT	RATEA (MVA)	RATEB(MVA)	TDF	TC%LOADING (% MVA)	CONTINGENCY
FDNS	00NR	0	25SP	G15_078	FROM->TO	DENVER CITY INTERCHANGE S. - SAN_ANDS_TP3115.00 115KV CKT 1	159	160	0.05377	132.1826	MUSTANG STATION - SEMINOLE 230KV CKT 1
FDNS	00NR	0	20SP	G15_078	FROM->TO	DENVER CITY INTERCHANGE S. - SAN_ANDS_TP3115.00 115KV CKT 1	159	160	0.05507	112.7195	MUSTANG STATION - SEMINOLE 230KV CKT 1
FDNS	00NR	0	20SP	G15_078	FROM->TO	DENVER CITY INTERCHANGE S. - SAN_ANDS_TP3115.00 115KV CKT 1	159	160	0.05507	112.7195	MUSTANG STATION - SEMINOLE 230KV CKT 1
FDNS	00NR	0	17SP	G15_078	FROM->TO	DENVER CITY INTERCHANGE S. - SAN_ANDS_TP3115.00 115KV CKT 1	159	160	0.05594	107.6019	MUSTANG STATION - SEMINOLE 230KV CKT 1
FDNS	00NR	0	17SP	G15_078	FROM->TO	DENVER CITY INTERCHANGE S. - SAN_ANDS_TP3115.00 115KV CKT 1	159	160	0.05594	107.6019	MUSTANG STATION - SEMINOLE 230KV CKT 1
FDNS	00NR	0	25SP	G15_078	FROM->TO	DENVER CITY INTERCHANGE S. - SHELL C2 SUB 115KV CKT 1	159	175	0.03029	110.8234	P12:115:LCEC:W56.1.HOBBG.LE-LVN
FDNS	00NR	0	25SP	G15_078	FROM->TO	DENVER CITY INTERCHANGE S. - SHELL C2 SUB 115KV CKT 1	159	175	0.03029	110.3079	LE-WEST_SUB3115.00 - LEA COUNTY REC-LOVINGTON INTERCHANGE 115KV CKT 1
FDNSLock	06ALL	0	20WP	G15_078		ELK CITY 230KV (ELKCTY-6) 230/138/13.8KV TRANSFORMER CKT 1	450	450	0.0617	87.66341	BASE CASE
FDNSLock	06ALL	0	20WP	G15_078		ELK CITY 230KV (ELKCTY-6) 230/138/13.8KV TRANSFORMER CKT 1	450	450	0.0617	87.66341	BASE CASE
FDNS	06ALL	0	20L	G15_078	TO->FROM	G14-057T 345.00 - LAWTON EASTSIDE 345KV CKT 1	717	789	0.10444	108.0268	BASE CASE
FDNS	06ALL	0	20L	G15_078	FROM->TO	G14-057T 345.00 - SUNNYSIDE 345KV CKT 1	717	789	0.10444	120.8788	BASE CASE
FDNS	06ALL	0	20WP	G15_078	FROM->TO	G14-057T 345.00 - SUNNYSIDE 345KV CKT 1	717	789	0.12819	107.5634	BASE CASE
FDNS	06ALL	0	17G	G15_078	FROM->TO	G14-057T 345.00 - SUNNYSIDE 345KV CKT 1	717	789	0.12553	106.9763	BASE CASE
FDNS	06ALL	0	16WP	G15_078	FROM->TO	G14-057T 345.00 - SUNNYSIDE 345KV CKT 1	717	789	0.12881	105.0999	BASE CASE
FDNS	06NR	0	20L	G15_078	FROM->TO	G14-074T 345.00 - OKLAUNION 345KV CKT 1	1022	1124	0.05664	106.9322	BASE CASE
FDNS	06NR	0	17G	G15_078	FROM->TO	G14-074T 345.00 - OKLAUNION 345KV CKT 1	1022	1124	0.0415	102.2735	BASE CASE
FDNS	06NR	0	20L	G15_078	FROM->TO	G14-074T 345.00 - OKLAUNION 345KV CKT 1	1022	1124	0.05397	102.2532	CHISHOLM7 345.00 - GRACEMONT 345KV CKT 1
FDNS	06NR	0	20L	G15_078	FROM->TO	G14-074T 345.00 - OKLAUNION 345KV CKT 1	1022	1124	0.05397	101.8896	CHISHOLM7 345.00 () 345/230/13.2KV TRANSFORMER CKT 1
FDNS	06NR	0	20L	G15_078	FROM->TO	G14-074T 345.00 - OKLAUNION 345KV CKT 1	1022	1124	0.06215	101.4902	TUCO INTERCHANGE - TUCO_2 345.00 345KV CKT 1
FDNS	06NR	0	20L	G15_078	FROM->TO	G14-074T 345.00 - OKLAUNION 345KV CKT 1	1022	1124	0.06555	101.2851	BUSHLAND INTERCHANGE - DEAF SMITH COUNTY INTERCHANGE 230KV CKT 1
FDNS	06NR	0	20L	G15_078	FROM->TO	G14-074T 345.00 - OKLAUNION 345KV CKT 1	1022	1124	0.06555	101.2851	BUSHLAND INTERCHANGE - DEAF SMITH COUNTY INTERCHANGE 230KV CKT 1
FDNS	06NR	0	20L	G15_078	FROM->TO	G14-074T 345.00 - OKLAUNION 345KV CKT 1	1022	1124	0.05637	101.2671	MOORE COUNTY INTERCHANGE - POTTER COUNTY INTERCHANGE 230KV CKT 1
FDNS	06NR	0	20L	G15_078	FROM->TO	G14-074T 345.00 - OKLAUNION 345KV CKT 1	1022	1124	0.05637	101.2671	MOORE COUNTY INTERCHANGE - POTTER COUNTY INTERCHANGE 230KV CKT 1
FDNS	06NR	0	20L	G15_078	FROM->TO	G14-074T 345.00 - OKLAUNION 345KV CKT 1	1022	1124	0.05571	101.2654	G11-14T 345.00 - WOODWARD DISTRICT EHV 345KV CKT 1
FDNS	06NR	0	20L	G15_078	FROM->TO	G14-074T 345.00 - OKLAUNION 345KV CKT 1	1022	1124	0.05571	101.2654	G11-14T 345.00 - WOODWARD DISTRICT EHV 345KV CKT 2
FDNS	00NR	0	25SP	G15_078	FROM->TO	Hitchland Interchange (H TB80155502) 345/230/13.2KV TRANSFORMER CKT 1	560	644	0.0303	100	Hitchland Interchange (SIEM 8743067) 345/230/13.2KV TRANSFORMER CKT 2
FDNS	00NR	0	25SP	G15_078	FROM->TO	Hitchland Interchange (H TB80155502) 345/230/13.2KV TRANSFORMER CKT 1	560	644	0.0303	100	Hitchland Interchange (SIEM 8743067) 345/230/13.2KV TRANSFORMER CKT 2
FDNS	00NR	0	25SP	G15_078	FROM->TO	Hitchland Interchange (SIEM 8743067) 345/230/13.2KV TRANSFORMER CKT 2	560	644	0.03092	102.3531	Hitchland Interchange (H TB80155502) 345/230/13.2KV TRANSFORMER CKT 1
FDNS	00NR	0	25SP	G15_078	FROM->TO	Hitchland Interchange (SIEM 8743067) 345/230/13.2KV TRANSFORMER CKT 2	560	644	0.03092	102.3531	Hitchland Interchange (H TB80155502) 345/230/13.2KV TRANSFORMER CKT 1
FDNS	00NR	0	25SP	G15_078	FROM->TO	Hitchland Interchange (SIEM 8743067) 345/230/13.2KV TRANSFORMER CKT 2	560	644	0.03092	100.5303	Hitchland Interchange (H TB80155502) 345/230/13.2KV TRANSFORMER CKT 1
FDNS	00NR	0	25SP	G15_078	FROM->TO	Hitchland Interchange (SIEM 8743067) 345/230/13.2KV TRANSFORMER CKT 2	560	644	0.03092	100.5303	Hitchland Interchange (H TB80155502) 345/230/13.2KV TRANSFORMER CKT 1
FDNS	00NR	0	25SP	G15_078	FROM->TO	LUBBOCK POWER & LIGHT-HOLLY PLANT (SHIH T101039) 230/69/13.5KV TRANSFORMER CKT 1	224	224	0.03569	104.8294	LUBBOCK POWER & LIGHT-SOUTHEAST - LUBBOCK SOUTH INTERCHANGE 230KV CKT 1
FDNS	00NR	0	25SP	G15_078	FROM->TO	LUBBOCK POWER & LIGHT-HOLLY PLANT (SHIH T101039) 230/69/13.5KV TRANSFORMER CKT 1	224	224	0.03569	104.8165	P12:LPL:SPS:K64.1.LP-SE.LUBBS
FDNS	00NR	0	25SP	G15_078	FROM->TO	LUBBOCK POWER & LIGHT-HOLLY PLANT (SHIH T101039) 230/69/13.5KV TRANSFORMER CKT 1	224	224	0.03343	101.9053	LUBBOCK EAST INTERCHANGE - LUBBOCK POWER & LIGHT-WADSWORTH 230KV CKT 1
FDNS	00NR	0	25SP	G15_078	FROM->TO	LUBBOCK POWER & LIGHT-HOLLY PLANT (SHIH T101039) 230/69/13.5KV TRANSFORMER CKT 1	224	224	0.03343	101.8957	P12:230:LPL:K57.1.LP-WADS.LUBBE
FDNS	00NR	0	25SP	G15_078	FROM->TO	LUBBOCK POWER & LIGHT-HOLLY PLANT (SHIH T101039) 230/69/13.5KV TRANSFORMER CKT 1	224	224	0.03343	101.8956	LUBBOCK POWER & LIGHT-WADSWORTH (SHIH T101038) 230/69/13.5KV TRANSFORMER CKT 1
FDNS	00NR	0	25SP	G15_078	FROM->TO	LUBBOCK POWER & LIGHT-HOLLY PLANT (SHIH T101039) 230/69/13.5KV TRANSFORMER CKT 1	224	224	0.03343	101.8956	LUBBOCK POWER & LIGHT-WADSWORTH (SHIH T101038) 230/69/13.5KV TRANSFORMER CKT 1
FDNSLock	06ALL	0	20WP	G15_078		Non-Converged Contingency	1792	1792	0.17095	-	BORDER 7345.00 - CHISHOLM7 345.00 345KV CKT 1
FDNSLock	06ALL	0	20WP	G15_078		Non-Converged Contingency	1792	1792	0.17095	-	BORDER 7345.00 - CHISHOLM7 345.00 345KV CKT 2
FDNSLock	06ALL	0	20WP	G15_078		Non-Converged Contingency	439	439	0.0617	-	CHISHOLM6 230.00 - ELK CITY 230KV 230KV CKT 1
FDNS	06ALL	0	20WP	G15_078	FROM->TO	POTTER COUNTY INTERCHANGE (WAUK 90343-A) 345/230/13.2KV TRANSFORMER CKT 1	560	560	0.13993	101.9937	BASE CASE
FDNS	06ALL	0	20WP	G15_078	FROM->TO	POTTER COUNTY INTERCHANGE (WAUK 90343-A) 345/230/13.2KV TRANSFORMER CKT 1	560	560	0.13993	100.9471	BASE CASE
FDNS	00NR	0	25SP	G15_078	FROM->TO	SAN_ANDS_TP3115.00 - SEMINOLE 115KV CKT 1	159	160	0.05377	112.2508	MUSTANG STATION - SEMINOLE 230KV CKT 1
FDNS	00NR	0	25SP	G15_078	FROM->TO	SAN_ANDS_TP3115.00 - SEMINOLE 115KV CKT 1	159	160	0.05377	112.2508	MUSTANG STATION - SEMINOLE 230KV CKT 1
FDNS	00NR	0	25SP	G15_078	FROM->TO	SHELL C2 SUB - SHELL C3 TAP 115KV CKT 1	179	179	0.03029	101.4057	P12:115:LCEC:W56.1.HOBBG.LE-LVN
FDNS	00NR	0	25SP	G15_078	FROM->TO	SHELL C2 SUB - SHELL C3 TAP 115KV CKT 1	179	179	0.03029	100.9042	LE-WEST_SUB3115.00 - LEA COUNTY REC-LOVINGTON INTERCHANGE 115KV CKT 1
FDNS	06ALL	0	17SP	G15_078	FROM->TO	SUNDOWN INTERCHANGE - WOLFFORTH INTERCHANGE 230KV CKT 1	318.7	350.57	0.28996	100	TOLK STATION EAST - TUCO INTERCHANGE 230KV CKT 1
FDNS	06ALL	0	17SP	G15_078	FROM->TO	SUNDOWN INTERCHANGE - WOLFFORTH INTERCHANGE 230KV CKT 1	318.7	350.57	0.28996	100	TOLK STATION EAST - TUCO INTERCHANGE 230KV CKT 1
FDNS	06ALL	0	20SP	G15_078	FROM->TO	TUCO INTERCHANGE - TUCO_2 230.00 230KV CKT 1	497	547	0.34791	176.1131	TUCO INTERCHANGE - TUCO_2 345.00 345KV CKT 1
FDNS	06ALL	0	17SP	G15_078	FROM->TO	TUCO INTERCHANGE - TUCO_2 230.00 230KV CKT 1	497	547	0.30286	172.1789	TUCO INTERCHANGE - TUCO_2 345.00 345KV CKT 1
FDNS	06NR	0	17G	G15_078	FROM->TO	TUCO INTERCHANGE - TUCO_2 230.00 230KV CKT 1	497	547	0.07985	120.0923	TUCO INTERCHANGE - TUCO_2 345.00 345KV CKT 1
FDNS	06NR	0	20L	G15_078	FROM->TO	TUCO INTERCHANGE - TUCO_2 230.00 230KV CKT 1	497	547	0.12285	110.6573	TUCO INTERCHANGE - TUCO_2 345.00 345KV CKT 1
FDNS	06ALL	0	25SP	G15_078	FROM->TO	TUCO INTERCHANGE - TUCO_2 230.00 230KV CKT 1	497	547	0.35847	101.2227615	TUCO INTERCHANGE - TUCO_2 345.00 345KV CKT 1
FDNS	06ALL	0	20SP	G15_078	FROM->TO	TUCO_2 345.00 (TUCO_2 XFMR) 345/230/13.2KV TRANSFORMER CKT 1	560	560	0.30325	168.9327	TUCO INTERCHANGE - TUCO_2 345.00 345KV CKT 1
FDNS	06ALL	0	17SP	G15_078	FROM->TO	TUCO_2 345.00 (TUCO_2 XFMR) 345/230/13.2KV TRANSFORMER CKT 1	560	560	0.29613	168.0719	TUCO INTERCHANGE - TUCO_2 345.00 345KV CKT 1
FDNS	06ALL	0	20SP	G15_078	FROM->TO	TUCO_2 345.00 (TUCO_2 XFMR) 345/230/13.2KV TRANSFORMER CKT 1	560	560	0.30325	162.4281	TUCO INTERCHANGE - TUCO_2 345.00 345KV CKT 1
FDNS	06ALL	0	17SP	G15_078	FROM->TO	TUCO_2 345.00 (TUCO_2 XFMR) 345/230/13.2KV TRANSFORMER CKT 1	560	560	0.29613	161.5424	TUCO INTERCHANGE - TUCO_2 345.00 345KV CKT 1
FDNS	06NR	0	17G	G15_078	FROM->TO	TUCO_2 345.00 (TUCO_2 XFMR) 345/230/13.2KV TRANSFORMER CKT 1	560	560	0.03748	114.7643	TUCO INTERCHANGE - TUCO_2 345.00 345KV CKT 1
FDNS	06NR	0	17G	G15_078	FROM->TO	TUCO_2 345.00 (TUCO_2 XFMR) 345/230/13.2KV TRANSFORMER CKT 1	560	560	0.03748	111.8684	TUCO INTERCHANGE - TUCO_2 345.00 345KV CKT 1
FDNS	06NR	0	20L	G15_078	FROM->TO	TUCO_2 345.00 (TUCO_2 XFMR) 345/230/13.2KV TRANSFORMER CKT 1	560	560	0.04634	110.8936	TUCO INTERCHANGE - TUCO_2 345.00 345KV CKT 1
FDNS	06NR	0	20L	G15_078	FROM->TO	TUCO_2 345.00 (TUCO_2 XFMR) 345/230/13.2KV TRANSFORMER CKT 1	560	560	0.04634	108.3383	TUCO INTERCHANGE - TUCO_2 345.00 345KV CKT 1
FDNS	06ALL	0	17G	G15_078	FROM->TO	WOLFFORTH INTERCHANGE - YUMA INTERCHANGE 115KV CKT 1	119.51	153.97	0.23115	103.043	LUBBOCK SOUTH INTERCHANGE - WOLFFORTH INTERCHANGE 230KV CKT 1
FDNS	06ALL	0	17G	G15_078	FROM->TO	WOLFFORTH INTERCHANGE - YUMA INTERCHANGE 115KV CKT 1	119.51	153.97	0.23115	103.043	LUBBOCK SOUTH INTERCHANGE - WOLFFORTH INTERCHANGE 230KV CKT 1
FDNS	06NR	2	17G	G15_078	TO->FROM	AMARILLO SOUTH INTERCHANGE - G15031_T 230.00 230KV CKT 1	318.7	350.57	0.09861	103.4449	NEWHART 230 - POTTER COUNTY INTERCHANGE 230KV CKT 1
FDNS	06NR	2	17G	G15_078	FROM->TO	BUSHLAND INTERCHANGE - HILLSIDE 115KV CKT 1	159	160	0.04645	118.1849	BUSHLAND INTERCHANGE - POTTER COUNTY INTERCHANGE 230KV CKT 1
FDNS	06NR	2	17G	G15_078	FROM->TO	BUSHLAND INTERCHANGE - HILLSIDE 115KV CKT 1	159	160	0.04645	118.1849	BUSHLAND INTERCHANGE - POTTER COUNTY INTERCHANGE 230KV CKT 1
FDNS	06NR	2	17G	G15_078	FROM->TO	BUSHLAND INTERCHANGE - POTTER COUNTY INTERCHANGE 230KV CKT 1	318.7	350.57	0.09322	103.6906	NEWHART 230 - POTTER COUNTY INTERCHANGE 230KV CKT 1
FDNS	06NR	2	17G	G15_078	FROM->TO	BUSHLAND INTERCHANGE (WH 7001795) 230/115/13.2KV TRANSFORMER CKT 1	168	168	0.04645	116.5462	BUSHLAND INTERCHANGE - POTTER COUNTY INTERCHANGE 230KV CKT 1
FDNS	06NR	2	17G	G15_078	FROM->TO	BUSHLAND INTERCHANGE (WH 7001795) 230/115/13.2KV TRANSFORMER CKT 1	168	168	0.04645	116.5462	BUSHLAND INTERCHANGE - POTTER COUNTY INTERCHANGE 230KV CKT 1
FDNS	06NR	2	17G	G15_078	FROM->TO	BUSHLAND INTERCHANGE (WH 7001795) 230/115/13.2KV TRANSFORMER CKT 1	168	168	0.04645	114.0422	BUSHLAND INTERCHANGE - POTTER COUNTY INTERCHANGE 230KV CKT 1
FDNS	06NR	2	17G	G15_078	FROM->TO	BUSHLAND INTERCHANGE (WH 7001795) 230/115/13.2KV TRANSFORMER CKT 1	168	168	0.04645	114.0422	BUSHLAND INTERCHANGE - POTTER COUNTY INTERCHANGE 230KV CKT 1
FDNS	06NR	2	17G	G15_078	FROM->TO	CANYON E_TP3115.00 - RANDALL COUNTY INTERCHANGE 115KV CKT 1	96	96	0.03833	100.8119	BUSHLAND INTERCHANGE - DEAF SMITH COUNTY INTERCHANGE 230KV CKT 1
FDNS	06NR	2	17G	G15_078	FROM->TO	CANYON E_TP3115.00 - RANDALL COUNTY INTERCHANGE 115KV CKT 1	96	96	0.03833	100.8119	BUSHLAND INTERCHANGE - DEAF SMITH COUNTY INTERCHANGE 230KV CKT 1
FDNS	06NR	2	17G	G15_078	TO->FROM	CANYON WEST SUB - DAWN SUB 115KV CKT 1	96	96	0.03833	127.5172	BUSHLAND INTERCHANGE - DEAF SMITH COUNTY INTERCHANGE 230KV CKT 1
FDNS	06NR	2	17G	G15_078	TO->FROM	CANYON WEST SUB - DAWN SUB 115KV CKT 1	96	96	0.03833	127.5172	BUSHLAND INTERCHANGE - DEAF SMITH COUNTY INTERCHANGE 230KV CKT 1
FDNS	06NR	2	17G	G15_078	FROM->TO	CASTRO COUNTY INTERCHANGE - DEAF SMITH REC-#21 115KV CKT 1	159	174	0.03209	106.0645	DEAF SMITH COUNTY INTERCHANGE - G15039_T 230.00 230KV CKT 1
FDNS	06ALL	2	20SP	G15_078	FROM->TO	CHISHOLM6 230.00 - ELK CITY 230KV 230KV CKT 1	353	353	0.06343	103.9805	BASE CASE
FDNS	06ALL	2	17SP	G15_078	FROM->TO	CHISHOLM6 230.00 - ELK CITY 230KV 230KV CKT 1	353	353	0.06347	101.7938	BASE CASE
FDNS	06ALL	2	20L	G15_078	TO->FROM	CIMARRON - MINCO 345KV CKT 1	956	956	0.21494	140.1322	G14-057T 345.00 - SUNNYSIDE 345KV CKT 1

SOLUTION	GROUP	SCENARIO	SEASON	SOURCE	DIRECTION	MONITORED ELEMENT	RATEA (MVA)	RATEB(MVA)	TDF	TC%LOADING (% MVA)	CONTINGENCY
FDNS	06ALL	2	20L	G15_078	TO->FROM	CIMARRON - MINCO 345KV CKT 1	956	956	0.21494	133.5433	G14-057T 345.00 - LAWTON EASTSIDE 345KV CKT 1
FDNS	06ALL	2	17G	G15_078	TO->FROM	CIMARRON - MINCO 345KV CKT 1	956	956	0.2357	131.7687	G14-057T 345.00 - SUNNYSIDE 345KV CKT 1
FDNS	06ALL	2	20WP	G15_078	TO->FROM	CIMARRON - MINCO 345KV CKT 1	956	956	0.24241	130.9595	G14-057T 345.00 - SUNNYSIDE 345KV CKT 1
FDNS	06ALL	2	17G	G15_078	TO->FROM	CIMARRON - MINCO 345KV CKT 1	956	956	0.2357	126.2954	G14-057T 345.00 - LAWTON EASTSIDE 345KV CKT 1
FDNS	06ALL	2	20WP	G15_078	TO->FROM	CIMARRON - MINCO 345KV CKT 1	956	956	0.24241	125.3296	G14-057T 345.00 - LAWTON EASTSIDE 345KV CKT 1
FDNS	06ALL	2	16WP	G15_078	TO->FROM	CIMARRON - MINCO 345KV CKT 1	956	956	0.24226	123.9324	G14-057T 345.00 - SUNNYSIDE 345KV CKT 1
FDNS	06ALL	2	17SP	G15_078	TO->FROM	CIMARRON - MINCO 345KV CKT 1	956	956	0.24079	123.0412	G14-057T 345.00 - SUNNYSIDE 345KV CKT 1
FDNS	06ALL	2	20SP	G15_078	TO->FROM	CIMARRON - MINCO 345KV CKT 1	956	956	0.24861	120.4683	G14-057T 345.00 - SUNNYSIDE 345KV CKT 1
FDNS	06ALL	2	16WP	G15_078	TO->FROM	CIMARRON - MINCO 345KV CKT 1	956	956	0.24226	118.3934	G14-057T 345.00 - LAWTON EASTSIDE 345KV CKT 1
FDNS	06ALL	2	17SP	G15_078	TO->FROM	CIMARRON - MINCO 345KV CKT 1	956	956	0.24079	117.7499	G14-057T 345.00 - LAWTON EASTSIDE 345KV CKT 1
FDNS	06ALL	2	20SP	G15_078	TO->FROM	CIMARRON - MINCO 345KV CKT 1	956	956	0.24861	115.0256	G14-057T 345.00 - LAWTON EASTSIDE 345KV CKT 1
FDNS	06ALL	2	17G	G15_078	TO->FROM	CIMARRON - MINCO 345KV CKT 1	956	956	0.20129	111.0722	MATHWSN7 345.00 - TATONGA7 345.00 345KV CKT 1
FDNS	06ALL	2	20WP	G15_078	TO->FROM	CIMARRON - MINCO 345KV CKT 1	956	956	0.20389	110.8109	MATHWSN7 345.00 - TATONGA7 345.00 345KV CKT 1
FDNS	06ALL	2	20L	G15_078	TO->FROM	CIMARRON - MINCO 345KV CKT 1	956	956	0.22039	107.6011	CHISHOLM7 345.00 - WOODWARD DISTRICT EHV 345KV CKT 1
FDNS	06ALL	2	17G	G15_078	TO->FROM	CIMARRON - MINCO 345KV CKT 1	956	956	0.23106	107.4004	CHISHOLM7 345.00 - WOODWARD DISTRICT EHV 345KV CKT 1
FDNS	06ALL	2	20WP	G15_078	TO->FROM	CIMARRON - MINCO 345KV CKT 1	956	956	0.20389	105.5266	G11_051T 345.00 - TATONGA7 345.00 345KV CKT 1
FDNSLock	06ALL	2	17G	G15_078	TO->FROM	CIMARRON - MINCO 345KV CKT 1	956	956	0.20129	105.1772	G11_051T 345.00 - TATONGA7 345.00 345KV CKT 1
FDNS	06ALL	2	17SP	G15_078	TO->FROM	CIMARRON - MINCO 345KV CKT 1	956	956	0.20565	104.7953	MATHWSN7 345.00 - TATONGA7 345.00 345KV CKT 1
FDNS	06ALL	2	20SP	G15_078	TO->FROM	CIMARRON - MINCO 345KV CKT 1	956	956	0.21061	104.2231	MATHWSN7 345.00 - TATONGA7 345.00 345KV CKT 1
FDNS	06ALL	2	16WP	G15_078	TO->FROM	CIMARRON - MINCO 345KV CKT 1	956	956	0.20628	104.0692	MATHWSN7 345.00 - TATONGA7 345.00 345KV CKT 1
FDNS	06ALL	2	20WP	G15_078	TO->FROM	CIMARRON - MINCO 345KV CKT 1	956	956	0.20389	103.9402	G11_051T 345.00 - WOODWARD DISTRICT EHV 345KV CKT 1
FDNS	06ALL	2	20WP	G15_078	TO->FROM	CIMARRON - MINCO 345KV CKT 1	956	956	0.24347	103.712	CHISHOLM7 345.00 - WOODWARD DISTRICT EHV 345KV CKT 1
FDNSLock	06ALL	2	17G	G15_078	TO->FROM	CIMARRON - MINCO 345KV CKT 1	956	956	0.20129	103.655	G11_051T 345.00 - WOODWARD DISTRICT EHV 345KV CKT 1
FDNS	06ALL	2	20SP	G15_078	TO->FROM	CIMARRON - MINCO 345KV CKT 1	956	956	0.25042	102.1101	CHISHOLM7 345.00 - WOODWARD DISTRICT EHV 345KV CKT 1
FDNS	06ALL	2	17SP	G15_078	TO->FROM	CIMARRON - MINCO 345KV CKT 1	956	956	0.23974	100.969	CHISHOLM7 345.00 - WOODWARD DISTRICT EHV 345KV CKT 1
FDNS	06ALL	2	17SP	G15_078	TO->FROM	CIMARRON - MINCO 345KV CKT 1	956	956	0.20565	99.6	G11_051T 345.00 - TATONGA7 345.00 345KV CKT 1
FDNS	06NR	2	17G	G15_078	TO->FROM	COULTER INTERCHANGE - HILLSIDE 115KV CKT 1	159	159	0.04645	113.2181	BUSHLAND INTERCHANGE - POTTER COUNTY INTERCHANGE 230KV CKT 1
FDNS	06NR	2	17G	G15_078	TO->FROM	COULTER INTERCHANGE - HILLSIDE 115KV CKT 1	159	159	0.04645	113.2181	BUSHLAND INTERCHANGE - POTTER COUNTY INTERCHANGE 230KV CKT 1
FDNS	06NR	2	17G	G15_078	TO->FROM	DAWN SUB - Panda Energy Substation Hereford 115KV CKT 1	96	96	0.03833	130.9313	BUSHLAND INTERCHANGE - DEAF SMITH COUNTY INTERCHANGE 230KV CKT 1
FDNS	06NR	2	17G	G15_078	TO->FROM	DAWN SUB - Panda Energy Substation Hereford 115KV CKT 1	96	96	0.03833	130.9313	BUSHLAND INTERCHANGE - DEAF SMITH COUNTY INTERCHANGE 230KV CKT 1
FDNS	06NR	2	17G	G15_078	TO->FROM	DEAF SMITH COUNTY INTERCHANGE - DEAF SMITH REC-#21 115KV CKT 1	159	174	0.03209	100.9586	DEAF SMITH COUNTY INTERCHANGE - G15039_T 230.00 230KV CKT 1
FDNS	06ALL	2	20SP	G15_078	TO->FROM	DEAF SMITH COUNTY INTERCHANGE - G15039_T 230.00 230KV CKT 1	318.7	350.57	0.10785	106.1518	BASE CASE
FDNS	06NR	2	17G	G15_078	TO->FROM	DEAF SMITH COUNTY INTERCHANGE - G15039_T 230.00 230KV CKT 1	318.7	350.57	0.10216	104.2484	NEWHART 230 - PLANT X STATION 230KV CKT 1
FDNS	06ALL	2	17SP	G15_078	TO->FROM	DEAF SMITH COUNTY INTERCHANGE - G15039_T 230.00 230KV CKT 1	318.7	350.57	0.13291	104.2255	BASE CASE
FDNS	06NR	2	17G	G15_078	TO->FROM	DEAF SMITH COUNTY INTERCHANGE - G15039_T 230.00 230KV CKT 1	318.7	350.57	0.09528	103.9799	NEWHART 230 - POTTER COUNTY INTERCHANGE 230KV CKT 1
FDNS	06NR	2	17G	G15_078	TO->FROM	DEAF SMITH COUNTY INTERCHANGE - G15039_T 230.00 230KV CKT 1	318.7	350.57	0.09322	102.5424	AMARILLO SOUTH INTERCHANGE - G15031_T 230.00 230KV CKT 1
FDNS	06NR	2	17G	G15_078	FROM->TO	DEAF SMITH COUNTY INTERCHANGE - Panda Energy Substation Hereford 115KV CKT 1	96	96	0.03833	136.0663	BUSHLAND INTERCHANGE - DEAF SMITH COUNTY INTERCHANGE 230KV CKT 1
FDNS	06NR	2	17G	G15_078	FROM->TO	DEAF SMITH COUNTY INTERCHANGE - Panda Energy Substation Hereford 115KV CKT 1	96	96	0.03833	136.0663	BUSHLAND INTERCHANGE - DEAF SMITH COUNTY INTERCHANGE 230KV CKT 1
FDNS	00NR	2	25SP	G15_078	FROM->TO	DENVER CITY INTERCHANGE S. - SAN_ANDS_TP3115.00 115KV CKT 1	159	160	0.05377	132.1525	MUSTANG STATION - SEMINOLE 230KV CKT 1
FDNS	00NR	2	25SP	G15_078	FROM->TO	DENVER CITY INTERCHANGE S. - SAN_ANDS_TP3115.00 115KV CKT 1	159	160	0.05377	132.1525	MUSTANG STATION - SEMINOLE 230KV CKT 1
FDNS	00NR	2	20SP	G15_078	FROM->TO	DENVER CITY INTERCHANGE S. - SAN_ANDS_TP3115.00 115KV CKT 1	159	160	0.05507	112.7136	MUSTANG STATION - SEMINOLE 230KV CKT 1
FDNS	00NR	2	20SP	G15_078	FROM->TO	DENVER CITY INTERCHANGE S. - SAN_ANDS_TP3115.00 115KV CKT 1	159	160	0.05507	112.7136	MUSTANG STATION - SEMINOLE 230KV CKT 1
FDNS	00NR	2	17SP	G15_078	FROM->TO	DENVER CITY INTERCHANGE S. - SAN_ANDS_TP3115.00 115KV CKT 1	159	160	0.05594	107.595	MUSTANG STATION - SEMINOLE 230KV CKT 1
FDNS	00NR	2	17SP	G15_078	FROM->TO	DENVER CITY INTERCHANGE S. - SAN_ANDS_TP3115.00 115KV CKT 1	159	160	0.05594	107.595	MUSTANG STATION - SEMINOLE 230KV CKT 1
FDNS	00NR	2	25SP	G15_078	FROM->TO	DENVER CITY INTERCHANGE S. - SHELL C2 SUB 115KV CKT 1	159	175	0.03029	110.7876	P12:115:LCEC:W56.1.HOBBG.LE-LVN
FDNS	00NR	2	25SP	G15_078	FROM->TO	DENVER CITY INTERCHANGE S. - SHELL C2 SUB 115KV CKT 1	159	175	0.03029	110.2774	LE-WEST_SUB3115.00 - LEA COUNTY REC-LOVINGTON INTERCHANGE 115KV CKT 1
FDNS	06ALL	2	20L	G15_078	TO->FROM	G14-057T 345.00 - LAWTON EASTSIDE 345KV CKT 1	717	789	0.10472	105.4406	BASE CASE
FDNS	06ALL	2	20L	G15_078	FROM->TO	G14-057T 345.00 - SUNNYSIDE 345KV CKT 1	717	789	0.10472	118.6576	BASE CASE
FDNS	06ALL	2	20WP	G15_078	FROM->TO	G14-057T 345.00 - SUNNYSIDE 345KV CKT 1	717	789	0.12832	106.4822	BASE CASE
FDNS	06ALL	2	17G	G15_078	FROM->TO	G14-057T 345.00 - SUNNYSIDE 345KV CKT 1	717	789	0.1257	105.8626	BASE CASE
FDNS	06ALL	2	16WP	G15_078	FROM->TO	G14-057T 345.00 - SUNNYSIDE 345KV CKT 1	717	789	0.129	104.4384	BASE CASE
FDNS	06NR	2	20L	G15_078	FROM->TO	G14-074T 345.00 - OKLAUNION 345KV CKT 1	1022	1124	0.05664	106.9322	BASE CASE
FDNS	06NR	2	17G	G15_078	FROM->TO	G14-074T 345.00 - OKLAUNION 345KV CKT 1	1022	1124	0.0415	102.9455	BASE CASE
FDNS	06NR	2	20L	G15_078	FROM->TO	G14-074T 345.00 - OKLAUNION 345KV CKT 1	1022	1124	0.05397	102.2532	CHISHOLM7 345.00 - GRACEMONT 345KV CKT 1
FDNS	06NR	2	20L	G15_078	FROM->TO	G14-074T 345.00 - OKLAUNION 345KV CKT 1	1022	1124	0.05397	101.8896	CHISHOLM7 345.00 () 345/230/13.2KV TRANSFORMER CKT 1
FDNS	06NR	2	20L	G15_078	FROM->TO	G14-074T 345.00 - OKLAUNION 345KV CKT 1	1022	1124	0.06215	101.4902	TUCO INTERCHANGE - TUCO_2 345.00 345KV CKT 1
FDNS	06NR	2	20L	G15_078	FROM->TO	G14-074T 345.00 - OKLAUNION 345KV CKT 1	1022	1124	0.06555	101.2851	BUSHLAND INTERCHANGE - DEAF SMITH COUNTY INTERCHANGE 230KV CKT 1
FDNS	06NR	2	20L	G15_078	FROM->TO	G14-074T 345.00 - OKLAUNION 345KV CKT 1	1022	1124	0.06555	101.2851	BUSHLAND INTERCHANGE - DEAF SMITH COUNTY INTERCHANGE 230KV CKT 1
FDNS	06NR	2	20L	G15_078	FROM->TO	G14-074T 345.00 - OKLAUNION 345KV CKT 1	1022	1124	0.05637	101.2671	MOORE COUNTY INTERCHANGE - POTTER COUNTY INTERCHANGE 230KV CKT 1
FDNS	06NR	2	20L	G15_078	FROM->TO	G14-074T 345.00 - OKLAUNION 345KV CKT 1	1022	1124	0.05637	101.2671	MOORE COUNTY INTERCHANGE - POTTER COUNTY INTERCHANGE 230KV CKT 1
FDNS	06NR	2	20L	G15_078	FROM->TO	G14-074T 345.00 - OKLAUNION 345KV CKT 1	1022	1124	0.05571	101.2654	G11-14T 345.00 - WOODWARD DISTRICT EHV 345KV CKT 1
FDNS	06NR	2	20L	G15_078	FROM->TO	G14-074T 345.00 - OKLAUNION 345KV CKT 1	1022	1124	0.05571	101.2654	G11-14T 345.00 - WOODWARD DISTRICT EHV 345KV CKT 2
FDNS	06ALL	2	20L	G15_078	FROM->TO	GRACEMONT - MINCO 345KV CKT 1	1195	1195	0.21494	101.0673	G14-057T 345.00 - SUNNYSIDE 345KV CKT 1
FDNS	00NR	2	25SP	G15_078	FROM->TO	Hitchland Interchange (H TB80155502) 345/230/13.2KV TRANSFORMER CKT 1	560	644	0.0303	99.7	Hitchland Interchange (SIEM 8743067) 345/230/13.2KV TRANSFORMER CKT 2
FDNS	00NR	2	25SP	G15_078	FROM->TO	Hitchland Interchange (H TB80155502) 345/230/13.2KV TRANSFORMER CKT 1	560	644	0.0303	99.7	Hitchland Interchange (SIEM 8743067) 345/230/13.2KV TRANSFORMER CKT 2
FDNS	00NR	2	25SP	G15_078	FROM->TO	Hitchland Interchange (SIEM 8743067) 345/230/13.2KV TRANSFORMER CKT 2	560	644	0.03092	101.9783	Hitchland Interchange (H TB80155502) 345/230/13.2KV TRANSFORMER CKT 1
FDNS	00NR	2	25SP	G15_078	FROM->TO	Hitchland Interchange (SIEM 8743067) 345/230/13.2KV TRANSFORMER CKT 2	560	644	0.03092	101.9783	Hitchland Interchange (H TB80155502) 345/230/13.2KV TRANSFORMER CKT 1
FDNS	00NR	2	25SP	G15_078	FROM->TO	Hitchland Interchange (SIEM 8743067) 345/230/13.2KV TRANSFORMER CKT 2	560	644	0.03092	100.1637	Hitchland Interchange (H TB80155502) 345/230/13.2KV TRANSFORMER CKT 1
FDNS	00NR	2	25SP	G15_078	FROM->TO	Hitchland Interchange (SIEM 8743067) 345/230/13.2KV TRANSFORMER CKT 2	560	644	0.03092	100.1637	Hitchland Interchange (H TB80155502) 345/230/13.2KV TRANSFORMER CKT 1
FDNS	00NR	2	25SP	G15_078	FROM->TO	LUBBOCK POWER & LIGHT-HOLLY PLANT (SHIH T101039) 230/69/13.5KV TRANSFORMER CKT 1	224	224	0.03569	104.7613	LUBBOCK POWER & LIGHT-SOUTHEAST - LUBBOCK SOUTH INTERCHANGE 230KV CKT 1
FDNS	00NR	2	25SP	G15_078	FROM->TO	LUBBOCK POWER & LIGHT-HOLLY PLANT (SHIH T101039) 230/69/13.5KV TRANSFORMER CKT 1	224	224	0.03569	104.7484	P12:LPL:SPS:K64.1.LP-SE.LUBBS
FDNS	00NR	2	25SP	G15_078	FROM->TO	LUBBOCK POWER & LIGHT-HOLLY PLANT (SHIH T101039) 230/69/13.5KV TRANSFORMER CKT 1	224	224	0.03343	102.133	P12:230:LPL:K57.1.LP-WADS.LUBBE
FDNS	00NR	2	25SP	G15_078	FROM->TO	LUBBOCK POWER & LIGHT-HOLLY PLANT (SHIH T101039) 230/69/13.5KV TRANSFORMER CKT 1	224	224	0.03343	102.1329	LUBBOCK POWER & LIGHT-WADSWORTH (SHIH T101038) 230/69/13.5KV TRANSFORMER CKT 1
FDNS	00NR	2	25SP	G15_078	FROM->TO	LUBBOCK POWER & LIGHT-HOLLY PLANT (SHIH T101039) 230/69/13.5KV TRANSFORMER CKT 1	224	224	0.03343	102.1329	LUBBOCK POWER & LIGHT-WADSWORTH (SHIH T101038) 230/69/13.5KV TRANSFORMER CKT 1
FDNS	00NR	2	25SP	G15_078	FROM->TO	LUBBOCK POWER & LIGHT-HOLLY PLANT (SHIH T101039) 230/69/13.5KV TRANSFORMER CKT 1	224	224	0.03343	101.829	LUBBOCK EAST INTERCHANGE - LUBBOCK POWER & LIGHT-WADSWORTH 230KV CKT 1
FDNSLock	06ALL	2	20WP	G15_078		P12:230:AEPW:ELKCITY6:SWEETWT6	0	0	0.11152	9999	BASE CASE
FDNS	00NR	2	25SP	G15_078	FROM->TO	SAN_ANDS_TP3115.00 - SEMINOLE 115KV CKT 1	159	160	0.05377	112.2279	MUSTANG STATION - SEMINOLE 230KV CKT 1
FDNS	00NR	2	25SP	G15_078	FROM->TO	SAN_ANDS_TP3115.00 - SEMINOLE 115KV CKT 1	159	160	0.05377	112.2279	MUSTANG STATION - SEMINOLE 230KV CKT 1
FDNS	00NR	2	25SP	G15_078	FROM->TO	SHELL C2 SUB - SHELL C3 TAP 115KV CKT 1	179	179	0.03029	101.3721	P12:115:LCEC:W56.1.HOBBG.LE-LVN

SOLUTION	GROUP	SCENARIO	SEASON	SOURCE	DIRECTION	MONITORED ELEMENT	RATEA (MVA)	RATEB(MVA)	TDF	TC%LOADING (% MVA)	CONTINGENCY
FDNS	00NR	2	25SP	G15_078	FROM->TO	SHELL C2 SUB - SHELL C3 TAP 115KV CKT 1	179	179	0.03029	100.8761	LE-WEST_SUB3115.00 - LEA COUNTY REC-LOVINGTON INTERCHANGE 115KV CKT 1
FDNS	06ALL	2	17SP	G15_078	FROM->TO	SUNDOWN INTERCHANGE - WOLFFORTH INTERCHANGE 230KV CKT 1	318.7	350.57	0.29008	101.6908	TOLK STATION EAST - TUCO INTERCHANGE 230KV CKT 1
FDNS	06ALL	2	17SP	G15_078	FROM->TO	SUNDOWN INTERCHANGE - WOLFFORTH INTERCHANGE 230KV CKT 1	318.7	350.57	0.29008	101.6908	TOLK STATION EAST - TUCO INTERCHANGE 230KV CKT 1
FDNS	06ALL	2	20L	G15_078	FROM->TO	TUCO INTERCHANGE - TUCO_2 230.00 230KV CKT 1	497	547	0.31086	181.2199	TUCO INTERCHANGE - TUCO_2 345.00 345KV CKT 1
FDNS	06ALL	2	17G	G15_078	FROM->TO	TUCO INTERCHANGE - TUCO_2 230.00 230KV CKT 1	497	547	0.28227	176.0864	TUCO INTERCHANGE - TUCO_2 345.00 345KV CKT 1
FDNS	06ALL	2	20SP	G15_078	FROM->TO	TUCO INTERCHANGE - TUCO_2 230.00 230KV CKT 1	497	547	0.34804	166.2483	TUCO INTERCHANGE - TUCO_2 345.00 345KV CKT 1
FDNS	06ALL	2	17SP	G15_078	FROM->TO	TUCO INTERCHANGE - TUCO_2 230.00 230KV CKT 1	497	547	0.30299	159.9768	TUCO INTERCHANGE - TUCO_2 345.00 345KV CKT 1
FDNS	06ALL	2	20WP	G15_078	FROM->TO	TUCO INTERCHANGE - TUCO_2 230.00 230KV CKT 1	552	608	0.34255	155.2742	TUCO INTERCHANGE - TUCO_2 345.00 345KV CKT 1
FDNS	06ALL	2	16WP	G15_078	FROM->TO	TUCO INTERCHANGE - TUCO_2 230.00 230KV CKT 1	552	608	0.2919	142.7524	TUCO INTERCHANGE - TUCO_2 345.00 345KV CKT 1
FDNS	06NR	2	20L	G15_078	FROM->TO	TUCO INTERCHANGE - TUCO_2 230.00 230KV CKT 1	497	547	0.12285	110.6574	TUCO INTERCHANGE - TUCO_2 345.00 345KV CKT 1
FDNS	06NR	2	17G	G15_078	FROM->TO	TUCO INTERCHANGE - TUCO_2 230.00 230KV CKT 1	497	547	0.07985	106.5066	TUCO INTERCHANGE - TUCO_2 345.00 345KV CKT 1
FDNS	06ALL	2	25SP	G15_078	FROM->TO	TUCO INTERCHANGE - TUCO_2 230.00 230KV CKT 1	497	547	0.35848	102.0482993	TUCO INTERCHANGE - TUCO_2 345.00 345KV CKT 1
FDNS	06ALL	2	16WP	G15_078	FROM->TO	TUCO INTERCHANGE (GE M1022338) 345/230/13.2KV TRANSFORMER CKT 1	560	560	0.28338	120.5418	TUCO INTERCHANGE (SIEM 8743066) 345/230/13.2KV TRANSFORMER CKT 2
FDNS	06ALL	2	16WP	G15_078	FROM->TO	TUCO INTERCHANGE (GE M1022338) 345/230/13.2KV TRANSFORMER CKT 1	560	560	0.28338	120.5418	TUCO INTERCHANGE (SIEM 8743066) 345/230/13.2KV TRANSFORMER CKT 2
FDNS	06ALL	2	16WP	G15_078	FROM->TO	TUCO INTERCHANGE (GE M1022338) 345/230/13.2KV TRANSFORMER CKT 1	560	560	0.27427	120.3223	TUCO_2 345.00 (TUCO_2 XFMR) 345/230/13.2KV TRANSFORMER CKT 1
FDNS	06ALL	2	16WP	G15_078	FROM->TO	TUCO INTERCHANGE (GE M1022338) 345/230/13.2KV TRANSFORMER CKT 1	560	560	0.28338	118.6764	TUCO INTERCHANGE (SIEM 8743066) 345/230/13.2KV TRANSFORMER CKT 2
FDNS	06ALL	2	16WP	G15_078	FROM->TO	TUCO INTERCHANGE (GE M1022338) 345/230/13.2KV TRANSFORMER CKT 1	560	560	0.28338	118.6764	TUCO INTERCHANGE (SIEM 8743066) 345/230/13.2KV TRANSFORMER CKT 2
FDNS	06ALL	2	16WP	G15_078	FROM->TO	TUCO INTERCHANGE (GE M1022338) 345/230/13.2KV TRANSFORMER CKT 1	560	560	0.27427	118.6764	TUCO_2 345.00 (TUCO_2 XFMR) 345/230/13.2KV TRANSFORMER CKT 1
FDNS	06ALL	2	17G	G15_078	FROM->TO	TUCO INTERCHANGE (GE M1022338) 345/230/13.2KV TRANSFORMER CKT 1	560	560	0.27375	114.4569	TUCO INTERCHANGE (SIEM 8743066) 345/230/13.2KV TRANSFORMER CKT 2
FDNS	06ALL	2	17G	G15_078	FROM->TO	TUCO INTERCHANGE (GE M1022338) 345/230/13.2KV TRANSFORMER CKT 1	560	560	0.26487	114.4414	TUCO_2 345.00 (TUCO_2 XFMR) 345/230/13.2KV TRANSFORMER CKT 1
FDNS	06ALL	2	17G	G15_078	FROM->TO	TUCO INTERCHANGE (GE M1022338) 345/230/13.2KV TRANSFORMER CKT 1	560	560	0.26487	112.333	TUCO_2 345.00 (TUCO_2 XFMR) 345/230/13.2KV TRANSFORMER CKT 1
FDNS	06ALL	2	17G	G15_078	FROM->TO	TUCO INTERCHANGE (GE M1022338) 345/230/13.2KV TRANSFORMER CKT 1	560	560	0.27375	112.1874	TUCO INTERCHANGE (SIEM 8743066) 345/230/13.2KV TRANSFORMER CKT 2
FDNS	06ALL	2	16WP	G15_078	FROM->TO	TUCO INTERCHANGE (GE M1022338) 345/230/13.2KV TRANSFORMER CKT 1	560	560	0.26489	103.9349	TUCO INTERCHANGE - TUCO_2 230.00 230KV CKT 1
FDNS	06ALL	2	16WP	G15_078	FROM->TO	TUCO INTERCHANGE (GE M1022338) 345/230/13.2KV TRANSFORMER CKT 1	560	560	0.26489	102.2603	TUCO INTERCHANGE - TUCO_2 230.00 230KV CKT 1
FDNS	06ALL	2	17G	G15_078	FROM->TO	TUCO INTERCHANGE (GE M1022338) 345/230/13.2KV TRANSFORMER CKT 1	560	560	0.25616	100.6861	TUCO INTERCHANGE - TUCO_2 230.00 230KV CKT 1
FDNS	06ALL	2	20L	G15_078	FROM->TO	TUCO_2 345.00 (TUCO_2 XFMR) 345/230/13.2KV TRANSFORMER CKT 1	560	560	0.26027	190.1451	TUCO INTERCHANGE - TUCO_2 345.00 345KV CKT 1
FDNS	06ALL	2	20WP	G15_078	FROM->TO	TUCO_2 345.00 (TUCO_2 XFMR) 345/230/13.2KV TRANSFORMER CKT 1	560	560	0.29708	189.4604	TUCO INTERCHANGE - TUCO_2 345.00 345KV CKT 1
FDNS	06ALL	2	17G	G15_078	FROM->TO	TUCO_2 345.00 (TUCO_2 XFMR) 345/230/13.2KV TRANSFORMER CKT 1	560	560	0.28461	187.4581	TUCO INTERCHANGE - TUCO_2 345.00 345KV CKT 1
FDNS	06ALL	2	20WP	G15_078	FROM->TO	TUCO_2 345.00 (TUCO_2 XFMR) 345/230/13.2KV TRANSFORMER CKT 1	560	560	0.29708	184.0471	TUCO INTERCHANGE - TUCO_2 345.00 345KV CKT 1
FDNS	06ALL	2	20L	G15_078	FROM->TO	TUCO_2 345.00 (TUCO_2 XFMR) 345/230/13.2KV TRANSFORMER CKT 1	560	560	0.26027	184.0031	TUCO INTERCHANGE - TUCO_2 345.00 345KV CKT 1
FDNS	06ALL	2	17G	G15_078	FROM->TO	TUCO_2 345.00 (TUCO_2 XFMR) 345/230/13.2KV TRANSFORMER CKT 1	560	560	0.28461	182.4703	TUCO INTERCHANGE - TUCO_2 345.00 345KV CKT 1
FDNS	06ALL	2	16WP	G15_078	FROM->TO	TUCO_2 345.00 (TUCO_2 XFMR) 345/230/13.2KV TRANSFORMER CKT 1	560	560	0.29513	175.5009	TUCO INTERCHANGE - TUCO_2 345.00 345KV CKT 1
FDNS	06ALL	2	16WP	G15_078	FROM->TO	TUCO_2 345.00 (TUCO_2 XFMR) 345/230/13.2KV TRANSFORMER CKT 1	560	560	0.29513	172.6087	TUCO INTERCHANGE - TUCO_2 345.00 345KV CKT 1
FDNS	06ALL	2	20SP	G15_078	FROM->TO	TUCO_2 345.00 (TUCO_2 XFMR) 345/230/13.2KV TRANSFORMER CKT 1	560	560	0.30339	166.4217	TUCO INTERCHANGE - TUCO_2 345.00 345KV CKT 1
FDNS	06ALL	2	17SP	G15_078	FROM->TO	TUCO_2 345.00 (TUCO_2 XFMR) 345/230/13.2KV TRANSFORMER CKT 1	560	560	0.29627	164.6979	TUCO INTERCHANGE - TUCO_2 345.00 345KV CKT 1
FDNS	06ALL	2	20SP	G15_078	FROM->TO	TUCO_2 345.00 (TUCO_2 XFMR) 345/230/13.2KV TRANSFORMER CKT 1	560	560	0.30339	163.5805	TUCO INTERCHANGE - TUCO_2 345.00 345KV CKT 1
FDNS	06ALL	2	17SP	G15_078	FROM->TO	TUCO_2 345.00 (TUCO_2 XFMR) 345/230/13.2KV TRANSFORMER CKT 1	560	560	0.29627	162.1713	TUCO INTERCHANGE - TUCO_2 345.00 345KV CKT 1
FDNS	06ALL	2	16WP	G15_078	FROM->TO	TUCO_2 345.00 (TUCO_2 XFMR) 345/230/13.2KV TRANSFORMER CKT 1	560	560	0.24863	112.6263	TUCO INTERCHANGE (GE M1022338) 345/230/13.2KV TRANSFORMER CKT 1
FDNS	06ALL	2	16WP	G15_078	FROM->TO	TUCO_2 345.00 (TUCO_2 XFMR) 345/230/13.2KV TRANSFORMER CKT 1	560	560	0.24863	112.6263	TUCO INTERCHANGE (GE M1022338) 345/230/13.2KV TRANSFORMER CKT 1
FDNS	06ALL	2	16WP	G15_078	FROM->TO	TUCO_2 345.00 (TUCO_2 XFMR) 345/230/13.2KV TRANSFORMER CKT 1	560	560	0.24863	111.4972	TUCO INTERCHANGE (GE M1022338) 345/230/13.2KV TRANSFORMER CKT 1
FDNS	06ALL	2	16WP	G15_078	FROM->TO	TUCO_2 345.00 (TUCO_2 XFMR) 345/230/13.2KV TRANSFORMER CKT 1	560	560	0.24863	111.4972	TUCO INTERCHANGE (GE M1022338) 345/230/13.2KV TRANSFORMER CKT 1
FDNS	06NR	2	20L	G15_078	FROM->TO	TUCO_2 345.00 (TUCO_2 XFMR) 345/230/13.2KV TRANSFORMER CKT 1	560	560	0.04634	110.8937	TUCO INTERCHANGE - TUCO_2 345.00 345KV CKT 1
FDNS	06NR	2	20L	G15_078	FROM->TO	TUCO_2 345.00 (TUCO_2 XFMR) 345/230/13.2KV TRANSFORMER CKT 1	560	560	0.04634	108.3383	TUCO INTERCHANGE - TUCO_2 345.00 345KV CKT 1
FDNS	06ALL	2	17G	G15_078	FROM->TO	TUCO_2 345.00 (TUCO_2 XFMR) 345/230/13.2KV TRANSFORMER CKT 1	560	560	0.24001	107.1719	TUCO INTERCHANGE (GE M1022338) 345/230/13.2KV TRANSFORMER CKT 1
FDNS	06NR	2	17G	G15_078	FROM->TO	TUCO_2 345.00 (TUCO_2 XFMR) 345/230/13.2KV TRANSFORMER CKT 1	560	560	0.03748	107.0023	TUCO INTERCHANGE - TUCO_2 345.00 345KV CKT 1
FDNS	06ALL	2	16WP	G15_078	FROM->TO	TUCO_2 345.00 (TUCO_2 XFMR) 345/230/13.2KV TRANSFORMER CKT 1	560	560	0.2326	105.8242	TUCO INTERCHANGE (SIEM 8743066) 345/230/13.2KV TRANSFORMER CKT 2
FDNS	06ALL	2	16WP	G15_078	FROM->TO	TUCO_2 345.00 (TUCO_2 XFMR) 345/230/13.2KV TRANSFORMER CKT 1	560	560	0.2326	105.8242	TUCO INTERCHANGE (SIEM 8743066) 345/230/13.2KV TRANSFORMER CKT 2
FDNS	06ALL	2	17G	G15_078	FROM->TO	TUCO_2 345.00 (TUCO_2 XFMR) 345/230/13.2KV TRANSFORMER CKT 1	560	560	0.24001	105.6097	TUCO INTERCHANGE (GE M1022338) 345/230/13.2KV TRANSFORMER CKT 1
FDNS	06ALL	2	16WP	G15_078	FROM->TO	TUCO_2 345.00 (TUCO_2 XFMR) 345/230/13.2KV TRANSFORMER CKT 1	560	560	0.2326	104.8168	TUCO INTERCHANGE (SIEM 8743066) 345/230/13.2KV TRANSFORMER CKT 2
FDNS	06ALL	2	16WP	G15_078	FROM->TO	TUCO_2 345.00 (TUCO_2 XFMR) 345/230/13.2KV TRANSFORMER CKT 1	560	560	0.2326	104.8168	TUCO INTERCHANGE (SIEM 8743066) 345/230/13.2KV TRANSFORMER CKT 2
FDNS	06NR	2	17G	G15_078	FROM->TO	TUCO_2 345.00 (TUCO_2 XFMR) 345/230/13.2KV TRANSFORMER CKT 1	560	560	0.03748	104.728	TUCO INTERCHANGE - TUCO_2 345.00 345KV CKT 1
FDNS	06ALL	2	17G	G15_078	FROM->TO	TUCO_2 345.00 (TUCO_2 XFMR) 345/230/13.2KV TRANSFORMER CKT 1	560	560	0.22452	100.7205	TUCO INTERCHANGE (SIEM 8743066) 345/230/13.2KV TRANSFORMER CKT 2
FDNS	06ALL	2	17G	G15_078	FROM->TO	WOLFFORTH INTERCHANGE - YUMA INTERCHANGE 115KV CKT 1	119.51	153.97	0.23132	103.3037	LUBBOCK SOUTH INTERCHANGE - WOLFFORTH INTERCHANGE 230KV CKT 1
FDNS	06ALL	2	17G	G15_078	FROM->TO	WOLFFORTH INTERCHANGE - YUMA INTERCHANGE 115KV CKT 1	119.51	153.97	0.23132	103.3037	LUBBOCK SOUTH INTERCHANGE - WOLFFORTH INTERCHANGE 230KV CKT 1
FDNS	06NR	3	17G	G15_078	TO->FROM	AMARILLO SOUTH INTERCHANGE - G15031_T 230.00 230KV CKT 1	318.7	350.57	0.09859	103.2239	NEWHART 230 - POTTER COUNTY INTERCHANGE 230KV CKT 1
FDNS	06NR	3	20L	G15_078	FROM->TO	BUSHLAND INTERCHANGE - HILLSIDE 115KV CKT 1	159	160	0.03893	108.1399	BUSHLAND INTERCHANGE - POTTER COUNTY INTERCHANGE 230KV CKT 1
FDNS	06NR	3	20L	G15_078	FROM->TO	BUSHLAND INTERCHANGE - HILLSIDE 115KV CKT 1	159	160	0.03893	108.1399	BUSHLAND INTERCHANGE - POTTER COUNTY INTERCHANGE 230KV CKT 1
FDNS	06NR	3	17G	G15_078	FROM->TO	BUSHLAND INTERCHANGE - HILLSIDE 115KV CKT 1	159	160	0.04286	105.508	BUSHLAND INTERCHANGE - POTTER COUNTY INTERCHANGE 230KV CKT 1
FDNS	06NR	3	17G	G15_078	FROM->TO	BUSHLAND INTERCHANGE - HILLSIDE 115KV CKT 1	159	160	0.04286	105.508	BUSHLAND INTERCHANGE - POTTER COUNTY INTERCHANGE 230KV CKT 1
FDNS	06NR	3	20L	G15_078	FROM->TO	BUSHLAND INTERCHANGE - POTTER COUNTY INTERCHANGE 230KV CKT 1	318.7	350.57	0.08194	102.6252	NEWHART 230 - POTTER COUNTY INTERCHANGE 230KV CKT 1
FDNS	06NR	3	20L	G15_078	FROM->TO	BUSHLAND INTERCHANGE (WH 7001795) 230/115/13.2KV TRANSFORMER CKT 1	168	168	0.03893	106.6189	BUSHLAND INTERCHANGE - POTTER COUNTY INTERCHANGE 230KV CKT 1
FDNS	06NR	3	20L	G15_078	FROM->TO	BUSHLAND INTERCHANGE (WH 7001795) 230/115/13.2KV TRANSFORMER CKT 1	168	168	0.03893	106.6189	BUSHLAND INTERCHANGE - POTTER COUNTY INTERCHANGE 230KV CKT 1
FDNS	06NR	3	17G	G15_078	FROM->TO	BUSHLAND INTERCHANGE (WH 7001795) 230/115/13.2KV TRANSFORMER CKT 1	168	168	0.04286	104.9286	BUSHLAND INTERCHANGE - POTTER COUNTY INTERCHANGE 230KV CKT 1
FDNS	06NR	3	17G	G15_078	FROM->TO	BUSHLAND INTERCHANGE (WH 7001795) 230/115/13.2KV TRANSFORMER CKT 1	168	168	0.04286	104.9286	BUSHLAND INTERCHANGE - POTTER COUNTY INTERCHANGE 230KV CKT 1
FDNS	06NR	3	20L	G15_078	FROM->TO	BUSHLAND INTERCHANGE (WH 7001795) 230/115/13.2KV TRANSFORMER CKT 1	168	168	0.03893	104.4653	BUSHLAND INTERCHANGE - POTTER COUNTY INTERCHANGE 230KV CKT 1
FDNS	06NR	3	20L	G15_078	FROM->TO	BUSHLAND INTERCHANGE (WH 7001795) 230/115/13.2KV TRANSFORMER CKT 1	168	168	0.03893	104.4653	BUSHLAND INTERCHANGE - POTTER COUNTY INTERCHANGE 230KV CKT 1
FDNS	06NR	3	17G	G15_078	FROM->TO	BUSHLAND INTERCHANGE (WH 7001795) 230/115/13.2KV TRANSFORMER CKT 1	168	168	0.04286	102.648	BUSHLAND INTERCHANGE - POTTER COUNTY INTERCHANGE 230KV CKT 1
FDNS	06NR	3	17G	G15_078	FROM->TO	BUSHLAND INTERCHANGE (WH 7001795) 230/115/13.2KV TRANSFORMER CKT 1	168	168	0.04286	102.648	BUSHLAND INTERCHANGE - POTTER COUNTY INTERCHANGE 230KV CKT 1
FDNS	06NR	3	17G	G15_078	TO->FROM	CANYON WEST SUB - DAWN SUB 115KV CKT 1	96	96	0.03511	109.382	BUSHLAND INTERCHANGE - DEAF SMITH COUNTY INTERCHANGE 230KV CKT 1
FDNS	06NR	3	17G	G15_078	TO->FROM	CANYON WEST SUB - DAWN SUB 115KV CKT 1	96	96	0.03511	109.382	BUSHLAND INTERCHANGE - DEAF SMITH COUNTY INTERCHANGE 230KV CKT 1
FDNS	06NR	3	20L	G15_078	FROM->TO	CASTRO COUNTY INTERCHANGE - DEAF SMITH REC-#21 115KV CKT 1	159	174	0.03035	101.2841	DEAF SMITH COUNTY INTERCHANGE - G15039_T 230.00 230KV CKT 1
FDNS	06NR	3	17G	G15_078	FROM->TO	CASTRO COUNTY INTERCHANGE - DEAF SMITH REC-#21 115KV CKT 1	159	174	0.03053	100.2799	DEAF SMITH COUNTY INTERCHANGE - G15039_T 230.00 230KV CKT 1
FDNS	06ALL	3	20SP	G15_078	FROM->TO	CHISHOLM6 230.00 - ELK CITY 230KV 230KV CKT 1	353	353	0.06363	104.1963	BASE CASE
FDNS	06ALL	3	17SP	G15_078	FROM->TO	CHISHOLM6 230.00 - ELK CITY 230KV 230KV CKT 1	353	353	0.06384	101.9728	BASE CASE
FDNS	06ALL	3	20L	G15_078	TO->FROM	CIMARRON - MINCO 345KV CKT 1	956	956	0.21863	140.6921	G14-057T 345.00 - SUNNYSIDE 345KV CKT 1
FDNS	06ALL	3	20L	G15_078	TO->FROM	CIMARRON - MINCO 345KV CKT 1	956	956	0.21863	134.2883	G14-057T 345.00 - LAWTON EASTSIDE 345KV CKT 1
FDNS	06ALL	3	17G	G15_078	TO->FROM	CIMARRON - MINCO 345KV CKT 1	956	956	0.24389	132.797	G14-057T 345.00 - SUNNYSIDE 345KV CKT 1
FDNS	06ALL	3	20WP	G15_078	TO->FROM	CIMARRON - MINCO 345KV CKT 1	956	956	0.24594	131.9094	G14-057T 345.00 - SUNNYSIDE 345KV CKT 1
FDNS	06ALL	3	17G	G15_078	TO->FROM	CIMARRON - MINCO 345KV CKT 1	956	956	0.24389	127.3481	G14-057T 345.00 - LAWTON EASTSIDE 345KV CKT 1

SOLUTION	GROUP	SCENARIO	SEASON	SOURCE	DIRECTION	MONITORED ELEMENT	RATEA (MVA)	RATEB(MVA)	TDF	TC%LOADING (% MVA)	CONTINGENCY
FDNS	06ALL	3	20WP	G15_078	TO->FROM	CIMARRON - MINCO 345KV CKT 1	956	956	0.24594	126.3057	G14-057T 345.00 - LAWTON EASTSIDE 345KV CKT 1
FDNS	06ALL	3	16WP	G15_078	TO->FROM	CIMARRON - MINCO 345KV CKT 1	956	956	0.25081	125.3645	G14-057T 345.00 - SUNNYSIDE 345KV CKT 1
FDNS	06ALL	3	17SP	G15_078	TO->FROM	CIMARRON - MINCO 345KV CKT 1	956	956	0.24824	124.3731	G14-057T 345.00 - SUNNYSIDE 345KV CKT 1
FDNS	06ALL	3	20SP	G15_078	TO->FROM	CIMARRON - MINCO 345KV CKT 1	956	956	0.25195	121.3286	G14-057T 345.00 - SUNNYSIDE 345KV CKT 1
FDNS	06ALL	3	16WP	G15_078	TO->FROM	CIMARRON - MINCO 345KV CKT 1	956	956	0.25081	119.9255	G14-057T 345.00 - LAWTON EASTSIDE 345KV CKT 1
FDNS	06ALL	3	17SP	G15_078	TO->FROM	CIMARRON - MINCO 345KV CKT 1	956	956	0.24824	118.8978	G14-057T 345.00 - LAWTON EASTSIDE 345KV CKT 1
FDNS	06ALL	3	20SP	G15_078	TO->FROM	CIMARRON - MINCO 345KV CKT 1	956	956	0.25195	116.0894	G14-057T 345.00 - LAWTON EASTSIDE 345KV CKT 1
FDNS	06ALL	3	20WP	G15_078	TO->FROM	CIMARRON - MINCO 345KV CKT 1	956	956	0.20637	111.5734	MATHWSN7 345.00 - TATONGA7 345.00 345KV CKT 1
FDNS	06ALL	3	20L	G15_078	TO->FROM	CIMARRON - MINCO 345KV CKT 1	956	956	0.22483	109.488	CHISHOLM7 345.00 - WOODWARD DISTRICT EHV 345KV CKT 1
FDNS	06ALL	3	17G	G15_078	TO->FROM	CIMARRON - MINCO 345KV CKT 1	956	956	0.24181	109.1031	CHISHOLM7 345.00 - WOODWARD DISTRICT EHV 345KV CKT 1
FDNS	06ALL	3	20WP	G15_078	TO->FROM	CIMARRON - MINCO 345KV CKT 1	956	956	0.20637	106.2571	G11_051T 345.00 - TATONGA7 345.00 345KV CKT 1
FDNS	06ALL	3	17G	G15_078	TO->FROM	CIMARRON - MINCO 345KV CKT 1	956	956	0.20684	106.016	G11_051T 345.00 - TATONGA7 345.00 345KV CKT 1
FDNS	06ALL	3	17SP	G15_078	TO->FROM	CIMARRON - MINCO 345KV CKT 1	956	956	0.21068	105.6361	MATHWSN7 345.00 - TATONGA7 345.00 345KV CKT 1
FDNS	06ALL	3	20WP	G15_078	TO->FROM	CIMARRON - MINCO 345KV CKT 1	956	956	0.24792	105.2058	CHISHOLM7 345.00 - WOODWARD DISTRICT EHV 345KV CKT 1
FDNS	06ALL	3	16WP	G15_078	TO->FROM	CIMARRON - MINCO 345KV CKT 1	956	956	0.21211	105.1594	MATHWSN7 345.00 - TATONGA7 345.00 345KV CKT 1
FDNS	06ALL	3	20SP	G15_078	TO->FROM	CIMARRON - MINCO 345KV CKT 1	956	956	0.21292	104.8651	MATHWSN7 345.00 - TATONGA7 345.00 345KV CKT 1
FDNS	06ALL	3	20WP	G15_078	TO->FROM	CIMARRON - MINCO 345KV CKT 1	956	956	0.20637	104.6601	G11_051T 345.00 - WOODWARD DISTRICT EHV 345KV CKT 1
FDNS	06ALL	3	17G	G15_078	TO->FROM	CIMARRON - MINCO 345KV CKT 1	956	956	0.20684	104.4511	G11_051T 345.00 - WOODWARD DISTRICT EHV 345KV CKT 1
FDNS	06ALL	3	20SP	G15_078	TO->FROM	CIMARRON - MINCO 345KV CKT 1	956	956	0.2547	103.3967	CHISHOLM7 345.00 - WOODWARD DISTRICT EHV 345KV CKT 1
FDNS	06ALL	3	17SP	G15_078	TO->FROM	CIMARRON - MINCO 345KV CKT 1	956	956	0.24954	102.6701	CHISHOLM7 345.00 - WOODWARD DISTRICT EHV 345KV CKT 1
FDNS	06ALL	3	17SP	G15_078	TO->FROM	CIMARRON - MINCO 345KV CKT 1	956	956	0.21068	100.4546	G11_051T 345.00 - TATONGA7 345.00 345KV CKT 1
FDNS	06ALL	3	20WP	G15_078	TO->FROM	CIMARRON - MINCO 345KV CKT 1	956	956	0.19793	100.2954	P12:138:WFEC:MSL03
FDNS	06ALL	3	16WP	G15_078	TO->FROM	CIMARRON - MINCO 345KV CKT 1	956	956	0.21211	99.8	G11_051T 345.00 - TATONGA7 345.00 345KV CKT 1
FDNS	06ALL	3	20SP	G15_078	TO->FROM	CIMARRON - MINCO 345KV CKT 1	956	956	0.21292	99.7	G11_051T 345.00 - TATONGA7 345.00 345KV CKT 1
FDNS	06ALL	3	17SP	G15_078	TO->FROM	CIMARRON - MINCO 345KV CKT 1	956	956	0.20094	99.6	P12:138:WFEC:MSL03
FDNS	06ALL	3	20SP	G15_078	TO->FROM	CIMARRON - MINCO 345KV CKT 1	956	956	0.20413	99.6	P12:138:WFEC:MSL03
FDNS	06NR	3	20L	G15_078	TO->FROM	COULTER INTERCHANGE - HILLSIDE 115KV CKT 1	159	159	0.03893	105.531	BUSHLAND INTERCHANGE - POTTER COUNTY INTERCHANGE 230KV CKT 1
FDNS	06NR	3	20L	G15_078	TO->FROM	COULTER INTERCHANGE - HILLSIDE 115KV CKT 1	159	159	0.03893	105.531	BUSHLAND INTERCHANGE - POTTER COUNTY INTERCHANGE 230KV CKT 1
FDNS	06NR	3	17G	G15_078	TO->FROM	COULTER INTERCHANGE - HILLSIDE 115KV CKT 1	159	159	0.04286	100.454	BUSHLAND INTERCHANGE - POTTER COUNTY INTERCHANGE 230KV CKT 1
FDNS	06NR	3	17G	G15_078	TO->FROM	COULTER INTERCHANGE - HILLSIDE 115KV CKT 1	159	159	0.04286	100.454	BUSHLAND INTERCHANGE - POTTER COUNTY INTERCHANGE 230KV CKT 1
FDNS	06NR	3	17G	G15_078	TO->FROM	DAWN SUB - Panda Energy Substation Hereford 115KV CKT 1	96	96	0.03511	112.7612	BUSHLAND INTERCHANGE - DEAF SMITH COUNTY INTERCHANGE 230KV CKT 1
FDNS	06NR	3	17G	G15_078	TO->FROM	DAWN SUB - Panda Energy Substation Hereford 115KV CKT 1	96	96	0.03511	112.7612	BUSHLAND INTERCHANGE - DEAF SMITH COUNTY INTERCHANGE 230KV CKT 1
FDNS	06NR	3	17G	G15_078	FROM->TO	DEAF SMITH COUNTY INTERCHANGE - Panda Energy Substation Hereford 115KV CKT 1	96	96	0.03511	117.8354	BUSHLAND INTERCHANGE - DEAF SMITH COUNTY INTERCHANGE 230KV CKT 1
FDNS	06NR	3	17G	G15_078	FROM->TO	DEAF SMITH COUNTY INTERCHANGE - Panda Energy Substation Hereford 115KV CKT 1	96	96	0.03511	117.8354	BUSHLAND INTERCHANGE - DEAF SMITH COUNTY INTERCHANGE 230KV CKT 1
FDNS	00NR	3	25SP	G15_078	FROM->TO	DENVER CITY INTERCHANGE S. - SAN_ANDS_TP3115.00 115KV CKT 1	159	160	0.05375	131.4614	MUSTANG STATION - SEMINOLE 230KV CKT 1
FDNS	00NR	3	25SP	G15_078	FROM->TO	DENVER CITY INTERCHANGE S. - SAN_ANDS_TP3115.00 115KV CKT 1	159	160	0.05375	131.4614	MUSTANG STATION - SEMINOLE 230KV CKT 1
FDNS	00NR	3	20SP	G15_078	FROM->TO	DENVER CITY INTERCHANGE S. - SAN_ANDS_TP3115.00 115KV CKT 1	159	160	0.05504	112.5672	MUSTANG STATION - SEMINOLE 230KV CKT 1
FDNS	00NR	3	20SP	G15_078	FROM->TO	DENVER CITY INTERCHANGE S. - SAN_ANDS_TP3115.00 115KV CKT 1	159	160	0.05504	112.5672	MUSTANG STATION - SEMINOLE 230KV CKT 1
FDNS	00NR	3	17SP	G15_078	FROM->TO	DENVER CITY INTERCHANGE S. - SAN_ANDS_TP3115.00 115KV CKT 1	159	160	0.0564	106.8606	MUSTANG STATION - SEMINOLE 230KV CKT 1
FDNS	00NR	3	17SP	G15_078	FROM->TO	DENVER CITY INTERCHANGE S. - SAN_ANDS_TP3115.00 115KV CKT 1	159	160	0.0564	106.8606	MUSTANG STATION - SEMINOLE 230KV CKT 1
FDNS	00NR	3	25SP	G15_078	FROM->TO	DENVER CITY INTERCHANGE S. - SHELL C2 SUB 115KV CKT 1	159	175	0.03028	110.4745	P12:115:LCEC:W56.1.HOBBG.LE-LVN
FDNS	00NR	3	25SP	G15_078	FROM->TO	DENVER CITY INTERCHANGE S. - SHELL C2 SUB 115KV CKT 1	159	175	0.03028	109.9315	LE-WEST_SUB3115.00 - LEA COUNTY REC-LOVINGTON INTERCHANGE 115KV CKT 1
FDNS	06ALL	3	20L	G15_078	TO->FROM	G14-057T 345.00 - LAWTON EASTSIDE 345KV CKT 1	717	789	0.10646	106.0801	BASE CASE
FDNS	06ALL	3	20L	G15_078	FROM->TO	G14-057T 345.00 - SUNNYSIDE 345KV CKT 1	717	789	0.10646	119.3111	BASE CASE
FDNS	06ALL	3	20WP	G15_078	FROM->TO	G14-057T 345.00 - SUNNYSIDE 345KV CKT 1	717	789	0.12999	107.198	BASE CASE
FDNS	06ALL	3	17G	G15_078	FROM->TO	G14-057T 345.00 - SUNNYSIDE 345KV CKT 1	717	789	0.12952	106.7167	BASE CASE
FDNS	06ALL	3	16WP	G15_078	FROM->TO	G14-057T 345.00 - SUNNYSIDE 345KV CKT 1	717	789	0.13299	105.3992	BASE CASE
FDNS	06NR	3	20L	G15_078	FROM->TO	G14-074T 345.00 - OKLAUNION 345KV CKT 1	1022	1124	0.05653	108.2612	BASE CASE
FDNS	06NR	3	17G	G15_078	FROM->TO	G14-074T 345.00 - OKLAUNION 345KV CKT 1	1022	1124	0.0455	106.9843	G11_051T 345.00 - WOODWARD DISTRICT EHV 345KV CKT 1
FDNS	06NR	3	17G	G15_078	FROM->TO	G14-074T 345.00 - OKLAUNION 345KV CKT 1	1022	1124	0.04605	105.0698	BASE CASE
FDNS	06NR	3	20L	G15_078	FROM->TO	G14-074T 345.00 - OKLAUNION 345KV CKT 1	1022	1124	0.05382	103.3966	CHISHOLM7 345.00 - GRACEMONT 345KV CKT 1
FDNS	06NR	3	20L	G15_078	FROM->TO	G14-074T 345.00 - OKLAUNION 345KV CKT 1	1022	1124	0.05382	102.9036	CHISHOLM7 345.00 () 345/230/13.2KV TRANSFORMER CKT 1
FDNS	06NR	3	20L	G15_078	FROM->TO	G14-074T 345.00 - OKLAUNION 345KV CKT 1	1022	1124	0.06722	102.6829	AMARILLO SOUTH INTERCHANGE - G15031_T 230.00 230KV CKT 1
FDNS	06NR	3	20L	G15_078	FROM->TO	G14-074T 345.00 - OKLAUNION 345KV CKT 1	1022	1124	0.06556	102.2907	NEWHART 230 - POTTER COUNTY INTERCHANGE 230KV CKT 1
FDNS	06NR	3	20L	G15_078	FROM->TO	G14-074T 345.00 - OKLAUNION 345KV CKT 1	1022	1124	0.0637	101.9316	DEAF SMITH COUNTY INTERCHANGE - G15039_T 230.00 230KV CKT 1
FDNS	06NR	3	20L	G15_078	FROM->TO	G14-074T 345.00 - OKLAUNION 345KV CKT 1	1022	1124	0.0637	100.8261	G15039_T 230.00 - PLANT X STATION 230KV CKT 1
FDNS	06NR	3	20L	G15_078	FROM->TO	G14-074T 345.00 - OKLAUNION 345KV CKT 1	1022	1124	0.05634	100.637	MINGO - RED WILLOW 345KV CKT 1
FDNS	06NR	3	20L	G15_078	FROM->TO	G14-074T 345.00 - OKLAUNION 345KV CKT 1	1022	1124	0.05634	100.637	MINGO - RED WILLOW 345KV CKT 1
FDNS	06NR	3	20L	G15_078	FROM->TO	G14-074T 345.00 - OKLAUNION 345KV CKT 1	1022	1124	0.05574	100.065	CHILDRESS - LAKE PAULINE 138KV CKT 1
FDNS	06NR	3	20L	G15_078	FROM->TO	G14-074T 345.00 - OKLAUNION 345KV CKT 1	1022	1124	0.05574	100.065	CHILDRESS - LAKE PAULINE 138KV CKT 1
FDNS	06NR	3	20L	G15_078	FROM->TO	G14-074T 345.00 - OKLAUNION 345KV CKT 1	1022	1124	0.05606	100	CONWAY SUB - NICHOLS STATION 115KV CKT 1
FDNS	06NR	3	20L	G15_078	FROM->TO	G14-074T 345.00 - OKLAUNION 345KV CKT 1	1022	1124	0.05606	99.9	CONWAY SUB - KIRBY SWITCHING STATION 115KV CKT 1
FDNS	06NR	3	17G	G15_078	FROM->TO	G14-074T 345.00 - OKLAUNION 345KV CKT 1	1022	1124	0.05608	99.8	AMARILLO SOUTH INTERCHANGE - G15031_T 230.00 230KV CKT 1
FDNS	06NR	3	20L	G15_078	FROM->TO	G14-074T 345.00 - OKLAUNION 345KV CKT 1	1022	1124	0.05606	99.8	P12:115:SPS:T53.1.NICHLS.KIRBY
FDNS	06NR	3	20L	G15_078	FROM->TO	G14-074T 345.00 - OKLAUNION 345KV CKT 1	1022	1124	0.0565	99.7	IODINE - WOODWARD EHV 138KV CKT 1
FDNS	06NR	3	20L	G15_078	FROM->TO	G14-074T 345.00 - OKLAUNION 345KV CKT 1	1022	1124	0.0565	99.6	DEWEY - IODINE 138KV CKT 1
FDNS	06NR	3	20L	G15_078	FROM->TO	G14-074T 345.00 - OKLAUNION 345KV CKT 1	1022	1124	0.0565	99.6	WOODWARD - WWPAR4 138.00 138KV CKT 1
FDNS	06NR	3	20L	G15_078	FROM->TO	G14-074T 345.00 - OKLAUNION 345KV CKT 1	1022	1124	0.0565	99.6	WOODWARD EHV - WWPAR4 138.00 138KV CKT 1
FDNS	06NR	3	17G	G15_078	FROM->TO	G14-074T 345.00 - OKLAUNION 345KV CKT 1	1022	1124	0.04374	99.5	CHISHOLM7 345.00 - GRACEMONT 345KV CKT 1
FDNS	06NR	3	20L	G15_078	FROM->TO	G14-074T 345.00 - OKLAUNION 345KV CKT 1	1022	1124	0.0561	99.5	KIRBY SWITCHING STATION - MCCLELLAN SUB 115KV CKT 1
FDNS	06NR	3	20L	G15_078	FROM->TO	G14-074T 345.00 - OKLAUNION 345KV CKT 1	1022	1124	0.0561	99.5	MCCLELLAN SUB - MCLEAN RURAL SUB 115KV CKT 1
FDNS	06ALL	3	20L	G15_078	FROM->TO	GRACEMONT - MINCO 345KV CKT 1	1195	1195	0.21863	101.53	G14-057T 345.00 - SUNNYSIDE 345KV CKT 1
FDNS	00NR	3	25SP	G15_078	FROM->TO	Hitchland Interchange (SIEM 8743067) 345/230/13.2KV TRANSFORMER CKT 2	560	644	0.03074	100.776	Hitchland Interchange (H TB80155502) 345/230/13.2KV TRANSFORMER CKT 1
FDNS	00NR	3	25SP	G15_078	FROM->TO	Hitchland Interchange (SIEM 8743067) 345/230/13.2KV TRANSFORMER CKT 2	560	644	0.03074	100.776	Hitchland Interchange (H TB80155502) 345/230/13.2KV TRANSFORMER CKT 1
FDNS	00NR	3	25SP	G15_078	FROM->TO	LUBBOCK POWER & LIGHT-HOLLY PLANT (SHIH T101039) 230/69/13.5KV TRANSFORMER CKT 1	224	224	0.03569	104.7002	LUBBOCK POWER & LIGHT-SOUTHEAST - LUBBOCK SOUTH INTERCHANGE 230KV CKT 1
FDNS	00NR	3	25SP	G15_078	FROM->TO	LUBBOCK POWER & LIGHT-HOLLY PLANT (SHIH T101039) 230/69/13.5KV TRANSFORMER CKT 1	224	224	0.03569	104.6872	P12:LPL:SPS:K64.1.LP-SE.LUBBS
FDNS	00NR	3	25SP	G15_078	FROM->TO	LUBBOCK POWER & LIGHT-HOLLY PLANT (SHIH T101039) 230/69/13.5KV TRANSFORMER CKT 1	224	224	0.03342	101.9683	LUBBOCK EAST INTERCHANGE - LUBBOCK POWER & LIGHT-WADSWORTH 230KV CKT 1
FDNS	00NR	3	25SP	G15_078	FROM->TO	LUBBOCK POWER & LIGHT-HOLLY PLANT (SHIH T101039) 230/69/13.5KV TRANSFORMER CKT 1	224	224	0.03342	101.9535	P12:230:LPL:K57.1.LP-WADS.LUBBE
FDNS	00NR	3	25SP	G15_078	FROM->TO	LUBBOCK POWER & LIGHT-HOLLY PLANT (SHIH T101039) 230/69/13.5KV TRANSFORMER CKT 1	224	224	0.03342	101.9534	LUBBOCK POWER & LIGHT-WADSWORTH (SHIH T101038) 230/69/13.5KV TRANSFORMER CKT 1

SOLUTION	GROUP	SCENARIO	SEASON	SOURCE	DIRECTION	MONITORED ELEMENT	RATEA (MVA)	RATEB(MVA)	TDF	TC%LOADING (% MVA)	CONTINGENCY
FDNS	00NR	3	25SP	G15_078	FROM->TO	LUBBOCK POWER & LIGHT-HOLLY PLANT (SHIH T101039) 230/69/13.5KV TRANSFORMER CKT 1	224	224	0.03342	101.9534	LUBBOCK POWER & LIGHT-WADSWORTH (SHIH T101038) 230/69/13.5KV TRANSFORMER CKT 1
FDNS	00NR	3	25SP	G15_078	FROM->TO	SAN_ANDS_TP3115.00 - SEMINOLE 115KV CKT 1	159	160	0.05375	111.5565	MUSTANG STATION - SEMINOLE 230KV CKT 1
FDNS	00NR	3	25SP	G15_078	FROM->TO	SAN_ANDS_TP3115.00 - SEMINOLE 115KV CKT 1	159	160	0.05375	111.5565	MUSTANG STATION - SEMINOLE 230KV CKT 1
FDNS	00NR	3	25SP	G15_078	FROM->TO	SHELL C2 SUB - SHELL C3 TAP 115KV CKT 1	179	179	0.03028	101.0673	P12:115:LCEC:W56.1.HOBBG.LE-LVN
FDNS	00NR	3	25SP	G15_078	FROM->TO	SHELL C2 SUB - SHELL C3 TAP 115KV CKT 1	179	179	0.03028	100.5427	LE-WEST_SUB3115.00 - LEA COUNTY REC-LOVINGTON INTERCHANGE 115KV CKT 1
FDNS	06ALL	3	20L	G15_078	FROM->TO	TUCO INTERCHANGE - TUCO_2 230.00 230KV CKT 1	497	547	0.2263	105.0803	TUCO INTERCHANGE - TUCO_2 345.00 345KV CKT 1
FDNS	06ALL	3	20SP	G15_078	FROM->TO	TUCO INTERCHANGE - TUCO_2 230.00 230KV CKT 1	497	547	0.24553	99.5	TUCO INTERCHANGE - TUCO_2 345.00 345KV CKT 1
FDNS	06ALL	4	20SP	G15_078	FROM->TO	CHISHOLM6 230.00 - ELK CITY 230KV 230KV CKT 1	353	353	0.06194	103.152	BASE CASE
FDNS	06ALL	4	17SP	G15_078	FROM->TO	CHISHOLM6 230.00 - ELK CITY 230KV 230KV CKT 1	353	353	0.06203	100.7007	BASE CASE
FDNS	06ALL	4	20L	G15_078	TO->FROM	CIMARRON - MINCO 345KV CKT 1	956	956	0.20508	136.9659	G14-057T 345.00 - SUNNYSIDE 345KV CKT 1
FDNS	06ALL	4	20L	G15_078	TO->FROM	CIMARRON - MINCO 345KV CKT 1	956	956	0.20508	130.9905	G14-057T 345.00 - LAWTON EASTSIDE 345KV CKT 1
FDNS	06ALL	4	17G	G15_078	TO->FROM	CIMARRON - MINCO 345KV CKT 1	956	956	0.22795	129.7974	G14-057T 345.00 - SUNNYSIDE 345KV CKT 1
FDNS	06ALL	4	20WP	G15_078	TO->FROM	CIMARRON - MINCO 345KV CKT 1	956	956	0.23079	128.511	G14-057T 345.00 - SUNNYSIDE 345KV CKT 1
FDNS	06ALL	4	17G	G15_078	TO->FROM	CIMARRON - MINCO 345KV CKT 1	956	956	0.22795	124.286	G14-057T 345.00 - LAWTON EASTSIDE 345KV CKT 1
FDNS	06ALL	4	20WP	G15_078	TO->FROM	CIMARRON - MINCO 345KV CKT 1	956	956	0.23079	123.0537	G14-057T 345.00 - LAWTON EASTSIDE 345KV CKT 1
FDNS	06ALL	4	16WP	G15_078	TO->FROM	CIMARRON - MINCO 345KV CKT 1	956	956	0.23452	122.1275	G14-057T 345.00 - SUNNYSIDE 345KV CKT 1
FDNS	06ALL	4	17SP	G15_078	TO->FROM	CIMARRON - MINCO 345KV CKT 1	956	956	0.23183	121.005	G14-057T 345.00 - SUNNYSIDE 345KV CKT 1
FDNS	06ALL	4	20SP	G15_078	TO->FROM	CIMARRON - MINCO 345KV CKT 1	956	956	0.23653	117.7968	G14-057T 345.00 - SUNNYSIDE 345KV CKT 1
FDNS	06ALL	4	16WP	G15_078	TO->FROM	CIMARRON - MINCO 345KV CKT 1	956	956	0.23452	116.5578	G14-057T 345.00 - LAWTON EASTSIDE 345KV CKT 1
FDNS	06ALL	4	17SP	G15_078	TO->FROM	CIMARRON - MINCO 345KV CKT 1	956	956	0.23183	115.6625	G14-057T 345.00 - LAWTON EASTSIDE 345KV CKT 1
FDNS	06ALL	4	20SP	G15_078	TO->FROM	CIMARRON - MINCO 345KV CKT 1	956	956	0.23653	112.5931	G14-057T 345.00 - LAWTON EASTSIDE 345KV CKT 1
FDNSLock	06ALL	4	17G	G15_078	TO->FROM	CIMARRON - MINCO 345KV CKT 1	956	956	0.19693	110.3749	MATHWSN7 345.00 - TATONGA7 345.00 345KV CKT 1
FDNS	06ALL	4	20WP	G15_078	TO->FROM	CIMARRON - MINCO 345KV CKT 1	956	956	0.19691	109.8635	MATHWSN7 345.00 - TATONGA7 345.00 345KV CKT 1
FDNS	06ALL	4	20WP	G15_078	TO->FROM	CIMARRON - MINCO 345KV CKT 1	956	956	0.19691	104.457	G11_051T 345.00 - TATONGA7 345.00 345KV CKT 1
FDNS	06ALL	4	17G	G15_078	TO->FROM	CIMARRON - MINCO 345KV CKT 1	956	956	0.21783	104.4362	CHISHOLM7 345.00 - WOODWARD DISTRICT EHV 345KV CKT 1
FDNS	06ALL	4	17G	G15_078	TO->FROM	CIMARRON - MINCO 345KV CKT 1	956	956	0.19693	104.3067	G11_051T 345.00 - TATONGA7 345.00 345KV CKT 1
FDNS	06ALL	4	20L	G15_078	TO->FROM	CIMARRON - MINCO 345KV CKT 1	956	956	0.20409	103.7687	CHISHOLM7 345.00 - WOODWARD DISTRICT EHV 345KV CKT 1
FDNS	06ALL	4	17SP	G15_078	TO->FROM	CIMARRON - MINCO 345KV CKT 1	956	956	0.20039	103.6969	MATHWSN7 345.00 - TATONGA7 345.00 345KV CKT 1
FDNS	06ALL	4	16WP	G15_078	TO->FROM	CIMARRON - MINCO 345KV CKT 1	956	956	0.20198	103.3746	MATHWSN7 345.00 - TATONGA7 345.00 345KV CKT 1
FDNS	06ALL	4	20WP	G15_078	TO->FROM	CIMARRON - MINCO 345KV CKT 1	956	956	0.19691	102.8471	G11_051T 345.00 - WOODWARD DISTRICT EHV 345KV CKT 1
FDNS	06ALL	4	20SP	G15_078	TO->FROM	CIMARRON - MINCO 345KV CKT 1	956	956	0.20327	102.8303	MATHWSN7 345.00 - TATONGA7 345.00 345KV CKT 1
FDNS	06ALL	4	17G	G15_078	TO->FROM	CIMARRON - MINCO 345KV CKT 1	956	956	0.19693	102.7262	G11_051T 345.00 - WOODWARD DISTRICT EHV 345KV CKT 1
FDNS	06ALL	4	20WP	G15_078	TO->FROM	CIMARRON - MINCO 345KV CKT 1	956	956	0.22495	100.3052	CHISHOLM7 345.00 - WOODWARD DISTRICT EHV 345KV CKT 1
FDNS	00NR	4	25SP	G15_078	FROM->TO	DENVER CITY INTERCHANGE S. - SAN_ANDS_TP3115.00 115KV CKT 1	159	160	0.05394	131.1993	MUSTANG STATION - SEMINOLE 230KV CKT 1
FDNS	00NR	4	25SP	G15_078	FROM->TO	DENVER CITY INTERCHANGE S. - SAN_ANDS_TP3115.00 115KV CKT 1	159	160	0.05394	131.1993	MUSTANG STATION - SEMINOLE 230KV CKT 1
FDNS	00NR	4	20SP	G15_078	FROM->TO	DENVER CITY INTERCHANGE S. - SAN_ANDS_TP3115.00 115KV CKT 1	159	160	0.05524	112.5918	MUSTANG STATION - SEMINOLE 230KV CKT 1
FDNS	00NR	4	20SP	G15_078	FROM->TO	DENVER CITY INTERCHANGE S. - SAN_ANDS_TP3115.00 115KV CKT 1	159	160	0.05524	112.5918	MUSTANG STATION - SEMINOLE 230KV CKT 1
FDNS	00NR	4	17SP	G15_078	FROM->TO	DENVER CITY INTERCHANGE S. - SAN_ANDS_TP3115.00 115KV CKT 1	159	160	0.05674	106.8918	MUSTANG STATION - SEMINOLE 230KV CKT 1
FDNS	00NR	4	17SP	G15_078	FROM->TO	DENVER CITY INTERCHANGE S. - SAN_ANDS_TP3115.00 115KV CKT 1	159	160	0.05674	106.8918	MUSTANG STATION - SEMINOLE 230KV CKT 1
FDNS	00NR	4	25SP	G15_078	FROM->TO	DENVER CITY INTERCHANGE S. - SHELL C2 SUB 115KV CKT 1	159	175	0.03035	110.3426	P12:115:LCEC:W56.1.HOBBG.LE-LVN
FDNS	00NR	4	25SP	G15_078	FROM->TO	DENVER CITY INTERCHANGE S. - SHELL C2 SUB 115KV CKT 1	159	175	0.03035	109.8053	LE-WEST_SUB3115.00 - LEA COUNTY REC-LOVINGTON INTERCHANGE 115KV CKT 1
FDNSLock	06ALL	4	16WP	G15_078		G14_001T 345.00 - WICHITA 345KV CKT 1	1035	1035	0.05397	25.24282	BASE CASE
FDNS	06ALL	4	20L	G15_078	TO->FROM	G14-057T 345.00 - LAWTON EASTSIDE 345KV CKT 1	717	789	0.10053	104.3251	BASE CASE
FDNS	06ALL	4	20L	G15_078	FROM->TO	G14-057T 345.00 - SUNNYSIDE 345KV CKT 1	717	789	0.10053	117.5276	BASE CASE
FDNS	06ALL	4	20WP	G15_078	FROM->TO	G14-057T 345.00 - SUNNYSIDE 345KV CKT 1	717	789	0.12342	105.3579	BASE CASE
FDNS	06ALL	4	17G	G15_078	FROM->TO	G14-057T 345.00 - SUNNYSIDE 345KV CKT 1	717	789	0.12262	105.0325	BASE CASE
FDNS	06ALL	4	16WP	G15_078	FROM->TO	G14-057T 345.00 - SUNNYSIDE 345KV CKT 1	717	789	0.12594	103.6585	BASE CASE
FDNS	06NR	4	20L	G15_078	FROM->TO	G14-074T 345.00 - OKLAUNION 345KV CKT 1	1022	1124	0.03761	103.8229	GRAPEVINE INTERCHANGE - STATELINE INTERCHANGE 230KV CKT 1
FDNS	06NR	4	20L	G15_078	FROM->TO	G14-074T 345.00 - OKLAUNION 345KV CKT 1	1022	1124	0.03761	103.8229	GRAPEVINE INTERCHANGE - STATELINE INTERCHANGE 230KV CKT 1
FDNS	06NR	4	17G	G15_078	FROM->TO	G14-074T 345.00 - OKLAUNION 345KV CKT 1	1022	1124	0.03085	102.9967	MATHWSN7 345.00 - TATONGA7 345.00 345KV CKT 1
FDNS	06NR	4	20L	G15_078	FROM->TO	G14-074T 345.00 - OKLAUNION 345KV CKT 1	1022	1124	0.0415	101.1904	BASE CASE
FDNS	06NR	4	17G	G15_078	FROM->TO	G14-074T 345.00 - OKLAUNION 345KV CKT 1	1022	1124	0.03085	99.8	G11_051T 345.00 - TATONGA7 345.00 345KV CKT 1
FDNS	00NR	4	25SP	G15_078	FROM->TO	Hitchland Interchange (SIEM 8743067) 345/230/13.2KV TRANSFORMER CKT 2	560	644	0.03145	100.255	Hitchland Interchange (H TB80155502) 345/230/13.2KV TRANSFORMER CKT 1
FDNS	00NR	4	25SP	G15_078	FROM->TO	Hitchland Interchange (SIEM 8743067) 345/230/13.2KV TRANSFORMER CKT 2	560	644	0.03145	100.255	Hitchland Interchange (H TB80155502) 345/230/13.2KV TRANSFORMER CKT 1
FDNS	00NR	4	25SP	G15_078	FROM->TO	LUBBOCK POWER & LIGHT-HOLLY PLANT (SHIH T101039) 230/69/13.5KV TRANSFORMER CKT 1	224	224	0.03569	104.6928	LUBBOCK POWER & LIGHT-SOUTHEAST - LUBBOCK SOUTH INTERCHANGE 230KV CKT 1
FDNS	00NR	4	25SP	G15_078	FROM->TO	LUBBOCK POWER & LIGHT-HOLLY PLANT (SHIH T101039) 230/69/13.5KV TRANSFORMER CKT 1	224	224	0.03569	104.6926	P12:LPL:SPS:K64.1.LP-SE.LUBBS
FDNS	00NR	4	25SP	G15_078	FROM->TO	LUBBOCK POWER & LIGHT-HOLLY PLANT (SHIH T101039) 230/69/13.5KV TRANSFORMER CKT 1	224	224	0.03344	101.9377	LUBBOCK EAST INTERCHANGE - LUBBOCK POWER & LIGHT-WADSWORTH 230KV CKT 1
FDNS	00NR	4	25SP	G15_078	FROM->TO	LUBBOCK POWER & LIGHT-HOLLY PLANT (SHIH T101039) 230/69/13.5KV TRANSFORMER CKT 1	224	224	0.03344	101.923	P12:230:LPL:K57.1.LP-WADS.LUBBE
FDNS	00NR	4	25SP	G15_078	FROM->TO	LUBBOCK POWER & LIGHT-HOLLY PLANT (SHIH T101039) 230/69/13.5KV TRANSFORMER CKT 1	224	224	0.03344	101.9229	LUBBOCK POWER & LIGHT-WADSWORTH (SHIH T101038) 230/69/13.5KV TRANSFORMER CKT 1
FDNS	00NR	4	25SP	G15_078	FROM->TO	LUBBOCK POWER & LIGHT-HOLLY PLANT (SHIH T101039) 230/69/13.5KV TRANSFORMER CKT 1	224	224	0.03344	101.9229	LUBBOCK POWER & LIGHT-WADSWORTH (SHIH T101038) 230/69/13.5KV TRANSFORMER CKT 1
FDNSLock	06ALL	4	20L	G15_078		OKLAUNION 345KV SWITCHED SHUNT	1022	1124	0.16934	86.37846	BASE CASE
FDNS	00NR	4	25SP	G15_078	FROM->TO	SAN_ANDS_TP3115.00 - SEMINOLE 115KV CKT 1	159	160	0.05394	111.3028	MUSTANG STATION - SEMINOLE 230KV CKT 1
FDNS	00NR	4	25SP	G15_078	FROM->TO	SAN_ANDS_TP3115.00 - SEMINOLE 115KV CKT 1	159	160	0.05394	111.3028	MUSTANG STATION - SEMINOLE 230KV CKT 1
FDNS	00NR	4	25SP	G15_078	FROM->TO	SHELL C2 SUB - SHELL C3 TAP 115KV CKT 1	179	179	0.03035	100.94	P12:115:LCEC:W56.1.HOBBG.LE-LVN
FDNS	00NR	4	25SP	G15_078	FROM->TO	SHELL C2 SUB - SHELL C3 TAP 115KV CKT 1	179	179	0.03035	100.4205	LE-WEST_SUB3115.00 - LEA COUNTY REC-LOVINGTON INTERCHANGE 115KV CKT 1
FDNS	06ALL	4	16WP	G15_078	FROM->TO	TOLK STATION (ABBXNL844501) 345/230/13.2KV TRANSFORMER CKT 1	560	560	0.2597	113.0515	CROSSROADS 7345.00 - TOLK STATION 345KV CKT 1
FDNS	06ALL	4	16WP	G15_078	FROM->TO	TOLK STATION (ABBXNL844501) 345/230/13.2KV TRANSFORMER CKT 1	560	560	0.2597	110.3257	CROSSROADS 7345.00 - TOLK STATION 345KV CKT 1
FDNS	06ALL	4	20L	G15_078	FROM->TO	TUCO INTERCHANGE - TUCO_2 230.00 230KV CKT 1	497	547	0.22681	103.1103	TUCO INTERCHANGE - TUCO_2 345.00 345KV CKT 1
FDNS	06ALL	4	20WP	G15_078	FROM->TO	TUCO_2 345.00 (TUCO_2 XFMR) 345/230/13.2KV TRANSFORMER CKT 1	560	560	0.19813	111.7671	TUCO INTERCHANGE - TUCO_2 345.00 345KV CKT 1
FDNS	06ALL	4	20WP	G15_078	FROM->TO	TUCO_2 345.00 (TUCO_2 XFMR) 345/230/13.2KV TRANSFORMER CKT 1	560	560	0.19813	109.2949	TUCO INTERCHANGE - TUCO_2 345.00 345KV CKT 1
FDNS	06ALL	5	20SP	G15_078	FROM->TO	CHISHOLM6 230.00 - ELK CITY 230KV 230KV CKT 1	353	353	0.06594	107.7212	BASE CASE
FDNS	06ALL	5	17SP	G15_078	FROM->TO	CHISHOLM6 230.00 - ELK CITY 230KV 230KV CKT 1	353	353	0.0666	105.7594	BASE CASE
FDNS	06ALL	5	20L	G15_078	TO->FROM	CIMARRON - MINCO 345KV CKT 1	956	956	0.21208	139.1694	G14-057T 345.00 - SUNNYSIDE 345KV CKT 1
FDNS	06ALL	5	20L	G15_078	TO->FROM	CIMARRON - MINCO 345KV CKT 1	956	956	0.21208	133.4583	G14-057T 345.00 - LAWTON EASTSIDE 345KV CKT 1
FDNS	06ALL	5	17G	G15_078	TO->FROM	CIMARRON - MINCO 345KV CKT 1	956	956	0.23627	132.5137	G14-057T 345.00 - SUNNYSIDE 345KV CKT 1
FDNS	06ALL	5	20WP	G15_078	TO->FROM	CIMARRON - MINCO 345KV CKT 1	956	956	0.23724	131.4126	G14-057T 345.00 - SUNNYSIDE 345KV CKT 1
FDNS	06ALL	5	17G	G15_078	TO->FROM	CIMARRON - MINCO 345KV CKT 1	956	956	0.23627	127.0859	G14-057T 345.00 - LAWTON EASTSIDE 345KV CKT 1
FDNS	06ALL	5	20WP	G15_078	TO->FROM	CIMARRON - MINCO 345KV CKT 1	956	956	0.23724	126.0182	G14-057T 345.00 - LAWTON EASTSIDE 345KV CKT 1
FDNS	06ALL	5	16WP	G15_078	TO->FROM	CIMARRON - MINCO 345KV CKT 1	956	956	0.24302	125.0103	G14-057T 345.00 - SUNNYSIDE 345KV CKT 1

SOLUTION	GROUP	SCENARIO	SEASON	SOURCE	DIRECTION	MONITORED ELEMENT	RATEA (MVA)	RATEB(MVA)	TDF	TC%LOADING (% MVA)	CONTINGENCY
FDNS	06ALL	5	17SP	G15_078	TO->FROM	CIMARRON - MINCO 345KV CKT 1	956	956	0.23982	123.5221	G14-057T 345.00 - SUNNYSIDE 345KV CKT 1
FDNS	06ALL	5	20SP	G15_078	TO->FROM	CIMARRON - MINCO 345KV CKT 1	956	956	0.24344	120.476	G14-057T 345.00 - SUNNYSIDE 345KV CKT 1
FDNS	06ALL	5	16WP	G15_078	TO->FROM	CIMARRON - MINCO 345KV CKT 1	956	956	0.24302	119.6144	G14-057T 345.00 - LAWTON EASTSIDE 345KV CKT 1
FDNS	06ALL	5	17SP	G15_078	TO->FROM	CIMARRON - MINCO 345KV CKT 1	956	956	0.23982	118.2604	G14-057T 345.00 - LAWTON EASTSIDE 345KV CKT 1
FDNS	06ALL	5	20SP	G15_078	TO->FROM	CIMARRON - MINCO 345KV CKT 1	956	956	0.24344	115.0864	G14-057T 345.00 - LAWTON EASTSIDE 345KV CKT 1
FDNS	06ALL	5	17G	G15_078	TO->FROM	CIMARRON - MINCO 345KV CKT 1	956	956	0.20423	113.1247	MATHWSN7 345.00 - TATONGA7 345.00 345KV CKT 1
FDNS	06ALL	5	20WP	G15_078	TO->FROM	CIMARRON - MINCO 345KV CKT 1	956	956	0.20262	112.7231	MATHWSN7 345.00 - TATONGA7 345.00 345KV CKT 1
FDNS	06ALL	5	20L	G15_078	TO->FROM	CIMARRON - MINCO 345KV CKT 1	956	956	0.2119	110.4804	CHISHOLM7 345.00 - WOODWARD DISTRICT EHV 345KV CKT 1
FDNS	06ALL	5	17G	G15_078	TO->FROM	CIMARRON - MINCO 345KV CKT 1	956	956	0.22983	110.4087	CHISHOLM7 345.00 - WOODWARD DISTRICT EHV 345KV CKT 1
FDNS	06ALL	5	20WP	G15_078	TO->FROM	CIMARRON - MINCO 345KV CKT 1	956	956	0.20262	107.3503	G11_051T 345.00 - TATONGA7 345.00 345KV CKT 1
FDNS	06ALL	5	17G	G15_078	TO->FROM	CIMARRON - MINCO 345KV CKT 1	956	956	0.20423	107.1655	G11_051T 345.00 - TATONGA7 345.00 345KV CKT 1
FDNS	06ALL	5	20WP	G15_078	TO->FROM	CIMARRON - MINCO 345KV CKT 1	956	956	0.23328	106.6912	CHISHOLM7 345.00 - WOODWARD DISTRICT EHV 345KV CKT 1
FDNS	06ALL	5	16WP	G15_078	TO->FROM	CIMARRON - MINCO 345KV CKT 1	956	956	0.20945	106.1194	MATHWSN7 345.00 - TATONGA7 345.00 345KV CKT 1
FDNS	06ALL	5	17SP	G15_078	TO->FROM	CIMARRON - MINCO 345KV CKT 1	956	956	0.20744	106.0588	MATHWSN7 345.00 - TATONGA7 345.00 345KV CKT 1
FDNS	06ALL	5	20WP	G15_078	TO->FROM	CIMARRON - MINCO 345KV CKT 1	956	956	0.20262	105.6974	G11_051T 345.00 - WOODWARD DISTRICT EHV 345KV CKT 1
FDNS	06ALL	5	17G	G15_078	TO->FROM	CIMARRON - MINCO 345KV CKT 1	956	956	0.20423	105.5499	G11_051T 345.00 - WOODWARD DISTRICT EHV 345KV CKT 1
FDNS	06ALL	5	20SP	G15_078	TO->FROM	CIMARRON - MINCO 345KV CKT 1	956	956	0.20939	105.1459	MATHWSN7 345.00 - TATONGA7 345.00 345KV CKT 1
FDNS	06ALL	5	20SP	G15_078	TO->FROM	CIMARRON - MINCO 345KV CKT 1	956	956	0.24033	102.6282	CHISHOLM7 345.00 - WOODWARD DISTRICT EHV 345KV CKT 1
FDNS	06ALL	5	17SP	G15_078	TO->FROM	CIMARRON - MINCO 345KV CKT 1	956	956	0.23635	102.3712	CHISHOLM7 345.00 - WOODWARD DISTRICT EHV 345KV CKT 1
FDNS	06ALL	5	17SP	G15_078	TO->FROM	CIMARRON - MINCO 345KV CKT 1	956	956	0.20744	100.8538	G11_051T 345.00 - TATONGA7 345.00 345KV CKT 1
FDNS	06ALL	5	16WP	G15_078	TO->FROM	CIMARRON - MINCO 345KV CKT 1	956	956	0.20945	100.7286	G11_051T 345.00 - TATONGA7 345.00 345KV CKT 1
FDNS	06ALL	5	20SP	G15_078	TO->FROM	CIMARRON - MINCO 345KV CKT 1	956	956	0.20939	100	G11_051T 345.00 - TATONGA7 345.00 345KV CKT 1
FDNS	06ALL	5	16WP	G15_078	TO->FROM	CIMARRON - MINCO 345KV CKT 1	956	956	0.23799	99.9	CHISHOLM7 345.00 - WOODWARD DISTRICT EHV 345KV CKT 1
FDNS	06ALL	5	17SP	G15_078	TO->FROM	CIMARRON - MINCO 345KV CKT 1	956	956	0.19531	99.5	P12:138:WFEC:MSL03
FDNS	00NR	5	25SP	G15_078	FROM->TO	DENVER CITY INTERCHANGE S. - SAN_ANDS_TP3115.00 115KV CKT 1	159	160	0.05394	131.1859	MUSTANG STATION - SEMINOLE 230KV CKT 1
FDNS	00NR	5	25SP	G15_078	FROM->TO	DENVER CITY INTERCHANGE S. - SAN_ANDS_TP3115.00 115KV CKT 1	159	160	0.05394	131.1859	MUSTANG STATION - SEMINOLE 230KV CKT 1
FDNS	00NR	5	20SP	G15_078	FROM->TO	DENVER CITY INTERCHANGE S. - SAN_ANDS_TP3115.00 115KV CKT 1	159	160	0.05524	112.6361	MUSTANG STATION - SEMINOLE 230KV CKT 1
FDNS	00NR	5	20SP	G15_078	FROM->TO	DENVER CITY INTERCHANGE S. - SAN_ANDS_TP3115.00 115KV CKT 1	159	160	0.05524	112.6361	MUSTANG STATION - SEMINOLE 230KV CKT 1
FDNS	00NR	5	17SP	G15_078	FROM->TO	DENVER CITY INTERCHANGE S. - SAN_ANDS_TP3115.00 115KV CKT 1	159	160	0.05673	107.0011	MUSTANG STATION - SEMINOLE 230KV CKT 1
FDNS	00NR	5	17SP	G15_078	FROM->TO	DENVER CITY INTERCHANGE S. - SAN_ANDS_TP3115.00 115KV CKT 1	159	160	0.05673	107.0011	MUSTANG STATION - SEMINOLE 230KV CKT 1
FDNS	00NR	5	25SP	G15_078	FROM->TO	DENVER CITY INTERCHANGE S. - SHELL C2 SUB 115KV CKT 1	159	175	0.03035	110.3356	P12:115:LCEC:W56.1.HOBBG.LE-LVN
FDNS	00NR	5	25SP	G15_078	FROM->TO	DENVER CITY INTERCHANGE S. - SHELL C2 SUB 115KV CKT 1	159	175	0.03035	109.7983	LE-WEST_SUB3115.00 - LEA COUNTY REC-LOVINGTON INTERCHANGE 115KV CKT 1
FDNS	06ALL	5	20L	G15_078	TO->FROM	G14-057T 345.00 - LAWTON EASTSIDE 345KV CKT 1	717	789	0.1022	104.5834	BASE CASE
FDNS	06ALL	5	20L	G15_078	FROM->TO	G14-057T 345.00 - SUNNYSIDE 345KV CKT 1	717	789	0.1022	117.7866	BASE CASE
FDNS	06ALL	5	20WP	G15_078	FROM->TO	G14-057T 345.00 - SUNNYSIDE 345KV CKT 1	717	789	0.12418	105.6059	BASE CASE
FDNS	06ALL	5	17G	G15_078	FROM->TO	G14-057T 345.00 - SUNNYSIDE 345KV CKT 1	717	789	0.12389	105.2883	BASE CASE
FDNS	06ALL	5	16WP	G15_078	FROM->TO	G14-057T 345.00 - SUNNYSIDE 345KV CKT 1	717	789	0.12715	103.9305	BASE CASE
FDNS	06ALL	5	20L	G15_078	FROM->TO	GRACEMONT - MINCO 345KV CKT 1	1195	1195	0.21208	100.3039	G14-057T 345.00 - SUNNYSIDE 345KV CKT 1
FDNS	00NR	5	25SP	G15_078	FROM->TO	Hitchland Interchange (SIEM 8743067) 345/230/13.2KV TRANSFORMER CKT 2	560	644	0.03112	99.8	Hitchland Interchange (H TB80155502) 345/230/13.2KV TRANSFORMER CKT 1
FDNS	00NR	5	25SP	G15_078	FROM->TO	Hitchland Interchange (SIEM 8743067) 345/230/13.2KV TRANSFORMER CKT 2	560	644	0.03112	99.8	Hitchland Interchange (H TB80155502) 345/230/13.2KV TRANSFORMER CKT 1
FDNS	00NR	5	25SP	G15_078	FROM->TO	LUBBOCK POWER & LIGHT-HOLLY PLANT (SHIH T101039) 230/69/13.5KV TRANSFORMER CKT 1	224	224	0.03569	104.6927	LUBBOCK POWER & LIGHT-SOUTHEAST - LUBBOCK SOUTH INTERCHANGE 230KV CKT 1
FDNS	00NR	5	25SP	G15_078	FROM->TO	LUBBOCK POWER & LIGHT-HOLLY PLANT (SHIH T101039) 230/69/13.5KV TRANSFORMER CKT 1	224	224	0.03569	104.6925	P12:LPL:SPS:K64.1.LP-SE.LUBBS
FDNS	00NR	5	25SP	G15_078	FROM->TO	LUBBOCK POWER & LIGHT-HOLLY PLANT (SHIH T101039) 230/69/13.5KV TRANSFORMER CKT 1	224	224	0.03344	101.9351	LUBBOCK EAST INTERCHANGE - LUBBOCK POWER & LIGHT-WADSWORTH 230KV CKT 1
FDNS	00NR	5	25SP	G15_078	FROM->TO	LUBBOCK POWER & LIGHT-HOLLY PLANT (SHIH T101039) 230/69/13.5KV TRANSFORMER CKT 1	224	224	0.03344	101.9204	P12:230:LPL:K57.1.LP-WADS.LUBBE
FDNS	00NR	5	25SP	G15_078	FROM->TO	LUBBOCK POWER & LIGHT-HOLLY PLANT (SHIH T101039) 230/69/13.5KV TRANSFORMER CKT 1	224	224	0.03344	101.9203	LUBBOCK POWER & LIGHT-WADSWORTH (SHIH T101038) 230/69/13.5KV TRANSFORMER CKT 1
FDNS	00NR	5	25SP	G15_078	FROM->TO	LUBBOCK POWER & LIGHT-HOLLY PLANT (SHIH T101039) 230/69/13.5KV TRANSFORMER CKT 1	224	224	0.03344	101.9203	LUBBOCK POWER & LIGHT-WADSWORTH (SHIH T101038) 230/69/13.5KV TRANSFORMER CKT 1
FDNS	06ALL	5	16WP	G15_078	FROM->TO	POTTER COUNTY INTERCHANGE (WAUK 90343-A) 345/230/13.2KV TRANSFORMER CKT 1	560	560	0.20505	123.3278	P12:345:SPS:J15.1.XRDS.TOLK
FDNS	06ALL	5	16WP	G15_078	FROM->TO	POTTER COUNTY INTERCHANGE (WAUK 90343-A) 345/230/13.2KV TRANSFORMER CKT 1	560	560	0.20505	122.0001	P12:345:SPS:J15.1.XRDS.TOLK
FDNS	06ALL	5	17SP	G15_078	FROM->TO	POTTER COUNTY INTERCHANGE (WAUK 90343-A) 345/230/13.2KV TRANSFORMER CKT 1	560	560	0.1989	108.8592	P12:345:SPS:J15.1.XRDS.TOLK
FDNS	06ALL	5	17SP	G15_078	FROM->TO	POTTER COUNTY INTERCHANGE (WAUK 90343-A) 345/230/13.2KV TRANSFORMER CKT 1	560	560	0.1989	107.3735	P12:345:SPS:J15.1.XRDS.TOLK
FDNS	00NR	5	25SP	G15_078	FROM->TO	SAN_ANDS_TP3115.00 - SEMINOLE 115KV CKT 1	159	160	0.05394	111.2898	MUSTANG STATION - SEMINOLE 230KV CKT 1
FDNS	00NR	5	25SP	G15_078	FROM->TO	SAN_ANDS_TP3115.00 - SEMINOLE 115KV CKT 1	159	160	0.05394	111.2898	MUSTANG STATION - SEMINOLE 230KV CKT 1
FDNS	00NR	5	25SP	G15_078	FROM->TO	SHELL C2 SUB - SHELL C3 TAP 115KV CKT 1	179	179	0.03035	100.9332	P12:115:LCEC:W56.1.HOBBG.LE-LVN
FDNS	00NR	5	25SP	G15_078	FROM->TO	SHELL C2 SUB - SHELL C3 TAP 115KV CKT 1	179	179	0.03035	100.4139	LE-WEST_SUB3115.00 - LEA COUNTY REC-LOVINGTON INTERCHANGE 115KV CKT 1
FDNS	06ALL	5	16WP	G15_078	FROM->TO	TOLK STATION (ABBXNL844501) 345/230/13.2KV TRANSFORMER CKT 1	560	560	0.26481	113.0248	CROSSROADS 7345.00 - TOLK STATION 345KV CKT 1
FDNS	06ALL	5	16WP	G15_078	FROM->TO	TOLK STATION (ABBXNL844501) 345/230/13.2KV TRANSFORMER CKT 1	560	560	0.26481	110.571	CROSSROADS 7345.00 - TOLK STATION 345KV CKT 1
FDNS	06ALL	6	20SP	G15_078	FROM->TO	CHISHOLM6 230.00 - ELK CITY 230KV 230KV CKT 1	353	353	0.05912	102.8848	BASE CASE
FDNS	06ALL	6	17SP	G15_078	FROM->TO	CHISHOLM6 230.00 - ELK CITY 230KV 230KV CKT 1	353	353	0.05962	100.6562	BASE CASE
FDNS	06ALL	6	17G	G15_078	TO->FROM	CIMARRON - MINCO 345KV CKT 1	956	956	0.20979	121.6178	G14-057T 345.00 - SUNNYSIDE 345KV CKT 1
FDNS	06ALL	6	20WP	G15_078	TO->FROM	CIMARRON - MINCO 345KV CKT 1	956	956	0.21185	119.7395	G14-057T 345.00 - SUNNYSIDE 345KV CKT 1
FDNS	06ALL	6	17G	G15_078	TO->FROM	CIMARRON - MINCO 345KV CKT 1	956	956	0.20979	116.437	G14-057T 345.00 - LAWTON EASTSIDE 345KV CKT 1
FDNS	06ALL	6	20WP	G15_078	TO->FROM	CIMARRON - MINCO 345KV CKT 1	956	956	0.21185	114.5016	G14-057T 345.00 - LAWTON EASTSIDE 345KV CKT 1
FDNS	06ALL	6	17SP	G15_078	TO->FROM	CIMARRON - MINCO 345KV CKT 1	956	956	0.21308	114.4047	G14-057T 345.00 - SUNNYSIDE 345KV CKT 1
FDNS	06ALL	6	16WP	G15_078	TO->FROM	CIMARRON - MINCO 345KV CKT 1	956	956	0.21593	114.352	G14-057T 345.00 - SUNNYSIDE 345KV CKT 1
FDNS	06ALL	6	20SP	G15_078	TO->FROM	CIMARRON - MINCO 345KV CKT 1	956	956	0.21728	111.5632	G14-057T 345.00 - SUNNYSIDE 345KV CKT 1
FDNS	06ALL	6	17SP	G15_078	TO->FROM	CIMARRON - MINCO 345KV CKT 1	956	956	0.21308	109.1774	G14-057T 345.00 - LAWTON EASTSIDE 345KV CKT 1
FDNS	06ALL	6	16WP	G15_078	TO->FROM	CIMARRON - MINCO 345KV CKT 1	956	956	0.21593	108.975	G14-057T 345.00 - LAWTON EASTSIDE 345KV CKT 1
FDNS	06ALL	6	20SP	G15_078	TO->FROM	CIMARRON - MINCO 345KV CKT 1	956	956	0.21728	106.5254	G14-057T 345.00 - LAWTON EASTSIDE 345KV CKT 1
FDNS	06ALL	6	17G	G15_078	TO->FROM	CIMARRON - MINCO 345KV CKT 1	956	956	0.19911	105.9404	CHISHOLM7 345.00 - WOODWARD DISTRICT EHV 345KV CKT 1
FDNS	06ALL	6	20WP	G15_078	TO->FROM	CIMARRON - MINCO 345KV CKT 1	956	956	0.20289	101.5954	CHISHOLM7 345.00 - WOODWARD DISTRICT EHV 345KV CKT 1
FDNS	00NR	6	25SP	G15_078	FROM->TO	DENVER CITY INTERCHANGE S. - SAN_ANDS_TP3115.00 115KV CKT 1	159	160	0.05394	131.1858	MUSTANG STATION - SEMINOLE 230KV CKT 1
FDNS	00NR	6	25SP	G15_078	FROM->TO	DENVER CITY INTERCHANGE S. - SAN_ANDS_TP3115.00 115KV CKT 1	159	160	0.05394	131.1858	MUSTANG STATION - SEMINOLE 230KV CKT 1
FDNS	00NR	6	20SP	G15_078	FROM->TO	DENVER CITY INTERCHANGE S. - SAN_ANDS_TP3115.00 115KV CKT 1	159	160	0.05524	112.6372	MUSTANG STATION - SEMINOLE 230KV CKT 1
FDNS	00NR	6	20SP	G15_078	FROM->TO	DENVER CITY INTERCHANGE S. - SAN_ANDS_TP3115.00 115KV CKT 1	159	160	0.05524	112.6372	MUSTANG STATION - SEMINOLE 230KV CKT 1
FDNS	00NR	6	17SP	G15_078	FROM->TO	DENVER CITY INTERCHANGE S. - SAN_ANDS_TP3115.00 115KV CKT 1	159	160	0.05673	107.0038	MUSTANG STATION - SEMINOLE 230KV CKT 1
FDNS	00NR	6	17SP	G15_078	FROM->TO	DENVER CITY INTERCHANGE S. - SAN_ANDS_TP3115.00 115KV CKT 1	159	160	0.05673	107.0038	MUSTANG STATION - SEMINOLE 230KV CKT 1
FDNS	00NR	6	25SP	G15_078	FROM->TO	DENVER CITY INTERCHANGE S. - SHELL C2 SUB 115KV CKT 1	159	175	0.03035	110.3354	P12:115:LCEC:W56.1.HOBBG.LE-LVN
FDNS	00NR	6	25SP	G15_078	FROM->TO	DENVER CITY INTERCHANGE S. - SHELL C2 SUB 115KV CKT 1	159	175	0.03035	109.7982	LE-WEST_SUB3115.00 - LEA COUNTY REC-LOVINGTON INTERCHANGE 115KV CKT 1
FDNS	06ALL	6	20L	G15_078	TO->FROM	G14-057T 345.00 - LAWTON EASTSIDE 345KV CKT 1	717	789	0.09759	102.0743	BASE CASE

SOLUTION	GROUP	SCENARIO	SEASON	SOURCE	DIRECTION	MONITORED ELEMENT	RATEA (MVA)	RATEB(MVA)	TDF	TC%LOADING (% MVA)	CONTINGENCY
FDNS	06ALL	6	20L	G15_078	FROM->TO	G14-057T 345.00 - SUNNYSIDE 345KV CKT 1	717	789	0.09759	115.279	BASE CASE
FDNS	06ALL	6	20WP	G15_078	FROM->TO	G14-057T 345.00 - SUNNYSIDE 345KV CKT 1	717	789	0.11908	103.5944	BASE CASE
FDNS	06ALL	6	17G	G15_078	FROM->TO	G14-057T 345.00 - SUNNYSIDE 345KV CKT 1	717	789	0.11869	103.4014	BASE CASE
FDNS	06ALL	6	16WP	G15_078	FROM->TO	G14-057T 345.00 - SUNNYSIDE 345KV CKT 1	717	789	0.1218	102.0868	BASE CASE
FDNS	00NR	6	25SP	G15_078	FROM->TO	Hitchland Interchange (SIEM 8743067) 345/230/13.2KV TRANSFORMER CKT 2	560	644	0.03071	100.0805	Hitchland Interchange (H TB80155502) 345/230/13.2KV TRANSFORMER CKT 1
FDNS	00NR	6	25SP	G15_078	FROM->TO	Hitchland Interchange (SIEM 8743067) 345/230/13.2KV TRANSFORMER CKT 2	560	644	0.03071	100.0805	Hitchland Interchange (H TB80155502) 345/230/13.2KV TRANSFORMER CKT 1
FDNS	00NR	6	25SP	G15_078	FROM->TO	LUBBOCK POWER & LIGHT-HOLLY PLANT (SHIH T101039) 230/69/13.5KV TRANSFORMER CKT 1	224	224	0.03569	104.6926	LUBBOCK POWER & LIGHT-SOUTHEAST - LUBBOCK SOUTH INTERCHANGE 230KV CKT 1
FDNS	00NR	6	25SP	G15_078	FROM->TO	LUBBOCK POWER & LIGHT-HOLLY PLANT (SHIH T101039) 230/69/13.5KV TRANSFORMER CKT 1	224	224	0.03569	104.6924	P12:LPL:SPS:K64.1.LP-SE.LUBBS
FDNS	00NR	6	25SP	G15_078	FROM->TO	LUBBOCK POWER & LIGHT-HOLLY PLANT (SHIH T101039) 230/69/13.5KV TRANSFORMER CKT 1	224	224	0.03344	101.9349	LUBBOCK EAST INTERCHANGE - LUBBOCK POWER & LIGHT-WADSWORTH 230KV CKT 1
FDNS	00NR	6	25SP	G15_078	FROM->TO	LUBBOCK POWER & LIGHT-HOLLY PLANT (SHIH T101039) 230/69/13.5KV TRANSFORMER CKT 1	224	224	0.03344	101.9202	LUBBOCK POWER & LIGHT-WADSWORTH (SHIH T101038) 230/69/13.5KV TRANSFORMER CKT 1
FDNS	00NR	6	25SP	G15_078	FROM->TO	LUBBOCK POWER & LIGHT-HOLLY PLANT (SHIH T101039) 230/69/13.5KV TRANSFORMER CKT 1	224	224	0.03344	101.9202	LUBBOCK POWER & LIGHT-WADSWORTH (SHIH T101038) 230/69/13.5KV TRANSFORMER CKT 1
FDNS	00NR	6	25SP	G15_078	FROM->TO	LUBBOCK POWER & LIGHT-HOLLY PLANT (SHIH T101039) 230/69/13.5KV TRANSFORMER CKT 1	224	224	0.03344	101.9202	P12:230:LPL:K57.1.LP-WADS.LUBBE
FDNS	06ALL	6	16WP	G15_078	FROM->TO	POTTER COUNTY INTERCHANGE (WAUK 90343-A) 345/230/13.2KV TRANSFORMER CKT 1	560	560	0.2192	124.5835	P12:345:SPS:J15.1.XRDS.TOLK
FDNS	06ALL	6	16WP	G15_078	FROM->TO	POTTER COUNTY INTERCHANGE (WAUK 90343-A) 345/230/13.2KV TRANSFORMER CKT 1	560	560	0.2192	123.2053	P12:345:SPS:J15.1.XRDS.TOLK
FDNS	06ALL	6	16WP	G15_078	FROM->TO	POTTER COUNTY INTERCHANGE (WAUK 90343-A) 345/230/13.2KV TRANSFORMER CKT 1	560	560	0.19654	116.5159	POTTER COUNTY INTERCHANGE - TOLK STATION 345KV CKT 1
FDNS	06ALL	6	16WP	G15_078	FROM->TO	POTTER COUNTY INTERCHANGE (WAUK 90343-A) 345/230/13.2KV TRANSFORMER CKT 1	560	560	0.19654	115.3558	POTTER COUNTY INTERCHANGE - TOLK STATION 345KV CKT 1
FDNS	06ALL	6	17SP	G15_078	FROM->TO	POTTER COUNTY INTERCHANGE (WAUK 90343-A) 345/230/13.2KV TRANSFORMER CKT 1	560	560	0.21302	109.9868	P12:345:SPS:J15.1.XRDS.TOLK
FDNS	06ALL	6	17SP	G15_078	FROM->TO	POTTER COUNTY INTERCHANGE (WAUK 90343-A) 345/230/13.2KV TRANSFORMER CKT 1	560	560	0.21302	108.4833	P12:345:SPS:J15.1.XRDS.TOLK
FDNS	00NR	6	25SP	G15_078	FROM->TO	SAN_ANDS_TP3115.00 - SEMINOLE 115KV CKT 1	159	160	0.05394	111.2897	MUSTANG STATION - SEMINOLE 230KV CKT 1
FDNS	00NR	6	25SP	G15_078	FROM->TO	SAN_ANDS_TP3115.00 - SEMINOLE 115KV CKT 1	159	160	0.05394	111.2897	MUSTANG STATION - SEMINOLE 230KV CKT 1
FDNS	00NR	6	25SP	G15_078	FROM->TO	SHELL C2 SUB - SHELL C3 TAP 115KV CKT 1	179	179	0.03035	100.9331	P12:115:LCEC:W56.1.HOBBG.LE-LVN
FDNS	00NR	6	25SP	G15_078	FROM->TO	SHELL C2 SUB - SHELL C3 TAP 115KV CKT 1	179	179	0.03035	100.4137	LE-WEST_SUB3115.00 - LEA COUNTY REC-LOVINGTON INTERCHANGE 115KV CKT 1
FDNS	06ALL	6	16WP	G15_078	FROM->TO	TOLK STATION (ABBXNL844501) 345/230/13.2KV TRANSFORMER CKT 1	560	560	0.26646	112.8509	CROSSROADS 7345.00 - TOLK STATION 345KV CKT 1
FDNS	06ALL	6	16WP	G15_078	FROM->TO	TOLK STATION (ABBXNL844501) 345/230/13.2KV TRANSFORMER CKT 1	560	560	0.26646	110.425	CROSSROADS 7345.00 - TOLK STATION 345KV CKT 1
FDNS	06ALL	7	20SP	G15_078	FROM->TO	CHISHOLM6 230.00 - ELK CITY 230KV 230KV CKT 1	353	353	0.05912	100.158	BASE CASE
FDNS	06ALL	7	17G	G15_078	TO->FROM	CIMARRON - MINCO 345KV CKT 1	956	956	0.20982	117.9395	G14-057T 345.00 - SUNNYSIDE 345KV CKT 1
FDNS	06ALL	7	20WP	G15_078	TO->FROM	CIMARRON - MINCO 345KV CKT 1	956	956	0.21185	116.4002	G14-057T 345.00 - SUNNYSIDE 345KV CKT 1
FDNS	06ALL	7	17G	G15_078	TO->FROM	CIMARRON - MINCO 345KV CKT 1	956	956	0.20982	112.8925	G14-057T 345.00 - LAWTON EASTSIDE 345KV CKT 1
FDNS	06ALL	7	16WP	G15_078	TO->FROM	CIMARRON - MINCO 345KV CKT 1	956	956	0.21595	111.0593	G14-057T 345.00 - SUNNYSIDE 345KV CKT 1
FDNS	06ALL	7	20WP	G15_078	TO->FROM	CIMARRON - MINCO 345KV CKT 1	956	956	0.21185	111.0342	G14-057T 345.00 - LAWTON EASTSIDE 345KV CKT 1
FDNS	06ALL	7	17SP	G15_078	TO->FROM	CIMARRON - MINCO 345KV CKT 1	956	956	0.2131	111.0288	G14-057T 345.00 - SUNNYSIDE 345KV CKT 1
FDNS	06ALL	7	20SP	G15_078	TO->FROM	CIMARRON - MINCO 345KV CKT 1	956	956	0.21729	108.4281	G14-057T 345.00 - SUNNYSIDE 345KV CKT 1
FDNS	06ALL	7	17SP	G15_078	TO->FROM	CIMARRON - MINCO 345KV CKT 1	956	956	0.2131	106.172	G14-057T 345.00 - LAWTON EASTSIDE 345KV CKT 1
FDNS	06ALL	7	16WP	G15_078	TO->FROM	CIMARRON - MINCO 345KV CKT 1	956	956	0.21595	105.9627	G14-057T 345.00 - LAWTON EASTSIDE 345KV CKT 1
FDNS	06ALL	7	20SP	G15_078	TO->FROM	CIMARRON - MINCO 345KV CKT 1	956	956	0.21729	103.5061	G14-057T 345.00 - LAWTON EASTSIDE 345KV CKT 1
FDNS	00NR	7	25SP	G15_078	FROM->TO	DENVER CITY INTERCHANGE S. - SAN_ANDS_TP3115.00 115KV CKT 1	159	160	0.05394	131.1634	MUSTANG STATION - SEMINOLE 230KV CKT 1
FDNS	00NR	7	25SP	G15_078	FROM->TO	DENVER CITY INTERCHANGE S. - SAN_ANDS_TP3115.00 115KV CKT 1	159	160	0.05394	131.1634	MUSTANG STATION - SEMINOLE 230KV CKT 1
FDNS	00NR	7	20SP	G15_078	FROM->TO	DENVER CITY INTERCHANGE S. - SAN_ANDS_TP3115.00 115KV CKT 1	159	160	0.05524	112.6238	MUSTANG STATION - SEMINOLE 230KV CKT 1
FDNS	00NR	7	20SP	G15_078	FROM->TO	DENVER CITY INTERCHANGE S. - SAN_ANDS_TP3115.00 115KV CKT 1	159	160	0.05524	112.6238	MUSTANG STATION - SEMINOLE 230KV CKT 1
FDNS	00NR	7	17SP	G15_078	FROM->TO	DENVER CITY INTERCHANGE S. - SAN_ANDS_TP3115.00 115KV CKT 1	159	160	0.05673	106.9724	MUSTANG STATION - SEMINOLE 230KV CKT 1
FDNS	00NR	7	17SP	G15_078	FROM->TO	DENVER CITY INTERCHANGE S. - SAN_ANDS_TP3115.00 115KV CKT 1	159	160	0.05673	106.9724	MUSTANG STATION - SEMINOLE 230KV CKT 1
FDNS	00NR	7	25SP	G15_078	FROM->TO	DENVER CITY INTERCHANGE S. - SHELL C2 SUB 115KV CKT 1	159	175	0.03035	110.3146	P12:115:LCEC:W56.1.HOBBG.LE-LVN
FDNS	00NR	7	25SP	G15_078	FROM->TO	DENVER CITY INTERCHANGE S. - SHELL C2 SUB 115KV CKT 1	159	175	0.03035	109.7723	LE-WEST_SUB3115.00 - LEA COUNTY REC-LOVINGTON INTERCHANGE 115KV CKT 1
FDNS	06ALL	7	20L	G15_078	TO->FROM	G14-057T 345.00 - LAWTON EASTSIDE 345KV CKT 1	717	789	0.0976	100.7791	BASE CASE
FDNS	06ALL	7	20L	G15_078	FROM->TO	G14-057T 345.00 - SUNNYSIDE 345KV CKT 1	717	789	0.0976	114.0012	BASE CASE
FDNS	06ALL	7	20WP	G15_078	FROM->TO	G14-057T 345.00 - SUNNYSIDE 345KV CKT 1	717	789	0.11908	102.5888	BASE CASE
FDNS	06ALL	7	17G	G15_078	FROM->TO	G14-057T 345.00 - SUNNYSIDE 345KV CKT 1	717	789	0.11869	102.2119	BASE CASE
FDNS	06ALL	7	16WP	G15_078	FROM->TO	G14-057T 345.00 - SUNNYSIDE 345KV CKT 1	717	789	0.12181	101.1576	BASE CASE
FDNS	00NR	7	25SP	G15_078	FROM->TO	LUBBOCK POWER & LIGHT-HOLLY PLANT (SHIH T101039) 230/69/13.5KV TRANSFORMER CKT 1	224	224	0.03569	104.7009	LUBBOCK POWER & LIGHT-SOUTHEAST - LUBBOCK SOUTH INTERCHANGE 230KV CKT 1
FDNS	00NR	7	25SP	G15_078	FROM->TO	LUBBOCK POWER & LIGHT-HOLLY PLANT (SHIH T101039) 230/69/13.5KV TRANSFORMER CKT 1	224	224	0.03569	104.6879	P12:LPL:SPS:K64.1.LP-SE.LUBBS
FDNS	00NR	7	25SP	G15_078	FROM->TO	LUBBOCK POWER & LIGHT-HOLLY PLANT (SHIH T101039) 230/69/13.5KV TRANSFORMER CKT 1	224	224	0.03344	101.9255	LUBBOCK EAST INTERCHANGE - LUBBOCK POWER & LIGHT-WADSWORTH 230KV CKT 1
FDNS	00NR	7	25SP	G15_078	FROM->TO	LUBBOCK POWER & LIGHT-HOLLY PLANT (SHIH T101039) 230/69/13.5KV TRANSFORMER CKT 1	224	224	0.03344	101.9108	P12:230:LPL:K57.1.LP-WADS.LUBBE
FDNS	00NR	7	25SP	G15_078	FROM->TO	LUBBOCK POWER & LIGHT-HOLLY PLANT (SHIH T101039) 230/69/13.5KV TRANSFORMER CKT 1	224	224	0.03344	101.9107	LUBBOCK POWER & LIGHT-WADSWORTH (SHIH T101038) 230/69/13.5KV TRANSFORMER CKT 1
FDNS	00NR	7	25SP	G15_078	FROM->TO	LUBBOCK POWER & LIGHT-HOLLY PLANT (SHIH T101039) 230/69/13.5KV TRANSFORMER CKT 1	224	224	0.03344	101.9107	LUBBOCK POWER & LIGHT-WADSWORTH (SHIH T101038) 230/69/13.5KV TRANSFORMER CKT 1
FDNS	06ALL	7	16WP	G15_078	FROM->TO	POTTER COUNTY INTERCHANGE (WAUK 90343-A) 345/230/13.2KV TRANSFORMER CKT 1	560	560	0.21922	133.795	P12:345:SPS:J15.1.XRDS.TOLK
FDNS	06ALL	7	16WP	G15_078	FROM->TO	POTTER COUNTY INTERCHANGE (WAUK 90343-A) 345/230/13.2KV TRANSFORMER CKT 1	560	560	0.21922	130.8152	P12:345:SPS:J15.1.XRDS.TOLK
FDNS	06ALL	7	16WP	G15_078	FROM->TO	POTTER COUNTY INTERCHANGE (WAUK 90343-A) 345/230/13.2KV TRANSFORMER CKT 1	560	560	0.19656	125.2874	POTTER COUNTY INTERCHANGE - TOLK STATION 345KV CKT 1
FDNS	06ALL	7	16WP	G15_078	FROM->TO	POTTER COUNTY INTERCHANGE (WAUK 90343-A) 345/230/13.2KV TRANSFORMER CKT 1	560	560	0.19656	122.7478	POTTER COUNTY INTERCHANGE - TOLK STATION 345KV CKT 1
FDNS	06ALL	7	17SP	G15_078	FROM->TO	POTTER COUNTY INTERCHANGE (WAUK 90343-A) 345/230/13.2KV TRANSFORMER CKT 1	560	560	0.21303	118.7065	P12:345:SPS:J15.1.XRDS.TOLK
FDNS	06ALL	7	17SP	G15_078	FROM->TO	POTTER COUNTY INTERCHANGE (WAUK 90343-A) 345/230/13.2KV TRANSFORMER CKT 1	560	560	0.21303	115.9022	P12:345:SPS:J15.1.XRDS.TOLK
FDNS	00NR	7	25SP	G15_078	FROM->TO	POTTER COUNTY INTERCHANGE (WAUK 90343-A) 345/230/13.2KV TRANSFORMER CKT 1	560	560	0.03655	100.2945	P12:345:SPS:J15.1.XRDS.TOLK
FDNS	00NR	7	25SP	G15_078	FROM->TO	POTTER COUNTY INTERCHANGE (WAUK 90343-A) 345/230/13.2KV TRANSFORMER CKT 1	560	560	0.03655	100.0757	P12:345:SPS:J15.1.XRDS.TOLK
FDNS	00NR	7	25SP	G15_078	FROM->TO	SAN_ANDS_TP3115.00 - SEMINOLE 115KV CKT 1	159	160	0.05394	111.2688	MUSTANG STATION - SEMINOLE 230KV CKT 1
FDNS	00NR	7	25SP	G15_078	FROM->TO	SAN_ANDS_TP3115.00 - SEMINOLE 115KV CKT 1	159	160	0.05394	111.2688	MUSTANG STATION - SEMINOLE 230KV CKT 1
FDNS	00NR	7	25SP	G15_078	FROM->TO	SHELL C2 SUB - SHELL C3 TAP 115KV CKT 1	179	179	0.03035	100.913	P12:115:LCEC:W56.1.HOBBG.LE-LVN
FDNS	00NR	7	25SP	G15_078	FROM->TO	SHELL C2 SUB - SHELL C3 TAP 115KV CKT 1	179	179	0.03035	100.3883	LE-WEST_SUB3115.00 - LEA COUNTY REC-LOVINGTON INTERCHANGE 115KV CKT 1
FDNS	06ALL	7	16WP	G15_078	FROM->TO	TOLK STATION (ABBXNL844501) 345/230/13.2KV TRANSFORMER CKT 1	560	560	0.26649	112.9883	CROSSROADS 7345.00 - TOLK STATION 345KV CKT 1
FDNS	06ALL	7	16WP	G15_078	FROM->TO	TOLK STATION (ABBXNL844501) 345/230/13.2KV TRANSFORMER CKT 1	560	560	0.26649	110.8952	CROSSROADS 7345.00 - TOLK STATION 345KV CKT 1
FDNS	00NR	8	25SP	G15_078	FROM->TO	DENVER CITY INTERCHANGE S. - SAN_ANDS_TP3115.00 115KV CKT 1	159	160	0.054	131.3433	MUSTANG STATION - SEMINOLE 230KV CKT 1
FDNS	00NR	8	25SP	G15_078	FROM->TO	DENVER CITY INTERCHANGE S. - SAN_ANDS_TP3115.00 115KV CKT 1	159	160	0.054	131.3433	MUSTANG STATION - SEMINOLE 230KV CKT 1
FDNS	00NR	8	20SP	G15_078	FROM->TO	DENVER CITY INTERCHANGE S. - SAN_ANDS_TP3115.00 115KV CKT 1	159	160	0.0553	112.6806	MUSTANG STATION - SEMINOLE 230KV CKT 1
FDNS	00NR	8	20SP	G15_078	FROM->TO	DENVER CITY INTERCHANGE S. - SAN_ANDS_TP3115.00 115KV CKT 1	159	160	0.0553	112.6806	MUSTANG STATION - SEMINOLE 230KV CKT 1
FDNS	00NR	8	17SP	G15_078	FROM->TO	DENVER CITY INTERCHANGE S. - SAN_ANDS_TP3115.00 115KV CKT 1	159	160	0.05679	107.0503	MUSTANG STATION - SEMINOLE 230KV CKT 1
FDNS	00NR	8	17SP	G15_078	FROM->TO	DENVER CITY INTERCHANGE S. - SAN_ANDS_TP3115.00 115KV CKT 1	159	160	0.05679	107.0503	MUSTANG STATION - SEMINOLE 230KV CKT 1
FDNS	00NR	8	25SP	G15_078	FROM->TO	DENVER CITY INTERCHANGE S. - SHELL C2 SUB 115KV CKT 1	159	175	0.03038	110.4042	P12:115:LCEC:W56.1.HOBBG.LE-LVN
FDNS	00NR	8	25SP	G15_078	FROM->TO	DENVER CITY INTERCHANGE S. - SHELL C2 SUB 115KV CKT 1	159	175	0.03038	109.8609	LE-WEST_SUB3115.00 - LEA COUNTY REC-LOVINGTON INTERCHANGE 115KV CKT 1
FDNS	00NR	8	25SP	G15_078	FROM->TO	LUBBOCK POWER & LIGHT-HOLLY PLANT (SHIH T101039) 230/69/13.5KV TRANSFORMER CKT 1	224	224	0.03568	104.7109	LUBBOCK POWER & LIGHT-SOUTHEAST - LUBBOCK SOUTH INTERCHANGE 230KV CKT 1
FDNS	00NR	8	25SP	G15_078	FROM->TO	LUBBOCK POWER & LIGHT-HOLLY PLANT (SHIH T101039) 230/69/13.5KV TRANSFORMER CKT 1	224	224	0.03568	104.6979	P12:LPL:SPS:K64.1.LP-SE.LUBBS
FDNS	00NR	8	25SP	G15_078	FROM->TO	LUBBOCK POWER & LIGHT-HOLLY PLANT (SHIH T101039) 230/69/13.5KV TRANSFORMER CKT 1	224	224	0.03343	101.953	LUBBOCK EAST INTERCHANGE - LUBBOCK POWER & LIGHT-WADSWORTH 230KV CKT 1

SOLUTION	GROUP	SCENARIO	SEASON	SOURCE	DIRECTION	MONITORED ELEMENT	RATEA (MVA)	RATEB(MVA)	TDF	TC%LOADING (% MVA)	CONTINGENCY
FDNS	00NR	8	25SP	G15_078	FROM->TO	LUBBOCK POWER & LIGHT-HOLLY PLANT (SHIH T101039) 230/69/13.5KV TRANSFORMER CKT 1	224	224	0.03343	101.9381	P12:230:LPL:K57.1.LP-WADS.LUBBE
FDNS	00NR	8	25SP	G15_078	FROM->TO	LUBBOCK POWER & LIGHT-HOLLY PLANT (SHIH T101039) 230/69/13.5KV TRANSFORMER CKT 1	224	224	0.03343	101.938	LUBBOCK POWER & LIGHT-WADSWORTH (SHIH T101038) 230/69/13.5KV TRANSFORMER CKT 1
FDNS	00NR	8	25SP	G15_078	FROM->TO	LUBBOCK POWER & LIGHT-HOLLY PLANT (SHIH T101039) 230/69/13.5KV TRANSFORMER CKT 1	224	224	0.03343	101.938	LUBBOCK POWER & LIGHT-WADSWORTH (SHIH T101038) 230/69/13.5KV TRANSFORMER CKT 1
FDNS	00NR	8	25SP	G15_078	FROM->TO	SAN_ANDS_TP3115.00 - SEMINOLE 115KV CKT 1	159	160	0.054	111.4438	MUSTANG STATION - SEMINOLE 230KV CKT 1
FDNS	00NR	8	25SP	G15_078	FROM->TO	SAN_ANDS_TP3115.00 - SEMINOLE 115KV CKT 1	159	160	0.054	111.4438	MUSTANG STATION - SEMINOLE 230KV CKT 1
FDNS	00NR	8	25SP	G15_078	FROM->TO	SHELL C2 SUB - SHELL C3 TAP 115KV CKT 1	179	179	0.03038	100.9991	P12:115:LCEC:W56.1.HOBBG.LE-LVN
FDNS	00NR	8	25SP	G15_078	FROM->TO	SHELL C2 SUB - SHELL C3 TAP 115KV CKT 1	179	179	0.03038	100.4738	LE-WEST_SUB3115.00 - LEA COUNTY REC-LOVINGTON INTERCHANGE 115KV CKT 1
FDNS	00NR	9	25SP	G15_078	FROM->TO	LUBBOCK POWER & LIGHT-HOLLY PLANT (SHIH T101039) 230/69/13.5KV TRANSFORMER CKT 1	224	224	0.03568	104.6637	LUBBOCK POWER & LIGHT-SOUTHEAST - LUBBOCK SOUTH INTERCHANGE 230KV CKT 1
FDNS	00NR	9	25SP	G15_078	FROM->TO	LUBBOCK POWER & LIGHT-HOLLY PLANT (SHIH T101039) 230/69/13.5KV TRANSFORMER CKT 1	224	224	0.03568	104.6507	P12:LPL:SPS:K64.1.LP-SE.LUBBS
FDNS	00NR	9	25SP	G15_078	FROM->TO	LUBBOCK POWER & LIGHT-HOLLY PLANT (SHIH T101039) 230/69/13.5KV TRANSFORMER CKT 1	224	224	0.03345	101.7729	LUBBOCK EAST INTERCHANGE - LUBBOCK POWER & LIGHT-WADSWORTH 230KV CKT 1
FDNS	00NR	9	25SP	G15_078	FROM->TO	LUBBOCK POWER & LIGHT-HOLLY PLANT (SHIH T101039) 230/69/13.5KV TRANSFORMER CKT 1	224	224	0.03345	101.758	P12:230:LPL:K57.1.LP-WADS.LUBBE
FDNS	00NR	9	25SP	G15_078	FROM->TO	LUBBOCK POWER & LIGHT-HOLLY PLANT (SHIH T101039) 230/69/13.5KV TRANSFORMER CKT 1	224	224	0.03345	101.7579	LUBBOCK POWER & LIGHT-WADSWORTH (SHIH T101038) 230/69/13.5KV TRANSFORMER CKT 1
FDNS	00NR	9	25SP	G15_078	FROM->TO	LUBBOCK POWER & LIGHT-HOLLY PLANT (SHIH T101039) 230/69/13.5KV TRANSFORMER CKT 1	224	224	0.03345	101.7579	LUBBOCK POWER & LIGHT-WADSWORTH (SHIH T101038) 230/69/13.5KV TRANSFORMER CKT 1
FDNSLock-Blown up	06ALL	0	16WP	G15_079		Non-Converged Contingency	483	483	0.3023	-	AMOCO SWITCHING STATION - YOAKUM COUNTY INTERCHANGE 230KV CKT 1
FDNSLock-Blown up	06ALL	0	16WP	G15_079		Non-Converged Contingency	1022	1124	0.20212	-	G14-074T 345.00 - OKLAUNION 345KV CKT 1
FDNSLock-Blown up	06ALL	0	16WP	G15_079		Non-Converged Contingency	1022	1124	0.20212	-	G14-074T 345.00 - TUCO INTERCHANGE 345KV CKT 1
FDNSLock-Blown up	06ALL	0	16WP	G15_079		Non-Converged Contingency	1022	1124	0.20212	-	GEN509403 1-PIRKEY GENERATION
FDNSLock-Blown up	06ALL	0	16WP	G15_079		Non-Converged Contingency	1022	1124	0.20212	-	GEN509404 1-WELSH #1
FDNSLock-Blown up	06ALL	0	16WP	G15_079		Non-Converged Contingency	1022	1124	0.20212	-	GEN509406 1-WELSH #3
FDNSLock-Blown up	06ALL	0	16WP	G15_079		Non-Converged Contingency	1022	1124	0.20212	-	GEN509416 1-TURK GENERATION
FDNSLock-Blown up	06ALL	0	16WP	G15_079		Non-Converged Contingency	1022	1124	0.20212	-	GEN511848 1-SOUTHWESTERN STATION #3
FDNSLock-Blown up	06ALL	0	16WP	G15_079		Non-Converged Contingency	560	560	0.19051	-	TUCO INTERCHANGE (GE M1022338) 345/230/13.2KV TRANSFORMER CKT 1
FDNSLock-Blown up	06ALL	0	16WP	G15_079		Non-Converged Contingency	956	956	0.17812	-	CIMARRON - MINCO 345KV CKT 1
FDNSLock-Blown up	06ALL	0	16WP	G15_079		Non-Converged Contingency	1195	1195	0.17812	-	GRACEMONT - MINCO 345KV CKT 1
FDNSLock-Blown up	06ALL	0	16WP	G15_079		Non-Converged Contingency	552.14	607.52	0.17623	-	TOLK STATION EAST - TUCO INTERCHANGE 230KV CKT 1
FDNSLock-Blown up	06ALL	0	16WP	G15_079		Non-Converged Contingency	556.53	611.5	0.17195	-	NEWHART 230 - PLANT X STATION 230KV CKT 1
FDNSLock-Blown up	06ALL	0	16WP	G15_079		Non-Converged Contingency	427.05	427.05	0.16659	-	JONES STATION - TUCO INTERCHANGE 230KV CKT 1
FDNSLock-Blown up	06ALL	0	16WP	G15_079		Non-Converged Contingency	987.16	1082.8	0.16613	-	G14_038T 345.00 - Hitchland Interchange 345KV CKT 1
FDNSLock-Blown up	06ALL	0	16WP	G15_079		Non-Converged Contingency	987.16	1082.8	0.16613	-	G14_038T 345.00 - POTTER COUNTY INTERCHANGE 345KV CKT 1
FDNSLock-Blown up	06ALL	0	16WP	G15_079		Non-Converged Contingency	560	560	0.16613	-	POTTER COUNTY INTERCHANGE (WAUK 90343-A) 345/230/13.2KV TRANSFORMER CKT 1
FDNSLock-Blown up	06ALL	0	16WP	G15_079		Non-Converged Contingency	616	700	0.16602	-	TUCO INTERCHANGE (SIEM 8743066) 345/230/13.2KV TRANSFORMER CKT 2
FDNSLock-Blown up	06ALL	0	16WP	G15_079		Non-Converged Contingency	560	560	0.16249	-	TUCO_2 345.00 (TUCO_2 XFMR) 345/230/13.2KV TRANSFORMER CKT 1
FDNSLock-Blown up	06ALL	0	16WP	G15_079		Non-Converged Contingency	1792	1792	0.16143	-	CHISHOLM7 345.00 - WOODWARD DISTRICT EHV 345KV CKT 1
FDNSLock-Blown up	06ALL	0	16WP	G15_079		Non-Converged Contingency	1330	1940	0.16085	-	CHISHOLM7 345.00 - GRACEMONT 345KV CKT 1
FDNSLock-Blown up	06ALL	0	16WP	G15_079		Non-Converged Contingency	1792	1792	0.15845	-	BORDER 7345.00 - CHISHOLM7 345.00 345KV CKT 1
FDNSLock-Blown up	06ALL	0	16WP	G15_079		Non-Converged Contingency	1792	1792	0.15845	-	BORDER 7345.00 - CHISHOLM7 345.00 345KV CKT 2
FDNSLock-Blown up	06ALL	0	16WP	G15_079		Non-Converged Contingency	1792	1972	0.15845	-	BORDER 7345.00 - TUCO_2 345.00 345KV CKT 1
FDNSLock-Blown up	06ALL	0	16WP	G15_079		Non-Converged Contingency	1420	1775	0.15845	-	BORDER 7345.00 - TUCO_2 345.00 345KV CKT 2
FDNSLock-Blown up	06ALL	0	16WP	G15_079		Non-Converged Contingency	557	557	0.15569	-	BUSHLAND INTERCHANGE - DEAF SMITH COUNTY INTERCHANGE 230KV CKT 1
FDNSLock-Blown up	06ALL	0	16WP	G15_079		Non-Converged Contingency	1792	1972	0.15441	-	TUCO INTERCHANGE - TUCO_2 345.00 345KV CKT 1
FDNSLock-Blown up	06ALL	0	16WP	G15_079		Non-Converged Contingency	552	608	0.15224	-	TUCO INTERCHANGE - TUCO_2 230.00 230KV CKT 1
FDNSLock-Blown up	06ALL	0	16WP	G15_079		Non-Converged Contingency	329.05	360.92	0.14097	-	DEAF SMITH COUNTY INTERCHANGE - G15039_T 230.00 230KV CKT 1
FDNSLock-Blown up	06ALL	0	16WP	G15_079		Non-Converged Contingency	329.05	360.92	0.14097	-	G15039_T 230.00 - PLANT X STATION 230KV CKT 1
FDNSLock-Blown up	06ALL	0	16WP	G15_079		Non-Converged Contingency	987.16	1082.8	0.13767	-	FINNEY SWITCHING STATION - Hitchland Interchange 345KV CKT 1
FDNSLock-Blown up	06ALL	0	16WP	G15_079		Non-Converged Contingency	956.09	1051.7	0.13767	-	FINNEY SWITCHING STATION - HOLCOMB 345KV CKT 1
FDNSLock-Blown up	06ALL	0	16WP	G15_079		Non-Converged Contingency	329.05	360.92	0.13757	-	BUSHLAND INTERCHANGE - POTTER COUNTY INTERCHANGE 230KV CKT 1
FDNSLock-Blown up	06ALL	0	16WP	G15_079		Non-Converged Contingency	717	789	0.12827	-	G14-057T 345.00 - LAWTON EASTSIDE 345KV CKT 1
FDNSLock-Blown up	06ALL	0	16WP	G15_079		Non-Converged Contingency	717	789	0.12827	-	G14-057T 345.00 - SUNNYSIDE 345KV CKT 1
FDNSLock-Blown up	06ALL	0	16WP	G15_079		Non-Converged Contingency	557	557	0.11589	-	NEWHART 230 - POTTER COUNTY INTERCHANGE 230KV CKT 1
FDNSLock-Blown up	06ALL	0	16WP	G15_079		Non-Converged Contingency	442	752	0.11571	-	PLANT X STATION - TOLK STATION WEST 230KV CKT 1
FDNSLock-Blown up	06ALL	0	16WP	G15_079		Non-Converged Contingency	442	752	0.11377	-	PLANT X STATION - TOLK STATION EAST 230KV CKT 2
FDNSLock-Blown up	06ALL	0	16WP	G15_079		Non-Converged Contingency	143.02	173.09	0.10812	-	WOLFFORTH INTERCHANGE - YUMA INTERCHANGE 115KV CKT 1
FDNSLock-Blown up	06ALL	0	16WP	G15_079		Non-Converged Contingency	1420	1775	0.09984	-	G11_051T 345.00 - TATONGA7 345.00 345KV CKT 1
FDNSLock-Blown up	06ALL	0	16WP	G15_079		Non-Converged Contingency	1420	1775	0.09984	-	G11_051T 345.00 - WOODWARD DISTRICT EHV 345KV CKT 1
FDNSLock-Blown up	06ALL	0	16WP	G15_079		Non-Converged Contingency	1195	1195	0.09984	-	MATHWSN7 345.00 - TATONGA7 345.00 345KV CKT 1
FDNSLock-Blown up	06ALL	0	16WP	G15_079		Non-Converged Contingency	1561	1793	0.09414	-	THISTLE7 345.00 - WOODWARD DISTRICT EHV 345KV CKT 1
FDNSLock-Blown up	06ALL	0	16WP	G15_079		Non-Converged Contingency	1561	1793	0.09414	-	THISTLE7 345.00 - WOODWARD DISTRICT EHV 345KV CKT 2
FDNSLock-Blown up	06ALL	0	16WP	G15_079		Non-Converged Contingency	329.05	360.92	0.08689	-	AMARILLO SOUTH INTERCHANGE - G15031_T 230.00 230KV CKT 1
FDNSLock-Blown up	06ALL	0	16WP	G15_079		Non-Converged Contingency	1793	1793	0.07902	-	BVRCNTY7 345.00 - G11-14T 345.00 345KV CKT 1
FDNSLock-Blown up	06ALL	0	16WP	G15_079		Non-Converged Contingency	1716	1793	0.07902	-	BVRCNTY7 345.00 - G11-14T 345.00 345KV CKT 2
FDNSLock-Blown up	06ALL	0	16WP	G15_079		Non-Converged Contingency	1792	1792	0.07902	-	BVRCNTY7 345.00 - OPTIMA 345.00 345KV CKT 1
FDNSLock-Blown up	06ALL	0	16WP	G15_079		Non-Converged Contingency	1792	1792	0.07902	-	BVRCNTY7 345.00 - OPTIMA 345.00 345KV CKT 2
FDNSLock-Blown up	06ALL	0	16WP	G15_079		Non-Converged Contingency	1793	1793	0.07902	-	G11-14T 345.00 - WOODWARD DISTRICT EHV 345KV CKT 1
FDNSLock-Blown up	06ALL	0	16WP	G15_079		Non-Converged Contingency	1716	1793	0.07902	-	G11-14T 345.00 - WOODWARD DISTRICT EHV 345KV CKT 2
FDNSLock-Blown up	06ALL	0	16WP	G15_079		Non-Converged Contingency	1532	1793	0.07549	-	G1524G1525 345.00 - THISTLE7 345.00 345KV CKT 1
FDNSLock-Blown up	06ALL	0	16WP	G15_079		Non-Converged Contingency	1532	1793	0.07549	-	G1524G1525 345.00 - THISTLE7 345.00 345KV CKT 2
FDNSLock-Blown up	06ALL	0	16WP	G15_079		Non-Converged Contingency	1532	1793	0.07549	-	GEN532751 1-WOLF CREEK GENERATING STATION UNIT 1
FDNSLock-Blown up	06ALL	0	16WP	G15_079		Non-Converged Contingency	556.92	556.92	0.07053	-	HITCHLAND INTERCHANGE - MOORE COUNTY INTERCHANGE 230KV CKT 1
FDNSLock-Blown up	06ALL	0	16WP	G15_079		Non-Converged Contingency	439	439	0.06921	-	CHISHOLM6 230.00 - SWEETWATER 230KV CKT 1
FDNSLock-Blown up	06ALL	0	16WP	G15_079		Non-Converged Contingency	435.02	457.73	0.06921	-	STATELINE INTERCHANGE - STLN-DEMARC6 230KV CKT 1
FDNSLock-Blown up	06ALL	0	16WP	G15_079		Non-Converged Contingency	439	439	0.06921	-	STLN-DEMARC6 - SWEETWATER 230KV CKT 1
FDNSLock-Blown up	06ALL	0	16WP	G15_079		Non-Converged Contingency	717.1	717.1	0.06641	-	HOLCOMB - SETAB 345KV CKT 1
FDNSLock-Blown up	06ALL	0	16WP	G15_079		Non-Converged Contingency	785	785	0.06542	-	MINGO - RED WILLOW 345KV CKT 1
FDNSLock-Blown up	06ALL	0	16WP	G15_079		Non-Converged Contingency	762.5	762.5	0.06531	-	MINGO - SETAB 345KV CKT 1
FDNSLock-Blown up	06ALL	0	16WP	G15_079		Non-Converged Contingency	439	439	0.06383	-	CHISHOLM6 230.00 - ELK CITY 230KV 230KV CKT 1
FDNSLock-Blown up	06ALL	0	16WP	G15_079		Non-Converged Contingency	450	450	0.06383	-	ELK CITY 230KV (ELKCTY-6) 230/138/13.8KV TRANSFORMER CKT 1
FDNSLock-Blown up	06ALL	0	16WP	G15_079		Non-Converged Contingency	717	717	0.06349	-	CIMARRON - DRAPER LAKE 345KV CKT 1
FDNSLock-Blown up	06ALL	0	16WP	G15_079		Non-Converged Contingency	329.05	360.92	0.06013	-	MOORE COUNTY INTERCHANGE - POTTER COUNTY INTERCHANGE 230KV CKT 1
FDNSLock-Blown up	06ALL	0	16WP	G15_079		Non-Converged Contingency	557	557	0.05884	-	GRAPEVINE INTERCHANGE - STATELINE INTERCHANGE 230KV CKT 1

SOLUTION	GROUP	SCENARIO	SEASON	SOURCE	DIRECTION	MONITORED ELEMENT	RATEA (MVA)	RATEB(MVA)	TDF	TC%LOADING (% MVA)	CONTINGENCY
FDNSLock-Blown up	06ALL	0	16WP	G15_079		Non-Converged Contingency	557	557	0.05878	-	GRAPEVINE INTERCHANGE - NICHOLS STATION 230KV CKT 1
FDNSLock-Blown up	06ALL	0	16WP	G15_079		Non-Converged Contingency	1195	1195	0.05744	-	GEN520947 1-HUGO1
FDNSLock-Blown up	06ALL	0	16WP	G15_079		Non-Converged Contingency	1793	1793	0.0566	-	G13-010T 345.00 - POST ROCK 345KV CKT 1
FDNSLock-Blown up	06ALL	0	16WP	G15_079		Non-Converged Contingency	1793	1793	0.0566	-	G13-010T 345.00 - SPEARVILLE 345KV CKT 1
FDNSLock-Blown up	06ALL	0	16WP	G15_079		Non-Converged Contingency	726.6	726.6	0.05566	-	BUCKNER7 345.00 - HOLCOMB 345KV CKT 1
FDNSLock-Blown up	06ALL	0	16WP	G15_079		Non-Converged Contingency	1413	1517	0.05566	-	BUCKNER7 345.00 - SPEARVILLE 345KV CKT 1
FDNSLock-Blown up	06ALL	0	16WP	G15_079		Non-Converged Contingency	717	789	0.04284	-	GRACEMONT - LAWTON EASTSIDE 345KV CKT 1
FDNSLock-Blown up	06ALL	0	16WP	G15_079		Non-Converged Contingency	286	315	0.03246	-	CANYON E_TP3115.00 - CANYON WEST SUB 115KV CKT 1
FDNSLock-Blown up	06ALL	0	16WP	G15_079		Non-Converged Contingency	106	106	0.03246	-	CANYON WEST SUB - DAWN SUB 115KV CKT 1
FDNSLock-Blown up	06ALL	0	16WP	G15_079		Non-Converged Contingency	106	106	0.03246	-	DAWN SUB - Panda Energy Substation Hereford 115KV CKT 1
FDNSLock-Blown up	06ALL	0	16WP	G15_079		Non-Converged Contingency	106	106	0.03246	-	DEAF SMITH COUNTY INTERCHANGE - Panda Energy Substation Hereford 115KV CKT 1
FDNSLock-Blown up	06ALL	0	16WP	G15_079		Non-Converged Contingency	164.53	177.08	0.02998	-	Hansford County Switch Station - SPEARMAN INTERCHANGE 115KV CKT 1
FDNSLock-Blown up	06ALL	0	16WP	G15_079		Non-Converged Contingency	177.08	177.08	0.02998	-	HITCHLAND INTERCHANGE - Hansford County Switch Station 115KV CKT 1
FDNSLock-Blown up	06NR	0	17G	G15_079		Non-Converged Contingency	478	502	0.09224	-	BUSHLAND INTERCHANGE - DEAF SMITH COUNTY INTERCHANGE 230KV CKT 1
FDNSLock-Blown up	06NR	0	17G	G15_079		Non-Converged Contingency	318.7	350.57	0.08361	-	DEAF SMITH COUNTY INTERCHANGE - G15039_T 230.00 230KV CKT 1
FDNSLock-Blown up	06NR	0	17G	G15_079		Non-Converged Contingency	318.7	350.57	0.08361	-	G15039_T 230.00 - PLANT X STATION 230KV CKT 1
FDNSLock-Blown up	06NR	0	17G	G15_079		Non-Converged Contingency	318.7	350.57	0.07634	-	BUSHLAND INTERCHANGE - POTTER COUNTY INTERCHANGE 230KV CKT 1
FDNSLock-Blown up	06NR	0	17G	G15_079		Non-Converged Contingency	478	502	0.07341	-	NEWHART 230 - POTTER COUNTY INTERCHANGE 230KV CKT 1
FDNSLock-Blown up	06NR	0	17G	G15_079		Non-Converged Contingency	318.7	350.57	0.07325	-	AMARILLO SOUTH INTERCHANGE - G15031_T 230.00 230KV CKT 1
FDNSLock-Blown up	06NR	0	17G	G15_079		Non-Converged Contingency	1022	1124	0.03913	-	G14-074T 345.00 - OKLAUNION 345KV CKT 1
FDNSLock-Blown up	06NR	0	17G	G15_079		Non-Converged Contingency	1022	1124	0.03913	-	G14-074T 345.00 - TUCO INTERCHANGE 345KV CKT 1
FDNSLock-Blown up	06NR	0	17G	G15_079		Non-Converged Contingency	1792	1972	0.03725	-	BORDER 7345.00 - TUCO_2 345.00 345KV CKT 1
FDNSLock-Blown up	06NR	0	17G	G15_079		Non-Converged Contingency	1792	1792	0.03725	-	BORDER 7345.00 - WOODWARD DISTRICT EHV 345KV CKT 1
FDNSLock-Blown up	06ALL	0	17SP	G15_079		Non-Converged Contingency	956	1042	0.20177	-	G14-074T 345.00 - OKLAUNION 345KV CKT 1
FDNSLock-Blown up	06ALL	0	17SP	G15_079		Non-Converged Contingency	956	1042	0.20177	-	G14-074T 345.00 - TUCO INTERCHANGE 345KV CKT 1
FDNSLock-Blown up	06ALL	0	17SP	G15_079		Non-Converged Contingency	956.09	1051.7	0.16396	-	G14_038T 345.00 - Hitchland Interchange 345KV CKT 1
FDNSLock-Blown up	06ALL	0	17SP	G15_079		Non-Converged Contingency	956.09	1051.7	0.16396	-	G14_038T 345.00 - POTTER COUNTY INTERCHANGE 345KV CKT 1
FDNSLock-Blown up	06ALL	0	17SP	G15_079		Non-Converged Contingency	560	560	0.16396	-	POTTER COUNTY INTERCHANGE (WAUK 90343-A) 345/230/13.2KV TRANSFORMER CKT 1
FDNSLock-Blown up	06ALL	0	17SP	G15_079		Non-Converged Contingency	1792	1972	0.15934	-	BORDER 7345.00 - TUCO_2 345.00 345KV CKT 1
FDNSLock-Blown up	06ALL	0	17SP	G15_079		Non-Converged Contingency	1420	1775	0.15934	-	BORDER 7345.00 - TUCO_2 345.00 345KV CKT 2
FDNSLock-Blown up	06ALL	0	20L	G15_079		Non-Converged Contingency	318.7	350.57	0.52382	-	G15079_T 230.00 - YOAKUM COUNTY INTERCHANGE 230KV CKT 1
FDNSLock-Blown up	06ALL	0	20L	G15_079		Non-Converged Contingency	1792	1792	0.32374	-	TUCO INTERCHANGE - YOAKUM_345 345.00 345KV CKT 1
FDNSLock-Blown up	06ALL	0	20L	G15_079		Non-Converged Contingency	1792	1972	0.25127	-	TUCO INTERCHANGE - TUCO_2 345.00 345KV CKT 1
FDNSLock-Blown up	06ALL	0	20L	G15_079		Non-Converged Contingency	0	0	0.19973	-	P12:345:SPS:J07.1.FINN.HITCH
FDNSLock-Blown up	06ALL	0	20L	G15_079		Non-Converged Contingency	560	644	0.19288	-	HOBBS (UPDATE DATA) 345/230/13.2KV TRANSFORMER CKT 1
FDNSLock-Blown up	06ALL	0	20L	G15_079		Non-Converged Contingency	1792	1792	0.19264	-	HOBBS - YOAKUM_345 345.00 345KV CKT 1
FDNSLock-Blown up	06ALL	0	20L	G15_079		Non-Converged Contingency	1022	1124	0.18161	-	G14-074T 345.00 - OKLAUNION 345KV CKT 1
FDNSLock-Blown up	06ALL	0	20L	G15_079		Non-Converged Contingency	1022	1124	0.18161	-	G14-074T 345.00 - TUCO INTERCHANGE 345KV CKT 1
FDNSLock-Blown up	06ALL	0	20L	G15_079		Non-Converged Contingency	1022	1124	0.18161	-	GEN506754 1-LEBROCK STEAM 1
FDNSLock-Blown up	06ALL	0	20L	G15_079		Non-Converged Contingency	1022	1124	0.18161	-	GEN509394 1-FLINT CREEK
FDNSLock-Blown up	06ALL	0	20L	G15_079		Non-Converged Contingency	1022	1124	0.18161	-	GEN509403 1-PIRKEY GENERATION
FDNSLock-Blown up	06ALL	0	20L	G15_079		Non-Converged Contingency	1022	1124	0.18161	-	GEN509404 1-WELSH #1
FDNSLock-Blown up	06ALL	0	20L	G15_079		Non-Converged Contingency	1022	1124	0.18161	-	GEN509406 1-WELSH #3
FDNSLock-Blown up	06ALL	0	20L	G15_079		Non-Converged Contingency	1022	1124	0.18161	-	GEN509408 1-WILKES #2
FDNSLock-Blown up	06ALL	0	20L	G15_079		Non-Converged Contingency	1022	1124	0.18161	-	GEN509416 1-TURK GENERATION
FDNSLock-Blown up	06ALL	0	20L	G15_079		Non-Converged Contingency	1022	1124	0.18161	-	GEN511840 1-NORTHEASTERN STATION #3
FDNSLock-Blown up	06ALL	0	20L	G15_079		Non-Converged Contingency	1022	1124	0.18161	-	GEN511960 1-ROARK1 0.7000
FDNSLock-Blown up	06ALL	0	20L	G15_079		Non-Converged Contingency	1022	1124	0.18161	-	GEN562590 1-G14_057_3 0.6900
FDNSLock-Blown up	06ALL	0	20L	G15_079		Non-Converged Contingency	1022	1124	0.18161	-	OKLAUNION 345KV SWITCHED SHUNT
FDNSLock-Blown up	06ALL	0	20L	G15_079		Non-Converged Contingency	414	414	0.17972	-	AMOCO SWITCHING STATION - YOAKUM COUNTY INTERCHANGE 230KV CKT 1
FDNSLock-Blown up	06ALL	0	20L	G15_079		Non-Converged Contingency	414	414	0.17972	-	AMOCO SWITCHING STATION - YOAKUM COUNTY INTERCHANGE 230KV CKT 1
FDNSLock-Blown up	06ALL	0	20L	G15_079		Non-Converged Contingency	956	956	0.16295	-	CIMARRON - MINCO 345KV CKT 1
FDNSLock-Blown up	06ALL	0	20L	G15_079		Non-Converged Contingency	1195	1195	0.16295	-	GRACEMONT - MINCO 345KV CKT 1
FDNSLock-Blown up	06ALL	0	20L	G15_079		Non-Converged Contingency	1792	1792	0.15409	-	CHISHOLM7 345.00 - WOODWARD DISTRICT EHV 345KV CKT 1
FDNSLock-Blown up	06ALL	0	20L	G15_079		Non-Converged Contingency	1792	1792	0.14967	-	BORDER 7345.00 - CHISHOLM7 345.00 345KV CKT 1
FDNSLock-Blown up	06ALL	0	20L	G15_079		Non-Converged Contingency	1792	1792	0.14967	-	BORDER 7345.00 - CHISHOLM7 345.00 345KV CKT 2
FDNSLock-Blown up	06ALL	0	20L	G15_079		Non-Converged Contingency	1792	1972	0.14967	-	BORDER 7345.00 - TUCO_2 345.00 345KV CKT 1
FDNSLock-Blown up	06ALL	0	20L	G15_079		Non-Converged Contingency	1420	1775	0.14967	-	BORDER 7345.00 - TUCO_2 345.00 345KV CKT 2
FDNSLock-Blown up	06ALL	0	20L	G15_079		Non-Converged Contingency	1792	1972	0.14967	-	BORDER 7345.00 345KV SWITCHED SHUNT
FDNSLock-Blown up	06ALL	0	20L	G15_079		Non-Converged Contingency	1584	2098	0.12942	-	CHISHOLM7 345.00 - GRACEMONT 345KV CKT 1
FDNSLock-Blown up	06ALL	0	20L	G15_079		Non-Converged Contingency	1584	2098	0.12942	-	GEN514805 1-SOONER UNIT 1
FDNSLock-Blown up	06ALL	0	20L	G15_079		Non-Converged Contingency	1584	2098	0.12942	-	GEN514806 1-SOONER UNIT 2
FDNSLock-Blown up	06ALL	0	20L	G15_079		Non-Converged Contingency	1584	2098	0.12942	-	GEN515040 1-SEMINOLE 1G
FDNSLock-Blown up	06ALL	0	20L	G15_079		Non-Converged Contingency	1584	2098	0.12942	-	GEN515223 1-MUSKOGEE 4G
FDNSLock-Blown up	06ALL	0	20L	G15_079		Non-Converged Contingency	0	0	0.12056	-	P12:115:SPS:T71.1.CRLSLE.YUMA
FDNSLock-Blown up	06ALL	0	20L	G15_079		Non-Converged Contingency	956.09	1051.7	0.11083	-	G14_038T 345.00 - Hitchland Interchange 345KV CKT 1
FDNSLock-Blown up	06ALL	0	20L	G15_079		Non-Converged Contingency	956.09	1051.7	0.11083	-	G14_038T 345.00 - POTTER COUNTY INTERCHANGE 345KV CKT 1
FDNSLock-Blown up	06ALL	0	20L	G15_079		Non-Converged Contingency	560	560	0.11083	-	POTTER COUNTY INTERCHANGE (WAUK 90343-A) 345/230/13.2KV TRANSFORMER CKT 1
FDNSLock-Blown up	06ALL	0	20L	G15_079		Non-Converged Contingency	560	560	0.11083	-	POTTER COUNTY INTERCHANGE (WAUK 90343-A) 345/230/13.2KV TRANSFORMER CKT 1
FDNSLock-Blown up	06ALL	0	20L	G15_079		Non-Converged Contingency	478	502	0.11045	-	BUSHLAND INTERCHANGE - DEAF SMITH COUNTY INTERCHANGE 230KV CKT 1
FDNSLock-Blown up	06ALL	0	20L	G15_079		Non-Converged Contingency	478	502	0.11045	-	BUSHLAND INTERCHANGE - DEAF SMITH COUNTY INTERCHANGE 230KV CKT 1
FDNSLock-Blown up	06ALL	0	20L	G15_079		Non-Converged Contingency	478	502	0.11045	-	BUSHLAND INTERCHANGE 230KV SWITCHED SHUNT
FDNSLock-Blown up	06ALL	0	20L	G15_079		Non-Converged Contingency	717	926	0.10765	-	CROSSROADS 7345.00 - TOLK STATION 345KV CKT 1
FDNSLock-Blown up	06ALL	0	20L	G15_079		Non-Converged Contingency	560	560	0.10765	-	TOLK STATION (ABBXNL844501) 345/230/13.2KV TRANSFORMER CKT 1
FDNSLock-Blown up	06ALL	0	20L	G15_079		Non-Converged Contingency	560	560	0.10765	-	TOLK STATION (ABBXNL844501) 345/230/13.2KV TRANSFORMER CKT 1
FDNSLock-Blown up	06ALL	0	20L	G15_079		Non-Converged Contingency	956.09	1051.7	0.10665	-	Hitchland Interchange - WALKTAP7 345.00 345KV CKT 1
FDNSLock-Blown up	06ALL	0	20L	G15_079		Non-Converged Contingency	956.09	1051.7	0.10665	-	Hitchland Interchange - WALKTAP7 345.00 345KV CKT 1
FDNSLock-Blown up	06ALL	0	20L	G15_079		Non-Converged Contingency	717	789	0.10443	-	G14-057T 345.00 - LAWTON EASTSIDE 345KV CKT 1
FDNSLock-Blown up	06ALL	0	20L	G15_079		Non-Converged Contingency	717	789	0.10443	-	G14-057T 345.00 - SUNNYSIDE 345KV CKT 1

SOLUTION	GROUP	SCENARIO	SEASON	SOURCE	DIRECTION	MONITORED ELEMENT	RATEA (MVA)	RATEB(MVA)	TDF	TC%LOADING (% MVA)	CONTINGENCY
FDNSLock-Blown up	06ALL	0	20L	G15_079		Non-Converged Contingency	478.05	547.36	0.10124	-	NEWHART 230 - PLANT X STATION 230KV CKT 1
FDNSLock-Blown up	06ALL	0	20L	G15_079		Non-Converged Contingency	497	547	0.09953	-	TUCO INTERCHANGE - TUCO_2 230.00 230KV CKT 1
FDNSLock-Blown up	06ALL	0	20L	G15_079		Non-Converged Contingency	318.7	350.57	0.09947	-	DEAF SMITH COUNTY INTERCHANGE - G15039_T 230.00 230KV CKT 1
FDNSLock-Blown up	06ALL	0	20L	G15_079		Non-Converged Contingency	318.7	350.57	0.09947	-	G15039_T 230.00 - PLANT X STATION 230KV CKT 1
FDNSLock-Blown up	06ALL	0	20L	G15_079		Non-Converged Contingency	318.7	350.57	0.09805	-	BUSHLAND INTERCHANGE - POTTER COUNTY INTERCHANGE 230KV CKT 1
FDNSLock-Blown up	06ALL	0	20L	G15_079		Non-Converged Contingency	318.7	350.57	0.09805	-	BUSHLAND INTERCHANGE - POTTER COUNTY INTERCHANGE 230KV CKT 1
FDNSLock-Blown up	06ALL	0	20L	G15_079		Non-Converged Contingency	478	502	0.09421	-	NEWHART 230 - POTTER COUNTY INTERCHANGE 230KV CKT 1
FDNSLock-Blown up	06ALL	0	20L	G15_079		Non-Converged Contingency	956.09	1051.7	0.09308	-	FINNEY SWITCHING STATION - HOLCOMB 345KV CKT 1
FDNSLock-Blown up	06ALL	0	20L	G15_079		Non-Converged Contingency	956.09	1051.7	0.09308	-	FINNEY SWITCHING STATION - HOLCOMB 345KV CKT 1
FDNSLock-Blown up	06ALL	0	20L	G15_079		Non-Converged Contingency	956.09	1051.7	0.09308	-	FINNEY SWITCHING STATION - WALKTAP7 345.00 345KV CKT 1
FDNSLock-Blown up	06ALL	0	20L	G15_079		Non-Converged Contingency	956.09	1051.7	0.09308	-	FINNEY SWITCHING STATION - WALKTAP7 345.00 345KV CKT 1
FDNSLock-Blown up	06ALL	0	20L	G15_079		Non-Converged Contingency	0	0	0.08762	-	P12:115:SPS:T59.1.CARGIL.CURRY
FDNSLock-Blown up	06ALL	0	20L	G15_079		Non-Converged Contingency	478	502	0.0843	-	AMARILLO SOUTH INTERCHANGE - G15031_T 230.00 230KV CKT 1
FDNSLock-Blown up	06ALL	0	20L	G15_079		Non-Converged Contingency	0	0	0.08429	-	P12:230:AEPW:ELKCITY6:SWEETWT6
FDNSLock-Blown up	06NR	0	20L	G15_079		Non-Converged Contingency	478	502	0.07978	-	AMARILLO SOUTH INTERCHANGE - G15031_T 230.00 230KV CKT 1
FDNSLock-Blown up	06ALL	0	20L	G15_079		Non-Converged Contingency	0	0	0.07833	-	P12:115:SPS:W40.1.WCANYON.DFSMTH
FDNSLock-Blown up	06ALL	0	20L	G15_079		Non-Converged Contingency	318.7	350.57	0.07798	-	LUBBOCK SOUTH INTERCHANGE - WOLFFORTH INTERCHANGE 230KV CKT 1
FDNSLock-Blown up	06ALL	0	20L	G15_079		Non-Converged Contingency	318.7	350.57	0.07798	-	LUBBOCK SOUTH INTERCHANGE - WOLFFORTH INTERCHANGE 230KV CKT 1
FDNSLock-Blown up	06ALL	0	20L	G15_079		Non-Converged Contingency	318.7	350.57	0.07798	-	LUBBOCK SOUTH INTERCHANGE 230KV SWITCHED SHUNT
FDNSLock-Blown up	06ALL	0	20L	G15_079		Non-Converged Contingency	1561	1793	0.07537	-	THISTLE7 345.00 - WOODWARD DISTRICT EHV 345KV CKT 1
FDNSLock-Blown up	06ALL	0	20L	G15_079		Non-Converged Contingency	1561	1793	0.07537	-	THISTLE7 345.00 - WOODWARD DISTRICT EHV 345KV CKT 1
FDNSLock-Blown up	06ALL	0	20L	G15_079		Non-Converged Contingency	1561	1793	0.07537	-	THISTLE7 345.00 - WOODWARD DISTRICT EHV 345KV CKT 2
FDNSLock-Blown up	06ALL	0	20L	G15_079		Non-Converged Contingency	1561	1793	0.07537	-	THISTLE7 345.00 - WOODWARD DISTRICT EHV 345KV CKT 2
FDNSLock-Blown up	06ALL	0	20L	G15_079		Non-Converged Contingency	1420	1775	0.07428	-	G11_051T 345.00 - TATONGA7 345.00 345KV CKT 1
FDNSLock-Blown up	06ALL	0	20L	G15_079		Non-Converged Contingency	1420	1775	0.07428	-	G11_051T 345.00 - WOODWARD DISTRICT EHV 345KV CKT 1
FDNSLock-Blown up	06ALL	0	20L	G15_079		Non-Converged Contingency	1195	1195	0.07428	-	MATHWSN7 345.00 - TATONGA7 345.00 345KV CKT 1
FDNSLock-Blown up	06ALL	0	20L	G15_079		Non-Converged Contingency	478	502	0.07303	-	CARLISLE INTERCHANGE - TUCO INTERCHANGE 230KV CKT 1
FDNSLock-Blown up	06ALL	0	20L	G15_079		Non-Converged Contingency	478	502	0.07303	-	CARLISLE INTERCHANGE - TUCO INTERCHANGE 230KV CKT 1
FDNSLock-Blown up	06ALL	0	20L	G15_079		Non-Converged Contingency	1195	1195	0.07186	-	ARCADIA - NORTHWEST 345KV CKT 1
FDNSLock-Blown up	06ALL	0	20L	G15_079		Non-Converged Contingency	442	752	0.07164	-	PLANT X STATION - TOLK STATION WEST 230KV CKT 1
FDNSLock-Blown up	06ALL	0	20L	G15_079		Non-Converged Contingency	442	752	0.07164	-	PLANT X STATION - TOLK STATION WEST 230KV CKT 1
FDNSLock-Blown up	06NR	0	20L	G15_079		Non-Converged Contingency	478	502	0.0706	-	NEWHART 230 - POTTER COUNTY INTERCHANGE 230KV CKT 1
FDNSLock-Blown up	06ALL	0	20L	G15_079		Non-Converged Contingency	442	752	0.07041	-	PLANT X STATION - TOLK STATION EAST 230KV CKT 2
FDNSLock-Blown up	06ALL	0	20L	G15_079		Non-Converged Contingency	442	752	0.07041	-	PLANT X STATION - TOLK STATION EAST 230KV CKT 2
FDNSLock-Blown up	06ALL	0	20L	G15_079		Non-Converged Contingency	956	956	0.06993	-	CIMARRON - NORTHWEST 345KV CKT 1
FDNSLock-Blown up	06ALL	0	20L	G15_079		Non-Converged Contingency	0	0	0.06923	-	P12:230:SPS:K51.1.OASIS.RSVLT
FDNSLock-Blown up	06NR	0	20L	G15_079		Non-Converged Contingency	318.7	350.57	0.06861	-	DEAF SMITH COUNTY INTERCHANGE - G15039_T 230.00 230KV CKT 1
FDNSLock-Blown up	06ALL	0	20L	G15_079		Non-Converged Contingency	0	0	0.06845	-	P12:230:AEPW-SPS:SWEETWT6:WHEELER 6
FDNSLock-Blown up	06ALL	0	20L	G15_079		Non-Converged Contingency	0	0	0.06571	-	P12:115:SPS:T58.1.HERFRD.CARGIL
FDNSLock-Blown up	06ALL	0	20L	G15_079		Non-Converged Contingency	478	478	0.06514	-	CARLISLE INTERCHANGE - WOLFFORTH INTERCHANGE 230KV CKT 1
FDNSLock-Blown up	06ALL	0	20L	G15_079		Non-Converged Contingency	1195	1195	0.06374	-	MATHWSN7 345.00 - NORTHWEST 345KV CKT 1
FDNSLock-Blown up	06NR	0	20L	G15_079		Non-Converged Contingency	318.7	350.57	0.0634	-	BUSHLAND INTERCHANGE - POTTER COUNTY INTERCHANGE 230KV CKT 1
FDNSLock-Blown up	06NR	0	20L	G15_079		Non-Converged Contingency	318.7	350.57	0.0634	-	BUSHLAND INTERCHANGE - POTTER COUNTY INTERCHANGE 230KV CKT 1
FDNSLock-Blown up	06ALL	0	20L	G15_079		Non-Converged Contingency	0	0	0.06	-	P12:138:AEPW-OGE:WTH_JCT4:JENSEN4
FDNSLock-Blown up	06ALL	0	20L	G15_079		Non-Converged Contingency	956	956	0.05889	-	G15063_T 345.00 - MATHWSN7 345.00 345KV CKT 1
FDNSLock-Blown up	06ALL	0	20L	G15_079		Non-Converged Contingency	956	956	0.05889	-	G15063_T 345.00 - WOODRING 345KV CKT 1
FDNSLock-Blown up	06ALL	0	20L	G15_079		Non-Converged Contingency	560	560	0.05832	-	TUCO INTERCHANGE (GE M1022338) 345/230/13.2KV TRANSFORMER CKT 1
FDNSLock-Blown up	06ALL	0	20L	G15_079		Non-Converged Contingency	560	560	0.05832	-	TUCO INTERCHANGE (GE M1022338) 345/230/13.2KV TRANSFORMER CKT 1
FDNSLock-Blown up	06ALL	0	20L	G15_079		Non-Converged Contingency	1039	1195	0.05674	-	NORTHWEST - SPRING CREEK 345KV CKT 1
FDNSLock-Blown up	06ALL	0	20L	G15_079		Non-Converged Contingency	1039	1195	0.05674	-	SOONER - SPRING CREEK 345KV CKT 1
FDNSLock-Blown up	06ALL	0	20L	G15_079		Non-Converged Contingency	478.05	546.96	0.05661	-	TOLK STATION EAST - TUCO INTERCHANGE 230KV CKT 1
FDNSLock-Blown up	06ALL	0	20L	G15_079		Non-Converged Contingency	478.05	546.96	0.05661	-	TOLK STATION EAST - TUCO INTERCHANGE 230KV CKT 1
FDNSLock-Blown up	06NR	0	20L	G15_079		Non-Converged Contingency	1022	1124	0.0566	-	G14-074T 345.00 - OKLAUNION 345KV CKT 1
FDNSLock-Blown up	06NR	0	20L	G15_079		Non-Converged Contingency	1022	1124	0.0566	-	G14-074T 345.00 - TUCO INTERCHANGE 345KV CKT 1
FDNSLock-Blown up	06NR	0	20L	G15_079		Non-Converged Contingency	1022	1124	0.0566	-	OKLAUNION 345KV SWITCHED SHUNT
FDNSLock-Blown up	06ALL	0	20L	G15_079		Non-Converged Contingency	1532	1793	0.05654	-	G1524G1525 345.00 - THISTLE7 345.00 345KV CKT 1
FDNSLock-Blown up	06ALL	0	20L	G15_079		Non-Converged Contingency	1532	1793	0.05654	-	G1524G1525 345.00 - THISTLE7 345.00 345KV CKT 2
FDNSLock-Blown up	06ALL	0	20L	G15_079		Non-Converged Contingency	1532	1793	0.05654	-	G1524G1525 345.00 - WICHITA 345KV CKT 1
FDNSLock-Blown up	06ALL	0	20L	G15_079		Non-Converged Contingency	1532	1793	0.05654	-	G1524G1525 345.00 - WICHITA 345KV CKT 2
FDNSLock-Blown up	06ALL	0	20L	G15_079		Non-Converged Contingency	1532	1793	0.05654	-	GEN532653 1-JEFFREY ENERGY CENTER UNIT 3
FDNSLock-Blown up	06ALL	0	20L	G15_079		Non-Converged Contingency	1532	1793	0.05654	-	GEN532663 1-LAWRENCE ENERGY CENTER UNIT 5
FDNSLock-Blown up	06ALL	0	20L	G15_079		Non-Converged Contingency	1532	1793	0.05654	-	GEN532751 1-WOLF CREEK GENERATING STATION UNIT 1
FDNSLock-Blown up	06ALL	0	20L	G15_079		Non-Converged Contingency	435.82	501.55	0.05626	-	Harrington Station Mid Bus - RANDALL COUNTY INTERCHANGE 230KV CKT 1
FDNSLock-Blown up	06ALL	0	20L	G15_079		Non-Converged Contingency	435.82	501.55	0.05626	-	Harrington Station Mid Bus - RANDALL COUNTY INTERCHANGE 230KV CKT 1
FDNSLock-Blown up	06ALL	0	20L	G15_079		Non-Converged Contingency	343.79	343.79	0.05412	-	JONES STATION - TUCO INTERCHANGE 230KV CKT 1
FDNSLock-Blown up	06ALL	0	20L	G15_079		Non-Converged Contingency	343.79	343.79	0.05412	-	JONES STATION - TUCO INTERCHANGE 230KV CKT 1
FDNSLock-Blown up	06NR	0	20L	G15_079		Non-Converged Contingency	1792	1972	0.05385	-	BORDER 7345.00 - TUCO_2 345.00 345KV CKT 1
FDNSLock-Blown up	06NR	0	20L	G15_079		Non-Converged Contingency	1792	1792	0.05385	-	BORDER 7345.00 - WOODWARD DISTRICT EHV 345KV CKT 1
FDNSLock-Blown up	06NR	0	20L	G15_079		Non-Converged Contingency	1792	1972	0.05385	-	BORDER 7345.00 345KV SWITCHED SHUNT
FDNSLock-Blown up	06ALL	0	20L	G15_079		Non-Converged Contingency	0	0	0.05253	-	P12:138:AEPW:S.W.S.-4:L.E.S.-4
FDNSLock-Blown up	06ALL	0	20L	G15_079		Non-Converged Contingency	785	785	0.05245	-	GEN640009 1-COOPER NUCLEAR STATION
FDNSLock-Blown up	06ALL	0	20L	G15_079		Non-Converged Contingency	785	785	0.05245	-	MINGO - RED WILLOW 345KV CKT 1
FDNSLock-Blown up	06ALL	0	20L	G15_079		Non-Converged Contingency	785	785	0.05245	-	MINGO - RED WILLOW 345KV CKT 1
FDNSLock-Blown up	06ALL	0	20L	G15_079		Non-Converged Contingency	0	0	0.05222	-	P12:115:SPS:V05.1.OSAGE.WCANYON
FDNSLock-Blown up	06ALL	0	20L	G15_079		Non-Converged Contingency	762.5	762.5	0.05102	-	MINGO - SETAB 345KV CKT 1
FDNSLock-Blown up	06ALL	0	20L	G15_079		Non-Converged Contingency	762.5	762.5	0.05102	-	MINGO - SETAB 345KV CKT 1
FDNSLock-Blown up	06ALL	0	20L	G15_079		Non-Converged Contingency	560	644	0.05083	-	TUCO INTERCHANGE (SIEM 8743066) 345/230/13.2KV TRANSFORMER CKT 2
FDNSLock-Blown up	06ALL	0	20L	G15_079		Non-Converged Contingency	560	644	0.05083	-	TUCO INTERCHANGE (SIEM 8743066) 345/230/13.2KV TRANSFORMER CKT 2
FDNSLock-Blown up	06ALL	0	20L	G15_079		Non-Converged Contingency	717	789	0.05074	-	GRACEMONT - LAWTON EASTSIDE 345KV CKT 1

SOLUTION	GROUP	SCENARIO	SEASON	SOURCE	DIRECTION	MONITORED ELEMENT	RATEA (MVA)	RATEB(MVA)	TDF	TC%LOADING (% MVA)	CONTINGENCY
FDNSLock-Blown up	06ALL	0	20L	G15_079		Non-Converged Contingency	717	789	0.05074	-	GRACEMONT - LAWTON EASTSIDE 345KV CKT 1
FDNSLock-Blown up	06ALL	0	20L	G15_079		Non-Converged Contingency	0	0	0.05068	-	P12:115:SPS:T66.1.RNDALL.HAPPY
FDNSLock-Blown up	06ALL	0	20L	G15_079		Non-Converged Contingency	0	0	0.05068	-	P12:115:SPS:T67.1.HAPPY.KRESS
FDNSLock-Blown up	06ALL	0	20L	G15_079		Non-Converged Contingency	1195	1195	0.05055	-	SOONER - WOODRING 345KV CKT 1
FDNSLock-Blown up	06ALL	0	20L	G15_079		Non-Converged Contingency	717.1	717.1	0.05054	-	HOLCOMB - SETAB 345KV CKT 1
FDNSLock-Blown up	06ALL	0	20L	G15_079		Non-Converged Contingency	717.1	717.1	0.05054	-	HOLCOMB - SETAB 345KV CKT 1
FDNSLock-Blown up	06ALL	0	20L	G15_079		Non-Converged Contingency	439	439	0.05006	-	CHISHOLM6 230.00 - ELK CITY 230KV 230KV CKT 1
FDNSLock-Blown up	06ALL	0	20L	G15_079		Non-Converged Contingency	450	450	0.05006	-	ELK CITY 230KV (ELKCTY-6) 230/138/13.8KV TRANSFORMER CKT 1
FDNSLock-Blown up	06ALL	0	20L	G15_079		Non-Converged Contingency	450	450	0.05006	-	ELK CITY 230KV (ELKCTY-6) 230/138/13.8KV TRANSFORMER CKT 1
FDNSLock-Blown up	06ALL	0	20L	G15_079		Non-Converged Contingency	0	0	0.04964	-	P12:115:SPS:T28.1.LAMTON.PLANTX
FDNSLock-Blown up	06ALL	0	20L	G15_079		Non-Converged Contingency	560	560	0.04807	-	TUCO_2 345.00 (TUCO_2 XFMR) 345/230/13.2KV TRANSFORMER CKT 1
FDNSLock-Blown up	06ALL	0	20L	G15_079		Non-Converged Contingency	1195	1195	0.04795	-	JOHNSON COUNTY - SUNNYSIDE 345KV CKT 1
FDNSLock-Blown up	06ALL	0	20L	G15_079		Non-Converged Contingency	478.05	501.55	0.04755	-	AMARILLO SOUTH INTERCHANGE - NICHOLS STATION 230KV CKT 1
FDNSLock-Blown up	06ALL	0	20L	G15_079		Non-Converged Contingency	478.05	501.55	0.04755	-	AMARILLO SOUTH INTERCHANGE - NICHOLS STATION 230KV CKT 1
FDNSLock-Blown up	06ALL	0	20L	G15_079		Non-Converged Contingency	501.95	501.95	0.04692	-	HITCHLAND INTERCHANGE - MOORE COUNTY INTERCHANGE 230KV CKT 1
FDNSLock-Blown up	06ALL	0	20L	G15_079		Non-Converged Contingency	501.95	501.95	0.04692	-	HITCHLAND INTERCHANGE - MOORE COUNTY INTERCHANGE 230KV CKT 1
FDNSLock-Blown up	06ALL	0	20L	G15_079		Non-Converged Contingency	560	644	0.04584	-	Hitchland Interchange (SIEM 8743067) 345/230/13.2KV TRANSFORMER CKT 2
FDNSLock-Blown up	06ALL	0	20L	G15_079		Non-Converged Contingency	560	644	0.04584	-	Hitchland Interchange (SIEM 8743067) 345/230/13.2KV TRANSFORMER CKT 2
FDNSLock-Blown up	06ALL	0	20L	G15_079		Non-Converged Contingency	1504	1792	0.04509	-	AXTELL - POST ROCK 345KV CKT 1
FDNSLock-Blown up	06ALL	0	20L	G15_079		Non-Converged Contingency	0	0	0.04508	-	P12:115:SPS:V15.1.TUCO.INDANA
FDNSLock-Blown up	06ALL	0	20L	G15_079		Non-Converged Contingency	1793	1793	0.04494	-	BVRCNTY7 345.00 - G11-14T 345.00 345KV CKT 1
FDNSLock-Blown up	06ALL	0	20L	G15_079		Non-Converged Contingency	1716	1793	0.04494	-	BVRCNTY7 345.00 - G11-14T 345.00 345KV CKT 2
FDNSLock-Blown up	06ALL	0	20L	G15_079		Non-Converged Contingency	1792	1792	0.04494	-	BVRCNTY7 345.00 - OPTIMA 345.00 345KV CKT 1
FDNSLock-Blown up	06ALL	0	20L	G15_079		Non-Converged Contingency	1792	1792	0.04494	-	BVRCNTY7 345.00 - OPTIMA 345.00 345KV CKT 2
FDNSLock-Blown up	06ALL	0	20L	G15_079		Non-Converged Contingency	1793	1793	0.04494	-	G11-14T 345.00 - WOODWARD DISTRICT EHV 345KV CKT 1
FDNSLock-Blown up	06ALL	0	20L	G15_079		Non-Converged Contingency	1716	1793	0.04494	-	G11-14T 345.00 - WOODWARD DISTRICT EHV 345KV CKT 2
FDNSLock-Blown up	06ALL	0	20L	G15_079		Non-Converged Contingency	1792	1792	0.04494	-	Hitchland Interchange - OPTIMA 345.00 345KV CKT 1
FDNSLock-Blown up	06ALL	0	20L	G15_079		Non-Converged Contingency	1792	1792	0.04494	-	Hitchland Interchange - OPTIMA 345.00 345KV CKT 2
FDNSLock-Blown up	06ALL	0	20L	G15_079		Non-Converged Contingency	0	0	0.04482	-	P12:138:WFEC-AEPW:WASHITA4:CLINTJC4
FDNSLock-Blown up	06ALL	0	20L	G15_079		Non-Converged Contingency	878	956	0.04445	-	BENTON - WICHITA 345KV CKT 1
FDNSLock-Blown up	06ALL	0	20L	G15_079		Non-Converged Contingency	1151	1195	0.04413	-	JOHNSON COUNTY - PITTSBURG 345KV CKT 1
FDNSLock-Blown up	06ALL	0	20L	G15_079		Non-Converged Contingency	1151	1195	0.04413	-	JOHNSON COUNTY - PITTSBURG 345KV CKT 1
FDNSLock-Blown up	06ALL	0	20L	G15_079		Non-Converged Contingency	1505	1793	0.04412	-	G13-010T 345.00 - POST ROCK 345KV CKT 1
FDNSLock-Blown up	06ALL	0	20L	G15_079		Non-Converged Contingency	1505	1793	0.04412	-	G13-010T 345.00 - SPEARVILLE 345KV CKT 1
FDNSLock-Blown up	06ALL	0	20L	G15_079		Non-Converged Contingency	1195	1195	0.044	-	CIMARRON - DRAPER LAKE 345KV CKT 1
FDNSLock-Blown up	06ALL	0	20L	G15_079		Non-Converged Contingency	0	0	0.04128	-	P12:115:SPS:T85.1.WHITT.NEF
FDNSLock-Blown up	06ALL	0	20L	G15_079		Non-Converged Contingency	956	956	0.04111	-	GERALD GENTLEMAN STATION - RED WILLOW 345KV CKT 1
FDNSLock-Blown up	06ALL	0	20L	G15_079		Non-Converged Contingency	0	0	0.04058	-	P12:138:AEPW-OGE:CORNVIL4:CIMARON4
FDNSLock-Blown up	06ALL	0	20L	G15_079		Non-Converged Contingency	1035	1035	0.04051	-	EMPORIA ENERGY CENTER - G14_001T 345.00 345KV CKT 1
FDNSLock-Blown up	06ALL	0	20L	G15_079		Non-Converged Contingency	1035	1035	0.04051	-	G14_001T 345.00 - WICHITA 345KV CKT 1
FDNSLock-Blown up	06ALL	0	20L	G15_079		Non-Converged Contingency	0	0	0.04041	-	P12:115:SPS:V03.1.NICHLS.EPLANT
FDNSLock-Blown up	06ALL	0	20L	G15_079		Non-Converged Contingency	318.7	350.57	0.04039	-	MOORE COUNTY INTERCHANGE - POTTER COUNTY INTERCHANGE 230KV CKT 1
FDNSLock-Blown up	06ALL	0	20L	G15_079		Non-Converged Contingency	318.7	350.57	0.04039	-	MOORE COUNTY INTERCHANGE - POTTER COUNTY INTERCHANGE 230KV CKT 1
FDNSLock-Blown up	06ALL	0	20L	G15_079		Non-Converged Contingency	560	644	0.03987	-	Hitchland Interchange (H TB80155502) 345/230/13.2KV TRANSFORMER CKT 1
FDNSLock-Blown up	06ALL	0	20L	G15_079		Non-Converged Contingency	560	644	0.03987	-	Hitchland Interchange (H TB80155502) 345/230/13.2KV TRANSFORMER CKT 1
FDNSLock-Blown up	06ALL	0	20L	G15_079		Non-Converged Contingency	1195	1195	0.03974	-	GEN520811 1-ANADRK4
FDNSLock-Blown up	06ALL	0	20L	G15_079		Non-Converged Contingency	1195	1195	0.03974	-	HUGO - SUNNYSIDE 345KV CKT 1
FDNSLock-Blown up	06ALL	0	20L	G15_079		Non-Converged Contingency	0	0	0.03926	-	P12:115:SPS:T14.1.MADDOX.WBENDR
FDNSLock-Blown up	06ALL	0	20L	G15_079		Non-Converged Contingency	1141	1195	0.03783	-	GEN542951 5-HAWTHORN UNIT #5
FDNSLock-Blown up	06ALL	0	20L	G15_079		Non-Converged Contingency	1141	1195	0.03783	-	LACYGNE - WAVERLY7 345.00 345KV CKT 1
FDNSLock-Blown up	06ALL	0	20L	G15_079		Non-Converged Contingency	1141	1195	0.03783	-	WAVERLY7 345.00 - WOLF CREEK 345KV CKT 1
FDNSLock-Blown up	06ALL	0	20L	G15_079		Non-Converged Contingency	0	0	0.03648	-	P12:115:LCEC:W56.1.HOBBG.LE-LVN
FDNSLock-Blown up	06ALL	0	20L	G15_079		Non-Converged Contingency	1195	1195	0.03603	-	MUSKOGEE - SEMINOLE 345KV CKT 1
FDNSLock-Blown up	06ALL	0	20L	G15_079		Non-Converged Contingency	1076	1076	0.03535	-	G15074_T 345.00 - HOYT 345KV CKT 1
FDNSLock-Blown up	06ALL	0	20L	G15_079		Non-Converged Contingency	1076	1076	0.03535	-	G15074_T 345.00 - JEFFREY ENERGY CENTER 345KV CKT 1
FDNSLock-Blown up	06ALL	0	20L	G15_079		Non-Converged Contingency	1036	1195	0.03518	-	HOYT - STRANGER CREEK 345KV CKT 1
FDNSLock-Blown up	06ALL	0	20L	G15_079		Non-Converged Contingency	0	0	0.03517	-	P12:115:SPS:T98.1.HIGG.HOBBG
FDNSLock-Blown up	06ALL	0	20L	G15_079		Non-Converged Contingency	726.6	726.6	0.03442	-	BUCKNER7 345.00 - HOLCOMB 345KV CKT 1
FDNSLock-Blown up	06ALL	0	20L	G15_079		Non-Converged Contingency	726.6	726.6	0.03442	-	BUCKNER7 345.00 - HOLCOMB 345KV CKT 1
FDNSLock-Blown up	06ALL	0	20L	G15_079		Non-Converged Contingency	1413	1517	0.03442	-	BUCKNER7 345.00 - SPEARVILLE 345KV CKT 1
FDNSLock-Blown up	06ALL	0	20L	G15_079		Non-Converged Contingency	1413	1517	0.03442	-	BUCKNER7 345.00 - SPEARVILLE 345KV CKT 1
FDNSLock-Blown up	06ALL	0	20L	G15_079		Non-Converged Contingency	421	439	0.03423	-	CHISHOLM6 230.00 - SWEETWATER 230KV CKT 1
FDNSLock-Blown up	06ALL	0	20L	G15_079		Non-Converged Contingency	348.58	381.24	0.03423	-	STATELINE INTERCHANGE - STLN-DEMARC6 230KV CKT 1
FDNSLock-Blown up	06ALL	0	20L	G15_079		Non-Converged Contingency	353	353	0.03423	-	STLN-DEMARC6 - SWEETWATER 230KV CKT 1
FDNSLock-Blown up	06ALL	0	20L	G15_079		Non-Converged Contingency	497.17	546.96	0.03413	-	AMARILLO SOUTH INTERCHANGE - RANDALL COUNTY INTERCHANGE 230KV CKT 1
FDNSLock-Blown up	06ALL	0	20L	G15_079		Non-Converged Contingency	497.17	546.96	0.03413	-	AMARILLO SOUTH INTERCHANGE - RANDALL COUNTY INTERCHANGE 230KV CKT 1
FDNSLock-Blown up	06ALL	0	20L	G15_079		Non-Converged Contingency	0	0	0.03249	-	P12:138:OKGE:3TERM10
FDNSLock-Blown up	06ALL	0	20L	G15_079		Non-Converged Contingency	717	717	0.03169	-	EMPORIA ENERGY CENTER - SWISSVALE 345KV CKT 1
FDNSLock-Blown up	06ALL	0	20L	G15_079		Non-Converged Contingency	0	0	0.03095	-	P12:115:SPS:W29.1.OCLTRE.SPRMN
FDNSLock-Blown up	06ALL	0	20L	G15_079		Non-Converged Contingency	0	0	0.0305	-	P12:115:SPS:W08.1.HITCH.LASLEY
FDNSLock-Blown up	06ALL	0	20L	G15_079		Non-Converged Contingency	0	0	0.0305	-	P12:138:AEPW:REDROCKRD4:WTH_JCT4
FDNSLock-Blown up	06ALL	0	20L	G15_079		Non-Converged Contingency	0	0	0.03036	-	P12:115:SPS:T04.1.DFSMTH.CASTRO
FDNSLock-Blown up	06ALL	0	20L	G15_079		Non-Converged Contingency	0	0	0.02992	-	P12:115:SPS:W35.1.GAINES.JNSDRW
FDNSLock-Blown up	06ALL	0	20L	G15_079		Non-Converged Contingency	0	0	0.02987	-	P12:138:AEPW:DUNCAN-4:L.E.S.-4
FDNSLock-Blown up	06ALL	0	20L	G15_079		Non-Converged Contingency	502	502	0.02981	-	GRAPEVINE INTERCHANGE - NICHOLS STATION 230KV CKT 1
FDNSLock-Blown up	06ALL	0	20L	G15_079		Non-Converged Contingency	502	502	0.02981	-	GRAPEVINE INTERCHANGE - NICHOLS STATION 230KV CKT 1
FDNSLock-Blown up	06ALL	0	20L	G15_079		Non-Converged Contingency	717	717	0.02968	-	SWISSVALE - WEST GARDNER 345KV CKT 1
FDNSLock-Blown up	06ALL	0	20SP	G15_079		Non-Converged Contingency	956	1042	0.21641	-	G14-074T 345.00 - OKLAUNION 345KV CKT 1
FDNSLock-Blown up	06ALL	0	20SP	G15_079		Non-Converged Contingency	1792	1972	0.17453	-	BORDER 7345.00 - TUCO_2 345.00 345KV CKT 1

SOLUTION	GROUP	SCENARIO	SEASON	SOURCE	DIRECTION	MONITORED ELEMENT	RATEA (MVA)	RATEB(MVA)	TDF	TC%LOADING (% MVA)	CONTINGENCY
FDNSLock-Blown up	06ALL	0	20SP	G15_079		Non-Converged Contingency	1420	1775	0.17453	-	BORDER 7345.00 - TUCO_2 345.00 345KV CKT 2
FDNSLock-Blown up	06ALL	0	20SP	G15_079		Non-Converged Contingency	956.09	1051.7	0.14509	-	G14_038T 345.00 - Hitchland Interchange 345KV CKT 1
FDNSLock-Blown up	06ALL	0	20SP	G15_079		Non-Converged Contingency	956.09	1051.7	0.14509	-	G14_038T 345.00 - POTTER COUNTY INTERCHANGE 345KV CKT 1
FDNSLock-Blown up	06ALL	0	20WP	G15_079		Non-Converged Contingency	1792	1792	0.3541	-	TUCO INTERCHANGE - YOAKUM_345 345.00 345KV CKT 1
FDNSLock-Blown up	06ALL	0	20WP	G15_079		Non-Converged Contingency	1792	1972	0.27952	-	TUCO INTERCHANGE - TUCO_2 345.00 345KV CKT 1
FDNSLock-Blown up	06ALL	0	20WP	G15_079		Non-Converged Contingency	0	0	0.24162	-	P12:345:SPS:J07.1.FINN.HITCH
FDNSLock-Blown up	06ALL	0	20WP	G15_079		Non-Converged Contingency	1022	1124	0.21155	-	G14-074T 345.00 - OKLAUNION 345KV CKT 1
FDNSLock-Blown up	06ALL	0	20WP	G15_079		Non-Converged Contingency	1022	1124	0.21155	-	G14-074T 345.00 - TUCO INTERCHANGE 345KV CKT 1
FDNSLock-Blown up	06ALL	0	20WP	G15_079		Non-Converged Contingency	1022	1124	0.21155	-	OKLAUNION 345KV SWITCHED SHUNT
FDNSLock-Blown up	06ALL	0	20WP	G15_079		Non-Converged Contingency	956	956	0.17968	-	CIMARRON - MINCO 345KV CKT 1
FDNSLock-Blown up	06ALL	0	20WP	G15_079		Non-Converged Contingency	1195	1195	0.17968	-	GRACEMONT - MINCO 345KV CKT 1
FDNSLock-Blown up	06ALL	0	20WP	G15_079		Non-Converged Contingency	1792	1792	0.17422	-	CHISHOLM7 345.00 - WOODWARD DISTRICT EHV 345KV CKT 1
FDNSLock-Blown up	06ALL	0	20WP	G15_079		Non-Converged Contingency	1792	1972	0.17086	-	BORDER 7345.00 - TUCO_2 345.00 345KV CKT 1
FDNSLock-Blown up	06ALL	0	20WP	G15_079		Non-Converged Contingency	1420	1775	0.17086	-	BORDER 7345.00 - TUCO_2 345.00 345KV CKT 2
FDNSLock-Blown up	06ALL	0	20WP	G15_079		Non-Converged Contingency	1792	1972	0.17086	-	BORDER 7345.00 345KV SWITCHED SHUNT
FDNSLock-Blown up	06ALL	0	20WP	G15_079		Non-Converged Contingency	1584	2098	0.15553	-	CHISHOLM7 345.00 - GRACEMONT 345KV CKT 1
FDNSLock-Blown up	06ALL	0	20WP	G15_079		Non-Converged Contingency	987.16	1082.8	0.14002	-	G14_038T 345.00 - Hitchland Interchange 345KV CKT 1
FDNSLock-Blown up	06ALL	0	20WP	G15_079		Non-Converged Contingency	987.16	1082.8	0.14002	-	G14_038T 345.00 - POTTER COUNTY INTERCHANGE 345KV CKT 1
FDNSLock-Blown up	06ALL	0	20WP	G15_079		Non-Converged Contingency	560	560	0.14002	-	POTTER COUNTY INTERCHANGE (WAUK 90343-A) 345/230/13.2KV TRANSFORMER CKT 1
FDNSLock-Blown up	06ALL	0	20WP	G15_079		Non-Converged Contingency	560	560	0.14002	-	POTTER COUNTY INTERCHANGE (WAUK 90343-A) 345/230/13.2KV TRANSFORMER CKT 1
FDNSLock-Blown up	06ALL	0	20WP	G15_079		Non-Converged Contingency	987.16	1082.8	0.12878	-	Hitchland Interchange - WALKTAP7 345.00 345KV CKT 1
FDNSLock-Blown up	06ALL	0	20WP	G15_079		Non-Converged Contingency	987.16	1082.8	0.12878	-	Hitchland Interchange - WALKTAP7 345.00 345KV CKT 1
FDNSLock-Blown up	06ALL	0	20WP	G15_079		Non-Converged Contingency	717	789	0.12818	-	G14-057T 345.00 - LAWTON EASTSIDE 345KV CKT 1
FDNSLock-Blown up	06ALL	0	20WP	G15_079		Non-Converged Contingency	717	789	0.12818	-	G14-057T 345.00 - SUNNYSIDE 345KV CKT 1
FDNSLock-Blown up	06ALL	0	20WP	G15_079		Non-Converged Contingency	557	557	0.11887	-	BUSHLAND INTERCHANGE - DEAF SMITH COUNTY INTERCHANGE 230KV CKT 1
FDNSLock-Blown up	06ALL	0	20WP	G15_079		Non-Converged Contingency	557	557	0.11887	-	BUSHLAND INTERCHANGE - DEAF SMITH COUNTY INTERCHANGE 230KV CKT 1
FDNSLock-Blown up	06ALL	0	20WP	G15_079		Non-Converged Contingency	956.09	1051.7	0.11284	-	FINNEY SWITCHING STATION - HOLCOMB 345KV CKT 1
FDNSLock-Blown up	06ALL	0	20WP	G15_079		Non-Converged Contingency	956.09	1051.7	0.11284	-	FINNEY SWITCHING STATION - HOLCOMB 345KV CKT 1
FDNSLock-Blown up	06ALL	0	20WP	G15_079		Non-Converged Contingency	987.16	1082.8	0.11284	-	FINNEY SWITCHING STATION - WALKTAP7 345.00 345KV CKT 1
FDNSLock-Blown up	06ALL	0	20WP	G15_079		Non-Converged Contingency	987.16	1082.8	0.11284	-	FINNEY SWITCHING STATION - WALKTAP7 345.00 345KV CKT 1
FDNSLock-Blown up	06ALL	0	20WP	G15_079		Non-Converged Contingency	0	0	0.11141	-	P12:230:AEPW:ELKCITY6:SWEETWT6
FDNSLock-Blown up	06ALL	0	20WP	G15_079		Non-Converged Contingency	329.05	360.92	0.10724	-	DEAF SMITH COUNTY INTERCHANGE - G15039_T 230.00 230KV CKT 1
FDNSLock-Blown up	06ALL	0	20WP	G15_079		Non-Converged Contingency	329.05	360.92	0.10724	-	G15039_T 230.00 - PLANT X STATION 230KV CKT 1
FDNSLock-Blown up	06ALL	0	20WP	G15_079		Non-Converged Contingency	329.05	360.92	0.10619	-	BUSHLAND INTERCHANGE - POTTER COUNTY INTERCHANGE 230KV CKT 1
FDNSLock-Blown up	06ALL	0	20WP	G15_079		Non-Converged Contingency	329.05	360.92	0.10619	-	BUSHLAND INTERCHANGE - POTTER COUNTY INTERCHANGE 230KV CKT 1
FDNSLock-Blown up	06ALL	0	20WP	G15_079		Non-Converged Contingency	557	557	0.10002	-	NEWHART 230 - POTTER COUNTY INTERCHANGE 230KV CKT 1
FDNSLock-Blown up	06ALL	0	20WP	G15_079		Non-Converged Contingency	0	0	0.09942	-	P12:230:AEPW-SPS:SWEETWT6:WHEELER 6
FDNSLock-Blown up	06ALL	0	20WP	G15_079		Non-Converged Contingency	1561	1793	0.08923	-	THISTLE7 345.00 - WOODWARD DISTRICT EHV 345KV CKT 1
FDNSLock-Blown up	06ALL	0	20WP	G15_079		Non-Converged Contingency	1561	1793	0.08923	-	THISTLE7 345.00 - WOODWARD DISTRICT EHV 345KV CKT 1
FDNSLock-Blown up	06ALL	0	20WP	G15_079		Non-Converged Contingency	1561	1793	0.08923	-	THISTLE7 345.00 - WOODWARD DISTRICT EHV 345KV CKT 2
FDNSLock-Blown up	06ALL	0	20WP	G15_079		Non-Converged Contingency	1561	1793	0.08923	-	THISTLE7 345.00 - WOODWARD DISTRICT EHV 345KV CKT 2
FDNSLock-Blown up	06ALL	0	20WP	G15_079		Non-Converged Contingency	1420	1775	0.08872	-	G11_051T 345.00 - TATONGA7 345.00 345KV CKT 1
FDNSLock-Blown up	06ALL	0	20WP	G15_079		Non-Converged Contingency	1420	1775	0.08872	-	G11_051T 345.00 - WOODWARD DISTRICT EHV 345KV CKT 1
FDNSLock-Blown up	06ALL	0	20WP	G15_079		Non-Converged Contingency	1195	1195	0.08872	-	MATHWSN7 345.00 - TATONGA7 345.00 345KV CKT 1
FDNSLock-Blown up	06ALL	0	20WP	G15_079		Non-Converged Contingency	478	502	0.08613	-	AMARILLO SOUTH INTERCHANGE - G15031_T 230.00 230KV CKT 1
FDNSLock-Blown up	06ALL	0	20WP	G15_079		Non-Converged Contingency	1793	1793	0.06037	-	G11-14T 345.00 - WOODWARD DISTRICT EHV 345KV CKT 1
FDNSLock-Blown up	06ALL	0	20WP	G15_079		Non-Converged Contingency	1716	1793	0.06037	-	G11-14T 345.00 - WOODWARD DISTRICT EHV 345KV CKT 2
FDNSLock-Blown up	06ALL	0	20WP	G15_079		Non-Converged Contingency	556.92	556.92	0.05947	-	HITCHLAND INTERCHANGE - MOORE COUNTY INTERCHANGE 230KV CKT 1
FDNSLock-Blown up	06ALL	0	20WP	G15_079		Non-Converged Contingency	556.92	556.92	0.05947	-	HITCHLAND INTERCHANGE - MOORE COUNTY INTERCHANGE 230KV CKT 1
FDNSLock-Blown up	06ALL	0	20WP	G15_079		Non-Converged Contingency	329.05	360.92	0.0506	-	MOORE COUNTY INTERCHANGE - POTTER COUNTY INTERCHANGE 230KV CKT 1
FDNSLock-Blown up	06ALL	0	20WP	G15_079		Non-Converged Contingency	329.05	360.92	0.0506	-	MOORE COUNTY INTERCHANGE - POTTER COUNTY INTERCHANGE 230KV CKT 1
FDNSLock-Blown up	06ALL	0	20WP	G15_079		Non-Converged Contingency	421	439	0.04971	-	CHISHOLM6 230.00 - SWEETWATER 230KV CKT 1
FDNSLock-Blown up	06ALL	0	20WP	G15_079		Non-Converged Contingency	435.02	457.73	0.04971	-	STATELINE INTERCHANGE - STLN-DEMARC6 230KV CKT 1
FDNSLock-Blown up	06ALL	0	20WP	G15_079		Non-Converged Contingency	439	439	0.04971	-	STLN-DEMARC6 - SWEETWATER 230KV CKT 1
FDNSLock-Blown up	06ALL	0	20WP	G15_079		Non-Converged Contingency	557	557	0.04316	-	GRAPEVINE INTERCHANGE - NICHOLS STATION 230KV CKT 1
FDNSLock-Blown up	06ALL	0	20WP	G15_079		Non-Converged Contingency	557	557	0.04316	-	GRAPEVINE INTERCHANGE - NICHOLS STATION 230KV CKT 1
FDNSLock-Blown up	06ALL	0	20WP	G15_079		Non-Converged Contingency	557	557	0.04238	-	GRAPEVINE INTERCHANGE - STATELINE INTERCHANGE 230KV CKT 1
FDNSLock-Blown up	06ALL	0	20WP	G15_079		Non-Converged Contingency	557	557	0.04238	-	GRAPEVINE INTERCHANGE - STATELINE INTERCHANGE 230KV CKT 1
FDNSLock-Blown up	06ALL	2	16WP	G15_079		Non-Converged Contingency	1022	1124	0.20246	-	G14-074T 345.00 - OKLAUNION 345KV CKT 1
FDNSLock-Blown up	06ALL	2	16WP	G15_079		Non-Converged Contingency	1022	1124	0.20246	-	G14-074T 345.00 - TUCO INTERCHANGE 345KV CKT 1
FDNSLock-Blown up	06ALL	2	16WP	G15_079		Non-Converged Contingency	987.16	1082.8	0.16646	-	G14_038T 345.00 - Hitchland Interchange 345KV CKT 1
FDNSLock-Blown up	06ALL	2	16WP	G15_079		Non-Converged Contingency	987.16	1082.8	0.16646	-	G14_038T 345.00 - POTTER COUNTY INTERCHANGE 345KV CKT 1
FDNSLock-Blown up	06ALL	2	16WP	G15_079		Non-Converged Contingency	560	560	0.16646	-	POTTER COUNTY INTERCHANGE (WAUK 90343-A) 345/230/13.2KV TRANSFORMER CKT 1
FDNSLock-Blown up	06ALL	2	16WP	G15_079		Non-Converged Contingency	1792	1972	0.15873	-	BORDER 7345.00 - TUCO_2 345.00 345KV CKT 1
FDNSLock-Blown up	06ALL	2	16WP	G15_079		Non-Converged Contingency	1420	1775	0.15873	-	BORDER 7345.00 - TUCO_2 345.00 345KV CKT 2
FDNSLock-Blown up	06ALL	2	17G	G15_079		Non-Converged Contingency	1022	1124	0.19591	-	G14-074T 345.00 - OKLAUNION 345KV CKT 1
FDNSLock-Blown up	06ALL	2	17G	G15_079		Non-Converged Contingency	1022	1124	0.19591	-	G14-074T 345.00 - TUCO INTERCHANGE 345KV CKT 1
FDNSLock-Blown up	06ALL	2	17G	G15_079		Non-Converged Contingency	956.09	1051.7	0.15723	-	G14_038T 345.00 - Hitchland Interchange 345KV CKT 1
FDNSLock-Blown up	06ALL	2	17G	G15_079		Non-Converged Contingency	956.09	1051.7	0.15723	-	G14_038T 345.00 - POTTER COUNTY INTERCHANGE 345KV CKT 1
FDNSLock-Blown up	06ALL	2	17G	G15_079		Non-Converged Contingency	560	560	0.15723	-	POTTER COUNTY INTERCHANGE (WAUK 90343-A) 345/230/13.2KV TRANSFORMER CKT 1
FDNSLock-Blown up	06ALL	2	17G	G15_079		Non-Converged Contingency	1792	1972	0.15299	-	BORDER 7345.00 - TUCO_2 345.00 345KV CKT 1
FDNSLock-Blown up	06ALL	2	17G	G15_079		Non-Converged Contingency	1420	1775	0.15299	-	BORDER 7345.00 - TUCO_2 345.00 345KV CKT 2
FDNSLock-Blown up	06NR	2	17G	G15_079		Non-Converged Contingency	1022	1124	0.03913	-	G14-074T 345.00 - OKLAUNION 345KV CKT 1
FDNSLock-Blown up	06NR	2	17G	G15_079		Non-Converged Contingency	1022	1124	0.03913	-	G14-074T 345.00 - TUCO INTERCHANGE 345KV CKT 1
FDNSLock-Blown up	06NR	2	17G	G15_079		Non-Converged Contingency	1792	1972	0.03725	-	BORDER 7345.00 - TUCO_2 345.00 345KV CKT 1
FDNSLock-Blown up	06NR	2	17G	G15_079		Non-Converged Contingency	1792	1792	0.03725	-	BORDER 7345.00 - WOODWARD DISTRICT EHV 345KV CKT 1
FDNSLock-Blown up	06ALL	2	17SP	G15_079		Non-Converged Contingency	956	1042	0.20187	-	G14-074T 345.00 - OKLAUNION 345KV CKT 1
FDNSLock-Blown up	06ALL	2	20L	G15_079		Non-Converged Contingency	0	0	0.20104	-	P12:345:SPS:J07.1.FINN.HITCH
FDNSLock-Blown up	06ALL	2	20L	G15_079		Non-Converged Contingency	1022	1124	0.18235	-	G14-074T 345.00 - OKLAUNION 345KV CKT 1

SOLUTION	GROUP	SCENARIO	SEASON	SOURCE	DIRECTION	MONITORED ELEMENT	RATEA (MVA)	RATEB(MVA)	TDF	TC%LOADING (% MVA)	CONTINGENCY
FDNSLock-Blown up	06ALL	2	20L	G15_079		Non-Converged Contingency	1022	1124	0.18235	-	G14-074T 345.00 - TUCO INTERCHANGE 345KV CKT 1
FDNSLock-Blown up	06ALL	2	20L	G15_079		Non-Converged Contingency	1022	1124	0.18235	-	OKLAUNION 345KV SWITCHED SHUNT
FDNSLock-Blown up	06ALL	2	20L	G15_079		Non-Converged Contingency	1792	1972	0.15034	-	BORDER 7345.00 - TUCO_2 345.00 345KV CKT 1
FDNSLock-Blown up	06ALL	2	20L	G15_079		Non-Converged Contingency	1420	1775	0.15034	-	BORDER 7345.00 - TUCO_2 345.00 345KV CKT 2
FDNSLock-Blown up	06ALL	2	20L	G15_079		Non-Converged Contingency	1584	2098	0.12987	-	CHISHOLM7 345.00 - GRACEMONT 345KV CKT 1
FDNSLock-Blown up	06ALL	2	20L	G15_079		Non-Converged Contingency	956.09	1051.7	0.11147	-	G14_038T 345.00 - Hitchland Interchange 345KV CKT 1
FDNSLock-Blown up	06ALL	2	20L	G15_079		Non-Converged Contingency	956.09	1051.7	0.11147	-	G14_038T 345.00 - POTTER COUNTY INTERCHANGE 345KV CKT 1
FDNSLock-Blown up	06ALL	2	20L	G15_079		Non-Converged Contingency	560	560	0.11147	-	POTTER COUNTY INTERCHANGE (WAUK 90343-A) 345/230/13.2KV TRANSFORMER CKT 1
FDNSLock-Blown up	06ALL	2	20L	G15_079		Non-Converged Contingency	560	560	0.11147	-	POTTER COUNTY INTERCHANGE (WAUK 90343-A) 345/230/13.2KV TRANSFORMER CKT 1
FDNSLock-Blown up	06ALL	2	20L	G15_079		Non-Converged Contingency	956.09	1051.7	0.10734	-	Hitchland Interchange - WALKTAP7 345.00 345KV CKT 1
FDNSLock-Blown up	06ALL	2	20L	G15_079		Non-Converged Contingency	956.09	1051.7	0.10734	-	Hitchland Interchange - WALKTAP7 345.00 345KV CKT 1
FDNSLock-Blown up	06ALL	2	20L	G15_079		Non-Converged Contingency	0	0	0.08465	-	P12:230:AEPW:ELKCITY6:SWEETWT6
FDNSLock-Blown up	06NR	2	20L	G15_079		Non-Converged Contingency	478	502	0.07978	-	AMARILLO SOUTH INTERCHANGE - G15031_T 230.00 230KV CKT 1
FDNSLock-Blown up	06ALL	2	20L	G15_079		Non-Converged Contingency	1195	1195	0.07454	-	MATHWSN7 345.00 - TATONGA7 345.00 345KV CKT 1
FDNSLock-Blown up	06NR	2	20L	G15_079		Non-Converged Contingency	478	502	0.0706	-	NEWHART 230 - POTTER COUNTY INTERCHANGE 230KV CKT 1
FDNSLock-Blown up	06NR	2	20L	G15_079		Non-Converged Contingency	318.7	350.57	0.06861	-	DEAF SMITH COUNTY INTERCHANGE - G15039_T 230.00 230KV CKT 1
FDNSLock-Blown up	06NR	2	20L	G15_079		Non-Converged Contingency	318.7	350.57	0.0634	-	BUSHLAND INTERCHANGE - POTTER COUNTY INTERCHANGE 230KV CKT 1
FDNSLock-Blown up	06NR	2	20L	G15_079		Non-Converged Contingency	318.7	350.57	0.0634	-	BUSHLAND INTERCHANGE - POTTER COUNTY INTERCHANGE 230KV CKT 1
FDNSLock-Blown up	06NR	2	20L	G15_079		Non-Converged Contingency	1022	1124	0.0566	-	G14-074T 345.00 - OKLAUNION 345KV CKT 1
FDNSLock-Blown up	06NR	2	20L	G15_079		Non-Converged Contingency	1022	1124	0.0566	-	G14-074T 345.00 - TUCO INTERCHANGE 345KV CKT 1
FDNSLock-Blown up	06NR	2	20L	G15_079		Non-Converged Contingency	1022	1124	0.0566	-	OKLAUNION 345KV SWITCHED SHUNT
FDNSLock-Blown up	06NR	2	20L	G15_079		Non-Converged Contingency	1792	1972	0.05385	-	BORDER 7345.00 - TUCO_2 345.00 345KV CKT 1
FDNSLock-Blown up	06NR	2	20L	G15_079		Non-Converged Contingency	1792	1792	0.05385	-	BORDER 7345.00 - WOODWARD DISTRICT EHV 345KV CKT 1
FDNSLock-Blown up	06NR	2	20L	G15_079		Non-Converged Contingency	1792	1972	0.05385	-	BORDER 7345.00 345KV SWITCHED SHUNT
FDNSLock-Blown up	06ALL	2	20L	G15_079		Non-Converged Contingency	421	439	0.0344	-	CHISHOLM6 230.00 - SWEETWATER 230KV CKT 1
FDNSLock-Blown up	06ALL	2	20SP	G15_079		Non-Converged Contingency	956	1042	0.2165	-	G14-074T 345.00 - OKLAUNION 345KV CKT 1
FDNSLock-Blown up	06ALL	2	20WP	G15_079		Non-Converged Contingency	1022	1124	0.21179	-	G14-074T 345.00 - OKLAUNION 345KV CKT 1
FDNSLock-Blown up	06ALL	2	20WP	G15_079		Non-Converged Contingency	1022	1124	0.21179	-	G14-074T 345.00 - TUCO INTERCHANGE 345KV CKT 1
FDNSLock-Blown up	06ALL	2	20WP	G15_079		Non-Converged Contingency	1792	1972	0.17107	-	BORDER 7345.00 - TUCO_2 345.00 345KV CKT 1
FDNSLock-Blown up	06ALL	2	20WP	G15_079		Non-Converged Contingency	1420	1775	0.17107	-	BORDER 7345.00 - TUCO_2 345.00 345KV CKT 2
FDNSLock-Blown up	06ALL	2	20WP	G15_079		Non-Converged Contingency	987.16	1082.8	0.14024	-	G14_038T 345.00 - Hitchland Interchange 345KV CKT 1
FDNSLock-Blown up	06ALL	2	20WP	G15_079		Non-Converged Contingency	987.16	1082.8	0.14024	-	G14_038T 345.00 - POTTER COUNTY INTERCHANGE 345KV CKT 1
FDNSLock-Blown up	06ALL	2	20WP	G15_079		Non-Converged Contingency	560	560	0.14024	-	POTTER COUNTY INTERCHANGE (WAUK 90343-A) 345/230/13.2KV TRANSFORMER CKT 1
FDNSLock-Blown up	06ALL	2	20WP	G15_079		Non-Converged Contingency	560	560	0.14024	-	POTTER COUNTY INTERCHANGE (WAUK 90343-A) 345/230/13.2KV TRANSFORMER CKT 1
FDNSLock-Blown up	06ALL	3	16WP	G15_079		Non-Converged Contingency	1022	1124	0.2158	-	G14-074T 345.00 - OKLAUNION 345KV CKT 1
FDNSLock-Blown up	06ALL	3	16WP	G15_079		Non-Converged Contingency	1022	1124	0.2158	-	G14-074T 345.00 - TUCO INTERCHANGE 345KV CKT 1
FDNSLock-Blown up	06NR	3	17G	G15_079		Non-Converged Contingency	1022	1124	0.04581	-	G14-074T 345.00 - OKLAUNION 345KV CKT 1
FDNSLock-Blown up	06NR	3	17G	G15_079		Non-Converged Contingency	1022	1124	0.04581	-	G14-074T 345.00 - TUCO INTERCHANGE 345KV CKT 1
FDNSLock-Blown up	06NR	3	17G	G15_079		Non-Converged Contingency	1792	1972	0.04411	-	BORDER 7345.00 - TUCO_2 345.00 345KV CKT 1
FDNSLock-Blown up	06NR	3	17G	G15_079		Non-Converged Contingency	1792	1792	0.04411	-	BORDER 7345.00 - WOODWARD DISTRICT EHV 345KV CKT 1
FDNSLock-Blown up	06ALL	3	17SP	G15_079		Non-Converged Contingency	956	1042	0.21385	-	G14-074T 345.00 - OKLAUNION 345KV CKT 1
FDNSLock-Blown up	06ALL	3	20L	G15_079		Non-Converged Contingency	1022	1124	0.1874	-	G14-074T 345.00 - OKLAUNION 345KV CKT 1
FDNSLock-Blown up	06ALL	3	20L	G15_079		Non-Converged Contingency	1022	1124	0.1874	-	G14-074T 345.00 - TUCO INTERCHANGE 345KV CKT 1
FDNSLock-Blown up	06ALL	3	20L	G15_079		Non-Converged Contingency	1792	1972	0.15611	-	BORDER 7345.00 - TUCO_2 345.00 345KV CKT 1
FDNSLock-Blown up	06ALL	3	20L	G15_079		Non-Converged Contingency	1420	1775	0.15611	-	BORDER 7345.00 - TUCO_2 345.00 345KV CKT 2
FDNSLock-Blown up	06ALL	3	20L	G15_079		Non-Converged Contingency	1584	2098	0.13147	-	CHISHOLM7 345.00 - GRACEMONT 345KV CKT 1
FDNSLock-Blown up	06ALL	3	20L	G15_079		Non-Converged Contingency	956.09	1051.7	0.10699	-	G14_038T 345.00 - Hitchland Interchange 345KV CKT 1
FDNSLock-Blown up	06ALL	3	20L	G15_079		Non-Converged Contingency	956.09	1051.7	0.10699	-	G14_038T 345.00 - POTTER COUNTY INTERCHANGE 345KV CKT 1
FDNSLock-Blown up	06ALL	3	20L	G15_079		Non-Converged Contingency	560	560	0.10699	-	POTTER COUNTY INTERCHANGE (WAUK 90343-A) 345/230/13.2KV TRANSFORMER CKT 1
FDNSLock-Blown up	06ALL	3	20L	G15_079		Non-Converged Contingency	956.09	1051.7	0.10566	-	Hitchland Interchange - WALKTAP7 345.00 345KV CKT 1
FDNSLock-Blown up	06ALL	3	20L	G15_079		Non-Converged Contingency	1195	1195	0.07369	-	MATHWSN7 345.00 - TATONGA7 345.00 345KV CKT 1
FDNSLock-Blown up	06NR	3	20L	G15_079		Non-Converged Contingency	1022	1124	0.05728	-	G14-074T 345.00 - OKLAUNION 345KV CKT 1
FDNSLock-Blown up	06NR	3	20L	G15_079		Non-Converged Contingency	1022	1124	0.05728	-	G14-074T 345.00 - TUCO INTERCHANGE 345KV CKT 1
FDNSLock-Blown up	06NR	3	20L	G15_079		Non-Converged Contingency	1022	1124	0.05728	-	OKLAUNION 345KV SWITCHED SHUNT
FDNSLock-Blown up	06NR	3	20L	G15_079		Non-Converged Contingency	1792	1972	0.05456	-	BORDER 7345.00 - TUCO_2 345.00 345KV CKT 1
FDNSLock-Blown up	06NR	3	20L	G15_079		Non-Converged Contingency	1792	1792	0.05456	-	BORDER 7345.00 - WOODWARD DISTRICT EHV 345KV CKT 1
FDNSLock-Blown up	06NR	3	20L	G15_079		Non-Converged Contingency	1792	1972	0.05456	-	BORDER 7345.00 345KV SWITCHED SHUNT
FDNSLock-Blown up	06ALL	3	20L	G15_079		Non-Converged Contingency	421	439	0.03055	-	CHISHOLM6 230.00 - SWEETWATER 230KV CKT 1
FDNSLock-Blown up	06ALL	3	20SP	G15_079		Non-Converged Contingency	956	1042	0.22167	-	G14-074T 345.00 - OKLAUNION 345KV CKT 1
FDNSLock-Blown up	06ALL	3	20WP	G15_079		Non-Converged Contingency	1022	1124	0.21708	-	G14-074T 345.00 - OKLAUNION 345KV CKT 1
FDNSLock-Blown up	06ALL	3	20WP	G15_079		Non-Converged Contingency	1022	1124	0.21708	-	G14-074T 345.00 - TUCO INTERCHANGE 345KV CKT 1
FDNSLock-Blown up	06ALL	3	20WP	G15_079		Non-Converged Contingency	1792	1972	0.17732	-	BORDER 7345.00 - TUCO_2 345.00 345KV CKT 1
FDNSLock-Blown up	06ALL	3	20WP	G15_079		Non-Converged Contingency	1420	1775	0.17732	-	BORDER 7345.00 - TUCO_2 345.00 345KV CKT 2
FDNSLock-Blown up	06ALL	3	20WP	G15_079		Non-Converged Contingency	987.16	1082.8	0.13442	-	G14_038T 345.00 - Hitchland Interchange 345KV CKT 1
FDNSLock-Blown up	06ALL	3	20WP	G15_079		Non-Converged Contingency	987.16	1082.8	0.13442	-	G14_038T 345.00 - POTTER COUNTY INTERCHANGE 345KV CKT 1
FDNSLock-Blown up	06ALL	4	16WP	G15_079		Non-Converged Contingency	1022	1124	0.19403	-	G14-074T 345.00 - OKLAUNION 345KV CKT 1
FDNSLock-Blown up	06ALL	4	17G	G15_079		Non-Converged Contingency	956.09	1051.7	0.19843	-	G14_038T 345.00 - Hitchland Interchange 345KV CKT 1
FDNSLock-Blown up	06ALL	4	17G	G15_079		Non-Converged Contingency	956.09	1051.7	0.19843	-	G14_038T 345.00 - POTTER COUNTY INTERCHANGE 345KV CKT 1
FDNSLock-Blown up	06ALL	4	17G	G15_079		Non-Converged Contingency	1022	1124	0.18751	-	G14-074T 345.00 - OKLAUNION 345KV CKT 1
FDNSLock-Blown up	06ALL	4	17G	G15_079		Non-Converged Contingency	1022	1124	0.18751	-	G14-074T 345.00 - TUCO INTERCHANGE 345KV CKT 1
FDNSLock-Blown up	06ALL	4	20L	G15_079		Non-Converged Contingency	0	0	0.22159	-	P12:345:SPS:J07.1.FINN.HITCH
FDNSLock-Blown up	06ALL	4	20L	G15_079		Non-Converged Contingency	1022	1124	0.16923	-	G14-074T 345.00 - OKLAUNION 345KV CKT 1
FDNSLock-Blown up	06ALL	4	20L	G15_079		Non-Converged Contingency	1022	1124	0.16923	-	G14-074T 345.00 - TUCO INTERCHANGE 345KV CKT 1
FDNSLock-Blown up	06ALL	4	20L	G15_079		Non-Converged Contingency	956.09	1051.7	0.15612	-	G14_038T 345.00 - Hitchland Interchange 345KV CKT 1
FDNSLock-Blown up	06ALL	4	20L	G15_079		Non-Converged Contingency	956.09	1051.7	0.15612	-	G14_038T 345.00 - POTTER COUNTY INTERCHANGE 345KV CKT 1
FDNSLock-Blown up	06ALL	4	20L	G15_079		Non-Converged Contingency	1792	1972	0.13652	-	BORDER 7345.00 - TUCO_2 345.00 345KV CKT 1
FDNSLock-Blown up	06ALL	4	20L	G15_079		Non-Converged Contingency	1420	1775	0.13652	-	BORDER 7345.00 - TUCO_2 345.00 345KV CKT 2
FDNSLock-Blown up	06ALL	4	20L	G15_079		Non-Converged Contingency	1584	2098	0.12763	-	CHISHOLM7 345.00 - GRACEMONT 345KV CKT 1
FDNSLock-Blown up	06ALL	4	20L	G15_079		Non-Converged Contingency	956.09	1051.7	0.1183	-	Hitchland Interchange - WALKTAP7 345.00 345KV CKT 1

SOLUTION	GROUP	SCENARIO	SEASON	SOURCE	DIRECTION	MONITORED ELEMENT	RATEA (MVA)	RATEB(MVA)	TDF	TC%LOADING (% MVA)	CONTINGENCY
FDNSLock-Blown up	06ALL	4	20L	G15_079		Non-Converged Contingency	956.09	1051.7	0.1183	-	Hitchland Interchange - WALKTAP7 345.00 345KV CKT 1
FDNSLock-Blown up	06ALL	4	20L	G15_079		Non-Converged Contingency	0	0	0.0894	-	P12:230:AEPW:ELKCITY6:SWEETWT6
FDNSLock-Blown up	06NR	4	20L	G15_079		Non-Converged Contingency	1022	1124	0.04138	-	G14-074T 345.00 - OKLAUNION 345KV CKT 1
FDNSLock-Blown up	06NR	4	20L	G15_079		Non-Converged Contingency	1022	1124	0.04138	-	G14-074T 345.00 - TUCO INTERCHANGE 345KV CKT 1
FDNSLock-Blown up	06NR	4	20L	G15_079		Non-Converged Contingency	1022	1124	0.04138	-	OKLAUNION 345KV SWITCHED SHUNT
FDNSLock-Blown up	06NR	4	20L	G15_079		Non-Converged Contingency	1792	1972	0.03809	-	BORDER 7345.00 - TUCO_2 345.00 345KV CKT 1
FDNSLock-Blown up	06NR	4	20L	G15_079		Non-Converged Contingency	1792	1792	0.03809	-	BORDER 7345.00 - WOODWARD DISTRICT EHV 345KV CKT 1
FDNSLock-Blown up	06ALL	4	20WP	G15_079		Non-Converged Contingency	1022	1124	0.19716	-	G14-074T 345.00 - OKLAUNION 345KV CKT 1
FDNSLock-Blown up	06ALL	4	20WP	G15_079		Non-Converged Contingency	1022	1124	0.19716	-	G14-074T 345.00 - TUCO INTERCHANGE 345KV CKT 1
FDNSLock-Blown up	06ALL	4	20WP	G15_079		Non-Converged Contingency	987.16	1082.8	0.18663	-	G14_038T 345.00 - Hitchland Interchange 345KV CKT 1
FDNSLock-Blown up	06ALL	5	16WP	G15_079		Non-Converged Contingency	1022	1124	0.18642	-	G14-074T 345.00 - OKLAUNION 345KV CKT 1
FDNSLock-Blown up	06ALL	5	17G	G15_079		Non-Converged Contingency	1022	1124	0.18039	-	G14-074T 345.00 - OKLAUNION 345KV CKT 1
FDNSLock-Blown up	06ALL	5	20L	G15_079		Non-Converged Contingency	1022	1124	0.16551	-	G14-074T 345.00 - OKLAUNION 345KV CKT 1
FDNSLock-Blown up	06NR	5	20L	G15_079		Non-Converged Contingency	1022	1124	0.04232	-	G14-074T 345.00 - OKLAUNION 345KV CKT 1
FDNSLock-Blown up	06NR	5	20L	G15_079		Non-Converged Contingency	1022	1124	0.04232	-	G14-074T 345.00 - TUCO INTERCHANGE 345KV CKT 1
FDNSLock-Blown up	06NR	5	20L	G15_079		Non-Converged Contingency	1792	1972	0.03845	-	BORDER 7345.00 - TUCO_2 345.00 345KV CKT 1
FDNSLock-Blown up	06NR	5	20L	G15_079		Non-Converged Contingency	1792	1792	0.03845	-	BORDER 7345.00 - WOODWARD DISTRICT EHV 345KV CKT 1
FDNSLock-Blown up	06ALL	5	20WP	G15_079		Non-Converged Contingency	1022	1124	0.19062	-	G14-074T 345.00 - OKLAUNION 345KV CKT 1
FDNSLock-Blown up	06ALL	6	17G	G15_079		Non-Converged Contingency	1022	1124	0.17333	-	G14-074T 345.00 - OKLAUNION 345KV CKT 1
FDNSLock-Blown up	06ALL	6	20L	G15_079		Non-Converged Contingency	1022	1124	0.15951	-	G14-074T 345.00 - OKLAUNION 345KV CKT 1
FDNSLock-Blown up	06NR	6	20L	G15_079		Non-Converged Contingency	1022	1124	0.04241	-	G14-074T 345.00 - OKLAUNION 345KV CKT 1
FDNSLock-Blown up	06NR	6	20L	G15_079		Non-Converged Contingency	1792	1972	0.03848	-	BORDER 7345.00 - TUCO_2 345.00 345KV CKT 1
FDNSLock-Blown up	06NR	6	20L	G15_079		Non-Converged Contingency	1792	1792	0.03848	-	BORDER 7345.00 - WOODWARD DISTRICT EHV 345KV CKT 1
FDNSLock-Blown up	06ALL	6	20WP	G15_079		Non-Converged Contingency	1022	1124	0.1838	-	G14-074T 345.00 - OKLAUNION 345KV CKT 1
FDNSLock-Blown up	06NR	7	20L	G15_079		Non-Converged Contingency	1022	1124	0.04241	-	G14-074T 345.00 - OKLAUNION 345KV CKT 1
FDNS	06ALL	0	16WP	G15_079	FROM->TO	BUSHLAND INTERCHANGE - POTTER COUNTY INTERCHANGE 230KV CKT 1	329.05	360.92	0.13757	103.4995	BASE CASE
FDNS	06NR	0	17G	G15_079	FROM->TO	BUSHLAND INTERCHANGE - POTTER COUNTY INTERCHANGE 230KV CKT 1	318.7	350.57	0.08861	101.2444	BUSHLAND INTERCHANGE - HILLSIDE 115KV CKT 1
FDNS	06NR	0	17G	G15_079	FROM->TO	BUSHLAND INTERCHANGE - POTTER COUNTY INTERCHANGE 230KV CKT 1	318.7	350.57	0.08861	101.1735	BUSHLAND INTERCHANGE (WH 7001795) 230/115/13.2KV TRANSFORMER CKT 1
FDNS	06NR	0	17G	G15_079	FROM->TO	BUSHLAND INTERCHANGE - POTTER COUNTY INTERCHANGE 230KV CKT 1	318.7	350.57	0.08861	101.1735	BUSHLAND INTERCHANGE (WH 7001795) 230/115/13.2KV TRANSFORMER CKT 1
FDNS	06NR	0	17G	G15_079	FROM->TO	BUSHLAND INTERCHANGE - POTTER COUNTY INTERCHANGE 230KV CKT 1	318.7	350.57	0.08861	100.4335	P12:115:SPS:V52.1.COLTR.BSHLND
FDNS	06ALL	0	20SP	G15_079	FROM->TO	CHISHOLM6 230.00 - ELK CITY 230KV 230KV CKT 1	353	353	0.06339	106.4803	BASE CASE
FDNS	06ALL	0	17SP	G15_079	FROM->TO	CHISHOLM6 230.00 - ELK CITY 230KV 230KV CKT 1	353	353	0.0634	104.7427	BASE CASE
FDNS	06ALL	0	17SP	G15_079	TO->FROM	CIMARRON - MINCO 345KV CKT 1	956	956	0.23943	123.2446	G14-057T 345.00 - SUNNYSIDE 345KV CKT 1
FDNS	06ALL	0	20SP	G15_079	TO->FROM	CIMARRON - MINCO 345KV CKT 1	956	956	0.24845	120.5642	G14-057T 345.00 - SUNNYSIDE 345KV CKT 1
FDNS	06ALL	0	17SP	G15_079	TO->FROM	CIMARRON - MINCO 345KV CKT 1	956	956	0.23943	117.8925	G14-057T 345.00 - LAWTON EASTSIDE 345KV CKT 1
FDNS	06ALL	0	20SP	G15_079	TO->FROM	CIMARRON - MINCO 345KV CKT 1	956	956	0.24845	115.1699	G14-057T 345.00 - LAWTON EASTSIDE 345KV CKT 1
FDNS	06ALL	0	17SP	G15_079	TO->FROM	CIMARRON - MINCO 345KV CKT 1	956	956	0.20473	105.5731	MATHWSN7 345.00 - TATONGA7 345.00 345KV CKT 1
FDNS	06ALL	0	20SP	G15_079	TO->FROM	CIMARRON - MINCO 345KV CKT 1	956	956	0.21047	104.5241	MATHWSN7 345.00 - TATONGA7 345.00 345KV CKT 1
FDNS	06ALL	0	20SP	G15_079	TO->FROM	CIMARRON - MINCO 345KV CKT 1	956	956	0.25022	102.9387	CHISHOLM7 345.00 - WOODWARD DISTRICT EHV 345KV CKT 1
FDNS	06ALL	0	17SP	G15_079	TO->FROM	CIMARRON - MINCO 345KV CKT 1	956	956	0.23793	102.0892	CHISHOLM7 345.00 - WOODWARD DISTRICT EHV 345KV CKT 1
FDNS	06ALL	0	17SP	G15_079	TO->FROM	CIMARRON - MINCO 345KV CKT 1	956	956	0.20473	100.3376	G11_051T 345.00 - TATONGA7 345.00 345KV CKT 1
FDNS	06ALL	0	20SP	G15_079	TO->FROM	DEAF SMITH COUNTY INTERCHANGE - G15039_T 230.00 230KV CKT 1	318.7	350.57	0.10853	110.3343	BASE CASE
FDNS	06NR	0	17G	G15_079	TO->FROM	DEAF SMITH COUNTY INTERCHANGE - G15039_T 230.00 230KV CKT 1	318.7	350.57	0.10757	110.3216	NEWHART 230 - PLANT X STATION 230KV CKT 1
FDNS	06ALL	0	17SP	G15_079	TO->FROM	DEAF SMITH COUNTY INTERCHANGE - G15039_T 230.00 230KV CKT 1	318.7	350.57	0.13654	108.4885	BASE CASE
FDNS	06NR	0	17G	G15_079	TO->FROM	DEAF SMITH COUNTY INTERCHANGE - G15039_T 230.00 230KV CKT 1	318.7	350.57	0.08861	103.1436	P12:115:SPS:T04.1.DFSMTH.CASTRO
FDNS	06NR	0	17G	G15_079	TO->FROM	DEAF SMITH COUNTY INTERCHANGE - G15039_T 230.00 230KV CKT 1	318.7	350.57	0.09251	101.0528	CURRY COUNTY INTERCHANGE - DEAF SMITH REC-#20 115KV CKT 1
FDNS	06NR	0	17G	G15_079	TO->FROM	DEAF SMITH COUNTY INTERCHANGE - G15039_T 230.00 230KV CKT 1	318.7	350.57	0.09246	100.4761	TOLK STATION EAST - TUCO INTERCHANGE 230KV CKT 1
FDNS	06NR	0	17G	G15_079	TO->FROM	DEAF SMITH COUNTY INTERCHANGE - G15039_T 230.00 230KV CKT 1	318.7	350.57	0.09246	100.4761	TOLK STATION EAST - TUCO INTERCHANGE 230KV CKT 1
FDNS	06NR	0	17G	G15_079	TO->FROM	DEAF SMITH COUNTY INTERCHANGE - G15039_T 230.00 230KV CKT 1	318.7	350.57	0.08361	99.9	P12:230:SPS:CL.1.BSHLND.WLDRDO
FDNS	06NR	0	17G	G15_079	TO->FROM	DEAF SMITH COUNTY INTERCHANGE - G15039_T 230.00 230KV CKT 1	318.7	350.57	0.09251	99.6	DEAF SMITH REC-#20 - PARMER COUNTY SUB 115KV CKT 1
FDNSLock	06ALL	0	20WP	G15_079		ELK CITY 230KV (ELKCTY-6) 230/138/13.8KV TRANSFORMER CKT 1	450	450	0.06169	87.66341	BASE CASE
FDNSLock	06ALL	0	20WP	G15_079		ELK CITY 230KV (ELKCTY-6) 230/138/13.8KV TRANSFORMER CKT 1	450	450	0.06169	87.66341	BASE CASE
FDNS	06ALL	0	20L	G15_079	TO->FROM	G14-057T 345.00 - LAWTON EASTSIDE 345KV CKT 1	717	789	0.10443	108.0268	BASE CASE
FDNS	06ALL	0	20L	G15_079	FROM->TO	G14-057T 345.00 - SUNNYSIDE 345KV CKT 1	717	789	0.10443	120.8788	BASE CASE
FDNS	06ALL	0	20WP	G15_079	FROM->TO	G14-057T 345.00 - SUNNYSIDE 345KV CKT 1	717	789	0.12818	107.5634	BASE CASE
FDNS	06ALL	0	17G	G15_079	FROM->TO	G14-057T 345.00 - SUNNYSIDE 345KV CKT 1	717	789	0.12499	106.9763	BASE CASE
FDNS	06ALL	0	16WP	G15_079	FROM->TO	G14-057T 345.00 - SUNNYSIDE 345KV CKT 1	717	789	0.12827	105.0999	BASE CASE
FDNS	06NR	0	20L	G15_079	FROM->TO	G14-074T 345.00 - OKLAUNION 345KV CKT 1	1022	1124	0.0566	106.9322	BASE CASE
FDNS	06NR	0	17G	G15_079	FROM->TO	G14-074T 345.00 - OKLAUNION 345KV CKT 1	1022	1124	0.03913	102.2735	BASE CASE
FDNS	06NR	0	20L	G15_079	FROM->TO	G14-074T 345.00 - OKLAUNION 345KV CKT 1	1022	1124	0.05393	102.2532	CHISHOLM7 345.00 - GRACEMONT 345KV CKT 1
FDNS	06NR	0	20L	G15_079	FROM->TO	G14-074T 345.00 - OKLAUNION 345KV CKT 1	1022	1124	0.05393	101.8896	CHISHOLM7 345.00 () 345/230/13.2KV TRANSFORMER CKT 1
FDNS	06NR	0	20L	G15_079	FROM->TO	G14-074T 345.00 - OKLAUNION 345KV CKT 1	1022	1124	0.06288	101.4902	TUCO INTERCHANGE - TUCO_2 345.00 345KV CKT 1
FDNS	06NR	0	20L	G15_079	FROM->TO	G14-074T 345.00 - OKLAUNION 345KV CKT 1	1022	1124	0.06565	101.2851	BUSHLAND INTERCHANGE - DEAF SMITH COUNTY INTERCHANGE 230KV CKT 1
FDNS	06NR	0	20L	G15_079	FROM->TO	G14-074T 345.00 - OKLAUNION 345KV CKT 1	1022	1124	0.06565	101.2851	BUSHLAND INTERCHANGE - DEAF SMITH COUNTY INTERCHANGE 230KV CKT 1
FDNS	06NR	0	20L	G15_079	FROM->TO	G14-074T 345.00 - OKLAUNION 345KV CKT 1	1022	1124	0.05633	101.2671	MOORE COUNTY INTERCHANGE - POTTER COUNTY INTERCHANGE 230KV CKT 1
FDNS	06NR	0	20L	G15_079	FROM->TO	G14-074T 345.00 - OKLAUNION 345KV CKT 1	1022	1124	0.05633	101.2671	MOORE COUNTY INTERCHANGE - POTTER COUNTY INTERCHANGE 230KV CKT 1
FDNS	06NR	0	20L	G15_079	FROM->TO	G14-074T 345.00 - OKLAUNION 345KV CKT 1	1022	1124	0.05567	101.2654	G11-14T 345.00 - WOODWARD DISTRICT EHV 345KV CKT 1
FDNS	06NR	0	20L	G15_079	FROM->TO	G14-074T 345.00 - OKLAUNION 345KV CKT 1	1022	1124	0.05567	101.2654	G11-14T 345.00 - WOODWARD DISTRICT EHV 345KV CKT 2
FDNS	00NR	0	25SP	G15_079	FROM->TO	Hitchland Interchange (H TB80155502) 345/230/13.2KV TRANSFORMER CKT 1	560	644	0.03026	100	Hitchland Interchange (SIEM 8743067) 345/230/13.2KV TRANSFORMER CKT 2
FDNS	00NR	0	25SP	G15_079	FROM->TO	Hitchland Interchange (H TB80155502) 345/230/13.2KV TRANSFORMER CKT 1	560	644	0.03026	100	Hitchland Interchange (SIEM 8743067) 345/230/13.2KV TRANSFORMER CKT 2
FDNS	00NR	0	25SP	G15_079	FROM->TO	Hitchland Interchange (SIEM 8743067) 345/230/13.2KV TRANSFORMER CKT 2	560	644	0.03089	102.3531	Hitchland Interchange (H TB80155502) 345/230/13.2KV TRANSFORMER CKT 1
FDNS	00NR	0	25SP	G15_079	FROM->TO	Hitchland Interchange (SIEM 8743067) 345/230/13.2KV TRANSFORMER CKT 2	560	644	0.03089	102.3531	Hitchland Interchange (H TB80155502) 345/230/13.2KV TRANSFORMER CKT 1
FDNS	00NR	0	25SP	G15_079	FROM->TO	Hitchland Interchange (SIEM 8743067) 345/230/13.2KV TRANSFORMER CKT 2	560	644	0.03089	100.5303	Hitchland Interchange (H TB80155502) 345/230/13.2KV TRANSFORMER CKT 1
FDNS	00NR	0	25SP	G15_079	FROM->TO	Hitchland Interchange (SIEM 8743067) 345/230/13.2KV TRANSFORMER CKT 2	560	644	0.03089	100.5303	Hitchland Interchange (H TB80155502) 345/230/13.2KV TRANSFORMER CKT 1
FDNS	00NR	0	25SP	G15_079	TO->FROM	JONES STATION - TUCO INTERCHANGE 230KV CKT 1	343.79	343.79	0.03348	139.3518	CARLISLE INTERCHANGE - TUCO INTERCHANGE 230KV CKT 1
FDNS	00NR	0	25SP	G15_079	TO->FROM	JONES STATION - TUCO INTERCHANGE 230KV CKT 1	343.79	343.79	0.03348	139.3518	CARLISLE INTERCHANGE - TUCO INTERCHANGE 230KV CKT 1
FDNS	00NR	0	25SP	G15_079	TO->FROM	JONES STATION - TUCO INTERCHANGE 230KV CKT 1	343.79	343.79	0.03691	119.4572	GEN526333 1-JONES GEN #3 21 KV
FDNS	00NR	0	25SP	G15_079	TO->FROM	JONES STATION - TUCO INTERCHANGE 230KV CKT 1	343.79	343.79	0.03691	119.0504	GEN526334 1-JONES_4 116.500
FDNS	00NR	0	25SP	G15_079	TO->FROM	JONES STATION - TUCO INTERCHANGE 230KV CKT 1	343.79	343.79	0.03292	111.1942	CARLISLE INTERCHANGE - WOLFFORTH INTERCHANGE 230KV CKT 1

SOLUTION	GROUP	SCENARIO	SEASON	SOURCE	DIRECTION	MONITORED ELEMENT	RATEA (MVA)	RATEB(MVA)	TDF	TC%LOADING (% MVA)	CONTINGENCY
FDNS	00NR	0	25SP	G15_079	TO->FROM	JONES STATION - TUCO INTERCHANGE 230KV CKT 1	343.79	343.79	0.03808	107.2791	TUCO INTERCHANGE (ENRCO 136401) 230/115/13.2KV TRANSFORMER CKT 1
FDNS	00NR	0	25SP	G15_079	TO->FROM	JONES STATION - TUCO INTERCHANGE 230KV CKT 1	343.79	343.79	0.03808	107.2791	TUCO INTERCHANGE (ENRCO 136401) 230/115/13.2KV TRANSFORMER CKT 1
FDNS	00NR	0	25SP	G15_079	TO->FROM	JONES STATION - TUCO INTERCHANGE 230KV CKT 1	343.79	343.79	0.03808	107.2791	TUCO INTERCHANGE (ENRCO 136401) 230/115/13.2KV TRANSFORMER CKT 2
FDNS	00NR	0	25SP	G15_079	TO->FROM	JONES STATION - TUCO INTERCHANGE 230KV CKT 1	343.79	343.79	0.03808	107.2791	TUCO INTERCHANGE (ENRCO 136401) 230/115/13.2KV TRANSFORMER CKT 2
FDNS	00NR	0	25SP	G15_079	TO->FROM	JONES STATION - TUCO INTERCHANGE 230KV CKT 1	343.79	343.79	0.03691	106.7618	GEN526332 1-JONES GEN #2 21 KV
FDNS	00NR	0	25SP	G15_079	TO->FROM	JONES STATION - TUCO INTERCHANGE 230KV CKT 1	343.79	343.79	0.03691	106.7593	GEN526331 1-JONES GEN #1 22 KV
FDNS	00NR	0	25SP	G15_079	TO->FROM	JONES STATION - TUCO INTERCHANGE 230KV CKT 1	343.79	343.79	0.03951	105.7418	LUBBOCK EAST INTERCHANGE - TUCO INTERCHANGE 115KV CKT 1
FDNS	00NR	0	25SP	G15_079	TO->FROM	JONES STATION - TUCO INTERCHANGE 230KV CKT 1	343.79	343.79	0.03951	105.7418	LUBBOCK EAST INTERCHANGE - TUCO INTERCHANGE 115KV CKT 1
FDNS	00NR	0	25SP	G15_079	TO->FROM	JONES STATION - TUCO INTERCHANGE 230KV CKT 1	343.79	343.79	0.03551	102.5912	STANTON SUB - TUCO INTERCHANGE 115KV CKT 1
FDNS	00NR	0	25SP	G15_079	TO->FROM	JONES STATION - TUCO INTERCHANGE 230KV CKT 1	343.79	343.79	0.03912	102.3658	P12:230:LPL:K39.1.CRLSLE.LP-MLWK
FDNS	00NR	0	25SP	G15_079	TO->FROM	JONES STATION - TUCO INTERCHANGE 230KV CKT 1	343.79	343.79	0.03912	102.3646	CARLISLE INTERCHANGE - LUBBOCK POWER & LIGHT-MILWAUKEE 230KV CKT 1
FDNS	00NR	0	25SP	G15_079	TO->FROM	JONES STATION - TUCO INTERCHANGE 230KV CKT 1	343.79	343.79	0.03912	102.363	LUBBOCK POWER & LIGHT-MILWAUKEE (M-E C0681251) 230/69/13.5KV TRANSFORMER CKT 1
FDNS	00NR	0	25SP	G15_079	TO->FROM	JONES STATION - TUCO INTERCHANGE 230KV CKT 1	343.79	343.79	0.03912	102.363	LUBBOCK POWER & LIGHT-MILWAUKEE (M-E C0681251) 230/69/13.5KV TRANSFORMER CKT 1
FDNS	00NR	0	25SP	G15_079	TO->FROM	JONES STATION - TUCO INTERCHANGE 230KV CKT 1	343.79	343.79	0.03788	102.0923	TOLK STATION EAST - TUCO INTERCHANGE 230KV CKT 1
FDNS	00NR	0	25SP	G15_079	TO->FROM	JONES STATION - TUCO INTERCHANGE 230KV CKT 1	343.79	343.79	0.03788	102.0923	TOLK STATION EAST - TUCO INTERCHANGE 230KV CKT 1
FDNS	00NR	0	25SP	G15_079	TO->FROM	JONES STATION - TUCO INTERCHANGE 230KV CKT 1	343.79	343.79	0.03551	101.6363	P12:115:SPS:V15.1.TUCO.INDANA
FDNS	00NR	0	25SP	G15_079	TO->FROM	JONES STATION - TUCO INTERCHANGE 230KV CKT 1	343.79	343.79	0.03551	101.6061	INDIANA SUB - STANTON SUB 115KV CKT 1
FDNS	00NR	0	25SP	G15_079	TO->FROM	JONES STATION - TUCO INTERCHANGE 230KV CKT 1	343.79	343.79	0.03691	101.0841	GEN527903 1-HOBBS PLANT #3 (ST)
FDNS	00NR	0	25SP	G15_079	TO->FROM	JONES STATION - TUCO INTERCHANGE 230KV CKT 1	343.79	343.79	0.03691	101.0701	GEN527166 1-MUSTANG_6 118.000
FDNS	00NR	0	25SP	G15_079	TO->FROM	JONES STATION - TUCO INTERCHANGE 230KV CKT 1	343.79	343.79	0.03691	100.6214	GEN528501 1-G14_012 24.000
FDNS	00NR	0	25SP	G15_079	TO->FROM	JONES STATION - TUCO INTERCHANGE 230KV CKT 1	343.79	343.79	0.03684	100.6076	KRESS INTERCHANGE - SWISHER COUNTY INTERCHANGE 115KV CKT 1
FDNS	00NR	0	25SP	G15_079	TO->FROM	JONES STATION - TUCO INTERCHANGE 230KV CKT 1	343.79	343.79	0.03684	100.6076	KRESS INTERCHANGE - SWISHER COUNTY INTERCHANGE 115KV CKT 1
FDNS	00NR	0	25SP	G15_079	TO->FROM	JONES STATION - TUCO INTERCHANGE 230KV CKT 1	343.79	343.79	0.04048	100.4516	CARLISLE INTERCHANGE - MURPHY SUB 115KV CKT 1
FDNS	00NR	0	25SP	G15_079	TO->FROM	JONES STATION - TUCO INTERCHANGE 230KV CKT 1	343.79	343.79	0.04048	100.4516	CARLISLE INTERCHANGE - MURPHY SUB 115KV CKT 1
FDNS	00NR	0	25SP	G15_079	TO->FROM	JONES STATION - TUCO INTERCHANGE 230KV CKT 1	343.79	343.79	0.03168	100.2532	YOAKUM_345 345.00 (UPDATE DATA) 345/230/13.2KV TRANSFORMER CKT 1
FDNS	00NR	0	25SP	G15_079	TO->FROM	JONES STATION - TUCO INTERCHANGE 230KV CKT 1	343.79	343.79	0.03737	100	POTTER COUNTY INTERCHANGE (WAUK 90343-A) 345/230/13.2KV TRANSFORMER CKT 1
FDNS	00NR	0	25SP	G15_079	TO->FROM	JONES STATION - TUCO INTERCHANGE 230KV CKT 1	343.79	343.79	0.03737	100	POTTER COUNTY INTERCHANGE (WAUK 90343-A) 345/230/13.2KV TRANSFORMER CKT 1
FDNS	00NR	0	25SP	G15_079	TO->FROM	JONES STATION - TUCO INTERCHANGE 230KV CKT 1	343.79	343.79	0.03691	100	GEN563122 1-G15077_3 0.3850
FDNS	00NR	0	25SP	G15_079	TO->FROM	JONES STATION - TUCO INTERCHANGE 230KV CKT 1	343.79	343.79	0.03691	99.9	GEN527901 1-HOBBS PLANT #1 (CT)
FDNS	00NR	0	25SP	G15_079	TO->FROM	JONES STATION - TUCO INTERCHANGE 230KV CKT 1	343.79	343.79	0.03691	99.9	GEN527902 1-HOBBS PLANT #2 (CT)
FDNS	00NR	0	25SP	G15_079	TO->FROM	JONES STATION - TUCO INTERCHANGE 230KV CKT 1	343.79	343.79	0.03691	99.9	GEN563102 1-G15075_3 0.5500
FDNS	00NR	0	25SP	G15_079	TO->FROM	JONES STATION - TUCO INTERCHANGE 230KV CKT 1	343.79	343.79	0.03551	99.9	INDIANA SUB - SOUTH PLAINS REC-ERSKINE 115KV CKT 1
FDNS	00NR	0	25SP	G15_079	TO->FROM	JONES STATION - TUCO INTERCHANGE 230KV CKT 1	343.79	343.79	0.03751	99.7	FLOYD COUNTY INTERCHANGE - TUCO INTERCHANGE 115KV CKT 1
FDNS	00NR	0	25SP	G15_079	TO->FROM	JONES STATION - TUCO INTERCHANGE 230KV CKT 1	343.79	343.79	0.03751	99.7	FLOYD COUNTY INTERCHANGE - TUCO INTERCHANGE 115KV CKT 1
FDNS	00NR	0	25SP	G15_079	TO->FROM	JONES STATION - TUCO INTERCHANGE 230KV CKT 1	343.79	343.79	0.03393	99.7	HOBBS - YOAKUM_345 345.00 345KV CKT 1
FDNS	00NR	0	25SP	G15_079	TO->FROM	JONES STATION - TUCO INTERCHANGE 230KV CKT 1	343.79	343.79	0.03737	99.6	G14_038T 345.00 - POTTER COUNTY INTERCHANGE 345KV CKT 1
FDNS	00NR	0	25SP	G15_079	TO->FROM	JONES STATION - TUCO INTERCHANGE 230KV CKT 1	343.79	343.79	0.03691	99.6	GEN563142 1-G15079_3 0.5500
FDNS	00NR	0	25SP	G15_079	TO->FROM	JONES STATION - TUCO INTERCHANGE 230KV CKT 1	343.79	343.79	0.03691	99.6	GEN563151 1-G15080_2 0.5500
FDNS	00NR	0	25SP	G15_079	TO->FROM	JONES STATION - TUCO INTERCHANGE 230KV CKT 1	343.79	343.79	0.03503	99.6	BUSHLAND INTERCHANGE - DEAF SMITH COUNTY INTERCHANGE 230KV CKT 1
FDNS	00NR	0	25SP	G15_079	TO->FROM	JONES STATION - TUCO INTERCHANGE 230KV CKT 1	343.79	343.79	0.03503	99.6	BUSHLAND INTERCHANGE - DEAF SMITH COUNTY INTERCHANGE 230KV CKT 1
FDNS	00NR	0	25SP	G15_079	TO->FROM	JONES STATION - TUCO INTERCHANGE 230KV CKT 1	343.79	343.79	0.03448	99.6	P12:345:SPS:J02.1.TOLK.EDDY
FDNS	00NR	0	25SP	G15_079	FROM->TO	LUBBOCK POWER & LIGHT-HOLLY PLANT (SHIH T101039) 230/69/13.5KV TRANSFORMER CKT 1	224	224	0.03577	104.8294	LUBBOCK POWER & LIGHT-SOUTHEAST - LUBBOCK SOUTH INTERCHANGE 230KV CKT 1
FDNS	00NR	0	25SP	G15_079	FROM->TO	LUBBOCK POWER & LIGHT-HOLLY PLANT (SHIH T101039) 230/69/13.5KV TRANSFORMER CKT 1	224	224	0.03577	104.8165	P12:LPL:SPS:K64.1.LP-SE.LUBBS
FDNS	00NR	0	25SP	G15_079	FROM->TO	LUBBOCK POWER & LIGHT-HOLLY PLANT (SHIH T101039) 230/69/13.5KV TRANSFORMER CKT 1	224	224	0.03374	101.9053	LUBBOCK EAST INTERCHANGE - LUBBOCK POWER & LIGHT-WADSWORTH 230KV CKT 1
FDNS	00NR	0	25SP	G15_079	FROM->TO	LUBBOCK POWER & LIGHT-HOLLY PLANT (SHIH T101039) 230/69/13.5KV TRANSFORMER CKT 1	224	224	0.03374	101.8957	P12:230:LPL:K57.1.LP-WADS.LUBBE
FDNS	00NR	0	25SP	G15_079	FROM->TO	LUBBOCK POWER & LIGHT-HOLLY PLANT (SHIH T101039) 230/69/13.5KV TRANSFORMER CKT 1	224	224	0.03374	101.8956	LUBBOCK POWER & LIGHT-WADSWORTH (SHIH T101038) 230/69/13.5KV TRANSFORMER CKT 1
FDNS	00NR	0	25SP	G15_079	FROM->TO	LUBBOCK POWER & LIGHT-HOLLY PLANT (SHIH T101039) 230/69/13.5KV TRANSFORMER CKT 1	224	224	0.03374	101.8956	LUBBOCK POWER & LIGHT-WADSWORTH (SHIH T101038) 230/69/13.5KV TRANSFORMER CKT 1
FDNSLock	06ALL	0	20WP	G15_079		Non-Converged Contingency	1792	1792	0.17086	-	BORDER 7345.00 - CHISHOLM7 345.00 345KV CKT 1
FDNSLock	06ALL	0	20WP	G15_079		Non-Converged Contingency	1792	1792	0.17086	-	BORDER 7345.00 - CHISHOLM7 345.00 345KV CKT 2
FDNSLock	06ALL	0	20WP	G15_079		Non-Converged Contingency	439	439	0.06169	-	CHISHOLM6 230.00 - ELK CITY 230KV 230KV CKT 1
FDNS	06ALL	0	20WP	G15_079	FROM->TO	POTTER COUNTY INTERCHANGE (WAUK 90343-A) 345/230/13.2KV TRANSFORMER CKT 1	560	560	0.14002	101.9937	BASE CASE
FDNS	06ALL	0	20WP	G15_079	FROM->TO	POTTER COUNTY INTERCHANGE (WAUK 90343-A) 345/230/13.2KV TRANSFORMER CKT 1	560	560	0.14002	100.9471	BASE CASE
FDNS	06ALL	0	17SP	G15_079	FROM->TO	SUNDOWN INTERCHANGE - WOLFFORTH INTERCHANGE 230KV CKT 1	318.7	350.57	0.30292	100	TOLK STATION EAST - TUCO INTERCHANGE 230KV CKT 1
FDNS	06ALL	0	17SP	G15_079	FROM->TO	SUNDOWN INTERCHANGE - WOLFFORTH INTERCHANGE 230KV CKT 1	318.7	350.57	0.30292	100	TOLK STATION EAST - TUCO INTERCHANGE 230KV CKT 1
FDNS	06ALL	0	20SP	G15_079	FROM->TO	TUCO INTERCHANGE - TUCO_2 230.00 230KV CKT 1	497	547	0.34383	176.1131	TUCO INTERCHANGE - TUCO_2 345.00 345KV CKT 1
FDNS	06ALL	0	17SP	G15_079	FROM->TO	TUCO INTERCHANGE - TUCO_2 230.00 230KV CKT 1	497	547	0.29163	172.1789	TUCO INTERCHANGE - TUCO_2 345.00 345KV CKT 1
FDNS	06NR	0	17G	G15_079	FROM->TO	TUCO INTERCHANGE - TUCO_2 230.00 230KV CKT 1	497	547	0.07008	120.0923	TUCO INTERCHANGE - TUCO_2 345.00 345KV CKT 1
FDNS	06NR	0	20L	G15_079	FROM->TO	TUCO INTERCHANGE - TUCO_2 230.00 230KV CKT 1	497	547	0.11928	110.6573	TUCO INTERCHANGE - TUCO_2 345.00 345KV CKT 1
FDNS	06ALL	0	25SP	G15_079	FROM->TO	TUCO INTERCHANGE - TUCO_2 230.00 230KV CKT 1	497	547	0.35439	101.2227615	TUCO INTERCHANGE - TUCO_2 345.00 345KV CKT 1
FDNS	06ALL	0	20SP	G15_079	FROM->TO	TUCO_2 345.00 (TUCO_2 XFMR) 345/230/13.2KV TRANSFORMER CKT 1	560	560	0.30138	168.9327	TUCO INTERCHANGE - TUCO_2 345.00 345KV CKT 1
FDNS	06ALL	0	17SP	G15_079	FROM->TO	TUCO_2 345.00 (TUCO_2 XFMR) 345/230/13.2KV TRANSFORMER CKT 1	560	560	0.29272	168.0719	TUCO INTERCHANGE - TUCO_2 345.00 345KV CKT 1
FDNS	06ALL	0	20SP	G15_079	FROM->TO	TUCO_2 345.00 (TUCO_2 XFMR) 345/230/13.2KV TRANSFORMER CKT 1	560	560	0.30138	162.4281	TUCO INTERCHANGE - TUCO_2 345.00 345KV CKT 1
FDNS	06ALL	0	17SP	G15_079	FROM->TO	TUCO_2 345.00 (TUCO_2 XFMR) 345/230/13.2KV TRANSFORMER CKT 1	560	560	0.29272	161.5424	TUCO INTERCHANGE - TUCO_2 345.00 345KV CKT 1
FDNS	06NR	0	17G	G15_079	FROM->TO	TUCO_2 345.00 (TUCO_2 XFMR) 345/230/13.2KV TRANSFORMER CKT 1	560	560	0.03538	114.7643	TUCO INTERCHANGE - TUCO_2 345.00 345KV CKT 1
FDNS	06NR	0	17G	G15_079	FROM->TO	TUCO_2 345.00 (TUCO_2 XFMR) 345/230/13.2KV TRANSFORMER CKT 1	560	560	0.03538	111.8684	TUCO INTERCHANGE - TUCO_2 345.00 345KV CKT 1
FDNS	06NR	0	20L	G15_079	FROM->TO	TUCO_2 345.00 (TUCO_2 XFMR) 345/230/13.2KV TRANSFORMER CKT 1	560	560	0.04518	110.8936	TUCO INTERCHANGE - TUCO_2 345.00 345KV CKT 1
FDNS	06NR	0	20L	G15_079	FROM->TO	TUCO_2 345.00 (TUCO_2 XFMR) 345/230/13.2KV TRANSFORMER CKT 1	560	560	0.04518	108.3383	TUCO INTERCHANGE - TUCO_2 345.00 345KV CKT 1
FDNS	06ALL	0	17G	G15_079	FROM->TO	WOLFFORTH INTERCHANGE - YUMA INTERCHANGE 115KV CKT 1	119.51	153.97	0.20162	103.043	LUBBOCK SOUTH INTERCHANGE - WOLFFORTH INTERCHANGE 230KV CKT 1
FDNS	06ALL	0	17G	G15_079	FROM->TO	WOLFFORTH INTERCHANGE - YUMA INTERCHANGE 115KV CKT 1	119.51	153.97	0.20162	103.043	LUBBOCK SOUTH INTERCHANGE - WOLFFORTH INTERCHANGE 230KV CKT 1
FDNS	06NR	2	17G	G15_079	TO->FROM	AMARILLO SOUTH INTERCHANGE - G15031_T 230.00 230KV CKT 1	318.7	350.57	0.09774	103.4449	NEWHART 230 - POTTER COUNTY INTERCHANGE 230KV CKT 1
FDNS	06NR	2	17G	G15_079	FROM->TO	BUSHLAND INTERCHANGE - HILLSIDE 115KV CKT 1	159	160	0.0487	118.1849	BUSHLAND INTERCHANGE - POTTER COUNTY INTERCHANGE 230KV CKT 1
FDNS	06NR	2	17G	G15_079	FROM->TO	BUSHLAND INTERCHANGE - HILLSIDE 115KV CKT 1	159	160	0.0487	118.1849	BUSHLAND INTERCHANGE - POTTER COUNTY INTERCHANGE 230KV CKT 1
FDNS	06NR	2	17G	G15_079	FROM->TO	BUSHLAND INTERCHANGE - POTTER COUNTY INTERCHANGE 230KV CKT 1	318.7	350.57	0.09706	103.6906	NEWHART 230 - POTTER COUNTY INTERCHANGE 230KV CKT 1
FDNS	06NR	2	17G	G15_079	FROM->TO	BUSHLAND INTERCHANGE (WH 7001795) 230/115/13.2KV TRANSFORMER CKT 1	168	168	0.0487	116.5462	BUSHLAND INTERCHANGE - POTTER COUNTY INTERCHANGE 230KV CKT 1
FDNS	06NR	2	17G	G15_079	FROM->TO	BUSHLAND INTERCHANGE (WH 7001795) 230/115/13.2KV TRANSFORMER CKT 1	168	168	0.0487	116.5462	BUSHLAND INTERCHANGE - POTTER COUNTY INTERCHANGE 230KV CKT 1
FDNS	06NR	2	17G	G15_079	FROM->TO	BUSHLAND INTERCHANGE (WH 7001795) 230/115/13.2KV TRANSFORMER CKT 1	168	168	0.0487	114.0422	BUSHLAND INTERCHANGE - POTTER COUNTY INTERCHANGE 230KV CKT 1
FDNS	06NR	2	17G	G15_079	FROM->TO	BUSHLAND INTERCHANGE (WH 7001795) 230/115/13.2KV TRANSFORMER CKT 1	168	168	0.0487	114.0422	BUSHLAND INTERCHANGE - POTTER COUNTY INTERCHANGE 230KV CKT 1
FDNS	06NR	2	17G	G15_079	FROM->TO	CANYON E_TP3115.00 - RANDALL COUNTY INTERCHANGE 115KV CKT 1	96	96	0.04027	100.8119	BUSHLAND INTERCHANGE - DEAF SMITH COUNTY INTERCHANGE 230KV CKT 1
FDNS	06NR	2	17G	G15_079	FROM->TO	CANYON E_TP3115.00 - RANDALL COUNTY INTERCHANGE 115KV CKT 1	96	96	0.04027	100.8119	BUSHLAND INTERCHANGE - DEAF SMITH COUNTY INTERCHANGE 230KV CKT 1

SOLUTION	GROUP	SCENARIO	SEASON	SOURCE	DIRECTION	MONITORED ELEMENT	RATEA (MVA)	RATEB(MVA)	TDF	TC%LOADING (% MVA)	CONTINGENCY
FDNS	06NR	2	17G	G15_079	TO->FROM	CANYON WEST SUB - DAWN SUB 115KV CKT 1	96	96	0.04027	127.5172	BUSHLAND INTERCHANGE - DEAF SMITH COUNTY INTERCHANGE 230KV CKT 1
FDNS	06NR	2	17G	G15_079	TO->FROM	CANYON WEST SUB - DAWN SUB 115KV CKT 1	96	96	0.04027	127.5172	BUSHLAND INTERCHANGE - DEAF SMITH COUNTY INTERCHANGE 230KV CKT 1
FDNS	06NR	2	17G	G15_079	TO->FROM	CARGILL SUB - DEAF SMITH REC-#24 115KV CKT 1	96	96	0.03107	107.5549	DEAF SMITH COUNTY INTERCHANGE - G15039_T 230.00 230KV CKT 1
FDNS	06NR	2	17G	G15_079	TO->FROM	CARGILL SUB - DEAF SMITH REC-#24 115KV CKT 1	96	96	0.03107	99.6	G15039_T 230.00 - PLANT X STATION 230KV CKT 1
FDNS	06NR	2	17G	G15_079	FROM->TO	CARGILL SUB - FRIONA SUB 115KV CKT 1	96	96	0.03107	100.202	DEAF SMITH COUNTY INTERCHANGE - G15039_T 230.00 230KV CKT 1
FDNS	06NR	2	17G	G15_079	FROM->TO	CASTRO COUNTY INTERCHANGE - DEAF SMITH REC-#21 115KV CKT 1	159	174	0.03197	106.0645	DEAF SMITH COUNTY INTERCHANGE - G15039_T 230.00 230KV CKT 1
FDNS	06ALL	2	20SP	G15_079	FROM->TO	CHISHOLM6 230.00 - ELK CITY 230KV 230KV CKT 1	353	353	0.06342	103.9805	BASE CASE
FDNS	06ALL	2	17SP	G15_079	FROM->TO	CHISHOLM6 230.00 - ELK CITY 230KV 230KV CKT 1	353	353	0.06343	101.7938	BASE CASE
FDNS	06ALL	2	20L	G15_079	TO->FROM	CIMARRON - MINCO 345KV CKT 1	956	956	0.21491	140.1322	G14-057T 345.00 - SUNNYSIDE 345KV CKT 1
FDNS	06ALL	2	20L	G15_079	TO->FROM	CIMARRON - MINCO 345KV CKT 1	956	956	0.21491	133.5433	G14-057T 345.00 - LAWTON EASTSIDE 345KV CKT 1
FDNS	06ALL	2	17G	G15_079	TO->FROM	CIMARRON - MINCO 345KV CKT 1	956	956	0.23454	131.7687	G14-057T 345.00 - SUNNYSIDE 345KV CKT 1
FDNS	06ALL	2	20WP	G15_079	TO->FROM	CIMARRON - MINCO 345KV CKT 1	956	956	0.24238	130.9595	G14-057T 345.00 - SUNNYSIDE 345KV CKT 1
FDNS	06ALL	2	17G	G15_079	TO->FROM	CIMARRON - MINCO 345KV CKT 1	956	956	0.23454	126.2954	G14-057T 345.00 - LAWTON EASTSIDE 345KV CKT 1
FDNS	06ALL	2	20WP	G15_079	TO->FROM	CIMARRON - MINCO 345KV CKT 1	956	956	0.24238	125.3296	G14-057T 345.00 - LAWTON EASTSIDE 345KV CKT 1
FDNS	06ALL	2	16WP	G15_079	TO->FROM	CIMARRON - MINCO 345KV CKT 1	956	956	0.2411	123.9324	G14-057T 345.00 - SUNNYSIDE 345KV CKT 1
FDNS	06ALL	2	17SP	G15_079	TO->FROM	CIMARRON - MINCO 345KV CKT 1	956	956	0.23956	123.0412	G14-057T 345.00 - SUNNYSIDE 345KV CKT 1
FDNS	06ALL	2	20SP	G15_079	TO->FROM	CIMARRON - MINCO 345KV CKT 1	956	956	0.24858	120.4683	G14-057T 345.00 - SUNNYSIDE 345KV CKT 1
FDNS	06ALL	2	16WP	G15_079	TO->FROM	CIMARRON - MINCO 345KV CKT 1	956	956	0.2411	118.3934	G14-057T 345.00 - LAWTON EASTSIDE 345KV CKT 1
FDNS	06ALL	2	17SP	G15_079	TO->FROM	CIMARRON - MINCO 345KV CKT 1	956	956	0.23956	117.7499	G14-057T 345.00 - LAWTON EASTSIDE 345KV CKT 1
FDNS	06ALL	2	20SP	G15_079	TO->FROM	CIMARRON - MINCO 345KV CKT 1	956	956	0.24858	115.0256	G14-057T 345.00 - LAWTON EASTSIDE 345KV CKT 1
FDNS	06ALL	2	17G	G15_079	TO->FROM	CIMARRON - MINCO 345KV CKT 1	956	956	0.20054	111.0722	MATHWSN7 345.00 - TATONGA7 345.00 345KV CKT 1
FDNS	06ALL	2	20WP	G15_079	TO->FROM	CIMARRON - MINCO 345KV CKT 1	956	956	0.20387	110.8109	MATHWSN7 345.00 - TATONGA7 345.00 345KV CKT 1
FDNS	06ALL	2	20L	G15_079	TO->FROM	CIMARRON - MINCO 345KV CKT 1	956	956	0.22033	107.6011	CHISHOLM7 345.00 - WOODWARD DISTRICT EHV 345KV CKT 1
FDNS	06ALL	2	17G	G15_079	TO->FROM	CIMARRON - MINCO 345KV CKT 1	956	956	0.22949	107.4004	CHISHOLM7 345.00 - WOODWARD DISTRICT EHV 345KV CKT 1
FDNS	06ALL	2	20WP	G15_079	TO->FROM	CIMARRON - MINCO 345KV CKT 1	956	956	0.20387	105.5266	G11_051T 345.00 - TATONGA7 345.00 345KV CKT 1
FDNSLock	06ALL	2	17G	G15_079	TO->FROM	CIMARRON - MINCO 345KV CKT 1	956	956	0.20054	105.1772	G11_051T 345.00 - TATONGA7 345.00 345KV CKT 1
FDNS	06ALL	2	17SP	G15_079	TO->FROM	CIMARRON - MINCO 345KV CKT 1	956	956	0.20485	104.7953	MATHWSN7 345.00 - TATONGA7 345.00 345KV CKT 1
FDNS	06ALL	2	20SP	G15_079	TO->FROM	CIMARRON - MINCO 345KV CKT 1	956	956	0.21059	104.2231	MATHWSN7 345.00 - TATONGA7 345.00 345KV CKT 1
FDNS	06ALL	2	16WP	G15_079	TO->FROM	CIMARRON - MINCO 345KV CKT 1	956	956	0.20553	104.0692	MATHWSN7 345.00 - TATONGA7 345.00 345KV CKT 1
FDNS	06ALL	2	20WP	G15_079	TO->FROM	CIMARRON - MINCO 345KV CKT 1	956	956	0.20387	103.9402	G11_051T 345.00 - WOODWARD DISTRICT EHV 345KV CKT 1
FDNS	06ALL	2	20WP	G15_079	TO->FROM	CIMARRON - MINCO 345KV CKT 1	956	956	0.24341	103.712	CHISHOLM7 345.00 - WOODWARD DISTRICT EHV 345KV CKT 1
FDNSLock	06ALL	2	17G	G15_079	TO->FROM	CIMARRON - MINCO 345KV CKT 1	956	956	0.20054	103.655	G11_051T 345.00 - WOODWARD DISTRICT EHV 345KV CKT 1
FDNS	06ALL	2	20SP	G15_079	TO->FROM	CIMARRON - MINCO 345KV CKT 1	956	956	0.25036	102.1101	CHISHOLM7 345.00 - WOODWARD DISTRICT EHV 345KV CKT 1
FDNS	06ALL	2	17SP	G15_079	TO->FROM	CIMARRON - MINCO 345KV CKT 1	956	956	0.23807	100.969	CHISHOLM7 345.00 - WOODWARD DISTRICT EHV 345KV CKT 1
FDNS	06ALL	2	17SP	G15_079	TO->FROM	CIMARRON - MINCO 345KV CKT 1	956	956	0.20485	99.6	G11_051T 345.00 - TATONGA7 345.00 345KV CKT 1
FDNS	06NR	2	17G	G15_079	TO->FROM	COULTER INTERCHANGE - HILLSIDE 115KV CKT 1	159	159	0.0487	113.2181	BUSHLAND INTERCHANGE - POTTER COUNTY INTERCHANGE 230KV CKT 1
FDNS	06NR	2	17G	G15_079	TO->FROM	COULTER INTERCHANGE - HILLSIDE 115KV CKT 1	159	159	0.0487	113.2181	BUSHLAND INTERCHANGE - POTTER COUNTY INTERCHANGE 230KV CKT 1
FDNS	06NR	2	17G	G15_079	FROM->TO	CURRY COUNTY INTERCHANGE - DEAF SMITH REC-#20 115KV CKT 1	96	96	0.03107	129.1509	DEAF SMITH COUNTY INTERCHANGE - G15039_T 230.00 230KV CKT 1
FDNS	06NR	2	17G	G15_079	FROM->TO	CURRY COUNTY INTERCHANGE - DEAF SMITH REC-#20 115KV CKT 1	96	96	0.03107	121.3057	G15039_T 230.00 - PLANT X STATION 230KV CKT 1
FDNS	06NR	2	17G	G15_079	TO->FROM	DAWN SUB - Panda Energy Substation Hereford 115KV CKT 1	96	96	0.04027	130.9313	BUSHLAND INTERCHANGE - DEAF SMITH COUNTY INTERCHANGE 230KV CKT 1
FDNS	06NR	2	17G	G15_079	TO->FROM	DAWN SUB - Panda Energy Substation Hereford 115KV CKT 1	96	96	0.04027	130.9313	BUSHLAND INTERCHANGE - DEAF SMITH COUNTY INTERCHANGE 230KV CKT 1
FDNS	06NR	2	17G	G15_079	TO->FROM	DEAF SMITH COUNTY INTERCHANGE - DEAF SMITH REC-#21 115KV CKT 1	159	174	0.03197	100.9586	DEAF SMITH COUNTY INTERCHANGE - G15039_T 230.00 230KV CKT 1
FDNS	06ALL	2	20SP	G15_079	TO->FROM	DEAF SMITH COUNTY INTERCHANGE - G15039_T 230.00 230KV CKT 1	318.7	350.57	0.10861	106.1518	BASE CASE
FDNS	06NR	2	17G	G15_079	TO->FROM	DEAF SMITH COUNTY INTERCHANGE - G15039_T 230.00 230KV CKT 1	318.7	350.57	0.10757	104.2484	NEWHART 230 - PLANT X STATION 230KV CKT 1
FDNS	06ALL	2	17SP	G15_079	TO->FROM	DEAF SMITH COUNTY INTERCHANGE - G15039_T 230.00 230KV CKT 1	318.7	350.57	0.13662	104.2255	BASE CASE
FDNS	06NR	2	17G	G15_079	TO->FROM	DEAF SMITH COUNTY INTERCHANGE - G15039_T 230.00 230KV CKT 1	318.7	350.57	0.09877	103.9799	NEWHART 230 - POTTER COUNTY INTERCHANGE 230KV CKT 1
FDNS	06NR	2	17G	G15_079	TO->FROM	DEAF SMITH COUNTY INTERCHANGE - G15039_T 230.00 230KV CKT 1	318.7	350.57	0.09633	102.5424	AMARILLO SOUTH INTERCHANGE - G15031_T 230.00 230KV CKT 1
FDNS	06NR	2	17G	G15_079	FROM->TO	DEAF SMITH COUNTY INTERCHANGE - Panda Energy Substation Hereford 115KV CKT 1	96	96	0.04027	136.0663	BUSHLAND INTERCHANGE - DEAF SMITH COUNTY INTERCHANGE 230KV CKT 1
FDNS	06NR	2	17G	G15_079	FROM->TO	DEAF SMITH COUNTY INTERCHANGE - Panda Energy Substation Hereford 115KV CKT 1	96	96	0.04027	136.0663	BUSHLAND INTERCHANGE - DEAF SMITH COUNTY INTERCHANGE 230KV CKT 1
FDNS	06NR	2	17G	G15_079	FROM->TO	DEAF SMITH REC-#20 - PARMER COUNTY SUB 115KV CKT 1	96	96	0.03107	121.0569	DEAF SMITH COUNTY INTERCHANGE - G15039_T 230.00 230KV CKT 1
FDNS	06NR	2	17G	G15_079	FROM->TO	DEAF SMITH REC-#20 - PARMER COUNTY SUB 115KV CKT 1	96	96	0.03107	113.3561	G15039_T 230.00 - PLANT X STATION 230KV CKT 1
FDNS	06NR	2	17G	G15_079	TO->FROM	DEAF SMITH REC-#24 - PARMER COUNTY SUB 115KV CKT 1	96	96	0.03107	114.1557	DEAF SMITH COUNTY INTERCHANGE - G15039_T 230.00 230KV CKT 1
FDNS	06NR	2	17G	G15_079	TO->FROM	DEAF SMITH REC-#24 - PARMER COUNTY SUB 115KV CKT 1	96	96	0.03107	106.1261	G15039_T 230.00 - PLANT X STATION 230KV CKT 1
FDNS	06ALL	2	20L	G15_079	TO->FROM	G14-057T 345.00 - LAWTON EASTSIDE 345KV CKT 1	717	789	0.10471	105.4406	BASE CASE
FDNS	06ALL	2	20L	G15_079	FROM->TO	G14-057T 345.00 - SUNNYSIDE 345KV CKT 1	717	789	0.10471	118.6576	BASE CASE
FDNS	06ALL	2	20WP	G15_079	FROM->TO	G14-057T 345.00 - SUNNYSIDE 345KV CKT 1	717	789	0.12831	106.4822	BASE CASE
FDNS	06ALL	2	17G	G15_079	FROM->TO	G14-057T 345.00 - SUNNYSIDE 345KV CKT 1	717	789	0.12517	105.8626	BASE CASE
FDNS	06ALL	2	16WP	G15_079	FROM->TO	G14-057T 345.00 - SUNNYSIDE 345KV CKT 1	717	789	0.12846	104.4384	BASE CASE
FDNS	06NR	2	20L	G15_079	FROM->TO	G14-074T 345.00 - OKLAUNION 345KV CKT 1	1022	1124	0.0566	106.9322	BASE CASE
FDNS	06NR	2	17G	G15_079	FROM->TO	G14-074T 345.00 - OKLAUNION 345KV CKT 1	1022	1124	0.03913	102.9455	BASE CASE
FDNS	06NR	2	20L	G15_079	FROM->TO	G14-074T 345.00 - OKLAUNION 345KV CKT 1	1022	1124	0.05393	102.2532	CHISHOLM7 345.00 - GRACEMONT 345KV CKT 1
FDNS	06NR	2	20L	G15_079	FROM->TO	G14-074T 345.00 - OKLAUNION 345KV CKT 1	1022	1124	0.05393	101.8896	CHISHOLM7 345.00 () 345/230/13.2KV TRANSFORMER CKT 1
FDNS	06NR	2	20L	G15_079	FROM->TO	G14-074T 345.00 - OKLAUNION 345KV CKT 1	1022	1124	0.06288	101.4902	TUCO INTERCHANGE - TUCO_2 345.00 345KV CKT 1
FDNS	06NR	2	20L	G15_079	FROM->TO	G14-074T 345.00 - OKLAUNION 345KV CKT 1	1022	1124	0.06565	101.2851	BUSHLAND INTERCHANGE - DEAF SMITH COUNTY INTERCHANGE 230KV CKT 1
FDNS	06NR	2	20L	G15_079	FROM->TO	G14-074T 345.00 - OKLAUNION 345KV CKT 1	1022	1124	0.06565	101.2851	BUSHLAND INTERCHANGE - DEAF SMITH COUNTY INTERCHANGE 230KV CKT 1
FDNS	06NR	2	20L	G15_079	FROM->TO	G14-074T 345.00 - OKLAUNION 345KV CKT 1	1022	1124	0.05633	101.2671	MOORE COUNTY INTERCHANGE - POTTER COUNTY INTERCHANGE 230KV CKT 1
FDNS	06NR	2	20L	G15_079	FROM->TO	G14-074T 345.00 - OKLAUNION 345KV CKT 1	1022	1124	0.05633	101.2671	MOORE COUNTY INTERCHANGE - POTTER COUNTY INTERCHANGE 230KV CKT 1
FDNS	06NR	2	20L	G15_079	FROM->TO	G14-074T 345.00 - OKLAUNION 345KV CKT 1	1022	1124	0.05567	101.2654	G11-14T 345.00 - WOODWARD DISTRICT EHV 345KV CKT 1
FDNS	06NR	2	20L	G15_079	FROM->TO	G14-074T 345.00 - OKLAUNION 345KV CKT 1	1022	1124	0.05567	101.2654	G11-14T 345.00 - WOODWARD DISTRICT EHV 345KV CKT 2
FDNS	06ALL	2	20L	G15_079	FROM->TO	GRACEMONT - MINCO 345KV CKT 1	1195	1195	0.21491	101.0673	G14-057T 345.00 - SUNNYSIDE 345KV CKT 1
FDNS	00NR	2	25SP	G15_079	FROM->TO	Hitchland Interchange (H TB80155502) 345/230/13.2KV TRANSFORMER CKT 1	560	644	0.03026	99.7	Hitchland Interchange (SIEM 8743067) 345/230/13.2KV TRANSFORMER CKT 2
FDNS	00NR	2	25SP	G15_079	FROM->TO	Hitchland Interchange (H TB80155502) 345/230/13.2KV TRANSFORMER CKT 1	560	644	0.03026	99.7	Hitchland Interchange (SIEM 8743067) 345/230/13.2KV TRANSFORMER CKT 2
FDNS	00NR	2	25SP	G15_079	FROM->TO	Hitchland Interchange (SIEM 8743067) 345/230/13.2KV TRANSFORMER CKT 2	560	644	0.03089	101.9783	Hitchland Interchange (H TB80155502) 345/230/13.2KV TRANSFORMER CKT 1
FDNS	00NR	2	25SP	G15_079	FROM->TO	Hitchland Interchange (SIEM 8743067) 345/230/13.2KV TRANSFORMER CKT 2	560	644	0.03089	101.9783	Hitchland Interchange (H TB80155502) 345/230/13.2KV TRANSFORMER CKT 1
FDNS	00NR	2	25SP	G15_079	FROM->TO	Hitchland Interchange (SIEM 8743067) 345/230/13.2KV TRANSFORMER CKT 2	560	644	0.03089	100.1637	Hitchland Interchange (H TB80155502) 345/230/13.2KV TRANSFORMER CKT 1
FDNS	00NR	2	25SP	G15_079	FROM->TO	Hitchland Interchange (SIEM 8743067) 345/230/13.2KV TRANSFORMER CKT 2	560	644	0.03089	100.1637	Hitchland Interchange (H TB80155502) 345/230/13.2KV TRANSFORMER CKT 1
FDNS	00NR	2	25SP	G15_079	TO->FROM	JONES STATION - TUCO INTERCHANGE 230KV CKT 1	343.79	343.79	0.03348	139.1643	CARLISLE INTERCHANGE - TUCO INTERCHANGE 230KV CKT 1
FDNS	00NR	2	25SP	G15_079	TO->FROM	JONES STATION - TUCO INTERCHANGE 230KV CKT 1	343.79	343.79	0.03348	139.1643	CARLISLE INTERCHANGE - TUCO INTERCHANGE 230KV CKT 1
FDNS	00NR	2	25SP	G15_079	TO->FROM	JONES STATION - TUCO INTERCHANGE 230KV CKT 1	343.79	343.79	0.03691	119.1138	GEN526333 1-JONES GEN #3 21 KV

SOLUTION	GROUP	SCENARIO	SEASON	SOURCE	DIRECTION	MONITORED ELEMENT	RATEA (MVA)	RATEB(MVA)	TDF	TC%LOADING (% MVA)	CONTINGENCY
FDNS	00NR	2	25SP	G15_079	TO->FROM	JONES STATION - TUCO INTERCHANGE 230KV CKT 1	343.79	343.79	0.03691	118.7159	GEN526334 1-JONES_4 116.500
FDNS	00NR	2	25SP	G15_079	TO->FROM	JONES STATION - TUCO INTERCHANGE 230KV CKT 1	343.79	343.79	0.03292	111.2162	CARLISLE INTERCHANGE - WOLFFORTH INTERCHANGE 230KV CKT 1
FDNS	00NR	2	25SP	G15_079	TO->FROM	JONES STATION - TUCO INTERCHANGE 230KV CKT 1	343.79	343.79	0.03808	106.9963	TUCO INTERCHANGE (ENRCO 136401) 230/115/13.2KV TRANSFORMER CKT 1
FDNS	00NR	2	25SP	G15_079	TO->FROM	JONES STATION - TUCO INTERCHANGE 230KV CKT 1	343.79	343.79	0.03808	106.9963	TUCO INTERCHANGE (ENRCO 136401) 230/115/13.2KV TRANSFORMER CKT 1
FDNS	00NR	2	25SP	G15_079	TO->FROM	JONES STATION - TUCO INTERCHANGE 230KV CKT 1	343.79	343.79	0.03808	106.9963	TUCO INTERCHANGE (ENRCO 136401) 230/115/13.2KV TRANSFORMER CKT 2
FDNS	00NR	2	25SP	G15_079	TO->FROM	JONES STATION - TUCO INTERCHANGE 230KV CKT 1	343.79	343.79	0.03808	106.9963	TUCO INTERCHANGE (ENRCO 136401) 230/115/13.2KV TRANSFORMER CKT 2
FDNS	00NR	2	25SP	G15_079	TO->FROM	JONES STATION - TUCO INTERCHANGE 230KV CKT 1	343.79	343.79	0.03691	106.4847	GEN526332 1-JONES GEN #2 21 KV
FDNS	00NR	2	25SP	G15_079	TO->FROM	JONES STATION - TUCO INTERCHANGE 230KV CKT 1	343.79	343.79	0.03691	106.4826	GEN526331 1-JONES GEN #1 22 KV
FDNS	00NR	2	25SP	G15_079	TO->FROM	JONES STATION - TUCO INTERCHANGE 230KV CKT 1	343.79	343.79	0.03951	105.6092	LUBBOCK EAST INTERCHANGE - TUCO INTERCHANGE 115KV CKT 1
FDNS	00NR	2	25SP	G15_079	TO->FROM	JONES STATION - TUCO INTERCHANGE 230KV CKT 1	343.79	343.79	0.03951	105.6092	LUBBOCK EAST INTERCHANGE - TUCO INTERCHANGE 115KV CKT 1
FDNS	00NR	2	25SP	G15_079	TO->FROM	JONES STATION - TUCO INTERCHANGE 230KV CKT 1	343.79	343.79	0.03551	102.5525	STANTON SUB - TUCO INTERCHANGE 115KV CKT 1
FDNS	00NR	2	25SP	G15_079	TO->FROM	JONES STATION - TUCO INTERCHANGE 230KV CKT 1	343.79	343.79	0.03912	102.3349	P12:230:LPL:K39.1.CRLSLE.LP-MLWK
FDNS	00NR	2	25SP	G15_079	TO->FROM	JONES STATION - TUCO INTERCHANGE 230KV CKT 1	343.79	343.79	0.03912	102.3335	LUBBOCK POWER & LIGHT-MILWAUKEE (M-E C0681251) 230/69/13.5KV TRANSFORMER CKT 1
FDNS	00NR	2	25SP	G15_079	TO->FROM	JONES STATION - TUCO INTERCHANGE 230KV CKT 1	343.79	343.79	0.03912	102.3335	LUBBOCK POWER & LIGHT-MILWAUKEE (M-E C0681251) 230/69/13.5KV TRANSFORMER CKT 1
FDNS	00NR	2	25SP	G15_079	TO->FROM	JONES STATION - TUCO INTERCHANGE 230KV CKT 1	343.79	343.79	0.03912	102.3328	CARLISLE INTERCHANGE - LUBBOCK POWER & LIGHT-MILWAUKEE 230KV CKT 1
FDNS	00NR	2	25SP	G15_079	TO->FROM	JONES STATION - TUCO INTERCHANGE 230KV CKT 1	343.79	343.79	0.03788	101.8206	TOLK STATION EAST - TUCO INTERCHANGE 230KV CKT 1
FDNS	00NR	2	25SP	G15_079	TO->FROM	JONES STATION - TUCO INTERCHANGE 230KV CKT 1	343.79	343.79	0.03788	101.8206	TOLK STATION EAST - TUCO INTERCHANGE 230KV CKT 1
FDNS	00NR	2	25SP	G15_079	TO->FROM	JONES STATION - TUCO INTERCHANGE 230KV CKT 1	343.79	343.79	0.03551	101.6251	P12:115:SPS:V15.1.TUCO.INDANA
FDNS	00NR	2	25SP	G15_079	TO->FROM	JONES STATION - TUCO INTERCHANGE 230KV CKT 1	343.79	343.79	0.03551	101.5793	INDIANA SUB - STANTON SUB 115KV CKT 1
FDNS	00NR	2	25SP	G15_079	TO->FROM	JONES STATION - TUCO INTERCHANGE 230KV CKT 1	343.79	343.79	0.03691	100.7469	GEN527166 1-MUSTANG_6 118.000
FDNS	00NR	2	25SP	G15_079	TO->FROM	JONES STATION - TUCO INTERCHANGE 230KV CKT 1	343.79	343.79	0.03691	100.7466	GEN527903 1-HOBBS PLANT #3 (ST)
FDNS	00NR	2	25SP	G15_079	TO->FROM	JONES STATION - TUCO INTERCHANGE 230KV CKT 1	343.79	343.79	0.04048	100.3452	CARLISLE INTERCHANGE - MURPHY SUB 115KV CKT 1
FDNS	00NR	2	25SP	G15_079	TO->FROM	JONES STATION - TUCO INTERCHANGE 230KV CKT 1	343.79	343.79	0.04048	100.3452	CARLISLE INTERCHANGE - MURPHY SUB 115KV CKT 1
FDNS	00NR	2	25SP	G15_079	TO->FROM	JONES STATION - TUCO INTERCHANGE 230KV CKT 1	343.79	343.79	0.03684	100.3228	KRESS INTERCHANGE - SWISHER COUNTY INTERCHANGE 115KV CKT 1
FDNS	00NR	2	25SP	G15_079	TO->FROM	JONES STATION - TUCO INTERCHANGE 230KV CKT 1	343.79	343.79	0.03684	100.3228	KRESS INTERCHANGE - SWISHER COUNTY INTERCHANGE 115KV CKT 1
FDNS	00NR	2	25SP	G15_079	TO->FROM	JONES STATION - TUCO INTERCHANGE 230KV CKT 1	343.79	343.79	0.03691	100.2967	GEN528501 1-G14_012 24.000
FDNS	00NR	2	25SP	G15_079	TO->FROM	JONES STATION - TUCO INTERCHANGE 230KV CKT 1	343.79	343.79	0.03168	100.1964	YOAKUM_345 345.00 (UPDATE DATA) 345/230/13.2KV TRANSFORMER CKT 1
FDNS	00NR	2	25SP	G15_079	TO->FROM	JONES STATION - TUCO INTERCHANGE 230KV CKT 1	343.79	343.79	0.03551	99.9	INDIANA SUB - SOUTH PLAINS REC-ERSKINE 115KV CKT 1
FDNS	00NR	2	25SP	G15_079	TO->FROM	JONES STATION - TUCO INTERCHANGE 230KV CKT 1	343.79	343.79	0.03751	99.8	FLOYD COUNTY INTERCHANGE - TUCO INTERCHANGE 115KV CKT 1
FDNS	00NR	2	25SP	G15_079	TO->FROM	JONES STATION - TUCO INTERCHANGE 230KV CKT 1	343.79	343.79	0.03751	99.8	FLOYD COUNTY INTERCHANGE - TUCO INTERCHANGE 115KV CKT 1
FDNS	00NR	2	25SP	G15_079	TO->FROM	JONES STATION - TUCO INTERCHANGE 230KV CKT 1	343.79	343.79	0.03737	99.7	POTTER COUNTY INTERCHANGE (WAUK 90343-A) 345/230/13.2KV TRANSFORMER CKT 1
FDNS	00NR	2	25SP	G15_079	TO->FROM	JONES STATION - TUCO INTERCHANGE 230KV CKT 1	343.79	343.79	0.03737	99.7	POTTER COUNTY INTERCHANGE (WAUK 90343-A) 345/230/13.2KV TRANSFORMER CKT 1
FDNS	00NR	2	25SP	G15_079	TO->FROM	JONES STATION - TUCO INTERCHANGE 230KV CKT 1	343.79	343.79	0.03691	99.7	GEN563122 1-G15077_3 0.3850
FDNS	00NR	2	25SP	G15_079	TO->FROM	JONES STATION - TUCO INTERCHANGE 230KV CKT 1	343.79	343.79	0.03691	99.6	GEN527901 1-HOBBS PLANT #1 (CT)
FDNS	00NR	2	25SP	G15_079	TO->FROM	JONES STATION - TUCO INTERCHANGE 230KV CKT 1	343.79	343.79	0.03691	99.6	GEN527902 1-HOBBS PLANT #2 (CT)
FDNS	00NR	2	25SP	G15_079	TO->FROM	JONES STATION - TUCO INTERCHANGE 230KV CKT 1	343.79	343.79	0.03691	99.6	GEN563102 1-G15075_3 0.5500
FDNS	00NR	2	25SP	G15_079	FROM->TO	LUBBOCK POWER & LIGHT-HOLLY PLANT (SHIH T101039) 230/69/13.5KV TRANSFORMER CKT 1	224	224	0.03577	104.7613	LUBBOCK POWER & LIGHT-SOUTHEAST - LUBBOCK SOUTH INTERCHANGE 230KV CKT 1
FDNS	00NR	2	25SP	G15_079	FROM->TO	LUBBOCK POWER & LIGHT-HOLLY PLANT (SHIH T101039) 230/69/13.5KV TRANSFORMER CKT 1	224	224	0.03577	104.7484	P12:LPL:SPS:K64.1.LP-SE.LUBBS
FDNS	00NR	2	25SP	G15_079	FROM->TO	LUBBOCK POWER & LIGHT-HOLLY PLANT (SHIH T101039) 230/69/13.5KV TRANSFORMER CKT 1	224	224	0.03374	102.133	P12:230:LPL:K57.1.LP-WADS.LUBBE
FDNS	00NR	2	25SP	G15_079	FROM->TO	LUBBOCK POWER & LIGHT-HOLLY PLANT (SHIH T101039) 230/69/13.5KV TRANSFORMER CKT 1	224	224	0.03374	102.1329	LUBBOCK POWER & LIGHT-WADSWORTH (SHIH T101038) 230/69/13.5KV TRANSFORMER CKT 1
FDNS	00NR	2	25SP	G15_079	FROM->TO	LUBBOCK POWER & LIGHT-HOLLY PLANT (SHIH T101039) 230/69/13.5KV TRANSFORMER CKT 1	224	224	0.03374	102.1329	LUBBOCK POWER & LIGHT-WADSWORTH (SHIH T101038) 230/69/13.5KV TRANSFORMER CKT 1
FDNS	00NR	2	25SP	G15_079	FROM->TO	LUBBOCK POWER & LIGHT-HOLLY PLANT (SHIH T101039) 230/69/13.5KV TRANSFORMER CKT 1	224	224	0.03374	101.829	LUBBOCK EAST INTERCHANGE - LUBBOCK POWER & LIGHT-WADSWORTH 230KV CKT 1
FDNSLock	06ALL	2	20WP	G15_079		P12:230:AEPW:ELKCITY6:SWEETWT6	0	0	0.11155	9999	BASE CASE
FDNS	06ALL	2	17SP	G15_079	FROM->TO	SUNDOWN INTERCHANGE - WOLFFORTH INTERCHANGE 230KV CKT 1	318.7	350.57	0.30304	101.6908	TOLK STATION EAST - TUCO INTERCHANGE 230KV CKT 1
FDNS	06ALL	2	17SP	G15_079	FROM->TO	SUNDOWN INTERCHANGE - WOLFFORTH INTERCHANGE 230KV CKT 1	318.7	350.57	0.30304	101.6908	TOLK STATION EAST - TUCO INTERCHANGE 230KV CKT 1
FDNS	06ALL	2	20L	G15_079	FROM->TO	TUCO INTERCHANGE - TUCO_2 230.00 230KV CKT 1	497	547	0.30677	181.2199	TUCO INTERCHANGE - TUCO_2 345.00 345KV CKT 1
FDNS	06ALL	2	17G	G15_079	FROM->TO	TUCO INTERCHANGE - TUCO_2 230.00 230KV CKT 1	497	547	0.2717	176.0864	TUCO INTERCHANGE - TUCO_2 345.00 345KV CKT 1
FDNS	06ALL	2	20SP	G15_079	FROM->TO	TUCO INTERCHANGE - TUCO_2 230.00 230KV CKT 1	497	547	0.34396	166.2483	TUCO INTERCHANGE - TUCO_2 345.00 345KV CKT 1
FDNS	06ALL	2	17SP	G15_079	FROM->TO	TUCO INTERCHANGE - TUCO_2 230.00 230KV CKT 1	497	547	0.29176	159.9768	TUCO INTERCHANGE - TUCO_2 345.00 345KV CKT 1
FDNS	06ALL	2	20WP	G15_079	FROM->TO	TUCO INTERCHANGE - TUCO_2 230.00 230KV CKT 1	552	608	0.33848	155.2742	TUCO INTERCHANGE - TUCO_2 345.00 345KV CKT 1
FDNS	06ALL	2	16WP	G15_079	FROM->TO	TUCO INTERCHANGE - TUCO_2 230.00 230KV CKT 1	552	608	0.28132	142.7524	TUCO INTERCHANGE - TUCO_2 345.00 345KV CKT 1
FDNS	06NR	2	20L	G15_079	FROM->TO	TUCO INTERCHANGE - TUCO_2 230.00 230KV CKT 1	497	547	0.11928	110.6574	TUCO INTERCHANGE - TUCO_2 345.00 345KV CKT 1
FDNS	06NR	2	17G	G15_079	FROM->TO	TUCO INTERCHANGE - TUCO_2 230.00 230KV CKT 1	497	547	0.07008	106.5066	TUCO INTERCHANGE - TUCO_2 345.00 345KV CKT 1
FDNS	06ALL	2	25SP	G15_079	FROM->TO	TUCO INTERCHANGE - TUCO_2 230.00 230KV CKT 1	497	547	0.3544	102.0482993	TUCO INTERCHANGE - TUCO_2 345.00 345KV CKT 1
FDNS	06ALL	2	16WP	G15_079	FROM->TO	TUCO INTERCHANGE (GE M1022338) 345/230/13.2KV TRANSFORMER CKT 1	560	560	0.2797	120.5418	TUCO INTERCHANGE (SIEM 8743066) 345/230/13.2KV TRANSFORMER CKT 2
FDNS	06ALL	2	16WP	G15_079	FROM->TO	TUCO INTERCHANGE (GE M1022338) 345/230/13.2KV TRANSFORMER CKT 1	560	560	0.2797	120.5418	TUCO INTERCHANGE (SIEM 8743066) 345/230/13.2KV TRANSFORMER CKT 2
FDNS	06ALL	2	16WP	G15_079	FROM->TO	TUCO INTERCHANGE (GE M1022338) 345/230/13.2KV TRANSFORMER CKT 1	560	560	0.2714	120.3223	TUCO_2 345.00 (TUCO_2 XFMR) 345/230/13.2KV TRANSFORMER CKT 1
FDNS	06ALL	2	16WP	G15_079	FROM->TO	TUCO INTERCHANGE (GE M1022338) 345/230/13.2KV TRANSFORMER CKT 1	560	560	0.2797	118.6764	TUCO INTERCHANGE (SIEM 8743066) 345/230/13.2KV TRANSFORMER CKT 2
FDNS	06ALL	2	16WP	G15_079	FROM->TO	TUCO INTERCHANGE (GE M1022338) 345/230/13.2KV TRANSFORMER CKT 1	560	560	0.2797	118.6764	TUCO INTERCHANGE (SIEM 8743066) 345/230/13.2KV TRANSFORMER CKT 2
FDNS	06ALL	2	16WP	G15_079	FROM->TO	TUCO INTERCHANGE (GE M1022338) 345/230/13.2KV TRANSFORMER CKT 1	560	560	0.2714	118.6764	TUCO_2 345.00 (TUCO_2 XFMR) 345/230/13.2KV TRANSFORMER CKT 1
FDNS	06ALL	2	17G	G15_079	FROM->TO	TUCO INTERCHANGE (GE M1022338) 345/230/13.2KV TRANSFORMER CKT 1	560	560	0.27007	114.4569	TUCO INTERCHANGE (SIEM 8743066) 345/230/13.2KV TRANSFORMER CKT 2
FDNS	06ALL	2	17G	G15_079	FROM->TO	TUCO INTERCHANGE (GE M1022338) 345/230/13.2KV TRANSFORMER CKT 1	560	560	0.262	114.4414	TUCO_2 345.00 (TUCO_2 XFMR) 345/230/13.2KV TRANSFORMER CKT 1
FDNS	06ALL	2	17G	G15_079	FROM->TO	TUCO INTERCHANGE (GE M1022338) 345/230/13.2KV TRANSFORMER CKT 1	560	560	0.262	112.333	TUCO_2 345.00 (TUCO_2 XFMR) 345/230/13.2KV TRANSFORMER CKT 1
FDNS	06ALL	2	17G	G15_079	FROM->TO	TUCO INTERCHANGE (GE M1022338) 345/230/13.2KV TRANSFORMER CKT 1	560	560	0.27007	112.1874	TUCO INTERCHANGE (SIEM 8743066) 345/230/13.2KV TRANSFORMER CKT 2
FDNS	06ALL	2	16WP	G15_079	FROM->TO	TUCO INTERCHANGE (GE M1022338) 345/230/13.2KV TRANSFORMER CKT 1	560	560	0.25877	103.9349	TUCO INTERCHANGE - TUCO_2 230.00 230KV CKT 1
FDNS	06ALL	2	16WP	G15_079	FROM->TO	TUCO INTERCHANGE (GE M1022338) 345/230/13.2KV TRANSFORMER CKT 1	560	560	0.25877	102.2603	TUCO INTERCHANGE - TUCO_2 230.00 230KV CKT 1
FDNS	06ALL	2	17G	G15_079	FROM->TO	TUCO INTERCHANGE (GE M1022338) 345/230/13.2KV TRANSFORMER CKT 1	560	560	0.25005	100.6861	TUCO INTERCHANGE - TUCO_2 230.00 230KV CKT 1
FDNS	06ALL	2	20L	G15_079	FROM->TO	TUCO_2 345.00 (TUCO_2 XFMR) 345/230/13.2KV TRANSFORMER CKT 1	560	560	0.25839	190.1451	TUCO INTERCHANGE - TUCO_2 345.00 345KV CKT 1
FDNS	06ALL	2	20WP	G15_079	FROM->TO	TUCO_2 345.00 (TUCO_2 XFMR) 345/230/13.2KV TRANSFORMER CKT 1	560	560	0.2952	189.4604	TUCO INTERCHANGE - TUCO_2 345.00 345KV CKT 1
FDNS	06ALL	2	17G	G15_079	FROM->TO	TUCO_2 345.00 (TUCO_2 XFMR) 345/230/13.2KV TRANSFORMER CKT 1	560	560	0.28139	187.4581	TUCO INTERCHANGE - TUCO_2 345.00 345KV CKT 1
FDNS	06ALL	2	20WP	G15_079	FROM->TO	TUCO_2 345.00 (TUCO_2 XFMR) 345/230/13.2KV TRANSFORMER CKT 1	560	560	0.2952	184.0471	TUCO INTERCHANGE - TUCO_2 345.00 345KV CKT 1
FDNS	06ALL	2	20L	G15_079	FROM->TO	TUCO_2 345.00 (TUCO_2 XFMR) 345/230/13.2KV TRANSFORMER CKT 1	560	560	0.25839	184.0031	TUCO INTERCHANGE - TUCO_2 345.00 345KV CKT 1
FDNS	06ALL	2	17G	G15_079	FROM->TO	TUCO_2 345.00 (TUCO_2 XFMR) 345/230/13.2KV TRANSFORMER CKT 1	560	560	0.28139	182.4703	TUCO INTERCHANGE - TUCO_2 345.00 345KV CKT 1
FDNS	06ALL	2	16WP	G15_079	FROM->TO	TUCO_2 345.00 (TUCO_2 XFMR) 345/230/13.2KV TRANSFORMER CKT 1	560	560	0.29192	175.5009	TUCO INTERCHANGE - TUCO_2 345.00 345KV CKT 1
FDNS	06ALL	2	16WP	G15_079	FROM->TO	TUCO_2 345.00 (TUCO_2 XFMR) 345/230/13.2KV TRANSFORMER CKT 1	560	560	0.29192	172.6087	TUCO INTERCHANGE - TUCO_2 345.00 345KV CKT 1
FDNS	06ALL	2	20SP	G15_079	FROM->TO	TUCO_2 345.00 (TUCO_2 XFMR) 345/230/13.2KV TRANSFORMER CKT 1	560	560	0.30152	166.4217	TUCO INTERCHANGE - TUCO_2 345.00 345KV CKT 1
FDNS	06ALL	2	17SP	G15_079	FROM->TO	TUCO_2 345.00 (TUCO_2 XFMR) 345/230/13.2KV TRANSFORMER CKT 1	560	560	0.29286	164.6979	TUCO INTERCHANGE - TUCO_2 345.00 345KV CKT 1
FDNS	06ALL	2	20SP	G15_079	FROM->TO	TUCO_2 345.00 (TUCO_2 XFMR) 345/230/13.2KV TRANSFORMER CKT 1	560	560	0.30152	163.5805	TUCO INTERCHANGE - TUCO_2 345.00 345KV CKT 1
FDNS	06ALL	2	17SP	G15_079	FROM->TO	TUCO_2 345.00 (TUCO_2 XFMR) 345/230/13.2KV TRANSFORMER CKT 1	560	560	0.29286	162.1713	TUCO INTERCHANGE - TUCO_2 345.00 345KV CKT 1

SOLUTION	GROUP	SCENARIO	SEASON	SOURCE	DIRECTION	MONITORED ELEMENT	RATEA (MVA)	RATEB(MVA)	TDF	TC%LOADING (% MVA)	CONTINGENCY
FDNS	06ALL	2	16WP	G15_079	FROM->TO	TUCO_2 345.00 (TUCO_2 XFMR) 345/230/13.2KV TRANSFORMER CKT 1	560	560	0.24679	112.6263	TUCO INTERCHANGE (GE M1022338) 345/230/13.2KV TRANSFORMER CKT 1
FDNS	06ALL	2	16WP	G15_079	FROM->TO	TUCO_2 345.00 (TUCO_2 XFMR) 345/230/13.2KV TRANSFORMER CKT 1	560	560	0.24679	112.6263	TUCO INTERCHANGE (GE M1022338) 345/230/13.2KV TRANSFORMER CKT 1
FDNS	06ALL	2	16WP	G15_079	FROM->TO	TUCO_2 345.00 (TUCO_2 XFMR) 345/230/13.2KV TRANSFORMER CKT 1	560	560	0.24679	111.4972	TUCO INTERCHANGE (GE M1022338) 345/230/13.2KV TRANSFORMER CKT 1
FDNS	06ALL	2	16WP	G15_079	FROM->TO	TUCO_2 345.00 (TUCO_2 XFMR) 345/230/13.2KV TRANSFORMER CKT 1	560	560	0.24679	111.4972	TUCO INTERCHANGE (GE M1022338) 345/230/13.2KV TRANSFORMER CKT 1
FDNS	06NR	2	20L	G15_079	FROM->TO	TUCO_2 345.00 (TUCO_2 XFMR) 345/230/13.2KV TRANSFORMER CKT 1	560	560	0.04518	110.8937	TUCO INTERCHANGE - TUCO_2 345.00 345KV CKT 1
FDNS	06NR	2	20L	G15_079	FROM->TO	TUCO_2 345.00 (TUCO_2 XFMR) 345/230/13.2KV TRANSFORMER CKT 1	560	560	0.04518	108.3383	TUCO INTERCHANGE - TUCO_2 345.00 345KV CKT 1
FDNS	06ALL	2	17G	G15_079	FROM->TO	TUCO_2 345.00 (TUCO_2 XFMR) 345/230/13.2KV TRANSFORMER CKT 1	560	560	0.23817	107.1719	TUCO INTERCHANGE (GE M1022338) 345/230/13.2KV TRANSFORMER CKT 1
FDNS	06NR	2	17G	G15_079	FROM->TO	TUCO_2 345.00 (TUCO_2 XFMR) 345/230/13.2KV TRANSFORMER CKT 1	560	560	0.03538	107.0023	TUCO INTERCHANGE - TUCO_2 345.00 345KV CKT 1
FDNS	06ALL	2	16WP	G15_079	FROM->TO	TUCO_2 345.00 (TUCO_2 XFMR) 345/230/13.2KV TRANSFORMER CKT 1	560	560	0.23096	105.8242	TUCO INTERCHANGE (SIEM 8743066) 345/230/13.2KV TRANSFORMER CKT 2
FDNS	06ALL	2	16WP	G15_079	FROM->TO	TUCO_2 345.00 (TUCO_2 XFMR) 345/230/13.2KV TRANSFORMER CKT 1	560	560	0.23096	105.8242	TUCO INTERCHANGE (SIEM 8743066) 345/230/13.2KV TRANSFORMER CKT 2
FDNS	06ALL	2	17G	G15_079	FROM->TO	TUCO_2 345.00 (TUCO_2 XFMR) 345/230/13.2KV TRANSFORMER CKT 1	560	560	0.23817	105.6097	TUCO INTERCHANGE (GE M1022338) 345/230/13.2KV TRANSFORMER CKT 1
FDNS	06ALL	2	16WP	G15_079	FROM->TO	TUCO_2 345.00 (TUCO_2 XFMR) 345/230/13.2KV TRANSFORMER CKT 1	560	560	0.23096	104.8168	TUCO INTERCHANGE (SIEM 8743066) 345/230/13.2KV TRANSFORMER CKT 2
FDNS	06ALL	2	16WP	G15_079	FROM->TO	TUCO_2 345.00 (TUCO_2 XFMR) 345/230/13.2KV TRANSFORMER CKT 1	560	560	0.23096	104.8168	TUCO INTERCHANGE (SIEM 8743066) 345/230/13.2KV TRANSFORMER CKT 2
FDNS	06NR	2	17G	G15_079	FROM->TO	TUCO_2 345.00 (TUCO_2 XFMR) 345/230/13.2KV TRANSFORMER CKT 1	560	560	0.03538	104.728	TUCO INTERCHANGE - TUCO_2 345.00 345KV CKT 1
FDNS	06ALL	2	17G	G15_079	FROM->TO	TUCO_2 345.00 (TUCO_2 XFMR) 345/230/13.2KV TRANSFORMER CKT 1	560	560	0.22289	100.7205	TUCO INTERCHANGE (SIEM 8743066) 345/230/13.2KV TRANSFORMER CKT 2
FDNS	06ALL	2	17G	G15_079	FROM->TO	WOLFFORTH INTERCHANGE - YUMA INTERCHANGE 115KV CKT 1	119.51	153.97	0.20179	103.3037	LUBBOCK SOUTH INTERCHANGE - WOLFFORTH INTERCHANGE 230KV CKT 1
FDNS	06ALL	2	17G	G15_079	FROM->TO	WOLFFORTH INTERCHANGE - YUMA INTERCHANGE 115KV CKT 1	119.51	153.97	0.20179	103.3037	LUBBOCK SOUTH INTERCHANGE - WOLFFORTH INTERCHANGE 230KV CKT 1
FDNS	06NR	3	17G	G15_079	TO->FROM	AMARILLO SOUTH INTERCHANGE - G15031_T 230.00 230KV CKT 1	318.7	350.57	0.09771	103.2239	NEWHART 230 - POTTER COUNTY INTERCHANGE 230KV CKT 1
FDNS	06NR	3	20L	G15_079	FROM->TO	BUSHLAND INTERCHANGE - HILLSIDE 115KV CKT 1	159	160	0.039	108.1399	BUSHLAND INTERCHANGE - POTTER COUNTY INTERCHANGE 230KV CKT 1
FDNS	06NR	3	20L	G15_079	FROM->TO	BUSHLAND INTERCHANGE - HILLSIDE 115KV CKT 1	159	160	0.039	108.1399	BUSHLAND INTERCHANGE - POTTER COUNTY INTERCHANGE 230KV CKT 1
FDNS	06NR	3	17G	G15_079	FROM->TO	BUSHLAND INTERCHANGE - HILLSIDE 115KV CKT 1	159	160	0.04358	105.508	BUSHLAND INTERCHANGE - POTTER COUNTY INTERCHANGE 230KV CKT 1
FDNS	06NR	3	17G	G15_079	FROM->TO	BUSHLAND INTERCHANGE - HILLSIDE 115KV CKT 1	159	160	0.04358	105.508	BUSHLAND INTERCHANGE - POTTER COUNTY INTERCHANGE 230KV CKT 1
FDNS	06NR	3	20L	G15_079	FROM->TO	BUSHLAND INTERCHANGE - POTTER COUNTY INTERCHANGE 230KV CKT 1	318.7	350.57	0.08181	102.6252	NEWHART 230 - POTTER COUNTY INTERCHANGE 230KV CKT 1
FDNS	06NR	3	20L	G15_079	FROM->TO	BUSHLAND INTERCHANGE (WH 7001795) 230/115/13.2KV TRANSFORMER CKT 1	168	168	0.039	106.6189	BUSHLAND INTERCHANGE - POTTER COUNTY INTERCHANGE 230KV CKT 1
FDNS	06NR	3	20L	G15_079	FROM->TO	BUSHLAND INTERCHANGE (WH 7001795) 230/115/13.2KV TRANSFORMER CKT 1	168	168	0.039	106.6189	BUSHLAND INTERCHANGE - POTTER COUNTY INTERCHANGE 230KV CKT 1
FDNS	06NR	3	17G	G15_079	FROM->TO	BUSHLAND INTERCHANGE (WH 7001795) 230/115/13.2KV TRANSFORMER CKT 1	168	168	0.04358	104.9286	BUSHLAND INTERCHANGE - POTTER COUNTY INTERCHANGE 230KV CKT 1
FDNS	06NR	3	17G	G15_079	FROM->TO	BUSHLAND INTERCHANGE (WH 7001795) 230/115/13.2KV TRANSFORMER CKT 1	168	168	0.04358	104.9286	BUSHLAND INTERCHANGE - POTTER COUNTY INTERCHANGE 230KV CKT 1
FDNS	06NR	3	20L	G15_079	FROM->TO	BUSHLAND INTERCHANGE (WH 7001795) 230/115/13.2KV TRANSFORMER CKT 1	168	168	0.039	104.4653	BUSHLAND INTERCHANGE - POTTER COUNTY INTERCHANGE 230KV CKT 1
FDNS	06NR	3	20L	G15_079	FROM->TO	BUSHLAND INTERCHANGE (WH 7001795) 230/115/13.2KV TRANSFORMER CKT 1	168	168	0.039	104.4653	BUSHLAND INTERCHANGE - POTTER COUNTY INTERCHANGE 230KV CKT 1
FDNS	06NR	3	17G	G15_079	FROM->TO	BUSHLAND INTERCHANGE (WH 7001795) 230/115/13.2KV TRANSFORMER CKT 1	168	168	0.04358	102.648	BUSHLAND INTERCHANGE - POTTER COUNTY INTERCHANGE 230KV CKT 1
FDNS	06NR	3	17G	G15_079	FROM->TO	BUSHLAND INTERCHANGE (WH 7001795) 230/115/13.2KV TRANSFORMER CKT 1	168	168	0.04358	102.648	BUSHLAND INTERCHANGE - POTTER COUNTY INTERCHANGE 230KV CKT 1
FDNS	06NR	3	17G	G15_079	TO->FROM	CANYON WEST SUB - DAWN SUB 115KV CKT 1	96	96	0.03579	109.382	BUSHLAND INTERCHANGE - DEAF SMITH COUNTY INTERCHANGE 230KV CKT 1
FDNS	06NR	3	17G	G15_079	TO->FROM	CANYON WEST SUB - DAWN SUB 115KV CKT 1	96	96	0.03579	109.382	BUSHLAND INTERCHANGE - DEAF SMITH COUNTY INTERCHANGE 230KV CKT 1
FDNS	06NR	3	20L	G15_079	FROM->TO	CASTRO COUNTY INTERCHANGE - DEAF SMITH REC-#21 115KV CKT 1	159	174	0.02951	101.2841	DEAF SMITH COUNTY INTERCHANGE - G15039_T 230.00 230KV CKT 1
FDNS	06NR	3	17G	G15_079	FROM->TO	CASTRO COUNTY INTERCHANGE - DEAF SMITH REC-#21 115KV CKT 1	159	174	0.02979	100.2799	DEAF SMITH COUNTY INTERCHANGE - G15039_T 230.00 230KV CKT 1
FDNS	06ALL	3	20SP	G15_079	FROM->TO	CHISHOLM6 230.00 - ELK CITY 230KV 230KV CKT 1	353	353	0.06364	104.1963	BASE CASE
FDNS	06ALL	3	17SP	G15_079	FROM->TO	CHISHOLM6 230.00 - ELK CITY 230KV 230KV CKT 1	353	353	0.06385	101.9728	BASE CASE
FDNS	06ALL	3	20L	G15_079	TO->FROM	CIMARRON - MINCO 345KV CKT 1	956	956	0.219	140.6921	G14-057T 345.00 - SUNNYSIDE 345KV CKT 1
FDNS	06ALL	3	20L	G15_079	TO->FROM	CIMARRON - MINCO 345KV CKT 1	956	956	0.219	134.2883	G14-057T 345.00 - LAWTON EASTSIDE 345KV CKT 1
FDNS	06ALL	3	17G	G15_079	TO->FROM	CIMARRON - MINCO 345KV CKT 1	956	956	0.24379	132.797	G14-057T 345.00 - SUNNYSIDE 345KV CKT 1
FDNS	06ALL	3	20WP	G15_079	TO->FROM	CIMARRON - MINCO 345KV CKT 1	956	956	0.24631	131.9094	G14-057T 345.00 - SUNNYSIDE 345KV CKT 1
FDNS	06ALL	3	17G	G15_079	TO->FROM	CIMARRON - MINCO 345KV CKT 1	956	956	0.24379	127.3481	G14-057T 345.00 - LAWTON EASTSIDE 345KV CKT 1
FDNS	06ALL	3	20WP	G15_079	TO->FROM	CIMARRON - MINCO 345KV CKT 1	956	956	0.24631	126.3057	G14-057T 345.00 - LAWTON EASTSIDE 345KV CKT 1
FDNS	06ALL	3	16WP	G15_079	TO->FROM	CIMARRON - MINCO 345KV CKT 1	956	956	0.2507	125.3645	G14-057T 345.00 - SUNNYSIDE 345KV CKT 1
FDNS	06ALL	3	17SP	G15_079	TO->FROM	CIMARRON - MINCO 345KV CKT 1	956	956	0.24807	124.3731	G14-057T 345.00 - SUNNYSIDE 345KV CKT 1
FDNS	06ALL	3	20SP	G15_079	TO->FROM	CIMARRON - MINCO 345KV CKT 1	956	956	0.25232	121.3286	G14-057T 345.00 - SUNNYSIDE 345KV CKT 1
FDNS	06ALL	3	16WP	G15_079	TO->FROM	CIMARRON - MINCO 345KV CKT 1	956	956	0.2507	119.9255	G14-057T 345.00 - LAWTON EASTSIDE 345KV CKT 1
FDNS	06ALL	3	17SP	G15_079	TO->FROM	CIMARRON - MINCO 345KV CKT 1	956	956	0.24807	118.8978	G14-057T 345.00 - LAWTON EASTSIDE 345KV CKT 1
FDNS	06ALL	3	20SP	G15_079	TO->FROM	CIMARRON - MINCO 345KV CKT 1	956	956	0.25232	116.0894	G14-057T 345.00 - LAWTON EASTSIDE 345KV CKT 1
FDNS	06ALL	3	20WP	G15_079	TO->FROM	CIMARRON - MINCO 345KV CKT 1	956	956	0.20661	111.5734	MATHWSN7 345.00 - TATONGA7 345.00 345KV CKT 1
FDNS	06ALL	3	20L	G15_079	TO->FROM	CIMARRON - MINCO 345KV CKT 1	956	956	0.22532	109.488	CHISHOLM7 345.00 - WOODWARD DISTRICT EHV 345KV CKT 1
FDNS	06ALL	3	17G	G15_079	TO->FROM	CIMARRON - MINCO 345KV CKT 1	956	956	0.2417	109.1031	CHISHOLM7 345.00 - WOODWARD DISTRICT EHV 345KV CKT 1
FDNS	06ALL	3	20WP	G15_079	TO->FROM	CIMARRON - MINCO 345KV CKT 1	956	956	0.20661	106.2571	G11_051T 345.00 - TATONGA7 345.00 345KV CKT 1
FDNS	06ALL	3	17G	G15_079	TO->FROM	CIMARRON - MINCO 345KV CKT 1	956	956	0.20678	106.016	G11_051T 345.00 - TATONGA7 345.00 345KV CKT 1
FDNS	06ALL	3	17SP	G15_079	TO->FROM	CIMARRON - MINCO 345KV CKT 1	956	956	0.21058	105.6361	MATHWSN7 345.00 - TATONGA7 345.00 345KV CKT 1
FDNS	06ALL	3	20WP	G15_079	TO->FROM	CIMARRON - MINCO 345KV CKT 1	956	956	0.24842	105.2058	CHISHOLM7 345.00 - WOODWARD DISTRICT EHV 345KV CKT 1
FDNS	06ALL	3	16WP	G15_079	TO->FROM	CIMARRON - MINCO 345KV CKT 1	956	956	0.21205	105.1594	MATHWSN7 345.00 - TATONGA7 345.00 345KV CKT 1
FDNS	06ALL	3	20SP	G15_079	TO->FROM	CIMARRON - MINCO 345KV CKT 1	956	956	0.21316	104.8651	MATHWSN7 345.00 - TATONGA7 345.00 345KV CKT 1
FDNS	06ALL	3	20WP	G15_079	TO->FROM	CIMARRON - MINCO 345KV CKT 1	956	956	0.20661	104.6601	G11_051T 345.00 - WOODWARD DISTRICT EHV 345KV CKT 1
FDNS	06ALL	3	17G	G15_079	TO->FROM	CIMARRON - MINCO 345KV CKT 1	956	956	0.20678	104.4511	G11_051T 345.00 - WOODWARD DISTRICT EHV 345KV CKT 1
FDNS	06ALL	3	20SP	G15_079	TO->FROM	CIMARRON - MINCO 345KV CKT 1	956	956	0.2552	103.3967	CHISHOLM7 345.00 - WOODWARD DISTRICT EHV 345KV CKT 1
FDNS	06ALL	3	17SP	G15_079	TO->FROM	CIMARRON - MINCO 345KV CKT 1	956	956	0.24934	102.6701	CHISHOLM7 345.00 - WOODWARD DISTRICT EHV 345KV CKT 1
FDNS	06ALL	3	17SP	G15_079	TO->FROM	CIMARRON - MINCO 345KV CKT 1	956	956	0.21058	100.4546	G11_051T 345.00 - TATONGA7 345.00 345KV CKT 1
FDNS	06ALL	3	20WP	G15_079	TO->FROM	CIMARRON - MINCO 345KV CKT 1	956	956	0.19823	100.2954	P12:138:WFEC:MSL03
FDNS	06ALL	3	16WP	G15_079	TO->FROM	CIMARRON - MINCO 345KV CKT 1	956	956	0.21205	99.8	G11_051T 345.00 - TATONGA7 345.00 345KV CKT 1
FDNS	06ALL	3	20SP	G15_079	TO->FROM	CIMARRON - MINCO 345KV CKT 1	956	956	0.21316	99.7	G11_051T 345.00 - TATONGA7 345.00 345KV CKT 1
FDNS	06ALL	3	17SP	G15_079	TO->FROM	CIMARRON - MINCO 345KV CKT 1	956	956	0.2008	99.6	P12:138:WFEC:MSL03
FDNS	06ALL	3	20SP	G15_079	TO->FROM	CIMARRON - MINCO 345KV CKT 1	956	956	0.20444	99.6	P12:138:WFEC:MSL03
FDNS	06NR	3	20L	G15_079	TO->FROM	COULTER INTERCHANGE - HILLSIDE 115KV CKT 1	159	159	0.039	105.531	BUSHLAND INTERCHANGE - POTTER COUNTY INTERCHANGE 230KV CKT 1
FDNS	06NR	3	20L	G15_079	TO->FROM	COULTER INTERCHANGE - HILLSIDE 115KV CKT 1	159	159	0.039	105.531	BUSHLAND INTERCHANGE - POTTER COUNTY INTERCHANGE 230KV CKT 1
FDNS	06NR	3	17G	G15_079	TO->FROM	COULTER INTERCHANGE - HILLSIDE 115KV CKT 1	159	159	0.04358	100.454	BUSHLAND INTERCHANGE - POTTER COUNTY INTERCHANGE 230KV CKT 1
FDNS	06NR	3	17G	G15_079	TO->FROM	COULTER INTERCHANGE - HILLSIDE 115KV CKT 1	159	159	0.04358	100.454	BUSHLAND INTERCHANGE - POTTER COUNTY INTERCHANGE 230KV CKT 1
FDNS	06NR	3	17G	G15_079	TO->FROM	DAWN SUB - Panda Energy Substation Hereford 115KV CKT 1	96	96	0.03579	112.7612	BUSHLAND INTERCHANGE - DEAF SMITH COUNTY INTERCHANGE 230KV CKT 1
FDNS	06NR	3	17G	G15_079	TO->FROM	DAWN SUB - Panda Energy Substation Hereford 115KV CKT 1	96	96	0.03579	112.7612	BUSHLAND INTERCHANGE - DEAF SMITH COUNTY INTERCHANGE 230KV CKT 1
FDNS	06NR	3	17G	G15_079	FROM->TO	DEAF SMITH COUNTY INTERCHANGE - Panda Energy Substation Hereford 115KV CKT 1	96	96	0.03579	117.8354	BUSHLAND INTERCHANGE - DEAF SMITH COUNTY INTERCHANGE 230KV CKT 1
FDNS	06NR	3	17G	G15_079	FROM->TO	DEAF SMITH COUNTY INTERCHANGE - Panda Energy Substation Hereford 115KV CKT 1	96	96	0.03579	117.8354	BUSHLAND INTERCHANGE - DEAF SMITH COUNTY INTERCHANGE 230KV CKT 1
FDNS	06ALL	3	20L	G15_079	TO->FROM	G14-057T 345.00 - LAWTON EASTSIDE 345KV CKT 1	717	789	0.10663	106.0801	BASE CASE
FDNS	06ALL	3	20L	G15_079	FROM->TO	G14-057T 345.00 - SUNNYSIDE 345KV CKT 1	717	789	0.10663	119.3111	BASE CASE
FDNS	06ALL	3	20WP	G15_079	FROM->TO	G14-057T 345.00 - SUNNYSIDE 345KV CKT 1	717	789	0.13016	107.198	BASE CASE

SOLUTION	GROUP	SCENARIO	SEASON	SOURCE	DIRECTION	MONITORED ELEMENT	RATEA (MVA)	RATEB(MVA)	TDF	TC%LOADING (% MVA)	CONTINGENCY
FDNS	06ALL	3	17G	G15_079	FROM->TO	G14-057T 345.00 - SUNNYSIDE 345KV CKT 1	717	789	0.12947	106.7167	BASE CASE
FDNS	06ALL	3	16WP	G15_079	FROM->TO	G14-057T 345.00 - SUNNYSIDE 345KV CKT 1	717	789	0.13294	105.3992	BASE CASE
FDNS	06NR	3	20L	G15_079	FROM->TO	G14-074T 345.00 - OKLAUNION 345KV CKT 1	1022	1124	0.05728	108.2612	BASE CASE
FDNS	06NR	3	17G	G15_079	FROM->TO	G14-074T 345.00 - OKLAUNION 345KV CKT 1	1022	1124	0.04527	106.9843	G11_051T 345.00 - WOODWARD DISTRICT EHV 345KV CKT 1
FDNS	06NR	3	17G	G15_079	FROM->TO	G14-074T 345.00 - OKLAUNION 345KV CKT 1	1022	1124	0.04581	105.0698	BASE CASE
FDNS	06NR	3	20L	G15_079	FROM->TO	G14-074T 345.00 - OKLAUNION 345KV CKT 1	1022	1124	0.05454	103.3966	CHISHOLM7 345.00 - GRACEMONT 345KV CKT 1
FDNS	06NR	3	20L	G15_079	FROM->TO	G14-074T 345.00 - OKLAUNION 345KV CKT 1	1022	1124	0.05454	102.9036	CHISHOLM7 345.00 () 345/230/13.2KV TRANSFORMER CKT 1
FDNS	06NR	3	20L	G15_079	FROM->TO	G14-074T 345.00 - OKLAUNION 345KV CKT 1	1022	1124	0.06789	102.6829	AMARILLO SOUTH INTERCHANGE - G15031_T 230.00 230KV CKT 1
FDNS	06NR	3	20L	G15_079	FROM->TO	G14-074T 345.00 - OKLAUNION 345KV CKT 1	1022	1124	0.06624	102.2907	NEWHART 230 - POTTER COUNTY INTERCHANGE 230KV CKT 1
FDNS	06NR	3	20L	G15_079	FROM->TO	G14-074T 345.00 - OKLAUNION 345KV CKT 1	1022	1124	0.06441	101.9316	DEAF SMITH COUNTY INTERCHANGE - G15039_T 230.00 230KV CKT 1
FDNS	06NR	3	20L	G15_079	FROM->TO	G14-074T 345.00 - OKLAUNION 345KV CKT 1	1022	1124	0.06441	100.8261	G15039_T 230.00 - PLANT X STATION 230KV CKT 1
FDNS	06NR	3	20L	G15_079	FROM->TO	G14-074T 345.00 - OKLAUNION 345KV CKT 1	1022	1124	0.05709	100.637	MINGO - RED WILLOW 345KV CKT 1
FDNS	06NR	3	20L	G15_079	FROM->TO	G14-074T 345.00 - OKLAUNION 345KV CKT 1	1022	1124	0.05709	100.637	MINGO - RED WILLOW 345KV CKT 1
FDNS	06NR	3	20L	G15_079	FROM->TO	G14-074T 345.00 - OKLAUNION 345KV CKT 1	1022	1124	0.05649	100.065	CHILDRESS - LAKE PAULINE 138KV CKT 1
FDNS	06NR	3	20L	G15_079	FROM->TO	G14-074T 345.00 - OKLAUNION 345KV CKT 1	1022	1124	0.05649	100.065	CHILDRESS - LAKE PAULINE 138KV CKT 1
FDNS	06NR	3	20L	G15_079	FROM->TO	G14-074T 345.00 - OKLAUNION 345KV CKT 1	1022	1124	0.05681	100	CONWAY SUB - NICHOLS STATION 115KV CKT 1
FDNS	06NR	3	20L	G15_079	FROM->TO	G14-074T 345.00 - OKLAUNION 345KV CKT 1	1022	1124	0.05681	99.9	CONWAY SUB - KIRBY SWITCHING STATION 115KV CKT 1
FDNS	06NR	3	17G	G15_079	FROM->TO	G14-074T 345.00 - OKLAUNION 345KV CKT 1	1022	1124	0.05574	99.8	AMARILLO SOUTH INTERCHANGE - G15031_T 230.00 230KV CKT 1
FDNS	06NR	3	20L	G15_079	FROM->TO	G14-074T 345.00 - OKLAUNION 345KV CKT 1	1022	1124	0.05681	99.8	P12:115:SPS:T53.1.NICHLS.KIRBY
FDNS	06NR	3	20L	G15_079	FROM->TO	G14-074T 345.00 - OKLAUNION 345KV CKT 1	1022	1124	0.05725	99.7	IODINE - WOODWARD EHV 138KV CKT 1
FDNS	06NR	3	20L	G15_079	FROM->TO	G14-074T 345.00 - OKLAUNION 345KV CKT 1	1022	1124	0.05726	99.6	WOODWARD - WWPAR4 138.00 138KV CKT 1
FDNS	06NR	3	20L	G15_079	FROM->TO	G14-074T 345.00 - OKLAUNION 345KV CKT 1	1022	1124	0.05726	99.6	WOODWARD EHV - WWPAR4 138.00 138KV CKT 1
FDNS	06NR	3	20L	G15_079	FROM->TO	G14-074T 345.00 - OKLAUNION 345KV CKT 1	1022	1124	0.05725	99.6	DEWEY - IODINE 138KV CKT 1
FDNS	06NR	3	17G	G15_079	FROM->TO	G14-074T 345.00 - OKLAUNION 345KV CKT 1	1022	1124	0.04351	99.5	CHISHOLM7 345.00 - GRACEMONT 345KV CKT 1
FDNS	06NR	3	20L	G15_079	FROM->TO	G14-074T 345.00 - OKLAUNION 345KV CKT 1	1022	1124	0.05685	99.5	KIRBY SWITCHING STATION - MCCLELLAN SUB 115KV CKT 1
FDNS	06NR	3	20L	G15_079	FROM->TO	G14-074T 345.00 - OKLAUNION 345KV CKT 1	1022	1124	0.05685	99.5	MCCLELLAN SUB - MCLEAN RURAL SUB 115KV CKT 1
FDNS	06ALL	3	20L	G15_079	FROM->TO	GRACEMONT - MINCO 345KV CKT 1	1195	1195	0.219	101.53	G14-057T 345.00 - SUNNYSIDE 345KV CKT 1
FDNS	00NR	3	25SP	G15_079	FROM->TO	Hitchland Interchange (SIEM 8743067) 345/230/13.2KV TRANSFORMER CKT 2	560	644	0.0312	100.776	Hitchland Interchange (H TB80155502) 345/230/13.2KV TRANSFORMER CKT 1
FDNS	00NR	3	25SP	G15_079	FROM->TO	Hitchland Interchange (SIEM 8743067) 345/230/13.2KV TRANSFORMER CKT 2	560	644	0.0312	100.776	Hitchland Interchange (H TB80155502) 345/230/13.2KV TRANSFORMER CKT 1
FDNS	00NR	3	25SP	G15_079	TO->FROM	JONES STATION - TUCO INTERCHANGE 230KV CKT 1	343.79	343.79	0.03462	130.1614	CARLISLE INTERCHANGE - TUCO INTERCHANGE 230KV CKT 1
FDNS	00NR	3	25SP	G15_079	TO->FROM	JONES STATION - TUCO INTERCHANGE 230KV CKT 1	343.79	343.79	0.03462	130.1614	CARLISLE INTERCHANGE - TUCO INTERCHANGE 230KV CKT 1
FDNS	00NR	3	25SP	G15_079	TO->FROM	JONES STATION - TUCO INTERCHANGE 230KV CKT 1	343.79	343.79	0.03763	113.3309	GEN526333 1-JONES GEN #3 21 KV
FDNS	00NR	3	25SP	G15_079	TO->FROM	JONES STATION - TUCO INTERCHANGE 230KV CKT 1	343.79	343.79	0.03763	112.9359	GEN526334 1-JONES_4 116.500
FDNS	00NR	3	25SP	G15_079	TO->FROM	JONES STATION - TUCO INTERCHANGE 230KV CKT 1	343.79	343.79	0.03395	103.864	CARLISLE INTERCHANGE - WOLFFORTH INTERCHANGE 230KV CKT 1
FDNS	00NR	3	25SP	G15_079	TO->FROM	JONES STATION - TUCO INTERCHANGE 230KV CKT 1	343.79	343.79	0.03763	100.8779	GEN526332 1-JONES GEN #2 21 KV
FDNS	00NR	3	25SP	G15_079	TO->FROM	JONES STATION - TUCO INTERCHANGE 230KV CKT 1	343.79	343.79	0.03763	100.876	GEN526331 1-JONES GEN #1 22 KV
FDNS	00NR	3	25SP	G15_079	TO->FROM	JONES STATION - TUCO INTERCHANGE 230KV CKT 1	343.79	343.79	0.03882	100.7208	TUCO INTERCHANGE (ENRCO 136401) 230/115/13.2KV TRANSFORMER CKT 1
FDNS	00NR	3	25SP	G15_079	TO->FROM	JONES STATION - TUCO INTERCHANGE 230KV CKT 1	343.79	343.79	0.03882	100.7208	TUCO INTERCHANGE (ENRCO 136401) 230/115/13.2KV TRANSFORMER CKT 1
FDNS	00NR	3	25SP	G15_079	TO->FROM	JONES STATION - TUCO INTERCHANGE 230KV CKT 1	343.79	343.79	0.03882	100.7208	TUCO INTERCHANGE (ENRCO 136401) 230/115/13.2KV TRANSFORMER CKT 2
FDNS	00NR	3	25SP	G15_079	TO->FROM	JONES STATION - TUCO INTERCHANGE 230KV CKT 1	343.79	343.79	0.03882	100.7208	TUCO INTERCHANGE (ENRCO 136401) 230/115/13.2KV TRANSFORMER CKT 2
FDNS	00NR	3	25SP	G15_079	TO->FROM	JONES STATION - TUCO INTERCHANGE 230KV CKT 1	343.79	343.79	0.04025	99.8	LUBBOCK EAST INTERCHANGE - TUCO INTERCHANGE 115KV CKT 1
FDNS	00NR	3	25SP	G15_079	TO->FROM	JONES STATION - TUCO INTERCHANGE 230KV CKT 1	343.79	343.79	0.04025	99.8	LUBBOCK EAST INTERCHANGE - TUCO INTERCHANGE 115KV CKT 1
FDNS	00NR	3	25SP	G15_079	FROM->TO	LUBBOCK POWER & LIGHT-HOLLY PLANT (SHIH T101039) 230/69/13.5KV TRANSFORMER CKT 1	224	224	0.03577	104.7002	LUBBOCK POWER & LIGHT-SOUTHEAST - LUBBOCK SOUTH INTERCHANGE 230KV CKT 1
FDNS	00NR	3	25SP	G15_079	FROM->TO	LUBBOCK POWER & LIGHT-HOLLY PLANT (SHIH T101039) 230/69/13.5KV TRANSFORMER CKT 1	224	224	0.03577	104.6872	P12:LPL:SPS:K64.1.LP-SE.LUBBS
FDNS	00NR	3	25SP	G15_079	FROM->TO	LUBBOCK POWER & LIGHT-HOLLY PLANT (SHIH T101039) 230/69/13.5KV TRANSFORMER CKT 1	224	224	0.03375	101.9683	LUBBOCK EAST INTERCHANGE - LUBBOCK POWER & LIGHT-WADSWORTH 230KV CKT 1
FDNS	00NR	3	25SP	G15_079	FROM->TO	LUBBOCK POWER & LIGHT-HOLLY PLANT (SHIH T101039) 230/69/13.5KV TRANSFORMER CKT 1	224	224	0.03375	101.9535	P12:230:LPL:K57.1.LP-WADS.LUBBE
FDNS	00NR	3	25SP	G15_079	FROM->TO	LUBBOCK POWER & LIGHT-HOLLY PLANT (SHIH T101039) 230/69/13.5KV TRANSFORMER CKT 1	224	224	0.03375	101.9534	LUBBOCK POWER & LIGHT-WADSWORTH (SHIH T101038) 230/69/13.5KV TRANSFORMER CKT 1
FDNS	00NR	3	25SP	G15_079	FROM->TO	LUBBOCK POWER & LIGHT-HOLLY PLANT (SHIH T101039) 230/69/13.5KV TRANSFORMER CKT 1	224	224	0.03375	101.9534	LUBBOCK POWER & LIGHT-WADSWORTH (SHIH T101038) 230/69/13.5KV TRANSFORMER CKT 1
FDNS	06ALL	3	20L	G15_079	FROM->TO	TUCO INTERCHANGE - TUCO_2 230.00 230KV CKT 1	497	547	0.2123	105.0803	TUCO INTERCHANGE - TUCO_2 345.00 345KV CKT 1
FDNS	06ALL	3	20SP	G15_079	FROM->TO	TUCO INTERCHANGE - TUCO_2 230.00 230KV CKT 1	497	547	0.23155	99.5	TUCO INTERCHANGE - TUCO_2 345.00 345KV CKT 1
FDNS	06ALL	4	20SP	G15_079	FROM->TO	CHISHOLM6 230.00 - ELK CITY 230KV 230KV CKT 1	353	353	0.06189	103.152	BASE CASE
FDNS	06ALL	4	17SP	G15_079	FROM->TO	CHISHOLM6 230.00 - ELK CITY 230KV 230KV CKT 1	353	353	0.06195	100.7007	BASE CASE
FDNS	06ALL	4	20L	G15_079	TO->FROM	CIMARRON - MINCO 345KV CKT 1	956	956	0.20494	136.9659	G14-057T 345.00 - SUNNYSIDE 345KV CKT 1
FDNS	06ALL	4	20L	G15_079	TO->FROM	CIMARRON - MINCO 345KV CKT 1	956	956	0.20494	130.9905	G14-057T 345.00 - LAWTON EASTSIDE 345KV CKT 1
FDNS	06ALL	4	17G	G15_079	TO->FROM	CIMARRON - MINCO 345KV CKT 1	956	956	0.22708	129.7974	G14-057T 345.00 - SUNNYSIDE 345KV CKT 1
FDNS	06ALL	4	20WP	G15_079	TO->FROM	CIMARRON - MINCO 345KV CKT 1	956	956	0.23065	128.511	G14-057T 345.00 - SUNNYSIDE 345KV CKT 1
FDNS	06ALL	4	17G	G15_079	TO->FROM	CIMARRON - MINCO 345KV CKT 1	956	956	0.22708	124.286	G14-057T 345.00 - LAWTON EASTSIDE 345KV CKT 1
FDNS	06ALL	4	20WP	G15_079	TO->FROM	CIMARRON - MINCO 345KV CKT 1	956	956	0.23065	123.0537	G14-057T 345.00 - LAWTON EASTSIDE 345KV CKT 1
FDNS	06ALL	4	16WP	G15_079	TO->FROM	CIMARRON - MINCO 345KV CKT 1	956	956	0.23364	122.1275	G14-057T 345.00 - SUNNYSIDE 345KV CKT 1
FDNS	06ALL	4	17SP	G15_079	TO->FROM	CIMARRON - MINCO 345KV CKT 1	956	956	0.23088	121.005	G14-057T 345.00 - SUNNYSIDE 345KV CKT 1
FDNS	06ALL	4	20SP	G15_079	TO->FROM	CIMARRON - MINCO 345KV CKT 1	956	956	0.23639	117.7968	G14-057T 345.00 - SUNNYSIDE 345KV CKT 1
FDNS	06ALL	4	16WP	G15_079	TO->FROM	CIMARRON - MINCO 345KV CKT 1	956	956	0.23364	116.5578	G14-057T 345.00 - LAWTON EASTSIDE 345KV CKT 1
FDNS	06ALL	4	17SP	G15_079	TO->FROM	CIMARRON - MINCO 345KV CKT 1	956	956	0.23088	115.6625	G14-057T 345.00 - LAWTON EASTSIDE 345KV CKT 1
FDNS	06ALL	4	20SP	G15_079	TO->FROM	CIMARRON - MINCO 345KV CKT 1	956	956	0.23639	112.5931	G14-057T 345.00 - LAWTON EASTSIDE 345KV CKT 1
FDNSLock	06ALL	4	17G	G15_079	TO->FROM	CIMARRON - MINCO 345KV CKT 1	956	956	0.19636	110.3749	MATHWSN7 345.00 - TATONGA7 345.00 345KV CKT 1
FDNS	06ALL	4	20WP	G15_079	TO->FROM	CIMARRON - MINCO 345KV CKT 1	956	956	0.19682	109.8635	MATHWSN7 345.00 - TATONGA7 345.00 345KV CKT 1
FDNS	06ALL	4	20WP	G15_079	TO->FROM	CIMARRON - MINCO 345KV CKT 1	956	956	0.19682	104.457	G11_051T 345.00 - TATONGA7 345.00 345KV CKT 1
FDNS	06ALL	4	17G	G15_079	TO->FROM	CIMARRON - MINCO 345KV CKT 1	956	956	0.21665	104.4362	CHISHOLM7 345.00 - WOODWARD DISTRICT EHV 345KV CKT 1
FDNS	06ALL	4	17G	G15_079	TO->FROM	CIMARRON - MINCO 345KV CKT 1	956	956	0.19636	104.3067	G11_051T 345.00 - TATONGA7 345.00 345KV CKT 1
FDNS	06ALL	4	20L	G15_079	TO->FROM	CIMARRON - MINCO 345KV CKT 1	956	956	0.20388	103.7687	CHISHOLM7 345.00 - WOODWARD DISTRICT EHV 345KV CKT 1
FDNS	06ALL	4	17SP	G15_079	TO->FROM	CIMARRON - MINCO 345KV CKT 1	956	956	0.19977	103.6969	MATHWSN7 345.00 - TATONGA7 345.00 345KV CKT 1
FDNS	06ALL	4	16WP	G15_079	TO->FROM	CIMARRON - MINCO 345KV CKT 1	956	956	0.20142	103.3746	MATHWSN7 345.00 - TATONGA7 345.00 345KV CKT 1
FDNS	06ALL	4	20WP	G15_079	TO->FROM	CIMARRON - MINCO 345KV CKT 1	956	956	0.19682	102.8471	G11_051T 345.00 - WOODWARD DISTRICT EHV 345KV CKT 1
FDNS	06ALL	4	20SP	G15_079	TO->FROM	CIMARRON - MINCO 345KV CKT 1	956	956	0.20318	102.8303	MATHWSN7 345.00 - TATONGA7 345.00 345KV CKT 1
FDNS	06ALL	4	17G	G15_079	TO->FROM	CIMARRON - MINCO 345KV CKT 1	956	956	0.19636	102.7262	G11_051T 345.00 - WOODWARD DISTRICT EHV 345KV CKT 1
FDNS	06ALL	4	20WP	G15_079	TO->FROM	CIMARRON - MINCO 345KV CKT 1	956	956	0.22473	100.3052	CHISHOLM7 345.00 - WOODWARD DISTRICT EHV 345KV CKT 1
FDNSLock	06ALL	4	16WP	G15_079		G14_001T 345.00 - WICHITA 345KV CKT 1	1035	1035	0.05398	25.24282	BASE CASE
FDNS	06ALL	4	20L	G15_079	TO->FROM	G14-057T 345.00 - LAWTON EASTSIDE 345KV CKT 1	717	789	0.10048	104.3251	BASE CASE
FDNS	06ALL	4	20L	G15_079	FROM->TO	G14-057T 345.00 - SUNNYSIDE 345KV CKT 1	717	789	0.10048	117.5276	BASE CASE

SOLUTION	GROUP	SCENARIO	SEASON	SOURCE	DIRECTION	MONITORED ELEMENT	RATEA (MVA)	RATEB(MVA)	TDF	TC%LOADING (% MVA)	CONTINGENCY
FDNS	06ALL	4	20WP	G15_079	FROM->TO	G14-057T 345.00 - SUNNYSIDE 345KV CKT 1	717	789	0.12337	105.3579	BASE CASE
FDNS	06ALL	4	17G	G15_079	FROM->TO	G14-057T 345.00 - SUNNYSIDE 345KV CKT 1	717	789	0.12222	105.0325	BASE CASE
FDNS	06ALL	4	16WP	G15_079	FROM->TO	G14-057T 345.00 - SUNNYSIDE 345KV CKT 1	717	789	0.12554	103.6585	BASE CASE
FDNS	06NR	4	20L	G15_079	FROM->TO	G14-074T 345.00 - OKLAUNION 345KV CKT 1	1022	1124	0.03746	103.8229	GRAPEVINE INTERCHANGE - STATELINE INTERCHANGE 230KV CKT 1
FDNS	06NR	4	20L	G15_079	FROM->TO	G14-074T 345.00 - OKLAUNION 345KV CKT 1	1022	1124	0.03746	103.8229	GRAPEVINE INTERCHANGE - STATELINE INTERCHANGE 230KV CKT 1
FDNS	06NR	4	20L	G15_079	FROM->TO	G14-074T 345.00 - OKLAUNION 345KV CKT 1	1022	1124	0.04138	101.1904	BASE CASE
FDNS	00NR	4	25SP	G15_079	FROM->TO	Hitchland Interchange (SIEM 8743067) 345/230/13.2KV TRANSFORMER CKT 2	560	644	0.03197	100.255	Hitchland Interchange (H TB80155502) 345/230/13.2KV TRANSFORMER CKT 1
FDNS	00NR	4	25SP	G15_079	FROM->TO	Hitchland Interchange (SIEM 8743067) 345/230/13.2KV TRANSFORMER CKT 2	560	644	0.03197	100.255	Hitchland Interchange (H TB80155502) 345/230/13.2KV TRANSFORMER CKT 1
FDNS	00NR	4	25SP	G15_079	TO->FROM	JONES STATION - TUCO INTERCHANGE 230KV CKT 1	343.79	343.79	0.0349	129.809	CARLISLE INTERCHANGE - TUCO INTERCHANGE 230KV CKT 1
FDNS	00NR	4	25SP	G15_079	TO->FROM	JONES STATION - TUCO INTERCHANGE 230KV CKT 1	343.79	343.79	0.0349	129.809	CARLISLE INTERCHANGE - TUCO INTERCHANGE 230KV CKT 1
FDNS	00NR	4	25SP	G15_079	TO->FROM	JONES STATION - TUCO INTERCHANGE 230KV CKT 1	343.79	343.79	0.03775	113.028	GEN526333 1-JONES GEN #3 21 KV
FDNS	00NR	4	25SP	G15_079	TO->FROM	JONES STATION - TUCO INTERCHANGE 230KV CKT 1	343.79	343.79	0.03775	112.6359	GEN526334 1-JONES_4 116.500
FDNS	00NR	4	25SP	G15_079	TO->FROM	JONES STATION - TUCO INTERCHANGE 230KV CKT 1	343.79	343.79	0.0342	103.563	CARLISLE INTERCHANGE - WOLFFORTH INTERCHANGE 230KV CKT 1
FDNS	00NR	4	25SP	G15_079	TO->FROM	JONES STATION - TUCO INTERCHANGE 230KV CKT 1	343.79	343.79	0.03196	100.6898	P12:345:SPS:J02.1.TOLK.EDDY
FDNS	00NR	4	25SP	G15_079	TO->FROM	JONES STATION - TUCO INTERCHANGE 230KV CKT 1	343.79	343.79	0.03775	100.6764	GEN526332 1-JONES GEN #2 21 KV
FDNS	00NR	4	25SP	G15_079	TO->FROM	JONES STATION - TUCO INTERCHANGE 230KV CKT 1	343.79	343.79	0.03775	100.6745	GEN526331 1-JONES GEN #1 22 KV
FDNS	00NR	4	25SP	G15_079	TO->FROM	JONES STATION - TUCO INTERCHANGE 230KV CKT 1	343.79	343.79	0.03879	100.6429	TUCO INTERCHANGE (ENRCO 136401) 230/115/13.2KV TRANSFORMER CKT 1
FDNS	00NR	4	25SP	G15_079	TO->FROM	JONES STATION - TUCO INTERCHANGE 230KV CKT 1	343.79	343.79	0.03879	100.6429	TUCO INTERCHANGE (ENRCO 136401) 230/115/13.2KV TRANSFORMER CKT 1
FDNS	00NR	4	25SP	G15_079	TO->FROM	JONES STATION - TUCO INTERCHANGE 230KV CKT 1	343.79	343.79	0.03879	100.6429	TUCO INTERCHANGE (ENRCO 136401) 230/115/13.2KV TRANSFORMER CKT 2
FDNS	00NR	4	25SP	G15_079	TO->FROM	JONES STATION - TUCO INTERCHANGE 230KV CKT 1	343.79	343.79	0.03879	100.6429	TUCO INTERCHANGE (ENRCO 136401) 230/115/13.2KV TRANSFORMER CKT 2
FDNS	00NR	4	25SP	G15_079	TO->FROM	JONES STATION - TUCO INTERCHANGE 230KV CKT 1	343.79	343.79	0.04049	99.8	LUBBOCK EAST INTERCHANGE - TUCO INTERCHANGE 115KV CKT 1
FDNS	00NR	4	25SP	G15_079	TO->FROM	JONES STATION - TUCO INTERCHANGE 230KV CKT 1	343.79	343.79	0.04049	99.8	LUBBOCK EAST INTERCHANGE - TUCO INTERCHANGE 115KV CKT 1
FDNS	00NR	4	25SP	G15_079	FROM->TO	LUBBOCK POWER & LIGHT-HOLLY PLANT (SHIH T101039) 230/69/13.5KV TRANSFORMER CKT 1	224	224	0.03577	104.6928	LUBBOCK POWER & LIGHT-SOUTHEAST - LUBBOCK SOUTH INTERCHANGE 230KV CKT 1
FDNS	00NR	4	25SP	G15_079	FROM->TO	LUBBOCK POWER & LIGHT-HOLLY PLANT (SHIH T101039) 230/69/13.5KV TRANSFORMER CKT 1	224	224	0.03577	104.6926	P12:LPL:SPS:K64.1.LP-SE.LUBBS
FDNS	00NR	4	25SP	G15_079	FROM->TO	LUBBOCK POWER & LIGHT-HOLLY PLANT (SHIH T101039) 230/69/13.5KV TRANSFORMER CKT 1	224	224	0.03377	101.9377	LUBBOCK EAST INTERCHANGE - LUBBOCK POWER & LIGHT-WADSWORTH 230KV CKT 1
FDNS	00NR	4	25SP	G15_079	FROM->TO	LUBBOCK POWER & LIGHT-HOLLY PLANT (SHIH T101039) 230/69/13.5KV TRANSFORMER CKT 1	224	224	0.03377	101.923	P12:230:LPL:K57.1.LP-WADS.LUBBE
FDNS	00NR	4	25SP	G15_079	FROM->TO	LUBBOCK POWER & LIGHT-HOLLY PLANT (SHIH T101039) 230/69/13.5KV TRANSFORMER CKT 1	224	224	0.03377	101.9229	LUBBOCK POWER & LIGHT-WADSWORTH (SHIH T101038) 230/69/13.5KV TRANSFORMER CKT 1
FDNS	00NR	4	25SP	G15_079	FROM->TO	LUBBOCK POWER & LIGHT-HOLLY PLANT (SHIH T101039) 230/69/13.5KV TRANSFORMER CKT 1	224	224	0.03377	101.9229	LUBBOCK POWER & LIGHT-WADSWORTH (SHIH T101038) 230/69/13.5KV TRANSFORMER CKT 1
FDNSLock	06ALL	4	20L	G15_079		OKLAUNION 345KV SWITCHED SHUNT	1022	1124	0.16923	86.37846	BASE CASE
FDNS	06ALL	4	16WP	G15_079	FROM->TO	TOLK STATION (ABBXNL844501) 345/230/13.2KV TRANSFORMER CKT 1	560	560	0.27243	113.0515	CROSSROADS 7345.00 - TOLK STATION 345KV CKT 1
FDNS	06ALL	4	16WP	G15_079	FROM->TO	TOLK STATION (ABBXNL844501) 345/230/13.2KV TRANSFORMER CKT 1	560	560	0.27243	110.3257	CROSSROADS 7345.00 - TOLK STATION 345KV CKT 1
FDNS	06ALL	4	20L	G15_079	FROM->TO	TUCO INTERCHANGE - TUCO_2 230.00 230KV CKT 1	497	547	0.21282	103.1103	TUCO INTERCHANGE - TUCO_2 345.00 345KV CKT 1
FDNS	06ALL	5	20SP	G15_079	FROM->TO	CHISHOLM6 230.00 - ELK CITY 230KV 230KV CKT 1	353	353	0.06592	107.7212	BASE CASE
FDNS	06ALL	5	17SP	G15_079	FROM->TO	CHISHOLM6 230.00 - ELK CITY 230KV 230KV CKT 1	353	353	0.06663	105.7594	BASE CASE
FDNS	06ALL	5	20L	G15_079	TO->FROM	CIMARRON - MINCO 345KV CKT 1	956	956	0.212	139.1694	G14-057T 345.00 - SUNNYSIDE 345KV CKT 1
FDNS	06ALL	5	20L	G15_079	TO->FROM	CIMARRON - MINCO 345KV CKT 1	956	956	0.212	133.4583	G14-057T 345.00 - LAWTON EASTSIDE 345KV CKT 1
FDNS	06ALL	5	17G	G15_079	TO->FROM	CIMARRON - MINCO 345KV CKT 1	956	956	0.23558	132.5137	G14-057T 345.00 - SUNNYSIDE 345KV CKT 1
FDNS	06ALL	5	20WP	G15_079	TO->FROM	CIMARRON - MINCO 345KV CKT 1	956	956	0.23715	131.4126	G14-057T 345.00 - SUNNYSIDE 345KV CKT 1
FDNS	06ALL	5	17G	G15_079	TO->FROM	CIMARRON - MINCO 345KV CKT 1	956	956	0.23558	127.0859	G14-057T 345.00 - LAWTON EASTSIDE 345KV CKT 1
FDNS	06ALL	5	20WP	G15_079	TO->FROM	CIMARRON - MINCO 345KV CKT 1	956	956	0.23715	126.0182	G14-057T 345.00 - LAWTON EASTSIDE 345KV CKT 1
FDNS	06ALL	5	16WP	G15_079	TO->FROM	CIMARRON - MINCO 345KV CKT 1	956	956	0.24233	125.0103	G14-057T 345.00 - SUNNYSIDE 345KV CKT 1
FDNS	06ALL	5	17SP	G15_079	TO->FROM	CIMARRON - MINCO 345KV CKT 1	956	956	0.23906	123.5221	G14-057T 345.00 - SUNNYSIDE 345KV CKT 1
FDNS	06ALL	5	20SP	G15_079	TO->FROM	CIMARRON - MINCO 345KV CKT 1	956	956	0.24335	120.476	G14-057T 345.00 - SUNNYSIDE 345KV CKT 1
FDNS	06ALL	5	16WP	G15_079	TO->FROM	CIMARRON - MINCO 345KV CKT 1	956	956	0.24233	119.6144	G14-057T 345.00 - LAWTON EASTSIDE 345KV CKT 1
FDNS	06ALL	5	17SP	G15_079	TO->FROM	CIMARRON - MINCO 345KV CKT 1	956	956	0.23906	118.2604	G14-057T 345.00 - LAWTON EASTSIDE 345KV CKT 1
FDNS	06ALL	5	20SP	G15_079	TO->FROM	CIMARRON - MINCO 345KV CKT 1	956	956	0.24335	115.0864	G14-057T 345.00 - LAWTON EASTSIDE 345KV CKT 1
FDNS	06ALL	5	17G	G15_079	TO->FROM	CIMARRON - MINCO 345KV CKT 1	956	956	0.20383	113.1247	MATHWSN7 345.00 - TATONGA7 345.00 345KV CKT 1
FDNS	06ALL	5	20WP	G15_079	TO->FROM	CIMARRON - MINCO 345KV CKT 1	956	956	0.20258	112.7231	MATHWSN7 345.00 - TATONGA7 345.00 345KV CKT 1
FDNS	06ALL	5	20L	G15_079	TO->FROM	CIMARRON - MINCO 345KV CKT 1	956	956	0.21182	110.4804	CHISHOLM7 345.00 - WOODWARD DISTRICT EHV 345KV CKT 1
FDNS	06ALL	5	17G	G15_079	TO->FROM	CIMARRON - MINCO 345KV CKT 1	956	956	0.2291	110.4087	CHISHOLM7 345.00 - WOODWARD DISTRICT EHV 345KV CKT 1
FDNS	06ALL	5	20WP	G15_079	TO->FROM	CIMARRON - MINCO 345KV CKT 1	956	956	0.20258	107.3503	G11_051T 345.00 - TATONGA7 345.00 345KV CKT 1
FDNS	06ALL	5	17G	G15_079	TO->FROM	CIMARRON - MINCO 345KV CKT 1	956	956	0.20383	107.1655	G11_051T 345.00 - TATONGA7 345.00 345KV CKT 1
FDNS	06ALL	5	20WP	G15_079	TO->FROM	CIMARRON - MINCO 345KV CKT 1	956	956	0.2332	106.6912	CHISHOLM7 345.00 - WOODWARD DISTRICT EHV 345KV CKT 1
FDNS	06ALL	5	16WP	G15_079	TO->FROM	CIMARRON - MINCO 345KV CKT 1	956	956	0.20904	106.1194	MATHWSN7 345.00 - TATONGA7 345.00 345KV CKT 1
FDNS	06ALL	5	17SP	G15_079	TO->FROM	CIMARRON - MINCO 345KV CKT 1	956	956	0.20699	106.0588	MATHWSN7 345.00 - TATONGA7 345.00 345KV CKT 1
FDNS	06ALL	5	20WP	G15_079	TO->FROM	CIMARRON - MINCO 345KV CKT 1	956	956	0.20258	105.6974	G11_051T 345.00 - WOODWARD DISTRICT EHV 345KV CKT 1
FDNS	06ALL	5	17G	G15_079	TO->FROM	CIMARRON - MINCO 345KV CKT 1	956	956	0.20383	105.5499	G11_051T 345.00 - WOODWARD DISTRICT EHV 345KV CKT 1
FDNS	06ALL	5	20SP	G15_079	TO->FROM	CIMARRON - MINCO 345KV CKT 1	956	956	0.20935	105.1459	MATHWSN7 345.00 - TATONGA7 345.00 345KV CKT 1
FDNS	06ALL	5	20SP	G15_079	TO->FROM	CIMARRON - MINCO 345KV CKT 1	956	956	0.24025	102.6282	CHISHOLM7 345.00 - WOODWARD DISTRICT EHV 345KV CKT 1
FDNS	06ALL	5	17SP	G15_079	TO->FROM	CIMARRON - MINCO 345KV CKT 1	956	956	0.23556	102.3712	CHISHOLM7 345.00 - WOODWARD DISTRICT EHV 345KV CKT 1
FDNS	06ALL	5	17SP	G15_079	TO->FROM	CIMARRON - MINCO 345KV CKT 1	956	956	0.20699	100.8538	G11_051T 345.00 - TATONGA7 345.00 345KV CKT 1
FDNS	06ALL	5	16WP	G15_079	TO->FROM	CIMARRON - MINCO 345KV CKT 1	956	956	0.20904	100.7286	G11_051T 345.00 - TATONGA7 345.00 345KV CKT 1
FDNS	06ALL	5	20SP	G15_079	TO->FROM	CIMARRON - MINCO 345KV CKT 1	956	956	0.20935	100	G11_051T 345.00 - TATONGA7 345.00 345KV CKT 1
FDNS	06ALL	5	16WP	G15_079	TO->FROM	CIMARRON - MINCO 345KV CKT 1	956	956	0.23726	99.9	CHISHOLM7 345.00 - WOODWARD DISTRICT EHV 345KV CKT 1
FDNS	06ALL	5	20L	G15_079	TO->FROM	G14-057T 345.00 - LAWTON EASTSIDE 345KV CKT 1	717	789	0.10216	104.5834	BASE CASE
FDNS	06ALL	5	20L	G15_079	FROM->TO	G14-057T 345.00 - SUNNYSIDE 345KV CKT 1	717	789	0.10216	117.7866	BASE CASE
FDNS	06ALL	5	20WP	G15_079	FROM->TO	G14-057T 345.00 - SUNNYSIDE 345KV CKT 1	717	789	0.12413	105.6059	BASE CASE
FDNS	06ALL	5	17G	G15_079	FROM->TO	G14-057T 345.00 - SUNNYSIDE 345KV CKT 1	717	789	0.12351	105.2883	BASE CASE
FDNS	06ALL	5	16WP	G15_079	FROM->TO	G14-057T 345.00 - SUNNYSIDE 345KV CKT 1	717	789	0.12677	103.9305	BASE CASE
FDNS	06ALL	5	20L	G15_079	FROM->TO	GRACEMONT - MINCO 345KV CKT 1	1195	1195	0.212	100.3039	G14-057T 345.00 - SUNNYSIDE 345KV CKT 1
FDNS	00NR	5	25SP	G15_079	FROM->TO	Hitchland Interchange (SIEM 8743067) 345/230/13.2KV TRANSFORMER CKT 2	560	644	0.03167	99.8	Hitchland Interchange (H TB80155502) 345/230/13.2KV TRANSFORMER CKT 1
FDNS	00NR	5	25SP	G15_079	FROM->TO	Hitchland Interchange (SIEM 8743067) 345/230/13.2KV TRANSFORMER CKT 2	560	644	0.03167	99.8	Hitchland Interchange (H TB80155502) 345/230/13.2KV TRANSFORMER CKT 1
FDNS	00NR	5	25SP	G15_079	TO->FROM	JONES STATION - TUCO INTERCHANGE 230KV CKT 1	343.79	343.79	0.03484	129.641	CARLISLE INTERCHANGE - TUCO INTERCHANGE 230KV CKT 1
FDNS	00NR	5	25SP	G15_079	TO->FROM	JONES STATION - TUCO INTERCHANGE 230KV CKT 1	343.79	343.79	0.03484	129.641	CARLISLE INTERCHANGE - TUCO INTERCHANGE 230KV CKT 1
FDNS	00NR	5	25SP	G15_079	TO->FROM	JONES STATION - TUCO INTERCHANGE 230KV CKT 1	343.79	343.79	0.03772	112.7964	GEN526333 1-JONES GEN #3 21 KV
FDNS	00NR	5	25SP	G15_079	TO->FROM	JONES STATION - TUCO INTERCHANGE 230KV CKT 1	343.79	343.79	0.03772	112.4061	GEN526334 1-JONES_4 116.500
FDNS	00NR	5	25SP	G15_079	TO->FROM	JONES STATION - TUCO INTERCHANGE 230KV CKT 1	343.79	343.79	0.03416	103.4197	CARLISLE INTERCHANGE - WOLFFORTH INTERCHANGE 230KV CKT 1
FDNS	00NR	5	25SP	G15_079	TO->FROM	JONES STATION - TUCO INTERCHANGE 230KV CKT 1	343.79	343.79	0.03193	100.5886	P12:345:SPS:J02.1.TOLK.EDDY
FDNS	00NR	5	25SP	G15_079	TO->FROM	JONES STATION - TUCO INTERCHANGE 230KV CKT 1	343.79	343.79	0.03772	100.5344	GEN526332 1-JONES GEN #2 21 KV

SOLUTION	GROUP	SCENARIO	SEASON	SOURCE	DIRECTION	MONITORED ELEMENT	RATEA (MVA)	RATEB(MVA)	TDF	TC%LOADING (% MVA)	CONTINGENCY
FDNS	00NR	5	25SP	G15_079	TO->FROM	JONES STATION - TUCO INTERCHANGE 230KV CKT 1	343.79	343.79	0.03772	100.5324	GEN526331 1-JONES GEN #1 22 KV
FDNS	00NR	5	25SP	G15_079	TO->FROM	JONES STATION - TUCO INTERCHANGE 230KV CKT 1	343.79	343.79	0.03875	100.5232	TUCO INTERCHANGE (ENRCO 136401) 230/115/13.2KV TRANSFORMER CKT 1
FDNS	00NR	5	25SP	G15_079	TO->FROM	JONES STATION - TUCO INTERCHANGE 230KV CKT 1	343.79	343.79	0.03875	100.5232	TUCO INTERCHANGE (ENRCO 136401) 230/115/13.2KV TRANSFORMER CKT 1
FDNS	00NR	5	25SP	G15_079	TO->FROM	JONES STATION - TUCO INTERCHANGE 230KV CKT 1	343.79	343.79	0.03875	100.5232	TUCO INTERCHANGE (ENRCO 136401) 230/115/13.2KV TRANSFORMER CKT 2
FDNS	00NR	5	25SP	G15_079	TO->FROM	JONES STATION - TUCO INTERCHANGE 230KV CKT 1	343.79	343.79	0.03875	100.5232	TUCO INTERCHANGE (ENRCO 136401) 230/115/13.2KV TRANSFORMER CKT 2
FDNS	00NR	5	25SP	G15_079	TO->FROM	JONES STATION - TUCO INTERCHANGE 230KV CKT 1	343.79	343.79	0.04045	99.6	LUBBOCK EAST INTERCHANGE - TUCO INTERCHANGE 115KV CKT 1
FDNS	00NR	5	25SP	G15_079	TO->FROM	JONES STATION - TUCO INTERCHANGE 230KV CKT 1	343.79	343.79	0.04045	99.6	LUBBOCK EAST INTERCHANGE - TUCO INTERCHANGE 115KV CKT 1
FDNS	00NR	5	25SP	G15_079	FROM->TO	LUBBOCK POWER & LIGHT-HOLLY PLANT (SHIH T101039) 230/69/13.5KV TRANSFORMER CKT 1	224	224	0.03577	104.6927	LUBBOCK POWER & LIGHT-SOUTHEAST - LUBBOCK SOUTH INTERCHANGE 230KV CKT 1
FDNS	00NR	5	25SP	G15_079	FROM->TO	LUBBOCK POWER & LIGHT-HOLLY PLANT (SHIH T101039) 230/69/13.5KV TRANSFORMER CKT 1	224	224	0.03577	104.6925	P12:LPL:SPS:K64.1.LP-SE.LUBBS
FDNS	00NR	5	25SP	G15_079	FROM->TO	LUBBOCK POWER & LIGHT-HOLLY PLANT (SHIH T101039) 230/69/13.5KV TRANSFORMER CKT 1	224	224	0.03377	101.9351	LUBBOCK EAST INTERCHANGE - LUBBOCK POWER & LIGHT-WADSWORTH 230KV CKT 1
FDNS	00NR	5	25SP	G15_079	FROM->TO	LUBBOCK POWER & LIGHT-HOLLY PLANT (SHIH T101039) 230/69/13.5KV TRANSFORMER CKT 1	224	224	0.03377	101.9204	P12:230:LPL:K57.1.LP-WADS.LUBBE
FDNS	00NR	5	25SP	G15_079	FROM->TO	LUBBOCK POWER & LIGHT-HOLLY PLANT (SHIH T101039) 230/69/13.5KV TRANSFORMER CKT 1	224	224	0.03377	101.9203	LUBBOCK POWER & LIGHT-WADSWORTH (SHIH T101038) 230/69/13.5KV TRANSFORMER CKT 1
FDNS	00NR	5	25SP	G15_079	FROM->TO	LUBBOCK POWER & LIGHT-HOLLY PLANT (SHIH T101039) 230/69/13.5KV TRANSFORMER CKT 1	224	224	0.03377	101.9203	LUBBOCK POWER & LIGHT-WADSWORTH (SHIH T101038) 230/69/13.5KV TRANSFORMER CKT 1
FDNS	06ALL	5	17G	G15_079	FROM->TO	POTTER COUNTY INTERCHANGE (WAUK 90343-A) 345/230/13.2KV TRANSFORMER CKT 1	560	560	0.19653	131.4477	P12:345:SPS:J15.1.XRDS.TOLK
FDNS	06ALL	5	17G	G15_079	FROM->TO	POTTER COUNTY INTERCHANGE (WAUK 90343-A) 345/230/13.2KV TRANSFORMER CKT 1	560	560	0.19653	130.9697	P12:345:SPS:J15.1.XRDS.TOLK
FDNS	06ALL	5	16WP	G15_079	FROM->TO	POTTER COUNTY INTERCHANGE (WAUK 90343-A) 345/230/13.2KV TRANSFORMER CKT 1	560	560	0.20779	123.3278	P12:345:SPS:J15.1.XRDS.TOLK
FDNS	06ALL	5	16WP	G15_079	FROM->TO	POTTER COUNTY INTERCHANGE (WAUK 90343-A) 345/230/13.2KV TRANSFORMER CKT 1	560	560	0.20779	122.0001	P12:345:SPS:J15.1.XRDS.TOLK
FDNS	06ALL	5	17SP	G15_079	FROM->TO	POTTER COUNTY INTERCHANGE (WAUK 90343-A) 345/230/13.2KV TRANSFORMER CKT 1	560	560	0.20175	108.8592	P12:345:SPS:J15.1.XRDS.TOLK
FDNS	06ALL	5	17SP	G15_079	FROM->TO	POTTER COUNTY INTERCHANGE (WAUK 90343-A) 345/230/13.2KV TRANSFORMER CKT 1	560	560	0.20175	107.3735	P12:345:SPS:J15.1.XRDS.TOLK
FDNS	06ALL	5	16WP	G15_079	FROM->TO	TOLK STATION (ABBXNL844501) 345/230/13.2KV TRANSFORMER CKT 1	560	560	0.27761	113.0248	CROSSROADS 7345.00 - TOLK STATION 345KV CKT 1
FDNS	06ALL	5	16WP	G15_079	FROM->TO	TOLK STATION (ABBXNL844501) 345/230/13.2KV TRANSFORMER CKT 1	560	560	0.27761	110.571	CROSSROADS 7345.00 - TOLK STATION 345KV CKT 1
FDNS	06ALL	6	20SP	G15_079	FROM->TO	CHISHOLM6 230.00 - ELK CITY 230KV 230KV CKT 1	353	353	0.05909	102.8848	BASE CASE
FDNS	06ALL	6	17SP	G15_079	FROM->TO	CHISHOLM6 230.00 - ELK CITY 230KV 230KV CKT 1	353	353	0.05962	100.6562	BASE CASE
FDNS	06ALL	6	17G	G15_079	TO->FROM	CIMARRON - MINCO 345KV CKT 1	956	956	0.209	121.6178	G14-057T 345.00 - SUNNYSIDE 345KV CKT 1
FDNS	06ALL	6	20WP	G15_079	TO->FROM	CIMARRON - MINCO 345KV CKT 1	956	956	0.21173	119.7395	G14-057T 345.00 - SUNNYSIDE 345KV CKT 1
FDNS	06ALL	6	17G	G15_079	TO->FROM	CIMARRON - MINCO 345KV CKT 1	956	956	0.209	116.437	G14-057T 345.00 - LAWTON EASTSIDE 345KV CKT 1
FDNS	06ALL	6	20WP	G15_079	TO->FROM	CIMARRON - MINCO 345KV CKT 1	956	956	0.21173	114.5016	G14-057T 345.00 - LAWTON EASTSIDE 345KV CKT 1
FDNS	06ALL	6	17SP	G15_079	TO->FROM	CIMARRON - MINCO 345KV CKT 1	956	956	0.21222	114.4047	G14-057T 345.00 - SUNNYSIDE 345KV CKT 1
FDNS	06ALL	6	16WP	G15_079	TO->FROM	CIMARRON - MINCO 345KV CKT 1	956	956	0.21514	114.352	G14-057T 345.00 - SUNNYSIDE 345KV CKT 1
FDNS	06ALL	6	20SP	G15_079	TO->FROM	CIMARRON - MINCO 345KV CKT 1	956	956	0.21716	111.5632	G14-057T 345.00 - SUNNYSIDE 345KV CKT 1
FDNS	06ALL	6	17SP	G15_079	TO->FROM	CIMARRON - MINCO 345KV CKT 1	956	956	0.21222	109.1774	G14-057T 345.00 - LAWTON EASTSIDE 345KV CKT 1
FDNS	06ALL	6	16WP	G15_079	TO->FROM	CIMARRON - MINCO 345KV CKT 1	956	956	0.21514	108.975	G14-057T 345.00 - LAWTON EASTSIDE 345KV CKT 1
FDNS	06ALL	6	20SP	G15_079	TO->FROM	CIMARRON - MINCO 345KV CKT 1	956	956	0.21716	106.5254	G14-057T 345.00 - LAWTON EASTSIDE 345KV CKT 1
FDNS	06ALL	6	17G	G15_079	TO->FROM	CIMARRON - MINCO 345KV CKT 1	956	956	0.19829	105.9404	CHISHOLM7 345.00 - WOODWARD DISTRICT EHV 345KV CKT 1
FDNS	06ALL	6	20WP	G15_079	TO->FROM	CIMARRON - MINCO 345KV CKT 1	956	956	0.20276	101.5954	CHISHOLM7 345.00 - WOODWARD DISTRICT EHV 345KV CKT 1
FDNS	06ALL	6	20L	G15_079	TO->FROM	G14-057T 345.00 - LAWTON EASTSIDE 345KV CKT 1	717	789	0.09753	102.0743	BASE CASE
FDNS	06ALL	6	20L	G15_079	FROM->TO	G14-057T 345.00 - SUNNYSIDE 345KV CKT 1	717	789	0.09753	115.279	BASE CASE
FDNS	06ALL	6	20WP	G15_079	FROM->TO	G14-057T 345.00 - SUNNYSIDE 345KV CKT 1	717	789	0.11902	103.5944	BASE CASE
FDNS	06ALL	6	17G	G15_079	FROM->TO	G14-057T 345.00 - SUNNYSIDE 345KV CKT 1	717	789	0.11828	103.4014	BASE CASE
FDNS	06ALL	6	16WP	G15_079	FROM->TO	G14-057T 345.00 - SUNNYSIDE 345KV CKT 1	717	789	0.12139	102.0868	BASE CASE
FDNS	00NR	6	25SP	G15_079	FROM->TO	Hitchland Interchange (SIEM 8743067) 345/230/13.2KV TRANSFORMER CKT 2	560	644	0.03132	100.0805	Hitchland Interchange (H TB80155502) 345/230/13.2KV TRANSFORMER CKT 1
FDNS	00NR	6	25SP	G15_079	FROM->TO	Hitchland Interchange (SIEM 8743067) 345/230/13.2KV TRANSFORMER CKT 2	560	644	0.03132	100.0805	Hitchland Interchange (H TB80155502) 345/230/13.2KV TRANSFORMER CKT 1
FDNS	00NR	6	25SP	G15_079	TO->FROM	JONES STATION - TUCO INTERCHANGE 230KV CKT 1	343.79	343.79	0.03484	129.6325	CARLISLE INTERCHANGE - TUCO INTERCHANGE 230KV CKT 1
FDNS	00NR	6	25SP	G15_079	TO->FROM	JONES STATION - TUCO INTERCHANGE 230KV CKT 1	343.79	343.79	0.03484	129.6325	CARLISLE INTERCHANGE - TUCO INTERCHANGE 230KV CKT 1
FDNS	00NR	6	25SP	G15_079	TO->FROM	JONES STATION - TUCO INTERCHANGE 230KV CKT 1	343.79	343.79	0.03771	112.7855	GEN526333 1-JONES GEN #3 21 KV
FDNS	00NR	6	25SP	G15_079	TO->FROM	JONES STATION - TUCO INTERCHANGE 230KV CKT 1	343.79	343.79	0.03771	112.3951	GEN526334 1-JONES_4 116.500
FDNS	00NR	6	25SP	G15_079	TO->FROM	JONES STATION - TUCO INTERCHANGE 230KV CKT 1	343.79	343.79	0.03415	103.4125	CARLISLE INTERCHANGE - WOLFFORTH INTERCHANGE 230KV CKT 1
FDNS	00NR	6	25SP	G15_079	TO->FROM	JONES STATION - TUCO INTERCHANGE 230KV CKT 1	343.79	343.79	0.03192	100.5783	P12:345:SPS:J02.1.TOLK.EDDY
FDNS	00NR	6	25SP	G15_079	TO->FROM	JONES STATION - TUCO INTERCHANGE 230KV CKT 1	343.79	343.79	0.03771	100.5273	GEN526332 1-JONES GEN #2 21 KV
FDNS	00NR	6	25SP	G15_079	TO->FROM	JONES STATION - TUCO INTERCHANGE 230KV CKT 1	343.79	343.79	0.03771	100.5254	GEN526331 1-JONES GEN #1 22 KV
FDNS	00NR	6	25SP	G15_079	TO->FROM	JONES STATION - TUCO INTERCHANGE 230KV CKT 1	343.79	343.79	0.03874	100.5163	TUCO INTERCHANGE (ENRCO 136401) 230/115/13.2KV TRANSFORMER CKT 1
FDNS	00NR	6	25SP	G15_079	TO->FROM	JONES STATION - TUCO INTERCHANGE 230KV CKT 1	343.79	343.79	0.03874	100.5163	TUCO INTERCHANGE (ENRCO 136401) 230/115/13.2KV TRANSFORMER CKT 1
FDNS	00NR	6	25SP	G15_079	TO->FROM	JONES STATION - TUCO INTERCHANGE 230KV CKT 1	343.79	343.79	0.03874	100.5163	TUCO INTERCHANGE (ENRCO 136401) 230/115/13.2KV TRANSFORMER CKT 2
FDNS	00NR	6	25SP	G15_079	TO->FROM	JONES STATION - TUCO INTERCHANGE 230KV CKT 1	343.79	343.79	0.03874	100.5163	TUCO INTERCHANGE (ENRCO 136401) 230/115/13.2KV TRANSFORMER CKT 2
FDNS	00NR	6	25SP	G15_079	TO->FROM	JONES STATION - TUCO INTERCHANGE 230KV CKT 1	343.79	343.79	0.04045	99.6	LUBBOCK EAST INTERCHANGE - TUCO INTERCHANGE 115KV CKT 1
FDNS	00NR	6	25SP	G15_079	TO->FROM	JONES STATION - TUCO INTERCHANGE 230KV CKT 1	343.79	343.79	0.04045	99.6	LUBBOCK EAST INTERCHANGE - TUCO INTERCHANGE 115KV CKT 1
FDNS	00NR	6	25SP	G15_079	FROM->TO	LUBBOCK POWER & LIGHT-HOLLY PLANT (SHIH T101039) 230/69/13.5KV TRANSFORMER CKT 1	224	224	0.03577	104.6926	LUBBOCK POWER & LIGHT-SOUTHEAST - LUBBOCK SOUTH INTERCHANGE 230KV CKT 1
FDNS	00NR	6	25SP	G15_079	FROM->TO	LUBBOCK POWER & LIGHT-HOLLY PLANT (SHIH T101039) 230/69/13.5KV TRANSFORMER CKT 1	224	224	0.03577	104.6924	P12:LPL:SPS:K64.1.LP-SE.LUBBS
FDNS	00NR	6	25SP	G15_079	FROM->TO	LUBBOCK POWER & LIGHT-HOLLY PLANT (SHIH T101039) 230/69/13.5KV TRANSFORMER CKT 1	224	224	0.03377	101.9349	LUBBOCK EAST INTERCHANGE - LUBBOCK POWER & LIGHT-WADSWORTH 230KV CKT 1
FDNS	00NR	6	25SP	G15_079	FROM->TO	LUBBOCK POWER & LIGHT-HOLLY PLANT (SHIH T101039) 230/69/13.5KV TRANSFORMER CKT 1	224	224	0.03377	101.9202	LUBBOCK POWER & LIGHT-WADSWORTH (SHIH T101038) 230/69/13.5KV TRANSFORMER CKT 1
FDNS	00NR	6	25SP	G15_079	FROM->TO	LUBBOCK POWER & LIGHT-HOLLY PLANT (SHIH T101039) 230/69/13.5KV TRANSFORMER CKT 1	224	224	0.03377	101.9202	LUBBOCK POWER & LIGHT-WADSWORTH (SHIH T101038) 230/69/13.5KV TRANSFORMER CKT 1
FDNS	00NR	6	25SP	G15_079	FROM->TO	LUBBOCK POWER & LIGHT-HOLLY PLANT (SHIH T101039) 230/69/13.5KV TRANSFORMER CKT 1	224	224	0.03377	101.9202	P12:230:LPL:K57.1.LP-WADS.LUBBE
FDNS	06ALL	6	16WP	G15_079	FROM->TO	POTTER COUNTY INTERCHANGE (WAUK 90343-A) 345/230/13.2KV TRANSFORMER CKT 1	560	560	0.22195	124.5835	P12:345:SPS:J15.1.XRDS.TOLK
FDNS	06ALL	6	16WP	G15_079	FROM->TO	POTTER COUNTY INTERCHANGE (WAUK 90343-A) 345/230/13.2KV TRANSFORMER CKT 1	560	560	0.22195	123.2053	P12:345:SPS:J15.1.XRDS.TOLK
FDNS	06ALL	6	16WP	G15_079	FROM->TO	POTTER COUNTY INTERCHANGE (WAUK 90343-A) 345/230/13.2KV TRANSFORMER CKT 1	560	560	0.19679	116.5159	POTTER COUNTY INTERCHANGE - TOLK STATION 345KV CKT 1
FDNS	06ALL	6	16WP	G15_079	FROM->TO	POTTER COUNTY INTERCHANGE (WAUK 90343-A) 345/230/13.2KV TRANSFORMER CKT 1	560	560	0.19679	115.3558	POTTER COUNTY INTERCHANGE - TOLK STATION 345KV CKT 1
FDNS	06ALL	6	17SP	G15_079	FROM->TO	POTTER COUNTY INTERCHANGE (WAUK 90343-A) 345/230/13.2KV TRANSFORMER CKT 1	560	560	0.21588	109.9868	P12:345:SPS:J15.1.XRDS.TOLK
FDNS	06ALL	6	17SP	G15_079	FROM->TO	POTTER COUNTY INTERCHANGE (WAUK 90343-A) 345/230/13.2KV TRANSFORMER CKT 1	560	560	0.21588	108.4833	P12:345:SPS:J15.1.XRDS.TOLK
FDNS	06ALL	6	16WP	G15_079	FROM->TO	TOLK STATION (ABBXNL844501) 345/230/13.2KV TRANSFORMER CKT 1	560	560	0.27926	112.8509	CROSSROADS 7345.00 - TOLK STATION 345KV CKT 1
FDNS	06ALL	6	16WP	G15_079	FROM->TO	TOLK STATION (ABBXNL844501) 345/230/13.2KV TRANSFORMER CKT 1	560	560	0.27926	110.425	CROSSROADS 7345.00 - TOLK STATION 345KV CKT 1
FDNS	06ALL	7	20SP	G15_079	FROM->TO	CHISHOLM6 230.00 - ELK CITY 230KV 230KV CKT 1	353	353	0.05909	100.158	BASE CASE
FDNS	06ALL	7	17G	G15_079	TO->FROM	CIMARRON - MINCO 345KV CKT 1	956	956	0.20902	117.9395	G14-057T 345.00 - SUNNYSIDE 345KV CKT 1
FDNS	06ALL	7	20WP	G15_079	TO->FROM	CIMARRON - MINCO 345KV CKT 1	956	956	0.21173	116.4002	G14-057T 345.00 - SUNNYSIDE 345KV CKT 1
FDNS	06ALL	7	17G	G15_079	TO->FROM	CIMARRON - MINCO 345KV CKT 1	956	956	0.20902	112.8925	G14-057T 345.00 - LAWTON EASTSIDE 345KV CKT 1
FDNS	06ALL	7	16WP	G15_079	TO->FROM	CIMARRON - MINCO 345KV CKT 1	956	956	0.21516	111.0593	G14-057T 345.00 - SUNNYSIDE 345KV CKT 1
FDNS	06ALL	7	20WP	G15_079	TO->FROM	CIMARRON - MINCO 345KV CKT 1	956	956	0.21173	111.0342	G14-057T 345.00 - LAWTON EASTSIDE 345KV CKT 1
FDNS	06ALL	7	17SP	G15_079	TO->FROM	CIMARRON - MINCO 345KV CKT 1	956	956	0.21223	111.0288	G14-057T 345.00 - SUNNYSIDE 345KV CKT 1
FDNS	06ALL	7	20SP	G15_079	TO->FROM	CIMARRON - MINCO 345KV CKT 1	956	956	0.21716	108.4281	G14-057T 345.00 - SUNNYSIDE 345KV CKT 1
FDNS	06ALL	7	17SP	G15_079	TO->FROM	CIMARRON - MINCO 345KV CKT 1	956	956	0.21223	106.172	G14-057T 345.00 - LAWTON EASTSIDE 345KV CKT 1

SOLUTION	GROUP	SCENARIO	SEASON	SOURCE	DIRECTION	MONITORED ELEMENT	RATEA (MVA)	RATEB(MVA)	TDF	TC%LOADING (% MVA)	CONTINGENCY
FDNS	06ALL	7	16WP	G15_079	TO->FROM	CIMARRON - MINCO 345KV CKT 1	956	956	0.21516	105.9627	G14-057T 345.00 - LAWTON EASTSIDE 345KV CKT 1
FDNS	06ALL	7	20SP	G15_079	TO->FROM	CIMARRON - MINCO 345KV CKT 1	956	956	0.21716	103.5061	G14-057T 345.00 - LAWTON EASTSIDE 345KV CKT 1
FDNS	06ALL	7	20L	G15_079	TO->FROM	G14-057T 345.00 - LAWTON EASTSIDE 345KV CKT 1	717	789	0.09754	100.7791	BASE CASE
FDNS	06ALL	7	20L	G15_079	FROM->TO	G14-057T 345.00 - SUNNYSIDE 345KV CKT 1	717	789	0.09754	114.0012	BASE CASE
FDNS	06ALL	7	20WP	G15_079	FROM->TO	G14-057T 345.00 - SUNNYSIDE 345KV CKT 1	717	789	0.11902	102.5888	BASE CASE
FDNS	06ALL	7	17G	G15_079	FROM->TO	G14-057T 345.00 - SUNNYSIDE 345KV CKT 1	717	789	0.11829	102.2119	BASE CASE
FDNS	06ALL	7	16WP	G15_079	FROM->TO	G14-057T 345.00 - SUNNYSIDE 345KV CKT 1	717	789	0.1214	101.1576	BASE CASE
FDNS	00NR	7	25SP	G15_079	TO->FROM	JONES STATION - TUCO INTERCHANGE 230KV CKT 1	343.79	343.79	0.03484	129.1537	CARLISLE INTERCHANGE - TUCO INTERCHANGE 230KV CKT 1
FDNS	00NR	7	25SP	G15_079	TO->FROM	JONES STATION - TUCO INTERCHANGE 230KV CKT 1	343.79	343.79	0.03484	129.1537	CARLISLE INTERCHANGE - TUCO INTERCHANGE 230KV CKT 1
FDNS	00NR	7	25SP	G15_079	TO->FROM	JONES STATION - TUCO INTERCHANGE 230KV CKT 1	343.79	343.79	0.03771	112.419	GEN526333 1-JONES GEN #3 21 KV
FDNS	00NR	7	25SP	G15_079	TO->FROM	JONES STATION - TUCO INTERCHANGE 230KV CKT 1	343.79	343.79	0.03771	112.036	GEN526334 1-JONES_4 116.500
FDNS	00NR	7	25SP	G15_079	TO->FROM	JONES STATION - TUCO INTERCHANGE 230KV CKT 1	343.79	343.79	0.03415	103.0013	CARLISLE INTERCHANGE - WOLFFORTH INTERCHANGE 230KV CKT 1
FDNS	00NR	7	25SP	G15_079	TO->FROM	JONES STATION - TUCO INTERCHANGE 230KV CKT 1	343.79	343.79	0.03192	100.2536	P12:345:SPS:J02.1.TOLK.EDDY
FDNS	00NR	7	25SP	G15_079	TO->FROM	JONES STATION - TUCO INTERCHANGE 230KV CKT 1	343.79	343.79	0.03771	100.1954	GEN526332 1-JONES GEN #2 21 KV
FDNS	00NR	7	25SP	G15_079	TO->FROM	JONES STATION - TUCO INTERCHANGE 230KV CKT 1	343.79	343.79	0.03771	100.1934	GEN526331 1-JONES GEN #1 22 KV
FDNS	00NR	7	25SP	G15_079	TO->FROM	JONES STATION - TUCO INTERCHANGE 230KV CKT 1	343.79	343.79	0.03874	100.1486	TUCO INTERCHANGE (ENRCO 136401) 230/115/13.2KV TRANSFORMER CKT 1
FDNS	00NR	7	25SP	G15_079	TO->FROM	JONES STATION - TUCO INTERCHANGE 230KV CKT 1	343.79	343.79	0.03874	100.1486	TUCO INTERCHANGE (ENRCO 136401) 230/115/13.2KV TRANSFORMER CKT 1
FDNS	00NR	7	25SP	G15_079	TO->FROM	JONES STATION - TUCO INTERCHANGE 230KV CKT 1	343.79	343.79	0.03874	100.1486	TUCO INTERCHANGE (ENRCO 136401) 230/115/13.2KV TRANSFORMER CKT 2
FDNS	00NR	7	25SP	G15_079	TO->FROM	JONES STATION - TUCO INTERCHANGE 230KV CKT 1	343.79	343.79	0.03874	100.1486	TUCO INTERCHANGE (ENRCO 136401) 230/115/13.2KV TRANSFORMER CKT 2
FDNS	00NR	7	25SP	G15_079	FROM->TO	LUBBOCK POWER & LIGHT-HOLLY PLANT (SHIH T101039) 230/69/13.5KV TRANSFORMER CKT 1	224	224	0.03577	104.7009	LUBBOCK POWER & LIGHT-SOUTHEAST - LUBBOCK SOUTH INTERCHANGE 230KV CKT 1
FDNS	00NR	7	25SP	G15_079	FROM->TO	LUBBOCK POWER & LIGHT-HOLLY PLANT (SHIH T101039) 230/69/13.5KV TRANSFORMER CKT 1	224	224	0.03577	104.6879	P12:LPL:SPS:K64.1.LP-SE.LUBBS
FDNS	00NR	7	25SP	G15_079	FROM->TO	LUBBOCK POWER & LIGHT-HOLLY PLANT (SHIH T101039) 230/69/13.5KV TRANSFORMER CKT 1	224	224	0.03377	101.9255	LUBBOCK EAST INTERCHANGE - LUBBOCK POWER & LIGHT-WADSWORTH 230KV CKT 1
FDNS	00NR	7	25SP	G15_079	FROM->TO	LUBBOCK POWER & LIGHT-HOLLY PLANT (SHIH T101039) 230/69/13.5KV TRANSFORMER CKT 1	224	224	0.03377	101.9108	P12:230:LPL:K57.1.LP-WADS.LUBBE
FDNS	00NR	7	25SP	G15_079	FROM->TO	LUBBOCK POWER & LIGHT-HOLLY PLANT (SHIH T101039) 230/69/13.5KV TRANSFORMER CKT 1	224	224	0.03377	101.9107	LUBBOCK POWER & LIGHT-WADSWORTH (SHIH T101038) 230/69/13.5KV TRANSFORMER CKT 1
FDNS	00NR	7	25SP	G15_079	FROM->TO	LUBBOCK POWER & LIGHT-HOLLY PLANT (SHIH T101039) 230/69/13.5KV TRANSFORMER CKT 1	224	224	0.03377	101.9107	LUBBOCK POWER & LIGHT-WADSWORTH (SHIH T101038) 230/69/13.5KV TRANSFORMER CKT 1
FDNS	06ALL	7	16WP	G15_079	FROM->TO	POTTER COUNTY INTERCHANGE (WAUK 90343-A) 345/230/13.2KV TRANSFORMER CKT 1	560	560	0.22197	133.795	P12:345:SPS:J15.1.XRDS.TOLK
FDNS	06ALL	7	16WP	G15_079	FROM->TO	POTTER COUNTY INTERCHANGE (WAUK 90343-A) 345/230/13.2KV TRANSFORMER CKT 1	560	560	0.22197	130.8152	P12:345:SPS:J15.1.XRDS.TOLK
FDNS	06ALL	7	16WP	G15_079	FROM->TO	POTTER COUNTY INTERCHANGE (WAUK 90343-A) 345/230/13.2KV TRANSFORMER CKT 1	560	560	0.19681	125.2874	POTTER COUNTY INTERCHANGE - TOLK STATION 345KV CKT 1
FDNS	06ALL	7	16WP	G15_079	FROM->TO	POTTER COUNTY INTERCHANGE (WAUK 90343-A) 345/230/13.2KV TRANSFORMER CKT 1	560	560	0.19681	122.7478	POTTER COUNTY INTERCHANGE - TOLK STATION 345KV CKT 1
FDNS	06ALL	7	17SP	G15_079	FROM->TO	POTTER COUNTY INTERCHANGE (WAUK 90343-A) 345/230/13.2KV TRANSFORMER CKT 1	560	560	0.21589	118.7065	P12:345:SPS:J15.1.XRDS.TOLK
FDNS	06ALL	7	17SP	G15_079	FROM->TO	POTTER COUNTY INTERCHANGE (WAUK 90343-A) 345/230/13.2KV TRANSFORMER CKT 1	560	560	0.21589	115.9022	P12:345:SPS:J15.1.XRDS.TOLK
FDNS	00NR	7	25SP	G15_079	FROM->TO	POTTER COUNTY INTERCHANGE (WAUK 90343-A) 345/230/13.2KV TRANSFORMER CKT 1	560	560	0.03735	100.2945	P12:345:SPS:J15.1.XRDS.TOLK
FDNS	00NR	7	25SP	G15_079	FROM->TO	POTTER COUNTY INTERCHANGE (WAUK 90343-A) 345/230/13.2KV TRANSFORMER CKT 1	560	560	0.03735	100.0757	P12:345:SPS:J15.1.XRDS.TOLK
FDNS	06ALL	7	16WP	G15_079	FROM->TO	TOLK STATION (ABBXNL844501) 345/230/13.2KV TRANSFORMER CKT 1	560	560	0.27929	112.9883	CROSSROADS 7345.00 - TOLK STATION 345KV CKT 1
FDNS	06ALL	7	16WP	G15_079	FROM->TO	TOLK STATION (ABBXNL844501) 345/230/13.2KV TRANSFORMER CKT 1	560	560	0.27929	110.8952	CROSSROADS 7345.00 - TOLK STATION 345KV CKT 1
FDNS	00NR	8	25SP	G15_079	TO->FROM	JONES STATION - TUCO INTERCHANGE 230KV CKT 1	343.79	343.79	0.03399	128.3131	CARLISLE INTERCHANGE - TUCO INTERCHANGE 230KV CKT 1
FDNS	00NR	8	25SP	G15_079	TO->FROM	JONES STATION - TUCO INTERCHANGE 230KV CKT 1	343.79	343.79	0.03399	128.3131	CARLISLE INTERCHANGE - TUCO INTERCHANGE 230KV CKT 1
FDNS	00NR	8	25SP	G15_079	TO->FROM	JONES STATION - TUCO INTERCHANGE 230KV CKT 1	343.79	343.79	0.03711	111.8492	GEN526333 1-JONES GEN #3 21 KV
FDNS	00NR	8	25SP	G15_079	TO->FROM	JONES STATION - TUCO INTERCHANGE 230KV CKT 1	343.79	343.79	0.03711	111.4668	GEN526334 1-JONES_4 116.500
FDNS	00NR	8	25SP	G15_079	TO->FROM	JONES STATION - TUCO INTERCHANGE 230KV CKT 1	343.79	343.79	0.03341	102.3279	CARLISLE INTERCHANGE - WOLFFORTH INTERCHANGE 230KV CKT 1
FDNS	00NR	8	25SP	G15_079	TO->FROM	JONES STATION - TUCO INTERCHANGE 230KV CKT 1	343.79	343.79	0.03175	99.7	P12:345:SPS:J02.1.TOLK.EDDY
FDNS	00NR	8	25SP	G15_079	TO->FROM	JONES STATION - TUCO INTERCHANGE 230KV CKT 1	343.79	343.79	0.03805	99.5	TUCO INTERCHANGE (ENRCO 136401) 230/115/13.2KV TRANSFORMER CKT 1
FDNS	00NR	8	25SP	G15_079	TO->FROM	JONES STATION - TUCO INTERCHANGE 230KV CKT 1	343.79	343.79	0.03805	99.5	TUCO INTERCHANGE (ENRCO 136401) 230/115/13.2KV TRANSFORMER CKT 1
FDNS	00NR	8	25SP	G15_079	TO->FROM	JONES STATION - TUCO INTERCHANGE 230KV CKT 1	343.79	343.79	0.03805	99.5	TUCO INTERCHANGE (ENRCO 136401) 230/115/13.2KV TRANSFORMER CKT 2
FDNS	00NR	8	25SP	G15_079	TO->FROM	JONES STATION - TUCO INTERCHANGE 230KV CKT 1	343.79	343.79	0.03805	99.5	TUCO INTERCHANGE (ENRCO 136401) 230/115/13.2KV TRANSFORMER CKT 2
FDNS	00NR	8	25SP	G15_079	TO->FROM	JONES STATION - TUCO INTERCHANGE 230KV CKT 1	343.79	343.79	0.03711	99.5	GEN526331 1-JONES GEN #1 22 KV
FDNS	00NR	8	25SP	G15_079	TO->FROM	JONES STATION - TUCO INTERCHANGE 230KV CKT 1	343.79	343.79	0.03711	99.5	GEN526332 1-JONES GEN #2 21 KV
FDNS	00NR	8	25SP	G15_079	FROM->TO	LUBBOCK POWER & LIGHT-HOLLY PLANT (SHIH T101039) 230/69/13.5KV TRANSFORMER CKT 1	224	224	0.03577	104.7109	LUBBOCK POWER & LIGHT-SOUTHEAST - LUBBOCK SOUTH INTERCHANGE 230KV CKT 1
FDNS	00NR	8	25SP	G15_079	FROM->TO	LUBBOCK POWER & LIGHT-HOLLY PLANT (SHIH T101039) 230/69/13.5KV TRANSFORMER CKT 1	224	224	0.03577	104.6979	P12:LPL:SPS:K64.1.LP-SE.LUBBS
FDNS	00NR	8	25SP	G15_079	FROM->TO	LUBBOCK POWER & LIGHT-HOLLY PLANT (SHIH T101039) 230/69/13.5KV TRANSFORMER CKT 1	224	224	0.03376	101.953	LUBBOCK EAST INTERCHANGE - LUBBOCK POWER & LIGHT-WADSWORTH 230KV CKT 1
FDNS	00NR	8	25SP	G15_079	FROM->TO	LUBBOCK POWER & LIGHT-HOLLY PLANT (SHIH T101039) 230/69/13.5KV TRANSFORMER CKT 1	224	224	0.03376	101.9381	P12:230:LPL:K57.1.LP-WADS.LUBBE
FDNS	00NR	8	25SP	G15_079	FROM->TO	LUBBOCK POWER & LIGHT-HOLLY PLANT (SHIH T101039) 230/69/13.5KV TRANSFORMER CKT 1	224	224	0.03376	101.938	LUBBOCK POWER & LIGHT-WADSWORTH (SHIH T101038) 230/69/13.5KV TRANSFORMER CKT 1
FDNS	00NR	8	25SP	G15_079	FROM->TO	LUBBOCK POWER & LIGHT-HOLLY PLANT (SHIH T101039) 230/69/13.5KV TRANSFORMER CKT 1	224	224	0.03376	101.938	LUBBOCK POWER & LIGHT-WADSWORTH (SHIH T101038) 230/69/13.5KV TRANSFORMER CKT 1
FDNS	00NR	9	25SP	G15_079	FROM->TO	LUBBOCK POWER & LIGHT-HOLLY PLANT (SHIH T101039) 230/69/13.5KV TRANSFORMER CKT 1	224	224	0.03576	104.6637	LUBBOCK POWER & LIGHT-SOUTHEAST - LUBBOCK SOUTH INTERCHANGE 230KV CKT 1
FDNS	00NR	9	25SP	G15_079	FROM->TO	LUBBOCK POWER & LIGHT-HOLLY PLANT (SHIH T101039) 230/69/13.5KV TRANSFORMER CKT 1	224	224	0.03576	104.6507	P12:LPL:SPS:K64.1.LP-SE.LUBBS
FDNS	00NR	9	25SP	G15_079	FROM->TO	LUBBOCK POWER & LIGHT-HOLLY PLANT (SHIH T101039) 230/69/13.5KV TRANSFORMER CKT 1	224	224	0.03377	101.7729	LUBBOCK EAST INTERCHANGE - LUBBOCK POWER & LIGHT-WADSWORTH 230KV CKT 1
FDNS	00NR	9	25SP	G15_079	FROM->TO	LUBBOCK POWER & LIGHT-HOLLY PLANT (SHIH T101039) 230/69/13.5KV TRANSFORMER CKT 1	224	224	0.03377	101.758	P12:230:LPL:K57.1.LP-WADS.LUBBE
FDNS	00NR	9	25SP	G15_079	FROM->TO	LUBBOCK POWER & LIGHT-HOLLY PLANT (SHIH T101039) 230/69/13.5KV TRANSFORMER CKT 1	224	224	0.03377	101.7579	LUBBOCK POWER & LIGHT-WADSWORTH (SHIH T101038) 230/69/13.5KV TRANSFORMER CKT 1
FDNS	00NR	9	25SP	G15_079	FROM->TO	LUBBOCK POWER & LIGHT-HOLLY PLANT (SHIH T101039) 230/69/13.5KV TRANSFORMER CKT 1	224	224	0.03377	101.7579	LUBBOCK POWER & LIGHT-WADSWORTH (SHIH T101038) 230/69/13.5KV TRANSFORMER CKT 1
FDNS	00NR	9	25SP	G15_079	FROM->TO	MUSTANG STATION (ENRCO 136161) 230/115/13.2KV TRANSFORMER CKT 1	250	288	0.03082	103.5181	MUSTANG STATION - SEMINOLE 230KV CKT 1
FDNS	00NR	9	25SP	G15_079	FROM->TO	MUSTANG STATION (ENRCO 136161) 230/115/13.2KV TRANSFORMER CKT 1	250	288	0.03082	103.5181	MUSTANG STATION - SEMINOLE 230KV CKT 1
FDNS	00NR	9	25SP	G15_079	FROM->TO	MUSTANG STATION (ENRCO 136161) 230/115/13.2KV TRANSFORMER CKT 1	250	288	0.03082	103.3971	MUSTANG STATION - SEMINOLE 230KV CKT 1
FDNS	00NR	9	25SP	G15_079	FROM->TO	MUSTANG STATION (ENRCO 136161) 230/115/13.2KV TRANSFORMER CKT 1	250	288	0.03082	103.3971	MUSTANG STATION - SEMINOLE 230KV CKT 1
FDNSLock-Blown up	06ALL	0	16WP	G15_080		Non-Converged Contingency	483	483	0.3023	-	AMOCO SWITCHING STATION - YOAKUM COUNTY INTERCHANGE 230KV CKT 1
FDNSLock-Blown up	06ALL	0	16WP	G15_080		Non-Converged Contingency	1022	1124	0.20212	-	G14-074T 345.00 - OKLAUNION 345KV CKT 1
FDNSLock-Blown up	06ALL	0	16WP	G15_080		Non-Converged Contingency	1022	1124	0.20212	-	G14-074T 345.00 - TUCO INTERCHANGE 345KV CKT 1
FDNSLock-Blown up	06ALL	0	16WP	G15_080		Non-Converged Contingency	1022	1124	0.20212	-	GEN509403 1-PIRKEY GENERATION
FDNSLock-Blown up	06ALL	0	16WP	G15_080		Non-Converged Contingency	1022	1124	0.20212	-	GEN509404 1-WELSH #1
FDNSLock-Blown up	06ALL	0	16WP	G15_080		Non-Converged Contingency	1022	1124	0.20212	-	GEN509406 1-WELSH #3
FDNSLock-Blown up	06ALL	0	16WP	G15_080		Non-Converged Contingency	1022	1124	0.20212	-	GEN509416 1-TURK GENERATION
FDNSLock-Blown up	06ALL	0	16WP	G15_080		Non-Converged Contingency	1022	1124	0.20212	-	GEN511848 1-SOUTHWESTERN STATION #3
FDNSLock-Blown up	06ALL	0	16WP	G15_080		Non-Converged Contingency	560	560	0.19051	-	TUCO INTERCHANGE (GE M1022338) 345/230/13.2KV TRANSFORMER CKT 1
FDNSLock-Blown up	06ALL	0	16WP	G15_080		Non-Converged Contingency	956	956	0.17812	-	CIMARRON - MINCO 345KV CKT 1
FDNSLock-Blown up	06ALL	0	16WP	G15_080		Non-Converged Contingency	1195	1195	0.17812	-	GRACEMONT - MINCO 345KV CKT 1
FDNSLock-Blown up	06ALL	0	16WP	G15_080		Non-Converged Contingency	552.14	607.52	0.17623	-	TOLK STATION EAST - TUCO INTERCHANGE 230KV CKT 1
FDNSLock-Blown up	06ALL	0	16WP	G15_080		Non-Converged Contingency	556.53	611.5	0.17195	-	NEWHART 230 - PLANT X STATION 230KV CKT 1
FDNSLock-Blown up	06ALL	0	16WP	G15_080		Non-Converged Contingency	427.05	427.05	0.16659	-	JONES STATION - TUCO INTERCHANGE 230KV CKT 1
FDNSLock-Blown up	06ALL	0	16WP	G15_080		Non-Converged Contingency	987.16	1082.8	0.16613	-	G14_038T 345.00 - Hitchland Interchange 345KV CKT 1
FDNSLock-Blown up	06ALL	0	16WP	G15_080		Non-Converged Contingency	987.16	1082.8	0.16613	-	G14_038T 345.00 - POTTER COUNTY INTERCHANGE 345KV CKT 1

SOLUTION	GROUP	SCENARIO	SEASON	SOURCE	DIRECTION	MONITORED ELEMENT	RATEA (MVA)	RATEB(MVA)	TDF	TC%LOADING (% MVA)	CONTINGENCY
FDNSLock-Blown up	06ALL	0	16WP	G15_080		Non-Converged Contingency	560	560	0.16613	-	POTTER COUNTY INTERCHANGE (WAUK 90343-A) 345/230/13.2KV TRANSFORMER CKT 1
FDNSLock-Blown up	06ALL	0	16WP	G15_080		Non-Converged Contingency	616	700	0.16602	-	TUCO INTERCHANGE (SIEM 8743066) 345/230/13.2KV TRANSFORMER CKT 2
FDNSLock-Blown up	06ALL	0	16WP	G15_080		Non-Converged Contingency	560	560	0.16249	-	TUCO_2 345.00 (TUCO_2 XFMR) 345/230/13.2KV TRANSFORMER CKT 1
FDNSLock-Blown up	06ALL	0	16WP	G15_080		Non-Converged Contingency	1792	1792	0.16143	-	CHISHOLM7 345.00 - WOODWARD DISTRICT EHV 345KV CKT 1
FDNSLock-Blown up	06ALL	0	16WP	G15_080		Non-Converged Contingency	1330	1940	0.16085	-	CHISHOLM7 345.00 - GRACEMONT 345KV CKT 1
FDNSLock-Blown up	06ALL	0	16WP	G15_080		Non-Converged Contingency	1792	1792	0.15845	-	BORDER 7345.00 - CHISHOLM7 345.00 345KV CKT 1
FDNSLock-Blown up	06ALL	0	16WP	G15_080		Non-Converged Contingency	1792	1792	0.15845	-	BORDER 7345.00 - CHISHOLM7 345.00 345KV CKT 2
FDNSLock-Blown up	06ALL	0	16WP	G15_080		Non-Converged Contingency	1792	1972	0.15845	-	BORDER 7345.00 - TUCO_2 345.00 345KV CKT 1
FDNSLock-Blown up	06ALL	0	16WP	G15_080		Non-Converged Contingency	1420	1775	0.15845	-	BORDER 7345.00 - TUCO_2 345.00 345KV CKT 2
FDNSLock-Blown up	06ALL	0	16WP	G15_080		Non-Converged Contingency	557	557	0.15569	-	BUSHLAND INTERCHANGE - DEAF SMITH COUNTY INTERCHANGE 230KV CKT 1
FDNSLock-Blown up	06ALL	0	16WP	G15_080		Non-Converged Contingency	1792	1972	0.15441	-	TUCO INTERCHANGE - TUCO_2 345.00 345KV CKT 1
FDNSLock-Blown up	06ALL	0	16WP	G15_080		Non-Converged Contingency	552	608	0.15224	-	TUCO INTERCHANGE - TUCO_2 230.00 230KV CKT 1
FDNSLock-Blown up	06ALL	0	16WP	G15_080		Non-Converged Contingency	329.05	360.92	0.14097	-	DEAF SMITH COUNTY INTERCHANGE - G15039_T 230.00 230KV CKT 1
FDNSLock-Blown up	06ALL	0	16WP	G15_080		Non-Converged Contingency	329.05	360.92	0.14097	-	G15039_T 230.00 - PLANT X STATION 230KV CKT 1
FDNSLock-Blown up	06ALL	0	16WP	G15_080		Non-Converged Contingency	987.16	1082.8	0.13767	-	FINNEY SWITCHING STATION - Hitchland Interchange 345KV CKT 1
FDNSLock-Blown up	06ALL	0	16WP	G15_080		Non-Converged Contingency	956.09	1051.7	0.13767	-	FINNEY SWITCHING STATION - HOLCOMB 345KV CKT 1
FDNSLock-Blown up	06ALL	0	16WP	G15_080		Non-Converged Contingency	329.05	360.92	0.13757	-	BUSHLAND INTERCHANGE - POTTER COUNTY INTERCHANGE 230KV CKT 1
FDNSLock-Blown up	06ALL	0	16WP	G15_080		Non-Converged Contingency	717	789	0.12827	-	G14-057T 345.00 - LAWTON EASTSIDE 345KV CKT 1
FDNSLock-Blown up	06ALL	0	16WP	G15_080		Non-Converged Contingency	717	789	0.12827	-	G14-057T 345.00 - SUNNYSIDE 345KV CKT 1
FDNSLock-Blown up	06ALL	0	16WP	G15_080		Non-Converged Contingency	557	557	0.11589	-	NEWHART 230 - POTTER COUNTY INTERCHANGE 230KV CKT 1
FDNSLock-Blown up	06ALL	0	16WP	G15_080		Non-Converged Contingency	442	752	0.11571	-	PLANT X STATION - TOLK STATION WEST 230KV CKT 1
FDNSLock-Blown up	06ALL	0	16WP	G15_080		Non-Converged Contingency	442	752	0.11377	-	PLANT X STATION - TOLK STATION EAST 230KV CKT 2
FDNSLock-Blown up	06ALL	0	16WP	G15_080		Non-Converged Contingency	143.02	173.09	0.10812	-	WOLFFORTH INTERCHANGE - YUMA INTERCHANGE 115KV CKT 1
FDNSLock-Blown up	06ALL	0	16WP	G15_080		Non-Converged Contingency	1420	1775	0.09984	-	G11_051T 345.00 - TATONGA7 345.00 345KV CKT 1
FDNSLock-Blown up	06ALL	0	16WP	G15_080		Non-Converged Contingency	1420	1775	0.09984	-	G11_051T 345.00 - WOODWARD DISTRICT EHV 345KV CKT 1
FDNSLock-Blown up	06ALL	0	16WP	G15_080		Non-Converged Contingency	1195	1195	0.09984	-	MATHWSN7 345.00 - TATONGA7 345.00 345KV CKT 1
FDNSLock-Blown up	06ALL	0	16WP	G15_080		Non-Converged Contingency	1561	1793	0.09414	-	THISTLE7 345.00 - WOODWARD DISTRICT EHV 345KV CKT 1
FDNSLock-Blown up	06ALL	0	16WP	G15_080		Non-Converged Contingency	1561	1793	0.09414	-	THISTLE7 345.00 - WOODWARD DISTRICT EHV 345KV CKT 2
FDNSLock-Blown up	06ALL	0	16WP	G15_080		Non-Converged Contingency	329.05	360.92	0.08689	-	AMARILLO SOUTH INTERCHANGE - G15031_T 230.00 230KV CKT 1
FDNSLock-Blown up	06ALL	0	16WP	G15_080		Non-Converged Contingency	1793	1793	0.07902	-	BVRCNTY7 345.00 - G11-14T 345.00 345KV CKT 1
FDNSLock-Blown up	06ALL	0	16WP	G15_080		Non-Converged Contingency	1716	1793	0.07902	-	BVRCNTY7 345.00 - G11-14T 345.00 345KV CKT 2
FDNSLock-Blown up	06ALL	0	16WP	G15_080		Non-Converged Contingency	1792	1792	0.07902	-	BVRCNTY7 345.00 - OPTIMA 345.00 345KV CKT 1
FDNSLock-Blown up	06ALL	0	16WP	G15_080		Non-Converged Contingency	1792	1792	0.07902	-	BVRCNTY7 345.00 - OPTIMA 345.00 345KV CKT 2
FDNSLock-Blown up	06ALL	0	16WP	G15_080		Non-Converged Contingency	1793	1793	0.07902	-	G11-14T 345.00 - WOODWARD DISTRICT EHV 345KV CKT 1
FDNSLock-Blown up	06ALL	0	16WP	G15_080		Non-Converged Contingency	1716	1793	0.07902	-	G11-14T 345.00 - WOODWARD DISTRICT EHV 345KV CKT 2
FDNSLock-Blown up	06ALL	0	16WP	G15_080		Non-Converged Contingency	1532	1793	0.07549	-	G1524G1525 345.00 - THISTLE7 345.00 345KV CKT 1
FDNSLock-Blown up	06ALL	0	16WP	G15_080		Non-Converged Contingency	1532	1793	0.07549	-	G1524G1525 345.00 - THISTLE7 345.00 345KV CKT 2
FDNSLock-Blown up	06ALL	0	16WP	G15_080		Non-Converged Contingency	1532	1793	0.07549	-	GEN532751 1-WOLF CREEK GENERATING STATION UNIT 1
FDNSLock-Blown up	06ALL	0	16WP	G15_080		Non-Converged Contingency	556.92	556.92	0.07053	-	HITCHLAND INTERCHANGE - MOORE COUNTY INTERCHANGE 230KV CKT 1
FDNSLock-Blown up	06ALL	0	16WP	G15_080		Non-Converged Contingency	439	439	0.06921	-	CHISHOLM6 230.00 - SWEETWATER 230KV CKT 1
FDNSLock-Blown up	06ALL	0	16WP	G15_080		Non-Converged Contingency	435.02	457.73	0.06921	-	STATELINE INTERCHANGE - STLN-DEMARC6 230KV CKT 1
FDNSLock-Blown up	06ALL	0	16WP	G15_080		Non-Converged Contingency	439	439	0.06921	-	STLN-DEMARC6 - SWEETWATER 230KV CKT 1
FDNSLock-Blown up	06ALL	0	16WP	G15_080		Non-Converged Contingency	717.1	717.1	0.06641	-	HOLCOMB - SETAB 345KV CKT 1
FDNSLock-Blown up	06ALL	0	16WP	G15_080		Non-Converged Contingency	785	785	0.06542	-	MINGO - RED WILLOW 345KV CKT 1
FDNSLock-Blown up	06ALL	0	16WP	G15_080		Non-Converged Contingency	762.5	762.5	0.06531	-	MINGO - SETAB 345KV CKT 1
FDNSLock-Blown up	06ALL	0	16WP	G15_080		Non-Converged Contingency	439	439	0.06383	-	CHISHOLM6 230.00 - ELK CITY 230KV 230KV CKT 1
FDNSLock-Blown up	06ALL	0	16WP	G15_080		Non-Converged Contingency	450	450	0.06383	-	ELK CITY 230KV (ELKCTY-6) 230/138/13.8KV TRANSFORMER CKT 1
FDNSLock-Blown up	06ALL	0	16WP	G15_080		Non-Converged Contingency	717	717	0.06349	-	CIMARRON - DRAPER LAKE 345KV CKT 1
FDNSLock-Blown up	06ALL	0	16WP	G15_080		Non-Converged Contingency	329.05	360.92	0.06013	-	MOORE COUNTY INTERCHANGE - POTTER COUNTY INTERCHANGE 230KV CKT 1
FDNSLock-Blown up	06ALL	0	16WP	G15_080		Non-Converged Contingency	557	557	0.05884	-	GRAPEVINE INTERCHANGE - STATELINE INTERCHANGE 230KV CKT 1
FDNSLock-Blown up	06ALL	0	16WP	G15_080		Non-Converged Contingency	557	557	0.05878	-	GRAPEVINE INTERCHANGE - NICHOLS STATION 230KV CKT 1
FDNSLock-Blown up	06ALL	0	16WP	G15_080		Non-Converged Contingency	1195	1195	0.05744	-	GEN520947 1-HUGO1
FDNSLock-Blown up	06ALL	0	16WP	G15_080		Non-Converged Contingency	1793	1793	0.0566	-	G13-010T 345.00 - POST ROCK 345KV CKT 1
FDNSLock-Blown up	06ALL	0	16WP	G15_080		Non-Converged Contingency	1793	1793	0.0566	-	G13-010T 345.00 - SPEARVILLE 345KV CKT 1
FDNSLock-Blown up	06ALL	0	16WP	G15_080		Non-Converged Contingency	726.6	726.6	0.05566	-	BUCKNER7 345.00 - HOLCOMB 345KV CKT 1
FDNSLock-Blown up	06ALL	0	16WP	G15_080		Non-Converged Contingency	1413	1517	0.05566	-	BUCKNER7 345.00 - SPEARVILLE 345KV CKT 1
FDNSLock-Blown up	06ALL	0	16WP	G15_080		Non-Converged Contingency	717	789	0.04284	-	GRACEMONT - LAWTON EASTSIDE 345KV CKT 1
FDNSLock-Blown up	06ALL	0	16WP	G15_080		Non-Converged Contingency	286	315	0.03246	-	CANYON E_TP3115.00 - CANYON WEST SUB 115KV CKT 1
FDNSLock-Blown up	06ALL	0	16WP	G15_080		Non-Converged Contingency	106	106	0.03246	-	CANYON WEST SUB - DAWN SUB 115KV CKT 1
FDNSLock-Blown up	06ALL	0	16WP	G15_080		Non-Converged Contingency	106	106	0.03246	-	DAWN SUB - Panda Energy Substation Hereford 115KV CKT 1
FDNSLock-Blown up	06ALL	0	16WP	G15_080		Non-Converged Contingency	106	106	0.03246	-	DEAF SMITH COUNTY INTERCHANGE - Panda Energy Substation Hereford 115KV CKT 1
FDNSLock-Blown up	06ALL	0	16WP	G15_080		Non-Converged Contingency	164.53	177.08	0.02998	-	Hansford County Switch Station - SPEARMAN INTERCHANGE 115KV CKT 1
FDNSLock-Blown up	06ALL	0	16WP	G15_080		Non-Converged Contingency	177.08	177.08	0.02998	-	HITCHLAND INTERCHANGE - Hansford County Switch Station 115KV CKT 1
FDNSLock-Blown up	06NR	0	17G	G15_080		Non-Converged Contingency	478	502	0.09224	-	BUSHLAND INTERCHANGE - DEAF SMITH COUNTY INTERCHANGE 230KV CKT 1
FDNSLock-Blown up	06NR	0	17G	G15_080		Non-Converged Contingency	318.7	350.57	0.08361	-	DEAF SMITH COUNTY INTERCHANGE - G15039_T 230.00 230KV CKT 1
FDNSLock-Blown up	06NR	0	17G	G15_080		Non-Converged Contingency	318.7	350.57	0.08361	-	G15039_T 230.00 - PLANT X STATION 230KV CKT 1
FDNSLock-Blown up	06NR	0	17G	G15_080		Non-Converged Contingency	318.7	350.57	0.07634	-	BUSHLAND INTERCHANGE - POTTER COUNTY INTERCHANGE 230KV CKT 1
FDNSLock-Blown up	06NR	0	17G	G15_080		Non-Converged Contingency	478	502	0.07341	-	NEWHART 230 - POTTER COUNTY INTERCHANGE 230KV CKT 1
FDNSLock-Blown up	06NR	0	17G	G15_080		Non-Converged Contingency	318.7	350.57	0.07325	-	AMARILLO SOUTH INTERCHANGE - G15031_T 230.00 230KV CKT 1
FDNSLock-Blown up	06NR	0	17G	G15_080		Non-Converged Contingency	1022	1124	0.03913	-	G14-074T 345.00 - OKLAUNION 345KV CKT 1
FDNSLock-Blown up	06NR	0	17G	G15_080		Non-Converged Contingency	1022	1124	0.03913	-	G14-074T 345.00 - TUCO INTERCHANGE 345KV CKT 1
FDNSLock-Blown up	06NR	0	17G	G15_080		Non-Converged Contingency	1792	1972	0.03725	-	BORDER 7345.00 - TUCO_2 345.00 345KV CKT 1
FDNSLock-Blown up	06NR	0	17G	G15_080		Non-Converged Contingency	1792	1792	0.03725	-	BORDER 7345.00 - WOODWARD DISTRICT EHV 345KV CKT 1
FDNSLock-Blown up	06ALL	0	17SP	G15_080		Non-Converged Contingency	956	1042	0.20177	-	G14-074T 345.00 - OKLAUNION 345KV CKT 1
FDNSLock-Blown up	06ALL	0	17SP	G15_080		Non-Converged Contingency	956	1042	0.20177	-	G14-074T 345.00 - TUCO INTERCHANGE 345KV CKT 1
FDNSLock-Blown up	06ALL	0	17SP	G15_080		Non-Converged Contingency	956.09	1051.7	0.16396	-	G14_038T 345.00 - Hitchland Interchange 345KV CKT 1
FDNSLock-Blown up	06ALL	0	17SP	G15_080		Non-Converged Contingency	956.09	1051.7	0.16396	-	G14_038T 345.00 - POTTER COUNTY INTERCHANGE 345KV CKT 1
FDNSLock-Blown up	06ALL	0	17SP	G15_080		Non-Converged Contingency	560	560	0.16396	-	POTTER COUNTY INTERCHANGE (WAUK 90343-A) 345/230/13.2KV TRANSFORMER CKT 1
FDNSLock-Blown up	06ALL	0	17SP	G15_080		Non-Converged Contingency	1792	1972	0.15934	-	BORDER 7345.00 - TUCO_2 345.00 345KV CKT 1

SOLUTION	GROUP	SCENARIO	SEASON	SOURCE	DIRECTION	MONITORED ELEMENT	RATEA (MVA)	RATEB(MVA)	TDF	TC%LOADING (% MVA)	CONTINGENCY
FDNSLock-Blown up	06ALL	0	17SP	G15_080		Non-Converged Contingency	1420	1775	0.15934	-	BORDER 7345.00 - TUCO_2 345.00 345KV CKT 2
FDNSLock-Blown up	06ALL	0	20L	G15_080		Non-Converged Contingency	318.7	350.57	0.52382	-	G15079_T 230.00 - YOAKUM COUNTY INTERCHANGE 230KV CKT 1
FDNSLock-Blown up	06ALL	0	20L	G15_080		Non-Converged Contingency	1792	1792	0.32374	-	TUCO INTERCHANGE - YOAKUM_345 345.00 345KV CKT 1
FDNSLock-Blown up	06ALL	0	20L	G15_080		Non-Converged Contingency	1792	1972	0.25127	-	TUCO INTERCHANGE - TUCO_2 345.00 345KV CKT 1
FDNSLock-Blown up	06ALL	0	20L	G15_080		Non-Converged Contingency	0	0	0.19973	-	P12:345:SPS:J07.1.FINN.HITCH
FDNSLock-Blown up	06ALL	0	20L	G15_080		Non-Converged Contingency	560	644	0.19288	-	HOBBS (UPDATE DATA) 345/230/13.2KV TRANSFORMER CKT 1
FDNSLock-Blown up	06ALL	0	20L	G15_080		Non-Converged Contingency	1792	1792	0.19264	-	HOBBS - YOAKUM_345 345.00 345KV CKT 1
FDNSLock-Blown up	06ALL	0	20L	G15_080		Non-Converged Contingency	1022	1124	0.18161	-	G14-074T 345.00 - OKLAUNION 345KV CKT 1
FDNSLock-Blown up	06ALL	0	20L	G15_080		Non-Converged Contingency	1022	1124	0.18161	-	G14-074T 345.00 - TUCO INTERCHANGE 345KV CKT 1
FDNSLock-Blown up	06ALL	0	20L	G15_080		Non-Converged Contingency	1022	1124	0.18161	-	GEN506754 1-LEBROCK STEAM 1
FDNSLock-Blown up	06ALL	0	20L	G15_080		Non-Converged Contingency	1022	1124	0.18161	-	GEN509394 1-FLINT CREEK
FDNSLock-Blown up	06ALL	0	20L	G15_080		Non-Converged Contingency	1022	1124	0.18161	-	GEN509403 1-PIRKEY GENERATION
FDNSLock-Blown up	06ALL	0	20L	G15_080		Non-Converged Contingency	1022	1124	0.18161	-	GEN509404 1-WELSH #1
FDNSLock-Blown up	06ALL	0	20L	G15_080		Non-Converged Contingency	1022	1124	0.18161	-	GEN509406 1-WELSH #3
FDNSLock-Blown up	06ALL	0	20L	G15_080		Non-Converged Contingency	1022	1124	0.18161	-	GEN509408 1-WILKES #2
FDNSLock-Blown up	06ALL	0	20L	G15_080		Non-Converged Contingency	1022	1124	0.18161	-	GEN509416 1-TURK GENERATION
FDNSLock-Blown up	06ALL	0	20L	G15_080		Non-Converged Contingency	1022	1124	0.18161	-	GEN511840 1-NORTHEASTERN STATION #3
FDNSLock-Blown up	06ALL	0	20L	G15_080		Non-Converged Contingency	1022	1124	0.18161	-	GEN511960 1-ROARK1 0.7000
FDNSLock-Blown up	06ALL	0	20L	G15_080		Non-Converged Contingency	1022	1124	0.18161	-	GEN562590 1-G14_057_3 0.6900
FDNSLock-Blown up	06ALL	0	20L	G15_080		Non-Converged Contingency	1022	1124	0.18161	-	OKLAUNION 345KV SWITCHED SHUNT
FDNSLock-Blown up	06ALL	0	20L	G15_080		Non-Converged Contingency	414	414	0.17972	-	AMOCO SWITCHING STATION - YOAKUM COUNTY INTERCHANGE 230KV CKT 1
FDNSLock-Blown up	06ALL	0	20L	G15_080		Non-Converged Contingency	414	414	0.17972	-	AMOCO SWITCHING STATION - YOAKUM COUNTY INTERCHANGE 230KV CKT 1
FDNSLock-Blown up	06ALL	0	20L	G15_080		Non-Converged Contingency	956	956	0.16295	-	CIMARRON - MINCO 345KV CKT 1
FDNSLock-Blown up	06ALL	0	20L	G15_080		Non-Converged Contingency	1195	1195	0.16295	-	GRACEMONT - MINCO 345KV CKT 1
FDNSLock-Blown up	06ALL	0	20L	G15_080		Non-Converged Contingency	1792	1792	0.15409	-	CHISHOLM7 345.00 - WOODWARD DISTRICT EHV 345KV CKT 1
FDNSLock-Blown up	06ALL	0	20L	G15_080		Non-Converged Contingency	1792	1792	0.14967	-	BORDER 7345.00 - CHISHOLM7 345.00 345KV CKT 1
FDNSLock-Blown up	06ALL	0	20L	G15_080		Non-Converged Contingency	1792	1792	0.14967	-	BORDER 7345.00 - CHISHOLM7 345.00 345KV CKT 2
FDNSLock-Blown up	06ALL	0	20L	G15_080		Non-Converged Contingency	1792	1972	0.14967	-	BORDER 7345.00 - TUCO_2 345.00 345KV CKT 1
FDNSLock-Blown up	06ALL	0	20L	G15_080		Non-Converged Contingency	1420	1775	0.14967	-	BORDER 7345.00 - TUCO_2 345.00 345KV CKT 2
FDNSLock-Blown up	06ALL	0	20L	G15_080		Non-Converged Contingency	1792	1972	0.14967	-	BORDER 7345.00 345KV SWITCHED SHUNT
FDNSLock-Blown up	06ALL	0	20L	G15_080		Non-Converged Contingency	1584	2098	0.12942	-	CHISHOLM7 345.00 - GRACEMONT 345KV CKT 1
FDNSLock-Blown up	06ALL	0	20L	G15_080		Non-Converged Contingency	1584	2098	0.12942	-	GEN514805 1-SOONER UNIT 1
FDNSLock-Blown up	06ALL	0	20L	G15_080		Non-Converged Contingency	1584	2098	0.12942	-	GEN514806 1-SOONER UNIT 2
FDNSLock-Blown up	06ALL	0	20L	G15_080		Non-Converged Contingency	1584	2098	0.12942	-	GEN515040 1-SEMINOLE 1G
FDNSLock-Blown up	06ALL	0	20L	G15_080		Non-Converged Contingency	1584	2098	0.12942	-	GEN515223 1-MUSKOGEE 4G
FDNSLock-Blown up	06ALL	0	20L	G15_080		Non-Converged Contingency	0	0	0.12056	-	P12:115:SPS:T71.1.CRLSLE.YUMA
FDNSLock-Blown up	06ALL	0	20L	G15_080		Non-Converged Contingency	956.09	1051.7	0.11083	-	G14_038T 345.00 - Hitchland Interchange 345KV CKT 1
FDNSLock-Blown up	06ALL	0	20L	G15_080		Non-Converged Contingency	956.09	1051.7	0.11083	-	G14_038T 345.00 - POTTER COUNTY INTERCHANGE 345KV CKT 1
FDNSLock-Blown up	06ALL	0	20L	G15_080		Non-Converged Contingency	560	560	0.11083	-	POTTER COUNTY INTERCHANGE (WAUK 90343-A) 345/230/13.2KV TRANSFORMER CKT 1
FDNSLock-Blown up	06ALL	0	20L	G15_080		Non-Converged Contingency	560	560	0.11083	-	POTTER COUNTY INTERCHANGE (WAUK 90343-A) 345/230/13.2KV TRANSFORMER CKT 1
FDNSLock-Blown up	06ALL	0	20L	G15_080		Non-Converged Contingency	478	502	0.11045	-	BUSHLAND INTERCHANGE - DEAF SMITH COUNTY INTERCHANGE 230KV CKT 1
FDNSLock-Blown up	06ALL	0	20L	G15_080		Non-Converged Contingency	478	502	0.11045	-	BUSHLAND INTERCHANGE - DEAF SMITH COUNTY INTERCHANGE 230KV CKT 1
FDNSLock-Blown up	06ALL	0	20L	G15_080		Non-Converged Contingency	478	502	0.11045	-	BUSHLAND INTERCHANGE 230KV SWITCHED SHUNT
FDNSLock-Blown up	06ALL	0	20L	G15_080		Non-Converged Contingency	717	926	0.10765	-	CROSSROADS 7345.00 - TOLK STATION 345KV CKT 1
FDNSLock-Blown up	06ALL	0	20L	G15_080		Non-Converged Contingency	560	560	0.10765	-	TOLK STATION (ABBXNL844501) 345/230/13.2KV TRANSFORMER CKT 1
FDNSLock-Blown up	06ALL	0	20L	G15_080		Non-Converged Contingency	560	560	0.10765	-	TOLK STATION (ABBXNL844501) 345/230/13.2KV TRANSFORMER CKT 1
FDNSLock-Blown up	06ALL	0	20L	G15_080		Non-Converged Contingency	956.09	1051.7	0.10665	-	Hitchland Interchange - WALKTAP7 345.00 345KV CKT 1
FDNSLock-Blown up	06ALL	0	20L	G15_080		Non-Converged Contingency	956.09	1051.7	0.10665	-	Hitchland Interchange - WALKTAP7 345.00 345KV CKT 1
FDNSLock-Blown up	06ALL	0	20L	G15_080		Non-Converged Contingency	717	789	0.10443	-	G14-057T 345.00 - LAWTON EASTSIDE 345KV CKT 1
FDNSLock-Blown up	06ALL	0	20L	G15_080		Non-Converged Contingency	717	789	0.10443	-	G14-057T 345.00 - SUNNYSIDE 345KV CKT 1
FDNSLock-Blown up	06ALL	0	20L	G15_080		Non-Converged Contingency	478.05	547.36	0.10124	-	NEWHART 230 - PLANT X STATION 230KV CKT 1
FDNSLock-Blown up	06ALL	0	20L	G15_080		Non-Converged Contingency	497	547	0.09953	-	TUCO INTERCHANGE - TUCO_2 230.00 230KV CKT 1
FDNSLock-Blown up	06ALL	0	20L	G15_080		Non-Converged Contingency	318.7	350.57	0.09947	-	DEAF SMITH COUNTY INTERCHANGE - G15039_T 230.00 230KV CKT 1
FDNSLock-Blown up	06ALL	0	20L	G15_080		Non-Converged Contingency	318.7	350.57	0.09947	-	G15039_T 230.00 - PLANT X STATION 230KV CKT 1
FDNSLock-Blown up	06ALL	0	20L	G15_080		Non-Converged Contingency	318.7	350.57	0.09805	-	BUSHLAND INTERCHANGE - POTTER COUNTY INTERCHANGE 230KV CKT 1
FDNSLock-Blown up	06ALL	0	20L	G15_080		Non-Converged Contingency	318.7	350.57	0.09805	-	BUSHLAND INTERCHANGE - POTTER COUNTY INTERCHANGE 230KV CKT 1
FDNSLock-Blown up	06ALL	0	20L	G15_080		Non-Converged Contingency	478	502	0.09421	-	NEWHART 230 - POTTER COUNTY INTERCHANGE 230KV CKT 1
FDNSLock-Blown up	06ALL	0	20L	G15_080		Non-Converged Contingency	956.09	1051.7	0.09308	-	FINNEY SWITCHING STATION - HOLCOMB 345KV CKT 1
FDNSLock-Blown up	06ALL	0	20L	G15_080		Non-Converged Contingency	956.09	1051.7	0.09308	-	FINNEY SWITCHING STATION - HOLCOMB 345KV CKT 1
FDNSLock-Blown up	06ALL	0	20L	G15_080		Non-Converged Contingency	956.09	1051.7	0.09308	-	FINNEY SWITCHING STATION - WALKTAP7 345.00 345KV CKT 1
FDNSLock-Blown up	06ALL	0	20L	G15_080		Non-Converged Contingency	956.09	1051.7	0.09308	-	FINNEY SWITCHING STATION - WALKTAP7 345.00 345KV CKT 1
FDNSLock-Blown up	06ALL	0	20L	G15_080		Non-Converged Contingency	0	0	0.08762	-	P12:115:SPS:T59.1.CARGIL.CURRY
FDNSLock-Blown up	06ALL	0	20L	G15_080		Non-Converged Contingency	478	502	0.0843	-	AMARILLO SOUTH INTERCHANGE - G15031_T 230.00 230KV CKT 1
FDNSLock-Blown up	06ALL	0	20L	G15_080		Non-Converged Contingency	0	0	0.08429	-	P12:230:AEPW:ELKCITY6:SWEETWT6
FDNSLock-Blown up	06NR	0	20L	G15_080		Non-Converged Contingency	478	502	0.07978	-	AMARILLO SOUTH INTERCHANGE - G15031_T 230.00 230KV CKT 1
FDNSLock-Blown up	06ALL	0	20L	G15_080		Non-Converged Contingency	0	0	0.07833	-	P12:115:SPS:W40.1.WCANYON.DFSMTH
FDNSLock-Blown up	06ALL	0	20L	G15_080		Non-Converged Contingency	318.7	350.57	0.07798	-	LUBBOCK SOUTH INTERCHANGE - WOLFFORTH INTERCHANGE 230KV CKT 1
FDNSLock-Blown up	06ALL	0	20L	G15_080		Non-Converged Contingency	318.7	350.57	0.07798	-	LUBBOCK SOUTH INTERCHANGE - WOLFFORTH INTERCHANGE 230KV CKT 1
FDNSLock-Blown up	06ALL	0	20L	G15_080		Non-Converged Contingency	318.7	350.57	0.07798	-	LUBBOCK SOUTH INTERCHANGE 230KV SWITCHED SHUNT
FDNSLock-Blown up	06ALL	0	20L	G15_080		Non-Converged Contingency	1561	1793	0.07537	-	THISTLE7 345.00 - WOODWARD DISTRICT EHV 345KV CKT 1
FDNSLock-Blown up	06ALL	0	20L	G15_080		Non-Converged Contingency	1561	1793	0.07537	-	THISTLE7 345.00 - WOODWARD DISTRICT EHV 345KV CKT 1
FDNSLock-Blown up	06ALL	0	20L	G15_080		Non-Converged Contingency	1561	1793	0.07537	-	THISTLE7 345.00 - WOODWARD DISTRICT EHV 345KV CKT 2
FDNSLock-Blown up	06ALL	0	20L	G15_080		Non-Converged Contingency	1561	1793	0.07537	-	THISTLE7 345.00 - WOODWARD DISTRICT EHV 345KV CKT 2
FDNSLock-Blown up	06ALL	0	20L	G15_080		Non-Converged Contingency	1420	1775	0.07428	-	G11_051T 345.00 - TATONGA7 345.00 345KV CKT 1
FDNSLock-Blown up	06ALL	0	20L	G15_080		Non-Converged Contingency	1420	1775	0.07428	-	G11_051T 345.00 - WOODWARD DISTRICT EHV 345KV CKT 1
FDNSLock-Blown up	06ALL	0	20L	G15_080		Non-Converged Contingency	1195	1195	0.07428	-	MATHWSN7 345.00 - TATONGA7 345.00 345KV CKT 1
FDNSLock-Blown up	06ALL	0	20L	G15_080		Non-Converged Contingency	478	502	0.07303	-	CARLISLE INTERCHANGE - TUCO INTERCHANGE 230KV CKT 1
FDNSLock-Blown up	06ALL	0	20L	G15_080		Non-Converged Contingency	478	502	0.07303	-	CARLISLE INTERCHANGE - TUCO INTERCHANGE 230KV CKT 1
FDNSLock-Blown up	06ALL	0	20L	G15_080		Non-Converged Contingency	1195	1195	0.07186	-	ARCADIA - NORTHWEST 345KV CKT 1

SOLUTION	GROUP	SCENARIO	SEASON	SOURCE	DIRECTION	MONITORED ELEMENT	RATEA (MVA)	RATEB(MVA)	TDF	TC%LOADING (% MVA)	CONTINGENCY
FDNSLock-Blown up	06ALL	0	20L	G15_080		Non-Converged Contingency	442	752	0.07164	-	PLANT X STATION - TOLK STATION WEST 230KV CKT 1
FDNSLock-Blown up	06ALL	0	20L	G15_080		Non-Converged Contingency	442	752	0.07164	-	PLANT X STATION - TOLK STATION WEST 230KV CKT 1
FDNSLock-Blown up	06NR	0	20L	G15_080		Non-Converged Contingency	478	502	0.0706	-	NEWHART 230 - POTTER COUNTY INTERCHANGE 230KV CKT 1
FDNSLock-Blown up	06ALL	0	20L	G15_080		Non-Converged Contingency	442	752	0.07041	-	PLANT X STATION - TOLK STATION EAST 230KV CKT 2
FDNSLock-Blown up	06ALL	0	20L	G15_080		Non-Converged Contingency	442	752	0.07041	-	PLANT X STATION - TOLK STATION EAST 230KV CKT 2
FDNSLock-Blown up	06ALL	0	20L	G15_080		Non-Converged Contingency	956	956	0.06993	-	CIMARRON - NORTHWEST 345KV CKT 1
FDNSLock-Blown up	06ALL	0	20L	G15_080		Non-Converged Contingency	0	0	0.06923	-	P12:230:SPS:K51.1.OASIS.RSVLT
FDNSLock-Blown up	06NR	0	20L	G15_080		Non-Converged Contingency	318.7	350.57	0.06861	-	DEAF SMITH COUNTY INTERCHANGE - G15039_T 230.00 230KV CKT 1
FDNSLock-Blown up	06ALL	0	20L	G15_080		Non-Converged Contingency	0	0	0.06845	-	P12:230:AEPW-SPS:SWEETWT6:WHEELER 6
FDNSLock-Blown up	06ALL	0	20L	G15_080		Non-Converged Contingency	0	0	0.06571	-	P12:115:SPS:T58.1.HERFRD.CARGIL
FDNSLock-Blown up	06ALL	0	20L	G15_080		Non-Converged Contingency	478	478	0.06514	-	CARLISLE INTERCHANGE - WOLFFORTH INTERCHANGE 230KV CKT 1
FDNSLock-Blown up	06ALL	0	20L	G15_080		Non-Converged Contingency	1195	1195	0.06374	-	MATHWSN7 345.00 - NORTHWEST 345KV CKT 1
FDNSLock-Blown up	06NR	0	20L	G15_080		Non-Converged Contingency	318.7	350.57	0.0634	-	BUSHLAND INTERCHANGE - POTTER COUNTY INTERCHANGE 230KV CKT 1
FDNSLock-Blown up	06NR	0	20L	G15_080		Non-Converged Contingency	318.7	350.57	0.0634	-	BUSHLAND INTERCHANGE - POTTER COUNTY INTERCHANGE 230KV CKT 1
FDNSLock-Blown up	06ALL	0	20L	G15_080		Non-Converged Contingency	0	0	0.06	-	P12:138:AEPW-OGE:WTH_JCT4:JENSEN4
FDNSLock-Blown up	06ALL	0	20L	G15_080		Non-Converged Contingency	956	956	0.05889	-	G15063_T 345.00 - MATHWSN7 345.00 345KV CKT 1
FDNSLock-Blown up	06ALL	0	20L	G15_080		Non-Converged Contingency	956	956	0.05889	-	G15063_T 345.00 - WOODRING 345KV CKT 1
FDNSLock-Blown up	06ALL	0	20L	G15_080		Non-Converged Contingency	560	560	0.05832	-	TUCO INTERCHANGE (GE M1022338) 345/230/13.2KV TRANSFORMER CKT 1
FDNSLock-Blown up	06ALL	0	20L	G15_080		Non-Converged Contingency	560	560	0.05832	-	TUCO INTERCHANGE (GE M1022338) 345/230/13.2KV TRANSFORMER CKT 1
FDNSLock-Blown up	06ALL	0	20L	G15_080		Non-Converged Contingency	1039	1195	0.05674	-	NORTHWEST - SPRING CREEK 345KV CKT 1
FDNSLock-Blown up	06ALL	0	20L	G15_080		Non-Converged Contingency	1039	1195	0.05674	-	SOONER - SPRING CREEK 345KV CKT 1
FDNSLock-Blown up	06ALL	0	20L	G15_080		Non-Converged Contingency	478.05	546.96	0.05661	-	TOLK STATION EAST - TUCO INTERCHANGE 230KV CKT 1
FDNSLock-Blown up	06ALL	0	20L	G15_080		Non-Converged Contingency	478.05	546.96	0.05661	-	TOLK STATION EAST - TUCO INTERCHANGE 230KV CKT 1
FDNSLock-Blown up	06NR	0	20L	G15_080		Non-Converged Contingency	1022	1124	0.0566	-	G14-074T 345.00 - OKLAUNION 345KV CKT 1
FDNSLock-Blown up	06NR	0	20L	G15_080		Non-Converged Contingency	1022	1124	0.0566	-	G14-074T 345.00 - TUCO INTERCHANGE 345KV CKT 1
FDNSLock-Blown up	06NR	0	20L	G15_080		Non-Converged Contingency	1022	1124	0.0566	-	OKLAUNION 345KV SWITCHED SHUNT
FDNSLock-Blown up	06ALL	0	20L	G15_080		Non-Converged Contingency	1532	1793	0.05654	-	G1524G1525 345.00 - THISTLE7 345.00 345KV CKT 1
FDNSLock-Blown up	06ALL	0	20L	G15_080		Non-Converged Contingency	1532	1793	0.05654	-	G1524G1525 345.00 - THISTLE7 345.00 345KV CKT 2
FDNSLock-Blown up	06ALL	0	20L	G15_080		Non-Converged Contingency	1532	1793	0.05654	-	G1524G1525 345.00 - WICHITA 345KV CKT 1
FDNSLock-Blown up	06ALL	0	20L	G15_080		Non-Converged Contingency	1532	1793	0.05654	-	G1524G1525 345.00 - WICHITA 345KV CKT 2
FDNSLock-Blown up	06ALL	0	20L	G15_080		Non-Converged Contingency	1532	1793	0.05654	-	GEN532653 1-JEFFREY ENERGY CENTER UNIT 3
FDNSLock-Blown up	06ALL	0	20L	G15_080		Non-Converged Contingency	1532	1793	0.05654	-	GEN532663 1-LAWRENCE ENERGY CENTER UNIT 5
FDNSLock-Blown up	06ALL	0	20L	G15_080		Non-Converged Contingency	1532	1793	0.05654	-	GEN532751 1-WOLF CREEK GENERATING STATION UNIT 1
FDNSLock-Blown up	06ALL	0	20L	G15_080		Non-Converged Contingency	435.82	501.55	0.05626	-	Harrington Station Mid Bus - RANDALL COUNTY INTERCHANGE 230KV CKT 1
FDNSLock-Blown up	06ALL	0	20L	G15_080		Non-Converged Contingency	435.82	501.55	0.05626	-	Harrington Station Mid Bus - RANDALL COUNTY INTERCHANGE 230KV CKT 1
FDNSLock-Blown up	06ALL	0	20L	G15_080		Non-Converged Contingency	343.79	343.79	0.05412	-	JONES STATION - TUCO INTERCHANGE 230KV CKT 1
FDNSLock-Blown up	06ALL	0	20L	G15_080		Non-Converged Contingency	343.79	343.79	0.05412	-	JONES STATION - TUCO INTERCHANGE 230KV CKT 1
FDNSLock-Blown up	06NR	0	20L	G15_080		Non-Converged Contingency	1792	1972	0.05385	-	BORDER 7345.00 - TUCO_2 345.00 345KV CKT 1
FDNSLock-Blown up	06NR	0	20L	G15_080		Non-Converged Contingency	1792	1792	0.05385	-	BORDER 7345.00 - WOODWARD DISTRICT EHV 345KV CKT 1
FDNSLock-Blown up	06NR	0	20L	G15_080		Non-Converged Contingency	1792	1972	0.05385	-	BORDER 7345.00 345KV SWITCHED SHUNT
FDNSLock-Blown up	06ALL	0	20L	G15_080		Non-Converged Contingency	0	0	0.05253	-	P12:138:AEPW:S.W.S.-4:L.E.S.-4
FDNSLock-Blown up	06ALL	0	20L	G15_080		Non-Converged Contingency	785	785	0.05245	-	GEN640009 1-COOPER NUCLEAR STATION
FDNSLock-Blown up	06ALL	0	20L	G15_080		Non-Converged Contingency	785	785	0.05245	-	MINGO - RED WILLOW 345KV CKT 1
FDNSLock-Blown up	06ALL	0	20L	G15_080		Non-Converged Contingency	785	785	0.05245	-	MINGO - RED WILLOW 345KV CKT 1
FDNSLock-Blown up	06ALL	0	20L	G15_080		Non-Converged Contingency	0	0	0.05222	-	P12:115:SPS:V05.1.OSAGE.WCANYON
FDNSLock-Blown up	06ALL	0	20L	G15_080		Non-Converged Contingency	762.5	762.5	0.05102	-	MINGO - SETAB 345KV CKT 1
FDNSLock-Blown up	06ALL	0	20L	G15_080		Non-Converged Contingency	762.5	762.5	0.05102	-	MINGO - SETAB 345KV CKT 1
FDNSLock-Blown up	06ALL	0	20L	G15_080		Non-Converged Contingency	560	644	0.05083	-	TUCO INTERCHANGE (SIEM 8743066) 345/230/13.2KV TRANSFORMER CKT 2
FDNSLock-Blown up	06ALL	0	20L	G15_080		Non-Converged Contingency	560	644	0.05083	-	TUCO INTERCHANGE (SIEM 8743066) 345/230/13.2KV TRANSFORMER CKT 2
FDNSLock-Blown up	06ALL	0	20L	G15_080		Non-Converged Contingency	717	789	0.05074	-	GRACEMONT - LAWTON EASTSIDE 345KV CKT 1
FDNSLock-Blown up	06ALL	0	20L	G15_080		Non-Converged Contingency	717	789	0.05074	-	GRACEMONT - LAWTON EASTSIDE 345KV CKT 1
FDNSLock-Blown up	06ALL	0	20L	G15_080		Non-Converged Contingency	0	0	0.05068	-	P12:115:SPS:T66.1.RNDALL.HAPPY
FDNSLock-Blown up	06ALL	0	20L	G15_080		Non-Converged Contingency	0	0	0.05068	-	P12:115:SPS:T67.1.HAPPY.KRESS
FDNSLock-Blown up	06ALL	0	20L	G15_080		Non-Converged Contingency	1195	1195	0.05055	-	SOONER - WOODRING 345KV CKT 1
FDNSLock-Blown up	06ALL	0	20L	G15_080		Non-Converged Contingency	717.1	717.1	0.05054	-	HOLCOMB - SETAB 345KV CKT 1
FDNSLock-Blown up	06ALL	0	20L	G15_080		Non-Converged Contingency	717.1	717.1	0.05054	-	HOLCOMB - SETAB 345KV CKT 1
FDNSLock-Blown up	06ALL	0	20L	G15_080		Non-Converged Contingency	439	439	0.05006	-	CHISHOLM6 230.00 - ELK CITY 230KV 230KV CKT 1
FDNSLock-Blown up	06ALL	0	20L	G15_080		Non-Converged Contingency	450	450	0.05006	-	ELK CITY 230KV (ELKCTY-6) 230/138/13.8KV TRANSFORMER CKT 1
FDNSLock-Blown up	06ALL	0	20L	G15_080		Non-Converged Contingency	450	450	0.05006	-	ELK CITY 230KV (ELKCTY-6) 230/138/13.8KV TRANSFORMER CKT 1
FDNSLock-Blown up	06ALL	0	20L	G15_080		Non-Converged Contingency	0	0	0.04964	-	P12:115:SPS:T28.1.LAMTON.PLANTX
FDNSLock-Blown up	06ALL	0	20L	G15_080		Non-Converged Contingency	560	560	0.04807	-	TUCO_2 345.00 (TUCO_2 XFMR) 345/230/13.2KV TRANSFORMER CKT 1
FDNSLock-Blown up	06ALL	0	20L	G15_080		Non-Converged Contingency	1195	1195	0.04795	-	JOHNSON COUNTY - SUNNYSIDE 345KV CKT 1
FDNSLock-Blown up	06ALL	0	20L	G15_080		Non-Converged Contingency	478.05	501.55	0.04755	-	AMARILLO SOUTH INTERCHANGE - NICHOLS STATION 230KV CKT 1
FDNSLock-Blown up	06ALL	0	20L	G15_080		Non-Converged Contingency	478.05	501.55	0.04755	-	AMARILLO SOUTH INTERCHANGE - NICHOLS STATION 230KV CKT 1
FDNSLock-Blown up	06ALL	0	20L	G15_080		Non-Converged Contingency	501.95	501.95	0.04692	-	HITCHLAND INTERCHANGE - MOORE COUNTY INTERCHANGE 230KV CKT 1
FDNSLock-Blown up	06ALL	0	20L	G15_080		Non-Converged Contingency	501.95	501.95	0.04692	-	HITCHLAND INTERCHANGE - MOORE COUNTY INTERCHANGE 230KV CKT 1
FDNSLock-Blown up	06ALL	0	20L	G15_080		Non-Converged Contingency	560	644	0.04584	-	Hitchland Interchange (SIEM 8743067) 345/230/13.2KV TRANSFORMER CKT 2
FDNSLock-Blown up	06ALL	0	20L	G15_080		Non-Converged Contingency	560	644	0.04584	-	Hitchland Interchange (SIEM 8743067) 345/230/13.2KV TRANSFORMER CKT 2
FDNSLock-Blown up	06ALL	0	20L	G15_080		Non-Converged Contingency	1504	1792	0.04509	-	AXTELL - POST ROCK 345KV CKT 1
FDNSLock-Blown up	06ALL	0	20L	G15_080		Non-Converged Contingency	0	0	0.04508	-	P12:115:SPS:V15.1.TUCO.INDANA
FDNSLock-Blown up	06ALL	0	20L	G15_080		Non-Converged Contingency	1793	1793	0.04494	-	BVRCNTY7 345.00 - G11-14T 345.00 345KV CKT 1
FDNSLock-Blown up	06ALL	0	20L	G15_080		Non-Converged Contingency	1716	1793	0.04494	-	BVRCNTY7 345.00 - G11-14T 345.00 345KV CKT 2
FDNSLock-Blown up	06ALL	0	20L	G15_080		Non-Converged Contingency	1792	1792	0.04494	-	BVRCNTY7 345.00 - OPTIMA 345.00 345KV CKT 1
FDNSLock-Blown up	06ALL	0	20L	G15_080		Non-Converged Contingency	1792	1792	0.04494	-	BVRCNTY7 345.00 - OPTIMA 345.00 345KV CKT 2
FDNSLock-Blown up	06ALL	0	20L	G15_080		Non-Converged Contingency	1793	1793	0.04494	-	G11-14T 345.00 - WOODWARD DISTRICT EHV 345KV CKT 1
FDNSLock-Blown up	06ALL	0	20L	G15_080		Non-Converged Contingency	1716	1793	0.04494	-	G11-14T 345.00 - WOODWARD DISTRICT EHV 345KV CKT 2
FDNSLock-Blown up	06ALL	0	20L	G15_080		Non-Converged Contingency	1792	1792	0.04494	-	Hitchland Interchange - OPTIMA 345.00 345KV CKT 1
FDNSLock-Blown up	06ALL	0	20L	G15_080		Non-Converged Contingency	1792	1792	0.04494	-	Hitchland Interchange - OPTIMA 345.00 345KV CKT 2
FDNSLock-Blown up	06ALL	0	20L	G15_080		Non-Converged Contingency	0	0	0.04482	-	P12:138:WFEC-AEPW:WASHITA4:CLINTJC4

SOLUTION	GROUP	SCENARIO	SEASON	SOURCE	DIRECTION	MONITORED ELEMENT	RATEA (MVA)	RATEB(MVA)	TDF	TC%LOADING (% MVA)	CONTINGENCY
FDNSLock-Blown up	06ALL	0	20L	G15_080		Non-Converged Contingency	878	956	0.04445	-	BENTON - WICHITA 345KV CKT 1
FDNSLock-Blown up	06ALL	0	20L	G15_080		Non-Converged Contingency	1151	1195	0.04413	-	JOHNSON COUNTY - PITTSBURG 345KV CKT 1
FDNSLock-Blown up	06ALL	0	20L	G15_080		Non-Converged Contingency	1151	1195	0.04413	-	JOHNSON COUNTY - PITTSBURG 345KV CKT 1
FDNSLock-Blown up	06ALL	0	20L	G15_080		Non-Converged Contingency	1505	1793	0.04412	-	G13-010T 345.00 - POST ROCK 345KV CKT 1
FDNSLock-Blown up	06ALL	0	20L	G15_080		Non-Converged Contingency	1505	1793	0.04412	-	G13-010T 345.00 - SPEARVILLE 345KV CKT 1
FDNSLock-Blown up	06ALL	0	20L	G15_080		Non-Converged Contingency	1195	1195	0.044	-	CIMARRON - DRAPER LAKE 345KV CKT 1
FDNSLock-Blown up	06ALL	0	20L	G15_080		Non-Converged Contingency	0	0	0.04128	-	P12:115:SPS:T85.1.WHITT.NEF
FDNSLock-Blown up	06ALL	0	20L	G15_080		Non-Converged Contingency	956	956	0.04111	-	GERALD GENTLEMAN STATION - RED WILLOW 345KV CKT 1
FDNSLock-Blown up	06ALL	0	20L	G15_080		Non-Converged Contingency	0	0	0.04058	-	P12:138:AEPW-OGE:CORNVIL4:CIMARON4
FDNSLock-Blown up	06ALL	0	20L	G15_080		Non-Converged Contingency	1035	1035	0.04051	-	EMPORIA ENERGY CENTER - G14_001T 345.00 345KV CKT 1
FDNSLock-Blown up	06ALL	0	20L	G15_080		Non-Converged Contingency	1035	1035	0.04051	-	G14_001T 345.00 - WICHITA 345KV CKT 1
FDNSLock-Blown up	06ALL	0	20L	G15_080		Non-Converged Contingency	0	0	0.04041	-	P12:115:SPS:V03.1.NICHLS.EPLANT
FDNSLock-Blown up	06ALL	0	20L	G15_080		Non-Converged Contingency	318.7	350.57	0.04039	-	MOORE COUNTY INTERCHANGE - POTTER COUNTY INTERCHANGE 230KV CKT 1
FDNSLock-Blown up	06ALL	0	20L	G15_080		Non-Converged Contingency	318.7	350.57	0.04039	-	MOORE COUNTY INTERCHANGE - POTTER COUNTY INTERCHANGE 230KV CKT 1
FDNSLock-Blown up	06ALL	0	20L	G15_080		Non-Converged Contingency	560	644	0.03987	-	Hitchland Interchange (H TB80155502) 345/230/13.2KV TRANSFORMER CKT 1
FDNSLock-Blown up	06ALL	0	20L	G15_080		Non-Converged Contingency	560	644	0.03987	-	Hitchland Interchange (H TB80155502) 345/230/13.2KV TRANSFORMER CKT 1
FDNSLock-Blown up	06ALL	0	20L	G15_080		Non-Converged Contingency	1195	1195	0.03974	-	GEN520811 1-ANADRK4
FDNSLock-Blown up	06ALL	0	20L	G15_080		Non-Converged Contingency	1195	1195	0.03974	-	HUGO - SUNNYSIDE 345KV CKT 1
FDNSLock-Blown up	06ALL	0	20L	G15_080		Non-Converged Contingency	0	0	0.03926	-	P12:115:SPS:T14.1.MADDOX.WBENDR
FDNSLock-Blown up	06ALL	0	20L	G15_080		Non-Converged Contingency	1141	1195	0.03783	-	GEN542951 5-HAWTHORN UNIT #5
FDNSLock-Blown up	06ALL	0	20L	G15_080		Non-Converged Contingency	1141	1195	0.03783	-	LACYGNE - WAVERLY7 345.00 345KV CKT 1
FDNSLock-Blown up	06ALL	0	20L	G15_080		Non-Converged Contingency	1141	1195	0.03783	-	WAVERLY7 345.00 - WOLF CREEK 345KV CKT 1
FDNSLock-Blown up	06ALL	0	20L	G15_080		Non-Converged Contingency	0	0	0.03648	-	P12:115:LCEC:W56.1.HOBBG.LE-LVN
FDNSLock-Blown up	06ALL	0	20L	G15_080		Non-Converged Contingency	1195	1195	0.03603	-	MUSKOGEE - SEMINOLE 345KV CKT 1
FDNSLock-Blown up	06ALL	0	20L	G15_080		Non-Converged Contingency	1076	1076	0.03535	-	G15074_T 345.00 - HOYT 345KV CKT 1
FDNSLock-Blown up	06ALL	0	20L	G15_080		Non-Converged Contingency	1076	1076	0.03535	-	G15074_T 345.00 - JEFFREY ENERGY CENTER 345KV CKT 1
FDNSLock-Blown up	06ALL	0	20L	G15_080		Non-Converged Contingency	1036	1195	0.03518	-	HOYT - STRANGER CREEK 345KV CKT 1
FDNSLock-Blown up	06ALL	0	20L	G15_080		Non-Converged Contingency	0	0	0.03517	-	P12:115:SPS:T98.1.HIGG.HOBBG
FDNSLock-Blown up	06ALL	0	20L	G15_080		Non-Converged Contingency	726.6	726.6	0.03442	-	BUCKNER7 345.00 - HOLCOMB 345KV CKT 1
FDNSLock-Blown up	06ALL	0	20L	G15_080		Non-Converged Contingency	726.6	726.6	0.03442	-	BUCKNER7 345.00 - HOLCOMB 345KV CKT 1
FDNSLock-Blown up	06ALL	0	20L	G15_080		Non-Converged Contingency	1413	1517	0.03442	-	BUCKNER7 345.00 - SPEARVILLE 345KV CKT 1
FDNSLock-Blown up	06ALL	0	20L	G15_080		Non-Converged Contingency	1413	1517	0.03442	-	BUCKNER7 345.00 - SPEARVILLE 345KV CKT 1
FDNSLock-Blown up	06ALL	0	20L	G15_080		Non-Converged Contingency	421	439	0.03423	-	CHISHOLM6 230.00 - SWEETWATER 230KV CKT 1
FDNSLock-Blown up	06ALL	0	20L	G15_080		Non-Converged Contingency	348.58	381.24	0.03423	-	STATELINE INTERCHANGE - STLN-DEMARC6 230KV CKT 1
FDNSLock-Blown up	06ALL	0	20L	G15_080		Non-Converged Contingency	353	353	0.03423	-	STLN-DEMARC6 - SWEETWATER 230KV CKT 1
FDNSLock-Blown up	06ALL	0	20L	G15_080		Non-Converged Contingency	497.17	546.96	0.03413	-	AMARILLO SOUTH INTERCHANGE - RANDALL COUNTY INTERCHANGE 230KV CKT 1
FDNSLock-Blown up	06ALL	0	20L	G15_080		Non-Converged Contingency	497.17	546.96	0.03413	-	AMARILLO SOUTH INTERCHANGE - RANDALL COUNTY INTERCHANGE 230KV CKT 1
FDNSLock-Blown up	06ALL	0	20L	G15_080		Non-Converged Contingency	0	0	0.03249	-	P12:138:OKGE:3TERM10
FDNSLock-Blown up	06ALL	0	20L	G15_080		Non-Converged Contingency	717	717	0.03169	-	EMPORIA ENERGY CENTER - SWISSVALE 345KV CKT 1
FDNSLock-Blown up	06ALL	0	20L	G15_080		Non-Converged Contingency	0	0	0.03095	-	P12:115:SPS:W29.1.OCLTRE.SPRMN
FDNSLock-Blown up	06ALL	0	20L	G15_080		Non-Converged Contingency	0	0	0.0305	-	P12:115:SPS:W08.1.HITCH.LASLEY
FDNSLock-Blown up	06ALL	0	20L	G15_080		Non-Converged Contingency	0	0	0.0305	-	P12:138:AEPW:REDROCKRD4:WTH_JCT4
FDNSLock-Blown up	06ALL	0	20L	G15_080		Non-Converged Contingency	0	0	0.03036	-	P12:115:SPS:T04.1.DFSMTH.CASTRO
FDNSLock-Blown up	06ALL	0	20L	G15_080		Non-Converged Contingency	0	0	0.02992	-	P12:115:SPS:W35.1.GAINES.JNSDRW
FDNSLock-Blown up	06ALL	0	20L	G15_080		Non-Converged Contingency	0	0	0.02987	-	P12:138:AEPW:DUNCAN-4:L.E.S.-4
FDNSLock-Blown up	06ALL	0	20L	G15_080		Non-Converged Contingency	502	502	0.02981	-	GRAPEVINE INTERCHANGE - NICHOLS STATION 230KV CKT 1
FDNSLock-Blown up	06ALL	0	20L	G15_080		Non-Converged Contingency	502	502	0.02981	-	GRAPEVINE INTERCHANGE - NICHOLS STATION 230KV CKT 1
FDNSLock-Blown up	06ALL	0	20L	G15_080		Non-Converged Contingency	717	717	0.02968	-	SWISSVALE - WEST GARDNER 345KV CKT 1
FDNSLock-Blown up	06ALL	0	20SP	G15_080		Non-Converged Contingency	956	1042	0.21641	-	G14-074T 345.00 - OKLAUNION 345KV CKT 1
FDNSLock-Blown up	06ALL	0	20SP	G15_080		Non-Converged Contingency	1792	1972	0.17453	-	BORDER 7345.00 - TUCO_2 345.00 345KV CKT 1
FDNSLock-Blown up	06ALL	0	20SP	G15_080		Non-Converged Contingency	1420	1775	0.17453	-	BORDER 7345.00 - TUCO_2 345.00 345KV CKT 2
FDNSLock-Blown up	06ALL	0	20SP	G15_080		Non-Converged Contingency	956.09	1051.7	0.14509	-	G14_038T 345.00 - Hitchland Interchange 345KV CKT 1
FDNSLock-Blown up	06ALL	0	20SP	G15_080		Non-Converged Contingency	956.09	1051.7	0.14509	-	G14_038T 345.00 - POTTER COUNTY INTERCHANGE 345KV CKT 1
FDNSLock-Blown up	06ALL	0	20WP	G15_080		Non-Converged Contingency	1792	1792	0.3541	-	TUCO INTERCHANGE - YOAKUM_345 345.00 345KV CKT 1
FDNSLock-Blown up	06ALL	0	20WP	G15_080		Non-Converged Contingency	1792	1972	0.27952	-	TUCO INTERCHANGE - TUCO_2 345.00 345KV CKT 1
FDNSLock-Blown up	06ALL	0	20WP	G15_080		Non-Converged Contingency	0	0	0.24162	-	P12:345:SPS:J07.1.FINN.HITCH
FDNSLock-Blown up	06ALL	0	20WP	G15_080		Non-Converged Contingency	1022	1124	0.21155	-	G14-074T 345.00 - OKLAUNION 345KV CKT 1
FDNSLock-Blown up	06ALL	0	20WP	G15_080		Non-Converged Contingency	1022	1124	0.21155	-	G14-074T 345.00 - TUCO INTERCHANGE 345KV CKT 1
FDNSLock-Blown up	06ALL	0	20WP	G15_080		Non-Converged Contingency	1022	1124	0.21155	-	OKLAUNION 345KV SWITCHED SHUNT
FDNSLock-Blown up	06ALL	0	20WP	G15_080		Non-Converged Contingency	956	956	0.17968	-	CIMARRON - MINCO 345KV CKT 1
FDNSLock-Blown up	06ALL	0	20WP	G15_080		Non-Converged Contingency	1195	1195	0.17968	-	GRACEMONT - MINCO 345KV CKT 1
FDNSLock-Blown up	06ALL	0	20WP	G15_080		Non-Converged Contingency	1792	1792	0.17422	-	CHISHOLM7 345.00 - WOODWARD DISTRICT EHV 345KV CKT 1
FDNSLock-Blown up	06ALL	0	20WP	G15_080		Non-Converged Contingency	1792	1972	0.17086	-	BORDER 7345.00 - TUCO_2 345.00 345KV CKT 1
FDNSLock-Blown up	06ALL	0	20WP	G15_080		Non-Converged Contingency	1420	1775	0.17086	-	BORDER 7345.00 - TUCO_2 345.00 345KV CKT 2
FDNSLock-Blown up	06ALL	0	20WP	G15_080		Non-Converged Contingency	1792	1972	0.17086	-	BORDER 7345.00 345KV SWITCHED SHUNT
FDNSLock-Blown up	06ALL	0	20WP	G15_080		Non-Converged Contingency	1584	2098	0.15553	-	CHISHOLM7 345.00 - GRACEMONT 345KV CKT 1
FDNSLock-Blown up	06ALL	0	20WP	G15_080		Non-Converged Contingency	987.16	1082.8	0.14002	-	G14_038T 345.00 - Hitchland Interchange 345KV CKT 1
FDNSLock-Blown up	06ALL	0	20WP	G15_080		Non-Converged Contingency	987.16	1082.8	0.14002	-	G14_038T 345.00 - POTTER COUNTY INTERCHANGE 345KV CKT 1
FDNSLock-Blown up	06ALL	0	20WP	G15_080		Non-Converged Contingency	560	560	0.14002	-	POTTER COUNTY INTERCHANGE (WAUK 90343-A) 345/230/13.2KV TRANSFORMER CKT 1
FDNSLock-Blown up	06ALL	0	20WP	G15_080		Non-Converged Contingency	560	560	0.14002	-	POTTER COUNTY INTERCHANGE (WAUK 90343-A) 345/230/13.2KV TRANSFORMER CKT 1
FDNSLock-Blown up	06ALL	0	20WP	G15_080		Non-Converged Contingency	987.16	1082.8	0.12878	-	Hitchland Interchange - WALKTAP7 345.00 345KV CKT 1
FDNSLock-Blown up	06ALL	0	20WP	G15_080		Non-Converged Contingency	987.16	1082.8	0.12878	-	Hitchland Interchange - WALKTAP7 345.00 345KV CKT 1
FDNSLock-Blown up	06ALL	0	20WP	G15_080		Non-Converged Contingency	717	789	0.12818	-	G14-057T 345.00 - LAWTON EASTSIDE 345KV CKT 1
FDNSLock-Blown up	06ALL	0	20WP	G15_080		Non-Converged Contingency	717	789	0.12818	-	G14-057T 345.00 - SUNNYSIDE 345KV CKT 1
FDNSLock-Blown up	06ALL	0	20WP	G15_080		Non-Converged Contingency	557	557	0.11887	-	BUSHLAND INTERCHANGE - DEAF SMITH COUNTY INTERCHANGE 230KV CKT 1
FDNSLock-Blown up	06ALL	0	20WP	G15_080		Non-Converged Contingency	557	557	0.11887	-	BUSHLAND INTERCHANGE - DEAF SMITH COUNTY INTERCHANGE 230KV CKT 1
FDNSLock-Blown up	06ALL	0	20WP	G15_080		Non-Converged Contingency	956.09	1051.7	0.11284	-	FINNEY SWITCHING STATION - HOLCOMB 345KV CKT 1
FDNSLock-Blown up	06ALL	0	20WP	G15_080		Non-Converged Contingency	956.09	1051.7	0.11284	-	FINNEY SWITCHING STATION - HOLCOMB 345KV CKT 1
FDNSLock-Blown up	06ALL	0	20WP	G15_080		Non-Converged Contingency	987.16	1082.8	0.11284	-	FINNEY SWITCHING STATION - WALKTAP7 345.00 345KV CKT 1

SOLUTION	GROUP	SCENARIO	SEASON	SOURCE	DIRECTION	MONITORED ELEMENT	RATEA (MVA)	RATEB(MVA)	TDF	TC%LOADING (% MVA)	CONTINGENCY
FDNSLock-Blown up	06ALL	0	20WP	G15_080		Non-Converged Contingency	987.16	1082.8	0.11284	-	FINNEY SWITCHING STATION - WALKTAP7 345.00 345KV CKT 1
FDNSLock-Blown up	06ALL	0	20WP	G15_080		Non-Converged Contingency	0	0	0.11141	-	P12:230:AEPW:ELKCITY6:SWEETWT6
FDNSLock-Blown up	06ALL	0	20WP	G15_080		Non-Converged Contingency	329.05	360.92	0.10724	-	DEAF SMITH COUNTY INTERCHANGE - G15039_T 230.00 230KV CKT 1
FDNSLock-Blown up	06ALL	0	20WP	G15_080		Non-Converged Contingency	329.05	360.92	0.10724	-	G15039_T 230.00 - PLANT X STATION 230KV CKT 1
FDNSLock-Blown up	06ALL	0	20WP	G15_080		Non-Converged Contingency	329.05	360.92	0.10619	-	BUSHLAND INTERCHANGE - POTTER COUNTY INTERCHANGE 230KV CKT 1
FDNSLock-Blown up	06ALL	0	20WP	G15_080		Non-Converged Contingency	329.05	360.92	0.10619	-	BUSHLAND INTERCHANGE - POTTER COUNTY INTERCHANGE 230KV CKT 1
FDNSLock-Blown up	06ALL	0	20WP	G15_080		Non-Converged Contingency	557	557	0.10002	-	NEWHART 230 - POTTER COUNTY INTERCHANGE 230KV CKT 1
FDNSLock-Blown up	06ALL	0	20WP	G15_080		Non-Converged Contingency	0	0	0.09942	-	P12:230:AEPW-SPS:SWEETWT6:WHEELER 6
FDNSLock-Blown up	06ALL	0	20WP	G15_080		Non-Converged Contingency	1561	1793	0.08923	-	THISTLE7 345.00 - WOODWARD DISTRICT EHV 345KV CKT 1
FDNSLock-Blown up	06ALL	0	20WP	G15_080		Non-Converged Contingency	1561	1793	0.08923	-	THISTLE7 345.00 - WOODWARD DISTRICT EHV 345KV CKT 1
FDNSLock-Blown up	06ALL	0	20WP	G15_080		Non-Converged Contingency	1561	1793	0.08923	-	THISTLE7 345.00 - WOODWARD DISTRICT EHV 345KV CKT 2
FDNSLock-Blown up	06ALL	0	20WP	G15_080		Non-Converged Contingency	1561	1793	0.08923	-	THISTLE7 345.00 - WOODWARD DISTRICT EHV 345KV CKT 2
FDNSLock-Blown up	06ALL	0	20WP	G15_080		Non-Converged Contingency	1420	1775	0.08872	-	G11_051T 345.00 - TATONGA7 345.00 345KV CKT 1
FDNSLock-Blown up	06ALL	0	20WP	G15_080		Non-Converged Contingency	1420	1775	0.08872	-	G11_051T 345.00 - WOODWARD DISTRICT EHV 345KV CKT 1
FDNSLock-Blown up	06ALL	0	20WP	G15_080		Non-Converged Contingency	1195	1195	0.08872	-	MATHWSN7 345.00 - TATONGA7 345.00 345KV CKT 1
FDNSLock-Blown up	06ALL	0	20WP	G15_080		Non-Converged Contingency	478	502	0.08613	-	AMARILLO SOUTH INTERCHANGE - G15031_T 230.00 230KV CKT 1
FDNSLock-Blown up	06ALL	0	20WP	G15_080		Non-Converged Contingency	1793	1793	0.06037	-	G11-14T 345.00 - WOODWARD DISTRICT EHV 345KV CKT 1
FDNSLock-Blown up	06ALL	0	20WP	G15_080		Non-Converged Contingency	1716	1793	0.06037	-	G11-14T 345.00 - WOODWARD DISTRICT EHV 345KV CKT 2
FDNSLock-Blown up	06ALL	0	20WP	G15_080		Non-Converged Contingency	556.92	556.92	0.05947	-	HITCHLAND INTERCHANGE - MOORE COUNTY INTERCHANGE 230KV CKT 1
FDNSLock-Blown up	06ALL	0	20WP	G15_080		Non-Converged Contingency	556.92	556.92	0.05947	-	HITCHLAND INTERCHANGE - MOORE COUNTY INTERCHANGE 230KV CKT 1
FDNSLock-Blown up	06ALL	0	20WP	G15_080		Non-Converged Contingency	329.05	360.92	0.0506	-	MOORE COUNTY INTERCHANGE - POTTER COUNTY INTERCHANGE 230KV CKT 1
FDNSLock-Blown up	06ALL	0	20WP	G15_080		Non-Converged Contingency	329.05	360.92	0.0506	-	MOORE COUNTY INTERCHANGE - POTTER COUNTY INTERCHANGE 230KV CKT 1
FDNSLock-Blown up	06ALL	0	20WP	G15_080		Non-Converged Contingency	421	439	0.04971	-	CHISHOLM6 230.00 - SWEETWATER 230KV CKT 1
FDNSLock-Blown up	06ALL	0	20WP	G15_080		Non-Converged Contingency	435.02	457.73	0.04971	-	STATELINE INTERCHANGE - STLN-DEMARC6 230KV CKT 1
FDNSLock-Blown up	06ALL	0	20WP	G15_080		Non-Converged Contingency	439	439	0.04971	-	STLN-DEMARC6 - SWEETWATER 230KV CKT 1
FDNSLock-Blown up	06ALL	0	20WP	G15_080		Non-Converged Contingency	557	557	0.04316	-	GRAPEVINE INTERCHANGE - NICHOLS STATION 230KV CKT 1
FDNSLock-Blown up	06ALL	0	20WP	G15_080		Non-Converged Contingency	557	557	0.04316	-	GRAPEVINE INTERCHANGE - NICHOLS STATION 230KV CKT 1
FDNSLock-Blown up	06ALL	0	20WP	G15_080		Non-Converged Contingency	557	557	0.04238	-	GRAPEVINE INTERCHANGE - STATELINE INTERCHANGE 230KV CKT 1
FDNSLock-Blown up	06ALL	0	20WP	G15_080		Non-Converged Contingency	557	557	0.04238	-	GRAPEVINE INTERCHANGE - STATELINE INTERCHANGE 230KV CKT 1
FDNSLock-Blown up	06ALL	2	16WP	G15_080		Non-Converged Contingency	1022	1124	0.20246	-	G14-074T 345.00 - OKLAUNION 345KV CKT 1
FDNSLock-Blown up	06ALL	2	16WP	G15_080		Non-Converged Contingency	1022	1124	0.20246	-	G14-074T 345.00 - TUCO INTERCHANGE 345KV CKT 1
FDNSLock-Blown up	06ALL	2	16WP	G15_080		Non-Converged Contingency	987.16	1082.8	0.16646	-	G14_038T 345.00 - Hitchland Interchange 345KV CKT 1
FDNSLock-Blown up	06ALL	2	16WP	G15_080		Non-Converged Contingency	987.16	1082.8	0.16646	-	G14_038T 345.00 - POTTER COUNTY INTERCHANGE 345KV CKT 1
FDNSLock-Blown up	06ALL	2	16WP	G15_080		Non-Converged Contingency	560	560	0.16646	-	POTTER COUNTY INTERCHANGE (WAUK 90343-A) 345/230/13.2KV TRANSFORMER CKT 1
FDNSLock-Blown up	06ALL	2	16WP	G15_080		Non-Converged Contingency	1792	1972	0.15873	-	BORDER 7345.00 - TUCO_2 345.00 345KV CKT 1
FDNSLock-Blown up	06ALL	2	16WP	G15_080		Non-Converged Contingency	1420	1775	0.15873	-	BORDER 7345.00 - TUCO_2 345.00 345KV CKT 2
FDNSLock-Blown up	06ALL	2	17G	G15_080		Non-Converged Contingency	1022	1124	0.19591	-	G14-074T 345.00 - OKLAUNION 345KV CKT 1
FDNSLock-Blown up	06ALL	2	17G	G15_080		Non-Converged Contingency	1022	1124	0.19591	-	G14-074T 345.00 - TUCO INTERCHANGE 345KV CKT 1
FDNSLock-Blown up	06ALL	2	17G	G15_080		Non-Converged Contingency	956.09	1051.7	0.15723	-	G14_038T 345.00 - Hitchland Interchange 345KV CKT 1
FDNSLock-Blown up	06ALL	2	17G	G15_080		Non-Converged Contingency	956.09	1051.7	0.15723	-	G14_038T 345.00 - POTTER COUNTY INTERCHANGE 345KV CKT 1
FDNSLock-Blown up	06ALL	2	17G	G15_080		Non-Converged Contingency	560	560	0.15723	-	POTTER COUNTY INTERCHANGE (WAUK 90343-A) 345/230/13.2KV TRANSFORMER CKT 1
FDNSLock-Blown up	06ALL	2	17G	G15_080		Non-Converged Contingency	1792	1972	0.15299	-	BORDER 7345.00 - TUCO_2 345.00 345KV CKT 1
FDNSLock-Blown up	06ALL	2	17G	G15_080		Non-Converged Contingency	1420	1775	0.15299	-	BORDER 7345.00 - TUCO_2 345.00 345KV CKT 2
FDNSLock-Blown up	06NR	2	17G	G15_080		Non-Converged Contingency	1022	1124	0.03913	-	G14-074T 345.00 - OKLAUNION 345KV CKT 1
FDNSLock-Blown up	06NR	2	17G	G15_080		Non-Converged Contingency	1022	1124	0.03913	-	G14-074T 345.00 - TUCO INTERCHANGE 345KV CKT 1
FDNSLock-Blown up	06NR	2	17G	G15_080		Non-Converged Contingency	1792	1972	0.03725	-	BORDER 7345.00 - TUCO_2 345.00 345KV CKT 1
FDNSLock-Blown up	06NR	2	17G	G15_080		Non-Converged Contingency	1792	1792	0.03725	-	BORDER 7345.00 - WOODWARD DISTRICT EHV 345KV CKT 1
FDNSLock-Blown up	06ALL	2	17SP	G15_080		Non-Converged Contingency	956	1042	0.20187	-	G14-074T 345.00 - OKLAUNION 345KV CKT 1
FDNSLock-Blown up	06ALL	2	20L	G15_080		Non-Converged Contingency	0	0	0.20104	-	P12:345:SPS:J07.1.FINN.HITCH
FDNSLock-Blown up	06ALL	2	20L	G15_080		Non-Converged Contingency	1022	1124	0.18235	-	G14-074T 345.00 - OKLAUNION 345KV CKT 1
FDNSLock-Blown up	06ALL	2	20L	G15_080		Non-Converged Contingency	1022	1124	0.18235	-	G14-074T 345.00 - TUCO INTERCHANGE 345KV CKT 1
FDNSLock-Blown up	06ALL	2	20L	G15_080		Non-Converged Contingency	1022	1124	0.18235	-	OKLAUNION 345KV SWITCHED SHUNT
FDNSLock-Blown up	06ALL	2	20L	G15_080		Non-Converged Contingency	1792	1972	0.15034	-	BORDER 7345.00 - TUCO_2 345.00 345KV CKT 1
FDNSLock-Blown up	06ALL	2	20L	G15_080		Non-Converged Contingency	1420	1775	0.15034	-	BORDER 7345.00 - TUCO_2 345.00 345KV CKT 2
FDNSLock-Blown up	06ALL	2	20L	G15_080		Non-Converged Contingency	1584	2098	0.12987	-	CHISHOLM7 345.00 - GRACEMONT 345KV CKT 1
FDNSLock-Blown up	06ALL	2	20L	G15_080		Non-Converged Contingency	956.09	1051.7	0.11147	-	G14_038T 345.00 - Hitchland Interchange 345KV CKT 1
FDNSLock-Blown up	06ALL	2	20L	G15_080		Non-Converged Contingency	956.09	1051.7	0.11147	-	G14_038T 345.00 - POTTER COUNTY INTERCHANGE 345KV CKT 1
FDNSLock-Blown up	06ALL	2	20L	G15_080		Non-Converged Contingency	560	560	0.11147	-	POTTER COUNTY INTERCHANGE (WAUK 90343-A) 345/230/13.2KV TRANSFORMER CKT 1
FDNSLock-Blown up	06ALL	2	20L	G15_080		Non-Converged Contingency	560	560	0.11147	-	POTTER COUNTY INTERCHANGE (WAUK 90343-A) 345/230/13.2KV TRANSFORMER CKT 1
FDNSLock-Blown up	06ALL	2	20L	G15_080		Non-Converged Contingency	956.09	1051.7	0.10734	-	Hitchland Interchange - WALKTAP7 345.00 345KV CKT 1
FDNSLock-Blown up	06ALL	2	20L	G15_080		Non-Converged Contingency	956.09	1051.7	0.10734	-	Hitchland Interchange - WALKTAP7 345.00 345KV CKT 1
FDNSLock-Blown up	06ALL	2	20L	G15_080		Non-Converged Contingency	0	0	0.08465	-	P12:230:AEPW:ELKCITY6:SWEETWT6
FDNSLock-Blown up	06NR	2	20L	G15_080		Non-Converged Contingency	478	502	0.07978	-	AMARILLO SOUTH INTERCHANGE - G15031_T 230.00 230KV CKT 1
FDNSLock-Blown up	06ALL	2	20L	G15_080		Non-Converged Contingency	1195	1195	0.07454	-	MATHWSN7 345.00 - TATONGA7 345.00 345KV CKT 1
FDNSLock-Blown up	06NR	2	20L	G15_080		Non-Converged Contingency	478	502	0.0706	-	NEWHART 230 - POTTER COUNTY INTERCHANGE 230KV CKT 1
FDNSLock-Blown up	06NR	2	20L	G15_080		Non-Converged Contingency	318.7	350.57	0.06861	-	DEAF SMITH COUNTY INTERCHANGE - G15039_T 230.00 230KV CKT 1
FDNSLock-Blown up	06NR	2	20L	G15_080		Non-Converged Contingency	318.7	350.57	0.0634	-	BUSHLAND INTERCHANGE - POTTER COUNTY INTERCHANGE 230KV CKT 1
FDNSLock-Blown up	06NR	2	20L	G15_080		Non-Converged Contingency	318.7	350.57	0.0634	-	BUSHLAND INTERCHANGE - POTTER COUNTY INTERCHANGE 230KV CKT 1
FDNSLock-Blown up	06NR	2	20L	G15_080		Non-Converged Contingency	1022	1124	0.0566	-	G14-074T 345.00 - OKLAUNION 345KV CKT 1
FDNSLock-Blown up	06NR	2	20L	G15_080		Non-Converged Contingency	1022	1124	0.0566	-	G14-074T 345.00 - TUCO INTERCHANGE 345KV CKT 1
FDNSLock-Blown up	06NR	2	20L	G15_080		Non-Converged Contingency	1022	1124	0.0566	-	OKLAUNION 345KV SWITCHED SHUNT
FDNSLock-Blown up	06NR	2	20L	G15_080		Non-Converged Contingency	1792	1972	0.05385	-	BORDER 7345.00 - TUCO_2 345.00 345KV CKT 1
FDNSLock-Blown up	06NR	2	20L	G15_080		Non-Converged Contingency	1792	1792	0.05385	-	BORDER 7345.00 - WOODWARD DISTRICT EHV 345KV CKT 1
FDNSLock-Blown up	06NR	2	20L	G15_080		Non-Converged Contingency	1792	1972	0.05385	-	BORDER 7345.00 345KV SWITCHED SHUNT
FDNSLock-Blown up	06ALL	2	20L	G15_080		Non-Converged Contingency	421	439	0.0344	-	CHISHOLM6 230.00 - SWEETWATER 230KV CKT 1
FDNSLock-Blown up	06ALL	2	20SP	G15_080		Non-Converged Contingency	956	1042	0.2165	-	G14-074T 345.00 - OKLAUNION 345KV CKT 1
FDNSLock-Blown up	06ALL	2	20WP	G15_080		Non-Converged Contingency	1022	1124	0.21179	-	G14-074T 345.00 - OKLAUNION 345KV CKT 1
FDNSLock-Blown up	06ALL	2	20WP	G15_080		Non-Converged Contingency	1022	1124	0.21179	-	G14-074T 345.00 - TUCO INTERCHANGE 345KV CKT 1
FDNSLock-Blown up	06ALL	2	20WP	G15_080		Non-Converged Contingency	1792	1972	0.17107	-	BORDER 7345.00 - TUCO_2 345.00 345KV CKT 1

SOLUTION	GROUP	SCENARIO	SEASON	SOURCE	DIRECTION	MONITORED ELEMENT	RATEA (MVA)	RATEB(MVA)	TDF	TC%LOADING (% MVA)	CONTINGENCY
FDNSLock-Blown up	06ALL	2	20WP	G15_080		Non-Converged Contingency	1420	1775	0.17107	-	BORDER 7345.00 - TUCO_2 345.00 345KV CKT 2
FDNSLock-Blown up	06ALL	2	20WP	G15_080		Non-Converged Contingency	987.16	1082.8	0.14024	-	G14_038T 345.00 - Hitchland Interchange 345KV CKT 1
FDNSLock-Blown up	06ALL	2	20WP	G15_080		Non-Converged Contingency	987.16	1082.8	0.14024	-	G14_038T 345.00 - POTTER COUNTY INTERCHANGE 345KV CKT 1
FDNSLock-Blown up	06ALL	2	20WP	G15_080		Non-Converged Contingency	560	560	0.14024	-	POTTER COUNTY INTERCHANGE (WAUK 90343-A) 345/230/13.2KV TRANSFORMER CKT 1
FDNSLock-Blown up	06ALL	2	20WP	G15_080		Non-Converged Contingency	560	560	0.14024	-	POTTER COUNTY INTERCHANGE (WAUK 90343-A) 345/230/13.2KV TRANSFORMER CKT 1
FDNSLock-Blown up	06ALL	3	16WP	G15_080		Non-Converged Contingency	1022	1124	0.2158	-	G14-074T 345.00 - OKLAUNION 345KV CKT 1
FDNSLock-Blown up	06ALL	3	16WP	G15_080		Non-Converged Contingency	1022	1124	0.2158	-	G14-074T 345.00 - TUCO INTERCHANGE 345KV CKT 1
FDNSLock-Blown up	06NR	3	17G	G15_080		Non-Converged Contingency	1022	1124	0.04581	-	G14-074T 345.00 - OKLAUNION 345KV CKT 1
FDNSLock-Blown up	06NR	3	17G	G15_080		Non-Converged Contingency	1022	1124	0.04581	-	G14-074T 345.00 - TUCO INTERCHANGE 345KV CKT 1
FDNSLock-Blown up	06NR	3	17G	G15_080		Non-Converged Contingency	1792	1972	0.04411	-	BORDER 7345.00 - TUCO_2 345.00 345KV CKT 1
FDNSLock-Blown up	06NR	3	17G	G15_080		Non-Converged Contingency	1792	1792	0.04411	-	BORDER 7345.00 - WOODWARD DISTRICT EHV 345KV CKT 1
FDNSLock-Blown up	06ALL	3	17SP	G15_080		Non-Converged Contingency	956	1042	0.21385	-	G14-074T 345.00 - OKLAUNION 345KV CKT 1
FDNSLock-Blown up	06ALL	3	20L	G15_080		Non-Converged Contingency	1022	1124	0.1874	-	G14-074T 345.00 - OKLAUNION 345KV CKT 1
FDNSLock-Blown up	06ALL	3	20L	G15_080		Non-Converged Contingency	1022	1124	0.1874	-	G14-074T 345.00 - TUCO INTERCHANGE 345KV CKT 1
FDNSLock-Blown up	06ALL	3	20L	G15_080		Non-Converged Contingency	1792	1972	0.15611	-	BORDER 7345.00 - TUCO_2 345.00 345KV CKT 1
FDNSLock-Blown up	06ALL	3	20L	G15_080		Non-Converged Contingency	1420	1775	0.15611	-	BORDER 7345.00 - TUCO_2 345.00 345KV CKT 2
FDNSLock-Blown up	06ALL	3	20L	G15_080		Non-Converged Contingency	1584	2098	0.13147	-	CHISHOLM7 345.00 - GRACEMONT 345KV CKT 1
FDNSLock-Blown up	06ALL	3	20L	G15_080		Non-Converged Contingency	956.09	1051.7	0.10699	-	G14_038T 345.00 - Hitchland Interchange 345KV CKT 1
FDNSLock-Blown up	06ALL	3	20L	G15_080		Non-Converged Contingency	956.09	1051.7	0.10699	-	G14_038T 345.00 - POTTER COUNTY INTERCHANGE 345KV CKT 1
FDNSLock-Blown up	06ALL	3	20L	G15_080		Non-Converged Contingency	560	560	0.10699	-	POTTER COUNTY INTERCHANGE (WAUK 90343-A) 345/230/13.2KV TRANSFORMER CKT 1
FDNSLock-Blown up	06ALL	3	20L	G15_080		Non-Converged Contingency	956.09	1051.7	0.10566	-	Hitchland Interchange - WALKTAP7 345.00 345KV CKT 1
FDNSLock-Blown up	06ALL	3	20L	G15_080		Non-Converged Contingency	1195	1195	0.07369	-	MATHWSN7 345.00 - TATONGA7 345.00 345KV CKT 1
FDNSLock-Blown up	06NR	3	20L	G15_080		Non-Converged Contingency	1022	1124	0.05728	-	G14-074T 345.00 - OKLAUNION 345KV CKT 1
FDNSLock-Blown up	06NR	3	20L	G15_080		Non-Converged Contingency	1022	1124	0.05728	-	G14-074T 345.00 - TUCO INTERCHANGE 345KV CKT 1
FDNSLock-Blown up	06NR	3	20L	G15_080		Non-Converged Contingency	1022	1124	0.05728	-	OKLAUNION 345KV SWITCHED SHUNT
FDNSLock-Blown up	06NR	3	20L	G15_080		Non-Converged Contingency	1792	1972	0.05456	-	BORDER 7345.00 - TUCO_2 345.00 345KV CKT 1
FDNSLock-Blown up	06NR	3	20L	G15_080		Non-Converged Contingency	1792	1792	0.05456	-	BORDER 7345.00 - WOODWARD DISTRICT EHV 345KV CKT 1
FDNSLock-Blown up	06NR	3	20L	G15_080		Non-Converged Contingency	1792	1972	0.05456	-	BORDER 7345.00 345KV SWITCHED SHUNT
FDNSLock-Blown up	06ALL	3	20L	G15_080		Non-Converged Contingency	421	439	0.03055	-	CHISHOLM6 230.00 - SWEETWATER 230KV CKT 1
FDNSLock-Blown up	06ALL	3	20SP	G15_080		Non-Converged Contingency	956	1042	0.22167	-	G14-074T 345.00 - OKLAUNION 345KV CKT 1
FDNSLock-Blown up	06ALL	3	20WP	G15_080		Non-Converged Contingency	1022	1124	0.21708	-	G14-074T 345.00 - OKLAUNION 345KV CKT 1
FDNSLock-Blown up	06ALL	3	20WP	G15_080		Non-Converged Contingency	1022	1124	0.21708	-	G14-074T 345.00 - TUCO INTERCHANGE 345KV CKT 1
FDNSLock-Blown up	06ALL	3	20WP	G15_080		Non-Converged Contingency	1792	1972	0.17732	-	BORDER 7345.00 - TUCO_2 345.00 345KV CKT 1
FDNSLock-Blown up	06ALL	3	20WP	G15_080		Non-Converged Contingency	1420	1775	0.17732	-	BORDER 7345.00 - TUCO_2 345.00 345KV CKT 2
FDNSLock-Blown up	06ALL	3	20WP	G15_080		Non-Converged Contingency	987.16	1082.8	0.13442	-	G14_038T 345.00 - Hitchland Interchange 345KV CKT 1
FDNSLock-Blown up	06ALL	3	20WP	G15_080		Non-Converged Contingency	987.16	1082.8	0.13442	-	G14_038T 345.00 - POTTER COUNTY INTERCHANGE 345KV CKT 1
FDNSLock-Blown up	06ALL	4	16WP	G15_080		Non-Converged Contingency	1022	1124	0.19403	-	G14-074T 345.00 - OKLAUNION 345KV CKT 1
FDNSLock-Blown up	06ALL	4	17G	G15_080		Non-Converged Contingency	956.09	1051.7	0.19843	-	G14_038T 345.00 - Hitchland Interchange 345KV CKT 1
FDNSLock-Blown up	06ALL	4	17G	G15_080		Non-Converged Contingency	956.09	1051.7	0.19843	-	G14_038T 345.00 - POTTER COUNTY INTERCHANGE 345KV CKT 1
FDNSLock-Blown up	06ALL	4	17G	G15_080		Non-Converged Contingency	1022	1124	0.18751	-	G14-074T 345.00 - OKLAUNION 345KV CKT 1
FDNSLock-Blown up	06ALL	4	17G	G15_080		Non-Converged Contingency	1022	1124	0.18751	-	G14-074T 345.00 - TUCO INTERCHANGE 345KV CKT 1
FDNSLock-Blown up	06ALL	4	20L	G15_080		Non-Converged Contingency	0	0	0.22159	-	P12:345:SPS:J07.1.FINN.HITCH
FDNSLock-Blown up	06ALL	4	20L	G15_080		Non-Converged Contingency	1022	1124	0.16923	-	G14-074T 345.00 - OKLAUNION 345KV CKT 1
FDNSLock-Blown up	06ALL	4	20L	G15_080		Non-Converged Contingency	1022	1124	0.16923	-	G14-074T 345.00 - TUCO INTERCHANGE 345KV CKT 1
FDNSLock-Blown up	06ALL	4	20L	G15_080		Non-Converged Contingency	956.09	1051.7	0.15612	-	G14_038T 345.00 - Hitchland Interchange 345KV CKT 1
FDNSLock-Blown up	06ALL	4	20L	G15_080		Non-Converged Contingency	956.09	1051.7	0.15612	-	G14_038T 345.00 - POTTER COUNTY INTERCHANGE 345KV CKT 1
FDNSLock-Blown up	06ALL	4	20L	G15_080		Non-Converged Contingency	1792	1972	0.13652	-	BORDER 7345.00 - TUCO_2 345.00 345KV CKT 1
FDNSLock-Blown up	06ALL	4	20L	G15_080		Non-Converged Contingency	1420	1775	0.13652	-	BORDER 7345.00 - TUCO_2 345.00 345KV CKT 2
FDNSLock-Blown up	06ALL	4	20L	G15_080		Non-Converged Contingency	1584	2098	0.12763	-	CHISHOLM7 345.00 - GRACEMONT 345KV CKT 1
FDNSLock-Blown up	06ALL	4	20L	G15_080		Non-Converged Contingency	956.09	1051.7	0.1183	-	Hitchland Interchange - WALKTAP7 345.00 345KV CKT 1
FDNSLock-Blown up	06ALL	4	20L	G15_080		Non-Converged Contingency	956.09	1051.7	0.1183	-	Hitchland Interchange - WALKTAP7 345.00 345KV CKT 1
FDNSLock-Blown up	06ALL	4	20L	G15_080		Non-Converged Contingency	0	0	0.0894	-	P12:230:AEPW:ELKCITY6:SWEETWT6
FDNSLock-Blown up	06NR	4	20L	G15_080		Non-Converged Contingency	1022	1124	0.04138	-	G14-074T 345.00 - OKLAUNION 345KV CKT 1
FDNSLock-Blown up	06NR	4	20L	G15_080		Non-Converged Contingency	1022	1124	0.04138	-	G14-074T 345.00 - TUCO INTERCHANGE 345KV CKT 1
FDNSLock-Blown up	06NR	4	20L	G15_080		Non-Converged Contingency	1022	1124	0.04138	-	OKLAUNION 345KV SWITCHED SHUNT
FDNSLock-Blown up	06NR	4	20L	G15_080		Non-Converged Contingency	1792	1972	0.03809	-	BORDER 7345.00 - TUCO_2 345.00 345KV CKT 1
FDNSLock-Blown up	06NR	4	20L	G15_080		Non-Converged Contingency	1792	1792	0.03809	-	BORDER 7345.00 - WOODWARD DISTRICT EHV 345KV CKT 1
FDNSLock-Blown up	06ALL	4	20WP	G15_080		Non-Converged Contingency	1022	1124	0.19716	-	G14-074T 345.00 - OKLAUNION 345KV CKT 1
FDNSLock-Blown up	06ALL	4	20WP	G15_080		Non-Converged Contingency	1022	1124	0.19716	-	G14-074T 345.00 - TUCO INTERCHANGE 345KV CKT 1
FDNSLock-Blown up	06ALL	4	20WP	G15_080		Non-Converged Contingency	987.16	1082.8	0.18663	-	G14_038T 345.00 - Hitchland Interchange 345KV CKT 1
FDNSLock-Blown up	06ALL	5	16WP	G15_080		Non-Converged Contingency	1022	1124	0.18642	-	G14-074T 345.00 - OKLAUNION 345KV CKT 1
FDNSLock-Blown up	06ALL	5	17G	G15_080		Non-Converged Contingency	1022	1124	0.18039	-	G14-074T 345.00 - OKLAUNION 345KV CKT 1
FDNSLock-Blown up	06ALL	5	20L	G15_080		Non-Converged Contingency	1022	1124	0.16551	-	G14-074T 345.00 - OKLAUNION 345KV CKT 1
FDNSLock-Blown up	06NR	5	20L	G15_080		Non-Converged Contingency	1022	1124	0.04232	-	G14-074T 345.00 - OKLAUNION 345KV CKT 1
FDNSLock-Blown up	06NR	5	20L	G15_080		Non-Converged Contingency	1022	1124	0.04232	-	G14-074T 345.00 - TUCO INTERCHANGE 345KV CKT 1
FDNSLock-Blown up	06NR	5	20L	G15_080		Non-Converged Contingency	1792	1972	0.03845	-	BORDER 7345.00 - TUCO_2 345.00 345KV CKT 1
FDNSLock-Blown up	06NR	5	20L	G15_080		Non-Converged Contingency	1792	1792	0.03845	-	BORDER 7345.00 - WOODWARD DISTRICT EHV 345KV CKT 1
FDNSLock-Blown up	06ALL	5	20WP	G15_080		Non-Converged Contingency	1022	1124	0.19062	-	G14-074T 345.00 - OKLAUNION 345KV CKT 1
FDNSLock-Blown up	06ALL	6	17G	G15_080		Non-Converged Contingency	1022	1124	0.17333	-	G14-074T 345.00 - OKLAUNION 345KV CKT 1
FDNSLock-Blown up	06ALL	6	20L	G15_080		Non-Converged Contingency	1022	1124	0.15951	-	G14-074T 345.00 - OKLAUNION 345KV CKT 1
FDNSLock-Blown up	06NR	6	20L	G15_080		Non-Converged Contingency	1022	1124	0.04241	-	G14-074T 345.00 - OKLAUNION 345KV CKT 1
FDNSLock-Blown up	06NR	6	20L	G15_080		Non-Converged Contingency	1792	1972	0.03848	-	BORDER 7345.00 - TUCO_2 345.00 345KV CKT 1
FDNSLock-Blown up	06NR	6	20L	G15_080		Non-Converged Contingency	1792	1792	0.03848	-	BORDER 7345.00 - WOODWARD DISTRICT EHV 345KV CKT 1
FDNSLock-Blown up	06ALL	6	20WP	G15_080		Non-Converged Contingency	1022	1124	0.1838	-	G14-074T 345.00 - OKLAUNION 345KV CKT 1
FDNSLock-Blown up	06NR	7	20L	G15_080		Non-Converged Contingency	1022	1124	0.04241	-	G14-074T 345.00 - OKLAUNION 345KV CKT 1
FDNS	06ALL	0	16WP	G15_080	FROM->TO	BUSHLAND INTERCHANGE - POTTER COUNTY INTERCHANGE 230KV CKT 1	329.05	360.92	0.13757	103.4995	BASE CASE
FDNS	06NR	0	17G	G15_080	FROM->TO	BUSHLAND INTERCHANGE - POTTER COUNTY INTERCHANGE 230KV CKT 1	318.7	350.57	0.08861	101.2444	BUSHLAND INTERCHANGE - HILLSIDE 115KV CKT 1
FDNS	06NR	0	17G	G15_080	FROM->TO	BUSHLAND INTERCHANGE - POTTER COUNTY INTERCHANGE 230KV CKT 1	318.7	350.57	0.08861	101.1735	BUSHLAND INTERCHANGE (WH 7001795) 230/115/13.2KV TRANSFORMER CKT 1
FDNS	06NR	0	17G	G15_080	FROM->TO	BUSHLAND INTERCHANGE - POTTER COUNTY INTERCHANGE 230KV CKT 1	318.7	350.57	0.08861	101.1735	BUSHLAND INTERCHANGE (WH 7001795) 230/115/13.2KV TRANSFORMER CKT 1

SOLUTION	GROUP	SCENARIO	SEASON	SOURCE	DIRECTION	MONITORED ELEMENT	RATEA (MVA)	RATEB(MVA)	TDF	TC%LOADING (% MVA)	CONTINGENCY
FDNS	06NR	0	17G	G15_080	FROM->TO	BUSHLAND INTERCHANGE - POTTER COUNTY INTERCHANGE 230KV CKT 1	318.7	350.57	0.08861	100.4335	P12:115:SPS:V52.1.COLTR.BSHLND
FDNS	06ALL	0	20SP	G15_080	FROM->TO	CHISHOLM6 230.00 - ELK CITY 230KV 230KV CKT 1	353	353	0.06339	106.4803	BASE CASE
FDNS	06ALL	0	17SP	G15_080	FROM->TO	CHISHOLM6 230.00 - ELK CITY 230KV 230KV CKT 1	353	353	0.0634	104.7427	BASE CASE
FDNS	06ALL	0	17SP	G15_080	TO->FROM	CIMARRON - MINCO 345KV CKT 1	956	956	0.23943	123.2446	G14-057T 345.00 - SUNNYSIDE 345KV CKT 1
FDNS	06ALL	0	20SP	G15_080	TO->FROM	CIMARRON - MINCO 345KV CKT 1	956	956	0.24845	120.5642	G14-057T 345.00 - SUNNYSIDE 345KV CKT 1
FDNS	06ALL	0	17SP	G15_080	TO->FROM	CIMARRON - MINCO 345KV CKT 1	956	956	0.23943	117.8925	G14-057T 345.00 - LAWTON EASTSIDE 345KV CKT 1
FDNS	06ALL	0	20SP	G15_080	TO->FROM	CIMARRON - MINCO 345KV CKT 1	956	956	0.24845	115.1699	G14-057T 345.00 - LAWTON EASTSIDE 345KV CKT 1
FDNS	06ALL	0	17SP	G15_080	TO->FROM	CIMARRON - MINCO 345KV CKT 1	956	956	0.20473	105.5731	MATHWSN7 345.00 - TATONGA7 345.00 345KV CKT 1
FDNS	06ALL	0	20SP	G15_080	TO->FROM	CIMARRON - MINCO 345KV CKT 1	956	956	0.21047	104.5241	MATHWSN7 345.00 - TATONGA7 345.00 345KV CKT 1
FDNS	06ALL	0	20SP	G15_080	TO->FROM	CIMARRON - MINCO 345KV CKT 1	956	956	0.25022	102.9387	CHISHOLM7 345.00 - WOODWARD DISTRICT EHV 345KV CKT 1
FDNS	06ALL	0	17SP	G15_080	TO->FROM	CIMARRON - MINCO 345KV CKT 1	956	956	0.23793	102.0892	CHISHOLM7 345.00 - WOODWARD DISTRICT EHV 345KV CKT 1
FDNS	06ALL	0	17SP	G15_080	TO->FROM	CIMARRON - MINCO 345KV CKT 1	956	956	0.20473	100.3376	G11_051T 345.00 - TATONGA7 345.00 345KV CKT 1
FDNS	06ALL	0	20SP	G15_080	TO->FROM	DEAF SMITH COUNTY INTERCHANGE - G15039_T 230.00 230KV CKT 1	318.7	350.57	0.10853	110.3343	BASE CASE
FDNS	06NR	0	17G	G15_080	TO->FROM	DEAF SMITH COUNTY INTERCHANGE - G15039_T 230.00 230KV CKT 1	318.7	350.57	0.10757	110.3216	NEWHART 230 - PLANT X STATION 230KV CKT 1
FDNS	06ALL	0	17SP	G15_080	TO->FROM	DEAF SMITH COUNTY INTERCHANGE - G15039_T 230.00 230KV CKT 1	318.7	350.57	0.13654	108.4885	BASE CASE
FDNS	06NR	0	17G	G15_080	TO->FROM	DEAF SMITH COUNTY INTERCHANGE - G15039_T 230.00 230KV CKT 1	318.7	350.57	0.08861	103.1436	P12:115:SPS:T04.1.DFSMTH.CASTRO
FDNS	06NR	0	17G	G15_080	TO->FROM	DEAF SMITH COUNTY INTERCHANGE - G15039_T 230.00 230KV CKT 1	318.7	350.57	0.09251	101.0528	CURRY COUNTY INTERCHANGE - DEAF SMITH REC-#20 115KV CKT 1
FDNS	06NR	0	17G	G15_080	TO->FROM	DEAF SMITH COUNTY INTERCHANGE - G15039_T 230.00 230KV CKT 1	318.7	350.57	0.09246	100.4761	TOLK STATION EAST - TUCO INTERCHANGE 230KV CKT 1
FDNS	06NR	0	17G	G15_080	TO->FROM	DEAF SMITH COUNTY INTERCHANGE - G15039_T 230.00 230KV CKT 1	318.7	350.57	0.09246	100.4761	TOLK STATION EAST - TUCO INTERCHANGE 230KV CKT 1
FDNS	06NR	0	17G	G15_080	TO->FROM	DEAF SMITH COUNTY INTERCHANGE - G15039_T 230.00 230KV CKT 1	318.7	350.57	0.08361	99.9	P12:230:SPS:CL.1.BSHLND.WLDRDO
FDNS	06NR	0	17G	G15_080	TO->FROM	DEAF SMITH COUNTY INTERCHANGE - G15039_T 230.00 230KV CKT 1	318.7	350.57	0.09251	99.6	DEAF SMITH REC-#20 - PARMER COUNTY SUB 115KV CKT 1
FDNSLock	06ALL	0	20WP	G15_080		ELK CITY 230KV (ELKCTY-6) 230/138/13.8KV TRANSFORMER CKT 1	450	450	0.06169	87.66341	BASE CASE
FDNSLock	06ALL	0	20WP	G15_080		ELK CITY 230KV (ELKCTY-6) 230/138/13.8KV TRANSFORMER CKT 1	450	450	0.06169	87.66341	BASE CASE
FDNS	06ALL	0	20L	G15_080	TO->FROM	G14-057T 345.00 - LAWTON EASTSIDE 345KV CKT 1	717	789	0.10443	108.0268	BASE CASE
FDNS	06ALL	0	20L	G15_080	FROM->TO	G14-057T 345.00 - SUNNYSIDE 345KV CKT 1	717	789	0.10443	120.8788	BASE CASE
FDNS	06ALL	0	20WP	G15_080	FROM->TO	G14-057T 345.00 - SUNNYSIDE 345KV CKT 1	717	789	0.12818	107.5634	BASE CASE
FDNS	06ALL	0	17G	G15_080	FROM->TO	G14-057T 345.00 - SUNNYSIDE 345KV CKT 1	717	789	0.12499	106.9763	BASE CASE
FDNS	06ALL	0	16WP	G15_080	FROM->TO	G14-057T 345.00 - SUNNYSIDE 345KV CKT 1	717	789	0.12827	105.0999	BASE CASE
FDNS	06NR	0	20L	G15_080	FROM->TO	G14-074T 345.00 - OKLAUNION 345KV CKT 1	1022	1124	0.0566	106.9322	BASE CASE
FDNS	06NR	0	17G	G15_080	FROM->TO	G14-074T 345.00 - OKLAUNION 345KV CKT 1	1022	1124	0.03913	102.2735	BASE CASE
FDNS	06NR	0	20L	G15_080	FROM->TO	G14-074T 345.00 - OKLAUNION 345KV CKT 1	1022	1124	0.05393	102.2532	CHISHOLM7 345.00 - GRACEMONT 345KV CKT 1
FDNS	06NR	0	20L	G15_080	FROM->TO	G14-074T 345.00 - OKLAUNION 345KV CKT 1	1022	1124	0.05393	101.8896	CHISHOLM7 345.00 () 345/230/13.2KV TRANSFORMER CKT 1
FDNS	06NR	0	20L	G15_080	FROM->TO	G14-074T 345.00 - OKLAUNION 345KV CKT 1	1022	1124	0.06288	101.4902	TUCO INTERCHANGE - TUCO_2 345.00 345KV CKT 1
FDNS	06NR	0	20L	G15_080	FROM->TO	G14-074T 345.00 - OKLAUNION 345KV CKT 1	1022	1124	0.06565	101.2851	BUSHLAND INTERCHANGE - DEAF SMITH COUNTY INTERCHANGE 230KV CKT 1
FDNS	06NR	0	20L	G15_080	FROM->TO	G14-074T 345.00 - OKLAUNION 345KV CKT 1	1022	1124	0.06565	101.2851	BUSHLAND INTERCHANGE - DEAF SMITH COUNTY INTERCHANGE 230KV CKT 1
FDNS	06NR	0	20L	G15_080	FROM->TO	G14-074T 345.00 - OKLAUNION 345KV CKT 1	1022	1124	0.05633	101.2671	MOORE COUNTY INTERCHANGE - POTTER COUNTY INTERCHANGE 230KV CKT 1
FDNS	06NR	0	20L	G15_080	FROM->TO	G14-074T 345.00 - OKLAUNION 345KV CKT 1	1022	1124	0.05633	101.2671	MOORE COUNTY INTERCHANGE - POTTER COUNTY INTERCHANGE 230KV CKT 1
FDNS	06NR	0	20L	G15_080	FROM->TO	G14-074T 345.00 - OKLAUNION 345KV CKT 1	1022	1124	0.05567	101.2654	G11-14T 345.00 - WOODWARD DISTRICT EHV 345KV CKT 1
FDNS	06NR	0	20L	G15_080	FROM->TO	G14-074T 345.00 - OKLAUNION 345KV CKT 1	1022	1124	0.05567	101.2654	G11-14T 345.00 - WOODWARD DISTRICT EHV 345KV CKT 2
FDNS	00NR	0	25SP	G15_080	FROM->TO	Hitchland Interchange (H TB80155502) 345/230/13.2KV TRANSFORMER CKT 1	560	644	0.03026	100	Hitchland Interchange (SIEM 8743067) 345/230/13.2KV TRANSFORMER CKT 2
FDNS	00NR	0	25SP	G15_080	FROM->TO	Hitchland Interchange (H TB80155502) 345/230/13.2KV TRANSFORMER CKT 1	560	644	0.03026	100	Hitchland Interchange (SIEM 8743067) 345/230/13.2KV TRANSFORMER CKT 2
FDNS	00NR	0	25SP	G15_080	FROM->TO	Hitchland Interchange (SIEM 8743067) 345/230/13.2KV TRANSFORMER CKT 2	560	644	0.03089	102.3531	Hitchland Interchange (H TB80155502) 345/230/13.2KV TRANSFORMER CKT 1
FDNS	00NR	0	25SP	G15_080	FROM->TO	Hitchland Interchange (SIEM 8743067) 345/230/13.2KV TRANSFORMER CKT 2	560	644	0.03089	102.3531	Hitchland Interchange (H TB80155502) 345/230/13.2KV TRANSFORMER CKT 1
FDNS	00NR	0	25SP	G15_080	FROM->TO	Hitchland Interchange (SIEM 8743067) 345/230/13.2KV TRANSFORMER CKT 2	560	644	0.03089	100.5303	Hitchland Interchange (H TB80155502) 345/230/13.2KV TRANSFORMER CKT 1
FDNS	00NR	0	25SP	G15_080	FROM->TO	Hitchland Interchange (SIEM 8743067) 345/230/13.2KV TRANSFORMER CKT 2	560	644	0.03089	100.5303	Hitchland Interchange (H TB80155502) 345/230/13.2KV TRANSFORMER CKT 1
FDNS	00NR	0	25SP	G15_080	TO->FROM	JONES STATION - TUCO INTERCHANGE 230KV CKT 1	343.79	343.79	0.03348	139.3518	CARLISLE INTERCHANGE - TUCO INTERCHANGE 230KV CKT 1
FDNS	00NR	0	25SP	G15_080	TO->FROM	JONES STATION - TUCO INTERCHANGE 230KV CKT 1	343.79	343.79	0.03348	139.3518	CARLISLE INTERCHANGE - TUCO INTERCHANGE 230KV CKT 1
FDNS	00NR	0	25SP	G15_080	TO->FROM	JONES STATION - TUCO INTERCHANGE 230KV CKT 1	343.79	343.79	0.03691	119.4572	GEN526333 1-JONES GEN #3 21 KV
FDNS	00NR	0	25SP	G15_080	TO->FROM	JONES STATION - TUCO INTERCHANGE 230KV CKT 1	343.79	343.79	0.03691	119.0504	GEN526334 1-JONES_4 116.500
FDNS	00NR	0	25SP	G15_080	TO->FROM	JONES STATION - TUCO INTERCHANGE 230KV CKT 1	343.79	343.79	0.03292	111.1942	CARLISLE INTERCHANGE - WOLFFORTH INTERCHANGE 230KV CKT 1
FDNS	00NR	0	25SP	G15_080	TO->FROM	JONES STATION - TUCO INTERCHANGE 230KV CKT 1	343.79	343.79	0.03808	107.2791	TUCO INTERCHANGE (ENRCO 136401) 230/115/13.2KV TRANSFORMER CKT 1
FDNS	00NR	0	25SP	G15_080	TO->FROM	JONES STATION - TUCO INTERCHANGE 230KV CKT 1	343.79	343.79	0.03808	107.2791	TUCO INTERCHANGE (ENRCO 136401) 230/115/13.2KV TRANSFORMER CKT 1
FDNS	00NR	0	25SP	G15_080	TO->FROM	JONES STATION - TUCO INTERCHANGE 230KV CKT 1	343.79	343.79	0.03808	107.2791	TUCO INTERCHANGE (ENRCO 136401) 230/115/13.2KV TRANSFORMER CKT 2
FDNS	00NR	0	25SP	G15_080	TO->FROM	JONES STATION - TUCO INTERCHANGE 230KV CKT 1	343.79	343.79	0.03808	107.2791	TUCO INTERCHANGE (ENRCO 136401) 230/115/13.2KV TRANSFORMER CKT 2
FDNS	00NR	0	25SP	G15_080	TO->FROM	JONES STATION - TUCO INTERCHANGE 230KV CKT 1	343.79	343.79	0.03691	106.7618	GEN526332 1-JONES GEN #2 21 KV
FDNS	00NR	0	25SP	G15_080	TO->FROM	JONES STATION - TUCO INTERCHANGE 230KV CKT 1	343.79	343.79	0.03691	106.7593	GEN526331 1-JONES GEN #1 22 KV
FDNS	00NR	0	25SP	G15_080	TO->FROM	JONES STATION - TUCO INTERCHANGE 230KV CKT 1	343.79	343.79	0.03951	105.7418	LUBBOCK EAST INTERCHANGE - TUCO INTERCHANGE 115KV CKT 1
FDNS	00NR	0	25SP	G15_080	TO->FROM	JONES STATION - TUCO INTERCHANGE 230KV CKT 1	343.79	343.79	0.03951	105.7418	LUBBOCK EAST INTERCHANGE - TUCO INTERCHANGE 115KV CKT 1
FDNS	00NR	0	25SP	G15_080	TO->FROM	JONES STATION - TUCO INTERCHANGE 230KV CKT 1	343.79	343.79	0.03551	102.5912	STANTON SUB - TUCO INTERCHANGE 115KV CKT 1
FDNS	00NR	0	25SP	G15_080	TO->FROM	JONES STATION - TUCO INTERCHANGE 230KV CKT 1	343.79	343.79	0.03912	102.3658	P12:230:LPL:K39.1.CRLSLE.LP-MLWK
FDNS	00NR	0	25SP	G15_080	TO->FROM	JONES STATION - TUCO INTERCHANGE 230KV CKT 1	343.79	343.79	0.03912	102.3646	CARLISLE INTERCHANGE - LUBBOCK POWER & LIGHT-MILWAUKEE 230KV CKT 1
FDNS	00NR	0	25SP	G15_080	TO->FROM	JONES STATION - TUCO INTERCHANGE 230KV CKT 1	343.79	343.79	0.03912	102.363	LUBBOCK POWER & LIGHT-MILWAUKEE (M-E C0681251) 230/69/13.5KV TRANSFORMER CKT 1
FDNS	00NR	0	25SP	G15_080	TO->FROM	JONES STATION - TUCO INTERCHANGE 230KV CKT 1	343.79	343.79	0.03912	102.363	LUBBOCK POWER & LIGHT-MILWAUKEE (M-E C0681251) 230/69/13.5KV TRANSFORMER CKT 1
FDNS	00NR	0	25SP	G15_080	TO->FROM	JONES STATION - TUCO INTERCHANGE 230KV CKT 1	343.79	343.79	0.03788	102.0923	TOLK STATION EAST - TUCO INTERCHANGE 230KV CKT 1
FDNS	00NR	0	25SP	G15_080	TO->FROM	JONES STATION - TUCO INTERCHANGE 230KV CKT 1	343.79	343.79	0.03788	102.0923	TOLK STATION EAST - TUCO INTERCHANGE 230KV CKT 1
FDNS	00NR	0	25SP	G15_080	TO->FROM	JONES STATION - TUCO INTERCHANGE 230KV CKT 1	343.79	343.79	0.03551	101.6363	P12:115:SPS:V15.1.TUCO.INDANA
FDNS	00NR	0	25SP	G15_080	TO->FROM	JONES STATION - TUCO INTERCHANGE 230KV CKT 1	343.79	343.79	0.03551	101.6061	INDIANA SUB - STANTON SUB 115KV CKT 1
FDNS	00NR	0	25SP	G15_080	TO->FROM	JONES STATION - TUCO INTERCHANGE 230KV CKT 1	343.79	343.79	0.03691	101.0841	GEN527903 1-HOBBS PLANT #3 (ST)
FDNS	00NR	0	25SP	G15_080	TO->FROM	JONES STATION - TUCO INTERCHANGE 230KV CKT 1	343.79	343.79	0.03691	101.0701	GEN527166 1-MUSTANG_6 118.000
FDNS	00NR	0	25SP	G15_080	TO->FROM	JONES STATION - TUCO INTERCHANGE 230KV CKT 1	343.79	343.79	0.03691	100.6214	GEN528501 1-G14_012 24.000
FDNS	00NR	0	25SP	G15_080	TO->FROM	JONES STATION - TUCO INTERCHANGE 230KV CKT 1	343.79	343.79	0.03684	100.6076	KRESS INTERCHANGE - SWISHER COUNTY INTERCHANGE 115KV CKT 1
FDNS	00NR	0	25SP	G15_080	TO->FROM	JONES STATION - TUCO INTERCHANGE 230KV CKT 1	343.79	343.79	0.03684	100.6076	KRESS INTERCHANGE - SWISHER COUNTY INTERCHANGE 115KV CKT 1
FDNS	00NR	0	25SP	G15_080	TO->FROM	JONES STATION - TUCO INTERCHANGE 230KV CKT 1	343.79	343.79	0.04048	100.4516	CARLISLE INTERCHANGE - MURPHY SUB 115KV CKT 1
FDNS	00NR	0	25SP	G15_080	TO->FROM	JONES STATION - TUCO INTERCHANGE 230KV CKT 1	343.79	343.79	0.04048	100.4516	CARLISLE INTERCHANGE - MURPHY SUB 115KV CKT 1
FDNS	00NR	0	25SP	G15_080	TO->FROM	JONES STATION - TUCO INTERCHANGE 230KV CKT 1	343.79	343.79	0.03168	100.2532	YOAKUM_345 345.00 (UPDATE DATA) 345/230/13.2KV TRANSFORMER CKT 1
FDNS	00NR	0	25SP	G15_080	TO->FROM	JONES STATION - TUCO INTERCHANGE 230KV CKT 1	343.79	343.79	0.03737	100	POTTER COUNTY INTERCHANGE (WAUK 90343-A) 345/230/13.2KV TRANSFORMER CKT 1
FDNS	00NR	0	25SP	G15_080	TO->FROM	JONES STATION - TUCO INTERCHANGE 230KV CKT 1	343.79	343.79	0.03737	100	POTTER COUNTY INTERCHANGE (WAUK 90343-A) 345/230/13.2KV TRANSFORMER CKT 1
FDNS	00NR	0	25SP	G15_080	TO->FROM	JONES STATION - TUCO INTERCHANGE 230KV CKT 1	343.79	343.79	0.03691	100	GEN563122 1-G15077_3 0.3850
FDNS	00NR	0	25SP	G15_080	TO->FROM	JONES STATION - TUCO INTERCHANGE 230KV CKT 1	343.79	343.79	0.03691	99.9	GEN527901 1-HOBBS PLANT #1 (CT)

SOLUTION	GROUP	SCENARIO	SEASON	SOURCE	DIRECTION	MONITORED ELEMENT	RATEA (MVA)	RATEB(MVA)	TDF	TC%LOADING (% MVA)	CONTINGENCY
FDNS	00NR	0	25SP	G15_080	TO->FROM	JONES STATION - TUCO INTERCHANGE 230KV CKT 1	343.79	343.79	0.03691	99.9	GEN527902 1-HOBBS PLANT #2 (CT)
FDNS	00NR	0	25SP	G15_080	TO->FROM	JONES STATION - TUCO INTERCHANGE 230KV CKT 1	343.79	343.79	0.03691	99.9	GEN563102 1-G15075_3 0.5500
FDNS	00NR	0	25SP	G15_080	TO->FROM	JONES STATION - TUCO INTERCHANGE 230KV CKT 1	343.79	343.79	0.03551	99.9	INDIANA SUB - SOUTH PLAINS REC-ERSKINE 115KV CKT 1
FDNS	00NR	0	25SP	G15_080	TO->FROM	JONES STATION - TUCO INTERCHANGE 230KV CKT 1	343.79	343.79	0.03751	99.7	FLOYD COUNTY INTERCHANGE - TUCO INTERCHANGE 115KV CKT 1
FDNS	00NR	0	25SP	G15_080	TO->FROM	JONES STATION - TUCO INTERCHANGE 230KV CKT 1	343.79	343.79	0.03751	99.7	FLOYD COUNTY INTERCHANGE - TUCO INTERCHANGE 115KV CKT 1
FDNS	00NR	0	25SP	G15_080	TO->FROM	JONES STATION - TUCO INTERCHANGE 230KV CKT 1	343.79	343.79	0.03393	99.7	HOBBS - YOAKUM_345 345.00 345KV CKT 1
FDNS	00NR	0	25SP	G15_080	TO->FROM	JONES STATION - TUCO INTERCHANGE 230KV CKT 1	343.79	343.79	0.03737	99.6	G14_038T 345.00 - POTTER COUNTY INTERCHANGE 345KV CKT 1
FDNS	00NR	0	25SP	G15_080	TO->FROM	JONES STATION - TUCO INTERCHANGE 230KV CKT 1	343.79	343.79	0.03691	99.6	GEN563142 1-G15079_3 0.5500
FDNS	00NR	0	25SP	G15_080	TO->FROM	JONES STATION - TUCO INTERCHANGE 230KV CKT 1	343.79	343.79	0.03691	99.6	GEN563151 1-G15080_2 0.5500
FDNS	00NR	0	25SP	G15_080	TO->FROM	JONES STATION - TUCO INTERCHANGE 230KV CKT 1	343.79	343.79	0.03503	99.6	BUSHLAND INTERCHANGE - DEAF SMITH COUNTY INTERCHANGE 230KV CKT 1
FDNS	00NR	0	25SP	G15_080	TO->FROM	JONES STATION - TUCO INTERCHANGE 230KV CKT 1	343.79	343.79	0.03503	99.6	BUSHLAND INTERCHANGE - DEAF SMITH COUNTY INTERCHANGE 230KV CKT 1
FDNS	00NR	0	25SP	G15_080	TO->FROM	JONES STATION - TUCO INTERCHANGE 230KV CKT 1	343.79	343.79	0.03448	99.6	P12:345:SPS:J02.1.TOLK.EDDY
FDNS	00NR	0	25SP	G15_080	FROM->TO	LUBBOCK POWER & LIGHT-HOLLY PLANT (SHIH T101039) 230/69/13.5KV TRANSFORMER CKT 1	224	224	0.03577	104.8294	LUBBOCK POWER & LIGHT-SOUTHEAST - LUBBOCK SOUTH INTERCHANGE 230KV CKT 1
FDNS	00NR	0	25SP	G15_080	FROM->TO	LUBBOCK POWER & LIGHT-HOLLY PLANT (SHIH T101039) 230/69/13.5KV TRANSFORMER CKT 1	224	224	0.03577	104.8165	P12:LPL:SPS:K64.1.LP-SE.LUBBS
FDNS	00NR	0	25SP	G15_080	FROM->TO	LUBBOCK POWER & LIGHT-HOLLY PLANT (SHIH T101039) 230/69/13.5KV TRANSFORMER CKT 1	224	224	0.03374	101.9053	LUBBOCK EAST INTERCHANGE - LUBBOCK POWER & LIGHT-WADSWORTH 230KV CKT 1
FDNS	00NR	0	25SP	G15_080	FROM->TO	LUBBOCK POWER & LIGHT-HOLLY PLANT (SHIH T101039) 230/69/13.5KV TRANSFORMER CKT 1	224	224	0.03374	101.8957	P12:230:LPL:K57.1.LP-WADS.LUBBE
FDNS	00NR	0	25SP	G15_080	FROM->TO	LUBBOCK POWER & LIGHT-HOLLY PLANT (SHIH T101039) 230/69/13.5KV TRANSFORMER CKT 1	224	224	0.03374	101.8956	LUBBOCK POWER & LIGHT-WADSWORTH (SHIH T101038) 230/69/13.5KV TRANSFORMER CKT 1
FDNS	00NR	0	25SP	G15_080	FROM->TO	LUBBOCK POWER & LIGHT-HOLLY PLANT (SHIH T101039) 230/69/13.5KV TRANSFORMER CKT 1	224	224	0.03374	101.8956	LUBBOCK POWER & LIGHT-WADSWORTH (SHIH T101038) 230/69/13.5KV TRANSFORMER CKT 1
FDNSLock	06ALL	0	20WP	G15_080		Non-Converged Contingency	1792	1792	0.17086	-	BORDER 7345.00 - CHISHOLM7 345.00 345KV CKT 1
FDNSLock	06ALL	0	20WP	G15_080		Non-Converged Contingency	1792	1792	0.17086	-	BORDER 7345.00 - CHISHOLM7 345.00 345KV CKT 2
FDNSLock	06ALL	0	20WP	G15_080		Non-Converged Contingency	439	439	0.06169	-	CHISHOLM6 230.00 - ELK CITY 230KV 230KV CKT 1
FDNS	06ALL	0	20WP	G15_080	FROM->TO	POTTER COUNTY INTERCHANGE (WAUK 90343-A) 345/230/13.2KV TRANSFORMER CKT 1	560	560	0.14002	101.9937	BASE CASE
FDNS	06ALL	0	20WP	G15_080	FROM->TO	POTTER COUNTY INTERCHANGE (WAUK 90343-A) 345/230/13.2KV TRANSFORMER CKT 1	560	560	0.14002	100.9471	BASE CASE
FDNS	06ALL	0	17SP	G15_080	FROM->TO	SUNDOWN INTERCHANGE - WOLFFORTH INTERCHANGE 230KV CKT 1	318.7	350.57	0.30292	100	TOLK STATION EAST - TUCO INTERCHANGE 230KV CKT 1
FDNS	06ALL	0	17SP	G15_080	FROM->TO	SUNDOWN INTERCHANGE - WOLFFORTH INTERCHANGE 230KV CKT 1	318.7	350.57	0.30292	100	TOLK STATION EAST - TUCO INTERCHANGE 230KV CKT 1
FDNS	06ALL	0	20SP	G15_080	FROM->TO	TUCO INTERCHANGE - TUCO_2 230.00 230KV CKT 1	497	547	0.34383	176.1131	TUCO INTERCHANGE - TUCO_2 345.00 345KV CKT 1
FDNS	06ALL	0	17SP	G15_080	FROM->TO	TUCO INTERCHANGE - TUCO_2 230.00 230KV CKT 1	497	547	0.29163	172.1789	TUCO INTERCHANGE - TUCO_2 345.00 345KV CKT 1
FDNS	06NR	0	17G	G15_080	FROM->TO	TUCO INTERCHANGE - TUCO_2 230.00 230KV CKT 1	497	547	0.07008	120.0923	TUCO INTERCHANGE - TUCO_2 345.00 345KV CKT 1
FDNS	06NR	0	20L	G15_080	FROM->TO	TUCO INTERCHANGE - TUCO_2 230.00 230KV CKT 1	497	547	0.11928	110.6573	TUCO INTERCHANGE - TUCO_2 345.00 345KV CKT 1
FDNS	06ALL	0	25SP	G15_080	FROM->TO	TUCO INTERCHANGE - TUCO_2 230.00 230KV CKT 1	497	547	0.35439	101.2227615	TUCO INTERCHANGE - TUCO_2 345.00 345KV CKT 1
FDNS	06ALL	0	20SP	G15_080	FROM->TO	TUCO_2 345.00 (TUCO_2 XFMR) 345/230/13.2KV TRANSFORMER CKT 1	560	560	0.30138	168.9327	TUCO INTERCHANGE - TUCO_2 345.00 345KV CKT 1
FDNS	06ALL	0	17SP	G15_080	FROM->TO	TUCO_2 345.00 (TUCO_2 XFMR) 345/230/13.2KV TRANSFORMER CKT 1	560	560	0.29272	168.0719	TUCO INTERCHANGE - TUCO_2 345.00 345KV CKT 1
FDNS	06ALL	0	20SP	G15_080	FROM->TO	TUCO_2 345.00 (TUCO_2 XFMR) 345/230/13.2KV TRANSFORMER CKT 1	560	560	0.30138	162.4281	TUCO INTERCHANGE - TUCO_2 345.00 345KV CKT 1
FDNS	06ALL	0	17SP	G15_080	FROM->TO	TUCO_2 345.00 (TUCO_2 XFMR) 345/230/13.2KV TRANSFORMER CKT 1	560	560	0.29272	161.5424	TUCO INTERCHANGE - TUCO_2 345.00 345KV CKT 1
FDNS	06NR	0	17G	G15_080	FROM->TO	TUCO_2 345.00 (TUCO_2 XFMR) 345/230/13.2KV TRANSFORMER CKT 1	560	560	0.03538	114.7643	TUCO INTERCHANGE - TUCO_2 345.00 345KV CKT 1
FDNS	06NR	0	17G	G15_080	FROM->TO	TUCO_2 345.00 (TUCO_2 XFMR) 345/230/13.2KV TRANSFORMER CKT 1	560	560	0.03538	111.8684	TUCO INTERCHANGE - TUCO_2 345.00 345KV CKT 1
FDNS	06NR	0	20L	G15_080	FROM->TO	TUCO_2 345.00 (TUCO_2 XFMR) 345/230/13.2KV TRANSFORMER CKT 1	560	560	0.04518	110.8936	TUCO INTERCHANGE - TUCO_2 345.00 345KV CKT 1
FDNS	06NR	0	20L	G15_080	FROM->TO	TUCO_2 345.00 (TUCO_2 XFMR) 345/230/13.2KV TRANSFORMER CKT 1	560	560	0.04518	108.3383	TUCO INTERCHANGE - TUCO_2 345.00 345KV CKT 1
FDNS	06ALL	0	17G	G15_080	FROM->TO	WOLFFORTH INTERCHANGE - YUMA INTERCHANGE 115KV CKT 1	119.51	153.97	0.20162	103.043	LUBBOCK SOUTH INTERCHANGE - WOLFFORTH INTERCHANGE 230KV CKT 1
FDNS	06ALL	0	17G	G15_080	FROM->TO	WOLFFORTH INTERCHANGE - YUMA INTERCHANGE 115KV CKT 1	119.51	153.97	0.20162	103.043	LUBBOCK SOUTH INTERCHANGE - WOLFFORTH INTERCHANGE 230KV CKT 1
FDNS	06NR	2	17G	G15_080	TO->FROM	AMARILLO SOUTH INTERCHANGE - G15031_T 230.00 230KV CKT 1	318.7	350.57	0.09774	103.4449	NEWHART 230 - POTTER COUNTY INTERCHANGE 230KV CKT 1
FDNS	06NR	2	17G	G15_080	FROM->TO	BUSHLAND INTERCHANGE - HILLSIDE 115KV CKT 1	159	160	0.0487	118.1849	BUSHLAND INTERCHANGE - POTTER COUNTY INTERCHANGE 230KV CKT 1
FDNS	06NR	2	17G	G15_080	FROM->TO	BUSHLAND INTERCHANGE - HILLSIDE 115KV CKT 1	159	160	0.0487	118.1849	BUSHLAND INTERCHANGE - POTTER COUNTY INTERCHANGE 230KV CKT 1
FDNS	06NR	2	17G	G15_080	FROM->TO	BUSHLAND INTERCHANGE - POTTER COUNTY INTERCHANGE 230KV CKT 1	318.7	350.57	0.09706	103.6906	NEWHART 230 - POTTER COUNTY INTERCHANGE 230KV CKT 1
FDNS	06NR	2	17G	G15_080	FROM->TO	BUSHLAND INTERCHANGE (WH 7001795) 230/115/13.2KV TRANSFORMER CKT 1	168	168	0.0487	116.5462	BUSHLAND INTERCHANGE - POTTER COUNTY INTERCHANGE 230KV CKT 1
FDNS	06NR	2	17G	G15_080	FROM->TO	BUSHLAND INTERCHANGE (WH 7001795) 230/115/13.2KV TRANSFORMER CKT 1	168	168	0.0487	116.5462	BUSHLAND INTERCHANGE - POTTER COUNTY INTERCHANGE 230KV CKT 1
FDNS	06NR	2	17G	G15_080	FROM->TO	BUSHLAND INTERCHANGE (WH 7001795) 230/115/13.2KV TRANSFORMER CKT 1	168	168	0.0487	114.0422	BUSHLAND INTERCHANGE - POTTER COUNTY INTERCHANGE 230KV CKT 1
FDNS	06NR	2	17G	G15_080	FROM->TO	BUSHLAND INTERCHANGE (WH 7001795) 230/115/13.2KV TRANSFORMER CKT 1	168	168	0.0487	114.0422	BUSHLAND INTERCHANGE - POTTER COUNTY INTERCHANGE 230KV CKT 1
FDNS	06NR	2	17G	G15_080	FROM->TO	CANYON E_TP3115.00 - RANDALL COUNTY INTERCHANGE 115KV CKT 1	96	96	0.04027	100.8119	BUSHLAND INTERCHANGE - DEAF SMITH COUNTY INTERCHANGE 230KV CKT 1
FDNS	06NR	2	17G	G15_080	FROM->TO	CANYON E_TP3115.00 - RANDALL COUNTY INTERCHANGE 115KV CKT 1	96	96	0.04027	100.8119	BUSHLAND INTERCHANGE - DEAF SMITH COUNTY INTERCHANGE 230KV CKT 1
FDNS	06NR	2	17G	G15_080	TO->FROM	CANYON WEST SUB - DAWN SUB 115KV CKT 1	96	96	0.04027	127.5172	BUSHLAND INTERCHANGE - DEAF SMITH COUNTY INTERCHANGE 230KV CKT 1
FDNS	06NR	2	17G	G15_080	TO->FROM	CANYON WEST SUB - DAWN SUB 115KV CKT 1	96	96	0.04027	127.5172	BUSHLAND INTERCHANGE - DEAF SMITH COUNTY INTERCHANGE 230KV CKT 1
FDNS	06NR	2	17G	G15_080	TO->FROM	CARGILL SUB - DEAF SMITH REC-#24 115KV CKT 1	96	96	0.03107	107.5549	DEAF SMITH COUNTY INTERCHANGE - G15039_T 230.00 230KV CKT 1
FDNS	06NR	2	17G	G15_080	TO->FROM	CARGILL SUB - DEAF SMITH REC-#24 115KV CKT 1	96	96	0.03107	99.6	G15039_T 230.00 - PLANT X STATION 230KV CKT 1
FDNS	06NR	2	17G	G15_080	FROM->TO	CARGILL SUB - FRIONA SUB 115KV CKT 1	96	96	0.03107	100.202	DEAF SMITH COUNTY INTERCHANGE - G15039_T 230.00 230KV CKT 1
FDNS	06NR	2	17G	G15_080	FROM->TO	CASTRO COUNTY INTERCHANGE - DEAF SMITH REC-#21 115KV CKT 1	159	174	0.03197	106.0645	DEAF SMITH COUNTY INTERCHANGE - G15039_T 230.00 230KV CKT 1
FDNS	06ALL	2	20SP	G15_080	FROM->TO	CHISHOLM6 230.00 - ELK CITY 230KV 230KV CKT 1	353	353	0.06342	103.9805	BASE CASE
FDNS	06ALL	2	17SP	G15_080	FROM->TO	CHISHOLM6 230.00 - ELK CITY 230KV 230KV CKT 1	353	353	0.06343	101.7938	BASE CASE
FDNS	06ALL	2	20L	G15_080	TO->FROM	CIMARRON - MINCO 345KV CKT 1	956	956	0.21491	140.1322	G14-057T 345.00 - SUNNYSIDE 345KV CKT 1
FDNS	06ALL	2	20L	G15_080	TO->FROM	CIMARRON - MINCO 345KV CKT 1	956	956	0.21491	133.5433	G14-057T 345.00 - LAWTON EASTSIDE 345KV CKT 1
FDNS	06ALL	2	17G	G15_080	TO->FROM	CIMARRON - MINCO 345KV CKT 1	956	956	0.23454	131.7687	G14-057T 345.00 - SUNNYSIDE 345KV CKT 1
FDNS	06ALL	2	20WP	G15_080	TO->FROM	CIMARRON - MINCO 345KV CKT 1	956	956	0.24238	130.9595	G14-057T 345.00 - SUNNYSIDE 345KV CKT 1
FDNS	06ALL	2	17G	G15_080	TO->FROM	CIMARRON - MINCO 345KV CKT 1	956	956	0.23454	126.2954	G14-057T 345.00 - LAWTON EASTSIDE 345KV CKT 1
FDNS	06ALL	2	20WP	G15_080	TO->FROM	CIMARRON - MINCO 345KV CKT 1	956	956	0.24238	125.3296	G14-057T 345.00 - LAWTON EASTSIDE 345KV CKT 1
FDNS	06ALL	2	16WP	G15_080	TO->FROM	CIMARRON - MINCO 345KV CKT 1	956	956	0.2411	123.9324	G14-057T 345.00 - SUNNYSIDE 345KV CKT 1
FDNS	06ALL	2	17SP	G15_080	TO->FROM	CIMARRON - MINCO 345KV CKT 1	956	956	0.23956	123.0412	G14-057T 345.00 - SUNNYSIDE 345KV CKT 1
FDNS	06ALL	2	20SP	G15_080	TO->FROM	CIMARRON - MINCO 345KV CKT 1	956	956	0.24858	120.4683	G14-057T 345.00 - SUNNYSIDE 345KV CKT 1
FDNS	06ALL	2	16WP	G15_080	TO->FROM	CIMARRON - MINCO 345KV CKT 1	956	956	0.2411	118.3934	G14-057T 345.00 - LAWTON EASTSIDE 345KV CKT 1
FDNS	06ALL	2	17SP	G15_080	TO->FROM	CIMARRON - MINCO 345KV CKT 1	956	956	0.23956	117.7499	G14-057T 345.00 - LAWTON EASTSIDE 345KV CKT 1
FDNS	06ALL	2	20SP	G15_080	TO->FROM	CIMARRON - MINCO 345KV CKT 1	956	956	0.24858	115.0256	G14-057T 345.00 - LAWTON EASTSIDE 345KV CKT 1
FDNS	06ALL	2	17G	G15_080	TO->FROM	CIMARRON - MINCO 345KV CKT 1	956	956	0.20054	111.0722	MATHWSN7 345.00 - TATONGA7 345.00 345KV CKT 1
FDNS	06ALL	2	20WP	G15_080	TO->FROM	CIMARRON - MINCO 345KV CKT 1	956	956	0.20387	110.8109	MATHWSN7 345.00 - TATONGA7 345.00 345KV CKT 1
FDNS	06ALL	2	20L	G15_080	TO->FROM	CIMARRON - MINCO 345KV CKT 1	956	956	0.22033	107.6011	CHISHOLM7 345.00 - WOODWARD DISTRICT EHV 345KV CKT 1
FDNS	06ALL	2	17G	G15_080	TO->FROM	CIMARRON - MINCO 345KV CKT 1	956	956	0.22949	107.4004	CHISHOLM7 345.00 - WOODWARD DISTRICT EHV 345KV CKT 1
FDNS	06ALL	2	20WP	G15_080	TO->FROM	CIMARRON - MINCO 345KV CKT 1	956	956	0.20387	105.5266	G11_051T 345.00 - TATONGA7 345.00 345KV CKT 1
FDNSLock	06ALL	2	17G	G15_080	TO->FROM	CIMARRON - MINCO 345KV CKT 1	956	956	0.20054	105.1772	G11_051T 345.00 - TATONGA7 345.00 345KV CKT 1
FDNS	06ALL	2	17SP	G15_080	TO->FROM	CIMARRON - MINCO 345KV CKT 1	956	956	0.20485	104.7953	MATHWSN7 345.00 - TATONGA7 345.00 345KV CKT 1
FDNS	06ALL	2	20SP	G15_080	TO->FROM	CIMARRON - MINCO 345KV CKT 1	956	956	0.21059	104.2231	MATHWSN7 345.00 - TATONGA7 345.00 345KV CKT 1
FDNS	06ALL	2	16WP	G15_080	TO->FROM	CIMARRON - MINCO 345KV CKT 1	956	956	0.20553	104.0692	MATHWSN7 345.00 - TATONGA7 345.00 345KV CKT 1

SOLUTION	GROUP	SCENARIO	SEASON	SOURCE	DIRECTION	MONITORED ELEMENT	RATEA (MVA)	RATEB(MVA)	TDF	TC%LOADING (% MVA)	CONTINGENCY
FDNS	06ALL	2	20WP	G15_080	TO->FROM	CIMARRON - MINCO 345KV CKT 1	956	956	0.20387	103.9402	G11_051T 345.00 - WOODWARD DISTRICT EHV 345KV CKT 1
FDNS	06ALL	2	20WP	G15_080	TO->FROM	CIMARRON - MINCO 345KV CKT 1	956	956	0.24341	103.712	CHISHOLM7 345.00 - WOODWARD DISTRICT EHV 345KV CKT 1
FDNSLock	06ALL	2	17G	G15_080	TO->FROM	CIMARRON - MINCO 345KV CKT 1	956	956	0.20054	103.655	G11_051T 345.00 - WOODWARD DISTRICT EHV 345KV CKT 1
FDNS	06ALL	2	20SP	G15_080	TO->FROM	CIMARRON - MINCO 345KV CKT 1	956	956	0.25036	102.1101	CHISHOLM7 345.00 - WOODWARD DISTRICT EHV 345KV CKT 1
FDNS	06ALL	2	17SP	G15_080	TO->FROM	CIMARRON - MINCO 345KV CKT 1	956	956	0.23807	100.969	CHISHOLM7 345.00 - WOODWARD DISTRICT EHV 345KV CKT 1
FDNS	06ALL	2	17SP	G15_080	TO->FROM	CIMARRON - MINCO 345KV CKT 1	956	956	0.20485	99.6	G11_051T 345.00 - TATONGA7 345.00 345KV CKT 1
FDNS	06NR	2	17G	G15_080	TO->FROM	COULTER INTERCHANGE - HILLSIDE 115KV CKT 1	159	159	0.0487	113.2181	BUSHLAND INTERCHANGE - POTTER COUNTY INTERCHANGE 230KV CKT 1
FDNS	06NR	2	17G	G15_080	TO->FROM	COULTER INTERCHANGE - HILLSIDE 115KV CKT 1	159	159	0.0487	113.2181	BUSHLAND INTERCHANGE - POTTER COUNTY INTERCHANGE 230KV CKT 1
FDNS	06NR	2	17G	G15_080	FROM->TO	CURRY COUNTY INTERCHANGE - DEAF SMITH REC-#20 115KV CKT 1	96	96	0.03107	129.1509	DEAF SMITH COUNTY INTERCHANGE - G15039_T 230.00 230KV CKT 1
FDNS	06NR	2	17G	G15_080	FROM->TO	CURRY COUNTY INTERCHANGE - DEAF SMITH REC-#20 115KV CKT 1	96	96	0.03107	121.3057	G15039_T 230.00 - PLANT X STATION 230KV CKT 1
FDNS	06NR	2	17G	G15_080	TO->FROM	DAWN SUB - Panda Energy Substation Hereford 115KV CKT 1	96	96	0.04027	130.9313	BUSHLAND INTERCHANGE - DEAF SMITH COUNTY INTERCHANGE 230KV CKT 1
FDNS	06NR	2	17G	G15_080	TO->FROM	DAWN SUB - Panda Energy Substation Hereford 115KV CKT 1	96	96	0.04027	130.9313	BUSHLAND INTERCHANGE - DEAF SMITH COUNTY INTERCHANGE 230KV CKT 1
FDNS	06NR	2	17G	G15_080	TO->FROM	DEAF SMITH COUNTY INTERCHANGE - DEAF SMITH REC-#21 115KV CKT 1	159	174	0.03197	100.9586	DEAF SMITH COUNTY INTERCHANGE - G15039_T 230.00 230KV CKT 1
FDNS	06ALL	2	20SP	G15_080	TO->FROM	DEAF SMITH COUNTY INTERCHANGE - G15039_T 230.00 230KV CKT 1	318.7	350.57	0.10861	106.1518	BASE CASE
FDNS	06NR	2	17G	G15_080	TO->FROM	DEAF SMITH COUNTY INTERCHANGE - G15039_T 230.00 230KV CKT 1	318.7	350.57	0.10757	104.2484	NEWHART 230 - PLANT X STATION 230KV CKT 1
FDNS	06ALL	2	17SP	G15_080	TO->FROM	DEAF SMITH COUNTY INTERCHANGE - G15039_T 230.00 230KV CKT 1	318.7	350.57	0.13662	104.2255	BASE CASE
FDNS	06NR	2	17G	G15_080	TO->FROM	DEAF SMITH COUNTY INTERCHANGE - G15039_T 230.00 230KV CKT 1	318.7	350.57	0.09877	103.9799	NEWHART 230 - POTTER COUNTY INTERCHANGE 230KV CKT 1
FDNS	06NR	2	17G	G15_080	TO->FROM	DEAF SMITH COUNTY INTERCHANGE - G15039_T 230.00 230KV CKT 1	318.7	350.57	0.09633	102.5424	AMARILLO SOUTH INTERCHANGE - G15031_T 230.00 230KV CKT 1
FDNS	06NR	2	17G	G15_080	FROM->TO	DEAF SMITH COUNTY INTERCHANGE - Panda Energy Substation Hereford 115KV CKT 1	96	96	0.04027	136.0663	BUSHLAND INTERCHANGE - DEAF SMITH COUNTY INTERCHANGE 230KV CKT 1
FDNS	06NR	2	17G	G15_080	FROM->TO	DEAF SMITH COUNTY INTERCHANGE - Panda Energy Substation Hereford 115KV CKT 1	96	96	0.04027	136.0663	BUSHLAND INTERCHANGE - DEAF SMITH COUNTY INTERCHANGE 230KV CKT 1
FDNS	06NR	2	17G	G15_080	FROM->TO	DEAF SMITH REC-#20 - PARMER COUNTY SUB 115KV CKT 1	96	96	0.03107	121.0569	DEAF SMITH COUNTY INTERCHANGE - G15039_T 230.00 230KV CKT 1
FDNS	06NR	2	17G	G15_080	FROM->TO	DEAF SMITH REC-#20 - PARMER COUNTY SUB 115KV CKT 1	96	96	0.03107	113.3561	G15039_T 230.00 - PLANT X STATION 230KV CKT 1
FDNS	06NR	2	17G	G15_080	TO->FROM	DEAF SMITH REC-#24 - PARMER COUNTY SUB 115KV CKT 1	96	96	0.03107	114.1557	DEAF SMITH COUNTY INTERCHANGE - G15039_T 230.00 230KV CKT 1
FDNS	06NR	2	17G	G15_080	TO->FROM	DEAF SMITH REC-#24 - PARMER COUNTY SUB 115KV CKT 1	96	96	0.03107	106.1261	G15039_T 230.00 - PLANT X STATION 230KV CKT 1
FDNS	06ALL	2	20L	G15_080	TO->FROM	G14-057T 345.00 - LAWTON EASTSIDE 345KV CKT 1	717	789	0.10471	105.4406	BASE CASE
FDNS	06ALL	2	20L	G15_080	FROM->TO	G14-057T 345.00 - SUNNYSIDE 345KV CKT 1	717	789	0.10471	118.6576	BASE CASE
FDNS	06ALL	2	20WP	G15_080	FROM->TO	G14-057T 345.00 - SUNNYSIDE 345KV CKT 1	717	789	0.12831	106.4822	BASE CASE
FDNS	06ALL	2	17G	G15_080	FROM->TO	G14-057T 345.00 - SUNNYSIDE 345KV CKT 1	717	789	0.12517	105.8626	BASE CASE
FDNS	06ALL	2	16WP	G15_080	FROM->TO	G14-057T 345.00 - SUNNYSIDE 345KV CKT 1	717	789	0.12846	104.4384	BASE CASE
FDNS	06NR	2	20L	G15_080	FROM->TO	G14-074T 345.00 - OKLAUNION 345KV CKT 1	1022	1124	0.0566	106.9322	BASE CASE
FDNS	06NR	2	17G	G15_080	FROM->TO	G14-074T 345.00 - OKLAUNION 345KV CKT 1	1022	1124	0.03913	102.9455	BASE CASE
FDNS	06NR	2	20L	G15_080	FROM->TO	G14-074T 345.00 - OKLAUNION 345KV CKT 1	1022	1124	0.05393	102.2532	CHISHOLM7 345.00 - GRACEMONT 345KV CKT 1
FDNS	06NR	2	20L	G15_080	FROM->TO	G14-074T 345.00 - OKLAUNION 345KV CKT 1	1022	1124	0.05393	101.8896	CHISHOLM7 345.00 () 345/230/13.2KV TRANSFORMER CKT 1
FDNS	06NR	2	20L	G15_080	FROM->TO	G14-074T 345.00 - OKLAUNION 345KV CKT 1	1022	1124	0.06288	101.4902	TUCO INTERCHANGE - TUCO_2 345.00 345KV CKT 1
FDNS	06NR	2	20L	G15_080	FROM->TO	G14-074T 345.00 - OKLAUNION 345KV CKT 1	1022	1124	0.06565	101.2851	BUSHLAND INTERCHANGE - DEAF SMITH COUNTY INTERCHANGE 230KV CKT 1
FDNS	06NR	2	20L	G15_080	FROM->TO	G14-074T 345.00 - OKLAUNION 345KV CKT 1	1022	1124	0.06565	101.2851	BUSHLAND INTERCHANGE - DEAF SMITH COUNTY INTERCHANGE 230KV CKT 1
FDNS	06NR	2	20L	G15_080	FROM->TO	G14-074T 345.00 - OKLAUNION 345KV CKT 1	1022	1124	0.05633	101.2671	MOORE COUNTY INTERCHANGE - POTTER COUNTY INTERCHANGE 230KV CKT 1
FDNS	06NR	2	20L	G15_080	FROM->TO	G14-074T 345.00 - OKLAUNION 345KV CKT 1	1022	1124	0.05633	101.2671	MOORE COUNTY INTERCHANGE - POTTER COUNTY INTERCHANGE 230KV CKT 1
FDNS	06NR	2	20L	G15_080	FROM->TO	G14-074T 345.00 - OKLAUNION 345KV CKT 1	1022	1124	0.05567	101.2654	G11-14T 345.00 - WOODWARD DISTRICT EHV 345KV CKT 1
FDNS	06NR	2	20L	G15_080	FROM->TO	G14-074T 345.00 - OKLAUNION 345KV CKT 1	1022	1124	0.05567	101.2654	G11-14T 345.00 - WOODWARD DISTRICT EHV 345KV CKT 2
FDNS	06ALL	2	20L	G15_080	FROM->TO	GRACEMONT - MINCO 345KV CKT 1	1195	1195	0.21491	101.0673	G14-057T 345.00 - SUNNYSIDE 345KV CKT 1
FDNS	00NR	2	25SP	G15_080	FROM->TO	Hitchland Interchange (H TB80155502) 345/230/13.2KV TRANSFORMER CKT 1	560	644	0.03026	99.7	Hitchland Interchange (SIEM 8743067) 345/230/13.2KV TRANSFORMER CKT 2
FDNS	00NR	2	25SP	G15_080	FROM->TO	Hitchland Interchange (H TB80155502) 345/230/13.2KV TRANSFORMER CKT 1	560	644	0.03026	99.7	Hitchland Interchange (SIEM 8743067) 345/230/13.2KV TRANSFORMER CKT 2
FDNS	00NR	2	25SP	G15_080	FROM->TO	Hitchland Interchange (SIEM 8743067) 345/230/13.2KV TRANSFORMER CKT 2	560	644	0.03089	101.9783	Hitchland Interchange (H TB80155502) 345/230/13.2KV TRANSFORMER CKT 1
FDNS	00NR	2	25SP	G15_080	FROM->TO	Hitchland Interchange (SIEM 8743067) 345/230/13.2KV TRANSFORMER CKT 2	560	644	0.03089	101.9783	Hitchland Interchange (H TB80155502) 345/230/13.2KV TRANSFORMER CKT 1
FDNS	00NR	2	25SP	G15_080	FROM->TO	Hitchland Interchange (SIEM 8743067) 345/230/13.2KV TRANSFORMER CKT 2	560	644	0.03089	100.1637	Hitchland Interchange (H TB80155502) 345/230/13.2KV TRANSFORMER CKT 1
FDNS	00NR	2	25SP	G15_080	FROM->TO	Hitchland Interchange (SIEM 8743067) 345/230/13.2KV TRANSFORMER CKT 2	560	644	0.03089	100.1637	Hitchland Interchange (H TB80155502) 345/230/13.2KV TRANSFORMER CKT 1
FDNS	00NR	2	25SP	G15_080	TO->FROM	JONES STATION - TUCO INTERCHANGE 230KV CKT 1	343.79	343.79	0.03348	139.1643	CARLISLE INTERCHANGE - TUCO INTERCHANGE 230KV CKT 1
FDNS	00NR	2	25SP	G15_080	TO->FROM	JONES STATION - TUCO INTERCHANGE 230KV CKT 1	343.79	343.79	0.03348	139.1643	CARLISLE INTERCHANGE - TUCO INTERCHANGE 230KV CKT 1
FDNS	00NR	2	25SP	G15_080	TO->FROM	JONES STATION - TUCO INTERCHANGE 230KV CKT 1	343.79	343.79	0.03691	119.1138	GEN526333 1-JONES GEN #3 21 KV
FDNS	00NR	2	25SP	G15_080	TO->FROM	JONES STATION - TUCO INTERCHANGE 230KV CKT 1	343.79	343.79	0.03691	118.7159	GEN526334 1-JONES_4 116.500
FDNS	00NR	2	25SP	G15_080	TO->FROM	JONES STATION - TUCO INTERCHANGE 230KV CKT 1	343.79	343.79	0.03292	111.2162	CARLISLE INTERCHANGE - WOLFFORTH INTERCHANGE 230KV CKT 1
FDNS	00NR	2	25SP	G15_080	TO->FROM	JONES STATION - TUCO INTERCHANGE 230KV CKT 1	343.79	343.79	0.03808	106.9963	TUCO INTERCHANGE (ENRCO 136401) 230/115/13.2KV TRANSFORMER CKT 1
FDNS	00NR	2	25SP	G15_080	TO->FROM	JONES STATION - TUCO INTERCHANGE 230KV CKT 1	343.79	343.79	0.03808	106.9963	TUCO INTERCHANGE (ENRCO 136401) 230/115/13.2KV TRANSFORMER CKT 1
FDNS	00NR	2	25SP	G15_080	TO->FROM	JONES STATION - TUCO INTERCHANGE 230KV CKT 1	343.79	343.79	0.03808	106.9963	TUCO INTERCHANGE (ENRCO 136401) 230/115/13.2KV TRANSFORMER CKT 2
FDNS	00NR	2	25SP	G15_080	TO->FROM	JONES STATION - TUCO INTERCHANGE 230KV CKT 1	343.79	343.79	0.03808	106.9963	TUCO INTERCHANGE (ENRCO 136401) 230/115/13.2KV TRANSFORMER CKT 2
FDNS	00NR	2	25SP	G15_080	TO->FROM	JONES STATION - TUCO INTERCHANGE 230KV CKT 1	343.79	343.79	0.03691	106.4847	GEN526332 1-JONES GEN #2 21 KV
FDNS	00NR	2	25SP	G15_080	TO->FROM	JONES STATION - TUCO INTERCHANGE 230KV CKT 1	343.79	343.79	0.03691	106.4826	GEN526331 1-JONES GEN #1 22 KV
FDNS	00NR	2	25SP	G15_080	TO->FROM	JONES STATION - TUCO INTERCHANGE 230KV CKT 1	343.79	343.79	0.03951	105.6092	LUBBOCK EAST INTERCHANGE - TUCO INTERCHANGE 115KV CKT 1
FDNS	00NR	2	25SP	G15_080	TO->FROM	JONES STATION - TUCO INTERCHANGE 230KV CKT 1	343.79	343.79	0.03951	105.6092	LUBBOCK EAST INTERCHANGE - TUCO INTERCHANGE 115KV CKT 1
FDNS	00NR	2	25SP	G15_080	TO->FROM	JONES STATION - TUCO INTERCHANGE 230KV CKT 1	343.79	343.79	0.03551	102.5525	STANTON SUB - TUCO INTERCHANGE 115KV CKT 1
FDNS	00NR	2	25SP	G15_080	TO->FROM	JONES STATION - TUCO INTERCHANGE 230KV CKT 1	343.79	343.79	0.03912	102.3349	P12:230:LPL:K39.1.CRLSLE.LP-MLWK
FDNS	00NR	2	25SP	G15_080	TO->FROM	JONES STATION - TUCO INTERCHANGE 230KV CKT 1	343.79	343.79	0.03912	102.3335	LUBBOCK POWER & LIGHT-MILWAUKEE (M-E C0681251) 230/69/13.5KV TRANSFORMER CKT 1
FDNS	00NR	2	25SP	G15_080	TO->FROM	JONES STATION - TUCO INTERCHANGE 230KV CKT 1	343.79	343.79	0.03912	102.3335	LUBBOCK POWER & LIGHT-MILWAUKEE (M-E C0681251) 230/69/13.5KV TRANSFORMER CKT 1
FDNS	00NR	2	25SP	G15_080	TO->FROM	JONES STATION - TUCO INTERCHANGE 230KV CKT 1	343.79	343.79	0.03912	102.3328	CARLISLE INTERCHANGE - LUBBOCK POWER & LIGHT-MILWAUKEE 230KV CKT 1
FDNS	00NR	2	25SP	G15_080	TO->FROM	JONES STATION - TUCO INTERCHANGE 230KV CKT 1	343.79	343.79	0.03788	101.8206	TOLK STATION EAST - TUCO INTERCHANGE 230KV CKT 1
FDNS	00NR	2	25SP	G15_080	TO->FROM	JONES STATION - TUCO INTERCHANGE 230KV CKT 1	343.79	343.79	0.03788	101.8206	TOLK STATION EAST - TUCO INTERCHANGE 230KV CKT 1
FDNS	00NR	2	25SP	G15_080	TO->FROM	JONES STATION - TUCO INTERCHANGE 230KV CKT 1	343.79	343.79	0.03551	101.6251	P12:115:SPS:V15.1.TUCO.INDANA
FDNS	00NR	2	25SP	G15_080	TO->FROM	JONES STATION - TUCO INTERCHANGE 230KV CKT 1	343.79	343.79	0.03551	101.5793	INDIANA SUB - STANTON SUB 115KV CKT 1
FDNS	00NR	2	25SP	G15_080	TO->FROM	JONES STATION - TUCO INTERCHANGE 230KV CKT 1	343.79	343.79	0.03691	100.7469	GEN527166 1-MUSTANG_6 118.000
FDNS	00NR	2	25SP	G15_080	TO->FROM	JONES STATION - TUCO INTERCHANGE 230KV CKT 1	343.79	343.79	0.03691	100.7466	GEN527903 1-HOBBS PLANT #3 (ST)
FDNS	00NR	2	25SP	G15_080	TO->FROM	JONES STATION - TUCO INTERCHANGE 230KV CKT 1	343.79	343.79	0.04048	100.3452	CARLISLE INTERCHANGE - MURPHY SUB 115KV CKT 1
FDNS	00NR	2	25SP	G15_080	TO->FROM	JONES STATION - TUCO INTERCHANGE 230KV CKT 1	343.79	343.79	0.04048	100.3452	CARLISLE INTERCHANGE - MURPHY SUB 115KV CKT 1
FDNS	00NR	2	25SP	G15_080	TO->FROM	JONES STATION - TUCO INTERCHANGE 230KV CKT 1	343.79	343.79	0.03684	100.3228	KRESS INTERCHANGE - SWISHER COUNTY INTERCHANGE 115KV CKT 1
FDNS	00NR	2	25SP	G15_080	TO->FROM	JONES STATION - TUCO INTERCHANGE 230KV CKT 1	343.79	343.79	0.03684	100.3228	KRESS INTERCHANGE - SWISHER COUNTY INTERCHANGE 115KV CKT 1
FDNS	00NR	2	25SP	G15_080	TO->FROM	JONES STATION - TUCO INTERCHANGE 230KV CKT 1	343.79	343.79	0.03691	100.2967	GEN528501 1-G14_012 24.000
FDNS	00NR	2	25SP	G15_080	TO->FROM	JONES STATION - TUCO INTERCHANGE 230KV CKT 1	343.79	343.79	0.03168	100.1964	YOAKUM_345 345.00 (UPDATE DATA) 345/230/13.2KV TRANSFORMER CKT 1
FDNS	00NR	2	25SP	G15_080	TO->FROM	JONES STATION - TUCO INTERCHANGE 230KV CKT 1	343.79	343.79	0.03551	99.9	INDIANA SUB - SOUTH PLAINS REC-ERSKINE 115KV CKT 1
FDNS	00NR	2	25SP	G15_080	TO->FROM	JONES STATION - TUCO INTERCHANGE 230KV CKT 1	343.79	343.79	0.03751	99.8	FLOYD COUNTY INTERCHANGE - TUCO INTERCHANGE 115KV CKT 1

SOLUTION	GROUP	SCENARIO	SEASON	SOURCE	DIRECTION	MONITORED ELEMENT	RATEA (MVA)	RATEB(MVA)	TDF	TC%LOADING (% MVA)	CONTINGENCY
FDNS	00NR	2	25SP	G15_080	TO->FROM	JONES STATION - TUCO INTERCHANGE 230KV CKT 1	343.79	343.79	0.03751	99.8	FLOYD COUNTY INTERCHANGE - TUCO INTERCHANGE 115KV CKT 1
FDNS	00NR	2	25SP	G15_080	TO->FROM	JONES STATION - TUCO INTERCHANGE 230KV CKT 1	343.79	343.79	0.03737	99.7	POTTER COUNTY INTERCHANGE (WAUK 90343-A) 345/230/13.2KV TRANSFORMER CKT 1
FDNS	00NR	2	25SP	G15_080	TO->FROM	JONES STATION - TUCO INTERCHANGE 230KV CKT 1	343.79	343.79	0.03737	99.7	POTTER COUNTY INTERCHANGE (WAUK 90343-A) 345/230/13.2KV TRANSFORMER CKT 1
FDNS	00NR	2	25SP	G15_080	TO->FROM	JONES STATION - TUCO INTERCHANGE 230KV CKT 1	343.79	343.79	0.03691	99.7	GEN563122 1-G15077_3 0.3850
FDNS	00NR	2	25SP	G15_080	TO->FROM	JONES STATION - TUCO INTERCHANGE 230KV CKT 1	343.79	343.79	0.03691	99.6	GEN527901 1-HOBBS PLANT #1 (CT)
FDNS	00NR	2	25SP	G15_080	TO->FROM	JONES STATION - TUCO INTERCHANGE 230KV CKT 1	343.79	343.79	0.03691	99.6	GEN527902 1-HOBBS PLANT #2 (CT)
FDNS	00NR	2	25SP	G15_080	TO->FROM	JONES STATION - TUCO INTERCHANGE 230KV CKT 1	343.79	343.79	0.03691	99.6	GEN563102 1-G15075_3 0.5500
FDNS	00NR	2	25SP	G15_080	FROM->TO	LUBBOCK POWER & LIGHT-HOLLY PLANT (SHIH T101039) 230/69/13.5KV TRANSFORMER CKT 1	224	224	0.03577	104.7613	LUBBOCK POWER & LIGHT-SOUTHEAST - LUBBOCK SOUTH INTERCHANGE 230KV CKT 1
FDNS	00NR	2	25SP	G15_080	FROM->TO	LUBBOCK POWER & LIGHT-HOLLY PLANT (SHIH T101039) 230/69/13.5KV TRANSFORMER CKT 1	224	224	0.03577	104.7484	P12:LPL:SPS:K64.1.LP-SE.LUBBS
FDNS	00NR	2	25SP	G15_080	FROM->TO	LUBBOCK POWER & LIGHT-HOLLY PLANT (SHIH T101039) 230/69/13.5KV TRANSFORMER CKT 1	224	224	0.03374	102.133	P12:230:LPL:K57.1.LP-WADS.LUBBE
FDNS	00NR	2	25SP	G15_080	FROM->TO	LUBBOCK POWER & LIGHT-HOLLY PLANT (SHIH T101039) 230/69/13.5KV TRANSFORMER CKT 1	224	224	0.03374	102.1329	LUBBOCK POWER & LIGHT-WADSWORTH (SHIH T101038) 230/69/13.5KV TRANSFORMER CKT 1
FDNS	00NR	2	25SP	G15_080	FROM->TO	LUBBOCK POWER & LIGHT-HOLLY PLANT (SHIH T101039) 230/69/13.5KV TRANSFORMER CKT 1	224	224	0.03374	102.1329	LUBBOCK POWER & LIGHT-WADSWORTH (SHIH T101038) 230/69/13.5KV TRANSFORMER CKT 1
FDNS	00NR	2	25SP	G15_080	FROM->TO	LUBBOCK POWER & LIGHT-HOLLY PLANT (SHIH T101039) 230/69/13.5KV TRANSFORMER CKT 1	224	224	0.03374	101.829	LUBBOCK EAST INTERCHANGE - LUBBOCK POWER & LIGHT-WADSWORTH 230KV CKT 1
FDNSLock	06ALL	2	20WP	G15_080		P12:230:AEPW:ELKCITY6:SWEETWT6	0	0	0.11155	9999	BASE CASE
FDNS	06ALL	2	17SP	G15_080	FROM->TO	SUNDOWN INTERCHANGE - WOLFFORTH INTERCHANGE 230KV CKT 1	318.7	350.57	0.30304	101.6908	TOLK STATION EAST - TUCO INTERCHANGE 230KV CKT 1
FDNS	06ALL	2	17SP	G15_080	FROM->TO	SUNDOWN INTERCHANGE - WOLFFORTH INTERCHANGE 230KV CKT 1	318.7	350.57	0.30304	101.6908	TOLK STATION EAST - TUCO INTERCHANGE 230KV CKT 1
FDNS	06ALL	2	20L	G15_080	FROM->TO	TUCO INTERCHANGE - TUCO_2 230.00 230KV CKT 1	497	547	0.30677	181.2199	TUCO INTERCHANGE - TUCO_2 345.00 345KV CKT 1
FDNS	06ALL	2	17G	G15_080	FROM->TO	TUCO INTERCHANGE - TUCO_2 230.00 230KV CKT 1	497	547	0.2717	176.0864	TUCO INTERCHANGE - TUCO_2 345.00 345KV CKT 1
FDNS	06ALL	2	20SP	G15_080	FROM->TO	TUCO INTERCHANGE - TUCO_2 230.00 230KV CKT 1	497	547	0.34396	166.2483	TUCO INTERCHANGE - TUCO_2 345.00 345KV CKT 1
FDNS	06ALL	2	17SP	G15_080	FROM->TO	TUCO INTERCHANGE - TUCO_2 230.00 230KV CKT 1	497	547	0.29176	159.9768	TUCO INTERCHANGE - TUCO_2 345.00 345KV CKT 1
FDNS	06ALL	2	20WP	G15_080	FROM->TO	TUCO INTERCHANGE - TUCO_2 230.00 230KV CKT 1	552	608	0.33848	155.2742	TUCO INTERCHANGE - TUCO_2 345.00 345KV CKT 1
FDNS	06ALL	2	16WP	G15_080	FROM->TO	TUCO INTERCHANGE - TUCO_2 230.00 230KV CKT 1	552	608	0.28132	142.7524	TUCO INTERCHANGE - TUCO_2 345.00 345KV CKT 1
FDNS	06NR	2	20L	G15_080	FROM->TO	TUCO INTERCHANGE - TUCO_2 230.00 230KV CKT 1	497	547	0.11928	110.6574	TUCO INTERCHANGE - TUCO_2 345.00 345KV CKT 1
FDNS	06NR	2	17G	G15_080	FROM->TO	TUCO INTERCHANGE - TUCO_2 230.00 230KV CKT 1	497	547	0.07008	106.5066	TUCO INTERCHANGE - TUCO_2 345.00 345KV CKT 1
FDNS	06ALL	2	25SP	G15_080	FROM->TO	TUCO INTERCHANGE - TUCO_2 230.00 230KV CKT 1	497	547	0.3544	102.0482993	TUCO INTERCHANGE - TUCO_2 345.00 345KV CKT 1
FDNS	06ALL	2	16WP	G15_080	FROM->TO	TUCO INTERCHANGE (GE M1022338) 345/230/13.2KV TRANSFORMER CKT 1	560	560	0.2797	120.5418	TUCO INTERCHANGE (SIEM 8743066) 345/230/13.2KV TRANSFORMER CKT 2
FDNS	06ALL	2	16WP	G15_080	FROM->TO	TUCO INTERCHANGE (GE M1022338) 345/230/13.2KV TRANSFORMER CKT 1	560	560	0.2797	120.5418	TUCO INTERCHANGE (SIEM 8743066) 345/230/13.2KV TRANSFORMER CKT 2
FDNS	06ALL	2	16WP	G15_080	FROM->TO	TUCO INTERCHANGE (GE M1022338) 345/230/13.2KV TRANSFORMER CKT 1	560	560	0.2714	120.3223	TUCO_2 345.00 (TUCO_2 XFMR) 345/230/13.2KV TRANSFORMER CKT 1
FDNS	06ALL	2	16WP	G15_080	FROM->TO	TUCO INTERCHANGE (GE M1022338) 345/230/13.2KV TRANSFORMER CKT 1	560	560	0.2797	118.6764	TUCO INTERCHANGE (SIEM 8743066) 345/230/13.2KV TRANSFORMER CKT 2
FDNS	06ALL	2	16WP	G15_080	FROM->TO	TUCO INTERCHANGE (GE M1022338) 345/230/13.2KV TRANSFORMER CKT 1	560	560	0.2797	118.6764	TUCO INTERCHANGE (SIEM 8743066) 345/230/13.2KV TRANSFORMER CKT 2
FDNS	06ALL	2	16WP	G15_080	FROM->TO	TUCO INTERCHANGE (GE M1022338) 345/230/13.2KV TRANSFORMER CKT 1	560	560	0.2714	118.6764	TUCO_2 345.00 (TUCO_2 XFMR) 345/230/13.2KV TRANSFORMER CKT 1
FDNS	06ALL	2	17G	G15_080	FROM->TO	TUCO INTERCHANGE (GE M1022338) 345/230/13.2KV TRANSFORMER CKT 1	560	560	0.27007	114.4569	TUCO INTERCHANGE (SIEM 8743066) 345/230/13.2KV TRANSFORMER CKT 2
FDNS	06ALL	2	17G	G15_080	FROM->TO	TUCO INTERCHANGE (GE M1022338) 345/230/13.2KV TRANSFORMER CKT 1	560	560	0.262	114.4414	TUCO_2 345.00 (TUCO_2 XFMR) 345/230/13.2KV TRANSFORMER CKT 1
FDNS	06ALL	2	17G	G15_080	FROM->TO	TUCO INTERCHANGE (GE M1022338) 345/230/13.2KV TRANSFORMER CKT 1	560	560	0.262	112.333	TUCO_2 345.00 (TUCO_2 XFMR) 345/230/13.2KV TRANSFORMER CKT 1
FDNS	06ALL	2	17G	G15_080	FROM->TO	TUCO INTERCHANGE (GE M1022338) 345/230/13.2KV TRANSFORMER CKT 1	560	560	0.27007	112.1874	TUCO INTERCHANGE (SIEM 8743066) 345/230/13.2KV TRANSFORMER CKT 2
FDNS	06ALL	2	16WP	G15_080	FROM->TO	TUCO INTERCHANGE (GE M1022338) 345/230/13.2KV TRANSFORMER CKT 1	560	560	0.25877	103.9349	TUCO INTERCHANGE - TUCO_2 230.00 230KV CKT 1
FDNS	06ALL	2	16WP	G15_080	FROM->TO	TUCO INTERCHANGE (GE M1022338) 345/230/13.2KV TRANSFORMER CKT 1	560	560	0.25877	102.2603	TUCO INTERCHANGE - TUCO_2 230.00 230KV CKT 1
FDNS	06ALL	2	17G	G15_080	FROM->TO	TUCO INTERCHANGE (GE M1022338) 345/230/13.2KV TRANSFORMER CKT 1	560	560	0.25005	100.6861	TUCO INTERCHANGE - TUCO_2 230.00 230KV CKT 1
FDNS	06ALL	2	20L	G15_080	FROM->TO	TUCO_2 345.00 (TUCO_2 XFMR) 345/230/13.2KV TRANSFORMER CKT 1	560	560	0.25839	190.1451	TUCO INTERCHANGE - TUCO_2 345.00 345KV CKT 1
FDNS	06ALL	2	20WP	G15_080	FROM->TO	TUCO_2 345.00 (TUCO_2 XFMR) 345/230/13.2KV TRANSFORMER CKT 1	560	560	0.2952	189.4604	TUCO INTERCHANGE - TUCO_2 345.00 345KV CKT 1
FDNS	06ALL	2	17G	G15_080	FROM->TO	TUCO_2 345.00 (TUCO_2 XFMR) 345/230/13.2KV TRANSFORMER CKT 1	560	560	0.28139	187.4581	TUCO INTERCHANGE - TUCO_2 345.00 345KV CKT 1
FDNS	06ALL	2	20WP	G15_080	FROM->TO	TUCO_2 345.00 (TUCO_2 XFMR) 345/230/13.2KV TRANSFORMER CKT 1	560	560	0.2952	184.0471	TUCO INTERCHANGE - TUCO_2 345.00 345KV CKT 1
FDNS	06ALL	2	20L	G15_080	FROM->TO	TUCO_2 345.00 (TUCO_2 XFMR) 345/230/13.2KV TRANSFORMER CKT 1	560	560	0.25839	184.0031	TUCO INTERCHANGE - TUCO_2 345.00 345KV CKT 1
FDNS	06ALL	2	17G	G15_080	FROM->TO	TUCO_2 345.00 (TUCO_2 XFMR) 345/230/13.2KV TRANSFORMER CKT 1	560	560	0.28139	182.4703	TUCO INTERCHANGE - TUCO_2 345.00 345KV CKT 1
FDNS	06ALL	2	16WP	G15_080	FROM->TO	TUCO_2 345.00 (TUCO_2 XFMR) 345/230/13.2KV TRANSFORMER CKT 1	560	560	0.29192	175.5009	TUCO INTERCHANGE - TUCO_2 345.00 345KV CKT 1
FDNS	06ALL	2	16WP	G15_080	FROM->TO	TUCO_2 345.00 (TUCO_2 XFMR) 345/230/13.2KV TRANSFORMER CKT 1	560	560	0.29192	172.6087	TUCO INTERCHANGE - TUCO_2 345.00 345KV CKT 1
FDNS	06ALL	2	20SP	G15_080	FROM->TO	TUCO_2 345.00 (TUCO_2 XFMR) 345/230/13.2KV TRANSFORMER CKT 1	560	560	0.30152	166.4217	TUCO INTERCHANGE - TUCO_2 345.00 345KV CKT 1
FDNS	06ALL	2	17SP	G15_080	FROM->TO	TUCO_2 345.00 (TUCO_2 XFMR) 345/230/13.2KV TRANSFORMER CKT 1	560	560	0.29286	164.6979	TUCO INTERCHANGE - TUCO_2 345.00 345KV CKT 1
FDNS	06ALL	2	20SP	G15_080	FROM->TO	TUCO_2 345.00 (TUCO_2 XFMR) 345/230/13.2KV TRANSFORMER CKT 1	560	560	0.30152	163.5805	TUCO INTERCHANGE - TUCO_2 345.00 345KV CKT 1
FDNS	06ALL	2	17SP	G15_080	FROM->TO	TUCO_2 345.00 (TUCO_2 XFMR) 345/230/13.2KV TRANSFORMER CKT 1	560	560	0.29286	162.1713	TUCO INTERCHANGE - TUCO_2 345.00 345KV CKT 1
FDNS	06ALL	2	16WP	G15_080	FROM->TO	TUCO_2 345.00 (TUCO_2 XFMR) 345/230/13.2KV TRANSFORMER CKT 1	560	560	0.24679	112.6263	TUCO INTERCHANGE (GE M1022338) 345/230/13.2KV TRANSFORMER CKT 1
FDNS	06ALL	2	16WP	G15_080	FROM->TO	TUCO_2 345.00 (TUCO_2 XFMR) 345/230/13.2KV TRANSFORMER CKT 1	560	560	0.24679	112.6263	TUCO INTERCHANGE (GE M1022338) 345/230/13.2KV TRANSFORMER CKT 1
FDNS	06ALL	2	16WP	G15_080	FROM->TO	TUCO_2 345.00 (TUCO_2 XFMR) 345/230/13.2KV TRANSFORMER CKT 1	560	560	0.24679	111.4972	TUCO INTERCHANGE (GE M1022338) 345/230/13.2KV TRANSFORMER CKT 1
FDNS	06ALL	2	16WP	G15_080	FROM->TO	TUCO_2 345.00 (TUCO_2 XFMR) 345/230/13.2KV TRANSFORMER CKT 1	560	560	0.24679	111.4972	TUCO INTERCHANGE (GE M1022338) 345/230/13.2KV TRANSFORMER CKT 1
FDNS	06NR	2	20L	G15_080	FROM->TO	TUCO_2 345.00 (TUCO_2 XFMR) 345/230/13.2KV TRANSFORMER CKT 1	560	560	0.04518	110.8937	TUCO INTERCHANGE - TUCO_2 345.00 345KV CKT 1
FDNS	06NR	2	20L	G15_080	FROM->TO	TUCO_2 345.00 (TUCO_2 XFMR) 345/230/13.2KV TRANSFORMER CKT 1	560	560	0.04518	108.3383	TUCO INTERCHANGE - TUCO_2 345.00 345KV CKT 1
FDNS	06ALL	2	17G	G15_080	FROM->TO	TUCO_2 345.00 (TUCO_2 XFMR) 345/230/13.2KV TRANSFORMER CKT 1	560	560	0.23817	107.1719	TUCO INTERCHANGE (GE M1022338) 345/230/13.2KV TRANSFORMER CKT 1
FDNS	06NR	2	17G	G15_080	FROM->TO	TUCO_2 345.00 (TUCO_2 XFMR) 345/230/13.2KV TRANSFORMER CKT 1	560	560	0.03538	107.0023	TUCO INTERCHANGE - TUCO_2 345.00 345KV CKT 1
FDNS	06ALL	2	16WP	G15_080	FROM->TO	TUCO_2 345.00 (TUCO_2 XFMR) 345/230/13.2KV TRANSFORMER CKT 1	560	560	0.23096	105.8242	TUCO INTERCHANGE (SIEM 8743066) 345/230/13.2KV TRANSFORMER CKT 2
FDNS	06ALL	2	16WP	G15_080	FROM->TO	TUCO_2 345.00 (TUCO_2 XFMR) 345/230/13.2KV TRANSFORMER CKT 1	560	560	0.23096	105.8242	TUCO INTERCHANGE (SIEM 8743066) 345/230/13.2KV TRANSFORMER CKT 2
FDNS	06ALL	2	17G	G15_080	FROM->TO	TUCO_2 345.00 (TUCO_2 XFMR) 345/230/13.2KV TRANSFORMER CKT 1	560	560	0.23817	105.6097	TUCO INTERCHANGE (GE M1022338) 345/230/13.2KV TRANSFORMER CKT 1
FDNS	06ALL	2	16WP	G15_080	FROM->TO	TUCO_2 345.00 (TUCO_2 XFMR) 345/230/13.2KV TRANSFORMER CKT 1	560	560	0.23096	104.8168	TUCO INTERCHANGE (SIEM 8743066) 345/230/13.2KV TRANSFORMER CKT 2
FDNS	06ALL	2	16WP	G15_080	FROM->TO	TUCO_2 345.00 (TUCO_2 XFMR) 345/230/13.2KV TRANSFORMER CKT 1	560	560	0.23096	104.8168	TUCO INTERCHANGE (SIEM 8743066) 345/230/13.2KV TRANSFORMER CKT 2
FDNS	06NR	2	17G	G15_080	FROM->TO	TUCO_2 345.00 (TUCO_2 XFMR) 345/230/13.2KV TRANSFORMER CKT 1	560	560	0.03538	104.728	TUCO INTERCHANGE - TUCO_2 345.00 345KV CKT 1
FDNS	06ALL	2	17G	G15_080	FROM->TO	TUCO_2 345.00 (TUCO_2 XFMR) 345/230/13.2KV TRANSFORMER CKT 1	560	560	0.22289	100.7205	TUCO INTERCHANGE (SIEM 8743066) 345/230/13.2KV TRANSFORMER CKT 2
FDNS	06ALL	2	17G	G15_080	FROM->TO	WOLFFORTH INTERCHANGE - YUMA INTERCHANGE 115KV CKT 1	119.51	153.97	0.20179	103.3037	LUBBOCK SOUTH INTERCHANGE - WOLFFORTH INTERCHANGE 230KV CKT 1
FDNS	06ALL	2	17G	G15_080	FROM->TO	WOLFFORTH INTERCHANGE - YUMA INTERCHANGE 115KV CKT 1	119.51	153.97	0.20179	103.3037	LUBBOCK SOUTH INTERCHANGE - WOLFFORTH INTERCHANGE 230KV CKT 1
FDNS	06NR	3	17G	G15_080	TO->FROM	AMARILLO SOUTH INTERCHANGE - G15031_T 230.00 230KV CKT 1	318.7	350.57	0.09771	103.2239	NEWHART 230 - POTTER COUNTY INTERCHANGE 230KV CKT 1
FDNS	06NR	3	20L	G15_080	FROM->TO	BUSHLAND INTERCHANGE - HILLSIDE 115KV CKT 1	159	160	0.039	108.1399	BUSHLAND INTERCHANGE - POTTER COUNTY INTERCHANGE 230KV CKT 1
FDNS	06NR	3	20L	G15_080	FROM->TO	BUSHLAND INTERCHANGE - HILLSIDE 115KV CKT 1	159	160	0.039	108.1399	BUSHLAND INTERCHANGE - POTTER COUNTY INTERCHANGE 230KV CKT 1
FDNS	06NR	3	17G	G15_080	FROM->TO	BUSHLAND INTERCHANGE - HILLSIDE 115KV CKT 1	159	160	0.04358	105.508	BUSHLAND INTERCHANGE - POTTER COUNTY INTERCHANGE 230KV CKT 1
FDNS	06NR	3	17G	G15_080	FROM->TO	BUSHLAND INTERCHANGE - HILLSIDE 115KV CKT 1	159	160	0.04358	105.508	BUSHLAND INTERCHANGE - POTTER COUNTY INTERCHANGE 230KV CKT 1
FDNS	06NR	3	20L	G15_080	FROM->TO	BUSHLAND INTERCHANGE - POTTER COUNTY INTERCHANGE 230KV CKT 1	318.7	350.57	0.08181	102.6252	NEWHART 230 - POTTER COUNTY INTERCHANGE 230KV CKT 1
FDNS	06NR	3	20L	G15_080	FROM->TO	BUSHLAND INTERCHANGE (WH 7001795) 230/115/13.2KV TRANSFORMER CKT 1	168	168	0.039	106.6189	BUSHLAND INTERCHANGE - POTTER COUNTY INTERCHANGE 230KV CKT 1
FDNS	06NR	3	20L	G15_080	FROM->TO	BUSHLAND INTERCHANGE (WH 7001795) 230/115/13.2KV TRANSFORMER CKT 1	168	168	0.039	106.6189	BUSHLAND INTERCHANGE - POTTER COUNTY INTERCHANGE 230KV CKT 1
FDNS	06NR	3	17G	G15_080	FROM->TO	BUSHLAND INTERCHANGE (WH 7001795) 230/115/13.2KV TRANSFORMER CKT 1	168	168	0.04358	104.9286	BUSHLAND INTERCHANGE - POTTER COUNTY INTERCHANGE 230KV CKT 1
FDNS	06NR	3	17G	G15_080	FROM->TO	BUSHLAND INTERCHANGE (WH 7001795) 230/115/13.2KV TRANSFORMER CKT 1	168	168	0.04358	104.9286	BUSHLAND INTERCHANGE - POTTER COUNTY INTERCHANGE 230KV CKT 1
FDNS	06NR	3	20L	G15_080	FROM->TO	BUSHLAND INTERCHANGE (WH 7001795) 230/115/13.2KV TRANSFORMER CKT 1	168	168	0.039	104.4653	BUSHLAND INTERCHANGE - POTTER COUNTY INTERCHANGE 230KV CKT 1
FDNS	06NR	3	20L	G15_080	FROM->TO	BUSHLAND INTERCHANGE (WH 7001795) 230/115/13.2KV TRANSFORMER CKT 1	168	168	0.039	104.4653	BUSHLAND INTERCHANGE - POTTER COUNTY INTERCHANGE 230KV CKT 1

SOLUTION	GROUP	SCENARIO	SEASON	SOURCE	DIRECTION	MONITORED ELEMENT	RATEA (MVA)	RATEB(MVA)	TDF	TC%LOADING (% MVA)	CONTINGENCY
FDNS	06NR	3	17G	G15_080	FROM->TO	BUSHLAND INTERCHANGE (WH 7001795) 230/115/13.2KV TRANSFORMER CKT 1	168	168	0.04358	102.648	BUSHLAND INTERCHANGE - POTTER COUNTY INTERCHANGE 230KV CKT 1
FDNS	06NR	3	17G	G15_080	FROM->TO	BUSHLAND INTERCHANGE (WH 7001795) 230/115/13.2KV TRANSFORMER CKT 1	168	168	0.04358	102.648	BUSHLAND INTERCHANGE - POTTER COUNTY INTERCHANGE 230KV CKT 1
FDNS	06NR	3	17G	G15_080	TO->FROM	CANYON WEST SUB - DAWN SUB 115KV CKT 1	96	96	0.03579	109.382	BUSHLAND INTERCHANGE - DEAF SMITH COUNTY INTERCHANGE 230KV CKT 1
FDNS	06NR	3	17G	G15_080	TO->FROM	CANYON WEST SUB - DAWN SUB 115KV CKT 1	96	96	0.03579	109.382	BUSHLAND INTERCHANGE - DEAF SMITH COUNTY INTERCHANGE 230KV CKT 1
FDNS	06NR	3	20L	G15_080	FROM->TO	CASTRO COUNTY INTERCHANGE - DEAF SMITH REC-#21 115KV CKT 1	159	174	0.02951	101.2841	DEAF SMITH COUNTY INTERCHANGE - G15039_T 230.00 230KV CKT 1
FDNS	06NR	3	17G	G15_080	FROM->TO	CASTRO COUNTY INTERCHANGE - DEAF SMITH REC-#21 115KV CKT 1	159	174	0.02979	100.2799	DEAF SMITH COUNTY INTERCHANGE - G15039_T 230.00 230KV CKT 1
FDNS	06ALL	3	20SP	G15_080	FROM->TO	CHISHOLM6 230.00 - ELK CITY 230KV 230KV CKT 1	353	353	0.06364	104.1963	BASE CASE
FDNS	06ALL	3	17SP	G15_080	FROM->TO	CHISHOLM6 230.00 - ELK CITY 230KV 230KV CKT 1	353	353	0.06385	101.9728	BASE CASE
FDNS	06ALL	3	20L	G15_080	TO->FROM	CIMARRON - MINCO 345KV CKT 1	956	956	0.219	140.6921	G14-057T 345.00 - SUNNYSIDE 345KV CKT 1
FDNS	06ALL	3	20L	G15_080	TO->FROM	CIMARRON - MINCO 345KV CKT 1	956	956	0.219	134.2883	G14-057T 345.00 - LAWTON EASTSIDE 345KV CKT 1
FDNS	06ALL	3	17G	G15_080	TO->FROM	CIMARRON - MINCO 345KV CKT 1	956	956	0.24379	132.797	G14-057T 345.00 - SUNNYSIDE 345KV CKT 1
FDNS	06ALL	3	20WP	G15_080	TO->FROM	CIMARRON - MINCO 345KV CKT 1	956	956	0.24631	131.9094	G14-057T 345.00 - SUNNYSIDE 345KV CKT 1
FDNS	06ALL	3	17G	G15_080	TO->FROM	CIMARRON - MINCO 345KV CKT 1	956	956	0.24379	127.3481	G14-057T 345.00 - LAWTON EASTSIDE 345KV CKT 1
FDNS	06ALL	3	20WP	G15_080	TO->FROM	CIMARRON - MINCO 345KV CKT 1	956	956	0.24631	126.3057	G14-057T 345.00 - LAWTON EASTSIDE 345KV CKT 1
FDNS	06ALL	3	16WP	G15_080	TO->FROM	CIMARRON - MINCO 345KV CKT 1	956	956	0.2507	125.3645	G14-057T 345.00 - SUNNYSIDE 345KV CKT 1
FDNS	06ALL	3	17SP	G15_080	TO->FROM	CIMARRON - MINCO 345KV CKT 1	956	956	0.24807	124.3731	G14-057T 345.00 - SUNNYSIDE 345KV CKT 1
FDNS	06ALL	3	20SP	G15_080	TO->FROM	CIMARRON - MINCO 345KV CKT 1	956	956	0.25232	121.3286	G14-057T 345.00 - SUNNYSIDE 345KV CKT 1
FDNS	06ALL	3	16WP	G15_080	TO->FROM	CIMARRON - MINCO 345KV CKT 1	956	956	0.2507	119.9255	G14-057T 345.00 - LAWTON EASTSIDE 345KV CKT 1
FDNS	06ALL	3	17SP	G15_080	TO->FROM	CIMARRON - MINCO 345KV CKT 1	956	956	0.24807	118.8978	G14-057T 345.00 - LAWTON EASTSIDE 345KV CKT 1
FDNS	06ALL	3	20SP	G15_080	TO->FROM	CIMARRON - MINCO 345KV CKT 1	956	956	0.25232	116.0894	G14-057T 345.00 - LAWTON EASTSIDE 345KV CKT 1
FDNS	06ALL	3	20WP	G15_080	TO->FROM	CIMARRON - MINCO 345KV CKT 1	956	956	0.20661	111.5734	MATHWSN7 345.00 - TATONGA7 345.00 345KV CKT 1
FDNS	06ALL	3	20L	G15_080	TO->FROM	CIMARRON - MINCO 345KV CKT 1	956	956	0.22532	109.488	CHISHOLM7 345.00 - WOODWARD DISTRICT EHV 345KV CKT 1
FDNS	06ALL	3	17G	G15_080	TO->FROM	CIMARRON - MINCO 345KV CKT 1	956	956	0.2417	109.1031	CHISHOLM7 345.00 - WOODWARD DISTRICT EHV 345KV CKT 1
FDNS	06ALL	3	20WP	G15_080	TO->FROM	CIMARRON - MINCO 345KV CKT 1	956	956	0.20661	106.2571	G11_051T 345.00 - TATONGA7 345.00 345KV CKT 1
FDNS	06ALL	3	17G	G15_080	TO->FROM	CIMARRON - MINCO 345KV CKT 1	956	956	0.20678	106.016	G11_051T 345.00 - TATONGA7 345.00 345KV CKT 1
FDNS	06ALL	3	17SP	G15_080	TO->FROM	CIMARRON - MINCO 345KV CKT 1	956	956	0.21058	105.6361	MATHWSN7 345.00 - TATONGA7 345.00 345KV CKT 1
FDNS	06ALL	3	20WP	G15_080	TO->FROM	CIMARRON - MINCO 345KV CKT 1	956	956	0.24842	105.2058	CHISHOLM7 345.00 - WOODWARD DISTRICT EHV 345KV CKT 1
FDNS	06ALL	3	16WP	G15_080	TO->FROM	CIMARRON - MINCO 345KV CKT 1	956	956	0.21205	105.1594	MATHWSN7 345.00 - TATONGA7 345.00 345KV CKT 1
FDNS	06ALL	3	20SP	G15_080	TO->FROM	CIMARRON - MINCO 345KV CKT 1	956	956	0.21316	104.8651	MATHWSN7 345.00 - TATONGA7 345.00 345KV CKT 1
FDNS	06ALL	3	20WP	G15_080	TO->FROM	CIMARRON - MINCO 345KV CKT 1	956	956	0.20661	104.6601	G11_051T 345.00 - WOODWARD DISTRICT EHV 345KV CKT 1
FDNS	06ALL	3	17G	G15_080	TO->FROM	CIMARRON - MINCO 345KV CKT 1	956	956	0.20678	104.4511	G11_051T 345.00 - WOODWARD DISTRICT EHV 345KV CKT 1
FDNS	06ALL	3	20SP	G15_080	TO->FROM	CIMARRON - MINCO 345KV CKT 1	956	956	0.2552	103.3967	CHISHOLM7 345.00 - WOODWARD DISTRICT EHV 345KV CKT 1
FDNS	06ALL	3	17SP	G15_080	TO->FROM	CIMARRON - MINCO 345KV CKT 1	956	956	0.24934	102.6701	CHISHOLM7 345.00 - WOODWARD DISTRICT EHV 345KV CKT 1
FDNS	06ALL	3	17SP	G15_080	TO->FROM	CIMARRON - MINCO 345KV CKT 1	956	956	0.21058	100.4546	G11_051T 345.00 - TATONGA7 345.00 345KV CKT 1
FDNS	06ALL	3	20WP	G15_080	TO->FROM	CIMARRON - MINCO 345KV CKT 1	956	956	0.19823	100.2954	P12:138:WFEC:MSL03
FDNS	06ALL	3	16WP	G15_080	TO->FROM	CIMARRON - MINCO 345KV CKT 1	956	956	0.21205	99.8	G11_051T 345.00 - TATONGA7 345.00 345KV CKT 1
FDNS	06ALL	3	20SP	G15_080	TO->FROM	CIMARRON - MINCO 345KV CKT 1	956	956	0.21316	99.7	G11_051T 345.00 - TATONGA7 345.00 345KV CKT 1
FDNS	06ALL	3	17SP	G15_080	TO->FROM	CIMARRON - MINCO 345KV CKT 1	956	956	0.2008	99.6	P12:138:WFEC:MSL03
FDNS	06ALL	3	20SP	G15_080	TO->FROM	CIMARRON - MINCO 345KV CKT 1	956	956	0.20444	99.6	P12:138:WFEC:MSL03
FDNS	06NR	3	20L	G15_080	TO->FROM	COULTER INTERCHANGE - HILLSIDE 115KV CKT 1	159	159	0.039	105.531	BUSHLAND INTERCHANGE - POTTER COUNTY INTERCHANGE 230KV CKT 1
FDNS	06NR	3	20L	G15_080	TO->FROM	COULTER INTERCHANGE - HILLSIDE 115KV CKT 1	159	159	0.039	105.531	BUSHLAND INTERCHANGE - POTTER COUNTY INTERCHANGE 230KV CKT 1
FDNS	06NR	3	17G	G15_080	TO->FROM	COULTER INTERCHANGE - HILLSIDE 115KV CKT 1	159	159	0.04358	100.454	BUSHLAND INTERCHANGE - POTTER COUNTY INTERCHANGE 230KV CKT 1
FDNS	06NR	3	17G	G15_080	TO->FROM	COULTER INTERCHANGE - HILLSIDE 115KV CKT 1	159	159	0.04358	100.454	BUSHLAND INTERCHANGE - POTTER COUNTY INTERCHANGE 230KV CKT 1
FDNS	06NR	3	17G	G15_080	TO->FROM	DAWN SUB - Panda Energy Substation Hereford 115KV CKT 1	96	96	0.03579	112.7612	BUSHLAND INTERCHANGE - DEAF SMITH COUNTY INTERCHANGE 230KV CKT 1
FDNS	06NR	3	17G	G15_080	TO->FROM	DAWN SUB - Panda Energy Substation Hereford 115KV CKT 1	96	96	0.03579	112.7612	BUSHLAND INTERCHANGE - DEAF SMITH COUNTY INTERCHANGE 230KV CKT 1
FDNS	06NR	3	17G	G15_080	FROM->TO	DEAF SMITH COUNTY INTERCHANGE - Panda Energy Substation Hereford 115KV CKT 1	96	96	0.03579	117.8354	BUSHLAND INTERCHANGE - DEAF SMITH COUNTY INTERCHANGE 230KV CKT 1
FDNS	06NR	3	17G	G15_080	FROM->TO	DEAF SMITH COUNTY INTERCHANGE - Panda Energy Substation Hereford 115KV CKT 1	96	96	0.03579	117.8354	BUSHLAND INTERCHANGE - DEAF SMITH COUNTY INTERCHANGE 230KV CKT 1
FDNS	06ALL	3	20L	G15_080	TO->FROM	G14-057T 345.00 - LAWTON EASTSIDE 345KV CKT 1	717	789	0.10663	106.0801	BASE CASE
FDNS	06ALL	3	20L	G15_080	FROM->TO	G14-057T 345.00 - SUNNYSIDE 345KV CKT 1	717	789	0.10663	119.3111	BASE CASE
FDNS	06ALL	3	20WP	G15_080	FROM->TO	G14-057T 345.00 - SUNNYSIDE 345KV CKT 1	717	789	0.13016	107.198	BASE CASE
FDNS	06ALL	3	17G	G15_080	FROM->TO	G14-057T 345.00 - SUNNYSIDE 345KV CKT 1	717	789	0.12947	106.7167	BASE CASE
FDNS	06ALL	3	16WP	G15_080	FROM->TO	G14-057T 345.00 - SUNNYSIDE 345KV CKT 1	717	789	0.13294	105.3992	BASE CASE
FDNS	06NR	3	20L	G15_080	FROM->TO	G14-074T 345.00 - OKLAUNION 345KV CKT 1	1022	1124	0.05728	108.2612	BASE CASE
FDNS	06NR	3	17G	G15_080	FROM->TO	G14-074T 345.00 - OKLAUNION 345KV CKT 1	1022	1124	0.04527	106.9843	G11_051T 345.00 - WOODWARD DISTRICT EHV 345KV CKT 1
FDNS	06NR	3	17G	G15_080	FROM->TO	G14-074T 345.00 - OKLAUNION 345KV CKT 1	1022	1124	0.04581	105.0698	BASE CASE
FDNS	06NR	3	20L	G15_080	FROM->TO	G14-074T 345.00 - OKLAUNION 345KV CKT 1	1022	1124	0.05454	103.3966	CHISHOLM7 345.00 - GRACEMONT 345KV CKT 1
FDNS	06NR	3	20L	G15_080	FROM->TO	G14-074T 345.00 - OKLAUNION 345KV CKT 1	1022	1124	0.05454	102.9036	CHISHOLM7 345.00 () 345/230/13.2KV TRANSFORMER CKT 1
FDNS	06NR	3	20L	G15_080	FROM->TO	G14-074T 345.00 - OKLAUNION 345KV CKT 1	1022	1124	0.06789	102.6829	AMARILLO SOUTH INTERCHANGE - G15031_T 230.00 230KV CKT 1
FDNS	06NR	3	20L	G15_080	FROM->TO	G14-074T 345.00 - OKLAUNION 345KV CKT 1	1022	1124	0.06624	102.2907	NEWHART 230 - POTTER COUNTY INTERCHANGE 230KV CKT 1
FDNS	06NR	3	20L	G15_080	FROM->TO	G14-074T 345.00 - OKLAUNION 345KV CKT 1	1022	1124	0.06441	101.9316	DEAF SMITH COUNTY INTERCHANGE - G15039_T 230.00 230KV CKT 1
FDNS	06NR	3	20L	G15_080	FROM->TO	G14-074T 345.00 - OKLAUNION 345KV CKT 1	1022	1124	0.06441	100.8261	G15039_T 230.00 - PLANT X STATION 230KV CKT 1
FDNS	06NR	3	20L	G15_080	FROM->TO	G14-074T 345.00 - OKLAUNION 345KV CKT 1	1022	1124	0.05709	100.637	MINGO - RED WILLOW 345KV CKT 1
FDNS	06NR	3	20L	G15_080	FROM->TO	G14-074T 345.00 - OKLAUNION 345KV CKT 1	1022	1124	0.05709	100.637	MINGO - RED WILLOW 345KV CKT 1
FDNS	06NR	3	20L	G15_080	FROM->TO	G14-074T 345.00 - OKLAUNION 345KV CKT 1	1022	1124	0.05649	100.065	CHILDRESS - LAKE PAULINE 138KV CKT 1
FDNS	06NR	3	20L	G15_080	FROM->TO	G14-074T 345.00 - OKLAUNION 345KV CKT 1	1022	1124	0.05649	100.065	CHILDRESS - LAKE PAULINE 138KV CKT 1
FDNS	06NR	3	20L	G15_080	FROM->TO	G14-074T 345.00 - OKLAUNION 345KV CKT 1	1022	1124	0.05681	100	CONWAY SUB - NICHOLS STATION 115KV CKT 1
FDNS	06NR	3	20L	G15_080	FROM->TO	G14-074T 345.00 - OKLAUNION 345KV CKT 1	1022	1124	0.05681	99.9	CONWAY SUB - KIRBY SWITCHING STATION 115KV CKT 1
FDNS	06NR	3	17G	G15_080	FROM->TO	G14-074T 345.00 - OKLAUNION 345KV CKT 1	1022	1124	0.05574	99.8	AMARILLO SOUTH INTERCHANGE - G15031_T 230.00 230KV CKT 1
FDNS	06NR	3	20L	G15_080	FROM->TO	G14-074T 345.00 - OKLAUNION 345KV CKT 1	1022	1124	0.05681	99.8	P12:115:SPS:T53.1.NICHLS.KIRBY
FDNS	06NR	3	20L	G15_080	FROM->TO	G14-074T 345.00 - OKLAUNION 345KV CKT 1	1022	1124	0.05725	99.7	IODINE - WOODWARD EHV 138KV CKT 1
FDNS	06NR	3	20L	G15_080	FROM->TO	G14-074T 345.00 - OKLAUNION 345KV CKT 1	1022	1124	0.05726	99.6	WOODWARD - WWPAR4 138.00 138KV CKT 1
FDNS	06NR	3	20L	G15_080	FROM->TO	G14-074T 345.00 - OKLAUNION 345KV CKT 1	1022	1124	0.05726	99.6	WOODWARD EHV - WWPAR4 138.00 138KV CKT 1
FDNS	06NR	3	20L	G15_080	FROM->TO	G14-074T 345.00 - OKLAUNION 345KV CKT 1	1022	1124	0.05725	99.6	DEWEY - IODINE 138KV CKT 1
FDNS	06NR	3	17G	G15_080	FROM->TO	G14-074T 345.00 - OKLAUNION 345KV CKT 1	1022	1124	0.04351	99.5	CHISHOLM7 345.00 - GRACEMONT 345KV CKT 1
FDNS	06NR	3	20L	G15_080	FROM->TO	G14-074T 345.00 - OKLAUNION 345KV CKT 1	1022	1124	0.05685	99.5	KIRBY SWITCHING STATION - MCCLELLAN SUB 115KV CKT 1
FDNS	06NR	3	20L	G15_080	FROM->TO	G14-074T 345.00 - OKLAUNION 345KV CKT 1	1022	1124	0.05685	99.5	MCCLELLAN SUB - MCLEAN RURAL SUB 115KV CKT 1
FDNS	06ALL	3	20L	G15_080	FROM->TO	GRACEMONT - MINCO 345KV CKT 1	1195	1195	0.219	101.53	G14-057T 345.00 - SUNNYSIDE 345KV CKT 1
FDNS	00NR	3	25SP	G15_080	FROM->TO	Hitchland Interchange (SIEM 8743067) 345/230/13.2KV TRANSFORMER CKT 2	560	644	0.0312	100.776	Hitchland Interchange (H TB80155502) 345/230/13.2KV TRANSFORMER CKT 1
FDNS	00NR	3	25SP	G15_080	FROM->TO	Hitchland Interchange (SIEM 8743067) 345/230/13.2KV TRANSFORMER CKT 2	560	644	0.0312	100.776	Hitchland Interchange (H TB80155502) 345/230/13.2KV TRANSFORMER CKT 1

SOLUTION	GROUP	SCENARIO	SEASON	SOURCE	DIRECTION	MONITORED ELEMENT	RATEA (MVA)	RATEB(MVA)	TDF	TC%LOADING (% MVA)	CONTINGENCY
FDNS	00NR	3	25SP	G15_080	TO->FROM	JONES STATION - TUCO INTERCHANGE 230KV CKT 1	343.79	343.79	0.03462	130.1614	CARLISLE INTERCHANGE - TUCO INTERCHANGE 230KV CKT 1
FDNS	00NR	3	25SP	G15_080	TO->FROM	JONES STATION - TUCO INTERCHANGE 230KV CKT 1	343.79	343.79	0.03462	130.1614	CARLISLE INTERCHANGE - TUCO INTERCHANGE 230KV CKT 1
FDNS	00NR	3	25SP	G15_080	TO->FROM	JONES STATION - TUCO INTERCHANGE 230KV CKT 1	343.79	343.79	0.03763	113.3309	GEN526333 1-JONES GEN #3 21 KV
FDNS	00NR	3	25SP	G15_080	TO->FROM	JONES STATION - TUCO INTERCHANGE 230KV CKT 1	343.79	343.79	0.03763	112.9359	GEN526334 1-JONES_4 116.500
FDNS	00NR	3	25SP	G15_080	TO->FROM	JONES STATION - TUCO INTERCHANGE 230KV CKT 1	343.79	343.79	0.03395	103.864	CARLISLE INTERCHANGE - WOLFFORTH INTERCHANGE 230KV CKT 1
FDNS	00NR	3	25SP	G15_080	TO->FROM	JONES STATION - TUCO INTERCHANGE 230KV CKT 1	343.79	343.79	0.03763	100.8779	GEN526332 1-JONES GEN #2 21 KV
FDNS	00NR	3	25SP	G15_080	TO->FROM	JONES STATION - TUCO INTERCHANGE 230KV CKT 1	343.79	343.79	0.03763	100.876	GEN526331 1-JONES GEN #1 22 KV
FDNS	00NR	3	25SP	G15_080	TO->FROM	JONES STATION - TUCO INTERCHANGE 230KV CKT 1	343.79	343.79	0.03882	100.7208	TUCO INTERCHANGE (ENRCO 136401) 230/115/13.2KV TRANSFORMER CKT 1
FDNS	00NR	3	25SP	G15_080	TO->FROM	JONES STATION - TUCO INTERCHANGE 230KV CKT 1	343.79	343.79	0.03882	100.7208	TUCO INTERCHANGE (ENRCO 136401) 230/115/13.2KV TRANSFORMER CKT 1
FDNS	00NR	3	25SP	G15_080	TO->FROM	JONES STATION - TUCO INTERCHANGE 230KV CKT 1	343.79	343.79	0.03882	100.7208	TUCO INTERCHANGE (ENRCO 136401) 230/115/13.2KV TRANSFORMER CKT 2
FDNS	00NR	3	25SP	G15_080	TO->FROM	JONES STATION - TUCO INTERCHANGE 230KV CKT 1	343.79	343.79	0.03882	100.7208	TUCO INTERCHANGE (ENRCO 136401) 230/115/13.2KV TRANSFORMER CKT 2
FDNS	00NR	3	25SP	G15_080	TO->FROM	JONES STATION - TUCO INTERCHANGE 230KV CKT 1	343.79	343.79	0.04025	99.8	LUBBOCK EAST INTERCHANGE - TUCO INTERCHANGE 115KV CKT 1
FDNS	00NR	3	25SP	G15_080	TO->FROM	JONES STATION - TUCO INTERCHANGE 230KV CKT 1	343.79	343.79	0.04025	99.8	LUBBOCK EAST INTERCHANGE - TUCO INTERCHANGE 115KV CKT 1
FDNS	00NR	3	25SP	G15_080	FROM->TO	LUBBOCK POWER & LIGHT-HOLLY PLANT (SHIH T101039) 230/69/13.5KV TRANSFORMER CKT 1	224	224	0.03577	104.7002	LUBBOCK POWER & LIGHT-SOUTHEAST - LUBBOCK SOUTH INTERCHANGE 230KV CKT 1
FDNS	00NR	3	25SP	G15_080	FROM->TO	LUBBOCK POWER & LIGHT-HOLLY PLANT (SHIH T101039) 230/69/13.5KV TRANSFORMER CKT 1	224	224	0.03577	104.6872	P12:LPL:SPS:K64.1.LP-SE.LUBBS
FDNS	00NR	3	25SP	G15_080	FROM->TO	LUBBOCK POWER & LIGHT-HOLLY PLANT (SHIH T101039) 230/69/13.5KV TRANSFORMER CKT 1	224	224	0.03375	101.9683	LUBBOCK EAST INTERCHANGE - LUBBOCK POWER & LIGHT-WADSWORTH 230KV CKT 1
FDNS	00NR	3	25SP	G15_080	FROM->TO	LUBBOCK POWER & LIGHT-HOLLY PLANT (SHIH T101039) 230/69/13.5KV TRANSFORMER CKT 1	224	224	0.03375	101.9535	P12:230:LPL:K57.1.LP-WADS.LUBBE
FDNS	00NR	3	25SP	G15_080	FROM->TO	LUBBOCK POWER & LIGHT-HOLLY PLANT (SHIH T101039) 230/69/13.5KV TRANSFORMER CKT 1	224	224	0.03375	101.9534	LUBBOCK POWER & LIGHT-WADSWORTH (SHIH T101038) 230/69/13.5KV TRANSFORMER CKT 1
FDNS	00NR	3	25SP	G15_080	FROM->TO	LUBBOCK POWER & LIGHT-HOLLY PLANT (SHIH T101039) 230/69/13.5KV TRANSFORMER CKT 1	224	224	0.03375	101.9534	LUBBOCK POWER & LIGHT-WADSWORTH (SHIH T101038) 230/69/13.5KV TRANSFORMER CKT 1
FDNS	06ALL	3	20L	G15_080	FROM->TO	TUCO INTERCHANGE - TUCO_2 230.00 230KV CKT 1	497	547	0.2123	105.0803	TUCO INTERCHANGE - TUCO_2 345.00 345KV CKT 1
FDNS	06ALL	3	20SP	G15_080	FROM->TO	TUCO INTERCHANGE - TUCO_2 230.00 230KV CKT 1	497	547	0.23155	99.5	TUCO INTERCHANGE - TUCO_2 345.00 345KV CKT 1
FDNS	06ALL	4	20SP	G15_080	FROM->TO	CHISHOLM6 230.00 - ELK CITY 230KV 230KV CKT 1	353	353	0.06189	103.152	BASE CASE
FDNS	06ALL	4	17SP	G15_080	FROM->TO	CHISHOLM6 230.00 - ELK CITY 230KV 230KV CKT 1	353	353	0.06195	100.7007	BASE CASE
FDNS	06ALL	4	20L	G15_080	TO->FROM	CIMARRON - MINCO 345KV CKT 1	956	956	0.20494	136.9659	G14-057T 345.00 - SUNNYSIDE 345KV CKT 1
FDNS	06ALL	4	20L	G15_080	TO->FROM	CIMARRON - MINCO 345KV CKT 1	956	956	0.20494	130.9905	G14-057T 345.00 - LAWTON EASTSIDE 345KV CKT 1
FDNS	06ALL	4	17G	G15_080	TO->FROM	CIMARRON - MINCO 345KV CKT 1	956	956	0.22708	129.7974	G14-057T 345.00 - SUNNYSIDE 345KV CKT 1
FDNS	06ALL	4	20WP	G15_080	TO->FROM	CIMARRON - MINCO 345KV CKT 1	956	956	0.23065	128.511	G14-057T 345.00 - SUNNYSIDE 345KV CKT 1
FDNS	06ALL	4	17G	G15_080	TO->FROM	CIMARRON - MINCO 345KV CKT 1	956	956	0.22708	124.286	G14-057T 345.00 - LAWTON EASTSIDE 345KV CKT 1
FDNS	06ALL	4	20WP	G15_080	TO->FROM	CIMARRON - MINCO 345KV CKT 1	956	956	0.23065	123.0537	G14-057T 345.00 - LAWTON EASTSIDE 345KV CKT 1
FDNS	06ALL	4	16WP	G15_080	TO->FROM	CIMARRON - MINCO 345KV CKT 1	956	956	0.23364	122.1275	G14-057T 345.00 - SUNNYSIDE 345KV CKT 1
FDNS	06ALL	4	17SP	G15_080	TO->FROM	CIMARRON - MINCO 345KV CKT 1	956	956	0.23088	121.005	G14-057T 345.00 - SUNNYSIDE 345KV CKT 1
FDNS	06ALL	4	20SP	G15_080	TO->FROM	CIMARRON - MINCO 345KV CKT 1	956	956	0.23639	117.7968	G14-057T 345.00 - SUNNYSIDE 345KV CKT 1
FDNS	06ALL	4	16WP	G15_080	TO->FROM	CIMARRON - MINCO 345KV CKT 1	956	956	0.23364	116.5578	G14-057T 345.00 - LAWTON EASTSIDE 345KV CKT 1
FDNS	06ALL	4	17SP	G15_080	TO->FROM	CIMARRON - MINCO 345KV CKT 1	956	956	0.23088	115.6625	G14-057T 345.00 - LAWTON EASTSIDE 345KV CKT 1
FDNS	06ALL	4	20SP	G15_080	TO->FROM	CIMARRON - MINCO 345KV CKT 1	956	956	0.23639	112.5931	G14-057T 345.00 - LAWTON EASTSIDE 345KV CKT 1
FDNSLock	06ALL	4	17G	G15_080	TO->FROM	CIMARRON - MINCO 345KV CKT 1	956	956	0.19636	110.3749	MATHWSN7 345.00 - TATONGA7 345.00 345KV CKT 1
FDNS	06ALL	4	20WP	G15_080	TO->FROM	CIMARRON - MINCO 345KV CKT 1	956	956	0.19682	109.8635	MATHWSN7 345.00 - TATONGA7 345.00 345KV CKT 1
FDNS	06ALL	4	20WP	G15_080	TO->FROM	CIMARRON - MINCO 345KV CKT 1	956	956	0.19682	104.457	G11_051T 345.00 - TATONGA7 345.00 345KV CKT 1
FDNS	06ALL	4	17G	G15_080	TO->FROM	CIMARRON - MINCO 345KV CKT 1	956	956	0.21665	104.4362	CHISHOLM7 345.00 - WOODWARD DISTRICT EHV 345KV CKT 1
FDNS	06ALL	4	17G	G15_080	TO->FROM	CIMARRON - MINCO 345KV CKT 1	956	956	0.19636	104.3067	G11_051T 345.00 - TATONGA7 345.00 345KV CKT 1
FDNS	06ALL	4	20L	G15_080	TO->FROM	CIMARRON - MINCO 345KV CKT 1	956	956	0.20388	103.7687	CHISHOLM7 345.00 - WOODWARD DISTRICT EHV 345KV CKT 1
FDNS	06ALL	4	17SP	G15_080	TO->FROM	CIMARRON - MINCO 345KV CKT 1	956	956	0.19977	103.6969	MATHWSN7 345.00 - TATONGA7 345.00 345KV CKT 1
FDNS	06ALL	4	16WP	G15_080	TO->FROM	CIMARRON - MINCO 345KV CKT 1	956	956	0.20142	103.3746	MATHWSN7 345.00 - TATONGA7 345.00 345KV CKT 1
FDNS	06ALL	4	20WP	G15_080	TO->FROM	CIMARRON - MINCO 345KV CKT 1	956	956	0.19682	102.8471	G11_051T 345.00 - WOODWARD DISTRICT EHV 345KV CKT 1
FDNS	06ALL	4	20SP	G15_080	TO->FROM	CIMARRON - MINCO 345KV CKT 1	956	956	0.20318	102.8303	MATHWSN7 345.00 - TATONGA7 345.00 345KV CKT 1
FDNS	06ALL	4	17G	G15_080	TO->FROM	CIMARRON - MINCO 345KV CKT 1	956	956	0.19636	102.7262	G11_051T 345.00 - WOODWARD DISTRICT EHV 345KV CKT 1
FDNS	06ALL	4	20WP	G15_080	TO->FROM	CIMARRON - MINCO 345KV CKT 1	956	956	0.22473	100.3052	CHISHOLM7 345.00 - WOODWARD DISTRICT EHV 345KV CKT 1
FDNSLock	06ALL	4	16WP	G15_080		G14_001T 345.00 - WICHITA 345KV CKT 1	1035	1035	0.05398	25.24282	BASE CASE
FDNS	06ALL	4	20L	G15_080	TO->FROM	G14-057T 345.00 - LAWTON EASTSIDE 345KV CKT 1	717	789	0.10048	104.3251	BASE CASE
FDNS	06ALL	4	20L	G15_080	FROM->TO	G14-057T 345.00 - SUNNYSIDE 345KV CKT 1	717	789	0.10048	117.5276	BASE CASE
FDNS	06ALL	4	20WP	G15_080	FROM->TO	G14-057T 345.00 - SUNNYSIDE 345KV CKT 1	717	789	0.12337	105.3579	BASE CASE
FDNS	06ALL	4	17G	G15_080	FROM->TO	G14-057T 345.00 - SUNNYSIDE 345KV CKT 1	717	789	0.12222	105.0325	BASE CASE
FDNS	06ALL	4	16WP	G15_080	FROM->TO	G14-057T 345.00 - SUNNYSIDE 345KV CKT 1	717	789	0.12554	103.6585	BASE CASE
FDNS	06NR	4	20L	G15_080	FROM->TO	G14-074T 345.00 - OKLAUNION 345KV CKT 1	1022	1124	0.03746	103.8229	GRAPEVINE INTERCHANGE - STATELINE INTERCHANGE 230KV CKT 1
FDNS	06NR	4	20L	G15_080	FROM->TO	G14-074T 345.00 - OKLAUNION 345KV CKT 1	1022	1124	0.03746	103.8229	GRAPEVINE INTERCHANGE - STATELINE INTERCHANGE 230KV CKT 1
FDNS	06NR	4	20L	G15_080	FROM->TO	G14-074T 345.00 - OKLAUNION 345KV CKT 1	1022	1124	0.04138	101.1904	BASE CASE
FDNS	00NR	4	25SP	G15_080	FROM->TO	Hitchland Interchange (SIEM 8743067) 345/230/13.2KV TRANSFORMER CKT 2	560	644	0.03197	100.255	Hitchland Interchange (H TB80155502) 345/230/13.2KV TRANSFORMER CKT 1
FDNS	00NR	4	25SP	G15_080	FROM->TO	Hitchland Interchange (SIEM 8743067) 345/230/13.2KV TRANSFORMER CKT 2	560	644	0.03197	100.255	Hitchland Interchange (H TB80155502) 345/230/13.2KV TRANSFORMER CKT 1
FDNS	00NR	4	25SP	G15_080	TO->FROM	JONES STATION - TUCO INTERCHANGE 230KV CKT 1	343.79	343.79	0.0349	129.809	CARLISLE INTERCHANGE - TUCO INTERCHANGE 230KV CKT 1
FDNS	00NR	4	25SP	G15_080	TO->FROM	JONES STATION - TUCO INTERCHANGE 230KV CKT 1	343.79	343.79	0.0349	129.809	CARLISLE INTERCHANGE - TUCO INTERCHANGE 230KV CKT 1
FDNS	00NR	4	25SP	G15_080	TO->FROM	JONES STATION - TUCO INTERCHANGE 230KV CKT 1	343.79	343.79	0.03775	113.028	GEN526333 1-JONES GEN #3 21 KV
FDNS	00NR	4	25SP	G15_080	TO->FROM	JONES STATION - TUCO INTERCHANGE 230KV CKT 1	343.79	343.79	0.03775	112.6359	GEN526334 1-JONES_4 116.500
FDNS	00NR	4	25SP	G15_080	TO->FROM	JONES STATION - TUCO INTERCHANGE 230KV CKT 1	343.79	343.79	0.0342	103.563	CARLISLE INTERCHANGE - WOLFFORTH INTERCHANGE 230KV CKT 1
FDNS	00NR	4	25SP	G15_080	TO->FROM	JONES STATION - TUCO INTERCHANGE 230KV CKT 1	343.79	343.79	0.03196	100.6898	P12:345:SPS:J02.1.TOLK.EDDY
FDNS	00NR	4	25SP	G15_080	TO->FROM	JONES STATION - TUCO INTERCHANGE 230KV CKT 1	343.79	343.79	0.03775	100.6764	GEN526332 1-JONES GEN #2 21 KV
FDNS	00NR	4	25SP	G15_080	TO->FROM	JONES STATION - TUCO INTERCHANGE 230KV CKT 1	343.79	343.79	0.03775	100.6745	GEN526331 1-JONES GEN #1 22 KV
FDNS	00NR	4	25SP	G15_080	TO->FROM	JONES STATION - TUCO INTERCHANGE 230KV CKT 1	343.79	343.79	0.03879	100.6429	TUCO INTERCHANGE (ENRCO 136401) 230/115/13.2KV TRANSFORMER CKT 1
FDNS	00NR	4	25SP	G15_080	TO->FROM	JONES STATION - TUCO INTERCHANGE 230KV CKT 1	343.79	343.79	0.03879	100.6429	TUCO INTERCHANGE (ENRCO 136401) 230/115/13.2KV TRANSFORMER CKT 1
FDNS	00NR	4	25SP	G15_080	TO->FROM	JONES STATION - TUCO INTERCHANGE 230KV CKT 1	343.79	343.79	0.03879	100.6429	TUCO INTERCHANGE (ENRCO 136401) 230/115/13.2KV TRANSFORMER CKT 2
FDNS	00NR	4	25SP	G15_080	TO->FROM	JONES STATION - TUCO INTERCHANGE 230KV CKT 1	343.79	343.79	0.03879	100.6429	TUCO INTERCHANGE (ENRCO 136401) 230/115/13.2KV TRANSFORMER CKT 2
FDNS	00NR	4	25SP	G15_080	TO->FROM	JONES STATION - TUCO INTERCHANGE 230KV CKT 1	343.79	343.79	0.04049	99.8	LUBBOCK EAST INTERCHANGE - TUCO INTERCHANGE 115KV CKT 1
FDNS	00NR	4	25SP	G15_080	TO->FROM	JONES STATION - TUCO INTERCHANGE 230KV CKT 1	343.79	343.79	0.04049	99.8	LUBBOCK EAST INTERCHANGE - TUCO INTERCHANGE 115KV CKT 1
FDNS	00NR	4	25SP	G15_080	FROM->TO	LUBBOCK POWER & LIGHT-HOLLY PLANT (SHIH T101039) 230/69/13.5KV TRANSFORMER CKT 1	224	224	0.03577	104.6928	LUBBOCK POWER & LIGHT-SOUTHEAST - LUBBOCK SOUTH INTERCHANGE 230KV CKT 1
FDNS	00NR	4	25SP	G15_080	FROM->TO	LUBBOCK POWER & LIGHT-HOLLY PLANT (SHIH T101039) 230/69/13.5KV TRANSFORMER CKT 1	224	224	0.03577	104.6926	P12:LPL:SPS:K64.1.LP-SE.LUBBS
FDNS	00NR	4	25SP	G15_080	FROM->TO	LUBBOCK POWER & LIGHT-HOLLY PLANT (SHIH T101039) 230/69/13.5KV TRANSFORMER CKT 1	224	224	0.03377	101.9377	LUBBOCK EAST INTERCHANGE - LUBBOCK POWER & LIGHT-WADSWORTH 230KV CKT 1
FDNS	00NR	4	25SP	G15_080	FROM->TO	LUBBOCK POWER & LIGHT-HOLLY PLANT (SHIH T101039) 230/69/13.5KV TRANSFORMER CKT 1	224	224	0.03377	101.923	P12:230:LPL:K57.1.LP-WADS.LUBBE
FDNS	00NR	4	25SP	G15_080	FROM->TO	LUBBOCK POWER & LIGHT-HOLLY PLANT (SHIH T101039) 230/69/13.5KV TRANSFORMER CKT 1	224	224	0.03377	101.9229	LUBBOCK POWER & LIGHT-WADSWORTH (SHIH T101038) 230/69/13.5KV TRANSFORMER CKT 1
FDNS	00NR	4	25SP	G15_080	FROM->TO	LUBBOCK POWER & LIGHT-HOLLY PLANT (SHIH T101039) 230/69/13.5KV TRANSFORMER CKT 1	224	224	0.03377	101.9229	LUBBOCK POWER & LIGHT-WADSWORTH (SHIH T101038) 230/69/13.5KV TRANSFORMER CKT 1
FDNSLock	06ALL	4	20L	G15_080		OKLAUNION 345KV SWITCHED SHUNT	1022	1124	0.16923	86.37846	BASE CASE

SOLUTION	GROUP	SCENARIO	SEASON	SOURCE	DIRECTION	MONITORED ELEMENT	RATEA (MVA)	RATEB(MVA)	TDF	TC%LOADING (% MVA)	CONTINGENCY
FDNS	06ALL	4	16WP	G15_080	FROM->TO	TOLK STATION (ABBXNL844501) 345/230/13.2KV TRANSFORMER CKT 1	560	560	0.27243	113.0515	CROSSROADS 7345.00 - TOLK STATION 345KV CKT 1
FDNS	06ALL	4	16WP	G15_080	FROM->TO	TOLK STATION (ABBXNL844501) 345/230/13.2KV TRANSFORMER CKT 1	560	560	0.27243	110.3257	CROSSROADS 7345.00 - TOLK STATION 345KV CKT 1
FDNS	06ALL	4	20L	G15_080	FROM->TO	TUCO INTERCHANGE - TUCO_2 230.00 230KV CKT 1	497	547	0.21282	103.1103	TUCO INTERCHANGE - TUCO_2 345.00 345KV CKT 1
FDNS	06ALL	5	20SP	G15_080	FROM->TO	CHISHOLM6 230.00 - ELK CITY 230KV 230KV CKT 1	353	353	0.06592	107.7212	BASE CASE
FDNS	06ALL	5	17SP	G15_080	FROM->TO	CHISHOLM6 230.00 - ELK CITY 230KV 230KV CKT 1	353	353	0.06663	105.7594	BASE CASE
FDNS	06ALL	5	20L	G15_080	TO->FROM	CIMARRON - MINCO 345KV CKT 1	956	956	0.212	139.1694	G14-057T 345.00 - SUNNYSIDE 345KV CKT 1
FDNS	06ALL	5	20L	G15_080	TO->FROM	CIMARRON - MINCO 345KV CKT 1	956	956	0.212	133.4583	G14-057T 345.00 - LAWTON EASTSIDE 345KV CKT 1
FDNS	06ALL	5	17G	G15_080	TO->FROM	CIMARRON - MINCO 345KV CKT 1	956	956	0.23558	132.5137	G14-057T 345.00 - SUNNYSIDE 345KV CKT 1
FDNS	06ALL	5	20WP	G15_080	TO->FROM	CIMARRON - MINCO 345KV CKT 1	956	956	0.23715	131.4126	G14-057T 345.00 - SUNNYSIDE 345KV CKT 1
FDNS	06ALL	5	17G	G15_080	TO->FROM	CIMARRON - MINCO 345KV CKT 1	956	956	0.23558	127.0859	G14-057T 345.00 - LAWTON EASTSIDE 345KV CKT 1
FDNS	06ALL	5	20WP	G15_080	TO->FROM	CIMARRON - MINCO 345KV CKT 1	956	956	0.23715	126.0182	G14-057T 345.00 - LAWTON EASTSIDE 345KV CKT 1
FDNS	06ALL	5	16WP	G15_080	TO->FROM	CIMARRON - MINCO 345KV CKT 1	956	956	0.24233	125.0103	G14-057T 345.00 - SUNNYSIDE 345KV CKT 1
FDNS	06ALL	5	17SP	G15_080	TO->FROM	CIMARRON - MINCO 345KV CKT 1	956	956	0.23906	123.5221	G14-057T 345.00 - SUNNYSIDE 345KV CKT 1
FDNS	06ALL	5	20SP	G15_080	TO->FROM	CIMARRON - MINCO 345KV CKT 1	956	956	0.24335	120.476	G14-057T 345.00 - SUNNYSIDE 345KV CKT 1
FDNS	06ALL	5	16WP	G15_080	TO->FROM	CIMARRON - MINCO 345KV CKT 1	956	956	0.24233	119.6144	G14-057T 345.00 - LAWTON EASTSIDE 345KV CKT 1
FDNS	06ALL	5	17SP	G15_080	TO->FROM	CIMARRON - MINCO 345KV CKT 1	956	956	0.23906	118.2604	G14-057T 345.00 - LAWTON EASTSIDE 345KV CKT 1
FDNS	06ALL	5	20SP	G15_080	TO->FROM	CIMARRON - MINCO 345KV CKT 1	956	956	0.24335	115.0864	G14-057T 345.00 - LAWTON EASTSIDE 345KV CKT 1
FDNS	06ALL	5	17G	G15_080	TO->FROM	CIMARRON - MINCO 345KV CKT 1	956	956	0.20383	113.1247	MATHWSN7 345.00 - TATONGA7 345.00 345KV CKT 1
FDNS	06ALL	5	20WP	G15_080	TO->FROM	CIMARRON - MINCO 345KV CKT 1	956	956	0.20258	112.7231	MATHWSN7 345.00 - TATONGA7 345.00 345KV CKT 1
FDNS	06ALL	5	20L	G15_080	TO->FROM	CIMARRON - MINCO 345KV CKT 1	956	956	0.21182	110.4804	CHISHOLM7 345.00 - WOODWARD DISTRICT EHV 345KV CKT 1
FDNS	06ALL	5	17G	G15_080	TO->FROM	CIMARRON - MINCO 345KV CKT 1	956	956	0.2291	110.4087	CHISHOLM7 345.00 - WOODWARD DISTRICT EHV 345KV CKT 1
FDNS	06ALL	5	20WP	G15_080	TO->FROM	CIMARRON - MINCO 345KV CKT 1	956	956	0.20258	107.3503	G11_051T 345.00 - TATONGA7 345.00 345KV CKT 1
FDNS	06ALL	5	17G	G15_080	TO->FROM	CIMARRON - MINCO 345KV CKT 1	956	956	0.20383	107.1655	G11_051T 345.00 - TATONGA7 345.00 345KV CKT 1
FDNS	06ALL	5	20WP	G15_080	TO->FROM	CIMARRON - MINCO 345KV CKT 1	956	956	0.2332	106.6912	CHISHOLM7 345.00 - WOODWARD DISTRICT EHV 345KV CKT 1
FDNS	06ALL	5	16WP	G15_080	TO->FROM	CIMARRON - MINCO 345KV CKT 1	956	956	0.20904	106.1194	MATHWSN7 345.00 - TATONGA7 345.00 345KV CKT 1
FDNS	06ALL	5	17SP	G15_080	TO->FROM	CIMARRON - MINCO 345KV CKT 1	956	956	0.20699	106.0588	MATHWSN7 345.00 - TATONGA7 345.00 345KV CKT 1
FDNS	06ALL	5	20WP	G15_080	TO->FROM	CIMARRON - MINCO 345KV CKT 1	956	956	0.20258	105.6974	G11_051T 345.00 - WOODWARD DISTRICT EHV 345KV CKT 1
FDNS	06ALL	5	17G	G15_080	TO->FROM	CIMARRON - MINCO 345KV CKT 1	956	956	0.20383	105.5499	G11_051T 345.00 - WOODWARD DISTRICT EHV 345KV CKT 1
FDNS	06ALL	5	20SP	G15_080	TO->FROM	CIMARRON - MINCO 345KV CKT 1	956	956	0.20935	105.1459	MATHWSN7 345.00 - TATONGA7 345.00 345KV CKT 1
FDNS	06ALL	5	20SP	G15_080	TO->FROM	CIMARRON - MINCO 345KV CKT 1	956	956	0.24025	102.6282	CHISHOLM7 345.00 - WOODWARD DISTRICT EHV 345KV CKT 1
FDNS	06ALL	5	17SP	G15_080	TO->FROM	CIMARRON - MINCO 345KV CKT 1	956	956	0.23556	102.3712	CHISHOLM7 345.00 - WOODWARD DISTRICT EHV 345KV CKT 1
FDNS	06ALL	5	17SP	G15_080	TO->FROM	CIMARRON - MINCO 345KV CKT 1	956	956	0.20699	100.8538	G11_051T 345.00 - TATONGA7 345.00 345KV CKT 1
FDNS	06ALL	5	16WP	G15_080	TO->FROM	CIMARRON - MINCO 345KV CKT 1	956	956	0.20904	100.7286	G11_051T 345.00 - TATONGA7 345.00 345KV CKT 1
FDNS	06ALL	5	20SP	G15_080	TO->FROM	CIMARRON - MINCO 345KV CKT 1	956	956	0.20935	100	G11_051T 345.00 - TATONGA7 345.00 345KV CKT 1
FDNS	06ALL	5	16WP	G15_080	TO->FROM	CIMARRON - MINCO 345KV CKT 1	956	956	0.23726	99.9	CHISHOLM7 345.00 - WOODWARD DISTRICT EHV 345KV CKT 1
FDNS	06ALL	5	20L	G15_080	TO->FROM	G14-057T 345.00 - LAWTON EASTSIDE 345KV CKT 1	717	789	0.10216	104.5834	BASE CASE
FDNS	06ALL	5	20L	G15_080	FROM->TO	G14-057T 345.00 - SUNNYSIDE 345KV CKT 1	717	789	0.10216	117.7866	BASE CASE
FDNS	06ALL	5	20WP	G15_080	FROM->TO	G14-057T 345.00 - SUNNYSIDE 345KV CKT 1	717	789	0.12413	105.6059	BASE CASE
FDNS	06ALL	5	17G	G15_080	FROM->TO	G14-057T 345.00 - SUNNYSIDE 345KV CKT 1	717	789	0.12351	105.2883	BASE CASE
FDNS	06ALL	5	16WP	G15_080	FROM->TO	G14-057T 345.00 - SUNNYSIDE 345KV CKT 1	717	789	0.12677	103.9305	BASE CASE
FDNS	06ALL	5	20L	G15_080	FROM->TO	GRACEMONT - MINCO 345KV CKT 1	1195	1195	0.212	100.3039	G14-057T 345.00 - SUNNYSIDE 345KV CKT 1
FDNS	00NR	5	25SP	G15_080	FROM->TO	Hitchland Interchange (SIEM 8743067) 345/230/13.2KV TRANSFORMER CKT 2	560	644	0.03167	99.8	Hitchland Interchange (H TB80155502) 345/230/13.2KV TRANSFORMER CKT 1
FDNS	00NR	5	25SP	G15_080	FROM->TO	Hitchland Interchange (SIEM 8743067) 345/230/13.2KV TRANSFORMER CKT 2	560	644	0.03167	99.8	Hitchland Interchange (H TB80155502) 345/230/13.2KV TRANSFORMER CKT 1
FDNS	00NR	5	25SP	G15_080	TO->FROM	JONES STATION - TUCO INTERCHANGE 230KV CKT 1	343.79	343.79	0.03484	129.641	CARLISLE INTERCHANGE - TUCO INTERCHANGE 230KV CKT 1
FDNS	00NR	5	25SP	G15_080	TO->FROM	JONES STATION - TUCO INTERCHANGE 230KV CKT 1	343.79	343.79	0.03484	129.641	CARLISLE INTERCHANGE - TUCO INTERCHANGE 230KV CKT 1
FDNS	00NR	5	25SP	G15_080	TO->FROM	JONES STATION - TUCO INTERCHANGE 230KV CKT 1	343.79	343.79	0.03772	112.7964	GEN526333 1-JONES GEN #3 21 KV
FDNS	00NR	5	25SP	G15_080	TO->FROM	JONES STATION - TUCO INTERCHANGE 230KV CKT 1	343.79	343.79	0.03772	112.4061	GEN526334 1-JONES_4 116.500
FDNS	00NR	5	25SP	G15_080	TO->FROM	JONES STATION - TUCO INTERCHANGE 230KV CKT 1	343.79	343.79	0.03416	103.4197	CARLISLE INTERCHANGE - WOLFFORTH INTERCHANGE 230KV CKT 1
FDNS	00NR	5	25SP	G15_080	TO->FROM	JONES STATION - TUCO INTERCHANGE 230KV CKT 1	343.79	343.79	0.03193	100.5886	P12:345:SPS:J02.1.TOLK.EDDY
FDNS	00NR	5	25SP	G15_080	TO->FROM	JONES STATION - TUCO INTERCHANGE 230KV CKT 1	343.79	343.79	0.03772	100.5344	GEN526332 1-JONES GEN #2 21 KV
FDNS	00NR	5	25SP	G15_080	TO->FROM	JONES STATION - TUCO INTERCHANGE 230KV CKT 1	343.79	343.79	0.03772	100.5324	GEN526331 1-JONES GEN #1 22 KV
FDNS	00NR	5	25SP	G15_080	TO->FROM	JONES STATION - TUCO INTERCHANGE 230KV CKT 1	343.79	343.79	0.03875	100.5232	TUCO INTERCHANGE (ENRCO 136401) 230/115/13.2KV TRANSFORMER CKT 1
FDNS	00NR	5	25SP	G15_080	TO->FROM	JONES STATION - TUCO INTERCHANGE 230KV CKT 1	343.79	343.79	0.03875	100.5232	TUCO INTERCHANGE (ENRCO 136401) 230/115/13.2KV TRANSFORMER CKT 1
FDNS	00NR	5	25SP	G15_080	TO->FROM	JONES STATION - TUCO INTERCHANGE 230KV CKT 1	343.79	343.79	0.03875	100.5232	TUCO INTERCHANGE (ENRCO 136401) 230/115/13.2KV TRANSFORMER CKT 2
FDNS	00NR	5	25SP	G15_080	TO->FROM	JONES STATION - TUCO INTERCHANGE 230KV CKT 1	343.79	343.79	0.03875	100.5232	TUCO INTERCHANGE (ENRCO 136401) 230/115/13.2KV TRANSFORMER CKT 2
FDNS	00NR	5	25SP	G15_080	TO->FROM	JONES STATION - TUCO INTERCHANGE 230KV CKT 1	343.79	343.79	0.04045	99.6	LUBBOCK EAST INTERCHANGE - TUCO INTERCHANGE 115KV CKT 1
FDNS	00NR	5	25SP	G15_080	TO->FROM	JONES STATION - TUCO INTERCHANGE 230KV CKT 1	343.79	343.79	0.04045	99.6	LUBBOCK EAST INTERCHANGE - TUCO INTERCHANGE 115KV CKT 1
FDNS	00NR	5	25SP	G15_080	FROM->TO	LUBBOCK POWER & LIGHT-HOLLY PLANT (SHIH T101039) 230/69/13.5KV TRANSFORMER CKT 1	224	224	0.03577	104.6927	LUBBOCK POWER & LIGHT-SOUTHEAST - LUBBOCK SOUTH INTERCHANGE 230KV CKT 1
FDNS	00NR	5	25SP	G15_080	FROM->TO	LUBBOCK POWER & LIGHT-HOLLY PLANT (SHIH T101039) 230/69/13.5KV TRANSFORMER CKT 1	224	224	0.03577	104.6925	P12:LPL:SPS:K64.1.LP-SE.LUBBS
FDNS	00NR	5	25SP	G15_080	FROM->TO	LUBBOCK POWER & LIGHT-HOLLY PLANT (SHIH T101039) 230/69/13.5KV TRANSFORMER CKT 1	224	224	0.03377	101.9351	LUBBOCK EAST INTERCHANGE - LUBBOCK POWER & LIGHT-WADSWORTH 230KV CKT 1
FDNS	00NR	5	25SP	G15_080	FROM->TO	LUBBOCK POWER & LIGHT-HOLLY PLANT (SHIH T101039) 230/69/13.5KV TRANSFORMER CKT 1	224	224	0.03377	101.9204	P12:230:LPL:K57.1.LP-WADS.LUBBE
FDNS	00NR	5	25SP	G15_080	FROM->TO	LUBBOCK POWER & LIGHT-HOLLY PLANT (SHIH T101039) 230/69/13.5KV TRANSFORMER CKT 1	224	224	0.03377	101.9203	LUBBOCK POWER & LIGHT-WADSWORTH (SHIH T101038) 230/69/13.5KV TRANSFORMER CKT 1
FDNS	00NR	5	25SP	G15_080	FROM->TO	LUBBOCK POWER & LIGHT-HOLLY PLANT (SHIH T101039) 230/69/13.5KV TRANSFORMER CKT 1	224	224	0.03377	101.9203	LUBBOCK POWER & LIGHT-WADSWORTH (SHIH T101038) 230/69/13.5KV TRANSFORMER CKT 1
FDNS	06ALL	5	17G	G15_080	FROM->TO	POTTER COUNTY INTERCHANGE (WAUK 90343-A) 345/230/13.2KV TRANSFORMER CKT 1	560	560	0.19653	131.4477	P12:345:SPS:J15.1.XRDS.TOLK
FDNS	06ALL	5	17G	G15_080	FROM->TO	POTTER COUNTY INTERCHANGE (WAUK 90343-A) 345/230/13.2KV TRANSFORMER CKT 1	560	560	0.19653	130.9697	P12:345:SPS:J15.1.XRDS.TOLK
FDNS	06ALL	5	16WP	G15_080	FROM->TO	POTTER COUNTY INTERCHANGE (WAUK 90343-A) 345/230/13.2KV TRANSFORMER CKT 1	560	560	0.20779	123.3278	P12:345:SPS:J15.1.XRDS.TOLK
FDNS	06ALL	5	16WP	G15_080	FROM->TO	POTTER COUNTY INTERCHANGE (WAUK 90343-A) 345/230/13.2KV TRANSFORMER CKT 1	560	560	0.20779	122.0001	P12:345:SPS:J15.1.XRDS.TOLK
FDNS	06ALL	5	17SP	G15_080	FROM->TO	POTTER COUNTY INTERCHANGE (WAUK 90343-A) 345/230/13.2KV TRANSFORMER CKT 1	560	560	0.20175	108.8592	P12:345:SPS:J15.1.XRDS.TOLK
FDNS	06ALL	5	17SP	G15_080	FROM->TO	POTTER COUNTY INTERCHANGE (WAUK 90343-A) 345/230/13.2KV TRANSFORMER CKT 1	560	560	0.20175	107.3735	P12:345:SPS:J15.1.XRDS.TOLK
FDNS	06ALL	5	16WP	G15_080	FROM->TO	TOLK STATION (ABBXNL844501) 345/230/13.2KV TRANSFORMER CKT 1	560	560	0.27761	113.0248	CROSSROADS 7345.00 - TOLK STATION 345KV CKT 1
FDNS	06ALL	5	16WP	G15_080	FROM->TO	TOLK STATION (ABBXNL844501) 345/230/13.2KV TRANSFORMER CKT 1	560	560	0.27761	110.571	CROSSROADS 7345.00 - TOLK STATION 345KV CKT 1
FDNS	06ALL	6	20SP	G15_080	FROM->TO	CHISHOLM6 230.00 - ELK CITY 230KV 230KV CKT 1	353	353	0.05909	102.8848	BASE CASE
FDNS	06ALL	6	17SP	G15_080	FROM->TO	CHISHOLM6 230.00 - ELK CITY 230KV 230KV CKT 1	353	353	0.05962	100.6562	BASE CASE
FDNS	06ALL	6	17G	G15_080	TO->FROM	CIMARRON - MINCO 345KV CKT 1	956	956	0.209	121.6178	G14-057T 345.00 - SUNNYSIDE 345KV CKT 1
FDNS	06ALL	6	20WP	G15_080	TO->FROM	CIMARRON - MINCO 345KV CKT 1	956	956	0.21173	119.7395	G14-057T 345.00 - SUNNYSIDE 345KV CKT 1
FDNS	06ALL	6	17G	G15_080	TO->FROM	CIMARRON - MINCO 345KV CKT 1	956	956	0.209	116.437	G14-057T 345.00 - LAWTON EASTSIDE 345KV CKT 1
FDNS	06ALL	6	20WP	G15_080	TO->FROM	CIMARRON - MINCO 345KV CKT 1	956	956	0.21173	114.5016	G14-057T 345.00 - LAWTON EASTSIDE 345KV CKT 1
FDNS	06ALL	6	17SP	G15_080	TO->FROM	CIMARRON - MINCO 345KV CKT 1	956	956	0.21222	114.4047	G14-057T 345.00 - SUNNYSIDE 345KV CKT 1
FDNS	06ALL	6	16WP	G15_080	TO->FROM	CIMARRON - MINCO 345KV CKT 1	956	956	0.21514	114.352	G14-057T 345.00 - SUNNYSIDE 345KV CKT 1

SOLUTION	GROUP	SCENARIO	SEASON	SOURCE	DIRECTION	MONITORED ELEMENT	RATEA (MVA)	RATEB(MVA)	TDF	TC%LOADING (% MVA)	CONTINGENCY
FDNS	06ALL	6	20SP	G15_080	TO->FROM	CIMARRON - MINCO 345KV CKT 1	956	956	0.21716	111.5632	G14-057T 345.00 - SUNNYSIDE 345KV CKT 1
FDNS	06ALL	6	17SP	G15_080	TO->FROM	CIMARRON - MINCO 345KV CKT 1	956	956	0.21222	109.1774	G14-057T 345.00 - LAWTON EASTSIDE 345KV CKT 1
FDNS	06ALL	6	16WP	G15_080	TO->FROM	CIMARRON - MINCO 345KV CKT 1	956	956	0.21514	108.975	G14-057T 345.00 - LAWTON EASTSIDE 345KV CKT 1
FDNS	06ALL	6	20SP	G15_080	TO->FROM	CIMARRON - MINCO 345KV CKT 1	956	956	0.21716	106.5254	G14-057T 345.00 - LAWTON EASTSIDE 345KV CKT 1
FDNS	06ALL	6	17G	G15_080	TO->FROM	CIMARRON - MINCO 345KV CKT 1	956	956	0.19829	105.9404	CHISHOLM7 345.00 - WOODWARD DISTRICT EHV 345KV CKT 1
FDNS	06ALL	6	20WP	G15_080	TO->FROM	CIMARRON - MINCO 345KV CKT 1	956	956	0.20276	101.5954	CHISHOLM7 345.00 - WOODWARD DISTRICT EHV 345KV CKT 1
FDNS	06ALL	6	20L	G15_080	TO->FROM	G14-057T 345.00 - LAWTON EASTSIDE 345KV CKT 1	717	789	0.09753	102.0743	BASE CASE
FDNS	06ALL	6	20L	G15_080	FROM->TO	G14-057T 345.00 - SUNNYSIDE 345KV CKT 1	717	789	0.09753	115.279	BASE CASE
FDNS	06ALL	6	20WP	G15_080	FROM->TO	G14-057T 345.00 - SUNNYSIDE 345KV CKT 1	717	789	0.11902	103.5944	BASE CASE
FDNS	06ALL	6	17G	G15_080	FROM->TO	G14-057T 345.00 - SUNNYSIDE 345KV CKT 1	717	789	0.11828	103.4014	BASE CASE
FDNS	06ALL	6	16WP	G15_080	FROM->TO	G14-057T 345.00 - SUNNYSIDE 345KV CKT 1	717	789	0.12139	102.0868	BASE CASE
FDNS	00NR	6	25SP	G15_080	FROM->TO	Hitchland Interchange (SIEM 8743067) 345/230/13.2KV TRANSFORMER CKT 2	560	644	0.03132	100.0805	Hitchland Interchange (H TB80155502) 345/230/13.2KV TRANSFORMER CKT 1
FDNS	00NR	6	25SP	G15_080	FROM->TO	Hitchland Interchange (SIEM 8743067) 345/230/13.2KV TRANSFORMER CKT 2	560	644	0.03132	100.0805	Hitchland Interchange (H TB80155502) 345/230/13.2KV TRANSFORMER CKT 1
FDNS	00NR	6	25SP	G15_080	TO->FROM	JONES STATION - TUCO INTERCHANGE 230KV CKT 1	343.79	343.79	0.03484	129.6325	CARLISLE INTERCHANGE - TUCO INTERCHANGE 230KV CKT 1
FDNS	00NR	6	25SP	G15_080	TO->FROM	JONES STATION - TUCO INTERCHANGE 230KV CKT 1	343.79	343.79	0.03484	129.6325	CARLISLE INTERCHANGE - TUCO INTERCHANGE 230KV CKT 1
FDNS	00NR	6	25SP	G15_080	TO->FROM	JONES STATION - TUCO INTERCHANGE 230KV CKT 1	343.79	343.79	0.03771	112.7855	GEN526333 1-JONES GEN #3 21 KV
FDNS	00NR	6	25SP	G15_080	TO->FROM	JONES STATION - TUCO INTERCHANGE 230KV CKT 1	343.79	343.79	0.03771	112.3951	GEN526334 1-JONES_4 116.500
FDNS	00NR	6	25SP	G15_080	TO->FROM	JONES STATION - TUCO INTERCHANGE 230KV CKT 1	343.79	343.79	0.03415	103.4125	CARLISLE INTERCHANGE - WOLFFORTH INTERCHANGE 230KV CKT 1
FDNS	00NR	6	25SP	G15_080	TO->FROM	JONES STATION - TUCO INTERCHANGE 230KV CKT 1	343.79	343.79	0.03192	100.5783	P12:345:SPS:J02.1.TOLK.EDDY
FDNS	00NR	6	25SP	G15_080	TO->FROM	JONES STATION - TUCO INTERCHANGE 230KV CKT 1	343.79	343.79	0.03771	100.5273	GEN526332 1-JONES GEN #2 21 KV
FDNS	00NR	6	25SP	G15_080	TO->FROM	JONES STATION - TUCO INTERCHANGE 230KV CKT 1	343.79	343.79	0.03771	100.5254	GEN526331 1-JONES GEN #1 22 KV
FDNS	00NR	6	25SP	G15_080	TO->FROM	JONES STATION - TUCO INTERCHANGE 230KV CKT 1	343.79	343.79	0.03874	100.5163	TUCO INTERCHANGE (ENRCO 136401) 230/115/13.2KV TRANSFORMER CKT 1
FDNS	00NR	6	25SP	G15_080	TO->FROM	JONES STATION - TUCO INTERCHANGE 230KV CKT 1	343.79	343.79	0.03874	100.5163	TUCO INTERCHANGE (ENRCO 136401) 230/115/13.2KV TRANSFORMER CKT 1
FDNS	00NR	6	25SP	G15_080	TO->FROM	JONES STATION - TUCO INTERCHANGE 230KV CKT 1	343.79	343.79	0.03874	100.5163	TUCO INTERCHANGE (ENRCO 136401) 230/115/13.2KV TRANSFORMER CKT 2
FDNS	00NR	6	25SP	G15_080	TO->FROM	JONES STATION - TUCO INTERCHANGE 230KV CKT 1	343.79	343.79	0.03874	100.5163	TUCO INTERCHANGE (ENRCO 136401) 230/115/13.2KV TRANSFORMER CKT 2
FDNS	00NR	6	25SP	G15_080	TO->FROM	JONES STATION - TUCO INTERCHANGE 230KV CKT 1	343.79	343.79	0.04045	99.6	LUBBOCK EAST INTERCHANGE - TUCO INTERCHANGE 115KV CKT 1
FDNS	00NR	6	25SP	G15_080	TO->FROM	JONES STATION - TUCO INTERCHANGE 230KV CKT 1	343.79	343.79	0.04045	99.6	LUBBOCK EAST INTERCHANGE - TUCO INTERCHANGE 115KV CKT 1
FDNS	00NR	6	25SP	G15_080	FROM->TO	LUBBOCK POWER & LIGHT-HOLLY PLANT (SHIH T101039) 230/69/13.5KV TRANSFORMER CKT 1	224	224	0.03577	104.6926	LUBBOCK POWER & LIGHT-SOUTHEAST - LUBBOCK SOUTH INTERCHANGE 230KV CKT 1
FDNS	00NR	6	25SP	G15_080	FROM->TO	LUBBOCK POWER & LIGHT-HOLLY PLANT (SHIH T101039) 230/69/13.5KV TRANSFORMER CKT 1	224	224	0.03577	104.6924	P12:LPL:SPS:K64.1.LP-SE.LUBBS
FDNS	00NR	6	25SP	G15_080	FROM->TO	LUBBOCK POWER & LIGHT-HOLLY PLANT (SHIH T101039) 230/69/13.5KV TRANSFORMER CKT 1	224	224	0.03377	101.9349	LUBBOCK EAST INTERCHANGE - LUBBOCK POWER & LIGHT-WADSWORTH 230KV CKT 1
FDNS	00NR	6	25SP	G15_080	FROM->TO	LUBBOCK POWER & LIGHT-HOLLY PLANT (SHIH T101039) 230/69/13.5KV TRANSFORMER CKT 1	224	224	0.03377	101.9202	LUBBOCK POWER & LIGHT-WADSWORTH (SHIH T101038) 230/69/13.5KV TRANSFORMER CKT 1
FDNS	00NR	6	25SP	G15_080	FROM->TO	LUBBOCK POWER & LIGHT-HOLLY PLANT (SHIH T101039) 230/69/13.5KV TRANSFORMER CKT 1	224	224	0.03377	101.9202	LUBBOCK POWER & LIGHT-WADSWORTH (SHIH T101038) 230/69/13.5KV TRANSFORMER CKT 1
FDNS	00NR	6	25SP	G15_080	FROM->TO	LUBBOCK POWER & LIGHT-HOLLY PLANT (SHIH T101039) 230/69/13.5KV TRANSFORMER CKT 1	224	224	0.03377	101.9202	P12:230:LPL:K57.1.LP-WADS.LUBBE
FDNS	06ALL	6	16WP	G15_080	FROM->TO	POTTER COUNTY INTERCHANGE (WAUK 90343-A) 345/230/13.2KV TRANSFORMER CKT 1	560	560	0.22195	124.5835	P12:345:SPS:J15.1.XRDS.TOLK
FDNS	06ALL	6	16WP	G15_080	FROM->TO	POTTER COUNTY INTERCHANGE (WAUK 90343-A) 345/230/13.2KV TRANSFORMER CKT 1	560	560	0.22195	123.2053	P12:345:SPS:J15.1.XRDS.TOLK
FDNS	06ALL	6	16WP	G15_080	FROM->TO	POTTER COUNTY INTERCHANGE (WAUK 90343-A) 345/230/13.2KV TRANSFORMER CKT 1	560	560	0.19679	116.5159	POTTER COUNTY INTERCHANGE - TOLK STATION 345KV CKT 1
FDNS	06ALL	6	16WP	G15_080	FROM->TO	POTTER COUNTY INTERCHANGE (WAUK 90343-A) 345/230/13.2KV TRANSFORMER CKT 1	560	560	0.19679	115.3558	POTTER COUNTY INTERCHANGE - TOLK STATION 345KV CKT 1
FDNS	06ALL	6	17SP	G15_080	FROM->TO	POTTER COUNTY INTERCHANGE (WAUK 90343-A) 345/230/13.2KV TRANSFORMER CKT 1	560	560	0.21588	109.9868	P12:345:SPS:J15.1.XRDS.TOLK
FDNS	06ALL	6	17SP	G15_080	FROM->TO	POTTER COUNTY INTERCHANGE (WAUK 90343-A) 345/230/13.2KV TRANSFORMER CKT 1	560	560	0.21588	108.4833	P12:345:SPS:J15.1.XRDS.TOLK
FDNS	06ALL	6	16WP	G15_080	FROM->TO	TOLK STATION (ABBXNL844501) 345/230/13.2KV TRANSFORMER CKT 1	560	560	0.27926	112.8509	CROSSROADS 7345.00 - TOLK STATION 345KV CKT 1
FDNS	06ALL	6	16WP	G15_080	FROM->TO	TOLK STATION (ABBXNL844501) 345/230/13.2KV TRANSFORMER CKT 1	560	560	0.27926	110.425	CROSSROADS 7345.00 - TOLK STATION 345KV CKT 1
FDNS	06ALL	7	20SP	G15_080	FROM->TO	CHISHOLM6 230.00 - ELK CITY 230KV 230KV CKT 1	353	353	0.05909	100.158	BASE CASE
FDNS	06ALL	7	17G	G15_080	TO->FROM	CIMARRON - MINCO 345KV CKT 1	956	956	0.20902	117.9395	G14-057T 345.00 - SUNNYSIDE 345KV CKT 1
FDNS	06ALL	7	20WP	G15_080	TO->FROM	CIMARRON - MINCO 345KV CKT 1	956	956	0.21173	116.4002	G14-057T 345.00 - SUNNYSIDE 345KV CKT 1
FDNS	06ALL	7	17G	G15_080	TO->FROM	CIMARRON - MINCO 345KV CKT 1	956	956	0.20902	112.8925	G14-057T 345.00 - LAWTON EASTSIDE 345KV CKT 1
FDNS	06ALL	7	16WP	G15_080	TO->FROM	CIMARRON - MINCO 345KV CKT 1	956	956	0.21516	111.0593	G14-057T 345.00 - SUNNYSIDE 345KV CKT 1
FDNS	06ALL	7	20WP	G15_080	TO->FROM	CIMARRON - MINCO 345KV CKT 1	956	956	0.21173	111.0342	G14-057T 345.00 - LAWTON EASTSIDE 345KV CKT 1
FDNS	06ALL	7	17SP	G15_080	TO->FROM	CIMARRON - MINCO 345KV CKT 1	956	956	0.21223	111.0288	G14-057T 345.00 - SUNNYSIDE 345KV CKT 1
FDNS	06ALL	7	20SP	G15_080	TO->FROM	CIMARRON - MINCO 345KV CKT 1	956	956	0.21716	108.4281	G14-057T 345.00 - SUNNYSIDE 345KV CKT 1
FDNS	06ALL	7	17SP	G15_080	TO->FROM	CIMARRON - MINCO 345KV CKT 1	956	956	0.21223	106.172	G14-057T 345.00 - LAWTON EASTSIDE 345KV CKT 1
FDNS	06ALL	7	16WP	G15_080	TO->FROM	CIMARRON - MINCO 345KV CKT 1	956	956	0.21516	105.9627	G14-057T 345.00 - LAWTON EASTSIDE 345KV CKT 1
FDNS	06ALL	7	20SP	G15_080	TO->FROM	CIMARRON - MINCO 345KV CKT 1	956	956	0.21716	103.5061	G14-057T 345.00 - LAWTON EASTSIDE 345KV CKT 1
FDNS	06ALL	7	20L	G15_080	TO->FROM	G14-057T 345.00 - LAWTON EASTSIDE 345KV CKT 1	717	789	0.09754	100.7791	BASE CASE
FDNS	06ALL	7	20L	G15_080	FROM->TO	G14-057T 345.00 - SUNNYSIDE 345KV CKT 1	717	789	0.09754	114.0012	BASE CASE
FDNS	06ALL	7	20WP	G15_080	FROM->TO	G14-057T 345.00 - SUNNYSIDE 345KV CKT 1	717	789	0.11902	102.5888	BASE CASE
FDNS	06ALL	7	17G	G15_080	FROM->TO	G14-057T 345.00 - SUNNYSIDE 345KV CKT 1	717	789	0.11829	102.2119	BASE CASE
FDNS	06ALL	7	16WP	G15_080	FROM->TO	G14-057T 345.00 - SUNNYSIDE 345KV CKT 1	717	789	0.1214	101.1576	BASE CASE
FDNS	00NR	7	25SP	G15_080	TO->FROM	JONES STATION - TUCO INTERCHANGE 230KV CKT 1	343.79	343.79	0.03484	129.1537	CARLISLE INTERCHANGE - TUCO INTERCHANGE 230KV CKT 1
FDNS	00NR	7	25SP	G15_080	TO->FROM	JONES STATION - TUCO INTERCHANGE 230KV CKT 1	343.79	343.79	0.03484	129.1537	CARLISLE INTERCHANGE - TUCO INTERCHANGE 230KV CKT 1
FDNS	00NR	7	25SP	G15_080	TO->FROM	JONES STATION - TUCO INTERCHANGE 230KV CKT 1	343.79	343.79	0.03771	112.419	GEN526333 1-JONES GEN #3 21 KV
FDNS	00NR	7	25SP	G15_080	TO->FROM	JONES STATION - TUCO INTERCHANGE 230KV CKT 1	343.79	343.79	0.03771	112.036	GEN526334 1-JONES_4 116.500
FDNS	00NR	7	25SP	G15_080	TO->FROM	JONES STATION - TUCO INTERCHANGE 230KV CKT 1	343.79	343.79	0.03415	103.0013	CARLISLE INTERCHANGE - WOLFFORTH INTERCHANGE 230KV CKT 1
FDNS	00NR	7	25SP	G15_080	TO->FROM	JONES STATION - TUCO INTERCHANGE 230KV CKT 1	343.79	343.79	0.03192	100.2536	P12:345:SPS:J02.1.TOLK.EDDY
FDNS	00NR	7	25SP	G15_080	TO->FROM	JONES STATION - TUCO INTERCHANGE 230KV CKT 1	343.79	343.79	0.03771	100.1954	GEN526332 1-JONES GEN #2 21 KV
FDNS	00NR	7	25SP	G15_080	TO->FROM	JONES STATION - TUCO INTERCHANGE 230KV CKT 1	343.79	343.79	0.03771	100.1934	GEN526331 1-JONES GEN #1 22 KV
FDNS	00NR	7	25SP	G15_080	TO->FROM	JONES STATION - TUCO INTERCHANGE 230KV CKT 1	343.79	343.79	0.03874	100.1486	TUCO INTERCHANGE (ENRCO 136401) 230/115/13.2KV TRANSFORMER CKT 1
FDNS	00NR	7	25SP	G15_080	TO->FROM	JONES STATION - TUCO INTERCHANGE 230KV CKT 1	343.79	343.79	0.03874	100.1486	TUCO INTERCHANGE (ENRCO 136401) 230/115/13.2KV TRANSFORMER CKT 1
FDNS	00NR	7	25SP	G15_080	TO->FROM	JONES STATION - TUCO INTERCHANGE 230KV CKT 1	343.79	343.79	0.03874	100.1486	TUCO INTERCHANGE (ENRCO 136401) 230/115/13.2KV TRANSFORMER CKT 2
FDNS	00NR	7	25SP	G15_080	TO->FROM	JONES STATION - TUCO INTERCHANGE 230KV CKT 1	343.79	343.79	0.03874	100.1486	TUCO INTERCHANGE (ENRCO 136401) 230/115/13.2KV TRANSFORMER CKT 2
FDNS	00NR	7	25SP	G15_080	FROM->TO	LUBBOCK POWER & LIGHT-HOLLY PLANT (SHIH T101039) 230/69/13.5KV TRANSFORMER CKT 1	224	224	0.03577	104.7009	LUBBOCK POWER & LIGHT-SOUTHEAST - LUBBOCK SOUTH INTERCHANGE 230KV CKT 1
FDNS	00NR	7	25SP	G15_080	FROM->TO	LUBBOCK POWER & LIGHT-HOLLY PLANT (SHIH T101039) 230/69/13.5KV TRANSFORMER CKT 1	224	224	0.03577	104.6879	P12:LPL:SPS:K64.1.LP-SE.LUBBS
FDNS	00NR	7	25SP	G15_080	FROM->TO	LUBBOCK POWER & LIGHT-HOLLY PLANT (SHIH T101039) 230/69/13.5KV TRANSFORMER CKT 1	224	224	0.03377	101.9255	LUBBOCK EAST INTERCHANGE - LUBBOCK POWER & LIGHT-WADSWORTH 230KV CKT 1
FDNS	00NR	7	25SP	G15_080	FROM->TO	LUBBOCK POWER & LIGHT-HOLLY PLANT (SHIH T101039) 230/69/13.5KV TRANSFORMER CKT 1	224	224	0.03377	101.9108	P12:230:LPL:K57.1.LP-WADS.LUBBE
FDNS	00NR	7	25SP	G15_080	FROM->TO	LUBBOCK POWER & LIGHT-HOLLY PLANT (SHIH T101039) 230/69/13.5KV TRANSFORMER CKT 1	224	224	0.03377	101.9107	LUBBOCK POWER & LIGHT-WADSWORTH (SHIH T101038) 230/69/13.5KV TRANSFORMER CKT 1
FDNS	00NR	7	25SP	G15_080	FROM->TO	LUBBOCK POWER & LIGHT-HOLLY PLANT (SHIH T101039) 230/69/13.5KV TRANSFORMER CKT 1	224	224	0.03377	101.9107	LUBBOCK POWER & LIGHT-WADSWORTH (SHIH T101038) 230/69/13.5KV TRANSFORMER CKT 1
FDNS	06ALL	7	16WP	G15_080	FROM->TO	POTTER COUNTY INTERCHANGE (WAUK 90343-A) 345/230/13.2KV TRANSFORMER CKT 1	560	560	0.22197	133.795	P12:345:SPS:J15.1.XRDS.TOLK
FDNS	06ALL	7	16WP	G15_080	FROM->TO	POTTER COUNTY INTERCHANGE (WAUK 90343-A) 345/230/13.2KV TRANSFORMER CKT 1	560	560	0.22197	130.8152	P12:345:SPS:J15.1.XRDS.TOLK
FDNS	06ALL	7	16WP	G15_080	FROM->TO	POTTER COUNTY INTERCHANGE (WAUK 90343-A) 345/230/13.2KV TRANSFORMER CKT 1	560	560	0.19681	125.2874	POTTER COUNTY INTERCHANGE - TOLK STATION 345KV CKT 1
FDNS	06ALL	7	16WP	G15_080	FROM->TO	POTTER COUNTY INTERCHANGE (WAUK 90343-A) 345/230/13.2KV TRANSFORMER CKT 1	560	560	0.19681	122.7478	POTTER COUNTY INTERCHANGE - TOLK STATION 345KV CKT 1

SOLUTION	GROUP	SCENARIO	SEASON	SOURCE	DIRECTION	MONITORED ELEMENT	RATEA (MVA)	RATEB(MVA)	TDF	TC%LOADING (% MVA)	CONTINGENCY
FDNS	06ALL	7	17SP	G15_080	FROM->TO	POTTER COUNTY INTERCHANGE (WAUK 90343-A) 345/230/13.2KV TRANSFORMER CKT 1	560	560	0.21589	118.7065	P12:345:SPS:J15.1.XRDS.TOLK
FDNS	06ALL	7	17SP	G15_080	FROM->TO	POTTER COUNTY INTERCHANGE (WAUK 90343-A) 345/230/13.2KV TRANSFORMER CKT 1	560	560	0.21589	115.9022	P12:345:SPS:J15.1.XRDS.TOLK
FDNS	00NR	7	25SP	G15_080	FROM->TO	POTTER COUNTY INTERCHANGE (WAUK 90343-A) 345/230/13.2KV TRANSFORMER CKT 1	560	560	0.03735	100.2945	P12:345:SPS:J15.1.XRDS.TOLK
FDNS	00NR	7	25SP	G15_080	FROM->TO	POTTER COUNTY INTERCHANGE (WAUK 90343-A) 345/230/13.2KV TRANSFORMER CKT 1	560	560	0.03735	100.0757	P12:345:SPS:J15.1.XRDS.TOLK
FDNS	06ALL	7	16WP	G15_080	FROM->TO	TOLK STATION (ABBXNL844501) 345/230/13.2KV TRANSFORMER CKT 1	560	560	0.27929	112.9883	CROSSROADS 7345.00 - TOLK STATION 345KV CKT 1
FDNS	06ALL	7	16WP	G15_080	FROM->TO	TOLK STATION (ABBXNL844501) 345/230/13.2KV TRANSFORMER CKT 1	560	560	0.27929	110.8952	CROSSROADS 7345.00 - TOLK STATION 345KV CKT 1
FDNS	00NR	8	25SP	G15_080	TO->FROM	JONES STATION - TUCO INTERCHANGE 230KV CKT 1	343.79	343.79	0.03399	128.3131	CARLISLE INTERCHANGE - TUCO INTERCHANGE 230KV CKT 1
FDNS	00NR	8	25SP	G15_080	TO->FROM	JONES STATION - TUCO INTERCHANGE 230KV CKT 1	343.79	343.79	0.03399	128.3131	CARLISLE INTERCHANGE - TUCO INTERCHANGE 230KV CKT 1
FDNS	00NR	8	25SP	G15_080	TO->FROM	JONES STATION - TUCO INTERCHANGE 230KV CKT 1	343.79	343.79	0.03711	111.8492	GEN526333 1-JONES GEN #3 21 KV
FDNS	00NR	8	25SP	G15_080	TO->FROM	JONES STATION - TUCO INTERCHANGE 230KV CKT 1	343.79	343.79	0.03711	111.4668	GEN526334 1-JONES_4 116.500
FDNS	00NR	8	25SP	G15_080	TO->FROM	JONES STATION - TUCO INTERCHANGE 230KV CKT 1	343.79	343.79	0.03341	102.3279	CARLISLE INTERCHANGE - WOLFFORTH INTERCHANGE 230KV CKT 1
FDNS	00NR	8	25SP	G15_080	TO->FROM	JONES STATION - TUCO INTERCHANGE 230KV CKT 1	343.79	343.79	0.03175	99.7	P12:345:SPS:J02.1.TOLK.EDDY
FDNS	00NR	8	25SP	G15_080	TO->FROM	JONES STATION - TUCO INTERCHANGE 230KV CKT 1	343.79	343.79	0.03805	99.5	TUCO INTERCHANGE (ENRCO 136401) 230/115/13.2KV TRANSFORMER CKT 1
FDNS	00NR	8	25SP	G15_080	TO->FROM	JONES STATION - TUCO INTERCHANGE 230KV CKT 1	343.79	343.79	0.03805	99.5	TUCO INTERCHANGE (ENRCO 136401) 230/115/13.2KV TRANSFORMER CKT 1
FDNS	00NR	8	25SP	G15_080	TO->FROM	JONES STATION - TUCO INTERCHANGE 230KV CKT 1	343.79	343.79	0.03805	99.5	TUCO INTERCHANGE (ENRCO 136401) 230/115/13.2KV TRANSFORMER CKT 2
FDNS	00NR	8	25SP	G15_080	TO->FROM	JONES STATION - TUCO INTERCHANGE 230KV CKT 1	343.79	343.79	0.03805	99.5	TUCO INTERCHANGE (ENRCO 136401) 230/115/13.2KV TRANSFORMER CKT 2
FDNS	00NR	8	25SP	G15_080	TO->FROM	JONES STATION - TUCO INTERCHANGE 230KV CKT 1	343.79	343.79	0.03711	99.5	GEN526331 1-JONES GEN #1 22 KV
FDNS	00NR	8	25SP	G15_080	TO->FROM	JONES STATION - TUCO INTERCHANGE 230KV CKT 1	343.79	343.79	0.03711	99.5	GEN526332 1-JONES GEN #2 21 KV
FDNS	00NR	8	25SP	G15_080	FROM->TO	LUBBOCK POWER & LIGHT-HOLLY PLANT (SHIH T101039) 230/69/13.5KV TRANSFORMER CKT 1	224	224	0.03577	104.7109	LUBBOCK POWER & LIGHT-SOUTHEAST - LUBBOCK SOUTH INTERCHANGE 230KV CKT 1
FDNS	00NR	8	25SP	G15_080	FROM->TO	LUBBOCK POWER & LIGHT-HOLLY PLANT (SHIH T101039) 230/69/13.5KV TRANSFORMER CKT 1	224	224	0.03577	104.6979	P12:LPL:SPS:K64.1.LP-SE.LUBBS
FDNS	00NR	8	25SP	G15_080	FROM->TO	LUBBOCK POWER & LIGHT-HOLLY PLANT (SHIH T101039) 230/69/13.5KV TRANSFORMER CKT 1	224	224	0.03376	101.953	LUBBOCK EAST INTERCHANGE - LUBBOCK POWER & LIGHT-WADSWORTH 230KV CKT 1
FDNS	00NR	8	25SP	G15_080	FROM->TO	LUBBOCK POWER & LIGHT-HOLLY PLANT (SHIH T101039) 230/69/13.5KV TRANSFORMER CKT 1	224	224	0.03376	101.9381	P12:230:LPL:K57.1.LP-WADS.LUBBE
FDNS	00NR	8	25SP	G15_080	FROM->TO	LUBBOCK POWER & LIGHT-HOLLY PLANT (SHIH T101039) 230/69/13.5KV TRANSFORMER CKT 1	224	224	0.03376	101.938	LUBBOCK POWER & LIGHT-WADSWORTH (SHIH T101038) 230/69/13.5KV TRANSFORMER CKT 1
FDNS	00NR	8	25SP	G15_080	FROM->TO	LUBBOCK POWER & LIGHT-HOLLY PLANT (SHIH T101039) 230/69/13.5KV TRANSFORMER CKT 1	224	224	0.03376	101.938	LUBBOCK POWER & LIGHT-WADSWORTH (SHIH T101038) 230/69/13.5KV TRANSFORMER CKT 1
FDNS	00NR	9	25SP	G15_080	FROM->TO	LUBBOCK POWER & LIGHT-HOLLY PLANT (SHIH T101039) 230/69/13.5KV TRANSFORMER CKT 1	224	224	0.03576	104.6637	LUBBOCK POWER & LIGHT-SOUTHEAST - LUBBOCK SOUTH INTERCHANGE 230KV CKT 1
FDNS	00NR	9	25SP	G15_080	FROM->TO	LUBBOCK POWER & LIGHT-HOLLY PLANT (SHIH T101039) 230/69/13.5KV TRANSFORMER CKT 1	224	224	0.03576	104.6507	P12:LPL:SPS:K64.1.LP-SE.LUBBS
FDNS	00NR	9	25SP	G15_080	FROM->TO	LUBBOCK POWER & LIGHT-HOLLY PLANT (SHIH T101039) 230/69/13.5KV TRANSFORMER CKT 1	224	224	0.03377	101.7729	LUBBOCK EAST INTERCHANGE - LUBBOCK POWER & LIGHT-WADSWORTH 230KV CKT 1
FDNS	00NR	9	25SP	G15_080	FROM->TO	LUBBOCK POWER & LIGHT-HOLLY PLANT (SHIH T101039) 230/69/13.5KV TRANSFORMER CKT 1	224	224	0.03377	101.758	P12:230:LPL:K57.1.LP-WADS.LUBBE
FDNS	00NR	9	25SP	G15_080	FROM->TO	LUBBOCK POWER & LIGHT-HOLLY PLANT (SHIH T101039) 230/69/13.5KV TRANSFORMER CKT 1	224	224	0.03377	101.7579	LUBBOCK POWER & LIGHT-WADSWORTH (SHIH T101038) 230/69/13.5KV TRANSFORMER CKT 1
FDNS	00NR	9	25SP	G15_080	FROM->TO	LUBBOCK POWER & LIGHT-HOLLY PLANT (SHIH T101039) 230/69/13.5KV TRANSFORMER CKT 1	224	224	0.03377	101.7579	LUBBOCK POWER & LIGHT-WADSWORTH (SHIH T101038) 230/69/13.5KV TRANSFORMER CKT 1
FDNS	00NR	9	25SP	G15_080	FROM->TO	MUSTANG STATION (ENRCO 136161) 230/115/13.2KV TRANSFORMER CKT 1	250	288	0.03082	103.5181	MUSTANG STATION - SEMINOLE 230KV CKT 1
FDNS	00NR	9	25SP	G15_080	FROM->TO	MUSTANG STATION (ENRCO 136161) 230/115/13.2KV TRANSFORMER CKT 1	250	288	0.03082	103.5181	MUSTANG STATION - SEMINOLE 230KV CKT 1
FDNS	00NR	9	25SP	G15_080	FROM->TO	MUSTANG STATION (ENRCO 136161) 230/115/13.2KV TRANSFORMER CKT 1	250	288	0.03082	103.3971	MUSTANG STATION - SEMINOLE 230KV CKT 1
FDNS	00NR	9	25SP	G15_080	FROM->TO	MUSTANG STATION (ENRCO 136161) 230/115/13.2KV TRANSFORMER CKT 1	250	288	0.03082	103.3971	MUSTANG STATION - SEMINOLE 230KV CKT 1
FDNSLock-Blown up	01ALL	0	16WP	G15_081		Non-Converged Contingency	1195	1195	0.40846	-	MATHWSN7 345.00 - TATONGA7 345.00 345KV CKT 1
FDNSLock-Blown up	01NR	0	17G	G15_081		Non-Converged Contingency	1195	1195	0.46822	-	MATHWSN7 345.00 - TATONGA7 345.00 345KV CKT 1
FDNSLock-Blown up	01ALL	0	20L	G15_081		Non-Converged Contingency	1195	1195	0.41497	-	MATHWSN7 345.00 - TATONGA7 345.00 345KV CKT 1
FDNSLock-Blown up	01ALL	0	20WP	G15_081		Non-Converged Contingency	1195	1195	0.40302	-	MATHWSN7 345.00 - TATONGA7 345.00 345KV CKT 1
FDNSLock-Blown up	01ALL	0	25SP	G15_081		Non-Converged Contingency	1792	1972	0.04658	-	BORDER 7345.00 - TUCO_2 345.00 345KV CKT 1
FDNS	00NR	0	20WP	G15_081	TO->FROM	CHISHOLM6 230.00 - SWEETWATER 230KV CKT 1	421	439	0.04825	106.0142	G14-074T 345.00 - OKLAUNION 345KV CKT 1
FDNS	00NR	0	20WP	G15_081	TO->FROM	CHISHOLM6 230.00 - SWEETWATER 230KV CKT 1	421	439	0.07252	100.3638	MATHWSN7 345.00 - TATONGA7 345.00 345KV CKT 1
FDNS	00NR	0	16WP	G15_081	FROM->TO	CIMARRON - DRAPER LAKE 345KV CKT 1	717	717	0.15524	132.6508	G14-057T 345.00 - SUNNYSIDE 345KV CKT 1
FDNS	00NR	0	16WP	G15_081	FROM->TO	CIMARRON - DRAPER LAKE 345KV CKT 1	717	717	0.15524	122.0003	G14-057T 345.00 - LAWTON EASTSIDE 345KV CKT 1
FDNS	00NR	0	16WP	G15_081	FROM->TO	CIMARRON - DRAPER LAKE 345KV CKT 1	717	717	0.14799	116.5817	ARCADIA - SEMINOLE 345KV CKT 1
FDNS	00NR	0	16WP	G15_081	FROM->TO	CIMARRON - DRAPER LAKE 345KV CKT 1	717	717	0.14527	115.588	CLEVELAND - G15066_T 345.00 345KV CKT 1
FDNS	00NR	0	16WP	G15_081	FROM->TO	CIMARRON - DRAPER LAKE 345KV CKT 1	717	717	0.19185	115.2993	ARCADIA - NORTHWEST 345KV CKT 1
FDNS	00NR	0	16WP	G15_081	FROM->TO	CIMARRON - DRAPER LAKE 345KV CKT 1	717	717	0.14527	114.8063	G15066_T 345.00 - SOONER 345KV CKT 1
FDNS	00NR	0	16WP	G15_081	FROM->TO	CIMARRON - DRAPER LAKE 345KV CKT 1	717	717	0.14361	110.2756	CLEVELAND - TULSA NORTH 345KV CKT 1
FDNS	00NR	0	16WP	G15_081	FROM->TO	CIMARRON - DRAPER LAKE 345KV CKT 1	717	717	0.14361	110.2756	CLEVELAND - TULSA NORTH 345KV CKT 1
FDNS	00NR	0	16WP	G15_081	FROM->TO	CIMARRON - DRAPER LAKE 345KV CKT 1	717	717	0.15637	110.1142	MATHWSN7 345.00 - NORTHWEST 345KV CKT 1
FDNS	00NR	0	16WP	G15_081	FROM->TO	CIMARRON - DRAPER LAKE 345KV CKT 1	717	717	0.14446	109.2409	CIMARRON - SARA 138KV CKT 1
FDNS	00NR	0	16WP	G15_081	FROM->TO	CIMARRON - DRAPER LAKE 345KV CKT 1	717	717	0.14411	108.713	P12:138:WFEC:MSL03
FDNS	00NR	0	16WP	G15_081	FROM->TO	CIMARRON - DRAPER LAKE 345KV CKT 1	717	717	0.1427	108.0689	CIMARRON (CIMARON2) 345/138/13.8KV TRANSFORMER CKT 1
FDNS	00NR	0	16WP	G15_081	FROM->TO	CIMARRON - DRAPER LAKE 345KV CKT 1	717	717	0.14446	107.9446	SARA - STHLAKE4 138.00 138KV CKT 1
FDNS	00NR	0	16WP	G15_081	FROM->TO	CIMARRON - DRAPER LAKE 345KV CKT 1	717	717	0.14262	107.899	CIMARRON (CIMARON1) 345/138/13.8KV TRANSFORMER CKT 1
FDNS	00NR	0	16WP	G15_081	FROM->TO	CIMARRON - DRAPER LAKE 345KV CKT 1	717	717	0.14446	107.745	MCCLAIN - STHLAKE4 138.00 138KV CKT 1
FDNS	00NR	0	16WP	G15_081	FROM->TO	CIMARRON - DRAPER LAKE 345KV CKT 1	717	717	0.1432	107.4685	CIMARRON - CZECH HALL 138KV CKT 1
FDNS	00NR	0	16WP	G15_081	FROM->TO	CIMARRON - DRAPER LAKE 345KV CKT 1	717	717	0.1432	107.112	CZECH HALL - XEROX 138KV CKT 1
FDNS	00NR	0	16WP	G15_081	FROM->TO	CIMARRON - DRAPER LAKE 345KV CKT 1	717	717	0.1432	107.0924	MORGAN - XEROX 138KV CKT 1
FDNS	00NR	0	16WP	G15_081	FROM->TO	CIMARRON - DRAPER LAKE 345KV CKT 1	717	717	0.14196	106.9919	ANADARKO - POCASSETT 138KV CKT 1
FDNS	00NR	0	16WP	G15_081	FROM->TO	CIMARRON - DRAPER LAKE 345KV CKT 1	717	717	0.1432	106.9752	MORGAN - MUSTANG 138KV CKT 1
FDNS	00NR	0	16WP	G15_081	FROM->TO	CIMARRON - DRAPER LAKE 345KV CKT 1	717	717	0.14196	106.7926	POCASSETT - TUTTLE 138KV CKT 1
FDNS	00NR	0	16WP	G15_081	FROM->TO	CIMARRON - DRAPER LAKE 345KV CKT 1	717	717	0.14061	106.703	GEN515040 1-SEMINOLE 1G
FDNS	00NR	0	16WP	G15_081	FROM->TO	CIMARRON - DRAPER LAKE 345KV CKT 1	717	717	0.14117	106.6763	LACYGNE - WAVERLY7 345.00 345KV CKT 1
FDNS	00NR	0	16WP	G15_081	FROM->TO	CIMARRON - DRAPER LAKE 345KV CKT 1	717	717	0.1438	106.5853	JOHNSON COUNTY - SUNNYSIDE 345KV CKT 1
FDNS	00NR	0	16WP	G15_081	FROM->TO	CIMARRON - DRAPER LAKE 345KV CKT 1	717	717	0.14117	106.4587	WAVERLY7 345.00 - WOLF CREEK 345KV CKT 1
FDNSLock	00NR	0	16WP	G15_081	FROM->TO	CIMARRON - DRAPER LAKE 345KV CKT 1	717	717	0.14061	106.456	GEN509403 1-PIRKEY GENERATION
FDNS	00NR	0	16WP	G15_081	FROM->TO	CIMARRON - DRAPER LAKE 345KV CKT 1	717	717	0.14202	106.4058	CORN TAP - NAPLESTP 138.00 138KV CKT 1
FDNS	00NR	0	16WP	G15_081	FROM->TO	CIMARRON - DRAPER LAKE 345KV CKT 1	717	717	0.14061	106.3792	GEN509416 1-TURK GENERATION
FDNS	00NR	0	16WP	G15_081	FROM->TO	CIMARRON - DRAPER LAKE 345KV CKT 1	717	717	0.14061	106.3605	GEN501801 1-DOLET HILLS UNIT1
FDNS	00NR	0	16WP	G15_081	FROM->TO	CIMARRON - DRAPER LAKE 345KV CKT 1	717	717	0.14202	106.3121	NAPLESTP 138.00 - PAYNE 138.00 138KV CKT 1
FDNS	00NR	0	16WP	G15_081	FROM->TO	CIMARRON - DRAPER LAKE 345KV CKT 1	717	717	0.14196	106.2787	BRIDGECR 138.00 - TUTTLE 138KV CKT 1
FDNS	00NR	0	16WP	G15_081	FROM->TO	CIMARRON - DRAPER LAKE 345KV CKT 1	717	717	0.1426	106.2342	CANEYRV7 345.00 - NEOSHO 345KV CKT 1
FDNS	00NR	0	17SP	G15_081	FROM->TO	CIMARRON - DRAPER LAKE 345KV CKT 1	717	717	0.14426	106.1697	G14-057T 345.00 - SUNNYSIDE 345KV CKT 1
FDNSLock	00NR	0	16WP	G15_081	FROM->TO	CIMARRON - DRAPER LAKE 345KV CKT 1	717	717	0.14061	106.0246	GEN336821 1-GRAND GULF UNIT
FDNS	00NR	0	16WP	G15_081	FROM->TO	CIMARRON - DRAPER LAKE 345KV CKT 1	717	717	0.14061	105.9922	GEN515042 1-SEMINOLE 3G
FDNS	00NR	0	16WP	G15_081	FROM->TO	CIMARRON - DRAPER LAKE 345KV CKT 1	717	717	0.1426	105.9562	CANEYRV7 345.00 - LATHAMS7 345.00 345KV CKT 1
FDNS	00NR	0	16WP	G15_081	FROM->TO	CIMARRON - DRAPER LAKE 345KV CKT 1	717	717	0.14196	105.9048	BRIDGECR 138.00 - SUNSHINE CANYON 138KV CKT 1
FDNS	00NR	0	16WP	G15_081	FROM->TO	CIMARRON - DRAPER LAKE 345KV CKT 1	717	717	0.14196	105.894	P12:138:WFEC:MSL01

SOLUTION	GROUP	SCENARIO	SEASON	SOURCE	DIRECTION	MONITORED ELEMENT	RATEA (MVA)	RATEB(MVA)	TDF	TC%LOADING (% MVA)	CONTINGENCY
FDNS	00NR	0	16WP	G15_081	FROM->TO	CIMARRON - DRAPER LAKE 345KV CKT 1	717	717	0.14061	105.7583	GEN515041 1-SEMINOLE 2G
FDNSLock	00NR	0	16WP	G15_081	FROM->TO	CIMARRON - DRAPER LAKE 345KV CKT 1	717	717	0.14061	105.7266	GEN336153 1-WATERFORD UNIT#3
FDNS	00NR	0	16WP	G15_081	FROM->TO	CIMARRON - DRAPER LAKE 345KV CKT 1	717	717	0.14688	105.5516	CIMARRON - NORTHWEST 345KV CKT 1
FDNS	00NR	0	16WP	G15_081	FROM->TO	CIMARRON - DRAPER LAKE 345KV CKT 1	717	717	0.14061	105.5263	GEN509406 1-WELSH #3
FDNS	00NR	0	16WP	G15_081	FROM->TO	CIMARRON - DRAPER LAKE 345KV CKT 1	717	717	0.14061	105.5261	GEN509404 1-WELSH #1
FDNS	00NR	0	16WP	G15_081	FROM->TO	CIMARRON - DRAPER LAKE 345KV CKT 1	717	717	0.1426	105.5155	LATHAMS7 345.00 - ROSE HILL 345KV CKT 1
FDNSLock	00NR	0	16WP	G15_081	FROM->TO	CIMARRON - DRAPER LAKE 345KV CKT 1	717	717	0.14061	105.4219	GEN335831 1-RIVERBEND UNIT#1
FDNSLock	00NR	0	16WP	G15_081	FROM->TO	CIMARRON - DRAPER LAKE 345KV CKT 1	717	717	0.14061	105.406	GEN337911 1-ARKANSAS NUCLEAR ONE UNIT #2
FDNS	00NR	0	16WP	G15_081	FROM->TO	CIMARRON - DRAPER LAKE 345KV CKT 1	717	717	0.14105	105.1336	HUGO - SUNNYSIDE 345KV CKT 1
FDNS	00NR	0	16WP	G15_081	FROM->TO	CIMARRON - DRAPER LAKE 345KV CKT 1	717	717	0.13788	105.1183	CANADIAN RIVER - MUSKOGEE 345KV CKT 1
FDNS	00NR	0	16WP	G15_081	FROM->TO	CIMARRON - DRAPER LAKE 345KV CKT 1	717	717	0.14095	105.0337	P12:138:OKGE:3TERM14
FDNS	00NR	0	16WP	G15_081	FROM->TO	CIMARRON - DRAPER LAKE 345KV CKT 1	717	717	0.14061	105.0296	GRAND GULF 500/22.0KV TRANSFORMER CKT 1
FDNS	00NR	0	16WP	G15_081	FROM->TO	CIMARRON - DRAPER LAKE 345KV CKT 1	717	717	0.14061	105.0273	GEN337910 1-ARKANSAS NUCLEAR ONE UNIT #1
FDNS	00NR	0	16WP	G15_081	FROM->TO	CIMARRON - DRAPER LAKE 345KV CKT 1	717	717	0.14357	105.0144	JOHNSON COUNTY - PITTSBURG 345KV CKT 1
FDNS	00NR	0	16WP	G15_081	FROM->TO	CIMARRON - DRAPER LAKE 345KV CKT 1	717	717	0.14357	105.0144	JOHNSON COUNTY - PITTSBURG 345KV CKT 1
FDNS	00NR	0	16WP	G15_081	FROM->TO	CIMARRON - DRAPER LAKE 345KV CKT 1	717	717	0.14175	104.9951	HORSESHOE LAKE - JONES TAP 138KV CKT 1
FDNS	00NR	0	16WP	G15_081	FROM->TO	CIMARRON - DRAPER LAKE 345KV CKT 1	717	717	0.14073	104.9687	MORISNT4 138.00 - STILLWATER 138KV CKT 1
FDNS	00NR	0	16WP	G15_081	FROM->TO	CIMARRON - DRAPER LAKE 345KV CKT 1	717	717	0.14074	104.9641	P12:138:OKGE:3TERM2
FDNS	00NR	0	16WP	G15_081	FROM->TO	CIMARRON - DRAPER LAKE 345KV CKT 1	717	717	0.14071	104.9439	REDBUD - RIVERSIDE STATION 345KV CKT 1
FDNS	00NR	0	16WP	G15_081	FROM->TO	CIMARRON - DRAPER LAKE 345KV CKT 1	717	717	0.14071	104.9439	REDBUD - RIVERSIDE STATION 345KV CKT 1
FDNS	00NR	0	16WP	G15_081	FROM->TO	CIMARRON - DRAPER LAKE 345KV CKT 1	717	717	0.14061	104.8928	GEN515226 1-MUSKOGEE 6G
FDNS	00NR	0	16WP	G15_081	FROM->TO	CIMARRON - DRAPER LAKE 345KV CKT 1	717	717	0.14061	104.879	GEN501813 1-RODEMACHER UNIT 3
FDNS	00NR	0	16WP	G15_081	FROM->TO	CIMARRON - DRAPER LAKE 345KV CKT 1	717	717	0.14283	104.8291	BAILEY4 138.00 - SUNSHINE CANYON 138KV CKT 1
FDNS	00NR	0	16WP	G15_081	FROM->TO	CIMARRON - DRAPER LAKE 345KV CKT 1	717	717	0.14134	104.7782	NORTHWEST (NORTWST2) 345/138/13.8KV TRANSFORMER CKT 1
FDNS	00NR	0	16WP	G15_081	FROM->TO	CIMARRON - DRAPER LAKE 345KV CKT 1	717	717	0.14066	104.7766	7SAREPTA% 345.00 - LONGWOOD 345KV CKT 1
FDNS	00NR	0	16WP	G15_081	FROM->TO	CIMARRON - DRAPER LAKE 345KV CKT 1	717	717	0.14066	104.7766	7SAREPTA% 345.00 - LONGWOOD 345KV CKT 1
FDNS	00NR	0	16WP	G15_081	FROM->TO	CIMARRON - DRAPER LAKE 345KV CKT 1	717	717	0.1402	104.7749	ARCADIA - KAMO MEMORIAL 138KV CKT 1
FDNS	00NR	0	16WP	G15_081	FROM->TO	CIMARRON - DRAPER LAKE 345KV CKT 1	717	717	0.14068	104.7555	P12:138:OKGE:3TERM12
FDNS	00NR	0	16WP	G15_081	FROM->TO	CIMARRON - DRAPER LAKE 345KV CKT 1	717	717	0.14065	104.7399	DOLET HILLS - SOUTHWEST SHREVEPORT 345KV CKT 1
FDNS	00NR	0	16WP	G15_081	FROM->TO	CIMARRON - DRAPER LAKE 345KV CKT 1	717	717	0.14065	104.7399	DOLET HILLS - SOUTHWEST SHREVEPORT 345KV CKT 1
FDNS	00NR	0	16WP	G15_081	FROM->TO	CIMARRON - DRAPER LAKE 345KV CKT 1	717	717	0.14061	104.6942	GEN515225 1-MUSKOGEE 5G
FDNS	00NR	0	16WP	G15_081	FROM->TO	CIMARRON - DRAPER LAKE 345KV CKT 1	717	717	0.14061	104.694	GEN515223 1-MUSKOGEE 4G
FDNS	00NR	0	16WP	G15_081	FROM->TO	CIMARRON - DRAPER LAKE 345KV CKT 1	717	717	0.14061	104.6904	GEN335206 1-NELSON UNIT 6
FDNS	00NR	0	16WP	G15_081	FROM->TO	CIMARRON - DRAPER LAKE 345KV CKT 1	717	717	0.14168	104.68	MEMORIAL - SKYLINE 138KV CKT 1
FDNS	00NR	0	16WP	G15_081	FROM->TO	CIMARRON - DRAPER LAKE 345KV CKT 1	717	717	0.1415	104.583	GRACEMONT (BANK 1) 345/138/13.8KV TRANSFORMER CKT 1
FDNS	00NR	0	16WP	G15_081	FROM->TO	CIMARRON - DRAPER LAKE 345KV CKT 1	717	717	0.14195	104.5721	QUAIL CREEK - SKYLINE 138KV CKT 1
FDNS	00NR	0	16WP	G15_081	FROM->TO	CIMARRON - DRAPER LAKE 345KV CKT 1	717	717	0.14061	104.5492	GEN509409 1-WILKES #3
FDNS	00NR	0	16WP	G15_081	FROM->TO	CIMARRON - DRAPER LAKE 345KV CKT 1	717	717	0.14061	104.5474	GEN337653 1-WHITE BLUFF UNIT #2
FDNS	00NR	0	16WP	G15_081	FROM->TO	CIMARRON - DRAPER LAKE 345KV CKT 1	717	717	0.142	104.5355	P12:138:OKGE:3TERM18
FDNS	00NR	0	16WP	G15_081	FROM->TO	CIMARRON - DRAPER LAKE 345KV CKT 1	717	717	0.14283	104.5271	BAILEY4 138.00 - WESTMOORE 138KV CKT 1
FDNS	00NR	0	16WP	G15_081	FROM->TO	CIMARRON - DRAPER LAKE 345KV CKT 1	717	717	0.14061	104.519	GEN501812 1-RODEMACHER UNIT 2
FDNS	00NR	0	16WP	G15_081	FROM->TO	CIMARRON - DRAPER LAKE 345KV CKT 1	717	717	0.14128	104.5145	NORTHWEST (NORTWST4) 345/138/13.8KV TRANSFORMER CKT 1
FDNS	00NR	0	16WP	G15_081	FROM->TO	CIMARRON - DRAPER LAKE 345KV CKT 1	717	717	0.14061	104.4548	NEW MADRID 161/22.0KV TRANSFORMER CKT 1
FDNS	00NR	0	16WP	G15_081	FROM->TO	CIMARRON - DRAPER LAKE 345KV CKT 1	717	717	0.14193	104.4542	36 & MERIDIAN - CHEMTRON 138KV CKT 1
FDNS	00NR	0	16WP	G15_081	FROM->TO	CIMARRON - DRAPER LAKE 345KV CKT 1	717	717	0.14429	104.4515	THISTLE7 345.00 - WOODWARD DISTRICT EHV 345KV CKT 1
FDNS	00NR	0	16WP	G15_081	FROM->TO	CIMARRON - DRAPER LAKE 345KV CKT 1	717	717	0.14429	104.4515	THISTLE7 345.00 - WOODWARD DISTRICT EHV 345KV CKT 1
FDNS	00NR	0	16WP	G15_081	FROM->TO	CIMARRON - DRAPER LAKE 345KV CKT 1	717	717	0.14429	104.4515	THISTLE7 345.00 - WOODWARD DISTRICT EHV 345KV CKT 2
FDNS	00NR	0	16WP	G15_081	FROM->TO	CIMARRON - DRAPER LAKE 345KV CKT 1	717	717	0.14429	104.4515	THISTLE7 345.00 - WOODWARD DISTRICT EHV 345KV CKT 2
FDNS	00NR	0	16WP	G15_081	FROM->TO	CIMARRON - DRAPER LAKE 345KV CKT 1	717	717	0.14061	104.4411	NEW MADRID 345/22.0KV TRANSFORMER CKT 1
FDNS	00NR	0	16WP	G15_081	FROM->TO	CIMARRON - DRAPER LAKE 345KV CKT 1	717	717	0.14061	104.4225	GEN520947 1-HUGO1
FDNS	00NR	0	16WP	G15_081	FROM->TO	CIMARRON - DRAPER LAKE 345KV CKT 1	717	717	0.14061	104.4148	GEN337652 1-WHITE BLUFF UNIT #1
FDNS	00NR	0	16WP	G15_081	FROM->TO	CIMARRON - DRAPER LAKE 345KV CKT 1	717	717	0.14128	104.3894	NORTHWEST (NORTWST3) 345/138/13.8KV TRANSFORMER CKT 1
FDNS	00NR	0	16WP	G15_081	FROM->TO	CIMARRON - DRAPER LAKE 345KV CKT 1	717	717	0.14064	104.376	3TR3AR8EL7EL
FDNS	00NR	0	16WP	G15_081	FROM->TO	CIMARRON - DRAPER LAKE 345KV CKT 1	717	717	0.14064	104.376	7SAREPTA% 345.00 - ELDORADO EHV 345KV CKT 1
FDNS	00NR	0	16WP	G15_081	FROM->TO	CIMARRON - DRAPER LAKE 345KV CKT 1	717	717	0.14064	104.3682	ELDORADO EHV 500/345KV TRANSFORMER CKT 1
FDNS	00NR	0	16WP	G15_081	FROM->TO	CIMARRON - DRAPER LAKE 345KV CKT 1	717	717	0.14193	104.3672	CHEMTRON - PENNSYLVANIA 138KV CKT 1
FDNS	00NR	0	16WP	G15_081	FROM->TO	CIMARRON - DRAPER LAKE 345KV CKT 1	717	717	0.13857	104.3371	G15052_T 345.00 - ROSE HILL 345KV CKT 1
FDNS	00NR	0	16WP	G15_081	FROM->TO	CIMARRON - DRAPER LAKE 345KV CKT 1	717	717	0.14091	104.3332	G15074_T 345.00 - HOYT 345KV CKT 1
FDNS	00NR	0	16WP	G15_081	FROM->TO	CIMARRON - DRAPER LAKE 345KV CKT 1	717	717	0.14235	104.3021	BLANCHARD - CORNVILLE 138KV CKT 1
FDNS	00NR	0	16WP	G15_081	FROM->TO	CIMARRON - DRAPER LAKE 345KV CKT 1	717	717	0.1411	104.3015	COMANCHE - LOCO 138KV CKT 1
FDNS	00NR	0	16WP	G15_081	FROM->TO	CIMARRON - DRAPER LAKE 345KV CKT 1	717	717	0.14106	104.2791	P12:138:OKGE:3TERM17
FDNS	00NR	0	16WP	G15_081	FROM->TO	CIMARRON - DRAPER LAKE 345KV CKT 1	717	717	0.14061	104.2625	GEN515577 1-ARBWND11 0.6900
FDNS	00NR	0	16WP	G15_081	FROM->TO	CIMARRON - DRAPER LAKE 345KV CKT 1	717	717	0.14283	104.2438	FRANKLIN SW - WESTMOORE 138KV CKT 1
FDNS	00NR	0	16WP	G15_081	FROM->TO	CIMARRON - DRAPER LAKE 345KV CKT 1	717	717	0.14185	104.2374	P12:138:OKGE:3TERM11
FDNS	00NR	0	16WP	G15_081	FROM->TO	CIMARRON - DRAPER LAKE 345KV CKT 1	717	717	0.14061	104.2237	GEN334440 1-SABINE UNIT 4
FDNS	00NR	0	16WP	G15_081	FROM->TO	CIMARRON - DRAPER LAKE 345KV CKT 1	717	717	0.14109	104.2165	LONEOAK - NORTHWEST 138KV CKT 1
FDNS	00NR	0	16WP	G15_081	FROM->TO	CIMARRON - DRAPER LAKE 345KV CKT 1	717	717	0.14235	104.211	P12:138:AEPW-OGE:CORNVIL4:MAUD 4
FDNS	00NR	0	16WP	G15_081	FROM->TO	CIMARRON - DRAPER LAKE 345KV CKT 1	717	717	0.14184	104.2024	KETCH TAP - NORTHWEST 138KV CKT 1
FDNS	00NR	0	16WP	G15_081	FROM->TO	CIMARRON - DRAPER LAKE 345KV CKT 1	717	717	0.14061	104.2023	DELL 500 - ESSEX UNIT 2 500KV CKT Z1
FDNS	00NR	0	16WP	G15_081	FROM->TO	CIMARRON - DRAPER LAKE 345KV CKT 1	717	717	0.14134	104.1938	DIVISION AVE - LAKESIDE 138KV CKT 1
FDNS	00NR	0	16WP	G15_081	FROM->TO	CIMARRON - DRAPER LAKE 345KV CKT 1	717	717	0.14012	104.1729	HORSESHOE LAKE - KAMO MEMORIAL 138KV CKT 1
FDNS	00NR	0	16WP	G15_081	FROM->TO	CIMARRON - DRAPER LAKE 345KV CKT 1	717	717	0.14096	104.1303	NORTHWEST - PANTHER 138KV CKT 1
FDNS	00NR	0	16WP	G15_081	FROM->TO	CIMARRON - DRAPER LAKE 345KV CKT 1	717	717	0.14279	104.1253	G14-074T 345.00 - OKLAUNION 345KV CKT 1
FDNS	00NR	0	16WP	G15_081	FROM->TO	CIMARRON - DRAPER LAKE 345KV CKT 1	717	717	0.14312	104.1217	CLARKSVILLE - ONETA 345KV CKT 1
FDNS	00NR	0	16WP	G15_081	FROM->TO	CIMARRON - DRAPER LAKE 345KV CKT 1	717	717	0.14312	104.1217	CLARKSVILLE - ONETA 345KV CKT 1
FDNS	00NR	0	16WP	G15_081	FROM->TO	CIMARRON - DRAPER LAKE 345KV CKT 1	717	717	0.14118	104.1144	P12:138:OKGE:3TERM20
FDNS	00NR	0	16WP	G15_081	FROM->TO	CIMARRON - DRAPER LAKE 345KV CKT 1	717	717	0.14235	104.1089	BLANCHARD - MAUD 138KV CKT 1
FDNS	00NR	0	16WP	G15_081	FROM->TO	CIMARRON - DRAPER LAKE 345KV CKT 1	717	717	0.14152	104.1015	CIMARRON - HAYMAKER 138KV CKT 1
FDNS	00NR	0	16WP	G15_081	FROM->TO	CIMARRON - DRAPER LAKE 345KV CKT 1	717	717	0.14073	104.0977	P12:138:OKGE:3TERM47

SOLUTION	GROUP	SCENARIO	SEASON	SOURCE	DIRECTION	MONITORED ELEMENT	RATEA (MVA)	RATEB(MVA)	TDF	TC%LOADING (% MVA)	CONTINGENCY
FDNS	00NR	0	16WP	G15_081	FROM->TO	CIMARRON - DRAPER LAKE 345KV CKT 1	717	717	0.14061	104.0931	GEN336252 1-NINEMILE POINT UNIT#5
FDNS	00NR	0	16WP	G15_081	FROM->TO	CIMARRON - DRAPER LAKE 345KV CKT 1	717	717	0.14261	104.0857	FINNEY SWITCHING STATION - HOLCOMB 345KV CKT 1
FDNS	00NR	0	16WP	G15_081	FROM->TO	CIMARRON - DRAPER LAKE 345KV CKT 1	717	717	0.14261	104.0857	FINNEY SWITCHING STATION - HOLCOMB 345KV CKT 1
FDNS	00NR	0	16WP	G15_081	FROM->TO	CIMARRON - DRAPER LAKE 345KV CKT 1	717	717	0.14061	104.0808	DOLET HILLS 345/24.0KV TRANSFORMER CKT 1
FDNS	00NR	0	16WP	G15_081	FROM->TO	CIMARRON - DRAPER LAKE 345KV CKT 1	717	717	0.14096	104.08	PANTHER - SILVER LAKE 138KV CKT 1
FDNS	00NR	0	16WP	G15_081	FROM->TO	CIMARRON - DRAPER LAKE 345KV CKT 1	717	717	0.14134	104.0723	HEFNER - LAKESIDE 138KV CKT 1
FDNS	00NR	0	16WP	G15_081	FROM->TO	CIMARRON - DRAPER LAKE 345KV CKT 1	717	717	0.14117	104.041	BLACKBERRY - NEOSHO 345KV CKT 1
FDNS	00NR	0	16WP	G15_081	FROM->TO	CIMARRON - DRAPER LAKE 345KV CKT 1	717	717	0.14061	104.0356	WHITE BLUFF 500/26.0KV TRANSFORMER CKT 1
FDNS	00NR	0	16WP	G15_081	FROM->TO	CIMARRON - DRAPER LAKE 345KV CKT 1	717	717	0.14147	104.0273	KETCH - KETCH TAP 138KV CKT 1
FDNS	00NR	0	16WP	G15_081	FROM->TO	CIMARRON - DRAPER LAKE 345KV CKT 1	717	717	0.14128	104.02	EMPORIA ENERGY CENTER - G14_001T 345.00 345KV CKT 1
FDNS	00NR	0	16WP	G15_081	FROM->TO	CIMARRON - DRAPER LAKE 345KV CKT 1	717	717	0.14091	104.0189	HOYT - STRANGER CREEK 345KV CKT 1
FDNS	00NR	0	16WP	G15_081	FROM->TO	CIMARRON - DRAPER LAKE 345KV CKT 1	717	717	0.14091	104.0086	DIVISION AVE - MUSTANG 138KV CKT 1
FDNS	00NR	0	16WP	G15_081	FROM->TO	CIMARRON - DRAPER LAKE 345KV CKT 1	717	717	0.14082	104	G15088_T 345.00 - MOORE 345KV CKT 1
FDNS	00NR	0	16WP	G15_081	FROM->TO	CIMARRON - DRAPER LAKE 345KV CKT 1	717	717	0.14061	104	GEN300006 1-NEW MADRID UNIT 1
FDNS	00NR	0	16WP	G15_081	FROM->TO	CIMARRON - DRAPER LAKE 345KV CKT 1	717	717	0.14061	104	GEN300007 1-NEW MADRID UNIT 2
FDNS	00NR	0	16WP	G15_081	FROM->TO	CIMARRON - DRAPER LAKE 345KV CKT 1	717	717	0.14085	103.999	P12:138:WFEC:MSL02
FDNS	00NR	0	16WP	G15_081	FROM->TO	CIMARRON - DRAPER LAKE 345KV CKT 1	717	717	0.14152	103.998	DIVISION AVE - HAYMAKER 138KV CKT 1
FDNS	00NR	0	16WP	G15_081	FROM->TO	CIMARRON - DRAPER LAKE 345KV CKT 1	717	717	0.14061	103.9886	GEN509408 1-WILKES #2
FDNS	00NR	0	16WP	G15_081	FROM->TO	CIMARRON - DRAPER LAKE 345KV CKT 1	717	717	0.14085	103.9879	P12:138:AEPW-OGE:SHIDLER4:OSAGE 4
FDNS	00NR	0	16WP	G15_081	FROM->TO	CIMARRON - DRAPER LAKE 345KV CKT 1	717	717	0.14176	103.975	MCCLAIN - PLEASANT VALLEY 138KV CKT 1
FDNS	00NR	0	16WP	G15_081	FROM->TO	CIMARRON - DRAPER LAKE 345KV CKT 1	717	717	0.14108	103.9746	SWISSVALE - WEST GARDNER 345KV CKT 1
FDNS	00NR	0	16WP	G15_081	FROM->TO	CIMARRON - DRAPER LAKE 345KV CKT 1	717	717	0.14091	103.9659	G15074_T 345.00 - JEFFREY ENERGY CENTER 345KV CKT 1
FDNS	00NR	0	16WP	G15_081	FROM->TO	CIMARRON - DRAPER LAKE 345KV CKT 1	717	717	0.14079	103.962	ANADARKO - GEORGIA 138KV CKT 1
FDNS	00NR	0	16WP	G15_081	FROM->TO	CIMARRON - DRAPER LAKE 345KV CKT 1	717	717	0.14061	103.9525	GEN335204 1-NELSON UNIT 4
FDNS	00NR	0	16WP	G15_081	FROM->TO	CIMARRON - DRAPER LAKE 345KV CKT 1	717	717	0.14061	103.9519	GEN336831 1-BAXTER WILSON SES
FDNS	00NR	0	16WP	G15_081	FROM->TO	CIMARRON - DRAPER LAKE 345KV CKT 1	717	717	0.14054	103.9391	P12:138:AEPW:OKMULGE4:R.S.S-4
FDNS	00NR	0	16WP	G15_081	FROM->TO	CIMARRON - DRAPER LAKE 345KV CKT 1	717	717	0.14061	103.9208	GEN506754 1-LEBROCK STEAM 1
FDNS	00NR	0	16WP	G15_081	FROM->TO	CIMARRON - DRAPER LAKE 345KV CKT 1	717	717	0.14155	103.919	CLASSEN - ROBINSON 138KV CKT 1
FDNS	00NR	0	16WP	G15_081	FROM->TO	CIMARRON - DRAPER LAKE 345KV CKT 1	717	717	0.14061	103.9013	GEN334441 1-SABINE UNIT 5
FDNS	00NR	0	16WP	G15_081	FROM->TO	CIMARRON - DRAPER LAKE 345KV CKT 1	717	717	0.14061	103.8962	GEN334071 1-LEWIS CREEK 2
FDNS	00NR	0	16WP	G15_081	FROM->TO	CIMARRON - DRAPER LAKE 345KV CKT 1	717	717	0.14079	103.8953	FLETCHER - GEORGIA 138KV CKT 1
FDNS	00NR	0	16WP	G15_081	FROM->TO	CIMARRON - DRAPER LAKE 345KV CKT 1	717	717	0.14128	103.8915	G14_001T 345.00 - WICHITA 345KV CKT 1
FDNS	00NR	0	16WP	G15_081	FROM->TO	CIMARRON - DRAPER LAKE 345KV CKT 1	717	717	0.14061	103.8883	GEN334070 1-LEWIS CREEK 1
FDNS	00NR	0	16WP	G15_081	FROM->TO	CIMARRON - DRAPER LAKE 345KV CKT 1	717	717	0.14223	103.8865	BENTON - WICHITA 345KV CKT 1
FDNS	00NR	0	16WP	G15_081	FROM->TO	CIMARRON - DRAPER LAKE 345KV CKT 1	717	717	0.14261	103.8864	FINNEY SWITCHING STATION - Hitchland Interchange 345KV CKT 1
FDNS	00NR	0	16WP	G15_081	FROM->TO	CIMARRON - DRAPER LAKE 345KV CKT 1	717	717	0.14061	103.8862	GEN336251 1-NINEMILE POINT UNIT#4
FDNS	00NR	0	16WP	G15_081	FROM->TO	CIMARRON - DRAPER LAKE 345KV CKT 1	717	717	0.14068	103.8786	WEBRE - WELLS 500KV CKT 1
FDNS	00NR	0	16WP	G15_081	FROM->TO	CIMARRON - DRAPER LAKE 345KV CKT 1	717	717	0.14145	103.8775	LACYGNE - NEOSHO 345KV CKT 1
FDNSLock	00NR	0	16WP	G15_081	FROM->TO	CIMARRON - DRAPER LAKE 345KV CKT 1	717	717	0.14061	103.8742	GEN590011 2-ERCOT EQUIVALENCE
FDNS	00NR	0	16WP	G15_081	FROM->TO	CIMARRON - DRAPER LAKE 345KV CKT 1	717	717	0.14096	103.862	EMPORIA ENERGY CENTER - SWISSVALE 345KV CKT 1
FDNS	00NR	0	16WP	G15_081	FROM->TO	CIMARRON - DRAPER LAKE 345KV CKT 1	717	717	0.14083	103.8385	EMPIRE - FLETCHER 138KV CKT 1
FDNSLock	00NR	0	16WP	G15_081	FROM->TO	CIMARRON - DRAPER LAKE 345KV CKT 1	717	717	0.14061	103.8317	GEN590010 1-ERCOT EQUIVALENCE
FDNS	00NR	0	16WP	G15_081	FROM->TO	CIMARRON - DRAPER LAKE 345KV CKT 1	717	717	0.14178	103.8223	G1524G1525 345.00 - THISTLE7 345.00 345KV CKT 1
FDNS	00NR	0	16WP	G15_081	FROM->TO	CIMARRON - DRAPER LAKE 345KV CKT 1	717	717	0.14178	103.8223	G1524G1525 345.00 - THISTLE7 345.00 345KV CKT 2
FDNS	00NR	0	16WP	G15_081	FROM->TO	CIMARRON - DRAPER LAKE 345KV CKT 1	717	717	0.14061	103.8186	GEN503909 1-FULTONU1 1 16.000
FDNSLock	00NR	0	16WP	G15_081	FROM->TO	CIMARRON - DRAPER LAKE 345KV CKT 1	717	717	0.14061	103.8129	GEN338146 1-INDEPENDENCE UNIT #2
FDNS	00NR	0	16WP	G15_081	FROM->TO	CIMARRON - DRAPER LAKE 345KV CKT 1	717	717	0.14109	103.8126	LONEOAK - QUAIL CREEK 138KV CKT 1
FDNS	00NR	0	16WP	G15_081	FROM->TO	CIMARRON - DRAPER LAKE 345KV CKT 1	717	717	0.14061	103.809	GEN501811 1-RODEMACHER UNIT 1
FDNS	00NR	0	16WP	G15_081	FROM->TO	CIMARRON - DRAPER LAKE 345KV CKT 1	717	717	0.14092	103.8044	WOODRING (WOODRNG2) 345/138/13.8KV TRANSFORMER CKT 1
FDNS	00NR	0	16WP	G15_081	FROM->TO	CIMARRON - DRAPER LAKE 345KV CKT 1	717	717	0.14145	103.7918	CRINER - PAYNE 138.00 138KV CKT 1
FDNS	00NR	0	16WP	G15_081	FROM->TO	CIMARRON - DRAPER LAKE 345KV CKT 1	717	717	0.14085	103.7817	OSAGE - WEBB CITY TAP 138KV CKT 1
FDNS	00NR	0	16WP	G15_081	FROM->TO	CIMARRON - DRAPER LAKE 345KV CKT 1	717	717	0.14083	103.7768	COMANCHE - EMPIRE 138KV CKT 1
FDNS	00NR	0	16WP	G15_081	FROM->TO	CIMARRON - DRAPER LAKE 345KV CKT 1	717	717	0.14061	103.7748	FRONTIER - GRIMES 345KV CKT 1
FDNS	00NR	0	16WP	G15_081	FROM->TO	CIMARRON - DRAPER LAKE 345KV CKT 1	717	717	0.14061	103.7716	GEN334433 1-SABINE UNIT 3
FDNS	00NR	0	16WP	G15_081	FROM->TO	CIMARRON - DRAPER LAKE 345KV CKT 1	717	717	0.14061	103.7693	P12:069:OKGE:3TERM4
FDNS	00NR	0	16WP	G15_081	FROM->TO	CIMARRON - DRAPER LAKE 345KV CKT 1	717	717	0.14061	103.7671	GEN334030 1-FRONTIER UNIT 1
FDNS	00NR	0	16WP	G15_081	FROM->TO	CIMARRON - DRAPER LAKE 345KV CKT 1	717	717	0.14061	103.7661	GEN334031 1-FRONTIER UNIT 2
FDNS	00NR	0	16WP	G15_081	FROM->TO	CIMARRON - DRAPER LAKE 345KV CKT 1	717	717	0.14061	103.764	GEN303007 1-1BC2 U2
FDNS	00NR	0	16WP	G15_081	FROM->TO	CIMARRON - DRAPER LAKE 345KV CKT 1	717	717	0.14091	103.7619	SPVALLY4 138.00 - STILLWATER 138KV CKT 1
FDNS	00NR	0	16WP	G15_081	FROM->TO	CIMARRON - DRAPER LAKE 345KV CKT 1	717	717	0.14061	103.7587	GEN303006 1-1BC2 U1
FDNS	00NR	0	16WP	G15_081	FROM->TO	CIMARRON - DRAPER LAKE 345KV CKT 1	717	717	0.14061	103.7582	GEN337041 1-GERALD ANDRUS
FDNS	00NR	0	16WP	G15_081	FROM->TO	CIMARRON - DRAPER LAKE 345KV CKT 1	717	717	0.14061	103.7551	P12:161:AEPW:DYESS 5:HYLAND 5
FDNS	00NR	0	16WP	G15_081	FROM->TO	CIMARRON - DRAPER LAKE 345KV CKT 1	717	717	0.14061	103.7415	GEN336191 1-LITTLE GYPSY UNIT#3
FDNS	00NR	0	16WP	G15_081	FROM->TO	CIMARRON - DRAPER LAKE 345KV CKT 1	717	717	0.14063	103.7374	8DANIEL8 500.00 - MCKNIGHT 500KV CKT 1
FDNS	00NR	0	16WP	G15_081	FROM->TO	CIMARRON - DRAPER LAKE 345KV CKT 1	717	717	0.14061	103.7345	GEN509393 S1-ARSENAL HILL GENS #4 (STALL)
FDNS	00NR	0	16WP	G15_081	FROM->TO	CIMARRON - DRAPER LAKE 345KV CKT 1	717	717	0.1408	103.7342	CLEAVELAND - CLEVLND 4 138.00 138KV CKT Z1
FDNS	00NR	0	16WP	G15_081	FROM->TO	CIMARRON - DRAPER LAKE 345KV CKT 1	717	717	0.1408	103.7339	CLEVELAND (CLVAUTO1) 345/138/13.8KV TRANSFORMER CKT 1
FDNS	00NR	0	16WP	G15_081	FROM->TO	CIMARRON - DRAPER LAKE 345KV CKT 1	717	717	0.1408	103.7339	CLEVELAND (CLVAUTO1) 345/138/13.8KV TRANSFORMER CKT 1
FDNS	00NR	0	16WP	G15_081	FROM->TO	CIMARRON - DRAPER LAKE 345KV CKT 1	717	717	0.14091	103.7325	PAYNESB4 138.00 - SPVALLY4 138.00 138KV CKT 1
FDNS	00NR	0	16WP	G15_081	FROM->TO	CIMARRON - DRAPER LAKE 345KV CKT 1	717	717	0.14079	103.7308	P12:138:OKGE:3TERM13
FDNS	00NR	0	16WP	G15_081	FROM->TO	CIMARRON - DRAPER LAKE 345KV CKT 1	717	717	0.14162	103.7266	ARKANSAS NUCLEAR ONE - FT SMITH 500KV CKT 1
FDNS	00NR	0	16WP	G15_081	FROM->TO	CIMARRON - DRAPER LAKE 345KV CKT 1	717	717	0.14162	103.7266	ARKANSAS NUCLEAR ONE - FT SMITH 500KV CKT 1
FDNS	00NR	0	16WP	G15_081	FROM->TO	CIMARRON - DRAPER LAKE 345KV CKT 1	717	717	0.14061	103.7179	GEN509392 G2-ARSENAL HILL GENS #3 (STALL)
FDNS	00NR	0	16WP	G15_081	FROM->TO	CIMARRON - DRAPER LAKE 345KV CKT 1	717	717	0.14061	103.7178	GEN509391 G1-ARSENAL HILL GENS #2 (STALL)
FDNS	00NR	0	16WP	G15_081	FROM->TO	CIMARRON - DRAPER LAKE 345KV CKT 1	717	717	0.14091	103.7169	CUSHING - PAYNESB4 138.00 138KV CKT 1
FDNS	00NR	0	16WP	G15_081	FROM->TO	CIMARRON - DRAPER LAKE 345KV CKT 1	717	717	0.14061	103.711	GEN335614 1-WILLOW GLENN UNIT#4
FDNS	00NR	0	16WP	G15_081	FROM->TO	CIMARRON - DRAPER LAKE 345KV CKT 1	717	717	0.14109	103.7087	DAYTON - MUSTANG 138KV CKT 1
FDNS	00NR	0	16WP	G15_081	FROM->TO	CIMARRON - DRAPER LAKE 345KV CKT 1	717	717	0.14109	103.7038	DAYTON - HOBBY LOBBY 138KV CKT 1
FDNS	00NR	0	16WP	G15_081	FROM->TO	CIMARRON - DRAPER LAKE 345KV CKT 1	717	717	0.14061	103.6985	GEN303008 1-1BC2 U3

SOLUTION	GROUP	SCENARIO	SEASON	SOURCE	DIRECTION	MONITORED ELEMENT	RATEA (MVA)	RATEB(MVA)	TDF	TC%LOADING (% MVA)	CONTINGENCY
FDNS	00NR	0	16WP	G15_081	FROM->TO	CIMARRON - DRAPER LAKE 345KV CKT 1	717	717	0.13803	103.6895	CANADIAN RIVER - PITTSBURG 345KV CKT 1
FDNS	00NR	0	16WP	G15_081	FROM->TO	CIMARRON - DRAPER LAKE 345KV CKT 1	717	717	0.13803	103.6895	CANADIAN RIVER - PITTSBURG 345KV CKT 1
FDNS	00NR	0	16WP	G15_081	FROM->TO	CIMARRON - DRAPER LAKE 345KV CKT 1	717	717	0.14111	103.6882	MUSTANG - SW 5TH 138KV CKT 1
FDNS	00NR	0	16WP	G15_081	FROM->TO	CIMARRON - DRAPER LAKE 345KV CKT 1	717	717	0.14061	103.6855	GEN338143 1-INDEPENDENCE UNIT #1
FDNS	00NR	0	16WP	G15_081	FROM->TO	CIMARRON - DRAPER LAKE 345KV CKT 1	717	717	0.14059	103.6766	ELDORADO EHV - MOUNT OLIVE 500KV CKT 1
FDNS	00NR	0	16WP	G15_081	FROM->TO	CIMARRON - DRAPER LAKE 345KV CKT 1	717	717	0.14061	103.6764	GEN336170 1-GULF OXY U4
FDNS	00NR	0	16WP	G15_081	FROM->TO	CIMARRON - DRAPER LAKE 345KV CKT 1	717	717	0.14061	103.6751	GEN336464 1-MICHOUD UNIT #3
FDNS	00NR	0	16WP	G15_081	FROM->TO	CIMARRON - DRAPER LAKE 345KV CKT 1	717	717	0.14145	103.6693	COLE - CRINER 138KV CKT 1
FDNS	00NR	0	16WP	G15_081	FROM->TO	CIMARRON - DRAPER LAKE 345KV CKT 1	717	717	0.14067	103.6516	P12:069:OKGE:3TERM19
FDNS	00NR	0	16WP	G15_081	FROM->TO	CIMARRON - DRAPER LAKE 345KV CKT 1	717	717	0.14061	103.6516	ESSEX UNIT 2 500/18.0KV TRANSFORMER CKT 1
FDNS	00NR	0	16WP	G15_081	FROM->TO	CIMARRON - DRAPER LAKE 345KV CKT 1	717	717	0.14072	103.6427	7LUTESVIL 345.00 - 7ST FRANC 345.00 345KV CKT 1
FDNS	00NR	0	16WP	G15_081	FROM->TO	CIMARRON - DRAPER LAKE 345KV CKT 1	717	717	0.14111	103.6334	OUMED 4 - STONEWALL 138KV CKT 1
FDNS	00NR	0	16WP	G15_081	FROM->TO	CIMARRON - DRAPER LAKE 345KV CKT 1	717	717	0.14061	103.6302	GEN336801 1-BAXTER WILSON UNIT #1
FDNS	00NR	0	16WP	G15_081	FROM->TO	CIMARRON - DRAPER LAKE 345KV CKT 1	717	717	0.14155	103.6262	LIGHTNING CREEK - ROBINSON 138KV CKT 1
FDNS	00NR	0	16WP	G15_081	FROM->TO	CIMARRON - DRAPER LAKE 345KV CKT 1	717	717	0.14021	103.6225	ARCADIA - LGARBER4 138.00 138KV CKT 1
FDNS	00NR	0	16WP	G15_081	FROM->TO	CIMARRON - DRAPER LAKE 345KV CKT 1	717	717	0.14061	103.6136	GEN506752 1-LEBROCK GAS 1
FDNS	00NR	0	16WP	G15_081	FROM->TO	CIMARRON - DRAPER LAKE 345KV CKT 1	717	717	0.14061	103.6135	GEN506753 1-LEBROCK GAS 2
FDNS	00NR	0	16WP	G15_081	FROM->TO	CIMARRON - DRAPER LAKE 345KV CKT 1	717	717	0.1406	103.6057	7JASPER 345.00 - BLACKBERRY 345KV CKT 1
FDNS	00NR	0	16WP	G15_081	FROM->TO	CIMARRON - DRAPER LAKE 345KV CKT 1	717	717	0.14085	103.6018	FAIRFAX TAP - SHIDLER 138KV CKT 1
FDNS	00NR	0	16WP	G15_081	FROM->TO	CIMARRON - DRAPER LAKE 345KV CKT 1	717	717	0.14085	103.6017	FAIRFAX TAP - WEBB CITY TAP 138KV CKT 1
FDNS	00NR	0	16WP	G15_081	FROM->TO	CIMARRON - DRAPER LAKE 345KV CKT 1	717	717	0.14021	103.5927	CHITWOOD - LGARBER4 138.00 138KV CKT 1
FDNS	00NR	0	16WP	G15_081	FROM->TO	CIMARRON - DRAPER LAKE 345KV CKT 1	717	717	0.14061	103.5925	GEN501910 1-ACADIA UNIT ST1
FDNS	00NR	0	16WP	G15_081	FROM->TO	CIMARRON - DRAPER LAKE 345KV CKT 1	717	717	0.14061	103.5817	RODEMACHER 230/22.0KV TRANSFORMER CKT 1
FDNS	00NR	0	16WP	G15_081	FROM->TO	CIMARRON - DRAPER LAKE 345KV CKT 1	717	717	0.14021	103.5804	CHITWOOD - JONES TAP 138KV CKT 1
FDNS	00NR	0	16WP	G15_081	FROM->TO	CIMARRON - DRAPER LAKE 345KV CKT 1	717	717	0.14061	103.5784	GEN511843 1-RIVERSIDE STATION #2
FDNS	00NR	0	16WP	G15_081	FROM->TO	CIMARRON - DRAPER LAKE 345KV CKT 1	717	717	0.14057	103.5772	P12:138:AEPW-OGE:WTH_JCT4:JENSEN4
FDNS	00NR	0	16WP	G15_081	FROM->TO	CIMARRON - DRAPER LAKE 345KV CKT 1	717	717	0.14161	103.571	TULSA NORTH - WEKIWA 345KV CKT 1
FDNS	00NR	0	16WP	G15_081	FROM->TO	CIMARRON - DRAPER LAKE 345KV CKT 1	717	717	0.14161	103.571	TULSA NORTH - WEKIWA 345KV CKT 1
FDNS	00NR	0	16WP	G15_081	FROM->TO	CIMARRON - DRAPER LAKE 345KV CKT 1	717	717	0.14064	103.5684	6LAYFLD 230.00 - CARROLL 230KV CKT 1
FDNS	00NR	0	16WP	G15_081	FROM->TO	CIMARRON - DRAPER LAKE 345KV CKT 1	717	717	0.14074	103.5641	8WNEWMADRID 500.00 - DELL 500 500KV CKT 1
FDNS	00NR	0	16WP	G15_081	FROM->TO	CIMARRON - DRAPER LAKE 345KV CKT 1	717	717	0.14063	103.5615	P12:345:GRDA:CHOUTEAU-SPORTSMANACRES
FDNS	00NR	0	16WP	G15_081	FROM->TO	CIMARRON - DRAPER LAKE 345KV CKT 1	717	717	0.14056	103.5548	ELDORADO EHV - SHERIDAN EHV 500KV CKT 1
FDNS	00NR	0	16WP	G15_081	FROM->TO	CIMARRON - DRAPER LAKE 345KV CKT 1	717	717	0.14068	103.5535	CHISHOLM6 230.00 - ELK CITY 230KV 230KV CKT 1
FDNS	00NR	0	16WP	G15_081	FROM->TO	CIMARRON - DRAPER LAKE 345KV CKT 1	717	717	0.14068	103.5504	ELK CITY 230KV (ELKCTY-6) 230/138/13.8KV TRANSFORMER CKT 1
FDNS	00NR	0	16WP	G15_081	FROM->TO	CIMARRON - DRAPER LAKE 345KV CKT 1	717	717	0.14068	103.5504	ELK CITY 230KV (ELKCTY-6) 230/138/13.8KV TRANSFORMER CKT 1
FDNS	00NR	0	16WP	G15_081	FROM->TO	CIMARRON - DRAPER LAKE 345KV CKT 1	717	717	0.14141	103.5453	G13-010T 345.00 - POST ROCK 345KV CKT 1
FDNS	00NR	0	16WP	G15_081	FROM->TO	CIMARRON - DRAPER LAKE 345KV CKT 1	717	717	0.14066	103.5337	P12:138:AEPW:N.E.S.-4:CATOOSA4
FDNS	00NR	0	16WP	G15_081	FROM->TO	CIMARRON - DRAPER LAKE 345KV CKT 1	717	717	0.14111	103.5322	OUMED 4 - PARK PLACE 138KV CKT 1
FDNS	00NR	0	16WP	G15_081	FROM->TO	CIMARRON - DRAPER LAKE 345KV CKT 1	717	717	0.14063	103.5255	FULTON 115 - HOPE 115KV CKT 1
FDNS	00NR	0	16WP	G15_081	FROM->TO	CIMARRON - DRAPER LAKE 345KV CKT 1	717	717	0.14063	103.5255	FULTON 115 - HOPE 115KV CKT 1
FDNS	00NR	0	16WP	G15_081	FROM->TO	CIMARRON - DRAPER LAKE 345KV CKT 1	717	717	0.14075	103.5186	P13:138-161:WERE:NSES_TX-4OR5::
FDNS	00NR	0	16WP	G15_081	FROM->TO	CIMARRON - DRAPER LAKE 345KV CKT 1	717	717	0.14061	103.5156	8CAJUN2 500/24.0KV TRANSFORMER CKT 1
FDNS	00NR	0	16WP	G15_081	FROM->TO	CIMARRON - DRAPER LAKE 345KV CKT 1	717	717	0.14049	103.5154	MORISNT4 138.00 - SOONER 138KV CKT 1
FDNS	00NR	0	16WP	G15_081	FROM->TO	CIMARRON - DRAPER LAKE 345KV CKT 1	717	717	0.14073	103.5113	P12:138:AEPW:CATOOSA4:T.S.E.-4
FDNS	00NR	0	16WP	G15_081	FROM->TO	CIMARRON - DRAPER LAKE 345KV CKT 1	717	717	0.14061	103.5052	ST FRANCIS - ST FRANCIS 1 161KV CKT Z1
FDNS	00NR	0	16WP	G15_081	FROM->TO	CIMARRON - DRAPER LAKE 345KV CKT 1	717	717	0.14066	103.5015	7JASPER 345.00 - MORGAN 345KV CKT 1
FDNS	00NR	0	16WP	G15_081	FROM->TO	CIMARRON - DRAPER LAKE 345KV CKT 1	717	717	0.14061	103.4974	P12:069:OKGE:3TERM3
FDNS	00NR	0	16WP	G15_081	FROM->TO	CIMARRON - DRAPER LAKE 345KV CKT 1	717	717	0.14078	103.4908	HUGO - VALLIANT 345KV CKT 1
FDNS	00NR	0	16WP	G15_081	FROM->TO	CIMARRON - DRAPER LAKE 345KV CKT 1	717	717	0.14078	103.4908	HUGO - VALLIANT 345KV CKT 1
FDNS	00NR	0	16WP	G15_081	FROM->TO	CIMARRON - DRAPER LAKE 345KV CKT 1	717	717	0.14061	103.4903	GEN509394 1-FLINT CREEK
FDNS	00NR	0	16WP	G15_081	FROM->TO	CIMARRON - DRAPER LAKE 345KV CKT 1	717	717	0.14061	103.4898	GEN300015 1-1SGPDEL 18.000
FDNS	00NR	0	16WP	G15_081	FROM->TO	CIMARRON - DRAPER LAKE 345KV CKT 1	717	717	0.14141	103.4897	G13-010T 345.00 - SPEARVILLE 345KV CKT 1
FDNS	00NR	0	16WP	G15_081	FROM->TO	CIMARRON - DRAPER LAKE 345KV CKT 1	717	717	0.14155	103.4895	DALE - HORSESHOE LAKE 138KV CKT 1
FDNS	00NR	0	16WP	G15_081	FROM->TO	CIMARRON - DRAPER LAKE 345KV CKT 1	717	717	0.14155	103.4888	LIGHTNING CREEK - TROSPER 138KV CKT 1
FDNS	00NR	0	16WP	G15_081	FROM->TO	CIMARRON - DRAPER LAKE 345KV CKT 1	717	717	0.14061	103.4794	GEN337766 1-TRACTEBEL UNIT S1
FDNS	00NR	0	16WP	G15_081	FROM->TO	CIMARRON - DRAPER LAKE 345KV CKT 1	717	717	0.14061	103.4788	P12:138:AEPW:SHERID4:112GORE4
FDNS	00NR	0	16WP	G15_081	FROM->TO	CIMARRON - DRAPER LAKE 345KV CKT 1	717	717	0.14061	103.4762	GEN515564 1-ORIGIN11 0.6900
FDNS	00NR	0	16WP	G15_081	FROM->TO	CIMARRON - DRAPER LAKE 345KV CKT 1	717	717	0.14061	103.4762	GEN515565 1-ORIGIN21 0.6900
FDNS	00NR	0	16WP	G15_081	FROM->TO	CIMARRON - DRAPER LAKE 345KV CKT 1	717	717	0.14109	103.4744	36 & MERIDIAN - HOBBY LOBBY 138KV CKT 1
FDNS	00NR	0	16WP	G15_081	FROM->TO	CIMARRON - DRAPER LAKE 345KV CKT 1	717	717	0.14069	103.474	HAMMETT TAP - HAMMETT2 138KV CKT 1
FDNS	00NR	0	16WP	G15_081	FROM->TO	CIMARRON - DRAPER LAKE 345KV CKT 1	717	717	0.14102	103.4732	ANADARKO - GRACMNT4 138.00 138KV CKT 1
FDNS	00NR	0	16WP	G15_081	FROM->TO	CIMARRON - DRAPER LAKE 345KV CKT 1	717	717	0.14061	103.4731	GEN336222 1-LITTLE GYPSY UNIT#2
FDNS	00NR	0	16WP	G15_081	FROM->TO	CIMARRON - DRAPER LAKE 345KV CKT 1	717	717	0.14223	103.4701	NORTHEAST STATION - ONETA 345KV CKT 1
FDNS	00NR	0	16WP	G15_081	FROM->TO	CIMARRON - DRAPER LAKE 345KV CKT 1	717	717	0.14223	103.4701	NORTHEAST STATION - ONETA 345KV CKT 1
FDNS	00NR	0	16WP	G15_081	FROM->TO	CIMARRON - DRAPER LAKE 345KV CKT 1	717	717	0.14069	103.4701	P12:138:OKGE:3TERM28
FDNS	00NR	0	16WP	G15_081	FROM->TO	CIMARRON - DRAPER LAKE 345KV CKT 1	717	717	0.14068	103.4665	FLETCHER - MARLOW JCT 69KV CKT 1
FDNS	00NR	0	16WP	G15_081	FROM->TO	CIMARRON - DRAPER LAKE 345KV CKT 1	717	717	0.14061	103.4622	GEN501970 1-EVANGELINE UNIT 7
FDNS	00NR	0	16WP	G15_081	FROM->TO	CIMARRON - DRAPER LAKE 345KV CKT 1	717	717	0.14061	103.4621	NELSON 230/20.0KV TRANSFORMER CKT 1
FDNS	00NR	0	16WP	G15_081	FROM->TO	CIMARRON - DRAPER LAKE 345KV CKT 1	717	717	0.1407	103.4586	NW164TH4 138.00 - PIEDMONT 138KV CKT 1
FDNS	00NR	0	16WP	G15_081	FROM->TO	CIMARRON - DRAPER LAKE 345KV CKT 1	717	717	0.14061	103.458	P12:161:AEPW:EROGERS5:ECNTRTN5
FDNS	00NR	0	16WP	G15_081	FROM->TO	CIMARRON - DRAPER LAKE 345KV CKT 1	717	717	0.14054	103.4577	P12:138:OKGE-AEPW:JENSEN4:REDROCKRD4
FDNS	00NR	0	16WP	G15_081	FROM->TO	CIMARRON - DRAPER LAKE 345KV CKT 1	717	717	0.1407	103.4567	NORTHWEST - NW164TH4 138.00 138KV CKT 1
FDNS	00NR	0	16WP	G15_081	FROM->TO	CIMARRON - DRAPER LAKE 345KV CKT 1	717	717	0.14061	103.4555	ESSEX UNIT 2 500/18.0KV TRANSFORMER CKT 1
FDNS	00NR	0	16WP	G15_081	FROM->TO	CIMARRON - DRAPER LAKE 345KV CKT 1	717	717	0.14067	103.4553	P12:161:AEPW-SWPA:BEAVER5:EROGERS5
FDNS	00NR	0	16WP	G15_081	FROM->TO	CIMARRON - DRAPER LAKE 345KV CKT 1	717	717	0.14075	103.4548	COMANCHE TAP - OMPA-DUNCAN 840 138KV CKT 1
FDNS	00NR	0	16WP	G15_081	FROM->TO	CIMARRON - DRAPER LAKE 345KV CKT 1	717	717	0.14081	103.4517	CORN TAP - SEQUOYAHJ4 138.00 138KV CKT 1
FDNS	00NR	0	16WP	G15_081	FROM->TO	CIMARRON - DRAPER LAKE 345KV CKT 1	717	717	0.14075	103.4516	P12:138:AEPW:CORNVIL4:S.W.S.-4
FDNS	00NR	0	16WP	G15_081	FROM->TO	CIMARRON - DRAPER LAKE 345KV CKT 1	717	717	0.14081	103.4513	ANADARKO - SEQUOYAHJ4 138.00 138KV CKT 1
FDNS	00NR	0	16WP	G15_081	FROM->TO	CIMARRON - DRAPER LAKE 345KV CKT 1	717	717	0.14155	103.448	DALE - SQUIRL CREEK 138KV CKT 1

SOLUTION	GROUP	SCENARIO	SEASON	SOURCE	DIRECTION	MONITORED ELEMENT	RATEA (MVA)	RATEB(MVA)	TDF	TC%LOADING (% MVA)	CONTINGENCY
FDNS	00NR	0	16WP	G15_081	FROM->TO	CIMARRON - DRAPER LAKE 345KV CKT 1	717	717	0.14093	103.4464	HEALDTON - LOCO 138KV CKT 1
FDNS	00NR	0	16WP	G15_081	FROM->TO	CIMARRON - DRAPER LAKE 345KV CKT 1	717	717	0.14061	103.4463	P12:161:AEPW:DYESS5:ELMSPRNG:TONTITN5
FDNS	00NR	0	16WP	G15_081	FROM->TO	CIMARRON - DRAPER LAKE 345KV CKT 1	717	717	0.14061	103.4425	GEN336152 1-WATERFORD UNIT#2
FDNS	00NR	0	16WP	G15_081	FROM->TO	CIMARRON - DRAPER LAKE 345KV CKT 1	717	717	0.14061	103.4415	GEN336151 1-WATERFORD UNIT#1
FDNS	00NR	0	16WP	G15_081	FROM->TO	CIMARRON - DRAPER LAKE 345KV CKT 1	717	717	0.14061	103.4407	ST FRANCIS 345/161KV TRANSFORMER CKT 1
FDNS	00NR	0	16WP	G15_081	FROM->TO	CIMARRON - DRAPER LAKE 345KV CKT 1	717	717	0.14083	103.4351	CORN TAP - CORNVILLE 138KV CKT 1
FDNS	00NR	0	16WP	G15_081	FROM->TO	CIMARRON - DRAPER LAKE 345KV CKT 1	717	717	0.14105	103.4322	MARSHALL - WOODRING 138KV CKT 1
FDNS	00NR	0	16WP	G15_081	FROM->TO	CIMARRON - DRAPER LAKE 345KV CKT 1	717	717	0.14061	103.4302	GEN334392 1-EXXON MOBIL IPP 1
FDNS	00NR	0	16WP	G15_081	FROM->TO	CIMARRON - DRAPER LAKE 345KV CKT 1	717	717	0.14105	103.4299	COTTONWOOD CREEK - MARSHALL 138KV CKT 1
FDNS	00NR	0	16WP	G15_081	FROM->TO	CIMARRON - DRAPER LAKE 345KV CKT 1	717	717	0.1408	103.4289	HEFNER - TULSA 138KV CKT 1
FDNS	00NR	0	16WP	G15_081	FROM->TO	CIMARRON - DRAPER LAKE 345KV CKT 1	717	717	0.14145	103.4279	COLE - OUSW4 138KV CKT 1
FDNS	00NR	0	16WP	G15_081	FROM->TO	CIMARRON - DRAPER LAKE 345KV CKT 1	717	717	0.14061	103.426	MC NIEL 500/115KV TRANSFORMER CKT 1
FDNS	00NR	0	16WP	G15_081	FROM->TO	CIMARRON - DRAPER LAKE 345KV CKT 1	717	717	0.14061	103.424	GEN334393 1-EXXON MOBIL IPP 2
FDNS	00NR	0	16WP	G15_081	FROM->TO	CIMARRON - DRAPER LAKE 345KV CKT 1	717	717	0.14061	103.424	GEN334394 1-EXXON MOBIL IPP 3
FDNS	00NR	0	16WP	G15_081	FROM->TO	CIMARRON - DRAPER LAKE 345KV CKT 1	717	717	0.14068	103.4222	P12:138:AEPW:MOUNDRD4:SHIDLER4
FDNS	00NR	0	16WP	G15_081	FROM->TO	CIMARRON - DRAPER LAKE 345KV CKT 1	717	717	0.14062	103.4218	BISMARK - HOT SPRINGS WEST BUS 115KV CKT 1
FDNS	00NR	0	16WP	G15_081	FROM->TO	CIMARRON - DRAPER LAKE 345KV CKT 1	717	717	0.14105	103.4138	EL RENO SW - MUSTANG2 69.000 69KV CKT 1
FDNS	00NR	0	16WP	G15_081	FROM->TO	CIMARRON - DRAPER LAKE 345KV CKT 1	717	717	0.14071	103.4132	BRISTOW - SILVER CITY 138KV CKT 1
FDNS	00NR	0	16WP	G15_081	FROM->TO	CIMARRON - DRAPER LAKE 345KV CKT 1	717	717	0.14061	103.4123	KELLYAV4 138.00 - MEMORIAL 138KV CKT 1
FDNS	00NR	0	16WP	G15_081	FROM->TO	CIMARRON - DRAPER LAKE 345KV CKT 1	717	717	0.14061	103.4084	GEN501972 1-EVANGELINE UNIT 7-2
FDNS	00NR	0	16WP	G15_081	FROM->TO	CIMARRON - DRAPER LAKE 345KV CKT 1	717	717	0.14061	103.4083	GEN501971 1-EVANGELINE UNIT 7-1
FDNS	00NR	0	16WP	G15_081	FROM->TO	CIMARRON - DRAPER LAKE 345KV CKT 1	717	717	0.14068	103.4049	SHIDLER - WEST PAWHUSKA 138KV CKT 1
FDNS	00NR	0	16WP	G15_081	FROM->TO	CIMARRON - DRAPER LAKE 345KV CKT 1	717	717	0.14093	103.4047	HEALDTON - RINGLING 138KV CKT 1
FDNS	00NR	0	16WP	G15_081	FROM->TO	CIMARRON - DRAPER LAKE 345KV CKT 1	717	717	0.14061	103.3987	GEN334431 1-SABINE UNIT 1
FDNS	00NR	0	16WP	G15_081	FROM->TO	CIMARRON - DRAPER LAKE 345KV CKT 1	717	717	0.14061	103.3986	GEN334432 1-SABINE UNIT 2
FDNS	00NR	0	16WP	G15_081	FROM->TO	CIMARRON - DRAPER LAKE 345KV CKT 1	717	717	0.14061	103.3959	GEN336242 1-1NMIL ST1 18.000
FDNS	00NR	0	16WP	G15_081	FROM->TO	CIMARRON - DRAPER LAKE 345KV CKT 1	717	717	0.14061	103.3954	GEN337764 1-TRACTEBEL UNIT C1
FDNS	00NR	0	16WP	G15_081	FROM->TO	CIMARRON - DRAPER LAKE 345KV CKT 1	717	717	0.14061	103.3954	GEN337765 1-TRACTEBEL UNIT C2
FDNS	00NR	0	16WP	G15_081	FROM->TO	CIMARRON - DRAPER LAKE 345KV CKT 1	717	717	0.14074	103.3939	BROOKLINE - MORGAN 345KV CKT 1
FDNS	00NR	0	16WP	G15_081	FROM->TO	CIMARRON - DRAPER LAKE 345KV CKT 1	717	717	0.14074	103.3939	BROOKLINE - MORGAN 345KV CKT 1
FDNS	00NR	0	16WP	G15_081	FROM->TO	CIMARRON - DRAPER LAKE 345KV CKT 1	717	717	0.14061	103.3938	GEN501912 1-ACADIA UNIT CT1B
FDNS	00NR	0	16WP	G15_081	FROM->TO	CIMARRON - DRAPER LAKE 345KV CKT 1	717	717	0.14061	103.3931	GEN501911 1-ACADIA UNIT CT1A
FDNS	00NR	0	16WP	G15_081	FROM->TO	CIMARRON - DRAPER LAKE 345KV CKT 1	717	717	0.14111	103.3919	BODLE - PARK PLACE 138KV CKT 1
FDNS	00NR	0	16WP	G15_081	FROM->TO	CIMARRON - DRAPER LAKE 345KV CKT 1	717	717	0.14086	103.3911	COUNCIL - MUSTANG 138KV CKT 1
FDNS	00NR	0	16WP	G15_081	FROM->TO	CIMARRON - DRAPER LAKE 345KV CKT 1	717	717	0.14234	103.391	BRYANT - MEMORIAL 138KV CKT 1
FDNS	00NR	0	16WP	G15_081	FROM->TO	CIMARRON - DRAPER LAKE 345KV CKT 1	717	717	0.14068	103.3884	PAWHUSKA TAP - WEST PAWHUSKA 138KV CKT 1
FDNS	00NR	0	16WP	G15_081	FROM->TO	CIMARRON - DRAPER LAKE 345KV CKT 1	717	717	0.14062	103.3884	ALPINE AECC - BISMARK 115KV CKT 1
FDNS	00NR	0	16WP	G15_081	FROM->TO	CIMARRON - DRAPER LAKE 345KV CKT 1	717	717	0.14061	103.388	CYPRESS - HARTBURG 500KV CKT 1
FDNS	00NR	0	16WP	G15_081	FROM->TO	CIMARRON - DRAPER LAKE 345KV CKT 1	717	717	0.1407	103.3831	PIEDMONT - RICHRDS 138KV CKT 1
FDNS	00NR	0	16WP	G15_081	FROM->TO	CIMARRON - DRAPER LAKE 345KV CKT 1	717	717	0.14061	103.3827	P12:69:AEPW:L.E.S.-2:LAW WC2
FDNS	00NR	0	16WP	G15_081	FROM->TO	CIMARRON - DRAPER LAKE 345KV CKT 1	717	717	0.14061	103.3809	KELLYAV4 138.00 - REMNGTON PARK 138KV CKT 1
FDNS	00NR	0	16WP	G15_081	FROM->TO	CIMARRON - DRAPER LAKE 345KV CKT 1	717	717	0.14069	103.3808	HAMMETT2 - MEEKER 138KV CKT 1
FDNS	00NR	0	16WP	G15_081	FROM->TO	CIMARRON - DRAPER LAKE 345KV CKT 1	717	717	0.14085	103.375	HAMMETT TAP - HORSESHOE LAKE 138KV CKT 1
FDNS	00NR	0	16WP	G15_081	FROM->TO	CIMARRON - DRAPER LAKE 345KV CKT 1	717	717	0.14059	103.3697	LAYFLD8 500.00 - MOUNT OLIVE 500KV CKT 1
FDNS	00NR	0	16WP	G15_081	FROM->TO	CIMARRON - DRAPER LAKE 345KV CKT 1	717	717	0.14059	103.3697	LAYFLD8 500.00 - MOUNT OLIVE 500KV CKT 1
FDNS	00NR	0	16WP	G15_081	FROM->TO	CIMARRON - DRAPER LAKE 345KV CKT 1	717	717	0.14093	103.3631	RINGLING - SOUTH WILSON 138KV CKT 1
FDNS	00NR	0	16WP	G15_081	FROM->TO	CIMARRON - DRAPER LAKE 345KV CKT 1	717	717	0.14096	103.3457	CIVIT - PAOLI 138KV CKT 1
FDNS	00NR	0	16WP	G15_081	FROM->TO	CIMARRON - DRAPER LAKE 345KV CKT 1	717	717	0.14059	103.3404	LACYGNE - STILWELL 345KV CKT 1
FDNS	00NR	0	16WP	G15_081	FROM->TO	CIMARRON - DRAPER LAKE 345KV CKT 1	717	717	0.14138	103.3399	GRACEMONT - LAWTON EASTSIDE 345KV CKT 1
FDNS	00NR	0	16WP	G15_081	FROM->TO	CIMARRON - DRAPER LAKE 345KV CKT 1	717	717	0.14138	103.3399	GRACEMONT - LAWTON EASTSIDE 345KV CKT 1
FDNS	00NR	0	16WP	G15_081	FROM->TO	CIMARRON - DRAPER LAKE 345KV CKT 1	717	717	0.14086	103.3365	COUNCIL - WESTOAKS 138KV CKT 1
FDNS	00NR	0	16WP	G15_081	FROM->TO	CIMARRON - DRAPER LAKE 345KV CKT 1	717	717	0.14061	102.9113	BASE CASE
FDNS	00NR	0	16WP	G15_081	FROM->TO	CIMARRON - DRAPER LAKE 345KV CKT 1	717	717	0.14041	102.5994	GRAPEVINE INTERCHANGE - NICHOLS STATION 230KV CKT 1
FDNS	00NR	0	16WP	G15_081	FROM->TO	CIMARRON - DRAPER LAKE 345KV CKT 1	717	717	0.14041	102.5994	GRAPEVINE INTERCHANGE - NICHOLS STATION 230KV CKT 1
FDNS	00NR	0	16WP	G15_081	FROM->TO	CIMARRON - DRAPER LAKE 345KV CKT 1	717	717	0.14429	102.5967	G15063_T 345.00 - WOODRING 345KV CKT 1
FDNS	00NR	0	16WP	G15_081	FROM->TO	CIMARRON - DRAPER LAKE 345KV CKT 1	717	717	0.14139	102.5371	BURGETT4 138.00 - RNDBARN4 138.00 138KV CKT 1
FDNS	00NR	0	16WP	G15_081	FROM->TO	CIMARRON - DRAPER LAKE 345KV CKT 1	717	717	0.14139	102.5354	BURGETT4 138.00 - DANFORTH 138KV CKT 1
FDNS	00NR	0	16WP	G15_081	FROM->TO	CIMARRON - DRAPER LAKE 345KV CKT 1	717	717	0.14139	102.5245	ARCADIA - RNDBARN4 138.00 138KV CKT 1
FDNS	00NR	0	16WP	G15_081	FROM->TO	CIMARRON - DRAPER LAKE 345KV CKT 1	717	717	0.14061	102.495	GEN659125 1-COVEY
FDNS	00NR	0	16WP	G15_081	FROM->TO	CIMARRON - DRAPER LAKE 345KV CKT 1	717	717	0.14061	102.4903	GEN515550 1-MNCWND31 0.6900
FDNS	00NR	0	16WP	G15_081	FROM->TO	CIMARRON - DRAPER LAKE 345KV CKT 1	717	717	0.14031	102.482	GRAPEVINE INTERCHANGE - STATELINE INTERCHANGE 230KV CKT 1
FDNS	00NR	0	16WP	G15_081	FROM->TO	CIMARRON - DRAPER LAKE 345KV CKT 1	717	717	0.14031	102.482	GRAPEVINE INTERCHANGE - STATELINE INTERCHANGE 230KV CKT 1
FDNS	00NR	0	16WP	G15_081	FROM->TO	CIMARRON - DRAPER LAKE 345KV CKT 1	717	717	0.14061	102.477	GEN562611 1-G14_064_3 0.6900
FDNS	00NR	0	16WP	G15_081	FROM->TO	CIMARRON - DRAPER LAKE 345KV CKT 1	717	717	0.14061	102.4715	GEN511848 1-SOUTHWESTERN STATION #3
FDNS	00NR	0	16WP	G15_081	FROM->TO	CIMARRON - DRAPER LAKE 345KV CKT 1	717	717	0.14061	102.4453	GEN515601 1-KNGFSR11 0.7000
FDNS	00NR	0	16WP	G15_081	FROM->TO	CIMARRON - DRAPER LAKE 345KV CKT 1	717	717	0.14061	102.4414	GEN600071 10-RIVER SIDE
FDNS	00NR	0	16WP	G15_081	FROM->TO	CIMARRON - DRAPER LAKE 345KV CKT 1	717	717	0.14061	102.4413	GEN600070 9-RIVER SIDE
FDNS	00NR	0	16WP	G15_081	FROM->TO	CIMARRON - DRAPER LAKE 345KV CKT 1	717	717	0.14061	102.4362	GEN672303 3-BOUNDARY DAM GENERATOR 3
FDNS	00NR	0	16WP	G15_081	FROM->TO	CIMARRON - DRAPER LAKE 345KV CKT 1	717	717	0.14061	102.4362	GEN672304 4-BOUNDARY DAM GENERATOR 4
FDNS	00NR	0	16WP	G15_081	FROM->TO	CIMARRON - DRAPER LAKE 345KV CKT 1	717	717	0.14061	102.4362	GEN672305 5-BOUNDARY DAM GENERATOR 5
FDNS	00NR	0	16WP	G15_081	FROM->TO	CIMARRON - DRAPER LAKE 345KV CKT 1	717	717	0.14061	102.4353	GEN600007 7-RIVERSIDE GEN 7
FDNS	00NR	0	16WP	G15_081	FROM->TO	CIMARRON - DRAPER LAKE 345KV CKT 1	717	717	0.14061	102.4347	GEN600067 9-HIGH BRIDGE
FDNS	00NR	0	16WP	G15_081	FROM->TO	CIMARRON - DRAPER LAKE 345KV CKT 1	717	717	0.14061	102.4338	GEN563062 1-G15071_3 0.6900
FDNS	00NR	0	16WP	G15_081	FROM->TO	CIMARRON - DRAPER LAKE 345KV CKT 1	717	717	0.14061	102.4307	GEN615052 1-CAMBRIDGE GENERATING STATION
FDNS	00NR	0	16WP	G15_081	FROM->TO	CIMARRON - DRAPER LAKE 345KV CKT 1	717	717	0.14061	102.4274	GEN541151 3-SIBLEY GENERATING UNIT #3
FDNS	00NR	0	16WP	G15_081	FROM->TO	CIMARRON - DRAPER LAKE 345KV CKT 1	717	717	0.14019	102.4256	CHISNEY - CLARKSVILLE 138KV CKT 1
FDNSLock	00NR	0	16WP	G15_081	FROM->TO	CIMARRON - DRAPER LAKE 345KV CKT 1	717	717	0.14061	102.4224	GEN600014 4-BLACK DOG GEN 4
FDNS	00NR	0	16WP	G15_081	FROM->TO	CIMARRON - DRAPER LAKE 345KV CKT 1	717	717	0.14061	102.4218	GEN563282 1-G15094_3 0.6900
FDNS	00NR	0	16WP	G15_081	FROM->TO	CIMARRON - DRAPER LAKE 345KV CKT 1	717	717	0.14061	102.4212	GEN652353 2-GR PRAIRIEG 0.6900

SOLUTION	GROUP	SCENARIO	SEASON	SOURCE	DIRECTION	MONITORED ELEMENT	RATEA (MVA)	RATEB(MVA)	TDF	TC%LOADING (% MVA)	CONTINGENCY
FDNS	00NR	0	16WP	G15_081	FROM->TO	CIMARRON - DRAPER LAKE 345KV CKT 1	717	717	0.14061	102.4168	GEN629067 1-EMERY GAS TURBINE 1
FDNS	00NR	0	16WP	G15_081	FROM->TO	CIMARRON - DRAPER LAKE 345KV CKT 1	717	717	0.14087	102.4148	7MCCREDIE 345.00 - 7MONTGMRY 345.00 345KV CKT 1
FDNS	00NR	0	16WP	G15_081	FROM->TO	CIMARRON - DRAPER LAKE 345KV CKT 1	717	717	0.14061	102.4032	GEN563102 1-G15075_3 0.5500
FDNS	00NR	0	16WP	G15_081	FROM->TO	CIMARRON - DRAPER LAKE 345KV CKT 1	717	717	0.14061	102.4015	GEN515591 1-PALDRW11 0.6900
FDNS	00NR	0	16WP	G15_081	FROM->TO	CIMARRON - DRAPER LAKE 345KV CKT 1	717	717	0.14061	102.4	GEN300003 1-THOMAS HILL UNIT 3
FDNS	00NR	0	16WP	G15_081	FROM->TO	CIMARRON - DRAPER LAKE 345KV CKT 1	717	717	0.14061	102.4	GEN600011 5-BLACK DOG GEN 1
FDNS	00NR	0	16WP	G15_081	FROM->TO	CIMARRON - DRAPER LAKE 345KV CKT 1	717	717	0.14061	102.4	GEN615032 2-PLEASANT VALLEY
FDNS	00NR	0	16WP	G15_081	FROM->TO	CIMARRON - DRAPER LAKE 345KV CKT 1	717	717	0.14061	102.3966	GEN562602 1-G15_029_3 0.6900
FDNS	00NR	0	16WP	G15_081	FROM->TO	CIMARRON - DRAPER LAKE 345KV CKT 1	717	717	0.1411	102.3868	SEMINOLE - VANOSTP4 138.00 138KV CKT 1
FDNS	00NR	0	16WP	G15_081	FROM->TO	CIMARRON - DRAPER LAKE 345KV CKT 1	717	717	0.14061	102.3864	GEN600017 C-LS POWER CT
FDNS	00NR	0	16WP	G15_081	FROM->TO	CIMARRON - DRAPER LAKE 345KV CKT 1	717	717	0.14061	102.3828	GEN562812 1-G15040_3 0.3570
FDNS	00NR	0	16WP	G15_081	FROM->TO	CIMARRON - DRAPER LAKE 345KV CKT 1	717	717	0.14061	102.3765	GEN563132 1-G15078_3 0.3570
FDNS	00NR	0	16WP	G15_081	FROM->TO	CIMARRON - DRAPER LAKE 345KV CKT 1	717	717	0.14213	102.3681	FOREST HILL - MAUD 138KV CKT 1
FDNS	00NR	0	16WP	G15_081	FROM->TO	CIMARRON - DRAPER LAKE 345KV CKT 1	717	717	0.14061	102.3672	GEN524285 1-WILDORADO WIND GEN
FDNS	00NR	0	16WP	G15_081	FROM->TO	CIMARRON - DRAPER LAKE 345KV CKT 1	717	717	0.14069	102.366	P12:138:AEPW:WELETK4:EARLSBORO4
FDNS	00NR	0	16WP	G15_081	FROM->TO	CIMARRON - DRAPER LAKE 345KV CKT 1	717	717	0.14069	102.366	P12:138:OKGE:3TERM36
FDNS	00NR	0	16WP	G15_081	FROM->TO	CIMARRON - DRAPER LAKE 345KV CKT 1	717	717	0.14061	102.3624	GEN562074 1-G1149G1504 0.6900
FDNS	00NR	0	16WP	G15_081	FROM->TO	CIMARRON - DRAPER LAKE 345KV CKT 1	717	717	0.14061	102.3559	GEN672392 1-NBECGT1G 18.000
FDNS	00NR	0	16WP	G15_081	FROM->TO	CIMARRON - DRAPER LAKE 345KV CKT 1	717	717	0.14069	102.3552	EARLSBORO 4138.00 - FIXICO TAP 138KV CKT 1
FDNS	00NR	0	16WP	G15_081	FROM->TO	CIMARRON - DRAPER LAKE 345KV CKT 1	717	717	0.14061	102.3552	GEN629070 2-BEAVER CHANNEL GENERATORFOR UNIT NO 2
FDNS	00NR	0	16WP	G15_081	FROM->TO	CIMARRON - DRAPER LAKE 345KV CKT 1	717	717	0.14061	102.3445	GEN526331 1-JONES GEN #1 22 KV
FDNS	00NR	0	16WP	G15_081	FROM->TO	CIMARRON - DRAPER LAKE 345KV CKT 1	717	717	0.14061	102.3445	GEN526332 1-JONES GEN #2 21 KV
FDNS	00NR	0	16WP	G15_081	FROM->TO	CIMARRON - DRAPER LAKE 345KV CKT 1	717	717	0.14076	102.3431	CANADIAN RIVER - MCALESTER SOUTH 138KV CKT 1
FDNS	00NR	0	16WP	G15_081	FROM->TO	CIMARRON - DRAPER LAKE 345KV CKT 1	717	717	0.14076	102.3431	CANADIAN RIVER - MCALESTER SOUTH 138KV CKT 1
FDNS	00NR	0	16WP	G15_081	FROM->TO	CIMARRON - DRAPER LAKE 345KV CKT 1	717	717	0.14061	102.343	GEN562596 1-G14_059_3 0.6900
FDNS	00NR	0	16WP	G15_081	FROM->TO	CIMARRON - DRAPER LAKE 345KV CKT 1	717	717	0.14076	102.3417	CANADIAN RIVER () 345/138/13.8KV TRANSFORMER CKT 1
FDNS	00NR	0	16WP	G15_081	FROM->TO	CIMARRON - DRAPER LAKE 345KV CKT 1	717	717	0.14076	102.3417	CANADIAN RIVER () 345/138/13.8KV TRANSFORMER CKT 1
FDNS	00NR	0	16WP	G15_081	FROM->TO	CIMARRON - DRAPER LAKE 345KV CKT 1	717	717	0.14061	102.336	GEN615010 1-STANTON4
FDNS	00NR	0	16WP	G15_081	FROM->TO	CIMARRON - DRAPER LAKE 345KV CKT 1	717	717	0.14061	102.3359	GEN629071 1-BURLINGTON GENERATOR FOR UNIT NO 1 E
FDNS	00NR	0	16WP	G15_081	FROM->TO	CIMARRON - DRAPER LAKE 345KV CKT 1	717	717	0.14019	102.3342	CHISNEY - HIGHLAND 138KV CKT 1
FDNS	00NR	0	16WP	G15_081	FROM->TO	CIMARRON - DRAPER LAKE 345KV CKT 1	717	717	0.14061	102.3307	GEN515365 1-CENT 21 0.7000
FDNS	00NR	0	16WP	G15_081	FROM->TO	CIMARRON - DRAPER LAKE 345KV CKT 1	717	717	0.14061	102.3205	GEN562983 1-G15061_4 0.6900
FDNS	00NR	0	16WP	G15_081	FROM->TO	CIMARRON - DRAPER LAKE 345KV CKT 1	717	717	0.14061	102.3205	GEN562984 1-G15061_5 0.6900
FDNS	00NR	0	16WP	G15_081	FROM->TO	CIMARRON - DRAPER LAKE 345KV CKT 1	717	717	0.14062	102.3203	P12:138:WFEC:MSL07
FDNS	00NR	0	16WP	G15_081	FROM->TO	CIMARRON - DRAPER LAKE 345KV CKT 1	717	717	0.14062	102.3203	P12:138:WFEC-AEPW:HUGOPP4:ATOKA--4
FDNS	00NR	0	16WP	G15_081	FROM->TO	CIMARRON - DRAPER LAKE 345KV CKT 1	717	717	0.14061	102.3161	GEN562017 1-G11_022_3 0.6900
FDNS	00NR	0	16WP	G15_081	FROM->TO	CIMARRON - DRAPER LAKE 345KV CKT 1	717	717	0.14061	102.3138	GEN615021 1-GRE-ER 14G 16.000
FDNS	00NR	0	16WP	G15_081	FROM->TO	CIMARRON - DRAPER LAKE 345KV CKT 1	717	717	0.14068	102.3122	GRPRAR1-LNX3345.00 - HOLT.CO3 345.00 345KV CKT 1
FDNS	00NR	0	16WP	G15_081	FROM->TO	CIMARRON - DRAPER LAKE 345KV CKT 1	717	717	0.14068	102.3107	P12:138:AEPW:SHAM4WT:CHILD4WT
FDNS	00NR	0	16WP	G15_081	FROM->TO	CIMARRON - DRAPER LAKE 345KV CKT 1	717	717	0.14068	102.3086	GRPRAR1-LNX3345.00 - GRPRAR 345KV CKT Z
FDNS	00NR	0	16WP	G15_081	FROM->TO	CIMARRON - DRAPER LAKE 345KV CKT 1	717	717	0.14061	102.3034	GEN562429 1-G13-029 0.6900
FDNS	00NR	0	16WP	G15_081	FROM->TO	CIMARRON - DRAPER LAKE 345KV CKT 1	717	717	0.14061	102.3021	GEN562432 1-G13-030 0.6900
FDNS	00NR	0	16WP	G15_081	FROM->TO	CIMARRON - DRAPER LAKE 345KV CKT 1	717	717	0.14061	102.3019	GEN560105 1-G08-22 0.6900
FDNS	00NR	0	16WP	G15_081	FROM->TO	CIMARRON - DRAPER LAKE 345KV CKT 1	717	717	0.14061	102.3006	INDEPENDENCE 500/26.0KV TRANSFORMER CKT 1
FDNS	00NR	0	16WP	G15_081	FROM->TO	CIMARRON - DRAPER LAKE 345KV CKT 1	717	717	0.14061	102.2985	GEN532663 1-LAWRENCE ENERGY CENTER UNIT 5
FDNS	00NR	0	16WP	G15_081	FROM->TO	CIMARRON - DRAPER LAKE 345KV CKT 1	717	717	0.14057	102.2985	P12:138:AEPW-SWPA:LONEOAK4:TUPELO4
FDNS	00NR	0	16WP	G15_081	FROM->TO	CIMARRON - DRAPER LAKE 345KV CKT 1	717	717	0.14057	102.2984	P12:138:WFEC:MSL06
FDNS	00NR	0	16WP	G15_081	FROM->TO	CIMARRON - DRAPER LAKE 345KV CKT 1	717	717	0.14091	102.2966	OVEXFRMCCOVE
FDNS	00NR	0	16WP	G15_081	FROM->TO	CIMARRON - DRAPER LAKE 345KV CKT 1	717	717	0.14076	102.2931	DELL 500 - INDEPENDENCE 500KV CKT 1
FDNS	00NR	0	16WP	G15_081	FROM->TO	CIMARRON - DRAPER LAKE 345KV CKT 1	717	717	0.14061	102.2894	BURLINGTON NO1 + NO 2 + NO 3 161/20.0KV TRANSFORMER CKT 1
FDNS	00NR	0	16WP	G15_081	FROM->TO	CIMARRON - DRAPER LAKE 345KV CKT 1	717	717	0.14069	102.2839	P12:138:AEPW-OGE:WELETK4:MAUD 4
FDNS	00NR	0	16WP	G15_081	FROM->TO	CIMARRON - DRAPER LAKE 345KV CKT 1	717	717	0.13965	102.2797	P12:230:AEPW:ELKCITY6:SWEETWT6
FDNS	00NR	0	16WP	G15_081	FROM->TO	CIMARRON - DRAPER LAKE 345KV CKT 1	717	717	0.14061	102.2752	GEN527882 1-CUNNINGHAM GEN #2 20 KV
FDNS	00NR	0	16WP	G15_081	FROM->TO	CIMARRON - DRAPER LAKE 345KV CKT 1	717	717	0.14072	102.2741	P12:138:WFEC:MSL16
FDNS	00NR	0	16WP	G15_081	FROM->TO	CIMARRON - DRAPER LAKE 345KV CKT 1	717	717	0.14069	102.2712	EARLSBORO 4138.00 - MAUD 138KV CKT 1
FDNS	00NR	0	16WP	G15_081	FROM->TO	CIMARRON - DRAPER LAKE 345KV CKT 1	717	717	0.14069	102.2712	EARLSBORO 4138.00 - MAUD 138KV CKT 1
FDNS	00NR	0	16WP	G15_081	FROM->TO	CIMARRON - DRAPER LAKE 345KV CKT 1	717	717	0.14061	102.2674	GEN562550 1-G14_040_3 0.6900
FDNS	00NR	0	16WP	G15_081	FROM->TO	CIMARRON - DRAPER LAKE 345KV CKT 1	717	717	0.14061	102.2642	GEN524295 1-SPNSPUR_WND10.6900
FDNS	00NR	0	16WP	G15_081	FROM->TO	CIMARRON - DRAPER LAKE 345KV CKT 1	717	717	0.14061	102.2579	GEN562832 1-G15042_3 0.6900
FDNS	00NR	0	16WP	G15_081	FROM->TO	CIMARRON - DRAPER LAKE 345KV CKT 1	717	717	0.14182	102.2486	MAUD - SEMINOLE 138KV CKT 1
FDNS	00NR	0	16WP	G15_081	FROM->TO	CIMARRON - DRAPER LAKE 345KV CKT 1	717	717	0.14005	102.2397	STLN-DEMARC6 - SWEETWATER 230KV CKT 1
FDNS	00NR	0	16WP	G15_081	FROM->TO	CIMARRON - DRAPER LAKE 345KV CKT 1	717	717	0.14005	102.2392	P12:230:AEPW-SPS:SWEETWT6:WHEELER 6
FDNS	00NR	0	16WP	G15_081	FROM->TO	CIMARRON - DRAPER LAKE 345KV CKT 1	717	717	0.14005	102.2372	STATELINE INTERCHANGE - STLN-DEMARC6 230KV CKT 1
FDNS	00NR	0	16WP	G15_081	FROM->TO	CIMARRON - DRAPER LAKE 345KV CKT 1	717	717	0.14061	102.221	GEN531447 1-HOLCOMB GENERATOR
FDNS	00NR	0	16WP	G15_081	FROM->TO	CIMARRON - DRAPER LAKE 345KV CKT 1	717	717	0.14061	102.2207	P12:230:UMZB:# 112 #: NU IN SD. NU-RCDC & DRY CREEK XFMR
FDNS	00NR	0	16WP	G15_081	FROM->TO	CIMARRON - DRAPER LAKE 345KV CKT 1	717	717	0.14061	102.2195	RCDC EAST 4230.00 - RED CEDAR DC 230KV CKT 1
FDNS	00NR	0	16WP	G15_081	FROM->TO	CIMARRON - DRAPER LAKE 345KV CKT 1	717	717	0.14061	102.2165	GEN645011 1-NEBRASKA CITY 1
FDNS	00NR	0	16WP	G15_081	FROM->TO	CIMARRON - DRAPER LAKE 345KV CKT 1	717	717	0.14061	102.2156	GEN345671 2-1RUSH G2 18.000
FDNS	00NR	0	16WP	G15_081	FROM->TO	CIMARRON - DRAPER LAKE 345KV CKT 1	717	717	0.14061	102.2137	GEN345670 1-1RUSH G1 18.000
FDNS	00NR	0	16WP	G15_081	FROM->TO	CIMARRON - DRAPER LAKE 345KV CKT 1	717	717	0.14061	102.2132	GEN515606 1-CANDN11 0.6900
FDNS	00NR	0	16WP	G15_081	FROM->TO	CIMARRON - DRAPER LAKE 345KV CKT 1	717	717	0.14061	102.2132	GEN515607 1-CANDN12 0.6900
FDNS	00NR	0	16WP	G15_081	FROM->TO	CIMARRON - DRAPER LAKE 345KV CKT 1	717	717	0.14019	102.2079	HIGHLAND - PINK SW 138KV CKT 1
FDNS	00NR	0	16WP	G15_081	FROM->TO	CIMARRON - DRAPER LAKE 345KV CKT 1	717	717	0.14061	102.1858	GEN515443 1-MNCOWND1 0.7000
FDNS	00NR	0	16WP	G15_081	FROM->TO	CIMARRON - DRAPER LAKE 345KV CKT 1	717	717	0.14061	102.1851	GEN562794 1-G15038_5 0.6900
FDNS	00NR	0	16WP	G15_081	FROM->TO	CIMARRON - DRAPER LAKE 345KV CKT 1	717	717	0.14061	102.1851	GEN562795 1-G15038_6 0.6900
FDNS	00NR	0	16WP	G15_081	FROM->TO	CIMARRON - DRAPER LAKE 345KV CKT 1	717	717	0.14061	102.1817	GEN563092 1-G15074_3 0.6900
FDNS	00NR	0	16WP	G15_081	FROM->TO	CIMARRON - DRAPER LAKE 345KV CKT 1	717	717	0.14134	102.1805	FT SMITH - MUSKOGEE 345KV CKT 1
FDNS	00NR	0	16WP	G15_081	FROM->TO	CIMARRON - DRAPER LAKE 345KV CKT 1	717	717	0.14061	102.1774	GEN542951 5-HAWTHORN UNIT #5
FDNS	00NR	0	16WP	G15_081	FROM->TO	CIMARRON - DRAPER LAKE 345KV CKT 1	717	717	0.14061	102.1724	GEN645012 2-NEBRASKA CITY 2

SOLUTION	GROUP	SCENARIO	SEASON	SOURCE	DIRECTION	MONITORED ELEMENT	RATEA (MVA)	RATEB(MVA)	TDF	TC%LOADING (% MVA)	CONTINGENCY
FDNSLock	00NR	0	16WP	G15_081	FROM->TO	CIMARRON - DRAPER LAKE 345KV CKT 1	717	717	0.14061	102.1642	GEN629072 4-LANSING GENERATOR FOR UNITS NO4 EIA CODE 1
FDNS	00NR	0	16WP	G15_081	FROM->TO	CIMARRON - DRAPER LAKE 345KV CKT 1	717	717	0.14061	102.1533	GEN562512 1-G14_020_3 0.6900
FDNS	00NR	0	16WP	G15_081	FROM->TO	CIMARRON - DRAPER LAKE 345KV CKT 1	717	717	0.14083	102.1446	KEO EHV - WEST MEMPHIS 500 500KV CKT 1
FDNS	00NR	0	16WP	G15_081	FROM->TO	CIMARRON - DRAPER LAKE 345KV CKT 1	717	717	0.14005	102.1408	CHISHOLM6 230.00 - SWEETWATER 230KV CKT 1
FDNS	00NR	0	16WP	G15_081	FROM->TO	CIMARRON - DRAPER LAKE 345KV CKT 1	717	717	0.14061	102.134	GEN657749 1-YOUNG 1 GENERATOR
FDNS	00NR	0	16WP	G15_081	FROM->TO	CIMARRON - DRAPER LAKE 345KV CKT 1	717	717	0.14061	102.1262	GEN562699 1-G15_018_3 0.6900
FDNS	00NR	0	16WP	G15_081	FROM->TO	CIMARRON - DRAPER LAKE 345KV CKT 1	717	717	0.14061	102.1114	GEN640009 1-COOPER NUCLEAR STATION
FDNS	00NR	0	16WP	G15_081	FROM->TO	CIMARRON - DRAPER LAKE 345KV CKT 1	717	717	0.14061	102.1042	GEN529201 1-OMCDLEC1 13.800
FDNS	00NR	0	16WP	G15_081	FROM->TO	CIMARRON - DRAPER LAKE 345KV CKT 1	717	717	0.14099	102.1014	FRISCCO4 138.00 - LULA 138KV CKT 1
FDNS	00NR	0	16WP	G15_081	FROM->TO	CIMARRON - DRAPER LAKE 345KV CKT 1	717	717	0.14061	102.0883	GEN563122 1-G15077_3 0.3850
FDNS	00NR	0	16WP	G15_081	FROM->TO	CIMARRON - DRAPER LAKE 345KV CKT 1	717	717	0.14061	102.0793	GEN563182 1-G15083_3 0.6900
FDNSLock	00NR	0	16WP	G15_081	FROM->TO	CIMARRON - DRAPER LAKE 345KV CKT 1	717	717	0.14061	102.0662	GEN681522 3-GENOA 3
FDNS	00NR	0	16WP	G15_081	FROM->TO	CIMARRON - DRAPER LAKE 345KV CKT 1	717	717	0.14061	102.0608	GEN562685 1-G15_013_3 0.3550
FDNS	00NR	0	16WP	G15_081	FROM->TO	CIMARRON - DRAPER LAKE 345KV CKT 1	717	717	0.14214	102.0437	HOLLYWOOD - MIDWEST TAP 138KV CKT 1
FDNS	00NR	0	16WP	G15_081	FROM->TO	CIMARRON - DRAPER LAKE 345KV CKT 1	717	717	0.14061	102.0354	GEN344895 2-1LAB G2 20.000
FDNS	00NR	0	16WP	G15_081	FROM->TO	CIMARRON - DRAPER LAKE 345KV CKT 1	717	717	0.1406	102.0328	TUPELO - TUPELO TAP 138KV CKT 1
FDNS	00NR	0	16WP	G15_081	FROM->TO	CIMARRON - DRAPER LAKE 345KV CKT 1	717	717	0.13946	102.0286	CHISHOLM7 345.00 - GRACEMONT 345KV CKT 1
FDNS	00NR	0	16WP	G15_081	FROM->TO	CIMARRON - DRAPER LAKE 345KV CKT 1	717	717	0.14061	102.0223	GEN563222 1-G15088_3 0.6900
FDNS	00NR	0	16WP	G15_081	FROM->TO	CIMARRON - DRAPER LAKE 345KV CKT 1	717	717	0.14061	102.0212	4SIOUX 1 138.00 138/18.0KV TRANSFORMER CKT 1
FDNS	00NR	0	16WP	G15_081	FROM->TO	CIMARRON - DRAPER LAKE 345KV CKT 1	717	717	0.14067	102.0151	CIMARRON - TUTTLE CONOCO TAP 138KV CKT 1
FDNS	00NR	0	16WP	G15_081	FROM->TO	CIMARRON - DRAPER LAKE 345KV CKT 1	717	717	0.14099	102.0133	FRISCCO4 138.00 - HARDEN 4 138.00 138KV CKT 1
FDNS	00NR	0	16WP	G15_081	FROM->TO	CIMARRON - DRAPER LAKE 345KV CKT 1	717	717	0.14061	102.0083	GEN523461 1-BLACKHAWK GEN #1
FDNS	00NR	0	16WP	G15_081	FROM->TO	CIMARRON - DRAPER LAKE 345KV CKT 1	717	717	0.14061	102.0082	GEN523462 1-BLACKHAWK GEN #2
FDNS	00NR	0	16WP	G15_081	FROM->TO	CIMARRON - DRAPER LAKE 345KV CKT 1	717	717	0.14061	102.0073	GEN344896 3-1LAB G3 20.000
FDNS	00NR	0	16WP	G15_081	FROM->TO	CIMARRON - DRAPER LAKE 345KV CKT 1	717	717	0.14061	102.0058	GEN344894 1-1LAB G1 20.000
FDNS	00NR	0	16WP	G15_081	FROM->TO	CIMARRON - DRAPER LAKE 345KV CKT 1	717	717	0.14061	102.0047	GEN344897 4-1LAB G4 20.000
FDNS	00NR	0	16WP	G15_081	FROM->TO	CIMARRON - DRAPER LAKE 345KV CKT 1	717	717	0.14061	102.0003	GEN562587 1-G14_056_3 0.6900
FDNS	00NR	0	16WP	G15_081	FROM->TO	CIMARRON - DRAPER LAKE 345KV CKT 1	717	717	0.14061	101.9772	GEN515602 1-KNGFSR12 0.7000
FDNS	00NR	0	16WP	G15_081	FROM->TO	CIMARRON - DRAPER LAKE 345KV CKT 1	717	717	0.14061	101.9571	GEN563082 1-G15073_3 0.6900
FDNS	00NR	0	16WP	G15_081	FROM->TO	CIMARRON - DRAPER LAKE 345KV CKT 1	717	717	0.14067	101.9436	TUTTLE - TUTTLE CONOCO TAP 138KV CKT 1
FDNS	00NR	0	16WP	G15_081	FROM->TO	CIMARRON - DRAPER LAKE 345KV CKT 1	717	717	0.13946	101.9367	CHISHOLM7 345.00 (CHISHOLM) 345/230/13.2KV TRANSFORMER CKT 1
FDNS	00NR	0	16WP	G15_081	FROM->TO	CIMARRON - DRAPER LAKE 345KV CKT 1	717	717	0.14061	101.9307	GEN562704 1-G15_020_3 0.3550
FDNS	00NR	0	16WP	G15_081	FROM->TO	CIMARRON - DRAPER LAKE 345KV CKT 1	717	717	0.14061	101.9129	GEN563202 1-G15085_3 0.5500
FDNS	00NR	0	16WP	G15_081	FROM->TO	CIMARRON - DRAPER LAKE 345KV CKT 1	717	717	0.14061	101.9087	CLAY BOSWELL 230/20.9KV TRANSFORMER CKT 1
FDNS	00NR	0	16WP	G15_081	FROM->TO	CIMARRON - DRAPER LAKE 345KV CKT 1	717	717	0.14061	101.8974	GEN640010 1-GERALD GENTLEMAN STATION UNIT 1
FDNS	00NR	0	16WP	G15_081	FROM->TO	CIMARRON - DRAPER LAKE 345KV CKT 1	717	717	0.14061	101.8665	GEN672321 1-SHAND GENERATOR 1
FDNS	00NR	0	16WP	G15_081	FROM->TO	CIMARRON - DRAPER LAKE 345KV CKT 1	717	717	0.14116	101.8497	LULA - TUPELO TAP 138KV CKT 1
FDNS	00NR	0	16WP	G15_081	FROM->TO	CIMARRON - DRAPER LAKE 345KV CKT 1	717	717	0.14066	101.8468	NORTHWEST TEXARKANA - VALLIANT 345KV CKT 1
FDNS	00NR	0	16WP	G15_081	FROM->TO	CIMARRON - DRAPER LAKE 345KV CKT 1	717	717	0.14066	101.8468	NORTHWEST TEXARKANA - VALLIANT 345KV CKT 1
FDNS	00NR	0	16WP	G15_081	FROM->TO	CIMARRON - DRAPER LAKE 345KV CKT 1	717	717	0.14061	101.8436	GEN562710 1-G15_022_3 0.5500
FDNS	00NR	0	16WP	G15_081	FROM->TO	CIMARRON - DRAPER LAKE 345KV CKT 1	717	717	0.13989	101.8429	SEMINOLE (SEMINOL1) 345/138/14.4KV TRANSFORMER CKT 1
FDNS	00NR	0	16WP	G15_081	FROM->TO	CIMARRON - DRAPER LAKE 345KV CKT 1	717	717	0.14061	101.8407	GEN672310 1-POPLAR RIVER GENERATOR 1
FDNS	00NR	0	16WP	G15_081	FROM->TO	CIMARRON - DRAPER LAKE 345KV CKT 1	717	717	0.14061	101.8406	GEN672311 2-POPLAR RIVER GENERATOR 2
FDNS	00NR	0	16WP	G15_081	FROM->TO	CIMARRON - DRAPER LAKE 345KV CKT 1	717	717	0.14061	101.8304	GEN672306 6-BOUNDARY DAM GENERATOR 6
FDNS	00NR	0	16WP	G15_081	FROM->TO	CIMARRON - DRAPER LAKE 345KV CKT 1	717	717	0.14061	101.8297	GEN640011 2-GERALD GENTLEMAN STATION UNIT 2
FDNS	00NR	0	16WP	G15_081	FROM->TO	CIMARRON - DRAPER LAKE 345KV CKT 1	717	717	0.14061	101.8274	GEN542956 2-LACYGNE UNIT #2
FDNS	00NR	0	16WP	G15_081	FROM->TO	CIMARRON - DRAPER LAKE 345KV CKT 1	717	717	0.14061	101.8181	GEN659118 1-LARAMIE RIVER UNIT1
FDNS	00NR	0	16WP	G15_081	FROM->TO	CIMARRON - DRAPER LAKE 345KV CKT 1	717	717	0.14099	101.7929	ETNA - HARDEN 4 138.00 138KV CKT 1
FDNS	00NR	0	16WP	G15_081	FROM->TO	CIMARRON - DRAPER LAKE 345KV CKT 1	717	717	0.13772	101.7872	RENFROW7 345.00 - VIOLA 7 345.00 345KV CKT 1
FDNS	01NR	0	17G	G15_081	FROM->TO	CIMARRON - DRAPER LAKE 345KV CKT 1	717	717	0.15528	101.7747	G14-057T 345.00 - SUNNYSIDE 345KV CKT 1
FDNS	00NR	0	16WP	G15_081	FROM->TO	CIMARRON - DRAPER LAKE 345KV CKT 1	717	717	0.14124	101.7737	P12:138:OKGE:3TERM22
FDNS	00NR	0	16WP	G15_081	FROM->TO	CIMARRON - DRAPER LAKE 345KV CKT 1	717	717	0.14125	101.7718	DRAPER LAKE - SOONER TAP 138KV CKT 1
FDNS	00NR	0	16WP	G15_081	FROM->TO	CIMARRON - DRAPER LAKE 345KV CKT 1	717	717	0.14019	101.7634	P12:138:WFEC:MSL08
FDNS	00NR	0	16WP	G15_081	FROM->TO	CIMARRON - DRAPER LAKE 345KV CKT 1	717	717	0.14019	101.7516	FRANKLIN - PINK SW 138KV CKT 1
FDNS	00NR	0	16WP	G15_081	FROM->TO	CIMARRON - DRAPER LAKE 345KV CKT 1	717	717	0.14069	101.7502	P12:138:WFEC:MSL09
FDNS	00NR	0	16WP	G15_081	FROM->TO	CIMARRON - DRAPER LAKE 345KV CKT 1	717	717	0.14261	101.7466	OAKCREEK - WILD MARY 138KV CKT 1
FDNS	00NR	0	16WP	G15_081	FROM->TO	CIMARRON - DRAPER LAKE 345KV CKT 1	717	717	0.14061	101.7397	GEN542957 1-IATAN UNIT #1
FDNSLock	00NR	0	16WP	G15_081	FROM->TO	CIMARRON - DRAPER LAKE 345KV CKT 1	717	717	0.14061	101.7355	GEN681542 6-JP MADGETT
FDNS	00NR	0	16WP	G15_081	FROM->TO	CIMARRON - DRAPER LAKE 345KV CKT 1	717	717	0.14061	101.7124	GEN530690 1-PRWINDG1 0.6900
FDNS	00NR	0	16WP	G15_081	FROM->TO	CIMARRON - DRAPER LAKE 345KV CKT 1	717	717	0.14099	101.7075	ETNA - PARK LANE 138KV CKT 1
FDNS	00NR	0	16WP	G15_081	FROM->TO	CIMARRON - DRAPER LAKE 345KV CKT 1	717	717	0.14061	101.7	GEN645001 1-FORT CALHOUN 1
FDNS	00NR	0	16WP	G15_081	FROM->TO	CIMARRON - DRAPER LAKE 345KV CKT 1	717	717	0.13775	101.6997	HUNTERS7 345.00 - RENFROW7 345.00 345KV CKT 1
FDNS	00NR	0	16WP	G15_081	FROM->TO	CIMARRON - DRAPER LAKE 345KV CKT 1	717	717	0.14061	101.658	GEN542955 1-LACYGNE UNIT #1
FDNS	00NR	0	16WP	G15_081	FROM->TO	CIMARRON - DRAPER LAKE 345KV CKT 1	717	717	0.14061	101.6477	GEN562754 1-G15031_5 0.6900
FDNS	00NR	0	16WP	G15_081	FROM->TO	CIMARRON - DRAPER LAKE 345KV CKT 1	717	717	0.14061	101.6356	GEN562556 1-G14_046_3 0.3420
FDNS	00NR	0	16WP	G15_081	FROM->TO	CIMARRON - DRAPER LAKE 345KV CKT 1	717	717	0.13974	101.6321	SEMINOLE (SEMINOL2) 345/138/14.4KV TRANSFORMER CKT 1
FDNS	00NR	0	16WP	G15_081	FROM->TO	CIMARRON - DRAPER LAKE 345KV CKT 1	717	717	0.14061	101.6108	GEN661015 1-COYOTE
FDNS	00NR	0	16WP	G15_081	FROM->TO	CIMARRON - DRAPER LAKE 345KV CKT 1	717	717	0.14061	101.6042	GEN562756 1-G15031_7 0.6900
FDNS	00NR	0	16WP	G15_081	FROM->TO	CIMARRON - DRAPER LAKE 345KV CKT 1	717	717	0.14061	101.6013	GEN532653 1-JEFFREY ENERGY CENTER UNIT 3
FDNS	00NR	0	16WP	G15_081	FROM->TO	CIMARRON - DRAPER LAKE 345KV CKT 1	717	717	0.14061	101.6012	GEN532652 1-JEFFREY ENERGY CENTER UNIT 2
FDNS	00NR	0	16WP	G15_081	FROM->TO	CIMARRON - DRAPER LAKE 345KV CKT 1	717	717	0.14061	101.5971	GEN532651 1-JEFFREY ENERGY CENTER UNIT 1
FDNS	00NR	0	16WP	G15_081	FROM->TO	CIMARRON - DRAPER LAKE 345KV CKT 1	717	717	0.14061	101.5894	GEN562974 1-G15060_5 0.6900
FDNS	00NR	0	16WP	G15_081	FROM->TO	CIMARRON - DRAPER LAKE 345KV CKT 1	717	717	0.14061	101.5883	GEN563142 1-G15079_3 0.5500
FDNS	00NR	0	16WP	G15_081	FROM->TO	CIMARRON - DRAPER LAKE 345KV CKT 1	717	717	0.14061	101.5883	GEN563151 1-G15080_2 0.5500
FDNS	00NR	0	16WP	G15_081	FROM->TO	CIMARRON - DRAPER LAKE 345KV CKT 1	717	717	0.14061	101.5778	GEN563042 1-G15068_3 0.6900
FDNS	00NR	0	16WP	G15_081	FROM->TO	CIMARRON - DRAPER LAKE 345KV CKT 1	717	717	0.14061	101.5733	GEN562973 1-G15060_4 0.6900
FDNS	00NR	0	16WP	G15_081	FROM->TO	CIMARRON - DRAPER LAKE 345KV CKT 1	717	717	0.14061	101.5428	GEN562078 1-G11_051_3 0.6900
FDNS	00NR	0	16WP	G15_081	FROM->TO	CIMARRON - DRAPER LAKE 345KV CKT 1	717	717	0.14061	101.531	GEN562691 1-G15_015_3 0.6900
FDNS	00NR	0	16WP	G15_081	FROM->TO	CIMARRON - DRAPER LAKE 345KV CKT 1	717	717	0.14261	101.52	AIRDEPT4 138.00 - WILD MARY 138KV CKT 1

SOLUTION	GROUP	SCENARIO	SEASON	SOURCE	DIRECTION	MONITORED ELEMENT	RATEA (MVA)	RATEB(MVA)	TDF	TC%LOADING (% MVA)	CONTINGENCY
FDNS	00NR	0	16WP	G15_081	FROM->TO	CIMARRON - DRAPER LAKE 345KV CKT 1	717	717	0.14151	101.4938	PARK LANE - SEMINOLE 138KV CKT 1
FDNS	00NR	0	16WP	G15_081	FROM->TO	CIMARRON - DRAPER LAKE 345KV CKT 1	717	717	0.14061	101.4886	GEN562655 1-G14_074_3 0.6900
FDNS	00NR	0	16WP	G15_081	FROM->TO	CIMARRON - DRAPER LAKE 345KV CKT 1	717	717	0.14061	101.4881	GEN562762 1-G15033_3 0.6900
FDNS	00NR	0	16WP	G15_081	FROM->TO	CIMARRON - DRAPER LAKE 345KV CKT 1	717	717	0.14061	101.4826	GEN657748 1-YOUNG 2 GENERATOR
FDNS	00NR	0	16WP	G15_081	FROM->TO	CIMARRON - DRAPER LAKE 345KV CKT 1	717	717	0.14019	101.468	FRANKLIN - FRANKLIN SW 138KV CKT 1
FDNS	00NR	0	16WP	G15_081	FROM->TO	CIMARRON - DRAPER LAKE 345KV CKT 1	717	717	0.14061	101.4312	GEN527901 1-HOBBS PLANT #1 (CT)
FDNS	00NR	0	16WP	G15_081	FROM->TO	CIMARRON - DRAPER LAKE 345KV CKT 1	717	717	0.14061	101.4312	GEN527902 1-HOBBS PLANT #2 (CT)
FDNS	00NR	0	16WP	G15_081	FROM->TO	CIMARRON - DRAPER LAKE 345KV CKT 1	717	717	0.14061	101.405	GEN563273 2-G15093_4 0.6900
FDNS	00NR	0	16WP	G15_081	FROM->TO	CIMARRON - DRAPER LAKE 345KV CKT 1	717	717	0.14061	101.389	GEN563043 1-G15068_4 0.6900
FDNS	00NR	0	16WP	G15_081	FROM->TO	CIMARRON - DRAPER LAKE 345KV CKT 1	717	717	0.14069	101.3853	LYDIA - WELSH 345KV CKT 1
FDNS	00NR	0	16WP	G15_081	FROM->TO	CIMARRON - DRAPER LAKE 345KV CKT 1	717	717	0.14069	101.3853	LYDIA - WELSH 345KV CKT 1
FDNS	00NR	0	16WP	G15_081	FROM->TO	CIMARRON - DRAPER LAKE 345KV CKT 1	717	717	0.14061	101.3678	GEN563052 1-G15069_3 0.6900
FDNS	00NR	0	16WP	G15_081	FROM->TO	CIMARRON - DRAPER LAKE 345KV CKT 1	717	717	0.14061	101.3481	GEN525845 1-ELK_2 1 138.00
FDNS	00NR	0	16WP	G15_081	FROM->TO	CIMARRON - DRAPER LAKE 345KV CKT 1	717	717	0.14061	101.3447	GEN525844 1-ELK_1 118.000
FDNS	00NR	0	16WP	G15_081	FROM->TO	CIMARRON - DRAPER LAKE 345KV CKT 1	717	717	0.14061	101.3169	GEN563242 1-G15090_3 0.6900
FDNS	00NR	0	16WP	G15_081	FROM->TO	CIMARRON - DRAPER LAKE 345KV CKT 1	717	717	0.14061	101.298	GEN526333 1-JONES GEN #3 21 KV
FDNS	00NR	0	16WP	G15_081	FROM->TO	CIMARRON - DRAPER LAKE 345KV CKT 1	717	717	0.14061	101.298	GEN526334 1-JONES_4 116.500
FDNS	00NR	0	16WP	G15_081	FROM->TO	CIMARRON - DRAPER LAKE 345KV CKT 1	717	717	0.14067	101.2942	P12:138:AEPW-OGE:CORNVIL4:CIMARON4
FDNS	00NR	0	16WP	G15_081	FROM->TO	CIMARRON - DRAPER LAKE 345KV CKT 1	717	717	0.14061	101.2934	GEN620315 1-BIG STONE GEN
FDNS	00NR	0	16WP	G15_081	FROM->TO	CIMARRON - DRAPER LAKE 345KV CKT 1	717	717	0.14261	101.2904	AIRDEPT4 138.00 - GM 138KV CKT 1
FDNS	00NR	0	16WP	G15_081	FROM->TO	CIMARRON - DRAPER LAKE 345KV CKT 1	717	717	0.14061	101.2796	GEN562772 1-G15034_3 0.6900
FDNS	00NR	0	16WP	G15_081	FROM->TO	CIMARRON - DRAPER LAKE 345KV CKT 1	717	717	0.13775	101.2661	HUNTERS7 345.00 - WOODRING 345KV CKT 1
FDNS	00NR	0	16WP	G15_081	FROM->TO	CIMARRON - DRAPER LAKE 345KV CKT 1	717	717	0.14061	101.2635	GEN523971 1-HARRINGTON GEN #1 24 KV
FDNS	00NR	0	16WP	G15_081	FROM->TO	CIMARRON - DRAPER LAKE 345KV CKT 1	717	717	0.14061	101.2635	GEN523972 1-HARRINGTON GEN #2 24 KV
FDNS	00NR	0	16WP	G15_081	FROM->TO	CIMARRON - DRAPER LAKE 345KV CKT 1	717	717	0.14061	101.2635	GEN523973 1-HARRINGTON GEN #3 24 KV
FDNS	00NR	0	16WP	G15_081	FROM->TO	CIMARRON - DRAPER LAKE 345KV CKT 1	717	717	0.13857	101.2533	RANCHRD7 345.00 - SOONER 345KV CKT 1
FDNS	00NR	0	16WP	G15_081	FROM->TO	CIMARRON - DRAPER LAKE 345KV CKT 1	717	717	0.14061	101.2384	GEN600004 2-PRAIRIE ISLAND G2
FDNS	00NR	0	16WP	G15_081	FROM->TO	CIMARRON - DRAPER LAKE 345KV CKT 1	717	717	0.14061	101.2354	GEN600003 1-PRAIRIE ISLAND G1
FDNSLock	00NR	0	16WP	G15_081	FROM->TO	CIMARRON - DRAPER LAKE 345KV CKT 1	717	717	0.14061	101.2218	GEN600006 1-AS KING
FDNSLock	00NR	0	16WP	G15_081	FROM->TO	CIMARRON - DRAPER LAKE 345KV CKT 1	717	717	0.14061	101.201	GEN636641 1-LOUISA UNIT 1
FDNS	00NR	0	16WP	G15_081	FROM->TO	CIMARRON - DRAPER LAKE 345KV CKT 1	717	717	0.13573	101.136	MUSKOGEE - SEMINOLE 345KV CKT 1
FDNS	00NR	0	16WP	G15_081	FROM->TO	CIMARRON - DRAPER LAKE 345KV CKT 1	717	717	0.14061	101.1035	GEN563292 1-G15095_3 0.6900
FDNS	00NR	0	16WP	G15_081	FROM->TO	CIMARRON - DRAPER LAKE 345KV CKT 1	717	717	0.14061	101.1	GEN542962 2-IATAN UNIT #2
FDNS	00NR	0	16WP	G15_081	FROM->TO	CIMARRON - DRAPER LAKE 345KV CKT 1	717	717	0.14061	101.1	GEN615002 2-COAL CREEK
FDNS	00NR	0	16WP	G15_081	FROM->TO	CIMARRON - DRAPER LAKE 345KV CKT 1	717	717	0.14301	101.0885	NORTHWEST - SPRING CREEK 345KV CKT 1
FDNS	00NR	0	16WP	G15_081	FROM->TO	CIMARRON - DRAPER LAKE 345KV CKT 1	717	717	0.14061	101.0833	GEN600005 1-MONTICELLO
FDNS	00NR	0	16WP	G15_081	FROM->TO	CIMARRON - DRAPER LAKE 345KV CKT 1	717	717	0.14261	101.082	DRAPER LAKE - GM 138KV CKT 1
FDNS	00NR	0	16WP	G15_081	FROM->TO	CIMARRON - DRAPER LAKE 345KV CKT 1	717	717	0.14061	101.0628	GEN527166 1-MUSTANG_6 118.000
FDNS	00NR	0	16WP	G15_081	FROM->TO	CIMARRON - DRAPER LAKE 345KV CKT 1	717	717	0.14061	101.0553	GEN525562 1-TOLK GEN #2 24 KV
FDNS	00NR	0	16WP	G15_081	FROM->TO	CIMARRON - DRAPER LAKE 345KV CKT 1	717	717	0.14301	101.0485	SOONER - SPRING CREEK 345KV CKT 1
FDNS	00NR	0	16WP	G15_081	FROM->TO	CIMARRON - DRAPER LAKE 345KV CKT 1	717	717	0.14603	101.0368	CLARKSVILLE - MUSKOGEE 345KV CKT 1
FDNS	00NR	0	16WP	G15_081	FROM->TO	CIMARRON - DRAPER LAKE 345KV CKT 1	717	717	0.14603	101.0368	CLARKSVILLE - MUSKOGEE 345KV CKT 1
FDNS	00NR	0	16WP	G15_081	FROM->TO	CIMARRON - DRAPER LAKE 345KV CKT 1	717	717	0.14061	101.0116	GEN562952 1-G15057_3 0.6500
FDNS	00NR	0	16WP	G15_081	FROM->TO	CIMARRON - DRAPER LAKE 345KV CKT 1	717	717	0.14061	101.0001	GEN563272 1-G15093_3 0.6900
FDNS	00NR	0	16WP	G15_081	FROM->TO	CIMARRON - DRAPER LAKE 345KV CKT 1	717	717	0.14061	101	GEN629074 1-ARNOLD LOWSIDE OF GSU XFMR
FDNS	00NR	0	16WP	G15_081	FROM->TO	CIMARRON - DRAPER LAKE 345KV CKT 1	717	717	0.14061	100.9585	GEN635213 3-NEAL UNIT 3
FDNS	00NR	0	16WP	G15_081	FROM->TO	CIMARRON - DRAPER LAKE 345KV CKT 1	717	717	0.14139	100.9479	FRANKLIN SW - MIDWEST TAP 138KV CKT 1
FDNS	00NR	0	16WP	G15_081	FROM->TO	CIMARRON - DRAPER LAKE 345KV CKT 1	717	717	0.134	100.9426	DRAPER LAKE - SEMINOLE 345KV CKT 3
FDNS	00NR	0	16WP	G15_081	FROM->TO	CIMARRON - DRAPER LAKE 345KV CKT 1	717	717	0.14061	100.9128	GEN562892 1-G15048_3 0.6900
FDNS	00NR	0	16WP	G15_081	FROM->TO	CIMARRON - DRAPER LAKE 345KV CKT 1	717	717	0.14061	100.9011	BIG STONE 230/24.0KV TRANSFORMER CKT 1
FDNS	00NR	0	16WP	G15_081	FROM->TO	CIMARRON - DRAPER LAKE 345KV CKT 1	717	717	0.14061	100.8665	GEN563173 1-G15082_3 0.6900
FDNS	00NR	0	16WP	G15_081	FROM->TO	CIMARRON - DRAPER LAKE 345KV CKT 1	717	717	0.14169	100.8575	CHAMBER SPRINGS - CLARKSVILLE 345KV CKT 1
FDNS	00NR	0	16WP	G15_081	FROM->TO	CIMARRON - DRAPER LAKE 345KV CKT 1	717	717	0.14061	100.8263	GEN562902 1-G15052_3 0.6900
FDNS	00NR	0	16WP	G15_081	FROM->TO	CIMARRON - DRAPER LAKE 345KV CKT 1	717	717	0.14072	100.8149	LYDIA - VALLIANT 345KV CKT 1
FDNS	00NR	0	16WP	G15_081	FROM->TO	CIMARRON - DRAPER LAKE 345KV CKT 1	717	717	0.14072	100.8149	LYDIA - VALLIANT 345KV CKT 1
FDNS	00NR	0	16WP	G15_081	FROM->TO	CIMARRON - DRAPER LAKE 345KV CKT 1	717	717	0.14061	100.81	GEN514805 1-SOONER UNIT 1
FDNS	00NR	0	16WP	G15_081	FROM->TO	CIMARRON - DRAPER LAKE 345KV CKT 1	717	717	0.14061	100.787	GEN527903 1-HOBBS PLANT #3 (ST)
FDNS	00NR	0	16WP	G15_081	FROM->TO	CIMARRON - DRAPER LAKE 345KV CKT 1	717	717	0.14061	100.7504	GEN525561 1-TOLK GEN #1 24 KV
FDNSLock	00NR	0	16WP	G15_081	FROM->TO	CIMARRON - DRAPER LAKE 345KV CKT 1	717	717	0.14061	100.7392	GEN600000 1-SHERBURNECNTY G1
FDNS	00NR	0	16WP	G15_081	FROM->TO	CIMARRON - DRAPER LAKE 345KV CKT 1	717	717	0.14049	100.6808	P12:138:OKGE:3TERM23
FDNS	00NR	0	16WP	G15_081	FROM->TO	CIMARRON - DRAPER LAKE 345KV CKT 1	717	717	0.14061	100.6578	GEN600001 2-SHERBURNE CNTY G2
FDNS	00NR	0	16WP	G15_081	FROM->TO	CIMARRON - DRAPER LAKE 345KV CKT 1	717	717	0.14049	100.6216	BARNES 4 138.00 - DRAPER LAKE 138KV CKT 1
FDNS	00NR	0	16WP	G15_081	FROM->TO	CIMARRON - DRAPER LAKE 345KV CKT 1	717	717	0.14061	100.6	GEN344225 1-1CAL G1 25.000
FDNS	00NR	0	16WP	G15_081	FROM->TO	CIMARRON - DRAPER LAKE 345KV CKT 1	717	717	0.14061	100.5641	GEN514806 1-SOONER UNIT 2
FDNSLock	00NR	0	16WP	G15_081	FROM->TO	CIMARRON - DRAPER LAKE 345KV CKT 1	717	717	0.14061	100.5438	GEN629075 1-OTTUMWA GENERATOR FOR OTTUMWA UNIT NO 1
FDNS	00NR	0	16WP	G15_081	FROM->TO	CIMARRON - DRAPER LAKE 345KV CKT 1	717	717	0.14061	100.5167	GEN563162 1-G15081_3 0.6900
FDNS	00NR	0	16WP	G15_081	FROM->TO	CIMARRON - DRAPER LAKE 345KV CKT 1	717	717	0.14225	100.3768	DRAPER LAKE (DRAPER2) 345/138/13.8KV TRANSFORMER CKT 1
FDNS	00NR	0	16WP	G15_081	FROM->TO	CIMARRON - DRAPER LAKE 345KV CKT 1	717	717	0.14061	100.3192	SHERBURNE CO 345/24.0KV TRANSFORMER CKT 1
FDNS	00NR	0	16WP	G15_081	FROM->TO	CIMARRON - DRAPER LAKE 345KV CKT 1	717	717	0.13493	100.2891	CIMARRON - MATHWSN7 345.00 345KV CKT 1
FDNS	00NR	0	16WP	G15_081	FROM->TO	CIMARRON - DRAPER LAKE 345KV CKT 1	717	717	0.13493	100.2891	CIMARRON - MATHWSN7 345.00 345KV CKT 2
FDNS	00NR	0	16WP	G15_081	FROM->TO	CIMARRON - DRAPER LAKE 345KV CKT 1	717	717	0.14225	100.286	DRAPER LAKE (DRAPER3) 345/138/13.8KV TRANSFORMER CKT 1
FDNS	00NR	0	16WP	G15_081	FROM->TO	CIMARRON - DRAPER LAKE 345KV CKT 1	717	717	0.14225	100.286	DRAPER LAKE (DRAPER4) 345/138/13.8KV TRANSFORMER CKT 1
FDNSLock	00NR	0	16WP	G15_081	FROM->TO	CIMARRON - DRAPER LAKE 345KV CKT 1	717	717	0.14061	100.2812	GEN635214 4-NEAL UNIT 4
FDNS	00NR	0	16WP	G15_081	FROM->TO	CIMARRON - DRAPER LAKE 345KV CKT 1	717	717	0.14061	100.2003	GEN562882 1-G15047_3 0.6900
FDNS	00NR	0	16WP	G15_081	FROM->TO	CIMARRON - DRAPER LAKE 345KV CKT 1	717	717	0.14061	100.1889	GEN600002 3-SHERBURNE CNTY G3
FDNS	00NR	0	16WP	G15_081	FROM->TO	CIMARRON - DRAPER LAKE 345KV CKT 1	717	717	0.14061	99.8	GEN635023 3-WALTER SCOTT UNIT 3
FDNS	00NR	0	16WP	G15_081	FROM->TO	CIMARRON - DRAPER LAKE 345KV CKT 1	717	717	0.14061	99.7	GEN562023 1-G11_020_3 0.6900
FDNS	00NR	0	16WP	G15_081	FROM->TO	CIMARRON - DRAPER LAKE 345KV CKT 1	717	717	0.14061	99.7	GEN562026 1-G11_019_3 0.6900
FDNS	00NR	0	16WP	G15_081	FROM->TO	CIMARRON - DRAPER LAKE 345KV CKT 1	717	717	0.14061	99.6	EASTDC - ERCOT EQUIVALENCE 345KV CKT 1

SOLUTION	GROUP	SCENARIO	SEASON	SOURCE	DIRECTION	MONITORED ELEMENT	RATEA (MVA)	RATEB(MVA)	TDF	TC%LOADING (% MVA)	CONTINGENCY
FDNS	00NR	0	16WP	G15_081	FROM->TO	CIMARRON - DRAPER LAKE 345KV CKT 1	717	717	0.12828	99.5	DRAPER LAKE - SEMINOLE 345KV CKT 1
FDNS	00NR	0	16WP	G15_081	FROM->TO	CIMARRON - DRAPER LAKE 345KV CKT 1	717	717	0.12828	99.5	DRAPER LAKE - SEMINOLE 345KV CKT 2
FDNS	00NR	0	20WP	G15_081	TO->FROM	CIMARRON - MINCO 345KV CKT 1	956	956	0.05139	113.1031	G14-057T 345.00 - SUNNYSIDE 345KV CKT 1
FDNS	00NR	0	16WP	G15_081	TO->FROM	CIMARRON - MINCO 345KV CKT 1	956	956	0.05205	112.6453	G14-057T 345.00 - SUNNYSIDE 345KV CKT 1
FDNS	00NR	0	20WP	G15_081	TO->FROM	CLEARWATER - MILAN TAP 138KV CKT 1	110	110	0.03418	125.164	MATHWSN7 345.00 - TATONGA7 345.00 345KV CKT 1
FDNS	00NR	0	20WP	G15_081	TO->FROM	CLEARWATER - MILAN TAP 138KV CKT 1	110	110	0.03418	118.4183	G11_051T 345.00 - TATONGA7 345.00 345KV CKT 1
FDNS	00NR	0	17SP	G15_081	TO->FROM	CLEARWATER - MILAN TAP 138KV CKT 1	110	110	0.03044	110.5978	MATHWSN7 345.00 - TATONGA7 345.00 345KV CKT 1
FDNS	00NR	0	17SP	G15_081	TO->FROM	CLEARWATER - MILAN TAP 138KV CKT 1	110	110	0.03044	105.3646	G11_051T 345.00 - TATONGA7 345.00 345KV CKT 1
FDNS	01NR	0	20L	G15_081	TO->FROM	CLEARWATER - MILAN TAP 138KV CKT 1	110	110	0.03472	100.1509	MATHWSN7 345.00 - TATONGA7 345.00 345KV CKT 1
FDNS	01NR	0	20L	G15_081	FROM->TO	CLEO CORNER - CLEOPLT4 138.00 138KV CKT 1	191	191	0.03619	120.3357	MATHWSN7 345.00 - TATONGA7 345.00 345KV CKT 1
FDNSLock	00NR	0	16WP	G15_081	FROM->TO	CLEO CORNER - CLEOPLT4 138.00 138KV CKT 1	191	191	0.03544	118.7587	MATHWSN7 345.00 - TATONGA7 345.00 345KV CKT 1
FDNS	00NR	0	20WP	G15_081	FROM->TO	CLEO CORNER - CLEOPLT4 138.00 138KV CKT 1	191	191	0.03518	118.0033	MATHWSN7 345.00 - TATONGA7 345.00 345KV CKT 1
FDNSLock	00NR	0	16WP	G15_081	FROM->TO	CLEO CORNER - CLEOPLT4 138.00 138KV CKT 1	191	191	0.03544	114.6586	G11_051T 345.00 - TATONGA7 345.00 345KV CKT 1
FDNS	00NR	0	20WP	G15_081	FROM->TO	CLEO CORNER - CLEOPLT4 138.00 138KV CKT 1	191	191	0.03518	114.0655	G11_051T 345.00 - TATONGA7 345.00 345KV CKT 1
FDNS	00NR	0	17SP	G15_081	FROM->TO	CLEO CORNER - CLEOPLT4 138.00 138KV CKT 1	191	191	0.035	110.1289	MATHWSN7 345.00 - TATONGA7 345.00 345KV CKT 1
FDNS	00NR	0	17SP	G15_081	FROM->TO	CLEO CORNER - CLEOPLT4 138.00 138KV CKT 1	191	191	0.035	106.7029	G11_051T 345.00 - TATONGA7 345.00 345KV CKT 1
FDNS	01NR	0	20L	G15_081	FROM->TO	CLEO CORNER - CLEOPLT4 138.00 138KV CKT 1	191	191	0.03619	106.302	G11_051T 345.00 - TATONGA7 345.00 345KV CKT 1
FDNS	00NR	0	20SP	G15_081	FROM->TO	CLEO CORNER - CLEOPLT4 138.00 138KV CKT 1	191	191	0.03492	105.3449	MATHWSN7 345.00 - TATONGA7 345.00 345KV CKT 1
FDNS	00NR	0	20SP	G15_081	FROM->TO	CLEO CORNER - CLEOPLT4 138.00 138KV CKT 1	191	191	0.03492	101.9636	G11_051T 345.00 - TATONGA7 345.00 345KV CKT 1
FDNS	01NR	0	17G	G15_081	FROM->TO	CLEO CORNER - CLEOPLT4 138.00 138KV CKT 1	191	191	0.03545	100.9643	G11_051T 345.00 - TATONGA7 345.00 345KV CKT 1
FDNS	00NR	0	20WP	G15_081	TO->FROM	DEWEY - IODINE 138KV CKT 1	249	270	0.07518	104.196	MATHWSN7 345.00 - TATONGA7 345.00 345KV CKT 1
FDNS	00NR	0	17SP	G15_081	TO->FROM	DEWEY - IODINE 138KV CKT 1	194	222	0.07723	102.87	MATHWSN7 345.00 - TATONGA7 345.00 345KV CKT 1
FDNS	00NR	0	20SP	G15_081	TO->FROM	DEWEY - IODINE 138KV CKT 1	194	222	0.07682	102.1747	MATHWSN7 345.00 - TATONGA7 345.00 345KV CKT 1
FDNSLock	00NR	0	16WP	G15_081	TO->FROM	DEWEY - IODINE 138KV CKT 1	249	270	0.07576	100.2321	MATHWSN7 345.00 - TATONGA7 345.00 345KV CKT 1
FDNS	00NR	0	20WP	G15_081	TO->FROM	FPL SWITCH - WOODWARD 138KV CKT 1	171	185	0.09869	131.8709	MATHWSN7 345.00 - TATONGA7 345.00 345KV CKT 1
FDNSLock	00NR	0	16WP	G15_081	TO->FROM	FPL SWITCH - WOODWARD 138KV CKT 1	171	185	0.09948	126.1968	MATHWSN7 345.00 - TATONGA7 345.00 345KV CKT 1
FDNS	00NR	0	20WP	G15_081	TO->FROM	FPL SWITCH - WOODWARD 138KV CKT 1	171	185	0.09869	119.6762	G11_051T 345.00 - TATONGA7 345.00 345KV CKT 1
FDNS	01NR	0	20L	G15_081	TO->FROM	FPL SWITCH - WOODWARD 138KV CKT 1	133	153	0.09913	114.6092	MATHWSN7 345.00 - TATONGA7 345.00 345KV CKT 1
FDNSLock	00NR	0	16WP	G15_081	TO->FROM	FPL SWITCH - WOODWARD 138KV CKT 1	171	185	0.09948	113.0036	G11_051T 345.00 - TATONGA7 345.00 345KV CKT 1
FDNS	00NR	0	16WP	G15_081	FROM->TO	G14-057T 345.00 - SUNNYSIDE 345KV CKT 1	717	789	0.06888	141.3261	CIMARRON - MINCO 345KV CKT 1
FDNS	00NR	0	20WP	G15_081	FROM->TO	G14-057T 345.00 - SUNNYSIDE 345KV CKT 1	717	789	0.06826	139.8556	CIMARRON - MINCO 345KV CKT 1
FDNS	00NR	0	16WP	G15_081	FROM->TO	G14-057T 345.00 - SUNNYSIDE 345KV CKT 1	717	789	0.06888	130.2319	GRACEMONT - MINCO 345KV CKT 1
FDNS	00NR	0	20WP	G15_081	FROM->TO	G14-057T 345.00 - SUNNYSIDE 345KV CKT 1	717	789	0.06826	128.6283	GRACEMONT - MINCO 345KV CKT 1
FDNS	00NR	0	16WP	G15_081	FROM->TO	G14-057T 345.00 - SUNNYSIDE 345KV CKT 1	717	789	0.05844	125.8516	PITTSBURG - SEMINOLE 345KV CKT 1
FDNS	00NR	0	16WP	G15_081	FROM->TO	G14-057T 345.00 - SUNNYSIDE 345KV CKT 1	717	789	0.05844	125.8516	PITTSBURG - SEMINOLE 345KV CKT 1
FDNS	00NR	0	16WP	G15_081	FROM->TO	G14-057T 345.00 - SUNNYSIDE 345KV CKT 1	717	789	0.06242	125.7317	BASE CASE
FDNS	00NR	0	20WP	G15_081	FROM->TO	G14-057T 345.00 - SUNNYSIDE 345KV CKT 1	717	789	0.06193	123.4961	BASE CASE
FDNS	00NR	0	16WP	G15_081	FROM->TO	G14-057T 345.00 - SUNNYSIDE 345KV CKT 1	717	789	0.07548	123.2027	CIMARRON - DRAPER LAKE 345KV CKT 1
FDNS	00NR	0	20WP	G15_081	FROM->TO	G14-057T 345.00 - SUNNYSIDE 345KV CKT 1	717	789	0.05788	122.942	PITTSBURG - SEMINOLE 345KV CKT 1
FDNS	00NR	0	20WP	G15_081	FROM->TO	G14-057T 345.00 - SUNNYSIDE 345KV CKT 1	717	789	0.05788	122.942	PITTSBURG - SEMINOLE 345KV CKT 1
FDNS	00NR	0	20WP	G15_081	FROM->TO	G14-057T 345.00 - SUNNYSIDE 345KV CKT 1	717	789	0.07491	120.8155	CIMARRON - DRAPER LAKE 345KV CKT 1
FDNS	00NR	0	16WP	G15_081	FROM->TO	G14-057T 345.00 - SUNNYSIDE 345KV CKT 1	717	789	0.06655	120.3338	P12:138:WFEC:MSL03
FDNS	00NR	0	16WP	G15_081	FROM->TO	G14-057T 345.00 - SUNNYSIDE 345KV CKT 1	717	789	0.06132	119.7169	PITTSBURG - VALLIANT 345KV CKT 1
FDNS	00NR	0	16WP	G15_081	FROM->TO	G14-057T 345.00 - SUNNYSIDE 345KV CKT 1	717	789	0.06132	119.7169	PITTSBURG - VALLIANT 345KV CKT 1
FDNSLock	00NR	0	16WP	G15_081	FROM->TO	G14-057T 345.00 - SUNNYSIDE 345KV CKT 1	717	789	0.06242	119.4097	GEN509403 1-PIRKEY GENERATION
FDNS	00NR	0	16WP	G15_081	FROM->TO	G14-057T 345.00 - SUNNYSIDE 345KV CKT 1	717	789	0.06242	119.3291	GEN509416 1-TURK GENERATION
FDNS	00NR	0	16WP	G15_081	FROM->TO	G14-057T 345.00 - SUNNYSIDE 345KV CKT 1	717	789	0.0643	119.038	CLEVELAND - G15066_T 345.00 345KV CKT 1
FDNS	00NR	0	16WP	G15_081	FROM->TO	G14-057T 345.00 - SUNNYSIDE 345KV CKT 1	717	789	0.0643	118.7424	G15066_T 345.00 - SOONER 345KV CKT 1
FDNS	00NR	0	20WP	G15_081	FROM->TO	G14-057T 345.00 - SUNNYSIDE 345KV CKT 1	717	789	0.0661	118.4531	P12:138:WFEC:MSL03
FDNS	00NR	0	16WP	G15_081	FROM->TO	G14-057T 345.00 - SUNNYSIDE 345KV CKT 1	717	789	0.06242	118.4277	GEN501801 1-DOLET HILLS UNIT1
FDNS	00NR	0	16WP	G15_081	FROM->TO	G14-057T 345.00 - SUNNYSIDE 345KV CKT 1	717	789	0.06242	118.0417	GEN509404 1-WELSH #1
FDNS	00NR	0	16WP	G15_081	FROM->TO	G14-057T 345.00 - SUNNYSIDE 345KV CKT 1	717	789	0.06242	118.0417	GEN509406 1-WELSH #3
FDNS	00NR	0	16WP	G15_081	FROM->TO	G14-057T 345.00 - SUNNYSIDE 345KV CKT 1	717	789	0.05628	117.7945	BORDER 7345.00 - WOODWARD DISTRICT EHV 345KV CKT 1
FDNS	00NR	0	16WP	G15_081	FROM->TO	G14-057T 345.00 - SUNNYSIDE 345KV CKT 1	717	789	0.06253	117.3154	7SAREPTA% 345.00 - LONGWOOD 345KV CKT 1
FDNS	00NR	0	16WP	G15_081	FROM->TO	G14-057T 345.00 - SUNNYSIDE 345KV CKT 1	717	789	0.06253	117.3154	7SAREPTA% 345.00 - LONGWOOD 345KV CKT 1
FDNS	00NR	0	20WP	G15_081	FROM->TO	G14-057T 345.00 - SUNNYSIDE 345KV CKT 1	717	789	0.06193	117.2677	GEN509403 1-PIRKEY GENERATION
FDNS	00NR	0	16WP	G15_081	FROM->TO	G14-057T 345.00 - SUNNYSIDE 345KV CKT 1	717	789	0.0637	117.2341	CORN TAP - NAPLESTP 138.00 138KV CKT 1
FDNS	00NR	0	20WP	G15_081	FROM->TO	G14-057T 345.00 - SUNNYSIDE 345KV CKT 1	717	789	0.06193	117.1868	GEN509416 1-TURK GENERATION
FDNS	00NR	0	16WP	G15_081	FROM->TO	G14-057T 345.00 - SUNNYSIDE 345KV CKT 1	717	789	0.0637	117.1497	NAPLESTP 138.00 - PAYNE 138.00 138KV CKT 1
FDNS	00NR	0	16WP	G15_081	FROM->TO	G14-057T 345.00 - SUNNYSIDE 345KV CKT 1	717	789	0.06251	117.1471	DOLET HILLS - SOUTHWEST SHREVEPORT 345KV CKT 1
FDNS	00NR	0	16WP	G15_081	FROM->TO	G14-057T 345.00 - SUNNYSIDE 345KV CKT 1	717	789	0.06251	117.1471	DOLET HILLS - SOUTHWEST SHREVEPORT 345KV CKT 1
FDNS	00NR	0	16WP	G15_081	FROM->TO	G14-057T 345.00 - SUNNYSIDE 345KV CKT 1	717	789	0.06341	117.1448	ANADARKO - POCASSETT 138KV CKT 1
FDNSLock	00NR	0	16WP	G15_081	FROM->TO	G14-057T 345.00 - SUNNYSIDE 345KV CKT 1	717	789	0.06242	117.1301	GEN336821 1-GRAND GULF UNIT
FDNS	00NR	0	16WP	G15_081	FROM->TO	G14-057T 345.00 - SUNNYSIDE 345KV CKT 1	717	789	0.06367	117.0898	CLEVELAND - TULSA NORTH 345KV CKT 1
FDNS	00NR	0	16WP	G15_081	FROM->TO	G14-057T 345.00 - SUNNYSIDE 345KV CKT 1	717	789	0.06367	117.0898	CLEVELAND - TULSA NORTH 345KV CKT 1
FDNS	00NR	0	16WP	G15_081	FROM->TO	G14-057T 345.00 - SUNNYSIDE 345KV CKT 1	717	789	0.06352	117.0742	COMANCHE - LOCO 138KV CKT 1
FDNSLock	00NR	0	16WP	G15_081	FROM->TO	G14-057T 345.00 - SUNNYSIDE 345KV CKT 1	717	789	0.06242	117.0352	GEN336153 1-WATERFORD UNIT#3
FDNS	00NR	0	16WP	G15_081	FROM->TO	G14-057T 345.00 - SUNNYSIDE 345KV CKT 1	717	789	0.05859	117.0161	CANADIAN RIVER - MUSKOGEE 345KV CKT 1
FDNS	00NR	0	16WP	G15_081	FROM->TO	G14-057T 345.00 - SUNNYSIDE 345KV CKT 1	717	789	0.06341	116.9961	POCASSETT - TUTTLE 138KV CKT 1
FDNS	00NR	0	20WP	G15_081	FROM->TO	G14-057T 345.00 - SUNNYSIDE 345KV CKT 1	717	789	0.06376	116.9383	CLEVELAND - G15066_T 345.00 345KV CKT 1
FDNSLock	00NR	0	16WP	G15_081	FROM->TO	G14-057T 345.00 - SUNNYSIDE 345KV CKT 1	717	789	0.07312	116.891	MATHWSN7 345.00 - TATONGA7 345.00 345KV CKT 1
FDNS	00NR	0	16WP	G15_081	FROM->TO	G14-057T 345.00 - SUNNYSIDE 345KV CKT 1	717	789	0.05628	116.8671	BORDER 7345.00 - TUCO_2 345.00 345KV CKT 1
FDNS	00NR	0	20WP	G15_081	FROM->TO	G14-057T 345.00 - SUNNYSIDE 345KV CKT 1	717	789	0.06082	116.8606	PITTSBURG - VALLIANT 345KV CKT 1
FDNS	00NR	0	20WP	G15_081	FROM->TO	G14-057T 345.00 - SUNNYSIDE 345KV CKT 1	717	789	0.06082	116.8606	PITTSBURG - VALLIANT 345KV CKT 1
FDNS	00NR	0	16WP	G15_081	FROM->TO	G14-057T 345.00 - SUNNYSIDE 345KV CKT 1	717	789	0.07318	116.8117	ARCADIA - NORTHWEST 345KV CKT 1
FDNS	00NR	0	16WP	G15_081	FROM->TO	G14-057T 345.00 - SUNNYSIDE 345KV CKT 1	717	789	0.06242	116.7419	GRAND GULF 500/22.0KV TRANSFORMER CKT 1
FDNSLock	00NR	0	16WP	G15_081	FROM->TO	G14-057T 345.00 - SUNNYSIDE 345KV CKT 1	717	789	0.06242	116.7414	GEN335831 1-RIVERBEND UNIT#1
FDNS	00NR	0	16WP	G15_081	FROM->TO	G14-057T 345.00 - SUNNYSIDE 345KV CKT 1	717	789	0.06242	116.7065	GEN515577 1-ARBWND11 0.6900
FDNS	00NR	0	16WP	G15_081	FROM->TO	G14-057T 345.00 - SUNNYSIDE 345KV CKT 1	717	789	0.06382	116.6977	ARCADIA - SEMINOLE 345KV CKT 1

SOLUTION	GROUP	SCENARIO	SEASON	SOURCE	DIRECTION	MONITORED ELEMENT	RATEA (MVA)	RATEB(MVA)	TDF	TC%LOADING (% MVA)	CONTINGENCY
FDNS	00NR	0	16WP	G15_081	FROM->TO	G14-057T 345.00 - SUNNYSIDE 345KV CKT 1	717	789	0.06242	116.6641	GEN509409 1-WILKES #3
FDNS	00NR	0	16WP	G15_081	FROM->TO	G14-057T 345.00 - SUNNYSIDE 345KV CKT 1	717	789	0.06248	116.6569	7SAREPTA% 345.00 - ELDORADO EHV 345KV CKT 1
FDNS	00NR	0	16WP	G15_081	FROM->TO	G14-057T 345.00 - SUNNYSIDE 345KV CKT 1	717	789	0.06248	116.6567	3TR3AR8EL7EL
FDNS	00NR	0	16WP	G15_081	FROM->TO	G14-057T 345.00 - SUNNYSIDE 345KV CKT 1	717	789	0.06248	116.6476	ELDORADO EHV 500/345KV TRANSFORMER CKT 1
FDNS	00NR	0	20WP	G15_081	FROM->TO	G14-057T 345.00 - SUNNYSIDE 345KV CKT 1	717	789	0.06376	116.6463	G15066_T 345.00 - SOONER 345KV CKT 1
FDNS	00NR	0	16WP	G15_081	FROM->TO	G14-057T 345.00 - SUNNYSIDE 345KV CKT 1	717	789	0.06312	116.6347	P12:138:AEPW:DUNCAN-4:L.E.S.-4
FDNS	00NR	0	16WP	G15_081	FROM->TO	G14-057T 345.00 - SUNNYSIDE 345KV CKT 1	717	789	0.06341	116.6144	BRIDGECR 138.00 - TUTTLE 138KV CKT 1
FDNS	00NR	0	16WP	G15_081	FROM->TO	G14-057T 345.00 - SUNNYSIDE 345KV CKT 1	717	789	0.06312	116.5237	COMANCHE TAP - OMPA-DUNCAN 840 138KV CKT 1
FDNS	00NR	0	16WP	G15_081	FROM->TO	G14-057T 345.00 - SUNNYSIDE 345KV CKT 1	717	789	0.06375	116.4781	HEALDTON - LOCO 138KV CKT 1
FDNS	00NR	0	20WP	G15_081	FROM->TO	G14-057T 345.00 - SUNNYSIDE 345KV CKT 1	717	789	0.06193	116.4704	GEN501801 1-DOLET HILLS UNIT1
FDNS	00NR	0	16WP	G15_081	FROM->TO	G14-057T 345.00 - SUNNYSIDE 345KV CKT 1	717	789	0.06628	116.4505	FINNEY SWITCHING STATION - HOLCOMB 345KV CKT 1
FDNS	00NR	0	16WP	G15_081	FROM->TO	G14-057T 345.00 - SUNNYSIDE 345KV CKT 1	717	789	0.06628	116.4505	FINNEY SWITCHING STATION - HOLCOMB 345KV CKT 1
FDNS	00NR	0	16WP	G15_081	FROM->TO	G14-057T 345.00 - SUNNYSIDE 345KV CKT 1	717	789	0.06242	116.4	GEN300006 1-NEW MADRID UNIT 1
FDNS	00NR	0	16WP	G15_081	FROM->TO	G14-057T 345.00 - SUNNYSIDE 345KV CKT 1	717	789	0.06242	116.4	GEN300007 1-NEW MADRID UNIT 2
FDNS	00NR	0	16WP	G15_081	FROM->TO	G14-057T 345.00 - SUNNYSIDE 345KV CKT 1	717	789	0.06277	116.3928	LACYGNE - WAVERLY7 345.00 345KV CKT 1
FDNS	00NR	0	16WP	G15_081	FROM->TO	G14-057T 345.00 - SUNNYSIDE 345KV CKT 1	717	789	0.06242	116.369	GEN501813 1-RODEMACHER UNIT 3
FDNS	00NR	0	16WP	G15_081	FROM->TO	G14-057T 345.00 - SUNNYSIDE 345KV CKT 1	717	789	0.06341	116.3452	P12:138:WFEC:MSL01
FDNS	00NR	0	16WP	G15_081	FROM->TO	G14-057T 345.00 - SUNNYSIDE 345KV CKT 1	717	789	0.06341	116.3403	BRIDGECR 138.00 - SUNSHINE CANYON 138KV CKT 1
FDNS	00NR	0	16WP	G15_081	FROM->TO	G14-057T 345.00 - SUNNYSIDE 345KV CKT 1	717	789	0.06375	116.3386	HEALDTON - RINGLING 138KV CKT 1
FDNS	00NR	0	16WP	G15_081	FROM->TO	G14-057T 345.00 - SUNNYSIDE 345KV CKT 1	717	789	0.06277	116.2527	WAVERLY7 345.00 - WOLF CREEK 345KV CKT 1
FDNS	00NR	0	16WP	G15_081	FROM->TO	G14-057T 345.00 - SUNNYSIDE 345KV CKT 1	717	789	0.06242	116.2503	GEN520947 1-HUGO1
FDNS	00NR	0	16WP	G15_081	FROM->TO	G14-057T 345.00 - SUNNYSIDE 345KV CKT 1	717	789	0.06312	116.2417	DUNCAN - OMPA-DUNCAN 840 138KV CKT 1
FDNS	00NR	0	16WP	G15_081	FROM->TO	G14-057T 345.00 - SUNNYSIDE 345KV CKT 1	717	789	0.06312	116.2417	DUNCAN - OMPA-DUNCAN 840 138KV CKT 1
FDNS	00NR	0	20WP	G15_081	FROM->TO	G14-057T 345.00 - SUNNYSIDE 345KV CKT 1	717	789	0.05593	116.2407	BORDER 7345.00 - WOODWARD DISTRICT EHV 345KV CKT 1
FDNSLock	00NR	0	16WP	G15_081	FROM->TO	G14-057T 345.00 - SUNNYSIDE 345KV CKT 1	717	789	0.07312	116.2034	G11_051T 345.00 - TATONGA7 345.00 345KV CKT 1
FDNS	00NR	0	16WP	G15_081	FROM->TO	G14-057T 345.00 - SUNNYSIDE 345KV CKT 1	717	789	0.06375	116.1742	RINGLING - SOUTH WILSON 138KV CKT 1
FDNS	00NR	0	16WP	G15_081	FROM->TO	G14-057T 345.00 - SUNNYSIDE 345KV CKT 1	717	789	0.06242	116.1685	GEN335206 1-NELSON UNIT 6
FDNS	00NR	0	16WP	G15_081	FROM->TO	G14-057T 345.00 - SUNNYSIDE 345KV CKT 1	717	789	0.06628	116.0651	FINNEY SWITCHING STATION - Hitchland Interchange 345KV CKT 1
FDNS	00NR	0	16WP	G15_081	FROM->TO	G14-057T 345.00 - SUNNYSIDE 345KV CKT 1	717	789	0.06242	116.0517	DOLET HILLS 345/24.0KV TRANSFORMER CKT 1
FDNS	00NR	0	16WP	G15_081	FROM->TO	G14-057T 345.00 - SUNNYSIDE 345KV CKT 1	717	789	0.06239	116.0067	P12:138:AEPW:SHERID4:112GORE4
FDNS	00NR	0	16WP	G15_081	FROM->TO	G14-057T 345.00 - SUNNYSIDE 345KV CKT 1	717	789	0.06134	115.998	PARK LANE - SEMINOLE 138KV CKT 1
FDNSLock	00NR	0	16WP	G15_081	FROM->TO	G14-057T 345.00 - SUNNYSIDE 345KV CKT 1	717	789	0.06242	115.9851	GEN590011 2-ERCOT EQUIVALENCE
FDNS	00NR	0	16WP	G15_081	FROM->TO	G14-057T 345.00 - SUNNYSIDE 345KV CKT 1	717	789	0.06242	115.9826	GEN501812 1-RODEMACHER UNIT 2
FDNS	00NR	0	16WP	G15_081	FROM->TO	G14-057T 345.00 - SUNNYSIDE 345KV CKT 1	717	789	0.0666	115.9522	THISTLE7 345.00 - WOODWARD DISTRICT EHV 345KV CKT 1
FDNS	00NR	0	16WP	G15_081	FROM->TO	G14-057T 345.00 - SUNNYSIDE 345KV CKT 1	717	789	0.0666	115.9522	THISTLE7 345.00 - WOODWARD DISTRICT EHV 345KV CKT 1
FDNS	00NR	0	16WP	G15_081	FROM->TO	G14-057T 345.00 - SUNNYSIDE 345KV CKT 1	717	789	0.0666	115.9522	THISTLE7 345.00 - WOODWARD DISTRICT EHV 345KV CKT 2
FDNS	00NR	0	16WP	G15_081	FROM->TO	G14-057T 345.00 - SUNNYSIDE 345KV CKT 1	717	789	0.0666	115.9522	THISTLE7 345.00 - WOODWARD DISTRICT EHV 345KV CKT 2
FDNS	00NR	0	20WP	G15_081	FROM->TO	G14-057T 345.00 - SUNNYSIDE 345KV CKT 1	717	789	0.06193	115.9478	GEN509406 1-WELSH #3
FDNS	00NR	0	20WP	G15_081	FROM->TO	G14-057T 345.00 - SUNNYSIDE 345KV CKT 1	717	789	0.06193	115.9475	GEN509404 1-WELSH #1
FDNS	00NR	0	16WP	G15_081	FROM->TO	G14-057T 345.00 - SUNNYSIDE 345KV CKT 1	717	789	0.06354	115.9348	CANEYRV7 345.00 - NEOSHO 345KV CKT 1
FDNS	00NR	0	16WP	G15_081	FROM->TO	G14-057T 345.00 - SUNNYSIDE 345KV CKT 1	717	789	0.06242	115.9221	GEN515564 1-ORIGIN11 0.6900
FDNS	00NR	0	16WP	G15_081	FROM->TO	G14-057T 345.00 - SUNNYSIDE 345KV CKT 1	717	789	0.06242	115.9221	GEN515565 1-ORIGIN21 0.6900
FDNSLock	00NR	0	16WP	G15_081	FROM->TO	G14-057T 345.00 - SUNNYSIDE 345KV CKT 1	717	789	0.06242	115.9096	GEN590010 1-ERCOT EQUIVALENCE
FDNS	00NR	0	16WP	G15_081	FROM->TO	G14-057T 345.00 - SUNNYSIDE 345KV CKT 1	717	789	0.06375	115.8986	MARIETTA - SOUTH WILSON 138KV CKT 1
FDNS	00NR	0	16WP	G15_081	FROM->TO	G14-057T 345.00 - SUNNYSIDE 345KV CKT 1	717	789	0.06242	115.8352	GEN509408 1-WILKES #2
FDNS	00NR	0	16WP	G15_081	FROM->TO	G14-057T 345.00 - SUNNYSIDE 345KV CKT 1	717	789	0.06375	115.8012	P12:138:WFEC:MSL17
FDNS	00NR	0	16WP	G15_081	FROM->TO	G14-057T 345.00 - SUNNYSIDE 345KV CKT 1	717	789	0.06354	115.7954	CANEYRV7 345.00 - LATHAMS7 345.00 345KV CKT 1
FDNS	00NR	0	16WP	G15_081	FROM->TO	G14-057T 345.00 - SUNNYSIDE 345KV CKT 1	717	789	0.06281	115.7632	P12:138:WFEC:MSL02
FDNS	00NR	0	16WP	G15_081	FROM->TO	G14-057T 345.00 - SUNNYSIDE 345KV CKT 1	717	789	0.06242	115.7471	P12:161:AEPW:DYESS 5:HYLAND 5
FDNS	00NR	0	16WP	G15_081	FROM->TO	G14-057T 345.00 - SUNNYSIDE 345KV CKT 1	717	789	0.06242	115.7452	GEN506754 1-LEBROCK STEAM 1
FDNS	00NR	0	16WP	G15_081	FROM->TO	G14-057T 345.00 - SUNNYSIDE 345KV CKT 1	717	789	0.06242	115.7417	P12:69:AEPW:L.E.S.-2:LAW WC2
FDNS	00NR	0	16WP	G15_081	FROM->TO	G14-057T 345.00 - SUNNYSIDE 345KV CKT 1	717	789	0.0625	115.7311	REDBUD - RIVERSIDE STATION 345KV CKT 1
FDNS	00NR	0	16WP	G15_081	FROM->TO	G14-057T 345.00 - SUNNYSIDE 345KV CKT 1	717	789	0.0625	115.7311	REDBUD - RIVERSIDE STATION 345KV CKT 1
FDNS	00NR	0	16WP	G15_081	FROM->TO	G14-057T 345.00 - SUNNYSIDE 345KV CKT 1	717	789	0.06238	115.7085	ELDORADO EHV - MOUNT OLIVE 500KV CKT 1
FDNS	00NR	0	16WP	G15_081	FROM->TO	G14-057T 345.00 - SUNNYSIDE 345KV CKT 1	717	789	0.06242	115.6998	GEN334440 1-SABINE UNIT 4
FDNS	00NR	0	16WP	G15_081	FROM->TO	G14-057T 345.00 - SUNNYSIDE 345KV CKT 1	717	789	0.06354	115.6769	CIVIT - PAOLI 138KV CKT 1
FDNS	00NR	0	16WP	G15_081	FROM->TO	G14-057T 345.00 - SUNNYSIDE 345KV CKT 1	717	789	0.0627	115.675	ANADARKO - GEORGIA 138KV CKT 1
FDNS	00NR	0	16WP	G15_081	FROM->TO	G14-057T 345.00 - SUNNYSIDE 345KV CKT 1	717	789	0.0657	115.6471	MATHWSN7 345.00 - NORTHWEST 345KV CKT 1
FDNS	00NR	0	16WP	G15_081	FROM->TO	G14-057T 345.00 - SUNNYSIDE 345KV CKT 1	717	789	0.0624	115.6371	P12:138:AEPW:112GORE4:L.E.S.-4
FDNS	00NR	0	16WP	G15_081	FROM->TO	G14-057T 345.00 - SUNNYSIDE 345KV CKT 1	717	789	0.0623	115.6268	ELDORADO EHV - SHERIDAN EHV 500KV CKT 1
FDNS	00NR	0	16WP	G15_081	FROM->TO	G14-057T 345.00 - SUNNYSIDE 345KV CKT 1	717	789	0.06412	115.6192	P12:138:AEPW-OGE:CORNVIL4:MAUD 4
FDNS	00NR	0	16WP	G15_081	FROM->TO	G14-057T 345.00 - SUNNYSIDE 345KV CKT 1	717	789	0.06242	115.6004	NEW MADRID 161/22.0KV TRANSFORMER CKT 1
FDNS	00NR	0	16WP	G15_081	FROM->TO	G14-057T 345.00 - SUNNYSIDE 345KV CKT 1	717	789	0.06254	115.5963	WEBRE - WELLS 500KV CKT 1
FDNS	00NR	0	16WP	G15_081	FROM->TO	G14-057T 345.00 - SUNNYSIDE 345KV CKT 1	717	789	0.06273	115.5952	PAOLI - PAYNE 138.00 138KV CKT 1
FDNS	00NR	0	16WP	G15_081	FROM->TO	G14-057T 345.00 - SUNNYSIDE 345KV CKT 1	717	789	0.06242	115.5952	GEN503909 1-FULTONU1 1 16.000
FDNS	00NR	0	16WP	G15_081	FROM->TO	G14-057T 345.00 - SUNNYSIDE 345KV CKT 1	717	789	0.06242	115.5865	NEW MADRID 345/22.0KV TRANSFORMER CKT 1
FDNS	00NR	0	16WP	G15_081	FROM->TO	G14-057T 345.00 - SUNNYSIDE 345KV CKT 1	717	789	0.0627	115.5859	FLETCHER - GEORGIA 138KV CKT 1
FDNS	00NR	0	16WP	G15_081	FROM->TO	G14-057T 345.00 - SUNNYSIDE 345KV CKT 1	717	789	0.06354	115.5778	LATHAMS7 345.00 - ROSE HILL 345KV CKT 1
FDNS	00NR	0	16WP	G15_081	FROM->TO	G14-057T 345.00 - SUNNYSIDE 345KV CKT 1	717	789	0.06259	115.5671	LAWTON EASTSIDE (LES 5) 345/138/13.8KV TRANSFORMER CKT 2
FDNS	00NR	0	16WP	G15_081	FROM->TO	G14-057T 345.00 - SUNNYSIDE 345KV CKT 1	717	789	0.06259	115.5671	LAWTON EASTSIDE (LES 5) 345/138/13.8KV TRANSFORMER CKT 2
FDNS	00NR	0	16WP	G15_081	FROM->TO	G14-057T 345.00 - SUNNYSIDE 345KV CKT 1	717	789	0.06242	115.5633	FRONTIER - GRIMES 345KV CKT 1
FDNS	00NR	0	16WP	G15_081	FROM->TO	G14-057T 345.00 - SUNNYSIDE 345KV CKT 1	717	789	0.06276	115.5527	EMPIRE - FLETCHER 138KV CKT 1
FDNS	00NR	0	16WP	G15_081	FROM->TO	G14-057T 345.00 - SUNNYSIDE 345KV CKT 1	717	789	0.06412	115.5491	BLANCHARD - CORNVILLE 138KV CKT 1
FDNS	00NR	0	16WP	G15_081	FROM->TO	G14-057T 345.00 - SUNNYSIDE 345KV CKT 1	717	789	0.06354	115.5364	CIVIT - STRATFORD 138KV CKT 1
FDNS	00NR	0	16WP	G15_081	FROM->TO	G14-057T 345.00 - SUNNYSIDE 345KV CKT 1	717	789	0.06243	115.5229	TUPELO - TUPELO TAP 138KV CKT 1
FDNS	00NR	0	16WP	G15_081	FROM->TO	G14-057T 345.00 - SUNNYSIDE 345KV CKT 1	717	789	0.06276	115.4711	COMANCHE - EMPIRE 138KV CKT 1
FDNS	00NR	0	16WP	G15_081	FROM->TO	G14-057T 345.00 - SUNNYSIDE 345KV CKT 1	717	789	0.0642	115.4691	G1524G1525 345.00 - THISTLE7 345.00 345KV CKT 1
FDNS	00NR	0	16WP	G15_081	FROM->TO	G14-057T 345.00 - SUNNYSIDE 345KV CKT 1	717	789	0.0642	115.4691	G1524G1525 345.00 - THISTLE7 345.00 345KV CKT 2
FDNS	00NR	0	16WP	G15_081	FROM->TO	G14-057T 345.00 - SUNNYSIDE 345KV CKT 1	717	789	0.06242	115.4679	GEN509393 S1-ARSENAL HILL GENS #4 (STALL)

SOLUTION	GROUP	SCENARIO	SEASON	SOURCE	DIRECTION	MONITORED ELEMENT	RATEA (MVA)	RATEB(MVA)	TDF	TC%LOADING (% MVA)	CONTINGENCY
FDNS	00NR	0	16WP	G15_081	FROM->TO	G14-057T 345.00 - SUNNYSIDE 345KV CKT 1	717	789	0.06242	115.4437	GEN509392 G2-ARSENAL HILL GENS #3 (STALL)
FDNS	00NR	0	16WP	G15_081	FROM->TO	G14-057T 345.00 - SUNNYSIDE 345KV CKT 1	717	789	0.06242	115.4436	GEN509391 G1-ARSENAL HILL GENS #2 (STALL)
FDNS	00NR	0	16WP	G15_081	FROM->TO	G14-057T 345.00 - SUNNYSIDE 345KV CKT 1	717	789	0.06242	115.429	GEN336252 1-NINEMILE POINT UNIT#5
FDNS	00NR	0	16WP	G15_081	FROM->TO	G14-057T 345.00 - SUNNYSIDE 345KV CKT 1	717	789	0.06354	115.419	OIL CENTER - STRATFORD 138KV CKT 1
FDNS	00NR	0	16WP	G15_081	FROM->TO	G14-057T 345.00 - SUNNYSIDE 345KV CKT 1	717	789	0.06242	115.4027	DELL 500 - ESSEX UNIT 2 500KV CKT Z1
FDNS	00NR	0	16WP	G15_081	FROM->TO	G14-057T 345.00 - SUNNYSIDE 345KV CKT 1	717	789	0.06242	115.3907	GEN334071 1-LEWIS CREEK 2
FDNS	00NR	0	16WP	G15_081	FROM->TO	G14-057T 345.00 - SUNNYSIDE 345KV CKT 1	717	789	0.06242	115.3817	GEN334070 1-LEWIS CREEK 1
FDNS	00NR	0	16WP	G15_081	FROM->TO	G14-057T 345.00 - SUNNYSIDE 345KV CKT 1	717	789	0.06242	115.3782	GEN335204 1-NELSON UNIT 4
FDNS	00NR	0	20WP	G15_081	FROM->TO	G14-057T 345.00 - SUNNYSIDE 345KV CKT 1	717	789	0.06206	115.3748	7SAREPTA% 345.00 - LONGWOOD 345KV CKT 1
FDNS	00NR	0	20WP	G15_081	FROM->TO	G14-057T 345.00 - SUNNYSIDE 345KV CKT 1	717	789	0.06206	115.3748	7SAREPTA% 345.00 - LONGWOOD 345KV CKT 1
FDNS	00NR	0	20WP	G15_081	FROM->TO	G14-057T 345.00 - SUNNYSIDE 345KV CKT 1	717	789	0.06325	115.3669	CORN TAP - NAPLESTP 138.00 138KV CKT 1
FDNS	00NR	0	16WP	G15_081	FROM->TO	G14-057T 345.00 - SUNNYSIDE 345KV CKT 1	717	789	0.06261	115.3542	DUNCAN (DUNCAN) 138/69/13.8KV TRANSFORMER CKT 1
FDNS	00NR	0	16WP	G15_081	FROM->TO	G14-057T 345.00 - SUNNYSIDE 345KV CKT 1	717	789	0.06261	115.3542	DUNCAN (DUNCAN) 138/69/13.8KV TRANSFORMER CKT 1
FDNS	00NR	0	16WP	G15_081	FROM->TO	G14-057T 345.00 - SUNNYSIDE 345KV CKT 1	717	789	0.06412	115.3522	BLANCHARD - MAUD 138KV CKT 1
FDNS	00NR	0	16WP	G15_081	FROM->TO	G14-057T 345.00 - SUNNYSIDE 345KV CKT 1	717	789	0.06242	115.3434	GEN334441 1-SABINE UNIT 5
FDNS	00NR	0	16WP	G15_081	FROM->TO	G14-057T 345.00 - SUNNYSIDE 345KV CKT 1	717	789	0.06242	115.3149	GEN337653 1-WHITE BLUFF UNIT #2
FDNS	00NR	0	20WP	G15_081	FROM->TO	G14-057T 345.00 - SUNNYSIDE 345KV CKT 1	717	789	0.05593	115.3146	BORDER 7345.00 - TUCO_2 345.00 345KV CKT 1
FDNS	00NR	0	16WP	G15_081	FROM->TO	G14-057T 345.00 - SUNNYSIDE 345KV CKT 1	717	789	0.06246	115.3081	P12:138:AEPW:CATOOSA4:T.S.E.-4
FDNS	00NR	0	16WP	G15_081	FROM->TO	G14-057T 345.00 - SUNNYSIDE 345KV CKT 1	717	789	0.06241	115.3065	P12:161:AEPW-SWPA:BEAVER5:EROGERS5
FDNS	00NR	0	16WP	G15_081	FROM->TO	G14-057T 345.00 - SUNNYSIDE 345KV CKT 1	717	789	0.06242	115.3	GEN300003 1-THOMAS HILL UNIT 3
FDNS	00NR	0	16WP	G15_081	FROM->TO	G14-057T 345.00 - SUNNYSIDE 345KV CKT 1	717	789	0.06248	115.2966	6LAYFLD 230.00 - CARROLL 230KV CKT 1
FDNS	00NR	0	16WP	G15_081	FROM->TO	G14-057T 345.00 - SUNNYSIDE 345KV CKT 1	717	789	0.06242	115.2935	GEN506752 1-LEBROCK GAS 1
FDNS	00NR	0	16WP	G15_081	FROM->TO	G14-057T 345.00 - SUNNYSIDE 345KV CKT 1	717	789	0.06242	115.2933	GEN506753 1-LEBROCK GAS 2
FDNS	00NR	0	16WP	G15_081	FROM->TO	G14-057T 345.00 - SUNNYSIDE 345KV CKT 1	717	789	0.06242	115.2879	GEN334030 1-FRONTIER UNIT 1
FDNS	00NR	0	16WP	G15_081	FROM->TO	G14-057T 345.00 - SUNNYSIDE 345KV CKT 1	717	789	0.06236	115.2871	TUTTLE - TUTTLE CONOCO TAP 138KV CKT 1
FDNS	00NR	0	16WP	G15_081	FROM->TO	G14-057T 345.00 - SUNNYSIDE 345KV CKT 1	717	789	0.06242	115.2864	GEN334031 1-FRONTIER UNIT 2
FDNS	00NR	0	20WP	G15_081	FROM->TO	G14-057T 345.00 - SUNNYSIDE 345KV CKT 1	717	789	0.06325	115.2754	NAPLESTP 138.00 - PAYNE 138.00 138KV CKT 1
FDNS	00NR	0	16WP	G15_081	FROM->TO	G14-057T 345.00 - SUNNYSIDE 345KV CKT 1	717	789	0.0637	115.2707	BAILEY4 138.00 - SUNSHINE CANYON 138KV CKT 1
FDNS	00NR	0	16WP	G15_081	FROM->TO	G14-057T 345.00 - SUNNYSIDE 345KV CKT 1	717	789	0.06242	115.2699	GEN515040 1-SEMINOLE 1G
FDNS	00NR	0	16WP	G15_081	FROM->TO	G14-057T 345.00 - SUNNYSIDE 345KV CKT 1	717	789	0.06038	115.2647	GRACEMONT - LAWTON EASTSIDE 345KV CKT 1
FDNS	00NR	0	16WP	G15_081	FROM->TO	G14-057T 345.00 - SUNNYSIDE 345KV CKT 1	717	789	0.06038	115.2647	GRACEMONT - LAWTON EASTSIDE 345KV CKT 1
FDNS	00NR	0	16WP	G15_081	FROM->TO	G14-057T 345.00 - SUNNYSIDE 345KV CKT 1	717	789	0.06247	115.2642	FULTON 115 - HOPE 115KV CKT 1
FDNS	00NR	0	16WP	G15_081	FROM->TO	G14-057T 345.00 - SUNNYSIDE 345KV CKT 1	717	789	0.06247	115.2642	FULTON 115 - HOPE 115KV CKT 1
FDNS	00NR	0	16WP	G15_081	FROM->TO	G14-057T 345.00 - SUNNYSIDE 345KV CKT 1	717	789	0.06246	115.249	8DANIEL8 500.00 - MCKNIGHT 500KV CKT 1
FDNS	00NR	0	16WP	G15_081	FROM->TO	G14-057T 345.00 - SUNNYSIDE 345KV CKT 1	717	789	0.06354	115.2478	LATTA JCT - OIL CENTER 138KV CKT 1
FDNS	00NR	0	16WP	G15_081	FROM->TO	G14-057T 345.00 - SUNNYSIDE 345KV CKT 1	717	789	0.06242	115.2473	GEN515226 1-MUSKOGEE 6G
FDNS	00NR	0	16WP	G15_081	FROM->TO	G14-057T 345.00 - SUNNYSIDE 345KV CKT 1	717	789	0.06278	115.2426	P12:138:AEPW-OGE:WTH_JCT4:JENSEN4
FDNS	00NR	0	16WP	G15_081	FROM->TO	G14-057T 345.00 - SUNNYSIDE 345KV CKT 1	717	789	0.06242	115.2333	GEN300015 1-1SGPDEL 18.000
FDNSLock	00NR	0	16WP	G15_081	FROM->TO	G14-057T 345.00 - SUNNYSIDE 345KV CKT 1	717	789	0.06242	115.2307	GEN337911 1-ARKANSAS NUCLEAR ONE UNIT #2
FDNS	00NR	0	16WP	G15_081	FROM->TO	G14-057T 345.00 - SUNNYSIDE 345KV CKT 1	717	789	0.06242	115.2299	P12:161:AEPW:DYESS5:ELMSPRNG:TONTITN5
FDNS	00NR	0	16WP	G15_081	FROM->TO	G14-057T 345.00 - SUNNYSIDE 345KV CKT 1	717	789	0.06242	115.2278	GEN337652 1-WHITE BLUFF UNIT #1
FDNS	00NR	0	16WP	G15_081	FROM->TO	G14-057T 345.00 - SUNNYSIDE 345KV CKT 1	717	789	0.06242	115.2235	GEN336251 1-NINEMILE POINT UNIT#4
FDNS	00NR	0	16WP	G15_081	FROM->TO	G14-057T 345.00 - SUNNYSIDE 345KV CKT 1	717	789	0.06269	115.2215	P12:138:AEPW:CORNVIL4:S.W.S.-4
FDNS	00NR	0	16WP	G15_081	FROM->TO	G14-057T 345.00 - SUNNYSIDE 345KV CKT 1	717	789	0.06242	115.2199	GEN501811 1-RODEMACHER UNIT 1
FDNS	00NR	0	16WP	G15_081	FROM->TO	G14-057T 345.00 - SUNNYSIDE 345KV CKT 1	717	789	0.06242	115.2185	GEN336831 1-BAXTER WILSON SES
FDNS	00NR	0	16WP	G15_081	FROM->TO	G14-057T 345.00 - SUNNYSIDE 345KV CKT 1	717	789	0.06273	115.2077	P12:138:AEPW:CORNVIL4:DUNCAN-4
FDNS	00NR	0	16WP	G15_081	FROM->TO	G14-057T 345.00 - SUNNYSIDE 345KV CKT 1	717	789	0.06265	115.2071	G15074_T 345.00 - HOYT 345KV CKT 1
FDNS	00NR	0	16WP	G15_081	FROM->TO	G14-057T 345.00 - SUNNYSIDE 345KV CKT 1	717	789	0.06236	115.206	CIMARRON - TUTTLE CONOCO TAP 138KV CKT 1
FDNS	00NR	0	20WP	G15_081	FROM->TO	G14-057T 345.00 - SUNNYSIDE 345KV CKT 1	717	789	0.06193	115.2011	GEN336821 1-GRAND GULF UNIT
FDNS	00NR	0	16WP	G15_081	FROM->TO	G14-057T 345.00 - SUNNYSIDE 345KV CKT 1	717	789	0.06264	115.2	G15088_T 345.00 - MOORE 345KV CKT 1
FDNS	00NR	0	16WP	G15_081	FROM->TO	G14-057T 345.00 - SUNNYSIDE 345KV CKT 1	717	789	0.06242	115.1975	GEN334433 1-SABINE UNIT 3
FDNS	00NR	0	16WP	G15_081	FROM->TO	G14-057T 345.00 - SUNNYSIDE 345KV CKT 1	717	789	0.06261	115.1706	P12:69:WFEC-AEPW:COMANCH2:DUNCAN-2
FDNS	00NR	0	16WP	G15_081	FROM->TO	G14-057T 345.00 - SUNNYSIDE 345KV CKT 1	717	789	0.06287	115.1663	BUCKNER7 345.00 - SPEARVILLE 345KV CKT 1
FDNS	00NR	0	16WP	G15_081	FROM->TO	G14-057T 345.00 - SUNNYSIDE 345KV CKT 1	717	789	0.06287	115.1663	BUCKNER7 345.00 - SPEARVILLE 345KV CKT 1
FDNS	00NR	0	16WP	G15_081	FROM->TO	G14-057T 345.00 - SUNNYSIDE 345KV CKT 1	717	789	0.06242	115.164	GEN562783 1-G15036_4 0.6900
FDNS	00NR	0	16WP	G15_081	FROM->TO	G14-057T 345.00 - SUNNYSIDE 345KV CKT 1	717	789	0.06242	115.164	GEN562784 1-G15036_5 0.6900
FDNSLock	00NR	0	16WP	G15_081	FROM->TO	G14-057T 345.00 - SUNNYSIDE 345KV CKT 1	717	789	0.06242	115.1601	GEN505432 1-SIKESTON
FDNS	00NR	0	16WP	G15_081	FROM->TO	G14-057T 345.00 - SUNNYSIDE 345KV CKT 1	717	789	0.06294	115.158	CIMARRON - CZECH HALL 138KV CKT 1
FDNS	00NR	0	16WP	G15_081	FROM->TO	G14-057T 345.00 - SUNNYSIDE 345KV CKT 1	717	789	0.06242	115.1483	GEN515223 1-MUSKOGEE 4G
FDNS	00NR	0	16WP	G15_081	FROM->TO	G14-057T 345.00 - SUNNYSIDE 345KV CKT 1	717	789	0.06242	115.1483	GEN515225 1-MUSKOGEE 5G
FDNS	00NR	0	16WP	G15_081	FROM->TO	G14-057T 345.00 - SUNNYSIDE 345KV CKT 1	717	789	0.0626	115.1473	P12:138:AEPW:WTHWF4:CLINTJC4
FDNS	00NR	0	16WP	G15_081	FROM->TO	G14-057T 345.00 - SUNNYSIDE 345KV CKT 1	717	789	0.06296	115.1258	CIMARRON - SARA 138KV CKT 1
FDNS	00NR	0	16WP	G15_081	FROM->TO	G14-057T 345.00 - SUNNYSIDE 345KV CKT 1	717	789	0.06242	115.1244	P12:161:AEPW:EROGERS5:ECNTRTN5
FDNS	00NR	0	16WP	G15_081	FROM->TO	G14-057T 345.00 - SUNNYSIDE 345KV CKT 1	717	789	0.06239	115.1205	LAYFLD8 500.00 - MOUNT OLIVE 500KV CKT 1
FDNS	00NR	0	16WP	G15_081	FROM->TO	G14-057T 345.00 - SUNNYSIDE 345KV CKT 1	717	789	0.06239	115.1205	LAYFLD8 500.00 - MOUNT OLIVE 500KV CKT 1
FDNS	00NR	0	16WP	G15_081	FROM->TO	G14-057T 345.00 - SUNNYSIDE 345KV CKT 1	717	789	0.06261	115.1191	DUNCAN - TOSCO 69KV CKT 1
FDNS	00NR	0	16WP	G15_081	FROM->TO	G14-057T 345.00 - SUNNYSIDE 345KV CKT 1	717	789	0.06242	115.1185	RODEMACHER 230/22.0KV TRANSFORMER CKT 1
FDNS	00NR	0	16WP	G15_081	FROM->TO	G14-057T 345.00 - SUNNYSIDE 345KV CKT 1	717	789	0.06242	115.118	WHITE BLUFF 500/26.0KV TRANSFORMER CKT 1
FDNS	00NR	0	16WP	G15_081	FROM->TO	G14-057T 345.00 - SUNNYSIDE 345KV CKT 1	717	789	0.0626	115.1125	P12:138:AEPW:WTHWF4:WTH_SE4
FDNS	00NR	0	16WP	G15_081	FROM->TO	G14-057T 345.00 - SUNNYSIDE 345KV CKT 1	717	789	0.06243	115.1104	MC NIEL 500/115KV TRANSFORMER CKT 1
FDNS	00NR	0	16WP	G15_081	FROM->TO	G14-057T 345.00 - SUNNYSIDE 345KV CKT 1	717	789	0.05893	115.1076	CANADIAN RIVER - PITTSBURG 345KV CKT 1
FDNS	00NR	0	16WP	G15_081	FROM->TO	G14-057T 345.00 - SUNNYSIDE 345KV CKT 1	717	789	0.05893	115.1076	CANADIAN RIVER - PITTSBURG 345KV CKT 1
FDNS	00NR	0	20WP	G15_081	FROM->TO	G14-057T 345.00 - SUNNYSIDE 345KV CKT 1	717	789	0.06291	115.1068	ANADARKO - POCASSETT 138KV CKT 1
FDNS	00NR	0	16WP	G15_081	FROM->TO	G14-057T 345.00 - SUNNYSIDE 345KV CKT 1	717	789	0.06244	115.1055	BISMARK - HOT SPRINGS WEST BUS 115KV CKT 1
FDNS	00NR	0	16WP	G15_081	FROM->TO	G14-057T 345.00 - SUNNYSIDE 345KV CKT 1	717	789	0.06242	115.1045	GEN303007 1-1BC2 U2
FDNS	00NR	0	16WP	G15_081	FROM->TO	G14-057T 345.00 - SUNNYSIDE 345KV CKT 1	717	789	0.0637	115.1009	BAILEY4 138.00 - WESTMOORE 138KV CKT 1
FDNS	00NR	0	16WP	G15_081	FROM->TO	G14-057T 345.00 - SUNNYSIDE 345KV CKT 1	717	789	0.0624	115.1003	HOT SPRINGS EHV - MAGNET COVE 500KV CKT 1
FDNS	00NR	0	16WP	G15_081	FROM->TO	G14-057T 345.00 - SUNNYSIDE 345KV CKT 1	717	789	0.06242	115.0992	GEN303006 1-1BC2 U1
FDNS	00NR	0	16WP	G15_081	FROM->TO	G14-057T 345.00 - SUNNYSIDE 345KV CKT 1	717	789	0.06297	115.0967	CLEO CORNER - CLEOPLT4 138.00 138KV CKT 1

SOLUTION	GROUP	SCENARIO	SEASON	SOURCE	DIRECTION	MONITORED ELEMENT	RATEA (MVA)	RATEB(MVA)	TDF	TC%LOADING (% MVA)	CONTINGENCY
FDNS	00NR	0	16WP	G15_081	FROM->TO	G14-057T 345.00 - SUNNYSIDE 345KV CKT 1	717	789	0.06179	115.0929	ARBWIND4 138.00 - CARTER 138KV CKT 1
FDNS	00NR	0	16WP	G15_081	FROM->TO	G14-057T 345.00 - SUNNYSIDE 345KV CKT 1	717	789	0.06283	115.0928	G15095_T 138.00 - ROSE_VALLEY 138.00 138KV CKT 1
FDNS	00NR	0	16WP	G15_081	FROM->TO	G14-057T 345.00 - SUNNYSIDE 345KV CKT 1	717	789	0.0625	115.0921	P12:69:AEPW-OMPA:COMANC-2:OMWALTR2
FDNS	00NR	0	20WP	G15_081	FROM->TO	G14-057T 345.00 - SUNNYSIDE 345KV CKT 1	717	789	0.06193	115.0919	GEN336153 1-WATERFORD UNIT#3
FDNS	00NR	0	16WP	G15_081	FROM->TO	G14-057T 345.00 - SUNNYSIDE 345KV CKT 1	717	789	0.06242	115.0853	GEN337910 1-ARKANSAS NUCLEAR ONE UNIT #1
FDNS	00NR	0	16WP	G15_081	FROM->TO	G14-057T 345.00 - SUNNYSIDE 345KV CKT 1	717	789	0.06164	115.0838	SEMINOLE - VANOSTP4 138.00 138KV CKT 1
FDNS	00NR	0	16WP	G15_081	FROM->TO	G14-057T 345.00 - SUNNYSIDE 345KV CKT 1	717	789	0.06297	115.0828	CLEOPLT4 138.00 - MEN TAP 138KV CKT 1
FDNS	00NR	0	16WP	G15_081	FROM->TO	G14-057T 345.00 - SUNNYSIDE 345KV CKT 1	717	789	0.06242	115.0797	GEN300010 1-ST FRANCIS UNIT 1
FDNS	00NR	0	16WP	G15_081	FROM->TO	G14-057T 345.00 - SUNNYSIDE 345KV CKT 1	717	789	0.06242	115.0766	GEN336191 1-LITTLE GYPSY UNIT#3
FDNS	00NR	0	16WP	G15_081	FROM->TO	G14-057T 345.00 - SUNNYSIDE 345KV CKT 1	717	789	0.06297	115.0709	IMO TAP - MEN TAP 138KV CKT 1
FDNS	00NR	0	16WP	G15_081	FROM->TO	G14-057T 345.00 - SUNNYSIDE 345KV CKT 1	717	789	0.06294	115.0701	CZECH HALL - XEROX 138KV CKT 1
FDNS	00NR	0	16WP	G15_081	FROM->TO	G14-057T 345.00 - SUNNYSIDE 345KV CKT 1	717	789	0.06294	115.0657	MORGAN - XEROX 138KV CKT 1
FDNS	00NR	0	16WP	G15_081	FROM->TO	G14-057T 345.00 - SUNNYSIDE 345KV CKT 1	717	789	0.06244	115.057	P12:138:AEPW:N.E.S.-4:CATOOSA4
FDNS	00NR	0	16WP	G15_081	FROM->TO	G14-057T 345.00 - SUNNYSIDE 345KV CKT 1	717	789	0.06242	115.0559	NELSON 230/20.0KV TRANSFORMER CKT 1
FDNS	00NR	0	16WP	G15_081	FROM->TO	G14-057T 345.00 - SUNNYSIDE 345KV CKT 1	717	789	0.06244	115.0529	ALPINE AECC - BISMARK 115KV CKT 1
FDNS	00NR	0	16WP	G15_081	FROM->TO	G14-057T 345.00 - SUNNYSIDE 345KV CKT 1	717	789	0.06242	115.0513	GEN335614 1-WILLOW GLENN UNIT#4
FDNS	00NR	0	16WP	G15_081	FROM->TO	G14-057T 345.00 - SUNNYSIDE 345KV CKT 1	717	789	0.06261	115.0494	COMANCHE TAP - TOSCO 69KV CKT 1
FDNS	00NR	0	16WP	G15_081	FROM->TO	G14-057T 345.00 - SUNNYSIDE 345KV CKT 1	717	789	0.06294	115.0419	MORGAN - MUSTANG 138KV CKT 1
FDNS	00NR	0	16WP	G15_081	FROM->TO	G14-057T 345.00 - SUNNYSIDE 345KV CKT 1	717	789	0.06385	115.0417	BENTON - WICHITA 345KV CKT 1
FDNS	00NR	0	16WP	G15_081	FROM->TO	G14-057T 345.00 - SUNNYSIDE 345KV CKT 1	717	789	0.06242	115.0396	GEN303008 1-1BC2 U3
FDNS	00NR	0	16WP	G15_081	FROM->TO	G14-057T 345.00 - SUNNYSIDE 345KV CKT 1	717	789	0.06242	115.03	GEN300011 1-ST FRANCIS UNIT 2
FDNS	00NR	0	16WP	G15_081	FROM->TO	G14-057T 345.00 - SUNNYSIDE 345KV CKT 1	717	789	0.06283	115.0247	NOEL_SW 138.00 - ROSE_VALLEY 138.00 138KV CKT 1
FDNS	00NR	0	16WP	G15_081	FROM->TO	G14-057T 345.00 - SUNNYSIDE 345KV CKT 1	717	789	0.06242	115.0126	GEN336170 1-GULF OXY U4
FDNS	00NR	0	16WP	G15_081	FROM->TO	G14-057T 345.00 - SUNNYSIDE 345KV CKT 1	717	789	0.06274	115.0103	WEATHERFORD JCT. - WEATHERFORD SOUTHEAST 138KV CKT 1
FDNS	00NR	0	16WP	G15_081	FROM->TO	G14-057T 345.00 - SUNNYSIDE 345KV CKT 1	717	789	0.06274	115.0103	WEATHERFORD JCT. - WEATHERFORD SOUTHEAST 138KV CKT 1
FDNS	00NR	0	16WP	G15_081	FROM->TO	G14-057T 345.00 - SUNNYSIDE 345KV CKT 1	717	789	0.06243	115.0093	CYPRESS - HARTBURG 500KV CKT 1
FDNS	00NR	0	16WP	G15_081	FROM->TO	G14-057T 345.00 - SUNNYSIDE 345KV CKT 1	717	789	0.06244	115.0092	ALPINE AECC - AMITY SS 115KV CKT 1
FDNS	00NR	0	16WP	G15_081	FROM->TO	G14-057T 345.00 - SUNNYSIDE 345KV CKT 1	717	789	0.06242	115.0076	GEN336464 1-MICHOUD UNIT #3
FDNS	00NR	0	20WP	G15_081	FROM->TO	G14-057T 345.00 - SUNNYSIDE 345KV CKT 1	717	789	0.06315	115.0036	CLEVELAND - TULSA NORTH 345KV CKT 1
FDNS	00NR	0	20WP	G15_081	FROM->TO	G14-057T 345.00 - SUNNYSIDE 345KV CKT 1	717	789	0.06315	115.0036	CLEVELAND - TULSA NORTH 345KV CKT 1
FDNS	00NR	0	16WP	G15_081	FROM->TO	G14-057T 345.00 - SUNNYSIDE 345KV CKT 1	717	789	0.06265	114.998	HOYT - STRANGER CREEK 345KV CKT 1
FDNS	00NR	0	16WP	G15_081	FROM->TO	G14-057T 345.00 - SUNNYSIDE 345KV CKT 1	717	789	0.06252	114.9964	CHISHOLM6 230.00 - ELK CITY 230KV 230KV CKT 1
FDNS	00NR	0	20WP	G15_081	FROM->TO	G14-057T 345.00 - SUNNYSIDE 345KV CKT 1	717	789	0.06301	114.9957	COMANCHE - LOCO 138KV CKT 1
FDNS	00NR	0	16WP	G15_081	FROM->TO	G14-057T 345.00 - SUNNYSIDE 345KV CKT 1	717	789	0.06261	114.9952	COMANCHE - COMANCHE TAP 69KV CKT 1
FDNS	00NR	0	16WP	G15_081	FROM->TO	G14-057T 345.00 - SUNNYSIDE 345KV CKT 1	717	789	0.06252	114.9949	ELK CITY 230KV (ELKCTY-6) 230/138/13.8KV TRANSFORMER CKT 1
FDNS	00NR	0	16WP	G15_081	FROM->TO	G14-057T 345.00 - SUNNYSIDE 345KV CKT 1	717	789	0.06252	114.9949	ELK CITY 230KV (ELKCTY-6) 230/138/13.8KV TRANSFORMER CKT 1
FDNS	00NR	0	16WP	G15_081	FROM->TO	G14-057T 345.00 - SUNNYSIDE 345KV CKT 1	717	789	0.06242	114.9914	GEN300016 1-1G1GPDEL 18.000
FDNS	00NR	0	16WP	G15_081	FROM->TO	G14-057T 345.00 - SUNNYSIDE 345KV CKT 1	717	789	0.06242	114.9913	8CAJUN2 500/24.0KV TRANSFORMER CKT 1
FDNS	00NR	0	20WP	G15_081	FROM->TO	G14-057T 345.00 - SUNNYSIDE 345KV CKT 1	717	789	0.05997	114.9873	GRACEMONT - LAWTON EASTSIDE 345KV CKT 1
FDNS	00NR	0	20WP	G15_081	FROM->TO	G14-057T 345.00 - SUNNYSIDE 345KV CKT 1	717	789	0.05997	114.9873	GRACEMONT - LAWTON EASTSIDE 345KV CKT 1
FDNS	00NR	0	16WP	G15_081	FROM->TO	G14-057T 345.00 - SUNNYSIDE 345KV CKT 1	717	789	0.06297	114.9818	P12:138:OKGE-AEPW:JENSEN4:REDROCKRD4
FDNS	00NR	0	16WP	G15_081	FROM->TO	G14-057T 345.00 - SUNNYSIDE 345KV CKT 1	717	789	0.06242	114.9768	GEN337041 1-GERALD ANDRUS
FDNS	00NR	0	16WP	G15_081	FROM->TO	G14-057T 345.00 - SUNNYSIDE 345KV CKT 1	717	789	0.0638	114.9721	CANADIAN - NOBLE 138KV CKT 1
FDNS	00NR	0	16WP	G15_081	FROM->TO	G14-057T 345.00 - SUNNYSIDE 345KV CKT 1	717	789	0.06242	114.9655	GEN501910 1-ACADIA UNIT ST1
FDNS	00NR	0	16WP	G15_081	FROM->TO	G14-057T 345.00 - SUNNYSIDE 345KV CKT 1	717	789	0.06242	114.9604	P12:138:AEPW:R.S.S.-4:S.HUD.-4
FDNS	00NR	0	16WP	G15_081	FROM->TO	G14-057T 345.00 - SUNNYSIDE 345KV CKT 1	717	789	0.06354	114.9568	LASALLE - LATTA JCT 138KV CKT 1
FDNS	00NR	0	16WP	G15_081	FROM->TO	G14-057T 345.00 - SUNNYSIDE 345KV CKT 1	717	789	0.06274	114.9568	P12:138:AEPW:REDROCKRD4:WTH_JCT4
FDNS	00NR	0	16WP	G15_081	FROM->TO	G14-057T 345.00 - SUNNYSIDE 345KV CKT 1	717	789	0.06241	114.9566	7JASPER 345.00 - BLACKBERRY 345KV CKT 1
FDNS	00NR	0	16WP	G15_081	FROM->TO	G14-057T 345.00 - SUNNYSIDE 345KV CKT 1	717	789	0.06263	114.955	WALTERS - WALTERS 69KV CKT 1
FDNS	00NR	0	16WP	G15_081	FROM->TO	G14-057T 345.00 - SUNNYSIDE 345KV CKT 1	717	789	0.06381	114.9539	P12:138:OKGE:3TERM27
FDNS	00NR	0	20WP	G15_081	FROM->TO	G14-057T 345.00 - SUNNYSIDE 345KV CKT 1	717	789	0.06291	114.9532	POCASSETT - TUTTLE 138KV CKT 1
FDNS	00NR	0	16WP	G15_081	FROM->TO	G14-057T 345.00 - SUNNYSIDE 345KV CKT 1	717	789	0.06265	114.9521	G15074_T 345.00 - JEFFREY ENERGY CENTER 345KV CKT 1
FDNS	00NR	0	16WP	G15_081	FROM->TO	G14-057T 345.00 - SUNNYSIDE 345KV CKT 1	717	789	0.0628	114.9482	BLACKBERRY - NEOSHO 345KV CKT 1
FDNS	00NR	0	16WP	G15_081	FROM->TO	G14-057T 345.00 - SUNNYSIDE 345KV CKT 1	717	789	0.06276	114.9468	SWISSVALE - WEST GARDNER 345KV CKT 1
FDNS	00NR	0	16WP	G15_081	FROM->TO	G14-057T 345.00 - SUNNYSIDE 345KV CKT 1	717	789	0.06271	114.9464	NORGE ROAD - SOUTHWESTERN STATION 138KV CKT 1
FDNS	00NR	0	16WP	G15_081	FROM->TO	G14-057T 345.00 - SUNNYSIDE 345KV CKT 1	717	789	0.06271	114.9464	NORGE ROAD - SOUTHWESTERN STATION 138KV CKT 1
FDNS	00NR	0	16WP	G15_081	FROM->TO	G14-057T 345.00 - SUNNYSIDE 345KV CKT 1	717	789	0.0637	114.9431	FRANKLIN SW - WESTMOORE 138KV CKT 1
FDNS	00NR	0	16WP	G15_081	FROM->TO	G14-057T 345.00 - SUNNYSIDE 345KV CKT 1	717	789	0.06499	114.9374	DRAPER LAKE - SEMINOLE 345KV CKT 2
FDNS	00NR	0	16WP	G15_081	FROM->TO	G14-057T 345.00 - SUNNYSIDE 345KV CKT 1	717	789	0.06499	114.9373	DRAPER LAKE - SEMINOLE 345KV CKT 1
FDNS	00NR	0	20WP	G15_081	FROM->TO	G14-057T 345.00 - SUNNYSIDE 345KV CKT 1	717	789	0.06202	114.9356	DOLET HILLS - SOUTHWEST SHREVEPORT 345KV CKT 1
FDNS	00NR	0	20WP	G15_081	FROM->TO	G14-057T 345.00 - SUNNYSIDE 345KV CKT 1	717	789	0.06202	114.9356	DOLET HILLS - SOUTHWEST SHREVEPORT 345KV CKT 1
FDNS	00NR	0	16WP	G15_081	FROM->TO	G14-057T 345.00 - SUNNYSIDE 345KV CKT 1	717	789	0.06296	114.933	SARA - STHLAKE4 138.00 138KV CKT 1
FDNS	00NR	0	16WP	G15_081	FROM->TO	G14-057T 345.00 - SUNNYSIDE 345KV CKT 1	717	789	0.06065	114.9289	G14_038T 345.00 - Hitchland Interchange 345KV CKT 1
FDNS	00NR	0	16WP	G15_081	FROM->TO	G14-057T 345.00 - SUNNYSIDE 345KV CKT 1	717	789	0.06238	114.9274	ETTA (DUKE HOTSPRINGS) - MC NIEL 500KV CKT 1
FDNS	00NR	0	16WP	G15_081	FROM->TO	G14-057T 345.00 - SUNNYSIDE 345KV CKT 1	717	789	0.06242	114.9218	P12:138:AEPW:YARCH-S4:T.S.E.-4
FDNS	00NR	0	16WP	G15_081	FROM->TO	G14-057T 345.00 - SUNNYSIDE 345KV CKT 1	717	789	0.0625	114.9213	LAWTON RELIFT TAP - OMPA-WALTERS 69KV CKT 1
FDNS	00NR	0	16WP	G15_081	FROM->TO	G14-057T 345.00 - SUNNYSIDE 345KV CKT 1	717	789	0.06242	114.9181	SABINE 230/24.0KV TRANSFORMER CKT 1
FDNS	00NR	0	16WP	G15_081	FROM->TO	G14-057T 345.00 - SUNNYSIDE 345KV CKT 1	717	789	0.06242	114.9164	ESSEX UNIT 2 500/18.0KV TRANSFORMER CKT 1
FDNS	00NR	0	16WP	G15_081	FROM->TO	G14-057T 345.00 - SUNNYSIDE 345KV CKT 1	717	789	0.06242	114.9157	P12:69:AEPW:NROGERS2:ECNTRTN2
FDNS	00NR	0	16WP	G15_081	FROM->TO	G14-057T 345.00 - SUNNYSIDE 345KV CKT 1	717	789	0.06242	114.9156	P12:138:AEPW:BA_71ST4:T.S.E.-4
FDNS	00NR	0	16WP	G15_081	FROM->TO	G14-057T 345.00 - SUNNYSIDE 345KV CKT 1	717	789	0.06242	114.9151	GEN336801 1-BAXTER WILSON UNIT #1
FDNS	00NR	0	16WP	G15_081	FROM->TO	G14-057T 345.00 - SUNNYSIDE 345KV CKT 1	717	789	0.06288	114.9126	EMPORIA ENERGY CENTER - G14_001T 345.00 345KV CKT 1
FDNS	00NR	0	16WP	G15_081	FROM->TO	G14-057T 345.00 - SUNNYSIDE 345KV CKT 1	717	789	0.06253	114.9076	7LUTESVIL 345.00 - 7ST FRANC 345.00 345KV CKT 1
FDNS	00NR	0	16WP	G15_081	FROM->TO	G14-057T 345.00 - SUNNYSIDE 345KV CKT 1	717	789	0.06296	114.9039	MCCLAIN - STHLAKE4 138.00 138KV CKT 1
FDNS	00NR	0	16WP	G15_081	FROM->TO	G14-057T 345.00 - SUNNYSIDE 345KV CKT 1	717	789	0.06242	114.8963	FRONTIER 345/18.0KV TRANSFORMER CKT 1
FDNS	00NR	0	16WP	G15_081	FROM->TO	G14-057T 345.00 - SUNNYSIDE 345KV CKT 1	717	789	0.06247	114.8959	HOPE - MCNAB REC 115KV CKT 1
FDNS	00NR	0	16WP	G15_081	FROM->TO	G14-057T 345.00 - SUNNYSIDE 345KV CKT 1	717	789	0.06242	114.8947	FRONTIER 345/18.0KV TRANSFORMER CKT 1
FDNS	00NR	0	16WP	G15_081	FROM->TO	G14-057T 345.00 - SUNNYSIDE 345KV CKT 1	717	789	0.06253	114.888	P12:138:AEPW-OGE:SHIDLER4:OSAGE 4
FDNS	00NR	0	16WP	G15_081	FROM->TO	G14-057T 345.00 - SUNNYSIDE 345KV CKT 1	717	789	0.06247	114.887	P12:115:AEPW:TURK3:HOPE3

SOLUTION	GROUP	SCENARIO	SEASON	SOURCE	DIRECTION	MONITORED ELEMENT	RATEA (MVA)	RATEB(MVA)	TDF	TC%LOADING (% MVA)	CONTINGENCY
FDNS	00NR	0	16WP	G15_081	FROM->TO	G14-057T 345.00 - SUNNYSIDE 345KV CKT 1	717	789	0.06242	114.8839	P12:161:AEPW:CHAMSPR5:FARMING5
FDNS	00NR	0	16WP	G15_081	FROM->TO	G14-057T 345.00 - SUNNYSIDE 345KV CKT 1	717	789	0.06269	114.8809	SOUTHWESTERN STATION - VERDEN 138KV CKT 1
FDNS	00NR	0	16WP	G15_081	FROM->TO	G14-057T 345.00 - SUNNYSIDE 345KV CKT 1	717	789	0.0638	114.8807	NOBLE - PURCELL4 138.00 138KV CKT 1
FDNS	00NR	0	16WP	G15_081	FROM->TO	G14-057T 345.00 - SUNNYSIDE 345KV CKT 1	717	789	0.06274	114.8796	HINTON - WEATHERFORD JCT. 138KV CKT 1
FDNS	00NR	0	16WP	G15_081	FROM->TO	G14-057T 345.00 - SUNNYSIDE 345KV CKT 1	717	789	0.06227	114.8773	ENOWILT - LONE OAK 138KV CKT 1
FDNS	00NR	0	16WP	G15_081	FROM->TO	G14-057T 345.00 - SUNNYSIDE 345KV CKT 1	717	789	0.0627	114.8748	ANADARKO - SEQUOYAHJ4 138.00 138KV CKT 1
FDNS	00NR	0	16WP	G15_081	FROM->TO	G14-057T 345.00 - SUNNYSIDE 345KV CKT 1	717	789	0.0627	114.8744	CORN TAP - SEQUOYAHJ4 138.00 138KV CKT 1
FDNS	00NR	0	16WP	G15_081	FROM->TO	G14-057T 345.00 - SUNNYSIDE 345KV CKT 1	717	789	0.06121	114.8724	ARBUCKLE - VANOSTP4 138.00 138KV CKT 1
FDNS	00NR	0	16WP	G15_081	FROM->TO	G14-057T 345.00 - SUNNYSIDE 345KV CKT 1	717	789	0.0626	114.872	WEATHERFORD TAP - WEATHERFORD WIND FARM 138KV CKT 1
FDNS	00NR	0	16WP	G15_081	FROM->TO	G14-057T 345.00 - SUNNYSIDE 345KV CKT 1	717	789	0.06256	114.8684	8WNEWMADRID 500.00 - DELL 500 500KV CKT 1
FDNS	00NR	0	16WP	G15_081	FROM->TO	G14-057T 345.00 - SUNNYSIDE 345KV CKT 1	717	789	0.06227	114.8684	ENOWILT - SARDIS 138KV CKT 1
FDNS	00NR	0	16WP	G15_081	FROM->TO	G14-057T 345.00 - SUNNYSIDE 345KV CKT 1	717	789	0.06242	114.8662	GEN505616 1-BROKEN BOW
FDNS	00NR	0	16WP	G15_081	FROM->TO	G14-057T 345.00 - SUNNYSIDE 345KV CKT 1	717	789	0.06276	114.8654	CLINTON JUNCTION - ELK CITY 138KV CKT 1
FDNS	00NR	0	16WP	G15_081	FROM->TO	G14-057T 345.00 - SUNNYSIDE 345KV CKT 1	717	789	0.06276	114.8654	CLINTON JUNCTION - ELK CITY 138KV CKT 1
FDNS	00NR	0	16WP	G15_081	FROM->TO	G14-057T 345.00 - SUNNYSIDE 345KV CKT 1	717	789	0.06247	114.8645	MCNAB REC - Turk 115 115KV CKT 1
FDNS	00NR	0	16WP	G15_081	FROM->TO	G14-057T 345.00 - SUNNYSIDE 345KV CKT 1	717	789	0.06247	114.8645	TURK (TURK 1) 138/115/13.2KV TRANSFORMER CKT 1
FDNS	00NR	0	16WP	G15_081	FROM->TO	G14-057T 345.00 - SUNNYSIDE 345KV CKT 1	717	789	0.06247	114.8645	TURK (TURK 1) 138/115/13.2KV TRANSFORMER CKT 1
FDNS	00NR	0	16WP	G15_081	FROM->TO	G14-057T 345.00 - SUNNYSIDE 345KV CKT 1	717	789	0.06269	114.86	NORTH 29TH CHICKASHA - VERDEN 138KV CKT 1
FDNS	00NR	0	16WP	G15_081	FROM->TO	G14-057T 345.00 - SUNNYSIDE 345KV CKT 1	717	789	0.06288	114.8591	G14_001T 345.00 - WICHITA 345KV CKT 1
FDNS	00NR	0	16WP	G15_081	FROM->TO	G14-057T 345.00 - SUNNYSIDE 345KV CKT 1	717	789	0.06242	114.8585	LEWIS CREEK SWITCHYARD 138/22.0KV TRANSFORMER CKT 1
FDNS	00NR	0	16WP	G15_081	FROM->TO	G14-057T 345.00 - SUNNYSIDE 345KV CKT 1	717	789	0.06327	114.8545	G13-010T 345.00 - POST ROCK 345KV CKT 1
FDNS	00NR	0	16WP	G15_081	FROM->TO	G14-057T 345.00 - SUNNYSIDE 345KV CKT 1	717	789	0.0625	114.8545	OMPA-WALTERS - WALTERS 69KV CKT 1
FDNS	00NR	0	16WP	G15_081	FROM->TO	G14-057T 345.00 - SUNNYSIDE 345KV CKT 1	717	789	0.0625	114.8545	OMPA-WALTERS - WALTERS 69KV CKT 1
FDNS	00NR	0	16WP	G15_081	FROM->TO	G14-057T 345.00 - SUNNYSIDE 345KV CKT 1	717	789	0.06245	114.8539	COUCH SES - MC NIEL 115KV CKT 1
FDNS	00NR	0	16WP	G15_081	FROM->TO	G14-057T 345.00 - SUNNYSIDE 345KV CKT 1	717	789	0.06242	114.8536	LEWIS CREEK SWITCHYARD 138/22.0KV TRANSFORMER CKT 1
FDNS	00NR	0	16WP	G15_081	FROM->TO	G14-057T 345.00 - SUNNYSIDE 345KV CKT 1	717	789	0.06267	114.8433	EMPORIA ENERGY CENTER - SWISSVALE 345KV CKT 1
FDNS	00NR	0	16WP	G15_081	FROM->TO	G14-057T 345.00 - SUNNYSIDE 345KV CKT 1	717	789	0.06263	114.8397	P12:69:WFEC-AEPW:COMANCH2:WALTRS-2
FDNS	00NR	0	16WP	G15_081	FROM->TO	G14-057T 345.00 - SUNNYSIDE 345KV CKT 1	717	789	0.06242	114.8396	GEN501970 1-EVANGELINE UNIT 7
FDNS	00NR	0	16WP	G15_081	FROM->TO	G14-057T 345.00 - SUNNYSIDE 345KV CKT 1	717	789	0.06245	114.835	MORISNT4 138.00 - STILLWATER 138KV CKT 1
FDNS	00NR	0	16WP	G15_081	FROM->TO	G14-057T 345.00 - SUNNYSIDE 345KV CKT 1	717	789	0.06227	114.8336	CLAYTON - SARDIS 138KV CKT 1
FDNS	00NR	0	16WP	G15_081	FROM->TO	G14-057T 345.00 - SUNNYSIDE 345KV CKT 1	717	789	0.06247	114.8296	P12:138:OKGE:3TERM2
FDNS	00NR	0	16WP	G15_081	FROM->TO	G14-057T 345.00 - SUNNYSIDE 345KV CKT 1	717	789	0.06274	114.8285	HINTON - REDROCKRD4 138.00 138KV CKT 1
FDNS	00NR	0	16WP	G15_081	FROM->TO	G14-057T 345.00 - SUNNYSIDE 345KV CKT 1	717	789	0.06242	114.8271	GEN334392 1-EXXON MOBIL IPP 1
FDNS	00NR	0	16WP	G15_081	FROM->TO	G14-057T 345.00 - SUNNYSIDE 345KV CKT 1	717	789	0.06271	114.826	CORNVILLE - NORGE ROAD 138KV CKT 1
FDNS	00NR	0	16WP	G15_081	FROM->TO	G14-057T 345.00 - SUNNYSIDE 345KV CKT 1	717	789	0.06271	114.826	CORNVILLE - NORGE ROAD 138KV CKT 1
FDNS	00NR	0	16WP	G15_081	FROM->TO	G14-057T 345.00 - SUNNYSIDE 345KV CKT 1	717	789	0.06354	114.822	LASALLE - STONEWAL LH138.00 138KV CKT 1
FDNS	00NR	0	16WP	G15_081	FROM->TO	G14-057T 345.00 - SUNNYSIDE 345KV CKT 1	717	789	0.06242	114.8203	GEN334393 1-EXXON MOBIL IPP 2
FDNS	00NR	0	16WP	G15_081	FROM->TO	G14-057T 345.00 - SUNNYSIDE 345KV CKT 1	717	789	0.06242	114.8203	GEN334394 1-EXXON MOBIL IPP 3
FDNS	00NR	0	16WP	G15_081	FROM->TO	G14-057T 345.00 - SUNNYSIDE 345KV CKT 1	717	789	0.06248	114.8155	P12:138:OKGE:3TERM12
FDNS	00NR	0	16WP	G15_081	FROM->TO	G14-057T 345.00 - SUNNYSIDE 345KV CKT 1	717	789	0.06242	114.812	GEN336222 1-LITTLE GYPSY UNIT#2
FDNS	00NR	0	16WP	G15_081	FROM->TO	G14-057T 345.00 - SUNNYSIDE 345KV CKT 1	717	789	0.06354	114.807	STONEWAL LH138.00 - TUPELO TAP 138KV CKT 1
FDNS	00NR	0	16WP	G15_081	FROM->TO	G14-057T 345.00 - SUNNYSIDE 345KV CKT 1	717	789	0.06227	114.8059	P12:138:AEPW-SWPA:LONEOAK4:BRKNBW4
FDNS	00NR	0	16WP	G15_081	FROM->TO	G14-057T 345.00 - SUNNYSIDE 345KV CKT 1	717	789	0.06249	114.803	FLETCHER - MARLOW JCT 69KV CKT 1
FDNS	00NR	0	20WP	G15_081	FROM->TO	G14-057T 345.00 - SUNNYSIDE 345KV CKT 1	717	789	0.06193	114.7966	GEN335831 1-RIVERBEND UNIT#1
FDNS	00NR	0	16WP	G15_081	FROM->TO	G14-057T 345.00 - SUNNYSIDE 345KV CKT 1	717	789	0.06247	114.7955	7JASPER 345.00 - MORGAN 345KV CKT 1
FDNS	00NR	0	16WP	G15_081	FROM->TO	G14-057T 345.00 - SUNNYSIDE 345KV CKT 1	717	789	0.06243	114.7941	P12:138:AEPW:R.S.S-4:T.P.S.-4
FDNS	00NR	0	16WP	G15_081	FROM->TO	G14-057T 345.00 - SUNNYSIDE 345KV CKT 1	717	789	0.06242	114.7937	GEN506749 1-EASTMAN GENERATION A
FDNS	00NR	0	16WP	G15_081	FROM->TO	G14-057T 345.00 - SUNNYSIDE 345KV CKT 1	717	789	0.06227	114.792	CLAYTON - NASHOBA 138KV CKT 1
FDNS	00NR	0	16WP	G15_081	FROM->TO	G14-057T 345.00 - SUNNYSIDE 345KV CKT 1	717	789	0.06364	114.7904	CLARKSVILLE - ONETA 345KV CKT 1
FDNS	00NR	0	16WP	G15_081	FROM->TO	G14-057T 345.00 - SUNNYSIDE 345KV CKT 1	717	789	0.06364	114.7904	CLARKSVILLE - ONETA 345KV CKT 1
FDNS	00NR	0	16WP	G15_081	FROM->TO	G14-057T 345.00 - SUNNYSIDE 345KV CKT 1	717	789	0.06269	114.7904	CORNVILLE - NORTH 29TH CHICKASHA 138KV CKT 1
FDNS	00NR	0	16WP	G15_081	FROM->TO	G14-057T 345.00 - SUNNYSIDE 345KV CKT 1	717	789	0.06242	114.7901	GEN334431 1-SABINE UNIT 1
FDNS	00NR	0	16WP	G15_081	FROM->TO	G14-057T 345.00 - SUNNYSIDE 345KV CKT 1	717	789	0.06242	114.79	GEN334432 1-SABINE UNIT 2
FDNS	00NR	0	16WP	G15_081	FROM->TO	G14-057T 345.00 - SUNNYSIDE 345KV CKT 1	717	789	0.06256	114.785	FRANKLIN - FRANKLIN SW 138KV CKT 1
FDNS	00NR	0	16WP	G15_081	FROM->TO	G14-057T 345.00 - SUNNYSIDE 345KV CKT 1	717	789	0.0626	114.7845	WEATHERFORD SOUTHEAST - WEATHERFORD TAP 138KV CKT 1
FDNS	00NR	0	16WP	G15_081	FROM->TO	G14-057T 345.00 - SUNNYSIDE 345KV CKT 1	717	789	0.06242	114.7829	GEN501972 1-EVANGELINE UNIT 7-2
FDNS	00NR	0	16WP	G15_081	FROM->TO	G14-057T 345.00 - SUNNYSIDE 345KV CKT 1	717	789	0.06242	114.7828	GEN501971 1-EVANGELINE UNIT 7-1
FDNS	00NR	0	16WP	G15_081	FROM->TO	G14-057T 345.00 - SUNNYSIDE 345KV CKT 1	717	789	0.06242	114.7826	GEN336152 1-WATERFORD UNIT#2
FDNS	00NR	0	16WP	G15_081	FROM->TO	G14-057T 345.00 - SUNNYSIDE 345KV CKT 1	717	789	0.06242	114.7815	GEN336151 1-WATERFORD UNIT#1
FDNS	00NR	0	16WP	G15_081	FROM->TO	G14-057T 345.00 - SUNNYSIDE 345KV CKT 1	717	789	0.06227	114.779	BETHEL - NASHOBA 138KV CKT 1
FDNS	00NR	0	16WP	G15_081	FROM->TO	G14-057T 345.00 - SUNNYSIDE 345KV CKT 1	717	789	0.06242	114.7698	P12:138:AEPW:R.S.S.-4:R:96YALE-4
FDNS	00NR	0	20WP	G15_081	FROM->TO	G14-057T 345.00 - SUNNYSIDE 345KV CKT 1	717	789	0.07269	114.7697	ARCADIA - NORTHWEST 345KV CKT 1
FDNS	00NR	0	20WP	G15_081	FROM->TO	G14-057T 345.00 - SUNNYSIDE 345KV CKT 1	717	789	0.06193	114.7537	GRAND GULF 500/22.0KV TRANSFORMER CKT 1
FDNS	00NR	0	16WP	G15_081	FROM->TO	G14-057T 345.00 - SUNNYSIDE 345KV CKT 1	717	789	0.06375	114.7505	MARIETTA - MARIETTA4 138.00 138KV CKT 1
FDNS	00NR	0	16WP	G15_081	FROM->TO	G14-057T 345.00 - SUNNYSIDE 345KV CKT 1	717	789	0.06297	114.7347	Canadian Pump Station - REDROCKRD4 138.00 138KV CKT 1
FDNS	00NR	0	16WP	G15_081	FROM->TO	G14-057T 345.00 - SUNNYSIDE 345KV CKT 1	717	789	0.0626	114.73	CLINTON JUNCTION - CLINTON NATURAL GAS TAP 138KV CKT 1
FDNS	00NR	0	16WP	G15_081	FROM->TO	G14-057T 345.00 - SUNNYSIDE 345KV CKT 1	717	789	0.06254	114.7223	P12:138:OKGE:3TERM47
FDNS	00NR	0	16WP	G15_081	FROM->TO	G14-057T 345.00 - SUNNYSIDE 345KV CKT 1	717	789	0.06354	114.7209	CIMARRON - NORTHWEST 345KV CKT 1
FDNS	00NR	0	16WP	G15_081	FROM->TO	G14-057T 345.00 - SUNNYSIDE 345KV CKT 1	717	789	0.06264	114.7076	HAMMETT TAP - HORSESHOE LAKE 138KV CKT 1
FDNS	00NR	0	20WP	G15_081	FROM->TO	G14-057T 345.00 - SUNNYSIDE 345KV CKT 1	717	789	0.062	114.7044	7SAREPTA% 345.00 - ELDORADO EHV 345KV CKT 1
FDNS	00NR	0	20WP	G15_081	FROM->TO	G14-057T 345.00 - SUNNYSIDE 345KV CKT 1	717	789	0.062	114.7042	3TR3AR8EL7EL
FDNS	00NR	0	20WP	G15_081	FROM->TO	G14-057T 345.00 - SUNNYSIDE 345KV CKT 1	717	789	0.062	114.6934	ELDORADO EHV 500/345KV TRANSFORMER CKT 1
FDNS	00NR	0	20WP	G15_081	FROM->TO	G14-057T 345.00 - SUNNYSIDE 345KV CKT 1	717	789	0.06262	114.6786	P12:138:AEPW:DUNCAN-4:L.E.S.-4
FDNS	00NR	0	16WP	G15_081	FROM->TO	G14-057T 345.00 - SUNNYSIDE 345KV CKT 1	717	789	0.06263	114.6677	COMANCHE - WALTERS 69KV CKT 1
FDNS	00NR	0	20WP	G15_081	FROM->TO	G14-057T 345.00 - SUNNYSIDE 345KV CKT 1	717	789	0.06193	114.608	GEN515577 1-ARBWND11 0.6900
FDNS	00NR	0	20WP	G15_081	FROM->TO	G14-057T 345.00 - SUNNYSIDE 345KV CKT 1	717	789	0.07235	114.5615	MATHWSN7 345.00 - TATONGA7 345.00 345KV CKT 1
FDNS	00NR	0	20WP	G15_081	FROM->TO	G14-057T 345.00 - SUNNYSIDE 345KV CKT 1	717	789	0.06262	114.5571	COMANCHE TAP - OMPA-DUNCAN 840 138KV CKT 1
FDNS	00NR	0	20WP	G15_081	FROM->TO	G14-057T 345.00 - SUNNYSIDE 345KV CKT 1	717	789	0.06291	114.5549	BRIDGECR 138.00 - TUTTLE 138KV CKT 1
FDNS	00NR	0	20WP	G15_081	FROM->TO	G14-057T 345.00 - SUNNYSIDE 345KV CKT 1	717	789	0.05813	114.5467	CANADIAN RIVER - MUSKOGEE 345KV CKT 1

SOLUTION	GROUP	SCENARIO	SEASON	SOURCE	DIRECTION	MONITORED ELEMENT	RATEA (MVA)	RATEB(MVA)	TDF	TC%LOADING (% MVA)	CONTINGENCY
FDNS	00NR	0	20WP	G15_081	FROM->TO	G14-057T 345.00 - SUNNYSIDE 345KV CKT 1	717	789	0.06193	114.4684	GEN509409 1-WILKES #3
FDNS	00NR	0	20WP	G15_081	FROM->TO	G14-057T 345.00 - SUNNYSIDE 345KV CKT 1	717	789	0.066	114.4388	Hitchland Interchange - WALKTAP7 345.00 345KV CKT 1
FDNS	00NR	0	20WP	G15_081	FROM->TO	G14-057T 345.00 - SUNNYSIDE 345KV CKT 1	717	789	0.066	114.4388	Hitchland Interchange - WALKTAP7 345.00 345KV CKT 1
FDNS	00NR	0	20WP	G15_081	FROM->TO	G14-057T 345.00 - SUNNYSIDE 345KV CKT 1	717	789	0.06326	114.4317	HEALDTON - LOCO 138KV CKT 1
FDNS	00NR	0	20WP	G15_081	FROM->TO	G14-057T 345.00 - SUNNYSIDE 345KV CKT 1	717	789	0.06329	114.4268	ARCADIA - SEMINOLE 345KV CKT 1
FDNS	00NR	0	20WP	G15_081	FROM->TO	G14-057T 345.00 - SUNNYSIDE 345KV CKT 1	717	789	0.066	114.4189	P12:345:SPS:J07.1.FINN.HITCH
FDNS	00NR	0	20WP	G15_081	FROM->TO	G14-057T 345.00 - SUNNYSIDE 345KV CKT 1	717	789	0.06193	114.4089	GEN501813 1-RODEMACHER UNIT 3
FDNS	00NR	0	20WP	G15_081	FROM->TO	G14-057T 345.00 - SUNNYSIDE 345KV CKT 1	717	789	0.06193	114.3121	GEN300006 1-NEW MADRID UNIT 1
FDNS	00NR	0	20WP	G15_081	FROM->TO	G14-057T 345.00 - SUNNYSIDE 345KV CKT 1	717	789	0.06193	114.2922	GEN300007 1-NEW MADRID UNIT 2
FDNS	00NR	0	20WP	G15_081	FROM->TO	G14-057T 345.00 - SUNNYSIDE 345KV CKT 1	717	789	0.06326	114.2876	HEALDTON - RINGLING 138KV CKT 1
FDNS	00NR	0	20WP	G15_081	FROM->TO	G14-057T 345.00 - SUNNYSIDE 345KV CKT 1	717	789	0.06228	114.2757	LACYGNE - WAVERLY7 345.00 345KV CKT 1
FDNS	00NR	0	20WP	G15_081	FROM->TO	G14-057T 345.00 - SUNNYSIDE 345KV CKT 1	717	789	0.06262	114.2686	DUNCAN - OMPA-DUNCAN 840 138KV CKT 1
FDNS	00NR	0	20WP	G15_081	FROM->TO	G14-057T 345.00 - SUNNYSIDE 345KV CKT 1	717	789	0.06262	114.2686	DUNCAN - OMPA-DUNCAN 840 138KV CKT 1
FDNS	00NR	0	20WP	G15_081	FROM->TO	G14-057T 345.00 - SUNNYSIDE 345KV CKT 1	717	789	0.06291	114.2678	P12:138:WFEC:MSL01
FDNS	00NR	0	16WP	G15_081	FROM->TO	G14-057T 345.00 - SUNNYSIDE 345KV CKT 1	717	789	0.06242	114.2581	803-OKLAUNION
FDNS	00NR	0	20WP	G15_081	FROM->TO	G14-057T 345.00 - SUNNYSIDE 345KV CKT 1	717	789	0.06291	114.2563	BRIDGECR 138.00 - SUNSHINE CANYON 138KV CKT 1
FDNS	00NR	0	20WP	G15_081	FROM->TO	G14-057T 345.00 - SUNNYSIDE 345KV CKT 1	717	789	0.06193	114.1972	GEN335206 1-NELSON UNIT 6
FDNS	00NR	0	20WP	G15_081	FROM->TO	G14-057T 345.00 - SUNNYSIDE 345KV CKT 1	717	789	0.06228	114.1543	WAVERLY7 345.00 - WOLF CREEK 345KV CKT 1
FDNS	00NR	0	20WP	G15_081	FROM->TO	G14-057T 345.00 - SUNNYSIDE 345KV CKT 1	717	789	0.06193	114.1257	GEN520947 1-HUGO1
FDNS	00NR	0	20WP	G15_081	FROM->TO	G14-057T 345.00 - SUNNYSIDE 345KV CKT 1	717	789	0.06326	114.1171	RINGLING - SOUTH WILSON 138KV CKT 1
FDNS	00NR	0	16WP	G15_081	FROM->TO	G14-057T 345.00 - SUNNYSIDE 345KV CKT 1	717	789	0.06133	114.0994	P12:138:OKGE:3TERM39
FDNS	00NR	0	20WP	G15_081	FROM->TO	G14-057T 345.00 - SUNNYSIDE 345KV CKT 1	717	789	0.07235	114.0411	G11_051T 345.00 - TATONGA7 345.00 345KV CKT 1
FDNS	00NR	0	20WP	G15_081	FROM->TO	G14-057T 345.00 - SUNNYSIDE 345KV CKT 1	717	789	0.0619	114.0258	ELDORADO EHV - MOUNT OLIVE 500KV CKT 1
FDNS	00NR	0	20WP	G15_081	FROM->TO	G14-057T 345.00 - SUNNYSIDE 345KV CKT 1	717	789	0.06193	114.0121	GEN501812 1-RODEMACHER UNIT 2
FDNS	00NR	0	20WP	G15_081	FROM->TO	G14-057T 345.00 - SUNNYSIDE 345KV CKT 1	717	789	0.06191	114.0071	P12:138:AEPW:SHERID4:112GORE4
FDNS	00NR	0	20WP	G15_081	FROM->TO	G14-057T 345.00 - SUNNYSIDE 345KV CKT 1	717	789	0.06193	114.0013	DOLET HILLS 345/24.0KV TRANSFORMER CKT 1
FDNS	00NR	0	20WP	G15_081	FROM->TO	G14-057T 345.00 - SUNNYSIDE 345KV CKT 1	717	789	0.06607	113.9961	THISTLE7 345.00 - WOODWARD DISTRICT EHV 345KV CKT 1
FDNS	00NR	0	20WP	G15_081	FROM->TO	G14-057T 345.00 - SUNNYSIDE 345KV CKT 1	717	789	0.06607	113.9961	THISTLE7 345.00 - WOODWARD DISTRICT EHV 345KV CKT 1
FDNS	00NR	0	20WP	G15_081	FROM->TO	G14-057T 345.00 - SUNNYSIDE 345KV CKT 1	717	789	0.06607	113.9961	THISTLE7 345.00 - WOODWARD DISTRICT EHV 345KV CKT 2
FDNS	00NR	0	20WP	G15_081	FROM->TO	G14-057T 345.00 - SUNNYSIDE 345KV CKT 1	717	789	0.06607	113.9961	THISTLE7 345.00 - WOODWARD DISTRICT EHV 345KV CKT 2
FDNS	00NR	0	20WP	G15_081	FROM->TO	G14-057T 345.00 - SUNNYSIDE 345KV CKT 1	717	789	0.06085	113.9283	PARK LANE - SEMINOLE 138KV CKT 1
FDNS	00NR	0	20WP	G15_081	FROM->TO	G14-057T 345.00 - SUNNYSIDE 345KV CKT 1	717	789	0.06206	113.8762	WEBRE - WELLS 500KV CKT 1
FDNS	00NR	0	20WP	G15_081	FROM->TO	G14-057T 345.00 - SUNNYSIDE 345KV CKT 1	717	789	0.06193	113.875	GEN515564 1-ORIGIN11 0.6900
FDNS	00NR	0	20WP	G15_081	FROM->TO	G14-057T 345.00 - SUNNYSIDE 345KV CKT 1	717	789	0.06193	113.875	GEN515565 1-ORIGIN21 0.6900
FDNS	00NR	0	16WP	G15_081	FROM->TO	G14-057T 345.00 - SUNNYSIDE 345KV CKT 1	717	789	0.0617	113.8718	MAYSVILLE - MAYSVLT4 138.00 138KV CKT 1
FDNS	00NR	0	16WP	G15_081	FROM->TO	G14-057T 345.00 - SUNNYSIDE 345KV CKT 1	717	789	0.06276	113.8663	DRAPER LAKE - MIDWEST TAP 138KV CKT 1
FDNS	00NR	0	16WP	G15_081	FROM->TO	G14-057T 345.00 - SUNNYSIDE 345KV CKT 1	717	789	0.06248	113.8628	GLASSES - MADILL INDUSTRIAL TAP 138KV CKT 1
FDNS	00NR	0	20WP	G15_081	FROM->TO	G14-057T 345.00 - SUNNYSIDE 345KV CKT 1	717	789	0.06193	113.8527	GEN334440 1-SABINE UNIT 4
FDNS	00NR	0	16WP	G15_081	FROM->TO	G14-057T 345.00 - SUNNYSIDE 345KV CKT 1	717	789	0.06152	113.8517	CIMARRON - MATHWSN7 345.00 345KV CKT 1
FDNS	00NR	0	16WP	G15_081	FROM->TO	G14-057T 345.00 - SUNNYSIDE 345KV CKT 1	717	789	0.06152	113.8517	CIMARRON - MATHWSN7 345.00 345KV CKT 2
FDNS	00NR	0	16WP	G15_081	FROM->TO	G14-057T 345.00 - SUNNYSIDE 345KV CKT 1	717	789	0.06242	113.8451	GEN562691 1-G15_015_3 0.6900
FDNS	00NR	0	16WP	G15_081	FROM->TO	G14-057T 345.00 - SUNNYSIDE 345KV CKT 1	717	789	0.06242	113.8449	GEN562772 1-G15034_3 0.6900
FDNS	00NR	0	16WP	G15_081	FROM->TO	G14-057T 345.00 - SUNNYSIDE 345KV CKT 1	717	789	0.06276	113.8438	P12:138:OKGE:3TERM21
FDNS	00NR	0	16WP	G15_081	FROM->TO	G14-057T 345.00 - SUNNYSIDE 345KV CKT 1	717	789	0.06235	113.8375	HUGO (HUGO 1) 345/138/13.8KV TRANSFORMER CKT 1
FDNS	00NR	0	20WP	G15_081	FROM->TO	G14-057T 345.00 - SUNNYSIDE 345KV CKT 1	717	789	0.06302	113.8344	CANEYRV7 345.00 - NEOSHO 345KV CKT 1
FDNS	00NR	0	20WP	G15_081	FROM->TO	G14-057T 345.00 - SUNNYSIDE 345KV CKT 1	717	789	0.06326	113.8289	MARIETTA - SOUTH WILSON 138KV CKT 1
FDNS	00NR	0	20WP	G15_081	FROM->TO	G14-057T 345.00 - SUNNYSIDE 345KV CKT 1	717	789	0.06193	113.8232	GEN590011 2-ERCOT EQUIVALENCE
FDNS	00NR	0	16WP	G15_081	FROM->TO	G14-057T 345.00 - SUNNYSIDE 345KV CKT 1	717	789	0.06242	113.8171	GEN521103 1-BLUE CANYON WIND FARM
FDNS	00NR	0	16WP	G15_081	FROM->TO	G14-057T 345.00 - SUNNYSIDE 345KV CKT 1	717	789	0.06242	113.8166	GEN520812 1-ANADRK5
FDNS	00NR	0	16WP	G15_081	FROM->TO	G14-057T 345.00 - SUNNYSIDE 345KV CKT 1	717	789	0.06242	113.8165	GEN520813 1-ANADRK6
FDNS	00NR	0	16WP	G15_081	FROM->TO	G14-057T 345.00 - SUNNYSIDE 345KV CKT 1	717	789	0.0617	113.8102	MAYSVLT4 138.00 - PRAIRIE POINT 138KV CKT 1
FDNS	00NR	0	16WP	G15_081	FROM->TO	G14-057T 345.00 - SUNNYSIDE 345KV CKT 1	717	789	0.06248	113.8033	GLASSES - RUSSETT 138KV CKT 1
FDNS	00NR	0	20WP	G15_081	FROM->TO	G14-057T 345.00 - SUNNYSIDE 345KV CKT 1	717	789	0.06193	113.7939	DELL 500 - ESSEX UNIT 2 500KV CKT Z1
FDNS	00NR	0	20WP	G15_081	FROM->TO	G14-057T 345.00 - SUNNYSIDE 345KV CKT 1	717	789	0.06193	113.7926	P12:161:AEPW:DYESS 5:HYLAND 5
FDNS	00NR	0	16WP	G15_081	FROM->TO	G14-057T 345.00 - SUNNYSIDE 345KV CKT 1	717	789	0.06179	113.785	ARBUCKLE - SULPHR 4 138.00 138KV CKT 1
FDNS	00NR	0	20WP	G15_081	FROM->TO	G14-057T 345.00 - SUNNYSIDE 345KV CKT 1	717	789	0.06205	113.7845	REDBUD - RIVERSIDE STATION 345KV CKT 1
FDNS	00NR	0	20WP	G15_081	FROM->TO	G14-057T 345.00 - SUNNYSIDE 345KV CKT 1	717	789	0.06205	113.7845	REDBUD - RIVERSIDE STATION 345KV CKT 1
FDNS	00NR	0	16WP	G15_081	FROM->TO	G14-057T 345.00 - SUNNYSIDE 345KV CKT 1	717	789	0.06244	113.7802	P12:138:WFEC:MSL11
FDNS	00NR	0	16WP	G15_081	FROM->TO	G14-057T 345.00 - SUNNYSIDE 345KV CKT 1	717	789	0.06244	113.7802	P12:138:WFEC-AEPW:PHAROAH4:LONEOAK4
FDNS	00NR	0	16WP	G15_081	FROM->TO	G14-057T 345.00 - SUNNYSIDE 345KV CKT 1	717	789	0.06249	113.7755	CANEY CREEK - JOHNSON COUNTY 138KV CKT 1
FDNS	00NR	0	16WP	G15_081	FROM->TO	G14-057T 345.00 - SUNNYSIDE 345KV CKT 1	717	789	0.06242	113.7736	GEN511961 1-DEMPSEY-WTG10.7000
FDNS	00NR	0	16WP	G15_081	FROM->TO	G14-057T 345.00 - SUNNYSIDE 345KV CKT 1	717	789	0.06241	113.758	P12:069:OKGE:3TERM42
FDNS	00NR	0	20WP	G15_081	FROM->TO	G14-057T 345.00 - SUNNYSIDE 345KV CKT 1	717	789	0.06193	113.7534	GEN590010 1-ERCOT EQUIVALENCE
FDNS	00NR	0	20WP	G15_081	FROM->TO	G14-057T 345.00 - SUNNYSIDE 345KV CKT 1	717	789	0.06193	113.7453	P12:69:AEPW:L.E.S.-2:LAW WC2
FDNS	00NR	0	20WP	G15_081	FROM->TO	G14-057T 345.00 - SUNNYSIDE 345KV CKT 1	717	789	0.06211	113.7442	LAWTON EASTSIDE (LES 5) 345/138/13.8KV TRANSFORMER CKT 2
FDNS	00NR	0	20WP	G15_081	FROM->TO	G14-057T 345.00 - SUNNYSIDE 345KV CKT 1	717	789	0.06211	113.7442	LAWTON EASTSIDE (LES 5) 345/138/13.8KV TRANSFORMER CKT 2
FDNS	00NR	0	16WP	G15_081	FROM->TO	G14-057T 345.00 - SUNNYSIDE 345KV CKT 1	717	789	0.06242	113.7348	GEN629070 2-BEAVER CHANNEL GENERATORFOR UNIT NO 2
FDNS	00NR	0	16WP	G15_081	FROM->TO	G14-057T 345.00 - SUNNYSIDE 345KV CKT 1	717	789	0.06249	113.7272	GRPRAR1-LNX3345.00 - HOLT.CO3 345.00 345KV CKT 1
FDNS	00NR	0	20WP	G15_081	FROM->TO	G14-057T 345.00 - SUNNYSIDE 345KV CKT 1	717	789	0.06326	113.7272	P12:138:WFEC:MSL17
FDNS	00NR	0	16WP	G15_081	FROM->TO	G14-057T 345.00 - SUNNYSIDE 345KV CKT 1	717	789	0.06242	113.7271	GEN515443 1-MNCOWND1 0.7000
FDNS	00NR	0	16WP	G15_081	FROM->TO	G14-057T 345.00 - SUNNYSIDE 345KV CKT 1	717	789	0.06249	113.7234	GRPRAR1-LNX3345.00 - GRPRAR 345KV CKT Z
FDNS	00NR	0	20WP	G15_081	FROM->TO	G14-057T 345.00 - SUNNYSIDE 345KV CKT 1	717	789	0.06231	113.7227	P12:138:WFEC:MSL02
FDNS	00NR	0	16WP	G15_081	FROM->TO	G14-057T 345.00 - SUNNYSIDE 345KV CKT 1	717	789	0.06256	113.7218	P12:138:WFEC:MSL08
FDNS	00NR	0	16WP	G15_081	FROM->TO	G14-057T 345.00 - SUNNYSIDE 345KV CKT 1	717	789	0.06242	113.7183	GEN615021 1-GRE-ER 14G 16.000
FDNS	00NR	0	16WP	G15_081	FROM->TO	G14-057T 345.00 - SUNNYSIDE 345KV CKT 1	717	789	0.06242	113.7147	GEN562902 1-G15052_3 0.6900
FDNS	00NR	0	16WP	G15_081	FROM->TO	G14-057T 345.00 - SUNNYSIDE 345KV CKT 1	717	789	0.0617	113.7129	PRAIRIE POINT - RATLIFF 138KV CKT 1
FDNS	00NR	0	16WP	G15_081	FROM->TO	G14-057T 345.00 - SUNNYSIDE 345KV CKT 1	717	789	0.06234	113.7093	CARTER - CHICKASAW 138KV CKT 1
FDNS	00NR	0	16WP	G15_081	FROM->TO	G14-057T 345.00 - SUNNYSIDE 345KV CKT 1	717	789	0.06242	113.7078	GEN563242 1-G15090_3 0.6900
FDNS	00NR	0	16WP	G15_081	FROM->TO	G14-057T 345.00 - SUNNYSIDE 345KV CKT 1	717	789	0.06242	113.7066	GEN560183 1-REDHIL-WTG1 12.000

SOLUTION	GROUP	SCENARIO	SEASON	SOURCE	DIRECTION	MONITORED ELEMENT	RATEA (MVA)	RATEB(MVA)	TDF	TC%LOADING (% MVA)	CONTINGENCY
FDNS	00NR	0	16WP	G15_081	FROM->TO	G14-057T 345.00 - SUNNYSIDE 345KV CKT 1	717	789	0.06242	113.7049	GEN629071 1-BURLINGTON GENERATOR FOR UNIT NO 1 E
FDNS	00NR	0	16WP	G15_081	FROM->TO	G14-057T 345.00 - SUNNYSIDE 345KV CKT 1	717	789	0.06258	113.7009	CANADIAN RIVER - MCALESTER SOUTH 138KV CKT 1
FDNS	00NR	0	16WP	G15_081	FROM->TO	G14-057T 345.00 - SUNNYSIDE 345KV CKT 1	717	789	0.06258	113.7009	CANADIAN RIVER - MCALESTER SOUTH 138KV CKT 1
FDNS	00NR	0	16WP	G15_081	FROM->TO	G14-057T 345.00 - SUNNYSIDE 345KV CKT 1	717	789	0.06258	113.6996	CANADIAN RIVER () 345/138/13.8KV TRANSFORMER CKT 1
FDNS	00NR	0	16WP	G15_081	FROM->TO	G14-057T 345.00 - SUNNYSIDE 345KV CKT 1	717	789	0.06258	113.6996	CANADIAN RIVER () 345/138/13.8KV TRANSFORMER CKT 1
FDNS	00NR	0	16WP	G15_081	FROM->TO	G14-057T 345.00 - SUNNYSIDE 345KV CKT 1	717	789	0.06317	113.6995	NORTHWEST - SPRING CREEK 345KV CKT 1
FDNS	00NR	0	16WP	G15_081	FROM->TO	G14-057T 345.00 - SUNNYSIDE 345KV CKT 1	717	789	0.06108	113.6963	MOREWOOD SW - NINE MILE 138KV CKT 1
FDNS	00NR	0	16WP	G15_081	FROM->TO	G14-057T 345.00 - SUNNYSIDE 345KV CKT 1	717	789	0.06217	113.6922	ROCKY POINT - SPRINGDALE 138KV CKT 1
FDNS	00NR	0	16WP	G15_081	FROM->TO	G14-057T 345.00 - SUNNYSIDE 345KV CKT 1	717	789	0.06317	113.6897	SOONER - SPRING CREEK 345KV CKT 1
FDNS	00NR	0	20WP	G15_081	FROM->TO	G14-057T 345.00 - SUNNYSIDE 345KV CKT 1	717	789	0.06302	113.687	CANEYRV7 345.00 - LATHAMS7 345.00 345KV CKT 1
FDNS	00NR	0	16WP	G15_081	FROM->TO	G14-057T 345.00 - SUNNYSIDE 345KV CKT 1	717	789	0.06242	113.679	INDEPENDENCE 500/26.0KV TRANSFORMER CKT 1
FDNS	00NR	0	16WP	G15_081	FROM->TO	G14-057T 345.00 - SUNNYSIDE 345KV CKT 1	717	789	0.06242	113.6766	BURLINGTON NO1 + NO 2 + NO 3 161/20.0KV TRANSFORMER CKT 1
FDNS	00NR	0	20WP	G15_081	FROM->TO	G14-057T 345.00 - SUNNYSIDE 345KV CKT 1	717	789	0.06193	113.676	GEN509408 1-WILKES #2
FDNS	00NR	0	16WP	G15_081	FROM->TO	G14-057T 345.00 - SUNNYSIDE 345KV CKT 1	717	789	0.06225	113.6747	ALTUS JUNCTION - RUSSELL 138KV CKT 1
FDNS	00NR	0	16WP	G15_081	FROM->TO	G14-057T 345.00 - SUNNYSIDE 345KV CKT 1	717	789	0.06225	113.6747	ALTUS JUNCTION - RUSSELL 138KV CKT 1
FDNS	00NR	0	16WP	G15_081	FROM->TO	G14-057T 345.00 - SUNNYSIDE 345KV CKT 1	717	789	0.06246	113.6724	NORTHWEST TEXARKANA - WELSH 345KV CKT 1
FDNS	00NR	0	16WP	G15_081	FROM->TO	G14-057T 345.00 - SUNNYSIDE 345KV CKT 1	717	789	0.06246	113.6724	NORTHWEST TEXARKANA - WELSH 345KV CKT 1
FDNS	00NR	0	16WP	G15_081	FROM->TO	G14-057T 345.00 - SUNNYSIDE 345KV CKT 1	717	789	0.06242	113.6705	GEN514805 1-SOONER UNIT 1
FDNS	00NR	0	16WP	G15_081	FROM->TO	G14-057T 345.00 - SUNNYSIDE 345KV CKT 1	717	789	0.06242	113.6637	GEN514806 1-SOONER UNIT 2
FDNS	00NR	0	20WP	G15_081	FROM->TO	G14-057T 345.00 - SUNNYSIDE 345KV CKT 1	717	789	0.06225	113.6598	PAOLI - PAYNE 138.00 138KV CKT 1
FDNS	00NR	0	20WP	G15_081	FROM->TO	G14-057T 345.00 - SUNNYSIDE 345KV CKT 1	717	789	0.06181	113.6598	ELDORADO EHV - SHERIDAN EHV 500KV CKT 1
FDNS	00NR	0	16WP	G15_081	FROM->TO	G14-057T 345.00 - SUNNYSIDE 345KV CKT 1	717	789	0.06262	113.6579	KEO EHV - WEST MEMPHIS 500 500KV CKT 1
FDNS	00NR	0	16WP	G15_081	FROM->TO	G14-057T 345.00 - SUNNYSIDE 345KV CKT 1	717	789	0.06276	113.6508	CHAMBER SPRINGS - CLARKSVILLE 345KV CKT 1
FDNS	00NR	0	20WP	G15_081	FROM->TO	G14-057T 345.00 - SUNNYSIDE 345KV CKT 1	717	789	0.06193	113.6501	GEN506754 1-LEBROCK STEAM 1
FDNS	00NR	0	16WP	G15_081	FROM->TO	G14-057T 345.00 - SUNNYSIDE 345KV CKT 1	717	789	0.06242	113.6474	GEN562078 1-G11_051_3 0.6900
FDNS	00NR	0	20WP	G15_081	FROM->TO	G14-057T 345.00 - SUNNYSIDE 345KV CKT 1	717	789	0.0622	113.6428	ANADARKO - GEORGIA 138KV CKT 1
FDNS	00NR	0	16WP	G15_081	FROM->TO	G14-057T 345.00 - SUNNYSIDE 345KV CKT 1	717	789	0.06242	113.6379	P12:230:UMZB:# 112 #: NU IN SD. NU-RCDC & DRY CREEK XFMR
FDNS	00NR	0	16WP	G15_081	FROM->TO	G14-057T 345.00 - SUNNYSIDE 345KV CKT 1	717	789	0.06242	113.6365	RCDC EAST 4230.00 - RED CEDAR DC 230KV CKT 1
FDNS	00NR	0	16WP	G15_081	FROM->TO	G14-057T 345.00 - SUNNYSIDE 345KV CKT 1	717	789	0.06179	113.6334	JOLLYVILLE - SULPHR 4 138.00 138KV CKT 1
FDNS	00NR	0	16WP	G15_081	FROM->TO	G14-057T 345.00 - SUNNYSIDE 345KV CKT 1	717	789	0.06242	113.6189	GEN562802 1-G15039_3 0.3570
FDNS	00NR	0	20WP	G15_081	FROM->TO	G14-057T 345.00 - SUNNYSIDE 345KV CKT 1	717	789	0.06191	113.6137	P12:138:AEPW:112GORE4:L.E.S.-4
FDNS	00NR	0	16WP	G15_081	FROM->TO	G14-057T 345.00 - SUNNYSIDE 345KV CKT 1	717	789	0.06242	113.6124	GEN524285 1-WILDORADO WIND GEN
FDNS	00NR	0	20WP	G15_081	FROM->TO	G14-057T 345.00 - SUNNYSIDE 345KV CKT 1	717	789	0.06306	113.6016	CIVIT - PAOLI 138KV CKT 1
FDNS	00NR	0	20WP	G15_081	FROM->TO	G14-057T 345.00 - SUNNYSIDE 345KV CKT 1	717	789	0.06519	113.5945	MATHWSN7 345.00 - NORTHWEST 345KV CKT 1
FDNS	00NR	0	16WP	G15_081	FROM->TO	G14-057T 345.00 - SUNNYSIDE 345KV CKT 1	717	789	0.06242	113.5926	GEN524295 1-SPNSPUR_WND10.6900
FDNS	00NR	0	16WP	G15_081	FROM->TO	G14-057T 345.00 - SUNNYSIDE 345KV CKT 1	717	789	0.06242	113.5923	GEN562587 1-G14_056_3 0.6900
FDNS	00NR	0	16WP	G15_081	FROM->TO	G14-057T 345.00 - SUNNYSIDE 345KV CKT 1	717	789	0.06242	113.5856	GEN560331 1-G10-46 13.800
FDNS	00NR	0	16WP	G15_081	FROM->TO	G14-057T 345.00 - SUNNYSIDE 345KV CKT 1	717	789	0.06146	113.5745	ARKANSAS NUCLEAR ONE - FT SMITH 500KV CKT 1
FDNS	00NR	0	16WP	G15_081	FROM->TO	G14-057T 345.00 - SUNNYSIDE 345KV CKT 1	717	789	0.06146	113.5745	ARKANSAS NUCLEAR ONE - FT SMITH 500KV CKT 1
FDNSLock	00NR	0	16WP	G15_081	FROM->TO	G14-057T 345.00 - SUNNYSIDE 345KV CKT 1	717	789	0.06242	113.5733	GEN629072 4-LANSING GENERATOR FOR UNITS NO4 EIA CODE 1
FDNS	00NR	0	20WP	G15_081	FROM->TO	G14-057T 345.00 - SUNNYSIDE 345KV CKT 1	717	789	0.06193	113.5691	GEN336252 1-NINEMILE POINT UNIT#5
FDNS	00NR	0	16WP	G15_081	FROM->TO	G14-057T 345.00 - SUNNYSIDE 345KV CKT 1	717	789	0.06179	113.5649	JOLLYVILLE - KERR MCGEE CIMARRON 138KV CKT 1
FDNS	00NR	0	16WP	G15_081	FROM->TO	G14-057T 345.00 - SUNNYSIDE 345KV CKT 1	717	789	0.06242	113.5641	GEN562882 1-G15047_3 0.6900
FDNS	00NR	0	16WP	G15_081	FROM->TO	G14-057T 345.00 - SUNNYSIDE 345KV CKT 1	717	789	0.06108	113.5619	BEARCAT 138.00 - NINE MILE 138KV CKT 1
FDNS	00NR	0	16WP	G15_081	FROM->TO	G14-057T 345.00 - SUNNYSIDE 345KV CKT 1	717	789	0.06242	113.555	GEN562269 1-G12-020-1 0.6900
FDNS	00NR	0	16WP	G15_081	FROM->TO	G14-057T 345.00 - SUNNYSIDE 345KV CKT 1	717	789	0.06242	113.5529	GEN657749 1-YOUNG 1 GENERATOR
FDNS	00NR	0	20WP	G15_081	FROM->TO	G14-057T 345.00 - SUNNYSIDE 345KV CKT 1	717	789	0.0622	113.5467	FLETCHER - GEORGIA 138KV CKT 1
FDNS	00NR	0	20WP	G15_081	FROM->TO	G14-057T 345.00 - SUNNYSIDE 345KV CKT 1	717	789	0.06363	113.5386	P12:138:AEPW-OGE:CORNVIL4:MAUD 4
FDNS	00NR	0	20WP	G15_081	FROM->TO	G14-057T 345.00 - SUNNYSIDE 345KV CKT 1	717	789	0.06193	113.5228	FRONTIER - GRIMES 345KV CKT 1
FDNS	00NR	0	16WP	G15_081	FROM->TO	G14-057T 345.00 - SUNNYSIDE 345KV CKT 1	717	789	0.06179	113.5143	ARBWIND4 138.00 - KERR MCGEE CIMARRON 138KV CKT 1
FDNS	00NR	0	20WP	G15_081	FROM->TO	G14-057T 345.00 - SUNNYSIDE 345KV CKT 1	717	789	0.06193	113.5117	GEN335204 1-NELSON UNIT 4
FDNS	00NR	0	16WP	G15_081	FROM->TO	G14-057T 345.00 - SUNNYSIDE 345KV CKT 1	717	789	0.06242	113.51	GEN562270 1-G12-020-2 0.6900
FDNS	00NR	0	20WP	G15_081	FROM->TO	G14-057T 345.00 - SUNNYSIDE 345KV CKT 1	717	789	0.06193	113.5052	GEN503909 1-FULTONU1 1 16.000
FDNS	00NR	0	20WP	G15_081	FROM->TO	G14-057T 345.00 - SUNNYSIDE 345KV CKT 1	717	789	0.06193	113.5045	GEN334441 1-SABINE UNIT 5
FDNS	00NR	0	16WP	G15_081	FROM->TO	G14-057T 345.00 - SUNNYSIDE 345KV CKT 1	717	789	0.06242	113.5044	GEN562812 1-G15040_3 0.3570
FDNS	00NR	0	20WP	G15_081	FROM->TO	G14-057T 345.00 - SUNNYSIDE 345KV CKT 1	717	789	0.06227	113.5041	EMPIRE - FLETCHER 138KV CKT 1
FDNS	00NR	0	16WP	G15_081	FROM->TO	G14-057T 345.00 - SUNNYSIDE 345KV CKT 1	717	789	0.06191	113.503	P12:138:AEPW:112GORE4:SNYDER-4
FDNS	00NR	0	16WP	G15_081	FROM->TO	G14-057T 345.00 - SUNNYSIDE 345KV CKT 1	717	789	0.06481	113.5027	CLARKSVILLE - MUSKOGEE 345KV CKT 1
FDNS	00NR	0	16WP	G15_081	FROM->TO	G14-057T 345.00 - SUNNYSIDE 345KV CKT 1	717	789	0.06481	113.5027	CLARKSVILLE - MUSKOGEE 345KV CKT 1
FDNS	00NR	0	16WP	G15_081	FROM->TO	G14-057T 345.00 - SUNNYSIDE 345KV CKT 1	717	789	0.06242	113.5015	GEN563102 1-G15075_3 0.5500
FDNS	00NR	0	16WP	G15_081	FROM->TO	G14-057T 345.00 - SUNNYSIDE 345KV CKT 1	717	789	0.06242	113.4982	GEN562974 1-G15060_5 0.6900
FDNS	00NR	0	16WP	G15_081	FROM->TO	G14-057T 345.00 - SUNNYSIDE 345KV CKT 1	717	789	0.06242	113.4946	GEN563062 1-G15071_3 0.6900
FDNS	00NR	0	16WP	G15_081	FROM->TO	G14-057T 345.00 - SUNNYSIDE 345KV CKT 1	717	789	0.06242	113.4938	GEN563132 1-G15078_3 0.3570
FDNS	00NR	0	16WP	G15_081	FROM->TO	G14-057T 345.00 - SUNNYSIDE 345KV CKT 1	717	789	0.06242	113.4887	GEN562973 1-G15060_4 0.6900
FDNS	00NR	0	20WP	G15_081	FROM->TO	G14-057T 345.00 - SUNNYSIDE 345KV CKT 1	717	789	0.06194	113.4836	TUPELO - TUPELO TAP 138KV CKT 1
FDNSLock	00NR	0	16WP	G15_081	FROM->TO	G14-057T 345.00 - SUNNYSIDE 345KV CKT 1	717	789	0.06242	113.4834	GEN681522 3-GENOA 3
FDNS	00NR	0	16WP	G15_081	FROM->TO	G14-057T 345.00 - SUNNYSIDE 345KV CKT 1	717	789	0.06108	113.4794	P12:138:WFEC:MSL14
FDNS	00NR	0	20WP	G15_081	FROM->TO	G14-057T 345.00 - SUNNYSIDE 345KV CKT 1	717	789	0.06302	113.4741	LATHAMS7 345.00 - ROSE HILL 345KV CKT 1
FDNS	00NR	0	16WP	G15_081	FROM->TO	G14-057T 345.00 - SUNNYSIDE 345KV CKT 1	717	789	0.06108	113.4666	BEARCAT 138.00 - MOORELAND 138KV CKT 1
FDNS	00NR	0	20WP	G15_081	FROM->TO	G14-057T 345.00 - SUNNYSIDE 345KV CKT 1	717	789	0.06363	113.4632	BLANCHARD - CORNVILLE 138KV CKT 1
FDNS	00NR	0	20WP	G15_081	FROM->TO	G14-057T 345.00 - SUNNYSIDE 345KV CKT 1	717	789	0.06306	113.4605	CIVIT - STRATFORD 138KV CKT 1
FDNS	00NR	0	16WP	G15_081	FROM->TO	G14-057T 345.00 - SUNNYSIDE 345KV CKT 1	717	789	0.06235	113.4561	BROWN - RUSSETT 138KV CKT 1
FDNS	00NR	0	16WP	G15_081	FROM->TO	G14-057T 345.00 - SUNNYSIDE 345KV CKT 1	717	789	0.06186	113.4351	CHICKASAW - TOTAL 138KV CKT 1
FDNS	00NR	0	16WP	G15_081	FROM->TO	G14-057T 345.00 - SUNNYSIDE 345KV CKT 1	717	789	0.06232	113.4301	RUSSETT - SPRINGDALE 138KV CKT 1
FDNS	00NR	0	16WP	G15_081	FROM->TO	G14-057T 345.00 - SUNNYSIDE 345KV CKT 1	717	789	0.06242	113.4267	GEN345671 2-1RUSH G2 18.000
FDNS	00NR	0	16WP	G15_081	FROM->TO	G14-057T 345.00 - SUNNYSIDE 345KV CKT 1	717	789	0.06242	113.4248	GEN345670 1-1RUSH G1 18.000
FDNS	00NR	0	20WP	G15_081	FROM->TO	G14-057T 345.00 - SUNNYSIDE 345KV CKT 1	717	789	0.06227	113.4227	COMANCHE - EMPIRE 138KV CKT 1
FDNS	00NR	0	20WP	G15_081	FROM->TO	G14-057T 345.00 - SUNNYSIDE 345KV CKT 1	717	789	0.0619	113.4172	LAYFLD8 500.00 - MOUNT OLIVE 500KV CKT 1
FDNS	00NR	0	20WP	G15_081	FROM->TO	G14-057T 345.00 - SUNNYSIDE 345KV CKT 1	717	789	0.0619	113.4172	LAYFLD8 500.00 - MOUNT OLIVE 500KV CKT 1

SOLUTION	GROUP	SCENARIO	SEASON	SOURCE	DIRECTION	MONITORED ELEMENT	RATEA (MVA)	RATEB(MVA)	TDF	TC%LOADING (% MVA)	CONTINGENCY
FDNS	00NR	0	16WP	G15_081	FROM->TO	G14-057T 345.00 - SUNNYSIDE 345KV CKT 1	717	789	0.06242	113.4132	GEN526331 1-JONES GEN #1 22 KV
FDNS	00NR	0	16WP	G15_081	FROM->TO	G14-057T 345.00 - SUNNYSIDE 345KV CKT 1	717	789	0.06242	113.4131	GEN526332 1-JONES GEN #2 21 KV
FDNS	00NR	0	16WP	G15_081	FROM->TO	G14-057T 345.00 - SUNNYSIDE 345KV CKT 1	717	789	0.06242	113.4028	GEN560105 1-G08-22 0.6900
FDNS	00NR	0	16WP	G15_081	FROM->TO	G14-057T 345.00 - SUNNYSIDE 345KV CKT 1	717	789	0.06242	113.3993	GEN562550 1-G14_040_3 0.6900
FDNS	00NR	0	16WP	G15_081	FROM->TO	G14-057T 345.00 - SUNNYSIDE 345KV CKT 1	717	789	0.06208	113.3982	ROCKY POINT - SUNNYSIDE 138KV CKT 1
FDNS	00NR	0	20WP	G15_081	FROM->TO	G14-057T 345.00 - SUNNYSIDE 345KV CKT 1	717	789	0.06193	113.3982	GEN336251 1-NINEMILE POINT UNIT#4
FDNS	00NR	0	20WP	G15_081	FROM->TO	G14-057T 345.00 - SUNNYSIDE 345KV CKT 1	717	789	0.06368	113.393	G1524G1525 345.00 - THISTLE7 345.00 345KV CKT 1
FDNS	00NR	0	20WP	G15_081	FROM->TO	G14-057T 345.00 - SUNNYSIDE 345KV CKT 1	717	789	0.06368	113.393	G1524G1525 345.00 - THISTLE7 345.00 345KV CKT 2
FDNS	00NR	0	20WP	G15_081	FROM->TO	G14-057T 345.00 - SUNNYSIDE 345KV CKT 1	717	789	0.06439	113.3929	FINNEY SWITCHING STATION - HOLCOMB 345KV CKT 1
FDNS	00NR	0	20WP	G15_081	FROM->TO	G14-057T 345.00 - SUNNYSIDE 345KV CKT 1	717	789	0.06439	113.3929	FINNEY SWITCHING STATION - HOLCOMB 345KV CKT 1
FDNS	00NR	0	20WP	G15_081	FROM->TO	G14-057T 345.00 - SUNNYSIDE 345KV CKT 1	717	789	0.06193	113.3927	GEN334071 1-LEWIS CREEK 2
FDNS	00NR	0	16WP	G15_081	FROM->TO	G14-057T 345.00 - SUNNYSIDE 345KV CKT 1	717	789	0.06235	113.3879	RUSSETT - RUSSETT 138KV CKT 1
FDNS	00NR	0	20WP	G15_081	FROM->TO	G14-057T 345.00 - SUNNYSIDE 345KV CKT 1	717	789	0.06193	113.3843	GEN334070 1-LEWIS CREEK 1
FDNS	00NR	0	16WP	G15_081	FROM->TO	G14-057T 345.00 - SUNNYSIDE 345KV CKT 1	717	789	0.06242	113.3775	4SIOUX 1 138.00 138/18.0KV TRANSFORMER CKT 1
FDNS	00NR	0	16WP	G15_081	FROM->TO	G14-057T 345.00 - SUNNYSIDE 345KV CKT 1	717	789	0.06234	113.3694	P12:138:WFEC:MSL07
FDNS	00NR	0	16WP	G15_081	FROM->TO	G14-057T 345.00 - SUNNYSIDE 345KV CKT 1	717	789	0.06234	113.3694	P12:138:WFEC-AEPW:HUGOPP4:ATOKA--4
FDNS	00NR	0	20WP	G15_081	FROM->TO	G14-057T 345.00 - SUNNYSIDE 345KV CKT 1	717	789	0.06192	113.3642	P12:161:AEPW-SWPA:BEAVERS:EROGERS5
FDNS	00NR	0	20WP	G15_081	FROM->TO	G14-057T 345.00 - SUNNYSIDE 345KV CKT 1	717	789	0.06193	113.3603	GEN509392 G2-ARSENAL HILL GENS #3 (STALL)
FDNS	00NR	0	20WP	G15_081	FROM->TO	G14-057T 345.00 - SUNNYSIDE 345KV CKT 1	717	789	0.06193	113.3602	GEN509391 G1-ARSENAL HILL GENS #2 (STALL)
FDNS	00NR	0	16WP	G15_081	FROM->TO	G14-057T 345.00 - SUNNYSIDE 345KV CKT 1	717	789	0.06242	113.3591	GEN511962 2-RKYRDGW2-1 0.7000
FDNS	00NR	0	20WP	G15_081	FROM->TO	G14-057T 345.00 - SUNNYSIDE 345KV CKT 1	717	789	0.06193	113.3581	GEN509393 S1-ARSENAL HILL GENS #4 (STALL)
FDNS	00NR	0	16WP	G15_081	FROM->TO	G14-057T 345.00 - SUNNYSIDE 345KV CKT 1	717	789	0.06242	113.3577	GEN521112 1-ORME3 13.800
FDNS	00NR	0	16WP	G15_081	FROM->TO	G14-057T 345.00 - SUNNYSIDE 345KV CKT 1	717	789	0.06242	113.3553	CLAY BOSWELL 230/20.9KV TRANSFORMER CKT 1
FDNS	00NR	0	16WP	G15_081	FROM->TO	G14-057T 345.00 - SUNNYSIDE 345KV CKT 1	717	789	0.06242	113.3532	GEN527882 1-CUNNINGHAM GEN #2 20 KV
FDNS	00NR	0	20WP	G15_081	FROM->TO	G14-057T 345.00 - SUNNYSIDE 345KV CKT 1	717	789	0.06193	113.3465	GEN334433 1-SABINE UNIT 3
FDNS	00NR	0	20WP	G15_081	FROM->TO	G14-057T 345.00 - SUNNYSIDE 345KV CKT 1	717	789	0.06306	113.3428	OIL CENTER - STRATFORD 138KV CKT 1
FDNS	00NR	0	16WP	G15_081	FROM->TO	G14-057T 345.00 - SUNNYSIDE 345KV CKT 1	717	789	0.06242	113.3369	GEN562892 1-G15048_3 0.6900
FDNS	00NR	0	20WP	G15_081	FROM->TO	G14-057T 345.00 - SUNNYSIDE 345KV CKT 1	717	789	0.06193	113.3339	GEN337653 1-WHITE BLUFF UNIT #2
FDNS	00NR	0	16WP	G15_081	FROM->TO	G14-057T 345.00 - SUNNYSIDE 345KV CKT 1	717	789	0.06164	113.3312	ARDMORE WEST - CARTER 138KV CKT 1
FDNS	00NR	0	16WP	G15_081	FROM->TO	G14-057T 345.00 - SUNNYSIDE 345KV CKT 1	717	789	0.06242	113.3247	GEN562512 1-G14_020_3 0.6900
FDNS	00NR	0	20WP	G15_081	FROM->TO	G14-057T 345.00 - SUNNYSIDE 345KV CKT 1	717	789	0.06193	113.323	GEN336831 1-BAXTER WILSON SES
FDNS	00NR	0	16WP	G15_081	FROM->TO	G14-057T 345.00 - SUNNYSIDE 345KV CKT 1	717	789	0.06242	113.3179	GEN672321 1-SHAND GENERATOR 1
FDNS	00NR	0	16WP	G15_081	FROM->TO	G14-057T 345.00 - SUNNYSIDE 345KV CKT 1	717	789	0.06242	113.3158	GEN563192 1-G15084_3 0.5500
FDNS	00NR	0	20WP	G15_081	FROM->TO	G14-057T 345.00 - SUNNYSIDE 345KV CKT 1	717	789	0.06255	113.3115	P12:138:AEPW:S.W.S.-4:L.E.S.-4
FDNS	00NR	0	16WP	G15_081	FROM->TO	G14-057T 345.00 - SUNNYSIDE 345KV CKT 1	717	789	0.06242	113.3067	GEN511853 1-COMANCHE #3
FDNS	00NR	0	20WP	G15_081	FROM->TO	G14-057T 345.00 - SUNNYSIDE 345KV CKT 1	717	789	0.06193	113.3019	P12:161:AEPW:DYESS5:ELMSPRNG:TONTITN5
FDNS	00NR	0	20WP	G15_081	FROM->TO	G14-057T 345.00 - SUNNYSIDE 345KV CKT 1	717	789	0.06212	113.2967	DUNCAN (DUNCAN) 138/69/13.8KV TRANSFORMER CKT 1
FDNS	00NR	0	20WP	G15_081	FROM->TO	G14-057T 345.00 - SUNNYSIDE 345KV CKT 1	717	789	0.06212	113.2967	DUNCAN (DUNCAN) 138/69/13.8KV TRANSFORMER CKT 1
FDNS	00NR	0	16WP	G15_081	FROM->TO	G14-057T 345.00 - SUNNYSIDE 345KV CKT 1	717	789	0.06242	113.2937	GEN672310 1-POPLAR RIVER GENERATOR 1
FDNS	00NR	0	16WP	G15_081	FROM->TO	G14-057T 345.00 - SUNNYSIDE 345KV CKT 1	717	789	0.06242	113.2937	GEN672311 2-POPLAR RIVER GENERATOR 2
FDNS	00NR	0	16WP	G15_081	FROM->TO	G14-057T 345.00 - SUNNYSIDE 345KV CKT 1	717	789	0.06247	113.2933	P12:138:WFEC:MSL16
FDNS	00NR	0	16WP	G15_081	FROM->TO	G14-057T 345.00 - SUNNYSIDE 345KV CKT 1	717	789	0.06239	113.2886	P12:138:WFEC-AEPW:GOLDENSW4:CRAIGJT4
FDNS	00NR	0	16WP	G15_081	FROM->TO	G14-057T 345.00 - SUNNYSIDE 345KV CKT 1	717	789	0.06242	113.2851	GEN672306 6-BOUNDARY DAM GENERATOR 6
FDNS	00NR	0	16WP	G15_081	FROM->TO	G14-057T 345.00 - SUNNYSIDE 345KV CKT 1	717	789	0.06171	113.2851	SUNNYSIDE (SUNNYSD5) 345/138/13.8KV TRANSFORMER CKT 1
FDNS	00NR	0	20WP	G15_081	FROM->TO	G14-057T 345.00 - SUNNYSIDE 345KV CKT 1	717	789	0.06193	113.2821	GEN337911 1-ARKANSAS NUCLEAR ONE UNIT #2
FDNS	00NR	0	20WP	G15_081	FROM->TO	G14-057T 345.00 - SUNNYSIDE 345KV CKT 1	717	789	0.06193	113.2788	GEN515040 1-SEMINOLE 1G
FDNS	00NR	0	20WP	G15_081	FROM->TO	G14-057T 345.00 - SUNNYSIDE 345KV CKT 1	717	789	0.06015	113.2722	G14_038T 345.00 - Hitchland Interchange 345KV CKT 1
FDNS	00NR	0	20WP	G15_081	FROM->TO	G14-057T 345.00 - SUNNYSIDE 345KV CKT 1	717	789	0.06193	113.2716	GEN334030 1-FRONTIER UNIT 1
FDNS	00NR	0	16WP	G15_081	FROM->TO	G14-057T 345.00 - SUNNYSIDE 345KV CKT 1	717	789	0.06242	113.271	GEN344895 2-1LAB G2 20.000
FDNS	00NR	0	20WP	G15_081	FROM->TO	G14-057T 345.00 - SUNNYSIDE 345KV CKT 1	717	789	0.06193	113.2693	GEN334031 1-FRONTIER UNIT 2
FDNS	00NR	0	16WP	G15_081	FROM->TO	G14-057T 345.00 - SUNNYSIDE 345KV CKT 1	717	789	0.06242	113.2581	GEN523461 1-BLACKHAWK GEN #1
FDNS	00NR	0	16WP	G15_081	FROM->TO	G14-057T 345.00 - SUNNYSIDE 345KV CKT 1	717	789	0.06242	113.258	GEN523462 1-BLACKHAWK GEN #2
FDNS	00NR	0	20WP	G15_081	FROM->TO	G14-057T 345.00 - SUNNYSIDE 345KV CKT 1	717	789	0.06188	113.2548	TUTTLE - TUTTLE CONOCO TAP 138KV CKT 1
FDNS	00NR	0	16WP	G15_081	FROM->TO	G14-057T 345.00 - SUNNYSIDE 345KV CKT 1	717	789	0.06242	113.2537	GEN511852 1-COMANCHE #2
FDNS	00NR	0	20WP	G15_081	FROM->TO	G14-057T 345.00 - SUNNYSIDE 345KV CKT 1	717	789	0.06197	113.2501	P12:138:AEPW:CATOOSA4:T.S.E.-4
FDNS	00NR	0	20WP	G15_081	FROM->TO	G14-057T 345.00 - SUNNYSIDE 345KV CKT 1	717	789	0.06363	113.2433	BLANCHARD - MAUD 138KV CKT 1
FDNS	00NR	0	16WP	G15_081	FROM->TO	G14-057T 345.00 - SUNNYSIDE 345KV CKT 1	717	789	0.06242	113.2389	GEN344896 3-1LAB G3 20.000
FDNS	00NR	0	16WP	G15_081	FROM->TO	G14-057T 345.00 - SUNNYSIDE 345KV CKT 1	717	789	0.06242	113.2375	GEN344894 1-1LAB G1 20.000
FDNS	00NR	0	16WP	G15_081	FROM->TO	G14-057T 345.00 - SUNNYSIDE 345KV CKT 1	717	789	0.06242	113.2361	GEN344897 4-1LAB G4 20.000
FDNS	00NR	0	20WP	G15_081	FROM->TO	G14-057T 345.00 - SUNNYSIDE 345KV CKT 1	717	789	0.06199	113.2345	FULTON 115 - HOPE 115KV CKT 1
FDNS	00NR	0	20WP	G15_081	FROM->TO	G14-057T 345.00 - SUNNYSIDE 345KV CKT 1	717	789	0.06199	113.2345	FULTON 115 - HOPE 115KV CKT 1
FDNS	00NR	0	20WP	G15_081	FROM->TO	G14-057T 345.00 - SUNNYSIDE 345KV CKT 1	717	789	0.06228	113.2314	P12:138:AEPW-OGE:WTH_JCT4:JENSEN4
FDNS	00NR	0	20WP	G15_081	FROM->TO	G14-057T 345.00 - SUNNYSIDE 345KV CKT 1	717	789	0.06193	113.2306	GEN337652 1-WHITE BLUFF UNIT #1
FDNS	00NR	0	20WP	G15_081	FROM->TO	G14-057T 345.00 - SUNNYSIDE 345KV CKT 1	717	789	0.06193	113.2297	GEN501811 1-RODEMACHER UNIT 1
FDNS	00NR	0	20WP	G15_081	FROM->TO	G14-057T 345.00 - SUNNYSIDE 345KV CKT 1	717	789	0.06224	113.2296	P12:138:AEPW:CORNVIL4:DUNCAN-4
FDNS	00NR	0	20WP	G15_081	FROM->TO	G14-057T 345.00 - SUNNYSIDE 345KV CKT 1	717	789	0.06193	113.2154	GEN506752 1-LEBROCK GAS 1
FDNS	00NR	0	16WP	G15_081	FROM->TO	G14-057T 345.00 - SUNNYSIDE 345KV CKT 1	717	789	0.06164	113.2152	ARDMORE WEST - UNIROYAL 138KV CKT 1
FDNS	00NR	0	20WP	G15_081	FROM->TO	G14-057T 345.00 - SUNNYSIDE 345KV CKT 1	717	789	0.06193	113.2151	GEN506753 1-LEBROCK GAS 2
FDNS	00NR	0	20WP	G15_081	FROM->TO	G14-057T 345.00 - SUNNYSIDE 345KV CKT 1	717	789	0.06193	113.212	GEN300015 1-1SGPDEL 18.000
FDNS	00NR	0	20WP	G15_081	FROM->TO	G14-057T 345.00 - SUNNYSIDE 345KV CKT 1	717	789	0.06193	113.2097	GEN515226 1-MUSKOGEE 6G
FDNS	00NR	0	20WP	G15_081	FROM->TO	G14-057T 345.00 - SUNNYSIDE 345KV CKT 1	717	789	0.06193	113.2086	GEN300003 1-THOMAS HILL UNIT 3
FDNS	00NR	0	16WP	G15_081	FROM->TO	G14-057T 345.00 - SUNNYSIDE 345KV CKT 1	717	789	0.06239	113.2023	P12:138:AEPW-SWPA:LONEOAK4:TUPELO4
FDNS	00NR	0	16WP	G15_081	FROM->TO	G14-057T 345.00 - SUNNYSIDE 345KV CKT 1	717	789	0.06239	113.2023	P12:138:WFEC:MSL06
FDNS	00NR	0	16WP	G15_081	FROM->TO	G14-057T 345.00 - SUNNYSIDE 345KV CKT 1	717	789	0.06215	113.2022	P12:138:OKGE:3TERM40
FDNS	00NR	0	20WP	G15_081	FROM->TO	G14-057T 345.00 - SUNNYSIDE 345KV CKT 1	717	789	0.06193	113.197	GEN336191 1-LITTLE GYPSY UNIT#3
FDNS	00NR	0	16WP	G15_081	FROM->TO	G14-057T 345.00 - SUNNYSIDE 345KV CKT 1	717	789	0.06242	113.1818	GEN563162 1-G15081_3 0.6900
FDNSLock	00NR	0	16WP	G15_081	FROM->TO	G14-057T 345.00 - SUNNYSIDE 345KV CKT 1	717	789	0.06242	113.1814	GEN681542 6-JP MADGETT
FDNS	00NR	0	16WP	G15_081	FROM->TO	G14-057T 345.00 - SUNNYSIDE 345KV CKT 1	717	789	0.06242	113.1784	GEN521110 1-ORME1 13.800
FDNS	00NR	0	16WP	G15_081	FROM->TO	G14-057T 345.00 - SUNNYSIDE 345KV CKT 1	717	789	0.06242	113.1784	GEN521111 1-ORME2 13.800

SOLUTION	GROUP	SCENARIO	SEASON	SOURCE	DIRECTION	MONITORED ELEMENT	RATEA (MVA)	RATEB(MVA)	TDF	TC%LOADING (% MVA)	CONTINGENCY
FDNS	00NR	0	20WP	G15_081	FROM->TO	G14-057T 345.00 - SUNNYSIDE 345KV CKT 1	717	789	0.06219	113.1781	P12:138:AEPW:CORNVIL4:S.W.S.-4
FDNS	00NR	0	20WP	G15_081	FROM->TO	G14-057T 345.00 - SUNNYSIDE 345KV CKT 1	717	789	0.06199	113.1775	6LAYFLD 230.00 - CARROLL 230KV CKT 1
FDNS	00NR	0	16WP	G15_081	FROM->TO	G14-057T 345.00 - SUNNYSIDE 345KV CKT 1	717	789	0.06242	113.1714	GEN562699 1-G15_018_3 0.6900
FDNS	00NR	0	16WP	G15_081	FROM->TO	G14-057T 345.00 - SUNNYSIDE 345KV CKT 1	717	789	0.06223	113.1706	G15085_T 138.00 - RUSSELL 138KV CKT 1
FDNS	00NR	0	16WP	G15_081	FROM->TO	G14-057T 345.00 - SUNNYSIDE 345KV CKT 1	717	789	0.06194	113.1705	CARTRCO4 138.00 - RATLIFF 138KV CKT 1
FDNS	00NR	0	20WP	G15_081	FROM->TO	G14-057T 345.00 - SUNNYSIDE 345KV CKT 1	717	789	0.06306	113.1702	LATTA JCT - OIL CENTER 138KV CKT 1
FDNS	00NR	0	20WP	G15_081	FROM->TO	G14-057T 345.00 - SUNNYSIDE 345KV CKT 1	717	789	0.06193	113.1681	GEN335614 1-WILLOW GLENN UNIT#4
FDNS	00NR	0	20WP	G15_081	FROM->TO	G14-057T 345.00 - SUNNYSIDE 345KV CKT 1	717	789	0.06188	113.162	CIMARRON - TUTTLE CONOCO TAP 138KV CKT 1
FDNS	00NR	0	16WP	G15_081	FROM->TO	G14-057T 345.00 - SUNNYSIDE 345KV CKT 1	717	789	0.06242	113.159	GEN563292 1-G15095_3 0.6900
FDNS	00NR	0	20WP	G15_081	FROM->TO	G14-057T 345.00 - SUNNYSIDE 345KV CKT 1	717	789	0.06197	113.1529	8DANIEL8 500.00 - MCKNIGHT 500KV CKT 1
FDNS	00NR	0	20WP	G15_081	FROM->TO	G14-057T 345.00 - SUNNYSIDE 345KV CKT 1	717	789	0.0632	113.1398	BAILEY4 138.00 - SUNSHINE CANYON 138KV CKT 1
FDNS	00NR	0	20WP	G15_081	FROM->TO	G14-057T 345.00 - SUNNYSIDE 345KV CKT 1	717	789	0.06234	113.1297	G15095_T 138.00 - ROSE_VALLEY 138.00 138KV CKT 1
FDNS	00NR	0	16WP	G15_081	FROM->TO	G14-057T 345.00 - SUNNYSIDE 345KV CKT 1	717	789	0.06327	113.1295	G15063_T 345.00 - MATHWSN7 345.00 345KV CKT 1
FDNS	00NR	0	20WP	G15_081	FROM->TO	G14-057T 345.00 - SUNNYSIDE 345KV CKT 1	717	789	0.06193	113.1261	GEN337910 1-ARKANSAS NUCLEAR ONE UNIT #1
FDNS	00NR	0	20WP	G15_081	FROM->TO	G14-057T 345.00 - SUNNYSIDE 345KV CKT 1	717	789	0.06193	113.1241	P12:161:AEPW:EROGERS5:ECNTRTN5
FDNS	00NR	0	20WP	G15_081	FROM->TO	G14-057T 345.00 - SUNNYSIDE 345KV CKT 1	717	789	0.06234	113.1228	BUCKNER7 345.00 - SPEARVILLE 345KV CKT 1
FDNS	00NR	0	20WP	G15_081	FROM->TO	G14-057T 345.00 - SUNNYSIDE 345KV CKT 1	717	789	0.06234	113.1228	BUCKNER7 345.00 - SPEARVILLE 345KV CKT 1
FDNS	00NR	0	20WP	G15_081	FROM->TO	G14-057T 345.00 - SUNNYSIDE 345KV CKT 1	717	789	0.06193	113.122	GEN303007 1-1BC2 U2
FDNS	00NR	0	20WP	G15_081	FROM->TO	G14-057T 345.00 - SUNNYSIDE 345KV CKT 1	717	789	0.06439	113.1199	FINNEY SWITCHING STATION - WALKTAP7 345.00 345KV CKT 1
FDNS	00NR	0	20WP	G15_081	FROM->TO	G14-057T 345.00 - SUNNYSIDE 345KV CKT 1	717	789	0.06439	113.1199	FINNEY SWITCHING STATION - WALKTAP7 345.00 345KV CKT 1
FDNS	00NR	0	16WP	G15_081	FROM->TO	G14-057T 345.00 - SUNNYSIDE 345KV CKT 1	717	789	0.06191	113.1195	CACHE - SNYDER 138KV CKT 1
FDNS	00NR	0	20WP	G15_081	FROM->TO	G14-057T 345.00 - SUNNYSIDE 345KV CKT 1	717	789	0.06193	113.1171	GEN336464 1-MICHOUD UNIT #3
FDNS	00NR	0	20WP	G15_081	FROM->TO	G14-057T 345.00 - SUNNYSIDE 345KV CKT 1	717	789	0.06193	113.116	GEN303006 1-1BC2 U1
FDNS	00NR	0	20WP	G15_081	FROM->TO	G14-057T 345.00 - SUNNYSIDE 345KV CKT 1	717	789	0.06211	113.1158	P12:138:AEPW:WTHWF4:CLINTJC4
FDNS	00NR	0	20WP	G15_081	FROM->TO	G14-057T 345.00 - SUNNYSIDE 345KV CKT 1	717	789	0.06193	113.1142	WHITE BLUFF 500/26.0KV TRANSFORMER CKT 1
FDNS	00NR	0	20WP	G15_081	FROM->TO	G14-057T 345.00 - SUNNYSIDE 345KV CKT 1	717	789	0.06212	113.1123	P12:69:WFEC-AEPW:COMANCH2:DUNCAN-2
FDNS	00NR	0	20WP	G15_081	FROM->TO	G14-057T 345.00 - SUNNYSIDE 345KV CKT 1	717	789	0.06193	113.1123	GEN515223 1-MUSKOGEE 4G
FDNS	00NR	0	20WP	G15_081	FROM->TO	G14-057T 345.00 - SUNNYSIDE 345KV CKT 1	717	789	0.06193	113.1123	GEN515225 1-MUSKOGEE 5G
FDNS	00NR	0	20WP	G15_081	FROM->TO	G14-057T 345.00 - SUNNYSIDE 345KV CKT 1	717	789	0.06193	113.1096	GEN562783 1-G15036_4 0.6900
FDNS	00NR	0	20WP	G15_081	FROM->TO	G14-057T 345.00 - SUNNYSIDE 345KV CKT 1	717	789	0.06193	113.1096	GEN562784 1-G15036_5 0.6900
FDNS	00NR	0	20WP	G15_081	FROM->TO	G14-057T 345.00 - SUNNYSIDE 345KV CKT 1	717	789	0.06213	113.1077	G15088_T 345.00 - MOORE 345KV CKT 1
FDNS	00NR	0	20WP	G15_081	FROM->TO	G14-057T 345.00 - SUNNYSIDE 345KV CKT 1	717	789	0.06201	113.1046	P12:69:AEPW-OMPA:COMANC-2:OMWALTR2
FDNS	00NR	0	20WP	G15_081	FROM->TO	G14-057T 345.00 - SUNNYSIDE 345KV CKT 1	717	789	0.06196	113.0985	BISMARK - HOT SPRINGS WEST BUS 115KV CKT 1
FDNS	00NR	0	20WP	G15_081	FROM->TO	G14-057T 345.00 - SUNNYSIDE 345KV CKT 1	717	789	0.06243	113.0959	CIMARRON - CZECH HALL 138KV CKT 1
FDNS	00NR	0	20WP	G15_081	FROM->TO	G14-057T 345.00 - SUNNYSIDE 345KV CKT 1	717	789	0.06216	113.0936	G15074_T 345.00 - HOYT 345KV CKT 1
FDNS	00NR	0	20WP	G15_081	FROM->TO	G14-057T 345.00 - SUNNYSIDE 345KV CKT 1	717	789	0.06194	113.0914	MC NIEL 500/115KV TRANSFORMER CKT 1
FDNS	00NR	0	20WP	G15_081	FROM->TO	G14-057T 345.00 - SUNNYSIDE 345KV CKT 1	717	789	0.06193	113.0857	GEN300010 1-ST FRANCIS UNIT 1
FDNS	00NR	0	20WP	G15_081	FROM->TO	G14-057T 345.00 - SUNNYSIDE 345KV CKT 1	717	789	0.06212	113.0853	DUNCAN - TOSCO 69KV CKT 1
FDNS	00NR	0	20WP	G15_081	FROM->TO	G14-057T 345.00 - SUNNYSIDE 345KV CKT 1	717	789	0.06211	113.0823	P12:138:AEPW:WTHWF4:WTH_SE4
FDNS	00NR	0	16WP	G15_081	FROM->TO	G14-057T 345.00 - SUNNYSIDE 345KV CKT 1	717	789	0.06242	113.0731	GEN563122 1-G15077_3 0.3850
FDNS	00NR	0	16WP	G15_081	FROM->TO	G14-057T 345.00 - SUNNYSIDE 345KV CKT 1	717	789	0.06242	113.0722	GEN661015 1-COYOTE
FDNS	00NR	0	20WP	G15_081	FROM->TO	G14-057T 345.00 - SUNNYSIDE 345KV CKT 1	717	789	0.06191	113.0703	HOT SPRINGS EHV - MAGNET COVE 500KV CKT 1
FDNS	00NR	0	20WP	G15_081	FROM->TO	G14-057T 345.00 - SUNNYSIDE 345KV CKT 1	717	789	0.06248	113.0696	CLEO CORNER - CLEOPLT4 138.00 138KV CKT 1
FDNS	00NR	0	20WP	G15_081	FROM->TO	G14-057T 345.00 - SUNNYSIDE 345KV CKT 1	717	789	0.06193	113.0607	GEN337041 1-GERALD ANDRUS
FDNS	00NR	0	20WP	G15_081	FROM->TO	G14-057T 345.00 - SUNNYSIDE 345KV CKT 1	717	789	0.06193	113.059	GEN505432 1-SIKESTON
FDNS	00NR	0	16WP	G15_081	FROM->TO	G14-057T 345.00 - SUNNYSIDE 345KV CKT 1	717	789	0.06242	113.0554	GEN562861 1-G15045_2 0.4800
FDNS	00NR	0	20WP	G15_081	FROM->TO	G14-057T 345.00 - SUNNYSIDE 345KV CKT 1	717	789	0.06193	113.0543	GEN303008 1-1BC2 U3
FDNS	00NR	0	20WP	G15_081	FROM->TO	G14-057T 345.00 - SUNNYSIDE 345KV CKT 1	717	789	0.06204	113.0517	CHISHOLM6 230.00 - ELK CITY 230KV 230KV CKT 1
FDNS	00NR	0	20WP	G15_081	FROM->TO	G14-057T 345.00 - SUNNYSIDE 345KV CKT 1	717	789	0.06234	113.0491	NOEL_SW 138.00 - ROSE_VALLEY 138.00 138KV CKT 1
FDNS	00NR	0	20WP	G15_081	FROM->TO	G14-057T 345.00 - SUNNYSIDE 345KV CKT 1	717	789	0.06248	113.0487	CLEOPLT4 138.00 - MEN TAP 138KV CKT 1
FDNS	00NR	0	20WP	G15_081	FROM->TO	G14-057T 345.00 - SUNNYSIDE 345KV CKT 1	717	789	0.06204	113.0487	ELK CITY 230KV (ELKCTY-6) 230/138/13.8KV TRANSFORMER CKT 1
FDNS	00NR	0	20WP	G15_081	FROM->TO	G14-057T 345.00 - SUNNYSIDE 345KV CKT 1	717	789	0.06204	113.0487	ELK CITY 230KV (ELKCTY-6) 230/138/13.8KV TRANSFORMER CKT 1
FDNS	00NR	0	20WP	G15_081	FROM->TO	G14-057T 345.00 - SUNNYSIDE 345KV CKT 1	717	789	0.06196	113.047	ALPINE AECC - BISMARK 115KV CKT 1
FDNS	00NR	0	16WP	G15_081	FROM->TO	G14-057T 345.00 - SUNNYSIDE 345KV CKT 1	717	789	0.06242	113.0454	GEN520811 1-ANADRK4
FDNS	00NR	0	20WP	G15_081	FROM->TO	G14-057T 345.00 - SUNNYSIDE 345KV CKT 1	717	789	0.06248	113.0419	CIMARRON - SARA 138KV CKT 1
FDNS	00NR	0	20WP	G15_081	FROM->TO	G14-057T 345.00 - SUNNYSIDE 345KV CKT 1	717	789	0.06248	113.0367	IMO TAP - MEN TAP 138KV CKT 1
FDNS	00NR	0	20WP	G15_081	FROM->TO	G14-057T 345.00 - SUNNYSIDE 345KV CKT 1	717	789	0.06193	113.0282	GEN300011 1-ST FRANCIS UNIT 2
FDNS	00NR	0	20WP	G15_081	FROM->TO	G14-057T 345.00 - SUNNYSIDE 345KV CKT 1	717	789	0.06193	113.0251	GEN336170 1-GULF OXY U4
FDNS	00NR	0	20WP	G15_081	FROM->TO	G14-057T 345.00 - SUNNYSIDE 345KV CKT 1	717	789	0.06195	113.0227	P12:138:AEPW:N.E.S.-4:CATOOSA4
FDNSLock	00NR	0	16WP	G15_081	FROM->TO	G14-057T 345.00 - SUNNYSIDE 345KV CKT 1	717	789	0.06242	113.0211	GEN532751 1-WOLF CREEK GENERATING STATION UNIT 1
FDNS	00NR	0	20WP	G15_081	FROM->TO	G14-057T 345.00 - SUNNYSIDE 345KV CKT 1	717	789	0.06115	113.0209	SEMINOLE - VANOSTP4 138.00 138KV CKT 1
FDNS	00NR	0	20WP	G15_081	FROM->TO	G14-057T 345.00 - SUNNYSIDE 345KV CKT 1	717	789	0.06243	113.0172	CZECH HALL - XEROX 138KV CKT 1
FDNS	00NR	0	20WP	G15_081	FROM->TO	G14-057T 345.00 - SUNNYSIDE 345KV CKT 1	717	789	0.06212	113.0167	COMANCHE TAP - TOSCO 69KV CKT 1
FDNS	00NR	0	20WP	G15_081	FROM->TO	G14-057T 345.00 - SUNNYSIDE 345KV CKT 1	717	789	0.06193	113.0167	NELSON 230/20.0KV TRANSFORMER CKT 1
FDNS	00NR	0	16WP	G15_081	FROM->TO	G14-057T 345.00 - SUNNYSIDE 345KV CKT 1	717	789	0.06274	113.0164	P12:138:WFEC:MSL15
FDNS	00NR	0	20WP	G15_081	FROM->TO	G14-057T 345.00 - SUNNYSIDE 345KV CKT 1	717	789	0.06243	113.0131	MORGAN - XEROX 138KV CKT 1
FDNS	00NR	0	20WP	G15_081	FROM->TO	G14-057T 345.00 - SUNNYSIDE 345KV CKT 1	717	789	0.06193	113.0062	GEN336801 1-BAXTER WILSON UNIT #1
FDNS	00NR	0	20WP	G15_081	FROM->TO	G14-057T 345.00 - SUNNYSIDE 345KV CKT 1	717	789	0.06196	112.9982	ALPINE AECC - AMITY SS 115KV CKT 1
FDNS	00NR	0	20WP	G15_081	FROM->TO	G14-057T 345.00 - SUNNYSIDE 345KV CKT 1	717	789	0.0613	112.9962	ARBWIND4 138.00 - CARTER 138KV CKT 1
FDNS	00NR	0	16WP	G15_081	FROM->TO	G14-057T 345.00 - SUNNYSIDE 345KV CKT 1	717	789	0.06164	112.9937	SUNNYSIDE - UNIROYAL 138KV CKT 1
FDNS	00NR	0	20WP	G15_081	FROM->TO	G14-057T 345.00 - SUNNYSIDE 345KV CKT 1	717	789	0.06243	112.9905	MORGAN - MUSTANG 138KV CKT 1
FDNS	00NR	0	20WP	G15_081	FROM->TO	G14-057T 345.00 - SUNNYSIDE 345KV CKT 1	717	789	0.06224	112.9897	WEATHERFORD JCT. - WEATHERFORD SOUTHEAST 138KV CKT 1
FDNS	00NR	0	20WP	G15_081	FROM->TO	G14-057T 345.00 - SUNNYSIDE 345KV CKT 1	717	789	0.06224	112.9897	WEATHERFORD JCT. - WEATHERFORD SOUTHEAST 138KV CKT 1
FDNS	00NR	0	20WP	G15_081	FROM->TO	G14-057T 345.00 - SUNNYSIDE 345KV CKT 1	717	789	0.06193	112.9775	8CAJUN2 500/24.0KV TRANSFORMER CKT 1
FDNS	00NR	0	20WP	G15_081	FROM->TO	G14-057T 345.00 - SUNNYSIDE 345KV CKT 1	717	789	0.06193	112.9766	GEN501910 1-ACADIA UNIT ST1
FDNS	00NR	0	16WP	G15_081	FROM->TO	G14-057T 345.00 - SUNNYSIDE 345KV CKT 1	717	789	0.06242	112.9741	GEN562992 1-G15063_3 0.6900
FDNS	00NR	0	20WP	G15_081	FROM->TO	G14-057T 345.00 - SUNNYSIDE 345KV CKT 1	717	789	0.06224	112.9676	ANADARKO - SEQUOYAHJ4 138.00 138KV CKT 1
FDNS	00NR	0	20WP	G15_081	FROM->TO	G14-057T 345.00 - SUNNYSIDE 345KV CKT 1	717	789	0.06224	112.9661	CORN TAP - SEQUOYAHJ4 138.00 138KV CKT 1
FDNS	00NR	0	20WP	G15_081	FROM->TO	G14-057T 345.00 - SUNNYSIDE 345KV CKT 1	717	789	0.06212	112.9645	COMANCHE - COMANCHE TAP 69KV CKT 1

SOLUTION	GROUP	SCENARIO	SEASON	SOURCE	DIRECTION	MONITORED ELEMENT	RATEA (MVA)	RATEB(MVA)	TDF	TC%LOADING (% MVA)	CONTINGENCY
FDNS	00NR	0	20WP	G15_081	FROM->TO	G14-057T 345.00 - SUNNYSIDE 345KV CKT 1	717	789	0.0632	112.9615	BAILEY4 138.00 - WESTMOORE 138KV CKT 1
FDNS	00NR	0	16WP	G15_081	FROM->TO	G14-057T 345.00 - SUNNYSIDE 345KV CKT 1	717	789	0.06242	112.9554	GEN657748 1-YOUNG 2 GENERATOR
FDNS	00NR	0	16WP	G15_081	FROM->TO	G14-057T 345.00 - SUNNYSIDE 345KV CKT 1	717	789	0.06139	112.9501	GRAPEVINE INTERCHANGE - STATELINE INTERCHANGE 230KV CKT 1
FDNS	00NR	0	16WP	G15_081	FROM->TO	G14-057T 345.00 - SUNNYSIDE 345KV CKT 1	717	789	0.06139	112.9501	GRAPEVINE INTERCHANGE - STATELINE INTERCHANGE 230KV CKT 1
FDNS	00NR	0	20WP	G15_081	FROM->TO	G14-057T 345.00 - SUNNYSIDE 345KV CKT 1	717	789	0.06248	112.95	P12:138:OKGE-AEPW:JENSEN4:REDROCKRD4
FDNS	00NR	0	20WP	G15_081	FROM->TO	G14-057T 345.00 - SUNNYSIDE 345KV CKT 1	717	789	0.06214	112.94	WALTERS - WALTERS 69KV CKT 1
FDNS	00NR	0	20WP	G15_081	FROM->TO	G14-057T 345.00 - SUNNYSIDE 345KV CKT 1	717	789	0.06224	112.9379	P12:138:AEPW:REDROCKRD4:WTH_JCT4
FDNS	00NR	0	20WP	G15_081	FROM->TO	G14-057T 345.00 - SUNNYSIDE 345KV CKT 1	717	789	0.06193	112.9375	SABINE 230/24.0KV TRANSFORMER CKT 1
FDNS	00NR	0	20WP	G15_081	FROM->TO	G14-057T 345.00 - SUNNYSIDE 345KV CKT 1	717	789	0.06193	112.9335	GEN300016 1-1G1GPDEL 18.000
FDNS	00NR	0	20WP	G15_081	FROM->TO	G14-057T 345.00 - SUNNYSIDE 345KV CKT 1	717	789	0.06248	112.9306	SARA - STHLAKE4 138.00 138KV CKT 1
FDNS	00NR	0	16WP	G15_081	FROM->TO	G14-057T 345.00 - SUNNYSIDE 345KV CKT 1	717	789	0.06375	112.9294	CANEY CREEK - TEXOMA JCT 138KV CKT 1
FDNS	00NR	0	20WP	G15_081	FROM->TO	G14-057T 345.00 - SUNNYSIDE 345KV CKT 1	717	789	0.06193	112.9286	P12:138:AEPW:R.S.S.-4:S.HUD.-4
FDNS	00NR	0	20WP	G15_081	FROM->TO	G14-057T 345.00 - SUNNYSIDE 345KV CKT 1	717	789	0.06189	112.9232	ETTA (DUKE HOTSPRINGS) - MC NIEL 500KV CKT 1
FDNS	00NR	0	20WP	G15_081	FROM->TO	G14-057T 345.00 - SUNNYSIDE 345KV CKT 1	717	789	0.06193	112.9218	GEN336222 1-LITTLE GYPSY UNIT#2
FDNS	00NR	0	16WP	G15_081	FROM->TO	G14-057T 345.00 - SUNNYSIDE 345KV CKT 1	717	789	0.06222	112.9113	P12:138:AEPW:SHAM4WT:CHILD4WT
FDNS	00NR	0	20WP	G15_081	FROM->TO	G14-057T 345.00 - SUNNYSIDE 345KV CKT 1	717	789	0.06201	112.9105	LAWTON RELIFT TAP - OMPA-WALTERS 69KV CKT 1
FDNS	00NR	0	20WP	G15_081	FROM->TO	G14-057T 345.00 - SUNNYSIDE 345KV CKT 1	717	789	0.06248	112.9005	MCCLAIN - STHLAKE4 138.00 138KV CKT 1
FDNS	00NR	0	20WP	G15_081	FROM->TO	G14-057T 345.00 - SUNNYSIDE 345KV CKT 1	717	789	0.06193	112.897	P12:69:AEPW:NROGERS2:ECNTRTN2
FDNS	00NR	0	20WP	G15_081	FROM->TO	G14-057T 345.00 - SUNNYSIDE 345KV CKT 1	717	789	0.0628	112.8964	G13-010T 345.00 - POST ROCK 345KV CKT 1
FDNS	00NR	0	16WP	G15_081	FROM->TO	G14-057T 345.00 - SUNNYSIDE 345KV CKT 1	717	789	0.06242	112.8952	GEN562704 1-G15_020_3 0.3550
FDNS	00NR	0	20WP	G15_081	FROM->TO	G14-057T 345.00 - SUNNYSIDE 345KV CKT 1	717	789	0.06306	112.8932	LASALLE - LATTA JCT 138KV CKT 1
FDNS	00NR	0	20WP	G15_081	FROM->TO	G14-057T 345.00 - SUNNYSIDE 345KV CKT 1	717	789	0.06221	112.8928	NORGE ROAD - SOUTHWESTERN STATION 138KV CKT 1
FDNS	00NR	0	20WP	G15_081	FROM->TO	G14-057T 345.00 - SUNNYSIDE 345KV CKT 1	717	789	0.06221	112.8928	NORGE ROAD - SOUTHWESTERN STATION 138KV CKT 1
FDNS	00NR	0	16WP	G15_081	FROM->TO	G14-057T 345.00 - SUNNYSIDE 345KV CKT 1	717	789	0.06242	112.8914	GEN562952 1-G15057_3 0.6500
FDNS	00NR	0	20WP	G15_081	FROM->TO	G14-057T 345.00 - SUNNYSIDE 345KV CKT 1	717	789	0.06193	112.8872	GEN336152 1-WATERFORD UNIT#2
FDNS	00NR	0	20WP	G15_081	FROM->TO	G14-057T 345.00 - SUNNYSIDE 345KV CKT 1	717	789	0.06193	112.8868	P12:138:AEPW:BA_71ST4:T.S.E.-4
FDNS	00NR	0	20WP	G15_081	FROM->TO	G14-057T 345.00 - SUNNYSIDE 345KV CKT 1	717	789	0.06193	112.8864	GEN336151 1-WATERFORD UNIT#1
FDNS	00NR	0	20WP	G15_081	FROM->TO	G14-057T 345.00 - SUNNYSIDE 345KV CKT 1	717	789	0.06193	112.882	P12:138:AEPW:YARCH-S4:T.S.E.-4
FDNS	00NR	0	20WP	G15_081	FROM->TO	G14-057T 345.00 - SUNNYSIDE 345KV CKT 1	717	789	0.06238	112.8781	EMPORIA ENERGY CENTER - G14_001T 345.00 345KV CKT 1
FDNS	00NR	0	20WP	G15_081	FROM->TO	G14-057T 345.00 - SUNNYSIDE 345KV CKT 1	717	789	0.06217	112.8777	HOYT - STRANGER CREEK 345KV CKT 1
FDNS	00NR	0	20WP	G15_081	FROM->TO	G14-057T 345.00 - SUNNYSIDE 345KV CKT 1	717	789	0.06204	112.8772	P12:138:AEPW-OGE:SHIDLER4:OSAGE 4
FDNS	00NR	0	20WP	G15_081	FROM->TO	G14-057T 345.00 - SUNNYSIDE 345KV CKT 1	717	789	0.06193	112.875	GEN300017 1-1G2GPDEL 18.000
FDNS	00NR	0	20WP	G15_081	FROM->TO	G14-057T 345.00 - SUNNYSIDE 345KV CKT 1	717	789	0.06193	112.8749	FRONTIER 345/18.0KV TRANSFORMER CKT 1
FDNS	00NR	0	20WP	G15_081	FROM->TO	G14-057T 345.00 - SUNNYSIDE 345KV CKT 1	717	789	0.06193	112.8727	FRONTIER 345/18.0KV TRANSFORMER CKT 1
FDNS	00NR	0	20WP	G15_081	FROM->TO	G14-057T 345.00 - SUNNYSIDE 345KV CKT 1	717	789	0.06199	112.8685	P12:138:OKGE:3TERM2
FDNS	00NR	0	20WP	G15_081	FROM->TO	G14-057T 345.00 - SUNNYSIDE 345KV CKT 1	717	789	0.06227	112.8667	CLINTON JUNCTION - ELK CITY 138KV CKT 1
FDNS	00NR	0	20WP	G15_081	FROM->TO	G14-057T 345.00 - SUNNYSIDE 345KV CKT 1	717	789	0.06227	112.8667	CLINTON JUNCTION - ELK CITY 138KV CKT 1
FDNS	00NR	0	20WP	G15_081	FROM->TO	G14-057T 345.00 - SUNNYSIDE 345KV CKT 1	717	789	0.06199	112.8667	HOPE - MCNAB REC 115KV CKT 1
FDNS	00NR	0	20WP	G15_081	FROM->TO	G14-057T 345.00 - SUNNYSIDE 345KV CKT 1	717	789	0.06197	112.8653	MORISNT4 138.00 - STILLWATER 138KV CKT 1
FDNS	00NR	0	20WP	G15_081	FROM->TO	G14-057T 345.00 - SUNNYSIDE 345KV CKT 1	717	789	0.06199	112.856	P12:115:AEPW:TURK3:HOPE3
FDNS	00NR	0	20WP	G15_081	FROM->TO	G14-057T 345.00 - SUNNYSIDE 345KV CKT 1	717	789	0.06324	112.8552	BENTON - WICHITA 345KV CKT 1
FDNS	00NR	0	20WP	G15_081	FROM->TO	G14-057T 345.00 - SUNNYSIDE 345KV CKT 1	717	789	0.06216	112.853	G15074_T 345.00 - JEFFREY ENERGY CENTER 345KV CKT 1
FDNS	00NR	0	16WP	G15_081	FROM->TO	G14-057T 345.00 - SUNNYSIDE 345KV CKT 1	717	789	0.06242	112.8518	GEN563173 1-G15082_3 0.6900
FDNS	00NR	0	20WP	G15_081	FROM->TO	G14-057T 345.00 - SUNNYSIDE 345KV CKT 1	717	789	0.0628	112.8505	G13-010T 345.00 - SPEARVILLE 345KV CKT 1
FDNS	00NR	0	20WP	G15_081	FROM->TO	G14-057T 345.00 - SUNNYSIDE 345KV CKT 1	717	789	0.06196	112.8485	COUCH SES - MC NIEL 115KV CKT 1
FDNS	00NR	0	20WP	G15_081	FROM->TO	G14-057T 345.00 - SUNNYSIDE 345KV CKT 1	717	789	0.06211	112.8447	WEATHERFORD TAP - WEATHERFORD WIND FARM 138KV CKT 1
FDNS	00NR	0	20WP	G15_081	FROM->TO	G14-057T 345.00 - SUNNYSIDE 345KV CKT 1	717	789	0.0623	112.8444	BLACKBERRY - NEOSHO 345KV CKT 1
FDNS	00NR	0	20WP	G15_081	FROM->TO	G14-057T 345.00 - SUNNYSIDE 345KV CKT 1	717	789	0.06193	112.8441	LEWIS CREEK SWITCHYARD 138/22.0KV TRANSFORMER CKT 1
FDNS	00NR	0	20WP	G15_081	FROM->TO	G14-057T 345.00 - SUNNYSIDE 345KV CKT 1	717	789	0.06224	112.8435	HINTON - WEATHERFORD JCT. 138KV CKT 1
FDNS	00NR	0	20WP	G15_081	FROM->TO	G14-057T 345.00 - SUNNYSIDE 345KV CKT 1	717	789	0.06193	112.8396	LEWIS CREEK SWITCHYARD 138/22.0KV TRANSFORMER CKT 1
FDNS	00NR	0	16WP	G15_081	FROM->TO	G14-057T 345.00 - SUNNYSIDE 345KV CKT 1	717	789	0.0614	112.8375	GRAPEVINE INTERCHANGE - NICHOLS STATION 230KV CKT 1
FDNS	00NR	0	16WP	G15_081	FROM->TO	G14-057T 345.00 - SUNNYSIDE 345KV CKT 1	717	789	0.0614	112.8375	GRAPEVINE INTERCHANGE - NICHOLS STATION 230KV CKT 1
FDNS	00NR	0	20WP	G15_081	FROM->TO	G14-057T 345.00 - SUNNYSIDE 345KV CKT 1	717	789	0.06201	112.8369	OMPA-WALTERS - WALTERS 69KV CKT 1
FDNS	00NR	0	20WP	G15_081	FROM->TO	G14-057T 345.00 - SUNNYSIDE 345KV CKT 1	717	789	0.06201	112.8369	OMPA-WALTERS - WALTERS 69KV CKT 1
FDNS	00NR	0	20WP	G15_081	FROM->TO	G14-057T 345.00 - SUNNYSIDE 345KV CKT 1	717	789	0.06194	112.8359	CYPRESS - HARTBURG 500KV CKT 1
FDNS	00NR	0	20WP	G15_081	FROM->TO	G14-057T 345.00 - SUNNYSIDE 345KV CKT 1	717	789	0.06219	112.8325	SOUTHWESTERN STATION - VERDEN 138KV CKT 1
FDNS	00NR	0	20WP	G15_081	FROM->TO	G14-057T 345.00 - SUNNYSIDE 345KV CKT 1	717	789	0.06193	112.8315	GEN334432 1-SABINE UNIT 2
FDNS	00NR	0	20WP	G15_081	FROM->TO	G14-057T 345.00 - SUNNYSIDE 345KV CKT 1	717	789	0.06193	112.831	GEN334431 1-SABINE UNIT 1
FDNS	00NR	0	20WP	G15_081	FROM->TO	G14-057T 345.00 - SUNNYSIDE 345KV CKT 1	717	789	0.06199	112.8308	TURK (TURK 1) 138/115/13.2KV TRANSFORMER CKT 1
FDNS	00NR	0	20WP	G15_081	FROM->TO	G14-057T 345.00 - SUNNYSIDE 345KV CKT 1	717	789	0.06199	112.8308	TURK (TURK 1) 138/115/13.2KV TRANSFORMER CKT 1
FDNS	00NR	0	20WP	G15_081	FROM->TO	G14-057T 345.00 - SUNNYSIDE 345KV CKT 1	717	789	0.06199	112.8307	MCNAB REC - Turk 115 115KV CKT 1
FDNS	00NR	0	20WP	G15_081	FROM->TO	G14-057T 345.00 - SUNNYSIDE 345KV CKT 1	717	789	0.06192	112.8301	7JASPER 345.00 - BLACKBERRY 345KV CKT 1
FDNS	00NR	0	20WP	G15_081	FROM->TO	G14-057T 345.00 - SUNNYSIDE 345KV CKT 1	717	789	0.06193	112.8268	GEN501823 1-TECHE UNIT 3
FDNS	00NR	0	20WP	G15_081	FROM->TO	G14-057T 345.00 - SUNNYSIDE 345KV CKT 1	717	789	0.06193	112.8248	GEN501970 1-EVANGELINE UNIT 7
FDNS	00NR	0	20WP	G15_081	FROM->TO	G14-057T 345.00 - SUNNYSIDE 345KV CKT 1	717	789	0.06193	112.8197	GEN505616 1-BROKEN BOW
FDNS	00NR	0	20WP	G15_081	FROM->TO	G14-057T 345.00 - SUNNYSIDE 345KV CKT 1	717	789	0.06214	112.8185	P12:69:WFEC-AEPW:COMANCH2:WALTRS-2
FDNS	00NR	0	20WP	G15_081	FROM->TO	G14-057T 345.00 - SUNNYSIDE 345KV CKT 1	717	789	0.06331	112.8114	CANADIAN - NOBLE 138KV CKT 1
FDNS	00NR	0	20WP	G15_081	FROM->TO	G14-057T 345.00 - SUNNYSIDE 345KV CKT 1	717	789	0.06219	112.8107	NORTH 29TH CHICKASHA - VERDEN 138KV CKT 1
FDNS	00NR	0	20WP	G15_081	FROM->TO	G14-057T 345.00 - SUNNYSIDE 345KV CKT 1	717	789	0.06193	112.8098	P12:161:AEPW:CHAMSPR5:FARMING5
FDNS	00NR	0	16WP	G15_081	FROM->TO	G14-057T 345.00 - SUNNYSIDE 345KV CKT 1	717	789	0.06242	112.8084	GEN562710 1-G15_022_3 0.5500
FDNS	00NR	0	20WP	G15_081	FROM->TO	G14-057T 345.00 - SUNNYSIDE 345KV CKT 1	717	789	0.06204	112.8043	7LUTESVIL 345.00 - 7ST FRANC 345.00 345KV CKT 1
FDNS	00NR	0	20WP	G15_081	FROM->TO	G14-057T 345.00 - SUNNYSIDE 345KV CKT 1	717	789	0.06193	112.8033	GEN334392 1-EXXON MOBIL IPP 1
FDNS	00NR	0	20WP	G15_081	FROM->TO	G14-057T 345.00 - SUNNYSIDE 345KV CKT 1	717	789	0.06238	112.8	G14_001T 345.00 - WICHITA 345KV CKT 1
FDNS	00NR	0	20WP	G15_081	FROM->TO	G14-057T 345.00 - SUNNYSIDE 345KV CKT 1	717	789	0.06193	112.7969	GEN334393 1-EXXON MOBIL IPP 2
FDNS	00NR	0	20WP	G15_081	FROM->TO	G14-057T 345.00 - SUNNYSIDE 345KV CKT 1	717	789	0.06193	112.7969	GEN334394 1-EXXON MOBIL IPP 3
FDNS	00NR	0	20WP	G15_081	FROM->TO	G14-057T 345.00 - SUNNYSIDE 345KV CKT 1	717	789	0.0632	112.7939	FRANKLIN SW - WESTMOORE 138KV CKT 1
FDNS	00NR	0	20WP	G15_081	FROM->TO	G14-057T 345.00 - SUNNYSIDE 345KV CKT 1	717	789	0.06202	112.7921	LAKEOVER - MCADAMS 500KV CKT 1
FDNS	00NR	0	16WP	G15_081	FROM->TO	G14-057T 345.00 - SUNNYSIDE 345KV CKT 1	717	789	0.06242	112.7898	GEN620315 1-BIG STONE GEN
FDNS	00NR	0	20WP	G15_081	FROM->TO	G14-057T 345.00 - SUNNYSIDE 345KV CKT 1	717	789	0.06332	112.7872	P12:138:OKGE:3TERM27

SOLUTION	GROUP	SCENARIO	SEASON	SOURCE	DIRECTION	MONITORED ELEMENT	RATEA (MVA)	RATEB(MVA)	TDF	TC%LOADING (% MVA)	CONTINGENCY
FDNS	00NR	0	20WP	G15_081	FROM->TO	G14-057T 345.00 - SUNNYSIDE 345KV CKT 1	717	789	0.06218	112.7859	EMPORIA ENERGY CENTER - SWISSVALE 345KV CKT 1
FDNS	00NR	0	20WP	G15_081	FROM->TO	G14-057T 345.00 - SUNNYSIDE 345KV CKT 1	717	789	0.06193	112.7835	ST FRANCIS - ST FRANCIS 1 161KV CKT Z1
FDNS	00NR	0	20WP	G15_081	FROM->TO	G14-057T 345.00 - SUNNYSIDE 345KV CKT 1	717	789	0.06211	112.7809	MCADAMS - WOLF CREEK 500KV CKT 1
FDNS	00NR	0	20WP	G15_081	FROM->TO	G14-057T 345.00 - SUNNYSIDE 345KV CKT 1	717	789	0.06193	112.779	SABINE 230/22.0KV TRANSFORMER CKT 1
FDNS	00NR	0	20WP	G15_081	FROM->TO	G14-057T 345.00 - SUNNYSIDE 345KV CKT 1	717	789	0.062	112.7787	FLETCHER - MARLOW JCT 69KV CKT 1
FDNS	00NR	0	20WP	G15_081	FROM->TO	G14-057T 345.00 - SUNNYSIDE 345KV CKT 1	717	789	0.06226	112.7734	SWISSVALE - WEST GARDNER 345KV CKT 1
FDNS	00NR	0	20WP	G15_081	FROM->TO	G14-057T 345.00 - SUNNYSIDE 345KV CKT 1	717	789	0.06224	112.7689	HINTON - REDROCKRD4 138.00 138KV CKT 1
FDNS	00NR	0	16WP	G15_081	FROM->TO	G14-057T 345.00 - SUNNYSIDE 345KV CKT 1	717	789	0.06242	112.7677	GEN511851 1-COMANCHE #1
FDNS	00NR	0	20WP	G15_081	FROM->TO	G14-057T 345.00 - SUNNYSIDE 345KV CKT 1	717	789	0.06193	112.7667	GEN501972 1-EVANGELINE UNIT 7-2
FDNS	00NR	0	20WP	G15_081	FROM->TO	G14-057T 345.00 - SUNNYSIDE 345KV CKT 1	717	789	0.06193	112.7666	GEN501971 1-EVANGELINE UNIT 7-1
FDNS	00NR	0	20WP	G15_081	FROM->TO	G14-057T 345.00 - SUNNYSIDE 345KV CKT 1	717	789	0.06194	112.7601	P12:138:AEPW:R.S.S-4:T.P.S.-4
FDNS	00NR	0	20WP	G15_081	FROM->TO	G14-057T 345.00 - SUNNYSIDE 345KV CKT 1	717	789	0.06221	112.7558	CORNVILLE - NORGE ROAD 138KV CKT 1
FDNS	00NR	0	20WP	G15_081	FROM->TO	G14-057T 345.00 - SUNNYSIDE 345KV CKT 1	717	789	0.06221	112.7558	CORNVILLE - NORGE ROAD 138KV CKT 1
FDNS	00NR	0	20WP	G15_081	FROM->TO	G14-057T 345.00 - SUNNYSIDE 345KV CKT 1	717	789	0.06199	112.7544	P12:138:OKGE:3TERM12
FDNS	00NR	0	20WP	G15_081	FROM->TO	G14-057T 345.00 - SUNNYSIDE 345KV CKT 1	717	789	0.06178	112.7529	ENOWILT - LONE OAK 138KV CKT 1
FDNS	00NR	0	20WP	G15_081	FROM->TO	G14-057T 345.00 - SUNNYSIDE 345KV CKT 1	717	789	0.06211	112.7506	WEATHERFORD SOUTHEAST - WEATHERFORD TAP 138KV CKT 1
FDNS	00NR	0	20WP	G15_081	FROM->TO	G14-057T 345.00 - SUNNYSIDE 345KV CKT 1	717	789	0.06178	112.7442	ENOWILT - SARDIS 138KV CKT 1
FDNS	00NR	0	20WP	G15_081	FROM->TO	G14-057T 345.00 - SUNNYSIDE 345KV CKT 1	717	789	0.06193	112.7431	GEN501912 1-ACADIA UNIT CT1B
FDNS	00NR	0	20WP	G15_081	FROM->TO	G14-057T 345.00 - SUNNYSIDE 345KV CKT 1	717	789	0.06207	112.743	FRANKLIN - FRANKLIN SW 138KV CKT 1
FDNS	00NR	0	20WP	G15_081	FROM->TO	G14-057T 345.00 - SUNNYSIDE 345KV CKT 1	717	789	0.06187	112.7424	P12:138:WFEC-AEPW:ELKCTY-4:ERICK4
FDNS	00NR	0	20WP	G15_081	FROM->TO	G14-057T 345.00 - SUNNYSIDE 345KV CKT 1	717	789	0.06193	112.7423	GEN501911 1-ACADIA UNIT CT1A
FDNS	00NR	0	20WP	G15_081	FROM->TO	G14-057T 345.00 - SUNNYSIDE 345KV CKT 1	717	789	0.06306	112.7421	LASALLE - STONEWAL LH138.00 138KV CKT 1
FDNS	00NR	0	20WP	G15_081	FROM->TO	G14-057T 345.00 - SUNNYSIDE 345KV CKT 1	717	789	0.06196	112.7364	AMITY SS - MURFREESBORO EAST (AECC) 115KV CKT 1
FDNS	00NR	0	20WP	G15_081	FROM->TO	G14-057T 345.00 - SUNNYSIDE 345KV CKT 1	717	789	0.06193	112.7343	P12:138:AEPW:R.S.S.-4:R:96YALE-4
FDNS	00NR	0	16WP	G15_081	FROM->TO	G14-057T 345.00 - SUNNYSIDE 345KV CKT 1	717	789	0.06242	112.7303	GEN600004 2-PRAIRIE ISLAND G2
FDNS	00NR	0	16WP	G15_081	FROM->TO	G14-057T 345.00 - SUNNYSIDE 345KV CKT 1	717	789	0.06242	112.7275	GEN600003 1-PRAIRIE ISLAND G1
FDNS	00NR	0	20WP	G15_081	FROM->TO	G14-057T 345.00 - SUNNYSIDE 345KV CKT 1	717	789	0.06219	112.7268	CORNVILLE - NORTH 29TH CHICKASHA 138KV CKT 1
FDNS	00NR	0	20WP	G15_081	FROM->TO	G14-057T 345.00 - SUNNYSIDE 345KV CKT 1	717	789	0.06306	112.724	STONEWAL LH138.00 - TUPELO TAP 138KV CKT 1
FDNS	00NR	0	20WP	G15_081	FROM->TO	G14-057T 345.00 - SUNNYSIDE 345KV CKT 1	717	789	0.06331	112.7182	NOBLE - PURCELL4 138.00 138KV CKT 1
FDNSLock	00NR	0	16WP	G15_081	FROM->TO	G14-057T 345.00 - SUNNYSIDE 345KV CKT 1	717	789	0.06242	112.715	GEN600006 1-AS KING
FDNS	00NR	0	20WP	G15_081	FROM->TO	G14-057T 345.00 - SUNNYSIDE 345KV CKT 1	717	789	0.06305	112.7058	CIMARRON - NORTHWEST 345KV CKT 1
FDNS	00NR	0	20WP	G15_081	FROM->TO	G14-057T 345.00 - SUNNYSIDE 345KV CKT 1	717	789	0.06211	112.7001	CLINTON JUNCTION - CLINTON NATURAL GAS TAP 138KV CKT 1
FDNS	00NR	0	20WP	G15_081	FROM->TO	G14-057T 345.00 - SUNNYSIDE 345KV CKT 1	717	789	0.06248	112.6983	Canadian Pump Station - REDROCKRD4 138.00 138KV CKT 1
FDNS	00NR	0	20WP	G15_081	FROM->TO	G14-057T 345.00 - SUNNYSIDE 345KV CKT 1	717	789	0.06233	112.6767	CRINER - PAYNE 138.00 138KV CKT 1
FDNS	00NR	0	16WP	G15_081	FROM->TO	G14-057T 345.00 - SUNNYSIDE 345KV CKT 1	717	789	0.06247	112.6686	P12:138:WFEC:MSL09
FDNS	00NR	0	16WP	G15_081	FROM->TO	G14-057T 345.00 - SUNNYSIDE 345KV CKT 1	717	789	0.06236	112.6633	P12:138:AEPW-OGE:CORNVIL4:CIMARON4
FDNS	00NR	0	20WP	G15_081	FROM->TO	G14-057T 345.00 - SUNNYSIDE 345KV CKT 1	717	789	0.06214	112.6419	COMANCHE - WALTERS 69KV CKT 1
FDNSLock	00NR	0	16WP	G15_081	FROM->TO	G14-057T 345.00 - SUNNYSIDE 345KV CKT 1	717	789	0.06242	112.6382	GEN636641 1-LOUISA UNIT 1
FDNS	00NR	0	16WP	G15_081	FROM->TO	G14-057T 345.00 - SUNNYSIDE 345KV CKT 1	717	789	0.06242	112.6	GEN615002 2-COAL CREEK
FDNS	00NR	0	16WP	G15_081	FROM->TO	G14-057T 345.00 - SUNNYSIDE 345KV CKT 1	717	789	0.06242	112.5883	GEN600005 1-MONTICELLO
FDNS	00NR	0	16WP	G15_081	FROM->TO	G14-057T 345.00 - SUNNYSIDE 345KV CKT 1	717	789	0.06029	112.5634	CHISHOLM7 345.00 (CHISHOLM) 345/230/13.2KV TRANSFORMER CKT 1
FDNS	00NR	0	16WP	G15_081	FROM->TO	G14-057T 345.00 - SUNNYSIDE 345KV CKT 1	717	789	0.06242	112.5594	GEN562754 1-G15031_5 0.6900
FDNS	00NR	0	16WP	G15_081	FROM->TO	G14-057T 345.00 - SUNNYSIDE 345KV CKT 1	717	789	0.06242	112.5259	GEN635213 3-NEAL UNIT 3
FDNS	00NR	0	16WP	G15_081	FROM->TO	G14-057T 345.00 - SUNNYSIDE 345KV CKT 1	717	789	0.06242	112.5005	GEN562756 1-G15031_7 0.6900
FDNS	00NR	0	16WP	G15_081	FROM->TO	G14-057T 345.00 - SUNNYSIDE 345KV CKT 1	717	789	0.06242	112.5	GEN629074 1-ARNOLD LOWSIDE OF GSU XFMR
FDNS	00NR	0	16WP	G15_081	FROM->TO	G14-057T 345.00 - SUNNYSIDE 345KV CKT 1	717	789	0.06242	112.4623	GEN562023 1-G11_020_3 0.6900
FDNS	00NR	0	16WP	G15_081	FROM->TO	G14-057T 345.00 - SUNNYSIDE 345KV CKT 1	717	789	0.06242	112.4623	GEN562026 1-G11_019_3 0.6900
FDNS	00NR	0	16WP	G15_081	FROM->TO	G14-057T 345.00 - SUNNYSIDE 345KV CKT 1	717	789	0.06242	112.4584	GEN562556 1-G14_046_3 0.3420
FDNS	00NR	0	16WP	G15_081	FROM->TO	G14-057T 345.00 - SUNNYSIDE 345KV CKT 1	717	789	0.06029	112.4526	CHISHOLM7 345.00 - GRACEMONT 345KV CKT 1
FDNS	00NR	0	16WP	G15_081	FROM->TO	G14-057T 345.00 - SUNNYSIDE 345KV CKT 1	717	789	0.06242	112.451	BIG STONE 230/24.0KV TRANSFORMER CKT 1
FDNS	00NR	0	16WP	G15_081	FROM->TO	G14-057T 345.00 - SUNNYSIDE 345KV CKT 1	717	789	0.06242	112.3702	GEN563142 1-G15079_3 0.5500
FDNS	00NR	0	16WP	G15_081	FROM->TO	G14-057T 345.00 - SUNNYSIDE 345KV CKT 1	717	789	0.06242	112.3702	GEN563151 1-G15080_2 0.5500
FDNS	00NR	0	16WP	G15_081	FROM->TO	G14-057T 345.00 - SUNNYSIDE 345KV CKT 1	717	789	0.06242	112.3332	GEN523971 1-HARRINGTON GEN #1 24 KV
FDNS	00NR	0	16WP	G15_081	FROM->TO	G14-057T 345.00 - SUNNYSIDE 345KV CKT 1	717	789	0.06242	112.3331	GEN523973 1-HARRINGTON GEN #3 24 KV
FDNS	00NR	0	16WP	G15_081	FROM->TO	G14-057T 345.00 - SUNNYSIDE 345KV CKT 1	717	789	0.06242	112.333	GEN523972 1-HARRINGTON GEN #2 24 KV
FDNS	00NR	0	16WP	G15_081	FROM->TO	G14-057T 345.00 - SUNNYSIDE 345KV CKT 1	717	789	0.06252	112.293	NORTHWEST TEXARKANA - VALLIANT 345KV CKT 1
FDNS	00NR	0	16WP	G15_081	FROM->TO	G14-057T 345.00 - SUNNYSIDE 345KV CKT 1	717	789	0.06252	112.293	NORTHWEST TEXARKANA - VALLIANT 345KV CKT 1
FDNS	00NR	0	16WP	G15_081	FROM->TO	G14-057T 345.00 - SUNNYSIDE 345KV CKT 1	717	789	0.0606	112.2788	P12:230:AEPW-SPS:SWEETWT6:WHEELER 6
FDNS	00NR	0	16WP	G15_081	FROM->TO	G14-057T 345.00 - SUNNYSIDE 345KV CKT 1	717	789	0.0606	112.2782	STLN-DEMARC6 - SWEETWATER 230KV CKT 1
FDNS	00NR	0	16WP	G15_081	FROM->TO	G14-057T 345.00 - SUNNYSIDE 345KV CKT 1	717	789	0.0606	112.2771	STATELINE INTERCHANGE - STLN-DEMARC6 230KV CKT 1
FDNSLock	00NR	0	16WP	G15_081	FROM->TO	G14-057T 345.00 - SUNNYSIDE 345KV CKT 1	717	789	0.06242	112.2748	GEN600000 1-SHERBURNECNTY G1
FDNS	00NR	0	16WP	G15_081	FROM->TO	G14-057T 345.00 - SUNNYSIDE 345KV CKT 1	717	789	0.06242	112.2359	GEN511848 1-SOUTHWESTERN STATION #3
FDNS	00NR	0	20WP	G15_081	FROM->TO	G14-057T 345.00 - SUNNYSIDE 345KV CKT 1	717	789	0.06193	112.2265	803-OKLAUNION
FDNS	00NR	0	16WP	G15_081	FROM->TO	G14-057T 345.00 - SUNNYSIDE 345KV CKT 1	717	789	0.06242	112.2003	GEN600001 2-SHERBURNE CNTY G2
FDNS	00NR	0	16WP	G15_081	FROM->TO	G14-057T 345.00 - SUNNYSIDE 345KV CKT 1	717	789	0.06242	112.163	GEN563042 1-G15068_3 0.6900
FDNS	00NR	0	16WP	G15_081	FROM->TO	G14-057T 345.00 - SUNNYSIDE 345KV CKT 1	717	789	0.06242	112.1422	GEN527901 1-HOBBS PLANT #1 (CT)
FDNS	00NR	0	16WP	G15_081	FROM->TO	G14-057T 345.00 - SUNNYSIDE 345KV CKT 1	717	789	0.06242	112.1422	GEN527902 1-HOBBS PLANT #2 (CT)
FDNSLock	00NR	0	16WP	G15_081	FROM->TO	G14-057T 345.00 - SUNNYSIDE 345KV CKT 1	717	789	0.06242	112.0855	GEN629075 1-OTTUMWA GENERATOR FOR OTTUMWA UNIT NO 1
FDNS	00NR	0	20WP	G15_081	FROM->TO	G14-057T 345.00 - SUNNYSIDE 345KV CKT 1	717	789	0.06084	111.9515	P12:138:OKGE:3TERM39
FDNSLock	00NR	0	16WP	G15_081	FROM->TO	G14-057T 345.00 - SUNNYSIDE 345KV CKT 1	717	789	0.06242	111.9266	GEN635214 4-NEAL UNIT 4
FDNS	00NR	0	16WP	G15_081	FROM->TO	G14-057T 345.00 - SUNNYSIDE 345KV CKT 1	717	789	0.06242	111.9233	SHERBURNE CO 345/24.0KV TRANSFORMER CKT 1
FDNS	00NR	0	20WP	G15_081	FROM->TO	G14-057T 345.00 - SUNNYSIDE 345KV CKT 1	717	789	0.06159	111.9074	RANCHRD7 345.00 - SOONER 345KV CKT 1
FDNS	00NR	0	20WP	G15_081	FROM->TO	G14-057T 345.00 - SUNNYSIDE 345KV CKT 1	717	789	0.06158	111.8943	CHILDRESS - LAKE PAULINE 138KV CKT 1
FDNS	00NR	0	20WP	G15_081	FROM->TO	G14-057T 345.00 - SUNNYSIDE 345KV CKT 1	717	789	0.06158	111.8943	CHILDRESS - LAKE PAULINE 138KV CKT 1
FDNS	00NR	0	20WP	G15_081	FROM->TO	G14-057T 345.00 - SUNNYSIDE 345KV CKT 1	717	789	0.06174	111.8901	CHILDRESS - HOLLIS TAP 138KV CKT 1
FDNS	00NR	0	20WP	G15_081	FROM->TO	G14-057T 345.00 - SUNNYSIDE 345KV CKT 1	717	789	0.06193	111.8664	GEN562084 1-G11_050_3 0.6900
FDNS	00NR	0	16WP	G15_081	FROM->TO	G14-057T 345.00 - SUNNYSIDE 345KV CKT 1	717	789	0.06242	111.861	GEN563043 1-G15068_4 0.6900
FDNS	00NR	0	16WP	G15_081	FROM->TO	G14-057T 345.00 - SUNNYSIDE 345KV CKT 1	717	789	0.06242	111.8591	GEN563273 2-G15093_4 0.6900
FDNS	00NR	0	20WP	G15_081	FROM->TO	G14-057T 345.00 - SUNNYSIDE 345KV CKT 1	717	789	0.06121	111.847	MAYSVILLE - PAOLI 138KV CKT 1

SOLUTION	GROUP	SCENARIO	SEASON	SOURCE	DIRECTION	MONITORED ELEMENT	RATEA (MVA)	RATEB(MVA)	TDF	TC%LOADING (% MVA)	CONTINGENCY
FDNS	00NR	0	20WP	G15_081	FROM->TO	G14-057T 345.00 - SUNNYSIDE 345KV CKT 1	717	789	0.06193	111.8386	GEN560187 1-WTH WIND 0.5750
FDNS	00NR	0	16WP	G15_081	FROM->TO	G14-057T 345.00 - SUNNYSIDE 345KV CKT 1	717	789	0.06242	111.8362	GEN526333 1-JONES GEN #3 21 KV
FDNS	00NR	0	16WP	G15_081	FROM->TO	G14-057T 345.00 - SUNNYSIDE 345KV CKT 1	717	789	0.06242	111.8361	GEN526334 1-JONES_4 116.500
FDNS	00NR	0	20WP	G15_081	FROM->TO	G14-057T 345.00 - SUNNYSIDE 345KV CKT 1	717	789	0.06103	111.8224	CIMARRON - MATHWSN7 345.00 345KV CKT 1
FDNS	00NR	0	20WP	G15_081	FROM->TO	G14-057T 345.00 - SUNNYSIDE 345KV CKT 1	717	789	0.06103	111.8224	CIMARRON - MATHWSN7 345.00 345KV CKT 2
FDNS	00NR	0	20WP	G15_081	FROM->TO	G14-057T 345.00 - SUNNYSIDE 345KV CKT 1	717	789	0.06193	111.8182	GEN560112 1-G08_037_3 0.6900
FDNS	00NR	0	16WP	G15_081	FROM->TO	G14-057T 345.00 - SUNNYSIDE 345KV CKT 1	717	789	0.06242	111.8	GEN344225 1-1CAL G1 25.000
FDNS	00NR	0	16WP	G15_081	FROM->TO	G14-057T 345.00 - SUNNYSIDE 345KV CKT 1	717	789	0.05999	111.7926	P12:230:AEPW:ELKCITY6:SWEETWT6
FDNS	00NR	0	16WP	G15_081	FROM->TO	G14-057T 345.00 - SUNNYSIDE 345KV CKT 1	717	789	0.06242	111.7857	GEN525844 1-ELK_1 118.000
FDNS	00NR	0	20WP	G15_081	FROM->TO	G14-057T 345.00 - SUNNYSIDE 345KV CKT 1	717	789	0.06193	111.7821	GEN521103 1-BLUE CANYON WIND FARM
FDNS	00NR	0	20WP	G15_081	FROM->TO	G14-057T 345.00 - SUNNYSIDE 345KV CKT 1	717	789	0.06193	111.7799	GEN520812 1-ANADRK5
FDNS	00NR	0	20WP	G15_081	FROM->TO	G14-057T 345.00 - SUNNYSIDE 345KV CKT 1	717	789	0.06193	111.7798	GEN520813 1-ANADRK6
FDNS	00NR	0	20WP	G15_081	FROM->TO	G14-057T 345.00 - SUNNYSIDE 345KV CKT 1	717	789	0.06227	111.7795	DRAPER LAKE - MIDWEST TAP 138KV CKT 1
FDNS	00NR	0	16WP	G15_081	FROM->TO	G14-057T 345.00 - SUNNYSIDE 345KV CKT 1	717	789	0.06242	111.779	GEN525845 1-ELK_2 1 138.00
FDNS	00NR	0	20WP	G15_081	FROM->TO	G14-057T 345.00 - SUNNYSIDE 345KV CKT 1	717	789	0.06193	111.7781	GEN563052 1-G15069_3 0.6900
FDNS	00NR	0	16WP	G15_081	FROM->TO	G14-057T 345.00 - SUNNYSIDE 345KV CKT 1	717	789	0.06242	111.7743	GEN600002 3-SHERBURNE CNTY G3
FDNS	00NR	0	20WP	G15_081	FROM->TO	G14-057T 345.00 - SUNNYSIDE 345KV CKT 1	717	789	0.06121	111.7716	MAYSVILLE - MAYSVLT4 138.00 138KV CKT 1
FDNS	00NR	0	20WP	G15_081	FROM->TO	G14-057T 345.00 - SUNNYSIDE 345KV CKT 1	717	789	0.06227	111.7619	P12:138:OKGE:3TERM21
FDNS	00NR	0	20WP	G15_081	FROM->TO	G14-057T 345.00 - SUNNYSIDE 345KV CKT 1	717	789	0.06193	111.7611	GEN562691 1-G15_015_3 0.6900
FDNS	00NR	0	20WP	G15_081	FROM->TO	G14-057T 345.00 - SUNNYSIDE 345KV CKT 1	717	789	0.06193	111.7556	GEN562772 1-G15034_3 0.6900
FDNS	00NR	0	20WP	G15_081	FROM->TO	G14-057T 345.00 - SUNNYSIDE 345KV CKT 1	717	789	0.06193	111.7408	GEN511961 1-DEMPSEY-WTG10.7000
FDNS	00NR	0	20WP	G15_081	FROM->TO	G14-057T 345.00 - SUNNYSIDE 345KV CKT 1	717	789	0.06267	111.7297	SOONER - SPRING CREEK 345KV CKT 1
FDNS	00NR	0	20WP	G15_081	FROM->TO	G14-057T 345.00 - SUNNYSIDE 345KV CKT 1	717	789	0.06193	111.7267	P12:069:OKGE:3TERM42
FDNS	00NR	0	20WP	G15_081	FROM->TO	G14-057T 345.00 - SUNNYSIDE 345KV CKT 1	717	789	0.06267	111.7265	NORTHWEST - SPRING CREEK 345KV CKT 1
FDNS	00NR	0	20WP	G15_081	FROM->TO	G14-057T 345.00 - SUNNYSIDE 345KV CKT 1	717	789	0.0613	111.7238	ARBUCKLE - SULPHR 4 138.00 138KV CKT 1
FDNS	00NR	0	20WP	G15_081	FROM->TO	G14-057T 345.00 - SUNNYSIDE 345KV CKT 1	717	789	0.06199	111.7062	GLASSES - MADILL INDUSTRIAL TAP 138KV CKT 1
FDNS	00NR	0	20WP	G15_081	FROM->TO	G14-057T 345.00 - SUNNYSIDE 345KV CKT 1	717	789	0.06121	111.7055	MAYSVLT4 138.00 - PRAIRIE POINT 138KV CKT 1
FDNS	00NR	0	20WP	G15_081	FROM->TO	G14-057T 345.00 - SUNNYSIDE 345KV CKT 1	717	789	0.06195	111.7005	P12:138:WFEC:MSL11
FDNS	00NR	0	20WP	G15_081	FROM->TO	G14-057T 345.00 - SUNNYSIDE 345KV CKT 1	717	789	0.06195	111.7005	P12:138:WFEC-AEPW:PHAROAH4:LONEOAK4
FDNS	00NR	0	20WP	G15_081	FROM->TO	G14-057T 345.00 - SUNNYSIDE 345KV CKT 1	717	789	0.062	111.6941	CANEY CREEK - JOHNSON COUNTY 138KV CKT 1
FDNS	00NR	0	20WP	G15_081	FROM->TO	G14-057T 345.00 - SUNNYSIDE 345KV CKT 1	717	789	0.06193	111.689	GEN515443 1-MNCOWND1 0.7000
FDNS	00NR	0	20WP	G15_081	FROM->TO	G14-057T 345.00 - SUNNYSIDE 345KV CKT 1	717	789	0.06058	111.6853	MOREWOOD SW - NINE MILE 138KV CKT 1
FDNS	00NR	0	20WP	G15_081	FROM->TO	G14-057T 345.00 - SUNNYSIDE 345KV CKT 1	717	789	0.06177	111.6712	ALTUS JUNCTION - RUSSELL 138KV CKT 1
FDNS	00NR	0	20WP	G15_081	FROM->TO	G14-057T 345.00 - SUNNYSIDE 345KV CKT 1	717	789	0.06177	111.6712	ALTUS JUNCTION - RUSSELL 138KV CKT 1
FDNS	00NR	0	20WP	G15_081	FROM->TO	G14-057T 345.00 - SUNNYSIDE 345KV CKT 1	717	789	0.06193	111.6708	GEN560183 1-REDHIL-WTG1 12.000
FDNS	00NR	0	20WP	G15_081	FROM->TO	G14-057T 345.00 - SUNNYSIDE 345KV CKT 1	717	789	0.06193	111.6625	INDEPENDENCE 500/26.0KV TRANSFORMER CKT 1
FDNS	00NR	0	20WP	G15_081	FROM->TO	G14-057T 345.00 - SUNNYSIDE 345KV CKT 1	717	789	0.06199	111.6578	GLASSES - RUSSETT 138KV CKT 1
FDNS	00NR	0	20WP	G15_081	FROM->TO	G14-057T 345.00 - SUNNYSIDE 345KV CKT 1	717	789	0.06193	111.654	GEN600067 9-HIGH BRIDGE
FDNS	00NR	0	20WP	G15_081	FROM->TO	G14-057T 345.00 - SUNNYSIDE 345KV CKT 1	717	789	0.06217	111.6529	OVEXFRMCCOVE
FDNS	00NR	0	20WP	G15_081	FROM->TO	G14-057T 345.00 - SUNNYSIDE 345KV CKT 1	717	789	0.06207	111.6441	P12:138:WFEC:MSL08
FDNS	00NR	0	16WP	G15_081	FROM->TO	G14-057T 345.00 - SUNNYSIDE 345KV CKT 1	717	789	0.06242	111.6433	GEN525562 1-TOLK GEN #2 24 KV
FDNS	00NR	0	20WP	G15_081	FROM->TO	G14-057T 345.00 - SUNNYSIDE 345KV CKT 1	717	789	0.06186	111.6433	CARTER - CHICKASAW 138KV CKT 1
FDNS	00NR	0	16WP	G15_081	FROM->TO	G14-057T 345.00 - SUNNYSIDE 345KV CKT 1	717	789	0.06242	111.6359	GEN563202 1-G15085_3 0.5500
FDNS	00NR	0	20WP	G15_081	FROM->TO	G14-057T 345.00 - SUNNYSIDE 345KV CKT 1	717	789	0.0621	111.6359	CANADIAN RIVER - MCALESTER SOUTH 138KV CKT 1
FDNS	00NR	0	20WP	G15_081	FROM->TO	G14-057T 345.00 - SUNNYSIDE 345KV CKT 1	717	789	0.0621	111.6359	CANADIAN RIVER - MCALESTER SOUTH 138KV CKT 1
FDNS	00NR	0	20WP	G15_081	FROM->TO	G14-057T 345.00 - SUNNYSIDE 345KV CKT 1	717	789	0.06326	111.6344	LEBANON - TEXOMA JCT 138KV CKT 1
FDNS	00NR	0	20WP	G15_081	FROM->TO	G14-057T 345.00 - SUNNYSIDE 345KV CKT 1	717	789	0.0621	111.6341	CANADIAN RIVER () 345/138/13.8KV TRANSFORMER CKT 1
FDNS	00NR	0	20WP	G15_081	FROM->TO	G14-057T 345.00 - SUNNYSIDE 345KV CKT 1	717	789	0.0621	111.6341	CANADIAN RIVER () 345/138/13.8KV TRANSFORMER CKT 1
FDNS	00NR	0	20WP	G15_081	FROM->TO	G14-057T 345.00 - SUNNYSIDE 345KV CKT 1	717	789	0.06193	111.6328	P12:230:UMZB:# 112 #: NU IN SD. NU-RCDC & DRY CREEK XFMR
FDNS	00NR	0	16WP	G15_081	FROM->TO	G14-057T 345.00 - SUNNYSIDE 345KV CKT 1	717	789	0.06258	111.6299	LYDIA - WELSH 345KV CKT 1
FDNS	00NR	0	16WP	G15_081	FROM->TO	G14-057T 345.00 - SUNNYSIDE 345KV CKT 1	717	789	0.06258	111.6299	LYDIA - WELSH 345KV CKT 1
FDNS	00NR	0	20WP	G15_081	FROM->TO	G14-057T 345.00 - SUNNYSIDE 345KV CKT 1	717	789	0.06193	111.627	RCDC EAST 4230.00 - RED CEDAR DC 230KV CKT 1
FDNS	00NR	0	20WP	G15_081	FROM->TO	G14-057T 345.00 - SUNNYSIDE 345KV CKT 1	717	789	0.06168	111.6223	ROCKY POINT - SPRINGDALE 138KV CKT 1
FDNS	00NR	0	20WP	G15_081	FROM->TO	G14-057T 345.00 - SUNNYSIDE 345KV CKT 1	717	789	0.06193	111.6211	GEN562902 1-G15052_3 0.6900
FDNS	00NR	0	20WP	G15_081	FROM->TO	G14-057T 345.00 - SUNNYSIDE 345KV CKT 1	717	789	0.06186	111.621	HUGO (HUGO 1) 345/138/13.8KV TRANSFORMER CKT 1
FDNS	00NR	0	20WP	G15_081	FROM->TO	G14-057T 345.00 - SUNNYSIDE 345KV CKT 1	717	789	0.06193	111.6184	GEN563242 1-G15090_3 0.6900
FDNS	00NR	0	20WP	G15_081	FROM->TO	G14-057T 345.00 - SUNNYSIDE 345KV CKT 1	717	789	0.06121	111.6131	PRAIRIE POINT - RATLIFF 138KV CKT 1
FDNS	00NR	0	20WP	G15_081	FROM->TO	G14-057T 345.00 - SUNNYSIDE 345KV CKT 1	717	789	0.06227	111.6118	CHAMBER SPRINGS - CLARKSVILLE 345KV CKT 1
FDNS	00NR	0	20WP	G15_081	FROM->TO	G14-057T 345.00 - SUNNYSIDE 345KV CKT 1	717	789	0.06204	111.6064	GRPRAR1-LNX3345.00 - GRPRAR 345KV CKT Z
FDNS	00NR	0	20WP	G15_081	FROM->TO	G14-057T 345.00 - SUNNYSIDE 345KV CKT 1	717	789	0.06204	111.606	GRPRAR1-LNX3345.00 - HOLT.CO3 345.00 345KV CKT 1
FDNS	00NR	0	16WP	G15_081	FROM->TO	G14-057T 345.00 - SUNNYSIDE 345KV CKT 1	717	789	0.06242	111.5979	GEN527166 1-MUSTANG_6 118.000
FDNS	00NR	0	20WP	G15_081	FROM->TO	G14-057T 345.00 - SUNNYSIDE 345KV CKT 1	717	789	0.06193	111.5943	GEN629072 4-LANSING GENERATOR FOR UNITS NO4 EIA CODE 1
FDNS	00NR	0	16WP	G15_081	FROM->TO	G14-057T 345.00 - SUNNYSIDE 345KV CKT 1	717	789	0.0606	111.5888	CHISHOLM6 230.00 - SWEETWATER 230KV CKT 1
FDNS	00NR	0	20WP	G15_081	FROM->TO	G14-057T 345.00 - SUNNYSIDE 345KV CKT 1	717	789	0.06193	111.5796	GEN562078 1-G11_051_3 0.6900
FDNS	00NR	0	20WP	G15_081	FROM->TO	G14-057T 345.00 - SUNNYSIDE 345KV CKT 1	717	789	0.06145	111.5767	P12:138:AEPW:112GORE4:SNYDER-4
FDNS	00NR	0	20WP	G15_081	FROM->TO	G14-057T 345.00 - SUNNYSIDE 345KV CKT 1	717	789	0.06193	111.5711	GEN524285 1-WILDORADO WIND GEN
FDNS	00NR	0	20WP	G15_081	FROM->TO	G14-057T 345.00 - SUNNYSIDE 345KV CKT 1	717	789	0.0613	111.5694	JOLLYVILLE - SULPHR 4 138.00 138KV CKT 1
FDNS	00NR	0	20WP	G15_081	FROM->TO	G14-057T 345.00 - SUNNYSIDE 345KV CKT 1	717	789	0.06193	111.5522	GEN562587 1-G14_056_3 0.6900
FDNS	00NR	0	20WP	G15_081	FROM->TO	G14-057T 345.00 - SUNNYSIDE 345KV CKT 1	717	789	0.06193	111.5512	GEN514805 1-SOONER UNIT 1
FDNS	00NR	0	20WP	G15_081	FROM->TO	G14-057T 345.00 - SUNNYSIDE 345KV CKT 1	717	789	0.06058	111.5491	BEARCAT 138.00 - NINE MILE 138KV CKT 1
FDNS	00NR	0	20WP	G15_081	FROM->TO	G14-057T 345.00 - SUNNYSIDE 345KV CKT 1	717	789	0.06193	111.5454	GEN524295 1-SPNSPUR_WND10.6900
FDNS	00NR	0	20WP	G15_081	FROM->TO	G14-057T 345.00 - SUNNYSIDE 345KV CKT 1	717	789	0.06193	111.5399	GEN657749 1-YOUNG 1 GENERATOR
FDNS	00NR	0	16WP	G15_081	FROM->TO	G14-057T 345.00 - SUNNYSIDE 345KV CKT 1	717	789	0.06199	111.5346	JOHNSON COUNTY (JOHNCO) 345/138/13.8KV TRANSFORMER CKT 1
FDNS	00NR	0	16WP	G15_081	FROM->TO	G14-057T 345.00 - SUNNYSIDE 345KV CKT 1	717	789	0.06242	111.5255	GEN635023 3-WALTER SCOTT UNIT 3
FDNS	00NR	0	20WP	G15_081	FROM->TO	G14-057T 345.00 - SUNNYSIDE 345KV CKT 1	717	789	0.06193	111.5198	GEN514806 1-SOONER UNIT 2
FDNS	00NR	0	20WP	G15_081	FROM->TO	G14-057T 345.00 - SUNNYSIDE 345KV CKT 1	717	789	0.06193	111.5196	GEN524023 1-NICHOLS GEN #3 22 KV
FDNS	00NR	0	16WP	G15_081	FROM->TO	G14-057T 345.00 - SUNNYSIDE 345KV CKT 1	717	789	0.06242	111.5165	GEN562590 1-G14_057_3 0.6900
FDNS	00NR	0	20WP	G15_081	FROM->TO	G14-057T 345.00 - SUNNYSIDE 345KV CKT 1	717	789	0.06199	111.5107	CROCKETT - TENASKA RUSK COUNTY 345KV CKT 1
FDNS	00NR	0	20WP	G15_081	FROM->TO	G14-057T 345.00 - SUNNYSIDE 345KV CKT 1	717	789	0.06199	111.5059	LEBROCK - TENASKA RUSK COUNTY 345KV CKT 1

SOLUTION	GROUP	SCENARIO	SEASON	SOURCE	DIRECTION	MONITORED ELEMENT	RATEA (MVA)	RATEB(MVA)	TDF	TC%LOADING (% MVA)	CONTINGENCY
FDNS	00NR	0	20WP	G15_081	FROM->TO	G14-057T 345.00 - SUNNYSIDE 345KV CKT 1	717	789	0.0613	111.4877	JOLLYVILLE - KERR MCGEE CIMARRON 138KV CKT 1
FDNS	00NR	0	20WP	G15_081	FROM->TO	G14-057T 345.00 - SUNNYSIDE 345KV CKT 1	717	789	0.06193	111.4834	GEN562812 1-G15040_3 0.3570
FDNS	00NR	0	20WP	G15_081	FROM->TO	G14-057T 345.00 - SUNNYSIDE 345KV CKT 1	717	789	0.06193	111.4785	GEN562270 1-G12-020-2 0.6900
FDNS	00NR	0	20WP	G15_081	FROM->TO	G14-057T 345.00 - SUNNYSIDE 345KV CKT 1	717	789	0.06193	111.4769	GEN562882 1-G15047_3 0.6900
FDNS	00NR	0	20WP	G15_081	FROM->TO	G14-057T 345.00 - SUNNYSIDE 345KV CKT 1	717	789	0.06193	111.4766	GEN563132 1-G15078_3 0.3570
FDNS	00NR	0	20WP	G15_081	FROM->TO	G14-057T 345.00 - SUNNYSIDE 345KV CKT 1	717	789	0.06193	111.4697	GEN563102 1-G15075_3 0.5500
FDNS	00NR	0	20WP	G15_081	FROM->TO	G14-057T 345.00 - SUNNYSIDE 345KV CKT 1	717	789	0.06193	111.4569	GEN563062 1-G15071_3 0.6900
FDNS	00NR	0	20WP	G15_081	FROM->TO	G14-057T 345.00 - SUNNYSIDE 345KV CKT 1	717	789	0.06058	111.4547	BEARCAT 138.00 - MOORELAND 138KV CKT 1
FDNS	00NR	0	20WP	G15_081	FROM->TO	G14-057T 345.00 - SUNNYSIDE 345KV CKT 1	717	789	0.06058	111.4501	P12:138:WFEC:MSL14
FDNS	00NR	0	20WP	G15_081	FROM->TO	G14-057T 345.00 - SUNNYSIDE 345KV CKT 1	717	789	0.0613	111.4369	ARBWIND4 138.00 - KERR MCGEE CIMARRON 138KV CKT 1
FDNS	00NR	0	20WP	G15_081	FROM->TO	G14-057T 345.00 - SUNNYSIDE 345KV CKT 1	717	789	0.06193	111.4202	GEN562974 1-G15060_5 0.6900
FDNS	00NR	0	20WP	G15_081	FROM->TO	G14-057T 345.00 - SUNNYSIDE 345KV CKT 1	717	789	0.06193	111.4197	GEN521112 1-ORME3 13.800
FDNS	00NR	0	20WP	G15_081	FROM->TO	G14-057T 345.00 - SUNNYSIDE 345KV CKT 1	717	789	0.06187	111.4177	BROWN - RUSSETT 138KV CKT 1
FDNS	00NR	0	16WP	G15_081	FROM->TO	G14-057T 345.00 - SUNNYSIDE 345KV CKT 1	717	789	0.06242	111.4166	GEN562762 1-G15033_3 0.6900
FDNS	00NR	0	20WP	G15_081	FROM->TO	G14-057T 345.00 - SUNNYSIDE 345KV CKT 1	717	789	0.06193	111.4113	GEN345671 2-1RUSH G2 18.000
FDNS	00NR	0	20WP	G15_081	FROM->TO	G14-057T 345.00 - SUNNYSIDE 345KV CKT 1	717	789	0.06193	111.4104	GEN562973 1-G15060_4 0.6900
FDNS	00NR	0	20WP	G15_081	FROM->TO	G14-057T 345.00 - SUNNYSIDE 345KV CKT 1	717	789	0.06193	111.4094	GEN345670 1-1RUSH G1 18.000
FDNS	00NR	0	16WP	G15_081	FROM->TO	G14-057T 345.00 - SUNNYSIDE 345KV CKT 1	717	789	0.06242	111.4055	GEN562655 1-G14_074_3 0.6900
FDNS	00NR	0	20WP	G15_081	FROM->TO	G14-057T 345.00 - SUNNYSIDE 345KV CKT 1	717	789	0.06137	111.3964	CHICKASAW - TOTAL 138KV CKT 1
FDNS	00NR	0	20WP	G15_081	FROM->TO	G14-057T 345.00 - SUNNYSIDE 345KV CKT 1	717	789	0.06193	111.3839	GEN560105 1-G08-22 0.6900
FDNS	00NR	0	20WP	G15_081	FROM->TO	G14-057T 345.00 - SUNNYSIDE 345KV CKT 1	717	789	0.06193	111.3817	4SIOUX 1 138.00 138/18.0KV TRANSFORMER CKT 1
FDNS	00NR	0	20WP	G15_081	FROM->TO	G14-057T 345.00 - SUNNYSIDE 345KV CKT 1	717	789	0.06187	111.372	RUSSETT - RUSSETT 138KV CKT 1
FDNS	00NR	0	20WP	G15_081	FROM->TO	G14-057T 345.00 - SUNNYSIDE 345KV CKT 1	717	789	0.06193	111.3666	GEN562550 1-G14_040_3 0.6900
FDNS	00NR	0	20WP	G15_081	FROM->TO	G14-057T 345.00 - SUNNYSIDE 345KV CKT 1	717	789	0.06193	111.3633	GEN681522 3-GENOA 3
FDNS	00NR	0	16WP	G15_081	FROM->TO	G14-057T 345.00 - SUNNYSIDE 345KV CKT 1	717	789	0.06242	111.3403	GEN562685 1-G15_013_3 0.3550
FDNS	00NR	0	20WP	G15_081	FROM->TO	G14-057T 345.00 - SUNNYSIDE 345KV CKT 1	717	789	0.06193	111.3293	GEN511853 1-COMANCHE #3
FDNS	00NR	0	20WP	G15_081	FROM->TO	G14-057T 345.00 - SUNNYSIDE 345KV CKT 1	717	789	0.06193	111.3226	GEN527161 1-MUSTANG GEN #1
FDNS	00NR	0	20WP	G15_081	FROM->TO	G14-057T 345.00 - SUNNYSIDE 345KV CKT 1	717	789	0.06193	111.3226	GEN527162 1-MUSTANG GEN #2
FDNS	00NR	0	20WP	G15_081	FROM->TO	G14-057T 345.00 - SUNNYSIDE 345KV CKT 1	717	789	0.06159	111.3211	ROCKY POINT - SUNNYSIDE 138KV CKT 1
FDNS	00NR	0	20WP	G15_081	FROM->TO	G14-057T 345.00 - SUNNYSIDE 345KV CKT 1	717	789	0.06193	111.3161	EASTDC - ERCOT EQUIVALENCE 345KV CKT 1
FDNS	00NR	0	20WP	G15_081	FROM->TO	G14-057T 345.00 - SUNNYSIDE 345KV CKT 1	717	789	0.06193	111.3113	GEN511962 2-RKYRDGW2-1 0.7000
FDNS	00NR	0	20WP	G15_081	FROM->TO	G14-057T 345.00 - SUNNYSIDE 345KV CKT 1	717	789	0.06193	111.2988	GEN672321 1-SHAND GENERATOR 1
FDNS	00NR	0	20WP	G15_081	FROM->TO	G14-057T 345.00 - SUNNYSIDE 345KV CKT 1	717	789	0.06183	111.2978	RUSSETT - SPRINGDALE 138KV CKT 1
FDNS	00NR	0	20WP	G15_081	FROM->TO	G14-057T 345.00 - SUNNYSIDE 345KV CKT 1	717	789	0.06193	111.2896	GEN525494 1-PLANT X GEN #4 20 KV
FDNS	00NR	0	20WP	G15_081	FROM->TO	G14-057T 345.00 - SUNNYSIDE 345KV CKT 1	717	789	0.06277	111.2832	G15063_T 345.00 - MATHWSN7 345.00 345KV CKT 1
FDNS	00NR	0	20WP	G15_081	FROM->TO	G14-057T 345.00 - SUNNYSIDE 345KV CKT 1	717	789	0.06193	111.2755	GEN672310 1-POPLAR RIVER GENERATOR 1
FDNS	00NR	0	20WP	G15_081	FROM->TO	G14-057T 345.00 - SUNNYSIDE 345KV CKT 1	717	789	0.06193	111.2755	GEN672311 2-POPLAR RIVER GENERATOR 2
FDNS	00NR	0	20WP	G15_081	FROM->TO	G14-057T 345.00 - SUNNYSIDE 345KV CKT 1	717	789	0.06193	111.2739	GEN527882 1-CUNNINGHAM GEN #2 20 KV
FDNS	00NR	0	20WP	G15_081	FROM->TO	G14-057T 345.00 - SUNNYSIDE 345KV CKT 1	717	789	0.06193	111.266	GEN672306 6-BOUNDARY DAM GENERATOR 6
FDNS	00NR	0	20WP	G15_081	FROM->TO	G14-057T 345.00 - SUNNYSIDE 345KV CKT 1	717	789	0.06193	111.2655	GEN563192 1-G15084_3 0.5500
FDNS	00NR	0	20WP	G15_081	FROM->TO	G14-057T 345.00 - SUNNYSIDE 345KV CKT 1	717	789	0.06193	111.2616	GEN562512 1-G14_020_3 0.6900
FDNS	00NR	0	20WP	G15_081	FROM->TO	G14-057T 345.00 - SUNNYSIDE 345KV CKT 1	717	789	0.06193	111.2595	GEN511852 1-COMANCHE #2
FDNS	00NR	0	20WP	G15_081	FROM->TO	G14-057T 345.00 - SUNNYSIDE 345KV CKT 1	717	789	0.06193	111.2591	GEN344895 2-1LAB G2 20.000
FDNS	00NR	0	20WP	G15_081	FROM->TO	G14-057T 345.00 - SUNNYSIDE 345KV CKT 1	717	789	0.06193	111.258	GEN527163 1-MUSTANG GEN #3 22 KV
FDNS	00NR	0	20WP	G15_081	FROM->TO	G14-057T 345.00 - SUNNYSIDE 345KV CKT 1	717	789	0.06191	111.2526	P12:138:WFEC-AEPW:GOLDENSW4:CRAIGJT4
FDNS	00NR	0	20WP	G15_081	FROM->TO	G14-057T 345.00 - SUNNYSIDE 345KV CKT 1	717	789	0.06193	111.2434	GEN562892 1-G15048_3 0.6900
FDNS	00NR	0	20WP	G15_081	FROM->TO	G14-057T 345.00 - SUNNYSIDE 345KV CKT 1	717	789	0.06193	111.2366	GEN681542 6-JP MADGETT
FDNS	00NR	0	20WP	G15_081	FROM->TO	G14-057T 345.00 - SUNNYSIDE 345KV CKT 1	717	789	0.06098	111.235	ARKANSAS NUCLEAR ONE - FT SMITH 500KV CKT 1
FDNS	00NR	0	20WP	G15_081	FROM->TO	G14-057T 345.00 - SUNNYSIDE 345KV CKT 1	717	789	0.06098	111.235	ARKANSAS NUCLEAR ONE - FT SMITH 500KV CKT 1
FDNS	00NR	0	20WP	G15_081	FROM->TO	G14-057T 345.00 - SUNNYSIDE 345KV CKT 1	717	789	0.06193	111.2295	GEN344896 3-1LAB G3 20.000
FDNS	00NR	0	20WP	G15_081	FROM->TO	G14-057T 345.00 - SUNNYSIDE 345KV CKT 1	717	789	0.06193	111.2284	GEN344897 4-1LAB G4 20.000
FDNS	00NR	0	20WP	G15_081	FROM->TO	G14-057T 345.00 - SUNNYSIDE 345KV CKT 1	717	789	0.06193	111.2281	GEN344894 1-1LAB G1 20.000
FDNS	00NR	0	20WP	G15_081	FROM->TO	G14-057T 345.00 - SUNNYSIDE 345KV CKT 1	717	789	0.06198	111.2223	P12:138:WFEC:MSL16
FDNS	00NR	0	20WP	G15_081	FROM->TO	G14-057T 345.00 - SUNNYSIDE 345KV CKT 1	717	789	0.06116	111.2221	ARDMORE WEST - CARTER 138KV CKT 1
FDNS	00NR	0	16WP	G15_081	FROM->TO	G14-057T 345.00 - SUNNYSIDE 345KV CKT 1	717	789	0.06242	111.2074	GEN525561 1-TOLK GEN #1 24 KV
FDNS	00NR	0	16WP	G15_081	FROM->TO	G14-057T 345.00 - SUNNYSIDE 345KV CKT 1	717	789	0.06242	111.2074	GEN527903 1-HOBBS PLANT #3 (ST)
FDNS	00NR	0	16WP	G15_081	FROM->TO	G14-057T 345.00 - SUNNYSIDE 345KV CKT 1	717	789	0.06242	111.2054	GEN563272 1-G15093_3 0.6900
FDNS	00NR	0	20WP	G15_081	FROM->TO	G14-057T 345.00 - SUNNYSIDE 345KV CKT 1	717	789	0.06193	111.2032	GEN523461 1-BLACKHAWK GEN #1
FDNS	00NR	0	20WP	G15_081	FROM->TO	G14-057T 345.00 - SUNNYSIDE 345KV CKT 1	717	789	0.06193	111.2031	GEN523462 1-BLACKHAWK GEN #2
FDNS	00NR	0	20WP	G15_081	FROM->TO	G14-057T 345.00 - SUNNYSIDE 345KV CKT 1	717	789	0.06145	111.1791	CACHE - SNYDER 138KV CKT 1
FDNS	00NR	0	20WP	G15_081	FROM->TO	G14-057T 345.00 - SUNNYSIDE 345KV CKT 1	717	789	0.06185	111.1605	P12:138:WFEC:MSL07
FDNS	00NR	0	20WP	G15_081	FROM->TO	G14-057T 345.00 - SUNNYSIDE 345KV CKT 1	717	789	0.06185	111.1605	P12:138:WFEC-AEPW:HUGOPP4:ATOKA--4
FDNS	00NR	0	20WP	G15_081	FROM->TO	G14-057T 345.00 - SUNNYSIDE 345KV CKT 1	717	789	0.0619	111.1553	P12:138:AEPW-SWPA:LONEOAK4:TUPELO4
FDNS	00NR	0	20WP	G15_081	FROM->TO	G14-057T 345.00 - SUNNYSIDE 345KV CKT 1	717	789	0.0619	111.1553	P12:138:WFEC:MSL06
FDNS	00NR	0	20WP	G15_081	FROM->TO	G14-057T 345.00 - SUNNYSIDE 345KV CKT 1	717	789	0.06193	111.1514	GEN521111 1-ORME2 13.800
FDNS	00NR	0	20WP	G15_081	FROM->TO	G14-057T 345.00 - SUNNYSIDE 345KV CKT 1	717	789	0.06193	111.1465	GEN562699 1-G15_018_3 0.6900
FDNS	00NR	0	20WP	G15_081	FROM->TO	G14-057T 345.00 - SUNNYSIDE 345KV CKT 1	717	789	0.06122	111.1385	SUNNYSIDE (SUNNYSD5) 345/138/13.8KV TRANSFORMER CKT 1
FDNS	00NR	0	20WP	G15_081	FROM->TO	G14-057T 345.00 - SUNNYSIDE 345KV CKT 1	717	789	0.06193	111.1382	GEN521110 1-ORME1 13.800
FDNS	00NR	0	20WP	G15_081	FROM->TO	G14-057T 345.00 - SUNNYSIDE 345KV CKT 1	717	789	0.06432	111.1308	CLARKSVILLE - MUSKOGEE 345KV CKT 1
FDNS	00NR	0	20WP	G15_081	FROM->TO	G14-057T 345.00 - SUNNYSIDE 345KV CKT 1	717	789	0.06432	111.1308	CLARKSVILLE - MUSKOGEE 345KV CKT 1
FDNS	00NR	0	20WP	G15_081	FROM->TO	G14-057T 345.00 - SUNNYSIDE 345KV CKT 1	717	789	0.06175	111.1294	G15085_T 138.00 - RUSSELL 138KV CKT 1
FDNS	00NR	0	20WP	G15_081	FROM->TO	G14-057T 345.00 - SUNNYSIDE 345KV CKT 1	717	789	0.06116	111.1097	ARDMORE WEST - UNIROYAL 138KV CKT 1
FDNS	00NR	0	16WP	G15_081	FROM->TO	G14-057T 345.00 - SUNNYSIDE 345KV CKT 1	717	789	0.06242	111.1021	GEN635024 4-WALTER SCOTT UNIT 4
FDNS	00NR	0	20WP	G15_081	FROM->TO	G14-057T 345.00 - SUNNYSIDE 345KV CKT 1	717	789	0.06193	111.0967	GEN520811 1-ANADRK4
FDNS	00NR	0	20WP	G15_081	FROM->TO	G14-057T 345.00 - SUNNYSIDE 345KV CKT 1	717	789	0.06193	111.0961	GEN563162 1-G15081_3 0.6900
FDNS	00NR	0	20WP	G15_081	FROM->TO	G14-057T 345.00 - SUNNYSIDE 345KV CKT 1	717	789	0.06193	111.0703	GEN661015 1-COYOTE
FDNS	00NR	0	20WP	G15_081	FROM->TO	G14-057T 345.00 - SUNNYSIDE 345KV CKT 1	717	789	0.06193	111.0659	GEN563292 1-G15095_3 0.6900
FDNS	00NR	0	20WP	G15_081	FROM->TO	G14-057T 345.00 - SUNNYSIDE 345KV CKT 1	717	789	0.06167	111.0612	P12:138:OKGE:3TERM40
FDNS	00NR	0	20WP	G15_081	FROM->TO	G14-057T 345.00 - SUNNYSIDE 345KV CKT 1	717	789	0.06145	111.0535	CARTRCO4 138.00 - RATLIFF 138KV CKT 1

SOLUTION	GROUP	SCENARIO	SEASON	SOURCE	DIRECTION	MONITORED ELEMENT	RATEA (MVA)	RATEB(MVA)	TDF	TC%LOADING (% MVA)	CONTINGENCY
FDNS	00NR	0	20WP	G15_081	FROM->TO	G14-057T 345.00 - SUNNYSIDE 345KV CKT 1	717	789	0.06193	111.0431	GEN563122 1-G15077_3 0.3850
FDNS	00NR	0	20WP	G15_081	FROM->TO	G14-057T 345.00 - SUNNYSIDE 345KV CKT 1	717	789	0.06193	111.0154	GEN562861 1-G15045_2 0.4800
FDNS	00NR	0	20WP	G15_081	FROM->TO	G14-057T 345.00 - SUNNYSIDE 345KV CKT 1	717	789	0.06193	110.9573	GEN657748 1-YOUNG 2 GENERATOR
FDNS	00NR	0	20WP	G15_081	FROM->TO	G14-057T 345.00 - SUNNYSIDE 345KV CKT 1	717	789	0.06193	110.9312	GEN527883 1-CUNNINGHAM GEN #3 22 KV
FDNS	00NR	0	20WP	G15_081	FROM->TO	G14-057T 345.00 - SUNNYSIDE 345KV CKT 1	717	789	0.06193	110.9282	GEN527884 1-CUNNINGHAM GEN #4 22 KV
FDNS	00NR	0	20WP	G15_081	FROM->TO	G14-057T 345.00 - SUNNYSIDE 345KV CKT 1	717	789	0.06225	110.9202	P12:138:WFEC:MSL15
FDNS	00NR	0	20WP	G15_081	FROM->TO	G14-057T 345.00 - SUNNYSIDE 345KV CKT 1	717	789	0.06193	110.8807	GEN562992 1-G15063_3 0.6900
FDNS	00NR	0	20WP	G15_081	FROM->TO	G14-057T 345.00 - SUNNYSIDE 345KV CKT 1	717	789	0.06116	110.8733	SUNNYSIDE - UNIROYAL 138KV CKT 1
FDNS	00NR	0	20WP	G15_081	FROM->TO	G14-057T 345.00 - SUNNYSIDE 345KV CKT 1	717	789	0.06174	110.8647	P12:138:AEPW:SHAM4WT:CHILD4WT
FDNS	00NR	0	20WP	G15_081	FROM->TO	G14-057T 345.00 - SUNNYSIDE 345KV CKT 1	717	789	0.06193	110.8625	GEN562704 1-G15_020_3 0.3550
FDNS	00NR	0	20WP	G15_081	FROM->TO	G14-057T 345.00 - SUNNYSIDE 345KV CKT 1	717	789	0.06193	110.8623	GEN526331 1-JONES GEN #1 22 KV
FDNS	00NR	0	20WP	G15_081	FROM->TO	G14-057T 345.00 - SUNNYSIDE 345KV CKT 1	717	789	0.06193	110.8621	GEN526332 1-JONES GEN #2 21 KV
FDNS	00NR	0	20WP	G15_081	FROM->TO	G14-057T 345.00 - SUNNYSIDE 345KV CKT 1	717	789	0.06193	110.8621	GEN620315 1-BIG STONE GEN
FDNS	00NR	0	20WP	G15_081	FROM->TO	G14-057T 345.00 - SUNNYSIDE 345KV CKT 1	717	789	0.06193	110.8294	GEN562952 1-G15057_3 0.6500
FDNS	00NR	0	20WP	G15_081	FROM->TO	G14-057T 345.00 - SUNNYSIDE 345KV CKT 1	717	789	0.06193	110.7897	GEN511851 1-COMANCHE #1
FDNS	00NR	0	20WP	G15_081	FROM->TO	G14-057T 345.00 - SUNNYSIDE 345KV CKT 1	717	789	0.06193	110.7889	GEN600004 2-PRAIRIE ISLAND G2
FDNS	00NR	0	17SP	G15_081	FROM->TO	G14-057T 345.00 - SUNNYSIDE 345KV CKT 1	717	789	0.06231	110.7884	CIMARRON - MINCO 345KV CKT 1
FDNS	00NR	0	20WP	G15_081	FROM->TO	G14-057T 345.00 - SUNNYSIDE 345KV CKT 1	717	789	0.06193	110.7863	GEN600003 1-PRAIRIE ISLAND G1
FDNS	00NR	0	20WP	G15_081	FROM->TO	G14-057T 345.00 - SUNNYSIDE 345KV CKT 1	717	789	0.06193	110.7686	GEN600006 1-AS KING
FDNS	00NR	0	20WP	G15_081	FROM->TO	G14-057T 345.00 - SUNNYSIDE 345KV CKT 1	717	789	0.06193	110.7635	GEN563173 1-G15082_3 0.6900
FDNS	00NR	0	20WP	G15_081	FROM->TO	G14-057T 345.00 - SUNNYSIDE 345KV CKT 1	717	789	0.06193	110.7507	GEN562710 1-G15_022_3 0.5500
FDNS	00NR	0	20WP	G15_081	FROM->TO	G14-057T 345.00 - SUNNYSIDE 345KV CKT 1	717	789	0.06326	110.7451	CANEY CREEK - TEXOMA JCT 138KV CKT 1
FDNS	00NR	0	20WP	G15_081	FROM->TO	G14-057T 345.00 - SUNNYSIDE 345KV CKT 1	717	789	0.06093	110.7436	GRAPEVINE INTERCHANGE - STATELINE INTERCHANGE 230KV CKT 1
FDNS	00NR	0	20WP	G15_081	FROM->TO	G14-057T 345.00 - SUNNYSIDE 345KV CKT 1	717	789	0.06093	110.7436	GRAPEVINE INTERCHANGE - STATELINE INTERCHANGE 230KV CKT 1
FDNS	00NR	0	20WP	G15_081	FROM->TO	G14-057T 345.00 - SUNNYSIDE 345KV CKT 1	717	789	0.06193	110.7218	GEN532751 1-WOLF CREEK GENERATING STATION UNIT 1
FDNS	00NR	0	20WP	G15_081	FROM->TO	G14-057T 345.00 - SUNNYSIDE 345KV CKT 1	717	789	0.06188	110.6708	P12:138:AEPW-OGE:CORNVIL4:CIMARON4
FDNS	00NR	0	20WP	G15_081	FROM->TO	G14-057T 345.00 - SUNNYSIDE 345KV CKT 1	717	789	0.06094	110.6105	GRAPEVINE INTERCHANGE - NICHOLS STATION 230KV CKT 1
FDNS	00NR	0	20WP	G15_081	FROM->TO	G14-057T 345.00 - SUNNYSIDE 345KV CKT 1	717	789	0.06094	110.6105	GRAPEVINE INTERCHANGE - NICHOLS STATION 230KV CKT 1
FDNS	00NR	0	20WP	G15_081	FROM->TO	G14-057T 345.00 - SUNNYSIDE 345KV CKT 1	717	789	0.06193	110.6	GEN615002 2-COAL CREEK
FDNS	00NR	0	20WP	G15_081	FROM->TO	G14-057T 345.00 - SUNNYSIDE 345KV CKT 1	717	789	0.06193	110.5967	GEN635213 3-NEAL UNIT 3
FDNS	00NR	0	20WP	G15_081	FROM->TO	G14-057T 345.00 - SUNNYSIDE 345KV CKT 1	717	789	0.06193	110.5961	GEN629074 1-ARNOLD LOWSIDE OF GSU XFMR
FDNS	00NR	0	20WP	G15_081	FROM->TO	G14-057T 345.00 - SUNNYSIDE 345KV CKT 1	717	789	0.06204	110.531	NORTHWEST TEXARKANA - VALLIANT 345KV CKT 1
FDNS	00NR	0	20WP	G15_081	FROM->TO	G14-057T 345.00 - SUNNYSIDE 345KV CKT 1	717	789	0.06204	110.531	NORTHWEST TEXARKANA - VALLIANT 345KV CKT 1
FDNS	00NR	0	20WP	G15_081	FROM->TO	G14-057T 345.00 - SUNNYSIDE 345KV CKT 1	717	789	0.06198	110.5277	P12:138:WFEC:MSL09
FDNS	00NR	0	16WP	G15_081	FROM->TO	G14-057T 345.00 - SUNNYSIDE 345KV CKT 1	717	789	0.06263	110.5148	LYDIA - VALLIANT 345KV CKT 1
FDNS	00NR	0	16WP	G15_081	FROM->TO	G14-057T 345.00 - SUNNYSIDE 345KV CKT 1	717	789	0.06263	110.5148	LYDIA - VALLIANT 345KV CKT 1
FDNS	00NR	0	20WP	G15_081	FROM->TO	G14-057T 345.00 - SUNNYSIDE 345KV CKT 1	717	789	0.06193	110.5037	GEN636641 1-LOUISA UNIT 1
FDNS	00NR	0	20WP	G15_081	FROM->TO	G14-057T 345.00 - SUNNYSIDE 345KV CKT 1	717	789	0.06193	110.5028	GEN562754 1-G15031_5 0.6900
FDNS	00NR	0	20WP	G15_081	FROM->TO	G14-057T 345.00 - SUNNYSIDE 345KV CKT 1	717	789	0.06193	110.469	GEN600005 1-MONTICELLO
FDNS	00NR	0	20WP	G15_081	FROM->TO	G14-057T 345.00 - SUNNYSIDE 345KV CKT 1	717	789	0.05985	110.4636	CHISHOLM7 345.00 () 345/230/13.2KV TRANSFORMER CKT 1
FDNS	00NR	0	20WP	G15_081	FROM->TO	G14-057T 345.00 - SUNNYSIDE 345KV CKT 1	717	789	0.06193	110.445	GEN562556 1-G14_046_3 0.3420
FDNS	00NR	0	20WP	G15_081	FROM->TO	G14-057T 345.00 - SUNNYSIDE 345KV CKT 1	717	789	0.06193	110.444	GEN562756 1-G15031_7 0.6900
FDNS	00NR	0	20WP	G15_081	FROM->TO	G14-057T 345.00 - SUNNYSIDE 345KV CKT 1	717	789	0.05985	110.3828	CHISHOLM7 345.00 - GRACEMONT 345KV CKT 1
FDNS	00NR	0	20WP	G15_081	FROM->TO	G14-057T 345.00 - SUNNYSIDE 345KV CKT 1	717	789	0.06193	110.3618	GEN563142 1-G15079_3 0.5500
FDNS	00NR	0	20WP	G15_081	FROM->TO	G14-057T 345.00 - SUNNYSIDE 345KV CKT 1	717	789	0.06193	110.3618	GEN563151 1-G15080_2 0.5500
FDNS	00NR	0	20WP	G15_081	FROM->TO	G14-057T 345.00 - SUNNYSIDE 345KV CKT 1	717	789	0.06193	110.3553	GEN562023 1-G11_020_3 0.6900
FDNS	00NR	0	20WP	G15_081	FROM->TO	G14-057T 345.00 - SUNNYSIDE 345KV CKT 1	717	789	0.06193	110.3553	GEN562026 1-G11_019_3 0.6900
FDNS	00NR	0	20WP	G15_081	FROM->TO	G14-057T 345.00 - SUNNYSIDE 345KV CKT 1	717	789	0.06193	110.3434	GEN600000 1-SHERBURNECNTY G1
FDNS	00NR	0	20WP	G15_081	FROM->TO	G14-057T 345.00 - SUNNYSIDE 345KV CKT 1	717	789	0.06193	110.3082	GEN629075 1-OTTUMWA GENERATOR FOR OTTUMWA UNIT NO 1
FDNS	00NR	0	20WP	G15_081	FROM->TO	G14-057T 345.00 - SUNNYSIDE 345KV CKT 1	717	789	0.06193	110.2904	GEN600001 2-SHERBURNE CNTY G2
FDNS	00NR	0	20WP	G15_081	FROM->TO	G14-057T 345.00 - SUNNYSIDE 345KV CKT 1	717	789	0.06193	110.2626	GEN523971 1-HARRINGTON GEN #1 24 KV
FDNS	00NR	0	20WP	G15_081	FROM->TO	G14-057T 345.00 - SUNNYSIDE 345KV CKT 1	717	789	0.06193	110.2626	GEN523972 1-HARRINGTON GEN #2 24 KV
FDNS	00NR	0	20WP	G15_081	FROM->TO	G14-057T 345.00 - SUNNYSIDE 345KV CKT 1	717	789	0.06193	110.2626	GEN523973 1-HARRINGTON GEN #3 24 KV
FDNS	00NR	0	20WP	G15_081	FROM->TO	G14-057T 345.00 - SUNNYSIDE 345KV CKT 1	717	789	0.06193	110.2331	GEN511848 1-SOUTHWESTERN STATION #3
FDNS	00NR	0	20WP	G15_081	FROM->TO	G14-057T 345.00 - SUNNYSIDE 345KV CKT 1	717	789	0.06211	110.1764	LYDIA - WELSH 345KV CKT 1
FDNS	00NR	0	20WP	G15_081	FROM->TO	G14-057T 345.00 - SUNNYSIDE 345KV CKT 1	717	789	0.06211	110.1764	LYDIA - WELSH 345KV CKT 1
FDNS	00NR	0	20WP	G15_081	FROM->TO	G14-057T 345.00 - SUNNYSIDE 345KV CKT 1	717	789	0.06193	110.163	GEN527901 1-HOBBS PLANT #1 (CT)
FDNS	00NR	0	20WP	G15_081	FROM->TO	G14-057T 345.00 - SUNNYSIDE 345KV CKT 1	717	789	0.06193	110.163	GEN527902 1-HOBBS PLANT #2 (CT)
FDNS	00NR	0	20WP	G15_081	FROM->TO	G14-057T 345.00 - SUNNYSIDE 345KV CKT 1	717	789	0.06193	110.1255	GEN563042 1-G15068_3 0.6900
FDNS	00NR	0	20WP	G15_081	FROM->TO	G14-057T 345.00 - SUNNYSIDE 345KV CKT 1	717	789	0.06193	110.028	GEN635214 4-NEAL UNIT 4
FDNS	00NR	0	20WP	G15_081	FROM->TO	G14-057T 345.00 - SUNNYSIDE 345KV CKT 1	717	789	0.06016	109.9254	STATELINE INTERCHANGE - STLN-DEMARC6 230KV CKT 1
FDNS	00NR	0	20WP	G15_081	FROM->TO	G14-057T 345.00 - SUNNYSIDE 345KV CKT 1	717	789	0.06016	109.9227	STLN-DEMARC6 - SWEETWATER 230KV CKT 1
FDNS	00NR	0	20WP	G15_081	FROM->TO	G14-057T 345.00 - SUNNYSIDE 345KV CKT 1	717	789	0.06016	109.9175	P12:230:AEPW-SPS:SWEETWT6:WHEELER 6
FDNS	00NR	0	20WP	G15_081	FROM->TO	G14-057T 345.00 - SUNNYSIDE 345KV CKT 1	717	789	0.06193	109.8577	GEN600002 3-SHERBURNE CNTY G3
FDNS	00NR	0	20WP	G15_081	FROM->TO	G14-057T 345.00 - SUNNYSIDE 345KV CKT 1	717	789	0.06193	109.827	GEN563043 1-G15068_4 0.6900
FDNS	00NR	0	20WP	G15_081	FROM->TO	G14-057T 345.00 - SUNNYSIDE 345KV CKT 1	717	789	0.06193	109.8013	GEN526333 1-JONES GEN #3 21 KV
FDNS	00NR	0	20WP	G15_081	FROM->TO	G14-057T 345.00 - SUNNYSIDE 345KV CKT 1	717	789	0.06193	109.8012	GEN526334 1-JONES_4 116.500
FDNS	00NR	0	20WP	G15_081	FROM->TO	G14-057T 345.00 - SUNNYSIDE 345KV CKT 1	717	789	0.06193	109.7846	GEN563273 2-G15093_4 0.6900
FDNS	00NR	0	20WP	G15_081	FROM->TO	G14-057T 345.00 - SUNNYSIDE 345KV CKT 1	717	789	0.06193	109.7685	GEN344225 1-1CAL G1 25.000
FDNS	00NR	0	20WP	G15_081	FROM->TO	G14-057T 345.00 - SUNNYSIDE 345KV CKT 1	717	789	0.06193	109.7635	GEN525844 1-ELK_1 118.000
FDNS	00NR	0	20WP	G15_081	FROM->TO	G14-057T 345.00 - SUNNYSIDE 345KV CKT 1	717	789	0.06193	109.7458	GEN525845 1-ELK_2 1 18.000
FDNS	00NR	0	20WP	G15_081	FROM->TO	G14-057T 345.00 - SUNNYSIDE 345KV CKT 1	717	789	0.06193	109.6155	GEN527166 1-MUSTANG_6 118.000
FDNS	00NR	0	20WP	G15_081	FROM->TO	G14-057T 345.00 - SUNNYSIDE 345KV CKT 1	717	789	0.06193	109.5706	GEN635023 3-WALTER SCOTT UNIT 3
FDNS	00NR	0	20WP	G15_081	FROM->TO	G14-057T 345.00 - SUNNYSIDE 345KV CKT 1	717	789	0.06193	109.5526	GEN563202 1-G15085_3 0.5500
FDNS	00NR	0	20WP	G15_081	FROM->TO	G14-057T 345.00 - SUNNYSIDE 345KV CKT 1	717	789	0.06193	109.5515	GEN528501 1-G14_012 24.000
FDNS	00NR	0	20WP	G15_081	FROM->TO	G14-057T 345.00 - SUNNYSIDE 345KV CKT 1	717	789	0.05956	109.4942	P12:230:AEPW:ELKCITY6:SWEETWT6
FDNS	00NR	0	20WP	G15_081	FROM->TO	G14-057T 345.00 - SUNNYSIDE 345KV CKT 1	717	789	0.06193	109.4928	GEN562590 1-G14_057_3 0.6900
FDNS	00NR	0	16WP	G15_081	FROM->TO	G14-057T 345.00 - SUNNYSIDE 345KV CKT 1	717	789	0.06242	109.4478	EASTDC - ERCOT EQUIVALENCE 345KV CKT 1
FDNS	00NR	0	20WP	G15_081	FROM->TO	G14-057T 345.00 - SUNNYSIDE 345KV CKT 1	717	789	0.06193	109.3772	GEN562762 1-G15033_3 0.6900

SOLUTION	GROUP	SCENARIO	SEASON	SOURCE	DIRECTION	MONITORED ELEMENT	RATEA (MVA)	RATEB(MVA)	TDF	TC%LOADING (% MVA)	CONTINGENCY
FDNS	00NR	0	20WP	G15_081	FROM->TO	G14-057T 345.00 - SUNNYSIDE 345KV CKT 1	717	789	0.06193	109.3658	GEN562655 1-G14_074_3 0.6900
FDNS	00NR	0	20WP	G15_081	FROM->TO	G14-057T 345.00 - SUNNYSIDE 345KV CKT 1	717	789	0.06193	109.3638	GEN525562 1-TOLK GEN #2 24 KV
FDNS	00NR	0	20WP	G15_081	FROM->TO	G14-057T 345.00 - SUNNYSIDE 345KV CKT 1	717	789	0.0615	109.2753	JOHNSON COUNTY (JOHNCO) 345/138/13.8KV TRANSFORMER CKT 1
FDNS	00NR	0	20WP	G15_081	FROM->TO	G14-057T 345.00 - SUNNYSIDE 345KV CKT 1	717	789	0.06193	109.27	GEN562685 1-G15_013_3 0.3550
FDNS	00NR	0	20WP	G15_081	FROM->TO	G14-057T 345.00 - SUNNYSIDE 345KV CKT 1	717	789	0.06193	109.2675	GEN527903 1-HOBBS PLANT #3 (ST)
FDNS	00NR	0	20WP	G15_081	FROM->TO	G14-057T 345.00 - SUNNYSIDE 345KV CKT 1	717	789	0.06016	109.2452	CHISHOLM6 230.00 - SWEETWATER 230KV CKT 1
FDNS	00NR	0	20WP	G15_081	FROM->TO	G14-057T 345.00 - SUNNYSIDE 345KV CKT 1	717	789	0.06193	109.1665	GEN635024 4-WALTER SCOTT UNIT 4
FDNS	00NR	0	20WP	G15_081	FROM->TO	G14-057T 345.00 - SUNNYSIDE 345KV CKT 1	717	789	0.06193	109.1256	GEN563272 1-G15093_3 0.6900
FDNS	00NR	0	20WP	G15_081	FROM->TO	G14-057T 345.00 - SUNNYSIDE 345KV CKT 1	717	789	0.06216	109.1187	LYDIA - VALLIANT 345KV CKT 1
FDNS	00NR	0	20WP	G15_081	FROM->TO	G14-057T 345.00 - SUNNYSIDE 345KV CKT 1	717	789	0.06216	109.1187	LYDIA - VALLIANT 345KV CKT 1
FDNS	00NR	0	20WP	G15_081	FROM->TO	G14-057T 345.00 - SUNNYSIDE 345KV CKT 1	717	789	0.06193	108.7846	GEN525561 1-TOLK GEN #1 24 KV
FDNS	00NR	0	16WP	G15_081	FROM->TO	G14-057T 345.00 - SUNNYSIDE 345KV CKT 1	717	789	0.0528	108.4243	JOHNSON COUNTY - PITTSBURG 345KV CKT 1
FDNS	00NR	0	16WP	G15_081	FROM->TO	G14-057T 345.00 - SUNNYSIDE 345KV CKT 1	717	789	0.0528	108.4243	JOHNSON COUNTY - PITTSBURG 345KV CKT 1
FDNS	00NR	0	16WP	G15_081	FROM->TO	G14-057T 345.00 - SUNNYSIDE 345KV CKT 1	717	789	0.06242	108.057	GEN563263 1-G15092_4 0.6900
FDNS	00NR	0	16WP	G15_081	FROM->TO	G14-057T 345.00 - SUNNYSIDE 345KV CKT 1	717	789	0.06108	107.6655	HUGO - VALLIANT 345KV CKT 1
FDNS	00NR	0	16WP	G15_081	FROM->TO	G14-057T 345.00 - SUNNYSIDE 345KV CKT 1	717	789	0.06108	107.6655	HUGO - VALLIANT 345KV CKT 1
FDNS	00NR	0	20WP	G15_081	FROM->TO	G14-057T 345.00 - SUNNYSIDE 345KV CKT 1	717	789	0.05236	106.869	JOHNSON COUNTY - PITTSBURG 345KV CKT 1
FDNS	00NR	0	20WP	G15_081	FROM->TO	G14-057T 345.00 - SUNNYSIDE 345KV CKT 1	717	789	0.05236	106.869	JOHNSON COUNTY - PITTSBURG 345KV CKT 1
FDNS	00NR	0	20WP	G15_081	FROM->TO	G14-057T 345.00 - SUNNYSIDE 345KV CKT 1	717	789	0.06063	106.5939	HUGO - VALLIANT 345KV CKT 1
FDNS	00NR	0	20WP	G15_081	FROM->TO	G14-057T 345.00 - SUNNYSIDE 345KV CKT 1	717	789	0.06063	106.5939	HUGO - VALLIANT 345KV CKT 1
FDNS	00NR	0	16WP	G15_081	FROM->TO	G14-057T 345.00 - SUNNYSIDE 345KV CKT 1	717	789	0.06242	106.381	GEN563262 1-G15092_3 0.6900
FDNS	00NR	0	20WP	G15_081	FROM->TO	G14-057T 345.00 - SUNNYSIDE 345KV CKT 1	717	789	0.06193	105.9962	GEN563263 1-G15092_4 0.6900
FDNS	00NR	0	16WP	G15_081	FROM->TO	G14-057T 345.00 - SUNNYSIDE 345KV CKT 1	717	789	0.04657	104.8432	G14-074T 345.00 - TUCO INTERCHANGE 345KV CKT 1
FDNS	00NR	0	20WP	G15_081	FROM->TO	G14-057T 345.00 - SUNNYSIDE 345KV CKT 1	717	789	0.06193	104.3167	GEN563262 1-G15092_3 0.6900
FDNS	00NR	0	16WP	G15_081	FROM->TO	G14-057T 345.00 - SUNNYSIDE 345KV CKT 1	717	789	0.05057	102.6669	JOHNSON COUNTY - SUNNYSIDE 345KV CKT 1
FDNS	00NR	0	20WP	G15_081	FROM->TO	G14-057T 345.00 - SUNNYSIDE 345KV CKT 1	717	789	0.04616	101.6269	G14-074T 345.00 - TUCO INTERCHANGE 345KV CKT 1
FDNS	00NR	0	20SP	G15_081	FROM->TO	G14-057T 345.00 - SUNNYSIDE 345KV CKT 1	717	789	0.06197	100.8006	CIMARRON - MINCO 345KV CKT 1
FDNS	00NR	0	17SP	G15_081	FROM->TO	G14-057T 345.00 - SUNNYSIDE 345KV CKT 1	717	789	0.06231	100.4284	GRACEMONT - MINCO 345KV CKT 1
FDNS	00NR	0	20WP	G15_081	FROM->TO	G14-057T 345.00 - SUNNYSIDE 345KV CKT 1	717	789	0.05013	100.3152	JOHNSON COUNTY - SUNNYSIDE 345KV CKT 1
FDNS	01ALL	0	20WP	G15_081	TO->FROM	MATHWSN7 345.00 - TATONGA7 345.00 345KV CKT 1	1195	1195	0.43306	120.7669	THISTLE7 345.00 - WOODWARD DISTRICT EHV 345KV CKT 1
FDNS	01ALL	0	20WP	G15_081	TO->FROM	MATHWSN7 345.00 - TATONGA7 345.00 345KV CKT 1	1195	1195	0.43306	120.7669	THISTLE7 345.00 - WOODWARD DISTRICT EHV 345KV CKT 1
FDNS	01ALL	0	20WP	G15_081	TO->FROM	MATHWSN7 345.00 - TATONGA7 345.00 345KV CKT 1	1195	1195	0.43306	120.7669	THISTLE7 345.00 - WOODWARD DISTRICT EHV 345KV CKT 2
FDNS	01ALL	0	20WP	G15_081	TO->FROM	MATHWSN7 345.00 - TATONGA7 345.00 345KV CKT 1	1195	1195	0.43306	120.7669	THISTLE7 345.00 - WOODWARD DISTRICT EHV 345KV CKT 2
FDNS	01ALL	0	16WP	G15_081	TO->FROM	MATHWSN7 345.00 - TATONGA7 345.00 345KV CKT 1	1195	1195	0.4391	115.6156	THISTLE7 345.00 - WOODWARD DISTRICT EHV 345KV CKT 1
FDNS	01ALL	0	16WP	G15_081	TO->FROM	MATHWSN7 345.00 - TATONGA7 345.00 345KV CKT 1	1195	1195	0.4391	115.6156	THISTLE7 345.00 - WOODWARD DISTRICT EHV 345KV CKT 1
FDNS	01ALL	0	16WP	G15_081	TO->FROM	MATHWSN7 345.00 - TATONGA7 345.00 345KV CKT 1	1195	1195	0.4391	115.6156	THISTLE7 345.00 - WOODWARD DISTRICT EHV 345KV CKT 2
FDNS	01ALL	0	16WP	G15_081	TO->FROM	MATHWSN7 345.00 - TATONGA7 345.00 345KV CKT 1	1195	1195	0.4391	115.6156	THISTLE7 345.00 - WOODWARD DISTRICT EHV 345KV CKT 2
FDNS	01ALL	0	20WP	G15_081	TO->FROM	MATHWSN7 345.00 - TATONGA7 345.00 345KV CKT 1	1195	1195	0.41539	114.4647	Hitchland Interchange - WALKTAP7 345.00 345KV CKT 1
FDNS	01ALL	0	20WP	G15_081	TO->FROM	MATHWSN7 345.00 - TATONGA7 345.00 345KV CKT 1	1195	1195	0.41539	114.4647	Hitchland Interchange - WALKTAP7 345.00 345KV CKT 1
FDNS	01ALL	0	20WP	G15_081	TO->FROM	MATHWSN7 345.00 - TATONGA7 345.00 345KV CKT 1	1195	1195	0.41539	114.423	P12:345:SPS:J07.1.FINN.HITCH
FDNS	01ALL	0	20WP	G15_081	TO->FROM	MATHWSN7 345.00 - TATONGA7 345.00 345KV CKT 1	1195	1195	0.41355	113.7175	G1524G1525 345.00 - THISTLE7 345.00 345KV CKT 1
FDNS	01ALL	0	20WP	G15_081	TO->FROM	MATHWSN7 345.00 - TATONGA7 345.00 345KV CKT 1	1195	1195	0.41355	113.7175	G1524G1525 345.00 - THISTLE7 345.00 345KV CKT 2
FDNS	01ALL	0	20WP	G15_081	TO->FROM	MATHWSN7 345.00 - TATONGA7 345.00 345KV CKT 1	1195	1195	0.3997	113.1773	CIMARRON - MINCO 345KV CKT 1
FDNS	01ALL	0	20WP	G15_081	TO->FROM	MATHWSN7 345.00 - TATONGA7 345.00 345KV CKT 1	1195	1195	0.41644	112.744	BORDER 7345.00 - TUCO_2 345.00 345KV CKT 1
FDNS	01ALL	0	20WP	G15_081	TO->FROM	MATHWSN7 345.00 - TATONGA7 345.00 345KV CKT 1	1195	1195	0.41644	111.7827	BORDER 7345.00 - WOODWARD DISTRICT EHV 345KV CKT 1
FDNS	01ALL	0	20L	G15_081	TO->FROM	MATHWSN7 345.00 - TATONGA7 345.00 345KV CKT 1	1195	1195	0.44521	111.6874	THISTLE7 345.00 - WOODWARD DISTRICT EHV 345KV CKT 1
FDNS	01ALL	0	20L	G15_081	TO->FROM	MATHWSN7 345.00 - TATONGA7 345.00 345KV CKT 1	1195	1195	0.44521	111.6874	THISTLE7 345.00 - WOODWARD DISTRICT EHV 345KV CKT 1
FDNS	01ALL	0	20L	G15_081	TO->FROM	MATHWSN7 345.00 - TATONGA7 345.00 345KV CKT 1	1195	1195	0.44521	111.6874	THISTLE7 345.00 - WOODWARD DISTRICT EHV 345KV CKT 2
FDNS	01ALL	0	20L	G15_081	TO->FROM	MATHWSN7 345.00 - TATONGA7 345.00 345KV CKT 1	1195	1195	0.44521	111.6874	THISTLE7 345.00 - WOODWARD DISTRICT EHV 345KV CKT 2
FDNS	01ALL	0	20WP	G15_081	TO->FROM	MATHWSN7 345.00 - TATONGA7 345.00 345KV CKT 1	1195	1195	0.41047	111.5372	FINNEY SWITCHING STATION - HOLCOMB 345KV CKT 1
FDNS	01ALL	0	20WP	G15_081	TO->FROM	MATHWSN7 345.00 - TATONGA7 345.00 345KV CKT 1	1195	1195	0.41047	111.5372	FINNEY SWITCHING STATION - HOLCOMB 345KV CKT 1
FDNS	01ALL	0	20WP	G15_081	TO->FROM	MATHWSN7 345.00 - TATONGA7 345.00 345KV CKT 1	1195	1195	0.4073	111.4758	DEWEY - SOUTHARD 138KV CKT 1
FDNS	01ALL	0	20WP	G15_081	TO->FROM	MATHWSN7 345.00 - TATONGA7 345.00 345KV CKT 1	1195	1195	0.4073	111.2588	ROMAN NOSE - SOUTHARD 138KV CKT 1
FDNS	01ALL	0	20WP	G15_081	TO->FROM	MATHWSN7 345.00 - TATONGA7 345.00 345KV CKT 1	1195	1195	0.40729	111.1491	G13-010T 345.00 - POST ROCK 345KV CKT 1
FDNS	01ALL	0	20WP	G15_081	TO->FROM	MATHWSN7 345.00 - TATONGA7 345.00 345KV CKT 1	1195	1195	0.40729	111.0566	G13-010T 345.00 - SPEARVILLE 345KV CKT 1
FDNS	01ALL	0	20WP	G15_081	TO->FROM	MATHWSN7 345.00 - TATONGA7 345.00 345KV CKT 1	1195	1195	0.41047	111.0009	FINNEY SWITCHING STATION - WALKTAP7 345.00 345KV CKT 1
FDNS	01ALL	0	20WP	G15_081	TO->FROM	MATHWSN7 345.00 - TATONGA7 345.00 345KV CKT 1	1195	1195	0.41047	111.0009	FINNEY SWITCHING STATION - WALKTAP7 345.00 345KV CKT 1
FDNS	00NR	0	20WP	G15_081	TO->FROM	MATHWSN7 345.00 - TATONGA7 345.00 345KV CKT 1	1195	1195	0.48403	110.9769	G14-074T 345.00 - OKLAUNION 345KV CKT 1
FDNS	01ALL	0	20WP	G15_081	TO->FROM	MATHWSN7 345.00 - TATONGA7 345.00 345KV CKT 1	1195	1195	0.40607	110.9766	CHISHOLM6 230.00 - SWEETWATER 230KV CKT 1
FDNS	01ALL	0	20WP	G15_081	TO->FROM	MATHWSN7 345.00 - TATONGA7 345.00 345KV CKT 1	1195	1195	0.40946	110.93	MINGO - RED WILLOW 345KV CKT 1
FDNS	01ALL	0	20WP	G15_081	TO->FROM	MATHWSN7 345.00 - TATONGA7 345.00 345KV CKT 1	1195	1195	0.40946	110.93	MINGO - RED WILLOW 345KV CKT 1
FDNS	01ALL	0	20WP	G15_081	TO->FROM	MATHWSN7 345.00 - TATONGA7 345.00 345KV CKT 1	1195	1195	0.40957	110.8625	G14-074T 345.00 - OKLAUNION 345KV CKT 1
FDNS	01ALL	0	20WP	G15_081	TO->FROM	MATHWSN7 345.00 - TATONGA7 345.00 345KV CKT 1	1195	1195	0.41032	110.7371	IODINE - WOODWARD EHV 138KV CKT 1
FDNS	01ALL	0	20WP	G15_081	TO->FROM	MATHWSN7 345.00 - TATONGA7 345.00 345KV CKT 1	1195	1195	0.40645	110.7173	P12:230:AEPW:ELKCITY6:SWEETWT6
FDNS	01ALL	0	20WP	G15_081	TO->FROM	MATHWSN7 345.00 - TATONGA7 345.00 345KV CKT 1	1195	1195	0.41032	110.5739	DEWEY - IODINE 138KV CKT 1
FDNS	01ALL	0	20WP	G15_081	TO->FROM	MATHWSN7 345.00 - TATONGA7 345.00 345KV CKT 1	1195	1195	0.40463	110.48	CLEO CORNER - CLEOPLT4 138.00 138KV CKT 1
FDNS	01ALL	0	20WP	G15_081	TO->FROM	MATHWSN7 345.00 - TATONGA7 345.00 345KV CKT 1	1195	1195	0.40463	110.4274	CLEOPLT4 138.00 - MEN TAP 138KV CKT 1
FDNS	01ALL	0	20WP	G15_081	TO->FROM	MATHWSN7 345.00 - TATONGA7 345.00 345KV CKT 1	1195	1195	0.40814	110.424	MINGO - SETAB 345KV CKT 1
FDNS	01ALL	0	20WP	G15_081	TO->FROM	MATHWSN7 345.00 - TATONGA7 345.00 345KV CKT 1	1195	1195	0.40814	110.424	MINGO - SETAB 345KV CKT 1
FDNS	01ALL	0	20WP	G15_081	TO->FROM	MATHWSN7 345.00 - TATONGA7 345.00 345KV CKT 1	1195	1195	0.40463	110.3983	IMO TAP - MEN TAP 138KV CKT 1
FDNS	01ALL	0	20WP	G15_081	TO->FROM	MATHWSN7 345.00 - TATONGA7 345.00 345KV CKT 1	1195	1195	0.40302	110.2258	GEN520947 1-HUGO1
FDNS	01ALL	0	20WP	G15_081	TO->FROM	MATHWSN7 345.00 - TATONGA7 345.00 345KV CKT 1	1195	1195	0.40416	110.1953	G15095_T 138.00 - ROSE_VALLEY 138.00 138KV CKT 1
FDNS	01ALL	0	20WP	G15_081	TO->FROM	MATHWSN7 345.00 - TATONGA7 345.00 345KV CKT 1	1195	1195	0.40721	110.1585	AXTELL - POST ROCK 345KV CKT 1
FDNS	01ALL	0	20WP	G15_081	TO->FROM	MATHWSN7 345.00 - TATONGA7 345.00 345KV CKT 1	1195	1195	0.40302	110.112	GEN514806 1-SOONER UNIT 2
FDNS	01ALL	0	20WP	G15_081	TO->FROM	MATHWSN7 345.00 - TATONGA7 345.00 345KV CKT 1	1195	1195	0.40302	110.0988	GEN509416 1-TURK GENERATION
FDNS	01ALL	0	20WP	G15_081	TO->FROM	MATHWSN7 345.00 - TATONGA7 345.00 345KV CKT 1	1195	1195	0.40416	110.0696	NOEL_SW 138.00 - ROSE_VALLEY 138.00 138KV CKT 1
FDNS	01ALL	0	20WP	G15_081	TO->FROM	MATHWSN7 345.00 - TATONGA7 345.00 345KV CKT 1	1195	1195	0.40302	110.0339	GEN509403 1-PIRKEY GENERATION
FDNS	01ALL	0	20WP	G15_081	TO->FROM	MATHWSN7 345.00 - TATONGA7 345.00 345KV CKT 1	1195	1195	0.40461	109.9487	GRAPEVINE INTERCHANGE - NICHOLS STATION 230KV CKT 1
FDNS	01ALL	0	20WP	G15_081	TO->FROM	MATHWSN7 345.00 - TATONGA7 345.00 345KV CKT 1	1195	1195	0.40461	109.9487	GRAPEVINE INTERCHANGE - NICHOLS STATION 230KV CKT 1

SOLUTION	GROUP	SCENARIO	SEASON	SOURCE	DIRECTION	MONITORED ELEMENT	RATEA (MVA)	RATEB(MVA)	TDF	TC%LOADING (% MVA)	CONTINGENCY
FDNS	01ALL	0	20WP	G15_081	TO->FROM	MATHWSN7 345.00 - TATONGA7 345.00 345KV CKT 1	1195	1195	0.40302	109.913	GEN336821 1-GRAND GULF UNIT
FDNS	01ALL	0	20WP	G15_081	TO->FROM	MATHWSN7 345.00 - TATONGA7 345.00 345KV CKT 1	1195	1195	0.40678	109.909	HOLCOMB - SETAB 345KV CKT 1
FDNS	01ALL	0	20WP	G15_081	TO->FROM	MATHWSN7 345.00 - TATONGA7 345.00 345KV CKT 1	1195	1195	0.40678	109.909	HOLCOMB - SETAB 345KV CKT 1
FDNS	01ALL	0	20WP	G15_081	TO->FROM	MATHWSN7 345.00 - TATONGA7 345.00 345KV CKT 1	1195	1195	0.40302	109.9086	GEN514805 1-SOONER UNIT 1
FDNS	01ALL	0	20WP	G15_081	TO->FROM	MATHWSN7 345.00 - TATONGA7 345.00 345KV CKT 1	1195	1195	0.40302	109.8608	GEN337911 1-ARKANSAS NUCLEAR ONE UNIT #2
FDNS	01ALL	0	16WP	G15_081	TO->FROM	MATHWSN7 345.00 - TATONGA7 345.00 345KV CKT 1	1195	1195	0.4207	109.8352	FINNEY SWITCHING STATION - HOLCOMB 345KV CKT 1
FDNS	01ALL	0	16WP	G15_081	TO->FROM	MATHWSN7 345.00 - TATONGA7 345.00 345KV CKT 1	1195	1195	0.4207	109.8352	FINNEY SWITCHING STATION - HOLCOMB 345KV CKT 1
FDNS	01ALL	0	20WP	G15_081	TO->FROM	MATHWSN7 345.00 - TATONGA7 345.00 345KV CKT 1	1195	1195	0.40302	109.8345	GEN515602 1-KNGFSR12 0.7000
FDNS	01ALL	0	20WP	G15_081	TO->FROM	MATHWSN7 345.00 - TATONGA7 345.00 345KV CKT 1	1195	1195	0.40302	109.8165	GEN562587 1-G14_056_3 0.6900
FDNS	01ALL	0	20WP	G15_081	TO->FROM	MATHWSN7 345.00 - TATONGA7 345.00 345KV CKT 1	1195	1195	0.40302	109.8028	GEN515226 1-MUSKOGEE 6G
FDNS	01ALL	0	20WP	G15_081	TO->FROM	MATHWSN7 345.00 - TATONGA7 345.00 345KV CKT 1	1195	1195	0.40302	109.7346	GEN515040 1-SEMINOLE 1G
FDNS	01ALL	0	20WP	G15_081	TO->FROM	MATHWSN7 345.00 - TATONGA7 345.00 345KV CKT 1	1195	1195	0.406	109.6858	G1524G1525 345.00 - WICHITA 345KV CKT 1
FDNS	01ALL	0	20WP	G15_081	TO->FROM	MATHWSN7 345.00 - TATONGA7 345.00 345KV CKT 1	1195	1195	0.406	109.6858	G1524G1525 345.00 - WICHITA 345KV CKT 2
FDNS	01ALL	0	20WP	G15_081	TO->FROM	MATHWSN7 345.00 - TATONGA7 345.00 345KV CKT 1	1195	1195	0.40302	109.6436	GEN509406 1-WELSH #3
FDNS	01ALL	0	20WP	G15_081	TO->FROM	MATHWSN7 345.00 - TATONGA7 345.00 345KV CKT 1	1195	1195	0.40302	109.6435	GEN509404 1-WELSH #1
FDNS	01ALL	0	20WP	G15_081	TO->FROM	MATHWSN7 345.00 - TATONGA7 345.00 345KV CKT 1	1195	1195	0.40302	109.6337	GEN336153 1-WATERFORD UNIT#3
FDNS	01ALL	0	20WP	G15_081	TO->FROM	MATHWSN7 345.00 - TATONGA7 345.00 345KV CKT 1	1195	1195	0.40302	109.6215	GEN511843 1-RIVERSIDE STATION #2
FDNS	01ALL	0	20WP	G15_081	TO->FROM	MATHWSN7 345.00 - TATONGA7 345.00 345KV CKT 1	1195	1195	0.40302	109.6144	GEN515225 1-MUSKOGEE 5G
FDNS	01ALL	0	20WP	G15_081	TO->FROM	MATHWSN7 345.00 - TATONGA7 345.00 345KV CKT 1	1195	1195	0.40302	109.6143	GEN515223 1-MUSKOGEE 4G
FDNS	01ALL	0	20WP	G15_081	TO->FROM	MATHWSN7 345.00 - TATONGA7 345.00 345KV CKT 1	1195	1195	0.40302	109.5665	GEN337910 1-ARKANSAS NUCLEAR ONE UNIT #1
FDNS	01ALL	0	20WP	G15_081	TO->FROM	MATHWSN7 345.00 - TATONGA7 345.00 345KV CKT 1	1195	1195	0.40302	109.5557	GEN515042 1-SEMINOLE 3G
FDNS	01ALL	0	20WP	G15_081	TO->FROM	MATHWSN7 345.00 - TATONGA7 345.00 345KV CKT 1	1195	1195	0.40302	109.4825	GEN501801 1-DOLET HILLS UNIT1
FDNS	01ALL	0	20WP	G15_081	TO->FROM	MATHWSN7 345.00 - TATONGA7 345.00 345KV CKT 1	1195	1195	0.40801	109.476	BENTON - WICHITA 345KV CKT 1
FDNS	01ALL	0	20WP	G15_081	TO->FROM	MATHWSN7 345.00 - TATONGA7 345.00 345KV CKT 1	1195	1195	0.40414	109.4666	G14-057T 345.00 - SUNNYSIDE 345KV CKT 1
FDNS	01ALL	0	20WP	G15_081	TO->FROM	MATHWSN7 345.00 - TATONGA7 345.00 345KV CKT 1	1195	1195	0.40441	109.4544	P12:138:WFEC:MSL14
FDNS	01ALL	0	20WP	G15_081	TO->FROM	MATHWSN7 345.00 - TATONGA7 345.00 345KV CKT 1	1195	1195	0.41034	109.4475	FPL SWITCH - MOORELAND 138KV CKT 1
FDNS	01ALL	0	20WP	G15_081	TO->FROM	MATHWSN7 345.00 - TATONGA7 345.00 345KV CKT 1	1195	1195	0.40302	109.4459	GEN335831 1-RIVERBEND UNIT#1
FDNS	01ALL	0	20WP	G15_081	TO->FROM	MATHWSN7 345.00 - TATONGA7 345.00 345KV CKT 1	1195	1195	0.40302	109.4436	GEN515443 1-MNCOWND1 0.7000
FDNS	01ALL	0	20WP	G15_081	TO->FROM	MATHWSN7 345.00 - TATONGA7 345.00 345KV CKT 1	1195	1195	0.40386	109.4101	P12:138:WFEC:MSL15
FDNS	01ALL	0	20WP	G15_081	TO->FROM	MATHWSN7 345.00 - TATONGA7 345.00 345KV CKT 1	1195	1195	0.40441	109.4068	BEARCAT 138.00 - MOORELAND 138KV CKT 1
FDNS	01ALL	0	20WP	G15_081	TO->FROM	MATHWSN7 345.00 - TATONGA7 345.00 345KV CKT 1	1195	1195	0.40429	109.4064	P12:138:WFEC:MSL12
FDNS	01ALL	0	20WP	G15_081	TO->FROM	MATHWSN7 345.00 - TATONGA7 345.00 345KV CKT 1	1195	1195	0.40429	109.391	MOORELAND - PIC4 138.00 138KV CKT 1
FDNS	01ALL	0	20WP	G15_081	TO->FROM	MATHWSN7 345.00 - TATONGA7 345.00 345KV CKT 1	1195	1195	0.40302	109.3883	P12:345:GRDA:CHOUTEAU-SPORTSMANACRES
FDNS	01ALL	0	20WP	G15_081	TO->FROM	MATHWSN7 345.00 - TATONGA7 345.00 345KV CKT 1	1195	1195	0.40302	109.3841	GEN509394 1-FLINT CREEK
FDNS	01ALL	0	20WP	G15_081	TO->FROM	MATHWSN7 345.00 - TATONGA7 345.00 345KV CKT 1	1195	1195	0.40429	109.3759	CEDARDALE - PIC4 138.00 138KV CKT 1
FDNS	01ALL	0	20WP	G15_081	TO->FROM	MATHWSN7 345.00 - TATONGA7 345.00 345KV CKT 1	1195	1195	0.40302	109.3672	GEN562794 1-G15038_5 0.6900
FDNS	01ALL	0	20WP	G15_081	TO->FROM	MATHWSN7 345.00 - TATONGA7 345.00 345KV CKT 1	1195	1195	0.40302	109.3672	GEN562795 1-G15038_6 0.6900
FDNS	01ALL	0	20WP	G15_081	TO->FROM	MATHWSN7 345.00 - TATONGA7 345.00 345KV CKT 1	1195	1195	0.40302	109.3543	GEN515606 1-CANDN11 0.6900
FDNS	01ALL	0	20WP	G15_081	TO->FROM	MATHWSN7 345.00 - TATONGA7 345.00 345KV CKT 1	1195	1195	0.40302	109.3543	GEN515607 1-CANDN12 0.6900
FDNS	01ALL	0	20WP	G15_081	TO->FROM	MATHWSN7 345.00 - TATONGA7 345.00 345KV CKT 1	1195	1195	0.40429	109.3461	CEDARDALE - OKEENE 138KV CKT 1
FDNS	01ALL	0	20WP	G15_081	TO->FROM	MATHWSN7 345.00 - TATONGA7 345.00 345KV CKT 1	1195	1195	0.40302	109.3438	GEN511840 1-NORTHEASTERN STATION #3
FDNS	01ALL	0	20WP	G15_081	TO->FROM	MATHWSN7 345.00 - TATONGA7 345.00 345KV CKT 1	1195	1195	0.40441	109.3248	BEARCAT 138.00 - NINE MILE 138KV CKT 1
FDNS	01ALL	0	20WP	G15_081	TO->FROM	MATHWSN7 345.00 - TATONGA7 345.00 345KV CKT 1	1195	1195	0.40639	109.2999	POTTER COUNTY INTERCHANGE (WAUK 90343-A) 345/230/13.2KV TRANSFORMER CKT 1
FDNS	01ALL	0	20WP	G15_081	TO->FROM	MATHWSN7 345.00 - TATONGA7 345.00 345KV CKT 1	1195	1195	0.40639	109.2999	POTTER COUNTY INTERCHANGE (WAUK 90343-A) 345/230/13.2KV TRANSFORMER CKT 1
FDNS	01ALL	0	20WP	G15_081	TO->FROM	MATHWSN7 345.00 - TATONGA7 345.00 345KV CKT 1	1195	1195	0.40607	109.2812	STLN-DEMARC6 - SWEETWATER 230KV CKT 1
FDNS	01ALL	0	20WP	G15_081	TO->FROM	MATHWSN7 345.00 - TATONGA7 345.00 345KV CKT 1	1195	1195	0.40607	109.2765	STATELINE INTERCHANGE - STLN-DEMARC6 230KV CKT 1
FDNS	01ALL	0	20WP	G15_081	TO->FROM	MATHWSN7 345.00 - TATONGA7 345.00 345KV CKT 1	1195	1195	0.40607	109.2752	P12:230:AEPW-SPS:SWEETWT6:WHEELER 6
FDNS	01ALL	0	20WP	G15_081	TO->FROM	MATHWSN7 345.00 - TATONGA7 345.00 345KV CKT 1	1195	1195	0.40302	109.2708	GEN511839 1-NORTHEASTERN STATION #2
FDNS	01ALL	0	20WP	G15_081	TO->FROM	MATHWSN7 345.00 - TATONGA7 345.00 345KV CKT 1	1195	1195	0.40957	109.2658	G14-074T 345.00 - TUCO INTERCHANGE 345KV CKT 1
FDNS	01ALL	0	20WP	G15_081	TO->FROM	MATHWSN7 345.00 - TATONGA7 345.00 345KV CKT 1	1195	1195	0.40302	109.2409	GEN515041 1-SEMINOLE 2G
FDNS	01ALL	0	20WP	G15_081	TO->FROM	MATHWSN7 345.00 - TATONGA7 345.00 345KV CKT 1	1195	1195	0.40473	109.2355	GRAPEVINE INTERCHANGE - STATELINE INTERCHANGE 230KV CKT 1
FDNS	01ALL	0	20WP	G15_081	TO->FROM	MATHWSN7 345.00 - TATONGA7 345.00 345KV CKT 1	1195	1195	0.40473	109.2355	GRAPEVINE INTERCHANGE - STATELINE INTERCHANGE 230KV CKT 1
FDNS	01ALL	0	20WP	G15_081	TO->FROM	MATHWSN7 345.00 - TATONGA7 345.00 345KV CKT 1	1195	1195	0.40302	109.2143	GEN511842 1-RIVERSIDE STATION #1
FDNS	01ALL	0	20WP	G15_081	TO->FROM	MATHWSN7 345.00 - TATONGA7 345.00 345KV CKT 1	1195	1195	0.40414	109.2138	G14-057T 345.00 - LAWTON EASTSIDE 345KV CKT 1
FDNS	01ALL	0	20WP	G15_081	TO->FROM	MATHWSN7 345.00 - TATONGA7 345.00 345KV CKT 1	1195	1195	0.40441	109.1837	MOREWOOD SW - NINE MILE 138KV CKT 1
FDNS	01ALL	0	20WP	G15_081	TO->FROM	MATHWSN7 345.00 - TATONGA7 345.00 345KV CKT 1	1195	1195	0.40302	109.1819	GEN513601 1-GRECCTG_1 20.000
FDNS	01ALL	0	20WP	G15_081	TO->FROM	MATHWSN7 345.00 - TATONGA7 345.00 345KV CKT 1	1195	1195	0.40498	109.156	FLATRDG3 - THISTLE4 138.00 138KV CKT 1
FDNS	01ALL	0	20WP	G15_081	TO->FROM	MATHWSN7 345.00 - TATONGA7 345.00 345KV CKT 1	1195	1195	0.40498	109.156	FLATRDG3 - THISTLE4 138.00 138KV CKT 1
FDNS	01ALL	0	20WP	G15_081	TO->FROM	MATHWSN7 345.00 - TATONGA7 345.00 345KV CKT 1	1195	1195	0.40498	109.1553	THISTLE7 345.00 (THISTLE T1) 345/138/13.8KV TRANSFORMER CKT 1
FDNS	01ALL	0	20WP	G15_081	TO->FROM	MATHWSN7 345.00 - TATONGA7 345.00 345KV CKT 1	1195	1195	0.40386	109.1506	NOEL_SW 138.00 - SALT_PLAINS 138.00 138KV CKT 1
FDNS	01ALL	0	20WP	G15_081	TO->FROM	MATHWSN7 345.00 - TATONGA7 345.00 345KV CKT 1	1195	1195	0.40472	109.1459	DOVER SW - OKEENE 138KV CKT 1
FDNS	01ALL	0	20WP	G15_081	TO->FROM	MATHWSN7 345.00 - TATONGA7 345.00 345KV CKT 1	1195	1195	0.40302	109.1275	GEN337653 1-WHITE BLUFF UNIT #2
FDNS	01ALL	0	16WP	G15_081	TO->FROM	MATHWSN7 345.00 - TATONGA7 345.00 345KV CKT 1	1195	1195	0.4207	109.1002	FINNEY SWITCHING STATION - Hitchland Interchange 345KV CKT 1
FDNS	01ALL	0	20WP	G15_081	TO->FROM	MATHWSN7 345.00 - TATONGA7 345.00 345KV CKT 1	1195	1195	0.40365	109.0999	G15074_T 345.00 - HOYT 345KV CKT 1
FDNS	01ALL	0	20WP	G15_081	TO->FROM	MATHWSN7 345.00 - TATONGA7 345.00 345KV CKT 1	1195	1195	0.40302	109.0798	GEN300006 1-NEW MADRID UNIT 1
FDNS	01ALL	0	20WP	G15_081	TO->FROM	MATHWSN7 345.00 - TATONGA7 345.00 345KV CKT 1	1195	1195	0.40302	109.0772	GEN512688 2-GRDA1 GSU2 22
FDNS	01ALL	0	20WP	G15_081	TO->FROM	MATHWSN7 345.00 - TATONGA7 345.00 345KV CKT 1	1195	1195	0.40302	109.0712	GEN300007 1-NEW MADRID UNIT 2
FDNS	01ALL	0	20WP	G15_081	TO->FROM	MATHWSN7 345.00 - TATONGA7 345.00 345KV CKT 1	1195	1195	0.40365	109.0311	G15074_T 345.00 - JEFFREY ENERGY CENTER 345KV CKT 1
FDNS	01ALL	0	20WP	G15_081	TO->FROM	MATHWSN7 345.00 - TATONGA7 345.00 345KV CKT 1	1195	1195	0.40373	109.0293	LACYGNE - WAVERLY7 345.00 345KV CKT 1
FDNS	01ALL	0	20WP	G15_081	TO->FROM	MATHWSN7 345.00 - TATONGA7 345.00 345KV CKT 1	1195	1195	0.40302	109.0194	GEN337652 1-WHITE BLUFF UNIT #1
FDNS	01ALL	0	20WP	G15_081	TO->FROM	MATHWSN7 345.00 - TATONGA7 345.00 345KV CKT 1	1195	1195	0.40302	108.9974	GEN501813 1-RODEMACHER UNIT 3
FDNS	01ALL	0	20WP	G15_081	TO->FROM	MATHWSN7 345.00 - TATONGA7 345.00 345KV CKT 1	1195	1195	0.40484	108.9913	CANEYRV7 345.00 - NEOSHO 345KV CKT 1
FDNS	01ALL	0	20WP	G15_081	TO->FROM	MATHWSN7 345.00 - TATONGA7 345.00 345KV CKT 1	1195	1195	0.40302	108.9884	GEN509409 1-WILKES #3
FDNS	01ALL	0	20WP	G15_081	TO->FROM	MATHWSN7 345.00 - TATONGA7 345.00 345KV CKT 1	1195	1195	0.40373	108.9641	WAVERLY7 345.00 - WOLF CREEK 345KV CKT 1
FDNS	01ALL	0	20WP	G15_081	TO->FROM	MATHWSN7 345.00 - TATONGA7 345.00 345KV CKT 1	1195	1195	0.405	108.9523	CHISHOLM7 345.00 - GRACEMONT 345KV CKT 1
FDNS	01ALL	0	20WP	G15_081	TO->FROM	MATHWSN7 345.00 - TATONGA7 345.00 345KV CKT 1	1195	1195	0.40484	108.8936	CANEYRV7 345.00 - LATHAMS7 345.00 345KV CKT 1
FDNS	01ALL	0	20WP	G15_081	TO->FROM	MATHWSN7 345.00 - TATONGA7 345.00 345KV CKT 1	1195	1195	0.40302	108.8935	GEN335206 1-NELSON UNIT 6
FDNS	01ALL	0	20WP	G15_081	TO->FROM	MATHWSN7 345.00 - TATONGA7 345.00 345KV CKT 1	1195	1195	0.40386	108.8927	C_CITY_138 138.00 - SALT_PLAINS 138.00 138KV CKT 1
FDNS	01ALL	0	20WP	G15_081	TO->FROM	MATHWSN7 345.00 - TATONGA7 345.00 345KV CKT 1	1195	1195	0.40302	108.8877	GEN514910 2-REDBUD GEN

SOLUTION	GROUP	SCENARIO	SEASON	SOURCE	DIRECTION	MONITORED ELEMENT	RATEA (MVA)	RATEB(MVA)	TDF	TC%LOADING (% MVA)	CONTINGENCY
FDNS	01ALL	0	20WP	G15_081	TO->FROM	MATHWSN7 345.00 - TATONGA7 345.00 345KV CKT 1	1195	1195	0.40302	108.8761	GEN515601 1-KNGFSR11 0.7000
FDNS	01ALL	0	20WP	G15_081	TO->FROM	MATHWSN7 345.00 - TATONGA7 345.00 345KV CKT 1	1195	1195	0.40895	108.8657	G11-14T 345.00 - WOODWARD DISTRICT EHV 345KV CKT 1
FDNS	01ALL	0	20WP	G15_081	TO->FROM	MATHWSN7 345.00 - TATONGA7 345.00 345KV CKT 1	1195	1195	0.40895	108.8657	G11-14T 345.00 - WOODWARD DISTRICT EHV 345KV CKT 2
FDNS	01ALL	0	20WP	G15_081	TO->FROM	MATHWSN7 345.00 - TATONGA7 345.00 345KV CKT 1	1195	1195	0.40379	108.8558	MULLERGREN - SPEARVILLE 230KV CKT 1
FDNS	01ALL	0	20WP	G15_081	TO->FROM	MATHWSN7 345.00 - TATONGA7 345.00 345KV CKT 1	1195	1195	0.40379	108.8558	MULLERGREN - SPEARVILLE 230KV CKT 1
FDNS	01ALL	0	20WP	G15_081	TO->FROM	MATHWSN7 345.00 - TATONGA7 345.00 345KV CKT 1	1195	1195	0.40302	108.8397	GRAND GULF 500/22.0KV TRANSFORMER CKT 1
FDNS	01ALL	0	20WP	G15_081	TO->FROM	MATHWSN7 345.00 - TATONGA7 345.00 345KV CKT 1	1195	1195	0.40333	108.8303	BUCKNER7 345.00 - SPEARVILLE 345KV CKT 1
FDNS	01ALL	0	20WP	G15_081	TO->FROM	MATHWSN7 345.00 - TATONGA7 345.00 345KV CKT 1	1195	1195	0.40333	108.8303	BUCKNER7 345.00 - SPEARVILLE 345KV CKT 1
FDNS	01ALL	0	20WP	G15_081	TO->FROM	MATHWSN7 345.00 - TATONGA7 345.00 345KV CKT 1	1195	1195	0.40302	108.8302	GEN514911 2-REDBUD GEN
FDNS	01ALL	0	20WP	G15_081	TO->FROM	MATHWSN7 345.00 - TATONGA7 345.00 345KV CKT 1	1195	1195	0.40302	108.8302	GEN514942 2-REDBUD4G
FDNS	01ALL	0	20WP	G15_081	TO->FROM	MATHWSN7 345.00 - TATONGA7 345.00 345KV CKT 1	1195	1195	0.40386	108.8293	BYRON_138 138.00 - C_CITY_138 138.00 138KV CKT 1
FDNS	01ALL	0	20WP	G15_081	TO->FROM	MATHWSN7 345.00 - TATONGA7 345.00 345KV CKT 1	1195	1195	0.40379	108.8049	AXTELL - PAULINE 345KV CKT 1
FDNS	01ALL	0	20WP	G15_081	TO->FROM	MATHWSN7 345.00 - TATONGA7 345.00 345KV CKT 1	1195	1195	0.40302	108.8039	DELL 500 - ESSEX UNIT 2 500KV CKT Z1
FDNS	01ALL	0	20WP	G15_081	TO->FROM	MATHWSN7 345.00 - TATONGA7 345.00 345KV CKT 1	1195	1195	0.40366	108.8016	G15088_T 345.00 - MOORE 345KV CKT 1
FDNS	01ALL	0	20WP	G15_081	TO->FROM	MATHWSN7 345.00 - TATONGA7 345.00 345KV CKT 1	1195	1195	0.40302	108.8014	GEN501812 1-RODEMACHER UNIT 2
FDNS	01ALL	0	20WP	G15_081	TO->FROM	MATHWSN7 345.00 - TATONGA7 345.00 345KV CKT 1	1195	1195	0.40369	108.7762	HOYT - STRANGER CREEK 345KV CKT 1
FDNS	01ALL	0	20WP	G15_081	TO->FROM	MATHWSN7 345.00 - TATONGA7 345.00 345KV CKT 1	1195	1195	0.40639	108.7742	G14_038T 345.00 - POTTER COUNTY INTERCHANGE 345KV CKT 1
FDNS	01ALL	0	20WP	G15_081	TO->FROM	MATHWSN7 345.00 - TATONGA7 345.00 345KV CKT 1	1195	1195	0.40302	108.7734	GEN514940 1-REDBUD GEN
FDNS	01ALL	0	20WP	G15_081	TO->FROM	MATHWSN7 345.00 - TATONGA7 345.00 345KV CKT 1	1195	1195	0.40302	108.7723	GEN338146 1-INDEPENDENCE UNIT #2
FDNS	01ALL	0	20WP	G15_081	TO->FROM	MATHWSN7 345.00 - TATONGA7 345.00 345KV CKT 1	1195	1195	0.40302	108.7678	GEN511848 1-SOUTHWESTERN STATION #3
FDNS	01ALL	0	20WP	G15_081	TO->FROM	MATHWSN7 345.00 - TATONGA7 345.00 345KV CKT 1	1195	1195	0.40302	108.7674	GEN514900 1-REDBUD2S
FDNS	01ALL	0	20WP	G15_081	TO->FROM	MATHWSN7 345.00 - TATONGA7 345.00 345KV CKT 1	1195	1195	0.40302	108.7673	GEN514899 1-REDBUD1S
FDNS	01ALL	0	20WP	G15_081	TO->FROM	MATHWSN7 345.00 - TATONGA7 345.00 345KV CKT 1	1195	1195	0.40456	108.7641	G14_001T 345.00 - WICHITA 345KV CKT 1
FDNS	01ALL	0	20WP	G15_081	TO->FROM	MATHWSN7 345.00 - TATONGA7 345.00 345KV CKT 1	1195	1195	0.40354	108.764	GRAND ISLAND - SWEETWATER 345KV CKT 1
FDNS	01ALL	0	16WP	G15_081	TO->FROM	MATHWSN7 345.00 - TATONGA7 345.00 345KV CKT 1	1195	1195	0.42066	108.756	BORDER 7345.00 - TUCO_2 345.00 345KV CKT 1
FDNS	01ALL	0	20WP	G15_081	TO->FROM	MATHWSN7 345.00 - TATONGA7 345.00 345KV CKT 1	1195	1195	0.40338	108.7365	SMOKYHL6 230.00 - SUMMIT 230KV CKT 1
FDNS	01ALL	0	20WP	G15_081	TO->FROM	MATHWSN7 345.00 - TATONGA7 345.00 345KV CKT 1	1195	1195	0.40588	108.7347	GERALD GENTLEMAN STATION - RED WILLOW 345KV CKT 1
FDNS	01ALL	0	20WP	G15_081	TO->FROM	MATHWSN7 345.00 - TATONGA7 345.00 345KV CKT 1	1195	1195	0.40457	108.7325	P12:138:MKEC:HARPER-CLEARWATER::
FDNS	01ALL	0	20WP	G15_081	TO->FROM	MATHWSN7 345.00 - TATONGA7 345.00 345KV CKT 1	1195	1195	0.40302	108.732	GEN336252 1-NINEMILE POINT UNIT#5
FDNS	01ALL	0	20WP	G15_081	TO->FROM	MATHWSN7 345.00 - TATONGA7 345.00 345KV CKT 1	1195	1195	0.40302	108.732	GEN338143 1-INDEPENDENCE UNIT #1
FDNS	01ALL	0	20WP	G15_081	TO->FROM	MATHWSN7 345.00 - TATONGA7 345.00 345KV CKT 1	1195	1195	0.40457	108.7278	P12:138:WERE:CLWA-MKEC_138F::
FDNS	01ALL	0	20WP	G15_081	TO->FROM	MATHWSN7 345.00 - TATONGA7 345.00 345KV CKT 1	1195	1195	0.40484	108.7246	LATHAMS7 345.00 - ROSE HILL 345KV CKT 1
FDNS	01ALL	0	20WP	G15_081	TO->FROM	MATHWSN7 345.00 - TATONGA7 345.00 345KV CKT 1	1195	1195	0.40302	108.7188	GEN514905 1-REDBUD3S
FDNS	01ALL	0	20WP	G15_081	TO->FROM	MATHWSN7 345.00 - TATONGA7 345.00 345KV CKT 1	1195	1195	0.40302	108.7154	GEN563272 1-G15093_3 0.6900
FDNS	01ALL	0	20WP	G15_081	TO->FROM	MATHWSN7 345.00 - TATONGA7 345.00 345KV CKT 1	1195	1195	0.40456	108.7127	EMPORIA ENERGY CENTER - G14_001T 345.00 345KV CKT 1
FDNS	01ALL	0	20WP	G15_081	TO->FROM	MATHWSN7 345.00 - TATONGA7 345.00 345KV CKT 1	1195	1195	0.40302	108.6972	GEN590011 2-ERCOT EQUIVALENCE
FDNS	01ALL	0	20WP	G15_081	TO->FROM	MATHWSN7 345.00 - TATONGA7 345.00 345KV CKT 1	1195	1195	0.40469	108.697	GLASS MOUNTAIN - MOORELAND 138KV CKT 1
FDNS	01ALL	0	20WP	G15_081	TO->FROM	MATHWSN7 345.00 - TATONGA7 345.00 345KV CKT 1	1195	1195	0.40302	108.6875	GEN334440 1-SABINE UNIT 4
FDNS	01ALL	0	20WP	G15_081	TO->FROM	MATHWSN7 345.00 - TATONGA7 345.00 345KV CKT 1	1195	1195	0.40302	108.6836	GEN515550 1-MNCWND31 0.6900
FDNS	01ALL	0	20WP	G15_081	TO->FROM	MATHWSN7 345.00 - TATONGA7 345.00 345KV CKT 1	1195	1195	0.40302	108.6761	GEN562952 1-G15057_3 0.6500
FDNS	01ALL	0	20WP	G15_081	TO->FROM	MATHWSN7 345.00 - TATONGA7 345.00 345KV CKT 1	1195	1195	0.40454	108.671	P12:138:WERE:MURR-MKEC_138P::
FDNS	01ALL	0	20WP	G15_081	TO->FROM	MATHWSN7 345.00 - TATONGA7 345.00 345KV CKT 1	1195	1195	0.40302	108.6707	GEN336831 1-BAXTER WILSON SES
FDNS	01ALL	0	20WP	G15_081	TO->FROM	MATHWSN7 345.00 - TATONGA7 345.00 345KV CKT 1	1195	1195	0.40302	108.6622	GEN590010 1-ERCOT EQUIVALENCE
FDNS	01ALL	0	20WP	G15_081	TO->FROM	MATHWSN7 345.00 - TATONGA7 345.00 345KV CKT 1	1195	1195	0.40469	108.6554	CLEO CORNER - GLASS MOUNTAIN 138KV CKT 1
FDNS	01ALL	0	20WP	G15_081	TO->FROM	MATHWSN7 345.00 - TATONGA7 345.00 345KV CKT 1	1195	1195	0.40366	108.6546	G15088_T 345.00 - PAULINE 345KV CKT 1
FDNS	01ALL	0	20WP	G15_081	TO->FROM	MATHWSN7 345.00 - TATONGA7 345.00 345KV CKT 1	1195	1195	0.40302	108.6389	GEN562512 1-G14_020_3 0.6900
FDNS	01ALL	0	20WP	G15_081	TO->FROM	MATHWSN7 345.00 - TATONGA7 345.00 345KV CKT 1	1195	1195	0.40302	108.6343	GEN511938 1-OEC STEAM # 1
FDNS	00NR	0	16WP	G15_081	TO->FROM	MATHWSN7 345.00 - TATONGA7 345.00 345KV CKT 1	1195	1195	0.48557	108.6268	G14-074T 345.00 - OKLAUNION 345KV CKT 1
FDNS	01ALL	0	20WP	G15_081	TO->FROM	MATHWSN7 345.00 - TATONGA7 345.00 345KV CKT 1	1195	1195	0.40302	108.6266	GEN336251 1-NINEMILE POINT UNIT#4
FDNS	01ALL	0	20WP	G15_081	TO->FROM	MATHWSN7 345.00 - TATONGA7 345.00 345KV CKT 1	1195	1195	0.40404	108.6089	EL RENO - ROMAN NOSE 138KV CKT 1
FDNS	01ALL	0	20WP	G15_081	TO->FROM	MATHWSN7 345.00 - TATONGA7 345.00 345KV CKT 1	1195	1195	0.40302	108.5907	GEN337041 1-GERALD ANDRUS
FDNS	01ALL	0	20WP	G15_081	TO->FROM	MATHWSN7 345.00 - TATONGA7 345.00 345KV CKT 1	1195	1195	0.40466	108.5741	TUCO INTERCHANGE - TUCO_2 345.00 345KV CKT 1
FDNS	01ALL	0	20WP	G15_081	TO->FROM	MATHWSN7 345.00 - TATONGA7 345.00 345KV CKT 1	1195	1195	0.40386	108.5689	BYRON_138 138.00 - SANDY_CN_138138.00 138KV CKT 1
FDNS	01ALL	0	20WP	G15_081	TO->FROM	MATHWSN7 345.00 - TATONGA7 345.00 345KV CKT 1	1195	1195	0.40302	108.5585	GEN511941 1-OEC STEAM # 2
FDNS	01ALL	0	20WP	G15_081	TO->FROM	MATHWSN7 345.00 - TATONGA7 345.00 345KV CKT 1	1195	1195	0.40392	108.5556	SWISSVALE - WEST GARDNER 345KV CKT 1
FDNS	01ALL	0	20WP	G15_081	TO->FROM	MATHWSN7 345.00 - TATONGA7 345.00 345KV CKT 1	1195	1195	0.40302	108.5508	GEN335204 1-NELSON UNIT 4
FDNS	01ALL	0	20WP	G15_081	TO->FROM	MATHWSN7 345.00 - TATONGA7 345.00 345KV CKT 1	1195	1195	0.40302	108.5473	GEN300024 1-1CHOTST6 16.000
FDNS	01ALL	0	20WP	G15_081	TO->FROM	MATHWSN7 345.00 - TATONGA7 345.00 345KV CKT 1	1195	1195	0.40302	108.5471	GEN300031 1-CHOUTEAU CTG 1
FDNS	01ALL	0	20WP	G15_081	TO->FROM	MATHWSN7 345.00 - TATONGA7 345.00 345KV CKT 1	1195	1195	0.40302	108.5454	WHITE BLUFF 500/26.0KV TRANSFORMER CKT 1
FDNS	01ALL	0	20WP	G15_081	TO->FROM	MATHWSN7 345.00 - TATONGA7 345.00 345KV CKT 1	1195	1195	0.40302	108.5442	GEN563273 2-G15093_4 0.6900
FDNS	01ALL	0	20WP	G15_081	TO->FROM	MATHWSN7 345.00 - TATONGA7 345.00 345KV CKT 1	1195	1195	0.40302	108.5249	GEN334441 1-SABINE UNIT 5
FDNS	01ALL	0	20WP	G15_081	TO->FROM	MATHWSN7 345.00 - TATONGA7 345.00 345KV CKT 1	1195	1195	0.40302	108.5242	GEN300020 1-1CHOTCT4 16.000
FDNS	01ALL	0	20WP	G15_081	TO->FROM	MATHWSN7 345.00 - TATONGA7 345.00 345KV CKT 1	1195	1195	0.40302	108.5242	GEN300021 1-1CHOTCT5 16.000
FDNS	01ALL	0	20WP	G15_081	TO->FROM	MATHWSN7 345.00 - TATONGA7 345.00 345KV CKT 1	1195	1195	0.40302	108.524	GEN300032 1-CHOUTEAU CTG 2
FDNS	01ALL	0	20WP	G15_081	TO->FROM	MATHWSN7 345.00 - TATONGA7 345.00 345KV CKT 1	1195	1195	0.40302	108.524	GEN300033 1-CHOUTEAU STG 3
FDNS	01ALL	0	20WP	G15_081	TO->FROM	MATHWSN7 345.00 - TATONGA7 345.00 345KV CKT 1	1195	1195	0.40243	108.5233	ARKANSAS NUCLEAR ONE - FT SMITH 500KV CKT 1
FDNS	01ALL	0	20WP	G15_081	TO->FROM	MATHWSN7 345.00 - TATONGA7 345.00 345KV CKT 1	1195	1195	0.40243	108.5233	ARKANSAS NUCLEAR ONE - FT SMITH 500KV CKT 1
FDNS	01ALL	0	16WP	G15_081	TO->FROM	MATHWSN7 345.00 - TATONGA7 345.00 345KV CKT 1	1195	1195	0.41945	108.5231	G1524G1525 345.00 - THISTLE7 345.00 345KV CKT 1
FDNS	01ALL	0	16WP	G15_081	TO->FROM	MATHWSN7 345.00 - TATONGA7 345.00 345KV CKT 1	1195	1195	0.41945	108.5231	G1524G1525 345.00 - THISTLE7 345.00 345KV CKT 2
FDNS	01ALL	0	20WP	G15_081	TO->FROM	MATHWSN7 345.00 - TATONGA7 345.00 345KV CKT 1	1195	1195	0.40314	108.5105	GRAND ISLAND - MCCOOL 345KV CKT 1
FDNS	01ALL	0	20WP	G15_081	TO->FROM	MATHWSN7 345.00 - TATONGA7 345.00 345KV CKT 1	1195	1195	0.40384	108.508	DEWEY - TALOGA 138KV CKT 1
FDNS	01ALL	0	20WP	G15_081	TO->FROM	MATHWSN7 345.00 - TATONGA7 345.00 345KV CKT 1	1195	1195	0.40501	108.5032	BVRCNTY7 345.00 - OPTIMA 345.00 345KV CKT 1
FDNS	01ALL	0	20WP	G15_081	TO->FROM	MATHWSN7 345.00 - TATONGA7 345.00 345KV CKT 1	1195	1195	0.40501	108.5032	BVRCNTY7 345.00 - OPTIMA 345.00 345KV CKT 2
FDNS	01ALL	0	20WP	G15_081	TO->FROM	MATHWSN7 345.00 - TATONGA7 345.00 345KV CKT 1	1195	1195	0.40302	108.4961	GEN336191 1-LITTLE GYPSY UNIT#3
FDNS	01ALL	0	20WP	G15_081	TO->FROM	MATHWSN7 345.00 - TATONGA7 345.00 345KV CKT 1	1195	1195	0.4037	108.4947	ELK CITY - RED HILLS WIND 138KV CKT 1
FDNS	01ALL	0	20WP	G15_081	TO->FROM	MATHWSN7 345.00 - TATONGA7 345.00 345KV CKT 1	1195	1195	0.4037	108.4947	ELK CITY - RED HILLS WIND 138KV CKT 1
FDNS	01ALL	0	20WP	G15_081	TO->FROM	MATHWSN7 345.00 - TATONGA7 345.00 345KV CKT 1	1195	1195	0.40302	108.4815	GEN509393 S1-ARSENAL HILL GENS #4 (STALL)
FDNS	01ALL	0	20WP	G15_081	TO->FROM	MATHWSN7 345.00 - TATONGA7 345.00 345KV CKT 1	1195	1195	0.405	108.4801	CHISHOLM7 345.00 () 345/230/13.2KV TRANSFORMER CKT 1
FDNS	01ALL	0	20WP	G15_081	TO->FROM	MATHWSN7 345.00 - TATONGA7 345.00 345KV CKT 1	1195	1195	0.40639	108.4755	G14_038T 345.00 - Hitchland Interchange 345KV CKT 1

SOLUTION	GROUP	SCENARIO	SEASON	SOURCE	DIRECTION	MONITORED ELEMENT	RATEA (MVA)	RATEB(MVA)	TDF	TC%LOADING (% MVA)	CONTINGENCY
FDNS	01ALL	0	20WP	G15_081	TO->FROM	MATHWSN7 345.00 - TATONGA7 345.00 345KV CKT 1	1195	1195	0.40302	108.4754	GEN335614 1-WILLOW GLENN UNIT#4
FDNS	01ALL	0	20WP	G15_081	TO->FROM	MATHWSN7 345.00 - TATONGA7 345.00 345KV CKT 1	1195	1195	0.40302	108.4586	GEN336464 1-MICHOUD UNIT #3
FDNS	01ALL	0	20WP	G15_081	TO->FROM	MATHWSN7 345.00 - TATONGA7 345.00 345KV CKT 1	1195	1195	0.40343	108.4574	CIRCLE - MULLERGREN 230KV CKT 1
FDNS	01ALL	0	20WP	G15_081	TO->FROM	MATHWSN7 345.00 - TATONGA7 345.00 345KV CKT 1	1195	1195	0.40343	108.4574	CIRCLE - MULLERGREN 230KV CKT 1
FDNS	01ALL	0	20WP	G15_081	TO->FROM	MATHWSN7 345.00 - TATONGA7 345.00 345KV CKT 1	1195	1195	0.40302	108.4529	GEN336801 1-BAXTER WILSON UNIT #1
FDNS	01ALL	0	20WP	G15_081	TO->FROM	MATHWSN7 345.00 - TATONGA7 345.00 345KV CKT 1	1195	1195	0.40302	108.4512	GEN334433 1-SABINE UNIT 3
FDNS	01ALL	0	20WP	G15_081	TO->FROM	MATHWSN7 345.00 - TATONGA7 345.00 345KV CKT 1	1195	1195	0.40302	108.4465	GEN300015 1-1SGPDEL 18.000
FDNS	01ALL	0	20WP	G15_081	TO->FROM	MATHWSN7 345.00 - TATONGA7 345.00 345KV CKT 1	1195	1195	0.40302	108.4455	GEN562992 1-G15063_3 0.6900
FDNS	01ALL	0	20WP	G15_081	TO->FROM	MATHWSN7 345.00 - TATONGA7 345.00 345KV CKT 1	1195	1195	0.40521	108.4441	BENTON - ROSE HILL 345KV CKT 1
FDNS	01ALL	0	20WP	G15_081	TO->FROM	MATHWSN7 345.00 - TATONGA7 345.00 345KV CKT 1	1195	1195	0.40347	108.4409	TALOGA (TALOGA) 138/69/13.8KV TRANSFORMER CKT 1
FDNS	01ALL	0	20WP	G15_081	TO->FROM	MATHWSN7 345.00 - TATONGA7 345.00 345KV CKT 1	1195	1195	0.40302	108.4402	GEN303007 1-1BC2 U2
FDNS	01ALL	0	20WP	G15_081	TO->FROM	MATHWSN7 345.00 - TATONGA7 345.00 345KV CKT 1	1195	1195	0.40302	108.4397	GEN303006 1-1BC2 U1
FDNS	01ALL	0	20WP	G15_081	TO->FROM	MATHWSN7 345.00 - TATONGA7 345.00 345KV CKT 1	1195	1195	0.40383	108.4272	EMPORIA ENERGY CENTER - SWISSVALE 345KV CKT 1
FDNS	01ALL	0	20WP	G15_081	TO->FROM	MATHWSN7 345.00 - TATONGA7 345.00 345KV CKT 1	1195	1195	0.40302	108.4185	GEN520812 1-ANADRK5
FDNS	01ALL	0	20WP	G15_081	TO->FROM	MATHWSN7 345.00 - TATONGA7 345.00 345KV CKT 1	1195	1195	0.40302	108.4184	GEN520813 1-ANADRK6
FDNS	01ALL	0	20WP	G15_081	TO->FROM	MATHWSN7 345.00 - TATONGA7 345.00 345KV CKT 1	1195	1195	0.40302	108.4131	GEN334071 1-LEWIS CREEK 2
FDNS	01ALL	0	17G	G15_081	TO->FROM	MATHWSN7 345.00 - TATONGA7 345.00 345KV CKT 1	1195	1195	0.44549	108.4116	THISTLE7 345.00 - WOODWARD DISTRICT EHV 345KV CKT 1
FDNS	01ALL	0	17G	G15_081	TO->FROM	MATHWSN7 345.00 - TATONGA7 345.00 345KV CKT 1	1195	1195	0.44549	108.4116	THISTLE7 345.00 - WOODWARD DISTRICT EHV 345KV CKT 2
FDNS	01ALL	0	20WP	G15_081	TO->FROM	MATHWSN7 345.00 - TATONGA7 345.00 345KV CKT 1	1195	1195	0.40302	108.4105	GEN501811 1-RODEMACHER UNIT 1
FDNS	01ALL	0	20WP	G15_081	TO->FROM	MATHWSN7 345.00 - TATONGA7 345.00 345KV CKT 1	1195	1195	0.40302	108.4095	GEN334070 1-LEWIS CREEK 1
FDNS	01ALL	0	20WP	G15_081	TO->FROM	MATHWSN7 345.00 - TATONGA7 345.00 345KV CKT 1	1195	1195	0.40302	108.4091	GEN509392 G2-ARSENAL HILL GENS #3 (STALL)
FDNS	01ALL	0	20WP	G15_081	TO->FROM	MATHWSN7 345.00 - TATONGA7 345.00 345KV CKT 1	1195	1195	0.40302	108.4052	GEN511939 1-OEC GAS # 1-1
FDNS	01ALL	0	20WP	G15_081	TO->FROM	MATHWSN7 345.00 - TATONGA7 345.00 345KV CKT 1	1195	1195	0.40302	108.4042	GEN503909 1-FULTONU1 1 16.000
FDNS	01ALL	0	20WP	G15_081	TO->FROM	MATHWSN7 345.00 - TATONGA7 345.00 345KV CKT 1	1195	1195	0.40302	108.4032	GEN300010 1-ST FRANCIS UNIT 1
FDNS	01ALL	0	20WP	G15_081	TO->FROM	MATHWSN7 345.00 - TATONGA7 345.00 345KV CKT 1	1195	1195	0.40302	108.4027	GEN303008 1-1BC2 U3
FDNS	01ALL	0	20WP	G15_081	TO->FROM	MATHWSN7 345.00 - TATONGA7 345.00 345KV CKT 1	1195	1195	0.40336	108.4017	GERALD GENTLEMAN STATION - THEDFRD3 345.00 345KV CKT 1
FDNS	01ALL	0	20WP	G15_081	TO->FROM	MATHWSN7 345.00 - TATONGA7 345.00 345KV CKT 1	1195	1195	0.40302	108.4001	GEN506754 1-LEBROCK STEAM 1
FDNS	01ALL	0	20WP	G15_081	TO->FROM	MATHWSN7 345.00 - TATONGA7 345.00 345KV CKT 1	1195	1195	0.40302	108.4	GEN515266 1-AES 1G
FDNS	01ALL	0	20WP	G15_081	TO->FROM	MATHWSN7 345.00 - TATONGA7 345.00 345KV CKT 1	1195	1195	0.40302	108.4	GEN515267 1-AES 2G
FDNS	01ALL	0	20WP	G15_081	TO->FROM	MATHWSN7 345.00 - TATONGA7 345.00 345KV CKT 1	1195	1195	0.40302	108.3971	GEN509391 G1-ARSENAL HILL GENS #2 (STALL)
FDNS	01ALL	0	20WP	G15_081	TO->FROM	MATHWSN7 345.00 - TATONGA7 345.00 345KV CKT 1	1195	1195	0.40302	108.3947	GEN549893 2-SOUTHWEST 2
FDNS	01ALL	0	20WP	G15_081	TO->FROM	MATHWSN7 345.00 - TATONGA7 345.00 345KV CKT 1	1195	1195	0.40302	108.3921	GEN336170 1-GULF OXY U4
FDNS	01ALL	0	20WP	G15_081	TO->FROM	MATHWSN7 345.00 - TATONGA7 345.00 345KV CKT 1	1195	1195	0.40351	108.3901	CANTON - TALOGA 69KV CKT 1
FDNS	01ALL	0	20WP	G15_081	TO->FROM	MATHWSN7 345.00 - TATONGA7 345.00 345KV CKT 1	1195	1195	0.40302	108.3891	GEN511838 1-NORTHEASTERN STATION # 1-1B
FDNS	01ALL	0	20WP	G15_081	TO->FROM	MATHWSN7 345.00 - TATONGA7 345.00 345KV CKT 1	1195	1195	0.40302	108.3889	GEN511837 1-NORTHEASTERN STATION # 1-1A
FDNS	01ALL	0	20WP	G15_081	TO->FROM	MATHWSN7 345.00 - TATONGA7 345.00 345KV CKT 1	1195	1195	0.40302	108.3763	GEN513602 1-GRECSTG_1 17.500
FDNS	01ALL	0	20WP	G15_081	TO->FROM	MATHWSN7 345.00 - TATONGA7 345.00 345KV CKT 1	1195	1195	0.40302	108.3714	GEN300011 1-ST FRANCIS UNIT 2
FDNS	01ALL	0	20WP	G15_081	TO->FROM	MATHWSN7 345.00 - TATONGA7 345.00 345KV CKT 1	1195	1195	0.4037	108.3688	ELLIS 4 138.00 - MOREWOOD SW 138KV CKT 1
FDNS	01ALL	0	20WP	G15_081	TO->FROM	MATHWSN7 345.00 - TATONGA7 345.00 345KV CKT 1	1195	1195	0.40302	108.3656	GEN300003 1-THOMAS HILL UNIT 3
FDNS	01ALL	0	20WP	G15_081	TO->FROM	MATHWSN7 345.00 - TATONGA7 345.00 345KV CKT 1	1195	1195	0.40302	108.365	GEN505432 1-SIKESTON
FDNS	01ALL	0	20WP	G15_081	TO->FROM	MATHWSN7 345.00 - TATONGA7 345.00 345KV CKT 1	1195	1195	0.40356	108.3544	P12:138:AEPW-OGE:WTH_JCT4:JENSEN4
FDNS	01ALL	0	20WP	G15_081	TO->FROM	MATHWSN7 345.00 - TATONGA7 345.00 345KV CKT 1	1195	1195	0.40333	108.3507	BUCKNER7 345.00 - HOLCOMB 345KV CKT 1
FDNS	01ALL	0	20WP	G15_081	TO->FROM	MATHWSN7 345.00 - TATONGA7 345.00 345KV CKT 1	1195	1195	0.40333	108.3507	BUCKNER7 345.00 - HOLCOMB 345KV CKT 1
FDNS	01ALL	0	20WP	G15_081	TO->FROM	MATHWSN7 345.00 - TATONGA7 345.00 345KV CKT 1	1195	1195	0.40351	108.3483	CANTON - OKEENE 69KV CKT 1
FDNS	01ALL	0	20WP	G15_081	TO->FROM	MATHWSN7 345.00 - TATONGA7 345.00 345KV CKT 1	1195	1195	0.40302	108.3418	GEN511955 G-COGENTRIX GAS # 2
FDNS	01ALL	0	20WP	G15_081	TO->FROM	MATHWSN7 345.00 - TATONGA7 345.00 345KV CKT 1	1195	1195	0.40352	108.3392	DARLINGTNRD4138.00 - ROMAN NOSE 138KV CKT 1
FDNS	01ALL	0	20WP	G15_081	TO->FROM	MATHWSN7 345.00 - TATONGA7 345.00 345KV CKT 1	1195	1195	0.40251	108.3361	LACYGNE - NEOSHO 345KV CKT 1
FDNS	01ALL	0	20WP	G15_081	TO->FROM	MATHWSN7 345.00 - TATONGA7 345.00 345KV CKT 1	1195	1195	0.40302	108.3296	GEN336222 1-LITTLE GYPSY UNIT#2
FDNS	01ALL	0	20WP	G15_081	TO->FROM	MATHWSN7 345.00 - TATONGA7 345.00 345KV CKT 1	1195	1195	0.40315	108.3284	MCCOOL - MOORE 345KV CKT 1
FDNS	01ALL	0	20WP	G15_081	TO->FROM	MATHWSN7 345.00 - TATONGA7 345.00 345KV CKT 1	1195	1195	0.40302	108.322	GEN337766 1-TRACTEBEL UNIT S1
FDNS	01ALL	0	20WP	G15_081	TO->FROM	MATHWSN7 345.00 - TATONGA7 345.00 345KV CKT 1	1195	1195	0.40302	108.3172	GEN511953 G-COGENTRIX GAS # 1
FDNS	01ALL	0	20WP	G15_081	TO->FROM	MATHWSN7 345.00 - TATONGA7 345.00 345KV CKT 1	1195	1195	0.40302	108.3158	GEN501910 1-ACADIA UNIT ST1
FDNS	01ALL	0	20WP	G15_081	TO->FROM	MATHWSN7 345.00 - TATONGA7 345.00 345KV CKT 1	1195	1195	0.40302	108.3116	GEN334030 1-FRONTIER UNIT 1
FDNS	01ALL	0	20WP	G15_081	TO->FROM	MATHWSN7 345.00 - TATONGA7 345.00 345KV CKT 1	1195	1195	0.40302	108.3111	GEN336152 1-WATERFORD UNIT#2
FDNS	01ALL	0	20WP	G15_081	TO->FROM	MATHWSN7 345.00 - TATONGA7 345.00 345KV CKT 1	1195	1195	0.40302	108.311	GEN334031 1-FRONTIER UNIT 2
FDNS	01ALL	0	20WP	G15_081	TO->FROM	MATHWSN7 345.00 - TATONGA7 345.00 345KV CKT 1	1195	1195	0.403	108.3109	DOLET HILLS - SOUTHWEST SHREVEPORT 345KV CKT 1
FDNS	01ALL	0	20WP	G15_081	TO->FROM	MATHWSN7 345.00 - TATONGA7 345.00 345KV CKT 1	1195	1195	0.403	108.3109	DOLET HILLS - SOUTHWEST SHREVEPORT 345KV CKT 1
FDNS	01ALL	0	20WP	G15_081	TO->FROM	MATHWSN7 345.00 - TATONGA7 345.00 345KV CKT 1	1195	1195	0.40302	108.3106	GEN336151 1-WATERFORD UNIT#1
FDNS	01ALL	0	20WP	G15_081	TO->FROM	MATHWSN7 345.00 - TATONGA7 345.00 345KV CKT 1	1195	1195	0.40321	108.309	CLINTON JUNCTION - ELK CITY 138KV CKT 1
FDNS	01ALL	0	20WP	G15_081	TO->FROM	MATHWSN7 345.00 - TATONGA7 345.00 345KV CKT 1	1195	1195	0.40321	108.309	CLINTON JUNCTION - ELK CITY 138KV CKT 1
FDNS	01ALL	0	20WP	G15_081	TO->FROM	MATHWSN7 345.00 - TATONGA7 345.00 345KV CKT 1	1195	1195	0.4034	108.3065	P12:115:MKEC:BARBER-RIVERROAD::
FDNS	01ALL	0	20WP	G15_081	TO->FROM	MATHWSN7 345.00 - TATONGA7 345.00 345KV CKT 1	1195	1195	0.4035	108.3026	Canadian Pump Station - REDROCKRD4 138.00 138KV CKT 1
FDNS	01ALL	0	20WP	G15_081	TO->FROM	MATHWSN7 345.00 - TATONGA7 345.00 345KV CKT 1	1195	1195	0.40302	108.3011	GEN511836 1-NORTHEASTERN STATION #1
FDNS	01ALL	0	20WP	G15_081	TO->FROM	MATHWSN7 345.00 - TATONGA7 345.00 345KV CKT 1	1195	1195	0.4034	108.2993	BARBER 3 115.00 - SAWYER 3 115.00 115KV CKT 1
FDNS	01ALL	0	20WP	G15_081	TO->FROM	MATHWSN7 345.00 - TATONGA7 345.00 345KV CKT 1	1195	1195	0.4033	108.2968	HOLT.CO3 345.00 - THEDFRD3 345.00 345KV CKT 1
FDNS	01ALL	0	20WP	G15_081	TO->FROM	MATHWSN7 345.00 - TATONGA7 345.00 345KV CKT 1	1195	1195	0.40302	108.2967	GEN511957 G-COGENTRIX GAS # 3
FDNS	01ALL	0	20WP	G15_081	TO->FROM	MATHWSN7 345.00 - TATONGA7 345.00 345KV CKT 1	1195	1195	0.40302	108.2956	GEN511954 S-COGENTRIX STEAM # 1
FDNS	01ALL	0	20WP	G15_081	TO->FROM	MATHWSN7 345.00 - TATONGA7 345.00 345KV CKT 1	1195	1195	0.40302	108.2956	GEN511956 S-COGENTRIX STEAM # 2
FDNS	01ALL	0	20WP	G15_081	TO->FROM	MATHWSN7 345.00 - TATONGA7 345.00 345KV CKT 1	1195	1195	0.40302	108.2941	GEN300016 1-1G1GPDEL 18.000
FDNS	01ALL	0	20WP	G15_081	TO->FROM	MATHWSN7 345.00 - TATONGA7 345.00 345KV CKT 1	1195	1195	0.4039	108.2909	HITCHLAND INTERCHANGE - MOORE COUNTY INTERCHANGE 230KV CKT 1
FDNS	01ALL	0	20WP	G15_081	TO->FROM	MATHWSN7 345.00 - TATONGA7 345.00 345KV CKT 1	1195	1195	0.4039	108.2909	HITCHLAND INTERCHANGE - MOORE COUNTY INTERCHANGE 230KV CKT 1
FDNS	01ALL	0	20WP	G15_081	TO->FROM	MATHWSN7 345.00 - TATONGA7 345.00 345KV CKT 1	1195	1195	0.40416	108.2877	G15095_T 138.00 - MOORELAND 138KV CKT 1
FDNS	01ALL	0	20WP	G15_081	TO->FROM	MATHWSN7 345.00 - TATONGA7 345.00 345KV CKT 1	1195	1195	0.40302	108.285	GEN514912 2-REDBUD GEN
FDNS	01ALL	0	20WP	G15_081	TO->FROM	MATHWSN7 345.00 - TATONGA7 345.00 345KV CKT 1	1195	1195	0.4034	108.2844	ALEXANDER - SAWYER 3 115.00 115KV CKT 1
FDNS	01ALL	0	20WP	G15_081	TO->FROM	MATHWSN7 345.00 - TATONGA7 345.00 345KV CKT 1	1195	1195	0.40302	108.2843	GEN520811 1-ANADRK4
FDNS	01ALL	0	20WP	G15_081	TO->FROM	MATHWSN7 345.00 - TATONGA7 345.00 345KV CKT 1	1195	1195	0.40302	108.2805	DOLET HILLS 345/24.0KV TRANSFORMER CKT 1
FDNS	01ALL	0	20WP	G15_081	TO->FROM	MATHWSN7 345.00 - TATONGA7 345.00 345KV CKT 1	1195	1195	0.40352	108.28	DARLINGTNRD4138.00 - REDROCKRD4 138.00 138KV CKT 1
FDNS	01ALL	0	20WP	G15_081	TO->FROM	MATHWSN7 345.00 - TATONGA7 345.00 345KV CKT 1	1195	1195	0.40352	108.28	DARLINGTNRD4138.00 - REDROCKRD4 138.00 138KV CKT 1
FDNS	01ALL	0	20WP	G15_081	TO->FROM	MATHWSN7 345.00 - TATONGA7 345.00 345KV CKT 1	1195	1195	0.4035	108.2779	P12:138:OKGE-AEPW:JENSEN4:REDROCKRD4

SOLUTION	GROUP	SCENARIO	SEASON	SOURCE	DIRECTION	MONITORED ELEMENT	RATEA (MVA)	RATEB(MVA)	TDF	TC%LOADING (% MVA)	CONTINGENCY
FDNS	01ALL	0	20WP	G15_081	TO->FROM	MATHWSN7 345.00 - TATONGA7 345.00 345KV CKT 1	1195	1195	0.40302	108.2756	GEN506752 1-LEBROCK GAS 1
FDNS	01ALL	0	20WP	G15_081	TO->FROM	MATHWSN7 345.00 - TATONGA7 345.00 345KV CKT 1	1195	1195	0.40302	108.2755	GEN506753 1-LEBROCK GAS 2
FDNS	01ALL	0	20WP	G15_081	TO->FROM	MATHWSN7 345.00 - TATONGA7 345.00 345KV CKT 1	1195	1195	0.4037	108.2745	CUSTER4 138.00 - ELLIS 4 138.00 138KV CKT 1
FDNS	01ALL	0	20WP	G15_081	TO->FROM	MATHWSN7 345.00 - TATONGA7 345.00 345KV CKT 1	1195	1195	0.40302	108.2739	GEN511940 1-OEC GAS # 1-2
FDNS	01ALL	0	20WP	G15_081	TO->FROM	MATHWSN7 345.00 - TATONGA7 345.00 345KV CKT 1	1195	1195	0.40344	108.2715	BLACKBERRY - NEOSHO 345KV CKT 1
FDNS	01ALL	0	20WP	G15_081	TO->FROM	MATHWSN7 345.00 - TATONGA7 345.00 345KV CKT 1	1195	1195	0.40342	108.2684	RENO COUNTY - SUMMIT 345KV CKT 1
FDNS	01ALL	0	20WP	G15_081	TO->FROM	MATHWSN7 345.00 - TATONGA7 345.00 345KV CKT 1	1195	1195	0.40334	108.2662	WALKEMEYER - WALKTAP3 115.00 115KV CKT 1
FDNS	01ALL	0	20WP	G15_081	TO->FROM	MATHWSN7 345.00 - TATONGA7 345.00 345KV CKT 1	1195	1195	0.40334	108.2662	WALKEMEYER - WALKTAP3 115.00 115KV CKT 1
FDNS	01ALL	0	20WP	G15_081	TO->FROM	MATHWSN7 345.00 - TATONGA7 345.00 345KV CKT 1	1195	1195	0.40334	108.2661	WALKTAP7 345.00 (WALKE345) 345/115/13.8KV TRANSFORMER CKT 1
FDNS	01ALL	0	20WP	G15_081	TO->FROM	MATHWSN7 345.00 - TATONGA7 345.00 345KV CKT 1	1195	1195	0.40334	108.2661	WALKTAP7 345.00 (WALKE345) 345/115/13.8KV TRANSFORMER CKT 1
FDNS	01ALL	0	20WP	G15_081	TO->FROM	MATHWSN7 345.00 - TATONGA7 345.00 345KV CKT 1	1195	1195	0.40302	108.2626	GEN337764 1-TRACTEBEL UNIT C1
FDNS	01ALL	0	20WP	G15_081	TO->FROM	MATHWSN7 345.00 - TATONGA7 345.00 345KV CKT 1	1195	1195	0.40302	108.2626	GEN337765 1-TRACTEBEL UNIT C2
FDNS	01ALL	0	20WP	G15_081	TO->FROM	MATHWSN7 345.00 - TATONGA7 345.00 345KV CKT 1	1195	1195	0.40302	108.2623	GEN300017 1-1G2GPDEL 18.000
FDNS	01ALL	0	20WP	G15_081	TO->FROM	MATHWSN7 345.00 - TATONGA7 345.00 345KV CKT 1	1195	1195	0.40325	108.2619	CONWAY SUB - NICHOLS STATION 115KV CKT 1
FDNS	01ALL	0	20WP	G15_081	TO->FROM	MATHWSN7 345.00 - TATONGA7 345.00 345KV CKT 1	1195	1195	0.40302	108.2571	ST FRANCIS - ST FRANCIS 1 161KV CKT Z1
FDNS	01ALL	0	20WP	G15_081	TO->FROM	MATHWSN7 345.00 - TATONGA7 345.00 345KV CKT 1	1195	1195	0.40327	108.256	NUNDRWD - WAYSIDE 230KV CKT 1
FDNS	01ALL	0	20WP	G15_081	TO->FROM	MATHWSN7 345.00 - TATONGA7 345.00 345KV CKT 1	1195	1195	0.4037	108.2552	CUSTER4 138.00 - RED HILLS WIND 138KV CKT 1
FDNS	01ALL	0	20WP	G15_081	TO->FROM	MATHWSN7 345.00 - TATONGA7 345.00 345KV CKT 1	1195	1195	0.40302	108.2526	GEN509408 1-WILKES #2
FDNS	01ALL	0	20WP	G15_081	TO->FROM	MATHWSN7 345.00 - TATONGA7 345.00 345KV CKT 1	1195	1195	0.403	108.2526	WEBRE - WELLS 500KV CKT 1
FDNS	01ALL	0	20WP	G15_081	TO->FROM	MATHWSN7 345.00 - TATONGA7 345.00 345KV CKT 1	1195	1195	0.40302	108.2514	GEN549890 1-SOUTHWEST 1
FDNS	01ALL	0	20WP	G15_081	TO->FROM	MATHWSN7 345.00 - TATONGA7 345.00 345KV CKT 1	1195	1195	0.40341	108.2462	PUTNAM - TALOGA 69KV CKT 1
FDNS	01ALL	0	20WP	G15_081	TO->FROM	MATHWSN7 345.00 - TATONGA7 345.00 345KV CKT 1	1195	1195	0.40302	108.2449	GEN501823 1-TECHE UNIT 3
FDNS	01ALL	0	20WP	G15_081	TO->FROM	MATHWSN7 345.00 - TATONGA7 345.00 345KV CKT 1	1195	1195	0.40302	108.2437	GEN511851 1-COMANCHE #1
FDNS	01ALL	0	20WP	G15_081	TO->FROM	MATHWSN7 345.00 - TATONGA7 345.00 345KV CKT 1	1195	1195	0.40302	108.2381	GEN562882 1-G15047_3 0.6900
FDNS	01ALL	0	20WP	G15_081	TO->FROM	MATHWSN7 345.00 - TATONGA7 345.00 345KV CKT 1	1195	1195	0.40334	108.2372	RED WILLOW (RD.WILLOW T1) 345/115/13.8KV TRANSFORMER CKT 1
FDNS	01ALL	0	20WP	G15_081	TO->FROM	MATHWSN7 345.00 - TATONGA7 345.00 345KV CKT 1	1195	1195	0.40334	108.2372	RED WILLOW (RD.WILLOW T1) 345/115/13.8KV TRANSFORMER CKT 1
FDNS	01ALL	0	20WP	G15_081	TO->FROM	MATHWSN7 345.00 - TATONGA7 345.00 345KV CKT 1	1195	1195	0.40302	108.2366	GERALD GENTLEMAN STATION - SWEETWATER 345KV CKT 1
FDNS	01ALL	0	20WP	G15_081	TO->FROM	MATHWSN7 345.00 - TATONGA7 345.00 345KV CKT 1	1195	1195	0.40302	108.2332	GEN501970 1-EVANGELINE UNIT 7
FDNS	01ALL	0	20WP	G15_081	TO->FROM	MATHWSN7 345.00 - TATONGA7 345.00 345KV CKT 1	1195	1195	0.40301	108.2304	7SAREPTA% 345.00 - LONGWOOD 345KV CKT 1
FDNS	01ALL	0	20WP	G15_081	TO->FROM	MATHWSN7 345.00 - TATONGA7 345.00 345KV CKT 1	1195	1195	0.40301	108.2304	7SAREPTA% 345.00 - LONGWOOD 345KV CKT 1
FDNS	01ALL	0	20WP	G15_081	TO->FROM	MATHWSN7 345.00 - TATONGA7 345.00 345KV CKT 1	1195	1195	0.4034	108.2292	ALEXANDER - NINNESC3 115.00 115KV CKT 1
FDNS	01ALL	0	20WP	G15_081	TO->FROM	MATHWSN7 345.00 - TATONGA7 345.00 345KV CKT 1	1195	1195	0.40302	108.2282	ST FRANCIS 345/161KV TRANSFORMER CKT 1
FDNS	01ALL	0	20WP	G15_081	TO->FROM	MATHWSN7 345.00 - TATONGA7 345.00 345KV CKT 1	1195	1195	0.4036	108.2261	WOODWARD (WOODWRD2) 138/69/13.2KV TRANSFORMER CKT 1
FDNS	01ALL	0	20WP	G15_081	TO->FROM	MATHWSN7 345.00 - TATONGA7 345.00 345KV CKT 1	1195	1195	0.40318	108.2259	KNOLL 230 - POSTROCK6 230.00 230KV CKT 1
FDNS	01ALL	0	20WP	G15_081	TO->FROM	MATHWSN7 345.00 - TATONGA7 345.00 345KV CKT 1	1195	1195	0.40325	108.224	P12:115:SPS:T53.1.NICHLS.KIRBY
FDNS	01ALL	0	20WP	G15_081	TO->FROM	MATHWSN7 345.00 - TATONGA7 345.00 345KV CKT 1	1195	1195	0.40302	108.2232	GEN336242 1-1NMIL ST1 18.000
FDNS	01ALL	0	20WP	G15_081	TO->FROM	MATHWSN7 345.00 - TATONGA7 345.00 345KV CKT 1	1195	1195	0.40302	108.2214	ARKANSAS NUCLEAR ONE 500/22.0KV TRANSFORMER CKT 1
FDNS	01ALL	0	20WP	G15_081	TO->FROM	MATHWSN7 345.00 - TATONGA7 345.00 345KV CKT 1	1195	1195	0.40302	108.2201	GEN338388 1-1PLUM PT U1 23.000
FDNS	01ALL	0	20WP	G15_081	TO->FROM	MATHWSN7 345.00 - TATONGA7 345.00 345KV CKT 1	1195	1195	0.40338	108.2161	KNOLL 230 - SMOKYHL6 230.00 230KV CKT 1
FDNS	01ALL	0	20WP	G15_081	TO->FROM	MATHWSN7 345.00 - TATONGA7 345.00 345KV CKT 1	1195	1195	0.40302	108.2154	GEN503900 1-FITZHUGH CT1
FDNS	01ALL	0	20WP	G15_081	TO->FROM	MATHWSN7 345.00 - TATONGA7 345.00 345KV CKT 1	1195	1195	0.40341	108.2146	HAMON BUTLER - PUTNAM 69KV CKT 1
FDNS	01ALL	0	20WP	G15_081	TO->FROM	MATHWSN7 345.00 - TATONGA7 345.00 345KV CKT 1	1195	1195	0.40303	108.2143	POST ROCK (POSTROCK T1) 345/230/13.8KV TRANSFORMER CKT 1
FDNS	01ALL	0	20WP	G15_081	TO->FROM	MATHWSN7 345.00 - TATONGA7 345.00 345KV CKT 1	1195	1195	0.40341	108.2139	ARAPAHO - HAMON BUTLER 69KV CKT 1
FDNS	01ALL	0	20WP	G15_081	TO->FROM	MATHWSN7 345.00 - TATONGA7 345.00 345KV CKT 1	1195	1195	0.40301	108.2135	8DANIEL8 500.00 - MCKNIGHT 500KV CKT 1
FDNS	01ALL	0	20WP	G15_081	TO->FROM	MATHWSN7 345.00 - TATONGA7 345.00 345KV CKT 1	1195	1195	0.40302	108.2127	GEN334431 1-SABINE UNIT 1
FDNS	01ALL	0	20WP	G15_081	TO->FROM	MATHWSN7 345.00 - TATONGA7 345.00 345KV CKT 1	1195	1195	0.40302	108.2127	GEN334432 1-SABINE UNIT 2
FDNS	01ALL	0	20WP	G15_081	TO->FROM	MATHWSN7 345.00 - TATONGA7 345.00 345KV CKT 1	1195	1195	0.40341	108.2125	ARAPAHO - INDUSTRIAL PARK 69KV CKT 1
FDNS	01ALL	0	20WP	G15_081	TO->FROM	MATHWSN7 345.00 - TATONGA7 345.00 345KV CKT 1	1195	1195	0.40301	108.2119	3TR3AR8EL7EL
FDNS	01ALL	0	20WP	G15_081	TO->FROM	MATHWSN7 345.00 - TATONGA7 345.00 345KV CKT 1	1195	1195	0.40301	108.2119	7SAREPTA% 345.00 - ELDORADO EHV 345KV CKT 1
FDNS	01ALL	0	20WP	G15_081	TO->FROM	MATHWSN7 345.00 - TATONGA7 345.00 345KV CKT 1	1195	1195	0.40301	108.2095	ELDORADO EHV 500/345KV TRANSFORMER CKT 1
FDNS	01ALL	0	20WP	G15_081	TO->FROM	MATHWSN7 345.00 - TATONGA7 345.00 345KV CKT 1	1195	1195	0.40377	108.208	FTTHOM2-LNX3345.00 - GRPRAR2-LNX3345.00 345KV CKT 1
FDNS	01ALL	0	20WP	G15_081	TO->FROM	MATHWSN7 345.00 - TATONGA7 345.00 345KV CKT 1	1195	1195	0.40325	108.2047	CONWAY SUB - KIRBY SWITCHING STATION 115KV CKT 1
FDNS	01ALL	0	20WP	G15_081	TO->FROM	MATHWSN7 345.00 - TATONGA7 345.00 345KV CKT 1	1195	1195	0.40321	108.2038	KIRBY SWITCHING STATION - MCCLELLAN SUB 115KV CKT 1
FDNS	01ALL	0	20WP	G15_081	TO->FROM	MATHWSN7 345.00 - TATONGA7 345.00 345KV CKT 1	1195	1195	0.40302	108.2024	GEN501971 1-EVANGELINE UNIT 7-1
FDNS	01ALL	0	20WP	G15_081	TO->FROM	MATHWSN7 345.00 - TATONGA7 345.00 345KV CKT 1	1195	1195	0.40302	108.2024	GEN501972 1-EVANGELINE UNIT 7-2
FDNS	01ALL	0	20WP	G15_081	TO->FROM	MATHWSN7 345.00 - TATONGA7 345.00 345KV CKT 1	1195	1195	0.40302	108.2017	GEN337430 1-PERYVILLE UNIT #3
FDNS	01ALL	0	20WP	G15_081	TO->FROM	MATHWSN7 345.00 - TATONGA7 345.00 345KV CKT 1	1195	1195	0.40321	108.2016	MCCLELLAN SUB - MCLEAN RURAL SUB 115KV CKT 1
FDNS	01ALL	0	20WP	G15_081	TO->FROM	MATHWSN7 345.00 - TATONGA7 345.00 345KV CKT 1	1195	1195	0.40302	108.2013	GEN337428 1-PERYVILLE UNIT #1
FDNS	01ALL	0	20WP	G15_081	TO->FROM	MATHWSN7 345.00 - TATONGA7 345.00 345KV CKT 1	1195	1195	0.40377	108.2005	FT THOMPSON - FTTHOM2-LNX3345.00 345KV CKT Z
FDNS	01ALL	0	20WP	G15_081	TO->FROM	MATHWSN7 345.00 - TATONGA7 345.00 345KV CKT 1	1195	1195	0.40302	108.2003	GEN501912 1-ACADIA UNIT CT1B
FDNS	01ALL	0	20WP	G15_081	TO->FROM	MATHWSN7 345.00 - TATONGA7 345.00 345KV CKT 1	1195	1195	0.40302	108.2	GEN501911 1-ACADIA UNIT CT1A
FDNS	01ALL	0	20WP	G15_081	TO->FROM	MATHWSN7 345.00 - TATONGA7 345.00 345KV CKT 1	1195	1195	0.4035	108.1989	Canadian Pump Station - JENSEN ROAD 138KV CKT 1
FDNS	01ALL	0	20WP	G15_081	TO->FROM	MATHWSN7 345.00 - TATONGA7 345.00 345KV CKT 1	1195	1195	0.40302	108.1982	FRONTIER - GRIMES 345KV CKT 1
FDNS	01ALL	0	20WP	G15_081	TO->FROM	MATHWSN7 345.00 - TATONGA7 345.00 345KV CKT 1	1195	1195	0.40302	108.1955	GEN334392 1-EXXON MOBIL IPP 1
FDNS	01ALL	0	20WP	G15_081	TO->FROM	MATHWSN7 345.00 - TATONGA7 345.00 345KV CKT 1	1195	1195	0.40302	108.195	GEN334393 1-EXXON MOBIL IPP 2
FDNS	01ALL	0	20WP	G15_081	TO->FROM	MATHWSN7 345.00 - TATONGA7 345.00 345KV CKT 1	1195	1195	0.40302	108.195	GEN334394 1-EXXON MOBIL IPP 3
FDNS	01ALL	0	20WP	G15_081	TO->FROM	MATHWSN7 345.00 - TATONGA7 345.00 345KV CKT 1	1195	1195	0.40302	108.195	RODEMACHER 230/22.0KV TRANSFORMER CKT 1
FDNS	01ALL	0	20WP	G15_081	TO->FROM	MATHWSN7 345.00 - TATONGA7 345.00 345KV CKT 1	1195	1195	0.40302	107.9199	BASE CASE
FDNS	01ALL	0	16WP	G15_081	TO->FROM	MATHWSN7 345.00 - TATONGA7 345.00 345KV CKT 1	1195	1195	0.40567	107.898	CIMARRON - MINCO 345KV CKT 1
FDNS	01ALL	0	20WP	G15_081	TO->FROM	MATHWSN7 345.00 - TATONGA7 345.00 345KV CKT 1	1195	1195	0.40302	107.7753	GEN532751 1-WOLF CREEK GENERATING STATION UNIT 1
FDNS	01ALL	0	16WP	G15_081	TO->FROM	MATHWSN7 345.00 - TATONGA7 345.00 345KV CKT 1	1195	1195	0.42066	107.7618	BORDER 7345.00 - WOODWARD DISTRICT EHV 345KV CKT 1
FDNS	01ALL	0	20WP	G15_081	TO->FROM	MATHWSN7 345.00 - TATONGA7 345.00 345KV CKT 1	1195	1195	0.4031	107.6368	NEWKIRK4 - PECKHAM TAP 138KV CKT 1
FDNS	01ALL	0	20WP	G15_081	TO->FROM	MATHWSN7 345.00 - TATONGA7 345.00 345KV CKT 1	1195	1195	0.40302	107.6363	GEN530594 1-SMKYP1G1 0.6900
FDNS	01ALL	0	20WP	G15_081	TO->FROM	MATHWSN7 345.00 - TATONGA7 345.00 345KV CKT 1	1195	1195	0.40302	107.6343	GEN657705 X-DRAYTON
FDNS	01ALL	0	20WP	G15_081	TO->FROM	MATHWSN7 345.00 - TATONGA7 345.00 345KV CKT 1	1195	1195	0.40302	107.6322	GEN629068 1-EMERY GAS TURBINE 2
FDNS	01ALL	0	20WP	G15_081	TO->FROM	MATHWSN7 345.00 - TATONGA7 345.00 345KV CKT 1	1195	1195	0.40329	107.6299	P12:138:WERE:CRSW-OGE_138:::
FDNS	01ALL	0	20WP	G15_081	TO->FROM	MATHWSN7 345.00 - TATONGA7 345.00 345KV CKT 1	1195	1195	0.40302	107.6292	GEN629067 1-EMERY GAS TURBINE 1
FDNS	01ALL	0	20WP	G15_081	TO->FROM	MATHWSN7 345.00 - TATONGA7 345.00 345KV CKT 1	1195	1195	0.40302	107.628	GEN562556 1-G14_046_3 0.3420
FDNS	01ALL	0	20WP	G15_081	TO->FROM	MATHWSN7 345.00 - TATONGA7 345.00 345KV CKT 1	1195	1195	0.40302	107.6273	GEN600050 1-FEP

SOLUTION	GROUP	SCENARIO	SEASON	SOURCE	DIRECTION	MONITORED ELEMENT	RATEA (MVA)	RATEB(MVA)	TDF	TC%LOADING (% MVA)	CONTINGENCY
FDNS	01ALL	0	20WP	G15_081	TO->FROM	MATHWSN7 345.00 - TATONGA7 345.00 345KV CKT 1	1195	1195	0.40302	107.6262	GEN563042 1-G15068_3 0.6900
FDNS	01ALL	0	20WP	G15_081	TO->FROM	MATHWSN7 345.00 - TATONGA7 345.00 345KV CKT 1	1195	1195	0.40302	107.6237	GEN562754 1-G15031_5 0.6900
FDNS	01ALL	0	20WP	G15_081	TO->FROM	MATHWSN7 345.00 - TATONGA7 345.00 345KV CKT 1	1195	1195	0.40302	107.6216	GEN615032 2-PLEASANT VALLEY
FDNS	01ALL	0	20WP	G15_081	TO->FROM	MATHWSN7 345.00 - TATONGA7 345.00 345KV CKT 1	1195	1195	0.40302	107.6208	GEN563142 1-G15079_3 0.5500
FDNS	01ALL	0	20WP	G15_081	TO->FROM	MATHWSN7 345.00 - TATONGA7 345.00 345KV CKT 1	1195	1195	0.40302	107.6208	GEN563151 1-G15080_2 0.5500
FDNS	01ALL	0	20WP	G15_081	TO->FROM	MATHWSN7 345.00 - TATONGA7 345.00 345KV CKT 1	1195	1195	0.40302	107.6184	GEN563002 1-G15064_3 0.6900
FDNS	01ALL	0	20WP	G15_081	TO->FROM	MATHWSN7 345.00 - TATONGA7 345.00 345KV CKT 1	1195	1195	0.40302	107.6176	GEN523170 1-GOODWELL_1 10.6900
FDNS	01ALL	0	20WP	G15_081	TO->FROM	MATHWSN7 345.00 - TATONGA7 345.00 345KV CKT 1	1195	1195	0.40302	107.6173	GEN615052 1-CAMBRIDGE GENERATING STATION
FDNS	01ALL	0	20WP	G15_081	TO->FROM	MATHWSN7 345.00 - TATONGA7 345.00 345KV CKT 1	1195	1195	0.40302	107.6167	GEN539785 1-ENSNGW 1 0.5750
FDNS	01ALL	0	20WP	G15_081	TO->FROM	MATHWSN7 345.00 - TATONGA7 345.00 345KV CKT 1	1195	1195	0.4031	107.6165	NEWKIRK4 - NWKRKAT4 138.00 138KV CKT 1
FDNS	01ALL	0	20WP	G15_081	TO->FROM	MATHWSN7 345.00 - TATONGA7 345.00 345KV CKT 1	1195	1195	0.4031	107.615	CRESWELL - MIDLTNT4 138.00 138KV CKT 1
FDNS	01ALL	0	20WP	G15_081	TO->FROM	MATHWSN7 345.00 - TATONGA7 345.00 345KV CKT 1	1195	1195	0.40302	107.6144	GEN600065 7-HIGH BRIDGE
FDNS	01ALL	0	20WP	G15_081	TO->FROM	MATHWSN7 345.00 - TATONGA7 345.00 345KV CKT 1	1195	1195	0.40302	107.6144	GEN600066 8-HIGH BRIDGE
FDNS	01ALL	0	20WP	G15_081	TO->FROM	MATHWSN7 345.00 - TATONGA7 345.00 345KV CKT 1	1195	1195	0.40302	107.6135	GEN562756 1-G15031_7 0.6900
FDNS	01ALL	0	20WP	G15_081	TO->FROM	MATHWSN7 345.00 - TATONGA7 345.00 345KV CKT 1	1195	1195	0.40302	107.6134	GEN600070 9-RIVER SIDE
FDNS	01ALL	0	20WP	G15_081	TO->FROM	MATHWSN7 345.00 - TATONGA7 345.00 345KV CKT 1	1195	1195	0.40302	107.6134	GEN600071 10-RIVER SIDE
FDNS	01ALL	0	20WP	G15_081	TO->FROM	MATHWSN7 345.00 - TATONGA7 345.00 345KV CKT 1	1195	1195	0.40284	107.6107	P12:138:AECI:LUTHER-JONES
FDNS	01ALL	0	20WP	G15_081	TO->FROM	MATHWSN7 345.00 - TATONGA7 345.00 345KV CKT 1	1195	1195	0.40302	107.6095	GEN600007 7-RIVERSIDE GEN 7
FDNS	01ALL	0	20WP	G15_081	TO->FROM	MATHWSN7 345.00 - TATONGA7 345.00 345KV CKT 1	1195	1195	0.40302	107.6083	GEN562298 1-G12-024 0.6500
FDNS	01ALL	0	20WP	G15_081	TO->FROM	MATHWSN7 345.00 - TATONGA7 345.00 345KV CKT 1	1195	1195	0.40302	107.607	GEN600011 5-BLACK DOG GEN 1
FDNS	01ALL	0	20WP	G15_081	TO->FROM	MATHWSN7 345.00 - TATONGA7 345.00 345KV CKT 1	1195	1195	0.40302	107.6055	GEN563012 1-G15065_3 0.6900
FDNS	01ALL	0	20WP	G15_081	TO->FROM	MATHWSN7 345.00 - TATONGA7 345.00 345KV CKT 1	1195	1195	0.40302	107.6052	GEN523171 1-GOODWELL_2 10.6900
FDNS	01ALL	0	20WP	G15_081	TO->FROM	MATHWSN7 345.00 - TATONGA7 345.00 345KV CKT 1	1195	1195	0.40302	107.604	GEN600014 4-BLACK DOG GEN 4
FDNS	01ALL	0	20WP	G15_081	TO->FROM	MATHWSN7 345.00 - TATONGA7 345.00 345KV CKT 1	1195	1195	0.40302	107.6014	GEN539630 1-FLTRDG-WG1 0.6000
FDNS	01ALL	0	20WP	G15_081	TO->FROM	MATHWSN7 345.00 - TATONGA7 345.00 345KV CKT 1	1195	1195	0.40302	107.597	GEN539762 1-SSWIND 1 34.500
FDNS	01ALL	0	20WP	G15_081	TO->FROM	MATHWSN7 345.00 - TATONGA7 345.00 345KV CKT 1	1195	1195	0.40312	107.5965	7MCCREDIE 345.00 - 7MONTGMRY 345.00 345KV CKT 1
FDNS	01ALL	0	20WP	G15_081	TO->FROM	MATHWSN7 345.00 - TATONGA7 345.00 345KV CKT 1	1195	1195	0.4026	107.5953	LYDIA - WELSH 345KV CKT 1
FDNS	01ALL	0	20WP	G15_081	TO->FROM	MATHWSN7 345.00 - TATONGA7 345.00 345KV CKT 1	1195	1195	0.4026	107.5953	LYDIA - WELSH 345KV CKT 1
FDNS	01ALL	0	20WP	G15_081	TO->FROM	MATHWSN7 345.00 - TATONGA7 345.00 345KV CKT 1	1195	1195	0.40329	107.5937	P12:138:OKGE:3TERM7
FDNS	01ALL	0	20WP	G15_081	TO->FROM	MATHWSN7 345.00 - TATONGA7 345.00 345KV CKT 1	1195	1195	0.40302	107.5899	GEN531505 1-CIMWD2 1 0.6900
FDNS	01ALL	0	20WP	G15_081	TO->FROM	MATHWSN7 345.00 - TATONGA7 345.00 345KV CKT 1	1195	1195	0.40302	107.5881	GEN562483 1-G13_027_3 0.6900
FDNS	01ALL	0	20WP	G15_081	TO->FROM	MATHWSN7 345.00 - TATONGA7 345.00 345KV CKT 1	1195	1195	0.40297	107.5871	ARKANSAS NUCLEAR ONE - PLEASANT HILL 500KV CKT 1
FDNS	01ALL	0	20WP	G15_081	TO->FROM	MATHWSN7 345.00 - TATONGA7 345.00 345KV CKT 1	1195	1195	0.40289	107.5863	VIOLA 7 345.00 (VIOLA 1X) 345/138/13.8KV TRANSFORMER CKT 1
FDNS	01ALL	0	20WP	G15_081	TO->FROM	MATHWSN7 345.00 - TATONGA7 345.00 345KV CKT 1	1195	1195	0.40302	107.5843	GEN563043 1-G15068_4 0.6900
FDNS	01ALL	0	20WP	G15_081	TO->FROM	MATHWSN7 345.00 - TATONGA7 345.00 345KV CKT 1	1195	1195	0.40302	107.5839	GEN542902 1-GPW_G1 0.7000
FDNS	01ALL	0	20WP	G15_081	TO->FROM	MATHWSN7 345.00 - TATONGA7 345.00 345KV CKT 1	1195	1195	0.40282	107.5832	7JASPER 345.00 - BLACKBERRY 345KV CKT 1
FDNS	01ALL	0	20WP	G15_081	TO->FROM	MATHWSN7 345.00 - TATONGA7 345.00 345KV CKT 1	1195	1195	0.40302	107.5826	GEN600017 C-LS POWER CT
FDNS	01ALL	0	20WP	G15_081	TO->FROM	MATHWSN7 345.00 - TATONGA7 345.00 345KV CKT 1	1195	1195	0.40302	107.5817	GEN560586 1-G06-44-4 4.1600
FDNS	01ALL	0	20WP	G15_081	TO->FROM	MATHWSN7 345.00 - TATONGA7 345.00 345KV CKT 1	1195	1195	0.40302	107.5773	GEN533202 1-CNTRPL-WTG1 1.0000
FDNS	01ALL	0	20WP	G15_081	TO->FROM	MATHWSN7 345.00 - TATONGA7 345.00 345KV CKT 1	1195	1195	0.40302	107.5742	GEN560693 1-G11-008-1 0.6900
FDNS	01ALL	0	20WP	G15_081	TO->FROM	MATHWSN7 345.00 - TATONGA7 345.00 345KV CKT 1	1195	1195	0.40302	107.5739	GEN562035 1-G11_016_3 0.6900
FDNS	01ALL	0	20WP	G15_081	TO->FROM	MATHWSN7 345.00 - TATONGA7 345.00 345KV CKT 1	1195	1195	0.40302	107.5736	GEN562688 1-G15_014_3 0.6900
FDNS	01ALL	0	20WP	G15_081	TO->FROM	MATHWSN7 345.00 - TATONGA7 345.00 345KV CKT 1	1195	1195	0.40302	107.5736	GEN672305 5-BOUNDARY DAM GENERATOR 5
FDNS	01ALL	0	20WP	G15_081	TO->FROM	MATHWSN7 345.00 - TATONGA7 345.00 345KV CKT 1	1195	1195	0.40302	107.5735	GEN672303 3-BOUNDARY DAM GENERATOR 3
FDNS	01ALL	0	20WP	G15_081	TO->FROM	MATHWSN7 345.00 - TATONGA7 345.00 345KV CKT 1	1195	1195	0.40302	107.5735	GEN672304 4-BOUNDARY DAM GENERATOR 4
FDNS	01ALL	0	20WP	G15_081	TO->FROM	MATHWSN7 345.00 - TATONGA7 345.00 345KV CKT 1	1195	1195	0.4031	107.5713	KILDARE4 - NWKRKAT4 138.00 138KV CKT 1
FDNS	01ALL	0	20WP	G15_081	TO->FROM	MATHWSN7 345.00 - TATONGA7 345.00 345KV CKT 1	1195	1195	0.40261	107.571	ARCADIA - SEMINOLE 345KV CKT 1
FDNS	01ALL	0	20WP	G15_081	TO->FROM	MATHWSN7 345.00 - TATONGA7 345.00 345KV CKT 1	1195	1195	0.40302	107.5583	GEN600046 1-MECST
FDNS	01ALL	0	20WP	G15_081	TO->FROM	MATHWSN7 345.00 - TATONGA7 345.00 345KV CKT 1	1195	1195	0.40293	107.5529	7MONTGMRY 345.00 - 7SPENCER 345.00 345KV CKT 1
FDNS	01ALL	0	20WP	G15_081	TO->FROM	MATHWSN7 345.00 - TATONGA7 345.00 345KV CKT 1	1195	1195	0.40306	107.5526	CLARKSVILLE - MUSKOGEE 345KV CKT 1
FDNS	01ALL	0	20WP	G15_081	TO->FROM	MATHWSN7 345.00 - TATONGA7 345.00 345KV CKT 1	1195	1195	0.40306	107.5526	CLARKSVILLE - MUSKOGEE 345KV CKT 1
FDNS	01ALL	0	20WP	G15_081	TO->FROM	MATHWSN7 345.00 - TATONGA7 345.00 345KV CKT 1	1195	1195	0.40302	107.5526	GEN560432 1-G08-124 0.6900
FDNS	01ALL	0	20WP	G15_081	TO->FROM	MATHWSN7 345.00 - TATONGA7 345.00 345KV CKT 1	1195	1195	0.40293	107.5521	7MAYWOOD 345.00 - 7SPENCER 345.00 345KV CKT 1
FDNS	01ALL	0	20WP	G15_081	TO->FROM	MATHWSN7 345.00 - TATONGA7 345.00 345KV CKT 1	1195	1195	0.40302	107.5511	GEN530690 1-PRWINDG1 0.6900
FDNS	01ALL	0	20WP	G15_081	TO->FROM	MATHWSN7 345.00 - TATONGA7 345.00 345KV CKT 1	1195	1195	0.40302	107.5489	GEN600047 1-MECCT1
FDNS	01ALL	0	20WP	G15_081	TO->FROM	MATHWSN7 345.00 - TATONGA7 345.00 345KV CKT 1	1195	1195	0.40302	107.5478	GEN672392 1-NBECGT1G 18.000
FDNS	01ALL	0	20WP	G15_081	TO->FROM	MATHWSN7 345.00 - TATONGA7 345.00 345KV CKT 1	1195	1195	0.40302	107.5477	GEN560585 1-G06-44-3 4.1600
FDNS	01ALL	0	20WP	G15_081	TO->FROM	MATHWSN7 345.00 - TATONGA7 345.00 345KV CKT 1	1195	1195	0.40302	107.5469	4SIOUX 1 138.00 138/18.0KV TRANSFORMER CKT 1
FDNS	01ALL	0	20WP	G15_081	TO->FROM	MATHWSN7 345.00 - TATONGA7 345.00 345KV CKT 1	1195	1195	0.40055	107.5454	CIMARRON - MATHWSN7 345.00 345KV CKT 1
FDNS	01ALL	0	20WP	G15_081	TO->FROM	MATHWSN7 345.00 - TATONGA7 345.00 345KV CKT 1	1195	1195	0.40055	107.5454	CIMARRON - MATHWSN7 345.00 345KV CKT 2
FDNS	01ALL	0	20WP	G15_081	TO->FROM	MATHWSN7 345.00 - TATONGA7 345.00 345KV CKT 1	1195	1195	0.40302	107.5396	GEN542957 1-IATAN UNIT #1
FDNS	01ALL	0	20WP	G15_081	TO->FROM	MATHWSN7 345.00 - TATONGA7 345.00 345KV CKT 1	1195	1195	0.40297	107.5352	DELL 500 - INDEPENDENCE 500KV CKT 1
FDNS	01ALL	0	20WP	G15_081	TO->FROM	MATHWSN7 345.00 - TATONGA7 345.00 345KV CKT 1	1195	1195	0.40302	107.5347	GEN539653 1-CIMARRON RIVER PLANT GENERATOR
FDNS	01ALL	0	20WP	G15_081	TO->FROM	MATHWSN7 345.00 - TATONGA7 345.00 345KV CKT 1	1195	1195	0.40315	107.5334	OVEXFRMCCOVE
FDNS	01ALL	0	20WP	G15_081	TO->FROM	MATHWSN7 345.00 - TATONGA7 345.00 345KV CKT 1	1195	1195	0.40302	107.529	GEN615021 1-GRE-ER 14G 16.000
FDNS	01ALL	0	20WP	G15_081	TO->FROM	MATHWSN7 345.00 - TATONGA7 345.00 345KV CKT 1	1195	1195	0.40302	107.5288	GEN659111 2-LELAND OLDS UNIT2
FDNS	01ALL	0	20WP	G15_081	TO->FROM	MATHWSN7 345.00 - TATONGA7 345.00 345KV CKT 1	1195	1195	0.40302	107.527	GEN560329 1-G10-45 0.6900
FDNS	01ALL	0	20WP	G15_081	TO->FROM	MATHWSN7 345.00 - TATONGA7 345.00 345KV CKT 1	1195	1195	0.40302	107.5214	GEN531503 1-CIMRRN 1 0.6900
FDNS	01ALL	0	20WP	G15_081	TO->FROM	MATHWSN7 345.00 - TATONGA7 345.00 345KV CKT 1	1195	1195	0.4028	107.5114	VIOLA 7 345.00 - WICHITA 345KV CKT 1
FDNS	01ALL	0	20WP	G15_081	TO->FROM	MATHWSN7 345.00 - TATONGA7 345.00 345KV CKT 1	1195	1195	0.40302	107.5046	GEN629072 4-LANSING GENERATOR FOR UNITS NO4 EIA CODE 1
FDNS	01ALL	0	20WP	G15_081	TO->FROM	MATHWSN7 345.00 - TATONGA7 345.00 345KV CKT 1	1195	1195	0.40302	107.5039	GEN641089 2-ENERGY CENTER 2
FDNS	01ALL	0	20WP	G15_081	TO->FROM	MATHWSN7 345.00 - TATONGA7 345.00 345KV CKT 1	1195	1195	0.40302	107.4956	GEN542962 2-IATAN UNIT #2
FDNS	01ALL	0	20WP	G15_081	TO->FROM	MATHWSN7 345.00 - TATONGA7 345.00 345KV CKT 1	1195	1195	0.40285	107.4908	LACYGNE - STILWELL 345KV CKT 1
FDNS	01ALL	0	20WP	G15_081	TO->FROM	MATHWSN7 345.00 - TATONGA7 345.00 345KV CKT 1	1195	1195	0.40302	107.487	GEN600067 9-HIGH BRIDGE
FDNS	01ALL	0	20WP	G15_081	TO->FROM	MATHWSN7 345.00 - TATONGA7 345.00 345KV CKT 1	1195	1195	0.40302	107.481	GEN659103 1-ANTELOPE VALLEY UNIT1
FDNS	01ALL	0	20WP	G15_081	TO->FROM	MATHWSN7 345.00 - TATONGA7 345.00 345KV CKT 1	1195	1195	0.40302	107.481	GEN659107 2-ANTELOPE VALLEY UNIT2
FDNS	01ALL	0	20WP	G15_081	TO->FROM	MATHWSN7 345.00 - TATONGA7 345.00 345KV CKT 1	1195	1195	0.4029	107.4669	LACYGNE - WEST GARDNER 345KV CKT 1
FDNS	01ALL	0	20WP	G15_081	TO->FROM	MATHWSN7 345.00 - TATONGA7 345.00 345KV CKT 1	1195	1195	0.40294	107.4536	KEO EHV - WEST MEMPHIS 500 500KV CKT 1
FDNS	01ALL	0	20WP	G15_081	TO->FROM	MATHWSN7 345.00 - TATONGA7 345.00 345KV CKT 1	1195	1195	0.40249	107.4444	LYDIA - VALLIANT 345KV CKT 1

SOLUTION	GROUP	SCENARIO	SEASON	SOURCE	DIRECTION	MONITORED ELEMENT	RATEA (MVA)	RATEB(MVA)	TDF	TC%LOADING (% MVA)	CONTINGENCY
FDNS	01ALL	0	20WP	G15_081	TO->FROM	MATHWSN7 345.00 - TATONGA7 345.00 345KV CKT 1	1195	1195	0.40249	107.4444	LYDIA - VALLIANT 345KV CKT 1
FDNS	01ALL	0	20WP	G15_081	TO->FROM	MATHWSN7 345.00 - TATONGA7 345.00 345KV CKT 1	1195	1195	0.40235	107.4437	FT SMITH - MUSKOGEE 345KV CKT 1
FDNS	01ALL	0	20WP	G15_081	TO->FROM	MATHWSN7 345.00 - TATONGA7 345.00 345KV CKT 1	1195	1195	0.40302	107.439	GEN615010 1-STANTON4
FDNS	01ALL	0	20WP	G15_081	TO->FROM	MATHWSN7 345.00 - TATONGA7 345.00 345KV CKT 1	1195	1195	0.40194	107.4321	CLEVELAND - TULSA NORTH 345KV CKT 1
FDNS	01ALL	0	20WP	G15_081	TO->FROM	MATHWSN7 345.00 - TATONGA7 345.00 345KV CKT 1	1195	1195	0.40194	107.4321	CLEVELAND - TULSA NORTH 345KV CKT 1
FDNS	01ALL	0	20WP	G15_081	TO->FROM	MATHWSN7 345.00 - TATONGA7 345.00 345KV CKT 1	1195	1195	0.40271	107.429	BROOKLINE - FLINT CREEK 345KV CKT 1
FDNS	01ALL	0	20WP	G15_081	TO->FROM	MATHWSN7 345.00 - TATONGA7 345.00 345KV CKT 1	1195	1195	0.40271	107.429	BROOKLINE - FLINT CREEK 345KV CKT 1
FDNS	01ALL	0	20WP	G15_081	TO->FROM	MATHWSN7 345.00 - TATONGA7 345.00 345KV CKT 1	1195	1195	0.40302	107.4211	GEN562269 1-G12-020-1 0.6900
FDNS	01ALL	0	20WP	G15_081	TO->FROM	MATHWSN7 345.00 - TATONGA7 345.00 345KV CKT 1	1195	1195	0.40302	107.4174	GEN539807 1-G05-12-1 0.6900
FDNS	01ALL	0	20WP	G15_081	TO->FROM	MATHWSN7 345.00 - TATONGA7 345.00 345KV CKT 1	1195	1195	0.40302	107.4039	GEN645011 1-NEBRASKA CITY 1
FDNS	01ALL	0	20WP	G15_081	TO->FROM	MATHWSN7 345.00 - TATONGA7 345.00 345KV CKT 1	1195	1195	0.40302	107.3921	GEN562270 1-G12-020-2 0.6900
FDNS	01ALL	0	20WP	G15_081	TO->FROM	MATHWSN7 345.00 - TATONGA7 345.00 345KV CKT 1	1195	1195	0.40302	107.3884	RCDC EAST 4230.00 - RED CEDAR DC 230KV CKT 1
FDNS	01ALL	0	20WP	G15_081	TO->FROM	MATHWSN7 345.00 - TATONGA7 345.00 345KV CKT 1	1195	1195	0.40302	107.3855	P12:230:UMZB:# 112 #: NU IN SD. NU-RCDC & DRY CREEK XFMR
FDNS	01ALL	0	20WP	G15_081	TO->FROM	MATHWSN7 345.00 - TATONGA7 345.00 345KV CKT 1	1195	1195	0.40302	107.3795	GEN525844 1-ELK_1 118.000
FDNS	01ALL	0	20WP	G15_081	TO->FROM	MATHWSN7 345.00 - TATONGA7 345.00 345KV CKT 1	1195	1195	0.40302	107.376	GEN562524 1-G14_026_3 12.000
FDNS	01ALL	0	20WP	G15_081	TO->FROM	MATHWSN7 345.00 - TATONGA7 345.00 345KV CKT 1	1195	1195	0.40302	107.3744	GEN528361 1-MADDOX GEN #1
FDNS	01ALL	0	20WP	G15_081	TO->FROM	MATHWSN7 345.00 - TATONGA7 345.00 345KV CKT 1	1195	1195	0.40302	107.3697	GEN645012 2-NEBRASKA CITY 2
FDNS	01ALL	0	20WP	G15_081	TO->FROM	MATHWSN7 345.00 - TATONGA7 345.00 345KV CKT 1	1195	1195	0.40302	107.356	GEN560286 1-G10-01-1WTG 0.6900
FDNS	01ALL	0	20WP	G15_081	TO->FROM	MATHWSN7 345.00 - TATONGA7 345.00 345KV CKT 1	1195	1195	0.40302	107.356	GEN560287 1-G10-01-2WTG 0.6900
FDNS	01ALL	0	20WP	G15_081	TO->FROM	MATHWSN7 345.00 - TATONGA7 345.00 345KV CKT 1	1195	1195	0.40302	107.3529	GEN681522 3-GENOA 3
FDNS	01ALL	0	20WP	G15_081	TO->FROM	MATHWSN7 345.00 - TATONGA7 345.00 345KV CKT 1	1195	1195	0.40302	107.3425	GEN520998 1-MORLND3
FDNS	01ALL	0	20WP	G15_081	TO->FROM	MATHWSN7 345.00 - TATONGA7 345.00 345KV CKT 1	1195	1195	0.39879	107.3412	SOONER - SPRING CREEK 345KV CKT 1
FDNS	01ALL	0	20WP	G15_081	TO->FROM	MATHWSN7 345.00 - TATONGA7 345.00 345KV CKT 1	1195	1195	0.39879	107.3395	NORTHWEST - SPRING CREEK 345KV CKT 1
FDNS	01ALL	0	20WP	G15_081	TO->FROM	MATHWSN7 345.00 - TATONGA7 345.00 345KV CKT 1	1195	1195	0.40302	107.3292	GEN525493 1-PLANT X GEN #3
FDNS	01ALL	0	20WP	G15_081	TO->FROM	MATHWSN7 345.00 - TATONGA7 345.00 345KV CKT 1	1195	1195	0.40302	107.3171	GEN560256 1-G10-14-1 0.6900
FDNS	01ALL	0	20WP	G15_081	TO->FROM	MATHWSN7 345.00 - TATONGA7 345.00 345KV CKT 1	1195	1195	0.40272	107.315	CIMARRON (CIMARON1) 345/138/13.8KV TRANSFORMER CKT 1
FDNS	01ALL	0	20L	G15_081	TO->FROM	MATHWSN7 345.00 - TATONGA7 345.00 345KV CKT 1	1195	1195	0.42768	107.3105	BORDER 7345.00 - TUCO_2 345.00 345KV CKT 1
FDNS	01ALL	0	20WP	G15_081	TO->FROM	MATHWSN7 345.00 - TATONGA7 345.00 345KV CKT 1	1195	1195	0.4027	107.306	CIMARRON (CIMARON2) 345/138/13.8KV TRANSFORMER CKT 1
FDNS	01ALL	0	20WP	G15_081	TO->FROM	MATHWSN7 345.00 - TATONGA7 345.00 345KV CKT 1	1195	1195	0.40302	107.3016	GEN560257 1-G10-14-2 0.6900
FDNS	01ALL	0	20WP	G15_081	TO->FROM	MATHWSN7 345.00 - TATONGA7 345.00 345KV CKT 1	1195	1195	0.40302	107.2826	GEN640009 1-COOPER NUCLEAR STATION
FDNS	01ALL	0	20WP	G15_081	TO->FROM	MATHWSN7 345.00 - TATONGA7 345.00 345KV CKT 1	1195	1195	0.40302	107.2793	GEN657749 1-YOUNG 1 GENERATOR
FDNS	01ALL	0	20WP	G15_081	TO->FROM	MATHWSN7 345.00 - TATONGA7 345.00 345KV CKT 1	1195	1195	0.40302	107.2782	GEN524285 1-WILDORADO WIND GEN
FDNS	01ALL	0	20WP	G15_081	TO->FROM	MATHWSN7 345.00 - TATONGA7 345.00 345KV CKT 1	1195	1195	0.40302	107.2782	GEN562544 1-G14_038_3 0.6900
FDNS	01ALL	0	20WP	G15_081	TO->FROM	MATHWSN7 345.00 - TATONGA7 345.00 345KV CKT 1	1195	1195	0.40288	107.2608	7SPORTSMAN - BLACKBERRY 345KV CKT 1
FDNS	01ALL	0	20WP	G15_081	TO->FROM	MATHWSN7 345.00 - TATONGA7 345.00 345KV CKT 1	1195	1195	0.40263	107.2512	GRDA1 - GREC TAP5 345.00 345KV CKT 1
FDNS	01ALL	0	20WP	G15_081	TO->FROM	MATHWSN7 345.00 - TATONGA7 345.00 345KV CKT 1	1195	1195	0.40302	107.2458	GEN560105 1-G08-22 0.6900
FDNS	01ALL	0	20WP	G15_081	TO->FROM	MATHWSN7 345.00 - TATONGA7 345.00 345KV CKT 1	1195	1195	0.40302	107.2435	GEN532653 1-JEFFREY ENERGY CENTER UNIT 3
FDNS	01ALL	0	20WP	G15_081	TO->FROM	MATHWSN7 345.00 - TATONGA7 345.00 345KV CKT 1	1195	1195	0.40302	107.2433	GEN532652 1-JEFFREY ENERGY CENTER UNIT 2
FDNS	01ALL	0	20WP	G15_081	TO->FROM	MATHWSN7 345.00 - TATONGA7 345.00 345KV CKT 1	1195	1195	0.40302	107.2428	GEN562648 1-G14_037_3 0.6900
FDNS	01ALL	0	20WP	G15_081	TO->FROM	MATHWSN7 345.00 - TATONGA7 345.00 345KV CKT 1	1195	1195	0.40302	107.2415	GEN681542 6-JP MADGETT
FDNS	01ALL	0	20WP	G15_081	TO->FROM	MATHWSN7 345.00 - TATONGA7 345.00 345KV CKT 1	1195	1195	0.40302	107.23	GEN532651 1-JEFFREY ENERGY CENTER UNIT 1
FDNS	01ALL	0	20WP	G15_081	TO->FROM	MATHWSN7 345.00 - TATONGA7 345.00 345KV CKT 1	1195	1195	0.40302	107.2257	GEN528501 1-G14_012 24.000
FDNS	01ALL	0	20WP	G15_081	TO->FROM	MATHWSN7 345.00 - TATONGA7 345.00 345KV CKT 1	1195	1195	0.40302	107.22	GEN645001 1-FORT CALHOUN 1
FDNS	01ALL	0	20WP	G15_081	TO->FROM	MATHWSN7 345.00 - TATONGA7 345.00 345KV CKT 1	1195	1195	0.40302	107.2011	GEN562550 1-G14_040_3 0.6900
FDNS	01ALL	0	20WP	G15_081	TO->FROM	MATHWSN7 345.00 - TATONGA7 345.00 345KV CKT 1	1195	1195	0.40173	107.1803	G15066_T 345.00 - SOONER 345KV CKT 1
FDNS	01ALL	0	20WP	G15_081	TO->FROM	MATHWSN7 345.00 - TATONGA7 345.00 345KV CKT 1	1195	1195	0.40302	107.1615	GEN672321 1-SHAND GENERATOR 1
FDNS	01ALL	0	20WP	G15_081	TO->FROM	MATHWSN7 345.00 - TATONGA7 345.00 345KV CKT 1	1195	1195	0.40302	107.1473	GEN563173 1-G15082_3 0.6900
FDNS	01ALL	0	20WP	G15_081	TO->FROM	MATHWSN7 345.00 - TATONGA7 345.00 345KV CKT 1	1195	1195	0.40302	107.1451	GEN562042 1-G11_014_3 0.6900
FDNS	01ALL	0	20WP	G15_081	TO->FROM	MATHWSN7 345.00 - TATONGA7 345.00 345KV CKT 1	1195	1195	0.40302	107.145	GEN672310 1-POPLAR RIVER GENERATOR 1
FDNS	01ALL	0	20WP	G15_081	TO->FROM	MATHWSN7 345.00 - TATONGA7 345.00 345KV CKT 1	1195	1195	0.40302	107.145	GEN672311 2-POPLAR RIVER GENERATOR 2
FDNS	01ALL	0	20WP	G15_081	TO->FROM	MATHWSN7 345.00 - TATONGA7 345.00 345KV CKT 1	1195	1195	0.40302	107.1352	GEN672306 6-BOUNDARY DAM GENERATOR 6
FDNS	01ALL	0	20WP	G15_081	TO->FROM	MATHWSN7 345.00 - TATONGA7 345.00 345KV CKT 1	1195	1195	0.40302	107.1198	GEN524022 1-NICHOLS GEN #2
FDNS	01ALL	0	20WP	G15_081	TO->FROM	MATHWSN7 345.00 - TATONGA7 345.00 345KV CKT 1	1195	1195	0.40302	107.1173	GEN520922 1-SLEEPING BEAR
FDNS	01ALL	0	20WP	G15_081	TO->FROM	MATHWSN7 345.00 - TATONGA7 345.00 345KV CKT 1	1195	1195	0.40173	107.1052	CLEVELAND - G15066_T 345.00 345KV CKT 1
FDNS	01ALL	0	17SP	G15_081	TO->FROM	MATHWSN7 345.00 - TATONGA7 345.00 345KV CKT 1	1195	1195	0.43662	107.0918	THISTLE7 345.00 - WOODWARD DISTRICT EHV 345KV CKT 1
FDNS	01ALL	0	17SP	G15_081	TO->FROM	MATHWSN7 345.00 - TATONGA7 345.00 345KV CKT 1	1195	1195	0.43662	107.0918	THISTLE7 345.00 - WOODWARD DISTRICT EHV 345KV CKT 1
FDNS	01ALL	0	17SP	G15_081	TO->FROM	MATHWSN7 345.00 - TATONGA7 345.00 345KV CKT 1	1195	1195	0.43662	107.0918	THISTLE7 345.00 - WOODWARD DISTRICT EHV 345KV CKT 2
FDNS	01ALL	0	17SP	G15_081	TO->FROM	MATHWSN7 345.00 - TATONGA7 345.00 345KV CKT 1	1195	1195	0.43662	107.0918	THISTLE7 345.00 - WOODWARD DISTRICT EHV 345KV CKT 2
FDNS	01ALL	0	20WP	G15_081	TO->FROM	MATHWSN7 345.00 - TATONGA7 345.00 345KV CKT 1	1195	1195	0.40302	107.0741	GEN515787 1-OKLA WIND ENERGY CENTER
FDNS	01ALL	0	20WP	G15_081	TO->FROM	MATHWSN7 345.00 - TATONGA7 345.00 345KV CKT 1	1195	1195	0.40199	107.0555	PITTSBURG - VALLIANT 345KV CKT 1
FDNS	01ALL	0	20WP	G15_081	TO->FROM	MATHWSN7 345.00 - TATONGA7 345.00 345KV CKT 1	1195	1195	0.40199	107.0555	PITTSBURG - VALLIANT 345KV CKT 1
FDNS	01ALL	0	20WP	G15_081	TO->FROM	MATHWSN7 345.00 - TATONGA7 345.00 345KV CKT 1	1195	1195	0.40302	107.0472	GEN524295 1-SPNSPUR_WND10.6900
FDNS	01ALL	0	20WP	G15_081	TO->FROM	MATHWSN7 345.00 - TATONGA7 345.00 345KV CKT 1	1195	1195	0.40302	107.0412	GEN636641 1-LOUISA UNIT 1
FDNS	01ALL	0	20WP	G15_081	TO->FROM	MATHWSN7 345.00 - TATONGA7 345.00 345KV CKT 1	1195	1195	0.40281	107.0382	DELAWARE - NEOSHO 345KV CKT 1
FDNS	01ALL	0	20WP	G15_081	TO->FROM	MATHWSN7 345.00 - TATONGA7 345.00 345KV CKT 1	1195	1195	0.40281	107.0382	DELAWARE - NEOSHO 345KV CKT 1
FDNS	01ALL	0	20WP	G15_081	TO->FROM	MATHWSN7 345.00 - TATONGA7 345.00 345KV CKT 1	1195	1195	0.40282	107.0364	CHAMBER SPRINGS - CLARKSVILLE 345KV CKT 1
FDNS	01ALL	0	20WP	G15_081	TO->FROM	MATHWSN7 345.00 - TATONGA7 345.00 345KV CKT 1	1195	1195	0.40302	106.9937	GEN515591 1-PALDRW11 0.6900
FDNS	01ALL	0	20WP	G15_081	TO->FROM	MATHWSN7 345.00 - TATONGA7 345.00 345KV CKT 1	1195	1195	0.39831	106.9793	ARCADIA - NORTHWEST 345KV CKT 1
FDNS	01ALL	0	20WP	G15_081	TO->FROM	MATHWSN7 345.00 - TATONGA7 345.00 345KV CKT 1	1195	1195	0.40263	106.97	RANCHRD7 345.00 - SOONER 345KV CKT 1
FDNS	01ALL	0	20WP	G15_081	TO->FROM	MATHWSN7 345.00 - TATONGA7 345.00 345KV CKT 1	1195	1195	0.40302	106.9587	GEN629074 1-ARNOLD LOWSIDE OF GSU XFMR
FDNS	01ALL	0	20WP	G15_081	TO->FROM	MATHWSN7 345.00 - TATONGA7 345.00 345KV CKT 1	1195	1195	0.40302	106.9507	GEN562074 1-G1149G1504 0.6900
FDNS	01ALL	0	20WP	G15_081	TO->FROM	MATHWSN7 345.00 - TATONGA7 345.00 345KV CKT 1	1195	1195	0.40302	106.9248	GEN562017 1-G11_022_3 0.6900
FDNS	01ALL	0	20WP	G15_081	TO->FROM	MATHWSN7 345.00 - TATONGA7 345.00 345KV CKT 1	1195	1195	0.40302	106.9043	GEN527883 1-CUNNINGHAM GEN #3 22 KV
FDNS	01ALL	0	20WP	G15_081	TO->FROM	MATHWSN7 345.00 - TATONGA7 345.00 345KV CKT 1	1195	1195	0.40302	106.9026	GEN563292 1-G15095_3 0.6900
FDNS	01ALL	0	20WP	G15_081	TO->FROM	MATHWSN7 345.00 - TATONGA7 345.00 345KV CKT 1	1195	1195	0.40302	106.9013	GEN527884 1-CUNNINGHAM GEN #4 22 KV
FDNS	01ALL	0	20WP	G15_081	TO->FROM	MATHWSN7 345.00 - TATONGA7 345.00 345KV CKT 1	1195	1195	0.40302	106.884	GEN620315 1-BIG STONE GEN
FDNS	01ALL	0	20WP	G15_081	TO->FROM	MATHWSN7 345.00 - TATONGA7 345.00 345KV CKT 1	1195	1195	0.40302	106.8819	GEN629075 1-OTTUMWA GENERATOR FOR OTTUMWA UNIT NO 1
FDNS	01ALL	0	20WP	G15_081	TO->FROM	MATHWSN7 345.00 - TATONGA7 345.00 345KV CKT 1	1195	1195	0.40302	106.8809	GEN520997 1-MORLND2
FDNS	01ALL	0	20WP	G15_081	TO->FROM	MATHWSN7 345.00 - TATONGA7 345.00 345KV CKT 1	1195	1195	0.40302	106.8757	GEN600004 2-PRAIRIE ISLAND G2

SOLUTION	GROUP	SCENARIO	SEASON	SOURCE	DIRECTION	MONITORED ELEMENT	RATEA (MVA)	RATEB(MVA)	TDF	TC%LOADING (% MVA)	CONTINGENCY
FDNS	01ALL	0	20WP	G15_081	TO->FROM	MATHWSN7 345.00 - TATONGA7 345.00 345KV CKT 1	1195	1195	0.40302	106.8739	GEN600003 1-PRAIRIE ISLAND G1
FDNS	01ALL	0	20WP	G15_081	TO->FROM	MATHWSN7 345.00 - TATONGA7 345.00 345KV CKT 1	1195	1195	0.40302	106.8587	GEN661015 1-COYOTE
FDNS	01ALL	0	20WP	G15_081	TO->FROM	MATHWSN7 345.00 - TATONGA7 345.00 345KV CKT 1	1195	1195	0.40302	106.843	GEN600006 1-AS KING
FDNS	01ALL	0	20WP	G15_081	TO->FROM	MATHWSN7 345.00 - TATONGA7 345.00 345KV CKT 1	1195	1195	0.40302	106.8263	GEN562432 1-G13-030 0.6900
FDNS	01ALL	0	20WP	G15_081	TO->FROM	MATHWSN7 345.00 - TATONGA7 345.00 345KV CKT 1	1195	1195	0.40302	106.8254	GEN523461 1-BLACKHAWK GEN #1
FDNS	01ALL	0	20WP	G15_081	TO->FROM	MATHWSN7 345.00 - TATONGA7 345.00 345KV CKT 1	1195	1195	0.40302	106.8252	GEN523462 1-BLACKHAWK GEN #2
FDNS	01ALL	0	20WP	G15_081	TO->FROM	MATHWSN7 345.00 - TATONGA7 345.00 345KV CKT 1	1195	1195	0.40537	106.8163	WOODWARD DISTRICT EHV (WWDEHV) 345/138/13.8KV TRANSFORMER CKT 1
FDNS	01ALL	0	20WP	G15_081	TO->FROM	MATHWSN7 345.00 - TATONGA7 345.00 345KV CKT 1	1195	1195	0.40302	106.8144	GEN539670 4-JUDSON LARGE GENERATOR
FDNS	01ALL	0	20WP	G15_081	TO->FROM	MATHWSN7 345.00 - TATONGA7 345.00 345KV CKT 1	1195	1195	0.40302	106.7648	GEN524023 1-NICHOLS GEN #3 22 KV
FDNS	01ALL	0	20WP	G15_081	TO->FROM	MATHWSN7 345.00 - TATONGA7 345.00 345KV CKT 1	1195	1195	0.40549	106.7601	WOODWARD DISTRICT EHV (WWDEHV-T2) 345/138/13.8KV TRANSFORMER CKT 2
FDNS	01ALL	0	20WP	G15_081	TO->FROM	MATHWSN7 345.00 - TATONGA7 345.00 345KV CKT 1	1195	1195	0.40302	106.7565	GEN657748 1-YOUNG 2 GENERATOR
FDNS	01ALL	0	20WP	G15_081	TO->FROM	MATHWSN7 345.00 - TATONGA7 345.00 345KV CKT 1	1195	1195	0.40302	106.7282	GEN635213 3-NEAL UNIT 3
FDNS	01ALL	0	20WP	G15_081	TO->FROM	MATHWSN7 345.00 - TATONGA7 345.00 345KV CKT 1	1195	1195	0.40282	106.7173	DELAWARE - NORTHEAST STATION 345KV CKT 1
FDNS	01ALL	0	20WP	G15_081	TO->FROM	MATHWSN7 345.00 - TATONGA7 345.00 345KV CKT 1	1195	1195	0.40282	106.7173	DELAWARE - NORTHEAST STATION 345KV CKT 1
FDNS	01ALL	0	20WP	G15_081	TO->FROM	MATHWSN7 345.00 - TATONGA7 345.00 345KV CKT 1	1195	1195	0.40302	106.7134	GEN527161 1-MUSTANG GEN #1
FDNS	01ALL	0	20WP	G15_081	TO->FROM	MATHWSN7 345.00 - TATONGA7 345.00 345KV CKT 1	1195	1195	0.40302	106.7134	GEN527162 1-MUSTANG GEN #2
FDNS	01ALL	0	20WP	G15_081	TO->FROM	MATHWSN7 345.00 - TATONGA7 345.00 345KV CKT 1	1195	1195	0.40302	106.7107	GEN515389 1-TLGWND-WTG1 0.7000
FDNS	01ALL	0	20WP	G15_081	TO->FROM	MATHWSN7 345.00 - TATONGA7 345.00 345KV CKT 1	1195	1195	0.40136	106.6597	PITTSBURG - SEMINOLE 345KV CKT 1
FDNS	01ALL	0	20WP	G15_081	TO->FROM	MATHWSN7 345.00 - TATONGA7 345.00 345KV CKT 1	1195	1195	0.40136	106.6597	PITTSBURG - SEMINOLE 345KV CKT 1
FDNS	01ALL	0	20WP	G15_081	TO->FROM	MATHWSN7 345.00 - TATONGA7 345.00 345KV CKT 1	1195	1195	0.40302	106.6333	GEN527882 1-CUNNINGHAM GEN #2 20 KV
FDNS	01ALL	0	20WP	G15_081	TO->FROM	MATHWSN7 345.00 - TATONGA7 345.00 345KV CKT 1	1195	1195	0.4	106.6254	REDBUD - RIVERSIDE STATION 345KV CKT 1
FDNS	01ALL	0	20WP	G15_081	TO->FROM	MATHWSN7 345.00 - TATONGA7 345.00 345KV CKT 1	1195	1195	0.4	106.6254	REDBUD - RIVERSIDE STATION 345KV CKT 1
FDNS	01ALL	0	20WP	G15_081	TO->FROM	MATHWSN7 345.00 - TATONGA7 345.00 345KV CKT 1	1195	1195	0.40302	106.6181	GEN600001 2-SHERBURNE CNTY G2
FDNS	01ALL	0	20WP	G15_081	TO->FROM	MATHWSN7 345.00 - TATONGA7 345.00 345KV CKT 1	1195	1195	0.40302	106.6179	GEN527163 1-MUSTANG GEN #3 22 KV
FDNS	01ALL	0	20WP	G15_081	TO->FROM	MATHWSN7 345.00 - TATONGA7 345.00 345KV CKT 1	1195	1195	0.40302	106.6083	GEN525494 1-PLANT X GEN #4 20 KV
FDNS	01ALL	0	20WP	G15_081	TO->FROM	MATHWSN7 345.00 - TATONGA7 345.00 345KV CKT 1	1195	1195	0.40302	106.6045	GEN600005 1-MONTICELLO
FDNS	01ALL	0	16WP	G15_081	TO->FROM	MATHWSN7 345.00 - TATONGA7 345.00 345KV CKT 1	1195	1195	0.41287	106.5585	DEWEY - SOUTHARD 138KV CKT 1
FDNS	01ALL	0	20WP	G15_081	TO->FROM	MATHWSN7 345.00 - TATONGA7 345.00 345KV CKT 1	1195	1195	0.40302	106.5392	GEN526333 1-JONES GEN #3 21 KV
FDNS	01ALL	0	20WP	G15_081	TO->FROM	MATHWSN7 345.00 - TATONGA7 345.00 345KV CKT 1	1195	1195	0.40302	106.5151	GEN600000 1-SHERBURNECNTY G1
FDNS	01ALL	0	20WP	G15_081	TO->FROM	MATHWSN7 345.00 - TATONGA7 345.00 345KV CKT 1	1195	1195	0.40302	106.466	GEN560155 1-G10-11 0.7000
FDNS	01ALL	0	20WP	G15_081	TO->FROM	MATHWSN7 345.00 - TATONGA7 345.00 345KV CKT 1	1195	1195	0.40302	106.4217	SHERBURNE CO 345/24.0KV TRANSFORMER CKT 1
FDNS	01ALL	0	20WP	G15_081	TO->FROM	MATHWSN7 345.00 - TATONGA7 345.00 345KV CKT 1	1195	1195	0.40302	106.4096	GEN615001 1-COAL CREEK
FDNS	01ALL	0	20L	G15_081	TO->FROM	MATHWSN7 345.00 - TATONGA7 345.00 345KV CKT 1	1195	1195	0.42759	106.4035	Hitchland Interchange - WALKTAP7 345.00 345KV CKT 1
FDNS	01ALL	0	20L	G15_081	TO->FROM	MATHWSN7 345.00 - TATONGA7 345.00 345KV CKT 1	1195	1195	0.42759	106.4035	Hitchland Interchange - WALKTAP7 345.00 345KV CKT 1
FDNS	01ALL	0	20WP	G15_081	TO->FROM	MATHWSN7 345.00 - TATONGA7 345.00 345KV CKT 1	1195	1195	0.40302	106.3944	GEN640011 2-GERALD GENTLEMAN STATION UNIT 2
FDNS	01ALL	0	20WP	G15_081	TO->FROM	MATHWSN7 345.00 - TATONGA7 345.00 345KV CKT 1	1195	1195	0.40302	106.3873	GEN615002 2-COAL CREEK
FDNS	01ALL	0	20L	G15_081	TO->FROM	MATHWSN7 345.00 - TATONGA7 345.00 345KV CKT 1	1195	1195	0.42759	106.3866	P12:345:SPS:J07.1.FINN.HITCH
FDNS	01ALL	0	20WP	G15_081	TO->FROM	MATHWSN7 345.00 - TATONGA7 345.00 345KV CKT 1	1195	1195	0.40226	106.3632	HUNTERS7 345.00 - WOODRING 345KV CKT 1
FDNS	01ALL	0	20WP	G15_081	TO->FROM	MATHWSN7 345.00 - TATONGA7 345.00 345KV CKT 1	1195	1195	0.40302	106.3598	GEN659118 1-LARAMIE RIVER UNIT1
FDNS	01ALL	0	16WP	G15_081	TO->FROM	MATHWSN7 345.00 - TATONGA7 345.00 345KV CKT 1	1195	1195	0.41287	106.3448	ROMAN NOSE - SOUTHARD 138KV CKT 1
FDNS	01ALL	0	20L	G15_081	TO->FROM	MATHWSN7 345.00 - TATONGA7 345.00 345KV CKT 1	1195	1195	0.42768	106.3447	BORDER 7345.00 - WOODWARD DISTRICT EHV 345KV CKT 1
FDNS	01ALL	0	20WP	G15_081	TO->FROM	MATHWSN7 345.00 - TATONGA7 345.00 345KV CKT 1	1195	1195	0.41621	106.3324	WOODWARD EHV - WWPAR4 138.00 138KV CKT 1
FDNS	01ALL	0	20WP	G15_081	TO->FROM	MATHWSN7 345.00 - TATONGA7 345.00 345KV CKT 1	1195	1195	0.41621	106.3306	WOODWARD - WWPAR4 138.00 138KV CKT 1
FDNS	01ALL	0	20WP	G15_081	TO->FROM	MATHWSN7 345.00 - TATONGA7 345.00 345KV CKT 1	1195	1195	0.40302	106.307	GEN640010 1-GERALD GENTLEMAN STATION UNIT 1
FDNS	01ALL	0	20WP	G15_081	TO->FROM	MATHWSN7 345.00 - TATONGA7 345.00 345KV CKT 1	1195	1195	0.40302	106.2925	GEN515365 1-CENT 21 0.7000
FDNS	01ALL	0	20WP	G15_081	TO->FROM	MATHWSN7 345.00 - TATONGA7 345.00 345KV CKT 1	1195	1195	0.40263	106.2813	OPENSKY7 345.00 - RANCHRD7 345.00 345KV CKT 1
FDNS	01ALL	0	20WP	G15_081	TO->FROM	MATHWSN7 345.00 - TATONGA7 345.00 345KV CKT 1	1195	1195	0.40302	106.2771	GEN527901 1-HOBBS PLANT #1 (CT)
FDNS	01ALL	0	20WP	G15_081	TO->FROM	MATHWSN7 345.00 - TATONGA7 345.00 345KV CKT 1	1195	1195	0.40302	106.2771	GEN527902 1-HOBBS PLANT #2 (CT)
FDNS	01ALL	0	20WP	G15_081	TO->FROM	MATHWSN7 345.00 - TATONGA7 345.00 345KV CKT 1	1195	1195	0.40302	106.2556	GEN635214 4-NEAL UNIT 4
FDNS	01ALL	0	20WP	G15_081	TO->FROM	MATHWSN7 345.00 - TATONGA7 345.00 345KV CKT 1	1195	1195	0.40137	106.2135	GRACEMONT - LAWTON EASTSIDE 345KV CKT 1
FDNS	01ALL	0	20WP	G15_081	TO->FROM	MATHWSN7 345.00 - TATONGA7 345.00 345KV CKT 1	1195	1195	0.40137	106.2135	GRACEMONT - LAWTON EASTSIDE 345KV CKT 1
FDNS	01ALL	0	20WP	G15_081	TO->FROM	MATHWSN7 345.00 - TATONGA7 345.00 345KV CKT 1	1195	1195	0.40302	106.1787	GEN526331 1-JONES GEN #1 22 KV
FDNS	01ALL	0	20WP	G15_081	TO->FROM	MATHWSN7 345.00 - TATONGA7 345.00 345KV CKT 1	1195	1195	0.40302	106.1784	GEN526332 1-JONES GEN #2 21 KV
FDNS	01ALL	0	20WP	G15_081	TO->FROM	MATHWSN7 345.00 - TATONGA7 345.00 345KV CKT 1	1195	1195	0.40302	106.1524	GEN600002 3-SHERBURNE CNTY G3
FDNS	01ALL	0	20WP	G15_081	TO->FROM	MATHWSN7 345.00 - TATONGA7 345.00 345KV CKT 1	1195	1195	0.40302	106.0696	GEN635023 3-WALTER SCOTT UNIT 3
FDNS	01ALL	0	16WP	G15_081	TO->FROM	MATHWSN7 345.00 - TATONGA7 345.00 345KV CKT 1	1195	1195	0.41275	106.0326	G13-010T 345.00 - POST ROCK 345KV CKT 1
FDNS	01ALL	0	20WP	G15_081	TO->FROM	MATHWSN7 345.00 - TATONGA7 345.00 345KV CKT 1	1195	1195	0.40192	106.0101	RENFROW7 345.00 - VIOLA 7 345.00 345KV CKT 1
FDNS	01ALL	0	20WP	G15_081	TO->FROM	MATHWSN7 345.00 - TATONGA7 345.00 345KV CKT 1	1195	1195	0.3997	105.9985	GRACEMONT - MINCO 345KV CKT 1
FDNS	01ALL	0	16WP	G15_081	TO->FROM	MATHWSN7 345.00 - TATONGA7 345.00 345KV CKT 1	1195	1195	0.41275	105.9496	G13-010T 345.00 - SPEARVILLE 345KV CKT 1
FDNS	01ALL	0	20WP	G15_081	TO->FROM	MATHWSN7 345.00 - TATONGA7 345.00 345KV CKT 1	1195	1195	0.40263	105.8141	G15052_T 345.00 - OPENSKY7 345.00 345KV CKT 1
FDNS	01ALL	0	20WP	G15_081	TO->FROM	MATHWSN7 345.00 - TATONGA7 345.00 345KV CKT 1	1195	1195	0.40302	105.8078	GEN515397 1-OUSPRT 1 0.6900
FDNS	01ALL	0	20WP	G15_081	TO->FROM	MATHWSN7 345.00 - TATONGA7 345.00 345KV CKT 1	1195	1195	0.40302	105.7904	GEN635024 4-WALTER SCOTT UNIT 4
FDNS	01ALL	0	20WP	G15_081	TO->FROM	MATHWSN7 345.00 - TATONGA7 345.00 345KV CKT 1	1195	1195	0.40226	105.7256	HUNTERS7 345.00 - RENFROW7 345.00 345KV CKT 1
FDNS	01ALL	0	16WP	G15_081	TO->FROM	MATHWSN7 345.00 - TATONGA7 345.00 345KV CKT 1	1195	1195	0.41601	105.6398	IODINE - WOODWARD EHV 138KV CKT 1
FDNS	01ALL	0	16WP	G15_081	TO->FROM	MATHWSN7 345.00 - TATONGA7 345.00 345KV CKT 1	1195	1195	0.41014	105.5877	CLEO CORNER - CLEOPLT4 138.00 138KV CKT 1
FDNS	01ALL	0	20WP	G15_081	TO->FROM	MATHWSN7 345.00 - TATONGA7 345.00 345KV CKT 1	1195	1195	0.40302	105.5672	GEN527903 1-HOBBS PLANT #3 (ST)
FDNS	01ALL	0	16WP	G15_081	TO->FROM	MATHWSN7 345.00 - TATONGA7 345.00 345KV CKT 1	1195	1195	0.41014	105.5504	CLEOPLT4 138.00 - MEN TAP 138KV CKT 1
FDNS	01ALL	0	20WP	G15_081	TO->FROM	MATHWSN7 345.00 - TATONGA7 345.00 345KV CKT 1	1195	1195	0.40302	105.5335	GEN531447 1-HOLCOMB GENERATOR
FDNS	01ALL	0	16WP	G15_081	TO->FROM	MATHWSN7 345.00 - TATONGA7 345.00 345KV CKT 1	1195	1195	0.41014	105.5211	IMO TAP - MEN TAP 138KV CKT 1
FDNS	01ALL	0	16WP	G15_081	TO->FROM	MATHWSN7 345.00 - TATONGA7 345.00 345KV CKT 1	1195	1195	0.40846	105.4839	GEN520947 1-HUGO1
FDNS	01ALL	0	16WP	G15_081	TO->FROM	MATHWSN7 345.00 - TATONGA7 345.00 345KV CKT 1	1195	1195	0.41601	105.4836	DEWEY - IODINE 138KV CKT 1
FDNS	01ALL	0	20WP	G15_081	TO->FROM	MATHWSN7 345.00 - TATONGA7 345.00 345KV CKT 1	1195	1195	0.39909	105.3917	CIMARRON - DRAPER LAKE 345KV CKT 1
FDNS	01ALL	0	16WP	G15_081	TO->FROM	MATHWSN7 345.00 - TATONGA7 345.00 345KV CKT 1	1195	1195	0.40846	105.381	GEN509416 1-TURK GENERATION
FDNS	01ALL	0	20WP	G15_081	TO->FROM	MATHWSN7 345.00 - TATONGA7 345.00 345KV CKT 1	1195	1195	0.40263	105.3361	G15052_T 345.00 - ROSE HILL 345KV CKT 1
FDNS	01ALL	0	16WP	G15_081	TO->FROM	MATHWSN7 345.00 - TATONGA7 345.00 345KV CKT 1	1195	1195	0.41459	105.3199	MINGO - RED WILLOW 345KV CKT 1
FDNS	01ALL	0	16WP	G15_081	TO->FROM	MATHWSN7 345.00 - TATONGA7 345.00 345KV CKT 1	1195	1195	0.41459	105.3199	MINGO - RED WILLOW 345KV CKT 1
FDNS	01ALL	0	16WP	G15_081	TO->FROM	MATHWSN7 345.00 - TATONGA7 345.00 345KV CKT 1	1195	1195	0.40846	105.3199	GEN509403 1-PIRKEY GENERATION
FDNS	01ALL	0	20SP	G15_081	TO->FROM	MATHWSN7 345.00 - TATONGA7 345.00 345KV CKT 1	1195	1195	0.43629	105.3165	THISTLE7 345.00 - WOODWARD DISTRICT EHV 345KV CKT 1
FDNS	01ALL	0	20SP	G15_081	TO->FROM	MATHWSN7 345.00 - TATONGA7 345.00 345KV CKT 1	1195	1195	0.43629	105.3165	THISTLE7 345.00 - WOODWARD DISTRICT EHV 345KV CKT 1

SOLUTION	GROUP	SCENARIO	SEASON	SOURCE	DIRECTION	MONITORED ELEMENT	RATEA (MVA)	RATEB(MVA)	TDF	TC%LOADING (% MVA)	CONTINGENCY
FDNS	01ALL	0	20SP	G15_081	TO->FROM	MATHWSN7 345.00 - TATONGA7 345.00 345KV CKT 1	1195	1195	0.43629	105.3165	THISTLE7 345.00 - WOODWARD DISTRICT EHV 345KV CKT 2
FDNS	01ALL	0	20SP	G15_081	TO->FROM	MATHWSN7 345.00 - TATONGA7 345.00 345KV CKT 1	1195	1195	0.43629	105.3165	THISTLE7 345.00 - WOODWARD DISTRICT EHV 345KV CKT 2
FDNS	01ALL	0	20WP	G15_081	TO->FROM	MATHWSN7 345.00 - TATONGA7 345.00 345KV CKT 1	1195	1195	0.40302	105.2925	GEN523971 1-HARRINGTON GEN #1 24 KV
FDNS	01ALL	0	20WP	G15_081	TO->FROM	MATHWSN7 345.00 - TATONGA7 345.00 345KV CKT 1	1195	1195	0.40302	105.2924	GEN523973 1-HARRINGTON GEN #3 24 KV
FDNS	01ALL	0	20WP	G15_081	TO->FROM	MATHWSN7 345.00 - TATONGA7 345.00 345KV CKT 1	1195	1195	0.40302	105.2923	GEN523972 1-HARRINGTON GEN #2 24 KV
FDNS	01ALL	0	20WP	G15_081	TO->FROM	MATHWSN7 345.00 - TATONGA7 345.00 345KV CKT 1	1195	1195	0.40302	105.2782	GEN562974 1-G15060_5 0.6900
FDNS	01ALL	0	16WP	G15_081	TO->FROM	MATHWSN7 345.00 - TATONGA7 345.00 345KV CKT 1	1195	1195	0.40846	105.2781	GEN514806 1-SOONER UNIT 2
FDNS	01ALL	0	20L	G15_081	TO->FROM	MATHWSN7 345.00 - TATONGA7 345.00 345KV CKT 1	1195	1195	0.42575	105.272	G1524G1525 345.00 - THISTLE7 345.00 345KV CKT 1
FDNS	01ALL	0	20L	G15_081	TO->FROM	MATHWSN7 345.00 - TATONGA7 345.00 345KV CKT 1	1195	1195	0.42575	105.272	G1524G1525 345.00 - THISTLE7 345.00 345KV CKT 2
FDNS	01ALL	0	16WP	G15_081	TO->FROM	MATHWSN7 345.00 - TATONGA7 345.00 345KV CKT 1	1195	1195	0.41237	105.2688	CHISHOLM6 230.00 - SWEETWATER 230KV CKT 1
FDNS	01ALL	0	20WP	G15_081	TO->FROM	MATHWSN7 345.00 - TATONGA7 345.00 345KV CKT 1	1195	1195	0.39357	105.2505	G15063_T 345.00 - MATHWSN7 345.00 345KV CKT 1
FDNS	01ALL	0	20WP	G15_081	TO->FROM	MATHWSN7 345.00 - TATONGA7 345.00 345KV CKT 1	1195	1195	0.40302	105.2467	GEN562973 1-G15060_4 0.6900
FDNS	01ALL	0	16WP	G15_081	TO->FROM	MATHWSN7 345.00 - TATONGA7 345.00 345KV CKT 1	1195	1195	0.40965	105.2144	G15095_T 138.00 - ROSE_VALLEY 138.00 138KV CKT 1
FDNS	01ALL	0	16WP	G15_081	TO->FROM	MATHWSN7 345.00 - TATONGA7 345.00 345KV CKT 1	1195	1195	0.41261	105.1518	AXTELL - POST ROCK 345KV CKT 1
FDNS	01ALL	0	16WP	G15_081	TO->FROM	MATHWSN7 345.00 - TATONGA7 345.00 345KV CKT 1	1195	1195	0.40965	105.1068	NOEL_SW 138.00 - ROSE_VALLEY 138.00 138KV CKT 1
FDNS	01ALL	0	16WP	G15_081	TO->FROM	MATHWSN7 345.00 - TATONGA7 345.00 345KV CKT 1	1195	1195	0.40846	105.1065	GEN336821 1-GRAND GULF UNIT
FDNS	01ALL	0	16WP	G15_081	TO->FROM	MATHWSN7 345.00 - TATONGA7 345.00 345KV CKT 1	1195	1195	0.40846	105.0821	GEN514805 1-SOONER UNIT 1
FDNS	01ALL	0	16WP	G15_081	TO->FROM	MATHWSN7 345.00 - TATONGA7 345.00 345KV CKT 1	1195	1195	0.40846	105.0636	GEN515602 1-KNGFSR12 0.7000
FDNS	01ALL	0	16WP	G15_081	TO->FROM	MATHWSN7 345.00 - TATONGA7 345.00 345KV CKT 1	1195	1195	0.41277	105.0592	P12:230:AEPW:ELKCITY6:SWEETWT6
FDNS	01ALL	0	16WP	G15_081	TO->FROM	MATHWSN7 345.00 - TATONGA7 345.00 345KV CKT 1	1195	1195	0.40846	105.0574	GEN562587 1-G14_056_3 0.6900
FDNS	01ALL	0	16WP	G15_081	TO->FROM	MATHWSN7 345.00 - TATONGA7 345.00 345KV CKT 1	1195	1195	0.40846	105.0387	GEN337911 1-ARKANSAS NUCLEAR ONE UNIT #2
FDNS	01ALL	0	16WP	G15_081	TO->FROM	MATHWSN7 345.00 - TATONGA7 345.00 345KV CKT 1	1195	1195	0.41151	105.0187	POTTER COUNTY INTERCHANGE (WAUK 90343-A) 345/230/13.2KV TRANSFORMER CKT 1
FDNS	01ALL	0	16WP	G15_081	TO->FROM	MATHWSN7 345.00 - TATONGA7 345.00 345KV CKT 1	1195	1195	0.41151	105.0187	POTTER COUNTY INTERCHANGE (WAUK 90343-A) 345/230/13.2KV TRANSFORMER CKT 1
FDNS	01ALL	0	16WP	G15_081	TO->FROM	MATHWSN7 345.00 - TATONGA7 345.00 345KV CKT 1	1195	1195	0.40846	104.9957	GEN515226 1-MUSKOGEE 6G
FDNS	01ALL	0	16WP	G15_081	TO->FROM	MATHWSN7 345.00 - TATONGA7 345.00 345KV CKT 1	1195	1195	0.41349	104.9735	MINGO - SETAB 345KV CKT 1
FDNS	01ALL	0	16WP	G15_081	TO->FROM	MATHWSN7 345.00 - TATONGA7 345.00 345KV CKT 1	1195	1195	0.41349	104.9735	MINGO - SETAB 345KV CKT 1
FDNS	01ALL	0	16WP	G15_081	TO->FROM	MATHWSN7 345.00 - TATONGA7 345.00 345KV CKT 1	1195	1195	0.40846	104.9071	GEN509406 1-WELSH #3
FDNS	01ALL	0	16WP	G15_081	TO->FROM	MATHWSN7 345.00 - TATONGA7 345.00 345KV CKT 1	1195	1195	0.40846	104.907	GEN509404 1-WELSH #1
FDNS	01ALL	0	16WP	G15_081	TO->FROM	MATHWSN7 345.00 - TATONGA7 345.00 345KV CKT 1	1195	1195	0.40846	104.9021	GEN515040 1-SEMINOLE 1G
FDNS	01ALL	0	16WP	G15_081	TO->FROM	MATHWSN7 345.00 - TATONGA7 345.00 345KV CKT 1	1195	1195	0.41228	104.8759	HOLCOMB - SETAB 345KV CKT 1
FDNS	01ALL	0	16WP	G15_081	TO->FROM	MATHWSN7 345.00 - TATONGA7 345.00 345KV CKT 1	1195	1195	0.41228	104.8759	HOLCOMB - SETAB 345KV CKT 1
FDNS	01ALL	0	20WP	G15_081	TO->FROM	MATHWSN7 345.00 - TATONGA7 345.00 345KV CKT 1	1195	1195	0.39483	104.8728	MATHWSN7 345.00 - NORTHWEST 345KV CKT 1
FDNS	01ALL	0	16WP	G15_081	TO->FROM	MATHWSN7 345.00 - TATONGA7 345.00 345KV CKT 1	1195	1195	0.40846	104.8549	GEN511843 1-RIVERSIDE STATION #2
FDNS	01ALL	0	16WP	G15_081	TO->FROM	MATHWSN7 345.00 - TATONGA7 345.00 345KV CKT 1	1195	1195	0.40846	104.8273	GEN336153 1-WATERFORD UNIT#3
FDNS	01ALL	0	16WP	G15_081	TO->FROM	MATHWSN7 345.00 - TATONGA7 345.00 345KV CKT 1	1195	1195	0.40846	104.8088	GEN515225 1-MUSKOGEE 5G
FDNS	01ALL	0	16WP	G15_081	TO->FROM	MATHWSN7 345.00 - TATONGA7 345.00 345KV CKT 1	1195	1195	0.40846	104.8087	GEN515223 1-MUSKOGEE 4G
FDNS	01ALL	0	16WP	G15_081	TO->FROM	MATHWSN7 345.00 - TATONGA7 345.00 345KV CKT 1	1195	1195	0.41157	104.7569	G1524G1525 345.00 - WICHITA 345KV CKT 1
FDNS	01ALL	0	16WP	G15_081	TO->FROM	MATHWSN7 345.00 - TATONGA7 345.00 345KV CKT 1	1195	1195	0.41157	104.7569	G1524G1525 345.00 - WICHITA 345KV CKT 2
FDNS	01ALL	0	16WP	G15_081	TO->FROM	MATHWSN7 345.00 - TATONGA7 345.00 345KV CKT 1	1195	1195	0.40846	104.7498	GEN337910 1-ARKANSAS NUCLEAR ONE UNIT #1
FDNS	01ALL	0	16WP	G15_081	TO->FROM	MATHWSN7 345.00 - TATONGA7 345.00 345KV CKT 1	1195	1195	0.41382	104.7235	BENTON - WICHITA 345KV CKT 1
FDNS	01ALL	0	20WP	G15_081	TO->FROM	MATHWSN7 345.00 - TATONGA7 345.00 345KV CKT 1	1195	1195	0.40302	104.7206	GEN515393 1-OGEWND2G
FDNS	01ALL	0	16WP	G15_081	TO->FROM	MATHWSN7 345.00 - TATONGA7 345.00 345KV CKT 1	1195	1195	0.40846	104.6769	GEN515443 1-MNCOWND1 0.7000
FDNS	01ALL	0	16WP	G15_081	TO->FROM	MATHWSN7 345.00 - TATONGA7 345.00 345KV CKT 1	1195	1195	0.4098	104.6577	P12:138:WFEC:MSL14
FDNS	01ALL	0	16WP	G15_081	TO->FROM	MATHWSN7 345.00 - TATONGA7 345.00 345KV CKT 1	1195	1195	0.40971	104.6549	G14-057T 345.00 - SUNNYSIDE 345KV CKT 1
FDNS	01ALL	0	16WP	G15_081	TO->FROM	MATHWSN7 345.00 - TATONGA7 345.00 345KV CKT 1	1195	1195	0.40846	104.6485	GEN501801 1-DOLET HILLS UNIT1
FDNS	01ALL	0	16WP	G15_081	TO->FROM	MATHWSN7 345.00 - TATONGA7 345.00 345KV CKT 1	1195	1195	0.40846	104.6387	GEN335831 1-RIVERBEND UNIT#1
FDNS	01ALL	0	16WP	G15_081	TO->FROM	MATHWSN7 345.00 - TATONGA7 345.00 345KV CKT 1	1195	1195	0.40846	104.6188	GEN509394 1-FLINT CREEK
FDNS	01ALL	0	16WP	G15_081	TO->FROM	MATHWSN7 345.00 - TATONGA7 345.00 345KV CKT 1	1195	1195	0.4098	104.6111	BEARCAT 138.00 - MOORELAND 138KV CKT 1
FDNS	01ALL	0	16WP	G15_081	TO->FROM	MATHWSN7 345.00 - TATONGA7 345.00 345KV CKT 1	1195	1195	0.40846	104.5929	GEN562794 1-G15038_5 0.6900
FDNS	01ALL	0	16WP	G15_081	TO->FROM	MATHWSN7 345.00 - TATONGA7 345.00 345KV CKT 1	1195	1195	0.40846	104.5929	GEN562795 1-G15038_6 0.6900
FDNS	01ALL	0	16WP	G15_081	TO->FROM	MATHWSN7 345.00 - TATONGA7 345.00 345KV CKT 1	1195	1195	0.40846	104.578	GEN515606 1-CANDN11 0.6900
FDNS	01ALL	0	16WP	G15_081	TO->FROM	MATHWSN7 345.00 - TATONGA7 345.00 345KV CKT 1	1195	1195	0.40846	104.578	GEN515607 1-CANDN12 0.6900
FDNS	01ALL	0	16WP	G15_081	TO->FROM	MATHWSN7 345.00 - TATONGA7 345.00 345KV CKT 1	1195	1195	0.40846	104.5724	GEN511840 1-NORTHEASTERN STATION #3
FDNS	01ALL	0	16WP	G15_081	TO->FROM	MATHWSN7 345.00 - TATONGA7 345.00 345KV CKT 1	1195	1195	0.40935	104.5593	P12:138:WFEC:MSL15
FDNS	01ALL	0	16WP	G15_081	TO->FROM	MATHWSN7 345.00 - TATONGA7 345.00 345KV CKT 1	1195	1195	0.41049	104.5533	GRAPEVINE INTERCHANGE - NICHOLS STATION 230KV CKT 1
FDNS	01ALL	0	16WP	G15_081	TO->FROM	MATHWSN7 345.00 - TATONGA7 345.00 345KV CKT 1	1195	1195	0.41049	104.5533	GRAPEVINE INTERCHANGE - NICHOLS STATION 230KV CKT 1
FDNS	01ALL	0	20WP	G15_081	TO->FROM	MATHWSN7 345.00 - TATONGA7 345.00 345KV CKT 1	1195	1195	0.39357	104.5445	G15063_T 345.00 - WOODRING 345KV CKT 1
FDNS	01ALL	0	16WP	G15_081	TO->FROM	MATHWSN7 345.00 - TATONGA7 345.00 345KV CKT 1	1195	1195	0.4098	104.5308	BEARCAT 138.00 - NINE MILE 138KV CKT 1
FDNS	01ALL	0	16WP	G15_081	TO->FROM	MATHWSN7 345.00 - TATONGA7 345.00 345KV CKT 1	1195	1195	0.40978	104.5204	P12:138:WFEC:MSL12
FDNS	01ALL	0	16WP	G15_081	TO->FROM	MATHWSN7 345.00 - TATONGA7 345.00 345KV CKT 1	1195	1195	0.40978	104.506	MOORELAND - PIC4 138.00 138KV CKT 1
FDNS	01ALL	0	16WP	G15_081	TO->FROM	MATHWSN7 345.00 - TATONGA7 345.00 345KV CKT 1	1195	1195	0.40846	104.4997	GEN511839 1-NORTHEASTERN STATION #2
FDNS	01ALL	0	16WP	G15_081	TO->FROM	MATHWSN7 345.00 - TATONGA7 345.00 345KV CKT 1	1195	1195	0.40978	104.4911	CEDARDALE - PIC4 138.00 138KV CKT 1
FDNS	01ALL	0	16WP	G15_081	TO->FROM	MATHWSN7 345.00 - TATONGA7 345.00 345KV CKT 1	1195	1195	0.41151	104.4713	G14_038T 345.00 - POTTER COUNTY INTERCHANGE 345KV CKT 1
FDNS	01ALL	0	16WP	G15_081	TO->FROM	MATHWSN7 345.00 - TATONGA7 345.00 345KV CKT 1	1195	1195	0.40846	104.4701	P12:345:GRDA:CHOUTEAU-SPORTSMANACRES
FDNS	01ALL	0	16WP	G15_081	TO->FROM	MATHWSN7 345.00 - TATONGA7 345.00 345KV CKT 1	1195	1195	0.40978	104.4641	CEDARDALE - OKEENE 138KV CKT 1
FDNS	01ALL	0	16WP	G15_081	TO->FROM	MATHWSN7 345.00 - TATONGA7 345.00 345KV CKT 1	1195	1195	0.40846	104.4421	GEN511842 1-RIVERSIDE STATION #1
FDNS	01ALL	0	20L	G15_081	TO->FROM	MATHWSN7 345.00 - TATONGA7 345.00 345KV CKT 1	1195	1195	0.42102	104.434	MINGO - RED WILLOW 345KV CKT 1
FDNS	01ALL	0	20L	G15_081	TO->FROM	MATHWSN7 345.00 - TATONGA7 345.00 345KV CKT 1	1195	1195	0.42102	104.434	MINGO - RED WILLOW 345KV CKT 1
FDNS	01ALL	0	16WP	G15_081	TO->FROM	MATHWSN7 345.00 - TATONGA7 345.00 345KV CKT 1	1195	1195	0.41768	104.4022	G14-074T 345.00 - OKLAUNION 345KV CKT 1
FDNS	01ALL	0	16WP	G15_081	TO->FROM	MATHWSN7 345.00 - TATONGA7 345.00 345KV CKT 1	1195	1195	0.4098	104.3933	MOREWOOD SW - NINE MILE 138KV CKT 1
FDNS	01ALL	0	16WP	G15_081	TO->FROM	MATHWSN7 345.00 - TATONGA7 345.00 345KV CKT 1	1195	1195	0.40936	104.393	GRAND ISLAND - SWEETWATER 345KV CKT 1
FDNS	01ALL	0	16WP	G15_081	TO->FROM	MATHWSN7 345.00 - TATONGA7 345.00 345KV CKT 1	1195	1195	0.40911	104.3728	G15074_T 345.00 - HOYT 345KV CKT 1
FDNS	01ALL	0	16WP	G15_081	TO->FROM	MATHWSN7 345.00 - TATONGA7 345.00 345KV CKT 1	1195	1195	0.40846	104.3396	GEN512688 2-GRDA1 GSU2 22
FDNS	01ALL	0	16WP	G15_081	TO->FROM	MATHWSN7 345.00 - TATONGA7 345.00 345KV CKT 1	1195	1195	0.40846	104.3259	GEN337653 1-WHITE BLUFF UNIT #2
FDNS	01ALL	0	16WP	G15_081	TO->FROM	MATHWSN7 345.00 - TATONGA7 345.00 345KV CKT 1	1195	1195	0.41024	104.3201	DOVER SW - OKEENE 138KV CKT 1
FDNS	01ALL	0	16WP	G15_081	TO->FROM	MATHWSN7 345.00 - TATONGA7 345.00 345KV CKT 1	1195	1195	0.40971	104.3189	G14-057T 345.00 - LAWTON EASTSIDE 345KV CKT 1
FDNS	01ALL	0	16WP	G15_081	TO->FROM	MATHWSN7 345.00 - TATONGA7 345.00 345KV CKT 1	1195	1195	0.41605	104.3068	FPL SWITCH - MOORELAND 138KV CKT 1
FDNS	01ALL	0	16WP	G15_081	TO->FROM	MATHWSN7 345.00 - TATONGA7 345.00 345KV CKT 1	1195	1195	0.40911	104.3018	G15074_T 345.00 - JEFFREY ENERGY CENTER 345KV CKT 1
FDNS	01ALL	0	16WP	G15_081	TO->FROM	MATHWSN7 345.00 - TATONGA7 345.00 345KV CKT 1	1195	1195	0.40935	104.2943	NOEL_SW 138.00 - SALT_PLAINS 138.00 138KV CKT 1

SOLUTION	GROUP	SCENARIO	SEASON	SOURCE	DIRECTION	MONITORED ELEMENT	RATEA (MVA)	RATEB(MVA)	TDF	TC%LOADING (% MVA)	CONTINGENCY
FDNS	01ALL	0	16WP	G15_081	TO->FROM	MATHWSN7 345.00 - TATONGA7 345.00 345KV CKT 1	1195	1195	0.40846	104.2906	GEN515042 1-SEMINOLE 3G
FDNS	01ALL	0	16WP	G15_081	TO->FROM	MATHWSN7 345.00 - TATONGA7 345.00 345KV CKT 1	1195	1195	0.40846	104.2853	GEN300006 1-NEW MADRID UNIT 1
FDNS	01ALL	0	16WP	G15_081	TO->FROM	MATHWSN7 345.00 - TATONGA7 345.00 345KV CKT 1	1195	1195	0.41403	104.2832	G11-14T 345.00 - WOODWARD DISTRICT EHV 345KV CKT 1
FDNS	01ALL	0	16WP	G15_081	TO->FROM	MATHWSN7 345.00 - TATONGA7 345.00 345KV CKT 1	1195	1195	0.41403	104.2832	G11-14T 345.00 - WOODWARD DISTRICT EHV 345KV CKT 2
FDNS	01ALL	0	16WP	G15_081	TO->FROM	MATHWSN7 345.00 - TATONGA7 345.00 345KV CKT 1	1195	1195	0.40846	104.2807	GEN300007 1-NEW MADRID UNIT 2
FDNS	01ALL	0	16WP	G15_081	TO->FROM	MATHWSN7 345.00 - TATONGA7 345.00 345KV CKT 1	1195	1195	0.40923	104.2795	LACYGNE - WAVERLY7 345.00 345KV CKT 1
FDNS	01ALL	0	16WP	G15_081	TO->FROM	MATHWSN7 345.00 - TATONGA7 345.00 345KV CKT 1	1195	1195	0.40846	104.2616	GEN509409 1-WILKES #3
FDNS	01ALL	0	20WP	G15_081	TO->FROM	MATHWSN7 345.00 - TATONGA7 345.00 345KV CKT 1	1195	1195	0.40302	104.2475	GEN562078 1-G11_051_3 0.6900
FDNS	01ALL	0	20L	G15_081	TO->FROM	MATHWSN7 345.00 - TATONGA7 345.00 345KV CKT 1	1195	1195	0.4144	104.2439	CIMARRON - MINCO 345KV CKT 1
FDNS	01ALL	0	16WP	G15_081	TO->FROM	MATHWSN7 345.00 - TATONGA7 345.00 345KV CKT 1	1195	1195	0.40846	104.2303	GEN337652 1-WHITE BLUFF UNIT #1
FDNS	01ALL	0	16WP	G15_081	TO->FROM	MATHWSN7 345.00 - TATONGA7 345.00 345KV CKT 1	1195	1195	0.41028	104.2255	FLATRDG3 - THISTLE4 138.00 138KV CKT 1
FDNS	01ALL	0	16WP	G15_081	TO->FROM	MATHWSN7 345.00 - TATONGA7 345.00 345KV CKT 1	1195	1195	0.41028	104.2255	FLATRDG3 - THISTLE4 138.00 138KV CKT 1
FDNS	01ALL	0	16WP	G15_081	TO->FROM	MATHWSN7 345.00 - TATONGA7 345.00 345KV CKT 1	1195	1195	0.41028	104.2252	THISTLE7 345.00 (THISTLE T1) 345/138/13.8KV TRANSFORMER CKT 1
FDNS	01ALL	0	16WP	G15_081	TO->FROM	MATHWSN7 345.00 - TATONGA7 345.00 345KV CKT 1	1195	1195	0.40846	104.2066	GEN515041 1-SEMINOLE 2G
FDNS	01ALL	0	16WP	G15_081	TO->FROM	MATHWSN7 345.00 - TATONGA7 345.00 345KV CKT 1	1195	1195	0.40923	104.2054	WAVERLY7 345.00 - WOLF CREEK 345KV CKT 1
FDNS	01ALL	0	16WP	G15_081	TO->FROM	MATHWSN7 345.00 - TATONGA7 345.00 345KV CKT 1	1195	1195	0.40846	104.1936	GEN501813 1-RODEMACHER UNIT 3
FDNS	01ALL	0	16WP	G15_081	TO->FROM	MATHWSN7 345.00 - TATONGA7 345.00 345KV CKT 1	1195	1195	0.41044	104.1821	CANEYRV7 345.00 - NEOSHO 345KV CKT 1
FDNS	01ALL	0	16WP	G15_081	TO->FROM	MATHWSN7 345.00 - TATONGA7 345.00 345KV CKT 1	1195	1195	0.41151	104.1612	G14_038T 345.00 - Hitchland Interchange 345KV CKT 1
FDNS	01ALL	0	20WP	G15_081	TO->FROM	MATHWSN7 345.00 - TATONGA7 345.00 345KV CKT 1	1195	1195	0.40302	104.1498	GEN525561 1-TOLK GEN #1 24 KV
FDNS	01ALL	0	16WP	G15_081	TO->FROM	MATHWSN7 345.00 - TATONGA7 345.00 345KV CKT 1	1195	1195	0.40921	104.1172	G15088_T 345.00 - MOORE 345KV CKT 1
FDNS	01ALL	0	20WP	G15_081	TO->FROM	MATHWSN7 345.00 - TATONGA7 345.00 345KV CKT 1	1195	1195	0.40302	104.1126	GEN560219 1-G07_062_8 0.6900
FDNS	01ALL	0	16WP	G15_081	TO->FROM	MATHWSN7 345.00 - TATONGA7 345.00 345KV CKT 1	1195	1195	0.40846	104.0909	GEN335206 1-NELSON UNIT 6
FDNS	01ALL	0	16WP	G15_081	TO->FROM	MATHWSN7 345.00 - TATONGA7 345.00 345KV CKT 1	1195	1195	0.40846	104.0753	GEN513601 1-GRECCTG_1 20.000
FDNS	01ALL	0	16WP	G15_081	TO->FROM	MATHWSN7 345.00 - TATONGA7 345.00 345KV CKT 1	1195	1195	0.41044	104.0752	CANEYRV7 345.00 - LATHAMS7 345.00 345KV CKT 1
FDNS	01ALL	0	16WP	G15_081	TO->FROM	MATHWSN7 345.00 - TATONGA7 345.00 345KV CKT 1	1195	1195	0.40846	104.0684	GEN515601 1-KNGFSR11 0.7000
FDNS	01ALL	0	16WP	G15_081	TO->FROM	MATHWSN7 345.00 - TATONGA7 345.00 345KV CKT 1	1195	1195	0.40846	104.0604	GEN514910 2-REDBUD GEN
FDNS	01ALL	0	16WP	G15_081	TO->FROM	MATHWSN7 345.00 - TATONGA7 345.00 345KV CKT 1	1195	1195	0.40846	104.0582	GRAND GULF 500/22.0KV TRANSFORMER CKT 1
FDNS	01ALL	0	16WP	G15_081	TO->FROM	MATHWSN7 345.00 - TATONGA7 345.00 345KV CKT 1	1195	1195	0.40937	104.0502	AXTELL - PAULINE 345KV CKT 1
FDNS	01ALL	0	16WP	G15_081	TO->FROM	MATHWSN7 345.00 - TATONGA7 345.00 345KV CKT 1	1195	1195	0.40935	104.0428	C_CITY_138 138.00 - SALT_PLAINS 138.00 138KV CKT 1
FDNS	01ALL	0	16WP	G15_081	TO->FROM	MATHWSN7 345.00 - TATONGA7 345.00 345KV CKT 1	1195	1195	0.40914	104.028	HOYT - STRANGER CREEK 345KV CKT 1
FDNS	01ALL	0	16WP	G15_081	TO->FROM	MATHWSN7 345.00 - TATONGA7 345.00 345KV CKT 1	1195	1195	0.40846	104.0042	GEN511848 1-SOUTHWESTERN STATION #3
FDNS	01ALL	0	16WP	G15_081	TO->FROM	MATHWSN7 345.00 - TATONGA7 345.00 345KV CKT 1	1195	1195	0.40846	104.0037	GEN514911 2-REDBUD GEN
FDNS	01ALL	0	16WP	G15_081	TO->FROM	MATHWSN7 345.00 - TATONGA7 345.00 345KV CKT 1	1195	1195	0.40846	104.0037	GEN514942 2-REDBUD4G
FDNS	01ALL	0	16WP	G15_081	TO->FROM	MATHWSN7 345.00 - TATONGA7 345.00 345KV CKT 1	1195	1195	0.40935	103.9974	BYRON_138 138.00 - C_CITY_138 138.00 138KV CKT 1
FDNS	01ALL	0	16WP	G15_081	TO->FROM	MATHWSN7 345.00 - TATONGA7 345.00 345KV CKT 1	1195	1195	0.40846	103.9843	GEN338146 1-INDEPENDENCE UNIT #2
FDNS	01ALL	0	16WP	G15_081	TO->FROM	MATHWSN7 345.00 - TATONGA7 345.00 345KV CKT 1	1195	1195	0.40923	103.9766	MULLERGREN - SPEARVILLE 230KV CKT 1
FDNS	01ALL	0	16WP	G15_081	TO->FROM	MATHWSN7 345.00 - TATONGA7 345.00 345KV CKT 1	1195	1195	0.40923	103.9766	MULLERGREN - SPEARVILLE 230KV CKT 1
FDNS	01ALL	0	16WP	G15_081	TO->FROM	MATHWSN7 345.00 - TATONGA7 345.00 345KV CKT 1	1195	1195	0.40921	103.9703	G15088_T 345.00 - PAULINE 345KV CKT 1
FDNS	01ALL	0	16WP	G15_081	TO->FROM	MATHWSN7 345.00 - TATONGA7 345.00 345KV CKT 1	1195	1195	0.40846	103.9694	GEN501812 1-RODEMACHER UNIT 2
FDNS	01ALL	0	16WP	G15_081	TO->FROM	MATHWSN7 345.00 - TATONGA7 345.00 345KV CKT 1	1195	1195	0.40846	103.9652	GEN590011 2-ERCOT EQUIVALENCE
FDNS	01ALL	0	16WP	G15_081	TO->FROM	MATHWSN7 345.00 - TATONGA7 345.00 345KV CKT 1	1195	1195	0.40983	103.9633	P12:138:WERE:MURR-MKEC_138P::
FDNS	01ALL	0	16WP	G15_081	TO->FROM	MATHWSN7 345.00 - TATONGA7 345.00 345KV CKT 1	1195	1195	0.41001	103.9513	G14_001T 345.00 - WICHITA 345KV CKT 1
FDNS	01ALL	0	20WP	G15_081	TO->FROM	MATHWSN7 345.00 - TATONGA7 345.00 345KV CKT 1	1195	1195	0.40302	103.9477	GEN525562 1-TOLK GEN #2 24 KV
FDNS	01ALL	0	16WP	G15_081	TO->FROM	MATHWSN7 345.00 - TATONGA7 345.00 345KV CKT 1	1195	1195	0.40846	103.9476	GEN514940 1-REDBUD GEN
FDNS	01ALL	0	16WP	G15_081	TO->FROM	MATHWSN7 345.00 - TATONGA7 345.00 345KV CKT 1	1195	1195	0.40846	103.9422	GEN338143 1-INDEPENDENCE UNIT #1
FDNS	01ALL	0	16WP	G15_081	TO->FROM	MATHWSN7 345.00 - TATONGA7 345.00 345KV CKT 1	1195	1195	0.40846	103.9416	GEN514900 1-REDBUD2S
FDNS	01ALL	0	16WP	G15_081	TO->FROM	MATHWSN7 345.00 - TATONGA7 345.00 345KV CKT 1	1195	1195	0.40846	103.9415	GEN514899 1-REDBUD1S
FDNS	01ALL	0	16WP	G15_081	TO->FROM	MATHWSN7 345.00 - TATONGA7 345.00 345KV CKT 1	1195	1195	0.40983	103.9366	P12:138:MKEC:HARPER-CLEARWATER::
FDNS	01ALL	0	16WP	G15_081	TO->FROM	MATHWSN7 345.00 - TATONGA7 345.00 345KV CKT 1	1195	1195	0.40983	103.9366	P12:138:WERE:CLWA-MKEC_138F::
FDNS	01ALL	0	16WP	G15_081	TO->FROM	MATHWSN7 345.00 - TATONGA7 345.00 345KV CKT 1	1195	1195	0.40846	103.9335	GEN511938 1-OEC STEAM # 1
FDNS	01ALL	0	16WP	G15_081	TO->FROM	MATHWSN7 345.00 - TATONGA7 345.00 345KV CKT 1	1195	1195	0.40846	103.9329	GEN511941 1-OEC STEAM # 2
FDNS	01ALL	0	16WP	G15_081	TO->FROM	MATHWSN7 345.00 - TATONGA7 345.00 345KV CKT 1	1195	1195	0.40846	103.9281	GEN590010 1-ERCOT EQUIVALENCE
FDNS	01ALL	0	16WP	G15_081	TO->FROM	MATHWSN7 345.00 - TATONGA7 345.00 345KV CKT 1	1195	1195	0.40846	103.9208	GEN563272 1-G15093_3 0.6900
FDNS	01ALL	0	16WP	G15_081	TO->FROM	MATHWSN7 345.00 - TATONGA7 345.00 345KV CKT 1	1195	1195	0.41001	103.9186	EMPORIA ENERGY CENTER - G14_001T 345.00 345KV CKT 1
FDNS	01ALL	0	16WP	G15_081	TO->FROM	MATHWSN7 345.00 - TATONGA7 345.00 345KV CKT 1	1195	1195	0.40846	103.8937	GEN514905 1-REDBUD3S
FDNS	01ALL	0	16WP	G15_081	TO->FROM	MATHWSN7 345.00 - TATONGA7 345.00 345KV CKT 1	1195	1195	0.41065	103.8914	GRAPEVINE INTERCHANGE - STATELINE INTERCHANGE 230KV CKT 1
FDNS	01ALL	0	16WP	G15_081	TO->FROM	MATHWSN7 345.00 - TATONGA7 345.00 345KV CKT 1	1195	1195	0.41065	103.8914	GRAPEVINE INTERCHANGE - STATELINE INTERCHANGE 230KV CKT 1
FDNS	01ALL	0	16WP	G15_081	TO->FROM	MATHWSN7 345.00 - TATONGA7 345.00 345KV CKT 1	1195	1195	0.41044	103.8899	LATHAMS7 345.00 - ROSE HILL 345KV CKT 1
FDNS	01ALL	0	16WP	G15_081	TO->FROM	MATHWSN7 345.00 - TATONGA7 345.00 345KV CKT 1	1195	1195	0.41082	103.8855	CHISHOLM7 345.00 - GRACEMONT 345KV CKT 1
FDNS	01ALL	0	16WP	G15_081	TO->FROM	MATHWSN7 345.00 - TATONGA7 345.00 345KV CKT 1	1195	1195	0.40846	103.8801	GEN515550 1-MNCWND31 0.6900
FDNS	01ALL	0	16WP	G15_081	TO->FROM	MATHWSN7 345.00 - TATONGA7 345.00 345KV CKT 1	1195	1195	0.40846	103.8732	GEN562952 1-G15057_3 0.6500
FDNS	01ALL	0	16WP	G15_081	TO->FROM	MATHWSN7 345.00 - TATONGA7 345.00 345KV CKT 1	1195	1195	0.40885	103.8652	SMOKYHL6 230.00 - SUMMIT 230KV CKT 1
FDNS	01ALL	0	16WP	G15_081	TO->FROM	MATHWSN7 345.00 - TATONGA7 345.00 345KV CKT 1	1195	1195	0.40846	103.8487	GEN336252 1-NINEMILE POINT UNIT#5
FDNS	01ALL	0	16WP	G15_081	TO->FROM	MATHWSN7 345.00 - TATONGA7 345.00 345KV CKT 1	1195	1195	0.40983	103.8382	CLEARWATER - GILL ENERGY CENTER WEST 138KV CKT 1
FDNS	01ALL	0	16WP	G15_081	TO->FROM	MATHWSN7 345.00 - TATONGA7 345.00 345KV CKT 1	1195	1195	0.40846	103.8351	GEN562512 1-G14_020_3 0.6900
FDNS	01ALL	0	16WP	G15_081	TO->FROM	MATHWSN7 345.00 - TATONGA7 345.00 345KV CKT 1	1195	1195	0.40897	103.8151	BUCKNER7 345.00 - SPEARVILLE 345KV CKT 1
FDNS	01ALL	0	16WP	G15_081	TO->FROM	MATHWSN7 345.00 - TATONGA7 345.00 345KV CKT 1	1195	1195	0.40897	103.8151	BUCKNER7 345.00 - SPEARVILLE 345KV CKT 1
FDNS	01ALL	0	16WP	G15_081	TO->FROM	MATHWSN7 345.00 - TATONGA7 345.00 345KV CKT 1	1195	1195	0.4102	103.8143	GLASS MOUNTAIN - MOORELAND 138KV CKT 1
FDNS	01ALL	0	16WP	G15_081	TO->FROM	MATHWSN7 345.00 - TATONGA7 345.00 345KV CKT 1	1195	1195	0.40846	103.8013	GEN336831 1-BAXTER WILSON SES
FDNS	01ALL	0	16WP	G15_081	TO->FROM	MATHWSN7 345.00 - TATONGA7 345.00 345KV CKT 1	1195	1195	0.40846	103.7965	DELL 500 - ESSEX UNIT 2 500KV CKT Z1
FDNS	01ALL	0	16WP	G15_081	TO->FROM	MATHWSN7 345.00 - TATONGA7 345.00 345KV CKT 1	1195	1195	0.40945	103.7927	SWISSVALE - WEST GARDNER 345KV CKT 1
FDNS	01ALL	0	16WP	G15_081	TO->FROM	MATHWSN7 345.00 - TATONGA7 345.00 345KV CKT 1	1195	1195	0.40846	103.787	GEN334440 1-SABINE UNIT 4
FDNS	01ALL	0	16WP	G15_081	TO->FROM	MATHWSN7 345.00 - TATONGA7 345.00 345KV CKT 1	1195	1195	0.40952	103.7804	EL RENO - ROMAN NOSE 138KV CKT 1
FDNS	01ALL	0	16WP	G15_081	TO->FROM	MATHWSN7 345.00 - TATONGA7 345.00 345KV CKT 1	1195	1195	0.4102	103.776	CLEO CORNER - GLASS MOUNTAIN 138KV CKT 1
FDNS	01ALL	0	16WP	G15_081	TO->FROM	MATHWSN7 345.00 - TATONGA7 345.00 345KV CKT 1	1195	1195	0.40846	103.7645	WHITE BLUFF 500/26.0KV TRANSFORMER CKT 1
FDNS	01ALL	0	16WP	G15_081	TO->FROM	MATHWSN7 345.00 - TATONGA7 345.00 345KV CKT 1	1195	1195	0.41033	103.7623	BVRCNTY7 345.00 - OPTIMA 345.00 345KV CKT 1
FDNS	01ALL	0	16WP	G15_081	TO->FROM	MATHWSN7 345.00 - TATONGA7 345.00 345KV CKT 1	1195	1195	0.41033	103.7623	BVRCNTY7 345.00 - OPTIMA 345.00 345KV CKT 2
FDNS	01ALL	0	16WP	G15_081	TO->FROM	MATHWSN7 345.00 - TATONGA7 345.00 345KV CKT 1	1195	1195	0.40935	103.7555	BYRON_138 138.00 - SANDY_CN_138138.00 138KV CKT 1
FDNS	01ALL	0	16WP	G15_081	TO->FROM	MATHWSN7 345.00 - TATONGA7 345.00 345KV CKT 1	1195	1195	0.40846	103.7452	GEN563273 2-G15093_4 0.6900

SOLUTION	GROUP	SCENARIO	SEASON	SOURCE	DIRECTION	MONITORED ELEMENT	RATEA (MVA)	RATEB(MVA)	TDF	TC%LOADING (% MVA)	CONTINGENCY
FDNS	01ALL	0	16WP	G15_081	TO->FROM	MATHWSN7 345.00 - TATONGA7 345.00 345KV CKT 1	1195	1195	0.40846	103.723	GEN336251 1-NINEMILE POINT UNIT#4
FDNS	01ALL	0	16WP	G15_081	TO->FROM	MATHWSN7 345.00 - TATONGA7 345.00 345KV CKT 1	1195	1195	0.40846	103.723	GEN337041 1-GERALD ANDRUS
FDNS	01ALL	0	16WP	G15_081	TO->FROM	MATHWSN7 345.00 - TATONGA7 345.00 345KV CKT 1	1195	1195	0.40846	103.7126	GEN509393 S1-ARSENAL HILL GENS #4 (STALL)
FDNS	01ALL	0	16WP	G15_081	TO->FROM	MATHWSN7 345.00 - TATONGA7 345.00 345KV CKT 1	1195	1195	0.40846	103.7122	GEN300024 1-1CHOTST6 16.000
FDNS	01ALL	0	16WP	G15_081	TO->FROM	MATHWSN7 345.00 - TATONGA7 345.00 345KV CKT 1	1195	1195	0.40846	103.712	GEN300031 1-CHOUTEAU CTG 1
FDNS	01ALL	0	16WP	G15_081	TO->FROM	MATHWSN7 345.00 - TATONGA7 345.00 345KV CKT 1	1195	1195	0.40912	103.7013	ELK CITY - RED HILLS WIND 138KV CKT 1
FDNS	01ALL	0	16WP	G15_081	TO->FROM	MATHWSN7 345.00 - TATONGA7 345.00 345KV CKT 1	1195	1195	0.40912	103.7013	ELK CITY - RED HILLS WIND 138KV CKT 1
FDNS	01ALL	0	16WP	G15_081	TO->FROM	MATHWSN7 345.00 - TATONGA7 345.00 345KV CKT 1	1195	1195	0.40859	103.6834	GRAND ISLAND - MCCOOL 345KV CKT 1
FDNS	01ALL	0	16WP	G15_081	TO->FROM	MATHWSN7 345.00 - TATONGA7 345.00 345KV CKT 1	1195	1195	0.40846	103.6803	GEN511939 1-OEC GAS # 1-1
FDNS	01ALL	0	16WP	G15_081	TO->FROM	MATHWSN7 345.00 - TATONGA7 345.00 345KV CKT 1	1195	1195	0.40846	103.6803	GEN511940 1-OEC GAS # 1-2
FDNS	01ALL	0	16WP	G15_081	TO->FROM	MATHWSN7 345.00 - TATONGA7 345.00 345KV CKT 1	1195	1195	0.40846	103.6803	GEN511942 1-OEC GAS # 2-1
FDNS	01ALL	0	16WP	G15_081	TO->FROM	MATHWSN7 345.00 - TATONGA7 345.00 345KV CKT 1	1195	1195	0.40846	103.6803	GEN511943 1-OEC GAS # 2-2
FDNS	01ALL	0	16WP	G15_081	TO->FROM	MATHWSN7 345.00 - TATONGA7 345.00 345KV CKT 1	1195	1195	0.40846	103.6735	GEN300020 1-1CHOTCT4 16.000
FDNS	01ALL	0	16WP	G15_081	TO->FROM	MATHWSN7 345.00 - TATONGA7 345.00 345KV CKT 1	1195	1195	0.40846	103.6735	GEN300021 1-1CHOTCT5 16.000
FDNS	01ALL	0	16WP	G15_081	TO->FROM	MATHWSN7 345.00 - TATONGA7 345.00 345KV CKT 1	1195	1195	0.40846	103.6733	GEN300032 1-CHOUTEAU CTG 2
FDNS	01ALL	0	16WP	G15_081	TO->FROM	MATHWSN7 345.00 - TATONGA7 345.00 345KV CKT 1	1195	1195	0.40846	103.6733	GEN300033 1-CHOUTEAU STG 3
FDNS	01ALL	0	16WP	G15_081	TO->FROM	MATHWSN7 345.00 - TATONGA7 345.00 345KV CKT 1	1195	1195	0.40846	103.6629	GEN335204 1-NELSON UNIT 4
FDNS	01ALL	0	16WP	G15_081	TO->FROM	MATHWSN7 345.00 - TATONGA7 345.00 345KV CKT 1	1195	1195	0.40929	103.6499	EMPORIA ENERGY CENTER - SWISSVALE 345KV CKT 1
FDNS	01ALL	0	16WP	G15_081	TO->FROM	MATHWSN7 345.00 - TATONGA7 345.00 345KV CKT 1	1195	1195	0.40846	103.6455	GEN300015 1-1SGPDEL 18.000
FDNS	01ALL	0	16WP	G15_081	TO->FROM	MATHWSN7 345.00 - TATONGA7 345.00 345KV CKT 1	1195	1195	0.40846	103.6375	GEN509392 G2-ARSENAL HILL GENS #3 (STALL)
FDNS	01ALL	0	16WP	G15_081	TO->FROM	MATHWSN7 345.00 - TATONGA7 345.00 345KV CKT 1	1195	1195	0.40846	103.6328	GEN562992 1-G15063_3 0.6900
FDNS	01ALL	0	16WP	G15_081	TO->FROM	MATHWSN7 345.00 - TATONGA7 345.00 345KV CKT 1	1195	1195	0.40846	103.6323	GEN503909 1-FULTONU1 1 16.000
FDNS	01ALL	0	16WP	G15_081	TO->FROM	MATHWSN7 345.00 - TATONGA7 345.00 345KV CKT 1	1195	1195	0.40846	103.6283	GEN506754 1-LEBROCK STEAM 1
FDNS	01ALL	0	16WP	G15_081	TO->FROM	MATHWSN7 345.00 - TATONGA7 345.00 345KV CKT 1	1195	1195	0.40931	103.6251	DEWEY - TALOGA 138KV CKT 1
FDNS	01ALL	0	16WP	G15_081	TO->FROM	MATHWSN7 345.00 - TATONGA7 345.00 345KV CKT 1	1195	1195	0.40846	103.625	GEN509391 G1-ARSENAL HILL GENS #2 (STALL)
FDNS	01ALL	0	16WP	G15_081	TO->FROM	MATHWSN7 345.00 - TATONGA7 345.00 345KV CKT 1	1195	1195	0.40846	103.6217	GEN334441 1-SABINE UNIT 5
FDNS	01ALL	0	16WP	G15_081	TO->FROM	MATHWSN7 345.00 - TATONGA7 345.00 345KV CKT 1	1195	1195	0.40996	103.6215	TUCO INTERCHANGE - TUCO_2 345.00 345KV CKT 1
FDNS	01ALL	0	16WP	G15_081	TO->FROM	MATHWSN7 345.00 - TATONGA7 345.00 345KV CKT 1	1195	1195	0.40854	103.62	GERALD GENTLEMAN STATION - SWEETWATER 345KV CKT 1
FDNS	01ALL	0	16WP	G15_081	TO->FROM	MATHWSN7 345.00 - TATONGA7 345.00 345KV CKT 1	1195	1195	0.40846	103.6175	GEN520812 1-ANADRK5
FDNS	01ALL	0	16WP	G15_081	TO->FROM	MATHWSN7 345.00 - TATONGA7 345.00 345KV CKT 1	1195	1195	0.40846	103.6174	GEN520813 1-ANADRK6
FDNS	01ALL	0	16WP	G15_081	TO->FROM	MATHWSN7 345.00 - TATONGA7 345.00 345KV CKT 1	1195	1195	0.40846	103.6144	GEN303007 1-1BC2 U2
FDNS	01ALL	0	16WP	G15_081	TO->FROM	MATHWSN7 345.00 - TATONGA7 345.00 345KV CKT 1	1195	1195	0.40846	103.614	GEN303006 1-1BC2 U1
FDNS	01ALL	0	16WP	G15_081	TO->FROM	MATHWSN7 345.00 - TATONGA7 345.00 345KV CKT 1	1195	1195	0.40846	103.6131	GEN515266 1-AES 1G
FDNS	01ALL	0	16WP	G15_081	TO->FROM	MATHWSN7 345.00 - TATONGA7 345.00 345KV CKT 1	1195	1195	0.40846	103.6131	GEN515267 1-AES 2G
FDNS	01ALL	0	16WP	G15_081	TO->FROM	MATHWSN7 345.00 - TATONGA7 345.00 345KV CKT 1	1195	1195	0.41237	103.611	P12:230:AEPW-SPS:SWEETWT6:WHEELER 6
FDNS	01ALL	0	16WP	G15_081	TO->FROM	MATHWSN7 345.00 - TATONGA7 345.00 345KV CKT 1	1195	1195	0.41237	103.6107	STATELINE INTERCHANGE - STLN-DEMARC6 230KV CKT 1
FDNS	01ALL	0	16WP	G15_081	TO->FROM	MATHWSN7 345.00 - TATONGA7 345.00 345KV CKT 1	1195	1195	0.41237	103.609	STLN-DEMARC6 - SWEETWATER 230KV CKT 1
FDNS	01ALL	0	16WP	G15_081	TO->FROM	MATHWSN7 345.00 - TATONGA7 345.00 345KV CKT 1	1195	1195	0.40846	103.6088	GEN505432 1-SIKESTON
FDNS	01ALL	0	16WP	G15_081	TO->FROM	MATHWSN7 345.00 - TATONGA7 345.00 345KV CKT 1	1195	1195	0.40846	103.607	GEN336191 1-LITTLE GYPSY UNIT#3
FDNS	01ALL	0	16WP	G15_081	TO->FROM	MATHWSN7 345.00 - TATONGA7 345.00 345KV CKT 1	1195	1195	0.40846	103.6039	GEN336801 1-BAXTER WILSON UNIT #1
FDNS	01ALL	0	16WP	G15_081	TO->FROM	MATHWSN7 345.00 - TATONGA7 345.00 345KV CKT 1	1195	1195	0.40926	103.598	HITCHLAND INTERCHANGE - MOORE COUNTY INTERCHANGE 230KV CKT 1
FDNS	01ALL	0	16WP	G15_081	TO->FROM	MATHWSN7 345.00 - TATONGA7 345.00 345KV CKT 1	1195	1195	0.40926	103.598	HITCHLAND INTERCHANGE - MOORE COUNTY INTERCHANGE 230KV CKT 1
FDNS	01ALL	0	16WP	G15_081	TO->FROM	MATHWSN7 345.00 - TATONGA7 345.00 345KV CKT 1	1195	1195	0.40846	103.5968	GEN300003 1-THOMAS HILL UNIT 3
FDNS	01ALL	0	16WP	G15_081	TO->FROM	MATHWSN7 345.00 - TATONGA7 345.00 345KV CKT 1	1195	1195	0.40846	103.5903	GEN549893 2-SOUTHWEST 2
FDNS	01ALL	0	16WP	G15_081	TO->FROM	MATHWSN7 345.00 - TATONGA7 345.00 345KV CKT 1	1195	1195	0.40893	103.59	TALOGA (TALOGA) 138/69/13.8KV TRANSFORMER CKT 1
FDNS	01ALL	0	16WP	G15_081	TO->FROM	MATHWSN7 345.00 - TATONGA7 345.00 345KV CKT 1	1195	1195	0.40846	103.589	GEN335614 1-WILLOW GLENN UNIT#4
FDNS	01ALL	0	16WP	G15_081	TO->FROM	MATHWSN7 345.00 - TATONGA7 345.00 345KV CKT 1	1195	1195	0.40846	103.5862	GEN501811 1-RODEMACHER UNIT 1
FDNS	01ALL	0	16WP	G15_081	TO->FROM	MATHWSN7 345.00 - TATONGA7 345.00 345KV CKT 1	1195	1195	0.40846	103.5841	GEN300010 1-ST FRANCIS UNIT 1
FDNS	01ALL	0	16WP	G15_081	TO->FROM	MATHWSN7 345.00 - TATONGA7 345.00 345KV CKT 1	1195	1195	0.40846	103.5818	GEN334071 1-LEWIS CREEK 2
FDNS	01ALL	0	16WP	G15_081	TO->FROM	MATHWSN7 345.00 - TATONGA7 345.00 345KV CKT 1	1195	1195	0.40846	103.5788	GEN511837 1-NORTHEASTERN STATION # 1-1A
FDNS	01ALL	0	16WP	G15_081	TO->FROM	MATHWSN7 345.00 - TATONGA7 345.00 345KV CKT 1	1195	1195	0.40846	103.5788	GEN511838 1-NORTHEASTERN STATION # 1-1B
FDNS	01ALL	0	16WP	G15_081	TO->FROM	MATHWSN7 345.00 - TATONGA7 345.00 345KV CKT 1	1195	1195	0.41084	103.5781	BENTON - ROSE HILL 345KV CKT 1
FDNS	01ALL	0	16WP	G15_081	TO->FROM	MATHWSN7 345.00 - TATONGA7 345.00 345KV CKT 1	1195	1195	0.40846	103.578	GEN334070 1-LEWIS CREEK 1
FDNS	01ALL	0	16WP	G15_081	TO->FROM	MATHWSN7 345.00 - TATONGA7 345.00 345KV CKT 1	1195	1195	0.40846	103.5777	GEN303008 1-1BC2 U3
FDNS	01ALL	0	16WP	G15_081	TO->FROM	MATHWSN7 345.00 - TATONGA7 345.00 345KV CKT 1	1195	1195	0.40912	103.5773	ELLIS 4 138.00 - MOREWOOD SW 138KV CKT 1
FDNS	01ALL	0	16WP	G15_081	TO->FROM	MATHWSN7 345.00 - TATONGA7 345.00 345KV CKT 1	1195	1195	0.40846	103.5747	GEN336464 1-MICHOUD UNIT #3
FDNS	01ALL	0	16WP	G15_081	TO->FROM	MATHWSN7 345.00 - TATONGA7 345.00 345KV CKT 1	1195	1195	0.40846	103.5741	GEN513602 1-GRECSTG_1 17.500
FDNS	01ALL	0	16WP	G15_081	TO->FROM	MATHWSN7 345.00 - TATONGA7 345.00 345KV CKT 1	1195	1195	0.40846	103.568	GEN336170 1-GULF OXY U4
FDNS	01ALL	0	16WP	G15_081	TO->FROM	MATHWSN7 345.00 - TATONGA7 345.00 345KV CKT 1	1195	1195	0.40846	103.5576	GEN300011 1-ST FRANCIS UNIT 2
FDNS	01ALL	0	16WP	G15_081	TO->FROM	MATHWSN7 345.00 - TATONGA7 345.00 345KV CKT 1	1195	1195	0.40846	103.5571	GEN334433 1-SABINE UNIT 3
FDNS	01ALL	0	16WP	G15_081	TO->FROM	MATHWSN7 345.00 - TATONGA7 345.00 345KV CKT 1	1195	1195	0.4089	103.5494	CIRCLE - MULLERGREN 230KV CKT 1
FDNS	01ALL	0	16WP	G15_081	TO->FROM	MATHWSN7 345.00 - TATONGA7 345.00 345KV CKT 1	1195	1195	0.4089	103.5494	CIRCLE - MULLERGREN 230KV CKT 1
FDNS	01ALL	0	16WP	G15_081	TO->FROM	MATHWSN7 345.00 - TATONGA7 345.00 345KV CKT 1	1195	1195	0.4086	103.5484	MCCOOL - MOORE 345KV CKT 1
FDNS	01ALL	0	16WP	G15_081	TO->FROM	MATHWSN7 345.00 - TATONGA7 345.00 345KV CKT 1	1195	1195	0.40845	103.5422	DOLET HILLS - SOUTHWEST SHREVEPORT 345KV CKT 1
FDNS	01ALL	0	16WP	G15_081	TO->FROM	MATHWSN7 345.00 - TATONGA7 345.00 345KV CKT 1	1195	1195	0.40845	103.5422	DOLET HILLS - SOUTHWEST SHREVEPORT 345KV CKT 1
FDNS	01ALL	0	16WP	G15_081	TO->FROM	MATHWSN7 345.00 - TATONGA7 345.00 345KV CKT 1	1195	1195	0.40897	103.54	CANTON - TALOGA 69KV CKT 1
FDNSLock	01ALL	0	16WP	G15_081	TO->FROM	MATHWSN7 345.00 - TATONGA7 345.00 345KV CKT 1	1195	1195	0.40876	103.5393	STEGALL (SGQ KV3A) 345/230/13.8KV TRANSFORMER CKT 1
FDNS	01ALL	0	16WP	G15_081	TO->FROM	MATHWSN7 345.00 - TATONGA7 345.00 345KV CKT 1	1195	1195	0.41108	103.5366	GERALD GENTLEMAN STATION - RED WILLOW 345KV CKT 1
FDNS	01ALL	0	16WP	G15_081	TO->FROM	MATHWSN7 345.00 - TATONGA7 345.00 345KV CKT 1	1195	1195	0.40846	103.5323	GEN511955 G-COGENTRIX GAS # 2
FDNS	01ALL	0	16WP	G15_081	TO->FROM	MATHWSN7 345.00 - TATONGA7 345.00 345KV CKT 1	1195	1195	0.40846	103.5152	GEN300016 1-1G1GPDEL 18.000
FDNS	01ALL	0	16WP	G15_081	TO->FROM	MATHWSN7 345.00 - TATONGA7 345.00 345KV CKT 1	1195	1195	0.40904	103.5141	P12:138:AEPW-OGE:WTH_JCT4:JENSEN4
FDNS	01ALL	0	16WP	G15_081	TO->FROM	MATHWSN7 345.00 - TATONGA7 345.00 345KV CKT 1	1195	1195	0.40898	103.5105	DARLINGTNRD4138.00 - ROMAN NOSE 138KV CKT 1
FDNS	01ALL	0	16WP	G15_081	TO->FROM	MATHWSN7 345.00 - TATONGA7 345.00 345KV CKT 1	1195	1195	0.40897	103.5012	CANTON - OKEENE 69KV CKT 1
FDNS	01ALL	0	16WP	G15_081	TO->FROM	MATHWSN7 345.00 - TATONGA7 345.00 345KV CKT 1	1195	1195	0.40886	103.5011	P12:115:MKEC:BARBER-RIVERROAD::
FDNS	01ALL	0	16WP	G15_081	TO->FROM	MATHWSN7 345.00 - TATONGA7 345.00 345KV CKT 1	1195	1195	0.40846	103.4999	GEN337766 1-TRACTEBEL UNIT S1
FDNS	01ALL	0	16WP	G15_081	TO->FROM	MATHWSN7 345.00 - TATONGA7 345.00 345KV CKT 1	1195	1195	0.40846	103.4987	GEN511953 G-COGENTRIX GAS # 1
FDNS	01ALL	0	16WP	G15_081	TO->FROM	MATHWSN7 345.00 - TATONGA7 345.00 345KV CKT 1	1195	1195	0.4088	103.4945	NUNDRWD - WAYSIDE 230KV CKT 1
FDNS	01ALL	0	16WP	G15_081	TO->FROM	MATHWSN7 345.00 - TATONGA7 345.00 345KV CKT 1	1195	1195	0.40886	103.4942	BARBER 3 115.00 - SAWYER 3 115.00 115KV CKT 1
FDNS	01NR	0	20L	G15_081	TO->FROM	MATHWSN7 345.00 - TATONGA7 345.00 345KV CKT 1	1195	1195	0.49314	103.4941	THISTLE7 345.00 - WOODWARD DISTRICT EHV 345KV CKT 1

SOLUTION	GROUP	SCENARIO	SEASON	SOURCE	DIRECTION	MONITORED ELEMENT	RATEA (MVA)	RATEB(MVA)	TDF	TC%LOADING (% MVA)	CONTINGENCY
FDNS	01NR	0	20L	G15_081	TO->FROM	MATHWSN7 345.00 - TATONGA7 345.00 345KV CKT 1	1195	1195	0.49314	103.4941	THISTLE7 345.00 - WOODWARD DISTRICT EHV 345KV CKT 1
FDNS	01NR	0	20L	G15_081	TO->FROM	MATHWSN7 345.00 - TATONGA7 345.00 345KV CKT 1	1195	1195	0.49314	103.4941	THISTLE7 345.00 - WOODWARD DISTRICT EHV 345KV CKT 2
FDNS	01NR	0	20L	G15_081	TO->FROM	MATHWSN7 345.00 - TATONGA7 345.00 345KV CKT 1	1195	1195	0.49314	103.4941	THISTLE7 345.00 - WOODWARD DISTRICT EHV 345KV CKT 2
FDNS	01ALL	0	16WP	G15_081	TO->FROM	MATHWSN7 345.00 - TATONGA7 345.00 345KV CKT 1	1195	1195	0.40846	103.4923	GEN501910 1-ACADIA UNIT ST1
FDNS	01ALL	0	16WP	G15_081	TO->FROM	MATHWSN7 345.00 - TATONGA7 345.00 345KV CKT 1	1195	1195	0.40846	103.4905	GEN334030 1-FRONTIER UNIT 1
FDNS	01ALL	0	16WP	G15_081	TO->FROM	MATHWSN7 345.00 - TATONGA7 345.00 345KV CKT 1	1195	1195	0.40846	103.49	GEN334031 1-FRONTIER UNIT 2
FDNS	01ALL	0	16WP	G15_081	TO->FROM	MATHWSN7 345.00 - TATONGA7 345.00 345KV CKT 1	1195	1195	0.40846	103.4898	GEN511836 1-NORTHEASTERN STATION #1
FDNS	01ALL	0	16WP	G15_081	TO->FROM	MATHWSN7 345.00 - TATONGA7 345.00 345KV CKT 1	1195	1195	0.40846	103.4865	GEN511957 G-COGENTRIX GAS # 3
FDNS	01ALL	0	16WP	G15_081	TO->FROM	MATHWSN7 345.00 - TATONGA7 345.00 345KV CKT 1	1195	1195	0.40846	103.486	GEN520811 1-ANADRK4
FDNS	01ALL	0	16WP	G15_081	TO->FROM	MATHWSN7 345.00 - TATONGA7 345.00 345KV CKT 1	1195	1195	0.40846	103.4855	GEN511954 S-COGENTRIX STEAM # 1
FDNS	01ALL	0	16WP	G15_081	TO->FROM	MATHWSN7 345.00 - TATONGA7 345.00 345KV CKT 1	1195	1195	0.40846	103.4855	GEN511956 S-COGENTRIX STEAM # 2
FDNS	01ALL	0	16WP	G15_081	TO->FROM	MATHWSN7 345.00 - TATONGA7 345.00 345KV CKT 1	1195	1195	0.40912	103.4852	CUSTER4 138.00 - ELLIS 4 138.00 138KV CKT 1
FDNS	01ALL	0	16WP	G15_081	TO->FROM	MATHWSN7 345.00 - TATONGA7 345.00 345KV CKT 1	1195	1195	0.40886	103.4801	ALEXANDER - SAWYER 3 115.00 115KV CKT 1
FDNS	01ALL	0	16WP	G15_081	TO->FROM	MATHWSN7 345.00 - TATONGA7 345.00 345KV CKT 1	1195	1195	0.40892	103.4743	BLACKBERRY - NEOSHO 345KV CKT 1
FDNS	01ALL	0	16WP	G15_081	TO->FROM	MATHWSN7 345.00 - TATONGA7 345.00 345KV CKT 1	1195	1195	0.40846	103.4724	GEN506752 1-LEBROCK GAS 1
FDNS	01ALL	0	16WP	G15_081	TO->FROM	MATHWSN7 345.00 - TATONGA7 345.00 345KV CKT 1	1195	1195	0.40846	103.4724	GEN506753 1-LEBROCK GAS 2
FDNS	01ALL	0	16WP	G15_081	TO->FROM	MATHWSN7 345.00 - TATONGA7 345.00 345KV CKT 1	1195	1195	0.40898	103.4697	Canadian Pump Station - REDROCKRD4 138.00 138KV CKT 1
FDNS	01ALL	0	16WP	G15_081	TO->FROM	MATHWSN7 345.00 - TATONGA7 345.00 345KV CKT 1	1195	1195	0.40912	103.4663	CUSTER4 138.00 - RED HILLS WIND 138KV CKT 1
FDNS	01ALL	0	16WP	G15_081	TO->FROM	MATHWSN7 345.00 - TATONGA7 345.00 345KV CKT 1	1195	1195	0.40852	103.4633	GERALD GENTLEMAN STATION - SWEETWATER 345KV CKT 2
FDNS	01ALL	0	16WP	G15_081	TO->FROM	MATHWSN7 345.00 - TATONGA7 345.00 345KV CKT 1	1195	1195	0.40791	103.4622	ARKANSAS NUCLEAR ONE - FT SMITH 500KV CKT 1
FDNS	01ALL	0	16WP	G15_081	TO->FROM	MATHWSN7 345.00 - TATONGA7 345.00 345KV CKT 1	1195	1195	0.40791	103.4622	ARKANSAS NUCLEAR ONE - FT SMITH 500KV CKT 1
FDNS	01ALL	0	16WP	G15_081	TO->FROM	MATHWSN7 345.00 - TATONGA7 345.00 345KV CKT 1	1195	1195	0.41007	103.458	BVRCNTY7 345.00 - G11-14T 345.00 345KV CKT 1
FDNS	01ALL	0	16WP	G15_081	TO->FROM	MATHWSN7 345.00 - TATONGA7 345.00 345KV CKT 1	1195	1195	0.41007	103.458	BVRCNTY7 345.00 - G11-14T 345.00 345KV CKT 2
FDNS	01ALL	0	16WP	G15_081	TO->FROM	MATHWSN7 345.00 - TATONGA7 345.00 345KV CKT 1	1195	1195	0.40866	103.4573	STEGALL-LNX3230.00 - WAYSIDE 230KV CKT 1
FDNS	01ALL	0	16WP	G15_081	TO->FROM	MATHWSN7 345.00 - TATONGA7 345.00 345KV CKT 1	1195	1195	0.40846	103.4544	GEN509408 1-WILKES #2
FDNS	01ALL	0	16WP	G15_081	TO->FROM	MATHWSN7 345.00 - TATONGA7 345.00 345KV CKT 1	1195	1195	0.4087	103.4537	CLINTON JUNCTION - ELK CITY 138KV CKT 1
FDNS	01ALL	0	16WP	G15_081	TO->FROM	MATHWSN7 345.00 - TATONGA7 345.00 345KV CKT 1	1195	1195	0.4087	103.4537	CLINTON JUNCTION - ELK CITY 138KV CKT 1
FDNS	01ALL	0	16WP	G15_081	TO->FROM	MATHWSN7 345.00 - TATONGA7 345.00 345KV CKT 1	1195	1195	0.40866	103.4521	STEGALL - STEGALL-LNX3230.00 230KV CKT Z
FDNS	01ALL	0	16WP	G15_081	TO->FROM	MATHWSN7 345.00 - TATONGA7 345.00 345KV CKT 1	1195	1195	0.40898	103.4511	DARLINGTNRD4138.00 - REDROCKRD4 138.00 138KV CKT 1
FDNS	01ALL	0	16WP	G15_081	TO->FROM	MATHWSN7 345.00 - TATONGA7 345.00 345KV CKT 1	1195	1195	0.40898	103.4511	DARLINGTNRD4138.00 - REDROCKRD4 138.00 138KV CKT 1
FDNS	01ALL	0	16WP	G15_081	TO->FROM	MATHWSN7 345.00 - TATONGA7 345.00 345KV CKT 1	1195	1195	0.40898	103.4456	P12:138:OKGE-AEPW:JENSEN4:REDROCKRD4
FDNS	01ALL	0	16WP	G15_081	TO->FROM	MATHWSN7 345.00 - TATONGA7 345.00 345KV CKT 1	1195	1195	0.40846	103.4454	GEN549890 1-SOUTHWEST 1
FDNS	01ALL	0	16WP	G15_081	TO->FROM	MATHWSN7 345.00 - TATONGA7 345.00 345KV CKT 1	1195	1195	0.40846	103.4447	GEN336222 1-LITTLE GYPSY UNIT#2
FDNS	01ALL	0	16WP	G15_081	TO->FROM	MATHWSN7 345.00 - TATONGA7 345.00 345KV CKT 1	1195	1195	0.40846	103.4415	GEN337764 1-TRACTEBEL UNIT C1
FDNS	01ALL	0	16WP	G15_081	TO->FROM	MATHWSN7 345.00 - TATONGA7 345.00 345KV CKT 1	1195	1195	0.40846	103.4415	GEN337765 1-TRACTEBEL UNIT C2
FDNS	01ALL	0	16WP	G15_081	TO->FROM	MATHWSN7 345.00 - TATONGA7 345.00 345KV CKT 1	1195	1195	0.40846	103.4414	GEN511851 1-COMANCHE #1
FDNS	01ALL	0	16WP	G15_081	TO->FROM	MATHWSN7 345.00 - TATONGA7 345.00 345KV CKT 1	1195	1195	0.40846	103.4349	GEN514912 2-REDBUD GEN
FDNS	01ALL	0	16WP	G15_081	TO->FROM	MATHWSN7 345.00 - TATONGA7 345.00 345KV CKT 1	1195	1195	0.40845	103.4296	8DANIEL8 500.00 - MCKNIGHT 500KV CKT 1
FDNS	01ALL	0	16WP	G15_081	TO->FROM	MATHWSN7 345.00 - TATONGA7 345.00 345KV CKT 1	1195	1195	0.40846	103.4289	GEN336152 1-WATERFORD UNIT#2
FDNS	01ALL	0	16WP	G15_081	TO->FROM	MATHWSN7 345.00 - TATONGA7 345.00 345KV CKT 1	1195	1195	0.40846	103.4282	GEN336151 1-WATERFORD UNIT#1
FDNS	01ALL	0	16WP	G15_081	TO->FROM	MATHWSN7 345.00 - TATONGA7 345.00 345KV CKT 1	1195	1195	0.40846	103.4252	GEN562882 1-G15047_3 0.6900
FDNS	01ALL	0	16WP	G15_081	TO->FROM	MATHWSN7 345.00 - TATONGA7 345.00 345KV CKT 1	1195	1195	0.40886	103.4242	PUTNAM - TALOGA 69KV CKT 1
FDNS	01ALL	0	16WP	G15_081	TO->FROM	MATHWSN7 345.00 - TATONGA7 345.00 345KV CKT 1	1195	1195	0.40841	103.4219	AS KING - EAU CLAIRE 345KV CKT 1
FDNS	01ALL	0	16WP	G15_081	TO->FROM	MATHWSN7 345.00 - TATONGA7 345.00 345KV CKT 1	1195	1195	0.40845	103.4214	7SAREPTA% 345.00 - LONGWOOD 345KV CKT 1
FDNS	01ALL	0	16WP	G15_081	TO->FROM	MATHWSN7 345.00 - TATONGA7 345.00 345KV CKT 1	1195	1195	0.40845	103.4214	7SAREPTA% 345.00 - LONGWOOD 345KV CKT 1
FDNS	01ALL	0	16WP	G15_081	TO->FROM	MATHWSN7 345.00 - TATONGA7 345.00 345KV CKT 1	1195	1195	0.40886	103.4151	ALEXANDER - NINNESC3 115.00 115KV CKT 1
FDNS	01ALL	0	16WP	G15_081	TO->FROM	MATHWSN7 345.00 - TATONGA7 345.00 345KV CKT 1	1195	1195	0.40846	103.4131	ST FRANCIS - ST FRANCIS 1 161KV CKT Z1
FDNS	01ALL	0	20L	G15_081	TO->FROM	MATHWSN7 345.00 - TATONGA7 345.00 345KV CKT 1	1195	1195	0.42254	103.4123	FINNEY SWITCHING STATION - HOLCOMB 345KV CKT 1
FDNS	01ALL	0	20L	G15_081	TO->FROM	MATHWSN7 345.00 - TATONGA7 345.00 345KV CKT 1	1195	1195	0.42254	103.4123	FINNEY SWITCHING STATION - HOLCOMB 345KV CKT 1
FDNS	01ALL	0	16WP	G15_081	TO->FROM	MATHWSN7 345.00 - TATONGA7 345.00 345KV CKT 1	1195	1195	0.41082	103.412	CHISHOLM7 345.00 (CHISHOLM) 345/230/13.2KV TRANSFORMER CKT 1
FDNS	01ALL	0	16WP	G15_081	TO->FROM	MATHWSN7 345.00 - TATONGA7 345.00 345KV CKT 1	1195	1195	0.40846	103.4114	GEN501970 1-EVANGELINE UNIT 7
FDNS	01ALL	0	16WP	G15_081	TO->FROM	MATHWSN7 345.00 - TATONGA7 345.00 345KV CKT 1	1195	1195	0.40896	103.4094	SPEARVILLE (SPEARVL) 345/230/13.8KV TRANSFORMER CKT 1
FDNS	01ALL	0	16WP	G15_081	TO->FROM	MATHWSN7 345.00 - TATONGA7 345.00 345KV CKT 1	1195	1195	0.40896	103.4094	SPEARVILLE (SPEARVL) 345/230/13.8KV TRANSFORMER CKT 1
FDNS	01ALL	0	16WP	G15_081	TO->FROM	MATHWSN7 345.00 - TATONGA7 345.00 345KV CKT 1	1195	1195	0.40846	103.4085	GEN503900 1-FITZHUGH CT1
FDNS	01ALL	0	16WP	G15_081	TO->FROM	MATHWSN7 345.00 - TATONGA7 345.00 345KV CKT 1	1195	1195	0.40864	103.4066	BUSHLAND INTERCHANGE - DEAF SMITH COUNTY INTERCHANGE 230KV CKT 1
FDNS	01ALL	0	16WP	G15_081	TO->FROM	MATHWSN7 345.00 - TATONGA7 345.00 345KV CKT 1	1195	1195	0.40864	103.4066	BUSHLAND INTERCHANGE - DEAF SMITH COUNTY INTERCHANGE 230KV CKT 1
FDNS	01ALL	0	16WP	G15_081	TO->FROM	MATHWSN7 345.00 - TATONGA7 345.00 345KV CKT 1	1195	1195	0.40879	103.4044	RED WILLOW (RD.WILLOW T1) 345/115/13.8KV TRANSFORMER CKT 1
FDNS	01ALL	0	16WP	G15_081	TO->FROM	MATHWSN7 345.00 - TATONGA7 345.00 345KV CKT 1	1195	1195	0.40879	103.4044	RED WILLOW (RD.WILLOW T1) 345/115/13.8KV TRANSFORMER CKT 1
FDNS	01ALL	0	16WP	G15_081	TO->FROM	MATHWSN7 345.00 - TATONGA7 345.00 345KV CKT 1	1195	1195	0.40846	103.4023	GEN336242 1-1NMIL ST1 18.000
FDNS	01ALL	0	16WP	G15_081	TO->FROM	MATHWSN7 345.00 - TATONGA7 345.00 345KV CKT 1	1195	1195	0.40886	103.399	HAMON BUTLER - PUTNAM 69KV CKT 1
FDNS	01ALL	0	16WP	G15_081	TO->FROM	MATHWSN7 345.00 - TATONGA7 345.00 345KV CKT 1	1195	1195	0.40886	103.3984	ARAPAHO - HAMON BUTLER 69KV CKT 1
FDNS	01ALL	0	16WP	G15_081	TO->FROM	MATHWSN7 345.00 - TATONGA7 345.00 345KV CKT 1	1195	1195	0.40886	103.3972	ARAPAHO - INDUSTRIAL PARK 69KV CKT 1
FDNS	01ALL	0	16WP	G15_081	TO->FROM	MATHWSN7 345.00 - TATONGA7 345.00 345KV CKT 1	1195	1195	0.40845	103.3937	3TR3AR8EL7EL
FDNS	01ALL	0	16WP	G15_081	TO->FROM	MATHWSN7 345.00 - TATONGA7 345.00 345KV CKT 1	1195	1195	0.40845	103.3937	7SAREPTA% 345.00 - ELDORADO EHV 345KV CKT 1
FDNS	01ALL	0	16WP	G15_081	TO->FROM	MATHWSN7 345.00 - TATONGA7 345.00 345KV CKT 1	1195	1195	0.40845	103.3924	ELDORADO EHV 500/345KV TRANSFORMER CKT 1
FDNS	01ALL	0	16WP	G15_081	TO->FROM	MATHWSN7 345.00 - TATONGA7 345.00 345KV CKT 1	1195	1195	0.40848	103.391	POST ROCK (POSTROCK T1) 345/230/13.8KV TRANSFORMER CKT 1
FDNS	01ALL	0	16WP	G15_081	TO->FROM	MATHWSN7 345.00 - TATONGA7 345.00 345KV CKT 1	1195	1195	0.40846	103.3874	ST FRANCIS 345/161KV TRANSFORMER CKT 1
FDNS	01ALL	0	16WP	G15_081	TO->FROM	MATHWSN7 345.00 - TATONGA7 345.00 345KV CKT 1	1195	1195	0.40846	103.3833	FRONTIER - GRIMES 345KV CKT 1
FDNS	01ALL	0	16WP	G15_081	TO->FROM	MATHWSN7 345.00 - TATONGA7 345.00 345KV CKT 1	1195	1195	0.40846	103.3819	GEN337430 1-PERYVILLE UNIT #3
FDNS	01ALL	0	16WP	G15_081	TO->FROM	MATHWSN7 345.00 - TATONGA7 345.00 345KV CKT 1	1195	1195	0.40846	103.3815	GEN337428 1-PERYVILLE UNIT #1
FDNS	01ALL	0	16WP	G15_081	TO->FROM	MATHWSN7 345.00 - TATONGA7 345.00 345KV CKT 1	1195	1195	0.40846	103.3813	GEN501972 1-EVANGELINE UNIT 7-2
FDNS	01ALL	0	16WP	G15_081	TO->FROM	MATHWSN7 345.00 - TATONGA7 345.00 345KV CKT 1	1195	1195	0.40846	103.3812	GEN501971 1-EVANGELINE UNIT 7-1
FDNS	01ALL	0	16WP	G15_081	TO->FROM	MATHWSN7 345.00 - TATONGA7 345.00 345KV CKT 1	1195	1195	0.40846	103.3791	GEN501912 1-ACADIA UNIT CT1B
FDNS	01ALL	0	16WP	G15_081	TO->FROM	MATHWSN7 345.00 - TATONGA7 345.00 345KV CKT 1	1195	1195	0.40846	103.3788	GEN501911 1-ACADIA UNIT CT1A
FDNS	01ALL	0	16WP	G15_081	TO->FROM	MATHWSN7 345.00 - TATONGA7 345.00 345KV CKT 1	1195	1195	0.40844	103.3764	WEBRE - WELLS 500KV CKT 1
FDNS	01ALL	0	16WP	G15_081	TO->FROM	MATHWSN7 345.00 - TATONGA7 345.00 345KV CKT 1	1195	1195	0.40846	103.3755	GEN334392 1-EXXON MOBIL IPP 1
FDNS	01ALL	0	16WP	G15_081	TO->FROM	MATHWSN7 345.00 - TATONGA7 345.00 345KV CKT 1	1195	1195	0.40846	103.3751	GEN334393 1-EXXON MOBIL IPP 2
FDNS	01ALL	0	16WP	G15_081	TO->FROM	MATHWSN7 345.00 - TATONGA7 345.00 345KV CKT 1	1195	1195	0.40846	103.3751	GEN334394 1-EXXON MOBIL IPP 3
FDNS	01ALL	0	16WP	G15_081	TO->FROM	MATHWSN7 345.00 - TATONGA7 345.00 345KV CKT 1	1195	1195	0.40846	103.3692	GEN338388 1-1PLUM PT U1 23.000

SOLUTION	GROUP	SCENARIO	SEASON	SOURCE	DIRECTION	MONITORED ELEMENT	RATEA (MVA)	RATEB(MVA)	TDF	TC%LOADING (% MVA)	CONTINGENCY
FDNS	01ALL	0	20WP	G15_081	TO->FROM	MATHWSN7 345.00 - TATONGA7 345.00 345KV CKT 1	1195	1195	0.40302	103.2961	GEN515449 1-CRSRDW11 0.6900
FDNS	01ALL	0	20WP	G15_081	TO->FROM	MATHWSN7 345.00 - TATONGA7 345.00 345KV CKT 1	1195	1195	0.40302	103.2329	GEN515450 1-CRSRDW21 0.6900
FDNS	01ALL	0	20WP	G15_081	TO->FROM	MATHWSN7 345.00 - TATONGA7 345.00 345KV CKT 1	1195	1195	0.40302	103.2218	GEN515632 1-SLINGW21 0.6900
FDNS	01ALL	0	20L	G15_081	TO->FROM	MATHWSN7 345.00 - TATONGA7 345.00 345KV CKT 1	1195	1195	0.41964	103.1999	DEWEY - SOUTHARD 138KV CKT 1
FDNS	01ALL	0	20WP	G15_081	TO->FROM	MATHWSN7 345.00 - TATONGA7 345.00 345KV CKT 1	1195	1195	0.40302	103.1914	GEN515611 1-NBUFFRG1 0.6900
FDNS	01ALL	0	20WP	G15_081	TO->FROM	MATHWSN7 345.00 - TATONGA7 345.00 345KV CKT 1	1195	1195	0.40302	103.1914	GEN560217 1-G07_062_6 0.6900
FDNS	01ALL	0	20WP	G15_081	TO->FROM	MATHWSN7 345.00 - TATONGA7 345.00 345KV CKT 1	1195	1195	0.40302	103.1914	GEN560218 1-G07_062_7 0.6900
FDNS	01ALL	0	20WP	G15_081	TO->FROM	MATHWSN7 345.00 - TATONGA7 345.00 345KV CKT 1	1195	1195	0.40302	103.1359	GEN515586 1-MMTHPW11 0.5750
FDNS	01ALL	0	20WP	G15_081	TO->FROM	MATHWSN7 345.00 - TATONGA7 345.00 345KV CKT 1	1195	1195	0.40302	103.1332	GEN515583 1-SLINGW11 0.6900
FDNS	01ALL	0	16WP	G15_081	TO->FROM	MATHWSN7 345.00 - TATONGA7 345.00 345KV CKT 1	1195	1195	0.40846	103.1041	BASE CASE
FDNS	01ALL	0	20L	G15_081	TO->FROM	MATHWSN7 345.00 - TATONGA7 345.00 345KV CKT 1	1195	1195	0.41904	103.0992	G13-010T 345.00 - POST ROCK 345KV CKT 1
FDNS	01ALL	0	20L	G15_081	TO->FROM	MATHWSN7 345.00 - TATONGA7 345.00 345KV CKT 1	1195	1195	0.41964	103.0582	ROMAN NOSE - SOUTHARD 138KV CKT 1
FDNS	01ALL	0	20L	G15_081	TO->FROM	MATHWSN7 345.00 - TATONGA7 345.00 345KV CKT 1	1195	1195	0.41982	103.0514	MINGO - SETAB 345KV CKT 1
FDNS	01ALL	0	20L	G15_081	TO->FROM	MATHWSN7 345.00 - TATONGA7 345.00 345KV CKT 1	1195	1195	0.41982	103.0514	MINGO - SETAB 345KV CKT 1
FDNS	01ALL	0	20L	G15_081	TO->FROM	MATHWSN7 345.00 - TATONGA7 345.00 345KV CKT 1	1195	1195	0.41904	103.0108	G13-010T 345.00 - SPEARVILLE 345KV CKT 1
FDNS	01ALL	0	16WP	G15_081	TO->FROM	MATHWSN7 345.00 - TATONGA7 345.00 345KV CKT 1	1195	1195	0.40846	102.9362	GEN532751 1-WOLF CREEK GENERATING STATION UNIT 1
FDNS	01ALL	0	20L	G15_081	TO->FROM	MATHWSN7 345.00 - TATONGA7 345.00 345KV CKT 1	1195	1195	0.41782	102.9012	POTTER COUNTY INTERCHANGE (WAUK 90343-A) 345/230/13.2KV TRANSFORMER CKT 1
FDNS	01ALL	0	20L	G15_081	TO->FROM	MATHWSN7 345.00 - TATONGA7 345.00 345KV CKT 1	1195	1195	0.41782	102.9012	POTTER COUNTY INTERCHANGE (WAUK 90343-A) 345/230/13.2KV TRANSFORMER CKT 1
FDNS	01ALL	0	20L	G15_081	TO->FROM	MATHWSN7 345.00 - TATONGA7 345.00 345KV CKT 1	1195	1195	0.42254	102.8883	FINNEY SWITCHING STATION - WALKTAP7 345.00 345KV CKT 1
FDNS	01ALL	0	20L	G15_081	TO->FROM	MATHWSN7 345.00 - TATONGA7 345.00 345KV CKT 1	1195	1195	0.42254	102.8883	FINNEY SWITCHING STATION - WALKTAP7 345.00 345KV CKT 1
FDNS	01ALL	0	16WP	G15_081	TO->FROM	MATHWSN7 345.00 - TATONGA7 345.00 345KV CKT 1	1195	1195	0.4082	102.8276	NORTHWEST TEXARKANA - VALLIANT 345KV CKT 1
FDNS	01ALL	0	16WP	G15_081	TO->FROM	MATHWSN7 345.00 - TATONGA7 345.00 345KV CKT 1	1195	1195	0.4082	102.8276	NORTHWEST TEXARKANA - VALLIANT 345KV CKT 1
FDNS	01ALL	0	16WP	G15_081	TO->FROM	MATHWSN7 345.00 - TATONGA7 345.00 345KV CKT 1	1195	1195	0.40846	102.8269	GEN629070 2-BEAVER CHANNEL GENERATORFOR UNIT NO 2
FDNS	01ALL	0	16WP	G15_081	TO->FROM	MATHWSN7 345.00 - TATONGA7 345.00 345KV CKT 1	1195	1195	0.40846	102.8221	GEN600065 7-HIGH BRIDGE
FDNS	01ALL	0	16WP	G15_081	TO->FROM	MATHWSN7 345.00 - TATONGA7 345.00 345KV CKT 1	1195	1195	0.40846	102.8221	GEN600066 8-HIGH BRIDGE
FDNS	01ALL	0	16WP	G15_081	TO->FROM	MATHWSN7 345.00 - TATONGA7 345.00 345KV CKT 1	1195	1195	0.40846	102.8195	GEN524890 1-SNJN-WTGA1 10.6000
FDNS	01ALL	0	16WP	G15_081	TO->FROM	MATHWSN7 345.00 - TATONGA7 345.00 345KV CKT 1	1195	1195	0.40846	102.8193	GEN530594 1-SMKYP1G1 0.6900
FDNS	01ALL	0	16WP	G15_081	TO->FROM	MATHWSN7 345.00 - TATONGA7 345.00 345KV CKT 1	1195	1195	0.40845	102.8172	P12:138:AEPW-WERE:NBVILLE4:DEARING4
FDNS	01ALL	0	16WP	G15_081	TO->FROM	MATHWSN7 345.00 - TATONGA7 345.00 345KV CKT 1	1195	1195	0.40846	102.8111	GEN562754 1-G15031_5 0.6900
FDNS	01ALL	0	16WP	G15_081	TO->FROM	MATHWSN7 345.00 - TATONGA7 345.00 345KV CKT 1	1195	1195	0.40828	102.811	P12:138:AECI:LUTHER-JONES
FDNS	01ALL	0	16WP	G15_081	TO->FROM	MATHWSN7 345.00 - TATONGA7 345.00 345KV CKT 1	1195	1195	0.40846	102.8108	GEN600050 1-FEP
FDNS	01ALL	0	16WP	G15_081	TO->FROM	MATHWSN7 345.00 - TATONGA7 345.00 345KV CKT 1	1195	1195	0.40845	102.8094	CLARKSVILLE - MUSKOGEE 345KV CKT 1
FDNS	01ALL	0	16WP	G15_081	TO->FROM	MATHWSN7 345.00 - TATONGA7 345.00 345KV CKT 1	1195	1195	0.40845	102.8094	CLARKSVILLE - MUSKOGEE 345KV CKT 1
FDNS	01ALL	0	16WP	G15_081	TO->FROM	MATHWSN7 345.00 - TATONGA7 345.00 345KV CKT 1	1195	1195	0.40846	102.8045	GEN523170 1-GOODWELL_1 10.6900
FDNS	01ALL	0	16WP	G15_081	TO->FROM	MATHWSN7 345.00 - TATONGA7 345.00 345KV CKT 1	1195	1195	0.40846	102.8036	GEN615052 1-CAMBRIDGE GENERATING STATION
FDNS	01ALL	0	16WP	G15_081	TO->FROM	MATHWSN7 345.00 - TATONGA7 345.00 345KV CKT 1	1195	1195	0.40846	102.8033	GEN563002 1-G15064_3 0.6900
FDNS	01ALL	0	16WP	G15_081	TO->FROM	MATHWSN7 345.00 - TATONGA7 345.00 345KV CKT 1	1195	1195	0.40846	102.801	GEN562756 1-G15031_7 0.6900
FDNS	01ALL	0	16WP	G15_081	TO->FROM	MATHWSN7 345.00 - TATONGA7 345.00 345KV CKT 1	1195	1195	0.40846	102.798	GEN629067 1-EMERY GAS TURBINE 1
FDNS	01ALL	0	16WP	G15_081	TO->FROM	MATHWSN7 345.00 - TATONGA7 345.00 345KV CKT 1	1195	1195	0.40846	102.7972	GEN600070 9-RIVER SIDE
FDNS	01ALL	0	16WP	G15_081	TO->FROM	MATHWSN7 345.00 - TATONGA7 345.00 345KV CKT 1	1195	1195	0.40846	102.7972	GEN600071 10-RIVER SIDE
FDNS	01ALL	0	16WP	G15_081	TO->FROM	MATHWSN7 345.00 - TATONGA7 345.00 345KV CKT 1	1195	1195	0.40846	102.7966	GEN562298 1-G12-024 0.6500
FDNS	01ALL	0	16WP	G15_081	TO->FROM	MATHWSN7 345.00 - TATONGA7 345.00 345KV CKT 1	1195	1195	0.40859	102.7949	7MCCREDIE 345.00 - 7MONTGMRY 345.00 345KV CKT 1
FDNS	01ALL	0	16WP	G15_081	TO->FROM	MATHWSN7 345.00 - TATONGA7 345.00 345KV CKT 1	1195	1195	0.40846	102.7944	GEN562556 1-G14_046_3 0.3420
FDNS	01ALL	0	16WP	G15_081	TO->FROM	MATHWSN7 345.00 - TATONGA7 345.00 345KV CKT 1	1195	1195	0.40846	102.7943	GEN615032 2-PLEASANT VALLEY
FDNS	01ALL	0	16WP	G15_081	TO->FROM	MATHWSN7 345.00 - TATONGA7 345.00 345KV CKT 1	1195	1195	0.40846	102.7939	GEN600067 9-HIGH BRIDGE
FDNS	01ALL	0	16WP	G15_081	TO->FROM	MATHWSN7 345.00 - TATONGA7 345.00 345KV CKT 1	1195	1195	0.40846	102.7929	GEN600007 7-RIVERSIDE GEN 7
FDNS	01ALL	0	16WP	G15_081	TO->FROM	MATHWSN7 345.00 - TATONGA7 345.00 345KV CKT 1	1195	1195	0.40846	102.7923	GEN523171 1-GOODWELL_2 10.6900
FDNS	01ALL	0	16WP	G15_081	TO->FROM	MATHWSN7 345.00 - TATONGA7 345.00 345KV CKT 1	1195	1195	0.40846	102.7887	GEN600011 5-BLACK DOG GEN 1
FDNS	01ALL	0	16WP	G15_081	TO->FROM	MATHWSN7 345.00 - TATONGA7 345.00 345KV CKT 1	1195	1195	0.40846	102.786	GEN563012 1-G15065_3 0.6900
FDNS	01ALL	0	16WP	G15_081	TO->FROM	MATHWSN7 345.00 - TATONGA7 345.00 345KV CKT 1	1195	1195	0.40846	102.7854	GEN600014 4-BLACK DOG GEN 4
FDNS	01ALL	0	16WP	G15_081	TO->FROM	MATHWSN7 345.00 - TATONGA7 345.00 345KV CKT 1	1195	1195	0.40846	102.7851	GEN563043 1-G15068_4 0.6900
FDNS	01ALL	0	16WP	G15_081	TO->FROM	MATHWSN7 345.00 - TATONGA7 345.00 345KV CKT 1	1195	1195	0.40846	102.781	GEN563142 1-G15079_3 0.5500
FDNS	01ALL	0	16WP	G15_081	TO->FROM	MATHWSN7 345.00 - TATONGA7 345.00 345KV CKT 1	1195	1195	0.40846	102.781	GEN563151 1-G15080_2 0.5500
FDNS	01ALL	0	16WP	G15_081	TO->FROM	MATHWSN7 345.00 - TATONGA7 345.00 345KV CKT 1	1195	1195	0.40846	102.7801	GEN531505 1-CIMWD2 1 0.6900
FDNS	01ALL	0	16WP	G15_081	TO->FROM	MATHWSN7 345.00 - TATONGA7 345.00 345KV CKT 1	1195	1195	0.40846	102.7762	GEN539762 1-SSWIND 1 34.500
FDNS	01ALL	0	16WP	G15_081	TO->FROM	MATHWSN7 345.00 - TATONGA7 345.00 345KV CKT 1	1195	1195	0.40846	102.7742	GEN672303 3-BOUNDARY DAM GENERATOR 3
FDNS	01ALL	0	16WP	G15_081	TO->FROM	MATHWSN7 345.00 - TATONGA7 345.00 345KV CKT 1	1195	1195	0.40846	102.7742	GEN672304 4-BOUNDARY DAM GENERATOR 4
FDNS	01ALL	0	16WP	G15_081	TO->FROM	MATHWSN7 345.00 - TATONGA7 345.00 345KV CKT 1	1195	1195	0.40846	102.7742	GEN672305 5-BOUNDARY DAM GENERATOR 5
FDNS	01ALL	0	16WP	G15_081	TO->FROM	MATHWSN7 345.00 - TATONGA7 345.00 345KV CKT 1	1195	1195	0.40846	102.774	GEN539630 1-FLTRDG-WG1 0.6000
FDNS	01ALL	0	16WP	G15_081	TO->FROM	MATHWSN7 345.00 - TATONGA7 345.00 345KV CKT 1	1195	1195	0.40846	102.7708	GEN530690 1-PRWINDG1 0.6900
FDNS	01ALL	0	16WP	G15_081	TO->FROM	MATHWSN7 345.00 - TATONGA7 345.00 345KV CKT 1	1195	1195	0.40841	102.7675	8BHAM STEEL 500.00 - WEST MEMPHIS 500 500KV CKT 1
FDNS	01ALL	0	16WP	G15_081	TO->FROM	MATHWSN7 345.00 - TATONGA7 345.00 345KV CKT 1	1195	1195	0.40846	102.7652	GEN560586 1-G06-44-4 4.1600
FDNS	01ALL	0	16WP	G15_081	TO->FROM	MATHWSN7 345.00 - TATONGA7 345.00 345KV CKT 1	1195	1195	0.40841	102.7652	ARKANSAS NUCLEAR ONE - PLEASANT HILL 500KV CKT 1
FDNS	01ALL	0	16WP	G15_081	TO->FROM	MATHWSN7 345.00 - TATONGA7 345.00 345KV CKT 1	1195	1195	0.40846	102.7649	GEN533202 1-CNTRPL-WTG1 1.0000
FDNS	01ALL	0	16WP	G15_081	TO->FROM	MATHWSN7 345.00 - TATONGA7 345.00 345KV CKT 1	1195	1195	0.41605	102.7648	FPL SWITCH - WOODWARD 138KV CKT 1
FDNS	01ALL	0	16WP	G15_081	TO->FROM	MATHWSN7 345.00 - TATONGA7 345.00 345KV CKT 1	1195	1195	0.40846	102.7629	GEN560693 1-G11-008-1 0.6900
FDNS	01ALL	0	16WP	G15_081	TO->FROM	MATHWSN7 345.00 - TATONGA7 345.00 345KV CKT 1	1195	1195	0.40846	102.7621	GEN562035 1-G11_016_3 0.6900
FDNS	01ALL	0	16WP	G15_081	TO->FROM	MATHWSN7 345.00 - TATONGA7 345.00 345KV CKT 1	1195	1195	0.40846	102.762	GEN600017 C-LS POWER CT
FDNS	01ALL	0	16WP	G15_081	TO->FROM	MATHWSN7 345.00 - TATONGA7 345.00 345KV CKT 1	1195	1195	0.40838	102.761	7MONTGMRY 345.00 - 7SPENCER 345.00 345KV CKT 1
FDNS	01ALL	0	16WP	G15_081	TO->FROM	MATHWSN7 345.00 - TATONGA7 345.00 345KV CKT 1	1195	1195	0.40838	102.7603	7MAYWOOD 345.00 - 7SPENCER 345.00 345KV CKT 1
FDNS	01ALL	0	16WP	G15_081	TO->FROM	MATHWSN7 345.00 - TATONGA7 345.00 345KV CKT 1	1195	1195	0.40846	102.7582	GEN659111 2-LELAND OLDS UNIT2
FDNS	01ALL	0	16WP	G15_081	TO->FROM	MATHWSN7 345.00 - TATONGA7 345.00 345KV CKT 1	1195	1195	0.40846	102.7563	GEN562483 1-G13_027_3 0.6900
FDNS	01ALL	0	20L	G15_081	TO->FROM	MATHWSN7 345.00 - TATONGA7 345.00 345KV CKT 1	1195	1195	0.41497	102.7489	GEN514806 1-SOONER UNIT 2
FDNS	01ALL	0	16WP	G15_081	TO->FROM	MATHWSN7 345.00 - TATONGA7 345.00 345KV CKT 1	1195	1195	0.40846	102.7417	GEN560432 1-G08-124 0.6900
FDNS	00NR	0	20WP	G15_081	TO->FROM	MATHWSN7 345.00 - TATONGA7 345.00 345KV CKT 1	1195	1195	0.49409	102.7399	THISTLE7 345.00 - WOODWARD DISTRICT EHV 345KV CKT 1
FDNS	00NR	0	20WP	G15_081	TO->FROM	MATHWSN7 345.00 - TATONGA7 345.00 345KV CKT 1	1195	1195	0.49409	102.7399	THISTLE7 345.00 - WOODWARD DISTRICT EHV 345KV CKT 1
FDNS	00NR	0	20WP	G15_081	TO->FROM	MATHWSN7 345.00 - TATONGA7 345.00 345KV CKT 1	1195	1195	0.49409	102.7399	THISTLE7 345.00 - WOODWARD DISTRICT EHV 345KV CKT 2
FDNS	00NR	0	20WP	G15_081	TO->FROM	MATHWSN7 345.00 - TATONGA7 345.00 345KV CKT 1	1195	1195	0.49409	102.7399	THISTLE7 345.00 - WOODWARD DISTRICT EHV 345KV CKT 2
FDNS	01ALL	0	16WP	G15_081	TO->FROM	MATHWSN7 345.00 - TATONGA7 345.00 345KV CKT 1	1195	1195	0.40846	102.7362	GEN562688 1-G15_014_3 0.6900

SOLUTION	GROUP	SCENARIO	SEASON	SOURCE	DIRECTION	MONITORED ELEMENT	RATEA (MVA)	RATEB(MVA)	TDF	TC%LOADING (% MVA)	CONTINGENCY
FDNS	01ALL	0	16WP	G15_081	TO->FROM	MATHWSN7 345.00 - TATONGA7 345.00 345KV CKT 1	1195	1195	0.40846	102.7312	GEN560585 1-G06-44-3 4.1600
FDNS	01ALL	0	16WP	G15_081	TO->FROM	MATHWSN7 345.00 - TATONGA7 345.00 345KV CKT 1	1195	1195	0.40861	102.7289	OVEXFRMCCOVE
FDNS	01ALL	0	16WP	G15_081	TO->FROM	MATHWSN7 345.00 - TATONGA7 345.00 345KV CKT 1	1195	1195	0.40806	102.7265	ARCADIA - SEMINOLE 345KV CKT 1
FDNS	01ALL	0	20L	G15_081	TO->FROM	MATHWSN7 345.00 - TATONGA7 345.00 345KV CKT 1	1195	1195	0.41896	102.7218	AXTELL - POST ROCK 345KV CKT 1
FDNS	01ALL	0	16WP	G15_081	TO->FROM	MATHWSN7 345.00 - TATONGA7 345.00 345KV CKT 1	1195	1195	0.40846	102.7175	GEN560329 1-G10-45 0.6900
FDNS	01ALL	0	16WP	G15_081	TO->FROM	MATHWSN7 345.00 - TATONGA7 345.00 345KV CKT 1	1195	1195	0.40846	102.7171	GEN672392 1-NBECGT1G 18.000
FDNS	01ALL	0	16WP	G15_081	TO->FROM	MATHWSN7 345.00 - TATONGA7 345.00 345KV CKT 1	1195	1195	0.40846	102.7159	GEN659103 1-ANTELOPE VALLEY UNIT1
FDNS	01ALL	0	16WP	G15_081	TO->FROM	MATHWSN7 345.00 - TATONGA7 345.00 345KV CKT 1	1195	1195	0.40846	102.7159	GEN659107 2-ANTELOPE VALLEY UNIT2
FDNS	01ALL	0	16WP	G15_081	TO->FROM	MATHWSN7 345.00 - TATONGA7 345.00 345KV CKT 1	1195	1195	0.406	102.7144	CIMARRON - MATHWSN7 345.00 345KV CKT 1
FDNS	01ALL	0	16WP	G15_081	TO->FROM	MATHWSN7 345.00 - TATONGA7 345.00 345KV CKT 1	1195	1195	0.406	102.7144	CIMARRON - MATHWSN7 345.00 345KV CKT 2
FDNS	01ALL	0	16WP	G15_081	TO->FROM	MATHWSN7 345.00 - TATONGA7 345.00 345KV CKT 1	1195	1195	0.40846	102.7128	GEN531503 1-CIMRRN 1 0.6900
FDNS	01ALL	0	16WP	G15_081	TO->FROM	MATHWSN7 345.00 - TATONGA7 345.00 345KV CKT 1	1195	1195	0.40846	102.7099	GEN615021 1-GRE-ER 14G 16.000
FDNS	01ALL	0	16WP	G15_081	TO->FROM	MATHWSN7 345.00 - TATONGA7 345.00 345KV CKT 1	1195	1195	0.40846	102.7087	GEN539767 1-GRAY COUNTY WIND FARM
FDNS	01ALL	0	16WP	G15_081	TO->FROM	MATHWSN7 345.00 - TATONGA7 345.00 345KV CKT 1	1195	1195	0.40804	102.6946	LYDIA - WELSH 345KV CKT 1
FDNS	01ALL	0	16WP	G15_081	TO->FROM	MATHWSN7 345.00 - TATONGA7 345.00 345KV CKT 1	1195	1195	0.40804	102.6946	LYDIA - WELSH 345KV CKT 1
FDNS	01ALL	0	16WP	G15_081	TO->FROM	MATHWSN7 345.00 - TATONGA7 345.00 345KV CKT 1	1195	1195	0.40849	102.6862	MIDLTNT4 138.00 - PECKHAM TAP 138KV CKT 1
FDNS	01ALL	0	16WP	G15_081	TO->FROM	MATHWSN7 345.00 - TATONGA7 345.00 345KV CKT 1	1195	1195	0.40849	102.6654	NEWKIRK4 - PECKHAM TAP 138KV CKT 1
FDNS	01ALL	0	16WP	G15_081	TO->FROM	MATHWSN7 345.00 - TATONGA7 345.00 345KV CKT 1	1195	1195	0.4083	102.6632	LACYGNE - STILWELL 345KV CKT 1
FDNS	01ALL	0	16WP	G15_081	TO->FROM	MATHWSN7 345.00 - TATONGA7 345.00 345KV CKT 1	1195	1195	0.40846	102.663	GEN629072 4-LANSING GENERATOR FOR UNITS NO4 EIA CODE 1
FDNS	01ALL	0	16WP	G15_081	TO->FROM	MATHWSN7 345.00 - TATONGA7 345.00 345KV CKT 1	1195	1195	0.40846	102.6625	GEN641089 2-ENERGY CENTER 2
FDNS	01ALL	0	16WP	G15_081	TO->FROM	MATHWSN7 345.00 - TATONGA7 345.00 345KV CKT 1	1195	1195	0.40868	102.6551	P12:138:WERE:CRSW-OGE_138::
FDNS	01ALL	0	16WP	G15_081	TO->FROM	MATHWSN7 345.00 - TATONGA7 345.00 345KV CKT 1	1195	1195	0.40849	102.6468	NEWKIRK4 - NWKRKAT4 138.00 138KV CKT 1
FDNS	01ALL	0	16WP	G15_081	TO->FROM	MATHWSN7 345.00 - TATONGA7 345.00 345KV CKT 1	1195	1195	0.40868	102.6428	P12:138:OKGE:3TERM7
FDNS	01ALL	0	16WP	G15_081	TO->FROM	MATHWSN7 345.00 - TATONGA7 345.00 345KV CKT 1	1195	1195	0.4073	102.6417	CLEVELAND - TULSA NORTH 345KV CKT 1
FDNS	01ALL	0	16WP	G15_081	TO->FROM	MATHWSN7 345.00 - TATONGA7 345.00 345KV CKT 1	1195	1195	0.4073	102.6417	CLEVELAND - TULSA NORTH 345KV CKT 1
FDNS	01ALL	0	16WP	G15_081	TO->FROM	MATHWSN7 345.00 - TATONGA7 345.00 345KV CKT 1	1195	1195	0.40842	102.6396	DELL 500 - INDEPENDENCE 500KV CKT 1
FDNS	01ALL	0	16WP	G15_081	TO->FROM	MATHWSN7 345.00 - TATONGA7 345.00 345KV CKT 1	1195	1195	0.40397	102.6343	SOONER - SPRING CREEK 345KV CKT 1
FDNS	01ALL	0	16WP	G15_081	TO->FROM	MATHWSN7 345.00 - TATONGA7 345.00 345KV CKT 1	1195	1195	0.40849	102.6338	CRESWELL - MIDLTNT4 138.00 138KV CKT 1
FDNS	01ALL	0	16WP	G15_081	TO->FROM	MATHWSN7 345.00 - TATONGA7 345.00 345KV CKT 1	1195	1195	0.40836	102.633	LACYGNE - WEST GARDNER 345KV CKT 1
FDNS	01ALL	0	16WP	G15_081	TO->FROM	MATHWSN7 345.00 - TATONGA7 345.00 345KV CKT 1	1195	1195	0.40397	102.6324	NORTHWEST - SPRING CREEK 345KV CKT 1
FDNS	01ALL	0	16WP	G15_081	TO->FROM	MATHWSN7 345.00 - TATONGA7 345.00 345KV CKT 1	1195	1195	0.40846	102.6309	GEN615010 1-STANTON4
FDNS	01ALL	0	16WP	G15_081	TO->FROM	MATHWSN7 345.00 - TATONGA7 345.00 345KV CKT 1	1195	1195	0.40846	102.6226	GEN562269 1-G12-020-1 0.6900
FDNS	01ALL	0	16WP	G15_081	TO->FROM	MATHWSN7 345.00 - TATONGA7 345.00 345KV CKT 1	1195	1195	0.40846	102.6101	GEN539807 1-G05-12-1 0.6900
FDNS	01ALL	0	16WP	G15_081	TO->FROM	MATHWSN7 345.00 - TATONGA7 345.00 345KV CKT 1	1195	1195	0.40849	102.6079	KILDARE4 - NWKRKAT4 138.00 138KV CKT 1
FDNS	01ALL	0	16WP	G15_081	TO->FROM	MATHWSN7 345.00 - TATONGA7 345.00 345KV CKT 1	1195	1195	0.40846	102.6069	RCDC EAST 4230.00 - RED CEDAR DC 230KV CKT 1
FDNS	01ALL	0	16WP	G15_081	TO->FROM	MATHWSN7 345.00 - TATONGA7 345.00 345KV CKT 1	1195	1195	0.40846	102.6044	P12:230:UMZB:# 112 #: NU IN SD. NU-RCDC & DRY CREEK XFMR
FDNS	01ALL	0	20L	G15_081	TO->FROM	MATHWSN7 345.00 - TATONGA7 345.00 345KV CKT 1	1195	1195	0.42235	102.6036	IODINE - WOODWARD EHV 138KV CKT 1
FDNS	01ALL	0	16WP	G15_081	TO->FROM	MATHWSN7 345.00 - TATONGA7 345.00 345KV CKT 1	1195	1195	0.40846	102.6007	GEN524021 1-NICHOLS GEN #1
FDNS	01ALL	0	16WP	G15_081	TO->FROM	MATHWSN7 345.00 - TATONGA7 345.00 345KV CKT 1	1195	1195	0.4084	102.5986	KEO EHV - WEST MEMPHIS 500 500KV CKT 1
FDNS	01ALL	0	16WP	G15_081	TO->FROM	MATHWSN7 345.00 - TATONGA7 345.00 345KV CKT 1	1195	1195	0.40846	102.5948	GEN681522 3-GENOA 3
FDNS	01ALL	0	16WP	G15_081	TO->FROM	MATHWSN7 345.00 - TATONGA7 345.00 345KV CKT 1	1195	1195	0.40846	102.5943	GEN562270 1-G12-020-2 0.6900
FDNS	01ALL	0	16WP	G15_081	TO->FROM	MATHWSN7 345.00 - TATONGA7 345.00 345KV CKT 1	1195	1195	0.40818	102.5833	BROOKLINE - FLINT CREEK 345KV CKT 1
FDNS	01ALL	0	16WP	G15_081	TO->FROM	MATHWSN7 345.00 - TATONGA7 345.00 345KV CKT 1	1195	1195	0.40818	102.5833	BROOKLINE - FLINT CREEK 345KV CKT 1
FDNS	01ALL	0	16WP	G15_081	TO->FROM	MATHWSN7 345.00 - TATONGA7 345.00 345KV CKT 1	1195	1195	0.40782	102.5662	FT SMITH - MUSKOGEE 345KV CKT 1
FDNS	01ALL	0	16WP	G15_081	TO->FROM	MATHWSN7 345.00 - TATONGA7 345.00 345KV CKT 1	1195	1195	0.40846	102.565	GEN645011 1-NEBRASKA CITY 1
FDNS	01ALL	0	16WP	G15_081	TO->FROM	MATHWSN7 345.00 - TATONGA7 345.00 345KV CKT 1	1195	1195	0.40846	102.5604	GEN562524 1-G14_026_3 12.000
FDNS	01ALL	0	16WP	G15_081	TO->FROM	MATHWSN7 345.00 - TATONGA7 345.00 345KV CKT 1	1195	1195	0.40792	102.549	LYDIA - VALLIANT 345KV CKT 1
FDNS	01ALL	0	16WP	G15_081	TO->FROM	MATHWSN7 345.00 - TATONGA7 345.00 345KV CKT 1	1195	1195	0.40792	102.549	LYDIA - VALLIANT 345KV CKT 1
FDNS	01ALL	0	16WP	G15_081	TO->FROM	MATHWSN7 345.00 - TATONGA7 345.00 345KV CKT 1	1195	1195	0.40846	102.5467	GEN560286 1-G10-01-1WTG 0.6900
FDNS	01ALL	0	16WP	G15_081	TO->FROM	MATHWSN7 345.00 - TATONGA7 345.00 345KV CKT 1	1195	1195	0.40846	102.5467	GEN560287 1-G10-01-2WTG 0.6900
FDNS	01ALL	0	20L	G15_081	TO->FROM	MATHWSN7 345.00 - TATONGA7 345.00 345KV CKT 1	1195	1195	0.41497	102.5454	GEN515040 1-SEMINOLE 1G
FDNS	01ALL	0	20L	G15_081	TO->FROM	MATHWSN7 345.00 - TATONGA7 345.00 345KV CKT 1	1195	1195	0.41497	102.5411	GEN514805 1-SOONER UNIT 1
FDNS	01ALL	0	16WP	G15_081	TO->FROM	MATHWSN7 345.00 - TATONGA7 345.00 345KV CKT 1	1195	1195	0.40846	102.5348	GEN528361 1-MADDOX GEN #1
FDNS	01ALL	0	16WP	G15_081	TO->FROM	MATHWSN7 345.00 - TATONGA7 345.00 345KV CKT 1	1195	1195	0.40846	102.5324	GEN645012 2-NEBRASKA CITY 2
FDNS	01ALL	0	16WP	G15_081	TO->FROM	MATHWSN7 345.00 - TATONGA7 345.00 345KV CKT 1	1195	1195	0.40816	102.519	CIMARRON (CIMARON1) 345/138/13.8KV TRANSFORMER CKT 1
FDNS	01ALL	0	16WP	G15_081	TO->FROM	MATHWSN7 345.00 - TATONGA7 345.00 345KV CKT 1	1195	1195	0.40814	102.5098	CIMARRON (CIMARON2) 345/138/13.8KV TRANSFORMER CKT 1
FDNS	01ALL	0	16WP	G15_081	TO->FROM	MATHWSN7 345.00 - TATONGA7 345.00 345KV CKT 1	1195	1195	0.40846	102.5022	GEN560256 1-G10-14-1 0.6900
FDNS	01ALL	0	16WP	G15_081	TO->FROM	MATHWSN7 345.00 - TATONGA7 345.00 345KV CKT 1	1195	1195	0.40808	102.491	GRDA1 - GREC TAP5 345.00 345KV CKT 1
FDNS	01ALL	0	16WP	G15_081	TO->FROM	MATHWSN7 345.00 - TATONGA7 345.00 345KV CKT 1	1195	1195	0.40846	102.4865	GEN560257 1-G10-14-2 0.6900
FDNS	01ALL	0	16WP	G15_081	TO->FROM	MATHWSN7 345.00 - TATONGA7 345.00 345KV CKT 1	1195	1195	0.40846	102.4818	GEN520998 1-MORLND3
FDNS	01ALL	0	16WP	G15_081	TO->FROM	MATHWSN7 345.00 - TATONGA7 345.00 345KV CKT 1	1195	1195	0.40846	102.4678	GEN645001 1-FORT CALHOUN 1
FDNS	01ALL	0	16WP	G15_081	TO->FROM	MATHWSN7 345.00 - TATONGA7 345.00 345KV CKT 1	1195	1195	0.40846	102.4661	GEN562544 1-G14_038_3 0.6900
FDNS	01ALL	0	16WP	G15_081	TO->FROM	MATHWSN7 345.00 - TATONGA7 345.00 345KV CKT 1	1195	1195	0.40846	102.4639	GEN524285 1-WILDORADO WIND GEN
FDNS	01ALL	0	16WP	G15_081	TO->FROM	MATHWSN7 345.00 - TATONGA7 345.00 345KV CKT 1	1195	1195	0.40846	102.4622	GEN657749 1-YOUNG 1 GENERATOR
FDNS	01ALL	0	16WP	G15_081	TO->FROM	MATHWSN7 345.00 - TATONGA7 345.00 345KV CKT 1	1195	1195	0.40846	102.452	GEN640009 1-COOPER NUCLEAR STATION
FDNS	01ALL	0	16WP	G15_081	TO->FROM	MATHWSN7 345.00 - TATONGA7 345.00 345KV CKT 1	1195	1195	0.40846	102.442	GEN532653 1-JEFFREY ENERGY CENTER UNIT 3
FDNS	01ALL	0	16WP	G15_081	TO->FROM	MATHWSN7 345.00 - TATONGA7 345.00 345KV CKT 1	1195	1195	0.40846	102.4418	GEN532652 1-JEFFREY ENERGY CENTER UNIT 2
FDNS	01ALL	0	20L	G15_081	TO->FROM	MATHWSN7 345.00 - TATONGA7 345.00 345KV CKT 1	1195	1195	0.42235	102.4416	DEWEY - IODINE 138KV CKT 1
FDNS	01ALL	0	16WP	G15_081	TO->FROM	MATHWSN7 345.00 - TATONGA7 345.00 345KV CKT 1	1195	1195	0.40846	102.4356	GEN532651 1-JEFFREY ENERGY CENTER UNIT 1
FDNS	01ALL	0	16WP	G15_081	TO->FROM	MATHWSN7 345.00 - TATONGA7 345.00 345KV CKT 1	1195	1195	0.40846	102.4298	GEN562648 1-G14_037_3 0.6900
FDNS	00NR	0	20WP	G15_081	TO->FROM	MATHWSN7 345.00 - TATONGA7 345.00 345KV CKT 1	1195	1195	0.47459	102.4191	CHISHOLM6 230.00 - SWEETWATER 230KV CKT 1
FDNS	01ALL	0	16WP	G15_081	TO->FROM	MATHWSN7 345.00 - TATONGA7 345.00 345KV CKT 1	1195	1195	0.40837	102.4108	7SPORTSMAN - BLACKBERRY 345KV CKT 1
FDNS	00NR	0	20WP	G15_081	TO->FROM	MATHWSN7 345.00 - TATONGA7 345.00 345KV CKT 1	1195	1195	0.48403	102.4108	G14-074T 345.00 - TUCO INTERCHANGE 345KV CKT 1
FDNS	01ALL	0	16WP	G15_081	TO->FROM	MATHWSN7 345.00 - TATONGA7 345.00 345KV CKT 1	1195	1195	0.40846	102.3971	GEN560105 1-G08-22 0.6900
FDNS	01ALL	0	16WP	G15_081	TO->FROM	MATHWSN7 345.00 - TATONGA7 345.00 345KV CKT 1	1195	1195	0.40705	102.3933	G15066_T 345.00 - SOONER 345KV CKT 1
FDNS	01ALL	0	20L	G15_081	TO->FROM	MATHWSN7 345.00 - TATONGA7 345.00 345KV CKT 1	1195	1195	0.41703	102.3813	CLEO CORNER - CLEOPLT4 138.00 138KV CKT 1
FDNS	01ALL	0	16WP	G15_081	TO->FROM	MATHWSN7 345.00 - TATONGA7 345.00 345KV CKT 1	1195	1195	0.40846	102.3769	GEN562550 1-G14_040_3 0.6900
FDNS	01ALL	0	16WP	G15_081	TO->FROM	MATHWSN7 345.00 - TATONGA7 345.00 345KV CKT 1	1195	1195	0.40846	102.375	GEN681542 6-JP MADGETT
FDNS	01ALL	0	20L	G15_081	TO->FROM	MATHWSN7 345.00 - TATONGA7 345.00 345KV CKT 1	1195	1195	0.41703	102.3748	IMO TAP - MEN TAP 138KV CKT 1

SOLUTION	GROUP	SCENARIO	SEASON	SOURCE	DIRECTION	MONITORED ELEMENT	RATEA (MVA)	RATEB(MVA)	TDF	TC%LOADING (% MVA)	CONTINGENCY
FDNS	01ALL	0	16WP	G15_081	TO->FROM	MATHWSN7 345.00 - TATONGA7 345.00 345KV CKT 1	1195	1195	0.40846	102.351	GEN672321 1-SHAND GENERATOR 1
FDNS	01ALL	0	16WP	G15_081	TO->FROM	MATHWSN7 345.00 - TATONGA7 345.00 345KV CKT 1	1195	1195	0.40846	102.3369	GEN563173 1-G15082_3 0.6900
FDNS	01ALL	0	16WP	G15_081	TO->FROM	MATHWSN7 345.00 - TATONGA7 345.00 345KV CKT 1	1195	1195	0.40846	102.335	GEN562042 1-G11_014_3 0.6900
FDNS	01ALL	0	16WP	G15_081	TO->FROM	MATHWSN7 345.00 - TATONGA7 345.00 345KV CKT 1	1195	1195	0.40846	102.3335	GEN672310 1-POPLAR RIVER GENERATOR 1
FDNS	01ALL	0	16WP	G15_081	TO->FROM	MATHWSN7 345.00 - TATONGA7 345.00 345KV CKT 1	1195	1195	0.40846	102.3335	GEN672311 2-POPLAR RIVER GENERATOR 2
FDNS	01ALL	0	20L	G15_081	TO->FROM	MATHWSN7 345.00 - TATONGA7 345.00 345KV CKT 1	1195	1195	0.41703	102.3325	CLEOPLT4 138.00 - MEN TAP 138KV CKT 1
FDNS	01ALL	0	16WP	G15_081	TO->FROM	MATHWSN7 345.00 - TATONGA7 345.00 345KV CKT 1	1195	1195	0.40846	102.3312	GEN520922 1-SLEEPING BEAR
FDNS	01ALL	0	16WP	G15_081	TO->FROM	MATHWSN7 345.00 - TATONGA7 345.00 345KV CKT 1	1195	1195	0.40846	102.3249	GEN527882 1-CUNNINGHAM GEN #2 20 KV
FDNS	01ALL	0	16WP	G15_081	TO->FROM	MATHWSN7 345.00 - TATONGA7 345.00 345KV CKT 1	1195	1195	0.40846	102.3249	GEN672306 6-BOUNDARY DAM GENERATOR 6
FDNS	01ALL	0	16WP	G15_081	TO->FROM	MATHWSN7 345.00 - TATONGA7 345.00 345KV CKT 1	1195	1195	0.40705	102.3203	CLEVELAND - G15066_T 345.00 345KV CKT 1
FDNS	01ALL	0	20L	G15_081	TO->FROM	MATHWSN7 345.00 - TATONGA7 345.00 345KV CKT 1	1195	1195	0.41497	102.3081	GEN562587 1-G14_056_3 0.6900
FDNS	01ALL	0	16WP	G15_081	TO->FROM	MATHWSN7 345.00 - TATONGA7 345.00 345KV CKT 1	1195	1195	0.40846	102.2982	GEN524023 1-NICHOLS GEN #3 22 KV
FDNS	01ALL	0	16WP	G15_081	TO->FROM	MATHWSN7 345.00 - TATONGA7 345.00 345KV CKT 1	1195	1195	0.40846	102.29	GEN515787 1-OKLA WIND ENERGY CENTER
FDNS	01ALL	0	20L	G15_081	TO->FROM	MATHWSN7 345.00 - TATONGA7 345.00 345KV CKT 1	1195	1195	0.41855	102.2806	HOLCOMB - SETAB 345KV CKT 1
FDNS	01ALL	0	20L	G15_081	TO->FROM	MATHWSN7 345.00 - TATONGA7 345.00 345KV CKT 1	1195	1195	0.41855	102.2806	HOLCOMB - SETAB 345KV CKT 1
FDNS	01ALL	0	20L	G15_081	TO->FROM	MATHWSN7 345.00 - TATONGA7 345.00 345KV CKT 1	1195	1195	0.41497	102.2713	GEN515602 1-KNGFSR12 0.7000
FDNS	01ALL	0	16WP	G15_081	TO->FROM	MATHWSN7 345.00 - TATONGA7 345.00 345KV CKT 1	1195	1195	0.40846	102.2568	GEN636641 1-LOUISA UNIT 1
FDNS	01ALL	0	16WP	G15_081	TO->FROM	MATHWSN7 345.00 - TATONGA7 345.00 345KV CKT 1	1195	1195	0.40846	102.2374	GEN524295 1-SPNSPUR_WND10.6900
FDNS	01ALL	0	16WP	G15_081	TO->FROM	MATHWSN7 345.00 - TATONGA7 345.00 345KV CKT 1	1195	1195	0.40363	102.2264	ARCADIA - NORTHWEST 345KV CKT 1
FDNS	01ALL	0	20L	G15_081	TO->FROM	MATHWSN7 345.00 - TATONGA7 345.00 345KV CKT 1	1195	1195	0.41497	102.2042	GEN509403 1-PIRKEY GENERATION
FDNS	01ALL	0	16WP	G15_081	TO->FROM	MATHWSN7 345.00 - TATONGA7 345.00 345KV CKT 1	1195	1195	0.40741	102.1988	PITTSBURG - VALLIANT 345KV CKT 1
FDNS	01ALL	0	16WP	G15_081	TO->FROM	MATHWSN7 345.00 - TATONGA7 345.00 345KV CKT 1	1195	1195	0.40741	102.1988	PITTSBURG - VALLIANT 345KV CKT 1
FDNS	01ALL	0	16WP	G15_081	TO->FROM	MATHWSN7 345.00 - TATONGA7 345.00 345KV CKT 1	1195	1195	0.4083	102.1942	CHAMBER SPRINGS - CLARKSVILLE 345KV CKT 1
FDNS	01ALL	0	16WP	G15_081	TO->FROM	MATHWSN7 345.00 - TATONGA7 345.00 345KV CKT 1	1195	1195	0.40846	102.183	GEN515591 1-PALDRW11 0.6900
FDNS	00NR	0	20WP	G15_081	TO->FROM	MATHWSN7 345.00 - TATONGA7 345.00 345KV CKT 1	1195	1195	0.47522	102.1811	P12:230:AEPW:ELKCITY6:SWEETWT6
FDNS	01ALL	0	16WP	G15_081	TO->FROM	MATHWSN7 345.00 - TATONGA7 345.00 345KV CKT 1	1195	1195	0.40846	102.1675	GEN562074 1-G1149G1504 0.6900
FDNS	01ALL	0	16WP	G15_081	TO->FROM	MATHWSN7 345.00 - TATONGA7 345.00 345KV CKT 1	1195	1195	0.40846	102.1495	GEN563292 1-G15095_3 0.6900
FDNS	01ALL	0	17G	G15_081	TO->FROM	MATHWSN7 345.00 - TATONGA7 345.00 345KV CKT 1	1195	1195	0.42674	102.1181	FINNEY SWITCHING STATION - HOLCOMB 345KV CKT 1
FDNS	01ALL	0	16WP	G15_081	TO->FROM	MATHWSN7 345.00 - TATONGA7 345.00 345KV CKT 1	1195	1195	0.40846	102.1131	GEN562017 1-G11_022_3 0.6900
FDNS	01ALL	0	16WP	G15_081	TO->FROM	MATHWSN7 345.00 - TATONGA7 345.00 345KV CKT 1	1195	1195	0.40846	102.0963	GEN520997 1-MORLND2
FDNS	01ALL	0	17G	G15_081	TO->FROM	MATHWSN7 345.00 - TATONGA7 345.00 345KV CKT 1	1195	1195	0.42786	102.0895	BORDER 7345.00 - TUCO_2 345.00 345KV CKT 1
FDNS	01ALL	0	16WP	G15_081	TO->FROM	MATHWSN7 345.00 - TATONGA7 345.00 345KV CKT 1	1195	1195	0.40846	102.0854	GEN539670 4-JUDSON LARGE GENERATOR
FDNS	01ALL	0	20L	G15_081	TO->FROM	MATHWSN7 345.00 - TATONGA7 345.00 345KV CKT 1	1195	1195	0.41497	102.0799	GEN509416 1-TURK GENERATION
FDNS	01ALL	0	20L	G15_081	TO->FROM	MATHWSN7 345.00 - TATONGA7 345.00 345KV CKT 1	1195	1195	0.41497	102.0704	GEN336821 1-GRAND GULF UNIT
FDNS	01ALL	0	16WP	G15_081	TO->FROM	MATHWSN7 345.00 - TATONGA7 345.00 345KV CKT 1	1195	1195	0.40803	102.0673	HUNTERS7 345.00 - WOODRING 345KV CKT 1
FDNS	01ALL	0	16WP	G15_081	TO->FROM	MATHWSN7 345.00 - TATONGA7 345.00 345KV CKT 1	1195	1195	0.40846	102.0485	GEN629074 1-ARNOLD LOWSIDE OF GSU XFMR
FDNS	01ALL	0	20L	G15_081	TO->FROM	MATHWSN7 345.00 - TATONGA7 345.00 345KV CKT 1	1195	1195	0.41497	102.0384	GEN337911 1-ARKANSAS NUCLEAR ONE UNIT #2
FDNS	01ALL	0	16WP	G15_081	TO->FROM	MATHWSN7 345.00 - TATONGA7 345.00 345KV CKT 1	1195	1195	0.40846	102.0287	GEN526332 1-JONES GEN #2 21 KV
FDNS	01ALL	0	16WP	G15_081	TO->FROM	MATHWSN7 345.00 - TATONGA7 345.00 345KV CKT 1	1195	1195	0.40839	102.028	DELAWARE - NEOSHO 345KV CKT 1
FDNS	01ALL	0	16WP	G15_081	TO->FROM	MATHWSN7 345.00 - TATONGA7 345.00 345KV CKT 1	1195	1195	0.40839	102.028	DELAWARE - NEOSHO 345KV CKT 1
FDNS	01ALL	0	16WP	G15_081	TO->FROM	MATHWSN7 345.00 - TATONGA7 345.00 345KV CKT 1	1195	1195	0.40846	102.0241	GEN661015 1-COYOTE
FDNS	01ALL	0	16WP	G15_081	TO->FROM	MATHWSN7 345.00 - TATONGA7 345.00 345KV CKT 1	1195	1195	0.40846	102.0207	GEN523461 1-BLACKHAWK GEN #1
FDNS	01ALL	0	16WP	G15_081	TO->FROM	MATHWSN7 345.00 - TATONGA7 345.00 345KV CKT 1	1195	1195	0.40846	102.0206	GEN523462 1-BLACKHAWK GEN #2
FDNS	01ALL	0	16WP	G15_081	TO->FROM	MATHWSN7 345.00 - TATONGA7 345.00 345KV CKT 1	1195	1195	0.40846	102.0179	GEN562432 1-G13-030 0.6900
FDNS	01ALL	0	16WP	G15_081	TO->FROM	MATHWSN7 345.00 - TATONGA7 345.00 345KV CKT 1	1195	1195	0.40846	102.0164	GEN620315 1-BIG STONE GEN
FDNS	01ALL	0	16WP	G15_081	TO->FROM	MATHWSN7 345.00 - TATONGA7 345.00 345KV CKT 1	1195	1195	0.40846	102.0039	EASTDC - ERCOT EQUIVALENCE 345KV CKT 1
FDNS	01ALL	0	20L	G15_081	TO->FROM	MATHWSN7 345.00 - TATONGA7 345.00 345KV CKT 1	1195	1195	0.41638	101.9998	G15095_T 138.00 - ROSE_VALLEY 138.00 138KV CKT 1
FDNS	01ALL	0	20L	G15_081	TO->FROM	MATHWSN7 345.00 - TATONGA7 345.00 345KV CKT 1	1195	1195	0.42207	101.9957	FPL SWITCH - MOORELAND 138KV CKT 1
FDNS	01ALL	0	20L	G15_081	TO->FROM	MATHWSN7 345.00 - TATONGA7 345.00 345KV CKT 1	1195	1195	0.41497	101.9805	GEN515223 1-MUSKOGEE 4G
FDNS	01ALL	0	16WP	G15_081	TO->FROM	MATHWSN7 345.00 - TATONGA7 345.00 345KV CKT 1	1195	1195	0.40846	101.9793	GEN600004 2-PRAIRIE ISLAND G2
FDNS	01ALL	0	16WP	G15_081	TO->FROM	MATHWSN7 345.00 - TATONGA7 345.00 345KV CKT 1	1195	1195	0.40846	101.9773	GEN600003 1-PRAIRIE ISLAND G1
FDNS	01ALL	0	20WP	G15_081	TO->FROM	MATHWSN7 345.00 - TATONGA7 345.00 345KV CKT 1	1195	1195	1	101.9591	G11_051T 345.00 - WOODWARD DISTRICT EHV 345KV CKT 1
FDNS	01ALL	0	16WP	G15_081	TO->FROM	MATHWSN7 345.00 - TATONGA7 345.00 345KV CKT 1	1195	1195	0.40846	101.959	GEN600006 1-AS KING
FDNS	01ALL	0	16WP	G15_081	TO->FROM	MATHWSN7 345.00 - TATONGA7 345.00 345KV CKT 1	1195	1195	0.40517	101.9535	REDBUD - RIVERSIDE STATION 345KV CKT 1
FDNS	01ALL	0	16WP	G15_081	TO->FROM	MATHWSN7 345.00 - TATONGA7 345.00 345KV CKT 1	1195	1195	0.40517	101.9535	REDBUD - RIVERSIDE STATION 345KV CKT 1
FDNS	01ALL	0	20L	G15_081	TO->FROM	MATHWSN7 345.00 - TATONGA7 345.00 345KV CKT 1	1195	1195	0.41782	101.9408	G14_038T 345.00 - POTTER COUNTY INTERCHANGE 345KV CKT 1
FDNS	01ALL	0	16WP	G15_081	TO->FROM	MATHWSN7 345.00 - TATONGA7 345.00 345KV CKT 1	1195	1195	0.40846	101.9256	GEN515389 1-TLGWND-WTG1 0.7000
FDNS	01ALL	0	20L	G15_081	TO->FROM	MATHWSN7 345.00 - TATONGA7 345.00 345KV CKT 1	1195	1195	1	101.9245	G11_051T 345.00 - WOODWARD DISTRICT EHV 345KV CKT 1
FDNS	01ALL	0	16WP	G15_081	TO->FROM	MATHWSN7 345.00 - TATONGA7 345.00 345KV CKT 1	1195	1195	0.40846	101.9156	GEN657748 1-YOUNG 2 GENERATOR
FDNS	01ALL	0	16WP	G15_081	TO->FROM	MATHWSN7 345.00 - TATONGA7 345.00 345KV CKT 1	1195	1195	0.41089	101.9091	WOODWARD DISTRICT EHV (WWDEHV) 345/138/13.8KV TRANSFORMER CKT 1
FDNS	01ALL	0	20L	G15_081	TO->FROM	MATHWSN7 345.00 - TATONGA7 345.00 345KV CKT 1	1195	1195	0.41638	101.8905	NOEL_SW 138.00 - ROSE_VALLEY 138.00 138KV CKT 1
FDNS	01ALL	0	20L	G15_081	TO->FROM	MATHWSN7 345.00 - TATONGA7 345.00 345KV CKT 1	1195	1195	0.41497	101.8891	GEN515443 1-MNCOWND1 0.7000
FDNS	01ALL	0	16WP	G15_081	TO->FROM	MATHWSN7 345.00 - TATONGA7 345.00 345KV CKT 1	1195	1195	0.40846	101.8656	GEN527161 1-MUSTANG GEN #1
FDNS	01ALL	0	16WP	G15_081	TO->FROM	MATHWSN7 345.00 - TATONGA7 345.00 345KV CKT 1	1195	1195	0.40846	101.8656	GEN527162 1-MUSTANG GEN #2
FDNS	01ALL	0	16WP	G15_081	TO->FROM	MATHWSN7 345.00 - TATONGA7 345.00 345KV CKT 1	1195	1195	0.41102	101.8483	WOODWARD DISTRICT EHV (WWDEHV-T2) 345/138/13.8KV TRANSFORMER CKT 2
FDNS	01ALL	0	20L	G15_081	TO->FROM	MATHWSN7 345.00 - TATONGA7 345.00 345KV CKT 1	1195	1195	0.41941	101.8421	P12:230:AEPW:ELKCITY6:SWEETWT6
FDNS	01ALL	0	16WP	G15_081	TO->FROM	MATHWSN7 345.00 - TATONGA7 345.00 345KV CKT 1	1195	1195	0.40846	101.8403	GEN600005 1-MONTICELLO
FDNS	01ALL	0	16WP	G15_081	TO->FROM	MATHWSN7 345.00 - TATONGA7 345.00 345KV CKT 1	1195	1195	0.40846	101.8354	GEN635213 3-NEAL UNIT 3
FDNSLock	01ALL	0	16WP	G15_081	TO->FROM	MATHWSN7 345.00 - TATONGA7 345.00 345KV CKT 1	1195	1195	0.40846	101.8204	GEN629075 1-OTTUMWA GENERATOR FOR OTTUMWA UNIT NO 1
FDNS	01ALL	0	16WP	G15_081	TO->FROM	MATHWSN7 345.00 - TATONGA7 345.00 345KV CKT 1	1195	1195	0.40671	101.8155	PITTSBURG - SEMINOLE 345KV CKT 1
FDNS	01ALL	0	16WP	G15_081	TO->FROM	MATHWSN7 345.00 - TATONGA7 345.00 345KV CKT 1	1195	1195	0.40671	101.8155	PITTSBURG - SEMINOLE 345KV CKT 1
FDNS	01ALL	0	20L	G15_081	TO->FROM	MATHWSN7 345.00 - TATONGA7 345.00 345KV CKT 1	1195	1195	0.41497	101.8146	GEN336153 1-WATERFORD UNIT#3
FDNS	01ALL	0	20L	G15_081	TO->FROM	MATHWSN7 345.00 - TATONGA7 345.00 345KV CKT 1	1195	1195	0.41497	101.8129	GEN509394 1-FLINT CREEK
FDNS	01ALL	0	16WP	G15_081	TO->FROM	MATHWSN7 345.00 - TATONGA7 345.00 345KV CKT 1	1195	1195	0.40846	101.768	GEN527163 1-MUSTANG GEN #3 22 KV
FDNS	01ALL	0	20L	G15_081	TO->FROM	MATHWSN7 345.00 - TATONGA7 345.00 345KV CKT 1	1195	1195	0.41497	101.7671	GEN562794 1-G15038_5 0.6900
FDNS	01ALL	0	20L	G15_081	TO->FROM	MATHWSN7 345.00 - TATONGA7 345.00 345KV CKT 1	1195	1195	0.41497	101.7671	GEN562795 1-G15038_6 0.6900
FDNS	01ALL	0	20L	G15_081	TO->FROM	MATHWSN7 345.00 - TATONGA7 345.00 345KV CKT 1	1195	1195	0.41497	101.763	GEN300007 1-NEW MADRID UNIT 2
FDNS	01ALL	0	20L	G15_081	TO->FROM	MATHWSN7 345.00 - TATONGA7 345.00 345KV CKT 1	1195	1195	0.41895	101.7606	CHISHOLM6 230.00 - SWEETWATER 230KV CKT 1
FDNS	01ALL	0	20L	G15_081	TO->FROM	MATHWSN7 345.00 - TATONGA7 345.00 345KV CKT 1	1195	1195	0.41497	101.7569	GEN337910 1-ARKANSAS NUCLEAR ONE UNIT #1

SOLUTION	GROUP	SCENARIO	SEASON	SOURCE	DIRECTION	MONITORED ELEMENT	RATEA (MVA)	RATEB(MVA)	TDF	TC%LOADING (% MVA)	CONTINGENCY
FDNS	01ALL	0	20L	G15_081	TO->FROM	MATHWSN7 345.00 - TATONGA7 345.00 345KV CKT 1	1195	1195	0.41802	101.7532	G1524G1525 345.00 - WICHITA 345KV CKT 1
FDNS	01ALL	0	20L	G15_081	TO->FROM	MATHWSN7 345.00 - TATONGA7 345.00 345KV CKT 1	1195	1195	0.41802	101.7532	G1524G1525 345.00 - WICHITA 345KV CKT 2
FDNS	01ALL	0	16WP	G15_081	TO->FROM	MATHWSN7 345.00 - TATONGA7 345.00 345KV CKT 1	1195	1195	1	101.7503	G11_051T 345.00 - WOODWARD DISTRICT EHV 345KV CKT 1
FDNS	01ALL	0	20L	G15_081	TO->FROM	MATHWSN7 345.00 - TATONGA7 345.00 345KV CKT 1	1195	1195	0.41497	101.7495	GEN515606 1-CANDN11 0.6900
FDNS	01ALL	0	20L	G15_081	TO->FROM	MATHWSN7 345.00 - TATONGA7 345.00 345KV CKT 1	1195	1195	0.41497	101.7495	GEN515607 1-CANDN12 0.6900
FDNS	01ALL	0	16WP	G15_081	TO->FROM	MATHWSN7 345.00 - TATONGA7 345.00 345KV CKT 1	1195	1195	0.4082	101.7469	RANCHRD7 345.00 - SOONER 345KV CKT 1
FDNS	01ALL	0	16WP	G15_081	TO->FROM	MATHWSN7 345.00 - TATONGA7 345.00 345KV CKT 1	1195	1195	0.40846	101.7122	GEN600001 2-SHERBURNE CNTY G2
FDNS	01ALL	0	16WP	G15_081	TO->FROM	MATHWSN7 345.00 - TATONGA7 345.00 345KV CKT 1	1195	1195	0.40841	101.6972	DELAWARE - NORTHEAST STATION 345KV CKT 1
FDNS	01ALL	0	16WP	G15_081	TO->FROM	MATHWSN7 345.00 - TATONGA7 345.00 345KV CKT 1	1195	1195	0.40841	101.6972	DELAWARE - NORTHEAST STATION 345KV CKT 1
FDNS	01ALL	0	20L	G15_081	TO->FROM	MATHWSN7 345.00 - TATONGA7 345.00 345KV CKT 1	1195	1195	0.41646	101.6829	CANEYRV7 345.00 - NEOSHO 345KV CKT 1
FDNS	01ALL	0	17G	G15_081	TO->FROM	MATHWSN7 345.00 - TATONGA7 345.00 345KV CKT 1	1195	1195	1	101.6822	G11_051T 345.00 - WOODWARD DISTRICT EHV 345KV CKT 1
FDNS	01ALL	0	20L	G15_081	TO->FROM	MATHWSN7 345.00 - TATONGA7 345.00 345KV CKT 1	1195	1195	0.41761	101.6655	GERALD GENTLEMAN STATION - RED WILLOW 345KV CKT 1
FDNS	01ALL	0	16WP	G15_081	TO->FROM	MATHWSN7 345.00 - TATONGA7 345.00 345KV CKT 1	1195	1195	0.40846	101.6633	GEN560155 1-G10-11 0.7000
FDNS	01ALL	0	20L	G15_081	TO->FROM	MATHWSN7 345.00 - TATONGA7 345.00 345KV CKT 1	1195	1195	0.41497	101.638	GEN501801 1-DOLET HILLS UNIT1
FDNS	01ALL	0	20L	G15_081	TO->FROM	MATHWSN7 345.00 - TATONGA7 345.00 345KV CKT 1	1195	1195	0.41497	101.634	GEN335831 1-RIVERBEND UNIT#1
FDNS	01ALL	0	20L	G15_081	TO->FROM	MATHWSN7 345.00 - TATONGA7 345.00 345KV CKT 1	1195	1195	0.41782	101.6246	G14_038T 345.00 - Hitchland Interchange 345KV CKT 1
FDNS	01ALL	0	16WP	G15_081	TO->FROM	MATHWSN7 345.00 - TATONGA7 345.00 345KV CKT 1	1195	1195	0.40846	101.6083	GEN640011 2-GERALD GENTLEMAN STATION UNIT 2
FDNS	01ALL	0	16WP	G15_081	TO->FROM	MATHWSN7 345.00 - TATONGA7 345.00 345KV CKT 1	1195	1195	0.40846	101.6038	GEN600000 1-SHERBURNECNTY G1
FDNS	01ALL	0	20L	G15_081	TO->FROM	MATHWSN7 345.00 - TATONGA7 345.00 345KV CKT 1	1195	1195	0.42025	101.5911	BENTON - WICHITA 345KV CKT 1
FDNS	01ALL	0	16WP	G15_081	TO->FROM	MATHWSN7 345.00 - TATONGA7 345.00 345KV CKT 1	1195	1195	0.40846	101.5625	GEN615001 1-COAL CREEK
FDNS	01ALL	0	20WP	G15_081	TO->FROM	MATHWSN7 345.00 - TATONGA7 345.00 345KV CKT 1	1195	1195	0.40302	101.5621	GEN563162 1-G15081_3 0.6900
FDNS	01ALL	0	20L	G15_081	TO->FROM	MATHWSN7 345.00 - TATONGA7 345.00 345KV CKT 1	1195	1195	0.41604	101.5541	G14-057T 345.00 - SUNNYSIDE 345KV CKT 1
FDNS	01ALL	0	20L	G15_081	TO->FROM	MATHWSN7 345.00 - TATONGA7 345.00 345KV CKT 1	1195	1195	0.41646	101.5529	CANEYRV7 345.00 - LATHAMS7 345.00 345KV CKT 1
FDNS	01ALL	0	17G	G15_081	TO->FROM	MATHWSN7 345.00 - TATONGA7 345.00 345KV CKT 1	1195	1195	0.42636	101.5453	G1524G1525 345.00 - THISTLE7 345.00 345KV CKT 1
FDNS	01ALL	0	17G	G15_081	TO->FROM	MATHWSN7 345.00 - TATONGA7 345.00 345KV CKT 1	1195	1195	0.42636	101.5453	G1524G1525 345.00 - THISTLE7 345.00 345KV CKT 2
FDNS	01ALL	0	16WP	G15_081	TO->FROM	MATHWSN7 345.00 - TATONGA7 345.00 345KV CKT 1	1195	1195	0.40846	101.545	GEN640010 1-GERALD GENTLEMAN STATION UNIT 1
FDNS	01ALL	0	16WP	G15_081	TO->FROM	MATHWSN7 345.00 - TATONGA7 345.00 345KV CKT 1	1195	1195	0.40846	101.5387	GEN615002 2-COAL CREEK
FDNS	01ALL	0	20L	G15_081	TO->FROM	MATHWSN7 345.00 - TATONGA7 345.00 345KV CKT 1	1195	1195	0.42054	101.5332	G11-14T 345.00 - WOODWARD DISTRICT EHV 345KV CKT 1
FDNS	01ALL	0	20L	G15_081	TO->FROM	MATHWSN7 345.00 - TATONGA7 345.00 345KV CKT 1	1195	1195	0.42054	101.5332	G11-14T 345.00 - WOODWARD DISTRICT EHV 345KV CKT 2
FDNS	01ALL	0	16WP	G15_081	TO->FROM	MATHWSN7 345.00 - TATONGA7 345.00 345KV CKT 1	1195	1195	0.40846	101.5134	GEN515365 1-CENT 21 0.7000
FDNS	01ALL	0	20L	G15_081	TO->FROM	MATHWSN7 345.00 - TATONGA7 345.00 345KV CKT 1	1195	1195	0.41555	101.5097	LACYGNE - WAVERLY7 345.00 345KV CKT 1
FDNS	01ALL	0	20L	G15_081	TO->FROM	MATHWSN7 345.00 - TATONGA7 345.00 345KV CKT 1	1195	1195	0.41598	101.5023	P12:138:WFEC:MSL15
FDNS	01ALL	0	20L	G15_081	TO->FROM	MATHWSN7 345.00 - TATONGA7 345.00 345KV CKT 1	1195	1195	0.41555	101.4933	WAVERLY7 345.00 - WOLF CREEK 345KV CKT 1
FDNS	01ALL	0	16WP	G15_081	TO->FROM	MATHWSN7 345.00 - TATONGA7 345.00 345KV CKT 1	1195	1195	0.40782	101.4713	RENFROW7 345.00 - VIOLA 7 345.00 345KV CKT 1
FDNS	01ALL	0	16WP	G15_081	TO->FROM	MATHWSN7 345.00 - TATONGA7 345.00 345KV CKT 1	1195	1195	0.40846	101.4615	GEN659118 1-LARAMIE RIVER UNIT1
FDNS	01ALL	0	20L	G15_081	TO->FROM	MATHWSN7 345.00 - TATONGA7 345.00 345KV CKT 1	1195	1195	0.41497	101.4603	GEN511840 1-NORTHEASTERN STATION #3
FDNS	01ALL	0	16WP	G15_081	TO->FROM	MATHWSN7 345.00 - TATONGA7 345.00 345KV CKT 1	1195	1195	0.40846	101.4314	GEN526331 1-JONES GEN #1 22 KV
FDNS	01ALL	0	17G	G15_081	TO->FROM	MATHWSN7 345.00 - TATONGA7 345.00 345KV CKT 1	1195	1195	0.42674	101.4052	FINNEY SWITCHING STATION - Hitchland Interchange 345KV CKT 1
FDNS	01ALL	0	20SP	G15_081	TO->FROM	MATHWSN7 345.00 - TATONGA7 345.00 345KV CKT 1	1195	1195	1	101.3946	G11_051T 345.00 - WOODWARD DISTRICT EHV 345KV CKT 1
FDNS	01ALL	0	20L	G15_081	TO->FROM	MATHWSN7 345.00 - TATONGA7 345.00 345KV CKT 1	1195	1195	0.41497	101.3763	GEN300006 1-NEW MADRID UNIT 1
FDNS	01ALL	0	17SP	G15_081	TO->FROM	MATHWSN7 345.00 - TATONGA7 345.00 345KV CKT 1	1195	1195	1	101.3734	G11_051T 345.00 - WOODWARD DISTRICT EHV 345KV CKT 1
FDNS	01ALL	0	16WP	G15_081	TO->FROM	MATHWSN7 345.00 - TATONGA7 345.00 345KV CKT 1	1195	1195	0.40803	101.3724	HUNTERS7 345.00 - RENFROW7 345.00 345KV CKT 1
FDNS	01ALL	0	20L	G15_081	TO->FROM	MATHWSN7 345.00 - TATONGA7 345.00 345KV CKT 1	1195	1195	0.41497	101.3575	GEN337652 1-WHITE BLUFF UNIT #1
FDNS	01ALL	0	20L	G15_081	TO->FROM	MATHWSN7 345.00 - TATONGA7 345.00 345KV CKT 1	1195	1195	0.41497	101.3455	GEN590011 2-ERCOT EQUIVALENCE
FDNS	01ALL	0	20L	G15_081	TO->FROM	MATHWSN7 345.00 - TATONGA7 345.00 345KV CKT 1	1195	1195	0.41604	101.343	G14-057T 345.00 - LAWTON EASTSIDE 345KV CKT 1
FDNS	01ALL	0	20L	G15_081	TO->FROM	MATHWSN7 345.00 - TATONGA7 345.00 345KV CKT 1	1195	1195	0.41497	101.34	GEN337653 1-WHITE BLUFF UNIT #2
FDNS	01ALL	0	20L	G15_081	TO->FROM	MATHWSN7 345.00 - TATONGA7 345.00 345KV CKT 1	1195	1195	0.41747	101.3318	CHISHOLM7 345.00 - GRACEMONT 345KV CKT 1
FDNS	01ALL	0	16WP	G15_081	TO->FROM	MATHWSN7 345.00 - TATONGA7 345.00 345KV CKT 1	1195	1195	0.40846	101.3179	GEN635214 4-NEAL UNIT 4
FDNS	01ALL	0	16WP	G15_081	TO->FROM	MATHWSN7 345.00 - TATONGA7 345.00 345KV CKT 1	1195	1195	0.40846	101.3115	GEN527901 1-HOBBS PLANT #1 (CT)
FDNS	01ALL	0	16WP	G15_081	TO->FROM	MATHWSN7 345.00 - TATONGA7 345.00 345KV CKT 1	1195	1195	0.40846	101.3115	GEN527902 1-HOBBS PLANT #2 (CT)
FDNS	01ALL	0	20L	G15_081	TO->FROM	MATHWSN7 345.00 - TATONGA7 345.00 345KV CKT 1	1195	1195	0.41646	101.3105	LATHAMS7 345.00 - ROSE HILL 345KV CKT 1
FDNS	01ALL	0	20L	G15_081	TO->FROM	MATHWSN7 345.00 - TATONGA7 345.00 345KV CKT 1	1195	1195	0.41497	101.2941	GEN590010 1-ERCOT EQUIVALENCE
FDNS	01ALL	0	20L	G15_081	TO->FROM	MATHWSN7 345.00 - TATONGA7 345.00 345KV CKT 1	1195	1195	0.41655	101.2649	P12:138:WFEC:MSL12
FDNS	01ALL	0	16WP	G15_081	TO->FROM	MATHWSN7 345.00 - TATONGA7 345.00 345KV CKT 1	1195	1195	0.40697	101.2583	GRACEMONT - LAWTON EASTSIDE 345KV CKT 1
FDNS	01ALL	0	16WP	G15_081	TO->FROM	MATHWSN7 345.00 - TATONGA7 345.00 345KV CKT 1	1195	1195	0.40697	101.2583	GRACEMONT - LAWTON EASTSIDE 345KV CKT 1
FDNS	01ALL	0	20L	G15_081	TO->FROM	MATHWSN7 345.00 - TATONGA7 345.00 345KV CKT 1	1195	1195	0.41633	101.258	EMPORIA ENERGY CENTER - G14_001T 345.00 345KV CKT 1
FDNS	01ALL	0	20L	G15_081	TO->FROM	MATHWSN7 345.00 - TATONGA7 345.00 345KV CKT 1	1195	1195	0.41655	101.2518	MOORELAND - PIC4 138.00 138KV CKT 1
FDNS	01ALL	0	20L	G15_081	TO->FROM	MATHWSN7 345.00 - TATONGA7 345.00 345KV CKT 1	1195	1195	0.4164	101.2407	P12:138:WFEC:MSL14
FDNS	01ALL	0	20L	G15_081	TO->FROM	MATHWSN7 345.00 - TATONGA7 345.00 345KV CKT 1	1195	1195	0.41655	101.2366	CEDARDALE - PIC4 138.00 138KV CKT 1
FDNS	01ALL	0	20L	G15_081	TO->FROM	MATHWSN7 345.00 - TATONGA7 345.00 345KV CKT 1	1195	1195	0.41497	101.2326	GEN515601 1-KNGFSR11 0.7000
FDNS	01ALL	0	20L	G15_081	TO->FROM	MATHWSN7 345.00 - TATONGA7 345.00 345KV CKT 1	1195	1195	0.41633	101.2316	G14_001T 345.00 - WICHITA 345KV CKT 1
FDNS	01ALL	0	20L	G15_081	TO->FROM	MATHWSN7 345.00 - TATONGA7 345.00 345KV CKT 1	1195	1195	0.41598	101.2303	NOEL_SW 138.00 - SALT_PLAINS 138.00 138KV CKT 1
FDNS	01ALL	0	20L	G15_081	TO->FROM	MATHWSN7 345.00 - TATONGA7 345.00 345KV CKT 1	1195	1195	0.41497	101.2274	GEN514910 2-REDBUD GEN
FDNS	01ALL	0	20L	G15_081	TO->FROM	MATHWSN7 345.00 - TATONGA7 345.00 345KV CKT 1	1195	1195	0.41709	101.2244	DOVER SW - OKEENE 138KV CKT 1
FDNS	01ALL	0	20L	G15_081	TO->FROM	MATHWSN7 345.00 - TATONGA7 345.00 345KV CKT 1	1195	1195	0.41497	101.2244	GEN514911 2-REDBUD GEN
FDNS	01ALL	0	20L	G15_081	TO->FROM	MATHWSN7 345.00 - TATONGA7 345.00 345KV CKT 1	1195	1195	0.41497	101.2244	GEN514942 2-REDBUD4G
FDNS	01ALL	0	20L	G15_081	TO->FROM	MATHWSN7 345.00 - TATONGA7 345.00 345KV CKT 1	1195	1195	0.41655	101.2233	CEDARDALE - OKEENE 138KV CKT 1
FDNS	01ALL	0	16WP	G15_081	TO->FROM	MATHWSN7 345.00 - TATONGA7 345.00 345KV CKT 1	1195	1195	0.40846	101.2098	GEN600002 3-SHERBURNE CNTY G3
FDNS	01ALL	0	20L	G15_081	TO->FROM	MATHWSN7 345.00 - TATONGA7 345.00 345KV CKT 1	1195	1195	0.4164	101.1922	BEARCAT 138.00 - MOORELAND 138KV CKT 1
FDNS	01ALL	0	16WP	G15_081	TO->FROM	MATHWSN7 345.00 - TATONGA7 345.00 345KV CKT 1	1195	1195	0.40846	101.1762	GEN635023 3-WALTER SCOTT UNIT 3
FDNS	01ALL	0	20L	G15_081	TO->FROM	MATHWSN7 345.00 - TATONGA7 345.00 345KV CKT 1	1195	1195	0.41497	101.1475	GEN509404 1-WELSH #1
FDNS	01ALL	0	20L	G15_081	TO->FROM	MATHWSN7 345.00 - TATONGA7 345.00 345KV CKT 1	1195	1195	0.41497	101.1421	GEN532751 1-WOLF CREEK GENERATING STATION UNIT 1
FDNS	01ALL	0	20L	G15_081	TO->FROM	MATHWSN7 345.00 - TATONGA7 345.00 345KV CKT 1	1195	1195	0.41497	101.1188	GEN563272 1-G15093_3 0.6900
FDNS	01ALL	0	20L	G15_081	TO->FROM	MATHWSN7 345.00 - TATONGA7 345.00 345KV CKT 1	1195	1195	0.41497	101.1177	GEN335206 1-NELSON UNIT 6
FDNS	01ALL	0	20L	G15_081	TO->FROM	MATHWSN7 345.00 - TATONGA7 345.00 345KV CKT 1	1195	1195	0.4164	101.1159	BEARCAT 138.00 - NINE MILE 138KV CKT 1
FDNS	01ALL	0	17G	G15_081	TO->FROM	MATHWSN7 345.00 - TATONGA7 345.00 345KV CKT 1	1195	1195	0.42786	101.1096	BORDER 7345.00 - WOODWARD DISTRICT EHV 345KV CKT 1
FDNS	01ALL	0	20L	G15_081	TO->FROM	MATHWSN7 345.00 - TATONGA7 345.00 345KV CKT 1	1195	1195	0.41497	101.1065	GEN513602 1-GRECSTG_1 17.500
FDNS	01ALL	0	20L	G15_081	TO->FROM	MATHWSN7 345.00 - TATONGA7 345.00 345KV CKT 1	1195	1195	0.41497	101.0972	GEN514905 1-REDBUD3S
FDNS	01ALL	0	20L	G15_081	TO->FROM	MATHWSN7 345.00 - TATONGA7 345.00 345KV CKT 1	1195	1195	0.41701	101.0964	FLATRDG3 - THISTLE4 138.00 138KV CKT 1

SOLUTION	GROUP	SCENARIO	SEASON	SOURCE	DIRECTION	MONITORED ELEMENT	RATEA (MVA)	RATEB(MVA)	TDF	TC%LOADING (% MVA)	CONTINGENCY
FDNS	01ALL	0	20L	G15_081	TO->FROM	MATHWSN7 345.00 - TATONGA7 345.00 345KV CKT 1	1195	1195	0.41701	101.0964	FLATRDG3 - THISTLE4 138.00 138KV CKT 1
FDNS	01ALL	0	20L	G15_081	TO->FROM	MATHWSN7 345.00 - TATONGA7 345.00 345KV CKT 1	1195	1195	0.41701	101.0961	THISTLE7 345.00 (THISTLE T1) 345/138/13.8KV TRANSFORMER CKT 1
FDNS	01ALL	0	20L	G15_081	TO->FROM	MATHWSN7 345.00 - TATONGA7 345.00 345KV CKT 1	1195	1195	0.41497	101.0845	GRAND GULF 500/22.0KV TRANSFORMER CKT 1
FDNS	01ALL	0	20L	G15_081	TO->FROM	MATHWSN7 345.00 - TATONGA7 345.00 345KV CKT 1	1195	1195	0.41497	101.0827	GEN338146 1-INDEPENDENCE UNIT #2
FDNS	01ALL	0	20L	G15_081	TO->FROM	MATHWSN7 345.00 - TATONGA7 345.00 345KV CKT 1	1195	1195	0.41497	101.0468	GEN515550 1-MNCWND31 0.6900
FDNS	01ALL	0	20L	G15_081	TO->FROM	MATHWSN7 345.00 - TATONGA7 345.00 345KV CKT 1	1195	1195	0.41666	101.0402	TUCO INTERCHANGE - TUCO_2 345.00 345KV CKT 1
FDNS	01ALL	0	20L	G15_081	TO->FROM	MATHWSN7 345.00 - TATONGA7 345.00 345KV CKT 1	1195	1195	0.41497	101.0399	GEN562952 1-G15057_3 0.6500
FDNS	01ALL	0	20L	G15_081	TO->FROM	MATHWSN7 345.00 - TATONGA7 345.00 345KV CKT 1	1195	1195	0.41497	101.0351	GEN338143 1-INDEPENDENCE UNIT #1
FDNS	01ALL	0	16WP	G15_081	TO->FROM	MATHWSN7 345.00 - TATONGA7 345.00 345KV CKT 1	1195	1195	0.4082	101.0303	OPENSKY7 345.00 - RANCHRD7 345.00 345KV CKT 1
FDNS	01ALL	0	16WP	G15_081	TO->FROM	MATHWSN7 345.00 - TATONGA7 345.00 345KV CKT 1	1195	1195	0.40846	101.0231	GEN515397 1-OUSPRT 1 0.6900
FDNS	01ALL	0	20WP	G15_081	TO->FROM	MATHWSN7 345.00 - TATONGA7 345.00 345KV CKT 1	1195	1195	0.40302	101.0112	GEN562023 1-G11_020_3 0.6900
FDNS	01ALL	0	20WP	G15_081	TO->FROM	MATHWSN7 345.00 - TATONGA7 345.00 345KV CKT 1	1195	1195	0.40302	101.0112	GEN562026 1-G11_019_3 0.6900
FDNS	00NR	0	16WP	G15_081	TO->FROM	MATHWSN7 345.00 - TATONGA7 345.00 345KV CKT 1	1195	1195	0.49531	101.0086	THISTLE7 345.00 - WOODWARD DISTRICT EHV 345KV CKT 1
FDNS	00NR	0	16WP	G15_081	TO->FROM	MATHWSN7 345.00 - TATONGA7 345.00 345KV CKT 1	1195	1195	0.49531	101.0086	THISTLE7 345.00 - WOODWARD DISTRICT EHV 345KV CKT 1
FDNS	00NR	0	16WP	G15_081	TO->FROM	MATHWSN7 345.00 - TATONGA7 345.00 345KV CKT 1	1195	1195	0.49531	101.0086	THISTLE7 345.00 - WOODWARD DISTRICT EHV 345KV CKT 2
FDNS	00NR	0	16WP	G15_081	TO->FROM	MATHWSN7 345.00 - TATONGA7 345.00 345KV CKT 1	1195	1195	0.49531	101.0086	THISTLE7 345.00 - WOODWARD DISTRICT EHV 345KV CKT 2
FDNS	01ALL	0	20L	G15_081	TO->FROM	MATHWSN7 345.00 - TATONGA7 345.00 345KV CKT 1	1195	1195	0.41532	100.9987	SMOKYHL6 230.00 - SUMMIT 230KV CKT 1
FDNS	01ALL	0	20L	G15_081	TO->FROM	MATHWSN7 345.00 - TATONGA7 345.00 345KV CKT 1	1195	1195	0.41497	100.9966	GEN562512 1-G14_020_3 0.6900
FDNS	01ALL	0	20L	G15_081	TO->FROM	MATHWSN7 345.00 - TATONGA7 345.00 345KV CKT 1	1195	1195	0.41598	100.9949	C_CITY_138 138.00 - SALT_PLAINS 138.00 138KV CKT 1
FDNS	01ALL	0	20L	G15_081	TO->FROM	MATHWSN7 345.00 - TATONGA7 345.00 345KV CKT 1	1195	1195	0.41567	100.9947	ELK CITY - RED HILLS WIND 138KV CKT 1
FDNS	01ALL	0	20L	G15_081	TO->FROM	MATHWSN7 345.00 - TATONGA7 345.00 345KV CKT 1	1195	1195	0.41567	100.9947	ELK CITY - RED HILLS WIND 138KV CKT 1
FDNS	01ALL	0	20L	G15_081	TO->FROM	MATHWSN7 345.00 - TATONGA7 345.00 345KV CKT 1	1195	1195	0.41497	100.9902	GEN513601 1-GRECCTG_1 20.000
FDNS	01ALL	0	20L	G15_081	TO->FROM	MATHWSN7 345.00 - TATONGA7 345.00 345KV CKT 1	1195	1195	0.4164	100.9789	MOREWOOD SW - NINE MILE 138KV CKT 1
FDNS	01ALL	0	20L	G15_081	TO->FROM	MATHWSN7 345.00 - TATONGA7 345.00 345KV CKT 1	1195	1195	0.41598	100.9759	BYRON_138 138.00 - C_CITY_138 138.00 138KV CKT 1
FDNS	01ALL	0	16WP	G15_081	TO->FROM	MATHWSN7 345.00 - TATONGA7 345.00 345KV CKT 1	1195	1195	0.39877	100.9612	G15063_T 345.00 - MATHWSN7 345.00 345KV CKT 1
FDNS	01ALL	0	20L	G15_081	TO->FROM	MATHWSN7 345.00 - TATONGA7 345.00 345KV CKT 1	1195	1195	0.4157	100.9606	MULLERGREN - SPEARVILLE 230KV CKT 1
FDNS	01ALL	0	20L	G15_081	TO->FROM	MATHWSN7 345.00 - TATONGA7 345.00 345KV CKT 1	1195	1195	0.4157	100.9606	MULLERGREN - SPEARVILLE 230KV CKT 1
FDNS	01ALL	0	16WP	G15_081	TO->FROM	MATHWSN7 345.00 - TATONGA7 345.00 345KV CKT 1	1195	1195	0.40846	100.9482	GEN531447 1-HOLCOMB GENERATOR
FDNS	01ALL	0	20L	G15_081	TO->FROM	MATHWSN7 345.00 - TATONGA7 345.00 345KV CKT 1	1195	1195	0.41497	100.9211	GEN563273 2-G15093_4 0.6900
FDNS	01ALL	0	16WP	G15_081	TO->FROM	MATHWSN7 345.00 - TATONGA7 345.00 345KV CKT 1	1195	1195	0.42214	100.9108	WOODWARD EHV - WWPAR4 138.00 138KV CKT 1
FDNS	01ALL	0	20L	G15_081	TO->FROM	MATHWSN7 345.00 - TATONGA7 345.00 345KV CKT 1	1195	1195	0.41685	100.9092	BVRCNTY7 345.00 - OPTIMA 345.00 345KV CKT 1
FDNS	01ALL	0	20L	G15_081	TO->FROM	MATHWSN7 345.00 - TATONGA7 345.00 345KV CKT 1	1195	1195	0.41685	100.9092	BVRCNTY7 345.00 - OPTIMA 345.00 345KV CKT 2
FDNS	01ALL	0	16WP	G15_081	TO->FROM	MATHWSN7 345.00 - TATONGA7 345.00 345KV CKT 1	1195	1195	0.42214	100.9087	WOODWARD - WWPAR4 138.00 138KV CKT 1
FDNS	01ALL	0	20L	G15_081	TO->FROM	MATHWSN7 345.00 - TATONGA7 345.00 345KV CKT 1	1195	1195	0.41662	100.8922	P12:138:WERE:CLWA-MKEC_138F::
FDNS	01ALL	0	20L	G15_081	TO->FROM	MATHWSN7 345.00 - TATONGA7 345.00 345KV CKT 1	1195	1195	0.41662	100.8915	P12:138:MKEC:HARPER-CLEARWATER::
FDNS	01ALL	0	20L	G15_081	TO->FROM	MATHWSN7 345.00 - TATONGA7 345.00 345KV CKT 1	1195	1195	0.41704	100.8785	GRAPEVINE INTERCHANGE - NICHOLS STATION 230KV CKT 1
FDNS	01ALL	0	20L	G15_081	TO->FROM	MATHWSN7 345.00 - TATONGA7 345.00 345KV CKT 1	1195	1195	0.41704	100.8785	GRAPEVINE INTERCHANGE - NICHOLS STATION 230KV CKT 1
FDNS	01ALL	0	16WP	G15_081	TO->FROM	MATHWSN7 345.00 - TATONGA7 345.00 345KV CKT 1	1195	1195	0.40846	100.8782	GEN635024 4-WALTER SCOTT UNIT 4
FDNS	01ALL	0	20L	G15_081	TO->FROM	MATHWSN7 345.00 - TATONGA7 345.00 345KV CKT 1	1195	1195	0.41497	100.8732	GEN501813 1-RODEMACHER UNIT 3
FDNS	01ALL	0	20L	G15_081	TO->FROM	MATHWSN7 345.00 - TATONGA7 345.00 345KV CKT 1	1195	1195	0.41747	100.8722	CHISHOLM7 345.00 () 345/230/13.2KV TRANSFORMER CKT 1
FDNS	00NR	0	20WP	G15_081	TO->FROM	MATHWSN7 345.00 - TATONGA7 345.00 345KV CKT 1	1195	1195	0.46924	100.869	CIMARRON - MINCO 345KV CKT 1
FDNS	01ALL	0	20L	G15_081	TO->FROM	MATHWSN7 345.00 - TATONGA7 345.00 345KV CKT 1	1195	1195	0.41497	100.8648	GEN505432 1-SIKESTON
FDNS	01ALL	0	20L	G15_081	TO->FROM	MATHWSN7 345.00 - TATONGA7 345.00 345KV CKT 1	1195	1195	0.41497	100.8562	GEN501812 1-RODEMACHER UNIT 2
FDNS	01ALL	0	20L	G15_081	TO->FROM	MATHWSN7 345.00 - TATONGA7 345.00 345KV CKT 1	1195	1195	0.4166	100.8503	P12:138:WERE:MURR-MKEC_138P::
FDNS	01ALL	0	20L	G15_081	TO->FROM	MATHWSN7 345.00 - TATONGA7 345.00 345KV CKT 1	1195	1195	0.41755	100.8397	BENTON - ROSE HILL 345KV CKT 1
FDNS	01ALL	0	20L	G15_081	TO->FROM	MATHWSN7 345.00 - TATONGA7 345.00 345KV CKT 1	1195	1195	0.41571	100.8361	HITCHLAND INTERCHANGE - MOORE COUNTY INTERCHANGE 230KV CKT 1
FDNS	01ALL	0	20L	G15_081	TO->FROM	MATHWSN7 345.00 - TATONGA7 345.00 345KV CKT 1	1195	1195	0.41571	100.8361	HITCHLAND INTERCHANGE - MOORE COUNTY INTERCHANGE 230KV CKT 1
FDNS	01ALL	0	16WP	G15_081	TO->FROM	MATHWSN7 345.00 - TATONGA7 345.00 345KV CKT 1	1195	1195	0.40567	100.8209	GRACEMONT - MINCO 345KV CKT 1
FDNS	01ALL	0	20L	G15_081	TO->FROM	MATHWSN7 345.00 - TATONGA7 345.00 345KV CKT 1	1195	1195	0.41497	100.8047	WHITE BLUFF 500/26.0KV TRANSFORMER CKT 1
FDNS	01ALL	0	20L	G15_081	TO->FROM	MATHWSN7 345.00 - TATONGA7 345.00 345KV CKT 1	1195	1195	0.41497	100.8044	GEN515225 1-MUSKOGEE 5G
FDNS	01ALL	0	20L	G15_081	TO->FROM	MATHWSN7 345.00 - TATONGA7 345.00 345KV CKT 1	1195	1195	0.41613	100.8036	EL RENO - ROMAN NOSE 138KV CKT 1
FDNS	01ALL	0	20L	G15_081	TO->FROM	MATHWSN7 345.00 - TATONGA7 345.00 345KV CKT 1	1195	1195	0.41572	100.787	DEWEY - TALOGA 138KV CKT 1
FDNS	01ALL	0	20L	G15_081	TO->FROM	MATHWSN7 345.00 - TATONGA7 345.00 345KV CKT 1	1195	1195	0.41497	100.7693	GEN506754 1-LEBROCK STEAM 1
FDNS	01ALL	0	20L	G15_081	TO->FROM	MATHWSN7 345.00 - TATONGA7 345.00 345KV CKT 1	1195	1195	0.4156	100.7655	G15088_T 345.00 - MOORE 345KV CKT 1
FDNS	01ALL	0	20L	G15_081	TO->FROM	MATHWSN7 345.00 - TATONGA7 345.00 345KV CKT 1	1195	1195	0.41497	100.7644	GEN562992 1-G15063_3 0.6900
FDNS	01ALL	0	20L	G15_081	TO->FROM	MATHWSN7 345.00 - TATONGA7 345.00 345KV CKT 1	1195	1195	0.41598	100.7579	BYRON_138 138.00 - SANDY_CN_138138.00 138KV CKT 1
FDNS	01ALL	0	20L	G15_081	TO->FROM	MATHWSN7 345.00 - TATONGA7 345.00 345KV CKT 1	1195	1195	0.41576	100.7443	EMPORIA ENERGY CENTER - SWISSVALE 345KV CKT 1
FDNS	01ALL	0	20L	G15_081	TO->FROM	MATHWSN7 345.00 - TATONGA7 345.00 345KV CKT 1	1195	1195	0.41497	100.7441	GEN514912 2-REDBUD GEN
FDNS	01ALL	0	20L	G15_081	TO->FROM	MATHWSN7 345.00 - TATONGA7 345.00 345KV CKT 1	1195	1195	0.41589	100.7427	SWISSVALE - WEST GARDNER 345KV CKT 1
FDNS	01ALL	0	20L	G15_081	TO->FROM	MATHWSN7 345.00 - TATONGA7 345.00 345KV CKT 1	1195	1195	0.41559	100.7307	BLUSTEM7 345.00 - SUMMIT 345KV CKT 1
FDNS	01ALL	0	17SP	G15_081	TO->FROM	MATHWSN7 345.00 - TATONGA7 345.00 345KV CKT 1	1195	1195	0.41877	100.7197	BORDER 7345.00 - TUCO_2 345.00 345KV CKT 1
FDNS	01ALL	0	20L	G15_081	TO->FROM	MATHWSN7 345.00 - TATONGA7 345.00 345KV CKT 1	1195	1195	0.41575	100.6938	AXTELL - PAULINE 345KV CKT 1
FDNS	01ALL	0	20L	G15_081	TO->FROM	MATHWSN7 345.00 - TATONGA7 345.00 345KV CKT 1	1195	1195	0.41577	100.681	G15074_T 345.00 - HOYT 345KV CKT 1
FDNS	01ALL	0	20L	G15_081	TO->FROM	MATHWSN7 345.00 - TATONGA7 345.00 345KV CKT 1	1195	1195	0.41579	100.6642	HOYT - STRANGER CREEK 345KV CKT 1
FDNS	01ALL	0	20L	G15_081	TO->FROM	MATHWSN7 345.00 - TATONGA7 345.00 345KV CKT 1	1195	1195	0.41577	100.661	G15074_T 345.00 - JEFFREY ENERGY CENTER 345KV CKT 1
FDNS	01ALL	0	20L	G15_081	TO->FROM	MATHWSN7 345.00 - TATONGA7 345.00 345KV CKT 1	1195	1195	0.41539	100.6503	CIRCLE - MULLERGREN 230KV CKT 1
FDNS	01ALL	0	20L	G15_081	TO->FROM	MATHWSN7 345.00 - TATONGA7 345.00 345KV CKT 1	1195	1195	0.41539	100.6503	CIRCLE - MULLERGREN 230KV CKT 1
FDNS	01ALL	0	20L	G15_081	TO->FROM	MATHWSN7 345.00 - TATONGA7 345.00 345KV CKT 1	1195	1195	0.4156	100.6478	G15088_T 345.00 - PAULINE 345KV CKT 1
FDNS	01ALL	0	20L	G15_081	TO->FROM	MATHWSN7 345.00 - TATONGA7 345.00 345KV CKT 1	1195	1195	0.41497	100.6454	GEN336831 1-BAXTER WILSON SES
FDNS	01ALL	0	20L	G15_081	TO->FROM	MATHWSN7 345.00 - TATONGA7 345.00 345KV CKT 1	1195	1195	0.41497	100.6434	GEN336170 1-GULF OXY U4
FDNS	01ALL	0	20L	G15_081	TO->FROM	MATHWSN7 345.00 - TATONGA7 345.00 345KV CKT 1	1195	1195	0.41497	100.6428	GEN334440 1-SABINE UNIT 4
FDNS	01ALL	0	16WP	G15_081	TO->FROM	MATHWSN7 345.00 - TATONGA7 345.00 345KV CKT 1	1195	1195	0.40846	100.6411	GEN523971 1-HARRINGTON GEN #1 24 KV
FDNS	01ALL	0	16WP	G15_081	TO->FROM	MATHWSN7 345.00 - TATONGA7 345.00 345KV CKT 1	1195	1195	0.40846	100.641	GEN523973 1-HARRINGTON GEN #3 24 KV
FDNS	01ALL	0	16WP	G15_081	TO->FROM	MATHWSN7 345.00 - TATONGA7 345.00 345KV CKT 1	1195	1195	0.40846	100.6409	GEN523972 1-HARRINGTON GEN #2 24 KV
FDNS	01ALL	0	20L	G15_081	TO->FROM	MATHWSN7 345.00 - TATONGA7 345.00 345KV CKT 1	1195	1195	0.41531	100.6395	WALKTAP7 345.00 (WALKE345) 345/115/13.8KV TRANSFORMER CKT 1
FDNS	01ALL	0	20L	G15_081	TO->FROM	MATHWSN7 345.00 - TATONGA7 345.00 345KV CKT 1	1195	1195	0.41531	100.6395	WALKTAP7 345.00 (WALKE345) 345/115/13.8KV TRANSFORMER CKT 1
FDNS	01ALL	0	20L	G15_081	TO->FROM	MATHWSN7 345.00 - TATONGA7 345.00 345KV CKT 1	1195	1195	0.41497	100.6375	GEN336252 1-NINEMILE POINT UNIT#5
FDNS	01ALL	0	20L	G15_081	TO->FROM	MATHWSN7 345.00 - TATONGA7 345.00 345KV CKT 1	1195	1195	0.41531	100.6367	WALKEMEYER - WALKTAP3 115.00 115KV CKT 1
FDNS	01ALL	0	20L	G15_081	TO->FROM	MATHWSN7 345.00 - TATONGA7 345.00 345KV CKT 1	1195	1195	0.41531	100.6367	WALKEMEYER - WALKTAP3 115.00 115KV CKT 1

SOLUTION	GROUP	SCENARIO	SEASON	SOURCE	DIRECTION	MONITORED ELEMENT	RATEA (MVA)	RATEB(MVA)	TDF	TC%LOADING (% MVA)	CONTINGENCY
FDNS	01ALL	0	20L	G15_081	TO->FROM	MATHWSN7 345.00 - TATONGA7 345.00 345KV CKT 1	1195	1195	0.41518	100.6363	BUSHLAND INTERCHANGE - DEAF SMITH COUNTY INTERCHANGE 230KV CKT 1
FDNS	01ALL	0	20L	G15_081	TO->FROM	MATHWSN7 345.00 - TATONGA7 345.00 345KV CKT 1	1195	1195	0.41518	100.6363	BUSHLAND INTERCHANGE - DEAF SMITH COUNTY INTERCHANGE 230KV CKT 1
FDNS	01ALL	0	20L	G15_081	TO->FROM	MATHWSN7 345.00 - TATONGA7 345.00 345KV CKT 1	1195	1195	0.41491	100.6324	WEBRE - WELLS 500KV CKT 1
FDNS	01ALL	0	20L	G15_081	TO->FROM	MATHWSN7 345.00 - TATONGA7 345.00 345KV CKT 1	1195	1195	0.41544	100.6083	TALOGA (TALOGA) 138/69/13.8KV TRANSFORMER CKT 1
FDNS	01ALL	0	20L	G15_081	TO->FROM	MATHWSN7 345.00 - TATONGA7 345.00 345KV CKT 1	1195	1195	0.41497	100.6033	GEN549893 2-SOUTHWEST 2
FDNS	01ALL	0	20L	G15_081	TO->FROM	MATHWSN7 345.00 - TATONGA7 345.00 345KV CKT 1	1195	1195	0.41497	100.5986	GEN335204 1-NELSON UNIT 4
FDNS	01ALL	0	20L	G15_081	TO->FROM	MATHWSN7 345.00 - TATONGA7 345.00 345KV CKT 1	1195	1195	0.41497	100.5957	GEN506752 1-LEBROCK GAS 1
FDNS	01ALL	0	20L	G15_081	TO->FROM	MATHWSN7 345.00 - TATONGA7 345.00 345KV CKT 1	1195	1195	0.41497	100.5955	GEN506753 1-LEBROCK GAS 2
FDNS	01ALL	0	20L	G15_081	TO->FROM	MATHWSN7 345.00 - TATONGA7 345.00 345KV CKT 1	1195	1195	0.41563	100.5929	P12:138:AEPW-OGE:WTH_JCT4:JENSEN4
FDNS	01ALL	0	20L	G15_081	TO->FROM	MATHWSN7 345.00 - TATONGA7 345.00 345KV CKT 1	1195	1195	0.41497	100.5903	GEN337041 1-GERALD ANDRUS
FDNS	01ALL	0	20L	G15_081	TO->FROM	MATHWSN7 345.00 - TATONGA7 345.00 345KV CKT 1	1195	1195	0.41658	100.59	BVRCNTY7 345.00 - G11-14T 345.00 345KV CKT 1
FDNS	01ALL	0	20L	G15_081	TO->FROM	MATHWSN7 345.00 - TATONGA7 345.00 345KV CKT 1	1195	1195	0.41658	100.59	BVRCNTY7 345.00 - G11-14T 345.00 345KV CKT 2
FDNS	01ALL	0	20L	G15_081	TO->FROM	MATHWSN7 345.00 - TATONGA7 345.00 345KV CKT 1	1195	1195	0.41708	100.5861	GLASS MOUNTAIN - MOORELAND 138KV CKT 1
FDNS	01ALL	0	16WP	G15_081	TO->FROM	MATHWSN7 345.00 - TATONGA7 345.00 345KV CKT 1	1195	1195	0.40449	100.581	CIMARRON - DRAPER LAKE 345KV CKT 1
FDNS	01ALL	0	20L	G15_081	TO->FROM	MATHWSN7 345.00 - TATONGA7 345.00 345KV CKT 1	1195	1195	0.41531	100.574	RENO COUNTY - SUMMIT 345KV CKT 1
FDNS	01ALL	0	20L	G15_081	TO->FROM	MATHWSN7 345.00 - TATONGA7 345.00 345KV CKT 1	1195	1195	0.41552	100.5687	CANTON - TALOGA 69KV CKT 1
FDNS	01ALL	0	20L	G15_081	TO->FROM	MATHWSN7 345.00 - TATONGA7 345.00 345KV CKT 1	1195	1195	0.41537	100.5641	BLACKBERRY - NEOSHO 345KV CKT 1
FDNS	01ALL	0	20L	G15_081	TO->FROM	MATHWSN7 345.00 - TATONGA7 345.00 345KV CKT 1	1195	1195	0.41555	100.5629	GRAND ISLAND - SWEETWATER 345KV CKT 1
FDNS	00NR	0	16WP	G15_081	TO->FROM	MATHWSN7 345.00 - TATONGA7 345.00 345KV CKT 1	1195	1195	0.48557	100.5612	G14-074T 345.00 - TUCO INTERCHANGE 345KV CKT 1
FDNS	01ALL	0	20L	G15_081	TO->FROM	MATHWSN7 345.00 - TATONGA7 345.00 345KV CKT 1	1195	1195	0.41497	100.5602	GEN562882 1-G15047_3 0.6900
FDNS	01ALL	0	20L	G15_081	TO->FROM	MATHWSN7 345.00 - TATONGA7 345.00 345KV CKT 1	1195	1195	0.41559	100.5569	Canadian Pump Station - REDROCKRD4 138.00 138KV CKT 1
FDNS	01ALL	0	20L	G15_081	TO->FROM	MATHWSN7 345.00 - TATONGA7 345.00 345KV CKT 1	1195	1195	0.41497	100.5553	GEN334030 1-FRONTIER UNIT 1
FDNS	01ALL	0	20L	G15_081	TO->FROM	MATHWSN7 345.00 - TATONGA7 345.00 345KV CKT 1	1195	1195	0.41721	100.5546	GRAPEVINE INTERCHANGE - STATELINE INTERCHANGE 230KV CKT 1
FDNS	01ALL	0	20L	G15_081	TO->FROM	MATHWSN7 345.00 - TATONGA7 345.00 345KV CKT 1	1195	1195	0.41721	100.5546	GRAPEVINE INTERCHANGE - STATELINE INTERCHANGE 230KV CKT 1
FDNS	01ALL	0	20L	G15_081	TO->FROM	MATHWSN7 345.00 - TATONGA7 345.00 345KV CKT 1	1195	1195	0.41548	100.5546	BLUSTEM7 345.00 - JEFFREY ENERGY CENTER 345KV CKT 1
FDNS	01ALL	0	20L	G15_081	TO->FROM	MATHWSN7 345.00 - TATONGA7 345.00 345KV CKT 1	1195	1195	0.41497	100.5546	GEN334031 1-FRONTIER UNIT 2
FDNS	01ALL	0	20L	G15_081	TO->FROM	MATHWSN7 345.00 - TATONGA7 345.00 345KV CKT 1	1195	1195	0.41519	100.5543	NEWHART 230 - POTTER COUNTY INTERCHANGE 230KV CKT 1
FDNS	01ALL	0	20L	G15_081	TO->FROM	MATHWSN7 345.00 - TATONGA7 345.00 345KV CKT 1	1195	1195	0.4155	100.5514	DARLINGTNRD4138.00 - ROMAN NOSE 138KV CKT 1
FDNS	01ALL	0	20L	G15_081	TO->FROM	MATHWSN7 345.00 - TATONGA7 345.00 345KV CKT 1	1195	1195	0.41708	100.5498	CLEO CORNER - GLASS MOUNTAIN 138KV CKT 1
FDNS	01ALL	0	20L	G15_081	TO->FROM	MATHWSN7 345.00 - TATONGA7 345.00 345KV CKT 1	1195	1195	0.41552	100.5489	CANTON - OKEENE 69KV CKT 1
FDNS	01ALL	0	20L	G15_081	TO->FROM	MATHWSN7 345.00 - TATONGA7 345.00 345KV CKT 1	1195	1195	0.41497	100.5475	GEN521103 1-BLUE CANYON WIND FARM
FDNS	01ALL	0	16WP	G15_081	TO->FROM	MATHWSN7 345.00 - TATONGA7 345.00 345KV CKT 1	1195	1195	0.4082	100.5404	G15052_T 345.00 - OPENSKY7 345.00 345KV CKT 1
FDNS	01ALL	0	20L	G15_081	TO->FROM	MATHWSN7 345.00 - TATONGA7 345.00 345KV CKT 1	1195	1195	0.41559	100.5379	P12:138:OKGE-AEPW:JENSEN4:REDROCKRD4
FDNS	01ALL	0	20L	G15_081	TO->FROM	MATHWSN7 345.00 - TATONGA7 345.00 345KV CKT 1	1195	1195	0.41497	100.5286	GEN506749 1-EASTMAN GENERATION A
FDNS	01ALL	0	16WP	G15_081	TO->FROM	MATHWSN7 345.00 - TATONGA7 345.00 345KV CKT 1	1195	1195	0.40846	100.5257	GEN527903 1-HOBBS PLANT #3 (ST)
FDNS	01ALL	0	20L	G15_081	TO->FROM	MATHWSN7 345.00 - TATONGA7 345.00 345KV CKT 1	1195	1195	0.41497	100.5204	DOLET HILLS 345/24.0KV TRANSFORMER CKT 1
FDNS	01ALL	0	20L	G15_081	TO->FROM	MATHWSN7 345.00 - TATONGA7 345.00 345KV CKT 1	1195	1195	0.41497	100.5176	GEN335614 1-WILLOW GLENN UNIT#4
FDNS	01ALL	0	20L	G15_081	TO->FROM	MATHWSN7 345.00 - TATONGA7 345.00 345KV CKT 1	1195	1195	0.41565	100.5083	FTTHOM2-LNX3345.00 - GRPRAR2-LNX3345.00 345KV CKT 1
FDNS	01ALL	0	20L	G15_081	TO->FROM	MATHWSN7 345.00 - TATONGA7 345.00 345KV CKT 1	1195	1195	0.41497	100.508	GEN509408 1-WILKES #2
FDNS	01ALL	0	20L	G15_081	TO->FROM	MATHWSN7 345.00 - TATONGA7 345.00 345KV CKT 1	1195	1195	0.41497	100.5076	GEN336464 1-MICHOUD UNIT #3
FDNS	01ALL	0	20L	G15_081	TO->FROM	MATHWSN7 345.00 - TATONGA7 345.00 345KV CKT 1	1195	1195	0.41497	100.507	GEN336191 1-LITTLE GYPSY UNIT#3
FDNS	01ALL	0	20L	G15_081	TO->FROM	MATHWSN7 345.00 - TATONGA7 345.00 345KV CKT 1	1195	1195	0.41544	100.5068	BUCKNER7 345.00 - SPEARVILLE 345KV CKT 1
FDNS	01ALL	0	20L	G15_081	TO->FROM	MATHWSN7 345.00 - TATONGA7 345.00 345KV CKT 1	1195	1195	0.41544	100.5068	BUCKNER7 345.00 - SPEARVILLE 345KV CKT 1
FDNS	01ALL	0	16WP	G15_081	TO->FROM	MATHWSN7 345.00 - TATONGA7 345.00 345KV CKT 1	1195	1195	0.40846	100.5064	GEN562974 1-G15060_5 0.6900
FDNS	01ALL	0	20L	G15_081	TO->FROM	MATHWSN7 345.00 - TATONGA7 345.00 345KV CKT 1	1195	1195	0.41497	100.5021	GEN336801 1-BAXTER WILSON UNIT #1
FDNS	01ALL	0	20L	G15_081	TO->FROM	MATHWSN7 345.00 - TATONGA7 345.00 345KV CKT 1	1195	1195	0.41532	100.5007	KNOLL 230 - SMOKYHL6 230.00 230KV CKT 1
FDNS	01ALL	0	20L	G15_081	TO->FROM	MATHWSN7 345.00 - TATONGA7 345.00 345KV CKT 1	1195	1195	0.41497	100.4991	GEN599951 1-PSCO LAMAR DC TIE
FDNS	01ALL	0	20L	G15_081	TO->FROM	MATHWSN7 345.00 - TATONGA7 345.00 345KV CKT 1	1195	1195	0.41565	100.4986	FT THOMPSON - FTTHOM2-LNX3345.00 345KV CKT Z
FDNS	01ALL	0	20L	G15_081	TO->FROM	MATHWSN7 345.00 - TATONGA7 345.00 345KV CKT 1	1195	1195	0.41523	100.4942	CLINTON JUNCTION - ELK CITY 138KV CKT 1
FDNS	01ALL	0	20L	G15_081	TO->FROM	MATHWSN7 345.00 - TATONGA7 345.00 345KV CKT 1	1195	1195	0.41523	100.4942	CLINTON JUNCTION - ELK CITY 138KV CKT 1
FDNS	01ALL	0	20L	G15_081	TO->FROM	MATHWSN7 345.00 - TATONGA7 345.00 345KV CKT 1	1195	1195	0.41565	100.4929	GRPRAR2-LNX3345.00 - YANKTON 345KV CKT Z
FDNS	01ALL	0	20L	G15_081	TO->FROM	MATHWSN7 345.00 - TATONGA7 345.00 345KV CKT 1	1195	1195	0.41497	100.4919	GEN563022 1-G15066_3 0.6900
FDNS	01ALL	0	20L	G15_081	TO->FROM	MATHWSN7 345.00 - TATONGA7 345.00 345KV CKT 1	1195	1195	0.41534	100.4916	P12:115:MKEC:BARBER-RIVERROAD::
FDNS	01ALL	0	20L	G15_081	TO->FROM	MATHWSN7 345.00 - TATONGA7 345.00 345KV CKT 1	1195	1195	0.4149	100.4884	DOLET HILLS - SOUTHWEST SHREVEPORT 345KV CKT 1
FDNS	01ALL	0	20L	G15_081	TO->FROM	MATHWSN7 345.00 - TATONGA7 345.00 345KV CKT 1	1195	1195	0.4149	100.4884	DOLET HILLS - SOUTHWEST SHREVEPORT 345KV CKT 1
FDNS	01ALL	0	20L	G15_081	TO->FROM	MATHWSN7 345.00 - TATONGA7 345.00 345KV CKT 1	1195	1195	0.41534	100.4877	BARBER 3 115.00 - SAWYER 3 115.00 115KV CKT 1
FDNS	01ALL	0	20L	G15_081	TO->FROM	MATHWSN7 345.00 - TATONGA7 345.00 345KV CKT 1	1195	1195	0.4155	100.4858	DARLINGTNRD4138.00 - REDROCKRD4 138.00 138KV CKT 1
FDNS	01ALL	0	20L	G15_081	TO->FROM	MATHWSN7 345.00 - TATONGA7 345.00 345KV CKT 1	1195	1195	0.4155	100.4858	DARLINGTNRD4138.00 - REDROCKRD4 138.00 138KV CKT 1
FDNS	01ALL	0	20L	G15_081	TO->FROM	MATHWSN7 345.00 - TATONGA7 345.00 345KV CKT 1	1195	1195	0.41497	100.4855	GEN303007 1-1BC2 U2
FDNS	01ALL	0	20L	G15_081	TO->FROM	MATHWSN7 345.00 - TATONGA7 345.00 345KV CKT 1	1195	1195	0.41549	100.4854	CRESENT - TWIN LAKES 138KV CKT 1
FDNS	01ALL	0	20L	G15_081	TO->FROM	MATHWSN7 345.00 - TATONGA7 345.00 345KV CKT 1	1195	1195	0.41497	100.4843	GEN336242 1-1NMIL ST1 18.000
FDNS	01ALL	0	20L	G15_081	TO->FROM	MATHWSN7 345.00 - TATONGA7 345.00 345KV CKT 1	1195	1195	0.41497	100.4806	ARKANSAS NUCLEAR ONE 500/22.0KV TRANSFORMER CKT 1
FDNS	01ALL	0	20L	G15_081	TO->FROM	MATHWSN7 345.00 - TATONGA7 345.00 345KV CKT 1	1195	1195	0.41534	100.4797	ALEXANDER - SAWYER 3 115.00 115KV CKT 1
FDNS	01ALL	0	20L	G15_081	TO->FROM	MATHWSN7 345.00 - TATONGA7 345.00 345KV CKT 1	1195	1195	0.41497	100.4784	GEN303006 1-1BC2 U1
FDNS	01ALL	0	20L	G15_081	TO->FROM	MATHWSN7 345.00 - TATONGA7 345.00 345KV CKT 1	1195	1195	0.41497	100.4766	GEN562611 1-G14_064_3 0.6900
FDNS	01ALL	0	16WP	G15_081	TO->FROM	MATHWSN7 345.00 - TATONGA7 345.00 345KV CKT 1	1195	1195	0.40846	100.4751	GEN562973 1-G15060_4 0.6900
FDNS	01ALL	0	20L	G15_081	TO->FROM	MATHWSN7 345.00 - TATONGA7 345.00 345KV CKT 1	1195	1195	0.41497	100.473	GEN562590 1-G14_057_3 0.6900
FDNS	01ALL	0	20L	G15_081	TO->FROM	MATHWSN7 345.00 - TATONGA7 345.00 345KV CKT 1	1195	1195	0.41497	100.4717	GEN542951 5-HAWTHORN UNIT #5
FDNS	01ALL	0	20L	G15_081	TO->FROM	MATHWSN7 345.00 - TATONGA7 345.00 345KV CKT 1	1195	1195	0.41497	100.4713	GEN334441 1-SABINE UNIT 5
FDNS	01ALL	0	20L	G15_081	TO->FROM	MATHWSN7 345.00 - TATONGA7 345.00 345KV CKT 1	1195	1195	0.41497	100.467	GEN336251 1-NINEMILE POINT UNIT#4
FDNS	01ALL	0	17G	G15_081	TO->FROM	MATHWSN7 345.00 - TATONGA7 345.00 345KV CKT 1	1195	1195	0.41285	100.466	CIMARRON - MINCO 345KV CKT 1
FDNS	01ALL	0	20L	G15_081	TO->FROM	MATHWSN7 345.00 - TATONGA7 345.00 345KV CKT 1	1195	1195	0.41497	100.4648	GEN338388 1-1PLUM PT U1 23.000
FDNS	01ALL	0	20L	G15_081	TO->FROM	MATHWSN7 345.00 - TATONGA7 345.00 345KV CKT 1	1195	1195	0.41497	100.4644	GEN337430 1-PERYVILLE UNIT #3
FDNS	01ALL	0	20L	G15_081	TO->FROM	MATHWSN7 345.00 - TATONGA7 345.00 345KV CKT 1	1195	1195	0.41497	100.4641	GEN337428 1-PERYVILLE UNIT #1
FDNS	01ALL	0	20L	G15_081	TO->FROM	MATHWSN7 345.00 - TATONGA7 345.00 345KV CKT 1	1195	1195	0.41497	100.4611	GEN334392 1-EXXON MOBIL IPP 1
FDNS	01ALL	0	20L	G15_081	TO->FROM	MATHWSN7 345.00 - TATONGA7 345.00 345KV CKT 1	1195	1195	0.41497	100.4605	GEN334393 1-EXXON MOBIL IPP 2
FDNS	01ALL	0	20L	G15_081	TO->FROM	MATHWSN7 345.00 - TATONGA7 345.00 345KV CKT 1	1195	1195	0.41497	100.4605	GEN334394 1-EXXON MOBIL IPP 3
FDNS	00NR	0	16WP	G15_081	TO->FROM	MATHWSN7 345.00 - TATONGA7 345.00 345KV CKT 1	1195	1195	0.47602	100.4392	CHISHOLM6 230.00 - SWEETWATER 230KV CKT 1
FDNS	01ALL	0	20WP	G15_081	TO->FROM	MATHWSN7 345.00 - TATONGA7 345.00 345KV CKT 1	1195	1195	0.40302	100.343	GEN562602 1-G15_029_3 0.6900

SOLUTION	GROUP	SCENARIO	SEASON	SOURCE	DIRECTION	MONITORED ELEMENT	RATEA (MVA)	RATEB(MVA)	TDF	TC%LOADING (% MVA)	CONTINGENCY
FDNS	00NR	0	20WP	G15_081	TO->FROM	MATHWSN7 345.00 - TATONGA7 345.00 345KV CKT 1	1195	1195	0.47459	100.3181	STLN-DEMARC6 - SWEETWATER 230KV CKT 1
FDNS	00NR	0	20WP	G15_081	TO->FROM	MATHWSN7 345.00 - TATONGA7 345.00 345KV CKT 1	1195	1195	0.47459	100.2999	STATELINE INTERCHANGE - STLN-DEMARC6 230KV CKT 1
FDNS	00NR	0	16WP	G15_081	TO->FROM	MATHWSN7 345.00 - TATONGA7 345.00 345KV CKT 1	1195	1195	0.47667	100.2694	P12:230:AEPW:ELKCITY6:SWEETWT6
FDNS	00NR	0	20WP	G15_081	TO->FROM	MATHWSN7 345.00 - TATONGA7 345.00 345KV CKT 1	1195	1195	0.47459	100.26	P12:230:AEPW-SPS:SWEETWT6:WHEELER 6
FDNS	01ALL	0	16WP	G15_081	TO->FROM	MATHWSN7 345.00 - TATONGA7 345.00 345KV CKT 1	1195	1195	0.39877	100.2505	G15063_T 345.00 - WOODRING 345KV CKT 1
FDNS	01ALL	0	17SP	G15_081	TO->FROM	MATHWSN7 345.00 - TATONGA7 345.00 345KV CKT 1	1195	1195	0.4192	100.2352	Hitchland Interchange - WALKTAP7 345.00 345KV CKT 1
FDNS	01ALL	0	17SP	G15_081	TO->FROM	MATHWSN7 345.00 - TATONGA7 345.00 345KV CKT 1	1195	1195	0.4192	100.2352	Hitchland Interchange - WALKTAP7 345.00 345KV CKT 1
FDNS	01ALL	0	17SP	G15_081	TO->FROM	MATHWSN7 345.00 - TATONGA7 345.00 345KV CKT 1	1195	1195	0.4192	100.2307	P12:345:SPS:J07.1.FINN.HITCH
FDNS	01ALL	0	20L	G15_081	TO->FROM	MATHWSN7 345.00 - TATONGA7 345.00 345KV CKT 1	1195	1195	0.41497	100.1968	BASE CASE
FDNS	01ALL	0	17SP	G15_081	TO->FROM	MATHWSN7 345.00 - TATONGA7 345.00 345KV CKT 1	1195	1195	0.41739	100.1571	G1524G1525 345.00 - THISTLE7 345.00 345KV CKT 1
FDNS	01ALL	0	17SP	G15_081	TO->FROM	MATHWSN7 345.00 - TATONGA7 345.00 345KV CKT 1	1195	1195	0.41739	100.1571	G1524G1525 345.00 - THISTLE7 345.00 345KV CKT 2
FDNS	01ALL	0	16WP	G15_081	TO->FROM	MATHWSN7 345.00 - TATONGA7 345.00 345KV CKT 1	1195	1195	0.4001	100.1511	MATHWSN7 345.00 - NORTHWEST 345KV CKT 1
FDNS	01ALL	0	17SP	G15_081	TO->FROM	MATHWSN7 345.00 - TATONGA7 345.00 345KV CKT 1	1195	1195	0.40361	100.1179	CIMARRON - MINCO 345KV CKT 1
FDNS	00NR	0	20WP	G15_081	TO->FROM	MATHWSN7 345.00 - TATONGA7 345.00 345KV CKT 1	1195	1195	0.47812	100.09	G1524G1525 345.00 - THISTLE7 345.00 345KV CKT 1
FDNS	00NR	0	20WP	G15_081	TO->FROM	MATHWSN7 345.00 - TATONGA7 345.00 345KV CKT 1	1195	1195	0.47812	100.09	G1524G1525 345.00 - THISTLE7 345.00 345KV CKT 2
FDNS	01ALL	0	16WP	G15_081	TO->FROM	MATHWSN7 345.00 - TATONGA7 345.00 345KV CKT 1	1195	1195	0.4082	100.0528	G15052_T 345.00 - ROSE HILL 345KV CKT 1
FDNS	01ALL	0	16WP	G15_081	TO->FROM	MATHWSN7 345.00 - TATONGA7 345.00 345KV CKT 1	1195	1195	0.40846	100	GEN515393 1-OGEWND2G
FDNS	01ALL	0	16WP	G15_081	TO->FROM	MATHWSN7 345.00 - TATONGA7 345.00 345KV CKT 1	1195	1195	0.40782	100	VIOLA 7 345.00 - WICHITA 345KV CKT 1
FDNS	01ALL	0	20L	G15_081	TO->FROM	MATHWSN7 345.00 - TATONGA7 345.00 345KV CKT 1	1195	1195	0.41497	99.9	BURLINGTON NO1 + NO 2 + NO 3 161/20.0KV TRANSFORMER CKT 1
FDNS	01ALL	0	20L	G15_081	TO->FROM	MATHWSN7 345.00 - TATONGA7 345.00 345KV CKT 1	1195	1195	0.41497	99.9	GEN523171 1-GOODWELL_2 10.6900
FDNS	01ALL	0	20L	G15_081	TO->FROM	MATHWSN7 345.00 - TATONGA7 345.00 345KV CKT 1	1195	1195	0.41497	99.9	GEN523815 1-LLANO ESTACADO WIND GEN
FDNS	01ALL	0	20L	G15_081	TO->FROM	MATHWSN7 345.00 - TATONGA7 345.00 345KV CKT 1	1195	1195	0.41497	99.9	GEN530690 1-PRWINDG1 0.6900
FDNS	01ALL	0	20L	G15_081	TO->FROM	MATHWSN7 345.00 - TATONGA7 345.00 345KV CKT 1	1195	1195	0.41497	99.9	GEN531503 1-CIMRRN 1 0.6900
FDNS	01ALL	0	20L	G15_081	TO->FROM	MATHWSN7 345.00 - TATONGA7 345.00 345KV CKT 1	1195	1195	0.41497	99.9	GEN531505 1-CIMWD2 1 0.6900
FDNS	01ALL	0	20L	G15_081	TO->FROM	MATHWSN7 345.00 - TATONGA7 345.00 345KV CKT 1	1195	1195	0.41497	99.9	GEN533202 1-CNTRPL-WTG1 1.0000
FDNS	01ALL	0	20L	G15_081	TO->FROM	MATHWSN7 345.00 - TATONGA7 345.00 345KV CKT 1	1195	1195	0.41497	99.9	GEN539630 1-FLTRDG-WG1 0.6000
FDNS	01ALL	0	20L	G15_081	TO->FROM	MATHWSN7 345.00 - TATONGA7 345.00 345KV CKT 1	1195	1195	0.41497	99.9	GEN539762 1-SSWIND 1 34.500
FDNS	01ALL	0	20L	G15_081	TO->FROM	MATHWSN7 345.00 - TATONGA7 345.00 345KV CKT 1	1195	1195	0.41497	99.9	GEN542902 1-GPW_G1 0.7000
FDNS	01ALL	0	20L	G15_081	TO->FROM	MATHWSN7 345.00 - TATONGA7 345.00 345KV CKT 1	1195	1195	0.41497	99.9	GEN560329 1-G10-45 0.6900
FDNS	01ALL	0	20L	G15_081	TO->FROM	MATHWSN7 345.00 - TATONGA7 345.00 345KV CKT 1	1195	1195	0.41497	99.9	GEN560432 1-G08-124 0.6900
FDNS	01ALL	0	20L	G15_081	TO->FROM	MATHWSN7 345.00 - TATONGA7 345.00 345KV CKT 1	1195	1195	0.41497	99.9	GEN560585 1-G06-44-3 4.1600
FDNS	01ALL	0	20L	G15_081	TO->FROM	MATHWSN7 345.00 - TATONGA7 345.00 345KV CKT 1	1195	1195	0.41497	99.9	GEN560586 1-G06-44-4 4.1600
FDNS	01ALL	0	20L	G15_081	TO->FROM	MATHWSN7 345.00 - TATONGA7 345.00 345KV CKT 1	1195	1195	0.41497	99.9	GEN560693 1-G11-008-1 0.6900
FDNS	01ALL	0	20L	G15_081	TO->FROM	MATHWSN7 345.00 - TATONGA7 345.00 345KV CKT 1	1195	1195	0.41497	99.9	GEN562035 1-G11_016_3 0.6900
FDNS	01ALL	0	20L	G15_081	TO->FROM	MATHWSN7 345.00 - TATONGA7 345.00 345KV CKT 1	1195	1195	0.41497	99.9	GEN562298 1-G12-024 0.6500
FDNS	01ALL	0	20L	G15_081	TO->FROM	MATHWSN7 345.00 - TATONGA7 345.00 345KV CKT 1	1195	1195	0.41497	99.9	GEN562483 1-G13_027_3 0.6900
FDNS	01ALL	0	20L	G15_081	TO->FROM	MATHWSN7 345.00 - TATONGA7 345.00 345KV CKT 1	1195	1195	0.41497	99.9	GEN562688 1-G15_014_3 0.6900
FDNS	01ALL	0	20L	G15_081	TO->FROM	MATHWSN7 345.00 - TATONGA7 345.00 345KV CKT 1	1195	1195	0.41497	99.9	GEN563043 1-G15068_4 0.6900
FDNS	01ALL	0	20L	G15_081	TO->FROM	MATHWSN7 345.00 - TATONGA7 345.00 345KV CKT 1	1195	1195	0.41497	99.9	GEN657749 1-YOUNG 1 GENERATOR
FDNS	01ALL	0	20L	G15_081	TO->FROM	MATHWSN7 345.00 - TATONGA7 345.00 345KV CKT 1	1195	1195	0.41497	99.9	GEN672321 1-SHAND GENERATOR 1
FDNS	01ALL	0	20L	G15_081	TO->FROM	MATHWSN7 345.00 - TATONGA7 345.00 345KV CKT 1	1195	1195	0.41497	99.9	INDEPENDENCE 500/26.0KV TRANSFORMER CKT 1
FDNS	01ALL	0	20L	G15_081	TO->FROM	MATHWSN7 345.00 - TATONGA7 345.00 345KV CKT 1	1195	1195	0.41492	99.9	ARKANSAS NUCLEAR ONE - PLEASANT HILL 500KV CKT 1
FDNS	01ALL	0	20L	G15_081	TO->FROM	MATHWSN7 345.00 - TATONGA7 345.00 345KV CKT 1	1195	1195	0.41488	99.9	8BHAM STEEL 500.00 - WEST MEMPHIS 500 500KV CKT 1
FDNS	01ALL	0	20L	G15_081	TO->FROM	MATHWSN7 345.00 - TATONGA7 345.00 345KV CKT 1	1195	1195	0.41488	99.9	DELAWARE - NEOSHO 345KV CKT 1
FDNS	01ALL	0	20L	G15_081	TO->FROM	MATHWSN7 345.00 - TATONGA7 345.00 345KV CKT 1	1195	1195	0.41488	99.9	DELAWARE - NEOSHO 345KV CKT 1
FDNS	01ALL	0	20L	G15_081	TO->FROM	MATHWSN7 345.00 - TATONGA7 345.00 345KV CKT 1	1195	1195	0.41471	99.9	GREC TAP5 345.00 - TULSA NORTH 345KV CKT 1
FDNS	01ALL	0	20L	G15_081	TO->FROM	MATHWSN7 345.00 - TATONGA7 345.00 345KV CKT 1	1195	1195	0.41469	99.9	LYDIA - WELSH 345KV CKT 1
FDNS	01ALL	0	20L	G15_081	TO->FROM	MATHWSN7 345.00 - TATONGA7 345.00 345KV CKT 1	1195	1195	0.41469	99.9	LYDIA - WELSH 345KV CKT 1
FDNS	01ALL	0	20L	G15_081	TO->FROM	MATHWSN7 345.00 - TATONGA7 345.00 345KV CKT 1	1195	1195	0.41468	99.9	HAMMETT TAP - HORSESHOE LAKE 138KV CKT 1
FDNS	01ALL	0	20L	G15_081	TO->FROM	MATHWSN7 345.00 - TATONGA7 345.00 345KV CKT 1	1195	1195	0.4132	99.9	SOONER - WOODRING 345KV CKT 1
FDNS	01ALL	0	20L	G15_081	TO->FROM	MATHWSN7 345.00 - TATONGA7 345.00 345KV CKT 1	1195	1195	0.4127	99.9	CIMARRON - MATHWSN7 345.00 345KV CKT 1
FDNS	01ALL	0	20L	G15_081	TO->FROM	MATHWSN7 345.00 - TATONGA7 345.00 345KV CKT 1	1195	1195	0.4127	99.9	CIMARRON - MATHWSN7 345.00 345KV CKT 2
FDNS	01ALL	0	20L	G15_081	TO->FROM	MATHWSN7 345.00 - TATONGA7 345.00 345KV CKT 1	1195	1195	0.41497	99.8	4SIOUX 2 138.00 138/18.0KV TRANSFORMER CKT 1
FDNS	01ALL	0	20L	G15_081	TO->FROM	MATHWSN7 345.00 - TATONGA7 345.00 345KV CKT 1	1195	1195	0.41497	99.8	CLAY BOSWELL 230/20.9KV TRANSFORMER CKT 1
FDNS	01ALL	0	20L	G15_081	TO->FROM	MATHWSN7 345.00 - TATONGA7 345.00 345KV CKT 1	1195	1195	0.41497	99.8	GEN528361 1-MADDOX GEN #1
FDNS	01ALL	0	20L	G15_081	TO->FROM	MATHWSN7 345.00 - TATONGA7 345.00 345KV CKT 1	1195	1195	0.41497	99.8	GEN562269 1-G12-020-1 0.6900
FDNS	01ALL	0	20L	G15_081	TO->FROM	MATHWSN7 345.00 - TATONGA7 345.00 345KV CKT 1	1195	1195	0.41497	99.8	GEN629072 4-LANSING GENERATOR FOR UNITS NO4 EIA CODE 1
FDNS	01ALL	0	20L	G15_081	TO->FROM	MATHWSN7 345.00 - TATONGA7 345.00 345KV CKT 1	1195	1195	0.41497	99.8	GEN681542 6-JP MADGETT
FDNS	01ALL	0	20L	G15_081	TO->FROM	MATHWSN7 345.00 - TATONGA7 345.00 345KV CKT 1	1195	1195	0.41484	99.8	CHAMBER SPRINGS - CLARKSVILLE 345KV CKT 1
FDNS	01ALL	0	20L	G15_081	TO->FROM	MATHWSN7 345.00 - TATONGA7 345.00 345KV CKT 1	1195	1195	0.41482	99.8	ARCADIA - SEMINOLE 345KV CKT 1
FDNS	01ALL	0	20L	G15_081	TO->FROM	MATHWSN7 345.00 - TATONGA7 345.00 345KV CKT 1	1195	1195	0.4147	99.8	CIMARRON (CIMARON1) 345/138/13.8KV TRANSFORMER CKT 1
FDNS	01ALL	0	20L	G15_081	TO->FROM	MATHWSN7 345.00 - TATONGA7 345.00 345KV CKT 1	1195	1195	0.41469	99.8	CIMARRON (CIMARON2) 345/138/13.8KV TRANSFORMER CKT 1
FDNS	01ALL	0	17SP	G15_081	TO->FROM	MATHWSN7 345.00 - TATONGA7 345.00 345KV CKT 1	1195	1195	0.41877	99.7	BORDER 7345.00 - WOODWARD DISTRICT EHV 345KV CKT 1
FDNS	01ALL	0	20L	G15_081	TO->FROM	MATHWSN7 345.00 - TATONGA7 345.00 345KV CKT 1	1195	1195	0.4172	99.7	RANCHRD7 345.00 - SOONER 345KV CKT 1
FDNS	01ALL	0	20L	G15_081	TO->FROM	MATHWSN7 345.00 - TATONGA7 345.00 345KV CKT 1	1195	1195	0.41497	99.7	GEN524485 1-CAPROCK WIND GEN
FDNS	01ALL	0	20L	G15_081	TO->FROM	MATHWSN7 345.00 - TATONGA7 345.00 345KV CKT 1	1195	1195	0.41497	99.7	GEN526331 1-JONES GEN #1 22 KV
FDNS	01ALL	0	20L	G15_081	TO->FROM	MATHWSN7 345.00 - TATONGA7 345.00 345KV CKT 1	1195	1195	0.41497	99.7	GEN526332 1-JONES GEN #2 21 KV
FDNS	01ALL	0	20L	G15_081	TO->FROM	MATHWSN7 345.00 - TATONGA7 345.00 345KV CKT 1	1195	1195	0.41497	99.7	GEN560286 1-G10-01-1WTG 0.6900
FDNS	01ALL	0	20L	G15_081	TO->FROM	MATHWSN7 345.00 - TATONGA7 345.00 345KV CKT 1	1195	1195	0.41497	99.7	GEN560287 1-G10-01-2WTG 0.6900
FDNS	01ALL	0	20L	G15_081	TO->FROM	MATHWSN7 345.00 - TATONGA7 345.00 345KV CKT 1	1195	1195	0.41497	99.7	GEN562270 1-G12-020-2 0.6900
FDNS	01ALL	0	20L	G15_081	TO->FROM	MATHWSN7 345.00 - TATONGA7 345.00 345KV CKT 1	1195	1195	0.41497	99.7	GEN562524 1-G14_026_3 12.000
FDNS	01ALL	0	20L	G15_081	TO->FROM	MATHWSN7 345.00 - TATONGA7 345.00 345KV CKT 1	1195	1195	0.41497	99.7	GEN661015 1-COYOTE
FDNS	01ALL	0	20L	G15_081	TO->FROM	MATHWSN7 345.00 - TATONGA7 345.00 345KV CKT 1	1195	1195	0.41488	99.7	DELL 500 - INDEPENDENCE 500KV CKT 1
FDNS	01ALL	0	20L	G15_081	TO->FROM	MATHWSN7 345.00 - TATONGA7 345.00 345KV CKT 1	1195	1195	0.41485	99.7	KEO EHV - WEST MEMPHIS 500 500KV CKT 1
FDNS	01ALL	0	20L	G15_081	TO->FROM	MATHWSN7 345.00 - TATONGA7 345.00 345KV CKT 1	1195	1195	0.4146	99.7	LYDIA - VALLIANT 345KV CKT 1
FDNS	01ALL	0	20L	G15_081	TO->FROM	MATHWSN7 345.00 - TATONGA7 345.00 345KV CKT 1	1195	1195	0.4146	99.7	LYDIA - VALLIANT 345KV CKT 1
FDNS	01ALL	0	20L	G15_081	TO->FROM	MATHWSN7 345.00 - TATONGA7 345.00 345KV CKT 1	1195	1195	0.41452	99.7	FT SMITH - MUSKOGEE 345KV CKT 1
FDNS	01ALL	0	20L	G15_081	TO->FROM	MATHWSN7 345.00 - TATONGA7 345.00 345KV CKT 1	1195	1195	0.41497	99.6	GEN527882 1-CUNNINGHAM GEN #2 20 KV
FDNS	01ALL	0	20L	G15_081	TO->FROM	MATHWSN7 345.00 - TATONGA7 345.00 345KV CKT 1	1195	1195	0.41497	99.6	GEN539670 4-JUDSON LARGE GENERATOR

SOLUTION	GROUP	SCENARIO	SEASON	SOURCE	DIRECTION	MONITORED ELEMENT	RATEA (MVA)	RATEB(MVA)	TDF	TC%LOADING (% MVA)	CONTINGENCY
FDNS	01ALL	0	20L	G15_081	TO->FROM	MATHWSN7 345.00 - TATONGA7 345.00 345KV CKT 1	1195	1195	0.41497	99.6	GEN560105 1-G08-22 0.6900
FDNS	01ALL	0	20L	G15_081	TO->FROM	MATHWSN7 345.00 - TATONGA7 345.00 345KV CKT 1	1195	1195	0.41497	99.6	GEN560256 1-G10-14-1 0.6900
FDNS	01ALL	0	20L	G15_081	TO->FROM	MATHWSN7 345.00 - TATONGA7 345.00 345KV CKT 1	1195	1195	0.41497	99.6	GEN560257 1-G10-14-2 0.6900
FDNS	01ALL	0	20L	G15_081	TO->FROM	MATHWSN7 345.00 - TATONGA7 345.00 345KV CKT 1	1195	1195	0.41497	99.6	GEN562544 1-G14_038_3 0.6900
FDNS	01ALL	0	20L	G15_081	TO->FROM	MATHWSN7 345.00 - TATONGA7 345.00 345KV CKT 1	1195	1195	0.41497	99.6	GEN562648 1-G14_037_3 0.6900
FDNS	01ALL	0	20L	G15_081	TO->FROM	MATHWSN7 345.00 - TATONGA7 345.00 345KV CKT 1	1195	1195	0.41497	99.6	GEN657748 1-YOUNG 2 GENERATOR
FDNS	01ALL	0	20L	G15_081	TO->FROM	MATHWSN7 345.00 - TATONGA7 345.00 345KV CKT 1	1195	1195	0.41497	99.6	GEN659118 1-LARAMIE RIVER UNIT1
FDNS	01ALL	0	20L	G15_081	TO->FROM	MATHWSN7 345.00 - TATONGA7 345.00 345KV CKT 1	1195	1195	0.41497	99.6	GEN672306 6-BOUNDARY DAM GENERATOR 6
FDNS	01ALL	0	20L	G15_081	TO->FROM	MATHWSN7 345.00 - TATONGA7 345.00 345KV CKT 1	1195	1195	0.41497	99.6	GEN672310 1-POPLAR RIVER GENERATOR 1
FDNS	01ALL	0	20L	G15_081	TO->FROM	MATHWSN7 345.00 - TATONGA7 345.00 345KV CKT 1	1195	1195	0.4149	99.6	DELAWARE - NORTHEAST STATION 345KV CKT 1
FDNS	01ALL	0	20L	G15_081	TO->FROM	MATHWSN7 345.00 - TATONGA7 345.00 345KV CKT 1	1195	1195	0.4149	99.6	DELAWARE - NORTHEAST STATION 345KV CKT 1
FDNS	01ALL	0	16WP	G15_081	TO->FROM	MATHWSN7 345.00 - TATONGA7 345.00 345KV CKT 1	1195	1195	0.40846	99.5	GEN562078 1-G11_051_3 0.6900
FDNS	01ALL	0	20L	G15_081	TO->FROM	MATHWSN7 345.00 - TATONGA7 345.00 345KV CKT 1	1195	1195	0.41497	99.5	GEN515787 1-OKLA WIND ENERGY CENTER
FDNS	01ALL	0	20L	G15_081	TO->FROM	MATHWSN7 345.00 - TATONGA7 345.00 345KV CKT 1	1195	1195	0.41497	99.5	GEN520922 1-SLEEPING BEAR
FDNS	01ALL	0	20L	G15_081	TO->FROM	MATHWSN7 345.00 - TATONGA7 345.00 345KV CKT 1	1195	1195	0.41497	99.5	GEN525844 1-ELK_1 118.000
FDNS	01ALL	0	20L	G15_081	TO->FROM	MATHWSN7 345.00 - TATONGA7 345.00 345KV CKT 1	1195	1195	0.41497	99.5	GEN539807 1-G05-12-1 0.6900
FDNS	01ALL	0	20L	G15_081	TO->FROM	MATHWSN7 345.00 - TATONGA7 345.00 345KV CKT 1	1195	1195	0.41497	99.5	GEN562042 1-G11_014_3 0.6900
FDNS	01ALL	0	20L	G15_081	TO->FROM	MATHWSN7 345.00 - TATONGA7 345.00 345KV CKT 1	1195	1195	0.41497	99.5	GEN562550 1-G14_040_3 0.6900
FDNS	01ALL	0	20L	G15_081	TO->FROM	MATHWSN7 345.00 - TATONGA7 345.00 345KV CKT 1	1195	1195	0.41497	99.5	GEN563173 1-G15082_3 0.6900
FDNS	01ALL	0	20L	G15_081	TO->FROM	MATHWSN7 345.00 - TATONGA7 345.00 345KV CKT 1	1195	1195	0.41497	99.5	GEN563292 1-G15095_3 0.6900
FDNS	01ALL	0	20L	G15_081	TO->FROM	MATHWSN7 345.00 - TATONGA7 345.00 345KV CKT 1	1195	1195	0.41471	99.5	GRDA1 - GREC TAP5 345.00 345KV CKT 1
FDNS	01NR	0	20L	G15_081	TO->FROM	ROMAN NOSE - SOUTHARD 138KV CKT 1	133	153	0.05247	122.4038	MATHWSN7 345.00 - TATONGA7 345.00 345KV CKT 1
FDNS	00NR	0	17SP	G15_081	TO->FROM	ROMAN NOSE - SOUTHARD 138KV CKT 1	133	153	0.05591	105.4044	MATHWSN7 345.00 - TATONGA7 345.00 345KV CKT 1
FDNSLock	00NR	0	16WP	G15_081	TO->FROM	ROMAN NOSE - SOUTHARD 138KV CKT 1	171	185	0.05364	104.3877	MATHWSN7 345.00 - TATONGA7 345.00 345KV CKT 1
FDNS	00NR	0	20WP	G15_081	TO->FROM	ROMAN NOSE - SOUTHARD 138KV CKT 1	171	185	0.05323	103.7546	MATHWSN7 345.00 - TATONGA7 345.00 345KV CKT 1
FDNS	00NR	0	17SP	G15_081	FROM->TO	SWISSVALE - WEST GARDNER 345KV CKT 1	717	717	0.03808	105.8268	HOYT - STRANGER CREEK 345KV CKT 1
FDNS	00NR	0	17SP	G15_081	FROM->TO	SWISSVALE - WEST GARDNER 345KV CKT 1	717	717	0.03585	104.7282	G15074_T 345.00 - HOYT 345KV CKT 1
FDNS	00NR	0	16WP	G15_081	FROM->TO	SWISSVALE - WEST GARDNER 345KV CKT 1	717	717	0.04052	101.7741	HOYT - STRANGER CREEK 345KV CKT 1
FDNS	00NR	0	16WP	G15_081	FROM->TO	SWISSVALE - WEST GARDNER 345KV CKT 1	717	717	0.03649	101.0038	LACYGNE - WAVERLY7 345.00 345KV CKT 1
FDNS	00NR	0	16WP	G15_081	FROM->TO	SWISSVALE - WEST GARDNER 345KV CKT 1	717	717	0.03818	99.7	G15074_T 345.00 - HOYT 345KV CKT 1
FDNS	00NR	0	16WP	G15_081	FROM->TO	SWISSVALE - WEST GARDNER 345KV CKT 1	717	717	0.03649	99.6	WAVERLY7 345.00 - WOLF CREEK 345KV CKT 1
FDNS	00NR	0	20WP	G15_081	FROM->TO	WOODWARD EHV - WWPAR4 138.00 138KV CKT 1	287	287	0.11899	104.4323	MATHWSN7 345.00 - TATONGA7 345.00 345KV CKT 1
FDNS	00NR	2	16WP	G15_081	FROM->TO	CIMARRON - DRAPER LAKE 345KV CKT 1	717	717	0.15513	116.4604	CLEVELAND - TULSA NORTH 345KV CKT 1
FDNS	00NR	2	16WP	G15_081	FROM->TO	CIMARRON - DRAPER LAKE 345KV CKT 1	717	717	0.15539	115.0647	P12:138:WFEC:MSL03
FDNS	00NR	2	16WP	G15_081	FROM->TO	CIMARRON - DRAPER LAKE 345KV CKT 1	717	717	0.15309	111.8969	P12:138:WFEC:MSL01
FDNS	00NR	2	16WP	G15_081	FROM->TO	CIMARRON - DRAPER LAKE 345KV CKT 1	717	717	0.1519	111.2482	GRAND GULF 500/22.0KV TRANSFORMER CKT 1
FDNS	00NR	2	16WP	G15_081	FROM->TO	CIMARRON - DRAPER LAKE 345KV CKT 1	717	717	0.15232	111.2407	P12:138:OKGE:3TERM14
FDNS	00NR	2	16WP	G15_081	FROM->TO	CIMARRON - DRAPER LAKE 345KV CKT 1	717	717	0.15233	111.1914	REDBUD - RIVERSIDE STATION 345KV CKT 1
FDNS	00NR	2	16WP	G15_081	FROM->TO	CIMARRON - DRAPER LAKE 345KV CKT 1	717	717	0.15478	111.1158	JOHNSON COUNTY - PITTSBURG 345KV CKT 1
FDNS	00NR	2	16WP	G15_081	FROM->TO	CIMARRON - DRAPER LAKE 345KV CKT 1	717	717	0.15198	111.0878	P12:138:OKGE:3TERM2
FDNS	00NR	2	16WP	G15_081	FROM->TO	CIMARRON - DRAPER LAKE 345KV CKT 1	717	717	0.15192	110.9474	7SAREPTA% 345.00 - LONGWOOD 345KV CKT 1
FDNS	00NR	2	16WP	G15_081	FROM->TO	CIMARRON - DRAPER LAKE 345KV CKT 1	717	717	0.15198	110.9352	P12:138:OKGE:3TERM12
FDNS	00NR	2	16WP	G15_081	FROM->TO	CIMARRON - DRAPER LAKE 345KV CKT 1	717	717	0.15193	110.9233	DOLET HILLS - SOUTHWEST SHREVEPORT 345KV CKT 1
FDNS	00NR	2	16WP	G15_081	FROM->TO	CIMARRON - DRAPER LAKE 345KV CKT 1	717	717	0.15339	110.7684	P12:138:OKGE:3TERM18
FDNS	00NR	2	16WP	G15_081	FROM->TO	CIMARRON - DRAPER LAKE 345KV CKT 1	717	717	0.1519	110.6806	NEW MADRID 161/22.0KV TRANSFORMER CKT 1
FDNS	00NR	2	16WP	G15_081	FROM->TO	CIMARRON - DRAPER LAKE 345KV CKT 1	717	717	0.15585	110.6721	THISTLE7 345.00 - WOODWARD DISTRICT EHV 345KV CKT 1
FDNS	00NR	2	16WP	G15_081	FROM->TO	CIMARRON - DRAPER LAKE 345KV CKT 1	717	717	0.15585	110.6721	THISTLE7 345.00 - WOODWARD DISTRICT EHV 345KV CKT 2
FDNS	00NR	2	16WP	G15_081	FROM->TO	CIMARRON - DRAPER LAKE 345KV CKT 1	717	717	0.1519	110.6721	NEW MADRID 345/22.0KV TRANSFORMER CKT 1
FDNS	00NR	2	16WP	G15_081	FROM->TO	CIMARRON - DRAPER LAKE 345KV CKT 1	717	717	0.15191	110.542	7SAREPTA% 345.00 - ELDORADO EHV 345KV CKT 1
FDNS	00NR	2	16WP	G15_081	FROM->TO	CIMARRON - DRAPER LAKE 345KV CKT 1	717	717	0.15191	110.5352	ELDORADO EHV 500/345KV TRANSFORMER CKT 1
FDNS	00NR	2	16WP	G15_081	FROM->TO	CIMARRON - DRAPER LAKE 345KV CKT 1	717	717	0.15327	110.4913	P12:138:OKGE:3TERM11
FDNS	00NR	2	16WP	G15_081	FROM->TO	CIMARRON - DRAPER LAKE 345KV CKT 1	717	717	0.15239	110.4789	P12:138:OKGE:3TERM17
FDNS	00NR	2	16WP	G15_081	FROM->TO	CIMARRON - DRAPER LAKE 345KV CKT 1	717	717	0.1519	110.4198	DELL 500 - ESSEX UNIT 2 500KV CKT Z1
FDNS	00NR	2	16WP	G15_081	FROM->TO	CIMARRON - DRAPER LAKE 345KV CKT 1	717	717	0.1536	110.3524	P12:138:AEPW-OGE:CORNVIL4:MAUD 4
FDNS	00NR	2	16WP	G15_081	FROM->TO	CIMARRON - DRAPER LAKE 345KV CKT 1	717	717	0.15254	110.3362	P12:138:OKGE:3TERM20
FDNS	00NR	2	16WP	G15_081	FROM->TO	CIMARRON - DRAPER LAKE 345KV CKT 1	717	717	0.1544	110.2891	CLARKSVILLE - ONETA 345KV CKT 1
FDNS	00NR	2	16WP	G15_081	FROM->TO	CIMARRON - DRAPER LAKE 345KV CKT 1	717	717	0.15202	110.281	P12:138:OKGE:3TERM47
FDNS	00NR	2	16WP	G15_081	FROM->TO	CIMARRON - DRAPER LAKE 345KV CKT 1	717	717	0.15388	110.2624	FINNEY SWITCHING STATION - HOLCOMB 345KV CKT 1
FDNS	00NR	2	16WP	G15_081	FROM->TO	CIMARRON - DRAPER LAKE 345KV CKT 1	717	717	0.1519	110.2574	DOLET HILLS 345/24.0KV TRANSFORMER CKT 1
FDNS	00NR	2	16WP	G15_081	FROM->TO	CIMARRON - DRAPER LAKE 345KV CKT 1	717	717	0.1519	110.2508	WHITE BLUFF 500/26.0KV TRANSFORMER CKT 1
FDNS	00NR	2	16WP	G15_081	FROM->TO	CIMARRON - DRAPER LAKE 345KV CKT 1	717	717	0.15242	110.2117	BLACKBERRY - NEOSHO 345KV CKT 1
FDNS	00NR	2	16WP	G15_081	FROM->TO	CIMARRON - DRAPER LAKE 345KV CKT 1	717	717	0.15213	110.142	P12:138:AEPW-OGE:SHIDLER4:OSAGE 4
FDNS	00NR	2	16WP	G15_081	FROM->TO	CIMARRON - DRAPER LAKE 345KV CKT 1	717	717	0.15214	110.1103	P12:138:WFEC:MSL02
FDNS	00NR	2	16WP	G15_081	FROM->TO	CIMARRON - DRAPER LAKE 345KV CKT 1	717	717	0.15403	110.1089	GRACEMONT - LAWTON EASTSIDE 345KV CKT 1
FDNS	00NR	2	16WP	G15_081	FROM->TO	CIMARRON - DRAPER LAKE 345KV CKT 1	717	717	0.15178	110.0911	P12:138:AEPW:OKMULGE4:R.S.S-4
FDNS	00NR	2	16WP	G15_081	FROM->TO	CIMARRON - DRAPER LAKE 345KV CKT 1	717	717	0.15196	110.0582	WEBRE - WELLS 500KV CKT 1
FDNS	00NR	2	16WP	G15_081	FROM->TO	CIMARRON - DRAPER LAKE 345KV CKT 1	717	717	0.1519	109.9538	FRONTIER - GRIMES 345KV CKT 1
FDNS	00NR	2	16WP	G15_081	FROM->TO	CIMARRON - DRAPER LAKE 345KV CKT 1	717	717	0.1521	109.9445	CLEAVELAND - CLEVLND 4 138.00 138KV CKT Z1
FDNS	00NR	2	16WP	G15_081	FROM->TO	CIMARRON - DRAPER LAKE 345KV CKT 1	717	717	0.1521	109.9443	CLEVELAND (CLVAUTO1) 345/138/13.8KV TRANSFORMER CKT 1
FDNS	00NR	2	16WP	G15_081	FROM->TO	CIMARRON - DRAPER LAKE 345KV CKT 1	717	717	0.1519	109.9391	P12:069:OKGE:3TERM4
FDNS	00NR	2	16WP	G15_081	FROM->TO	CIMARRON - DRAPER LAKE 345KV CKT 1	717	717	0.1529	109.9301	ARKANSAS NUCLEAR ONE - FT SMITH 500KV CKT 1
FDNS	00NR	2	16WP	G15_081	FROM->TO	CIMARRON - DRAPER LAKE 345KV CKT 1	717	717	0.15192	109.9269	8DANIEL8 500.00 - MCKNIGHT 500KV CKT 1
FDNS	00NR	2	16WP	G15_081	FROM->TO	CIMARRON - DRAPER LAKE 345KV CKT 1	717	717	0.1521	109.9207	P12:138:OKGE:3TERM13
FDNS	00NR	2	16WP	G15_081	FROM->TO	CIMARRON - DRAPER LAKE 345KV CKT 1	717	717	0.1519	109.9018	P12:161:AEPW:DYESS 5:HYLAND 5
FDNS	00NR	2	16WP	G15_081	FROM->TO	CIMARRON - DRAPER LAKE 345KV CKT 1	717	717	0.15192	109.853	P12:345:GRDA:CHOUTEAU-SPORTSMANACRES
FDNS	00NR	2	16WP	G15_081	FROM->TO	CIMARRON - DRAPER LAKE 345KV CKT 1	717	717	0.15188	109.8424	ELDORADO EHV - MOUNT OLIVE 500KV CKT 1
FDNS	00NR	2	16WP	G15_081	FROM->TO	CIMARRON - DRAPER LAKE 345KV CKT 1	717	717	0.1519	109.8363	ESSEX UNIT 2 500/18.0KV TRANSFORMER CKT 1
FDNS	00NR	2	16WP	G15_081	FROM->TO	CIMARRON - DRAPER LAKE 345KV CKT 1	717	717	0.15197	109.8338	P12:069:OKGE:3TERM19
FDNS	00NR	2	16WP	G15_081	FROM->TO	CIMARRON - DRAPER LAKE 345KV CKT 1	717	717	0.152	109.8302	7LUTESVIL 345.00 - 7ST FRANC 345.00 345KV CKT 1

SOLUTION	GROUP	SCENARIO	SEASON	SOURCE	DIRECTION	MONITORED ELEMENT	RATEA (MVA)	RATEB(MVA)	TDF	TC%LOADING (% MVA)	CONTINGENCY
FDNS	00NR	2	16WP	G15_081	FROM->TO	CIMARRON - DRAPER LAKE 345KV CKT 1	717	717	0.1519	109.7675	RODEMACHER 230/22.0KV TRANSFORMER CKT 1
FDNS	00NR	2	16WP	G15_081	FROM->TO	CIMARRON - DRAPER LAKE 345KV CKT 1	717	717	0.1519	109.765	7JASPER 345.00 - BLACKBERRY 345KV CKT 1
FDNS	00NR	2	16WP	G15_081	FROM->TO	CIMARRON - DRAPER LAKE 345KV CKT 1	717	717	0.15191	109.7538	P12:138:AEPW-OGE:WTH_JCT4:JENSEN4
FDNS	00NR	2	16WP	G15_081	FROM->TO	CIMARRON - DRAPER LAKE 345KV CKT 1	717	717	0.14912	109.7486	CANADIAN RIVER - PITTSBURG 345KV CKT 1
FDNS	00NR	2	16WP	G15_081	FROM->TO	CIMARRON - DRAPER LAKE 345KV CKT 1	717	717	0.15202	109.7457	8WNEWMADRID 500.00 - DELL 500 500KV CKT 1
FDNS	00NR	2	16WP	G15_081	FROM->TO	CIMARRON - DRAPER LAKE 345KV CKT 1	717	717	0.15192	109.7367	6LAYFLD 230.00 - CARROLL 230KV CKT 1
FDNS	00NR	2	16WP	G15_081	FROM->TO	CIMARRON - DRAPER LAKE 345KV CKT 1	717	717	0.15198	109.7329	ELK CITY 230KV (ELKCTY-6) 230/138/13.8KV TRANSFORMER CKT 1
FDNS	00NR	2	16WP	G15_081	FROM->TO	CIMARRON - DRAPER LAKE 345KV CKT 1	717	717	0.15284	109.7216	TULSA NORTH - WEKIWA 345KV CKT 1
FDNS	00NR	2	16WP	G15_081	FROM->TO	CIMARRON - DRAPER LAKE 345KV CKT 1	717	717	0.15185	109.7203	ELDORADO EHV - SHERIDAN EHV 500KV CKT 1
FDNS	00NR	2	16WP	G15_081	FROM->TO	CIMARRON - DRAPER LAKE 345KV CKT 1	717	717	0.15195	109.7031	P12:138:AEPW:N.E.S.-4:CATOOSA4
FDNS	00NR	2	16WP	G15_081	FROM->TO	CIMARRON - DRAPER LAKE 345KV CKT 1	717	717	0.15203	109.7019	P13:138-161:WERE:NSES_TX-4OR5::
FDNS	00NR	2	16WP	G15_081	FROM->TO	CIMARRON - DRAPER LAKE 345KV CKT 1	717	717	0.1519	109.6988	ST FRANCIS 161/16.0KV TRANSFORMER CKT 1
FDNS	00NR	2	16WP	G15_081	FROM->TO	CIMARRON - DRAPER LAKE 345KV CKT 1	717	717	0.1519	109.6987	ST FRANCIS - ST FRANCIS 1 161KV CKT Z1
FDNS	00NR	2	16WP	G15_081	FROM->TO	CIMARRON - DRAPER LAKE 345KV CKT 1	717	717	0.15191	109.6925	FULTON 115 - HOPE 115KV CKT 1
FDNS	00NR	2	16WP	G15_081	FROM->TO	CIMARRON - DRAPER LAKE 345KV CKT 1	717	717	0.1519	109.6904	8CAJUN2 500/24.0KV TRANSFORMER CKT 1
FDNS	00NR	2	16WP	G15_081	FROM->TO	CIMARRON - DRAPER LAKE 345KV CKT 1	717	717	0.15209	109.6801	HUGO - VALLIANT 345KV CKT 1
FDNS	00NR	2	16WP	G15_081	FROM->TO	CIMARRON - DRAPER LAKE 345KV CKT 1	717	717	0.15195	109.6741	7JASPER 345.00 - MORGAN 345KV CKT 1
FDNS	00NR	2	16WP	G15_081	FROM->TO	CIMARRON - DRAPER LAKE 345KV CKT 1	717	717	0.1519	109.6734	P12:069:OKGE:3TERM3
FDNS	00NR	2	16WP	G15_081	FROM->TO	CIMARRON - DRAPER LAKE 345KV CKT 1	717	717	0.15188	109.6617	P12:138:OKGE-AEPW:JENSEN4:REDROCKRD4
FDNS	00NR	2	16WP	G15_081	FROM->TO	CIMARRON - DRAPER LAKE 345KV CKT 1	717	717	0.15201	109.6528	P12:138:AEPW:CATOOSA4:T.S.E.-4
FDNS	00NR	2	16WP	G15_081	FROM->TO	CIMARRON - DRAPER LAKE 345KV CKT 1	717	717	0.15199	109.6503	P12:138:OKGE:3TERM28
FDNS	00NR	2	16WP	G15_081	FROM->TO	CIMARRON - DRAPER LAKE 345KV CKT 1	717	717	0.1519	109.647	ESSEX UNIT 2 500/18.0KV TRANSFORMER CKT 1
FDNS	00NR	2	16WP	G15_081	FROM->TO	CIMARRON - DRAPER LAKE 345KV CKT 1	717	717	0.1519	109.6402	NELSON 230/20.0KV TRANSFORMER CKT 1
FDNS	00NR	2	16WP	G15_081	FROM->TO	CIMARRON - DRAPER LAKE 345KV CKT 1	717	717	0.15192	109.637	AS KING - EAU CLAIRE 345KV CKT 1
FDNS	00NR	2	16WP	G15_081	FROM->TO	CIMARRON - DRAPER LAKE 345KV CKT 1	717	717	0.1519	109.6339	ST FRANCIS 2 161/16.0KV TRANSFORMER CKT 2
FDNS	00NR	2	16WP	G15_081	FROM->TO	CIMARRON - DRAPER LAKE 345KV CKT 1	717	717	0.1519	109.6338	ST FRANCIS 345/161KV TRANSFORMER CKT 1
FDNS	00NR	2	16WP	G15_081	FROM->TO	CIMARRON - DRAPER LAKE 345KV CKT 1	717	717	0.1519	109.6287	P12:161:AEPW:EROGERS5:ECNTRTN5
FDNS	00NR	2	16WP	G15_081	FROM->TO	CIMARRON - DRAPER LAKE 345KV CKT 1	717	717	0.1519	109.6274	P12:138:AEPW:SHERID4:112GORE4
FDNS	00NR	2	16WP	G15_081	FROM->TO	CIMARRON - DRAPER LAKE 345KV CKT 1	717	717	0.1519	109.6228	P12:161:AEPW:DYESS5:ELMSPRNG:TONTITN5
FDNS	00NR	2	16WP	G15_081	FROM->TO	CIMARRON - DRAPER LAKE 345KV CKT 1	717	717	0.15202	109.6205	P12:138:AEPW:CORNVIL4:S.W.S.-4
FDNS	00NR	2	16WP	G15_081	FROM->TO	CIMARRON - DRAPER LAKE 345KV CKT 1	717	717	0.15195	109.6133	P12:161:AEPW-SWPA:BEAVER5:EROGERS5
FDNS	00NR	2	16WP	G15_081	FROM->TO	CIMARRON - DRAPER LAKE 345KV CKT 1	717	717	0.1519	109.5977	MC NIEL 500/115KV TRANSFORMER CKT 1
FDNS	00NR	2	16WP	G15_081	FROM->TO	CIMARRON - DRAPER LAKE 345KV CKT 1	717	717	0.15202	109.5932	BROOKLINE - MORGAN 345KV CKT 1
FDNS	00NR	2	16WP	G15_081	FROM->TO	CIMARRON - DRAPER LAKE 345KV CKT 1	717	717	0.15198	109.593	P12:138:AEPW:MOUNDRD4:SHIDLER4
FDNS	00NR	2	16WP	G15_081	FROM->TO	CIMARRON - DRAPER LAKE 345KV CKT 1	717	717	0.1519	109.5926	BISMARK - HOT SPRINGS WEST BUS 115KV CKT 1
FDNS	00NR	2	16WP	G15_081	FROM->TO	CIMARRON - DRAPER LAKE 345KV CKT 1	717	717	0.15343	109.5879	NORTHEAST STATION - ONETA 345KV CKT 1
FDNS	00NR	2	16WP	G15_081	FROM->TO	CIMARRON - DRAPER LAKE 345KV CKT 1	717	717	0.15193	109.5873	P12:138:WFEC:MSL15
FDNS	00NR	2	16WP	G15_081	FROM->TO	CIMARRON - DRAPER LAKE 345KV CKT 1	717	717	0.15199	109.5847	BRISTOW - SILVER CITY 138KV CKT 1
FDNS	00NR	2	16WP	G15_081	FROM->TO	CIMARRON - DRAPER LAKE 345KV CKT 1	717	717	0.15194	109.5683	ARPIN B4 345.00 - EAU CLAIRE 345KV CKT 1
FDNS	00NR	2	16WP	G15_081	FROM->TO	CIMARRON - DRAPER LAKE 345KV CKT 1	717	717	0.1519	109.565	CYPRESS - HARTBURG 500KV CKT 1
FDNS	00NR	2	16WP	G15_081	FROM->TO	CIMARRON - DRAPER LAKE 345KV CKT 1	717	717	0.1519	109.5595	ALPINE AECC - BISMARK 115KV CKT 1
FDNS	00NR	2	16WP	G15_081	FROM->TO	CIMARRON - DRAPER LAKE 345KV CKT 1	717	717	0.1519	109.5426	P12:69:AEPW:L.E.S.-2:LAW WC2
FDNS	00NR	2	16WP	G15_081	FROM->TO	CIMARRON - DRAPER LAKE 345KV CKT 1	717	717	0.1519	109.5408	SABINE 230/24.0KV TRANSFORMER CKT 1
FDNS	00NR	2	16WP	G15_081	FROM->TO	CIMARRON - DRAPER LAKE 345KV CKT 1	717	717	0.15188	109.5391	LAYFLD8 500.00 - MOUNT OLIVE 500KV CKT 1
FDNS	00NR	2	16WP	G15_081	FROM->TO	CIMARRON - DRAPER LAKE 345KV CKT 1	717	717	0.1519	109.0896	BASE CASE
FDNS	00NR	2	16WP	G15_081	FROM->TO	CIMARRON - DRAPER LAKE 345KV CKT 1	717	717	0.15206	108.6174	7MCCREDIE 345.00 - 7OVERTON 345.00 345KV CKT 1
FDNS	00NR	2	16WP	G15_081	FROM->TO	CIMARRON - DRAPER LAKE 345KV CKT 1	717	717	0.15158	108.6121	P12:138:WFEC:MSL10
FDNS	00NR	2	16WP	G15_081	FROM->TO	CIMARRON - DRAPER LAKE 345KV CKT 1	717	717	0.15307	108.5713	DELAWARE - NORTHEAST STATION 345KV CKT 1
FDNS	00NR	2	16WP	G15_081	FROM->TO	CIMARRON - DRAPER LAKE 345KV CKT 1	717	717	0.15214	108.5624	7MCCREDIE 345.00 - 7MONTGMRY 345.00 345KV CKT 1
FDNS	00NR	2	16WP	G15_081	FROM->TO	CIMARRON - DRAPER LAKE 345KV CKT 1	717	717	0.15198	108.5199	P12:138:AEPW:SHAM4WT:CHILD4WT
FDNS	00NR	2	16WP	G15_081	FROM->TO	CIMARRON - DRAPER LAKE 345KV CKT 1	717	717	0.15193	108.5167	P12:138:OKGE:3TERM36
FDNS	00NR	2	16WP	G15_081	FROM->TO	CIMARRON - DRAPER LAKE 345KV CKT 1	717	717	0.15191	108.5107	P12:138:WFEC:MSL07
FDNS	00NR	2	16WP	G15_081	FROM->TO	CIMARRON - DRAPER LAKE 345KV CKT 1	717	717	0.15191	108.5107	P12:138:WFEC-AEPW:HUGOPP4:ATOKA--4
FDNS	00NR	2	16WP	G15_081	FROM->TO	CIMARRON - DRAPER LAKE 345KV CKT 1	717	717	0.15204	108.5101	CANADIAN RIVER - MCALESTER SOUTH 138KV CKT 1
FDNS	00NR	2	16WP	G15_081	FROM->TO	CIMARRON - DRAPER LAKE 345KV CKT 1	717	717	0.15204	108.5091	CANADIAN RIVER () 345/138/13.8KV TRANSFORMER CKT 1
FDNS	00NR	2	16WP	G15_081	FROM->TO	CIMARRON - DRAPER LAKE 345KV CKT 1	717	717	0.15193	108.5058	P12:138:AEPW:WELETK4:EARLSBORO4
FDNS	00NR	2	16WP	G15_081	FROM->TO	CIMARRON - DRAPER LAKE 345KV CKT 1	717	717	0.15186	108.4969	P12:138:AEPW-SWPA:LONEOAK4:TUPELO4
FDNS	00NR	2	16WP	G15_081	FROM->TO	CIMARRON - DRAPER LAKE 345KV CKT 1	717	717	0.15186	108.4969	P12:138:WFEC:MSL06
FDNS	00NR	2	16WP	G15_081	FROM->TO	CIMARRON - DRAPER LAKE 345KV CKT 1	717	717	0.152	108.485	P12:138:WFEC:MSL16
FDNS	00NR	2	16WP	G15_081	FROM->TO	CIMARRON - DRAPER LAKE 345KV CKT 1	717	717	0.1519	108.4672	INDEPENDENCE 500/26.0KV TRANSFORMER CKT 1
FDNS	00NR	2	16WP	G15_081	FROM->TO	CIMARRON - DRAPER LAKE 345KV CKT 1	717	717	0.1519	108.4545	BURLINGTON NO1 + NO 2 + NO 3 161/20.0KV TRANSFORMER CKT 1
FDNS	00NR	2	16WP	G15_081	FROM->TO	CIMARRON - DRAPER LAKE 345KV CKT 1	717	717	0.15276	108.436	MINGO - SETAB 345KV CKT 1
FDNS	00NR	2	16WP	G15_081	FROM->TO	CIMARRON - DRAPER LAKE 345KV CKT 1	717	717	0.15204	108.4316	DELL 500 - INDEPENDENCE 500KV CKT 1
FDNS	00NR	2	16WP	G15_081	FROM->TO	CIMARRON - DRAPER LAKE 345KV CKT 1	717	717	0.15193	108.4219	P12:138:AEPW-OGE:WELETK4:MAUD 4
FDNS	00NR	2	16WP	G15_081	FROM->TO	CIMARRON - DRAPER LAKE 345KV CKT 1	717	717	0.15194	108.4183	EARLSBORO 4138.00 - MAUD 138KV CKT 1
FDNS	00NR	2	16WP	G15_081	FROM->TO	CIMARRON - DRAPER LAKE 345KV CKT 1	717	717	0.1519	108.3752	THOMAS HILL 161/22.0KV TRANSFORMER CKT 1
FDNS	00NR	2	16WP	G15_081	FROM->TO	CIMARRON - DRAPER LAKE 345KV CKT 1	717	717	0.1519	108.3713	P12:230:UMZB:# 112 #: NU IN SD. NU-RCDC & DRY CREEK XFMR
FDNS	00NR	2	16WP	G15_081	FROM->TO	CIMARRON - DRAPER LAKE 345KV CKT 1	717	717	0.1521	108.2738	KEO EHV - WEST MEMPHIS 500 500KV CKT 1
FDNS	00NR	2	16WP	G15_081	FROM->TO	CIMARRON - DRAPER LAKE 345KV CKT 1	717	717	0.1519	108.1869	4SIOUX 1 138.00 138/18.0KV TRANSFORMER CKT 1
FDNS	00NR	2	16WP	G15_081	FROM->TO	CIMARRON - DRAPER LAKE 345KV CKT 1	717	717	0.1519	108.0523	CLAY BOSWELL 230/20.9KV TRANSFORMER CKT 1
FDNS	00NR	2	16WP	G15_081	FROM->TO	CIMARRON - DRAPER LAKE 345KV CKT 1	717	717	0.15192	107.9815	NORTHWEST TEXARKANA - VALLIANT 345KV CKT 1
FDNS	00NR	2	16WP	G15_081	FROM->TO	CIMARRON - DRAPER LAKE 345KV CKT 1	717	717	0.15201	107.9537	P12:138:WFEC:MSL09
FDNS	00NR	2	16WP	G15_081	FROM->TO	CIMARRON - DRAPER LAKE 345KV CKT 1	717	717	0.15249	107.9148	P12:138:OKGE:3TERM22
FDNS	00NR	2	16WP	G15_081	FROM->TO	CIMARRON - DRAPER LAKE 345KV CKT 1	717	717	0.15142	107.9092	P12:138:WFEC:MSL08
FDNS	00NR	2	16WP	G15_081	FROM->TO	CIMARRON - DRAPER LAKE 345KV CKT 1	717	717	0.15213	107.6099	P12:138:AEPW-OGE:CORNVIL4:CIMARON4
FDNS	00NR	2	16WP	G15_081	FROM->TO	CIMARRON - DRAPER LAKE 345KV CKT 1	717	717	0.15194	107.5056	LYDIA - WELSH 345KV CKT 1
FDNS	00NR	2	16WP	G15_081	FROM->TO	CIMARRON - DRAPER LAKE 345KV CKT 1	717	717	0.15719	107.1046	CLARKSVILLE - MUSKOGEE 345KV CKT 1
FDNS	00NR	2	16WP	G15_081	FROM->TO	CIMARRON - DRAPER LAKE 345KV CKT 1	717	717	0.1519	107.0031	BIG STONE 230/24.0KV TRANSFORMER CKT 1
FDNS	00NR	2	16WP	G15_081	FROM->TO	CIMARRON - DRAPER LAKE 345KV CKT 1	717	717	0.15195	106.9076	LYDIA - VALLIANT 345KV CKT 1

SOLUTION	GROUP	SCENARIO	SEASON	SOURCE	DIRECTION	MONITORED ELEMENT	RATEA (MVA)	RATEB(MVA)	TDF	TC%LOADING (% MVA)	CONTINGENCY
FDNS	00NR	2	16WP	G15_081	FROM->TO	CIMARRON - DRAPER LAKE 345KV CKT 1	717	717	0.15176	106.8165	P12:138:OKGE:3TERM23
FDNS	00NR	2	16WP	G15_081	FROM->TO	CIMARRON - DRAPER LAKE 345KV CKT 1	717	717	0.1519	106.4011	SHERBURNE CO 345/24.0KV TRANSFORMER CKT 1
FDNS	01ALL	2	16WP	G15_081	FROM->TO	CIMARRON - DRAPER LAKE 345KV CKT 1	717	717	0.09999	103.9899	BASE CASE
FDNS	00NR	2	16WP	G15_081	FROM->TO	CIMARRON - DRAPER LAKE 345KV CKT 1	717	717	0.15574	103.4591	P12:138:OKGE:3TERM21
FDNS	00NR	2	16WP	G15_081	FROM->TO	CIMARRON - DRAPER LAKE 345KV CKT 1	717	717	0.15322	101.6899	PITTSBURG - VALLIANT 345KV CKT 1
FDNS	00NR	2	16WP	G15_081	FROM->TO	G14-057T 345.00 - SUNNYSIDE 345KV CKT 1	717	789	0.0571	125.0762	PITTSBURG - SEMINOLE 345KV CKT 1
FDNS	00NR	2	16WP	G15_081	FROM->TO	G14-057T 345.00 - SUNNYSIDE 345KV CKT 1	717	789	0.05995	124.2437	BASE CASE
FDNS	00NR	2	20WP	G15_081	FROM->TO	G14-057T 345.00 - SUNNYSIDE 345KV CKT 1	717	789	0.05663	122.3486	PITTSBURG - SEMINOLE 345KV CKT 1
FDNS	00NR	2	20WP	G15_081	FROM->TO	G14-057T 345.00 - SUNNYSIDE 345KV CKT 1	717	789	0.05956	122.1851	BASE CASE
FDNS	00NR	2	16WP	G15_081	FROM->TO	G14-057T 345.00 - SUNNYSIDE 345KV CKT 1	717	789	0.06364	118.87	P12:138:WFEC:MSL03
FDNS	00NR	2	16WP	G15_081	FROM->TO	G14-057T 345.00 - SUNNYSIDE 345KV CKT 1	717	789	0.05902	118.2698	PITTSBURG - VALLIANT 345KV CKT 1
FDNS	00NR	2	20WP	G15_081	FROM->TO	G14-057T 345.00 - SUNNYSIDE 345KV CKT 1	717	789	0.06325	116.9352	P12:138:WFEC:MSL03
FDNS	00NR	2	16WP	G15_081	FROM->TO	G14-057T 345.00 - SUNNYSIDE 345KV CKT 1	717	789	0.05998	115.9008	7SAREPTA% 345.00 - LONGWOOD 345KV CKT 1
FDNS	00NR	2	20WP	G15_081	FROM->TO	G14-057T 345.00 - SUNNYSIDE 345KV CKT 1	717	789	0.05862	115.7887	PITTSBURG - VALLIANT 345KV CKT 1
FDNS	00NR	2	16WP	G15_081	FROM->TO	G14-057T 345.00 - SUNNYSIDE 345KV CKT 1	717	789	0.06	115.7458	DOLET HILLS - SOUTHWEST SHREVEPORT 345KV CKT 1
FDNS	00NR	2	16WP	G15_081	FROM->TO	G14-057T 345.00 - SUNNYSIDE 345KV CKT 1	717	789	0.06131	115.7334	CLEVELAND - TULSA NORTH 345KV CKT 1
FDNS	00NR	2	16WP	G15_081	FROM->TO	G14-057T 345.00 - SUNNYSIDE 345KV CKT 1	717	789	0.05995	115.3409	GRAND GULF 500/22.0KV TRANSFORMER CKT 1
FDNS	00NR	2	16WP	G15_081	FROM->TO	G14-057T 345.00 - SUNNYSIDE 345KV CKT 1	717	789	0.05997	115.2476	7SAREPTA% 345.00 - ELDORADO EHV 345KV CKT 1
FDNS	00NR	2	16WP	G15_081	FROM->TO	G14-057T 345.00 - SUNNYSIDE 345KV CKT 1	717	789	0.05997	115.2364	ELDORADO EHV 500/345KV TRANSFORMER CKT 1
FDNS	00NR	2	16WP	G15_081	FROM->TO	G14-057T 345.00 - SUNNYSIDE 345KV CKT 1	717	789	0.06052	115.1782	P12:138:AEPW:DUNCAN-4:L.E.S.-4
FDNS	00NR	2	16WP	G15_081	FROM->TO	G14-057T 345.00 - SUNNYSIDE 345KV CKT 1	717	789	0.06081	114.8175	P12:138:WFEC:MSL01
FDNS	00NR	2	16WP	G15_081	FROM->TO	G14-057T 345.00 - SUNNYSIDE 345KV CKT 1	717	789	0.06052	114.7912	DUNCAN - OMPA-DUNCAN 840 138KV CKT 1
FDNS	00NR	2	16WP	G15_081	FROM->TO	G14-057T 345.00 - SUNNYSIDE 345KV CKT 1	717	789	0.05995	114.657	DOLET HILLS 345/24.0KV TRANSFORMER CKT 1
FDNS	00NR	2	16WP	G15_081	FROM->TO	G14-057T 345.00 - SUNNYSIDE 345KV CKT 1	717	789	0.05993	114.6276	P12:138:AEPW:SHERID4:112GORE4
FDNS	00NR	2	16WP	G15_081	FROM->TO	G14-057T 345.00 - SUNNYSIDE 345KV CKT 1	717	789	0.06305	114.6104	FINNEY SWITCHING STATION - HOLCOMB 345KV CKT 1
FDNS	00NR	2	16WP	G15_081	FROM->TO	G14-057T 345.00 - SUNNYSIDE 345KV CKT 1	717	789	0.06031	114.5304	REDBUD - RIVERSIDE STATION 345KV CKT 1
FDNS	00NR	2	16WP	G15_081	FROM->TO	G14-057T 345.00 - SUNNYSIDE 345KV CKT 1	717	789	0.0613	114.4751	P12:138:WFEC:MSL17
FDNS	00NR	2	16WP	G15_081	FROM->TO	G14-057T 345.00 - SUNNYSIDE 345KV CKT 1	717	789	0.05995	114.3715	P12:69:AEPW:L.E.S.-2:LAW WC2
FDNS	00NR	2	16WP	G15_081	FROM->TO	G14-057T 345.00 - SUNNYSIDE 345KV CKT 1	717	789	0.05995	114.3488	P12:161:AEPW:DYESS 5:HYLAND 5
FDNS	00NR	2	16WP	G15_081	FROM->TO	G14-057T 345.00 - SUNNYSIDE 345KV CKT 1	717	789	0.0599	114.3229	ELDORADO EHV - MOUNT OLIVE 500KV CKT 1
FDNS	00NR	2	16WP	G15_081	FROM->TO	G14-057T 345.00 - SUNNYSIDE 345KV CKT 1	717	789	0.06032	114.3189	P12:138:WFEC:MSL02
FDNS	00NR	2	16WP	G15_081	FROM->TO	G14-057T 345.00 - SUNNYSIDE 345KV CKT 1	717	789	0.05993	114.2825	P12:138:AEPW:112GORE4:L.E.S.-4
FDNS	00NR	2	16WP	G15_081	FROM->TO	G14-057T 345.00 - SUNNYSIDE 345KV CKT 1	717	789	0.05982	114.2476	ELDORADO EHV - SHERIDAN EHV 500KV CKT 1
FDNS	00NR	2	16WP	G15_081	FROM->TO	G14-057T 345.00 - SUNNYSIDE 345KV CKT 1	717	789	0.05995	114.2205	NEW MADRID 161/22.0KV TRANSFORMER CKT 1
FDNS	00NR	2	16WP	G15_081	FROM->TO	G14-057T 345.00 - SUNNYSIDE 345KV CKT 1	717	789	0.06161	114.2147	P12:138:AEPW-OGE:CORNVIL4:MAUD 4
FDNS	00NR	2	16WP	G15_081	FROM->TO	G14-057T 345.00 - SUNNYSIDE 345KV CKT 1	717	789	0.05995	114.2089	NEW MADRID 345/22.0KV TRANSFORMER CKT 1
FDNS	00NR	2	16WP	G15_081	FROM->TO	G14-057T 345.00 - SUNNYSIDE 345KV CKT 1	717	789	0.06004	114.2028	WEBRE - WELLS 500KV CKT 1
FDNS	00NR	2	16WP	G15_081	FROM->TO	G14-057T 345.00 - SUNNYSIDE 345KV CKT 1	717	789	0.05995	114.1815	FRONTIER - GRIMES 345KV CKT 1
FDNS	00NR	2	16WP	G15_081	FROM->TO	G14-057T 345.00 - SUNNYSIDE 345KV CKT 1	717	789	0.06006	114.1592	LAWTON EASTSIDE (LES 5) 345/138/13.8KV TRANSFORMER CKT 2
FDNS	00NR	2	20WP	G15_081	FROM->TO	G14-057T 345.00 - SUNNYSIDE 345KV CKT 1	717	789	0.05961	114.0928	7SAREPTA% 345.00 - LONGWOOD 345KV CKT 1
FDNS	00NR	2	16WP	G15_081	FROM->TO	G14-057T 345.00 - SUNNYSIDE 345KV CKT 1	717	789	0.06305	114.0392	THISTLE7 345.00 - WOODWARD DISTRICT EHV 345KV CKT 1
FDNS	00NR	2	16WP	G15_081	FROM->TO	G14-057T 345.00 - SUNNYSIDE 345KV CKT 1	717	789	0.06305	114.0392	THISTLE7 345.00 - WOODWARD DISTRICT EHV 345KV CKT 2
FDNS	00NR	2	16WP	G15_081	FROM->TO	G14-057T 345.00 - SUNNYSIDE 345KV CKT 1	717	789	0.05995	114.0181	DELL 500 - ESSEX UNIT 2 500KV CKT Z1
FDNS	00NR	2	16WP	G15_081	FROM->TO	G14-057T 345.00 - SUNNYSIDE 345KV CKT 1	717	789	0.06013	113.9738	DUNCAN (DUNCAN) 138/69/13.8KV TRANSFORMER CKT 1
FDNS	00NR	2	16WP	G15_081	FROM->TO	G14-057T 345.00 - SUNNYSIDE 345KV CKT 1	717	789	0.05994	113.9424	P12:161:AEPW-SWPA:BEAVER5:EROGERS5
FDNS	00NR	2	16WP	G15_081	FROM->TO	G14-057T 345.00 - SUNNYSIDE 345KV CKT 1	717	789	0.05998	113.9237	P12:138:AEPW:CATOOSA4:T.S.E.-4
FDNS	00NR	2	16WP	G15_081	FROM->TO	G14-057T 345.00 - SUNNYSIDE 345KV CKT 1	717	789	0.05998	113.9117	6LAYFLD 230.00 - CARROLL 230KV CKT 1
FDNS	00NR	2	16WP	G15_081	FROM->TO	G14-057T 345.00 - SUNNYSIDE 345KV CKT 1	717	789	0.05996	113.8781	FULTON 115 - HOPE 115KV CKT 1
FDNS	00NR	2	16WP	G15_081	FROM->TO	G14-057T 345.00 - SUNNYSIDE 345KV CKT 1	717	789	0.05998	113.8739	8DANIEL8 500.00 - MCKNIGHT 500KV CKT 1
FDNS	00NR	2	16WP	G15_081	FROM->TO	G14-057T 345.00 - SUNNYSIDE 345KV CKT 1	717	789	0.05995	113.8724	P12:161:AEPW:DYESS5:ELMSPRNG:TONTITN5
FDNS	00NR	2	20WP	G15_081	FROM->TO	G14-057T 345.00 - SUNNYSIDE 345KV CKT 1	717	789	0.06089	113.8412	CLEVELAND - TULSA NORTH 345KV CKT 1
FDNS	00NR	2	16WP	G15_081	FROM->TO	G14-057T 345.00 - SUNNYSIDE 345KV CKT 1	717	789	0.06017	113.8378	P12:138:AEPW:CORNVIL4:S.W.S.-4
FDNS	00NR	2	16WP	G15_081	FROM->TO	G14-057T 345.00 - SUNNYSIDE 345KV CKT 1	717	789	0.06018	113.8049	P12:138:AEPW:CORNVIL4:DUNCAN-4
FDNS	00NR	2	16WP	G15_081	FROM->TO	G14-057T 345.00 - SUNNYSIDE 345KV CKT 1	717	789	0.06013	113.8023	P12:69:WFEC-AEPW:COMANCH2:DUNCAN-2
FDNS	00NR	2	16WP	G15_081	FROM->TO	G14-057T 345.00 - SUNNYSIDE 345KV CKT 1	717	789	0.06018	113.7798	P12:138:AEPW-OGE:WTH_JCT4:JENSEN4
FDNS	00NR	2	16WP	G15_081	FROM->TO	G14-057T 345.00 - SUNNYSIDE 345KV CKT 1	717	789	0.05995	113.7588	P12:161:AEPW:EROGERS5:ECNTRTN5
FDNS	00NR	2	16WP	G15_081	FROM->TO	G14-057T 345.00 - SUNNYSIDE 345KV CKT 1	717	789	0.05991	113.7486	LAYFLD8 500.00 - MOUNT OLIVE 500KV CKT 1
FDNS	00NR	2	16WP	G15_081	FROM->TO	G14-057T 345.00 - SUNNYSIDE 345KV CKT 1	717	789	0.05995	113.7485	RODEMACHER 230/22.0KV TRANSFORMER CKT 1
FDNS	00NR	2	16WP	G15_081	FROM->TO	G14-057T 345.00 - SUNNYSIDE 345KV CKT 1	717	789	0.05995	113.7391	WHITE BLUFF 500/26.0KV TRANSFORMER CKT 1
FDNS	00NR	2	16WP	G15_081	FROM->TO	G14-057T 345.00 - SUNNYSIDE 345KV CKT 1	717	789	0.06007	113.7384	P12:138:AEPW:WTHWF4:CLINTJC4
FDNS	00NR	2	16WP	G15_081	FROM->TO	G14-057T 345.00 - SUNNYSIDE 345KV CKT 1	717	789	0.05995	113.7358	MC NIEL 500/115KV TRANSFORMER CKT 1
FDNS	00NR	2	16WP	G15_081	FROM->TO	G14-057T 345.00 - SUNNYSIDE 345KV CKT 1	717	789	0.05992	113.7307	HOT SPRINGS EHV - MAGNET COVE 500KV CKT 1
FDNS	00NR	2	16WP	G15_081	FROM->TO	G14-057T 345.00 - SUNNYSIDE 345KV CKT 1	717	789	0.05995	113.7275	BISMARK - HOT SPRINGS WEST BUS 115KV CKT 1
FDNS	00NR	2	16WP	G15_081	FROM->TO	G14-057T 345.00 - SUNNYSIDE 345KV CKT 1	717	789	0.06002	113.7242	P12:69:AEPW-OMPA:COMANC-2:OMWALTR2
FDNS	00NR	2	16WP	G15_081	FROM->TO	G14-057T 345.00 - SUNNYSIDE 345KV CKT 1	717	789	0.06031	113.7165	BUCKNER7 345.00 - SPEARVILLE 345KV CKT 1
FDNS	00NR	2	16WP	G15_081	FROM->TO	G14-057T 345.00 - SUNNYSIDE 345KV CKT 1	717	789	0.06007	113.6923	P12:138:AEPW:WTHWF4:WTH_SE4
FDNS	00NR	2	16WP	G15_081	FROM->TO	G14-057T 345.00 - SUNNYSIDE 345KV CKT 1	717	789	0.05997	113.6922	P12:138:AEPW:N.E.S.-4:CATOOSA4
FDNS	00NR	2	20WP	G15_081	FROM->TO	G14-057T 345.00 - SUNNYSIDE 345KV CKT 1	717	789	0.05962	113.6826	DOLET HILLS - SOUTHWEST SHREVEPORT 345KV CKT 1
FDNS	00NR	2	16WP	G15_081	FROM->TO	G14-057T 345.00 - SUNNYSIDE 345KV CKT 1	717	789	0.05995	113.6815	NELSON 230/20.0KV TRANSFORMER CKT 1
FDNS	00NR	2	16WP	G15_081	FROM->TO	G14-057T 345.00 - SUNNYSIDE 345KV CKT 1	717	789	0.05995	113.6759	ALPINE AECC - BISMARK 115KV CKT 1
FDNS	00NR	2	16WP	G15_081	FROM->TO	G14-057T 345.00 - SUNNYSIDE 345KV CKT 1	717	789	0.06146	113.6755	P12:138:OKGE:3TERM27
FDNS	00NR	2	16WP	G15_081	FROM->TO	G14-057T 345.00 - SUNNYSIDE 345KV CKT 1	717	789	0.05995	113.64	CYPRESS - HARTBURG 500KV CKT 1
FDNS	00NR	2	16WP	G15_081	FROM->TO	G14-057T 345.00 - SUNNYSIDE 345KV CKT 1	717	789	0.06005	113.6346	ELK CITY 230KV (ELKCTY-6) 230/138/13.8KV TRANSFORMER CKT 1
FDNS	00NR	2	16WP	G15_081	FROM->TO	G14-057T 345.00 - SUNNYSIDE 345KV CKT 1	717	789	0.05995	113.6333	ALPINE AECC - AMITY SS 115KV CKT 1
FDNS	00NR	2	16WP	G15_081	FROM->TO	G14-057T 345.00 - SUNNYSIDE 345KV CKT 1	717	789	0.05995	113.6232	8CAJUN2 500/24.0KV TRANSFORMER CKT 1
FDNS	00NR	2	16WP	G15_081	FROM->TO	G14-057T 345.00 - SUNNYSIDE 345KV CKT 1	717	789	0.05622	113.6224	CANADIAN RIVER - PITTSBURG 345KV CKT 1
FDNS	00NR	2	16WP	G15_081	FROM->TO	G14-057T 345.00 - SUNNYSIDE 345KV CKT 1	717	789	0.05995	113.609	7JASPER 345.00 - BLACKBERRY 345KV CKT 1
FDNS	00NR	2	16WP	G15_081	FROM->TO	G14-057T 345.00 - SUNNYSIDE 345KV CKT 1	717	789	0.05995	113.5983	P12:138:AEPW:R.S.S.-4:S.HUD.-4
FDNS	00NR	2	16WP	G15_081	FROM->TO	G14-057T 345.00 - SUNNYSIDE 345KV CKT 1	717	789	0.0599	113.5627	ETTA (DUKE HOTSPRINGS) - MC NIEL 500KV CKT 1

SOLUTION	GROUP	SCENARIO	SEASON	SOURCE	DIRECTION	MONITORED ELEMENT	RATEA (MVA)	RATEB(MVA)	TDF	TC%LOADING (% MVA)	CONTINGENCY
FDNS	00NR	2	16WP	G15_081	FROM->TO	G14-057T 345.00 - SUNNYSIDE 345KV CKT 1	717	789	0.05995	113.5603	P12:138:AEPW:YARCH-S4:T.S.E.-4
FDNS	00NR	2	16WP	G15_081	FROM->TO	G14-057T 345.00 - SUNNYSIDE 345KV CKT 1	717	789	0.06016	113.5565	WEATHERFORD JCT. - WEATHERFORD SOUTHEAST 138KV CKT 1
FDNS	00NR	2	16WP	G15_081	FROM->TO	G14-057T 345.00 - SUNNYSIDE 345KV CKT 1	717	789	0.05995	113.5542	P12:138:AEPW:BA_71ST4:T.S.E.-4
FDNS	00NR	2	16WP	G15_081	FROM->TO	G14-057T 345.00 - SUNNYSIDE 345KV CKT 1	717	789	0.05995	113.5534	P12:69:AEPW:NROGERS2:ECNTRTN2
FDNS	00NR	2	16WP	G15_081	FROM->TO	G14-057T 345.00 - SUNNYSIDE 345KV CKT 1	717	789	0.05995	113.5458	SABINE 230/24.0KV TRANSFORMER CKT 1
FDNS	00NR	2	16WP	G15_081	FROM->TO	G14-057T 345.00 - SUNNYSIDE 345KV CKT 1	717	789	0.06029	113.5397	BLACKBERRY - NEOSHO 345KV CKT 1
FDNS	00NR	2	16WP	G15_081	FROM->TO	G14-057T 345.00 - SUNNYSIDE 345KV CKT 1	717	789	0.06005	113.5342	7LUTESVIL 345.00 - 7ST FRANC 345.00 345KV CKT 1
FDNS	00NR	2	16WP	G15_081	FROM->TO	G14-057T 345.00 - SUNNYSIDE 345KV CKT 1	717	789	0.05995	113.5301	FRONTIER 345/18.0KV TRANSFORMER CKT 1
FDNS	00NR	2	20WP	G15_081	FROM->TO	G14-057T 345.00 - SUNNYSIDE 345KV CKT 1	717	789	0.05956	113.53	GRAND GULF 500/22.0KV TRANSFORMER CKT 1
FDNS	00NR	2	16WP	G15_081	FROM->TO	G14-057T 345.00 - SUNNYSIDE 345KV CKT 1	717	789	0.05995	113.5285	FRONTIER 345/18.0KV TRANSFORMER CKT 1
FDNS	00NR	2	16WP	G15_081	FROM->TO	G14-057T 345.00 - SUNNYSIDE 345KV CKT 1	717	789	0.05995	113.5223	P12:161:AEPW:CHAMSPR5:FARMING5
FDNS	00NR	2	16WP	G15_081	FROM->TO	G14-057T 345.00 - SUNNYSIDE 345KV CKT 1	717	789	0.06035	113.5201	P12:138:OKGE-AEPW:JENSEN4:REDROCKRD4
FDNS	00NR	2	16WP	G15_081	FROM->TO	G14-057T 345.00 - SUNNYSIDE 345KV CKT 1	717	789	0.05995	113.52	ESSEX UNIT 2 500/18.0KV TRANSFORMER CKT 1
FDNS	00NR	2	16WP	G15_081	FROM->TO	G14-057T 345.00 - SUNNYSIDE 345KV CKT 1	717	789	0.06005	113.5188	P12:138:AEPW-OGE:SHIDLER4:OSAGE 4
FDNS	00NR	2	16WP	G15_081	FROM->TO	G14-057T 345.00 - SUNNYSIDE 345KV CKT 1	717	789	0.06019	113.5131	NORGE ROAD - SOUTHWESTERN STATION 138KV CKT 1
FDNS	00NR	2	16WP	G15_081	FROM->TO	G14-057T 345.00 - SUNNYSIDE 345KV CKT 1	717	789	0.05996	113.5071	P12:115:AEPW:TURK3:HOPE3
FDNS	00NR	2	16WP	G15_081	FROM->TO	G14-057T 345.00 - SUNNYSIDE 345KV CKT 1	717	789	0.06016	113.5062	P12:138:AEPW:REDROCKRD4:WTH_JCT4
FDNS	00NR	2	16WP	G15_081	FROM->TO	G14-057T 345.00 - SUNNYSIDE 345KV CKT 1	717	789	0.06007	113.4943	8WNEWMADRID 500.00 - DELL 500 500KV CKT 1
FDNS	00NR	2	16WP	G15_081	FROM->TO	G14-057T 345.00 - SUNNYSIDE 345KV CKT 1	717	789	0.05995	113.4932	LEWIS CREEK SWITCHYARD 138/22.0KV TRANSFORMER CKT 1
FDNS	00NR	2	16WP	G15_081	FROM->TO	G14-057T 345.00 - SUNNYSIDE 345KV CKT 1	717	789	0.05995	113.4884	LEWIS CREEK SWITCHYARD 138/22.0KV TRANSFORMER CKT 1
FDNS	00NR	2	16WP	G15_081	FROM->TO	G14-057T 345.00 - SUNNYSIDE 345KV CKT 1	717	789	0.06002	113.4861	OMPA-WALTERS - WALTERS 69KV CKT 1
FDNS	00NR	2	16WP	G15_081	FROM->TO	G14-057T 345.00 - SUNNYSIDE 345KV CKT 1	717	789	0.05996	113.4852	TURK (TURK 1) 138/115/13.2KV TRANSFORMER CKT 1
FDNS	00NR	2	16WP	G15_081	FROM->TO	G14-057T 345.00 - SUNNYSIDE 345KV CKT 1	717	789	0.05996	113.4831	COUCH SES - MC NIEL 115KV CKT 1
FDNS	00NR	2	16WP	G15_081	FROM->TO	G14-057T 345.00 - SUNNYSIDE 345KV CKT 1	717	789	0.06001	113.4667	P12:138:OKGE:3TERM12
FDNS	00NR	2	16WP	G15_081	FROM->TO	G14-057T 345.00 - SUNNYSIDE 345KV CKT 1	717	789	0.06014	113.4631	P12:69:WFEC-AEPW:COMANCH2:WALTRS-2
FDNS	00NR	2	16WP	G15_081	FROM->TO	G14-057T 345.00 - SUNNYSIDE 345KV CKT 1	717	789	0.05981	113.4581	P12:138:AEPW-SWPA:LONEOAK4:BRKNBW4
FDNS	00NR	2	20WP	G15_081	FROM->TO	G14-057T 345.00 - SUNNYSIDE 345KV CKT 1	717	789	0.05959	113.452	7SAREPTA% 345.00 - ELDORADO EHV 345KV CKT 1
FDNS	00NR	2	16WP	G15_081	FROM->TO	G14-057T 345.00 - SUNNYSIDE 345KV CKT 1	717	789	0.05998	113.4484	P12:138:OKGE:3TERM2
FDNS	00NR	2	20WP	G15_081	FROM->TO	G14-057T 345.00 - SUNNYSIDE 345KV CKT 1	717	789	0.05959	113.4413	ELDORADO EHV 500/345KV TRANSFORMER CKT 1
FDNS	00NR	2	16WP	G15_081	FROM->TO	G14-057T 345.00 - SUNNYSIDE 345KV CKT 1	717	789	0.06	113.4391	7JASPER 345.00 - MORGAN 345KV CKT 1
FDNS	00NR	2	16WP	G15_081	FROM->TO	G14-057T 345.00 - SUNNYSIDE 345KV CKT 1	717	789	0.06031	113.4377	BUCKNER7 345.00 - HOLCOMB 345KV CKT 1
FDNS	00NR	2	16WP	G15_081	FROM->TO	G14-057T 345.00 - SUNNYSIDE 345KV CKT 1	717	789	0.05995	113.434	P12:138:AEPW:R.S.S-4:T.P.S.-4
FDNS	00NR	2	16WP	G15_081	FROM->TO	G14-057T 345.00 - SUNNYSIDE 345KV CKT 1	717	789	0.0602	113.4303	CLINTON JUNCTION - ELK CITY 138KV CKT 1
FDNS	00NR	2	16WP	G15_081	FROM->TO	G14-057T 345.00 - SUNNYSIDE 345KV CKT 1	717	789	0.06116	113.4299	CLARKSVILLE - ONETA 345KV CKT 1
FDNS	00NR	2	20WP	G15_081	FROM->TO	G14-057T 345.00 - SUNNYSIDE 345KV CKT 1	717	789	0.06013	113.4146	P12:138:AEPW:DUNCAN-4:L.E.S.-4
FDNS	00NR	2	16WP	G15_081	FROM->TO	G14-057T 345.00 - SUNNYSIDE 345KV CKT 1	717	789	0.05995	113.4106	P12:138:AEPW:R.S.S.-4:R:96YALE-4
FDNS	00NR	2	16WP	G15_081	FROM->TO	G14-057T 345.00 - SUNNYSIDE 345KV CKT 1	717	789	0.06019	113.3952	CORNVILLE - NORGE ROAD 138KV CKT 1
FDNS	00NR	2	16WP	G15_081	FROM->TO	G14-057T 345.00 - SUNNYSIDE 345KV CKT 1	717	789	0.05995	113.3951	P12:138:AEPW:MOHAWK4:T.NO--4
FDNS	00NR	2	16WP	G15_081	FROM->TO	G14-057T 345.00 - SUNNYSIDE 345KV CKT 1	717	789	0.05995	113.3891	ST FRANCIS 161/16.0KV TRANSFORMER CKT 1
FDNS	00NR	2	16WP	G15_081	FROM->TO	G14-057T 345.00 - SUNNYSIDE 345KV CKT 1	717	789	0.05995	113.389	ST FRANCIS - ST FRANCIS 1 161KV CKT Z1
FDNS	00NR	2	16WP	G15_081	FROM->TO	G14-057T 345.00 - SUNNYSIDE 345KV CKT 1	717	789	0.05989	113.3855	P12:138:AEPW:OKMULGE4:R.S.S-4
FDNS	00NR	2	16WP	G15_081	FROM->TO	G14-057T 345.00 - SUNNYSIDE 345KV CKT 1	717	789	0.05995	113.385	LAYFLD8 500.00 (LAYFLD AUTO) 500/230/13.8KV TRANSFORMER CKT 1
FDNS	00NR	2	16WP	G15_081	FROM->TO	G14-057T 345.00 - SUNNYSIDE 345KV CKT 1	717	789	0.05995	113.3786	SABINE 230/22.0KV TRANSFORMER CKT 1
FDNS	00NR	2	16WP	G15_081	FROM->TO	G14-057T 345.00 - SUNNYSIDE 345KV CKT 1	717	789	0.05995	113.3764	AMITY SS - MURFREESBORO EAST (AECC) 115KV CKT 1
FDNS	00NR	2	16WP	G15_081	FROM->TO	G14-057T 345.00 - SUNNYSIDE 345KV CKT 1	717	789	0.0599	113.3747	P12:138:WFEC-AEPW:ELKCTY-4:ERICK4
FDNS	00NR	2	16WP	G15_081	FROM->TO	G14-057T 345.00 - SUNNYSIDE 345KV CKT 1	717	789	0.06009	113.3729	P12:138:OKGE:3TERM47
FDNS	00NR	2	20WP	G15_081	FROM->TO	G14-057T 345.00 - SUNNYSIDE 345KV CKT 1	717	789	0.06013	113.0115	DUNCAN - OMPA-DUNCAN 840 138KV CKT 1
FDNS	00NR	2	20WP	G15_081	FROM->TO	G14-057T 345.00 - SUNNYSIDE 345KV CKT 1	717	789	0.06043	112.9602	P12:138:WFEC:MSL01
FDNS	00NR	2	16WP	G15_081	FROM->TO	G14-057T 345.00 - SUNNYSIDE 345KV CKT 1	717	789	0.05995	112.9058	803-OKLAUNION
FDNS	00NR	2	20WP	G15_081	FROM->TO	G14-057T 345.00 - SUNNYSIDE 345KV CKT 1	717	789	0.05952	112.8133	ELDORADO EHV - MOUNT OLIVE 500KV CKT 1
FDNS	00NR	2	20WP	G15_081	FROM->TO	G14-057T 345.00 - SUNNYSIDE 345KV CKT 1	717	789	0.05954	112.8085	P12:138:AEPW:SHERID4:112GORE4
FDNS	00NR	2	20WP	G15_081	FROM->TO	G14-057T 345.00 - SUNNYSIDE 345KV CKT 1	717	789	0.05956	112.7873	DOLET HILLS 345/24.0KV TRANSFORMER CKT 1
FDNS	00NR	2	20WP	G15_081	FROM->TO	G14-057T 345.00 - SUNNYSIDE 345KV CKT 1	717	789	0.06283	112.7668	Hitchland Interchange - WALKTAP7 345.00 345KV CKT 1
FDNS	00NR	2	20WP	G15_081	FROM->TO	G14-057T 345.00 - SUNNYSIDE 345KV CKT 1	717	789	0.06283	112.7573	P12:345:SPS:J07.1.FINN.HITCH
FDNS	00NR	2	20WP	G15_081	FROM->TO	G14-057T 345.00 - SUNNYSIDE 345KV CKT 1	717	789	0.05996	112.7566	REDBUD - RIVERSIDE STATION 345KV CKT 1
FDNS	00NR	2	20WP	G15_081	FROM->TO	G14-057T 345.00 - SUNNYSIDE 345KV CKT 1	717	789	0.05966	112.653	WEBRE - WELLS 500KV CKT 1
FDNS	00NR	2	20WP	G15_081	FROM->TO	G14-057T 345.00 - SUNNYSIDE 345KV CKT 1	717	789	0.05956	112.6136	P12:161:AEPW:DYESS 5:HYLAND 5
FDNS	00NR	2	20WP	G15_081	FROM->TO	G14-057T 345.00 - SUNNYSIDE 345KV CKT 1	717	789	0.05956	112.5779	DELL 500 - ESSEX UNIT 2 500KV CKT Z1
FDNS	00NR	2	20WP	G15_081	FROM->TO	G14-057T 345.00 - SUNNYSIDE 345KV CKT 1	717	789	0.05956	112.5497	P12:69:AEPW:L.E.S.-2:LAW WC2
FDNS	00NR	2	20WP	G15_081	FROM->TO	G14-057T 345.00 - SUNNYSIDE 345KV CKT 1	717	789	0.0609	112.5491	P12:138:WFEC:MSL17
FDNS	00NR	2	20WP	G15_081	FROM->TO	G14-057T 345.00 - SUNNYSIDE 345KV CKT 1	717	789	0.05993	112.4804	P12:138:WFEC:MSL02
FDNS	00NR	2	20WP	G15_081	FROM->TO	G14-057T 345.00 - SUNNYSIDE 345KV CKT 1	717	789	0.05967	112.4648	LAWTON EASTSIDE (LES 5) 345/138/13.8KV TRANSFORMER CKT 2
FDNS	00NR	2	20WP	G15_081	FROM->TO	G14-057T 345.00 - SUNNYSIDE 345KV CKT 1	717	789	0.05943	112.4575	ELDORADO EHV - SHERIDAN EHV 500KV CKT 1
FDNS	00NR	2	16WP	G15_081	FROM->TO	G14-057T 345.00 - SUNNYSIDE 345KV CKT 1	717	789	0.06025	112.4486	P12:138:OKGE:3TERM21
FDNS	00NR	2	16WP	G15_081	FROM->TO	G14-057T 345.00 - SUNNYSIDE 345KV CKT 1	717	789	0.05997	112.4396	P12:138:WFEC:MSL11
FDNS	00NR	2	16WP	G15_081	FROM->TO	G14-057T 345.00 - SUNNYSIDE 345KV CKT 1	717	789	0.05997	112.4396	P12:138:WFEC-AEPW:PHAROAH4:LONEOAK4
FDNS	00NR	2	20WP	G15_081	FROM->TO	G14-057T 345.00 - SUNNYSIDE 345KV CKT 1	717	789	0.05954	112.4267	P12:138:AEPW:112GORE4:L.E.S.-4
FDNS	00NR	2	16WP	G15_081	FROM->TO	G14-057T 345.00 - SUNNYSIDE 345KV CKT 1	717	789	0.05994	112.4178	P12:069:OKGE:3TERM42
FDNS	00NR	2	16WP	G15_081	FROM->TO	G14-057T 345.00 - SUNNYSIDE 345KV CKT 1	717	789	0.06011	112.4163	P12:138:WFEC:MSL08
FDNS	00NR	2	16WP	G15_081	FROM->TO	G14-057T 345.00 - SUNNYSIDE 345KV CKT 1	717	789	0.06007	112.411	DELL 500 - INDEPENDENCE 500KV CKT 1
FDNS	00NR	2	16WP	G15_081	FROM->TO	G14-057T 345.00 - SUNNYSIDE 345KV CKT 1	717	789	0.05894	112.3839	P12:138:WFEC:MSL14
FDNS	00NR	2	16WP	G15_081	FROM->TO	G14-057T 345.00 - SUNNYSIDE 345KV CKT 1	717	789	0.05995	112.3439	BURLINGTON NO1 + NO 2 + NO 3 161/20.0KV TRANSFORMER CKT 1
FDNS	00NR	2	16WP	G15_081	FROM->TO	G14-057T 345.00 - SUNNYSIDE 345KV CKT 1	717	789	0.05995	112.3431	INDEPENDENCE 500/26.0KV TRANSFORMER CKT 1
FDNS	00NR	2	16WP	G15_081	FROM->TO	G14-057T 345.00 - SUNNYSIDE 345KV CKT 1	717	789	0.06011	112.3389	CANADIAN RIVER - MCALESTER SOUTH 138KV CKT 1
FDNS	00NR	2	16WP	G15_081	FROM->TO	G14-057T 345.00 - SUNNYSIDE 345KV CKT 1	717	789	0.06011	112.3377	CANADIAN RIVER () 345/138/13.8KV TRANSFORMER CKT 1
FDNS	00NR	2	16WP	G15_081	FROM->TO	G14-057T 345.00 - SUNNYSIDE 345KV CKT 1	717	789	0.05982	112.3253	ALTUS JUNCTION - RUSSELL 138KV CKT 1
FDNS	00NR	2	20WP	G15_081	FROM->TO	G14-057T 345.00 - SUNNYSIDE 345KV CKT 1	717	789	0.05956	112.3175	FRONTIER - GRIMES 345KV CKT 1
FDNS	00NR	2	16WP	G15_081	FROM->TO	G14-057T 345.00 - SUNNYSIDE 345KV CKT 1	717	789	0.05997	112.3173	NORTHWEST TEXARKANA - WELSH 345KV CKT 1
FDNS	00NR	2	16WP	G15_081	FROM->TO	G14-057T 345.00 - SUNNYSIDE 345KV CKT 1	717	789	0.06085	112.315	MINGO - SETAB 345KV CKT 1

SOLUTION	GROUP	SCENARIO	SEASON	SOURCE	DIRECTION	MONITORED ELEMENT	RATEA (MVA)	RATEB(MVA)	TDF	TC%LOADING (% MVA)	CONTINGENCY
FDNS	00NR	2	20WP	G15_081	FROM->TO	G14-057T 345.00 - SUNNYSIDE 345KV CKT 1	717	789	0.06122	112.3124	P12:138:AEPW-OGE:CORNVIL4:MAUD 4
FDNS	00NR	2	16WP	G15_081	FROM->TO	G14-057T 345.00 - SUNNYSIDE 345KV CKT 1	717	789	0.05995	112.3074	P12:230:UMZB:# 112 #: NU IN SD. NU-RCDC & DRY CREEK XFMR
FDNS	00NR	2	16WP	G15_081	FROM->TO	G14-057T 345.00 - SUNNYSIDE 345KV CKT 1	717	789	0.06012	112.2896	KEO EHV - WEST MEMPHIS 500 500KV CKT 1
FDNS	00NR	2	16WP	G15_081	FROM->TO	G14-057T 345.00 - SUNNYSIDE 345KV CKT 1	717	789	0.05995	112.2707	THOMAS HILL 161/22.0KV TRANSFORMER CKT 1
FDNS	00NR	2	16WP	G15_081	FROM->TO	G14-057T 345.00 - SUNNYSIDE 345KV CKT 1	717	789	0.05904	112.257	ARKANSAS NUCLEAR ONE - FT SMITH 500KV CKT 1
FDNS	00NR	2	20WP	G15_081	FROM->TO	G14-057T 345.00 - SUNNYSIDE 345KV CKT 1	717	789	0.05952	112.2143	LAYFLD8 500.00 - MOUNT OLIVE 500KV CKT 1
FDNS	00NR	2	20WP	G15_081	FROM->TO	G14-057T 345.00 - SUNNYSIDE 345KV CKT 1	717	789	0.06264	112.2058	THISTLE7 345.00 - WOODWARD DISTRICT EHV 345KV CKT 1
FDNS	00NR	2	20WP	G15_081	FROM->TO	G14-057T 345.00 - SUNNYSIDE 345KV CKT 1	717	789	0.06264	112.2058	THISTLE7 345.00 - WOODWARD DISTRICT EHV 345KV CKT 2
FDNS	00NR	2	20WP	G15_081	FROM->TO	G14-057T 345.00 - SUNNYSIDE 345KV CKT 1	717	789	0.05955	112.1722	P12:161:AEPW-SWPA:BEAVER5:EROGERS5
FDNS	00NR	2	16WP	G15_081	FROM->TO	G14-057T 345.00 - SUNNYSIDE 345KV CKT 1	717	789	0.05953	112.1653	P12:138:AEPW:112GORE4:SNYDER-4
FDNS	00NR	2	20WP	G15_081	FROM->TO	G14-057T 345.00 - SUNNYSIDE 345KV CKT 1	717	789	0.05974	112.1515	DUNCAN (DUNCAN) 138/69/13.8KV TRANSFORMER CKT 1
FDNS	00NR	2	20WP	G15_081	FROM->TO	G14-057T 345.00 - SUNNYSIDE 345KV CKT 1	717	789	0.05956	112.1323	P12:161:AEPW:DYESS5:ELMSPRNG:TONTITN5
FDNS	00NR	2	16WP	G15_081	FROM->TO	G14-057T 345.00 - SUNNYSIDE 345KV CKT 1	717	789	0.06225	112.1239	CLARKSVILLE - MUSKOGEE 345KV CKT 1
FDNS	00NR	2	20WP	G15_081	FROM->TO	G14-057T 345.00 - SUNNYSIDE 345KV CKT 1	717	789	0.05959	112.054	P12:138:AEPW:CATOOSA4:T.S.E.-4
FDNS	00NR	2	16WP	G15_081	FROM->TO	G14-057T 345.00 - SUNNYSIDE 345KV CKT 1	717	789	0.05995	112.0482	4SIOUX 1 138.00 138/18.0KV TRANSFORMER CKT 1
FDNS	00NR	2	16WP	G15_081	FROM->TO	G14-057T 345.00 - SUNNYSIDE 345KV CKT 1	717	789	0.05989	112.0471	P12:138:WFEC:MSL07
FDNS	00NR	2	16WP	G15_081	FROM->TO	G14-057T 345.00 - SUNNYSIDE 345KV CKT 1	717	789	0.05989	112.0471	P12:138:WFEC-AEPW:HUGOPP4:ATOKA--4
FDNS	00NR	2	16WP	G15_081	FROM->TO	G14-057T 345.00 - SUNNYSIDE 345KV CKT 1	717	789	0.05995	112.0336	CLAY BOSWELL 230/20.9KV TRANSFORMER CKT 1
FDNS	00NR	2	20WP	G15_081	FROM->TO	G14-057T 345.00 - SUNNYSIDE 345KV CKT 1	717	789	0.05958	112.0214	FULTON 115 - HOPE 115KV CKT 1
FDNS	00NR	2	20WP	G15_081	FROM->TO	G14-057T 345.00 - SUNNYSIDE 345KV CKT 1	717	789	0.05996	112.008	P12:138:AEPW:S.W.S.-4:L.E.S.-4
FDNS	00NR	2	16WP	G15_081	FROM->TO	G14-057T 345.00 - SUNNYSIDE 345KV CKT 1	717	789	0.06	111.997	P12:138:WFEC:MSL16
FDNS	00NR	2	20WP	G15_081	FROM->TO	G14-057T 345.00 - SUNNYSIDE 345KV CKT 1	717	789	0.05979	111.993	P12:138:AEPW:CORNVIL4:DUNCAN-4
FDNS	00NR	2	20WP	G15_081	FROM->TO	G14-057T 345.00 - SUNNYSIDE 345KV CKT 1	717	789	0.0596	111.9655	6LAYFLD 230.00 - CARROLL 230KV CKT 1
FDNS	00NR	2	20WP	G15_081	FROM->TO	G14-057T 345.00 - SUNNYSIDE 345KV CKT 1	717	789	0.05974	111.9597	P12:69:WFEC-AEPW:COMANCH2:DUNCAN-2
FDNS	00NR	2	20WP	G15_081	FROM->TO	G14-057T 345.00 - SUNNYSIDE 345KV CKT 1	717	789	0.05959	111.9504	8DANIEL8 500.00 - MCKNIGHT 500KV CKT 1
FDNS	00NR	2	20WP	G15_081	FROM->TO	G14-057T 345.00 - SUNNYSIDE 345KV CKT 1	717	789	0.05978	111.9499	P12:138:AEPW:CORNVIL4:S.W.S.-4
FDNS	00NR	2	16WP	G15_081	FROM->TO	G14-057T 345.00 - SUNNYSIDE 345KV CKT 1	717	789	0.05992	111.9491	P12:138:WFEC-AEPW:GOLDENSW4:CRAIGJT4
FDNS	00NR	2	20WP	G15_081	FROM->TO	G14-057T 345.00 - SUNNYSIDE 345KV CKT 1	717	789	0.05979	111.9426	P12:138:AEPW-OGE:WTH_JCT4:JENSEN4
FDNS	00NR	2	20WP	G15_081	FROM->TO	G14-057T 345.00 - SUNNYSIDE 345KV CKT 1	717	789	0.05956	111.9316	P12:161:AEPW:EROGERS5:ECNTRTN5
FDNS	00NR	2	20WP	G15_081	FROM->TO	G14-057T 345.00 - SUNNYSIDE 345KV CKT 1	717	789	0.06154	111.9134	FINNEY SWITCHING STATION - HOLCOMB 345KV CKT 1
FDNS	00NR	2	20WP	G15_081	FROM->TO	G14-057T 345.00 - SUNNYSIDE 345KV CKT 1	717	789	0.05956	111.9095	WHITE BLUFF 500/26.0KV TRANSFORMER CKT 1
FDNS	00NR	2	20WP	G15_081	FROM->TO	G14-057T 345.00 - SUNNYSIDE 345KV CKT 1	717	789	0.05957	111.8936	BISMARK - HOT SPRINGS WEST BUS 115KV CKT 1
FDNS	00NR	2	20WP	G15_081	FROM->TO	G14-057T 345.00 - SUNNYSIDE 345KV CKT 1	717	789	0.05963	111.8896	P12:69:AEPW-OMPA:COMANC-2:OMWALTR2
FDNS	00NR	2	20WP	G15_081	FROM->TO	G14-057T 345.00 - SUNNYSIDE 345KV CKT 1	717	789	0.05956	111.8895	MC NIEL 500/115KV TRANSFORMER CKT 1
FDNS	00NR	2	20WP	G15_081	FROM->TO	G14-057T 345.00 - SUNNYSIDE 345KV CKT 1	717	789	0.05956	111.8895	RODEMACHER 230/22.0KV TRANSFORMER CKT 1
FDNS	00NR	2	20WP	G15_081	FROM->TO	G14-057T 345.00 - SUNNYSIDE 345KV CKT 1	717	789	0.05968	111.8774	P12:138:AEPW:WTHWF4:CLINTJC4
FDNS	00NR	2	20WP	G15_081	FROM->TO	G14-057T 345.00 - SUNNYSIDE 345KV CKT 1	717	789	0.05954	111.8739	HOT SPRINGS EHV - MAGNET COVE 500KV CKT 1
FDNS	00NR	2	16WP	G15_081	FROM->TO	G14-057T 345.00 - SUNNYSIDE 345KV CKT 1	717	789	0.05992	111.8719	P12:138:AEPW-SWPA:LONEOAK4:TUPELO4
FDNS	00NR	2	16WP	G15_081	FROM->TO	G14-057T 345.00 - SUNNYSIDE 345KV CKT 1	717	789	0.05992	111.8719	P12:138:WFEC:MSL06
FDNS	00NR	2	20WP	G15_081	FROM->TO	G14-057T 345.00 - SUNNYSIDE 345KV CKT 1	717	789	0.05967	111.866	ELK CITY 230KV (ELKCTY-6) 230/138/13.8KV TRANSFORMER CKT 1
FDNS	00NR	2	20WP	G15_081	FROM->TO	G14-057T 345.00 - SUNNYSIDE 345KV CKT 1	717	789	0.05989	111.8593	BUCKNER7 345.00 - SPEARVILLE 345KV CKT 1
FDNS	00NR	2	16WP	G15_081	FROM->TO	G14-057T 345.00 - SUNNYSIDE 345KV CKT 1	717	789	0.05969	111.8539	P12:138:OKGE:3TERM40
FDNS	00NR	2	20WP	G15_081	FROM->TO	G14-057T 345.00 - SUNNYSIDE 345KV CKT 1	717	789	0.05957	111.8396	ALPINE AECC - BISMARK 115KV CKT 1
FDNS	00NR	2	20WP	G15_081	FROM->TO	G14-057T 345.00 - SUNNYSIDE 345KV CKT 1	717	789	0.05968	111.8391	P12:138:AEPW:WTHWF4:WTH_SE4
FDNS	00NR	2	20WP	G15_081	FROM->TO	G14-057T 345.00 - SUNNYSIDE 345KV CKT 1	717	789	0.05958	111.8307	P12:138:AEPW:N.E.S.-4:CATOOSA4
FDNS	00NR	2	20WP	G15_081	FROM->TO	G14-057T 345.00 - SUNNYSIDE 345KV CKT 1	717	789	0.05956	111.8199	NELSON 230/20.0KV TRANSFORMER CKT 1
FDNS	00NR	2	16WP	G15_081	FROM->TO	G14-057T 345.00 - SUNNYSIDE 345KV CKT 1	717	789	0.05425	111.8167	GRACEMONT - LAWTON EASTSIDE 345KV CKT 1
FDNS	00NR	2	20WP	G15_081	FROM->TO	G14-057T 345.00 - SUNNYSIDE 345KV CKT 1	717	789	0.05957	111.7914	ALPINE AECC - AMITY SS 115KV CKT 1
FDNS	00NR	2	16WP	G15_081	FROM->TO	G14-057T 345.00 - SUNNYSIDE 345KV CKT 1	717	789	0.05913	111.7803	GRAPEVINE INTERCHANGE - STATELINE INTERCHANGE 230KV CKT 1
FDNS	00NR	2	20WP	G15_081	FROM->TO	G14-057T 345.00 - SUNNYSIDE 345KV CKT 1	717	789	0.05956	111.7693	8CAJUN2 500/24.0KV TRANSFORMER CKT 1
FDNS	00NR	2	20WP	G15_081	FROM->TO	G14-057T 345.00 - SUNNYSIDE 345KV CKT 1	717	789	0.05956	111.7376	P12:138:AEPW:R.S.S.-4:S.HUD.-4
FDNS	00NR	2	20WP	G15_081	FROM->TO	G14-057T 345.00 - SUNNYSIDE 345KV CKT 1	717	789	0.05956	111.7312	SABINE 230/24.0KV TRANSFORMER CKT 1
FDNS	00NR	2	20WP	G15_081	FROM->TO	G14-057T 345.00 - SUNNYSIDE 345KV CKT 1	717	789	0.05952	111.7295	ETTA (DUKE HOTSPRINGS) - MC NIEL 500KV CKT 1
FDNS	00NR	2	20WP	G15_081	FROM->TO	G14-057T 345.00 - SUNNYSIDE 345KV CKT 1	717	789	0.05962	111.727	LAWTON EASTSIDE (LES 4) 345/138/13.8KV TRANSFORMER CKT 1
FDNS	00NR	2	20WP	G15_081	FROM->TO	G14-057T 345.00 - SUNNYSIDE 345KV CKT 1	717	789	0.05956	111.7065	P12:69:AEPW:NROGERS2:ECNTRTN2
FDNS	00NR	2	20WP	G15_081	FROM->TO	G14-057T 345.00 - SUNNYSIDE 345KV CKT 1	717	789	0.05976	111.6987	WEATHERFORD JCT. - WEATHERFORD SOUTHEAST 138KV CKT 1
FDNS	00NR	2	20WP	G15_081	FROM->TO	G14-057T 345.00 - SUNNYSIDE 345KV CKT 1	717	789	0.05956	111.6968	P12:138:AEPW:BA_71ST4:T.S.E.-4
FDNS	00NR	2	20WP	G15_081	FROM->TO	G14-057T 345.00 - SUNNYSIDE 345KV CKT 1	717	789	0.05956	111.6915	P12:138:AEPW:YARCH-S4:T.S.E.-4
FDNS	00NR	2	20WP	G15_081	FROM->TO	G14-057T 345.00 - SUNNYSIDE 345KV CKT 1	717	789	0.05967	111.6801	P12:138:AEPW-OGE:SHIDLER4:OSAGE 4
FDNS	00NR	2	20WP	G15_081	FROM->TO	G14-057T 345.00 - SUNNYSIDE 345KV CKT 1	717	789	0.05956	111.6786	7JASPER 345.00 - BLACKBERRY 345KV CKT 1
FDNS	00NR	2	20WP	G15_081	FROM->TO	G14-057T 345.00 - SUNNYSIDE 345KV CKT 1	717	789	0.0598	111.6681	NORGE ROAD - SOUTHWESTERN STATION 138KV CKT 1
FDNS	00NR	2	20WP	G15_081	FROM->TO	G14-057T 345.00 - SUNNYSIDE 345KV CKT 1	717	789	0.05956	111.6665	FRONTIER 345/18.0KV TRANSFORMER CKT 1
FDNS	00NR	2	20WP	G15_081	FROM->TO	G14-057T 345.00 - SUNNYSIDE 345KV CKT 1	717	789	0.05956	111.6643	FRONTIER 345/18.0KV TRANSFORMER CKT 1
FDNS	00NR	2	20WP	G15_081	FROM->TO	G14-057T 345.00 - SUNNYSIDE 345KV CKT 1	717	789	0.06106	111.6636	P12:138:OKGE:3TERM27
FDNS	00NR	2	20WP	G15_081	FROM->TO	G14-057T 345.00 - SUNNYSIDE 345KV CKT 1	717	789	0.05976	111.6636	P12:138:AEPW:REDROCKRD4:WTH_JCT4
FDNS	00NR	2	20WP	G15_081	FROM->TO	G14-057T 345.00 - SUNNYSIDE 345KV CKT 1	717	789	0.05996	111.6606	P12:138:OKGE-AEPW:JENSEN4:REDROCKRD4
FDNS	00NR	2	20WP	G15_081	FROM->TO	G14-057T 345.00 - SUNNYSIDE 345KV CKT 1	717	789	0.06154	111.6573	FINNEY SWITCHING STATION - WALKTAP7 345.00 345KV CKT 1
FDNS	00NR	2	20WP	G15_081	FROM->TO	G14-057T 345.00 - SUNNYSIDE 345KV CKT 1	717	789	0.05958	111.6478	P12:115:AEPW:TURK3:HOPE3
FDNS	00NR	2	16WP	G15_081	FROM->TO	G14-057T 345.00 - SUNNYSIDE 345KV CKT 1	717	789	0.05914	111.6468	GRAPEVINE INTERCHANGE - NICHOLS STATION 230KV CKT 1
FDNS	00NR	2	20WP	G15_081	FROM->TO	G14-057T 345.00 - SUNNYSIDE 345KV CKT 1	717	789	0.0596	111.6463	P12:138:OKGE:3TERM2
FDNS	00NR	2	20WP	G15_081	FROM->TO	G14-057T 345.00 - SUNNYSIDE 345KV CKT 1	717	789	0.05957	111.646	COUCH SES - MC NIEL 115KV CKT 1
FDNS	00NR	2	20WP	G15_081	FROM->TO	G14-057T 345.00 - SUNNYSIDE 345KV CKT 1	717	789	0.05963	111.6439	OMPA-WALTERS - WALTERS 69KV CKT 1
FDNS	00NR	2	20WP	G15_081	FROM->TO	G14-057T 345.00 - SUNNYSIDE 345KV CKT 1	717	789	0.05956	111.6428	CYPRESS - HARTBURG 500KV CKT 1
FDNS	00NR	2	20WP	G15_081	FROM->TO	G14-057T 345.00 - SUNNYSIDE 345KV CKT 1	717	789	0.05956	111.6362	LEWIS CREEK SWITCHYARD 138/22.0KV TRANSFORMER CKT 1
FDNS	00NR	2	20WP	G15_081	FROM->TO	G14-057T 345.00 - SUNNYSIDE 345KV CKT 1	717	789	0.05956	111.6318	LEWIS CREEK SWITCHYARD 138/22.0KV TRANSFORMER CKT 1
FDNS	00NR	2	20WP	G15_081	FROM->TO	G14-057T 345.00 - SUNNYSIDE 345KV CKT 1	717	789	0.05958	111.6221	TURK (TURK 1) 138/115/13.2KV TRANSFORMER CKT 1
FDNS	00NR	2	16WP	G15_081	FROM->TO	G14-057T 345.00 - SUNNYSIDE 345KV CKT 1	717	789	0.05979	111.6209	P12:138:AEPW:SHAM4WT:CHILD4WT
FDNS	00NR	2	20WP	G15_081	FROM->TO	G14-057T 345.00 - SUNNYSIDE 345KV CKT 1	717	789	0.05956	111.6197	P12:161:AEPW:CHAMSPR5:FARMING5
FDNS	00NR	2	16WP	G15_081	FROM->TO	G14-057T 345.00 - SUNNYSIDE 345KV CKT 1	717	789	0.06019	111.6149	P12:138:WFEC:MSL15

SOLUTION	GROUP	SCENARIO	SEASON	SOURCE	DIRECTION	MONITORED ELEMENT	RATEA (MVA)	RATEB(MVA)	TDF	TC%LOADING (% MVA)	CONTINGENCY
FDNS	00NR	2	20WP	G15_081	FROM->TO	G14-057T 345.00 - SUNNYSIDE 345KV CKT 1	717	789	0.05975	111.6141	P12:69:WFEC-AEPW:COMANCH2:WALTRS-2
FDNS	00NR	2	20WP	G15_081	FROM->TO	G14-057T 345.00 - SUNNYSIDE 345KV CKT 1	717	789	0.05966	111.6003	7LUTESVIL 345.00 - 7ST FRANC 345.00 345KV CKT 1
FDNS	00NR	2	20WP	G15_081	FROM->TO	G14-057T 345.00 - SUNNYSIDE 345KV CKT 1	717	789	0.05981	111.5953	CLINTON JUNCTION - ELK CITY 138KV CKT 1
FDNS	00NR	2	20WP	G15_081	FROM->TO	G14-057T 345.00 - SUNNYSIDE 345KV CKT 1	717	789	0.05956	111.5867	ST FRANCIS - ST FRANCIS 1 161KV CKT Z1
FDNS	00NR	2	20WP	G15_081	FROM->TO	G14-057T 345.00 - SUNNYSIDE 345KV CKT 1	717	789	0.05989	111.5864	BUCKNER7 345.00 - HOLCOMB 345KV CKT 1
FDNS	00NR	2	20WP	G15_081	FROM->TO	G14-057T 345.00 - SUNNYSIDE 345KV CKT 1	717	789	0.05964	111.5758	LAKEOVER - MCADAMS 500KV CKT 1
FDNS	00NR	2	20WP	G15_081	FROM->TO	G14-057T 345.00 - SUNNYSIDE 345KV CKT 1	717	789	0.05956	111.5739	SABINE 230/22.0KV TRANSFORMER CKT 1
FDNS	00NR	2	20WP	G15_081	FROM->TO	G14-057T 345.00 - SUNNYSIDE 345KV CKT 1	717	789	0.05962	111.5724	P12:138:OKGE:3TERM12
FDNS	00NR	2	20WP	G15_081	FROM->TO	G14-057T 345.00 - SUNNYSIDE 345KV CKT 1	717	789	0.05957	111.5703	P12:138:AEPW:R.S.S-4:T.P.S.-4
FDNS	00NR	2	20WP	G15_081	FROM->TO	G14-057T 345.00 - SUNNYSIDE 345KV CKT 1	717	789	0.05971	111.5586	MCADAMS - WOLF CREEK 500KV CKT 1
FDNS	00NR	2	20WP	G15_081	FROM->TO	G14-057T 345.00 - SUNNYSIDE 345KV CKT 1	717	789	0.05952	111.5573	P12:138:WFEC-AEPW:ELKCTY-4:ERICK4
FDNS	00NR	2	20WP	G15_081	FROM->TO	G14-057T 345.00 - SUNNYSIDE 345KV CKT 1	717	789	0.05956	111.5451	P12:138:AEPW:R.S.S.-4:R:96YALE-4
FDNS	00NR	2	20WP	G15_081	FROM->TO	G14-057T 345.00 - SUNNYSIDE 345KV CKT 1	717	789	0.05957	111.5353	AMITY SS - MURFREESBORO EAST (AECC) 115KV CKT 1
FDNS	00NR	2	20WP	G15_081	FROM->TO	G14-057T 345.00 - SUNNYSIDE 345KV CKT 1	717	789	0.05956	111.5338	NELSON 230/24.0KV TRANSFORMER CKT 1
FDNS	00NR	2	20WP	G15_081	FROM->TO	G14-057T 345.00 - SUNNYSIDE 345KV CKT 1	717	789	0.05969	111.5289	8WNEWMADRID 500.00 - DELL 500 500KV CKT 1
FDNS	00NR	2	20WP	G15_081	FROM->TO	G14-057T 345.00 - SUNNYSIDE 345KV CKT 1	717	789	0.05956	111.5241	ST FRANCIS 345/161KV TRANSFORMER CKT 1
FDNS	00NR	2	20WP	G15_081	FROM->TO	G14-057T 345.00 - SUNNYSIDE 345KV CKT 1	717	789	0.05956	111.5229	P12:138:AEPW:MOHAWK4:T.NO--4
FDNS	00NR	2	20WP	G15_081	FROM->TO	G14-057T 345.00 - SUNNYSIDE 345KV CKT 1	717	789	0.0598	111.521	CORNVILLE - NORGE ROAD 138KV CKT 1
FDNS	00NR	2	20WP	G15_081	FROM->TO	G14-057T 345.00 - SUNNYSIDE 345KV CKT 1	717	789	0.05957	111.5172	LAYFLD8 500.00 (LAYFLD AUTO) 500/230/13.8KV TRANSFORMER CKT 1
FDNS	00NR	2	20WP	G15_081	FROM->TO	G14-057T 345.00 - SUNNYSIDE 345KV CKT 1	717	789	0.05942	111.5029	P12:138:AEPW-SWPA:LONEOAK4:BRKNBW4
FDNS	00NR	2	20WP	G15_081	FROM->TO	G14-057T 345.00 - SUNNYSIDE 345KV CKT 1	717	789	0.05961	111.4903	7JASPER 345.00 - MORGAN 345KV CKT 1
FDNS	00NR	2	20WP	G15_081	FROM->TO	G14-057T 345.00 - SUNNYSIDE 345KV CKT 1	717	789	0.05969	111.4562	P12:138:OKGE:3TERM20
FDNS	00NR	2	20WP	G15_081	FROM->TO	G14-057T 345.00 - SUNNYSIDE 345KV CKT 1	717	789	0.05394	111.4559	GRACEMONT - LAWTON EASTSIDE 345KV CKT 1
FDNS	00NR	2	16WP	G15_081	FROM->TO	G14-057T 345.00 - SUNNYSIDE 345KV CKT 1	717	789	0.06002	111.3775	P12:138:WFEC:MSL09
FDNS	00NR	2	16WP	G15_081	FROM->TO	G14-057T 345.00 - SUNNYSIDE 345KV CKT 1	717	789	0.05851	111.219	P12:230:AEPW-SPS:SWEETWT6:WHEELER 6
FDNS	00NR	2	16WP	G15_081	FROM->TO	G14-057T 345.00 - SUNNYSIDE 345KV CKT 1	717	789	0.05973	111.2158	P12:138:AEPW-OGE:CORNVIL4:CIMARON4
FDNS	00NR	2	16WP	G15_081	FROM->TO	G14-057T 345.00 - SUNNYSIDE 345KV CKT 1	717	789	0.05995	111.1543	BIG STONE 230/24.0KV TRANSFORMER CKT 1
FDNS	00NR	2	20WP	G15_081	FROM->TO	G14-057T 345.00 - SUNNYSIDE 345KV CKT 1	717	789	0.05956	111.0351	803-OKLAUNION
FDNS	00NR	2	16WP	G15_081	FROM->TO	G14-057T 345.00 - SUNNYSIDE 345KV CKT 1	717	789	0.05999	110.9204	NORTHWEST TEXARKANA - VALLIANT 345KV CKT 1
FDNS	00NR	2	16WP	G15_081	FROM->TO	G14-057T 345.00 - SUNNYSIDE 345KV CKT 1	717	789	0.05808	110.8617	P12:230:AEPW:ELKCITY6:SWEETWT6
FDNS	00NR	2	20WP	G15_081	FROM->TO	G14-057T 345.00 - SUNNYSIDE 345KV CKT 1	717	789	0.05856	110.81	P12:138:OKGE:3TERM39
FDNS	00NR	2	16WP	G15_081	FROM->TO	G14-057T 345.00 - SUNNYSIDE 345KV CKT 1	717	789	0.05995	110.6383	SHERBURNE CO 345/24.0KV TRANSFORMER CKT 1
FDNS	00NR	2	20WP	G15_081	FROM->TO	G14-057T 345.00 - SUNNYSIDE 345KV CKT 1	717	789	0.05958	110.6101	NORTHWEST TEXARKANA - WELSH 345KV CKT 1
FDNS	00NR	2	20WP	G15_081	FROM->TO	G14-057T 345.00 - SUNNYSIDE 345KV CKT 1	717	789	0.05956	110.549	P12:069:OKGE:3TERM42
FDNS	00NR	2	20WP	G15_081	FROM->TO	G14-057T 345.00 - SUNNYSIDE 345KV CKT 1	717	789	0.05855	110.5478	P12:138:WFEC:MSL14
FDNS	00NR	2	20WP	G15_081	FROM->TO	G14-057T 345.00 - SUNNYSIDE 345KV CKT 1	717	789	0.05956	110.5385	BURLINGTON NO1 + NO 2 + NO 3 161/20.0KV TRANSFORMER CKT 1
FDNS	00NR	2	20WP	G15_081	FROM->TO	G14-057T 345.00 - SUNNYSIDE 345KV CKT 1	717	789	0.05986	110.536	P12:138:OKGE:3TERM21
FDNS	00NR	2	20WP	G15_081	FROM->TO	G14-057T 345.00 - SUNNYSIDE 345KV CKT 1	717	789	0.05959	110.5303	P12:138:WFEC:MSL11
FDNS	00NR	2	20WP	G15_081	FROM->TO	G14-057T 345.00 - SUNNYSIDE 345KV CKT 1	717	789	0.05959	110.5303	P12:138:WFEC-AEPW:PHAROAH4:LONEOAK4
FDNS	00NR	2	20WP	G15_081	FROM->TO	G14-057T 345.00 - SUNNYSIDE 345KV CKT 1	717	789	0.05972	110.4954	P12:138:WFEC:MSL08
FDNS	00NR	2	20WP	G15_081	FROM->TO	G14-057T 345.00 - SUNNYSIDE 345KV CKT 1	717	789	0.05956	110.4869	INDEPENDENCE 500/26.0KV TRANSFORMER CKT 1
FDNS	00NR	2	20WP	G15_081	FROM->TO	G14-057T 345.00 - SUNNYSIDE 345KV CKT 1	717	789	0.05956	110.4606	P12:230:UMZB:# 112 #: NU IN SD. NU-RCDC & DRY CREEK XFMR
FDNS	00NR	2	20WP	G15_081	FROM->TO	G14-057T 345.00 - SUNNYSIDE 345KV CKT 1	717	789	0.05943	110.4558	ALTUS JUNCTION - RUSSELL 138KV CKT 1
FDNS	00NR	2	20WP	G15_081	FROM->TO	G14-057T 345.00 - SUNNYSIDE 345KV CKT 1	717	789	0.05972	110.4489	CANADIAN RIVER - MCALESTER SOUTH 138KV CKT 1
FDNS	00NR	2	20WP	G15_081	FROM->TO	G14-057T 345.00 - SUNNYSIDE 345KV CKT 1	717	789	0.05972	110.4471	CANADIAN RIVER () 345/138/13.8KV TRANSFORMER CKT 1
FDNS	00NR	2	20WP	G15_081	FROM->TO	G14-057T 345.00 - SUNNYSIDE 345KV CKT 1	717	789	0.05916	110.4101	P12:138:AEPW:112GORE4:SNYDER-4
FDNS	00NR	2	16WP	G15_081	FROM->TO	G14-057T 345.00 - SUNNYSIDE 345KV CKT 1	717	789	0.06003	110.2331	LYDIA - WELSH 345KV CKT 1
FDNS	00NR	2	20WP	G15_081	FROM->TO	G14-057T 345.00 - SUNNYSIDE 345KV CKT 1	717	789	0.05956	110.2097	4SIOUX 1 138.00 138/18.0KV TRANSFORMER CKT 1
FDNS	00NR	2	20WP	G15_081	FROM->TO	G14-057T 345.00 - SUNNYSIDE 345KV CKT 1	717	789	0.05953	110.0798	P12:138:WFEC-AEPW:GOLDENSW4:CRAIGJT4
FDNS	00NR	2	20WP	G15_081	FROM->TO	G14-057T 345.00 - SUNNYSIDE 345KV CKT 1	717	789	0.05866	110.0749	ARKANSAS NUCLEAR ONE - FT SMITH 500KV CKT 1
FDNS	00NR	2	20WP	G15_081	FROM->TO	G14-057T 345.00 - SUNNYSIDE 345KV CKT 1	717	789	0.05956	110.0725	CLAY BOSWELL 230/20.9KV TRANSFORMER CKT 1
FDNS	00NR	2	20WP	G15_081	FROM->TO	G14-057T 345.00 - SUNNYSIDE 345KV CKT 1	717	789	0.05961	110.0622	P12:138:WFEC:MSL16
FDNS	00NR	2	20WP	G15_081	FROM->TO	G14-057T 345.00 - SUNNYSIDE 345KV CKT 1	717	789	0.0595	110.0031	P12:138:WFEC:MSL07
FDNS	00NR	2	20WP	G15_081	FROM->TO	G14-057T 345.00 - SUNNYSIDE 345KV CKT 1	717	789	0.0595	110.0031	P12:138:WFEC-AEPW:HUGOPP4:ATOKA--4
FDNS	00NR	2	20WP	G15_081	FROM->TO	G14-057T 345.00 - SUNNYSIDE 345KV CKT 1	717	789	0.05953	109.9818	P12:138:AEPW-SWPA:LONEOAK4:TUPELO4
FDNS	00NR	2	20WP	G15_081	FROM->TO	G14-057T 345.00 - SUNNYSIDE 345KV CKT 1	717	789	0.05953	109.9818	P12:138:WFEC:MSL06
FDNS	00NR	2	20WP	G15_081	FROM->TO	G14-057T 345.00 - SUNNYSIDE 345KV CKT 1	717	789	0.06186	109.9188	CLARKSVILLE - MUSKOGEE 345KV CKT 1
FDNS	00NR	2	20WP	G15_081	FROM->TO	G14-057T 345.00 - SUNNYSIDE 345KV CKT 1	717	789	0.05931	109.883	P12:138:OKGE:3TERM40
FDNS	00NR	2	20WP	G15_081	FROM->TO	G14-057T 345.00 - SUNNYSIDE 345KV CKT 1	717	789	0.05876	109.7869	GRAPEVINE INTERCHANGE - STATELINE INTERCHANGE 230KV CKT 1
FDNS	00NR	2	20WP	G15_081	FROM->TO	G14-057T 345.00 - SUNNYSIDE 345KV CKT 1	717	789	0.0594	109.726	P12:138:AEPW:SHAM4WT:CHILD4WT
FDNS	00NR	2	20WP	G15_081	FROM->TO	G14-057T 345.00 - SUNNYSIDE 345KV CKT 1	717	789	0.05981	109.6934	P12:138:WFEC:MSL15
FDNS	00NR	2	20WP	G15_081	FROM->TO	G14-057T 345.00 - SUNNYSIDE 345KV CKT 1	717	789	0.05877	109.6263	GRAPEVINE INTERCHANGE - NICHOLS STATION 230KV CKT 1
FDNS	00NR	2	20WP	G15_081	FROM->TO	G14-057T 345.00 - SUNNYSIDE 345KV CKT 1	717	789	0.05956	109.4111	BIG STONE 230/24.0KV TRANSFORMER CKT 1
FDNS	00NR	2	20WP	G15_081	FROM->TO	G14-057T 345.00 - SUNNYSIDE 345KV CKT 1	717	789	0.05963	109.3862	P12:138:WFEC:MSL09
FDNS	00NR	2	20WP	G15_081	FROM->TO	G14-057T 345.00 - SUNNYSIDE 345KV CKT 1	717	789	0.05934	109.3646	P12:138:AEPW-OGE:CORNVIL4:CIMARON4
FDNS	00NR	2	20WP	G15_081	FROM->TO	G14-057T 345.00 - SUNNYSIDE 345KV CKT 1	717	789	0.05962	109.316	NORTHWEST TEXARKANA - VALLIANT 345KV CKT 1
FDNS	00NR	2	20WP	G15_081	FROM->TO	G14-057T 345.00 - SUNNYSIDE 345KV CKT 1	717	789	0.05815	109.1361	P12:230:AEPW-SPS:SWEETWT6:WHEELER 6
FDNS	00NR	2	16WP	G15_081	FROM->TO	G14-057T 345.00 - SUNNYSIDE 345KV CKT 1	717	789	0.06005	109.1144	LYDIA - VALLIANT 345KV CKT 1
FDNS	00NR	2	20WP	G15_081	FROM->TO	G14-057T 345.00 - SUNNYSIDE 345KV CKT 1	717	789	0.05965	108.9522	LYDIA - WELSH 345KV CKT 1
FDNS	00NR	2	20WP	G15_081	FROM->TO	G14-057T 345.00 - SUNNYSIDE 345KV CKT 1	717	789	0.05956	108.9029	SHERBURNE CO 345/24.0KV TRANSFORMER CKT 1
FDNS	00NR	2	20WP	G15_081	FROM->TO	G14-057T 345.00 - SUNNYSIDE 345KV CKT 1	717	789	0.05774	108.8988	P12:230:AEPW:ELKCITY6:SWEETWT6
FDNS	00NR	2	20WP	G15_081	FROM->TO	G14-057T 345.00 - SUNNYSIDE 345KV CKT 1	717	789	0.05968	107.8976	LYDIA - VALLIANT 345KV CKT 1
FDNS	00NR	2	16WP	G15_081	FROM->TO	G14-057T 345.00 - SUNNYSIDE 345KV CKT 1	717	789	0.05063	107.1829	JOHNSON COUNTY - PITTSBURG 345KV CKT 1
FDNS	00NR	2	16WP	G15_081	FROM->TO	G14-057T 345.00 - SUNNYSIDE 345KV CKT 1	717	789	0.05849	106.2395	HUGO - VALLIANT 345KV CKT 1
FDNS	00NR	2	20WP	G15_081	FROM->TO	G14-057T 345.00 - SUNNYSIDE 345KV CKT 1	717	789	0.05029	105.821	JOHNSON COUNTY - PITTSBURG 345KV CKT 1
FDNS	00NR	2	20WP	G15_081	FROM->TO	G14-057T 345.00 - SUNNYSIDE 345KV CKT 1	717	789	0.05814	105.3214	HUGO - VALLIANT 345KV CKT 1
FDNS	00NR	3	16WP	G15_081	FROM->TO	G14-057T 345.00 - SUNNYSIDE 345KV CKT 1	717	789	0.05966	134.7924	CIMARRON - MINCO 345KV CKT 1
FDNS	00NR	3	20WP	G15_081	FROM->TO	G14-057T 345.00 - SUNNYSIDE 345KV CKT 1	717	789	0.05949	133.9604	CIMARRON - MINCO 345KV CKT 1
FDNS	00NR	3	16WP	G15_081	FROM->TO	G14-057T 345.00 - SUNNYSIDE 345KV CKT 1	717	789	0.05693	124.8136	PITTSBURG - SEMINOLE 345KV CKT 1

SOLUTION	GROUP	SCENARIO	SEASON	SOURCE	DIRECTION	MONITORED ELEMENT	RATEA (MVA)	RATEB(MVA)	TDF	TC%LOADING (% MVA)	CONTINGENCY
FDNS	00NR	3	16WP	G15_081	FROM->TO	G14-057T 345.00 - SUNNYSIDE 345KV CKT 1	717	789	0.05693	124.8136	PITTSBURG - SEMINOLE 345KV CKT 1
FDNS	00NR	3	16WP	G15_081	FROM->TO	G14-057T 345.00 - SUNNYSIDE 345KV CKT 1	717	789	0.05966	124.109	GRACEMONT - MINCO 345KV CKT 1
FDNS	00NR	3	16WP	G15_081	FROM->TO	G14-057T 345.00 - SUNNYSIDE 345KV CKT 1	717	789	0.05978	124.008	BASE CASE
FDNS	00NR	3	20WP	G15_081	FROM->TO	G14-057T 345.00 - SUNNYSIDE 345KV CKT 1	717	789	0.05949	123.2947	GRACEMONT - MINCO 345KV CKT 1
FDNS	00NR	3	20WP	G15_081	FROM->TO	G14-057T 345.00 - SUNNYSIDE 345KV CKT 1	717	789	0.05663	122.341	PITTSBURG - SEMINOLE 345KV CKT 1
FDNS	00NR	3	20WP	G15_081	FROM->TO	G14-057T 345.00 - SUNNYSIDE 345KV CKT 1	717	789	0.05663	122.341	PITTSBURG - SEMINOLE 345KV CKT 1
FDNS	00NR	3	20WP	G15_081	FROM->TO	G14-057T 345.00 - SUNNYSIDE 345KV CKT 1	717	789	0.05956	122.1742	BASE CASE
FDNS	00NR	3	16WP	G15_081	FROM->TO	G14-057T 345.00 - SUNNYSIDE 345KV CKT 1	717	789	0.07388	122.0119	CIMARRON - DRAPER LAKE 345KV CKT 1
FDNS	00NR	3	20WP	G15_081	FROM->TO	G14-057T 345.00 - SUNNYSIDE 345KV CKT 1	717	789	0.07363	120.1547	CIMARRON - DRAPER LAKE 345KV CKT 1
FDNS	00NR	3	16WP	G15_081	FROM->TO	G14-057T 345.00 - SUNNYSIDE 345KV CKT 1	717	789	0.06346	118.6121	P12:138:WFEC:MSL03
FDNS	00NR	3	16WP	G15_081	FROM->TO	G14-057T 345.00 - SUNNYSIDE 345KV CKT 1	717	789	0.05885	118.0416	PITTSBURG - VALLIANT 345KV CKT 1
FDNS	00NR	3	16WP	G15_081	FROM->TO	G14-057T 345.00 - SUNNYSIDE 345KV CKT 1	717	789	0.05885	118.0416	PITTSBURG - VALLIANT 345KV CKT 1
FDNS	00NR	3	16WP	G15_081	FROM->TO	G14-057T 345.00 - SUNNYSIDE 345KV CKT 1	717	789	0.05978	117.8049	GEN509403 1-PIRKEY GENERATION
FDNS	00NR	3	16WP	G15_081	FROM->TO	G14-057T 345.00 - SUNNYSIDE 345KV CKT 1	717	789	0.05978	117.7043	GEN509416 1-TURK GENERATION
FDNS	00NR	3	16WP	G15_081	FROM->TO	G14-057T 345.00 - SUNNYSIDE 345KV CKT 1	717	789	0.0618	117.4601	CLEVELAND - G15066_T 345.00 345KV CKT 1
FDNS	00NR	3	16WP	G15_081	FROM->TO	G14-057T 345.00 - SUNNYSIDE 345KV CKT 1	717	789	0.0618	117.173	G15066_T 345.00 - SOONER 345KV CKT 1
FDNS	00NR	3	20WP	G15_081	FROM->TO	G14-057T 345.00 - SUNNYSIDE 345KV CKT 1	717	789	0.06326	116.9133	P12:138:WFEC:MSL03
FDNS	00NR	3	16WP	G15_081	FROM->TO	G14-057T 345.00 - SUNNYSIDE 345KV CKT 1	717	789	0.05978	116.8021	GEN501801 1-DOLET HILLS UNIT1
FDNS	00NR	3	16WP	G15_081	FROM->TO	G14-057T 345.00 - SUNNYSIDE 345KV CKT 1	717	789	0.05492	116.6882	BORDER 7345.00 - WOODWARD DISTRICT EHV 345KV CKT 1
FDNS	00NR	3	16WP	G15_081	FROM->TO	G14-057T 345.00 - SUNNYSIDE 345KV CKT 1	717	789	0.05978	116.404	GEN509406 1-WELSH #3
FDNS	00NR	3	16WP	G15_081	FROM->TO	G14-057T 345.00 - SUNNYSIDE 345KV CKT 1	717	789	0.05978	116.4039	GEN509404 1-WELSH #1
FDNS	00NR	3	20WP	G15_081	FROM->TO	G14-057T 345.00 - SUNNYSIDE 345KV CKT 1	717	789	0.05956	116.0922	GEN509403 1-PIRKEY GENERATION
FDNS	00NR	3	20WP	G15_081	FROM->TO	G14-057T 345.00 - SUNNYSIDE 345KV CKT 1	717	789	0.05956	116.0108	GEN509416 1-TURK GENERATION
FDNS	00NR	3	20WP	G15_081	FROM->TO	G14-057T 345.00 - SUNNYSIDE 345KV CKT 1	717	789	0.06153	115.8354	CLEVELAND - G15066_T 345.00 345KV CKT 1
FDNS	00NR	3	20WP	G15_081	FROM->TO	G14-057T 345.00 - SUNNYSIDE 345KV CKT 1	717	789	0.05863	115.7845	PITTSBURG - VALLIANT 345KV CKT 1
FDNS	00NR	3	20WP	G15_081	FROM->TO	G14-057T 345.00 - SUNNYSIDE 345KV CKT 1	717	789	0.05863	115.7845	PITTSBURG - VALLIANT 345KV CKT 1
FDNS	00NR	3	16WP	G15_081	FROM->TO	G14-057T 345.00 - SUNNYSIDE 345KV CKT 1	717	789	0.06102	115.7786	CORN TAP - NAPLESTP 138.00 138KV CKT 1
FDNS	00NR	3	16WP	G15_081	FROM->TO	G14-057T 345.00 - SUNNYSIDE 345KV CKT 1	717	789	0.05492	115.7529	BORDER 7345.00 - TUCO_2 345.00 345KV CKT 1
FDNS	00NR	3	16WP	G15_081	FROM->TO	G14-057T 345.00 - SUNNYSIDE 345KV CKT 1	717	789	0.06102	115.6961	NAPLESTP 138.00 - PAYNE 138.00 138KV CKT 1
FDNS	00NR	3	16WP	G15_081	FROM->TO	G14-057T 345.00 - SUNNYSIDE 345KV CKT 1	717	789	0.05981	115.6773	7SAREPTA% 345.00 - LONGWOOD 345KV CKT 1
FDNS	00NR	3	16WP	G15_081	FROM->TO	G14-057T 345.00 - SUNNYSIDE 345KV CKT 1	717	789	0.05981	115.6773	7SAREPTA% 345.00 - LONGWOOD 345KV CKT 1
FDNS	00NR	3	20WP	G15_081	FROM->TO	G14-057T 345.00 - SUNNYSIDE 345KV CKT 1	717	789	0.05482	115.5781	BORDER 7345.00 - WOODWARD DISTRICT EHV 345KV CKT 1
FDNS	00NR	3	20WP	G15_081	FROM->TO	G14-057T 345.00 - SUNNYSIDE 345KV CKT 1	717	789	0.06153	115.5413	G15066_T 345.00 - SOONER 345KV CKT 1
FDNS	00NR	3	16WP	G15_081	FROM->TO	G14-057T 345.00 - SUNNYSIDE 345KV CKT 1	717	789	0.05983	115.5202	DOLET HILLS - SOUTHWEST SHREVEPORT 345KV CKT 1
FDNS	00NR	3	16WP	G15_081	FROM->TO	G14-057T 345.00 - SUNNYSIDE 345KV CKT 1	717	789	0.05983	115.5202	DOLET HILLS - SOUTHWEST SHREVEPORT 345KV CKT 1
FDNS	00NR	3	16WP	G15_081	FROM->TO	G14-057T 345.00 - SUNNYSIDE 345KV CKT 1	717	789	0.06114	115.5069	CLEVELAND - TULSA NORTH 345KV CKT 1
FDNS	00NR	3	16WP	G15_081	FROM->TO	G14-057T 345.00 - SUNNYSIDE 345KV CKT 1	717	789	0.06114	115.5069	CLEVELAND - TULSA NORTH 345KV CKT 1
FDNSLock	00NR	3	16WP	G15_081	FROM->TO	G14-057T 345.00 - SUNNYSIDE 345KV CKT 1	717	789	0.05978	115.4962	GEN336821 1-GRAND GULF UNIT
FDNS	00NR	3	16WP	G15_081	FROM->TO	G14-057T 345.00 - SUNNYSIDE 345KV CKT 1	717	789	0.07123	115.448	ARCADIA - NORTHWEST 345KV CKT 1
FDNSLock	00NR	3	16WP	G15_081	FROM->TO	G14-057T 345.00 - SUNNYSIDE 345KV CKT 1	717	789	0.05978	115.4165	GEN336153 1-WATERFORD UNIT#3
FDNS	00NR	3	16WP	G15_081	FROM->TO	G14-057T 345.00 - SUNNYSIDE 345KV CKT 1	717	789	0.06082	115.4159	COMANCHE - LOCO 138KV CKT 1
FDNS	00NR	3	16WP	G15_081	FROM->TO	G14-057T 345.00 - SUNNYSIDE 345KV CKT 1	717	789	0.06064	115.353	ANADARKO - POCASSETT 138KV CKT 1
FDNS	00NR	3	16WP	G15_081	FROM->TO	G14-057T 345.00 - SUNNYSIDE 345KV CKT 1	717	789	0.05575	115.3212	CANADIAN RIVER - MUSKOGEE 345KV CKT 1
FDNS	00NR	3	20WP	G15_081	FROM->TO	G14-057T 345.00 - SUNNYSIDE 345KV CKT 1	717	789	0.05956	115.253	GEN501801 1-DOLET HILLS UNIT1
FDNS	00NR	3	16WP	G15_081	FROM->TO	G14-057T 345.00 - SUNNYSIDE 345KV CKT 1	717	789	0.06137	115.2138	ARCADIA - SEMINOLE 345KV CKT 1
FDNS	00NR	3	16WP	G15_081	FROM->TO	G14-057T 345.00 - SUNNYSIDE 345KV CKT 1	717	789	0.06064	115.2125	POCASSETT - TUTTLE 138KV CKT 1
FDNSLock	00NR	3	16WP	G15_081	FROM->TO	G14-057T 345.00 - SUNNYSIDE 345KV CKT 1	717	789	0.05978	115.1249	GEN335831 1-RIVERBEND UNIT#1
FDNS	00NR	3	16WP	G15_081	FROM->TO	G14-057T 345.00 - SUNNYSIDE 345KV CKT 1	717	789	0.05978	115.1143	GRAND GULF 500/22.0KV TRANSFORMER CKT 1
FDNS	00NR	3	16WP	G15_081	FROM->TO	G14-057T 345.00 - SUNNYSIDE 345KV CKT 1	717	789	0.05978	115.0932	GEN515577 1-ARBWND11 0.6900
FDNS	00NR	3	16WP	G15_081	FROM->TO	G14-057T 345.00 - SUNNYSIDE 345KV CKT 1	717	789	0.0598	115.0342	7SAREPTA% 345.00 - ELDORADO EHV 345KV CKT 1
FDNS	00NR	3	16WP	G15_081	FROM->TO	G14-057T 345.00 - SUNNYSIDE 345KV CKT 1	717	789	0.0598	115.034	3TR3AR8EL7EL
FDNS	00NR	3	16WP	G15_081	FROM->TO	G14-057T 345.00 - SUNNYSIDE 345KV CKT 1	717	789	0.05978	115.0265	GEN509409 1-WILKES #3
FDNS	00NR	3	16WP	G15_081	FROM->TO	G14-057T 345.00 - SUNNYSIDE 345KV CKT 1	717	789	0.0598	115.0233	ELDORADO EHV 500/345KV TRANSFORMER CKT 1
FDNS	00NR	3	16WP	G15_081	FROM->TO	G14-057T 345.00 - SUNNYSIDE 345KV CKT 1	717	789	0.06035	114.9623	P12:138:AEPW:DUNCAN-4:L.E.S.-4
FDNS	00NR	3	16WP	G15_081	FROM->TO	G14-057T 345.00 - SUNNYSIDE 345KV CKT 1	717	789	0.06112	114.9274	HEALDTON - LOCO 138KV CKT 1
FDNS	00NR	3	16WP	G15_081	FROM->TO	G14-057T 345.00 - SUNNYSIDE 345KV CKT 1	717	789	0.06064	114.8486	BRIDGECR 138.00 - TUTTLE 138KV CKT 1
FDNS	00NR	3	16WP	G15_081	FROM->TO	G14-057T 345.00 - SUNNYSIDE 345KV CKT 1	717	789	0.06035	114.8474	COMANCHE TAP - OMPA-DUNCAN 840 138KV CKT 1
FDNS	00NR	3	16WP	G15_081	FROM->TO	G14-057T 345.00 - SUNNYSIDE 345KV CKT 1	717	789	0.06112	114.7868	HEALDTON - RINGLING 138KV CKT 1
FDNS	00NR	3	16WP	G15_081	FROM->TO	G14-057T 345.00 - SUNNYSIDE 345KV CKT 1	717	789	0.05978	114.7634	GEN501813 1-RODEMACHER UNIT 3
FDNSLock	00NR	3	16WP	G15_081	FROM->TO	G14-057T 345.00 - SUNNYSIDE 345KV CKT 1	717	789	0.05978	114.7487	GEN300006 1-NEW MADRID UNIT 1
FDNSLock	00NR	3	16WP	G15_081	FROM->TO	G14-057T 345.00 - SUNNYSIDE 345KV CKT 1	717	789	0.05978	114.7366	GEN300007 1-NEW MADRID UNIT 2
FDNS	00NR	3	20WP	G15_081	FROM->TO	G14-057T 345.00 - SUNNYSIDE 345KV CKT 1	717	789	0.05956	114.7319	GEN509406 1-WELSH #3
FDNS	00NR	3	20WP	G15_081	FROM->TO	G14-057T 345.00 - SUNNYSIDE 345KV CKT 1	717	789	0.05956	114.7317	GEN509404 1-WELSH #1
FDNS	00NR	3	16WP	G15_081	FROM->TO	G14-057T 345.00 - SUNNYSIDE 345KV CKT 1	717	789	0.0601	114.7109	LACYGNE - WAVERLY7 345.00 345KV CKT 1
FDNS	00NR	3	20WP	G15_081	FROM->TO	G14-057T 345.00 - SUNNYSIDE 345KV CKT 1	717	789	0.05482	114.6379	BORDER 7345.00 - TUCO_2 345.00 345KV CKT 1
FDNS	00NR	3	16WP	G15_081	FROM->TO	G14-057T 345.00 - SUNNYSIDE 345KV CKT 1	717	789	0.05978	114.6254	GEN520947 1-HUGO1
FDNS	00NR	3	16WP	G15_081	FROM->TO	G14-057T 345.00 - SUNNYSIDE 345KV CKT 1	717	789	0.06112	114.6225	RINGLING - SOUTH WILSON 138KV CKT 1
FDNS	00NR	3	16WP	G15_081	FROM->TO	G14-057T 345.00 - SUNNYSIDE 345KV CKT 1	717	789	0.0601	114.5992	WAVERLY7 345.00 - WOLF CREEK 345KV CKT 1
FDNS	00NR	3	16WP	G15_081	FROM->TO	G14-057T 345.00 - SUNNYSIDE 345KV CKT 1	717	789	0.06064	114.5952	P12:138:WFEC:MSL01
FDNS	00NR	3	16WP	G15_081	FROM->TO	G14-057T 345.00 - SUNNYSIDE 345KV CKT 1	717	789	0.06064	114.5868	BRIDGECR 138.00 - SUNSHINE CANYON 138KV CKT 1
FDNS	00NR	3	16WP	G15_081	FROM->TO	G14-057T 345.00 - SUNNYSIDE 345KV CKT 1	717	789	0.06035	114.5765	DUNCAN - OMPA-DUNCAN 840 138KV CKT 1
FDNS	00NR	3	16WP	G15_081	FROM->TO	G14-057T 345.00 - SUNNYSIDE 345KV CKT 1	717	789	0.06035	114.5765	DUNCAN - OMPA-DUNCAN 840 138KV CKT 1
FDNS	00NR	3	16WP	G15_081	FROM->TO	G14-057T 345.00 - SUNNYSIDE 345KV CKT 1	717	789	0.05978	114.566	GEN335206 1-NELSON UNIT 6
FDNS	00NR	3	16WP	G15_081	FROM->TO	G14-057T 345.00 - SUNNYSIDE 345KV CKT 1	717	789	0.05978	114.4229	DOLET HILLS 345/24.0KV TRANSFORMER CKT 1
FDNS	00NR	3	16WP	G15_081	FROM->TO	G14-057T 345.00 - SUNNYSIDE 345KV CKT 1	717	789	0.05976	114.4188	P12:138:AEPW:SHERID4:112GORE4
FDNS	00NR	3	16WP	G15_081	FROM->TO	G14-057T 345.00 - SUNNYSIDE 345KV CKT 1	717	789	0.05878	114.4101	PARK LANE - SEMINOLE 138KV CKT 1
FDNS	00NR	3	16WP	G15_081	FROM->TO	G14-057T 345.00 - SUNNYSIDE 345KV CKT 1	717	789	0.05978	114.3829	GEN501812 1-RODEMACHER UNIT 2
FDNS	00NR	3	16WP	G15_081	FROM->TO	G14-057T 345.00 - SUNNYSIDE 345KV CKT 1	717	789	0.05978	114.3533	GEN590011 2-ERCOT EQUIVALENCE
FDNS	00NR	3	16WP	G15_081	FROM->TO	G14-057T 345.00 - SUNNYSIDE 345KV CKT 1	717	789	0.06112	114.3473	MARIETTA - SOUTH WILSON 138KV CKT 1

SOLUTION	GROUP	SCENARIO	SEASON	SOURCE	DIRECTION	MONITORED ELEMENT	RATEA (MVA)	RATEB(MVA)	TDF	TC%LOADING (% MVA)	CONTINGENCY
FDNS	00NR	3	16WP	G15_081	FROM->TO	G14-057T 345.00 - SUNNYSIDE 345KV CKT 1	717	789	0.05978	114.3456	GEN515564 1-ORIGIN11 0.6900
FDNS	00NR	3	16WP	G15_081	FROM->TO	G14-057T 345.00 - SUNNYSIDE 345KV CKT 1	717	789	0.05978	114.3456	GEN515565 1-ORIGIN21 0.6900
FDNS	00NR	3	16WP	G15_081	FROM->TO	G14-057T 345.00 - SUNNYSIDE 345KV CKT 1	717	789	0.06014	114.3132	REDBUD - RIVERSIDE STATION 345KV CKT 1
FDNS	00NR	3	16WP	G15_081	FROM->TO	G14-057T 345.00 - SUNNYSIDE 345KV CKT 1	717	789	0.06014	114.3132	REDBUD - RIVERSIDE STATION 345KV CKT 1
FDNS	00NR	3	16WP	G15_081	FROM->TO	G14-057T 345.00 - SUNNYSIDE 345KV CKT 1	717	789	0.06304	114.2953	Hitchland Interchange - WALKTAP7 345.00 345KV CKT 1
FDNS	00NR	3	16WP	G15_081	FROM->TO	G14-057T 345.00 - SUNNYSIDE 345KV CKT 1	717	789	0.06304	114.2953	Hitchland Interchange - WALKTAP7 345.00 345KV CKT 1
FDNS	00NR	3	16WP	G15_081	FROM->TO	G14-057T 345.00 - SUNNYSIDE 345KV CKT 1	717	789	0.06362	114.2952	MATHWSN7 345.00 - NORTHWEST 345KV CKT 1
FDNS	00NR	3	16WP	G15_081	FROM->TO	G14-057T 345.00 - SUNNYSIDE 345KV CKT 1	717	789	0.06304	114.2807	P12:345:SPS:J07.1.FINN.HITCH
FDNS	00NR	3	16WP	G15_081	FROM->TO	G14-057T 345.00 - SUNNYSIDE 345KV CKT 1	717	789	0.05978	114.2786	GEN590010 1-ERCOT EQUIVALENCE
FDNS	00NR	3	16WP	G15_081	FROM->TO	G14-057T 345.00 - SUNNYSIDE 345KV CKT 1	717	789	0.06112	114.2632	P12:138:WFEC:MSL17
FDNS	00NR	3	16WP	G15_081	FROM->TO	G14-057T 345.00 - SUNNYSIDE 345KV CKT 1	717	789	0.06076	114.2419	CANEYRV7 345.00 - NEOSHO 345KV CKT 1
FDNS	00NR	3	16WP	G15_081	FROM->TO	G14-057T 345.00 - SUNNYSIDE 345KV CKT 1	717	789	0.06094	114.1859	CIVIT - PAOLI 138KV CKT 1
FDNS	00NR	3	16WP	G15_081	FROM->TO	G14-057T 345.00 - SUNNYSIDE 345KV CKT 1	717	789	0.05978	114.1631	P12:69:AEPW:L.E.S.-2:LAW WC2
FDNS	00NR	3	16WP	G15_081	FROM->TO	G14-057T 345.00 - SUNNYSIDE 345KV CKT 1	717	789	0.05978	114.1449	P12:161:AEPW:DYESS 5:HYLAND 5
FDNS	00NR	3	16WP	G15_081	FROM->TO	G14-057T 345.00 - SUNNYSIDE 345KV CKT 1	717	789	0.05978	114.1444	GEN509408 1-WILKES #2
FDNS	00NR	3	20WP	G15_081	FROM->TO	G14-057T 345.00 - SUNNYSIDE 345KV CKT 1	717	789	0.06081	114.1414	CORN TAP - NAPLESTP 138.00 138KV CKT 1
FDNS	00NR	3	16WP	G15_081	FROM->TO	G14-057T 345.00 - SUNNYSIDE 345KV CKT 1	717	789	0.05978	114.1339	GEN506754 1-LEBROCK STEAM 1
FDNS	00NR	3	16WP	G15_081	FROM->TO	G14-057T 345.00 - SUNNYSIDE 345KV CKT 1	717	789	0.05973	114.1161	ELDORADO EHV - MOUNT OLIVE 500KV CKT 1
FDNS	00NR	3	16WP	G15_081	FROM->TO	G14-057T 345.00 - SUNNYSIDE 345KV CKT 1	717	789	0.06076	114.1082	CANEYRV7 345.00 - LATHAMS7 345.00 345KV CKT 1
FDNS	00NR	3	16WP	G15_081	FROM->TO	G14-057T 345.00 - SUNNYSIDE 345KV CKT 1	717	789	0.06015	114.1072	P12:138:WFEC:MSL02
FDNS	00NR	3	16WP	G15_081	FROM->TO	G14-057T 345.00 - SUNNYSIDE 345KV CKT 1	717	789	0.06014	114.1066	PAOLI - PAYNE 138.00 138KV CKT 1
FDNS	00NR	3	16WP	G15_081	FROM->TO	G14-057T 345.00 - SUNNYSIDE 345KV CKT 1	717	789	0.05978	114.1045	GEN334440 1-SABINE UNIT 4
FDNS	00NR	3	20WP	G15_081	FROM->TO	G14-057T 345.00 - SUNNYSIDE 345KV CKT 1	717	789	0.05961	114.0897	7SAREPTA% 345.00 - LONGWOOD 345KV CKT 1
FDNS	00NR	3	20WP	G15_081	FROM->TO	G14-057T 345.00 - SUNNYSIDE 345KV CKT 1	717	789	0.05961	114.0897	7SAREPTA% 345.00 - LONGWOOD 345KV CKT 1
FDNS	00NR	3	16WP	G15_081	FROM->TO	G14-057T 345.00 - SUNNYSIDE 345KV CKT 1	717	789	0.05976	114.0744	P12:138:AEPW:112GORE4:L.E.S.-4
FDNS	00NR	3	20WP	G15_081	FROM->TO	G14-057T 345.00 - SUNNYSIDE 345KV CKT 1	717	789	0.06081	114.0575	NAPLESTP 138.00 - PAYNE 138.00 138KV CKT 1
FDNS	00NR	3	16WP	G15_081	FROM->TO	G14-057T 345.00 - SUNNYSIDE 345KV CKT 1	717	789	0.06094	114.0436	CIVIT - STRATFORD 138KV CKT 1
FDNS	00NR	3	16WP	G15_081	FROM->TO	G14-057T 345.00 - SUNNYSIDE 345KV CKT 1	717	789	0.05965	114.0419	ELDORADO EHV - SHERIDAN EHV 500KV CKT 1
FDNS	00NR	3	16WP	G15_081	FROM->TO	G14-057T 345.00 - SUNNYSIDE 345KV CKT 1	717	789	0.06005	114.0191	ANADARKO - GEORGIA 138KV CKT 1
FDNS	00NR	3	16WP	G15_081	FROM->TO	G14-057T 345.00 - SUNNYSIDE 345KV CKT 1	717	789	0.05987	114.0156	TUPELO - TUPELO TAP 138KV CKT 1
FDNS	00NR	3	16WP	G15_081	FROM->TO	G14-057T 345.00 - SUNNYSIDE 345KV CKT 1	717	789	0.05987	113.9972	WEBRE - WELLS 500KV CKT 1
FDNS	00NR	3	16WP	G15_081	FROM->TO	G14-057T 345.00 - SUNNYSIDE 345KV CKT 1	717	789	0.06143	113.9928	P12:138:AEPW-OGE:CORNVIL4:MAUD 4
FDNS	00NR	3	16WP	G15_081	FROM->TO	G14-057T 345.00 - SUNNYSIDE 345KV CKT 1	717	789	0.05978	113.9809	GEN503909 1-FULTONU1 1 16.000
FDNS	00NR	3	16WP	G15_081	FROM->TO	G14-057T 345.00 - SUNNYSIDE 345KV CKT 1	717	789	0.05978	113.9741	FRONTIER - GRIMES 345KV CKT 1
FDNS	00NR	3	20WP	G15_081	FROM->TO	G14-057T 345.00 - SUNNYSIDE 345KV CKT 1	717	789	0.05956	113.9718	GEN336821 1-GRAND GULF UNIT
FDNS	00NR	3	16WP	G15_081	FROM->TO	G14-057T 345.00 - SUNNYSIDE 345KV CKT 1	717	789	0.06005	113.9406	FLETCHER - GEORGIA 138KV CKT 1
FDNS	00NR	3	16WP	G15_081	FROM->TO	G14-057T 345.00 - SUNNYSIDE 345KV CKT 1	717	789	0.05989	113.9351	LAWTON EASTSIDE (LES 5) 345/138/13.8KV TRANSFORMER CKT 2
FDNS	00NR	3	16WP	G15_081	FROM->TO	G14-057T 345.00 - SUNNYSIDE 345KV CKT 1	717	789	0.05989	113.9351	LAWTON EASTSIDE (LES 5) 345/138/13.8KV TRANSFORMER CKT 2
FDNS	00NR	3	16WP	G15_081	FROM->TO	G14-057T 345.00 - SUNNYSIDE 345KV CKT 1	717	789	0.06094	113.9244	OIL CENTER - STRATFORD 138KV CKT 1
FDNS	00NR	3	16WP	G15_081	FROM->TO	G14-057T 345.00 - SUNNYSIDE 345KV CKT 1	717	789	0.06143	113.9189	BLANCHARD - CORNVILLE 138KV CKT 1
FDNS	00NR	3	16WP	G15_081	FROM->TO	G14-057T 345.00 - SUNNYSIDE 345KV CKT 1	717	789	0.06011	113.9064	EMPIRE - FLETCHER 138KV CKT 1
FDNS	00NR	3	16WP	G15_081	FROM->TO	G14-057T 345.00 - SUNNYSIDE 345KV CKT 1	717	789	0.06076	113.8979	LATHAMS7 345.00 - ROSE HILL 345KV CKT 1
FDNS	00NR	3	20WP	G15_081	FROM->TO	G14-057T 345.00 - SUNNYSIDE 345KV CKT 1	717	789	0.05956	113.8628	GEN336153 1-WATERFORD UNIT#3
FDNS	00NR	3	16WP	G15_081	FROM->TO	G14-057T 345.00 - SUNNYSIDE 345KV CKT 1	717	789	0.05978	113.855	GEN509393 S1-ARSENAL HILL GENS #4 (STALL)
FDNS	00NR	3	20WP	G15_081	FROM->TO	G14-057T 345.00 - SUNNYSIDE 345KV CKT 1	717	789	0.06089	113.8408	CLEVELAND - TULSA NORTH 345KV CKT 1
FDNS	00NR	3	20WP	G15_081	FROM->TO	G14-057T 345.00 - SUNNYSIDE 345KV CKT 1	717	789	0.06089	113.8408	CLEVELAND - TULSA NORTH 345KV CKT 1
FDNS	00NR	3	16WP	G15_081	FROM->TO	G14-057T 345.00 - SUNNYSIDE 345KV CKT 1	717	789	0.05978	113.8313	GEN509392 G2-ARSENAL HILL GENS #3 (STALL)
FDNS	00NR	3	16WP	G15_081	FROM->TO	G14-057T 345.00 - SUNNYSIDE 345KV CKT 1	717	789	0.05978	113.8312	GEN509391 G1-ARSENAL HILL GENS #2 (STALL)
FDNS	00NR	3	16WP	G15_081	FROM->TO	G14-057T 345.00 - SUNNYSIDE 345KV CKT 1	717	789	0.06011	113.8286	COMANCHE - EMPIRE 138KV CKT 1
FDNS	00NR	3	16WP	G15_081	FROM->TO	G14-057T 345.00 - SUNNYSIDE 345KV CKT 1	717	789	0.05978	113.8154	GEN336252 1-NINEMILE POINT UNIT#5
FDNS	00NR	3	20WP	G15_081	FROM->TO	G14-057T 345.00 - SUNNYSIDE 345KV CKT 1	717	789	0.07103	113.8144	ARCADIA - NORTHWEST 345KV CKT 1
FDNS	00NR	3	16WP	G15_081	FROM->TO	G14-057T 345.00 - SUNNYSIDE 345KV CKT 1	717	789	0.05978	113.7996	GEN334071 1-LEWIS CREEK 2
FDNS	00NR	3	16WP	G15_081	FROM->TO	G14-057T 345.00 - SUNNYSIDE 345KV CKT 1	717	789	0.05978	113.7967	DELL 500 - ESSEX UNIT 2 500KV CKT Z1
FDNS	00NR	3	16WP	G15_081	FROM->TO	G14-057T 345.00 - SUNNYSIDE 345KV CKT 1	717	789	0.05978	113.7907	GEN334070 1-LEWIS CREEK 1
FDNS	00NR	3	16WP	G15_081	FROM->TO	G14-057T 345.00 - SUNNYSIDE 345KV CKT 1	717	789	0.05978	113.7883	GEN335204 1-NELSON UNIT 4
FDNS	00NR	3	16WP	G15_081	FROM->TO	G14-057T 345.00 - SUNNYSIDE 345KV CKT 1	717	789	0.06278	113.7671	THISTLE7 345.00 - WOODWARD DISTRICT EHV 345KV CKT 1
FDNS	00NR	3	16WP	G15_081	FROM->TO	G14-057T 345.00 - SUNNYSIDE 345KV CKT 1	717	789	0.06278	113.7671	THISTLE7 345.00 - WOODWARD DISTRICT EHV 345KV CKT 1
FDNS	00NR	3	16WP	G15_081	FROM->TO	G14-057T 345.00 - SUNNYSIDE 345KV CKT 1	717	789	0.06278	113.7671	THISTLE7 345.00 - WOODWARD DISTRICT EHV 345KV CKT 2
FDNS	00NR	3	16WP	G15_081	FROM->TO	G14-057T 345.00 - SUNNYSIDE 345KV CKT 1	717	789	0.06278	113.7671	THISTLE7 345.00 - WOODWARD DISTRICT EHV 345KV CKT 2
FDNS	00NR	3	20WP	G15_081	FROM->TO	G14-057T 345.00 - SUNNYSIDE 345KV CKT 1	717	789	0.06043	113.7671	ANADARKO - POCASSETT 138KV CKT 1
FDNS	00NR	3	16WP	G15_081	FROM->TO	G14-057T 345.00 - SUNNYSIDE 345KV CKT 1	717	789	0.05996	113.7574	DUNCAN (DUNCAN) 138/69/13.8KV TRANSFORMER CKT 1
FDNS	00NR	3	16WP	G15_081	FROM->TO	G14-057T 345.00 - SUNNYSIDE 345KV CKT 1	717	789	0.05996	113.7574	DUNCAN (DUNCAN) 138/69/13.8KV TRANSFORMER CKT 1
FDNS	00NR	3	16WP	G15_081	FROM->TO	G14-057T 345.00 - SUNNYSIDE 345KV CKT 1	717	789	0.05978	113.7542	GEN334441 1-SABINE UNIT 5
FDNS	00NR	3	16WP	G15_081	FROM->TO	G14-057T 345.00 - SUNNYSIDE 345KV CKT 1	717	789	0.06094	113.7458	LATTA JCT - OIL CENTER 138KV CKT 1
FDNS	00NR	3	20WP	G15_081	FROM->TO	G14-057T 345.00 - SUNNYSIDE 345KV CKT 1	717	789	0.06061	113.7368	COMANCHE - LOCO 138KV CKT 1
FDNS	00NR	3	16WP	G15_081	FROM->TO	G14-057T 345.00 - SUNNYSIDE 345KV CKT 1	717	789	0.05977	113.7361	P12:161:AEPW-SWPA:BEAVER5:EROGERS5
FDNS	00NR	3	16WP	G15_081	FROM->TO	G14-057T 345.00 - SUNNYSIDE 345KV CKT 1	717	789	0.06143	113.7205	BLANCHARD - MAUD 138KV CKT 1
FDNS	00NR	3	16WP	G15_081	FROM->TO	G14-057T 345.00 - SUNNYSIDE 345KV CKT 1	717	789	0.05981	113.7186	P12:138:AEPW:CATOOSA4:T.S.E.-4
FDNS	00NR	3	16WP	G15_081	FROM->TO	G14-057T 345.00 - SUNNYSIDE 345KV CKT 1	717	789	0.05978	113.709	GEN337653 1-WHITE BLUFF UNIT #2
FDNS	00NR	3	16WP	G15_081	FROM->TO	G14-057T 345.00 - SUNNYSIDE 345KV CKT 1	717	789	0.05981	113.708	6LAYFLD 230.00 - CARROLL 230KV CKT 1
FDNS	00NR	3	16WP	G15_081	FROM->TO	G14-057T 345.00 - SUNNYSIDE 345KV CKT 1	717	789	0.05978	113.7044	GEN334030 1-FRONTIER UNIT 1
FDNS	00NR	3	16WP	G15_081	FROM->TO	G14-057T 345.00 - SUNNYSIDE 345KV CKT 1	717	789	0.05978	113.7028	GEN334031 1-FRONTIER UNIT 2
FDNS	00NR	3	16WP	G15_081	FROM->TO	G14-057T 345.00 - SUNNYSIDE 345KV CKT 1	717	789	0.05978	113.7	GEN300003 1-THOMAS HILL UNIT 3
FDNS	00NR	3	16WP	G15_081	FROM->TO	G14-057T 345.00 - SUNNYSIDE 345KV CKT 1	717	789	0.05978	113.6896	GEN506752 1-LEBROCK GAS 1
FDNS	00NR	3	16WP	G15_081	FROM->TO	G14-057T 345.00 - SUNNYSIDE 345KV CKT 1	717	789	0.05978	113.6894	GEN506753 1-LEBROCK GAS 2
FDNS	00NR	3	20WP	G15_081	FROM->TO	G14-057T 345.00 - SUNNYSIDE 345KV CKT 1	717	789	0.05962	113.6795	DOLET HILLS - SOUTHWEST SHREVEPORT 345KV CKT 1
FDNS	00NR	3	20WP	G15_081	FROM->TO	G14-057T 345.00 - SUNNYSIDE 345KV CKT 1	717	789	0.05962	113.6795	DOLET HILLS - SOUTHWEST SHREVEPORT 345KV CKT 1
FDNS	00NR	3	16WP	G15_081	FROM->TO	G14-057T 345.00 - SUNNYSIDE 345KV CKT 1	717	789	0.0598	113.6747	FULTON 115 - HOPE 115KV CKT 1
FDNS	00NR	3	16WP	G15_081	FROM->TO	G14-057T 345.00 - SUNNYSIDE 345KV CKT 1	717	789	0.0598	113.6747	FULTON 115 - HOPE 115KV CKT 1

SOLUTION	GROUP	SCENARIO	SEASON	SOURCE	DIRECTION	MONITORED ELEMENT	RATEA (MVA)	RATEB(MVA)	TDF	TC%LOADING (% MVA)	CONTINGENCY
FDNS	00NR	3	16WP	G15_081	FROM->TO	G14-057T 345.00 - SUNNYSIDE 345KV CKT 1	717	789	0.05981	113.6675	8DANIEL8 500.00 - MCKNIGHT 500KV CKT 1
FDNS	00NR	3	16WP	G15_081	FROM->TO	G14-057T 345.00 - SUNNYSIDE 345KV CKT 1	717	789	0.05978	113.6672	P12:161:AEPW:DYESS5:ELMSPRNG:TONTITN5
FDNS	00NR	3	16WP	G15_081	FROM->TO	G14-057T 345.00 - SUNNYSIDE 345KV CKT 1	717	789	0.05978	113.637	GEN515226 1-MUSKOGEE 6G
FDNS	00NR	3	16WP	G15_081	FROM->TO	G14-057T 345.00 - SUNNYSIDE 345KV CKT 1	717	789	0.05978	113.6367	GEN501811 1-RODEMACHER UNIT 1
FDNS	00NR	3	16WP	G15_081	FROM->TO	G14-057T 345.00 - SUNNYSIDE 345KV CKT 1	717	789	0.05978	113.6288	GEN300015 1-1SGPDEL 18.000
FDNS	00NR	3	16WP	G15_081	FROM->TO	G14-057T 345.00 - SUNNYSIDE 345KV CKT 1	717	789	0.06	113.6265	P12:138:AEPW:CORNVIL4:S.W.S.-4
FDNS	00NR	3	16WP	G15_081	FROM->TO	G14-057T 345.00 - SUNNYSIDE 345KV CKT 1	717	789	0.05978	113.624	GEN337911 1-ARKANSAS NUCLEAR ONE UNIT #2
FDNS	00NR	3	16WP	G15_081	FROM->TO	G14-057T 345.00 - SUNNYSIDE 345KV CKT 1	717	789	0.05978	113.6187	GEN336251 1-NINEMILE POINT UNIT#4
FDNS	00NR	3	16WP	G15_081	FROM->TO	G14-057T 345.00 - SUNNYSIDE 345KV CKT 1	717	789	0.05978	113.618	GEN337652 1-WHITE BLUFF UNIT #1
FDNS	00NR	3	16WP	G15_081	FROM->TO	G14-057T 345.00 - SUNNYSIDE 345KV CKT 1	717	789	0.05978	113.6154	GEN334433 1-SABINE UNIT 3
FDNS	00NR	3	20WP	G15_081	FROM->TO	G14-057T 345.00 - SUNNYSIDE 345KV CKT 1	717	789	0.06043	113.6148	POCASSETT - TUTTLE 138KV CKT 1
FDNS	00NR	3	16WP	G15_081	FROM->TO	G14-057T 345.00 - SUNNYSIDE 345KV CKT 1	717	789	0.05978	113.6126	GEN336831 1-BAXTER WILSON SES
FDNS	00NR	3	16WP	G15_081	FROM->TO	G14-057T 345.00 - SUNNYSIDE 345KV CKT 1	717	789	0.05997	113.5975	G15074_T 345.00 - HOYT 345KV CKT 1
FDNS	00NR	3	16WP	G15_081	FROM->TO	G14-057T 345.00 - SUNNYSIDE 345KV CKT 1	717	789	0.06001	113.5963	P12:138:AEPW:CORNVIL4:DUNCAN-4
FDNS	00NR	3	16WP	G15_081	FROM->TO	G14-057T 345.00 - SUNNYSIDE 345KV CKT 1	717	789	0.05996	113.5953	P12:69:WFEC-AEPW:COMANCH2:DUNCAN-2
FDNS	00NR	3	16WP	G15_081	FROM->TO	G14-057T 345.00 - SUNNYSIDE 345KV CKT 1	717	789	0.05978	113.5846	GEN562783 1-G15036_4 0.6900
FDNS	00NR	3	16WP	G15_081	FROM->TO	G14-057T 345.00 - SUNNYSIDE 345KV CKT 1	717	789	0.05978	113.5846	GEN562784 1-G15036_5 0.6900
FDNS	00NR	3	16WP	G15_081	FROM->TO	G14-057T 345.00 - SUNNYSIDE 345KV CKT 1	717	789	0.06089	113.5764	BAILEY4 138.00 - SUNSHINE CANYON 138KV CKT 1
FDNS	00NR	3	16WP	G15_081	FROM->TO	G14-057T 345.00 - SUNNYSIDE 345KV CKT 1	717	789	0.05956	113.5753	TUTTLE - TUTTLE CONOCO TAP 138KV CKT 1
FDNSLock	00NR	3	16WP	G15_081	FROM->TO	G14-057T 345.00 - SUNNYSIDE 345KV CKT 1	717	789	0.05996	113.5721	G15088_T 345.00 - MOORE 345KV CKT 1
FDNS	00NR	3	16WP	G15_081	FROM->TO	G14-057T 345.00 - SUNNYSIDE 345KV CKT 1	717	789	0.06031	113.5699	CIMARRON - CZECH HALL 138KV CKT 1
FDNS	00NR	3	16WP	G15_081	FROM->TO	G14-057T 345.00 - SUNNYSIDE 345KV CKT 1	717	789	0.06111	113.565	G1524G1525 345.00 - THISTLE7 345.00 345KV CKT 1
FDNS	00NR	3	16WP	G15_081	FROM->TO	G14-057T 345.00 - SUNNYSIDE 345KV CKT 1	717	789	0.06111	113.565	G1524G1525 345.00 - THISTLE7 345.00 345KV CKT 2
FDNS	00NR	3	20WP	G15_081	FROM->TO	G14-057T 345.00 - SUNNYSIDE 345KV CKT 1	717	789	0.05956	113.5641	GEN335831 1-RIVERBEND UNIT#1
FDNS	00NR	3	16WP	G15_081	FROM->TO	G14-057T 345.00 - SUNNYSIDE 345KV CKT 1	717	789	0.06	113.5595	P12:138:AEPW-OGE:WTH_JCT4:JENSEN4
FDNS	00NR	3	16WP	G15_081	FROM->TO	G14-057T 345.00 - SUNNYSIDE 345KV CKT 1	717	789	0.05978	113.5563	GEN505432 1-SIKESTON
FDNS	00NR	3	16WP	G15_081	FROM->TO	G14-057T 345.00 - SUNNYSIDE 345KV CKT 1	717	789	0.05978	113.554	P12:161:AEPW:EROGERS5:ECNTRTN5
FDNS	00NR	3	16WP	G15_081	FROM->TO	G14-057T 345.00 - SUNNYSIDE 345KV CKT 1	717	789	0.06035	113.5536	CIMARRON - SARA 138KV CKT 1
FDNS	00NR	3	16WP	G15_081	FROM->TO	G14-057T 345.00 - SUNNYSIDE 345KV CKT 1	717	789	0.05978	113.5512	GEN515040 1-SEMINOLE 1G
FDNS	00NR	3	16WP	G15_081	FROM->TO	G14-057T 345.00 - SUNNYSIDE 345KV CKT 1	717	789	0.05974	113.545	LAYFLD8 500.00 - MOUNT OLIVE 500KV CKT 1
FDNS	00NR	3	16WP	G15_081	FROM->TO	G14-057T 345.00 - SUNNYSIDE 345KV CKT 1	717	789	0.05974	113.545	LAYFLD8 500.00 - MOUNT OLIVE 500KV CKT 1
FDNS	00NR	3	16WP	G15_081	FROM->TO	G14-057T 345.00 - SUNNYSIDE 345KV CKT 1	717	789	0.05921	113.5433	ARBWIND4 138.00 - CARTER 138KV CKT 1
FDNS	00NR	3	16WP	G15_081	FROM->TO	G14-057T 345.00 - SUNNYSIDE 345KV CKT 1	717	789	0.05978	113.5426	RODEMACHER 230/22.0KV TRANSFORMER CKT 1
FDNS	00NR	3	16WP	G15_081	FROM->TO	G14-057T 345.00 - SUNNYSIDE 345KV CKT 1	717	789	0.05996	113.5415	DUNCAN - TOSCO 69KV CKT 1
FDNS	00NR	3	16WP	G15_081	FROM->TO	G14-057T 345.00 - SUNNYSIDE 345KV CKT 1	717	789	0.05978	113.5409	GEN515223 1-MUSKOGEE 4G
FDNS	00NR	3	16WP	G15_081	FROM->TO	G14-057T 345.00 - SUNNYSIDE 345KV CKT 1	717	789	0.05978	113.5409	GEN515225 1-MUSKOGEE 5G
FDNS	00NR	3	16WP	G15_081	FROM->TO	G14-057T 345.00 - SUNNYSIDE 345KV CKT 1	717	789	0.05842	113.5371	G14_038T 345.00 - Hitchland Interchange 345KV CKT 1
FDNS	00NR	3	16WP	G15_081	FROM->TO	G14-057T 345.00 - SUNNYSIDE 345KV CKT 1	717	789	0.0599	113.5328	P12:138:AEPW:WTHWF4:CLINTJC4
FDNS	00NR	3	16WP	G15_081	FROM->TO	G14-057T 345.00 - SUNNYSIDE 345KV CKT 1	717	789	0.05978	113.5321	MC NIEL 500/115KV TRANSFORMER CKT 1
FDNS	00NR	3	20WP	G15_081	FROM->TO	G14-057T 345.00 - SUNNYSIDE 345KV CKT 1	717	789	0.05956	113.527	GRAND GULF 500/22.0KV TRANSFORMER CKT 1
FDNS	00NR	3	16WP	G15_081	FROM->TO	G14-057T 345.00 - SUNNYSIDE 345KV CKT 1	717	789	0.05975	113.5264	HOT SPRINGS EHV - MAGNET COVE 500KV CKT 1
FDNS	00NR	3	16WP	G15_081	FROM->TO	G14-057T 345.00 - SUNNYSIDE 345KV CKT 1	717	789	0.05978	113.5229	BISMARK - HOT SPRINGS WEST BUS 115KV CKT 1
FDNS	00NR	3	16WP	G15_081	FROM->TO	G14-057T 345.00 - SUNNYSIDE 345KV CKT 1	717	789	0.05978	113.5226	GEN303007 1-1BC2 U2
FDNS	00NR	3	16WP	G15_081	FROM->TO	G14-057T 345.00 - SUNNYSIDE 345KV CKT 1	717	789	0.05978	113.5208	WHITE BLUFF 500/26.0KV TRANSFORMER CKT 1
FDNS	00NR	3	16WP	G15_081	FROM->TO	G14-057T 345.00 - SUNNYSIDE 345KV CKT 1	717	789	0.05978	113.5177	GEN303006 1-1BC2 U1
FDNS	00NR	3	16WP	G15_081	FROM->TO	G14-057T 345.00 - SUNNYSIDE 345KV CKT 1	717	789	0.05985	113.5176	P12:69:AEPW-OMPA:COMANC-2:OMWALTR2
FDNS	00NR	3	16WP	G15_081	FROM->TO	G14-057T 345.00 - SUNNYSIDE 345KV CKT 1	717	789	0.05905	113.5174	SEMINOLE - VANOSTP4 138.00 138KV CKT 1
FDNS	00NR	3	16WP	G15_081	FROM->TO	G14-057T 345.00 - SUNNYSIDE 345KV CKT 1	717	789	0.05996	113.4974	COMANCHE TAP - TOSCO 69KV CKT 1
FDNS	00NR	3	16WP	G15_081	FROM->TO	G14-057T 345.00 - SUNNYSIDE 345KV CKT 1	717	789	0.05956	113.4956	CIMARRON - TUTTLE CONOCO TAP 138KV CKT 1
FDNS	00NR	3	16WP	G15_081	FROM->TO	G14-057T 345.00 - SUNNYSIDE 345KV CKT 1	717	789	0.05978	113.4954	GEN336191 1-LITTLE GYPSY UNIT#3
FDNS	00NR	3	16WP	G15_081	FROM->TO	G14-057T 345.00 - SUNNYSIDE 345KV CKT 1	717	789	0.06129	113.4942	CANADIAN - NOBLE 138KV CKT 1
FDNS	00NR	3	16WP	G15_081	FROM->TO	G14-057T 345.00 - SUNNYSIDE 345KV CKT 1	717	789	0.06031	113.4938	CZECH HALL - XEROX 138KV CKT 1
FDNS	00NR	3	16WP	G15_081	FROM->TO	G14-057T 345.00 - SUNNYSIDE 345KV CKT 1	717	789	0.06031	113.4896	MORGAN - XEROX 138KV CKT 1
FDNS	00NR	3	16WP	G15_081	FROM->TO	G14-057T 345.00 - SUNNYSIDE 345KV CKT 1	717	789	0.0598	113.4871	P12:138:AEPW:N.E.S.-4:CATOOSA4
FDNS	00NR	3	16WP	G15_081	FROM->TO	G14-057T 345.00 - SUNNYSIDE 345KV CKT 1	717	789	0.05978	113.4833	GEN337910 1-ARKANSAS NUCLEAR ONE UNIT #1
FDNS	00NR	3	16WP	G15_081	FROM->TO	G14-057T 345.00 - SUNNYSIDE 345KV CKT 1	717	789	0.06013	113.4805	BUCKNER7 345.00 - SPEARVILLE 345KV CKT 1
FDNS	00NR	3	16WP	G15_081	FROM->TO	G14-057T 345.00 - SUNNYSIDE 345KV CKT 1	717	789	0.06013	113.4805	BUCKNER7 345.00 - SPEARVILLE 345KV CKT 1
FDNS	00NR	3	16WP	G15_081	FROM->TO	G14-057T 345.00 - SUNNYSIDE 345KV CKT 1	717	789	0.05978	113.4774	GEN300010 1-ST FRANCIS UNIT 1
FDNS	00NR	3	16WP	G15_081	FROM->TO	G14-057T 345.00 - SUNNYSIDE 345KV CKT 1	717	789	0.0599	113.4769	P12:138:AEPW:WTHWF4:WTH_SE4
FDNS	00NR	3	16WP	G15_081	FROM->TO	G14-057T 345.00 - SUNNYSIDE 345KV CKT 1	717	789	0.06094	113.473	LASALLE - LATTA JCT 138KV CKT 1
FDNS	00NR	3	16WP	G15_081	FROM->TO	G14-057T 345.00 - SUNNYSIDE 345KV CKT 1	717	789	0.05978	113.4723	NELSON 230/20.0KV TRANSFORMER CKT 1
FDNS	00NR	3	16WP	G15_081	FROM->TO	G14-057T 345.00 - SUNNYSIDE 345KV CKT 1	717	789	0.05978	113.4715	ALPINE AECC - BISMARK 115KV CKT 1
FDNS	00NR	3	16WP	G15_081	FROM->TO	G14-057T 345.00 - SUNNYSIDE 345KV CKT 1	717	789	0.05978	113.4706	GEN335614 1-WILLOW GLENN UNIT#4
FDNS	00NR	3	16WP	G15_081	FROM->TO	G14-057T 345.00 - SUNNYSIDE 345KV CKT 1	717	789	0.06031	113.4666	MORGAN - MUSTANG 138KV CKT 1
FDNS	00NR	3	16WP	G15_081	FROM->TO	G14-057T 345.00 - SUNNYSIDE 345KV CKT 1	717	789	0.06129	113.4645	P12:138:OKGE:3TERM27
FDNS	00NR	3	16WP	G15_081	FROM->TO	G14-057T 345.00 - SUNNYSIDE 345KV CKT 1	717	789	0.05978	113.4591	GEN303008 1-1BC2 U3
FDNS	00NR	3	16WP	G15_081	FROM->TO	G14-057T 345.00 - SUNNYSIDE 345KV CKT 1	717	789	0.06173	113.4492	FINNEY SWITCHING STATION - HOLCOMB 345KV CKT 1
FDNS	00NR	3	16WP	G15_081	FROM->TO	G14-057T 345.00 - SUNNYSIDE 345KV CKT 1	717	789	0.06173	113.4492	FINNEY SWITCHING STATION - HOLCOMB 345KV CKT 1
FDNS	00NR	3	20WP	G15_081	FROM->TO	G14-057T 345.00 - SUNNYSIDE 345KV CKT 1	717	789	0.05959	113.4437	7SAREPTA% 345.00 - ELDORADO EHV 345KV CKT 1
FDNS	00NR	3	20WP	G15_081	FROM->TO	G14-057T 345.00 - SUNNYSIDE 345KV CKT 1	717	789	0.05959	113.4435	3TR3AR8EL7EL
FDNS	00NR	3	16WP	G15_081	FROM->TO	G14-057T 345.00 - SUNNYSIDE 345KV CKT 1	717	789	0.05996	113.4348	COMANCHE - COMANCHE TAP 69KV CKT 1
FDNS	00NR	3	16WP	G15_081	FROM->TO	G14-057T 345.00 - SUNNYSIDE 345KV CKT 1	717	789	0.05978	113.4347	CYPRESS - HARTBURG 500KV CKT 1
FDNS	00NR	3	20WP	G15_081	FROM->TO	G14-057T 345.00 - SUNNYSIDE 345KV CKT 1	717	789	0.05959	113.4329	ELDORADO EHV 500/345KV TRANSFORMER CKT 1
FDNS	00NR	3	16WP	G15_081	FROM->TO	G14-057T 345.00 - SUNNYSIDE 345KV CKT 1	717	789	0.05978	113.4325	GEN336170 1-GULF OXY U4
FDNS	00NR	3	16WP	G15_081	FROM->TO	G14-057T 345.00 - SUNNYSIDE 345KV CKT 1	717	789	0.05978	113.4287	ALPINE AECC - AMITY SS 115KV CKT 1
FDNS	00NR	3	16WP	G15_081	FROM->TO	G14-057T 345.00 - SUNNYSIDE 345KV CKT 1	717	789	0.05978	113.4284	GEN300011 1-ST FRANCIS UNIT 2
FDNS	00NR	3	16WP	G15_081	FROM->TO	G14-057T 345.00 - SUNNYSIDE 345KV CKT 1	717	789	0.05978	113.4275	GEN336464 1-MICHOUD UNIT #3
FDNS	00NR	3	16WP	G15_081	FROM->TO	G14-057T 345.00 - SUNNYSIDE 345KV CKT 1	717	789	0.05987	113.4253	CHISHOLM6 230.00 - ELK CITY 230KV 230KV CKT 1
FDNS	00NR	3	16WP	G15_081	FROM->TO	G14-057T 345.00 - SUNNYSIDE 345KV CKT 1	717	789	0.05606	113.4235	CANADIAN RIVER - PITTSBURG 345KV CKT 1

SOLUTION	GROUP	SCENARIO	SEASON	SOURCE	DIRECTION	MONITORED ELEMENT	RATEA (MVA)	RATEB(MVA)	TDF	TC%LOADING (% MVA)	CONTINGENCY
FDNS	00NR	3	16WP	G15_081	FROM->TO	G14-057T 345.00 - SUNNYSIDE 345KV CKT 1	717	789	0.05606	113.4235	CANADIAN RIVER - PITTSBURG 345KV CKT 1
FDNS	00NR	3	16WP	G15_081	FROM->TO	G14-057T 345.00 - SUNNYSIDE 345KV CKT 1	717	789	0.05978	113.4182	8CAJUN2 500/24.0KV TRANSFORMER CKT 1
FDNS	00NR	3	16WP	G15_081	FROM->TO	G14-057T 345.00 - SUNNYSIDE 345KV CKT 1	717	789	0.05987	113.4176	ELK CITY 230KV (ELKCTY-6) 230/138/13.8KV TRANSFORMER CKT 1
FDNS	00NR	3	16WP	G15_081	FROM->TO	G14-057T 345.00 - SUNNYSIDE 345KV CKT 1	717	789	0.05987	113.4176	ELK CITY 230KV (ELKCTY-6) 230/138/13.8KV TRANSFORMER CKT 1
FDNS	00NR	3	16WP	G15_081	FROM->TO	G14-057T 345.00 - SUNNYSIDE 345KV CKT 1	717	789	0.06029	113.4121	GRACEMONT (BANK 1) 345/138/13.8KV TRANSFORMER CKT 1
FDNS	00NR	3	20WP	G15_081	FROM->TO	G14-057T 345.00 - SUNNYSIDE 345KV CKT 1	717	789	0.06013	113.4112	P12:138:AEPW:DUNCAN-4:L.E.S.-4
FDNS	00NR	3	16WP	G15_081	FROM->TO	G14-057T 345.00 - SUNNYSIDE 345KV CKT 1	717	789	0.06089	113.4106	BAILEY4 138.00 - WESTMOORE 138KV CKT 1
FDNS	00NR	3	20WP	G15_081	FROM->TO	G14-057T 345.00 - SUNNYSIDE 345KV CKT 1	717	789	0.05956	113.409	GEN515577 1-ARBWND11 0.6900
FDNS	00NR	3	16WP	G15_081	FROM->TO	G14-057T 345.00 - SUNNYSIDE 345KV CKT 1	717	789	0.0625	113.4036	DRAPER LAKE - SEMINOLE 345KV CKT 1
FDNS	00NR	3	16WP	G15_081	FROM->TO	G14-057T 345.00 - SUNNYSIDE 345KV CKT 1	717	789	0.0625	113.4036	DRAPER LAKE - SEMINOLE 345KV CKT 2
FDNS	00NR	3	16WP	G15_081	FROM->TO	G14-057T 345.00 - SUNNYSIDE 345KV CKT 1	717	789	0.06129	113.4027	NOBLE - PURCELL4 138.00 138KV CKT 1
FDNS	00NR	3	16WP	G15_081	FROM->TO	G14-057T 345.00 - SUNNYSIDE 345KV CKT 1	717	789	0.05998	113.3955	HOYT - STRANGER CREEK 345KV CKT 1
FDNS	00NR	3	16WP	G15_081	FROM->TO	G14-057T 345.00 - SUNNYSIDE 345KV CKT 1	717	789	0.05978	113.3936	7JASPER 345.00 - BLACKBERRY 345KV CKT 1
FDNS	00NR	3	16WP	G15_081	FROM->TO	G14-057T 345.00 - SUNNYSIDE 345KV CKT 1	717	789	0.05978	113.393	GEN300016 1-1G1GPDEL 18.000
FDNS	00NR	3	16WP	G15_081	FROM->TO	G14-057T 345.00 - SUNNYSIDE 345KV CKT 1	717	789	0.05978	113.3926	P12:138:AEPW:R.S.S.-4:S.HUD.-4
FDNS	00NR	3	16WP	G15_081	FROM->TO	G14-057T 345.00 - SUNNYSIDE 345KV CKT 1	717	789	0.05978	113.3866	GEN501910 1-ACADIA UNIT ST1
FDNS	00NR	3	16WP	G15_081	FROM->TO	G14-057T 345.00 - SUNNYSIDE 345KV CKT 1	717	789	0.06009	113.3762	G15095_T 138.00 - ROSE_VALLEY 138.00 138KV CKT 1
FDNS	00NR	3	16WP	G15_081	FROM->TO	G14-057T 345.00 - SUNNYSIDE 345KV CKT 1	717	789	0.05978	113.3742	GEN337041 1-GERALD ANDRUS
FDNS	00NR	3	16WP	G15_081	FROM->TO	G14-057T 345.00 - SUNNYSIDE 345KV CKT 1	717	789	0.06035	113.3698	SARA - STHLAKE4 138.00 138KV CKT 1
FDNS	00NR	3	16WP	G15_081	FROM->TO	G14-057T 345.00 - SUNNYSIDE 345KV CKT 1	717	789	0.05997	113.3592	G15074_T 345.00 - JEFFREY ENERGY CENTER 345KV CKT 1
FDNS	00NR	3	16WP	G15_081	FROM->TO	G14-057T 345.00 - SUNNYSIDE 345KV CKT 1	717	789	0.05973	113.3574	ETTA (DUKE HOTSPRINGS) - MC NIEL 500KV CKT 1
FDNS	00NR	3	16WP	G15_081	FROM->TO	G14-057T 345.00 - SUNNYSIDE 345KV CKT 1	717	789	0.05978	113.3546	P12:138:AEPW:YARCH-S4:T.S.E.-4
FDNS	00NR	3	16WP	G15_081	FROM->TO	G14-057T 345.00 - SUNNYSIDE 345KV CKT 1	717	789	0.05996	113.3531	WALTERS - WALTERS 69KV CKT 1
FDNS	00NR	3	16WP	G15_081	FROM->TO	G14-057T 345.00 - SUNNYSIDE 345KV CKT 1	717	789	0.06005	113.3511	ANADARKO - SEQUOYAHJ4 138.00 138KV CKT 1
FDNS	00NR	3	16WP	G15_081	FROM->TO	G14-057T 345.00 - SUNNYSIDE 345KV CKT 1	717	789	0.05978	113.3484	P12:138:AEPW:BA_71ST4:T.S.E.-4
FDNS	00NR	3	16WP	G15_081	FROM->TO	G14-057T 345.00 - SUNNYSIDE 345KV CKT 1	717	789	0.05978	113.3477	P12:69:AEPW:NROGERS2:ECNTRTN2
FDNS	00NR	3	16WP	G15_081	FROM->TO	G14-057T 345.00 - SUNNYSIDE 345KV CKT 1	717	789	0.06005	113.3455	CORN TAP - SEQUOYAHJ4 138.00 138KV CKT 1
FDNS	00NR	3	20WP	G15_081	FROM->TO	G14-057T 345.00 - SUNNYSIDE 345KV CKT 1	717	789	0.06113	113.3441	ARCADIA - SEMINOLE 345KV CKT 1
FDNS	00NR	3	16WP	G15_081	FROM->TO	G14-057T 345.00 - SUNNYSIDE 345KV CKT 1	717	789	0.06035	113.3421	MCCLAIN - STHLAKE4 138.00 138KV CKT 1
FDNS	00NR	3	16WP	G15_081	FROM->TO	G14-057T 345.00 - SUNNYSIDE 345KV CKT 1	717	789	0.05978	113.3405	SABINE 230/24.0KV TRANSFORMER CKT 1
FDNS	00NR	3	16WP	G15_081	FROM->TO	G14-057T 345.00 - SUNNYSIDE 345KV CKT 1	717	789	0.05978	113.3362	GEN336801 1-BAXTER WILSON UNIT #1
FDNS	00NR	3	16WP	G15_081	FROM->TO	G14-057T 345.00 - SUNNYSIDE 345KV CKT 1	717	789	0.05998	113.3355	WEATHERFORD JCT. - WEATHERFORD SOUTHEAST 138KV CKT 1
FDNS	00NR	3	16WP	G15_081	FROM->TO	G14-057T 345.00 - SUNNYSIDE 345KV CKT 1	717	789	0.05998	113.3355	WEATHERFORD JCT. - WEATHERFORD SOUTHEAST 138KV CKT 1
FDNS	00NR	3	16WP	G15_081	FROM->TO	G14-057T 345.00 - SUNNYSIDE 345KV CKT 1	717	789	0.06012	113.3323	BLACKBERRY - NEOSHO 345KV CKT 1
FDNS	00NR	3	16WP	G15_081	FROM->TO	G14-057T 345.00 - SUNNYSIDE 345KV CKT 1	717	789	0.05985	113.3317	LAWTON RELIFT TAP - OMPA-WALTERS 69KV CKT 1
FDNS	00NR	3	16WP	G15_081	FROM->TO	G14-057T 345.00 - SUNNYSIDE 345KV CKT 1	717	789	0.05988	113.3282	7LUTESVIL 345.00 - 7ST FRANC 345.00 345KV CKT 1
FDNS	00NR	3	16WP	G15_081	FROM->TO	G14-057T 345.00 - SUNNYSIDE 345KV CKT 1	717	789	0.05978	113.3247	FRONTIER 345/18.0KV TRANSFORMER CKT 1
FDNS	00NR	3	16WP	G15_081	FROM->TO	G14-057T 345.00 - SUNNYSIDE 345KV CKT 1	717	789	0.06007	113.3235	SWISSVALE - WEST GARDNER 345KV CKT 1
FDNS	00NR	3	16WP	G15_081	FROM->TO	G14-057T 345.00 - SUNNYSIDE 345KV CKT 1	717	789	0.05978	113.323	FRONTIER 345/18.0KV TRANSFORMER CKT 1
FDNS	00NR	3	16WP	G15_081	FROM->TO	G14-057T 345.00 - SUNNYSIDE 345KV CKT 1	717	789	0.05964	113.3228	ENOWILT - LONE OAK 138KV CKT 1
FDNS	00NR	3	16WP	G15_081	FROM->TO	G14-057T 345.00 - SUNNYSIDE 345KV CKT 1	717	789	0.06009	113.3201	NOEL_SW 138.00 - ROSE_VALLEY 138.00 138KV CKT 1
FDNS	00NR	3	16WP	G15_081	FROM->TO	G14-057T 345.00 - SUNNYSIDE 345KV CKT 1	717	789	0.06002	113.3193	NORGE ROAD - SOUTHWESTERN STATION 138KV CKT 1
FDNS	00NR	3	16WP	G15_081	FROM->TO	G14-057T 345.00 - SUNNYSIDE 345KV CKT 1	717	789	0.06002	113.3193	NORGE ROAD - SOUTHWESTERN STATION 138KV CKT 1
FDNS	00NR	3	16WP	G15_081	FROM->TO	G14-057T 345.00 - SUNNYSIDE 345KV CKT 1	717	789	0.05978	113.3188	GEN512688 2-GRDA1 GSU2 22
FDNS	00NR	3	16WP	G15_081	FROM->TO	G14-057T 345.00 - SUNNYSIDE 345KV CKT 1	717	789	0.05864	113.3185	ARBUCKLE - VANOSTP4 138.00 138KV CKT 1
FDNS	00NR	3	16WP	G15_081	FROM->TO	G14-057T 345.00 - SUNNYSIDE 345KV CKT 1	717	789	0.06094	113.3171	LASALLE - STONEWAL LH138.00 138KV CKT 1
FDNS	00NR	3	16WP	G15_081	FROM->TO	G14-057T 345.00 - SUNNYSIDE 345KV CKT 1	717	789	0.05978	113.3165	P12:161:AEPW:CHAMSPR5:FARMING5
FDNS	00NR	3	16WP	G15_081	FROM->TO	G14-057T 345.00 - SUNNYSIDE 345KV CKT 1	717	789	0.05964	113.3139	ENOWILT - SARDIS 138KV CKT 1
FDNS	00NR	3	16WP	G15_081	FROM->TO	G14-057T 345.00 - SUNNYSIDE 345KV CKT 1	717	789	0.06019	113.3124	P12:138:OKGE-AEPW:JENSEN4:REDROCKRD4
FDNS	00NR	3	16WP	G15_081	FROM->TO	G14-057T 345.00 - SUNNYSIDE 345KV CKT 1	717	789	0.05988	113.312	P12:138:AEPW-OGE:SHIDLER4:OSAGE 4
FDNS	00NR	3	16WP	G15_081	FROM->TO	G14-057T 345.00 - SUNNYSIDE 345KV CKT 1	717	789	0.0598	113.3118	HOPE - MCNAB REC 115KV CKT 1
FDNS	00NR	3	16WP	G15_081	FROM->TO	G14-057T 345.00 - SUNNYSIDE 345KV CKT 1	717	789	0.06018	113.3064	EMPORIA ENERGY CENTER - G14_001T 345.00 345KV CKT 1
FDNS	00NR	3	16WP	G15_081	FROM->TO	G14-057T 345.00 - SUNNYSIDE 345KV CKT 1	717	789	0.0598	113.3033	P12:115:AEPW:TURK3:HOPE3
FDNS	00NR	3	16WP	G15_081	FROM->TO	G14-057T 345.00 - SUNNYSIDE 345KV CKT 1	717	789	0.06094	113.3024	STONEWAL LH138.00 - TUPELO TAP 138KV CKT 1
FDNS	00NR	3	16WP	G15_081	FROM->TO	G14-057T 345.00 - SUNNYSIDE 345KV CKT 1	717	789	0.06092	113.2971	BENTON - WICHITA 345KV CKT 1
FDNS	00NR	3	16WP	G15_081	FROM->TO	G14-057T 345.00 - SUNNYSIDE 345KV CKT 1	717	789	0.0602	113.2951	CLEO CORNER - CLEOPLT4 138.00 138KV CKT 1
FDNS	00NR	3	20WP	G15_081	FROM->TO	G14-057T 345.00 - SUNNYSIDE 345KV CKT 1	717	789	0.06013	113.2941	COMANCHE TAP - OMPA-DUNCAN 840 138KV CKT 1
FDNS	00NR	3	16WP	G15_081	FROM->TO	G14-057T 345.00 - SUNNYSIDE 345KV CKT 1	717	789	0.0599	113.2889	8WNEWMADRID 500.00 - DELL 500 500KV CKT 1
FDNS	00NR	3	16WP	G15_081	FROM->TO	G14-057T 345.00 - SUNNYSIDE 345KV CKT 1	717	789	0.05978	113.2876	LEWIS CREEK SWITCHYARD 138/22.0KV TRANSFORMER CKT 1
FDNS	00NR	3	16WP	G15_081	FROM->TO	G14-057T 345.00 - SUNNYSIDE 345KV CKT 1	717	789	0.05978	113.2872	GEN505616 1-BROKEN BOW
FDNS	00NR	3	16WP	G15_081	FROM->TO	G14-057T 345.00 - SUNNYSIDE 345KV CKT 1	717	789	0.05998	113.2857	P12:138:AEPW:REDROCKRD4:WTH_JCT4
FDNS	00NR	3	16WP	G15_081	FROM->TO	G14-057T 345.00 - SUNNYSIDE 345KV CKT 1	717	789	0.0602	113.2836	CLEOPLT4 138.00 - MEN TAP 138KV CKT 1
FDNS	00NR	3	16WP	G15_081	FROM->TO	G14-057T 345.00 - SUNNYSIDE 345KV CKT 1	717	789	0.05978	113.2828	LEWIS CREEK SWITCHYARD 138/22.0KV TRANSFORMER CKT 1
FDNS	00NR	3	16WP	G15_081	FROM->TO	G14-057T 345.00 - SUNNYSIDE 345KV CKT 1	717	789	0.0598	113.2811	MCNAB REC - Turk 115 115KV CKT 1
FDNS	00NR	3	16WP	G15_081	FROM->TO	G14-057T 345.00 - SUNNYSIDE 345KV CKT 1	717	789	0.0598	113.2811	TURK (TURK 1) 138/115/13.2KV TRANSFORMER CKT 1
FDNS	00NR	3	16WP	G15_081	FROM->TO	G14-057T 345.00 - SUNNYSIDE 345KV CKT 1	717	789	0.0598	113.2811	TURK (TURK 1) 138/115/13.2KV TRANSFORMER CKT 1
FDNS	00NR	3	16WP	G15_081	FROM->TO	G14-057T 345.00 - SUNNYSIDE 345KV CKT 1	717	789	0.05964	113.2796	CLAYTON - SARDIS 138KV CKT 1
FDNS	00NR	3	16WP	G15_081	FROM->TO	G14-057T 345.00 - SUNNYSIDE 345KV CKT 1	717	789	0.06	113.2795	SOUTHWESTERN STATION - VERDEN 138KV CKT 1
FDNS	00NR	3	16WP	G15_081	FROM->TO	G14-057T 345.00 - SUNNYSIDE 345KV CKT 1	717	789	0.05979	113.2784	COUCH SES - MC NIEL 115KV CKT 1
FDNS	00NR	3	16WP	G15_081	FROM->TO	G14-057T 345.00 - SUNNYSIDE 345KV CKT 1	717	789	0.05842	113.2751	G14_038T 345.00 - POTTER COUNTY INTERCHANGE 345KV CKT 1
FDNS	00NR	3	16WP	G15_081	FROM->TO	G14-057T 345.00 - SUNNYSIDE 345KV CKT 1	717	789	0.0602	113.2735	IMO TAP - MEN TAP 138KV CKT 1
FDNS	00NR	3	16WP	G15_081	FROM->TO	G14-057T 345.00 - SUNNYSIDE 345KV CKT 1	717	789	0.05985	113.2659	OMPA-WALTERS - WALTERS 69KV CKT 1
FDNS	00NR	3	16WP	G15_081	FROM->TO	G14-057T 345.00 - SUNNYSIDE 345KV CKT 1	717	789	0.05985	113.2659	OMPA-WALTERS - WALTERS 69KV CKT 1
FDNS	00NR	3	16WP	G15_081	FROM->TO	G14-057T 345.00 - SUNNYSIDE 345KV CKT 1	717	789	0.05978	113.2631	GEN501970 1-EVANGELINE UNIT 7
FDNS	00NR	3	16WP	G15_081	FROM->TO	G14-057T 345.00 - SUNNYSIDE 345KV CKT 1	717	789	0.05984	113.2597	P12:138:OKGE:3TERM12
FDNS	00NR	3	16WP	G15_081	FROM->TO	G14-057T 345.00 - SUNNYSIDE 345KV CKT 1	717	789	0.06	113.2593	NORTH 29TH CHICKASHA - VERDEN 138KV CKT 1
FDNS	00NR	3	16WP	G15_081	FROM->TO	G14-057T 345.00 - SUNNYSIDE 345KV CKT 1	717	789	0.06089	113.2549	FRANKLIN SW - WESTMOORE 138KV CKT 1
FDNS	00NR	3	16WP	G15_081	FROM->TO	G14-057T 345.00 - SUNNYSIDE 345KV CKT 1	717	789	0.05996	113.254	P12:69:WFEC-AEPW:COMANCH2:WALTRS-2
FDNS	00NR	3	16WP	G15_081	FROM->TO	G14-057T 345.00 - SUNNYSIDE 345KV CKT 1	717	789	0.06	113.2526	EMPORIA ENERGY CENTER - SWISSVALE 345KV CKT 1

SOLUTION	GROUP	SCENARIO	SEASON	SOURCE	DIRECTION	MONITORED ELEMENT	RATEA (MVA)	RATEB(MVA)	TDF	TC%LOADING (% MVA)	CONTINGENCY
FDNS	00NR	3	16WP	G15_081	FROM->TO	G14-057T 345.00 - SUNNYSIDE 345KV CKT 1	717	789	0.05964	113.2521	P12:138:AEPW-SWPA:LONEOAK4:BRKNBW4
FDNS	00NR	3	16WP	G15_081	FROM->TO	G14-057T 345.00 - SUNNYSIDE 345KV CKT 1	717	789	0.05978	113.2509	GEN334392 1-EXXON MOBIL IPP 1
FDNS	00NR	3	16WP	G15_081	FROM->TO	G14-057T 345.00 - SUNNYSIDE 345KV CKT 1	717	789	0.0598	113.2458	MORISNT4 138.00 - STILLWATER 138KV CKT 1
FDNS	00NR	3	20WP	G15_081	FROM->TO	G14-057T 345.00 - SUNNYSIDE 345KV CKT 1	717	789	0.05956	113.2451	GEN509409 1-WILKES #3
FDNS	00NR	3	16WP	G15_081	FROM->TO	G14-057T 345.00 - SUNNYSIDE 345KV CKT 1	717	789	0.05978	113.2443	GEN334393 1-EXXON MOBIL IPP 2
FDNS	00NR	3	16WP	G15_081	FROM->TO	G14-057T 345.00 - SUNNYSIDE 345KV CKT 1	717	789	0.05978	113.2443	GEN334394 1-EXXON MOBIL IPP 3
FDNS	00NR	3	16WP	G15_081	FROM->TO	G14-057T 345.00 - SUNNYSIDE 345KV CKT 1	717	789	0.06018	113.242	G14_001T 345.00 - WICHITA 345KV CKT 1
FDNS	00NR	3	16WP	G15_081	FROM->TO	G14-057T 345.00 - SUNNYSIDE 345KV CKT 1	717	789	0.05978	113.2419	GEN659125 1-COVEY
FDNS	00NR	3	20WP	G15_081	FROM->TO	G14-057T 345.00 - SUNNYSIDE 345KV CKT 1	717	789	0.06091	113.2416	HEALDTON - LOCO 138KV CKT 1
FDNS	00NR	3	16WP	G15_081	FROM->TO	G14-057T 345.00 - SUNNYSIDE 345KV CKT 1	717	789	0.05981	113.2403	P12:138:OKGE:3TERM2
FDNS	00NR	3	16WP	G15_081	FROM->TO	G14-057T 345.00 - SUNNYSIDE 345KV CKT 1	717	789	0.0599	113.2392	WEATHERFORD TAP - WEATHERFORD WIND FARM 138KV CKT 1
FDNS	00NR	3	16WP	G15_081	FROM->TO	G14-057T 345.00 - SUNNYSIDE 345KV CKT 1	717	789	0.05964	113.2392	CLAYTON - NASHOBA 138KV CKT 1
FDNS	00NR	3	16WP	G15_081	FROM->TO	G14-057T 345.00 - SUNNYSIDE 345KV CKT 1	717	789	0.05978	113.2373	GEN509394 1-FLINT CREEK
FDNS	00NR	3	20WP	G15_081	FROM->TO	G14-057T 345.00 - SUNNYSIDE 345KV CKT 1	717	789	0.05556	113.2365	CANADIAN RIVER - MUSKOGEE 345KV CKT 1
FDNS	00NR	3	16WP	G15_081	FROM->TO	G14-057T 345.00 - SUNNYSIDE 345KV CKT 1	717	789	0.05978	113.2355	GEN336222 1-LITTLE GYPSY UNIT#2
FDNS	00NR	3	16WP	G15_081	FROM->TO	G14-057T 345.00 - SUNNYSIDE 345KV CKT 1	717	789	0.05994	113.2354	FRANKLIN - FRANKLIN SW 138KV CKT 1
FDNS	00NR	3	16WP	G15_081	FROM->TO	G14-057T 345.00 - SUNNYSIDE 345KV CKT 1	717	789	0.06013	113.2312	BUCKNER7 345.00 - HOLCOMB 345KV CKT 1
FDNS	00NR	3	16WP	G15_081	FROM->TO	G14-057T 345.00 - SUNNYSIDE 345KV CKT 1	717	789	0.06013	113.2312	BUCKNER7 345.00 - HOLCOMB 345KV CKT 1
FDNS	00NR	3	16WP	G15_081	FROM->TO	G14-057T 345.00 - SUNNYSIDE 345KV CKT 1	717	789	0.05978	113.2279	P12:138:AEPW:R.S.S-4:T.P.S.-4
FDNS	00NR	3	16WP	G15_081	FROM->TO	G14-057T 345.00 - SUNNYSIDE 345KV CKT 1	717	789	0.05964	113.2263	BETHEL - NASHOBA 138KV CKT 1
FDNS	00NR	3	16WP	G15_081	FROM->TO	G14-057T 345.00 - SUNNYSIDE 345KV CKT 1	717	789	0.06112	113.2253	MARIETTA - MARIETTA4 138.00 138KV CKT 1
FDNS	00NR	3	16WP	G15_081	FROM->TO	G14-057T 345.00 - SUNNYSIDE 345KV CKT 1	717	789	0.06099	113.2238	CLARKSVILLE - ONETA 345KV CKT 1
FDNS	00NR	3	16WP	G15_081	FROM->TO	G14-057T 345.00 - SUNNYSIDE 345KV CKT 1	717	789	0.06099	113.2238	CLARKSVILLE - ONETA 345KV CKT 1
FDNS	00NR	3	20WP	G15_081	FROM->TO	G14-057T 345.00 - SUNNYSIDE 345KV CKT 1	717	789	0.06043	113.2232	BRIDGECR 138.00 - TUTTLE 138KV CKT 1
FDNS	00NR	3	16WP	G15_081	FROM->TO	G14-057T 345.00 - SUNNYSIDE 345KV CKT 1	717	789	0.05978	113.2174	GEN506749 1-EASTMAN GENERATION A
FDNS	00NR	3	16WP	G15_081	FROM->TO	G14-057T 345.00 - SUNNYSIDE 345KV CKT 1	717	789	0.05978	113.2146	GEN334432 1-SABINE UNIT 2
FDNS	00NR	3	16WP	G15_081	FROM->TO	G14-057T 345.00 - SUNNYSIDE 345KV CKT 1	717	789	0.05983	113.2145	7JASPER 345.00 - MORGAN 345KV CKT 1
FDNS	00NR	3	16WP	G15_081	FROM->TO	G14-057T 345.00 - SUNNYSIDE 345KV CKT 1	717	789	0.05978	113.2145	GEN334431 1-SABINE UNIT 1
FDNS	00NR	3	16WP	G15_081	FROM->TO	G14-057T 345.00 - SUNNYSIDE 345KV CKT 1	717	789	0.05998	113.2094	HINTON - WEATHERFORD JCT. 138KV CKT 1
FDNS	00NR	3	16WP	G15_081	FROM->TO	G14-057T 345.00 - SUNNYSIDE 345KV CKT 1	717	789	0.05978	113.2073	GEN501971 1-EVANGELINE UNIT 7-1
FDNS	00NR	3	16WP	G15_081	FROM->TO	G14-057T 345.00 - SUNNYSIDE 345KV CKT 1	717	789	0.05978	113.2073	GEN501972 1-EVANGELINE UNIT 7-2
FDNS	00NR	3	16WP	G15_081	FROM->TO	G14-057T 345.00 - SUNNYSIDE 345KV CKT 1	717	789	0.05978	113.2066	GEN336152 1-WATERFORD UNIT#2
FDNS	00NR	3	16WP	G15_081	FROM->TO	G14-057T 345.00 - SUNNYSIDE 345KV CKT 1	717	789	0.05978	113.2056	GEN336151 1-WATERFORD UNIT#1
FDNS	00NR	3	16WP	G15_081	FROM->TO	G14-057T 345.00 - SUNNYSIDE 345KV CKT 1	717	789	0.05978	113.2044	P12:138:AEPW:R.S.S.-4:R:96YALE-4
FDNS	00NR	3	16WP	G15_081	FROM->TO	G14-057T 345.00 - SUNNYSIDE 345KV CKT 1	717	789	0.06003	113.2038	CLINTON JUNCTION - ELK CITY 138KV CKT 1
FDNS	00NR	3	16WP	G15_081	FROM->TO	G14-057T 345.00 - SUNNYSIDE 345KV CKT 1	717	789	0.06003	113.2038	CLINTON JUNCTION - ELK CITY 138KV CKT 1
FDNS	00NR	3	16WP	G15_081	FROM->TO	G14-057T 345.00 - SUNNYSIDE 345KV CKT 1	717	789	0.06002	113.2005	CORNVILLE - NORGE ROAD 138KV CKT 1
FDNS	00NR	3	16WP	G15_081	FROM->TO	G14-057T 345.00 - SUNNYSIDE 345KV CKT 1	717	789	0.06002	113.2005	CORNVILLE - NORGE ROAD 138KV CKT 1
FDNS	00NR	3	16WP	G15_081	FROM->TO	G14-057T 345.00 - SUNNYSIDE 345KV CKT 1	717	789	0.06173	113.1938	FINNEY SWITCHING STATION - WALKTAP7 345.00 345KV CKT 1
FDNS	00NR	3	16WP	G15_081	FROM->TO	G14-057T 345.00 - SUNNYSIDE 345KV CKT 1	717	789	0.06173	113.1938	FINNEY SWITCHING STATION - WALKTAP7 345.00 345KV CKT 1
FDNS	00NR	3	16WP	G15_081	FROM->TO	G14-057T 345.00 - SUNNYSIDE 345KV CKT 1	717	789	0.06129	113.1938	PURCELL4 138.00 - WALNUT CREEK 138KV CKT 1
FDNS	00NR	3	16WP	G15_081	FROM->TO	G14-057T 345.00 - SUNNYSIDE 345KV CKT 1	717	789	0.06	113.1935	CORNVILLE - NORTH 29TH CHICKASHA 138KV CKT 1
FDNS	00NR	3	16WP	G15_081	FROM->TO	G14-057T 345.00 - SUNNYSIDE 345KV CKT 1	717	789	0.05978	113.189	P12:138:AEPW:MOHAWK4:T.NO--4
FDNS	00NR	3	16WP	G15_081	FROM->TO	G14-057T 345.00 - SUNNYSIDE 345KV CKT 1	717	789	0.05978	113.1839	GEN501912 1-ACADIA UNIT CT1B
FDNS	00NR	3	16WP	G15_081	FROM->TO	G14-057T 345.00 - SUNNYSIDE 345KV CKT 1	717	789	0.06047	113.1837	G13-010T 345.00 - POST ROCK 345KV CKT 1
FDNS	00NR	3	16WP	G15_081	FROM->TO	G14-057T 345.00 - SUNNYSIDE 345KV CKT 1	717	789	0.05978	113.1832	GEN501911 1-ACADIA UNIT CT1A
FDNS	00NR	3	16WP	G15_081	FROM->TO	G14-057T 345.00 - SUNNYSIDE 345KV CKT 1	717	789	0.05978	113.1825	ST FRANCIS - ST FRANCIS 1 161KV CKT Z1
FDNS	00NR	3	20WP	G15_081	FROM->TO	G14-057T 345.00 - SUNNYSIDE 345KV CKT 1	717	789	0.05956	113.1822	GEN501813 1-RODEMACHER UNIT 3
FDNS	00NR	3	16WP	G15_081	FROM->TO	G14-057T 345.00 - SUNNYSIDE 345KV CKT 1	717	789	0.06004	113.181	HAMMETT TAP - HORSESHOE LAKE 138KV CKT 1
FDNS	00NR	3	16WP	G15_081	FROM->TO	G14-057T 345.00 - SUNNYSIDE 345KV CKT 1	717	789	0.05978	113.1799	LAYFLD8 500.00 (LAYFLD AUTO) 500/230/13.8KV TRANSFORMER CKT 1
FDNS	00NR	3	16WP	G15_081	FROM->TO	G14-057T 345.00 - SUNNYSIDE 345KV CKT 1	717	789	0.05978	113.1799	LAYFLD8 500.00 (LAYFLD AUTO) 500/230/13.8KV TRANSFORMER CKT 1
FDNS	00NR	3	16WP	G15_081	FROM->TO	G14-057T 345.00 - SUNNYSIDE 345KV CKT 1	717	789	0.05972	113.1784	P12:138:AEPW:OKMULGE4:R.S.S-4
FDNS	00NR	3	16WP	G15_081	FROM->TO	G14-057T 345.00 - SUNNYSIDE 345KV CKT 1	717	789	0.05926	113.1736	ARBUCKLE - MILLCREEK 138KV CKT 1
FDNS	00NR	3	16WP	G15_081	FROM->TO	G14-057T 345.00 - SUNNYSIDE 345KV CKT 1	717	789	0.05978	113.1727	SABINE 230/22.0KV TRANSFORMER CKT 1
FDNS	00NR	3	16WP	G15_081	FROM->TO	G14-057T 345.00 - SUNNYSIDE 345KV CKT 1	717	789	0.05964	113.1722	BETHEL - BROKEN BOW 138KV CKT 1
FDNS	00NR	3	16WP	G15_081	FROM->TO	G14-057T 345.00 - SUNNYSIDE 345KV CKT 1	717	789	0.05978	113.1713	AMITY SS - MURFREESBORO EAST (AECC) 115KV CKT 1
FDNS	00NR	3	16WP	G15_081	FROM->TO	G14-057T 345.00 - SUNNYSIDE 345KV CKT 1	717	789	0.05984	113.1701	FLETCHER - MARLOW JCT 69KV CKT 1
FDNS	00NR	3	16WP	G15_081	FROM->TO	G14-057T 345.00 - SUNNYSIDE 345KV CKT 1	717	789	0.05992	113.1658	P12:138:OKGE:3TERM47
FDNS	00NR	3	16WP	G15_081	FROM->TO	G14-057T 345.00 - SUNNYSIDE 345KV CKT 1	717	789	0.05973	113.1648	P12:138:WFEC-AEPW:ELKCTY-4:ERICK4
FDNS	00NR	3	16WP	G15_081	FROM->TO	G14-057T 345.00 - SUNNYSIDE 345KV CKT 1	717	789	0.05978	113.1593	GEN336242 1-1NMIL ST1 18.000
FDNS	00NR	3	16WP	G15_081	FROM->TO	G14-057T 345.00 - SUNNYSIDE 345KV CKT 1	717	789	0.05998	113.1531	HINTON - REDROCKRD4 138.00 138KV CKT 1
FDNS	00NR	3	16WP	G15_081	FROM->TO	G14-057T 345.00 - SUNNYSIDE 345KV CKT 1	717	789	0.0599	113.1518	WEATHERFORD SOUTHEAST - WEATHERFORD TAP 138KV CKT 1
FDNS	00NR	3	16WP	G15_081	FROM->TO	G14-057T 345.00 - SUNNYSIDE 345KV CKT 1	717	789	0.06093	113.1417	CIMARRON - NORTHWEST 345KV CKT 1
FDNS	00NR	3	16WP	G15_081	FROM->TO	G14-057T 345.00 - SUNNYSIDE 345KV CKT 1	717	789	0.06011	113.1395	SEMINOLE (SEMINOL2) 345/138/14.4KV TRANSFORMER CKT 1
FDNS	00NR	3	20WP	G15_081	FROM->TO	G14-057T 345.00 - SUNNYSIDE 345KV CKT 1	717	789	0.05956	113.11	GEN300006 1-NEW MADRID UNIT 1
FDNS	00NR	3	20WP	G15_081	FROM->TO	G14-057T 345.00 - SUNNYSIDE 345KV CKT 1	717	789	0.06091	113.0974	HEALDTON - RINGLING 138KV CKT 1
FDNS	00NR	3	20WP	G15_081	FROM->TO	G14-057T 345.00 - SUNNYSIDE 345KV CKT 1	717	789	0.05956	113.0898	GEN300007 1-NEW MADRID UNIT 2
FDNS	00NR	3	20WP	G15_081	FROM->TO	G14-057T 345.00 - SUNNYSIDE 345KV CKT 1	717	789	0.05989	113.0279	LACYGNE - WAVERLY7 345.00 345KV CKT 1
FDNS	00NR	3	20WP	G15_081	FROM->TO	G14-057T 345.00 - SUNNYSIDE 345KV CKT 1	717	789	0.06013	113.0084	DUNCAN - OMPA-DUNCAN 840 138KV CKT 1
FDNS	00NR	3	20WP	G15_081	FROM->TO	G14-057T 345.00 - SUNNYSIDE 345KV CKT 1	717	789	0.06013	113.0084	DUNCAN - OMPA-DUNCAN 840 138KV CKT 1
FDNS	00NR	3	20WP	G15_081	FROM->TO	G14-057T 345.00 - SUNNYSIDE 345KV CKT 1	717	789	0.05956	112.9726	GEN335206 1-NELSON UNIT 6
FDNS	00NR	3	20WP	G15_081	FROM->TO	G14-057T 345.00 - SUNNYSIDE 345KV CKT 1	717	789	0.06043	112.9475	P12:138:WFEC:MSL01
FDNS	00NR	3	20WP	G15_081	FROM->TO	G14-057T 345.00 - SUNNYSIDE 345KV CKT 1	717	789	0.05956	112.9471	GEN520947 1-HUGO1
FDNS	00NR	3	20WP	G15_081	FROM->TO	G14-057T 345.00 - SUNNYSIDE 345KV CKT 1	717	789	0.06043	112.9409	BRIDGECR 138.00 - SUNSHINE CANYON 138KV CKT 1
FDNS	00NR	3	20WP	G15_081	FROM->TO	G14-057T 345.00 - SUNNYSIDE 345KV CKT 1	717	789	0.06091	112.9263	RINGLING - SOUTH WILSON 138KV CKT 1
FDNS	00NR	3	20WP	G15_081	FROM->TO	G14-057T 345.00 - SUNNYSIDE 345KV CKT 1	717	789	0.05989	112.9164	WAVERLY7 345.00 - WOLF CREEK 345KV CKT 1
FDNS	00NR	3	20WP	G15_081	FROM->TO	G14-057T 345.00 - SUNNYSIDE 345KV CKT 1	717	789	0.05952	112.8103	ELDORADO EHV - MOUNT OLIVE 500KV CKT 1
FDNS	00NR	3	20WP	G15_081	FROM->TO	G14-057T 345.00 - SUNNYSIDE 345KV CKT 1	717	789	0.05954	112.8048	P12:138:AEPW:SHERID4:112GORE4
FDNS	00NR	3	20WP	G15_081	FROM->TO	G14-057T 345.00 - SUNNYSIDE 345KV CKT 1	717	789	0.05956	112.7894	GEN501812 1-RODEMACHER UNIT 2

SOLUTION	GROUP	SCENARIO	SEASON	SOURCE	DIRECTION	MONITORED ELEMENT	RATEA (MVA)	RATEB(MVA)	TDF	TC%LOADING (% MVA)	CONTINGENCY
FDNS	00NR	3	20WP	G15_081	FROM->TO	G14-057T 345.00 - SUNNYSIDE 345KV CKT 1	717	789	0.05956	112.7848	DOLET HILLS 345/24.0KV TRANSFORMER CKT 1
FDNS	00NR	3	20WP	G15_081	FROM->TO	G14-057T 345.00 - SUNNYSIDE 345KV CKT 1	717	789	0.06283	112.7635	Hitchland Interchange - WALKTAP7 345.00 345KV CKT 1
FDNS	00NR	3	20WP	G15_081	FROM->TO	G14-057T 345.00 - SUNNYSIDE 345KV CKT 1	717	789	0.06283	112.7635	Hitchland Interchange - WALKTAP7 345.00 345KV CKT 1
FDNS	00NR	3	20WP	G15_081	FROM->TO	G14-057T 345.00 - SUNNYSIDE 345KV CKT 1	717	789	0.05996	112.7532	REDBUD - RIVERSIDE STATION 345KV CKT 1
FDNS	00NR	3	20WP	G15_081	FROM->TO	G14-057T 345.00 - SUNNYSIDE 345KV CKT 1	717	789	0.05996	112.7532	REDBUD - RIVERSIDE STATION 345KV CKT 1
FDNS	00NR	3	20WP	G15_081	FROM->TO	G14-057T 345.00 - SUNNYSIDE 345KV CKT 1	717	789	0.05856	112.7515	PARK LANE - SEMINOLE 138KV CKT 1
FDNS	00NR	3	20WP	G15_081	FROM->TO	G14-057T 345.00 - SUNNYSIDE 345KV CKT 1	717	789	0.06283	112.7315	P12:345:SPS:J07.1.FINN.HITCH
FDNS	00NR	3	16WP	G15_081	FROM->TO	G14-057T 345.00 - SUNNYSIDE 345KV CKT 1	717	789	0.05978	112.6917	803-OKLAUNION
FDNS	00NR	3	20WP	G15_081	FROM->TO	G14-057T 345.00 - SUNNYSIDE 345KV CKT 1	717	789	0.05956	112.6663	GEN515564 1-ORIGIN11 0.6900
FDNS	00NR	3	20WP	G15_081	FROM->TO	G14-057T 345.00 - SUNNYSIDE 345KV CKT 1	717	789	0.05956	112.6663	GEN515565 1-ORIGIN21 0.6900
FDNS	00NR	3	20WP	G15_081	FROM->TO	G14-057T 345.00 - SUNNYSIDE 345KV CKT 1	717	789	0.05967	112.6503	WEBRE - WELLS 500KV CKT 1
FDNS	00NR	3	20WP	G15_081	FROM->TO	G14-057T 345.00 - SUNNYSIDE 345KV CKT 1	717	789	0.0634	112.6484	MATHWSN7 345.00 - NORTHWEST 345KV CKT 1
FDNS	00NR	3	20WP	G15_081	FROM->TO	G14-057T 345.00 - SUNNYSIDE 345KV CKT 1	717	789	0.06091	112.6402	MARIETTA - SOUTH WILSON 138KV CKT 1
FDNS	00NR	3	20WP	G15_081	FROM->TO	G14-057T 345.00 - SUNNYSIDE 345KV CKT 1	717	789	0.05956	112.6312	GEN334440 1-SABINE UNIT 4
FDNS	00NR	3	20WP	G15_081	FROM->TO	G14-057T 345.00 - SUNNYSIDE 345KV CKT 1	717	789	0.05956	112.6087	P12:161:AEPW:DYESS 5:HYLAND 5
FDNS	00NR	3	20WP	G15_081	FROM->TO	G14-057T 345.00 - SUNNYSIDE 345KV CKT 1	717	789	0.05956	112.6022	GEN590011 2-ERCOT EQUIVALENCE
FDNS	00NR	3	20WP	G15_081	FROM->TO	G14-057T 345.00 - SUNNYSIDE 345KV CKT 1	717	789	0.06053	112.5781	CANEYRV7 345.00 - NEOSHO 345KV CKT 1
FDNS	00NR	3	20WP	G15_081	FROM->TO	G14-057T 345.00 - SUNNYSIDE 345KV CKT 1	717	789	0.05956	112.5754	DELL 500 - ESSEX UNIT 2 500KV CKT Z1
FDNS	00NR	3	20WP	G15_081	FROM->TO	G14-057T 345.00 - SUNNYSIDE 345KV CKT 1	717	789	0.05956	112.5462	P12:69:AEPW:L.E.S.-2:LAW WC2
FDNS	00NR	3	20WP	G15_081	FROM->TO	G14-057T 345.00 - SUNNYSIDE 345KV CKT 1	717	789	0.06091	112.5445	P12:138:WFEC:MSL17
FDNS	00NR	3	20WP	G15_081	FROM->TO	G14-057T 345.00 - SUNNYSIDE 345KV CKT 1	717	789	0.05956	112.5331	GEN590010 1-ERCOT EQUIVALENCE
FDNS	00NR	3	20WP	G15_081	FROM->TO	G14-057T 345.00 - SUNNYSIDE 345KV CKT 1	717	789	0.05994	112.4743	P12:138:WFEC:MSL02
FDNS	00NR	3	20WP	G15_081	FROM->TO	G14-057T 345.00 - SUNNYSIDE 345KV CKT 1	717	789	0.05992	112.4659	PAOLI - PAYNE 138.00 138KV CKT 1
FDNS	00NR	3	20WP	G15_081	FROM->TO	G14-057T 345.00 - SUNNYSIDE 345KV CKT 1	717	789	0.05944	112.457	ELDORADO EHV - SHERIDAN EHV 500KV CKT 1
FDNS	00NR	3	20WP	G15_081	FROM->TO	G14-057T 345.00 - SUNNYSIDE 345KV CKT 1	717	789	0.05967	112.4554	LAWTON EASTSIDE (LES 5) 345/138/13.8KV TRANSFORMER CKT 2
FDNS	00NR	3	20WP	G15_081	FROM->TO	G14-057T 345.00 - SUNNYSIDE 345KV CKT 1	717	789	0.05967	112.4554	LAWTON EASTSIDE (LES 5) 345/138/13.8KV TRANSFORMER CKT 2
FDNS	00NR	3	20WP	G15_081	FROM->TO	G14-057T 345.00 - SUNNYSIDE 345KV CKT 1	717	789	0.05956	112.4511	GEN506754 1-LEBROCK STEAM 1
FDNS	00NR	3	20WP	G15_081	FROM->TO	G14-057T 345.00 - SUNNYSIDE 345KV CKT 1	717	789	0.06053	112.4369	CANEYRV7 345.00 - LATHAMS7 345.00 345KV CKT 1
FDNS	00NR	3	20WP	G15_081	FROM->TO	G14-057T 345.00 - SUNNYSIDE 345KV CKT 1	717	789	0.06072	112.4276	CIVIT - PAOLI 138KV CKT 1
FDNS	00NR	3	20WP	G15_081	FROM->TO	G14-057T 345.00 - SUNNYSIDE 345KV CKT 1	717	789	0.05955	112.4232	P12:138:AEPW:112GORE4:L.E.S.-4
FDNS	00NR	3	20WP	G15_081	FROM->TO	G14-057T 345.00 - SUNNYSIDE 345KV CKT 1	717	789	0.05956	112.4064	GEN509408 1-WILKES #2
FDNS	00NR	3	20WP	G15_081	FROM->TO	G14-057T 345.00 - SUNNYSIDE 345KV CKT 1	717	789	0.05984	112.4035	ANADARKO - GEORGIA 138KV CKT 1
FDNS	00NR	3	20WP	G15_081	FROM->TO	G14-057T 345.00 - SUNNYSIDE 345KV CKT 1	717	789	0.05956	112.3511	GEN336252 1-NINEMILE POINT UNIT#5
FDNS	00NR	3	20WP	G15_081	FROM->TO	G14-057T 345.00 - SUNNYSIDE 345KV CKT 1	717	789	0.05984	112.3173	FLETCHER - GEORGIA 138KV CKT 1
FDNS	00NR	3	20WP	G15_081	FROM->TO	G14-057T 345.00 - SUNNYSIDE 345KV CKT 1	717	789	0.05956	112.3147	FRONTIER - GRIMES 345KV CKT 1
FDNS	00NR	3	16WP	G15_081	FROM->TO	G14-057T 345.00 - SUNNYSIDE 345KV CKT 1	717	789	0.05981	112.3105	JOHNSON COUNTY - RUSSETT 138KV CKT 1
FDNS	00NR	3	20WP	G15_081	FROM->TO	G14-057T 345.00 - SUNNYSIDE 345KV CKT 1	717	789	0.06122	112.3086	P12:138:AEPW-OGE:CORNVIL4:MAUD 4
FDNS	00NR	3	20WP	G15_081	FROM->TO	G14-057T 345.00 - SUNNYSIDE 345KV CKT 1	717	789	0.05956	112.3074	GEN503909 1-FULTONU1 1 16.000
FDNS	00NR	3	16WP	G15_081	FROM->TO	G14-057T 345.00 - SUNNYSIDE 345KV CKT 1	717	789	0.0592	112.305	MAYSVLT4 138.00 - PRAIRIE POINT 138KV CKT 1
FDNS	00NR	3	16WP	G15_081	FROM->TO	G14-057T 345.00 - SUNNYSIDE 345KV CKT 1	717	789	0.06093	112.3037	NORTHWEST - SPRING CREEK 345KV CKT 1
FDNS	00NR	3	20WP	G15_081	FROM->TO	G14-057T 345.00 - SUNNYSIDE 345KV CKT 1	717	789	0.05965	112.3024	TUPELO - TUPELO TAP 138KV CKT 1
FDNS	00NR	3	16WP	G15_081	FROM->TO	G14-057T 345.00 - SUNNYSIDE 345KV CKT 1	717	789	0.05984	112.2986	GLASSES - MADILL INDUSTRIAL TAP 138KV CKT 1
FDNS	00NR	3	16WP	G15_081	FROM->TO	G14-057T 345.00 - SUNNYSIDE 345KV CKT 1	717	789	0.06093	112.2965	SOONER - SPRING CREEK 345KV CKT 1
FDNS	00NR	3	20WP	G15_081	FROM->TO	G14-057T 345.00 - SUNNYSIDE 345KV CKT 1	717	789	0.05956	112.2943	GEN335204 1-NELSON UNIT 4
FDNS	00NR	3	20WP	G15_081	FROM->TO	G14-057T 345.00 - SUNNYSIDE 345KV CKT 1	717	789	0.06072	112.2874	CIVIT - STRATFORD 138KV CKT 1
FDNS	00NR	3	20WP	G15_081	FROM->TO	G14-057T 345.00 - SUNNYSIDE 345KV CKT 1	717	789	0.05956	112.2871	GEN334441 1-SABINE UNIT 5
FDNS	00NR	3	16WP	G15_081	FROM->TO	G14-057T 345.00 - SUNNYSIDE 345KV CKT 1	717	789	0.05978	112.2764	GEN562772 1-G15034_3 0.6900
FDNS	00NR	3	16WP	G15_081	FROM->TO	G14-057T 345.00 - SUNNYSIDE 345KV CKT 1	717	789	0.05972	112.2747	HUGO (HUGO 1) 345/138/13.8KV TRANSFORMER CKT 1
FDNS	00NR	3	16WP	G15_081	FROM->TO	G14-057T 345.00 - SUNNYSIDE 345KV CKT 1	717	789	0.05978	112.2677	GEN521103 1-BLUE CANYON WIND FARM
FDNS	00NR	3	16WP	G15_081	FROM->TO	G14-057T 345.00 - SUNNYSIDE 345KV CKT 1	717	789	0.05978	112.264	GEN562691 1-G15_015_3 0.6900
FDNS	00NR	3	20WP	G15_081	FROM->TO	G14-057T 345.00 - SUNNYSIDE 345KV CKT 1	717	789	0.0599	112.262	EMPIRE - FLETCHER 138KV CKT 1
FDNS	00NR	3	16WP	G15_081	FROM->TO	G14-057T 345.00 - SUNNYSIDE 345KV CKT 1	717	789	0.06009	112.2614	DRAPER LAKE - MIDWEST TAP 138KV CKT 1
FDNS	00NR	3	20WP	G15_081	FROM->TO	G14-057T 345.00 - SUNNYSIDE 345KV CKT 1	717	789	0.05818	112.2457	G14_038T 345.00 - Hitchland Interchange 345KV CKT 1
FDNS	00NR	3	16WP	G15_081	FROM->TO	G14-057T 345.00 - SUNNYSIDE 345KV CKT 1	717	789	0.05921	112.2436	ARBUCKLE - SULPHR 4 138.00 138KV CKT 1
FDNS	00NR	3	16WP	G15_081	FROM->TO	G14-057T 345.00 - SUNNYSIDE 345KV CKT 1	717	789	0.05978	112.2392	GEN520812 1-ANADRK5
FDNS	00NR	3	16WP	G15_081	FROM->TO	G14-057T 345.00 - SUNNYSIDE 345KV CKT 1	717	789	0.05978	112.2391	GEN520813 1-ANADRK6
FDNS	00NR	3	16WP	G15_081	FROM->TO	G14-057T 345.00 - SUNNYSIDE 345KV CKT 1	717	789	0.05984	112.2379	GLASSES - RUSSETT 138KV CKT 1
FDNS	00NR	3	16WP	G15_081	FROM->TO	G14-057T 345.00 - SUNNYSIDE 345KV CKT 1	717	789	0.0598	112.2346	P12:138:WFEC:MSL11
FDNS	00NR	3	16WP	G15_081	FROM->TO	G14-057T 345.00 - SUNNYSIDE 345KV CKT 1	717	789	0.0598	112.2346	P12:138:WFEC-AEPW:PHAROAH4:LONEOAK4
FDNS	00NR	3	16WP	G15_081	FROM->TO	G14-057T 345.00 - SUNNYSIDE 345KV CKT 1	717	789	0.05873	112.2325	BEARCAT 138.00 - NINE MILE 138KV CKT 1
FDNS	00NR	3	20WP	G15_081	FROM->TO	G14-057T 345.00 - SUNNYSIDE 345KV CKT 1	717	789	0.06122	112.2312	BLANCHARD - CORNVILLE 138KV CKT 1
FDNS	00NR	3	16WP	G15_081	FROM->TO	G14-057T 345.00 - SUNNYSIDE 345KV CKT 1	717	789	0.05978	112.2289	GEN511961 1-DEMPSEY-WTG10.7000
FDNS	00NR	3	16WP	G15_081	FROM->TO	G14-057T 345.00 - SUNNYSIDE 345KV CKT 1	717	789	0.05978	112.2149	GEN600017 C-LS POWER CT
FDNS	00NR	3	16WP	G15_081	FROM->TO	G14-057T 345.00 - SUNNYSIDE 345KV CKT 1	717	789	0.05994	112.2118	P12:138:WFEC:MSL08
FDNS	00NR	3	16WP	G15_081	FROM->TO	G14-057T 345.00 - SUNNYSIDE 345KV CKT 1	717	789	0.05977	112.2113	P12:069:OKGE:3TERM42
FDNS	00NR	3	20WP	G15_081	FROM->TO	G14-057T 345.00 - SUNNYSIDE 345KV CKT 1	717	789	0.05953	112.2112	LAYFLD8 500.00 - MOUNT OLIVE 500KV CKT 1
FDNS	00NR	3	20WP	G15_081	FROM->TO	G14-057T 345.00 - SUNNYSIDE 345KV CKT 1	717	789	0.05953	112.2112	LAYFLD8 500.00 - MOUNT OLIVE 500KV CKT 1
FDNS	00NR	3	20WP	G15_081	FROM->TO	G14-057T 345.00 - SUNNYSIDE 345KV CKT 1	717	789	0.06053	112.2105	LATHAMS7 345.00 - ROSE HILL 345KV CKT 1
FDNS	00NR	3	16WP	G15_081	FROM->TO	G14-057T 345.00 - SUNNYSIDE 345KV CKT 1	717	789	0.06008	112.2096	P12:138:OKGE:3TERM21
FDNS	00NR	3	16WP	G15_081	FROM->TO	G14-057T 345.00 - SUNNYSIDE 345KV CKT 1	717	789	0.0592	112.2081	PRAIRIE POINT - RATLIFF 138KV CKT 1
FDNS	00NR	3	16WP	G15_081	FROM->TO	G14-057T 345.00 - SUNNYSIDE 345KV CKT 1	717	789	0.0599	112.2038	DELL 500 - INDEPENDENCE 500KV CKT 1
FDNS	00NR	3	20WP	G15_081	FROM->TO	G14-057T 345.00 - SUNNYSIDE 345KV CKT 1	717	789	0.06263	112.1996	THISTLE7 345.00 - WOODWARD DISTRICT EHV 345KV CKT 1
FDNS	00NR	3	20WP	G15_081	FROM->TO	G14-057T 345.00 - SUNNYSIDE 345KV CKT 1	717	789	0.06263	112.1996	THISTLE7 345.00 - WOODWARD DISTRICT EHV 345KV CKT 1
FDNS	00NR	3	20WP	G15_081	FROM->TO	G14-057T 345.00 - SUNNYSIDE 345KV CKT 1	717	789	0.06263	112.1996	THISTLE7 345.00 - WOODWARD DISTRICT EHV 345KV CKT 2
FDNS	00NR	3	20WP	G15_081	FROM->TO	G14-057T 345.00 - SUNNYSIDE 345KV CKT 1	717	789	0.06263	112.1996	THISTLE7 345.00 - WOODWARD DISTRICT EHV 345KV CKT 2
FDNS	00NR	3	16WP	G15_081	FROM->TO	G14-057T 345.00 - SUNNYSIDE 345KV CKT 1	717	789	0.05874	112.1984	CIMARRON - MATHWSN7 345.00 345KV CKT 1
FDNS	00NR	3	16WP	G15_081	FROM->TO	G14-057T 345.00 - SUNNYSIDE 345KV CKT 1	717	789	0.05874	112.1984	CIMARRON - MATHWSN7 345.00 345KV CKT 2
FDNS	00NR	3	20WP	G15_081	FROM->TO	G14-057T 345.00 - SUNNYSIDE 345KV CKT 1	717	789	0.05956	112.1966	GEN334071 1-LEWIS CREEK 2
FDNS	00NR	3	16WP	G15_081	FROM->TO	G14-057T 345.00 - SUNNYSIDE 345KV CKT 1	717	789	0.05978	112.1901	GEN672392 1-NBECGT1G 18.000

SOLUTION	GROUP	SCENARIO	SEASON	SOURCE	DIRECTION	MONITORED ELEMENT	RATEA (MVA)	RATEB(MVA)	TDF	TC%LOADING (% MVA)	CONTINGENCY
FDNS	00NR	3	20WP	G15_081	FROM->TO	G14-057T 345.00 - SUNNYSIDE 345KV CKT 1	717	789	0.05956	112.1883	GEN334070 1-LEWIS CREEK 1
FDNS	00NR	3	16WP	G15_081	FROM->TO	G14-057T 345.00 - SUNNYSIDE 345KV CKT 1	717	789	0.06002	112.1877	OVEXFRMCCOVE
FDNS	00NR	3	20WP	G15_081	FROM->TO	G14-057T 345.00 - SUNNYSIDE 345KV CKT 1	717	789	0.0599	112.1831	COMANCHE - EMPIRE 138KV CKT 1
FDNS	00NR	3	20WP	G15_081	FROM->TO	G14-057T 345.00 - SUNNYSIDE 345KV CKT 1	717	789	0.05956	112.1813	GEN336251 1-NINEMILE POINT UNIT#4
FDNS	00NR	3	16WP	G15_081	FROM->TO	G14-057T 345.00 - SUNNYSIDE 345KV CKT 1	717	789	0.05978	112.1744	GEN528361 1-MADDOX GEN #1
FDNS	00NR	3	16WP	G15_081	FROM->TO	G14-057T 345.00 - SUNNYSIDE 345KV CKT 1	717	789	0.05984	112.1735	GRPRAR1-LNX3345.00 - HOLT.CO3 345.00 345KV CKT 1
FDNS	00NR	3	16WP	G15_081	FROM->TO	G14-057T 345.00 - SUNNYSIDE 345KV CKT 1	717	789	0.05873	112.1726	P12:138:WFEC:MSL14
FDNS	00NR	3	16WP	G15_081	FROM->TO	G14-057T 345.00 - SUNNYSIDE 345KV CKT 1	717	789	0.05984	112.1714	CANEY CREEK - JOHNSON COUNTY 138KV CKT 1
FDNS	00NR	3	16WP	G15_081	FROM->TO	G14-057T 345.00 - SUNNYSIDE 345KV CKT 1	717	789	0.05978	112.1704	GEN615010 1-STANTON4
FDNS	00NR	3	20WP	G15_081	FROM->TO	G14-057T 345.00 - SUNNYSIDE 345KV CKT 1	717	789	0.06072	112.1703	OIL CENTER - STRATFORD 138KV CKT 1
FDNS	00NR	3	20WP	G15_081	FROM->TO	G14-057T 345.00 - SUNNYSIDE 345KV CKT 1	717	789	0.05955	112.1694	P12:161:AEPW-SWPA:BEAVER5:EROGERS5
FDNS	00NR	3	20WP	G15_081	FROM->TO	G14-057T 345.00 - SUNNYSIDE 345KV CKT 1	717	789	0.05956	112.1647	GEN509392 G2-ARSENAL HILL GENS #3 (STALL)
FDNS	00NR	3	16WP	G15_081	FROM->TO	G14-057T 345.00 - SUNNYSIDE 345KV CKT 1	717	789	0.05978	112.1645	GEN629070 2-BEAVER CHANNEL GENERATORFOR UNIT NO 2
FDNS	00NR	3	20WP	G15_081	FROM->TO	G14-057T 345.00 - SUNNYSIDE 345KV CKT 1	717	789	0.05956	112.1645	GEN509391 G1-ARSENAL HILL GENS #2 (STALL)
FDNS	00NR	3	16WP	G15_081	FROM->TO	G14-057T 345.00 - SUNNYSIDE 345KV CKT 1	717	789	0.05984	112.1628	GRPRAR1-LNX3345.00 - GRPRAR 345KV CKT Z
FDNS	00NR	3	20WP	G15_081	FROM->TO	G14-057T 345.00 - SUNNYSIDE 345KV CKT 1	717	789	0.05956	112.1625	GEN509393 S1-ARSENAL HILL GENS #4 (STALL)
FDNS	00NR	3	16WP	G15_081	FROM->TO	G14-057T 345.00 - SUNNYSIDE 345KV CKT 1	717	789	0.05978	112.155	GEN560183 1-REDHIL-WTG1 12.000
FDNS	00NR	3	16WP	G15_081	FROM->TO	G14-057T 345.00 - SUNNYSIDE 345KV CKT 1	717	789	0.05978	112.1545	GEN515443 1-MNCOWND1 0.7000
FDNS	00NR	3	16WP	G15_081	FROM->TO	G14-057T 345.00 - SUNNYSIDE 345KV CKT 1	717	789	0.05978	112.15	GEN629071 1-BURLINGTON GENERATOR FOR UNIT NO 1 E
FDNS	00NR	3	16WP	G15_081	FROM->TO	G14-057T 345.00 - SUNNYSIDE 345KV CKT 1	717	789	0.05978	112.1499	GEN615021 1-GRE-ER 14G 16.000
FDNS	00NR	3	20WP	G15_081	FROM->TO	G14-057T 345.00 - SUNNYSIDE 345KV CKT 1	717	789	0.05974	112.1481	DUNCAN (DUNCAN) 138/69/13.8KV TRANSFORMER CKT 1
FDNS	00NR	3	20WP	G15_081	FROM->TO	G14-057T 345.00 - SUNNYSIDE 345KV CKT 1	717	789	0.05974	112.1481	DUNCAN (DUNCAN) 138/69/13.8KV TRANSFORMER CKT 1
FDNS	00NR	3	16WP	G15_081	FROM->TO	G14-057T 345.00 - SUNNYSIDE 345KV CKT 1	717	789	0.05971	112.146	CARTER - CHICKASAW 138KV CKT 1
FDNS	00NR	3	16WP	G15_081	FROM->TO	G14-057T 345.00 - SUNNYSIDE 345KV CKT 1	717	789	0.05978	112.1366	INDEPENDENCE 500/26.0KV TRANSFORMER CKT 1
FDNS	00NR	3	16WP	G15_081	FROM->TO	G14-057T 345.00 - SUNNYSIDE 345KV CKT 1	717	789	0.05978	112.1349	GEN562902 1-G15052_3 0.6900
FDNS	00NR	3	16WP	G15_081	FROM->TO	G14-057T 345.00 - SUNNYSIDE 345KV CKT 1	717	789	0.05978	112.1348	GEN563242 1-G15090_3 0.6900
FDNS	00NR	3	16WP	G15_081	FROM->TO	G14-057T 345.00 - SUNNYSIDE 345KV CKT 1	717	789	0.05978	112.1346	BURLINGTON NO1 + NO 2 + NO 3 161/20.0KV TRANSFORMER CKT 1
FDNS	00NR	3	16WP	G15_081	FROM->TO	G14-057T 345.00 - SUNNYSIDE 345KV CKT 1	717	789	0.05955	112.1346	ROCKY POINT - SPRINGDALE 138KV CKT 1
FDNS	00NR	3	16WP	G15_081	FROM->TO	G14-057T 345.00 - SUNNYSIDE 345KV CKT 1	717	789	0.05873	112.134	BEARCAT 138.00 - MOORELAND 138KV CKT 1
FDNS	00NR	3	16WP	G15_081	FROM->TO	G14-057T 345.00 - SUNNYSIDE 345KV CKT 1	717	789	0.05994	112.131	CANADIAN RIVER - MCALESTER SOUTH 138KV CKT 1
FDNS	00NR	3	16WP	G15_081	FROM->TO	G14-057T 345.00 - SUNNYSIDE 345KV CKT 1	717	789	0.05994	112.131	CANADIAN RIVER - MCALESTER SOUTH 138KV CKT 1
FDNS	00NR	3	20WP	G15_081	FROM->TO	G14-057T 345.00 - SUNNYSIDE 345KV CKT 1	717	789	0.05956	112.1307	GEN334433 1-SABINE UNIT 3
FDNS	00NR	3	16WP	G15_081	FROM->TO	G14-057T 345.00 - SUNNYSIDE 345KV CKT 1	717	789	0.05994	112.1297	CANADIAN RIVER () 345/138/13.8KV TRANSFORMER CKT 1
FDNS	00NR	3	16WP	G15_081	FROM->TO	G14-057T 345.00 - SUNNYSIDE 345KV CKT 1	717	789	0.05994	112.1297	CANADIAN RIVER () 345/138/13.8KV TRANSFORMER CKT 1
FDNS	00NR	3	20WP	G15_081	FROM->TO	G14-057T 345.00 - SUNNYSIDE 345KV CKT 1	717	789	0.05956	112.1296	P12:161:AEPW:DYESS5:ELMSPRNG:TONTITN5
FDNS	00NR	3	20WP	G15_081	FROM->TO	G14-057T 345.00 - SUNNYSIDE 345KV CKT 1	717	789	0.05956	112.1167	GEN337653 1-WHITE BLUFF UNIT #2
FDNS	00NR	3	16WP	G15_081	FROM->TO	G14-057T 345.00 - SUNNYSIDE 345KV CKT 1	717	789	0.05965	112.1149	ALTUS JUNCTION - RUSSELL 138KV CKT 1
FDNS	00NR	3	16WP	G15_081	FROM->TO	G14-057T 345.00 - SUNNYSIDE 345KV CKT 1	717	789	0.05965	112.1149	ALTUS JUNCTION - RUSSELL 138KV CKT 1
FDNS	00NR	3	16WP	G15_081	FROM->TO	G14-057T 345.00 - SUNNYSIDE 345KV CKT 1	717	789	0.0598	112.1082	NORTHWEST TEXARKANA - WELSH 345KV CKT 1
FDNS	00NR	3	16WP	G15_081	FROM->TO	G14-057T 345.00 - SUNNYSIDE 345KV CKT 1	717	789	0.0598	112.1082	NORTHWEST TEXARKANA - WELSH 345KV CKT 1
FDNS	00NR	3	20WP	G15_081	FROM->TO	G14-057T 345.00 - SUNNYSIDE 345KV CKT 1	717	789	0.05956	112.1075	GEN336831 1-BAXTER WILSON SES
FDNS	00NR	3	16WP	G15_081	FROM->TO	G14-057T 345.00 - SUNNYSIDE 345KV CKT 1	717	789	0.05978	112.1003	GEN562078 1-G11_051_3 0.6900
FDNS	00NR	3	16WP	G15_081	FROM->TO	G14-057T 345.00 - SUNNYSIDE 345KV CKT 1	717	789	0.06069	112.0975	MINGO - SETAB 345KV CKT 1
FDNS	00NR	3	16WP	G15_081	FROM->TO	G14-057T 345.00 - SUNNYSIDE 345KV CKT 1	717	789	0.06069	112.0975	MINGO - SETAB 345KV CKT 1
FDNS	00NR	3	16WP	G15_081	FROM->TO	G14-057T 345.00 - SUNNYSIDE 345KV CKT 1	717	789	0.06009	112.0928	CHAMBER SPRINGS - CLARKSVILLE 345KV CKT 1
FDNS	00NR	3	16WP	G15_081	FROM->TO	G14-057T 345.00 - SUNNYSIDE 345KV CKT 1	717	789	0.05921	112.0919	JOLLYVILLE - SULPHR 4 138.00 138KV CKT 1
FDNS	00NR	3	16WP	G15_081	FROM->TO	G14-057T 345.00 - SUNNYSIDE 345KV CKT 1	717	789	0.05978	112.0854	P12:230:UMZB:# 112 #: NU IN SD. NU-RCDC & DRY CREEK XFMR
FDNS	00NR	3	16WP	G15_081	FROM->TO	G14-057T 345.00 - SUNNYSIDE 345KV CKT 1	717	789	0.05978	112.0839	RCDC EAST 4230.00 - RED CEDAR DC 230KV CKT 1
FDNS	00NR	3	16WP	G15_081	FROM->TO	G14-057T 345.00 - SUNNYSIDE 345KV CKT 1	717	789	0.05995	112.0816	KEO EHV - WEST MEMPHIS 500 500KV CKT 1
FDNS	00NR	3	20WP	G15_081	FROM->TO	G14-057T 345.00 - SUNNYSIDE 345KV CKT 1	717	789	0.05956	112.0763	GEN334030 1-FRONTIER UNIT 1
FDNS	00NR	3	16WP	G15_081	FROM->TO	G14-057T 345.00 - SUNNYSIDE 345KV CKT 1	717	789	0.05978	112.076	GEN562802 1-G15039_3 0.3570
FDNS	00NR	3	20WP	G15_081	FROM->TO	G14-057T 345.00 - SUNNYSIDE 345KV CKT 1	717	789	0.05956	112.074	GEN334031 1-FRONTIER UNIT 2
FDNS	00NR	3	16WP	G15_081	FROM->TO	G14-057T 345.00 - SUNNYSIDE 345KV CKT 1	717	789	0.05978	112.0707	GEN524285 1-WILDORADO WIND GEN
FDNS	00NR	3	16WP	G15_081	FROM->TO	G14-057T 345.00 - SUNNYSIDE 345KV CKT 1	717	789	0.05978	112.0633	GEN514805 1-SOONER UNIT 1
FDNS	00NR	3	20WP	G15_081	FROM->TO	G14-057T 345.00 - SUNNYSIDE 345KV CKT 1	717	789	0.05956	112.0614	GEN337911 1-ARKANSAS NUCLEAR ONE UNIT #2
FDNS	00NR	3	16WP	G15_081	FROM->TO	G14-057T 345.00 - SUNNYSIDE 345KV CKT 1	717	789	0.05978	112.0546	GEN524295 1-SPNSPUR_WND10.6900
FDNS	00NR	3	16WP	G15_081	FROM->TO	G14-057T 345.00 - SUNNYSIDE 345KV CKT 1	717	789	0.05978	112.0543	GEN514806 1-SOONER UNIT 2
FDNS	00NR	3	20WP	G15_081	FROM->TO	G14-057T 345.00 - SUNNYSIDE 345KV CKT 1	717	789	0.0596	112.0512	P12:138:AEPW:CATOOSA4:T.S.E.-4
FDNS	00NR	3	16WP	G15_081	FROM->TO	G14-057T 345.00 - SUNNYSIDE 345KV CKT 1	717	789	0.05978	112.0426	GEN560331 1-G10-46 13.800
FDNS	00NR	3	16WP	G15_081	FROM->TO	G14-057T 345.00 - SUNNYSIDE 345KV CKT 1	717	789	0.05887	112.0377	ARKANSAS NUCLEAR ONE - FT SMITH 500KV CKT 1
FDNS	00NR	3	16WP	G15_081	FROM->TO	G14-057T 345.00 - SUNNYSIDE 345KV CKT 1	717	789	0.05887	112.0377	ARKANSAS NUCLEAR ONE - FT SMITH 500KV CKT 1
FDNS	00NR	3	20WP	G15_081	FROM->TO	G14-057T 345.00 - SUNNYSIDE 345KV CKT 1	717	789	0.06122	112.026	BLANCHARD - MAUD 138KV CKT 1
FDNS	00NR	3	16WP	G15_081	FROM->TO	G14-057T 345.00 - SUNNYSIDE 345KV CKT 1	717	789	0.05921	112.0245	JOLLYVILLE - KERR MCGEE CIMARRON 138KV CKT 1
FDNS	00NR	3	20WP	G15_081	FROM->TO	G14-057T 345.00 - SUNNYSIDE 345KV CKT 1	717	789	0.05959	112.0213	FULTON 115 - HOPE 115KV CKT 1
FDNS	00NR	3	20WP	G15_081	FROM->TO	G14-057T 345.00 - SUNNYSIDE 345KV CKT 1	717	789	0.05959	112.0213	FULTON 115 - HOPE 115KV CKT 1
FDNS	00NR	3	20WP	G15_081	FROM->TO	G14-057T 345.00 - SUNNYSIDE 345KV CKT 1	717	789	0.05956	112.021	GEN506752 1-LEBROCK GAS 1
FDNS	00NR	3	20WP	G15_081	FROM->TO	G14-057T 345.00 - SUNNYSIDE 345KV CKT 1	717	789	0.05956	112.0206	GEN506753 1-LEBROCK GAS 2
FDNS	00NR	3	16WP	G15_081	FROM->TO	G14-057T 345.00 - SUNNYSIDE 345KV CKT 1	717	789	0.05978	112.0196	GEN562587 1-G14_056_3 0.6900
FDNS	00NR	3	20WP	G15_081	FROM->TO	G14-057T 345.00 - SUNNYSIDE 345KV CKT 1	717	789	0.05956	112.0151	GEN501811 1-RODEMACHER UNIT 1
FDNS	00NR	3	20WP	G15_081	FROM->TO	G14-057T 345.00 - SUNNYSIDE 345KV CKT 1	717	789	0.05956	112.0142	GEN337652 1-WHITE BLUFF UNIT #1
FDNS	00NR	3	16WP	G15_081	FROM->TO	G14-057T 345.00 - SUNNYSIDE 345KV CKT 1	717	789	0.05978	112.0133	GEN562269 1-G12-020-1 0.6900
FDNS	00NR	3	20WP	G15_081	FROM->TO	G14-057T 345.00 - SUNNYSIDE 345KV CKT 1	717	789	0.05995	112.0111	P12:138:AEPW:S.W.S.-4:L.E.S.-4
FDNS	00NR	3	20WP	G15_081	FROM->TO	G14-057T 345.00 - SUNNYSIDE 345KV CKT 1	717	789	0.05956	112.0088	GEN300003 1-THOMAS HILL UNIT 3
FDNS	00NR	3	16WP	G15_081	FROM->TO	G14-057T 345.00 - SUNNYSIDE 345KV CKT 1	717	789	0.05978	112.008	GEN629072 4-LANSING GENERATOR FOR UNITS NO4 EIA CODE 1
FDNS	00NR	3	20WP	G15_081	FROM->TO	G14-057T 345.00 - SUNNYSIDE 345KV CKT 1	717	789	0.06072	111.9975	LATTA JCT - OIL CENTER 138KV CKT 1
FDNS	00NR	3	20WP	G15_081	FROM->TO	G14-057T 345.00 - SUNNYSIDE 345KV CKT 1	717	789	0.05956	111.9962	GEN300015 1-1SGPDEL 18.000
FDNS	00NR	3	20WP	G15_081	FROM->TO	G14-057T 345.00 - SUNNYSIDE 345KV CKT 1	717	789	0.05956	111.9908	GEN515226 1-MUSKOGEE 6G
FDNS	00NR	3	20WP	G15_081	FROM->TO	G14-057T 345.00 - SUNNYSIDE 345KV CKT 1	717	789	0.0598	111.989	P12:138:AEPW:CORNVIL4:DUNCAN-4
FDNS	00NR	3	16WP	G15_081	FROM->TO	G14-057T 345.00 - SUNNYSIDE 345KV CKT 1	717	789	0.05978	111.9885	GEN657749 1-YOUNG 1 GENERATOR

SOLUTION	GROUP	SCENARIO	SEASON	SOURCE	DIRECTION	MONITORED ELEMENT	RATEA (MVA)	RATEB(MVA)	TDF	TC%LOADING (% MVA)	CONTINGENCY
FDNS	00NR	3	16WP	G15_081	FROM->TO	G14-057T 345.00 - SUNNYSIDE 345KV CKT 1	717	789	0.05978	111.9876	GEN562882 1-G15047_3 0.6900
FDNS	00NR	3	20WP	G15_081	FROM->TO	G14-057T 345.00 - SUNNYSIDE 345KV CKT 1	717	789	0.05956	111.9824	GEN336191 1-LITTLE GYPSY UNIT#3
FDNS	00NR	3	16WP	G15_081	FROM->TO	G14-057T 345.00 - SUNNYSIDE 345KV CKT 1	717	789	0.05921	111.9735	ARBWIND4 138.00 - KERR MCGEE CIMARRON 138KV CKT 1
FDNS	00NR	3	16WP	G15_081	FROM->TO	G14-057T 345.00 - SUNNYSIDE 345KV CKT 1	717	789	0.05978	111.9699	GEN562270 1-G12-020-2 0.6900
FDNS	00NR	3	16WP	G15_081	FROM->TO	G14-057T 345.00 - SUNNYSIDE 345KV CKT 1	717	789	0.06146	111.9688	G15063_T 345.00 - MATHWSN7 345.00 345KV CKT 1
FDNS	00NR	3	16WP	G15_081	FROM->TO	G14-057T 345.00 - SUNNYSIDE 345KV CKT 1	717	789	0.05978	111.964	GEN562812 1-G15040_3 0.3570
FDNS	00NR	3	20WP	G15_081	FROM->TO	G14-057T 345.00 - SUNNYSIDE 345KV CKT 1	717	789	0.0596	111.9635	6LAYFLD 230.00 - CARROLL 230KV CKT 1
FDNS	00NR	3	16WP	G15_081	FROM->TO	G14-057T 345.00 - SUNNYSIDE 345KV CKT 1	717	789	0.05978	111.9615	GEN563102 1-G15075_3 0.5500
FDNS	00NR	3	20WP	G15_081	FROM->TO	G14-057T 345.00 - SUNNYSIDE 345KV CKT 1	717	789	0.06087	111.9575	G1524G1525 345.00 - THISTLE7 345.00 345KV CKT 1
FDNS	00NR	3	20WP	G15_081	FROM->TO	G14-057T 345.00 - SUNNYSIDE 345KV CKT 1	717	789	0.06087	111.9575	G1524G1525 345.00 - THISTLE7 345.00 345KV CKT 2
FDNS	00NR	3	16WP	G15_081	FROM->TO	G14-057T 345.00 - SUNNYSIDE 345KV CKT 1	717	789	0.05978	111.9565	GEN562974 1-G15060_5 0.6900
FDNS	00NR	3	20WP	G15_081	FROM->TO	G14-057T 345.00 - SUNNYSIDE 345KV CKT 1	717	789	0.05974	111.9564	P12:69:WFEC-AEPW:COMANCH2:DUNCAN-2
FDNS	00NR	3	20WP	G15_081	FROM->TO	G14-057T 345.00 - SUNNYSIDE 345KV CKT 1	717	789	0.05956	111.9539	GEN335614 1-WILLOW GLENN UNIT#4
FDNS	00NR	3	16WP	G15_081	FROM->TO	G14-057T 345.00 - SUNNYSIDE 345KV CKT 1	717	789	0.05978	111.9538	GEN563132 1-G15078_3 0.3570
FDNS	00NR	3	16WP	G15_081	FROM->TO	G14-057T 345.00 - SUNNYSIDE 345KV CKT 1	717	789	0.05978	111.9476	GEN562973 1-G15060_4 0.6900
FDNS	00NR	3	20WP	G15_081	FROM->TO	G14-057T 345.00 - SUNNYSIDE 345KV CKT 1	717	789	0.0596	111.9476	8DANIEL8 500.00 - MCKNIGHT 500KV CKT 1
FDNS	00NR	3	20WP	G15_081	FROM->TO	G14-057T 345.00 - SUNNYSIDE 345KV CKT 1	717	789	0.05956	111.9452	GEN515040 1-SEMINOLE 1G
FDNS	00NR	3	16WP	G15_081	FROM->TO	G14-057T 345.00 - SUNNYSIDE 345KV CKT 1	717	789	0.05935	111.9451	P12:138:AEPW:112GORE4:SNYDER-4
FDNS	00NR	3	20WP	G15_081	FROM->TO	G14-057T 345.00 - SUNNYSIDE 345KV CKT 1	717	789	0.05979	111.9448	P12:138:AEPW:CORNVIL4:S.W.S.-4
FDNS	00NR	3	16WP	G15_081	FROM->TO	G14-057T 345.00 - SUNNYSIDE 345KV CKT 1	717	789	0.05978	111.9371	GEN563062 1-G15071_3 0.6900
FDNS	00NR	3	20WP	G15_081	FROM->TO	G14-057T 345.00 - SUNNYSIDE 345KV CKT 1	717	789	0.05818	111.9367	G14_038T 345.00 - POTTER COUNTY INTERCHANGE 345KV CKT 1
FDNS	00NR	3	20WP	G15_081	FROM->TO	G14-057T 345.00 - SUNNYSIDE 345KV CKT 1	717	789	0.05979	111.9306	P12:138:AEPW-OGE:WTH_JCT4:JENSEN4
FDNS	00NR	3	20WP	G15_081	FROM->TO	G14-057T 345.00 - SUNNYSIDE 345KV CKT 1	717	789	0.05957	111.9287	P12:161:AEPW:EROGERS5:ECNTRTN5
FDNS	00NR	3	16WP	G15_081	FROM->TO	G14-057T 345.00 - SUNNYSIDE 345KV CKT 1	717	789	0.06208	111.9195	CLARKSVILLE - MUSKOGEE 345KV CKT 1
FDNS	00NR	3	16WP	G15_081	FROM->TO	G14-057T 345.00 - SUNNYSIDE 345KV CKT 1	717	789	0.06208	111.9195	CLARKSVILLE - MUSKOGEE 345KV CKT 1
FDNS	00NR	3	20WP	G15_081	FROM->TO	G14-057T 345.00 - SUNNYSIDE 345KV CKT 1	717	789	0.05935	111.919	TUTTLE - TUTTLE CONOCO TAP 138KV CKT 1
FDNS	00NR	3	20WP	G15_081	FROM->TO	G14-057T 345.00 - SUNNYSIDE 345KV CKT 1	717	789	0.06154	111.9104	FINNEY SWITCHING STATION - HOLCOMB 345KV CKT 1
FDNS	00NR	3	20WP	G15_081	FROM->TO	G14-057T 345.00 - SUNNYSIDE 345KV CKT 1	717	789	0.06154	111.9104	FINNEY SWITCHING STATION - HOLCOMB 345KV CKT 1
FDNS	00NR	3	20WP	G15_081	FROM->TO	G14-057T 345.00 - SUNNYSIDE 345KV CKT 1	717	789	0.05956	111.9081	GEN303007 1-1BC2 U2
FDNS	00NR	3	20WP	G15_081	FROM->TO	G14-057T 345.00 - SUNNYSIDE 345KV CKT 1	717	789	0.05956	111.9079	GEN337910 1-ARKANSAS NUCLEAR ONE UNIT #1
FDNS	00NR	3	20WP	G15_081	FROM->TO	G14-057T 345.00 - SUNNYSIDE 345KV CKT 1	717	789	0.05956	111.9067	WHITE BLUFF 500/26.0KV TRANSFORMER CKT 1
FDNS	00NR	3	20WP	G15_081	FROM->TO	G14-057T 345.00 - SUNNYSIDE 345KV CKT 1	717	789	0.05974	111.9057	DUNCAN - TOSCO 69KV CKT 1
FDNS	00NR	3	20WP	G15_081	FROM->TO	G14-057T 345.00 - SUNNYSIDE 345KV CKT 1	717	789	0.05956	111.9033	GEN336464 1-MICHOUD UNIT #3
FDNS	00NR	3	20WP	G15_081	FROM->TO	G14-057T 345.00 - SUNNYSIDE 345KV CKT 1	717	789	0.05956	111.9023	GEN303006 1-1BC2 U1
FDNS	00NR	3	20WP	G15_081	FROM->TO	G14-057T 345.00 - SUNNYSIDE 345KV CKT 1	717	789	0.06008	111.9021	CIMARRON - CZECH HALL 138KV CKT 1
FDNS	00NR	3	16WP	G15_081	FROM->TO	G14-057T 345.00 - SUNNYSIDE 345KV CKT 1	717	789	0.05927	111.9015	CHICKASAW - TOTAL 138KV CKT 1
FDNS	00NR	3	16WP	G15_081	FROM->TO	G14-057T 345.00 - SUNNYSIDE 345KV CKT 1	717	789	0.05978	111.9	GEN681522 3-GENOA 3
FDNS	00NR	3	20WP	G15_081	FROM->TO	G14-057T 345.00 - SUNNYSIDE 345KV CKT 1	717	789	0.05956	111.8989	GEN562783 1-G15036_4 0.6900
FDNS	00NR	3	20WP	G15_081	FROM->TO	G14-057T 345.00 - SUNNYSIDE 345KV CKT 1	717	789	0.05956	111.8989	GEN562784 1-G15036_5 0.6900
FDNS	00NR	3	20WP	G15_081	FROM->TO	G14-057T 345.00 - SUNNYSIDE 345KV CKT 1	717	789	0.05956	111.8941	GEN515223 1-MUSKOGEE 4G
FDNS	00NR	3	20WP	G15_081	FROM->TO	G14-057T 345.00 - SUNNYSIDE 345KV CKT 1	717	789	0.05956	111.8941	GEN515225 1-MUSKOGEE 5G
FDNS	00NR	3	20WP	G15_081	FROM->TO	G14-057T 345.00 - SUNNYSIDE 345KV CKT 1	717	789	0.05957	111.8903	BISMARK - HOT SPRINGS WEST BUS 115KV CKT 1
FDNS	00NR	3	16WP	G15_081	FROM->TO	G14-057T 345.00 - SUNNYSIDE 345KV CKT 1	717	789	0.05971	111.887	BROWN - RUSSETT 138KV CKT 1
FDNS	00NR	3	20WP	G15_081	FROM->TO	G14-057T 345.00 - SUNNYSIDE 345KV CKT 1	717	789	0.05964	111.8865	P12:69:AEPW-OMPA:COMANC-2:OMWALTR2
FDNS	00NR	3	20WP	G15_081	FROM->TO	G14-057T 345.00 - SUNNYSIDE 345KV CKT 1	717	789	0.05957	111.8863	MC NIEL 500/115KV TRANSFORMER CKT 1
FDNS	00NR	3	20WP	G15_081	FROM->TO	G14-057T 345.00 - SUNNYSIDE 345KV CKT 1	717	789	0.05956	111.8863	RODEMACHER 230/22.0KV TRANSFORMER CKT 1
FDNS	00NR	3	16WP	G15_081	FROM->TO	G14-057T 345.00 - SUNNYSIDE 345KV CKT 1	717	789	0.05978	111.876	GEN526331 1-JONES GEN #1 22 KV
FDNS	00NR	3	16WP	G15_081	FROM->TO	G14-057T 345.00 - SUNNYSIDE 345KV CKT 1	717	789	0.05978	111.8759	GEN526332 1-JONES GEN #2 21 KV
FDNS	00NR	3	20WP	G15_081	FROM->TO	G14-057T 345.00 - SUNNYSIDE 345KV CKT 1	717	789	0.05973	111.8745	G15088_T 345.00 - MOORE 345KV CKT 1
FDNS	00NR	3	20WP	G15_081	FROM->TO	G14-057T 345.00 - SUNNYSIDE 345KV CKT 1	717	789	0.05954	111.8706	HOT SPRINGS EHV - MAGNET COVE 500KV CKT 1
FDNS	00NR	3	20WP	G15_081	FROM->TO	G14-057T 345.00 - SUNNYSIDE 345KV CKT 1	717	789	0.05956	111.8701	GEN300010 1-ST FRANCIS UNIT 1
FDNS	00NR	3	16WP	G15_081	FROM->TO	G14-057T 345.00 - SUNNYSIDE 345KV CKT 1	717	789	0.05968	111.87	RUSSETT - SPRINGDALE 138KV CKT 1
FDNS	00NR	3	20WP	G15_081	FROM->TO	G14-057T 345.00 - SUNNYSIDE 345KV CKT 1	717	789	0.05968	111.8695	P12:138:AEPW:WTHWF4:CLINTJC4
FDNS	00NR	3	20WP	G15_081	FROM->TO	G14-057T 345.00 - SUNNYSIDE 345KV CKT 1	717	789	0.05966	111.8682	CHISHOLM6 230.00 - ELK CITY 230KV 230KV CKT 1
FDNS	00NR	3	20WP	G15_081	FROM->TO	G14-057T 345.00 - SUNNYSIDE 345KV CKT 1	717	789	0.05966	111.8675	ELK CITY 230KV (ELKCTY-6) 230/138/13.8KV TRANSFORMER CKT 1
FDNS	00NR	3	20WP	G15_081	FROM->TO	G14-057T 345.00 - SUNNYSIDE 345KV CKT 1	717	789	0.05966	111.8675	ELK CITY 230KV (ELKCTY-6) 230/138/13.8KV TRANSFORMER CKT 1
FDNS	00NR	3	16WP	G15_081	FROM->TO	G14-057T 345.00 - SUNNYSIDE 345KV CKT 1	717	789	0.05978	111.8657	GEN560105 1-G08-22 0.6900
FDNS	00NR	3	16WP	G15_081	FROM->TO	G14-057T 345.00 - SUNNYSIDE 345KV CKT 1	717	789	0.05978	111.8633	GEN562550 1-G14_040_3 0.6900
FDNS	00NR	3	20WP	G15_081	FROM->TO	G14-057T 345.00 - SUNNYSIDE 345KV CKT 1	717	789	0.06014	111.8624	CIMARRON - SARA 138KV CKT 1
FDNS	00NR	3	20WP	G15_081	FROM->TO	G14-057T 345.00 - SUNNYSIDE 345KV CKT 1	717	789	0.06069	111.8621	BAILEY4 138.00 - SUNSHINE CANYON 138KV CKT 1
FDNS	00NR	3	20WP	G15_081	FROM->TO	G14-057T 345.00 - SUNNYSIDE 345KV CKT 1	717	789	0.05974	111.8602	COMANCHE TAP - TOSCO 69KV CKT 1
FDNS	00NR	3	16WP	G15_081	FROM->TO	G14-057T 345.00 - SUNNYSIDE 345KV CKT 1	717	789	0.05978	111.8567	GEN345671 2-1RUSH G2 18.000
FDNS	00NR	3	20WP	G15_081	FROM->TO	G14-057T 345.00 - SUNNYSIDE 345KV CKT 1	717	789	0.05989	111.8552	BUCKNER7 345.00 - SPEARVILLE 345KV CKT 1
FDNS	00NR	3	20WP	G15_081	FROM->TO	G14-057T 345.00 - SUNNYSIDE 345KV CKT 1	717	789	0.05989	111.8552	BUCKNER7 345.00 - SPEARVILLE 345KV CKT 1
FDNS	00NR	3	16WP	G15_081	FROM->TO	G14-057T 345.00 - SUNNYSIDE 345KV CKT 1	717	789	0.05978	111.8549	GEN345670 1-1RUSH G1 18.000
FDNS	00NR	3	20WP	G15_081	FROM->TO	G14-057T 345.00 - SUNNYSIDE 345KV CKT 1	717	789	0.05976	111.85	G15074_T 345.00 - HOYT 345KV CKT 1
FDNS	00NR	3	20WP	G15_081	FROM->TO	G14-057T 345.00 - SUNNYSIDE 345KV CKT 1	717	789	0.05956	111.847	GEN337041 1-GERALD ANDRUS
FDNS	00NR	3	16WP	G15_081	FROM->TO	G14-057T 345.00 - SUNNYSIDE 345KV CKT 1	717	789	0.05946	111.8445	ROCKY POINT - SUNNYSIDE 138KV CKT 1
FDNS	00NR	3	20WP	G15_081	FROM->TO	G14-057T 345.00 - SUNNYSIDE 345KV CKT 1	717	789	0.05956	111.8445	GEN505432 1-SIKESTON
FDNS	00NR	3	20WP	G15_081	FROM->TO	G14-057T 345.00 - SUNNYSIDE 345KV CKT 1	717	789	0.05884	111.8443	SEMINOLE - VANOSTP4 138.00 138KV CKT 1
FDNS	00NR	3	16WP	G15_081	FROM->TO	G14-057T 345.00 - SUNNYSIDE 345KV CKT 1	717	789	0.05972	111.8418	P12:138:WFEC:MSL07
FDNS	00NR	3	16WP	G15_081	FROM->TO	G14-057T 345.00 - SUNNYSIDE 345KV CKT 1	717	789	0.05972	111.8418	P12:138:WFEC-AEPW:HUGOPP4:ATOKA--4
FDNS	00NR	3	20WP	G15_081	FROM->TO	G14-057T 345.00 - SUNNYSIDE 345KV CKT 1	717	789	0.05956	111.8414	GEN303008 1-1BC2 U3
FDNS	00NR	3	20WP	G15_081	FROM->TO	G14-057T 345.00 - SUNNYSIDE 345KV CKT 1	717	789	0.05935	111.8396	CIMARRON - TUTTLE CONOCO TAP 138KV CKT 1
FDNS	00NR	3	16WP	G15_081	FROM->TO	G14-057T 345.00 - SUNNYSIDE 345KV CKT 1	717	789	0.05978	111.8382	4SIOUX 1 138.00 138/18.0KV TRANSFORMER CKT 1
FDNS	00NR	3	20WP	G15_081	FROM->TO	G14-057T 345.00 - SUNNYSIDE 345KV CKT 1	717	789	0.05957	111.8363	ALPINE AECC - BISMARK 115KV CKT 1
FDNS	00NR	3	20WP	G15_081	FROM->TO	G14-057T 345.00 - SUNNYSIDE 345KV CKT 1	717	789	0.05899	111.834	ARBWIND4 138.00 - CARTER 138KV CKT 1
FDNS	00NR	3	20WP	G15_081	FROM->TO	G14-057T 345.00 - SUNNYSIDE 345KV CKT 1	717	789	0.05968	111.8304	P12:138:AEPW:WTHWF4:WTH_SE4
FDNS	00NR	3	20WP	G15_081	FROM->TO	G14-057T 345.00 - SUNNYSIDE 345KV CKT 1	717	789	0.05958	111.8279	P12:138:AEPW:N.E.S.-4:CATOOSA4

SOLUTION	GROUP	SCENARIO	SEASON	SOURCE	DIRECTION	MONITORED ELEMENT	RATEA (MVA)	RATEB(MVA)	TDF	TC%LOADING (% MVA)	CONTINGENCY
FDNS	00NR	3	20WP	G15_081	FROM->TO	G14-057T 345.00 - SUNNYSIDE 345KV CKT 1	717	789	0.06008	111.8273	CZECH HALL - XEROX 138KV CKT 1
FDNS	00NR	3	16WP	G15_081	FROM->TO	G14-057T 345.00 - SUNNYSIDE 345KV CKT 1	717	789	0.05978	111.8246	GEN511962 2-RKYRDGW2-1 0.7000
FDNS	00NR	3	20WP	G15_081	FROM->TO	G14-057T 345.00 - SUNNYSIDE 345KV CKT 1	717	789	0.06008	111.8232	MORGAN - XEROX 138KV CKT 1
FDNS	00NR	3	16WP	G15_081	FROM->TO	G14-057T 345.00 - SUNNYSIDE 345KV CKT 1	717	789	0.05971	111.8183	RUSSETT - RUSSETT 138KV CKT 1
FDNS	00NR	3	16WP	G15_081	FROM->TO	G14-057T 345.00 - SUNNYSIDE 345KV CKT 1	717	789	0.05978	111.8177	GEN527882 1-CUNNINGHAM GEN #2 20 KV
FDNS	00NR	3	20WP	G15_081	FROM->TO	G14-057T 345.00 - SUNNYSIDE 345KV CKT 1	717	789	0.05956	111.8171	NELSON 230/20.0KV TRANSFORMER CKT 1
FDNS	00NR	3	20WP	G15_081	FROM->TO	G14-057T 345.00 - SUNNYSIDE 345KV CKT 1	717	789	0.05956	111.8136	GEN300011 1-ST FRANCIS UNIT 2
FDNS	00NR	3	20WP	G15_081	FROM->TO	G14-057T 345.00 - SUNNYSIDE 345KV CKT 1	717	789	0.05956	111.8124	GEN336170 1-GULF OXY U4
FDNS	00NR	3	20WP	G15_081	FROM->TO	G14-057T 345.00 - SUNNYSIDE 345KV CKT 1	717	789	0.06007	111.8108	GRACEMONT (BANK 1) 345/138/13.8KV TRANSFORMER CKT 1
FDNS	00NR	3	16WP	G15_081	FROM->TO	G14-057T 345.00 - SUNNYSIDE 345KV CKT 1	717	789	0.05978	111.8089	CLAY BOSWELL 230/20.9KV TRANSFORMER CKT 1
FDNS	00NR	3	20WP	G15_081	FROM->TO	G14-057T 345.00 - SUNNYSIDE 345KV CKT 1	717	789	0.05988	111.8014	G15095_T 138.00 - ROSE_VALLEY 138.00 138KV CKT 1
FDNS	00NR	3	20WP	G15_081	FROM->TO	G14-057T 345.00 - SUNNYSIDE 345KV CKT 1	717	789	0.06008	111.801	MORGAN - MUSTANG 138KV CKT 1
FDNS	00NR	3	16WP	G15_081	FROM->TO	G14-057T 345.00 - SUNNYSIDE 345KV CKT 1	717	789	0.05978	111.7989	GEN521112 1-ORME3 13.800
FDNS	00NR	3	16WP	G15_081	FROM->TO	G14-057T 345.00 - SUNNYSIDE 345KV CKT 1	717	789	0.05978	111.7937	GEN563192 1-G15084_3 0.5500
FDNS	00NR	3	20WP	G15_081	FROM->TO	G14-057T 345.00 - SUNNYSIDE 345KV CKT 1	717	789	0.05956	111.7932	GEN336801 1-BAXTER WILSON UNIT #1
FDNS	00NR	3	16WP	G15_081	FROM->TO	G14-057T 345.00 - SUNNYSIDE 345KV CKT 1	717	789	0.05983	111.7906	P12:138:WFEC:MSL16
FDNS	00NR	3	16WP	G15_081	FROM->TO	G14-057T 345.00 - SUNNYSIDE 345KV CKT 1	717	789	0.05907	111.7903	ARDMORE WEST - CARTER 138KV CKT 1
FDNS	00NR	3	20WP	G15_081	FROM->TO	G14-057T 345.00 - SUNNYSIDE 345KV CKT 1	717	789	0.05957	111.7887	ALPINE AECC - AMITY SS 115KV CKT 1
FDNS	00NR	3	20WP	G15_081	FROM->TO	G14-057T 345.00 - SUNNYSIDE 345KV CKT 1	717	789	0.05974	111.7828	COMANCHE - COMANCHE TAP 69KV CKT 1
FDNS	00NR	3	16WP	G15_081	FROM->TO	G14-057T 345.00 - SUNNYSIDE 345KV CKT 1	717	789	0.05978	111.7721	GEN562892 1-G15048_3 0.6900
FDNS	00NR	3	16WP	G15_081	FROM->TO	G14-057T 345.00 - SUNNYSIDE 345KV CKT 1	717	789	0.05978	111.7673	GEN520811 1-ANADRK4
FDNS	00NR	3	20WP	G15_081	FROM->TO	G14-057T 345.00 - SUNNYSIDE 345KV CKT 1	717	789	0.05956	111.7665	8CAJUN2 500/24.0KV TRANSFORMER CKT 1
FDNS	00NR	3	20WP	G15_081	FROM->TO	G14-057T 345.00 - SUNNYSIDE 345KV CKT 1	717	789	0.05956	111.7649	GEN501910 1-ACADIA UNIT ST1
FDNS	00NR	3	16WP	G15_081	FROM->TO	G14-057T 345.00 - SUNNYSIDE 345KV CKT 1	717	789	0.05978	111.7579	GEN672321 1-SHAND GENERATOR 1
FDNS	00NR	3	20WP	G15_081	FROM->TO	G14-057T 345.00 - SUNNYSIDE 345KV CKT 1	717	789	0.06014	111.7535	SARA - STHLAKE4 138.00 138KV CKT 1
FDNS	00NR	3	16WP	G15_081	FROM->TO	G14-057T 345.00 - SUNNYSIDE 345KV CKT 1	717	789	0.05914	111.7506	SUNNYSIDE (SUNNYSD5) 345/138/13.8KV TRANSFORMER CKT 1
FDNS	00NR	3	16WP	G15_081	FROM->TO	G14-057T 345.00 - SUNNYSIDE 345KV CKT 1	717	789	0.05975	111.7436	P12:138:WFEC-AEPW:GOLDENSW4:CRAIGJT4
FDNS	00NR	3	16WP	G15_081	FROM->TO	G14-057T 345.00 - SUNNYSIDE 345KV CKT 1	717	789	0.05978	111.7409	GEN562512 1-G14_020_3 0.6900
FDNS	00NR	3	20WP	G15_081	FROM->TO	G14-057T 345.00 - SUNNYSIDE 345KV CKT 1	717	789	0.05956	111.7346	P12:138:AEPW:R.S.S.-4:S.HUD.-4
FDNS	00NR	3	16WP	G15_081	FROM->TO	G14-057T 345.00 - SUNNYSIDE 345KV CKT 1	717	789	0.05978	111.7343	GEN672310 1-POPLAR RIVER GENERATOR 1
FDNS	00NR	3	20WP	G15_081	FROM->TO	G14-057T 345.00 - SUNNYSIDE 345KV CKT 1	717	789	0.05988	111.7343	NOEL_SW 138.00 - ROSE_VALLEY 138.00 138KV CKT 1
FDNS	00NR	3	16WP	G15_081	FROM->TO	G14-057T 345.00 - SUNNYSIDE 345KV CKT 1	717	789	0.05978	111.7342	GEN672311 2-POPLAR RIVER GENERATOR 2
FDNS	00NR	3	16WP	G15_081	FROM->TO	G14-057T 345.00 - SUNNYSIDE 345KV CKT 1	717	789	0.05978	111.7315	GEN523461 1-BLACKHAWK GEN #1
FDNS	00NR	3	16WP	G15_081	FROM->TO	G14-057T 345.00 - SUNNYSIDE 345KV CKT 1	717	789	0.05978	111.7314	GEN523462 1-BLACKHAWK GEN #2
FDNS	00NR	3	20WP	G15_081	FROM->TO	G14-057T 345.00 - SUNNYSIDE 345KV CKT 1	717	789	0.05956	111.7283	SABINE 230/24.0KV TRANSFORMER CKT 1
FDNS	00NR	3	20WP	G15_081	FROM->TO	G14-057T 345.00 - SUNNYSIDE 345KV CKT 1	717	789	0.05952	111.7263	ETTA (DUKE HOTSPRINGS) - MC NIEL 500KV CKT 1
FDNS	00NR	3	16WP	G15_081	FROM->TO	G14-057T 345.00 - SUNNYSIDE 345KV CKT 1	717	789	0.05978	111.7262	GEN672306 6-BOUNDARY DAM GENERATOR 6
FDNS	00NR	3	20WP	G15_081	FROM->TO	G14-057T 345.00 - SUNNYSIDE 345KV CKT 1	717	789	0.06014	111.7241	MCCLAIN - STHLAKE4 138.00 138KV CKT 1
FDNS	00NR	3	20WP	G15_081	FROM->TO	G14-057T 345.00 - SUNNYSIDE 345KV CKT 1	717	789	0.05975	111.7215	WALTERS - WALTERS 69KV CKT 1
FDNS	00NR	3	20WP	G15_081	FROM->TO	G14-057T 345.00 - SUNNYSIDE 345KV CKT 1	717	789	0.05956	111.7206	GEN300016 1-1G1GPDEL 18.000
FDNS	00NR	3	20WP	G15_081	FROM->TO	G14-057T 345.00 - SUNNYSIDE 345KV CKT 1	717	789	0.06072	111.7186	LASALLE - LATTA JCT 138KV CKT 1
FDNS	00NR	3	20WP	G15_081	FROM->TO	G14-057T 345.00 - SUNNYSIDE 345KV CKT 1	717	789	0.05962	111.7178	LAWTON EASTSIDE (LES 4) 345/138/13.8KV TRANSFORMER CKT 1
FDNS	00NR	3	20WP	G15_081	FROM->TO	G14-057T 345.00 - SUNNYSIDE 345KV CKT 1	717	789	0.05962	111.7178	LAWTON EASTSIDE (LES 4) 345/138/13.8KV TRANSFORMER CKT 1
FDNS	00NR	3	20WP	G15_081	FROM->TO	G14-057T 345.00 - SUNNYSIDE 345KV CKT 1	717	789	0.05956	111.7104	GEN336222 1-LITTLE GYPSY UNIT#2
FDNS	00NR	3	20WP	G15_081	FROM->TO	G14-057T 345.00 - SUNNYSIDE 345KV CKT 1	717	789	0.05956	111.7036	P12:69:AEPW:NROGERS2:ECNTRTN2
FDNS	00NR	3	20WP	G15_081	FROM->TO	G14-057T 345.00 - SUNNYSIDE 345KV CKT 1	717	789	0.05984	111.7013	ANADARKO - SEQUOYAHJ4 138.00 138KV CKT 1
FDNS	00NR	3	20WP	G15_081	FROM->TO	G14-057T 345.00 - SUNNYSIDE 345KV CKT 1	717	789	0.05964	111.7011	LAWTON RELIFT TAP - OMPA-WALTERS 69KV CKT 1
FDNS	00NR	3	20WP	G15_081	FROM->TO	G14-057T 345.00 - SUNNYSIDE 345KV CKT 1	717	789	0.05984	111.6985	CORN TAP - SEQUOYAHJ4 138.00 138KV CKT 1
FDNS	00NR	3	16WP	G15_081	FROM->TO	G14-057T 345.00 - SUNNYSIDE 345KV CKT 1	717	789	0.05978	111.6964	GEN344895 2-1LAB G2 20.000
FDNS	00NR	3	20WP	G15_081	FROM->TO	G14-057T 345.00 - SUNNYSIDE 345KV CKT 1	717	789	0.05957	111.6938	P12:138:AEPW:BA_71ST4:T.S.E.-4
FDNS	00NR	3	20WP	G15_081	FROM->TO	G14-057T 345.00 - SUNNYSIDE 345KV CKT 1	717	789	0.05956	111.6885	P12:138:AEPW:YARCH-S4:T.S.E.-4
FDNS	00NR	3	20WP	G15_081	FROM->TO	G14-057T 345.00 - SUNNYSIDE 345KV CKT 1	717	789	0.06069	111.6873	BAILEY4 138.00 - WESTMOORE 138KV CKT 1
FDNS	00NR	3	20WP	G15_081	FROM->TO	G14-057T 345.00 - SUNNYSIDE 345KV CKT 1	717	789	0.06106	111.6872	CANADIAN - NOBLE 138KV CKT 1
FDNS	00NR	3	20WP	G15_081	FROM->TO	G14-057T 345.00 - SUNNYSIDE 345KV CKT 1	717	789	0.05976	111.6867	WEATHERFORD JCT. - WEATHERFORD SOUTHEAST 138KV CKT 1
FDNS	00NR	3	20WP	G15_081	FROM->TO	G14-057T 345.00 - SUNNYSIDE 345KV CKT 1	717	789	0.05976	111.6867	WEATHERFORD JCT. - WEATHERFORD SOUTHEAST 138KV CKT 1
FDNS	00NR	3	20WP	G15_081	FROM->TO	G14-057T 345.00 - SUNNYSIDE 345KV CKT 1	717	789	0.05967	111.6785	P12:138:AEPW-OGE:SHIDLER4:OSAGE 4
FDNS	00NR	3	20WP	G15_081	FROM->TO	G14-057T 345.00 - SUNNYSIDE 345KV CKT 1	717	789	0.05956	111.6766	7JASPER 345.00 - BLACKBERRY 345KV CKT 1
FDNS	00NR	3	20WP	G15_081	FROM->TO	G14-057T 345.00 - SUNNYSIDE 345KV CKT 1	717	789	0.05956	111.6762	GEN336152 1-WATERFORD UNIT#2
FDNS	00NR	3	16WP	G15_081	FROM->TO	G14-057T 345.00 - SUNNYSIDE 345KV CKT 1	717	789	0.05907	111.6754	ARDMORE WEST - UNIROYAL 138KV CKT 1
FDNS	00NR	3	20WP	G15_081	FROM->TO	G14-057T 345.00 - SUNNYSIDE 345KV CKT 1	717	789	0.05956	111.6754	GEN336151 1-WATERFORD UNIT#1
FDNS	00NR	3	16WP	G15_081	FROM->TO	G14-057T 345.00 - SUNNYSIDE 345KV CKT 1	717	789	0.05978	111.6717	GEN511853 1-COMANCHE #3
FDNS	00NR	3	16WP	G15_081	FROM->TO	G14-057T 345.00 - SUNNYSIDE 345KV CKT 1	717	789	0.05975	111.6662	P12:138:AEPW-SWPA:LONEOAK4:TUPELO4
FDNS	00NR	3	16WP	G15_081	FROM->TO	G14-057T 345.00 - SUNNYSIDE 345KV CKT 1	717	789	0.05975	111.6662	P12:138:WFEC:MSL06
FDNS	00NR	3	16WP	G15_081	FROM->TO	G14-057T 345.00 - SUNNYSIDE 345KV CKT 1	717	789	0.05978	111.6643	GEN344896 3-1LAB G3 20.000
FDNS	00NR	3	20WP	G15_081	FROM->TO	G14-057T 345.00 - SUNNYSIDE 345KV CKT 1	717	789	0.05956	111.6636	FRONTIER 345/18.0KV TRANSFORMER CKT 1
FDNS	00NR	3	20WP	G15_081	FROM->TO	G14-057T 345.00 - SUNNYSIDE 345KV CKT 1	717	789	0.0598	111.6632	NORGE ROAD - SOUTHWESTERN STATION 138KV CKT 1
FDNS	00NR	3	20WP	G15_081	FROM->TO	G14-057T 345.00 - SUNNYSIDE 345KV CKT 1	717	789	0.0598	111.6632	NORGE ROAD - SOUTHWESTERN STATION 138KV CKT 1
FDNS	00NR	3	16WP	G15_081	FROM->TO	G14-057T 345.00 - SUNNYSIDE 345KV CKT 1	717	789	0.05978	111.663	GEN344894 1-1LAB G1 20.000
FDNS	00NR	3	20WP	G15_081	FROM->TO	G14-057T 345.00 - SUNNYSIDE 345KV CKT 1	717	789	0.05956	111.6629	GEN300017 1-1G2GPDEL 18.000
FDNS	00NR	3	16WP	G15_081	FROM->TO	G14-057T 345.00 - SUNNYSIDE 345KV CKT 1	717	789	0.05978	111.6622	GEN563162 1-G15081_3 0.6900
FDNS	00NR	3	16WP	G15_081	FROM->TO	G14-057T 345.00 - SUNNYSIDE 345KV CKT 1	717	789	0.05978	111.6615	GEN344897 4-1LAB G4 20.000
FDNS	00NR	3	20WP	G15_081	FROM->TO	G14-057T 345.00 - SUNNYSIDE 345KV CKT 1	717	789	0.05956	111.6613	FRONTIER 345/18.0KV TRANSFORMER CKT 1
FDNS	00NR	3	20WP	G15_081	FROM->TO	G14-057T 345.00 - SUNNYSIDE 345KV CKT 1	717	789	0.05997	111.6592	P12:138:OKGE-AEPW:JENSEN4:REDROCKRD4
FDNS	00NR	3	20WP	G15_081	FROM->TO	G14-057T 345.00 - SUNNYSIDE 345KV CKT 1	717	789	0.06107	111.6575	P12:138:OKGE:3TERM27
FDNS	00NR	3	16WP	G15_081	FROM->TO	G14-057T 345.00 - SUNNYSIDE 345KV CKT 1	717	789	0.05939	111.656	CARTRCO4 138.00 - RATLIFF 138KV CKT 1
FDNS	00NR	3	20WP	G15_081	FROM->TO	G14-057T 345.00 - SUNNYSIDE 345KV CKT 1	717	789	0.06154	111.6547	FINNEY SWITCHING STATION - WALKTAP7 345.00 345KV CKT 1
FDNS	00NR	3	20WP	G15_081	FROM->TO	G14-057T 345.00 - SUNNYSIDE 345KV CKT 1	717	789	0.06154	111.6547	FINNEY SWITCHING STATION - WALKTAP7 345.00 345KV CKT 1
FDNS	00NR	3	20WP	G15_081	FROM->TO	G14-057T 345.00 - SUNNYSIDE 345KV CKT 1	717	789	0.05959	111.6543	HOPE - MCNAB REC 115KV CKT 1
FDNS	00NR	3	20WP	G15_081	FROM->TO	G14-057T 345.00 - SUNNYSIDE 345KV CKT 1	717	789	0.05976	111.6513	P12:138:AEPW:REDROCKRD4:WTH_JCT4

SOLUTION	GROUP	SCENARIO	SEASON	SOURCE	DIRECTION	MONITORED ELEMENT	RATEA (MVA)	RATEB(MVA)	TDF	TC%LOADING (% MVA)	CONTINGENCY
FDNS	00NR	3	20WP	G15_081	FROM->TO	G14-057T 345.00 - SUNNYSIDE 345KV CKT 1	717	789	0.05959	111.6507	MORISNT4 138.00 - STILLWATER 138KV CKT 1
FDNS	00NR	3	16WP	G15_081	FROM->TO	G14-057T 345.00 - SUNNYSIDE 345KV CKT 1	717	789	0.05952	111.6475	P12:138:OKGE:3TERM40
FDNS	00NR	3	20WP	G15_081	FROM->TO	G14-057T 345.00 - SUNNYSIDE 345KV CKT 1	717	789	0.0596	111.6449	P12:138:OKGE:3TERM2
FDNS	00NR	3	20WP	G15_081	FROM->TO	G14-057T 345.00 - SUNNYSIDE 345KV CKT 1	717	789	0.05999	111.6448	CLEO CORNER - CLEOPLT4 138.00 138KV CKT 1
FDNS	00NR	3	20WP	G15_081	FROM->TO	G14-057T 345.00 - SUNNYSIDE 345KV CKT 1	717	789	0.05959	111.6444	P12:115:AEPW:TURK3:HOPE3
FDNS	00NR	3	20WP	G15_081	FROM->TO	G14-057T 345.00 - SUNNYSIDE 345KV CKT 1	717	789	0.05958	111.6427	COUCH SES - MC NIEL 115KV CKT 1
FDNS	00NR	3	20WP	G15_081	FROM->TO	G14-057T 345.00 - SUNNYSIDE 345KV CKT 1	717	789	0.05977	111.6425	HOYT - STRANGER CREEK 345KV CKT 1
FDNS	00NR	3	20WP	G15_081	FROM->TO	G14-057T 345.00 - SUNNYSIDE 345KV CKT 1	717	789	0.05956	111.6414	GEN334432 1-SABINE UNIT 2
FDNS	00NR	3	16WP	G15_081	FROM->TO	G14-057T 345.00 - SUNNYSIDE 345KV CKT 1	717	789	0.05978	111.6412	GEN562699 1-G15_018_3 0.6900
FDNS	00NR	3	20WP	G15_081	FROM->TO	G14-057T 345.00 - SUNNYSIDE 345KV CKT 1	717	789	0.05956	111.6412	GEN334431 1-SABINE UNIT 1
FDNS	00NR	3	20WP	G15_081	FROM->TO	G14-057T 345.00 - SUNNYSIDE 345KV CKT 1	717	789	0.05957	111.6399	CYPRESS - HARTBURG 500KV CKT 1
FDNS	00NR	3	20WP	G15_081	FROM->TO	G14-057T 345.00 - SUNNYSIDE 345KV CKT 1	717	789	0.06227	111.6398	DRAPER LAKE - SEMINOLE 345KV CKT 1
FDNS	00NR	3	20WP	G15_081	FROM->TO	G14-057T 345.00 - SUNNYSIDE 345KV CKT 1	717	789	0.06227	111.6398	DRAPER LAKE - SEMINOLE 345KV CKT 2
FDNS	00NR	3	16WP	G15_081	FROM->TO	G14-057T 345.00 - SUNNYSIDE 345KV CKT 1	717	789	0.05978	111.6389	GEN511852 1-COMANCHE #2
FDNS	00NR	3	20WP	G15_081	FROM->TO	G14-057T 345.00 - SUNNYSIDE 345KV CKT 1	717	789	0.05843	111.6383	ARBUCKLE - VANOSTP4 138.00 138KV CKT 1
FDNS	00NR	3	20WP	G15_081	FROM->TO	G14-057T 345.00 - SUNNYSIDE 345KV CKT 1	717	789	0.05956	111.6369	GEN501823 1-TECHE UNIT 3
FDNS	00NR	3	20WP	G15_081	FROM->TO	G14-057T 345.00 - SUNNYSIDE 345KV CKT 1	717	789	0.05956	111.635	GEN501970 1-EVANGELINE UNIT 7
FDNS	00NR	3	20WP	G15_081	FROM->TO	G14-057T 345.00 - SUNNYSIDE 345KV CKT 1	717	789	0.05964	111.6342	OMPA-WALTERS - WALTERS 69KV CKT 1
FDNS	00NR	3	20WP	G15_081	FROM->TO	G14-057T 345.00 - SUNNYSIDE 345KV CKT 1	717	789	0.05964	111.6342	OMPA-WALTERS - WALTERS 69KV CKT 1
FDNS	00NR	3	20WP	G15_081	FROM->TO	G14-057T 345.00 - SUNNYSIDE 345KV CKT 1	717	789	0.05956	111.6333	LEWIS CREEK SWITCHYARD 138/22.0KV TRANSFORMER CKT 1
FDNS	00NR	3	20WP	G15_081	FROM->TO	G14-057T 345.00 - SUNNYSIDE 345KV CKT 1	717	789	0.05996	111.6323	EMPORIA ENERGY CENTER - G14_001T 345.00 345KV CKT 1
FDNS	00NR	3	20WP	G15_081	FROM->TO	G14-057T 345.00 - SUNNYSIDE 345KV CKT 1	717	789	0.05989	111.6296	BLACKBERRY - NEOSHO 345KV CKT 1
FDNS	00NR	3	20WP	G15_081	FROM->TO	G14-057T 345.00 - SUNNYSIDE 345KV CKT 1	717	789	0.05956	111.6288	LEWIS CREEK SWITCHYARD 138/22.0KV TRANSFORMER CKT 1
FDNS	00NR	3	20WP	G15_081	FROM->TO	G14-057T 345.00 - SUNNYSIDE 345KV CKT 1	717	789	0.06126	111.6282	G15063_T 345.00 - WOODRING 345KV CKT 1
FDNS	00NR	3	20WP	G15_081	FROM->TO	G14-057T 345.00 - SUNNYSIDE 345KV CKT 1	717	789	0.05999	111.6279	CLEOPLT4 138.00 - MEN TAP 138KV CKT 1
FDNS	00NR	3	16WP	G15_081	FROM->TO	G14-057T 345.00 - SUNNYSIDE 345KV CKT 1	717	789	0.05978	111.6238	GEN521110 1-ORME1 13.800
FDNS	00NR	3	16WP	G15_081	FROM->TO	G14-057T 345.00 - SUNNYSIDE 345KV CKT 1	717	789	0.05978	111.6238	GEN521111 1-ORME2 13.800
FDNS	00NR	3	16WP	G15_081	FROM->TO	G14-057T 345.00 - SUNNYSIDE 345KV CKT 1	717	789	0.05978	111.6195	GEN563292 1-G15095_3 0.6900
FDNS	00NR	3	20WP	G15_081	FROM->TO	G14-057T 345.00 - SUNNYSIDE 345KV CKT 1	717	789	0.05959	111.6188	TURK (TURK 1) 138/115/13.2KV TRANSFORMER CKT 1
FDNS	00NR	3	20WP	G15_081	FROM->TO	G14-057T 345.00 - SUNNYSIDE 345KV CKT 1	717	789	0.05959	111.6188	TURK (TURK 1) 138/115/13.2KV TRANSFORMER CKT 1
FDNS	00NR	3	20WP	G15_081	FROM->TO	G14-057T 345.00 - SUNNYSIDE 345KV CKT 1	717	789	0.05959	111.6187	MCNAB REC - Turk 115 115KV CKT 1
FDNS	00NR	3	20WP	G15_081	FROM->TO	G14-057T 345.00 - SUNNYSIDE 345KV CKT 1	717	789	0.05976	111.6181	G15074_T 345.00 - JEFFREY ENERGY CENTER 345KV CKT 1
FDNS	00NR	3	20WP	G15_081	FROM->TO	G14-057T 345.00 - SUNNYSIDE 345KV CKT 1	717	789	0.05999	111.618	IMO TAP - MEN TAP 138KV CKT 1
FDNS	00NR	3	20WP	G15_081	FROM->TO	G14-057T 345.00 - SUNNYSIDE 345KV CKT 1	717	789	0.05956	111.6167	P12:161:AEPW:CHAMSPR5:FARMING5
FDNS	00NR	3	20WP	G15_081	FROM->TO	G14-057T 345.00 - SUNNYSIDE 345KV CKT 1	717	789	0.05956	111.6138	GEN334392 1-EXXON MOBIL IPP 1
FDNS	00NR	3	20WP	G15_081	FROM->TO	G14-057T 345.00 - SUNNYSIDE 345KV CKT 1	717	789	0.05956	111.6109	GEN505616 1-BROKEN BOW
FDNS	00NR	3	20WP	G15_081	FROM->TO	G14-057T 345.00 - SUNNYSIDE 345KV CKT 1	717	789	0.05975	111.6104	P12:69:WFEC-AEPW:COMANCH2:WALTRS-2
FDNS	00NR	3	20WP	G15_081	FROM->TO	G14-057T 345.00 - SUNNYSIDE 345KV CKT 1	717	789	0.05956	111.6075	GEN334393 1-EXXON MOBIL IPP 2
FDNS	00NR	3	20WP	G15_081	FROM->TO	G14-057T 345.00 - SUNNYSIDE 345KV CKT 1	717	789	0.05956	111.6075	GEN334394 1-EXXON MOBIL IPP 3
FDNS	00NR	3	20WP	G15_081	FROM->TO	G14-057T 345.00 - SUNNYSIDE 345KV CKT 1	717	789	0.05956	111.606	GEN515042 1-SEMINOLE 3G
FDNS	00NR	3	16WP	G15_081	FROM->TO	G14-057T 345.00 - SUNNYSIDE 345KV CKT 1	717	789	0.05963	111.6031	G15085_T 138.00 - RUSSELL 138KV CKT 1
FDNS	00NR	3	20WP	G15_081	FROM->TO	G14-057T 345.00 - SUNNYSIDE 345KV CKT 1	717	789	0.05966	111.5974	7LUTESVIL 345.00 - 7ST FRANC 345.00 345KV CKT 1
FDNS	00NR	3	20WP	G15_081	FROM->TO	G14-057T 345.00 - SUNNYSIDE 345KV CKT 1	717	789	0.05968	111.5949	WEATHERFORD TAP - WEATHERFORD WIND FARM 138KV CKT 1
FDNS	00NR	3	20WP	G15_081	FROM->TO	G14-057T 345.00 - SUNNYSIDE 345KV CKT 1	717	789	0.06106	111.5943	NOBLE - PURCELL4 138.00 138KV CKT 1
FDNS	00NR	3	20WP	G15_081	FROM->TO	G14-057T 345.00 - SUNNYSIDE 345KV CKT 1	717	789	0.05979	111.5935	SOUTHWESTERN STATION - VERDEN 138KV CKT 1
FDNS	00NR	3	20WP	G15_081	FROM->TO	G14-057T 345.00 - SUNNYSIDE 345KV CKT 1	717	789	0.06027	111.592	G13-010T 345.00 - POST ROCK 345KV CKT 1
FDNS	00NR	3	20WP	G15_081	FROM->TO	G14-057T 345.00 - SUNNYSIDE 345KV CKT 1	717	789	0.05982	111.5879	CLINTON JUNCTION - ELK CITY 138KV CKT 1
FDNS	00NR	3	20WP	G15_081	FROM->TO	G14-057T 345.00 - SUNNYSIDE 345KV CKT 1	717	789	0.05982	111.5879	CLINTON JUNCTION - ELK CITY 138KV CKT 1
FDNS	00NR	3	20WP	G15_081	FROM->TO	G14-057T 345.00 - SUNNYSIDE 345KV CKT 1	717	789	0.05956	111.5838	ST FRANCIS - ST FRANCIS 1 161KV CKT Z1
FDNS	00NR	3	20WP	G15_081	FROM->TO	G14-057T 345.00 - SUNNYSIDE 345KV CKT 1	717	789	0.05989	111.5828	BUCKNER7 345.00 - HOLCOMB 345KV CKT 1
FDNS	00NR	3	20WP	G15_081	FROM->TO	G14-057T 345.00 - SUNNYSIDE 345KV CKT 1	717	789	0.05989	111.5828	BUCKNER7 345.00 - HOLCOMB 345KV CKT 1
FDNS	00NR	3	20WP	G15_081	FROM->TO	G14-057T 345.00 - SUNNYSIDE 345KV CKT 1	717	789	0.06072	111.5788	LASALLE - STONEWAL LH138.00 138KV CKT 1
FDNS	00NR	3	16WP	G15_081	FROM->TO	G14-057T 345.00 - SUNNYSIDE 345KV CKT 1	717	789	0.05897	111.5774	GRAPEVINE INTERCHANGE - STATELINE INTERCHANGE 230KV CKT 1
FDNS	00NR	3	16WP	G15_081	FROM->TO	G14-057T 345.00 - SUNNYSIDE 345KV CKT 1	717	789	0.05897	111.5774	GRAPEVINE INTERCHANGE - STATELINE INTERCHANGE 230KV CKT 1
FDNS	00NR	3	20WP	G15_081	FROM->TO	G14-057T 345.00 - SUNNYSIDE 345KV CKT 1	717	789	0.05956	111.5772	GEN501971 1-EVANGELINE UNIT 7-1
FDNS	00NR	3	20WP	G15_081	FROM->TO	G14-057T 345.00 - SUNNYSIDE 345KV CKT 1	717	789	0.05956	111.5772	GEN501972 1-EVANGELINE UNIT 7-2
FDNS	00NR	3	20WP	G15_081	FROM->TO	G14-057T 345.00 - SUNNYSIDE 345KV CKT 1	717	789	0.05996	111.5767	G14_001T 345.00 - WICHITA 345KV CKT 1
FDNS	00NR	3	20WP	G15_081	FROM->TO	G14-057T 345.00 - SUNNYSIDE 345KV CKT 1	717	789	0.05972	111.5754	FRANKLIN - FRANKLIN SW 138KV CKT 1
FDNS	00NR	3	20WP	G15_081	FROM->TO	G14-057T 345.00 - SUNNYSIDE 345KV CKT 1	717	789	0.05964	111.5725	LAKEOVER - MCADAMS 500KV CKT 1
FDNS	00NR	3	20WP	G15_081	FROM->TO	G14-057T 345.00 - SUNNYSIDE 345KV CKT 1	717	789	0.05979	111.5724	NORTH 29TH CHICKASHA - VERDEN 138KV CKT 1
FDNS	00NR	3	20WP	G15_081	FROM->TO	G14-057T 345.00 - SUNNYSIDE 345KV CKT 1	717	789	0.05956	111.5709	SABINE 230/22.0KV TRANSFORMER CKT 1
FDNS	00NR	3	20WP	G15_081	FROM->TO	G14-057T 345.00 - SUNNYSIDE 345KV CKT 1	717	789	0.05978	111.5705	EMPORIA ENERGY CENTER - SWISSVALE 345KV CKT 1
FDNS	00NR	3	20WP	G15_081	FROM->TO	G14-057T 345.00 - SUNNYSIDE 345KV CKT 1	717	789	0.05943	111.5696	ENOWILT - LONE OAK 138KV CKT 1
FDNS	00NR	3	20WP	G15_081	FROM->TO	G14-057T 345.00 - SUNNYSIDE 345KV CKT 1	717	789	0.05963	111.5693	P12:138:OKGE:3TERM12
FDNS	00NR	3	20WP	G15_081	FROM->TO	G14-057T 345.00 - SUNNYSIDE 345KV CKT 1	717	789	0.05963	111.5689	FLETCHER - MARLOW JCT 69KV CKT 1
FDNS	00NR	3	20WP	G15_081	FROM->TO	G14-057T 345.00 - SUNNYSIDE 345KV CKT 1	717	789	0.05957	111.5672	P12:138:AEPW:R.S.S-4:T.P.S.-4
FDNS	00NR	3	20WP	G15_081	FROM->TO	G14-057T 345.00 - SUNNYSIDE 345KV CKT 1	717	789	0.06072	111.5636	STONEWAL LH138.00 - TUPELO TAP 138KV CKT 1
FDNS	00NR	3	20WP	G15_081	FROM->TO	G14-057T 345.00 - SUNNYSIDE 345KV CKT 1	717	789	0.05943	111.5609	ENOWILT - SARDIS 138KV CKT 1
FDNS	00NR	3	16WP	G15_081	FROM->TO	G14-057T 345.00 - SUNNYSIDE 345KV CKT 1	717	789	0.05935	111.5593	CACHE - SNYDER 138KV CKT 1
FDNS	00NR	3	20WP	G15_081	FROM->TO	G14-057T 345.00 - SUNNYSIDE 345KV CKT 1	717	789	0.05976	111.5564	HINTON - WEATHERFORD JCT. 138KV CKT 1
FDNS	00NR	3	20WP	G15_081	FROM->TO	G14-057T 345.00 - SUNNYSIDE 345KV CKT 1	717	789	0.05972	111.5553	MCADAMS - WOLF CREEK 500KV CKT 1
FDNS	00NR	3	20WP	G15_081	FROM->TO	G14-057T 345.00 - SUNNYSIDE 345KV CKT 1	717	789	0.05956	111.5542	GEN501912 1-ACADIA UNIT CT1B
FDNS	00NR	3	20WP	G15_081	FROM->TO	G14-057T 345.00 - SUNNYSIDE 345KV CKT 1	717	789	0.05956	111.5534	GEN501911 1-ACADIA UNIT CT1A
FDNS	00NR	3	20WP	G15_081	FROM->TO	G14-057T 345.00 - SUNNYSIDE 345KV CKT 1	717	789	0.05952	111.5533	P12:138:WFEC-AEPW:ELKCTY-4:ERICK4
FDNS	00NR	3	20WP	G15_081	FROM->TO	G14-057T 345.00 - SUNNYSIDE 345KV CKT 1	717	789	0.06027	111.5453	G13-010T 345.00 - SPEARVILLE 345KV CKT 1
FDNS	00NR	3	20WP	G15_081	FROM->TO	G14-057T 345.00 - SUNNYSIDE 345KV CKT 1	717	789	0.05984	111.5441	SWISSVALE - WEST GARDNER 345KV CKT 1
FDNS	00NR	3	16WP	G15_081	FROM->TO	G14-057T 345.00 - SUNNYSIDE 345KV CKT 1	717	789	0.05978	111.5424	GEN563122 1-G15077_3 0.3850
FDNS	00NR	3	20WP	G15_081	FROM->TO	G14-057T 345.00 - SUNNYSIDE 345KV CKT 1	717	789	0.05956	111.5421	P12:138:AEPW:R.S.S.-4:R:96YALE-4
FDNS	00NR	3	20WP	G15_081	FROM->TO	G14-057T 345.00 - SUNNYSIDE 345KV CKT 1	717	789	0.05956	111.5379	GEN506749 1-EASTMAN GENERATION A

SOLUTION	GROUP	SCENARIO	SEASON	SOURCE	DIRECTION	MONITORED ELEMENT	RATEA (MVA)	RATEB(MVA)	TDF	TC%LOADING (% MVA)	CONTINGENCY
FDNS	00NR	3	16WP	G15_081	FROM->TO	G14-057T 345.00 - SUNNYSIDE 345KV CKT 1	717	789	0.05978	111.5346	GEN562861 1-G15045_2 0.4800
FDNS	00NR	3	20WP	G15_081	FROM->TO	G14-057T 345.00 - SUNNYSIDE 345KV CKT 1	717	789	0.0598	111.5342	CORNVILLE - NORGE ROAD 138KV CKT 1
FDNS	00NR	3	20WP	G15_081	FROM->TO	G14-057T 345.00 - SUNNYSIDE 345KV CKT 1	717	789	0.0598	111.5342	CORNVILLE - NORGE ROAD 138KV CKT 1
FDNS	00NR	3	20WP	G15_081	FROM->TO	G14-057T 345.00 - SUNNYSIDE 345KV CKT 1	717	789	0.05957	111.5319	AMITY SS - MURFREESBORO EAST (AECC) 115KV CKT 1
FDNS	00NR	3	20WP	G15_081	FROM->TO	G14-057T 345.00 - SUNNYSIDE 345KV CKT 1	717	789	0.05956	111.5307	NELSON 230/24.0KV TRANSFORMER CKT 1
FDNS	00NR	3	20WP	G15_081	FROM->TO	G14-057T 345.00 - SUNNYSIDE 345KV CKT 1	717	789	0.05956	111.5287	GEN336242 1-1NMIL ST1 18.000
FDNS	00NR	3	16WP	G15_081	FROM->TO	G14-057T 345.00 - SUNNYSIDE 345KV CKT 1	717	789	0.05403	111.5277	GRACEMONT - LAWTON EASTSIDE 345KV CKT 1
FDNS	00NR	3	16WP	G15_081	FROM->TO	G14-057T 345.00 - SUNNYSIDE 345KV CKT 1	717	789	0.05403	111.5277	GRACEMONT - LAWTON EASTSIDE 345KV CKT 1
FDNS	00NR	3	20WP	G15_081	FROM->TO	G14-057T 345.00 - SUNNYSIDE 345KV CKT 1	717	789	0.05969	111.5271	8WNEWMADRID 500.00 - DELL 500 500KV CKT 1
FDNS	00NR	3	20WP	G15_081	FROM->TO	G14-057T 345.00 - SUNNYSIDE 345KV CKT 1	717	789	0.06059	111.5252	BENTON - WICHITA 345KV CKT 1
FDNS	00NR	3	20WP	G15_081	FROM->TO	G14-057T 345.00 - SUNNYSIDE 345KV CKT 1	717	789	0.06069	111.5246	FRANKLIN SW - WESTMOORE 138KV CKT 1
FDNS	00NR	3	20WP	G15_081	FROM->TO	G14-057T 345.00 - SUNNYSIDE 345KV CKT 1	717	789	0.05943	111.5223	CLAYTON - SARDIS 138KV CKT 1
FDNS	00NR	3	20WP	G15_081	FROM->TO	G14-057T 345.00 - SUNNYSIDE 345KV CKT 1	717	789	0.05956	111.5212	ST FRANCIS 345/161KV TRANSFORMER CKT 1
FDNS	00NR	3	20WP	G15_081	FROM->TO	G14-057T 345.00 - SUNNYSIDE 345KV CKT 1	717	789	0.05956	111.5199	P12:138:AEPW:MOHAWK4:T.NO--4
FDNS	00NR	3	16WP	G15_081	FROM->TO	G14-057T 345.00 - SUNNYSIDE 345KV CKT 1	717	789	0.05978	111.5178	GEN661015 1-COYOTE
FDNS	00NR	3	20WP	G15_081	FROM->TO	G14-057T 345.00 - SUNNYSIDE 345KV CKT 1	717	789	0.05957	111.5138	LAYFLD8 500.00 (LAYFLD AUTO) 500/230/13.8KV TRANSFORMER CKT 1
FDNS	00NR	3	20WP	G15_081	FROM->TO	G14-057T 345.00 - SUNNYSIDE 345KV CKT 1	717	789	0.05957	111.5138	LAYFLD8 500.00 (LAYFLD AUTO) 500/230/13.8KV TRANSFORMER CKT 1
FDNS	00NR	3	20WP	G15_081	FROM->TO	G14-057T 345.00 - SUNNYSIDE 345KV CKT 1	717	789	0.06072	111.5114	CIMARRON - NORTHWEST 345KV CKT 1
FDNS	00NR	3	20WP	G15_081	FROM->TO	G14-057T 345.00 - SUNNYSIDE 345KV CKT 1	717	789	0.05979	111.5059	CORNVILLE - NORTH 29TH CHICKASHA 138KV CKT 1
FDNS	00NR	3	20WP	G15_081	FROM->TO	G14-057T 345.00 - SUNNYSIDE 345KV CKT 1	717	789	0.05904	111.5036	ARBUCKLE - MILLCREEK 138KV CKT 1
FDNS	00NR	3	20WP	G15_081	FROM->TO	G14-057T 345.00 - SUNNYSIDE 345KV CKT 1	717	789	0.05968	111.5033	WEATHERFORD SOUTHEAST - WEATHERFORD TAP 138KV CKT 1
FDNS	00NR	3	20WP	G15_081	FROM->TO	G14-057T 345.00 - SUNNYSIDE 345KV CKT 1	717	789	0.05943	111.5001	P12:138:AEPW-SWPA:LONEOAK4:BRKNBW4
FDNS	00NR	3	20WP	G15_081	FROM->TO	G14-057T 345.00 - SUNNYSIDE 345KV CKT 1	717	789	0.05956	111.4992	SABINE 138/22.0KV TRANSFORMER CKT 1
FDNS	00NR	3	20WP	G15_081	FROM->TO	G14-057T 345.00 - SUNNYSIDE 345KV CKT 1	717	789	0.05943	111.489	CLAYTON - NASHOBA 138KV CKT 1
FDNS	00NR	3	20WP	G15_081	FROM->TO	G14-057T 345.00 - SUNNYSIDE 345KV CKT 1	717	789	0.05961	111.4879	7JASPER 345.00 - MORGAN 345KV CKT 1
FDNS	00NR	3	20WP	G15_081	FROM->TO	G14-057T 345.00 - SUNNYSIDE 345KV CKT 1	717	789	0.05976	111.4844	HINTON - REDROCKRD4 138.00 138KV CKT 1
FDNS	00NR	3	20WP	G15_081	FROM->TO	G14-057T 345.00 - SUNNYSIDE 345KV CKT 1	717	789	0.05989	111.4828	SEMINOLE (SEMINOL2) 345/138/14.4KV TRANSFORMER CKT 1
FDNS	00NR	3	20WP	G15_081	FROM->TO	G14-057T 345.00 - SUNNYSIDE 345KV CKT 1	717	789	0.05956	111.4828	GEN338146 1-INDEPENDENCE UNIT #2
FDNS	00NR	3	16WP	G15_081	FROM->TO	G14-057T 345.00 - SUNNYSIDE 345KV CKT 1	717	789	0.05907	111.4571	SUNNYSIDE - UNIROYAL 138KV CKT 1
FDNS	00NR	3	20WP	G15_081	FROM->TO	G14-057T 345.00 - SUNNYSIDE 345KV CKT 1	717	789	0.0597	111.4536	P12:138:OKGE:3TERM20
FDNS	00NR	3	20WP	G15_081	FROM->TO	G14-057T 345.00 - SUNNYSIDE 345KV CKT 1	717	789	0.05968	111.4533	CLINTON JUNCTION - CLINTON NATURAL GAS TAP 138KV CKT 1
FDNS	00NR	3	20WP	G15_081	FROM->TO	G14-057T 345.00 - SUNNYSIDE 345KV CKT 1	717	789	0.05392	111.4488	GRACEMONT - LAWTON EASTSIDE 345KV CKT 1
FDNS	00NR	3	20WP	G15_081	FROM->TO	G14-057T 345.00 - SUNNYSIDE 345KV CKT 1	717	789	0.05392	111.4488	GRACEMONT - LAWTON EASTSIDE 345KV CKT 1
FDNS	00NR	3	20WP	G15_081	FROM->TO	G14-057T 345.00 - SUNNYSIDE 345KV CKT 1	717	789	0.06091	111.4413	MARIETTA - MARIETTA4 138.00 138KV CKT 1
FDNS	00NR	3	16WP	G15_081	FROM->TO	G14-057T 345.00 - SUNNYSIDE 345KV CKT 1	717	789	0.05898	111.44	GRAPEVINE INTERCHANGE - NICHOLS STATION 230KV CKT 1
FDNS	00NR	3	16WP	G15_081	FROM->TO	G14-057T 345.00 - SUNNYSIDE 345KV CKT 1	717	789	0.05898	111.44	GRAPEVINE INTERCHANGE - NICHOLS STATION 230KV CKT 1
FDNS	00NR	3	20WP	G15_081	FROM->TO	G14-057T 345.00 - SUNNYSIDE 345KV CKT 1	717	789	0.05975	111.4355	COMANCHE - WALTERS 69KV CKT 1
FDNS	00NR	3	16WP	G15_081	FROM->TO	G14-057T 345.00 - SUNNYSIDE 345KV CKT 1	717	789	0.05962	111.4174	P12:138:AEPW:SHAM4WT:CHILD4WT
FDNS	00NR	3	16WP	G15_081	FROM->TO	G14-057T 345.00 - SUNNYSIDE 345KV CKT 1	717	789	0.06002	111.4115	P12:138:WFEC:MSL15
FDNS	00NR	3	16WP	G15_081	FROM->TO	G14-057T 345.00 - SUNNYSIDE 345KV CKT 1	717	789	0.05816	111.4067	CHISHOLM7 345.00 (CHISHOLM) 345/230/13.2KV TRANSFORMER CKT 1
FDNS	00NR	3	16WP	G15_081	FROM->TO	G14-057T 345.00 - SUNNYSIDE 345KV CKT 1	717	789	0.05978	111.4034	GEN657748 1-YOUNG 2 GENERATOR
FDNS	00NR	3	16WP	G15_081	FROM->TO	G14-057T 345.00 - SUNNYSIDE 345KV CKT 1	717	789	0.05978	111.4	GEN532751 1-WOLF CREEK GENERATING STATION UNIT 1
FDNS	00NR	3	16WP	G15_081	FROM->TO	G14-057T 345.00 - SUNNYSIDE 345KV CKT 1	717	789	0.05978	111.3811	GEN562992 1-G15063_3 0.6900
FDNS	00NR	3	16WP	G15_081	FROM->TO	G14-057T 345.00 - SUNNYSIDE 345KV CKT 1	717	789	0.05978	111.3562	GEN562704 1-G15_020_3 0.3550
FDNS	00NR	3	16WP	G15_081	FROM->TO	G14-057T 345.00 - SUNNYSIDE 345KV CKT 1	717	789	0.05978	111.3542	GEN563173 1-G15082_3 0.6900
FDNS	00NR	3	16WP	G15_081	FROM->TO	G14-057T 345.00 - SUNNYSIDE 345KV CKT 1	717	789	0.06112	111.3478	CANEY CREEK - TEXOMA JCT 138KV CKT 1
FDNS	00NR	3	16WP	G15_081	FROM->TO	G14-057T 345.00 - SUNNYSIDE 345KV CKT 1	717	789	0.05978	111.3165	GEN562952 1-G15057_3 0.6500
FDNS	00NR	3	16WP	G15_081	FROM->TO	G14-057T 345.00 - SUNNYSIDE 345KV CKT 1	717	789	0.05978	111.2724	GEN562710 1-G15_022_3 0.5500
FDNS	00NR	3	16WP	G15_081	FROM->TO	G14-057T 345.00 - SUNNYSIDE 345KV CKT 1	717	789	0.05978	111.2411	GEN620315 1-BIG STONE GEN
FDNS	00NR	3	16WP	G15_081	FROM->TO	G14-057T 345.00 - SUNNYSIDE 345KV CKT 1	717	789	0.05816	111.1801	CHISHOLM7 345.00 - GRACEMONT 345KV CKT 1
FDNSLock	00NR	3	16WP	G15_081	FROM->TO	G14-057T 345.00 - SUNNYSIDE 345KV CKT 1	717	789	0.05978	111.1763	GEN600004 2-PRAIRIE ISLAND G2
FDNSLock	00NR	3	16WP	G15_081	FROM->TO	G14-057T 345.00 - SUNNYSIDE 345KV CKT 1	717	789	0.05978	111.1736	GEN600003 1-PRAIRIE ISLAND G1
FDNS	00NR	3	16WP	G15_081	FROM->TO	G14-057T 345.00 - SUNNYSIDE 345KV CKT 1	717	789	0.05985	111.1734	P12:138:WFEC:MSL09
FDNSLock	00NR	3	16WP	G15_081	FROM->TO	G14-057T 345.00 - SUNNYSIDE 345KV CKT 1	717	789	0.05978	111.1659	GEN600006 1-AS KING
FDNS	00NR	3	16WP	G15_081	FROM->TO	G14-057T 345.00 - SUNNYSIDE 345KV CKT 1	717	789	0.05978	111.1295	GEN511851 1-COMANCHE #1
FDNS	00NR	3	16WP	G15_081	FROM->TO	G14-057T 345.00 - SUNNYSIDE 345KV CKT 1	717	789	0.05978	111.1	GEN636641 1-LOUISA UNIT 1
FDNS	00NR	3	16WP	G15_081	FROM->TO	G14-057T 345.00 - SUNNYSIDE 345KV CKT 1	717	789	0.05978	111.0396	GEN600005 1-MONTICELLO
FDNS	00NR	3	16WP	G15_081	FROM->TO	G14-057T 345.00 - SUNNYSIDE 345KV CKT 1	717	789	0.05835	111.0304	P12:230:AEPW-SPS:SWEETWT6:WHEELER 6
FDNS	00NR	3	16WP	G15_081	FROM->TO	G14-057T 345.00 - SUNNYSIDE 345KV CKT 1	717	789	0.05835	111.0294	STATELINE INTERCHANGE - STLN-DEMARC6 230KV CKT 1
FDNS	00NR	3	16WP	G15_081	FROM->TO	G14-057T 345.00 - SUNNYSIDE 345KV CKT 1	717	789	0.05835	111.0283	STLN-DEMARC6 - SWEETWATER 230KV CKT 1
FDNS	00NR	3	16WP	G15_081	FROM->TO	G14-057T 345.00 - SUNNYSIDE 345KV CKT 1	717	789	0.05978	111.0266	GEN562754 1-G15031_5 0.6900
FDNS	00NR	3	20WP	G15_081	FROM->TO	G14-057T 345.00 - SUNNYSIDE 345KV CKT 1	717	789	0.05956	111.0252	803-OKLAUNION
FDNS	00NR	3	16WP	G15_081	FROM->TO	G14-057T 345.00 - SUNNYSIDE 345KV CKT 1	717	789	0.05978	111.0089	GEN615002 2-COAL CREEK
FDNS	00NR	3	16WP	G15_081	FROM->TO	G14-057T 345.00 - SUNNYSIDE 345KV CKT 1	717	789	0.05978	111	GEN629074 1-ARNOLD LOWSIDE OF GSU XFMR
FDNS	00NR	3	16WP	G15_081	FROM->TO	G14-057T 345.00 - SUNNYSIDE 345KV CKT 1	717	789	0.05956	110.9877	P12:138:AEPW-OGE:CORNVIL4:CIMARON4
FDNS	00NR	3	16WP	G15_081	FROM->TO	G14-057T 345.00 - SUNNYSIDE 345KV CKT 1	717	789	0.05978	110.9862	GEN562023 1-G11_020_3 0.6900
FDNS	00NR	3	16WP	G15_081	FROM->TO	G14-057T 345.00 - SUNNYSIDE 345KV CKT 1	717	789	0.05978	110.9862	GEN562026 1-G11_019_3 0.6900
FDNS	00NR	3	16WP	G15_081	FROM->TO	G14-057T 345.00 - SUNNYSIDE 345KV CKT 1	717	789	0.05978	110.9797	GEN635213 3-NEAL UNIT 3
FDNS	00NR	3	16WP	G15_081	FROM->TO	G14-057T 345.00 - SUNNYSIDE 345KV CKT 1	717	789	0.05978	110.9682	GEN562756 1-G15031_7 0.6900
FDNS	00NR	3	16WP	G15_081	FROM->TO	G14-057T 345.00 - SUNNYSIDE 345KV CKT 1	717	789	0.05978	110.9258	BIG STONE 230/24.0KV TRANSFORMER CKT 1
FDNS	00NR	3	16WP	G15_081	FROM->TO	G14-057T 345.00 - SUNNYSIDE 345KV CKT 1	717	789	0.05978	110.9216	GEN562556 1-G14_046_3 0.3420
FDNS	00NR	3	16WP	G15_081	FROM->TO	G14-057T 345.00 - SUNNYSIDE 345KV CKT 1	717	789	0.05978	110.8335	GEN563142 1-G15079_3 0.5500
FDNS	00NR	3	16WP	G15_081	FROM->TO	G14-057T 345.00 - SUNNYSIDE 345KV CKT 1	717	789	0.05978	110.8335	GEN563151 1-G15080_2 0.5500
FDNS	00NR	3	16WP	G15_081	FROM->TO	G14-057T 345.00 - SUNNYSIDE 345KV CKT 1	717	789	0.05978	110.8185	GEN523971 1-HARRINGTON GEN #1 24 KV
FDNS	00NR	3	16WP	G15_081	FROM->TO	G14-057T 345.00 - SUNNYSIDE 345KV CKT 1	717	789	0.05978	110.8185	GEN523973 1-HARRINGTON GEN #3 24 KV
FDNS	00NR	3	16WP	G15_081	FROM->TO	G14-057T 345.00 - SUNNYSIDE 345KV CKT 1	717	789	0.05978	110.8184	GEN523972 1-HARRINGTON GEN #2 24 KV
FDNS	00NR	3	20WP	G15_081	FROM->TO	G14-057T 345.00 - SUNNYSIDE 345KV CKT 1	717	789	0.05856	110.8058	P12:138:OKGE:3TERM39
FDNS	00NR	3	16WP	G15_081	FROM->TO	G14-057T 345.00 - SUNNYSIDE 345KV CKT 1	717	789	0.05978	110.7304	GEN600000 1-SHERBURNECNTY G1
FDNS	00NR	3	16WP	G15_081	FROM->TO	G14-057T 345.00 - SUNNYSIDE 345KV CKT 1	717	789	0.05982	110.7146	NORTHWEST TEXARKANA - VALLIANT 345KV CKT 1

SOLUTION	GROUP	SCENARIO	SEASON	SOURCE	DIRECTION	MONITORED ELEMENT	RATEA (MVA)	RATEB(MVA)	TDF	TC%LOADING (% MVA)	CONTINGENCY
FDNS	00NR	3	16WP	G15_081	FROM->TO	G14-057T 345.00 - SUNNYSIDE 345KV CKT 1	717	789	0.05982	110.7146	NORTHWEST TEXARKANA - VALLIANT 345KV CKT 1
FDNS	00NR	3	16WP	G15_081	FROM->TO	G14-057T 345.00 - SUNNYSIDE 345KV CKT 1	717	789	0.05791	110.6535	P12:230:AEPW:ELKCITY6:SWEETWT6
FDNS	00NR	3	16WP	G15_081	FROM->TO	G14-057T 345.00 - SUNNYSIDE 345KV CKT 1	717	789	0.05978	110.6508	GEN600001 2-SHERBURNE CNTY G2
FDNS	00NR	3	20WP	G15_081	FROM->TO	G14-057T 345.00 - SUNNYSIDE 345KV CKT 1	717	789	0.05898	110.6277	MAYSVILLE - MAYSVLT4 138.00 138KV CKT 1
FDNS	00NR	3	16WP	G15_081	FROM->TO	G14-057T 345.00 - SUNNYSIDE 345KV CKT 1	717	789	0.05978	110.6206	GEN563042 1-G15068_3 0.6900
FDNS	00NR	3	16WP	G15_081	FROM->TO	G14-057T 345.00 - SUNNYSIDE 345KV CKT 1	717	789	0.05978	110.6069	GEN527901 1-HOBBS PLANT #1 (CT)
FDNS	00NR	3	16WP	G15_081	FROM->TO	G14-057T 345.00 - SUNNYSIDE 345KV CKT 1	717	789	0.05978	110.6069	GEN527902 1-HOBBS PLANT #2 (CT)
FDNS	00NR	3	16WP	G15_081	FROM->TO	G14-057T 345.00 - SUNNYSIDE 345KV CKT 1	717	789	0.05978	110.6027	GEN511848 1-SOUTHWESTERN STATION #3
FDNS	00NR	3	20WP	G15_081	FROM->TO	G14-057T 345.00 - SUNNYSIDE 345KV CKT 1	717	789	0.05851	110.5975	BEARCAT 138.00 - NINE MILE 138KV CKT 1
FDNS	00NR	3	20WP	G15_081	FROM->TO	G14-057T 345.00 - SUNNYSIDE 345KV CKT 1	717	789	0.05956	110.5893	GEN521103 1-BLUE CANYON WIND FARM
FDNS	00NR	3	20WP	G15_081	FROM->TO	G14-057T 345.00 - SUNNYSIDE 345KV CKT 1	717	789	0.05956	110.5787	GEN562691 1-G15_015_3 0.6900
FDNS	00NR	3	20WP	G15_081	FROM->TO	G14-057T 345.00 - SUNNYSIDE 345KV CKT 1	717	789	0.05956	110.5785	GEN520812 1-ANADRK5
FDNS	00NR	3	20WP	G15_081	FROM->TO	G14-057T 345.00 - SUNNYSIDE 345KV CKT 1	717	789	0.05956	110.5784	GEN520813 1-ANADRK6
FDNS	00NR	3	20WP	G15_081	FROM->TO	G14-057T 345.00 - SUNNYSIDE 345KV CKT 1	717	789	0.05956	110.5753	GEN563052 1-G15069_3 0.6900
FDNS	00NR	3	20WP	G15_081	FROM->TO	G14-057T 345.00 - SUNNYSIDE 345KV CKT 1	717	789	0.05956	110.5696	GEN562772 1-G15034_3 0.6900
FDNS	00NR	3	20WP	G15_081	FROM->TO	G14-057T 345.00 - SUNNYSIDE 345KV CKT 1	717	789	0.05988	110.5695	DRAPER LAKE - MIDWEST TAP 138KV CKT 1
FDNS	00NR	3	20WP	G15_081	FROM->TO	G14-057T 345.00 - SUNNYSIDE 345KV CKT 1	717	789	0.05956	110.5621	GEN600046 1-MECST
FDNS	00NR	3	20WP	G15_081	FROM->TO	G14-057T 345.00 - SUNNYSIDE 345KV CKT 1	717	789	0.05898	110.5618	MAYSVLT4 138.00 - PRAIRIE POINT 138KV CKT 1
FDNS	00NR	3	20WP	G15_081	FROM->TO	G14-057T 345.00 - SUNNYSIDE 345KV CKT 1	717	789	0.05956	110.5514	GEN629070 2-BEAVER CHANNEL GENERATORFOR UNIT NO 2
FDNS	00NR	3	20WP	G15_081	FROM->TO	G14-057T 345.00 - SUNNYSIDE 345KV CKT 1	717	789	0.05956	110.5496	GEN511961 1-DEMPSEY-WTG10.7000
FDNS	00NR	3	20WP	G15_081	FROM->TO	G14-057T 345.00 - SUNNYSIDE 345KV CKT 1	717	789	0.05956	110.5482	GEN600047 1-MECCT1
FDNS	00NR	3	20WP	G15_081	FROM->TO	G14-057T 345.00 - SUNNYSIDE 345KV CKT 1	717	789	0.05956	110.5464	P12:069:OKGE:3TERM42
FDNS	00NR	3	20WP	G15_081	FROM->TO	G14-057T 345.00 - SUNNYSIDE 345KV CKT 1	717	789	0.05899	110.546	ARBUCKLE - SULPHR 4 138.00 138KV CKT 1
FDNS	00NR	3	20WP	G15_081	FROM->TO	G14-057T 345.00 - SUNNYSIDE 345KV CKT 1	717	789	0.05956	110.5432	GEN629071 1-BURLINGTON GENERATOR FOR UNIT NO 1 E
FDNS	00NR	3	20WP	G15_081	FROM->TO	G14-057T 345.00 - SUNNYSIDE 345KV CKT 1	717	789	0.05852	110.5428	CIMARRON - MATHWSN7 345.00 345KV CKT 1
FDNS	00NR	3	20WP	G15_081	FROM->TO	G14-057T 345.00 - SUNNYSIDE 345KV CKT 1	717	789	0.05852	110.5428	CIMARRON - MATHWSN7 345.00 345KV CKT 2
FDNS	00NR	3	20WP	G15_081	FROM->TO	G14-057T 345.00 - SUNNYSIDE 345KV CKT 1	717	789	0.05851	110.5403	P12:138:WFEC:MSL14
FDNS	00NR	3	20WP	G15_081	FROM->TO	G14-057T 345.00 - SUNNYSIDE 345KV CKT 1	717	789	0.05987	110.5392	P12:138:OKGE:3TERM21
FDNS	00NR	3	20WP	G15_081	FROM->TO	G14-057T 345.00 - SUNNYSIDE 345KV CKT 1	717	789	0.06126	110.5365	G15063_T 345.00 - MATHWSN7 345.00 345KV CKT 1
FDNS	00NR	3	20WP	G15_081	FROM->TO	G14-057T 345.00 - SUNNYSIDE 345KV CKT 1	717	789	0.05956	110.5362	BURLINGTON NO1 + NO 2 + NO 3 161/20.0KV TRANSFORMER CKT 1
FDNSLock	00NR	3	16WP	G15_081	FROM->TO	G14-057T 345.00 - SUNNYSIDE 345KV CKT 1	717	789	0.05978	110.5323	GEN629075 1-OTTUMWA GENERATOR FOR OTTUMWA UNIT NO 1
FDNS	00NR	3	20WP	G15_081	FROM->TO	G14-057T 345.00 - SUNNYSIDE 345KV CKT 1	717	789	0.05959	110.5286	P12:138:WFEC:MSL11
FDNS	00NR	3	20WP	G15_081	FROM->TO	G14-057T 345.00 - SUNNYSIDE 345KV CKT 1	717	789	0.05959	110.5286	P12:138:WFEC-AEPW:PHAROAH4:LONEOAK4
FDNS	00NR	3	20WP	G15_081	FROM->TO	G14-057T 345.00 - SUNNYSIDE 345KV CKT 1	717	789	0.05956	110.525	GEN615010 1-STANTON4
FDNS	00NR	3	20WP	G15_081	FROM->TO	G14-057T 345.00 - SUNNYSIDE 345KV CKT 1	717	789	0.05956	110.5192	GEN615021 1-GRE-ER 14G 16.000
FDNS	00NR	3	20WP	G15_081	FROM->TO	G14-057T 345.00 - SUNNYSIDE 345KV CKT 1	717	789	0.05962	110.5122	GLASSES - MADILL INDUSTRIAL TAP 138KV CKT 1
FDNS	00NR	3	20WP	G15_081	FROM->TO	G14-057T 345.00 - SUNNYSIDE 345KV CKT 1	717	789	0.05963	110.4994	CANEY CREEK - JOHNSON COUNTY 138KV CKT 1
FDNS	00NR	3	20WP	G15_081	FROM->TO	G14-057T 345.00 - SUNNYSIDE 345KV CKT 1	717	789	0.05851	110.4961	BEARCAT 138.00 - MOORELAND 138KV CKT 1
FDNS	00NR	3	20WP	G15_081	FROM->TO	G14-057T 345.00 - SUNNYSIDE 345KV CKT 1	717	789	0.05972	110.4941	P12:138:WFEC:MSL08
FDNS	00NR	3	20WP	G15_081	FROM->TO	G14-057T 345.00 - SUNNYSIDE 345KV CKT 1	717	789	0.05956	110.4852	GEN531447 1-HOLCOMB GENERATOR
FDNS	00NR	3	20WP	G15_081	FROM->TO	G14-057T 345.00 - SUNNYSIDE 345KV CKT 1	717	789	0.05956	110.4848	GEN515443 1-MNCOWND1 0.7000
FDNS	00NR	3	20WP	G15_081	FROM->TO	G14-057T 345.00 - SUNNYSIDE 345KV CKT 1	717	789	0.05956	110.4842	INDEPENDENCE 500/26.0KV TRANSFORMER CKT 1
FDNS	00NR	3	20WP	G15_081	FROM->TO	G14-057T 345.00 - SUNNYSIDE 345KV CKT 1	717	789	0.06091	110.4812	LEBANON - TEXOMA JCT 138KV CKT 1
FDNS	00NR	3	20WP	G15_081	FROM->TO	G14-057T 345.00 - SUNNYSIDE 345KV CKT 1	717	789	0.05956	110.4761	GEN560183 1-REDHIL-WTG1 12.000
FDNS	00NR	3	20WP	G15_081	FROM->TO	G14-057T 345.00 - SUNNYSIDE 345KV CKT 1	717	789	0.05898	110.4698	PRAIRIE POINT - RATLIFF 138KV CKT 1
FDNS	00NR	3	20WP	G15_081	FROM->TO	G14-057T 345.00 - SUNNYSIDE 345KV CKT 1	717	789	0.05956	110.4591	GEN600067 9-HIGH BRIDGE
FDNS	00NR	3	20WP	G15_081	FROM->TO	G14-057T 345.00 - SUNNYSIDE 345KV CKT 1	717	789	0.05956	110.4575	P12:230:UMZB:# 112 #: NU IN SD. NU-RCDC & DRY CREEK XFMR
FDNS	00NR	3	20WP	G15_081	FROM->TO	G14-057T 345.00 - SUNNYSIDE 345KV CKT 1	717	789	0.05956	110.4571	RCDC EAST 4230.00 - RED CEDAR DC 230KV CKT 1
FDNS	00NR	3	20WP	G15_081	FROM->TO	G14-057T 345.00 - SUNNYSIDE 345KV CKT 1	717	789	0.05977	110.4567	OVEXFRMCCOVE
FDNS	00NR	3	20WP	G15_081	FROM->TO	G14-057T 345.00 - SUNNYSIDE 345KV CKT 1	717	789	0.05949	110.4537	CARTER - CHICKASAW 138KV CKT 1
FDNS	00NR	3	20WP	G15_081	FROM->TO	G14-057T 345.00 - SUNNYSIDE 345KV CKT 1	717	789	0.05943	110.4531	ALTUS JUNCTION - RUSSELL 138KV CKT 1
FDNS	00NR	3	20WP	G15_081	FROM->TO	G14-057T 345.00 - SUNNYSIDE 345KV CKT 1	717	789	0.05943	110.4531	ALTUS JUNCTION - RUSSELL 138KV CKT 1
FDNS	00NR	3	20WP	G15_081	FROM->TO	G14-057T 345.00 - SUNNYSIDE 345KV CKT 1	717	789	0.05962	110.4518	GLASSES - RUSSETT 138KV CKT 1
FDNS	00NR	3	20WP	G15_081	FROM->TO	G14-057T 345.00 - SUNNYSIDE 345KV CKT 1	717	789	0.05973	110.4453	CANADIAN RIVER - MCALESTER SOUTH 138KV CKT 1
FDNS	00NR	3	20WP	G15_081	FROM->TO	G14-057T 345.00 - SUNNYSIDE 345KV CKT 1	717	789	0.05973	110.4453	CANADIAN RIVER - MCALESTER SOUTH 138KV CKT 1
FDNS	00NR	3	20WP	G15_081	FROM->TO	G14-057T 345.00 - SUNNYSIDE 345KV CKT 1	717	789	0.05973	110.4435	CANADIAN RIVER () 345/138/13.8KV TRANSFORMER CKT 1
FDNS	00NR	3	20WP	G15_081	FROM->TO	G14-057T 345.00 - SUNNYSIDE 345KV CKT 1	717	789	0.05973	110.4435	CANADIAN RIVER () 345/138/13.8KV TRANSFORMER CKT 1
FDNS	00NR	3	20WP	G15_081	FROM->TO	G14-057T 345.00 - SUNNYSIDE 345KV CKT 1	717	789	0.05966	110.4405	GRPRAR1-LNX3345.00 - HOLT.CO3 345.00 345KV CKT 1
FDNS	00NR	3	20WP	G15_081	FROM->TO	G14-057T 345.00 - SUNNYSIDE 345KV CKT 1	717	789	0.05966	110.4383	GRPRAR1-LNX3345.00 - GRPRAR 345KV CKT Z
FDNS	00NR	3	20WP	G15_081	FROM->TO	G14-057T 345.00 - SUNNYSIDE 345KV CKT 1	717	789	0.05956	110.4359	GEN563242 1-G15090_3 0.6900
FDNS	00NR	3	20WP	G15_081	FROM->TO	G14-057T 345.00 - SUNNYSIDE 345KV CKT 1	717	789	0.05951	110.4311	HUGO (HUGO 1) 345/138/13.8KV TRANSFORMER CKT 1
FDNS	00NR	3	20WP	G15_081	FROM->TO	G14-057T 345.00 - SUNNYSIDE 345KV CKT 1	717	789	0.05933	110.4292	ROCKY POINT - SPRINGDALE 138KV CKT 1
FDNS	00NR	3	20WP	G15_081	FROM->TO	G14-057T 345.00 - SUNNYSIDE 345KV CKT 1	717	789	0.05987	110.419	CHAMBER SPRINGS - CLARKSVILLE 345KV CKT 1
FDNS	00NR	3	20WP	G15_081	FROM->TO	G14-057T 345.00 - SUNNYSIDE 345KV CKT 1	717	789	0.05956	110.4157	GEN562902 1-G15052_3 0.6900
FDNS	00NR	3	20WP	G15_081	FROM->TO	G14-057T 345.00 - SUNNYSIDE 345KV CKT 1	717	789	0.05916	110.4053	P12:138:AEPW:112GORE4:SNYDER-4
FDNS	00NR	3	16WP	G15_081	FROM->TO	G14-057T 345.00 - SUNNYSIDE 345KV CKT 1	717	789	0.05978	110.405	SHERBURNE CO 345/24.0KV TRANSFORMER CKT 1
FDNS	00NR	3	20WP	G15_081	FROM->TO	G14-057T 345.00 - SUNNYSIDE 345KV CKT 1	717	789	0.05956	110.4025	GEN562078 1-G11_051_3 0.6900
FDNS	00NR	3	20WP	G15_081	FROM->TO	G14-057T 345.00 - SUNNYSIDE 345KV CKT 1	717	789	0.05899	110.4003	JOLLYVILLE - SULPHR 4 138.00 138KV CKT 1
FDNS	00NR	3	16WP	G15_081	FROM->TO	G14-057T 345.00 - SUNNYSIDE 345KV CKT 1	717	789	0.05978	110.4	GEN635214 4-NEAL UNIT 4
FDNS	00NR	3	20WP	G15_081	FROM->TO	G14-057T 345.00 - SUNNYSIDE 345KV CKT 1	717	789	0.05956	110.3996	GEN629072 4-LANSING GENERATOR FOR UNITS NO4 EIA CODE 1
FDNS	00NR	3	20WP	G15_081	FROM->TO	G14-057T 345.00 - SUNNYSIDE 345KV CKT 1	717	789	0.05956	110.397	GEN562802 1-G15039_3 0.3570
FDNS	00NR	3	20WP	G15_081	FROM->TO	G14-057T 345.00 - SUNNYSIDE 345KV CKT 1	717	789	0.05956	110.3855	GEN524285 1-WILDORADO WIND GEN
FDNS	00NR	3	20WP	G15_081	FROM->TO	G14-057T 345.00 - SUNNYSIDE 345KV CKT 1	717	789	0.05956	110.368	GEN560331 1-G10-46 13.800
FDNS	00NR	3	20WP	G15_081	FROM->TO	G14-057T 345.00 - SUNNYSIDE 345KV CKT 1	717	789	0.05956	110.3627	GEN524295 1-SPNSPUR_WND10.6900
FDNS	00NR	3	20WP	G15_081	FROM->TO	G14-057T 345.00 - SUNNYSIDE 345KV CKT 1	717	789	0.05956	110.3483	GEN562587 1-G14_056_3 0.6900
FDNS	00NR	3	20WP	G15_081	FROM->TO	G14-057T 345.00 - SUNNYSIDE 345KV CKT 1	717	789	0.05956	110.3477	GEN657749 1-YOUNG 1 GENERATOR
FDNS	00NR	3	20WP	G15_081	FROM->TO	G14-057T 345.00 - SUNNYSIDE 345KV CKT 1	717	789	0.05956	110.342	GEN514805 1-SOONER UNIT 1
FDNS	00NR	3	20WP	G15_081	FROM->TO	G14-057T 345.00 - SUNNYSIDE 345KV CKT 1	717	789	0.05956	110.337	GEN562269 1-G12-020-1 0.6900
FDNS	00NR	3	20WP	G15_081	FROM->TO	G14-057T 345.00 - SUNNYSIDE 345KV CKT 1	717	789	0.05956	110.3367	GEN524023 1-NICHOLS GEN #3 22 KV

SOLUTION	GROUP	SCENARIO	SEASON	SOURCE	DIRECTION	MONITORED ELEMENT	RATEA (MVA)	RATEB(MVA)	TDF	TC%LOADING (% MVA)	CONTINGENCY
FDNS	00NR	3	20WP	G15_081	FROM->TO	G14-057T 345.00 - SUNNYSIDE 345KV CKT 1	717	789	0.05899	110.3364	JOLLYVILLE - KERR MCGEE CIMARRON 138KV CKT 1
FDNS	00NR	3	16WP	G15_081	FROM->TO	G14-057T 345.00 - SUNNYSIDE 345KV CKT 1	717	789	0.05978	110.328	GEN563273 2-G15093_4 0.6900
FDNS	00NR	3	20WP	G15_081	FROM->TO	G14-057T 345.00 - SUNNYSIDE 345KV CKT 1	717	789	0.05956	110.3222	GEN514806 1-SOONER UNIT 2
FDNS	00NR	3	20WP	G15_081	FROM->TO	G14-057T 345.00 - SUNNYSIDE 345KV CKT 1	717	789	0.0596	110.3219	CROCKETT - TENASKA RUSK COUNTY 345KV CKT 1
FDNS	00NR	3	16WP	G15_081	FROM->TO	G14-057T 345.00 - SUNNYSIDE 345KV CKT 1	717	789	0.05978	110.3185	GEN563043 1-G15068_4 0.6900
FDNS	00NR	3	20WP	G15_081	FROM->TO	G14-057T 345.00 - SUNNYSIDE 345KV CKT 1	717	789	0.0596	110.3172	LEBROCK - TENASKA RUSK COUNTY 345KV CKT 1
FDNS	00NR	3	16WP	G15_081	FROM->TO	G14-057T 345.00 - SUNNYSIDE 345KV CKT 1	717	789	0.05835	110.3023	CHISHOLM6 230.00 - SWEETWATER 230KV CKT 1
FDNS	00NR	3	16WP	G15_081	FROM->TO	G14-057T 345.00 - SUNNYSIDE 345KV CKT 1	717	789	0.05978	110.2979	GEN526333 1-JONES GEN #3 21 KV
FDNS	00NR	3	16WP	G15_081	FROM->TO	G14-057T 345.00 - SUNNYSIDE 345KV CKT 1	717	789	0.05978	110.2979	GEN526334 1-JONES_4 116.500
FDNS	00NR	3	20WP	G15_081	FROM->TO	G14-057T 345.00 - SUNNYSIDE 345KV CKT 1	717	789	0.05956	110.2978	GEN562812 1-G15040_3 0.3570
FDNS	00NR	3	20WP	G15_081	FROM->TO	G14-057T 345.00 - SUNNYSIDE 345KV CKT 1	717	789	0.05956	110.2935	GEN562270 1-G12-020-2 0.6900
FDNS	00NR	3	20WP	G15_081	FROM->TO	G14-057T 345.00 - SUNNYSIDE 345KV CKT 1	717	789	0.05899	110.2924	ARBWIND4 138.00 - KERR MCGEE CIMARRON 138KV CKT 1
FDNS	00NR	3	20WP	G15_081	FROM->TO	G14-057T 345.00 - SUNNYSIDE 345KV CKT 1	717	789	0.05956	110.2912	GEN563132 1-G15078_3 0.3570
FDNS	00NR	3	20WP	G15_081	FROM->TO	G14-057T 345.00 - SUNNYSIDE 345KV CKT 1	717	789	0.05956	110.2846	GEN563102 1-G15075_3 0.5500
FDNS	00NR	3	20WP	G15_081	FROM->TO	G14-057T 345.00 - SUNNYSIDE 345KV CKT 1	717	789	0.05956	110.2683	GEN562882 1-G15047_3 0.6900
FDNS	00NR	3	20WP	G15_081	FROM->TO	G14-057T 345.00 - SUNNYSIDE 345KV CKT 1	717	789	0.05956	110.2606	GEN562974 1-G15060_5 0.6900
FDNS	00NR	3	20WP	G15_081	FROM->TO	G14-057T 345.00 - SUNNYSIDE 345KV CKT 1	717	789	0.05956	110.2605	GEN563062 1-G15071_3 0.6900
FDNS	00NR	3	20WP	G15_081	FROM->TO	G14-057T 345.00 - SUNNYSIDE 345KV CKT 1	717	789	0.05956	110.251	GEN562973 1-G15060_4 0.6900
FDNS	00NR	3	16WP	G15_081	FROM->TO	G14-057T 345.00 - SUNNYSIDE 345KV CKT 1	717	789	0.05978	110.2441	GEN525844 1-ELK_1 118.000
FDNS	00NR	3	16WP	G15_081	FROM->TO	G14-057T 345.00 - SUNNYSIDE 345KV CKT 1	717	789	0.05978	110.2387	GEN525845 1-ELK_2 1 138.00
FDNS	00NR	3	20WP	G15_081	FROM->TO	G14-057T 345.00 - SUNNYSIDE 345KV CKT 1	717	789	0.05956	110.2364	GEN345671 2-1RUSH G2 18.000
FDNS	00NR	3	20WP	G15_081	FROM->TO	G14-057T 345.00 - SUNNYSIDE 345KV CKT 1	717	789	0.05906	110.235	CHICKASAW - TOTAL 138KV CKT 1
FDNS	00NR	3	20WP	G15_081	FROM->TO	G14-057T 345.00 - SUNNYSIDE 345KV CKT 1	717	789	0.05956	110.2345	GEN345670 1-1RUSH G1 18.000
FDNS	00NR	3	20WP	G15_081	FROM->TO	G14-057T 345.00 - SUNNYSIDE 345KV CKT 1	717	789	0.0595	110.229	BROWN - RUSSETT 138KV CKT 1
FDNS	00NR	3	20WP	G15_081	FROM->TO	G14-057T 345.00 - SUNNYSIDE 345KV CKT 1	717	789	0.05956	110.2248	GEN521112 1-ORME3 13.800
FDNS	00NR	3	16WP	G15_081	FROM->TO	G14-057T 345.00 - SUNNYSIDE 345KV CKT 1	717	789	0.05978	110.2242	GEN600002 3-SHERBURNE CNTY G3
FDNS	00NR	3	20WP	G15_081	FROM->TO	G14-057T 345.00 - SUNNYSIDE 345KV CKT 1	717	789	0.05956	110.2069	4SIOUX 1 138.00 138/18.0KV TRANSFORMER CKT 1
FDNS	00NR	3	20WP	G15_081	FROM->TO	G14-057T 345.00 - SUNNYSIDE 345KV CKT 1	717	789	0.05956	110.2006	GEN560105 1-G08-22 0.6900
FDNS	00NR	3	16WP	G15_081	FROM->TO	G14-057T 345.00 - SUNNYSIDE 345KV CKT 1	717	789	0.05978	110.2	GEN344225 1-1CAL G1 25.000
FDNS	00NR	3	20WP	G15_081	FROM->TO	G14-057T 345.00 - SUNNYSIDE 345KV CKT 1	717	789	0.05956	110.1843	GEN562550 1-G14_040_3 0.6900
FDNS	00NR	3	20WP	G15_081	FROM->TO	G14-057T 345.00 - SUNNYSIDE 345KV CKT 1	717	789	0.05956	110.1721	GEN681522 3-GENOA 3
FDNS	00NR	3	20WP	G15_081	FROM->TO	G14-057T 345.00 - SUNNYSIDE 345KV CKT 1	717	789	0.0595	110.1597	RUSSETT - RUSSETT 138KV CKT 1
FDNS	00NR	3	20WP	G15_081	FROM->TO	G14-057T 345.00 - SUNNYSIDE 345KV CKT 1	717	789	0.05956	110.1569	GEN520811 1-ANADRK4
FDNS	00NR	3	16WP	G15_081	FROM->TO	G14-057T 345.00 - SUNNYSIDE 345KV CKT 1	717	789	0.05978	110.1546	GEN563202 1-G15085_3 0.5500
FDNS	00NR	3	20WP	G15_081	FROM->TO	G14-057T 345.00 - SUNNYSIDE 345KV CKT 1	717	789	0.05956	110.1419	EASTDC - ERCOT EQUIVALENCE 345KV CKT 1
FDNS	00NR	3	20WP	G15_081	FROM->TO	G14-057T 345.00 - SUNNYSIDE 345KV CKT 1	717	789	0.05956	110.1409	GEN527161 1-MUSTANG GEN #1
FDNS	00NR	3	20WP	G15_081	FROM->TO	G14-057T 345.00 - SUNNYSIDE 345KV CKT 1	717	789	0.05956	110.1409	GEN527162 1-MUSTANG GEN #2
FDNS	00NR	3	20WP	G15_081	FROM->TO	G14-057T 345.00 - SUNNYSIDE 345KV CKT 1	717	789	0.05925	110.1322	ROCKY POINT - SUNNYSIDE 138KV CKT 1
FDNS	00NR	3	20WP	G15_081	FROM->TO	G14-057T 345.00 - SUNNYSIDE 345KV CKT 1	717	789	0.05956	110.1314	GEN511962 2-RKYRDGW2-1 0.7000
FDNS	00NR	3	20WP	G15_081	FROM->TO	G14-057T 345.00 - SUNNYSIDE 345KV CKT 1	717	789	0.05956	110.1099	GEN672321 1-SHAND GENERATOR 1
FDNS	00NR	3	20WP	G15_081	FROM->TO	G14-057T 345.00 - SUNNYSIDE 345KV CKT 1	717	789	0.05947	110.1098	RUSSETT - SPRINGDALE 138KV CKT 1
FDNS	00NR	3	20WP	G15_081	FROM->TO	G14-057T 345.00 - SUNNYSIDE 345KV CKT 1	717	789	0.05956	110.1087	GEN525494 1-PLANT X GEN #4 20 KV
FDNS	00NR	3	16WP	G15_081	FROM->TO	G14-057T 345.00 - SUNNYSIDE 345KV CKT 1	717	789	0.05978	110.1083	GEN525562 1-TOLK GEN #2 24 KV
FDNS	00NR	3	20WP	G15_081	FROM->TO	G14-057T 345.00 - SUNNYSIDE 345KV CKT 1	717	789	0.05956	110.0936	GEN563192 1-G15084_3 0.5500
FDNS	00NR	3	20WP	G15_081	FROM->TO	G14-057T 345.00 - SUNNYSIDE 345KV CKT 1	717	789	0.05956	110.0933	GEN527882 1-CUNNINGHAM GEN #2 20 KV
FDNS	00NR	3	20WP	G15_081	FROM->TO	G14-057T 345.00 - SUNNYSIDE 345KV CKT 1	717	789	0.05956	110.087	GEN672310 1-POPLAR RIVER GENERATOR 1
FDNS	00NR	3	20WP	G15_081	FROM->TO	G14-057T 345.00 - SUNNYSIDE 345KV CKT 1	717	789	0.05956	110.087	GEN672311 2-POPLAR RIVER GENERATOR 2
FDNS	00NR	3	20WP	G15_081	FROM->TO	G14-057T 345.00 - SUNNYSIDE 345KV CKT 1	717	789	0.05956	110.0849	GEN344895 2-1LAB G2 20.000
FDNS	00NR	3	20WP	G15_081	FROM->TO	G14-057T 345.00 - SUNNYSIDE 345KV CKT 1	717	789	0.05954	110.0781	P12:138:WFEC-AEPW:GOLDENSW4:CRAIGJT4
FDNS	00NR	3	20WP	G15_081	FROM->TO	G14-057T 345.00 - SUNNYSIDE 345KV CKT 1	717	789	0.05956	110.0779	GEN527163 1-MUSTANG GEN #3 22 KV
FDNS	00NR	3	20WP	G15_081	FROM->TO	G14-057T 345.00 - SUNNYSIDE 345KV CKT 1	717	789	0.05956	110.0777	GEN672306 6-BOUNDARY DAM GENERATOR 6
FDNS	00NR	3	20WP	G15_081	FROM->TO	G14-057T 345.00 - SUNNYSIDE 345KV CKT 1	717	789	0.05866	110.0767	ARKANSAS NUCLEAR ONE - FT SMITH 500KV CKT 1
FDNS	00NR	3	20WP	G15_081	FROM->TO	G14-057T 345.00 - SUNNYSIDE 345KV CKT 1	717	789	0.05866	110.0767	ARKANSAS NUCLEAR ONE - FT SMITH 500KV CKT 1
FDNS	00NR	3	20WP	G15_081	FROM->TO	G14-057T 345.00 - SUNNYSIDE 345KV CKT 1	717	789	0.05956	110.0692	CLAY BOSWELL 230/20.9KV TRANSFORMER CKT 1
FDNS	00NR	3	20WP	G15_081	FROM->TO	G14-057T 345.00 - SUNNYSIDE 345KV CKT 1	717	789	0.05956	110.0685	GEN511853 1-COMANCHE #3
FDNS	00NR	3	16WP	G15_081	FROM->TO	G14-057T 345.00 - SUNNYSIDE 345KV CKT 1	717	789	0.05978	110.0622	GEN527166 1-MUSTANG_6 118.000
FDNS	00NR	3	20WP	G15_081	FROM->TO	G14-057T 345.00 - SUNNYSIDE 345KV CKT 1	717	789	0.05956	110.0608	GEN562512 1-G14_020_3 0.6900
FDNS	00NR	3	20WP	G15_081	FROM->TO	G14-057T 345.00 - SUNNYSIDE 345KV CKT 1	717	789	0.05956	110.0598	GEN562892 1-G15048_3 0.6900
FDNS	00NR	3	20WP	G15_081	FROM->TO	G14-057T 345.00 - SUNNYSIDE 345KV CKT 1	717	789	0.05956	110.0557	GEN344896 3-1LAB G3 20.000
FDNS	00NR	3	20WP	G15_081	FROM->TO	G14-057T 345.00 - SUNNYSIDE 345KV CKT 1	717	789	0.05956	110.0546	GEN344897 4-1LAB G4 20.000
FDNS	00NR	3	20WP	G15_081	FROM->TO	G14-057T 345.00 - SUNNYSIDE 345KV CKT 1	717	789	0.05956	110.0543	GEN344894 1-1LAB G1 20.000
FDNS	00NR	3	20WP	G15_081	FROM->TO	G14-057T 345.00 - SUNNYSIDE 345KV CKT 1	717	789	0.05961	110.052	P12:138:WFEC:MSL16
FDNS	00NR	3	20WP	G15_081	FROM->TO	G14-057T 345.00 - SUNNYSIDE 345KV CKT 1	717	789	0.05956	110.048	GEN681542 6-JP MADGETT
FDNS	00NR	3	20WP	G15_081	FROM->TO	G14-057T 345.00 - SUNNYSIDE 345KV CKT 1	717	789	0.05885	110.045	ARDMORE WEST - CARTER 138KV CKT 1
FDNS	00NR	3	20WP	G15_081	FROM->TO	G14-057T 345.00 - SUNNYSIDE 345KV CKT 1	717	789	0.05956	110.0283	GEN523461 1-BLACKHAWK GEN #1
FDNS	00NR	3	20WP	G15_081	FROM->TO	G14-057T 345.00 - SUNNYSIDE 345KV CKT 1	717	789	0.05956	110.0282	GEN523462 1-BLACKHAWK GEN #2
FDNS	00NR	3	16WP	G15_081	FROM->TO	G14-057T 345.00 - SUNNYSIDE 345KV CKT 1	717	789	0.05986	110.0259	LYDIA - WELSH 345KV CKT 1
FDNS	00NR	3	16WP	G15_081	FROM->TO	G14-057T 345.00 - SUNNYSIDE 345KV CKT 1	717	789	0.05986	110.0259	LYDIA - WELSH 345KV CKT 1
FDNS	00NR	3	20WP	G15_081	FROM->TO	G14-057T 345.00 - SUNNYSIDE 345KV CKT 1	717	789	0.05956	110.0211	GEN511852 1-COMANCHE #2
FDNS	00NR	3	20WP	G15_081	FROM->TO	G14-057T 345.00 - SUNNYSIDE 345KV CKT 1	717	789	0.0595	110.0017	P12:138:WFEC:MSL07
FDNS	00NR	3	20WP	G15_081	FROM->TO	G14-057T 345.00 - SUNNYSIDE 345KV CKT 1	717	789	0.0595	110.0017	P12:138:WFEC-AEPW:HUGOPP4:ATOKA--4
FDNS	00NR	3	20WP	G15_081	FROM->TO	G14-057T 345.00 - SUNNYSIDE 345KV CKT 1	717	789	0.05916	109.9974	CACHE - SNYDER 138KV CKT 1
FDNS	00NR	3	16WP	G15_081	FROM->TO	G14-057T 345.00 - SUNNYSIDE 345KV CKT 1	717	789	0.05943	109.9851	JOHNSON COUNTY (JOHNCO) 345/138/13.8KV TRANSFORMER CKT 1
FDNS	00NR	3	20WP	G15_081	FROM->TO	G14-057T 345.00 - SUNNYSIDE 345KV CKT 1	717	789	0.05953	109.9835	P12:138:WFEC:MSL06
FDNS	00NR	3	20WP	G15_081	FROM->TO	G14-057T 345.00 - SUNNYSIDE 345KV CKT 1	717	789	0.05953	109.9834	P12:138:AEPW-SWPA:LONEOAK4:TUPELO4
FDNS	00NR	3	20WP	G15_081	FROM->TO	G14-057T 345.00 - SUNNYSIDE 345KV CKT 1	717	789	0.05892	109.9829	SUNNYSIDE (SUNNYSD5) 345/138/13.8KV TRANSFORMER CKT 1
FDNS	00NR	3	16WP	G15_081	FROM->TO	G14-057T 345.00 - SUNNYSIDE 345KV CKT 1	717	789	0.05978	109.9726	GEN635023 3-WALTER SCOTT UNIT 3
FDNS	00NR	3	20WP	G15_081	FROM->TO	G14-057T 345.00 - SUNNYSIDE 345KV CKT 1	717	789	0.05956	109.9691	GEN562699 1-G15_018_3 0.6900
FDNS	00NR	3	20WP	G15_081	FROM->TO	G14-057T 345.00 - SUNNYSIDE 345KV CKT 1	717	789	0.05956	109.9656	GEN521111 1-ORME2 13.800

SOLUTION	GROUP	SCENARIO	SEASON	SOURCE	DIRECTION	MONITORED ELEMENT	RATEA (MVA)	RATEB(MVA)	TDF	TC%LOADING (% MVA)	CONTINGENCY
FDNS	00NR	3	20WP	G15_081	FROM->TO	G14-057T 345.00 - SUNNYSIDE 345KV CKT 1	717	789	0.05956	109.9576	GEN563162 1-G15081_3 0.6900
FDNS	00NR	3	20WP	G15_081	FROM->TO	G14-057T 345.00 - SUNNYSIDE 345KV CKT 1	717	789	0.05942	109.9548	G15085_T 138.00 - RUSSELL 138KV CKT 1
FDNS	00NR	3	20WP	G15_081	FROM->TO	G14-057T 345.00 - SUNNYSIDE 345KV CKT 1	717	789	0.05956	109.9527	GEN521110 1-ORME1 13.800
FDNS	00NR	3	20WP	G15_081	FROM->TO	G14-057T 345.00 - SUNNYSIDE 345KV CKT 1	717	789	0.05885	109.9336	ARDMORE WEST - UNIROYAL 138KV CKT 1
FDNS	00NR	3	16WP	G15_081	FROM->TO	G14-057T 345.00 - SUNNYSIDE 345KV CKT 1	717	789	0.05978	109.9237	GEN562590 1-G14_057_3 0.6900
FDNS	00NR	3	20WP	G15_081	FROM->TO	G14-057T 345.00 - SUNNYSIDE 345KV CKT 1	717	789	0.06187	109.9147	CLARKSVILLE - MUSKOGEE 345KV CKT 1
FDNS	00NR	3	20WP	G15_081	FROM->TO	G14-057T 345.00 - SUNNYSIDE 345KV CKT 1	717	789	0.06187	109.9147	CLARKSVILLE - MUSKOGEE 345KV CKT 1
FDNS	00NR	3	20WP	G15_081	FROM->TO	G14-057T 345.00 - SUNNYSIDE 345KV CKT 1	717	789	0.05956	109.9067	GEN563292 1-G15095_3 0.6900
FDNS	00NR	3	20WP	G15_081	FROM->TO	G14-057T 345.00 - SUNNYSIDE 345KV CKT 1	717	789	0.05917	109.9062	CARTRCO4 138.00 - RATLIFF 138KV CKT 1
FDNS	00NR	3	16WP	G15_081	FROM->TO	G14-057T 345.00 - SUNNYSIDE 345KV CKT 1	717	789	0.05978	109.8862	GEN562762 1-G15033_3 0.6900
FDNS	00NR	3	20WP	G15_081	FROM->TO	G14-057T 345.00 - SUNNYSIDE 345KV CKT 1	717	789	0.05956	109.8853	GEN661015 1-COYOTE
FDNS	00NR	3	20WP	G15_081	FROM->TO	G14-057T 345.00 - SUNNYSIDE 345KV CKT 1	717	789	0.05931	109.8801	P12:138:OKGE:3TERM40
FDNS	00NR	3	16WP	G15_081	FROM->TO	G14-057T 345.00 - SUNNYSIDE 345KV CKT 1	717	789	0.05978	109.8763	GEN562655 1-G14_074_3 0.6900
FDNS	00NR	3	20WP	G15_081	FROM->TO	G14-057T 345.00 - SUNNYSIDE 345KV CKT 1	717	789	0.05956	109.868	GEN563122 1-G15077_3 0.3850
FDNS	00NR	3	20WP	G15_081	FROM->TO	G14-057T 345.00 - SUNNYSIDE 345KV CKT 1	717	789	0.05956	109.8597	GEN562861 1-G15045_2 0.4800
FDNS	00NR	3	16WP	G15_081	FROM->TO	G14-057T 345.00 - SUNNYSIDE 345KV CKT 1	717	789	0.05978	109.827	GEN562685 1-G15_013_3 0.3550
FDNS	00NR	3	16WP	G15_081	FROM->TO	G14-057T 345.00 - SUNNYSIDE 345KV CKT 1	717	789	0.05978	109.8155	GEN525561 1-TOLK GEN #1 24 KV
FDNS	00NR	3	20WP	G15_081	FROM->TO	G14-057T 345.00 - SUNNYSIDE 345KV CKT 1	717	789	0.05877	109.7898	GRAPEVINE INTERCHANGE - STATELINE INTERCHANGE 230KV CKT 1
FDNS	00NR	3	20WP	G15_081	FROM->TO	G14-057T 345.00 - SUNNYSIDE 345KV CKT 1	717	789	0.05877	109.7898	GRAPEVINE INTERCHANGE - STATELINE INTERCHANGE 230KV CKT 1
FDNS	00NR	3	20WP	G15_081	FROM->TO	G14-057T 345.00 - SUNNYSIDE 345KV CKT 1	717	789	0.05956	109.7741	GEN657748 1-YOUNG 2 GENERATOR
FDNS	00NR	3	20WP	G15_081	FROM->TO	G14-057T 345.00 - SUNNYSIDE 345KV CKT 1	717	789	0.05956	109.7573	GEN527883 1-CUNNINGHAM GEN #3 22 KV
FDNS	00NR	3	20WP	G15_081	FROM->TO	G14-057T 345.00 - SUNNYSIDE 345KV CKT 1	717	789	0.05956	109.7543	GEN527884 1-CUNNINGHAM GEN #4 22 KV
FDNS	00NR	3	20WP	G15_081	FROM->TO	G14-057T 345.00 - SUNNYSIDE 345KV CKT 1	717	789	0.05941	109.724	P12:138:AEPW:SHAM4WT:CHILD4WT
FDNS	00NR	3	20WP	G15_081	FROM->TO	G14-057T 345.00 - SUNNYSIDE 345KV CKT 1	717	789	0.05885	109.7208	SUNNYSIDE - UNIROYAL 138KV CKT 1
FDNS	00NR	3	20WP	G15_081	FROM->TO	G14-057T 345.00 - SUNNYSIDE 345KV CKT 1	717	789	0.05981	109.6964	P12:138:WFEC:MSL15
FDNS	00NR	3	20WP	G15_081	FROM->TO	G14-057T 345.00 - SUNNYSIDE 345KV CKT 1	717	789	0.05798	109.6947	CHISHOLM7 345.00 () 345/230/13.2KV TRANSFORMER CKT 1
FDNS	00NR	3	20WP	G15_081	FROM->TO	G14-057T 345.00 - SUNNYSIDE 345KV CKT 1	717	789	0.05956	109.6877	GEN562704 1-G15_020_3 0.3550
FDNS	00NR	3	16WP	G15_081	FROM->TO	G14-057T 345.00 - SUNNYSIDE 345KV CKT 1	717	789	0.05978	109.6872	GEN563272 1-G15093_3 0.6900
FDNS	00NR	3	20WP	G15_081	FROM->TO	G14-057T 345.00 - SUNNYSIDE 345KV CKT 1	717	789	0.05956	109.6868	GEN526331 1-JONES GEN #1 22 KV
FDNS	00NR	3	20WP	G15_081	FROM->TO	G14-057T 345.00 - SUNNYSIDE 345KV CKT 1	717	789	0.05956	109.6866	GEN526332 1-JONES GEN #2 21 KV
FDNS	00NR	3	20WP	G15_081	FROM->TO	G14-057T 345.00 - SUNNYSIDE 345KV CKT 1	717	789	0.05956	109.6806	GEN620315 1-BIG STONE GEN
FDNS	00NR	3	20WP	G15_081	FROM->TO	G14-057T 345.00 - SUNNYSIDE 345KV CKT 1	717	789	0.05956	109.6773	GEN562992 1-G15063_3 0.6900
FDNS	00NR	3	16WP	G15_081	FROM->TO	G14-057T 345.00 - SUNNYSIDE 345KV CKT 1	717	789	0.05978	109.6728	GEN527903 1-HOBBS PLANT #3 (ST)
FDNS	00NR	3	20WP	G15_081	FROM->TO	G14-057T 345.00 - SUNNYSIDE 345KV CKT 1	717	789	0.05956	109.6301	GEN562952 1-G15057_3 0.6500
FDNS	00NR	3	20WP	G15_081	FROM->TO	G14-057T 345.00 - SUNNYSIDE 345KV CKT 1	717	789	0.05878	109.6281	GRAPEVINE INTERCHANGE - NICHOLS STATION 230KV CKT 1
FDNS	00NR	3	20WP	G15_081	FROM->TO	G14-057T 345.00 - SUNNYSIDE 345KV CKT 1	717	789	0.05878	109.6281	GRAPEVINE INTERCHANGE - NICHOLS STATION 230KV CKT 1
FDNS	00NR	3	20WP	G15_081	FROM->TO	G14-057T 345.00 - SUNNYSIDE 345KV CKT 1	717	789	0.05956	109.6258	GEN563173 1-G15082_3 0.6900
FDNS	00NR	3	20WP	G15_081	FROM->TO	G14-057T 345.00 - SUNNYSIDE 345KV CKT 1	717	789	0.05956	109.6067	GEN600004 2-PRAIRIE ISLAND G2
FDNS	00NR	3	20WP	G15_081	FROM->TO	G14-057T 345.00 - SUNNYSIDE 345KV CKT 1	717	789	0.05956	109.6041	GEN600003 1-PRAIRIE ISLAND G1
FDNS	00NR	3	20WP	G15_081	FROM->TO	G14-057T 345.00 - SUNNYSIDE 345KV CKT 1	717	789	0.05956	109.5869	GEN600006 1-AS KING
FDNS	00NR	3	20WP	G15_081	FROM->TO	G14-057T 345.00 - SUNNYSIDE 345KV CKT 1	717	789	0.05956	109.5867	GEN562710 1-G15_022_3 0.5500
FDNS	00NR	3	16WP	G15_081	FROM->TO	G14-057T 345.00 - SUNNYSIDE 345KV CKT 1	717	789	0.05978	109.5478	GEN635024 4-WALTER SCOTT UNIT 4
FDNS	00NR	3	20WP	G15_081	FROM->TO	G14-057T 345.00 - SUNNYSIDE 345KV CKT 1	717	789	0.06091	109.5472	CANEY CREEK - TEXOMA JCT 138KV CKT 1
FDNS	00NR	3	20WP	G15_081	FROM->TO	G14-057T 345.00 - SUNNYSIDE 345KV CKT 1	717	789	0.05956	109.5368	GEN511851 1-COMANCHE #1
FDNS	00NR	3	20WP	G15_081	FROM->TO	G14-057T 345.00 - SUNNYSIDE 345KV CKT 1	717	789	0.05798	109.5187	CHISHOLM7 345.00 - GRACEMONT 345KV CKT 1
FDNS	00NR	3	20WP	G15_081	FROM->TO	G14-057T 345.00 - SUNNYSIDE 345KV CKT 1	717	789	0.05956	109.509	GEN532751 1-WOLF CREEK GENERATING STATION UNIT 1
FDNS	00NR	3	20WP	G15_081	FROM->TO	G14-057T 345.00 - SUNNYSIDE 345KV CKT 1	717	789	0.05956	109.421	GEN635213 3-NEAL UNIT 3
FDNS	00NR	3	20WP	G15_081	FROM->TO	G14-057T 345.00 - SUNNYSIDE 345KV CKT 1	717	789	0.05956	109.4142	GEN629074 1-ARNOLD LOWSIDE OF GSU XFMR
FDNS	00NR	3	20WP	G15_081	FROM->TO	G14-057T 345.00 - SUNNYSIDE 345KV CKT 1	717	789	0.05956	109.4059	BIG STONE 230/24.0KV TRANSFORMER CKT 1
FDNSLock	00NR	3	20WP	G15_081	FROM->TO	G14-057T 345.00 - SUNNYSIDE 345KV CKT 1	717	789	0.05956	109.3781	GEN615002 2-COAL CREEK
FDNS	00NR	3	20WP	G15_081	FROM->TO	G14-057T 345.00 - SUNNYSIDE 345KV CKT 1	717	789	0.05963	109.3754	P12:138:WFEC:MSL09
FDNS	00NR	3	20WP	G15_081	FROM->TO	G14-057T 345.00 - SUNNYSIDE 345KV CKT 1	717	789	0.05935	109.354	P12:138:AEPW-OGE:CORNVIL4:CIMARON4
FDNS	00NR	3	20WP	G15_081	FROM->TO	G14-057T 345.00 - SUNNYSIDE 345KV CKT 1	717	789	0.05956	109.3349	GEN562754 1-G15031_5 0.6900
FDNS	00NR	3	20WP	G15_081	FROM->TO	G14-057T 345.00 - SUNNYSIDE 345KV CKT 1	717	789	0.05956	109.322	GEN636641 1-LOUISA UNIT 1
FDNS	00NR	3	20WP	G15_081	FROM->TO	G14-057T 345.00 - SUNNYSIDE 345KV CKT 1	717	789	0.05962	109.312	NORTHWEST TEXARKANA - VALLIANT 345KV CKT 1
FDNS	00NR	3	20WP	G15_081	FROM->TO	G14-057T 345.00 - SUNNYSIDE 345KV CKT 1	717	789	0.05962	109.312	NORTHWEST TEXARKANA - VALLIANT 345KV CKT 1
FDNS	00NR	3	20WP	G15_081	FROM->TO	G14-057T 345.00 - SUNNYSIDE 345KV CKT 1	717	789	0.05956	109.2925	GEN600005 1-MONTICELLO
FDNS	00NR	3	20WP	G15_081	FROM->TO	G14-057T 345.00 - SUNNYSIDE 345KV CKT 1	717	789	0.05956	109.2751	GEN562756 1-G15031_7 0.6900
FDNS	00NR	3	20WP	G15_081	FROM->TO	G14-057T 345.00 - SUNNYSIDE 345KV CKT 1	717	789	0.05956	109.274	GEN562556 1-G14_046_3 0.3420
FDNS	00NR	3	20WP	G15_081	FROM->TO	G14-057T 345.00 - SUNNYSIDE 345KV CKT 1	717	789	0.05956	109.2337	GEN562023 1-G11_020_3 0.6900
FDNS	00NR	3	20WP	G15_081	FROM->TO	G14-057T 345.00 - SUNNYSIDE 345KV CKT 1	717	789	0.05956	109.2337	GEN562026 1-G11_019_3 0.6900
FDNS	00NR	3	20WP	G15_081	FROM->TO	G14-057T 345.00 - SUNNYSIDE 345KV CKT 1	717	789	0.05956	109.1895	GEN563142 1-G15079_3 0.5500
FDNS	00NR	3	20WP	G15_081	FROM->TO	G14-057T 345.00 - SUNNYSIDE 345KV CKT 1	717	789	0.05956	109.1895	GEN563151 1-G15080_2 0.5500
FDNS	00NR	3	20WP	G15_081	FROM->TO	G14-057T 345.00 - SUNNYSIDE 345KV CKT 1	717	789	0.05956	109.1688	GEN600000 1-SHERBURNECNTY G1
FDNS	00NR	3	20WP	G15_081	FROM->TO	G14-057T 345.00 - SUNNYSIDE 345KV CKT 1	717	789	0.05817	109.1401	STLN-DEMARC6 - SWEETWATER 230KV CKT 1
FDNS	00NR	3	20WP	G15_081	FROM->TO	G14-057T 345.00 - SUNNYSIDE 345KV CKT 1	717	789	0.05817	109.1394	P12:230:AEPW-SPS:SWEETWT6:WHEELER 6
FDNS	00NR	3	20WP	G15_081	FROM->TO	G14-057T 345.00 - SUNNYSIDE 345KV CKT 1	717	789	0.05817	109.1378	STATELINE INTERCHANGE - STLN-DEMARC6 230KV CKT 1
FDNS	00NR	3	20WP	G15_081	FROM->TO	G14-057T 345.00 - SUNNYSIDE 345KV CKT 1	717	789	0.05956	109.1289	GEN629075 1-OTTUMWA GENERATOR FOR OTTUMWA UNIT NO 1
FDNS	00NR	3	20WP	G15_081	FROM->TO	G14-057T 345.00 - SUNNYSIDE 345KV CKT 1	717	789	0.05956	109.1195	GEN600001 2-SHERBURNE CNTY G2
FDNS	00NR	3	20WP	G15_081	FROM->TO	G14-057T 345.00 - SUNNYSIDE 345KV CKT 1	717	789	0.05956	109.097	GEN523971 1-HARRINGTON GEN #1 24 KV
FDNS	00NR	3	20WP	G15_081	FROM->TO	G14-057T 345.00 - SUNNYSIDE 345KV CKT 1	717	789	0.05956	109.0969	GEN523972 1-HARRINGTON GEN #2 24 KV
FDNS	00NR	3	20WP	G15_081	FROM->TO	G14-057T 345.00 - SUNNYSIDE 345KV CKT 1	717	789	0.05956	109.0969	GEN523973 1-HARRINGTON GEN #3 24 KV
FDNS	00NR	3	20WP	G15_081	FROM->TO	G14-057T 345.00 - SUNNYSIDE 345KV CKT 1	717	789	0.05956	109.0143	GEN511848 1-SOUTHWESTERN STATION #3
FDNS	00NR	3	20WP	G15_081	FROM->TO	G14-057T 345.00 - SUNNYSIDE 345KV CKT 1	717	789	0.05956	108.9872	GEN527901 1-HOBBS PLANT #1 (CT)
FDNS	00NR	3	20WP	G15_081	FROM->TO	G14-057T 345.00 - SUNNYSIDE 345KV CKT 1	717	789	0.05956	108.9872	GEN527902 1-HOBBS PLANT #2 (CT)
FDNS	00NR	3	20WP	G15_081	FROM->TO	G14-057T 345.00 - SUNNYSIDE 345KV CKT 1	717	789	0.05966	108.9494	LYDIA - WELSH 345KV CKT 1
FDNS	00NR	3	20WP	G15_081	FROM->TO	G14-057T 345.00 - SUNNYSIDE 345KV CKT 1	717	789	0.05966	108.9494	LYDIA - WELSH 345KV CKT 1
FDNS	00NR	3	20WP	G15_081	FROM->TO	G14-057T 345.00 - SUNNYSIDE 345KV CKT 1	717	789	0.05956	108.9486	GEN563042 1-G15068_3 0.6900
FDNS	00NR	3	20WP	G15_081	FROM->TO	G14-057T 345.00 - SUNNYSIDE 345KV CKT 1	717	789	0.05774	108.9039	P12:230:AEPW:ELKCITY6:SWEETWT6

SOLUTION	GROUP	SCENARIO	SEASON	SOURCE	DIRECTION	MONITORED ELEMENT	RATEA (MVA)	RATEB(MVA)	TDF	TC%LOADING (% MVA)	CONTINGENCY
FDNS	00NR	3	20WP	G15_081	FROM->TO	G14-057T 345.00 - SUNNYSIDE 345KV CKT 1	717	789	0.05956	108.8995	SHERBURNE CO 345/24.0KV TRANSFORMER CKT 1
FDNS	00NR	3	16WP	G15_081	FROM->TO	G14-057T 345.00 - SUNNYSIDE 345KV CKT 1	717	789	0.05988	108.8865	LYDIA - VALLIANT 345KV CKT 1
FDNS	00NR	3	16WP	G15_081	FROM->TO	G14-057T 345.00 - SUNNYSIDE 345KV CKT 1	717	789	0.05988	108.8865	LYDIA - VALLIANT 345KV CKT 1
FDNS	00NR	3	20WP	G15_081	FROM->TO	G14-057T 345.00 - SUNNYSIDE 345KV CKT 1	717	789	0.05956	108.8563	GEN635214 4-NEAL UNIT 4
FDNS	00NR	3	20WP	G15_081	FROM->TO	G14-057T 345.00 - SUNNYSIDE 345KV CKT 1	717	789	0.05956	108.6853	GEN600002 3-SHERBURNE CNTY G3
FDNS	00NR	3	20WP	G15_081	FROM->TO	G14-057T 345.00 - SUNNYSIDE 345KV CKT 1	717	789	0.05956	108.6493	GEN563043 1-G15068_4 0.6900
FDNS	00NR	3	20WP	G15_081	FROM->TO	G14-057T 345.00 - SUNNYSIDE 345KV CKT 1	717	789	0.05956	108.6374	GEN563273 2-G15093_4 0.6900
FDNS	00NR	3	20WP	G15_081	FROM->TO	G14-057T 345.00 - SUNNYSIDE 345KV CKT 1	717	789	0.05956	108.6252	GEN526333 1-JONES GEN #3 21 KV
FDNS	00NR	3	20WP	G15_081	FROM->TO	G14-057T 345.00 - SUNNYSIDE 345KV CKT 1	717	789	0.05956	108.6251	GEN526334 1-JONES_4 116.500
FDNS	00NR	3	20WP	G15_081	FROM->TO	G14-057T 345.00 - SUNNYSIDE 345KV CKT 1	717	789	0.05956	108.6086	GEN344225 1-1CAL G1 25.000
FDNS	00NR	3	20WP	G15_081	FROM->TO	G14-057T 345.00 - SUNNYSIDE 345KV CKT 1	717	789	0.05956	108.5859	GEN525844 1-ELK_1 118.000
FDNS	00NR	3	20WP	G15_081	FROM->TO	G14-057T 345.00 - SUNNYSIDE 345KV CKT 1	717	789	0.05956	108.5697	GEN525845 1-ELK_2 1 18.000
FDNS	00NR	3	20WP	G15_081	FROM->TO	G14-057T 345.00 - SUNNYSIDE 345KV CKT 1	717	789	0.05817	108.5198	CHISHOLM6 230.00 - SWEETWATER 230KV CKT 1
FDNS	00NR	3	20WP	G15_081	FROM->TO	G14-057T 345.00 - SUNNYSIDE 345KV CKT 1	717	789	0.05956	108.4391	GEN527166 1-MUSTANG_6 118.000
FDNS	00NR	3	20WP	G15_081	FROM->TO	G14-057T 345.00 - SUNNYSIDE 345KV CKT 1	717	789	0.05956	108.4294	GEN563202 1-G15085_3 0.5500
FDNS	00NR	3	20WP	G15_081	FROM->TO	G14-057T 345.00 - SUNNYSIDE 345KV CKT 1	717	789	0.05956	108.3924	GEN635023 3-WALTER SCOTT UNIT 3
FDNS	00NR	3	20WP	G15_081	FROM->TO	G14-057T 345.00 - SUNNYSIDE 345KV CKT 1	717	789	0.05956	108.3748	GEN528501 1-G14_012 24.000
FDNS	00NR	3	20WP	G15_081	FROM->TO	G14-057T 345.00 - SUNNYSIDE 345KV CKT 1	717	789	0.05956	108.2669	GEN562590 1-G14_057_3 0.6900
FDNS	00NR	3	20WP	G15_081	FROM->TO	G14-057T 345.00 - SUNNYSIDE 345KV CKT 1	717	789	0.05956	108.2159	GEN562762 1-G15033_3 0.6900
FDNS	00NR	3	20WP	G15_081	FROM->TO	G14-057T 345.00 - SUNNYSIDE 345KV CKT 1	717	789	0.05956	108.2058	GEN562655 1-G14_074_3 0.6900
FDNS	00NR	3	20WP	G15_081	FROM->TO	G14-057T 345.00 - SUNNYSIDE 345KV CKT 1	717	789	0.05956	108.1862	GEN525562 1-TOLK GEN #2 24 KV
FDNS	00NR	3	20WP	G15_081	FROM->TO	G14-057T 345.00 - SUNNYSIDE 345KV CKT 1	717	789	0.05921	108.1302	JOHNSON COUNTY (JOHNCO) 345/138/13.8KV TRANSFORMER CKT 1
FDNS	00NR	3	20WP	G15_081	FROM->TO	G14-057T 345.00 - SUNNYSIDE 345KV CKT 1	717	789	0.05956	108.1293	GEN562685 1-G15_013_3 0.3550
FDNS	00NR	3	20WP	G15_081	FROM->TO	G14-057T 345.00 - SUNNYSIDE 345KV CKT 1	717	789	0.05956	108.0904	GEN527903 1-HOBBS PLANT #3 (ST)
FDNS	00NR	3	20WP	G15_081	FROM->TO	G14-057T 345.00 - SUNNYSIDE 345KV CKT 1	717	789	0.05956	107.9849	GEN563272 1-G15093_3 0.6900
FDNS	00NR	3	20WP	G15_081	FROM->TO	G14-057T 345.00 - SUNNYSIDE 345KV CKT 1	717	789	0.05956	107.9844	GEN635024 4-WALTER SCOTT UNIT 4
FDNS	00NR	3	16WP	G15_081	FROM->TO	G14-057T 345.00 - SUNNYSIDE 345KV CKT 1	717	789	0.05978	107.8948	EASTDC - ERCOT EQUIVALENCE 345KV CKT 1
FDNS	00NR	3	20WP	G15_081	FROM->TO	G14-057T 345.00 - SUNNYSIDE 345KV CKT 1	717	789	0.05968	107.8931	LYDIA - VALLIANT 345KV CKT 1
FDNS	00NR	3	20WP	G15_081	FROM->TO	G14-057T 345.00 - SUNNYSIDE 345KV CKT 1	717	789	0.05968	107.8931	LYDIA - VALLIANT 345KV CKT 1
FDNS	00NR	3	20WP	G15_081	FROM->TO	G14-057T 345.00 - SUNNYSIDE 345KV CKT 1	717	789	0.05956	107.7483	GEN525561 1-TOLK GEN #1 24 KV
FDNS	00NR	3	16WP	G15_081	FROM->TO	G14-057T 345.00 - SUNNYSIDE 345KV CKT 1	717	789	0.05048	106.9904	JOHNSON COUNTY - PITTSBURG 345KV CKT 1
FDNS	00NR	3	16WP	G15_081	FROM->TO	G14-057T 345.00 - SUNNYSIDE 345KV CKT 1	717	789	0.05048	106.9904	JOHNSON COUNTY - PITTSBURG 345KV CKT 1
FDNS	00NR	3	16WP	G15_081	FROM->TO	G14-057T 345.00 - SUNNYSIDE 345KV CKT 1	717	789	0.05978	106.4713	GEN563263 1-G15092_4 0.6900
FDNS	00NR	3	16WP	G15_081	FROM->TO	G14-057T 345.00 - SUNNYSIDE 345KV CKT 1	717	789	0.05833	106.0336	HUGO - VALLIANT 345KV CKT 1
FDNS	00NR	3	16WP	G15_081	FROM->TO	G14-057T 345.00 - SUNNYSIDE 345KV CKT 1	717	789	0.05833	106.0336	HUGO - VALLIANT 345KV CKT 1
FDNS	00NR	3	17SP	G15_081	FROM->TO	G14-057T 345.00 - SUNNYSIDE 345KV CKT 1	717	789	0.05315	105.9521	CIMARRON - MINCO 345KV CKT 1
FDNS	00NR	3	20WP	G15_081	FROM->TO	G14-057T 345.00 - SUNNYSIDE 345KV CKT 1	717	789	0.05029	105.8204	JOHNSON COUNTY - PITTSBURG 345KV CKT 1
FDNS	00NR	3	20WP	G15_081	FROM->TO	G14-057T 345.00 - SUNNYSIDE 345KV CKT 1	717	789	0.05029	105.8204	JOHNSON COUNTY - PITTSBURG 345KV CKT 1
FDNS	00NR	3	20WP	G15_081	FROM->TO	G14-057T 345.00 - SUNNYSIDE 345KV CKT 1	717	789	0.05814	105.3179	HUGO - VALLIANT 345KV CKT 1
FDNS	00NR	3	20WP	G15_081	FROM->TO	G14-057T 345.00 - SUNNYSIDE 345KV CKT 1	717	789	0.05814	105.3179	HUGO - VALLIANT 345KV CKT 1
FDNS	00NR	3	16WP	G15_081	FROM->TO	G14-057T 345.00 - SUNNYSIDE 345KV CKT 1	717	789	0.04747	105.0413	G14-074T 345.00 - TUCO INTERCHANGE 345KV CKT 1
FDNS	00NR	3	20WP	G15_081	FROM->TO	G14-057T 345.00 - SUNNYSIDE 345KV CKT 1	717	789	0.05956	104.8195	GEN563263 1-G15092_4 0.6900
FDNS	00NR	3	16WP	G15_081	FROM->TO	G14-057T 345.00 - SUNNYSIDE 345KV CKT 1	717	789	0.05978	104.7958	GEN563262 1-G15092_3 0.6900
FDNS	00NR	3	20WP	G15_081	FROM->TO	G14-057T 345.00 - SUNNYSIDE 345KV CKT 1	717	789	0.05956	103.1549	GEN563262 1-G15092_3 0.6900
FDNS	00NR	3	20WP	G15_081	FROM->TO	G14-057T 345.00 - SUNNYSIDE 345KV CKT 1	717	789	0.04726	102.2467	G14-074T 345.00 - TUCO INTERCHANGE 345KV CKT 1
FDNS	00NR	3	16WP	G15_081	FROM->TO	G14-057T 345.00 - SUNNYSIDE 345KV CKT 1	717	789	0.04851	101.3793	JOHNSON COUNTY - SUNNYSIDE 345KV CKT 1
FDNS	00NR	3	17SP	G15_081	FROM->TO	SWISSVALE - WEST GARDNER 345KV CKT 1	717	717	0.03244	104.6634	HOYT - STRANGER CREEK 345KV CKT 1
FDNS	00NR	3	17SP	G15_081	FROM->TO	SWISSVALE - WEST GARDNER 345KV CKT 1	717	717	0.03054	103.3576	G15074_T 345.00 - HOYT 345KV CKT 1
FDNSLock-Blown up	02ALL	0	16WP	G15_082		Non-Converged Contingency	1793	1793	0.3126	-	G11-14T 345.00 - WOODWARD DISTRICT EHV 345KV CKT 1
FDNSLock-Blown up	02ALL	0	16WP	G15_082		Non-Converged Contingency	1716	1793	0.3126	-	G11-14T 345.00 - WOODWARD DISTRICT EHV 345KV CKT 2
FDNSLock-Blown up	02ALL	0	16WP	G15_082		Non-Converged Contingency	987.16	1082.8	0.19798	-	FINNEY SWITCHING STATION - Hitchland Interchange 345KV CKT 1
FDNSLock-Blown up	02ALL	0	16WP	G15_082		Non-Converged Contingency	956.09	1051.7	0.19798	-	FINNEY SWITCHING STATION - HOLCOMB 345KV CKT 1
FDNSLock-Blown up	02ALL	0	17G	G15_082		Non-Converged Contingency	1793	1793	0.31037	-	G11-14T 345.00 - WOODWARD DISTRICT EHV 345KV CKT 1
FDNSLock-Blown up	02ALL	0	17G	G15_082		Non-Converged Contingency	1716	1793	0.31037	-	G11-14T 345.00 - WOODWARD DISTRICT EHV 345KV CKT 2
FDNSLock-Blown up	02ALL	0	17G	G15_082		Non-Converged Contingency	1420	1775	0.22258	-	G11_051T 345.00 - TATONGA7 345.00 345KV CKT 1
FDNSLock-Blown up	02ALL	0	17G	G15_082		Non-Converged Contingency	1420	1775	0.22258	-	G11_051T 345.00 - WOODWARD DISTRICT EHV 345KV CKT 1
FDNSLock-Blown up	02ALL	0	17G	G15_082		Non-Converged Contingency	1195	1195	0.22258	-	MATHWSN7 345.00 - TATONGA7 345.00 345KV CKT 1
FDNSLock-Blown up	02ALL	0	17G	G15_082		Non-Converged Contingency	956.09	1051.7	0.19079	-	FINNEY SWITCHING STATION - Hitchland Interchange 345KV CKT 1
FDNSLock-Blown up	02ALL	0	17G	G15_082		Non-Converged Contingency	956.09	1051.7	0.19079	-	FINNEY SWITCHING STATION - HOLCOMB 345KV CKT 1
FDNSLock-Blown up	02ALL	0	17G	G15_082		Non-Converged Contingency	560	560	0.10016	-	POTTER COUNTY INTERCHANGE (WAUK 90343-A) 345/230/13.2KV TRANSFORMER CKT 1
FDNSLock-Blown up	02ALL	0	17G	G15_082		Non-Converged Contingency	439	439	0.0539	-	CHISHOLM6 230.00 - SWEETWATER 230KV CKT 1
FDNSLock-Blown up	02ALL	0	17SP	G15_082		Non-Converged Contingency	956.09	1051.7	0.20959	-	Hitchland Interchange - WALKTAP7 345.00 345KV CKT 1
FDNSLock-Blown up	02ALL	0	20L	G15_082		Non-Converged Contingency	0	0	0.3544	-	P12:345:SPS:J07.1.FINN.HITCH
FDNSLock-Blown up	02ALL	0	20L	G15_082		Non-Converged Contingency	1793	1793	0.29853	-	G11-14T 345.00 - WOODWARD DISTRICT EHV 345KV CKT 1
FDNSLock-Blown up	02ALL	0	20L	G15_082		Non-Converged Contingency	1716	1793	0.29853	-	G11-14T 345.00 - WOODWARD DISTRICT EHV 345KV CKT 2
FDNSLock-Blown up	02ALL	0	20L	G15_082		Non-Converged Contingency	1420	1775	0.20653	-	G11_051T 345.00 - TATONGA7 345.00 345KV CKT 1
FDNSLock-Blown up	02ALL	0	20L	G15_082		Non-Converged Contingency	1195	1195	0.20653	-	MATHWSN7 345.00 - TATONGA7 345.00 345KV CKT 1
FDNSLock-Blown up	02ALL	0	20L	G15_082		Non-Converged Contingency	956.09	1051.7	0.18919	-	Hitchland Interchange - WALKTAP7 345.00 345KV CKT 1
FDNSLock-Blown up	02ALL	0	20L	G15_082		Non-Converged Contingency	956.09	1051.7	0.18919	-	Hitchland Interchange - WALKTAP7 345.00 345KV CKT 1
FDNSLock-Blown up	02ALL	0	20L	G15_082		Non-Converged Contingency	956.09	1051.7	0.16521	-	FINNEY SWITCHING STATION - HOLCOMB 345KV CKT 1
FDNSLock-Blown up	02ALL	0	20L	G15_082		Non-Converged Contingency	956.09	1051.7	0.16521	-	FINNEY SWITCHING STATION - HOLCOMB 345KV CKT 1

SOLUTION	GROUP	SCENARIO	SEASON	SOURCE	DIRECTION	MONITORED ELEMENT	RATEA (MVA)	RATEB(MVA)	TDF	TC%LOADING (% MVA)	CONTINGENCY
FDNSLock-Blown up	02ALL	0	20L	G15_082		Non-Converged Contingency	956.09	1051.7	0.16521	-	FINNEY SWITCHING STATION - WALKTAP7 345.00 345KV CKT 1
FDNSLock-Blown up	02ALL	0	20L	G15_082		Non-Converged Contingency	956.09	1051.7	0.16521	-	FINNEY SWITCHING STATION - WALKTAP7 345.00 345KV CKT 1
FDNSLock-Blown up	02ALL	0	20L	G15_082		Non-Converged Contingency	560	560	0.11383	-	POTTER COUNTY INTERCHANGE (WAUK 90343-A) 345/230/13.2KV TRANSFORMER CKT 1
FDNSLock-Blown up	02ALL	0	20L	G15_082		Non-Converged Contingency	560	560	0.11383	-	POTTER COUNTY INTERCHANGE (WAUK 90343-A) 345/230/13.2KV TRANSFORMER CKT 1
FDNSLock-Blown up	02ALL	0	20L	G15_082		Non-Converged Contingency	1792	1972	0.05731	-	GEN525561 1-TOLK GEN #1 24 KV
FDNSLock-Blown up	02ALL	0	20L	G15_082		Non-Converged Contingency	1792	1972	0.05731	-	GEN562017 1-G11_022_3 0.6900
FDNSLock-Blown up	02ALL	0	20L	G15_082		Non-Converged Contingency	0	0	0.04729	-	P12:230:AEPW:ELKCITY6:SWEETWT6
FDNSLock-Blown up	02ALL	0	20L	G15_082		Non-Converged Contingency	421	439	0.04149	-	CHISHOLM6 230.00 - SWEETWATER 230KV CKT 1
FDNSLock-Blown up	02ALL	0	20L	G15_082		Non-Converged Contingency	717	789	0.03998	-	GEN515591 1-PALDRW11 0.6900
FDNSLock-Blown up	02ALL	0	20SP	G15_082		Non-Converged Contingency	956.09	1051.7	0.20568	-	Hitchland Interchange - WALKTAP7 345.00 345KV CKT 1
FDNSLock-Blown up	02ALL	0	20WP	G15_082		Non-Converged Contingency	0	0	0.37382	-	P12:345:SPS:J07.1.FINN.HITCH
FDNSLock-Blown up	02ALL	0	20WP	G15_082		Non-Converged Contingency	1793	1793	0.30393	-	G11-14T 345.00 - WOODWARD DISTRICT EHV 345KV CKT 1
FDNSLock-Blown up	02ALL	0	20WP	G15_082		Non-Converged Contingency	1716	1793	0.30393	-	G11-14T 345.00 - WOODWARD DISTRICT EHV 345KV CKT 2
FDNSLock-Blown up	02ALL	0	20WP	G15_082		Non-Converged Contingency	1420	1775	0.21018	-	G11_051T 345.00 - TATONGA7 345.00 345KV CKT 1
FDNSLock-Blown up	02ALL	0	20WP	G15_082		Non-Converged Contingency	1420	1775	0.21018	-	G11_051T 345.00 - WOODWARD DISTRICT EHV 345KV CKT 1
FDNSLock-Blown up	02ALL	0	20WP	G15_082		Non-Converged Contingency	1195	1195	0.21018	-	MATHWSN7 345.00 - TATONGA7 345.00 345KV CKT 1
FDNSLock-Blown up	02ALL	0	20WP	G15_082		Non-Converged Contingency	987.16	1082.8	0.19923	-	Hitchland Interchange - WALKTAP7 345.00 345KV CKT 1
FDNSLock-Blown up	02ALL	0	20WP	G15_082		Non-Converged Contingency	987.16	1082.8	0.19923	-	Hitchland Interchange - WALKTAP7 345.00 345KV CKT 1
FDNSLock-Blown up	02ALL	0	20WP	G15_082		Non-Converged Contingency	956.09	1051.7	0.17459	-	FINNEY SWITCHING STATION - HOLCOMB 345KV CKT 1
FDNSLock-Blown up	02ALL	0	20WP	G15_082		Non-Converged Contingency	956.09	1051.7	0.17459	-	FINNEY SWITCHING STATION - HOLCOMB 345KV CKT 1
FDNSLock-Blown up	02ALL	0	20WP	G15_082		Non-Converged Contingency	987.16	1082.8	0.17459	-	FINNEY SWITCHING STATION - WALKTAP7 345.00 345KV CKT 1
FDNSLock-Blown up	02ALL	0	20WP	G15_082		Non-Converged Contingency	987.16	1082.8	0.17459	-	FINNEY SWITCHING STATION - WALKTAP7 345.00 345KV CKT 1
FDNSLock-Blown up	02ALL	0	20WP	G15_082		Non-Converged Contingency	560	560	0.10251	-	POTTER COUNTY INTERCHANGE (WAUK 90343-A) 345/230/13.2KV TRANSFORMER CKT 1
FDNSLock-Blown up	02ALL	0	20WP	G15_082		Non-Converged Contingency	560	560	0.10251	-	POTTER COUNTY INTERCHANGE (WAUK 90343-A) 345/230/13.2KV TRANSFORMER CKT 1
FDNSLock-Blown up	02ALL	0	20WP	G15_082		Non-Converged Contingency	0	0	0.09754	-	P12:230:AEPW-SPS:SWEETWT6:WHEELER 6
FDNSLock-Blown up	02ALL	0	20WP	G15_082		Non-Converged Contingency	0	0	0.05809	-	P12:230:AEPW:ELKCITY6:SWEETWT6
FDNSLock-Blown up	02ALL	0	20WP	G15_082		Non-Converged Contingency	1022	1124	0.05144	-	G14-074T 345.00 - OKLAUNION 345KV CKT 1
FDNSLock-Blown up	02ALL	0	20WP	G15_082		Non-Converged Contingency	421	439	0.04877	-	CHISHOLM6 230.00 - SWEETWATER 230KV CKT 1
FDNSLock-Blown up	02ALL	0	20WP	G15_082		Non-Converged Contingency	435.02	457.73	0.04877	-	STATELINE INTERCHANGE - STLN-DEMARC6 230KV CKT 1
FDNSLock-Blown up	02ALL	0	20WP	G15_082		Non-Converged Contingency	439	439	0.04877	-	STLN-DEMARC6 - SWEETWATER 230KV CKT 1
FDNSLock-Blown up	02ALL	2	16WP	G15_082		Non-Converged Contingency	987.2	1082.8	0.20026	-	Hitchland Interchange - WALKTAP7 345.00 345KV CKT 1
FDNSLock-Blown up	02ALL	2	17G	G15_082		Non-Converged Contingency	956.09	1051.7	0.19278	-	Hitchland Interchange - WALKTAP7 345.00 345KV CKT 1
FDNSLock-Blown up	02ALL	2	20L	G15_082		Non-Converged Contingency	0	0	0.3379	-	P12:345:SPS:J07.1.FINN.HITCH
FDNSLock-Blown up	02ALL	2	20L	G15_082		Non-Converged Contingency	956.09	1051.7	0.18038	-	Hitchland Interchange - WALKTAP7 345.00 345KV CKT 1
FDNSLock-Blown up	02ALL	2	20WP	G15_082		Non-Converged Contingency	0	0	0.3566	-	P12:345:SPS:J07.1.FINN.HITCH
FDNSLock-Blown up	02ALL	2	20WP	G15_082		Non-Converged Contingency	1793	1793	0.3142	-	G11-14T 345.00 - WOODWARD DISTRICT EHV 345KV CKT 1
FDNSLock-Blown up	02ALL	2	20WP	G15_082		Non-Converged Contingency	1716	1793	0.3142	-	G11-14T 345.00 - WOODWARD DISTRICT EHV 345KV CKT 2
FDNSLock-Blown up	02ALL	2	20WP	G15_082		Non-Converged Contingency	987.16	1082.8	0.19007	-	Hitchland Interchange - WALKTAP7 345.00 345KV CKT 1
FDNSLock-Blown up	02ALL	2	20WP	G15_082		Non-Converged Contingency	987.16	1082.8	0.19007	-	Hitchland Interchange - WALKTAP7 345.00 345KV CKT 1
FDNSLock-Blown up	02ALL	2	20WP	G15_082		Non-Converged Contingency	956.09	1051.7	0.16653	-	FINNEY SWITCHING STATION - HOLCOMB 345KV CKT 1
FDNSLock-Blown up	02ALL	2	20WP	G15_082		Non-Converged Contingency	956.09	1051.7	0.16653	-	FINNEY SWITCHING STATION - HOLCOMB 345KV CKT 1
FDNSLock-Blown up	02ALL	2	20WP	G15_082		Non-Converged Contingency	987.16	1082.8	0.16653	-	FINNEY SWITCHING STATION - WALKTAP7 345.00 345KV CKT 1
FDNSLock-Blown up	02ALL	2	20WP	G15_082		Non-Converged Contingency	987.16	1082.8	0.16653	-	FINNEY SWITCHING STATION - WALKTAP7 345.00 345KV CKT 1
FDNS	00NR	0	20WP	G15_082	TO->FROM	CHISHOLM6 230.00 - SWEETWATER 230KV CKT 1	421	439	0.09605	104.7564	G14-074T 345.00 - OKLAUNION 345KV CKT 1
FDNS	00NR	0	20WP	G15_082	TO->FROM	CHISHOLM6 230.00 - SWEETWATER 230KV CKT 1	421	439	0.09788	99.9	MATHWSN7 345.00 - TATONGA7 345.00 345KV CKT 1
FDNS	00NR	0	16WP	G15_082	FROM->TO	CIMARRON - DRAPER LAKE 345KV CKT 1	717	717	0.13765	134.514	G14-057T 345.00 - SUNNYSIDE 345KV CKT 1
FDNS	00NR	0	16WP	G15_082	FROM->TO	CIMARRON - DRAPER LAKE 345KV CKT 1	717	717	0.13765	124.0279	G14-057T 345.00 - LAWTON EASTSIDE 345KV CKT 1
FDNS	00NR	0	16WP	G15_082	FROM->TO	CIMARRON - DRAPER LAKE 345KV CKT 1	717	717	0.12547	118.5037	ARCADIA - SEMINOLE 345KV CKT 1
FDNS	00NR	0	16WP	G15_082	FROM->TO	CIMARRON - DRAPER LAKE 345KV CKT 1	717	717	0.12423	117.2332	CLEVELAND - G15066_T 345.00 345KV CKT 1
FDNS	00NR	0	16WP	G15_082	FROM->TO	CIMARRON - DRAPER LAKE 345KV CKT 1	717	717	0.16643	116.9492	ARCADIA - NORTHWEST 345KV CKT 1
FDNS	00NR	0	16WP	G15_082	FROM->TO	CIMARRON - DRAPER LAKE 345KV CKT 1	717	717	0.12423	116.4448	G15066_T 345.00 - SOONER 345KV CKT 1
FDNS	00NR	0	16WP	G15_082	FROM->TO	CIMARRON - DRAPER LAKE 345KV CKT 1	717	717	0.1228	111.8605	CLEVELAND - TULSA NORTH 345KV CKT 1
FDNS	00NR	0	16WP	G15_082	FROM->TO	CIMARRON - DRAPER LAKE 345KV CKT 1	717	717	0.1228	111.8605	CLEVELAND - TULSA NORTH 345KV CKT 1
FDNS	00NR	0	16WP	G15_082	FROM->TO	CIMARRON - DRAPER LAKE 345KV CKT 1	717	717	0.13219	111.6018	MATHWSN7 345.00 - NORTHWEST 345KV CKT 1
FDNS	00NR	0	16WP	G15_082	FROM->TO	CIMARRON - DRAPER LAKE 345KV CKT 1	717	717	0.12386	110.6853	CIMARRON - SARA 138KV CKT 1
FDNS	00NR	0	16WP	G15_082	FROM->TO	CIMARRON - DRAPER LAKE 345KV CKT 1	717	717	0.12431	110.3906	P12:138:WFEC:MSL03
FDNS	00NR	0	16WP	G15_082	FROM->TO	CIMARRON - DRAPER LAKE 345KV CKT 1	717	717	0.12145	109.5178	CIMARRON (CIMARON2) 345/138/13.8KV TRANSFORMER CKT 1
FDNS	00NR	0	16WP	G15_082	FROM->TO	CIMARRON - DRAPER LAKE 345KV CKT 1	717	717	0.12386	109.3964	SARA - STHLAKE4 138.00 138KV CKT 1
FDNS	00NR	0	16WP	G15_082	FROM->TO	CIMARRON - DRAPER LAKE 345KV CKT 1	717	717	0.12141	109.3539	CIMARRON (CIMARON1) 345/138/13.8KV TRANSFORMER CKT 1
FDNS	00NR	0	16WP	G15_082	FROM->TO	CIMARRON - DRAPER LAKE 345KV CKT 1	717	717	0.12386	109.1974	MCCLAIN - STHLAKE4 138.00 138KV CKT 1
FDNS	00NR	0	16WP	G15_082	FROM->TO	CIMARRON - DRAPER LAKE 345KV CKT 1	717	717	0.12292	108.8931	CIMARRON - CZECH HALL 138KV CKT 1
FDNS	00NR	0	16WP	G15_082	FROM->TO	CIMARRON - DRAPER LAKE 345KV CKT 1	717	717	0.12292	108.5319	CZECH HALL - XEROX 138KV CKT 1
FDNS	00NR	0	16WP	G15_082	FROM->TO	CIMARRON - DRAPER LAKE 345KV CKT 1	717	717	0.12292	108.5118	MORGAN - XEROX 138KV CKT 1
FDNS	00NR	0	16WP	G15_082	FROM->TO	CIMARRON - DRAPER LAKE 345KV CKT 1	717	717	0.12292	108.3945	MORGAN - MUSTANG 138KV CKT 1

SOLUTION	GROUP	SCENARIO	SEASON	SOURCE	DIRECTION	MONITORED ELEMENT	RATEA (MVA)	RATEB(MVA)	TDF	TC%LOADING (% MVA)	CONTINGENCY
FDNS	00NR	0	16WP	G15_082	FROM->TO	CIMARRON - DRAPER LAKE 345KV CKT 1	717	717	0.12231	108.3343	ANADARKO - POCASSETT 138KV CKT 1
FDNS	00NR	0	16WP	G15_082	FROM->TO	CIMARRON - DRAPER LAKE 345KV CKT 1	717	717	0.12231	108.1369	POCASSETT - TUTTLE 138KV CKT 1
FDNS	00NR	0	16WP	G15_082	FROM->TO	CIMARRON - DRAPER LAKE 345KV CKT 1	717	717	0.12422	108.0989	JOHNSON COUNTY - SUNNYSIDE 345KV CKT 1
FDNS	00NR	0	16WP	G15_082	FROM->TO	CIMARRON - DRAPER LAKE 345KV CKT 1	717	717	0.1222	108.0453	CORN TAP - NAPLESTP 138.00 138KV CKT 1
FDNS	00NR	0	16WP	G15_082	FROM->TO	CIMARRON - DRAPER LAKE 345KV CKT 1	717	717	0.12045	108.0439	GEN515040 1-SEMINOLE 1G
FDNS	00NR	0	16WP	G15_082	FROM->TO	CIMARRON - DRAPER LAKE 345KV CKT 1	717	717	0.12095	107.9642	LACYGNE - WAVERLY7 345.00 345KV CKT 1
FDNS	00NR	0	16WP	G15_082	FROM->TO	CIMARRON - DRAPER LAKE 345KV CKT 1	717	717	0.1222	107.9494	NAPLESTP 138.00 - PAYNE 138.00 138KV CKT 1
FDNS	00NR	0	16WP	G15_082	FROM->TO	CIMARRON - DRAPER LAKE 345KV CKT 1	717	717	0.12045	107.7844	GEN501801 1-DOLET HILLS UNIT1
FDNS	00NR	0	16WP	G15_082	FROM->TO	CIMARRON - DRAPER LAKE 345KV CKT 1	717	717	0.12045	107.7649	GEN509403 1-PIRKEY GENERATION
FDNS	00NR	0	16WP	G15_082	FROM->TO	CIMARRON - DRAPER LAKE 345KV CKT 1	717	717	0.12095	107.7632	WAVERLY7 345.00 - WOLF CREEK 345KV CKT 1
FDNS	00NR	0	16WP	G15_082	FROM->TO	CIMARRON - DRAPER LAKE 345KV CKT 1	717	717	0.12262	107.7464	CANEYRV7 345.00 - NEOSHO 345KV CKT 1
FDNS	00NR	0	16WP	G15_082	FROM->TO	CIMARRON - DRAPER LAKE 345KV CKT 1	717	717	0.12045	107.7155	GEN509416 1-TURK GENERATION
FDNS	00NR	0	16WP	G15_082	FROM->TO	CIMARRON - DRAPER LAKE 345KV CKT 1	717	717	0.12231	107.6267	BRIDGECR 138.00 - TUTTLE 138KV CKT 1
FDNS	00NR	0	16WP	G15_082	FROM->TO	CIMARRON - DRAPER LAKE 345KV CKT 1	717	717	0.12262	107.4673	CANEYRV7 345.00 - LATHAMS7 345.00 345KV CKT 1
FDNS	00NR	0	16WP	G15_082	FROM->TO	CIMARRON - DRAPER LAKE 345KV CKT 1	717	717	0.12045	107.3739	GEN515042 1-SEMINOLE 3G
FDNS	00NR	0	16WP	G15_082	FROM->TO	CIMARRON - DRAPER LAKE 345KV CKT 1	717	717	0.12231	107.2556	P12:138:WFEC:MSL01
FDNS	00NR	0	16WP	G15_082	FROM->TO	CIMARRON - DRAPER LAKE 345KV CKT 1	717	717	0.12231	107.2506	BRIDGECR 138.00 - SUNSHINE CANYON 138KV CKT 1
FDNS	00NR	0	16WP	G15_082	FROM->TO	CIMARRON - DRAPER LAKE 345KV CKT 1	717	717	0.12045	107.148	GEN336153 1-WATERFORD UNIT#3
FDNS	00NR	0	16WP	G15_082	FROM->TO	CIMARRON - DRAPER LAKE 345KV CKT 1	717	717	0.12045	107.1409	GEN515041 1-SEMINOLE 2G
FDNS	00NR	0	16WP	G15_082	FROM->TO	CIMARRON - DRAPER LAKE 345KV CKT 1	717	717	0.12262	107.0277	LATHAMS7 345.00 - ROSE HILL 345KV CKT 1
FDNS	00NR	0	16WP	G15_082	FROM->TO	CIMARRON - DRAPER LAKE 345KV CKT 1	717	717	0.12045	106.9223	GEN336821 1-GRAND GULF UNIT
FDNS	00NR	0	16WP	G15_082	FROM->TO	CIMARRON - DRAPER LAKE 345KV CKT 1	717	717	0.12045	106.8917	GEN509406 1-WELSH #3
FDNS	00NR	0	16WP	G15_082	FROM->TO	CIMARRON - DRAPER LAKE 345KV CKT 1	717	717	0.12045	106.8915	GEN509404 1-WELSH #1
FDNS	00NR	0	16WP	G15_082	FROM->TO	CIMARRON - DRAPER LAKE 345KV CKT 1	717	717	0.12045	106.8495	GEN335831 1-RIVERBEND UNIT#1
FDNS	00NR	0	16WP	G15_082	FROM->TO	CIMARRON - DRAPER LAKE 345KV CKT 1	717	717	0.12045	106.8225	GEN337911 1-ARKANSAS NUCLEAR ONE UNIT #2
FDNS	00NR	0	16WP	G15_082	FROM->TO	CIMARRON - DRAPER LAKE 345KV CKT 1	717	717	0.12704	106.7514	CIMARRON - NORTHWEST 345KV CKT 1
FDNS	00NR	0	16WP	G15_082	FROM->TO	CIMARRON - DRAPER LAKE 345KV CKT 1	717	717	0.11785	106.6526	CANADIAN RIVER - MUSKOGEE 345KV CKT 1
FDNS	00NR	0	16WP	G15_082	FROM->TO	CIMARRON - DRAPER LAKE 345KV CKT 1	717	717	0.12092	106.5951	HUGO - SUNNYSIDE 345KV CKT 1
FDNS	00NR	0	17SP	G15_082	FROM->TO	CIMARRON - DRAPER LAKE 345KV CKT 1	717	717	0.12639	106.5688	G14-057T 345.00 - SUNNYSIDE 345KV CKT 1
FDNS	00NR	0	16WP	G15_082	FROM->TO	CIMARRON - DRAPER LAKE 345KV CKT 1	717	717	0.12386	106.5151	JOHNSON COUNTY - PITTSBURG 345KV CKT 1
FDNS	00NR	0	16WP	G15_082	FROM->TO	CIMARRON - DRAPER LAKE 345KV CKT 1	717	717	0.12386	106.5151	JOHNSON COUNTY - PITTSBURG 345KV CKT 1
FDNS	00NR	0	16WP	G15_082	FROM->TO	CIMARRON - DRAPER LAKE 345KV CKT 1	717	717	0.12064	106.4597	P12:138:OKGE:3TERM14
FDNS	00NR	0	16WP	G15_082	FROM->TO	CIMARRON - DRAPER LAKE 345KV CKT 1	717	717	0.1213	106.4537	HORSESHOE LAKE - JONES TAP 138KV CKT 1
FDNS	00NR	0	16WP	G15_082	FROM->TO	CIMARRON - DRAPER LAKE 345KV CKT 1	717	717	0.12045	106.4501	GEN337910 1-ARKANSAS NUCLEAR ONE UNIT #1
FDNS	00NR	0	16WP	G15_082	FROM->TO	CIMARRON - DRAPER LAKE 345KV CKT 1	717	717	0.1206	106.4371	MORISNT4 138.00 - STILLWATER 138KV CKT 1
FDNS	00NR	0	16WP	G15_082	FROM->TO	CIMARRON - DRAPER LAKE 345KV CKT 1	717	717	0.12062	106.4321	P12:138:OKGE:3TERM2
FDNS	00NR	0	16WP	G15_082	FROM->TO	CIMARRON - DRAPER LAKE 345KV CKT 1	717	717	0.11996	106.3761	REDBUD - RIVERSIDE STATION 345KV CKT 1
FDNS	00NR	0	16WP	G15_082	FROM->TO	CIMARRON - DRAPER LAKE 345KV CKT 1	717	717	0.11996	106.3761	REDBUD - RIVERSIDE STATION 345KV CKT 1
FDNS	00NR	0	16WP	G15_082	FROM->TO	CIMARRON - DRAPER LAKE 345KV CKT 1	717	717	0.12045	106.3301	GEN501813 1-RODEMACHER UNIT 3
FDNS	00NR	0	16WP	G15_082	FROM->TO	CIMARRON - DRAPER LAKE 345KV CKT 1	717	717	0.12045	106.264	GEN515226 1-MUSKOGEE 6G
FDNS	00NR	0	16WP	G15_082	FROM->TO	CIMARRON - DRAPER LAKE 345KV CKT 1	717	717	0.12096	106.2379	NORTHWEST (NORTWST2) 345/138/13.8KV TRANSFORMER CKT 1
FDNS	00NR	0	16WP	G15_082	FROM->TO	CIMARRON - DRAPER LAKE 345KV CKT 1	717	717	0.11992	106.2121	ARCADIA - KAMO MEMORIAL 138KV CKT 1
FDNS	00NR	0	16WP	G15_082	FROM->TO	CIMARRON - DRAPER LAKE 345KV CKT 1	717	717	0.12051	106.1972	P12:138:OKGE:3TERM12
FDNS	00NR	0	16WP	G15_082	FROM->TO	CIMARRON - DRAPER LAKE 345KV CKT 1	717	717	0.12328	106.1905	BAILEY4 138.00 - SUNSHINE CANYON 138KV CKT 1
FDNS	00NR	0	16WP	G15_082	FROM->TO	CIMARRON - DRAPER LAKE 345KV CKT 1	717	717	0.12045	106.1405	GEN335206 1-NELSON UNIT 6
FDNS	00NR	0	16WP	G15_082	FROM->TO	CIMARRON - DRAPER LAKE 345KV CKT 1	717	717	0.12057	106.1302	7SAREPTA% 345.00 - LONGWOOD 345KV CKT 1
FDNS	00NR	0	16WP	G15_082	FROM->TO	CIMARRON - DRAPER LAKE 345KV CKT 1	717	717	0.12057	106.1302	7SAREPTA% 345.00 - LONGWOOD 345KV CKT 1
FDNS	00NR	0	16WP	G15_082	FROM->TO	CIMARRON - DRAPER LAKE 345KV CKT 1	717	717	0.12132	106.1182	MEMORIAL - SKYLINE 138KV CKT 1
FDNS	00NR	0	16WP	G15_082	FROM->TO	CIMARRON - DRAPER LAKE 345KV CKT 1	717	717	0.12053	106.1062	DOLET HILLS - SOUTHWEST SHREVEPORT 345KV CKT 1
FDNS	00NR	0	16WP	G15_082	FROM->TO	CIMARRON - DRAPER LAKE 345KV CKT 1	717	717	0.12053	106.1062	DOLET HILLS - SOUTHWEST SHREVEPORT 345KV CKT 1
FDNS	00NR	0	16WP	G15_082	FROM->TO	CIMARRON - DRAPER LAKE 345KV CKT 1	717	717	0.12045	106.089	GRAND GULF 500/22.0KV TRANSFORMER CKT 1
FDNS	00NR	0	16WP	G15_082	FROM->TO	CIMARRON - DRAPER LAKE 345KV CKT 1	717	717	0.12045	106.0728	GEN515223 1-MUSKOGEE 4G
FDNS	00NR	0	16WP	G15_082	FROM->TO	CIMARRON - DRAPER LAKE 345KV CKT 1	717	717	0.12045	106.0728	GEN515225 1-MUSKOGEE 5G
FDNS	00NR	0	16WP	G15_082	FROM->TO	CIMARRON - DRAPER LAKE 345KV CKT 1	717	717	0.12156	106.0024	QUAIL CREEK - SKYLINE 138KV CKT 1
FDNS	00NR	0	16WP	G15_082	FROM->TO	CIMARRON - DRAPER LAKE 345KV CKT 1	717	717	0.12158	105.9795	P12:138:OKGE:3TERM18
FDNS	00NR	0	16WP	G15_082	FROM->TO	CIMARRON - DRAPER LAKE 345KV CKT 1	717	717	0.12079	105.9715	G15074_T 345.00 - HOYT 345KV CKT 1
FDNS	00NR	0	16WP	G15_082	FROM->TO	CIMARRON - DRAPER LAKE 345KV CKT 1	717	717	0.12045	105.971	GEN337653 1-WHITE BLUFF UNIT #2
FDNS	00NR	0	16WP	G15_082	FROM->TO	CIMARRON - DRAPER LAKE 345KV CKT 1	717	717	0.12045	105.9681	GEN501812 1-RODEMACHER UNIT 2
FDNS	00NR	0	16WP	G15_082	FROM->TO	CIMARRON - DRAPER LAKE 345KV CKT 1	717	717	0.12092	105.961	NORTHWEST (NORTWST4) 345/138/13.8KV TRANSFORMER CKT 1
FDNS	00NR	0	16WP	G15_082	FROM->TO	CIMARRON - DRAPER LAKE 345KV CKT 1	717	717	0.12045	105.942	GEN509409 1-WILKES #3
FDNS	00NR	0	16WP	G15_082	FROM->TO	CIMARRON - DRAPER LAKE 345KV CKT 1	717	717	0.12121	105.9362	GRACEMONT (BANK 1) 345/138/13.8KV TRANSFORMER CKT 1
FDNS	00NR	0	16WP	G15_082	FROM->TO	CIMARRON - DRAPER LAKE 345KV CKT 1	717	717	0.12152	105.8979	36 & MERIDIAN - CHEMTRON 138KV CKT 1
FDNS	00NR	0	16WP	G15_082	FROM->TO	CIMARRON - DRAPER LAKE 345KV CKT 1	717	717	0.12328	105.8906	BAILEY4 138.00 - WESTMOORE 138KV CKT 1
FDNS	00NR	0	16WP	G15_082	FROM->TO	CIMARRON - DRAPER LAKE 345KV CKT 1	717	717	0.12045	105.8523	GEN520947 1-HUGO1
FDNS	00NR	0	16WP	G15_082	FROM->TO	CIMARRON - DRAPER LAKE 345KV CKT 1	717	717	0.12045	105.8407	GEN337652 1-WHITE BLUFF UNIT #1
FDNS	00NR	0	16WP	G15_082	FROM->TO	CIMARRON - DRAPER LAKE 345KV CKT 1	717	717	0.12092	105.8386	NORTHWEST (NORTWST3) 345/138/13.8KV TRANSFORMER CKT 1
FDNS	00NR	0	16WP	G15_082	FROM->TO	CIMARRON - DRAPER LAKE 345KV CKT 1	717	717	0.12152	105.8108	CHEMTRON - PENNSYLVANIA 138KV CKT 1
FDNS	00NR	0	16WP	G15_082	FROM->TO	CIMARRON - DRAPER LAKE 345KV CKT 1	717	717	0.12383	105.7884	THISTLE7 345.00 - WOODWARD DISTRICT EHV 345KV CKT 1
FDNS	00NR	0	16WP	G15_082	FROM->TO	CIMARRON - DRAPER LAKE 345KV CKT 1	717	717	0.12383	105.7884	THISTLE7 345.00 - WOODWARD DISTRICT EHV 345KV CKT 1
FDNS	00NR	0	16WP	G15_082	FROM->TO	CIMARRON - DRAPER LAKE 345KV CKT 1	717	717	0.12383	105.7884	THISTLE7 345.00 - WOODWARD DISTRICT EHV 345KV CKT 2
FDNS	00NR	0	16WP	G15_082	FROM->TO	CIMARRON - DRAPER LAKE 345KV CKT 1	717	717	0.12383	105.7884	THISTLE7 345.00 - WOODWARD DISTRICT EHV 345KV CKT 2
FDNS	00NR	0	16WP	G15_082	FROM->TO	CIMARRON - DRAPER LAKE 345KV CKT 1	717	717	0.12052	105.7626	7SAREPTA% 345.00 - ELDORADO EHV 345KV CKT 1
FDNS	00NR	0	16WP	G15_082	FROM->TO	CIMARRON - DRAPER LAKE 345KV CKT 1	717	717	0.12052	105.7625	3TR3AR8EL7EL
FDNS	00NR	0	16WP	G15_082	FROM->TO	CIMARRON - DRAPER LAKE 345KV CKT 1	717	717	0.12052	105.7408	ELDORADO EHV 500/345KV TRANSFORMER CKT 1
FDNS	00NR	0	16WP	G15_082	FROM->TO	CIMARRON - DRAPER LAKE 345KV CKT 1	717	717	0.12239	105.739	BLANCHARD - CORNVILLE 138KV CKT 1
FDNS	00NR	0	16WP	G15_082	FROM->TO	CIMARRON - DRAPER LAKE 345KV CKT 1	717	717	0.12081	105.7083	P12:138:OKGE:3TERM17
FDNS	00NR	0	16WP	G15_082	FROM->TO	CIMARRON - DRAPER LAKE 345KV CKT 1	717	717	0.12102	105.7066	COMANCHE - LOCO 138KV CKT 1
FDNS	00NR	0	16WP	G15_082	FROM->TO	CIMARRON - DRAPER LAKE 345KV CKT 1	717	717	0.12045	105.6736	GEN515577 1-ARBWND11 0.6900
FDNS	00NR	0	16WP	G15_082	FROM->TO	CIMARRON - DRAPER LAKE 345KV CKT 1	717	717	0.12045	105.6712	GEN334440 1-SABINE UNIT 4

SOLUTION	GROUP	SCENARIO	SEASON	SOURCE	DIRECTION	MONITORED ELEMENT	RATEA (MVA)	RATEB(MVA)	TDF	TC%LOADING (% MVA)	CONTINGENCY
FDNS	00NR	0	16WP	G15_082	FROM->TO	CIMARRON - DRAPER LAKE 345KV CKT 1	717	717	0.12294	105.6665	CLARKSVILLE - ONETA 345KV CKT 1
FDNS	00NR	0	16WP	G15_082	FROM->TO	CIMARRON - DRAPER LAKE 345KV CKT 1	717	717	0.12294	105.6665	CLARKSVILLE - ONETA 345KV CKT 1
FDNS	00NR	0	16WP	G15_082	FROM->TO	CIMARRON - DRAPER LAKE 345KV CKT 1	717	717	0.12146	105.6647	P12:138:OKGE:3TERM11
FDNS	00NR	0	16WP	G15_082	FROM->TO	CIMARRON - DRAPER LAKE 345KV CKT 1	717	717	0.12239	105.65	P12:138:AEPW-OGE:CORNVIL4:MAUD 4
FDNS	00NR	0	16WP	G15_082	FROM->TO	CIMARRON - DRAPER LAKE 345KV CKT 1	717	717	0.12081	105.6454	LONEOAK - NORTHWEST 138KV CKT 1
FDNS	00NR	0	16WP	G15_082	FROM->TO	CIMARRON - DRAPER LAKE 345KV CKT 1	717	717	0.12045	105.6444	DELL 500 - ESSEX UNIT 2 500KV CKT Z1
FDNS	00NR	0	16WP	G15_082	FROM->TO	CIMARRON - DRAPER LAKE 345KV CKT 1	717	717	0.11803	105.6441	G15093_T 345.00 - LAWTON EASTSIDE 345KV CKT 1
FDNS	00NR	0	16WP	G15_082	FROM->TO	CIMARRON - DRAPER LAKE 345KV CKT 1	717	717	0.11776	105.6323	G15052_T 345.00 - ROSE HILL 345KV CKT 1
FDNS	00NR	0	16WP	G15_082	FROM->TO	CIMARRON - DRAPER LAKE 345KV CKT 1	717	717	0.12142	105.6254	KETCH TAP - NORTHWEST 138KV CKT 1
FDNS	00NR	0	16WP	G15_082	FROM->TO	CIMARRON - DRAPER LAKE 345KV CKT 1	717	717	0.1208	105.6203	HOYT - STRANGER CREEK 345KV CKT 1
FDNS	00NR	0	16WP	G15_082	FROM->TO	CIMARRON - DRAPER LAKE 345KV CKT 1	717	717	0.12109	105.6196	DIVISION AVE - LAKESIDE 138KV CKT 1
FDNS	00NR	0	16WP	G15_082	FROM->TO	CIMARRON - DRAPER LAKE 345KV CKT 1	717	717	0.11993	105.6133	HORSESHOE LAKE - KAMO MEMORIAL 138KV CKT 1
FDNS	00NR	0	16WP	G15_082	FROM->TO	CIMARRON - DRAPER LAKE 345KV CKT 1	717	717	0.12328	105.6091	FRANKLIN SW - WESTMOORE 138KV CKT 1
FDNS	00NR	0	16WP	G15_082	FROM->TO	CIMARRON - DRAPER LAKE 345KV CKT 1	717	717	0.12079	105.6025	G15074_T 345.00 - JEFFREY ENERGY CENTER 345KV CKT 1
FDNS	00NR	0	16WP	G15_082	FROM->TO	CIMARRON - DRAPER LAKE 345KV CKT 1	717	717	0.12083	105.5681	P12:138:OKGE:3TERM20
FDNS	00NR	0	16WP	G15_082	FROM->TO	CIMARRON - DRAPER LAKE 345KV CKT 1	717	717	0.12065	105.5621	NORTHWEST - PANTHER 138KV CKT 1
FDNS	00NR	0	16WP	G15_082	FROM->TO	CIMARRON - DRAPER LAKE 345KV CKT 1	717	717	0.12239	105.5455	BLANCHARD - MAUD 138KV CKT 1
FDNS	00NR	0	16WP	G15_082	FROM->TO	CIMARRON - DRAPER LAKE 345KV CKT 1	717	717	0.12107	105.5411	BLACKBERRY - NEOSHO 345KV CKT 1
FDNS	00NR	0	16WP	G15_082	FROM->TO	CIMARRON - DRAPER LAKE 345KV CKT 1	717	717	0.12394	105.5374	G14-074T 345.00 - OKLAUNION 345KV CKT 1
FDNS	00NR	0	16WP	G15_082	FROM->TO	CIMARRON - DRAPER LAKE 345KV CKT 1	717	717	0.12053	105.5285	P12:138:OKGE:3TERM47
FDNS	00NR	0	16WP	G15_082	FROM->TO	CIMARRON - DRAPER LAKE 345KV CKT 1	717	717	0.12045	105.524	GEN336252 1-NINEMILE POINT UNIT#5
FDNS	00NR	0	16WP	G15_082	FROM->TO	CIMARRON - DRAPER LAKE 345KV CKT 1	717	717	0.12141	105.5155	CIMARRON - HAYMAKER 138KV CKT 1
FDNS	00NR	0	16WP	G15_082	FROM->TO	CIMARRON - DRAPER LAKE 345KV CKT 1	717	717	0.12065	105.5117	PANTHER - SILVER LAKE 138KV CKT 1
FDNS	00NR	0	16WP	G15_082	FROM->TO	CIMARRON - DRAPER LAKE 345KV CKT 1	717	717	0.121	105.5043	SWISSVALE - WEST GARDNER 345KV CKT 1
FDNS	00NR	0	16WP	G15_082	FROM->TO	CIMARRON - DRAPER LAKE 345KV CKT 1	717	717	0.12045	105.5043	DOLET HILLS 345/24.0KV TRANSFORMER CKT 1
FDNS	00NR	0	16WP	G15_082	FROM->TO	CIMARRON - DRAPER LAKE 345KV CKT 1	717	717	0.12109	105.4979	HEFNER - LAKESIDE 138KV CKT 1
FDNS	00NR	0	16WP	G15_082	FROM->TO	CIMARRON - DRAPER LAKE 345KV CKT 1	717	717	0.12151	105.4925	LACYGNE - NEOSHO 345KV CKT 1
FDNS	00NR	0	16WP	G15_082	FROM->TO	CIMARRON - DRAPER LAKE 345KV CKT 1	717	717	0.12638	105.4723	FINNEY SWITCHING STATION - HOLCOMB 345KV CKT 1
FDNS	00NR	0	16WP	G15_082	FROM->TO	CIMARRON - DRAPER LAKE 345KV CKT 1	717	717	0.12638	105.4723	FINNEY SWITCHING STATION - HOLCOMB 345KV CKT 1
FDNS	00NR	0	16WP	G15_082	FROM->TO	CIMARRON - DRAPER LAKE 345KV CKT 1	717	717	0.12045	105.4692	WHITE BLUFF 500/26.0KV TRANSFORMER CKT 1
FDNS	00NR	0	16WP	G15_082	FROM->TO	CIMARRON - DRAPER LAKE 345KV CKT 1	717	717	0.12126	105.4671	KETCH - KETCH TAP 138KV CKT 1
FDNS	00NR	0	16WP	G15_082	FROM->TO	CIMARRON - DRAPER LAKE 345KV CKT 1	717	717	0.12063	105.4415	DIVISION AVE - MUSTANG 138KV CKT 1
FDNS	00NR	0	16WP	G15_082	FROM->TO	CIMARRON - DRAPER LAKE 345KV CKT 1	717	717	0.12045	105.4368	GEN509408 1-WILKES #2
FDNS	00NR	0	16WP	G15_082	FROM->TO	CIMARRON - DRAPER LAKE 345KV CKT 1	717	717	0.12068	105.4309	P12:138:AEPW-OGE:SHIDLER4:OSAGE 4
FDNS	00NR	0	16WP	G15_082	FROM->TO	CIMARRON - DRAPER LAKE 345KV CKT 1	717	717	0.12143	105.4093	MCCLAIN - PLEASANT VALLEY 138KV CKT 1
FDNS	00NR	0	16WP	G15_082	FROM->TO	CIMARRON - DRAPER LAKE 345KV CKT 1	717	717	0.12141	105.409	DIVISION AVE - HAYMAKER 138KV CKT 1
FDNS	00NR	0	16WP	G15_082	FROM->TO	CIMARRON - DRAPER LAKE 345KV CKT 1	717	717	0.12045	105.4009	GEN335204 1-NELSON UNIT 4
FDNS	00NR	0	16WP	G15_082	FROM->TO	CIMARRON - DRAPER LAKE 345KV CKT 1	717	717	0.12072	105.4005	P12:138:WFEC:MSL02
FDNS	00NR	0	16WP	G15_082	FROM->TO	CIMARRON - DRAPER LAKE 345KV CKT 1	717	717	0.12043	105.3943	P12:138:AEPW:OKMULGE4:R.S.S-4
FDNS	00NR	0	16WP	G15_082	FROM->TO	CIMARRON - DRAPER LAKE 345KV CKT 1	717	717	0.12045	105.3851	GEN336831 1-BAXTER WILSON SES
FDNS	00NR	0	16WP	G15_082	FROM->TO	CIMARRON - DRAPER LAKE 345KV CKT 1	717	717	0.12236	105.3581	BENTON - WICHITA 345KV CKT 1
FDNS	00NR	0	16WP	G15_082	FROM->TO	CIMARRON - DRAPER LAKE 345KV CKT 1	717	717	0.12065	105.3518	ANADARKO - GEORGIA 138KV CKT 1
FDNS	00NR	0	16WP	G15_082	FROM->TO	CIMARRON - DRAPER LAKE 345KV CKT 1	717	717	0.12126	105.3507	CLASSEN - ROBINSON 138KV CKT 1
FDNS	00NR	0	16WP	G15_082	FROM->TO	CIMARRON - DRAPER LAKE 345KV CKT 1	717	717	0.12045	105.3491	GEN334441 1-SABINE UNIT 5
FDNS	00NR	0	16WP	G15_082	FROM->TO	CIMARRON - DRAPER LAKE 345KV CKT 1	717	717	0.12045	105.3426	GEN334071 1-LEWIS CREEK 2
FDNS	00NR	0	16WP	G15_082	FROM->TO	CIMARRON - DRAPER LAKE 345KV CKT 1	717	717	0.12045	105.3347	GEN334070 1-LEWIS CREEK 1
FDNS	00NR	0	16WP	G15_082	FROM->TO	CIMARRON - DRAPER LAKE 345KV CKT 1	717	717	0.12045	105.3309	GEN300006 1-NEW MADRID UNIT 1
FDNS	00NR	0	16WP	G15_082	FROM->TO	CIMARRON - DRAPER LAKE 345KV CKT 1	717	717	0.12045	105.3257	GEN506754 1-LEBROCK STEAM 1
FDNS	00NR	0	16WP	G15_082	FROM->TO	CIMARRON - DRAPER LAKE 345KV CKT 1	717	717	0.12045	105.32	GEN336251 1-NINEMILE POINT UNIT#4
FDNS	00NR	0	16WP	G15_082	FROM->TO	CIMARRON - DRAPER LAKE 345KV CKT 1	717	717	0.12045	105.3188	GEN300007 1-NEW MADRID UNIT 2
FDNS	00NR	0	16WP	G15_082	FROM->TO	CIMARRON - DRAPER LAKE 345KV CKT 1	717	717	0.12083	105.2978	EMPORIA ENERGY CENTER - SWISSVALE 345KV CKT 1
FDNS	00NR	0	16WP	G15_082	FROM->TO	CIMARRON - DRAPER LAKE 345KV CKT 1	717	717	0.12175	105.2902	CRINER - PAYNE 138.00 138KV CKT 1
FDNS	00NR	0	16WP	G15_082	FROM->TO	CIMARRON - DRAPER LAKE 345KV CKT 1	717	717	0.12065	105.2885	FLETCHER - GEORGIA 138KV CKT 1
FDNS	00NR	0	16WP	G15_082	FROM->TO	CIMARRON - DRAPER LAKE 345KV CKT 1	717	717	0.12078	105.2667	G15088_T 345.00 - MOORE 345KV CKT 1
FDNS	00NR	0	16WP	G15_082	FROM->TO	CIMARRON - DRAPER LAKE 345KV CKT 1	717	717	0.12045	105.257	GEN501811 1-RODEMACHER UNIT 1
FDNS	00NR	0	16WP	G15_082	FROM->TO	CIMARRON - DRAPER LAKE 345KV CKT 1	717	717	0.12055	105.2481	WOODRING (WOODRNG2) 345/138/13.8KV TRANSFORMER CKT 1
FDNS	00NR	0	16WP	G15_082	FROM->TO	CIMARRON - DRAPER LAKE 345KV CKT 1	717	717	0.12068	105.2414	EMPIRE - FLETCHER 138KV CKT 1
FDNS	00NR	0	16WP	G15_082	FROM->TO	CIMARRON - DRAPER LAKE 345KV CKT 1	717	717	0.12056	105.2398	WEBRE - WELLS 500KV CKT 1
FDNS	00NR	0	16WP	G15_082	FROM->TO	CIMARRON - DRAPER LAKE 345KV CKT 1	717	717	0.12081	105.2384	LONEOAK - QUAIL CREEK 138KV CKT 1
FDNS	00NR	0	16WP	G15_082	FROM->TO	CIMARRON - DRAPER LAKE 345KV CKT 1	717	717	0.12045	105.2271	GEN503909 1-FULTONU1 1 16.000
FDNS	00NR	0	16WP	G15_082	FROM->TO	CIMARRON - DRAPER LAKE 345KV CKT 1	717	717	0.12068	105.2267	OSAGE - WEBB CITY TAP 138KV CKT 1
FDNS	00NR	0	16WP	G15_082	FROM->TO	CIMARRON - DRAPER LAKE 345KV CKT 1	717	717	0.12107	105.219	EMPORIA ENERGY CENTER - G14_001T 345.00 345KV CKT 1
FDNS	00NR	0	16WP	G15_082	FROM->TO	CIMARRON - DRAPER LAKE 345KV CKT 1	717	717	0.12045	105.2114	FRONTIER - GRIMES 345KV CKT 1
FDNS	00NR	0	16WP	G15_082	FROM->TO	CIMARRON - DRAPER LAKE 345KV CKT 1	717	717	0.12638	105.2099	FINNEY SWITCHING STATION - Hitchland Interchange 345KV CKT 1
FDNS	00NR	0	16WP	G15_082	FROM->TO	CIMARRON - DRAPER LAKE 345KV CKT 1	717	717	0.12045	105.2093	GEN338146 1-INDEPENDENCE UNIT #2
FDNS	00NR	0	16WP	G15_082	FROM->TO	CIMARRON - DRAPER LAKE 345KV CKT 1	717	717	0.12045	105.2084	GEN334030 1-FRONTIER UNIT 1
FDNS	00NR	0	16WP	G15_082	FROM->TO	CIMARRON - DRAPER LAKE 345KV CKT 1	717	717	0.12045	105.2072	GEN334031 1-FRONTIER UNIT 2
FDNS	00NR	0	16WP	G15_082	FROM->TO	CIMARRON - DRAPER LAKE 345KV CKT 1	717	717	0.12045	105.206	GEN590011 2-ERCOT EQUIVALENCE
FDNS	00NR	0	16WP	G15_082	FROM->TO	CIMARRON - DRAPER LAKE 345KV CKT 1	717	717	0.12073	105.203	SPVALLY4 138.00 - STILLWATER 138KV CKT 1
FDNS	00NR	0	16WP	G15_082	FROM->TO	CIMARRON - DRAPER LAKE 345KV CKT 1	717	717	0.12045	105.1963	GEN334433 1-SABINE UNIT 3
FDNS	00NR	0	16WP	G15_082	FROM->TO	CIMARRON - DRAPER LAKE 345KV CKT 1	717	717	0.12049	105.192	8DANIEL8 500.00 - MCKNIGHT 500KV CKT 1
FDNS	00NR	0	16WP	G15_082	FROM->TO	CIMARRON - DRAPER LAKE 345KV CKT 1	717	717	0.12181	105.1917	G1524G1525 345.00 - THISTLE7 345.00 345KV CKT 1
FDNS	00NR	0	16WP	G15_082	FROM->TO	CIMARRON - DRAPER LAKE 345KV CKT 1	717	717	0.12181	105.1917	G1524G1525 345.00 - THISTLE7 345.00 345KV CKT 2
FDNS	00NR	0	16WP	G15_082	FROM->TO	CIMARRON - DRAPER LAKE 345KV CKT 1	717	717	0.12045	105.1899	P12:161:AEPW:DYESS 5:HYLAND 5
FDNS	00NR	0	16WP	G15_082	FROM->TO	CIMARRON - DRAPER LAKE 345KV CKT 1	717	717	0.12045	105.1878	GEN303007 1-1BC2 U2
FDNS	00NR	0	16WP	G15_082	FROM->TO	CIMARRON - DRAPER LAKE 345KV CKT 1	717	717	0.12045	105.1861	P12:069:OKGE:3TERM4
FDNS	00NR	0	16WP	G15_082	FROM->TO	CIMARRON - DRAPER LAKE 345KV CKT 1	717	717	0.12045	105.1838	GEN303006 1-1BC2 U1
FDNS	00NR	0	16WP	G15_082	FROM->TO	CIMARRON - DRAPER LAKE 345KV CKT 1	717	717	0.12068	105.1784	COMANCHE - EMPIRE 138KV CKT 1
FDNS	00NR	0	16WP	G15_082	FROM->TO	CIMARRON - DRAPER LAKE 345KV CKT 1	717	717	0.11801	105.1747	CANADIAN RIVER - PITTSBURG 345KV CKT 1

SOLUTION	GROUP	SCENARIO	SEASON	SOURCE	DIRECTION	MONITORED ELEMENT	RATEA (MVA)	RATEB(MVA)	TDF	TC%LOADING (% MVA)	CONTINGENCY
FDNS	00NR	0	16WP	G15_082	FROM->TO	CIMARRON - DRAPER LAKE 345KV CKT 1	717	717	0.11801	105.1747	CANADIAN RIVER - PITTSBURG 345KV CKT 1
FDNS	00NR	0	16WP	G15_082	FROM->TO	CIMARRON - DRAPER LAKE 345KV CKT 1	717	717	0.12073	105.1737	PAYNESB4 138.00 - SPVALLY4 138.00 138KV CKT 1
FDNS	00NR	0	16WP	G15_082	FROM->TO	CIMARRON - DRAPER LAKE 345KV CKT 1	717	717	0.12064	105.1686	CLEAVELAND - CLEVLND 4 138.00 138KV CKT Z1
FDNS	00NR	0	16WP	G15_082	FROM->TO	CIMARRON - DRAPER LAKE 345KV CKT 1	717	717	0.12064	105.1683	CLEVELAND (CLVAUTO1) 345/138/13.8KV TRANSFORMER CKT 1
FDNS	00NR	0	16WP	G15_082	FROM->TO	CIMARRON - DRAPER LAKE 345KV CKT 1	717	717	0.12064	105.1683	CLEVELAND (CLVAUTO1) 345/138/13.8KV TRANSFORMER CKT 1
FDNS	00NR	0	16WP	G15_082	FROM->TO	CIMARRON - DRAPER LAKE 345KV CKT 1	717	717	0.12045	105.1681	GEN590010 1-ERCOT EQUIVALENCE
FDNS	00NR	0	16WP	G15_082	FROM->TO	CIMARRON - DRAPER LAKE 345KV CKT 1	717	717	0.12175	105.1674	COLE - CRINER 138KV CKT 1
FDNS	00NR	0	16WP	G15_082	FROM->TO	CIMARRON - DRAPER LAKE 345KV CKT 1	717	717	0.12045	105.1671	GEN336191 1-LITTLE GYPSY UNIT#3
FDNS	00NR	0	16WP	G15_082	FROM->TO	CIMARRON - DRAPER LAKE 345KV CKT 1	717	717	0.12045	105.1639	GEN337041 1-GERALD ANDRUS
FDNS	00NR	0	16WP	G15_082	FROM->TO	CIMARRON - DRAPER LAKE 345KV CKT 1	717	717	0.12059	105.1593	P12:138:OKGE:3TERM13
FDNS	00NR	0	16WP	G15_082	FROM->TO	CIMARRON - DRAPER LAKE 345KV CKT 1	717	717	0.12073	105.1579	CUSHING - PAYNESB4 138.00 138KV CKT 1
FDNS	00NR	0	16WP	G15_082	FROM->TO	CIMARRON - DRAPER LAKE 345KV CKT 1	717	717	0.12045	105.1485	GEN509393 S1-ARSENAL HILL GENS #4 (STALL)
FDNS	00NR	0	16WP	G15_082	FROM->TO	CIMARRON - DRAPER LAKE 345KV CKT 1	717	717	0.12058	105.1396	7LUTESVIL 345.00 - 7ST FRANC 345.00 345KV CKT 1
FDNS	00NR	0	16WP	G15_082	FROM->TO	CIMARRON - DRAPER LAKE 345KV CKT 1	717	717	0.12045	105.135	GEN335614 1-WILLOW GLENN UNIT#4
FDNS	00NR	0	16WP	G15_082	FROM->TO	CIMARRON - DRAPER LAKE 345KV CKT 1	717	717	0.12086	105.1346	DAYTON - MUSTANG 138KV CKT 1
FDNS	00NR	0	16WP	G15_082	FROM->TO	CIMARRON - DRAPER LAKE 345KV CKT 1	717	717	0.12044	105.1318	ELDORADO EHV - MOUNT OLIVE 500KV CKT 1
FDNS	00NR	0	16WP	G15_082	FROM->TO	CIMARRON - DRAPER LAKE 345KV CKT 1	717	717	0.12086	105.1296	DAYTON - HOBBY LOBBY 138KV CKT 1
FDNS	00NR	0	16WP	G15_082	FROM->TO	CIMARRON - DRAPER LAKE 345KV CKT 1	717	717	0.12045	105.1282	GEN509391 G1-ARSENAL HILL GENS #2 (STALL)
FDNS	00NR	0	16WP	G15_082	FROM->TO	CIMARRON - DRAPER LAKE 345KV CKT 1	717	717	0.12045	105.1282	GEN509392 G2-ARSENAL HILL GENS #3 (STALL)
FDNS	00NR	0	16WP	G15_082	FROM->TO	CIMARRON - DRAPER LAKE 345KV CKT 1	717	717	0.12045	105.1234	GEN303008 1-1BC2 U3
FDNS	00NR	0	16WP	G15_082	FROM->TO	CIMARRON - DRAPER LAKE 345KV CKT 1	717	717	0.1209	105.1108	MUSTANG - SW 5TH 138KV CKT 1
FDNS	00NR	0	16WP	G15_082	FROM->TO	CIMARRON - DRAPER LAKE 345KV CKT 1	717	717	0.12045	105.1018	GEN336170 1-GULF OXY U4
FDNS	00NR	0	16WP	G15_082	FROM->TO	CIMARRON - DRAPER LAKE 345KV CKT 1	717	717	0.12045	105.0992	GEN336464 1-MICHOUD UNIT #3
FDNS	00NR	0	16WP	G15_082	FROM->TO	CIMARRON - DRAPER LAKE 345KV CKT 1	717	717	0.12107	105.0904	G14_001T 345.00 - WICHITA 345KV CKT 1
FDNS	00NR	0	16WP	G15_082	FROM->TO	CIMARRON - DRAPER LAKE 345KV CKT 1	717	717	0.12045	105.0801	GEN338143 1-INDEPENDENCE UNIT #1
FDNS	00NR	0	16WP	G15_082	FROM->TO	CIMARRON - DRAPER LAKE 345KV CKT 1	717	717	0.12041	105.0713	ELDORADO EHV - SHERIDAN EHV 500KV CKT 1
FDNS	00NR	0	16WP	G15_082	FROM->TO	CIMARRON - DRAPER LAKE 345KV CKT 1	717	717	0.12051	105.0698	P12:069:OKGE:3TERM19
FDNS	00NR	0	16WP	G15_082	FROM->TO	CIMARRON - DRAPER LAKE 345KV CKT 1	717	717	0.12087	105.0611	OUMED 4 - STONEWALL 138KV CKT 1
FDNS	00NR	0	16WP	G15_082	FROM->TO	CIMARRON - DRAPER LAKE 345KV CKT 1	717	717	0.12126	105.0573	LIGHTNING CREEK - ROBINSON 138KV CKT 1
FDNS	00NR	0	16WP	G15_082	FROM->TO	CIMARRON - DRAPER LAKE 345KV CKT 1	717	717	0.12045	105.0545	GEN336801 1-BAXTER WILSON UNIT #1
FDNS	00NR	0	16WP	G15_082	FROM->TO	CIMARRON - DRAPER LAKE 345KV CKT 1	717	717	0.12061	105.0516	8WNEWMADRID 500.00 - DELL 500 500KV CKT 1
FDNS	00NR	0	16WP	G15_082	FROM->TO	CIMARRON - DRAPER LAKE 345KV CKT 1	717	717	0.12005	105.0494	ARCADIA - LGARBER4 138.00 138KV CKT 1
FDNS	00NR	0	16WP	G15_082	FROM->TO	CIMARRON - DRAPER LAKE 345KV CKT 1	717	717	0.12156	105.0468	TULSA NORTH - WEKIWA 345KV CKT 1
FDNS	00NR	0	16WP	G15_082	FROM->TO	CIMARRON - DRAPER LAKE 345KV CKT 1	717	717	0.12156	105.0468	TULSA NORTH - WEKIWA 345KV CKT 1
FDNS	00NR	0	16WP	G15_082	FROM->TO	CIMARRON - DRAPER LAKE 345KV CKT 1	717	717	0.12068	105.0467	FAIRFAX TAP - SHIDLER 138KV CKT 1
FDNS	00NR	0	16WP	G15_082	FROM->TO	CIMARRON - DRAPER LAKE 345KV CKT 1	717	717	0.12068	105.0466	FAIRFAX TAP - WEBB CITY TAP 138KV CKT 1
FDNS	00NR	0	16WP	G15_082	FROM->TO	CIMARRON - DRAPER LAKE 345KV CKT 1	717	717	0.12041	105.0348	7JASPER 345.00 - BLACKBERRY 345KV CKT 1
FDNS	00NR	0	16WP	G15_082	FROM->TO	CIMARRON - DRAPER LAKE 345KV CKT 1	717	717	0.12045	105.0303	GEN506752 1-LEBROCK GAS 1
FDNS	00NR	0	16WP	G15_082	FROM->TO	CIMARRON - DRAPER LAKE 345KV CKT 1	717	717	0.12045	105.0302	GEN506753 1-LEBROCK GAS 2
FDNS	00NR	0	16WP	G15_082	FROM->TO	CIMARRON - DRAPER LAKE 345KV CKT 1	717	717	0.12005	105.0194	CHITWOOD - LGARBER4 138.00 138KV CKT 1
FDNS	00NR	0	16WP	G15_082	FROM->TO	CIMARRON - DRAPER LAKE 345KV CKT 1	717	717	0.12045	105.0158	GEN501910 1-ACADIA UNIT ST1
FDNS	00NR	0	16WP	G15_082	FROM->TO	CIMARRON - DRAPER LAKE 345KV CKT 1	717	717	0.12005	105.007	CHITWOOD - JONES TAP 138KV CKT 1
FDNS	00NR	0	16WP	G15_082	FROM->TO	CIMARRON - DRAPER LAKE 345KV CKT 1	717	717	0.12045	105.0006	RODEMACHER 230/22.0KV TRANSFORMER CKT 1
FDNS	00NR	0	16WP	G15_082	FROM->TO	CIMARRON - DRAPER LAKE 345KV CKT 1	717	717	0.12048	104.9926	P12:345:GRDA:CHOUTEAU-SPORTSMANACRES
FDNS	00NR	0	16WP	G15_082	FROM->TO	CIMARRON - DRAPER LAKE 345KV CKT 1	717	717	0.1209	104.9917	CHISHOLM6 230.00 - ELK CITY 230KV 230KV CKT 1
FDNS	00NR	0	16WP	G15_082	FROM->TO	CIMARRON - DRAPER LAKE 345KV CKT 1	717	717	0.1209	104.9895	ELK CITY 230KV (ELKCTY-6) 230/138/13.8KV TRANSFORMER CKT 1
FDNS	00NR	0	16WP	G15_082	FROM->TO	CIMARRON - DRAPER LAKE 345KV CKT 1	717	717	0.1209	104.9895	ELK CITY 230KV (ELKCTY-6) 230/138/13.8KV TRANSFORMER CKT 1
FDNS	00NR	0	16WP	G15_082	FROM->TO	CIMARRON - DRAPER LAKE 345KV CKT 1	717	717	0.12076	104.979	ANADARKO - SEQUOYAHJ4 138.00 138KV CKT 1
FDNS	00NR	0	16WP	G15_082	FROM->TO	CIMARRON - DRAPER LAKE 345KV CKT 1	717	717	0.12076	104.9785	CORN TAP - SEQUOYAHJ4 138.00 138KV CKT 1
FDNS	00NR	0	16WP	G15_082	FROM->TO	CIMARRON - DRAPER LAKE 345KV CKT 1	717	717	0.12052	104.9722	P12:138:AEPW:N.E.S.-4:CATOOSA4
FDNS	00NR	0	16WP	G15_082	FROM->TO	CIMARRON - DRAPER LAKE 345KV CKT 1	717	717	0.12224	104.9713	NORTHEAST STATION - ONETA 345KV CKT 1
FDNS	00NR	0	16WP	G15_082	FROM->TO	CIMARRON - DRAPER LAKE 345KV CKT 1	717	717	0.12224	104.9713	NORTHEAST STATION - ONETA 345KV CKT 1
FDNS	00NR	0	16WP	G15_082	FROM->TO	CIMARRON - DRAPER LAKE 345KV CKT 1	717	717	0.1216	104.967	ARKANSAS NUCLEAR ONE - FT SMITH 500KV CKT 1
FDNS	00NR	0	16WP	G15_082	FROM->TO	CIMARRON - DRAPER LAKE 345KV CKT 1	717	717	0.1216	104.967	ARKANSAS NUCLEAR ONE - FT SMITH 500KV CKT 1
FDNS	00NR	0	16WP	G15_082	FROM->TO	CIMARRON - DRAPER LAKE 345KV CKT 1	717	717	0.12035	104.9644	P12:138:AEPW-OGE:WTH_JCT4:JENSEN4
FDNS	00NR	0	16WP	G15_082	FROM->TO	CIMARRON - DRAPER LAKE 345KV CKT 1	717	717	0.12061	104.9616	P13:138-161:WERE:NSES_TX-4OR5::
FDNS	00NR	0	16WP	G15_082	FROM->TO	CIMARRON - DRAPER LAKE 345KV CKT 1	717	717	0.12087	104.9596	OUMED 4 - PARK PLACE 138KV CKT 1
FDNS	00NR	0	16WP	G15_082	FROM->TO	CIMARRON - DRAPER LAKE 345KV CKT 1	717	717	0.12156	104.9544	G13-010T 345.00 - POST ROCK 345KV CKT 1
FDNS	00NR	0	16WP	G15_082	FROM->TO	CIMARRON - DRAPER LAKE 345KV CKT 1	717	717	0.12048	104.952	7JASPER 345.00 - MORGAN 345KV CKT 1
FDNS	00NR	0	16WP	G15_082	FROM->TO	CIMARRON - DRAPER LAKE 345KV CKT 1	717	717	0.12035	104.952	MORISNT4 138.00 - SOONER 138KV CKT 1
FDNS	00NR	0	16WP	G15_082	FROM->TO	CIMARRON - DRAPER LAKE 345KV CKT 1	717	717	0.12045	104.9518	GEN511843 1-RIVERSIDE STATION #2
FDNS	00NR	0	16WP	G15_082	FROM->TO	CIMARRON - DRAPER LAKE 345KV CKT 1	717	717	0.1205	104.9395	6LAYFLD 230.00 - CARROLL 230KV CKT 1
FDNS	00NR	0	16WP	G15_082	FROM->TO	CIMARRON - DRAPER LAKE 345KV CKT 1	717	717	0.12124	104.939	DALE - HORSESHOE LAKE 138KV CKT 1
FDNS	00NR	0	16WP	G15_082	FROM->TO	CIMARRON - DRAPER LAKE 345KV CKT 1	717	717	0.12045	104.9358	ST FRANCIS - ST FRANCIS 1 161KV CKT Z1
FDNS	00NR	0	16WP	G15_082	FROM->TO	CIMARRON - DRAPER LAKE 345KV CKT 1	717	717	0.12059	104.9312	P12:138:AEPW:CATOOSA4:T.S.E.-4
FDNS	00NR	0	16WP	G15_082	FROM->TO	CIMARRON - DRAPER LAKE 345KV CKT 1	717	717	0.12045	104.9271	8CAJUN2 500/24.0KV TRANSFORMER CKT 1
FDNS	00NR	0	16WP	G15_082	FROM->TO	CIMARRON - DRAPER LAKE 345KV CKT 1	717	717	0.12126	104.9196	LIGHTNING CREEK - TROSPER 138KV CKT 1
FDNS	00NR	0	16WP	G15_082	FROM->TO	CIMARRON - DRAPER LAKE 345KV CKT 1	717	717	0.1205	104.9189	FULTON 115 - HOPE 115KV CKT 1
FDNS	00NR	0	16WP	G15_082	FROM->TO	CIMARRON - DRAPER LAKE 345KV CKT 1	717	717	0.1205	104.9189	FULTON 115 - HOPE 115KV CKT 1
FDNS	00NR	0	16WP	G15_082	FROM->TO	CIMARRON - DRAPER LAKE 345KV CKT 1	717	717	0.12045	104.9189	P12:069:OKGE:3TERM3
FDNS	00NR	0	16WP	G15_082	FROM->TO	CIMARRON - DRAPER LAKE 345KV CKT 1	717	717	0.12063	104.918	HUGO - VALLIANT 345KV CKT 1
FDNS	00NR	0	16WP	G15_082	FROM->TO	CIMARRON - DRAPER LAKE 345KV CKT 1	717	717	0.12063	104.918	HUGO - VALLIANT 345KV CKT 1
FDNS	00NR	0	16WP	G15_082	FROM->TO	CIMARRON - DRAPER LAKE 345KV CKT 1	717	717	0.12175	104.9149	COLE - OUSW4 138KV CKT 1
FDNS	00NR	0	16WP	G15_082	FROM->TO	CIMARRON - DRAPER LAKE 345KV CKT 1	717	717	0.12093	104.9139	ANADARKO - GRACMNT4 138.00 138KV CKT 1
FDNS	00NR	0	16WP	G15_082	FROM->TO	CIMARRON - DRAPER LAKE 345KV CKT 1	717	717	0.12049	104.9034	HAMMETT TAP - HAMMETT2 138KV CKT 1
FDNS	00NR	0	16WP	G15_082	FROM->TO	CIMARRON - DRAPER LAKE 345KV CKT 1	717	717	0.12045	104.9033	NELSON 230/20.0KV TRANSFORMER CKT 1
FDNS	00NR	0	16WP	G15_082	FROM->TO	CIMARRON - DRAPER LAKE 345KV CKT 1	717	717	0.12156	104.9032	G13-010T 345.00 - SPEARVILLE 345KV CKT 1
FDNS	00NR	0	16WP	G15_082	FROM->TO	CIMARRON - DRAPER LAKE 345KV CKT 1	717	717	0.12045	104.9006	P12:138:AEPW:SHERID4:112GORE4
FDNS	00NR	0	16WP	G15_082	FROM->TO	CIMARRON - DRAPER LAKE 345KV CKT 1	717	717	0.12045	104.8999	GEN337766 1-TRACTEBEL UNIT S1

SOLUTION	GROUP	SCENARIO	SEASON	SOURCE	DIRECTION	MONITORED ELEMENT	RATEA (MVA)	RATEB(MVA)	TDF	TC%LOADING (% MVA)	CONTINGENCY
FDNS	00NR	0	16WP	G15_082	FROM->TO	CIMARRON - DRAPER LAKE 345KV CKT 1	717	717	0.12086	104.8998	36 & MERIDIAN - HOBBY LOBBY 138KV CKT 1
FDNS	00NR	0	16WP	G15_082	FROM->TO	CIMARRON - DRAPER LAKE 345KV CKT 1	717	717	0.12045	104.8976	GEN336222 1-LITTLE GYPSY UNIT#2
FDNS	00NR	0	16WP	G15_082	FROM->TO	CIMARRON - DRAPER LAKE 345KV CKT 1	717	717	0.12124	104.896	DALE - SQUIRL CREEK 138KV CKT 1
FDNS	00NR	0	16WP	G15_082	FROM->TO	CIMARRON - DRAPER LAKE 345KV CKT 1	717	717	0.12355	104.893	PECAN CREEK - RIVERSIDE STATION 345KV CKT 1
FDNS	00NR	0	16WP	G15_082	FROM->TO	CIMARRON - DRAPER LAKE 345KV CKT 1	717	717	0.12355	104.893	PECAN CREEK - RIVERSIDE STATION 345KV CKT 1
FDNS	00NR	0	16WP	G15_082	FROM->TO	CIMARRON - DRAPER LAKE 345KV CKT 1	717	717	0.12046	104.8912	P12:161:AEPW:EROGERS5:ECNTRTN5
FDNS	00NR	0	16WP	G15_082	FROM->TO	CIMARRON - DRAPER LAKE 345KV CKT 1	717	717	0.12078	104.8879	HEALDTON - LOCO 138KV CKT 1
FDNS	00NR	0	16WP	G15_082	FROM->TO	CIMARRON - DRAPER LAKE 345KV CKT 1	717	717	0.12053	104.8873	P12:138:OKGE:3TERM28
FDNS	00NR	0	16WP	G15_082	FROM->TO	CIMARRON - DRAPER LAKE 345KV CKT 1	717	717	0.12067	104.8861	COMANCHE TAP - OMPA-DUNCAN 840 138KV CKT 1
FDNS	00NR	0	16WP	G15_082	FROM->TO	CIMARRON - DRAPER LAKE 345KV CKT 1	717	717	0.12045	104.8852	GEN501970 1-EVANGELINE UNIT 7
FDNS	00NR	0	16WP	G15_082	FROM->TO	CIMARRON - DRAPER LAKE 345KV CKT 1	717	717	0.12045	104.8834	GEN515564 1-ORIGIN11 0.6900
FDNS	00NR	0	16WP	G15_082	FROM->TO	CIMARRON - DRAPER LAKE 345KV CKT 1	717	717	0.12045	104.8834	GEN515565 1-ORIGIN21 0.6900
FDNS	00NR	0	16WP	G15_082	FROM->TO	CIMARRON - DRAPER LAKE 345KV CKT 1	717	717	0.12049	104.8828	NW164TH4 138.00 - PIEDMONT 138KV CKT 1
FDNS	00NR	0	16WP	G15_082	FROM->TO	CIMARRON - DRAPER LAKE 345KV CKT 1	717	717	0.12045	104.8811	P12:161:AEPW:DYESS5:ELMSPRNG:TONTITN5
FDNS	00NR	0	16WP	G15_082	FROM->TO	CIMARRON - DRAPER LAKE 345KV CKT 1	717	717	0.12049	104.8808	NORTHWEST - NW164TH4 138.00 138KV CKT 1
FDNS	00NR	0	16WP	G15_082	FROM->TO	CIMARRON - DRAPER LAKE 345KV CKT 1	717	717	0.12096	104.877	COTTONWOOD CREEK - MARSHALL 138KV CKT 1
FDNS	00NR	0	16WP	G15_082	FROM->TO	CIMARRON - DRAPER LAKE 345KV CKT 1	717	717	0.12052	104.8763	P12:161:AEPW-SWPA:BEAVER5:EROGERS5
FDNS	00NR	0	16WP	G15_082	FROM->TO	CIMARRON - DRAPER LAKE 345KV CKT 1	717	717	0.12096	104.8753	MARSHALL - WOODRING 138KV CKT 1
FDNS	00NR	0	16WP	G15_082	FROM->TO	CIMARRON - DRAPER LAKE 345KV CKT 1	717	717	0.12045	104.8707	ST FRANCIS 345/161KV TRANSFORMER CKT 1
FDNS	00NR	0	16WP	G15_082	FROM->TO	CIMARRON - DRAPER LAKE 345KV CKT 1	717	717	0.12053	104.87	FLETCHER - MARLOW JCT 69KV CKT 1
FDNS	00NR	0	16WP	G15_082	FROM->TO	CIMARRON - DRAPER LAKE 345KV CKT 1	717	717	0.12048	104.8686	AS KING - EAU CLAIRE 345KV CKT 1
FDNS	00NR	0	16WP	G15_082	FROM->TO	CIMARRON - DRAPER LAKE 345KV CKT 1	717	717	0.12045	104.867	GEN300015 1-1SGPDEL 18.000
FDNS	00NR	0	16WP	G15_082	FROM->TO	CIMARRON - DRAPER LAKE 345KV CKT 1	717	717	0.12045	104.866	GEN336152 1-WATERFORD UNIT#2
FDNS	00NR	0	16WP	G15_082	FROM->TO	CIMARRON - DRAPER LAKE 345KV CKT 1	717	717	0.12045	104.8649	GEN336151 1-WATERFORD UNIT#1
FDNS	00NR	0	16WP	G15_082	FROM->TO	CIMARRON - DRAPER LAKE 345KV CKT 1	717	717	0.12036	104.8641	P12:138:OKGE-AEPW:JENSEN4:REDROCKRD4
FDNS	00NR	0	16WP	G15_082	FROM->TO	CIMARRON - DRAPER LAKE 345KV CKT 1	717	717	0.12057	104.8558	BRISTOW - SILVER CITY 138KV CKT 1
FDNS	00NR	0	16WP	G15_082	FROM->TO	CIMARRON - DRAPER LAKE 345KV CKT 1	717	717	0.12061	104.8543	HEFNER - TULSA 138KV CKT 1
FDNS	00NR	0	16WP	G15_082	FROM->TO	CIMARRON - DRAPER LAKE 345KV CKT 1	717	717	0.12045	104.8536	GEN334392 1-EXXON MOBIL IPP 1
FDNS	00NR	0	16WP	G15_082	FROM->TO	CIMARRON - DRAPER LAKE 345KV CKT 1	717	717	0.12065	104.8524	P12:138:AEPW:CORNVIL4:S.W.S.-4
FDNS	00NR	0	16WP	G15_082	FROM->TO	CIMARRON - DRAPER LAKE 345KV CKT 1	717	717	0.12078	104.8469	HEALDTON - RINGLING 138KV CKT 1
FDNS	00NR	0	16WP	G15_082	FROM->TO	CIMARRON - DRAPER LAKE 345KV CKT 1	717	717	0.12045	104.8466	GEN334393 1-EXXON MOBIL IPP 2
FDNS	00NR	0	16WP	G15_082	FROM->TO	CIMARRON - DRAPER LAKE 345KV CKT 1	717	717	0.12045	104.8466	GEN334394 1-EXXON MOBIL IPP 3
FDNS	00NR	0	16WP	G15_082	FROM->TO	CIMARRON - DRAPER LAKE 345KV CKT 1	717	717	0.1209	104.8434	EL RENO SW - MUSTANG2 69.000 69KV CKT 1
FDNS	00NR	0	16WP	G15_082	FROM->TO	CIMARRON - DRAPER LAKE 345KV CKT 1	717	717	0.12049	104.8379	P12:138:AEPW:MOUNDRD4:SHIDLER4
FDNS	00NR	0	16WP	G15_082	FROM->TO	CIMARRON - DRAPER LAKE 345KV CKT 1	717	717	0.12047	104.8361	MC NIEL 500/115KV TRANSFORMER CKT 1
FDNS	00NR	0	16WP	G15_082	FROM->TO	CIMARRON - DRAPER LAKE 345KV CKT 1	717	717	0.12045	104.8313	GEN501972 1-EVANGELINE UNIT 7-2
FDNS	00NR	0	16WP	G15_082	FROM->TO	CIMARRON - DRAPER LAKE 345KV CKT 1	717	717	0.12045	104.8312	GEN501971 1-EVANGELINE UNIT 7-1
FDNS	00NR	0	16WP	G15_082	FROM->TO	CIMARRON - DRAPER LAKE 345KV CKT 1	717	717	0.12049	104.8295	SHIDLER - WEST PAWHUSKA 138KV CKT 1
FDNS	00NR	0	16WP	G15_082	FROM->TO	CIMARRON - DRAPER LAKE 345KV CKT 1	717	717	0.12048	104.8293	BISMARK - HOT SPRINGS WEST BUS 115KV CKT 1
FDNS	00NR	0	16WP	G15_082	FROM->TO	CIMARRON - DRAPER LAKE 345KV CKT 1	717	717	0.12061	104.8251	BROOKLINE - MORGAN 345KV CKT 1
FDNS	00NR	0	16WP	G15_082	FROM->TO	CIMARRON - DRAPER LAKE 345KV CKT 1	717	717	0.12197	104.8248	BRYANT - MEMORIAL 138KV CKT 1
FDNS	00NR	0	16WP	G15_082	FROM->TO	CIMARRON - DRAPER LAKE 345KV CKT 1	717	717	0.12045	104.8222	GEN334432 1-SABINE UNIT 2
FDNS	00NR	0	16WP	G15_082	FROM->TO	CIMARRON - DRAPER LAKE 345KV CKT 1	717	717	0.12045	104.8221	GEN334431 1-SABINE UNIT 1
FDNS	00NR	0	16WP	G15_082	FROM->TO	CIMARRON - DRAPER LAKE 345KV CKT 1	717	717	0.12045	104.8193	GEN336242 1-1NMIL ST1 18.000
FDNS	00NR	0	16WP	G15_082	FROM->TO	CIMARRON - DRAPER LAKE 345KV CKT 1	717	717	0.12087	104.819	BODLE - PARK PLACE 138KV CKT 1
FDNS	00NR	0	16WP	G15_082	FROM->TO	CIMARRON - DRAPER LAKE 345KV CKT 1	717	717	0.12049	104.8183	PAWHUSKA TAP - WEST PAWHUSKA 138KV CKT 1
FDNS	00NR	0	16WP	G15_082	FROM->TO	CIMARRON - DRAPER LAKE 345KV CKT 1	717	717	0.12042	104.817	KELLYAV4 138.00 - MEMORIAL 138KV CKT 1
FDNS	00NR	0	16WP	G15_082	FROM->TO	CIMARRON - DRAPER LAKE 345KV CKT 1	717	717	0.12045	104.8168	GEN501912 1-ACADIA UNIT CT1B
FDNS	00NR	0	16WP	G15_082	FROM->TO	CIMARRON - DRAPER LAKE 345KV CKT 1	717	717	0.12045	104.8162	GEN337764 1-TRACTEBEL UNIT C1
FDNS	00NR	0	16WP	G15_082	FROM->TO	CIMARRON - DRAPER LAKE 345KV CKT 1	717	717	0.12045	104.8162	GEN337765 1-TRACTEBEL UNIT C2
FDNS	00NR	0	16WP	G15_082	FROM->TO	CIMARRON - DRAPER LAKE 345KV CKT 1	717	717	0.12045	104.8161	GEN501911 1-ACADIA UNIT CT1A
FDNS	00NR	0	16WP	G15_082	FROM->TO	CIMARRON - DRAPER LAKE 345KV CKT 1	717	717	0.12069	104.8136	COUNCIL - MUSTANG 138KV CKT 1
FDNS	00NR	0	16WP	G15_082	FROM->TO	CIMARRON - DRAPER LAKE 345KV CKT 1	717	717	0.12049	104.8125	HAMMETT2 - MEEKER 138KV CKT 1
FDNS	00NR	0	16WP	G15_082	FROM->TO	CIMARRON - DRAPER LAKE 345KV CKT 1	717	717	0.12067	104.8108	DUNCAN - OMPA-DUNCAN 840 138KV CKT 1
FDNS	00NR	0	16WP	G15_082	FROM->TO	CIMARRON - DRAPER LAKE 345KV CKT 1	717	717	0.12067	104.8108	DUNCAN - OMPA-DUNCAN 840 138KV CKT 1
FDNS	00NR	0	16WP	G15_082	FROM->TO	CIMARRON - DRAPER LAKE 345KV CKT 1	717	717	0.12051	104.8103	ARPIN B4 345.00 - EAU CLAIRE 345KV CKT 1
FDNS	00NR	0	16WP	G15_082	FROM->TO	CIMARRON - DRAPER LAKE 345KV CKT 1	717	717	0.12081	104.8096	CIVIT - PAOLI 138KV CKT 1
FDNS	00NR	0	16WP	G15_082	FROM->TO	CIMARRON - DRAPER LAKE 345KV CKT 1	717	717	0.12049	104.8071	PIEDMONT - RICHRDS 138KV CKT 1
FDNS	00NR	0	16WP	G15_082	FROM->TO	CIMARRON - DRAPER LAKE 345KV CKT 1	717	717	0.12078	104.8051	RINGLING - SOUTH WILSON 138KV CKT 1
FDNS	00NR	0	16WP	G15_082	FROM->TO	CIMARRON - DRAPER LAKE 345KV CKT 1	717	717	0.12042	104.8051	KELLYAV4 138.00 - REMNGTON PARK 138KV CKT 1
FDNS	00NR	0	16WP	G15_082	FROM->TO	CIMARRON - DRAPER LAKE 345KV CKT 1	717	717	0.12062	104.8048	HAMMETT TAP - HORSESHOE LAKE 138KV CKT 1
FDNS	00NR	0	16WP	G15_082	FROM->TO	CIMARRON - DRAPER LAKE 345KV CKT 1	717	717	0.12046	104.8047	CYPRESS - HARTBURG 500KV CKT 1
FDNS	00NR	0	16WP	G15_082	FROM->TO	CIMARRON - DRAPER LAKE 345KV CKT 1	717	717	0.12045	104.8016	SABINE 230/24.0KV TRANSFORMER CKT 1
FDNS	00NR	0	16WP	G15_082	FROM->TO	CIMARRON - DRAPER LAKE 345KV CKT 1	717	717	0.12044	104.7993	LAYFLD8 500.00 - MOUNT OLIVE 500KV CKT 1
FDNS	00NR	0	16WP	G15_082	FROM->TO	CIMARRON - DRAPER LAKE 345KV CKT 1	717	717	0.12044	104.7993	LAYFLD8 500.00 - MOUNT OLIVE 500KV CKT 1
FDNS	00NR	0	16WP	G15_082	FROM->TO	CIMARRON - DRAPER LAKE 345KV CKT 1	717	717	0.12045	104.799	HOT SPRINGS EHV - MAGNET COVE 500KV CKT 1
FDNS	00NR	0	16WP	G15_082	FROM->TO	CIMARRON - DRAPER LAKE 345KV CKT 1	717	717	0.12048	104.7974	ALPINE AECC - BISMARK 115KV CKT 1
FDNS	00NR	0	16WP	G15_082	FROM->TO	CIMARRON - DRAPER LAKE 345KV CKT 1	717	717	0.12065	104.7899	CORN TAP - CORNVILLE 138KV CKT 1
FDNS	00NR	0	16WP	G15_082	FROM->TO	CIMARRON - DRAPER LAKE 345KV CKT 1	717	717	0.12045	104.7855	P12:69:AEPW:L.E.S.-2:LAW WC2
FDNS	00NR	0	16WP	G15_082	FROM->TO	CIMARRON - DRAPER LAKE 345KV CKT 1	717	717	0.12081	104.7598	CIVIT - STRATFORD 138KV CKT 1
FDNS	00NR	0	16WP	G15_082	FROM->TO	CIMARRON - DRAPER LAKE 345KV CKT 1	717	717	0.12197	104.7467	ACORN 4 138.00 - BRYANT 138KV CKT 1
FDNS	00NR	0	16WP	G15_082	FROM->TO	CIMARRON - DRAPER LAKE 345KV CKT 1	717	717	0.12045	104.3306	BASE CASE
FDNS	00NR	0	16WP	G15_082	FROM->TO	CIMARRON - DRAPER LAKE 345KV CKT 1	717	717	0.12004	104.0292	GRAPEVINE INTERCHANGE - NICHOLS STATION 230KV CKT 1
FDNS	00NR	0	16WP	G15_082	FROM->TO	CIMARRON - DRAPER LAKE 345KV CKT 1	717	717	0.12004	104.0292	GRAPEVINE INTERCHANGE - NICHOLS STATION 230KV CKT 1
FDNS	00NR	0	16WP	G15_082	FROM->TO	CIMARRON - DRAPER LAKE 345KV CKT 1	717	717	0.1212	103.9598	BURGETT4 138.00 - RNDBARN4 138.00 138KV CKT 1
FDNS	00NR	0	16WP	G15_082	FROM->TO	CIMARRON - DRAPER LAKE 345KV CKT 1	717	717	0.1212	103.9581	BURGETT4 138.00 - DANFORTH 138KV CKT 1
FDNS	00NR	0	16WP	G15_082	FROM->TO	CIMARRON - DRAPER LAKE 345KV CKT 1	717	717	0.1212	103.9472	ARCADIA - RNDBARN4 138.00 138KV CKT 1
FDNS	00NR	0	16WP	G15_082	FROM->TO	CIMARRON - DRAPER LAKE 345KV CKT 1	717	717	0.12045	103.9329	GEN562694 1-G15_016_3 0.6900
FDNS	00NR	0	16WP	G15_082	FROM->TO	CIMARRON - DRAPER LAKE 345KV CKT 1	717	717	0.11981	103.9174	GRAPEVINE INTERCHANGE - STATELINE INTERCHANGE 230KV CKT 1

SOLUTION	GROUP	SCENARIO	SEASON	SOURCE	DIRECTION	MONITORED ELEMENT	RATEA (MVA)	RATEB(MVA)	TDF	TC%LOADING (% MVA)	CONTINGENCY
FDNS	00NR	0	16WP	G15_082	FROM->TO	CIMARRON - DRAPER LAKE 345KV CKT 1	717	717	0.11981	103.9174	GRAPEVINE INTERCHANGE - STATELINE INTERCHANGE 230KV CKT 1
FDNS	00NR	0	16WP	G15_082	FROM->TO	CIMARRON - DRAPER LAKE 345KV CKT 1	717	717	0.12045	103.9069	GEN515550 1-MNCWND31 0.6900
FDNS	00NR	0	16WP	G15_082	FROM->TO	CIMARRON - DRAPER LAKE 345KV CKT 1	717	717	0.12045	103.886	GEN562517 1-G14_021_S2 0.6900
FDNS	00NR	0	16WP	G15_082	FROM->TO	CIMARRON - DRAPER LAKE 345KV CKT 1	717	717	0.12045	103.8817	GEN562611 1-G14_064_3 0.6900
FDNS	00NR	0	16WP	G15_082	FROM->TO	CIMARRON - DRAPER LAKE 345KV CKT 1	717	717	0.12045	103.8741	GEN511848 1-SOUTHWESTERN STATION #3
FDNS	00NR	0	16WP	G15_082	FROM->TO	CIMARRON - DRAPER LAKE 345KV CKT 1	717	717	0.12081	103.8731	OVEXFRMCCOVE
FDNS	00NR	0	16WP	G15_082	FROM->TO	CIMARRON - DRAPER LAKE 345KV CKT 1	717	717	0.12045	103.8645	GEN641089 2-ENERGY CENTER 2
FDNS	00NR	0	16WP	G15_082	FROM->TO	CIMARRON - DRAPER LAKE 345KV CKT 1	717	717	0.12045	103.8619	GEN515601 1-KNGFSR11 0.7000
FDNS	00NR	0	16WP	G15_082	FROM->TO	CIMARRON - DRAPER LAKE 345KV CKT 1	717	717	0.12045	103.8531	GEN563192 1-G15084_3 0.5500
FDNS	00NR	0	16WP	G15_082	FROM->TO	CIMARRON - DRAPER LAKE 345KV CKT 1	717	717	0.12045	103.8524	GEN600070 9-RIVER SIDE
FDNS	00NR	0	16WP	G15_082	FROM->TO	CIMARRON - DRAPER LAKE 345KV CKT 1	717	717	0.12045	103.8523	GEN600071 10-RIVER SIDE
FDNS	00NR	0	16WP	G15_082	FROM->TO	CIMARRON - DRAPER LAKE 345KV CKT 1	717	717	0.12045	103.8472	GEN672303 3-BOUNDARY DAM GENERATOR 3
FDNS	00NR	0	16WP	G15_082	FROM->TO	CIMARRON - DRAPER LAKE 345KV CKT 1	717	717	0.12045	103.8472	GEN672304 4-BOUNDARY DAM GENERATOR 4
FDNS	00NR	0	16WP	G15_082	FROM->TO	CIMARRON - DRAPER LAKE 345KV CKT 1	717	717	0.12045	103.8472	GEN672305 5-BOUNDARY DAM GENERATOR 5
FDNS	00NR	0	16WP	G15_082	FROM->TO	CIMARRON - DRAPER LAKE 345KV CKT 1	717	717	0.12045	103.8468	GEN563062 1-G15071_3 0.6900
FDNS	00NR	0	16WP	G15_082	FROM->TO	CIMARRON - DRAPER LAKE 345KV CKT 1	717	717	0.12045	103.8462	GEN600007 7-RIVERSIDE GEN 7
FDNS	00NR	0	16WP	G15_082	FROM->TO	CIMARRON - DRAPER LAKE 345KV CKT 1	717	717	0.12045	103.8457	GEN600067 9-HIGH BRIDGE
FDNS	00NR	0	16WP	G15_082	FROM->TO	CIMARRON - DRAPER LAKE 345KV CKT 1	717	717	0.12045	103.8417	GEN615052 1-CAMBRIDGE GENERATING STATION
FDNS	00NR	0	16WP	G15_082	FROM->TO	CIMARRON - DRAPER LAKE 345KV CKT 1	717	717	0.12045	103.8401	GEN600011 5-BLACK DOG GEN 1
FDNS	00NR	0	16WP	G15_082	FROM->TO	CIMARRON - DRAPER LAKE 345KV CKT 1	717	717	0.12012	103.8381	CHISNEY - CLARKSVILLE 138KV CKT 1
FDNS	00NR	0	16WP	G15_082	FROM->TO	CIMARRON - DRAPER LAKE 345KV CKT 1	717	717	0.12045	103.8343	GEN600014 4-BLACK DOG GEN 4
FDNS	00NR	0	16WP	G15_082	FROM->TO	CIMARRON - DRAPER LAKE 345KV CKT 1	717	717	0.12177	103.8308	FOREST HILL - MAUD 138KV CKT 1
FDNS	00NR	0	16WP	G15_082	FROM->TO	CIMARRON - DRAPER LAKE 345KV CKT 1	717	717	0.12045	103.8268	GEN659125 1-COVEY
FDNS	00NR	0	16WP	G15_082	FROM->TO	CIMARRON - DRAPER LAKE 345KV CKT 1	717	717	0.12045	103.8267	GEN629067 1-EMERY GAS TURBINE 1
FDNS	00NR	0	16WP	G15_082	FROM->TO	CIMARRON - DRAPER LAKE 345KV CKT 1	717	717	0.12045	103.8264	GEN615032 2-PLEASANT VALLEY
FDNS	00NR	0	16WP	G15_082	FROM->TO	CIMARRON - DRAPER LAKE 345KV CKT 1	717	717	0.12045	103.8227	GEN562802 1-G15039_3 0.3570
FDNS	00NR	0	16WP	G15_082	FROM->TO	CIMARRON - DRAPER LAKE 345KV CKT 1	717	717	0.12045	103.8111	GEN562602 1-G15_029_3 0.6900
FDNS	00NR	0	16WP	G15_082	FROM->TO	CIMARRON - DRAPER LAKE 345KV CKT 1	717	717	0.12045	103.8108	GEN515591 1-PALDRW11 0.6900
FDNS	00NR	0	16WP	G15_082	FROM->TO	CIMARRON - DRAPER LAKE 345KV CKT 1	717	717	0.12045	103.8103	GEN563102 1-G15075_3 0.5500
FDNS	00NR	0	16WP	G15_082	FROM->TO	CIMARRON - DRAPER LAKE 345KV CKT 1	717	717	0.12045	103.7969	GEN600017 C-LS POWER CT
FDNS	00NR	0	16WP	G15_082	FROM->TO	CIMARRON - DRAPER LAKE 345KV CKT 1	717	717	0.12045	103.7968	GEN541151 3-SIBLEY GENERATING UNIT #3
FDNS	00NR	0	16WP	G15_082	FROM->TO	CIMARRON - DRAPER LAKE 345KV CKT 1	717	717	0.12062	103.7949	P12:138:AEPW:WELETK4:EARLSBORO4
FDNS	00NR	0	16WP	G15_082	FROM->TO	CIMARRON - DRAPER LAKE 345KV CKT 1	717	717	0.12062	103.7945	P12:138:OKGE:3TERM36
FDNS	00NR	0	16WP	G15_082	FROM->TO	CIMARRON - DRAPER LAKE 345KV CKT 1	717	717	0.12103	103.7944	SEMINOLE - VANOSTP4 138.00 138KV CKT 1
FDNS	00NR	0	16WP	G15_082	FROM->TO	CIMARRON - DRAPER LAKE 345KV CKT 1	717	717	0.12045	103.7928	GEN562812 1-G15040_3 0.3570
FDNS	00NR	0	16WP	G15_082	FROM->TO	CIMARRON - DRAPER LAKE 345KV CKT 1	717	717	0.1206	103.7881	EARLSBORO 4138.00 - FIXICO TAP 138KV CKT 1
FDNS	00NR	0	16WP	G15_082	FROM->TO	CIMARRON - DRAPER LAKE 345KV CKT 1	717	717	0.12045	103.7867	GEN563132 1-G15078_3 0.3570
FDNS	00NR	0	16WP	G15_082	FROM->TO	CIMARRON - DRAPER LAKE 345KV CKT 1	717	717	0.12045	103.7801	GEN563282 1-G15094_3 0.6900
FDNS	00NR	0	16WP	G15_082	FROM->TO	CIMARRON - DRAPER LAKE 345KV CKT 1	717	717	0.12045	103.775	GEN524285 1-WILDORADO WIND GEN
FDNS	00NR	0	16WP	G15_082	FROM->TO	CIMARRON - DRAPER LAKE 345KV CKT 1	717	717	0.12045	103.7734	GEN562074 1-G1149G1504 0.6900
FDNS	00NR	0	16WP	G15_082	FROM->TO	CIMARRON - DRAPER LAKE 345KV CKT 1	717	717	0.12045	103.7677	GEN652353 2-GR PRAIRIEG 0.6900
FDNS	00NR	0	16WP	G15_082	FROM->TO	CIMARRON - DRAPER LAKE 345KV CKT 1	717	717	0.12045	103.7667	GEN672392 1-NBECGT1G 18.000
FDNS	00NR	0	16WP	G15_082	FROM->TO	CIMARRON - DRAPER LAKE 345KV CKT 1	717	717	0.12045	103.7616	GEN629070 2-BEAVER CHANNEL GENERATORFOR UNIT NO 2
FDNS	00NR	0	16WP	G15_082	FROM->TO	CIMARRON - DRAPER LAKE 345KV CKT 1	717	717	0.1206	103.7614	CANADIAN RIVER - MCALESTER SOUTH 138KV CKT 1
FDNS	00NR	0	16WP	G15_082	FROM->TO	CIMARRON - DRAPER LAKE 345KV CKT 1	717	717	0.1206	103.7614	CANADIAN RIVER - MCALESTER SOUTH 138KV CKT 1
FDNS	00NR	0	16WP	G15_082	FROM->TO	CIMARRON - DRAPER LAKE 345KV CKT 1	717	717	0.1206	103.7599	CANADIAN RIVER () 345/138/13.8KV TRANSFORMER CKT 1
FDNS	00NR	0	16WP	G15_082	FROM->TO	CIMARRON - DRAPER LAKE 345KV CKT 1	717	717	0.1206	103.7599	CANADIAN RIVER () 345/138/13.8KV TRANSFORMER CKT 1
FDNS	00NR	0	16WP	G15_082	FROM->TO	CIMARRON - DRAPER LAKE 345KV CKT 1	717	717	0.12048	103.7556	P12:138:WFEC:MSL07
FDNS	00NR	0	16WP	G15_082	FROM->TO	CIMARRON - DRAPER LAKE 345KV CKT 1	717	717	0.12048	103.7556	P12:138:WFEC-AEPW:HUGOPP4:ATOKA--4
FDNS	00NR	0	16WP	G15_082	FROM->TO	CIMARRON - DRAPER LAKE 345KV CKT 1	717	717	0.12045	103.7518	GEN526331 1-JONES GEN #1 22 KV
FDNS	00NR	0	16WP	G15_082	FROM->TO	CIMARRON - DRAPER LAKE 345KV CKT 1	717	717	0.12045	103.7518	GEN526332 1-JONES GEN #2 21 KV
FDNS	00NR	0	16WP	G15_082	FROM->TO	CIMARRON - DRAPER LAKE 345KV CKT 1	717	717	0.12012	103.7458	CHISNEY - HIGHLAND 138KV CKT 1
FDNS	00NR	0	16WP	G15_082	FROM->TO	CIMARRON - DRAPER LAKE 345KV CKT 1	717	717	0.12045	103.7454	GEN615010 1-STANTON4
FDNS	00NR	0	16WP	G15_082	FROM->TO	CIMARRON - DRAPER LAKE 345KV CKT 1	717	717	0.12045	103.7429	GEN629071 1-BURLINGTON GENERATOR FOR UNIT NO 1 E
FDNS	00NR	0	16WP	G15_082	FROM->TO	CIMARRON - DRAPER LAKE 345KV CKT 1	717	717	0.12061	103.7388	P12:138:AEPW:SHAM4WT:CHILD4WT
FDNS	00NR	0	16WP	G15_082	FROM->TO	CIMARRON - DRAPER LAKE 345KV CKT 1	717	717	0.12045	103.7386	GEN515365 1-CENT 21 0.7000
FDNS	00NR	0	16WP	G15_082	FROM->TO	CIMARRON - DRAPER LAKE 345KV CKT 1	717	717	0.12045	103.7323	INDEPENDENCE 500/26.0KV TRANSFORMER CKT 1
FDNS	00NR	0	16WP	G15_082	FROM->TO	CIMARRON - DRAPER LAKE 345KV CKT 1	717	717	0.12042	103.7299	P12:138:AEPW-SWPA:LONEOAK4:TUPELO4
FDNS	00NR	0	16WP	G15_082	FROM->TO	CIMARRON - DRAPER LAKE 345KV CKT 1	717	717	0.12042	103.7298	P12:138:WFEC:MSL06
FDNS	00NR	0	16WP	G15_082	FROM->TO	CIMARRON - DRAPER LAKE 345KV CKT 1	717	717	0.12045	103.7262	GEN532663 1-LAWRENCE ENERGY CENTER UNIT 5
FDNS	00NR	0	16WP	G15_082	FROM->TO	CIMARRON - DRAPER LAKE 345KV CKT 1	717	717	0.12045	103.7243	GEN615021 1-GRE-ER 14G 16.000
FDNS	00NR	0	16WP	G15_082	FROM->TO	CIMARRON - DRAPER LAKE 345KV CKT 1	717	717	0.12045	103.7218	GEN562017 1-G11_022_3 0.6900
FDNS	00NR	0	16WP	G15_082	FROM->TO	CIMARRON - DRAPER LAKE 345KV CKT 1	717	717	0.12064	103.7196	DELL 500 - INDEPENDENCE 500KV CKT 1
FDNS	00NR	0	16WP	G15_082	FROM->TO	CIMARRON - DRAPER LAKE 345KV CKT 1	717	717	0.12056	103.7169	GRPRAR1-LNX3345.00 - YANKTON 345KV CKT Z
FDNS	00NR	0	16WP	G15_082	FROM->TO	CIMARRON - DRAPER LAKE 345KV CKT 1	717	717	0.12056	103.7168	GRPRAR1-LNX3345.00 - HOLT.CO3 345.00 345KV CKT 1
FDNS	00NR	0	16WP	G15_082	FROM->TO	CIMARRON - DRAPER LAKE 345KV CKT 1	717	717	0.12045	103.709	GEN560105 1-G08-22 0.6900
FDNS	00NR	0	16WP	G15_082	FROM->TO	CIMARRON - DRAPER LAKE 345KV CKT 1	717	717	0.12045	103.7084	GEN562432 1-G13-030 0.6900
FDNS	00NR	0	16WP	G15_082	FROM->TO	CIMARRON - DRAPER LAKE 345KV CKT 1	717	717	0.12045	103.7069	GEN562429 1-G13-029 0.6900
FDNS	00NR	0	16WP	G15_082	FROM->TO	CIMARRON - DRAPER LAKE 345KV CKT 1	717	717	0.12062	103.7036	P12:138:AEPW-OGE:WELETK4:MAUD 4
FDNS	00NR	0	16WP	G15_082	FROM->TO	CIMARRON - DRAPER LAKE 345KV CKT 1	717	717	0.12045	103.702	BURLINGTON NO1 + NO 2 + NO 3 161/20.0KV TRANSFORMER CKT 1
FDNS	00NR	0	16WP	G15_082	FROM->TO	CIMARRON - DRAPER LAKE 345KV CKT 1	717	717	0.1206	103.7019	EARLSBORO 4138.00 - MAUD 138KV CKT 1
FDNS	00NR	0	16WP	G15_082	FROM->TO	CIMARRON - DRAPER LAKE 345KV CKT 1	717	717	0.1206	103.7019	EARLSBORO 4138.00 - MAUD 138KV CKT 1
FDNS	00NR	0	16WP	G15_082	FROM->TO	CIMARRON - DRAPER LAKE 345KV CKT 1	717	717	0.12061	103.6994	P12:138:WFEC:MSL16
FDNS	00NR	0	16WP	G15_082	FROM->TO	CIMARRON - DRAPER LAKE 345KV CKT 1	717	717	0.12045	103.6922	GEN562596 1-G14_059_3 0.6900
FDNS	00NR	0	16WP	G15_082	FROM->TO	CIMARRON - DRAPER LAKE 345KV CKT 1	717	717	0.12045	103.6888	GEN562983 1-G15061_4 0.6900
FDNS	00NR	0	16WP	G15_082	FROM->TO	CIMARRON - DRAPER LAKE 345KV CKT 1	717	717	0.12045	103.6888	GEN562984 1-G15061_5 0.6900
FDNS	00NR	0	16WP	G15_082	FROM->TO	CIMARRON - DRAPER LAKE 345KV CKT 1	717	717	0.12168	103.6876	MAUD - SEMINOLE 138KV CKT 1
FDNS	00NR	0	16WP	G15_082	FROM->TO	CIMARRON - DRAPER LAKE 345KV CKT 1	717	717	0.12045	103.6826	GEN527882 1-CUNNINGHAM GEN #2 20 KV
FDNS	00NR	0	16WP	G15_082	FROM->TO	CIMARRON - DRAPER LAKE 345KV CKT 1	717	717	0.12045	103.673	GEN562550 1-G14_040_3 0.6900

SOLUTION	GROUP	SCENARIO	SEASON	SOURCE	DIRECTION	MONITORED ELEMENT	RATEA (MVA)	RATEB(MVA)	TDF	TC%LOADING (% MVA)	CONTINGENCY
FDNS	00NR	0	16WP	G15_082	FROM->TO	CIMARRON - DRAPER LAKE 345KV CKT 1	717	717	0.12045	103.6689	GEN524295 1-SPNSPUR_WND10.6900
FDNS	00NR	0	16WP	G15_082	FROM->TO	CIMARRON - DRAPER LAKE 345KV CKT 1	717	717	0.11927	103.6565	P12:230:AEPW-SPS:SWEETWT6:WHEELER 6
FDNS	00NR	0	16WP	G15_082	FROM->TO	CIMARRON - DRAPER LAKE 345KV CKT 1	717	717	0.11927	103.656	STLN-DEMARC6 - SWEETWATER 230KV CKT 1
FDNS	00NR	0	16WP	G15_082	FROM->TO	CIMARRON - DRAPER LAKE 345KV CKT 1	717	717	0.11927	103.6545	STATELINE INTERCHANGE - STLN-DEMARC6 230KV CKT 1
FDNS	00NR	0	16WP	G15_082	FROM->TO	CIMARRON - DRAPER LAKE 345KV CKT 1	717	717	0.12045	103.6384	RCDC EAST 4230.00 - RED CEDAR DC 230KV CKT 1
FDNS	00NR	0	16WP	G15_082	FROM->TO	CIMARRON - DRAPER LAKE 345KV CKT 1	717	717	0.12045	103.6377	P12:230:UMZB:# 112 #: NU IN SD. NU-RCDC & DRY CREEK XFMR
FDNS	00NR	0	16WP	G15_082	FROM->TO	CIMARRON - DRAPER LAKE 345KV CKT 1	717	717	0.11877	103.6372	P12:230:AEPW:ELKCITY6:SWEETWT6
FDNS	00NR	0	16WP	G15_082	FROM->TO	CIMARRON - DRAPER LAKE 345KV CKT 1	717	717	0.12045	103.6268	GEN515606 1-CANDN11 0.6900
FDNS	00NR	0	16WP	G15_082	FROM->TO	CIMARRON - DRAPER LAKE 345KV CKT 1	717	717	0.12045	103.6267	GEN515607 1-CANDN12 0.6900
FDNS	00NR	0	16WP	G15_082	FROM->TO	CIMARRON - DRAPER LAKE 345KV CKT 1	717	717	0.12012	103.6192	HIGHLAND - PINK SW 138KV CKT 1
FDNS	00NR	0	16WP	G15_082	FROM->TO	CIMARRON - DRAPER LAKE 345KV CKT 1	717	717	0.12045	103.6171	GEN562832 1-G15042_3 0.6900
FDNS	00NR	0	16WP	G15_082	FROM->TO	CIMARRON - DRAPER LAKE 345KV CKT 1	717	717	0.12045	103.6167	GEN531447 1-HOLCOMB GENERATOR
FDNS	00NR	0	16WP	G15_082	FROM->TO	CIMARRON - DRAPER LAKE 345KV CKT 1	717	717	0.12045	103.6068	GEN345671 2-1RUSH G2 18.000
FDNS	00NR	0	16WP	G15_082	FROM->TO	CIMARRON - DRAPER LAKE 345KV CKT 1	717	717	0.12045	103.6048	GEN345670 1-1RUSH G1 18.000
FDNS	00NR	0	16WP	G15_082	FROM->TO	CIMARRON - DRAPER LAKE 345KV CKT 1	717	717	0.12045	103.6008	GEN300003 1-THOMAS HILL UNIT 3
FDNS	00NR	0	16WP	G15_082	FROM->TO	CIMARRON - DRAPER LAKE 345KV CKT 1	717	717	0.12045	103.5984	GEN562794 1-G15038_5 0.6900
FDNS	00NR	0	16WP	G15_082	FROM->TO	CIMARRON - DRAPER LAKE 345KV CKT 1	717	717	0.12045	103.5984	GEN562795 1-G15038_6 0.6900
FDNS	00NR	0	16WP	G15_082	FROM->TO	CIMARRON - DRAPER LAKE 345KV CKT 1	717	717	0.12045	103.598	GEN515443 1-MNCOWND1 0.7000
FDNS	00NR	0	16WP	G15_082	FROM->TO	CIMARRON - DRAPER LAKE 345KV CKT 1	717	717	0.12045	103.5732	GEN629072 4-LANSING GENERATOR FOR UNITS NO4 EIA CODE 1
FDNS	00NR	0	16WP	G15_082	FROM->TO	CIMARRON - DRAPER LAKE 345KV CKT 1	717	717	0.12072	103.563	KEO EHV - WEST MEMPHIS 500 500KV CKT 1
FDNS	00NR	0	16WP	G15_082	FROM->TO	CIMARRON - DRAPER LAKE 345KV CKT 1	717	717	0.12045	103.5618	GEN562512 1-G14_020_3 0.6900
FDNS	00NR	0	16WP	G15_082	FROM->TO	CIMARRON - DRAPER LAKE 345KV CKT 1	717	717	0.12045	103.5568	GEN645011 1-NEBRASKA CITY 1
FDNS	00NR	0	16WP	G15_082	FROM->TO	CIMARRON - DRAPER LAKE 345KV CKT 1	717	717	0.12045	103.552	GEN563092 1-G15074_3 0.6900
FDNS	00NR	0	16WP	G15_082	FROM->TO	CIMARRON - DRAPER LAKE 345KV CKT 1	717	717	0.12045	103.5421	GEN657749 1-YOUNG 1 GENERATOR
FDNS	00NR	0	16WP	G15_082	FROM->TO	CIMARRON - DRAPER LAKE 345KV CKT 1	717	717	0.11927	103.5345	CHISHOLM6 230.00 - SWEETWATER 230KV CKT 1
FDNS	00NR	0	16WP	G15_082	FROM->TO	CIMARRON - DRAPER LAKE 345KV CKT 1	717	717	0.12045	103.5279	GEN562699 1-G15_018_3 0.6900
FDNS	00NR	0	16WP	G15_082	FROM->TO	CIMARRON - DRAPER LAKE 345KV CKT 1	717	717	0.12045	103.5083	GEN542951 5-HAWTHORN UNIT #5
FDNS	00NR	0	16WP	G15_082	FROM->TO	CIMARRON - DRAPER LAKE 345KV CKT 1	717	717	0.12045	103.5081	GEN645012 2-NEBRASKA CITY 2
FDNS	00NR	0	16WP	G15_082	FROM->TO	CIMARRON - DRAPER LAKE 345KV CKT 1	717	717	0.12092	103.5032	FRISCCO4 138.00 - LULA 138KV CKT 1
FDNS	00NR	0	16WP	G15_082	FROM->TO	CIMARRON - DRAPER LAKE 345KV CKT 1	717	717	0.12168	103.4976	HOLLYWOOD - MIDWEST TAP 138KV CKT 1
FDNS	00NR	0	16WP	G15_082	FROM->TO	CIMARRON - DRAPER LAKE 345KV CKT 1	717	717	0.11922	103.4906	G15063_T 345.00 - WOODRING 345KV CKT 1
FDNS	00NR	0	16WP	G15_082	FROM->TO	CIMARRON - DRAPER LAKE 345KV CKT 1	717	717	0.12045	103.4885	GEN529201 1-OMCDLEC1 13.800
FDNS	00NR	0	16WP	G15_082	FROM->TO	CIMARRON - DRAPER LAKE 345KV CKT 1	717	717	0.12045	103.4881	GEN563122 1-G15077_3 0.3850
FDNS	00NR	0	16WP	G15_082	FROM->TO	CIMARRON - DRAPER LAKE 345KV CKT 1	717	717	0.12045	103.4747	GEN681522 3-GENOA 3
FDNS	00NR	0	16WP	G15_082	FROM->TO	CIMARRON - DRAPER LAKE 345KV CKT 1	717	717	0.12045	103.4672	GEN562685 1-G15_013_3 0.3550
FDNS	00NR	0	16WP	G15_082	FROM->TO	CIMARRON - DRAPER LAKE 345KV CKT 1	717	717	0.12045	103.4577	GEN563182 1-G15083_3 0.6900
FDNS	00NR	0	16WP	G15_082	FROM->TO	CIMARRON - DRAPER LAKE 345KV CKT 1	717	717	0.11832	103.4468	CHISHOLM7 345.00 - GRACEMONT 345KV CKT 1
FDNS	00NR	0	16WP	G15_082	FROM->TO	CIMARRON - DRAPER LAKE 345KV CKT 1	717	717	0.12045	103.4456	4SIOUX 1 138.00 138/18.0KV TRANSFORMER CKT 1
FDNS	00NR	0	16WP	G15_082	FROM->TO	CIMARRON - DRAPER LAKE 345KV CKT 1	717	717	0.12002	103.4432	CIMARRON - TUTTLE CONOCO TAP 138KV CKT 1
FDNS	00NR	0	16WP	G15_082	FROM->TO	CIMARRON - DRAPER LAKE 345KV CKT 1	717	717	0.12045	103.4281	GEN344895 2-1LAB G2 20.000
FDNS	00NR	0	16WP	G15_082	FROM->TO	CIMARRON - DRAPER LAKE 345KV CKT 1	717	717	0.12051	103.4257	TUPELO - TUPELO TAP 138KV CKT 1
FDNS	00NR	0	16WP	G15_082	FROM->TO	CIMARRON - DRAPER LAKE 345KV CKT 1	717	717	0.12135	103.4253	FT SMITH - MUSKOGEE 345KV CKT 1
FDNS	00NR	0	16WP	G15_082	FROM->TO	CIMARRON - DRAPER LAKE 345KV CKT 1	717	717	0.12092	103.417	FRISCCO4 138.00 - HARDEN 4 138.00 138KV CKT 1
FDNS	00NR	0	16WP	G15_082	FROM->TO	CIMARRON - DRAPER LAKE 345KV CKT 1	717	717	0.12045	103.4099	GEN562587 1-G14_056_3 0.6900
FDNS	00NR	0	16WP	G15_082	FROM->TO	CIMARRON - DRAPER LAKE 345KV CKT 1	717	717	0.12045	103.4056	GEN523461 1-BLACKHAWK GEN #1
FDNS	00NR	0	16WP	G15_082	FROM->TO	CIMARRON - DRAPER LAKE 345KV CKT 1	717	717	0.12045	103.4056	GEN523462 1-BLACKHAWK GEN #2
FDNS	00NR	0	16WP	G15_082	FROM->TO	CIMARRON - DRAPER LAKE 345KV CKT 1	717	717	0.12045	103.399	GEN344896 3-1LAB G3 20.000
FDNS	00NR	0	16WP	G15_082	FROM->TO	CIMARRON - DRAPER LAKE 345KV CKT 1	717	717	0.12045	103.3975	GEN344894 1-1LAB G1 20.000
FDNS	00NR	0	16WP	G15_082	FROM->TO	CIMARRON - DRAPER LAKE 345KV CKT 1	717	717	0.12045	103.3964	GEN344897 4-1LAB G4 20.000
FDNS	00NR	0	16WP	G15_082	FROM->TO	CIMARRON - DRAPER LAKE 345KV CKT 1	717	717	0.12045	103.3879	GEN515602 1-KNGFSR12 0.7000
FDNS	00NR	0	16WP	G15_082	FROM->TO	CIMARRON - DRAPER LAKE 345KV CKT 1	717	717	0.12002	103.372	TUTTLE - TUTTLE CONOCO TAP 138KV CKT 1
FDNS	00NR	0	16WP	G15_082	FROM->TO	CIMARRON - DRAPER LAKE 345KV CKT 1	717	717	0.11832	103.3604	CHISHOLM7 345.00 (CHISHOLM) 345/230/13.2KV TRANSFORMER CKT 1
FDNS	00NR	0	16WP	G15_082	FROM->TO	CIMARRON - DRAPER LAKE 345KV CKT 1	717	717	0.12045	103.3584	GEN563222 1-G15088_3 0.6900
FDNS	00NR	0	16WP	G15_082	FROM->TO	CIMARRON - DRAPER LAKE 345KV CKT 1	717	717	0.12045	103.3249	CLAY BOSWELL 230/20.9KV TRANSFORMER CKT 1
FDNS	00NR	0	16WP	G15_082	FROM->TO	CIMARRON - DRAPER LAKE 345KV CKT 1	717	717	0.12045	103.3181	GEN562704 1-G15_020_3 0.3550
FDNS	00NR	0	16WP	G15_082	FROM->TO	CIMARRON - DRAPER LAKE 345KV CKT 1	717	717	0.12045	103.314	GEN563082 1-G15073_3 0.6900
FDNS	00NR	0	16WP	G15_082	FROM->TO	CIMARRON - DRAPER LAKE 345KV CKT 1	717	717	0.12045	103.2979	GEN563202 1-G15085_3 0.5500
FDNS	00NR	0	16WP	G15_082	FROM->TO	CIMARRON - DRAPER LAKE 345KV CKT 1	717	717	0.12045	103.2748	GEN672321 1-SHAND GENERATOR 1
FDNS	00NR	0	16WP	G15_082	FROM->TO	CIMARRON - DRAPER LAKE 345KV CKT 1	717	717	0.11989	103.2497	SEMINOLE (SEMINOL1) 345/138/14.4KV TRANSFORMER CKT 1
FDNS	00NR	0	16WP	G15_082	FROM->TO	CIMARRON - DRAPER LAKE 345KV CKT 1	717	717	0.12045	103.2488	GEN672310 1-POPLAR RIVER GENERATOR 1
FDNS	00NR	0	16WP	G15_082	FROM->TO	CIMARRON - DRAPER LAKE 345KV CKT 1	717	717	0.12045	103.2488	GEN672311 2-POPLAR RIVER GENERATOR 2
FDNS	00NR	0	16WP	G15_082	FROM->TO	CIMARRON - DRAPER LAKE 345KV CKT 1	717	717	0.12112	103.245	LULA - TUPELO TAP 138KV CKT 1
FDNS	00NR	0	16WP	G15_082	FROM->TO	CIMARRON - DRAPER LAKE 345KV CKT 1	717	717	0.12045	103.2393	GEN672306 6-BOUNDARY DAM GENERATOR 6
FDNS	00NR	0	16WP	G15_082	FROM->TO	CIMARRON - DRAPER LAKE 345KV CKT 1	717	717	0.12045	103.2286	GEN562710 1-G15_022_3 0.5500
FDNS	00NR	0	16WP	G15_082	FROM->TO	CIMARRON - DRAPER LAKE 345KV CKT 1	717	717	0.12092	103.2193	ETNA - HARDEN 4 138.00 138KV CKT 1
FDNS	00NR	0	16WP	G15_082	FROM->TO	CIMARRON - DRAPER LAKE 345KV CKT 1	717	717	0.12229	103.2075	OAKCREEK - WILD MARY 138KV CKT 1
FDNS	00NR	0	16WP	G15_082	FROM->TO	CIMARRON - DRAPER LAKE 345KV CKT 1	717	717	0.12055	103.2049	NORTHWEST TEXARKANA - VALLIANT 345KV CKT 1
FDNS	00NR	0	16WP	G15_082	FROM->TO	CIMARRON - DRAPER LAKE 345KV CKT 1	717	717	0.12055	103.2049	NORTHWEST TEXARKANA - VALLIANT 345KV CKT 1
FDNS	00NR	0	16WP	G15_082	FROM->TO	CIMARRON - DRAPER LAKE 345KV CKT 1	717	717	0.12119	103.1996	P12:138:OKGE:3TERM22
FDNS	00NR	0	16WP	G15_082	FROM->TO	CIMARRON - DRAPER LAKE 345KV CKT 1	717	717	0.12119	103.1978	DRAPER LAKE - SOONER TAP 138KV CKT 1
FDNS	00NR	0	16WP	G15_082	FROM->TO	CIMARRON - DRAPER LAKE 345KV CKT 1	717	717	0.12012	103.1811	P12:138:WFEC:MSL08
FDNS	00NR	0	16WP	G15_082	FROM->TO	CIMARRON - DRAPER LAKE 345KV CKT 1	717	717	0.12049	103.1784	P12:138:WFEC:MSL09
FDNS	00NR	0	16WP	G15_082	FROM->TO	CIMARRON - DRAPER LAKE 345KV CKT 1	717	717	0.12045	103.1704	GEN542956 2-LACYGNE UNIT #2
FDNS	00NR	0	16WP	G15_082	FROM->TO	CIMARRON - DRAPER LAKE 345KV CKT 1	717	717	0.12012	103.1696	FRANKLIN - PINK SW 138KV CKT 1
FDNS	00NR	0	16WP	G15_082	FROM->TO	CIMARRON - DRAPER LAKE 345KV CKT 1	717	717	0.12045	103.1368	GEN681542 6-JP MADGETT
FDNS	00NR	0	16WP	G15_082	FROM->TO	CIMARRON - DRAPER LAKE 345KV CKT 1	717	717	0.12045	103.1353	GEN640011 2-GERALD GENTLEMAN STATION UNIT 2
FDNS	00NR	0	16WP	G15_082	FROM->TO	CIMARRON - DRAPER LAKE 345KV CKT 1	717	717	0.12092	103.1294	ETNA - PARK LANE 138KV CKT 1
FDNS	00NR	0	16WP	G15_082	FROM->TO	CIMARRON - DRAPER LAKE 345KV CKT 1	717	717	0.12045	103.1073	GEN659118 1-LARAMIE RIVER UNIT1
FDNS	00NR	0	16WP	G15_082	FROM->TO	CIMARRON - DRAPER LAKE 345KV CKT 1	717	717	0.12045	103.0784	GEN542957 1-IATAN UNIT #1

SOLUTION	GROUP	SCENARIO	SEASON	SOURCE	DIRECTION	MONITORED ELEMENT	RATEA (MVA)	RATEB(MVA)	TDF	TC%LOADING (% MVA)	CONTINGENCY
FDNS	00NR	0	16WP	G15_082	FROM->TO	CIMARRON - DRAPER LAKE 345KV CKT 1	717	717	0.12045	103.0776	GEN563273 2-G15093_4 0.6900
FDNS	00NR	0	16WP	G15_082	FROM->TO	CIMARRON - DRAPER LAKE 345KV CKT 1	717	717	0.12045	103.0715	GEN530690 1-PRWINDG1 0.6900
FDNS	00NR	0	16WP	G15_082	FROM->TO	CIMARRON - DRAPER LAKE 345KV CKT 1	717	717	0.11978	103.0463	SEMINOLE (SEMINOL2) 345/138/14.4KV TRANSFORMER CKT 1
FDNS	00NR	0	16WP	G15_082	FROM->TO	CIMARRON - DRAPER LAKE 345KV CKT 1	717	717	0.12045	103.0274	GEN562754 1-G15031_5 0.6900
FDNS	00NR	0	16WP	G15_082	FROM->TO	CIMARRON - DRAPER LAKE 345KV CKT 1	717	717	0.12045	103.0175	GEN562556 1-G14_046_3 0.3420
FDNS	00NR	0	16WP	G15_082	FROM->TO	CIMARRON - DRAPER LAKE 345KV CKT 1	717	717	0.12045	103.0149	GEN661015 1-COYOTE
FDNS	00NR	0	16WP	G15_082	FROM->TO	CIMARRON - DRAPER LAKE 345KV CKT 1	717	717	0.11618	102.9943	RENFROW7 345.00 - VIOLA 7 345.00 345KV CKT 1
FDNS	00NR	0	16WP	G15_082	FROM->TO	CIMARRON - DRAPER LAKE 345KV CKT 1	717	717	0.12045	102.9885	GEN542955 1-LACYGNE UNIT #1
FDNS	00NR	0	16WP	G15_082	FROM->TO	CIMARRON - DRAPER LAKE 345KV CKT 1	717	717	0.12045	102.9843	GEN645001 1-FORT CALHOUN 1
FDNS	00NR	0	16WP	G15_082	FROM->TO	CIMARRON - DRAPER LAKE 345KV CKT 1	717	717	0.12045	102.9828	GEN562756 1-G15031_7 0.6900
FDNS	00NR	0	16WP	G15_082	FROM->TO	CIMARRON - DRAPER LAKE 345KV CKT 1	717	717	0.12229	102.9808	AIRDEPT4 138.00 - WILD MARY 138KV CKT 1
FDNS	00NR	0	16WP	G15_082	FROM->TO	CIMARRON - DRAPER LAKE 345KV CKT 1	717	717	0.12045	102.9699	GEN563142 1-G15079_3 0.5500
FDNS	00NR	0	16WP	G15_082	FROM->TO	CIMARRON - DRAPER LAKE 345KV CKT 1	717	717	0.12045	102.9699	GEN563151 1-G15080_2 0.5500
FDNS	00NR	0	16WP	G15_082	FROM->TO	CIMARRON - DRAPER LAKE 345KV CKT 1	717	717	0.12045	102.9566	GEN562974 1-G15060_5 0.6900
FDNS	00NR	0	16WP	G15_082	FROM->TO	CIMARRON - DRAPER LAKE 345KV CKT 1	717	717	0.12045	102.9562	GEN563042 1-G15068_3 0.6900
FDNS	00NR	0	16WP	G15_082	FROM->TO	CIMARRON - DRAPER LAKE 345KV CKT 1	717	717	0.12045	102.943	GEN532652 1-JEFFREY ENERGY CENTER UNIT 2
FDNS	00NR	0	16WP	G15_082	FROM->TO	CIMARRON - DRAPER LAKE 345KV CKT 1	717	717	0.12045	102.94	GEN562973 1-G15060_4 0.6900
FDNS	00NR	0	16WP	G15_082	FROM->TO	CIMARRON - DRAPER LAKE 345KV CKT 1	717	717	0.12045	102.939	GEN532651 1-JEFFREY ENERGY CENTER UNIT 1
FDNS	00NR	0	16WP	G15_082	FROM->TO	CIMARRON - DRAPER LAKE 345KV CKT 1	717	717	0.12045	102.933	GEN562078 1-G11_051_3 0.6900
FDNS	00NR	0	16WP	G15_082	FROM->TO	CIMARRON - DRAPER LAKE 345KV CKT 1	717	717	0.11612	102.9041	HUNTERS7 345.00 - RENFROW7 345.00 345KV CKT 1
FDNS	00NR	0	16WP	G15_082	FROM->TO	CIMARRON - DRAPER LAKE 345KV CKT 1	717	717	0.12152	102.9031	PARK LANE - SEMINOLE 138KV CKT 1
FDNS	00NR	0	16WP	G15_082	FROM->TO	CIMARRON - DRAPER LAKE 345KV CKT 1	717	717	0.12045	102.8979	GEN562691 1-G15_015_3 0.6900
FDNS	00NR	0	16WP	G15_082	FROM->TO	CIMARRON - DRAPER LAKE 345KV CKT 1	717	717	0.12045	102.8873	GEN657748 1-YOUNG 2 GENERATOR
FDNS	00NR	0	16WP	G15_082	FROM->TO	CIMARRON - DRAPER LAKE 345KV CKT 1	717	717	0.12012	102.8832	FRANKLIN - FRANKLIN SW 138KV CKT 1
FDNS	00NR	0	16WP	G15_082	FROM->TO	CIMARRON - DRAPER LAKE 345KV CKT 1	717	717	0.12045	102.8644	GEN562655 1-G14_074_3 0.6900
FDNS	00NR	0	16WP	G15_082	FROM->TO	CIMARRON - DRAPER LAKE 345KV CKT 1	717	717	0.12045	102.8641	GEN562762 1-G15033_3 0.6900
FDNS	00NR	0	16WP	G15_082	FROM->TO	CIMARRON - DRAPER LAKE 345KV CKT 1	717	717	0.12045	102.8105	GEN527901 1-HOBBS PLANT #1 (CT)
FDNS	00NR	0	16WP	G15_082	FROM->TO	CIMARRON - DRAPER LAKE 345KV CKT 1	717	717	0.12045	102.8105	GEN527902 1-HOBBS PLANT #2 (CT)
FDNS	00NR	0	16WP	G15_082	FROM->TO	CIMARRON - DRAPER LAKE 345KV CKT 1	717	717	0.12045	102.7627	GEN563043 1-G15068_4 0.6900
FDNS	00NR	0	16WP	G15_082	FROM->TO	CIMARRON - DRAPER LAKE 345KV CKT 1	717	717	0.12229	102.7512	AIRDEPT4 138.00 - GM 138KV CKT 1
FDNS	00NR	0	16WP	G15_082	FROM->TO	CIMARRON - DRAPER LAKE 345KV CKT 1	717	717	0.12045	102.7384	GEN563272 1-G15093_3 0.6900
FDNS	00NR	0	16WP	G15_082	FROM->TO	CIMARRON - DRAPER LAKE 345KV CKT 1	717	717	0.12002	102.7224	P12:138:AEPW-OGE:CORNVIL4:CIMARON4
FDNS	00NR	0	16WP	G15_082	FROM->TO	CIMARRON - DRAPER LAKE 345KV CKT 1	717	717	0.12045	102.7207	GEN525845 1-ELK_2 1 138.00
FDNS	00NR	0	16WP	G15_082	FROM->TO	CIMARRON - DRAPER LAKE 345KV CKT 1	717	717	0.12045	102.7175	GEN525844 1-ELK_1 118.000
FDNS	00NR	0	16WP	G15_082	FROM->TO	CIMARRON - DRAPER LAKE 345KV CKT 1	717	717	0.12045	102.7038	GEN620315 1-BIG STONE GEN
FDNS	00NR	0	16WP	G15_082	FROM->TO	CIMARRON - DRAPER LAKE 345KV CKT 1	717	717	0.1206	102.7029	LYDIA - WELSH 345KV CKT 1
FDNS	00NR	0	16WP	G15_082	FROM->TO	CIMARRON - DRAPER LAKE 345KV CKT 1	717	717	0.1206	102.7029	LYDIA - WELSH 345KV CKT 1
FDNS	00NR	0	16WP	G15_082	FROM->TO	CIMARRON - DRAPER LAKE 345KV CKT 1	717	717	0.12045	102.701	GEN563052 1-G15069_3 0.6900
FDNS	00NR	0	16WP	G15_082	FROM->TO	CIMARRON - DRAPER LAKE 345KV CKT 1	717	717	0.12609	102.6844	CLARKSVILLE - MUSKOGEE 345KV CKT 1
FDNS	00NR	0	16WP	G15_082	FROM->TO	CIMARRON - DRAPER LAKE 345KV CKT 1	717	717	0.12609	102.6844	CLARKSVILLE - MUSKOGEE 345KV CKT 1
FDNS	00NR	0	16WP	G15_082	FROM->TO	CIMARRON - DRAPER LAKE 345KV CKT 1	717	717	0.12045	102.6689	GEN526333 1-JONES GEN #3 21 KV
FDNS	00NR	0	16WP	G15_082	FROM->TO	CIMARRON - DRAPER LAKE 345KV CKT 1	717	717	0.12045	102.6689	GEN526334 1-JONES_4 116.500
FDNS	00NR	0	16WP	G15_082	FROM->TO	CIMARRON - DRAPER LAKE 345KV CKT 1	717	717	0.12045	102.668	GEN563242 1-G15090_3 0.6900
FDNS	00NR	0	16WP	G15_082	FROM->TO	CIMARRON - DRAPER LAKE 345KV CKT 1	717	717	0.12045	102.64	GEN600004 2-PRAIRIE ISLAND G2
FDNS	00NR	0	16WP	G15_082	FROM->TO	CIMARRON - DRAPER LAKE 345KV CKT 1	717	717	0.12045	102.6371	GEN600003 1-PRAIRIE ISLAND G1
FDNS	00NR	0	16WP	G15_082	FROM->TO	CIMARRON - DRAPER LAKE 345KV CKT 1	717	717	0.12045	102.6352	GEN523971 1-HARRINGTON GEN #1 24 KV
FDNS	00NR	0	16WP	G15_082	FROM->TO	CIMARRON - DRAPER LAKE 345KV CKT 1	717	717	0.12045	102.6352	GEN523972 1-HARRINGTON GEN #2 24 KV
FDNS	00NR	0	16WP	G15_082	FROM->TO	CIMARRON - DRAPER LAKE 345KV CKT 1	717	717	0.12045	102.6352	GEN523973 1-HARRINGTON GEN #3 24 KV
FDNS	00NR	0	16WP	G15_082	FROM->TO	CIMARRON - DRAPER LAKE 345KV CKT 1	717	717	0.12045	102.6345	GEN562772 1-G15034_3 0.6900
FDNS	00NR	0	16WP	G15_082	FROM->TO	CIMARRON - DRAPER LAKE 345KV CKT 1	717	717	0.12045	102.6278	GEN600006 1-AS KING
FDNS	00NR	0	16WP	G15_082	FROM->TO	CIMARRON - DRAPER LAKE 345KV CKT 1	717	717	0.12045	102.5988	GEN636641 1-LOUISA UNIT 1
FDNS	00NR	0	16WP	G15_082	FROM->TO	CIMARRON - DRAPER LAKE 345KV CKT 1	717	717	0.11776	102.5491	RANCHRD7 345.00 - SOONER 345KV CKT 1
FDNS	00NR	0	16WP	G15_082	FROM->TO	CIMARRON - DRAPER LAKE 345KV CKT 1	717	717	0.12229	102.5429	DRAPER LAKE - GM 138KV CKT 1
FDNS	00NR	0	16WP	G15_082	FROM->TO	CIMARRON - DRAPER LAKE 345KV CKT 1	717	717	0.11704	102.5072	MUSKOGEE - SEMINOLE 345KV CKT 1
FDNS	00NR	0	16WP	G15_082	FROM->TO	CIMARRON - DRAPER LAKE 345KV CKT 1	717	717	0.12045	102.4836	GEN600005 1-MONTICELLO
FDNS	00NR	0	16WP	G15_082	FROM->TO	CIMARRON - DRAPER LAKE 345KV CKT 1	717	717	0.12045	102.4716	GEN563292 1-G15095_3 0.6900
FDNS	00NR	0	16WP	G15_082	FROM->TO	CIMARRON - DRAPER LAKE 345KV CKT 1	717	717	0.11612	102.4674	HUNTERS7 345.00 - WOODRING 345KV CKT 1
FDNS	00NR	0	16WP	G15_082	FROM->TO	CIMARRON - DRAPER LAKE 345KV CKT 1	717	717	0.12045	102.4442	GEN615002 2-COAL CREEK
FDNS	00NR	0	16WP	G15_082	FROM->TO	CIMARRON - DRAPER LAKE 345KV CKT 1	717	717	0.12045	102.4383	GEN542962 2-IATAN UNIT #2
FDNS	00NR	0	16WP	G15_082	FROM->TO	CIMARRON - DRAPER LAKE 345KV CKT 1	717	717	0.12045	102.4346	GEN527166 1-MUSTANG_6 118.000
FDNS	00NR	0	16WP	G15_082	FROM->TO	CIMARRON - DRAPER LAKE 345KV CKT 1	717	717	0.12045	102.4232	GEN562952 1-G15057_3 0.6500
FDNS	00NR	0	16WP	G15_082	FROM->TO	CIMARRON - DRAPER LAKE 345KV CKT 1	717	717	0.12045	102.42	GEN525562 1-TOLK GEN #2 24 KV
FDNS	00NR	0	16WP	G15_082	FROM->TO	CIMARRON - DRAPER LAKE 345KV CKT 1	717	717	0.12045	102.3969	GEN629074 1-ARNOLD LOWSIDE OF GSU XFMR
FDNS	00NR	0	16WP	G15_082	FROM->TO	CIMARRON - DRAPER LAKE 345KV CKT 1	717	717	0.12182	102.3561	FRANKLIN SW - MIDWEST TAP 138KV CKT 1
FDNS	00NR	0	16WP	G15_082	FROM->TO	CIMARRON - DRAPER LAKE 345KV CKT 1	717	717	0.12045	102.3458	GEN635213 3-NEAL UNIT 3
FDNS	00NR	0	16WP	G15_082	FROM->TO	CIMARRON - DRAPER LAKE 345KV CKT 1	717	717	0.12045	102.3183	BIG STONE 230/24.0KV TRANSFORMER CKT 1
FDNS	00NR	0	16WP	G15_082	FROM->TO	CIMARRON - DRAPER LAKE 345KV CKT 1	717	717	0.12113	102.3159	NORTHWEST - SPRING CREEK 345KV CKT 1
FDNS	00NR	0	16WP	G15_082	FROM->TO	CIMARRON - DRAPER LAKE 345KV CKT 1	717	717	0.12168	102.2971	CHAMBER SPRINGS - CLARKSVILLE 345KV CKT 1
FDNS	00NR	0	16WP	G15_082	FROM->TO	CIMARRON - DRAPER LAKE 345KV CKT 1	717	717	0.11451	102.292	DRAPER LAKE - SEMINOLE 345KV CKT 3
FDNS	00NR	0	16WP	G15_082	FROM->TO	CIMARRON - DRAPER LAKE 345KV CKT 1	717	717	0.12113	102.2791	SOONER - SPRING CREEK 345KV CKT 1
FDNS	00NR	0	16WP	G15_082	FROM->TO	CIMARRON - DRAPER LAKE 345KV CKT 1	717	717	0.12045	102.267	GEN562892 1-G15048_3 0.6900
FDNS	00NR	0	16WP	G15_082	FROM->TO	CIMARRON - DRAPER LAKE 345KV CKT 1	717	717	0.12045	102.266	GEN640009 1-COOPER NUCLEAR STATION
FDNS	00NR	0	16WP	G15_082	FROM->TO	CIMARRON - DRAPER LAKE 345KV CKT 1	717	717	0.12045	102.2332	GEN563173 1-G15082_3 0.6900
FDNS	00NR	0	16WP	G15_082	FROM->TO	CIMARRON - DRAPER LAKE 345KV CKT 1	717	717	0.12045	102.1755	GEN562902 1-G15052_3 0.6900
FDNS	00NR	0	16WP	G15_082	FROM->TO	CIMARRON - DRAPER LAKE 345KV CKT 1	717	717	0.12045	102.1521	GEN527903 1-HOBBS PLANT #3 (ST)
FDNS	00NR	0	16WP	G15_082	FROM->TO	CIMARRON - DRAPER LAKE 345KV CKT 1	717	717	0.12045	102.1497	GEN514805 1-SOONER UNIT 1
FDNS	00NR	0	16WP	G15_082	FROM->TO	CIMARRON - DRAPER LAKE 345KV CKT 1	717	717	0.12045	102.1407	GEN525561 1-TOLK GEN #1 24 KV
FDNS	00NR	0	16WP	G15_082	FROM->TO	CIMARRON - DRAPER LAKE 345KV CKT 1	717	717	0.12045	102.1405	GEN600000 1-SHERBURNECNTY G1
FDNS	00NR	0	16WP	G15_082	FROM->TO	CIMARRON - DRAPER LAKE 345KV CKT 1	717	717	0.12028	102.1388	P12:138:OKGE:3TERM23

SOLUTION	GROUP	SCENARIO	SEASON	SOURCE	DIRECTION	MONITORED ELEMENT	RATEA (MVA)	RATEB(MVA)	TDF	TC%LOADING (% MVA)	CONTINGENCY
FDNS	00NR	0	16WP	G15_082	FROM->TO	CIMARRON - DRAPER LAKE 345KV CKT 1	717	717	0.12065	102.0882	LYDIA - VALLIANT 345KV CKT 1
FDNS	00NR	0	16WP	G15_082	FROM->TO	CIMARRON - DRAPER LAKE 345KV CKT 1	717	717	0.12065	102.0882	LYDIA - VALLIANT 345KV CKT 1
FDNS	00NR	0	16WP	G15_082	FROM->TO	CIMARRON - DRAPER LAKE 345KV CKT 1	717	717	0.12028	102.0796	BARNES 4 138.00 - DRAPER LAKE 138KV CKT 1
FDNS	00NR	0	16WP	G15_082	FROM->TO	CIMARRON - DRAPER LAKE 345KV CKT 1	717	717	0.12045	102.0452	GEN600001 2-SHERBURNE CNTY G2
FDNS	00NR	0	16WP	G15_082	FROM->TO	CIMARRON - DRAPER LAKE 345KV CKT 1	717	717	0.12045	101.9802	GEN344225 1-1CAL G1 25.000
FDNSLock	00NR	0	16WP	G15_082	FROM->TO	CIMARRON - DRAPER LAKE 345KV CKT 1	717	717	0.12045	101.9544	GEN629075 1-OTTUMWA GENERATOR FOR OTTUMWA UNIT NO 1
FDNS	00NR	0	16WP	G15_082	FROM->TO	CIMARRON - DRAPER LAKE 345KV CKT 1	717	717	0.12045	101.9019	GEN514806 1-SOONER UNIT 2
FDNS	00NR	0	16WP	G15_082	FROM->TO	CIMARRON - DRAPER LAKE 345KV CKT 1	717	717	0.12045	101.8893	GEN563162 1-G15081_3 0.6900
FDNS	00NR	0	16WP	G15_082	FROM->TO	CIMARRON - DRAPER LAKE 345KV CKT 1	717	717	0.12223	101.8256	DRAPER LAKE (DRAPER2) 345/138/13.8KV TRANSFORMER CKT 1
FDNS	00NR	0	16WP	G15_082	FROM->TO	CIMARRON - DRAPER LAKE 345KV CKT 1	717	717	0.12045	101.7392	SHERBURNE CO 345/24.0KV TRANSFORMER CKT 1
FDNS	00NR	0	16WP	G15_082	FROM->TO	CIMARRON - DRAPER LAKE 345KV CKT 1	717	717	0.12222	101.7317	DRAPER LAKE (DRAPER3) 345/138/13.8KV TRANSFORMER CKT 1
FDNS	00NR	0	16WP	G15_082	FROM->TO	CIMARRON - DRAPER LAKE 345KV CKT 1	717	717	0.12222	101.7317	DRAPER LAKE (DRAPER4) 345/138/13.8KV TRANSFORMER CKT 1
FDNS	00NR	0	16WP	G15_082	FROM->TO	CIMARRON - DRAPER LAKE 345KV CKT 1	717	717	0.12045	101.687	GEN635214 4-NEAL UNIT 4
FDNS	00NR	0	16WP	G15_082	FROM->TO	CIMARRON - DRAPER LAKE 345KV CKT 1	717	717	0.12045	101.6294	GEN532653 1-JEFFREY ENERGY CENTER UNIT 3
FDNS	00NR	0	16WP	G15_082	FROM->TO	CIMARRON - DRAPER LAKE 345KV CKT 1	717	717	0.1171	101.5886	CIMARRON - MATHWSN7 345.00 345KV CKT 1
FDNS	00NR	0	16WP	G15_082	FROM->TO	CIMARRON - DRAPER LAKE 345KV CKT 1	717	717	0.1171	101.5886	CIMARRON - MATHWSN7 345.00 345KV CKT 2
FDNS	00NR	0	16WP	G15_082	FROM->TO	CIMARRON - DRAPER LAKE 345KV CKT 1	717	717	0.12045	101.5798	GEN600002 3-SHERBURNE CNTY G3
FDNS	00NR	0	16WP	G15_082	FROM->TO	CIMARRON - DRAPER LAKE 345KV CKT 1	717	717	0.12045	101.5505	GEN562882 1-G15047_3 0.6900
FDNS	00NR	0	16WP	G15_082	FROM->TO	CIMARRON - DRAPER LAKE 345KV CKT 1	717	717	0.12045	101.2086	GEN635023 3-WALTER SCOTT UNIT 3
FDNS	00NR	0	16WP	G15_082	FROM->TO	CIMARRON - DRAPER LAKE 345KV CKT 1	717	717	0.12045	101.0573	GEN562023 1-G11_020_3 0.6900
FDNS	00NR	0	16WP	G15_082	FROM->TO	CIMARRON - DRAPER LAKE 345KV CKT 1	717	717	0.12045	101.0573	GEN562026 1-G11_019_3 0.6900
FDNS	00NR	0	16WP	G15_082	FROM->TO	CIMARRON - DRAPER LAKE 345KV CKT 1	717	717	0.12045	101.0053	EASTDC - ERCOT EQUIVALENCE 345KV CKT 1
FDNS	00NR	0	16WP	G15_082	FROM->TO	CIMARRON - DRAPER LAKE 345KV CKT 1	717	717	0.10935	100.7789	DRAPER LAKE - SEMINOLE 345KV CKT 1
FDNS	00NR	0	16WP	G15_082	FROM->TO	CIMARRON - DRAPER LAKE 345KV CKT 1	717	717	0.10935	100.7787	DRAPER LAKE - SEMINOLE 345KV CKT 2
FDNS	00NR	0	16WP	G15_082	FROM->TO	CIMARRON - DRAPER LAKE 345KV CKT 1	717	717	0.12045	100.7265	GEN635024 4-WALTER SCOTT UNIT 4
FDNS	00NR	0	16WP	G15_082	FROM->TO	CIMARRON - DRAPER LAKE 345KV CKT 1	717	717	0.11803	100.1552	G15093_T 345.00 - GRACEMONT 345KV CKT 1
FDNS	00NR	0	20WP	G15_082	TO->FROM	CIMARRON - MINCO 345KV CKT 1	956	956	0.10818	111.4913	G14-057T 345.00 - SUNNYSIDE 345KV CKT 1
FDNS	00NR	0	16WP	G15_082	TO->FROM	CIMARRON - MINCO 345KV CKT 1	956	956	0.10899	110.0571	G14-057T 345.00 - SUNNYSIDE 345KV CKT 1
FDNS	00NR	0	20WP	G15_082	TO->FROM	CLEARWATER - MILAN TAP 138KV CKT 1	110	110	0.03169	124.9824	MATHWSN7 345.00 - TATONGA7 345.00 345KV CKT 1
FDNS	00NR	0	20WP	G15_082	TO->FROM	CLEARWATER - MILAN TAP 138KV CKT 1	110	110	0.03169	118.0471	G11_051T 345.00 - TATONGA7 345.00 345KV CKT 1
FDNS	02NR	0	20L	G15_082	TO->FROM	CLEARWATER - MILAN TAP 138KV CKT 1	110	110	0.03223	110.2523	MATHWSN7 345.00 - TATONGA7 345.00 345KV CKT 1
FDNS	00NR	0	20WP	G15_082	TO->FROM	CLEARWATER - MILAN TAP 138KV CKT 1	110	110	0.03169	108.1313	G11_051T 345.00 - WOODWARD DISTRICT EHV 345KV CKT 1
FDNS	02NR	0	20L	G15_082	TO->FROM	CLEARWATER - MILAN TAP 138KV CKT 1	110	110	0.03223	101.2859	G11_051T 345.00 - TATONGA7 345.00 345KV CKT 1
FDNS	00NR	0	20WP	G15_082	FROM->TO	CLEO CORNER - CLEOPLT4 138.00 138KV CKT 1	191	191	0.03108	116.5489	MATHWSN7 345.00 - TATONGA7 345.00 345KV CKT 1
FDNS	00NR	0	16WP	G15_082	FROM->TO	CLEO CORNER - CLEOPLT4 138.00 138KV CKT 1	191	191	0.03142	116.1982	MATHWSN7 345.00 - TATONGA7 345.00 345KV CKT 1
FDNS	00NR	0	20WP	G15_082	FROM->TO	CLEO CORNER - CLEOPLT4 138.00 138KV CKT 1	191	191	0.03108	112.813	G11_051T 345.00 - TATONGA7 345.00 345KV CKT 1
FDNS	00NR	0	16WP	G15_082	FROM->TO	CLEO CORNER - CLEOPLT4 138.00 138KV CKT 1	191	191	0.03142	112.745	G11_051T 345.00 - TATONGA7 345.00 345KV CKT 1
FDNS	00NR	0	17SP	G15_082	FROM->TO	CLEO CORNER - CLEOPLT4 138.00 138KV CKT 1	191	191	0.03088	109.8524	MATHWSN7 345.00 - TATONGA7 345.00 345KV CKT 1
FDNS	00NR	0	16WP	G15_082	FROM->TO	CLEO CORNER - CLEOPLT4 138.00 138KV CKT 1	191	191	0.03142	107.4485	G11_051T 345.00 - WOODWARD DISTRICT EHV 345KV CKT 1
FDNS	00NR	0	20WP	G15_082	FROM->TO	CLEO CORNER - CLEOPLT4 138.00 138KV CKT 1	191	191	0.03108	107.3396	G11_051T 345.00 - WOODWARD DISTRICT EHV 345KV CKT 1
FDNS	00NR	0	17SP	G15_082	FROM->TO	CLEO CORNER - CLEOPLT4 138.00 138KV CKT 1	191	191	0.03088	106.6332	G11_051T 345.00 - TATONGA7 345.00 345KV CKT 1
FDNS	00NR	0	20SP	G15_082	FROM->TO	CLEO CORNER - CLEOPLT4 138.00 138KV CKT 1	191	191	0.03083	104.9466	MATHWSN7 345.00 - TATONGA7 345.00 345KV CKT 1
FDNS	00NR	0	20SP	G15_082	FROM->TO	CLEO CORNER - CLEOPLT4 138.00 138KV CKT 1	191	191	0.03083	101.6505	G11_051T 345.00 - TATONGA7 345.00 345KV CKT 1
FDNS	00NR	0	17SP	G15_082	FROM->TO	CLEO CORNER - CLEOPLT4 138.00 138KV CKT 1	191	191	0.03088	101.6335	G11_051T 345.00 - WOODWARD DISTRICT EHV 345KV CKT 1
FDNS	02NR	0	20L	G15_082	TO->FROM	DEWEY - IODINE 138KV CKT 1	194	222	0.06349	108.7061	MATHWSN7 345.00 - TATONGA7 345.00 345KV CKT 1
FDNS	02NR	0	17G	G15_082	TO->FROM	DEWEY - IODINE 138KV CKT 1	194	222	0.0644	107.653	MATHWSN7 345.00 - TATONGA7 345.00 345KV CKT 1
FDNS	00NR	0	17SP	G15_082	TO->FROM	DEWEY - IODINE 138KV CKT 1	194	222	0.06569	104.7583	MATHWSN7 345.00 - TATONGA7 345.00 345KV CKT 1
FDNS	00NR	0	20WP	G15_082	TO->FROM	DEWEY - IODINE 138KV CKT 1	249	270	0.06369	104.2458	MATHWSN7 345.00 - TATONGA7 345.00 345KV CKT 1
FDNS	00NR	0	20SP	G15_082	TO->FROM	DEWEY - IODINE 138KV CKT 1	194	222	0.06533	103.8114	MATHWSN7 345.00 - TATONGA7 345.00 345KV CKT 1
FDNS	00NR	0	16WP	G15_082	TO->FROM	DEWEY - IODINE 138KV CKT 1	249	270	0.06439	101.0108	MATHWSN7 345.00 - TATONGA7 345.00 345KV CKT 1
FDNS	02NR	0	17G	G15_082	TO->FROM	DEWEY - IODINE 138KV CKT 1	194	222	0.0644	99.8	G11_051T 345.00 - TATONGA7 345.00 345KV CKT 1
FDNS	02NR	0	20L	G15_082	TO->FROM	DEWEY - IODINE 138KV CKT 1	194	222	0.06349	99.5	G11_051T 345.00 - TATONGA7 345.00 345KV CKT 1
FDNS	00NR	0	17SP	G15_082	FROM->TO	EVANS ENERGY CENTER NORTH - MAIZEW 4 138.00 138KV CKT 1	369	382	0.04329	100	BENTON - WICHITA 345KV CKT 1
FDNS	02NR	0	20L	G15_082	TO->FROM	FPL SWITCH - WOODWARD 138KV CKT 1	133	153	0.0834	156.1305	MATHWSN7 345.00 - TATONGA7 345.00 345KV CKT 1
FDNS	02NR	0	17G	G15_082	TO->FROM	FPL SWITCH - WOODWARD 138KV CKT 1	133	153	0.08392	139.016	MATHWSN7 345.00 - TATONGA7 345.00 345KV CKT 1
FDNS	02NR	0	20L	G15_082	TO->FROM	FPL SWITCH - WOODWARD 138KV CKT 1	133	153	0.0834	136.7557	G11_051T 345.00 - TATONGA7 345.00 345KV CKT 1
FDNS	02NR	0	20L	G15_082	TO->FROM	FPL SWITCH - WOODWARD 138KV CKT 1	133	153	0.0834	132.8564	G11_051T 345.00 - WOODWARD DISTRICT EHV 345KV CKT 1
FDNS	00NR	0	20WP	G15_082	TO->FROM	FPL SWITCH - WOODWARD 138KV CKT 1	171	185	0.08297	131.5034	MATHWSN7 345.00 - TATONGA7 345.00 345KV CKT 1
FDNS	02NR	0	17G	G15_082	TO->FROM	FPL SWITCH - WOODWARD 138KV CKT 1	133	153	0.08392	122.9276	G11_051T 345.00 - TATONGA7 345.00 345KV CKT 1
FDNS	00NR	0	16WP	G15_082	TO->FROM	FPL SWITCH - WOODWARD 138KV CKT 1	171	185	0.08391	122.8202	MATHWSN7 345.00 - TATONGA7 345.00 345KV CKT 1
FDNS	02NR	0	17G	G15_082	TO->FROM	FPL SWITCH - WOODWARD 138KV CKT 1	133	153	0.08392	118.9631	G11_051T 345.00 - WOODWARD DISTRICT EHV 345KV CKT 1
FDNS	00NR	0	20WP	G15_082	TO->FROM	FPL SWITCH - WOODWARD 138KV CKT 1	171	185	0.08297	118.3805	G11_051T 345.00 - TATONGA7 345.00 345KV CKT 1
FDNS	02ALL	0	20L	G15_082	TO->FROM	FPL SWITCH - WOODWARD 138KV CKT 1	133	153	0.04243	117.7715	BASE CASE
FDNS	02NR	0	20L	G15_082	TO->FROM	FPL SWITCH - WOODWARD 138KV CKT 1	133	153	0.06702	117.5709	IODINE - WOODWARD EHV 138KV CKT 1
FDNS	02NR	0	20L	G15_082	TO->FROM	FPL SWITCH - WOODWARD 138KV CKT 1	133	153	0.06702	116.2104	DEWEY - IODINE 138KV CKT 1
FDNS	00NR	0	16WP	G15_082	TO->FROM	FPL SWITCH - WOODWARD 138KV CKT 1	171	185	0.08391	110.5237	G11_051T 345.00 - TATONGA7 345.00 345KV CKT 1
FDNS	02NR	0	17G	G15_082	TO->FROM	FPL SWITCH - WOODWARD 138KV CKT 1	133	153	0.06708	108.7171	IODINE - WOODWARD EHV 138KV CKT 1
FDNS	02NR	0	20L	G15_082	TO->FROM	FPL SWITCH - WOODWARD 138KV CKT 1	133	153	0.06243	108.0477	WOODWARD (WOODWRD2) 138/69/13.2KV TRANSFORMER CKT 1
FDNS	02NR	0	17G	G15_082	TO->FROM	FPL SWITCH - WOODWARD 138KV CKT 1	133	153	0.06708	107.4206	DEWEY - IODINE 138KV CKT 1
FDNS	02ALL	0	17G	G15_082	TO->FROM	FPL SWITCH - WOODWARD 138KV CKT 1	133	153	0.04526	107.3742	BASE CASE
FDNS	02NR	0	20L	G15_082	TO->FROM	FPL SWITCH - WOODWARD 138KV CKT 1	133	153	0.05881	105.0079	DEWEY - TALOGA 138KV CKT 1
FDNS	02NR	0	17G	G15_082	TO->FROM	FPL SWITCH - WOODWARD 138KV CKT 1	133	153	0.06236	103.5056	WOODWARD (WOODWRD2) 138/69/13.2KV TRANSFORMER CKT 1
FDNS	02NR	0	20L	G15_082	TO->FROM	FPL SWITCH - WOODWARD 138KV CKT 1	133	153	0.06028	103.3252	Hitchland Interchange - WALKTAP7 345.00 345KV CKT 1
FDNS	02NR	0	20L	G15_082	TO->FROM	FPL SWITCH - WOODWARD 138KV CKT 1	133	153	0.06028	103.3252	Hitchland Interchange - WALKTAP7 345.00 345KV CKT 1
FDNS	02NR	0	20L	G15_082	TO->FROM	FPL SWITCH - WOODWARD 138KV CKT 1	133	153	0.06025	102.7178	CHISHOLM6 230.00 - SWEETWATER 230KV CKT 1
FDNS	02NR	0	20L	G15_082	TO->FROM	FPL SWITCH - WOODWARD 138KV CKT 1	133	153	0.06028	102.6072	P12:345:SPS:J07.1.FINN.HITCH
FDNS	02NR	0	20L	G15_082	TO->FROM	FPL SWITCH - WOODWARD 138KV CKT 1	133	153	0.05924	101.6685	P12:230:AEPW:ELKCITY6:SWEETWT6
FDNS	00NR	0	16WP	G15_082	TO->FROM	G14-057T 345.00 - LAWTON EASTSIDE 345KV CKT 1	717	789	0.0969	100.1882	CIMARRON - MINCO 345KV CKT 1
FDNS	00NR	0	16WP	G15_082	FROM->TO	G14-057T 345.00 - SUNNYSIDE 345KV CKT 1	717	789	0.0969	142.532	CIMARRON - MINCO 345KV CKT 1

SOLUTION	GROUP	SCENARIO	SEASON	SOURCE	DIRECTION	MONITORED ELEMENT	RATEA (MVA)	RATEB(MVA)	TDF	TC%LOADING (% MVA)	CONTINGENCY
FDNS	00NR	0	20WP	G15_082	FROM->TO	G14-057T 345.00 - SUNNYSIDE 345KV CKT 1	717	789	0.09611	140.7125	CIMARRON - MINCO 345KV CKT 1
FDNS	00NR	0	16WP	G15_082	FROM->TO	G14-057T 345.00 - SUNNYSIDE 345KV CKT 1	717	789	0.0969	131.5168	GRACEMONT - MINCO 345KV CKT 1
FDNS	00NR	0	20WP	G15_082	FROM->TO	G14-057T 345.00 - SUNNYSIDE 345KV CKT 1	717	789	0.09611	129.6719	GRACEMONT - MINCO 345KV CKT 1
FDNS	00NR	0	16WP	G15_082	FROM->TO	G14-057T 345.00 - SUNNYSIDE 345KV CKT 1	717	789	0.06717	129.2697	PITTSBURG - SEMINOLE 345KV CKT 1
FDNS	00NR	0	16WP	G15_082	FROM->TO	G14-057T 345.00 - SUNNYSIDE 345KV CKT 1	717	789	0.06717	129.2697	PITTSBURG - SEMINOLE 345KV CKT 1
FDNS	00NR	0	16WP	G15_082	FROM->TO	G14-057T 345.00 - SUNNYSIDE 345KV CKT 1	717	789	0.07983	128.888	G15093_T 345.00 - GRACEMONT 345KV CKT 1
FDNS	00NR	0	16WP	G15_082	FROM->TO	G14-057T 345.00 - SUNNYSIDE 345KV CKT 1	717	789	0.07347	128.8637	BASE CASE
FDNS	00NR	0	20WP	G15_082	FROM->TO	G14-057T 345.00 - SUNNYSIDE 345KV CKT 1	717	789	0.07938	127.8858	G15093_T 345.00 - GRACEMONT 345KV CKT 1
FDNS	00NR	0	16WP	G15_082	FROM->TO	G14-057T 345.00 - SUNNYSIDE 345KV CKT 1	717	789	0.08464	126.1401	CIMARRON - DRAPER LAKE 345KV CKT 1
FDNS	00NR	0	20WP	G15_082	FROM->TO	G14-057T 345.00 - SUNNYSIDE 345KV CKT 1	717	789	0.07286	125.7148	BASE CASE
FDNS	00NR	0	20WP	G15_082	FROM->TO	G14-057T 345.00 - SUNNYSIDE 345KV CKT 1	717	789	0.06648	125.1522	PITTSBURG - SEMINOLE 345KV CKT 1
FDNS	00NR	0	20WP	G15_082	FROM->TO	G14-057T 345.00 - SUNNYSIDE 345KV CKT 1	717	789	0.06648	125.1522	PITTSBURG - SEMINOLE 345KV CKT 1
FDNS	00NR	0	16WP	G15_082	FROM->TO	G14-057T 345.00 - SUNNYSIDE 345KV CKT 1	717	789	0.07913	123.4382	P12:138:WFEC:MSL03
FDNS	00NR	0	20WP	G15_082	FROM->TO	G14-057T 345.00 - SUNNYSIDE 345KV CKT 1	717	789	0.08396	122.8917	CIMARRON - DRAPER LAKE 345KV CKT 1
FDNS	00NR	0	16WP	G15_082	FROM->TO	G14-057T 345.00 - SUNNYSIDE 345KV CKT 1	717	789	0.07203	122.7975	PITTSBURG - VALLIANT 345KV CKT 1
FDNS	00NR	0	16WP	G15_082	FROM->TO	G14-057T 345.00 - SUNNYSIDE 345KV CKT 1	717	789	0.07203	122.7975	PITTSBURG - VALLIANT 345KV CKT 1
FDNS	00NR	0	16WP	G15_082	FROM->TO	G14-057T 345.00 - SUNNYSIDE 345KV CKT 1	717	789	0.07347	122.2184	GEN509403 1-PIRKEY GENERATION
FDNS	00NR	0	16WP	G15_082	FROM->TO	G14-057T 345.00 - SUNNYSIDE 345KV CKT 1	717	789	0.07347	122.1224	GEN509416 1-TURK GENERATION
FDNS	00NR	0	16WP	G15_082	FROM->TO	G14-057T 345.00 - SUNNYSIDE 345KV CKT 1	717	789	0.07499	121.9583	CLEVELAND - G15066_T 345.00 345KV CKT 1
FDNS	00NR	0	16WP	G15_082	FROM->TO	G14-057T 345.00 - SUNNYSIDE 345KV CKT 1	717	789	0.07499	121.6618	G15066_T 345.00 - SOONER 345KV CKT 1
FDNS	00NR	0	16WP	G15_082	FROM->TO	G14-057T 345.00 - SUNNYSIDE 345KV CKT 1	717	789	0.07347	121.2546	GEN501801 1-DOLET HILLS UNIT1
FDNS	00NR	0	16WP	G15_082	FROM->TO	G14-057T 345.00 - SUNNYSIDE 345KV CKT 1	717	789	0.07347	120.8575	GEN509404 1-WELSH #1
FDNS	00NR	0	16WP	G15_082	FROM->TO	G14-057T 345.00 - SUNNYSIDE 345KV CKT 1	717	789	0.07347	120.8575	GEN509406 1-WELSH #3
FDNS	00NR	0	20WP	G15_082	FROM->TO	G14-057T 345.00 - SUNNYSIDE 345KV CKT 1	717	789	0.0785	120.5135	P12:138:WFEC:MSL03
FDNS	00NR	0	16WP	G15_082	FROM->TO	G14-057T 345.00 - SUNNYSIDE 345KV CKT 1	717	789	0.07069	120.4575	BORDER 7345.00 - WOODWARD DISTRICT EHV 345KV CKT 1
FDNS	00NR	0	16WP	G15_082	FROM->TO	G14-057T 345.00 - SUNNYSIDE 345KV CKT 1	717	789	0.07506	120.2981	CORN TAP - NAPLESTP 138.00 138KV CKT 1
FDNS	00NR	0	16WP	G15_082	FROM->TO	G14-057T 345.00 - SUNNYSIDE 345KV CKT 1	717	789	0.07506	120.2126	NAPLESTP 138.00 - PAYNE 138.00 138KV CKT 1
FDNS	00NR	0	16WP	G15_082	FROM->TO	G14-057T 345.00 - SUNNYSIDE 345KV CKT 1	717	789	0.0737	120.0603	7SAREPTA% 345.00 - LONGWOOD 345KV CKT 1
FDNS	00NR	0	16WP	G15_082	FROM->TO	G14-057T 345.00 - SUNNYSIDE 345KV CKT 1	717	789	0.0737	120.0603	7SAREPTA% 345.00 - LONGWOOD 345KV CKT 1
FDNS	00NR	0	16WP	G15_082	FROM->TO	G14-057T 345.00 - SUNNYSIDE 345KV CKT 1	717	789	0.06981	119.992	CANADIAN RIVER - MUSKOGEE 345KV CKT 1
FDNS	00NR	0	16WP	G15_082	FROM->TO	G14-057T 345.00 - SUNNYSIDE 345KV CKT 1	717	789	0.07445	119.9841	CLEVELAND - TULSA NORTH 345KV CKT 1
FDNS	00NR	0	16WP	G15_082	FROM->TO	G14-057T 345.00 - SUNNYSIDE 345KV CKT 1	717	789	0.07445	119.9841	CLEVELAND - TULSA NORTH 345KV CKT 1
FDNS	00NR	0	16WP	G15_082	FROM->TO	G14-057T 345.00 - SUNNYSIDE 345KV CKT 1	717	789	0.07483	119.9392	ANADARKO - POCASSETT 138KV CKT 1
FDNS	00NR	0	16WP	G15_082	FROM->TO	G14-057T 345.00 - SUNNYSIDE 345KV CKT 1	717	789	0.07473	119.9094	COMANCHE - LOCO 138KV CKT 1
FDNS	00NR	0	16WP	G15_082	FROM->TO	G14-057T 345.00 - SUNNYSIDE 345KV CKT 1	717	789	0.07361	119.9044	DOLET HILLS - SOUTHWEST SHREVEPORT 345KV CKT 1
FDNS	00NR	0	16WP	G15_082	FROM->TO	G14-057T 345.00 - SUNNYSIDE 345KV CKT 1	717	789	0.07361	119.9044	DOLET HILLS - SOUTHWEST SHREVEPORT 345KV CKT 1
FDNS	00NR	0	16WP	G15_082	FROM->TO	G14-057T 345.00 - SUNNYSIDE 345KV CKT 1	717	789	0.07347	119.8726	GEN336153 1-WATERFORD UNIT#3
FDNS	00NR	0	16WP	G15_082	FROM->TO	G14-057T 345.00 - SUNNYSIDE 345KV CKT 1	717	789	0.07483	119.7914	POCASSETT - TUTTLE 138KV CKT 1
FDNS	00NR	0	16WP	G15_082	FROM->TO	G14-057T 345.00 - SUNNYSIDE 345KV CKT 1	717	789	0.08312	119.6986	ARCADIA - NORTHWEST 345KV CKT 1
FDNS	00NR	0	16WP	G15_082	FROM->TO	G14-057T 345.00 - SUNNYSIDE 345KV CKT 1	717	789	0.07442	119.6289	ARCADIA - SEMINOLE 345KV CKT 1
FDNS	00NR	0	16WP	G15_082	FROM->TO	G14-057T 345.00 - SUNNYSIDE 345KV CKT 1	717	789	0.07347	119.575	GEN335831 1-RIVERBEND UNIT#1
FDNS	00NR	0	16WP	G15_082	FROM->TO	G14-057T 345.00 - SUNNYSIDE 345KV CKT 1	717	789	0.07069	119.5641	BORDER 7345.00 - TUCO_2 345.00 345KV CKT 1
FDNS	00NR	0	16WP	G15_082	FROM->TO	G14-057T 345.00 - SUNNYSIDE 345KV CKT 1	717	789	0.07347	119.5271	GEN515577 1-ARBWND11 0.6900
FDNS	00NR	0	16WP	G15_082	FROM->TO	G14-057T 345.00 - SUNNYSIDE 345KV CKT 1	717	789	0.07454	119.515	P12:138:AEPW:DUNCAN-4:L.E.S.-4
FDNS	00NR	0	16WP	G15_082	FROM->TO	G14-057T 345.00 - SUNNYSIDE 345KV CKT 1	717	789	0.07347	119.4957	GEN509409 1-WILKES #3
FDNS	00NR	0	16WP	G15_082	FROM->TO	G14-057T 345.00 - SUNNYSIDE 345KV CKT 1	717	789	0.07347	119.469	GEN336821 1-GRAND GULF UNIT
FDNS	00NR	0	16WP	G15_082	FROM->TO	G14-057T 345.00 - SUNNYSIDE 345KV CKT 1	717	789	0.0736	119.4388	7SAREPTA% 345.00 - ELDORADO EHV 345KV CKT 1
FDNS	00NR	0	16WP	G15_082	FROM->TO	G14-057T 345.00 - SUNNYSIDE 345KV CKT 1	717	789	0.0736	119.4386	3TR3AR8EL7EL
FDNS	00NR	0	16WP	G15_082	FROM->TO	G14-057T 345.00 - SUNNYSIDE 345KV CKT 1	717	789	0.0736	119.4205	ELDORADO EHV 500/345KV TRANSFORMER CKT 1
FDNS	00NR	0	16WP	G15_082	FROM->TO	G14-057T 345.00 - SUNNYSIDE 345KV CKT 1	717	789	0.07483	119.4106	BRIDGECR 138.00 - TUTTLE 138KV CKT 1
FDNS	00NR	0	16WP	G15_082	FROM->TO	G14-057T 345.00 - SUNNYSIDE 345KV CKT 1	717	789	0.07994	119.4105	MATHWSN7 345.00 - TATONGA7 345.00 345KV CKT 1
FDNS	00NR	0	16WP	G15_082	FROM->TO	G14-057T 345.00 - SUNNYSIDE 345KV CKT 1	717	789	0.07454	119.4015	COMANCHE TAP - OMPA-DUNCAN 840 138KV CKT 1
FDNS	00NR	0	16WP	G15_082	FROM->TO	G14-057T 345.00 - SUNNYSIDE 345KV CKT 1	717	789	0.07486	119.3937	HEALDTON - LOCO 138KV CKT 1
FDNS	00NR	0	20WP	G15_082	FROM->TO	G14-057T 345.00 - SUNNYSIDE 345KV CKT 1	717	789	0.07286	119.2649	GEN509403 1-PIRKEY GENERATION
FDNS	00NR	0	16WP	G15_082	FROM->TO	G14-057T 345.00 - SUNNYSIDE 345KV CKT 1	717	789	0.07486	119.2544	HEALDTON - RINGLING 138KV CKT 1
FDNS	00NR	0	16WP	G15_082	FROM->TO	G14-057T 345.00 - SUNNYSIDE 345KV CKT 1	717	789	0.07347	119.2121	GEN501813 1-RODEMACHER UNIT 3
FDNS	00NR	0	16WP	G15_082	FROM->TO	G14-057T 345.00 - SUNNYSIDE 345KV CKT 1	717	789	0.08493	119.2027	FINNEY SWITCHING STATION - HOLCOMB 345KV CKT 1
FDNS	00NR	0	16WP	G15_082	FROM->TO	G14-057T 345.00 - SUNNYSIDE 345KV CKT 1	717	789	0.08493	119.2027	FINNEY SWITCHING STATION - HOLCOMB 345KV CKT 1
FDNS	00NR	0	20WP	G15_082	FROM->TO	G14-057T 345.00 - SUNNYSIDE 345KV CKT 1	717	789	0.07286	119.1842	GEN509416 1-TURK GENERATION
FDNS	00NR	0	16WP	G15_082	FROM->TO	G14-057T 345.00 - SUNNYSIDE 345KV CKT 1	717	789	0.07347	119.1633	GEN300006 1-NEW MADRID UNIT 1
FDNS	00NR	0	16WP	G15_082	FROM->TO	G14-057T 345.00 - SUNNYSIDE 345KV CKT 1	717	789	0.07347	119.1519	GEN300007 1-NEW MADRID UNIT 2
FDNS	00NR	0	16WP	G15_082	FROM->TO	G14-057T 345.00 - SUNNYSIDE 345KV CKT 1	717	789	0.07378	119.1475	LACYGNE - WAVERLY7 345.00 345KV CKT 1
FDNS	00NR	0	16WP	G15_082	FROM->TO	G14-057T 345.00 - SUNNYSIDE 345KV CKT 1	717	789	0.07347	119.1464	GRAND GULF 500/22.0KV TRANSFORMER CKT 1
FDNS	00NR	0	16WP	G15_082	FROM->TO	G14-057T 345.00 - SUNNYSIDE 345KV CKT 1	717	789	0.07483	119.1348	BRIDGECR 138.00 - SUNSHINE CANYON 138KV CKT 1
FDNS	00NR	0	16WP	G15_082	FROM->TO	G14-057T 345.00 - SUNNYSIDE 345KV CKT 1	717	789	0.07483	119.1313	P12:138:WFEC:MSL01
FDNS	00NR	0	16WP	G15_082	FROM->TO	G14-057T 345.00 - SUNNYSIDE 345KV CKT 1	717	789	0.07454	119.1198	DUNCAN - OMPA-DUNCAN 840 138KV CKT 1
FDNS	00NR	0	16WP	G15_082	FROM->TO	G14-057T 345.00 - SUNNYSIDE 345KV CKT 1	717	789	0.07454	119.1198	DUNCAN - OMPA-DUNCAN 840 138KV CKT 1
FDNS	00NR	0	16WP	G15_082	FROM->TO	G14-057T 345.00 - SUNNYSIDE 345KV CKT 1	717	789	0.07486	119.089	RINGLING - SOUTH WILSON 138KV CKT 1
FDNS	00NR	0	16WP	G15_082	FROM->TO	G14-057T 345.00 - SUNNYSIDE 345KV CKT 1	717	789	0.07347	119.0746	GEN520947 1-HUGO1
FDNS	00NR	0	16WP	G15_082	FROM->TO	G14-057T 345.00 - SUNNYSIDE 345KV CKT 1	717	789	0.07378	119.0327	WAVERLY7 345.00 - WOLF CREEK 345KV CKT 1
FDNS	00NR	0	20WP	G15_082	FROM->TO	G14-057T 345.00 - SUNNYSIDE 345KV CKT 1	717	789	0.07433	119.0222	CLEVELAND - G15066_T 345.00 345KV CKT 1
FDNS	00NR	0	16WP	G15_082	FROM->TO	G14-057T 345.00 - SUNNYSIDE 345KV CKT 1	717	789	0.07347	119.0109	GEN335206 1-NELSON UNIT 6
FDNS	00NR	0	20WP	G15_082	FROM->TO	G14-057T 345.00 - SUNNYSIDE 345KV CKT 1	717	789	0.07141	118.9925	PITTSBURG - VALLIANT 345KV CKT 1
FDNS	00NR	0	20WP	G15_082	FROM->TO	G14-057T 345.00 - SUNNYSIDE 345KV CKT 1	717	789	0.07141	118.9925	PITTSBURG - VALLIANT 345KV CKT 1
FDNS	00NR	0	16WP	G15_082	FROM->TO	G14-057T 345.00 - SUNNYSIDE 345KV CKT 1	717	789	0.0722	118.8954	PARK LANE - SEMINOLE 138KV CKT 1
FDNS	00NR	0	16WP	G15_082	FROM->TO	G14-057T 345.00 - SUNNYSIDE 345KV CKT 1	717	789	0.07347	118.8696	DOLET HILLS 345/24.0KV TRANSFORMER CKT 1
FDNS	00NR	0	16WP	G15_082	FROM->TO	G14-057T 345.00 - SUNNYSIDE 345KV CKT 1	717	789	0.07343	118.8638	P12:138:AEPW:SHERID4:112GORE4
FDNS	00NR	0	16WP	G15_082	FROM->TO	G14-057T 345.00 - SUNNYSIDE 345KV CKT 1	717	789	0.07347	118.8239	GEN501812 1-RODEMACHER UNIT 2
FDNS	00NR	0	16WP	G15_082	FROM->TO	G14-057T 345.00 - SUNNYSIDE 345KV CKT 1	717	789	0.07486	118.8125	MARIETTA - SOUTH WILSON 138KV CKT 1

SOLUTION	GROUP	SCENARIO	SEASON	SOURCE	DIRECTION	MONITORED ELEMENT	RATEA (MVA)	RATEB(MVA)	TDF	TC%LOADING (% MVA)	CONTINGENCY
FDNS	00NR	0	16WP	G15_082	FROM->TO	G14-057T 345.00 - SUNNYSIDE 345KV CKT 1	717	789	0.07469	118.8098	CANEYRV7 345.00 - NEOSHO 345KV CKT 1
FDNS	00NR	0	16WP	G15_082	FROM->TO	G14-057T 345.00 - SUNNYSIDE 345KV CKT 1	717	789	0.07347	118.7761	GEN590011 2-ERCOT EQUIVALENCE
FDNS	00NR	0	16WP	G15_082	FROM->TO	G14-057T 345.00 - SUNNYSIDE 345KV CKT 1	717	789	0.07347	118.7659	GEN515564 1-ORIGIN11 0.6900
FDNS	00NR	0	16WP	G15_082	FROM->TO	G14-057T 345.00 - SUNNYSIDE 345KV CKT 1	717	789	0.07347	118.7659	GEN515565 1-ORIGIN21 0.6900
FDNS	00NR	0	20WP	G15_082	FROM->TO	G14-057T 345.00 - SUNNYSIDE 345KV CKT 1	717	789	0.07433	118.7229	G15066_T 345.00 - SOONER 345KV CKT 1
FDNS	00NR	0	16WP	G15_082	FROM->TO	G14-057T 345.00 - SUNNYSIDE 345KV CKT 1	717	789	0.07486	118.714	P12:138:WFEC:MSL17
FDNS	00NR	0	16WP	G15_082	FROM->TO	G14-057T 345.00 - SUNNYSIDE 345KV CKT 1	717	789	0.07347	118.7136	GEN509408 1-WILKES #2
FDNS	00NR	0	16WP	G15_082	FROM->TO	G14-057T 345.00 - SUNNYSIDE 345KV CKT 1	717	789	0.07347	118.7019	GEN590010 1-ERCOT EQUIVALENCE
FDNS	00NR	0	16WP	G15_082	FROM->TO	G14-057T 345.00 - SUNNYSIDE 345KV CKT 1	717	789	0.07731	118.701	THISTLE7 345.00 - WOODWARD DISTRICT EHV 345KV CKT 1
FDNS	00NR	0	16WP	G15_082	FROM->TO	G14-057T 345.00 - SUNNYSIDE 345KV CKT 1	717	789	0.07731	118.701	THISTLE7 345.00 - WOODWARD DISTRICT EHV 345KV CKT 1
FDNS	00NR	0	16WP	G15_082	FROM->TO	G14-057T 345.00 - SUNNYSIDE 345KV CKT 1	717	789	0.07731	118.701	THISTLE7 345.00 - WOODWARD DISTRICT EHV 345KV CKT 2
FDNS	00NR	0	16WP	G15_082	FROM->TO	G14-057T 345.00 - SUNNYSIDE 345KV CKT 1	717	789	0.07731	118.701	THISTLE7 345.00 - WOODWARD DISTRICT EHV 345KV CKT 2
FDNS	00NR	0	16WP	G15_082	FROM->TO	G14-057T 345.00 - SUNNYSIDE 345KV CKT 1	717	789	0.07469	118.6678	CANEYRV7 345.00 - LATHAMS7 345.00 345KV CKT 1
FDNS	00NR	0	16WP	G15_082	FROM->TO	G14-057T 345.00 - SUNNYSIDE 345KV CKT 1	717	789	0.08493	118.6585	FINNEY SWITCHING STATION - Hitchland Interchange 345KV CKT 1
FDNS	00NR	0	16WP	G15_082	FROM->TO	G14-057T 345.00 - SUNNYSIDE 345KV CKT 1	717	789	0.07336	118.622	ELDORADO EHV - SHERIDAN EHV 500KV CKT 1
FDNS	00NR	0	16WP	G15_082	FROM->TO	G14-057T 345.00 - SUNNYSIDE 345KV CKT 1	717	789	0.07461	118.615	CIVIT - PAOLI 138KV CKT 1
FDNS	00NR	0	16WP	G15_082	FROM->TO	G14-057T 345.00 - SUNNYSIDE 345KV CKT 1	717	789	0.07347	118.5935	P12:69:AEPW:L.E.S.-2:LAW WC2
FDNS	00NR	0	16WP	G15_082	FROM->TO	G14-057T 345.00 - SUNNYSIDE 345KV CKT 1	717	789	0.07308	118.5924	REDBUD - RIVERSIDE STATION 345KV CKT 1
FDNS	00NR	0	16WP	G15_082	FROM->TO	G14-057T 345.00 - SUNNYSIDE 345KV CKT 1	717	789	0.07308	118.5924	REDBUD - RIVERSIDE STATION 345KV CKT 1
FDNS	00NR	0	16WP	G15_082	FROM->TO	G14-057T 345.00 - SUNNYSIDE 345KV CKT 1	717	789	0.07373	118.5801	PAOLI - PAYNE 138.00 138KV CKT 1
FDNS	00NR	0	16WP	G15_082	FROM->TO	G14-057T 345.00 - SUNNYSIDE 345KV CKT 1	717	789	0.07345	118.5782	ELDORADO EHV - MOUNT OLIVE 500KV CKT 1
FDNS	00NR	0	16WP	G15_082	FROM->TO	G14-057T 345.00 - SUNNYSIDE 345KV CKT 1	717	789	0.07388	118.5768	P12:138:WFEC:MSL02
FDNS	00NR	0	16WP	G15_082	FROM->TO	G14-057T 345.00 - SUNNYSIDE 345KV CKT 1	717	789	0.07347	118.5766	P12:161:AEPW:DYESS 5:HYLAND 5
FDNS	00NR	0	16WP	G15_082	FROM->TO	G14-057T 345.00 - SUNNYSIDE 345KV CKT 1	717	789	0.07347	118.5575	GEN506754 1-LEBROCK STEAM 1
FDNS	00NR	0	16WP	G15_082	FROM->TO	G14-057T 345.00 - SUNNYSIDE 345KV CKT 1	717	789	0.07347	118.5393	GEN334440 1-SABINE UNIT 4
FDNS	00NR	0	16WP	G15_082	FROM->TO	G14-057T 345.00 - SUNNYSIDE 345KV CKT 1	717	789	0.07591	118.5016	MATHWSN7 345.00 - NORTHWEST 345KV CKT 1
FDNS	00NR	0	16WP	G15_082	FROM->TO	G14-057T 345.00 - SUNNYSIDE 345KV CKT 1	717	789	0.07344	118.4947	P12:138:AEPW:112GORE4:L.E.S.-4
FDNS	00NR	0	16WP	G15_082	FROM->TO	G14-057T 345.00 - SUNNYSIDE 345KV CKT 1	717	789	0.07377	118.4921	ANADARKO - GEORGIA 138KV CKT 1
FDNS	00NR	0	16WP	G15_082	FROM->TO	G14-057T 345.00 - SUNNYSIDE 345KV CKT 1	717	789	0.07537	118.485	P12:138:AEPW-OGE:CORNVIL4:MAUD 4
FDNS	00NR	0	20WP	G15_082	FROM->TO	G14-057T 345.00 - SUNNYSIDE 345KV CKT 1	717	789	0.07286	118.4753	GEN501801 1-DOLET HILLS UNIT1
FDNS	00NR	0	16WP	G15_082	FROM->TO	G14-057T 345.00 - SUNNYSIDE 345KV CKT 1	717	789	0.07461	118.472	CIVIT - STRATFORD 138KV CKT 1
FDNS	00NR	0	16WP	G15_082	FROM->TO	G14-057T 345.00 - SUNNYSIDE 345KV CKT 1	717	789	0.07469	118.4503	LATHAMS7 345.00 - ROSE HILL 345KV CKT 1
FDNS	00NR	0	16WP	G15_082	FROM->TO	G14-057T 345.00 - SUNNYSIDE 345KV CKT 1	717	789	0.07338	118.4492	TUPELO - TUPELO TAP 138KV CKT 1
FDNS	00NR	0	16WP	G15_082	FROM->TO	G14-057T 345.00 - SUNNYSIDE 345KV CKT 1	717	789	0.07384	118.4482	LAWTON EASTSIDE (LES 5) 345/138/13.8KV TRANSFORMER CKT 2
FDNS	00NR	0	16WP	G15_082	FROM->TO	G14-057T 345.00 - SUNNYSIDE 345KV CKT 1	717	789	0.07384	118.4482	LAWTON EASTSIDE (LES 5) 345/138/13.8KV TRANSFORMER CKT 2
FDNS	00NR	0	16WP	G15_082	FROM->TO	G14-057T 345.00 - SUNNYSIDE 345KV CKT 1	717	789	0.07537	118.4109	BLANCHARD - CORNVILLE 138KV CKT 1
FDNS	00NR	0	16WP	G15_082	FROM->TO	G14-057T 345.00 - SUNNYSIDE 345KV CKT 1	717	789	0.07377	118.4078	FLETCHER - GEORGIA 138KV CKT 1
FDNS	00NR	0	16WP	G15_082	FROM->TO	G14-057T 345.00 - SUNNYSIDE 345KV CKT 1	717	789	0.07347	118.4073	GEN503909 1-FULTONU1 1 16.000
FDNS	00NR	0	16WP	G15_082	FROM->TO	G14-057T 345.00 - SUNNYSIDE 345KV CKT 1	717	789	0.07347	118.4022	FRONTIER - GRIMES 345KV CKT 1
FDNS	00NR	0	16WP	G15_082	FROM->TO	G14-057T 345.00 - SUNNYSIDE 345KV CKT 1	717	789	0.07384	118.385	EMPIRE - FLETCHER 138KV CKT 1
FDNS	00NR	0	16WP	G15_082	FROM->TO	G14-057T 345.00 - SUNNYSIDE 345KV CKT 1	717	789	0.07461	118.3525	OIL CENTER - STRATFORD 138KV CKT 1
FDNS	00NR	0	16WP	G15_082	FROM->TO	G14-057T 345.00 - SUNNYSIDE 345KV CKT 1	717	789	0.07364	118.3353	WEBRE - WELLS 500KV CKT 1
FDNS	00NR	0	16WP	G15_082	FROM->TO	G14-057T 345.00 - SUNNYSIDE 345KV CKT 1	717	789	0.07384	118.2981	COMANCHE - EMPIRE 138KV CKT 1
FDNS	00NR	0	16WP	G15_082	FROM->TO	G14-057T 345.00 - SUNNYSIDE 345KV CKT 1	717	789	0.07347	118.2872	GEN509393 S1-ARSENAL HILL GENS #4 (STALL)
FDNS	00NR	0	16WP	G15_082	FROM->TO	G14-057T 345.00 - SUNNYSIDE 345KV CKT 1	717	789	0.07347	118.257	GEN509392 G2-ARSENAL HILL GENS #3 (STALL)
FDNS	00NR	0	16WP	G15_082	FROM->TO	G14-057T 345.00 - SUNNYSIDE 345KV CKT 1	717	789	0.07347	118.2569	GEN509391 G1-ARSENAL HILL GENS #2 (STALL)
FDNS	00NR	0	16WP	G15_082	FROM->TO	G14-057T 345.00 - SUNNYSIDE 345KV CKT 1	717	789	0.07347	118.2459	GEN336252 1-NINEMILE POINT UNIT#5
FDNS	00NR	0	16WP	G15_082	FROM->TO	G14-057T 345.00 - SUNNYSIDE 345KV CKT 1	717	789	0.07347	118.2421	DELL 500 - ESSEX UNIT 2 500KV CKT Z1
FDNS	00NR	0	16WP	G15_082	FROM->TO	G14-057T 345.00 - SUNNYSIDE 345KV CKT 1	717	789	0.07347	118.2287	GEN334071 1-LEWIS CREEK 2
FDNS	00NR	0	16WP	G15_082	FROM->TO	G14-057T 345.00 - SUNNYSIDE 345KV CKT 1	717	789	0.07371	118.2241	DUNCAN (DUNCAN) 138/69/13.8KV TRANSFORMER CKT 1
FDNS	00NR	0	16WP	G15_082	FROM->TO	G14-057T 345.00 - SUNNYSIDE 345KV CKT 1	717	789	0.07371	118.2241	DUNCAN (DUNCAN) 138/69/13.8KV TRANSFORMER CKT 1
FDNS	00NR	0	16WP	G15_082	FROM->TO	G14-057T 345.00 - SUNNYSIDE 345KV CKT 1	717	789	0.07347	118.2196	GEN334070 1-LEWIS CREEK 1
FDNS	00NR	0	16WP	G15_082	FROM->TO	G14-057T 345.00 - SUNNYSIDE 345KV CKT 1	717	789	0.07347	118.218	GEN335204 1-NELSON UNIT 4
FDNS	00NR	0	16WP	G15_082	FROM->TO	G14-057T 345.00 - SUNNYSIDE 345KV CKT 1	717	789	0.07537	118.2134	BLANCHARD - MAUD 138KV CKT 1
FDNS	00NR	0	16WP	G15_082	FROM->TO	G14-057T 345.00 - SUNNYSIDE 345KV CKT 1	717	789	0.07553	118.2044	G1524G1525 345.00 - THISTLE7 345.00 345KV CKT 1
FDNS	00NR	0	16WP	G15_082	FROM->TO	G14-057T 345.00 - SUNNYSIDE 345KV CKT 1	717	789	0.07553	118.2044	G1524G1525 345.00 - THISTLE7 345.00 345KV CKT 2
FDNS	00NR	0	16WP	G15_082	FROM->TO	G14-057T 345.00 - SUNNYSIDE 345KV CKT 1	717	789	0.07373	118.2024	G15074_T 345.00 - HOYT 345KV CKT 1
FDNS	00NR	0	16WP	G15_082	FROM->TO	G14-057T 345.00 - SUNNYSIDE 345KV CKT 1	717	789	0.07347	118.1828	GEN334441 1-SABINE UNIT 5
FDNS	00NR	0	16WP	G15_082	FROM->TO	G14-057T 345.00 - SUNNYSIDE 345KV CKT 1	717	789	0.07461	118.1796	LATTA JCT - OIL CENTER 138KV CKT 1
FDNS	00NR	0	16WP	G15_082	FROM->TO	G14-057T 345.00 - SUNNYSIDE 345KV CKT 1	717	789	0.07346	118.1699	P12:161:AEPW-SWPA:BEAVER5:EROGERS5
FDNS	00NR	0	16WP	G15_082	FROM->TO	G14-057T 345.00 - SUNNYSIDE 345KV CKT 1	717	789	0.07351	118.1514	P12:138:AEPW:CATOOSA4:T.S.E.-4
FDNS	00NR	0	16WP	G15_082	FROM->TO	G14-057T 345.00 - SUNNYSIDE 345KV CKT 1	717	789	0.07347	118.1258	GEN334030 1-FRONTIER UNIT 1
FDNS	00NR	0	16WP	G15_082	FROM->TO	G14-057T 345.00 - SUNNYSIDE 345KV CKT 1	717	789	0.07347	118.1241	GEN334031 1-FRONTIER UNIT 2
FDNS	00NR	0	16WP	G15_082	FROM->TO	G14-057T 345.00 - SUNNYSIDE 345KV CKT 1	717	789	0.07388	118.1217	TUTTLE - TUTTLE CONOCO TAP 138KV CKT 1
FDNS	00NR	0	16WP	G15_082	FROM->TO	G14-057T 345.00 - SUNNYSIDE 345KV CKT 1	717	789	0.07352	118.1207	8DANIEL8 500.00 - MCKNIGHT 500KV CKT 1
FDNS	00NR	0	16WP	G15_082	FROM->TO	G14-057T 345.00 - SUNNYSIDE 345KV CKT 1	717	789	0.07347	118.12	GEN337653 1-WHITE BLUFF UNIT #2
FDNS	00NR	0	16WP	G15_082	FROM->TO	G14-057T 345.00 - SUNNYSIDE 345KV CKT 1	717	789	0.07347	118.1123	GEN506752 1-LEBROCK GAS 1
FDNS	00NR	0	16WP	G15_082	FROM->TO	G14-057T 345.00 - SUNNYSIDE 345KV CKT 1	717	789	0.07347	118.1121	GEN506753 1-LEBROCK GAS 2
FDNS	00NR	0	20WP	G15_082	FROM->TO	G14-057T 345.00 - SUNNYSIDE 345KV CKT 1	717	789	0.07024	118.1012	BORDER 7345.00 - WOODWARD DISTRICT EHV 345KV CKT 1
FDNS	00NR	0	16WP	G15_082	FROM->TO	G14-057T 345.00 - SUNNYSIDE 345KV CKT 1	717	789	0.07347	118.1007	P12:161:AEPW:DYESS5:ELMSPRNG:TONTITN5
FDNS	00NR	0	16WP	G15_082	FROM->TO	G14-057T 345.00 - SUNNYSIDE 345KV CKT 1	717	789	0.07347	118.0987	GEN300003 1-THOMAS HILL UNIT 3
FDNS	00NR	0	16WP	G15_082	FROM->TO	G14-057T 345.00 - SUNNYSIDE 345KV CKT 1	717	789	0.07509	118.0838	BAILEY4 138.00 - SUNSHINE CANYON 138KV CKT 1
FDNS	00NR	0	16WP	G15_082	FROM->TO	G14-057T 345.00 - SUNNYSIDE 345KV CKT 1	717	789	0.07347	118.0822	GEN515040 1-SEMINOLE 1G
FDNS	00NR	0	16WP	G15_082	FROM->TO	G14-057T 345.00 - SUNNYSIDE 345KV CKT 1	717	789	0.07357	118.0804	6LAYFLD 230.00 - CARROLL 230KV CKT 1
FDNS	00NR	0	16WP	G15_082	FROM->TO	G14-057T 345.00 - SUNNYSIDE 345KV CKT 1	717	789	0.07427	118.0773	P12:138:AEPW-OGE:WTH_JCT4:JENSEN4
FDNS	00NR	0	16WP	G15_082	FROM->TO	G14-057T 345.00 - SUNNYSIDE 345KV CKT 1	717	789	0.07017	118.0727	CANADIAN RIVER - PITTSBURG 345KV CKT 1
FDNS	00NR	0	16WP	G15_082	FROM->TO	G14-057T 345.00 - SUNNYSIDE 345KV CKT 1	717	789	0.07017	118.0727	CANADIAN RIVER - PITTSBURG 345KV CKT 1
FDNS	00NR	0	16WP	G15_082	FROM->TO	G14-057T 345.00 - SUNNYSIDE 345KV CKT 1	717	789	0.07357	118.0726	FULTON 115 - HOPE 115KV CKT 1
FDNS	00NR	0	16WP	G15_082	FROM->TO	G14-057T 345.00 - SUNNYSIDE 345KV CKT 1	717	789	0.07357	118.0726	FULTON 115 - HOPE 115KV CKT 1

SOLUTION	GROUP	SCENARIO	SEASON	SOURCE	DIRECTION	MONITORED ELEMENT	RATEA (MVA)	RATEB(MVA)	TDF	TC%LOADING (% MVA)	CONTINGENCY
FDNS	00NR	0	16WP	G15_082	FROM->TO	G14-057T 345.00 - SUNNYSIDE 345KV CKT 1	717	789	0.074	118.0662	P12:138:AEPW:CORNVIL4:DUNCAN-4
FDNS	00NR	0	16WP	G15_082	FROM->TO	G14-057T 345.00 - SUNNYSIDE 345KV CKT 1	717	789	0.07347	118.0616	GEN501811 1-RODEMACHER UNIT 1
FDNS	00NR	0	16WP	G15_082	FROM->TO	G14-057T 345.00 - SUNNYSIDE 345KV CKT 1	717	789	0.07347	118.049	GEN334433 1-SABINE UNIT 3
FDNS	00NR	0	16WP	G15_082	FROM->TO	G14-057T 345.00 - SUNNYSIDE 345KV CKT 1	717	789	0.07371	118.0473	P12:69:WFEC-AEPW:COMANCH2:DUNCAN-2
FDNS	00NR	0	16WP	G15_082	FROM->TO	G14-057T 345.00 - SUNNYSIDE 345KV CKT 1	717	789	0.07347	118.0469	GEN515226 1-MUSKOGEE 6G
FDNS	00NR	0	16WP	G15_082	FROM->TO	G14-057T 345.00 - SUNNYSIDE 345KV CKT 1	717	789	0.07383	118.0463	P12:138:AEPW:CORNVIL4:S.W.S.-4
FDNS	00NR	0	16WP	G15_082	FROM->TO	G14-057T 345.00 - SUNNYSIDE 345KV CKT 1	717	789	0.07347	118.0452	GEN336251 1-NINEMILE POINT UNIT#4
FDNS	00NR	0	16WP	G15_082	FROM->TO	G14-057T 345.00 - SUNNYSIDE 345KV CKT 1	717	789	0.07388	118.0411	CIMARRON - TUTTLE CONOCO TAP 138KV CKT 1
FDNS	00NR	0	16WP	G15_082	FROM->TO	G14-057T 345.00 - SUNNYSIDE 345KV CKT 1	717	789	0.07347	118.0395	GEN336831 1-BAXTER WILSON SES
FDNS	00NR	0	16WP	G15_082	FROM->TO	G14-057T 345.00 - SUNNYSIDE 345KV CKT 1	717	789	0.07347	118.0381	GEN337652 1-WHITE BLUFF UNIT #1
FDNS	00NR	0	16WP	G15_082	FROM->TO	G14-057T 345.00 - SUNNYSIDE 345KV CKT 1	717	789	0.07347	118.0373	GEN300015 1-1SGPDEL 18.000
FDNS	00NR	0	16WP	G15_082	FROM->TO	G14-057T 345.00 - SUNNYSIDE 345KV CKT 1	717	789	0.07347	118.0278	GEN337911 1-ARKANSAS NUCLEAR ONE UNIT #2
FDNS	00NR	0	16WP	G15_082	FROM->TO	G14-057T 345.00 - SUNNYSIDE 345KV CKT 1	717	789	0.07347	118.0174	GEN562783 1-G15036_4 0.6900
FDNS	00NR	0	16WP	G15_082	FROM->TO	G14-057T 345.00 - SUNNYSIDE 345KV CKT 1	717	789	0.07347	118.0174	GEN562784 1-G15036_5 0.6900
FDNS	00NR	0	16WP	G15_082	FROM->TO	G14-057T 345.00 - SUNNYSIDE 345KV CKT 1	717	789	0.07396	118.0086	CIMARRON - CZECH HALL 138KV CKT 1
FDNS	00NR	0	16WP	G15_082	FROM->TO	G14-057T 345.00 - SUNNYSIDE 345KV CKT 1	717	789	0.07345	117.9973	LAYFLD8 500.00 - MOUNT OLIVE 500KV CKT 1
FDNS	00NR	0	16WP	G15_082	FROM->TO	G14-057T 345.00 - SUNNYSIDE 345KV CKT 1	717	789	0.07345	117.9973	LAYFLD8 500.00 - MOUNT OLIVE 500KV CKT 1
FDNS	00NR	0	16WP	G15_082	FROM->TO	G14-057T 345.00 - SUNNYSIDE 345KV CKT 1	717	789	0.07391	117.9948	P12:138:AEPW:WTHWF4:CLINTJC4
FDNS	00NR	0	16WP	G15_082	FROM->TO	G14-057T 345.00 - SUNNYSIDE 345KV CKT 1	717	789	0.07347	117.9926	P12:161:AEPW:EROGERS5:ECNTRTN5
FDNS	00NR	0	16WP	G15_082	FROM->TO	G14-057T 345.00 - SUNNYSIDE 345KV CKT 1	717	789	0.07371	117.9889	DUNCAN - TOSCO 69KV CKT 1
FDNS	00NR	0	16WP	G15_082	FROM->TO	G14-057T 345.00 - SUNNYSIDE 345KV CKT 1	717	789	0.07346	117.9883	HOT SPRINGS EHV - MAGNET COVE 500KV CKT 1
FDNS	00NR	0	16WP	G15_082	FROM->TO	G14-057T 345.00 - SUNNYSIDE 345KV CKT 1	717	789	0.07395	117.9835	CIMARRON - SARA 138KV CKT 1
FDNS	00NR	0	16WP	G15_082	FROM->TO	G14-057T 345.00 - SUNNYSIDE 345KV CKT 1	717	789	0.07347	117.9739	RODEMACHER 230/22.0KV TRANSFORMER CKT 1
FDNS	00NR	0	16WP	G15_082	FROM->TO	G14-057T 345.00 - SUNNYSIDE 345KV CKT 1	717	789	0.0741	117.9653	CLEO CORNER - CLEOPLT4 138.00 138KV CKT 1
FDNS	00NR	0	16WP	G15_082	FROM->TO	G14-057T 345.00 - SUNNYSIDE 345KV CKT 1	717	789	0.07374	117.9626	HOYT - STRANGER CREEK 345KV CKT 1
FDNS	00NR	0	16WP	G15_082	FROM->TO	G14-057T 345.00 - SUNNYSIDE 345KV CKT 1	717	789	0.07347	117.962	GEN505432 1-SIKESTON
FDNS	00NR	0	16WP	G15_082	FROM->TO	G14-057T 345.00 - SUNNYSIDE 345KV CKT 1	717	789	0.07269	117.9599	ARBWIND4 138.00 - CARTER 138KV CKT 1
FDNS	00NR	0	16WP	G15_082	FROM->TO	G14-057T 345.00 - SUNNYSIDE 345KV CKT 1	717	789	0.07391	117.9576	P12:138:AEPW:WTHWF4:WTH_SE4
FDNS	00NR	0	20WP	G15_082	FROM->TO	G14-057T 345.00 - SUNNYSIDE 345KV CKT 1	717	789	0.07286	117.9561	GEN509406 1-WELSH #3
FDNS	00NR	0	20WP	G15_082	FROM->TO	G14-057T 345.00 - SUNNYSIDE 345KV CKT 1	717	789	0.07286	117.9558	GEN509404 1-WELSH #1
FDNS	00NR	0	16WP	G15_082	FROM->TO	G14-057T 345.00 - SUNNYSIDE 345KV CKT 1	717	789	0.07347	117.9544	GEN303007 1-1BC2 U2
FDNS	00NR	0	16WP	G15_082	FROM->TO	G14-057T 345.00 - SUNNYSIDE 345KV CKT 1	717	789	0.07359	117.954	P12:69:AEPW-OMPA:COMANC-2:OMWALTR2
FDNS	00NR	0	16WP	G15_082	FROM->TO	G14-057T 345.00 - SUNNYSIDE 345KV CKT 1	717	789	0.0741	117.9516	CLEOPLT4 138.00 - MEN TAP 138KV CKT 1
FDNS	00NR	0	16WP	G15_082	FROM->TO	G14-057T 345.00 - SUNNYSIDE 345KV CKT 1	717	789	0.07347	117.9505	GEN303006 1-1BC2 U1
FDNS	00NR	0	16WP	G15_082	FROM->TO	G14-057T 345.00 - SUNNYSIDE 345KV CKT 1	717	789	0.07347	117.9503	GEN515223 1-MUSKOGEE 4G
FDNS	00NR	0	16WP	G15_082	FROM->TO	G14-057T 345.00 - SUNNYSIDE 345KV CKT 1	717	789	0.07347	117.9502	GEN515225 1-MUSKOGEE 5G
FDNS	00NR	0	16WP	G15_082	FROM->TO	G14-057T 345.00 - SUNNYSIDE 345KV CKT 1	717	789	0.07373	117.9494	G15074_T 345.00 - JEFFREY ENERGY CENTER 345KV CKT 1
FDNS	00NR	0	16WP	G15_082	FROM->TO	G14-057T 345.00 - SUNNYSIDE 345KV CKT 1	717	789	0.0735	117.9487	MC NIEL 500/115KV TRANSFORMER CKT 1
FDNS	00NR	0	16WP	G15_082	FROM->TO	G14-057T 345.00 - SUNNYSIDE 345KV CKT 1	717	789	0.07256	117.948	SEMINOLE - VANOSTP4 138.00 138KV CKT 1
FDNS	00NR	0	16WP	G15_082	FROM->TO	G14-057T 345.00 - SUNNYSIDE 345KV CKT 1	717	789	0.07347	117.9479	WHITE BLUFF 500/26.0KV TRANSFORMER CKT 1
FDNS	00NR	0	16WP	G15_082	FROM->TO	G14-057T 345.00 - SUNNYSIDE 345KV CKT 1	717	789	0.0738	117.9427	G15088_T 345.00 - MOORE 345KV CKT 1
FDNS	00NR	0	16WP	G15_082	FROM->TO	G14-057T 345.00 - SUNNYSIDE 345KV CKT 1	717	789	0.0741	117.9391	IMO TAP - MEN TAP 138KV CKT 1
FDNS	00NR	0	16WP	G15_082	FROM->TO	G14-057T 345.00 - SUNNYSIDE 345KV CKT 1	717	789	0.07353	117.9387	BISMARK - HOT SPRINGS WEST BUS 115KV CKT 1
FDNS	00NR	0	16WP	G15_082	FROM->TO	G14-057T 345.00 - SUNNYSIDE 345KV CKT 1	717	789	0.07393	117.9373	G15095_T 138.00 - ROSE_VALLEY 138.00 138KV CKT 1
FDNS	00NR	0	16WP	G15_082	FROM->TO	G14-057T 345.00 - SUNNYSIDE 345KV CKT 1	717	789	0.07396	117.9336	CZECH HALL - XEROX 138KV CKT 1
FDNS	00NR	0	16WP	G15_082	FROM->TO	G14-057T 345.00 - SUNNYSIDE 345KV CKT 1	717	789	0.07396	117.9293	MORGAN - XEROX 138KV CKT 1
FDNS	00NR	0	16WP	G15_082	FROM->TO	G14-057T 345.00 - SUNNYSIDE 345KV CKT 1	717	789	0.07347	117.9282	GEN336191 1-LITTLE GYPSY UNIT#3
FDNS	00NR	0	16WP	G15_082	FROM->TO	G14-057T 345.00 - SUNNYSIDE 345KV CKT 1	717	789	0.0735	117.9262	P12:138:AEPW:N.E.S.-4:CATOOSA4
FDNS	00NR	0	16WP	G15_082	FROM->TO	G14-057T 345.00 - SUNNYSIDE 345KV CKT 1	717	789	0.07509	117.9162	BAILEY4 138.00 - WESTMOORE 138KV CKT 1
FDNS	00NR	0	16WP	G15_082	FROM->TO	G14-057T 345.00 - SUNNYSIDE 345KV CKT 1	717	789	0.07557	117.9142	BUCKNER7 345.00 - SPEARVILLE 345KV CKT 1
FDNS	00NR	0	16WP	G15_082	FROM->TO	G14-057T 345.00 - SUNNYSIDE 345KV CKT 1	717	789	0.07557	117.9142	BUCKNER7 345.00 - SPEARVILLE 345KV CKT 1
FDNS	00NR	0	16WP	G15_082	FROM->TO	G14-057T 345.00 - SUNNYSIDE 345KV CKT 1	717	789	0.07371	117.9125	COMANCHE TAP - TOSCO 69KV CKT 1
FDNS	00NR	0	16WP	G15_082	FROM->TO	G14-057T 345.00 - SUNNYSIDE 345KV CKT 1	717	789	0.07396	117.9053	MORGAN - MUSTANG 138KV CKT 1
FDNS	00NR	0	16WP	G15_082	FROM->TO	G14-057T 345.00 - SUNNYSIDE 345KV CKT 1	717	789	0.07515	117.9041	BENTON - WICHITA 345KV CKT 1
FDNS	00NR	0	16WP	G15_082	FROM->TO	G14-057T 345.00 - SUNNYSIDE 345KV CKT 1	717	789	0.07461	117.9018	LASALLE - LATTA JCT 138KV CKT 1
FDNS	00NR	0	16WP	G15_082	FROM->TO	G14-057T 345.00 - SUNNYSIDE 345KV CKT 1	717	789	0.07347	117.9014	GEN335614 1-WILLOW GLENN UNIT#4
FDNS	00NR	0	16WP	G15_082	FROM->TO	G14-057T 345.00 - SUNNYSIDE 345KV CKT 1	717	789	0.07347	117.8985	NELSON 230/20.0KV TRANSFORMER CKT 1
FDNS	00NR	0	16WP	G15_082	FROM->TO	G14-057T 345.00 - SUNNYSIDE 345KV CKT 1	717	789	0.07347	117.8906	GEN303008 1-1BC2 U3
FDNS	00NR	0	16WP	G15_082	FROM->TO	G14-057T 345.00 - SUNNYSIDE 345KV CKT 1	717	789	0.07353	117.888	ALPINE AECC - BISMARK 115KV CKT 1
FDNS	00NR	0	16WP	G15_082	FROM->TO	G14-057T 345.00 - SUNNYSIDE 345KV CKT 1	717	789	0.07347	117.8873	GEN337910 1-ARKANSAS NUCLEAR ONE UNIT #1
FDNS	00NR	0	16WP	G15_082	FROM->TO	G14-057T 345.00 - SUNNYSIDE 345KV CKT 1	717	789	0.07347	117.8845	GEN300010 1-ST FRANCIS UNIT 1
FDNS	00NR	0	16WP	G15_082	FROM->TO	G14-057T 345.00 - SUNNYSIDE 345KV CKT 1	717	789	0.07393	117.8699	NOEL_SW 138.00 - ROSE_VALLEY 138.00 138KV CKT 1
FDNS	00NR	0	16WP	G15_082	FROM->TO	G14-057T 345.00 - SUNNYSIDE 345KV CKT 1	717	789	0.0746	117.8666	CANADIAN - NOBLE 138KV CKT 1
FDNS	00NR	0	16WP	G15_082	FROM->TO	G14-057T 345.00 - SUNNYSIDE 345KV CKT 1	717	789	0.07347	117.8639	GEN336170 1-GULF OXY U4
FDNS	00NR	0	16WP	G15_082	FROM->TO	G14-057T 345.00 - SUNNYSIDE 345KV CKT 1	717	789	0.07371	117.8583	COMANCHE - COMANCHE TAP 69KV CKT 1
FDNS	00NR	0	16WP	G15_082	FROM->TO	G14-057T 345.00 - SUNNYSIDE 345KV CKT 1	717	789	0.07347	117.8577	GEN336464 1-MICHOUD UNIT #3
FDNS	00NR	0	16WP	G15_082	FROM->TO	G14-057T 345.00 - SUNNYSIDE 345KV CKT 1	717	789	0.07348	117.8557	CYPRESS - HARTBURG 500KV CKT 1
FDNS	00NR	0	16WP	G15_082	FROM->TO	G14-057T 345.00 - SUNNYSIDE 345KV CKT 1	717	789	0.07347	117.8501	8CAJUN2 500/24.0KV TRANSFORMER CKT 1
FDNS	00NR	0	16WP	G15_082	FROM->TO	G14-057T 345.00 - SUNNYSIDE 345KV CKT 1	717	789	0.07462	117.8456	P12:138:OKGE:3TERM27
FDNS	00NR	0	16WP	G15_082	FROM->TO	G14-057T 345.00 - SUNNYSIDE 345KV CKT 1	717	789	0.07353	117.8438	ALPINE AECC - AMITY SS 115KV CKT 1
FDNS	00NR	0	16WP	G15_082	FROM->TO	G14-057T 345.00 - SUNNYSIDE 345KV CKT 1	717	789	0.07387	117.8429	SWISSVALE - WEST GARDNER 345KV CKT 1
FDNS	00NR	0	16WP	G15_082	FROM->TO	G14-057T 345.00 - SUNNYSIDE 345KV CKT 1	717	789	0.07388	117.8402	ANADARKO - SEQUOYAHJ4 138.00 138KV CKT 1
FDNS	00NR	0	16WP	G15_082	FROM->TO	G14-057T 345.00 - SUNNYSIDE 345KV CKT 1	717	789	0.07388	117.839	CORN TAP - SEQUOYAHJ4 138.00 138KV CKT 1
FDNS	00NR	0	16WP	G15_082	FROM->TO	G14-057T 345.00 - SUNNYSIDE 345KV CKT 1	717	789	0.07389	117.8385	BLACKBERRY - NEOSHO 345KV CKT 1
FDNS	00NR	0	16WP	G15_082	FROM->TO	G14-057T 345.00 - SUNNYSIDE 345KV CKT 1	717	789	0.07423	117.8365	WEATHERFORD JCT. - WEATHERFORD SOUTHEAST 138KV CKT 1
FDNS	00NR	0	16WP	G15_082	FROM->TO	G14-057T 345.00 - SUNNYSIDE 345KV CKT 1	717	789	0.07423	117.8365	WEATHERFORD JCT. - WEATHERFORD SOUTHEAST 138KV CKT 1
FDNS	00NR	0	16WP	G15_082	FROM->TO	G14-057T 345.00 - SUNNYSIDE 345KV CKT 1	717	789	0.07361	117.8349	7LUTESVIL 345.00 - 7ST FRANC 345.00 345KV CKT 1
FDNS	00NR	0	16WP	G15_082	FROM->TO	G14-057T 345.00 - SUNNYSIDE 345KV CKT 1	717	789	0.07347	117.8338	GEN300011 1-ST FRANCIS UNIT 2
FDNS	00NR	0	16WP	G15_082	FROM->TO	G14-057T 345.00 - SUNNYSIDE 345KV CKT 1	717	789	0.07343	117.8332	ETTA (DUKE HOTSPRINGS) - MC NIEL 500KV CKT 1

SOLUTION	GROUP	SCENARIO	SEASON	SOURCE	DIRECTION	MONITORED ELEMENT	RATEA (MVA)	RATEB(MVA)	TDF	TC%LOADING (% MVA)	CONTINGENCY
FDNS	00NR	0	16WP	G15_082	FROM->TO	G14-057T 345.00 - SUNNYSIDE 345KV CKT 1	717	789	0.07423	117.8316	P12:138:OKGE-AEPW:JENSEN4:REDROCKRD4
FDNS	00NR	0	16WP	G15_082	FROM->TO	G14-057T 345.00 - SUNNYSIDE 345KV CKT 1	717	789	0.07405	117.829	CHISHOLM6 230.00 - ELK CITY 230KV 230KV CKT 1
FDNS	00NR	0	16WP	G15_082	FROM->TO	G14-057T 345.00 - SUNNYSIDE 345KV CKT 1	717	789	0.07405	117.8268	ELK CITY 230KV (ELKCTY-6) 230/138/13.8KV TRANSFORMER CKT 1
FDNS	00NR	0	16WP	G15_082	FROM->TO	G14-057T 345.00 - SUNNYSIDE 345KV CKT 1	717	789	0.07405	117.8268	ELK CITY 230KV (ELKCTY-6) 230/138/13.8KV TRANSFORMER CKT 1
FDNS	00NR	0	16WP	G15_082	FROM->TO	G14-057T 345.00 - SUNNYSIDE 345KV CKT 1	717	789	0.07347	117.8235	P12:138:AEPW:R.S.S.-4:S.HUD.-4
FDNS	00NR	0	16WP	G15_082	FROM->TO	G14-057T 345.00 - SUNNYSIDE 345KV CKT 1	717	789	0.07343	117.8169	7JASPER 345.00 - BLACKBERRY 345KV CKT 1
FDNS	00NR	0	16WP	G15_082	FROM->TO	G14-057T 345.00 - SUNNYSIDE 345KV CKT 1	717	789	0.07347	117.815	GEN501910 1-ACADIA UNIT ST1
FDNS	00NR	0	16WP	G15_082	FROM->TO	G14-057T 345.00 - SUNNYSIDE 345KV CKT 1	717	789	0.07579	117.8127	DRAPER LAKE - SEMINOLE 345KV CKT 2
FDNS	00NR	0	16WP	G15_082	FROM->TO	G14-057T 345.00 - SUNNYSIDE 345KV CKT 1	717	789	0.07579	117.8126	DRAPER LAKE - SEMINOLE 345KV CKT 1
FDNS	00NR	0	16WP	G15_082	FROM->TO	G14-057T 345.00 - SUNNYSIDE 345KV CKT 1	717	789	0.07376	117.8064	WALTERS - WALTERS 69KV CKT 1
FDNS	00NR	0	16WP	G15_082	FROM->TO	G14-057T 345.00 - SUNNYSIDE 345KV CKT 1	717	789	0.07347	117.8023	GEN337041 1-GERALD ANDRUS
FDNS	00NR	0	16WP	G15_082	FROM->TO	G14-057T 345.00 - SUNNYSIDE 345KV CKT 1	717	789	0.07347	117.8005	GEN300016 1-1G1GPDEL 18.000
FDNS	00NR	0	16WP	G15_082	FROM->TO	G14-057T 345.00 - SUNNYSIDE 345KV CKT 1	717	789	0.07395	117.7939	SARA - STHLAKE4 138.00 138KV CKT 1
FDNS	00NR	0	16WP	G15_082	FROM->TO	G14-057T 345.00 - SUNNYSIDE 345KV CKT 1	717	789	0.07364	117.7888	8WNEWMADRID 500.00 - DELL 500 500KV CKT 1
FDNS	00NR	0	16WP	G15_082	FROM->TO	G14-057T 345.00 - SUNNYSIDE 345KV CKT 1	717	789	0.07347	117.7873	P12:138:AEPW:YARCH-S4:T.S.E.-4
FDNS	00NR	0	16WP	G15_082	FROM->TO	G14-057T 345.00 - SUNNYSIDE 345KV CKT 1	717	789	0.07423	117.7866	P12:138:AEPW:REDROCKRD4:WTH_JCT4
FDNS	00NR	0	16WP	G15_082	FROM->TO	G14-057T 345.00 - SUNNYSIDE 345KV CKT 1	717	789	0.07347	117.7813	P12:138:AEPW:BA_71ST4:T.S.E.-4
FDNS	00NR	0	16WP	G15_082	FROM->TO	G14-057T 345.00 - SUNNYSIDE 345KV CKT 1	717	789	0.07347	117.7808	P12:69:AEPW:NROGERS2:ECNTRTN2
FDNS	00NR	0	16WP	G15_082	FROM->TO	G14-057T 345.00 - SUNNYSIDE 345KV CKT 1	717	789	0.07328	117.7765	ENOWILT - LONE OAK 138KV CKT 1
FDNS	00NR	0	16WP	G15_082	FROM->TO	G14-057T 345.00 - SUNNYSIDE 345KV CKT 1	717	789	0.07359	117.7763	LAWTON RELIFT TAP - OMPA-WALTERS 69KV CKT 1
FDNS	00NR	0	16WP	G15_082	FROM->TO	G14-057T 345.00 - SUNNYSIDE 345KV CKT 1	717	789	0.0746	117.775	NOBLE - PURCELL4 138.00 138KV CKT 1
FDNS	00NR	0	16WP	G15_082	FROM->TO	G14-057T 345.00 - SUNNYSIDE 345KV CKT 1	717	789	0.07386	117.7711	NORGE ROAD - SOUTHWESTERN STATION 138KV CKT 1
FDNS	00NR	0	16WP	G15_082	FROM->TO	G14-057T 345.00 - SUNNYSIDE 345KV CKT 1	717	789	0.07386	117.7711	NORGE ROAD - SOUTHWESTERN STATION 138KV CKT 1
FDNS	00NR	0	16WP	G15_082	FROM->TO	G14-057T 345.00 - SUNNYSIDE 345KV CKT 1	717	789	0.07328	117.7673	ENOWILT - SARDIS 138KV CKT 1
FDNS	00NR	0	16WP	G15_082	FROM->TO	G14-057T 345.00 - SUNNYSIDE 345KV CKT 1	717	789	0.07347	117.7651	GEN336801 1-BAXTER WILSON UNIT #1
FDNS	00NR	0	16WP	G15_082	FROM->TO	G14-057T 345.00 - SUNNYSIDE 345KV CKT 1	717	789	0.07395	117.7644	MCCLAIN - STHLAKE4 138.00 138KV CKT 1
FDNS	00NR	0	16WP	G15_082	FROM->TO	G14-057T 345.00 - SUNNYSIDE 345KV CKT 1	717	789	0.07509	117.7605	FRANKLIN SW - WESTMOORE 138KV CKT 1
FDNS	00NR	0	16WP	G15_082	FROM->TO	G14-057T 345.00 - SUNNYSIDE 345KV CKT 1	717	789	0.07347	117.7581	SABINE 230/24.0KV TRANSFORMER CKT 1
FDNS	00NR	0	16WP	G15_082	FROM->TO	G14-057T 345.00 - SUNNYSIDE 345KV CKT 1	717	789	0.07357	117.7551	P12:138:AEPW-OGE:SHIDLER4:OSAGE 4
FDNS	00NR	0	16WP	G15_082	FROM->TO	G14-057T 345.00 - SUNNYSIDE 345KV CKT 1	717	789	0.07347	117.749	P12:161:AEPW:CHAMSPR5:FARMING5
FDNS	00NR	0	16WP	G15_082	FROM->TO	G14-057T 345.00 - SUNNYSIDE 345KV CKT 1	717	789	0.07347	117.7487	FRONTIER 345/18.0KV TRANSFORMER CKT 1
FDNS	00NR	0	16WP	G15_082	FROM->TO	G14-057T 345.00 - SUNNYSIDE 345KV CKT 1	717	789	0.07347	117.7469	FRONTIER 345/18.0KV TRANSFORMER CKT 1
FDNS	00NR	0	16WP	G15_082	FROM->TO	G14-057T 345.00 - SUNNYSIDE 345KV CKT 1	717	789	0.07205	117.7465	ARBUCKLE - VANOSTP4 138.00 138KV CKT 1
FDNS	00NR	0	16WP	G15_082	FROM->TO	G14-057T 345.00 - SUNNYSIDE 345KV CKT 1	717	789	0.07461	117.7423	LASALLE - STONEWAL LH138.00 138KV CKT 1
FDNS	00NR	0	16WP	G15_082	FROM->TO	G14-057T 345.00 - SUNNYSIDE 345KV CKT 1	717	789	0.07328	117.7319	CLAYTON - SARDIS 138KV CKT 1
FDNS	00NR	0	16WP	G15_082	FROM->TO	G14-057T 345.00 - SUNNYSIDE 345KV CKT 1	717	789	0.07461	117.727	STONEWAL LH138.00 - TUPELO TAP 138KV CKT 1
FDNS	00NR	0	16WP	G15_082	FROM->TO	G14-057T 345.00 - SUNNYSIDE 345KV CKT 1	717	789	0.07374	117.7181	EMPORIA ENERGY CENTER - SWISSVALE 345KV CKT 1
FDNS	00NR	0	16WP	G15_082	FROM->TO	G14-057T 345.00 - SUNNYSIDE 345KV CKT 1	717	789	0.07347	117.7165	GEN505616 1-BROKEN BOW
FDNS	00NR	0	16WP	G15_082	FROM->TO	G14-057T 345.00 - SUNNYSIDE 345KV CKT 1	717	789	0.07391	117.7141	WEATHERFORD TAP - WEATHERFORD WIND FARM 138KV CKT 1
FDNS	00NR	0	16WP	G15_082	FROM->TO	G14-057T 345.00 - SUNNYSIDE 345KV CKT 1	717	789	0.07359	117.7097	OMPA-WALTERS - WALTERS 69KV CKT 1
FDNS	00NR	0	16WP	G15_082	FROM->TO	G14-057T 345.00 - SUNNYSIDE 345KV CKT 1	717	789	0.07359	117.7097	OMPA-WALTERS - WALTERS 69KV CKT 1
FDNS	00NR	0	16WP	G15_082	FROM->TO	G14-057T 345.00 - SUNNYSIDE 345KV CKT 1	717	789	0.07347	117.7077	LEWIS CREEK SWITCHYARD 138/22.0KV TRANSFORMER CKT 1
FDNS	00NR	0	16WP	G15_082	FROM->TO	G14-057T 345.00 - SUNNYSIDE 345KV CKT 1	717	789	0.07468	117.7074	CLARKSVILLE - ONETA 345KV CKT 1
FDNS	00NR	0	16WP	G15_082	FROM->TO	G14-057T 345.00 - SUNNYSIDE 345KV CKT 1	717	789	0.07468	117.7074	CLARKSVILLE - ONETA 345KV CKT 1
FDNS	00NR	0	16WP	G15_082	FROM->TO	G14-057T 345.00 - SUNNYSIDE 345KV CKT 1	717	789	0.07423	117.7069	HINTON - WEATHERFORD JCT. 138KV CKT 1
FDNS	00NR	0	16WP	G15_082	FROM->TO	G14-057T 345.00 - SUNNYSIDE 345KV CKT 1	717	789	0.07328	117.7039	P12:138:AEPW-SWPA:LONEOAK4:BRKNBW4
FDNS	00NR	0	16WP	G15_082	FROM->TO	G14-057T 345.00 - SUNNYSIDE 345KV CKT 1	717	789	0.07383	117.7021	SOUTHWESTERN STATION - VERDEN 138KV CKT 1
FDNS	00NR	0	16WP	G15_082	FROM->TO	G14-057T 345.00 - SUNNYSIDE 345KV CKT 1	717	789	0.07352	117.7009	MORISNT4 138.00 - STILLWATER 138KV CKT 1
FDNS	00NR	0	16WP	G15_082	FROM->TO	G14-057T 345.00 - SUNNYSIDE 345KV CKT 1	717	789	0.07357	117.6997	HOPE - MCNAB REC 115KV CKT 1
FDNS	00NR	0	16WP	G15_082	FROM->TO	G14-057T 345.00 - SUNNYSIDE 345KV CKT 1	717	789	0.07328	117.6991	CLAYTON - NASHOBA 138KV CKT 1
FDNS	00NR	0	16WP	G15_082	FROM->TO	G14-057T 345.00 - SUNNYSIDE 345KV CKT 1	717	789	0.07353	117.6953	P12:138:OKGE:3TERM2
FDNS	00NR	0	16WP	G15_082	FROM->TO	G14-057T 345.00 - SUNNYSIDE 345KV CKT 1	717	789	0.07357	117.6921	P12:115:AEPW:TURK3:HOPE3
FDNS	00NR	0	16WP	G15_082	FROM->TO	G14-057T 345.00 - SUNNYSIDE 345KV CKT 1	717	789	0.07347	117.6887	GEN501970 1-EVANGELINE UNIT 7
FDNS	00NR	0	16WP	G15_082	FROM->TO	G14-057T 345.00 - SUNNYSIDE 345KV CKT 1	717	789	0.07376	117.6874	P12:69:WFEC-AEPW:COMANCH2:WALTRS-2
FDNS	00NR	0	16WP	G15_082	FROM->TO	G14-057T 345.00 - SUNNYSIDE 345KV CKT 1	717	789	0.07328	117.6849	BETHEL - NASHOBA 138KV CKT 1
FDNS	00NR	0	16WP	G15_082	FROM->TO	G14-057T 345.00 - SUNNYSIDE 345KV CKT 1	717	789	0.07383	117.6817	NORTH 29TH CHICKASHA - VERDEN 138KV CKT 1
FDNS	00NR	0	16WP	G15_082	FROM->TO	G14-057T 345.00 - SUNNYSIDE 345KV CKT 1	717	789	0.07347	117.6768	GEN334392 1-EXXON MOBIL IPP 1
FDNS	00NR	0	16WP	G15_082	FROM->TO	G14-057T 345.00 - SUNNYSIDE 345KV CKT 1	717	789	0.07353	117.6761	COUCH SES - MC NIEL 115KV CKT 1
FDNS	00NR	0	16WP	G15_082	FROM->TO	G14-057T 345.00 - SUNNYSIDE 345KV CKT 1	717	789	0.07486	117.6729	MARIETTA - MARIETTA4 138.00 138KV CKT 1
FDNS	00NR	0	16WP	G15_082	FROM->TO	G14-057T 345.00 - SUNNYSIDE 345KV CKT 1	717	789	0.07353	117.6707	P12:138:OKGE:3TERM12
FDNS	00NR	0	16WP	G15_082	FROM->TO	G14-057T 345.00 - SUNNYSIDE 345KV CKT 1	717	789	0.07347	117.6691	GEN334393 1-EXXON MOBIL IPP 2
FDNS	00NR	0	16WP	G15_082	FROM->TO	G14-057T 345.00 - SUNNYSIDE 345KV CKT 1	717	789	0.07347	117.6691	GEN334394 1-EXXON MOBIL IPP 3
FDNS	00NR	0	16WP	G15_082	FROM->TO	G14-057T 345.00 - SUNNYSIDE 345KV CKT 1	717	789	0.07357	117.668	MCNAB REC - Turk 115 115KV CKT 1
FDNS	00NR	0	16WP	G15_082	FROM->TO	G14-057T 345.00 - SUNNYSIDE 345KV CKT 1	717	789	0.07357	117.6679	TURK (TURK 1) 138/115/13.2KV TRANSFORMER CKT 1
FDNS	00NR	0	16WP	G15_082	FROM->TO	G14-057T 345.00 - SUNNYSIDE 345KV CKT 1	717	789	0.07357	117.6679	TURK (TURK 1) 138/115/13.2KV TRANSFORMER CKT 1
FDNS	00NR	0	16WP	G15_082	FROM->TO	G14-057T 345.00 - SUNNYSIDE 345KV CKT 1	717	789	0.0735	117.6679	7JASPER 345.00 - MORGAN 345KV CKT 1
FDNS	00NR	0	16WP	G15_082	FROM->TO	G14-057T 345.00 - SUNNYSIDE 345KV CKT 1	717	789	0.07347	117.6623	GEN336222 1-LITTLE GYPSY UNIT#2
FDNS	00NR	0	16WP	G15_082	FROM->TO	G14-057T 345.00 - SUNNYSIDE 345KV CKT 1	717	789	0.07348	117.6589	P12:138:AEPW:R.S.S-4:T.P.S.-4
FDNS	00NR	0	16WP	G15_082	FROM->TO	G14-057T 345.00 - SUNNYSIDE 345KV CKT 1	717	789	0.07358	117.6503	FRANKLIN - FRANKLIN SW 138KV CKT 1
FDNS	00NR	0	16WP	G15_082	FROM->TO	G14-057T 345.00 - SUNNYSIDE 345KV CKT 1	717	789	0.07423	117.648	HINTON - REDROCKRD4 138.00 138KV CKT 1
FDNS	00NR	0	16WP	G15_082	FROM->TO	G14-057T 345.00 - SUNNYSIDE 345KV CKT 1	717	789	0.07346	117.6428	P12:138:AEPW:OKMULGE4:R.S.S-4
FDNS	00NR	0	16WP	G15_082	FROM->TO	G14-057T 345.00 - SUNNYSIDE 345KV CKT 1	717	789	0.07347	117.6426	GEN506749 1-EASTMAN GENERATION A
FDNS	00NR	0	16WP	G15_082	FROM->TO	G14-057T 345.00 - SUNNYSIDE 345KV CKT 1	717	789	0.07386	117.6421	CORNVILLE - NORGE ROAD 138KV CKT 1
FDNS	00NR	0	16WP	G15_082	FROM->TO	G14-057T 345.00 - SUNNYSIDE 345KV CKT 1	717	789	0.07386	117.6421	CORNVILLE - NORGE ROAD 138KV CKT 1
FDNS	00NR	0	16WP	G15_082	FROM->TO	G14-057T 345.00 - SUNNYSIDE 345KV CKT 1	717	789	0.07347	117.6398	GEN334432 1-SABINE UNIT 2
FDNS	00NR	0	16WP	G15_082	FROM->TO	G14-057T 345.00 - SUNNYSIDE 345KV CKT 1	717	789	0.07347	117.6396	GEN334431 1-SABINE UNIT 1
FDNS	00NR	0	16WP	G15_082	FROM->TO	G14-057T 345.00 - SUNNYSIDE 345KV CKT 1	717	789	0.07389	117.6372	EMPORIA ENERGY CENTER - G14_001T 345.00 345KV CKT 1
FDNS	00NR	0	16WP	G15_082	FROM->TO	G14-057T 345.00 - SUNNYSIDE 345KV CKT 1	717	789	0.07355	117.6357	FLETCHER - MARLOW JCT 69KV CKT 1
FDNS	00NR	0	16WP	G15_082	FROM->TO	G14-057T 345.00 - SUNNYSIDE 345KV CKT 1	717	789	0.07347	117.6319	GEN501972 1-EVANGELINE UNIT 7-2

SOLUTION	GROUP	SCENARIO	SEASON	SOURCE	DIRECTION	MONITORED ELEMENT	RATEA (MVA)	RATEB(MVA)	TDF	TC%LOADING (% MVA)	CONTINGENCY
FDNS	00NR	0	16WP	G15_082	FROM->TO	G14-057T 345.00 - SUNNYSIDE 345KV CKT 1	717	789	0.07347	117.6319	P12:138:AEPW:R.S.S.-4:R:96YALE-4
FDNS	00NR	0	16WP	G15_082	FROM->TO	G14-057T 345.00 - SUNNYSIDE 345KV CKT 1	717	789	0.07347	117.6318	GEN336152 1-WATERFORD UNIT#2
FDNS	00NR	0	16WP	G15_082	FROM->TO	G14-057T 345.00 - SUNNYSIDE 345KV CKT 1	717	789	0.07347	117.6318	GEN501971 1-EVANGELINE UNIT 7-1
FDNS	00NR	0	16WP	G15_082	FROM->TO	G14-057T 345.00 - SUNNYSIDE 345KV CKT 1	717	789	0.07347	117.6307	GEN336151 1-WATERFORD UNIT#1
FDNS	00NR	0	16WP	G15_082	FROM->TO	G14-057T 345.00 - SUNNYSIDE 345KV CKT 1	717	789	0.07347	117.6261	ST FRANCIS - ST FRANCIS 1 161KV CKT Z1
FDNS	00NR	0	16WP	G15_082	FROM->TO	G14-057T 345.00 - SUNNYSIDE 345KV CKT 1	717	789	0.07328	117.6217	BETHEL - BROKEN BOW 138KV CKT 1
FDNS	00NR	0	16WP	G15_082	FROM->TO	G14-057T 345.00 - SUNNYSIDE 345KV CKT 1	717	789	0.07391	117.6203	WEATHERFORD SOUTHEAST - WEATHERFORD TAP 138KV CKT 1
FDNS	00NR	0	16WP	G15_082	FROM->TO	G14-057T 345.00 - SUNNYSIDE 345KV CKT 1	717	789	0.07383	117.6098	CORNVILLE - NORTH 29TH CHICKASHA 138KV CKT 1
FDNS	00NR	0	16WP	G15_082	FROM->TO	G14-057T 345.00 - SUNNYSIDE 345KV CKT 1	717	789	0.07423	117.5861	Canadian Pump Station - REDROCKRD4 138.00 138KV CKT 1
FDNS	00NR	0	16WP	G15_082	FROM->TO	G14-057T 345.00 - SUNNYSIDE 345KV CKT 1	717	789	0.07355	117.5784	P12:138:OKGE:3TERM47
FDNS	00NR	0	16WP	G15_082	FROM->TO	G14-057T 345.00 - SUNNYSIDE 345KV CKT 1	717	789	0.07391	117.5752	CLINTON JUNCTION - CLINTON NATURAL GAS TAP 138KV CKT 1
FDNS	00NR	0	16WP	G15_082	FROM->TO	G14-057T 345.00 - SUNNYSIDE 345KV CKT 1	717	789	0.07362	117.5678	HAMMETT TAP - HORSESHOE LAKE 138KV CKT 1
FDNS	00NR	0	16WP	G15_082	FROM->TO	G14-057T 345.00 - SUNNYSIDE 345KV CKT 1	717	789	0.0746	117.5654	PURCELL4 138.00 - WALNUT CREEK 138KV CKT 1
FDNS	00NR	0	16WP	G15_082	FROM->TO	G14-057T 345.00 - SUNNYSIDE 345KV CKT 1	717	789	0.07407	117.5565	CRINER - PAYNE 138.00 138KV CKT 1
FDNS	00NR	0	16WP	G15_082	FROM->TO	G14-057T 345.00 - SUNNYSIDE 345KV CKT 1	717	789	0.0737	117.5334	SEMINOLE (SEMINOL2) 345/138/14.4KV TRANSFORMER CKT 1
FDNS	00NR	0	16WP	G15_082	FROM->TO	G14-057T 345.00 - SUNNYSIDE 345KV CKT 1	717	789	0.07376	117.5202	COMANCHE - WALTERS 69KV CKT 1
FDNS	00NR	0	20WP	G15_082	FROM->TO	G14-057T 345.00 - SUNNYSIDE 345KV CKT 1	717	789	0.07445	117.4059	CORN TAP - NAPLESTP 138.00 138KV CKT 1
FDNS	00NR	0	20WP	G15_082	FROM->TO	G14-057T 345.00 - SUNNYSIDE 345KV CKT 1	717	789	0.07311	117.3242	7SAREPTA% 345.00 - LONGWOOD 345KV CKT 1
FDNS	00NR	0	20WP	G15_082	FROM->TO	G14-057T 345.00 - SUNNYSIDE 345KV CKT 1	717	789	0.07311	117.3242	7SAREPTA% 345.00 - LONGWOOD 345KV CKT 1
FDNS	00NR	0	20WP	G15_082	FROM->TO	G14-057T 345.00 - SUNNYSIDE 345KV CKT 1	717	789	0.07445	117.3199	NAPLESTP 138.00 - PAYNE 138.00 138KV CKT 1
FDNS	00NR	0	20WP	G15_082	FROM->TO	G14-057T 345.00 - SUNNYSIDE 345KV CKT 1	717	789	0.07286	117.2043	GEN336821 1-GRAND GULF UNIT
FDNS	00NR	0	20WP	G15_082	FROM->TO	G14-057T 345.00 - SUNNYSIDE 345KV CKT 1	717	789	0.07024	117.1857	BORDER 7345.00 - TUCO_2 345.00 345KV CKT 1
FDNS	00NR	0	20WP	G15_082	FROM->TO	G14-057T 345.00 - SUNNYSIDE 345KV CKT 1	717	789	0.07422	117.1306	ANADARKO - POCASSETT 138KV CKT 1
FDNS	00NR	0	16WP	G15_082	FROM->TO	G14-057T 345.00 - SUNNYSIDE 345KV CKT 1	717	789	0.07347	117.1042	803-OKLAUNION
FDNS	00NR	0	20WP	G15_082	FROM->TO	G14-057T 345.00 - SUNNYSIDE 345KV CKT 1	717	789	0.07286	117.099	GEN336153 1-WATERFORD UNIT#3
FDNS	00NR	0	20WP	G15_082	FROM->TO	G14-057T 345.00 - SUNNYSIDE 345KV CKT 1	717	789	0.07381	117.0559	CLEVELAND - TULSA NORTH 345KV CKT 1
FDNS	00NR	0	20WP	G15_082	FROM->TO	G14-057T 345.00 - SUNNYSIDE 345KV CKT 1	717	789	0.07381	117.0559	CLEVELAND - TULSA NORTH 345KV CKT 1
FDNS	00NR	0	20WP	G15_082	FROM->TO	G14-057T 345.00 - SUNNYSIDE 345KV CKT 1	717	789	0.07412	117.0397	COMANCHE - LOCO 138KV CKT 1
FDNS	00NR	0	16WP	G15_082	FROM->TO	G14-057T 345.00 - SUNNYSIDE 345KV CKT 1	717	789	0.07212	116.9804	P12:138:OKGE:3TERM39
FDNS	00NR	0	20WP	G15_082	FROM->TO	G14-057T 345.00 - SUNNYSIDE 345KV CKT 1	717	789	0.07422	116.9672	POCASSETT - TUTTLE 138KV CKT 1
FDNS	00NR	0	20WP	G15_082	FROM->TO	G14-057T 345.00 - SUNNYSIDE 345KV CKT 1	717	789	0.07302	116.9362	DOLET HILLS - SOUTHWEST SHREVEPORT 345KV CKT 1
FDNS	00NR	0	20WP	G15_082	FROM->TO	G14-057T 345.00 - SUNNYSIDE 345KV CKT 1	717	789	0.07302	116.9362	DOLET HILLS - SOUTHWEST SHREVEPORT 345KV CKT 1
FDNS	00NR	0	16WP	G15_082	FROM->TO	G14-057T 345.00 - SUNNYSIDE 345KV CKT 1	717	789	0.07274	116.8082	CHILDRESS - LAKE PAULINE 138KV CKT 1
FDNS	00NR	0	16WP	G15_082	FROM->TO	G14-057T 345.00 - SUNNYSIDE 345KV CKT 1	717	789	0.07274	116.8082	CHILDRESS - LAKE PAULINE 138KV CKT 1
FDNS	00NR	0	20WP	G15_082	FROM->TO	G14-057T 345.00 - SUNNYSIDE 345KV CKT 1	717	789	0.0825	116.8053	ARCADIA - NORTHWEST 345KV CKT 1
FDNS	00NR	0	16WP	G15_082	FROM->TO	G14-057T 345.00 - SUNNYSIDE 345KV CKT 1	717	789	0.07282	116.8016	HUNTERS7 345.00 - WOODRING 345KV CKT 1
FDNS	00NR	0	20WP	G15_082	FROM->TO	G14-057T 345.00 - SUNNYSIDE 345KV CKT 1	717	789	0.07286	116.801	GEN335831 1-RIVERBEND UNIT#1
FDNS	00NR	0	16WP	G15_082	FROM->TO	G14-057T 345.00 - SUNNYSIDE 345KV CKT 1	717	789	0.07307	116.7908	CHILDRESS - HOLLIS TAP 138KV CKT 1
FDNS	00NR	0	16WP	G15_082	FROM->TO	G14-057T 345.00 - SUNNYSIDE 345KV CKT 1	717	789	0.07299	116.7791	RANCHRD7 345.00 - SOONER 345KV CKT 1
FDNS	00NR	0	20WP	G15_082	FROM->TO	G14-057T 345.00 - SUNNYSIDE 345KV CKT 1	717	789	0.07286	116.7754	GRAND GULF 500/22.0KV TRANSFORMER CKT 1
FDNS	00NR	0	16WP	G15_082	FROM->TO	G14-057T 345.00 - SUNNYSIDE 345KV CKT 1	717	789	0.07242	116.7581	MAYSVILLE - MAYSVLT4 138.00 138KV CKT 1
FDNS	00NR	0	20WP	G15_082	FROM->TO	G14-057T 345.00 - SUNNYSIDE 345KV CKT 1	717	789	0.07392	116.7545	P12:138:AEPW:DUNCAN-4:L.E.S.-4
FDNS	00NR	0	20WP	G15_082	FROM->TO	G14-057T 345.00 - SUNNYSIDE 345KV CKT 1	717	789	0.07913	116.7304	MATHWSN7 345.00 - TATONGA7 345.00 345KV CKT 1
FDNS	00NR	0	16WP	G15_082	FROM->TO	G14-057T 345.00 - SUNNYSIDE 345KV CKT 1	717	789	0.07387	116.7128	DRAPER LAKE - MIDWEST TAP 138KV CKT 1
FDNS	00NR	0	16WP	G15_082	FROM->TO	G14-057T 345.00 - SUNNYSIDE 345KV CKT 1	717	789	0.07353	116.7123	GLASSES - MADILL INDUSTRIAL TAP 138KV CKT 1
FDNS	00NR	0	16WP	G15_082	FROM->TO	G14-057T 345.00 - SUNNYSIDE 345KV CKT 1	717	789	0.0739	116.7042	P12:138:OKGE:3TERM21
FDNS	00NR	0	16WP	G15_082	FROM->TO	G14-057T 345.00 - SUNNYSIDE 345KV CKT 1	717	789	0.07242	116.6962	MAYSVLT4 138.00 - PRAIRIE POINT 138KV CKT 1
FDNS	00NR	0	20WP	G15_082	FROM->TO	G14-057T 345.00 - SUNNYSIDE 345KV CKT 1	717	789	0.073	116.6926	7SAREPTA% 345.00 - ELDORADO EHV 345KV CKT 1
FDNS	00NR	0	20WP	G15_082	FROM->TO	G14-057T 345.00 - SUNNYSIDE 345KV CKT 1	717	789	0.073	116.6924	3TR3AR8EL7EL
FDNS	00NR	0	16WP	G15_082	FROM->TO	G14-057T 345.00 - SUNNYSIDE 345KV CKT 1	717	789	0.07338	116.6898	HUGO (HUGO 1) 345/138/13.8KV TRANSFORMER CKT 1
FDNS	00NR	0	16WP	G15_082	FROM->TO	G14-057T 345.00 - SUNNYSIDE 345KV CKT 1	717	789	0.07294	116.6855	CIMARRON - MATHWSN7 345.00 345KV CKT 1
FDNS	00NR	0	16WP	G15_082	FROM->TO	G14-057T 345.00 - SUNNYSIDE 345KV CKT 1	717	789	0.07294	116.6855	CIMARRON - MATHWSN7 345.00 345KV CKT 2
FDNS	00NR	0	20WP	G15_082	FROM->TO	G14-057T 345.00 - SUNNYSIDE 345KV CKT 1	717	789	0.073	116.682	ELDORADO EHV 500/345KV TRANSFORMER CKT 1
FDNS	00NR	0	16WP	G15_082	FROM->TO	G14-057T 345.00 - SUNNYSIDE 345KV CKT 1	717	789	0.07347	116.6629	GEN521103 1-BLUE CANYON WIND FARM
FDNS	00NR	0	16WP	G15_082	FROM->TO	G14-057T 345.00 - SUNNYSIDE 345KV CKT 1	717	789	0.07347	116.6594	GEN520812 1-ANADRK5
FDNS	00NR	0	16WP	G15_082	FROM->TO	G14-057T 345.00 - SUNNYSIDE 345KV CKT 1	717	789	0.07347	116.6592	GEN520813 1-ANADRK6
FDNS	00NR	0	16WP	G15_082	FROM->TO	G14-057T 345.00 - SUNNYSIDE 345KV CKT 1	717	789	0.07347	116.6591	GEN562691 1-G15_015_3 0.6900
FDNS	00NR	0	16WP	G15_082	FROM->TO	G14-057T 345.00 - SUNNYSIDE 345KV CKT 1	717	789	0.07347	116.6544	GEN562772 1-G15034_3 0.6900
FDNS	00NR	0	16WP	G15_082	FROM->TO	G14-057T 345.00 - SUNNYSIDE 345KV CKT 1	717	789	0.07353	116.6527	GLASSES - RUSSETT 138KV CKT 1
FDNS	00NR	0	16WP	G15_082	FROM->TO	G14-057T 345.00 - SUNNYSIDE 345KV CKT 1	717	789	0.07269	116.6412	ARBUCKLE - SULPHR 4 138.00 138KV CKT 1
FDNS	00NR	0	16WP	G15_082	FROM->TO	G14-057T 345.00 - SUNNYSIDE 345KV CKT 1	717	789	0.07348	116.6392	P12:138:WFEC:MSL11
FDNS	00NR	0	16WP	G15_082	FROM->TO	G14-057T 345.00 - SUNNYSIDE 345KV CKT 1	717	789	0.07348	116.6392	P12:138:WFEC-AEPW:PHAROAH4:LONEOAK4
FDNS	00NR	0	20WP	G15_082	FROM->TO	G14-057T 345.00 - SUNNYSIDE 345KV CKT 1	717	789	0.07392	116.6372	COMANCHE TAP - OMPA-DUNCAN 840 138KV CKT 1
FDNS	00NR	0	16WP	G15_082	FROM->TO	G14-057T 345.00 - SUNNYSIDE 345KV CKT 1	717	789	0.07354	116.6303	CANEY CREEK - JOHNSON COUNTY 138KV CKT 1
FDNS	00NR	0	20WP	G15_082	FROM->TO	G14-057T 345.00 - SUNNYSIDE 345KV CKT 1	717	789	0.07286	116.6256	GEN515577 1-ARBWND11 0.6900
FDNS	00NR	0	16WP	G15_082	FROM->TO	G14-057T 345.00 - SUNNYSIDE 345KV CKT 1	717	789	0.07347	116.6236	P12:069:OKGE:3TERM42
FDNS	00NR	0	20WP	G15_082	FROM->TO	G14-057T 345.00 - SUNNYSIDE 345KV CKT 1	717	789	0.06923	116.6199	CANADIAN RIVER - MUSKOGEE 345KV CKT 1
FDNS	00NR	0	16WP	G15_082	FROM->TO	G14-057T 345.00 - SUNNYSIDE 345KV CKT 1	717	789	0.07347	116.6179	GEN511961 1-DEMPSEY-WTG10.7000
FDNS	00NR	0	16WP	G15_082	FROM->TO	G14-057T 345.00 - SUNNYSIDE 345KV CKT 1	717	789	0.07242	116.5984	PRAIRIE POINT - RATLIFF 138KV CKT 1
FDNS	00NR	0	16WP	G15_082	FROM->TO	G14-057T 345.00 - SUNNYSIDE 345KV CKT 1	717	789	0.07358	116.5895	P12:138:WFEC:MSL08
FDNS	00NR	0	20WP	G15_082	FROM->TO	G14-057T 345.00 - SUNNYSIDE 345KV CKT 1	717	789	0.07422	116.5712	BRIDGECR 138.00 - TUTTLE 138KV CKT 1
FDNS	00NR	0	16WP	G15_082	FROM->TO	G14-057T 345.00 - SUNNYSIDE 345KV CKT 1	717	789	0.07347	116.5702	GEN515443 1-MNCOWND1 0.7000
FDNS	00NR	0	16WP	G15_082	FROM->TO	G14-057T 345.00 - SUNNYSIDE 345KV CKT 1	717	789	0.07338	116.57	CARTER - CHICKASAW 138KV CKT 1
FDNS	00NR	0	16WP	G15_082	FROM->TO	G14-057T 345.00 - SUNNYSIDE 345KV CKT 1	717	789	0.07347	116.5648	GEN615010 1-STANTON4
FDNS	00NR	0	16WP	G15_082	FROM->TO	G14-057T 345.00 - SUNNYSIDE 345KV CKT 1	717	789	0.07315	116.5612	ALTUS JUNCTION - RUSSELL 138KV CKT 1
FDNS	00NR	0	16WP	G15_082	FROM->TO	G14-057T 345.00 - SUNNYSIDE 345KV CKT 1	717	789	0.07315	116.5612	ALTUS JUNCTION - RUSSELL 138KV CKT 1
FDNS	00NR	0	16WP	G15_082	FROM->TO	G14-057T 345.00 - SUNNYSIDE 345KV CKT 1	717	789	0.07347	116.5583	GEN629070 2-BEAVER CHANNEL GENERATORFOR UNIT NO 2
FDNS	00NR	0	16WP	G15_082	FROM->TO	G14-057T 345.00 - SUNNYSIDE 345KV CKT 1	717	789	0.07358	116.5524	GRPRAR1-LNX3345.00 - HOLT.CO3 345.00 345KV CKT 1
FDNS	00NR	0	16WP	G15_082	FROM->TO	G14-057T 345.00 - SUNNYSIDE 345KV CKT 1	717	789	0.07358	116.5524	GRPRAR1-LNX3345.00 - YANKTON 345KV CKT Z

SOLUTION	GROUP	SCENARIO	SEASON	SOURCE	DIRECTION	MONITORED ELEMENT	RATEA (MVA)	RATEB(MVA)	TDF	TC%LOADING (% MVA)	CONTINGENCY
FDNS	00NR	0	16WP	G15_082	FROM->TO	G14-057T 345.00 - SUNNYSIDE 345KV CKT 1	717	789	0.07347	116.5504	GEN560183 1-REDHIL-WTG1 12.000
FDNS	00NR	0	16WP	G15_082	FROM->TO	G14-057T 345.00 - SUNNYSIDE 345KV CKT 1	717	789	0.07364	116.5486	CANADIAN RIVER - MCALESTER SOUTH 138KV CKT 1
FDNS	00NR	0	16WP	G15_082	FROM->TO	G14-057T 345.00 - SUNNYSIDE 345KV CKT 1	717	789	0.07364	116.5486	CANADIAN RIVER - MCALESTER SOUTH 138KV CKT 1
FDNS	00NR	0	16WP	G15_082	FROM->TO	G14-057T 345.00 - SUNNYSIDE 345KV CKT 1	717	789	0.07364	116.5471	CANADIAN RIVER () 345/138/13.8KV TRANSFORMER CKT 1
FDNS	00NR	0	16WP	G15_082	FROM->TO	G14-057T 345.00 - SUNNYSIDE 345KV CKT 1	717	789	0.07364	116.5471	CANADIAN RIVER () 345/138/13.8KV TRANSFORMER CKT 1
FDNS	00NR	0	16WP	G15_082	FROM->TO	G14-057T 345.00 - SUNNYSIDE 345KV CKT 1	717	789	0.07347	116.5455	GEN615021 1-GRE-ER 14G 16.000
FDNS	00NR	0	16WP	G15_082	FROM->TO	G14-057T 345.00 - SUNNYSIDE 345KV CKT 1	717	789	0.07347	116.5378	GEN629071 1-BURLINGTON GENERATOR FOR UNIT NO 1 E
FDNS	00NR	0	16WP	G15_082	FROM->TO	G14-057T 345.00 - SUNNYSIDE 345KV CKT 1	717	789	0.07317	116.5371	ROCKY POINT - SPRINGDALE 138KV CKT 1
FDNS	00NR	0	16WP	G15_082	FROM->TO	G14-057T 345.00 - SUNNYSIDE 345KV CKT 1	717	789	0.07347	116.5365	INDEPENDENCE 500/26.0KV TRANSFORMER CKT 1
FDNS	00NR	0	16WP	G15_082	FROM->TO	G14-057T 345.00 - SUNNYSIDE 345KV CKT 1	717	789	0.07386	116.5206	CHAMBER SPRINGS - CLARKSVILLE 345KV CKT 1
FDNS	00NR	0	16WP	G15_082	FROM->TO	G14-057T 345.00 - SUNNYSIDE 345KV CKT 1	717	789	0.07347	116.518	BURLINGTON NO1 + NO 2 + NO 3 161/20.0KV TRANSFORMER CKT 1
FDNS	00NR	0	16WP	G15_082	FROM->TO	G14-057T 345.00 - SUNNYSIDE 345KV CKT 1	717	789	0.07347	116.5142	GEN563242 1-G15090_3 0.6900
FDNS	00NR	0	16WP	G15_082	FROM->TO	G14-057T 345.00 - SUNNYSIDE 345KV CKT 1	717	789	0.07347	116.5076	GEN532653 1-JEFFREY ENERGY CENTER UNIT 3
FDNS	00NR	0	16WP	G15_082	FROM->TO	G14-057T 345.00 - SUNNYSIDE 345KV CKT 1	717	789	0.07347	116.5074	GEN562902 1-G15052_3 0.6900
FDNS	00NR	0	16WP	G15_082	FROM->TO	G14-057T 345.00 - SUNNYSIDE 345KV CKT 1	717	789	0.07239	116.5042	MOREWOOD SW - NINE MILE 138KV CKT 1
FDNS	00NR	0	20WP	G15_082	FROM->TO	G14-057T 345.00 - SUNNYSIDE 345KV CKT 1	717	789	0.07378	116.4952	ARCADIA - SEMINOLE 345KV CKT 1
FDNS	00NR	0	16WP	G15_082	FROM->TO	G14-057T 345.00 - SUNNYSIDE 345KV CKT 1	717	789	0.07371	116.492	KEO EHV - WEST MEMPHIS 500 500KV CKT 1
FDNS	00NR	0	16WP	G15_082	FROM->TO	G14-057T 345.00 - SUNNYSIDE 345KV CKT 1	717	789	0.07353	116.4891	NORTHWEST TEXARKANA - WELSH 345KV CKT 1
FDNS	00NR	0	16WP	G15_082	FROM->TO	G14-057T 345.00 - SUNNYSIDE 345KV CKT 1	717	789	0.07353	116.4891	NORTHWEST TEXARKANA - WELSH 345KV CKT 1
FDNS	00NR	0	16WP	G15_082	FROM->TO	G14-057T 345.00 - SUNNYSIDE 345KV CKT 1	717	789	0.07269	116.4889	JOLLYVILLE - SULPHR 4 138.00 138KV CKT 1
FDNS	00NR	0	16WP	G15_082	FROM->TO	G14-057T 345.00 - SUNNYSIDE 345KV CKT 1	717	789	0.07368	116.4836	NORTHWEST - SPRING CREEK 345KV CKT 1
FDNS	00NR	0	20WP	G15_082	FROM->TO	G14-057T 345.00 - SUNNYSIDE 345KV CKT 1	717	789	0.07286	116.4782	GEN509409 1-WILKES #3
FDNS	00NR	0	20WP	G15_082	FROM->TO	G14-057T 345.00 - SUNNYSIDE 345KV CKT 1	717	789	0.07424	116.4763	HEALDTON - LOCO 138KV CKT 1
FDNS	00NR	0	16WP	G15_082	FROM->TO	G14-057T 345.00 - SUNNYSIDE 345KV CKT 1	717	789	0.07347	116.4735	RCDC EAST 4230.00 - RED CEDAR DC 230KV CKT 1
FDNS	00NR	0	16WP	G15_082	FROM->TO	G14-057T 345.00 - SUNNYSIDE 345KV CKT 1	717	789	0.07347	116.4704	P12:230:UMZB:# 112 #: NU IN SD. NU-RCDC & DRY CREEK XFMR
FDNS	00NR	0	16WP	G15_082	FROM->TO	G14-057T 345.00 - SUNNYSIDE 345KV CKT 1	717	789	0.07368	116.4702	SOONER - SPRING CREEK 345KV CKT 1
FDNS	00NR	0	16WP	G15_082	FROM->TO	G14-057T 345.00 - SUNNYSIDE 345KV CKT 1	717	789	0.07347	116.4687	GEN562078 1-G11_051_3 0.6900
FDNS	00NR	0	16WP	G15_082	FROM->TO	G14-057T 345.00 - SUNNYSIDE 345KV CKT 1	717	789	0.07347	116.4597	GEN514805 1-SOONER UNIT 1
FDNS	00NR	0	16WP	G15_082	FROM->TO	G14-057T 345.00 - SUNNYSIDE 345KV CKT 1	717	789	0.07347	116.4583	GEN562802 1-G15039_3 0.3570
FDNS	00NR	0	16WP	G15_082	FROM->TO	G14-057T 345.00 - SUNNYSIDE 345KV CKT 1	717	789	0.07347	116.4533	GEN514806 1-SOONER UNIT 2
FDNS	00NR	0	16WP	G15_082	FROM->TO	G14-057T 345.00 - SUNNYSIDE 345KV CKT 1	717	789	0.07347	116.4511	GEN524285 1-WILDORADO WIND GEN
FDNS	00NR	0	16WP	G15_082	FROM->TO	G14-057T 345.00 - SUNNYSIDE 345KV CKT 1	717	789	0.07596	116.4462	CLARKSVILLE - MUSKOGEE 345KV CKT 1
FDNS	00NR	0	16WP	G15_082	FROM->TO	G14-057T 345.00 - SUNNYSIDE 345KV CKT 1	717	789	0.07596	116.4462	CLARKSVILLE - MUSKOGEE 345KV CKT 1
FDNS	00NR	0	16WP	G15_082	FROM->TO	G14-057T 345.00 - SUNNYSIDE 345KV CKT 1	717	789	0.07347	116.4341	GEN562587 1-G14_056_3 0.6900
FDNS	00NR	0	16WP	G15_082	FROM->TO	G14-057T 345.00 - SUNNYSIDE 345KV CKT 1	717	789	0.07347	116.4299	GEN524295 1-SPNSPUR_WND10.6900
FDNS	00NR	0	16WP	G15_082	FROM->TO	G14-057T 345.00 - SUNNYSIDE 345KV CKT 1	717	789	0.07347	116.4258	GEN560331 1-G10-46 13.800
FDNS	00NR	0	20WP	G15_082	FROM->TO	G14-057T 345.00 - SUNNYSIDE 345KV CKT 1	717	789	0.07286	116.4207	GEN501813 1-RODEMACHER UNIT 3
FDNS	00NR	0	16WP	G15_082	FROM->TO	G14-057T 345.00 - SUNNYSIDE 345KV CKT 1	717	789	0.07269	116.4198	JOLLYVILLE - KERR MCGEE CIMARRON 138KV CKT 1
FDNS	00NR	0	16WP	G15_082	FROM->TO	G14-057T 345.00 - SUNNYSIDE 345KV CKT 1	717	789	0.07347	116.3988	GEN629072 4-LANSING GENERATOR FOR UNITS NO4 EIA CODE 1
FDNS	00NR	0	16WP	G15_082	FROM->TO	G14-057T 345.00 - SUNNYSIDE 345KV CKT 1	717	789	0.07347	116.3947	GEN562269 1-G12-020-1 0.6900
FDNS	00NR	0	16WP	G15_082	FROM->TO	G14-057T 345.00 - SUNNYSIDE 345KV CKT 1	717	789	0.07347	116.3776	GEN657749 1-YOUNG 1 GENERATOR
FDNS	00NR	0	16WP	G15_082	FROM->TO	G14-057T 345.00 - SUNNYSIDE 345KV CKT 1	717	789	0.07269	116.3743	ARBWIND4 138.00 - KERR MCGEE CIMARRON 138KV CKT 1
FDNS	00NR	0	16WP	G15_082	FROM->TO	G14-057T 345.00 - SUNNYSIDE 345KV CKT 1	717	789	0.07267	116.368	P12:138:AEPW:112GORE4:SNYDER-4
FDNS	00NR	0	16WP	G15_082	FROM->TO	G14-057T 345.00 - SUNNYSIDE 345KV CKT 1	717	789	0.07239	116.3661	BEARCAT 138.00 - NINE MILE 138KV CKT 1
FDNS	00NR	0	16WP	G15_082	FROM->TO	G14-057T 345.00 - SUNNYSIDE 345KV CKT 1	717	789	0.07347	116.3557	GEN562882 1-G15047_3 0.6900
FDNS	00NR	0	16WP	G15_082	FROM->TO	G14-057T 345.00 - SUNNYSIDE 345KV CKT 1	717	789	0.07347	116.3493	GEN562270 1-G12-020-2 0.6900
FDNS	00NR	0	20WP	G15_082	FROM->TO	G14-057T 345.00 - SUNNYSIDE 345KV CKT 1	717	789	0.07392	116.3484	DUNCAN - OMPA-DUNCAN 840 138KV CKT 1
FDNS	00NR	0	20WP	G15_082	FROM->TO	G14-057T 345.00 - SUNNYSIDE 345KV CKT 1	717	789	0.07392	116.3484	DUNCAN - OMPA-DUNCAN 840 138KV CKT 1
FDNS	00NR	0	16WP	G15_082	FROM->TO	G14-057T 345.00 - SUNNYSIDE 345KV CKT 1	717	789	0.07347	116.3442	GEN562812 1-G15040_3 0.3570
FDNS	00NR	0	16WP	G15_082	FROM->TO	G14-057T 345.00 - SUNNYSIDE 345KV CKT 1	717	789	0.07347	116.3376	GEN563062 1-G15071_3 0.6900
FDNS	00NR	0	16WP	G15_082	FROM->TO	G14-057T 345.00 - SUNNYSIDE 345KV CKT 1	717	789	0.07347	116.3373	GEN563102 1-G15075_3 0.5500
FDNS	00NR	0	16WP	G15_082	FROM->TO	G14-057T 345.00 - SUNNYSIDE 345KV CKT 1	717	789	0.07347	116.3339	GEN563132 1-G15078_3 0.3570
FDNS	00NR	0	20WP	G15_082	FROM->TO	G14-057T 345.00 - SUNNYSIDE 345KV CKT 1	717	789	0.07424	116.3314	HEALDTON - RINGLING 138KV CKT 1
FDNS	00NR	0	16WP	G15_082	FROM->TO	G14-057T 345.00 - SUNNYSIDE 345KV CKT 1	717	789	0.07347	116.3152	GEN562974 1-G15060_5 0.6900
FDNS	00NR	0	16WP	G15_082	FROM->TO	G14-057T 345.00 - SUNNYSIDE 345KV CKT 1	717	789	0.07347	116.3083	GEN681522 3-GENOA 3
FDNS	00NR	0	16WP	G15_082	FROM->TO	G14-057T 345.00 - SUNNYSIDE 345KV CKT 1	717	789	0.07347	116.3055	GEN562973 1-G15060_4 0.6900
FDNS	00NR	0	16WP	G15_082	FROM->TO	G14-057T 345.00 - SUNNYSIDE 345KV CKT 1	717	789	0.0734	116.2989	BROWN - RUSSETT 138KV CKT 1
FDNS	00NR	0	16WP	G15_082	FROM->TO	G14-057T 345.00 - SUNNYSIDE 345KV CKT 1	717	789	0.07278	116.2927	CHICKASAW - TOTAL 138KV CKT 1
FDNS	00NR	0	20WP	G15_082	FROM->TO	G14-057T 345.00 - SUNNYSIDE 345KV CKT 1	717	789	0.07422	116.2876	P12:138:WFEC:MSL01
FDNS	00NR	0	20WP	G15_082	FROM->TO	G14-057T 345.00 - SUNNYSIDE 345KV CKT 1	717	789	0.07286	116.2873	GEN300006 1-NEW MADRID UNIT 1
FDNS	00NR	0	16WP	G15_082	FROM->TO	G14-057T 345.00 - SUNNYSIDE 345KV CKT 1	717	789	0.07239	116.2814	P12:138:WFEC:MSL14
FDNS	00NR	0	20WP	G15_082	FROM->TO	G14-057T 345.00 - SUNNYSIDE 345KV CKT 1	717	789	0.07422	116.2803	BRIDGECR 138.00 - SUNSHINE CANYON 138KV CKT 1
FDNS	00NR	0	16WP	G15_082	FROM->TO	G14-057T 345.00 - SUNNYSIDE 345KV CKT 1	717	789	0.07239	116.278	BEARCAT 138.00 - MOORELAND 138KV CKT 1
FDNS	00NR	0	16WP	G15_082	FROM->TO	G14-057T 345.00 - SUNNYSIDE 345KV CKT 1	717	789	0.07336	116.2722	RUSSETT - SPRINGDALE 138KV CKT 1
FDNS	00NR	0	20WP	G15_082	FROM->TO	G14-057T 345.00 - SUNNYSIDE 345KV CKT 1	717	789	0.07286	116.2676	GEN300007 1-NEW MADRID UNIT 2
FDNS	00NR	0	20WP	G15_082	FROM->TO	G14-057T 345.00 - SUNNYSIDE 345KV CKT 1	717	789	0.08486	116.2674	Hitchland Interchange - WALKTAP7 345.00 345KV CKT 1
FDNS	00NR	0	20WP	G15_082	FROM->TO	G14-057T 345.00 - SUNNYSIDE 345KV CKT 1	717	789	0.08486	116.2674	Hitchland Interchange - WALKTAP7 345.00 345KV CKT 1
FDNS	00NR	0	20WP	G15_082	FROM->TO	G14-057T 345.00 - SUNNYSIDE 345KV CKT 1	717	789	0.08486	116.2624	P12:345:SPS:J07.1.FINN.HITCH
FDNS	00NR	0	16WP	G15_082	FROM->TO	G14-057T 345.00 - SUNNYSIDE 345KV CKT 1	717	789	0.07334	116.2558	P12:138:WFEC:MSL07
FDNS	00NR	0	16WP	G15_082	FROM->TO	G14-057T 345.00 - SUNNYSIDE 345KV CKT 1	717	789	0.07334	116.2558	P12:138:WFEC-AEPW:HUGOPP4:ATOKA--4
FDNS	00NR	0	16WP	G15_082	FROM->TO	G14-057T 345.00 - SUNNYSIDE 345KV CKT 1	717	789	0.07347	116.2502	GEN526331 1-JONES GEN #1 22 KV
FDNS	00NR	0	16WP	G15_082	FROM->TO	G14-057T 345.00 - SUNNYSIDE 345KV CKT 1	717	789	0.07347	116.2502	GEN526332 1-JONES GEN #2 21 KV
FDNS	00NR	0	20WP	G15_082	FROM->TO	G14-057T 345.00 - SUNNYSIDE 345KV CKT 1	717	789	0.07316	116.2481	LACYGNE - WAVERLY7 345.00 345KV CKT 1
FDNS	00NR	0	16WP	G15_082	FROM->TO	G14-057T 345.00 - SUNNYSIDE 345KV CKT 1	717	789	0.07305	116.2431	ROCKY POINT - SUNNYSIDE 138KV CKT 1
FDNS	00NR	0	16WP	G15_082	FROM->TO	G14-057T 345.00 - SUNNYSIDE 345KV CKT 1	717	789	0.07347	116.2407	GEN560105 1-G08-22 0.6900
FDNS	00NR	0	16WP	G15_082	FROM->TO	G14-057T 345.00 - SUNNYSIDE 345KV CKT 1	717	789	0.07347	116.2365	GEN562550 1-G14_040_3 0.6900
FDNS	00NR	0	16WP	G15_082	FROM->TO	G14-057T 345.00 - SUNNYSIDE 345KV CKT 1	717	789	0.07347	116.2346	GEN345671 2-1RUSH G2 18.000
FDNS	00NR	0	16WP	G15_082	FROM->TO	G14-057T 345.00 - SUNNYSIDE 345KV CKT 1	717	789	0.07347	116.2328	GEN345670 1-1RUSH G1 18.000
FDNS	00NR	0	16WP	G15_082	FROM->TO	G14-057T 345.00 - SUNNYSIDE 345KV CKT 1	717	789	0.07347	116.2281	4SIOUX 1 138.00 138/18.0KV TRANSFORMER CKT 1

SOLUTION	GROUP	SCENARIO	SEASON	SOURCE	DIRECTION	MONITORED ELEMENT	RATEA (MVA)	RATEB(MVA)	TDF	TC%LOADING (% MVA)	CONTINGENCY
FDNS	00NR	0	16WP	G15_082	FROM->TO	G14-057T 345.00 - SUNNYSIDE 345KV CKT 1	717	789	0.0734	116.2225	RUSSETT - RUSSETT 138KV CKT 1
FDNS	00NR	0	20WP	G15_082	FROM->TO	G14-057T 345.00 - SUNNYSIDE 345KV CKT 1	717	789	0.07286	116.2081	GEN335206 1-NELSON UNIT 6
FDNS	00NR	0	16WP	G15_082	FROM->TO	G14-057T 345.00 - SUNNYSIDE 345KV CKT 1	717	789	0.07347	116.2032	GEN521112 1-ORME3 13.800
FDNS	00NR	0	16WP	G15_082	FROM->TO	G14-057T 345.00 - SUNNYSIDE 345KV CKT 1	717	789	0.07347	116.2029	GEN511962 2-RKYRDGW2-1 0.7000
FDNS	00NR	0	16WP	G15_082	FROM->TO	G14-057T 345.00 - SUNNYSIDE 345KV CKT 1	717	789	0.07347	116.1911	GEN527882 1-CUNNINGHAM GEN #2 20 KV
FDNS	00NR	0	16WP	G15_082	FROM->TO	G14-057T 345.00 - SUNNYSIDE 345KV CKT 1	717	789	0.07347	116.1879	CLAY BOSWELL 230/20.9KV TRANSFORMER CKT 1
FDNS	00NR	0	16WP	G15_082	FROM->TO	G14-057T 345.00 - SUNNYSIDE 345KV CKT 1	717	789	0.07251	116.1838	ARDMORE WEST - CARTER 138KV CKT 1
FDNS	00NR	0	20WP	G15_082	FROM->TO	G14-057T 345.00 - SUNNYSIDE 345KV CKT 1	717	789	0.07286	116.1615	GEN520947 1-HUGO1
FDNS	00NR	0	20WP	G15_082	FROM->TO	G14-057T 345.00 - SUNNYSIDE 345KV CKT 1	717	789	0.07424	116.1586	RINGLING - SOUTH WILSON 138KV CKT 1
FDNS	00NR	0	16WP	G15_082	FROM->TO	G14-057T 345.00 - SUNNYSIDE 345KV CKT 1	717	789	0.07347	116.1579	GEN563192 1-G15084_3 0.5500
FDNS	00NR	0	16WP	G15_082	FROM->TO	G14-057T 345.00 - SUNNYSIDE 345KV CKT 1	717	789	0.07354	116.1461	P12:138:WFEC:MSL16
FDNS	00NR	0	16WP	G15_082	FROM->TO	G14-057T 345.00 - SUNNYSIDE 345KV CKT 1	717	789	0.07347	116.1424	GEN672321 1-SHAND GENERATOR 1
FDNS	00NR	0	16WP	G15_082	FROM->TO	G14-057T 345.00 - SUNNYSIDE 345KV CKT 1	717	789	0.07256	116.1392	SUNNYSIDE (SUNNYSD5) 345/138/13.8KV TRANSFORMER CKT 1
FDNS	00NR	0	16WP	G15_082	FROM->TO	G14-057T 345.00 - SUNNYSIDE 345KV CKT 1	717	789	0.07347	116.1373	GEN562892 1-G15048_3 0.6900
FDNS	00NR	0	16WP	G15_082	FROM->TO	G14-057T 345.00 - SUNNYSIDE 345KV CKT 1	717	789	0.07347	116.136	GEN562512 1-G14_020_3 0.6900
FDNS	00NR	0	16WP	G15_082	FROM->TO	G14-057T 345.00 - SUNNYSIDE 345KV CKT 1	717	789	0.07345	116.1338	P12:138:WFEC-AEPW:GOLDENSW4:CRAIGJT4
FDNS	00NR	0	16WP	G15_082	FROM->TO	G14-057T 345.00 - SUNNYSIDE 345KV CKT 1	717	789	0.07347	116.1293	GEN511853 1-COMANCHE #3
FDNS	00NR	0	20WP	G15_082	FROM->TO	G14-057T 345.00 - SUNNYSIDE 345KV CKT 1	717	789	0.07316	116.1281	WAVERLY7 345.00 - WOLF CREEK 345KV CKT 1
FDNS	00NR	0	16WP	G15_082	FROM->TO	G14-057T 345.00 - SUNNYSIDE 345KV CKT 1	717	789	0.07347	116.1182	GEN672311 2-POPLAR RIVER GENERATOR 2
FDNS	00NR	0	16WP	G15_082	FROM->TO	G14-057T 345.00 - SUNNYSIDE 345KV CKT 1	717	789	0.07347	116.1181	GEN672310 1-POPLAR RIVER GENERATOR 1
FDNS	00NR	0	16WP	G15_082	FROM->TO	G14-057T 345.00 - SUNNYSIDE 345KV CKT 1	717	789	0.07347	116.1102	GEN672306 6-BOUNDARY DAM GENERATOR 6
FDNS	00NR	0	16WP	G15_082	FROM->TO	G14-057T 345.00 - SUNNYSIDE 345KV CKT 1	717	789	0.07347	116.0892	GEN523461 1-BLACKHAWK GEN #1
FDNS	00NR	0	16WP	G15_082	FROM->TO	G14-057T 345.00 - SUNNYSIDE 345KV CKT 1	717	789	0.07347	116.0891	GEN523462 1-BLACKHAWK GEN #2
FDNS	00NR	0	16WP	G15_082	FROM->TO	G14-057T 345.00 - SUNNYSIDE 345KV CKT 1	717	789	0.07347	116.0803	GEN344895 2-1LAB G2 20.000
FDNS	00NR	0	16WP	G15_082	FROM->TO	G14-057T 345.00 - SUNNYSIDE 345KV CKT 1	717	789	0.07347	116.0767	GEN511852 1-COMANCHE #2
FDNS	00NR	0	16WP	G15_082	FROM->TO	G14-057T 345.00 - SUNNYSIDE 345KV CKT 1	717	789	0.07251	116.0665	ARDMORE WEST - UNIROYAL 138KV CKT 1
FDNS	00NR	0	20WP	G15_082	FROM->TO	G14-057T 345.00 - SUNNYSIDE 345KV CKT 1	717	789	0.07284	116.0661	ELDORADO EHV - MOUNT OLIVE 500KV CKT 1
FDNS	00NR	0	16WP	G15_082	FROM->TO	G14-057T 345.00 - SUNNYSIDE 345KV CKT 1	717	789	0.07345	116.0557	P12:138:AEPW-SWPA:LONEOAK4:TUPELO4
FDNS	00NR	0	16WP	G15_082	FROM->TO	G14-057T 345.00 - SUNNYSIDE 345KV CKT 1	717	789	0.07345	116.0556	P12:138:WFEC:MSL06
FDNS	00NR	0	16WP	G15_082	FROM->TO	G14-057T 345.00 - SUNNYSIDE 345KV CKT 1	717	789	0.07347	116.0472	GEN344896 3-1LAB G3 20.000
FDNS	00NR	0	16WP	G15_082	FROM->TO	G14-057T 345.00 - SUNNYSIDE 345KV CKT 1	717	789	0.07347	116.0458	GEN344894 1-1LAB G1 20.000
FDNS	00NR	0	16WP	G15_082	FROM->TO	G14-057T 345.00 - SUNNYSIDE 345KV CKT 1	717	789	0.07347	116.0443	GEN344897 4-1LAB G4 20.000
FDNS	00NR	0	16WP	G15_082	FROM->TO	G14-057T 345.00 - SUNNYSIDE 345KV CKT 1	717	789	0.0731	116.0443	G15085_T 138.00 - RUSSELL 138KV CKT 1
FDNS	00NR	0	16WP	G15_082	FROM->TO	G14-057T 345.00 - SUNNYSIDE 345KV CKT 1	717	789	0.07315	116.0441	P12:138:OKGE:3TERM40
FDNS	00NR	0	20WP	G15_082	FROM->TO	G14-057T 345.00 - SUNNYSIDE 345KV CKT 1	717	789	0.07283	116.0401	P12:138:AEPW:SHERID4:112GORE4
FDNS	00NR	0	16WP	G15_082	FROM->TO	G14-057T 345.00 - SUNNYSIDE 345KV CKT 1	717	789	0.07277	116.04	CARTRCO4 138.00 - RATLIFF 138KV CKT 1
FDNS	00NR	0	20WP	G15_082	FROM->TO	G14-057T 345.00 - SUNNYSIDE 345KV CKT 1	717	789	0.07913	116.032	G11_051T 345.00 - TATONGA7 345.00 345KV CKT 1
FDNS	00NR	0	16WP	G15_082	FROM->TO	G14-057T 345.00 - SUNNYSIDE 345KV CKT 1	717	789	0.07347	116.0232	GEN521110 1-ORME1 13.800
FDNS	00NR	0	16WP	G15_082	FROM->TO	G14-057T 345.00 - SUNNYSIDE 345KV CKT 1	717	789	0.07347	116.0232	GEN521111 1-ORME2 13.800
FDNS	00NR	0	20WP	G15_082	FROM->TO	G14-057T 345.00 - SUNNYSIDE 345KV CKT 1	717	789	0.07286	116.0178	DOLET HILLS 345/24.0KV TRANSFORMER CKT 1
FDNS	00NR	0	20WP	G15_082	FROM->TO	G14-057T 345.00 - SUNNYSIDE 345KV CKT 1	717	789	0.07286	116.0168	GEN501812 1-RODEMACHER UNIT 2
FDNS	00NR	0	16WP	G15_082	FROM->TO	G14-057T 345.00 - SUNNYSIDE 345KV CKT 1	717	789	0.07347	116.0057	GEN562699 1-G15_018_3 0.6900
FDNS	00NR	0	16WP	G15_082	FROM->TO	G14-057T 345.00 - SUNNYSIDE 345KV CKT 1	717	789	0.07347	115.9994	GEN681542 6-JP MADGETT
FDNS	00NR	0	16WP	G15_082	FROM->TO	G14-057T 345.00 - SUNNYSIDE 345KV CKT 1	717	789	0.07347	115.998	GEN563162 1-G15081_3 0.6900
FDNS	00NR	0	16WP	G15_082	FROM->TO	G14-057T 345.00 - SUNNYSIDE 345KV CKT 1	717	789	0.07267	115.9887	CACHE - SNYDER 138KV CKT 1
FDNS	00NR	0	16WP	G15_082	FROM->TO	G14-057T 345.00 - SUNNYSIDE 345KV CKT 1	717	789	0.07347	115.9763	GEN563292 1-G15095_3 0.6900
FDNS	00NR	0	20WP	G15_082	FROM->TO	G14-057T 345.00 - SUNNYSIDE 345KV CKT 1	717	789	0.07159	115.9686	PARK LANE - SEMINOLE 138KV CKT 1
FDNS	00NR	0	20WP	G15_082	FROM->TO	G14-057T 345.00 - SUNNYSIDE 345KV CKT 1	717	789	0.07664	115.9361	THISTLE7 345.00 - WOODWARD DISTRICT EHV 345KV CKT 1
FDNS	00NR	0	20WP	G15_082	FROM->TO	G14-057T 345.00 - SUNNYSIDE 345KV CKT 1	717	789	0.07664	115.9361	THISTLE7 345.00 - WOODWARD DISTRICT EHV 345KV CKT 1
FDNS	00NR	0	20WP	G15_082	FROM->TO	G14-057T 345.00 - SUNNYSIDE 345KV CKT 1	717	789	0.07664	115.9361	THISTLE7 345.00 - WOODWARD DISTRICT EHV 345KV CKT 2
FDNS	00NR	0	20WP	G15_082	FROM->TO	G14-057T 345.00 - SUNNYSIDE 345KV CKT 1	717	789	0.07664	115.9361	THISTLE7 345.00 - WOODWARD DISTRICT EHV 345KV CKT 2
FDNS	00NR	0	16WP	G15_082	FROM->TO	G14-057T 345.00 - SUNNYSIDE 345KV CKT 1	717	789	0.07347	115.9207	GEN520811 1-ANADRK4
FDNS	00NR	0	16WP	G15_082	FROM->TO	G14-057T 345.00 - SUNNYSIDE 345KV CKT 1	717	789	0.07347	115.9032	GEN563122 1-G15077_3 0.3850
FDNS	00NR	0	16WP	G15_082	FROM->TO	G14-057T 345.00 - SUNNYSIDE 345KV CKT 1	717	789	0.07347	115.9026	GEN562861 1-G15045_2 0.4800
FDNS	00NR	0	20WP	G15_082	FROM->TO	G14-057T 345.00 - SUNNYSIDE 345KV CKT 1	717	789	0.07405	115.8972	CANEYRV7 345.00 - NEOSHO 345KV CKT 1
FDNS	00NR	0	16WP	G15_082	FROM->TO	G14-057T 345.00 - SUNNYSIDE 345KV CKT 1	717	789	0.07983	115.894	G15093_T 345.00 - LAWTON EASTSIDE 345KV CKT 1
FDNS	00NR	0	16WP	G15_082	FROM->TO	G14-057T 345.00 - SUNNYSIDE 345KV CKT 1	717	789	0.07347	115.8927	GEN661015 1-COYOTE
FDNS	00NR	0	20WP	G15_082	FROM->TO	G14-057T 345.00 - SUNNYSIDE 345KV CKT 1	717	789	0.07286	115.8884	GEN515564 1-ORIGIN11 0.6900
FDNS	00NR	0	20WP	G15_082	FROM->TO	G14-057T 345.00 - SUNNYSIDE 345KV CKT 1	717	789	0.07286	115.8884	GEN515565 1-ORIGIN21 0.6900
FDNS	00NR	0	20WP	G15_082	FROM->TO	G14-057T 345.00 - SUNNYSIDE 345KV CKT 1	717	789	0.07424	115.8694	MARIETTA - SOUTH WILSON 138KV CKT 1
FDNS	00NR	0	16WP	G15_082	FROM->TO	G14-057T 345.00 - SUNNYSIDE 345KV CKT 1	717	789	0.07318	115.8649	G15063_T 345.00 - MATHWSN7 345.00 345KV CKT 1
FDNS	00NR	0	20WP	G15_082	FROM->TO	G14-057T 345.00 - SUNNYSIDE 345KV CKT 1	717	789	0.07304	115.8639	WEBRE - WELLS 500KV CKT 1
FDNS	00NR	0	16WP	G15_082	FROM->TO	G14-057T 345.00 - SUNNYSIDE 345KV CKT 1	717	789	0.07382	115.8561	P12:138:WFEC:MSL15
FDNS	00NR	0	20WP	G15_082	FROM->TO	G14-057T 345.00 - SUNNYSIDE 345KV CKT 1	717	789	0.07286	115.8559	GEN334440 1-SABINE UNIT 4
FDNS	00NR	0	16WP	G15_082	FROM->TO	G14-057T 345.00 - SUNNYSIDE 345KV CKT 1	717	789	0.07251	115.8424	SUNNYSIDE - UNIROYAL 138KV CKT 1
FDNS	00NR	0	16WP	G15_082	FROM->TO	G14-057T 345.00 - SUNNYSIDE 345KV CKT 1	717	789	0.07128	115.8373	GRAPEVINE INTERCHANGE - STATELINE INTERCHANGE 230KV CKT 1
FDNS	00NR	0	16WP	G15_082	FROM->TO	G14-057T 345.00 - SUNNYSIDE 345KV CKT 1	717	789	0.07128	115.8373	GRAPEVINE INTERCHANGE - STATELINE INTERCHANGE 230KV CKT 1
FDNS	00NR	0	20WP	G15_082	FROM->TO	G14-057T 345.00 - SUNNYSIDE 345KV CKT 1	717	789	0.07286	115.8351	P12:161:AEPW:DYESS 5:HYLAND 5
FDNS	00NR	0	16WP	G15_082	FROM->TO	G14-057T 345.00 - SUNNYSIDE 345KV CKT 1	717	789	0.07486	115.8233	CANEY CREEK - TEXOMA JCT 138KV CKT 1
FDNS	00NR	0	20WP	G15_082	FROM->TO	G14-057T 345.00 - SUNNYSIDE 345KV CKT 1	717	789	0.07286	115.8197	DELL 500 - ESSEX UNIT 2 500KV CKT Z1
FDNS	00NR	0	20WP	G15_082	FROM->TO	G14-057T 345.00 - SUNNYSIDE 345KV CKT 1	717	789	0.07324	115.8186	LAWTON EASTSIDE (LES 5) 345/138/13.8KV TRANSFORMER CKT 2
FDNS	00NR	0	20WP	G15_082	FROM->TO	G14-057T 345.00 - SUNNYSIDE 345KV CKT 1	717	789	0.07324	115.8186	LAWTON EASTSIDE (LES 5) 345/138/13.8KV TRANSFORMER CKT 2
FDNS	00NR	0	20WP	G15_082	FROM->TO	G14-057T 345.00 - SUNNYSIDE 345KV CKT 1	717	789	0.07252	115.816	REDBUD - RIVERSIDE STATION 345KV CKT 1
FDNS	00NR	0	20WP	G15_082	FROM->TO	G14-057T 345.00 - SUNNYSIDE 345KV CKT 1	717	789	0.07252	115.816	REDBUD - RIVERSIDE STATION 345KV CKT 1
FDNS	00NR	0	20WP	G15_082	FROM->TO	G14-057T 345.00 - SUNNYSIDE 345KV CKT 1	717	789	0.07286	115.7949	GEN590011 2-ERCOT EQUIVALENCE
FDNS	00NR	0	20WP	G15_082	FROM->TO	G14-057T 345.00 - SUNNYSIDE 345KV CKT 1	717	789	0.07286	115.7767	P12:69:AEPW:L.E.S.-2:LAW WC2
FDNS	00NR	0	16WP	G15_082	FROM->TO	G14-057T 345.00 - SUNNYSIDE 345KV CKT 1	717	789	0.07347	115.7761	GEN657748 1-YOUNG 2 GENERATOR
FDNS	00NR	0	20WP	G15_082	FROM->TO	G14-057T 345.00 - SUNNYSIDE 345KV CKT 1	717	789	0.07424	115.77	P12:138:WFEC:MSL17
FDNS	00NR	0	16WP	G15_082	FROM->TO	G14-057T 345.00 - SUNNYSIDE 345KV CKT 1	717	789	0.07307	115.7699	P12:138:AEPW:SHAM4WT:CHILD4WT

SOLUTION	GROUP	SCENARIO	SEASON	SOURCE	DIRECTION	MONITORED ELEMENT	RATEA (MVA)	RATEB(MVA)	TDF	TC%LOADING (% MVA)	CONTINGENCY
FDNS	00NR	0	16WP	G15_082	FROM->TO	G14-057T 345.00 - SUNNYSIDE 345KV CKT 1	717	789	0.07347	115.7643	GEN562992 1-G15063_3 0.6900
FDNS	00NR	0	20WP	G15_082	FROM->TO	G14-057T 345.00 - SUNNYSIDE 345KV CKT 1	717	789	0.07405	115.7462	CANEYRV7 345.00 - LATHAMS7 345.00 345KV CKT 1
FDNS	00NR	0	20WP	G15_082	FROM->TO	G14-057T 345.00 - SUNNYSIDE 345KV CKT 1	717	789	0.07328	115.7457	P12:138:WFEC:MSL02
FDNS	00NR	0	20WP	G15_082	FROM->TO	G14-057T 345.00 - SUNNYSIDE 345KV CKT 1	717	789	0.07286	115.7256	GEN590010 1-ERCOT EQUIVALENCE
FDNS	00NR	0	20WP	G15_082	FROM->TO	G14-057T 345.00 - SUNNYSIDE 345KV CKT 1	717	789	0.07275	115.717	ELDORADO EHV - SHERIDAN EHV 500KV CKT 1
FDNS	00NR	0	20WP	G15_082	FROM->TO	G14-057T 345.00 - SUNNYSIDE 345KV CKT 1	717	789	0.07286	115.7143	GEN509408 1-WILKES #2
FDNS	00NR	0	16WP	G15_082	FROM->TO	G14-057T 345.00 - SUNNYSIDE 345KV CKT 1	717	789	0.07132	115.7126	GRAPEVINE INTERCHANGE - NICHOLS STATION 230KV CKT 1
FDNS	00NR	0	16WP	G15_082	FROM->TO	G14-057T 345.00 - SUNNYSIDE 345KV CKT 1	717	789	0.07132	115.7126	GRAPEVINE INTERCHANGE - NICHOLS STATION 230KV CKT 1
FDNS	00NR	0	16WP	G15_082	FROM->TO	G14-057T 345.00 - SUNNYSIDE 345KV CKT 1	717	789	0.07347	115.7115	GEN532751 1-WOLF CREEK GENERATING STATION UNIT 1
FDNS	00NR	0	16WP	G15_082	FROM->TO	G14-057T 345.00 - SUNNYSIDE 345KV CKT 1	717	789	0.07347	115.7104	GEN562704 1-G15_020_3 0.3550
FDNS	00NR	0	16WP	G15_082	FROM->TO	G14-057T 345.00 - SUNNYSIDE 345KV CKT 1	717	789	0.07347	115.7055	GEN562952 1-G15057_3 0.6500
FDNS	00NR	0	20WP	G15_082	FROM->TO	G14-057T 345.00 - SUNNYSIDE 345KV CKT 1	717	789	0.07312	115.6954	PAOLI - PAYNE 138.00 138KV CKT 1
FDNS	00NR	0	20WP	G15_082	FROM->TO	G14-057T 345.00 - SUNNYSIDE 345KV CKT 1	717	789	0.07317	115.6708	ANADARKO - GEORGIA 138KV CKT 1
FDNS	00NR	0	16WP	G15_082	FROM->TO	G14-057T 345.00 - SUNNYSIDE 345KV CKT 1	717	789	0.07347	115.6702	GEN563173 1-G15082_3 0.6900
FDNS	00NR	0	20WP	G15_082	FROM->TO	G14-057T 345.00 - SUNNYSIDE 345KV CKT 1	717	789	0.07286	115.6636	GEN506754 1-LEBROCK STEAM 1
FDNS	00NR	0	20WP	G15_082	FROM->TO	G14-057T 345.00 - SUNNYSIDE 345KV CKT 1	717	789	0.07283	115.647	P12:138:AEPW:112GORE4:L.E.S.-4
FDNS	00NR	0	20WP	G15_082	FROM->TO	G14-057T 345.00 - SUNNYSIDE 345KV CKT 1	717	789	0.07399	115.642	CIVIT - PAOLI 138KV CKT 1
FDNS	00NR	0	20WP	G15_082	FROM->TO	G14-057T 345.00 - SUNNYSIDE 345KV CKT 1	717	789	0.07528	115.625	MATHWSN7 345.00 - NORTHWEST 345KV CKT 1
FDNS	00NR	0	16WP	G15_082	FROM->TO	G14-057T 345.00 - SUNNYSIDE 345KV CKT 1	717	789	0.07347	115.6235	GEN562710 1-G15_022_3 0.5500
FDNS	00NR	0	16WP	G15_082	FROM->TO	G14-057T 345.00 - SUNNYSIDE 345KV CKT 1	717	789	0.07347	115.6153	GEN620315 1-BIG STONE GEN
FDNS	00NR	0	16WP	G15_082	FROM->TO	G14-057T 345.00 - SUNNYSIDE 345KV CKT 1	717	789	0.07347	115.5825	GEN511851 1-COMANCHE #1
FDNS	00NR	0	20WP	G15_082	FROM->TO	G14-057T 345.00 - SUNNYSIDE 345KV CKT 1	717	789	0.07475	115.5809	P12:138:AEPW-OGE:CORNVIL4:MAUD 4
FDNS	00NR	0	20WP	G15_082	FROM->TO	G14-057T 345.00 - SUNNYSIDE 345KV CKT 1	717	789	0.07317	115.574	FLETCHER - GEORGIA 138KV CKT 1
FDNS	00NR	0	20WP	G15_082	FROM->TO	G14-057T 345.00 - SUNNYSIDE 345KV CKT 1	717	789	0.07286	115.5699	GEN336252 1-NINEMILE POINT UNIT#5
FDNS	00NR	0	16WP	G15_082	FROM->TO	G14-057T 345.00 - SUNNYSIDE 345KV CKT 1	717	789	0.07347	115.5479	GEN600004 2-PRAIRIE ISLAND G2
FDNS	00NR	0	16WP	G15_082	FROM->TO	G14-057T 345.00 - SUNNYSIDE 345KV CKT 1	717	789	0.07347	115.5453	GEN600003 1-PRAIRIE ISLAND G1
FDNS	00NR	0	16WP	G15_082	FROM->TO	G14-057T 345.00 - SUNNYSIDE 345KV CKT 1	717	789	0.07347	115.5366	GEN600006 1-AS KING
FDNS	00NR	0	20WP	G15_082	FROM->TO	G14-057T 345.00 - SUNNYSIDE 345KV CKT 1	717	789	0.07286	115.5365	FRONTIER - GRIMES 345KV CKT 1
FDNS	00NR	0	20WP	G15_082	FROM->TO	G14-057T 345.00 - SUNNYSIDE 345KV CKT 1	717	789	0.07323	115.5291	EMPIRE - FLETCHER 138KV CKT 1
FDNS	00NR	0	20WP	G15_082	FROM->TO	G14-057T 345.00 - SUNNYSIDE 345KV CKT 1	717	789	0.07405	115.5264	LATHAMS7 345.00 - ROSE HILL 345KV CKT 1
FDNS	00NR	0	20WP	G15_082	FROM->TO	G14-057T 345.00 - SUNNYSIDE 345KV CKT 1	717	789	0.07276	115.5253	TUPELO - TUPELO TAP 138KV CKT 1
FDNS	00NR	0	16WP	G15_082	FROM->TO	G14-057T 345.00 - SUNNYSIDE 345KV CKT 1	717	789	0.0735	115.5233	P12:138:WFEC:MSL09
FDNS	00NR	0	20WP	G15_082	FROM->TO	G14-057T 345.00 - SUNNYSIDE 345KV CKT 1	717	789	0.07286	115.5187	GEN503909 1-FULTONU1 1 16.000
FDNS	00NR	0	20WP	G15_082	FROM->TO	G14-057T 345.00 - SUNNYSIDE 345KV CKT 1	717	789	0.07286	115.5136	GEN335204 1-NELSON UNIT 4
FDNS	00NR	0	20WP	G15_082	FROM->TO	G14-057T 345.00 - SUNNYSIDE 345KV CKT 1	717	789	0.07286	115.5063	GEN334441 1-SABINE UNIT 5
FDNS	00NR	0	16WP	G15_082	FROM->TO	G14-057T 345.00 - SUNNYSIDE 345KV CKT 1	717	789	0.07388	115.5013	P12:138:AEPW-OGE:CORNVIL4:CIMARON4
FDNS	00NR	0	20WP	G15_082	FROM->TO	G14-057T 345.00 - SUNNYSIDE 345KV CKT 1	717	789	0.07475	115.5008	BLANCHARD - CORNVILLE 138KV CKT 1
FDNS	00NR	0	20WP	G15_082	FROM->TO	G14-057T 345.00 - SUNNYSIDE 345KV CKT 1	717	789	0.07399	115.5004	CIVIT - STRATFORD 138KV CKT 1
FDNS	00NR	0	20WP	G15_082	FROM->TO	G14-057T 345.00 - SUNNYSIDE 345KV CKT 1	717	789	0.07416	115.4666	P12:138:AEPW:S.W.S.-4:L.E.S.-4
FDNS	00NR	0	20WP	G15_082	FROM->TO	G14-057T 345.00 - SUNNYSIDE 345KV CKT 1	717	789	0.07284	115.4522	LAYFLD8 500.00 - MOUNT OLIVE 500KV CKT 1
FDNS	00NR	0	20WP	G15_082	FROM->TO	G14-057T 345.00 - SUNNYSIDE 345KV CKT 1	717	789	0.07284	115.4522	LAYFLD8 500.00 - MOUNT OLIVE 500KV CKT 1
FDNS	00NR	0	16WP	G15_082	FROM->TO	G14-057T 345.00 - SUNNYSIDE 345KV CKT 1	717	789	0.07347	115.4517	GEN636641 1-LOUISA UNIT 1
FDNS	00NR	0	20WP	G15_082	FROM->TO	G14-057T 345.00 - SUNNYSIDE 345KV CKT 1	717	789	0.07323	115.4451	COMANCHE - EMPIRE 138KV CKT 1
FDNS	00NR	0	20WP	G15_082	FROM->TO	G14-057T 345.00 - SUNNYSIDE 345KV CKT 1	717	789	0.07489	115.4335	G1524G1525 345.00 - THISTLE7 345.00 345KV CKT 1
FDNS	00NR	0	20WP	G15_082	FROM->TO	G14-057T 345.00 - SUNNYSIDE 345KV CKT 1	717	789	0.07489	115.4335	G1524G1525 345.00 - THISTLE7 345.00 345KV CKT 2
FDNS	00NR	0	20WP	G15_082	FROM->TO	G14-057T 345.00 - SUNNYSIDE 345KV CKT 1	717	789	0.07286	115.4146	GEN334071 1-LEWIS CREEK 2
FDNS	00NR	0	20WP	G15_082	FROM->TO	G14-057T 345.00 - SUNNYSIDE 345KV CKT 1	717	789	0.07286	115.4062	GEN334070 1-LEWIS CREEK 1
FDNS	00NR	0	16WP	G15_082	FROM->TO	G14-057T 345.00 - SUNNYSIDE 345KV CKT 1	717	789	0.07347	115.4038	GEN600005 1-MONTICELLO
FDNS	00NR	0	20WP	G15_082	FROM->TO	G14-057T 345.00 - SUNNYSIDE 345KV CKT 1	717	789	0.07285	115.4005	P12:161:AEPW-SWPA:BEAVER5:EROGERS5
FDNS	00NR	0	20WP	G15_082	FROM->TO	G14-057T 345.00 - SUNNYSIDE 345KV CKT 1	717	789	0.07286	115.3977	GEN336251 1-NINEMILE POINT UNIT#4
FDNS	00NR	0	16WP	G15_082	FROM->TO	G14-057T 345.00 - SUNNYSIDE 345KV CKT 1	717	789	0.06952	115.3961	CHISHOLM7 345.00 (CHISHOLM) 345/230/13.2KV TRANSFORMER CKT 1
FDNS	00NR	0	20WP	G15_082	FROM->TO	G14-057T 345.00 - SUNNYSIDE 345KV CKT 1	717	789	0.07399	115.3823	OIL CENTER - STRATFORD 138KV CKT 1
FDNS	00NR	0	20WP	G15_082	FROM->TO	G14-057T 345.00 - SUNNYSIDE 345KV CKT 1	717	789	0.07286	115.3785	GEN509393 S1-ARSENAL HILL GENS #4 (STALL)
FDNS	00NR	0	20WP	G15_082	FROM->TO	G14-057T 345.00 - SUNNYSIDE 345KV CKT 1	717	789	0.07286	115.3743	GEN509392 G2-ARSENAL HILL GENS #3 (STALL)
FDNS	00NR	0	20WP	G15_082	FROM->TO	G14-057T 345.00 - SUNNYSIDE 345KV CKT 1	717	789	0.07286	115.3742	GEN509391 G1-ARSENAL HILL GENS #2 (STALL)
FDNS	00NR	0	16WP	G15_082	FROM->TO	G14-057T 345.00 - SUNNYSIDE 345KV CKT 1	717	789	0.07347	115.3733	GEN615002 2-COAL CREEK
FDNS	00NR	0	16WP	G15_082	FROM->TO	G14-057T 345.00 - SUNNYSIDE 345KV CKT 1	717	789	0.07347	115.3721	GEN562754 1-G15031_5 0.6900
FDNS	00NR	0	20WP	G15_082	FROM->TO	G14-057T 345.00 - SUNNYSIDE 345KV CKT 1	717	789	0.07286	115.3485	GEN334433 1-SABINE UNIT 3
FDNS	00NR	0	20WP	G15_082	FROM->TO	G14-057T 345.00 - SUNNYSIDE 345KV CKT 1	717	789	0.07286	115.3353	P12:161:AEPW:DYESS5:ELMSPRNG:TONTITN5
FDNS	00NR	0	20WP	G15_082	FROM->TO	G14-057T 345.00 - SUNNYSIDE 345KV CKT 1	717	789	0.0731	115.334	DUNCAN (DUNCAN) 138/69/13.8KV TRANSFORMER CKT 1
FDNS	00NR	0	20WP	G15_082	FROM->TO	G14-057T 345.00 - SUNNYSIDE 345KV CKT 1	717	789	0.0731	115.334	DUNCAN (DUNCAN) 138/69/13.8KV TRANSFORMER CKT 1
FDNS	00NR	0	20WP	G15_082	FROM->TO	G14-057T 345.00 - SUNNYSIDE 345KV CKT 1	717	789	0.07286	115.3327	GEN337653 1-WHITE BLUFF UNIT #2
FDNS	00NR	0	16WP	G15_082	FROM->TO	G14-057T 345.00 - SUNNYSIDE 345KV CKT 1	717	789	0.07347	115.3292	GEN635213 3-NEAL UNIT 3
FDNS	00NR	0	20WP	G15_082	FROM->TO	G14-057T 345.00 - SUNNYSIDE 345KV CKT 1	717	789	0.07286	115.3227	GEN336831 1-BAXTER WILSON SES
FDNS	00NR	0	16WP	G15_082	FROM->TO	G14-057T 345.00 - SUNNYSIDE 345KV CKT 1	717	789	0.07347	115.3127	GEN562756 1-G15031_7 0.6900
FDNS	00NR	0	20WP	G15_082	FROM->TO	G14-057T 345.00 - SUNNYSIDE 345KV CKT 1	717	789	0.08007	115.3021	FINNEY SWITCHING STATION - HOLCOMB 345KV CKT 1
FDNS	00NR	0	20WP	G15_082	FROM->TO	G14-057T 345.00 - SUNNYSIDE 345KV CKT 1	717	789	0.08007	115.3021	FINNEY SWITCHING STATION - HOLCOMB 345KV CKT 1
FDNS	00NR	0	16WP	G15_082	FROM->TO	G14-057T 345.00 - SUNNYSIDE 345KV CKT 1	717	789	0.07347	115.2952	GEN629074 1-ARNOLD LOWSIDE OF GSU XFMR
FDNS	00NR	0	20WP	G15_082	FROM->TO	G14-057T 345.00 - SUNNYSIDE 345KV CKT 1	717	789	0.07286	115.2917	GEN334030 1-FRONTIER UNIT 1
FDNS	00NR	0	20WP	G15_082	FROM->TO	G14-057T 345.00 - SUNNYSIDE 345KV CKT 1	717	789	0.07286	115.2893	GEN334031 1-FRONTIER UNIT 2
FDNS	00NR	0	20WP	G15_082	FROM->TO	G14-057T 345.00 - SUNNYSIDE 345KV CKT 1	717	789	0.07327	115.2859	TUTTLE - TUTTLE CONOCO TAP 138KV CKT 1
FDNS	00NR	0	20WP	G15_082	FROM->TO	G14-057T 345.00 - SUNNYSIDE 345KV CKT 1	717	789	0.07475	115.2848	BLANCHARD - MAUD 138KV CKT 1
FDNS	00NR	0	20WP	G15_082	FROM->TO	G14-057T 345.00 - SUNNYSIDE 345KV CKT 1	717	789	0.07291	115.2833	P12:138:AEPW:CATOOSA4:T.S.E.-4
FDNS	00NR	0	20WP	G15_082	FROM->TO	G14-057T 345.00 - SUNNYSIDE 345KV CKT 1	717	789	0.07339	115.2824	P12:138:AEPW:CORNVIL4:DUNCAN-4
FDNS	00NR	0	16WP	G15_082	FROM->TO	G14-057T 345.00 - SUNNYSIDE 345KV CKT 1	717	789	0.06952	115.2774	CHISHOLM7 345.00 - GRACEMONT 345KV CKT 1
FDNS	00NR	0	20WP	G15_082	FROM->TO	G14-057T 345.00 - SUNNYSIDE 345KV CKT 1	717	789	0.07286	115.2772	GEN337911 1-ARKANSAS NUCLEAR ONE UNIT #2
FDNS	00NR	0	16WP	G15_082	FROM->TO	G14-057T 345.00 - SUNNYSIDE 345KV CKT 1	717	789	0.07347	115.2749	BIG STONE 230/24.0KV TRANSFORMER CKT 1
FDNS	00NR	0	20WP	G15_082	FROM->TO	G14-057T 345.00 - SUNNYSIDE 345KV CKT 1	717	789	0.07286	115.274	GEN515040 1-SEMINOLE 1G
FDNS	00NR	0	16WP	G15_082	FROM->TO	G14-057T 345.00 - SUNNYSIDE 345KV CKT 1	717	789	0.07347	115.2709	GEN562556 1-G14_046_3 0.3420

SOLUTION	GROUP	SCENARIO	SEASON	SOURCE	DIRECTION	MONITORED ELEMENT	RATEA (MVA)	RATEB(MVA)	TDF	TC%LOADING (% MVA)	CONTINGENCY
FDNS	00NR	0	16WP	G15_082	FROM->TO	G14-057T 345.00 - SUNNYSIDE 345KV CKT 1	717	789	0.07347	115.2655	GEN562023 1-G11_020_3 0.6900
FDNS	00NR	0	16WP	G15_082	FROM->TO	G14-057T 345.00 - SUNNYSIDE 345KV CKT 1	717	789	0.07347	115.2655	GEN562026 1-G11_019_3 0.6900
FDNS	00NR	0	20WP	G15_082	FROM->TO	G14-057T 345.00 - SUNNYSIDE 345KV CKT 1	717	789	0.07365	115.2514	P12:138:AEPW-OGE:WTH_JCT4:JENSEN4
FDNS	00NR	0	20WP	G15_082	FROM->TO	G14-057T 345.00 - SUNNYSIDE 345KV CKT 1	717	789	0.06757	115.2503	G14_038T 345.00 - Hitchland Interchange 345KV CKT 1
FDNS	00NR	0	20WP	G15_082	FROM->TO	G14-057T 345.00 - SUNNYSIDE 345KV CKT 1	717	789	0.07297	115.242	FULTON 115 - HOPE 115KV CKT 1
FDNS	00NR	0	20WP	G15_082	FROM->TO	G14-057T 345.00 - SUNNYSIDE 345KV CKT 1	717	789	0.07297	115.242	FULTON 115 - HOPE 115KV CKT 1
FDNS	00NR	0	20WP	G15_082	FROM->TO	G14-057T 345.00 - SUNNYSIDE 345KV CKT 1	717	789	0.07286	115.2305	GEN501811 1-RODEMACHER UNIT 1
FDNS	00NR	0	20WP	G15_082	FROM->TO	G14-057T 345.00 - SUNNYSIDE 345KV CKT 1	717	789	0.07286	115.2296	GEN337652 1-WHITE BLUFF UNIT #1
FDNS	00NR	0	20WP	G15_082	FROM->TO	G14-057T 345.00 - SUNNYSIDE 345KV CKT 1	717	789	0.07286	115.229	GEN506752 1-LEBROCK GAS 1
FDNS	00NR	0	20WP	G15_082	FROM->TO	G14-057T 345.00 - SUNNYSIDE 345KV CKT 1	717	789	0.07286	115.2286	GEN506753 1-LEBROCK GAS 2
FDNS	00NR	0	20WP	G15_082	FROM->TO	G14-057T 345.00 - SUNNYSIDE 345KV CKT 1	717	789	0.07399	115.2094	LATTA JCT - OIL CENTER 138KV CKT 1
FDNS	00NR	0	20WP	G15_082	FROM->TO	G14-057T 345.00 - SUNNYSIDE 345KV CKT 1	717	789	0.07322	115.2041	P12:138:AEPW:CORNVIL4:S.W.S.-4
FDNS	00NR	0	20WP	G15_082	FROM->TO	G14-057T 345.00 - SUNNYSIDE 345KV CKT 1	717	789	0.07286	115.1973	GEN336191 1-LITTLE GYPSY UNIT#3
FDNS	00NR	0	20WP	G15_082	FROM->TO	G14-057T 345.00 - SUNNYSIDE 345KV CKT 1	717	789	0.07286	115.1932	GEN300015 1-1SGPDEL 18.000
FDNS	00NR	0	20WP	G15_082	FROM->TO	G14-057T 345.00 - SUNNYSIDE 345KV CKT 1	717	789	0.07327	115.1926	CIMARRON - TUTTLE CONOCO TAP 138KV CKT 1
FDNS	00NR	0	20WP	G15_082	FROM->TO	G14-057T 345.00 - SUNNYSIDE 345KV CKT 1	717	789	0.07286	115.1878	GEN515226 1-MUSKOGEE 6G
FDNS	00NR	0	16WP	G15_082	FROM->TO	G14-057T 345.00 - SUNNYSIDE 345KV CKT 1	717	789	0.07347	115.1828	GEN563142 1-G15079_3 0.5500
FDNS	00NR	0	16WP	G15_082	FROM->TO	G14-057T 345.00 - SUNNYSIDE 345KV CKT 1	717	789	0.07347	115.1828	GEN563151 1-G15080_2 0.5500
FDNS	00NR	0	20WP	G15_082	FROM->TO	G14-057T 345.00 - SUNNYSIDE 345KV CKT 1	717	789	0.07297	115.1756	6LAYFLD 230.00 - CARROLL 230KV CKT 1
FDNS	00NR	0	20WP	G15_082	FROM->TO	G14-057T 345.00 - SUNNYSIDE 345KV CKT 1	717	789	0.07286	115.1736	GEN300003 1-THOMAS HILL UNIT 3
FDNS	00NR	0	20WP	G15_082	FROM->TO	G14-057T 345.00 - SUNNYSIDE 345KV CKT 1	717	789	0.07286	115.1669	GEN335614 1-WILLOW GLENN UNIT#4
FDNS	00NR	0	20WP	G15_082	FROM->TO	G14-057T 345.00 - SUNNYSIDE 345KV CKT 1	717	789	0.07448	115.1655	BAILEY4 138.00 - SUNSHINE CANYON 138KV CKT 1
FDNS	00NR	0	20WP	G15_082	FROM->TO	G14-057T 345.00 - SUNNYSIDE 345KV CKT 1	717	789	0.07291	115.1654	8DANIEL8 500.00 - MCKNIGHT 500KV CKT 1
FDNS	00NR	0	20WP	G15_082	FROM->TO	G14-057T 345.00 - SUNNYSIDE 345KV CKT 1	717	789	0.0731	115.1613	P12:69:WFEC-AEPW:COMANCH2:DUNCAN-2
FDNS	00NR	0	20WP	G15_082	FROM->TO	G14-057T 345.00 - SUNNYSIDE 345KV CKT 1	717	789	0.07286	115.1564	P12:161:AEPW:EROGERS5:ECNTRTN5
FDNS	00NR	0	20WP	G15_082	FROM->TO	G14-057T 345.00 - SUNNYSIDE 345KV CKT 1	717	789	0.07331	115.1508	G15095_T 138.00 - ROSE_VALLEY 138.00 138KV CKT 1
FDNS	00NR	0	16WP	G15_082	FROM->TO	G14-057T 345.00 - SUNNYSIDE 345KV CKT 1	717	789	0.07347	115.1444	GEN523971 1-HARRINGTON GEN #1 24 KV
FDNS	00NR	0	16WP	G15_082	FROM->TO	G14-057T 345.00 - SUNNYSIDE 345KV CKT 1	717	789	0.07347	115.1444	GEN523973 1-HARRINGTON GEN #3 24 KV
FDNS	00NR	0	16WP	G15_082	FROM->TO	G14-057T 345.00 - SUNNYSIDE 345KV CKT 1	717	789	0.07347	115.1443	GEN523972 1-HARRINGTON GEN #2 24 KV
FDNS	00NR	0	20WP	G15_082	FROM->TO	G14-057T 345.00 - SUNNYSIDE 345KV CKT 1	717	789	0.07298	115.1412	P12:69:AEPW-OMPA:COMANC-2:OMWALTR2
FDNS	00NR	0	20WP	G15_082	FROM->TO	G14-057T 345.00 - SUNNYSIDE 345KV CKT 1	717	789	0.0733	115.1408	P12:138:AEPW:WTHWF4:CLINTJC4
FDNS	00NR	0	16WP	G15_082	FROM->TO	G14-057T 345.00 - SUNNYSIDE 345KV CKT 1	717	789	0.0696	115.1349	STLN-DEMARC6 - SWEETWATER 230KV CKT 1
FDNS	00NR	0	16WP	G15_082	FROM->TO	G14-057T 345.00 - SUNNYSIDE 345KV CKT 1	717	789	0.0696	115.134	P12:230:AEPW-SPS:SWEETWT6:WHEELER 6
FDNS	00NR	0	16WP	G15_082	FROM->TO	G14-057T 345.00 - SUNNYSIDE 345KV CKT 1	717	789	0.0696	115.1323	STATELINE INTERCHANGE - STLN-DEMARC6 230KV CKT 1
FDNS	00NR	0	20WP	G15_082	FROM->TO	G14-057T 345.00 - SUNNYSIDE 345KV CKT 1	717	789	0.07286	115.1294	GEN562783 1-G15036_4 0.6900
FDNS	00NR	0	20WP	G15_082	FROM->TO	G14-057T 345.00 - SUNNYSIDE 345KV CKT 1	717	789	0.07286	115.1294	GEN562784 1-G15036_5 0.6900
FDNS	00NR	0	20WP	G15_082	FROM->TO	G14-057T 345.00 - SUNNYSIDE 345KV CKT 1	717	789	0.0731	115.1293	DUNCAN - TOSCO 69KV CKT 1
FDNS	00NR	0	20WP	G15_082	FROM->TO	G14-057T 345.00 - SUNNYSIDE 345KV CKT 1	717	789	0.07286	115.1277	WHITE BLUFF 500/26.0KV TRANSFORMER CKT 1
FDNS	00NR	0	20WP	G15_082	FROM->TO	G14-057T 345.00 - SUNNYSIDE 345KV CKT 1	717	789	0.07334	115.1274	CIMARRON - CZECH HALL 138KV CKT 1
FDNS	00NR	0	20WP	G15_082	FROM->TO	G14-057T 345.00 - SUNNYSIDE 345KV CKT 1	717	789	0.07349	115.1256	CLEO CORNER - CLEOPLT4 138.00 138KV CKT 1
FDNS	00NR	0	20WP	G15_082	FROM->TO	G14-057T 345.00 - SUNNYSIDE 345KV CKT 1	717	789	0.07286	115.1211	GEN303007 1-1BC2 U2
FDNS	00NR	0	20WP	G15_082	FROM->TO	G14-057T 345.00 - SUNNYSIDE 345KV CKT 1	717	789	0.07286	115.1203	GEN337910 1-ARKANSAS NUCLEAR ONE UNIT #1
FDNS	00NR	0	20WP	G15_082	FROM->TO	G14-057T 345.00 - SUNNYSIDE 345KV CKT 1	717	789	0.07286	115.119	RODEMACHER 230/22.0KV TRANSFORMER CKT 1
FDNS	00NR	0	20WP	G15_082	FROM->TO	G14-057T 345.00 - SUNNYSIDE 345KV CKT 1	717	789	0.07479	115.1181	BUCKNER7 345.00 - SPEARVILLE 345KV CKT 1
FDNS	00NR	0	20WP	G15_082	FROM->TO	G14-057T 345.00 - SUNNYSIDE 345KV CKT 1	717	789	0.07479	115.1181	BUCKNER7 345.00 - SPEARVILLE 345KV CKT 1
FDNS	00NR	0	20WP	G15_082	FROM->TO	G14-057T 345.00 - SUNNYSIDE 345KV CKT 1	717	789	0.07286	115.1157	GEN336464 1-MICHOUD UNIT #3
FDNS	00NR	0	20WP	G15_082	FROM->TO	G14-057T 345.00 - SUNNYSIDE 345KV CKT 1	717	789	0.07286	115.1155	GEN303006 1-1BC2 U1
FDNS	00NR	0	20WP	G15_082	FROM->TO	G14-057T 345.00 - SUNNYSIDE 345KV CKT 1	717	789	0.07293	115.1153	BISMARK - HOT SPRINGS WEST BUS 115KV CKT 1
FDNS	00NR	0	20WP	G15_082	FROM->TO	G14-057T 345.00 - SUNNYSIDE 345KV CKT 1	717	789	0.07317	115.1147	G15088_T 345.00 - MOORE 345KV CKT 1
FDNS	00NR	0	20WP	G15_082	FROM->TO	G14-057T 345.00 - SUNNYSIDE 345KV CKT 1	717	789	0.07289	115.1126	MC NIEL 500/115KV TRANSFORMER CKT 1
FDNS	00NR	0	20WP	G15_082	FROM->TO	G14-057T 345.00 - SUNNYSIDE 345KV CKT 1	717	789	0.07349	115.1066	CLEOPLT4 138.00 - MEN TAP 138KV CKT 1
FDNS	00NR	0	20WP	G15_082	FROM->TO	G14-057T 345.00 - SUNNYSIDE 345KV CKT 1	717	789	0.0733	115.1058	P12:138:AEPW:WTHWF4:WTH_SE4
FDNS	00NR	0	20WP	G15_082	FROM->TO	G14-057T 345.00 - SUNNYSIDE 345KV CKT 1	717	789	0.07286	115.1058	HOT SPRINGS EHV - MAGNET COVE 500KV CKT 1
FDNS	00NR	0	20WP	G15_082	FROM->TO	G14-057T 345.00 - SUNNYSIDE 345KV CKT 1	717	789	0.07312	115.097	G15074_T 345.00 - HOYT 345KV CKT 1
FDNS	00NR	0	20WP	G15_082	FROM->TO	G14-057T 345.00 - SUNNYSIDE 345KV CKT 1	717	789	0.07349	115.0953	IMO TAP - MEN TAP 138KV CKT 1
FDNS	00NR	0	20WP	G15_082	FROM->TO	G14-057T 345.00 - SUNNYSIDE 345KV CKT 1	717	789	0.07286	115.0925	GEN515225 1-MUSKOGEE 5G
FDNS	00NR	0	20WP	G15_082	FROM->TO	G14-057T 345.00 - SUNNYSIDE 345KV CKT 1	717	789	0.07286	115.0924	GEN515223 1-MUSKOGEE 4G
FDNS	00NR	0	16WP	G15_082	FROM->TO	G14-057T 345.00 - SUNNYSIDE 345KV CKT 1	717	789	0.07347	115.0882	GEN600000 1-SHERBURNECNTY G1
FDNS	00NR	0	20WP	G15_082	FROM->TO	G14-057T 345.00 - SUNNYSIDE 345KV CKT 1	717	789	0.07334	115.0755	CIMARRON - SARA 138KV CKT 1
FDNS	00NR	0	20WP	G15_082	FROM->TO	G14-057T 345.00 - SUNNYSIDE 345KV CKT 1	717	789	0.07331	115.0721	NOEL_SW 138.00 - ROSE_VALLEY 138.00 138KV CKT 1
FDNS	00NR	0	20WP	G15_082	FROM->TO	G14-057T 345.00 - SUNNYSIDE 345KV CKT 1	717	789	0.07344	115.0702	ELK CITY 230KV (ELKCTY-6) 230/138/13.8KV TRANSFORMER CKT 1
FDNS	00NR	0	20WP	G15_082	FROM->TO	G14-057T 345.00 - SUNNYSIDE 345KV CKT 1	717	789	0.07344	115.0702	ELK CITY 230KV (ELKCTY-6) 230/138/13.8KV TRANSFORMER CKT 1
FDNS	00NR	0	20WP	G15_082	FROM->TO	G14-057T 345.00 - SUNNYSIDE 345KV CKT 1	717	789	0.07286	115.0661	GEN300010 1-ST FRANCIS UNIT 1
FDNS	00NR	0	20WP	G15_082	FROM->TO	G14-057T 345.00 - SUNNYSIDE 345KV CKT 1	717	789	0.0731	115.0658	COMANCHE TAP - TOSCO 69KV CKT 1
FDNS	00NR	0	20WP	G15_082	FROM->TO	G14-057T 345.00 - SUNNYSIDE 345KV CKT 1	717	789	0.07344	115.0621	CHISHOLM6 230.00 - ELK CITY 230KV 230KV CKT 1
FDNS	00NR	0	20WP	G15_082	FROM->TO	G14-057T 345.00 - SUNNYSIDE 345KV CKT 1	717	789	0.07293	115.0607	ALPINE AECC - BISMARK 115KV CKT 1
FDNS	00NR	0	20WP	G15_082	FROM->TO	G14-057T 345.00 - SUNNYSIDE 345KV CKT 1	717	789	0.07286	115.0588	GEN337041 1-GERALD ANDRUS
FDNS	00NR	0	20WP	G15_082	FROM->TO	G14-057T 345.00 - SUNNYSIDE 345KV CKT 1	717	789	0.07195	115.0567	SEMINOLE - VANOSTP4 138.00 138KV CKT 1
FDNS	00NR	0	20WP	G15_082	FROM->TO	G14-057T 345.00 - SUNNYSIDE 345KV CKT 1	717	789	0.07289	115.0556	P12:138:AEPW:N.E.S.-4:CATOOSA4
FDNS	00NR	0	20WP	G15_082	FROM->TO	G14-057T 345.00 - SUNNYSIDE 345KV CKT 1	717	789	0.07286	115.0535	GEN303008 1-1BC2 U3
FDNS	00NR	0	20WP	G15_082	FROM->TO	G14-057T 345.00 - SUNNYSIDE 345KV CKT 1	717	789	0.07334	115.0498	CZECH HALL - XEROX 138KV CKT 1
FDNS	00NR	0	20WP	G15_082	FROM->TO	G14-057T 345.00 - SUNNYSIDE 345KV CKT 1	717	789	0.07334	115.0457	MORGAN - XEROX 138KV CKT 1
FDNS	00NR	0	20WP	G15_082	FROM->TO	G14-057T 345.00 - SUNNYSIDE 345KV CKT 1	717	789	0.07286	115.0394	GEN505432 1-SIKESTON
FDNS	00NR	0	20WP	G15_082	FROM->TO	G14-057T 345.00 - SUNNYSIDE 345KV CKT 1	717	789	0.07208	115.0384	ARBWIND4 138.00 - CARTER 138KV CKT 1
FDNS	00NR	0	20WP	G15_082	FROM->TO	G14-057T 345.00 - SUNNYSIDE 345KV CKT 1	717	789	0.07286	115.0376	NELSON 230/20.0KV TRANSFORMER CKT 1
FDNS	00NR	0	16WP	G15_082	FROM->TO	G14-057T 345.00 - SUNNYSIDE 345KV CKT 1	717	789	0.07347	115.0284	GEN511848 1-SOUTHWESTERN STATION #3
FDNS	00NR	0	20WP	G15_082	FROM->TO	G14-057T 345.00 - SUNNYSIDE 345KV CKT 1	717	789	0.07938	115.0283	G15093_T 345.00 - LAWTON EASTSIDE 345KV CKT 1
FDNS	00NR	0	20WP	G15_082	FROM->TO	G14-057T 345.00 - SUNNYSIDE 345KV CKT 1	717	789	0.08007	115.0275	FINNEY SWITCHING STATION - WALKTAP7 345.00 345KV CKT 1
FDNS	00NR	0	20WP	G15_082	FROM->TO	G14-057T 345.00 - SUNNYSIDE 345KV CKT 1	717	789	0.08007	115.0275	FINNEY SWITCHING STATION - WALKTAP7 345.00 345KV CKT 1

SOLUTION	GROUP	SCENARIO	SEASON	SOURCE	DIRECTION	MONITORED ELEMENT	RATEA (MVA)	RATEB(MVA)	TDF	TC%LOADING (% MVA)	CONTINGENCY
FDNS	00NR	0	20WP	G15_082	FROM->TO	G14-057T 345.00 - SUNNYSIDE 345KV CKT 1	717	789	0.07286	115.0246	GEN336170 1-GULF OXY U4
FDNS	00NR	0	20WP	G15_082	FROM->TO	G14-057T 345.00 - SUNNYSIDE 345KV CKT 1	717	789	0.07334	115.023	MORGAN - MUSTANG 138KV CKT 1
FDNS	00NR	0	16WP	G15_082	FROM->TO	G14-057T 345.00 - SUNNYSIDE 345KV CKT 1	717	789	0.07366	115.0193	NORTHWEST TEXARKANA - VALLIANT 345KV CKT 1
FDNS	00NR	0	16WP	G15_082	FROM->TO	G14-057T 345.00 - SUNNYSIDE 345KV CKT 1	717	789	0.07366	115.0193	NORTHWEST TEXARKANA - VALLIANT 345KV CKT 1
FDNS	00NR	0	20WP	G15_082	FROM->TO	G14-057T 345.00 - SUNNYSIDE 345KV CKT 1	717	789	0.0736	115.0173	WEATHERFORD JCT. - WEATHERFORD SOUTHEAST 138KV CKT 1
FDNS	00NR	0	20WP	G15_082	FROM->TO	G14-057T 345.00 - SUNNYSIDE 345KV CKT 1	717	789	0.0736	115.0173	WEATHERFORD JCT. - WEATHERFORD SOUTHEAST 138KV CKT 1
FDNS	00NR	0	20WP	G15_082	FROM->TO	G14-057T 345.00 - SUNNYSIDE 345KV CKT 1	717	789	0.07305	115.0149	LAWTON EASTSIDE (LES 4) 345/138/13.8KV TRANSFORMER CKT 1
FDNS	00NR	0	20WP	G15_082	FROM->TO	G14-057T 345.00 - SUNNYSIDE 345KV CKT 1	717	789	0.07305	115.0149	LAWTON EASTSIDE (LES 4) 345/138/13.8KV TRANSFORMER CKT 1
FDNS	00NR	0	20WP	G15_082	FROM->TO	G14-057T 345.00 - SUNNYSIDE 345KV CKT 1	717	789	0.07293	115.0144	ALPINE AECC - AMITY SS 115KV CKT 1
FDNS	00NR	0	20WP	G15_082	FROM->TO	G14-057T 345.00 - SUNNYSIDE 345KV CKT 1	717	789	0.0731	115.0113	COMANCHE - COMANCHE TAP 69KV CKT 1
FDNS	00NR	0	20WP	G15_082	FROM->TO	G14-057T 345.00 - SUNNYSIDE 345KV CKT 1	717	789	0.07286	115.0087	GEN300011 1-ST FRANCIS UNIT 2
FDNS	00NR	0	20WP	G15_082	FROM->TO	G14-057T 345.00 - SUNNYSIDE 345KV CKT 1	717	789	0.07286	115.004	GEN336801 1-BAXTER WILSON UNIT #1
FDNS	00NR	0	16WP	G15_082	FROM->TO	G14-057T 345.00 - SUNNYSIDE 345KV CKT 1	717	789	0.07347	115.0013	GEN600001 2-SHERBURNE CNTY G2
FDNS	00NR	0	20WP	G15_082	FROM->TO	G14-057T 345.00 - SUNNYSIDE 345KV CKT 1	717	789	0.07286	114.9981	8CAJUN2 500/24.0KV TRANSFORMER CKT 1
FDNS	00NR	0	20WP	G15_082	FROM->TO	G14-057T 345.00 - SUNNYSIDE 345KV CKT 1	717	789	0.07448	114.9877	BAILEY4 138.00 - WESTMOORE 138KV CKT 1
FDNS	00NR	0	20WP	G15_082	FROM->TO	G14-057T 345.00 - SUNNYSIDE 345KV CKT 1	717	789	0.07327	114.9835	ANADARKO - SEQUOYAHJ4 138.00 138KV CKT 1
FDNS	00NR	0	20WP	G15_082	FROM->TO	G14-057T 345.00 - SUNNYSIDE 345KV CKT 1	717	789	0.07327	114.9819	CORN TAP - SEQUOYAHJ4 138.00 138KV CKT 1
FDNS	00NR	0	20WP	G15_082	FROM->TO	G14-057T 345.00 - SUNNYSIDE 345KV CKT 1	717	789	0.07361	114.9817	P12:138:OKGE-AEPW:JENSEN4:REDROCKRD4
FDNS	00NR	0	20WP	G15_082	FROM->TO	G14-057T 345.00 - SUNNYSIDE 345KV CKT 1	717	789	0.07286	114.9758	GEN501910 1-ACADIA UNIT ST1
FDNS	00NR	0	16WP	G15_082	FROM->TO	G14-057T 345.00 - SUNNYSIDE 345KV CKT 1	717	789	0.07347	114.9717	GEN563042 1-G15068_3 0.6900
FDNS	00NR	0	20WP	G15_082	FROM->TO	G14-057T 345.00 - SUNNYSIDE 345KV CKT 1	717	789	0.07315	114.9672	WALTERS - WALTERS 69KV CKT 1
FDNS	00NR	0	20WP	G15_082	FROM->TO	G14-057T 345.00 - SUNNYSIDE 345KV CKT 1	717	789	0.07334	114.9652	SARA - STHLAKE4 138.00 138KV CKT 1
FDNS	00NR	0	20WP	G15_082	FROM->TO	G14-057T 345.00 - SUNNYSIDE 345KV CKT 1	717	789	0.07283	114.9609	ETTA (DUKE HOTSPRINGS) - MC NIEL 500KV CKT 1
FDNS	00NR	0	20WP	G15_082	FROM->TO	G14-057T 345.00 - SUNNYSIDE 345KV CKT 1	717	789	0.07287	114.9604	P12:138:AEPW:R.S.S.-4:S.HUD.-4
FDNS	00NR	0	20WP	G15_082	FROM->TO	G14-057T 345.00 - SUNNYSIDE 345KV CKT 1	717	789	0.0736	114.9569	P12:138:AEPW:REDROCKRD4:WTH_JCT4
FDNS	00NR	0	16WP	G15_082	FROM->TO	G14-057T 345.00 - SUNNYSIDE 345KV CKT 1	717	789	0.07347	114.9536	GEN527901 1-HOBBS PLANT #1 (CT)
FDNS	00NR	0	16WP	G15_082	FROM->TO	G14-057T 345.00 - SUNNYSIDE 345KV CKT 1	717	789	0.07347	114.9536	GEN527902 1-HOBBS PLANT #2 (CT)
FDNS	00NR	0	20WP	G15_082	FROM->TO	G14-057T 345.00 - SUNNYSIDE 345KV CKT 1	717	789	0.07286	114.9523	SABINE 230/24.0KV TRANSFORMER CKT 1
FDNS	00NR	0	20WP	G15_082	FROM->TO	G14-057T 345.00 - SUNNYSIDE 345KV CKT 1	717	789	0.07298	114.9383	LAWTON RELIFT TAP - OMPA-WALTERS 69KV CKT 1
FDNS	00NR	0	20WP	G15_082	FROM->TO	G14-057T 345.00 - SUNNYSIDE 345KV CKT 1	717	789	0.07334	114.935	MCCLAIN - STHLAKE4 138.00 138KV CKT 1
FDNS	00NR	0	20WP	G15_082	FROM->TO	G14-057T 345.00 - SUNNYSIDE 345KV CKT 1	717	789	0.07286	114.9286	P12:69:AEPW:NROGERS2:ECNTRTN2
FDNS	00NR	0	20WP	G15_082	FROM->TO	G14-057T 345.00 - SUNNYSIDE 345KV CKT 1	717	789	0.07286	114.9207	GEN336222 1-LITTLE GYPSY UNIT#2
FDNS	00NR	0	20WP	G15_082	FROM->TO	G14-057T 345.00 - SUNNYSIDE 345KV CKT 1	717	789	0.07325	114.9205	NORGE ROAD - SOUTHWESTERN STATION 138KV CKT 1
FDNS	00NR	0	20WP	G15_082	FROM->TO	G14-057T 345.00 - SUNNYSIDE 345KV CKT 1	717	789	0.07325	114.9205	NORGE ROAD - SOUTHWESTERN STATION 138KV CKT 1
FDNS	00NR	0	20WP	G15_082	FROM->TO	G14-057T 345.00 - SUNNYSIDE 345KV CKT 1	717	789	0.07286	114.9191	GEN300016 1-1G1GPDEL 18.000
FDNS	00NR	0	20WP	G15_082	FROM->TO	G14-057T 345.00 - SUNNYSIDE 345KV CKT 1	717	789	0.07286	114.9184	P12:138:AEPW:BA_71ST4:T.S.E.-4
FDNS	00NR	0	20WP	G15_082	FROM->TO	G14-057T 345.00 - SUNNYSIDE 345KV CKT 1	717	789	0.07399	114.9158	LASALLE - LATTA JCT 138KV CKT 1
FDNS	00NR	0	20WP	G15_082	FROM->TO	G14-057T 345.00 - SUNNYSIDE 345KV CKT 1	717	789	0.07286	114.9137	P12:138:AEPW:YARCH-S4:T.S.E.-4
FDNS	00NR	0	20WP	G15_082	FROM->TO	G14-057T 345.00 - SUNNYSIDE 345KV CKT 1	717	789	0.07292	114.9133	MORISNT4 138.00 - STILLWATER 138KV CKT 1
FDNS	00NR	0	20WP	G15_082	FROM->TO	G14-057T 345.00 - SUNNYSIDE 345KV CKT 1	717	789	0.07297	114.9129	P12:138:AEPW-OGE:SHIDLER4:OSAGE 4
FDNS	00NR	0	20WP	G15_082	FROM->TO	G14-057T 345.00 - SUNNYSIDE 345KV CKT 1	717	789	0.07294	114.9077	P12:138:OKGE:3TERM2
FDNSLock	00NR	0	16WP	G15_082	FROM->TO	G14-057T 345.00 - SUNNYSIDE 345KV CKT 1	717	789	0.07347	114.9035	GEN629075 1-OTTUMWA GENERATOR FOR OTTUMWA UNIT NO 1
FDNS	00NR	0	20WP	G15_082	FROM->TO	G14-057T 345.00 - SUNNYSIDE 345KV CKT 1	717	789	0.07326	114.9024	BLACKBERRY - NEOSHO 345KV CKT 1
FDNS	00NR	0	20WP	G15_082	FROM->TO	G14-057T 345.00 - SUNNYSIDE 345KV CKT 1	717	789	0.07313	114.9015	HOYT - STRANGER CREEK 345KV CKT 1
FDNS	00NR	0	20WP	G15_082	FROM->TO	G14-057T 345.00 - SUNNYSIDE 345KV CKT 1	717	789	0.07407	114.8974	G13-010T 345.00 - POST ROCK 345KV CKT 1
FDNS	00NR	0	20WP	G15_082	FROM->TO	G14-057T 345.00 - SUNNYSIDE 345KV CKT 1	717	789	0.07286	114.8903	FRONTIER 345/18.0KV TRANSFORMER CKT 1
FDNS	00NR	0	20WP	G15_082	FROM->TO	G14-057T 345.00 - SUNNYSIDE 345KV CKT 1	717	789	0.07346	114.8895	CLINTON JUNCTION - ELK CITY 138KV CKT 1
FDNS	00NR	0	20WP	G15_082	FROM->TO	G14-057T 345.00 - SUNNYSIDE 345KV CKT 1	717	789	0.07346	114.8895	CLINTON JUNCTION - ELK CITY 138KV CKT 1
FDNS	00NR	0	20WP	G15_082	FROM->TO	G14-057T 345.00 - SUNNYSIDE 345KV CKT 1	717	789	0.07441	114.8883	BENTON - WICHITA 345KV CKT 1
FDNS	00NR	0	20WP	G15_082	FROM->TO	G14-057T 345.00 - SUNNYSIDE 345KV CKT 1	717	789	0.07286	114.888	FRONTIER 345/18.0KV TRANSFORMER CKT 1
FDNS	00NR	0	20WP	G15_082	FROM->TO	G14-057T 345.00 - SUNNYSIDE 345KV CKT 1	717	789	0.07286	114.885	GEN336152 1-WATERFORD UNIT#2
FDNS	00NR	0	20WP	G15_082	FROM->TO	G14-057T 345.00 - SUNNYSIDE 345KV CKT 1	717	789	0.07286	114.8842	GEN336151 1-WATERFORD UNIT#1
FDNS	00NR	0	20WP	G15_082	FROM->TO	G14-057T 345.00 - SUNNYSIDE 345KV CKT 1	717	789	0.07281	114.8796	7JASPER 345.00 - BLACKBERRY 345KV CKT 1
FDNS	00NR	0	20WP	G15_082	FROM->TO	G14-057T 345.00 - SUNNYSIDE 345KV CKT 1	717	789	0.07297	114.8711	HOPE - MCNAB REC 115KV CKT 1
FDNS	00NR	0	20WP	G15_082	FROM->TO	G14-057T 345.00 - SUNNYSIDE 345KV CKT 1	717	789	0.07298	114.8696	OMPA-WALTERS - WALTERS 69KV CKT 1
FDNS	00NR	0	20WP	G15_082	FROM->TO	G14-057T 345.00 - SUNNYSIDE 345KV CKT 1	717	789	0.07298	114.8696	OMPA-WALTERS - WALTERS 69KV CKT 1
FDNS	00NR	0	20WP	G15_082	FROM->TO	G14-057T 345.00 - SUNNYSIDE 345KV CKT 1	717	789	0.0733	114.8686	WEATHERFORD TAP - WEATHERFORD WIND FARM 138KV CKT 1
FDNS	00NR	0	20WP	G15_082	FROM->TO	G14-057T 345.00 - SUNNYSIDE 345KV CKT 1	717	789	0.07287	114.8647	CYPRESS - HARTBURG 500KV CKT 1
FDNS	00NR	0	20WP	G15_082	FROM->TO	G14-057T 345.00 - SUNNYSIDE 345KV CKT 1	717	789	0.07292	114.8627	COUCH SES - MC NIEL 115KV CKT 1
FDNS	00NR	0	20WP	G15_082	FROM->TO	G14-057T 345.00 - SUNNYSIDE 345KV CKT 1	717	789	0.0736	114.8623	HINTON - WEATHERFORD JCT. 138KV CKT 1
FDNS	00NR	0	20WP	G15_082	FROM->TO	G14-057T 345.00 - SUNNYSIDE 345KV CKT 1	717	789	0.07312	114.8621	G15074_T 345.00 - JEFFREY ENERGY CENTER 345KV CKT 1
FDNS	00NR	0	20WP	G15_082	FROM->TO	G14-057T 345.00 - SUNNYSIDE 345KV CKT 1	717	789	0.07286	114.8615	GEN300017 1-1G2GPDEL 18.000
FDNS	00NR	0	20WP	G15_082	FROM->TO	G14-057T 345.00 - SUNNYSIDE 345KV CKT 1	717	789	0.07297	114.8595	P12:115:AEPW:TURK3:HOPE3
FDNS	00NR	0	20WP	G15_082	FROM->TO	G14-057T 345.00 - SUNNYSIDE 345KV CKT 1	717	789	0.07286	114.859	LEWIS CREEK SWITCHYARD 138/22.0KV TRANSFORMER CKT 1
FDNS	00NR	0	20WP	G15_082	FROM->TO	G14-057T 345.00 - SUNNYSIDE 345KV CKT 1	717	789	0.07286	114.8545	LEWIS CREEK SWITCHYARD 138/22.0KV TRANSFORMER CKT 1
FDNS	00NR	0	20WP	G15_082	FROM->TO	G14-057T 345.00 - SUNNYSIDE 345KV CKT 1	717	789	0.07407	114.8541	G13-010T 345.00 - SPEARVILLE 345KV CKT 1
FDNS	00NR	0	20WP	G15_082	FROM->TO	G14-057T 345.00 - SUNNYSIDE 345KV CKT 1	717	789	0.07286	114.8507	GEN334432 1-SABINE UNIT 2
FDNS	00NR	0	20WP	G15_082	FROM->TO	G14-057T 345.00 - SUNNYSIDE 345KV CKT 1	717	789	0.07286	114.8504	GEN334431 1-SABINE UNIT 1
FDNS	00NR	0	20WP	G15_082	FROM->TO	G14-057T 345.00 - SUNNYSIDE 345KV CKT 1	717	789	0.07315	114.8468	P12:69:WFEC-AEPW:COMANCH2:WALTRS-2
FDNS	00NR	0	20WP	G15_082	FROM->TO	G14-057T 345.00 - SUNNYSIDE 345KV CKT 1	717	789	0.073	114.8467	7LUTESVIL 345.00 - 7ST FRANC 345.00 345KV CKT 1
FDNS	00NR	0	20WP	G15_082	FROM->TO	G14-057T 345.00 - SUNNYSIDE 345KV CKT 1	717	789	0.07322	114.8462	SOUTHWESTERN STATION - VERDEN 138KV CKT 1
FDNS	00NR	0	20WP	G15_082	FROM->TO	G14-057T 345.00 - SUNNYSIDE 345KV CKT 1	717	789	0.07286	114.8461	GEN501823 1-TECHE UNIT 3
FDNS	00NR	0	20WP	G15_082	FROM->TO	G14-057T 345.00 - SUNNYSIDE 345KV CKT 1	717	789	0.07286	114.844	GEN501970 1-EVANGELINE UNIT 7
FDNS	00NR	0	20WP	G15_082	FROM->TO	G14-057T 345.00 - SUNNYSIDE 345KV CKT 1	717	789	0.07324	114.8434	SWISSVALE - WEST GARDNER 345KV CKT 1
FDNS	00NR	0	20WP	G15_082	FROM->TO	G14-057T 345.00 - SUNNYSIDE 345KV CKT 1	717	789	0.07286	114.8414	P12:161:AEPW:CHAMSPR5:FARMING5
FDNS	00NR	0	20WP	G15_082	FROM->TO	G14-057T 345.00 - SUNNYSIDE 345KV CKT 1	717	789	0.07327	114.8411	EMPORIA ENERGY CENTER - G14_001T 345.00 345KV CKT 1
FDNS	00NR	0	20WP	G15_082	FROM->TO	G14-057T 345.00 - SUNNYSIDE 345KV CKT 1	717	789	0.07398	114.8407	CANADIAN - NOBLE 138KV CKT 1
FDNS	00NR	0	20WP	G15_082	FROM->TO	G14-057T 345.00 - SUNNYSIDE 345KV CKT 1	717	789	0.07286	114.8378	GEN505616 1-BROKEN BOW
FDNS	00NR	0	20WP	G15_082	FROM->TO	G14-057T 345.00 - SUNNYSIDE 345KV CKT 1	717	789	0.07297	114.835	TURK (TURK 1) 138/115/13.2KV TRANSFORMER CKT 1

SOLUTION	GROUP	SCENARIO	SEASON	SOURCE	DIRECTION	MONITORED ELEMENT	RATEA (MVA)	RATEB(MVA)	TDF	TC%LOADING (% MVA)	CONTINGENCY
FDNS	00NR	0	20WP	G15_082	FROM->TO	G14-057T 345.00 - SUNNYSIDE 345KV CKT 1	717	789	0.07297	114.835	TURK (TURK 1) 138/115/13.2KV TRANSFORMER CKT 1
FDNS	00NR	0	20WP	G15_082	FROM->TO	G14-057T 345.00 - SUNNYSIDE 345KV CKT 1	717	789	0.07297	114.8349	MCNAB REC - Turk 115 115KV CKT 1
FDNS	00NR	0	20WP	G15_082	FROM->TO	G14-057T 345.00 - SUNNYSIDE 345KV CKT 1	717	789	0.07322	114.8242	NORTH 29TH CHICKASHA - VERDEN 138KV CKT 1
FDNS	00NR	0	20WP	G15_082	FROM->TO	G14-057T 345.00 - SUNNYSIDE 345KV CKT 1	717	789	0.07286	114.8227	GEN334392 1-EXXON MOBIL IPP 1
FDNS	00NR	0	20WP	G15_082	FROM->TO	G14-057T 345.00 - SUNNYSIDE 345KV CKT 1	717	789	0.07448	114.8226	FRANKLIN SW - WESTMOORE 138KV CKT 1
FDNS	00NR	0	20WP	G15_082	FROM->TO	G14-057T 345.00 - SUNNYSIDE 345KV CKT 1	717	789	0.07401	114.8168	P12:138:OKGE:3TERM27
FDNS	00NR	0	20WP	G15_082	FROM->TO	G14-057T 345.00 - SUNNYSIDE 345KV CKT 1	717	789	0.07286	114.8153	GEN334393 1-EXXON MOBIL IPP 2
FDNS	00NR	0	20WP	G15_082	FROM->TO	G14-057T 345.00 - SUNNYSIDE 345KV CKT 1	717	789	0.07286	114.8153	GEN334394 1-EXXON MOBIL IPP 3
FDNS	00NR	0	20WP	G15_082	FROM->TO	G14-057T 345.00 - SUNNYSIDE 345KV CKT 1	717	789	0.07516	114.812	DRAPER LAKE - SEMINOLE 345KV CKT 1
FDNS	00NR	0	20WP	G15_082	FROM->TO	G14-057T 345.00 - SUNNYSIDE 345KV CKT 1	717	789	0.07516	114.812	DRAPER LAKE - SEMINOLE 345KV CKT 2
FDNS	00NR	0	20WP	G15_082	FROM->TO	G14-057T 345.00 - SUNNYSIDE 345KV CKT 1	717	789	0.07294	114.8108	FLETCHER - MARLOW JCT 69KV CKT 1
FDNS	00NR	0	20WP	G15_082	FROM->TO	G14-057T 345.00 - SUNNYSIDE 345KV CKT 1	717	789	0.07286	114.8004	ST FRANCIS - ST FRANCIS 1 161KV CKT Z1
FDNS	00NR	0	20WP	G15_082	FROM->TO	G14-057T 345.00 - SUNNYSIDE 345KV CKT 1	717	789	0.07268	114.7984	ENOWILT - LONE OAK 138KV CKT 1
FDNS	00NR	0	20WP	G15_082	FROM->TO	G14-057T 345.00 - SUNNYSIDE 345KV CKT 1	717	789	0.07313	114.7972	EMPORIA ENERGY CENTER - SWISSVALE 345KV CKT 1
FDNS	00NR	0	20WP	G15_082	FROM->TO	G14-057T 345.00 - SUNNYSIDE 345KV CKT 1	717	789	0.07286	114.7944	SABINE 230/22.0KV TRANSFORMER CKT 1
FDNS	00NR	0	20WP	G15_082	FROM->TO	G14-057T 345.00 - SUNNYSIDE 345KV CKT 1	717	789	0.07287	114.7916	P12:138:AEPW:R.S.S-4:T.P.S.-4
FDNS	00NR	0	20WP	G15_082	FROM->TO	G14-057T 345.00 - SUNNYSIDE 345KV CKT 1	717	789	0.07268	114.7896	ENOWILT - SARDIS 138KV CKT 1
FDNS	00NR	0	20WP	G15_082	FROM->TO	G14-057T 345.00 - SUNNYSIDE 345KV CKT 1	717	789	0.0736	114.7879	HINTON - REDROCKRD4 138.00 138KV CKT 1
FDNS	00NR	0	20WP	G15_082	FROM->TO	G14-057T 345.00 - SUNNYSIDE 345KV CKT 1	717	789	0.07292	114.7853	P12:138:OKGE:3TERM12
FDNS	00NR	0	20WP	G15_082	FROM->TO	G14-057T 345.00 - SUNNYSIDE 345KV CKT 1	717	789	0.07286	114.7846	GEN501971 1-EVANGELINE UNIT 7-1
FDNS	00NR	0	20WP	G15_082	FROM->TO	G14-057T 345.00 - SUNNYSIDE 345KV CKT 1	717	789	0.07286	114.7846	GEN501972 1-EVANGELINE UNIT 7-2
FDNS	00NR	0	20WP	G15_082	FROM->TO	G14-057T 345.00 - SUNNYSIDE 345KV CKT 1	717	789	0.07298	114.7841	LAKEOVER - MCADAMS 500KV CKT 1
FDNS	00NR	0	20WP	G15_082	FROM->TO	G14-057T 345.00 - SUNNYSIDE 345KV CKT 1	717	789	0.07325	114.7808	CORNVILLE - NORGE ROAD 138KV CKT 1
FDNS	00NR	0	20WP	G15_082	FROM->TO	G14-057T 345.00 - SUNNYSIDE 345KV CKT 1	717	789	0.07325	114.7808	CORNVILLE - NORGE ROAD 138KV CKT 1
FDNS	00NR	0	20WP	G15_082	FROM->TO	G14-057T 345.00 - SUNNYSIDE 345KV CKT 1	717	789	0.07399	114.7777	LASALLE - STONEWAL LH138.00 138KV CKT 1
FDNS	00NR	0	20WP	G15_082	FROM->TO	G14-057T 345.00 - SUNNYSIDE 345KV CKT 1	717	789	0.07297	114.7759	FRANKLIN - FRANKLIN SW 138KV CKT 1
FDNS	00NR	0	20WP	G15_082	FROM->TO	G14-057T 345.00 - SUNNYSIDE 345KV CKT 1	717	789	0.07303	114.7757	8WNEWMADRID 500.00 - DELL 500 500KV CKT 1
FDNS	00NR	0	20WP	G15_082	FROM->TO	G14-057T 345.00 - SUNNYSIDE 345KV CKT 1	717	789	0.0733	114.7745	WEATHERFORD SOUTHEAST - WEATHERFORD TAP 138KV CKT 1
FDNS	00NR	0	20WP	G15_082	FROM->TO	G14-057T 345.00 - SUNNYSIDE 345KV CKT 1	717	789	0.07282	114.7705	P12:138:WFEC-AEPW:ELKCTY-4:ERICK4
FDNS	00NR	0	20WP	G15_082	FROM->TO	G14-057T 345.00 - SUNNYSIDE 345KV CKT 1	717	789	0.07327	114.77	G14_001T 345.00 - WICHITA 345KV CKT 1
FDNS	00NR	0	20WP	G15_082	FROM->TO	G14-057T 345.00 - SUNNYSIDE 345KV CKT 1	717	789	0.07286	114.7655	P12:138:AEPW:R.S.S.-4:R:96YALE-4
FDNS	00NR	0	20WP	G15_082	FROM->TO	G14-057T 345.00 - SUNNYSIDE 345KV CKT 1	717	789	0.07399	114.7626	STONEWAL LH138.00 - TUPELO TAP 138KV CKT 1
FDNS	00NR	0	20WP	G15_082	FROM->TO	G14-057T 345.00 - SUNNYSIDE 345KV CKT 1	717	789	0.07286	114.762	GEN501912 1-ACADIA UNIT CT1B
FDNS	00NR	0	20WP	G15_082	FROM->TO	G14-057T 345.00 - SUNNYSIDE 345KV CKT 1	717	789	0.07286	114.7613	GEN501911 1-ACADIA UNIT CT1A
FDNS	00NR	0	20WP	G15_082	FROM->TO	G14-057T 345.00 - SUNNYSIDE 345KV CKT 1	717	789	0.07339	114.7606	DUNCAN - DUNCHERTP4 138.00 138KV CKT 1
FDNS	00NR	0	20WP	G15_082	FROM->TO	G14-057T 345.00 - SUNNYSIDE 345KV CKT 1	717	789	0.07339	114.7606	DUNCAN - DUNCHERTP4 138.00 138KV CKT 1
FDNS	00NR	0	20WP	G15_082	FROM->TO	G14-057T 345.00 - SUNNYSIDE 345KV CKT 1	717	789	0.07339	114.7598	DUNCAN EASTSIDE - DUNCHERTP4 138.00 138KV CKT 1
FDNS	00NR	0	20WP	G15_082	FROM->TO	G14-057T 345.00 - SUNNYSIDE 345KV CKT 1	717	789	0.07268	114.7542	CLAYTON - SARDIS 138KV CKT 1
FDNS	00NR	0	20WP	G15_082	FROM->TO	G14-057T 345.00 - SUNNYSIDE 345KV CKT 1	717	789	0.07322	114.7534	CORNVILLE - NORTH 29TH CHICKASHA 138KV CKT 1
FDNS	00NR	0	20WP	G15_082	FROM->TO	G14-057T 345.00 - SUNNYSIDE 345KV CKT 1	717	789	0.07293	114.7517	AMITY SS - MURFREESBORO EAST (AECC) 115KV CKT 1
FDNS	00NR	0	16WP	G15_082	FROM->TO	G14-057T 345.00 - SUNNYSIDE 345KV CKT 1	717	789	0.07347	114.7481	SHERBURNE CO 345/24.0KV TRANSFORMER CKT 1
FDNS	00NR	0	20WP	G15_082	FROM->TO	G14-057T 345.00 - SUNNYSIDE 345KV CKT 1	717	789	0.07398	114.7473	NOBLE - PURCELL4 138.00 138KV CKT 1
FDNS	00NR	0	16WP	G15_082	FROM->TO	G14-057T 345.00 - SUNNYSIDE 345KV CKT 1	717	789	0.07347	114.7436	GEN635214 4-NEAL UNIT 4
FDNS	00NR	0	20WP	G15_082	FROM->TO	G14-057T 345.00 - SUNNYSIDE 345KV CKT 1	717	789	0.07361	114.7248	Canadian Pump Station - REDROCKRD4 138.00 138KV CKT 1
FDNS	00NR	0	20WP	G15_082	FROM->TO	G14-057T 345.00 - SUNNYSIDE 345KV CKT 1	717	789	0.0733	114.7232	CLINTON JUNCTION - CLINTON NATURAL GAS TAP 138KV CKT 1
FDNS	00NR	0	20WP	G15_082	FROM->TO	G14-057T 345.00 - SUNNYSIDE 345KV CKT 1	717	789	0.07404	114.7125	CIMARRON - NORTHWEST 345KV CKT 1
FDNS	00NR	0	20WP	G15_082	FROM->TO	G14-057T 345.00 - SUNNYSIDE 345KV CKT 1	717	789	0.07346	114.6978	CRINER - PAYNE 138.00 138KV CKT 1
FDNS	00NR	0	20WP	G15_082	FROM->TO	G14-057T 345.00 - SUNNYSIDE 345KV CKT 1	717	789	0.07309	114.6753	SEMINOLE (SEMINOL2) 345/138/14.4KV TRANSFORMER CKT 1
FDNS	00NR	0	20WP	G15_082	FROM->TO	G14-057T 345.00 - SUNNYSIDE 345KV CKT 1	717	789	0.07315	114.6703	COMANCHE - WALTERS 69KV CKT 1
FDNS	00NR	0	16WP	G15_082	FROM->TO	G14-057T 345.00 - SUNNYSIDE 345KV CKT 1	717	789	0.07347	114.6671	GEN563043 1-G15068_4 0.6900
FDNS	00NR	0	20WP	G15_082	FROM->TO	G14-057T 345.00 - SUNNYSIDE 345KV CKT 1	717	789	0.07297	114.6656	P12:138:OKGE:3TERM20
FDNS	00NR	0	16WP	G15_082	FROM->TO	G14-057T 345.00 - SUNNYSIDE 345KV CKT 1	717	789	0.07347	114.64	GEN526333 1-JONES GEN #3 21 KV
FDNS	00NR	0	16WP	G15_082	FROM->TO	G14-057T 345.00 - SUNNYSIDE 345KV CKT 1	717	789	0.07347	114.64	GEN526334 1-JONES_4 116.500
FDNS	00NR	0	16WP	G15_082	FROM->TO	G14-057T 345.00 - SUNNYSIDE 345KV CKT 1	717	789	0.06883	114.5933	P12:230:AEPW:ELKCITY6:SWEETWT6
FDNS	00NR	0	16WP	G15_082	FROM->TO	G14-057T 345.00 - SUNNYSIDE 345KV CKT 1	717	789	0.07347	114.5915	GEN525844 1-ELK_1 118.000
FDNS	00NR	0	16WP	G15_082	FROM->TO	G14-057T 345.00 - SUNNYSIDE 345KV CKT 1	717	789	0.07347	114.5847	GEN525845 1-ELK_2 1 138.00
FDNS	00NR	0	16WP	G15_082	FROM->TO	G14-057T 345.00 - SUNNYSIDE 345KV CKT 1	717	789	0.07347	114.5778	GEN600002 3-SHERBURNE CNTY G3
FDNS	00NR	0	16WP	G15_082	FROM->TO	G14-057T 345.00 - SUNNYSIDE 345KV CKT 1	717	789	0.07347	114.5194	GEN344225 1-1CAL G1 25.000
FDNS	00NR	0	16WP	G15_082	FROM->TO	G14-057T 345.00 - SUNNYSIDE 345KV CKT 1	717	789	0.07347	114.46	GEN563202 1-G15085_3 0.5500
FDNS	00NR	0	16WP	G15_082	FROM->TO	G14-057T 345.00 - SUNNYSIDE 345KV CKT 1	717	789	0.07347	114.4446	GEN525562 1-TOLK GEN #2 24 KV
FDNS	00NR	0	16WP	G15_082	FROM->TO	G14-057T 345.00 - SUNNYSIDE 345KV CKT 1	717	789	0.0696	114.4288	CHISHOLM6 230.00 - SWEETWATER 230KV CKT 1
FDNS	00NR	0	16WP	G15_082	FROM->TO	G14-057T 345.00 - SUNNYSIDE 345KV CKT 1	717	789	0.07347	114.4063	GEN527166 1-MUSTANG_6 118.000
FDNS	00NR	0	16WP	G15_082	FROM->TO	G14-057T 345.00 - SUNNYSIDE 345KV CKT 1	717	789	0.07284	114.4006	JOHNSON COUNTY (JOHNCO) 345/138/13.8KV TRANSFORMER CKT 1
FDNS	00NR	0	16WP	G15_082	FROM->TO	G14-057T 345.00 - SUNNYSIDE 345KV CKT 1	717	789	0.07347	114.3466	GEN635023 3-WALTER SCOTT UNIT 3
FDNS	00NR	0	16WP	G15_082	FROM->TO	G14-057T 345.00 - SUNNYSIDE 345KV CKT 1	717	789	0.07347	114.3389	GEN562590 1-G14_057_3 0.6900
FDNS	00NR	0	16WP	G15_082	FROM->TO	G14-057T 345.00 - SUNNYSIDE 345KV CKT 1	717	789	0.07376	114.2787	LYDIA - WELSH 345KV CKT 1
FDNS	00NR	0	16WP	G15_082	FROM->TO	G14-057T 345.00 - SUNNYSIDE 345KV CKT 1	717	789	0.07376	114.2787	LYDIA - WELSH 345KV CKT 1
FDNS	00NR	0	20WP	G15_082	FROM->TO	G14-057T 345.00 - SUNNYSIDE 345KV CKT 1	717	789	0.07286	114.2427	803-OKLAUNION
FDNS	00NR	0	16WP	G15_082	FROM->TO	G14-057T 345.00 - SUNNYSIDE 345KV CKT 1	717	789	0.07347	114.2266	GEN562762 1-G15033_3 0.6900
FDNS	00NR	0	16WP	G15_082	FROM->TO	G14-057T 345.00 - SUNNYSIDE 345KV CKT 1	717	789	0.07347	114.2157	GEN562655 1-G14_074_3 0.6900
FDNS	00NR	0	16WP	G15_082	FROM->TO	G14-057T 345.00 - SUNNYSIDE 345KV CKT 1	717	789	0.07347	114.1561	GEN562685 1-G15_013_3 0.3550
FDNS	00NR	0	16WP	G15_082	FROM->TO	G14-057T 345.00 - SUNNYSIDE 345KV CKT 1	717	789	0.07347	114.0514	GEN525561 1-TOLK GEN #1 24 KV
FDNS	00NR	0	16WP	G15_082	FROM->TO	G14-057T 345.00 - SUNNYSIDE 345KV CKT 1	717	789	0.07347	114.0117	GEN527903 1-HOBBS PLANT #3 (ST)
FDNS	00NR	0	16WP	G15_082	FROM->TO	G14-057T 345.00 - SUNNYSIDE 345KV CKT 1	717	789	0.07347	114.0077	GEN563273 2-G15093_4 0.6900
FDNS	00NR	0	20WP	G15_082	FROM->TO	G14-057T 345.00 - SUNNYSIDE 345KV CKT 1	717	789	0.07151	113.9892	P12:138:OKGE:3TERM39
FDNS	00NR	0	20WP	G15_082	FROM->TO	G14-057T 345.00 - SUNNYSIDE 345KV CKT 1	717	789	0.07242	113.9255	RANCHRD7 345.00 - SOONER 345KV CKT 1
FDNS	00NR	0	16WP	G15_082	FROM->TO	G14-057T 345.00 - SUNNYSIDE 345KV CKT 1	717	789	0.07347	113.9228	GEN635024 4-WALTER SCOTT UNIT 4
FDNS	00NR	0	20WP	G15_082	FROM->TO	G14-057T 345.00 - SUNNYSIDE 345KV CKT 1	717	789	0.07286	113.88	GEN562084 1-G11_050_3 0.6900
FDNS	00NR	0	20WP	G15_082	FROM->TO	G14-057T 345.00 - SUNNYSIDE 345KV CKT 1	717	789	0.07181	113.8663	MAYSVILLE - PAOLI 138KV CKT 1

SOLUTION	GROUP	SCENARIO	SEASON	SOURCE	DIRECTION	MONITORED ELEMENT	RATEA (MVA)	RATEB(MVA)	TDF	TC%LOADING (% MVA)	CONTINGENCY
FDNS	00NR	0	20WP	G15_082	FROM->TO	G14-057T 345.00 - SUNNYSIDE 345KV CKT 1	717	789	0.07286	113.8506	GEN560187 1-WTH WIND 0.5750
FDNS	00NR	0	20WP	G15_082	FROM->TO	G14-057T 345.00 - SUNNYSIDE 345KV CKT 1	717	789	0.07234	113.8479	CIMARRON - MATHWSN7 345.00 345KV CKT 1
FDNS	00NR	0	20WP	G15_082	FROM->TO	G14-057T 345.00 - SUNNYSIDE 345KV CKT 1	717	789	0.07234	113.8479	CIMARRON - MATHWSN7 345.00 345KV CKT 2
FDNS	00NR	0	20WP	G15_082	FROM->TO	G14-057T 345.00 - SUNNYSIDE 345KV CKT 1	717	789	0.07286	113.8303	GEN560112 1-G08_037_3 0.6900
FDNS	00NR	0	20WP	G15_082	FROM->TO	G14-057T 345.00 - SUNNYSIDE 345KV CKT 1	717	789	0.07326	113.8035	DRAPER LAKE - MIDWEST TAP 138KV CKT 1
FDNS	00NR	0	20WP	G15_082	FROM->TO	G14-057T 345.00 - SUNNYSIDE 345KV CKT 1	717	789	0.07329	113.7969	P12:138:OKGE:3TERM21
FDNS	00NR	0	20WP	G15_082	FROM->TO	G14-057T 345.00 - SUNNYSIDE 345KV CKT 1	717	789	0.07286	113.794	GEN521103 1-BLUE CANYON WIND FARM
FDNS	00NR	0	20WP	G15_082	FROM->TO	G14-057T 345.00 - SUNNYSIDE 345KV CKT 1	717	789	0.07181	113.7906	MAYSVILLE - MAYSVLT4 138.00 138KV CKT 1
FDNS	00NR	0	20WP	G15_082	FROM->TO	G14-057T 345.00 - SUNNYSIDE 345KV CKT 1	717	789	0.07286	113.7882	GEN520812 1-ANADRK5
FDNS	00NR	0	20WP	G15_082	FROM->TO	G14-057T 345.00 - SUNNYSIDE 345KV CKT 1	717	789	0.07286	113.7881	GEN520813 1-ANADRK6
FDNS	00NR	0	20WP	G15_082	FROM->TO	G14-057T 345.00 - SUNNYSIDE 345KV CKT 1	717	789	0.07286	113.7765	GEN530690 1-PRWINDG1 0.6900
FDNS	00NR	0	20WP	G15_082	FROM->TO	G14-057T 345.00 - SUNNYSIDE 345KV CKT 1	717	789	0.07286	113.7649	GEN562691 1-G15_015_3 0.6900
FDNS	00NR	0	20WP	G15_082	FROM->TO	G14-057T 345.00 - SUNNYSIDE 345KV CKT 1	717	789	0.07286	113.7585	P12:069:OKGE:3TERM42
FDNS	00NR	0	20WP	G15_082	FROM->TO	G14-057T 345.00 - SUNNYSIDE 345KV CKT 1	717	789	0.07286	113.7527	GEN562772 1-G15034_3 0.6900
FDNS	00NR	0	20WP	G15_082	FROM->TO	G14-057T 345.00 - SUNNYSIDE 345KV CKT 1	717	789	0.07286	113.7519	GEN511961 1-DEMPSEY-WTG10.7000
FDNS	00NR	0	20WP	G15_082	FROM->TO	G14-057T 345.00 - SUNNYSIDE 345KV CKT 1	717	789	0.07286	113.7497	GEN563052 1-G15069_3 0.6900
FDNS	00NR	0	20WP	G15_082	FROM->TO	G14-057T 345.00 - SUNNYSIDE 345KV CKT 1	717	789	0.07208	113.7361	ARBUCKLE - SULPHR 4 138.00 138KV CKT 1
FDNS	00NR	0	20WP	G15_082	FROM->TO	G14-057T 345.00 - SUNNYSIDE 345KV CKT 1	717	789	0.07288	113.7326	P12:138:WFEC:MSL11
FDNS	00NR	0	20WP	G15_082	FROM->TO	G14-057T 345.00 - SUNNYSIDE 345KV CKT 1	717	789	0.07288	113.7326	P12:138:WFEC-AEPW:PHAROAH4:LONEOAK4
FDNS	00NR	0	20WP	G15_082	FROM->TO	G14-057T 345.00 - SUNNYSIDE 345KV CKT 1	717	789	0.07292	113.7315	GLASSES - MADILL INDUSTRIAL TAP 138KV CKT 1
FDNS	00NR	0	20WP	G15_082	FROM->TO	G14-057T 345.00 - SUNNYSIDE 345KV CKT 1	717	789	0.07307	113.7261	SOONER - SPRING CREEK 345KV CKT 1
FDNS	00NR	0	20WP	G15_082	FROM->TO	G14-057T 345.00 - SUNNYSIDE 345KV CKT 1	717	789	0.07181	113.7243	MAYSVLT4 138.00 - PRAIRIE POINT 138KV CKT 1
FDNS	00NR	0	20WP	G15_082	FROM->TO	G14-057T 345.00 - SUNNYSIDE 345KV CKT 1	717	789	0.07314	113.7235	OVEXFRMCCOVE
FDNS	00NR	0	20WP	G15_082	FROM->TO	G14-057T 345.00 - SUNNYSIDE 345KV CKT 1	717	789	0.07293	113.7232	CANEY CREEK - JOHNSON COUNTY 138KV CKT 1
FDNS	00NR	0	20WP	G15_082	FROM->TO	G14-057T 345.00 - SUNNYSIDE 345KV CKT 1	717	789	0.07307	113.7225	NORTHWEST - SPRING CREEK 345KV CKT 1
FDNS	00NR	0	20WP	G15_082	FROM->TO	G14-057T 345.00 - SUNNYSIDE 345KV CKT 1	717	789	0.07286	113.7148	BURLINGTON NO1 + NO 2 + NO 3 161/20.0KV TRANSFORMER CKT 1
FDNS	00NR	0	20WP	G15_082	FROM->TO	G14-057T 345.00 - SUNNYSIDE 345KV CKT 1	717	789	0.07286	113.7129	GEN615021 1-GRE-ER 14G 16.000
FDNS	00NR	0	20WP	G15_082	FROM->TO	G14-057T 345.00 - SUNNYSIDE 345KV CKT 1	717	789	0.07424	113.7087	LEBANON - TEXOMA JCT 138KV CKT 1
FDNS	00NR	0	20WP	G15_082	FROM->TO	G14-057T 345.00 - SUNNYSIDE 345KV CKT 1	717	789	0.07286	113.7022	GEN515443 1-MNCOWND1 0.7000
FDNS	00NR	0	20WP	G15_082	FROM->TO	G14-057T 345.00 - SUNNYSIDE 345KV CKT 1	717	789	0.07255	113.688	ALTUS JUNCTION - RUSSELL 138KV CKT 1
FDNS	00NR	0	20WP	G15_082	FROM->TO	G14-057T 345.00 - SUNNYSIDE 345KV CKT 1	717	789	0.07255	113.688	ALTUS JUNCTION - RUSSELL 138KV CKT 1
FDNS	00NR	0	20WP	G15_082	FROM->TO	G14-057T 345.00 - SUNNYSIDE 345KV CKT 1	717	789	0.07177	113.6879	MOREWOOD SW - NINE MILE 138KV CKT 1
FDNS	00NR	0	20WP	G15_082	FROM->TO	G14-057T 345.00 - SUNNYSIDE 345KV CKT 1	717	789	0.07286	113.6807	GEN560183 1-REDHIL-WTG1 12.000
FDNS	00NR	0	20WP	G15_082	FROM->TO	G14-057T 345.00 - SUNNYSIDE 345KV CKT 1	717	789	0.07292	113.6771	GLASSES - RUSSETT 138KV CKT 1
FDNS	00NR	0	20WP	G15_082	FROM->TO	G14-057T 345.00 - SUNNYSIDE 345KV CKT 1	717	789	0.07277	113.6751	CARTER - CHICKASAW 138KV CKT 1
FDNS	00NR	0	20WP	G15_082	FROM->TO	G14-057T 345.00 - SUNNYSIDE 345KV CKT 1	717	789	0.07286	113.6733	INDEPENDENCE 500/26.0KV TRANSFORMER CKT 1
FDNS	00NR	0	20WP	G15_082	FROM->TO	G14-057T 345.00 - SUNNYSIDE 345KV CKT 1	717	789	0.07286	113.6716	GEN531447 1-HOLCOMB GENERATOR
FDNS	00NR	0	20WP	G15_082	FROM->TO	G14-057T 345.00 - SUNNYSIDE 345KV CKT 1	717	789	0.07297	113.6697	P12:138:WFEC:MSL08
FDNS	00NR	0	20WP	G15_082	FROM->TO	G14-057T 345.00 - SUNNYSIDE 345KV CKT 1	717	789	0.07303	113.6664	CANADIAN RIVER - MCALESTER SOUTH 138KV CKT 1
FDNS	00NR	0	20WP	G15_082	FROM->TO	G14-057T 345.00 - SUNNYSIDE 345KV CKT 1	717	789	0.07303	113.6664	CANADIAN RIVER - MCALESTER SOUTH 138KV CKT 1
FDNS	00NR	0	20WP	G15_082	FROM->TO	G14-057T 345.00 - SUNNYSIDE 345KV CKT 1	717	789	0.07303	113.6643	CANADIAN RIVER () 345/138/13.8KV TRANSFORMER CKT 1
FDNS	00NR	0	20WP	G15_082	FROM->TO	G14-057T 345.00 - SUNNYSIDE 345KV CKT 1	717	789	0.07303	113.6643	CANADIAN RIVER () 345/138/13.8KV TRANSFORMER CKT 1
FDNS	00NR	0	20WP	G15_082	FROM->TO	G14-057T 345.00 - SUNNYSIDE 345KV CKT 1	717	789	0.07277	113.6589	HUGO (HUGO 1) 345/138/13.8KV TRANSFORMER CKT 1
FDNS	00NR	0	20WP	G15_082	FROM->TO	G14-057T 345.00 - SUNNYSIDE 345KV CKT 1	717	789	0.07286	113.6523	GEN600067 9-HIGH BRIDGE
FDNS	00NR	0	20WP	G15_082	FROM->TO	G14-057T 345.00 - SUNNYSIDE 345KV CKT 1	717	789	0.07325	113.6425	CHAMBER SPRINGS - CLARKSVILLE 345KV CKT 1
FDNS	00NR	0	20WP	G15_082	FROM->TO	G14-057T 345.00 - SUNNYSIDE 345KV CKT 1	717	789	0.07286	113.6381	P12:230:UMZB:# 112 #: NU IN SD. NU-RCDC & DRY CREEK XFMR
FDNS	00NR	0	20WP	G15_082	FROM->TO	G14-057T 345.00 - SUNNYSIDE 345KV CKT 1	717	789	0.07286	113.6377	RCDC EAST 4230.00 - RED CEDAR DC 230KV CKT 1
FDNS	00NR	0	20WP	G15_082	FROM->TO	G14-057T 345.00 - SUNNYSIDE 345KV CKT 1	717	789	0.07256	113.6341	ROCKY POINT - SPRINGDALE 138KV CKT 1
FDNS	00NR	0	20WP	G15_082	FROM->TO	G14-057T 345.00 - SUNNYSIDE 345KV CKT 1	717	789	0.07181	113.632	PRAIRIE POINT - RATLIFF 138KV CKT 1
FDNS	00NR	0	20WP	G15_082	FROM->TO	G14-057T 345.00 - SUNNYSIDE 345KV CKT 1	717	789	0.07211	113.6291	P12:138:AEPW:112GORE4:SNYDER-4
FDNS	00NR	0	20WP	G15_082	FROM->TO	G14-057T 345.00 - SUNNYSIDE 345KV CKT 1	717	789	0.07303	113.6221	GRPRAR1-LNX3345.00 - HOLT.CO3 345.00 345KV CKT 1
FDNS	00NR	0	20WP	G15_082	FROM->TO	G14-057T 345.00 - SUNNYSIDE 345KV CKT 1	717	789	0.07303	113.6221	GRPRAR1-LNX3345.00 - YANKTON 345KV CKT Z
FDNS	00NR	0	20WP	G15_082	FROM->TO	G14-057T 345.00 - SUNNYSIDE 345KV CKT 1	717	789	0.07286	113.6154	GEN563242 1-G15090_3 0.6900
FDNS	00NR	0	20WP	G15_082	FROM->TO	G14-057T 345.00 - SUNNYSIDE 345KV CKT 1	717	789	0.07286	113.5953	GEN562802 1-G15039_3 0.3570
FDNS	00NR	0	20WP	G15_082	FROM->TO	G14-057T 345.00 - SUNNYSIDE 345KV CKT 1	717	789	0.07286	113.5914	GEN629072 4-LANSING GENERATOR FOR UNITS NO4 EIA CODE 1
FDNS	00NR	0	20WP	G15_082	FROM->TO	G14-057T 345.00 - SUNNYSIDE 345KV CKT 1	717	789	0.07286	113.5908	GEN562902 1-G15052_3 0.6900
FDNS	00NR	0	20WP	G15_082	FROM->TO	G14-057T 345.00 - SUNNYSIDE 345KV CKT 1	717	789	0.07208	113.5901	JOLLYVILLE - SULPHR 4 138.00 138KV CKT 1
FDNS	00NR	0	20WP	G15_082	FROM->TO	G14-057T 345.00 - SUNNYSIDE 345KV CKT 1	717	789	0.07286	113.587	GEN562078 1-G11_051_3 0.6900
FDNS	00NR	0	20WP	G15_082	FROM->TO	G14-057T 345.00 - SUNNYSIDE 345KV CKT 1	717	789	0.07286	113.5825	GEN524285 1-WILDORADO WIND GEN
FDNS	00NR	0	20WP	G15_082	FROM->TO	G14-057T 345.00 - SUNNYSIDE 345KV CKT 1	717	789	0.07286	113.5657	GEN560331 1-G10-46 13.800
FDNS	00NR	0	20WP	G15_082	FROM->TO	G14-057T 345.00 - SUNNYSIDE 345KV CKT 1	717	789	0.07286	113.5647	GEN562587 1-G14_056_3 0.6900
FDNS	00NR	0	20WP	G15_082	FROM->TO	G14-057T 345.00 - SUNNYSIDE 345KV CKT 1	717	789	0.07286	113.5569	GEN524295 1-SPNSPUR_WND10.6900
FDNS	00NR	0	20WP	G15_082	FROM->TO	G14-057T 345.00 - SUNNYSIDE 345KV CKT 1	717	789	0.07177	113.5541	BEARCAT 138.00 - NINE MILE 138KV CKT 1
FDNS	00NR	0	20WP	G15_082	FROM->TO	G14-057T 345.00 - SUNNYSIDE 345KV CKT 1	717	789	0.07286	113.5372	GEN657749 1-YOUNG 1 GENERATOR
FDNS	00NR	0	20WP	G15_082	FROM->TO	G14-057T 345.00 - SUNNYSIDE 345KV CKT 1	717	789	0.07286	113.533	GEN562269 1-G12-020-1 0.6900
FDNS	00NR	0	20WP	G15_082	FROM->TO	G14-057T 345.00 - SUNNYSIDE 345KV CKT 1	717	789	0.07286	113.5266	GEN514805 1-SOONER UNIT 1
FDNS	00NR	0	20WP	G15_082	FROM->TO	G14-057T 345.00 - SUNNYSIDE 345KV CKT 1	717	789	0.07208	113.5252	JOLLYVILLE - KERR MCGEE CIMARRON 138KV CKT 1
FDNS	00NR	0	20WP	G15_082	FROM->TO	G14-057T 345.00 - SUNNYSIDE 345KV CKT 1	717	789	0.07286	113.5245	GEN524023 1-NICHOLS GEN #3 22 KV
FDNS	00NR	0	20WP	G15_082	FROM->TO	G14-057T 345.00 - SUNNYSIDE 345KV CKT 1	717	789	0.07296	113.5131	CROCKETT - TENASKA RUSK COUNTY 345KV CKT 1
FDNS	00NR	0	20WP	G15_082	FROM->TO	G14-057T 345.00 - SUNNYSIDE 345KV CKT 1	717	789	0.07296	113.5085	LEBROCK - TENASKA RUSK COUNTY 345KV CKT 1
FDNS	00NR	0	20WP	G15_082	FROM->TO	G14-057T 345.00 - SUNNYSIDE 345KV CKT 1	717	789	0.07286	113.4974	GEN514806 1-SOONER UNIT 2
FDNS	00NR	0	20WP	G15_082	FROM->TO	G14-057T 345.00 - SUNNYSIDE 345KV CKT 1	717	789	0.07286	113.4926	GEN562812 1-G15040_3 0.3570
FDNS	00NR	0	20WP	G15_082	FROM->TO	G14-057T 345.00 - SUNNYSIDE 345KV CKT 1	717	789	0.07286	113.4876	GEN562270 1-G12-020-2 0.6900
FDNS	00NR	0	20WP	G15_082	FROM->TO	G14-057T 345.00 - SUNNYSIDE 345KV CKT 1	717	789	0.07286	113.4858	GEN563132 1-G15078_3 0.3570
FDNS	00NR	0	20WP	G15_082	FROM->TO	G14-057T 345.00 - SUNNYSIDE 345KV CKT 1	717	789	0.07208	113.4767	ARBWIND4 138.00 - KERR MCGEE CIMARRON 138KV CKT 1
FDNS	00NR	0	20WP	G15_082	FROM->TO	G14-057T 345.00 - SUNNYSIDE 345KV CKT 1	717	789	0.07286	113.4762	GEN563102 1-G15075_3 0.5500
FDNS	00NR	0	20WP	G15_082	FROM->TO	G14-057T 345.00 - SUNNYSIDE 345KV CKT 1	717	789	0.07286	113.4667	GEN563062 1-G15071_3 0.6900
FDNS	00NR	0	20WP	G15_082	FROM->TO	G14-057T 345.00 - SUNNYSIDE 345KV CKT 1	717	789	0.07279	113.4656	BROWN - RUSSETT 138KV CKT 1
FDNS	00NR	0	20WP	G15_082	FROM->TO	G14-057T 345.00 - SUNNYSIDE 345KV CKT 1	717	789	0.07177	113.4565	BEARCAT 138.00 - MOORELAND 138KV CKT 1

SOLUTION	GROUP	SCENARIO	SEASON	SOURCE	DIRECTION	MONITORED ELEMENT	RATEA (MVA)	RATEB(MVA)	TDF	TC%LOADING (% MVA)	CONTINGENCY
FDNS	00NR	0	20WP	G15_082	FROM->TO	G14-057T 345.00 - SUNNYSIDE 345KV CKT 1	717	789	0.07177	113.4538	P12:138:WFEC:MSL14
FDNS	00NR	0	20WP	G15_082	FROM->TO	G14-057T 345.00 - SUNNYSIDE 345KV CKT 1	717	789	0.07286	113.4483	GEN562882 1-G15047_3 0.6900
FDNS	00NR	0	20WP	G15_082	FROM->TO	G14-057T 345.00 - SUNNYSIDE 345KV CKT 1	717	789	0.07286	113.429	GEN521112 1-ORME3 13.800
FDNS	00NR	0	20WP	G15_082	FROM->TO	G14-057T 345.00 - SUNNYSIDE 345KV CKT 1	717	789	0.07286	113.426	GEN562974 1-G15060_5 0.6900
FDNS	00NR	0	20WP	G15_082	FROM->TO	G14-057T 345.00 - SUNNYSIDE 345KV CKT 1	717	789	0.07286	113.4253	GEN345671 2-1RUSH G2 18.000
FDNS	00NR	0	20WP	G15_082	FROM->TO	G14-057T 345.00 - SUNNYSIDE 345KV CKT 1	717	789	0.07286	113.4234	GEN345670 1-1RUSH G1 18.000
FDNS	00NR	0	20WP	G15_082	FROM->TO	G14-057T 345.00 - SUNNYSIDE 345KV CKT 1	717	789	0.07217	113.4188	CHICKASAW - TOTAL 138KV CKT 1
FDNS	00NR	0	20WP	G15_082	FROM->TO	G14-057T 345.00 - SUNNYSIDE 345KV CKT 1	717	789	0.07286	113.416	GEN562973 1-G15060_4 0.6900
FDNS	00NR	0	20WP	G15_082	FROM->TO	G14-057T 345.00 - SUNNYSIDE 345KV CKT 1	717	789	0.07286	113.394	4SIOUX 1 138.00 138/18.0KV TRANSFORMER CKT 1
FDNS	00NR	0	20WP	G15_082	FROM->TO	G14-057T 345.00 - SUNNYSIDE 345KV CKT 1	717	789	0.07279	113.3932	RUSSETT - RUSSETT 138KV CKT 1
FDNS	00NR	0	20WP	G15_082	FROM->TO	G14-057T 345.00 - SUNNYSIDE 345KV CKT 1	717	789	0.07286	113.3926	GEN560105 1-G08-22 0.6900
FDNS	00NR	0	20WP	G15_082	FROM->TO	G14-057T 345.00 - SUNNYSIDE 345KV CKT 1	717	789	0.07286	113.3757	GEN562550 1-G14_040_3 0.6900
FDNS	00NR	0	20WP	G15_082	FROM->TO	G14-057T 345.00 - SUNNYSIDE 345KV CKT 1	717	789	0.07286	113.3604	GEN681522 3-GENOA 3
FDNS	00NR	0	20WP	G15_082	FROM->TO	G14-057T 345.00 - SUNNYSIDE 345KV CKT 1	717	789	0.07286	113.3439	EASTDC - ERCOT EQUIVALENCE 345KV CKT 1
FDNS	00NR	0	20WP	G15_082	FROM->TO	G14-057T 345.00 - SUNNYSIDE 345KV CKT 1	717	789	0.07245	113.3319	ROCKY POINT - SUNNYSIDE 138KV CKT 1
FDNS	00NR	0	20WP	G15_082	FROM->TO	G14-057T 345.00 - SUNNYSIDE 345KV CKT 1	717	789	0.07286	113.3239	GEN511962 2-RKYRDGW2-1 0.7000
FDNS	00NR	0	20WP	G15_082	FROM->TO	G14-057T 345.00 - SUNNYSIDE 345KV CKT 1	717	789	0.07286	113.3233	GEN527161 1-MUSTANG GEN #1
FDNS	00NR	0	20WP	G15_082	FROM->TO	G14-057T 345.00 - SUNNYSIDE 345KV CKT 1	717	789	0.07286	113.3233	GEN527162 1-MUSTANG GEN #2
FDNS	00NR	0	20WP	G15_082	FROM->TO	G14-057T 345.00 - SUNNYSIDE 345KV CKT 1	717	789	0.07275	113.3212	RUSSETT - SPRINGDALE 138KV CKT 1
FDNS	00NR	0	20WP	G15_082	FROM->TO	G14-057T 345.00 - SUNNYSIDE 345KV CKT 1	717	789	0.07286	113.3187	GEN511853 1-COMANCHE #3
FDNS	00NR	0	20WP	G15_082	FROM->TO	G14-057T 345.00 - SUNNYSIDE 345KV CKT 1	717	789	0.07178	113.3087	ARKANSAS NUCLEAR ONE - FT SMITH 500KV CKT 1
FDNS	00NR	0	20WP	G15_082	FROM->TO	G14-057T 345.00 - SUNNYSIDE 345KV CKT 1	717	789	0.07178	113.3087	ARKANSAS NUCLEAR ONE - FT SMITH 500KV CKT 1
FDNS	00NR	0	20WP	G15_082	FROM->TO	G14-057T 345.00 - SUNNYSIDE 345KV CKT 1	717	789	0.07286	113.2967	GEN672321 1-SHAND GENERATOR 1
FDNS	00NR	0	20WP	G15_082	FROM->TO	G14-057T 345.00 - SUNNYSIDE 345KV CKT 1	717	789	0.07286	113.2903	GEN525494 1-PLANT X GEN #4 20 KV
FDNS	00NR	0	20WP	G15_082	FROM->TO	G14-057T 345.00 - SUNNYSIDE 345KV CKT 1	717	789	0.07286	113.2784	GEN563192 1-G15084_3 0.5500
FDNS	00NR	0	20WP	G15_082	FROM->TO	G14-057T 345.00 - SUNNYSIDE 345KV CKT 1	717	789	0.07284	113.2745	P12:138:WFEC-AEPW:GOLDENSW4:CRAIGJT4
FDNS	00NR	0	20WP	G15_082	FROM->TO	G14-057T 345.00 - SUNNYSIDE 345KV CKT 1	717	789	0.07286	113.2741	GEN527882 1-CUNNINGHAM GEN #2 20 KV
FDNS	00NR	0	20WP	G15_082	FROM->TO	G14-057T 345.00 - SUNNYSIDE 345KV CKT 1	717	789	0.07286	113.2735	GEN672310 1-POPLAR RIVER GENERATOR 1
FDNS	00NR	0	20WP	G15_082	FROM->TO	G14-057T 345.00 - SUNNYSIDE 345KV CKT 1	717	789	0.07286	113.2735	GEN672311 2-POPLAR RIVER GENERATOR 2
FDNS	00NR	0	20WP	G15_082	FROM->TO	G14-057T 345.00 - SUNNYSIDE 345KV CKT 1	717	789	0.07286	113.2693	GEN344895 2-1LAB G2 20.000
FDNS	00NR	0	20WP	G15_082	FROM->TO	G14-057T 345.00 - SUNNYSIDE 345KV CKT 1	717	789	0.07286	113.2681	GEN562512 1-G14_020_3 0.6900
FDNS	00NR	0	20WP	G15_082	FROM->TO	G14-057T 345.00 - SUNNYSIDE 345KV CKT 1	717	789	0.07286	113.2641	GEN672306 6-BOUNDARY DAM GENERATOR 6
FDNS	00NR	0	20WP	G15_082	FROM->TO	G14-057T 345.00 - SUNNYSIDE 345KV CKT 1	717	789	0.07286	113.2595	GEN511852 1-COMANCHE #2
FDNS	00NR	0	20WP	G15_082	FROM->TO	G14-057T 345.00 - SUNNYSIDE 345KV CKT 1	717	789	0.07286	113.2578	GEN527163 1-MUSTANG GEN #3 22 KV
FDNS	00NR	0	20WP	G15_082	FROM->TO	G14-057T 345.00 - SUNNYSIDE 345KV CKT 1	717	789	0.07254	113.2523	G15063_T 345.00 - MATHWSN7 345.00 345KV CKT 1
FDNS	00NR	0	20WP	G15_082	FROM->TO	G14-057T 345.00 - SUNNYSIDE 345KV CKT 1	717	789	0.07286	113.2449	CLAY BOSWELL 230/20.9KV TRANSFORMER CKT 1
FDNS	00NR	0	20WP	G15_082	FROM->TO	G14-057T 345.00 - SUNNYSIDE 345KV CKT 1	717	789	0.07293	113.2431	P12:138:WFEC:MSL16
FDNS	00NR	0	20WP	G15_082	FROM->TO	G14-057T 345.00 - SUNNYSIDE 345KV CKT 1	717	789	0.07286	113.2397	GEN344896 3-1LAB G3 20.000
FDNS	00NR	0	20WP	G15_082	FROM->TO	G14-057T 345.00 - SUNNYSIDE 345KV CKT 1	717	789	0.07286	113.2385	GEN344897 4-1LAB G4 20.000
FDNS	00NR	0	20WP	G15_082	FROM->TO	G14-057T 345.00 - SUNNYSIDE 345KV CKT 1	717	789	0.07286	113.2383	GEN344894 1-1LAB G1 20.000
FDNS	00NR	0	20WP	G15_082	FROM->TO	G14-057T 345.00 - SUNNYSIDE 345KV CKT 1	717	789	0.07286	113.2327	GEN681542 6-JP MADGETT
FDNS	00NR	0	20WP	G15_082	FROM->TO	G14-057T 345.00 - SUNNYSIDE 345KV CKT 1	717	789	0.07286	113.2316	GEN562892 1-G15048_3 0.6900
FDNS	00NR	0	20WP	G15_082	FROM->TO	G14-057T 345.00 - SUNNYSIDE 345KV CKT 1	717	789	0.07191	113.2316	ARDMORE WEST - CARTER 138KV CKT 1
FDNS	00NR	0	20WP	G15_082	FROM->TO	G14-057T 345.00 - SUNNYSIDE 345KV CKT 1	717	789	0.07211	113.231	CACHE - SNYDER 138KV CKT 1
FDNS	00NR	0	20WP	G15_082	FROM->TO	G14-057T 345.00 - SUNNYSIDE 345KV CKT 1	717	789	0.07286	113.2134	GEN523461 1-BLACKHAWK GEN #1
FDNS	00NR	0	20WP	G15_082	FROM->TO	G14-057T 345.00 - SUNNYSIDE 345KV CKT 1	717	789	0.07286	113.2133	GEN523462 1-BLACKHAWK GEN #2
FDNS	00NR	0	20WP	G15_082	FROM->TO	G14-057T 345.00 - SUNNYSIDE 345KV CKT 1	717	789	0.07534	113.1986	CLARKSVILLE - MUSKOGEE 345KV CKT 1
FDNS	00NR	0	20WP	G15_082	FROM->TO	G14-057T 345.00 - SUNNYSIDE 345KV CKT 1	717	789	0.07534	113.1986	CLARKSVILLE - MUSKOGEE 345KV CKT 1
FDNS	00NR	0	20WP	G15_082	FROM->TO	G14-057T 345.00 - SUNNYSIDE 345KV CKT 1	717	789	0.07273	113.1966	P12:138:WFEC:MSL07
FDNS	00NR	0	20WP	G15_082	FROM->TO	G14-057T 345.00 - SUNNYSIDE 345KV CKT 1	717	789	0.07273	113.1966	P12:138:WFEC-AEPW:HUGOPP4:ATOKA--4
FDNS	00NR	0	20WP	G15_082	FROM->TO	G14-057T 345.00 - SUNNYSIDE 345KV CKT 1	717	789	0.07284	113.1824	P12:138:AEPW-SWPA:LONEOAK4:TUPELO4
FDNS	00NR	0	20WP	G15_082	FROM->TO	G14-057T 345.00 - SUNNYSIDE 345KV CKT 1	717	789	0.07284	113.1823	P12:138:WFEC:MSL06
FDNS	00NR	0	20WP	G15_082	FROM->TO	G14-057T 345.00 - SUNNYSIDE 345KV CKT 1	717	789	0.0725	113.1772	G15085_T 138.00 - RUSSELL 138KV CKT 1
FDNS	00NR	0	16WP	G15_082	FROM->TO	G14-057T 345.00 - SUNNYSIDE 345KV CKT 1	717	789	0.07347	113.1715	GEN563272 1-G15093_3 0.6900
FDNS	00NR	0	20WP	G15_082	FROM->TO	G14-057T 345.00 - SUNNYSIDE 345KV CKT 1	717	789	0.07286	113.1631	GEN521111 1-ORME2 13.800
FDNS	00NR	0	20WP	G15_082	FROM->TO	G14-057T 345.00 - SUNNYSIDE 345KV CKT 1	717	789	0.07195	113.1613	SUNNYSIDE (SUNNYSD5) 345/138/13.8KV TRANSFORMER CKT 1
FDNS	00NR	0	20WP	G15_082	FROM->TO	G14-057T 345.00 - SUNNYSIDE 345KV CKT 1	717	789	0.07286	113.1543	GEN562699 1-G15_018_3 0.6900
FDNS	00NR	0	20WP	G15_082	FROM->TO	G14-057T 345.00 - SUNNYSIDE 345KV CKT 1	717	789	0.07286	113.1498	GEN521110 1-ORME1 13.800
FDNS	00NR	0	20WP	G15_082	FROM->TO	G14-057T 345.00 - SUNNYSIDE 345KV CKT 1	717	789	0.07191	113.1185	ARDMORE WEST - UNIROYAL 138KV CKT 1
FDNS	00NR	0	20WP	G15_082	FROM->TO	G14-057T 345.00 - SUNNYSIDE 345KV CKT 1	717	789	0.07286	113.0959	GEN563162 1-G15081_3 0.6900
FDNS	00NR	0	20WP	G15_082	FROM->TO	G14-057T 345.00 - SUNNYSIDE 345KV CKT 1	717	789	0.07286	113.0881	GEN520811 1-ANADRK4
FDNS	00NR	0	20WP	G15_082	FROM->TO	G14-057T 345.00 - SUNNYSIDE 345KV CKT 1	717	789	0.07254	113.0837	P12:138:OKGE:3TERM40
FDNS	00NR	0	20WP	G15_082	FROM->TO	G14-057T 345.00 - SUNNYSIDE 345KV CKT 1	717	789	0.07216	113.0803	CARTRCO4 138.00 - RATLIFF 138KV CKT 1
FDNS	00NR	0	16WP	G15_082	FROM->TO	G14-057T 345.00 - SUNNYSIDE 345KV CKT 1	717	789	0.07386	113.0802	LYDIA - VALLIANT 345KV CKT 1
FDNS	00NR	0	16WP	G15_082	FROM->TO	G14-057T 345.00 - SUNNYSIDE 345KV CKT 1	717	789	0.07386	113.0802	LYDIA - VALLIANT 345KV CKT 1
FDNS	00NR	0	20WP	G15_082	FROM->TO	G14-057T 345.00 - SUNNYSIDE 345KV CKT 1	717	789	0.07286	113.0688	GEN661015 1-COYOTE
FDNS	00NR	0	20WP	G15_082	FROM->TO	G14-057T 345.00 - SUNNYSIDE 345KV CKT 1	717	789	0.07286	113.0676	GEN563292 1-G15095_3 0.6900
FDNS	00NR	0	20WP	G15_082	FROM->TO	G14-057T 345.00 - SUNNYSIDE 345KV CKT 1	717	789	0.07286	113.0527	GEN563122 1-G15077_3 0.3850
FDNS	00NR	0	20WP	G15_082	FROM->TO	G14-057T 345.00 - SUNNYSIDE 345KV CKT 1	717	789	0.07286	113.0294	GEN562861 1-G15045_2 0.4800
FDNS	00NR	0	20WP	G15_082	FROM->TO	G14-057T 345.00 - SUNNYSIDE 345KV CKT 1	717	789	0.07286	112.9558	GEN657748 1-YOUNG 2 GENERATOR
FDNS	00NR	0	20WP	G15_082	FROM->TO	G14-057T 345.00 - SUNNYSIDE 345KV CKT 1	717	789	0.0732	112.9468	P12:138:WFEC:MSL15
FDNS	00NR	0	20WP	G15_082	FROM->TO	G14-057T 345.00 - SUNNYSIDE 345KV CKT 1	717	789	0.07286	112.944	GEN527883 1-CUNNINGHAM GEN #3 22 KV
FDNS	00NR	0	20WP	G15_082	FROM->TO	G14-057T 345.00 - SUNNYSIDE 345KV CKT 1	717	789	0.07286	112.9413	GEN527884 1-CUNNINGHAM GEN #4 22 KV
FDNS	00NR	0	20WP	G15_082	FROM->TO	G14-057T 345.00 - SUNNYSIDE 345KV CKT 1	717	789	0.07191	112.9009	SUNNYSIDE - UNIROYAL 138KV CKT 1
FDNS	00NR	0	20WP	G15_082	FROM->TO	G14-057T 345.00 - SUNNYSIDE 345KV CKT 1	717	789	0.07247	112.8981	P12:138:AEPW:SHAM4WT:CHILD4WT
FDNS	00NR	0	20WP	G15_082	FROM->TO	G14-057T 345.00 - SUNNYSIDE 345KV CKT 1	717	789	0.07286	112.8744	GEN562704 1-G15_020_3 0.3550
FDNS	00NR	0	20WP	G15_082	FROM->TO	G14-057T 345.00 - SUNNYSIDE 345KV CKT 1	717	789	0.07286	112.8647	GEN562992 1-G15063_3 0.6900
FDNS	00NR	0	20WP	G15_082	FROM->TO	G14-057T 345.00 - SUNNYSIDE 345KV CKT 1	717	789	0.07286	112.8638	GEN620315 1-BIG STONE GEN
FDNS	00NR	0	20WP	G15_082	FROM->TO	G14-057T 345.00 - SUNNYSIDE 345KV CKT 1	717	789	0.07286	112.8615	GEN526331 1-JONES GEN #1 22 KV

SOLUTION	GROUP	SCENARIO	SEASON	SOURCE	DIRECTION	MONITORED ELEMENT	RATEA (MVA)	RATEB(MVA)	TDF	TC%LOADING (% MVA)	CONTINGENCY
FDNS	00NR	0	20WP	G15_082	FROM->TO	G14-057T 345.00 - SUNNYSIDE 345KV CKT 1	717	789	0.07286	112.8614	GEN526332 1-JONES GEN #2 21 KV
FDNS	00NR	0	20WP	G15_082	FROM->TO	G14-057T 345.00 - SUNNYSIDE 345KV CKT 1	717	789	0.07286	112.8364	GEN562952 1-G15057_3 0.6500
FDNS	00NR	0	20WP	G15_082	FROM->TO	G14-057T 345.00 - SUNNYSIDE 345KV CKT 1	717	789	0.07286	112.7887	GEN600004 2-PRAIRIE ISLAND G2
FDNS	00NR	0	20WP	G15_082	FROM->TO	G14-057T 345.00 - SUNNYSIDE 345KV CKT 1	717	789	0.07073	112.7878	GRAPEVINE INTERCHANGE - STATELINE INTERCHANGE 230KV CKT 1
FDNS	00NR	0	20WP	G15_082	FROM->TO	G14-057T 345.00 - SUNNYSIDE 345KV CKT 1	717	789	0.07073	112.7878	GRAPEVINE INTERCHANGE - STATELINE INTERCHANGE 230KV CKT 1
FDNS	00NR	0	20WP	G15_082	FROM->TO	G14-057T 345.00 - SUNNYSIDE 345KV CKT 1	717	789	0.07286	112.7861	GEN600003 1-PRAIRIE ISLAND G1
FDNS	00NR	0	20WP	G15_082	FROM->TO	G14-057T 345.00 - SUNNYSIDE 345KV CKT 1	717	789	0.07286	112.7816	GEN511851 1-COMANCHE #1
FDNS	00NR	0	20WP	G15_082	FROM->TO	G14-057T 345.00 - SUNNYSIDE 345KV CKT 1	717	789	0.07424	112.7773	CANEY CREEK - TEXOMA JCT 138KV CKT 1
FDNS	00NR	0	20WP	G15_082	FROM->TO	G14-057T 345.00 - SUNNYSIDE 345KV CKT 1	717	789	0.07286	112.7665	GEN600006 1-AS KING
FDNS	00NR	0	20WP	G15_082	FROM->TO	G14-057T 345.00 - SUNNYSIDE 345KV CKT 1	717	789	0.07286	112.7632	GEN563173 1-G15082_3 0.6900
FDNS	00NR	0	20WP	G15_082	FROM->TO	G14-057T 345.00 - SUNNYSIDE 345KV CKT 1	717	789	0.07286	112.763	GEN562710 1-G15_022_3 0.5500
FDNS	00NR	0	20WP	G15_082	FROM->TO	G14-057T 345.00 - SUNNYSIDE 345KV CKT 1	717	789	0.07327	112.6769	P12:138:AEPW-OGE:CORNVIL4:CIMARON4
FDNS	00NR	0	20WP	G15_082	FROM->TO	G14-057T 345.00 - SUNNYSIDE 345KV CKT 1	717	789	0.07076	112.6578	GRAPEVINE INTERCHANGE - NICHOLS STATION 230KV CKT 1
FDNS	00NR	0	20WP	G15_082	FROM->TO	G14-057T 345.00 - SUNNYSIDE 345KV CKT 1	717	789	0.07076	112.6578	GRAPEVINE INTERCHANGE - NICHOLS STATION 230KV CKT 1
FDNS	00NR	0	20WP	G15_082	FROM->TO	G14-057T 345.00 - SUNNYSIDE 345KV CKT 1	717	789	0.07286	112.622	GEN532751 1-WOLF CREEK GENERATING STATION UNIT 1
FDNS	00NR	0	20WP	G15_082	FROM->TO	G14-057T 345.00 - SUNNYSIDE 345KV CKT 1	717	789	0.07286	112.5924	GEN629074 1-ARNOLD LOWSIDE OF GSU XFMR
FDNS	00NR	0	20WP	G15_082	FROM->TO	G14-057T 345.00 - SUNNYSIDE 345KV CKT 1	717	789	0.07286	112.59	GEN615001 1-COAL CREEK
FDNS	00NR	0	20WP	G15_082	FROM->TO	G14-057T 345.00 - SUNNYSIDE 345KV CKT 1	717	789	0.07286	112.5849	GEN635213 3-NEAL UNIT 3
FDNS	00NR	0	20WP	G15_082	FROM->TO	G14-057T 345.00 - SUNNYSIDE 345KV CKT 1	717	789	0.07286	112.5649	GEN615002 2-COAL CREEK
FDNS	00NR	0	20WP	G15_082	FROM->TO	G14-057T 345.00 - SUNNYSIDE 345KV CKT 1	717	789	0.07289	112.5565	P12:138:WFEC:MSL09
FDNS	00NR	0	20WP	G15_082	FROM->TO	G14-057T 345.00 - SUNNYSIDE 345KV CKT 1	717	789	0.07286	112.5537	BIG STONE 230/24.0KV TRANSFORMER CKT 1
FDNS	00NR	0	20WP	G15_082	FROM->TO	G14-057T 345.00 - SUNNYSIDE 345KV CKT 1	717	789	0.07286	112.5127	GEN562754 1-G15031_5 0.6900
FDNS	00NR	0	20WP	G15_082	FROM->TO	G14-057T 345.00 - SUNNYSIDE 345KV CKT 1	717	789	0.07307	112.5	NORTHWEST TEXARKANA - VALLIANT 345KV CKT 1
FDNS	00NR	0	20WP	G15_082	FROM->TO	G14-057T 345.00 - SUNNYSIDE 345KV CKT 1	717	789	0.07307	112.5	NORTHWEST TEXARKANA - VALLIANT 345KV CKT 1
FDNS	00NR	0	20WP	G15_082	FROM->TO	G14-057T 345.00 - SUNNYSIDE 345KV CKT 1	717	789	0.07286	112.4977	GEN636641 1-LOUISA UNIT 1
FDNS	00NR	0	20WP	G15_082	FROM->TO	G14-057T 345.00 - SUNNYSIDE 345KV CKT 1	717	789	0.06901	112.4854	CHISHOLM7 345.00 () 345/230/13.2KV TRANSFORMER CKT 1
FDNS	00NR	0	20WP	G15_082	FROM->TO	G14-057T 345.00 - SUNNYSIDE 345KV CKT 1	717	789	0.07286	112.4681	GEN600005 1-MONTICELLO
FDNS	00NR	0	20WP	G15_082	FROM->TO	G14-057T 345.00 - SUNNYSIDE 345KV CKT 1	717	789	0.07286	112.4533	GEN562556 1-G14_046_3 0.3420
FDNS	00NR	0	20WP	G15_082	FROM->TO	G14-057T 345.00 - SUNNYSIDE 345KV CKT 1	717	789	0.07286	112.4448	GEN562756 1-G15031_7 0.6900
FDNS	00NR	0	20WP	G15_082	FROM->TO	G14-057T 345.00 - SUNNYSIDE 345KV CKT 1	717	789	0.06901	112.4115	CHISHOLM7 345.00 - GRACEMONT 345KV CKT 1
FDNS	00NR	0	20WP	G15_082	FROM->TO	G14-057T 345.00 - SUNNYSIDE 345KV CKT 1	717	789	0.07286	112.3689	GEN563142 1-G15079_3 0.5500
FDNS	00NR	0	20WP	G15_082	FROM->TO	G14-057T 345.00 - SUNNYSIDE 345KV CKT 1	717	789	0.07286	112.3689	GEN563151 1-G15080_2 0.5500
FDNS	00NR	0	20WP	G15_082	FROM->TO	G14-057T 345.00 - SUNNYSIDE 345KV CKT 1	717	789	0.07286	112.3454	GEN600000 1-SHERBURNECNTY G1
FDNS	00NR	0	20WP	G15_082	FROM->TO	G14-057T 345.00 - SUNNYSIDE 345KV CKT 1	717	789	0.07286	112.3409	GEN562023 1-G11_020_3 0.6900
FDNS	00NR	0	20WP	G15_082	FROM->TO	G14-057T 345.00 - SUNNYSIDE 345KV CKT 1	717	789	0.07286	112.3409	GEN562026 1-G11_019_3 0.6900
FDNS	00NR	0	20WP	G15_082	FROM->TO	G14-057T 345.00 - SUNNYSIDE 345KV CKT 1	717	789	0.07286	112.3068	GEN629075 1-OTTUMWA GENERATOR FOR OTTUMWA UNIT NO 1
FDNS	00NR	0	20WP	G15_082	FROM->TO	G14-057T 345.00 - SUNNYSIDE 345KV CKT 1	717	789	0.07286	112.2922	GEN600001 2-SHERBURNE CNTY G2
FDNS	00NR	0	16WP	G15_082	FROM->TO	G14-057T 345.00 - SUNNYSIDE 345KV CKT 1	717	789	0.07347	112.2652	EASTDC - ERCOT EQUIVALENCE 345KV CKT 1
FDNS	00NR	0	20WP	G15_082	FROM->TO	G14-057T 345.00 - SUNNYSIDE 345KV CKT 1	717	789	0.07286	112.259	GEN523971 1-HARRINGTON GEN #1 24 KV
FDNS	00NR	0	20WP	G15_082	FROM->TO	G14-057T 345.00 - SUNNYSIDE 345KV CKT 1	717	789	0.07286	112.259	GEN523973 1-HARRINGTON GEN #3 24 KV
FDNS	00NR	0	20WP	G15_082	FROM->TO	G14-057T 345.00 - SUNNYSIDE 345KV CKT 1	717	789	0.07286	112.2589	GEN523972 1-HARRINGTON GEN #2 24 KV
FDNS	00NR	0	20WP	G15_082	FROM->TO	G14-057T 345.00 - SUNNYSIDE 345KV CKT 1	717	789	0.07286	112.2231	GEN511848 1-SOUTHWESTERN STATION #3
FDNS	00NR	0	20WP	G15_082	FROM->TO	G14-057T 345.00 - SUNNYSIDE 345KV CKT 1	717	789	0.07286	112.1607	GEN527901 1-HOBBS PLANT #1 (CT)
FDNS	00NR	0	20WP	G15_082	FROM->TO	G14-057T 345.00 - SUNNYSIDE 345KV CKT 1	717	789	0.07286	112.1607	GEN527902 1-HOBBS PLANT #2 (CT)
FDNS	00NR	0	20WP	G15_082	FROM->TO	G14-057T 345.00 - SUNNYSIDE 345KV CKT 1	717	789	0.07286	112.1241	GEN563042 1-G15068_3 0.6900
FDNS	00NR	0	20WP	G15_082	FROM->TO	G14-057T 345.00 - SUNNYSIDE 345KV CKT 1	717	789	0.07317	112.1223	LYDIA - WELSH 345KV CKT 1
FDNS	00NR	0	20WP	G15_082	FROM->TO	G14-057T 345.00 - SUNNYSIDE 345KV CKT 1	717	789	0.07317	112.1223	LYDIA - WELSH 345KV CKT 1
FDNS	00NR	0	20WP	G15_082	FROM->TO	G14-057T 345.00 - SUNNYSIDE 345KV CKT 1	717	789	0.07286	112.0454	SHERBURNE CO 345/24.0KV TRANSFORMER CKT 1
FDNS	00NR	0	20WP	G15_082	FROM->TO	G14-057T 345.00 - SUNNYSIDE 345KV CKT 1	717	789	0.07286	112.0393	GEN635214 4-NEAL UNIT 4
FDNS	00NR	0	20WP	G15_082	FROM->TO	G14-057T 345.00 - SUNNYSIDE 345KV CKT 1	717	789	0.06908	111.9721	P12:230:AEPW-SPS:SWEETWT6:WHEELER 6
FDNS	00NR	0	20WP	G15_082	FROM->TO	G14-057T 345.00 - SUNNYSIDE 345KV CKT 1	717	789	0.06908	111.9702	STATELINE INTERCHANGE - STLN-DEMARC6 230KV CKT 1
FDNS	00NR	0	20WP	G15_082	FROM->TO	G14-057T 345.00 - SUNNYSIDE 345KV CKT 1	717	789	0.06908	111.9678	STLN-DEMARC6 - SWEETWATER 230KV CKT 1
FDNS	00NR	0	20WP	G15_082	FROM->TO	G14-057T 345.00 - SUNNYSIDE 345KV CKT 1	717	789	0.07286	111.869	GEN600002 3-SHERBURNE CNTY G3
FDNS	00NR	0	20WP	G15_082	FROM->TO	G14-057T 345.00 - SUNNYSIDE 345KV CKT 1	717	789	0.07286	111.8218	GEN563043 1-G15068_4 0.6900
FDNS	00NR	0	20WP	G15_082	FROM->TO	G14-057T 345.00 - SUNNYSIDE 345KV CKT 1	717	789	0.07286	111.7912	GEN526333 1-JONES GEN #3 21 KV
FDNS	00NR	0	20WP	G15_082	FROM->TO	G14-057T 345.00 - SUNNYSIDE 345KV CKT 1	717	789	0.07286	111.7911	GEN526334 1-JONES_4 116.500
FDNS	00NR	0	20WP	G15_082	FROM->TO	G14-057T 345.00 - SUNNYSIDE 345KV CKT 1	717	789	0.07286	111.7859	GEN344225 1-1CAL G1 25.000
FDNS	00NR	0	20WP	G15_082	FROM->TO	G14-057T 345.00 - SUNNYSIDE 345KV CKT 1	717	789	0.07286	111.7578	GEN525844 1-ELK_1 118.000
FDNS	00NR	0	20WP	G15_082	FROM->TO	G14-057T 345.00 - SUNNYSIDE 345KV CKT 1	717	789	0.07286	111.7398	GEN525845 1-ELK_2 1 18.000
FDNS	00NR	0	20WP	G15_082	FROM->TO	G14-057T 345.00 - SUNNYSIDE 345KV CKT 1	717	789	0.07286	111.6059	GEN527166 1-MUSTANG_6 118.000
FDNS	00NR	0	20WP	G15_082	FROM->TO	G14-057T 345.00 - SUNNYSIDE 345KV CKT 1	717	789	0.07286	111.5822	GEN635023 3-WALTER SCOTT UNIT 3
FDNS	00NR	0	20WP	G15_082	FROM->TO	G14-057T 345.00 - SUNNYSIDE 345KV CKT 1	717	789	0.06834	111.5772	P12:230:AEPW:ELKCITY6:SWEETWT6
FDNS	00NR	0	20WP	G15_082	FROM->TO	G14-057T 345.00 - SUNNYSIDE 345KV CKT 1	717	789	0.07286	111.5586	GEN563202 1-G15085_3 0.5500
FDNS	00NR	0	20WP	G15_082	FROM->TO	G14-057T 345.00 - SUNNYSIDE 345KV CKT 1	717	789	0.07286	111.5413	GEN528501 1-G14_012 24.000
FDNS	00NR	0	20WP	G15_082	FROM->TO	G14-057T 345.00 - SUNNYSIDE 345KV CKT 1	717	789	0.07286	111.4982	GEN562590 1-G14_057_3 0.6900
FDNS	00NR	0	20WP	G15_082	FROM->TO	G14-057T 345.00 - SUNNYSIDE 345KV CKT 1	717	789	0.07286	111.3773	GEN562762 1-G15033_3 0.6900
FDNS	00NR	0	20WP	G15_082	FROM->TO	G14-057T 345.00 - SUNNYSIDE 345KV CKT 1	717	789	0.07286	111.3662	GEN562655 1-G14_074_3 0.6900
FDNS	00NR	0	20WP	G15_082	FROM->TO	G14-057T 345.00 - SUNNYSIDE 345KV CKT 1	717	789	0.06908	111.3397	CHISHOLM6 230.00 - SWEETWATER 230KV CKT 1
FDNS	00NR	0	20WP	G15_082	FROM->TO	G14-057T 345.00 - SUNNYSIDE 345KV CKT 1	717	789	0.07286	111.3259	GEN525562 1-TOLK GEN #2 24 KV
FDNS	00NR	0	20WP	G15_082	FROM->TO	G14-057T 345.00 - SUNNYSIDE 345KV CKT 1	717	789	0.07223	111.2888	JOHNSON COUNTY (JOHNCO) 345/138/13.8KV TRANSFORMER CKT 1
FDNS	00NR	0	20WP	G15_082	FROM->TO	G14-057T 345.00 - SUNNYSIDE 345KV CKT 1	717	789	0.07286	111.2751	GEN562685 1-G15_013_3 0.3550
FDNS	00NR	0	20WP	G15_082	FROM->TO	G14-057T 345.00 - SUNNYSIDE 345KV CKT 1	717	789	0.07286	111.2535	GEN527903 1-HOBBS PLANT #3 (ST)
FDNS	00NR	0	20WP	G15_082	FROM->TO	G14-057T 345.00 - SUNNYSIDE 345KV CKT 1	717	789	0.07286	111.179	GEN635024 4-WALTER SCOTT UNIT 4
FDNS	00NR	0	17SP	G15_082	FROM->TO	G14-057T 345.00 - SUNNYSIDE 345KV CKT 1	717	789	0.08979	111.1306	CIMARRON - MINCO 345KV CKT 1
FDNS	00NR	0	20WP	G15_082	FROM->TO	G14-057T 345.00 - SUNNYSIDE 345KV CKT 1	717	789	0.07286	111.1213	GEN563273 2-G15093_4 0.6900
FDNS	00NR	0	16WP	G15_082	FROM->TO	G14-057T 345.00 - SUNNYSIDE 345KV CKT 1	717	789	0.0624	111.0799	JOHNSON COUNTY - PITTSBURG 345KV CKT 1
FDNS	00NR	0	16WP	G15_082	FROM->TO	G14-057T 345.00 - SUNNYSIDE 345KV CKT 1	717	789	0.0624	111.0799	JOHNSON COUNTY - PITTSBURG 345KV CKT 1
FDNS	00NR	0	20WP	G15_082	FROM->TO	G14-057T 345.00 - SUNNYSIDE 345KV CKT 1	717	789	0.07328	111.0395	LYDIA - VALLIANT 345KV CKT 1
FDNS	00NR	0	20WP	G15_082	FROM->TO	G14-057T 345.00 - SUNNYSIDE 345KV CKT 1	717	789	0.07328	111.0395	LYDIA - VALLIANT 345KV CKT 1

SOLUTION	GROUP	SCENARIO	SEASON	SOURCE	DIRECTION	MONITORED ELEMENT	RATEA (MVA)	RATEB(MVA)	TDF	TC%LOADING (% MVA)	CONTINGENCY
FDNS	00NR	0	16WP	G15_082	FROM->TO	G14-057T 345.00 - SUNNYSIDE 345KV CKT 1	717	789	0.07347	110.856	GEN563263 1-G15092_4 0.6900
FDNS	00NR	0	20WP	G15_082	FROM->TO	G14-057T 345.00 - SUNNYSIDE 345KV CKT 1	717	789	0.07286	110.7981	GEN525561 1-TOLK GEN #1 24 KV
FDNS	00NR	0	20WP	G15_082	FROM->TO	G14-057T 345.00 - SUNNYSIDE 345KV CKT 1	717	789	0.07286	110.2812	GEN563272 1-G15093_3 0.6900
FDNS	00NR	0	16WP	G15_082	FROM->TO	G14-057T 345.00 - SUNNYSIDE 345KV CKT 1	717	789	0.07214	110.1093	HUGO - VALLIANT 345KV CKT 1
FDNS	00NR	0	16WP	G15_082	FROM->TO	G14-057T 345.00 - SUNNYSIDE 345KV CKT 1	717	789	0.07214	110.1093	HUGO - VALLIANT 345KV CKT 1
FDNS	00NR	0	16WP	G15_082	FROM->TO	G14-057T 345.00 - SUNNYSIDE 345KV CKT 1	717	789	0.07347	109.172	GEN563262 1-G15092_3 0.6900
FDNS	00NR	0	20WP	G15_082	FROM->TO	G14-057T 345.00 - SUNNYSIDE 345KV CKT 1	717	789	0.06186	108.7221	JOHNSON COUNTY - PITTSBURG 345KV CKT 1
FDNS	00NR	0	20WP	G15_082	FROM->TO	G14-057T 345.00 - SUNNYSIDE 345KV CKT 1	717	789	0.06186	108.7221	JOHNSON COUNTY - PITTSBURG 345KV CKT 1
FDNS	00NR	0	20WP	G15_082	FROM->TO	G14-057T 345.00 - SUNNYSIDE 345KV CKT 1	717	789	0.07158	108.4223	HUGO - VALLIANT 345KV CKT 1
FDNS	00NR	0	20WP	G15_082	FROM->TO	G14-057T 345.00 - SUNNYSIDE 345KV CKT 1	717	789	0.07158	108.4223	HUGO - VALLIANT 345KV CKT 1
FDNS	00NR	0	16WP	G15_082	FROM->TO	G14-057T 345.00 - SUNNYSIDE 345KV CKT 1	717	789	0.04821	108.0754	G14-074T 345.00 - TUCO INTERCHANGE 345KV CKT 1
FDNS	00NR	0	20WP	G15_082	FROM->TO	G14-057T 345.00 - SUNNYSIDE 345KV CKT 1	717	789	0.07286	108.0024	GEN563263 1-G15092_4 0.6900
FDNS	00NR	0	20WP	G15_082	FROM->TO	G14-057T 345.00 - SUNNYSIDE 345KV CKT 1	717	789	0.07286	106.3181	GEN563262 1-G15092_3 0.6900
FDNS	00NR	0	16WP	G15_082	FROM->TO	G14-057T 345.00 - SUNNYSIDE 345KV CKT 1	717	789	0.05948	105.3633	JOHNSON COUNTY - SUNNYSIDE 345KV CKT 1
FDNS	00NR	0	20WP	G15_082	FROM->TO	G14-057T 345.00 - SUNNYSIDE 345KV CKT 1	717	789	0.04761	104.09	G14-074T 345.00 - TUCO INTERCHANGE 345KV CKT 1
FDNS	00NR	0	20WP	G15_082	FROM->TO	G14-057T 345.00 - SUNNYSIDE 345KV CKT 1	717	789	0.05894	102.1367	JOHNSON COUNTY - SUNNYSIDE 345KV CKT 1
FDNS	00NR	0	20SP	G15_082	FROM->TO	G14-057T 345.00 - SUNNYSIDE 345KV CKT 1	717	789	0.08982	101.4516	CIMARRON - MINCO 345KV CKT 1
FDNS	00NR	0	17SP	G15_082	FROM->TO	G14-057T 345.00 - SUNNYSIDE 345KV CKT 1	717	789	0.08979	100.8518	GRACEMONT - MINCO 345KV CKT 1
FDNS	00NR	0	20WP	G15_082	FROM->TO	G15093_T 345.00 - GRACEMONT 345KV CKT 1	717	789	0.06169	102.9976	G14-057T 345.00 - SUNNYSIDE 345KV CKT 1
FDNS	00NR	0	16WP	G15_082	FROM->TO	G15093_T 345.00 - GRACEMONT 345KV CKT 1	717	789	0.06167	100.2363	G14-057T 345.00 - SUNNYSIDE 345KV CKT 1
FDNS	00NR	0	25SP	G15_082	FROM->TO	Hitchland Interchange (SIEM 8743067) 345/230/13.2KV TRANSFORMER CKT 2	560	644	0.06578	101.6479	Hitchland Interchange (H TB80155502) 345/230/13.2KV TRANSFORMER CKT 1
FDNS	00NR	0	25SP	G15_082	FROM->TO	Hitchland Interchange (SIEM 8743067) 345/230/13.2KV TRANSFORMER CKT 2	560	644	0.06578	101.6479	Hitchland Interchange (H TB80155502) 345/230/13.2KV TRANSFORMER CKT 1
FDNS	00NR	0	25SP	G15_082	FROM->TO	Hitchland Interchange (SIEM 8743067) 345/230/13.2KV TRANSFORMER CKT 2	560	644	0.06578	99.9	Hitchland Interchange (H TB80155502) 345/230/13.2KV TRANSFORMER CKT 1
FDNS	00NR	0	25SP	G15_082	FROM->TO	Hitchland Interchange (SIEM 8743067) 345/230/13.2KV TRANSFORMER CKT 2	560	644	0.06578	99.9	Hitchland Interchange (H TB80155502) 345/230/13.2KV TRANSFORMER CKT 1
FDNS	00NR	0	20WP	G15_082	TO->FROM	MATHWSN7 345.00 - TATONGA7 345.00 345KV CKT 1	1195	1195	0.30843	110.6187	G14-074T 345.00 - OKLAUNION 345KV CKT 1
FDNS	00NR	0	16WP	G15_082	TO->FROM	MATHWSN7 345.00 - TATONGA7 345.00 345KV CKT 1	1195	1195	0.31109	108.2938	G14-074T 345.00 - OKLAUNION 345KV CKT 1
FDNS	02ALL	0	20L	G15_082	TO->FROM	MATHWSN7 345.00 - TATONGA7 345.00 345KV CKT 1	1195	1195	0.23168	103.39	THISTLE7 345.00 - WOODWARD DISTRICT EHV 345KV CKT 1
FDNS	02ALL	0	20L	G15_082	TO->FROM	MATHWSN7 345.00 - TATONGA7 345.00 345KV CKT 1	1195	1195	0.23168	103.39	THISTLE7 345.00 - WOODWARD DISTRICT EHV 345KV CKT 1
FDNS	02ALL	0	20L	G15_082	TO->FROM	MATHWSN7 345.00 - TATONGA7 345.00 345KV CKT 1	1195	1195	0.23168	103.39	THISTLE7 345.00 - WOODWARD DISTRICT EHV 345KV CKT 2
FDNS	02ALL	0	20L	G15_082	TO->FROM	MATHWSN7 345.00 - TATONGA7 345.00 345KV CKT 1	1195	1195	0.23168	103.39	THISTLE7 345.00 - WOODWARD DISTRICT EHV 345KV CKT 2
FDNS	02ALL	0	20L	G15_082	TO->FROM	MATHWSN7 345.00 - TATONGA7 345.00 345KV CKT 1	1195	1195	0.21436	103.2514	G14-074T 345.00 - OKLAUNION 345KV CKT 1
FDNS	00NR	0	20WP	G15_082	TO->FROM	MATHWSN7 345.00 - TATONGA7 345.00 345KV CKT 1	1195	1195	0.30581	102.5348	THISTLE7 345.00 - WOODWARD DISTRICT EHV 345KV CKT 1
FDNS	00NR	0	20WP	G15_082	TO->FROM	MATHWSN7 345.00 - TATONGA7 345.00 345KV CKT 1	1195	1195	0.30581	102.5348	THISTLE7 345.00 - WOODWARD DISTRICT EHV 345KV CKT 1
FDNS	00NR	0	20WP	G15_082	TO->FROM	MATHWSN7 345.00 - TATONGA7 345.00 345KV CKT 1	1195	1195	0.30581	102.5348	THISTLE7 345.00 - WOODWARD DISTRICT EHV 345KV CKT 2
FDNS	00NR	0	20WP	G15_082	TO->FROM	MATHWSN7 345.00 - TATONGA7 345.00 345KV CKT 1	1195	1195	0.30581	102.5348	THISTLE7 345.00 - WOODWARD DISTRICT EHV 345KV CKT 2
FDNS	00NR	0	20WP	G15_082	TO->FROM	MATHWSN7 345.00 - TATONGA7 345.00 345KV CKT 1	1195	1195	0.29736	102.5301	CHISHOLM6 230.00 - SWEETWATER 230KV CKT 1
FDNS	00NR	0	20WP	G15_082	TO->FROM	MATHWSN7 345.00 - TATONGA7 345.00 345KV CKT 1	1195	1195	0.30843	102.4272	G14-074T 345.00 - TUCO INTERCHANGE 345KV CKT 1
FDNS	00NR	0	20WP	G15_082	TO->FROM	MATHWSN7 345.00 - TATONGA7 345.00 345KV CKT 1	1195	1195	0.29814	102.324	P12:230:AEPW:ELKCITY6:SWEETWT6
FDNS	02ALL	0	20L	G15_082	TO->FROM	MATHWSN7 345.00 - TATONGA7 345.00 345KV CKT 1	1195	1195	0.21436	101.6412	G14-074T 345.00 - TUCO INTERCHANGE 345KV CKT 1
FDNS	00NR	0	20WP	G15_082	TO->FROM	MATHWSN7 345.00 - TATONGA7 345.00 345KV CKT 1	1195	1195	0.28948	100.7422	CIMARRON - MINCO 345KV CKT 1
FDNS	00NR	0	16WP	G15_082	TO->FROM	MATHWSN7 345.00 - TATONGA7 345.00 345KV CKT 1	1195	1195	0.30825	100.6804	THISTLE7 345.00 - WOODWARD DISTRICT EHV 345KV CKT 1
FDNS	00NR	0	16WP	G15_082	TO->FROM	MATHWSN7 345.00 - TATONGA7 345.00 345KV CKT 1	1195	1195	0.30825	100.6804	THISTLE7 345.00 - WOODWARD DISTRICT EHV 345KV CKT 1
FDNS	00NR	0	16WP	G15_082	TO->FROM	MATHWSN7 345.00 - TATONGA7 345.00 345KV CKT 1	1195	1195	0.30825	100.6804	THISTLE7 345.00 - WOODWARD DISTRICT EHV 345KV CKT 2
FDNS	00NR	0	16WP	G15_082	TO->FROM	MATHWSN7 345.00 - TATONGA7 345.00 345KV CKT 1	1195	1195	0.30825	100.6804	THISTLE7 345.00 - WOODWARD DISTRICT EHV 345KV CKT 2
FDNS	00NR	0	20WP	G15_082	TO->FROM	MATHWSN7 345.00 - TATONGA7 345.00 345KV CKT 1	1195	1195	0.29736	100.3377	STLN-DEMARC6 - SWEETWATER 230KV CKT 1
FDNS	00NR	0	20WP	G15_082	TO->FROM	MATHWSN7 345.00 - TATONGA7 345.00 345KV CKT 1	1195	1195	0.29736	100.3217	P12:230:AEPW-SPS:SWEETWT6:WHEELER 6
FDNS	00NR	0	20WP	G15_082	TO->FROM	MATHWSN7 345.00 - TATONGA7 345.00 345KV CKT 1	1195	1195	0.29736	100.3208	STATELINE INTERCHANGE - STLN-DEMARC6 230KV CKT 1
FDNS	00NR	0	16WP	G15_082	TO->FROM	MATHWSN7 345.00 - TATONGA7 345.00 345KV CKT 1	1195	1195	0.30012	100.3048	CHISHOLM6 230.00 - SWEETWATER 230KV CKT 1
FDNS	00NR	0	16WP	G15_082	TO->FROM	MATHWSN7 345.00 - TATONGA7 345.00 345KV CKT 1	1195	1195	0.31109	100.2691	G14-074T 345.00 - TUCO INTERCHANGE 345KV CKT 1
FDNS	00NR	0	20WP	G15_082	TO->FROM	MATHWSN7 345.00 - TATONGA7 345.00 345KV CKT 1	1195	1195	0.29402	100.1905	G1524G1525 345.00 - THISTLE7 345.00 345KV CKT 1
FDNS	00NR	0	20WP	G15_082	TO->FROM	MATHWSN7 345.00 - TATONGA7 345.00 345KV CKT 1	1195	1195	0.29402	100.1905	G1524G1525 345.00 - THISTLE7 345.00 345KV CKT 2
FDNS	00NR	0	16WP	G15_082	TO->FROM	MATHWSN7 345.00 - TATONGA7 345.00 345KV CKT 1	1195	1195	0.30095	100.1509	P12:230:AEPW:ELKCITY6:SWEETWT6
FDNS	02ALL	0	20L	G15_082	TO->FROM	MATHWSN7 345.00 - TATONGA7 345.00 345KV CKT 1	1195	1195	0.21547	100.0867	P12:230:AEPW-SPS:SWEETWT6:WHEELER 6
FDNS	02ALL	0	20L	G15_082	TO->FROM	MATHWSN7 345.00 - TATONGA7 345.00 345KV CKT 1	1195	1195	0.21547	100.0852	STATELINE INTERCHANGE - STLN-DEMARC6 230KV CKT 1
FDNS	02ALL	0	20L	G15_082	TO->FROM	MATHWSN7 345.00 - TATONGA7 345.00 345KV CKT 1	1195	1195	0.21547	100.0783	STLN-DEMARC6 - SWEETWATER 230KV CKT 1
FDNS	02ALL	0	20WP	G15_082	TO->FROM	MATHWSN7 345.00 - TATONGA7 345.00 345KV CKT 1	1195	1195	0.23707	99.9	THISTLE7 345.00 - WOODWARD DISTRICT EHV 345KV CKT 1
FDNS	02ALL	0	20WP	G15_082	TO->FROM	MATHWSN7 345.00 - TATONGA7 345.00 345KV CKT 1	1195	1195	0.23707	99.9	THISTLE7 345.00 - WOODWARD DISTRICT EHV 345KV CKT 1
FDNS	02ALL	0	20WP	G15_082	TO->FROM	MATHWSN7 345.00 - TATONGA7 345.00 345KV CKT 1	1195	1195	0.23707	99.9	THISTLE7 345.00 - WOODWARD DISTRICT EHV 345KV CKT 2
FDNS	02ALL	0	20WP	G15_082	TO->FROM	MATHWSN7 345.00 - TATONGA7 345.00 345KV CKT 1	1195	1195	0.23707	99.9	THISTLE7 345.00 - WOODWARD DISTRICT EHV 345KV CKT 2
FDNS	02ALL	0	25SP	G15_082	FROM->TO	POTTER COUNTY INTERCHANGE (WAUK 90343-A) 345/230/13.2KV TRANSFORMER CKT 1	560	560	0.0837	121.3761	BASE CASE
FDNS	02ALL	0	25SP	G15_082	FROM->TO	POTTER COUNTY INTERCHANGE (WAUK 90343-A) 345/230/13.2KV TRANSFORMER CKT 1	560	560	0.0837	118.254	BASE CASE
FDNS	00NR	0	25SP	G15_082	FROM->TO	POTTER COUNTY INTERCHANGE (WAUK 90343-A) 345/230/13.2KV TRANSFORMER CKT 1	560	560	0.06281	105.5004	G14-074T 345.00 - TUCO INTERCHANGE 345KV CKT 1
FDNS	00NR	0	25SP	G15_082	FROM->TO	POTTER COUNTY INTERCHANGE (WAUK 90343-A) 345/230/13.2KV TRANSFORMER CKT 1	560	560	0.09326	104.5016	HITCHLAND INTERCHANGE - MOORE COUNTY INTERCHANGE 230KV CKT 1
FDNS	00NR	0	25SP	G15_082	FROM->TO	POTTER COUNTY INTERCHANGE (WAUK 90343-A) 345/230/13.2KV TRANSFORMER CKT 1	560	560	0.09326	104.5016	HITCHLAND INTERCHANGE - MOORE COUNTY INTERCHANGE 230KV CKT 1
FDNS	00NR	0	25SP	G15_082	FROM->TO	POTTER COUNTY INTERCHANGE (WAUK 90343-A) 345/230/13.2KV TRANSFORMER CKT 1	560	560	0.06281	103.4737	G14-074T 345.00 - TUCO INTERCHANGE 345KV CKT 1
FDNS	00NR	0	25SP	G15_082	FROM->TO	POTTER COUNTY INTERCHANGE (WAUK 90343-A) 345/230/13.2KV TRANSFORMER CKT 1	560	560	0.09326	102.7426	HITCHLAND INTERCHANGE - MOORE COUNTY INTERCHANGE 230KV CKT 1
FDNS	00NR	0	25SP	G15_082	FROM->TO	POTTER COUNTY INTERCHANGE (WAUK 90343-A) 345/230/13.2KV TRANSFORMER CKT 1	560	560	0.09326	102.7426	HITCHLAND INTERCHANGE - MOORE COUNTY INTERCHANGE 230KV CKT 1
FDNS	00NR	0	25SP	G15_082	FROM->TO	POTTER COUNTY INTERCHANGE (WAUK 90343-A) 345/230/13.2KV TRANSFORMER CKT 1	560	560	0.08186	102.6982	BORDER 7345.00 - TUCO_2 345.00 345KV CKT 1
FDNS	00NR	0	25SP	G15_082	FROM->TO	POTTER COUNTY INTERCHANGE (WAUK 90343-A) 345/230/13.2KV TRANSFORMER CKT 1	560	560	0.08186	100.8912	BORDER 7345.00 - TUCO_2 345.00 345KV CKT 1
FDNS	00NR	0	25SP	G15_082	FROM->TO	POTTER COUNTY INTERCHANGE (WAUK 90343-A) 345/230/13.2KV TRANSFORMER CKT 1	560	560	0.08186	99.9	BORDER 7345.00 - WOODWARD DISTRICT EHV 345KV CKT 1
FDNS	00NR	0	17SP	G15_082	TO->FROM	ROMAN NOSE - SOUTHARD 138KV CKT 1	133	153	0.04843	107.3782	MATHWSN7 345.00 - TATONGA7 345.00 345KV CKT 1
FDNS	00NR	0	20WP	G15_082	TO->FROM	ROMAN NOSE - SOUTHARD 138KV CKT 1	171	185	0.04578	104.1325	MATHWSN7 345.00 - TATONGA7 345.00 345KV CKT 1
FDNS	02NR	0	20L	G15_082	TO->FROM	ROMAN NOSE - SOUTHARD 138KV CKT 1	133	153	0.04502	103.9781	MATHWSN7 345.00 - TATONGA7 345.00 345KV CKT 1
FDNS	00NR	0	16WP	G15_082	TO->FROM	ROMAN NOSE - SOUTHARD 138KV CKT 1	171	185	0.04627	103.2279	MATHWSN7 345.00 - TATONGA7 345.00 345KV CKT 1
FDNS	00NR	0	20SP	G15_082	TO->FROM	ROMAN NOSE - SOUTHARD 138KV CKT 1	133	153	0.04816	101.1967	MATHWSN7 345.00 - TATONGA7 345.00 345KV CKT 1
FDNS	00NR	0	17SP	G15_082	TO->FROM	ROMAN NOSE - SOUTHARD 138KV CKT 1	133	153	0.04843	100.8776	G11_051T 345.00 - TATONGA7 345.00 345KV CKT 1
FDNS	02NR	0	20L	G15_082	FROM->TO	STLN-DEMARC6 - SWEETWATER 230KV CKT 1	353	353	0.09715	100.3386	MATHWSN7 345.00 - TATONGA7 345.00 345KV CKT 1
FDNS	00NR	0	16WP	G15_082	FROM->TO	SWISSVALE - WEST GARDNER 345KV CKT 1	717	717	0.04651	111.0929	HOYT - STRANGER CREEK 345KV CKT 1
FDNS	00NR	0	16WP	G15_082	FROM->TO	SWISSVALE - WEST GARDNER 345KV CKT 1	717	717	0.04381	108.6646	G15074_T 345.00 - HOYT 345KV CKT 1

SOLUTION	GROUP	SCENARIO	SEASON	SOURCE	DIRECTION	MONITORED ELEMENT	RATEA (MVA)	RATEB(MVA)	TDF	TC%LOADING (% MVA)	CONTINGENCY
FDNS	00NR	0	17SP	G15_082	FROM->TO	SWISSVALE - WEST GARDNER 345KV CKT 1	717	717	0.04423	107.2885	HOYT - STRANGER CREEK 345KV CKT 1
FDNS	00NR	0	17SP	G15_082	FROM->TO	SWISSVALE - WEST GARDNER 345KV CKT 1	717	717	0.04163	106.0987	G15074_T 345.00 - HOYT 345KV CKT 1
FDNS	00NR	0	16WP	G15_082	FROM->TO	SWISSVALE - WEST GARDNER 345KV CKT 1	717	717	0.04087	105.6579	LACYGNE - WAVERLY7 345.00 345KV CKT 1
FDNS	00NR	0	16WP	G15_082	FROM->TO	SWISSVALE - WEST GARDNER 345KV CKT 1	717	717	0.04087	104.2099	WAVERLY7 345.00 - WOLF CREEK 345KV CKT 1
FDNS	00NR	0	16WP	G15_082	FROM->TO	SWISSVALE - WEST GARDNER 345KV CKT 1	717	717	0.04381	101.7276	G15074_T 345.00 - JEFFREY ENERGY CENTER 345KV CKT 1
FDNS	00NR	0	17SP	G15_082	FROM->TO	SWISSVALE - WEST GARDNER 345KV CKT 1	717	717	0.04163	99.6	G15074_T 345.00 - JEFFREY ENERGY CENTER 345KV CKT 1
FDNS	02NR	0	20L	G15_082	TO->FROM	WALKEMEYER - WALKTAP3 115.00 115KV CKT 1	280.9	303.8	0.0737	113.1402	FINNEY SWITCHING STATION - HOLCOMB 345KV CKT 1
FDNS	02NR	0	20L	G15_082	TO->FROM	WALKEMEYER - WALKTAP3 115.00 115KV CKT 1	280.9	303.8	0.0737	113.1402	FINNEY SWITCHING STATION - HOLCOMB 345KV CKT 1
FDNS	02NR	0	20L	G15_082	TO->FROM	WALKEMEYER - WALKTAP3 115.00 115KV CKT 1	280.9	303.8	0.0737	107.3935	FINNEY SWITCHING STATION - WALKTAP7 345.00 345KV CKT 1
FDNS	02NR	0	20L	G15_082	TO->FROM	WALKEMEYER - WALKTAP3 115.00 115KV CKT 1	280.9	303.8	0.0737	107.3935	FINNEY SWITCHING STATION - WALKTAP7 345.00 345KV CKT 1
FDNS	02NR	0	20L	G15_082	FROM->TO	WALKTAP7 345.00 (WALKE345) 345/115/13.8KV TRANSFORMER CKT 1	280	280	0.0737	120.4699	FINNEY SWITCHING STATION - HOLCOMB 345KV CKT 1
FDNS	02NR	0	20L	G15_082	FROM->TO	WALKTAP7 345.00 (WALKE345) 345/115/13.8KV TRANSFORMER CKT 1	280	280	0.0737	120.4699	FINNEY SWITCHING STATION - HOLCOMB 345KV CKT 1
FDNS	02NR	0	20L	G15_082	FROM->TO	WALKTAP7 345.00 (WALKE345) 345/115/13.8KV TRANSFORMER CKT 1	280	280	0.0737	119.6098	FINNEY SWITCHING STATION - HOLCOMB 345KV CKT 1
FDNS	02NR	0	20L	G15_082	FROM->TO	WALKTAP7 345.00 (WALKE345) 345/115/13.8KV TRANSFORMER CKT 1	280	280	0.0737	119.6098	FINNEY SWITCHING STATION - HOLCOMB 345KV CKT 1
FDNS	02NR	0	20L	G15_082	FROM->TO	WALKTAP7 345.00 (WALKE345) 345/115/13.8KV TRANSFORMER CKT 1	280	280	0.0737	114.8561	FINNEY SWITCHING STATION - WALKTAP7 345.00 345KV CKT 1
FDNS	02NR	0	20L	G15_082	FROM->TO	WALKTAP7 345.00 (WALKE345) 345/115/13.8KV TRANSFORMER CKT 1	280	280	0.0737	114.8561	FINNEY SWITCHING STATION - WALKTAP7 345.00 345KV CKT 1
FDNS	02NR	0	20L	G15_082	FROM->TO	WALKTAP7 345.00 (WALKE345) 345/115/13.8KV TRANSFORMER CKT 1	280	280	0.0737	114.0969	FINNEY SWITCHING STATION - WALKTAP7 345.00 345KV CKT 1
FDNS	02NR	0	20L	G15_082	FROM->TO	WALKTAP7 345.00 (WALKE345) 345/115/13.8KV TRANSFORMER CKT 1	280	280	0.0737	114.0969	FINNEY SWITCHING STATION - WALKTAP7 345.00 345KV CKT 1
FDNS	00NR	0	20WP	G15_082	FROM->TO	WOODWARD EHV - WWPAR4 138.00 138KV CKT 1	287	287	0.1001	103.6824	MATHWSN7 345.00 - TATONGA7 345.00 345KV CKT 1
FDNS	00NR	2	16WP	G15_082	FROM->TO	CIMARRON - DRAPER LAKE 345KV CKT 1	717	717	0.14993	140.1539	G14-057T 345.00 - SUNNYSIDE 345KV CKT 1
FDNS	00NR	2	16WP	G15_082	FROM->TO	CIMARRON - DRAPER LAKE 345KV CKT 1	717	717	0.14993	129.6063	G14-057T 345.00 - LAWTON EASTSIDE 345KV CKT 1
FDNS	00NR	2	16WP	G15_082	FROM->TO	CIMARRON - DRAPER LAKE 345KV CKT 1	717	717	0.13969	124.992	ARCADIA - SEMINOLE 345KV CKT 1
FDNS	00NR	2	16WP	G15_082	FROM->TO	CIMARRON - DRAPER LAKE 345KV CKT 1	717	717	0.18245	123.9037	ARCADIA - NORTHWEST 345KV CKT 1
FDNS	00NR	2	16WP	G15_082	FROM->TO	CIMARRON - DRAPER LAKE 345KV CKT 1	717	717	0.13759	123.1007	CLEVELAND - G15066_T 345.00 345KV CKT 1
FDNS	00NR	2	16WP	G15_082	FROM->TO	CIMARRON - DRAPER LAKE 345KV CKT 1	717	717	0.13759	122.3403	G15066_T 345.00 - SOONER 345KV CKT 1
FDNS	00NR	2	16WP	G15_082	FROM->TO	CIMARRON - DRAPER LAKE 345KV CKT 1	717	717	0.14731	118.3188	MATHWSN7 345.00 - NORTHWEST 345KV CKT 1
FDNS	00NR	2	16WP	G15_082	FROM->TO	CIMARRON - DRAPER LAKE 345KV CKT 1	717	717	0.13609	117.6791	CLEVELAND - TULSA NORTH 345KV CKT 1
FDNS	00NR	2	16WP	G15_082	FROM->TO	CIMARRON - DRAPER LAKE 345KV CKT 1	717	717	0.13609	117.6791	CLEVELAND - TULSA NORTH 345KV CKT 1
FDNS	00NR	2	16WP	G15_082	FROM->TO	CIMARRON - DRAPER LAKE 345KV CKT 1	717	717	0.1371	116.7378	CIMARRON - SARA 138KV CKT 1
FDNS	00NR	2	16WP	G15_082	FROM->TO	CIMARRON - DRAPER LAKE 345KV CKT 1	717	717	0.13726	116.257	P12:138:WFEC:MSL03
FDNS	00NR	2	16WP	G15_082	FROM->TO	CIMARRON - DRAPER LAKE 345KV CKT 1	717	717	0.13532	115.887	CIMARRON (CIMARON2) 345/138/13.8KV TRANSFORMER CKT 1
FDNS	00NR	2	16WP	G15_082	FROM->TO	CIMARRON - DRAPER LAKE 345KV CKT 1	717	717	0.13526	115.6934	CIMARRON (CIMARON1) 345/138/13.8KV TRANSFORMER CKT 1
FDNS	00NR	2	16WP	G15_082	FROM->TO	CIMARRON - DRAPER LAKE 345KV CKT 1	717	717	0.1371	115.4489	SARA - STHLAKE4 138.00 138KV CKT 1
FDNS	00NR	2	16WP	G15_082	FROM->TO	CIMARRON - DRAPER LAKE 345KV CKT 1	717	717	0.1371	115.2507	MCCLAIN - STHLAKE4 138.00 138KV CKT 1
FDNS	00NR	2	16WP	G15_082	FROM->TO	CIMARRON - DRAPER LAKE 345KV CKT 1	717	717	0.13601	114.8409	CIMARRON - CZECH HALL 138KV CKT 1
FDNS	00NR	2	16WP	G15_082	FROM->TO	CIMARRON - DRAPER LAKE 345KV CKT 1	717	717	0.13601	114.4918	CZECH HALL - XEROX 138KV CKT 1
FDNS	00NR	2	16WP	G15_082	FROM->TO	CIMARRON - DRAPER LAKE 345KV CKT 1	717	717	0.13601	114.4717	MORGAN - XEROX 138KV CKT 1
FDNS	00NR	2	16WP	G15_082	FROM->TO	CIMARRON - DRAPER LAKE 345KV CKT 1	717	717	0.13601	114.3553	MORGAN - MUSTANG 138KV CKT 1
FDNS	00NR	2	16WP	G15_082	FROM->TO	CIMARRON - DRAPER LAKE 345KV CKT 1	717	717	0.13514	114.1451	ANADARKO - POCASSETT 138KV CKT 1
FDNS	00NR	2	16WP	G15_082	FROM->TO	CIMARRON - DRAPER LAKE 345KV CKT 1	717	717	0.13514	113.9502	POCASSETT - TUTTLE 138KV CKT 1
FDNS	00NR	2	16WP	G15_082	FROM->TO	CIMARRON - DRAPER LAKE 345KV CKT 1	717	717	0.13512	113.9375	CORN TAP - NAPLESTP 138.00 138KV CKT 1
FDNS	00NR	2	16WP	G15_082	FROM->TO	CIMARRON - DRAPER LAKE 345KV CKT 1	717	717	0.13706	113.8727	JOHNSON COUNTY - SUNNYSIDE 345KV CKT 1
FDNS	00NR	2	16WP	G15_082	FROM->TO	CIMARRON - DRAPER LAKE 345KV CKT 1	717	717	0.13512	113.8406	NAPLESTP 138.00 - PAYNE 138.00 138KV CKT 1
FDNS	00NR	2	16WP	G15_082	FROM->TO	CIMARRON - DRAPER LAKE 345KV CKT 1	717	717	0.13392	113.837	LACYGNE - WAVERLY7 345.00 345KV CKT 1
FDNS	00NR	2	16WP	G15_082	FROM->TO	CIMARRON - DRAPER LAKE 345KV CKT 1	717	717	0.13348	113.769	GEN501801 1-DOLET HILLS UNIT1
FDNS	00NR	2	16WP	G15_082	FROM->TO	CIMARRON - DRAPER LAKE 345KV CKT 1	717	717	0.13348	113.73	GEN509403 1-PIRKEY GENERATION
FDNS	00NR	2	16WP	G15_082	FROM->TO	CIMARRON - DRAPER LAKE 345KV CKT 1	717	717	0.13348	113.6779	GEN509416 1-TURK GENERATION
FDNS	00NR	2	16WP	G15_082	FROM->TO	CIMARRON - DRAPER LAKE 345KV CKT 1	717	717	0.13547	113.6682	CANEYRV7 345.00 - NEOSHO 345KV CKT 1
FDNS	00NR	2	16WP	G15_082	FROM->TO	CIMARRON - DRAPER LAKE 345KV CKT 1	717	717	0.13348	113.6496	GEN515040 1-SEMINOLE 1G
FDNS	00NR	2	16WP	G15_082	FROM->TO	CIMARRON - DRAPER LAKE 345KV CKT 1	717	717	0.13392	113.633	WAVERLY7 345.00 - WOLF CREEK 345KV CKT 1
FDNS	00NR	2	16WP	G15_082	FROM->TO	CIMARRON - DRAPER LAKE 345KV CKT 1	717	717	0.13348	113.4498	GEN515042 1-SEMINOLE 3G
FDNS	00NR	2	16WP	G15_082	FROM->TO	CIMARRON - DRAPER LAKE 345KV CKT 1	717	717	0.13514	113.4445	BRIDGECR 138.00 - TUTTLE 138KV CKT 1
FDNS	00NR	2	16WP	G15_082	FROM->TO	CIMARRON - DRAPER LAKE 345KV CKT 1	717	717	0.13547	113.3747	CANEYRV7 345.00 - LATHAMS7 345.00 345KV CKT 1
FDNS	00NR	2	16WP	G15_082	FROM->TO	CIMARRON - DRAPER LAKE 345KV CKT 1	717	717	0.13348	113.2123	GEN515041 1-SEMINOLE 2G
FDNS	00NR	2	16WP	G15_082	FROM->TO	CIMARRON - DRAPER LAKE 345KV CKT 1	717	717	0.13348	113.1552	GEN336153 1-WATERFORD UNIT#3
FDNS	00NR	2	16WP	G15_082	FROM->TO	CIMARRON - DRAPER LAKE 345KV CKT 1	717	717	0.13514	113.0763	BRIDGECR 138.00 - SUNSHINE CANYON 138KV CKT 1
FDNS	00NR	2	16WP	G15_082	FROM->TO	CIMARRON - DRAPER LAKE 345KV CKT 1	717	717	0.13514	113.0697	P12:138:WFEC:MSL01
FDNS	00NR	2	16WP	G15_082	FROM->TO	CIMARRON - DRAPER LAKE 345KV CKT 1	717	717	0.13348	112.9181	GEN336821 1-GRAND GULF UNIT
FDNS	00NR	2	16WP	G15_082	FROM->TO	CIMARRON - DRAPER LAKE 345KV CKT 1	717	717	0.13547	112.9177	LATHAMS7 345.00 - ROSE HILL 345KV CKT 1
FDNS	00NR	2	16WP	G15_082	FROM->TO	CIMARRON - DRAPER LAKE 345KV CKT 1	717	717	0.13348	112.8715	GEN337911 1-ARKANSAS NUCLEAR ONE UNIT #2
FDNS	00NR	2	16WP	G15_082	FROM->TO	CIMARRON - DRAPER LAKE 345KV CKT 1	717	717	0.13348	112.8421	GEN335831 1-RIVERBEND UNIT#1
FDNS	00NR	2	16WP	G15_082	FROM->TO	CIMARRON - DRAPER LAKE 345KV CKT 1	717	717	0.13348	112.832	GEN509406 1-WELSH #3
FDNS	00NR	2	16WP	G15_082	FROM->TO	CIMARRON - DRAPER LAKE 345KV CKT 1	717	717	0.13348	112.8319	GEN509404 1-WELSH #1
FDNS	00NR	2	16WP	G15_082	FROM->TO	CIMARRON - DRAPER LAKE 345KV CKT 1	717	717	0.13739	112.6767	G14-074T 345.00 - OKLAUNION 345KV CKT 1
FDNS	00NR	2	16WP	G15_082	FROM->TO	CIMARRON - DRAPER LAKE 345KV CKT 1	717	717	0.1402	112.6748	CIMARRON - NORTHWEST 345KV CKT 1
FDNS	00NR	2	16WP	G15_082	FROM->TO	CIMARRON - DRAPER LAKE 345KV CKT 1	717	717	0.13396	112.5117	HUGO - SUNNYSIDE 345KV CKT 1
FDNS	00NR	2	16WP	G15_082	FROM->TO	CIMARRON - DRAPER LAKE 345KV CKT 1	717	717	0.13069	112.5012	CANADIAN RIVER - MUSKOGEE 345KV CKT 1
FDNS	00NR	2	16WP	G15_082	FROM->TO	CIMARRON - DRAPER LAKE 345KV CKT 1	717	717	0.13448	112.4848	HORSESHOE LAKE - JONES TAP 138KV CKT 1
FDNS	00NR	2	16WP	G15_082	FROM->TO	CIMARRON - DRAPER LAKE 345KV CKT 1	717	717	0.13348	112.4836	GEN337910 1-ARKANSAS NUCLEAR ONE UNIT #1
FDNS	00NR	2	16WP	G15_082	FROM->TO	CIMARRON - DRAPER LAKE 345KV CKT 1	717	717	0.13376	112.4564	P12:138:OKGE:3TERM14
FDNS	00NR	2	16WP	G15_082	FROM->TO	CIMARRON - DRAPER LAKE 345KV CKT 1	717	717	0.13677	112.3478	JOHNSON COUNTY - PITTSBURG 345KV CKT 1
FDNS	00NR	2	16WP	G15_082	FROM->TO	CIMARRON - DRAPER LAKE 345KV CKT 1	717	717	0.13677	112.3478	JOHNSON COUNTY - PITTSBURG 345KV CKT 1
FDNS	00NR	2	16WP	G15_082	FROM->TO	CIMARRON - DRAPER LAKE 345KV CKT 1	717	717	0.1334	112.3407	REDBUD - RIVERSIDE STATION 345KV CKT 1
FDNS	00NR	2	16WP	G15_082	FROM->TO	CIMARRON - DRAPER LAKE 345KV CKT 1	717	717	0.1334	112.3407	REDBUD - RIVERSIDE STATION 345KV CKT 1
FDNS	00NR	2	16WP	G15_082	FROM->TO	CIMARRON - DRAPER LAKE 345KV CKT 1	717	717	0.13357	112.3032	MORISNT4 138.00 - STILLWATER 138KV CKT 1
FDNS	00NR	2	16WP	G15_082	FROM->TO	CIMARRON - DRAPER LAKE 345KV CKT 1	717	717	0.13358	112.2965	P12:138:OKGE:3TERM2
FDNS	00NR	2	16WP	G15_082	FROM->TO	CIMARRON - DRAPER LAKE 345KV CKT 1	717	717	0.13348	112.2847	GEN501813 1-RODEMACHER UNIT 3
FDNS	00NR	2	16WP	G15_082	FROM->TO	CIMARRON - DRAPER LAKE 345KV CKT 1	717	717	0.13348	112.2595	GEN515226 1-MUSKOGEE 6G
FDNS	00NR	2	16WP	G15_082	FROM->TO	CIMARRON - DRAPER LAKE 345KV CKT 1	717	717	0.13413	112.2594	NORTHWEST (NORTWST2) 345/138/13.8KV TRANSFORMER CKT 1

SOLUTION	GROUP	SCENARIO	SEASON	SOURCE	DIRECTION	MONITORED ELEMENT	RATEA (MVA)	RATEB(MVA)	TDF	TC%LOADING (% MVA)	CONTINGENCY
FDNS	00NR	2	16WP	G15_082	FROM->TO	CIMARRON - DRAPER LAKE 345KV CKT 1	717	717	0.13276	112.2216	G15093_T 345.00 - LAWTON EASTSIDE 345KV CKT 1
FDNS	00NR	2	16WP	G15_082	FROM->TO	CIMARRON - DRAPER LAKE 345KV CKT 1	717	717	0.13302	112.1698	ARCADIA - KAMO MEMORIAL 138KV CKT 1
FDNS	00NR	2	16WP	G15_082	FROM->TO	CIMARRON - DRAPER LAKE 345KV CKT 1	717	717	0.13355	112.1425	P12:138:OKGE:3TERM12
FDNS	00NR	2	16WP	G15_082	FROM->TO	CIMARRON - DRAPER LAKE 345KV CKT 1	717	717	0.13446	112.1238	MEMORIAL - SKYLINE 138KV CKT 1
FDNS	00NR	2	16WP	G15_082	FROM->TO	CIMARRON - DRAPER LAKE 345KV CKT 1	717	717	0.13348	112.0938	GEN335206 1-NELSON UNIT 6
FDNS	00NR	2	16WP	G15_082	FROM->TO	CIMARRON - DRAPER LAKE 345KV CKT 1	717	717	0.13348	112.0615	GEN515225 1-MUSKOGEE 5G
FDNS	00NR	2	16WP	G15_082	FROM->TO	CIMARRON - DRAPER LAKE 345KV CKT 1	717	717	0.13348	112.0614	GEN515223 1-MUSKOGEE 4G
FDNS	00NR	2	16WP	G15_082	FROM->TO	CIMARRON - DRAPER LAKE 345KV CKT 1	717	717	0.13356	112.0492	7SAREPTA% 345.00 - LONGWOOD 345KV CKT 1
FDNS	00NR	2	16WP	G15_082	FROM->TO	CIMARRON - DRAPER LAKE 345KV CKT 1	717	717	0.13356	112.0492	7SAREPTA% 345.00 - LONGWOOD 345KV CKT 1
FDNS	00NR	2	16WP	G15_082	FROM->TO	CIMARRON - DRAPER LAKE 345KV CKT 1	717	717	0.13348	112.0492	GRAND GULF 500/22.0KV TRANSFORMER CKT 1
FDNS	00NR	2	16WP	G15_082	FROM->TO	CIMARRON - DRAPER LAKE 345KV CKT 1	717	717	0.13354	112.0308	DOLET HILLS - SOUTHWEST SHREVEPORT 345KV CKT 1
FDNS	00NR	2	16WP	G15_082	FROM->TO	CIMARRON - DRAPER LAKE 345KV CKT 1	717	717	0.13354	112.0308	DOLET HILLS - SOUTHWEST SHREVEPORT 345KV CKT 1
FDNS	00NR	2	16WP	G15_082	FROM->TO	CIMARRON - DRAPER LAKE 345KV CKT 1	717	717	0.13474	112.0296	QUAIL CREEK - SKYLINE 138KV CKT 1
FDNS	00NR	2	16WP	G15_082	FROM->TO	CIMARRON - DRAPER LAKE 345KV CKT 1	717	717	0.13473	111.9972	P12:138:OKGE:3TERM18
FDNS	00NR	2	16WP	G15_082	FROM->TO	CIMARRON - DRAPER LAKE 345KV CKT 1	717	717	0.13601	111.9821	BAILEY4 138.00 - SUNSHINE CANYON 138KV CKT 1
FDNS	00NR	2	16WP	G15_082	FROM->TO	CIMARRON - DRAPER LAKE 345KV CKT 1	717	717	0.13348	111.966	GEN337653 1-WHITE BLUFF UNIT #2
FDNS	00NR	2	16WP	G15_082	FROM->TO	CIMARRON - DRAPER LAKE 345KV CKT 1	717	717	0.13408	111.9541	NORTHWEST (NORTWST4) 345/138/13.8KV TRANSFORMER CKT 1
FDNS	00NR	2	16WP	G15_082	FROM->TO	CIMARRON - DRAPER LAKE 345KV CKT 1	717	717	0.13444	111.9528	GRACEMONT (BANK 1) 345/138/13.8KV TRANSFORMER CKT 1
FDNS	00NR	2	16WP	G15_082	FROM->TO	CIMARRON - DRAPER LAKE 345KV CKT 1	717	717	0.13379	111.9299	G15074_T 345.00 - HOYT 345KV CKT 1
FDNS	00NR	2	16WP	G15_082	FROM->TO	CIMARRON - DRAPER LAKE 345KV CKT 1	717	717	0.13348	111.9192	GEN501812 1-RODEMACHER UNIT 2
FDNS	00NR	2	16WP	G15_082	FROM->TO	CIMARRON - DRAPER LAKE 345KV CKT 1	717	717	0.13466	111.9149	36 & MERIDIAN - CHEMTRON 138KV CKT 1
FDNS	00NR	2	16WP	G15_082	FROM->TO	CIMARRON - DRAPER LAKE 345KV CKT 1	717	717	0.13348	111.8741	GEN509409 1-WILKES #3
FDNS	00NR	2	16WP	G15_082	FROM->TO	CIMARRON - DRAPER LAKE 345KV CKT 1	717	717	0.13408	111.849	NORTHWEST (NORTWST3) 345/138/13.8KV TRANSFORMER CKT 1
FDNS	00NR	2	16WP	G15_082	FROM->TO	CIMARRON - DRAPER LAKE 345KV CKT 1	717	717	0.13466	111.8273	CHEMTRON - PENNSYLVANIA 138KV CKT 1
FDNS	00NR	2	16WP	G15_082	FROM->TO	CIMARRON - DRAPER LAKE 345KV CKT 1	717	717	0.13348	111.8183	GEN337652 1-WHITE BLUFF UNIT #1
FDNS	00NR	2	16WP	G15_082	FROM->TO	CIMARRON - DRAPER LAKE 345KV CKT 1	717	717	0.13348	111.7506	GEN520947 1-HUGO1
FDNS	00NR	2	16WP	G15_082	FROM->TO	CIMARRON - DRAPER LAKE 345KV CKT 1	717	717	0.13672	111.7343	THISTLE7 345.00 - WOODWARD DISTRICT EHV 345KV CKT 1
FDNS	00NR	2	16WP	G15_082	FROM->TO	CIMARRON - DRAPER LAKE 345KV CKT 1	717	717	0.13672	111.7343	THISTLE7 345.00 - WOODWARD DISTRICT EHV 345KV CKT 1
FDNS	00NR	2	16WP	G15_082	FROM->TO	CIMARRON - DRAPER LAKE 345KV CKT 1	717	717	0.13672	111.7343	THISTLE7 345.00 - WOODWARD DISTRICT EHV 345KV CKT 2
FDNS	00NR	2	16WP	G15_082	FROM->TO	CIMARRON - DRAPER LAKE 345KV CKT 1	717	717	0.13672	111.7343	THISTLE7 345.00 - WOODWARD DISTRICT EHV 345KV CKT 2
FDNS	00NR	2	16WP	G15_082	FROM->TO	CIMARRON - DRAPER LAKE 345KV CKT 1	717	717	0.13464	111.7015	P12:138:OKGE:3TERM11
FDNS	00NR	2	16WP	G15_082	FROM->TO	CIMARRON - DRAPER LAKE 345KV CKT 1	717	717	0.13388	111.6946	P12:138:OKGE:3TERM17
FDNS	00NR	2	16WP	G15_082	FROM->TO	CIMARRON - DRAPER LAKE 345KV CKT 1	717	717	0.13352	111.6847	7SAREPTA% 345.00 - ELDORADO EHV 345KV CKT 1
FDNS	00NR	2	16WP	G15_082	FROM->TO	CIMARRON - DRAPER LAKE 345KV CKT 1	717	717	0.13352	111.6846	3TR3AR8EL7EL
FDNS	00NR	2	16WP	G15_082	FROM->TO	CIMARRON - DRAPER LAKE 345KV CKT 1	717	717	0.13601	111.6795	BAILEY4 138.00 - WESTMOORE 138KV CKT 1
FDNS	00NR	2	16WP	G15_082	FROM->TO	CIMARRON - DRAPER LAKE 345KV CKT 1	717	717	0.13352	111.6784	ELDORADO EHV 500/345KV TRANSFORMER CKT 1
FDNS	00NR	2	16WP	G15_082	FROM->TO	CIMARRON - DRAPER LAKE 345KV CKT 1	717	717	0.13463	111.6695	KETCH TAP - NORTHWEST 138KV CKT 1
FDNS	00NR	2	17SP	G15_082	FROM->TO	CIMARRON - DRAPER LAKE 345KV CKT 1	717	717	0.13934	111.6584	G14-057T 345.00 - SUNNYSIDE 345KV CKT 1
FDNS	00NR	2	16WP	G15_082	FROM->TO	CIMARRON - DRAPER LAKE 345KV CKT 1	717	717	0.13402	111.6397	COMANCHE - LOCO 138KV CKT 1
FDNS	00NR	2	16WP	G15_082	FROM->TO	CIMARRON - DRAPER LAKE 345KV CKT 1	717	717	0.13535	111.6334	BLANCHARD - CORNVILLE 138KV CKT 1
FDNS	00NR	2	16WP	G15_082	FROM->TO	CIMARRON - DRAPER LAKE 345KV CKT 1	717	717	0.13392	111.6304	LONEOAK - NORTHWEST 138KV CKT 1
FDNS	00NR	2	16WP	G15_082	FROM->TO	CIMARRON - DRAPER LAKE 345KV CKT 1	717	717	0.13595	111.6226	CLARKSVILLE - ONETA 345KV CKT 1
FDNS	00NR	2	16WP	G15_082	FROM->TO	CIMARRON - DRAPER LAKE 345KV CKT 1	717	717	0.13595	111.6226	CLARKSVILLE - ONETA 345KV CKT 1
FDNS	00NR	2	16WP	G15_082	FROM->TO	CIMARRON - DRAPER LAKE 345KV CKT 1	717	717	0.13348	111.6177	GEN334440 1-SABINE UNIT 4
FDNS	00NR	2	16WP	G15_082	FROM->TO	CIMARRON - DRAPER LAKE 345KV CKT 1	717	717	0.13348	111.6126	GEN515577 1-ARBWND11 0.6900
FDNS	00NR	2	16WP	G15_082	FROM->TO	CIMARRON - DRAPER LAKE 345KV CKT 1	717	717	0.13418	111.5991	DIVISION AVE - LAKESIDE 138KV CKT 1
FDNS	00NR	2	16WP	G15_082	FROM->TO	CIMARRON - DRAPER LAKE 345KV CKT 1	717	717	0.13348	111.5939	DELL 500 - ESSEX UNIT 2 500KV CKT Z1
FDNS	00NR	2	16WP	G15_082	FROM->TO	CIMARRON - DRAPER LAKE 345KV CKT 1	717	717	0.13393	111.5771	P12:138:OKGE:3TERM20
FDNS	00NR	2	16WP	G15_082	FROM->TO	CIMARRON - DRAPER LAKE 345KV CKT 1	717	717	0.1338	111.5725	HOYT - STRANGER CREEK 345KV CKT 1
FDNS	00NR	2	16WP	G15_082	FROM->TO	CIMARRON - DRAPER LAKE 345KV CKT 1	717	717	0.13296	111.5666	HORSESHOE LAKE - KAMO MEMORIAL 138KV CKT 1
FDNS	00NR	2	16WP	G15_082	FROM->TO	CIMARRON - DRAPER LAKE 345KV CKT 1	717	717	0.13377	111.5536	NORTHWEST - PANTHER 138KV CKT 1
FDNS	00NR	2	16WP	G15_082	FROM->TO	CIMARRON - DRAPER LAKE 345KV CKT 1	717	717	0.13379	111.5502	G15074_T 345.00 - JEFFREY ENERGY CENTER 345KV CKT 1
FDNS	00NR	2	16WP	G15_082	FROM->TO	CIMARRON - DRAPER LAKE 345KV CKT 1	717	717	0.13535	111.5384	P12:138:AEPW-OGE:CORNVIL4:MAUD 4
FDNS	00NR	2	16WP	G15_082	FROM->TO	CIMARRON - DRAPER LAKE 345KV CKT 1	717	717	0.13377	111.5044	PANTHER - SILVER LAKE 138KV CKT 1
FDNS	00NR	2	16WP	G15_082	FROM->TO	CIMARRON - DRAPER LAKE 345KV CKT 1	717	717	0.13405	111.497	BLACKBERRY - NEOSHO 345KV CKT 1
FDNS	00NR	2	16WP	G15_082	FROM->TO	CIMARRON - DRAPER LAKE 345KV CKT 1	717	717	0.13418	111.4792	HEFNER - LAKESIDE 138KV CKT 1
FDNS	00NR	2	16WP	G15_082	FROM->TO	CIMARRON - DRAPER LAKE 345KV CKT 1	717	717	0.13348	111.472	GEN336252 1-NINEMILE POINT UNIT#5
FDNS	00NR	2	16WP	G15_082	FROM->TO	CIMARRON - DRAPER LAKE 345KV CKT 1	717	717	0.13398	111.4688	SWISSVALE - WEST GARDNER 345KV CKT 1
FDNS	00NR	2	16WP	G15_082	FROM->TO	CIMARRON - DRAPER LAKE 345KV CKT 1	717	717	0.13356	111.4496	P12:138:OKGE:3TERM47
FDNS	00NR	2	16WP	G15_082	FROM->TO	CIMARRON - DRAPER LAKE 345KV CKT 1	717	717	0.1317	111.4416	G15052_T 345.00 - ROSE HILL 345KV CKT 1
FDNS	00NR	2	16WP	G15_082	FROM->TO	CIMARRON - DRAPER LAKE 345KV CKT 1	717	717	0.13535	111.4399	BLANCHARD - MAUD 138KV CKT 1
FDNS	00NR	2	16WP	G15_082	FROM->TO	CIMARRON - DRAPER LAKE 345KV CKT 1	717	717	0.13348	111.4385	DOLET HILLS 345/24.0KV TRANSFORMER CKT 1
FDNS	00NR	2	16WP	G15_082	FROM->TO	CIMARRON - DRAPER LAKE 345KV CKT 1	717	717	0.13373	111.4367	DIVISION AVE - MUSTANG 138KV CKT 1
FDNS	00NR	2	16WP	G15_082	FROM->TO	CIMARRON - DRAPER LAKE 345KV CKT 1	717	717	0.13441	111.4355	CIMARRON - HAYMAKER 138KV CKT 1
FDNS	00NR	2	16WP	G15_082	FROM->TO	CIMARRON - DRAPER LAKE 345KV CKT 1	717	717	0.13348	111.4236	WHITE BLUFF 500/26.0KV TRANSFORMER CKT 1
FDNS	00NR	2	16WP	G15_082	FROM->TO	CIMARRON - DRAPER LAKE 345KV CKT 1	717	717	0.13428	111.4194	KETCH - KETCH TAP 138KV CKT 1
FDNS	00NR	2	16WP	G15_082	FROM->TO	CIMARRON - DRAPER LAKE 345KV CKT 1	717	717	0.13453	111.4111	MCCLAIN - PLEASANT VALLEY 138KV CKT 1
FDNS	00NR	2	16WP	G15_082	FROM->TO	CIMARRON - DRAPER LAKE 345KV CKT 1	717	717	0.13449	111.4031	LACYGNE - NEOSHO 345KV CKT 1
FDNS	00NR	2	16WP	G15_082	FROM->TO	CIMARRON - DRAPER LAKE 345KV CKT 1	717	717	0.13601	111.3939	FRANKLIN SW - WESTMOORE 138KV CKT 1
FDNS	00NR	2	16WP	G15_082	FROM->TO	CIMARRON - DRAPER LAKE 345KV CKT 1	717	717	0.13369	111.3494	P12:138:AEPW-OGE:SHIDLER4:OSAGE 4
FDNS	00NR	2	16WP	G15_082	FROM->TO	CIMARRON - DRAPER LAKE 345KV CKT 1	717	717	0.13436	111.3447	CLASSEN - ROBINSON 138KV CKT 1
FDNS	00NR	2	16WP	G15_082	FROM->TO	CIMARRON - DRAPER LAKE 345KV CKT 1	717	717	0.13348	111.3442	GEN335204 1-NELSON UNIT 4
FDNS	00NR	2	16WP	G15_082	FROM->TO	CIMARRON - DRAPER LAKE 345KV CKT 1	717	717	0.1334	111.3346	P12:138:AEPW:OKMULGE4:R.S.S-4
FDNS	00NR	2	16WP	G15_082	FROM->TO	CIMARRON - DRAPER LAKE 345KV CKT 1	717	717	0.13348	111.3339	GEN336831 1-BAXTER WILSON SES
FDNS	00NR	2	16WP	G15_082	FROM->TO	CIMARRON - DRAPER LAKE 345KV CKT 1	717	717	0.13441	111.3306	DIVISION AVE - HAYMAKER 138KV CKT 1
FDNS	00NR	2	16WP	G15_082	FROM->TO	CIMARRON - DRAPER LAKE 345KV CKT 1	717	717	0.13384	111.3302	WOODRING (WOODRNG2) 345/138/13.8KV TRANSFORMER CKT 1
FDNS	00NR	2	16WP	G15_082	FROM->TO	CIMARRON - DRAPER LAKE 345KV CKT 1	717	717	0.13374	111.3081	P12:138:WFEC:MSL02
FDNS	00NR	2	16WP	G15_082	FROM->TO	CIMARRON - DRAPER LAKE 345KV CKT 1	717	717	0.13348	111.3077	GEN509408 1-WILKES #2
FDNS	00NR	2	16WP	G15_082	FROM->TO	CIMARRON - DRAPER LAKE 345KV CKT 1	717	717	0.13348	111.291	GEN334441 1-SABINE UNIT 5

SOLUTION	GROUP	SCENARIO	SEASON	SOURCE	DIRECTION	MONITORED ELEMENT	RATEA (MVA)	RATEB(MVA)	TDF	TC%LOADING (% MVA)	CONTINGENCY
FDNS	00NR	2	16WP	G15_082	FROM->TO	CIMARRON - DRAPER LAKE 345KV CKT 1	717	717	0.13539	111.2872	BENTON - WICHITA 345KV CKT 1
FDNS	00NR	2	16WP	G15_082	FROM->TO	CIMARRON - DRAPER LAKE 345KV CKT 1	717	717	0.14047	111.2845	Hitchland Interchange - WALKTAP7 345.00 345KV CKT 1
FDNS	00NR	2	16WP	G15_082	FROM->TO	CIMARRON - DRAPER LAKE 345KV CKT 1	717	717	0.14047	111.2845	Hitchland Interchange - WALKTAP7 345.00 345KV CKT 1
FDNS	00NR	2	16WP	G15_082	FROM->TO	CIMARRON - DRAPER LAKE 345KV CKT 1	717	717	0.13348	111.2811	GEN334071 1-LEWIS CREEK 2
FDNS	00NR	2	16WP	G15_082	FROM->TO	CIMARRON - DRAPER LAKE 345KV CKT 1	717	717	0.13605	111.2787	G15063_T 345.00 - WOODRING 345KV CKT 1
FDNS	00NR	2	16WP	G15_082	FROM->TO	CIMARRON - DRAPER LAKE 345KV CKT 1	717	717	0.14047	111.2783	P12:345:SPS:J07.1.FINN.HITCH
FDNS	00NR	2	16WP	G15_082	FROM->TO	CIMARRON - DRAPER LAKE 345KV CKT 1	717	717	0.13382	111.2771	EMPORIA ENERGY CENTER - SWISSVALE 345KV CKT 1
FDNS	00NR	2	16WP	G15_082	FROM->TO	CIMARRON - DRAPER LAKE 345KV CKT 1	717	717	0.13348	111.2743	GEN334070 1-LEWIS CREEK 1
FDNS	00NR	2	16WP	G15_082	FROM->TO	CIMARRON - DRAPER LAKE 345KV CKT 1	717	717	0.13367	111.2715	ANADARKO - GEORGIA 138KV CKT 1
FDNS	00NR	2	16WP	G15_082	FROM->TO	CIMARRON - DRAPER LAKE 345KV CKT 1	717	717	0.13507	111.2682	G1524G1525 345.00 - THISTLE7 345.00 345KV CKT 1
FDNS	00NR	2	16WP	G15_082	FROM->TO	CIMARRON - DRAPER LAKE 345KV CKT 1	717	717	0.13507	111.2682	G1524G1525 345.00 - THISTLE7 345.00 345KV CKT 2
FDNS	00NR	2	16WP	G15_082	FROM->TO	CIMARRON - DRAPER LAKE 345KV CKT 1	717	717	0.13348	111.2646	GEN336251 1-NINEMILE POINT UNIT#4
FDNS	00NR	2	16WP	G15_082	FROM->TO	CIMARRON - DRAPER LAKE 345KV CKT 1	717	717	0.13381	111.2617	G15088_T 345.00 - MOORE 345KV CKT 1
FDNS	00NR	2	16WP	G15_082	FROM->TO	CIMARRON - DRAPER LAKE 345KV CKT 1	717	717	0.13348	111.2509	GEN506754 1-LEBROCK STEAM 1
FDNS	00NR	2	16WP	G15_082	FROM->TO	CIMARRON - DRAPER LAKE 345KV CKT 1	717	717	0.13348	111.2485	GEN300006 1-NEW MADRID UNIT 1
FDNS	00NR	2	16WP	G15_082	FROM->TO	CIMARRON - DRAPER LAKE 345KV CKT 1	717	717	0.13348	111.2359	GEN300007 1-NEW MADRID UNIT 2
FDNS	00NR	2	16WP	G15_082	FROM->TO	CIMARRON - DRAPER LAKE 345KV CKT 1	717	717	0.13392	111.2296	LONEOAK - QUAIL CREEK 138KV CKT 1
FDNS	00NR	2	16WP	G15_082	FROM->TO	CIMARRON - DRAPER LAKE 345KV CKT 1	717	717	0.13739	111.2184	G14-074T 345.00 - TUCO INTERCHANGE 345KV CKT 1
FDNS	00NR	2	16WP	G15_082	FROM->TO	CIMARRON - DRAPER LAKE 345KV CKT 1	717	717	0.13348	111.2142	GEN338146 1-INDEPENDENCE UNIT #2
FDNS	00NR	2	16WP	G15_082	FROM->TO	CIMARRON - DRAPER LAKE 345KV CKT 1	717	717	0.13367	111.2119	FLETCHER - GEORGIA 138KV CKT 1
FDNS	00NR	2	16WP	G15_082	FROM->TO	CIMARRON - DRAPER LAKE 345KV CKT 1	717	717	0.13348	111.1983	GEN501811 1-RODEMACHER UNIT 1
FDNS	00NR	2	16WP	G15_082	FROM->TO	CIMARRON - DRAPER LAKE 345KV CKT 1	717	717	0.13357	111.1808	WEBRE - WELLS 500KV CKT 1
FDNS	00NR	2	16WP	G15_082	FROM->TO	CIMARRON - DRAPER LAKE 345KV CKT 1	717	717	0.13348	111.162	GEN334433 1-SABINE UNIT 3
FDNS	00NR	2	16WP	G15_082	FROM->TO	CIMARRON - DRAPER LAKE 345KV CKT 1	717	717	0.13348	111.1558	GEN303007 1-1BC2 U2
FDNS	00NR	2	16WP	G15_082	FROM->TO	CIMARRON - DRAPER LAKE 345KV CKT 1	717	717	0.1337	111.1557	EMPIRE - FLETCHER 138KV CKT 1
FDNS	00NR	2	16WP	G15_082	FROM->TO	CIMARRON - DRAPER LAKE 345KV CKT 1	717	717	0.13459	111.1545	CRINER - PAYNE 138.00 138KV CKT 1
FDNS	00NR	2	16WP	G15_082	FROM->TO	CIMARRON - DRAPER LAKE 345KV CKT 1	717	717	0.13367	111.1543	CLEAVELAND - CLEVLND 4 138.00 138KV CKT Z1
FDNS	00NR	2	16WP	G15_082	FROM->TO	CIMARRON - DRAPER LAKE 345KV CKT 1	717	717	0.13367	111.1541	CLEVELAND (CLVAUTO1) 345/138/13.8KV TRANSFORMER CKT 1
FDNS	00NR	2	16WP	G15_082	FROM->TO	CIMARRON - DRAPER LAKE 345KV CKT 1	717	717	0.13367	111.1541	CLEVELAND (CLVAUTO1) 345/138/13.8KV TRANSFORMER CKT 1
FDNS	00NR	2	16WP	G15_082	FROM->TO	CIMARRON - DRAPER LAKE 345KV CKT 1	717	717	0.13348	111.1526	GEN503909 1-FULTONU1 1 16.000
FDNS	00NR	2	16WP	G15_082	FROM->TO	CIMARRON - DRAPER LAKE 345KV CKT 1	717	717	0.13348	111.1519	GEN303006 1-1BC2 U1
FDNS	00NR	2	16WP	G15_082	FROM->TO	CIMARRON - DRAPER LAKE 345KV CKT 1	717	717	0.13348	111.15	GEN334030 1-FRONTIER UNIT 1
FDNS	00NR	2	16WP	G15_082	FROM->TO	CIMARRON - DRAPER LAKE 345KV CKT 1	717	717	0.13348	111.1488	GEN334031 1-FRONTIER UNIT 2
FDNS	00NR	2	16WP	G15_082	FROM->TO	CIMARRON - DRAPER LAKE 345KV CKT 1	717	717	0.13369	111.1473	OSAGE - WEBB CITY TAP 138KV CKT 1
FDNS	00NR	2	16WP	G15_082	FROM->TO	CIMARRON - DRAPER LAKE 345KV CKT 1	717	717	0.13348	111.1461	FRONTIER - GRIMES 345KV CKT 1
FDNS	00NR	2	16WP	G15_082	FROM->TO	CIMARRON - DRAPER LAKE 345KV CKT 1	717	717	0.13376	111.1444	SPVALLY4 138.00 - STILLWATER 138KV CKT 1
FDNS	00NR	2	16WP	G15_082	FROM->TO	CIMARRON - DRAPER LAKE 345KV CKT 1	717	717	0.13402	111.1414	EMPORIA ENERGY CENTER - G14_001T 345.00 345KV CKT 1
FDNS	00NR	2	16WP	G15_082	FROM->TO	CIMARRON - DRAPER LAKE 345KV CKT 1	717	717	0.13348	111.1376	P12:069:OKGE:3TERM4
FDNS	00NR	2	16WP	G15_082	FROM->TO	CIMARRON - DRAPER LAKE 345KV CKT 1	717	717	0.13348	111.1368	GEN337041 1-GERALD ANDRUS
FDNS	00NR	2	16WP	G15_082	FROM->TO	CIMARRON - DRAPER LAKE 345KV CKT 1	717	717	0.13351	111.1367	8DANIEL8 500.00 - MCKNIGHT 500KV CKT 1
FDNS	00NR	2	16WP	G15_082	FROM->TO	CIMARRON - DRAPER LAKE 345KV CKT 1	717	717	0.13348	111.135	GEN336191 1-LITTLE GYPSY UNIT#3
FDNS	00NR	2	16WP	G15_082	FROM->TO	CIMARRON - DRAPER LAKE 345KV CKT 1	717	717	0.13364	111.1291	P12:138:OKGE:3TERM13
FDNS	00NR	2	16WP	G15_082	FROM->TO	CIMARRON - DRAPER LAKE 345KV CKT 1	717	717	0.13348	111.1269	GEN590011 2-ERCOT EQUIVALENCE
FDNS	00NR	2	16WP	G15_082	FROM->TO	CIMARRON - DRAPER LAKE 345KV CKT 1	717	717	0.13376	111.1154	PAYNESB4 138.00 - SPVALLY4 138.00 138KV CKT 1
FDNS	00NR	2	16WP	G15_082	FROM->TO	CIMARRON - DRAPER LAKE 345KV CKT 1	717	717	0.13392	111.1091	DAYTON - MUSTANG 138KV CKT 1
FDNS	00NR	2	16WP	G15_082	FROM->TO	CIMARRON - DRAPER LAKE 345KV CKT 1	717	717	0.13392	111.1042	DAYTON - HOBBY LOBBY 138KV CKT 1
FDNS	00NR	2	16WP	G15_082	FROM->TO	CIMARRON - DRAPER LAKE 345KV CKT 1	717	717	0.13348	111.1023	GEN335614 1-WILLOW GLENN UNIT#4
FDNS	00NR	2	16WP	G15_082	FROM->TO	CIMARRON - DRAPER LAKE 345KV CKT 1	717	717	0.1337	111.1014	COMANCHE - EMPIRE 138KV CKT 1
FDNS	00NR	2	16WP	G15_082	FROM->TO	CIMARRON - DRAPER LAKE 345KV CKT 1	717	717	0.13376	111.0999	CUSHING - PAYNESB4 138.00 138KV CKT 1
FDNS	00NR	2	16WP	G15_082	FROM->TO	CIMARRON - DRAPER LAKE 345KV CKT 1	717	717	0.13348	111.0966	P12:161:AEPW:DYESS 5:HYLAND 5
FDNS	00NR	2	16WP	G15_082	FROM->TO	CIMARRON - DRAPER LAKE 345KV CKT 1	717	717	0.1336	111.0909	7LUTESVIL 345.00 - 7ST FRANC 345.00 345KV CKT 1
FDNS	00NR	2	16WP	G15_082	FROM->TO	CIMARRON - DRAPER LAKE 345KV CKT 1	717	717	0.13348	111.0905	GEN303008 1-1BC2 U3
FDNS	00NR	2	16WP	G15_082	FROM->TO	CIMARRON - DRAPER LAKE 345KV CKT 1	717	717	0.13348	111.0898	GEN590010 1-ERCOT EQUIVALENCE
FDNS	00NR	2	16WP	G15_082	FROM->TO	CIMARRON - DRAPER LAKE 345KV CKT 1	717	717	0.13395	111.077	MUSTANG - SW 5TH 138KV CKT 1
FDNS	00NR	2	16WP	G15_082	FROM->TO	CIMARRON - DRAPER LAKE 345KV CKT 1	717	717	0.13348	111.0737	GEN509393 S1-ARSENAL HILL GENS #4 (STALL)
FDNS	00NR	2	16WP	G15_082	FROM->TO	CIMARRON - DRAPER LAKE 345KV CKT 1	717	717	0.13348	111.0703	GEN338143 1-INDEPENDENCE UNIT #1
FDNS	00NR	2	16WP	G15_082	FROM->TO	CIMARRON - DRAPER LAKE 345KV CKT 1	717	717	0.13348	111.0686	GEN336170 1-GULF OXY U4
FDNS	00NR	2	16WP	G15_082	FROM->TO	CIMARRON - DRAPER LAKE 345KV CKT 1	717	717	0.13348	111.0661	GEN336464 1-MICHOUD UNIT #3
FDNS	00NR	2	16WP	G15_082	FROM->TO	CIMARRON - DRAPER LAKE 345KV CKT 1	717	717	0.13083	111.0613	CANADIAN RIVER - PITTSBURG 345KV CKT 1
FDNS	00NR	2	16WP	G15_082	FROM->TO	CIMARRON - DRAPER LAKE 345KV CKT 1	717	717	0.13083	111.0613	CANADIAN RIVER - PITTSBURG 345KV CKT 1
FDNS	00NR	2	16WP	G15_082	FROM->TO	CIMARRON - DRAPER LAKE 345KV CKT 1	717	717	0.13348	111.0536	GEN509392 G2-ARSENAL HILL GENS #3 (STALL)
FDNS	00NR	2	16WP	G15_082	FROM->TO	CIMARRON - DRAPER LAKE 345KV CKT 1	717	717	0.13348	111.0535	GEN509391 G1-ARSENAL HILL GENS #2 (STALL)
FDNS	00NR	2	16WP	G15_082	FROM->TO	CIMARRON - DRAPER LAKE 345KV CKT 1	717	717	0.13346	111.053	ELDORADO EHV - MOUNT OLIVE 500KV CKT 1
FDNS	00NR	2	16WP	G15_082	FROM->TO	CIMARRON - DRAPER LAKE 345KV CKT 1	717	717	0.13436	111.0483	LIGHTNING CREEK - ROBINSON 138KV CKT 1
FDNS	00NR	2	16WP	G15_082	FROM->TO	CIMARRON - DRAPER LAKE 345KV CKT 1	717	717	0.1335	111.0421	P12:345:GRDA:CHOUTEAU-SPORTSMANACRES
FDNS	00NR	2	16WP	G15_082	FROM->TO	CIMARRON - DRAPER LAKE 345KV CKT 1	717	717	0.13394	111.0414	OUMED 4 - STONEWALL 138KV CKT 1
FDNS	00NR	2	16WP	G15_082	FROM->TO	CIMARRON - DRAPER LAKE 345KV CKT 1	717	717	0.13354	111.0363	P12:069:OKGE:3TERM19
FDNS	00NR	2	16WP	G15_082	FROM->TO	CIMARRON - DRAPER LAKE 345KV CKT 1	717	717	0.13459	111.0246	COLE - CRINER 138KV CKT 1
FDNS	00NR	2	16WP	G15_082	FROM->TO	CIMARRON - DRAPER LAKE 345KV CKT 1	717	717	0.13348	111.0228	GEN336801 1-BAXTER WILSON UNIT #1
FDNS	00NR	2	16WP	G15_082	FROM->TO	CIMARRON - DRAPER LAKE 345KV CKT 1	717	717	0.13362	111.0102	8WNEWMADRID 500.00 - DELL 500 500KV CKT 1
FDNS	00NR	2	16WP	G15_082	FROM->TO	CIMARRON - DRAPER LAKE 345KV CKT 1	717	717	0.13402	111.0051	G14_001T 345.00 - WICHITA 345KV CKT 1
FDNS	00NR	2	16WP	G15_082	FROM->TO	CIMARRON - DRAPER LAKE 345KV CKT 1	717	717	0.13307	110.9908	ARCADIA - LGARBER4 138.00 138KV CKT 1
FDNS	00NR	2	16WP	G15_082	FROM->TO	CIMARRON - DRAPER LAKE 345KV CKT 1	717	717	0.13343	110.9832	ELDORADO EHV - SHERIDAN EHV 500KV CKT 1
FDNS	00NR	2	16WP	G15_082	FROM->TO	CIMARRON - DRAPER LAKE 345KV CKT 1	717	717	0.13452	110.9814	TULSA NORTH - WEKIWA 345KV CKT 1
FDNS	00NR	2	16WP	G15_082	FROM->TO	CIMARRON - DRAPER LAKE 345KV CKT 1	717	717	0.13452	110.9814	TULSA NORTH - WEKIWA 345KV CKT 1
FDNS	00NR	2	16WP	G15_082	FROM->TO	CIMARRON - DRAPER LAKE 345KV CKT 1	717	717	0.13348	110.9803	GEN501910 1-ACADIA UNIT ST1
FDNS	00NR	2	16WP	G15_082	FROM->TO	CIMARRON - DRAPER LAKE 345KV CKT 1	717	717	0.13369	110.9728	FAIRFAX TAP - SHIDLER 138KV CKT 1
FDNS	00NR	2	16WP	G15_082	FROM->TO	CIMARRON - DRAPER LAKE 345KV CKT 1	717	717	0.13369	110.9728	FAIRFAX TAP - WEBB CITY TAP 138KV CKT 1
FDNS	00NR	2	16WP	G15_082	FROM->TO	CIMARRON - DRAPER LAKE 345KV CKT 1	717	717	0.13348	110.9655	RODEMACHER 230/22.0KV TRANSFORMER CKT 1

SOLUTION	GROUP	SCENARIO	SEASON	SOURCE	DIRECTION	MONITORED ELEMENT	RATEA (MVA)	RATEB(MVA)	TDF	TC%LOADING (% MVA)	CONTINGENCY
FDNS	00NR	2	16WP	G15_082	FROM->TO	CIMARRON - DRAPER LAKE 345KV CKT 1	717	717	0.13307	110.9638	CHITWOOD - LGARBER4 138.00 138KV CKT 1
FDNS	00NR	2	16WP	G15_082	FROM->TO	CIMARRON - DRAPER LAKE 345KV CKT 1	717	717	0.13345	110.9611	7JASPER 345.00 - BLACKBERRY 345KV CKT 1
FDNS	00NR	2	16WP	G15_082	FROM->TO	CIMARRON - DRAPER LAKE 345KV CKT 1	717	717	0.13348	110.9564	GEN506752 1-LEBROCK GAS 1
FDNS	00NR	2	16WP	G15_082	FROM->TO	CIMARRON - DRAPER LAKE 345KV CKT 1	717	717	0.13348	110.9562	GEN506753 1-LEBROCK GAS 2
FDNS	00NR	2	16WP	G15_082	FROM->TO	CIMARRON - DRAPER LAKE 345KV CKT 1	717	717	0.13403	110.9544	IODINE - WOODWARD EHV 138KV CKT 1
FDNS	00NR	2	16WP	G15_082	FROM->TO	CIMARRON - DRAPER LAKE 345KV CKT 1	717	717	0.13307	110.9521	CHITWOOD - JONES TAP 138KV CKT 1
FDNS	00NR	2	16WP	G15_082	FROM->TO	CIMARRON - DRAPER LAKE 345KV CKT 1	717	717	0.13434	110.952	DALE - HORSESHOE LAKE 138KV CKT 1
FDNS	00NR	2	16WP	G15_082	FROM->TO	CIMARRON - DRAPER LAKE 345KV CKT 1	717	717	0.13344	110.9484	P12:138:AEPW-OGE:WTH_JCT4:JENSEN4
FDNS	00NR	2	16WP	G15_082	FROM->TO	CIMARRON - DRAPER LAKE 345KV CKT 1	717	717	0.13348	110.9408	GEN511843 1-RIVERSIDE STATION #2
FDNS	00NR	2	16WP	G15_082	FROM->TO	CIMARRON - DRAPER LAKE 345KV CKT 1	717	717	0.13394	110.9397	OUMED 4 - PARK PLACE 138KV CKT 1
FDNS	00NR	2	16WP	G15_082	FROM->TO	CIMARRON - DRAPER LAKE 345KV CKT 1	717	717	0.13462	110.9342	ARKANSAS NUCLEAR ONE - FT SMITH 500KV CKT 1
FDNS	00NR	2	16WP	G15_082	FROM->TO	CIMARRON - DRAPER LAKE 345KV CKT 1	717	717	0.13462	110.9342	ARKANSAS NUCLEAR ONE - FT SMITH 500KV CKT 1
FDNS	00NR	2	16WP	G15_082	FROM->TO	CIMARRON - DRAPER LAKE 345KV CKT 1	717	717	0.13363	110.9292	P13:138-161:WERE:NSES_TX-4OR5::
FDNS	00NR	2	16WP	G15_082	FROM->TO	CIMARRON - DRAPER LAKE 345KV CKT 1	717	717	0.13403	110.9276	DEWEY - IODINE 138KV CKT 1
FDNS	00NR	2	16WP	G15_082	FROM->TO	CIMARRON - DRAPER LAKE 345KV CKT 1	717	717	0.13436	110.9097	LIGHTNING CREEK - TROSPER 138KV CKT 1
FDNS	00NR	2	16WP	G15_082	FROM->TO	CIMARRON - DRAPER LAKE 345KV CKT 1	717	717	0.13354	110.9075	P12:138:AEPW:N.E.S.-4:CATOOSA4
FDNS	00NR	2	16WP	G15_082	FROM->TO	CIMARRON - DRAPER LAKE 345KV CKT 1	717	717	0.13434	110.9055	DALE - SQUIRL CREEK 138KV CKT 1
FDNS	00NR	2	16WP	G15_082	FROM->TO	CIMARRON - DRAPER LAKE 345KV CKT 1	717	717	0.13348	110.9023	ST FRANCIS - ST FRANCIS 1 161KV CKT Z1
FDNS	00NR	2	16WP	G15_082	FROM->TO	CIMARRON - DRAPER LAKE 345KV CKT 1	717	717	0.13351	110.8989	7JASPER 345.00 - MORGAN 345KV CKT 1
FDNS	00NR	2	16WP	G15_082	FROM->TO	CIMARRON - DRAPER LAKE 345KV CKT 1	717	717	0.13392	110.8966	CHISHOLM6 230.00 - ELK CITY 230KV 230KV CKT 1
FDNS	00NR	2	16WP	G15_082	FROM->TO	CIMARRON - DRAPER LAKE 345KV CKT 1	717	717	0.13516	110.8949	NORTHEAST STATION - ONETA 345KV CKT 1
FDNS	00NR	2	16WP	G15_082	FROM->TO	CIMARRON - DRAPER LAKE 345KV CKT 1	717	717	0.13516	110.8949	NORTHEAST STATION - ONETA 345KV CKT 1
FDNS	00NR	2	16WP	G15_082	FROM->TO	CIMARRON - DRAPER LAKE 345KV CKT 1	717	717	0.13392	110.8944	ELK CITY 230KV (ELKCTY-6) 230/138/13.8KV TRANSFORMER CKT 1
FDNS	00NR	2	16WP	G15_082	FROM->TO	CIMARRON - DRAPER LAKE 345KV CKT 1	717	717	0.13392	110.8944	ELK CITY 230KV (ELKCTY-6) 230/138/13.8KV TRANSFORMER CKT 1
FDNS	00NR	2	16WP	G15_082	FROM->TO	CIMARRON - DRAPER LAKE 345KV CKT 1	717	717	0.13352	110.8916	6LAYFLD 230.00 - CARROLL 230KV CKT 1
FDNS	00NR	2	16WP	G15_082	FROM->TO	CIMARRON - DRAPER LAKE 345KV CKT 1	717	717	0.13348	110.8909	8CAJUN2 500/24.0KV TRANSFORMER CKT 1
FDNS	00NR	2	16WP	G15_082	FROM->TO	CIMARRON - DRAPER LAKE 345KV CKT 1	717	717	0.13375	110.8854	ANADARKO - SEQUOYAHJ4 138.00 138KV CKT 1
FDNS	00NR	2	16WP	G15_082	FROM->TO	CIMARRON - DRAPER LAKE 345KV CKT 1	717	717	0.13366	110.8829	HUGO - VALLIANT 345KV CKT 1
FDNS	00NR	2	16WP	G15_082	FROM->TO	CIMARRON - DRAPER LAKE 345KV CKT 1	717	717	0.13366	110.8829	HUGO - VALLIANT 345KV CKT 1
FDNS	00NR	2	16WP	G15_082	FROM->TO	CIMARRON - DRAPER LAKE 345KV CKT 1	717	717	0.13336	110.8828	MORISNT4 138.00 - SOONER 138KV CKT 1
FDNS	00NR	2	16WP	G15_082	FROM->TO	CIMARRON - DRAPER LAKE 345KV CKT 1	717	717	0.13375	110.8825	CORN TAP - SEQUOYAHJ4 138.00 138KV CKT 1
FDNS	00NR	2	16WP	G15_082	FROM->TO	CIMARRON - DRAPER LAKE 345KV CKT 1	717	717	0.13348	110.8732	P12:069:OKGE:3TERM3
FDNS	00NR	2	16WP	G15_082	FROM->TO	CIMARRON - DRAPER LAKE 345KV CKT 1	717	717	0.13392	110.8723	36 & MERIDIAN - HOBBY LOBBY 138KV CKT 1
FDNS	00NR	2	16WP	G15_082	FROM->TO	CIMARRON - DRAPER LAKE 345KV CKT 1	717	717	0.13348	110.8707	GEN337766 1-TRACTEBEL UNIT S1
FDNS	00NR	2	16WP	G15_082	FROM->TO	CIMARRON - DRAPER LAKE 345KV CKT 1	717	717	0.13461	110.869	G13-010T 345.00 - POST ROCK 345KV CKT 1
FDNS	00NR	2	16WP	G15_082	FROM->TO	CIMARRON - DRAPER LAKE 345KV CKT 1	717	717	0.13351	110.8641	FULTON 115 - HOPE 115KV CKT 1
FDNS	00NR	2	16WP	G15_082	FROM->TO	CIMARRON - DRAPER LAKE 345KV CKT 1	717	717	0.13351	110.8641	FULTON 115 - HOPE 115KV CKT 1
FDNS	00NR	2	16WP	G15_082	FROM->TO	CIMARRON - DRAPER LAKE 345KV CKT 1	717	717	0.13345	110.8627	P12:138:OKGE-AEPW:JENSEN4:REDROCKRD4
FDNS	00NR	2	16WP	G15_082	FROM->TO	CIMARRON - DRAPER LAKE 345KV CKT 1	717	717	0.13348	110.861	GEN336222 1-LITTLE GYPSY UNIT#2
FDNS	00NR	2	16WP	G15_082	FROM->TO	CIMARRON - DRAPER LAKE 345KV CKT 1	717	717	0.13658	110.8586	PECAN CREEK - RIVERSIDE STATION 345KV CKT 1
FDNS	00NR	2	16WP	G15_082	FROM->TO	CIMARRON - DRAPER LAKE 345KV CKT 1	717	717	0.13658	110.8586	PECAN CREEK - RIVERSIDE STATION 345KV CKT 1
FDNS	00NR	2	16WP	G15_082	FROM->TO	CIMARRON - DRAPER LAKE 345KV CKT 1	717	717	0.13354	110.8579	HAMMETT TAP - HAMMETT2 138KV CKT 1
FDNS	00NR	2	16WP	G15_082	FROM->TO	CIMARRON - DRAPER LAKE 345KV CKT 1	717	717	0.13361	110.8552	P12:138:AEPW:CATOOSA4:T.S.E.-4
FDNS	00NR	2	16WP	G15_082	FROM->TO	CIMARRON - DRAPER LAKE 345KV CKT 1	717	717	0.13348	110.8539	GEN515564 1-ORIGIN11 0.6900
FDNS	00NR	2	16WP	G15_082	FROM->TO	CIMARRON - DRAPER LAKE 345KV CKT 1	717	717	0.13348	110.8539	GEN515565 1-ORIGIN21 0.6900
FDNS	00NR	2	16WP	G15_082	FROM->TO	CIMARRON - DRAPER LAKE 345KV CKT 1	717	717	0.13355	110.8518	NW164TH4 138.00 - PIEDMONT 138KV CKT 1
FDNS	00NR	2	16WP	G15_082	FROM->TO	CIMARRON - DRAPER LAKE 345KV CKT 1	717	717	0.13749	110.8516	SOONER - WOODRING 345KV CKT 1
FDNS	00NR	2	16WP	G15_082	FROM->TO	CIMARRON - DRAPER LAKE 345KV CKT 1	717	717	0.13356	110.8516	P12:138:OKGE:3TERM28
FDNS	00NR	2	16WP	G15_082	FROM->TO	CIMARRON - DRAPER LAKE 345KV CKT 1	717	717	0.13355	110.8502	NORTHWEST - NW164TH4 138.00 138KV CKT 1
FDNS	00NR	2	16WP	G15_082	FROM->TO	CIMARRON - DRAPER LAKE 345KV CKT 1	717	717	0.13348	110.8473	GEN501970 1-EVANGELINE UNIT 7
FDNS	00NR	2	16WP	G15_082	FROM->TO	CIMARRON - DRAPER LAKE 345KV CKT 1	717	717	0.13512	110.8444	BRYANT - MEMORIAL 138KV CKT 1
FDNS	00NR	2	16WP	G15_082	FROM->TO	CIMARRON - DRAPER LAKE 345KV CKT 1	717	717	0.13351	110.8431	AS KING - EAU CLAIRE 345KV CKT 1
FDNS	00NR	2	16WP	G15_082	FROM->TO	CIMARRON - DRAPER LAKE 345KV CKT 1	717	717	0.13348	110.8364	ST FRANCIS 345/161KV TRANSFORMER CKT 1
FDNS	00NR	2	16WP	G15_082	FROM->TO	CIMARRON - DRAPER LAKE 345KV CKT 1	717	717	0.13396	110.835	ANADARKO - GRACMNT4 138.00 138KV CKT 1
FDNS	00NR	2	16WP	G15_082	FROM->TO	CIMARRON - DRAPER LAKE 345KV CKT 1	717	717	0.13381	110.8339	HEALDTON - LOCO 138KV CKT 1
FDNS	00NR	2	16WP	G15_082	FROM->TO	CIMARRON - DRAPER LAKE 345KV CKT 1	717	717	0.13348	110.8324	NELSON 230/20.0KV TRANSFORMER CKT 1
FDNS	00NR	2	16WP	G15_082	FROM->TO	CIMARRON - DRAPER LAKE 345KV CKT 1	717	717	0.13348	110.8289	GEN336152 1-WATERFORD UNIT#2
FDNS	00NR	2	16WP	G15_082	FROM->TO	CIMARRON - DRAPER LAKE 345KV CKT 1	717	717	0.13348	110.828	P12:161:AEPW:EROGERS5:ECNTRTN5
FDNS	00NR	2	16WP	G15_082	FROM->TO	CIMARRON - DRAPER LAKE 345KV CKT 1	717	717	0.13348	110.8278	GEN336151 1-WATERFORD UNIT#1
FDNS	00NR	2	16WP	G15_082	FROM->TO	CIMARRON - DRAPER LAKE 345KV CKT 1	717	717	0.13348	110.8253	P12:138:AEPW:SHERID4:112GORE4
FDNS	00NR	2	16WP	G15_082	FROM->TO	CIMARRON - DRAPER LAKE 345KV CKT 1	717	717	0.13366	110.8196	HEFNER - TULSA 138KV CKT 1
FDNS	00NR	2	16WP	G15_082	FROM->TO	CIMARRON - DRAPER LAKE 345KV CKT 1	717	717	0.13348	110.8184	P12:161:AEPW:DYESS5:ELMSPRNG:TONTITN5
FDNS	00NR	2	16WP	G15_082	FROM->TO	CIMARRON - DRAPER LAKE 345KV CKT 1	717	717	0.13348	110.8146	GEN334392 1-EXXON MOBIL IPP 1
FDNS	00NR	2	16WP	G15_082	FROM->TO	CIMARRON - DRAPER LAKE 345KV CKT 1	717	717	0.13365	110.8141	P12:138:AEPW:CORNVIL4:S.W.S.-4
FDNS	00NR	2	16WP	G15_082	FROM->TO	CIMARRON - DRAPER LAKE 345KV CKT 1	717	717	0.13461	110.8087	G13-010T 345.00 - SPEARVILLE 345KV CKT 1
FDNS	00NR	2	16WP	G15_082	FROM->TO	CIMARRON - DRAPER LAKE 345KV CKT 1	717	717	0.13348	110.8075	GEN334393 1-EXXON MOBIL IPP 2
FDNS	00NR	2	16WP	G15_082	FROM->TO	CIMARRON - DRAPER LAKE 345KV CKT 1	717	717	0.13348	110.8075	GEN334394 1-EXXON MOBIL IPP 3
FDNS	00NR	2	16WP	G15_082	FROM->TO	CIMARRON - DRAPER LAKE 345KV CKT 1	717	717	0.13358	110.8067	BRISTOW - SILVER CITY 138KV CKT 1
FDNS	00NR	2	16WP	G15_082	FROM->TO	CIMARRON - DRAPER LAKE 345KV CKT 1	717	717	0.13355	110.8066	FLETCHER - MARLOW JCT 69KV CKT 1
FDNS	00NR	2	16WP	G15_082	FROM->TO	CIMARRON - DRAPER LAKE 345KV CKT 1	717	717	0.13367	110.8055	COMANCHE TAP - OMPA-DUNCAN 840 138KV CKT 1
FDNS	00NR	2	16WP	G15_082	FROM->TO	CIMARRON - DRAPER LAKE 345KV CKT 1	717	717	0.13363	110.8038	BROOKLINE - MORGAN 345KV CKT 1
FDNS	00NR	2	16WP	G15_082	FROM->TO	CIMARRON - DRAPER LAKE 345KV CKT 1	717	717	0.13355	110.7988	P12:161:AEPW-SWPA:BEAVERS:EROGERS5
FDNS	00NR	2	16WP	G15_082	FROM->TO	CIMARRON - DRAPER LAKE 345KV CKT 1	717	717	0.13346	110.7988	KELLYAV4 138.00 - MEMORIAL 138KV CKT 1
FDNS	00NR	2	16WP	G15_082	FROM->TO	CIMARRON - DRAPER LAKE 345KV CKT 1	717	717	0.13394	110.7987	BODLE - PARK PLACE 138KV CKT 1
FDNS	00NR	2	16WP	G15_082	FROM->TO	CIMARRON - DRAPER LAKE 345KV CKT 1	717	717	0.13348	110.7956	GEN300015 1-1SGPDEL 18.000
FDNS	00NR	2	16WP	G15_082	FROM->TO	CIMARRON - DRAPER LAKE 345KV CKT 1	717	717	0.13353	110.795	P12:138:AEPW:MOUNDRD4:SHIDLER4
FDNS	00NR	2	16WP	G15_082	FROM->TO	CIMARRON - DRAPER LAKE 345KV CKT 1	717	717	0.13381	110.7937	HEALDTON - RINGLING 138KV CKT 1
FDNS	00NR	2	16WP	G15_082	FROM->TO	CIMARRON - DRAPER LAKE 345KV CKT 1	717	717	0.13348	110.7926	GEN501971 1-EVANGELINE UNIT 7-1
FDNS	00NR	2	16WP	G15_082	FROM->TO	CIMARRON - DRAPER LAKE 345KV CKT 1	717	717	0.13348	110.7926	GEN501972 1-EVANGELINE UNIT 7-2

SOLUTION	GROUP	SCENARIO	SEASON	SOURCE	DIRECTION	MONITORED ELEMENT	RATEA (MVA)	RATEB(MVA)	TDF	TC%LOADING (% MVA)	CONTINGENCY
FDNS	00NR	2	16WP	G15_082	FROM->TO	CIMARRON - DRAPER LAKE 345KV CKT 1	717	717	0.13392	110.7912	MARSHALL - WOODRING 138KV CKT 1
FDNS	00NR	2	16WP	G15_082	FROM->TO	CIMARRON - DRAPER LAKE 345KV CKT 1	717	717	0.13349	110.7887	MC NIEL 500/115KV TRANSFORMER CKT 1
FDNS	00NR	2	16WP	G15_082	FROM->TO	CIMARRON - DRAPER LAKE 345KV CKT 1	717	717	0.13392	110.7858	COTTONWOOD CREEK - MARSHALL 138KV CKT 1
FDNS	00NR	2	16WP	G15_082	FROM->TO	CIMARRON - DRAPER LAKE 345KV CKT 1	717	717	0.13353	110.7858	ARPIN B4 345.00 - EAU CLAIRE 345KV CKT 1
FDNS	00NR	2	16WP	G15_082	FROM->TO	CIMARRON - DRAPER LAKE 345KV CKT 1	717	717	0.13369	110.7857	HAMMETT TAP - HORSESHOE LAKE 138KV CKT 1
FDNS	00NR	2	16WP	G15_082	FROM->TO	CIMARRON - DRAPER LAKE 345KV CKT 1	717	717	0.13348	110.7845	GEN337765 1-TRACTEBEL UNIT C2
FDNS	00NR	2	16WP	G15_082	FROM->TO	CIMARRON - DRAPER LAKE 345KV CKT 1	717	717	0.13348	110.7844	GEN337764 1-TRACTEBEL UNIT C1
FDNS	00NR	2	16WP	G15_082	FROM->TO	CIMARRON - DRAPER LAKE 345KV CKT 1	717	717	0.13348	110.7828	GEN334432 1-SABINE UNIT 2
FDNS	00NR	2	16WP	G15_082	FROM->TO	CIMARRON - DRAPER LAKE 345KV CKT 1	717	717	0.13348	110.7827	GEN334431 1-SABINE UNIT 1
FDNS	00NR	2	16WP	G15_082	FROM->TO	CIMARRON - DRAPER LAKE 345KV CKT 1	717	717	0.13348	110.7815	GEN336242 1-1NMIL ST1 18.000
FDNS	00NR	2	16WP	G15_082	FROM->TO	CIMARRON - DRAPER LAKE 345KV CKT 1	717	717	0.1335	110.7814	BISMARK - HOT SPRINGS WEST BUS 115KV CKT 1
FDNS	00NR	2	16WP	G15_082	FROM->TO	CIMARRON - DRAPER LAKE 345KV CKT 1	717	717	0.13353	110.781	SHIDLER - WEST PAWHUSKA 138KV CKT 1
FDNS	00NR	2	16WP	G15_082	FROM->TO	CIMARRON - DRAPER LAKE 345KV CKT 1	717	717	0.13348	110.7781	GEN501912 1-ACADIA UNIT CT1B
FDNS	00NR	2	16WP	G15_082	FROM->TO	CIMARRON - DRAPER LAKE 345KV CKT 1	717	717	0.13355	110.778	PIEDMONT - RICHRDS 138KV CKT 1
FDNS	00NR	2	16WP	G15_082	FROM->TO	CIMARRON - DRAPER LAKE 345KV CKT 1	717	717	0.13348	110.7775	GEN501911 1-ACADIA UNIT CT1A
FDNS	00NR	2	16WP	G15_082	FROM->TO	CIMARRON - DRAPER LAKE 345KV CKT 1	717	717	0.13373	110.7736	COUNCIL - MUSTANG 138KV CKT 1
FDNS	00NR	2	16WP	G15_082	FROM->TO	CIMARRON - DRAPER LAKE 345KV CKT 1	717	717	0.13351	110.773	P12:138:WFEC:MSL15
FDNS	00NR	2	16WP	G15_082	FROM->TO	CIMARRON - DRAPER LAKE 345KV CKT 1	717	717	0.13388	110.7687	EL RENO SW - MUSTANG2 69.000 69KV CKT 1
FDNS	00NR	2	16WP	G15_082	FROM->TO	CIMARRON - DRAPER LAKE 345KV CKT 1	717	717	0.13354	110.7677	HAMMETT2 - MEEKER 138KV CKT 1
FDNS	00NR	2	16WP	G15_082	FROM->TO	CIMARRON - DRAPER LAKE 345KV CKT 1	717	717	0.13346	110.7676	KELLYAV4 138.00 - REMNGTON PARK 138KV CKT 1
FDNS	00NR	2	16WP	G15_082	FROM->TO	CIMARRON - DRAPER LAKE 345KV CKT 1	717	717	0.13368	110.7673	CORN TAP - CORNVILLE 138KV CKT 1
FDNS	00NR	2	16WP	G15_082	FROM->TO	CIMARRON - DRAPER LAKE 345KV CKT 1	717	717	0.13512	110.7662	ACORN 4 138.00 - BRYANT 138KV CKT 1
FDNS	00NR	2	16WP	G15_082	FROM->TO	CIMARRON - DRAPER LAKE 345KV CKT 1	717	717	0.13353	110.7648	PAWHUSKA TAP - WEST PAWHUSKA 138KV CKT 1
FDNS	00NR	2	16WP	G15_082	FROM->TO	CIMARRON - DRAPER LAKE 345KV CKT 1	717	717	0.13384	110.7629	CIVIT - PAOLI 138KV CKT 1
FDNS	00NR	2	16WP	G15_082	FROM->TO	CIMARRON - DRAPER LAKE 345KV CKT 1	717	717	0.13348	110.76	CYPRESS - HARTBURG 500KV CKT 1
FDNS	00NR	2	16WP	G15_082	FROM->TO	CIMARRON - DRAPER LAKE 345KV CKT 1	717	717	0.13381	110.7525	RINGLING - SOUTH WILSON 138KV CKT 1
FDNS	00NR	2	16WP	G15_082	FROM->TO	CIMARRON - DRAPER LAKE 345KV CKT 1	717	717	0.13347	110.7509	HOT SPRINGS EHV - MAGNET COVE 500KV CKT 1
FDNS	00NR	2	16WP	G15_082	FROM->TO	CIMARRON - DRAPER LAKE 345KV CKT 1	717	717	0.13347	110.7506	LAYFLD8 500.00 - MOUNT OLIVE 500KV CKT 1
FDNS	00NR	2	16WP	G15_082	FROM->TO	CIMARRON - DRAPER LAKE 345KV CKT 1	717	717	0.13347	110.7506	LAYFLD8 500.00 - MOUNT OLIVE 500KV CKT 1
FDNS	00NR	2	16WP	G15_082	FROM->TO	CIMARRON - DRAPER LAKE 345KV CKT 1	717	717	0.1335	110.7487	ALPINE AECC - BISMARK 115KV CKT 1
FDNS	00NR	2	16WP	G15_082	FROM->TO	CIMARRON - DRAPER LAKE 345KV CKT 1	717	717	0.13459	110.7453	COLE - OUSW4 138KV CKT 1
FDNS	00NR	2	16WP	G15_082	FROM->TO	CIMARRON - DRAPER LAKE 345KV CKT 1	717	717	0.13356	110.7453	JOHNSON COUNTY (JOHNCO) 345/138/13.8KV TRANSFORMER CKT 1
FDNS	00NR	2	16WP	G15_082	FROM->TO	CIMARRON - DRAPER LAKE 345KV CKT 1	717	717	0.13348	110.7387	GEN337430 1-PERYVILLE UNIT #3
FDNS	00NR	2	16WP	G15_082	FROM->TO	CIMARRON - DRAPER LAKE 345KV CKT 1	717	717	0.13348	110.7379	GEN337428 1-PERYVILLE UNIT #1
FDNS	00NR	2	16WP	G15_082	FROM->TO	CIMARRON - DRAPER LAKE 345KV CKT 1	717	717	0.13348	110.7374	SABINE 230/24.0KV TRANSFORMER CKT 1
FDNS	00NR	2	16WP	G15_082	FROM->TO	CIMARRON - DRAPER LAKE 345KV CKT 1	717	717	0.13348	110.7362	P12:69:AEPW:L.E.S.-2:LAW WC2
FDNS	00NR	2	16WP	G15_082	FROM->TO	CIMARRON - DRAPER LAKE 345KV CKT 1	717	717	0.13346	110.734	REMNGTON PARK - STONEWALL 138KV CKT 1
FDNS	00NR	2	16WP	G15_082	FROM->TO	CIMARRON - DRAPER LAKE 345KV CKT 1	717	717	0.13377	110.7231	CHERRY CREEK - PLEASANT VALLEY 138KV CKT 1
FDNS	00NR	2	16WP	G15_082	FROM->TO	CIMARRON - DRAPER LAKE 345KV CKT 1	717	717	0.13366	110.7174	38TH ST - TULSA 138KV CKT 1
FDNS	00NR	2	16WP	G15_082	FROM->TO	CIMARRON - DRAPER LAKE 345KV CKT 1	717	717	0.13373	110.7168	COUNCIL - WESTOAKS 138KV CKT 1
FDNS	00NR	2	16WP	G15_082	FROM->TO	CIMARRON - DRAPER LAKE 345KV CKT 1	717	717	0.13384	110.7145	CIVIT - STRATFORD 138KV CKT 1
FDNS	00NR	2	16WP	G15_082	FROM->TO	CIMARRON - DRAPER LAKE 345KV CKT 1	717	717	0.13348	110.2873	BASE CASE
FDNS	00NR	2	16WP	G15_082	FROM->TO	CIMARRON - DRAPER LAKE 345KV CKT 1	717	717	0.13313	109.9372	CHISHOLM6 230.00 - SWEETWATER 230KV CKT 1
FDNS	00NR	2	16WP	G15_082	FROM->TO	CIMARRON - DRAPER LAKE 345KV CKT 1	717	717	0.13424	109.9081	BURGETT4 138.00 - DANFORTH 138KV CKT 1
FDNS	00NR	2	16WP	G15_082	FROM->TO	CIMARRON - DRAPER LAKE 345KV CKT 1	717	717	0.13424	109.9073	BURGETT4 138.00 - RNDBARN4 138.00 138KV CKT 1
FDNS	00NR	2	16WP	G15_082	FROM->TO	CIMARRON - DRAPER LAKE 345KV CKT 1	717	717	0.13424	109.8947	ARCADIA - RNDBARN4 138.00 138KV CKT 1
FDNS	00NR	2	16WP	G15_082	FROM->TO	CIMARRON - DRAPER LAKE 345KV CKT 1	717	717	0.13489	109.8763	FOREST HILL - MAUD 138KV CKT 1
FDNS	00NR	2	16WP	G15_082	FROM->TO	CIMARRON - DRAPER LAKE 345KV CKT 1	717	717	0.13348	109.8723	GEN515550 1-MNCWND31 0.6900
FDNS	00NR	2	16WP	G15_082	FROM->TO	CIMARRON - DRAPER LAKE 345KV CKT 1	717	717	0.13348	109.8551	GEN562694 1-G15_016_3 0.6900
FDNS	00NR	2	16WP	G15_082	FROM->TO	CIMARRON - DRAPER LAKE 345KV CKT 1	717	717	0.13379	109.8516	BORDER 7345.00 - TUCO_2 345.00 345KV CKT 1
FDNS	00NR	2	16WP	G15_082	FROM->TO	CIMARRON - DRAPER LAKE 345KV CKT 1	717	717	0.13348	109.8479	GEN562611 1-G14_064_3 0.6900
FDNS	00NR	2	16WP	G15_082	FROM->TO	CIMARRON - DRAPER LAKE 345KV CKT 1	717	717	0.13348	109.8437	GEN562714 1-G15_023_4 0.6900
FDNS	00NR	2	16WP	G15_082	FROM->TO	CIMARRON - DRAPER LAKE 345KV CKT 1	717	717	0.13348	109.8437	GEN562715 1-G15_023_5 0.6900
FDNS	00NR	2	16WP	G15_082	FROM->TO	CIMARRON - DRAPER LAKE 345KV CKT 1	717	717	0.13348	109.8384	GEN530594 1-SMKYP1G1 0.6900
FDNS	00NR	2	16WP	G15_082	FROM->TO	CIMARRON - DRAPER LAKE 345KV CKT 1	717	717	0.13348	109.827	GEN600065 7-HIGH BRIDGE
FDNS	00NR	2	16WP	G15_082	FROM->TO	CIMARRON - DRAPER LAKE 345KV CKT 1	717	717	0.13348	109.827	GEN600066 8-HIGH BRIDGE
FDNS	00NR	2	16WP	G15_082	FROM->TO	CIMARRON - DRAPER LAKE 345KV CKT 1	717	717	0.13348	109.8236	GEN629066 4-PRAIRIE CREEK GENERATORFOR UNIT NO4
FDNS	00NR	2	16WP	G15_082	FROM->TO	CIMARRON - DRAPER LAKE 345KV CKT 1	717	717	0.13348	109.8226	GEN515601 1-KNGFSR11 0.7000
FDNS	00NR	2	16WP	G15_082	FROM->TO	CIMARRON - DRAPER LAKE 345KV CKT 1	717	717	0.13348	109.8162	GEN562872 1-G15046_3 0.6900
FDNS	00NR	2	16WP	G15_082	FROM->TO	CIMARRON - DRAPER LAKE 345KV CKT 1	717	717	0.13348	109.8138	GEN600050 1-FEP
FDNS	00NR	2	16WP	G15_082	FROM->TO	CIMARRON - DRAPER LAKE 345KV CKT 1	717	717	0.13348	109.8128	GEN511848 1-SOUTHWESTERN STATION #3
FDNS	00NR	2	16WP	G15_082	FROM->TO	CIMARRON - DRAPER LAKE 345KV CKT 1	717	717	0.13348	109.8123	GEN563062 1-G15071_3 0.6900
FDNS	00NR	2	16WP	G15_082	FROM->TO	CIMARRON - DRAPER LAKE 345KV CKT 1	717	717	0.13348	109.811	GEN562517 1-G14_021_S2 0.6900
FDNS	00NR	2	16WP	G15_082	FROM->TO	CIMARRON - DRAPER LAKE 345KV CKT 1	717	717	0.13348	109.8071	GEN562042 1-G11_014_3 0.6900
FDNS	00NR	2	16WP	G15_082	FROM->TO	CIMARRON - DRAPER LAKE 345KV CKT 1	717	717	0.13324	109.8047	P12:138:WFEC:MSL10
FDNS	00NR	2	16WP	G15_082	FROM->TO	CIMARRON - DRAPER LAKE 345KV CKT 1	717	717	0.13381	109.7956	OVEXFRMCCOVE
FDNS	00NR	2	16WP	G15_082	FROM->TO	CIMARRON - DRAPER LAKE 345KV CKT 1	717	717	0.13348	109.7917	GEN600070 9-RIVER SIDE
FDNS	00NR	2	16WP	G15_082	FROM->TO	CIMARRON - DRAPER LAKE 345KV CKT 1	717	717	0.13348	109.7916	GEN600071 10-RIVER SIDE
FDNS	00NR	2	16WP	G15_082	FROM->TO	CIMARRON - DRAPER LAKE 345KV CKT 1	717	717	0.13348	109.7857	GEN672303 3-BOUNDARY DAM GENERATOR 3
FDNS	00NR	2	16WP	G15_082	FROM->TO	CIMARRON - DRAPER LAKE 345KV CKT 1	717	717	0.13348	109.7857	GEN672304 4-BOUNDARY DAM GENERATOR 4
FDNS	00NR	2	16WP	G15_082	FROM->TO	CIMARRON - DRAPER LAKE 345KV CKT 1	717	717	0.13348	109.7857	GEN672305 5-BOUNDARY DAM GENERATOR 5
FDNS	00NR	2	16WP	G15_082	FROM->TO	CIMARRON - DRAPER LAKE 345KV CKT 1	717	717	0.13348	109.7853	GEN600007 7-RIVERSIDE GEN 7
FDNS	00NR	2	16WP	G15_082	FROM->TO	CIMARRON - DRAPER LAKE 345KV CKT 1	717	717	0.13348	109.7849	GEN600067 9-HIGH BRIDGE
FDNS	00NR	2	16WP	G15_082	FROM->TO	CIMARRON - DRAPER LAKE 345KV CKT 1	717	717	0.13348	109.7843	GEN562270 1-G12-020-2 0.6900
FDNS	00NR	2	16WP	G15_082	FROM->TO	CIMARRON - DRAPER LAKE 345KV CKT 1	717	717	0.13348	109.7816	GEN641089 2-ENERGY CENTER 2
FDNS	00NR	2	16WP	G15_082	FROM->TO	CIMARRON - DRAPER LAKE 345KV CKT 1	717	717	0.13348	109.7809	GEN615052 1-CAMBRIDGE GENERATING STATION
FDNS	00NR	2	16WP	G15_082	FROM->TO	CIMARRON - DRAPER LAKE 345KV CKT 1	717	717	0.13348	109.779	GEN600011 5-BLACK DOG GEN 1
FDNS	00NR	2	16WP	G15_082	FROM->TO	CIMARRON - DRAPER LAKE 345KV CKT 1	717	717	0.13348	109.7728	GEN600014 4-BLACK DOG GEN 4
FDNS	00NR	2	16WP	G15_082	FROM->TO	CIMARRON - DRAPER LAKE 345KV CKT 1	717	717	0.13348	109.768	GEN629067 1-EMERY GAS TURBINE 1

SOLUTION	GROUP	SCENARIO	SEASON	SOURCE	DIRECTION	MONITORED ELEMENT	RATEA (MVA)	RATEB(MVA)	TDF	TC%LOADING (% MVA)	CONTINGENCY
FDNS	00NR	2	16WP	G15_082	FROM->TO	CIMARRON - DRAPER LAKE 345KV CKT 1	717	717	0.13348	109.7665	GEN562802 1-G15039_3 0.3570
FDNS	00NR	2	16WP	G15_082	FROM->TO	CIMARRON - DRAPER LAKE 345KV CKT 1	717	717	0.13348	109.7656	GEN615032 2-PLEASANT VALLEY
FDNS	00NR	2	16WP	G15_082	FROM->TO	CIMARRON - DRAPER LAKE 345KV CKT 1	717	717	0.13348	109.764	GEN562602 1-G15_029_3 0.6900
FDNS	00NR	2	16WP	G15_082	FROM->TO	CIMARRON - DRAPER LAKE 345KV CKT 1	717	717	0.13348	109.7631	GEN515611 1-NBUFFRG1 0.6900
FDNS	00NR	2	16WP	G15_082	FROM->TO	CIMARRON - DRAPER LAKE 345KV CKT 1	717	717	0.13348	109.7631	GEN560217 1-G07_062_6 0.6900
FDNS	00NR	2	16WP	G15_082	FROM->TO	CIMARRON - DRAPER LAKE 345KV CKT 1	717	717	0.13348	109.7631	GEN560218 1-G07_062_7 0.6900
FDNS	00NR	2	16WP	G15_082	FROM->TO	CIMARRON - DRAPER LAKE 345KV CKT 1	717	717	0.13348	109.7629	GEN563102 1-G15075_3 0.5500
FDNS	00NR	2	16WP	G15_082	FROM->TO	CIMARRON - DRAPER LAKE 345KV CKT 1	717	717	0.13308	109.7527	CHISNEY - CLARKSVILLE 138KV CKT 1
FDNS	00NR	2	16WP	G15_082	FROM->TO	CIMARRON - DRAPER LAKE 345KV CKT 1	717	717	0.13348	109.7419	GEN562812 1-G15040_3 0.3570
FDNS	00NR	2	16WP	G15_082	FROM->TO	CIMARRON - DRAPER LAKE 345KV CKT 1	717	717	0.13348	109.7359	GEN563132 1-G15078_3 0.3570
FDNS	00NR	2	16WP	G15_082	FROM->TO	CIMARRON - DRAPER LAKE 345KV CKT 1	717	717	0.13348	109.7344	GEN600017 C-LS POWER CT
FDNS	00NR	2	16WP	G15_082	FROM->TO	CIMARRON - DRAPER LAKE 345KV CKT 1	717	717	0.13526	109.728	G15061_T 345.00 - SETAB 345KV CKT 1
FDNS	00NR	2	16WP	G15_082	FROM->TO	CIMARRON - DRAPER LAKE 345KV CKT 1	717	717	0.13348	109.7233	GEN541151 3-SIBLEY GENERATING UNIT #3
FDNS	00NR	2	16WP	G15_082	FROM->TO	CIMARRON - DRAPER LAKE 345KV CKT 1	717	717	0.13365	109.7211	P12:138:AEPW:SHAM4WT:CHILD4WT
FDNS	00NR	2	16WP	G15_082	FROM->TO	CIMARRON - DRAPER LAKE 345KV CKT 1	717	717	0.13379	109.7196	BORDER 7345.00 - WOODWARD DISTRICT EHV 345KV CKT 1
FDNS	00NR	2	16WP	G15_082	FROM->TO	CIMARRON - DRAPER LAKE 345KV CKT 1	717	717	0.13402	109.7167	SEMINOLE - VANOSTP4 138.00 138KV CKT 1
FDNS	00NR	2	16WP	G15_082	FROM->TO	CIMARRON - DRAPER LAKE 345KV CKT 1	717	717	0.13358	109.7156	EARLSBORO 4138.00 - FIXICO TAP 138KV CKT 1
FDNS	00NR	2	16WP	G15_082	FROM->TO	CIMARRON - DRAPER LAKE 345KV CKT 1	717	717	0.13359	109.7147	P12:138:AEPW:WELETK4:EARLSBORO4
FDNS	00NR	2	16WP	G15_082	FROM->TO	CIMARRON - DRAPER LAKE 345KV CKT 1	717	717	0.13359	109.7142	P12:138:OKGE:3TERM36
FDNS	00NR	2	16WP	G15_082	FROM->TO	CIMARRON - DRAPER LAKE 345KV CKT 1	717	717	0.13348	109.7132	GEN515591 1-PALDRW11 0.6900
FDNS	00NR	2	16WP	G15_082	FROM->TO	CIMARRON - DRAPER LAKE 345KV CKT 1	717	717	0.13348	109.7131	GEN524285 1-WILDORADO WIND GEN
FDNS	00NR	2	16WP	G15_082	FROM->TO	CIMARRON - DRAPER LAKE 345KV CKT 1	717	717	0.13363	109.7087	CANADIAN RIVER - MCALESTER SOUTH 138KV CKT 1
FDNS	00NR	2	16WP	G15_082	FROM->TO	CIMARRON - DRAPER LAKE 345KV CKT 1	717	717	0.13363	109.7087	CANADIAN RIVER - MCALESTER SOUTH 138KV CKT 1
FDNS	00NR	2	16WP	G15_082	FROM->TO	CIMARRON - DRAPER LAKE 345KV CKT 1	717	717	0.13363	109.7078	CANADIAN RIVER () 345/138/13.8KV TRANSFORMER CKT 1
FDNS	00NR	2	16WP	G15_082	FROM->TO	CIMARRON - DRAPER LAKE 345KV CKT 1	717	717	0.13363	109.7078	CANADIAN RIVER () 345/138/13.8KV TRANSFORMER CKT 1
FDNS	00NR	2	16WP	G15_082	FROM->TO	CIMARRON - DRAPER LAKE 345KV CKT 1	717	717	0.13348	109.704	GEN526331 1-JONES GEN #1 22 KV
FDNS	00NR	2	16WP	G15_082	FROM->TO	CIMARRON - DRAPER LAKE 345KV CKT 1	717	717	0.13348	109.7039	GEN526332 1-JONES GEN #2 21 KV
FDNS	00NR	2	16WP	G15_082	FROM->TO	CIMARRON - DRAPER LAKE 345KV CKT 1	717	717	0.13348	109.7037	GEN629070 2-BEAVER CHANNEL GENERATORFOR UNIT NO 2
FDNS	00NR	2	16WP	G15_082	FROM->TO	CIMARRON - DRAPER LAKE 345KV CKT 1	717	717	0.13348	109.7022	GEN672392 1-NBECGT1G 18.000
FDNS	00NR	2	16WP	G15_082	FROM->TO	CIMARRON - DRAPER LAKE 345KV CKT 1	717	717	0.1335	109.6999	P12:138:WFEC:MSL07
FDNS	00NR	2	16WP	G15_082	FROM->TO	CIMARRON - DRAPER LAKE 345KV CKT 1	717	717	0.1335	109.6999	P12:138:WFEC-AEPW:HUGOPP4:ATOKA--4
FDNS	00NR	2	16WP	G15_082	FROM->TO	CIMARRON - DRAPER LAKE 345KV CKT 1	717	717	0.13344	109.6968	P12:138:AEPW-SWPA:LONEOAK4:TUPELO4
FDNS	00NR	2	16WP	G15_082	FROM->TO	CIMARRON - DRAPER LAKE 345KV CKT 1	717	717	0.13344	109.6968	P12:138:WFEC:MSL06
FDNS	00NR	2	16WP	G15_082	FROM->TO	CIMARRON - DRAPER LAKE 345KV CKT 1	717	717	0.13203	109.6954	CHISHOLM7 345.00 - GRACEMONT 345KV CKT 1
FDNS	00NR	2	16WP	G15_082	FROM->TO	CIMARRON - DRAPER LAKE 345KV CKT 1	717	717	0.13348	109.6923	GEN659125 1-COVEY
FDNS	00NR	2	16WP	G15_082	FROM->TO	CIMARRON - DRAPER LAKE 345KV CKT 1	717	717	0.13348	109.6891	GEN532663 1-LAWRENCE ENERGY CENTER UNIT 5
FDNS	00NR	2	16WP	G15_082	FROM->TO	CIMARRON - DRAPER LAKE 345KV CKT 1	717	717	0.13348	109.6856	GEN563282 1-G15094_3 0.6900
FDNS	00NR	2	16WP	G15_082	FROM->TO	CIMARRON - DRAPER LAKE 345KV CKT 1	717	717	0.13348	109.685	GEN629071 1-BURLINGTON GENERATOR FOR UNIT NO 1 E
FDNS	00NR	2	16WP	G15_082	FROM->TO	CIMARRON - DRAPER LAKE 345KV CKT 1	717	717	0.13362	109.6834	P12:138:WFEC:MSL16
FDNS	00NR	2	16WP	G15_082	FROM->TO	CIMARRON - DRAPER LAKE 345KV CKT 1	717	717	0.13348	109.6784	GEN615010 1-STANTON4
FDNS	00NR	2	16WP	G15_082	FROM->TO	CIMARRON - DRAPER LAKE 345KV CKT 1	717	717	0.13348	109.6746	GEN562074 1-G1149G1504 0.6900
FDNS	00NR	2	16WP	G15_082	FROM->TO	CIMARRON - DRAPER LAKE 345KV CKT 1	717	717	0.13348	109.6731	INDEPENDENCE 500/26.0KV TRANSFORMER CKT 1
FDNS	00NR	2	16WP	G15_082	FROM->TO	CIMARRON - DRAPER LAKE 345KV CKT 1	717	717	0.13348	109.6699	GEN652353 2-GR PRAIRIEG 0.6900
FDNS	00NR	2	16WP	G15_082	FROM->TO	CIMARRON - DRAPER LAKE 345KV CKT 1	717	717	0.13469	109.6689	MAUD - SEMINOLE 138KV CKT 1
FDNS	00NR	2	16WP	G15_082	FROM->TO	CIMARRON - DRAPER LAKE 345KV CKT 1	717	717	0.13348	109.6618	GEN562429 1-G13-029 0.6900
FDNS	00NR	2	16WP	G15_082	FROM->TO	CIMARRON - DRAPER LAKE 345KV CKT 1	717	717	0.13308	109.6591	CHISNEY - HIGHLAND 138KV CKT 1
FDNS	00NR	2	16WP	G15_082	FROM->TO	CIMARRON - DRAPER LAKE 345KV CKT 1	717	717	0.13348	109.6584	GEN615021 1-GRE-ER 14G 16.000
FDNS	00NR	2	16WP	G15_082	FROM->TO	CIMARRON - DRAPER LAKE 345KV CKT 1	717	717	0.13348	109.6557	GEN560105 1-G08-22 0.6900
FDNS	00NR	2	16WP	G15_082	FROM->TO	CIMARRON - DRAPER LAKE 345KV CKT 1	717	717	0.13203	109.6498	CHISHOLM7 345.00 (CHISHOLM) 345/230/13.2KV TRANSFORMER CKT 1
FDNS	00NR	2	16WP	G15_082	FROM->TO	CIMARRON - DRAPER LAKE 345KV CKT 1	717	717	0.13348	109.6429	BURLINGTON NO1 + NO 2 + NO 3 161/20.0KV TRANSFORMER CKT 1
FDNS	00NR	2	16WP	G15_082	FROM->TO	CIMARRON - DRAPER LAKE 345KV CKT 1	717	717	0.13365	109.6421	DELL 500 - INDEPENDENCE 500KV CKT 1
FDNS	00NR	2	16WP	G15_082	FROM->TO	CIMARRON - DRAPER LAKE 345KV CKT 1	717	717	0.13348	109.6392	GEN515365 1-CENT 21 0.7000
FDNS	00NR	2	16WP	G15_082	FROM->TO	CIMARRON - DRAPER LAKE 345KV CKT 1	717	717	0.13348	109.6299	GEN527882 1-CUNNINGHAM GEN #2 20 KV
FDNS	00NR	2	16WP	G15_082	FROM->TO	CIMARRON - DRAPER LAKE 345KV CKT 1	717	717	0.13358	109.6267	EARLSBORO 4138.00 - MAUD 138KV CKT 1
FDNS	00NR	2	16WP	G15_082	FROM->TO	CIMARRON - DRAPER LAKE 345KV CKT 1	717	717	0.13358	109.6267	EARLSBORO 4138.00 - MAUD 138KV CKT 1
FDNS	00NR	2	16WP	G15_082	FROM->TO	CIMARRON - DRAPER LAKE 345KV CKT 1	717	717	0.13358	109.6231	GRPRAR1-LNX3345.00 - YANKTON 345KV CKT Z
FDNS	00NR	2	16WP	G15_082	FROM->TO	CIMARRON - DRAPER LAKE 345KV CKT 1	717	717	0.13348	109.6226	GEN562017 1-G11_022_3 0.6900
FDNS	00NR	2	16WP	G15_082	FROM->TO	CIMARRON - DRAPER LAKE 345KV CKT 1	717	717	0.13358	109.6225	GRPRAR1-LNX3345.00 - HOLT.CO3 345.00 345KV CKT 1
FDNS	00NR	2	16WP	G15_082	FROM->TO	CIMARRON - DRAPER LAKE 345KV CKT 1	717	717	0.13359	109.6188	P12:138:AEPW-OGE:WELETK4:MAUD 4
FDNS	00NR	2	16WP	G15_082	FROM->TO	CIMARRON - DRAPER LAKE 345KV CKT 1	717	717	0.13348	109.6157	GEN562550 1-G14_040_3 0.6900
FDNS	00NR	2	16WP	G15_082	FROM->TO	CIMARRON - DRAPER LAKE 345KV CKT 1	717	717	0.13348	109.6008	GEN562432 1-G13-030 0.6900
FDNS	00NR	2	16WP	G15_082	FROM->TO	CIMARRON - DRAPER LAKE 345KV CKT 1	717	717	0.13348	109.5951	GEN562596 1-G14_059_3 0.6900
FDNS	00NR	2	16WP	G15_082	FROM->TO	CIMARRON - DRAPER LAKE 345KV CKT 1	717	717	0.13081	109.5942	HUNTERS7 345.00 - RENFROW7 345.00 345KV CKT 1
FDNS	00NR	2	16WP	G15_082	FROM->TO	CIMARRON - DRAPER LAKE 345KV CKT 1	717	717	0.13348	109.5911	GEN524295 1-SPNSPUR_WND10.6900
FDNS	00NR	2	16WP	G15_082	FROM->TO	CIMARRON - DRAPER LAKE 345KV CKT 1	717	717	0.13348	109.5909	GEN515606 1-CANDN11 0.6900
FDNS	00NR	2	16WP	G15_082	FROM->TO	CIMARRON - DRAPER LAKE 345KV CKT 1	717	717	0.13348	109.5909	GEN515607 1-CANDN12 0.6900
FDNS	00NR	2	16WP	G15_082	FROM->TO	CIMARRON - DRAPER LAKE 345KV CKT 1	717	717	0.13348	109.5891	GEN562983 1-G15061_4 0.6900
FDNS	00NR	2	16WP	G15_082	FROM->TO	CIMARRON - DRAPER LAKE 345KV CKT 1	717	717	0.13348	109.5891	GEN562984 1-G15061_5 0.6900
FDNS	00NR	2	16WP	G15_082	FROM->TO	CIMARRON - DRAPER LAKE 345KV CKT 1	717	717	0.13077	109.577	RENFROW7 345.00 - VIOLA 7 345.00 345KV CKT 1
FDNS	00NR	2	16WP	G15_082	FROM->TO	CIMARRON - DRAPER LAKE 345KV CKT 1	717	717	0.13348	109.5694	GEN515443 1-MNCOWND1 0.7000
FDNS	00NR	2	16WP	G15_082	FROM->TO	CIMARRON - DRAPER LAKE 345KV CKT 1	717	717	0.13348	109.5644	GEN562794 1-G15038_5 0.6900
FDNS	00NR	2	16WP	G15_082	FROM->TO	CIMARRON - DRAPER LAKE 345KV CKT 1	717	717	0.13348	109.5644	GEN562795 1-G15038_6 0.6900
FDNS	00NR	2	16WP	G15_082	FROM->TO	CIMARRON - DRAPER LAKE 345KV CKT 1	717	717	0.13348	109.563	P12:230:UMZB:# 112 #: NU IN SD. NU-RCDC & DRY CREEK XFMR
FDNS	00NR	2	16WP	G15_082	FROM->TO	CIMARRON - DRAPER LAKE 345KV CKT 1	717	717	0.13348	109.5613	RCDC EAST 4230.00 - RED CEDAR DC 230KV CKT 1
FDNS	00NR	2	16WP	G15_082	FROM->TO	CIMARRON - DRAPER LAKE 345KV CKT 1	717	717	0.13348	109.5567	GEN345671 2-1RUSH G2 18.000
FDNS	00NR	2	16WP	G15_082	FROM->TO	CIMARRON - DRAPER LAKE 345KV CKT 1	717	717	0.13348	109.5547	GEN345670 1-1RUSH G1 18.000
FDNS	00NR	2	16WP	G15_082	FROM->TO	CIMARRON - DRAPER LAKE 345KV CKT 1	717	717	0.13348	109.5363	GEN562512 1-G14_020_3 0.6900
FDNS	00NR	2	16WP	G15_082	FROM->TO	CIMARRON - DRAPER LAKE 345KV CKT 1	717	717	0.13308	109.5297	HIGHLAND - PINK SW 138KV CKT 1
FDNS	00NR	2	16WP	G15_082	FROM->TO	CIMARRON - DRAPER LAKE 345KV CKT 1	717	717	0.13485	109.524	HOLLYWOOD - MIDWEST TAP 138KV CKT 1

SOLUTION	GROUP	SCENARIO	SEASON	SOURCE	DIRECTION	MONITORED ELEMENT	RATEA (MVA)	RATEB(MVA)	TDF	TC%LOADING (% MVA)	CONTINGENCY
FDNS	00NR	2	16WP	G15_082	FROM->TO	CIMARRON - DRAPER LAKE 345KV CKT 1	717	717	0.13348	109.5039	GEN629072 4-LANSING GENERATOR FOR UNITS NO4 EIA CODE 1
FDNS	00NR	2	16WP	G15_082	FROM->TO	CIMARRON - DRAPER LAKE 345KV CKT 1	717	717	0.13348	109.4996	GEN531447 1-HOLCOMB GENERATOR
FDNS	00NR	2	16WP	G15_082	FROM->TO	CIMARRON - DRAPER LAKE 345KV CKT 1	717	717	0.13327	109.4985	CIMARRON - TUTTLE CONOCO TAP 138KV CKT 1
FDNS	00NR	2	16WP	G15_082	FROM->TO	CIMARRON - DRAPER LAKE 345KV CKT 1	717	717	0.13348	109.4882	GEN529201 1-OMCDLEC1 13.800
FDNS	00NR	2	16WP	G15_082	FROM->TO	CIMARRON - DRAPER LAKE 345KV CKT 1	717	717	0.13348	109.4836	GEN562832 1-G15042_3 0.6900
FDNS	00NR	2	16WP	G15_082	FROM->TO	CIMARRON - DRAPER LAKE 345KV CKT 1	717	717	0.13348	109.4804	GEN562685 1-G15_013_3 0.3550
FDNS	00NR	2	16WP	G15_082	FROM->TO	CIMARRON - DRAPER LAKE 345KV CKT 1	717	717	0.13373	109.475	KEO EHV - WEST MEMPHIS 500 500KV CKT 1
FDNS	00NR	2	16WP	G15_082	FROM->TO	CIMARRON - DRAPER LAKE 345KV CKT 1	717	717	0.13348	109.4696	GEN562699 1-G15_018_3 0.6900
FDNS	00NR	2	16WP	G15_082	FROM->TO	CIMARRON - DRAPER LAKE 345KV CKT 1	717	717	0.13348	109.4677	GEN657749 1-YOUNG 1 GENERATOR
FDNS	00NR	2	16WP	G15_082	FROM->TO	CIMARRON - DRAPER LAKE 345KV CKT 1	717	717	0.13348	109.467	GEN563092 1-G15074_3 0.6900
FDNS	00NR	2	16WP	G15_082	FROM->TO	CIMARRON - DRAPER LAKE 345KV CKT 1	717	717	0.13348	109.4641	GEN300003 1-THOMAS HILL UNIT 3
FDNS	00NR	2	16WP	G15_082	FROM->TO	CIMARRON - DRAPER LAKE 345KV CKT 1	717	717	0.13348	109.4572	GEN645011 1-NEBRASKA CITY 1
FDNS	00NR	2	16WP	G15_082	FROM->TO	CIMARRON - DRAPER LAKE 345KV CKT 1	717	717	0.13348	109.4331	GEN563122 1-G15077_3 0.3850
FDNS	00NR	2	16WP	G15_082	FROM->TO	CIMARRON - DRAPER LAKE 345KV CKT 1	717	717	0.13348	109.4297	GEN542951 5-HAWTHORN UNIT #5
FDNS	00NR	2	16WP	G15_082	FROM->TO	CIMARRON - DRAPER LAKE 345KV CKT 1	717	717	0.13327	109.4292	TUTTLE - TUTTLE CONOCO TAP 138KV CKT 1
FDNS	00NR	2	16WP	G15_082	FROM->TO	CIMARRON - DRAPER LAKE 345KV CKT 1	717	717	0.1339	109.4183	FRISCCO4 138.00 - LULA 138KV CKT 1
FDNS	00NR	2	16WP	G15_082	FROM->TO	CIMARRON - DRAPER LAKE 345KV CKT 1	717	717	0.13348	109.4054	GEN645012 2-NEBRASKA CITY 2
FDNS	00NR	2	16WP	G15_082	FROM->TO	CIMARRON - DRAPER LAKE 345KV CKT 1	717	717	0.13348	109.4021	GEN681522 3-GENOA 3
FDNS	00NR	2	16WP	G15_082	FROM->TO	CIMARRON - DRAPER LAKE 345KV CKT 1	717	717	0.13348	109.4013	GEN563182 1-G15083_3 0.6900
FDNS	00NR	2	16WP	G15_082	FROM->TO	CIMARRON - DRAPER LAKE 345KV CKT 1	717	717	0.13348	109.3887	4SIOUX 1 138.00 138/18.0KV TRANSFORMER CKT 1
FDNS	00NR	2	16WP	G15_082	FROM->TO	CIMARRON - DRAPER LAKE 345KV CKT 1	717	717	0.13348	109.3877	GEN562587 1-G14_056_3 0.6900
FDNS	00NR	2	16WP	G15_082	FROM->TO	CIMARRON - DRAPER LAKE 345KV CKT 1	717	717	0.13348	109.3753	GEN344895 2-1LAB G2 20.000
FDNS	00NR	2	16WP	G15_082	FROM->TO	CIMARRON - DRAPER LAKE 345KV CKT 1	717	717	0.13348	109.3564	GEN515602 1-KNGFSR12 0.7000
FDNS	00NR	2	16WP	G15_082	FROM->TO	CIMARRON - DRAPER LAKE 345KV CKT 1	717	717	0.13348	109.3523	GEN563202 1-G15085_3 0.5500
FDNS	00NR	2	16WP	G15_082	FROM->TO	CIMARRON - DRAPER LAKE 345KV CKT 1	717	717	0.13348	109.3461	GEN344896 3-1LAB G3 20.000
FDNS	00NR	2	16WP	G15_082	FROM->TO	CIMARRON - DRAPER LAKE 345KV CKT 1	717	717	0.13348	109.3447	GEN344894 1-1LAB G1 20.000
FDNS	00NR	2	16WP	G15_082	FROM->TO	CIMARRON - DRAPER LAKE 345KV CKT 1	717	717	0.13348	109.3435	GEN344897 4-1LAB G4 20.000
FDNS	00NR	2	16WP	G15_082	FROM->TO	CIMARRON - DRAPER LAKE 345KV CKT 1	717	717	0.13349	109.3353	TUPELO - TUPELO TAP 138KV CKT 1
FDNS	00NR	2	16WP	G15_082	FROM->TO	CIMARRON - DRAPER LAKE 345KV CKT 1	717	717	0.13348	109.3268	GEN523461 1-BLACKHAWK GEN #1
FDNS	00NR	2	16WP	G15_082	FROM->TO	CIMARRON - DRAPER LAKE 345KV CKT 1	717	717	0.13348	109.3267	GEN523462 1-BLACKHAWK GEN #2
FDNS	00NR	2	16WP	G15_082	FROM->TO	CIMARRON - DRAPER LAKE 345KV CKT 1	717	717	0.1339	109.3265	FRISCCO4 138.00 - HARDEN 4 138.00 138KV CKT 1
FDNS	00NR	2	16WP	G15_082	FROM->TO	CIMARRON - DRAPER LAKE 345KV CKT 1	717	717	0.13432	109.2737	FT SMITH - MUSKOGEE 345KV CKT 1
FDNS	00NR	2	16WP	G15_082	FROM->TO	CIMARRON - DRAPER LAKE 345KV CKT 1	717	717	0.13348	109.2552	GEN562704 1-G15_020_3 0.3550
FDNS	00NR	2	16WP	G15_082	FROM->TO	CIMARRON - DRAPER LAKE 345KV CKT 1	717	717	0.13348	109.2406	CLAY BOSWELL 230/20.9KV TRANSFORMER CKT 1
FDNS	00NR	2	16WP	G15_082	FROM->TO	CIMARRON - DRAPER LAKE 345KV CKT 1	717	717	0.13348	109.2348	GEN563222 1-G15088_3 0.6900
FDNS	00NR	2	16WP	G15_082	FROM->TO	CIMARRON - DRAPER LAKE 345KV CKT 1	717	717	0.13348	109.2175	GEN563082 1-G15073_3 0.6900
FDNS	00NR	2	16WP	G15_082	FROM->TO	CIMARRON - DRAPER LAKE 345KV CKT 1	717	717	0.13348	109.1919	GEN672321 1-SHAND GENERATOR 1
FDNS	00NR	2	16WP	G15_082	FROM->TO	CIMARRON - DRAPER LAKE 345KV CKT 1	717	717	0.13081	109.1905	HUNTERS7 345.00 - WOODRING 345KV CKT 1
FDNS	00NR	2	16WP	G15_082	FROM->TO	CIMARRON - DRAPER LAKE 345KV CKT 1	717	717	0.13537	109.1887	OAKCREEK - WILD MARY 138KV CKT 1
FDNS	00NR	2	16WP	G15_082	FROM->TO	CIMARRON - DRAPER LAKE 345KV CKT 1	717	717	0.13348	109.1649	GEN672310 1-POPLAR RIVER GENERATOR 1
FDNS	00NR	2	16WP	G15_082	FROM->TO	CIMARRON - DRAPER LAKE 345KV CKT 1	717	717	0.13348	109.1649	GEN672311 2-POPLAR RIVER GENERATOR 2
FDNS	00NR	2	16WP	G15_082	FROM->TO	CIMARRON - DRAPER LAKE 345KV CKT 1	717	717	0.13348	109.1611	GEN562710 1-G15_022_3 0.5500
FDNS	00NR	2	16WP	G15_082	FROM->TO	CIMARRON - DRAPER LAKE 345KV CKT 1	717	717	0.13354	109.1561	P12:138:WFEC:MSL09
FDNS	00NR	2	16WP	G15_082	FROM->TO	CIMARRON - DRAPER LAKE 345KV CKT 1	717	717	0.13348	109.1549	GEN672306 6-BOUNDARY DAM GENERATOR 6
FDNS	00NR	2	16WP	G15_082	FROM->TO	CIMARRON - DRAPER LAKE 345KV CKT 1	717	717	0.13408	109.1411	LULA - TUPELO TAP 138KV CKT 1
FDNS	00NR	2	16WP	G15_082	FROM->TO	CIMARRON - DRAPER LAKE 345KV CKT 1	717	717	0.13283	109.1199	SEMINOLE (SEMINOL1) 345/138/14.4KV TRANSFORMER CKT 1
FDNS	00NR	2	16WP	G15_082	FROM->TO	CIMARRON - DRAPER LAKE 345KV CKT 1	717	717	0.13308	109.1105	P12:138:WFEC:MSL08
FDNS	00NR	2	16WP	G15_082	FROM->TO	CIMARRON - DRAPER LAKE 345KV CKT 1	717	717	0.13355	109.1062	NORTHWEST TEXARKANA - VALLIANT 345KV CKT 1
FDNS	00NR	2	16WP	G15_082	FROM->TO	CIMARRON - DRAPER LAKE 345KV CKT 1	717	717	0.13355	109.1062	NORTHWEST TEXARKANA - VALLIANT 345KV CKT 1
FDNS	00NR	2	16WP	G15_082	FROM->TO	CIMARRON - DRAPER LAKE 345KV CKT 1	717	717	0.1317	109.1045	RANCHRD7 345.00 - SOONER 345KV CKT 1
FDNS	00NR	2	16WP	G15_082	FROM->TO	CIMARRON - DRAPER LAKE 345KV CKT 1	717	717	0.13416	109.1043	DRAPER LAKE - SOONER TAP 138KV CKT 1
FDNS	00NR	2	16WP	G15_082	FROM->TO	CIMARRON - DRAPER LAKE 345KV CKT 1	717	717	0.13416	109.1043	P12:138:OKGE:3TERM22
FDNS	00NR	2	16WP	G15_082	FROM->TO	CIMARRON - DRAPER LAKE 345KV CKT 1	717	717	0.1339	109.1019	ETNA - HARDEN 4 138.00 138KV CKT 1
FDNS	00NR	2	16WP	G15_082	FROM->TO	CIMARRON - DRAPER LAKE 345KV CKT 1	717	717	0.13348	109.0953	GEN563273 2-G15093_4 0.6900
FDNS	00NR	2	16WP	G15_082	FROM->TO	CIMARRON - DRAPER LAKE 345KV CKT 1	717	717	0.13308	109.0648	FRANKLIN - PINK SW 138KV CKT 1
FDNS	00NR	2	16WP	G15_082	FROM->TO	CIMARRON - DRAPER LAKE 345KV CKT 1	717	717	0.13348	109.0581	GEN542956 2-LACYGNE UNIT #2
FDNS	00NR	2	16WP	G15_082	FROM->TO	CIMARRON - DRAPER LAKE 345KV CKT 1	717	717	0.13348	109.0541	GEN681542 6-JP MADGETT
FDNS	00NR	2	16WP	G15_082	FROM->TO	CIMARRON - DRAPER LAKE 345KV CKT 1	717	717	0.1339	109.0074	ETNA - PARK LANE 138KV CKT 1
FDNS	00NR	2	16WP	G15_082	FROM->TO	CIMARRON - DRAPER LAKE 345KV CKT 1	717	717	0.13348	108.9883	GEN640011 2-GERALD GENTLEMAN STATION UNIT 2
FDNS	00NR	2	16WP	G15_082	FROM->TO	CIMARRON - DRAPER LAKE 345KV CKT 1	717	717	0.13537	108.9588	AIRDEPT4 138.00 - WILD MARY 138KV CKT 1
FDNS	00NR	2	16WP	G15_082	FROM->TO	CIMARRON - DRAPER LAKE 345KV CKT 1	717	717	0.13348	108.9511	GEN562754 1-G15031_5 0.6900
FDNS	00NR	2	16WP	G15_082	FROM->TO	CIMARRON - DRAPER LAKE 345KV CKT 1	717	717	0.13348	108.9508	GEN659118 1-LARAMIE RIVER UNIT1
FDNS	00NR	2	16WP	G15_082	FROM->TO	CIMARRON - DRAPER LAKE 345KV CKT 1	717	717	0.13348	108.9478	GEN530690 1-PRWINDG1 0.6900
FDNS	00NR	2	16WP	G15_082	FROM->TO	CIMARRON - DRAPER LAKE 345KV CKT 1	717	717	0.13348	108.9454	GEN542957 1-IATAN UNIT #1
FDNS	00NR	2	16WP	G15_082	FROM->TO	CIMARRON - DRAPER LAKE 345KV CKT 1	717	717	0.13348	108.9439	GEN562556 1-G14_046_3 0.3420
FDNS	00NR	2	16WP	G15_082	FROM->TO	CIMARRON - DRAPER LAKE 345KV CKT 1	717	717	0.13348	108.9203	GEN661015 1-COYOTE
FDNS	00NR	2	16WP	G15_082	FROM->TO	CIMARRON - DRAPER LAKE 345KV CKT 1	717	717	0.13348	108.9046	GEN562756 1-G15031_7 0.6900
FDNS	00NR	2	16WP	G15_082	FROM->TO	CIMARRON - DRAPER LAKE 345KV CKT 1	717	717	0.13348	108.8958	GEN563142 1-G15079_3 0.5500
FDNS	00NR	2	16WP	G15_082	FROM->TO	CIMARRON - DRAPER LAKE 345KV CKT 1	717	717	0.13348	108.8958	GEN563151 1-G15080_2 0.5500
FDNS	00NR	2	16WP	G15_082	FROM->TO	CIMARRON - DRAPER LAKE 345KV CKT 1	717	717	0.13348	108.8938	GEN563042 1-G15068_3 0.6900
FDNS	00NR	2	16WP	G15_082	FROM->TO	CIMARRON - DRAPER LAKE 345KV CKT 1	717	717	0.13348	108.8904	GEN562691 1-G15_015_3 0.6900
FDNS	00NR	2	16WP	G15_082	FROM->TO	CIMARRON - DRAPER LAKE 345KV CKT 1	717	717	0.1327	108.8887	SEMINOLE (SEMINOL2) 345/138/14.4KV TRANSFORMER CKT 1
FDNS	00NR	2	16WP	G15_082	FROM->TO	CIMARRON - DRAPER LAKE 345KV CKT 1	717	717	0.13542	108.8849	NORTHWEST - SPRING CREEK 345KV CKT 1
FDNS	00NR	2	16WP	G15_082	FROM->TO	CIMARRON - DRAPER LAKE 345KV CKT 1	717	717	0.13348	108.8729	GEN542955 1-LACYGNE UNIT #1
FDNS	00NR	2	16WP	G15_082	FROM->TO	CIMARRON - DRAPER LAKE 345KV CKT 1	717	717	0.13542	108.8574	SOONER - SPRING CREEK 345KV CKT 1
FDNS	00NR	2	16WP	G15_082	FROM->TO	CIMARRON - DRAPER LAKE 345KV CKT 1	717	717	0.13348	108.8355	GEN562762 1-G15033_3 0.6900
FDNS	00NR	2	16WP	G15_082	FROM->TO	CIMARRON - DRAPER LAKE 345KV CKT 1	717	717	0.13348	108.8354	GEN562655 1-G14_074_3 0.6900
FDNS	00NR	2	16WP	G15_082	FROM->TO	CIMARRON - DRAPER LAKE 345KV CKT 1	717	717	0.13348	108.8329	GEN532652 1-JEFFREY ENERGY CENTER UNIT 2
FDNS	00NR	2	16WP	G15_082	FROM->TO	CIMARRON - DRAPER LAKE 345KV CKT 1	717	717	0.13348	108.8281	GEN532651 1-JEFFREY ENERGY CENTER UNIT 1

SOLUTION	GROUP	SCENARIO	SEASON	SOURCE	DIRECTION	MONITORED ELEMENT	RATEA (MVA)	RATEB(MVA)	TDF	TC%LOADING (% MVA)	CONTINGENCY
FDNS	00NR	2	16WP	G15_082	FROM->TO	CIMARRON - DRAPER LAKE 345KV CKT 1	717	717	0.13327	108.8213	P12:138:AEPW-OGE:CORNVIL4:CIMARON4
FDNS	00NR	2	16WP	G15_082	FROM->TO	CIMARRON - DRAPER LAKE 345KV CKT 1	717	717	0.12951	108.82	G11_051T 345.00 - WOODWARD DISTRICT EHV 345KV CKT 1
FDNS	00NR	2	16WP	G15_082	FROM->TO	CIMARRON - DRAPER LAKE 345KV CKT 1	717	717	0.12951	108.82	G11_051T 345.00 - WOODWARD DISTRICT EHV 345KV CKT 2
FDNS	00NR	2	16WP	G15_082	FROM->TO	CIMARRON - DRAPER LAKE 345KV CKT 1	717	717	0.13348	108.811	GEN645001 1-FORT CALHOUN 1
FDNS	00NR	2	16WP	G15_082	FROM->TO	CIMARRON - DRAPER LAKE 345KV CKT 1	717	717	0.13348	108.7993	GEN562078 1-G11_051_3 0.6900
FDNS	00NR	2	16WP	G15_082	FROM->TO	CIMARRON - DRAPER LAKE 345KV CKT 1	717	717	0.13348	108.7877	GEN657748 1-YOUNG 2 GENERATOR
FDNS	00NR	2	16WP	G15_082	FROM->TO	CIMARRON - DRAPER LAKE 345KV CKT 1	717	717	0.13348	108.7755	GEN563272 1-G15093_3 0.6900
FDNS	00NR	2	16WP	G15_082	FROM->TO	CIMARRON - DRAPER LAKE 345KV CKT 1	717	717	0.13308	108.7718	FRANKLIN - FRANKLIN SW 138KV CKT 1
FDNS	00NR	2	16WP	G15_082	FROM->TO	CIMARRON - DRAPER LAKE 345KV CKT 1	717	717	0.13447	108.7629	PARK LANE - SEMINOLE 138KV CKT 1
FDNS	00NR	2	16WP	G15_082	FROM->TO	CIMARRON - DRAPER LAKE 345KV CKT 1	717	717	0.13348	108.7401	GEN562974 1-G15060_5 0.6900
FDNS	00NR	2	16WP	G15_082	FROM->TO	CIMARRON - DRAPER LAKE 345KV CKT 1	717	717	0.13348	108.7302	GEN527901 1-HOBBS PLANT #1 (CT)
FDNS	00NR	2	16WP	G15_082	FROM->TO	CIMARRON - DRAPER LAKE 345KV CKT 1	717	717	0.13348	108.7302	GEN527902 1-HOBBS PLANT #2 (CT)
FDNS	00NR	2	16WP	G15_082	FROM->TO	CIMARRON - DRAPER LAKE 345KV CKT 1	717	717	0.13537	108.7274	AIRDEPT4 138.00 - GM 138KV CKT 1
FDNS	00NR	2	16WP	G15_082	FROM->TO	CIMARRON - DRAPER LAKE 345KV CKT 1	717	717	0.13348	108.7214	GEN562973 1-G15060_4 0.6900
FDNS	00NR	2	16WP	G15_082	FROM->TO	CIMARRON - DRAPER LAKE 345KV CKT 1	717	717	0.13348	108.6945	GEN563043 1-G15068_4 0.6900
FDNS	00NR	2	16WP	G15_082	FROM->TO	CIMARRON - DRAPER LAKE 345KV CKT 1	717	717	0.13348	108.6882	GEN562772 1-G15034_3 0.6900
FDNS	00NR	2	16WP	G15_082	FROM->TO	CIMARRON - DRAPER LAKE 345KV CKT 1	717	717	0.13348	108.6509	GEN525845 1-ELK_2 1 138.00
FDNS	00NR	2	16WP	G15_082	FROM->TO	CIMARRON - DRAPER LAKE 345KV CKT 1	717	717	0.13348	108.6478	GEN525844 1-ELK_1 118.000
FDNS	00NR	2	16WP	G15_082	FROM->TO	CIMARRON - DRAPER LAKE 345KV CKT 1	717	717	0.13348	108.5993	GEN620315 1-BIG STONE GEN
FDNS	00NR	2	16WP	G15_082	FROM->TO	CIMARRON - DRAPER LAKE 345KV CKT 1	717	717	0.13358	108.5991	LYDIA - WELSH 345KV CKT 1
FDNS	00NR	2	16WP	G15_082	FROM->TO	CIMARRON - DRAPER LAKE 345KV CKT 1	717	717	0.13358	108.5991	LYDIA - WELSH 345KV CKT 1
FDNS	00NR	2	16WP	G15_082	FROM->TO	CIMARRON - DRAPER LAKE 345KV CKT 1	717	717	0.13348	108.5908	GEN526333 1-JONES GEN #3 21 KV
FDNS	00NR	2	16WP	G15_082	FROM->TO	CIMARRON - DRAPER LAKE 345KV CKT 1	717	717	0.13348	108.5908	GEN526334 1-JONES_4 116.500
FDNS	00NR	2	16WP	G15_082	FROM->TO	CIMARRON - DRAPER LAKE 345KV CKT 1	717	717	0.13348	108.571	GEN563052 1-G15069_3 0.6900
FDNS	00NR	2	16WP	G15_082	FROM->TO	CIMARRON - DRAPER LAKE 345KV CKT 1	717	717	0.13348	108.5394	GEN563242 1-G15090_3 0.6900
FDNS	00NR	2	16WP	G15_082	FROM->TO	CIMARRON - DRAPER LAKE 345KV CKT 1	717	717	0.13348	108.5359	GEN600004 2-PRAIRIE ISLAND G2
FDNS	00NR	2	16WP	G15_082	FROM->TO	CIMARRON - DRAPER LAKE 345KV CKT 1	717	717	0.13348	108.5326	GEN600003 1-PRAIRIE ISLAND G1
FDNS	00NR	2	16WP	G15_082	FROM->TO	CIMARRON - DRAPER LAKE 345KV CKT 1	717	717	0.13348	108.5298	GEN523971 1-HARRINGTON GEN #1 24 KV
FDNS	00NR	2	16WP	G15_082	FROM->TO	CIMARRON - DRAPER LAKE 345KV CKT 1	717	717	0.13348	108.5297	GEN523972 1-HARRINGTON GEN #2 24 KV
FDNS	00NR	2	16WP	G15_082	FROM->TO	CIMARRON - DRAPER LAKE 345KV CKT 1	717	717	0.13348	108.5297	GEN523973 1-HARRINGTON GEN #3 24 KV
FDNS	00NR	2	16WP	G15_082	FROM->TO	CIMARRON - DRAPER LAKE 345KV CKT 1	717	717	0.13896	108.5291	CLARKSVILLE - MUSKOGEE 345KV CKT 1
FDNS	00NR	2	16WP	G15_082	FROM->TO	CIMARRON - DRAPER LAKE 345KV CKT 1	717	717	0.13896	108.5291	CLARKSVILLE - MUSKOGEE 345KV CKT 1
FDNS	00NR	2	16WP	G15_082	FROM->TO	CIMARRON - DRAPER LAKE 345KV CKT 1	717	717	0.13348	108.5233	GEN600006 1-AS KING
FDNS	00NR	2	16WP	G15_082	FROM->TO	CIMARRON - DRAPER LAKE 345KV CKT 1	717	717	0.13537	108.5151	DRAPER LAKE - GM 138KV CKT 1
FDNS	00NR	2	16WP	G15_082	FROM->TO	CIMARRON - DRAPER LAKE 345KV CKT 1	717	717	0.13348	108.5068	GEN636641 1-LOUISA UNIT 1
FDNS	00NR	2	16WP	G15_082	FROM->TO	CIMARRON - DRAPER LAKE 345KV CKT 1	717	717	0.13348	108.4178	GEN562952 1-G15057_3 0.6500
FDNS	00NR	2	16WP	G15_082	FROM->TO	CIMARRON - DRAPER LAKE 345KV CKT 1	717	717	0.12951	108.4044	G11_051T 345.00 - TATONGA7 345.00 345KV CKT 1
FDNS	00NR	2	16WP	G15_082	FROM->TO	CIMARRON - DRAPER LAKE 345KV CKT 1	717	717	0.12951	108.4044	G11_051T 345.00 - TATONGA7 345.00 345KV CKT 2
FDNS	00NR	2	16WP	G15_082	FROM->TO	CIMARRON - DRAPER LAKE 345KV CKT 1	717	717	0.13348	108.4	GEN615001 1-COAL CREEK
FDNS	00NR	2	16WP	G15_082	FROM->TO	CIMARRON - DRAPER LAKE 345KV CKT 1	717	717	0.13348	108.3974	GEN563292 1-G15095_3 0.6900
FDNS	00NR	2	16WP	G15_082	FROM->TO	CIMARRON - DRAPER LAKE 345KV CKT 1	717	717	0.13348	108.3732	GEN600005 1-MONTICELLO
FDNS	00NR	2	16WP	G15_082	FROM->TO	CIMARRON - DRAPER LAKE 345KV CKT 1	717	717	0.13348	108.3402	GEN527166 1-MUSTANG_6 118.000
FDNS	00NR	2	16WP	G15_082	FROM->TO	CIMARRON - DRAPER LAKE 345KV CKT 1	717	717	0.13348	108.3268	GEN615002 2-COAL CREEK
FDNS	00NR	2	16WP	G15_082	FROM->TO	CIMARRON - DRAPER LAKE 345KV CKT 1	717	717	0.13348	108.3218	GEN525562 1-TOLK GEN #2 24 KV
FDNS	00NR	2	16WP	G15_082	FROM->TO	CIMARRON - DRAPER LAKE 345KV CKT 1	717	717	0.13348	108.2933	GEN629074 1-ARNOLD LOWSIDE OF GSU XFMR
FDNS	00NR	2	16WP	G15_082	FROM->TO	CIMARRON - DRAPER LAKE 345KV CKT 1	717	717	0.13348	108.2844	GEN562892 1-G15048_3 0.6900
FDNS	00NR	2	16WP	G15_082	FROM->TO	CIMARRON - DRAPER LAKE 345KV CKT 1	717	717	0.13348	108.2706	GEN542962 2-IATAN UNIT #2
FDNS	00NR	2	16WP	G15_082	FROM->TO	CIMARRON - DRAPER LAKE 345KV CKT 1	717	717	0.13348	108.2295	GEN635213 3-NEAL UNIT 3
FDNS	00NR	2	16WP	G15_082	FROM->TO	CIMARRON - DRAPER LAKE 345KV CKT 1	717	717	0.13348	108.1896	BIG STONE 230/24.0KV TRANSFORMER CKT 1
FDNS	00NR	2	16WP	G15_082	FROM->TO	CIMARRON - DRAPER LAKE 345KV CKT 1	717	717	0.13464	108.1554	CHAMBER SPRINGS - CLARKSVILLE 345KV CKT 1
FDNS	00NR	2	16WP	G15_082	FROM->TO	CIMARRON - DRAPER LAKE 345KV CKT 1	717	717	0.13348	108.1397	GEN562902 1-G15052_3 0.6900
FDNS	00NR	2	16WP	G15_082	FROM->TO	CIMARRON - DRAPER LAKE 345KV CKT 1	717	717	0.13348	108.1344	GEN525561 1-TOLK GEN #1 24 KV
FDNS	00NR	2	16WP	G15_082	FROM->TO	CIMARRON - DRAPER LAKE 345KV CKT 1	717	717	0.1271	108.1274	DRAPER LAKE - SEMINOLE 345KV CKT 3
FDNS	00NR	2	16WP	G15_082	FROM->TO	CIMARRON - DRAPER LAKE 345KV CKT 1	717	717	0.13348	108.0997	GEN514805 1-SOONER UNIT 1
FDNS	00NR	2	16WP	G15_082	FROM->TO	CIMARRON - DRAPER LAKE 345KV CKT 1	717	717	0.13455	108.0801	FRANKLIN SW - MIDWEST TAP 138KV CKT 1
FDNS	00NR	2	16WP	G15_082	FROM->TO	CIMARRON - DRAPER LAKE 345KV CKT 1	717	717	0.13348	108.0535	GEN640009 1-COOPER NUCLEAR STATION
FDNS	00NR	2	16WP	G15_082	FROM->TO	CIMARRON - DRAPER LAKE 345KV CKT 1	717	717	0.13328	108.0506	P12:138:OKGE:3TERM23
FDNS	00NR	2	16WP	G15_082	FROM->TO	CIMARRON - DRAPER LAKE 345KV CKT 1	717	717	0.13348	108.0462	GEN527903 1-HOBBS PLANT #3 (ST)
FDNS	00NR	2	16WP	G15_082	FROM->TO	CIMARRON - DRAPER LAKE 345KV CKT 1	717	717	0.13348	108.0158	GEN600000 1-SHERBURNECNTY G1
FDNS	00NR	2	16WP	G15_082	FROM->TO	CIMARRON - DRAPER LAKE 345KV CKT 1	717	717	0.13328	107.9912	BARNES 4 138.00 - DRAPER LAKE 138KV CKT 1
FDNS	00NR	2	16WP	G15_082	FROM->TO	CIMARRON - DRAPER LAKE 345KV CKT 1	717	717	0.13348	107.9616	GEN563173 1-G15082_3 0.6900
FDNS	00NR	2	16WP	G15_082	FROM->TO	CIMARRON - DRAPER LAKE 345KV CKT 1	717	717	0.13362	107.9527	LYDIA - VALLIANT 345KV CKT 1
FDNS	00NR	2	16WP	G15_082	FROM->TO	CIMARRON - DRAPER LAKE 345KV CKT 1	717	717	0.13362	107.9527	LYDIA - VALLIANT 345KV CKT 1
FDNS	00NR	2	16WP	G15_082	FROM->TO	CIMARRON - DRAPER LAKE 345KV CKT 1	717	717	0.12896	107.9473	MUSKOGEE - SEMINOLE 345KV CKT 1
FDNS	00NR	2	16WP	G15_082	FROM->TO	CIMARRON - DRAPER LAKE 345KV CKT 1	717	717	0.13348	107.9195	GEN600001 2-SHERBURNE CNTY G2
FDNS	00NR	2	16WP	G15_082	FROM->TO	CIMARRON - DRAPER LAKE 345KV CKT 1	717	717	0.13348	107.9109	GEN344225 1-1CAL G1 25.000
FDNS	00NR	2	16WP	G15_082	FROM->TO	CIMARRON - DRAPER LAKE 345KV CKT 1	717	717	0.13348	107.877	GEN514806 1-SOONER UNIT 2
FDNSLock	00NR	2	16WP	G15_082	FROM->TO	CIMARRON - DRAPER LAKE 345KV CKT 1	717	717	0.13348	107.8273	GEN629075 1-OTTUMWA GENERATOR FOR OTTUMWA UNIT NO 1
FDNS	00NR	2	16WP	G15_082	FROM->TO	CIMARRON - DRAPER LAKE 345KV CKT 1	717	717	0.13348	107.6941	GEN563162 1-G15081_3 0.6900
FDNS	00NR	2	16WP	G15_082	FROM->TO	CIMARRON - DRAPER LAKE 345KV CKT 1	717	717	0.13516	107.6918	DRAPER LAKE (DRAPER2) 345/138/13.8KV TRANSFORMER CKT 1
FDNS	00NR	2	16WP	G15_082	FROM->TO	CIMARRON - DRAPER LAKE 345KV CKT 1	717	717	0.13348	107.6444	GEN562882 1-G15047_3 0.6900
FDNS	00NR	2	16WP	G15_082	FROM->TO	CIMARRON - DRAPER LAKE 345KV CKT 1	717	717	0.13348	107.5832	SHERBURNE CO 345/24.0KV TRANSFORMER CKT 1
FDNS	00NR	2	16WP	G15_082	FROM->TO	CIMARRON - DRAPER LAKE 345KV CKT 1	717	717	0.13516	107.5722	DRAPER LAKE (DRAPER3) 345/138/13.8KV TRANSFORMER CKT 1
FDNS	00NR	2	16WP	G15_082	FROM->TO	CIMARRON - DRAPER LAKE 345KV CKT 1	717	717	0.13516	107.5722	DRAPER LAKE (DRAPER4) 345/138/13.8KV TRANSFORMER CKT 1
FDNS	00NR	2	16WP	G15_082	FROM->TO	CIMARRON - DRAPER LAKE 345KV CKT 1	717	717	0.13348	107.5355	GEN635214 4-NEAL UNIT 4
FDNS	00NR	2	16WP	G15_082	FROM->TO	CIMARRON - DRAPER LAKE 345KV CKT 1	717	717	0.13348	107.4285	GEN532653 1-JEFFREY ENERGY CENTER UNIT 3
FDNS	00NR	2	16WP	G15_082	FROM->TO	CIMARRON - DRAPER LAKE 345KV CKT 1	717	717	0.13348	107.4271	GEN600002 3-SHERBURNE CNTY G3
FDNS	00NR	2	16WP	G15_082	FROM->TO	CIMARRON - DRAPER LAKE 345KV CKT 1	717	717	0.13348	107.0373	GEN635023 3-WALTER SCOTT UNIT 3
FDNS	00NR	2	16WP	G15_082	FROM->TO	CIMARRON - DRAPER LAKE 345KV CKT 1	717	717	0.13348	106.9127	EASTDC - ERCOT EQUIVALENCE 345KV CKT 1

SOLUTION	GROUP	SCENARIO	SEASON	SOURCE	DIRECTION	MONITORED ELEMENT	RATEA (MVA)	RATEB(MVA)	TDF	TC%LOADING (% MVA)	CONTINGENCY
FDNS	00NR	2	16WP	G15_082	FROM->TO	CIMARRON - DRAPER LAKE 345KV CKT 1	717	717	0.13276	106.9066	G15093_T 345.00 - GRACEMONT 345KV CKT 1
FDNS	00NR	2	16WP	G15_082	FROM->TO	CIMARRON - DRAPER LAKE 345KV CKT 1	717	717	0.12863	106.7892	CIMARRON - MATHWSN7 345.00 345KV CKT 1
FDNS	00NR	2	16WP	G15_082	FROM->TO	CIMARRON - DRAPER LAKE 345KV CKT 1	717	717	0.12863	106.7892	CIMARRON - MATHWSN7 345.00 345KV CKT 2
FDNS	00NR	2	16WP	G15_082	FROM->TO	CIMARRON - DRAPER LAKE 345KV CKT 1	717	717	0.13605	106.6176	G15063_T 345.00 - MATHWSN7 345.00 345KV CKT 1
FDNS	00NR	2	16WP	G15_082	FROM->TO	CIMARRON - DRAPER LAKE 345KV CKT 1	717	717	0.13348	106.5642	GEN562023 1-G11_020_3 0.6900
FDNS	00NR	2	16WP	G15_082	FROM->TO	CIMARRON - DRAPER LAKE 345KV CKT 1	717	717	0.13348	106.5642	GEN562026 1-G11_019_3 0.6900
FDNS	00NR	2	16WP	G15_082	FROM->TO	CIMARRON - DRAPER LAKE 345KV CKT 1	717	717	0.13348	106.5318	GEN635024 4-WALTER SCOTT UNIT 4
FDNS	00NR	2	16WP	G15_082	FROM->TO	CIMARRON - DRAPER LAKE 345KV CKT 1	717	717	0.12156	106.4681	DRAPER LAKE - SEMINOLE 345KV CKT 1
FDNS	00NR	2	16WP	G15_082	FROM->TO	CIMARRON - DRAPER LAKE 345KV CKT 1	717	717	0.12156	106.468	DRAPER LAKE - SEMINOLE 345KV CKT 2
FDNS	00NR	2	16WP	G15_082	FROM->TO	CIMARRON - DRAPER LAKE 345KV CKT 1	717	717	0.1251	105.9026	MATHWSN7 345.00 - TATONGA7 345.00 345KV CKT 1
FDNS	00NR	2	16WP	G15_082	FROM->TO	CIMARRON - DRAPER LAKE 345KV CKT 1	717	717	0.1251	105.9026	MATHWSN7 345.00 - TATONGA7 345.00 345KV CKT 2
FDNS	00NR	2	16WP	G15_082	FROM->TO	CIMARRON - DRAPER LAKE 345KV CKT 1	717	717	0.13348	105.526	GEN562992 1-G15063_3 0.6900
FDNS	00NR	2	16WP	G15_082	FROM->TO	CIMARRON - DRAPER LAKE 345KV CKT 1	717	717	0.13789	104.6679	DRAPER LAKE - MIDWEST TAP 138KV CKT 1
FDNS	00NR	2	16WP	G15_082	FROM->TO	CIMARRON - DRAPER LAKE 345KV CKT 1	717	717	0.1379	104.6103	P12:138:OKGE:3TERM21
FDNS	00NR	2	16WP	G15_082	FROM->TO	CIMARRON - DRAPER LAKE 345KV CKT 1	717	717	0.13348	103.913	GEN532751 1-WOLF CREEK GENERATING STATION UNIT 1
FDNS	00NR	2	16WP	G15_082	FROM->TO	CIMARRON - DRAPER LAKE 345KV CKT 1	717	717	0.12239	102.9381	GRACEMONT - MINCO 345KV CKT 1
FDNS	00NR	2	16WP	G15_082	FROM->TO	CIMARRON - DRAPER LAKE 345KV CKT 1	717	717	0.13527	102.2522	PITTSBURG - VALLIANT 345KV CKT 1
FDNS	00NR	2	16WP	G15_082	FROM->TO	CIMARRON - DRAPER LAKE 345KV CKT 1	717	717	0.13527	102.2522	PITTSBURG - VALLIANT 345KV CKT 1
FDNS	00NR	2	17SP	G15_082	FROM->TO	CIMARRON - DRAPER LAKE 345KV CKT 1	717	717	0.13934	101.3508	G14-057T 345.00 - LAWTON EASTSIDE 345KV CKT 1
FDNS	00NR	2	17SP	G15_082	FROM->TO	CIMARRON - DRAPER LAKE 345KV CKT 1	717	717	0.12814	100.6422	CLEVELAND - G15066_T 345.00 345KV CKT 1
FDNS	00NR	2	17SP	G15_082	FROM->TO	CIMARRON - DRAPER LAKE 345KV CKT 1	717	717	0.12814	99.9	G15066_T 345.00 - SOONER 345KV CKT 1
FDNS	00NR	2	20WP	G15_082	TO->FROM	CIMARRON - MINCO 345KV CKT 1	956	956	0.08367	101.1423	G14-057T 345.00 - SUNNYSIDE 345KV CKT 1
FDNS	00NR	2	16WP	G15_082	FROM->TO	G14-057T 345.00 - SUNNYSIDE 345KV CKT 1	717	789	0.0853	136.04	CIMARRON - MINCO 345KV CKT 1
FDNS	00NR	2	20WP	G15_082	FROM->TO	G14-057T 345.00 - SUNNYSIDE 345KV CKT 1	717	789	0.08553	134.5175	CIMARRON - MINCO 345KV CKT 1
FDNS	00NR	2	16WP	G15_082	FROM->TO	G14-057T 345.00 - SUNNYSIDE 345KV CKT 1	717	789	0.06501	128.154	PITTSBURG - SEMINOLE 345KV CKT 1
FDNS	00NR	2	16WP	G15_082	FROM->TO	G14-057T 345.00 - SUNNYSIDE 345KV CKT 1	717	789	0.06501	128.154	PITTSBURG - SEMINOLE 345KV CKT 1
FDNS	00NR	2	16WP	G15_082	FROM->TO	G14-057T 345.00 - SUNNYSIDE 345KV CKT 1	717	789	0.07	127.0095	BASE CASE
FDNS	00NR	2	16WP	G15_082	FROM->TO	G14-057T 345.00 - SUNNYSIDE 345KV CKT 1	717	789	0.0853	125.3952	GRACEMONT - MINCO 345KV CKT 1
FDNS	00NR	2	16WP	G15_082	FROM->TO	G14-057T 345.00 - SUNNYSIDE 345KV CKT 1	717	789	0.08241	124.8701	CIMARRON - DRAPER LAKE 345KV CKT 1
FDNS	00NR	2	16WP	G15_082	FROM->TO	G14-057T 345.00 - SUNNYSIDE 345KV CKT 1	717	789	0.07191	124.7049	G15093_T 345.00 - GRACEMONT 345KV CKT 1
FDNS	00NR	2	20WP	G15_082	FROM->TO	G14-057T 345.00 - SUNNYSIDE 345KV CKT 1	717	789	0.065	124.2526	PITTSBURG - SEMINOLE 345KV CKT 1
FDNS	00NR	2	20WP	G15_082	FROM->TO	G14-057T 345.00 - SUNNYSIDE 345KV CKT 1	717	789	0.065	124.2526	PITTSBURG - SEMINOLE 345KV CKT 1
FDNS	00NR	2	20WP	G15_082	FROM->TO	G14-057T 345.00 - SUNNYSIDE 345KV CKT 1	717	789	0.07007	124.068	BASE CASE
FDNS	00NR	2	20WP	G15_082	FROM->TO	G14-057T 345.00 - SUNNYSIDE 345KV CKT 1	717	789	0.07225	123.822	G15093_T 345.00 - GRACEMONT 345KV CKT 1
FDNS	00NR	2	20WP	G15_082	FROM->TO	G14-057T 345.00 - SUNNYSIDE 345KV CKT 1	717	789	0.08553	123.8217	GRACEMONT - MINCO 345KV CKT 1
FDNS	00NR	2	20WP	G15_082	FROM->TO	G14-057T 345.00 - SUNNYSIDE 345KV CKT 1	717	789	0.08244	121.8635	CIMARRON - DRAPER LAKE 345KV CKT 1
FDNS	00NR	2	16WP	G15_082	FROM->TO	G14-057T 345.00 - SUNNYSIDE 345KV CKT 1	717	789	0.07505	121.3468	P12:138:WFEC:MSL03
FDNS	00NR	2	16WP	G15_082	FROM->TO	G14-057T 345.00 - SUNNYSIDE 345KV CKT 1	717	789	0.06875	121.1792	PITTSBURG - VALLIANT 345KV CKT 1
FDNS	00NR	2	16WP	G15_082	FROM->TO	G14-057T 345.00 - SUNNYSIDE 345KV CKT 1	717	789	0.06875	121.1792	PITTSBURG - VALLIANT 345KV CKT 1
FDNS	00NR	2	16WP	G15_082	FROM->TO	G14-057T 345.00 - SUNNYSIDE 345KV CKT 1	717	789	0.07	120.5129	GEN509403 1-PIRKEY GENERATION
FDNS	00NR	2	16WP	G15_082	FROM->TO	G14-057T 345.00 - SUNNYSIDE 345KV CKT 1	717	789	0.07	120.4199	GEN509416 1-TURK GENERATION
FDNS	00NR	2	16WP	G15_082	FROM->TO	G14-057T 345.00 - SUNNYSIDE 345KV CKT 1	717	789	0.07168	120.2704	CLEVELAND - G15066_T 345.00 345KV CKT 1
FDNS	00NR	2	16WP	G15_082	FROM->TO	G14-057T 345.00 - SUNNYSIDE 345KV CKT 1	717	789	0.07168	119.9742	G15066_T 345.00 - SOONER 345KV CKT 1
FDNS	00NR	2	16WP	G15_082	FROM->TO	G14-057T 345.00 - SUNNYSIDE 345KV CKT 1	717	789	0.07	119.539	GEN501801 1-DOLET HILLS UNIT1
FDNS	00NR	2	16WP	G15_082	FROM->TO	G14-057T 345.00 - SUNNYSIDE 345KV CKT 1	717	789	0.0687	119.3218	BORDER 7345.00 - WOODWARD DISTRICT EHV 345KV CKT 1
FDNS	00NR	2	16WP	G15_082	FROM->TO	G14-057T 345.00 - SUNNYSIDE 345KV CKT 1	717	789	0.07	119.1456	GEN509404 1-WELSH #1
FDNS	00NR	2	16WP	G15_082	FROM->TO	G14-057T 345.00 - SUNNYSIDE 345KV CKT 1	717	789	0.07	119.1456	GEN509406 1-WELSH #3
FDNS	00NR	2	20WP	G15_082	FROM->TO	G14-057T 345.00 - SUNNYSIDE 345KV CKT 1	717	789	0.07515	118.628	P12:138:WFEC:MSL03
FDNS	00NR	2	16WP	G15_082	FROM->TO	G14-057T 345.00 - SUNNYSIDE 345KV CKT 1	717	789	0.07149	118.5169	CORN TAP - NAPLESTP 138.00 138KV CKT 1
FDNS	00NR	2	16WP	G15_082	FROM->TO	G14-057T 345.00 - SUNNYSIDE 345KV CKT 1	717	789	0.07149	118.4297	NAPLESTP 138.00 - PAYNE 138.00 138KV CKT 1
FDNS	00NR	2	16WP	G15_082	FROM->TO	G14-057T 345.00 - SUNNYSIDE 345KV CKT 1	717	789	0.0687	118.3824	BORDER 7345.00 - TUCO_2 345.00 345KV CKT 1
FDNS	00NR	2	16WP	G15_082	FROM->TO	G14-057T 345.00 - SUNNYSIDE 345KV CKT 1	717	789	0.07015	118.3015	7SAREPTA% 345.00 - LONGWOOD 345KV CKT 1
FDNS	00NR	2	16WP	G15_082	FROM->TO	G14-057T 345.00 - SUNNYSIDE 345KV CKT 1	717	789	0.07015	118.3015	7SAREPTA% 345.00 - LONGWOOD 345KV CKT 1
FDNS	00NR	2	16WP	G15_082	FROM->TO	G14-057T 345.00 - SUNNYSIDE 345KV CKT 1	717	789	0.07111	118.2629	CLEVELAND - TULSA NORTH 345KV CKT 1
FDNS	00NR	2	16WP	G15_082	FROM->TO	G14-057T 345.00 - SUNNYSIDE 345KV CKT 1	717	789	0.07111	118.2629	CLEVELAND - TULSA NORTH 345KV CKT 1
FDNS	00NR	2	16WP	G15_082	FROM->TO	G14-057T 345.00 - SUNNYSIDE 345KV CKT 1	717	789	0.06613	118.1994	CANADIAN RIVER - MUSKOGEE 345KV CKT 1
FDNS	00NR	2	16WP	G15_082	FROM->TO	G14-057T 345.00 - SUNNYSIDE 345KV CKT 1	717	789	0.0712	118.1742	COMANCHE - LOCO 138KV CKT 1
FDNS	00NR	2	16WP	G15_082	FROM->TO	G14-057T 345.00 - SUNNYSIDE 345KV CKT 1	717	789	0.08045	118.1606	ARCADIA - NORTHWEST 345KV CKT 1
FDNS	00NR	2	16WP	G15_082	FROM->TO	G14-057T 345.00 - SUNNYSIDE 345KV CKT 1	717	789	0.07011	118.1562	DOLET HILLS - SOUTHWEST SHREVEPORT 345KV CKT 1
FDNS	00NR	2	16WP	G15_082	FROM->TO	G14-057T 345.00 - SUNNYSIDE 345KV CKT 1	717	789	0.07011	118.1562	DOLET HILLS - SOUTHWEST SHREVEPORT 345KV CKT 1
FDNS	00NR	2	16WP	G15_082	FROM->TO	G14-057T 345.00 - SUNNYSIDE 345KV CKT 1	717	789	0.07	118.1468	GEN336153 1-WATERFORD UNIT#3
FDNS	00NR	2	16WP	G15_082	FROM->TO	G14-057T 345.00 - SUNNYSIDE 345KV CKT 1	717	789	0.07121	118.0671	ANADARKO - POCASSETT 138KV CKT 1
FDNS	00NR	2	16WP	G15_082	FROM->TO	G14-057T 345.00 - SUNNYSIDE 345KV CKT 1	717	789	0.07118	118.0219	ARCADIA - SEMINOLE 345KV CKT 1
FDNS	00NR	2	16WP	G15_082	FROM->TO	G14-057T 345.00 - SUNNYSIDE 345KV CKT 1	717	789	0.07121	117.927	POCASSETT - TUTTLE 138KV CKT 1
FDNS	00NR	2	16WP	G15_082	FROM->TO	G14-057T 345.00 - SUNNYSIDE 345KV CKT 1	717	789	0.07	117.8538	GEN335831 1-RIVERBEND UNIT#1
FDNS	00NR	2	16WP	G15_082	FROM->TO	G14-057T 345.00 - SUNNYSIDE 345KV CKT 1	717	789	0.07	117.8232	GEN515577 1-ARBWND11 0.6900
FDNS	00NR	2	16WP	G15_082	FROM->TO	G14-057T 345.00 - SUNNYSIDE 345KV CKT 1	717	789	0.07	117.7688	GEN509409 1-WILKES #3
FDNS	00NR	2	20WP	G15_082	FROM->TO	G14-057T 345.00 - SUNNYSIDE 345KV CKT 1	717	789	0.07007	117.7606	GEN509403 1-PIRKEY GENERATION
FDNS	00NR	2	16WP	G15_082	FROM->TO	G14-057T 345.00 - SUNNYSIDE 345KV CKT 1	717	789	0.07	117.7524	GEN336821 1-GRAND GULF UNIT
FDNS	00NR	2	16WP	G15_082	FROM->TO	G14-057T 345.00 - SUNNYSIDE 345KV CKT 1	717	789	0.07092	117.7179	P12:138:AEPW:DUNCAN-4:L.E.S.-4
FDNS	00NR	2	16WP	G15_082	FROM->TO	G14-057T 345.00 - SUNNYSIDE 345KV CKT 1	717	789	0.07139	117.6988	HEALDTON - LOCO 138KV CKT 1
FDNS	00NR	2	16WP	G15_082	FROM->TO	G14-057T 345.00 - SUNNYSIDE 345KV CKT 1	717	789	0.07009	117.6925	7SAREPTA% 345.00 - ELDORADO EHV 345KV CKT 1
FDNS	00NR	2	16WP	G15_082	FROM->TO	G14-057T 345.00 - SUNNYSIDE 345KV CKT 1	717	789	0.07009	117.6923	3TR3AR8EL7EL
FDNS	00NR	2	16WP	G15_082	FROM->TO	G14-057T 345.00 - SUNNYSIDE 345KV CKT 1	717	789	0.07009	117.6827	ELDORADO EHV 500/345KV TRANSFORMER CKT 1
FDNS	00NR	2	20WP	G15_082	FROM->TO	G14-057T 345.00 - SUNNYSIDE 345KV CKT 1	717	789	0.07007	117.6813	GEN509416 1-TURK GENERATION
FDNS	00NR	2	20WP	G15_082	FROM->TO	G14-057T 345.00 - SUNNYSIDE 345KV CKT 1	717	789	0.06881	117.622	PITTSBURG - VALLIANT 345KV CKT 1
FDNS	00NR	2	20WP	G15_082	FROM->TO	G14-057T 345.00 - SUNNYSIDE 345KV CKT 1	717	789	0.06881	117.622	PITTSBURG - VALLIANT 345KV CKT 1
FDNS	00NR	2	16WP	G15_082	FROM->TO	G14-057T 345.00 - SUNNYSIDE 345KV CKT 1	717	789	0.07092	117.6041	COMANCHE TAP - OMPA-DUNCAN 840 138KV CKT 1
FDNS	00NR	2	16WP	G15_082	FROM->TO	G14-057T 345.00 - SUNNYSIDE 345KV CKT 1	717	789	0.07121	117.5644	BRIDGECR 138.00 - TUTTLE 138KV CKT 1

SOLUTION	GROUP	SCENARIO	SEASON	SOURCE	DIRECTION	MONITORED ELEMENT	RATEA (MVA)	RATEB(MVA)	TDF	TC%LOADING (% MVA)	CONTINGENCY
FDNS	00NR	2	20WP	G15_082	FROM->TO	G14-057T 345.00 - SUNNYSIDE 345KV CKT 1	717	789	0.0717	117.5591	CLEVELAND - G15066_T 345.00 345KV CKT 1
FDNS	00NR	2	16WP	G15_082	FROM->TO	G14-057T 345.00 - SUNNYSIDE 345KV CKT 1	717	789	0.07139	117.558	HEALDTON - RINGLING 138KV CKT 1
FDNS	00NR	2	16WP	G15_082	FROM->TO	G14-057T 345.00 - SUNNYSIDE 345KV CKT 1	717	789	0.07	117.4965	GEN501813 1-RODEMACHER UNIT 3
FDNS	00NR	2	16WP	G15_082	FROM->TO	G14-057T 345.00 - SUNNYSIDE 345KV CKT 1	717	789	0.07	117.4284	GRAND GULF 500/22.0KV TRANSFORMER CKT 1
FDNS	00NR	2	16WP	G15_082	FROM->TO	G14-057T 345.00 - SUNNYSIDE 345KV CKT 1	717	789	0.07	117.4261	GEN300006 1-NEW MADRID UNIT 1
FDNS	00NR	2	16WP	G15_082	FROM->TO	G14-057T 345.00 - SUNNYSIDE 345KV CKT 1	717	789	0.07	117.4145	GEN300007 1-NEW MADRID UNIT 2
FDNS	00NR	2	16WP	G15_082	FROM->TO	G14-057T 345.00 - SUNNYSIDE 345KV CKT 1	717	789	0.07139	117.393	RINGLING - SOUTH WILSON 138KV CKT 1
FDNS	00NR	2	16WP	G15_082	FROM->TO	G14-057T 345.00 - SUNNYSIDE 345KV CKT 1	717	789	0.07	117.3731	GEN520947 1-HUGO1
FDNS	00NR	2	16WP	G15_082	FROM->TO	G14-057T 345.00 - SUNNYSIDE 345KV CKT 1	717	789	0.07027	117.3536	LACYGNE - WAVERLY7 345.00 345KV CKT 1
FDNS	00NR	2	16WP	G15_082	FROM->TO	G14-057T 345.00 - SUNNYSIDE 345KV CKT 1	717	789	0.07092	117.333	DUNCAN - OMPA-DUNCAN 840 138KV CKT 1
FDNS	00NR	2	16WP	G15_082	FROM->TO	G14-057T 345.00 - SUNNYSIDE 345KV CKT 1	717	789	0.07092	117.333	DUNCAN - OMPA-DUNCAN 840 138KV CKT 1
FDNS	00NR	2	16WP	G15_082	FROM->TO	G14-057T 345.00 - SUNNYSIDE 345KV CKT 1	717	789	0.07121	117.3115	P12:138:WFEC:MSL01
FDNS	00NR	2	16WP	G15_082	FROM->TO	G14-057T 345.00 - SUNNYSIDE 345KV CKT 1	717	789	0.07121	117.3035	BRIDGECR 138.00 - SUNSHINE CANYON 138KV CKT 1
FDNS	00NR	2	16WP	G15_082	FROM->TO	G14-057T 345.00 - SUNNYSIDE 345KV CKT 1	717	789	0.07	117.2994	GEN335206 1-NELSON UNIT 6
FDNS	00NR	2	20WP	G15_082	FROM->TO	G14-057T 345.00 - SUNNYSIDE 345KV CKT 1	717	789	0.0717	117.2655	G15066_T 345.00 - SOONER 345KV CKT 1
FDNS	00NR	2	16WP	G15_082	FROM->TO	G14-057T 345.00 - SUNNYSIDE 345KV CKT 1	717	789	0.07027	117.2522	WAVERLY7 345.00 - WOLF CREEK 345KV CKT 1
FDNS	00NR	2	20WP	G15_082	FROM->TO	G14-057T 345.00 - SUNNYSIDE 345KV CKT 1	717	789	0.06893	117.2017	BORDER 7345.00 - WOODWARD DISTRICT EHV 345KV CKT 1
FDNS	00NR	2	16WP	G15_082	FROM->TO	G14-057T 345.00 - SUNNYSIDE 345KV CKT 1	717	789	0.06883	117.1975	PARK LANE - SEMINOLE 138KV CKT 1
FDNS	00NR	2	16WP	G15_082	FROM->TO	G14-057T 345.00 - SUNNYSIDE 345KV CKT 1	717	789	0.07	117.1638	DOLET HILLS 345/24.0KV TRANSFORMER CKT 1
FDNS	00NR	2	16WP	G15_082	FROM->TO	G14-057T 345.00 - SUNNYSIDE 345KV CKT 1	717	789	0.06997	117.1453	P12:138:AEPW:SHERID4:112GORE4
FDNS	00NR	2	16WP	G15_082	FROM->TO	G14-057T 345.00 - SUNNYSIDE 345KV CKT 1	717	789	0.07139	117.1163	MARIETTA - SOUTH WILSON 138KV CKT 1
FDNS	00NR	2	16WP	G15_082	FROM->TO	G14-057T 345.00 - SUNNYSIDE 345KV CKT 1	717	789	0.07	117.1152	GEN501812 1-RODEMACHER UNIT 2
FDNS	00NR	2	16WP	G15_082	FROM->TO	G14-057T 345.00 - SUNNYSIDE 345KV CKT 1	717	789	0.07	117.071	GEN515564 1-ORIGIN11 0.6900
FDNS	00NR	2	16WP	G15_082	FROM->TO	G14-057T 345.00 - SUNNYSIDE 345KV CKT 1	717	789	0.07	117.071	GEN515565 1-ORIGIN21 0.6900
FDNS	00NR	2	16WP	G15_082	FROM->TO	G14-057T 345.00 - SUNNYSIDE 345KV CKT 1	717	789	0.07	117.0552	GEN590011 2-ERCOT EQUIVALENCE
FDNS	00NR	2	16WP	G15_082	FROM->TO	G14-057T 345.00 - SUNNYSIDE 345KV CKT 1	717	789	0.07139	117.031	P12:138:WFEC:MSL17
FDNS	00NR	2	16WP	G15_082	FROM->TO	G14-057T 345.00 - SUNNYSIDE 345KV CKT 1	717	789	0.07106	117.0273	CANEYRV7 345.00 - NEOSHO 345KV CKT 1
FDNS	00NR	2	16WP	G15_082	FROM->TO	G14-057T 345.00 - SUNNYSIDE 345KV CKT 1	717	789	0.06993	117.0214	REDBUD - RIVERSIDE STATION 345KV CKT 1
FDNS	00NR	2	16WP	G15_082	FROM->TO	G14-057T 345.00 - SUNNYSIDE 345KV CKT 1	717	789	0.06993	117.0214	REDBUD - RIVERSIDE STATION 345KV CKT 1
FDNS	00NR	2	16WP	G15_082	FROM->TO	G14-057T 345.00 - SUNNYSIDE 345KV CKT 1	717	789	0.07308	116.9998	MATHWSN7 345.00 - NORTHWEST 345KV CKT 1
FDNS	00NR	2	16WP	G15_082	FROM->TO	G14-057T 345.00 - SUNNYSIDE 345KV CKT 1	717	789	0.07	116.983	GEN590010 1-ERCOT EQUIVALENCE
FDNS	00NR	2	20WP	G15_082	FROM->TO	G14-057T 345.00 - SUNNYSIDE 345KV CKT 1	717	789	0.07007	116.9593	GEN501801 1-DOLET HILLS UNIT1
FDNS	00NR	2	16WP	G15_082	FROM->TO	G14-057T 345.00 - SUNNYSIDE 345KV CKT 1	717	789	0.07117	116.9417	CIVIT - PAOLI 138KV CKT 1
FDNS	00NR	2	16WP	G15_082	FROM->TO	G14-057T 345.00 - SUNNYSIDE 345KV CKT 1	717	789	0.07	116.9236	GEN509408 1-WILKES #2
FDNS	00NR	2	16WP	G15_082	FROM->TO	G14-057T 345.00 - SUNNYSIDE 345KV CKT 1	717	789	0.06988	116.9121	ELDORADO EHV - SHERIDAN EHV 500KV CKT 1
FDNS	00NR	2	16WP	G15_082	FROM->TO	G14-057T 345.00 - SUNNYSIDE 345KV CKT 1	717	789	0.08097	116.8999	Hitchland Interchange - WALKTAP7 345.00 345KV CKT 1
FDNS	00NR	2	16WP	G15_082	FROM->TO	G14-057T 345.00 - SUNNYSIDE 345KV CKT 1	717	789	0.08097	116.8999	Hitchland Interchange - WALKTAP7 345.00 345KV CKT 1
FDNS	00NR	2	16WP	G15_082	FROM->TO	G14-057T 345.00 - SUNNYSIDE 345KV CKT 1	717	789	0.08097	116.887	P12:345:SPS:J07.1.FINN.HITCH
FDNS	00NR	2	16WP	G15_082	FROM->TO	G14-057T 345.00 - SUNNYSIDE 345KV CKT 1	717	789	0.07	116.8856	P12:69:AEPW:L.E.S.-2:LAW WC2
FDNS	00NR	2	16WP	G15_082	FROM->TO	G14-057T 345.00 - SUNNYSIDE 345KV CKT 1	717	789	0.07106	116.8846	CANEYRV7 345.00 - LATHAMS7 345.00 345KV CKT 1
FDNS	00NR	2	16WP	G15_082	FROM->TO	G14-057T 345.00 - SUNNYSIDE 345KV CKT 1	717	789	0.0703	116.884	PAOLI - PAYNE 138.00 138KV CKT 1
FDNS	00NR	2	16WP	G15_082	FROM->TO	G14-057T 345.00 - SUNNYSIDE 345KV CKT 1	717	789	0.07	116.8768	P12:161:AEPW:DYESS 5:HYLAND 5
FDNS	00NR	2	16WP	G15_082	FROM->TO	G14-057T 345.00 - SUNNYSIDE 345KV CKT 1	717	789	0.06997	116.8729	ELDORADO EHV - MOUNT OLIVE 500KV CKT 1
FDNS	00NR	2	16WP	G15_082	FROM->TO	G14-057T 345.00 - SUNNYSIDE 345KV CKT 1	717	789	0.07	116.849	GEN506754 1-LEBROCK STEAM 1
FDNS	00NR	2	16WP	G15_082	FROM->TO	G14-057T 345.00 - SUNNYSIDE 345KV CKT 1	717	789	0.07041	116.8398	P12:138:WFEC:MSL02
FDNS	00NR	2	16WP	G15_082	FROM->TO	G14-057T 345.00 - SUNNYSIDE 345KV CKT 1	717	789	0.07	116.8367	GEN334440 1-SABINE UNIT 4
FDNS	00NR	2	16WP	G15_082	FROM->TO	G14-057T 345.00 - SUNNYSIDE 345KV CKT 1	717	789	0.06997	116.8014	P12:138:AEPW:112GORE4:L.E.S.-4
FDNS	00NR	2	16WP	G15_082	FROM->TO	G14-057T 345.00 - SUNNYSIDE 345KV CKT 1	717	789	0.07117	116.799	CIVIT - STRATFORD 138KV CKT 1
FDNS	00NR	2	16WP	G15_082	FROM->TO	G14-057T 345.00 - SUNNYSIDE 345KV CKT 1	717	789	0.06999	116.7864	TUPELO - TUPELO TAP 138KV CKT 1
FDNS	00NR	2	16WP	G15_082	FROM->TO	G14-057T 345.00 - SUNNYSIDE 345KV CKT 1	717	789	0.0703	116.7487	ANADARKO - GEORGIA 138KV CKT 1
FDNS	00NR	2	16WP	G15_082	FROM->TO	G14-057T 345.00 - SUNNYSIDE 345KV CKT 1	717	789	0.07183	116.7203	P12:138:AEPW-OGE:CORNVIL4:MAUD 4
FDNS	00NR	2	16WP	G15_082	FROM->TO	G14-057T 345.00 - SUNNYSIDE 345KV CKT 1	717	789	0.07029	116.7082	LAWTON EASTSIDE (LES 5) 345/138/13.8KV TRANSFORMER CKT 2
FDNS	00NR	2	16WP	G15_082	FROM->TO	G14-057T 345.00 - SUNNYSIDE 345KV CKT 1	717	789	0.07029	116.7082	LAWTON EASTSIDE (LES 5) 345/138/13.8KV TRANSFORMER CKT 2
FDNS	00NR	2	16WP	G15_082	FROM->TO	G14-057T 345.00 - SUNNYSIDE 345KV CKT 1	717	789	0.07	116.7024	FRONTIER - GRIMES 345KV CKT 1
FDNS	00NR	2	16WP	G15_082	FROM->TO	G14-057T 345.00 - SUNNYSIDE 345KV CKT 1	717	789	0.07	116.702	GEN503909 1-FULTONU1 1 16.000
FDNS	00NR	2	16WP	G15_082	FROM->TO	G14-057T 345.00 - SUNNYSIDE 345KV CKT 1	717	789	0.07117	116.6794	OIL CENTER - STRATFORD 138KV CKT 1
FDNS	00NR	2	16WP	G15_082	FROM->TO	G14-057T 345.00 - SUNNYSIDE 345KV CKT 1	717	789	0.07106	116.6703	LATHAMS7 345.00 - ROSE HILL 345KV CKT 1
FDNS	00NR	2	16WP	G15_082	FROM->TO	G14-057T 345.00 - SUNNYSIDE 345KV CKT 1	717	789	0.0703	116.6701	FLETCHER - GEORGIA 138KV CKT 1
FDNS	00NR	2	16WP	G15_082	FROM->TO	G14-057T 345.00 - SUNNYSIDE 345KV CKT 1	717	789	0.07183	116.6456	BLANCHARD - CORNVILLE 138KV CKT 1
FDNS	00NR	2	16WP	G15_082	FROM->TO	G14-057T 345.00 - SUNNYSIDE 345KV CKT 1	717	789	0.07036	116.6407	EMPIRE - FLETCHER 138KV CKT 1
FDNS	00NR	2	16WP	G15_082	FROM->TO	G14-057T 345.00 - SUNNYSIDE 345KV CKT 1	717	789	0.07014	116.6268	WEBRE - WELLS 500KV CKT 1
FDNS	00NR	2	16WP	G15_082	FROM->TO	G14-057T 345.00 - SUNNYSIDE 345KV CKT 1	717	789	0.07	116.5829	GEN509393 S1-ARSENAL HILL GENS #4 (STALL)
FDNS	00NR	2	16WP	G15_082	FROM->TO	G14-057T 345.00 - SUNNYSIDE 345KV CKT 1	717	789	0.07036	116.5675	COMANCHE - EMPIRE 138KV CKT 1
FDNS	00NR	2	16WP	G15_082	FROM->TO	G14-057T 345.00 - SUNNYSIDE 345KV CKT 1	717	789	0.07	116.5533	GEN509392 G2-ARSENAL HILL GENS #3 (STALL)
FDNS	00NR	2	16WP	G15_082	FROM->TO	G14-057T 345.00 - SUNNYSIDE 345KV CKT 1	717	789	0.07	116.5532	GEN509391 G1-ARSENAL HILL GENS #2 (STALL)
FDNS	00NR	2	16WP	G15_082	FROM->TO	G14-057T 345.00 - SUNNYSIDE 345KV CKT 1	717	789	0.07	116.5432	GEN336252 1-NINEMILE POINT UNIT#5
FDNS	00NR	2	16WP	G15_082	FROM->TO	G14-057T 345.00 - SUNNYSIDE 345KV CKT 1	717	789	0.07	116.5301	GEN334071 1-LEWIS CREEK 2
FDNS	00NR	2	16WP	G15_082	FROM->TO	G14-057T 345.00 - SUNNYSIDE 345KV CKT 1	717	789	0.07	116.5227	GEN334070 1-LEWIS CREEK 1
FDNS	00NR	2	16WP	G15_082	FROM->TO	G14-057T 345.00 - SUNNYSIDE 345KV CKT 1	717	789	0.07	116.5196	GEN335204 1-NELSON UNIT 4
FDNS	00NR	2	16WP	G15_082	FROM->TO	G14-057T 345.00 - SUNNYSIDE 345KV CKT 1	717	789	0.07	116.5182	DELL 500 - ESSEX UNIT 2 500KV CKT Z1
FDNS	00NR	2	16WP	G15_082	FROM->TO	G14-057T 345.00 - SUNNYSIDE 345KV CKT 1	717	789	0.07117	116.5068	LATTA JCT - OIL CENTER 138KV CKT 1
FDNS	00NR	2	16WP	G15_082	FROM->TO	G14-057T 345.00 - SUNNYSIDE 345KV CKT 1	717	789	0.07023	116.4959	DUNCAN (DUNCAN) 138/69/13.8KV TRANSFORMER CKT 1
FDNS	00NR	2	16WP	G15_082	FROM->TO	G14-057T 345.00 - SUNNYSIDE 345KV CKT 1	717	789	0.07023	116.4959	DUNCAN (DUNCAN) 138/69/13.8KV TRANSFORMER CKT 1
FDNS	00NR	2	16WP	G15_082	FROM->TO	G14-057T 345.00 - SUNNYSIDE 345KV CKT 1	717	789	0.07252	116.4916	THISTLE7 345.00 - WOODWARD DISTRICT EHV 345KV CKT 1
FDNS	00NR	2	16WP	G15_082	FROM->TO	G14-057T 345.00 - SUNNYSIDE 345KV CKT 1	717	789	0.07252	116.4916	THISTLE7 345.00 - WOODWARD DISTRICT EHV 345KV CKT 1
FDNS	00NR	2	16WP	G15_082	FROM->TO	G14-057T 345.00 - SUNNYSIDE 345KV CKT 1	717	789	0.07252	116.4916	THISTLE7 345.00 - WOODWARD DISTRICT EHV 345KV CKT 2
FDNS	00NR	2	16WP	G15_082	FROM->TO	G14-057T 345.00 - SUNNYSIDE 345KV CKT 1	717	789	0.07252	116.4916	THISTLE7 345.00 - WOODWARD DISTRICT EHV 345KV CKT 2
FDNS	00NR	2	16WP	G15_082	FROM->TO	G14-057T 345.00 - SUNNYSIDE 345KV CKT 1	717	789	0.07	116.4854	GEN334441 1-SABINE UNIT 5
FDNS	00NR	2	16WP	G15_082	FROM->TO	G14-057T 345.00 - SUNNYSIDE 345KV CKT 1	717	789	0.06999	116.4638	P12:161:AEPW-SWPA:BEAVER5:EROGERS5

SOLUTION	GROUP	SCENARIO	SEASON	SOURCE	DIRECTION	MONITORED ELEMENT	RATEA (MVA)	RATEB(MVA)	TDF	TC%LOADING (% MVA)	CONTINGENCY
FDNS	00NR	2	16WP	G15_082	FROM->TO	G14-057T 345.00 - SUNNYSIDE 345KV CKT 1	717	789	0.07183	116.4544	BLANCHARD - MAUD 138KV CKT 1
FDNS	00NR	2	16WP	G15_082	FROM->TO	G14-057T 345.00 - SUNNYSIDE 345KV CKT 1	717	789	0.07022	116.4542	G15074_T 345.00 - HOYT 345KV CKT 1
FDNS	00NR	2	16WP	G15_082	FROM->TO	G14-057T 345.00 - SUNNYSIDE 345KV CKT 1	717	789	0.07004	116.4502	P12:138:AEPW:CATOOSA4:T.S.E.-4
FDNS	00NR	2	16WP	G15_082	FROM->TO	G14-057T 345.00 - SUNNYSIDE 345KV CKT 1	717	789	0.07	116.4335	GEN334030 1-FRONTIER UNIT 1
FDNS	00NR	2	16WP	G15_082	FROM->TO	G14-057T 345.00 - SUNNYSIDE 345KV CKT 1	717	789	0.07	116.4317	GEN334031 1-FRONTIER UNIT 2
FDNS	00NR	2	20WP	G15_082	FROM->TO	G14-057T 345.00 - SUNNYSIDE 345KV CKT 1	717	789	0.07007	116.4292	GEN509406 1-WELSH #3
FDNS	00NR	2	20WP	G15_082	FROM->TO	G14-057T 345.00 - SUNNYSIDE 345KV CKT 1	717	789	0.07007	116.4289	GEN509404 1-WELSH #1
FDNS	00NR	2	16WP	G15_082	FROM->TO	G14-057T 345.00 - SUNNYSIDE 345KV CKT 1	717	789	0.07	116.4251	GEN337653 1-WHITE BLUFF UNIT #2
FDNS	00NR	2	16WP	G15_082	FROM->TO	G14-057T 345.00 - SUNNYSIDE 345KV CKT 1	717	789	0.07004	116.4185	8DANIEL8 500.00 - MCKNIGHT 500KV CKT 1
FDNS	00NR	2	16WP	G15_082	FROM->TO	G14-057T 345.00 - SUNNYSIDE 345KV CKT 1	717	789	0.07	116.4126	GEN506752 1-LEBROCK GAS 1
FDNS	00NR	2	16WP	G15_082	FROM->TO	G14-057T 345.00 - SUNNYSIDE 345KV CKT 1	717	789	0.07	116.4124	GEN506753 1-LEBROCK GAS 2
FDNS	00NR	2	16WP	G15_082	FROM->TO	G14-057T 345.00 - SUNNYSIDE 345KV CKT 1	717	789	0.07	116.3964	P12:161:AEPW:DYESS5:ELMSPRNG:TONTITN5
FDNS	00NR	2	16WP	G15_082	FROM->TO	G14-057T 345.00 - SUNNYSIDE 345KV CKT 1	717	789	0.07007	116.3679	6LAYFLD 230.00 - CARROLL 230KV CKT 1
FDNS	00NR	2	16WP	G15_082	FROM->TO	G14-057T 345.00 - SUNNYSIDE 345KV CKT 1	717	789	0.07	116.3665	GEN300003 1-THOMAS HILL UNIT 3
FDNS	00NR	2	16WP	G15_082	FROM->TO	G14-057T 345.00 - SUNNYSIDE 345KV CKT 1	717	789	0.07	116.3656	GEN501811 1-RODEMACHER UNIT 1
FDNS	00NR	2	16WP	G15_082	FROM->TO	G14-057T 345.00 - SUNNYSIDE 345KV CKT 1	717	789	0.07007	116.3553	FULTON 115 - HOPE 115KV CKT 1
FDNS	00NR	2	16WP	G15_082	FROM->TO	G14-057T 345.00 - SUNNYSIDE 345KV CKT 1	717	789	0.07007	116.3553	FULTON 115 - HOPE 115KV CKT 1
FDNS	00NR	2	16WP	G15_082	FROM->TO	G14-057T 345.00 - SUNNYSIDE 345KV CKT 1	717	789	0.07032	116.3473	P12:138:AEPW:CORNVIL4:S.W.S.-4
FDNS	00NR	2	16WP	G15_082	FROM->TO	G14-057T 345.00 - SUNNYSIDE 345KV CKT 1	717	789	0.07	116.3465	GEN336251 1-NINEMILE POINT UNIT#4
FDNS	00NR	2	16WP	G15_082	FROM->TO	G14-057T 345.00 - SUNNYSIDE 345KV CKT 1	717	789	0.07	116.3461	GEN334433 1-SABINE UNIT 3
FDNS	00NR	2	16WP	G15_082	FROM->TO	G14-057T 345.00 - SUNNYSIDE 345KV CKT 1	717	789	0.07	116.3396	GEN336831 1-BAXTER WILSON SES
FDNS	00NR	2	16WP	G15_082	FROM->TO	G14-057T 345.00 - SUNNYSIDE 345KV CKT 1	717	789	0.07	116.3361	GEN515226 1-MUSKOGEE 6G
FDNS	00NR	2	16WP	G15_082	FROM->TO	G14-057T 345.00 - SUNNYSIDE 345KV CKT 1	717	789	0.07	116.3358	GEN300015 1-1SGPDEL 18.000
FDNS	00NR	2	16WP	G15_082	FROM->TO	G14-057T 345.00 - SUNNYSIDE 345KV CKT 1	717	789	0.07044	116.3344	P12:138:AEPW:CORNVIL4:DUNCAN-4
FDNS	00NR	2	16WP	G15_082	FROM->TO	G14-057T 345.00 - SUNNYSIDE 345KV CKT 1	717	789	0.07	116.3338	GEN337652 1-WHITE BLUFF UNIT #1
FDNS	00NR	2	16WP	G15_082	FROM->TO	G14-057T 345.00 - SUNNYSIDE 345KV CKT 1	717	789	0.07023	116.3328	P12:69:WFEC-AEPW:COMANCH2:DUNCAN-2
FDNS	00NR	2	16WP	G15_082	FROM->TO	G14-057T 345.00 - SUNNYSIDE 345KV CKT 1	717	789	0.07	116.3273	GEN337911 1-ARKANSAS NUCLEAR ONE UNIT #2
FDNS	00NR	2	16WP	G15_082	FROM->TO	G14-057T 345.00 - SUNNYSIDE 345KV CKT 1	717	789	0.07	116.3181	GEN562783 1-G15036_4 0.6900
FDNS	00NR	2	16WP	G15_082	FROM->TO	G14-057T 345.00 - SUNNYSIDE 345KV CKT 1	717	789	0.07	116.3181	GEN562784 1-G15036_5 0.6900
FDNS	00NR	2	16WP	G15_082	FROM->TO	G14-057T 345.00 - SUNNYSIDE 345KV CKT 1	717	789	0.06997	116.2947	LAYFLD8 500.00 - MOUNT OLIVE 500KV CKT 1
FDNS	00NR	2	16WP	G15_082	FROM->TO	G14-057T 345.00 - SUNNYSIDE 345KV CKT 1	717	789	0.06997	116.2947	LAYFLD8 500.00 - MOUNT OLIVE 500KV CKT 1
FDNS	00NR	2	16WP	G15_082	FROM->TO	G14-057T 345.00 - SUNNYSIDE 345KV CKT 1	717	789	0.06929	116.2931	ARBWIND4 138.00 - CARTER 138KV CKT 1
FDNS	00NR	2	16WP	G15_082	FROM->TO	G14-057T 345.00 - SUNNYSIDE 345KV CKT 1	717	789	0.07051	116.2926	CIMARRON - CZECH HALL 138KV CKT 1
FDNS	00NR	2	16WP	G15_082	FROM->TO	G14-057T 345.00 - SUNNYSIDE 345KV CKT 1	717	789	0.07144	116.2913	BAILEY4 138.00 - SUNSHINE CANYON 138KV CKT 1
FDNS	00NR	2	16WP	G15_082	FROM->TO	G14-057T 345.00 - SUNNYSIDE 345KV CKT 1	717	789	0.06999	116.2879	HOT SPRINGS EHV - MAGNET COVE 500KV CKT 1
FDNS	00NR	2	16WP	G15_082	FROM->TO	G14-057T 345.00 - SUNNYSIDE 345KV CKT 1	717	789	0.06645	116.2872	CANADIAN RIVER - PITTSBURG 345KV CKT 1
FDNS	00NR	2	16WP	G15_082	FROM->TO	G14-057T 345.00 - SUNNYSIDE 345KV CKT 1	717	789	0.06645	116.2872	CANADIAN RIVER - PITTSBURG 345KV CKT 1
FDNS	00NR	2	16WP	G15_082	FROM->TO	G14-057T 345.00 - SUNNYSIDE 345KV CKT 1	717	789	0.07101	116.2844	P12:138:AEPW:S.W.S.-4:L.E.S.-4
FDNS	00NR	2	16WP	G15_082	FROM->TO	G14-057T 345.00 - SUNNYSIDE 345KV CKT 1	717	789	0.07	116.2834	P12:161:AEPW:EROGERS5:ECNTRTN5
FDNS	00NR	2	16WP	G15_082	FROM->TO	G14-057T 345.00 - SUNNYSIDE 345KV CKT 1	717	789	0.07051	116.2828	CIMARRON - SARA 138KV CKT 1
FDNS	00NR	2	16WP	G15_082	FROM->TO	G14-057T 345.00 - SUNNYSIDE 345KV CKT 1	717	789	0.0702	116.2823	TUTTLE - TUTTLE CONOCO TAP 138KV CKT 1
FDNS	00NR	2	16WP	G15_082	FROM->TO	G14-057T 345.00 - SUNNYSIDE 345KV CKT 1	717	789	0.07023	116.2797	DUNCAN - TOSCO 69KV CKT 1
FDNS	00NR	2	16WP	G15_082	FROM->TO	G14-057T 345.00 - SUNNYSIDE 345KV CKT 1	717	789	0.07	116.2726	RODEMACHER 230/22.0KV TRANSFORMER CKT 1
FDNS	00NR	2	16WP	G15_082	FROM->TO	G14-057T 345.00 - SUNNYSIDE 345KV CKT 1	717	789	0.06915	116.2711	SEMINOLE - VANOSTP4 138.00 138KV CKT 1
FDNS	00NR	2	16WP	G15_082	FROM->TO	G14-057T 345.00 - SUNNYSIDE 345KV CKT 1	717	789	0.07065	116.2668	P12:138:AEPW-OGE:WTH_JCT4:JENSEN4
FDNS	00NR	2	16WP	G15_082	FROM->TO	G14-057T 345.00 - SUNNYSIDE 345KV CKT 1	717	789	0.07127	116.2633	CANADIAN - NOBLE 138KV CKT 1
FDNS	00NR	2	16WP	G15_082	FROM->TO	G14-057T 345.00 - SUNNYSIDE 345KV CKT 1	717	789	0.07	116.2605	GEN505432 1-SIKESTON
FDNS	00NR	2	16WP	G15_082	FROM->TO	G14-057T 345.00 - SUNNYSIDE 345KV CKT 1	717	789	0.07	116.258	GEN515040 1-SEMINOLE 1G
FDNS	00NR	2	16WP	G15_082	FROM->TO	G14-057T 345.00 - SUNNYSIDE 345KV CKT 1	717	789	0.06524	116.2546	G14_038T 345.00 - Hitchland Interchange 345KV CKT 1
FDNS	00NR	2	16WP	G15_082	FROM->TO	G14-057T 345.00 - SUNNYSIDE 345KV CKT 1	717	789	0.07	116.2529	WHITE BLUFF 500/26.0KV TRANSFORMER CKT 1
FDNS	00NR	2	20WP	G15_082	FROM->TO	G14-057T 345.00 - SUNNYSIDE 345KV CKT 1	717	789	0.06893	116.2529	BORDER 7345.00 - TUCO_2 345.00 345KV CKT 1
FDNS	00NR	2	16WP	G15_082	FROM->TO	G14-057T 345.00 - SUNNYSIDE 345KV CKT 1	717	789	0.07	116.2503	GEN303007 1-1BC2 U2
FDNS	00NR	2	16WP	G15_082	FROM->TO	G14-057T 345.00 - SUNNYSIDE 345KV CKT 1	717	789	0.07011	116.2501	P12:69:AEPW-OMPA:COMANC-2:OMWALTR2
FDNS	00NR	2	16WP	G15_082	FROM->TO	G14-057T 345.00 - SUNNYSIDE 345KV CKT 1	717	789	0.07	116.2466	GEN303006 1-1BC2 U1
FDNS	00NR	2	16WP	G15_082	FROM->TO	G14-057T 345.00 - SUNNYSIDE 345KV CKT 1	717	789	0.07037	116.2447	P12:138:AEPW:WTHWF4:CLINTJC4
FDNS	00NR	2	16WP	G15_082	FROM->TO	G14-057T 345.00 - SUNNYSIDE 345KV CKT 1	717	789	0.07002	116.2447	MC NIEL 500/115KV TRANSFORMER CKT 1
FDNS	00NR	2	16WP	G15_082	FROM->TO	G14-057T 345.00 - SUNNYSIDE 345KV CKT 1	717	789	0.07	116.2432	GEN515223 1-MUSKOGEE 4G
FDNS	00NR	2	16WP	G15_082	FROM->TO	G14-057T 345.00 - SUNNYSIDE 345KV CKT 1	717	789	0.07	116.2432	GEN515225 1-MUSKOGEE 5G
FDNS	00NR	2	16WP	G15_082	FROM->TO	G14-057T 345.00 - SUNNYSIDE 345KV CKT 1	717	789	0.07155	116.2425	G1524G1525 345.00 - THISTLE7 345.00 345KV CKT 1
FDNS	00NR	2	16WP	G15_082	FROM->TO	G14-057T 345.00 - SUNNYSIDE 345KV CKT 1	717	789	0.07155	116.2425	G1524G1525 345.00 - THISTLE7 345.00 345KV CKT 2
FDNS	00NR	2	16WP	G15_082	FROM->TO	G14-057T 345.00 - SUNNYSIDE 345KV CKT 1	717	789	0.07023	116.2353	COMANCHE TAP - TOSCO 69KV CKT 1
FDNS	00NR	2	16WP	G15_082	FROM->TO	G14-057T 345.00 - SUNNYSIDE 345KV CKT 1	717	789	0.07129	116.2332	P12:138:OKGE:3TERM27
FDNS	00NR	2	16WP	G15_082	FROM->TO	G14-057T 345.00 - SUNNYSIDE 345KV CKT 1	717	789	0.07004	116.2307	BISMARK - HOT SPRINGS WEST BUS 115KV CKT 1
FDNS	00NR	2	16WP	G15_082	FROM->TO	G14-057T 345.00 - SUNNYSIDE 345KV CKT 1	717	789	0.07023	116.2285	HOYT - STRANGER CREEK 345KV CKT 1
FDNS	00NR	2	16WP	G15_082	FROM->TO	G14-057T 345.00 - SUNNYSIDE 345KV CKT 1	717	789	0.07117	116.2269	LASALLE - LATTA JCT 138KV CKT 1
FDNS	00NR	2	16WP	G15_082	FROM->TO	G14-057T 345.00 - SUNNYSIDE 345KV CKT 1	717	789	0.07	116.2245	GEN336191 1-LITTLE GYPSY UNIT#3
FDNS	00NR	2	16WP	G15_082	FROM->TO	G14-057T 345.00 - SUNNYSIDE 345KV CKT 1	717	789	0.07003	116.2178	P12:138:AEPW:N.E.S.-4:CATOOSA4
FDNS	00NR	2	16WP	G15_082	FROM->TO	G14-057T 345.00 - SUNNYSIDE 345KV CKT 1	717	789	0.07051	116.2166	CZECH HALL - XEROX 138KV CKT 1
FDNS	00NR	2	16WP	G15_082	FROM->TO	G14-057T 345.00 - SUNNYSIDE 345KV CKT 1	717	789	0.07022	116.2144	G15074_T 345.00 - JEFFREY ENERGY CENTER 345KV CKT 1
FDNS	00NR	2	16WP	G15_082	FROM->TO	G14-057T 345.00 - SUNNYSIDE 345KV CKT 1	717	789	0.07051	116.2123	MORGAN - XEROX 138KV CKT 1
FDNS	00NR	2	16WP	G15_082	FROM->TO	G14-057T 345.00 - SUNNYSIDE 345KV CKT 1	717	789	0.0702	116.2086	CIMARRON - TUTTLE CONOCO TAP 138KV CKT 1
FDNS	00NR	2	16WP	G15_082	FROM->TO	G14-057T 345.00 - SUNNYSIDE 345KV CKT 1	717	789	0.07	116.2028	NELSON 230/20.0KV TRANSFORMER CKT 1
FDNS	00NR	2	16WP	G15_082	FROM->TO	G14-057T 345.00 - SUNNYSIDE 345KV CKT 1	717	789	0.07	116.1985	GEN335614 1-WILLOW GLENN UNIT#4
FDNS	00NR	2	16WP	G15_082	FROM->TO	G14-057T 345.00 - SUNNYSIDE 345KV CKT 1	717	789	0.07037	116.1961	P12:138:AEPW:WTHWF4:WTH_SE4
FDNS	00NR	2	16WP	G15_082	FROM->TO	G14-057T 345.00 - SUNNYSIDE 345KV CKT 1	717	789	0.0703	116.1939	G15088_T 345.00 - MOORE 345KV CKT 1
FDNS	00NR	2	16WP	G15_082	FROM->TO	G14-057T 345.00 - SUNNYSIDE 345KV CKT 1	717	789	0.07	116.191	GEN337910 1-ARKANSAS NUCLEAR ONE UNIT #1
FDNS	00NR	2	16WP	G15_082	FROM->TO	G14-057T 345.00 - SUNNYSIDE 345KV CKT 1	717	789	0.07051	116.1896	MORGAN - MUSTANG 138KV CKT 1
FDNS	00NR	2	16WP	G15_082	FROM->TO	G14-057T 345.00 - SUNNYSIDE 345KV CKT 1	717	789	0.07	116.1879	GEN303008 1-1BC2 U3
FDNS	00NR	2	16WP	G15_082	FROM->TO	G14-057T 345.00 - SUNNYSIDE 345KV CKT 1	717	789	0.07	116.1853	GEN300010 1-ST FRANCIS UNIT 1

SOLUTION	GROUP	SCENARIO	SEASON	SOURCE	DIRECTION	MONITORED ELEMENT	RATEA (MVA)	RATEB(MVA)	TDF	TC%LOADING (% MVA)	CONTINGENCY
FDNS	00NR	2	16WP	G15_082	FROM->TO	G14-057T 345.00 - SUNNYSIDE 345KV CKT 1	717	789	0.07004	116.1792	ALPINE AECC - BISMARK 115KV CKT 1
FDNS	00NR	2	16WP	G15_082	FROM->TO	G14-057T 345.00 - SUNNYSIDE 345KV CKT 1	717	789	0.07023	116.1722	COMANCHE - COMANCHE TAP 69KV CKT 1
FDNS	00NR	2	16WP	G15_082	FROM->TO	G14-057T 345.00 - SUNNYSIDE 345KV CKT 1	717	789	0.07127	116.1715	NOBLE - PURCELL4 138.00 138KV CKT 1
FDNS	00NR	2	16WP	G15_082	FROM->TO	G14-057T 345.00 - SUNNYSIDE 345KV CKT 1	717	789	0.07	116.1615	GEN336170 1-GULF OXY U4
FDNS	00NR	2	16WP	G15_082	FROM->TO	G14-057T 345.00 - SUNNYSIDE 345KV CKT 1	717	789	0.07193	116.1587	BUCKNER7 345.00 - SPEARVILLE 345KV CKT 1
FDNS	00NR	2	16WP	G15_082	FROM->TO	G14-057T 345.00 - SUNNYSIDE 345KV CKT 1	717	789	0.07193	116.1587	BUCKNER7 345.00 - SPEARVILLE 345KV CKT 1
FDNS	00NR	2	16WP	G15_082	FROM->TO	G14-057T 345.00 - SUNNYSIDE 345KV CKT 1	717	789	0.07	116.1552	GEN336464 1-MICHOUD UNIT #3
FDNS	00NR	2	16WP	G15_082	FROM->TO	G14-057T 345.00 - SUNNYSIDE 345KV CKT 1	717	789	0.07001	116.1538	CYPRESS - HARTBURG 500KV CKT 1
FDNS	00NR	2	16WP	G15_082	FROM->TO	G14-057T 345.00 - SUNNYSIDE 345KV CKT 1	717	789	0.07249	116.1536	DRAPER LAKE - SEMINOLE 345KV CKT 1
FDNS	00NR	2	16WP	G15_082	FROM->TO	G14-057T 345.00 - SUNNYSIDE 345KV CKT 1	717	789	0.07249	116.1536	DRAPER LAKE - SEMINOLE 345KV CKT 2
FDNS	00NR	2	16WP	G15_082	FROM->TO	G14-057T 345.00 - SUNNYSIDE 345KV CKT 1	717	789	0.07	116.1478	8CAJUN2 500/24.0KV TRANSFORMER CKT 1
FDNS	00NR	2	16WP	G15_082	FROM->TO	G14-057T 345.00 - SUNNYSIDE 345KV CKT 1	717	789	0.06997	116.1452	7JASPER 345.00 - BLACKBERRY 345KV CKT 1
FDNS	00NR	2	16WP	G15_082	FROM->TO	G14-057T 345.00 - SUNNYSIDE 345KV CKT 1	717	789	0.07004	116.1361	ALPINE AECC - AMITY SS 115KV CKT 1
FDNS	00NR	2	16WP	G15_082	FROM->TO	G14-057T 345.00 - SUNNYSIDE 345KV CKT 1	717	789	0.07	116.1355	GEN300011 1-ST FRANCIS UNIT 2
FDNS	00NR	2	16WP	G15_082	FROM->TO	G14-057T 345.00 - SUNNYSIDE 345KV CKT 1	717	789	0.06996	116.1306	ETTA (DUKE HOTSPRINGS) - MC NIEL 500KV CKT 1
FDNS	00NR	2	16WP	G15_082	FROM->TO	G14-057T 345.00 - SUNNYSIDE 345KV CKT 1	717	789	0.07144	116.1256	BAILEY4 138.00 - WESTMOORE 138KV CKT 1
FDNS	00NR	2	16WP	G15_082	FROM->TO	G14-057T 345.00 - SUNNYSIDE 345KV CKT 1	717	789	0.07	116.1216	P12:138:AEPW:R.S.S.-4:S.HUD.-4
FDNS	00NR	2	16WP	G15_082	FROM->TO	G14-057T 345.00 - SUNNYSIDE 345KV CKT 1	717	789	0.07037	116.1186	BLACKBERRY - NEOSHO 345KV CKT 1
FDNS	00NR	2	16WP	G15_082	FROM->TO	G14-057T 345.00 - SUNNYSIDE 345KV CKT 1	717	789	0.07652	116.1174	FINNEY SWITCHING STATION - HOLCOMB 345KV CKT 1
FDNS	00NR	2	16WP	G15_082	FROM->TO	G14-057T 345.00 - SUNNYSIDE 345KV CKT 1	717	789	0.07652	116.1174	FINNEY SWITCHING STATION - HOLCOMB 345KV CKT 1
FDNS	00NR	2	16WP	G15_082	FROM->TO	G14-057T 345.00 - SUNNYSIDE 345KV CKT 1	717	789	0.07	116.1151	GEN501910 1-ACADIA UNIT ST1
FDNS	00NR	2	16WP	G15_082	FROM->TO	G14-057T 345.00 - SUNNYSIDE 345KV CKT 1	717	789	0.07057	116.1134	CHISHOLM6 230.00 - ELK CITY 230KV 230KV CKT 1
FDNS	00NR	2	16WP	G15_082	FROM->TO	G14-057T 345.00 - SUNNYSIDE 345KV CKT 1	717	789	0.07057	116.113	ELK CITY 230KV (ELKCTY-6) 230/138/13.8KV TRANSFORMER CKT 1
FDNS	00NR	2	16WP	G15_082	FROM->TO	G14-057T 345.00 - SUNNYSIDE 345KV CKT 1	717	789	0.07057	116.113	ELK CITY 230KV (ELKCTY-6) 230/138/13.8KV TRANSFORMER CKT 1
FDNS	00NR	2	16WP	G15_082	FROM->TO	G14-057T 345.00 - SUNNYSIDE 345KV CKT 1	717	789	0.07012	116.1109	7LUTESVIL 345.00 - 7ST FRANC 345.00 345KV CKT 1
FDNS	00NR	2	16WP	G15_082	FROM->TO	G14-057T 345.00 - SUNNYSIDE 345KV CKT 1	717	789	0.07034	116.1094	SWISSVALE - WEST GARDNER 345KV CKT 1
FDNS	00NR	2	16WP	G15_082	FROM->TO	G14-057T 345.00 - SUNNYSIDE 345KV CKT 1	717	789	0.07	116.1059	GEN300016 1-1G1GPDEL 18.000
FDNS	00NR	2	16WP	G15_082	FROM->TO	G14-057T 345.00 - SUNNYSIDE 345KV CKT 1	717	789	0.07051	116.0994	SARA - STHLAKE4 138.00 138KV CKT 1
FDNS	00NR	2	16WP	G15_082	FROM->TO	G14-057T 345.00 - SUNNYSIDE 345KV CKT 1	717	789	0.07	116.098	GEN337041 1-GERALD ANDRUS
FDNS	00NR	2	16WP	G15_082	FROM->TO	G14-057T 345.00 - SUNNYSIDE 345KV CKT 1	717	789	0.06983	116.0867	ENOWILT - LONE OAK 138KV CKT 1
FDNS	00NR	2	16WP	G15_082	FROM->TO	G14-057T 345.00 - SUNNYSIDE 345KV CKT 1	717	789	0.07	116.0832	P12:138:AEPW:YARCH-S4:T.S.E.-4
FDNS	00NR	2	16WP	G15_082	FROM->TO	G14-057T 345.00 - SUNNYSIDE 345KV CKT 1	717	789	0.07026	116.0827	WALTERS - WALTERS 69KV CKT 1
FDNS	00NR	2	16WP	G15_082	FROM->TO	G14-057T 345.00 - SUNNYSIDE 345KV CKT 1	717	789	0.07015	116.0786	8WNEWMADRID 500.00 - DELL 500 500KV CKT 1
FDNS	00NR	2	16WP	G15_082	FROM->TO	G14-057T 345.00 - SUNNYSIDE 345KV CKT 1	717	789	0.06983	116.0777	ENOWILT - SARDIS 138KV CKT 1
FDNS	00NR	2	16WP	G15_082	FROM->TO	G14-057T 345.00 - SUNNYSIDE 345KV CKT 1	717	789	0.06868	116.0777	ARBUCKLE - VANOSTP4 138.00 138KV CKT 1
FDNS	00NR	2	16WP	G15_082	FROM->TO	G14-057T 345.00 - SUNNYSIDE 345KV CKT 1	717	789	0.07	116.0771	P12:138:AEPW:BA_71ST4:T.S.E.-4
FDNS	00NR	2	16WP	G15_082	FROM->TO	G14-057T 345.00 - SUNNYSIDE 345KV CKT 1	717	789	0.07	116.0758	P12:69:AEPW:NROGERS2:ECNTRTN2
FDNS	00NR	2	16WP	G15_082	FROM->TO	G14-057T 345.00 - SUNNYSIDE 345KV CKT 1	717	789	0.07045	116.0721	GRACEMONT (BANK 1) 345/138/13.8KV TRANSFORMER CKT 1
FDNS	00NR	2	16WP	G15_082	FROM->TO	G14-057T 345.00 - SUNNYSIDE 345KV CKT 1	717	789	0.07037	116.072	ANADARKO - SEQUOYAHJ4 138.00 138KV CKT 1
FDNS	00NR	2	16WP	G15_082	FROM->TO	G14-057T 345.00 - SUNNYSIDE 345KV CKT 1	717	789	0.07051	116.0719	MCCLAIN - STHLAKE4 138.00 138KV CKT 1
FDNS	00NR	2	16WP	G15_082	FROM->TO	G14-057T 345.00 - SUNNYSIDE 345KV CKT 1	717	789	0.07117	116.07	LASALLE - STONEWAL LH138.00 138KV CKT 1
FDNS	00NR	2	16WP	G15_082	FROM->TO	G14-057T 345.00 - SUNNYSIDE 345KV CKT 1	717	789	0.07037	116.0681	CORN TAP - SEQUOYAHJ4 138.00 138KV CKT 1
FDNS	00NR	2	16WP	G15_082	FROM->TO	G14-057T 345.00 - SUNNYSIDE 345KV CKT 1	717	789	0.07011	116.0676	LAWTON RELIFT TAP - OMPA-WALTERS 69KV CKT 1
FDNS	00NR	2	16WP	G15_082	FROM->TO	G14-057T 345.00 - SUNNYSIDE 345KV CKT 1	717	789	0.07	116.0666	SABINE 230/24.0KV TRANSFORMER CKT 1
FDNS	00NR	2	16WP	G15_082	FROM->TO	G14-057T 345.00 - SUNNYSIDE 345KV CKT 1	717	789	0.07	116.0637	GEN336801 1-BAXTER WILSON UNIT #1
FDNS	00NR	2	16WP	G15_082	FROM->TO	G14-057T 345.00 - SUNNYSIDE 345KV CKT 1	717	789	0.07117	116.0553	STONEWAL LH138.00 - TUPELO TAP 138KV CKT 1
FDNS	00NR	2	16WP	G15_082	FROM->TO	G14-057T 345.00 - SUNNYSIDE 345KV CKT 1	717	789	0.07	116.0506	FRONTIER 345/18.0KV TRANSFORMER CKT 1
FDNS	00NR	2	16WP	G15_082	FROM->TO	G14-057T 345.00 - SUNNYSIDE 345KV CKT 1	717	789	0.07	116.0488	FRONTIER 345/18.0KV TRANSFORMER CKT 1
FDNS	00NR	2	16WP	G15_082	FROM->TO	G14-057T 345.00 - SUNNYSIDE 345KV CKT 1	717	789	0.07015	116.0452	LAWTON EASTSIDE (LES 4) 345/138/13.8KV TRANSFORMER CKT 1
FDNS	00NR	2	16WP	G15_082	FROM->TO	G14-057T 345.00 - SUNNYSIDE 345KV CKT 1	717	789	0.07015	116.0452	LAWTON EASTSIDE (LES 4) 345/138/13.8KV TRANSFORMER CKT 1
FDNS	00NR	2	16WP	G15_082	FROM->TO	G14-057T 345.00 - SUNNYSIDE 345KV CKT 1	717	789	0.07	116.0452	P12:161:AEPW:CHAMSPR5:FARMING5
FDNS	00NR	2	16WP	G15_082	FROM->TO	G14-057T 345.00 - SUNNYSIDE 345KV CKT 1	717	789	0.0701	116.0447	P12:138:AEPW-OGE:SHIDLER4:OSAGE 4
FDNS	00NR	2	16WP	G15_082	FROM->TO	G14-057T 345.00 - SUNNYSIDE 345KV CKT 1	717	789	0.06983	116.043	CLAYTON - SARDIS 138KV CKT 1
FDNS	00NR	2	16WP	G15_082	FROM->TO	G14-057T 345.00 - SUNNYSIDE 345KV CKT 1	717	789	0.07062	116.0428	WEATHERFORD JCT. - WEATHERFORD SOUTHEAST 138KV CKT 1
FDNS	00NR	2	16WP	G15_082	FROM->TO	G14-057T 345.00 - SUNNYSIDE 345KV CKT 1	717	789	0.07062	116.0428	WEATHERFORD JCT. - WEATHERFORD SOUTHEAST 138KV CKT 1
FDNS	00NR	2	16WP	G15_082	FROM->TO	G14-057T 345.00 - SUNNYSIDE 345KV CKT 1	717	789	0.07034	116.04	NORGE ROAD - SOUTHWESTERN STATION 138KV CKT 1
FDNS	00NR	2	16WP	G15_082	FROM->TO	G14-057T 345.00 - SUNNYSIDE 345KV CKT 1	717	789	0.07034	116.04	NORGE ROAD - SOUTHWESTERN STATION 138KV CKT 1
FDNS	00NR	2	16WP	G15_082	FROM->TO	G14-057T 345.00 - SUNNYSIDE 345KV CKT 1	717	789	0.07135	116.0346	BENTON - WICHITA 345KV CKT 1
FDNS	00NR	2	16WP	G15_082	FROM->TO	G14-057T 345.00 - SUNNYSIDE 345KV CKT 1	717	789	0.07034	116.0345	G15095_T 138.00 - ROSE_VALLEY 138.00 138KV CKT 1
FDNS	00NR	2	16WP	G15_082	FROM->TO	G14-057T 345.00 - SUNNYSIDE 345KV CKT 1	717	789	0.06919	116.0331	TUCO INTERCHANGE - TUCO_2 345.00 345KV CKT 1
FDNS	00NR	2	16WP	G15_082	FROM->TO	G14-057T 345.00 - SUNNYSIDE 345KV CKT 1	717	789	0.07058	116.0293	P12:138:OKGE-AEPW:JENSEN4:REDROCKRD4
FDNS	00NR	2	16WP	G15_082	FROM->TO	G14-057T 345.00 - SUNNYSIDE 345KV CKT 1	717	789	0.07046	116.0218	CLEO CORNER - CLEOPLT4 138.00 138KV CKT 1
FDNS	00NR	2	16WP	G15_082	FROM->TO	G14-057T 345.00 - SUNNYSIDE 345KV CKT 1	717	789	0.06983	116.0169	P12:138:AEPW-SWPA:LONEOAK4:BRKNBW4
FDNS	00NR	2	16WP	G15_082	FROM->TO	G14-057T 345.00 - SUNNYSIDE 345KV CKT 1	717	789	0.07	116.0159	GEN505616 1-BROKEN BOW
FDNS	00NR	2	16WP	G15_082	FROM->TO	G14-057T 345.00 - SUNNYSIDE 345KV CKT 1	717	789	0.07	116.0147	LEWIS CREEK SWITCHYARD 138/22.0KV TRANSFORMER CKT 1
FDNS	00NR	2	16WP	G15_082	FROM->TO	G14-057T 345.00 - SUNNYSIDE 345KV CKT 1	717	789	0.07046	116.0113	CLEOPLT4 138.00 - MEN TAP 138KV CKT 1
FDNS	00NR	2	16WP	G15_082	FROM->TO	G14-057T 345.00 - SUNNYSIDE 345KV CKT 1	717	789	0.07	116.0099	LEWIS CREEK SWITCHYARD 138/22.0KV TRANSFORMER CKT 1
FDNS	00NR	2	16WP	G15_082	FROM->TO	G14-057T 345.00 - SUNNYSIDE 345KV CKT 1	717	789	0.0712	116.0085	CLARKSVILLE - ONETA 345KV CKT 1
FDNS	00NR	2	16WP	G15_082	FROM->TO	G14-057T 345.00 - SUNNYSIDE 345KV CKT 1	717	789	0.0712	116.0085	CLARKSVILLE - ONETA 345KV CKT 1
FDNS	00NR	2	16WP	G15_082	FROM->TO	G14-057T 345.00 - SUNNYSIDE 345KV CKT 1	717	789	0.07032	116.003	SOUTHWESTERN STATION - VERDEN 138KV CKT 1
FDNS	00NR	2	16WP	G15_082	FROM->TO	G14-057T 345.00 - SUNNYSIDE 345KV CKT 1	717	789	0.06983	116.0029	CLAYTON - NASHOBA 138KV CKT 1
FDNS	00NR	2	16WP	G15_082	FROM->TO	G14-057T 345.00 - SUNNYSIDE 345KV CKT 1	717	789	0.07046	116.0021	IMO TAP - MEN TAP 138KV CKT 1
FDNS	00NR	2	16WP	G15_082	FROM->TO	G14-057T 345.00 - SUNNYSIDE 345KV CKT 1	717	789	0.07011	116.0018	OMPA-WALTERS - WALTERS 69KV CKT 1
FDNS	00NR	2	16WP	G15_082	FROM->TO	G14-057T 345.00 - SUNNYSIDE 345KV CKT 1	717	789	0.07011	116.0018	OMPA-WALTERS - WALTERS 69KV CKT 1
FDNS	00NR	2	16WP	G15_082	FROM->TO	G14-057T 345.00 - SUNNYSIDE 345KV CKT 1	717	789	0.07023	115.9956	EMPORIA ENERGY CENTER - SWISSVALE 345KV CKT 1
FDNS	00NR	2	16WP	G15_082	FROM->TO	G14-057T 345.00 - SUNNYSIDE 345KV CKT 1	717	789	0.07062	115.9935	P12:138:AEPW:REDROCKRD4:WTH_JCT4
FDNS	00NR	2	16WP	G15_082	FROM->TO	G14-057T 345.00 - SUNNYSIDE 345KV CKT 1	717	789	0.07	115.9928	GEN512688 2-GRDA1 GSU2 22
FDNS	00NR	2	16WP	G15_082	FROM->TO	G14-057T 345.00 - SUNNYSIDE 345KV CKT 1	717	789	0.07139	115.9925	MARIETTA - MARIETTA4 138.00 138KV CKT 1
FDNS	00NR	2	16WP	G15_082	FROM->TO	G14-057T 345.00 - SUNNYSIDE 345KV CKT 1	717	789	0.07	115.9916	GEN501970 1-EVANGELINE UNIT 7

SOLUTION	GROUP	SCENARIO	SEASON	SOURCE	DIRECTION	MONITORED ELEMENT	RATEA (MVA)	RATEB(MVA)	TDF	TC%LOADING (% MVA)	CONTINGENCY
FDNS	00NR	2	16WP	G15_082	FROM->TO	G14-057T 345.00 - SUNNYSIDE 345KV CKT 1	717	789	0.07007	115.9904	HOPE - MCNAB REC 115KV CKT 1
FDNS	00NR	2	16WP	G15_082	FROM->TO	G14-057T 345.00 - SUNNYSIDE 345KV CKT 1	717	789	0.06983	115.9899	BETHEL - NASHOBA 138KV CKT 1
FDNS	00NR	2	16WP	G15_082	FROM->TO	G14-057T 345.00 - SUNNYSIDE 345KV CKT 1	717	789	0.07006	115.9858	P12:138:OKGE:3TERM12
FDNS	00NR	2	16WP	G15_082	FROM->TO	G14-057T 345.00 - SUNNYSIDE 345KV CKT 1	717	789	0.07026	115.9834	P12:69:WFEC-AEPW:COMANCH2:WALTRS-2
FDNS	00NR	2	16WP	G15_082	FROM->TO	G14-057T 345.00 - SUNNYSIDE 345KV CKT 1	717	789	0.07032	115.9828	NORTH 29TH CHICKASHA - VERDEN 138KV CKT 1
FDNS	00NR	2	16WP	G15_082	FROM->TO	G14-057T 345.00 - SUNNYSIDE 345KV CKT 1	717	789	0.07007	115.9818	P12:115:AEPW:TURK3:HOPE3
FDNS	00NR	2	16WP	G15_082	FROM->TO	G14-057T 345.00 - SUNNYSIDE 345KV CKT 1	717	789	0.07	115.9805	GEN334392 1-EXXON MOBIL IPP 1
FDNS	00NR	2	16WP	G15_082	FROM->TO	G14-057T 345.00 - SUNNYSIDE 345KV CKT 1	717	789	0.06524	115.9788	G14_038T 345.00 - POTTER COUNTY INTERCHANGE 345KV CKT 1
FDNS	00NR	2	16WP	G15_082	FROM->TO	G14-057T 345.00 - SUNNYSIDE 345KV CKT 1	717	789	0.07034	115.9784	NOEL_SW 138.00 - ROSE_VALLEY 138.00 138KV CKT 1
FDNS	00NR	2	16WP	G15_082	FROM->TO	G14-057T 345.00 - SUNNYSIDE 345KV CKT 1	717	789	0.07003	115.9763	7JASPER 345.00 - MORGAN 345KV CKT 1
FDNS	00NR	2	16WP	G15_082	FROM->TO	G14-057T 345.00 - SUNNYSIDE 345KV CKT 1	717	789	0.07004	115.9744	COUCH SES - MC NIEL 115KV CKT 1
FDNS	00NR	2	16WP	G15_082	FROM->TO	G14-057T 345.00 - SUNNYSIDE 345KV CKT 1	717	789	0.07003	115.9739	MORISNT4 138.00 - STILLWATER 138KV CKT 1
FDNS	00NR	2	16WP	G15_082	FROM->TO	G14-057T 345.00 - SUNNYSIDE 345KV CKT 1	717	789	0.07	115.9729	GEN334393 1-EXXON MOBIL IPP 2
FDNS	00NR	2	16WP	G15_082	FROM->TO	G14-057T 345.00 - SUNNYSIDE 345KV CKT 1	717	789	0.07	115.9729	GEN334394 1-EXXON MOBIL IPP 3
FDNS	00NR	2	16WP	G15_082	FROM->TO	G14-057T 345.00 - SUNNYSIDE 345KV CKT 1	717	789	0.07144	115.97	FRANKLIN SW - WESTMOORE 138KV CKT 1
FDNS	00NR	2	16WP	G15_082	FROM->TO	G14-057T 345.00 - SUNNYSIDE 345KV CKT 1	717	789	0.07004	115.9681	P12:138:OKGE:3TERM2
FDNS	00NR	2	16WP	G15_082	FROM->TO	G14-057T 345.00 - SUNNYSIDE 345KV CKT 1	717	789	0.07014	115.9675	FRANKLIN - FRANKLIN SW 138KV CKT 1
FDNS	00NR	2	16WP	G15_082	FROM->TO	G14-057T 345.00 - SUNNYSIDE 345KV CKT 1	717	789	0.07	115.9641	GEN336222 1-LITTLE GYPSY UNIT#2
FDNS	00NR	2	16WP	G15_082	FROM->TO	G14-057T 345.00 - SUNNYSIDE 345KV CKT 1	717	789	0.07037	115.9628	WEATHERFORD TAP - WEATHERFORD WIND FARM 138KV CKT 1
FDNS	00NR	2	16WP	G15_082	FROM->TO	G14-057T 345.00 - SUNNYSIDE 345KV CKT 1	717	789	0.07127	115.9611	PURCELL4 138.00 - WALNUT CREEK 138KV CKT 1
FDNS	00NR	2	16WP	G15_082	FROM->TO	G14-057T 345.00 - SUNNYSIDE 345KV CKT 1	717	789	0.07007	115.9599	MCNAB REC - Turk 115 115KV CKT 1
FDNS	00NR	2	16WP	G15_082	FROM->TO	G14-057T 345.00 - SUNNYSIDE 345KV CKT 1	717	789	0.07007	115.9599	TURK (TURK 1) 138/115/13.2KV TRANSFORMER CKT 1
FDNS	00NR	2	16WP	G15_082	FROM->TO	G14-057T 345.00 - SUNNYSIDE 345KV CKT 1	717	789	0.07007	115.9599	TURK (TURK 1) 138/115/13.2KV TRANSFORMER CKT 1
FDNS	00NR	2	16WP	G15_082	FROM->TO	G14-057T 345.00 - SUNNYSIDE 345KV CKT 1	717	789	0.07001	115.9567	P12:138:AEPW:R.S.S-4:T.P.S.-4
FDNS	00NR	2	16WP	G15_082	FROM->TO	G14-057T 345.00 - SUNNYSIDE 345KV CKT 1	717	789	0.07	115.9455	GEN506749 1-EASTMAN GENERATION A
FDNS	00NR	2	16WP	G15_082	FROM->TO	G14-057T 345.00 - SUNNYSIDE 345KV CKT 1	717	789	0.07	115.944	GEN334432 1-SABINE UNIT 2
FDNS	00NR	2	16WP	G15_082	FROM->TO	G14-057T 345.00 - SUNNYSIDE 345KV CKT 1	717	789	0.07	115.9439	GEN334431 1-SABINE UNIT 1
FDNS	00NR	2	16WP	G15_082	FROM->TO	G14-057T 345.00 - SUNNYSIDE 345KV CKT 1	717	789	0.06983	115.9363	BETHEL - BROKEN BOW 138KV CKT 1
FDNS	00NR	2	16WP	G15_082	FROM->TO	G14-057T 345.00 - SUNNYSIDE 345KV CKT 1	717	789	0.07	115.9358	GEN501972 1-EVANGELINE UNIT 7-2
FDNS	00NR	2	16WP	G15_082	FROM->TO	G14-057T 345.00 - SUNNYSIDE 345KV CKT 1	717	789	0.07	115.9357	GEN501971 1-EVANGELINE UNIT 7-1
FDNS	00NR	2	16WP	G15_082	FROM->TO	G14-057T 345.00 - SUNNYSIDE 345KV CKT 1	717	789	0.07	115.9343	GEN336152 1-WATERFORD UNIT#2
FDNS	00NR	2	16WP	G15_082	FROM->TO	G14-057T 345.00 - SUNNYSIDE 345KV CKT 1	717	789	0.07	115.9333	GEN336151 1-WATERFORD UNIT#1
FDNS	00NR	2	16WP	G15_082	FROM->TO	G14-057T 345.00 - SUNNYSIDE 345KV CKT 1	717	789	0.07	115.9325	P12:138:AEPW:R.S.S.-4:R:96YALE-4
FDNS	00NR	2	16WP	G15_082	FROM->TO	G14-057T 345.00 - SUNNYSIDE 345KV CKT 1	717	789	0.06933	115.9313	ARBUCKLE - MILLCREEK 138KV CKT 1
FDNS	00NR	2	16WP	G15_082	FROM->TO	G14-057T 345.00 - SUNNYSIDE 345KV CKT 1	717	789	0.06997	115.9288	P12:138:AEPW:OKMULGE4:R.S.S-4
FDNS	00NR	2	16WP	G15_082	FROM->TO	G14-057T 345.00 - SUNNYSIDE 345KV CKT 1	717	789	0.07008	115.9217	FLETCHER - MARLOW JCT 69KV CKT 1
FDNS	00NR	2	16WP	G15_082	FROM->TO	G14-057T 345.00 - SUNNYSIDE 345KV CKT 1	717	789	0.07	115.9213	GEN509394 1-FLINT CREEK
FDNS	00NR	2	16WP	G15_082	FROM->TO	G14-057T 345.00 - SUNNYSIDE 345KV CKT 1	717	789	0.07034	115.9206	CORNVILLE - NORGE ROAD 138KV CKT 1
FDNS	00NR	2	16WP	G15_082	FROM->TO	G14-057T 345.00 - SUNNYSIDE 345KV CKT 1	717	789	0.07034	115.9206	CORNVILLE - NORGE ROAD 138KV CKT 1
FDNS	00NR	2	16WP	G15_082	FROM->TO	G14-057T 345.00 - SUNNYSIDE 345KV CKT 1	717	789	0.0705	115.9187	CLINTON JUNCTION - ELK CITY 138KV CKT 1
FDNS	00NR	2	16WP	G15_082	FROM->TO	G14-057T 345.00 - SUNNYSIDE 345KV CKT 1	717	789	0.0705	115.9187	CLINTON JUNCTION - ELK CITY 138KV CKT 1
FDNS	00NR	2	16WP	G15_082	FROM->TO	G14-057T 345.00 - SUNNYSIDE 345KV CKT 1	717	789	0.07032	115.9172	CORNVILLE - NORTH 29TH CHICKASHA 138KV CKT 1
FDNS	00NR	2	16WP	G15_082	FROM->TO	G14-057T 345.00 - SUNNYSIDE 345KV CKT 1	717	789	0.07062	115.9169	HINTON - WEATHERFORD JCT. 138KV CKT 1
FDNS	00NR	2	16WP	G15_082	FROM->TO	G14-057T 345.00 - SUNNYSIDE 345KV CKT 1	717	789	0.07	115.9167	P12:138:AEPW:MOHAWK4:T.NO--4
FDNS	00NR	2	16WP	G15_082	FROM->TO	G14-057T 345.00 - SUNNYSIDE 345KV CKT 1	717	789	0.07	115.9149	ST FRANCIS - ST FRANCIS 1 161KV CKT Z1
FDNS	00NR	2	16WP	G15_082	FROM->TO	G14-057T 345.00 - SUNNYSIDE 345KV CKT 1	717	789	0.07	115.9122	GEN501912 1-ACADIA UNIT CT1B
FDNS	00NR	2	16WP	G15_082	FROM->TO	G14-057T 345.00 - SUNNYSIDE 345KV CKT 1	717	789	0.0702	115.9119	HAMMETT TAP - HORSESHOE LAKE 138KV CKT 1
FDNS	00NR	2	16WP	G15_082	FROM->TO	G14-057T 345.00 - SUNNYSIDE 345KV CKT 1	717	789	0.07	115.9114	GEN501911 1-ACADIA UNIT CT1A
FDNS	00NR	2	16WP	G15_082	FROM->TO	G14-057T 345.00 - SUNNYSIDE 345KV CKT 1	717	789	0.07035	115.9034	EMPORIA ENERGY CENTER - G14_001T 345.00 345KV CKT 1
FDNS	00NR	2	16WP	G15_082	FROM->TO	G14-057T 345.00 - SUNNYSIDE 345KV CKT 1	717	789	0.07	115.9004	SABINE 230/22.0KV TRANSFORMER CKT 1
FDNS	00NR	2	16WP	G15_082	FROM->TO	G14-057T 345.00 - SUNNYSIDE 345KV CKT 1	717	789	0.06997	115.8892	P12:138:WFEC-AEPW:ELKCTY-4:ERICK4
FDNS	00NR	2	16WP	G15_082	FROM->TO	G14-057T 345.00 - SUNNYSIDE 345KV CKT 1	717	789	0.07	115.887	GEN336242 1-1NMIL ST1 18.000
FDNS	00NR	2	16WP	G15_082	FROM->TO	G14-057T 345.00 - SUNNYSIDE 345KV CKT 1	717	789	0.07011	115.8837	P12:138:OKGE:3TERM47
FDNS	00NR	2	16WP	G15_082	FROM->TO	G14-057T 345.00 - SUNNYSIDE 345KV CKT 1	717	789	0.07027	115.8727	SEMINOLE (SEMINOL2) 345/138/14.4KV TRANSFORMER CKT 1
FDNS	00NR	2	16WP	G15_082	FROM->TO	G14-057T 345.00 - SUNNYSIDE 345KV CKT 1	717	789	0.07037	115.8686	WEATHERFORD SOUTHEAST - WEATHERFORD TAP 138KV CKT 1
FDNS	00NR	2	16WP	G15_082	FROM->TO	G14-057T 345.00 - SUNNYSIDE 345KV CKT 1	717	789	0.07062	115.8609	HINTON - REDROCKRD4 138.00 138KV CKT 1
FDNS	00NR	2	20WP	G15_082	FROM->TO	G14-057T 345.00 - SUNNYSIDE 345KV CKT 1	717	789	0.07157	115.8593	CORN TAP - NAPLESTP 138.00 138KV CKT 1
FDNS	00NR	2	20WP	G15_082	FROM->TO	G14-057T 345.00 - SUNNYSIDE 345KV CKT 1	717	789	0.07157	115.7771	NAPLESTP 138.00 - PAYNE 138.00 138KV CKT 1
FDNS	00NR	2	20WP	G15_082	FROM->TO	G14-057T 345.00 - SUNNYSIDE 345KV CKT 1	717	789	0.07023	115.7539	7SAREPTA% 345.00 - LONGWOOD 345KV CKT 1
FDNS	00NR	2	20WP	G15_082	FROM->TO	G14-057T 345.00 - SUNNYSIDE 345KV CKT 1	717	789	0.07023	115.7539	7SAREPTA% 345.00 - LONGWOOD 345KV CKT 1
FDNS	00NR	2	20WP	G15_082	FROM->TO	G14-057T 345.00 - SUNNYSIDE 345KV CKT 1	717	789	0.07007	115.6754	GEN336821 1-GRAND GULF UNIT
FDNS	00NR	2	20WP	G15_082	FROM->TO	G14-057T 345.00 - SUNNYSIDE 345KV CKT 1	717	789	0.07114	115.5766	CLEVELAND - TULSA NORTH 345KV CKT 1
FDNS	00NR	2	20WP	G15_082	FROM->TO	G14-057T 345.00 - SUNNYSIDE 345KV CKT 1	717	789	0.07114	115.5766	CLEVELAND - TULSA NORTH 345KV CKT 1
FDNS	00NR	2	20WP	G15_082	FROM->TO	G14-057T 345.00 - SUNNYSIDE 345KV CKT 1	717	789	0.07007	115.5714	GEN336153 1-WATERFORD UNIT#3
FDNS	00NR	2	20WP	G15_082	FROM->TO	G14-057T 345.00 - SUNNYSIDE 345KV CKT 1	717	789	0.07127	115.5005	COMANCHE - LOCO 138KV CKT 1
FDNS	00NR	2	20WP	G15_082	FROM->TO	G14-057T 345.00 - SUNNYSIDE 345KV CKT 1	717	789	0.08054	115.4907	ARCADIA - NORTHWEST 345KV CKT 1
FDNS	00NR	2	20WP	G15_082	FROM->TO	G14-057T 345.00 - SUNNYSIDE 345KV CKT 1	717	789	0.07129	115.4766	ANADARKO - POCASSETT 138KV CKT 1
FDNS	00NR	2	16WP	G15_082	FROM->TO	G14-057T 345.00 - SUNNYSIDE 345KV CKT 1	717	789	0.07	115.4193	803-OKLAUNION
FDNS	00NR	2	20WP	G15_082	FROM->TO	G14-057T 345.00 - SUNNYSIDE 345KV CKT 1	717	789	0.07018	115.3644	DOLET HILLS - SOUTHWEST SHREVEPORT 345KV CKT 1
FDNS	00NR	2	20WP	G15_082	FROM->TO	G14-057T 345.00 - SUNNYSIDE 345KV CKT 1	717	789	0.07018	115.3644	DOLET HILLS - SOUTHWEST SHREVEPORT 345KV CKT 1
FDNS	00NR	2	20WP	G15_082	FROM->TO	G14-057T 345.00 - SUNNYSIDE 345KV CKT 1	717	789	0.07129	115.3242	POCASSETT - TUTTLE 138KV CKT 1
FDNS	00NR	2	20WP	G15_082	FROM->TO	G14-057T 345.00 - SUNNYSIDE 345KV CKT 1	717	789	0.07007	115.2764	GEN335831 1-RIVERBEND UNIT#1
FDNS	00NR	2	20WP	G15_082	FROM->TO	G14-057T 345.00 - SUNNYSIDE 345KV CKT 1	717	789	0.07007	115.2371	GRAND GULF 500/22.0KV TRANSFORMER CKT 1
FDNS	00NR	2	20WP	G15_082	FROM->TO	G14-057T 345.00 - SUNNYSIDE 345KV CKT 1	717	789	0.07099	115.1653	P12:138:AEPW:DUNCAN-4:L.E.S.-4
FDNS	00NR	2	20WP	G15_082	FROM->TO	G14-057T 345.00 - SUNNYSIDE 345KV CKT 1	717	789	0.07016	115.1353	7SAREPTA% 345.00 - ELDORADO EHV 345KV CKT 1
FDNS	00NR	2	20WP	G15_082	FROM->TO	G14-057T 345.00 - SUNNYSIDE 345KV CKT 1	717	789	0.07016	115.1351	3TR3AR8EL7EL
FDNS	00NR	2	20WP	G15_082	FROM->TO	G14-057T 345.00 - SUNNYSIDE 345KV CKT 1	717	789	0.07016	115.1252	ELDORADO EHV 500/345KV TRANSFORMER CKT 1
FDNS	00NR	2	20WP	G15_082	FROM->TO	G14-057T 345.00 - SUNNYSIDE 345KV CKT 1	717	789	0.07007	115.1153	GEN515577 1-ARBWND11 0.6900
FDNS	00NR	2	20WP	G15_082	FROM->TO	G14-057T 345.00 - SUNNYSIDE 345KV CKT 1	717	789	0.07122	115.0959	ARCADIA - SEMINOLE 345KV CKT 1

SOLUTION	GROUP	SCENARIO	SEASON	SOURCE	DIRECTION	MONITORED ELEMENT	RATEA (MVA)	RATEB(MVA)	TDF	TC%LOADING (% MVA)	CONTINGENCY
FDNS	00NR	2	16WP	G15_082	FROM->TO	G14-057T 345.00 - SUNNYSIDE 345KV CKT 1	717	789	0.06911	115.0674	MAYSVLT4 138.00 - PRAIRIE POINT 138KV CKT 1
FDNS	00NR	2	20WP	G15_082	FROM->TO	G14-057T 345.00 - SUNNYSIDE 345KV CKT 1	717	789	0.07099	115.0517	COMANCHE TAP - OMPA-DUNCAN 840 138KV CKT 1
FDNS	00NR	2	16WP	G15_082	FROM->TO	G14-057T 345.00 - SUNNYSIDE 345KV CKT 1	717	789	0.07004	115.0388	JOHNSON COUNTY - RUSSETT 138KV CKT 1
FDNS	00NR	2	16WP	G15_082	FROM->TO	G14-057T 345.00 - SUNNYSIDE 345KV CKT 1	717	789	0.07006	115.0237	GLASSES - MADILL INDUSTRIAL TAP 138KV CKT 1
FDNS	00NR	2	20WP	G15_082	FROM->TO	G14-057T 345.00 - SUNNYSIDE 345KV CKT 1	717	789	0.0662	115.0013	CANADIAN RIVER - MUSKOGEE 345KV CKT 1
FDNS	00NR	2	16WP	G15_082	FROM->TO	G14-057T 345.00 - SUNNYSIDE 345KV CKT 1	717	789	0.06992	114.9975	HUGO (HUGO 1) 345/138/13.8KV TRANSFORMER CKT 1
FDNS	00NR	2	16WP	G15_082	FROM->TO	G14-057T 345.00 - SUNNYSIDE 345KV CKT 1	717	789	0.07	114.9935	GEN521103 1-BLUE CANYON WIND FARM
FDNS	00NR	2	16WP	G15_082	FROM->TO	G14-057T 345.00 - SUNNYSIDE 345KV CKT 1	717	789	0.07037	114.9852	DRAPER LAKE - MIDWEST TAP 138KV CKT 1
FDNS	00NR	2	16WP	G15_082	FROM->TO	G14-057T 345.00 - SUNNYSIDE 345KV CKT 1	717	789	0.07	114.9827	GEN562772 1-G15034_3 0.6900
FDNS	00NR	2	16WP	G15_082	FROM->TO	G14-057T 345.00 - SUNNYSIDE 345KV CKT 1	717	789	0.06929	114.9825	ARBUCKLE - SULPHR 4 138.00 138KV CKT 1
FDNS	00NR	2	16WP	G15_082	FROM->TO	G14-057T 345.00 - SUNNYSIDE 345KV CKT 1	717	789	0.06998	114.9767	HUGO POWER PLANT - VALLENT 138KV CKT 1
FDNS	00NR	2	16WP	G15_082	FROM->TO	G14-057T 345.00 - SUNNYSIDE 345KV CKT 1	717	789	0.07	114.9755	GEN563052 1-G15069_3 0.6900
FDNS	00NR	2	20WP	G15_082	FROM->TO	G14-057T 345.00 - SUNNYSIDE 345KV CKT 1	717	789	0.07146	114.9744	HEALDTON - LOCO 138KV CKT 1
FDNS	00NR	2	16WP	G15_082	FROM->TO	G14-057T 345.00 - SUNNYSIDE 345KV CKT 1	717	789	0.07	114.9735	GEN562691 1-G15_015_3 0.6900
FDNS	00NR	2	16WP	G15_082	FROM->TO	G14-057T 345.00 - SUNNYSIDE 345KV CKT 1	717	789	0.06911	114.97	PRAIRIE POINT - RATLIFF 138KV CKT 1
FDNS	00NR	2	16WP	G15_082	FROM->TO	G14-057T 345.00 - SUNNYSIDE 345KV CKT 1	717	789	0.07002	114.9674	P12:138:WFEC:MSL11
FDNS	00NR	2	16WP	G15_082	FROM->TO	G14-057T 345.00 - SUNNYSIDE 345KV CKT 1	717	789	0.07002	114.9674	P12:138:WFEC-AEPW:PHAROAH4:LONEOAK4
FDNS	00NR	2	16WP	G15_082	FROM->TO	G14-057T 345.00 - SUNNYSIDE 345KV CKT 1	717	789	0.07006	114.9632	GLASSES - RUSSETT 138KV CKT 1
FDNS	00NR	2	16WP	G15_082	FROM->TO	G14-057T 345.00 - SUNNYSIDE 345KV CKT 1	717	789	0.07	114.9603	GEN520812 1-ANADRK5
FDNS	00NR	2	16WP	G15_082	FROM->TO	G14-057T 345.00 - SUNNYSIDE 345KV CKT 1	717	789	0.07	114.9602	GEN520813 1-ANADRK6
FDNS	00NR	2	16WP	G15_082	FROM->TO	G14-057T 345.00 - SUNNYSIDE 345KV CKT 1	717	789	0.06931	114.9561	BEARCAT 138.00 - NINE MILE 138KV CKT 1
FDNS	00NR	2	16WP	G15_082	FROM->TO	G14-057T 345.00 - SUNNYSIDE 345KV CKT 1	717	789	0.07	114.9546	GEN511961 1-DEMPSEY-WTG10.7000
FDNS	00NR	2	16WP	G15_082	FROM->TO	G14-057T 345.00 - SUNNYSIDE 345KV CKT 1	717	789	0.07066	114.9514	NORTHWEST - SPRING CREEK 345KV CKT 1
FDNS	00NR	2	20WP	G15_082	FROM->TO	G14-057T 345.00 - SUNNYSIDE 345KV CKT 1	717	789	0.07007	114.9507	GEN509409 1-WILKES #3
FDNS	00NR	2	16WP	G15_082	FROM->TO	G14-057T 345.00 - SUNNYSIDE 345KV CKT 1	717	789	0.07066	114.9444	SOONER - SPRING CREEK 345KV CKT 1
FDNS	00NR	2	16WP	G15_082	FROM->TO	G14-057T 345.00 - SUNNYSIDE 345KV CKT 1	717	789	0.07038	114.9391	P12:138:OKGE:3TERM21
FDNS	00NR	2	16WP	G15_082	FROM->TO	G14-057T 345.00 - SUNNYSIDE 345KV CKT 1	717	789	0.07	114.939	P12:069:OKGE:3TERM42
FDNS	00NR	2	16WP	G15_082	FROM->TO	G14-057T 345.00 - SUNNYSIDE 345KV CKT 1	717	789	0.07	114.9389	GEN600017 C-LS POWER CT
FDNS	00NR	2	20WP	G15_082	FROM->TO	G14-057T 345.00 - SUNNYSIDE 345KV CKT 1	717	789	0.07129	114.9341	BRIDGECR 138.00 - TUTTLE 138KV CKT 1
FDNS	00NR	2	16WP	G15_082	FROM->TO	G14-057T 345.00 - SUNNYSIDE 345KV CKT 1	717	789	0.07014	114.9334	P12:138:WFEC:MSL08
FDNS	00NR	2	16WP	G15_082	FROM->TO	G14-057T 345.00 - SUNNYSIDE 345KV CKT 1	717	789	0.07015	114.9315	DELL 500 - INDEPENDENCE 500KV CKT 1
FDNS	00NR	2	16WP	G15_082	FROM->TO	G14-057T 345.00 - SUNNYSIDE 345KV CKT 1	717	789	0.07007	114.9226	CROCKETT - TENASKA RUSK COUNTY 345KV CKT 1
FDNS	00NR	2	16WP	G15_082	FROM->TO	G14-057T 345.00 - SUNNYSIDE 345KV CKT 1	717	789	0.07007	114.9175	LEBROCK - TENASKA RUSK COUNTY 345KV CKT 1
FDNS	00NR	2	16WP	G15_082	FROM->TO	G14-057T 345.00 - SUNNYSIDE 345KV CKT 1	717	789	0.07	114.9133	GEN672392 1-NBECGT1G 18.000
FDNS	00NR	2	16WP	G15_082	FROM->TO	G14-057T 345.00 - SUNNYSIDE 345KV CKT 1	717	789	0.07187	114.9059	G15061_T 345.00 - SETAB 345KV CKT 1
FDNS	00NR	2	16WP	G15_082	FROM->TO	G14-057T 345.00 - SUNNYSIDE 345KV CKT 1	717	789	0.06928	114.9056	CIMARRON - MATHWSN7 345.00 345KV CKT 1
FDNS	00NR	2	16WP	G15_082	FROM->TO	G14-057T 345.00 - SUNNYSIDE 345KV CKT 1	717	789	0.06928	114.9056	CIMARRON - MATHWSN7 345.00 345KV CKT 2
FDNS	00NR	2	16WP	G15_082	FROM->TO	G14-057T 345.00 - SUNNYSIDE 345KV CKT 1	717	789	0.07	114.9002	GEN528361 1-MADDOX GEN #1
FDNS	00NR	2	16WP	G15_082	FROM->TO	G14-057T 345.00 - SUNNYSIDE 345KV CKT 1	717	789	0.07007	114.8997	CANEY CREEK - JOHNSON COUNTY 138KV CKT 1
FDNS	00NR	2	16WP	G15_082	FROM->TO	G14-057T 345.00 - SUNNYSIDE 345KV CKT 1	717	789	0.06897	114.8991	ARKANSAS NUCLEAR ONE - FT SMITH 500KV CKT 1
FDNS	00NR	2	16WP	G15_082	FROM->TO	G14-057T 345.00 - SUNNYSIDE 345KV CKT 1	717	789	0.06897	114.8991	ARKANSAS NUCLEAR ONE - FT SMITH 500KV CKT 1
FDNS	00NR	2	20WP	G15_082	FROM->TO	G14-057T 345.00 - SUNNYSIDE 345KV CKT 1	717	789	0.07007	114.8983	GEN501813 1-RODEMACHER UNIT 3
FDNS	00NR	2	16WP	G15_082	FROM->TO	G14-057T 345.00 - SUNNYSIDE 345KV CKT 1	717	789	0.07	114.8917	GEN615010 1-STANTON4
FDNS	00NR	2	16WP	G15_082	FROM->TO	G14-057T 345.00 - SUNNYSIDE 345KV CKT 1	717	789	0.0701	114.8865	GRPRAR1-LNX3345.00 - YANKTON 345KV CKT Z
FDNS	00NR	2	16WP	G15_082	FROM->TO	G14-057T 345.00 - SUNNYSIDE 345KV CKT 1	717	789	0.0701	114.8859	GRPRAR1-LNX3345.00 - HOLT.CO3 345.00 345KV CKT 1
FDNS	00NR	2	16WP	G15_082	FROM->TO	G14-057T 345.00 - SUNNYSIDE 345KV CKT 1	717	789	0.07	114.8824	GEN629070 2-BEAVER CHANNEL GENERATORFOR UNIT NO 2
FDNS	00NR	2	16WP	G15_082	FROM->TO	G14-057T 345.00 - SUNNYSIDE 345KV CKT 1	717	789	0.07	114.8796	GEN560183 1-REDHIL-WTG1 12.000
FDNS	00NR	2	16WP	G15_082	FROM->TO	G14-057T 345.00 - SUNNYSIDE 345KV CKT 1	717	789	0.07	114.8788	GEN515443 1-MNCOWND1 0.7000
FDNS	00NR	2	16WP	G15_082	FROM->TO	G14-057T 345.00 - SUNNYSIDE 345KV CKT 1	717	789	0.06992	114.8736	CARTER - CHICKASAW 138KV CKT 1
FDNS	00NR	2	16WP	G15_082	FROM->TO	G14-057T 345.00 - SUNNYSIDE 345KV CKT 1	717	789	0.07	114.8732	GEN615021 1-GRE-ER 14G 16.000
FDNS	00NR	2	16WP	G15_082	FROM->TO	G14-057T 345.00 - SUNNYSIDE 345KV CKT 1	717	789	0.06931	114.868	P12:138:WFEC:MSL14
FDNS	00NR	2	16WP	G15_082	FROM->TO	G14-057T 345.00 - SUNNYSIDE 345KV CKT 1	717	789	0.07	114.8619	GEN629071 1-BURLINGTON GENERATOR FOR UNIT NO 1 E
FDNS	00NR	2	16WP	G15_082	FROM->TO	G14-057T 345.00 - SUNNYSIDE 345KV CKT 1	717	789	0.06972	114.8607	ROCKY POINT - SPRINGDALE 138KV CKT 1
FDNS	00NR	2	16WP	G15_082	FROM->TO	G14-057T 345.00 - SUNNYSIDE 345KV CKT 1	717	789	0.07	114.8602	INDEPENDENCE 500/26.0KV TRANSFORMER CKT 1
FDNS	00NR	2	16WP	G15_082	FROM->TO	G14-057T 345.00 - SUNNYSIDE 345KV CKT 1	717	789	0.07016	114.8558	CANADIAN RIVER - MCALESTER SOUTH 138KV CKT 1
FDNS	00NR	2	16WP	G15_082	FROM->TO	G14-057T 345.00 - SUNNYSIDE 345KV CKT 1	717	789	0.07016	114.8558	CANADIAN RIVER - MCALESTER SOUTH 138KV CKT 1
FDNS	00NR	2	16WP	G15_082	FROM->TO	G14-057T 345.00 - SUNNYSIDE 345KV CKT 1	717	789	0.07016	114.8545	CANADIAN RIVER () 345/138/13.8KV TRANSFORMER CKT 1
FDNS	00NR	2	16WP	G15_082	FROM->TO	G14-057T 345.00 - SUNNYSIDE 345KV CKT 1	717	789	0.07016	114.8545	CANADIAN RIVER () 345/138/13.8KV TRANSFORMER CKT 1
FDNS	00NR	2	16WP	G15_082	FROM->TO	G14-057T 345.00 - SUNNYSIDE 345KV CKT 1	717	789	0.07	114.8466	BURLINGTON NO1 + NO 2 + NO 3 161/20.0KV TRANSFORMER CKT 1
FDNS	00NR	2	16WP	G15_082	FROM->TO	G14-057T 345.00 - SUNNYSIDE 345KV CKT 1	717	789	0.06972	114.8388	ALTUS JUNCTION - RUSSELL 138KV CKT 1
FDNS	00NR	2	16WP	G15_082	FROM->TO	G14-057T 345.00 - SUNNYSIDE 345KV CKT 1	717	789	0.06972	114.8388	ALTUS JUNCTION - RUSSELL 138KV CKT 1
FDNS	00NR	2	16WP	G15_082	FROM->TO	G14-057T 345.00 - SUNNYSIDE 345KV CKT 1	717	789	0.07	114.8315	GEN563242 1-G15090_3 0.6900
FDNS	00NR	2	16WP	G15_082	FROM->TO	G14-057T 345.00 - SUNNYSIDE 345KV CKT 1	717	789	0.06929	114.8301	JOLLYVILLE - SULPHR 4 138.00 138KV CKT 1
FDNS	00NR	2	16WP	G15_082	FROM->TO	G14-057T 345.00 - SUNNYSIDE 345KV CKT 1	717	789	0.06931	114.8297	BEARCAT 138.00 - MOORELAND 138KV CKT 1
FDNS	00NR	2	16WP	G15_082	FROM->TO	G14-057T 345.00 - SUNNYSIDE 345KV CKT 1	717	789	0.07035	114.829	CHAMBER SPRINGS - CLARKSVILLE 345KV CKT 1
FDNS	00NR	2	20WP	G15_082	FROM->TO	G14-057T 345.00 - SUNNYSIDE 345KV CKT 1	717	789	0.07146	114.8284	HEALDTON - RINGLING 138KV CKT 1
FDNS	00NR	2	16WP	G15_082	FROM->TO	G14-057T 345.00 - SUNNYSIDE 345KV CKT 1	717	789	0.07	114.8258	GEN562902 1-G15052_3 0.6900
FDNS	00NR	2	16WP	G15_082	FROM->TO	G14-057T 345.00 - SUNNYSIDE 345KV CKT 1	717	789	0.07	114.8157	GEN562078 1-G11_051_3 0.6900
FDNS	00NR	2	16WP	G15_082	FROM->TO	G14-057T 345.00 - SUNNYSIDE 345KV CKT 1	717	789	0.07	114.8094	P12:230:UMZB:# 112 #: NU IN SD. NU-RCDC & DRY CREEK XFMR
FDNS	00NR	2	16WP	G15_082	FROM->TO	G14-057T 345.00 - SUNNYSIDE 345KV CKT 1	717	789	0.07	114.808	RCDC EAST 4230.00 - RED CEDAR DC 230KV CKT 1
FDNS	00NR	2	16WP	G15_082	FROM->TO	G14-057T 345.00 - SUNNYSIDE 345KV CKT 1	717	789	0.07	114.8067	GEN532653 1-JEFFREY ENERGY CENTER UNIT 3
FDNS	00NR	2	16WP	G15_082	FROM->TO	G14-057T 345.00 - SUNNYSIDE 345KV CKT 1	717	789	0.07022	114.802	KEO EHV - WEST MEMPHIS 500 500KV CKT 1
FDNS	00NR	2	16WP	G15_082	FROM->TO	G14-057T 345.00 - SUNNYSIDE 345KV CKT 1	717	789	0.07	114.8009	GEN562802 1-G15039_3 0.3570
FDNS	00NR	2	16WP	G15_082	FROM->TO	G14-057T 345.00 - SUNNYSIDE 345KV CKT 1	717	789	0.07	114.7958	GEN524285 1-WILDORADO WIND GEN
FDNS	00NR	2	16WP	G15_082	FROM->TO	G14-057T 345.00 - SUNNYSIDE 345KV CKT 1	717	789	0.07005	114.7928	NORTHWEST TEXARKANA - WELSH 345KV CKT 1
FDNS	00NR	2	16WP	G15_082	FROM->TO	G14-057T 345.00 - SUNNYSIDE 345KV CKT 1	717	789	0.07005	114.7928	NORTHWEST TEXARKANA - WELSH 345KV CKT 1
FDNS	00NR	2	16WP	G15_082	FROM->TO	G14-057T 345.00 - SUNNYSIDE 345KV CKT 1	717	789	0.07	114.7794	GEN524295 1-SPNSPUR_WND10.6900
FDNS	00NR	2	16WP	G15_082	FROM->TO	G14-057T 345.00 - SUNNYSIDE 345KV CKT 1	717	789	0.07	114.767	GEN560331 1-G10-46 13.800
FDNS	00NR	2	20WP	G15_082	FROM->TO	G14-057T 345.00 - SUNNYSIDE 345KV CKT 1	717	789	0.07099	114.7664	DUNCAN - OMPA-DUNCAN 840 138KV CKT 1

SOLUTION	GROUP	SCENARIO	SEASON	SOURCE	DIRECTION	MONITORED ELEMENT	RATEA (MVA)	RATEB(MVA)	TDF	TC%LOADING (% MVA)	CONTINGENCY
FDNS	00NR	2	20WP	G15_082	FROM->TO	G14-057T 345.00 - SUNNYSIDE 345KV CKT 1	717	789	0.07099	114.7664	DUNCAN - OMPA-DUNCAN 840 138KV CKT 1
FDNS	00NR	2	16WP	G15_082	FROM->TO	G14-057T 345.00 - SUNNYSIDE 345KV CKT 1	717	789	0.06929	114.762	JOLLYVILLE - KERR MCGEE CIMARRON 138KV CKT 1
FDNS	00NR	2	20WP	G15_082	FROM->TO	G14-057T 345.00 - SUNNYSIDE 345KV CKT 1	717	789	0.07007	114.7561	GEN300006 1-NEW MADRID UNIT 1
FDNS	00NR	2	16WP	G15_082	FROM->TO	G14-057T 345.00 - SUNNYSIDE 345KV CKT 1	717	789	0.07	114.7436	GEN514805 1-SOONER UNIT 1
FDNS	00NR	2	16WP	G15_082	FROM->TO	G14-057T 345.00 - SUNNYSIDE 345KV CKT 1	717	789	0.07	114.7432	GEN562587 1-G14_056_3 0.6900
FDNS	00NR	2	16WP	G15_082	FROM->TO	G14-057T 345.00 - SUNNYSIDE 345KV CKT 1	717	789	0.07	114.7376	GEN562269 1-G12-020-1 0.6900
FDNS	00NR	2	16WP	G15_082	FROM->TO	G14-057T 345.00 - SUNNYSIDE 345KV CKT 1	717	789	0.07239	114.7372	CLARKSVILLE - MUSKOGEE 345KV CKT 1
FDNS	00NR	2	16WP	G15_082	FROM->TO	G14-057T 345.00 - SUNNYSIDE 345KV CKT 1	717	789	0.07239	114.7372	CLARKSVILLE - MUSKOGEE 345KV CKT 1
FDNS	00NR	2	20WP	G15_082	FROM->TO	G14-057T 345.00 - SUNNYSIDE 345KV CKT 1	717	789	0.07007	114.7365	GEN300007 1-NEW MADRID UNIT 2
FDNS	00NR	2	16WP	G15_082	FROM->TO	G14-057T 345.00 - SUNNYSIDE 345KV CKT 1	717	789	0.07	114.7346	GEN514806 1-SOONER UNIT 2
FDNS	00NR	2	16WP	G15_082	FROM->TO	G14-057T 345.00 - SUNNYSIDE 345KV CKT 1	717	789	0.07	114.7281	GEN629072 4-LANSING GENERATOR FOR UNITS NO4 EIA CODE 1
FDNS	00NR	2	16WP	G15_082	FROM->TO	G14-057T 345.00 - SUNNYSIDE 345KV CKT 1	717	789	0.06929	114.7113	ARBWIND4 138.00 - KERR MCGEE CIMARRON 138KV CKT 1
FDNS	00NR	2	16WP	G15_082	FROM->TO	G14-057T 345.00 - SUNNYSIDE 345KV CKT 1	717	789	0.07	114.7088	GEN657749 1-YOUNG 1 GENERATOR
FDNS	00NR	2	16WP	G15_082	FROM->TO	G14-057T 345.00 - SUNNYSIDE 345KV CKT 1	717	789	0.06931	114.6998	P12:138:AEPW:112GORE4:SNYDER-4
FDNS	00NR	2	16WP	G15_082	FROM->TO	G14-057T 345.00 - SUNNYSIDE 345KV CKT 1	717	789	0.07	114.6939	GEN562270 1-G12-020-2 0.6900
FDNS	00NR	2	16WP	G15_082	FROM->TO	G14-057T 345.00 - SUNNYSIDE 345KV CKT 1	717	789	0.07	114.6892	GEN562812 1-G15040_3 0.3570
FDNS	00NR	2	20WP	G15_082	FROM->TO	G14-057T 345.00 - SUNNYSIDE 345KV CKT 1	717	789	0.07007	114.6878	GEN335206 1-NELSON UNIT 6
FDNS	00NR	2	20WP	G15_082	FROM->TO	G14-057T 345.00 - SUNNYSIDE 345KV CKT 1	717	789	0.07034	114.6842	LACYGNE - WAVERLY7 345.00 345KV CKT 1
FDNS	00NR	2	16WP	G15_082	FROM->TO	G14-057T 345.00 - SUNNYSIDE 345KV CKT 1	717	789	0.07	114.6839	GEN562882 1-G15047_3 0.6900
FDNS	00NR	2	16WP	G15_082	FROM->TO	G14-057T 345.00 - SUNNYSIDE 345KV CKT 1	717	789	0.07	114.6825	GEN563102 1-G15075_3 0.5500
FDNS	00NR	2	16WP	G15_082	FROM->TO	G14-057T 345.00 - SUNNYSIDE 345KV CKT 1	717	789	0.07	114.6793	GEN563132 1-G15078_3 0.3570
FDNS	00NR	2	16WP	G15_082	FROM->TO	G14-057T 345.00 - SUNNYSIDE 345KV CKT 1	717	789	0.07	114.6665	GEN562974 1-G15060_5 0.6900
FDNS	00NR	2	16WP	G15_082	FROM->TO	G14-057T 345.00 - SUNNYSIDE 345KV CKT 1	717	789	0.07	114.6619	GEN563062 1-G15071_3 0.6900
FDNS	00NR	2	20WP	G15_082	FROM->TO	G14-057T 345.00 - SUNNYSIDE 345KV CKT 1	717	789	0.07007	114.6586	GEN520947 1-HUGO1
FDNS	00NR	2	16WP	G15_082	FROM->TO	G14-057T 345.00 - SUNNYSIDE 345KV CKT 1	717	789	0.07	114.6573	GEN562973 1-G15060_4 0.6900
FDNS	00NR	2	20WP	G15_082	FROM->TO	G14-057T 345.00 - SUNNYSIDE 345KV CKT 1	717	789	0.07129	114.6571	P12:138:WFEC:MSL01
FDNS	00NR	2	20WP	G15_082	FROM->TO	G14-057T 345.00 - SUNNYSIDE 345KV CKT 1	717	789	0.07146	114.6567	RINGLING - SOUTH WILSON 138KV CKT 1
FDNS	00NR	2	20WP	G15_082	FROM->TO	G14-057T 345.00 - SUNNYSIDE 345KV CKT 1	717	789	0.07129	114.6537	BRIDGECR 138.00 - SUNSHINE CANYON 138KV CKT 1
FDNS	00NR	2	16WP	G15_082	FROM->TO	G14-057T 345.00 - SUNNYSIDE 345KV CKT 1	717	789	0.07	114.6392	GEN681522 3-GENOA 3
FDNS	00NR	2	16WP	G15_082	FROM->TO	G14-057T 345.00 - SUNNYSIDE 345KV CKT 1	717	789	0.06937	114.6318	CHICKASAW - TOTAL 138KV CKT 1
FDNS	00NR	2	16WP	G15_082	FROM->TO	G14-057T 345.00 - SUNNYSIDE 345KV CKT 1	717	789	0.07	114.5985	GEN526331 1-JONES GEN #1 22 KV
FDNS	00NR	2	16WP	G15_082	FROM->TO	G14-057T 345.00 - SUNNYSIDE 345KV CKT 1	717	789	0.07	114.5985	GEN526332 1-JONES GEN #2 21 KV
FDNS	00NR	2	16WP	G15_082	FROM->TO	G14-057T 345.00 - SUNNYSIDE 345KV CKT 1	717	789	0.06993	114.597	BROWN - RUSSETT 138KV CKT 1
FDNS	00NR	2	16WP	G15_082	FROM->TO	G14-057T 345.00 - SUNNYSIDE 345KV CKT 1	717	789	0.0699	114.596	P12:138:WFEC:MSL07
FDNS	00NR	2	16WP	G15_082	FROM->TO	G14-057T 345.00 - SUNNYSIDE 345KV CKT 1	717	789	0.0699	114.596	P12:138:WFEC-AEPW:HUGOPP4:ATOKA--4
FDNS	00NR	2	16WP	G15_082	FROM->TO	G14-057T 345.00 - SUNNYSIDE 345KV CKT 1	717	789	0.07	114.5898	GEN560105 1-G08-22 0.6900
FDNS	00NR	2	16WP	G15_082	FROM->TO	G14-057T 345.00 - SUNNYSIDE 345KV CKT 1	717	789	0.07	114.5874	GEN562550 1-G14_040_3 0.6900
FDNS	00NR	2	16WP	G15_082	FROM->TO	G14-057T 345.00 - SUNNYSIDE 345KV CKT 1	717	789	0.06989	114.5835	RUSSETT - SPRINGDALE 138KV CKT 1
FDNS	00NR	2	20WP	G15_082	FROM->TO	G14-057T 345.00 - SUNNYSIDE 345KV CKT 1	717	789	0.07034	114.5731	WAVERLY7 345.00 - WOLF CREEK 345KV CKT 1
FDNS	00NR	2	16WP	G15_082	FROM->TO	G14-057T 345.00 - SUNNYSIDE 345KV CKT 1	717	789	0.06962	114.5704	ROCKY POINT - SUNNYSIDE 138KV CKT 1
FDNS	00NR	2	16WP	G15_082	FROM->TO	G14-057T 345.00 - SUNNYSIDE 345KV CKT 1	717	789	0.07	114.559	4SIOUX 1 138.00 138/18.0KV TRANSFORMER CKT 1
FDNS	00NR	2	16WP	G15_082	FROM->TO	G14-057T 345.00 - SUNNYSIDE 345KV CKT 1	717	789	0.07066	114.5535	G15063_T 345.00 - MATHWSN7 345.00 345KV CKT 1
FDNS	00NR	2	16WP	G15_082	FROM->TO	G14-057T 345.00 - SUNNYSIDE 345KV CKT 1	717	789	0.07	114.5522	GEN345671 2-1RUSH G2 18.000
FDNS	00NR	2	16WP	G15_082	FROM->TO	G14-057T 345.00 - SUNNYSIDE 345KV CKT 1	717	789	0.07	114.5504	GEN345670 1-1RUSH G1 18.000
FDNS	00NR	2	16WP	G15_082	FROM->TO	G14-057T 345.00 - SUNNYSIDE 345KV CKT 1	717	789	0.07	114.5485	GEN511962 2-RKYRDGW2-1 0.7000
FDNS	00NR	2	16WP	G15_082	FROM->TO	G14-057T 345.00 - SUNNYSIDE 345KV CKT 1	717	789	0.07	114.5419	GEN527882 1-CUNNINGHAM GEN #2 20 KV
FDNS	00NR	2	20WP	G15_082	FROM->TO	G14-057T 345.00 - SUNNYSIDE 345KV CKT 1	717	789	0.07004	114.5388	ELDORADO EHV - MOUNT OLIVE 500KV CKT 1
FDNS	00NR	2	16WP	G15_082	FROM->TO	G14-057T 345.00 - SUNNYSIDE 345KV CKT 1	717	789	0.06993	114.5286	RUSSETT - RUSSETT 138KV CKT 1
FDNS	00NR	2	16WP	G15_082	FROM->TO	G14-057T 345.00 - SUNNYSIDE 345KV CKT 1	717	789	0.07	114.5273	CLAY BOSWELL 230/20.9KV TRANSFORMER CKT 1
FDNS	00NR	2	16WP	G15_082	FROM->TO	G14-057T 345.00 - SUNNYSIDE 345KV CKT 1	717	789	0.06912	114.5249	ARDMORE WEST - CARTER 138KV CKT 1
FDNS	00NR	2	16WP	G15_082	FROM->TO	G14-057T 345.00 - SUNNYSIDE 345KV CKT 1	717	789	0.07	114.5219	GEN521112 1-ORME3 13.800
FDNS	00NR	2	20WP	G15_082	FROM->TO	G14-057T 345.00 - SUNNYSIDE 345KV CKT 1	717	789	0.07004	114.5205	P12:138:AEPW:SHERID4:112GORE4
FDNS	00NR	2	16WP	G15_082	FROM->TO	G14-057T 345.00 - SUNNYSIDE 345KV CKT 1	717	789	0.07	114.5185	GEN563192 1-G15084_3 0.5500
FDNS	00NR	2	16WP	G15_082	FROM->TO	G14-057T 345.00 - SUNNYSIDE 345KV CKT 1	717	789	0.07006	114.5132	P12:138:WFEC:MSL16
FDNS	00NR	2	20WP	G15_082	FROM->TO	G14-057T 345.00 - SUNNYSIDE 345KV CKT 1	717	789	0.07007	114.5031	GEN501812 1-RODEMACHER UNIT 2
FDNS	00NR	2	16WP	G15_082	FROM->TO	G14-057T 345.00 - SUNNYSIDE 345KV CKT 1	717	789	0.07	114.4993	GEN562892 1-G15048_3 0.6900
FDNS	00NR	2	20WP	G15_082	FROM->TO	G14-057T 345.00 - SUNNYSIDE 345KV CKT 1	717	789	0.07007	114.4902	DOLET HILLS 345/24.0KV TRANSFORMER CKT 1
FDNS	00NR	2	20WP	G15_082	FROM->TO	G14-057T 345.00 - SUNNYSIDE 345KV CKT 1	717	789	0.06889	114.4875	PARK LANE - SEMINOLE 138KV CKT 1
FDNS	00NR	2	16WP	G15_082	FROM->TO	G14-057T 345.00 - SUNNYSIDE 345KV CKT 1	717	789	0.06918	114.4859	SUNNYSIDE (SUNNYSD5) 345/138/13.8KV TRANSFORMER CKT 1
FDNS	00NR	2	16WP	G15_082	FROM->TO	G14-057T 345.00 - SUNNYSIDE 345KV CKT 1	717	789	0.07	114.4772	GEN672321 1-SHAND GENERATOR 1
FDNS	00NR	2	20WP	G15_082	FROM->TO	G14-057T 345.00 - SUNNYSIDE 345KV CKT 1	717	789	0.07005	114.4604	REDBUD - RIVERSIDE STATION 345KV CKT 1
FDNS	00NR	2	20WP	G15_082	FROM->TO	G14-057T 345.00 - SUNNYSIDE 345KV CKT 1	717	789	0.07005	114.4604	REDBUD - RIVERSIDE STATION 345KV CKT 1
FDNS	00NR	2	16WP	G15_082	FROM->TO	G14-057T 345.00 - SUNNYSIDE 345KV CKT 1	717	789	0.07	114.4588	GEN562512 1-G14_020_3 0.6900
FDNS	00NR	2	16WP	G15_082	FROM->TO	G14-057T 345.00 - SUNNYSIDE 345KV CKT 1	717	789	0.07	114.4556	GEN523461 1-BLACKHAWK GEN #1
FDNS	00NR	2	16WP	G15_082	FROM->TO	G14-057T 345.00 - SUNNYSIDE 345KV CKT 1	717	789	0.07	114.4555	GEN523462 1-BLACKHAWK GEN #2
FDNS	00NR	2	16WP	G15_082	FROM->TO	G14-057T 345.00 - SUNNYSIDE 345KV CKT 1	717	789	0.07	114.4533	GEN672310 1-POPLAR RIVER GENERATOR 1
FDNS	00NR	2	16WP	G15_082	FROM->TO	G14-057T 345.00 - SUNNYSIDE 345KV CKT 1	717	789	0.07	114.4533	GEN672311 2-POPLAR RIVER GENERATOR 2
FDNS	00NR	2	16WP	G15_082	FROM->TO	G14-057T 345.00 - SUNNYSIDE 345KV CKT 1	717	789	0.06998	114.453	P12:138:WFEC-AEPW:GOLDENSW4:CRAIGJT4
FDNS	00NR	2	16WP	G15_082	FROM->TO	G14-057T 345.00 - SUNNYSIDE 345KV CKT 1	717	789	0.07	114.4453	GEN672306 6-BOUNDARY DAM GENERATOR 6
FDNS	00NR	2	16WP	G15_082	FROM->TO	G14-057T 345.00 - SUNNYSIDE 345KV CKT 1	717	789	0.06912	114.4088	ARDMORE WEST - UNIROYAL 138KV CKT 1
FDNS	00NR	2	16WP	G15_082	FROM->TO	G14-057T 345.00 - SUNNYSIDE 345KV CKT 1	717	789	0.07	114.4037	GEN520811 1-ANADRK4
FDNS	00NR	2	16WP	G15_082	FROM->TO	G14-057T 345.00 - SUNNYSIDE 345KV CKT 1	717	789	0.07	114.4008	GEN344895 2-1LAB G2 20.000
FDNS	00NR	2	16WP	G15_082	FROM->TO	G14-057T 345.00 - SUNNYSIDE 345KV CKT 1	717	789	0.06941	114.3989	CARTRCO4 138.00 - RATLIFF 138KV CKT 1
FDNS	00NR	2	16WP	G15_082	FROM->TO	G14-057T 345.00 - SUNNYSIDE 345KV CKT 1	717	789	0.06997	114.3898	P12:138:AEPW-SWPA:LONEOAK4:TUPELO4
FDNS	00NR	2	16WP	G15_082	FROM->TO	G14-057T 345.00 - SUNNYSIDE 345KV CKT 1	717	789	0.06997	114.3898	P12:138:WFEC:MSL06
FDNS	00NR	2	16WP	G15_082	FROM->TO	G14-057T 345.00 - SUNNYSIDE 345KV CKT 1	717	789	0.07	114.3872	GEN511853 1-COMANCHE #3
FDNS	00NR	2	20WP	G15_082	FROM->TO	G14-057T 345.00 - SUNNYSIDE 345KV CKT 1	717	789	0.07007	114.3853	GEN515564 1-ORIGIN11 0.6900
FDNS	00NR	2	20WP	G15_082	FROM->TO	G14-057T 345.00 - SUNNYSIDE 345KV CKT 1	717	789	0.07007	114.3853	GEN515565 1-ORIGIN21 0.6900
FDNS	00NR	2	20WP	G15_082	FROM->TO	G14-057T 345.00 - SUNNYSIDE 345KV CKT 1	717	789	0.07146	114.3694	MARIETTA - SOUTH WILSON 138KV CKT 1

SOLUTION	GROUP	SCENARIO	SEASON	SOURCE	DIRECTION	MONITORED ELEMENT	RATEA (MVA)	RATEB(MVA)	TDF	TC%LOADING (% MVA)	CONTINGENCY
FDNS	00NR	2	16WP	G15_082	FROM->TO	G14-057T 345.00 - SUNNYSIDE 345KV CKT 1	717	789	0.07	114.3681	GEN344896 3-1LAB G3 20.000
FDNS	00NR	2	16WP	G15_082	FROM->TO	G14-057T 345.00 - SUNNYSIDE 345KV CKT 1	717	789	0.07	114.3667	GEN344894 1-1LAB G1 20.000
FDNS	00NR	2	16WP	G15_082	FROM->TO	G14-057T 345.00 - SUNNYSIDE 345KV CKT 1	717	789	0.07	114.3656	GEN563162 1-G15081_3 0.6900
FDNS	00NR	2	16WP	G15_082	FROM->TO	G14-057T 345.00 - SUNNYSIDE 345KV CKT 1	717	789	0.07	114.3652	GEN344897 4-1LAB G4 20.000
FDNS	00NR	2	16WP	G15_082	FROM->TO	G14-057T 345.00 - SUNNYSIDE 345KV CKT 1	717	789	0.07	114.3644	GEN562699 1-G15_018_3 0.6900
FDNS	00NR	2	16WP	G15_082	FROM->TO	G14-057T 345.00 - SUNNYSIDE 345KV CKT 1	717	789	0.0697	114.3629	P12:138:OKGE:3TERM40
FDNS	00NR	2	20WP	G15_082	FROM->TO	G14-057T 345.00 - SUNNYSIDE 345KV CKT 1	717	789	0.07314	114.3543	MATHWSN7 345.00 - NORTHWEST 345KV CKT 1
FDNS	00NR	2	16WP	G15_082	FROM->TO	G14-057T 345.00 - SUNNYSIDE 345KV CKT 1	717	789	0.07	114.3477	GEN511852 1-COMANCHE #2
FDNS	00NR	2	16WP	G15_082	FROM->TO	G14-057T 345.00 - SUNNYSIDE 345KV CKT 1	717	789	0.07	114.346	GEN521110 1-ORME1 13.800
FDNS	00NR	2	16WP	G15_082	FROM->TO	G14-057T 345.00 - SUNNYSIDE 345KV CKT 1	717	789	0.07	114.346	GEN521111 1-ORME2 13.800
FDNS	00NR	2	20WP	G15_082	FROM->TO	G14-057T 345.00 - SUNNYSIDE 345KV CKT 1	717	789	0.07007	114.3437	GEN334440 1-SABINE UNIT 4
FDNS	00NR	2	16WP	G15_082	FROM->TO	G14-057T 345.00 - SUNNYSIDE 345KV CKT 1	717	789	0.06967	114.3404	G15085_T 138.00 - RUSSELL 138KV CKT 1
FDNS	00NR	2	16WP	G15_082	FROM->TO	G14-057T 345.00 - SUNNYSIDE 345KV CKT 1	717	789	0.07	114.3373	GEN681542 6-JP MADGETT
FDNS	00NR	2	20WP	G15_082	FROM->TO	G14-057T 345.00 - SUNNYSIDE 345KV CKT 1	717	789	0.07022	114.3262	WEBRE - WELLS 500KV CKT 1
FDNS	00NR	2	16WP	G15_082	FROM->TO	G14-057T 345.00 - SUNNYSIDE 345KV CKT 1	717	789	0.06803	114.3249	GRAPEVINE INTERCHANGE - STATELINE INTERCHANGE 230KV CKT 1
FDNS	00NR	2	16WP	G15_082	FROM->TO	G14-057T 345.00 - SUNNYSIDE 345KV CKT 1	717	789	0.06803	114.3249	GRAPEVINE INTERCHANGE - STATELINE INTERCHANGE 230KV CKT 1
FDNS	00NR	2	16WP	G15_082	FROM->TO	G14-057T 345.00 - SUNNYSIDE 345KV CKT 1	717	789	0.07	114.3247	GEN563292 1-G15095_3 0.6900
FDNS	00NR	2	20WP	G15_082	FROM->TO	G14-057T 345.00 - SUNNYSIDE 345KV CKT 1	717	789	0.0711	114.3245	CANEYRV7 345.00 - NEOSHO 345KV CKT 1
FDNS	00NR	2	20WP	G15_082	FROM->TO	G14-057T 345.00 - SUNNYSIDE 345KV CKT 1	717	789	0.07007	114.3199	P12:161:AEPW:DYESS 5:HYLAND 5
FDNS	00NR	2	16WP	G15_082	FROM->TO	G14-057T 345.00 - SUNNYSIDE 345KV CKT 1	717	789	0.06931	114.3159	CACHE - SNYDER 138KV CKT 1
FDNS	00NR	2	20WP	G15_082	FROM->TO	G14-057T 345.00 - SUNNYSIDE 345KV CKT 1	717	789	0.07007	114.2931	DELL 500 - ESSEX UNIT 2 500KV CKT Z1
FDNS	00NR	2	20WP	G15_082	FROM->TO	G14-057T 345.00 - SUNNYSIDE 345KV CKT 1	717	789	0.07146	114.2736	P12:138:WFEC:MSL17
FDNS	00NR	2	20WP	G15_082	FROM->TO	G14-057T 345.00 - SUNNYSIDE 345KV CKT 1	717	789	0.07007	114.273	GEN590011 2-ERCOT EQUIVALENCE
FDNS	00NR	2	16WP	G15_082	FROM->TO	G14-057T 345.00 - SUNNYSIDE 345KV CKT 1	717	789	0.07	114.2652	GEN563122 1-G15077_3 0.3850
FDNS	00NR	2	20WP	G15_082	FROM->TO	G14-057T 345.00 - SUNNYSIDE 345KV CKT 1	717	789	0.07007	114.2622	P12:69:AEPW:L.E.S.-2:LAW WC2
FDNS	00NR	2	16WP	G15_082	FROM->TO	G14-057T 345.00 - SUNNYSIDE 345KV CKT 1	717	789	0.07	114.2611	GEN562861 1-G15045_2 0.4800
FDNS	00NR	2	16WP	G15_082	FROM->TO	G14-057T 345.00 - SUNNYSIDE 345KV CKT 1	717	789	0.07	114.2323	GEN661015 1-COYOTE
FDNS	00NR	2	20WP	G15_082	FROM->TO	G14-057T 345.00 - SUNNYSIDE 345KV CKT 1	717	789	0.07037	114.2168	LAWTON EASTSIDE (LES 5) 345/138/13.8KV TRANSFORMER CKT 2
FDNS	00NR	2	20WP	G15_082	FROM->TO	G14-057T 345.00 - SUNNYSIDE 345KV CKT 1	717	789	0.07037	114.2168	LAWTON EASTSIDE (LES 5) 345/138/13.8KV TRANSFORMER CKT 2
FDNS	00NR	2	20WP	G15_082	FROM->TO	G14-057T 345.00 - SUNNYSIDE 345KV CKT 1	717	789	0.08093	114.2096	Hitchland Interchange - WALKTAP7 345.00 345KV CKT 1
FDNS	00NR	2	20WP	G15_082	FROM->TO	G14-057T 345.00 - SUNNYSIDE 345KV CKT 1	717	789	0.08093	114.2096	Hitchland Interchange - WALKTAP7 345.00 345KV CKT 1
FDNS	00NR	2	20WP	G15_082	FROM->TO	G14-057T 345.00 - SUNNYSIDE 345KV CKT 1	717	789	0.07007	114.2052	GEN590010 1-ERCOT EQUIVALENCE
FDNS	00NR	2	20WP	G15_082	FROM->TO	G14-057T 345.00 - SUNNYSIDE 345KV CKT 1	717	789	0.06995	114.203	ELDORADO EHV - SHERIDAN EHV 500KV CKT 1
FDNS	00NR	2	20WP	G15_082	FROM->TO	G14-057T 345.00 - SUNNYSIDE 345KV CKT 1	717	789	0.08093	114.1968	P12:345:SPS:J07.1.FINN.HITCH
FDNS	00NR	2	20WP	G15_082	FROM->TO	G14-057T 345.00 - SUNNYSIDE 345KV CKT 1	717	789	0.07037	114.1925	PAOLI - PAYNE 138.00 138KV CKT 1
FDNS	00NR	2	16WP	G15_082	FROM->TO	G14-057T 345.00 - SUNNYSIDE 345KV CKT 1	717	789	0.06912	114.1875	SUNNYSIDE - UNIROYAL 138KV CKT 1
FDNS	00NR	2	16WP	G15_082	FROM->TO	G14-057T 345.00 - SUNNYSIDE 345KV CKT 1	717	789	0.06807	114.1848	GRAPEVINE INTERCHANGE - NICHOLS STATION 230KV CKT 1
FDNS	00NR	2	16WP	G15_082	FROM->TO	G14-057T 345.00 - SUNNYSIDE 345KV CKT 1	717	789	0.06807	114.1848	GRAPEVINE INTERCHANGE - NICHOLS STATION 230KV CKT 1
FDNS	00NR	2	20WP	G15_082	FROM->TO	G14-057T 345.00 - SUNNYSIDE 345KV CKT 1	717	789	0.07048	114.1836	P12:138:WFEC:MSL02
FDNS	00NR	2	20WP	G15_082	FROM->TO	G14-057T 345.00 - SUNNYSIDE 345KV CKT 1	717	789	0.0711	114.1803	CANEYRV7 345.00 - LATHAMS7 345.00 345KV CKT 1
FDNS	00NR	2	20WP	G15_082	FROM->TO	G14-057T 345.00 - SUNNYSIDE 345KV CKT 1	717	789	0.07123	114.157	CIVIT - PAOLI 138KV CKT 1
FDNS	00NR	2	20WP	G15_082	FROM->TO	G14-057T 345.00 - SUNNYSIDE 345KV CKT 1	717	789	0.07007	114.1501	GEN506754 1-LEBROCK STEAM 1
FDNS	00NR	2	16WP	G15_082	FROM->TO	G14-057T 345.00 - SUNNYSIDE 345KV CKT 1	717	789	0.06965	114.1468	P12:138:AEPW:SHAM4WT:CHILD4WT
FDNS	00NR	2	20WP	G15_082	FROM->TO	G14-057T 345.00 - SUNNYSIDE 345KV CKT 1	717	789	0.07004	114.141	P12:138:AEPW:112GORE4:L.E.S.-4
FDNS	00NR	2	16WP	G15_082	FROM->TO	G14-057T 345.00 - SUNNYSIDE 345KV CKT 1	717	789	0.06666	114.1286	CHISHOLM7 345.00 (CHISHOLM) 345/230/13.2KV TRANSFORMER CKT 1
FDNS	00NR	2	16WP	G15_082	FROM->TO	G14-057T 345.00 - SUNNYSIDE 345KV CKT 1	717	789	0.07026	114.1189	P12:138:WFEC:MSL15
FDNS	00NR	2	16WP	G15_082	FROM->TO	G14-057T 345.00 - SUNNYSIDE 345KV CKT 1	717	789	0.07	114.1176	GEN657748 1-YOUNG 2 GENERATOR
FDNS	00NR	2	20WP	G15_082	FROM->TO	G14-057T 345.00 - SUNNYSIDE 345KV CKT 1	717	789	0.07007	114.1171	GEN509408 1-WILKES #2
FDNS	00NR	2	20WP	G15_082	FROM->TO	G14-057T 345.00 - SUNNYSIDE 345KV CKT 1	717	789	0.07037	114.1162	ANADARKO - GEORGIA 138KV CKT 1
FDNS	00NR	2	16WP	G15_082	FROM->TO	G14-057T 345.00 - SUNNYSIDE 345KV CKT 1	717	789	0.07139	114.1009	CANEY CREEK - TEXOMA JCT 138KV CKT 1
FDNS	00NR	2	16WP	G15_082	FROM->TO	G14-057T 345.00 - SUNNYSIDE 345KV CKT 1	717	789	0.07	114.0783	GEN562704 1-G15_020_3 0.3550
FDNS	00NR	2	16WP	G15_082	FROM->TO	G14-057T 345.00 - SUNNYSIDE 345KV CKT 1	717	789	0.07	114.0763	GEN563173 1-G15082_3 0.6900
FDNS	00NR	2	16WP	G15_082	FROM->TO	G14-057T 345.00 - SUNNYSIDE 345KV CKT 1	717	789	0.07	114.0756	GEN562992 1-G15063_3 0.6900
FDNS	00NR	2	20WP	G15_082	FROM->TO	G14-057T 345.00 - SUNNYSIDE 345KV CKT 1	717	789	0.07007	114.0602	GEN336252 1-NINEMILE POINT UNIT#5
FDNS	00NR	2	20WP	G15_082	FROM->TO	G14-057T 345.00 - SUNNYSIDE 345KV CKT 1	717	789	0.07005	114.0552	TUPELO - TUPELO TAP 138KV CKT 1
FDNS	00NR	2	16WP	G15_082	FROM->TO	G14-057T 345.00 - SUNNYSIDE 345KV CKT 1	717	789	0.07	114.0341	GEN562952 1-G15057_3 0.6500
FDNS	00NR	2	20WP	G15_082	FROM->TO	G14-057T 345.00 - SUNNYSIDE 345KV CKT 1	717	789	0.0719	114.0311	P12:138:AEPW-OGE:CORNVIL4:MAUD 4
FDNS	00NR	2	20WP	G15_082	FROM->TO	G14-057T 345.00 - SUNNYSIDE 345KV CKT 1	717	789	0.07037	114.0299	FLETCHER - GEORGIA 138KV CKT 1
FDNS	00NR	2	20WP	G15_082	FROM->TO	G14-057T 345.00 - SUNNYSIDE 345KV CKT 1	717	789	0.07007	114.0224	FRONTIER - GRIMES 345KV CKT 1
FDNS	00NR	2	20WP	G15_082	FROM->TO	G14-057T 345.00 - SUNNYSIDE 345KV CKT 1	717	789	0.07123	114.0165	CIVIT - STRATFORD 138KV CKT 1
FDNS	00NR	2	20WP	G15_082	FROM->TO	G14-057T 345.00 - SUNNYSIDE 345KV CKT 1	717	789	0.07007	114.0064	GEN503909 1-FULTONU1 1 16.000
FDNS	00NR	2	20WP	G15_082	FROM->TO	G14-057T 345.00 - SUNNYSIDE 345KV CKT 1	717	789	0.07007	114.0058	GEN335204 1-NELSON UNIT 4
FDNS	00NR	2	20WP	G15_082	FROM->TO	G14-057T 345.00 - SUNNYSIDE 345KV CKT 1	717	789	0.07007	113.9985	GEN334441 1-SABINE UNIT 5
FDNS	00NR	2	16WP	G15_082	FROM->TO	G14-057T 345.00 - SUNNYSIDE 345KV CKT 1	717	789	0.07	113.9946	GEN562710 1-G15_022_3 0.5500
FDNS	00NR	2	20WP	G15_082	FROM->TO	G14-057T 345.00 - SUNNYSIDE 345KV CKT 1	717	789	0.07043	113.9746	EMPIRE - FLETCHER 138KV CKT 1
FDNS	00NR	2	20WP	G15_082	FROM->TO	G14-057T 345.00 - SUNNYSIDE 345KV CKT 1	717	789	0.07269	113.9678	THISTLE7 345.00 - WOODWARD DISTRICT EHV 345KV CKT 1
FDNS	00NR	2	20WP	G15_082	FROM->TO	G14-057T 345.00 - SUNNYSIDE 345KV CKT 1	717	789	0.07269	113.9678	THISTLE7 345.00 - WOODWARD DISTRICT EHV 345KV CKT 1
FDNS	00NR	2	20WP	G15_082	FROM->TO	G14-057T 345.00 - SUNNYSIDE 345KV CKT 1	717	789	0.07269	113.9678	THISTLE7 345.00 - WOODWARD DISTRICT EHV 345KV CKT 2
FDNS	00NR	2	20WP	G15_082	FROM->TO	G14-057T 345.00 - SUNNYSIDE 345KV CKT 1	717	789	0.07269	113.9678	THISTLE7 345.00 - WOODWARD DISTRICT EHV 345KV CKT 2
FDNS	00NR	2	20WP	G15_082	FROM->TO	G14-057T 345.00 - SUNNYSIDE 345KV CKT 1	717	789	0.0711	113.966	LATHAMS7 345.00 - ROSE HILL 345KV CKT 1
FDNS	00NR	2	16WP	G15_082	FROM->TO	G14-057T 345.00 - SUNNYSIDE 345KV CKT 1	717	789	0.07	113.9597	GEN620315 1-BIG STONE GEN
FDNS	00NR	2	20WP	G15_082	FROM->TO	G14-057T 345.00 - SUNNYSIDE 345KV CKT 1	717	789	0.0719	113.9523	BLANCHARD - CORNVILLE 138KV CKT 1
FDNS	00NR	2	16WP	G15_082	FROM->TO	G14-057T 345.00 - SUNNYSIDE 345KV CKT 1	717	789	0.07	113.9394	GEN532751 1-WOLF CREEK GENERATING STATION UNIT 1
FDNS	00NR	2	20WP	G15_082	FROM->TO	G14-057T 345.00 - SUNNYSIDE 345KV CKT 1	717	789	0.07004	113.9377	LAYFLD8 500.00 - MOUNT OLIVE 500KV CKT 1
FDNS	00NR	2	20WP	G15_082	FROM->TO	G14-057T 345.00 - SUNNYSIDE 345KV CKT 1	717	789	0.07004	113.9377	LAYFLD8 500.00 - MOUNT OLIVE 500KV CKT 1
FDNS	00NR	2	20WP	G15_082	FROM->TO	G14-057T 345.00 - SUNNYSIDE 345KV CKT 1	717	789	0.0652	113.9264	G14_038T 345.00 - Hitchland Interchange 345KV CKT 1
FDNS	00NR	2	16WP	G15_082	FROM->TO	G14-057T 345.00 - SUNNYSIDE 345KV CKT 1	717	789	0.06666	113.9128	CHISHOLM7 345.00 - GRACEMONT 345KV CKT 1
FDNS	00NR	2	20WP	G15_082	FROM->TO	G14-057T 345.00 - SUNNYSIDE 345KV CKT 1	717	789	0.07007	113.9065	GEN334071 1-LEWIS CREEK 2
FDNS	00NR	2	16WP	G15_082	FROM->TO	G14-057T 345.00 - SUNNYSIDE 345KV CKT 1	717	789	0.07004	113.9028	P12:138:WFEC:MSL09

SOLUTION	GROUP	SCENARIO	SEASON	SOURCE	DIRECTION	MONITORED ELEMENT	RATEA (MVA)	RATEB(MVA)	TDF	TC%LOADING (% MVA)	CONTINGENCY
FDNS	00NR	2	20WP	G15_082	FROM->TO	G14-057T 345.00 - SUNNYSIDE 345KV CKT 1	717	789	0.07123	113.899	OIL CENTER - STRATFORD 138KV CKT 1
FDNS	00NR	2	20WP	G15_082	FROM->TO	G14-057T 345.00 - SUNNYSIDE 345KV CKT 1	717	789	0.07007	113.8981	GEN334070 1-LEWIS CREEK 1
FDNS	00NR	2	20WP	G15_082	FROM->TO	G14-057T 345.00 - SUNNYSIDE 345KV CKT 1	717	789	0.07006	113.8973	P12:161:AEPW-SWPA:BEAVER5:EROGERS5
FDNS	00NR	2	20WP	G15_082	FROM->TO	G14-057T 345.00 - SUNNYSIDE 345KV CKT 1	717	789	0.07043	113.8956	COMANCHE - EMPIRE 138KV CKT 1
FDNS	00NR	2	16WP	G15_082	FROM->TO	G14-057T 345.00 - SUNNYSIDE 345KV CKT 1	717	789	0.07	113.8915	GEN600004 2-PRAIRIE ISLAND G2
FDNS	00NR	2	20WP	G15_082	FROM->TO	G14-057T 345.00 - SUNNYSIDE 345KV CKT 1	717	789	0.07007	113.8895	GEN336251 1-NINEMILE POINT UNIT#4
FDNS	00NR	2	16WP	G15_082	FROM->TO	G14-057T 345.00 - SUNNYSIDE 345KV CKT 1	717	789	0.07	113.8886	GEN600003 1-PRAIRIE ISLAND G1
FDNS	00NR	2	16WP	G15_082	FROM->TO	G14-057T 345.00 - SUNNYSIDE 345KV CKT 1	717	789	0.07	113.8805	GEN600006 1-AS KING
FDNS	00NR	2	20WP	G15_082	FROM->TO	G14-057T 345.00 - SUNNYSIDE 345KV CKT 1	717	789	0.0703	113.8723	DUNCAN (DUNCAN) 138/69/13.8KV TRANSFORMER CKT 1
FDNS	00NR	2	20WP	G15_082	FROM->TO	G14-057T 345.00 - SUNNYSIDE 345KV CKT 1	717	789	0.0703	113.8723	DUNCAN (DUNCAN) 138/69/13.8KV TRANSFORMER CKT 1
FDNS	00NR	2	20WP	G15_082	FROM->TO	G14-057T 345.00 - SUNNYSIDE 345KV CKT 1	717	789	0.07007	113.8665	GEN509393 S1-ARSENAL HILL GENS #4 (STALL)
FDNS	00NR	2	20WP	G15_082	FROM->TO	G14-057T 345.00 - SUNNYSIDE 345KV CKT 1	717	789	0.07007	113.8625	GEN509392 G2-ARSENAL HILL GENS #3 (STALL)
FDNS	00NR	2	20WP	G15_082	FROM->TO	G14-057T 345.00 - SUNNYSIDE 345KV CKT 1	717	789	0.07007	113.8624	GEN509391 G1-ARSENAL HILL GENS #2 (STALL)
FDNS	00NR	2	16WP	G15_082	FROM->TO	G14-057T 345.00 - SUNNYSIDE 345KV CKT 1	717	789	0.07	113.8427	GEN511851 1-COMANCHE #1
FDNS	00NR	2	20WP	G15_082	FROM->TO	G14-057T 345.00 - SUNNYSIDE 345KV CKT 1	717	789	0.07007	113.841	GEN334433 1-SABINE UNIT 3
FDNS	00NR	2	20WP	G15_082	FROM->TO	G14-057T 345.00 - SUNNYSIDE 345KV CKT 1	717	789	0.07007	113.8372	P12:161:AEPW:DYESS5:ELMSPRNG:TONTITN5
FDNS	00NR	2	20WP	G15_082	FROM->TO	G14-057T 345.00 - SUNNYSIDE 345KV CKT 1	717	789	0.0711	113.8275	P12:138:AEPW:S.W.S.-4:L.E.S.-4
FDNS	00NR	2	20WP	G15_082	FROM->TO	G14-057T 345.00 - SUNNYSIDE 345KV CKT 1	717	789	0.07007	113.8223	GEN337653 1-WHITE BLUFF UNIT #2
FDNS	00NR	2	20WP	G15_082	FROM->TO	G14-057T 345.00 - SUNNYSIDE 345KV CKT 1	717	789	0.07007	113.815	GEN336831 1-BAXTER WILSON SES
FDNS	00NR	2	16WP	G15_082	FROM->TO	G14-057T 345.00 - SUNNYSIDE 345KV CKT 1	717	789	0.07	113.8	GEN615001 1-COAL CREEK
FDNS	00NR	2	16WP	G15_082	FROM->TO	G14-057T 345.00 - SUNNYSIDE 345KV CKT 1	717	789	0.06652	113.7949	STLN-DEMARC6 - SWEETWATER 230KV CKT 1
FDNS	00NR	2	16WP	G15_082	FROM->TO	G14-057T 345.00 - SUNNYSIDE 345KV CKT 1	717	789	0.07	113.7944	GEN636641 1-LOUISA UNIT 1
FDNS	00NR	2	16WP	G15_082	FROM->TO	G14-057T 345.00 - SUNNYSIDE 345KV CKT 1	717	789	0.06652	113.794	P12:230:AEPW-SPS:SWEETWT6:WHEELER 6
FDNS	00NR	2	16WP	G15_082	FROM->TO	G14-057T 345.00 - SUNNYSIDE 345KV CKT 1	717	789	0.06652	113.793	STATELINE INTERCHANGE - STLN-DEMARC6 230KV CKT 1
FDNS	00NR	2	20WP	G15_082	FROM->TO	G14-057T 345.00 - SUNNYSIDE 345KV CKT 1	717	789	0.07007	113.7846	GEN334030 1-FRONTIER UNIT 1
FDNS	00NR	2	20WP	G15_082	FROM->TO	G14-057T 345.00 - SUNNYSIDE 345KV CKT 1	717	789	0.07011	113.7826	P12:138:AEPW:CATOOSA4:T.S.E.-4
FDNS	00NR	2	20WP	G15_082	FROM->TO	G14-057T 345.00 - SUNNYSIDE 345KV CKT 1	717	789	0.07007	113.7822	GEN334031 1-FRONTIER UNIT 2
FDNS	00NR	2	20WP	G15_082	FROM->TO	G14-057T 345.00 - SUNNYSIDE 345KV CKT 1	717	789	0.07007	113.7673	GEN337911 1-ARKANSAS NUCLEAR ONE UNIT #2
FDNS	00NR	2	16WP	G15_082	FROM->TO	G14-057T 345.00 - SUNNYSIDE 345KV CKT 1	717	789	0.07	113.7497	GEN600005 1-MONTICELLO
FDNS	00NR	2	20WP	G15_082	FROM->TO	G14-057T 345.00 - SUNNYSIDE 345KV CKT 1	717	789	0.0719	113.7478	BLANCHARD - MAUD 138KV CKT 1
FDNS	00NR	2	16WP	G15_082	FROM->TO	G14-057T 345.00 - SUNNYSIDE 345KV CKT 1	717	789	0.07	113.7477	GEN562754 1-G15031_5 0.6900
FDNS	00NR	2	20WP	G15_082	FROM->TO	G14-057T 345.00 - SUNNYSIDE 345KV CKT 1	717	789	0.07051	113.7243	P12:138:AEPW:CORNVIL4:DUNCAN-4
FDNS	00NR	2	20WP	G15_082	FROM->TO	G14-057T 345.00 - SUNNYSIDE 345KV CKT 1	717	789	0.07007	113.7241	GEN501811 1-RODEMACHER UNIT 1
FDNS	00NR	2	20WP	G15_082	FROM->TO	G14-057T 345.00 - SUNNYSIDE 345KV CKT 1	717	789	0.07123	113.7233	LATTA JCT - OIL CENTER 138KV CKT 1
FDNS	00NR	2	16WP	G15_082	FROM->TO	G14-057T 345.00 - SUNNYSIDE 345KV CKT 1	717	789	0.07	113.7214	GEN615002 2-COAL CREEK
FDNS	00NR	2	20WP	G15_082	FROM->TO	G14-057T 345.00 - SUNNYSIDE 345KV CKT 1	717	789	0.07007	113.721	GEN506752 1-LEBROCK GAS 1
FDNS	00NR	2	20WP	G15_082	FROM->TO	G14-057T 345.00 - SUNNYSIDE 345KV CKT 1	717	789	0.07007	113.7208	GEN337652 1-WHITE BLUFF UNIT #1
FDNS	00NR	2	20WP	G15_082	FROM->TO	G14-057T 345.00 - SUNNYSIDE 345KV CKT 1	717	789	0.07007	113.7207	GEN506753 1-LEBROCK GAS 2
FDNS	00NR	2	20WP	G15_082	FROM->TO	G14-057T 345.00 - SUNNYSIDE 345KV CKT 1	717	789	0.07014	113.7163	FULTON 115 - HOPE 115KV CKT 1
FDNS	00NR	2	20WP	G15_082	FROM->TO	G14-057T 345.00 - SUNNYSIDE 345KV CKT 1	717	789	0.07014	113.7163	FULTON 115 - HOPE 115KV CKT 1
FDNS	00NR	2	16WP	G15_082	FROM->TO	G14-057T 345.00 - SUNNYSIDE 345KV CKT 1	717	789	0.0702	113.6997	P12:138:AEPW-OGE:CORNVIL4:CIMARON4
FDNS	00NR	2	20WP	G15_082	FROM->TO	G14-057T 345.00 - SUNNYSIDE 345KV CKT 1	717	789	0.07007	113.691	GEN336191 1-LITTLE GYPSY UNIT#3
FDNS	00NR	2	16WP	G15_082	FROM->TO	G14-057T 345.00 - SUNNYSIDE 345KV CKT 1	717	789	0.07	113.6891	GEN562756 1-G15031_7 0.6900
FDNS	00NR	2	16WP	G15_082	FROM->TO	G14-057T 345.00 - SUNNYSIDE 345KV CKT 1	717	789	0.07	113.6857	GEN562023 1-G11_020_3 0.6900
FDNS	00NR	2	16WP	G15_082	FROM->TO	G14-057T 345.00 - SUNNYSIDE 345KV CKT 1	717	789	0.07	113.6857	GEN562026 1-G11_019_3 0.6900
FDNS	00NR	2	20WP	G15_082	FROM->TO	G14-057T 345.00 - SUNNYSIDE 345KV CKT 1	717	789	0.0703	113.6843	P12:69:WFEC-AEPW:COMANCH2:DUNCAN-2
FDNS	00NR	2	20WP	G15_082	FROM->TO	G14-057T 345.00 - SUNNYSIDE 345KV CKT 1	717	789	0.07007	113.6795	GEN300015 1-1SGPDEL 18.000
FDNS	00NR	2	16WP	G15_082	FROM->TO	G14-057T 345.00 - SUNNYSIDE 345KV CKT 1	717	789	0.07	113.6792	GEN635213 3-NEAL UNIT 3
FDNS	00NR	2	20WP	G15_082	FROM->TO	G14-057T 345.00 - SUNNYSIDE 345KV CKT 1	717	789	0.07039	113.6773	P12:138:AEPW:CORNVIL4:S.W.S.-4
FDNS	00NR	2	20WP	G15_082	FROM->TO	G14-057T 345.00 - SUNNYSIDE 345KV CKT 1	717	789	0.07007	113.6731	GEN515226 1-MUSKOGEE 6G
FDNS	00NR	2	20WP	G15_082	FROM->TO	G14-057T 345.00 - SUNNYSIDE 345KV CKT 1	717	789	0.07007	113.6609	GEN335614 1-WILLOW GLENN UNIT#4
FDNS	00NR	2	20WP	G15_082	FROM->TO	G14-057T 345.00 - SUNNYSIDE 345KV CKT 1	717	789	0.07015	113.653	6LAYFLD 230.00 - CARROLL 230KV CKT 1
FDNS	00NR	2	20WP	G15_082	FROM->TO	G14-057T 345.00 - SUNNYSIDE 345KV CKT 1	717	789	0.07159	113.6516	G1524G1525 345.00 - THISTLE7 345.00 345KV CKT 1
FDNS	00NR	2	20WP	G15_082	FROM->TO	G14-057T 345.00 - SUNNYSIDE 345KV CKT 1	717	789	0.07159	113.6516	G1524G1525 345.00 - THISTLE7 345.00 345KV CKT 2
FDNS	00NR	2	20WP	G15_082	FROM->TO	G14-057T 345.00 - SUNNYSIDE 345KV CKT 1	717	789	0.07011	113.6507	8DANIEL8 500.00 - MCKNIGHT 500KV CKT 1
FDNS	00NR	2	20WP	G15_082	FROM->TO	G14-057T 345.00 - SUNNYSIDE 345KV CKT 1	717	789	0.07007	113.6507	P12:161:AEPW:EROGERS5:ECNTRTN5
FDNS	00NR	2	16WP	G15_082	FROM->TO	G14-057T 345.00 - SUNNYSIDE 345KV CKT 1	717	789	0.07	113.6432	GEN562556 1-G14_046_3 0.3420
FDNS	00NR	2	20WP	G15_082	FROM->TO	G14-057T 345.00 - SUNNYSIDE 345KV CKT 1	717	789	0.07007	113.6429	GEN300003 1-THOMAS HILL UNIT 3
FDNS	00NR	2	16WP	G15_082	FROM->TO	G14-057T 345.00 - SUNNYSIDE 345KV CKT 1	717	789	0.07	113.6408	GEN629074 1-ARNOLD LOWSIDE OF GSU XFMR
FDNS	00NR	2	16WP	G15_082	FROM->TO	G14-057T 345.00 - SUNNYSIDE 345KV CKT 1	717	789	0.07	113.6386	BIG STONE 230/24.0KV TRANSFORMER CKT 1
FDNS	00NR	2	20WP	G15_082	FROM->TO	G14-057T 345.00 - SUNNYSIDE 345KV CKT 1	717	789	0.07071	113.6383	P12:138:AEPW-OGE:WTH_JCT4:JENSEN4
FDNS	00NR	2	20WP	G15_082	FROM->TO	G14-057T 345.00 - SUNNYSIDE 345KV CKT 1	717	789	0.0703	113.6341	DUNCAN - TOSCO 69KV CKT 1
FDNS	00NR	2	20WP	G15_082	FROM->TO	G14-057T 345.00 - SUNNYSIDE 345KV CKT 1	717	789	0.07028	113.6335	TUTTLE - TUTTLE CONOCO TAP 138KV CKT 1
FDNS	00NR	2	20WP	G15_082	FROM->TO	G14-057T 345.00 - SUNNYSIDE 345KV CKT 1	717	789	0.07007	113.625	GEN562783 1-G15036_4 0.6900
FDNS	00NR	2	20WP	G15_082	FROM->TO	G14-057T 345.00 - SUNNYSIDE 345KV CKT 1	717	789	0.07007	113.625	GEN562784 1-G15036_5 0.6900
FDNS	00NR	2	20WP	G15_082	FROM->TO	G14-057T 345.00 - SUNNYSIDE 345KV CKT 1	717	789	0.07007	113.6186	GEN515040 1-SEMINOLE 1G
FDNS	00NR	2	20WP	G15_082	FROM->TO	G14-057T 345.00 - SUNNYSIDE 345KV CKT 1	717	789	0.07007	113.6152	GEN303007 1-1BC2 U2
FDNS	00NR	2	20WP	G15_082	FROM->TO	G14-057T 345.00 - SUNNYSIDE 345KV CKT 1	717	789	0.07018	113.6131	P12:69:AEPW-OMPA:COMANC-2:OMWALTR2
FDNS	00NR	2	20WP	G15_082	FROM->TO	G14-057T 345.00 - SUNNYSIDE 345KV CKT 1	717	789	0.07007	113.6129	GEN337910 1-ARKANSAS NUCLEAR ONE UNIT #1
FDNS	00NR	2	20WP	G15_082	FROM->TO	G14-057T 345.00 - SUNNYSIDE 345KV CKT 1	717	789	0.07007	113.6126	WHITE BLUFF 500/26.0KV TRANSFORMER CKT 1
FDNS	00NR	2	20WP	G15_082	FROM->TO	G14-057T 345.00 - SUNNYSIDE 345KV CKT 1	717	789	0.07056	113.6118	CIMARRON - CZECH HALL 138KV CKT 1
FDNS	00NR	2	20WP	G15_082	FROM->TO	G14-057T 345.00 - SUNNYSIDE 345KV CKT 1	717	789	0.07007	113.6102	GEN336464 1-MICHOUD UNIT #3
FDNS	00NR	2	20WP	G15_082	FROM->TO	G14-057T 345.00 - SUNNYSIDE 345KV CKT 1	717	789	0.07007	113.6098	GEN303006 1-1BC2 U1
FDNS	00NR	2	20WP	G15_082	FROM->TO	G14-057T 345.00 - SUNNYSIDE 345KV CKT 1	717	789	0.07007	113.6092	RODEMACHER 230/22.0KV TRANSFORMER CKT 1
FDNS	00NR	2	20WP	G15_082	FROM->TO	G14-057T 345.00 - SUNNYSIDE 345KV CKT 1	717	789	0.0652	113.607	G14_038T 345.00 - POTTER COUNTY INTERCHANGE 345KV CKT 1
FDNS	00NR	2	20WP	G15_082	FROM->TO	G14-057T 345.00 - SUNNYSIDE 345KV CKT 1	717	789	0.07009	113.5992	MC NIEL 500/115KV TRANSFORMER CKT 1
FDNS	00NR	2	20WP	G15_082	FROM->TO	G14-057T 345.00 - SUNNYSIDE 345KV CKT 1	717	789	0.07011	113.5986	BISMARK - HOT SPRINGS WEST BUS 115KV CKT 1
FDNS	00NR	2	20WP	G15_082	FROM->TO	G14-057T 345.00 - SUNNYSIDE 345KV CKT 1	717	789	0.07006	113.5973	HOT SPRINGS EHV - MAGNET COVE 500KV CKT 1
FDNS	00NR	2	20WP	G15_082	FROM->TO	G14-057T 345.00 - SUNNYSIDE 345KV CKT 1	717	789	0.0703	113.5878	COMANCHE TAP - TOSCO 69KV CKT 1

SOLUTION	GROUP	SCENARIO	SEASON	SOURCE	DIRECTION	MONITORED ELEMENT	RATEA (MVA)	RATEB(MVA)	TDF	TC%LOADING (% MVA)	CONTINGENCY
FDNS	00NR	2	20WP	G15_082	FROM->TO	G14-057T 345.00 - SUNNYSIDE 345KV CKT 1	717	789	0.07043	113.5814	P12:138:AEPW:WTHWF4:CLINTJC4
FDNS	00NR	2	20WP	G15_082	FROM->TO	G14-057T 345.00 - SUNNYSIDE 345KV CKT 1	717	789	0.07059	113.5804	CIMARRON - SARA 138KV CKT 1
FDNS	00NR	2	20WP	G15_082	FROM->TO	G14-057T 345.00 - SUNNYSIDE 345KV CKT 1	717	789	0.07007	113.5784	GEN515223 1-MUSKOGEE 4G
FDNS	00NR	2	20WP	G15_082	FROM->TO	G14-057T 345.00 - SUNNYSIDE 345KV CKT 1	717	789	0.07007	113.5784	GEN515225 1-MUSKOGEE 5G
FDNS	00NR	2	20WP	G15_082	FROM->TO	G14-057T 345.00 - SUNNYSIDE 345KV CKT 1	717	789	0.06922	113.5729	SEMINOLE - VANOSTP4 138.00 138KV CKT 1
FDNS	00NR	2	20WP	G15_082	FROM->TO	G14-057T 345.00 - SUNNYSIDE 345KV CKT 1	717	789	0.07152	113.5693	BAILEY4 138.00 - SUNSHINE CANYON 138KV CKT 1
FDNS	00NR	2	20WP	G15_082	FROM->TO	G14-057T 345.00 - SUNNYSIDE 345KV CKT 1	717	789	0.07029	113.5653	G15074_T 345.00 - HOYT 345KV CKT 1
FDNS	00NR	2	20WP	G15_082	FROM->TO	G14-057T 345.00 - SUNNYSIDE 345KV CKT 1	717	789	0.06936	113.5634	ARBWIND4 138.00 - CARTER 138KV CKT 1
FDNS	00NR	2	20WP	G15_082	FROM->TO	G14-057T 345.00 - SUNNYSIDE 345KV CKT 1	717	789	0.07028	113.5611	CIMARRON - TUTTLE CONOCO TAP 138KV CKT 1
FDNS	00NR	2	16WP	G15_082	FROM->TO	G14-057T 345.00 - SUNNYSIDE 345KV CKT 1	717	789	0.07	113.5557	GEN563142 1-G15079_3 0.5500
FDNS	00NR	2	16WP	G15_082	FROM->TO	G14-057T 345.00 - SUNNYSIDE 345KV CKT 1	717	789	0.07	113.5557	GEN563151 1-G15080_2 0.5500
FDNS	00NR	2	20WP	G15_082	FROM->TO	G14-057T 345.00 - SUNNYSIDE 345KV CKT 1	717	789	0.07188	113.5554	BUCKNER7 345.00 - SPEARVILLE 345KV CKT 1
FDNS	00NR	2	20WP	G15_082	FROM->TO	G14-057T 345.00 - SUNNYSIDE 345KV CKT 1	717	789	0.07188	113.5554	BUCKNER7 345.00 - SPEARVILLE 345KV CKT 1
FDNS	00NR	2	20WP	G15_082	FROM->TO	G14-057T 345.00 - SUNNYSIDE 345KV CKT 1	717	789	0.07065	113.5551	CHISHOLM6 230.00 - ELK CITY 230KV 230KV CKT 1
FDNS	00NR	2	20WP	G15_082	FROM->TO	G14-057T 345.00 - SUNNYSIDE 345KV CKT 1	717	789	0.07065	113.5543	ELK CITY 230KV (ELKCTY-6) 230/138/13.8KV TRANSFORMER CKT 1
FDNS	00NR	2	20WP	G15_082	FROM->TO	G14-057T 345.00 - SUNNYSIDE 345KV CKT 1	717	789	0.07065	113.5543	ELK CITY 230KV (ELKCTY-6) 230/138/13.8KV TRANSFORMER CKT 1
FDNS	00NR	2	20WP	G15_082	FROM->TO	G14-057T 345.00 - SUNNYSIDE 345KV CKT 1	717	789	0.07033	113.5535	G15088_T 345.00 - MOORE 345KV CKT 1
FDNS	00NR	2	20WP	G15_082	FROM->TO	G14-057T 345.00 - SUNNYSIDE 345KV CKT 1	717	789	0.07007	113.553	GEN337041 1-GERALD ANDRUS
FDNS	00NR	2	20WP	G15_082	FROM->TO	G14-057T 345.00 - SUNNYSIDE 345KV CKT 1	717	789	0.07007	113.5528	GEN300010 1-ST FRANCIS UNIT 1
FDNS	00NR	2	20WP	G15_082	FROM->TO	G14-057T 345.00 - SUNNYSIDE 345KV CKT 1	717	789	0.07009	113.5498	P12:138:AEPW:N.E.S.-4:CATOOSA4
FDNS	00NR	2	20WP	G15_082	FROM->TO	G14-057T 345.00 - SUNNYSIDE 345KV CKT 1	717	789	0.07007	113.5484	GEN303008 1-1BC2 U3
FDNS	00NR	2	20WP	G15_082	FROM->TO	G14-057T 345.00 - SUNNYSIDE 345KV CKT 1	717	789	0.07011	113.5441	ALPINE AECC - BISMARK 115KV CKT 1
FDNS	00NR	2	20WP	G15_082	FROM->TO	G14-057T 345.00 - SUNNYSIDE 345KV CKT 1	717	789	0.07043	113.5431	P12:138:AEPW:WTHWF4:WTH_SE4
FDNS	00NR	2	20WP	G15_082	FROM->TO	G14-057T 345.00 - SUNNYSIDE 345KV CKT 1	717	789	0.07056	113.5421	CZECH HALL - XEROX 138KV CKT 1
FDNS	00NR	2	16WP	G15_082	FROM->TO	G14-057T 345.00 - SUNNYSIDE 345KV CKT 1	717	789	0.07	113.5389	GEN523971 1-HARRINGTON GEN #1 24 KV
FDNS	00NR	2	16WP	G15_082	FROM->TO	G14-057T 345.00 - SUNNYSIDE 345KV CKT 1	717	789	0.07	113.5388	GEN523972 1-HARRINGTON GEN #2 24 KV
FDNS	00NR	2	16WP	G15_082	FROM->TO	G14-057T 345.00 - SUNNYSIDE 345KV CKT 1	717	789	0.07	113.5388	GEN523973 1-HARRINGTON GEN #3 24 KV
FDNS	00NR	2	20WP	G15_082	FROM->TO	G14-057T 345.00 - SUNNYSIDE 345KV CKT 1	717	789	0.07056	113.5379	MORGAN - XEROX 138KV CKT 1
FDNS	00NR	2	20WP	G15_082	FROM->TO	G14-057T 345.00 - SUNNYSIDE 345KV CKT 1	717	789	0.0703	113.5332	COMANCHE - COMANCHE TAP 69KV CKT 1
FDNS	00NR	2	20WP	G15_082	FROM->TO	G14-057T 345.00 - SUNNYSIDE 345KV CKT 1	717	789	0.07007	113.5267	GEN505432 1-SIKESTON
FDNS	00NR	2	20WP	G15_082	FROM->TO	G14-057T 345.00 - SUNNYSIDE 345KV CKT 1	717	789	0.07007	113.5228	NELSON 230/20.0KV TRANSFORMER CKT 1
FDNS	00NR	2	20WP	G15_082	FROM->TO	G14-057T 345.00 - SUNNYSIDE 345KV CKT 1	717	789	0.07007	113.5197	GEN336170 1-GULF OXY U4
FDNS	00NR	2	20WP	G15_082	FROM->TO	G14-057T 345.00 - SUNNYSIDE 345KV CKT 1	717	789	0.07056	113.5158	MORGAN - MUSTANG 138KV CKT 1
FDNS	00NR	2	20WP	G15_082	FROM->TO	G14-057T 345.00 - SUNNYSIDE 345KV CKT 1	717	789	0.07007	113.499	GEN336801 1-BAXTER WILSON UNIT #1
FDNS	00NR	2	20WP	G15_082	FROM->TO	G14-057T 345.00 - SUNNYSIDE 345KV CKT 1	717	789	0.07011	113.4985	ALPINE AECC - AMITY SS 115KV CKT 1
FDNS	00NR	2	20WP	G15_082	FROM->TO	G14-057T 345.00 - SUNNYSIDE 345KV CKT 1	717	789	0.07007	113.4958	GEN300011 1-ST FRANCIS UNIT 2
FDNS	00NR	2	20WP	G15_082	FROM->TO	G14-057T 345.00 - SUNNYSIDE 345KV CKT 1	717	789	0.0766	113.4884	FINNEY SWITCHING STATION - HOLCOMB 345KV CKT 1
FDNS	00NR	2	20WP	G15_082	FROM->TO	G14-057T 345.00 - SUNNYSIDE 345KV CKT 1	717	789	0.0766	113.4884	FINNEY SWITCHING STATION - HOLCOMB 345KV CKT 1
FDNS	00NR	2	20WP	G15_082	FROM->TO	G14-057T 345.00 - SUNNYSIDE 345KV CKT 1	717	789	0.07007	113.4882	8CAJUN2 500/24.0KV TRANSFORMER CKT 1
FDNS	00NR	2	20WP	G15_082	FROM->TO	G14-057T 345.00 - SUNNYSIDE 345KV CKT 1	717	789	0.07051	113.4815	GRACEMONT (BANK 1) 345/138/13.8KV TRANSFORMER CKT 1
FDNS	00NR	2	20WP	G15_082	FROM->TO	G14-057T 345.00 - SUNNYSIDE 345KV CKT 1	717	789	0.07059	113.4725	SARA - STHLAKE4 138.00 138KV CKT 1
FDNS	00NR	2	20WP	G15_082	FROM->TO	G14-057T 345.00 - SUNNYSIDE 345KV CKT 1	717	789	0.07007	113.4717	GEN501910 1-ACADIA UNIT ST1
FDNS	00NR	2	20WP	G15_082	FROM->TO	G14-057T 345.00 - SUNNYSIDE 345KV CKT 1	717	789	0.07022	113.4625	LAWTON EASTSIDE (LES 4) 345/138/13.8KV TRANSFORMER CKT 1
FDNS	00NR	2	20WP	G15_082	FROM->TO	G14-057T 345.00 - SUNNYSIDE 345KV CKT 1	717	789	0.07022	113.4625	LAWTON EASTSIDE (LES 4) 345/138/13.8KV TRANSFORMER CKT 1
FDNS	00NR	2	20WP	G15_082	FROM->TO	G14-057T 345.00 - SUNNYSIDE 345KV CKT 1	717	789	0.07007	113.4554	P12:138:AEPW:R.S.S.-4:S.HUD.-4
FDNS	00NR	2	20WP	G15_082	FROM->TO	G14-057T 345.00 - SUNNYSIDE 345KV CKT 1	717	789	0.07003	113.4549	ETTA (DUKE HOTSPRINGS) - MC NIEL 500KV CKT 1
FDNS	00NR	2	20WP	G15_082	FROM->TO	G14-057T 345.00 - SUNNYSIDE 345KV CKT 1	717	789	0.0704	113.4445	G15095_T 138.00 - ROSE_VALLEY 138.00 138KV CKT 1
FDNS	00NR	2	20WP	G15_082	FROM->TO	G14-057T 345.00 - SUNNYSIDE 345KV CKT 1	717	789	0.07007	113.4441	SABINE 230/24.0KV TRANSFORMER CKT 1
FDNS	00NR	2	20WP	G15_082	FROM->TO	G14-057T 345.00 - SUNNYSIDE 345KV CKT 1	717	789	0.07059	113.4432	MCCLAIN - STHLAKE4 138.00 138KV CKT 1
FDNS	00NR	2	20WP	G15_082	FROM->TO	G14-057T 345.00 - SUNNYSIDE 345KV CKT 1	717	789	0.07033	113.438	WALTERS - WALTERS 69KV CKT 1
FDNS	00NR	2	16WP	G15_082	FROM->TO	G14-057T 345.00 - SUNNYSIDE 345KV CKT 1	717	789	0.07	113.4367	GEN600000 1-SHERBURNECNTY G1
FDNS	00NR	2	20WP	G15_082	FROM->TO	G14-057T 345.00 - SUNNYSIDE 345KV CKT 1	717	789	0.07123	113.4349	LASALLE - LATTA JCT 138KV CKT 1
FDNS	00NR	2	20WP	G15_082	FROM->TO	G14-057T 345.00 - SUNNYSIDE 345KV CKT 1	717	789	0.07018	113.4298	LAWTON RELIFT TAP - OMPA-WALTERS 69KV CKT 1
FDNS	00NR	2	20WP	G15_082	FROM->TO	G14-057T 345.00 - SUNNYSIDE 345KV CKT 1	717	789	0.07007	113.4243	P12:69:AEPW:NROGERS2:ECNTRTN2
FDNS	00NR	2	20WP	G15_082	FROM->TO	G14-057T 345.00 - SUNNYSIDE 345KV CKT 1	717	789	0.07133	113.4221	CANADIAN - NOBLE 138KV CKT 1
FDNS	00NR	2	20WP	G15_082	FROM->TO	G14-057T 345.00 - SUNNYSIDE 345KV CKT 1	717	789	0.07007	113.4179	GEN336222 1-LITTLE GYPSY UNIT#2
FDNS	00NR	2	20WP	G15_082	FROM->TO	G14-057T 345.00 - SUNNYSIDE 345KV CKT 1	717	789	0.07044	113.4171	ANADARKO - SEQUOYAHJ4 138.00 138KV CKT 1
FDNS	00NR	2	20WP	G15_082	FROM->TO	G14-057T 345.00 - SUNNYSIDE 345KV CKT 1	717	789	0.07007	113.4146	P12:138:AEPW:BA_71ST4:T.S.E.-4
FDNS	00NR	2	20WP	G15_082	FROM->TO	G14-057T 345.00 - SUNNYSIDE 345KV CKT 1	717	789	0.07044	113.4131	CORN TAP - SEQUOYAHJ4 138.00 138KV CKT 1
FDNS	00NR	2	20WP	G15_082	FROM->TO	G14-057T 345.00 - SUNNYSIDE 345KV CKT 1	717	789	0.07007	113.4097	GEN300016 1-1G1GPDEL 18.000
FDNS	00NR	2	20WP	G15_082	FROM->TO	G14-057T 345.00 - SUNNYSIDE 345KV CKT 1	717	789	0.07007	113.4092	P12:138:AEPW:YARCH-S4:T.S.E.-4
FDNS	00NR	2	20WP	G15_082	FROM->TO	G14-057T 345.00 - SUNNYSIDE 345KV CKT 1	717	789	0.07017	113.4005	P12:138:AEPW-OGE:SHIDLER4:OSAGE 4
FDNS	00NR	2	20WP	G15_082	FROM->TO	G14-057T 345.00 - SUNNYSIDE 345KV CKT 1	717	789	0.07152	113.395	BAILEY4 138.00 - WESTMOORE 138KV CKT 1
FDNS	00NR	2	20WP	G15_082	FROM->TO	G14-057T 345.00 - SUNNYSIDE 345KV CKT 1	717	789	0.07069	113.3943	WEATHERFORD JCT. - WEATHERFORD SOUTHEAST 138KV CKT 1
FDNS	00NR	2	20WP	G15_082	FROM->TO	G14-057T 345.00 - SUNNYSIDE 345KV CKT 1	717	789	0.07069	113.3943	WEATHERFORD JCT. - WEATHERFORD SOUTHEAST 138KV CKT 1
FDNS	00NR	2	20WP	G15_082	FROM->TO	G14-057T 345.00 - SUNNYSIDE 345KV CKT 1	717	789	0.07003	113.3934	7JASPER 345.00 - BLACKBERRY 345KV CKT 1
FDNS	00NR	2	20WP	G15_082	FROM->TO	G14-057T 345.00 - SUNNYSIDE 345KV CKT 1	717	789	0.07135	113.3925	P12:138:OKGE:3TERM27
FDNS	00NR	2	16WP	G15_082	FROM->TO	G14-057T 345.00 - SUNNYSIDE 345KV CKT 1	717	789	0.06597	113.3871	P12:230:AEPW:ELKCITY6:SWEETWT6
FDNS	00NR	2	20WP	G15_082	FROM->TO	G14-057T 345.00 - SUNNYSIDE 345KV CKT 1	717	789	0.07007	113.3836	FRONTIER 345/18.0KV TRANSFORMER CKT 1
FDNS	00NR	2	20WP	G15_082	FROM->TO	G14-057T 345.00 - SUNNYSIDE 345KV CKT 1	717	789	0.07042	113.383	BLACKBERRY - NEOSHO 345KV CKT 1
FDNS	00NR	2	20WP	G15_082	FROM->TO	G14-057T 345.00 - SUNNYSIDE 345KV CKT 1	717	789	0.07007	113.3825	GEN336152 1-WATERFORD UNIT#2
FDNS	00NR	2	20WP	G15_082	FROM->TO	G14-057T 345.00 - SUNNYSIDE 345KV CKT 1	717	789	0.07007	113.3817	GEN336151 1-WATERFORD UNIT#1
FDNS	00NR	2	20WP	G15_082	FROM->TO	G14-057T 345.00 - SUNNYSIDE 345KV CKT 1	717	789	0.07007	113.3813	FRONTIER 345/18.0KV TRANSFORMER CKT 1
FDNS	00NR	2	20WP	G15_082	FROM->TO	G14-057T 345.00 - SUNNYSIDE 345KV CKT 1	717	789	0.0704	113.3803	NOEL_SW 138.00 - ROSE_VALLEY 138.00 138KV CKT 1
FDNS	00NR	2	20WP	G15_082	FROM->TO	G14-057T 345.00 - SUNNYSIDE 345KV CKT 1	717	789	0.07053	113.3788	CLEO CORNER - CLEOPLT4 138.00 138KV CKT 1
FDNS	00NR	2	20WP	G15_082	FROM->TO	G14-057T 345.00 - SUNNYSIDE 345KV CKT 1	717	789	0.07041	113.3725	NORGE ROAD - SOUTHWESTERN STATION 138KV CKT 1
FDNS	00NR	2	20WP	G15_082	FROM->TO	G14-057T 345.00 - SUNNYSIDE 345KV CKT 1	717	789	0.07041	113.3725	NORGE ROAD - SOUTHWESTERN STATION 138KV CKT 1
FDNS	00NR	2	20WP	G15_082	FROM->TO	G14-057T 345.00 - SUNNYSIDE 345KV CKT 1	717	789	0.0703	113.3723	HOYT - STRANGER CREEK 345KV CKT 1
FDNS	00NR	2	20WP	G15_082	FROM->TO	G14-057T 345.00 - SUNNYSIDE 345KV CKT 1	717	789	0.07064	113.3706	P12:138:OKGE-AEPW:JENSEN4:REDROCKRD4

SOLUTION	GROUP	SCENARIO	SEASON	SOURCE	DIRECTION	MONITORED ELEMENT	RATEA (MVA)	RATEB(MVA)	TDF	TC%LOADING (% MVA)	CONTINGENCY
FDNS	00NR	2	20WP	G15_082	FROM->TO	G14-057T 345.00 - SUNNYSIDE 345KV CKT 1	717	789	0.0701	113.3706	MORISNT4 138.00 - STILLWATER 138KV CKT 1
FDNS	00NR	2	20WP	G15_082	FROM->TO	G14-057T 345.00 - SUNNYSIDE 345KV CKT 1	717	789	0.06874	113.3657	ARBUCKLE - VANOSTP4 138.00 138KV CKT 1
FDNS	00NR	2	20WP	G15_082	FROM->TO	G14-057T 345.00 - SUNNYSIDE 345KV CKT 1	717	789	0.07255	113.3653	DRAPER LAKE - SEMINOLE 345KV CKT 1
FDNS	00NR	2	20WP	G15_082	FROM->TO	G14-057T 345.00 - SUNNYSIDE 345KV CKT 1	717	789	0.07255	113.3653	DRAPER LAKE - SEMINOLE 345KV CKT 2
FDNS	00NR	2	20WP	G15_082	FROM->TO	G14-057T 345.00 - SUNNYSIDE 345KV CKT 1	717	789	0.07012	113.3647	P12:138:OKGE:3TERM2
FDNS	00NR	2	20WP	G15_082	FROM->TO	G14-057T 345.00 - SUNNYSIDE 345KV CKT 1	717	789	0.07018	113.3632	OMPA-WALTERS - WALTERS 69KV CKT 1
FDNS	00NR	2	20WP	G15_082	FROM->TO	G14-057T 345.00 - SUNNYSIDE 345KV CKT 1	717	789	0.07018	113.3632	OMPA-WALTERS - WALTERS 69KV CKT 1
FDNS	00NR	2	20WP	G15_082	FROM->TO	G14-057T 345.00 - SUNNYSIDE 345KV CKT 1	717	789	0.07053	113.363	CLEOPLT4 138.00 - MEN TAP 138KV CKT 1
FDNS	00NR	2	20WP	G15_082	FROM->TO	G14-057T 345.00 - SUNNYSIDE 345KV CKT 1	717	789	0.07069	113.3602	P12:138:AEPW:REDROCKRD4:WTH_JCT4
FDNS	00NR	2	20WP	G15_082	FROM->TO	G14-057T 345.00 - SUNNYSIDE 345KV CKT 1	717	789	0.07008	113.3578	CYPRESS - HARTBURG 500KV CKT 1
FDNS	00NR	2	20WP	G15_082	FROM->TO	G14-057T 345.00 - SUNNYSIDE 345KV CKT 1	717	789	0.07053	113.3537	IMO TAP - MEN TAP 138KV CKT 1
FDNS	00NR	2	20WP	G15_082	FROM->TO	G14-057T 345.00 - SUNNYSIDE 345KV CKT 1	717	789	0.07007	113.3537	LEWIS CREEK SWITCHYARD 138/22.0KV TRANSFORMER CKT 1
FDNS	00NR	2	20WP	G15_082	FROM->TO	G14-057T 345.00 - SUNNYSIDE 345KV CKT 1	717	789	0.07007	113.3531	GEN300017 1-1G2GPDEL 18.000
FDNS	00NR	2	16WP	G15_082	FROM->TO	G14-057T 345.00 - SUNNYSIDE 345KV CKT 1	717	789	0.07	113.3523	GEN600001 2-SHERBURNE CNTY G2
FDNS	00NR	2	20WP	G15_082	FROM->TO	G14-057T 345.00 - SUNNYSIDE 345KV CKT 1	717	789	0.07014	113.3495	HOPE - MCNAB REC 115KV CKT 1
FDNS	00NR	2	20WP	G15_082	FROM->TO	G14-057T 345.00 - SUNNYSIDE 345KV CKT 1	717	789	0.07007	113.3492	LEWIS CREEK SWITCHYARD 138/22.0KV TRANSFORMER CKT 1
FDNS	00NR	2	20WP	G15_082	FROM->TO	G14-057T 345.00 - SUNNYSIDE 345KV CKT 1	717	789	0.07007	113.3484	GEN334432 1-SABINE UNIT 2
FDNS	00NR	2	20WP	G15_082	FROM->TO	G14-057T 345.00 - SUNNYSIDE 345KV CKT 1	717	789	0.07011	113.3483	COUCH SES - MC NIEL 115KV CKT 1
FDNS	00NR	2	20WP	G15_082	FROM->TO	G14-057T 345.00 - SUNNYSIDE 345KV CKT 1	717	789	0.07007	113.3482	GEN334431 1-SABINE UNIT 1
FDNS	00NR	2	20WP	G15_082	FROM->TO	G14-057T 345.00 - SUNNYSIDE 345KV CKT 1	717	789	0.07007	113.3431	GEN501823 1-TECHE UNIT 3
FDNS	00NR	2	20WP	G15_082	FROM->TO	G14-057T 345.00 - SUNNYSIDE 345KV CKT 1	717	789	0.07007	113.3411	GEN501970 1-EVANGELINE UNIT 7
FDNS	00NR	2	16WP	G15_082	FROM->TO	G14-057T 345.00 - SUNNYSIDE 345KV CKT 1	717	789	0.07	113.3401	GEN563042 1-G15068_3 0.6900
FDNS	00NR	2	20WP	G15_082	FROM->TO	G14-057T 345.00 - SUNNYSIDE 345KV CKT 1	717	789	0.07014	113.3396	P12:115:AEPW:TURK3:HOPE3
FDNS	00NR	2	20WP	G15_082	FROM->TO	G14-057T 345.00 - SUNNYSIDE 345KV CKT 1	717	789	0.07007	113.3374	P12:161:AEPW:CHAMSPR5:FARMING5
FDNS	00NR	2	20WP	G15_082	FROM->TO	G14-057T 345.00 - SUNNYSIDE 345KV CKT 1	717	789	0.07039	113.3363	SOUTHWESTERN STATION - VERDEN 138KV CKT 1
FDNS	00NR	2	20WP	G15_082	FROM->TO	G14-057T 345.00 - SUNNYSIDE 345KV CKT 1	717	789	0.07029	113.3345	G15074_T 345.00 - JEFFREY ENERGY CENTER 345KV CKT 1
FDNS	00NR	2	20WP	G15_082	FROM->TO	G14-057T 345.00 - SUNNYSIDE 345KV CKT 1	717	789	0.07007	113.333	GEN505616 1-BROKEN BOW
FDNS	00NR	2	16WP	G15_082	FROM->TO	G14-057T 345.00 - SUNNYSIDE 345KV CKT 1	717	789	0.07	113.329	GEN527901 1-HOBBS PLANT #1 (CT)
FDNS	00NR	2	16WP	G15_082	FROM->TO	G14-057T 345.00 - SUNNYSIDE 345KV CKT 1	717	789	0.07	113.329	GEN527902 1-HOBBS PLANT #2 (CT)
FDNS	00NR	2	20WP	G15_082	FROM->TO	G14-057T 345.00 - SUNNYSIDE 345KV CKT 1	717	789	0.07133	113.3289	NOBLE - PURCELL4 138.00 138KV CKT 1
FDNS	00NR	2	20WP	G15_082	FROM->TO	G14-057T 345.00 - SUNNYSIDE 345KV CKT 1	717	789	0.07033	113.327	P12:69:WFEC-AEPW:COMANCH2:WALTRS-2
FDNS	00NR	2	20WP	G15_082	FROM->TO	G14-057T 345.00 - SUNNYSIDE 345KV CKT 1	717	789	0.07019	113.3223	7LUTESVIL 345.00 - 7ST FRANC 345.00 345KV CKT 1
FDNS	00NR	2	20WP	G15_082	FROM->TO	G14-057T 345.00 - SUNNYSIDE 345KV CKT 1	717	789	0.07007	113.3206	GEN334392 1-EXXON MOBIL IPP 1
FDNS	00NR	2	20WP	G15_082	FROM->TO	G14-057T 345.00 - SUNNYSIDE 345KV CKT 1	717	789	0.07039	113.3158	NORTH 29TH CHICKASHA - VERDEN 138KV CKT 1
FDNS	00NR	2	20WP	G15_082	FROM->TO	G14-057T 345.00 - SUNNYSIDE 345KV CKT 1	717	789	0.07014	113.3138	MCNAB REC - Turk 115 115KV CKT 1
FDNS	00NR	2	20WP	G15_082	FROM->TO	G14-057T 345.00 - SUNNYSIDE 345KV CKT 1	717	789	0.07014	113.3138	TURK (TURK 1) 138/115/13.2KV TRANSFORMER CKT 1
FDNS	00NR	2	20WP	G15_082	FROM->TO	G14-057T 345.00 - SUNNYSIDE 345KV CKT 1	717	789	0.07014	113.3138	TURK (TURK 1) 138/115/13.2KV TRANSFORMER CKT 1
FDNS	00NR	2	20WP	G15_082	FROM->TO	G14-057T 345.00 - SUNNYSIDE 345KV CKT 1	717	789	0.07007	113.3133	GEN334393 1-EXXON MOBIL IPP 2
FDNS	00NR	2	20WP	G15_082	FROM->TO	G14-057T 345.00 - SUNNYSIDE 345KV CKT 1	717	789	0.07007	113.3133	GEN334394 1-EXXON MOBIL IPP 3
FDNS	00NR	2	16WP	G15_082	FROM->TO	G14-057T 345.00 - SUNNYSIDE 345KV CKT 1	717	789	0.07	113.312	GEN511848 1-SOUTHWESTERN STATION #3
FDNS	00NR	2	20WP	G15_082	FROM->TO	G14-057T 345.00 - SUNNYSIDE 345KV CKT 1	717	789	0.07039	113.3093	SWISSVALE - WEST GARDNER 345KV CKT 1
FDNS	00NR	2	20WP	G15_082	FROM->TO	G14-057T 345.00 - SUNNYSIDE 345KV CKT 1	717	789	0.07043	113.3069	WEATHERFORD TAP - WEATHERFORD WIND FARM 138KV CKT 1
FDNS	00NR	2	20WP	G15_082	FROM->TO	G14-057T 345.00 - SUNNYSIDE 345KV CKT 1	717	789	0.0699	113.306	ENOWILT - LONE OAK 138KV CKT 1
FDNS	00NR	2	20WP	G15_082	FROM->TO	G14-057T 345.00 - SUNNYSIDE 345KV CKT 1	717	789	0.0702	113.3037	FRANKLIN - FRANKLIN SW 138KV CKT 1
FDNS	00NR	2	20WP	G15_082	FROM->TO	G14-057T 345.00 - SUNNYSIDE 345KV CKT 1	717	789	0.07042	113.298	EMPORIA ENERGY CENTER - G14_001T 345.00 345KV CKT 1
FDNS	00NR	2	20WP	G15_082	FROM->TO	G14-057T 345.00 - SUNNYSIDE 345KV CKT 1	717	789	0.07056	113.2975	CLINTON JUNCTION - ELK CITY 138KV CKT 1
FDNS	00NR	2	20WP	G15_082	FROM->TO	G14-057T 345.00 - SUNNYSIDE 345KV CKT 1	717	789	0.07056	113.2975	CLINTON JUNCTION - ELK CITY 138KV CKT 1
FDNS	00NR	2	16WP	G15_082	FROM->TO	G14-057T 345.00 - SUNNYSIDE 345KV CKT 1	717	789	0.07013	113.2974	NORTHWEST TEXARKANA - VALLIANT 345KV CKT 1
FDNS	00NR	2	16WP	G15_082	FROM->TO	G14-057T 345.00 - SUNNYSIDE 345KV CKT 1	717	789	0.07013	113.2974	NORTHWEST TEXARKANA - VALLIANT 345KV CKT 1
FDNS	00NR	2	20WP	G15_082	FROM->TO	G14-057T 345.00 - SUNNYSIDE 345KV CKT 1	717	789	0.0699	113.2972	ENOWILT - SARDIS 138KV CKT 1
FDNS	00NR	2	20WP	G15_082	FROM->TO	G14-057T 345.00 - SUNNYSIDE 345KV CKT 1	717	789	0.07123	113.2966	LASALLE - STONEWAL LH138.00 138KV CKT 1
FDNS	00NR	2	20WP	G15_082	FROM->TO	G14-057T 345.00 - SUNNYSIDE 345KV CKT 1	717	789	0.07188	113.2956	BUCKNER7 345.00 - HOLCOMB 345KV CKT 1
FDNS	00NR	2	20WP	G15_082	FROM->TO	G14-057T 345.00 - SUNNYSIDE 345KV CKT 1	717	789	0.07188	113.2956	BUCKNER7 345.00 - HOLCOMB 345KV CKT 1
FDNS	00NR	2	20WP	G15_082	FROM->TO	G14-057T 345.00 - SUNNYSIDE 345KV CKT 1	717	789	0.07007	113.2919	SABINE 230/22.0KV TRANSFORMER CKT 1
FDNS	00NR	2	20WP	G15_082	FROM->TO	G14-057T 345.00 - SUNNYSIDE 345KV CKT 1	717	789	0.07007	113.2905	ST FRANCIS - ST FRANCIS 1 161KV CKT Z1
FDNS	00NR	2	20WP	G15_082	FROM->TO	G14-057T 345.00 - SUNNYSIDE 345KV CKT 1	717	789	0.07013	113.2894	P12:138:OKGE:3TERM12
FDNS	00NR	2	20WP	G15_082	FROM->TO	G14-057T 345.00 - SUNNYSIDE 345KV CKT 1	717	789	0.07015	113.2885	FLETCHER - MARLOW JCT 69KV CKT 1
FDNS	00NR	2	20WP	G15_082	FROM->TO	G14-057T 345.00 - SUNNYSIDE 345KV CKT 1	717	789	0.07008	113.2876	P12:138:AEPW:R.S.S-4:T.P.S.-4
FDNS	00NR	2	20WP	G15_082	FROM->TO	G14-057T 345.00 - SUNNYSIDE 345KV CKT 1	717	789	0.07073	113.2869	G15063_T 345.00 - WOODRING 345KV CKT 1
FDNS	00NR	2	20WP	G15_082	FROM->TO	G14-057T 345.00 - SUNNYSIDE 345KV CKT 1	717	789	0.07007	113.2853	GEN515042 1-SEMINOLE 3G
FDNS	00NR	2	20WP	G15_082	FROM->TO	G14-057T 345.00 - SUNNYSIDE 345KV CKT 1	717	789	0.07007	113.283	GEN501972 1-EVANGELINE UNIT 7-2
FDNS	00NR	2	20WP	G15_082	FROM->TO	G14-057T 345.00 - SUNNYSIDE 345KV CKT 1	717	789	0.07007	113.2829	GEN501971 1-EVANGELINE UNIT 7-1
FDNS	00NR	2	20WP	G15_082	FROM->TO	G14-057T 345.00 - SUNNYSIDE 345KV CKT 1	717	789	0.07123	113.2815	STONEWAL LH138.00 - TUPELO TAP 138KV CKT 1
FDNS	00NR	2	20WP	G15_082	FROM->TO	G14-057T 345.00 - SUNNYSIDE 345KV CKT 1	717	789	0.0703	113.2785	EMPORIA ENERGY CENTER - SWISSVALE 345KV CKT 1
FDNS	00NR	2	20WP	G15_082	FROM->TO	G14-057T 345.00 - SUNNYSIDE 345KV CKT 1	717	789	0.07017	113.2715	LAKEOVER - MCADAMS 500KV CKT 1
FDNS	00NR	2	20WP	G15_082	FROM->TO	G14-057T 345.00 - SUNNYSIDE 345KV CKT 1	717	789	0.07004	113.2702	P12:138:WFEC-AEPW:ELKCTY-4:ERICK4
FDNS	00NR	2	20WP	G15_082	FROM->TO	G14-057T 345.00 - SUNNYSIDE 345KV CKT 1	717	789	0.07069	113.2656	HINTON - WEATHERFORD JCT. 138KV CKT 1
FDNS	00NR	2	20WP	G15_082	FROM->TO	G14-057T 345.00 - SUNNYSIDE 345KV CKT 1	717	789	0.07108	113.2643	G13-010T 345.00 - POST ROCK 345KV CKT 1
FDNS	00NR	2	20WP	G15_082	FROM->TO	G14-057T 345.00 - SUNNYSIDE 345KV CKT 1	717	789	0.0699	113.2622	CLAYTON - SARDIS 138KV CKT 1
FDNS	00NR	2	20WP	G15_082	FROM->TO	G14-057T 345.00 - SUNNYSIDE 345KV CKT 1	717	789	0.07007	113.2621	P12:138:AEPW:R.S.S.-4:R:96YALE-4
FDNS	00NR	2	20WP	G15_082	FROM->TO	G14-057T 345.00 - SUNNYSIDE 345KV CKT 1	717	789	0.07022	113.2608	8WNEWMADRID 500.00 - DELL 500 500KV CKT 1
FDNS	00NR	2	20WP	G15_082	FROM->TO	G14-057T 345.00 - SUNNYSIDE 345KV CKT 1	717	789	0.07007	113.2603	GEN506749 1-EASTMAN GENERATION A
FDNS	00NR	2	20WP	G15_082	FROM->TO	G14-057T 345.00 - SUNNYSIDE 345KV CKT 1	717	789	0.07007	113.2598	GEN501912 1-ACADIA UNIT CT1B
FDNS	00NR	2	20WP	G15_082	FROM->TO	G14-057T 345.00 - SUNNYSIDE 345KV CKT 1	717	789	0.07007	113.2591	GEN501911 1-ACADIA UNIT CT1A
FDNS	00NR	2	20WP	G15_082	FROM->TO	G14-057T 345.00 - SUNNYSIDE 345KV CKT 1	717	789	0.07007	113.251	NELSON 230/24.0KV TRANSFORMER CKT 1
FDNS	00NR	2	20WP	G15_082	FROM->TO	G14-057T 345.00 - SUNNYSIDE 345KV CKT 1	717	789	0.07041	113.2485	CORNVILLE - NORGE ROAD 138KV CKT 1
FDNS	00NR	2	20WP	G15_082	FROM->TO	G14-057T 345.00 - SUNNYSIDE 345KV CKT 1	717	789	0.07041	113.2485	CORNVILLE - NORGE ROAD 138KV CKT 1
FDNS	00NR	2	20WP	G15_082	FROM->TO	G14-057T 345.00 - SUNNYSIDE 345KV CKT 1	717	789	0.07129	113.2465	BENTON - WICHITA 345KV CKT 1
FDNSLock	00NR	2	16WP	G15_082	FROM->TO	G14-057T 345.00 - SUNNYSIDE 345KV CKT 1	717	789	0.07	113.244	GEN629075 1-OTTUMWA GENERATOR FOR OTTUMWA UNIT NO 1

SOLUTION	GROUP	SCENARIO	SEASON	SOURCE	DIRECTION	MONITORED ELEMENT	RATEA (MVA)	RATEB(MVA)	TDF	TC%LOADING (% MVA)	CONTINGENCY
FDNS	00NR	2	20WP	G15_082	FROM->TO	G14-057T 345.00 - SUNNYSIDE 345KV CKT 1	717	789	0.07007	113.2399	P12:138:AEPW:MOHAWK4:T.NO--4
FDNS	00NR	2	20WP	G15_082	FROM->TO	G14-057T 345.00 - SUNNYSIDE 345KV CKT 1	717	789	0.07011	113.2381	AMITY SS - MURFREESBORO EAST (AECC) 115KV CKT 1
FDNS	00NR	2	20WP	G15_082	FROM->TO	G14-057T 345.00 - SUNNYSIDE 345KV CKT 1	717	789	0.06939	113.2349	ARBUCKLE - MILLCREEK 138KV CKT 1
FDNS	00NR	2	20WP	G15_082	FROM->TO	G14-057T 345.00 - SUNNYSIDE 345KV CKT 1	717	789	0.0699	113.2345	P12:138:AEPW-SWPA:LONEOAK4:BRKNBW4
FDNS	00NR	2	20WP	G15_082	FROM->TO	G14-057T 345.00 - SUNNYSIDE 345KV CKT 1	717	789	0.07007	113.2342	GEN336242 1-1NMIL ST1 18.000
FDNS	00NR	2	20WP	G15_082	FROM->TO	G14-057T 345.00 - SUNNYSIDE 345KV CKT 1	717	789	0.07009	113.2337	7JASPER 345.00 - MORGAN 345KV CKT 1
FDNS	00NR	2	20WP	G15_082	FROM->TO	G14-057T 345.00 - SUNNYSIDE 345KV CKT 1	717	789	0.07152	113.2328	FRANKLIN SW - WESTMOORE 138KV CKT 1
FDNS	00NR	2	20WP	G15_082	FROM->TO	G14-057T 345.00 - SUNNYSIDE 345KV CKT 1	717	789	0.07039	113.2283	CORNVILLE - NORTH 29TH CHICKASHA 138KV CKT 1
FDNS	00NR	2	20WP	G15_082	FROM->TO	G14-057T 345.00 - SUNNYSIDE 345KV CKT 1	717	789	0.07042	113.2279	G14_001T 345.00 - WICHITA 345KV CKT 1
FDNS	00NR	2	20WP	G15_082	FROM->TO	G14-057T 345.00 - SUNNYSIDE 345KV CKT 1	717	789	0.07027	113.2274	MCADAMS - WOLF CREEK 500KV CKT 1
FDNS	00NR	2	20WP	G15_082	FROM->TO	G14-057T 345.00 - SUNNYSIDE 345KV CKT 1	717	789	0.07007	113.2272	ST FRANCIS 345/161KV TRANSFORMER CKT 1
FDNS	00NR	2	20WP	G15_082	FROM->TO	G14-057T 345.00 - SUNNYSIDE 345KV CKT 1	717	789	0.0699	113.2237	CLAYTON - NASHOBA 138KV CKT 1
FDNS	00NR	2	20WP	G15_082	FROM->TO	G14-057T 345.00 - SUNNYSIDE 345KV CKT 1	717	789	0.07009	113.222	LAYFLD8 500.00 (LAYFLD AUTO) 500/230/13.8KV TRANSFORMER CKT 1
FDNS	00NR	2	20WP	G15_082	FROM->TO	G14-057T 345.00 - SUNNYSIDE 345KV CKT 1	717	789	0.07009	113.222	LAYFLD8 500.00 (LAYFLD AUTO) 500/230/13.8KV TRANSFORMER CKT 1
FDNS	00NR	2	20WP	G15_082	FROM->TO	G14-057T 345.00 - SUNNYSIDE 345KV CKT 1	717	789	0.07043	113.2199	WEATHERFORD SOUTHEAST - WEATHERFORD TAP 138KV CKT 1
FDNS	00NR	2	20WP	G15_082	FROM->TO	G14-057T 345.00 - SUNNYSIDE 345KV CKT 1	717	789	0.07007	113.2193	SABINE 138/22.0KV TRANSFORMER CKT 1
FDNS	00NR	2	20WP	G15_082	FROM->TO	G14-057T 345.00 - SUNNYSIDE 345KV CKT 1	717	789	0.07051	113.2134	DUNCAN - DUNCHERTP4 138.00 138KV CKT 1
FDNS	00NR	2	20WP	G15_082	FROM->TO	G14-057T 345.00 - SUNNYSIDE 345KV CKT 1	717	789	0.07051	113.2134	DUNCAN - DUNCHERTP4 138.00 138KV CKT 1
FDNS	00NR	2	20WP	G15_082	FROM->TO	G14-057T 345.00 - SUNNYSIDE 345KV CKT 1	717	789	0.07051	113.2128	DUNCAN EASTSIDE - DUNCHERTP4 138.00 138KV CKT 1
FDNS	00NR	2	20WP	G15_082	FROM->TO	G14-057T 345.00 - SUNNYSIDE 345KV CKT 1	717	789	0.0699	113.2107	BETHEL - NASHOBA 138KV CKT 1
FDNS	00NR	2	20WP	G15_082	FROM->TO	G14-057T 345.00 - SUNNYSIDE 345KV CKT 1	717	789	0.07034	113.2071	SEMINOLE (SEMINOL2) 345/138/14.4KV TRANSFORMER CKT 1
FDNS	00NR	2	20WP	G15_082	FROM->TO	G14-057T 345.00 - SUNNYSIDE 345KV CKT 1	717	789	0.07129	113.2013	CIMARRON - NORTHWEST 345KV CKT 1
FDNS	00NR	2	20WP	G15_082	FROM->TO	G14-057T 345.00 - SUNNYSIDE 345KV CKT 1	717	789	0.07069	113.1937	HINTON - REDROCKRD4 138.00 138KV CKT 1
FDNS	00NR	2	20WP	G15_082	FROM->TO	G14-057T 345.00 - SUNNYSIDE 345KV CKT 1	717	789	0.07007	113.1842	GEN338146 1-INDEPENDENCE UNIT #2
FDNS	00NR	2	20WP	G15_082	FROM->TO	G14-057T 345.00 - SUNNYSIDE 345KV CKT 1	717	789	0.07146	113.1716	MARIETTA - MARIETTA4 138.00 138KV CKT 1
FDNS	00NR	2	20WP	G15_082	FROM->TO	G14-057T 345.00 - SUNNYSIDE 345KV CKT 1	717	789	0.07019	113.1699	P12:138:OKGE:3TERM20
FDNS	00NR	2	20WP	G15_082	FROM->TO	G14-057T 345.00 - SUNNYSIDE 345KV CKT 1	717	789	0.07043	113.1624	CLINTON JUNCTION - CLINTON NATURAL GAS TAP 138KV CKT 1
FDNS	00NR	2	20WP	G15_082	FROM->TO	G14-057T 345.00 - SUNNYSIDE 345KV CKT 1	717	789	0.07033	113.1526	COMANCHE - WALTERS 69KV CKT 1
FDNS	00NR	2	16WP	G15_082	FROM->TO	G14-057T 345.00 - SUNNYSIDE 345KV CKT 1	717	789	0.07	113.1138	SHERBURNE CO 345/24.0KV TRANSFORMER CKT 1
FDNS	00NR	2	16WP	G15_082	FROM->TO	G14-057T 345.00 - SUNNYSIDE 345KV CKT 1	717	789	0.07	113.0901	GEN635214 4-NEAL UNIT 4
FDNS	00NR	2	16WP	G15_082	FROM->TO	G14-057T 345.00 - SUNNYSIDE 345KV CKT 1	717	789	0.06652	113.0627	CHISHOLM6 230.00 - SWEETWATER 230KV CKT 1
FDNS	00NR	2	16WP	G15_082	FROM->TO	G14-057T 345.00 - SUNNYSIDE 345KV CKT 1	717	789	0.07	113.0382	GEN563043 1-G15068_4 0.6900
FDNS	00NR	2	16WP	G15_082	FROM->TO	G14-057T 345.00 - SUNNYSIDE 345KV CKT 1	717	789	0.07	113.0166	GEN526333 1-JONES GEN #3 21 KV
FDNS	00NR	2	16WP	G15_082	FROM->TO	G14-057T 345.00 - SUNNYSIDE 345KV CKT 1	717	789	0.07	113.0165	GEN526334 1-JONES_4 116.500
FDNS	00NR	2	16WP	G15_082	FROM->TO	G14-057T 345.00 - SUNNYSIDE 345KV CKT 1	717	789	0.07	112.9641	GEN525844 1-ELK_1 118.000
FDNS	00NR	2	16WP	G15_082	FROM->TO	G14-057T 345.00 - SUNNYSIDE 345KV CKT 1	717	789	0.07	112.9588	GEN525845 1-ELK_2 1 138.00
FDNS	00NR	2	16WP	G15_082	FROM->TO	G14-057T 345.00 - SUNNYSIDE 345KV CKT 1	717	789	0.07	112.9228	GEN600002 3-SHERBURNE CNTY G3
FDNS	00NR	2	16WP	G15_082	FROM->TO	G14-057T 345.00 - SUNNYSIDE 345KV CKT 1	717	789	0.07	112.8751	GEN563202 1-G15085_3 0.5500
FDNS	00NR	2	16WP	G15_082	FROM->TO	G14-057T 345.00 - SUNNYSIDE 345KV CKT 1	717	789	0.07	112.8439	GEN344225 1-1CAL G1 25.000
FDNS	00NR	2	16WP	G15_082	FROM->TO	G14-057T 345.00 - SUNNYSIDE 345KV CKT 1	717	789	0.07	112.8273	GEN525562 1-TOLK GEN #2 24 KV
FDNS	00NR	2	16WP	G15_082	FROM->TO	G14-057T 345.00 - SUNNYSIDE 345KV CKT 1	717	789	0.07	112.788	GEN527166 1-MUSTANG_6 118.000
FDNS	00NR	2	20WP	G15_082	FROM->TO	G14-057T 345.00 - SUNNYSIDE 345KV CKT 1	717	789	0.07007	112.7462	803-OKLAUNION
FDNS	00NR	2	16WP	G15_082	FROM->TO	G14-057T 345.00 - SUNNYSIDE 345KV CKT 1	717	789	0.06947	112.742	JOHNSON COUNTY (JOHNCO) 345/138/13.8KV TRANSFORMER CKT 1
FDNS	00NR	2	16WP	G15_082	FROM->TO	G14-057T 345.00 - SUNNYSIDE 345KV CKT 1	717	789	0.07	112.689	GEN635023 3-WALTER SCOTT UNIT 3
FDNS	00NR	2	16WP	G15_082	FROM->TO	G14-057T 345.00 - SUNNYSIDE 345KV CKT 1	717	789	0.07	112.6383	GEN562590 1-G14_057_3 0.6900
FDNS	00NR	2	16WP	G15_082	FROM->TO	G14-057T 345.00 - SUNNYSIDE 345KV CKT 1	717	789	0.07	112.608	GEN562762 1-G15033_3 0.6900
FDNS	00NR	2	16WP	G15_082	FROM->TO	G14-057T 345.00 - SUNNYSIDE 345KV CKT 1	717	789	0.07	112.5985	GEN562655 1-G14_074_3 0.6900
FDNS	00NR	2	16WP	G15_082	FROM->TO	G14-057T 345.00 - SUNNYSIDE 345KV CKT 1	717	789	0.07	112.5755	GEN525561 1-TOLK GEN #1 24 KV
FDNS	00NR	2	16WP	G15_082	FROM->TO	G14-057T 345.00 - SUNNYSIDE 345KV CKT 1	717	789	0.0702	112.5564	LYDIA - WELSH 345KV CKT 1
FDNS	00NR	2	16WP	G15_082	FROM->TO	G14-057T 345.00 - SUNNYSIDE 345KV CKT 1	717	789	0.0702	112.5564	LYDIA - WELSH 345KV CKT 1
FDNS	00NR	2	16WP	G15_082	FROM->TO	G14-057T 345.00 - SUNNYSIDE 345KV CKT 1	717	789	0.07	112.546	GEN562685 1-G15_013_3 0.3550
FDNS	00NR	2	20WP	G15_082	FROM->TO	G14-057T 345.00 - SUNNYSIDE 345KV CKT 1	717	789	0.06883	112.5276	P12:138:OKGE:3TERM39
FDNS	00NR	2	20WP	G15_082	FROM->TO	G14-057T 345.00 - SUNNYSIDE 345KV CKT 1	717	789	0.07073	112.4138	NORTHWEST - SPRING CREEK 345KV CKT 1
FDNS	00NR	2	20WP	G15_082	FROM->TO	G14-057T 345.00 - SUNNYSIDE 345KV CKT 1	717	789	0.07073	112.4006	SOONER - SPRING CREEK 345KV CKT 1
FDNS	00NR	2	16WP	G15_082	FROM->TO	G14-057T 345.00 - SUNNYSIDE 345KV CKT 1	717	789	0.07	112.3986	GEN527903 1-HOBBS PLANT #3 (ST)
FDNS	00NR	2	16WP	G15_082	FROM->TO	G14-057T 345.00 - SUNNYSIDE 345KV CKT 1	717	789	0.07	112.3955	GEN563273 2-G15093_4 0.6900
FDNS	00NR	2	20WP	G15_082	FROM->TO	G14-057T 345.00 - SUNNYSIDE 345KV CKT 1	717	789	0.06917	112.3548	MAYSVILLE - MAYSVLT4 138.00 138KV CKT 1
FDNS	00NR	2	20WP	G15_082	FROM->TO	G14-057T 345.00 - SUNNYSIDE 345KV CKT 1	717	789	0.06938	112.3262	BEARCAT 138.00 - NINE MILE 138KV CKT 1
FDNS	00NR	2	20WP	G15_082	FROM->TO	G14-057T 345.00 - SUNNYSIDE 345KV CKT 1	717	789	0.07007	112.3081	GEN521103 1-BLUE CANYON WIND FARM
FDNS	00NR	2	20WP	G15_082	FROM->TO	G14-057T 345.00 - SUNNYSIDE 345KV CKT 1	717	789	0.07012	112.3061	NORTHWEST TEXARKANA - WELSH 345KV CKT 1
FDNS	00NR	2	20WP	G15_082	FROM->TO	G14-057T 345.00 - SUNNYSIDE 345KV CKT 1	717	789	0.07012	112.3061	NORTHWEST TEXARKANA - WELSH 345KV CKT 1
FDNS	00NR	2	20WP	G15_082	FROM->TO	G14-057T 345.00 - SUNNYSIDE 345KV CKT 1	717	789	0.07007	112.2918	GEN520812 1-ANADRK5
FDNS	00NR	2	20WP	G15_082	FROM->TO	G14-057T 345.00 - SUNNYSIDE 345KV CKT 1	717	789	0.07007	112.2918	GEN520813 1-ANADRK6
FDNS	00NR	2	20WP	G15_082	FROM->TO	G14-057T 345.00 - SUNNYSIDE 345KV CKT 1	717	789	0.07044	112.2889	DRAPER LAKE - MIDWEST TAP 138KV CKT 1
FDNS	00NR	2	20WP	G15_082	FROM->TO	G14-057T 345.00 - SUNNYSIDE 345KV CKT 1	717	789	0.06917	112.2887	MAYSVLT4 138.00 - PRAIRIE POINT 138KV CKT 1
FDNS	00NR	2	20WP	G15_082	FROM->TO	G14-057T 345.00 - SUNNYSIDE 345KV CKT 1	717	789	0.07007	112.2769	GEN530690 1-PRWINDG1 0.6900
FDNS	00NR	2	20WP	G15_082	FROM->TO	G14-057T 345.00 - SUNNYSIDE 345KV CKT 1	717	789	0.07007	112.2701	P12:069:OKGE:3TERM42
FDNS	00NR	2	20WP	G15_082	FROM->TO	G14-057T 345.00 - SUNNYSIDE 345KV CKT 1	717	789	0.07007	112.2697	GEN562691 1-G15_015_3 0.6900
FDNS	00NR	2	20WP	G15_082	FROM->TO	G14-057T 345.00 - SUNNYSIDE 345KV CKT 1	717	789	0.07013	112.2696	WELSH - WILKES 345KV CKT 1
FDNS	00NR	2	20WP	G15_082	FROM->TO	G14-057T 345.00 - SUNNYSIDE 345KV CKT 1	717	789	0.07013	112.2696	WELSH - WILKES 345KV CKT 1
FDNS	00NR	2	20WP	G15_082	FROM->TO	G14-057T 345.00 - SUNNYSIDE 345KV CKT 1	717	789	0.07007	112.2685	GEN511961 1-DEMPSEY-WTG10.7000
FDNS	00NR	2	20WP	G15_082	FROM->TO	G14-057T 345.00 - SUNNYSIDE 345KV CKT 1	717	789	0.06936	112.2651	ARBUCKLE - SULPHR 4 138.00 138KV CKT 1
FDNS	00NR	2	20WP	G15_082	FROM->TO	G14-057T 345.00 - SUNNYSIDE 345KV CKT 1	717	789	0.07007	112.265	GEN562772 1-G15034_3 0.6900
FDNS	00NR	2	20WP	G15_082	FROM->TO	G14-057T 345.00 - SUNNYSIDE 345KV CKT 1	717	789	0.07007	112.265	GEN600046 1-MECST
FDNS	00NR	2	16WP	G15_082	FROM->TO	G14-057T 345.00 - SUNNYSIDE 345KV CKT 1	717	789	0.07	112.2631	GEN635024 4-WALTER SCOTT UNIT 4
FDNS	00NR	2	20WP	G15_082	FROM->TO	G14-057T 345.00 - SUNNYSIDE 345KV CKT 1	717	789	0.07007	112.2568	GEN629071 1-BURLINGTON GENERATOR FOR UNIT NO 1 E
FDNS	00NR	2	20WP	G15_082	FROM->TO	G14-057T 345.00 - SUNNYSIDE 345KV CKT 1	717	789	0.06935	112.2562	CIMARRON - MATHWSN7 345.00 345KV CKT 1
FDNS	00NR	2	20WP	G15_082	FROM->TO	G14-057T 345.00 - SUNNYSIDE 345KV CKT 1	717	789	0.06935	112.2562	CIMARRON - MATHWSN7 345.00 345KV CKT 2
FDNS	00NR	2	20WP	G15_082	FROM->TO	G14-057T 345.00 - SUNNYSIDE 345KV CKT 1	717	789	0.07045	112.2558	P12:138:OKGE:3TERM21

SOLUTION	GROUP	SCENARIO	SEASON	SOURCE	DIRECTION	MONITORED ELEMENT	RATEA (MVA)	RATEB(MVA)	TDF	TC%LOADING (% MVA)	CONTINGENCY
FDNS	00NR	2	20WP	G15_082	FROM->TO	G14-057T 345.00 - SUNNYSIDE 345KV CKT 1	717	789	0.07007	112.252	GEN629070 2-BEAVER CHANNEL GENERATORFOR UNIT NO 2
FDNS	00NR	2	20WP	G15_082	FROM->TO	G14-057T 345.00 - SUNNYSIDE 345KV CKT 1	717	789	0.07007	112.2511	GEN600047 1-MECCT1
FDNS	00NR	2	20WP	G15_082	FROM->TO	G14-057T 345.00 - SUNNYSIDE 345KV CKT 1	717	789	0.07009	112.2462	P12:138:WFEC:MSL11
FDNS	00NR	2	20WP	G15_082	FROM->TO	G14-057T 345.00 - SUNNYSIDE 345KV CKT 1	717	789	0.07009	112.2462	P12:138:WFEC-AEPW:PHAROAH4:LONEOAK4
FDNS	00NR	2	20WP	G15_082	FROM->TO	G14-057T 345.00 - SUNNYSIDE 345KV CKT 1	717	789	0.07007	112.2436	GEN563052 1-G15069_3 0.6900
FDNS	00NR	2	20WP	G15_082	FROM->TO	G14-057T 345.00 - SUNNYSIDE 345KV CKT 1	717	789	0.06938	112.2408	P12:138:WFEC:MSL14
FDNS	00NR	2	20WP	G15_082	FROM->TO	G14-057T 345.00 - SUNNYSIDE 345KV CKT 1	717	789	0.07013	112.2312	GLASSES - MADILL INDUSTRIAL TAP 138KV CKT 1
FDNS	00NR	2	20WP	G15_082	FROM->TO	G14-057T 345.00 - SUNNYSIDE 345KV CKT 1	717	789	0.07007	112.2269	GEN615010 1-STANTON4
FDNS	00NR	2	20WP	G15_082	FROM->TO	G14-057T 345.00 - SUNNYSIDE 345KV CKT 1	717	789	0.07007	112.2264	BURLINGTON NO1 + NO 2 + NO 3 161/20.0KV TRANSFORMER CKT 1
FDNS	00NR	2	20WP	G15_082	FROM->TO	G14-057T 345.00 - SUNNYSIDE 345KV CKT 1	717	789	0.07007	112.2216	GEN615021 1-GRE-ER 14G 16.000
FDNS	00NR	2	20WP	G15_082	FROM->TO	G14-057T 345.00 - SUNNYSIDE 345KV CKT 1	717	789	0.07014	112.2196	CANEY CREEK - JOHNSON COUNTY 138KV CKT 1
FDNS	00NR	2	20WP	G15_082	FROM->TO	G14-057T 345.00 - SUNNYSIDE 345KV CKT 1	717	789	0.07031	112.2159	OVEXFRMCCOVE
FDNS	00NR	2	20WP	G15_082	FROM->TO	G14-057T 345.00 - SUNNYSIDE 345KV CKT 1	717	789	0.07146	112.2057	LEBANON - TEXOMA JCT 138KV CKT 1
FDNS	00NR	2	20WP	G15_082	FROM->TO	G14-057T 345.00 - SUNNYSIDE 345KV CKT 1	717	789	0.07007	112.2042	GEN515443 1-MNCOWND1 0.7000
FDNS	00NR	2	20WP	G15_082	FROM->TO	G14-057T 345.00 - SUNNYSIDE 345KV CKT 1	717	789	0.0702	112.2012	P12:138:WFEC:MSL08
FDNS	00NR	2	20WP	G15_082	FROM->TO	G14-057T 345.00 - SUNNYSIDE 345KV CKT 1	717	789	0.06938	112.1999	BEARCAT 138.00 - MOORELAND 138KV CKT 1
FDNS	00NR	2	20WP	G15_082	FROM->TO	G14-057T 345.00 - SUNNYSIDE 345KV CKT 1	717	789	0.07007	112.1975	GEN531447 1-HOLCOMB GENERATOR
FDNS	00NR	2	20WP	G15_082	FROM->TO	G14-057T 345.00 - SUNNYSIDE 345KV CKT 1	717	789	0.06917	112.1967	PRAIRIE POINT - RATLIFF 138KV CKT 1
FDNS	00NR	2	20WP	G15_082	FROM->TO	G14-057T 345.00 - SUNNYSIDE 345KV CKT 1	717	789	0.07007	112.1934	GEN560183 1-REDHIL-WTG1 12.000
FDNS	00NR	2	20WP	G15_082	FROM->TO	G14-057T 345.00 - SUNNYSIDE 345KV CKT 1	717	789	0.07007	112.1805	INDEPENDENCE 500/26.0KV TRANSFORMER CKT 1
FDNS	00NR	2	20WP	G15_082	FROM->TO	G14-057T 345.00 - SUNNYSIDE 345KV CKT 1	717	789	0.06999	112.1752	CARTER - CHICKASAW 138KV CKT 1
FDNS	00NR	2	20WP	G15_082	FROM->TO	G14-057T 345.00 - SUNNYSIDE 345KV CKT 1	717	789	0.07013	112.1715	GLASSES - RUSSETT 138KV CKT 1
FDNS	00NR	2	20WP	G15_082	FROM->TO	G14-057T 345.00 - SUNNYSIDE 345KV CKT 1	717	789	0.06979	112.1699	ALTUS JUNCTION - RUSSELL 138KV CKT 1
FDNS	00NR	2	20WP	G15_082	FROM->TO	G14-057T 345.00 - SUNNYSIDE 345KV CKT 1	717	789	0.06979	112.1699	ALTUS JUNCTION - RUSSELL 138KV CKT 1
FDNS	00NR	2	20WP	G15_082	FROM->TO	G14-057T 345.00 - SUNNYSIDE 345KV CKT 1	717	789	0.07023	112.1634	CANADIAN RIVER - MCALESTER SOUTH 138KV CKT 1
FDNS	00NR	2	20WP	G15_082	FROM->TO	G14-057T 345.00 - SUNNYSIDE 345KV CKT 1	717	789	0.07023	112.1634	CANADIAN RIVER - MCALESTER SOUTH 138KV CKT 1
FDNS	00NR	2	20WP	G15_082	FROM->TO	G14-057T 345.00 - SUNNYSIDE 345KV CKT 1	717	789	0.07007	112.1617	GEN600067 9-HIGH BRIDGE
FDNS	00NR	2	20WP	G15_082	FROM->TO	G14-057T 345.00 - SUNNYSIDE 345KV CKT 1	717	789	0.07073	112.1615	G15063_T 345.00 - MATHWSN7 345.00 345KV CKT 1
FDNS	00NR	2	20WP	G15_082	FROM->TO	G14-057T 345.00 - SUNNYSIDE 345KV CKT 1	717	789	0.07023	112.1615	CANADIAN RIVER () 345/138/13.8KV TRANSFORMER CKT 1
FDNS	00NR	2	20WP	G15_082	FROM->TO	G14-057T 345.00 - SUNNYSIDE 345KV CKT 1	717	789	0.07023	112.1615	CANADIAN RIVER () 345/138/13.8KV TRANSFORMER CKT 1
FDNS	00NR	2	20WP	G15_082	FROM->TO	G14-057T 345.00 - SUNNYSIDE 345KV CKT 1	717	789	0.07201	112.1606	G15061_T 345.00 - SETAB 345KV CKT 1
FDNS	00NR	2	20WP	G15_082	FROM->TO	G14-057T 345.00 - SUNNYSIDE 345KV CKT 1	717	789	0.06999	112.157	HUGO (HUGO 1) 345/138/13.8KV TRANSFORMER CKT 1
FDNS	00NR	2	20WP	G15_082	FROM->TO	G14-057T 345.00 - SUNNYSIDE 345KV CKT 1	717	789	0.06942	112.1564	P12:138:AEPW:112GORE4:SNYDER-4
FDNS	00NR	2	20WP	G15_082	FROM->TO	G14-057T 345.00 - SUNNYSIDE 345KV CKT 1	717	789	0.07007	112.1559	P12:230:UMZB:# 112 #: NU IN SD. NU-RCDC & DRY CREEK XFMR
FDNS	00NR	2	20WP	G15_082	FROM->TO	G14-057T 345.00 - SUNNYSIDE 345KV CKT 1	717	789	0.07007	112.1555	RCDC EAST 4230.00 - RED CEDAR DC 230KV CKT 1
FDNS	00NR	2	20WP	G15_082	FROM->TO	G14-057T 345.00 - SUNNYSIDE 345KV CKT 1	717	789	0.06979	112.1465	ROCKY POINT - SPRINGDALE 138KV CKT 1
FDNS	00NR	2	20WP	G15_082	FROM->TO	G14-057T 345.00 - SUNNYSIDE 345KV CKT 1	717	789	0.07022	112.1415	GRPRAR1-LNX3345.00 - YANKTON 345KV CKT Z
FDNS	00NR	2	20WP	G15_082	FROM->TO	G14-057T 345.00 - SUNNYSIDE 345KV CKT 1	717	789	0.07022	112.1401	GRPRAR1-LNX3345.00 - HOLT.CO3 345.00 345KV CKT 1
FDNS	00NR	2	20WP	G15_082	FROM->TO	G14-057T 345.00 - SUNNYSIDE 345KV CKT 1	717	789	0.07042	112.1374	CHAMBER SPRINGS - CLARKSVILLE 345KV CKT 1
FDNS	00NR	2	20WP	G15_082	FROM->TO	G14-057T 345.00 - SUNNYSIDE 345KV CKT 1	717	789	0.06936	112.1191	JOLLYVILLE - SULPHR 4 138.00 138KV CKT 1
FDNS	00NR	2	20WP	G15_082	FROM->TO	G14-057T 345.00 - SUNNYSIDE 345KV CKT 1	717	789	0.07007	112.1163	GEN562802 1-G15039_3 0.3570
FDNS	00NR	2	20WP	G15_082	FROM->TO	G14-057T 345.00 - SUNNYSIDE 345KV CKT 1	717	789	0.07007	112.1139	GEN562078 1-G11_051_3 0.6900
FDNS	00NR	2	20WP	G15_082	FROM->TO	G14-057T 345.00 - SUNNYSIDE 345KV CKT 1	717	789	0.07007	112.1109	GEN563242 1-G15090_3 0.6900
FDNS	00NR	2	20WP	G15_082	FROM->TO	G14-057T 345.00 - SUNNYSIDE 345KV CKT 1	717	789	0.07007	112.1049	GEN524285 1-WILDORADO WIND GEN
FDNS	00NR	2	20WP	G15_082	FROM->TO	G14-057T 345.00 - SUNNYSIDE 345KV CKT 1	717	789	0.07007	112.1011	GEN629072 4-LANSING GENERATOR FOR UNITS NO4 EIA CODE 1
FDNS	00NR	2	20WP	G15_082	FROM->TO	G14-057T 345.00 - SUNNYSIDE 345KV CKT 1	717	789	0.07007	112.0886	GEN562902 1-G15052_3 0.6900
FDNS	00NR	2	20WP	G15_082	FROM->TO	G14-057T 345.00 - SUNNYSIDE 345KV CKT 1	717	789	0.07007	112.0862	GEN560331 1-G10-46 13.800
FDNS	00NR	2	20WP	G15_082	FROM->TO	G14-057T 345.00 - SUNNYSIDE 345KV CKT 1	717	789	0.07007	112.0824	GEN524295 1-SPNSPUR_WND10.6900
FDNS	00NR	2	20WP	G15_082	FROM->TO	G14-057T 345.00 - SUNNYSIDE 345KV CKT 1	717	789	0.07007	112.0674	GEN562587 1-G14_056_3 0.6900
FDNS	00NR	2	20WP	G15_082	FROM->TO	G14-057T 345.00 - SUNNYSIDE 345KV CKT 1	717	789	0.07007	112.0551	GEN562269 1-G12-020-1 0.6900
FDNS	00NR	2	20WP	G15_082	FROM->TO	G14-057T 345.00 - SUNNYSIDE 345KV CKT 1	717	789	0.06936	112.0548	JOLLYVILLE - KERR MCGEE CIMARRON 138KV CKT 1
FDNS	00NR	2	20WP	G15_082	FROM->TO	G14-057T 345.00 - SUNNYSIDE 345KV CKT 1	717	789	0.07007	112.0497	GEN524023 1-NICHOLS GEN #3 22 KV
FDNS	00NR	2	20WP	G15_082	FROM->TO	G14-057T 345.00 - SUNNYSIDE 345KV CKT 1	717	789	0.07007	112.049	GEN657749 1-YOUNG 1 GENERATOR
FDNS	00NR	2	20WP	G15_082	FROM->TO	G14-057T 345.00 - SUNNYSIDE 345KV CKT 1	717	789	0.07007	112.0153	GEN562812 1-G15040_3 0.3570
FDNS	00NR	2	20WP	G15_082	FROM->TO	G14-057T 345.00 - SUNNYSIDE 345KV CKT 1	717	789	0.07014	112.0127	CROCKETT - TENASKA RUSK COUNTY 345KV CKT 1
FDNS	00NR	2	20WP	G15_082	FROM->TO	G14-057T 345.00 - SUNNYSIDE 345KV CKT 1	717	789	0.07007	112.0108	GEN562270 1-G12-020-2 0.6900
FDNS	00NR	2	20WP	G15_082	FROM->TO	G14-057T 345.00 - SUNNYSIDE 345KV CKT 1	717	789	0.07007	112.0087	GEN563132 1-G15078_3 0.3570
FDNS	00NR	2	20WP	G15_082	FROM->TO	G14-057T 345.00 - SUNNYSIDE 345KV CKT 1	717	789	0.07014	112.0079	LEBROCK - TENASKA RUSK COUNTY 345KV CKT 1
FDNS	00NR	2	20WP	G15_082	FROM->TO	G14-057T 345.00 - SUNNYSIDE 345KV CKT 1	717	789	0.07007	112.0079	GEN514805 1-SOONER UNIT 1
FDNS	00NR	2	20WP	G15_082	FROM->TO	G14-057T 345.00 - SUNNYSIDE 345KV CKT 1	717	789	0.06936	112.0064	ARBWIND4 138.00 - KERR MCGEE CIMARRON 138KV CKT 1
FDNS	00NR	2	20WP	G15_082	FROM->TO	G14-057T 345.00 - SUNNYSIDE 345KV CKT 1	717	789	0.07007	111.9994	GEN563102 1-G15075_3 0.5500
FDNS	00NR	2	20WP	G15_082	FROM->TO	G14-057T 345.00 - SUNNYSIDE 345KV CKT 1	717	789	0.07007	111.9883	GEN514806 1-SOONER UNIT 2
FDNS	00NR	2	20WP	G15_082	FROM->TO	G14-057T 345.00 - SUNNYSIDE 345KV CKT 1	717	789	0.07007	111.9766	GEN563062 1-G15071_3 0.6900
FDNS	00NR	2	20WP	G15_082	FROM->TO	G14-057T 345.00 - SUNNYSIDE 345KV CKT 1	717	789	0.07007	111.9572	GEN562974 1-G15060_5 0.6900
FDNS	00NR	2	20WP	G15_082	FROM->TO	G14-057T 345.00 - SUNNYSIDE 345KV CKT 1	717	789	0.07007	111.9519	GEN562882 1-G15047_3 0.6900
FDNS	00NR	2	16WP	G15_082	FROM->TO	G14-057T 345.00 - SUNNYSIDE 345KV CKT 1	717	789	0.07191	111.9516	G15093_T 345.00 - LAWTON EASTSIDE 345KV CKT 1
FDNS	00NR	2	20WP	G15_082	FROM->TO	G14-057T 345.00 - SUNNYSIDE 345KV CKT 1	717	789	0.06944	111.948	CHICKASAW - TOTAL 138KV CKT 1
FDNS	00NR	2	20WP	G15_082	FROM->TO	G14-057T 345.00 - SUNNYSIDE 345KV CKT 1	717	789	0.07007	111.9476	GEN562973 1-G15060_4 0.6900
FDNS	00NR	2	20WP	G15_082	FROM->TO	G14-057T 345.00 - SUNNYSIDE 345KV CKT 1	717	789	0.07007	111.9406	GEN521112 1-ORME3 13.800
FDNS	00NR	2	20WP	G15_082	FROM->TO	G14-057T 345.00 - SUNNYSIDE 345KV CKT 1	717	789	0.07	111.939	BROWN - RUSSETT 138KV CKT 1
FDNS	00NR	2	20WP	G15_082	FROM->TO	G14-057T 345.00 - SUNNYSIDE 345KV CKT 1	717	789	0.07007	111.9313	GEN345671 2-1RUSH G2 18.000
FDNS	00NR	2	20WP	G15_082	FROM->TO	G14-057T 345.00 - SUNNYSIDE 345KV CKT 1	717	789	0.07007	111.9294	GEN345670 1-1RUSH G1 18.000
FDNS	00NR	2	20WP	G15_082	FROM->TO	G14-057T 345.00 - SUNNYSIDE 345KV CKT 1	717	789	0.07007	111.9177	GEN560105 1-G08-22 0.6900
FDNS	00NR	2	20WP	G15_082	FROM->TO	G14-057T 345.00 - SUNNYSIDE 345KV CKT 1	717	789	0.07007	111.9064	4SIOUX 1 138.00 138/18.0KV TRANSFORMER CKT 1
FDNS	00NR	2	20WP	G15_082	FROM->TO	G14-057T 345.00 - SUNNYSIDE 345KV CKT 1	717	789	0.07007	111.9021	GEN562550 1-G14_040_3 0.6900
FDNS	00NR	2	20WP	G15_082	FROM->TO	G14-057T 345.00 - SUNNYSIDE 345KV CKT 1	717	789	0.07	111.8751	RUSSETT - RUSSETT 138KV CKT 1
FDNS	00NR	2	20WP	G15_082	FROM->TO	G14-057T 345.00 - SUNNYSIDE 345KV CKT 1	717	789	0.07007	111.8725	GEN681522 3-GENOA 3
FDNS	00NR	2	20WP	G15_082	FROM->TO	G14-057T 345.00 - SUNNYSIDE 345KV CKT 1	717	789	0.07007	111.8554	EASTDC - ERCOT EQUIVALENCE 345KV CKT 1
FDNS	00NR	2	20WP	G15_082	FROM->TO	G14-057T 345.00 - SUNNYSIDE 345KV CKT 1	717	789	0.07007	111.8509	GEN511962 2-RKYRDGW2-1 0.7000

SOLUTION	GROUP	SCENARIO	SEASON	SOURCE	DIRECTION	MONITORED ELEMENT	RATEA (MVA)	RATEB(MVA)	TDF	TC%LOADING (% MVA)	CONTINGENCY
FDNS	00NR	2	20WP	G15_082	FROM->TO	G14-057T 345.00 - SUNNYSIDE 345KV CKT 1	717	789	0.07007	111.8505	GEN527161 1-MUSTANG GEN #1
FDNS	00NR	2	20WP	G15_082	FROM->TO	G14-057T 345.00 - SUNNYSIDE 345KV CKT 1	717	789	0.07007	111.8505	GEN527162 1-MUSTANG GEN #2
FDNS	00NR	2	20WP	G15_082	FROM->TO	G14-057T 345.00 - SUNNYSIDE 345KV CKT 1	717	789	0.06968	111.8483	ROCKY POINT - SUNNYSIDE 138KV CKT 1
FDNS	00NR	2	20WP	G15_082	FROM->TO	G14-057T 345.00 - SUNNYSIDE 345KV CKT 1	717	789	0.06905	111.8452	ARKANSAS NUCLEAR ONE - FT SMITH 500KV CKT 1
FDNS	00NR	2	20WP	G15_082	FROM->TO	G14-057T 345.00 - SUNNYSIDE 345KV CKT 1	717	789	0.06905	111.8452	ARKANSAS NUCLEAR ONE - FT SMITH 500KV CKT 1
FDNS	00NR	2	20WP	G15_082	FROM->TO	G14-057T 345.00 - SUNNYSIDE 345KV CKT 1	717	789	0.06996	111.8209	RUSSETT - SPRINGDALE 138KV CKT 1
FDNS	00NR	2	20WP	G15_082	FROM->TO	G14-057T 345.00 - SUNNYSIDE 345KV CKT 1	717	789	0.07007	111.8181	GEN525494 1-PLANT X GEN #4 20 KV
FDNS	00NR	2	20WP	G15_082	FROM->TO	G14-057T 345.00 - SUNNYSIDE 345KV CKT 1	717	789	0.07007	111.8156	GEN563192 1-G15084_3 0.5500
FDNS	00NR	2	20WP	G15_082	FROM->TO	G14-057T 345.00 - SUNNYSIDE 345KV CKT 1	717	789	0.07007	111.811	GEN672321 1-SHAND GENERATOR 1
FDNS	00NR	2	20WP	G15_082	FROM->TO	G14-057T 345.00 - SUNNYSIDE 345KV CKT 1	717	789	0.07007	111.8023	GEN527882 1-CUNNINGHAM GEN #2 20 KV
FDNS	00NR	2	20WP	G15_082	FROM->TO	G14-057T 345.00 - SUNNYSIDE 345KV CKT 1	717	789	0.07007	111.7881	GEN672310 1-POPLAR RIVER GENERATOR 1
FDNS	00NR	2	20WP	G15_082	FROM->TO	G14-057T 345.00 - SUNNYSIDE 345KV CKT 1	717	789	0.07007	111.7881	GEN672311 2-POPLAR RIVER GENERATOR 2
FDNS	00NR	2	20WP	G15_082	FROM->TO	G14-057T 345.00 - SUNNYSIDE 345KV CKT 1	717	789	0.07007	111.7866	GEN527163 1-MUSTANG GEN #3 22 KV
FDNS	00NR	2	20WP	G15_082	FROM->TO	G14-057T 345.00 - SUNNYSIDE 345KV CKT 1	717	789	0.07005	111.7858	P12:138:WFEC-AEPW:GOLDENSW4:CRAIGJT4
FDNS	00NR	2	20WP	G15_082	FROM->TO	G14-057T 345.00 - SUNNYSIDE 345KV CKT 1	717	789	0.07007	111.7788	GEN672306 6-BOUNDARY DAM GENERATOR 6
FDNS	00NR	2	20WP	G15_082	FROM->TO	G14-057T 345.00 - SUNNYSIDE 345KV CKT 1	717	789	0.07013	111.7784	P12:138:WFEC:MSL16
FDNS	00NR	2	20WP	G15_082	FROM->TO	G14-057T 345.00 - SUNNYSIDE 345KV CKT 1	717	789	0.07007	111.7775	GEN344895 2-1LAB G2 20.000
FDNS	00NR	2	20WP	G15_082	FROM->TO	G14-057T 345.00 - SUNNYSIDE 345KV CKT 1	717	789	0.07007	111.7772	GEN520811 1-ANADRK4
FDNS	00NR	2	20WP	G15_082	FROM->TO	G14-057T 345.00 - SUNNYSIDE 345KV CKT 1	717	789	0.07007	111.7738	GEN562512 1-G14_020_3 0.6900
FDNS	00NR	2	20WP	G15_082	FROM->TO	G14-057T 345.00 - SUNNYSIDE 345KV CKT 1	717	789	0.07007	111.7683	GEN562892 1-G15048_3 0.6900
FDNS	00NR	2	20WP	G15_082	FROM->TO	G14-057T 345.00 - SUNNYSIDE 345KV CKT 1	717	789	0.07007	111.7669	GEN511853 1-COMANCHE #3
FDNS	00NR	2	20WP	G15_082	FROM->TO	G14-057T 345.00 - SUNNYSIDE 345KV CKT 1	717	789	0.07007	111.7659	CLAY BOSWELL 230/20.9KV TRANSFORMER CKT 1
FDNS	00NR	2	20WP	G15_082	FROM->TO	G14-057T 345.00 - SUNNYSIDE 345KV CKT 1	717	789	0.06919	111.7618	ARDMORE WEST - CARTER 138KV CKT 1
FDNS	00NR	2	20WP	G15_082	FROM->TO	G14-057T 345.00 - SUNNYSIDE 345KV CKT 1	717	789	0.06942	111.7496	CACHE - SNYDER 138KV CKT 1
FDNS	00NR	2	20WP	G15_082	FROM->TO	G14-057T 345.00 - SUNNYSIDE 345KV CKT 1	717	789	0.07007	111.7482	GEN523461 1-BLACKHAWK GEN #1
FDNS	00NR	2	20WP	G15_082	FROM->TO	G14-057T 345.00 - SUNNYSIDE 345KV CKT 1	717	789	0.07007	111.7481	GEN523462 1-BLACKHAWK GEN #2
FDNS	00NR	2	20WP	G15_082	FROM->TO	G14-057T 345.00 - SUNNYSIDE 345KV CKT 1	717	789	0.07007	111.748	GEN344896 3-1LAB G3 20.000
FDNS	00NR	2	20WP	G15_082	FROM->TO	G14-057T 345.00 - SUNNYSIDE 345KV CKT 1	717	789	0.07007	111.7476	GEN681542 6-JP MADGETT
FDNS	00NR	2	20WP	G15_082	FROM->TO	G14-057T 345.00 - SUNNYSIDE 345KV CKT 1	717	789	0.07007	111.7468	GEN344897 4-1LAB G4 20.000
FDNS	00NR	2	20WP	G15_082	FROM->TO	G14-057T 345.00 - SUNNYSIDE 345KV CKT 1	717	789	0.07007	111.7466	GEN344894 1-1LAB G1 20.000
FDNS	00NR	2	20WP	G15_082	FROM->TO	G14-057T 345.00 - SUNNYSIDE 345KV CKT 1	717	789	0.07007	111.7312	GEN511852 1-COMANCHE #2
FDNS	00NR	2	20WP	G15_082	FROM->TO	G14-057T 345.00 - SUNNYSIDE 345KV CKT 1	717	789	0.06997	111.7274	P12:138:WFEC:MSL07
FDNS	00NR	2	20WP	G15_082	FROM->TO	G14-057T 345.00 - SUNNYSIDE 345KV CKT 1	717	789	0.06997	111.7274	P12:138:WFEC-AEPW:HUGOPP4:ATOKA--4
FDNS	00NR	2	20WP	G15_082	FROM->TO	G14-057T 345.00 - SUNNYSIDE 345KV CKT 1	717	789	0.06924	111.6973	SUNNYSIDE (SUNNYSD5) 345/138/13.8KV TRANSFORMER CKT 1
FDNS	00NR	2	20WP	G15_082	FROM->TO	G14-057T 345.00 - SUNNYSIDE 345KV CKT 1	717	789	0.07004	111.6968	P12:138:AEPW-SWPA:LONEOAK4:TUPELO4
FDNS	00NR	2	20WP	G15_082	FROM->TO	G14-057T 345.00 - SUNNYSIDE 345KV CKT 1	717	789	0.07004	111.6968	P12:138:WFEC:MSL06
FDNS	00NR	2	20WP	G15_082	FROM->TO	G14-057T 345.00 - SUNNYSIDE 345KV CKT 1	717	789	0.07007	111.6867	GEN562699 1-G15_018_3 0.6900
FDNS	00NR	2	20WP	G15_082	FROM->TO	G14-057T 345.00 - SUNNYSIDE 345KV CKT 1	717	789	0.07007	111.6799	GEN521111 1-ORME2 13.800
FDNS	00NR	2	20WP	G15_082	FROM->TO	G14-057T 345.00 - SUNNYSIDE 345KV CKT 1	717	789	0.07245	111.6715	CLARKSVILLE - MUSKOGEE 345KV CKT 1
FDNS	00NR	2	20WP	G15_082	FROM->TO	G14-057T 345.00 - SUNNYSIDE 345KV CKT 1	717	789	0.07245	111.6715	CLARKSVILLE - MUSKOGEE 345KV CKT 1
FDNS	00NR	2	20WP	G15_082	FROM->TO	G14-057T 345.00 - SUNNYSIDE 345KV CKT 1	717	789	0.06974	111.6671	G15085_T 138.00 - RUSSELL 138KV CKT 1
FDNS	00NR	2	20WP	G15_082	FROM->TO	G14-057T 345.00 - SUNNYSIDE 345KV CKT 1	717	789	0.07007	111.6669	GEN521110 1-ORME1 13.800
FDNS	00NR	2	20WP	G15_082	FROM->TO	G14-057T 345.00 - SUNNYSIDE 345KV CKT 1	717	789	0.06919	111.6496	ARDMORE WEST - UNIROYAL 138KV CKT 1
FDNS	00NR	2	20WP	G15_082	FROM->TO	G14-057T 345.00 - SUNNYSIDE 345KV CKT 1	717	789	0.07007	111.6439	GEN563162 1-G15081_3 0.6900
FDNS	00NR	2	20WP	G15_082	FROM->TO	G14-057T 345.00 - SUNNYSIDE 345KV CKT 1	717	789	0.06947	111.6251	CARTRCO4 138.00 - RATLIFF 138KV CKT 1
FDNS	00NR	2	20WP	G15_082	FROM->TO	G14-057T 345.00 - SUNNYSIDE 345KV CKT 1	717	789	0.07007	111.5936	GEN563292 1-G15095_3 0.6900
FDNS	00NR	2	20WP	G15_082	FROM->TO	G14-057T 345.00 - SUNNYSIDE 345KV CKT 1	717	789	0.06977	111.5906	P12:138:OKGE:3TERM40
FDNS	00NR	2	20WP	G15_082	FROM->TO	G14-057T 345.00 - SUNNYSIDE 345KV CKT 1	717	789	0.07007	111.5873	GEN661015 1-COYOTE
FDNS	00NR	2	20WP	G15_082	FROM->TO	G14-057T 345.00 - SUNNYSIDE 345KV CKT 1	717	789	0.07007	111.5856	GEN563122 1-G15077_3 0.3850
FDNS	00NR	2	20WP	G15_082	FROM->TO	G14-057T 345.00 - SUNNYSIDE 345KV CKT 1	717	789	0.07007	111.5806	GEN562861 1-G15045_2 0.4800
FDNS	00NR	2	16WP	G15_082	FROM->TO	G14-057T 345.00 - SUNNYSIDE 345KV CKT 1	717	789	0.07	111.572	GEN563272 1-G15093_3 0.6900
FDNS	00NR	2	20WP	G15_082	FROM->TO	G14-057T 345.00 - SUNNYSIDE 345KV CKT 1	717	789	0.06814	111.5109	GRAPEVINE INTERCHANGE - STATELINE INTERCHANGE 230KV CKT 1
FDNS	00NR	2	20WP	G15_082	FROM->TO	G14-057T 345.00 - SUNNYSIDE 345KV CKT 1	717	789	0.06814	111.5109	GRAPEVINE INTERCHANGE - STATELINE INTERCHANGE 230KV CKT 1
FDNS	00NR	2	20WP	G15_082	FROM->TO	G14-057T 345.00 - SUNNYSIDE 345KV CKT 1	717	789	0.07007	111.4775	GEN527883 1-CUNNINGHAM GEN #3 22 KV
FDNS	00NR	2	20WP	G15_082	FROM->TO	G14-057T 345.00 - SUNNYSIDE 345KV CKT 1	717	789	0.07007	111.4763	GEN657748 1-YOUNG 2 GENERATOR
FDNS	00NR	2	20WP	G15_082	FROM->TO	G14-057T 345.00 - SUNNYSIDE 345KV CKT 1	717	789	0.07007	111.4745	GEN527884 1-CUNNINGHAM GEN #4 22 KV
FDNS	00NR	2	20WP	G15_082	FROM->TO	G14-057T 345.00 - SUNNYSIDE 345KV CKT 1	717	789	0.06972	111.4498	P12:138:AEPW:SHAM4WT:CHILD4WT
FDNS	00NR	2	20WP	G15_082	FROM->TO	G14-057T 345.00 - SUNNYSIDE 345KV CKT 1	717	789	0.06919	111.4346	SUNNYSIDE - UNIROYAL 138KV CKT 1
FDNS	00NR	2	20WP	G15_082	FROM->TO	G14-057T 345.00 - SUNNYSIDE 345KV CKT 1	717	789	0.06679	111.4143	CHISHOLM7 345.00 () 345/230/13.2KV TRANSFORMER CKT 1
FDNS	00NR	2	20WP	G15_082	FROM->TO	G14-057T 345.00 - SUNNYSIDE 345KV CKT 1	717	789	0.07007	111.4089	GEN562704 1-G15_020_3 0.3550
FDNS	00NR	2	20WP	G15_082	FROM->TO	G14-057T 345.00 - SUNNYSIDE 345KV CKT 1	717	789	0.07033	111.4048	P12:138:WFEC:MSL15
FDNS	00NR	2	20WP	G15_082	FROM->TO	G14-057T 345.00 - SUNNYSIDE 345KV CKT 1	717	789	0.07007	111.3951	GEN526331 1-JONES GEN #1 22 KV
FDNS	00NR	2	20WP	G15_082	FROM->TO	G14-057T 345.00 - SUNNYSIDE 345KV CKT 1	717	789	0.07007	111.3949	GEN526332 1-JONES GEN #2 21 KV
FDNS	00NR	2	20WP	G15_082	FROM->TO	G14-057T 345.00 - SUNNYSIDE 345KV CKT 1	717	789	0.07007	111.386	GEN620315 1-BIG STONE GEN
FDNS	00NR	2	20WP	G15_082	FROM->TO	G14-057T 345.00 - SUNNYSIDE 345KV CKT 1	717	789	0.07007	111.3503	GEN562992 1-G15063_3 0.6900
FDNS	00NR	2	20WP	G15_082	FROM->TO	G14-057T 345.00 - SUNNYSIDE 345KV CKT 1	717	789	0.07007	111.3437	GEN562952 1-G15057_3 0.6500
FDNS	00NR	2	20WP	G15_082	FROM->TO	G14-057T 345.00 - SUNNYSIDE 345KV CKT 1	717	789	0.06818	111.3433	GRAPEVINE INTERCHANGE - NICHOLS STATION 230KV CKT 1
FDNS	00NR	2	20WP	G15_082	FROM->TO	G14-057T 345.00 - SUNNYSIDE 345KV CKT 1	717	789	0.06818	111.3433	GRAPEVINE INTERCHANGE - NICHOLS STATION 230KV CKT 1
FDNS	00NR	2	16WP	G15_082	FROM->TO	G14-057T 345.00 - SUNNYSIDE 345KV CKT 1	717	789	0.07027	111.3426	LYDIA - VALLIANT 345KV CKT 1
FDNS	00NR	2	16WP	G15_082	FROM->TO	G14-057T 345.00 - SUNNYSIDE 345KV CKT 1	717	789	0.07027	111.3426	LYDIA - VALLIANT 345KV CKT 1
FDNS	00NR	2	20WP	G15_082	FROM->TO	G14-057T 345.00 - SUNNYSIDE 345KV CKT 1	717	789	0.07007	111.3353	GEN563173 1-G15082_3 0.6900
FDNS	00NR	2	20WP	G15_082	FROM->TO	G14-057T 345.00 - SUNNYSIDE 345KV CKT 1	717	789	0.07007	111.3105	GEN600004 2-PRAIRIE ISLAND G2
FDNS	00NR	2	20WP	G15_082	FROM->TO	G14-057T 345.00 - SUNNYSIDE 345KV CKT 1	717	789	0.07007	111.3079	GEN600003 1-PRAIRIE ISLAND G1
FDNS	00NR	2	20WP	G15_082	FROM->TO	G14-057T 345.00 - SUNNYSIDE 345KV CKT 1	717	789	0.07007	111.3007	GEN562710 1-G15_022_3 0.5500
FDNS	00NR	2	20WP	G15_082	FROM->TO	G14-057T 345.00 - SUNNYSIDE 345KV CKT 1	717	789	0.07007	111.2877	GEN600006 1-AS KING
FDNS	00NR	2	20WP	G15_082	FROM->TO	G14-057T 345.00 - SUNNYSIDE 345KV CKT 1	717	789	0.07146	111.2679	CANEY CREEK - TEXOMA JCT 138KV CKT 1
FDNS	00NR	2	20WP	G15_082	FROM->TO	G14-057T 345.00 - SUNNYSIDE 345KV CKT 1	717	789	0.06679	111.2518	CHISHOLM7 345.00 - GRACEMONT 345KV CKT 1
FDNS	00NR	2	20WP	G15_082	FROM->TO	G14-057T 345.00 - SUNNYSIDE 345KV CKT 1	717	789	0.07007	111.2423	GEN511851 1-COMANCHE #1
FDNS	00NR	2	20WP	G15_082	FROM->TO	G14-057T 345.00 - SUNNYSIDE 345KV CKT 1	717	789	0.07225	111.1225	G15093_T 345.00 - LAWTON EASTSIDE 345KV CKT 1

SOLUTION	GROUP	SCENARIO	SEASON	SOURCE	DIRECTION	MONITORED ELEMENT	RATEA (MVA)	RATEB(MVA)	TDF	TC%LOADING (% MVA)	CONTINGENCY
FDNS	00NR	2	20WP	G15_082	FROM->TO	G14-057T 345.00 - SUNNYSIDE 345KV CKT 1	717	789	0.07007	111.1155	GEN615001 1-COAL CREEK
FDNS	00NR	2	20WP	G15_082	FROM->TO	G14-057T 345.00 - SUNNYSIDE 345KV CKT 1	717	789	0.07007	111.113	GEN635213 3-NEAL UNIT 3
FDNS	00NR	2	20WP	G15_082	FROM->TO	G14-057T 345.00 - SUNNYSIDE 345KV CKT 1	717	789	0.07007	111.1125	GEN629074 1-ARNOLD LOWSIDE OF GSU XFMR
FDNS	00NR	2	20WP	G15_082	FROM->TO	G14-057T 345.00 - SUNNYSIDE 345KV CKT 1	717	789	0.07011	111.1073	P12:138:WFEC:MSL09
FDNS	00NR	2	20WP	G15_082	FROM->TO	G14-057T 345.00 - SUNNYSIDE 345KV CKT 1	717	789	0.07007	111.0986	BIG STONE 230/24.0KV TRANSFORMER CKT 1
FDNS	00NR	2	20WP	G15_082	FROM->TO	G14-057T 345.00 - SUNNYSIDE 345KV CKT 1	717	789	0.07007	111.0907	GEN615002 2-COAL CREEK
FDNS	00NR	2	20WP	G15_082	FROM->TO	G14-057T 345.00 - SUNNYSIDE 345KV CKT 1	717	789	0.07028	111.0681	P12:138:AEPW-OGE:CORNVIL4:CIMARON4
FDNS	00NR	2	20WP	G15_082	FROM->TO	G14-057T 345.00 - SUNNYSIDE 345KV CKT 1	717	789	0.07007	111.0539	GEN532751 1-WOLF CREEK GENERATING STATION UNIT 1
FDNS	00NR	2	20WP	G15_082	FROM->TO	G14-057T 345.00 - SUNNYSIDE 345KV CKT 1	717	789	0.07007	111.0533	GEN562754 1-G15031_5 0.6900
FDNS	00NR	2	20WP	G15_082	FROM->TO	G14-057T 345.00 - SUNNYSIDE 345KV CKT 1	717	789	0.07007	111.0177	GEN636641 1-LOUISA UNIT 1
FDNS	00NR	2	20WP	G15_082	FROM->TO	G14-057T 345.00 - SUNNYSIDE 345KV CKT 1	717	789	0.07007	110.9946	GEN562756 1-G15031_7 0.6900
FDNS	00NR	2	20WP	G15_082	FROM->TO	G14-057T 345.00 - SUNNYSIDE 345KV CKT 1	717	789	0.07007	110.9935	GEN600005 1-MONTICELLO
FDNS	00NR	2	20WP	G15_082	FROM->TO	G14-057T 345.00 - SUNNYSIDE 345KV CKT 1	717	789	0.07007	110.9904	GEN562556 1-G14_046_3 0.3420
FDNS	00NR	2	20WP	G15_082	FROM->TO	G14-057T 345.00 - SUNNYSIDE 345KV CKT 1	717	789	0.07021	110.9816	NORTHWEST TEXARKANA - VALLIANT 345KV CKT 1
FDNS	00NR	2	20WP	G15_082	FROM->TO	G14-057T 345.00 - SUNNYSIDE 345KV CKT 1	717	789	0.07021	110.9816	NORTHWEST TEXARKANA - VALLIANT 345KV CKT 1
FDNS	00NR	2	20WP	G15_082	FROM->TO	G14-057T 345.00 - SUNNYSIDE 345KV CKT 1	717	789	0.07007	110.9288	GEN562023 1-G11_020_3 0.6900
FDNS	00NR	2	20WP	G15_082	FROM->TO	G14-057T 345.00 - SUNNYSIDE 345KV CKT 1	717	789	0.07007	110.9288	GEN562026 1-G11_019_3 0.6900
FDNS	00NR	2	20WP	G15_082	FROM->TO	G14-057T 345.00 - SUNNYSIDE 345KV CKT 1	717	789	0.07007	110.9063	GEN563142 1-G15079_3 0.5500
FDNS	00NR	2	20WP	G15_082	FROM->TO	G14-057T 345.00 - SUNNYSIDE 345KV CKT 1	717	789	0.07007	110.9063	GEN563151 1-G15080_2 0.5500
FDNS	00NR	2	20WP	G15_082	FROM->TO	G14-057T 345.00 - SUNNYSIDE 345KV CKT 1	717	789	0.06666	110.8779	STLN-DEMARC6 - SWEETWATER 230KV CKT 1
FDNS	00NR	2	20WP	G15_082	FROM->TO	G14-057T 345.00 - SUNNYSIDE 345KV CKT 1	717	789	0.06666	110.8774	P12:230:AEPW-SPS:SWEETWT6:WHEELER 6
FDNS	00NR	2	20WP	G15_082	FROM->TO	G14-057T 345.00 - SUNNYSIDE 345KV CKT 1	717	789	0.06666	110.8758	STATELINE INTERCHANGE - STLN-DEMARC6 230KV CKT 1
FDNS	00NR	2	20WP	G15_082	FROM->TO	G14-057T 345.00 - SUNNYSIDE 345KV CKT 1	717	789	0.07007	110.8699	GEN600000 1-SHERBURNECNTY G1
FDNS	00NR	2	20WP	G15_082	FROM->TO	G14-057T 345.00 - SUNNYSIDE 345KV CKT 1	717	789	0.07007	110.8264	GEN629075 1-OTTUMWA GENERATOR FOR OTTUMWA UNIT NO 1
FDNS	00NR	2	20WP	G15_082	FROM->TO	G14-057T 345.00 - SUNNYSIDE 345KV CKT 1	717	789	0.07007	110.8261	GEN523971 1-HARRINGTON GEN #1 24 KV
FDNS	00NR	2	20WP	G15_082	FROM->TO	G14-057T 345.00 - SUNNYSIDE 345KV CKT 1	717	789	0.07007	110.826	GEN523972 1-HARRINGTON GEN #2 24 KV
FDNS	00NR	2	20WP	G15_082	FROM->TO	G14-057T 345.00 - SUNNYSIDE 345KV CKT 1	717	789	0.07007	110.826	GEN523973 1-HARRINGTON GEN #3 24 KV
FDNS	00NR	2	20WP	G15_082	FROM->TO	G14-057T 345.00 - SUNNYSIDE 345KV CKT 1	717	789	0.07007	110.8199	GEN600001 2-SHERBURNE CNTY G2
FDNS	00NR	2	20WP	G15_082	FROM->TO	G14-057T 345.00 - SUNNYSIDE 345KV CKT 1	717	789	0.07007	110.7076	GEN527901 1-HOBBS PLANT #1 (CT)
FDNS	00NR	2	20WP	G15_082	FROM->TO	G14-057T 345.00 - SUNNYSIDE 345KV CKT 1	717	789	0.07007	110.7076	GEN527902 1-HOBBS PLANT #2 (CT)
FDNS	00NR	2	20WP	G15_082	FROM->TO	G14-057T 345.00 - SUNNYSIDE 345KV CKT 1	717	789	0.07007	110.7026	GEN511848 1-SOUTHWESTERN STATION #3
FDNS	00NR	2	20WP	G15_082	FROM->TO	G14-057T 345.00 - SUNNYSIDE 345KV CKT 1	717	789	0.07007	110.6675	GEN563042 1-G15068_3 0.6900
FDNS	00NR	2	16WP	G15_082	FROM->TO	G14-057T 345.00 - SUNNYSIDE 345KV CKT 1	717	789	0.07	110.5993	EASTDC - ERCOT EQUIVALENCE 345KV CKT 1
FDNS	00NR	2	20WP	G15_082	FROM->TO	G14-057T 345.00 - SUNNYSIDE 345KV CKT 1	717	789	0.07007	110.5958	SHERBURNE CO 345/24.0KV TRANSFORMER CKT 1
FDNS	00NR	2	20WP	G15_082	FROM->TO	G14-057T 345.00 - SUNNYSIDE 345KV CKT 1	717	789	0.06614	110.5822	P12:230:AEPW:ELKCITY6:SWEETWT6
FDNS	00NR	2	20WP	G15_082	FROM->TO	G14-057T 345.00 - SUNNYSIDE 345KV CKT 1	717	789	0.07028	110.5807	LYDIA - WELSH 345KV CKT 1
FDNS	00NR	2	20WP	G15_082	FROM->TO	G14-057T 345.00 - SUNNYSIDE 345KV CKT 1	717	789	0.07028	110.5807	LYDIA - WELSH 345KV CKT 1
FDNS	00NR	2	20WP	G15_082	FROM->TO	G14-057T 345.00 - SUNNYSIDE 345KV CKT 1	717	789	0.07007	110.5635	GEN635214 4-NEAL UNIT 4
FDNS	00NR	2	20WP	G15_082	FROM->TO	G14-057T 345.00 - SUNNYSIDE 345KV CKT 1	717	789	0.07007	110.3938	GEN600002 3-SHERBURNE CNTY G3
FDNS	00NR	2	20WP	G15_082	FROM->TO	G14-057T 345.00 - SUNNYSIDE 345KV CKT 1	717	789	0.07007	110.3599	GEN563043 1-G15068_4 0.6900
FDNS	00NR	2	20WP	G15_082	FROM->TO	G14-057T 345.00 - SUNNYSIDE 345KV CKT 1	717	789	0.07007	110.3322	GEN526333 1-JONES GEN #3 21 KV
FDNS	00NR	2	20WP	G15_082	FROM->TO	G14-057T 345.00 - SUNNYSIDE 345KV CKT 1	717	789	0.07007	110.332	GEN526334 1-JONES_4 116.500
FDNS	00NR	2	20WP	G15_082	FROM->TO	G14-057T 345.00 - SUNNYSIDE 345KV CKT 1	717	789	0.07007	110.2967	GEN525844 1-ELK_1 118.000
FDNS	00NR	2	20WP	G15_082	FROM->TO	G14-057T 345.00 - SUNNYSIDE 345KV CKT 1	717	789	0.07007	110.2949	GEN344225 1-1CAL G1 25.000
FDNS	00NR	2	20WP	G15_082	FROM->TO	G14-057T 345.00 - SUNNYSIDE 345KV CKT 1	717	789	0.07007	110.2807	GEN525845 1-ELK_2 1 18.000
FDNS	00NR	2	20WP	G15_082	FROM->TO	G14-057T 345.00 - SUNNYSIDE 345KV CKT 1	717	789	0.06666	110.1884	CHISHOLM6 230.00 - SWEETWATER 230KV CKT 1
FDNS	00NR	2	20WP	G15_082	FROM->TO	G14-057T 345.00 - SUNNYSIDE 345KV CKT 1	717	789	0.07007	110.1507	GEN563202 1-G15085_3 0.5500
FDNS	00NR	2	20WP	G15_082	FROM->TO	G14-057T 345.00 - SUNNYSIDE 345KV CKT 1	717	789	0.07007	110.149	GEN527166 1-MUSTANG_6 118.000
FDNS	00NR	2	20WP	G15_082	FROM->TO	G14-057T 345.00 - SUNNYSIDE 345KV CKT 1	717	789	0.07007	110.1032	GEN635023 3-WALTER SCOTT UNIT 3
FDNS	00NR	2	20WP	G15_082	FROM->TO	G14-057T 345.00 - SUNNYSIDE 345KV CKT 1	717	789	0.07007	110.0848	GEN528501 1-G14_012 24.000
FDNS	00NR	2	20WP	G15_082	FROM->TO	G14-057T 345.00 - SUNNYSIDE 345KV CKT 1	717	789	0.07007	109.9816	GEN562590 1-G14_057_3 0.6900
FDNS	00NR	2	20WP	G15_082	FROM->TO	G14-057T 345.00 - SUNNYSIDE 345KV CKT 1	717	789	0.07007	109.9483	GEN562762 1-G15033_3 0.6900
FDNS	00NR	2	20WP	G15_082	FROM->TO	G14-057T 345.00 - SUNNYSIDE 345KV CKT 1	717	789	0.07007	109.9387	GEN562655 1-G14_074_3 0.6900
FDNS	00NR	2	20WP	G15_082	FROM->TO	G14-057T 345.00 - SUNNYSIDE 345KV CKT 1	717	789	0.07007	109.8722	GEN525562 1-TOLK GEN #2 24 KV
FDNS	00NR	2	20WP	G15_082	FROM->TO	G14-057T 345.00 - SUNNYSIDE 345KV CKT 1	717	789	0.07007	109.8316	GEN562685 1-G15_013_3 0.3550
FDNS	00NR	2	20WP	G15_082	FROM->TO	G14-057T 345.00 - SUNNYSIDE 345KV CKT 1	717	789	0.06953	109.8266	JOHNSON COUNTY (JOHNCO) 345/138/13.8KV TRANSFORMER CKT 1
FDNS	00NR	2	20WP	G15_082	FROM->TO	G14-057T 345.00 - SUNNYSIDE 345KV CKT 1	717	789	0.07007	109.8107	GEN527903 1-HOBBS PLANT #3 (ST)
FDNS	00NR	2	20WP	G15_082	FROM->TO	G14-057T 345.00 - SUNNYSIDE 345KV CKT 1	717	789	0.07007	109.6991	GEN635024 4-WALTER SCOTT UNIT 4
FDNS	00NR	2	20WP	G15_082	FROM->TO	G14-057T 345.00 - SUNNYSIDE 345KV CKT 1	717	789	0.07007	109.6838	GEN563273 2-G15093_4 0.6900
FDNS	00NR	2	16WP	G15_082	FROM->TO	G14-057T 345.00 - SUNNYSIDE 345KV CKT 1	717	789	0.05937	109.5794	JOHNSON COUNTY - PITTSBURG 345KV CKT 1
FDNS	00NR	2	16WP	G15_082	FROM->TO	G14-057T 345.00 - SUNNYSIDE 345KV CKT 1	717	789	0.05937	109.5794	JOHNSON COUNTY - PITTSBURG 345KV CKT 1
FDNS	00NR	2	20WP	G15_082	FROM->TO	G14-057T 345.00 - SUNNYSIDE 345KV CKT 1	717	789	0.07007	109.4996	GEN525561 1-TOLK GEN #1 24 KV
FDNS	00NR	2	20WP	G15_082	FROM->TO	G14-057T 345.00 - SUNNYSIDE 345KV CKT 1	717	789	0.07035	109.4797	LYDIA - VALLIANT 345KV CKT 1
FDNS	00NR	2	20WP	G15_082	FROM->TO	G14-057T 345.00 - SUNNYSIDE 345KV CKT 1	717	789	0.07035	109.4797	LYDIA - VALLIANT 345KV CKT 1
FDNS	00NR	2	16WP	G15_082	FROM->TO	G14-057T 345.00 - SUNNYSIDE 345KV CKT 1	717	789	0.07	109.1923	GEN563263 1-G15092_4 0.6900
FDNS	00NR	2	20WP	G15_082	FROM->TO	G14-057T 345.00 - SUNNYSIDE 345KV CKT 1	717	789	0.07007	108.8526	GEN563272 1-G15093_3 0.6900
FDNS	00NR	2	16WP	G15_082	FROM->TO	G14-057T 345.00 - SUNNYSIDE 345KV CKT 1	717	789	0.06857	108.3556	HUGO - VALLIANT 345KV CKT 1
FDNS	00NR	2	16WP	G15_082	FROM->TO	G14-057T 345.00 - SUNNYSIDE 345KV CKT 1	717	789	0.06857	108.3556	HUGO - VALLIANT 345KV CKT 1
FDNS	00NR	2	16WP	G15_082	FROM->TO	G14-057T 345.00 - SUNNYSIDE 345KV CKT 1	717	789	0.04904	108.3126	G14-074T 345.00 - TUCO INTERCHANGE 345KV CKT 1
FDNS	00NR	2	16WP	G15_082	FROM->TO	G14-057T 345.00 - SUNNYSIDE 345KV CKT 1	717	789	0.07	107.5188	GEN563262 1-G15092_3 0.6900
FDNS	00NR	2	20WP	G15_082	FROM->TO	G14-057T 345.00 - SUNNYSIDE 345KV CKT 1	717	789	0.05942	107.3941	JOHNSON COUNTY - PITTSBURG 345KV CKT 1
FDNS	00NR	2	20WP	G15_082	FROM->TO	G14-057T 345.00 - SUNNYSIDE 345KV CKT 1	717	789	0.05942	107.3941	JOHNSON COUNTY - PITTSBURG 345KV CKT 1
FDNS	00NR	2	20WP	G15_082	FROM->TO	G14-057T 345.00 - SUNNYSIDE 345KV CKT 1	717	789	0.06865	106.8289	HUGO - VALLIANT 345KV CKT 1
FDNS	00NR	2	20WP	G15_082	FROM->TO	G14-057T 345.00 - SUNNYSIDE 345KV CKT 1	717	789	0.06865	106.8289	HUGO - VALLIANT 345KV CKT 1
FDNS	00NR	2	20WP	G15_082	FROM->TO	G14-057T 345.00 - SUNNYSIDE 345KV CKT 1	717	789	0.07007	106.5063	GEN563263 1-G15092_4 0.6900
FDNS	00NR	2	17SP	G15_082	FROM->TO	G14-057T 345.00 - SUNNYSIDE 345KV CKT 1	717	789	0.07882	106.4331	CIMARRON - MINCO 345KV CKT 1
FDNS	00NR	2	20WP	G15_082	FROM->TO	G14-057T 345.00 - SUNNYSIDE 345KV CKT 1	717	789	0.07007	104.8395	GEN563262 1-G15092_3 0.6900
FDNS	00NR	2	20WP	G15_082	FROM->TO	G14-057T 345.00 - SUNNYSIDE 345KV CKT 1	717	789	0.04888	104.5132	G14-074T 345.00 - TUCO INTERCHANGE 345KV CKT 1
FDNS	00NR	2	16WP	G15_082	FROM->TO	G14-057T 345.00 - SUNNYSIDE 345KV CKT 1	717	789	0.05675	103.9715	JOHNSON COUNTY - SUNNYSIDE 345KV CKT 1

SOLUTION	GROUP	SCENARIO	SEASON	SOURCE	DIRECTION	MONITORED ELEMENT	RATEA (MVA)	RATEB(MVA)	TDF	TC%LOADING (% MVA)	CONTINGENCY
FDNS	00NR	2	20WP	G15_082	FROM->TO	G14-057T 345.00 - SUNNYSIDE 345KV CKT 1	717	789	0.05679	100.9284	JOHNSON COUNTY - SUNNYSIDE 345KV CKT 1
FDNS	02ALL	2	20L	G15_082	FROM->TO	Hitchland Interchange - WALKTAP7 345.00 345KV CKT 1	956.09	1051.7	0.23593	99.5	G11-14T 345.00 - WOODWARD DISTRICT EHV 345KV CKT 1
FDNS	02ALL	2	20L	G15_082	FROM->TO	Hitchland Interchange - WALKTAP7 345.00 345KV CKT 1	956.09	1051.7	0.23593	99.5	G11-14T 345.00 - WOODWARD DISTRICT EHV 345KV CKT 2
FDNS	00NR	2	25SP	G15_082	FROM->TO	Hitchland Interchange (H TB80155502) 345/230/13.2KV TRANSFORMER CKT 1	560	644	0.0645	99.6	Hitchland Interchange (SIEM 8743067) 345/230/13.2KV TRANSFORMER CKT 2
FDNS	00NR	2	25SP	G15_082	FROM->TO	Hitchland Interchange (H TB80155502) 345/230/13.2KV TRANSFORMER CKT 1	560	644	0.0645	99.6	Hitchland Interchange (SIEM 8743067) 345/230/13.2KV TRANSFORMER CKT 2
FDNS	00NR	2	25SP	G15_082	FROM->TO	Hitchland Interchange (SIEM 8743067) 345/230/13.2KV TRANSFORMER CKT 2	560	644	0.06584	101.9706	Hitchland Interchange (H TB80155502) 345/230/13.2KV TRANSFORMER CKT 1
FDNS	00NR	2	25SP	G15_082	FROM->TO	Hitchland Interchange (SIEM 8743067) 345/230/13.2KV TRANSFORMER CKT 2	560	644	0.06584	101.9706	Hitchland Interchange (H TB80155502) 345/230/13.2KV TRANSFORMER CKT 1
FDNS	00NR	2	25SP	G15_082	FROM->TO	Hitchland Interchange (SIEM 8743067) 345/230/13.2KV TRANSFORMER CKT 2	560	644	0.06584	100.1516	Hitchland Interchange (H TB80155502) 345/230/13.2KV TRANSFORMER CKT 1
FDNS	00NR	2	25SP	G15_082	FROM->TO	Hitchland Interchange (SIEM 8743067) 345/230/13.2KV TRANSFORMER CKT 2	560	644	0.06584	100.1516	Hitchland Interchange (H TB80155502) 345/230/13.2KV TRANSFORMER CKT 1
FDNS	02ALL	2	25SP	G15_082	FROM->TO	POTTER COUNTY INTERCHANGE (WAUK 90343-A) 345/230/13.2KV TRANSFORMER CKT 1	560	560	0.08376	121.4654	BASE CASE
FDNS	02ALL	2	25SP	G15_082	FROM->TO	POTTER COUNTY INTERCHANGE (WAUK 90343-A) 345/230/13.2KV TRANSFORMER CKT 1	560	560	0.08376	118.3664	BASE CASE
FDNS	00NR	2	25SP	G15_082	FROM->TO	POTTER COUNTY INTERCHANGE (WAUK 90343-A) 345/230/13.2KV TRANSFORMER CKT 1	560	560	0.06286	105.3493	G14-074T 345.00 - TUCO INTERCHANGE 345KV CKT 1
FDNS	00NR	2	25SP	G15_082	FROM->TO	POTTER COUNTY INTERCHANGE (WAUK 90343-A) 345/230/13.2KV TRANSFORMER CKT 1	560	560	0.09333	104.5017	HITCHLAND INTERCHANGE - MOORE COUNTY INTERCHANGE 230KV CKT 1
FDNS	00NR	2	25SP	G15_082	FROM->TO	POTTER COUNTY INTERCHANGE (WAUK 90343-A) 345/230/13.2KV TRANSFORMER CKT 1	560	560	0.09333	104.5017	HITCHLAND INTERCHANGE - MOORE COUNTY INTERCHANGE 230KV CKT 1
FDNS	00NR	2	25SP	G15_082	FROM->TO	POTTER COUNTY INTERCHANGE (WAUK 90343-A) 345/230/13.2KV TRANSFORMER CKT 1	560	560	0.06286	103.4436	G14-074T 345.00 - TUCO INTERCHANGE 345KV CKT 1
FDNS	00NR	2	25SP	G15_082	FROM->TO	POTTER COUNTY INTERCHANGE (WAUK 90343-A) 345/230/13.2KV TRANSFORMER CKT 1	560	560	0.09333	102.8391	HITCHLAND INTERCHANGE - MOORE COUNTY INTERCHANGE 230KV CKT 1
FDNS	00NR	2	25SP	G15_082	FROM->TO	POTTER COUNTY INTERCHANGE (WAUK 90343-A) 345/230/13.2KV TRANSFORMER CKT 1	560	560	0.09333	102.8391	HITCHLAND INTERCHANGE - MOORE COUNTY INTERCHANGE 230KV CKT 1
FDNS	00NR	2	25SP	G15_082	FROM->TO	POTTER COUNTY INTERCHANGE (WAUK 90343-A) 345/230/13.2KV TRANSFORMER CKT 1	560	560	0.08194	102.8366	BORDER 7345.00 - TUCO_2 345.00 345KV CKT 1
FDNS	00NR	2	25SP	G15_082	FROM->TO	POTTER COUNTY INTERCHANGE (WAUK 90343-A) 345/230/13.2KV TRANSFORMER CKT 1	560	560	0.08194	101.1233	BORDER 7345.00 - TUCO_2 345.00 345KV CKT 1
FDNS	00NR	2	25SP	G15_082	FROM->TO	POTTER COUNTY INTERCHANGE (WAUK 90343-A) 345/230/13.2KV TRANSFORMER CKT 1	560	560	0.08194	100	BORDER 7345.00 - WOODWARD DISTRICT EHV 345KV CKT 1
FDNS	00NR	2	16WP	G15_082	FROM->TO	SWISSVALE - WEST GARDNER 345KV CKT 1	717	717	0.04035	107.8786	HOYT - STRANGER CREEK 345KV CKT 1
FDNS	00NR	2	16WP	G15_082	FROM->TO	SWISSVALE - WEST GARDNER 345KV CKT 1	717	717	0.038	105.4817	G15074_T 345.00 - HOYT 345KV CKT 1
FDNS	00NR	2	17SP	G15_082	FROM->TO	SWISSVALE - WEST GARDNER 345KV CKT 1	717	717	0.03771	104.761	HOYT - STRANGER CREEK 345KV CKT 1
FDNS	00NR	2	17SP	G15_082	FROM->TO	SWISSVALE - WEST GARDNER 345KV CKT 1	717	717	0.03549	103.7025	G15074_T 345.00 - HOYT 345KV CKT 1
FDNS	00NR	2	16WP	G15_082	FROM->TO	SWISSVALE - WEST GARDNER 345KV CKT 1	717	717	0.03551	102.9968	LACYGNE - WAVERLY7 345.00 345KV CKT 1
FDNS	00NR	2	16WP	G15_082	FROM->TO	SWISSVALE - WEST GARDNER 345KV CKT 1	717	717	0.03551	101.5747	WAVERLY7 345.00 - WOLF CREEK 345KV CKT 1
FDNS	02NR	2	17G	G15_082	TO->FROM	WALKEMEYER - WALKTAP3 115.00 115KV CKT 1	280.9	303.8	0.0712	106.5012	FINNEY SWITCHING STATION - HOLCOMB 345KV CKT 1
FDNS	02NR	2	17G	G15_082	TO->FROM	WALKEMEYER - WALKTAP3 115.00 115KV CKT 1	280.9	303.8	0.0712	106.5012	FINNEY SWITCHING STATION - HOLCOMB 345KV CKT 1
FDNS	02NR	2	20L	G15_082	TO->FROM	WALKEMEYER - WALKTAP3 115.00 115KV CKT 1	280.9	303.8	0.06847	106.2875	FINNEY SWITCHING STATION - HOLCOMB 345KV CKT 1
FDNS	02NR	2	20L	G15_082	TO->FROM	WALKEMEYER - WALKTAP3 115.00 115KV CKT 1	280.9	303.8	0.06847	106.2875	FINNEY SWITCHING STATION - HOLCOMB 345KV CKT 1
FDNS	02NR	2	17G	G15_082	TO->FROM	WALKEMEYER - WALKTAP3 115.00 115KV CKT 1	280.9	303.8	0.0712	101.9027	FINNEY SWITCHING STATION - WALKTAP7 345.00 345KV CKT 1
FDNS	02NR	2	17G	G15_082	TO->FROM	WALKEMEYER - WALKTAP3 115.00 115KV CKT 1	280.9	303.8	0.0712	101.9027	FINNEY SWITCHING STATION - WALKTAP7 345.00 345KV CKT 1
FDNS	02NR	2	20L	G15_082	TO->FROM	WALKEMEYER - WALKTAP3 115.00 115KV CKT 1	280.9	303.8	0.06847	100.7858	FINNEY SWITCHING STATION - WALKTAP7 345.00 345KV CKT 1
FDNS	02NR	2	20L	G15_082	TO->FROM	WALKEMEYER - WALKTAP3 115.00 115KV CKT 1	280.9	303.8	0.06847	100.7858	FINNEY SWITCHING STATION - WALKTAP7 345.00 345KV CKT 1
FDNS	02NR	2	17G	G15_082	FROM->TO	WALKTAP7 345.00 (WALKE345) 345/115/13.8KV TRANSFORMER CKT 1	280	280	0.0712	114.691	FINNEY SWITCHING STATION - HOLCOMB 345KV CKT 1
FDNS	02NR	2	17G	G15_082	FROM->TO	WALKTAP7 345.00 (WALKE345) 345/115/13.8KV TRANSFORMER CKT 1	280	280	0.0712	114.691	FINNEY SWITCHING STATION - HOLCOMB 345KV CKT 1
FDNS	02NR	2	17G	G15_082	FROM->TO	WALKTAP7 345.00 (WALKE345) 345/115/13.8KV TRANSFORMER CKT 1	280	280	0.0712	114.0794	FINNEY SWITCHING STATION - HOLCOMB 345KV CKT 1
FDNS	02NR	2	17G	G15_082	FROM->TO	WALKTAP7 345.00 (WALKE345) 345/115/13.8KV TRANSFORMER CKT 1	280	280	0.0712	114.0794	FINNEY SWITCHING STATION - HOLCOMB 345KV CKT 1
FDNS	02NR	2	20L	G15_082	FROM->TO	WALKTAP7 345.00 (WALKE345) 345/115/13.8KV TRANSFORMER CKT 1	280	280	0.06847	113.9802	FINNEY SWITCHING STATION - HOLCOMB 345KV CKT 1
FDNS	02NR	2	20L	G15_082	FROM->TO	WALKTAP7 345.00 (WALKE345) 345/115/13.8KV TRANSFORMER CKT 1	280	280	0.06847	113.9802	FINNEY SWITCHING STATION - HOLCOMB 345KV CKT 1
FDNS	02NR	2	20L	G15_082	FROM->TO	WALKTAP7 345.00 (WALKE345) 345/115/13.8KV TRANSFORMER CKT 1	280	280	0.06847	113.1429	FINNEY SWITCHING STATION - HOLCOMB 345KV CKT 1
FDNS	02NR	2	20L	G15_082	FROM->TO	WALKTAP7 345.00 (WALKE345) 345/115/13.8KV TRANSFORMER CKT 1	280	280	0.06847	113.1429	FINNEY SWITCHING STATION - HOLCOMB 345KV CKT 1
FDNS	02NR	2	17G	G15_082	FROM->TO	WALKTAP7 345.00 (WALKE345) 345/115/13.8KV TRANSFORMER CKT 1	280	280	0.0712	109.7095	FINNEY SWITCHING STATION - WALKTAP7 345.00 345KV CKT 1
FDNS	02NR	2	17G	G15_082	FROM->TO	WALKTAP7 345.00 (WALKE345) 345/115/13.8KV TRANSFORMER CKT 1	280	280	0.0712	109.7095	FINNEY SWITCHING STATION - WALKTAP7 345.00 345KV CKT 1
FDNS	02NR	2	17G	G15_082	FROM->TO	WALKTAP7 345.00 (WALKE345) 345/115/13.8KV TRANSFORMER CKT 1	280	280	0.0712	108.9454	FINNEY SWITCHING STATION - WALKTAP7 345.00 345KV CKT 1
FDNS	02NR	2	17G	G15_082	FROM->TO	WALKTAP7 345.00 (WALKE345) 345/115/13.8KV TRANSFORMER CKT 1	280	280	0.0712	108.9454	FINNEY SWITCHING STATION - WALKTAP7 345.00 345KV CKT 1
FDNS	02NR	2	20L	G15_082	FROM->TO	WALKTAP7 345.00 (WALKE345) 345/115/13.8KV TRANSFORMER CKT 1	280	280	0.06847	108.4643	FINNEY SWITCHING STATION - WALKTAP7 345.00 345KV CKT 1
FDNS	02NR	2	20L	G15_082	FROM->TO	WALKTAP7 345.00 (WALKE345) 345/115/13.8KV TRANSFORMER CKT 1	280	280	0.06847	108.4643	FINNEY SWITCHING STATION - WALKTAP7 345.00 345KV CKT 1
FDNS	02NR	2	20L	G15_082	FROM->TO	WALKTAP7 345.00 (WALKE345) 345/115/13.8KV TRANSFORMER CKT 1	280	280	0.06847	107.7472	FINNEY SWITCHING STATION - WALKTAP7 345.00 345KV CKT 1
FDNS	02NR	2	20L	G15_082	FROM->TO	WALKTAP7 345.00 (WALKE345) 345/115/13.8KV TRANSFORMER CKT 1	280	280	0.06847	107.7472	FINNEY SWITCHING STATION - WALKTAP7 345.00 345KV CKT 1
FDNS	00NR	3	16WP	G15_082	FROM->TO	CIMARRON - DRAPER LAKE 345KV CKT 1	717	717	0.15279	141.2283	G14-057T 345.00 - SUNNYSIDE 345KV CKT 1
FDNS	00NR	3	16WP	G15_082	FROM->TO	CIMARRON - DRAPER LAKE 345KV CKT 1	717	717	0.15279	130.7384	G14-057T 345.00 - LAWTON EASTSIDE 345KV CKT 1
FDNS	00NR	3	16WP	G15_082	FROM->TO	CIMARRON - DRAPER LAKE 345KV CKT 1	717	717	0.13831	124.5277	ARCADIA - SEMINOLE 345KV CKT 1
FDNS	00NR	3	16WP	G15_082	FROM->TO	CIMARRON - DRAPER LAKE 345KV CKT 1	717	717	0.18182	123.5638	ARCADIA - NORTHWEST 345KV CKT 1
FDNS	00NR	3	16WP	G15_082	FROM->TO	CIMARRON - DRAPER LAKE 345KV CKT 1	717	717	0.1371	122.9411	CLEVELAND - G15066_T 345.00 345KV CKT 1
FDNS	00NR	3	16WP	G15_082	FROM->TO	CIMARRON - DRAPER LAKE 345KV CKT 1	717	717	0.1371	122.1695	G15066_T 345.00 - SOONER 345KV CKT 1
FDNS	00NR	3	16WP	G15_082	FROM->TO	CIMARRON - DRAPER LAKE 345KV CKT 1	717	717	0.14593	117.7585	MATHWSN7 345.00 - NORTHWEST 345KV CKT 1
FDNS	00NR	3	16WP	G15_082	FROM->TO	CIMARRON - DRAPER LAKE 345KV CKT 1	717	717	0.13567	117.5554	CLEVELAND - TULSA NORTH 345KV CKT 1
FDNS	00NR	3	16WP	G15_082	FROM->TO	CIMARRON - DRAPER LAKE 345KV CKT 1	717	717	0.13567	117.5554	CLEVELAND - TULSA NORTH 345KV CKT 1
FDNS	00NR	3	16WP	G15_082	FROM->TO	CIMARRON - DRAPER LAKE 345KV CKT 1	717	717	0.13674	116.6729	CIMARRON - SARA 138KV CKT 1
FDNS	00NR	3	16WP	G15_082	FROM->TO	CIMARRON - DRAPER LAKE 345KV CKT 1	717	717	0.13766	116.4981	P12:138:WFEC:MSL03
FDNS	00NR	3	16WP	G15_082	FROM->TO	CIMARRON - DRAPER LAKE 345KV CKT 1	717	717	0.13469	115.6807	CIMARRON (CIMARON2) 345/138/13.8KV TRANSFORMER CKT 1
FDNS	00NR	3	16WP	G15_082	FROM->TO	CIMARRON - DRAPER LAKE 345KV CKT 1	717	717	0.13463	115.4867	CIMARRON (CIMARON1) 345/138/13.8KV TRANSFORMER CKT 1
FDNS	00NR	3	16WP	G15_082	FROM->TO	CIMARRON - DRAPER LAKE 345KV CKT 1	717	717	0.13674	115.3728	SARA - STHLAKE4 138.00 138KV CKT 1
FDNS	00NR	3	16WP	G15_082	FROM->TO	CIMARRON - DRAPER LAKE 345KV CKT 1	717	717	0.13674	115.1737	MCCLAIN - STHLAKE4 138.00 138KV CKT 1
FDNS	00NR	3	16WP	G15_082	FROM->TO	CIMARRON - DRAPER LAKE 345KV CKT 1	717	717	0.13583	114.847	CIMARRON - CZECH HALL 138KV CKT 1
FDNS	00NR	3	16WP	G15_082	FROM->TO	CIMARRON - DRAPER LAKE 345KV CKT 1	717	717	0.13583	114.4882	CZECH HALL - XEROX 138KV CKT 1
FDNS	00NR	3	16WP	G15_082	FROM->TO	CIMARRON - DRAPER LAKE 345KV CKT 1	717	717	0.13583	114.4681	MORGAN - XEROX 138KV CKT 1
FDNS	00NR	3	16WP	G15_082	FROM->TO	CIMARRON - DRAPER LAKE 345KV CKT 1	717	717	0.13547	114.372	ANADARKO - POCASSETT 138KV CKT 1
FDNS	00NR	3	16WP	G15_082	FROM->TO	CIMARRON - DRAPER LAKE 345KV CKT 1	717	717	0.13583	114.3513	MORGAN - MUSTANG 138KV CKT 1
FDNS	00NR	3	16WP	G15_082	FROM->TO	CIMARRON - DRAPER LAKE 345KV CKT 1	717	717	0.13547	114.1745	POCASSETT - TUTTLE 138KV CKT 1
FDNS	00NR	3	16WP	G15_082	FROM->TO	CIMARRON - DRAPER LAKE 345KV CKT 1	717	717	0.13731	114.0927	JOHNSON COUNTY - SUNNYSIDE 345KV CKT 1
FDNS	00NR	3	16WP	G15_082	FROM->TO	CIMARRON - DRAPER LAKE 345KV CKT 1	717	717	0.13524	114.0337	CORN TAP - NAPLESTP 138.00 138KV CKT 1
FDNS	00NR	3	16WP	G15_082	FROM->TO	CIMARRON - DRAPER LAKE 345KV CKT 1	717	717	0.13524	113.9392	NAPLESTP 138.00 - PAYNE 138.00 138KV CKT 1
FDNS	00NR	3	16WP	G15_082	FROM->TO	CIMARRON - DRAPER LAKE 345KV CKT 1	717	717	0.13646	113.7993	G15093_T 345.00 - LAWTON EASTSIDE 345KV CKT 1
FDNS	00NR	3	16WP	G15_082	FROM->TO	CIMARRON - DRAPER LAKE 345KV CKT 1	717	717	0.1331	113.7276	GEN501801 1-DOLET HILLS UNIT1
FDNS	00NR	3	16WP	G15_082	FROM->TO	CIMARRON - DRAPER LAKE 345KV CKT 1	717	717	0.1331	113.6889	GEN509403 1-PIRKEY GENERATION
FDNS	00NR	3	16WP	G15_082	FROM->TO	CIMARRON - DRAPER LAKE 345KV CKT 1	717	717	0.13352	113.6865	LACYGNE - WAVERLY7 345.00 345KV CKT 1
FDNS	00NR	3	16WP	G15_082	FROM->TO	CIMARRON - DRAPER LAKE 345KV CKT 1	717	717	0.13547	113.6646	BRIDGECR 138.00 - TUTTLE 138KV CKT 1

SOLUTION	GROUP	SCENARIO	SEASON	SOURCE	DIRECTION	MONITORED ELEMENT	RATEA (MVA)	RATEB(MVA)	TDF	TC%LOADING (% MVA)	CONTINGENCY
FDNS	00NR	3	16WP	G15_082	FROM->TO	CIMARRON - DRAPER LAKE 345KV CKT 1	717	717	0.1331	113.6373	GEN509416 1-TURK GENERATION
FDNS	00NR	3	16WP	G15_082	FROM->TO	CIMARRON - DRAPER LAKE 345KV CKT 1	717	717	0.13352	113.4818	WAVERLY7 345.00 - WOLF CREEK 345KV CKT 1
FDNS	00NR	3	16WP	G15_082	FROM->TO	CIMARRON - DRAPER LAKE 345KV CKT 1	717	717	0.13492	113.4769	CANEYRV7 345.00 - NEOSHO 345KV CKT 1
FDNS	00NR	3	16WP	G15_082	FROM->TO	CIMARRON - DRAPER LAKE 345KV CKT 1	717	717	0.14173	113.4417	CIMARRON - NORTHWEST 345KV CKT 1
FDNS	00NR	3	16WP	G15_082	FROM->TO	CIMARRON - DRAPER LAKE 345KV CKT 1	717	717	0.1331	113.3927	GEN515042 1-SEMINOLE 3G
FDNS	00NR	3	16WP	G15_082	FROM->TO	CIMARRON - DRAPER LAKE 345KV CKT 1	717	717	0.1331	113.2994	GEN515040 1-SEMINOLE 1G
FDNS	00NR	3	16WP	G15_082	FROM->TO	CIMARRON - DRAPER LAKE 345KV CKT 1	717	717	0.13547	113.2949	BRIDGECR 138.00 - SUNSHINE CANYON 138KV CKT 1
FDNS	00NR	3	16WP	G15_082	FROM->TO	CIMARRON - DRAPER LAKE 345KV CKT 1	717	717	0.13547	113.2846	P12:138:WFEC:MSL01
FDNS	00NR	3	16WP	G15_082	FROM->TO	CIMARRON - DRAPER LAKE 345KV CKT 1	717	717	0.13492	113.2054	CANEYRV7 345.00 - LATHAMS7 345.00 345KV CKT 1
FDNS	00NR	3	16WP	G15_082	FROM->TO	CIMARRON - DRAPER LAKE 345KV CKT 1	717	717	0.1331	113.1543	GEN515041 1-SEMINOLE 2G
FDNS	00NR	3	16WP	G15_082	FROM->TO	CIMARRON - DRAPER LAKE 345KV CKT 1	717	717	0.1331	113.1052	GEN336153 1-WATERFORD UNIT#3
FDNS	00NR	3	16WP	G15_082	FROM->TO	CIMARRON - DRAPER LAKE 345KV CKT 1	717	717	0.1331	112.8647	GEN336821 1-GRAND GULF UNIT
FDNS	00NR	3	16WP	G15_082	FROM->TO	CIMARRON - DRAPER LAKE 345KV CKT 1	717	717	0.1331	112.7959	GEN337911 1-ARKANSAS NUCLEAR ONE UNIT #2
FDNS	00NR	3	16WP	G15_082	FROM->TO	CIMARRON - DRAPER LAKE 345KV CKT 1	717	717	0.1331	112.7867	GEN335831 1-RIVERBEND UNIT#1
FDNS	00NR	3	16WP	G15_082	FROM->TO	CIMARRON - DRAPER LAKE 345KV CKT 1	717	717	0.1331	112.7866	GEN509406 1-WELSH #3
FDNS	00NR	3	16WP	G15_082	FROM->TO	CIMARRON - DRAPER LAKE 345KV CKT 1	717	717	0.1331	112.7865	GEN509404 1-WELSH #1
FDNS	00NR	3	16WP	G15_082	FROM->TO	CIMARRON - DRAPER LAKE 345KV CKT 1	717	717	0.13492	112.7477	LATHAMS7 345.00 - ROSE HILL 345KV CKT 1
FDNS	00NR	3	16WP	G15_082	FROM->TO	CIMARRON - DRAPER LAKE 345KV CKT 1	717	717	0.137	112.5457	JOHNSON COUNTY - PITTSBURG 345KV CKT 1
FDNS	00NR	3	16WP	G15_082	FROM->TO	CIMARRON - DRAPER LAKE 345KV CKT 1	717	717	0.137	112.5457	JOHNSON COUNTY - PITTSBURG 345KV CKT 1
FDNS	00NR	3	17SP	G15_082	FROM->TO	CIMARRON - DRAPER LAKE 345KV CKT 1	717	717	0.14224	112.5433	G14-057T 345.00 - SUNNYSIDE 345KV CKT 1
FDNS	00NR	3	16WP	G15_082	FROM->TO	CIMARRON - DRAPER LAKE 345KV CKT 1	717	717	0.13376	112.4584	HUGO - SUNNYSIDE 345KV CKT 1
FDNS	00NR	3	16WP	G15_082	FROM->TO	CIMARRON - DRAPER LAKE 345KV CKT 1	717	717	0.1331	112.405	GEN337910 1-ARKANSAS NUCLEAR ONE UNIT #1
FDNS	00NR	3	16WP	G15_082	FROM->TO	CIMARRON - DRAPER LAKE 345KV CKT 1	717	717	0.13403	112.3659	HORSESHOE LAKE - JONES TAP 138KV CKT 1
FDNS	00NR	3	16WP	G15_082	FROM->TO	CIMARRON - DRAPER LAKE 345KV CKT 1	717	717	0.13331	112.3215	P12:138:OKGE:3TERM14
FDNS	00NR	3	16WP	G15_082	FROM->TO	CIMARRON - DRAPER LAKE 345KV CKT 1	717	717	0.13593	112.3056	G14-074T 345.00 - OKLAUNION 345KV CKT 1
FDNS	00NR	3	16WP	G15_082	FROM->TO	CIMARRON - DRAPER LAKE 345KV CKT 1	717	717	0.13317	112.2992	REDBUD - RIVERSIDE STATION 345KV CKT 1
FDNS	00NR	3	16WP	G15_082	FROM->TO	CIMARRON - DRAPER LAKE 345KV CKT 1	717	717	0.13317	112.2992	REDBUD - RIVERSIDE STATION 345KV CKT 1
FDNS	00NR	3	16WP	G15_082	FROM->TO	CIMARRON - DRAPER LAKE 345KV CKT 1	717	717	0.12997	112.2684	CANADIAN RIVER - MUSKOGEE 345KV CKT 1
FDNS	00NR	3	16WP	G15_082	FROM->TO	CIMARRON - DRAPER LAKE 345KV CKT 1	717	717	0.13644	112.2389	BAILEY4 138.00 - SUNSHINE CANYON 138KV CKT 1
FDNS	00NR	3	16WP	G15_082	FROM->TO	CIMARRON - DRAPER LAKE 345KV CKT 1	717	717	0.1331	112.2244	GEN501813 1-RODEMACHER UNIT 3
FDNS	00NR	3	16WP	G15_082	FROM->TO	CIMARRON - DRAPER LAKE 345KV CKT 1	717	717	0.13499	112.1956	GRACEMONT (BANK 1) 345/138/13.8KV TRANSFORMER CKT 1
FDNS	00NR	3	16WP	G15_082	FROM->TO	CIMARRON - DRAPER LAKE 345KV CKT 1	717	717	0.1331	112.1809	GEN515226 1-MUSKOGEE 6G
FDNS	00NR	3	16WP	G15_082	FROM->TO	CIMARRON - DRAPER LAKE 345KV CKT 1	717	717	0.13313	112.1647	MORISNT4 138.00 - STILLWATER 138KV CKT 1
FDNS	00NR	3	16WP	G15_082	FROM->TO	CIMARRON - DRAPER LAKE 345KV CKT 1	717	717	0.13315	112.1596	P12:138:OKGE:3TERM2
FDNS	00NR	3	16WP	G15_082	FROM->TO	CIMARRON - DRAPER LAKE 345KV CKT 1	717	717	0.13369	112.1212	NORTHWEST (NORTWST2) 345/138/13.8KV TRANSFORMER CKT 1
FDNS	00NR	3	16WP	G15_082	FROM->TO	CIMARRON - DRAPER LAKE 345KV CKT 1	717	717	0.1326	112.0473	ARCADIA - KAMO MEMORIAL 138KV CKT 1
FDNS	00NR	3	16WP	G15_082	FROM->TO	CIMARRON - DRAPER LAKE 345KV CKT 1	717	717	0.13317	112.0392	P12:138:OKGE:3TERM12
FDNS	00NR	3	16WP	G15_082	FROM->TO	CIMARRON - DRAPER LAKE 345KV CKT 1	717	717	0.1331	112.0287	GEN335206 1-NELSON UNIT 6
FDNS	00NR	3	16WP	G15_082	FROM->TO	CIMARRON - DRAPER LAKE 345KV CKT 1	717	717	0.13402	111.993	MEMORIAL - SKYLINE 138KV CKT 1
FDNS	00NR	3	16WP	G15_082	FROM->TO	CIMARRON - DRAPER LAKE 345KV CKT 1	717	717	0.1331	111.9812	GEN515225 1-MUSKOGEE 5G
FDNS	00NR	3	16WP	G15_082	FROM->TO	CIMARRON - DRAPER LAKE 345KV CKT 1	717	717	0.1331	111.9811	GEN515223 1-MUSKOGEE 4G
FDNS	00NR	3	16WP	G15_082	FROM->TO	CIMARRON - DRAPER LAKE 345KV CKT 1	717	717	0.1331	111.9683	GRAND GULF 500/22.0KV TRANSFORMER CKT 1
FDNS	00NR	3	16WP	G15_082	FROM->TO	CIMARRON - DRAPER LAKE 345KV CKT 1	717	717	0.13312	111.9386	7SAREPTA% 345.00 - LONGWOOD 345KV CKT 1
FDNS	00NR	3	16WP	G15_082	FROM->TO	CIMARRON - DRAPER LAKE 345KV CKT 1	717	717	0.13312	111.9386	7SAREPTA% 345.00 - LONGWOOD 345KV CKT 1
FDNS	00NR	3	16WP	G15_082	FROM->TO	CIMARRON - DRAPER LAKE 345KV CKT 1	717	717	0.13644	111.9373	BAILEY4 138.00 - WESTMOORE 138KV CKT 1
FDNS	00NR	3	16WP	G15_082	FROM->TO	CIMARRON - DRAPER LAKE 345KV CKT 1	717	717	0.13313	111.9361	DOLET HILLS - SOUTHWEST SHREVEPORT 345KV CKT 1
FDNS	00NR	3	16WP	G15_082	FROM->TO	CIMARRON - DRAPER LAKE 345KV CKT 1	717	717	0.13313	111.9361	DOLET HILLS - SOUTHWEST SHREVEPORT 345KV CKT 1
FDNS	00NR	3	16WP	G15_082	FROM->TO	CIMARRON - DRAPER LAKE 345KV CKT 1	717	717	0.13435	111.919	QUAIL CREEK - SKYLINE 138KV CKT 1
FDNS	00NR	3	16WP	G15_082	FROM->TO	CIMARRON - DRAPER LAKE 345KV CKT 1	717	717	0.1331	111.887	GEN337653 1-WHITE BLUFF UNIT #2
FDNS	00NR	3	16WP	G15_082	FROM->TO	CIMARRON - DRAPER LAKE 345KV CKT 1	717	717	0.13425	111.8642	P12:138:OKGE:3TERM18
FDNS	00NR	3	16WP	G15_082	FROM->TO	CIMARRON - DRAPER LAKE 345KV CKT 1	717	717	0.1331	111.8496	GEN501812 1-RODEMACHER UNIT 2
FDNS	00NR	3	16WP	G15_082	FROM->TO	CIMARRON - DRAPER LAKE 345KV CKT 1	717	717	0.13364	111.822	NORTHWEST (NORTWST4) 345/138/13.8KV TRANSFORMER CKT 1
FDNS	00NR	3	16WP	G15_082	FROM->TO	CIMARRON - DRAPER LAKE 345KV CKT 1	717	717	0.13338	111.8169	G15074_T 345.00 - HOYT 345KV CKT 1
FDNS	00NR	3	16WP	G15_082	FROM->TO	CIMARRON - DRAPER LAKE 345KV CKT 1	717	717	0.1331	111.8128	GEN509409 1-WILKES #3
FDNS	00NR	3	16WP	G15_082	FROM->TO	CIMARRON - DRAPER LAKE 345KV CKT 1	717	717	0.13418	111.7806	36 & MERIDIAN - CHEMTRON 138KV CKT 1
FDNS	00NR	3	16WP	G15_082	FROM->TO	CIMARRON - DRAPER LAKE 345KV CKT 1	717	717	0.1331	111.7413	GEN337652 1-WHITE BLUFF UNIT #1
FDNS	00NR	3	16WP	G15_082	FROM->TO	CIMARRON - DRAPER LAKE 345KV CKT 1	717	717	0.13534	111.7182	BLANCHARD - CORNVILLE 138KV CKT 1
FDNS	00NR	3	16WP	G15_082	FROM->TO	CIMARRON - DRAPER LAKE 345KV CKT 1	717	717	0.13364	111.7161	NORTHWEST (NORTWST3) 345/138/13.8KV TRANSFORMER CKT 1
FDNS	00NR	3	16WP	G15_082	FROM->TO	CIMARRON - DRAPER LAKE 345KV CKT 1	717	717	0.1331	111.7136	GEN520947 1-HUGO1
FDNS	00NR	3	16WP	G15_082	FROM->TO	CIMARRON - DRAPER LAKE 345KV CKT 1	717	717	0.13418	111.6926	CHEMTRON - PENNSYLVANIA 138KV CKT 1
FDNS	00NR	3	16WP	G15_082	FROM->TO	CIMARRON - DRAPER LAKE 345KV CKT 1	717	717	0.13644	111.6537	FRANKLIN SW - WESTMOORE 138KV CKT 1
FDNS	00NR	3	16WP	G15_082	FROM->TO	CIMARRON - DRAPER LAKE 345KV CKT 1	717	717	0.13534	111.6196	P12:138:AEPW-OGE:CORNVIL4:MAUD 4
FDNS	00NR	3	16WP	G15_082	FROM->TO	CIMARRON - DRAPER LAKE 345KV CKT 1	717	717	0.1338	111.611	COMANCHE - LOCO 138KV CKT 1
FDNS	00NR	3	16WP	G15_082	FROM->TO	CIMARRON - DRAPER LAKE 345KV CKT 1	717	717	0.13425	111.5885	P12:138:OKGE:3TERM11
FDNS	00NR	3	16WP	G15_082	FROM->TO	CIMARRON - DRAPER LAKE 345KV CKT 1	717	717	0.13347	111.5764	P12:138:OKGE:3TERM17
FDNS	00NR	3	16WP	G15_082	FROM->TO	CIMARRON - DRAPER LAKE 345KV CKT 1	717	717	0.13311	111.5704	7SAREPTA% 345.00 - ELDORADO EHV 345KV CKT 1
FDNS	00NR	3	16WP	G15_082	FROM->TO	CIMARRON - DRAPER LAKE 345KV CKT 1	717	717	0.13311	111.5703	3TR3AR8EL7EL
FDNS	00NR	3	16WP	G15_082	FROM->TO	CIMARRON - DRAPER LAKE 345KV CKT 1	717	717	0.13426	111.5647	KETCH TAP - NORTHWEST 138KV CKT 1
FDNS	00NR	3	16WP	G15_082	FROM->TO	CIMARRON - DRAPER LAKE 345KV CKT 1	717	717	0.13311	111.5643	ELDORADO EHV 500/345KV TRANSFORMER CKT 1
FDNS	00NR	3	16WP	G15_082	FROM->TO	CIMARRON - DRAPER LAKE 345KV CKT 1	717	717	0.1331	111.5422	GEN334440 1-SABINE UNIT 4
FDNS	00NR	3	16WP	G15_082	FROM->TO	CIMARRON - DRAPER LAKE 345KV CKT 1	717	717	0.1331	111.5386	GEN515577 1-ARBWND11 0.6900
FDNS	00NR	3	16WP	G15_082	FROM->TO	CIMARRON - DRAPER LAKE 345KV CKT 1	717	717	0.13534	111.5141	BLANCHARD - MAUD 138KV CKT 1
FDNS	00NR	3	16WP	G15_082	FROM->TO	CIMARRON - DRAPER LAKE 345KV CKT 1	717	717	0.1331	111.5113	DELL 500 - ESSEX UNIT 2 500KV CKT Z1
FDNS	00NR	3	16WP	G15_082	FROM->TO	CIMARRON - DRAPER LAKE 345KV CKT 1	717	717	0.13351	111.5091	LONEOAK - NORTHWEST 138KV CKT 1
FDNS	00NR	3	16WP	G15_082	FROM->TO	CIMARRON - DRAPER LAKE 345KV CKT 1	717	717	0.13657	111.5061	G15063_T 345.00 - WOODRING 345KV CKT 1
FDNS	00NR	3	16WP	G15_082	FROM->TO	CIMARRON - DRAPER LAKE 345KV CKT 1	717	717	0.13381	111.5022	DIVISION AVE - LAKESIDE 138KV CKT 1
FDNS	00NR	3	16WP	G15_082	FROM->TO	CIMARRON - DRAPER LAKE 345KV CKT 1	717	717	0.13549	111.4837	CLARKSVILLE - ONETA 345KV CKT 1
FDNS	00NR	3	16WP	G15_082	FROM->TO	CIMARRON - DRAPER LAKE 345KV CKT 1	717	717	0.13549	111.4837	CLARKSVILLE - ONETA 345KV CKT 1
FDNS	00NR	3	16WP	G15_082	FROM->TO	CIMARRON - DRAPER LAKE 345KV CKT 1	717	717	0.13339	111.4639	HOYT - STRANGER CREEK 345KV CKT 1

SOLUTION	GROUP	SCENARIO	SEASON	SOURCE	DIRECTION	MONITORED ELEMENT	RATEA (MVA)	RATEB(MVA)	TDF	TC%LOADING (% MVA)	CONTINGENCY
FDNS	00NR	3	16WP	G15_082	FROM->TO	CIMARRON - DRAPER LAKE 345KV CKT 1	717	717	0.13338	111.4422	G15074_T 345.00 - JEFFREY ENERGY CENTER 345KV CKT 1
FDNS	00NR	3	16WP	G15_082	FROM->TO	CIMARRON - DRAPER LAKE 345KV CKT 1	717	717	0.13595	111.4356	THISTLE7 345.00 - WOODWARD DISTRICT EHV 345KV CKT 1
FDNS	00NR	3	16WP	G15_082	FROM->TO	CIMARRON - DRAPER LAKE 345KV CKT 1	717	717	0.13595	111.4356	THISTLE7 345.00 - WOODWARD DISTRICT EHV 345KV CKT 1
FDNS	00NR	3	16WP	G15_082	FROM->TO	CIMARRON - DRAPER LAKE 345KV CKT 1	717	717	0.13595	111.4356	THISTLE7 345.00 - WOODWARD DISTRICT EHV 345KV CKT 2
FDNS	00NR	3	16WP	G15_082	FROM->TO	CIMARRON - DRAPER LAKE 345KV CKT 1	717	717	0.13595	111.4356	THISTLE7 345.00 - WOODWARD DISTRICT EHV 345KV CKT 2
FDNS	00NR	3	16WP	G15_082	FROM->TO	CIMARRON - DRAPER LAKE 345KV CKT 1	717	717	0.13249	111.4211	HORSESHOE LAKE - KAMO MEMORIAL 138KV CKT 1
FDNS	00NR	3	16WP	G15_082	FROM->TO	CIMARRON - DRAPER LAKE 345KV CKT 1	717	717	0.13332	111.4174	NORTHWEST - PANTHER 138KV CKT 1
FDNS	00NR	3	16WP	G15_082	FROM->TO	CIMARRON - DRAPER LAKE 345KV CKT 1	717	717	0.13339	111.4006	P12:138:OKGE:3TERM20
FDNS	00NR	3	16WP	G15_082	FROM->TO	CIMARRON - DRAPER LAKE 345KV CKT 1	717	717	0.13418	111.3975	CIMARRON - HAYMAKER 138KV CKT 1
FDNS	00NR	3	16WP	G15_082	FROM->TO	CIMARRON - DRAPER LAKE 345KV CKT 1	717	717	0.1331	111.3947	GEN336252 1-NINEMILE POINT UNIT#5
FDNS	00NR	3	16WP	G15_082	FROM->TO	CIMARRON - DRAPER LAKE 345KV CKT 1	717	717	0.13381	111.3817	HEFNER - LAKESIDE 138KV CKT 1
FDNS	00NR	3	16WP	G15_082	FROM->TO	CIMARRON - DRAPER LAKE 345KV CKT 1	717	717	0.13362	111.378	BLACKBERRY - NEOSHO 345KV CKT 1
FDNS	00NR	3	16WP	G15_082	FROM->TO	CIMARRON - DRAPER LAKE 345KV CKT 1	717	717	0.13332	111.368	PANTHER - SILVER LAKE 138KV CKT 1
FDNS	00NR	3	16WP	G15_082	FROM->TO	CIMARRON - DRAPER LAKE 345KV CKT 1	717	717	0.13152	111.3661	G15052_T 345.00 - ROSE HILL 345KV CKT 1
FDNS	00NR	3	16WP	G15_082	FROM->TO	CIMARRON - DRAPER LAKE 345KV CKT 1	717	717	0.13356	111.3498	SWISSVALE - WEST GARDNER 345KV CKT 1
FDNS	00NR	3	16WP	G15_082	FROM->TO	CIMARRON - DRAPER LAKE 345KV CKT 1	717	717	0.1331	111.3467	GEN509408 1-WILKES #2
FDNS	00NR	3	16WP	G15_082	FROM->TO	CIMARRON - DRAPER LAKE 345KV CKT 1	717	717	0.1331	111.3412	DOLET HILLS 345/24.0KV TRANSFORMER CKT 1
FDNS	00NR	3	16WP	G15_082	FROM->TO	CIMARRON - DRAPER LAKE 345KV CKT 1	717	717	0.13319	111.3411	P12:138:OKGE:3TERM47
FDNS	00NR	3	16WP	G15_082	FROM->TO	CIMARRON - DRAPER LAKE 345KV CKT 1	717	717	0.1331	111.3248	WHITE BLUFF 500/26.0KV TRANSFORMER CKT 1
FDNS	00NR	3	16WP	G15_082	FROM->TO	CIMARRON - DRAPER LAKE 345KV CKT 1	717	717	0.13328	111.3091	DIVISION AVE - MUSTANG 138KV CKT 1
FDNS	00NR	3	16WP	G15_082	FROM->TO	CIMARRON - DRAPER LAKE 345KV CKT 1	717	717	0.13418	111.2925	DIVISION AVE - HAYMAKER 138KV CKT 1
FDNS	00NR	3	16WP	G15_082	FROM->TO	CIMARRON - DRAPER LAKE 345KV CKT 1	717	717	0.13412	111.2893	MCCLAIN - PLEASANT VALLEY 138KV CKT 1
FDNS	00NR	3	16WP	G15_082	FROM->TO	CIMARRON - DRAPER LAKE 345KV CKT 1	717	717	0.13384	111.2856	KETCH - KETCH TAP 138KV CKT 1
FDNS	00NR	3	16WP	G15_082	FROM->TO	CIMARRON - DRAPER LAKE 345KV CKT 1	717	717	0.1331	111.2657	GEN335204 1-NELSON UNIT 4
FDNS	00NR	3	16WP	G15_082	FROM->TO	CIMARRON - DRAPER LAKE 345KV CKT 1	717	717	0.13401	111.2614	LACYGNE - NEOSHO 345KV CKT 1
FDNS	00NR	3	16WP	G15_082	FROM->TO	CIMARRON - DRAPER LAKE 345KV CKT 1	717	717	0.1331	111.2545	GEN336831 1-BAXTER WILSON SES
FDNS	00NR	3	16WP	G15_082	FROM->TO	CIMARRON - DRAPER LAKE 345KV CKT 1	717	717	0.13346	111.2446	P12:138:WFEC:MSL02
FDNS	00NR	3	16WP	G15_082	FROM->TO	CIMARRON - DRAPER LAKE 345KV CKT 1	717	717	0.1333	111.2355	P12:138:AEPW-OGE:SHIDLER4:OSAGE 4
FDNS	00NR	3	16WP	G15_082	FROM->TO	CIMARRON - DRAPER LAKE 345KV CKT 1	717	717	0.13466	111.2296	CRINER - PAYNE 138.00 138KV CKT 1
FDNS	00NR	3	16WP	G15_082	FROM->TO	CIMARRON - DRAPER LAKE 345KV CKT 1	717	717	0.13397	111.2286	CLASSEN - ROBINSON 138KV CKT 1
FDNS	00NR	3	16WP	G15_082	FROM->TO	CIMARRON - DRAPER LAKE 345KV CKT 1	717	717	0.1331	111.2118	GEN334441 1-SABINE UNIT 5
FDNS	00NR	3	16WP	G15_082	FROM->TO	CIMARRON - DRAPER LAKE 345KV CKT 1	717	717	0.13295	111.2066	P12:138:AEPW:OKMULGE4:R.S.S-4
FDNS	00NR	3	16WP	G15_082	FROM->TO	CIMARRON - DRAPER LAKE 345KV CKT 1	717	717	0.13342	111.2057	WOODRING (WOODRNG2) 345/138/13.8KV TRANSFORMER CKT 1
FDNS	00NR	3	16WP	G15_082	FROM->TO	CIMARRON - DRAPER LAKE 345KV CKT 1	717	717	0.13452	111.2042	CHISHOLM6 230.00 - ELK CITY 230KV 230KV CKT 1
FDNS	00NR	3	16WP	G15_082	FROM->TO	CIMARRON - DRAPER LAKE 345KV CKT 1	717	717	0.13337	111.2028	ANADARKO - GEORGIA 138KV CKT 1
FDNS	00NR	3	16WP	G15_082	FROM->TO	CIMARRON - DRAPER LAKE 345KV CKT 1	717	717	0.13452	111.2027	ELK CITY 230KV (ELKCTY-6) 230/138/13.8KV TRANSFORMER CKT 1
FDNS	00NR	3	16WP	G15_082	FROM->TO	CIMARRON - DRAPER LAKE 345KV CKT 1	717	717	0.13452	111.2027	ELK CITY 230KV (ELKCTY-6) 230/138/13.8KV TRANSFORMER CKT 1
FDNS	00NR	3	16WP	G15_082	FROM->TO	CIMARRON - DRAPER LAKE 345KV CKT 1	717	717	0.1331	111.2014	GEN334071 1-LEWIS CREEK 2
FDNS	00NR	3	16WP	G15_082	FROM->TO	CIMARRON - DRAPER LAKE 345KV CKT 1	717	717	0.1331	111.1948	GEN334070 1-LEWIS CREEK 1
FDNS	00NR	3	16WP	G15_082	FROM->TO	CIMARRON - DRAPER LAKE 345KV CKT 1	717	717	0.1331	111.188	GEN300006 1-NEW MADRID UNIT 1
FDNS	00NR	3	16WP	G15_082	FROM->TO	CIMARRON - DRAPER LAKE 345KV CKT 1	717	717	0.1331	111.1847	GEN336251 1-NINEMILE POINT UNIT#4
FDNS	00NR	3	16WP	G15_082	FROM->TO	CIMARRON - DRAPER LAKE 345KV CKT 1	717	717	0.1331	111.1768	GEN506754 1-LEBROCK STEAM 1
FDNS	00NR	3	16WP	G15_082	FROM->TO	CIMARRON - DRAPER LAKE 345KV CKT 1	717	717	0.1331	111.1751	GEN300007 1-NEW MADRID UNIT 2
FDNS	00NR	3	16WP	G15_082	FROM->TO	CIMARRON - DRAPER LAKE 345KV CKT 1	717	717	0.13342	111.1646	EMPORIA ENERGY CENTER - SWISSVALE 345KV CKT 1
FDNS	00NR	3	16WP	G15_082	FROM->TO	CIMARRON - DRAPER LAKE 345KV CKT 1	717	717	0.13339	111.1473	G15088_T 345.00 - MOORE 345KV CKT 1
FDNS	00NR	3	16WP	G15_082	FROM->TO	CIMARRON - DRAPER LAKE 345KV CKT 1	717	717	0.13337	111.1403	FLETCHER - GEORGIA 138KV CKT 1
FDNS	00NR	3	16WP	G15_082	FROM->TO	CIMARRON - DRAPER LAKE 345KV CKT 1	717	717	0.1331	111.1272	GEN338146 1-INDEPENDENCE UNIT #2
FDNS	00NR	3	16WP	G15_082	FROM->TO	CIMARRON - DRAPER LAKE 345KV CKT 1	717	717	0.1331	111.1174	GEN501811 1-RODEMACHER UNIT 1
FDNS	00NR	3	16WP	G15_082	FROM->TO	CIMARRON - DRAPER LAKE 345KV CKT 1	717	717	0.13466	111.1088	COLE - CRINER 138KV CKT 1
FDNS	00NR	3	16WP	G15_082	FROM->TO	CIMARRON - DRAPER LAKE 345KV CKT 1	717	717	0.1348	111.102	BENTON - WICHITA 345KV CKT 1
FDNS	00NR	3	16WP	G15_082	FROM->TO	CIMARRON - DRAPER LAKE 345KV CKT 1	717	717	0.13351	111.0977	LONEOAK - QUAIL CREEK 138KV CKT 1
FDNS	00NR	3	16WP	G15_082	FROM->TO	CIMARRON - DRAPER LAKE 345KV CKT 1	717	717	0.13341	111.0927	EMPIRE - FLETCHER 138KV CKT 1
FDNS	00NR	3	16WP	G15_082	FROM->TO	CIMARRON - DRAPER LAKE 345KV CKT 1	717	717	0.1331	111.081	GEN334433 1-SABINE UNIT 3
FDNS	00NR	3	16WP	G15_082	FROM->TO	CIMARRON - DRAPER LAKE 345KV CKT 1	717	717	0.1331	111.0748	GEN503909 1-FULTONU1 1 16.000
FDNS	00NR	3	16WP	G15_082	FROM->TO	CIMARRON - DRAPER LAKE 345KV CKT 1	717	717	0.1331	111.0742	GEN303007 1-1BC2 U2
FDNS	00NR	3	16WP	G15_082	FROM->TO	CIMARRON - DRAPER LAKE 345KV CKT 1	717	717	0.13449	111.0737	G1524G1525 345.00 - THISTLE7 345.00 345KV CKT 1
FDNS	00NR	3	16WP	G15_082	FROM->TO	CIMARRON - DRAPER LAKE 345KV CKT 1	717	717	0.13449	111.0737	G1524G1525 345.00 - THISTLE7 345.00 345KV CKT 2
FDNS	00NR	3	16WP	G15_082	FROM->TO	CIMARRON - DRAPER LAKE 345KV CKT 1	717	717	0.1331	111.0705	GEN303006 1-1BC2 U1
FDNS	00NR	3	16WP	G15_082	FROM->TO	CIMARRON - DRAPER LAKE 345KV CKT 1	717	717	0.13317	111.0697	WEBRE - WELLS 500KV CKT 1
FDNS	00NR	3	16WP	G15_082	FROM->TO	CIMARRON - DRAPER LAKE 345KV CKT 1	717	717	0.1331	111.0688	GEN334030 1-FRONTIER UNIT 1
FDNS	00NR	3	16WP	G15_082	FROM->TO	CIMARRON - DRAPER LAKE 345KV CKT 1	717	717	0.1331	111.0675	GEN334031 1-FRONTIER UNIT 2
FDNS	00NR	3	16WP	G15_082	FROM->TO	CIMARRON - DRAPER LAKE 345KV CKT 1	717	717	0.1331	111.0558	GEN590011 2-ERCOT EQUIVALENCE
FDNS	00NR	3	16WP	G15_082	FROM->TO	CIMARRON - DRAPER LAKE 345KV CKT 1	717	717	0.1331	111.0544	GEN337041 1-GERALD ANDRUS
FDNS	00NR	3	16WP	G15_082	FROM->TO	CIMARRON - DRAPER LAKE 345KV CKT 1	717	717	0.1331	111.0534	GEN336191 1-LITTLE GYPSY UNIT#3
FDNS	00NR	3	16WP	G15_082	FROM->TO	CIMARRON - DRAPER LAKE 345KV CKT 1	717	717	0.1331	111.0519	FRONTIER - GRIMES 345KV CKT 1
FDNS	00NR	3	16WP	G15_082	FROM->TO	CIMARRON - DRAPER LAKE 345KV CKT 1	717	717	0.13336	111.0478	SPVALLY4 138.00 - STILLWATER 138KV CKT 1
FDNS	00NR	3	16WP	G15_082	FROM->TO	CIMARRON - DRAPER LAKE 345KV CKT 1	717	717	0.13327	111.0413	CLEAVELAND - CLEVLND 4 138.00 138KV CKT Z1
FDNS	00NR	3	16WP	G15_082	FROM->TO	CIMARRON - DRAPER LAKE 345KV CKT 1	717	717	0.13313	111.0412	8DANIEL8 500.00 - MCKNIGHT 500KV CKT 1
FDNS	00NR	3	16WP	G15_082	FROM->TO	CIMARRON - DRAPER LAKE 345KV CKT 1	717	717	0.13327	111.0411	CLEVELAND (CLVAUTO1) 345/138/13.8KV TRANSFORMER CKT 1
FDNS	00NR	3	16WP	G15_082	FROM->TO	CIMARRON - DRAPER LAKE 345KV CKT 1	717	717	0.13327	111.0411	CLEVELAND (CLVAUTO1) 345/138/13.8KV TRANSFORMER CKT 1
FDNS	00NR	3	16WP	G15_082	FROM->TO	CIMARRON - DRAPER LAKE 345KV CKT 1	717	717	0.13341	111.0318	COMANCHE - EMPIRE 138KV CKT 1
FDNS	00NR	3	16WP	G15_082	FROM->TO	CIMARRON - DRAPER LAKE 345KV CKT 1	717	717	0.1333	111.0317	OSAGE - WEBB CITY TAP 138KV CKT 1
FDNS	00NR	3	16WP	G15_082	FROM->TO	CIMARRON - DRAPER LAKE 345KV CKT 1	717	717	0.1331	111.0307	P12:069:OKGE:3TERM4
FDNS	00NR	3	16WP	G15_082	FROM->TO	CIMARRON - DRAPER LAKE 345KV CKT 1	717	717	0.13424	111.025	P12:230:AEPW:ELKCITY6:SWEETWT6
FDNS	00NR	3	16WP	G15_082	FROM->TO	CIMARRON - DRAPER LAKE 345KV CKT 1	717	717	0.1331	111.0202	GEN335614 1-WILLOW GLENN UNIT#4
FDNS	00NR	3	16WP	G15_082	FROM->TO	CIMARRON - DRAPER LAKE 345KV CKT 1	717	717	0.13326	111.0191	P12:138:OKGE:3TERM13
FDNS	00NR	3	16WP	G15_082	FROM->TO	CIMARRON - DRAPER LAKE 345KV CKT 1	717	717	0.13907	111.0188	Hitchland Interchange - WALKTAP7 345.00 345KV CKT 1
FDNS	00NR	3	16WP	G15_082	FROM->TO	CIMARRON - DRAPER LAKE 345KV CKT 1	717	717	0.13907	111.0188	Hitchland Interchange - WALKTAP7 345.00 345KV CKT 1
FDNS	00NR	3	16WP	G15_082	FROM->TO	CIMARRON - DRAPER LAKE 345KV CKT 1	717	717	0.13336	111.0187	PAYNESB4 138.00 - SPVALLY4 138.00 138KV CKT 1

SOLUTION	GROUP	SCENARIO	SEASON	SOURCE	DIRECTION	MONITORED ELEMENT	RATEA (MVA)	RATEB(MVA)	TDF	TC%LOADING (% MVA)	CONTINGENCY
FDNS	00NR	3	16WP	G15_082	FROM->TO	CIMARRON - DRAPER LAKE 345KV CKT 1	717	717	0.1331	111.0167	GEN590010 1-ERCOT EQUIVALENCE
FDNS	00NR	3	16WP	G15_082	FROM->TO	CIMARRON - DRAPER LAKE 345KV CKT 1	717	717	0.1336	111.0159	EMPORIA ENERGY CENTER - G14_001T 345.00 345KV CKT 1
FDNS	00NR	3	16WP	G15_082	FROM->TO	CIMARRON - DRAPER LAKE 345KV CKT 1	717	717	0.1331	111.0083	GEN303008 1-1BC2 U3
FDNS	00NR	3	16WP	G15_082	FROM->TO	CIMARRON - DRAPER LAKE 345KV CKT 1	717	717	0.13907	111.0068	P12:345:SPS:J07.1.FINN.HITCH
FDNS	00NR	3	16WP	G15_082	FROM->TO	CIMARRON - DRAPER LAKE 345KV CKT 1	717	717	0.13336	111.0032	CUSHING - PAYNESB4 138.00 138KV CKT 1
FDNS	00NR	3	16WP	G15_082	FROM->TO	CIMARRON - DRAPER LAKE 345KV CKT 1	717	717	0.1331	111.0018	P12:161:AEPW:DYESS 5:HYLAND 5
FDNS	00NR	3	16WP	G15_082	FROM->TO	CIMARRON - DRAPER LAKE 345KV CKT 1	717	717	0.1331	110.9945	GEN509393 S1-ARSENAL HILL GENS #4 (STALL)
FDNS	00NR	3	16WP	G15_082	FROM->TO	CIMARRON - DRAPER LAKE 345KV CKT 1	717	717	0.13358	110.9911	MUSTANG - SW 5TH 138KV CKT 1
FDNS	00NR	3	16WP	G15_082	FROM->TO	CIMARRON - DRAPER LAKE 345KV CKT 1	717	717	0.13353	110.9898	DAYTON - MUSTANG 138KV CKT 1
FDNS	00NR	3	16WP	G15_082	FROM->TO	CIMARRON - DRAPER LAKE 345KV CKT 1	717	717	0.1331	110.9861	GEN336170 1-GULF OXY U4
FDNS	00NR	3	16WP	G15_082	FROM->TO	CIMARRON - DRAPER LAKE 345KV CKT 1	717	717	0.13321	110.9855	7LUTESVIL 345.00 - 7ST FRANC 345.00 345KV CKT 1
FDNS	00NR	3	16WP	G15_082	FROM->TO	CIMARRON - DRAPER LAKE 345KV CKT 1	717	717	0.13353	110.985	DAYTON - HOBBY LOBBY 138KV CKT 1
FDNS	00NR	3	16WP	G15_082	FROM->TO	CIMARRON - DRAPER LAKE 345KV CKT 1	717	717	0.1331	110.9846	GEN338143 1-INDEPENDENCE UNIT #1
FDNS	00NR	3	16WP	G15_082	FROM->TO	CIMARRON - DRAPER LAKE 345KV CKT 1	717	717	0.1331	110.9835	GEN336464 1-MICHOUD UNIT #3
FDNS	00NR	3	16WP	G15_082	FROM->TO	CIMARRON - DRAPER LAKE 345KV CKT 1	717	717	0.1331	110.974	GEN509391 G1-ARSENAL HILL GENS #2 (STALL)
FDNS	00NR	3	16WP	G15_082	FROM->TO	CIMARRON - DRAPER LAKE 345KV CKT 1	717	717	0.1331	110.974	GEN509392 G2-ARSENAL HILL GENS #3 (STALL)
FDNS	00NR	3	16WP	G15_082	FROM->TO	CIMARRON - DRAPER LAKE 345KV CKT 1	717	717	0.13308	110.9543	ELDORADO EHV - MOUNT OLIVE 500KV CKT 1
FDNS	00NR	3	16WP	G15_082	FROM->TO	CIMARRON - DRAPER LAKE 345KV CKT 1	717	717	0.13397	110.9519	LIGHTNING CREEK - ROBINSON 138KV CKT 1
FDNS	00NR	3	16WP	G15_082	FROM->TO	CIMARRON - DRAPER LAKE 345KV CKT 1	717	717	0.1331	110.9394	GEN336801 1-BAXTER WILSON UNIT #1
FDNS	00NR	3	16WP	G15_082	FROM->TO	CIMARRON - DRAPER LAKE 345KV CKT 1	717	717	0.13313	110.9339	P12:345:GRDA:CHOUTEAU-SPORTSMANACRES
FDNS	00NR	3	16WP	G15_082	FROM->TO	CIMARRON - DRAPER LAKE 345KV CKT 1	717	717	0.13316	110.9278	P12:069:OKGE:3TERM19
FDNS	00NR	3	16WP	G15_082	FROM->TO	CIMARRON - DRAPER LAKE 345KV CKT 1	717	717	0.13354	110.9198	OUMED 4 - STONEWALL 138KV CKT 1
FDNS	00NR	3	16WP	G15_082	FROM->TO	CIMARRON - DRAPER LAKE 345KV CKT 1	717	717	0.13323	110.9034	8WNEWMADRID 500.00 - DELL 500 500KV CKT 1
FDNS	00NR	3	16WP	G15_082	FROM->TO	CIMARRON - DRAPER LAKE 345KV CKT 1	717	717	0.1331	110.8967	GEN501910 1-ACADIA UNIT ST1
FDNS	00NR	3	16WP	G15_082	FROM->TO	CIMARRON - DRAPER LAKE 345KV CKT 1	717	717	0.13305	110.8823	ELDORADO EHV - SHERIDAN EHV 500KV CKT 1
FDNS	00NR	3	16WP	G15_082	FROM->TO	CIMARRON - DRAPER LAKE 345KV CKT 1	717	717	0.13308	110.8803	7JASPER 345.00 - BLACKBERRY 345KV CKT 1
FDNS	00NR	3	16WP	G15_082	FROM->TO	CIMARRON - DRAPER LAKE 345KV CKT 1	717	717	0.13391	110.8784	ANADARKO - GRACMNT4 138.00 138KV CKT 1
FDNS	00NR	3	16WP	G15_082	FROM->TO	CIMARRON - DRAPER LAKE 345KV CKT 1	717	717	0.1336	110.8777	G14_001T 345.00 - WICHITA 345KV CKT 1
FDNS	00NR	3	16WP	G15_082	FROM->TO	CIMARRON - DRAPER LAKE 345KV CKT 1	717	717	0.1331	110.8751	GEN506752 1-LEBROCK GAS 1
FDNS	00NR	3	16WP	G15_082	FROM->TO	CIMARRON - DRAPER LAKE 345KV CKT 1	717	717	0.1331	110.8749	GEN506753 1-LEBROCK GAS 2
FDNS	00NR	3	16WP	G15_082	FROM->TO	CIMARRON - DRAPER LAKE 345KV CKT 1	717	717	0.13267	110.8702	ARCADIA - LGARBER4 138.00 138KV CKT 1
FDNS	00NR	3	16WP	G15_082	FROM->TO	CIMARRON - DRAPER LAKE 345KV CKT 1	717	717	0.1331	110.868	RODEMACHER 230/22.0KV TRANSFORMER CKT 1
FDNS	00NR	3	16WP	G15_082	FROM->TO	CIMARRON - DRAPER LAKE 345KV CKT 1	717	717	0.1331	110.8575	GEN511843 1-RIVERSIDE STATION #2
FDNS	00NR	3	16WP	G15_082	FROM->TO	CIMARRON - DRAPER LAKE 345KV CKT 1	717	717	0.1333	110.8565	FAIRFAX TAP - SHIDLER 138KV CKT 1
FDNS	00NR	3	16WP	G15_082	FROM->TO	CIMARRON - DRAPER LAKE 345KV CKT 1	717	717	0.1333	110.8565	FAIRFAX TAP - WEBB CITY TAP 138KV CKT 1
FDNS	00NR	3	16WP	G15_082	FROM->TO	CIMARRON - DRAPER LAKE 345KV CKT 1	717	717	0.1335	110.8538	ANADARKO - SEQUOYAHJ4 138.00 138KV CKT 1
FDNS	00NR	3	16WP	G15_082	FROM->TO	CIMARRON - DRAPER LAKE 345KV CKT 1	717	717	0.1335	110.8528	CORN TAP - SEQUOYAHJ4 138.00 138KV CKT 1
FDNS	00NR	3	16WP	G15_082	FROM->TO	CIMARRON - DRAPER LAKE 345KV CKT 1	717	717	0.13393	110.8522	DALE - HORSESHOE LAKE 138KV CKT 1
FDNS	00NR	3	16WP	G15_082	FROM->TO	CIMARRON - DRAPER LAKE 345KV CKT 1	717	717	0.13267	110.8469	CHITWOOD - JONES TAP 138KV CKT 1
FDNS	00NR	3	16WP	G15_082	FROM->TO	CIMARRON - DRAPER LAKE 345KV CKT 1	717	717	0.13406	110.8422	TULSA NORTH - WEKIWA 345KV CKT 1
FDNS	00NR	3	16WP	G15_082	FROM->TO	CIMARRON - DRAPER LAKE 345KV CKT 1	717	717	0.13406	110.8422	TULSA NORTH - WEKIWA 345KV CKT 1
FDNS	00NR	3	16WP	G15_082	FROM->TO	CIMARRON - DRAPER LAKE 345KV CKT 1	717	717	0.13267	110.8414	CHITWOOD - LGARBER4 138.00 138KV CKT 1
FDNS	00NR	3	16WP	G15_082	FROM->TO	CIMARRON - DRAPER LAKE 345KV CKT 1	717	717	0.13466	110.837	COLE - OUSW4 138KV CKT 1
FDNS	00NR	3	16WP	G15_082	FROM->TO	CIMARRON - DRAPER LAKE 345KV CKT 1	717	717	0.13297	110.8255	P12:138:AEPW-OGE:WTH_JCT4:JENSEN4
FDNS	00NR	3	16WP	G15_082	FROM->TO	CIMARRON - DRAPER LAKE 345KV CKT 1	717	717	0.13593	110.8249	G14-074T 345.00 - TUCO INTERCHANGE 345KV CKT 1
FDNS	00NR	3	16WP	G15_082	FROM->TO	CIMARRON - DRAPER LAKE 345KV CKT 1	717	717	0.13324	110.8236	P13:138-161:WERE:NSES_TX-4OR5::
FDNS	00NR	3	16WP	G15_082	FROM->TO	CIMARRON - DRAPER LAKE 345KV CKT 1	717	717	0.13354	110.8199	OUMED 4 - PARK PLACE 138KV CKT 1
FDNS	00NR	3	16WP	G15_082	FROM->TO	CIMARRON - DRAPER LAKE 345KV CKT 1	717	717	0.1342	110.816	ARKANSAS NUCLEAR ONE - FT SMITH 500KV CKT 1
FDNS	00NR	3	16WP	G15_082	FROM->TO	CIMARRON - DRAPER LAKE 345KV CKT 1	717	717	0.1342	110.816	ARKANSAS NUCLEAR ONE - FT SMITH 500KV CKT 1
FDNS	00NR	3	16WP	G15_082	FROM->TO	CIMARRON - DRAPER LAKE 345KV CKT 1	717	717	0.13397	110.8126	LIGHTNING CREEK - TROSPER 138KV CKT 1
FDNS	00NR	3	16WP	G15_082	FROM->TO	CIMARRON - DRAPER LAKE 345KV CKT 1	717	717	0.13393	110.8093	DALE - SQUIRL CREEK 138KV CKT 1
FDNS	00NR	3	16WP	G15_082	FROM->TO	CIMARRON - DRAPER LAKE 345KV CKT 1	717	717	0.13316	110.8075	P12:138:AEPW:N.E.S.-4:CATOOSA4
FDNS	00NR	3	16WP	G15_082	FROM->TO	CIMARRON - DRAPER LAKE 345KV CKT 1	717	717	0.1331	110.8011	ST FRANCIS - ST FRANCIS 1 161KV CKT Z1
FDNS	00NR	3	16WP	G15_082	FROM->TO	CIMARRON - DRAPER LAKE 345KV CKT 1	717	717	0.13313	110.7969	7JASPER 345.00 - MORGAN 345KV CKT 1
FDNS	00NR	3	16WP	G15_082	FROM->TO	CIMARRON - DRAPER LAKE 345KV CKT 1	717	717	0.1331	110.7962	8CAJUN2 500/24.0KV TRANSFORMER CKT 1
FDNS	00NR	3	16WP	G15_082	FROM->TO	CIMARRON - DRAPER LAKE 345KV CKT 1	717	717	0.1331	110.7844	GEN337766 1-TRACTEBEL UNIT S1
FDNS	00NR	3	16WP	G15_082	FROM->TO	CIMARRON - DRAPER LAKE 345KV CKT 1	717	717	0.13312	110.779	6LAYFLD 230.00 - CARROLL 230KV CKT 1
FDNS	00NR	3	16WP	G15_082	FROM->TO	CIMARRON - DRAPER LAKE 345KV CKT 1	717	717	0.1331	110.7758	GEN336222 1-LITTLE GYPSY UNIT#2
FDNS	00NR	3	16WP	G15_082	FROM->TO	CIMARRON - DRAPER LAKE 345KV CKT 1	717	717	0.13353	110.7748	36 & MERIDIAN - HOBBY LOBBY 138KV CKT 1
FDNS	00NR	3	16WP	G15_082	FROM->TO	CIMARRON - DRAPER LAKE 345KV CKT 1	717	717	0.13007	110.7704	CANADIAN RIVER - PITTSBURG 345KV CKT 1
FDNS	00NR	3	16WP	G15_082	FROM->TO	CIMARRON - DRAPER LAKE 345KV CKT 1	717	717	0.13007	110.7704	CANADIAN RIVER - PITTSBURG 345KV CKT 1
FDNS	00NR	3	16WP	G15_082	FROM->TO	CIMARRON - DRAPER LAKE 345KV CKT 1	717	717	0.13308	110.768	P12:138:OKGE-AEPW:JENSEN4:REDROCKRD4
FDNS	00NR	3	16WP	G15_082	FROM->TO	CIMARRON - DRAPER LAKE 345KV CKT 1	717	717	0.1331	110.7664	P12:069:OKGE:3TERM3
FDNS	00NR	3	16WP	G15_082	FROM->TO	CIMARRON - DRAPER LAKE 345KV CKT 1	717	717	0.13297	110.7663	MORISNT4 138.00 - SOONER 138KV CKT 1
FDNS	00NR	3	16WP	G15_082	FROM->TO	CIMARRON - DRAPER LAKE 345KV CKT 1	717	717	0.1331	110.765	GEN515564 1-ORIGIN11 0.6900
FDNS	00NR	3	16WP	G15_082	FROM->TO	CIMARRON - DRAPER LAKE 345KV CKT 1	717	717	0.1331	110.765	GEN515565 1-ORIGIN21 0.6900
FDNS	00NR	3	16WP	G15_082	FROM->TO	CIMARRON - DRAPER LAKE 345KV CKT 1	717	717	0.13317	110.7631	HAMMETT TAP - HAMMETT2 138KV CKT 1
FDNS	00NR	3	16WP	G15_082	FROM->TO	CIMARRON - DRAPER LAKE 345KV CKT 1	717	717	0.13336	110.7626	HUGO - VALLIANT 345KV CKT 1
FDNS	00NR	3	16WP	G15_082	FROM->TO	CIMARRON - DRAPER LAKE 345KV CKT 1	717	717	0.13336	110.7626	HUGO - VALLIANT 345KV CKT 1
FDNS	00NR	3	16WP	G15_082	FROM->TO	CIMARRON - DRAPER LAKE 345KV CKT 1	717	717	0.1331	110.7621	GEN501970 1-EVANGELINE UNIT 7
FDNS	00NR	3	16WP	G15_082	FROM->TO	CIMARRON - DRAPER LAKE 345KV CKT 1	717	717	0.13311	110.7584	FULTON 115 - HOPE 115KV CKT 1
FDNS	00NR	3	16WP	G15_082	FROM->TO	CIMARRON - DRAPER LAKE 345KV CKT 1	717	717	0.13311	110.7584	FULTON 115 - HOPE 115KV CKT 1
FDNS	00NR	3	16WP	G15_082	FROM->TO	CIMARRON - DRAPER LAKE 345KV CKT 1	717	717	0.13475	110.7583	BRYANT - MEMORIAL 138KV CKT 1
FDNS	00NR	3	16WP	G15_082	FROM->TO	CIMARRON - DRAPER LAKE 345KV CKT 1	717	717	0.13352	110.7482	HEALDTON - LOCO 138KV CKT 1
FDNS	00NR	3	16WP	G15_082	FROM->TO	CIMARRON - DRAPER LAKE 345KV CKT 1	717	717	0.13322	110.7471	P12:138:AEPW:CATOOSA4:T.S.E.-4
FDNS	00NR	3	16WP	G15_082	FROM->TO	CIMARRON - DRAPER LAKE 345KV CKT 1	717	717	0.13319	110.7457	P12:138:OKGE:3TERM28
FDNS	00NR	3	16WP	G15_082	FROM->TO	CIMARRON - DRAPER LAKE 345KV CKT 1	717	717	0.1331	110.7432	GEN336152 1-WATERFORD UNIT#2
FDNS	00NR	3	16WP	G15_082	FROM->TO	CIMARRON - DRAPER LAKE 345KV CKT 1	717	717	0.1331	110.7421	GEN336151 1-WATERFORD UNIT#1
FDNS	00NR	3	16WP	G15_082	FROM->TO	CIMARRON - DRAPER LAKE 345KV CKT 1	717	717	0.13352	110.741	IODINE - WOODWARD EHV 138KV CKT 1

SOLUTION	GROUP	SCENARIO	SEASON	SOURCE	DIRECTION	MONITORED ELEMENT	RATEA (MVA)	RATEB(MVA)	TDF	TC%LOADING (% MVA)	CONTINGENCY
FDNS	00NR	3	16WP	G15_082	FROM->TO	CIMARRON - DRAPER LAKE 345KV CKT 1	717	717	0.13336	110.7397	P12:138:AEPW:CORNVIL4:S.W.S.-4
FDNS	00NR	3	16WP	G15_082	FROM->TO	CIMARRON - DRAPER LAKE 345KV CKT 1	717	717	0.13333	110.7379	COMANCHE TAP - OMPA-DUNCAN 840 138KV CKT 1
FDNS	00NR	3	16WP	G15_082	FROM->TO	CIMARRON - DRAPER LAKE 345KV CKT 1	717	717	0.13313	110.7376	AS KING - EAU CLAIRE 345KV CKT 1
FDNS	00NR	3	16WP	G15_082	FROM->TO	CIMARRON - DRAPER LAKE 345KV CKT 1	717	717	0.1331	110.7344	ST FRANCIS 345/161KV TRANSFORMER CKT 1
FDNS	00NR	3	16WP	G15_082	FROM->TO	CIMARRON - DRAPER LAKE 345KV CKT 1	717	717	0.13311	110.7312	P12:161:AEPW:EROGERS5:ECNTRTN5
FDNS	00NR	3	16WP	G15_082	FROM->TO	CIMARRON - DRAPER LAKE 345KV CKT 1	717	717	0.1331	110.7305	NELSON 230/20.0KV TRANSFORMER CKT 1
FDNS	00NR	3	16WP	G15_082	FROM->TO	CIMARRON - DRAPER LAKE 345KV CKT 1	717	717	0.13311	110.7291	P12:138:AEPW:SHERID4:112GORE4
FDNS	00NR	3	16WP	G15_082	FROM->TO	CIMARRON - DRAPER LAKE 345KV CKT 1	717	717	0.1331	110.729	GEN334392 1-EXXON MOBIL IPP 1
FDNS	00NR	3	16WP	G15_082	FROM->TO	CIMARRON - DRAPER LAKE 345KV CKT 1	717	717	0.13467	110.7255	NORTHEAST STATION - ONETA 345KV CKT 1
FDNS	00NR	3	16WP	G15_082	FROM->TO	CIMARRON - DRAPER LAKE 345KV CKT 1	717	717	0.13467	110.7255	NORTHEAST STATION - ONETA 345KV CKT 1
FDNS	00NR	3	16WP	G15_082	FROM->TO	CIMARRON - DRAPER LAKE 345KV CKT 1	717	717	0.1332	110.7255	FLETCHER - MARLOW JCT 69KV CKT 1
FDNS	00NR	3	16WP	G15_082	FROM->TO	CIMARRON - DRAPER LAKE 345KV CKT 1	717	717	0.1331	110.7233	GEN509394 1-FLINT CREEK
FDNS	00NR	3	16WP	G15_082	FROM->TO	CIMARRON - DRAPER LAKE 345KV CKT 1	717	717	0.1331	110.7218	GEN334393 1-EXXON MOBIL IPP 2
FDNS	00NR	3	16WP	G15_082	FROM->TO	CIMARRON - DRAPER LAKE 345KV CKT 1	717	717	0.1331	110.7218	GEN334394 1-EXXON MOBIL IPP 3
FDNS	00NR	3	16WP	G15_082	FROM->TO	CIMARRON - DRAPER LAKE 345KV CKT 1	717	717	0.13314	110.7173	NW164TH4 138.00 - PIEDMONT 138KV CKT 1
FDNS	00NR	3	16WP	G15_082	FROM->TO	CIMARRON - DRAPER LAKE 345KV CKT 1	717	717	0.13314	110.7156	NORTHWEST - NW164TH4 138.00 138KV CKT 1
FDNS	00NR	3	16WP	G15_082	FROM->TO	CIMARRON - DRAPER LAKE 345KV CKT 1	717	717	0.1331	110.7155	P12:161:AEPW:DYESS5:ELMSPRNG:TONTITN5
FDNS	00NR	3	16WP	G15_082	FROM->TO	CIMARRON - DRAPER LAKE 345KV CKT 1	717	717	0.1331	110.7129	GEN300015 1-1SGPDEL 18.000
FDNS	00NR	3	16WP	G15_082	FROM->TO	CIMARRON - DRAPER LAKE 345KV CKT 1	717	717	0.13613	110.7126	PECAN CREEK - RIVERSIDE STATION 345KV CKT 1
FDNS	00NR	3	16WP	G15_082	FROM->TO	CIMARRON - DRAPER LAKE 345KV CKT 1	717	717	0.13613	110.7126	PECAN CREEK - RIVERSIDE STATION 345KV CKT 1
FDNS	00NR	3	16WP	G15_082	FROM->TO	CIMARRON - DRAPER LAKE 345KV CKT 1	717	717	0.13328	110.7122	HEFNER - TULSA 138KV CKT 1
FDNS	00NR	3	16WP	G15_082	FROM->TO	CIMARRON - DRAPER LAKE 345KV CKT 1	717	717	0.13352	110.7084	HEALDTON - RINGLING 138KV CKT 1
FDNS	00NR	3	16WP	G15_082	FROM->TO	CIMARRON - DRAPER LAKE 345KV CKT 1	717	717	0.13317	110.7083	P12:161:AEPW-SWPA:BEAVER5:EROGERS5
FDNS	00NR	3	16WP	G15_082	FROM->TO	CIMARRON - DRAPER LAKE 345KV CKT 1	717	717	0.13352	110.708	DEWEY - IODINE 138KV CKT 1
FDNS	00NR	3	16WP	G15_082	FROM->TO	CIMARRON - DRAPER LAKE 345KV CKT 1	717	717	0.1341	110.7072	G13-010T 345.00 - POST ROCK 345KV CKT 1
FDNS	00NR	3	16WP	G15_082	FROM->TO	CIMARRON - DRAPER LAKE 345KV CKT 1	717	717	0.1331	110.7067	GEN501972 1-EVANGELINE UNIT 7-2
FDNS	00NR	3	16WP	G15_082	FROM->TO	CIMARRON - DRAPER LAKE 345KV CKT 1	717	717	0.1331	110.7066	GEN501971 1-EVANGELINE UNIT 7-1
FDNS	00NR	3	16WP	G15_082	FROM->TO	CIMARRON - DRAPER LAKE 345KV CKT 1	717	717	0.13711	110.6998	SOONER - WOODRING 345KV CKT 1
FDNS	00NR	3	16WP	G15_082	FROM->TO	CIMARRON - DRAPER LAKE 345KV CKT 1	717	717	0.13354	110.6991	BODLE - PARK PLACE 138KV CKT 1
FDNS	00NR	3	16WP	G15_082	FROM->TO	CIMARRON - DRAPER LAKE 345KV CKT 1	717	717	0.1331	110.6973	GEN337764 1-TRACTEBEL UNIT C1
FDNS	00NR	3	16WP	G15_082	FROM->TO	CIMARRON - DRAPER LAKE 345KV CKT 1	717	717	0.1331	110.6973	GEN337765 1-TRACTEBEL UNIT C2
FDNS	00NR	3	16WP	G15_082	FROM->TO	CIMARRON - DRAPER LAKE 345KV CKT 1	717	717	0.1331	110.6968	GEN334432 1-SABINE UNIT 2
FDNS	00NR	3	16WP	G15_082	FROM->TO	CIMARRON - DRAPER LAKE 345KV CKT 1	717	717	0.1331	110.6966	GEN334431 1-SABINE UNIT 1
FDNS	00NR	3	16WP	G15_082	FROM->TO	CIMARRON - DRAPER LAKE 345KV CKT 1	717	717	0.1331	110.6952	GEN336242 1-1NMIL ST1 18.000
FDNS	00NR	3	16WP	G15_082	FROM->TO	CIMARRON - DRAPER LAKE 345KV CKT 1	717	717	0.13324	110.6946	BROOKLINE - MORGAN 345KV CKT 1
FDNS	00NR	3	16WP	G15_082	FROM->TO	CIMARRON - DRAPER LAKE 345KV CKT 1	717	717	0.1331	110.6942	GEN511842 1-RIVERSIDE STATION #1
FDNS	00NR	3	16WP	G15_082	FROM->TO	CIMARRON - DRAPER LAKE 345KV CKT 1	717	717	0.13317	110.6922	BRISTOW - SILVER CITY 138KV CKT 1
FDNS	00NR	3	16WP	G15_082	FROM->TO	CIMARRON - DRAPER LAKE 345KV CKT 1	717	717	0.1331	110.6919	GEN501912 1-ACADIA UNIT CT1B
FDNS	00NR	3	16WP	G15_082	FROM->TO	CIMARRON - DRAPER LAKE 345KV CKT 1	717	717	0.1331	110.6913	GEN501911 1-ACADIA UNIT CT1A
FDNS	00NR	3	16WP	G15_082	FROM->TO	CIMARRON - DRAPER LAKE 345KV CKT 1	717	717	0.13333	110.687	HAMMETT TAP - HORSESHOE LAKE 138KV CKT 1
FDNS	00NR	3	16WP	G15_082	FROM->TO	CIMARRON - DRAPER LAKE 345KV CKT 1	717	717	0.13316	110.6865	P12:138:AEPW:MOUNDRD4:SHIDLER4
FDNS	00NR	3	16WP	G15_082	FROM->TO	CIMARRON - DRAPER LAKE 345KV CKT 1	717	717	0.1331	110.6848	MC NIEL 500/115KV TRANSFORMER CKT 1
FDNS	00NR	3	16WP	G15_082	FROM->TO	CIMARRON - DRAPER LAKE 345KV CKT 1	717	717	0.13475	110.6799	ACORN 4 138.00 - BRYANT 138KV CKT 1
FDNS	00NR	3	16WP	G15_082	FROM->TO	CIMARRON - DRAPER LAKE 345KV CKT 1	717	717	0.1335	110.678	MARSHALL - WOODRING 138KV CKT 1
FDNS	00NR	3	16WP	G15_082	FROM->TO	CIMARRON - DRAPER LAKE 345KV CKT 1	717	717	0.13315	110.6766	ARPIN B4 345.00 - EAU CLAIRE 345KV CKT 1
FDNS	00NR	3	16WP	G15_082	FROM->TO	CIMARRON - DRAPER LAKE 345KV CKT 1	717	717	0.1331	110.6751	BISMARK - HOT SPRINGS WEST BUS 115KV CKT 1
FDNS	00NR	3	16WP	G15_082	FROM->TO	CIMARRON - DRAPER LAKE 345KV CKT 1	717	717	0.13337	110.6738	COUNCIL - MUSTANG 138KV CKT 1
FDNS	00NR	3	16WP	G15_082	FROM->TO	CIMARRON - DRAPER LAKE 345KV CKT 1	717	717	0.13316	110.6721	SHIDLER - WEST PAWHUSKA 138KV CKT 1
FDNS	00NR	3	16WP	G15_082	FROM->TO	CIMARRON - DRAPER LAKE 345KV CKT 1	717	717	0.13317	110.6702	HAMMETT2 - MEEKER 138KV CKT 1
FDNS	00NR	3	16WP	G15_082	FROM->TO	CIMARRON - DRAPER LAKE 345KV CKT 1	717	717	0.13352	110.6678	RINGLING - SOUTH WILSON 138KV CKT 1
FDNS	00NR	3	16WP	G15_082	FROM->TO	CIMARRON - DRAPER LAKE 345KV CKT 1	717	717	0.13354	110.6642	CIVIT - PAOLI 138KV CKT 1
FDNS	00NR	3	16WP	G15_082	FROM->TO	CIMARRON - DRAPER LAKE 345KV CKT 1	717	717	0.13306	110.6628	KELLYAV4 138.00 - MEMORIAL 138KV CKT 1
FDNS	00NR	3	16WP	G15_082	FROM->TO	CIMARRON - DRAPER LAKE 345KV CKT 1	717	717	0.13333	110.6623	DUNCAN - OMPA-DUNCAN 840 138KV CKT 1
FDNS	00NR	3	16WP	G15_082	FROM->TO	CIMARRON - DRAPER LAKE 345KV CKT 1	717	717	0.13333	110.6623	DUNCAN - OMPA-DUNCAN 840 138KV CKT 1
FDNS	00NR	3	16WP	G15_082	FROM->TO	CIMARRON - DRAPER LAKE 345KV CKT 1	717	717	0.1335	110.6622	COTTONWOOD CREEK - MARSHALL 138KV CKT 1
FDNS	00NR	3	16WP	G15_082	FROM->TO	CIMARRON - DRAPER LAKE 345KV CKT 1	717	717	0.13311	110.6604	CYPRESS - HARTBURG 500KV CKT 1
FDNS	00NR	3	16WP	G15_082	FROM->TO	CIMARRON - DRAPER LAKE 345KV CKT 1	717	717	0.13316	110.657	PAWHUSKA TAP - WEST PAWHUSKA 138KV CKT 1
FDNS	00NR	3	16WP	G15_082	FROM->TO	CIMARRON - DRAPER LAKE 345KV CKT 1	717	717	0.13319	110.6569	JOHNSON COUNTY (JOHNCO) 345/138/13.8KV TRANSFORMER CKT 1
FDNS	00NR	3	16WP	G15_082	FROM->TO	CIMARRON - DRAPER LAKE 345KV CKT 1	717	717	0.13314	110.652	P12:138:WFEC:MSL15
FDNS	00NR	3	16WP	G15_082	FROM->TO	CIMARRON - DRAPER LAKE 345KV CKT 1	717	717	0.1331	110.6517	GEN337430 1-PERYVILLE UNIT #3
FDNS	00NR	3	16WP	G15_082	FROM->TO	CIMARRON - DRAPER LAKE 345KV CKT 1	717	717	0.1331	110.6508	GEN337428 1-PERYVILLE UNIT #1
FDNS	00NR	3	16WP	G15_082	FROM->TO	CIMARRON - DRAPER LAKE 345KV CKT 1	717	717	0.13309	110.6502	HOT SPRINGS EHV - MAGNET COVE 500KV CKT 1
FDNS	00NR	3	16WP	G15_082	FROM->TO	CIMARRON - DRAPER LAKE 345KV CKT 1	717	717	0.1333	110.6472	CORN TAP - CORNVILLE 138KV CKT 1
FDNS	00NR	3	16WP	G15_082	FROM->TO	CIMARRON - DRAPER LAKE 345KV CKT 1	717	717	0.13308	110.6464	LAYFLD8 500.00 - MOUNT OLIVE 500KV CKT 1
FDNS	00NR	3	16WP	G15_082	FROM->TO	CIMARRON - DRAPER LAKE 345KV CKT 1	717	717	0.13308	110.6464	LAYFLD8 500.00 - MOUNT OLIVE 500KV CKT 1
FDNS	00NR	3	16WP	G15_082	FROM->TO	CIMARRON - DRAPER LAKE 345KV CKT 1	717	717	0.13314	110.6451	PIEDMONT - RICHRDS 138KV CKT 1
FDNS	00NR	3	16WP	G15_082	FROM->TO	CIMARRON - DRAPER LAKE 345KV CKT 1	717	717	0.1331	110.6417	ALPINE AECC - BISMARK 115KV CKT 1
FDNS	00NR	3	16WP	G15_082	FROM->TO	CIMARRON - DRAPER LAKE 345KV CKT 1	717	717	0.13335	110.619	CHERRY CREEK - PLEASANT VALLEY 138KV CKT 1
FDNS	00NR	3	16WP	G15_082	FROM->TO	CIMARRON - DRAPER LAKE 345KV CKT 1	717	717	0.13354	110.6162	CIVIT - STRATFORD 138KV CKT 1
FDNS	00NR	3	16WP	G15_082	FROM->TO	CIMARRON - DRAPER LAKE 345KV CKT 1	717	717	0.1331	110.1947	BASE CASE
FDNS	00NR	3	16WP	G15_082	FROM->TO	CIMARRON - DRAPER LAKE 345KV CKT 1	717	717	0.13388	109.8091	BURGETT4 138.00 - DANFORTH 138KV CKT 1
FDNS	00NR	3	16WP	G15_082	FROM->TO	CIMARRON - DRAPER LAKE 345KV CKT 1	717	717	0.13388	109.8081	BURGETT4 138.00 - RNDBARN4 138.00 138KV CKT 1
FDNS	00NR	3	16WP	G15_082	FROM->TO	CIMARRON - DRAPER LAKE 345KV CKT 1	717	717	0.13388	109.7906	ARCADIA - RNDBARN4 138.00 138KV CKT 1
FDNS	00NR	3	16WP	G15_082	FROM->TO	CIMARRON - DRAPER LAKE 345KV CKT 1	717	717	0.1331	109.7775	GEN515550 1-MNCWND31 0.6900
FDNS	00NR	3	16WP	G15_082	FROM->TO	CIMARRON - DRAPER LAKE 345KV CKT 1	717	717	0.1331	109.7661	GEN562518 1-G14_021_N2 0.6900
FDNS	00NR	3	16WP	G15_082	FROM->TO	CIMARRON - DRAPER LAKE 345KV CKT 1	717	717	0.1331	109.7603	GEN562694 1-G15_016_3 0.6900
FDNS	00NR	3	16WP	G15_082	FROM->TO	CIMARRON - DRAPER LAKE 345KV CKT 1	717	717	0.1331	109.7551	GEN562611 1-G14_064_3 0.6900
FDNS	00NR	3	16WP	G15_082	FROM->TO	CIMARRON - DRAPER LAKE 345KV CKT 1	717	717	0.13313	109.7538	FIXICO TAP - WELEETKA 138KV CKT 1
FDNS	00NR	3	16WP	G15_082	FROM->TO	CIMARRON - DRAPER LAKE 345KV CKT 1	717	717	0.1331	109.7477	GEN562714 1-G15_023_4 0.6900

SOLUTION	GROUP	SCENARIO	SEASON	SOURCE	DIRECTION	MONITORED ELEMENT	RATEA (MVA)	RATEB(MVA)	TDF	TC%LOADING (% MVA)	CONTINGENCY
FDNS	00NR	3	16WP	G15_082	FROM->TO	CIMARRON - DRAPER LAKE 345KV CKT 1	717	717	0.1331	109.7477	GEN562715 1-G15_023_5 0.6900
FDNS	00NR	3	16WP	G15_082	FROM->TO	CIMARRON - DRAPER LAKE 345KV CKT 1	717	717	0.1331	109.7427	GEN530594 1-SMKYP1G1 0.6900
FDNS	00NR	3	16WP	G15_082	FROM->TO	CIMARRON - DRAPER LAKE 345KV CKT 1	717	717	0.1331	109.7423	7CALAWY 1 345.00 345/25.0KV TRANSFORMER CKT 1
FDNS	00NR	3	16WP	G15_082	FROM->TO	CIMARRON - DRAPER LAKE 345KV CKT 1	717	717	0.1332	109.7369	ARKANSAS NUCLEAR ONE - PLEASANT HILL 500KV CKT 1
FDNS	00NR	3	16WP	G15_082	FROM->TO	CIMARRON - DRAPER LAKE 345KV CKT 1	717	717	0.1331	109.7299	GEN515601 1-KNGFSR11 0.7000
FDNS	00NR	3	16WP	G15_082	FROM->TO	CIMARRON - DRAPER LAKE 345KV CKT 1	717	717	0.1331	109.7275	GEN511848 1-SOUTHWESTERN STATION #3
FDNS	00NR	3	16WP	G15_082	FROM->TO	CIMARRON - DRAPER LAKE 345KV CKT 1	717	717	0.1331	109.726	GEN600065 7-HIGH BRIDGE
FDNS	00NR	3	16WP	G15_082	FROM->TO	CIMARRON - DRAPER LAKE 345KV CKT 1	717	717	0.1331	109.726	GEN600066 8-HIGH BRIDGE
FDNS	00NR	3	16WP	G15_082	FROM->TO	CIMARRON - DRAPER LAKE 345KV CKT 1	717	717	0.1331	109.7253	GEN629066 4-PRAIRIE CREEK GENERATORFOR UNIT NO4
FDNS	00NR	3	16WP	G15_082	FROM->TO	CIMARRON - DRAPER LAKE 345KV CKT 1	717	717	0.1331	109.7243	GEN562872 1-G15046_3 0.6900
FDNS	00NR	3	16WP	G15_082	FROM->TO	CIMARRON - DRAPER LAKE 345KV CKT 1	717	717	0.13441	109.7218	FOREST HILL - MAUD 138KV CKT 1
FDNS	00NR	3	16WP	G15_082	FROM->TO	CIMARRON - DRAPER LAKE 345KV CKT 1	717	717	0.13263	109.7204	CLARKSVILLE - HAZEL JCT 138KV CKT 1
FDNS	00NR	3	16WP	G15_082	FROM->TO	CIMARRON - DRAPER LAKE 345KV CKT 1	717	717	0.13441	109.7184	DELAWARE - NORTHEAST STATION 345KV CKT 1
FDNS	00NR	3	16WP	G15_082	FROM->TO	CIMARRON - DRAPER LAKE 345KV CKT 1	717	717	0.13441	109.7184	DELAWARE - NORTHEAST STATION 345KV CKT 1
FDNS	00NR	3	16WP	G15_082	FROM->TO	CIMARRON - DRAPER LAKE 345KV CKT 1	717	717	0.1331	109.7178	GEN562517 1-G14_021_S2 0.6900
FDNS	00NR	3	16WP	G15_082	FROM->TO	CIMARRON - DRAPER LAKE 345KV CKT 1	717	717	0.1331	109.7126	GEN600050 1-FEP
FDNS	00NR	3	16WP	G15_082	FROM->TO	CIMARRON - DRAPER LAKE 345KV CKT 1	717	717	0.1331	109.7123	GEN562269 1-G12-020-1 0.6900
FDNS	00NR	3	16WP	G15_082	FROM->TO	CIMARRON - DRAPER LAKE 345KV CKT 1	717	717	0.1331	109.7105	GEN563062 1-G15071_3 0.6900
FDNS	00NR	3	16WP	G15_082	FROM->TO	CIMARRON - DRAPER LAKE 345KV CKT 1	717	717	0.1331	109.7055	GEN562042 1-G11_014_3 0.6900
FDNS	00NR	3	16WP	G15_082	FROM->TO	CIMARRON - DRAPER LAKE 345KV CKT 1	717	717	0.1331	109.6906	GEN600070 9-RIVER SIDE
FDNS	00NR	3	16WP	G15_082	FROM->TO	CIMARRON - DRAPER LAKE 345KV CKT 1	717	717	0.1331	109.6906	GEN600071 10-RIVER SIDE
FDNS	00NR	3	16WP	G15_082	FROM->TO	CIMARRON - DRAPER LAKE 345KV CKT 1	717	717	0.1331	109.6866	GEN641089 2-ENERGY CENTER 2
FDNS	00NR	3	16WP	G15_082	FROM->TO	CIMARRON - DRAPER LAKE 345KV CKT 1	717	717	0.1331	109.6845	GEN672303 3-BOUNDARY DAM GENERATOR 3
FDNS	00NR	3	16WP	G15_082	FROM->TO	CIMARRON - DRAPER LAKE 345KV CKT 1	717	717	0.1331	109.6845	GEN672304 4-BOUNDARY DAM GENERATOR 4
FDNS	00NR	3	16WP	G15_082	FROM->TO	CIMARRON - DRAPER LAKE 345KV CKT 1	717	717	0.1331	109.6845	GEN672305 5-BOUNDARY DAM GENERATOR 5
FDNS	00NR	3	16WP	G15_082	FROM->TO	CIMARRON - DRAPER LAKE 345KV CKT 1	717	717	0.1331	109.6842	GEN600007 7-RIVERSIDE GEN 7
FDNS	00NR	3	16WP	G15_082	FROM->TO	CIMARRON - DRAPER LAKE 345KV CKT 1	717	717	0.1331	109.6837	GEN600067 9-HIGH BRIDGE
FDNS	00NR	3	16WP	G15_082	FROM->TO	CIMARRON - DRAPER LAKE 345KV CKT 1	717	717	0.1331	109.6816	GEN562270 1-G12-020-2 0.6900
FDNS	00NR	3	16WP	G15_082	FROM->TO	CIMARRON - DRAPER LAKE 345KV CKT 1	717	717	0.1331	109.6799	GEN615052 1-CAMBRIDGE GENERATING STATION
FDNS	00NR	3	16WP	G15_082	FROM->TO	CIMARRON - DRAPER LAKE 345KV CKT 1	717	717	0.1331	109.6778	GEN600011 5-BLACK DOG GEN 1
FDNS	00NR	3	16WP	G15_082	FROM->TO	CIMARRON - DRAPER LAKE 345KV CKT 1	717	717	0.13087	109.6778	HUNTERS7 345.00 - RENFROW7 345.00 345KV CKT 1
FDNS	00NR	3	16WP	G15_082	FROM->TO	CIMARRON - DRAPER LAKE 345KV CKT 1	717	717	0.13283	109.675	P12:138:WFEC:MSL10
FDNS	00NR	3	16WP	G15_082	FROM->TO	CIMARRON - DRAPER LAKE 345KV CKT 1	717	717	0.1331	109.6738	GEN562602 1-G15_029_3 0.6900
FDNS	00NR	3	16WP	G15_082	FROM->TO	CIMARRON - DRAPER LAKE 345KV CKT 1	717	717	0.1331	109.6715	GEN600014 4-BLACK DOG GEN 4
FDNS	00NR	3	16WP	G15_082	FROM->TO	CIMARRON - DRAPER LAKE 345KV CKT 1	717	717	0.1331	109.6692	GEN629067 1-EMERY GAS TURBINE 1
FDNS	00NR	3	16WP	G15_082	FROM->TO	CIMARRON - DRAPER LAKE 345KV CKT 1	717	717	0.1331	109.6668	GEN515611 1-NBUFFRG1 0.6900
FDNS	00NR	3	16WP	G15_082	FROM->TO	CIMARRON - DRAPER LAKE 345KV CKT 1	717	717	0.1331	109.6668	GEN560217 1-G07_062_6 0.6900
FDNS	00NR	3	16WP	G15_082	FROM->TO	CIMARRON - DRAPER LAKE 345KV CKT 1	717	717	0.1331	109.6668	GEN560218 1-G07_062_7 0.6900
FDNS	00NR	3	16WP	G15_082	FROM->TO	CIMARRON - DRAPER LAKE 345KV CKT 1	717	717	0.13304	109.6665	BORDER 7345.00 - TUCO_2 345.00 345KV CKT 1
FDNS	00NR	3	16WP	G15_082	FROM->TO	CIMARRON - DRAPER LAKE 345KV CKT 1	717	717	0.1331	109.6638	GEN615032 2-PLEASANT VALLEY
FDNS	00NR	3	16WP	G15_082	FROM->TO	CIMARRON - DRAPER LAKE 345KV CKT 1	717	717	0.1331	109.6635	GEN562802 1-G15039_3 0.3570
FDNS	00NR	3	16WP	G15_082	FROM->TO	CIMARRON - DRAPER LAKE 345KV CKT 1	717	717	0.1334	109.6629	OVEXFRMCCOVE
FDNS	00NR	3	16WP	G15_082	FROM->TO	CIMARRON - DRAPER LAKE 345KV CKT 1	717	717	0.1331	109.6592	GEN563102 1-G15075_3 0.5500
FDNS	00NR	3	16WP	G15_082	FROM->TO	CIMARRON - DRAPER LAKE 345KV CKT 1	717	717	0.13369	109.655	SEMINOLE - VANOSTP4 138.00 138KV CKT 1
FDNS	00NR	3	16WP	G15_082	FROM->TO	CIMARRON - DRAPER LAKE 345KV CKT 1	717	717	0.13084	109.6478	RENFROW7 345.00 - VIOLA 7 345.00 345KV CKT 1
FDNS	00NR	3	16WP	G15_082	FROM->TO	CIMARRON - DRAPER LAKE 345KV CKT 1	717	717	0.1331	109.6376	GEN562812 1-G15040_3 0.3570
FDNS	00NR	3	16WP	G15_082	FROM->TO	CIMARRON - DRAPER LAKE 345KV CKT 1	717	717	0.1331	109.6327	GEN600017 C-LS POWER CT
FDNS	00NR	3	16WP	G15_082	FROM->TO	CIMARRON - DRAPER LAKE 345KV CKT 1	717	717	0.1331	109.6315	GEN563132 1-G15078_3 0.3570
FDNS	00NR	3	16WP	G15_082	FROM->TO	CIMARRON - DRAPER LAKE 345KV CKT 1	717	717	0.1331	109.6289	GEN541151 3-SIBLEY GENERATING UNIT #3
FDNS	00NR	3	16WP	G15_082	FROM->TO	CIMARRON - DRAPER LAKE 345KV CKT 1	717	717	0.1331	109.6113	GEN532663 1-LAWRENCE ENERGY CENTER UNIT 5
FDNS	00NR	3	16WP	G15_082	FROM->TO	CIMARRON - DRAPER LAKE 345KV CKT 1	717	717	0.1331	109.6093	GEN524285 1-WILDORADO WIND GEN
FDNS	00NR	3	16WP	G15_082	FROM->TO	CIMARRON - DRAPER LAKE 345KV CKT 1	717	717	0.1331	109.6071	GEN515591 1-PALDRW11 0.6900
FDNS	00NR	3	16WP	G15_082	FROM->TO	CIMARRON - DRAPER LAKE 345KV CKT 1	717	717	0.13304	109.604	BORDER 7345.00 - CHISHOLM7 345.00 345KV CKT 1
FDNS	00NR	3	16WP	G15_082	FROM->TO	CIMARRON - DRAPER LAKE 345KV CKT 1	717	717	0.13325	109.6019	CANADIAN RIVER - MCALESTER SOUTH 138KV CKT 1
FDNS	00NR	3	16WP	G15_082	FROM->TO	CIMARRON - DRAPER LAKE 345KV CKT 1	717	717	0.13325	109.6019	CANADIAN RIVER - MCALESTER SOUTH 138KV CKT 1
FDNS	00NR	3	16WP	G15_082	FROM->TO	CIMARRON - DRAPER LAKE 345KV CKT 1	717	717	0.1331	109.6019	GEN659125 1-COVEY
FDNS	00NR	3	16WP	G15_082	FROM->TO	CIMARRON - DRAPER LAKE 345KV CKT 1	717	717	0.13325	109.6009	CANADIAN RIVER () 345/138/13.8KV TRANSFORMER CKT 1
FDNS	00NR	3	16WP	G15_082	FROM->TO	CIMARRON - DRAPER LAKE 345KV CKT 1	717	717	0.13325	109.6009	CANADIAN RIVER () 345/138/13.8KV TRANSFORMER CKT 1
FDNS	00NR	3	16WP	G15_082	FROM->TO	CIMARRON - DRAPER LAKE 345KV CKT 1	717	717	0.1331	109.6	GEN629070 2-BEAVER CHANNEL GENERATORFOR UNIT NO 2
FDNS	00NR	3	16WP	G15_082	FROM->TO	CIMARRON - DRAPER LAKE 345KV CKT 1	717	717	0.1331	109.6	GEN672392 1-NBECGT1G 18.000
FDNS	00NR	3	16WP	G15_082	FROM->TO	CIMARRON - DRAPER LAKE 345KV CKT 1	717	717	0.1331	109.5992	GEN526331 1-JONES GEN #1 22 KV
FDNS	00NR	3	16WP	G15_082	FROM->TO	CIMARRON - DRAPER LAKE 345KV CKT 1	717	717	0.1331	109.5992	GEN526332 1-JONES GEN #2 21 KV
FDNS	00NR	3	16WP	G15_082	FROM->TO	CIMARRON - DRAPER LAKE 345KV CKT 1	717	717	0.13312	109.596	P12:138:WFEC:MSL07
FDNS	00NR	3	16WP	G15_082	FROM->TO	CIMARRON - DRAPER LAKE 345KV CKT 1	717	717	0.13312	109.596	P12:138:WFEC-AEPW:HUGOPP4:ATOKA--4
FDNS	00NR	3	16WP	G15_082	FROM->TO	CIMARRON - DRAPER LAKE 345KV CKT 1	717	717	0.13316	109.5952	EARLSBORO 4138.00 - FIXICO TAP 138KV CKT 1
FDNS	00NR	3	16WP	G15_082	FROM->TO	CIMARRON - DRAPER LAKE 345KV CKT 1	717	717	0.13326	109.5933	P12:138:AEPW:SHAM4WT:CHILD4WT
FDNS	00NR	3	16WP	G15_082	FROM->TO	CIMARRON - DRAPER LAKE 345KV CKT 1	717	717	0.13263	109.59	CHISNEY - CLARKSVILLE 138KV CKT 1
FDNS	00NR	3	16WP	G15_082	FROM->TO	CIMARRON - DRAPER LAKE 345KV CKT 1	717	717	0.13315	109.5895	P12:138:AEPW:WELETK4:EARLSBORO4
FDNS	00NR	3	16WP	G15_082	FROM->TO	CIMARRON - DRAPER LAKE 345KV CKT 1	717	717	0.13315	109.5891	P12:138:OKGE:3TERM36
FDNS	00NR	3	16WP	G15_082	FROM->TO	CIMARRON - DRAPER LAKE 345KV CKT 1	717	717	0.1331	109.5872	GEN629071 1-BURLINGTON GENERATOR FOR UNIT NO 1 E
FDNS	00NR	3	16WP	G15_082	FROM->TO	CIMARRON - DRAPER LAKE 345KV CKT 1	717	717	0.1331	109.5867	GEN563282 1-G15094_3 0.6900
FDNS	00NR	3	16WP	G15_082	FROM->TO	CIMARRON - DRAPER LAKE 345KV CKT 1	717	717	0.1331	109.5864	GEN562074 1-G1149G1504 0.6900
FDNS	00NR	3	16WP	G15_082	FROM->TO	CIMARRON - DRAPER LAKE 345KV CKT 1	717	717	0.13306	109.577	P12:138:AEPW-SWPA:LONEOAK4:TUPELO4
FDNS	00NR	3	16WP	G15_082	FROM->TO	CIMARRON - DRAPER LAKE 345KV CKT 1	717	717	0.13306	109.5769	P12:138:WFEC:MSL06
FDNS	00NR	3	16WP	G15_082	FROM->TO	CIMARRON - DRAPER LAKE 345KV CKT 1	717	717	0.1331	109.5757	GEN615010 1-STANTON4
FDNS	00NR	3	16WP	G15_082	FROM->TO	CIMARRON - DRAPER LAKE 345KV CKT 1	717	717	0.1331	109.5746	GEN652353 2-GR PRAIRIEG 0.6900
FDNS	00NR	3	16WP	G15_082	FROM->TO	CIMARRON - DRAPER LAKE 345KV CKT 1	717	717	0.13329	109.5704	P12:138:WFEC:MSL16
FDNS	00NR	3	16WP	G15_082	FROM->TO	CIMARRON - DRAPER LAKE 345KV CKT 1	717	717	0.1331	109.5666	GEN562429 1-G13-029 0.6900
FDNS	00NR	3	16WP	G15_082	FROM->TO	CIMARRON - DRAPER LAKE 345KV CKT 1	717	717	0.13433	109.5591	MAUD - SEMINOLE 138KV CKT 1

SOLUTION	GROUP	SCENARIO	SEASON	SOURCE	DIRECTION	MONITORED ELEMENT	RATEA (MVA)	RATEB(MVA)	TDF	TC%LOADING (% MVA)	CONTINGENCY
FDNS	00NR	3	16WP	G15_082	FROM->TO	CIMARRON - DRAPER LAKE 345KV CKT 1	717	717	0.1331	109.5565	GEN615021 1-GRE-ER 14G 16.000
FDNS	00NR	3	16WP	G15_082	FROM->TO	CIMARRON - DRAPER LAKE 345KV CKT 1	717	717	0.1331	109.5554	INDEPENDENCE 500/26.0KV TRANSFORMER CKT 1
FDNS	00NR	3	16WP	G15_082	FROM->TO	CIMARRON - DRAPER LAKE 345KV CKT 1	717	717	0.1331	109.5496	GEN560105 1-G08-22 0.6900
FDNS	00NR	3	16WP	G15_082	FROM->TO	CIMARRON - DRAPER LAKE 345KV CKT 1	717	717	0.13467	109.5403	G15061_T 345.00 - SETAB 345KV CKT 1
FDNS	00NR	3	16WP	G15_082	FROM->TO	CIMARRON - DRAPER LAKE 345KV CKT 1	717	717	0.1331	109.5367	GEN515365 1-CENT 21 0.7000
FDNS	00NR	3	16WP	G15_082	FROM->TO	CIMARRON - DRAPER LAKE 345KV CKT 1	717	717	0.1331	109.5293	BURLINGTON NO1 + NO 2 + NO 3 161/20.0KV TRANSFORMER CKT 1
FDNS	00NR	3	16WP	G15_082	FROM->TO	CIMARRON - DRAPER LAKE 345KV CKT 1	717	717	0.1331	109.5241	GEN527882 1-CUNNINGHAM GEN #2 20 KV
FDNS	00NR	3	16WP	G15_082	FROM->TO	CIMARRON - DRAPER LAKE 345KV CKT 1	717	717	0.13326	109.5187	DELL 500 - INDEPENDENCE 500KV CKT 1
FDNS	00NR	3	16WP	G15_082	FROM->TO	CIMARRON - DRAPER LAKE 345KV CKT 1	717	717	0.1331	109.5156	GEN562017 1-G11_022_3 0.6900
FDNS	00NR	3	16WP	G15_082	FROM->TO	CIMARRON - DRAPER LAKE 345KV CKT 1	717	717	0.1331	109.5094	GEN562550 1-G14_040_3 0.6900
FDNS	00NR	3	16WP	G15_082	FROM->TO	CIMARRON - DRAPER LAKE 345KV CKT 1	717	717	0.13316	109.5065	EARLSBORO 4138.00 - MAUD 138KV CKT 1
FDNS	00NR	3	16WP	G15_082	FROM->TO	CIMARRON - DRAPER LAKE 345KV CKT 1	717	717	0.13316	109.5065	EARLSBORO 4138.00 - MAUD 138KV CKT 1
FDNS	00NR	3	16WP	G15_082	FROM->TO	CIMARRON - DRAPER LAKE 345KV CKT 1	717	717	0.1332	109.5008	GRPRAR1-LNX3345.00 - HOLT.CO3 345.00 345KV CKT 1
FDNS	00NR	3	16WP	G15_082	FROM->TO	CIMARRON - DRAPER LAKE 345KV CKT 1	717	717	0.1332	109.5008	GRPRAR1-LNX3345.00 - YANKTON 345KV CKT Z
FDNS	00NR	3	16WP	G15_082	FROM->TO	CIMARRON - DRAPER LAKE 345KV CKT 1	717	717	0.1331	109.4981	GEN515606 1-CANDN11 0.6900
FDNS	00NR	3	16WP	G15_082	FROM->TO	CIMARRON - DRAPER LAKE 345KV CKT 1	717	717	0.1331	109.4981	GEN515607 1-CANDN12 0.6900
FDNS	00NR	3	16WP	G15_082	FROM->TO	CIMARRON - DRAPER LAKE 345KV CKT 1	717	717	0.1331	109.4951	GEN562596 1-G14_059_3 0.6900
FDNS	00NR	3	16WP	G15_082	FROM->TO	CIMARRON - DRAPER LAKE 345KV CKT 1	717	717	0.13315	109.4934	P12:138:AEPW-OGE:WELETK4:MAUD 4
FDNS	00NR	3	16WP	G15_082	FROM->TO	CIMARRON - DRAPER LAKE 345KV CKT 1	717	717	0.1331	109.4931	GEN562432 1-G13-030 0.6900
FDNS	00NR	3	16WP	G15_082	FROM->TO	CIMARRON - DRAPER LAKE 345KV CKT 1	717	717	0.13263	109.4927	CHISNEY - HIGHLAND 138KV CKT 1
FDNS	00NR	3	16WP	G15_082	FROM->TO	CIMARRON - DRAPER LAKE 345KV CKT 1	717	717	0.1331	109.4875	GEN562983 1-G15061_4 0.6900
FDNS	00NR	3	16WP	G15_082	FROM->TO	CIMARRON - DRAPER LAKE 345KV CKT 1	717	717	0.1331	109.4875	GEN562984 1-G15061_5 0.6900
FDNS	00NR	3	16WP	G15_082	FROM->TO	CIMARRON - DRAPER LAKE 345KV CKT 1	717	717	0.1331	109.4852	GEN524295 1-SPNSPUR_WND10.6900
FDNS	00NR	3	16WP	G15_082	FROM->TO	CIMARRON - DRAPER LAKE 345KV CKT 1	717	717	0.1331	109.4727	GEN515443 1-MNCOWND1 0.7000
FDNS	00NR	3	16WP	G15_082	FROM->TO	CIMARRON - DRAPER LAKE 345KV CKT 1	717	717	0.1331	109.4717	GEN562794 1-G15038_5 0.6900
FDNS	00NR	3	16WP	G15_082	FROM->TO	CIMARRON - DRAPER LAKE 345KV CKT 1	717	717	0.1331	109.4717	GEN562795 1-G15038_6 0.6900
FDNS	00NR	3	16WP	G15_082	FROM->TO	CIMARRON - DRAPER LAKE 345KV CKT 1	717	717	0.1331	109.4559	GEN345671 2-1RUSH G2 18.000
FDNS	00NR	3	16WP	G15_082	FROM->TO	CIMARRON - DRAPER LAKE 345KV CKT 1	717	717	0.1331	109.4539	GEN345670 1-1RUSH G1 18.000
FDNS	00NR	3	16WP	G15_082	FROM->TO	CIMARRON - DRAPER LAKE 345KV CKT 1	717	717	0.1331	109.4453	P12:230:UMZB:# 112 #: NU IN SD. NU-RCDC & DRY CREEK XFMR
FDNS	00NR	3	16WP	G15_082	FROM->TO	CIMARRON - DRAPER LAKE 345KV CKT 1	717	717	0.1331	109.4434	RCDC EAST 4230.00 - RED CEDAR DC 230KV CKT 1
FDNS	00NR	3	16WP	G15_082	FROM->TO	CIMARRON - DRAPER LAKE 345KV CKT 1	717	717	0.1331	109.4419	GEN562512 1-G14_020_3 0.6900
FDNS	00NR	3	16WP	G15_082	FROM->TO	CIMARRON - DRAPER LAKE 345KV CKT 1	717	717	0.1331	109.3997	GEN629072 4-LANSING GENERATOR FOR UNITS NO4 EIA CODE 1
FDNS	00NR	3	16WP	G15_082	FROM->TO	CIMARRON - DRAPER LAKE 345KV CKT 1	717	717	0.1331	109.3965	GEN529201 1-OMCDLEC1 13.800
FDNS	00NR	3	16WP	G15_082	FROM->TO	CIMARRON - DRAPER LAKE 345KV CKT 1	717	717	0.1331	109.3955	GEN531447 1-HOLCOMB GENERATOR
FDNS	00NR	3	16WP	G15_082	FROM->TO	CIMARRON - DRAPER LAKE 345KV CKT 1	717	717	0.1331	109.3913	GEN562832 1-G15042_3 0.6900
FDNS	00NR	3	16WP	G15_082	FROM->TO	CIMARRON - DRAPER LAKE 345KV CKT 1	717	717	0.1331	109.3802	GEN300003 1-THOMAS HILL UNIT 3
FDNS	00NR	3	16WP	G15_082	FROM->TO	CIMARRON - DRAPER LAKE 345KV CKT 1	717	717	0.1331	109.3717	GEN563092 1-G15074_3 0.6900
FDNS	00NR	3	16WP	G15_082	FROM->TO	CIMARRON - DRAPER LAKE 345KV CKT 1	717	717	0.13433	109.3677	HOLLYWOOD - MIDWEST TAP 138KV CKT 1
FDNS	00NR	3	16WP	G15_082	FROM->TO	CIMARRON - DRAPER LAKE 345KV CKT 1	717	717	0.1331	109.3646	GEN562685 1-G15_013_3 0.3550
FDNS	00NR	3	16WP	G15_082	FROM->TO	CIMARRON - DRAPER LAKE 345KV CKT 1	717	717	0.1331	109.3637	GEN562699 1-G15_018_3 0.6900
FDNS	00NR	3	16WP	G15_082	FROM->TO	CIMARRON - DRAPER LAKE 345KV CKT 1	717	717	0.1331	109.3631	GEN657749 1-YOUNG 1 GENERATOR
FDNS	00NR	3	16WP	G15_082	FROM->TO	CIMARRON - DRAPER LAKE 345KV CKT 1	717	717	0.1331	109.3625	GEN645011 1-NEBRASKA CITY 1
FDNS	00NR	3	16WP	G15_082	FROM->TO	CIMARRON - DRAPER LAKE 345KV CKT 1	717	717	0.13263	109.3598	HIGHLAND - PINK SW 138KV CKT 1
FDNS	00NR	3	16WP	G15_082	FROM->TO	CIMARRON - DRAPER LAKE 345KV CKT 1	717	717	0.13333	109.3478	KEO EHV - WEST MEMPHIS 500 500KV CKT 1
FDNS	00NR	3	16WP	G15_082	FROM->TO	CIMARRON - DRAPER LAKE 345KV CKT 1	717	717	0.1331	109.3355	GEN542951 5-HAWTHORN UNIT #5
FDNS	00NR	3	16WP	G15_082	FROM->TO	CIMARRON - DRAPER LAKE 345KV CKT 1	717	717	0.13353	109.3319	FRISCCO4 138.00 - LULA 138KV CKT 1
FDNS	00NR	3	16WP	G15_082	FROM->TO	CIMARRON - DRAPER LAKE 345KV CKT 1	717	717	0.1331	109.3284	GEN563122 1-G15077_3 0.3850
FDNS	00NR	3	16WP	G15_082	FROM->TO	CIMARRON - DRAPER LAKE 345KV CKT 1	717	717	0.1331	109.3105	GEN645012 2-NEBRASKA CITY 2
FDNS	00NR	3	16WP	G15_082	FROM->TO	CIMARRON - DRAPER LAKE 345KV CKT 1	717	717	0.1331	109.3063	GEN563182 1-G15083_3 0.6900
FDNS	00NR	3	16WP	G15_082	FROM->TO	CIMARRON - DRAPER LAKE 345KV CKT 1	717	717	0.1331	109.2977	GEN681522 3-GENOA 3
FDNS	00NR	3	16WP	G15_082	FROM->TO	CIMARRON - DRAPER LAKE 345KV CKT 1	717	717	0.13087	109.2904	HUNTERS7 345.00 - WOODRING 345KV CKT 1
FDNS	00NR	3	16WP	G15_082	FROM->TO	CIMARRON - DRAPER LAKE 345KV CKT 1	717	717	0.1331	109.2901	GEN562587 1-G14_056_3 0.6900
FDNS	00NR	3	16WP	G15_082	FROM->TO	CIMARRON - DRAPER LAKE 345KV CKT 1	717	717	0.1331	109.2724	GEN344895 2-1LAB G2 20.000
FDNS	00NR	3	16WP	G15_082	FROM->TO	CIMARRON - DRAPER LAKE 345KV CKT 1	717	717	0.1331	109.2713	4SIOUX 1 138.00 138/18.0KV TRANSFORMER CKT 1
FDNS	00NR	3	16WP	G15_082	FROM->TO	CIMARRON - DRAPER LAKE 345KV CKT 1	717	717	0.1331	109.2635	GEN515602 1-KNGFSR12 0.7000
FDNS	00NR	3	16WP	G15_082	FROM->TO	CIMARRON - DRAPER LAKE 345KV CKT 1	717	717	0.1331	109.2429	GEN344896 3-1LAB G3 20.000
FDNS	00NR	3	16WP	G15_082	FROM->TO	CIMARRON - DRAPER LAKE 345KV CKT 1	717	717	0.1331	109.2414	GEN344894 1-1LAB G1 20.000
FDNS	00NR	3	16WP	G15_082	FROM->TO	CIMARRON - DRAPER LAKE 345KV CKT 1	717	717	0.13353	109.2406	FRISCCO4 138.00 - HARDEN 4 138.00 138KV CKT 1
FDNS	00NR	3	16WP	G15_082	FROM->TO	CIMARRON - DRAPER LAKE 345KV CKT 1	717	717	0.1331	109.2403	GEN563202 1-G15085_3 0.5500
FDNS	00NR	3	16WP	G15_082	FROM->TO	CIMARRON - DRAPER LAKE 345KV CKT 1	717	717	0.1331	109.2402	GEN344897 4-1LAB G4 20.000
FDNS	00NR	3	16WP	G15_082	FROM->TO	CIMARRON - DRAPER LAKE 345KV CKT 1	717	717	0.13247	109.2352	CIMARRON - TUTTLE CONOCO TAP 138KV CKT 1
FDNS	00NR	3	16WP	G15_082	FROM->TO	CIMARRON - DRAPER LAKE 345KV CKT 1	717	717	0.1331	109.2204	GEN523461 1-BLACKHAWK GEN #1
FDNS	00NR	3	16WP	G15_082	FROM->TO	CIMARRON - DRAPER LAKE 345KV CKT 1	717	717	0.1331	109.2203	GEN523462 1-BLACKHAWK GEN #2
FDNS	00NR	3	16WP	G15_082	FROM->TO	CIMARRON - DRAPER LAKE 345KV CKT 1	717	717	0.1313	109.2048	CHISHOLM7 345.00 - GRACEMONT 345KV CKT 1
FDNS	00NR	3	16WP	G15_082	FROM->TO	CIMARRON - DRAPER LAKE 345KV CKT 1	717	717	0.13305	109.1896	TUPELO - TUPELO TAP 138KV CKT 1
FDNS	00NR	3	16WP	G15_082	FROM->TO	CIMARRON - DRAPER LAKE 345KV CKT 1	717	717	0.13247	109.1643	TUTTLE - TUTTLE CONOCO TAP 138KV CKT 1
FDNS	00NR	3	16WP	G15_082	FROM->TO	CIMARRON - DRAPER LAKE 345KV CKT 1	717	717	0.13389	109.1501	FT SMITH - MUSKOGEE 345KV CKT 1
FDNS	00NR	3	16WP	G15_082	FROM->TO	CIMARRON - DRAPER LAKE 345KV CKT 1	717	717	0.1331	109.1491	GEN562704 1-G15_020_3 0.3550
FDNS	00NR	3	16WP	G15_082	FROM->TO	CIMARRON - DRAPER LAKE 345KV CKT 1	717	717	0.1331	109.1386	GEN563222 1-G15088_3 0.6900
FDNS	00NR	3	16WP	G15_082	FROM->TO	CIMARRON - DRAPER LAKE 345KV CKT 1	717	717	0.1331	109.1199	GEN563082 1-G15073_3 0.6900
FDNS	00NR	3	16WP	G15_082	FROM->TO	CIMARRON - DRAPER LAKE 345KV CKT 1	717	717	0.1331	109.1188	CLAY BOSWELL 230/20.9KV TRANSFORMER CKT 1
FDNS	00NR	3	16WP	G15_082	FROM->TO	CIMARRON - DRAPER LAKE 345KV CKT 1	717	717	0.13152	109.0946	RANCHRD7 345.00 - SOONER 345KV CKT 1
FDNS	00NR	3	16WP	G15_082	FROM->TO	CIMARRON - DRAPER LAKE 345KV CKT 1	717	717	0.1331	109.0841	GEN672321 1-SHAND GENERATOR 1
FDNS	00NR	3	16WP	G15_082	FROM->TO	CIMARRON - DRAPER LAKE 345KV CKT 1	717	717	0.13373	109.0651	LULA - TUPELO TAP 138KV CKT 1
FDNS	00NR	3	16WP	G15_082	FROM->TO	CIMARRON - DRAPER LAKE 345KV CKT 1	717	717	0.1331	109.0569	GEN672310 1-POPLAR RIVER GENERATOR 1
FDNS	00NR	3	16WP	G15_082	FROM->TO	CIMARRON - DRAPER LAKE 345KV CKT 1	717	717	0.1331	109.0569	GEN672311 2-POPLAR RIVER GENERATOR 2
FDNS	00NR	3	16WP	G15_082	FROM->TO	CIMARRON - DRAPER LAKE 345KV CKT 1	717	717	0.1331	109.0568	GEN562710 1-G15_022_3 0.5500
FDNS	00NR	3	16WP	G15_082	FROM->TO	CIMARRON - DRAPER LAKE 345KV CKT 1	717	717	0.13495	109.0535	OAKCREEK - WILD MARY 138KV CKT 1
FDNS	00NR	3	16WP	G15_082	FROM->TO	CIMARRON - DRAPER LAKE 345KV CKT 1	717	717	0.1331	109.0467	GEN672306 6-BOUNDARY DAM GENERATOR 6

SOLUTION	GROUP	SCENARIO	SEASON	SOURCE	DIRECTION	MONITORED ELEMENT	RATEA (MVA)	RATEB(MVA)	TDF	TC%LOADING (% MVA)	CONTINGENCY
FDNS	00NR	3	16WP	G15_082	FROM->TO	CIMARRON - DRAPER LAKE 345KV CKT 1	717	717	0.13353	109.0387	ETNA - HARDEN 4 138.00 138KV CKT 1
FDNS	00NR	3	16WP	G15_082	FROM->TO	CIMARRON - DRAPER LAKE 345KV CKT 1	717	717	0.13389	109.0361	P12:138:OKGE:3TERM22
FDNS	00NR	3	16WP	G15_082	FROM->TO	CIMARRON - DRAPER LAKE 345KV CKT 1	717	717	0.13389	109.0345	DRAPER LAKE - SOONER TAP 138KV CKT 1
FDNS	00NR	3	16WP	G15_082	FROM->TO	CIMARRON - DRAPER LAKE 345KV CKT 1	717	717	0.13317	109.0307	P12:138:WFEC:MSL09
FDNS	00NR	3	16WP	G15_082	FROM->TO	CIMARRON - DRAPER LAKE 345KV CKT 1	717	717	0.12969	109.0256	G11_051T 345.00 - WOODWARD DISTRICT EHV 345KV CKT 1
FDNS	00NR	3	16WP	G15_082	FROM->TO	CIMARRON - DRAPER LAKE 345KV CKT 1	717	717	0.12969	109.0256	G11_051T 345.00 - WOODWARD DISTRICT EHV 345KV CKT 2
FDNS	00NR	3	16WP	G15_082	FROM->TO	CIMARRON - DRAPER LAKE 345KV CKT 1	717	717	0.13255	109.0173	SEMINOLE (SEMINOL1) 345/138/14.4KV TRANSFORMER CKT 1
FDNS	00NR	3	16WP	G15_082	FROM->TO	CIMARRON - DRAPER LAKE 345KV CKT 1	717	717	0.1331	108.9872	GEN563273 2-G15093_4 0.6900
FDNS	00NR	3	16WP	G15_082	FROM->TO	CIMARRON - DRAPER LAKE 345KV CKT 1	717	717	0.13313	108.9744	NORTHWEST TEXARKANA - VALLIANT 345KV CKT 1
FDNS	00NR	3	16WP	G15_082	FROM->TO	CIMARRON - DRAPER LAKE 345KV CKT 1	717	717	0.13313	108.9744	NORTHWEST TEXARKANA - VALLIANT 345KV CKT 1
FDNS	00NR	3	16WP	G15_082	FROM->TO	CIMARRON - DRAPER LAKE 345KV CKT 1	717	717	0.1356	108.9664	NORTHWEST - SPRING CREEK 345KV CKT 1
FDNS	00NR	3	16WP	G15_082	FROM->TO	CIMARRON - DRAPER LAKE 345KV CKT 1	717	717	0.1331	108.958	GEN542956 2-LACYGNE UNIT #2
FDNS	00NR	3	16WP	G15_082	FROM->TO	CIMARRON - DRAPER LAKE 345KV CKT 1	717	717	0.13263	108.9517	P12:138:WFEC:MSL08
FDNS	00NR	3	16WP	G15_082	FROM->TO	CIMARRON - DRAPER LAKE 345KV CKT 1	717	717	0.13353	108.9464	ETNA - PARK LANE 138KV CKT 1
FDNS	00NR	3	16WP	G15_082	FROM->TO	CIMARRON - DRAPER LAKE 345KV CKT 1	717	717	0.1331	108.9457	GEN681542 6-JP MADGETT
FDNS	00NR	3	16WP	G15_082	FROM->TO	CIMARRON - DRAPER LAKE 345KV CKT 1	717	717	0.1356	108.9419	SOONER - SPRING CREEK 345KV CKT 1
FDNS	00NR	3	16WP	G15_082	FROM->TO	CIMARRON - DRAPER LAKE 345KV CKT 1	717	717	0.13263	108.911	FRANKLIN - PINK SW 138KV CKT 1
FDNS	00NR	3	16WP	G15_082	FROM->TO	CIMARRON - DRAPER LAKE 345KV CKT 1	717	717	0.1331	108.8827	GEN640011 2-GERALD GENTLEMAN STATION UNIT 2
FDNS	00NR	3	16WP	G15_082	FROM->TO	CIMARRON - DRAPER LAKE 345KV CKT 1	717	717	0.1331	108.8472	GEN530690 1-PRWINDG1 0.6900
FDNS	00NR	3	16WP	G15_082	FROM->TO	CIMARRON - DRAPER LAKE 345KV CKT 1	717	717	0.1331	108.8465	GEN659118 1-LARAMIE RIVER UNIT1
FDNS	00NR	3	16WP	G15_082	FROM->TO	CIMARRON - DRAPER LAKE 345KV CKT 1	717	717	0.1331	108.846	GEN542957 1-IATAN UNIT #1
FDNS	00NR	3	16WP	G15_082	FROM->TO	CIMARRON - DRAPER LAKE 345KV CKT 1	717	717	0.1331	108.846	GEN562754 1-G15031_5 0.6900
FDNS	00NR	3	16WP	G15_082	FROM->TO	CIMARRON - DRAPER LAKE 345KV CKT 1	717	717	0.1331	108.8382	GEN562556 1-G14_046_3 0.3420
FDNS	00NR	3	16WP	G15_082	FROM->TO	CIMARRON - DRAPER LAKE 345KV CKT 1	717	717	0.13495	108.8206	AIRDEPT4 138.00 - WILD MARY 138KV CKT 1
FDNS	00NR	3	16WP	G15_082	FROM->TO	CIMARRON - DRAPER LAKE 345KV CKT 1	717	717	0.1331	108.8096	GEN661015 1-COYOTE
FDNS	00NR	3	16WP	G15_082	FROM->TO	CIMARRON - DRAPER LAKE 345KV CKT 1	717	717	0.1331	108.7995	GEN562756 1-G15031_7 0.6900
FDNS	00NR	3	16WP	G15_082	FROM->TO	CIMARRON - DRAPER LAKE 345KV CKT 1	717	717	0.1331	108.7968	GEN562691 1-G15_015_3 0.6900
FDNS	00NR	3	16WP	G15_082	FROM->TO	CIMARRON - DRAPER LAKE 345KV CKT 1	717	717	0.1331	108.7948	GEN563042 1-G15068_3 0.6900
FDNS	00NR	3	16WP	G15_082	FROM->TO	CIMARRON - DRAPER LAKE 345KV CKT 1	717	717	0.1331	108.7907	GEN563142 1-G15079_3 0.5500
FDNS	00NR	3	16WP	G15_082	FROM->TO	CIMARRON - DRAPER LAKE 345KV CKT 1	717	717	0.1331	108.7907	GEN563151 1-G15080_2 0.5500
FDNS	00NR	3	16WP	G15_082	FROM->TO	CIMARRON - DRAPER LAKE 345KV CKT 1	717	717	0.13244	108.7871	SEMINOLE (SEMINOL2) 345/138/14.4KV TRANSFORMER CKT 1
FDNS	00NR	3	16WP	G15_082	FROM->TO	CIMARRON - DRAPER LAKE 345KV CKT 1	717	717	0.1331	108.7736	GEN542955 1-LACYGNE UNIT #1
FDNS	00NR	3	16WP	G15_082	FROM->TO	CIMARRON - DRAPER LAKE 345KV CKT 1	717	717	0.1331	108.7366	GEN562762 1-G15033_3 0.6900
FDNS	00NR	3	16WP	G15_082	FROM->TO	CIMARRON - DRAPER LAKE 345KV CKT 1	717	717	0.1331	108.7363	GEN562655 1-G14_074_3 0.6900
FDNS	00NR	3	16WP	G15_082	FROM->TO	CIMARRON - DRAPER LAKE 345KV CKT 1	717	717	0.13417	108.7332	PARK LANE - SEMINOLE 138KV CKT 1
FDNS	00NR	3	16WP	G15_082	FROM->TO	CIMARRON - DRAPER LAKE 345KV CKT 1	717	717	0.1331	108.7318	GEN532652 1-JEFFREY ENERGY CENTER UNIT 2
FDNS	00NR	3	16WP	G15_082	FROM->TO	CIMARRON - DRAPER LAKE 345KV CKT 1	717	717	0.1331	108.7269	GEN532651 1-JEFFREY ENERGY CENTER UNIT 1
FDNS	00NR	3	16WP	G15_082	FROM->TO	CIMARRON - DRAPER LAKE 345KV CKT 1	717	717	0.1331	108.7165	GEN645001 1-FORT CALHOUN 1
FDNS	00NR	3	16WP	G15_082	FROM->TO	CIMARRON - DRAPER LAKE 345KV CKT 1	717	717	0.13646	108.7073	G15093_T 345.00 - GRACEMONT 345KV CKT 1
FDNS	00NR	3	16WP	G15_082	FROM->TO	CIMARRON - DRAPER LAKE 345KV CKT 1	717	717	0.1331	108.7003	GEN562078 1-G11_051_3 0.6900
FDNS	00NR	3	16WP	G15_082	FROM->TO	CIMARRON - DRAPER LAKE 345KV CKT 1	717	717	0.1331	108.6753	GEN657748 1-YOUNG 2 GENERATOR
FDNS	00NR	3	16WP	G15_082	FROM->TO	CIMARRON - DRAPER LAKE 345KV CKT 1	717	717	0.1331	108.6641	GEN563272 1-G15093_3 0.6900
FDNS	00NR	3	16WP	G15_082	FROM->TO	CIMARRON - DRAPER LAKE 345KV CKT 1	717	717	0.1331	108.6329	GEN562974 1-G15060_5 0.6900
FDNS	00NR	3	16WP	G15_082	FROM->TO	CIMARRON - DRAPER LAKE 345KV CKT 1	717	717	0.1331	108.6249	GEN527901 1-HOBBS PLANT #1 (CT)
FDNS	00NR	3	16WP	G15_082	FROM->TO	CIMARRON - DRAPER LAKE 345KV CKT 1	717	717	0.1331	108.6249	GEN527902 1-HOBBS PLANT #2 (CT)
FDNS	00NR	3	16WP	G15_082	FROM->TO	CIMARRON - DRAPER LAKE 345KV CKT 1	717	717	0.13263	108.6158	FRANKLIN - FRANKLIN SW 138KV CKT 1
FDNS	00NR	3	16WP	G15_082	FROM->TO	CIMARRON - DRAPER LAKE 345KV CKT 1	717	717	0.1331	108.614	GEN562973 1-G15060_4 0.6900
FDNS	00NR	3	16WP	G15_082	FROM->TO	CIMARRON - DRAPER LAKE 345KV CKT 1	717	717	0.12969	108.6124	G11_051T 345.00 - TATONGA7 345.00 345KV CKT 1
FDNS	00NR	3	16WP	G15_082	FROM->TO	CIMARRON - DRAPER LAKE 345KV CKT 1	717	717	0.12969	108.6124	G11_051T 345.00 - TATONGA7 345.00 345KV CKT 2
FDNS	00NR	3	16WP	G15_082	FROM->TO	CIMARRON - DRAPER LAKE 345KV CKT 1	717	717	0.1331	108.5941	GEN563043 1-G15068_4 0.6900
FDNS	00NR	3	16WP	G15_082	FROM->TO	CIMARRON - DRAPER LAKE 345KV CKT 1	717	717	0.1331	108.594	GEN562772 1-G15034_3 0.6900
FDNS	00NR	3	16WP	G15_082	FROM->TO	CIMARRON - DRAPER LAKE 345KV CKT 1	717	717	0.13495	108.5873	AIRDEPT4 138.00 - GM 138KV CKT 1
FDNS	00NR	3	16WP	G15_082	FROM->TO	CIMARRON - DRAPER LAKE 345KV CKT 1	717	717	0.1331	108.5505	GEN525845 1-ELK_2 1 138.00
FDNS	00NR	3	16WP	G15_082	FROM->TO	CIMARRON - DRAPER LAKE 345KV CKT 1	717	717	0.1331	108.5474	GEN525844 1-ELK_1 118.000
FDNS	00NR	3	16WP	G15_082	FROM->TO	CIMARRON - DRAPER LAKE 345KV CKT 1	717	717	0.13247	108.5451	P12:138:AEPW-OGE:CORNVIL4:CIMARON4
FDNS	00NR	3	16WP	G15_082	FROM->TO	CIMARRON - DRAPER LAKE 345KV CKT 1	717	717	0.1331	108.4857	GEN526333 1-JONES GEN #3 21 KV
FDNS	00NR	3	16WP	G15_082	FROM->TO	CIMARRON - DRAPER LAKE 345KV CKT 1	717	717	0.1331	108.4857	GEN526334 1-JONES_4 116.500
FDNS	00NR	3	16WP	G15_082	FROM->TO	CIMARRON - DRAPER LAKE 345KV CKT 1	717	717	0.1331	108.4855	GEN620315 1-BIG STONE GEN
FDNS	00NR	3	16WP	G15_082	FROM->TO	CIMARRON - DRAPER LAKE 345KV CKT 1	717	717	0.1331	108.4674	GEN563052 1-G15069_3 0.6900
FDNS	00NR	3	16WP	G15_082	FROM->TO	CIMARRON - DRAPER LAKE 345KV CKT 1	717	717	0.13315	108.4504	LYDIA - WELSH 345KV CKT 1
FDNS	00NR	3	16WP	G15_082	FROM->TO	CIMARRON - DRAPER LAKE 345KV CKT 1	717	717	0.13315	108.4504	LYDIA - WELSH 345KV CKT 1
FDNS	00NR	3	16WP	G15_082	FROM->TO	CIMARRON - DRAPER LAKE 345KV CKT 1	717	717	0.1331	108.4345	GEN563242 1-G15090_3 0.6900
FDNS	00NR	3	16WP	G15_082	FROM->TO	CIMARRON - DRAPER LAKE 345KV CKT 1	717	717	0.1331	108.4213	GEN600004 2-PRAIRIE ISLAND G2
FDNS	00NR	3	16WP	G15_082	FROM->TO	CIMARRON - DRAPER LAKE 345KV CKT 1	717	717	0.1331	108.4211	GEN523971 1-HARRINGTON GEN #1 24 KV
FDNS	00NR	3	16WP	G15_082	FROM->TO	CIMARRON - DRAPER LAKE 345KV CKT 1	717	717	0.1331	108.4211	GEN523972 1-HARRINGTON GEN #2 24 KV
FDNS	00NR	3	16WP	G15_082	FROM->TO	CIMARRON - DRAPER LAKE 345KV CKT 1	717	717	0.1331	108.4211	GEN523973 1-HARRINGTON GEN #3 24 KV
FDNS	00NR	3	16WP	G15_082	FROM->TO	CIMARRON - DRAPER LAKE 345KV CKT 1	717	717	0.1331	108.4183	GEN600003 1-PRAIRIE ISLAND G1
FDNS	00NR	3	16WP	G15_082	FROM->TO	CIMARRON - DRAPER LAKE 345KV CKT 1	717	717	0.1331	108.4088	GEN600006 1-AS KING
FDNS	00NR	3	16WP	G15_082	FROM->TO	CIMARRON - DRAPER LAKE 345KV CKT 1	717	717	0.1331	108.3912	GEN636641 1-LOUISA UNIT 1
FDNS	00NR	3	16WP	G15_082	FROM->TO	CIMARRON - DRAPER LAKE 345KV CKT 1	717	717	0.13495	108.3682	DRAPER LAKE - GM 138KV CKT 1
FDNS	00NR	3	16WP	G15_082	FROM->TO	CIMARRON - DRAPER LAKE 345KV CKT 1	717	717	0.1331	108.3208	GEN562952 1-G15057_3 0.6500
FDNS	00NR	3	16WP	G15_082	FROM->TO	CIMARRON - DRAPER LAKE 345KV CKT 1	717	717	0.13834	108.3108	CLARKSVILLE - MUSKOGEE 345KV CKT 1
FDNS	00NR	3	16WP	G15_082	FROM->TO	CIMARRON - DRAPER LAKE 345KV CKT 1	717	717	0.13834	108.3108	CLARKSVILLE - MUSKOGEE 345KV CKT 1
FDNS	00NR	3	16WP	G15_082	FROM->TO	CIMARRON - DRAPER LAKE 345KV CKT 1	717	717	0.1331	108.2944	GEN563292 1-G15095_3 0.6900
FDNS	00NR	3	16WP	G15_082	FROM->TO	CIMARRON - DRAPER LAKE 345KV CKT 1	717	717	0.1331	108.2576	GEN600005 1-MONTICELLO
FDNS	00NR	3	16WP	G15_082	FROM->TO	CIMARRON - DRAPER LAKE 345KV CKT 1	717	717	0.1331	108.2376	GEN615001 1-COAL CREEK
FDNS	00NR	3	16WP	G15_082	FROM->TO	CIMARRON - DRAPER LAKE 345KV CKT 1	717	717	0.1331	108.2311	GEN527166 1-MUSTANG_6 118.000
FDNS	00NR	3	16WP	G15_082	FROM->TO	CIMARRON - DRAPER LAKE 345KV CKT 1	717	717	0.13466	108.215	FRANKLIN SW - MIDWEST TAP 138KV CKT 1
FDNS	00NR	3	16WP	G15_082	FROM->TO	CIMARRON - DRAPER LAKE 345KV CKT 1	717	717	0.1331	108.2113	GEN525562 1-TOLK GEN #2 24 KV

SOLUTION	GROUP	SCENARIO	SEASON	SOURCE	DIRECTION	MONITORED ELEMENT	RATEA (MVA)	RATEB(MVA)	TDF	TC%LOADING (% MVA)	CONTINGENCY
FDNS	00NR	3	16WP	G15_082	FROM->TO	CIMARRON - DRAPER LAKE 345KV CKT 1	717	717	0.1331	108.2102	GEN615002 2-COAL CREEK
FDNS	00NR	3	16WP	G15_082	FROM->TO	CIMARRON - DRAPER LAKE 345KV CKT 1	717	717	0.1331	108.1852	GEN562892 1-G15048_3 0.6900
FDNS	00NR	3	16WP	G15_082	FROM->TO	CIMARRON - DRAPER LAKE 345KV CKT 1	717	717	0.1331	108.1768	GEN629074 1-ARNOLD LOWSIDE OF GSU XFMR
FDNS	00NR	3	16WP	G15_082	FROM->TO	CIMARRON - DRAPER LAKE 345KV CKT 1	717	717	0.1331	108.1688	GEN542962 2-IATAN UNIT #2
FDNS	00NR	3	16WP	G15_082	FROM->TO	CIMARRON - DRAPER LAKE 345KV CKT 1	717	717	0.1331	108.1397	GEN525561 1-TOLK GEN #1 24 KV
FDNS	00NR	3	16WP	G15_082	FROM->TO	CIMARRON - DRAPER LAKE 345KV CKT 1	717	717	0.1331	108.1156	GEN635213 3-NEAL UNIT 3
FDNS	00NR	3	16WP	G15_082	FROM->TO	CIMARRON - DRAPER LAKE 345KV CKT 1	717	717	0.1331	108.0604	BIG STONE 230/24.0KV TRANSFORMER CKT 1
FDNS	00NR	3	16WP	G15_082	FROM->TO	CIMARRON - DRAPER LAKE 345KV CKT 1	717	717	0.1331	108.0416	GEN562902 1-G15052_3 0.6900
FDNS	00NR	3	16WP	G15_082	FROM->TO	CIMARRON - DRAPER LAKE 345KV CKT 1	717	717	0.12662	108.0272	DRAPER LAKE - SEMINOLE 345KV CKT 3
FDNS	00NR	3	16WP	G15_082	FROM->TO	CIMARRON - DRAPER LAKE 345KV CKT 1	717	717	0.13419	108.0078	CHAMBER SPRINGS - CLARKSVILLE 345KV CKT 1
FDNS	00NR	3	16WP	G15_082	FROM->TO	CIMARRON - DRAPER LAKE 345KV CKT 1	717	717	0.1331	107.9666	GEN514805 1-SOONER UNIT 1
FDNS	00NR	3	16WP	G15_082	FROM->TO	CIMARRON - DRAPER LAKE 345KV CKT 1	717	717	0.1331	107.9525	GEN640009 1-COOPER NUCLEAR STATION
FDNS	00NR	3	16WP	G15_082	FROM->TO	CIMARRON - DRAPER LAKE 345KV CKT 1	717	717	0.1331	107.9356	GEN527903 1-HOBBS PLANT #3 (ST)
FDNS	00NR	3	16WP	G15_082	FROM->TO	CIMARRON - DRAPER LAKE 345KV CKT 1	717	717	0.1331	107.8988	GEN600000 1-SHERBURNECNTY G1
FDNS	00NR	3	16WP	G15_082	FROM->TO	CIMARRON - DRAPER LAKE 345KV CKT 1	717	717	0.13269	107.8361	P12:138:OKGE:3TERM23
FDNS	00NR	3	16WP	G15_082	FROM->TO	CIMARRON - DRAPER LAKE 345KV CKT 1	717	717	0.1331	107.8328	GEN563173 1-G15082_3 0.6900
FDNS	00NR	3	16WP	G15_082	FROM->TO	CIMARRON - DRAPER LAKE 345KV CKT 1	717	717	0.1331	107.8041	GEN600001 2-SHERBURNE CNTY G2
FDNS	00NR	3	16WP	G15_082	FROM->TO	CIMARRON - DRAPER LAKE 345KV CKT 1	717	717	0.13316	107.798	LYDIA - VALLIANT 345KV CKT 1
FDNS	00NR	3	16WP	G15_082	FROM->TO	CIMARRON - DRAPER LAKE 345KV CKT 1	717	717	0.13316	107.798	LYDIA - VALLIANT 345KV CKT 1
FDNS	00NR	3	16WP	G15_082	FROM->TO	CIMARRON - DRAPER LAKE 345KV CKT 1	717	717	0.1331	107.7923	GEN344225 1-1CAL G1 25.000
FDNS	00NR	3	16WP	G15_082	FROM->TO	CIMARRON - DRAPER LAKE 345KV CKT 1	717	717	0.13269	107.7739	BARNES 4 138.00 - DRAPER LAKE 138KV CKT 1
FDNS	00NR	3	16WP	G15_082	FROM->TO	CIMARRON - DRAPER LAKE 345KV CKT 1	717	717	0.1331	107.754	GEN514806 1-SOONER UNIT 2
FDNS	00NR	3	16WP	G15_082	FROM->TO	CIMARRON - DRAPER LAKE 345KV CKT 1	717	717	0.1331	107.6868	GEN629075 1-OTTUMWA GENERATOR FOR OTTUMWA UNIT NO 1
FDNS	00NR	3	16WP	G15_082	FROM->TO	CIMARRON - DRAPER LAKE 345KV CKT 1	717	717	0.13493	107.6414	DRAPER LAKE (DRAPER2) 345/138/13.8KV TRANSFORMER CKT 1
FDNS	00NR	3	16WP	G15_082	FROM->TO	CIMARRON - DRAPER LAKE 345KV CKT 1	717	717	0.1331	107.5905	GEN563162 1-G15081_3 0.6900
FDNS	00NR	3	16WP	G15_082	FROM->TO	CIMARRON - DRAPER LAKE 345KV CKT 1	717	717	0.1331	107.5542	GEN562882 1-G15047_3 0.6900
FDNS	00NR	3	16WP	G15_082	FROM->TO	CIMARRON - DRAPER LAKE 345KV CKT 1	717	717	0.12778	107.5428	MUSKOGEE - SEMINOLE 345KV CKT 1
FDNS	00NR	3	16WP	G15_082	FROM->TO	CIMARRON - DRAPER LAKE 345KV CKT 1	717	717	0.13492	107.5082	DRAPER LAKE (DRAPER3) 345/138/13.8KV TRANSFORMER CKT 1
FDNS	00NR	3	16WP	G15_082	FROM->TO	CIMARRON - DRAPER LAKE 345KV CKT 1	717	717	0.13492	107.5082	DRAPER LAKE (DRAPER4) 345/138/13.8KV TRANSFORMER CKT 1
FDNS	00NR	3	16WP	G15_082	FROM->TO	CIMARRON - DRAPER LAKE 345KV CKT 1	717	717	0.1331	107.4518	SHERBURNE CO 345/24.0KV TRANSFORMER CKT 1
FDNS	00NR	3	16WP	G15_082	FROM->TO	CIMARRON - DRAPER LAKE 345KV CKT 1	717	717	0.1331	107.4149	GEN635214 4-NEAL UNIT 4
FDNS	00NR	3	16WP	G15_082	FROM->TO	CIMARRON - DRAPER LAKE 345KV CKT 1	717	717	0.12972	107.3894	CIMARRON - MATHWSN7 345.00 345KV CKT 1
FDNS	00NR	3	16WP	G15_082	FROM->TO	CIMARRON - DRAPER LAKE 345KV CKT 1	717	717	0.12972	107.3894	CIMARRON - MATHWSN7 345.00 345KV CKT 2
FDNS	00NR	3	16WP	G15_082	FROM->TO	CIMARRON - DRAPER LAKE 345KV CKT 1	717	717	0.1331	107.321	GEN532653 1-JEFFREY ENERGY CENTER UNIT 3
FDNS	00NR	3	16WP	G15_082	FROM->TO	CIMARRON - DRAPER LAKE 345KV CKT 1	717	717	0.1331	107.3076	GEN600002 3-SHERBURNE CNTY G3
FDNS	00NR	3	16WP	G15_082	FROM->TO	CIMARRON - DRAPER LAKE 345KV CKT 1	717	717	0.1331	106.9136	GEN635023 3-WALTER SCOTT UNIT 3
FDNS	00NR	3	16WP	G15_082	FROM->TO	CIMARRON - DRAPER LAKE 345KV CKT 1	717	717	0.13657	106.8553	G15063_T 345.00 - MATHWSN7 345.00 345KV CKT 1
FDNS	00NR	3	16WP	G15_082	FROM->TO	CIMARRON - DRAPER LAKE 345KV CKT 1	717	717	0.1331	106.7601	EASTDC - ERCOT EQUIVALENCE 345KV CKT 1
FDNS	00NR	3	16WP	G15_082	FROM->TO	CIMARRON - DRAPER LAKE 345KV CKT 1	717	717	0.12599	106.5501	MATHWSN7 345.00 - TATONGA7 345.00 345KV CKT 1
FDNS	00NR	3	16WP	G15_082	FROM->TO	CIMARRON - DRAPER LAKE 345KV CKT 1	717	717	0.12599	106.5501	MATHWSN7 345.00 - TATONGA7 345.00 345KV CKT 2
FDNS	00NR	3	16WP	G15_082	FROM->TO	CIMARRON - DRAPER LAKE 345KV CKT 1	717	717	0.1331	106.4532	GEN562023 1-G11_020_3 0.6900
FDNS	00NR	3	16WP	G15_082	FROM->TO	CIMARRON - DRAPER LAKE 345KV CKT 1	717	717	0.1331	106.4532	GEN562026 1-G11_019_3 0.6900
FDNS	00NR	3	16WP	G15_082	FROM->TO	CIMARRON - DRAPER LAKE 345KV CKT 1	717	717	0.1331	106.4058	GEN635024 4-WALTER SCOTT UNIT 4
FDNS	00NR	3	16WP	G15_082	FROM->TO	CIMARRON - DRAPER LAKE 345KV CKT 1	717	717	0.121	106.3415	DRAPER LAKE - SEMINOLE 345KV CKT 1
FDNS	00NR	3	16WP	G15_082	FROM->TO	CIMARRON - DRAPER LAKE 345KV CKT 1	717	717	0.121	106.3414	DRAPER LAKE - SEMINOLE 345KV CKT 2
FDNS	00NR	3	16WP	G15_082	FROM->TO	CIMARRON - DRAPER LAKE 345KV CKT 1	717	717	0.1331	105.4287	GEN562992 1-G15063_3 0.6900
FDNS	00NR	3	16WP	G15_082	FROM->TO	CIMARRON - DRAPER LAKE 345KV CKT 1	717	717	0.1382	104.882	DRAPER LAKE - MIDWEST TAP 138KV CKT 1
FDNS	00NR	3	16WP	G15_082	FROM->TO	CIMARRON - DRAPER LAKE 345KV CKT 1	717	717	0.13823	104.8394	P12:138:OKGE:3TERM21
FDNS	00NR	3	16WP	G15_082	FROM->TO	CIMARRON - DRAPER LAKE 345KV CKT 1	717	717	0.1331	103.7949	GEN532751 1-WOLF CREEK GENERATING STATION UNIT 1
FDNS	00NR	3	17SP	G15_082	FROM->TO	CIMARRON - DRAPER LAKE 345KV CKT 1	717	717	0.14224	102.2798	G14-057T 345.00 - LAWTON EASTSIDE 345KV CKT 1
FDNS	00NR	3	16WP	G15_082	FROM->TO	CIMARRON - DRAPER LAKE 345KV CKT 1	717	717	0.13482	102.1451	PITTSBURG - VALLIANT 345KV CKT 1
FDNS	00NR	3	16WP	G15_082	FROM->TO	CIMARRON - DRAPER LAKE 345KV CKT 1	717	717	0.13482	102.1451	PITTSBURG - VALLIANT 345KV CKT 1
FDNS	00NR	3	17SP	G15_082	FROM->TO	CIMARRON - DRAPER LAKE 345KV CKT 1	717	717	0.12761	100.4401	CLEVELAND - G15066_T 345.00 345KV CKT 1
FDNS	00NR	3	17SP	G15_082	FROM->TO	CIMARRON - DRAPER LAKE 345KV CKT 1	717	717	0.12761	99.7	G15066_T 345.00 - SOONER 345KV CKT 1
FDNS	00NR	3	20WP	G15_082	TO->FROM	CIMARRON - MINCO 345KV CKT 1	956	956	0.15196	121.3451	G14-057T 345.00 - SUNNYSIDE 345KV CKT 1
FDNS	00NR	3	16WP	G15_082	TO->FROM	CIMARRON - MINCO 345KV CKT 1	956	956	0.15134	118.7247	G14-057T 345.00 - SUNNYSIDE 345KV CKT 1
FDNS	00NR	3	20WP	G15_082	TO->FROM	CIMARRON - MINCO 345KV CKT 1	956	956	0.15196	104.5195	G14-057T 345.00 - LAWTON EASTSIDE 345KV CKT 1
FDNS	00NR	3	16WP	G15_082	TO->FROM	CIMARRON - MINCO 345KV CKT 1	956	956	0.15134	101.9923	G14-057T 345.00 - LAWTON EASTSIDE 345KV CKT 1
FDNS	00NR	3	17SP	G15_082	TO->FROM	CIMARRON - MINCO 345KV CKT 1	956	956	0.15303	99.9	G14-057T 345.00 - SUNNYSIDE 345KV CKT 1
FDNS	00NR	3	16WP	G15_082	TO->FROM	G14-057T 345.00 - LAWTON EASTSIDE 345KV CKT 1	717	789	0.11416	103.2694	CIMARRON - MINCO 345KV CKT 1
FDNS	00NR	3	20WP	G15_082	TO->FROM	G14-057T 345.00 - LAWTON EASTSIDE 345KV CKT 1	717	789	0.11438	102.1881	CIMARRON - MINCO 345KV CKT 1
FDNS	00NR	3	16WP	G15_082	FROM->TO	G14-057T 345.00 - SUNNYSIDE 345KV CKT 1	717	789	0.11416	145.531	CIMARRON - MINCO 345KV CKT 1
FDNS	00NR	3	20WP	G15_082	FROM->TO	G14-057T 345.00 - SUNNYSIDE 345KV CKT 1	717	789	0.11438	144.3405	CIMARRON - MINCO 345KV CKT 1
FDNS	00NR	3	16WP	G15_082	FROM->TO	G14-057T 345.00 - SUNNYSIDE 345KV CKT 1	717	789	0.11416	136.8107	GRACEMONT - MINCO 345KV CKT 1
FDNS	00NR	3	20WP	G15_082	FROM->TO	G14-057T 345.00 - SUNNYSIDE 345KV CKT 1	717	789	0.11438	135.5134	GRACEMONT - MINCO 345KV CKT 1
FDNS	00NR	3	16WP	G15_082	FROM->TO	G14-057T 345.00 - SUNNYSIDE 345KV CKT 1	717	789	0.07907	133.6811	PITTSBURG - SEMINOLE 345KV CKT 1
FDNS	00NR	3	16WP	G15_082	FROM->TO	G14-057T 345.00 - SUNNYSIDE 345KV CKT 1	717	789	0.07907	133.6811	PITTSBURG - SEMINOLE 345KV CKT 1
FDNS	00NR	3	16WP	G15_082	FROM->TO	G14-057T 345.00 - SUNNYSIDE 345KV CKT 1	717	789	0.08432	133.1823	BASE CASE
FDNS	00NR	3	16WP	G15_082	FROM->TO	G14-057T 345.00 - SUNNYSIDE 345KV CKT 1	717	789	0.09672	130.563	CIMARRON - DRAPER LAKE 345KV CKT 1
FDNS	00NR	3	20WP	G15_082	FROM->TO	G14-057T 345.00 - SUNNYSIDE 345KV CKT 1	717	789	0.08441	130.5144	BASE CASE
FDNS	00NR	3	20WP	G15_082	FROM->TO	G14-057T 345.00 - SUNNYSIDE 345KV CKT 1	717	789	0.07909	130.0247	PITTSBURG - SEMINOLE 345KV CKT 1
FDNS	00NR	3	20WP	G15_082	FROM->TO	G14-057T 345.00 - SUNNYSIDE 345KV CKT 1	717	789	0.07909	130.0247	PITTSBURG - SEMINOLE 345KV CKT 1
FDNS	00NR	3	20WP	G15_082	FROM->TO	G14-057T 345.00 - SUNNYSIDE 345KV CKT 1	717	789	0.09677	127.806	CIMARRON - DRAPER LAKE 345KV CKT 1
FDNS	00NR	3	16WP	G15_082	FROM->TO	G14-057T 345.00 - SUNNYSIDE 345KV CKT 1	717	789	0.09083	127.4239	P12:138:WFEC:MSL03
FDNS	00NR	3	16WP	G15_082	FROM->TO	G14-057T 345.00 - SUNNYSIDE 345KV CKT 1	717	789	0.08312	126.7886	PITTSBURG - VALLIANT 345KV CKT 1
FDNS	00NR	3	16WP	G15_082	FROM->TO	G14-057T 345.00 - SUNNYSIDE 345KV CKT 1	717	789	0.08312	126.7886	PITTSBURG - VALLIANT 345KV CKT 1
FDNS	00NR	3	16WP	G15_082	FROM->TO	G14-057T 345.00 - SUNNYSIDE 345KV CKT 1	717	789	0.08432	126.3539	GEN509403 1-PIRKEY GENERATION
FDNS	00NR	3	16WP	G15_082	FROM->TO	G14-057T 345.00 - SUNNYSIDE 345KV CKT 1	717	789	0.08432	126.2548	GEN509416 1-TURK GENERATION
FDNS	00NR	3	16WP	G15_082	FROM->TO	G14-057T 345.00 - SUNNYSIDE 345KV CKT 1	717	789	0.08597	125.9676	CLEVELAND - G15066_T 345.00 345KV CKT 1

SOLUTION	GROUP	SCENARIO	SEASON	SOURCE	DIRECTION	MONITORED ELEMENT	RATEA (MVA)	RATEB(MVA)	TDF	TC%LOADING (% MVA)	CONTINGENCY
FDNS	00NR	3	16WP	G15_082	FROM->TO	G14-057T 345.00 - SUNNYSIDE 345KV CKT 1	717	789	0.08597	125.6648	G15066_T 345.00 - SOONER 345KV CKT 1
FDNS	00NR	3	16WP	G15_082	FROM->TO	G14-057T 345.00 - SUNNYSIDE 345KV CKT 1	717	789	0.07516	125.4425	G15093_T 345.00 - GRACEMONT 345KV CKT 1
FDNS	00NR	3	16WP	G15_082	FROM->TO	G14-057T 345.00 - SUNNYSIDE 345KV CKT 1	717	789	0.08432	125.3666	GEN501801 1-DOLET HILLS UNIT1
FDNS	00NR	3	20WP	G15_082	FROM->TO	G14-057T 345.00 - SUNNYSIDE 345KV CKT 1	717	789	0.09096	125.0519	P12:138:WFEC:MSL03
FDNS	00NR	3	16WP	G15_082	FROM->TO	G14-057T 345.00 - SUNNYSIDE 345KV CKT 1	717	789	0.08432	124.934	GEN509404 1-WELSH #1
FDNS	00NR	3	16WP	G15_082	FROM->TO	G14-057T 345.00 - SUNNYSIDE 345KV CKT 1	717	789	0.08432	124.934	GEN509406 1-WELSH #3
FDNS	00NR	3	20WP	G15_082	FROM->TO	G14-057T 345.00 - SUNNYSIDE 345KV CKT 1	717	789	0.07549	124.563	G15093_T 345.00 - GRACEMONT 345KV CKT 1
FDNS	00NR	3	16WP	G15_082	FROM->TO	G14-057T 345.00 - SUNNYSIDE 345KV CKT 1	717	789	0.08619	124.1907	CORN TAP - NAPLESTP 138.00 138KV CKT 1
FDNS	00NR	3	16WP	G15_082	FROM->TO	G14-057T 345.00 - SUNNYSIDE 345KV CKT 1	717	789	0.08619	124.1103	NAPLESTP 138.00 - PAYNE 138.00 138KV CKT 1
FDNS	00NR	3	16WP	G15_082	FROM->TO	G14-057T 345.00 - SUNNYSIDE 345KV CKT 1	717	789	0.08453	124.018	BORDER 7345.00 - CHISHOLM7 345.00 345KV CKT 1
FDNS	00NR	3	16WP	G15_082	FROM->TO	G14-057T 345.00 - SUNNYSIDE 345KV CKT 1	717	789	0.08435	123.9714	7SAREPTA% 345.00 - LONGWOOD 345KV CKT 1
FDNS	00NR	3	16WP	G15_082	FROM->TO	G14-057T 345.00 - SUNNYSIDE 345KV CKT 1	717	789	0.08435	123.9714	7SAREPTA% 345.00 - LONGWOOD 345KV CKT 1
FDNS	00NR	3	16WP	G15_082	FROM->TO	G14-057T 345.00 - SUNNYSIDE 345KV CKT 1	717	789	0.08432	123.9641	GEN336153 1-WATERFORD UNIT#3
FDNS	00NR	3	16WP	G15_082	FROM->TO	G14-057T 345.00 - SUNNYSIDE 345KV CKT 1	717	789	0.08541	123.9135	CLEVELAND - TULSA NORTH 345KV CKT 1
FDNS	00NR	3	16WP	G15_082	FROM->TO	G14-057T 345.00 - SUNNYSIDE 345KV CKT 1	717	789	0.08541	123.9135	CLEVELAND - TULSA NORTH 345KV CKT 1
FDNS	00NR	3	16WP	G15_082	FROM->TO	G14-057T 345.00 - SUNNYSIDE 345KV CKT 1	717	789	0.08582	123.8874	COMANCHE - LOCO 138KV CKT 1
FDNS	00NR	3	20WP	G15_082	FROM->TO	G14-057T 345.00 - SUNNYSIDE 345KV CKT 1	717	789	0.08441	123.8513	GEN509403 1-PIRKEY GENERATION
FDNS	00NR	3	16WP	G15_082	FROM->TO	G14-057T 345.00 - SUNNYSIDE 345KV CKT 1	717	789	0.08437	123.8457	DOLET HILLS - SOUTHWEST SHREVEPORT 345KV CKT 1
FDNS	00NR	3	16WP	G15_082	FROM->TO	G14-057T 345.00 - SUNNYSIDE 345KV CKT 1	717	789	0.08437	123.8457	DOLET HILLS - SOUTHWEST SHREVEPORT 345KV CKT 1
FDNS	00NR	3	16WP	G15_082	FROM->TO	G14-057T 345.00 - SUNNYSIDE 345KV CKT 1	717	789	0.09479	123.7682	ARCADIA - NORTHWEST 345KV CKT 1
FDNS	00NR	3	16WP	G15_082	FROM->TO	G14-057T 345.00 - SUNNYSIDE 345KV CKT 1	717	789	0.08594	123.763	ANADARKO - POCASSETT 138KV CKT 1
FDNS	00NR	3	20WP	G15_082	FROM->TO	G14-057T 345.00 - SUNNYSIDE 345KV CKT 1	717	789	0.08441	123.76	GEN509416 1-TURK GENERATION
FDNS	00NR	3	16WP	G15_082	FROM->TO	G14-057T 345.00 - SUNNYSIDE 345KV CKT 1	717	789	0.07987	123.6867	CANADIAN RIVER - MUSKOGEE 345KV CKT 1
FDNS	00NR	3	16WP	G15_082	FROM->TO	G14-057T 345.00 - SUNNYSIDE 345KV CKT 1	717	789	0.08432	123.649	GEN335831 1-RIVERBEND UNIT#1
FDNS	00NR	3	16WP	G15_082	FROM->TO	G14-057T 345.00 - SUNNYSIDE 345KV CKT 1	717	789	0.08594	123.6274	POCASSETT - TUTTLE 138KV CKT 1
FDNS	00NR	3	16WP	G15_082	FROM->TO	G14-057T 345.00 - SUNNYSIDE 345KV CKT 1	717	789	0.08533	123.6255	ARCADIA - SEMINOLE 345KV CKT 1
FDNS	00NR	3	16WP	G15_082	FROM->TO	G14-057T 345.00 - SUNNYSIDE 345KV CKT 1	717	789	0.08432	123.5482	GEN336821 1-GRAND GULF UNIT
FDNS	00NR	3	16WP	G15_082	FROM->TO	G14-057T 345.00 - SUNNYSIDE 345KV CKT 1	717	789	0.08432	123.5334	GEN515577 1-ARBWND11 0.6900
FDNS	00NR	3	16WP	G15_082	FROM->TO	G14-057T 345.00 - SUNNYSIDE 345KV CKT 1	717	789	0.08432	123.5088	GEN509409 1-WILKES #3
FDNS	00NR	3	16WP	G15_082	FROM->TO	G14-057T 345.00 - SUNNYSIDE 345KV CKT 1	717	789	0.08453	123.503	BORDER 7345.00 - TUCO_2 345.00 345KV CKT 1
FDNS	00NR	3	20WP	G15_082	FROM->TO	G14-057T 345.00 - SUNNYSIDE 345KV CKT 1	717	789	0.08601	123.4986	CLEVELAND - G15066_T 345.00 345KV CKT 1
FDNS	00NR	3	20WP	G15_082	FROM->TO	G14-057T 345.00 - SUNNYSIDE 345KV CKT 1	717	789	0.08321	123.4398	PITTSBURG - VALLIANT 345KV CKT 1
FDNS	00NR	3	20WP	G15_082	FROM->TO	G14-057T 345.00 - SUNNYSIDE 345KV CKT 1	717	789	0.08321	123.4398	PITTSBURG - VALLIANT 345KV CKT 1
FDNS	00NR	3	16WP	G15_082	FROM->TO	G14-057T 345.00 - SUNNYSIDE 345KV CKT 1	717	789	0.08603	123.3981	HEALDTON - LOCO 138KV CKT 1
FDNS	00NR	3	16WP	G15_082	FROM->TO	G14-057T 345.00 - SUNNYSIDE 345KV CKT 1	717	789	0.0854	123.3801	P12:138:AEPW:DUNCAN-4:L.E.S.-4
FDNS	00NR	3	16WP	G15_082	FROM->TO	G14-057T 345.00 - SUNNYSIDE 345KV CKT 1	717	789	0.08434	123.3469	7SAREPTA% 345.00 - ELDORADO EHV 345KV CKT 1
FDNS	00NR	3	16WP	G15_082	FROM->TO	G14-057T 345.00 - SUNNYSIDE 345KV CKT 1	717	789	0.08434	123.3467	3TR3AR8EL7EL
FDNS	00NR	3	16WP	G15_082	FROM->TO	G14-057T 345.00 - SUNNYSIDE 345KV CKT 1	717	789	0.08434	123.3366	ELDORADO EHV 500/345KV TRANSFORMER CKT 1
FDNS	00NR	3	16WP	G15_082	FROM->TO	G14-057T 345.00 - SUNNYSIDE 345KV CKT 1	717	789	0.0854	123.286	COMANCHE TAP - OMPA-DUNCAN 840 138KV CKT 1
FDNS	00NR	3	16WP	G15_082	FROM->TO	G14-057T 345.00 - SUNNYSIDE 345KV CKT 1	717	789	0.08594	123.2786	BRIDGECR 138.00 - TUTTLE 138KV CKT 1
FDNS	00NR	3	16WP	G15_082	FROM->TO	G14-057T 345.00 - SUNNYSIDE 345KV CKT 1	717	789	0.08603	123.2588	HEALDTON - RINGLING 138KV CKT 1
FDNS	00NR	3	16WP	G15_082	FROM->TO	G14-057T 345.00 - SUNNYSIDE 345KV CKT 1	717	789	0.08432	123.243	GEN501813 1-RODEMACHER UNIT 3
FDNS	00NR	3	20WP	G15_082	FROM->TO	G14-057T 345.00 - SUNNYSIDE 345KV CKT 1	717	789	0.08601	123.2028	G15066_T 345.00 - SOONER 345KV CKT 1
FDNS	00NR	3	16WP	G15_082	FROM->TO	G14-057T 345.00 - SUNNYSIDE 345KV CKT 1	717	789	0.08432	123.1618	GEN300006 1-NEW MADRID UNIT 1
FDNS	00NR	3	16WP	G15_082	FROM->TO	G14-057T 345.00 - SUNNYSIDE 345KV CKT 1	717	789	0.08432	123.1494	GEN300007 1-NEW MADRID UNIT 2
FDNS	00NR	3	16WP	G15_082	FROM->TO	G14-057T 345.00 - SUNNYSIDE 345KV CKT 1	717	789	0.08432	123.1371	GRAND GULF 500/22.0KV TRANSFORMER CKT 1
FDNS	00NR	3	16WP	G15_082	FROM->TO	G14-057T 345.00 - SUNNYSIDE 345KV CKT 1	717	789	0.08603	123.096	RINGLING - SOUTH WILSON 138KV CKT 1
FDNS	00NR	3	16WP	G15_082	FROM->TO	G14-057T 345.00 - SUNNYSIDE 345KV CKT 1	717	789	0.08432	123.0898	GEN520947 1-HUGO1
FDNS	00NR	3	16WP	G15_082	FROM->TO	G14-057T 345.00 - SUNNYSIDE 345KV CKT 1	717	789	0.08458	123.0557	LACYGNE - WAVERLY7 345.00 345KV CKT 1
FDNS	00NR	3	16WP	G15_082	FROM->TO	G14-057T 345.00 - SUNNYSIDE 345KV CKT 1	717	789	0.08594	123.033	P12:138:WFEC:MSL01
FDNS	00NR	3	16WP	G15_082	FROM->TO	G14-057T 345.00 - SUNNYSIDE 345KV CKT 1	717	789	0.08594	123.0308	BRIDGECR 138.00 - SUNSHINE CANYON 138KV CKT 1
FDNS	00NR	3	16WP	G15_082	FROM->TO	G14-057T 345.00 - SUNNYSIDE 345KV CKT 1	717	789	0.08432	123.0304	GEN335206 1-NELSON UNIT 6
FDNS	00NR	3	20WP	G15_082	FROM->TO	G14-057T 345.00 - SUNNYSIDE 345KV CKT 1	717	789	0.08441	123.0297	GEN501801 1-DOLET HILLS UNIT1
FDNS	00NR	3	16WP	G15_082	FROM->TO	G14-057T 345.00 - SUNNYSIDE 345KV CKT 1	717	789	0.0854	123.0097	DUNCAN - OMPA-DUNCAN 840 138KV CKT 1
FDNS	00NR	3	16WP	G15_082	FROM->TO	G14-057T 345.00 - SUNNYSIDE 345KV CKT 1	717	789	0.0854	123.0097	DUNCAN - OMPA-DUNCAN 840 138KV CKT 1
FDNS	00NR	3	16WP	G15_082	FROM->TO	G14-057T 345.00 - SUNNYSIDE 345KV CKT 1	717	789	0.08458	122.9366	WAVERLY7 345.00 - WOLF CREEK 345KV CKT 1
FDNS	00NR	3	16WP	G15_082	FROM->TO	G14-057T 345.00 - SUNNYSIDE 345KV CKT 1	717	789	0.08432	122.8425	DOLET HILLS 345/24.0KV TRANSFORMER CKT 1
FDNS	00NR	3	16WP	G15_082	FROM->TO	G14-057T 345.00 - SUNNYSIDE 345KV CKT 1	717	789	0.08432	122.8319	GEN501812 1-RODEMACHER UNIT 2
FDNS	00NR	3	16WP	G15_082	FROM->TO	G14-057T 345.00 - SUNNYSIDE 345KV CKT 1	717	789	0.08305	122.823	PARK LANE - SEMINOLE 138KV CKT 1
FDNS	00NR	3	16WP	G15_082	FROM->TO	G14-057T 345.00 - SUNNYSIDE 345KV CKT 1	717	789	0.08603	122.8229	MARIETTA - SOUTH WILSON 138KV CKT 1
FDNS	00NR	3	16WP	G15_082	FROM->TO	G14-057T 345.00 - SUNNYSIDE 345KV CKT 1	717	789	0.08432	122.7783	GEN509408 1-WILKES #2
FDNS	00NR	3	16WP	G15_082	FROM->TO	G14-057T 345.00 - SUNNYSIDE 345KV CKT 1	717	789	0.08432	122.7552	GEN590011 2-ERCOT EQUIVALENCE
FDNS	00NR	3	16WP	G15_082	FROM->TO	G14-057T 345.00 - SUNNYSIDE 345KV CKT 1	717	789	0.08536	122.7423	CANEYRV7 345.00 - NEOSHO 345KV CKT 1
FDNS	00NR	3	16WP	G15_082	FROM->TO	G14-057T 345.00 - SUNNYSIDE 345KV CKT 1	717	789	0.08603	122.7388	P12:138:WFEC:MSL17
FDNS	00NR	3	16WP	G15_082	FROM->TO	G14-057T 345.00 - SUNNYSIDE 345KV CKT 1	717	789	0.08432	122.7341	GEN515564 1-ORIGIN11 0.6900
FDNS	00NR	3	16WP	G15_082	FROM->TO	G14-057T 345.00 - SUNNYSIDE 345KV CKT 1	717	789	0.08432	122.7341	GEN515565 1-ORIGIN21 0.6900
FDNS	00NR	3	16WP	G15_082	FROM->TO	G14-057T 345.00 - SUNNYSIDE 345KV CKT 1	717	789	0.08427	122.7174	P12:138:AEPW:SHERID4:112GORE4
FDNS	00NR	3	16WP	G15_082	FROM->TO	G14-057T 345.00 - SUNNYSIDE 345KV CKT 1	717	789	0.08747	122.7098	MATHWSN7 345.00 - NORTHWEST 345KV CKT 1
FDNS	00NR	3	16WP	G15_082	FROM->TO	G14-057T 345.00 - SUNNYSIDE 345KV CKT 1	717	789	0.08432	122.6776	GEN590010 1-ERCOT EQUIVALENCE
FDNS	00NR	3	16WP	G15_082	FROM->TO	G14-057T 345.00 - SUNNYSIDE 345KV CKT 1	717	789	0.08437	122.6155	REDBUD - RIVERSIDE STATION 345KV CKT 1
FDNS	00NR	3	16WP	G15_082	FROM->TO	G14-057T 345.00 - SUNNYSIDE 345KV CKT 1	717	789	0.08437	122.6155	REDBUD - RIVERSIDE STATION 345KV CKT 1
FDNS	00NR	3	16WP	G15_082	FROM->TO	G14-057T 345.00 - SUNNYSIDE 345KV CKT 1	717	789	0.08536	122.5931	CANEYRV7 345.00 - LATHAMS7 345.00 345KV CKT 1
FDNS	00NR	3	16WP	G15_082	FROM->TO	G14-057T 345.00 - SUNNYSIDE 345KV CKT 1	717	789	0.08569	122.5841	CIVIT - PAOLI 138KV CKT 1
FDNS	00NR	3	16WP	G15_082	FROM->TO	G14-057T 345.00 - SUNNYSIDE 345KV CKT 1	717	789	0.08417	122.5434	ELDORADO EHV - SHERIDAN EHV 500KV CKT 1
FDNS	00NR	3	16WP	G15_082	FROM->TO	G14-057T 345.00 - SUNNYSIDE 345KV CKT 1	717	789	0.08751	122.5396	MATHWSN7 345.00 - TATONGA7 345.00 345KV CKT 1
FDNS	00NR	3	16WP	G15_082	FROM->TO	G14-057T 345.00 - SUNNYSIDE 345KV CKT 1	717	789	0.08751	122.5396	MATHWSN7 345.00 - TATONGA7 345.00 345KV CKT 2
FDNS	00NR	3	16WP	G15_082	FROM->TO	G14-057T 345.00 - SUNNYSIDE 345KV CKT 1	717	789	0.08432	122.5305	GEN334440 1-SABINE UNIT 4
FDNS	00NR	3	16WP	G15_082	FROM->TO	G14-057T 345.00 - SUNNYSIDE 345KV CKT 1	717	789	0.08432	122.53	GEN506754 1-LEBROCK STEAM 1
FDNS	00NR	3	16WP	G15_082	FROM->TO	G14-057T 345.00 - SUNNYSIDE 345KV CKT 1	717	789	0.08432	122.5173	P12:161:AEPW:DYESS 5:HYLAND 5

SOLUTION	GROUP	SCENARIO	SEASON	SOURCE	DIRECTION	MONITORED ELEMENT	RATEA (MVA)	RATEB(MVA)	TDF	TC%LOADING (% MVA)	CONTINGENCY
FDNS	00NR	3	16WP	G15_082	FROM->TO	G14-057T 345.00 - SUNNYSIDE 345KV CKT 1	717	789	0.08427	122.5104	ELDORADO EHV - MOUNT OLIVE 500KV CKT 1
FDNS	00NR	3	16WP	G15_082	FROM->TO	G14-057T 345.00 - SUNNYSIDE 345KV CKT 1	717	789	0.08465	122.5037	PAOLI - PAYNE 138.00 138KV CKT 1
FDNS	00NR	3	20WP	G15_082	FROM->TO	G14-057T 345.00 - SUNNYSIDE 345KV CKT 1	717	789	0.08441	122.4804	GEN509406 1-WELSH #3
FDNS	00NR	3	20WP	G15_082	FROM->TO	G14-057T 345.00 - SUNNYSIDE 345KV CKT 1	717	789	0.08441	122.4801	GEN509404 1-WELSH #1
FDNS	00NR	3	16WP	G15_082	FROM->TO	G14-057T 345.00 - SUNNYSIDE 345KV CKT 1	717	789	0.08432	122.4685	P12:69:AEPW:L.E.S.-2:LAW WC2
FDNS	00NR	3	16WP	G15_082	FROM->TO	G14-057T 345.00 - SUNNYSIDE 345KV CKT 1	717	789	0.08642	122.4627	P12:138:AEPW-OGE:CORNVIL4:MAUD 4
FDNS	00NR	3	16WP	G15_082	FROM->TO	G14-057T 345.00 - SUNNYSIDE 345KV CKT 1	717	789	0.08485	122.4598	P12:138:WFEC:MSL02
FDNS	00NR	3	16WP	G15_082	FROM->TO	G14-057T 345.00 - SUNNYSIDE 345KV CKT 1	717	789	0.08569	122.4448	CIVIT - STRATFORD 138KV CKT 1
FDNS	00NR	3	16WP	G15_082	FROM->TO	G14-057T 345.00 - SUNNYSIDE 345KV CKT 1	717	789	0.09514	122.4232	Hitchland Interchange - WALKTAP7 345.00 345KV CKT 1
FDNS	00NR	3	16WP	G15_082	FROM->TO	G14-057T 345.00 - SUNNYSIDE 345KV CKT 1	717	789	0.09514	122.4232	Hitchland Interchange - WALKTAP7 345.00 345KV CKT 1
FDNS	00NR	3	16WP	G15_082	FROM->TO	G14-057T 345.00 - SUNNYSIDE 345KV CKT 1	717	789	0.09514	122.4085	P12:345:SPS:J07.1.FINN.HITCH
FDNS	00NR	3	16WP	G15_082	FROM->TO	G14-057T 345.00 - SUNNYSIDE 345KV CKT 1	717	789	0.08642	122.3942	BLANCHARD - CORNVILLE 138KV CKT 1
FDNS	00NR	3	16WP	G15_082	FROM->TO	G14-057T 345.00 - SUNNYSIDE 345KV CKT 1	717	789	0.0844	122.3904	TUPELO - TUPELO TAP 138KV CKT 1
FDNS	00NR	3	16WP	G15_082	FROM->TO	G14-057T 345.00 - SUNNYSIDE 345KV CKT 1	717	789	0.08427	122.3742	P12:138:AEPW:112GORE4:L.E.S.-4
FDNS	00NR	3	16WP	G15_082	FROM->TO	G14-057T 345.00 - SUNNYSIDE 345KV CKT 1	717	789	0.08432	122.3738	GEN503909 1-FULTONU1 1 16.000
FDNS	00NR	3	16WP	G15_082	FROM->TO	G14-057T 345.00 - SUNNYSIDE 345KV CKT 1	717	789	0.08471	122.3609	ANADARKO - GEORGIA 138KV CKT 1
FDNS	00NR	3	16WP	G15_082	FROM->TO	G14-057T 345.00 - SUNNYSIDE 345KV CKT 1	717	789	0.08536	122.3582	LATHAMS7 345.00 - ROSE HILL 345KV CKT 1
FDNS	00NR	3	16WP	G15_082	FROM->TO	G14-057T 345.00 - SUNNYSIDE 345KV CKT 1	717	789	0.08432	122.3543	FRONTIER - GRIMES 345KV CKT 1
FDNS	00NR	3	16WP	G15_082	FROM->TO	G14-057T 345.00 - SUNNYSIDE 345KV CKT 1	717	789	0.08569	122.3285	OIL CENTER - STRATFORD 138KV CKT 1
FDNS	00NR	3	16WP	G15_082	FROM->TO	G14-057T 345.00 - SUNNYSIDE 345KV CKT 1	717	789	0.08471	122.2824	FLETCHER - GEORGIA 138KV CKT 1
FDNS	00NR	3	16WP	G15_082	FROM->TO	G14-057T 345.00 - SUNNYSIDE 345KV CKT 1	717	789	0.08478	122.2676	EMPIRE - FLETCHER 138KV CKT 1
FDNS	00NR	3	16WP	G15_082	FROM->TO	G14-057T 345.00 - SUNNYSIDE 345KV CKT 1	717	789	0.08443	122.2655	WEBRE - WELLS 500KV CKT 1
FDNS	00NR	3	16WP	G15_082	FROM->TO	G14-057T 345.00 - SUNNYSIDE 345KV CKT 1	717	789	0.08432	122.2487	GEN509393 S1-ARSENAL HILL GENS #4 (STALL)
FDNS	00NR	3	16WP	G15_082	FROM->TO	G14-057T 345.00 - SUNNYSIDE 345KV CKT 1	717	789	0.08446	122.2326	LAWTON EASTSIDE (LES 5) 345/138/13.8KV TRANSFORMER CKT 2
FDNS	00NR	3	16WP	G15_082	FROM->TO	G14-057T 345.00 - SUNNYSIDE 345KV CKT 1	717	789	0.08446	122.2326	LAWTON EASTSIDE (LES 5) 345/138/13.8KV TRANSFORMER CKT 2
FDNS	00NR	3	16WP	G15_082	FROM->TO	G14-057T 345.00 - SUNNYSIDE 345KV CKT 1	717	789	0.08432	122.2311	GEN336252 1-NINEMILE POINT UNIT#5
FDNS	00NR	3	16WP	G15_082	FROM->TO	G14-057T 345.00 - SUNNYSIDE 345KV CKT 1	717	789	0.08432	122.2177	GEN509392 G2-ARSENAL HILL GENS #3 (STALL)
FDNS	00NR	3	16WP	G15_082	FROM->TO	G14-057T 345.00 - SUNNYSIDE 345KV CKT 1	717	789	0.08432	122.2176	GEN509391 G1-ARSENAL HILL GENS #2 (STALL)
FDNS	00NR	3	16WP	G15_082	FROM->TO	G14-057T 345.00 - SUNNYSIDE 345KV CKT 1	717	789	0.08432	122.2147	DELL 500 - ESSEX UNIT 2 500KV CKT Z1
FDNS	00NR	3	16WP	G15_082	FROM->TO	G14-057T 345.00 - SUNNYSIDE 345KV CKT 1	717	789	0.08642	122.2094	BLANCHARD - MAUD 138KV CKT 1
FDNS	00NR	3	16WP	G15_082	FROM->TO	G14-057T 345.00 - SUNNYSIDE 345KV CKT 1	717	789	0.08432	122.201	GEN334071 1-LEWIS CREEK 2
FDNS	00NR	3	16WP	G15_082	FROM->TO	G14-057T 345.00 - SUNNYSIDE 345KV CKT 1	717	789	0.08432	122.1969	GEN335204 1-NELSON UNIT 4
FDNS	00NR	3	16WP	G15_082	FROM->TO	G14-057T 345.00 - SUNNYSIDE 345KV CKT 1	717	789	0.08432	122.1939	GEN334070 1-LEWIS CREEK 1
FDNS	00NR	3	16WP	G15_082	FROM->TO	G14-057T 345.00 - SUNNYSIDE 345KV CKT 1	717	789	0.08478	122.1874	COMANCHE - EMPIRE 138KV CKT 1
FDNS	00NR	3	16WP	G15_082	FROM->TO	G14-057T 345.00 - SUNNYSIDE 345KV CKT 1	717	789	0.08707	122.1705	THISTLE7 345.00 - WOODWARD DISTRICT EHV 345KV CKT 1
FDNS	00NR	3	16WP	G15_082	FROM->TO	G14-057T 345.00 - SUNNYSIDE 345KV CKT 1	717	789	0.08707	122.1705	THISTLE7 345.00 - WOODWARD DISTRICT EHV 345KV CKT 1
FDNS	00NR	3	16WP	G15_082	FROM->TO	G14-057T 345.00 - SUNNYSIDE 345KV CKT 1	717	789	0.08707	122.1705	THISTLE7 345.00 - WOODWARD DISTRICT EHV 345KV CKT 2
FDNS	00NR	3	16WP	G15_082	FROM->TO	G14-057T 345.00 - SUNNYSIDE 345KV CKT 1	717	789	0.08707	122.1705	THISTLE7 345.00 - WOODWARD DISTRICT EHV 345KV CKT 2
FDNS	00NR	3	16WP	G15_082	FROM->TO	G14-057T 345.00 - SUNNYSIDE 345KV CKT 1	717	789	0.08569	122.159	LATTA JCT - OIL CENTER 138KV CKT 1
FDNS	00NR	3	16WP	G15_082	FROM->TO	G14-057T 345.00 - SUNNYSIDE 345KV CKT 1	717	789	0.08432	122.159	GEN334441 1-SABINE UNIT 5
FDNS	00NR	3	16WP	G15_082	FROM->TO	G14-057T 345.00 - SUNNYSIDE 345KV CKT 1	717	789	0.08453	122.1524	G15074_T 345.00 - HOYT 345KV CKT 1
FDNS	00NR	3	16WP	G15_082	FROM->TO	G14-057T 345.00 - SUNNYSIDE 345KV CKT 1	717	789	0.08432	122.1417	GEN337653 1-WHITE BLUFF UNIT #2
FDNS	00NR	3	16WP	G15_082	FROM->TO	G14-057T 345.00 - SUNNYSIDE 345KV CKT 1	717	789	0.08457	122.1361	DUNCAN (DUNCAN) 138/69/13.8KV TRANSFORMER CKT 1
FDNS	00NR	3	16WP	G15_082	FROM->TO	G14-057T 345.00 - SUNNYSIDE 345KV CKT 1	717	789	0.08457	122.1361	DUNCAN (DUNCAN) 138/69/13.8KV TRANSFORMER CKT 1
FDNS	00NR	3	16WP	G15_082	FROM->TO	G14-057T 345.00 - SUNNYSIDE 345KV CKT 1	717	789	0.08431	122.0977	P12:161:AEPW-SWPA:BEAVER5:EROGERS5
FDNS	00NR	3	16WP	G15_082	FROM->TO	G14-057T 345.00 - SUNNYSIDE 345KV CKT 1	717	789	0.08432	122.0974	GEN337911 1-ARKANSAS NUCLEAR ONE UNIT #2
FDNS	00NR	3	16WP	G15_082	FROM->TO	G14-057T 345.00 - SUNNYSIDE 345KV CKT 1	717	789	0.08432	122.0958	GEN334030 1-FRONTIER UNIT 1
FDNS	00NR	3	16WP	G15_082	FROM->TO	G14-057T 345.00 - SUNNYSIDE 345KV CKT 1	717	789	0.08432	122.0939	GEN334031 1-FRONTIER UNIT 2
FDNS	00NR	3	16WP	G15_082	FROM->TO	G14-057T 345.00 - SUNNYSIDE 345KV CKT 1	717	789	0.08435	122.0714	8DANIEL8 500.00 - MCKNIGHT 500KV CKT 1
FDNS	00NR	3	16WP	G15_082	FROM->TO	G14-057T 345.00 - SUNNYSIDE 345KV CKT 1	717	789	0.08432	122.0695	GEN506752 1-LEBROCK GAS 1
FDNS	00NR	3	16WP	G15_082	FROM->TO	G14-057T 345.00 - SUNNYSIDE 345KV CKT 1	717	789	0.08432	122.0693	GEN506753 1-LEBROCK GAS 2
FDNS	00NR	3	16WP	G15_082	FROM->TO	G14-057T 345.00 - SUNNYSIDE 345KV CKT 1	717	789	0.08436	122.0673	P12:138:AEPW:CATOOSA4:T.S.E.-4
FDNS	00NR	3	16WP	G15_082	FROM->TO	G14-057T 345.00 - SUNNYSIDE 345KV CKT 1	717	789	0.08432	122.065	GEN515226 1-MUSKOGEE 6G
FDNS	00NR	3	16WP	G15_082	FROM->TO	G14-057T 345.00 - SUNNYSIDE 345KV CKT 1	717	789	0.08543	122.0634	P12:138:AEPW-OGE:WTH_JCT4:JENSEN4
FDNS	00NR	3	16WP	G15_082	FROM->TO	G14-057T 345.00 - SUNNYSIDE 345KV CKT 1	717	789	0.08432	122.046	GEN337652 1-WHITE BLUFF UNIT #1
FDNS	00NR	3	16WP	G15_082	FROM->TO	G14-057T 345.00 - SUNNYSIDE 345KV CKT 1	717	789	0.08612	122.0399	BAILEY4 138.00 - SUNSHINE CANYON 138KV CKT 1
FDNS	00NR	3	16WP	G15_082	FROM->TO	G14-057T 345.00 - SUNNYSIDE 345KV CKT 1	717	789	0.08488	122.0337	TUTTLE - TUTTLE CONOCO TAP 138KV CKT 1
FDNS	00NR	3	16WP	G15_082	FROM->TO	G14-057T 345.00 - SUNNYSIDE 345KV CKT 1	717	789	0.08432	122.0332	GEN501811 1-RODEMACHER UNIT 1
FDNS	00NR	3	16WP	G15_082	FROM->TO	G14-057T 345.00 - SUNNYSIDE 345KV CKT 1	717	789	0.08432	122.0207	GEN336251 1-NINEMILE POINT UNIT#4
FDNS	00NR	3	16WP	G15_082	FROM->TO	G14-057T 345.00 - SUNNYSIDE 345KV CKT 1	717	789	0.08432	122.0192	GEN336831 1-BAXTER WILSON SES
FDNS	00NR	3	16WP	G15_082	FROM->TO	G14-057T 345.00 - SUNNYSIDE 345KV CKT 1	717	789	0.08432	122.0192	P12:161:AEPW:DYESS5:ELMSPRNG:TONTITN5
FDNS	00NR	3	16WP	G15_082	FROM->TO	G14-057T 345.00 - SUNNYSIDE 345KV CKT 1	717	789	0.08432	122.0115	GEN334433 1-SABINE UNIT 3
FDNS	00NR	3	16WP	G15_082	FROM->TO	G14-057T 345.00 - SUNNYSIDE 345KV CKT 1	717	789	0.08432	121.9993	GEN300003 1-THOMAS HILL UNIT 3
FDNS	00NR	3	16WP	G15_082	FROM->TO	G14-057T 345.00 - SUNNYSIDE 345KV CKT 1	717	789	0.08432	121.9952	GEN300015 1-1SGPDEL 18.000
FDNS	00NR	3	16WP	G15_082	FROM->TO	G14-057T 345.00 - SUNNYSIDE 345KV CKT 1	717	789	0.08435	121.9863	6LAYFLD 230.00 - CARROLL 230KV CKT 1
FDNS	00NR	3	16WP	G15_082	FROM->TO	G14-057T 345.00 - SUNNYSIDE 345KV CKT 1	717	789	0.08602	121.9853	G1524G1525 345.00 - THISTLE7 345.00 345KV CKT 1
FDNS	00NR	3	16WP	G15_082	FROM->TO	G14-057T 345.00 - SUNNYSIDE 345KV CKT 1	717	789	0.08602	121.9853	G1524G1525 345.00 - THISTLE7 345.00 345KV CKT 2
FDNS	00NR	3	16WP	G15_082	FROM->TO	G14-057T 345.00 - SUNNYSIDE 345KV CKT 1	717	789	0.08434	121.9781	FULTON 115 - HOPE 115KV CKT 1
FDNS	00NR	3	16WP	G15_082	FROM->TO	G14-057T 345.00 - SUNNYSIDE 345KV CKT 1	717	789	0.08434	121.9781	FULTON 115 - HOPE 115KV CKT 1
FDNS	00NR	3	16WP	G15_082	FROM->TO	G14-057T 345.00 - SUNNYSIDE 345KV CKT 1	717	789	0.08475	121.9677	P12:138:AEPW:CORNVIL4:S.W.S.-4
FDNS	00NR	3	16WP	G15_082	FROM->TO	G14-057T 345.00 - SUNNYSIDE 345KV CKT 1	717	789	0.08432	121.9626	GEN562783 1-G15036_4 0.6900
FDNS	00NR	3	16WP	G15_082	FROM->TO	G14-057T 345.00 - SUNNYSIDE 345KV CKT 1	717	789	0.08432	121.9626	GEN562784 1-G15036_5 0.6900
FDNS	00NR	3	16WP	G15_082	FROM->TO	G14-057T 345.00 - SUNNYSIDE 345KV CKT 1	717	789	0.08488	121.9595	CIMARRON - TUTTLE CONOCO TAP 138KV CKT 1
FDNS	00NR	3	16WP	G15_082	FROM->TO	G14-057T 345.00 - SUNNYSIDE 345KV CKT 1	717	789	0.08432	121.9595	GEN515223 1-MUSKOGEE 4G
FDNS	00NR	3	16WP	G15_082	FROM->TO	G14-057T 345.00 - SUNNYSIDE 345KV CKT 1	717	789	0.08432	121.9595	GEN515225 1-MUSKOGEE 5G
FDNS	00NR	3	16WP	G15_082	FROM->TO	G14-057T 345.00 - SUNNYSIDE 345KV CKT 1	717	789	0.08457	121.952	P12:69:WFEC-AEPW:COMANCH2:DUNCAN-2
FDNS	00NR	3	16WP	G15_082	FROM->TO	G14-057T 345.00 - SUNNYSIDE 345KV CKT 1	717	789	0.08432	121.9359	GEN337910 1-ARKANSAS NUCLEAR ONE UNIT #1
FDNS	00NR	3	16WP	G15_082	FROM->TO	G14-057T 345.00 - SUNNYSIDE 345KV CKT 1	717	789	0.08165	121.9335	G14_038T 345.00 - Hitchland Interchange 345KV CKT 1
FDNS	00NR	3	16WP	G15_082	FROM->TO	G14-057T 345.00 - SUNNYSIDE 345KV CKT 1	717	789	0.08432	121.9328	GEN515040 1-SEMINOLE 1G

SOLUTION	GROUP	SCENARIO	SEASON	SOURCE	DIRECTION	MONITORED ELEMENT	RATEA (MVA)	RATEB(MVA)	TDF	TC%LOADING (% MVA)	CONTINGENCY
FDNS	00NR	3	16WP	G15_082	FROM->TO	G14-057T 345.00 - SUNNYSIDE 345KV CKT 1	717	789	0.08484	121.9327	P12:138:AEPW:CORNVIL4:DUNCAN-4
FDNS	00NR	3	16WP	G15_082	FROM->TO	G14-057T 345.00 - SUNNYSIDE 345KV CKT 1	717	789	0.08432	121.921	WHITE BLUFF 500/26.0KV TRANSFORMER CKT 1
FDNS	00NR	3	16WP	G15_082	FROM->TO	G14-057T 345.00 - SUNNYSIDE 345KV CKT 1	717	789	0.08427	121.9185	LAYFLD8 500.00 - MOUNT OLIVE 500KV CKT 1
FDNS	00NR	3	16WP	G15_082	FROM->TO	G14-057T 345.00 - SUNNYSIDE 345KV CKT 1	717	789	0.08427	121.9185	LAYFLD8 500.00 - MOUNT OLIVE 500KV CKT 1
FDNS	00NR	3	16WP	G15_082	FROM->TO	G14-057T 345.00 - SUNNYSIDE 345KV CKT 1	717	789	0.08432	121.918	RODEMACHER 230/22.0KV TRANSFORMER CKT 1
FDNS	00NR	3	16WP	G15_082	FROM->TO	G14-057T 345.00 - SUNNYSIDE 345KV CKT 1	717	789	0.08432	121.9169	GEN303007 1-1BC2 U2
FDNS	00NR	3	16WP	G15_082	FROM->TO	G14-057T 345.00 - SUNNYSIDE 345KV CKT 1	717	789	0.08495	121.9167	P12:138:AEPW:WTHWF4:CLINTJC4
FDNS	00NR	3	16WP	G15_082	FROM->TO	G14-057T 345.00 - SUNNYSIDE 345KV CKT 1	717	789	0.08429	121.9167	HOT SPRINGS EHV - MAGNET COVE 500KV CKT 1
FDNS	00NR	3	16WP	G15_082	FROM->TO	G14-057T 345.00 - SUNNYSIDE 345KV CKT 1	717	789	0.08432	121.9143	P12:161:AEPW:EROGERS5:ECNTRTN5
FDNS	00NR	3	16WP	G15_082	FROM->TO	G14-057T 345.00 - SUNNYSIDE 345KV CKT 1	717	789	0.08432	121.914	GEN505432 1-SIKESTON
FDNS	00NR	3	16WP	G15_082	FROM->TO	G14-057T 345.00 - SUNNYSIDE 345KV CKT 1	717	789	0.08432	121.9132	GEN303006 1-1BC2 U1
FDNS	00NR	3	16WP	G15_082	FROM->TO	G14-057T 345.00 - SUNNYSIDE 345KV CKT 1	717	789	0.08457	121.9063	DUNCAN - TOSCO 69KV CKT 1
FDNS	00NR	3	16WP	G15_082	FROM->TO	G14-057T 345.00 - SUNNYSIDE 345KV CKT 1	717	789	0.08454	121.9053	HOYT - STRANGER CREEK 345KV CKT 1
FDNS	00NR	3	16WP	G15_082	FROM->TO	G14-057T 345.00 - SUNNYSIDE 345KV CKT 1	717	789	0.08485	121.903	CIMARRON - CZECH HALL 138KV CKT 1
FDNS	00NR	3	16WP	G15_082	FROM->TO	G14-057T 345.00 - SUNNYSIDE 345KV CKT 1	717	789	0.08483	121.9023	CIMARRON - SARA 138KV CKT 1
FDNS	00NR	3	16WP	G15_082	FROM->TO	G14-057T 345.00 - SUNNYSIDE 345KV CKT 1	717	789	0.08461	121.8968	G15088_T 345.00 - MOORE 345KV CKT 1
FDNS	00NR	3	16WP	G15_082	FROM->TO	G14-057T 345.00 - SUNNYSIDE 345KV CKT 1	717	789	0.08432	121.8901	GEN336191 1-LITTLE GYPSY UNIT#3
FDNS	00NR	3	16WP	G15_082	FROM->TO	G14-057T 345.00 - SUNNYSIDE 345KV CKT 1	717	789	0.08453	121.8894	G15074_T 345.00 - JEFFREY ENERGY CENTER 345KV CKT 1
FDNS	00NR	3	16WP	G15_082	FROM->TO	G14-057T 345.00 - SUNNYSIDE 345KV CKT 1	717	789	0.08569	121.8887	LASALLE - LATTA JCT 138KV CKT 1
FDNS	00NR	3	16WP	G15_082	FROM->TO	G14-057T 345.00 - SUNNYSIDE 345KV CKT 1	717	789	0.08612	121.8831	BAILEY4 138.00 - WESTMOORE 138KV CKT 1
FDNS	00NR	3	16WP	G15_082	FROM->TO	G14-057T 345.00 - SUNNYSIDE 345KV CKT 1	717	789	0.08628	121.8829	BUCKNER7 345.00 - SPEARVILLE 345KV CKT 1
FDNS	00NR	3	16WP	G15_082	FROM->TO	G14-057T 345.00 - SUNNYSIDE 345KV CKT 1	717	789	0.08628	121.8829	BUCKNER7 345.00 - SPEARVILLE 345KV CKT 1
FDNS	00NR	3	16WP	G15_082	FROM->TO	G14-057T 345.00 - SUNNYSIDE 345KV CKT 1	717	789	0.08432	121.8712	MC NIEL 500/115KV TRANSFORMER CKT 1
FDNS	00NR	3	16WP	G15_082	FROM->TO	G14-057T 345.00 - SUNNYSIDE 345KV CKT 1	717	789	0.08557	121.8653	CANADIAN - NOBLE 138KV CKT 1
FDNS	00NR	3	16WP	G15_082	FROM->TO	G14-057T 345.00 - SUNNYSIDE 345KV CKT 1	717	789	0.08457	121.8647	COMANCHE TAP - TOSCO 69KV CKT 1
FDNS	00NR	3	20WP	G15_082	FROM->TO	G14-057T 345.00 - SUNNYSIDE 345KV CKT 1	717	789	0.0847	121.8647	BORDER 7345.00 - CHISHOLM7 345.00 345KV CKT 1
FDNS	00NR	3	16WP	G15_082	FROM->TO	G14-057T 345.00 - SUNNYSIDE 345KV CKT 1	717	789	0.08339	121.8629	SEMINOLE - VANOSTP4 138.00 138KV CKT 1
FDNS	00NR	3	16WP	G15_082	FROM->TO	G14-057T 345.00 - SUNNYSIDE 345KV CKT 1	717	789	0.08432	121.8618	GEN335614 1-WILLOW GLENN UNIT#4
FDNS	00NR	3	16WP	G15_082	FROM->TO	G14-057T 345.00 - SUNNYSIDE 345KV CKT 1	717	789	0.0856	121.8606	P12:138:OKGE:3TERM27
FDNS	00NR	3	16WP	G15_082	FROM->TO	G14-057T 345.00 - SUNNYSIDE 345KV CKT 1	717	789	0.08442	121.8572	P12:69:AEPW-OMPA:COMANC-2:OMWALTR2
FDNS	00NR	3	16WP	G15_082	FROM->TO	G14-057T 345.00 - SUNNYSIDE 345KV CKT 1	717	789	0.08351	121.8561	ARBWIND4 138.00 - CARTER 138KV CKT 1
FDNS	00NR	3	16WP	G15_082	FROM->TO	G14-057T 345.00 - SUNNYSIDE 345KV CKT 1	717	789	0.08432	121.8534	BISMARK - HOT SPRINGS WEST BUS 115KV CKT 1
FDNS	00NR	3	16WP	G15_082	FROM->TO	G14-057T 345.00 - SUNNYSIDE 345KV CKT 1	717	789	0.08432	121.8504	GEN303008 1-1BC2 U3
FDNS	00NR	3	16WP	G15_082	FROM->TO	G14-057T 345.00 - SUNNYSIDE 345KV CKT 1	717	789	0.08495	121.8493	P12:138:AEPW:WTHWF4:WTH_SE4
FDNS	00NR	3	16WP	G15_082	FROM->TO	G14-057T 345.00 - SUNNYSIDE 345KV CKT 1	717	789	0.08434	121.8464	P12:138:AEPW:N.E.S.-4:CATOOSA4
FDNS	00NR	3	16WP	G15_082	FROM->TO	G14-057T 345.00 - SUNNYSIDE 345KV CKT 1	717	789	0.08432	121.8363	GEN300010 1-ST FRANCIS UNIT 1
FDNS	00NR	3	16WP	G15_082	FROM->TO	G14-057T 345.00 - SUNNYSIDE 345KV CKT 1	717	789	0.08432	121.8358	NELSON 230/20.0KV TRANSFORMER CKT 1
FDNS	00NR	3	16WP	G15_082	FROM->TO	G14-057T 345.00 - SUNNYSIDE 345KV CKT 1	717	789	0.08485	121.8266	CZECH HALL - XEROX 138KV CKT 1
FDNS	00NR	3	16WP	G15_082	FROM->TO	G14-057T 345.00 - SUNNYSIDE 345KV CKT 1	717	789	0.08432	121.8227	GEN336170 1-GULF OXY U4
FDNS	00NR	3	16WP	G15_082	FROM->TO	G14-057T 345.00 - SUNNYSIDE 345KV CKT 1	717	789	0.08485	121.8225	MORGAN - XEROX 138KV CKT 1
FDNS	00NR	3	16WP	G15_082	FROM->TO	G14-057T 345.00 - SUNNYSIDE 345KV CKT 1	717	789	0.08432	121.8163	GEN336464 1-MICHOUD UNIT #3
FDNS	00NR	3	16WP	G15_082	FROM->TO	G14-057T 345.00 - SUNNYSIDE 345KV CKT 1	717	789	0.08539	121.8133	WEATHERFORD JCT. - WEATHERFORD SOUTHEAST 138KV CKT 1
FDNS	00NR	3	16WP	G15_082	FROM->TO	G14-057T 345.00 - SUNNYSIDE 345KV CKT 1	717	789	0.08539	121.8133	WEATHERFORD JCT. - WEATHERFORD SOUTHEAST 138KV CKT 1
FDNS	00NR	3	16WP	G15_082	FROM->TO	G14-057T 345.00 - SUNNYSIDE 345KV CKT 1	717	789	0.08683	121.8016	DRAPER LAKE - SEMINOLE 345KV CKT 2
FDNS	00NR	3	16WP	G15_082	FROM->TO	G14-057T 345.00 - SUNNYSIDE 345KV CKT 1	717	789	0.08683	121.8015	DRAPER LAKE - SEMINOLE 345KV CKT 1
FDNS	00NR	3	16WP	G15_082	FROM->TO	G14-057T 345.00 - SUNNYSIDE 345KV CKT 1	717	789	0.08485	121.8002	MORGAN - MUSTANG 138KV CKT 1
FDNS	00NR	3	16WP	G15_082	FROM->TO	G14-057T 345.00 - SUNNYSIDE 345KV CKT 1	717	789	0.08432	121.8001	ALPINE AECC - BISMARK 115KV CKT 1
FDNS	00NR	3	16WP	G15_082	FROM->TO	G14-057T 345.00 - SUNNYSIDE 345KV CKT 1	717	789	0.08457	121.7983	COMANCHE - COMANCHE TAP 69KV CKT 1
FDNS	00NR	3	16WP	G15_082	FROM->TO	G14-057T 345.00 - SUNNYSIDE 345KV CKT 1	717	789	0.08432	121.7882	8CAJUN2 500/24.0KV TRANSFORMER CKT 1
FDNS	00NR	3	16WP	G15_082	FROM->TO	G14-057T 345.00 - SUNNYSIDE 345KV CKT 1	717	789	0.08539	121.7876	P12:138:AEPW:REDROCKRD4:WTH_JCT4
FDNS	00NR	3	16WP	G15_082	FROM->TO	G14-057T 345.00 - SUNNYSIDE 345KV CKT 1	717	789	0.08432	121.7867	CYPRESS - HARTBURG 500KV CKT 1
FDNS	00NR	3	16WP	G15_082	FROM->TO	G14-057T 345.00 - SUNNYSIDE 345KV CKT 1	717	789	0.08465	121.7847	SWISSVALE - WEST GARDNER 345KV CKT 1
FDNS	00NR	3	16WP	G15_082	FROM->TO	G14-057T 345.00 - SUNNYSIDE 345KV CKT 1	717	789	0.08557	121.7835	NOBLE - PURCELL4 138.00 138KV CKT 1
FDNS	00NR	3	16WP	G15_082	FROM->TO	G14-057T 345.00 - SUNNYSIDE 345KV CKT 1	717	789	0.08432	121.7829	GEN300011 1-ST FRANCIS UNIT 2
FDNS	00NR	3	16WP	G15_082	FROM->TO	G14-057T 345.00 - SUNNYSIDE 345KV CKT 1	717	789	0.08468	121.7717	BLACKBERRY - NEOSHO 345KV CKT 1
FDNS	00NR	3	16WP	G15_082	FROM->TO	G14-057T 345.00 - SUNNYSIDE 345KV CKT 1	717	789	0.08432	121.7696	GEN501910 1-ACADIA UNIT ST1
FDNS	00NR	3	16WP	G15_082	FROM->TO	G14-057T 345.00 - SUNNYSIDE 345KV CKT 1	717	789	0.08432	121.7656	GEN337041 1-GERALD ANDRUS
FDNS	00NR	3	20WP	G15_082	FROM->TO	G14-057T 345.00 - SUNNYSIDE 345KV CKT 1	717	789	0.08441	121.7598	GEN336821 1-GRAND GULF UNIT
FDNS	00NR	3	16WP	G15_082	FROM->TO	G14-057T 345.00 - SUNNYSIDE 345KV CKT 1	717	789	0.08432	121.7571	ALPINE AECC - AMITY SS 115KV CKT 1
FDNS	00NR	3	16WP	G15_082	FROM->TO	G14-057T 345.00 - SUNNYSIDE 345KV CKT 1	717	789	0.08443	121.7561	7LUTESVIL 345.00 - 7ST FRANC 345.00 345KV CKT 1
FDNS	00NR	3	16WP	G15_082	FROM->TO	G14-057T 345.00 - SUNNYSIDE 345KV CKT 1	717	789	0.08427	121.7524	ETTA (DUKE HOTSPRINGS) - MC NIEL 500KV CKT 1
FDNS	00NR	3	16WP	G15_082	FROM->TO	G14-057T 345.00 - SUNNYSIDE 345KV CKT 1	717	789	0.08429	121.7516	7JASPER 345.00 - BLACKBERRY 345KV CKT 1
FDNS	00NR	3	16WP	G15_082	FROM->TO	G14-057T 345.00 - SUNNYSIDE 345KV CKT 1	717	789	0.08432	121.7514	GEN300016 1-1G1GPDEL 18.000
FDNS	00NR	3	20WP	G15_082	FROM->TO	G14-057T 345.00 - SUNNYSIDE 345KV CKT 1	717	789	0.0863	121.7481	CORN TAP - NAPLESTP 138.00 138KV CKT 1
FDNS	00NR	3	16WP	G15_082	FROM->TO	G14-057T 345.00 - SUNNYSIDE 345KV CKT 1	717	789	0.08432	121.745	GEN512688 2-GRDA1 GSU2 22
FDNS	00NR	3	16WP	G15_082	FROM->TO	G14-057T 345.00 - SUNNYSIDE 345KV CKT 1	717	789	0.08432	121.7393	P12:138:AEPW:R.S.S.-4:S.HUD.-4
FDNS	00NR	3	16WP	G15_082	FROM->TO	G14-057T 345.00 - SUNNYSIDE 345KV CKT 1	717	789	0.08612	121.737	FRANKLIN SW - WESTMOORE 138KV CKT 1
FDNS	00NR	3	16WP	G15_082	FROM->TO	G14-057T 345.00 - SUNNYSIDE 345KV CKT 1	717	789	0.08569	121.7334	LASALLE - STONEWAL LH138.00 138KV CKT 1
FDNS	00NR	3	16WP	G15_082	FROM->TO	G14-057T 345.00 - SUNNYSIDE 345KV CKT 1	717	789	0.08432	121.7225	GEN336801 1-BAXTER WILSON UNIT #1
FDNS	00NR	3	16WP	G15_082	FROM->TO	G14-057T 345.00 - SUNNYSIDE 345KV CKT 1	717	789	0.08569	121.7185	STONEWAL LH138.00 - TUPELO TAP 138KV CKT 1
FDNS	00NR	3	16WP	G15_082	FROM->TO	G14-057T 345.00 - SUNNYSIDE 345KV CKT 1	717	789	0.08446	121.7167	8WNEWMADRID 500.00 - DELL 500 500KV CKT 1
FDNS	00NR	3	16WP	G15_082	FROM->TO	G14-057T 345.00 - SUNNYSIDE 345KV CKT 1	717	789	0.08575	121.7165	BENTON - WICHITA 345KV CKT 1
FDNS	00NR	3	16WP	G15_082	FROM->TO	G14-057T 345.00 - SUNNYSIDE 345KV CKT 1	717	789	0.08483	121.7143	SARA - STHLAKE4 138.00 138KV CKT 1
FDNS	00NR	3	16WP	G15_082	FROM->TO	G14-057T 345.00 - SUNNYSIDE 345KV CKT 1	717	789	0.08539	121.7123	HINTON - WEATHERFORD JCT. 138KV CKT 1
FDNS	00NR	3	16WP	G15_082	FROM->TO	G14-057T 345.00 - SUNNYSIDE 345KV CKT 1	717	789	0.08482	121.709	ANADARKO - SEQUOYAHJ4 138.00 138KV CKT 1
FDNS	00NR	3	16WP	G15_082	FROM->TO	G14-057T 345.00 - SUNNYSIDE 345KV CKT 1	717	789	0.08463	121.7088	WALTERS - WALTERS 69KV CKT 1
FDNS	00NR	3	16WP	G15_082	FROM->TO	G14-057T 345.00 - SUNNYSIDE 345KV CKT 1	717	789	0.08165	121.7077	G14_038T 345.00 - POTTER COUNTY INTERCHANGE 345KV CKT 1
FDNS	00NR	3	16WP	G15_082	FROM->TO	G14-057T 345.00 - SUNNYSIDE 345KV CKT 1	717	789	0.08482	121.7075	CORN TAP - SEQUOYAHJ4 138.00 138KV CKT 1
FDNS	00NR	3	16WP	G15_082	FROM->TO	G14-057T 345.00 - SUNNYSIDE 345KV CKT 1	717	789	0.08603	121.7061	MARIETTA - MARIETTA4 138.00 138KV CKT 1

SOLUTION	GROUP	SCENARIO	SEASON	SOURCE	DIRECTION	MONITORED ELEMENT	RATEA (MVA)	RATEB(MVA)	TDF	TC%LOADING (% MVA)	CONTINGENCY
FDNS	00NR	3	16WP	G15_082	FROM->TO	G14-057T 345.00 - SUNNYSIDE 345KV CKT 1	717	789	0.08432	121.7029	P12:138:AEPW:YARCH-S4:T.S.E.-4
FDNS	00NR	3	16WP	G15_082	FROM->TO	G14-057T 345.00 - SUNNYSIDE 345KV CKT 1	717	789	0.08432	121.7012	P12:69:AEPW:NROGERS2:ECNTRTN2
FDNS	00NR	3	16WP	G15_082	FROM->TO	G14-057T 345.00 - SUNNYSIDE 345KV CKT 1	717	789	0.08432	121.6987	SABINE 230/24.0KV TRANSFORMER CKT 1
FDNS	00NR	3	16WP	G15_082	FROM->TO	G14-057T 345.00 - SUNNYSIDE 345KV CKT 1	717	789	0.08432	121.6973	P12:138:AEPW:BA_71ST4:T.S.E.-4
FDNS	00NR	3	16WP	G15_082	FROM->TO	G14-057T 345.00 - SUNNYSIDE 345KV CKT 1	717	789	0.08394	121.697	TUCO INTERCHANGE - TUCO_2 345.00 345KV CKT 1
FDNS	00NR	3	16WP	G15_082	FROM->TO	G14-057T 345.00 - SUNNYSIDE 345KV CKT 1	717	789	0.08414	121.6922	ENOWILT - LONE OAK 138KV CKT 1
FDNS	00NR	3	16WP	G15_082	FROM->TO	G14-057T 345.00 - SUNNYSIDE 345KV CKT 1	717	789	0.08442	121.6907	LAWTON RELIFT TAP - OMPA-WALTERS 69KV CKT 1
FDNS	00NR	3	16WP	G15_082	FROM->TO	G14-057T 345.00 - SUNNYSIDE 345KV CKT 1	717	789	0.08016	121.6875	CANADIAN RIVER - PITTSBURG 345KV CKT 1
FDNS	00NR	3	16WP	G15_082	FROM->TO	G14-057T 345.00 - SUNNYSIDE 345KV CKT 1	717	789	0.08016	121.6875	CANADIAN RIVER - PITTSBURG 345KV CKT 1
FDNS	00NR	3	16WP	G15_082	FROM->TO	G14-057T 345.00 - SUNNYSIDE 345KV CKT 1	717	789	0.08483	121.6863	MCCLAIN - STHLAKE4 138.00 138KV CKT 1
FDNS	00NR	3	16WP	G15_082	FROM->TO	G14-057T 345.00 - SUNNYSIDE 345KV CKT 1	717	789	0.08478	121.6843	NORGE ROAD - SOUTHWESTERN STATION 138KV CKT 1
FDNS	00NR	3	16WP	G15_082	FROM->TO	G14-057T 345.00 - SUNNYSIDE 345KV CKT 1	717	789	0.08478	121.6843	NORGE ROAD - SOUTHWESTERN STATION 138KV CKT 1
FDNS	00NR	3	16WP	G15_082	FROM->TO	G14-057T 345.00 - SUNNYSIDE 345KV CKT 1	717	789	0.08414	121.683	ENOWILT - SARDIS 138KV CKT 1
FDNS	00NR	3	16WP	G15_082	FROM->TO	G14-057T 345.00 - SUNNYSIDE 345KV CKT 1	717	789	0.08432	121.6817	FRONTIER 345/18.0KV TRANSFORMER CKT 1
FDNS	00NR	3	16WP	G15_082	FROM->TO	G14-057T 345.00 - SUNNYSIDE 345KV CKT 1	717	789	0.08432	121.6798	FRONTIER 345/18.0KV TRANSFORMER CKT 1
FDNS	00NR	3	20WP	G15_082	FROM->TO	G14-057T 345.00 - SUNNYSIDE 345KV CKT 1	717	789	0.08445	121.6778	7SAREPTA% 345.00 - LONGWOOD 345KV CKT 1
FDNS	00NR	3	20WP	G15_082	FROM->TO	G14-057T 345.00 - SUNNYSIDE 345KV CKT 1	717	789	0.08445	121.6778	7SAREPTA% 345.00 - LONGWOOD 345KV CKT 1
FDNS	00NR	3	16WP	G15_082	FROM->TO	G14-057T 345.00 - SUNNYSIDE 345KV CKT 1	717	789	0.08432	121.6682	P12:161:AEPW:CHAMSPR5:FARMING5
FDNS	00NR	3	16WP	G15_082	FROM->TO	G14-057T 345.00 - SUNNYSIDE 345KV CKT 1	717	789	0.08539	121.6668	HINTON - REDROCKRD4 138.00 138KV CKT 1
FDNS	00NR	3	16WP	G15_082	FROM->TO	G14-057T 345.00 - SUNNYSIDE 345KV CKT 1	717	789	0.08441	121.6668	P12:138:AEPW-OGE:SHIDLER4:OSAGE 4
FDNS	00NR	3	16WP	G15_082	FROM->TO	G14-057T 345.00 - SUNNYSIDE 345KV CKT 1	717	789	0.08496	121.6627	P12:138:OKGE-AEPW:JENSEN4:REDROCKRD4
FDNS	00NR	3	20WP	G15_082	FROM->TO	G14-057T 345.00 - SUNNYSIDE 345KV CKT 1	717	789	0.0863	121.6619	NAPLESTP 138.00 - PAYNE 138.00 138KV CKT 1
FDNS	00NR	3	16WP	G15_082	FROM->TO	G14-057T 345.00 - SUNNYSIDE 345KV CKT 1	717	789	0.08432	121.656	GEN505616 1-BROKEN BOW
FDNS	00NR	3	16WP	G15_082	FROM->TO	G14-057T 345.00 - SUNNYSIDE 345KV CKT 1	717	789	0.08454	121.6528	EMPORIA ENERGY CENTER - SWISSVALE 345KV CKT 1
FDNS	00NR	3	16WP	G15_082	FROM->TO	G14-057T 345.00 - SUNNYSIDE 345KV CKT 1	717	789	0.09081	121.6525	FINNEY SWITCHING STATION - HOLCOMB 345KV CKT 1
FDNS	00NR	3	16WP	G15_082	FROM->TO	G14-057T 345.00 - SUNNYSIDE 345KV CKT 1	717	789	0.09081	121.6525	FINNEY SWITCHING STATION - HOLCOMB 345KV CKT 1
FDNS	00NR	3	16WP	G15_082	FROM->TO	G14-057T 345.00 - SUNNYSIDE 345KV CKT 1	717	789	0.08414	121.648	CLAYTON - SARDIS 138KV CKT 1
FDNS	00NR	3	16WP	G15_082	FROM->TO	G14-057T 345.00 - SUNNYSIDE 345KV CKT 1	717	789	0.08432	121.6451	LEWIS CREEK SWITCHYARD 138/22.0KV TRANSFORMER CKT 1
FDNS	00NR	3	16WP	G15_082	FROM->TO	G14-057T 345.00 - SUNNYSIDE 345KV CKT 1	717	789	0.08286	121.6408	ARBUCKLE - VANOSTP4 138.00 138KV CKT 1
FDNS	00NR	3	16WP	G15_082	FROM->TO	G14-057T 345.00 - SUNNYSIDE 345KV CKT 1	717	789	0.08432	121.6401	LEWIS CREEK SWITCHYARD 138/22.0KV TRANSFORMER CKT 1
FDNS	00NR	3	16WP	G15_082	FROM->TO	G14-057T 345.00 - SUNNYSIDE 345KV CKT 1	717	789	0.08432	121.6373	GEN501970 1-EVANGELINE UNIT 7
FDNS	00NR	3	16WP	G15_082	FROM->TO	G14-057T 345.00 - SUNNYSIDE 345KV CKT 1	717	789	0.08475	121.6362	SOUTHWESTERN STATION - VERDEN 138KV CKT 1
FDNS	00NR	3	20WP	G15_082	FROM->TO	G14-057T 345.00 - SUNNYSIDE 345KV CKT 1	717	789	0.08441	121.634	GEN336153 1-WATERFORD UNIT#3
FDNS	00NR	3	16WP	G15_082	FROM->TO	G14-057T 345.00 - SUNNYSIDE 345KV CKT 1	717	789	0.08432	121.6279	GEN509394 1-FLINT CREEK
FDNS	00NR	3	16WP	G15_082	FROM->TO	G14-057T 345.00 - SUNNYSIDE 345KV CKT 1	717	789	0.08432	121.6236	GEN334392 1-EXXON MOBIL IPP 1
FDNS	00NR	3	16WP	G15_082	FROM->TO	G14-057T 345.00 - SUNNYSIDE 345KV CKT 1	717	789	0.08442	121.6211	OMPA-WALTERS - WALTERS 69KV CKT 1
FDNS	00NR	3	16WP	G15_082	FROM->TO	G14-057T 345.00 - SUNNYSIDE 345KV CKT 1	717	789	0.08442	121.6211	OMPA-WALTERS - WALTERS 69KV CKT 1
FDNS	00NR	3	16WP	G15_082	FROM->TO	G14-057T 345.00 - SUNNYSIDE 345KV CKT 1	717	789	0.08414	121.6203	P12:138:AEPW-SWPA:LONEOAK4:BRKNBW4
FDNS	00NR	3	16WP	G15_082	FROM->TO	G14-057T 345.00 - SUNNYSIDE 345KV CKT 1	717	789	0.08495	121.6191	WEATHERFORD TAP - WEATHERFORD WIND FARM 138KV CKT 1
FDNS	00NR	3	16WP	G15_082	FROM->TO	G14-057T 345.00 - SUNNYSIDE 345KV CKT 1	717	789	0.08475	121.6176	NORTH 29TH CHICKASHA - VERDEN 138KV CKT 1
FDNS	00NR	3	16WP	G15_082	FROM->TO	G14-057T 345.00 - SUNNYSIDE 345KV CKT 1	717	789	0.0855	121.6174	CLARKSVILLE - ONETA 345KV CKT 1
FDNS	00NR	3	16WP	G15_082	FROM->TO	G14-057T 345.00 - SUNNYSIDE 345KV CKT 1	717	789	0.0855	121.6174	CLARKSVILLE - ONETA 345KV CKT 1
FDNS	00NR	3	16WP	G15_082	FROM->TO	G14-057T 345.00 - SUNNYSIDE 345KV CKT 1	717	789	0.08432	121.6156	GEN334393 1-EXXON MOBIL IPP 2
FDNS	00NR	3	16WP	G15_082	FROM->TO	G14-057T 345.00 - SUNNYSIDE 345KV CKT 1	717	789	0.08432	121.6156	GEN334394 1-EXXON MOBIL IPP 3
FDNS	00NR	3	16WP	G15_082	FROM->TO	G14-057T 345.00 - SUNNYSIDE 345KV CKT 1	717	789	0.08479	121.6152	CLEO CORNER - CLEOPLT4 138.00 138KV CKT 1
FDNS	00NR	3	16WP	G15_082	FROM->TO	G14-057T 345.00 - SUNNYSIDE 345KV CKT 1	717	789	0.08585	121.6135	G11_051T 345.00 - TATONGA7 345.00 345KV CKT 1
FDNS	00NR	3	16WP	G15_082	FROM->TO	G14-057T 345.00 - SUNNYSIDE 345KV CKT 1	717	789	0.08585	121.6135	G11_051T 345.00 - TATONGA7 345.00 345KV CKT 2
FDNS	00NR	3	16WP	G15_082	FROM->TO	G14-057T 345.00 - SUNNYSIDE 345KV CKT 1	717	789	0.08432	121.6116	GEN336222 1-LITTLE GYPSY UNIT#2
FDNS	00NR	3	16WP	G15_082	FROM->TO	G14-057T 345.00 - SUNNYSIDE 345KV CKT 1	717	789	0.08465	121.6111	G15095_T 138.00 - ROSE_VALLEY 138.00 138KV CKT 1
FDNS	00NR	3	16WP	G15_082	FROM->TO	G14-057T 345.00 - SUNNYSIDE 345KV CKT 1	717	789	0.08414	121.6079	CLAYTON - NASHOBA 138KV CKT 1
FDNS	00NR	3	16WP	G15_082	FROM->TO	G14-057T 345.00 - SUNNYSIDE 345KV CKT 1	717	789	0.08463	121.6074	P12:69:WFEC-AEPW:COMANCH2:WALTRS-2
FDNS	00NR	3	16WP	G15_082	FROM->TO	G14-057T 345.00 - SUNNYSIDE 345KV CKT 1	717	789	0.08432	121.6069	MORISNT4 138.00 - STILLWATER 138KV CKT 1
FDNS	00NR	3	16WP	G15_082	FROM->TO	G14-057T 345.00 - SUNNYSIDE 345KV CKT 1	717	789	0.08479	121.6065	CLEOPLT4 138.00 - MEN TAP 138KV CKT 1
FDNS	00NR	3	16WP	G15_082	FROM->TO	G14-057T 345.00 - SUNNYSIDE 345KV CKT 1	717	789	0.08438	121.6027	P12:138:OKGE:3TERM12
FDNS	00NR	3	16WP	G15_082	FROM->TO	G14-057T 345.00 - SUNNYSIDE 345KV CKT 1	717	789	0.08434	121.6016	P12:138:OKGE:3TERM2
FDNS	00NR	3	16WP	G15_082	FROM->TO	G14-057T 345.00 - SUNNYSIDE 345KV CKT 1	717	789	0.08479	121.5991	IMO TAP - MEN TAP 138KV CKT 1
FDNS	00NR	3	16WP	G15_082	FROM->TO	G14-057T 345.00 - SUNNYSIDE 345KV CKT 1	717	789	0.08434	121.5986	HOPE - MCNAB REC 115KV CKT 1
FDNS	00NR	3	16WP	G15_082	FROM->TO	G14-057T 345.00 - SUNNYSIDE 345KV CKT 1	717	789	0.08414	121.5947	BETHEL - NASHOBA 138KV CKT 1
FDNS	00NR	3	16WP	G15_082	FROM->TO	G14-057T 345.00 - SUNNYSIDE 345KV CKT 1	717	789	0.08434	121.5946	7JASPER 345.00 - MORGAN 345KV CKT 1
FDNS	00NR	3	16WP	G15_082	FROM->TO	G14-057T 345.00 - SUNNYSIDE 345KV CKT 1	717	789	0.08434	121.5895	P12:115:AEPW:TURK3:HOPE3
FDNS	00NR	3	16WP	G15_082	FROM->TO	G14-057T 345.00 - SUNNYSIDE 345KV CKT 1	717	789	0.08433	121.5887	COUCH SES - MC NIEL 115KV CKT 1
FDNS	00NR	3	16WP	G15_082	FROM->TO	G14-057T 345.00 - SUNNYSIDE 345KV CKT 1	717	789	0.08432	121.5852	GEN334432 1-SABINE UNIT 2
FDNS	00NR	3	16WP	G15_082	FROM->TO	G14-057T 345.00 - SUNNYSIDE 345KV CKT 1	717	789	0.08432	121.5851	GEN334431 1-SABINE UNIT 1
FDNS	00NR	3	16WP	G15_082	FROM->TO	G14-057T 345.00 - SUNNYSIDE 345KV CKT 1	717	789	0.08432	121.5803	GEN506749 1-EASTMAN GENERATION A
FDNS	00NR	3	16WP	G15_082	FROM->TO	G14-057T 345.00 - SUNNYSIDE 345KV CKT 1	717	789	0.08432	121.5797	GEN336152 1-WATERFORD UNIT#2
FDNS	00NR	3	16WP	G15_082	FROM->TO	G14-057T 345.00 - SUNNYSIDE 345KV CKT 1	717	789	0.08432	121.5785	GEN336151 1-WATERFORD UNIT#1
FDNS	00NR	3	16WP	G15_082	FROM->TO	G14-057T 345.00 - SUNNYSIDE 345KV CKT 1	717	789	0.08432	121.578	GEN501972 1-EVANGELINE UNIT 7-2
FDNS	00NR	3	16WP	G15_082	FROM->TO	G14-057T 345.00 - SUNNYSIDE 345KV CKT 1	717	789	0.08432	121.5779	GEN501971 1-EVANGELINE UNIT 7-1
FDNS	00NR	3	16WP	G15_082	FROM->TO	G14-057T 345.00 - SUNNYSIDE 345KV CKT 1	717	789	0.08557	121.574	PURCELL4 138.00 - WALNUT CREEK 138KV CKT 1
FDNS	00NR	3	16WP	G15_082	FROM->TO	G14-057T 345.00 - SUNNYSIDE 345KV CKT 1	717	789	0.08433	121.5716	P12:138:AEPW:R.S.S-4:T.P.S.-4
FDNS	00NR	3	16WP	G15_082	FROM->TO	G14-057T 345.00 - SUNNYSIDE 345KV CKT 1	717	789	0.08478	121.5707	CORNVILLE - NORGE ROAD 138KV CKT 1
FDNS	00NR	3	16WP	G15_082	FROM->TO	G14-057T 345.00 - SUNNYSIDE 345KV CKT 1	717	789	0.08478	121.5707	CORNVILLE - NORGE ROAD 138KV CKT 1
FDNS	00NR	3	16WP	G15_082	FROM->TO	G14-057T 345.00 - SUNNYSIDE 345KV CKT 1	717	789	0.08434	121.5668	MCNAB REC - Turk 115 115KV CKT 1
FDNS	00NR	3	16WP	G15_082	FROM->TO	G14-057T 345.00 - SUNNYSIDE 345KV CKT 1	717	789	0.08434	121.5668	TURK (TURK 1) 138/115/13.2KV TRANSFORMER CKT 1
FDNS	00NR	3	16WP	G15_082	FROM->TO	G14-057T 345.00 - SUNNYSIDE 345KV CKT 1	717	789	0.08434	121.5668	TURK (TURK 1) 138/115/13.2KV TRANSFORMER CKT 1
FDNS	00NR	3	16WP	G15_082	FROM->TO	G14-057T 345.00 - SUNNYSIDE 345KV CKT 1	717	789	0.08475	121.5624	CORNVILLE - NORTH 29TH CHICKASHA 138KV CKT 1
FDNS	00NR	3	16WP	G15_082	FROM->TO	G14-057T 345.00 - SUNNYSIDE 345KV CKT 1	717	789	0.08465	121.5611	NOEL_SW 138.00 - ROSE_VALLEY 138.00 138KV CKT 1
FDNS	00NR	3	16WP	G15_082	FROM->TO	G14-057T 345.00 - SUNNYSIDE 345KV CKT 1	717	789	0.08432	121.557	ST FRANCIS - ST FRANCIS 1 161KV CKT Z1
FDNS	00NR	3	16WP	G15_082	FROM->TO	G14-057T 345.00 - SUNNYSIDE 345KV CKT 1	717	789	0.08424	121.5545	P12:138:AEPW:OKMULGE4:R.S.S-4

SOLUTION	GROUP	SCENARIO	SEASON	SOURCE	DIRECTION	MONITORED ELEMENT	RATEA (MVA)	RATEB(MVA)	TDF	TC%LOADING (% MVA)	CONTINGENCY
FDNS	00NR	3	16WP	G15_082	FROM->TO	G14-057T 345.00 - SUNNYSIDE 345KV CKT 1	717	789	0.08432	121.5536	GEN501912 1-ACADIA UNIT CT1B
FDNS	00NR	3	16WP	G15_082	FROM->TO	G14-057T 345.00 - SUNNYSIDE 345KV CKT 1	717	789	0.08432	121.5528	GEN501911 1-ACADIA UNIT CT1A
FDNS	00NR	3	16WP	G15_082	FROM->TO	G14-057T 345.00 - SUNNYSIDE 345KV CKT 1	717	789	0.08628	121.5509	BUCKNER7 345.00 - HOLCOMB 345KV CKT 1
FDNS	00NR	3	16WP	G15_082	FROM->TO	G14-057T 345.00 - SUNNYSIDE 345KV CKT 1	717	789	0.08628	121.5509	BUCKNER7 345.00 - HOLCOMB 345KV CKT 1
FDNS	00NR	3	16WP	G15_082	FROM->TO	G14-057T 345.00 - SUNNYSIDE 345KV CKT 1	717	789	0.08447	121.5506	FRANKLIN - FRANKLIN SW 138KV CKT 1
FDNS	00NR	3	16WP	G15_082	FROM->TO	G14-057T 345.00 - SUNNYSIDE 345KV CKT 1	717	789	0.08495	121.548	WEATHERFORD SOUTHEAST - WEATHERFORD TAP 138KV CKT 1
FDNS	00NR	3	16WP	G15_082	FROM->TO	G14-057T 345.00 - SUNNYSIDE 345KV CKT 1	717	789	0.08432	121.5466	P12:138:AEPW:R.S.S.-4:R:96YALE-4
FDNS	00NR	3	16WP	G15_082	FROM->TO	G14-057T 345.00 - SUNNYSIDE 345KV CKT 1	717	789	0.08479	121.5412	LACYGNE - NEOSHO 345KV CKT 1
FDNS	00NR	3	16WP	G15_082	FROM->TO	G14-057T 345.00 - SUNNYSIDE 345KV CKT 1	717	789	0.08574	121.5409	CIMARRON - NORTHWEST 345KV CKT 1
FDNS	00NR	3	16WP	G15_082	FROM->TO	G14-057T 345.00 - SUNNYSIDE 345KV CKT 1	717	789	0.08414	121.5409	BETHEL - BROKEN BOW 138KV CKT 1
FDNS	00NR	3	16WP	G15_082	FROM->TO	G14-057T 345.00 - SUNNYSIDE 345KV CKT 1	717	789	0.08432	121.5373	P12:138:AEPW:MOHAWK4:T.NO--4
FDNS	00NR	3	16WP	G15_082	FROM->TO	G14-057T 345.00 - SUNNYSIDE 345KV CKT 1	717	789	0.08466	121.5349	EMPORIA ENERGY CENTER - G14_001T 345.00 345KV CKT 1
FDNS	00NR	3	16WP	G15_082	FROM->TO	G14-057T 345.00 - SUNNYSIDE 345KV CKT 1	717	789	0.08442	121.5317	FLETCHER - MARLOW JCT 69KV CKT 1
FDNS	00NR	3	16WP	G15_082	FROM->TO	G14-057T 345.00 - SUNNYSIDE 345KV CKT 1	717	789	0.08432	121.5293	GEN336242 1-1NMIL ST1 18.000
FDNS	00NR	3	16WP	G15_082	FROM->TO	G14-057T 345.00 - SUNNYSIDE 345KV CKT 1	717	789	0.08432	121.5271	SABINE 230/22.0KV TRANSFORMER CKT 1
FDNS	00NR	3	16WP	G15_082	FROM->TO	G14-057T 345.00 - SUNNYSIDE 345KV CKT 1	717	789	0.08434	121.5169	AS KING - EAU CLAIRE 345KV CKT 1
FDNS	00NR	3	16WP	G15_082	FROM->TO	G14-057T 345.00 - SUNNYSIDE 345KV CKT 1	717	789	0.08452	121.5166	HAMMETT TAP - HORSESHOE LAKE 138KV CKT 1
FDNS	00NR	3	16WP	G15_082	FROM->TO	G14-057T 345.00 - SUNNYSIDE 345KV CKT 1	717	789	0.08495	121.5089	CLINTON JUNCTION - CLINTON NATURAL GAS TAP 138KV CKT 1
FDNS	00NR	3	16WP	G15_082	FROM->TO	G14-057T 345.00 - SUNNYSIDE 345KV CKT 1	717	789	0.08443	121.4962	P12:138:OKGE:3TERM47
FDNS	00NR	3	16WP	G15_082	FROM->TO	G14-057T 345.00 - SUNNYSIDE 345KV CKT 1	717	789	0.08455	121.4899	SEMINOLE (SEMINOL2) 345/138/14.4KV TRANSFORMER CKT 1
FDNS	00NR	3	16WP	G15_082	FROM->TO	G14-057T 345.00 - SUNNYSIDE 345KV CKT 1	717	789	0.08498	121.4864	CRINER - PAYNE 138.00 138KV CKT 1
FDNS	00NR	3	16WP	G15_082	FROM->TO	G14-057T 345.00 - SUNNYSIDE 345KV CKT 1	717	789	0.08432	121.4755	GEN338146 1-INDEPENDENCE UNIT #2
FDNS	00NR	3	20WP	G15_082	FROM->TO	G14-057T 345.00 - SUNNYSIDE 345KV CKT 1	717	789	0.08547	121.4517	CLEVELAND - TULSA NORTH 345KV CKT 1
FDNS	00NR	3	20WP	G15_082	FROM->TO	G14-057T 345.00 - SUNNYSIDE 345KV CKT 1	717	789	0.08547	121.4517	CLEVELAND - TULSA NORTH 345KV CKT 1
FDNS	00NR	3	16WP	G15_082	FROM->TO	G14-057T 345.00 - SUNNYSIDE 345KV CKT 1	717	789	0.08463	121.4361	COMANCHE - WALTERS 69KV CKT 1
FDNS	00NR	3	20WP	G15_082	FROM->TO	G14-057T 345.00 - SUNNYSIDE 345KV CKT 1	717	789	0.08592	121.4335	COMANCHE - LOCO 138KV CKT 1
FDNS	00NR	3	20WP	G15_082	FROM->TO	G14-057T 345.00 - SUNNYSIDE 345KV CKT 1	717	789	0.08605	121.417	ANADARKO - POCASSETT 138KV CKT 1
FDNS	00NR	3	20WP	G15_082	FROM->TO	G14-057T 345.00 - SUNNYSIDE 345KV CKT 1	717	789	0.0847	121.3485	BORDER 7345.00 - TUCO_2 345.00 345KV CKT 1
FDNS	00NR	3	20WP	G15_082	FROM->TO	G14-057T 345.00 - SUNNYSIDE 345KV CKT 1	717	789	0.09489	121.3233	ARCADIA - NORTHWEST 345KV CKT 1
FDNS	00NR	3	20WP	G15_082	FROM->TO	G14-057T 345.00 - SUNNYSIDE 345KV CKT 1	717	789	0.08441	121.314	GEN335831 1-RIVERBEND UNIT#1
FDNS	00NR	3	20WP	G15_082	FROM->TO	G14-057T 345.00 - SUNNYSIDE 345KV CKT 1	717	789	0.08447	121.2812	DOLET HILLS - SOUTHWEST SHREVEPORT 345KV CKT 1
FDNS	00NR	3	20WP	G15_082	FROM->TO	G14-057T 345.00 - SUNNYSIDE 345KV CKT 1	717	789	0.08447	121.2812	DOLET HILLS - SOUTHWEST SHREVEPORT 345KV CKT 1
FDNS	00NR	3	20WP	G15_082	FROM->TO	G14-057T 345.00 - SUNNYSIDE 345KV CKT 1	717	789	0.08605	121.2718	POCASSETT - TUTTLE 138KV CKT 1
FDNS	00NR	3	20WP	G15_082	FROM->TO	G14-057T 345.00 - SUNNYSIDE 345KV CKT 1	717	789	0.08441	121.2253	GRAND GULF 500/22.0KV TRANSFORMER CKT 1
FDNS	00NR	3	20WP	G15_082	FROM->TO	G14-057T 345.00 - SUNNYSIDE 345KV CKT 1	717	789	0.08549	121.0664	P12:138:AEPW:DUNCAN-4:L.E.S.-4
FDNS	00NR	3	20WP	G15_082	FROM->TO	G14-057T 345.00 - SUNNYSIDE 345KV CKT 1	717	789	0.08441	121.0656	GEN515577 1-ARBWND11 0.6900
FDNS	00NR	3	20WP	G15_082	FROM->TO	G14-057T 345.00 - SUNNYSIDE 345KV CKT 1	717	789	0.08443	121.0335	7SAREPTA% 345.00 - ELDORADO EHV 345KV CKT 1
FDNS	00NR	3	20WP	G15_082	FROM->TO	G14-057T 345.00 - SUNNYSIDE 345KV CKT 1	717	789	0.08443	121.0333	3TR3AR8EL7EL
FDNS	00NR	3	16WP	G15_082	FROM->TO	G14-057T 345.00 - SUNNYSIDE 345KV CKT 1	717	789	0.08432	121.0288	803-OKLAUNION
FDNS	00NR	3	20WP	G15_082	FROM->TO	G14-057T 345.00 - SUNNYSIDE 345KV CKT 1	717	789	0.08443	121.0233	ELDORADO EHV 500/345KV TRANSFORMER CKT 1
FDNS	00NR	3	20WP	G15_082	FROM->TO	G14-057T 345.00 - SUNNYSIDE 345KV CKT 1	717	789	0.08549	120.9673	COMANCHE TAP - OMPA-DUNCAN 840 138KV CKT 1
FDNS	00NR	3	20WP	G15_082	FROM->TO	G14-057T 345.00 - SUNNYSIDE 345KV CKT 1	717	789	0.08612	120.9304	HEALDTON - LOCO 138KV CKT 1
FDNS	00NR	3	20WP	G15_082	FROM->TO	G14-057T 345.00 - SUNNYSIDE 345KV CKT 1	717	789	0.08538	120.9292	ARCADIA - SEMINOLE 345KV CKT 1
FDNS	00NR	3	20WP	G15_082	FROM->TO	G14-057T 345.00 - SUNNYSIDE 345KV CKT 1	717	789	0.08441	120.9211	GEN509409 1-WILKES #3
FDNS	00NR	3	20WP	G15_082	FROM->TO	G14-057T 345.00 - SUNNYSIDE 345KV CKT 1	717	789	0.08605	120.8985	BRIDGECR 138.00 - TUTTLE 138KV CKT 1
FDNS	00NR	3	16WP	G15_082	FROM->TO	G14-057T 345.00 - SUNNYSIDE 345KV CKT 1	717	789	0.08432	120.892	P12:230:AEPW:ELKCITY6:SWEETWT6
FDNS	00NR	3	20WP	G15_082	FROM->TO	G14-057T 345.00 - SUNNYSIDE 345KV CKT 1	717	789	0.08441	120.8824	GEN501813 1-RODEMACHER UNIT 3
FDNS	00NR	3	16WP	G15_082	FROM->TO	G14-057T 345.00 - SUNNYSIDE 345KV CKT 1	717	789	0.0829	120.8531	P12:138:OKGE:3TERM39
FDNS	00NR	3	16WP	G15_082	FROM->TO	G14-057T 345.00 - SUNNYSIDE 345KV CKT 1	717	789	0.08417	120.8219	ELK CITY 230KV (ELKCTY-6) 230/138/13.8KV TRANSFORMER CKT 1
FDNS	00NR	3	16WP	G15_082	FROM->TO	G14-057T 345.00 - SUNNYSIDE 345KV CKT 1	717	789	0.08417	120.8219	ELK CITY 230KV (ELKCTY-6) 230/138/13.8KV TRANSFORMER CKT 1
FDNS	00NR	3	16WP	G15_082	FROM->TO	G14-057T 345.00 - SUNNYSIDE 345KV CKT 1	717	789	0.08417	120.8218	CHISHOLM6 230.00 - ELK CITY 230KV 230KV CKT 1
FDNS	00NR	3	20WP	G15_082	FROM->TO	G14-057T 345.00 - SUNNYSIDE 345KV CKT 1	717	789	0.08612	120.7863	HEALDTON - RINGLING 138KV CKT 1
FDNS	00NR	3	20WP	G15_082	FROM->TO	G14-057T 345.00 - SUNNYSIDE 345KV CKT 1	717	789	0.08441	120.7245	GEN300006 1-NEW MADRID UNIT 1
FDNS	00NR	3	20WP	G15_082	FROM->TO	G14-057T 345.00 - SUNNYSIDE 345KV CKT 1	717	789	0.07997	120.7132	CANADIAN RIVER - MUSKOGEE 345KV CKT 1
FDNS	00NR	3	20WP	G15_082	FROM->TO	G14-057T 345.00 - SUNNYSIDE 345KV CKT 1	717	789	0.08441	120.7035	GEN300007 1-NEW MADRID UNIT 2
FDNS	00NR	3	20WP	G15_082	FROM->TO	G14-057T 345.00 - SUNNYSIDE 345KV CKT 1	717	789	0.08549	120.6829	DUNCAN - OMPA-DUNCAN 840 138KV CKT 1
FDNS	00NR	3	20WP	G15_082	FROM->TO	G14-057T 345.00 - SUNNYSIDE 345KV CKT 1	717	789	0.08549	120.6829	DUNCAN - OMPA-DUNCAN 840 138KV CKT 1
FDNS	00NR	3	16WP	G15_082	FROM->TO	G14-057T 345.00 - SUNNYSIDE 345KV CKT 1	717	789	0.08326	120.6758	MAYSVILLE - MAYSVLT4 138.00 138KV CKT 1
FDNS	00NR	3	16WP	G15_082	FROM->TO	G14-057T 345.00 - SUNNYSIDE 345KV CKT 1	717	789	0.08472	120.6749	DRAPER LAKE - MIDWEST TAP 138KV CKT 1
FDNS	00NR	3	16WP	G15_082	FROM->TO	G14-057T 345.00 - SUNNYSIDE 345KV CKT 1	717	789	0.08475	120.6718	P12:138:OKGE:3TERM21
FDNS	00NR	3	20WP	G15_082	FROM->TO	G14-057T 345.00 - SUNNYSIDE 345KV CKT 1	717	789	0.08441	120.6602	GEN335206 1-NELSON UNIT 6
FDNS	00NR	3	16WP	G15_082	FROM->TO	G14-057T 345.00 - SUNNYSIDE 345KV CKT 1	717	789	0.08439	120.6412	GLASSES - MADILL INDUSTRIAL TAP 138KV CKT 1
FDNS	00NR	3	20WP	G15_082	FROM->TO	G14-057T 345.00 - SUNNYSIDE 345KV CKT 1	717	789	0.08605	120.6338	P12:138:WFEC:MSL01
FDNS	00NR	3	20WP	G15_082	FROM->TO	G14-057T 345.00 - SUNNYSIDE 345KV CKT 1	717	789	0.08605	120.6305	BRIDGECR 138.00 - SUNSHINE CANYON 138KV CKT 1
FDNS	00NR	3	16WP	G15_082	FROM->TO	G14-057T 345.00 - SUNNYSIDE 345KV CKT 1	717	789	0.08432	120.6238	GEN520812 1-ANADRK5
FDNS	00NR	3	16WP	G15_082	FROM->TO	G14-057T 345.00 - SUNNYSIDE 345KV CKT 1	717	789	0.08432	120.6237	GEN520813 1-ANADRK6
FDNS	00NR	3	16WP	G15_082	FROM->TO	G14-057T 345.00 - SUNNYSIDE 345KV CKT 1	717	789	0.08192	120.6161	CHISHOLM7 345.00 - WOODWARD DISTRICT EHV 345KV CKT 1
FDNS	00NR	3	20WP	G15_082	FROM->TO	G14-057T 345.00 - SUNNYSIDE 345KV CKT 1	717	789	0.08612	120.6161	RINGLING - SOUTH WILSON 138KV CKT 1
FDNS	00NR	3	20WP	G15_082	FROM->TO	G14-057T 345.00 - SUNNYSIDE 345KV CKT 1	717	789	0.08467	120.6154	LACYGNE - WAVERLY7 345.00 345KV CKT 1
FDNS	00NR	3	20WP	G15_082	FROM->TO	G14-057T 345.00 - SUNNYSIDE 345KV CKT 1	717	789	0.08441	120.6113	GEN520947 1-HUGO1
FDNS	00NR	3	16WP	G15_082	FROM->TO	G14-057T 345.00 - SUNNYSIDE 345KV CKT 1	717	789	0.08432	120.6102	GEN562772 1-G15034_3 0.6900
FDNS	00NR	3	16WP	G15_082	FROM->TO	G14-057T 345.00 - SUNNYSIDE 345KV CKT 1	717	789	0.08326	120.6074	MAYSVLT4 138.00 - PRAIRIE POINT 138KV CKT 1
FDNS	00NR	3	16WP	G15_082	FROM->TO	G14-057T 345.00 - SUNNYSIDE 345KV CKT 1	717	789	0.08432	120.5945	GEN562691 1-G15_015_3 0.6900
FDNS	00NR	3	16WP	G15_082	FROM->TO	G14-057T 345.00 - SUNNYSIDE 345KV CKT 1	717	789	0.08423	120.5942	HUGO (HUGO 1) 345/138/13.8KV TRANSFORMER CKT 1
FDNS	00NR	3	16WP	G15_082	FROM->TO	G14-057T 345.00 - SUNNYSIDE 345KV CKT 1	717	789	0.08432	120.5926	P12:138:WFEC:MSL11
FDNS	00NR	3	16WP	G15_082	FROM->TO	G14-057T 345.00 - SUNNYSIDE 345KV CKT 1	717	789	0.08432	120.5926	P12:138:WFEC-AEPW:PHAROAH4:LONEOAK4
FDNS	00NR	3	16WP	G15_082	FROM->TO	G14-057T 345.00 - SUNNYSIDE 345KV CKT 1	717	789	0.08439	120.5866	GLASSES - RUSSETT 138KV CKT 1
FDNS	00NR	3	16WP	G15_082	FROM->TO	G14-057T 345.00 - SUNNYSIDE 345KV CKT 1	717	789	0.08428	120.5704	HUGO POWER PLANT - VALLENT 138KV CKT 1
FDNS	00NR	3	16WP	G15_082	FROM->TO	G14-057T 345.00 - SUNNYSIDE 345KV CKT 1	717	789	0.08447	120.5632	P12:138:WFEC:MSL08

SOLUTION	GROUP	SCENARIO	SEASON	SOURCE	DIRECTION	MONITORED ELEMENT	RATEA (MVA)	RATEB(MVA)	TDF	TC%LOADING (% MVA)	CONTINGENCY
FDNS	00NR	3	16WP	G15_082	FROM->TO	G14-057T 345.00 - SUNNYSIDE 345KV CKT 1	717	789	0.0844	120.558	CANEY CREEK - JOHNSON COUNTY 138KV CKT 1
FDNS	00NR	3	16WP	G15_082	FROM->TO	G14-057T 345.00 - SUNNYSIDE 345KV CKT 1	717	789	0.08431	120.5528	P12:069:OKGE:3TERM42
FDNS	00NR	3	16WP	G15_082	FROM->TO	G14-057T 345.00 - SUNNYSIDE 345KV CKT 1	717	789	0.08432	120.5448	GEN515443 1-MNCOWND1 0.7000
FDNS	00NR	3	16WP	G15_082	FROM->TO	G14-057T 345.00 - SUNNYSIDE 345KV CKT 1	717	789	0.08351	120.5433	ARBUCKLE - SULPHR 4 138.00 138KV CKT 1
FDNS	00NR	3	16WP	G15_082	FROM->TO	G14-057T 345.00 - SUNNYSIDE 345KV CKT 1	717	789	0.08432	120.5416	GEN600014 4-BLACK DOG GEN 4
FDNS	00NR	3	16WP	G15_082	FROM->TO	G14-057T 345.00 - SUNNYSIDE 345KV CKT 1	717	789	0.08432	120.5379	GEN629067 1-EMERY GAS TURBINE 1
FDNS	00NR	3	16WP	G15_082	FROM->TO	G14-057T 345.00 - SUNNYSIDE 345KV CKT 1	717	789	0.08432	120.5347	GEN531447 1-HOLCOMB GENERATOR
FDNS	00NR	3	16WP	G15_082	FROM->TO	G14-057T 345.00 - SUNNYSIDE 345KV CKT 1	717	789	0.08432	120.5316	GEN615032 2-PLEASANT VALLEY
FDNS	00NR	3	16WP	G15_082	FROM->TO	G14-057T 345.00 - SUNNYSIDE 345KV CKT 1	717	789	0.08432	120.5294	GEN530690 1-PRWINDG1 0.6900
FDNS	00NR	3	16WP	G15_082	FROM->TO	G14-057T 345.00 - SUNNYSIDE 345KV CKT 1	717	789	0.08432	120.5274	GEN563062 1-G15071_3 0.6900
FDNS	00NR	3	16WP	G15_082	FROM->TO	G14-057T 345.00 - SUNNYSIDE 345KV CKT 1	717	789	0.08326	120.5091	PRAIRIE POINT - RATLIFF 138KV CKT 1
FDNS	00NR	3	16WP	G15_082	FROM->TO	G14-057T 345.00 - SUNNYSIDE 345KV CKT 1	717	789	0.08432	120.5048	GEN600017 C-LS POWER CT
FDNS	00NR	3	16WP	G15_082	FROM->TO	G14-057T 345.00 - SUNNYSIDE 345KV CKT 1	717	789	0.08432	120.5021	GEN562432 1-G13-030 0.6900
FDNS	00NR	3	16WP	G15_082	FROM->TO	G14-057T 345.00 - SUNNYSIDE 345KV CKT 1	717	789	0.08436	120.4998	CROCKETT - TENASKA RUSK COUNTY 345KV CKT 1
FDNS	00NR	3	16WP	G15_082	FROM->TO	G14-057T 345.00 - SUNNYSIDE 345KV CKT 1	717	789	0.08432	120.4988	GEN563052 1-G15069_3 0.6900
FDNS	00NR	3	16WP	G15_082	FROM->TO	G14-057T 345.00 - SUNNYSIDE 345KV CKT 1	717	789	0.08432	120.4981	GEN562017 1-G11_022_3 0.6900
FDNS	00NR	3	16WP	G15_082	FROM->TO	G14-057T 345.00 - SUNNYSIDE 345KV CKT 1	717	789	0.08446	120.497	DELL 500 - INDEPENDENCE 500KV CKT 1
FDNS	00NR	3	20WP	G15_082	FROM->TO	G14-057T 345.00 - SUNNYSIDE 345KV CKT 1	717	789	0.08467	120.4963	WAVERLY7 345.00 - WOLF CREEK 345KV CKT 1
FDNS	00NR	3	16WP	G15_082	FROM->TO	G14-057T 345.00 - SUNNYSIDE 345KV CKT 1	717	789	0.08436	120.4947	LEBROCK - TENASKA RUSK COUNTY 345KV CKT 1
FDNS	00NR	3	16WP	G15_082	FROM->TO	G14-057T 345.00 - SUNNYSIDE 345KV CKT 1	717	789	0.08408	120.4909	ALTUS JUNCTION - RUSSELL 138KV CKT 1
FDNS	00NR	3	16WP	G15_082	FROM->TO	G14-057T 345.00 - SUNNYSIDE 345KV CKT 1	717	789	0.08408	120.4909	ALTUS JUNCTION - RUSSELL 138KV CKT 1
FDNS	00NR	3	16WP	G15_082	FROM->TO	G14-057T 345.00 - SUNNYSIDE 345KV CKT 1	717	789	0.08422	120.4776	CARTER - CHICKASAW 138KV CKT 1
FDNS	00NR	3	16WP	G15_082	FROM->TO	G14-057T 345.00 - SUNNYSIDE 345KV CKT 1	717	789	0.08432	120.4761	GEN672392 1-NBECGT1G 18.000
FDNS	00NR	3	20WP	G15_082	FROM->TO	G14-057T 345.00 - SUNNYSIDE 345KV CKT 1	717	789	0.08441	120.4652	GEN501812 1-RODEMACHER UNIT 2
FDNS	00NR	3	16WP	G15_082	FROM->TO	G14-057T 345.00 - SUNNYSIDE 345KV CKT 1	717	789	0.08447	120.4615	CANADIAN RIVER - MCALESTER SOUTH 138KV CKT 1
FDNS	00NR	3	16WP	G15_082	FROM->TO	G14-057T 345.00 - SUNNYSIDE 345KV CKT 1	717	789	0.08447	120.4615	CANADIAN RIVER - MCALESTER SOUTH 138KV CKT 1
FDNS	00NR	3	16WP	G15_082	FROM->TO	G14-057T 345.00 - SUNNYSIDE 345KV CKT 1	717	789	0.08447	120.4599	CANADIAN RIVER () 345/138/13.8KV TRANSFORMER CKT 1
FDNS	00NR	3	16WP	G15_082	FROM->TO	G14-057T 345.00 - SUNNYSIDE 345KV CKT 1	717	789	0.08447	120.4599	CANADIAN RIVER () 345/138/13.8KV TRANSFORMER CKT 1
FDNS	00NR	3	16WP	G15_082	FROM->TO	G14-057T 345.00 - SUNNYSIDE 345KV CKT 1	717	789	0.08432	120.4589	GEN528361 1-MADDOX GEN #1
FDNS	00NR	3	16WP	G15_082	FROM->TO	G14-057T 345.00 - SUNNYSIDE 345KV CKT 1	717	789	0.08399	120.4524	ROCKY POINT - SPRINGDALE 138KV CKT 1
FDNS	00NR	3	16WP	G15_082	FROM->TO	G14-057T 345.00 - SUNNYSIDE 345KV CKT 1	717	789	0.08432	120.4515	GEN629070 2-BEAVER CHANNEL GENERATORFOR UNIT NO 2
FDNS	00NR	3	16WP	G15_082	FROM->TO	G14-057T 345.00 - SUNNYSIDE 345KV CKT 1	717	789	0.08432	120.4514	GEN615010 1-STANTON4
FDNS	00NR	3	20WP	G15_082	FROM->TO	G14-057T 345.00 - SUNNYSIDE 345KV CKT 1	717	789	0.08436	120.4443	ELDORADO EHV - MOUNT OLIVE 500KV CKT 1
FDNS	00NR	3	16WP	G15_082	FROM->TO	G14-057T 345.00 - SUNNYSIDE 345KV CKT 1	717	789	0.08432	120.4354	GEN629071 1-BURLINGTON GENERATOR FOR UNIT NO 1 E
FDNS	00NR	3	16WP	G15_082	FROM->TO	G14-057T 345.00 - SUNNYSIDE 345KV CKT 1	717	789	0.08432	120.4333	GEN615021 1-GRE-ER 14G 16.000
FDNS	00NR	3	16WP	G15_082	FROM->TO	G14-057T 345.00 - SUNNYSIDE 345KV CKT 1	717	789	0.08432	120.4301	INDEPENDENCE 500/26.0KV TRANSFORMER CKT 1
FDNS	00NR	3	16WP	G15_082	FROM->TO	G14-057T 345.00 - SUNNYSIDE 345KV CKT 1	717	789	0.08441	120.4227	GRPRAR1-LNX3345.00 - HOLT.CO3 345.00 345KV CKT 1
FDNS	00NR	3	16WP	G15_082	FROM->TO	G14-057T 345.00 - SUNNYSIDE 345KV CKT 1	717	789	0.08432	120.4226	GEN562587 1-G14_056_3 0.6900
FDNS	00NR	3	16WP	G15_082	FROM->TO	G14-057T 345.00 - SUNNYSIDE 345KV CKT 1	717	789	0.08441	120.4225	GRPRAR1-LNX3345.00 - YANKTON 345KV CKT Z
FDNS	00NR	3	16WP	G15_082	FROM->TO	G14-057T 345.00 - SUNNYSIDE 345KV CKT 1	717	789	0.08432	120.4217	GEN562902 1-G15052_3 0.6900
FDNS	00NR	3	16WP	G15_082	FROM->TO	G14-057T 345.00 - SUNNYSIDE 345KV CKT 1	717	789	0.08432	120.4164	BURLINGTON NO1 + NO 2 + NO 3 161/20.0KV TRANSFORMER CKT 1
FDNS	00NR	3	16WP	G15_082	FROM->TO	G14-057T 345.00 - SUNNYSIDE 345KV CKT 1	717	789	0.08432	120.4139	GEN514806 1-SOONER UNIT 2
FDNS	00NR	3	16WP	G15_082	FROM->TO	G14-057T 345.00 - SUNNYSIDE 345KV CKT 1	717	789	0.08432	120.4058	GEN514805 1-SOONER UNIT 1
FDNS	00NR	3	20WP	G15_082	FROM->TO	G14-057T 345.00 - SUNNYSIDE 345KV CKT 1	717	789	0.08441	120.4058	DOLET HILLS 345/24.0KV TRANSFORMER CKT 1
FDNS	00NR	3	16WP	G15_082	FROM->TO	G14-057T 345.00 - SUNNYSIDE 345KV CKT 1	717	789	0.08351	120.3901	JOLLYVILLE - SULPHR 4 138.00 138KV CKT 1
FDNS	00NR	3	16WP	G15_082	FROM->TO	G14-057T 345.00 - SUNNYSIDE 345KV CKT 1	717	789	0.08434	120.3734	NORTHWEST TEXARKANA - WELSH 345KV CKT 1
FDNS	00NR	3	16WP	G15_082	FROM->TO	G14-057T 345.00 - SUNNYSIDE 345KV CKT 1	717	789	0.08434	120.3734	NORTHWEST TEXARKANA - WELSH 345KV CKT 1
FDNS	00NR	3	16WP	G15_082	FROM->TO	G14-057T 345.00 - SUNNYSIDE 345KV CKT 1	717	789	0.08432	120.3679	GEN562074 1-G1149G1504 0.6900
FDNS	00NR	3	16WP	G15_082	FROM->TO	G14-057T 345.00 - SUNNYSIDE 345KV CKT 1	717	789	0.08432	120.3599	GEN562882 1-G15047_3 0.6900
FDNS	00NR	3	16WP	G15_082	FROM->TO	G14-057T 345.00 - SUNNYSIDE 345KV CKT 1	717	789	0.08432	120.3584	P12:230:UMZB:# 112 #: NU IN SD. NU-RCDC & DRY CREEK XFMR
FDNS	00NR	3	16WP	G15_082	FROM->TO	G14-057T 345.00 - SUNNYSIDE 345KV CKT 1	717	789	0.08432	120.3574	GEN562802 1-G15039_3 0.3570
FDNS	00NR	3	16WP	G15_082	FROM->TO	G14-057T 345.00 - SUNNYSIDE 345KV CKT 1	717	789	0.08432	120.3573	GEN524285 1-WILDORADO WIND GEN
FDNS	00NR	3	16WP	G15_082	FROM->TO	G14-057T 345.00 - SUNNYSIDE 345KV CKT 1	717	789	0.08432	120.3566	RCDC EAST 4230.00 - RED CEDAR DC 230KV CKT 1
FDNS	00NR	3	16WP	G15_082	FROM->TO	G14-057T 345.00 - SUNNYSIDE 345KV CKT 1	717	789	0.08452	120.3561	KEO EHV - WEST MEMPHIS 500 500KV CKT 1
FDNS	00NR	3	16WP	G15_082	FROM->TO	G14-057T 345.00 - SUNNYSIDE 345KV CKT 1	717	789	0.08468	120.3557	CHAMBER SPRINGS - CLARKSVILLE 345KV CKT 1
FDNS	00NR	3	16WP	G15_082	FROM->TO	G14-057T 345.00 - SUNNYSIDE 345KV CKT 1	717	789	0.08618	120.3532	G15061_T 345.00 - SETAB 345KV CKT 1
FDNS	00NR	3	16WP	G15_082	FROM->TO	G14-057T 345.00 - SUNNYSIDE 345KV CKT 1	717	789	0.08514	120.348	G15063_T 345.00 - MATHWSN7 345.00 345KV CKT 1
FDNS	00NR	3	16WP	G15_082	FROM->TO	G14-057T 345.00 - SUNNYSIDE 345KV CKT 1	717	789	0.08432	120.3439	GEN563242 1-G15090_3 0.6900
FDNS	00NR	3	20WP	G15_082	FROM->TO	G14-057T 345.00 - SUNNYSIDE 345KV CKT 1	717	789	0.08436	120.3377	P12:138:AEPW:SHERID4:112GORE4
FDNS	00NR	3	20WP	G15_082	FROM->TO	G14-057T 345.00 - SUNNYSIDE 345KV CKT 1	717	789	0.08612	120.3313	MARIETTA - SOUTH WILSON 138KV CKT 1
FDNS	00NR	3	20WP	G15_082	FROM->TO	G14-057T 345.00 - SUNNYSIDE 345KV CKT 1	717	789	0.08313	120.3313	PARK LANE - SEMINOLE 138KV CKT 1
FDNS	00NR	3	16WP	G15_082	FROM->TO	G14-057T 345.00 - SUNNYSIDE 345KV CKT 1	717	789	0.08351	120.3216	JOLLYVILLE - KERR MCGEE CIMARRON 138KV CKT 1
FDNS	00NR	3	16WP	G15_082	FROM->TO	G14-057T 345.00 - SUNNYSIDE 345KV CKT 1	717	789	0.08432	120.3212	GEN524295 1-SPNSPUR_WND10.6900
FDNS	00NR	3	16WP	G15_082	FROM->TO	G14-057T 345.00 - SUNNYSIDE 345KV CKT 1	717	789	0.08432	120.3128	GEN562078 1-G11_051_3 0.6900
FDNS	00NR	3	16WP	G15_082	FROM->TO	G14-057T 345.00 - SUNNYSIDE 345KV CKT 1	717	789	0.08432	120.3077	GEN560331 1-G10-46 13.800
FDNS	00NR	3	20WP	G15_082	FROM->TO	G14-057T 345.00 - SUNNYSIDE 345KV CKT 1	717	789	0.08441	120.2957	GEN515564 1-ORIGIN11 0.6900
FDNS	00NR	3	20WP	G15_082	FROM->TO	G14-057T 345.00 - SUNNYSIDE 345KV CKT 1	717	789	0.08441	120.2957	GEN515565 1-ORIGIN21 0.6900
FDNS	00NR	3	16WP	G15_082	FROM->TO	G14-057T 345.00 - SUNNYSIDE 345KV CKT 1	717	789	0.08432	120.2952	GEN532653 1-JEFFREY ENERGY CENTER UNIT 3
FDNS	00NR	3	20WP	G15_082	FROM->TO	G14-057T 345.00 - SUNNYSIDE 345KV CKT 1	717	789	0.08441	120.2902	GEN334440 1-SABINE UNIT 4
FDNS	00NR	3	20WP	G15_082	FROM->TO	G14-057T 345.00 - SUNNYSIDE 345KV CKT 1	717	789	0.0845	120.2881	REDBUD - RIVERSIDE STATION 345KV CKT 1
FDNS	00NR	3	20WP	G15_082	FROM->TO	G14-057T 345.00 - SUNNYSIDE 345KV CKT 1	717	789	0.0845	120.2881	REDBUD - RIVERSIDE STATION 345KV CKT 1
FDNS	00NR	3	16WP	G15_082	FROM->TO	G14-057T 345.00 - SUNNYSIDE 345KV CKT 1	717	789	0.08432	120.2789	GEN629072 4-LANSING GENERATOR FOR UNITS NO4 EIA CODE 1
FDNS	00NR	3	20WP	G15_082	FROM->TO	G14-057T 345.00 - SUNNYSIDE 345KV CKT 1	717	789	0.08755	120.2784	MATHWSN7 345.00 - NORTHWEST 345KV CKT 1
FDNS	00NR	3	16WP	G15_082	FROM->TO	G14-057T 345.00 - SUNNYSIDE 345KV CKT 1	717	789	0.08432	120.2756	GEN562269 1-G12-020-1 0.6900
FDNS	00NR	3	16WP	G15_082	FROM->TO	G14-057T 345.00 - SUNNYSIDE 345KV CKT 1	717	789	0.08668	120.2733	CLARKSVILLE - MUSKOGEE 345KV CKT 1
FDNS	00NR	3	16WP	G15_082	FROM->TO	G14-057T 345.00 - SUNNYSIDE 345KV CKT 1	717	789	0.08668	120.2733	CLARKSVILLE - MUSKOGEE 345KV CKT 1
FDNS	00NR	3	20WP	G15_082	FROM->TO	G14-057T 345.00 - SUNNYSIDE 345KV CKT 1	717	789	0.08542	120.2731	CANEYRV7 345.00 - NEOSHO 345KV CKT 1
FDNS	00NR	3	16WP	G15_082	FROM->TO	G14-057T 345.00 - SUNNYSIDE 345KV CKT 1	717	789	0.08432	120.2697	GEN511962 2-RKYRDGW2-1 0.7000
FDNS	00NR	3	16WP	G15_082	FROM->TO	G14-057T 345.00 - SUNNYSIDE 345KV CKT 1	717	789	0.08351	120.2574	ARBWIND4 138.00 - KERR MCGEE CIMARRON 138KV CKT 1

SOLUTION	GROUP	SCENARIO	SEASON	SOURCE	DIRECTION	MONITORED ELEMENT	RATEA (MVA)	RATEB(MVA)	TDF	TC%LOADING (% MVA)	CONTINGENCY
FDNS	00NR	3	16WP	G15_082	FROM->TO	G14-057T 345.00 - SUNNYSIDE 345KV CKT 1	717	789	0.08432	120.2529	GEN657749 1-YOUNG 1 GENERATOR
FDNS	00NR	3	16WP	G15_082	FROM->TO	G14-057T 345.00 - SUNNYSIDE 345KV CKT 1	717	789	0.07859	120.2464	BVRCNTY7 345.00 - GRAPEVINE 345.00 345KV CKT 1
FDNS	00NR	3	16WP	G15_082	FROM->TO	G14-057T 345.00 - SUNNYSIDE 345KV CKT 1	717	789	0.07859	120.2453	CHISHOLM7 345.00 - GRAPEVINE 345.00 345KV CKT 1
FDNS	00NR	3	20WP	G15_082	FROM->TO	G14-057T 345.00 - SUNNYSIDE 345KV CKT 1	717	789	0.08441	120.2446	DELL 500 - ESSEX UNIT 2 500KV CKT Z1
FDNS	00NR	3	20WP	G15_082	FROM->TO	G14-057T 345.00 - SUNNYSIDE 345KV CKT 1	717	789	0.08612	120.2408	P12:138:WFEC:MSL17
FDNS	00NR	3	20WP	G15_082	FROM->TO	G14-057T 345.00 - SUNNYSIDE 345KV CKT 1	717	789	0.08452	120.2308	WEBRE - WELLS 500KV CKT 1
FDNS	00NR	3	16WP	G15_082	FROM->TO	G14-057T 345.00 - SUNNYSIDE 345KV CKT 1	717	789	0.08432	120.2275	GEN562270 1-G12-020-2 0.6900
FDNS	00NR	3	16WP	G15_082	FROM->TO	G14-057T 345.00 - SUNNYSIDE 345KV CKT 1	717	789	0.08432	120.2273	GEN562812 1-G15040_3 0.3570
FDNS	00NR	3	16WP	G15_082	FROM->TO	G14-057T 345.00 - SUNNYSIDE 345KV CKT 1	717	789	0.08423	120.2267	P12:138:WFEC:MSL07
FDNS	00NR	3	16WP	G15_082	FROM->TO	G14-057T 345.00 - SUNNYSIDE 345KV CKT 1	717	789	0.08423	120.2267	P12:138:WFEC-AEPW:HUGOPP4:ATOKA--4
FDNS	00NR	3	20WP	G15_082	FROM->TO	G14-057T 345.00 - SUNNYSIDE 345KV CKT 1	717	789	0.08441	120.2183	P12:161:AEPW:DYESS 5:HYLAND 5
FDNS	00NR	3	16WP	G15_082	FROM->TO	G14-057T 345.00 - SUNNYSIDE 345KV CKT 1	717	789	0.08432	120.2166	GEN521112 1-ORME3 13.800
FDNS	00NR	3	16WP	G15_082	FROM->TO	G14-057T 345.00 - SUNNYSIDE 345KV CKT 1	717	789	0.08432	120.2164	GEN563132 1-G15078_3 0.3570
FDNS	00NR	3	16WP	G15_082	FROM->TO	G14-057T 345.00 - SUNNYSIDE 345KV CKT 1	717	789	0.08432	120.2159	GEN563102 1-G15075_3 0.5500
FDNS	00NR	3	20WP	G15_082	FROM->TO	G14-057T 345.00 - SUNNYSIDE 345KV CKT 1	717	789	0.08441	120.2082	GEN590011 2-ERCOT EQUIVALENCE
FDNS	00NR	3	16WP	G15_082	FROM->TO	G14-057T 345.00 - SUNNYSIDE 345KV CKT 1	717	789	0.08432	120.2053	GEN563192 1-G15084_3 0.5500
FDNS	00NR	3	20WP	G15_082	FROM->TO	G14-057T 345.00 - SUNNYSIDE 345KV CKT 1	717	789	0.08441	120.2021	GEN509408 1-WILKES #2
FDNS	00NR	3	16WP	G15_082	FROM->TO	G14-057T 345.00 - SUNNYSIDE 345KV CKT 1	717	789	0.0836	120.1923	CHICKASAW - TOTAL 138KV CKT 1
FDNS	00NR	3	16WP	G15_082	FROM->TO	G14-057T 345.00 - SUNNYSIDE 345KV CKT 1	717	789	0.08421	120.1879	BROWN - RUSSETT 138KV CKT 1
FDNS	00NR	3	16WP	G15_082	FROM->TO	G14-057T 345.00 - SUNNYSIDE 345KV CKT 1	717	789	0.08432	120.1836	GEN681522 3-GENOA 3
FDNS	00NR	3	16WP	G15_082	FROM->TO	G14-057T 345.00 - SUNNYSIDE 345KV CKT 1	717	789	0.08418	120.1774	RUSSETT - SPRINGDALE 138KV CKT 1
FDNS	00NR	3	20WP	G15_082	FROM->TO	G14-057T 345.00 - SUNNYSIDE 345KV CKT 1	717	789	0.08759	120.1684	MATHWSN7 345.00 - TATONGA7 345.00 345KV CKT 1
FDNS	00NR	3	20WP	G15_082	FROM->TO	G14-057T 345.00 - SUNNYSIDE 345KV CKT 1	717	789	0.08759	120.1684	MATHWSN7 345.00 - TATONGA7 345.00 345KV CKT 2
FDNS	00NR	3	16WP	G15_082	FROM->TO	G14-057T 345.00 - SUNNYSIDE 345KV CKT 1	717	789	0.08432	120.1682	GEN562512 1-G14_020_3 0.6900
FDNS	00NR	3	16WP	G15_082	FROM->TO	G14-057T 345.00 - SUNNYSIDE 345KV CKT 1	717	789	0.08387	120.1549	ROCKY POINT - SUNNYSIDE 138KV CKT 1
FDNS	00NR	3	16WP	G15_082	FROM->TO	G14-057T 345.00 - SUNNYSIDE 345KV CKT 1	717	789	0.08432	120.1383	GEN562892 1-G15048_3 0.6900
FDNS	00NR	3	20WP	G15_082	FROM->TO	G14-057T 345.00 - SUNNYSIDE 345KV CKT 1	717	789	0.08441	120.137	GEN590010 1-ERCOT EQUIVALENCE
FDNS	00NR	3	16WP	G15_082	FROM->TO	G14-057T 345.00 - SUNNYSIDE 345KV CKT 1	717	789	0.08329	120.1329	P12:138:AEPW:112GORE4:SNYDER-4
FDNS	00NR	3	16WP	G15_082	FROM->TO	G14-057T 345.00 - SUNNYSIDE 345KV CKT 1	717	789	0.08432	120.1306	GEN345671 2-1RUSH G2 18.000
FDNS	00NR	3	16WP	G15_082	FROM->TO	G14-057T 345.00 - SUNNYSIDE 345KV CKT 1	717	789	0.08432	120.1286	GEN345670 1-1RUSH G1 18.000
FDNS	00NR	3	16WP	G15_082	FROM->TO	G14-057T 345.00 - SUNNYSIDE 345KV CKT 1	717	789	0.08439	120.1279	P12:138:WFEC:MSL16
FDNS	00NR	3	16WP	G15_082	FROM->TO	G14-057T 345.00 - SUNNYSIDE 345KV CKT 1	717	789	0.08432	120.124	GEN526331 1-JONES GEN #1 22 KV
FDNS	00NR	3	16WP	G15_082	FROM->TO	G14-057T 345.00 - SUNNYSIDE 345KV CKT 1	717	789	0.08432	120.1239	GEN526332 1-JONES GEN #2 21 KV
FDNS	00NR	3	16WP	G15_082	FROM->TO	G14-057T 345.00 - SUNNYSIDE 345KV CKT 1	717	789	0.08432	120.1225	GEN562974 1-G15060_5 0.6900
FDNS	00NR	3	16WP	G15_082	FROM->TO	G14-057T 345.00 - SUNNYSIDE 345KV CKT 1	717	789	0.08432	120.1223	GEN562550 1-G14_040_3 0.6900
FDNS	00NR	3	16WP	G15_082	FROM->TO	G14-057T 345.00 - SUNNYSIDE 345KV CKT 1	717	789	0.08432	120.1194	4SIOUX 1 138.00 138/18.0KV TRANSFORMER CKT 1
FDNS	00NR	3	16WP	G15_082	FROM->TO	G14-057T 345.00 - SUNNYSIDE 345KV CKT 1	717	789	0.08432	120.1193	GEN560105 1-G08-22 0.6900
FDNS	00NR	3	16WP	G15_082	FROM->TO	G14-057T 345.00 - SUNNYSIDE 345KV CKT 1	717	789	0.08421	120.1188	RUSSETT - RUSSETT 138KV CKT 1
FDNS	00NR	3	20WP	G15_082	FROM->TO	G14-057T 345.00 - SUNNYSIDE 345KV CKT 1	717	789	0.08542	120.1175	CANEYRV7 345.00 - LATHAMS7 345.00 345KV CKT 1
FDNS	00NR	3	16WP	G15_082	FROM->TO	G14-057T 345.00 - SUNNYSIDE 345KV CKT 1	717	789	0.08432	120.1115	GEN562973 1-G15060_4 0.6900
FDNS	00NR	3	20WP	G15_082	FROM->TO	G14-057T 345.00 - SUNNYSIDE 345KV CKT 1	717	789	0.08426	120.1012	ELDORADO EHV - SHERIDAN EHV 500KV CKT 1
FDNS	00NR	3	20WP	G15_082	FROM->TO	G14-057T 345.00 - SUNNYSIDE 345KV CKT 1	717	789	0.08441	120.0914	P12:69:AEPW:L.E.S.-2:LAW WC2
FDNS	00NR	3	16WP	G15_082	FROM->TO	G14-057T 345.00 - SUNNYSIDE 345KV CKT 1	717	789	0.08331	120.0733	ARDMORE WEST - CARTER 138KV CKT 1
FDNS	00NR	3	20WP	G15_082	FROM->TO	G14-057T 345.00 - SUNNYSIDE 345KV CKT 1	717	789	0.08474	120.0733	PAOLI - PAYNE 138.00 138KV CKT 1
FDNS	00NR	3	20WP	G15_082	FROM->TO	G14-057T 345.00 - SUNNYSIDE 345KV CKT 1	717	789	0.08441	120.0695	GEN506754 1-LEBROCK STEAM 1
FDNS	00NR	3	16WP	G15_082	FROM->TO	G14-057T 345.00 - SUNNYSIDE 345KV CKT 1	717	789	0.08432	120.0672	GEN527882 1-CUNNINGHAM GEN #2 20 KV
FDNS	00NR	3	16WP	G15_082	FROM->TO	G14-057T 345.00 - SUNNYSIDE 345KV CKT 1	717	789	0.08428	120.0654	P12:138:WFEC-AEPW:GOLDENSW4:CRAIGJT4
FDNS	00NR	3	16WP	G15_082	FROM->TO	G14-057T 345.00 - SUNNYSIDE 345KV CKT 1	717	789	0.08432	120.0612	GEN511853 1-COMANCHE #3
FDNS	00NR	3	20WP	G15_082	FROM->TO	G14-057T 345.00 - SUNNYSIDE 345KV CKT 1	717	789	0.08578	120.0605	CIVIT - PAOLI 138KV CKT 1
FDNS	00NR	3	20WP	G15_082	FROM->TO	G14-057T 345.00 - SUNNYSIDE 345KV CKT 1	717	789	0.08495	120.0595	P12:138:WFEC:MSL02
FDNS	00NR	3	16WP	G15_082	FROM->TO	G14-057T 345.00 - SUNNYSIDE 345KV CKT 1	717	789	0.08432	120.059	CLAY BOSWELL 230/20.9KV TRANSFORMER CKT 1
FDNS	00NR	3	16WP	G15_082	FROM->TO	G14-057T 345.00 - SUNNYSIDE 345KV CKT 1	717	789	0.08432	120.0554	GEN521110 1-ORME1 13.800
FDNS	00NR	3	16WP	G15_082	FROM->TO	G14-057T 345.00 - SUNNYSIDE 345KV CKT 1	717	789	0.08432	120.0554	GEN521111 1-ORME2 13.800
FDNS	00NR	3	16WP	G15_082	FROM->TO	G14-057T 345.00 - SUNNYSIDE 345KV CKT 1	717	789	0.08432	120.0455	GEN520811 1-ANADRK4
FDNS	00NR	3	16WP	G15_082	FROM->TO	G14-057T 345.00 - SUNNYSIDE 345KV CKT 1	717	789	0.08405	120.0368	G15085_T 138.00 - RUSSELL 138KV CKT 1
FDNS	00NR	3	16WP	G15_082	FROM->TO	G14-057T 345.00 - SUNNYSIDE 345KV CKT 1	717	789	0.08336	120.0332	SUNNYSIDE (SUNNYSD5) 345/138/13.8KV TRANSFORMER CKT 1
FDNS	00NR	3	16WP	G15_082	FROM->TO	G14-057T 345.00 - SUNNYSIDE 345KV CKT 1	717	789	0.08428	120.0217	P12:138:AEPW-SWPA:LONEOAK4:TUPELO4
FDNS	00NR	3	16WP	G15_082	FROM->TO	G14-057T 345.00 - SUNNYSIDE 345KV CKT 1	717	789	0.08428	120.0217	P12:138:WFEC:MSL06
FDNS	00NR	3	16WP	G15_082	FROM->TO	G14-057T 345.00 - SUNNYSIDE 345KV CKT 1	717	789	0.08432	120.0205	GEN511852 1-COMANCHE #2
FDNS	00NR	3	20WP	G15_082	FROM->TO	G14-057T 345.00 - SUNNYSIDE 345KV CKT 1	717	789	0.08441	120.0089	NEW MADRID 161/22.0KV TRANSFORMER CKT 1
FDNS	00NR	3	20WP	G15_082	FROM->TO	G14-057T 345.00 - SUNNYSIDE 345KV CKT 1	717	789	0.08652	120.0071	P12:138:AEPW-OGE:CORNVIL4:MAUD 4
FDNS	00NR	3	16WP	G15_082	FROM->TO	G14-057T 345.00 - SUNNYSIDE 345KV CKT 1	717	789	0.08432	120.0035	GEN523461 1-BLACKHAWK GEN #1
FDNS	00NR	3	16WP	G15_082	FROM->TO	G14-057T 345.00 - SUNNYSIDE 345KV CKT 1	717	789	0.08432	120.0034	GEN523462 1-BLACKHAWK GEN #2
FDNS	00NR	3	16WP	G15_082	FROM->TO	G14-057T 345.00 - SUNNYSIDE 345KV CKT 1	717	789	0.08432	120.0031	GEN672321 1-SHAND GENERATOR 1
FDNS	00NR	3	20WP	G15_082	FROM->TO	G14-057T 345.00 - SUNNYSIDE 345KV CKT 1	717	789	0.08456	120.002	LAWTON EASTSIDE (LES 5) 345/138/13.8KV TRANSFORMER CKT 2
FDNS	00NR	3	20WP	G15_082	FROM->TO	G14-057T 345.00 - SUNNYSIDE 345KV CKT 1	717	789	0.08456	120.002	LAWTON EASTSIDE (LES 5) 345/138/13.8KV TRANSFORMER CKT 2
FDNS	00NR	3	20WP	G15_082	FROM->TO	G14-057T 345.00 - SUNNYSIDE 345KV CKT 1	717	789	0.08441	120.0014	GEN336252 1-NINEMILE POINT UNIT#5
FDNS	00NR	3	20WP	G15_082	FROM->TO	G14-057T 345.00 - SUNNYSIDE 345KV CKT 1	717	789	0.08441	119.9927	NEW MADRID 345/22.0KV TRANSFORMER CKT 1
FDNS	00NR	3	16WP	G15_082	FROM->TO	G14-057T 345.00 - SUNNYSIDE 345KV CKT 1	717	789	0.08432	119.9774	GEN672310 1-POPLAR RIVER GENERATOR 1
FDNS	00NR	3	16WP	G15_082	FROM->TO	G14-057T 345.00 - SUNNYSIDE 345KV CKT 1	717	789	0.08432	119.9774	GEN672311 2-POPLAR RIVER GENERATOR 2
FDNS	00NR	3	20WP	G15_082	FROM->TO	G14-057T 345.00 - SUNNYSIDE 345KV CKT 1	717	789	0.08481	119.9767	ANADARKO - GEORGIA 138KV CKT 1
FDNS	00NR	3	16WP	G15_082	FROM->TO	G14-057T 345.00 - SUNNYSIDE 345KV CKT 1	717	789	0.08432	119.9689	GEN344895 2-1LAB G2 20.000
FDNS	00NR	3	16WP	G15_082	FROM->TO	G14-057T 345.00 - SUNNYSIDE 345KV CKT 1	717	789	0.08432	119.9687	GEN672306 6-BOUNDARY DAM GENERATOR 6
FDNS	00NR	3	20WP	G15_082	FROM->TO	G14-057T 345.00 - SUNNYSIDE 345KV CKT 1	717	789	0.08437	119.9669	P12:138:AEPW:112GORE4:L.E.S.-4
FDNS	00NR	3	16WP	G15_082	FROM->TO	G14-057T 345.00 - SUNNYSIDE 345KV CKT 1	717	789	0.08331	119.9553	ARDMORE WEST - UNIROYAL 138KV CKT 1
FDNS	00NR	3	16WP	G15_082	FROM->TO	G14-057T 345.00 - SUNNYSIDE 345KV CKT 1	717	789	0.08361	119.9529	CARTRCO4 138.00 - RATLIFF 138KV CKT 1
FDNS	00NR	3	16WP	G15_082	FROM->TO	G14-057T 345.00 - SUNNYSIDE 345KV CKT 1	717	789	0.08432	119.9485	GEN563292 1-G15095_3 0.6900
FDNS	00NR	3	16WP	G15_082	FROM->TO	G14-057T 345.00 - SUNNYSIDE 345KV CKT 1	717	789	0.08396	119.9428	P12:138:OKGE:3TERM40
FDNS	00NR	3	16WP	G15_082	FROM->TO	G14-057T 345.00 - SUNNYSIDE 345KV CKT 1	717	789	0.08432	119.9349	GEN344896 3-1LAB G3 20.000

SOLUTION	GROUP	SCENARIO	SEASON	SOURCE	DIRECTION	MONITORED ELEMENT	RATEA (MVA)	RATEB(MVA)	TDF	TC%LOADING (% MVA)	CONTINGENCY
FDNS	00NR	3	20WP	G15_082	FROM->TO	G14-057T 345.00 - SUNNYSIDE 345KV CKT 1	717	789	0.08441	119.9347	GEN335204 1-NELSON UNIT 4
FDNS	00NR	3	16WP	G15_082	FROM->TO	G14-057T 345.00 - SUNNYSIDE 345KV CKT 1	717	789	0.08432	119.9334	GEN344894 1-1LAB G1 20.000
FDNS	00NR	3	16WP	G15_082	FROM->TO	G14-057T 345.00 - SUNNYSIDE 345KV CKT 1	717	789	0.08432	119.9319	GEN344897 4-1LAB G4 20.000
FDNS	00NR	3	20WP	G15_082	FROM->TO	G14-057T 345.00 - SUNNYSIDE 345KV CKT 1	717	789	0.08652	119.9307	BLANCHARD - CORNVILLE 138KV CKT 1
FDNS	00NR	3	20WP	G15_082	FROM->TO	G14-057T 345.00 - SUNNYSIDE 345KV CKT 1	717	789	0.09512	119.9284	Hitchland Interchange - WALKTAP7 345.00 345KV CKT 1
FDNS	00NR	3	20WP	G15_082	FROM->TO	G14-057T 345.00 - SUNNYSIDE 345KV CKT 1	717	789	0.09512	119.9284	Hitchland Interchange - WALKTAP7 345.00 345KV CKT 1
FDNS	00NR	3	20WP	G15_082	FROM->TO	G14-057T 345.00 - SUNNYSIDE 345KV CKT 1	717	789	0.08441	119.9255	GEN334441 1-SABINE UNIT 5
FDNS	00NR	3	20WP	G15_082	FROM->TO	G14-057T 345.00 - SUNNYSIDE 345KV CKT 1	717	789	0.08578	119.9227	CIVIT - STRATFORD 138KV CKT 1
FDNS	00NR	3	20WP	G15_082	FROM->TO	G14-057T 345.00 - SUNNYSIDE 345KV CKT 1	717	789	0.08441	119.9197	GEN503909 1-FULTONU1 1 16.000
FDNS	00NR	3	20WP	G15_082	FROM->TO	G14-057T 345.00 - SUNNYSIDE 345KV CKT 1	717	789	0.09512	119.9182	P12:345:SPS:J07.1.FINN.HITCH
FDNS	00NR	3	20WP	G15_082	FROM->TO	G14-057T 345.00 - SUNNYSIDE 345KV CKT 1	717	789	0.08441	119.9179	FRONTIER - GRIMES 345KV CKT 1
FDNS	00NR	3	20WP	G15_082	FROM->TO	G14-057T 345.00 - SUNNYSIDE 345KV CKT 1	717	789	0.08449	119.9096	TUPELO - TUPELO TAP 138KV CKT 1
FDNS	00NR	3	16WP	G15_082	FROM->TO	G14-057T 345.00 - SUNNYSIDE 345KV CKT 1	717	789	0.08432	119.8936	GEN562861 1-G15045_2 0.4800
FDNS	00NR	3	20WP	G15_082	FROM->TO	G14-057T 345.00 - SUNNYSIDE 345KV CKT 1	717	789	0.08727	119.8899	THISTLE7 345.00 - WOODWARD DISTRICT EHV 345KV CKT 1
FDNS	00NR	3	20WP	G15_082	FROM->TO	G14-057T 345.00 - SUNNYSIDE 345KV CKT 1	717	789	0.08727	119.8899	THISTLE7 345.00 - WOODWARD DISTRICT EHV 345KV CKT 1
FDNS	00NR	3	20WP	G15_082	FROM->TO	G14-057T 345.00 - SUNNYSIDE 345KV CKT 1	717	789	0.08727	119.8899	THISTLE7 345.00 - WOODWARD DISTRICT EHV 345KV CKT 2
FDNS	00NR	3	20WP	G15_082	FROM->TO	G14-057T 345.00 - SUNNYSIDE 345KV CKT 1	717	789	0.08727	119.8899	THISTLE7 345.00 - WOODWARD DISTRICT EHV 345KV CKT 2
FDNS	00NR	3	20WP	G15_082	FROM->TO	G14-057T 345.00 - SUNNYSIDE 345KV CKT 1	717	789	0.08481	119.8899	FLETCHER - GEORGIA 138KV CKT 1
FDNS	00NR	3	20WP	G15_082	FROM->TO	G14-057T 345.00 - SUNNYSIDE 345KV CKT 1	717	789	0.08542	119.885	LATHAMS7 345.00 - ROSE HILL 345KV CKT 1
FDNS	00NR	3	16WP	G15_082	FROM->TO	G14-057T 345.00 - SUNNYSIDE 345KV CKT 1	717	789	0.08432	119.8762	GEN562699 1-G15_018_3 0.6900
FDNS	00NR	3	16WP	G15_082	FROM->TO	G14-057T 345.00 - SUNNYSIDE 345KV CKT 1	717	789	0.08603	119.8697	CANEY CREEK - TEXOMA JCT 138KV CKT 1
FDNS	00NR	3	16WP	G15_082	FROM->TO	G14-057T 345.00 - SUNNYSIDE 345KV CKT 1	717	789	0.08432	119.8571	GEN681542 6-JP MADGETT
FDNS	00NR	3	20WP	G15_082	FROM->TO	G14-057T 345.00 - SUNNYSIDE 345KV CKT 1	717	789	0.08488	119.8546	EMPIRE - FLETCHER 138KV CKT 1
FDNS	00NR	3	16WP	G15_082	FROM->TO	G14-057T 345.00 - SUNNYSIDE 345KV CKT 1	717	789	0.08458	119.8488	P12:138:WFEC:MSL15
FDNS	00NR	3	20WP	G15_082	FROM->TO	G14-057T 345.00 - SUNNYSIDE 345KV CKT 1	717	789	0.08441	119.8238	GEN334071 1-LEWIS CREEK 2
FDNS	00NR	3	20WP	G15_082	FROM->TO	G14-057T 345.00 - SUNNYSIDE 345KV CKT 1	717	789	0.08441	119.82	GEN336251 1-NINEMILE POINT UNIT#4
FDNS	00NR	3	20WP	G15_082	FROM->TO	G14-057T 345.00 - SUNNYSIDE 345KV CKT 1	717	789	0.08436	119.8152	LAYFLD8 500.00 - MOUNT OLIVE 500KV CKT 1
FDNS	00NR	3	20WP	G15_082	FROM->TO	G14-057T 345.00 - SUNNYSIDE 345KV CKT 1	717	789	0.08436	119.8152	LAYFLD8 500.00 - MOUNT OLIVE 500KV CKT 1
FDNS	00NR	3	20WP	G15_082	FROM->TO	G14-057T 345.00 - SUNNYSIDE 345KV CKT 1	717	789	0.08441	119.815	GEN334070 1-LEWIS CREEK 1
FDNS	00NR	3	16WP	G15_082	FROM->TO	G14-057T 345.00 - SUNNYSIDE 345KV CKT 1	717	789	0.08403	119.8087	P12:138:AEPW:SHAM4WT:CHILD4WT
FDNS	00NR	3	20WP	G15_082	FROM->TO	G14-057T 345.00 - SUNNYSIDE 345KV CKT 1	717	789	0.08578	119.8076	OIL CENTER - STRATFORD 138KV CKT 1
FDNS	00NR	3	20WP	G15_082	FROM->TO	G14-057T 345.00 - SUNNYSIDE 345KV CKT 1	717	789	0.08166	119.7972	G14_038T 345.00 - Hitchland Interchange 345KV CKT 1
FDNS	00NR	3	20WP	G15_082	FROM->TO	G14-057T 345.00 - SUNNYSIDE 345KV CKT 1	717	789	0.08441	119.7863	GEN337653 1-WHITE BLUFF UNIT #2
FDNS	00NR	3	20WP	G15_082	FROM->TO	G14-057T 345.00 - SUNNYSIDE 345KV CKT 1	717	789	0.08441	119.7813	GEN337911 1-ARKANSAS NUCLEAR ONE UNIT #2
FDNS	00NR	3	16WP	G15_082	FROM->TO	G14-057T 345.00 - SUNNYSIDE 345KV CKT 1	717	789	0.08432	119.778	GEN563162 1-G15081_3 0.6900
FDNS	00NR	3	20WP	G15_082	FROM->TO	G14-057T 345.00 - SUNNYSIDE 345KV CKT 1	717	789	0.0844	119.7778	P12:161:AEPW-SWPA:BEAVER5:EROGERS5
FDNS	00NR	3	20WP	G15_082	FROM->TO	G14-057T 345.00 - SUNNYSIDE 345KV CKT 1	717	789	0.08488	119.777	COMANCHE - EMPIRE 138KV CKT 1
FDNS	00NR	3	20WP	G15_082	FROM->TO	G14-057T 345.00 - SUNNYSIDE 345KV CKT 1	717	789	0.08441	119.776	GEN509393 S1-ARSENAL HILL GENS #4 (STALL)
FDNS	00NR	3	16WP	G15_082	FROM->TO	G14-057T 345.00 - SUNNYSIDE 345KV CKT 1	717	789	0.08432	119.7737	GEN562952 1-G15057_3 0.6500
FDNS	00NR	3	20WP	G15_082	FROM->TO	G14-057T 345.00 - SUNNYSIDE 345KV CKT 1	717	789	0.08441	119.7717	GEN509392 G2-ARSENAL HILL GENS #3 (STALL)
FDNS	00NR	3	20WP	G15_082	FROM->TO	G14-057T 345.00 - SUNNYSIDE 345KV CKT 1	717	789	0.08441	119.7716	GEN509391 G1-ARSENAL HILL GENS #2 (STALL)
FDNS	00NR	3	16WP	G15_082	FROM->TO	G14-057T 345.00 - SUNNYSIDE 345KV CKT 1	717	789	0.08432	119.7678	GEN562992 1-G15063_3 0.6900
FDNS	00NR	3	16WP	G15_082	FROM->TO	G14-057T 345.00 - SUNNYSIDE 345KV CKT 1	717	789	0.08432	119.7657	GEN563122 1-G15077_3 0.3850
FDNS	00NR	3	20WP	G15_082	FROM->TO	G14-057T 345.00 - SUNNYSIDE 345KV CKT 1	717	789	0.08441	119.7597	GEN334433 1-SABINE UNIT 3
FDNS	00NR	3	16WP	G15_082	FROM->TO	G14-057T 345.00 - SUNNYSIDE 345KV CKT 1	717	789	0.08329	119.7547	CACHE - SNYDER 138KV CKT 1
FDNS	00NR	3	20WP	G15_082	FROM->TO	G14-057T 345.00 - SUNNYSIDE 345KV CKT 1	717	789	0.08441	119.7468	GEN336831 1-BAXTER WILSON SES
FDNS	00NR	3	20WP	G15_082	FROM->TO	G14-057T 345.00 - SUNNYSIDE 345KV CKT 1	717	789	0.08652	119.738	BLANCHARD - MAUD 138KV CKT 1
FDNS	00NR	3	16WP	G15_082	FROM->TO	G14-057T 345.00 - SUNNYSIDE 345KV CKT 1	717	789	0.08432	119.7367	GEN661015 1-COYOTE
FDNS	00NR	3	16WP	G15_082	FROM->TO	G14-057T 345.00 - SUNNYSIDE 345KV CKT 1	717	789	0.08331	119.73	SUNNYSIDE - UNIROYAL 138KV CKT 1
FDNS	00NR	3	20WP	G15_082	FROM->TO	G14-057T 345.00 - SUNNYSIDE 345KV CKT 1	717	789	0.08441	119.7186	P12:161:AEPW:DYESS5:ELMSPRNG:TONTITN5
FDNS	00NR	3	20WP	G15_082	FROM->TO	G14-057T 345.00 - SUNNYSIDE 345KV CKT 1	717	789	0.08466	119.6954	DUNCAN (DUNCAN) 138/69/13.8KV TRANSFORMER CKT 1
FDNS	00NR	3	20WP	G15_082	FROM->TO	G14-057T 345.00 - SUNNYSIDE 345KV CKT 1	717	789	0.08466	119.6954	DUNCAN (DUNCAN) 138/69/13.8KV TRANSFORMER CKT 1
FDNS	00NR	3	20WP	G15_082	FROM->TO	G14-057T 345.00 - SUNNYSIDE 345KV CKT 1	717	789	0.08552	119.6924	P12:138:AEPW-OGE:WTH_JCT4:JENSEN4
FDNS	00NR	3	20WP	G15_082	FROM->TO	G14-057T 345.00 - SUNNYSIDE 345KV CKT 1	717	789	0.08441	119.6923	GEN334030 1-FRONTIER UNIT 1
FDNS	00NR	3	20WP	G15_082	FROM->TO	G14-057T 345.00 - SUNNYSIDE 345KV CKT 1	717	789	0.08441	119.6898	GEN334031 1-FRONTIER UNIT 2
FDNS	00NR	3	20WP	G15_082	FROM->TO	G14-057T 345.00 - SUNNYSIDE 345KV CKT 1	717	789	0.08441	119.6753	GEN337652 1-WHITE BLUFF UNIT #1
FDNS	00NR	3	20WP	G15_082	FROM->TO	G14-057T 345.00 - SUNNYSIDE 345KV CKT 1	717	789	0.08441	119.6493	GEN515226 1-MUSKOGEE 6G
FDNS	00NR	3	20WP	G15_082	FROM->TO	G14-057T 345.00 - SUNNYSIDE 345KV CKT 1	717	789	0.08445	119.6472	P12:138:AEPW:CATOOSA4:T.S.E.-4
FDNS	00NR	3	20WP	G15_082	FROM->TO	G14-057T 345.00 - SUNNYSIDE 345KV CKT 1	717	789	0.08608	119.6468	G1524G1525 345.00 - THISTLE7 345.00 345KV CKT 1
FDNS	00NR	3	20WP	G15_082	FROM->TO	G14-057T 345.00 - SUNNYSIDE 345KV CKT 1	717	789	0.08608	119.6468	G1524G1525 345.00 - THISTLE7 345.00 345KV CKT 2
FDNS	00NR	3	20WP	G15_082	FROM->TO	G14-057T 345.00 - SUNNYSIDE 345KV CKT 1	717	789	0.08578	119.6384	LATTA JCT - OIL CENTER 138KV CKT 1
FDNS	00NR	3	20WP	G15_082	FROM->TO	G14-057T 345.00 - SUNNYSIDE 345KV CKT 1	717	789	0.08441	119.6371	GEN501811 1-RODEMACHER UNIT 1
FDNS	00NR	3	20WP	G15_082	FROM->TO	G14-057T 345.00 - SUNNYSIDE 345KV CKT 1	717	789	0.08499	119.6325	TUTTLE - TUTTLE CONOCO TAP 138KV CKT 1
FDNS	00NR	3	20WP	G15_082	FROM->TO	G14-057T 345.00 - SUNNYSIDE 345KV CKT 1	717	789	0.08441	119.6207	GEN506752 1-LEBROCK GAS 1
FDNS	00NR	3	20WP	G15_082	FROM->TO	G14-057T 345.00 - SUNNYSIDE 345KV CKT 1	717	789	0.08441	119.6204	GEN506753 1-LEBROCK GAS 2
FDNS	00NR	3	16WP	G15_082	FROM->TO	G14-057T 345.00 - SUNNYSIDE 345KV CKT 1	717	789	0.08432	119.6122	GEN657748 1-YOUNG 2 GENERATOR
FDNS	00NR	3	20WP	G15_082	FROM->TO	G14-057T 345.00 - SUNNYSIDE 345KV CKT 1	717	789	0.08441	119.609	GEN336191 1-LITTLE GYPSY UNIT#3
FDNS	00NR	3	20WP	G15_082	FROM->TO	G14-057T 345.00 - SUNNYSIDE 345KV CKT 1	717	789	0.08441	119.6035	GEN337910 1-ARKANSAS NUCLEAR ONE UNIT #1
FDNS	00NR	3	20WP	G15_082	FROM->TO	G14-057T 345.00 - SUNNYSIDE 345KV CKT 1	717	789	0.08441	119.5885	GEN300015 1-1SGPDEL 18.000
FDNS	00NR	3	20WP	G15_082	FROM->TO	G14-057T 345.00 - SUNNYSIDE 345KV CKT 1	717	789	0.08493	119.5837	P12:138:AEPW:CORNVIL4:DUNCAN-4
FDNS	00NR	3	20WP	G15_082	FROM->TO	G14-057T 345.00 - SUNNYSIDE 345KV CKT 1	717	789	0.08443	119.5837	FULTON 115 - HOPE 115KV CKT 1
FDNS	00NR	3	20WP	G15_082	FROM->TO	G14-057T 345.00 - SUNNYSIDE 345KV CKT 1	717	789	0.08443	119.5837	FULTON 115 - HOPE 115KV CKT 1
FDNS	00NR	3	20WP	G15_082	FROM->TO	G14-057T 345.00 - SUNNYSIDE 345KV CKT 1	717	789	0.08441	119.5772	GEN335614 1-WILLOW GLENN UNIT#4
FDNS	00NR	3	20WP	G15_082	FROM->TO	G14-057T 345.00 - SUNNYSIDE 345KV CKT 1	717	789	0.08623	119.5748	BAILEY4 138.00 - SUNSHINE CANYON 138KV CKT 1
FDNS	00NR	3	16WP	G15_082	FROM->TO	G14-057T 345.00 - SUNNYSIDE 345KV CKT 1	717	789	0.08436	119.574	P12:138:WFEC:MSL09
FDNS	00NR	3	16WP	G15_082	FROM->TO	G14-057T 345.00 - SUNNYSIDE 345KV CKT 1	717	789	0.08432	119.5666	GEN562704 1-G15_020_3 0.3550
FDNS	00NR	3	20WP	G15_082	FROM->TO	G14-057T 345.00 - SUNNYSIDE 345KV CKT 1	717	789	0.08499	119.5575	CIMARRON - TUTTLE CONOCO TAP 138KV CKT 1
FDNS	00NR	3	20WP	G15_082	FROM->TO	G14-057T 345.00 - SUNNYSIDE 345KV CKT 1	717	789	0.08166	119.5518	G14_038T 345.00 - POTTER COUNTY INTERCHANGE 345KV CKT 1
FDNS	00NR	3	20WP	G15_082	FROM->TO	G14-057T 345.00 - SUNNYSIDE 345KV CKT 1	717	789	0.08466	119.5501	P12:69:WFEC-AEPW:COMANCH2:DUNCAN-2

SOLUTION	GROUP	SCENARIO	SEASON	SOURCE	DIRECTION	MONITORED ELEMENT	RATEA (MVA)	RATEB(MVA)	TDF	TC%LOADING (% MVA)	CONTINGENCY
FDNS	00NR	3	20WP	G15_082	FROM->TO	G14-057T 345.00 - SUNNYSIDE 345KV CKT 1	717	789	0.08445	119.546	8DANIEL8 500.00 - MCKNIGHT 500KV CKT 1
FDNS	00NR	3	20WP	G15_082	FROM->TO	G14-057T 345.00 - SUNNYSIDE 345KV CKT 1	717	789	0.08441	119.543	GEN515223 1-MUSKOGEE 4G
FDNS	00NR	3	20WP	G15_082	FROM->TO	G14-057T 345.00 - SUNNYSIDE 345KV CKT 1	717	789	0.08441	119.5426	GEN515225 1-MUSKOGEE 5G
FDNS	00NR	3	20WP	G15_082	FROM->TO	G14-057T 345.00 - SUNNYSIDE 345KV CKT 1	717	789	0.08485	119.5416	P12:138:AEPW:CORNVIL4:S.W.S.-4
FDNS	00NR	3	16WP	G15_082	FROM->TO	G14-057T 345.00 - SUNNYSIDE 345KV CKT 1	717	789	0.08432	119.541	GEN511851 1-COMANCHE #1
FDNS	00NR	3	20WP	G15_082	FROM->TO	G14-057T 345.00 - SUNNYSIDE 345KV CKT 1	717	789	0.08625	119.5342	BUCKNER7 345.00 - SPEARVILLE 345KV CKT 1
FDNS	00NR	3	20WP	G15_082	FROM->TO	G14-057T 345.00 - SUNNYSIDE 345KV CKT 1	717	789	0.08625	119.5342	BUCKNER7 345.00 - SPEARVILLE 345KV CKT 1
FDNS	00NR	3	20WP	G15_082	FROM->TO	G14-057T 345.00 - SUNNYSIDE 345KV CKT 1	717	789	0.08441	119.5321	GEN515040 1-SEMINOLE 1G
FDNS	00NR	3	20WP	G15_082	FROM->TO	G14-057T 345.00 - SUNNYSIDE 345KV CKT 1	717	789	0.08441	119.5318	WHITE BLUFF 500/26.0KV TRANSFORMER CKT 1
FDNS	00NR	3	20WP	G15_082	FROM->TO	G14-057T 345.00 - SUNNYSIDE 345KV CKT 1	717	789	0.08441	119.5298	P12:161:AEPW:EROGERS5:ECNTRTN5
FDNS	00NR	3	16WP	G15_082	FROM->TO	G14-057T 345.00 - SUNNYSIDE 345KV CKT 1	717	789	0.08488	119.5291	P12:138:AEPW-OGE:CORNVIL4:CIMARON4
FDNS	00NR	3	20WP	G15_082	FROM->TO	G14-057T 345.00 - SUNNYSIDE 345KV CKT 1	717	789	0.08441	119.5286	GEN303007 1-1BC2 U2
FDNS	00NR	3	20WP	G15_082	FROM->TO	G14-057T 345.00 - SUNNYSIDE 345KV CKT 1	717	789	0.08441	119.5234	GEN336464 1-MICHOUD UNIT #3
FDNS	00NR	3	20WP	G15_082	FROM->TO	G14-057T 345.00 - SUNNYSIDE 345KV CKT 1	717	789	0.08441	119.5231	GEN303006 1-1BC2 U1
FDNS	00NR	3	20WP	G15_082	FROM->TO	G14-057T 345.00 - SUNNYSIDE 345KV CKT 1	717	789	0.08441	119.5216	GEN300003 1-THOMAS HILL UNIT 3
FDNS	00NR	3	20WP	G15_082	FROM->TO	G14-057T 345.00 - SUNNYSIDE 345KV CKT 1	717	789	0.08466	119.5206	DUNCAN - TOSCO 69KV CKT 1
FDNS	00NR	3	20WP	G15_082	FROM->TO	G14-057T 345.00 - SUNNYSIDE 345KV CKT 1	717	789	0.08445	119.5157	6LAYFLD 230.00 - CARROLL 230KV CKT 1
FDNS	00NR	3	20WP	G15_082	FROM->TO	G14-057T 345.00 - SUNNYSIDE 345KV CKT 1	717	789	0.08441	119.5149	GEN562783 1-G15036_4 0.6900
FDNS	00NR	3	20WP	G15_082	FROM->TO	G14-057T 345.00 - SUNNYSIDE 345KV CKT 1	717	789	0.08441	119.5149	GEN562784 1-G15036_5 0.6900
FDNS	00NR	3	20WP	G15_082	FROM->TO	G14-057T 345.00 - SUNNYSIDE 345KV CKT 1	717	789	0.08504	119.5071	P12:138:AEPW:WTHWF4:CLINTJC4
FDNS	00NR	3	20WP	G15_082	FROM->TO	G14-057T 345.00 - SUNNYSIDE 345KV CKT 1	717	789	0.08467	119.5043	G15088_T 345.00 - MOORE 345KV CKT 1
FDNS	00NR	3	20WP	G15_082	FROM->TO	G14-057T 345.00 - SUNNYSIDE 345KV CKT 1	717	789	0.08441	119.5011	RODEMACHER 230/22.0KV TRANSFORMER CKT 1
FDNS	00NR	3	20WP	G15_082	FROM->TO	G14-057T 345.00 - SUNNYSIDE 345KV CKT 1	717	789	0.0852	119.4937	P12:138:AEPW:S.W.S.-4:L.E.S.-4
FDNS	00NR	3	16WP	G15_082	FROM->TO	G14-057T 345.00 - SUNNYSIDE 345KV CKT 1	717	789	0.08432	119.4856	GEN562710 1-G15_022_3 0.5500
FDNS	00NR	3	20WP	G15_082	FROM->TO	G14-057T 345.00 - SUNNYSIDE 345KV CKT 1	717	789	0.08462	119.4814	G15074_T 345.00 - HOYT 345KV CKT 1
FDNS	00NR	3	20WP	G15_082	FROM->TO	G14-057T 345.00 - SUNNYSIDE 345KV CKT 1	717	789	0.08466	119.4742	COMANCHE TAP - TOSCO 69KV CKT 1
FDNS	00NR	3	20WP	G15_082	FROM->TO	G14-057T 345.00 - SUNNYSIDE 345KV CKT 1	717	789	0.08441	119.4734	GEN337041 1-GERALD ANDRUS
FDNS	00NR	3	20WP	G15_082	FROM->TO	G14-057T 345.00 - SUNNYSIDE 345KV CKT 1	717	789	0.08441	119.4731	MC NIEL 500/115KV TRANSFORMER CKT 1
FDNS	00NR	3	20WP	G15_082	FROM->TO	G14-057T 345.00 - SUNNYSIDE 345KV CKT 1	717	789	0.08438	119.4725	HOT SPRINGS EHV - MAGNET COVE 500KV CKT 1
FDNS	00NR	3	20WP	G15_082	FROM->TO	G14-057T 345.00 - SUNNYSIDE 345KV CKT 1	717	789	0.08492	119.4693	CIMARRON - CZECH HALL 138KV CKT 1
FDNS	00NR	3	20WP	G15_082	FROM->TO	G14-057T 345.00 - SUNNYSIDE 345KV CKT 1	717	789	0.08441	119.4686	BISMARK - HOT SPRINGS WEST BUS 115KV CKT 1
FDNS	00NR	3	20WP	G15_082	FROM->TO	G14-057T 345.00 - SUNNYSIDE 345KV CKT 1	717	789	0.08451	119.4588	P12:69:AEPW-OMPA:COMANC-2:OMWALTR2
FDNS	00NR	3	20WP	G15_082	FROM->TO	G14-057T 345.00 - SUNNYSIDE 345KV CKT 1	717	789	0.08441	119.4579	GEN303008 1-1BC2 U3
FDNS	00NR	3	20WP	G15_082	FROM->TO	G14-057T 345.00 - SUNNYSIDE 345KV CKT 1	717	789	0.08441	119.4555	GEN300010 1-ST FRANCIS UNIT 1
FDNS	00NR	3	20WP	G15_082	FROM->TO	G14-057T 345.00 - SUNNYSIDE 345KV CKT 1	717	789	0.08504	119.4462	P12:138:AEPW:WTHWF4:WTH_SE4
FDNS	00NR	3	16WP	G15_082	FROM->TO	G14-057T 345.00 - SUNNYSIDE 345KV CKT 1	717	789	0.08432	119.4432	GEN620315 1-BIG STONE GEN
FDNS	00NR	3	20WP	G15_082	FROM->TO	G14-057T 345.00 - SUNNYSIDE 345KV CKT 1	717	789	0.08493	119.4424	CIMARRON - SARA 138KV CKT 1
FDNS	00NR	3	20WP	G15_082	FROM->TO	G14-057T 345.00 - SUNNYSIDE 345KV CKT 1	717	789	0.08441	119.428	GEN336170 1-GULF OXY U4
FDNS	00NR	3	20WP	G15_082	FROM->TO	G14-057T 345.00 - SUNNYSIDE 345KV CKT 1	717	789	0.08441	119.4262	GEN505432 1-SIKESTON
FDNS	00NR	3	20WP	G15_082	FROM->TO	G14-057T 345.00 - SUNNYSIDE 345KV CKT 1	717	789	0.08443	119.426	P12:138:AEPW:N.E.S.-4:CATOOSA4
FDNS	00NR	3	20WP	G15_082	FROM->TO	G14-057T 345.00 - SUNNYSIDE 345KV CKT 1	717	789	0.08547	119.4175	WEATHERFORD JCT. - WEATHERFORD SOUTHEAST 138KV CKT 1
FDNS	00NR	3	20WP	G15_082	FROM->TO	G14-057T 345.00 - SUNNYSIDE 345KV CKT 1	717	789	0.08547	119.4175	WEATHERFORD JCT. - WEATHERFORD SOUTHEAST 138KV CKT 1
FDNS	00NR	3	20WP	G15_082	FROM->TO	G14-057T 345.00 - SUNNYSIDE 345KV CKT 1	717	789	0.08441	119.4138	NELSON 230/20.0KV TRANSFORMER CKT 1
FDNS	00NR	3	20WP	G15_082	FROM->TO	G14-057T 345.00 - SUNNYSIDE 345KV CKT 1	717	789	0.08441	119.4124	ALPINE AECC - BISMARK 115KV CKT 1
FDNS	00NR	3	20WP	G15_082	FROM->TO	G14-057T 345.00 - SUNNYSIDE 345KV CKT 1	717	789	0.08547	119.4114	P12:138:AEPW:REDROCKRD4:WTH_JCT4
FDNS	00NR	3	20WP	G15_082	FROM->TO	G14-057T 345.00 - SUNNYSIDE 345KV CKT 1	717	789	0.08441	119.4095	GEN336801 1-BAXTER WILSON UNIT #1
FDNS	00NR	3	20WP	G15_082	FROM->TO	G14-057T 345.00 - SUNNYSIDE 345KV CKT 1	717	789	0.08623	119.4082	BAILEY4 138.00 - WESTMOORE 138KV CKT 1
FDNS	00NR	3	20WP	G15_082	FROM->TO	G14-057T 345.00 - SUNNYSIDE 345KV CKT 1	717	789	0.08348	119.4079	SEMINOLE - VANOSTP4 138.00 138KV CKT 1
FDNS	00NR	3	16WP	G15_082	FROM->TO	G14-057T 345.00 - SUNNYSIDE 345KV CKT 1	717	789	0.08432	119.4039	GEN532751 1-WOLF CREEK GENERATING STATION UNIT 1
FDNS	00NR	3	20WP	G15_082	FROM->TO	G14-057T 345.00 - SUNNYSIDE 345KV CKT 1	717	789	0.08492	119.3963	CZECH HALL - XEROX 138KV CKT 1
FDNS	00NR	3	20WP	G15_082	FROM->TO	G14-057T 345.00 - SUNNYSIDE 345KV CKT 1	717	789	0.08441	119.3949	GEN300011 1-ST FRANCIS UNIT 2
FDNS	00NR	3	20WP	G15_082	FROM->TO	G14-057T 345.00 - SUNNYSIDE 345KV CKT 1	717	789	0.08492	119.3923	MORGAN - XEROX 138KV CKT 1
FDNS	00NR	3	20WP	G15_082	FROM->TO	G14-057T 345.00 - SUNNYSIDE 345KV CKT 1	717	789	0.0836	119.3864	ARBWIND4 138.00 - CARTER 138KV CKT 1
FDNS	00NR	3	20WP	G15_082	FROM->TO	G14-057T 345.00 - SUNNYSIDE 345KV CKT 1	717	789	0.08466	119.3826	COMANCHE - COMANCHE TAP 69KV CKT 1
FDNS	00NR	3	20WP	G15_082	FROM->TO	G14-057T 345.00 - SUNNYSIDE 345KV CKT 1	717	789	0.08441	119.3764	8CAJUN2 500/24.0KV TRANSFORMER CKT 1
FDNS	00NR	3	16WP	G15_082	FROM->TO	G14-057T 345.00 - SUNNYSIDE 345KV CKT 1	717	789	0.08432	119.3738	GEN600004 2-PRAIRIE ISLAND G2
FDNS	00NR	3	20WP	G15_082	FROM->TO	G14-057T 345.00 - SUNNYSIDE 345KV CKT 1	717	789	0.08441	119.3727	GEN501910 1-ACADIA UNIT ST1
FDNS	00NR	3	16WP	G15_082	FROM->TO	G14-057T 345.00 - SUNNYSIDE 345KV CKT 1	717	789	0.08432	119.371	GEN600003 1-PRAIRIE ISLAND G1
FDNS	00NR	3	20WP	G15_082	FROM->TO	G14-057T 345.00 - SUNNYSIDE 345KV CKT 1	717	789	0.08492	119.3708	MORGAN - MUSTANG 138KV CKT 1
FDNS	00NR	3	20WP	G15_082	FROM->TO	G14-057T 345.00 - SUNNYSIDE 345KV CKT 1	717	789	0.08441	119.3656	ALPINE AECC - AMITY SS 115KV CKT 1
FDNS	00NR	3	16WP	G15_082	FROM->TO	G14-057T 345.00 - SUNNYSIDE 345KV CKT 1	717	789	0.08432	119.3621	GEN600006 1-AS KING
FDNS	00NR	3	20WP	G15_082	FROM->TO	G14-057T 345.00 - SUNNYSIDE 345KV CKT 1	717	789	0.08578	119.3526	LASALLE - LATTA JCT 138KV CKT 1
FDNS	00NR	3	16WP	G15_082	FROM->TO	G14-057T 345.00 - SUNNYSIDE 345KV CKT 1	717	789	0.08432	119.3427	GEN563173 1-G15082_3 0.6900
FDNS	00NR	3	20WP	G15_082	FROM->TO	G14-057T 345.00 - SUNNYSIDE 345KV CKT 1	717	789	0.0852	119.3353	GRACEMONT (BANK 1) 345/138/13.8KV TRANSFORMER CKT 1
FDNS	00NR	3	20WP	G15_082	FROM->TO	G14-057T 345.00 - SUNNYSIDE 345KV CKT 1	717	789	0.08493	119.3342	SARA - STHLAKE4 138.00 138KV CKT 1
FDNS	00NR	3	20WP	G15_082	FROM->TO	G14-057T 345.00 - SUNNYSIDE 345KV CKT 1	717	789	0.08441	119.3261	SABINE 230/24.0KV TRANSFORMER CKT 1
FDNS	00NR	3	20WP	G15_082	FROM->TO	G14-057T 345.00 - SUNNYSIDE 345KV CKT 1	717	789	0.08436	119.3243	ETTA (DUKE HOTSPRINGS) - MC NIEL 500KV CKT 1
FDNS	00NR	3	20WP	G15_082	FROM->TO	G14-057T 345.00 - SUNNYSIDE 345KV CKT 1	717	789	0.08441	119.3212	P12:138:AEPW:R.S.S.-4:S.HUD.-4
FDNS	00NR	3	20WP	G15_082	FROM->TO	G14-057T 345.00 - SUNNYSIDE 345KV CKT 1	717	789	0.08441	119.3188	GEN336222 1-LITTLE GYPSY UNIT#2
FDNS	00NR	3	20WP	G15_082	FROM->TO	G14-057T 345.00 - SUNNYSIDE 345KV CKT 1	717	789	0.08547	119.3175	HINTON - WEATHERFORD JCT. 138KV CKT 1
FDNS	00NR	3	20WP	G15_082	FROM->TO	G14-057T 345.00 - SUNNYSIDE 345KV CKT 1	717	789	0.08441	119.3096	ESSEX UNIT 2 500/18.0KV TRANSFORMER CKT 1
FDNS	00NR	3	20WP	G15_082	FROM->TO	G14-057T 345.00 - SUNNYSIDE 345KV CKT 1	717	789	0.08491	119.3089	ANADARKO - SEQUOYAHJ4 138.00 138KV CKT 1
FDNS	00NR	3	20WP	G15_082	FROM->TO	G14-057T 345.00 - SUNNYSIDE 345KV CKT 1	717	789	0.08491	119.3073	CORN TAP - SEQUOYAHJ4 138.00 138KV CKT 1
FDNS	00NR	3	20WP	G15_082	FROM->TO	G14-057T 345.00 - SUNNYSIDE 345KV CKT 1	717	789	0.08472	119.3066	WALTERS - WALTERS 69KV CKT 1
FDNS	00NR	3	20WP	G15_082	FROM->TO	G14-057T 345.00 - SUNNYSIDE 345KV CKT 1	717	789	0.08493	119.3047	MCCLAIN - STHLAKE4 138.00 138KV CKT 1
FDNS	00NR	3	20WP	G15_082	FROM->TO	G14-057T 345.00 - SUNNYSIDE 345KV CKT 1	717	789	0.08441	119.3042	GEN300016 1-1G1GPDEL 18.000
FDNS	00NR	3	20WP	G15_082	FROM->TO	G14-057T 345.00 - SUNNYSIDE 345KV CKT 1	717	789	0.08441	119.2983	P12:69:AEPW:NROGERS2:ECNTRTN2
FDNS	00NR	3	20WP	G15_082	FROM->TO	G14-057T 345.00 - SUNNYSIDE 345KV CKT 1	717	789	0.08451	119.289	LAWTON RELIFT TAP - OMPA-WALTERS 69KV CKT 1
FDNS	00NR	3	20WP	G15_082	FROM->TO	G14-057T 345.00 - SUNNYSIDE 345KV CKT 1	717	789	0.08565	119.2867	CANADIAN - NOBLE 138KV CKT 1

SOLUTION	GROUP	SCENARIO	SEASON	SOURCE	DIRECTION	MONITORED ELEMENT	RATEA (MVA)	RATEB(MVA)	TDF	TC%LOADING (% MVA)	CONTINGENCY
FDNS	00NR	3	16WP	G15_082	FROM->TO	G14-057T 345.00 - SUNNYSIDE 345KV CKT 1	717	789	0.08432	119.2849	GEN636641 1-LOUISA UNIT 1
FDNS	00NR	3	20WP	G15_082	FROM->TO	G14-057T 345.00 - SUNNYSIDE 345KV CKT 1	717	789	0.08448	119.284	LAWTON EASTSIDE (LES 4) 345/138/13.8KV TRANSFORMER CKT 1
FDNS	00NR	3	20WP	G15_082	FROM->TO	G14-057T 345.00 - SUNNYSIDE 345KV CKT 1	717	789	0.08448	119.284	LAWTON EASTSIDE (LES 4) 345/138/13.8KV TRANSFORMER CKT 1
FDNS	00NR	3	20WP	G15_082	FROM->TO	G14-057T 345.00 - SUNNYSIDE 345KV CKT 1	717	789	0.08441	119.2832	P12:138:AEPW:BA_71ST4:T.S.E.-4
FDNS	00NR	3	20WP	G15_082	FROM->TO	G14-057T 345.00 - SUNNYSIDE 345KV CKT 1	717	789	0.08441	119.2811	GEN336152 1-WATERFORD UNIT#2
FDNS	00NR	3	20WP	G15_082	FROM->TO	G14-057T 345.00 - SUNNYSIDE 345KV CKT 1	717	789	0.08441	119.2803	GEN336151 1-WATERFORD UNIT#1
FDNS	00NR	3	20WP	G15_082	FROM->TO	G14-057T 345.00 - SUNNYSIDE 345KV CKT 1	717	789	0.08441	119.2771	P12:138:AEPW:YARCH-S4:T.S.E.-4
FDNS	00NR	3	20WP	G15_082	FROM->TO	G14-057T 345.00 - SUNNYSIDE 345KV CKT 1	717	789	0.08463	119.2731	HOYT - STRANGER CREEK 345KV CKT 1
FDNS	00NR	3	20WP	G15_082	FROM->TO	G14-057T 345.00 - SUNNYSIDE 345KV CKT 1	717	789	0.08569	119.2703	P12:138:OKGE:3TERM27
FDNS	00NR	3	20WP	G15_082	FROM->TO	G14-057T 345.00 - SUNNYSIDE 345KV CKT 1	717	789	0.08488	119.2695	NORGE ROAD - SOUTHWESTERN STATION 138KV CKT 1
FDNS	00NR	3	20WP	G15_082	FROM->TO	G14-057T 345.00 - SUNNYSIDE 345KV CKT 1	717	789	0.08488	119.2695	NORGE ROAD - SOUTHWESTERN STATION 138KV CKT 1
FDNS	00NR	3	20WP	G15_082	FROM->TO	G14-057T 345.00 - SUNNYSIDE 345KV CKT 1	717	789	0.08475	119.2669	BLACKBERRY - NEOSHO 345KV CKT 1
FDNS	00NR	3	20WP	G15_082	FROM->TO	G14-057T 345.00 - SUNNYSIDE 345KV CKT 1	717	789	0.0845	119.2667	P12:138:AEPW-OGE:SHIDLER4:OSAGE 4
FDNS	00NR	3	20WP	G15_082	FROM->TO	G14-057T 345.00 - SUNNYSIDE 345KV CKT 1	717	789	0.08441	119.262	FRONTIER 345/18.0KV TRANSFORMER CKT 1
FDNS	00NR	3	20WP	G15_082	FROM->TO	G14-057T 345.00 - SUNNYSIDE 345KV CKT 1	717	789	0.08441	119.2596	FRONTIER 345/18.0KV TRANSFORMER CKT 1
FDNS	00NR	3	20WP	G15_082	FROM->TO	G14-057T 345.00 - SUNNYSIDE 345KV CKT 1	717	789	0.08547	119.2593	HINTON - REDROCKRD4 138.00 138KV CKT 1
FDNS	00NR	3	20WP	G15_082	FROM->TO	G14-057T 345.00 - SUNNYSIDE 345KV CKT 1	717	789	0.08441	119.2575	GEN515042 1-SEMINOLE 3G
FDNS	00NR	3	20WP	G15_082	FROM->TO	G14-057T 345.00 - SUNNYSIDE 345KV CKT 1	717	789	0.08504	119.257	P12:138:OKGE-AEPW:JENSEN4:REDROCKRD4
FDNS	00NR	3	20WP	G15_082	FROM->TO	G14-057T 345.00 - SUNNYSIDE 345KV CKT 1	717	789	0.08442	119.2556	MORISNT4 138.00 - STILLWATER 138KV CKT 1
FDNS	00NR	3	20WP	G15_082	FROM->TO	G14-057T 345.00 - SUNNYSIDE 345KV CKT 1	717	789	0.08437	119.2555	7JASPER 345.00 - BLACKBERRY 345KV CKT 1
FDNS	00NR	3	20WP	G15_082	FROM->TO	G14-057T 345.00 - SUNNYSIDE 345KV CKT 1	717	789	0.08623	119.2533	FRANKLIN SW - WESTMOORE 138KV CKT 1
FDNS	00NR	3	20WP	G15_082	FROM->TO	G14-057T 345.00 - SUNNYSIDE 345KV CKT 1	717	789	0.08475	119.2522	G15095_T 138.00 - ROSE_VALLEY 138.00 138KV CKT 1
FDNS	00NR	3	20WP	G15_082	FROM->TO	G14-057T 345.00 - SUNNYSIDE 345KV CKT 1	717	789	0.09091	119.2518	FINNEY SWITCHING STATION - HOLCOMB 345KV CKT 1
FDNS	00NR	3	20WP	G15_082	FROM->TO	G14-057T 345.00 - SUNNYSIDE 345KV CKT 1	717	789	0.09091	119.2518	FINNEY SWITCHING STATION - HOLCOMB 345KV CKT 1
FDNS	00NR	3	20WP	G15_082	FROM->TO	G14-057T 345.00 - SUNNYSIDE 345KV CKT 1	717	789	0.0838	119.251	AMARILLO SOUTH INTERCHANGE - G15031_T 230.00 230KV CKT 1
FDNS	00NR	3	20WP	G15_082	FROM->TO	G14-057T 345.00 - SUNNYSIDE 345KV CKT 1	717	789	0.08443	119.2501	P12:138:OKGE:3TERM2
FDNS	00NR	3	20WP	G15_082	FROM->TO	G14-057T 345.00 - SUNNYSIDE 345KV CKT 1	717	789	0.08691	119.2471	DRAPER LAKE - SEMINOLE 345KV CKT 1
FDNS	00NR	3	20WP	G15_082	FROM->TO	G14-057T 345.00 - SUNNYSIDE 345KV CKT 1	717	789	0.08691	119.2471	DRAPER LAKE - SEMINOLE 345KV CKT 2
FDNS	00NR	3	20WP	G15_082	FROM->TO	G14-057T 345.00 - SUNNYSIDE 345KV CKT 1	717	789	0.08441	119.2446	GEN300017 1-1G2GPDEL 18.000
FDNS	00NR	3	20WP	G15_082	FROM->TO	G14-057T 345.00 - SUNNYSIDE 345KV CKT 1	717	789	0.08441	119.2401	GEN334432 1-SABINE UNIT 2
FDNS	00NR	3	20WP	G15_082	FROM->TO	G14-057T 345.00 - SUNNYSIDE 345KV CKT 1	717	789	0.08441	119.2399	GEN334431 1-SABINE UNIT 1
FDNS	00NR	3	20WP	G15_082	FROM->TO	G14-057T 345.00 - SUNNYSIDE 345KV CKT 1	717	789	0.08441	119.2367	GEN501823 1-TECHE UNIT 3
FDNS	00NR	3	20WP	G15_082	FROM->TO	G14-057T 345.00 - SUNNYSIDE 345KV CKT 1	717	789	0.08441	119.2339	GEN501970 1-EVANGELINE UNIT 7
FDNS	00NR	3	20WP	G15_082	FROM->TO	G14-057T 345.00 - SUNNYSIDE 345KV CKT 1	717	789	0.08441	119.2331	CYPRESS - HARTBURG 500KV CKT 1
FDNS	00NR	3	20WP	G15_082	FROM->TO	G14-057T 345.00 - SUNNYSIDE 345KV CKT 1	717	789	0.08462	119.2318	G15074_T 345.00 - JEFFREY ENERGY CENTER 345KV CKT 1
FDNS	00NR	3	20WP	G15_082	FROM->TO	G14-057T 345.00 - SUNNYSIDE 345KV CKT 1	717	789	0.08441	119.2318	LEWIS CREEK SWITCHYARD 138/22.0KV TRANSFORMER CKT 1
FDNS	00NR	3	20WP	G15_082	FROM->TO	G14-057T 345.00 - SUNNYSIDE 345KV CKT 1	717	789	0.08441	119.2272	LEWIS CREEK SWITCHYARD 138/22.0KV TRANSFORMER CKT 1
FDNS	00NR	3	16WP	G15_082	FROM->TO	G14-057T 345.00 - SUNNYSIDE 345KV CKT 1	717	789	0.08432	119.2233	GEN562754 1-G15031_5 0.6900
FDNS	00NR	3	20WP	G15_082	FROM->TO	G14-057T 345.00 - SUNNYSIDE 345KV CKT 1	717	789	0.08488	119.2222	CLEO CORNER - CLEOPLT4 138.00 138KV CKT 1
FDNS	00NR	3	20WP	G15_082	FROM->TO	G14-057T 345.00 - SUNNYSIDE 345KV CKT 1	717	789	0.08451	119.2216	OMPA-WALTERS - WALTERS 69KV CKT 1
FDNS	00NR	3	20WP	G15_082	FROM->TO	G14-057T 345.00 - SUNNYSIDE 345KV CKT 1	717	789	0.08451	119.2216	OMPA-WALTERS - WALTERS 69KV CKT 1
FDNS	00NR	3	16WP	G15_082	FROM->TO	G14-057T 345.00 - SUNNYSIDE 345KV CKT 1	717	789	0.08432	119.221	GEN600005 1-MONTICELLO
FDNS	00NR	3	20WP	G15_082	FROM->TO	G14-057T 345.00 - SUNNYSIDE 345KV CKT 1	717	789	0.08625	119.2186	BUCKNER7 345.00 - HOLCOMB 345KV CKT 1
FDNS	00NR	3	20WP	G15_082	FROM->TO	G14-057T 345.00 - SUNNYSIDE 345KV CKT 1	717	789	0.08625	119.2186	BUCKNER7 345.00 - HOLCOMB 345KV CKT 1
FDNS	00NR	3	20WP	G15_082	FROM->TO	G14-057T 345.00 - SUNNYSIDE 345KV CKT 1	717	789	0.08441	119.2177	GEN505616 1-BROKEN BOW
FDNS	00NR	3	20WP	G15_082	FROM->TO	G14-057T 345.00 - SUNNYSIDE 345KV CKT 1	717	789	0.08578	119.2176	LASALLE - STONEWAL LH138.00 138KV CKT 1
FDNS	00NR	3	20WP	G15_082	FROM->TO	G14-057T 345.00 - SUNNYSIDE 345KV CKT 1	717	789	0.08452	119.2168	7LUTESVIL 345.00 - 7ST FRANC 345.00 345KV CKT 1
FDNS	00NR	3	20WP	G15_082	FROM->TO	G14-057T 345.00 - SUNNYSIDE 345KV CKT 1	717	789	0.08504	119.2165	WEATHERFORD TAP - WEATHERFORD WIND FARM 138KV CKT 1
FDNS	00NR	3	20WP	G15_082	FROM->TO	G14-057T 345.00 - SUNNYSIDE 345KV CKT 1	717	789	0.08472	119.2161	SWISSVALE - WEST GARDNER 345KV CKT 1
FDNS	00NR	3	20WP	G15_082	FROM->TO	G14-057T 345.00 - SUNNYSIDE 345KV CKT 1	717	789	0.08594	119.2124	G11_051T 345.00 - TATONGA7 345.00 345KV CKT 1
FDNS	00NR	3	20WP	G15_082	FROM->TO	G14-057T 345.00 - SUNNYSIDE 345KV CKT 1	717	789	0.08594	119.2124	G11_051T 345.00 - TATONGA7 345.00 345KV CKT 2
FDNS	00NR	3	20WP	G15_082	FROM->TO	G14-057T 345.00 - SUNNYSIDE 345KV CKT 1	717	789	0.08442	119.2114	COUCH SES - MC NIEL 115KV CKT 1
FDNS	00NR	3	20WP	G15_082	FROM->TO	G14-057T 345.00 - SUNNYSIDE 345KV CKT 1	717	789	0.08441	119.2106	GEN334392 1-EXXON MOBIL IPP 1
FDNS	00NR	3	16WP	G15_082	FROM->TO	G14-057T 345.00 - SUNNYSIDE 345KV CKT 1	717	789	0.08432	119.209	GEN615001 1-COAL CREEK
FDNS	00NR	3	20WP	G15_082	FROM->TO	G14-057T 345.00 - SUNNYSIDE 345KV CKT 1	717	789	0.08441	119.2074	P12:161:AEPW:CHAMSPR5:FARMING5
FDNS	00NR	3	20WP	G15_082	FROM->TO	G14-057T 345.00 - SUNNYSIDE 345KV CKT 1	717	789	0.08443	119.206	HOPE - MCNAB REC 115KV CKT 1
FDNS	00NR	3	20WP	G15_082	FROM->TO	G14-057T 345.00 - SUNNYSIDE 345KV CKT 1	717	789	0.08524	119.205	G15063_T 345.00 - WOODRING 345KV CKT 1
FDNS	00NR	3	20WP	G15_082	FROM->TO	G14-057T 345.00 - SUNNYSIDE 345KV CKT 1	717	789	0.08441	119.2029	GEN334393 1-EXXON MOBIL IPP 2
FDNS	00NR	3	20WP	G15_082	FROM->TO	G14-057T 345.00 - SUNNYSIDE 345KV CKT 1	717	789	0.08441	119.2029	GEN334394 1-EXXON MOBIL IPP 3
FDNS	00NR	3	20WP	G15_082	FROM->TO	G14-057T 345.00 - SUNNYSIDE 345KV CKT 1	717	789	0.08485	119.2027	SOUTHWESTERN STATION - VERDEN 138KV CKT 1
FDNS	00NR	3	20WP	G15_082	FROM->TO	G14-057T 345.00 - SUNNYSIDE 345KV CKT 1	717	789	0.08578	119.2026	STONEWAL LH138.00 - TUPELO TAP 138KV CKT 1
FDNS	00NR	3	20WP	G15_082	FROM->TO	G14-057T 345.00 - SUNNYSIDE 345KV CKT 1	717	789	0.08472	119.201	P12:69:WFEC-AEPW:COMANCH2:WALTRS-2
FDNS	00NR	3	20WP	G15_082	FROM->TO	G14-057T 345.00 - SUNNYSIDE 345KV CKT 1	717	789	0.08443	119.1954	P12:115:AEPW:TURK3:HOPE3
FDNS	00NR	3	20WP	G15_082	FROM->TO	G14-057T 345.00 - SUNNYSIDE 345KV CKT 1	717	789	0.08475	119.1946	NOEL_SW 138.00 - ROSE_VALLEY 138.00 138KV CKT 1
FDNS	00NR	3	20WP	G15_082	FROM->TO	G14-057T 345.00 - SUNNYSIDE 345KV CKT 1	717	789	0.08565	119.193	NOBLE - PURCELL4 138.00 138KV CKT 1
FDNS	00NR	3	20WP	G15_082	FROM->TO	G14-057T 345.00 - SUNNYSIDE 345KV CKT 1	717	789	0.08488	119.1917	CLEOPLT4 138.00 - MEN TAP 138KV CKT 1
FDNS	00NR	3	20WP	G15_082	FROM->TO	G14-057T 345.00 - SUNNYSIDE 345KV CKT 1	717	789	0.08488	119.184	IMO TAP - MEN TAP 138KV CKT 1
FDNS	00NR	3	20WP	G15_082	FROM->TO	G14-057T 345.00 - SUNNYSIDE 345KV CKT 1	717	789	0.08485	119.1839	NORTH 29TH CHICKASHA - VERDEN 138KV CKT 1
FDNS	00NR	3	16WP	G15_082	FROM->TO	G14-057T 345.00 - SUNNYSIDE 345KV CKT 1	717	789	0.08432	119.1834	GEN615002 2-COAL CREEK
FDNS	00NR	3	20WP	G15_082	FROM->TO	G14-057T 345.00 - SUNNYSIDE 345KV CKT 1	717	789	0.08441	119.1816	ST FRANCIS - ST FRANCIS 1 161KV CKT Z1
FDNS	00NR	3	20WP	G15_082	FROM->TO	G14-057T 345.00 - SUNNYSIDE 345KV CKT 1	717	789	0.08441	119.1816	ST FRANCIS 161/16.0KV TRANSFORMER CKT 1
FDNS	00NR	3	20WP	G15_082	FROM->TO	G14-057T 345.00 - SUNNYSIDE 345KV CKT 1	717	789	0.08166	119.1769	POTTER COUNTY INTERCHANGE (WAUK 90343-A) 345/230/13.2KV TRANSFORMER CKT 1
FDNS	00NR	3	20WP	G15_082	FROM->TO	G14-057T 345.00 - SUNNYSIDE 345KV CKT 1	717	789	0.08166	119.1769	POTTER COUNTY INTERCHANGE (WAUK 90343-A) 345/230/13.2KV TRANSFORMER CKT 1
FDNS	00NR	3	20WP	G15_082	FROM->TO	G14-057T 345.00 - SUNNYSIDE 345KV CKT 1	717	789	0.08463	119.1765	EMPORIA ENERGY CENTER - SWISSVALE 345KV CKT 1
FDNS	00NR	3	20WP	G15_082	FROM->TO	G14-057T 345.00 - SUNNYSIDE 345KV CKT 1	717	789	0.08475	119.1757	EMPORIA ENERGY CENTER - G14_001T 345.00 345KV CKT 1
FDNS	00NR	3	20WP	G15_082	FROM->TO	G14-057T 345.00 - SUNNYSIDE 345KV CKT 1	717	789	0.08441	119.1724	GEN501972 1-EVANGELINE UNIT 7-2
FDNS	00NR	3	20WP	G15_082	FROM->TO	G14-057T 345.00 - SUNNYSIDE 345KV CKT 1	717	789	0.08441	119.1723	GEN501971 1-EVANGELINE UNIT 7-1
FDNS	00NR	3	20WP	G15_082	FROM->TO	G14-057T 345.00 - SUNNYSIDE 345KV CKT 1	717	789	0.08294	119.1713	ARBUCKLE - VANOSTP4 138.00 138KV CKT 1
FDNS	00NR	3	20WP	G15_082	FROM->TO	G14-057T 345.00 - SUNNYSIDE 345KV CKT 1	717	789	0.08443	119.1693	MCNAB REC - Turk 115 115KV CKT 1

SOLUTION	GROUP	SCENARIO	SEASON	SOURCE	DIRECTION	MONITORED ELEMENT	RATEA (MVA)	RATEB(MVA)	TDF	TC%LOADING (% MVA)	CONTINGENCY
FDNS	00NR	3	20WP	G15_082	FROM->TO	G14-057T 345.00 - SUNNYSIDE 345KV CKT 1	717	789	0.08443	119.1692	TURK (TURK 1) 138/115/13.2KV TRANSFORMER CKT 1
FDNS	00NR	3	20WP	G15_082	FROM->TO	G14-057T 345.00 - SUNNYSIDE 345KV CKT 1	717	789	0.08443	119.1692	TURK (TURK 1) 138/115/13.2KV TRANSFORMER CKT 1
FDNS	00NR	3	20WP	G15_082	FROM->TO	G14-057T 345.00 - SUNNYSIDE 345KV CKT 1	717	789	0.08441	119.1692	SABINE 230/22.0KV TRANSFORMER CKT 1
FDNS	00NR	3	20WP	G15_082	FROM->TO	G14-057T 345.00 - SUNNYSIDE 345KV CKT 1	717	789	0.08423	119.1611	ENOWILT - LONE OAK 138KV CKT 1
FDNS	00NR	3	20WP	G15_082	FROM->TO	G14-057T 345.00 - SUNNYSIDE 345KV CKT 1	717	789	0.08584	119.161	CIMARRON - NORTHWEST 345KV CKT 1
FDNS	00NR	3	16WP	G15_082	FROM->TO	G14-057T 345.00 - SUNNYSIDE 345KV CKT 1	717	789	0.08432	119.1606	GEN562756 1-G15031_7 0.6900
FDNS	00NR	3	20WP	G15_082	FROM->TO	G14-057T 345.00 - SUNNYSIDE 345KV CKT 1	717	789	0.08447	119.1585	P12:138:OKGE:3TERM12
FDNS	00NR	3	20WP	G15_082	FROM->TO	G14-057T 345.00 - SUNNYSIDE 345KV CKT 1	717	789	0.08572	119.1538	BENTON - WICHITA 345KV CKT 1
FDNS	00NR	3	20WP	G15_082	FROM->TO	G14-057T 345.00 - SUNNYSIDE 345KV CKT 1	717	789	0.08423	119.1522	ENOWILT - SARDIS 138KV CKT 1
FDNS	00NR	3	20WP	G15_082	FROM->TO	G14-057T 345.00 - SUNNYSIDE 345KV CKT 1	717	789	0.08488	119.1516	CORNVILLE - NORGE ROAD 138KV CKT 1
FDNS	00NR	3	20WP	G15_082	FROM->TO	G14-057T 345.00 - SUNNYSIDE 345KV CKT 1	717	789	0.08488	119.1516	CORNVILLE - NORGE ROAD 138KV CKT 1
FDNS	00NR	3	20WP	G15_082	FROM->TO	G14-057T 345.00 - SUNNYSIDE 345KV CKT 1	717	789	0.08442	119.1511	P12:138:AEPW:R.S.S-4:T.P.S.-4
FDNS	00NR	3	20WP	G15_082	FROM->TO	G14-057T 345.00 - SUNNYSIDE 345KV CKT 1	717	789	0.08441	119.1499	GEN509394 1-FLINT CREEK
FDNS	00NR	3	20WP	G15_082	FROM->TO	G14-057T 345.00 - SUNNYSIDE 345KV CKT 1	717	789	0.08441	119.1486	GEN501912 1-ACADIA UNIT CT1B
FDNS	00NR	3	20WP	G15_082	FROM->TO	G14-057T 345.00 - SUNNYSIDE 345KV CKT 1	717	789	0.08441	119.1478	GEN501911 1-ACADIA UNIT CT1A
FDNS	00NR	3	20WP	G15_082	FROM->TO	G14-057T 345.00 - SUNNYSIDE 345KV CKT 1	717	789	0.0845	119.1451	LAKEOVER - MCADAMS 500KV CKT 1
FDNS	00NR	3	20WP	G15_082	FROM->TO	G14-057T 345.00 - SUNNYSIDE 345KV CKT 1	717	789	0.08504	119.1448	WEATHERFORD SOUTHEAST - WEATHERFORD TAP 138KV CKT 1
FDNS	00NR	3	20WP	G15_082	FROM->TO	G14-057T 345.00 - SUNNYSIDE 345KV CKT 1	717	789	0.08612	119.1439	MARIETTA - MARIETTA4 138.00 138KV CKT 1
FDNS	00NR	3	20WP	G15_082	FROM->TO	G14-057T 345.00 - SUNNYSIDE 345KV CKT 1	717	789	0.08542	119.143	G13-010T 345.00 - POST ROCK 345KV CKT 1
FDNS	00NR	3	16WP	G15_082	FROM->TO	G14-057T 345.00 - SUNNYSIDE 345KV CKT 1	717	789	0.08432	119.1419	GEN635213 3-NEAL UNIT 3
FDNS	00NR	3	20WP	G15_082	FROM->TO	G14-057T 345.00 - SUNNYSIDE 345KV CKT 1	717	789	0.08451	119.1412	FLETCHER - MARLOW JCT 69KV CKT 1
FDNS	00NR	3	20WP	G15_082	FROM->TO	G14-057T 345.00 - SUNNYSIDE 345KV CKT 1	717	789	0.08441	119.1403	GEN506749 1-EASTMAN GENERATION A
FDNS	00NR	3	20WP	G15_082	FROM->TO	G14-057T 345.00 - SUNNYSIDE 345KV CKT 1	717	789	0.08455	119.139	8WNEWMADRID 500.00 - DELL 500 500KV CKT 1
FDNS	00NR	3	20WP	G15_082	FROM->TO	G14-057T 345.00 - SUNNYSIDE 345KV CKT 1	717	789	0.08441	119.1351	GEN515041 1-SEMINOLE 2G
FDNS	00NR	3	20WP	G15_082	FROM->TO	G14-057T 345.00 - SUNNYSIDE 345KV CKT 1	717	789	0.08441	119.1269	NELSON 230/24.0KV TRANSFORMER CKT 1
FDNS	00NR	3	20WP	G15_082	FROM->TO	G14-057T 345.00 - SUNNYSIDE 345KV CKT 1	717	789	0.08441	119.1263	P12:138:AEPW:R.S.S.-4:R:96YALE-4
FDNS	00NR	3	20WP	G15_082	FROM->TO	G14-057T 345.00 - SUNNYSIDE 345KV CKT 1	717	789	0.08456	119.1251	FRANKLIN - FRANKLIN SW 138KV CKT 1
FDNS	00NR	3	20WP	G15_082	FROM->TO	G14-057T 345.00 - SUNNYSIDE 345KV CKT 1	717	789	0.08441	119.1237	GEN336242 1-1NMIL ST1 18.000
FDNS	00NR	3	20WP	G15_082	FROM->TO	G14-057T 345.00 - SUNNYSIDE 345KV CKT 1	717	789	0.08423	119.1171	CLAYTON - SARDIS 138KV CKT 1
FDNS	00NR	3	16WP	G15_082	FROM->TO	G14-057T 345.00 - SUNNYSIDE 345KV CKT 1	717	789	0.08432	119.1163	GEN511848 1-SOUTHWESTERN STATION #3
FDNS	00NR	3	20WP	G15_082	FROM->TO	G14-057T 345.00 - SUNNYSIDE 345KV CKT 1	717	789	0.08441	119.1161	ST FRANCIS 2 161/16.0KV TRANSFORMER CKT 2
FDNS	00NR	3	20WP	G15_082	FROM->TO	G14-057T 345.00 - SUNNYSIDE 345KV CKT 1	717	789	0.08441	119.1156	ST FRANCIS 345/161KV TRANSFORMER CKT 1
FDNS	00NR	3	16WP	G15_082	FROM->TO	G14-057T 345.00 - SUNNYSIDE 345KV CKT 1	717	789	0.08432	119.115	GEN629074 1-ARNOLD LOWSIDE OF GSU XFMR
FDNS	00NR	3	20WP	G15_082	FROM->TO	G14-057T 345.00 - SUNNYSIDE 345KV CKT 1	717	789	0.08485	119.1142	CORNVILLE - NORTH 29TH CHICKASHA 138KV CKT 1
FDNS	00NR	3	20WP	G15_082	FROM->TO	G14-057T 345.00 - SUNNYSIDE 345KV CKT 1	717	789	0.08485	119.1118	LACYGNE - NEOSHO 345KV CKT 1
FDNS	00NR	3	20WP	G15_082	FROM->TO	G14-057T 345.00 - SUNNYSIDE 345KV CKT 1	717	789	0.08441	119.1095	P12:138:AEPW:MOHAWK4:T.NO--4
FDNS	00NR	3	20WP	G15_082	FROM->TO	G14-057T 345.00 - SUNNYSIDE 345KV CKT 1	717	789	0.08454	119.1084	GRAND ISLAND - MCCOOL 345KV CKT 1
FDNS	00NR	3	20WP	G15_082	FROM->TO	G14-057T 345.00 - SUNNYSIDE 345KV CKT 1	717	789	0.08504	119.1079	CLINTON JUNCTION - CLINTON NATURAL GAS TAP 138KV CKT 1
FDNS	00NR	3	20WP	G15_082	FROM->TO	G14-057T 345.00 - SUNNYSIDE 345KV CKT 1	717	789	0.08441	119.1078	GEN338146 1-INDEPENDENCE UNIT #2
FDNS	00NR	3	20WP	G15_082	FROM->TO	G14-057T 345.00 - SUNNYSIDE 345KV CKT 1	717	789	0.08441	119.105	ESSEX UNIT 2 500/18.0KV TRANSFORMER CKT 1
FDNS	00NR	3	20WP	G15_082	FROM->TO	G14-057T 345.00 - SUNNYSIDE 345KV CKT 1	717	789	0.08475	119.104	G14_001T 345.00 - WICHITA 345KV CKT 1
FDNS	00NR	3	20WP	G15_082	FROM->TO	G14-057T 345.00 - SUNNYSIDE 345KV CKT 1	717	789	0.08493	119.1024	DUNCAN - DUNCHERTP4 138.00 138KV CKT 1
FDNS	00NR	3	20WP	G15_082	FROM->TO	G14-057T 345.00 - SUNNYSIDE 345KV CKT 1	717	789	0.08493	119.1024	DUNCAN - DUNCHERTP4 138.00 138KV CKT 1
FDNS	00NR	3	20WP	G15_082	FROM->TO	G14-057T 345.00 - SUNNYSIDE 345KV CKT 1	717	789	0.08493	119.102	DUNCAN EASTSIDE - DUNCHERTP4 138.00 138KV CKT 1
FDNS	00NR	3	16WP	G15_082	FROM->TO	G14-057T 345.00 - SUNNYSIDE 345KV CKT 1	717	789	0.08432	119.1011	BIG STONE 230/24.0KV TRANSFORMER CKT 1
FDNS	00NR	3	20WP	G15_082	FROM->TO	G14-057T 345.00 - SUNNYSIDE 345KV CKT 1	717	789	0.08443	119.0985	7JASPER 345.00 - MORGAN 345KV CKT 1
FDNS	00NR	3	20WP	G15_082	FROM->TO	G14-057T 345.00 - SUNNYSIDE 345KV CKT 1	717	789	0.08441	119.0975	AMITY SS - MURFREESBORO EAST (AECC) 115KV CKT 1
FDNS	00NR	3	16WP	G15_082	FROM->TO	G14-057T 345.00 - SUNNYSIDE 345KV CKT 1	717	789	0.08432	119.0964	GEN562556 1-G14_046_3 0.3420
FDNS	00NR	3	20WP	G15_082	FROM->TO	G14-057T 345.00 - SUNNYSIDE 345KV CKT 1	717	789	0.08542	119.0948	G13-010T 345.00 - SPEARVILLE 345KV CKT 1
FDNS	00NR	3	20WP	G15_082	FROM->TO	G14-057T 345.00 - SUNNYSIDE 345KV CKT 1	717	789	0.08458	119.0938	MCADAMS - WOLF CREEK 500KV CKT 1
FDNS	00NR	3	20WP	G15_082	FROM->TO	G14-057T 345.00 - SUNNYSIDE 345KV CKT 1	717	789	0.08441	119.093	SABINE 138/22.0KV TRANSFORMER CKT 1
FDNS	00NR	3	20WP	G15_082	FROM->TO	G14-057T 345.00 - SUNNYSIDE 345KV CKT 1	717	789	0.08423	119.0873	P12:138:AEPW-SWPA:LONEOAK4:BRKNBW4
FDNS	00NR	3	20WP	G15_082	FROM->TO	G14-057T 345.00 - SUNNYSIDE 345KV CKT 1	717	789	0.08441	119.0834	LAYFLD8 500.00 (LAYFLD AUTO) 500/230/13.8KV TRANSFORMER CKT 1
FDNS	00NR	3	20WP	G15_082	FROM->TO	G14-057T 345.00 - SUNNYSIDE 345KV CKT 1	717	789	0.08441	119.0834	LAYFLD8 500.00 (LAYFLD AUTO) 500/230/13.8KV TRANSFORMER CKT 1
FDNS	00NR	3	20WP	G15_082	FROM->TO	G14-057T 345.00 - SUNNYSIDE 345KV CKT 1	717	789	0.08423	119.0781	CLAYTON - NASHOBA 138KV CKT 1
FDNS	00NR	3	20WP	G15_082	FROM->TO	G14-057T 345.00 - SUNNYSIDE 345KV CKT 1	717	789	0.08464	119.0746	SEMINOLE (SEMINOL2) 345/138/14.4KV TRANSFORMER CKT 1
FDNS	00NR	3	20WP	G15_082	FROM->TO	G14-057T 345.00 - SUNNYSIDE 345KV CKT 1	717	789	0.08508	119.0717	CRINER - PAYNE 138.00 138KV CKT 1
FDNS	00NR	3	20WP	G15_082	FROM->TO	G14-057T 345.00 - SUNNYSIDE 345KV CKT 1	717	789	0.08441	119.0677	GEN337766 1-TRACTEBEL UNIT S1
FDNS	00NR	3	16WP	G15_082	FROM->TO	G14-057T 345.00 - SUNNYSIDE 345KV CKT 1	717	789	0.08432	119.0582	GEN523971 1-HARRINGTON GEN #1 24 KV
FDNS	00NR	3	16WP	G15_082	FROM->TO	G14-057T 345.00 - SUNNYSIDE 345KV CKT 1	717	789	0.08432	119.0581	GEN523972 1-HARRINGTON GEN #2 24 KV
FDNS	00NR	3	16WP	G15_082	FROM->TO	G14-057T 345.00 - SUNNYSIDE 345KV CKT 1	717	789	0.08432	119.0581	GEN523973 1-HARRINGTON GEN #3 24 KV
FDNS	00NR	3	20WP	G15_082	FROM->TO	G14-057T 345.00 - SUNNYSIDE 345KV CKT 1	717	789	0.08452	119.0311	P12:138:OKGE:3TERM20
FDNS	00NR	3	20WP	G15_082	FROM->TO	G14-057T 345.00 - SUNNYSIDE 345KV CKT 1	717	789	0.08472	119.025	COMANCHE - WALTERS 69KV CKT 1
FDNS	00NR	3	16WP	G15_082	FROM->TO	G14-057T 345.00 - SUNNYSIDE 345KV CKT 1	717	789	0.08432	119.0004	GEN563142 1-G15079_3 0.5500
FDNS	00NR	3	16WP	G15_082	FROM->TO	G14-057T 345.00 - SUNNYSIDE 345KV CKT 1	717	789	0.08432	119.0004	GEN563151 1-G15080_2 0.5500
FDNS	00NR	3	16WP	G15_082	FROM->TO	G14-057T 345.00 - SUNNYSIDE 345KV CKT 1	717	789	0.08432	118.8853	GEN600000 1-SHERBURNECNTY G1
FDNS	00NR	3	16WP	G15_082	FROM->TO	G14-057T 345.00 - SUNNYSIDE 345KV CKT 1	717	789	0.08432	118.885	GEN562023 1-G11_020_3 0.6900
FDNS	00NR	3	16WP	G15_082	FROM->TO	G14-057T 345.00 - SUNNYSIDE 345KV CKT 1	717	789	0.08432	118.885	GEN562026 1-G11_019_3 0.6900
FDNS	00NR	3	16WP	G15_082	FROM->TO	G14-057T 345.00 - SUNNYSIDE 345KV CKT 1	717	789	0.08436	118.8191	NORTHWEST TEXARKANA - VALLIANT 345KV CKT 1
FDNS	00NR	3	16WP	G15_082	FROM->TO	G14-057T 345.00 - SUNNYSIDE 345KV CKT 1	717	789	0.08436	118.8191	NORTHWEST TEXARKANA - VALLIANT 345KV CKT 1
FDNS	00NR	3	16WP	G15_082	FROM->TO	G14-057T 345.00 - SUNNYSIDE 345KV CKT 1	717	789	0.08432	118.7968	GEN600001 2-SHERBURNE CNTY G2
FDNS	00NR	3	16WP	G15_082	FROM->TO	G14-057T 345.00 - SUNNYSIDE 345KV CKT 1	717	789	0.08432	118.7565	GEN527901 1-HOBBS PLANT #1 (CT)
FDNS	00NR	3	16WP	G15_082	FROM->TO	G14-057T 345.00 - SUNNYSIDE 345KV CKT 1	717	789	0.08432	118.7565	GEN527902 1-HOBBS PLANT #2 (CT)
FDNS	00NR	3	16WP	G15_082	FROM->TO	G14-057T 345.00 - SUNNYSIDE 345KV CKT 1	717	789	0.08432	118.7493	GEN563042 1-G15068_3 0.6900
FDNS	00NR	3	16WP	G15_082	FROM->TO	G14-057T 345.00 - SUNNYSIDE 345KV CKT 1	717	789	0.08432	118.7175	GEN563202 1-G15085_3 0.5500
FDNS	00NR	3	16WP	G15_082	FROM->TO	G14-057T 345.00 - SUNNYSIDE 345KV CKT 1	717	789	0.08432	118.6764	GEN629075 1-OTTUMWA GENERATOR FOR OTTUMWA UNIT NO 1
FDNS	00NR	3	20WP	G15_082	FROM->TO	G14-057T 345.00 - SUNNYSIDE 345KV CKT 1	717	789	0.08441	118.6043	803-OKLAUNION
FDNS	00NR	3	16WP	G15_082	FROM->TO	G14-057T 345.00 - SUNNYSIDE 345KV CKT 1	717	789	0.08432	118.5426	SHERBURNE CO 345/24.0KV TRANSFORMER CKT 1
FDNS	00NR	3	16WP	G15_082	FROM->TO	G14-057T 345.00 - SUNNYSIDE 345KV CKT 1	717	789	0.08432	118.5049	GEN635214 4-NEAL UNIT 4

SOLUTION	GROUP	SCENARIO	SEASON	SOURCE	DIRECTION	MONITORED ELEMENT	RATEA (MVA)	RATEB(MVA)	TDF	TC%LOADING (% MVA)	CONTINGENCY
FDNS	00NR	3	20WP	G15_082	FROM->TO	G14-057T 345.00 - SUNNYSIDE 345KV CKT 1	717	789	0.08442	118.4844	P12:230:AEPW:ELKCITY6:SWEETWT6
FDNS	00NR	3	16WP	G15_082	FROM->TO	G14-057T 345.00 - SUNNYSIDE 345KV CKT 1	717	789	0.08432	118.4159	GEN563043 1-G15068_4 0.6900
FDNS	00NR	3	16WP	G15_082	FROM->TO	G14-057T 345.00 - SUNNYSIDE 345KV CKT 1	717	789	0.08432	118.4006	GEN526333 1-JONES GEN #3 21 KV
FDNS	00NR	3	16WP	G15_082	FROM->TO	G14-057T 345.00 - SUNNYSIDE 345KV CKT 1	717	789	0.08432	118.4006	GEN526334 1-JONES_4 116.500
FDNS	00NR	3	20WP	G15_082	FROM->TO	G14-057T 345.00 - SUNNYSIDE 345KV CKT 1	717	789	0.08426	118.3694	ELK CITY 230KV (ELKCTY-6) 230/138/13.8KV TRANSFORMER CKT 1
FDNS	00NR	3	20WP	G15_082	FROM->TO	G14-057T 345.00 - SUNNYSIDE 345KV CKT 1	717	789	0.08426	118.3694	ELK CITY 230KV (ELKCTY-6) 230/138/13.8KV TRANSFORMER CKT 1
FDNS	00NR	3	20WP	G15_082	FROM->TO	G14-057T 345.00 - SUNNYSIDE 345KV CKT 1	717	789	0.08426	118.3689	CHISHOLM6 230.00 - ELK CITY 230KV 230KV CKT 1
FDNS	00NR	3	16WP	G15_082	FROM->TO	G14-057T 345.00 - SUNNYSIDE 345KV CKT 1	717	789	0.08432	118.3611	GEN562685 1-G15_013_3 0.3550
FDNS	00NR	3	16WP	G15_082	FROM->TO	G14-057T 345.00 - SUNNYSIDE 345KV CKT 1	717	789	0.08432	118.3455	GEN344225 1-1CAL G1 25.000
FDNS	00NR	3	16WP	G15_082	FROM->TO	G14-057T 345.00 - SUNNYSIDE 345KV CKT 1	717	789	0.08432	118.336	GEN525844 1-ELK_1 118.000
FDNS	00NR	3	16WP	G15_082	FROM->TO	G14-057T 345.00 - SUNNYSIDE 345KV CKT 1	717	789	0.08432	118.334	GEN600002 3-SHERBURNE CNTY G3
FDNS	00NR	3	16WP	G15_082	FROM->TO	G14-057T 345.00 - SUNNYSIDE 345KV CKT 1	717	789	0.08432	118.3321	GEN525845 1-ELK_2 1 138.00
FDNS	00NR	3	16WP	G15_082	FROM->TO	G14-057T 345.00 - SUNNYSIDE 345KV CKT 1	717	789	0.08374	118.3214	JOHNSON COUNTY (JOHNCO) 345/138/13.8KV TRANSFORMER CKT 1
FDNS	00NR	3	20WP	G15_082	FROM->TO	G14-057T 345.00 - SUNNYSIDE 345KV CKT 1	717	789	0.08299	118.3078	P12:138:OKGE:3TERM39
FDNS	00NR	3	16WP	G15_082	FROM->TO	G14-057T 345.00 - SUNNYSIDE 345KV CKT 1	717	789	0.08432	118.3046	GEN562590 1-G14_057_3 0.6900
FDNS	00NR	3	20WP	G15_082	FROM->TO	G14-057T 345.00 - SUNNYSIDE 345KV CKT 1	717	789	0.08334	118.2172	MAYSVILLE - PAOLI 138KV CKT 1
FDNS	00NR	3	20WP	G15_082	FROM->TO	G14-057T 345.00 - SUNNYSIDE 345KV CKT 1	717	789	0.08481	118.2099	DRAPER LAKE - MIDWEST TAP 138KV CKT 1
FDNS	00NR	3	16WP	G15_082	FROM->TO	G14-057T 345.00 - SUNNYSIDE 345KV CKT 1	717	789	0.08432	118.2093	GEN525562 1-TOLK GEN #2 24 KV
FDNS	00NR	3	20WP	G15_082	FROM->TO	G14-057T 345.00 - SUNNYSIDE 345KV CKT 1	717	789	0.08484	118.2041	P12:138:OKGE:3TERM21
FDNS	00NR	3	20WP	G15_082	FROM->TO	G14-057T 345.00 - SUNNYSIDE 345KV CKT 1	717	789	0.08441	118.193	GEN520812 1-ANADRK5
FDNS	00NR	3	20WP	G15_082	FROM->TO	G14-057T 345.00 - SUNNYSIDE 345KV CKT 1	717	789	0.08441	118.1929	GEN520813 1-ANADRK6
FDNS	00NR	3	16WP	G15_082	FROM->TO	G14-057T 345.00 - SUNNYSIDE 345KV CKT 1	717	789	0.08432	118.1887	GEN563273 2-G15093_4 0.6900
FDNS	00NR	3	20WP	G15_082	FROM->TO	G14-057T 345.00 - SUNNYSIDE 345KV CKT 1	717	789	0.08524	118.1842	G15063_T 345.00 - MATHWSN7 345.00 345KV CKT 1
FDNS	00NR	3	16WP	G15_082	FROM->TO	G14-057T 345.00 - SUNNYSIDE 345KV CKT 1	717	789	0.08432	118.1642	GEN527166 1-MUSTANG_6 118.000
FDNS	00NR	3	20WP	G15_082	FROM->TO	G14-057T 345.00 - SUNNYSIDE 345KV CKT 1	717	789	0.08437	118.1641	HUGO POWER PLANT - VALLENT 138KV CKT 1
FDNS	00NR	3	20WP	G15_082	FROM->TO	G14-057T 345.00 - SUNNYSIDE 345KV CKT 1	717	789	0.08441	118.1513	GEN562772 1-G15034_3 0.6900
FDNS	00NR	3	20WP	G15_082	FROM->TO	G14-057T 345.00 - SUNNYSIDE 345KV CKT 1	717	789	0.08443	118.1436	NORTHWEST TEXARKANA - WELSH 345KV CKT 1
FDNS	00NR	3	20WP	G15_082	FROM->TO	G14-057T 345.00 - SUNNYSIDE 345KV CKT 1	717	789	0.08443	118.1436	NORTHWEST TEXARKANA - WELSH 345KV CKT 1
FDNS	00NR	3	20WP	G15_082	FROM->TO	G14-057T 345.00 - SUNNYSIDE 345KV CKT 1	717	789	0.08334	118.1411	MAYSVILLE - MAYSVLT4 138.00 138KV CKT 1
FDNS	00NR	3	20WP	G15_082	FROM->TO	G14-057T 345.00 - SUNNYSIDE 345KV CKT 1	717	789	0.08441	118.1409	GEN562691 1-G15_015_3 0.6900
FDNS	00NR	3	20WP	G15_082	FROM->TO	G14-057T 345.00 - SUNNYSIDE 345KV CKT 1	717	789	0.0844	118.1361	P12:069:OKGE:3TERM42
FDNS	00NR	3	20WP	G15_082	FROM->TO	G14-057T 345.00 - SUNNYSIDE 345KV CKT 1	717	789	0.08462	118.129	KEO EHV - WEST MEMPHIS 500 500KV CKT 1
FDNS	00NR	3	20WP	G15_082	FROM->TO	G14-057T 345.00 - SUNNYSIDE 345KV CKT 1	717	789	0.08441	118.1214	P12:138:WFEC:MSL11
FDNS	00NR	3	20WP	G15_082	FROM->TO	G14-057T 345.00 - SUNNYSIDE 345KV CKT 1	717	789	0.08441	118.1214	P12:138:WFEC-AEPW:PHAROAH4:LONEOAK4
FDNS	00NR	3	20WP	G15_082	FROM->TO	G14-057T 345.00 - SUNNYSIDE 345KV CKT 1	717	789	0.08447	118.1163	DOLET HILLS 345/230KV TRANSFORMER CKT 1
FDNS	00NR	3	20WP	G15_082	FROM->TO	G14-057T 345.00 - SUNNYSIDE 345KV CKT 1	717	789	0.08441	118.1151	GEN515443 1-MNCOWND1 0.7000
FDNS	00NR	3	20WP	G15_082	FROM->TO	G14-057T 345.00 - SUNNYSIDE 345KV CKT 1	717	789	0.08441	118.1137	GEN600017 C-LS POWER CT
FDNS	00NR	3	20WP	G15_082	FROM->TO	G14-057T 345.00 - SUNNYSIDE 345KV CKT 1	717	789	0.08443	118.1093	WELSH - WILKES 345KV CKT 1
FDNS	00NR	3	20WP	G15_082	FROM->TO	G14-057T 345.00 - SUNNYSIDE 345KV CKT 1	717	789	0.08443	118.1093	WELSH - WILKES 345KV CKT 1
FDNS	00NR	3	16WP	G15_082	FROM->TO	G14-057T 345.00 - SUNNYSIDE 345KV CKT 1	717	789	0.08432	118.1066	GEN525561 1-TOLK GEN #1 24 KV
FDNS	00NR	3	20WP	G15_082	FROM->TO	G14-057T 345.00 - SUNNYSIDE 345KV CKT 1	717	789	0.08448	118.1063	GLASSES - MADILL INDUSTRIAL TAP 138KV CKT 1
FDNS	00NR	3	20WP	G15_082	FROM->TO	G14-057T 345.00 - SUNNYSIDE 345KV CKT 1	717	789	0.08441	118.1002	GEN524022 1-NICHOLS GEN #2
FDNS	00NR	3	20WP	G15_082	FROM->TO	G14-057T 345.00 - SUNNYSIDE 345KV CKT 1	717	789	0.08441	118.098	GEN672392 1-NBECGT1G 18.000
FDNS	00NR	3	20WP	G15_082	FROM->TO	G14-057T 345.00 - SUNNYSIDE 345KV CKT 1	717	789	0.08441	118.0949	GEN563062 1-G15071_3 0.6900
FDNS	00NR	3	20WP	G15_082	FROM->TO	G14-057T 345.00 - SUNNYSIDE 345KV CKT 1	717	789	0.08456	118.0906	P12:138:WFEC:MSL08
FDNS	00NR	3	20WP	G15_082	FROM->TO	G14-057T 345.00 - SUNNYSIDE 345KV CKT 1	717	789	0.08449	118.0889	CANEY CREEK - JOHNSON COUNTY 138KV CKT 1
FDNS	00NR	3	20WP	G15_082	FROM->TO	G14-057T 345.00 - SUNNYSIDE 345KV CKT 1	717	789	0.08441	118.0884	GEN600046 1-MECST
FDNS	00NR	3	20WP	G15_082	FROM->TO	G14-057T 345.00 - SUNNYSIDE 345KV CKT 1	717	789	0.08441	118.0866	GEN629071 1-BURLINGTON GENERATOR FOR UNIT NO 1 E
FDNS	00NR	3	20WP	G15_082	FROM->TO	G14-057T 345.00 - SUNNYSIDE 345KV CKT 1	717	789	0.08441	118.0801	GEN629070 2-BEAVER CHANNEL GENERATORFOR UNIT NO 2
FDNS	00NR	3	16WP	G15_082	FROM->TO	G14-057T 345.00 - SUNNYSIDE 345KV CKT 1	717	789	0.08432	118.0769	GEN635023 3-WALTER SCOTT UNIT 3
FDNS	00NR	3	20WP	G15_082	FROM->TO	G14-057T 345.00 - SUNNYSIDE 345KV CKT 1	717	789	0.08334	118.0742	MAYSVLT4 138.00 - PRAIRIE POINT 138KV CKT 1
FDNS	00NR	3	20WP	G15_082	FROM->TO	G14-057T 345.00 - SUNNYSIDE 345KV CKT 1	717	789	0.08441	118.0735	GEN600047 1-MECCT1
FDNS	00NR	3	20WP	G15_082	FROM->TO	G14-057T 345.00 - SUNNYSIDE 345KV CKT 1	717	789	0.0836	118.0733	ARBUCKLE - SULPHR 4 138.00 138KV CKT 1
FDNS	00NR	3	20WP	G15_082	FROM->TO	G14-057T 345.00 - SUNNYSIDE 345KV CKT 1	717	789	0.08441	118.0675	GEN530690 1-PRWINDG1 0.6900
FDNS	00NR	3	20WP	G15_082	FROM->TO	G14-057T 345.00 - SUNNYSIDE 345KV CKT 1	717	789	0.08417	118.0627	ALTUS JUNCTION - RUSSELL 138KV CKT 1
FDNS	00NR	3	20WP	G15_082	FROM->TO	G14-057T 345.00 - SUNNYSIDE 345KV CKT 1	717	789	0.08417	118.0627	ALTUS JUNCTION - RUSSELL 138KV CKT 1
FDNS	00NR	3	20WP	G15_082	FROM->TO	G14-057T 345.00 - SUNNYSIDE 345KV CKT 1	717	789	0.08441	118.0624	GEN562432 1-G13-030 0.6900
FDNS	00NR	3	16WP	G15_082	FROM->TO	G14-057T 345.00 - SUNNYSIDE 345KV CKT 1	717	789	0.08432	118.0594	GEN562762 1-G15033_3 0.6900
FDNS	00NR	3	20WP	G15_082	FROM->TO	G14-057T 345.00 - SUNNYSIDE 345KV CKT 1	717	789	0.08441	118.0586	GEN562017 1-G11_022_3 0.6900
FDNS	00NR	3	20WP	G15_082	FROM->TO	G14-057T 345.00 - SUNNYSIDE 345KV CKT 1	717	789	0.08441	118.0542	BURLINGTON NO1 + NO 2 + NO 3 161/20.0KV TRANSFORMER CKT 1
FDNS	00NR	3	16WP	G15_082	FROM->TO	G14-057T 345.00 - SUNNYSIDE 345KV CKT 1	717	789	0.08432	118.0514	GEN562655 1-G14_074_3 0.6900
FDNS	00NR	3	20WP	G15_082	FROM->TO	G14-057T 345.00 - SUNNYSIDE 345KV CKT 1	717	789	0.08448	118.0479	GLASSES - RUSSETT 138KV CKT 1
FDNS	00NR	3	20WP	G15_082	FROM->TO	G14-057T 345.00 - SUNNYSIDE 345KV CKT 1	717	789	0.08441	118.0458	GEN528361 1-MADDOX GEN #1
FDNS	00NR	3	20WP	G15_082	FROM->TO	G14-057T 345.00 - SUNNYSIDE 345KV CKT 1	717	789	0.08441	118.0456	GEN615010 1-STANTON4
FDNS	00NR	3	20WP	G15_082	FROM->TO	G14-057T 345.00 - SUNNYSIDE 345KV CKT 1	717	789	0.08441	118.0424	GEN615021 1-GRE-ER 14G 16.000
FDNS	00NR	3	16WP	G15_082	FROM->TO	G14-057T 345.00 - SUNNYSIDE 345KV CKT 1	717	789	0.0844	118.0368	LYDIA - WELSH 345KV CKT 1
FDNS	00NR	3	16WP	G15_082	FROM->TO	G14-057T 345.00 - SUNNYSIDE 345KV CKT 1	717	789	0.0844	118.0368	LYDIA - WELSH 345KV CKT 1
FDNS	00NR	3	20WP	G15_082	FROM->TO	G14-057T 345.00 - SUNNYSIDE 345KV CKT 1	717	789	0.08464	118.031	OVEXFRMCCOVE
FDNS	00NR	3	20WP	G15_082	FROM->TO	G14-057T 345.00 - SUNNYSIDE 345KV CKT 1	717	789	0.08441	118.0281	GEN563052 1-G15069_3 0.6900
FDNS	00NR	3	20WP	G15_082	FROM->TO	G14-057T 345.00 - SUNNYSIDE 345KV CKT 1	717	789	0.08431	118.024	CARTER - CHICKASAW 138KV CKT 1
FDNS	00NR	3	20WP	G15_082	FROM->TO	G14-057T 345.00 - SUNNYSIDE 345KV CKT 1	717	789	0.08457	118.015	CANADIAN RIVER - MCALESTER SOUTH 138KV CKT 1
FDNS	00NR	3	20WP	G15_082	FROM->TO	G14-057T 345.00 - SUNNYSIDE 345KV CKT 1	717	789	0.08457	118.015	CANADIAN RIVER - MCALESTER SOUTH 138KV CKT 1
FDNS	00NR	3	20WP	G15_082	FROM->TO	G14-057T 345.00 - SUNNYSIDE 345KV CKT 1	717	789	0.08457	118.0131	CANADIAN RIVER () 345/138/13.8KV TRANSFORMER CKT 1
FDNS	00NR	3	20WP	G15_082	FROM->TO	G14-057T 345.00 - SUNNYSIDE 345KV CKT 1	717	789	0.08457	118.0131	CANADIAN RIVER () 345/138/13.8KV TRANSFORMER CKT 1
FDNS	00NR	3	20WP	G15_082	FROM->TO	G14-057T 345.00 - SUNNYSIDE 345KV CKT 1	717	789	0.08441	118.0096	INDEPENDENCE 500/26.0KV TRANSFORMER CKT 1
FDNS	00NR	3	20WP	G15_082	FROM->TO	G14-057T 345.00 - SUNNYSIDE 345KV CKT 1	717	789	0.08432	118.0005	HUGO (HUGO 1) 345/138/13.8KV TRANSFORMER CKT 1
FDNS	00NR	3	20WP	G15_082	FROM->TO	G14-057T 345.00 - SUNNYSIDE 345KV CKT 1	717	789	0.08441	117.9912	GEN562587 1-G14_056_3 0.6900
FDNS	00NR	3	20WP	G15_082	FROM->TO	G14-057T 345.00 - SUNNYSIDE 345KV CKT 1	717	789	0.08334	117.9813	PRAIRIE POINT - RATLIFF 138KV CKT 1
FDNS	00NR	3	20WP	G15_082	FROM->TO	G14-057T 345.00 - SUNNYSIDE 345KV CKT 1	717	789	0.08408	117.9797	ROCKY POINT - SPRINGDALE 138KV CKT 1

SOLUTION	GROUP	SCENARIO	SEASON	SOURCE	DIRECTION	MONITORED ELEMENT	RATEA (MVA)	RATEB(MVA)	TDF	TC%LOADING (% MVA)	CONTINGENCY
FDNS	00NR	3	20WP	G15_082	FROM->TO	G14-057T 345.00 - SUNNYSIDE 345KV CKT 1	717	789	0.08441	117.9782	GEN600067 9-HIGH BRIDGE
FDNS	00NR	3	20WP	G15_082	FROM->TO	G14-057T 345.00 - SUNNYSIDE 345KV CKT 1	717	789	0.08441	117.9681	P12:230:UMZB:# 112 #: NU IN SD. NU-RCDC & DRY CREEK XFMR
FDNS	00NR	3	20WP	G15_082	FROM->TO	G14-057T 345.00 - SUNNYSIDE 345KV CKT 1	717	789	0.08441	117.9676	RCDC EAST 4230.00 - RED CEDAR DC 230KV CKT 1
FDNS	00NR	3	20WP	G15_082	FROM->TO	G14-057T 345.00 - SUNNYSIDE 345KV CKT 1	717	789	0.08441	117.9462	GEN531447 1-HOLCOMB GENERATOR
FDNS	00NR	3	20WP	G15_082	FROM->TO	G14-057T 345.00 - SUNNYSIDE 345KV CKT 1	717	789	0.08441	117.945	GEN562902 1-G15052_3 0.6900
FDNS	00NR	3	20WP	G15_082	FROM->TO	G14-057T 345.00 - SUNNYSIDE 345KV CKT 1	717	789	0.08441	117.9338	GEN562074 1-G1149G1504 0.6900
FDNS	00NR	3	20WP	G15_082	FROM->TO	G14-057T 345.00 - SUNNYSIDE 345KV CKT 1	717	789	0.08441	117.9336	GEN514805 1-SOONER UNIT 1
FDNS	00NR	3	20WP	G15_082	FROM->TO	G14-057T 345.00 - SUNNYSIDE 345KV CKT 1	717	789	0.08441	117.928	GEN562802 1-G15039_3 0.3570
FDNS	00NR	3	20WP	G15_082	FROM->TO	G14-057T 345.00 - SUNNYSIDE 345KV CKT 1	717	789	0.08455	117.9269	GRPRAR1-LNX3345.00 - YANKTON 345KV CKT Z
FDNS	00NR	3	20WP	G15_082	FROM->TO	G14-057T 345.00 - SUNNYSIDE 345KV CKT 1	717	789	0.08455	117.9266	GRPRAR1-LNX3345.00 - HOLT.CO3 345.00 345KV CKT 1
FDNS	00NR	3	20WP	G15_082	FROM->TO	G14-057T 345.00 - SUNNYSIDE 345KV CKT 1	717	789	0.0836	117.9261	JOLLYVILLE - SULPHR 4 138.00 138KV CKT 1
FDNS	00NR	3	20WP	G15_082	FROM->TO	G14-057T 345.00 - SUNNYSIDE 345KV CKT 1	717	789	0.08441	117.925	GEN514806 1-SOONER UNIT 2
FDNS	00NR	3	20WP	G15_082	FROM->TO	G14-057T 345.00 - SUNNYSIDE 345KV CKT 1	717	789	0.08441	117.9213	GEN524285 1-WILDORADO WIND GEN
FDNS	00NR	3	20WP	G15_082	FROM->TO	G14-057T 345.00 - SUNNYSIDE 345KV CKT 1	717	789	0.08477	117.9158	CHAMBER SPRINGS - CLARKSVILLE 345KV CKT 1
FDNS	00NR	3	20WP	G15_082	FROM->TO	G14-057T 345.00 - SUNNYSIDE 345KV CKT 1	717	789	0.08441	117.9158	GEN629072 4-LANSING GENERATOR FOR UNITS NO4 EIA CODE 1
FDNS	00NR	3	20WP	G15_082	FROM->TO	G14-057T 345.00 - SUNNYSIDE 345KV CKT 1	717	789	0.08441	117.8877	GEN524023 1-NICHOLS GEN #3 22 KV
FDNS	00NR	3	20WP	G15_082	FROM->TO	G14-057T 345.00 - SUNNYSIDE 345KV CKT 1	717	789	0.08441	117.8863	GEN562882 1-G15047_3 0.6900
FDNS	00NR	3	20WP	G15_082	FROM->TO	G14-057T 345.00 - SUNNYSIDE 345KV CKT 1	717	789	0.08441	117.8854	GEN563242 1-G15090_3 0.6900
FDNS	00NR	3	20WP	G15_082	FROM->TO	G14-057T 345.00 - SUNNYSIDE 345KV CKT 1	717	789	0.08441	117.8837	GEN560331 1-G10-46 13.800
FDNS	00NR	3	20WP	G15_082	FROM->TO	G14-057T 345.00 - SUNNYSIDE 345KV CKT 1	717	789	0.08441	117.8799	GEN524295 1-SPNSPUR_WND10.6900
FDNS	00NR	3	20WP	G15_082	FROM->TO	G14-057T 345.00 - SUNNYSIDE 345KV CKT 1	717	789	0.08441	117.8712	GEN521112 1-ORME3 13.800
FDNS	00NR	3	20WP	G15_082	FROM->TO	G14-057T 345.00 - SUNNYSIDE 345KV CKT 1	717	789	0.08441	117.8646	GEN562078 1-G11_051_3 0.6900
FDNS	00NR	3	20WP	G15_082	FROM->TO	G14-057T 345.00 - SUNNYSIDE 345KV CKT 1	717	789	0.0836	117.8608	JOLLYVILLE - KERR MCGEE CIMARRON 138KV CKT 1
FDNS	00NR	3	20WP	G15_082	FROM->TO	G14-057T 345.00 - SUNNYSIDE 345KV CKT 1	717	789	0.08634	117.8546	G15061_T 345.00 - SETAB 345KV CKT 1
FDNS	00NR	3	20WP	G15_082	FROM->TO	G14-057T 345.00 - SUNNYSIDE 345KV CKT 1	717	789	0.08441	117.8542	GEN657749 1-YOUNG 1 GENERATOR
FDNS	00NR	3	20WP	G15_082	FROM->TO	G14-057T 345.00 - SUNNYSIDE 345KV CKT 1	717	789	0.08441	117.8501	GEN562269 1-G12-020-1 0.6900
FDNS	00NR	3	20WP	G15_082	FROM->TO	G14-057T 345.00 - SUNNYSIDE 345KV CKT 1	717	789	0.08445	117.8293	CROCKETT - TENASKA RUSK COUNTY 345KV CKT 1
FDNS	00NR	3	20WP	G15_082	FROM->TO	G14-057T 345.00 - SUNNYSIDE 345KV CKT 1	717	789	0.08445	117.8285	LEBROCK - TENASKA RUSK COUNTY 345KV CKT 1
FDNS	00NR	3	20WP	G15_082	FROM->TO	G14-057T 345.00 - SUNNYSIDE 345KV CKT 1	717	789	0.08441	117.8248	GEN511962 2-RKYRDGW2-1 0.7000
FDNS	00NR	3	20WP	G15_082	FROM->TO	G14-057T 345.00 - SUNNYSIDE 345KV CKT 1	717	789	0.08343	117.824	P12:138:AEPW:112GORE4:SNYDER-4
FDNS	00NR	3	20WP	G15_082	FROM->TO	G14-057T 345.00 - SUNNYSIDE 345KV CKT 1	717	789	0.0836	117.8136	ARBWIND4 138.00 - KERR MCGEE CIMARRON 138KV CKT 1
FDNS	00NR	3	20WP	G15_082	FROM->TO	G14-057T 345.00 - SUNNYSIDE 345KV CKT 1	717	789	0.08441	117.8091	GEN562812 1-G15040_3 0.3570
FDNS	00NR	3	20WP	G15_082	FROM->TO	G14-057T 345.00 - SUNNYSIDE 345KV CKT 1	717	789	0.08441	117.8019	GEN562270 1-G12-020-2 0.6900
FDNS	00NR	3	20WP	G15_082	FROM->TO	G14-057T 345.00 - SUNNYSIDE 345KV CKT 1	717	789	0.08441	117.8017	GEN563132 1-G15078_3 0.3570
FDNS	00NR	3	20WP	G15_082	FROM->TO	G14-057T 345.00 - SUNNYSIDE 345KV CKT 1	717	789	0.0843	117.8004	BROWN - RUSSETT 138KV CKT 1
FDNS	00NR	3	20WP	G15_082	FROM->TO	G14-057T 345.00 - SUNNYSIDE 345KV CKT 1	717	789	0.07874	117.7939	BVRCNTY7 345.00 - GRAPEVINE 345.00 345KV CKT 1
FDNS	00NR	3	20WP	G15_082	FROM->TO	G14-057T 345.00 - SUNNYSIDE 345KV CKT 1	717	789	0.08441	117.7903	GEN563102 1-G15075_3 0.5500
FDNS	00NR	3	20WP	G15_082	FROM->TO	G14-057T 345.00 - SUNNYSIDE 345KV CKT 1	717	789	0.07874	117.7899	CHISHOLM7 345.00 - GRAPEVINE 345.00 345KV CKT 1
FDNS	00NR	3	20WP	G15_082	FROM->TO	G14-057T 345.00 - SUNNYSIDE 345KV CKT 1	717	789	0.08441	117.7747	THOMAS HILL 161/22.0KV TRANSFORMER CKT 1
FDNS	00NR	3	20WP	G15_082	FROM->TO	G14-057T 345.00 - SUNNYSIDE 345KV CKT 1	717	789	0.08441	117.7649	GEN345671 2-1RUSH G2 18.000
FDNS	00NR	3	20WP	G15_082	FROM->TO	G14-057T 345.00 - SUNNYSIDE 345KV CKT 1	717	789	0.08441	117.7629	GEN345670 1-1RUSH G1 18.000
FDNS	00NR	3	20WP	G15_082	FROM->TO	G14-057T 345.00 - SUNNYSIDE 345KV CKT 1	717	789	0.08441	117.7604	GEN563192 1-G15084_3 0.5500
FDNS	00NR	3	20WP	G15_082	FROM->TO	G14-057T 345.00 - SUNNYSIDE 345KV CKT 1	717	789	0.08347	117.7598	ARKANSAS NUCLEAR ONE - FT SMITH 500KV CKT 1
FDNS	00NR	3	20WP	G15_082	FROM->TO	G14-057T 345.00 - SUNNYSIDE 345KV CKT 1	717	789	0.08347	117.7598	ARKANSAS NUCLEAR ONE - FT SMITH 500KV CKT 1
FDNS	00NR	3	20WP	G15_082	FROM->TO	G14-057T 345.00 - SUNNYSIDE 345KV CKT 1	717	789	0.08369	117.7559	CHICKASAW - TOTAL 138KV CKT 1
FDNS	00NR	3	16WP	G15_082	FROM->TO	G14-057T 345.00 - SUNNYSIDE 345KV CKT 1	717	789	0.08432	117.7442	GEN527903 1-HOBBS PLANT #3 (ST)
FDNS	00NR	3	20WP	G15_082	FROM->TO	G14-057T 345.00 - SUNNYSIDE 345KV CKT 1	717	789	0.0843	117.732	RUSSETT - RUSSETT 138KV CKT 1
FDNS	00NR	3	20WP	G15_082	FROM->TO	G14-057T 345.00 - SUNNYSIDE 345KV CKT 1	717	789	0.08441	117.729	GEN562512 1-G14_020_3 0.6900
FDNS	00NR	3	20WP	G15_082	FROM->TO	G14-057T 345.00 - SUNNYSIDE 345KV CKT 1	717	789	0.08441	117.7228	4SIOUX 1 138.00 138/18.0KV TRANSFORMER CKT 1
FDNS	00NR	3	20WP	G15_082	FROM->TO	G14-057T 345.00 - SUNNYSIDE 345KV CKT 1	717	789	0.08441	117.705	GEN560105 1-G08-22 0.6900
FDNS	00NR	3	20WP	G15_082	FROM->TO	G14-057T 345.00 - SUNNYSIDE 345KV CKT 1	717	789	0.08441	117.6958	GEN562550 1-G14_040_3 0.6900
FDNS	00NR	3	20WP	G15_082	FROM->TO	G14-057T 345.00 - SUNNYSIDE 345KV CKT 1	717	789	0.08441	117.683	EASTDC - ERCOT EQUIVALENCE 345KV CKT 1
FDNS	00NR	3	20WP	G15_082	FROM->TO	G14-057T 345.00 - SUNNYSIDE 345KV CKT 1	717	789	0.08441	117.6775	GEN511853 1-COMANCHE #3
FDNS	00NR	3	20WP	G15_082	FROM->TO	G14-057T 345.00 - SUNNYSIDE 345KV CKT 1	717	789	0.08441	117.6719	GEN681522 3-GENOA 3
FDNS	00NR	3	20WP	G15_082	FROM->TO	G14-057T 345.00 - SUNNYSIDE 345KV CKT 1	717	789	0.08396	117.6715	ROCKY POINT - SUNNYSIDE 138KV CKT 1
FDNS	00NR	3	20WP	G15_082	FROM->TO	G14-057T 345.00 - SUNNYSIDE 345KV CKT 1	717	789	0.08441	117.6707	GEN562892 1-G15048_3 0.6900
FDNS	00NR	3	20WP	G15_082	FROM->TO	G14-057T 345.00 - SUNNYSIDE 345KV CKT 1	717	789	0.08441	117.6683	GEN562974 1-G15060_5 0.6900
FDNS	00NR	3	20WP	G15_082	FROM->TO	G14-057T 345.00 - SUNNYSIDE 345KV CKT 1	717	789	0.08427	117.6627	RUSSETT - SPRINGDALE 138KV CKT 1
FDNS	00NR	3	20WP	G15_082	FROM->TO	G14-057T 345.00 - SUNNYSIDE 345KV CKT 1	717	789	0.08441	117.657	GEN562973 1-G15060_4 0.6900
FDNS	00NR	3	20WP	G15_082	FROM->TO	G14-057T 345.00 - SUNNYSIDE 345KV CKT 1	717	789	0.08437	117.6495	P12:138:WFEC-AEPW:GOLDENSW4:CRAIGJT4
FDNS	00NR	3	20WP	G15_082	FROM->TO	G14-057T 345.00 - SUNNYSIDE 345KV CKT 1	717	789	0.08441	117.6481	GEN520811 1-ANADRK4
FDNS	00NR	3	20WP	G15_082	FROM->TO	G14-057T 345.00 - SUNNYSIDE 345KV CKT 1	717	789	0.08448	117.6474	P12:138:WFEC:MSL16
FDNS	00NR	3	20WP	G15_082	FROM->TO	G14-057T 345.00 - SUNNYSIDE 345KV CKT 1	717	789	0.08441	117.633	GEN521111 1-ORME2 13.800
FDNS	00NR	3	20WP	G15_082	FROM->TO	G14-057T 345.00 - SUNNYSIDE 345KV CKT 1	717	789	0.08441	117.6314	GEN511852 1-COMANCHE #2
FDNS	00NR	3	20WP	G15_082	FROM->TO	G14-057T 345.00 - SUNNYSIDE 345KV CKT 1	717	789	0.08441	117.6303	GEN527161 1-MUSTANG GEN #1
FDNS	00NR	3	20WP	G15_082	FROM->TO	G14-057T 345.00 - SUNNYSIDE 345KV CKT 1	717	789	0.08441	117.6303	GEN527162 1-MUSTANG GEN #2
FDNS	00NR	3	20WP	G15_082	FROM->TO	G14-057T 345.00 - SUNNYSIDE 345KV CKT 1	717	789	0.08414	117.6258	G15085_T 138.00 - RUSSELL 138KV CKT 1
FDNS	00NR	3	20WP	G15_082	FROM->TO	G14-057T 345.00 - SUNNYSIDE 345KV CKT 1	717	789	0.08441	117.6211	GEN521110 1-ORME1 13.800
FDNS	00NR	3	16WP	G15_082	FROM->TO	G14-057T 345.00 - SUNNYSIDE 345KV CKT 1	717	789	0.08432	117.6193	GEN635024 4-WALTER SCOTT UNIT 4
FDNS	00NR	3	20WP	G15_082	FROM->TO	G14-057T 345.00 - SUNNYSIDE 345KV CKT 1	717	789	0.08432	117.604	P12:138:WFEC:MSL07
FDNS	00NR	3	20WP	G15_082	FROM->TO	G14-057T 345.00 - SUNNYSIDE 345KV CKT 1	717	789	0.08432	117.604	P12:138:WFEC-AEPW:HUGOPP4:ATOKA--4
FDNS	00NR	3	20WP	G15_082	FROM->TO	G14-057T 345.00 - SUNNYSIDE 345KV CKT 1	717	789	0.08441	117.6008	GEN344895 2-1LAB G2 20.000
FDNS	00NR	3	20WP	G15_082	FROM->TO	G14-057T 345.00 - SUNNYSIDE 345KV CKT 1	717	789	0.08441	117.6002	GEN672321 1-SHAND GENERATOR 1
FDNS	00NR	3	20WP	G15_082	FROM->TO	G14-057T 345.00 - SUNNYSIDE 345KV CKT 1	717	789	0.08441	117.5998	GEN525494 1-PLANT X GEN #4 20 KV
FDNS	00NR	3	20WP	G15_082	FROM->TO	G14-057T 345.00 - SUNNYSIDE 345KV CKT 1	717	789	0.08437	117.5826	P12:138:AEPW-SWPA:LONEOAK4:TUPELO4
FDNS	00NR	3	20WP	G15_082	FROM->TO	G14-057T 345.00 - SUNNYSIDE 345KV CKT 1	717	789	0.08437	117.5825	P12:138:WFEC:MSL06
FDNS	00NR	3	20WP	G15_082	FROM->TO	G14-057T 345.00 - SUNNYSIDE 345KV CKT 1	717	789	0.08441	117.578	GEN527882 1-CUNNINGHAM GEN #2 20 KV
FDNS	00NR	3	20WP	G15_082	FROM->TO	G14-057T 345.00 - SUNNYSIDE 345KV CKT 1	717	789	0.08441	117.5756	GEN672310 1-POPLAR RIVER GENERATOR 1
FDNS	00NR	3	20WP	G15_082	FROM->TO	G14-057T 345.00 - SUNNYSIDE 345KV CKT 1	717	789	0.08441	117.5756	GEN672311 2-POPLAR RIVER GENERATOR 2

SOLUTION	GROUP	SCENARIO	SEASON	SOURCE	DIRECTION	MONITORED ELEMENT	RATEA (MVA)	RATEB(MVA)	TDF	TC%LOADING (% MVA)	CONTINGENCY
FDNS	00NR	3	20WP	G15_082	FROM->TO	G14-057T 345.00 - SUNNYSIDE 345KV CKT 1	717	789	0.08441	117.5702	GEN344896 3-1LAB G3 20.000
FDNS	00NR	3	20WP	G15_082	FROM->TO	G14-057T 345.00 - SUNNYSIDE 345KV CKT 1	717	789	0.08441	117.569	GEN344897 4-1LAB G4 20.000
FDNS	00NR	3	20WP	G15_082	FROM->TO	G14-057T 345.00 - SUNNYSIDE 345KV CKT 1	717	789	0.08441	117.5688	GEN344894 1-1LAB G1 20.000
FDNS	00NR	3	20WP	G15_082	FROM->TO	G14-057T 345.00 - SUNNYSIDE 345KV CKT 1	717	789	0.08441	117.5655	GEN672306 6-BOUNDARY DAM GENERATOR 6
FDNS	00NR	3	20WP	G15_082	FROM->TO	G14-057T 345.00 - SUNNYSIDE 345KV CKT 1	717	789	0.08441	117.561	GEN527163 1-MUSTANG GEN #3 22 KV
FDNS	00NR	3	20WP	G15_082	FROM->TO	G14-057T 345.00 - SUNNYSIDE 345KV CKT 1	717	789	0.08441	117.5558	CLAY BOSWELL 230/20.9KV TRANSFORMER CKT 1
FDNS	00NR	3	20WP	G15_082	FROM->TO	G14-057T 345.00 - SUNNYSIDE 345KV CKT 1	717	789	0.08441	117.5538	GEN523461 1-BLACKHAWK GEN #1
FDNS	00NR	3	20WP	G15_082	FROM->TO	G14-057T 345.00 - SUNNYSIDE 345KV CKT 1	717	789	0.08441	117.5537	GEN523462 1-BLACKHAWK GEN #2
FDNS	00NR	3	20WP	G15_082	FROM->TO	G14-057T 345.00 - SUNNYSIDE 345KV CKT 1	717	789	0.08339	117.5536	ARDMORE WEST - CARTER 138KV CKT 1
FDNS	00NR	3	20WP	G15_082	FROM->TO	G14-057T 345.00 - SUNNYSIDE 345KV CKT 1	717	789	0.08441	117.5366	GEN681542 6-JP MADGETT
FDNS	00NR	3	20WP	G15_082	FROM->TO	G14-057T 345.00 - SUNNYSIDE 345KV CKT 1	717	789	0.08345	117.4875	SUNNYSIDE (SUNNYSD5) 345/138/13.8KV TRANSFORMER CKT 1
FDNS	00NR	3	20WP	G15_082	FROM->TO	G14-057T 345.00 - SUNNYSIDE 345KV CKT 1	717	789	0.08441	117.4782	GEN563292 1-G15095_3 0.6900
FDNS	00NR	3	20WP	G15_082	FROM->TO	G14-057T 345.00 - SUNNYSIDE 345KV CKT 1	717	789	0.08441	117.4678	ALMA 161 161/24.0KV TRANSFORMER CKT 1
FDNS	00NR	3	20WP	G15_082	FROM->TO	G14-057T 345.00 - SUNNYSIDE 345KV CKT 1	717	789	0.08441	117.463	GEN562861 1-G15045_2 0.4800
FDNS	00NR	3	20WP	G15_082	FROM->TO	G14-057T 345.00 - SUNNYSIDE 345KV CKT 1	717	789	0.08441	117.4548	GEN562699 1-G15_018_3 0.6900
FDNS	00NR	3	20WP	G15_082	FROM->TO	G14-057T 345.00 - SUNNYSIDE 345KV CKT 1	717	789	0.08339	117.4397	ARDMORE WEST - UNIROYAL 138KV CKT 1
FDNS	00NR	3	20WP	G15_082	FROM->TO	G14-057T 345.00 - SUNNYSIDE 345KV CKT 1	717	789	0.08676	117.438	CLARKSVILLE - MUSKOGEE 345KV CKT 1
FDNS	00NR	3	20WP	G15_082	FROM->TO	G14-057T 345.00 - SUNNYSIDE 345KV CKT 1	717	789	0.08676	117.438	CLARKSVILLE - MUSKOGEE 345KV CKT 1
FDNS	00NR	3	20WP	G15_082	FROM->TO	G14-057T 345.00 - SUNNYSIDE 345KV CKT 1	717	789	0.0837	117.4261	CARTRCO4 138.00 - RATLIFF 138KV CKT 1
FDNS	00NR	3	20WP	G15_082	FROM->TO	G14-057T 345.00 - SUNNYSIDE 345KV CKT 1	717	789	0.08343	117.4229	CACHE - SNYDER 138KV CKT 1
FDNS	00NR	3	20WP	G15_082	FROM->TO	G14-057T 345.00 - SUNNYSIDE 345KV CKT 1	717	789	0.08405	117.4179	P12:138:OKGE:3TERM40
FDNS	00NR	3	16WP	G15_082	FROM->TO	G14-057T 345.00 - SUNNYSIDE 345KV CKT 1	717	789	0.08432	117.4162	GEN563272 1-G15093_3 0.6900
FDNS	00NR	3	20WP	G15_082	FROM->TO	G14-057T 345.00 - SUNNYSIDE 345KV CKT 1	717	789	0.08467	117.3756	P12:138:WFEC:MSL15
FDNS	00NR	3	20WP	G15_082	FROM->TO	G14-057T 345.00 - SUNNYSIDE 345KV CKT 1	717	789	0.08412	117.3751	P12:138:AEPW:SHAM4WT:CHILD4WT
FDNS	00NR	3	20WP	G15_082	FROM->TO	G14-057T 345.00 - SUNNYSIDE 345KV CKT 1	717	789	0.08441	117.3574	GEN661015 1-COYOTE
FDNS	00NR	3	20WP	G15_082	FROM->TO	G14-057T 345.00 - SUNNYSIDE 345KV CKT 1	717	789	0.08441	117.3393	GEN563122 1-G15077_3 0.3850
FDNS	00NR	3	20WP	G15_082	FROM->TO	G14-057T 345.00 - SUNNYSIDE 345KV CKT 1	717	789	0.08441	117.3335	GEN562952 1-G15057_3 0.6500
FDNS	00NR	3	20WP	G15_082	FROM->TO	G14-057T 345.00 - SUNNYSIDE 345KV CKT 1	717	789	0.08441	117.3138	GEN563162 1-G15081_3 0.6900
FDNS	00NR	3	20WP	G15_082	FROM->TO	G14-057T 345.00 - SUNNYSIDE 345KV CKT 1	717	789	0.08441	117.3002	GEN562992 1-G15063_3 0.6900
FDNS	00NR	3	20WP	G15_082	FROM->TO	G14-057T 345.00 - SUNNYSIDE 345KV CKT 1	717	789	0.08612	117.2674	CANEY CREEK - TEXOMA JCT 138KV CKT 1
FDNS	00NR	3	20WP	G15_082	FROM->TO	G14-057T 345.00 - SUNNYSIDE 345KV CKT 1	717	789	0.08441	117.2374	GEN657748 1-YOUNG 2 GENERATOR
FDNS	00NR	3	20WP	G15_082	FROM->TO	G14-057T 345.00 - SUNNYSIDE 345KV CKT 1	717	789	0.08339	117.2205	SUNNYSIDE - UNIROYAL 138KV CKT 1
FDNS	00NR	3	20WP	G15_082	FROM->TO	G14-057T 345.00 - SUNNYSIDE 345KV CKT 1	717	789	0.08441	117.2204	GEN527883 1-CUNNINGHAM GEN #3 22 KV
FDNS	00NR	3	20WP	G15_082	FROM->TO	G14-057T 345.00 - SUNNYSIDE 345KV CKT 1	717	789	0.08441	117.217	GEN527884 1-CUNNINGHAM GEN #4 22 KV
FDNS	00NR	3	20WP	G15_082	FROM->TO	G14-057T 345.00 - SUNNYSIDE 345KV CKT 1	717	789	0.08441	117.163	GEN511851 1-COMANCHE #1
FDNS	00NR	3	20WP	G15_082	FROM->TO	G14-057T 345.00 - SUNNYSIDE 345KV CKT 1	717	789	0.08441	117.1488	GEN562704 1-G15_020_3 0.3550
FDNS	00NR	3	20WP	G15_082	FROM->TO	G14-057T 345.00 - SUNNYSIDE 345KV CKT 1	717	789	0.08499	117.1454	P12:138:AEPW-OGE:CORNVIL4:CIMARON4
FDNS	00NR	3	20WP	G15_082	FROM->TO	G14-057T 345.00 - SUNNYSIDE 345KV CKT 1	717	789	0.08441	117.1426	GEN620315 1-BIG STONE GEN
FDNS	00NR	3	20WP	G15_082	FROM->TO	G14-057T 345.00 - SUNNYSIDE 345KV CKT 1	717	789	0.08441	117.1265	GEN526331 1-JONES GEN #1 22 KV
FDNS	00NR	3	20WP	G15_082	FROM->TO	G14-057T 345.00 - SUNNYSIDE 345KV CKT 1	717	789	0.08441	117.1263	GEN526332 1-JONES GEN #2 21 KV
FDNS	00NR	3	20WP	G15_082	FROM->TO	G14-057T 345.00 - SUNNYSIDE 345KV CKT 1	717	789	0.08441	117.066	GEN600004 2-PRAIRIE ISLAND G2
FDNS	00NR	3	20WP	G15_082	FROM->TO	G14-057T 345.00 - SUNNYSIDE 345KV CKT 1	717	789	0.08441	117.0633	GEN600003 1-PRAIRIE ISLAND G1
FDNS	00NR	3	20WP	G15_082	FROM->TO	G14-057T 345.00 - SUNNYSIDE 345KV CKT 1	717	789	0.08445	117.0453	P12:138:WFEC:MSL09
FDNS	00NR	3	20WP	G15_082	FROM->TO	G14-057T 345.00 - SUNNYSIDE 345KV CKT 1	717	789	0.08441	117.0413	GEN562710 1-G15_022_3 0.5500
FDNS	00NR	3	20WP	G15_082	FROM->TO	G14-057T 345.00 - SUNNYSIDE 345KV CKT 1	717	789	0.08441	117.0412	GEN600006 1-AS KING
FDNS	00NR	3	20WP	G15_082	FROM->TO	G14-057T 345.00 - SUNNYSIDE 345KV CKT 1	717	789	0.08441	116.8641	GEN629074 1-ARNOLD LOWSIDE OF GSU XFMR
FDNS	00NR	3	20WP	G15_082	FROM->TO	G14-057T 345.00 - SUNNYSIDE 345KV CKT 1	717	789	0.08441	116.8563	GEN563173 1-G15082_3 0.6900
FDNS	00NR	3	20WP	G15_082	FROM->TO	G14-057T 345.00 - SUNNYSIDE 345KV CKT 1	717	789	0.08441	116.8498	GEN635213 3-NEAL UNIT 3
FDNS	00NR	3	20WP	G15_082	FROM->TO	G14-057T 345.00 - SUNNYSIDE 345KV CKT 1	717	789	0.08441	116.8473	GEN615001 1-COAL CREEK
FDNS	00NR	3	20WP	G15_082	FROM->TO	G14-057T 345.00 - SUNNYSIDE 345KV CKT 1	717	789	0.08441	116.8372	BIG STONE 230/24.0KV TRANSFORMER CKT 1
FDNS	00NR	3	20WP	G15_082	FROM->TO	G14-057T 345.00 - SUNNYSIDE 345KV CKT 1	717	789	0.08441	116.8204	GEN615002 2-COAL CREEK
FDNS	00NR	3	20WP	G15_082	FROM->TO	G14-057T 345.00 - SUNNYSIDE 345KV CKT 1	717	789	0.08441	116.7856	GEN532751 1-WOLF CREEK GENERATING STATION UNIT 1
FDNS	00NR	3	16WP	G15_082	FROM->TO	G14-057T 345.00 - SUNNYSIDE 345KV CKT 1	717	789	0.08442	116.7763	LYDIA - VALLIANT 345KV CKT 1
FDNS	00NR	3	16WP	G15_082	FROM->TO	G14-057T 345.00 - SUNNYSIDE 345KV CKT 1	717	789	0.08442	116.7763	LYDIA - VALLIANT 345KV CKT 1
FDNS	00NR	3	20WP	G15_082	FROM->TO	G14-057T 345.00 - SUNNYSIDE 345KV CKT 1	717	789	0.08441	116.7739	GEN562754 1-G15031_5 0.6900
FDNS	00NR	3	20WP	G15_082	FROM->TO	G14-057T 345.00 - SUNNYSIDE 345KV CKT 1	717	789	0.08441	116.7705	GEN636641 1-LOUISA UNIT 1
FDNS	00NR	3	20WP	G15_082	FROM->TO	G14-057T 345.00 - SUNNYSIDE 345KV CKT 1	717	789	0.08446	116.7576	NORTHWEST TEXARKANA - VALLIANT 345KV CKT 1
FDNS	00NR	3	20WP	G15_082	FROM->TO	G14-057T 345.00 - SUNNYSIDE 345KV CKT 1	717	789	0.08446	116.7576	NORTHWEST TEXARKANA - VALLIANT 345KV CKT 1
FDNS	00NR	3	20WP	G15_082	FROM->TO	G14-057T 345.00 - SUNNYSIDE 345KV CKT 1	717	789	0.08441	116.7329	GEN511848 1-SOUTHWESTERN STATION #3
FDNS	00NR	3	20WP	G15_082	FROM->TO	G14-057T 345.00 - SUNNYSIDE 345KV CKT 1	717	789	0.08441	116.7242	GEN600005 1-MONTICELLO
FDNS	00NR	3	20WP	G15_082	FROM->TO	G14-057T 345.00 - SUNNYSIDE 345KV CKT 1	717	789	0.08441	116.701	GEN562756 1-G15031_7 0.6900
FDNS	00NR	3	20WP	G15_082	FROM->TO	G14-057T 345.00 - SUNNYSIDE 345KV CKT 1	717	789	0.08441	116.6864	GEN562556 1-G14_046_3 0.3420
FDNS	00NR	3	16WP	G15_082	FROM->TO	G14-057T 345.00 - SUNNYSIDE 345KV CKT 1	717	789	0.07023	116.6517	G14-074T 345.00 - TUCO INTERCHANGE 345KV CKT 1
FDNS	00NR	3	20WP	G15_082	FROM->TO	G14-057T 345.00 - SUNNYSIDE 345KV CKT 1	717	789	0.08441	116.5916	GEN600000 1-SHERBURNECNTY G1
FDNS	00NR	3	20WP	G15_082	FROM->TO	G14-057T 345.00 - SUNNYSIDE 345KV CKT 1	717	789	0.08441	116.5903	GEN563142 1-G15079_3 0.5500
FDNS	00NR	3	20WP	G15_082	FROM->TO	G14-057T 345.00 - SUNNYSIDE 345KV CKT 1	717	789	0.08441	116.5903	GEN563151 1-G15080_2 0.5500
FDNS	00NR	3	20WP	G15_082	FROM->TO	G14-057T 345.00 - SUNNYSIDE 345KV CKT 1	717	789	0.08441	116.5705	GEN523971 1-HARRINGTON GEN #1 24 KV
FDNS	00NR	3	20WP	G15_082	FROM->TO	G14-057T 345.00 - SUNNYSIDE 345KV CKT 1	717	789	0.08441	116.5705	GEN523973 1-HARRINGTON GEN #3 24 KV
FDNS	00NR	3	20WP	G15_082	FROM->TO	G14-057T 345.00 - SUNNYSIDE 345KV CKT 1	717	789	0.08441	116.5704	GEN523972 1-HARRINGTON GEN #2 24 KV
FDNS	00NR	3	20WP	G15_082	FROM->TO	G14-057T 345.00 - SUNNYSIDE 345KV CKT 1	717	789	0.08441	116.563	GEN629075 1-OTTUMWA GENERATOR FOR OTTUMWA UNIT NO 1
FDNS	00NR	3	20WP	G15_082	FROM->TO	G14-057T 345.00 - SUNNYSIDE 345KV CKT 1	717	789	0.08441	116.5396	GEN600001 2-SHERBURNE CNTY G2
FDNS	00NR	3	20WP	G15_082	FROM->TO	G14-057T 345.00 - SUNNYSIDE 345KV CKT 1	717	789	0.08441	116.3741	GEN562023 1-G11_020_3 0.6900
FDNS	00NR	3	20WP	G15_082	FROM->TO	G14-057T 345.00 - SUNNYSIDE 345KV CKT 1	717	789	0.08441	116.3741	GEN562026 1-G11_019_3 0.6900
FDNS	00NR	3	20WP	G15_082	FROM->TO	G14-057T 345.00 - SUNNYSIDE 345KV CKT 1	717	789	0.08441	116.3639	GEN527901 1-HOBBS PLANT #1 (CT)
FDNS	00NR	3	20WP	G15_082	FROM->TO	G14-057T 345.00 - SUNNYSIDE 345KV CKT 1	717	789	0.08441	116.3639	GEN527902 1-HOBBS PLANT #2 (CT)
FDNS	00NR	3	20WP	G15_082	FROM->TO	G14-057T 345.00 - SUNNYSIDE 345KV CKT 1	717	789	0.0845	116.3384	LYDIA - WELSH 345KV CKT 1
FDNS	00NR	3	20WP	G15_082	FROM->TO	G14-057T 345.00 - SUNNYSIDE 345KV CKT 1	717	789	0.0845	116.3384	LYDIA - WELSH 345KV CKT 1
FDNS	00NR	3	20WP	G15_082	FROM->TO	G14-057T 345.00 - SUNNYSIDE 345KV CKT 1	717	789	0.08441	116.3102	GEN563042 1-G15068_3 0.6900
FDNS	00NR	3	20WP	G15_082	FROM->TO	G14-057T 345.00 - SUNNYSIDE 345KV CKT 1	717	789	0.08441	116.2986	SHERBURNE CO 345/24.0KV TRANSFORMER CKT 1

SOLUTION	GROUP	SCENARIO	SEASON	SOURCE	DIRECTION	MONITORED ELEMENT	RATEA (MVA)	RATEB(MVA)	TDF	TC%LOADING (% MVA)	CONTINGENCY
FDNS	00NR	3	20WP	G15_082	FROM->TO	G14-057T 345.00 - SUNNYSIDE 345KV CKT 1	717	789	0.08441	116.2526	GEN635214 4-NEAL UNIT 4
FDNS	00NR	3	20WP	G15_082	FROM->TO	G14-057T 345.00 - SUNNYSIDE 345KV CKT 1	717	789	0.08441	116.2356	GEN563202 1-G15085_3 0.5500
FDNS	00NR	3	20WP	G15_082	FROM->TO	G14-057T 345.00 - SUNNYSIDE 345KV CKT 1	717	789	0.08441	116.0758	GEN600002 3-SHERBURNE CNTY G3
FDNS	00NR	3	20WP	G15_082	FROM->TO	G14-057T 345.00 - SUNNYSIDE 345KV CKT 1	717	789	0.08441	116.0607	GEN344225 1-1CAL G1 25.000
FDNS	00NR	3	16WP	G15_082	FROM->TO	G14-057T 345.00 - SUNNYSIDE 345KV CKT 1	717	789	0.08432	116.0286	EASTDC - ERCOT EQUIVALENCE 345KV CKT 1
FDNS	00NR	3	20WP	G15_082	FROM->TO	G14-057T 345.00 - SUNNYSIDE 345KV CKT 1	717	789	0.08441	115.9787	GEN563043 1-G15068_4 0.6900
FDNS	00NR	3	20WP	G15_082	FROM->TO	G14-057T 345.00 - SUNNYSIDE 345KV CKT 1	717	789	0.08441	115.955	GEN526333 1-JONES GEN #3 21 KV
FDNS	00NR	3	20WP	G15_082	FROM->TO	G14-057T 345.00 - SUNNYSIDE 345KV CKT 1	717	789	0.08441	115.9549	GEN526334 1-JONES_4 116.500
FDNS	00NR	3	20WP	G15_082	FROM->TO	G14-057T 345.00 - SUNNYSIDE 345KV CKT 1	717	789	0.08441	115.909	GEN525844 1-ELK_1 118.000
FDNS	00NR	3	20WP	G15_082	FROM->TO	G14-057T 345.00 - SUNNYSIDE 345KV CKT 1	717	789	0.08441	115.9086	GEN562685 1-G15_013_3 0.3550
FDNS	00NR	3	20WP	G15_082	FROM->TO	G14-057T 345.00 - SUNNYSIDE 345KV CKT 1	717	789	0.08441	115.8945	GEN525845 1-ELK_2 1 18.000
FDNS	00NR	3	20WP	G15_082	FROM->TO	G14-057T 345.00 - SUNNYSIDE 345KV CKT 1	717	789	0.08441	115.8898	GEN562590 1-G14_057_3 0.6900
FDNS	00NR	3	20WP	G15_082	FROM->TO	G14-057T 345.00 - SUNNYSIDE 345KV CKT 1	717	789	0.08441	115.7588	GEN527166 1-MUSTANG_6 118.000
FDNS	00NR	3	20WP	G15_082	FROM->TO	G14-057T 345.00 - SUNNYSIDE 345KV CKT 1	717	789	0.08441	115.7573	GEN635023 3-WALTER SCOTT UNIT 3
FDNS	00NR	3	20WP	G15_082	FROM->TO	G14-057T 345.00 - SUNNYSIDE 345KV CKT 1	717	789	0.08441	115.7339	GEN563273 2-G15093_4 0.6900
FDNS	00NR	3	20WP	G15_082	FROM->TO	G14-057T 345.00 - SUNNYSIDE 345KV CKT 1	717	789	0.08441	115.6885	GEN528501 1-G14_012 24.000
FDNS	00NR	3	20WP	G15_082	FROM->TO	G14-057T 345.00 - SUNNYSIDE 345KV CKT 1	717	789	0.08382	115.6433	JOHNSON COUNTY (JOHNCO) 345/138/13.8KV TRANSFORMER CKT 1
FDNS	00NR	3	20WP	G15_082	FROM->TO	G14-057T 345.00 - SUNNYSIDE 345KV CKT 1	717	789	0.08441	115.623	GEN562762 1-G15033_3 0.6900
FDNS	00NR	3	20WP	G15_082	FROM->TO	G14-057T 345.00 - SUNNYSIDE 345KV CKT 1	717	789	0.08441	115.6107	GEN562655 1-G14_074_3 0.6900
FDNS	00NR	3	20WP	G15_082	FROM->TO	G14-057T 345.00 - SUNNYSIDE 345KV CKT 1	717	789	0.08441	115.4643	GEN525562 1-TOLK GEN #2 24 KV
FDNS	00NR	3	20WP	G15_082	FROM->TO	G14-057T 345.00 - SUNNYSIDE 345KV CKT 1	717	789	0.08441	115.3793	GEN527903 1-HOBBS PLANT #3 (ST)
FDNS	00NR	3	20WP	G15_082	FROM->TO	G14-057T 345.00 - SUNNYSIDE 345KV CKT 1	717	789	0.08441	115.3193	GEN635024 4-WALTER SCOTT UNIT 4
FDNS	00NR	3	20WP	G15_082	FROM->TO	G14-057T 345.00 - SUNNYSIDE 345KV CKT 1	717	789	0.08441	115.2455	GEN525561 1-TOLK GEN #1 24 KV
FDNS	00NR	3	20WP	G15_082	FROM->TO	G14-057T 345.00 - SUNNYSIDE 345KV CKT 1	717	789	0.08452	115.21	LYDIA - VALLIANT 345KV CKT 1
FDNS	00NR	3	20WP	G15_082	FROM->TO	G14-057T 345.00 - SUNNYSIDE 345KV CKT 1	717	789	0.08452	115.21	LYDIA - VALLIANT 345KV CKT 1
FDNS	00NR	3	20WP	G15_082	FROM->TO	G14-057T 345.00 - SUNNYSIDE 345KV CKT 1	717	789	0.08441	114.9526	GEN563272 1-G15093_3 0.6900
FDNS	00NR	3	16WP	G15_082	FROM->TO	G14-057T 345.00 - SUNNYSIDE 345KV CKT 1	717	789	0.08432	114.9402	GEN563263 1-G15092_4 0.6900
FDNS	00NR	3	16WP	G15_082	FROM->TO	G14-057T 345.00 - SUNNYSIDE 345KV CKT 1	717	789	0.07002	114.6384	CHISHOLM7 345.00 - GRACEMONT 345KV CKT 1
FDNS	00NR	3	16WP	G15_082	FROM->TO	G14-057T 345.00 - SUNNYSIDE 345KV CKT 1	717	789	0.0716	114.359	JOHNSON COUNTY - PITTSBURG 345KV CKT 1
FDNS	00NR	3	16WP	G15_082	FROM->TO	G14-057T 345.00 - SUNNYSIDE 345KV CKT 1	717	789	0.0716	114.359	JOHNSON COUNTY - PITTSBURG 345KV CKT 1
FDNS	00NR	3	17SP	G15_082	FROM->TO	G14-057T 345.00 - SUNNYSIDE 345KV CKT 1	717	789	0.108	113.7097	CIMARRON - MINCO 345KV CKT 1
FDNS	00NR	3	16WP	G15_082	FROM->TO	G14-057T 345.00 - SUNNYSIDE 345KV CKT 1	717	789	0.08227	113.6335	HUGO - VALLIANT 345KV CKT 1
FDNS	00NR	3	16WP	G15_082	FROM->TO	G14-057T 345.00 - SUNNYSIDE 345KV CKT 1	717	789	0.08227	113.6335	HUGO - VALLIANT 345KV CKT 1
FDNS	00NR	3	16WP	G15_082	FROM->TO	G14-057T 345.00 - SUNNYSIDE 345KV CKT 1	717	789	0.08432	113.3001	GEN563262 1-G15092_3 0.6900
FDNS	00NR	3	20WP	G15_082	FROM->TO	G14-057T 345.00 - SUNNYSIDE 345KV CKT 1	717	789	0.07012	113.2763	G14-074T 345.00 - TUCO INTERCHANGE 345KV CKT 1
FDNS	00NR	3	16WP	G15_082	FROM->TO	G14-057T 345.00 - SUNNYSIDE 345KV CKT 1	717	789	0.07516	112.6039	G15093_T 345.00 - LAWTON EASTSIDE 345KV CKT 1
FDNS	00NR	3	20WP	G15_082	FROM->TO	G14-057T 345.00 - SUNNYSIDE 345KV CKT 1	717	789	0.08441	112.5017	GEN563263 1-G15092_4 0.6900
FDNS	00NR	3	20WP	G15_082	FROM->TO	G14-057T 345.00 - SUNNYSIDE 345KV CKT 1	717	789	0.07167	112.3909	JOHNSON COUNTY - PITTSBURG 345KV CKT 1
FDNS	00NR	3	20WP	G15_082	FROM->TO	G14-057T 345.00 - SUNNYSIDE 345KV CKT 1	717	789	0.07167	112.3909	JOHNSON COUNTY - PITTSBURG 345KV CKT 1
FDNS	00NR	3	20WP	G15_082	FROM->TO	G14-057T 345.00 - SUNNYSIDE 345KV CKT 1	717	789	0.08237	112.3625	HUGO - VALLIANT 345KV CKT 1
FDNS	00NR	3	20WP	G15_082	FROM->TO	G14-057T 345.00 - SUNNYSIDE 345KV CKT 1	717	789	0.08237	112.3625	HUGO - VALLIANT 345KV CKT 1
FDNS	00NR	3	20WP	G15_082	FROM->TO	G14-057T 345.00 - SUNNYSIDE 345KV CKT 1	717	789	0.07017	111.9906	CHISHOLM7 345.00 - GRACEMONT 345KV CKT 1
FDNS	00NR	3	20WP	G15_082	FROM->TO	G14-057T 345.00 - SUNNYSIDE 345KV CKT 1	717	789	0.07549	111.7788	G15093_T 345.00 - LAWTON EASTSIDE 345KV CKT 1
FDNS	00NR	3	20WP	G15_082	FROM->TO	G14-057T 345.00 - SUNNYSIDE 345KV CKT 1	717	789	0.08441	110.8641	GEN563262 1-G15092_3 0.6900
FDNS	00NR	3	16WP	G15_082	FROM->TO	G14-057T 345.00 - SUNNYSIDE 345KV CKT 1	717	789	0.06864	108.5675	JOHNSON COUNTY - SUNNYSIDE 345KV CKT 1
FDNS	00NR	3	16WP	G15_082	FROM->TO	G14-057T 345.00 - SUNNYSIDE 345KV CKT 1	717	789	0.07023	108.0108	G14-074T 345.00 - OKLAUNION 345KV CKT 1
FDNS	00NR	3	20WP	G15_082	FROM->TO	G14-057T 345.00 - SUNNYSIDE 345KV CKT 1	717	789	0.0687	105.7122	JOHNSON COUNTY - SUNNYSIDE 345KV CKT 1
FDNS	00NR	3	17SP	G15_082	FROM->TO	G14-057T 345.00 - SUNNYSIDE 345KV CKT 1	717	789	0.108	105.4835	GRACEMONT - MINCO 345KV CKT 1
FDNS	00NR	3	20WP	G15_082	FROM->TO	G14-057T 345.00 - SUNNYSIDE 345KV CKT 1	717	789	0.07012	104.5818	G14-074T 345.00 - OKLAUNION 345KV CKT 1
FDNS	00NR	3	20SP	G15_082	FROM->TO	G14-057T 345.00 - SUNNYSIDE 345KV CKT 1	717	789	0.10815	104.0137	CIMARRON - MINCO 345KV CKT 1
FDNS	00NR	3	16WP	G15_082	FROM->TO	G14-057T 345.00 - SUNNYSIDE 345KV CKT 1	717	789	0.07896	101.9948	HUGO - SUNNYSIDE 345KV CKT 1
FDNS	00NR	3	17SP	G15_082	FROM->TO	G14-057T 345.00 - SUNNYSIDE 345KV CKT 1	717	789	0.07675	101.9111	BASE CASE
FDNS	00NR	3	20WP	G15_082	FROM->TO	G14-057T 345.00 - SUNNYSIDE 345KV CKT 1	717	789	0.07907	101.3797	HUGO - SUNNYSIDE 345KV CKT 1
FDNS	00NR	3	17SP	G15_082	FROM->TO	G14-057T 345.00 - SUNNYSIDE 345KV CKT 1	717	789	0.08833	100.1383	CIMARRON - DRAPER LAKE 345KV CKT 1
FDNS	00NR	3	17SP	G15_082	FROM->TO	G14-057T 345.00 - SUNNYSIDE 345KV CKT 1	717	789	0.07072	99.6	PITTSBURG - SEMINOLE 345KV CKT 1
FDNS	00NR	3	17SP	G15_082	FROM->TO	G14-057T 345.00 - SUNNYSIDE 345KV CKT 1	717	789	0.07072	99.6	PITTSBURG - SEMINOLE 345KV CKT 1
FDNS	02ALL	3	25SP	G15_082	FROM->TO	POTTER COUNTY INTERCHANGE (WAUK 90343-A) 345/230/13.2KV TRANSFORMER CKT 1	560	560	0.06338	110.0696	BASE CASE
FDNS	02ALL	3	25SP	G15_082	FROM->TO	POTTER COUNTY INTERCHANGE (WAUK 90343-A) 345/230/13.2KV TRANSFORMER CKT 1	560	560	0.06338	108.0209	BASE CASE
FDNS	00NR	3	25SP	G15_082	FROM->TO	POTTER COUNTY INTERCHANGE (WAUK 90343-A) 345/230/13.2KV TRANSFORMER CKT 1	560	560	0.04284	101.4538	G14-074T 345.00 - TUCO INTERCHANGE 345KV CKT 1
FDNS	00NR	3	25SP	G15_082	FROM->TO	POTTER COUNTY INTERCHANGE (WAUK 90343-A) 345/230/13.2KV TRANSFORMER CKT 1	560	560	0.04284	99.9	G14-074T 345.00 - TUCO INTERCHANGE 345KV CKT 1
FDNS	00NR	3	16WP	G15_082	FROM->TO	SWISSVALE - WEST GARDNER 345KV CKT 1	717	717	0.03643	105.9691	HOYT - STRANGER CREEK 345KV CKT 1
FDNS	00NR	3	16WP	G15_082	FROM->TO	SWISSVALE - WEST GARDNER 345KV CKT 1	717	717	0.03431	103.6565	G15074_T 345.00 - HOYT 345KV CKT 1
FDNS	00NR	3	17SP	G15_082	FROM->TO	SWISSVALE - WEST GARDNER 345KV CKT 1	717	717	0.03373	103.2476	HOYT - STRANGER CREEK 345KV CKT 1
FDNS	00NR	3	17SP	G15_082	FROM->TO	SWISSVALE - WEST GARDNER 345KV CKT 1	717	717	0.03175	102.2667	G15074_T 345.00 - HOYT 345KV CKT 1
FDNS	00NR	3	16WP	G15_082	FROM->TO	SWISSVALE - WEST GARDNER 345KV CKT 1	717	717	0.03216	101.3298	LACYGNE - WAVERLY7 345.00 345KV CKT 1
FDNS	00NR	3	16WP	G15_082	FROM->TO	SWISSVALE - WEST GARDNER 345KV CKT 1	717	717	0.03216	99.9	WAVERLY7 345.00 - WOLF CREEK 345KV CKT 1
FDNS	02NR	3	17G	G15_082	FROM->TO	WALKTAP7 345.00 (WALKE345) 345/115/13.8KV TRANSFORMER CKT 1	280	280	0.0612	104.1568	FINNEY SWITCHING STATION - HOLCOMB 345KV CKT 1
FDNS	02NR	3	17G	G15_082	FROM->TO	WALKTAP7 345.00 (WALKE345) 345/115/13.8KV TRANSFORMER CKT 1	280	280	0.0612	104.1568	FINNEY SWITCHING STATION - HOLCOMB 345KV CKT 1
FDNS	02NR	3	17G	G15_082	FROM->TO	WALKTAP7 345.00 (WALKE345) 345/115/13.8KV TRANSFORMER CKT 1	280	280	0.0612	103.6883	FINNEY SWITCHING STATION - HOLCOMB 345KV CKT 1
FDNS	02NR	3	17G	G15_082	FROM->TO	WALKTAP7 345.00 (WALKE345) 345/115/13.8KV TRANSFORMER CKT 1	280	280	0.0612	103.6883	FINNEY SWITCHING STATION - HOLCOMB 345KV CKT 1
FDNS	02NR	3	20L	G15_082	FROM->TO	WALKTAP7 345.00 (WALKE345) 345/115/13.8KV TRANSFORMER CKT 1	280	280	0.05891	103.531	FINNEY SWITCHING STATION - HOLCOMB 345KV CKT 1
FDNS	02NR	3	20L	G15_082	FROM->TO	WALKTAP7 345.00 (WALKE345) 345/115/13.8KV TRANSFORMER CKT 1	280	280	0.05891	103.531	FINNEY SWITCHING STATION - HOLCOMB 345KV CKT 1
FDNS	02NR	3	20L	G15_082	FROM->TO	WALKTAP7 345.00 (WALKE345) 345/115/13.8KV TRANSFORMER CKT 1	280	280	0.05891	102.8377	FINNEY SWITCHING STATION - HOLCOMB 345KV CKT 1
FDNS	02NR	3	20L	G15_082	FROM->TO	WALKTAP7 345.00 (WALKE345) 345/115/13.8KV TRANSFORMER CKT 1	280	280	0.05891	102.8377	FINNEY SWITCHING STATION - HOLCOMB 345KV CKT 1
FDNS	08NR	0	20L	G15_083	FROM->TO	G15063_T 345.00 - MATHWSN7 345.00 345KV CKT 1	956	956	0.06137	101.6468	SOONER - SPRING CREEK 345KV CKT 1
FDNS	08NR	0	20L	G15_083	FROM->TO	G15063_T 345.00 - MATHWSN7 345.00 345KV CKT 1	956	956	0.06137	101.6199	NORTHWEST - SPRING CREEK 345KV CKT 1
FDNS	00NR	0	20WP	G15_084	TO->FROM	CHISHOLM6 230.00 - SWEETWATER 230KV CKT 1	421	439	0.13765	106.0142	G14-074T 345.00 - OKLAUNION 345KV CKT 1
FDNS	00NR	0	20WP	G15_084	TO->FROM	CHISHOLM6 230.00 - SWEETWATER 230KV CKT 1	421	439	0.13403	100.3638	MATHWSN7 345.00 - TATONGA7 345.00 345KV CKT 1
FDNS	00NR	0	16WP	G15_084	FROM->TO	CIMARRON - DRAPER LAKE 345KV CKT 1	717	717	0.12578	132.6508	G14-057T 345.00 - SUNNYSIDE 345KV CKT 1

SOLUTION	GROUP	SCENARIO	SEASON	SOURCE	DIRECTION	MONITORED ELEMENT	RATEA (MVA)	RATEB(MVA)	TDF	TC%LOADING (% MVA)	CONTINGENCY
FDNS	00NR	0	16WP	G15_084	FROM->TO	CIMARRON - DRAPER LAKE 345KV CKT 1	717	717	0.12578	122.0003	G14-057T 345.00 - LAWTON EASTSIDE 345KV CKT 1
FDNS	00NR	0	16WP	G15_084	FROM->TO	CIMARRON - DRAPER LAKE 345KV CKT 1	717	717	0.08736	116.5817	ARCADIA - SEMINOLE 345KV CKT 1
FDNS	00NR	0	16WP	G15_084	FROM->TO	CIMARRON - DRAPER LAKE 345KV CKT 1	717	717	0.09569	115.588	CLEVELAND - G15066_T 345.00 345KV CKT 1
FDNS	00NR	0	16WP	G15_084	FROM->TO	CIMARRON - DRAPER LAKE 345KV CKT 1	717	717	0.10533	115.2993	ARCADIA - NORTHWEST 345KV CKT 1
FDNS	00NR	0	16WP	G15_084	FROM->TO	CIMARRON - DRAPER LAKE 345KV CKT 1	717	717	0.09569	114.8063	G15066_T 345.00 - SOONER 345KV CKT 1
FDNS	00NR	0	16WP	G15_084	FROM->TO	CIMARRON - DRAPER LAKE 345KV CKT 1	717	717	0.09168	110.2756	CLEVELAND - TULSA NORTH 345KV CKT 1
FDNS	00NR	0	16WP	G15_084	FROM->TO	CIMARRON - DRAPER LAKE 345KV CKT 1	717	717	0.09168	110.2756	CLEVELAND - TULSA NORTH 345KV CKT 1
FDNS	00NR	0	16WP	G15_084	FROM->TO	CIMARRON - DRAPER LAKE 345KV CKT 1	717	717	0.08729	110.1142	MATHWSN7 345.00 - NORTHWEST 345KV CKT 1
FDNS	00NR	0	16WP	G15_084	FROM->TO	CIMARRON - DRAPER LAKE 345KV CKT 1	717	717	0.08488	109.2409	CIMARRON - SARA 138KV CKT 1
FDNS	00NR	0	16WP	G15_084	FROM->TO	CIMARRON - DRAPER LAKE 345KV CKT 1	717	717	0.09052	108.713	P12:138:WFEC:MSL03
FDNS	00NR	0	16WP	G15_084	FROM->TO	CIMARRON - DRAPER LAKE 345KV CKT 1	717	717	0.08121	108.0689	CIMARRON (CIMARON2) 345/138/13.8KV TRANSFORMER CKT 1
FDNS	00NR	0	16WP	G15_084	FROM->TO	CIMARRON - DRAPER LAKE 345KV CKT 1	717	717	0.08488	107.9446	SARA - STHLAKE4 138.00 138KV CKT 1
FDNS	00NR	0	16WP	G15_084	FROM->TO	CIMARRON - DRAPER LAKE 345KV CKT 1	717	717	0.08124	107.899	CIMARRON (CIMARON1) 345/138/13.8KV TRANSFORMER CKT 1
FDNS	00NR	0	16WP	G15_084	FROM->TO	CIMARRON - DRAPER LAKE 345KV CKT 1	717	717	0.08488	107.745	MCCLAIN - STHLAKE4 138.00 138KV CKT 1
FDNS	00NR	0	16WP	G15_084	FROM->TO	CIMARRON - DRAPER LAKE 345KV CKT 1	717	717	0.08495	107.4685	CIMARRON - CZECH HALL 138KV CKT 1
FDNS	00NR	0	16WP	G15_084	FROM->TO	CIMARRON - DRAPER LAKE 345KV CKT 1	717	717	0.08495	107.112	CZECH HALL - XEROX 138KV CKT 1
FDNS	00NR	0	16WP	G15_084	FROM->TO	CIMARRON - DRAPER LAKE 345KV CKT 1	717	717	0.08495	107.0924	MORGAN - XEROX 138KV CKT 1
FDNS	00NR	0	16WP	G15_084	FROM->TO	CIMARRON - DRAPER LAKE 345KV CKT 1	717	717	0.08837	106.9919	ANADARKO - POCASSETT 138KV CKT 1
FDNS	00NR	0	16WP	G15_084	FROM->TO	CIMARRON - DRAPER LAKE 345KV CKT 1	717	717	0.08495	106.9752	MORGAN - MUSTANG 138KV CKT 1
FDNS	00NR	0	16WP	G15_084	FROM->TO	CIMARRON - DRAPER LAKE 345KV CKT 1	717	717	0.08837	106.7926	POCASSETT - TUTTLE 138KV CKT 1
FDNS	00NR	0	16WP	G15_084	FROM->TO	CIMARRON - DRAPER LAKE 345KV CKT 1	717	717	0.08225	106.703	GEN515040 1-SEMINOLE 1G
FDNS	00NR	0	16WP	G15_084	FROM->TO	CIMARRON - DRAPER LAKE 345KV CKT 1	717	717	0.08313	106.6763	LACYGNE - WAVERLY7 345.00 345KV CKT 1
FDNS	00NR	0	16WP	G15_084	FROM->TO	CIMARRON - DRAPER LAKE 345KV CKT 1	717	717	0.08842	106.5853	JOHNSON COUNTY - SUNNYSIDE 345KV CKT 1
FDNS	00NR	0	16WP	G15_084	FROM->TO	CIMARRON - DRAPER LAKE 345KV CKT 1	717	717	0.08313	106.4587	WAVERLY7 345.00 - WOLF CREEK 345KV CKT 1
FDNS	00NR	0	16WP	G15_084	FROM->TO	CIMARRON - DRAPER LAKE 345KV CKT 1	717	717	0.08728	106.4058	CORN TAP - NAPLESTP 138.00 138KV CKT 1
FDNS	00NR	0	16WP	G15_084	FROM->TO	CIMARRON - DRAPER LAKE 345KV CKT 1	717	717	0.08225	106.3792	GEN509416 1-TURK GENERATION
FDNS	00NR	0	16WP	G15_084	FROM->TO	CIMARRON - DRAPER LAKE 345KV CKT 1	717	717	0.08225	106.3605	GEN501801 1-DOLET HILLS UNIT1
FDNS	00NR	0	16WP	G15_084	FROM->TO	CIMARRON - DRAPER LAKE 345KV CKT 1	717	717	0.08728	106.3121	NAPLESTP 138.00 - PAYNE 138.00 138KV CKT 1
FDNS	00NR	0	16WP	G15_084	FROM->TO	CIMARRON - DRAPER LAKE 345KV CKT 1	717	717	0.08837	106.2787	BRIDGECR 138.00 - TUTTLE 138KV CKT 1
FDNS	00NR	0	16WP	G15_084	FROM->TO	CIMARRON - DRAPER LAKE 345KV CKT 1	717	717	0.08461	106.2342	CANEYRV7 345.00 - NEOSHO 345KV CKT 1
FDNS	00NR	0	17SP	G15_084	FROM->TO	CIMARRON - DRAPER LAKE 345KV CKT 1	717	717	0.12616	106.1697	G14-057T 345.00 - SUNNYSIDE 345KV CKT 1
FDNSLock	00NR	0	16WP	G15_084	FROM->TO	CIMARRON - DRAPER LAKE 345KV CKT 1	717	717	0.08225	106.0246	GEN336821 1-GRAND GULF UNIT
FDNS	00NR	0	16WP	G15_084	FROM->TO	CIMARRON - DRAPER LAKE 345KV CKT 1	717	717	0.08225	105.9922	GEN515042 1-SEMINOLE 3G
FDNS	00NR	0	16WP	G15_084	FROM->TO	CIMARRON - DRAPER LAKE 345KV CKT 1	717	717	0.08461	105.9562	CANEYRV7 345.00 - LATHAMS7 345.00 345KV CKT 1
FDNS	00NR	0	16WP	G15_084	FROM->TO	CIMARRON - DRAPER LAKE 345KV CKT 1	717	717	0.08837	105.9048	BRIDGECR 138.00 - SUNSHINE CANYON 138KV CKT 1
FDNS	00NR	0	16WP	G15_084	FROM->TO	CIMARRON - DRAPER LAKE 345KV CKT 1	717	717	0.08837	105.894	P12:138:WFEC:MSL01
FDNS	00NR	0	16WP	G15_084	FROM->TO	CIMARRON - DRAPER LAKE 345KV CKT 1	717	717	0.08225	105.7583	GEN515041 1-SEMINOLE 2G
FDNSLock	00NR	0	16WP	G15_084	FROM->TO	CIMARRON - DRAPER LAKE 345KV CKT 1	717	717	0.08225	105.7266	GEN336153 1-WATERFORD UNIT#3
FDNS	00NR	0	16WP	G15_084	FROM->TO	CIMARRON - DRAPER LAKE 345KV CKT 1	717	717	0.09291	105.5516	CIMARRON - NORTHWEST 345KV CKT 1
FDNS	00NR	0	16WP	G15_084	FROM->TO	CIMARRON - DRAPER LAKE 345KV CKT 1	717	717	0.08225	105.5263	GEN509406 1-WELSH #3
FDNS	00NR	0	16WP	G15_084	FROM->TO	CIMARRON - DRAPER LAKE 345KV CKT 1	717	717	0.08225	105.5261	GEN509404 1-WELSH #1
FDNS	00NR	0	16WP	G15_084	FROM->TO	CIMARRON - DRAPER LAKE 345KV CKT 1	717	717	0.08461	105.5155	LATHAMS7 345.00 - ROSE HILL 345KV CKT 1
FDNSLock	00NR	0	16WP	G15_084	FROM->TO	CIMARRON - DRAPER LAKE 345KV CKT 1	717	717	0.08225	105.4219	GEN335831 1-RIVERBEND UNIT#1
FDNSLock	00NR	0	16WP	G15_084	FROM->TO	CIMARRON - DRAPER LAKE 345KV CKT 1	717	717	0.08225	105.406	GEN337911 1-ARKANSAS NUCLEAR ONE UNIT #2
FDNS	00NR	0	16WP	G15_084	FROM->TO	CIMARRON - DRAPER LAKE 345KV CKT 1	717	717	0.08603	105.1336	HUGO - SUNNYSIDE 345KV CKT 1
FDNS	00NR	0	16WP	G15_084	FROM->TO	CIMARRON - DRAPER LAKE 345KV CKT 1	717	717	0.0792	105.1183	CANADIAN RIVER - MUSKOGEE 345KV CKT 1
FDNS	00NR	0	16WP	G15_084	FROM->TO	CIMARRON - DRAPER LAKE 345KV CKT 1	717	717	0.08207	105.0337	P12:138:OKGE:3TERM14
FDNS	00NR	0	16WP	G15_084	FROM->TO	CIMARRON - DRAPER LAKE 345KV CKT 1	717	717	0.08225	105.0296	GRAND GULF 500/22.0KV TRANSFORMER CKT 1
FDNS	00NR	0	16WP	G15_084	FROM->TO	CIMARRON - DRAPER LAKE 345KV CKT 1	717	717	0.08225	105.0273	GEN337910 1-ARKANSAS NUCLEAR ONE UNIT #1
FDNS	00NR	0	16WP	G15_084	FROM->TO	CIMARRON - DRAPER LAKE 345KV CKT 1	717	717	0.0891	105.0144	JOHNSON COUNTY - PITTSBURG 345KV CKT 1
FDNS	00NR	0	16WP	G15_084	FROM->TO	CIMARRON - DRAPER LAKE 345KV CKT 1	717	717	0.0891	105.0144	JOHNSON COUNTY - PITTSBURG 345KV CKT 1
FDNS	00NR	0	16WP	G15_084	FROM->TO	CIMARRON - DRAPER LAKE 345KV CKT 1	717	717	0.08314	104.9951	HORSESHOE LAKE - JONES TAP 138KV CKT 1
FDNS	00NR	0	16WP	G15_084	FROM->TO	CIMARRON - DRAPER LAKE 345KV CKT 1	717	717	0.08301	104.9687	MORISNT4 138.00 - STILLWATER 138KV CKT 1
FDNS	00NR	0	16WP	G15_084	FROM->TO	CIMARRON - DRAPER LAKE 345KV CKT 1	717	717	0.08302	104.9641	P12:138:OKGE:3TERM2
FDNS	00NR	0	16WP	G15_084	FROM->TO	CIMARRON - DRAPER LAKE 345KV CKT 1	717	717	0.08751	104.9439	REDBUD - RIVERSIDE STATION 345KV CKT 1
FDNS	00NR	0	16WP	G15_084	FROM->TO	CIMARRON - DRAPER LAKE 345KV CKT 1	717	717	0.08751	104.9439	REDBUD - RIVERSIDE STATION 345KV CKT 1
FDNS	00NR	0	16WP	G15_084	FROM->TO	CIMARRON - DRAPER LAKE 345KV CKT 1	717	717	0.08225	104.8928	GEN515226 1-MUSKOGEE 6G
FDNS	00NR	0	16WP	G15_084	FROM->TO	CIMARRON - DRAPER LAKE 345KV CKT 1	717	717	0.08225	104.879	GEN501813 1-RODEMACHER UNIT 3
FDNS	00NR	0	16WP	G15_084	FROM->TO	CIMARRON - DRAPER LAKE 345KV CKT 1	717	717	0.08977	104.8291	BAILEY4 138.00 - SUNSHINE CANYON 138KV CKT 1
FDNS	00NR	0	16WP	G15_084	FROM->TO	CIMARRON - DRAPER LAKE 345KV CKT 1	717	717	0.08234	104.7782	NORTHWEST (NORTWST2) 345/138/13.8KV TRANSFORMER CKT 1
FDNS	00NR	0	16WP	G15_084	FROM->TO	CIMARRON - DRAPER LAKE 345KV CKT 1	717	717	0.08406	104.7766	7SAREPTA% 345.00 - LONGWOOD 345KV CKT 1
FDNS	00NR	0	16WP	G15_084	FROM->TO	CIMARRON - DRAPER LAKE 345KV CKT 1	717	717	0.08406	104.7766	7SAREPTA% 345.00 - LONGWOOD 345KV CKT 1
FDNS	00NR	0	16WP	G15_084	FROM->TO	CIMARRON - DRAPER LAKE 345KV CKT 1	717	717	0.08234	104.7749	ARCADIA - KAMO MEMORIAL 138KV CKT 1
FDNS	00NR	0	16WP	G15_084	FROM->TO	CIMARRON - DRAPER LAKE 345KV CKT 1	717	717	0.08229	104.7555	P12:138:OKGE:3TERM12
FDNS	00NR	0	16WP	G15_084	FROM->TO	CIMARRON - DRAPER LAKE 345KV CKT 1	717	717	0.083	104.7399	DOLET HILLS - SOUTHWEST SHREVEPORT 345KV CKT 1
FDNS	00NR	0	16WP	G15_084	FROM->TO	CIMARRON - DRAPER LAKE 345KV CKT 1	717	717	0.083	104.7399	DOLET HILLS - SOUTHWEST SHREVEPORT 345KV CKT 1
FDNS	00NR	0	16WP	G15_084	FROM->TO	CIMARRON - DRAPER LAKE 345KV CKT 1	717	717	0.08225	104.6942	GEN515225 1-MUSKOGEE 5G
FDNS	00NR	0	16WP	G15_084	FROM->TO	CIMARRON - DRAPER LAKE 345KV CKT 1	717	717	0.08225	104.694	GEN515223 1-MUSKOGEE 4G
FDNS	00NR	0	16WP	G15_084	FROM->TO	CIMARRON - DRAPER LAKE 345KV CKT 1	717	717	0.08225	104.6904	GEN335206 1-NELSON UNIT 6
FDNS	00NR	0	16WP	G15_084	FROM->TO	CIMARRON - DRAPER LAKE 345KV CKT 1	717	717	0.08262	104.68	MEMORIAL - SKYLINE 138KV CKT 1
FDNS	00NR	0	16WP	G15_084	FROM->TO	CIMARRON - DRAPER LAKE 345KV CKT 1	717	717	0.07586	104.583	GRACEMONT (BANK 1) 345/138/13.8KV TRANSFORMER CKT 1
FDNS	00NR	0	16WP	G15_084	FROM->TO	CIMARRON - DRAPER LAKE 345KV CKT 1	717	717	0.08299	104.5721	QUAIL CREEK - SKYLINE 138KV CKT 1
FDNS	00NR	0	16WP	G15_084	FROM->TO	CIMARRON - DRAPER LAKE 345KV CKT 1	717	717	0.08225	104.5492	GEN509409 1-WILKES #3
FDNS	00NR	0	16WP	G15_084	FROM->TO	CIMARRON - DRAPER LAKE 345KV CKT 1	717	717	0.08225	104.5474	GEN337653 1-WHITE BLUFF UNIT #2
FDNS	00NR	0	16WP	G15_084	FROM->TO	CIMARRON - DRAPER LAKE 345KV CKT 1	717	717	0.08265	104.5355	P12:138:OKGE:3TERM18
FDNS	00NR	0	16WP	G15_084	FROM->TO	CIMARRON - DRAPER LAKE 345KV CKT 1	717	717	0.08977	104.5271	BAILEY4 138.00 - WESTMOORE 138KV CKT 1
FDNS	00NR	0	16WP	G15_084	FROM->TO	CIMARRON - DRAPER LAKE 345KV CKT 1	717	717	0.08225	104.519	GEN501812 1-RODEMACHER UNIT 2
FDNS	00NR	0	16WP	G15_084	FROM->TO	CIMARRON - DRAPER LAKE 345KV CKT 1	717	717	0.08233	104.5145	NORTHWEST (NORTWST4) 345/138/13.8KV TRANSFORMER CKT 1
FDNS	00NR	0	16WP	G15_084	FROM->TO	CIMARRON - DRAPER LAKE 345KV CKT 1	717	717	0.08225	104.4548	NEW MADRID 161/22.0KV TRANSFORMER CKT 1

SOLUTION	GROUP	SCENARIO	SEASON	SOURCE	DIRECTION	MONITORED ELEMENT	RATEA (MVA)	RATEB(MVA)	TDF	TC%LOADING (% MVA)	CONTINGENCY
FDNS	00NR	0	16WP	G15_084	FROM->TO	CIMARRON - DRAPER LAKE 345KV CKT 1	717	717	0.08259	104.4542	36 & MERIDIAN - CHEMTRON 138KV CKT 1
FDNS	00NR	0	16WP	G15_084	FROM->TO	CIMARRON - DRAPER LAKE 345KV CKT 1	717	717	0.08387	104.4515	THISTLE7 345.00 - WOODWARD DISTRICT EHV 345KV CKT 1
FDNS	00NR	0	16WP	G15_084	FROM->TO	CIMARRON - DRAPER LAKE 345KV CKT 1	717	717	0.08387	104.4515	THISTLE7 345.00 - WOODWARD DISTRICT EHV 345KV CKT 1
FDNS	00NR	0	16WP	G15_084	FROM->TO	CIMARRON - DRAPER LAKE 345KV CKT 1	717	717	0.08387	104.4515	THISTLE7 345.00 - WOODWARD DISTRICT EHV 345KV CKT 2
FDNS	00NR	0	16WP	G15_084	FROM->TO	CIMARRON - DRAPER LAKE 345KV CKT 1	717	717	0.08387	104.4515	THISTLE7 345.00 - WOODWARD DISTRICT EHV 345KV CKT 2
FDNS	00NR	0	16WP	G15_084	FROM->TO	CIMARRON - DRAPER LAKE 345KV CKT 1	717	717	0.08225	104.4411	NEW MADRID 345/22.0KV TRANSFORMER CKT 1
FDNS	00NR	0	16WP	G15_084	FROM->TO	CIMARRON - DRAPER LAKE 345KV CKT 1	717	717	0.08225	104.4225	GEN520947 1-HUGO1
FDNS	00NR	0	16WP	G15_084	FROM->TO	CIMARRON - DRAPER LAKE 345KV CKT 1	717	717	0.08225	104.4148	GEN337652 1-WHITE BLUFF UNIT #1
FDNS	00NR	0	16WP	G15_084	FROM->TO	CIMARRON - DRAPER LAKE 345KV CKT 1	717	717	0.08233	104.3894	NORTHWEST (NORTWST3) 345/138/13.8KV TRANSFORMER CKT 1
FDNS	00NR	0	16WP	G15_084	FROM->TO	CIMARRON - DRAPER LAKE 345KV CKT 1	717	717	0.0832	104.376	3TR3AR8EL7EL
FDNS	00NR	0	16WP	G15_084	FROM->TO	CIMARRON - DRAPER LAKE 345KV CKT 1	717	717	0.0832	104.376	7SAREPTA% 345.00 - ELDORADO EHV 345KV CKT 1
FDNS	00NR	0	16WP	G15_084	FROM->TO	CIMARRON - DRAPER LAKE 345KV CKT 1	717	717	0.0832	104.3682	ELDORADO EHV 500/345KV TRANSFORMER CKT 1
FDNS	00NR	0	16WP	G15_084	FROM->TO	CIMARRON - DRAPER LAKE 345KV CKT 1	717	717	0.08259	104.3672	CHEMTRON - PENNSYLVANIA 138KV CKT 1
FDNS	00NR	0	16WP	G15_084	FROM->TO	CIMARRON - DRAPER LAKE 345KV CKT 1	717	717	0.08233	104.3371	G15052_T 345.00 - ROSE HILL 345KV CKT 1
FDNS	00NR	0	16WP	G15_084	FROM->TO	CIMARRON - DRAPER LAKE 345KV CKT 1	717	717	0.08257	104.3332	G15074_T 345.00 - HOYT 345KV CKT 1
FDNS	00NR	0	16WP	G15_084	FROM->TO	CIMARRON - DRAPER LAKE 345KV CKT 1	717	717	0.08604	104.3021	BLANCHARD - CORNVILLE 138KV CKT 1
FDNS	00NR	0	16WP	G15_084	FROM->TO	CIMARRON - DRAPER LAKE 345KV CKT 1	717	717	0.08423	104.3015	COMANCHE - LOCO 138KV CKT 1
FDNS	00NR	0	16WP	G15_084	FROM->TO	CIMARRON - DRAPER LAKE 345KV CKT 1	717	717	0.08243	104.2791	P12:138:OKGE:3TERM17
FDNS	00NR	0	16WP	G15_084	FROM->TO	CIMARRON - DRAPER LAKE 345KV CKT 1	717	717	0.08225	104.2625	GEN515577 1-ARBWND11 0.6900
FDNS	00NR	0	16WP	G15_084	FROM->TO	CIMARRON - DRAPER LAKE 345KV CKT 1	717	717	0.08977	104.2438	FRANKLIN SW - WESTMOORE 138KV CKT 1
FDNS	00NR	0	16WP	G15_084	FROM->TO	CIMARRON - DRAPER LAKE 345KV CKT 1	717	717	0.08291	104.2374	P12:138:OKGE:3TERM11
FDNS	00NR	0	16WP	G15_084	FROM->TO	CIMARRON - DRAPER LAKE 345KV CKT 1	717	717	0.08225	104.2237	GEN334440 1-SABINE UNIT 4
FDNS	00NR	0	16WP	G15_084	FROM->TO	CIMARRON - DRAPER LAKE 345KV CKT 1	717	717	0.08236	104.2165	LONEOAK - NORTHWEST 138KV CKT 1
FDNS	00NR	0	16WP	G15_084	FROM->TO	CIMARRON - DRAPER LAKE 345KV CKT 1	717	717	0.08604	104.211	P12:138:AEPW-OGE:CORNVIL4:MAUD 4
FDNS	00NR	0	16WP	G15_084	FROM->TO	CIMARRON - DRAPER LAKE 345KV CKT 1	717	717	0.08298	104.2024	KETCH TAP - NORTHWEST 138KV CKT 1
FDNS	00NR	0	16WP	G15_084	FROM->TO	CIMARRON - DRAPER LAKE 345KV CKT 1	717	717	0.08225	104.2023	DELL 500 - ESSEX UNIT 2 500KV CKT Z1
FDNS	00NR	0	16WP	G15_084	FROM->TO	CIMARRON - DRAPER LAKE 345KV CKT 1	717	717	0.08279	104.1938	DIVISION AVE - LAKESIDE 138KV CKT 1
FDNS	00NR	0	16WP	G15_084	FROM->TO	CIMARRON - DRAPER LAKE 345KV CKT 1	717	717	0.0817	104.1729	HORSESHOE LAKE - KAMO MEMORIAL 138KV CKT 1
FDNS	00NR	0	16WP	G15_084	FROM->TO	CIMARRON - DRAPER LAKE 345KV CKT 1	717	717	0.08209	104.1303	NORTHWEST - PANTHER 138KV CKT 1
FDNS	00NR	0	16WP	G15_084	FROM->TO	CIMARRON - DRAPER LAKE 345KV CKT 1	717	717	0.08362	104.1253	G14-074T 345.00 - OKLAUNION 345KV CKT 1
FDNS	00NR	0	16WP	G15_084	FROM->TO	CIMARRON - DRAPER LAKE 345KV CKT 1	717	717	0.08015	104.1217	CLARKSVILLE - ONETA 345KV CKT 1
FDNS	00NR	0	16WP	G15_084	FROM->TO	CIMARRON - DRAPER LAKE 345KV CKT 1	717	717	0.08015	104.1217	CLARKSVILLE - ONETA 345KV CKT 1
FDNS	00NR	0	16WP	G15_084	FROM->TO	CIMARRON - DRAPER LAKE 345KV CKT 1	717	717	0.08176	104.1144	P12:138:OKGE:3TERM20
FDNS	00NR	0	16WP	G15_084	FROM->TO	CIMARRON - DRAPER LAKE 345KV CKT 1	717	717	0.08604	104.1089	BLANCHARD - MAUD 138KV CKT 1
FDNS	00NR	0	16WP	G15_084	FROM->TO	CIMARRON - DRAPER LAKE 345KV CKT 1	717	717	0.08358	104.1015	CIMARRON - HAYMAKER 138KV CKT 1
FDNS	00NR	0	16WP	G15_084	FROM->TO	CIMARRON - DRAPER LAKE 345KV CKT 1	717	717	0.0829	104.0977	P12:138:OKGE:3TERM47
FDNS	00NR	0	16WP	G15_084	FROM->TO	CIMARRON - DRAPER LAKE 345KV CKT 1	717	717	0.08225	104.0931	GEN336252 1-NINEMILE POINT UNIT#5
FDNS	00NR	0	16WP	G15_084	FROM->TO	CIMARRON - DRAPER LAKE 345KV CKT 1	717	717	0.08515	104.0857	FINNEY SWITCHING STATION - HOLCOMB 345KV CKT 1
FDNS	00NR	0	16WP	G15_084	FROM->TO	CIMARRON - DRAPER LAKE 345KV CKT 1	717	717	0.08515	104.0857	FINNEY SWITCHING STATION - HOLCOMB 345KV CKT 1
FDNS	00NR	0	16WP	G15_084	FROM->TO	CIMARRON - DRAPER LAKE 345KV CKT 1	717	717	0.08225	104.0808	DOLET HILLS 345/24.0KV TRANSFORMER CKT 1
FDNS	00NR	0	16WP	G15_084	FROM->TO	CIMARRON - DRAPER LAKE 345KV CKT 1	717	717	0.08209	104.08	PANTHER - SILVER LAKE 138KV CKT 1
FDNS	00NR	0	16WP	G15_084	FROM->TO	CIMARRON - DRAPER LAKE 345KV CKT 1	717	717	0.08279	104.0723	HEFNER - LAKESIDE 138KV CKT 1
FDNS	00NR	0	16WP	G15_084	FROM->TO	CIMARRON - DRAPER LAKE 345KV CKT 1	717	717	0.08291	104.041	BLACKBERRY - NEOSHO 345KV CKT 1
FDNS	00NR	0	16WP	G15_084	FROM->TO	CIMARRON - DRAPER LAKE 345KV CKT 1	717	717	0.08225	104.0356	WHITE BLUFF 500/26.0KV TRANSFORMER CKT 1
FDNS	00NR	0	16WP	G15_084	FROM->TO	CIMARRON - DRAPER LAKE 345KV CKT 1	717	717	0.08237	104.0273	KETCH - KETCH TAP 138KV CKT 1
FDNS	00NR	0	16WP	G15_084	FROM->TO	CIMARRON - DRAPER LAKE 345KV CKT 1	717	717	0.08301	104.02	EMPORIA ENERGY CENTER - G14_001T 345.00 345KV CKT 1
FDNS	00NR	0	16WP	G15_084	FROM->TO	CIMARRON - DRAPER LAKE 345KV CKT 1	717	717	0.08257	104.0189	HOYT - STRANGER CREEK 345KV CKT 1
FDNS	00NR	0	16WP	G15_084	FROM->TO	CIMARRON - DRAPER LAKE 345KV CKT 1	717	717	0.08208	104.0086	DIVISION AVE - MUSTANG 138KV CKT 1
FDNS	00NR	0	16WP	G15_084	FROM->TO	CIMARRON - DRAPER LAKE 345KV CKT 1	717	717	0.08246	104	G15088_T 345.00 - MOORE 345KV CKT 1
FDNS	00NR	0	16WP	G15_084	FROM->TO	CIMARRON - DRAPER LAKE 345KV CKT 1	717	717	0.08225	104	GEN300006 1-NEW MADRID UNIT 1
FDNS	00NR	0	16WP	G15_084	FROM->TO	CIMARRON - DRAPER LAKE 345KV CKT 1	717	717	0.08225	104	GEN300007 1-NEW MADRID UNIT 2
FDNS	00NR	0	16WP	G15_084	FROM->TO	CIMARRON - DRAPER LAKE 345KV CKT 1	717	717	0.08308	103.999	P12:138:WFEC:MSL02
FDNS	00NR	0	16WP	G15_084	FROM->TO	CIMARRON - DRAPER LAKE 345KV CKT 1	717	717	0.08358	103.998	DIVISION AVE - HAYMAKER 138KV CKT 1
FDNS	00NR	0	16WP	G15_084	FROM->TO	CIMARRON - DRAPER LAKE 345KV CKT 1	717	717	0.08225	103.9886	GEN509408 1-WILKES #2
FDNS	00NR	0	16WP	G15_084	FROM->TO	CIMARRON - DRAPER LAKE 345KV CKT 1	717	717	0.08314	103.9879	P12:138:AEPW-OGE:SHIDLER4:OSAGE 4
FDNS	00NR	0	16WP	G15_084	FROM->TO	CIMARRON - DRAPER LAKE 345KV CKT 1	717	717	0.08281	103.975	MCCLAIN - PLEASANT VALLEY 138KV CKT 1
FDNS	00NR	0	16WP	G15_084	FROM->TO	CIMARRON - DRAPER LAKE 345KV CKT 1	717	717	0.08271	103.9746	SWISSVALE - WEST GARDNER 345KV CKT 1
FDNS	00NR	0	16WP	G15_084	FROM->TO	CIMARRON - DRAPER LAKE 345KV CKT 1	717	717	0.08257	103.9659	G15074_T 345.00 - JEFFREY ENERGY CENTER 345KV CKT 1
FDNS	00NR	0	16WP	G15_084	FROM->TO	CIMARRON - DRAPER LAKE 345KV CKT 1	717	717	0.08288	103.962	ANADARKO - GEORGIA 138KV CKT 1
FDNS	00NR	0	16WP	G15_084	FROM->TO	CIMARRON - DRAPER LAKE 345KV CKT 1	717	717	0.08225	103.9525	GEN335204 1-NELSON UNIT 4
FDNS	00NR	0	16WP	G15_084	FROM->TO	CIMARRON - DRAPER LAKE 345KV CKT 1	717	717	0.08225	103.9519	GEN336831 1-BAXTER WILSON SES
FDNS	00NR	0	16WP	G15_084	FROM->TO	CIMARRON - DRAPER LAKE 345KV CKT 1	717	717	0.08088	103.9391	P12:138:AEPW:OKMULGE4:R.S.S-4
FDNS	00NR	0	16WP	G15_084	FROM->TO	CIMARRON - DRAPER LAKE 345KV CKT 1	717	717	0.08225	103.9208	GEN506754 1-LEBROCK STEAM 1
FDNS	00NR	0	16WP	G15_084	FROM->TO	CIMARRON - DRAPER LAKE 345KV CKT 1	717	717	0.08284	103.919	CLASSEN - ROBINSON 138KV CKT 1
FDNS	00NR	0	16WP	G15_084	FROM->TO	CIMARRON - DRAPER LAKE 345KV CKT 1	717	717	0.08225	103.9013	GEN334441 1-SABINE UNIT 5
FDNS	00NR	0	16WP	G15_084	FROM->TO	CIMARRON - DRAPER LAKE 345KV CKT 1	717	717	0.08225	103.8962	GEN334071 1-LEWIS CREEK 2
FDNS	00NR	0	16WP	G15_084	FROM->TO	CIMARRON - DRAPER LAKE 345KV CKT 1	717	717	0.08288	103.8953	FLETCHER - GEORGIA 138KV CKT 1
FDNS	00NR	0	16WP	G15_084	FROM->TO	CIMARRON - DRAPER LAKE 345KV CKT 1	717	717	0.08301	103.8915	G14_001T 345.00 - WICHITA 345KV CKT 1
FDNS	00NR	0	16WP	G15_084	FROM->TO	CIMARRON - DRAPER LAKE 345KV CKT 1	717	717	0.08225	103.8883	GEN334070 1-LEWIS CREEK 1
FDNS	00NR	0	16WP	G15_084	FROM->TO	CIMARRON - DRAPER LAKE 345KV CKT 1	717	717	0.08324	103.8865	BENTON - WICHITA 345KV CKT 1
FDNS	00NR	0	16WP	G15_084	FROM->TO	CIMARRON - DRAPER LAKE 345KV CKT 1	717	717	0.08515	103.8864	FINNEY SWITCHING STATION - Hitchland Interchange 345KV CKT 1
FDNS	00NR	0	16WP	G15_084	FROM->TO	CIMARRON - DRAPER LAKE 345KV CKT 1	717	717	0.08225	103.8862	GEN336251 1-NINEMILE POINT UNIT#4
FDNS	00NR	0	16WP	G15_084	FROM->TO	CIMARRON - DRAPER LAKE 345KV CKT 1	717	717	0.08273	103.8786	WEBRE - WELLS 500KV CKT 1
FDNS	00NR	0	16WP	G15_084	FROM->TO	CIMARRON - DRAPER LAKE 345KV CKT 1	717	717	0.08294	103.8775	LACYGNE - NEOSHO 345KV CKT 1
FDNSLock	00NR	0	16WP	G15_084	FROM->TO	CIMARRON - DRAPER LAKE 345KV CKT 1	717	717	0.08225	103.8742	GEN590011 2-ERCOT EQUIVALENCE
FDNS	00NR	0	16WP	G15_084	FROM->TO	CIMARRON - DRAPER LAKE 345KV CKT 1	717	717	0.08262	103.862	EMPORIA ENERGY CENTER - SWISSVALE 345KV CKT 1
FDNS	00NR	0	16WP	G15_084	FROM->TO	CIMARRON - DRAPER LAKE 345KV CKT 1	717	717	0.08296	103.8385	EMPIRE - FLETCHER 138KV CKT 1
FDNSLock	00NR	0	16WP	G15_084	FROM->TO	CIMARRON - DRAPER LAKE 345KV CKT 1	717	717	0.08225	103.8317	GEN590010 1-ERCOT EQUIVALENCE
FDNS	00NR	0	16WP	G15_084	FROM->TO	CIMARRON - DRAPER LAKE 345KV CKT 1	717	717	0.08284	103.8223	G1524G1525 345.00 - THISTLE7 345.00 345KV CKT 1

SOLUTION	GROUP	SCENARIO	SEASON	SOURCE	DIRECTION	MONITORED ELEMENT	RATEA (MVA)	RATEB(MVA)	TDF	TC%LOADING (% MVA)	CONTINGENCY
FDNS	00NR	0	16WP	G15_084	FROM->TO	CIMARRON - DRAPER LAKE 345KV CKT 1	717	717	0.08284	103.8223	G1524G1525 345.00 - THISTLE7 345.00 345KV CKT 2
FDNS	00NR	0	16WP	G15_084	FROM->TO	CIMARRON - DRAPER LAKE 345KV CKT 1	717	717	0.08225	103.8186	GEN503909 1-FULTONU1 1 16.000
FDNSLock	00NR	0	16WP	G15_084	FROM->TO	CIMARRON - DRAPER LAKE 345KV CKT 1	717	717	0.08225	103.8129	GEN338146 1-INDEPENDENCE UNIT #2
FDNS	00NR	0	16WP	G15_084	FROM->TO	CIMARRON - DRAPER LAKE 345KV CKT 1	717	717	0.08236	103.8126	LONEOAK - QUAIL CREEK 138KV CKT 1
FDNS	00NR	0	16WP	G15_084	FROM->TO	CIMARRON - DRAPER LAKE 345KV CKT 1	717	717	0.08225	103.809	GEN501811 1-RODEMACHER UNIT 1
FDNS	00NR	0	16WP	G15_084	FROM->TO	CIMARRON - DRAPER LAKE 345KV CKT 1	717	717	0.08205	103.8044	WOODRING (WOODRNG2) 345/138/13.8KV TRANSFORMER CKT 1
FDNS	00NR	0	16WP	G15_084	FROM->TO	CIMARRON - DRAPER LAKE 345KV CKT 1	717	717	0.08589	103.7918	CRINER - PAYNE 138.00 138KV CKT 1
FDNS	00NR	0	16WP	G15_084	FROM->TO	CIMARRON - DRAPER LAKE 345KV CKT 1	717	717	0.08314	103.7817	OSAGE - WEBB CITY TAP 138KV CKT 1
FDNS	00NR	0	16WP	G15_084	FROM->TO	CIMARRON - DRAPER LAKE 345KV CKT 1	717	717	0.08296	103.7768	COMANCHE - EMPIRE 138KV CKT 1
FDNS	00NR	0	16WP	G15_084	FROM->TO	CIMARRON - DRAPER LAKE 345KV CKT 1	717	717	0.08225	103.7748	FRONTIER - GRIMES 345KV CKT 1
FDNS	00NR	0	16WP	G15_084	FROM->TO	CIMARRON - DRAPER LAKE 345KV CKT 1	717	717	0.08225	103.7716	GEN334433 1-SABINE UNIT 3
FDNS	00NR	0	16WP	G15_084	FROM->TO	CIMARRON - DRAPER LAKE 345KV CKT 1	717	717	0.08225	103.7693	P12:069:OKGE:3TERM4
FDNS	00NR	0	16WP	G15_084	FROM->TO	CIMARRON - DRAPER LAKE 345KV CKT 1	717	717	0.08225	103.7671	GEN334030 1-FRONTIER UNIT 1
FDNS	00NR	0	16WP	G15_084	FROM->TO	CIMARRON - DRAPER LAKE 345KV CKT 1	717	717	0.08225	103.7661	GEN334031 1-FRONTIER UNIT 2
FDNS	00NR	0	16WP	G15_084	FROM->TO	CIMARRON - DRAPER LAKE 345KV CKT 1	717	717	0.08225	103.764	GEN303007 1-1BC2 U2
FDNS	00NR	0	16WP	G15_084	FROM->TO	CIMARRON - DRAPER LAKE 345KV CKT 1	717	717	0.08298	103.7619	SPVALLY4 138.00 - STILLWATER 138KV CKT 1
FDNS	00NR	0	16WP	G15_084	FROM->TO	CIMARRON - DRAPER LAKE 345KV CKT 1	717	717	0.08225	103.7587	GEN303006 1-1BC2 U1
FDNS	00NR	0	16WP	G15_084	FROM->TO	CIMARRON - DRAPER LAKE 345KV CKT 1	717	717	0.08225	103.7582	GEN337041 1-GERALD ANDRUS
FDNS	00NR	0	16WP	G15_084	FROM->TO	CIMARRON - DRAPER LAKE 345KV CKT 1	717	717	0.08225	103.7551	P12:161:AEPW:DYESS 5:HYLAND 5
FDNS	00NR	0	16WP	G15_084	FROM->TO	CIMARRON - DRAPER LAKE 345KV CKT 1	717	717	0.08225	103.7415	GEN336191 1-LITTLE GYPSY UNIT#3
FDNS	00NR	0	16WP	G15_084	FROM->TO	CIMARRON - DRAPER LAKE 345KV CKT 1	717	717	0.08234	103.7374	8DANIEL8 500.00 - MCKNIGHT 500KV CKT 1
FDNS	00NR	0	16WP	G15_084	FROM->TO	CIMARRON - DRAPER LAKE 345KV CKT 1	717	717	0.08225	103.7345	GEN509393 S1-ARSENAL HILL GENS #4 (STALL)
FDNS	00NR	0	16WP	G15_084	FROM->TO	CIMARRON - DRAPER LAKE 345KV CKT 1	717	717	0.08255	103.7342	CLEAVELAND - CLEVLND 4 138.00 138KV CKT Z1
FDNS	00NR	0	16WP	G15_084	FROM->TO	CIMARRON - DRAPER LAKE 345KV CKT 1	717	717	0.08255	103.7339	CLEVELAND (CLVAUTO1) 345/138/13.8KV TRANSFORMER CKT 1
FDNS	00NR	0	16WP	G15_084	FROM->TO	CIMARRON - DRAPER LAKE 345KV CKT 1	717	717	0.08255	103.7339	CLEVELAND (CLVAUTO1) 345/138/13.8KV TRANSFORMER CKT 1
FDNS	00NR	0	16WP	G15_084	FROM->TO	CIMARRON - DRAPER LAKE 345KV CKT 1	717	717	0.08298	103.7325	PAYNESB4 138.00 - SPVALLY4 138.00 138KV CKT 1
FDNS	00NR	0	16WP	G15_084	FROM->TO	CIMARRON - DRAPER LAKE 345KV CKT 1	717	717	0.08232	103.7308	P12:138:OKGE:3TERM13
FDNS	00NR	0	16WP	G15_084	FROM->TO	CIMARRON - DRAPER LAKE 345KV CKT 1	717	717	0.0815	103.7266	ARKANSAS NUCLEAR ONE - FT SMITH 500KV CKT 1
FDNS	00NR	0	16WP	G15_084	FROM->TO	CIMARRON - DRAPER LAKE 345KV CKT 1	717	717	0.0815	103.7266	ARKANSAS NUCLEAR ONE - FT SMITH 500KV CKT 1
FDNS	00NR	0	16WP	G15_084	FROM->TO	CIMARRON - DRAPER LAKE 345KV CKT 1	717	717	0.08225	103.7179	GEN509392 G2-ARSENAL HILL GENS #3 (STALL)
FDNS	00NR	0	16WP	G15_084	FROM->TO	CIMARRON - DRAPER LAKE 345KV CKT 1	717	717	0.08225	103.7178	GEN509391 G1-ARSENAL HILL GENS #2 (STALL)
FDNS	00NR	0	16WP	G15_084	FROM->TO	CIMARRON - DRAPER LAKE 345KV CKT 1	717	717	0.08298	103.7169	CUSHING - PAYNESB4 138.00 138KV CKT 1
FDNS	00NR	0	16WP	G15_084	FROM->TO	CIMARRON - DRAPER LAKE 345KV CKT 1	717	717	0.08225	103.711	GEN335614 1-WILLOW GLENN UNIT#4
FDNS	00NR	0	16WP	G15_084	FROM->TO	CIMARRON - DRAPER LAKE 345KV CKT 1	717	717	0.08249	103.7087	DAYTON - MUSTANG 138KV CKT 1
FDNS	00NR	0	16WP	G15_084	FROM->TO	CIMARRON - DRAPER LAKE 345KV CKT 1	717	717	0.08249	103.7038	DAYTON - HOBBY LOBBY 138KV CKT 1
FDNS	00NR	0	16WP	G15_084	FROM->TO	CIMARRON - DRAPER LAKE 345KV CKT 1	717	717	0.08225	103.6985	GEN303008 1-1BC2 U3
FDNS	00NR	0	16WP	G15_084	FROM->TO	CIMARRON - DRAPER LAKE 345KV CKT 1	717	717	0.0788	103.6895	CANADIAN RIVER - PITTSBURG 345KV CKT 1
FDNS	00NR	0	16WP	G15_084	FROM->TO	CIMARRON - DRAPER LAKE 345KV CKT 1	717	717	0.0788	103.6895	CANADIAN RIVER - PITTSBURG 345KV CKT 1
FDNS	00NR	0	16WP	G15_084	FROM->TO	CIMARRON - DRAPER LAKE 345KV CKT 1	717	717	0.08263	103.6882	MUSTANG - SW 5TH 138KV CKT 1
FDNS	00NR	0	16WP	G15_084	FROM->TO	CIMARRON - DRAPER LAKE 345KV CKT 1	717	717	0.08225	103.6855	GEN338143 1-INDEPENDENCE UNIT #1
FDNS	00NR	0	16WP	G15_084	FROM->TO	CIMARRON - DRAPER LAKE 345KV CKT 1	717	717	0.08254	103.6766	ELDORADO EHV - MOUNT OLIVE 500KV CKT 1
FDNS	00NR	0	16WP	G15_084	FROM->TO	CIMARRON - DRAPER LAKE 345KV CKT 1	717	717	0.08225	103.6764	GEN336170 1-GULF OXY U4
FDNS	00NR	0	16WP	G15_084	FROM->TO	CIMARRON - DRAPER LAKE 345KV CKT 1	717	717	0.08225	103.6751	GEN336464 1-MICHOUD UNIT #3
FDNS	00NR	0	16WP	G15_084	FROM->TO	CIMARRON - DRAPER LAKE 345KV CKT 1	717	717	0.08589	103.6693	COLE - CRINER 138KV CKT 1
FDNS	00NR	0	16WP	G15_084	FROM->TO	CIMARRON - DRAPER LAKE 345KV CKT 1	717	717	0.08228	103.6516	P12:069:OKGE:3TERM19
FDNS	00NR	0	16WP	G15_084	FROM->TO	CIMARRON - DRAPER LAKE 345KV CKT 1	717	717	0.08225	103.6516	ESSEX UNIT 2 500/18.0KV TRANSFORMER CKT 1
FDNS	00NR	0	16WP	G15_084	FROM->TO	CIMARRON - DRAPER LAKE 345KV CKT 1	717	717	0.08242	103.6427	7LUTESVIL 345.00 - 7ST FRANC 345.00 345KV CKT 1
FDNS	00NR	0	16WP	G15_084	FROM->TO	CIMARRON - DRAPER LAKE 345KV CKT 1	717	717	0.08253	103.6334	OUMED 4 - STONEWALL 138KV CKT 1
FDNS	00NR	0	16WP	G15_084	FROM->TO	CIMARRON - DRAPER LAKE 345KV CKT 1	717	717	0.08225	103.6302	GEN336801 1-BAXTER WILSON UNIT #1
FDNS	00NR	0	16WP	G15_084	FROM->TO	CIMARRON - DRAPER LAKE 345KV CKT 1	717	717	0.08284	103.6262	LIGHTNING CREEK - ROBINSON 138KV CKT 1
FDNS	00NR	0	16WP	G15_084	FROM->TO	CIMARRON - DRAPER LAKE 345KV CKT 1	717	717	0.082	103.6225	ARCADIA - LGARBER4 138.00 138KV CKT 1
FDNS	00NR	0	16WP	G15_084	FROM->TO	CIMARRON - DRAPER LAKE 345KV CKT 1	717	717	0.08225	103.6136	GEN506752 1-LEBROCK GAS 1
FDNS	00NR	0	16WP	G15_084	FROM->TO	CIMARRON - DRAPER LAKE 345KV CKT 1	717	717	0.08225	103.6135	GEN506753 1-LEBROCK GAS 2
FDNS	00NR	0	16WP	G15_084	FROM->TO	CIMARRON - DRAPER LAKE 345KV CKT 1	717	717	0.08237	103.6057	7JASPER 345.00 - BLACKBERRY 345KV CKT 1
FDNS	00NR	0	16WP	G15_084	FROM->TO	CIMARRON - DRAPER LAKE 345KV CKT 1	717	717	0.08314	103.6018	FAIRFAX TAP - SHIDLER 138KV CKT 1
FDNS	00NR	0	16WP	G15_084	FROM->TO	CIMARRON - DRAPER LAKE 345KV CKT 1	717	717	0.08314	103.6017	FAIRFAX TAP - WEBB CITY TAP 138KV CKT 1
FDNS	00NR	0	16WP	G15_084	FROM->TO	CIMARRON - DRAPER LAKE 345KV CKT 1	717	717	0.082	103.5927	CHITWOOD - LGARBER4 138.00 138KV CKT 1
FDNS	00NR	0	16WP	G15_084	FROM->TO	CIMARRON - DRAPER LAKE 345KV CKT 1	717	717	0.08225	103.5925	GEN501910 1-ACADIA UNIT ST1
FDNS	00NR	0	16WP	G15_084	FROM->TO	CIMARRON - DRAPER LAKE 345KV CKT 1	717	717	0.08225	103.5817	RODEMACHER 230/22.0KV TRANSFORMER CKT 1
FDNS	00NR	0	16WP	G15_084	FROM->TO	CIMARRON - DRAPER LAKE 345KV CKT 1	717	717	0.082	103.5804	CHITWOOD - JONES TAP 138KV CKT 1
FDNS	00NR	0	16WP	G15_084	FROM->TO	CIMARRON - DRAPER LAKE 345KV CKT 1	717	717	0.08225	103.5784	GEN511843 1-RIVERSIDE STATION #2
FDNS	00NR	0	16WP	G15_084	FROM->TO	CIMARRON - DRAPER LAKE 345KV CKT 1	717	717	0.08168	103.5772	P12:138:AEPW-OGE:WTH_JCT4:JENSEN4
FDNS	00NR	0	16WP	G15_084	FROM->TO	CIMARRON - DRAPER LAKE 345KV CKT 1	717	717	0.08281	103.571	TULSA NORTH - WEKIWA 345KV CKT 1
FDNS	00NR	0	16WP	G15_084	FROM->TO	CIMARRON - DRAPER LAKE 345KV CKT 1	717	717	0.08281	103.571	TULSA NORTH - WEKIWA 345KV CKT 1
FDNS	00NR	0	16WP	G15_084	FROM->TO	CIMARRON - DRAPER LAKE 345KV CKT 1	717	717	0.08282	103.5684	6LAYFLD 230.00 - CARROLL 230KV CKT 1
FDNS	00NR	0	16WP	G15_084	FROM->TO	CIMARRON - DRAPER LAKE 345KV CKT 1	717	717	0.08246	103.5641	8WNEWMADRID 500.00 - DELL 500 500KV CKT 1
FDNS	00NR	0	16WP	G15_084	FROM->TO	CIMARRON - DRAPER LAKE 345KV CKT 1	717	717	0.08227	103.5615	P12:345:GRDA:CHOUTEAU-SPORTSMANACRES
FDNS	00NR	0	16WP	G15_084	FROM->TO	CIMARRON - DRAPER LAKE 345KV CKT 1	717	717	0.08264	103.5548	ELDORADO EHV - SHERIDAN EHV 500KV CKT 1
FDNS	00NR	0	16WP	G15_084	FROM->TO	CIMARRON - DRAPER LAKE 345KV CKT 1	717	717	0.08152	103.5535	CHISHOLM6 230.00 - ELK CITY 230KV 230KV CKT 1
FDNS	00NR	0	16WP	G15_084	FROM->TO	CIMARRON - DRAPER LAKE 345KV CKT 1	717	717	0.08152	103.5504	ELK CITY 230KV (ELKCTY-6) 230/138/13.8KV TRANSFORMER CKT 1
FDNS	00NR	0	16WP	G15_084	FROM->TO	CIMARRON - DRAPER LAKE 345KV CKT 1	717	717	0.08152	103.5504	ELK CITY 230KV (ELKCTY-6) 230/138/13.8KV TRANSFORMER CKT 1
FDNS	00NR	0	16WP	G15_084	FROM->TO	CIMARRON - DRAPER LAKE 345KV CKT 1	717	717	0.08292	103.5453	G13-010T 345.00 - POST ROCK 345KV CKT 1
FDNS	00NR	0	16WP	G15_084	FROM->TO	CIMARRON - DRAPER LAKE 345KV CKT 1	717	717	0.08202	103.5337	P12:138:AEPW:N.E.S.-4:CATOOSA4
FDNS	00NR	0	16WP	G15_084	FROM->TO	CIMARRON - DRAPER LAKE 345KV CKT 1	717	717	0.08253	103.5322	OUMED 4 - PARK PLACE 138KV CKT 1
FDNS	00NR	0	16WP	G15_084	FROM->TO	CIMARRON - DRAPER LAKE 345KV CKT 1	717	717	0.08235	103.5255	FULTON 115 - HOPE 115KV CKT 1
FDNS	00NR	0	16WP	G15_084	FROM->TO	CIMARRON - DRAPER LAKE 345KV CKT 1	717	717	0.08235	103.5255	FULTON 115 - HOPE 115KV CKT 1
FDNS	00NR	0	16WP	G15_084	FROM->TO	CIMARRON - DRAPER LAKE 345KV CKT 1	717	717	0.08243	103.5186	P13:138-161:WERE:NSES_TX-4OR5::
FDNS	00NR	0	16WP	G15_084	FROM->TO	CIMARRON - DRAPER LAKE 345KV CKT 1	717	717	0.08225	103.5156	8CAJUN2 500/24.0KV TRANSFORMER CKT 1
FDNS	00NR	0	16WP	G15_084	FROM->TO	CIMARRON - DRAPER LAKE 345KV CKT 1	717	717	0.08237	103.5154	MORISNT4 138.00 - SOONER 138KV CKT 1

SOLUTION	GROUP	SCENARIO	SEASON	SOURCE	DIRECTION	MONITORED ELEMENT	RATEA (MVA)	RATEB(MVA)	TDF	TC%LOADING (% MVA)	CONTINGENCY
FDNS	00NR	0	16WP	G15_084	FROM->TO	CIMARRON - DRAPER LAKE 345KV CKT 1	717	717	0.08223	103.5113	P12:138:AEPW:CATOOSA4:T.S.E.-4
FDNS	00NR	0	16WP	G15_084	FROM->TO	CIMARRON - DRAPER LAKE 345KV CKT 1	717	717	0.08225	103.5052	ST FRANCIS - ST FRANCIS 1 161KV CKT Z1
FDNS	00NR	0	16WP	G15_084	FROM->TO	CIMARRON - DRAPER LAKE 345KV CKT 1	717	717	0.08243	103.5015	7JASPER 345.00 - MORGAN 345KV CKT 1
FDNS	00NR	0	16WP	G15_084	FROM->TO	CIMARRON - DRAPER LAKE 345KV CKT 1	717	717	0.08225	103.4974	P12:069:OKGE:3TERM3
FDNS	00NR	0	16WP	G15_084	FROM->TO	CIMARRON - DRAPER LAKE 345KV CKT 1	717	717	0.08414	103.4908	HUGO - VALLIANT 345KV CKT 1
FDNS	00NR	0	16WP	G15_084	FROM->TO	CIMARRON - DRAPER LAKE 345KV CKT 1	717	717	0.08414	103.4908	HUGO - VALLIANT 345KV CKT 1
FDNS	00NR	0	16WP	G15_084	FROM->TO	CIMARRON - DRAPER LAKE 345KV CKT 1	717	717	0.08225	103.4903	GEN509394 1-FLINT CREEK
FDNS	00NR	0	16WP	G15_084	FROM->TO	CIMARRON - DRAPER LAKE 345KV CKT 1	717	717	0.08225	103.4898	GEN300015 1-1SGPDEL 18.000
FDNS	00NR	0	16WP	G15_084	FROM->TO	CIMARRON - DRAPER LAKE 345KV CKT 1	717	717	0.08292	103.4897	G13-010T 345.00 - SPEARVILLE 345KV CKT 1
FDNS	00NR	0	16WP	G15_084	FROM->TO	CIMARRON - DRAPER LAKE 345KV CKT 1	717	717	0.08276	103.4895	DALE - HORSESHOE LAKE 138KV CKT 1
FDNS	00NR	0	16WP	G15_084	FROM->TO	CIMARRON - DRAPER LAKE 345KV CKT 1	717	717	0.08284	103.4888	LIGHTNING CREEK - TROSPER 138KV CKT 1
FDNS	00NR	0	16WP	G15_084	FROM->TO	CIMARRON - DRAPER LAKE 345KV CKT 1	717	717	0.08225	103.4794	GEN337766 1-TRACTEBEL UNIT S1
FDNS	00NR	0	16WP	G15_084	FROM->TO	CIMARRON - DRAPER LAKE 345KV CKT 1	717	717	0.08231	103.4788	P12:138:AEPW:SHERID4:112GORE4
FDNS	00NR	0	16WP	G15_084	FROM->TO	CIMARRON - DRAPER LAKE 345KV CKT 1	717	717	0.08225	103.4762	GEN515564 1-ORIGIN11 0.6900
FDNS	00NR	0	16WP	G15_084	FROM->TO	CIMARRON - DRAPER LAKE 345KV CKT 1	717	717	0.08225	103.4762	GEN515565 1-ORIGIN21 0.6900
FDNS	00NR	0	16WP	G15_084	FROM->TO	CIMARRON - DRAPER LAKE 345KV CKT 1	717	717	0.08249	103.4744	36 & MERIDIAN - HOBBY LOBBY 138KV CKT 1
FDNS	00NR	0	16WP	G15_084	FROM->TO	CIMARRON - DRAPER LAKE 345KV CKT 1	717	717	0.08255	103.474	HAMMETT TAP - HAMMETT2 138KV CKT 1
FDNS	00NR	0	16WP	G15_084	FROM->TO	CIMARRON - DRAPER LAKE 345KV CKT 1	717	717	0.08111	103.4732	ANADARKO - GRACMNT4 138.00 138KV CKT 1
FDNS	00NR	0	16WP	G15_084	FROM->TO	CIMARRON - DRAPER LAKE 345KV CKT 1	717	717	0.08225	103.4731	GEN336222 1-LITTLE GYPSY UNIT#2
FDNS	00NR	0	16WP	G15_084	FROM->TO	CIMARRON - DRAPER LAKE 345KV CKT 1	717	717	0.08324	103.4701	NORTHEAST STATION - ONETA 345KV CKT 1
FDNS	00NR	0	16WP	G15_084	FROM->TO	CIMARRON - DRAPER LAKE 345KV CKT 1	717	717	0.08324	103.4701	NORTHEAST STATION - ONETA 345KV CKT 1
FDNS	00NR	0	16WP	G15_084	FROM->TO	CIMARRON - DRAPER LAKE 345KV CKT 1	717	717	0.08234	103.4701	P12:138:OKGE:3TERM28
FDNS	00NR	0	16WP	G15_084	FROM->TO	CIMARRON - DRAPER LAKE 345KV CKT 1	717	717	0.08247	103.4665	FLETCHER - MARLOW JCT 69KV CKT 1
FDNS	00NR	0	16WP	G15_084	FROM->TO	CIMARRON - DRAPER LAKE 345KV CKT 1	717	717	0.08225	103.4622	GEN501970 1-EVANGELINE UNIT 7
FDNS	00NR	0	16WP	G15_084	FROM->TO	CIMARRON - DRAPER LAKE 345KV CKT 1	717	717	0.08225	103.4621	NELSON 230/20.0KV TRANSFORMER CKT 1
FDNS	00NR	0	16WP	G15_084	FROM->TO	CIMARRON - DRAPER LAKE 345KV CKT 1	717	717	0.08212	103.4586	NW164TH4 138.00 - PIEDMONT 138KV CKT 1
FDNS	00NR	0	16WP	G15_084	FROM->TO	CIMARRON - DRAPER LAKE 345KV CKT 1	717	717	0.08225	103.458	P12:161:AEPW:EROGERS5:ECNTRTN5
FDNS	00NR	0	16WP	G15_084	FROM->TO	CIMARRON - DRAPER LAKE 345KV CKT 1	717	717	0.08209	103.4577	P12:138:OKGE-AEPW:JENSEN4:REDROCKRD4
FDNS	00NR	0	16WP	G15_084	FROM->TO	CIMARRON - DRAPER LAKE 345KV CKT 1	717	717	0.08212	103.4567	NORTHWEST - NW164TH4 138.00 138KV CKT 1
FDNS	00NR	0	16WP	G15_084	FROM->TO	CIMARRON - DRAPER LAKE 345KV CKT 1	717	717	0.08225	103.4555	ESSEX UNIT 2 500/18.0KV TRANSFORMER CKT 1
FDNS	00NR	0	16WP	G15_084	FROM->TO	CIMARRON - DRAPER LAKE 345KV CKT 1	717	717	0.08228	103.4553	P12:161:AEPW-SWPA:BEAVER5:EROGERS5
FDNS	00NR	0	16WP	G15_084	FROM->TO	CIMARRON - DRAPER LAKE 345KV CKT 1	717	717	0.08275	103.4548	COMANCHE TAP - OMPA-DUNCAN 840 138KV CKT 1
FDNS	00NR	0	16WP	G15_084	FROM->TO	CIMARRON - DRAPER LAKE 345KV CKT 1	717	717	0.08334	103.4517	CORN TAP - SEQUOYAHJ4 138.00 138KV CKT 1
FDNS	00NR	0	16WP	G15_084	FROM->TO	CIMARRON - DRAPER LAKE 345KV CKT 1	717	717	0.08288	103.4516	P12:138:AEPW:CORNVIL4:S.W.S.-4
FDNS	00NR	0	16WP	G15_084	FROM->TO	CIMARRON - DRAPER LAKE 345KV CKT 1	717	717	0.08334	103.4513	ANADARKO - SEQUOYAHJ4 138.00 138KV CKT 1
FDNS	00NR	0	16WP	G15_084	FROM->TO	CIMARRON - DRAPER LAKE 345KV CKT 1	717	717	0.08276	103.448	DALE - SQUIRL CREEK 138KV CKT 1
FDNS	00NR	0	16WP	G15_084	FROM->TO	CIMARRON - DRAPER LAKE 345KV CKT 1	717	717	0.08352	103.4464	HEALDTON - LOCO 138KV CKT 1
FDNS	00NR	0	16WP	G15_084	FROM->TO	CIMARRON - DRAPER LAKE 345KV CKT 1	717	717	0.08225	103.4463	P12:161:AEPW:DYESS5:ELMSPRNG:TONTITN5
FDNS	00NR	0	16WP	G15_084	FROM->TO	CIMARRON - DRAPER LAKE 345KV CKT 1	717	717	0.08225	103.4425	GEN336152 1-WATERFORD UNIT#2
FDNS	00NR	0	16WP	G15_084	FROM->TO	CIMARRON - DRAPER LAKE 345KV CKT 1	717	717	0.08225	103.4415	GEN336151 1-WATERFORD UNIT#1
FDNS	00NR	0	16WP	G15_084	FROM->TO	CIMARRON - DRAPER LAKE 345KV CKT 1	717	717	0.08225	103.4407	ST FRANCIS 345/161KV TRANSFORMER CKT 1
FDNS	00NR	0	16WP	G15_084	FROM->TO	CIMARRON - DRAPER LAKE 345KV CKT 1	717	717	0.08249	103.4351	CORN TAP - CORNVILLE 138KV CKT 1
FDNS	00NR	0	16WP	G15_084	FROM->TO	CIMARRON - DRAPER LAKE 345KV CKT 1	717	717	0.08232	103.4322	MARSHALL - WOODRING 138KV CKT 1
FDNS	00NR	0	16WP	G15_084	FROM->TO	CIMARRON - DRAPER LAKE 345KV CKT 1	717	717	0.08225	103.4302	GEN334392 1-EXXON MOBIL IPP 1
FDNS	00NR	0	16WP	G15_084	FROM->TO	CIMARRON - DRAPER LAKE 345KV CKT 1	717	717	0.08232	103.4299	COTTONWOOD CREEK - MARSHALL 138KV CKT 1
FDNS	00NR	0	16WP	G15_084	FROM->TO	CIMARRON - DRAPER LAKE 345KV CKT 1	717	717	0.08235	103.4289	HEFNER - TULSA 138KV CKT 1
FDNS	00NR	0	16WP	G15_084	FROM->TO	CIMARRON - DRAPER LAKE 345KV CKT 1	717	717	0.08589	103.4279	COLE - OUSW4 138KV CKT 1
FDNS	00NR	0	16WP	G15_084	FROM->TO	CIMARRON - DRAPER LAKE 345KV CKT 1	717	717	0.0824	103.426	MC NIEL 500/115KV TRANSFORMER CKT 1
FDNS	00NR	0	16WP	G15_084	FROM->TO	CIMARRON - DRAPER LAKE 345KV CKT 1	717	717	0.08225	103.424	GEN334393 1-EXXON MOBIL IPP 2
FDNS	00NR	0	16WP	G15_084	FROM->TO	CIMARRON - DRAPER LAKE 345KV CKT 1	717	717	0.08225	103.424	GEN334394 1-EXXON MOBIL IPP 3
FDNS	00NR	0	16WP	G15_084	FROM->TO	CIMARRON - DRAPER LAKE 345KV CKT 1	717	717	0.08284	103.4222	P12:138:AEPW:MOUNDRD4:SHIDLER4
FDNS	00NR	0	16WP	G15_084	FROM->TO	CIMARRON - DRAPER LAKE 345KV CKT 1	717	717	0.08237	103.4218	BISMARK - HOT SPRINGS WEST BUS 115KV CKT 1
FDNS	00NR	0	16WP	G15_084	FROM->TO	CIMARRON - DRAPER LAKE 345KV CKT 1	717	717	0.08241	103.4138	EL RENO SW - MUSTANG2 69.000 69KV CKT 1
FDNS	00NR	0	16WP	G15_084	FROM->TO	CIMARRON - DRAPER LAKE 345KV CKT 1	717	717	0.08205	103.4132	BRISTOW - SILVER CITY 138KV CKT 1
FDNS	00NR	0	16WP	G15_084	FROM->TO	CIMARRON - DRAPER LAKE 345KV CKT 1	717	717	0.08212	103.4123	KELLYAV4 138.00 - MEMORIAL 138KV CKT 1
FDNS	00NR	0	16WP	G15_084	FROM->TO	CIMARRON - DRAPER LAKE 345KV CKT 1	717	717	0.08225	103.4084	GEN501972 1-EVANGELINE UNIT 7-2
FDNS	00NR	0	16WP	G15_084	FROM->TO	CIMARRON - DRAPER LAKE 345KV CKT 1	717	717	0.08225	103.4083	GEN501971 1-EVANGELINE UNIT 7-1
FDNS	00NR	0	16WP	G15_084	FROM->TO	CIMARRON - DRAPER LAKE 345KV CKT 1	717	717	0.08284	103.4049	SHIDLER - WEST PAWHUSKA 138KV CKT 1
FDNS	00NR	0	16WP	G15_084	FROM->TO	CIMARRON - DRAPER LAKE 345KV CKT 1	717	717	0.08352	103.4047	HEALDTON - RINGLING 138KV CKT 1
FDNS	00NR	0	16WP	G15_084	FROM->TO	CIMARRON - DRAPER LAKE 345KV CKT 1	717	717	0.08225	103.3987	GEN334431 1-SABINE UNIT 1
FDNS	00NR	0	16WP	G15_084	FROM->TO	CIMARRON - DRAPER LAKE 345KV CKT 1	717	717	0.08225	103.3986	GEN334432 1-SABINE UNIT 2
FDNS	00NR	0	16WP	G15_084	FROM->TO	CIMARRON - DRAPER LAKE 345KV CKT 1	717	717	0.08225	103.3959	GEN336242 1-1NMIL ST1 18.000
FDNS	00NR	0	16WP	G15_084	FROM->TO	CIMARRON - DRAPER LAKE 345KV CKT 1	717	717	0.08225	103.3954	GEN337764 1-TRACTEBEL UNIT C1
FDNS	00NR	0	16WP	G15_084	FROM->TO	CIMARRON - DRAPER LAKE 345KV CKT 1	717	717	0.08225	103.3954	GEN337765 1-TRACTEBEL UNIT C2
FDNS	00NR	0	16WP	G15_084	FROM->TO	CIMARRON - DRAPER LAKE 345KV CKT 1	717	717	0.08237	103.3939	BROOKLINE - MORGAN 345KV CKT 1
FDNS	00NR	0	16WP	G15_084	FROM->TO	CIMARRON - DRAPER LAKE 345KV CKT 1	717	717	0.08237	103.3939	BROOKLINE - MORGAN 345KV CKT 1
FDNS	00NR	0	16WP	G15_084	FROM->TO	CIMARRON - DRAPER LAKE 345KV CKT 1	717	717	0.08225	103.3938	GEN501912 1-ACADIA UNIT CT1B
FDNS	00NR	0	16WP	G15_084	FROM->TO	CIMARRON - DRAPER LAKE 345KV CKT 1	717	717	0.08225	103.3931	GEN501911 1-ACADIA UNIT CT1A
FDNS	00NR	0	16WP	G15_084	FROM->TO	CIMARRON - DRAPER LAKE 345KV CKT 1	717	717	0.08253	103.3919	BODLE - PARK PLACE 138KV CKT 1
FDNS	00NR	0	16WP	G15_084	FROM->TO	CIMARRON - DRAPER LAKE 345KV CKT 1	717	717	0.0825	103.3911	COUNCIL - MUSTANG 138KV CKT 1
FDNS	00NR	0	16WP	G15_084	FROM->TO	CIMARRON - DRAPER LAKE 345KV CKT 1	717	717	0.08347	103.391	BRYANT - MEMORIAL 138KV CKT 1
FDNS	00NR	0	16WP	G15_084	FROM->TO	CIMARRON - DRAPER LAKE 345KV CKT 1	717	717	0.08284	103.3884	PAWHUSKA TAP - WEST PAWHUSKA 138KV CKT 1
FDNS	00NR	0	16WP	G15_084	FROM->TO	CIMARRON - DRAPER LAKE 345KV CKT 1	717	717	0.08237	103.3884	ALPINE AECC - BISMARK 115KV CKT 1
FDNS	00NR	0	16WP	G15_084	FROM->TO	CIMARRON - DRAPER LAKE 345KV CKT 1	717	717	0.08233	103.388	CYPRESS - HARTBURG 500KV CKT 1
FDNS	00NR	0	16WP	G15_084	FROM->TO	CIMARRON - DRAPER LAKE 345KV CKT 1	717	717	0.08212	103.3831	PIEDMONT - RICHRDS 138KV CKT 1
FDNS	00NR	0	16WP	G15_084	FROM->TO	CIMARRON - DRAPER LAKE 345KV CKT 1	717	717	0.08225	103.3827	P12:69:AEPW:L.E.S.-2:LAW WC2
FDNS	00NR	0	16WP	G15_084	FROM->TO	CIMARRON - DRAPER LAKE 345KV CKT 1	717	717	0.08212	103.3809	KELLYAV4 138.00 - REMNGTON PARK 138KV CKT 1
FDNS	00NR	0	16WP	G15_084	FROM->TO	CIMARRON - DRAPER LAKE 345KV CKT 1	717	717	0.08255	103.3808	HAMMETT2 - MEEKER 138KV CKT 1
FDNS	00NR	0	16WP	G15_084	FROM->TO	CIMARRON - DRAPER LAKE 345KV CKT 1	717	717	0.08283	103.375	HAMMETT TAP - HORSESHOE LAKE 138KV CKT 1

SOLUTION	GROUP	SCENARIO	SEASON	SOURCE	DIRECTION	MONITORED ELEMENT	RATEA (MVA)	RATEB(MVA)	TDF	TC%LOADING (% MVA)	CONTINGENCY
FDNS	00NR	0	16WP	G15_084	FROM->TO	CIMARRON - DRAPER LAKE 345KV CKT 1	717	717	0.0825	103.3697	LAYFLD8 500.00 - MOUNT OLIVE 500KV CKT 1
FDNS	00NR	0	16WP	G15_084	FROM->TO	CIMARRON - DRAPER LAKE 345KV CKT 1	717	717	0.0825	103.3697	LAYFLD8 500.00 - MOUNT OLIVE 500KV CKT 1
FDNS	00NR	0	16WP	G15_084	FROM->TO	CIMARRON - DRAPER LAKE 345KV CKT 1	717	717	0.08352	103.3631	RINGLING - SOUTH WILSON 138KV CKT 1
FDNS	00NR	0	16WP	G15_084	FROM->TO	CIMARRON - DRAPER LAKE 345KV CKT 1	717	717	0.08339	103.3457	CIVIT - PAOLI 138KV CKT 1
FDNS	00NR	0	16WP	G15_084	FROM->TO	CIMARRON - DRAPER LAKE 345KV CKT 1	717	717	0.08226	103.3404	LACYGNE - STILWELL 345KV CKT 1
FDNS	00NR	0	16WP	G15_084	FROM->TO	CIMARRON - DRAPER LAKE 345KV CKT 1	717	717	0.07886	103.3399	GRACEMONT - LAWTON EASTSIDE 345KV CKT 1
FDNS	00NR	0	16WP	G15_084	FROM->TO	CIMARRON - DRAPER LAKE 345KV CKT 1	717	717	0.07886	103.3399	GRACEMONT - LAWTON EASTSIDE 345KV CKT 1
FDNS	00NR	0	16WP	G15_084	FROM->TO	CIMARRON - DRAPER LAKE 345KV CKT 1	717	717	0.0825	103.3365	COUNCIL - WESTOAKS 138KV CKT 1
FDNS	00NR	0	16WP	G15_084	FROM->TO	CIMARRON - DRAPER LAKE 345KV CKT 1	717	717	0.08225	102.9113	BASE CASE
FDNS	00NR	0	16WP	G15_084	FROM->TO	CIMARRON - DRAPER LAKE 345KV CKT 1	717	717	0.08304	102.5994	GRAPEVINE INTERCHANGE - NICHOLS STATION 230KV CKT 1
FDNS	00NR	0	16WP	G15_084	FROM->TO	CIMARRON - DRAPER LAKE 345KV CKT 1	717	717	0.08304	102.5994	GRAPEVINE INTERCHANGE - NICHOLS STATION 230KV CKT 1
FDNS	00NR	0	16WP	G15_084	FROM->TO	CIMARRON - DRAPER LAKE 345KV CKT 1	717	717	0.08989	102.5967	G15063_T 345.00 - WOODRING 345KV CKT 1
FDNS	00NR	0	16WP	G15_084	FROM->TO	CIMARRON - DRAPER LAKE 345KV CKT 1	717	717	0.0827	102.5371	BURGETT4 138.00 - RNDBARN4 138.00 138KV CKT 1
FDNS	00NR	0	16WP	G15_084	FROM->TO	CIMARRON - DRAPER LAKE 345KV CKT 1	717	717	0.0827	102.5354	BURGETT4 138.00 - DANFORTH 138KV CKT 1
FDNS	00NR	0	16WP	G15_084	FROM->TO	CIMARRON - DRAPER LAKE 345KV CKT 1	717	717	0.0827	102.5245	ARCADIA - RNDBARN4 138.00 138KV CKT 1
FDNS	00NR	0	16WP	G15_084	FROM->TO	CIMARRON - DRAPER LAKE 345KV CKT 1	717	717	0.08225	102.495	GEN659125 1-COVEY
FDNS	00NR	0	16WP	G15_084	FROM->TO	CIMARRON - DRAPER LAKE 345KV CKT 1	717	717	0.08225	102.4903	GEN515550 1-MNCWND31 0.6900
FDNS	00NR	0	16WP	G15_084	FROM->TO	CIMARRON - DRAPER LAKE 345KV CKT 1	717	717	0.08142	102.482	GRAPEVINE INTERCHANGE - STATELINE INTERCHANGE 230KV CKT 1
FDNS	00NR	0	16WP	G15_084	FROM->TO	CIMARRON - DRAPER LAKE 345KV CKT 1	717	717	0.08142	102.482	GRAPEVINE INTERCHANGE - STATELINE INTERCHANGE 230KV CKT 1
FDNS	00NR	0	16WP	G15_084	FROM->TO	CIMARRON - DRAPER LAKE 345KV CKT 1	717	717	0.08225	102.477	GEN562611 1-G14_064_3 0.6900
FDNS	00NR	0	16WP	G15_084	FROM->TO	CIMARRON - DRAPER LAKE 345KV CKT 1	717	717	0.08225	102.4715	GEN511848 1-SOUTHWESTERN STATION #3
FDNS	00NR	0	16WP	G15_084	FROM->TO	CIMARRON - DRAPER LAKE 345KV CKT 1	717	717	0.08225	102.4453	GEN515601 1-KNGFSR11 0.7000
FDNS	00NR	0	16WP	G15_084	FROM->TO	CIMARRON - DRAPER LAKE 345KV CKT 1	717	717	0.08225	102.4414	GEN600071 10-RIVER SIDE
FDNS	00NR	0	16WP	G15_084	FROM->TO	CIMARRON - DRAPER LAKE 345KV CKT 1	717	717	0.08225	102.4413	GEN600070 9-RIVER SIDE
FDNS	00NR	0	16WP	G15_084	FROM->TO	CIMARRON - DRAPER LAKE 345KV CKT 1	717	717	0.08225	102.4362	GEN672303 3-BOUNDARY DAM GENERATOR 3
FDNS	00NR	0	16WP	G15_084	FROM->TO	CIMARRON - DRAPER LAKE 345KV CKT 1	717	717	0.08225	102.4362	GEN672304 4-BOUNDARY DAM GENERATOR 4
FDNS	00NR	0	16WP	G15_084	FROM->TO	CIMARRON - DRAPER LAKE 345KV CKT 1	717	717	0.08225	102.4362	GEN672305 5-BOUNDARY DAM GENERATOR 5
FDNS	00NR	0	16WP	G15_084	FROM->TO	CIMARRON - DRAPER LAKE 345KV CKT 1	717	717	0.08225	102.4353	GEN600007 7-RIVERSIDE GEN 7
FDNS	00NR	0	16WP	G15_084	FROM->TO	CIMARRON - DRAPER LAKE 345KV CKT 1	717	717	0.08225	102.4347	GEN600067 9-HIGH BRIDGE
FDNS	00NR	0	16WP	G15_084	FROM->TO	CIMARRON - DRAPER LAKE 345KV CKT 1	717	717	0.08225	102.4338	GEN563062 1-G15071_3 0.6900
FDNS	00NR	0	16WP	G15_084	FROM->TO	CIMARRON - DRAPER LAKE 345KV CKT 1	717	717	0.08225	102.4307	GEN615052 1-CAMBRIDGE GENERATING STATION
FDNS	00NR	0	16WP	G15_084	FROM->TO	CIMARRON - DRAPER LAKE 345KV CKT 1	717	717	0.08225	102.4274	GEN541151 3-SIBLEY GENERATING UNIT #3
FDNS	00NR	0	16WP	G15_084	FROM->TO	CIMARRON - DRAPER LAKE 345KV CKT 1	717	717	0.08096	102.4256	CHISNEY - CLARKSVILLE 138KV CKT 1
FDNSLock	00NR	0	16WP	G15_084	FROM->TO	CIMARRON - DRAPER LAKE 345KV CKT 1	717	717	0.08225	102.4224	GEN600014 4-BLACK DOG GEN 4
FDNS	00NR	0	16WP	G15_084	FROM->TO	CIMARRON - DRAPER LAKE 345KV CKT 1	717	717	0.08225	102.4218	GEN563282 1-G15094_3 0.6900
FDNS	00NR	0	16WP	G15_084	FROM->TO	CIMARRON - DRAPER LAKE 345KV CKT 1	717	717	0.08225	102.4212	GEN652353 2-GR PRAIRIEG 0.6900
FDNS	00NR	0	16WP	G15_084	FROM->TO	CIMARRON - DRAPER LAKE 345KV CKT 1	717	717	0.08225	102.4168	GEN629067 1-EMERY GAS TURBINE 1
FDNS	00NR	0	16WP	G15_084	FROM->TO	CIMARRON - DRAPER LAKE 345KV CKT 1	717	717	0.08262	102.4148	7MCCREDIE 345.00 - 7MONTGMRY 345.00 345KV CKT 1
FDNS	00NR	0	16WP	G15_084	FROM->TO	CIMARRON - DRAPER LAKE 345KV CKT 1	717	717	0.08225	102.4032	GEN563102 1-G15075_3 0.5500
FDNS	00NR	0	16WP	G15_084	FROM->TO	CIMARRON - DRAPER LAKE 345KV CKT 1	717	717	0.08225	102.4015	GEN515591 1-PALDRW11 0.6900
FDNS	00NR	0	16WP	G15_084	FROM->TO	CIMARRON - DRAPER LAKE 345KV CKT 1	717	717	0.08225	102.4	GEN300003 1-THOMAS HILL UNIT 3
FDNS	00NR	0	16WP	G15_084	FROM->TO	CIMARRON - DRAPER LAKE 345KV CKT 1	717	717	0.08225	102.4	GEN600011 5-BLACK DOG GEN 1
FDNS	00NR	0	16WP	G15_084	FROM->TO	CIMARRON - DRAPER LAKE 345KV CKT 1	717	717	0.08225	102.4	GEN615032 2-PLEASANT VALLEY
FDNS	00NR	0	16WP	G15_084	FROM->TO	CIMARRON - DRAPER LAKE 345KV CKT 1	717	717	0.08225	102.3966	GEN562602 1-G15_029_3 0.6900
FDNS	00NR	0	16WP	G15_084	FROM->TO	CIMARRON - DRAPER LAKE 345KV CKT 1	717	717	0.0823	102.3868	SEMINOLE - VANOSTP4 138.00 138KV CKT 1
FDNS	00NR	0	16WP	G15_084	FROM->TO	CIMARRON - DRAPER LAKE 345KV CKT 1	717	717	0.08225	102.3864	GEN600017 C-LS POWER CT
FDNS	00NR	0	16WP	G15_084	FROM->TO	CIMARRON - DRAPER LAKE 345KV CKT 1	717	717	0.08225	102.3828	GEN562812 1-G15040_3 0.3570
FDNS	00NR	0	16WP	G15_084	FROM->TO	CIMARRON - DRAPER LAKE 345KV CKT 1	717	717	0.08225	102.3765	GEN563132 1-G15078_3 0.3570
FDNS	00NR	0	16WP	G15_084	FROM->TO	CIMARRON - DRAPER LAKE 345KV CKT 1	717	717	0.08252	102.3681	FOREST HILL - MAUD 138KV CKT 1
FDNS	00NR	0	16WP	G15_084	FROM->TO	CIMARRON - DRAPER LAKE 345KV CKT 1	717	717	0.08225	102.3672	GEN524285 1-WILDORADO WIND GEN
FDNS	00NR	0	16WP	G15_084	FROM->TO	CIMARRON - DRAPER LAKE 345KV CKT 1	717	717	0.0811	102.366	P12:138:AEPW:WELETK4:EARLSBORO4
FDNS	00NR	0	16WP	G15_084	FROM->TO	CIMARRON - DRAPER LAKE 345KV CKT 1	717	717	0.0811	102.366	P12:138:OKGE:3TERM36
FDNS	00NR	0	16WP	G15_084	FROM->TO	CIMARRON - DRAPER LAKE 345KV CKT 1	717	717	0.08225	102.3624	GEN562074 1-G1149G1504 0.6900
FDNS	00NR	0	16WP	G15_084	FROM->TO	CIMARRON - DRAPER LAKE 345KV CKT 1	717	717	0.08225	102.3559	GEN672392 1-NBECGT1G 18.000
FDNS	00NR	0	16WP	G15_084	FROM->TO	CIMARRON - DRAPER LAKE 345KV CKT 1	717	717	0.08225	102.3552	GEN629070 2-BEAVER CHANNEL GENERATORFOR UNIT NO 2
FDNS	00NR	0	16WP	G15_084	FROM->TO	CIMARRON - DRAPER LAKE 345KV CKT 1	717	717	0.08141	102.3552	EARLSBORO 4138.00 - FIXICO TAP 138KV CKT 1
FDNS	00NR	0	16WP	G15_084	FROM->TO	CIMARRON - DRAPER LAKE 345KV CKT 1	717	717	0.08225	102.3445	GEN526331 1-JONES GEN #1 22 KV
FDNS	00NR	0	16WP	G15_084	FROM->TO	CIMARRON - DRAPER LAKE 345KV CKT 1	717	717	0.08225	102.3445	GEN526332 1-JONES GEN #2 21 KV
FDNS	00NR	0	16WP	G15_084	FROM->TO	CIMARRON - DRAPER LAKE 345KV CKT 1	717	717	0.08221	102.3431	CANADIAN RIVER - MCALESTER SOUTH 138KV CKT 1
FDNS	00NR	0	16WP	G15_084	FROM->TO	CIMARRON - DRAPER LAKE 345KV CKT 1	717	717	0.08221	102.3431	CANADIAN RIVER - MCALESTER SOUTH 138KV CKT 1
FDNS	00NR	0	16WP	G15_084	FROM->TO	CIMARRON - DRAPER LAKE 345KV CKT 1	717	717	0.08225	102.343	GEN562596 1-G14_059_3 0.6900
FDNS	00NR	0	16WP	G15_084	FROM->TO	CIMARRON - DRAPER LAKE 345KV CKT 1	717	717	0.08221	102.3417	CANADIAN RIVER () 345/138/13.8KV TRANSFORMER CKT 1
FDNS	00NR	0	16WP	G15_084	FROM->TO	CIMARRON - DRAPER LAKE 345KV CKT 1	717	717	0.08221	102.3417	CANADIAN RIVER () 345/138/13.8KV TRANSFORMER CKT 1
FDNS	00NR	0	16WP	G15_084	FROM->TO	CIMARRON - DRAPER LAKE 345KV CKT 1	717	717	0.08225	102.336	GEN615010 1-STANTON4
FDNS	00NR	0	16WP	G15_084	FROM->TO	CIMARRON - DRAPER LAKE 345KV CKT 1	717	717	0.08225	102.3359	GEN629071 1-BURLINGTON GENERATOR FOR UNIT NO 1 E
FDNS	00NR	0	16WP	G15_084	FROM->TO	CIMARRON - DRAPER LAKE 345KV CKT 1	717	717	0.08096	102.3342	CHISNEY - HIGHLAND 138KV CKT 1
FDNS	00NR	0	16WP	G15_084	FROM->TO	CIMARRON - DRAPER LAKE 345KV CKT 1	717	717	0.08225	102.3307	GEN515365 1-CENT 21 0.7000
FDNS	00NR	0	16WP	G15_084	FROM->TO	CIMARRON - DRAPER LAKE 345KV CKT 1	717	717	0.08225	102.3205	GEN562983 1-G15061_4 0.6900
FDNS	00NR	0	16WP	G15_084	FROM->TO	CIMARRON - DRAPER LAKE 345KV CKT 1	717	717	0.08225	102.3205	GEN562984 1-G15061_5 0.6900
FDNS	00NR	0	16WP	G15_084	FROM->TO	CIMARRON - DRAPER LAKE 345KV CKT 1	717	717	0.08206	102.3203	P12:138:WFEC:MSL07
FDNS	00NR	0	16WP	G15_084	FROM->TO	CIMARRON - DRAPER LAKE 345KV CKT 1	717	717	0.08206	102.3203	P12:138:WFEC-AEPW:HUGOPP4:ATOKA--4
FDNS	00NR	0	16WP	G15_084	FROM->TO	CIMARRON - DRAPER LAKE 345KV CKT 1	717	717	0.08225	102.3161	GEN562017 1-G11_022_3 0.6900
FDNS	00NR	0	16WP	G15_084	FROM->TO	CIMARRON - DRAPER LAKE 345KV CKT 1	717	717	0.08225	102.3138	GEN615021 1-GRE-ER 14G 16.000
FDNS	00NR	0	16WP	G15_084	FROM->TO	CIMARRON - DRAPER LAKE 345KV CKT 1	717	717	0.08233	102.3122	GRPRAR1-LNX3345.00 - HOLT.CO3 345.00 345KV CKT 1
FDNS	00NR	0	16WP	G15_084	FROM->TO	CIMARRON - DRAPER LAKE 345KV CKT 1	717	717	0.07589	102.3107	P12:138:AEPW:SHAM4WT:CHILD4WT
FDNS	00NR	0	16WP	G15_084	FROM->TO	CIMARRON - DRAPER LAKE 345KV CKT 1	717	717	0.08233	102.3086	GRPRAR1-LNX3345.00 - YANKTON 345KV CKT Z
FDNS	00NR	0	16WP	G15_084	FROM->TO	CIMARRON - DRAPER LAKE 345KV CKT 1	717	717	0.08225	102.3034	GEN562429 1-G13-029 0.6900
FDNS	00NR	0	16WP	G15_084	FROM->TO	CIMARRON - DRAPER LAKE 345KV CKT 1	717	717	0.08225	102.3021	GEN562432 1-G13-030 0.6900
FDNS	00NR	0	16WP	G15_084	FROM->TO	CIMARRON - DRAPER LAKE 345KV CKT 1	717	717	0.08225	102.3019	GEN560105 1-G08-22 0.6900

SOLUTION	GROUP	SCENARIO	SEASON	SOURCE	DIRECTION	MONITORED ELEMENT	RATEA (MVA)	RATEB(MVA)	TDF	TC%LOADING (% MVA)	CONTINGENCY
FDNS	00NR	0	16WP	G15_084	FROM->TO	CIMARRON - DRAPER LAKE 345KV CKT 1	717	717	0.08225	102.3006	INDEPENDENCE 500/26.0KV TRANSFORMER CKT 1
FDNS	00NR	0	16WP	G15_084	FROM->TO	CIMARRON - DRAPER LAKE 345KV CKT 1	717	717	0.08225	102.2985	GEN532663 1-LAWRENCE ENERGY CENTER UNIT 5
FDNS	00NR	0	16WP	G15_084	FROM->TO	CIMARRON - DRAPER LAKE 345KV CKT 1	717	717	0.08211	102.2985	P12:138:AEPW-SWPA:LONEOAK4:TUPELO4
FDNS	00NR	0	16WP	G15_084	FROM->TO	CIMARRON - DRAPER LAKE 345KV CKT 1	717	717	0.08211	102.2984	P12:138:WFEC:MSL06
FDNS	00NR	0	16WP	G15_084	FROM->TO	CIMARRON - DRAPER LAKE 345KV CKT 1	717	717	0.08267	102.2966	OVEXFRMCCOVE
FDNS	00NR	0	16WP	G15_084	FROM->TO	CIMARRON - DRAPER LAKE 345KV CKT 1	717	717	0.08241	102.2931	DELL 500 - INDEPENDENCE 500KV CKT 1
FDNS	00NR	0	16WP	G15_084	FROM->TO	CIMARRON - DRAPER LAKE 345KV CKT 1	717	717	0.08225	102.2894	BURLINGTON NO1 + NO 2 + NO 3 161/20.0KV TRANSFORMER CKT 1
FDNS	00NR	0	16WP	G15_084	FROM->TO	CIMARRON - DRAPER LAKE 345KV CKT 1	717	717	0.0811	102.2839	P12:138:AEPW-OGE:WELETK4:MAUD 4
FDNS	00NR	0	16WP	G15_084	FROM->TO	CIMARRON - DRAPER LAKE 345KV CKT 1	717	717	0.07754	102.2797	P12:230:AEPW:ELKCITY6:SWEETWT6
FDNS	00NR	0	16WP	G15_084	FROM->TO	CIMARRON - DRAPER LAKE 345KV CKT 1	717	717	0.08225	102.2752	GEN527882 1-CUNNINGHAM GEN #2 20 KV
FDNS	00NR	0	16WP	G15_084	FROM->TO	CIMARRON - DRAPER LAKE 345KV CKT 1	717	717	0.08273	102.2741	P12:138:WFEC:MSL16
FDNS	00NR	0	16WP	G15_084	FROM->TO	CIMARRON - DRAPER LAKE 345KV CKT 1	717	717	0.08141	102.2712	EARLSBORO 4138.00 - MAUD 138KV CKT 1
FDNS	00NR	0	16WP	G15_084	FROM->TO	CIMARRON - DRAPER LAKE 345KV CKT 1	717	717	0.08141	102.2712	EARLSBORO 4138.00 - MAUD 138KV CKT 1
FDNS	00NR	0	16WP	G15_084	FROM->TO	CIMARRON - DRAPER LAKE 345KV CKT 1	717	717	0.08225	102.2674	GEN562550 1-G14_040_3 0.6900
FDNS	00NR	0	16WP	G15_084	FROM->TO	CIMARRON - DRAPER LAKE 345KV CKT 1	717	717	0.08225	102.2642	GEN524295 1-SPNSPUR_WND10.6900
FDNS	00NR	0	16WP	G15_084	FROM->TO	CIMARRON - DRAPER LAKE 345KV CKT 1	717	717	0.08225	102.2579	GEN562832 1-G15042_3 0.6900
FDNS	00NR	0	16WP	G15_084	FROM->TO	CIMARRON - DRAPER LAKE 345KV CKT 1	717	717	0.08266	102.2486	MAUD - SEMINOLE 138KV CKT 1
FDNS	00NR	0	16WP	G15_084	FROM->TO	CIMARRON - DRAPER LAKE 345KV CKT 1	717	717	0.08026	102.2397	STLN-DEMARC6 - SWEETWATER 230KV CKT 1
FDNS	00NR	0	16WP	G15_084	FROM->TO	CIMARRON - DRAPER LAKE 345KV CKT 1	717	717	0.08026	102.2392	P12:230:AEPW-SPS:SWEETWT6:WHEELER 6
FDNS	00NR	0	16WP	G15_084	FROM->TO	CIMARRON - DRAPER LAKE 345KV CKT 1	717	717	0.08026	102.2372	STATELINE INTERCHANGE - STLN-DEMARC6 230KV CKT 1
FDNS	00NR	0	16WP	G15_084	FROM->TO	CIMARRON - DRAPER LAKE 345KV CKT 1	717	717	0.08225	102.221	GEN531447 1-HOLCOMB GENERATOR
FDNS	00NR	0	16WP	G15_084	FROM->TO	CIMARRON - DRAPER LAKE 345KV CKT 1	717	717	0.08225	102.2207	P12:230:UMZB:# 112 #: NU IN SD. NU-RCDC & DRY CREEK XFMR
FDNS	00NR	0	16WP	G15_084	FROM->TO	CIMARRON - DRAPER LAKE 345KV CKT 1	717	717	0.08225	102.2195	RCDC EAST 4230.00 - RED CEDAR DC 230KV CKT 1
FDNS	00NR	0	16WP	G15_084	FROM->TO	CIMARRON - DRAPER LAKE 345KV CKT 1	717	717	0.08225	102.2165	GEN645011 1-NEBRASKA CITY 1
FDNS	00NR	0	16WP	G15_084	FROM->TO	CIMARRON - DRAPER LAKE 345KV CKT 1	717	717	0.08225	102.2156	GEN345671 2-1RUSH G2 18.000
FDNS	00NR	0	16WP	G15_084	FROM->TO	CIMARRON - DRAPER LAKE 345KV CKT 1	717	717	0.08225	102.2137	GEN345670 1-1RUSH G1 18.000
FDNS	00NR	0	16WP	G15_084	FROM->TO	CIMARRON - DRAPER LAKE 345KV CKT 1	717	717	0.08225	102.2132	GEN515606 1-CANDN11 0.6900
FDNS	00NR	0	16WP	G15_084	FROM->TO	CIMARRON - DRAPER LAKE 345KV CKT 1	717	717	0.08225	102.2132	GEN515607 1-CANDN12 0.6900
FDNS	00NR	0	16WP	G15_084	FROM->TO	CIMARRON - DRAPER LAKE 345KV CKT 1	717	717	0.08096	102.2079	HIGHLAND - PINK SW 138KV CKT 1
FDNS	00NR	0	16WP	G15_084	FROM->TO	CIMARRON - DRAPER LAKE 345KV CKT 1	717	717	0.08225	102.1858	GEN515443 1-MNCOWND1 0.7000
FDNS	00NR	0	16WP	G15_084	FROM->TO	CIMARRON - DRAPER LAKE 345KV CKT 1	717	717	0.08225	102.1851	GEN562794 1-G15038_5 0.6900
FDNS	00NR	0	16WP	G15_084	FROM->TO	CIMARRON - DRAPER LAKE 345KV CKT 1	717	717	0.08225	102.1851	GEN562795 1-G15038_6 0.6900
FDNS	00NR	0	16WP	G15_084	FROM->TO	CIMARRON - DRAPER LAKE 345KV CKT 1	717	717	0.08225	102.1817	GEN563092 1-G15074_3 0.6900
FDNS	00NR	0	16WP	G15_084	FROM->TO	CIMARRON - DRAPER LAKE 345KV CKT 1	717	717	0.08149	102.1805	FT SMITH - MUSKOGEE 345KV CKT 1
FDNS	00NR	0	16WP	G15_084	FROM->TO	CIMARRON - DRAPER LAKE 345KV CKT 1	717	717	0.08225	102.1774	GEN542951 5-HAWTHORN UNIT #5
FDNS	00NR	0	16WP	G15_084	FROM->TO	CIMARRON - DRAPER LAKE 345KV CKT 1	717	717	0.08225	102.1724	GEN645012 2-NEBRASKA CITY 2
FDNSLock	00NR	0	16WP	G15_084	FROM->TO	CIMARRON - DRAPER LAKE 345KV CKT 1	717	717	0.08225	102.1642	GEN629072 4-LANSING GENERATOR FOR UNITS NO4 EIA CODE 1
FDNS	00NR	0	16WP	G15_084	FROM->TO	CIMARRON - DRAPER LAKE 345KV CKT 1	717	717	0.08225	102.1533	GEN562512 1-G14_020_3 0.6900
FDNS	00NR	0	16WP	G15_084	FROM->TO	CIMARRON - DRAPER LAKE 345KV CKT 1	717	717	0.08248	102.1446	KEO EHV - WEST MEMPHIS 500 500KV CKT 1
FDNS	00NR	0	16WP	G15_084	FROM->TO	CIMARRON - DRAPER LAKE 345KV CKT 1	717	717	0.08026	102.1408	CHISHOLM6 230.00 - SWEETWATER 230KV CKT 1
FDNS	00NR	0	16WP	G15_084	FROM->TO	CIMARRON - DRAPER LAKE 345KV CKT 1	717	717	0.08225	102.134	GEN657749 1-YOUNG 1 GENERATOR
FDNS	00NR	0	16WP	G15_084	FROM->TO	CIMARRON - DRAPER LAKE 345KV CKT 1	717	717	0.08225	102.1262	GEN562699 1-G15_018_3 0.6900
FDNS	00NR	0	16WP	G15_084	FROM->TO	CIMARRON - DRAPER LAKE 345KV CKT 1	717	717	0.08225	102.1114	GEN640009 1-COOPER NUCLEAR STATION
FDNS	00NR	0	16WP	G15_084	FROM->TO	CIMARRON - DRAPER LAKE 345KV CKT 1	717	717	0.08225	102.1042	GEN529201 1-OMCDLEC1 13.800
FDNS	00NR	0	16WP	G15_084	FROM->TO	CIMARRON - DRAPER LAKE 345KV CKT 1	717	717	0.08182	102.1014	FRISCCO4 138.00 - LULA 138KV CKT 1
FDNS	00NR	0	16WP	G15_084	FROM->TO	CIMARRON - DRAPER LAKE 345KV CKT 1	717	717	0.08225	102.0883	GEN563122 1-G15077_3 0.3850
FDNS	00NR	0	16WP	G15_084	FROM->TO	CIMARRON - DRAPER LAKE 345KV CKT 1	717	717	0.08225	102.0793	GEN563182 1-G15083_3 0.6900
FDNSLock	00NR	0	16WP	G15_084	FROM->TO	CIMARRON - DRAPER LAKE 345KV CKT 1	717	717	0.08225	102.0662	GEN681522 3-GENOA 3
FDNS	00NR	0	16WP	G15_084	FROM->TO	CIMARRON - DRAPER LAKE 345KV CKT 1	717	717	0.08225	102.0608	GEN562685 1-G15_013_3 0.3550
FDNS	00NR	0	16WP	G15_084	FROM->TO	CIMARRON - DRAPER LAKE 345KV CKT 1	717	717	0.08244	102.0437	HOLLYWOOD - MIDWEST TAP 138KV CKT 1
FDNS	00NR	0	16WP	G15_084	FROM->TO	CIMARRON - DRAPER LAKE 345KV CKT 1	717	717	0.08225	102.0354	GEN344895 2-1LAB G2 20.000
FDNS	00NR	0	16WP	G15_084	FROM->TO	CIMARRON - DRAPER LAKE 345KV CKT 1	717	717	0.08089	102.0328	TUPELO - TUPELO TAP 138KV CKT 1
FDNS	00NR	0	16WP	G15_084	FROM->TO	CIMARRON - DRAPER LAKE 345KV CKT 1	717	717	0.07693	102.0286	CHISHOLM7 345.00 - GRACEMONT 345KV CKT 1
FDNS	00NR	0	16WP	G15_084	FROM->TO	CIMARRON - DRAPER LAKE 345KV CKT 1	717	717	0.08225	102.0223	GEN563222 1-G15088_3 0.6900
FDNS	00NR	0	16WP	G15_084	FROM->TO	CIMARRON - DRAPER LAKE 345KV CKT 1	717	717	0.08225	102.0212	4SIOUX 1 138.00 138/18.0KV TRANSFORMER CKT 1
FDNS	00NR	0	16WP	G15_084	FROM->TO	CIMARRON - DRAPER LAKE 345KV CKT 1	717	717	0.0791	102.0151	CIMARRON - TUTTLE CONOCO TAP 138KV CKT 1
FDNS	00NR	0	16WP	G15_084	FROM->TO	CIMARRON - DRAPER LAKE 345KV CKT 1	717	717	0.08182	102.0133	FRISCCO4 138.00 - HARDEN 4 138.00 138KV CKT 1
FDNS	00NR	0	16WP	G15_084	FROM->TO	CIMARRON - DRAPER LAKE 345KV CKT 1	717	717	0.08225	102.0083	GEN523461 1-BLACKHAWK GEN #1
FDNS	00NR	0	16WP	G15_084	FROM->TO	CIMARRON - DRAPER LAKE 345KV CKT 1	717	717	0.08225	102.0082	GEN523462 1-BLACKHAWK GEN #2
FDNS	00NR	0	16WP	G15_084	FROM->TO	CIMARRON - DRAPER LAKE 345KV CKT 1	717	717	0.08225	102.0073	GEN344896 3-1LAB G3 20.000
FDNS	00NR	0	16WP	G15_084	FROM->TO	CIMARRON - DRAPER LAKE 345KV CKT 1	717	717	0.08225	102.0058	GEN344894 1-1LAB G1 20.000
FDNS	00NR	0	16WP	G15_084	FROM->TO	CIMARRON - DRAPER LAKE 345KV CKT 1	717	717	0.08225	102.0047	GEN344897 4-1LAB G4 20.000
FDNS	00NR	0	16WP	G15_084	FROM->TO	CIMARRON - DRAPER LAKE 345KV CKT 1	717	717	0.08225	102.0003	GEN562587 1-G14_056_3 0.6900
FDNS	00NR	0	16WP	G15_084	FROM->TO	CIMARRON - DRAPER LAKE 345KV CKT 1	717	717	0.08225	101.9772	GEN515602 1-KNGFSR12 0.7000
FDNS	00NR	0	16WP	G15_084	FROM->TO	CIMARRON - DRAPER LAKE 345KV CKT 1	717	717	0.08225	101.9571	GEN563082 1-G15073_3 0.6900
FDNS	00NR	0	16WP	G15_084	FROM->TO	CIMARRON - DRAPER LAKE 345KV CKT 1	717	717	0.0791	101.9436	TUTTLE - TUTTLE CONOCO TAP 138KV CKT 1
FDNS	00NR	0	16WP	G15_084	FROM->TO	CIMARRON - DRAPER LAKE 345KV CKT 1	717	717	0.07693	101.9367	CHISHOLM7 345.00 (CHISHOLM) 345/230/13.2KV TRANSFORMER CKT 1
FDNS	00NR	0	16WP	G15_084	FROM->TO	CIMARRON - DRAPER LAKE 345KV CKT 1	717	717	0.08225	101.9307	GEN562704 1-G15_020_3 0.3550
FDNS	00NR	0	16WP	G15_084	FROM->TO	CIMARRON - DRAPER LAKE 345KV CKT 1	717	717	0.08225	101.9129	GEN563202 1-G15085_3 0.5500
FDNS	00NR	0	16WP	G15_084	FROM->TO	CIMARRON - DRAPER LAKE 345KV CKT 1	717	717	0.08225	101.9087	CLAY BOSWELL 230/20.9KV TRANSFORMER CKT 1
FDNS	00NR	0	16WP	G15_084	FROM->TO	CIMARRON - DRAPER LAKE 345KV CKT 1	717	717	0.08225	101.8974	GEN640010 1-GERALD GENTLEMAN STATION UNIT 1
FDNS	00NR	0	16WP	G15_084	FROM->TO	CIMARRON - DRAPER LAKE 345KV CKT 1	717	717	0.08225	101.8665	GEN672321 1-SHAND GENERATOR 1
FDNS	00NR	0	16WP	G15_084	FROM->TO	CIMARRON - DRAPER LAKE 345KV CKT 1	717	717	0.08163	101.8497	LULA - TUPELO TAP 138KV CKT 1
FDNS	00NR	0	16WP	G15_084	FROM->TO	CIMARRON - DRAPER LAKE 345KV CKT 1	717	717	0.08057	101.8468	NORTHWEST TEXARKANA - VALLIANT 345KV CKT 1
FDNS	00NR	0	16WP	G15_084	FROM->TO	CIMARRON - DRAPER LAKE 345KV CKT 1	717	717	0.08057	101.8468	NORTHWEST TEXARKANA - VALLIANT 345KV CKT 1
FDNS	00NR	0	16WP	G15_084	FROM->TO	CIMARRON - DRAPER LAKE 345KV CKT 1	717	717	0.08225	101.8436	GEN562710 1-G15_022_3 0.5500
FDNS	00NR	0	16WP	G15_084	FROM->TO	CIMARRON - DRAPER LAKE 345KV CKT 1	717	717	0.08272	101.8429	SEMINOLE (SEMINOL1) 345/138/14.4KV TRANSFORMER CKT 1
FDNS	00NR	0	16WP	G15_084	FROM->TO	CIMARRON - DRAPER LAKE 345KV CKT 1	717	717	0.08225	101.8407	GEN672310 1-POPLAR RIVER GENERATOR 1
FDNS	00NR	0	16WP	G15_084	FROM->TO	CIMARRON - DRAPER LAKE 345KV CKT 1	717	717	0.08225	101.8406	GEN672311 2-POPLAR RIVER GENERATOR 2

SOLUTION	GROUP	SCENARIO	SEASON	SOURCE	DIRECTION	MONITORED ELEMENT	RATEA (MVA)	RATEB(MVA)	TDF	TC%LOADING (% MVA)	CONTINGENCY
FDNS	00NR	0	16WP	G15_084	FROM->TO	CIMARRON - DRAPER LAKE 345KV CKT 1	717	717	0.08225	101.8304	GEN672306 6-BOUNDARY DAM GENERATOR 6
FDNS	00NR	0	16WP	G15_084	FROM->TO	CIMARRON - DRAPER LAKE 345KV CKT 1	717	717	0.08225	101.8297	GEN640011 2-GERALD GENTLEMAN STATION UNIT 2
FDNS	00NR	0	16WP	G15_084	FROM->TO	CIMARRON - DRAPER LAKE 345KV CKT 1	717	717	0.08225	101.8274	GEN542956 2-LACYGNE UNIT #2
FDNS	00NR	0	16WP	G15_084	FROM->TO	CIMARRON - DRAPER LAKE 345KV CKT 1	717	717	0.08225	101.8181	GEN659118 1-LARAMIE RIVER UNIT1
FDNS	00NR	0	16WP	G15_084	FROM->TO	CIMARRON - DRAPER LAKE 345KV CKT 1	717	717	0.08182	101.7929	ETNA - HARDEN 4 138.00 138KV CKT 1
FDNS	00NR	0	16WP	G15_084	FROM->TO	CIMARRON - DRAPER LAKE 345KV CKT 1	717	717	0.08277	101.7872	RENFROW7 345.00 - VIOLA 7 345.00 345KV CKT 1
FDNS	00NR	0	16WP	G15_084	FROM->TO	CIMARRON - DRAPER LAKE 345KV CKT 1	717	717	0.08327	101.7737	P12:138:OKGE:3TERM22
FDNS	00NR	0	16WP	G15_084	FROM->TO	CIMARRON - DRAPER LAKE 345KV CKT 1	717	717	0.08325	101.7718	DRAPER LAKE - SOONER TAP 138KV CKT 1
FDNS	00NR	0	16WP	G15_084	FROM->TO	CIMARRON - DRAPER LAKE 345KV CKT 1	717	717	0.08096	101.7634	P12:138:WFEC:MSL08
FDNS	00NR	0	16WP	G15_084	FROM->TO	CIMARRON - DRAPER LAKE 345KV CKT 1	717	717	0.08096	101.7516	FRANKLIN - PINK SW 138KV CKT 1
FDNS	00NR	0	16WP	G15_084	FROM->TO	CIMARRON - DRAPER LAKE 345KV CKT 1	717	717	0.08255	101.7502	P12:138:WFEC:MSL09
FDNS	00NR	0	16WP	G15_084	FROM->TO	CIMARRON - DRAPER LAKE 345KV CKT 1	717	717	0.08344	101.7466	OAKCREEK - WILD MARY 138KV CKT 1
FDNS	00NR	0	16WP	G15_084	FROM->TO	CIMARRON - DRAPER LAKE 345KV CKT 1	717	717	0.08225	101.7397	GEN542957 1-IATAN UNIT #1
FDNSLock	00NR	0	16WP	G15_084	FROM->TO	CIMARRON - DRAPER LAKE 345KV CKT 1	717	717	0.08225	101.7355	GEN681542 6-JP MADGETT
FDNS	00NR	0	16WP	G15_084	FROM->TO	CIMARRON - DRAPER LAKE 345KV CKT 1	717	717	0.08225	101.7124	GEN530690 1-PRWINDG1 0.6900
FDNS	00NR	0	16WP	G15_084	FROM->TO	CIMARRON - DRAPER LAKE 345KV CKT 1	717	717	0.08182	101.7075	ETNA - PARK LANE 138KV CKT 1
FDNS	00NR	0	16WP	G15_084	FROM->TO	CIMARRON - DRAPER LAKE 345KV CKT 1	717	717	0.08225	101.7	GEN645001 1-FORT CALHOUN 1
FDNS	00NR	0	16WP	G15_084	FROM->TO	CIMARRON - DRAPER LAKE 345KV CKT 1	717	717	0.08257	101.6997	HUNTERS7 345.00 - RENFROW7 345.00 345KV CKT 1
FDNS	00NR	0	16WP	G15_084	FROM->TO	CIMARRON - DRAPER LAKE 345KV CKT 1	717	717	0.08225	101.658	GEN542955 1-LACYGNE UNIT #1
FDNS	00NR	0	16WP	G15_084	FROM->TO	CIMARRON - DRAPER LAKE 345KV CKT 1	717	717	0.08225	101.6477	GEN562754 1-G15031_5 0.6900
FDNS	00NR	0	16WP	G15_084	FROM->TO	CIMARRON - DRAPER LAKE 345KV CKT 1	717	717	0.08225	101.6356	GEN562556 1-G14_046_3 0.3420
FDNS	00NR	0	16WP	G15_084	FROM->TO	CIMARRON - DRAPER LAKE 345KV CKT 1	717	717	0.08281	101.6321	SEMINOLE (SEMINOL2) 345/138/14.4KV TRANSFORMER CKT 1
FDNS	00NR	0	16WP	G15_084	FROM->TO	CIMARRON - DRAPER LAKE 345KV CKT 1	717	717	0.08225	101.6108	GEN661015 1-COYOTE
FDNS	00NR	0	16WP	G15_084	FROM->TO	CIMARRON - DRAPER LAKE 345KV CKT 1	717	717	0.08225	101.6042	GEN562756 1-G15031_7 0.6900
FDNS	00NR	0	16WP	G15_084	FROM->TO	CIMARRON - DRAPER LAKE 345KV CKT 1	717	717	0.08225	101.6013	GEN532653 1-JEFFREY ENERGY CENTER UNIT 3
FDNS	00NR	0	16WP	G15_084	FROM->TO	CIMARRON - DRAPER LAKE 345KV CKT 1	717	717	0.08225	101.6012	GEN532652 1-JEFFREY ENERGY CENTER UNIT 2
FDNS	00NR	0	16WP	G15_084	FROM->TO	CIMARRON - DRAPER LAKE 345KV CKT 1	717	717	0.08225	101.5971	GEN532651 1-JEFFREY ENERGY CENTER UNIT 1
FDNS	00NR	0	16WP	G15_084	FROM->TO	CIMARRON - DRAPER LAKE 345KV CKT 1	717	717	0.08225	101.5894	GEN562974 1-G15060_5 0.6900
FDNS	00NR	0	16WP	G15_084	FROM->TO	CIMARRON - DRAPER LAKE 345KV CKT 1	717	717	0.08225	101.5883	GEN563142 1-G15079_3 0.5500
FDNS	00NR	0	16WP	G15_084	FROM->TO	CIMARRON - DRAPER LAKE 345KV CKT 1	717	717	0.08225	101.5883	GEN563151 1-G15080_2 0.5500
FDNS	00NR	0	16WP	G15_084	FROM->TO	CIMARRON - DRAPER LAKE 345KV CKT 1	717	717	0.08225	101.5778	GEN563042 1-G15068_3 0.6900
FDNS	00NR	0	16WP	G15_084	FROM->TO	CIMARRON - DRAPER LAKE 345KV CKT 1	717	717	0.08225	101.5733	GEN562973 1-G15060_4 0.6900
FDNS	00NR	0	16WP	G15_084	FROM->TO	CIMARRON - DRAPER LAKE 345KV CKT 1	717	717	0.08225	101.5428	GEN562078 1-G11_051_3 0.6900
FDNS	00NR	0	16WP	G15_084	FROM->TO	CIMARRON - DRAPER LAKE 345KV CKT 1	717	717	0.08225	101.531	GEN562691 1-G15_015_3 0.6900
FDNS	00NR	0	16WP	G15_084	FROM->TO	CIMARRON - DRAPER LAKE 345KV CKT 1	717	717	0.08344	101.52	AIRDEPT4 138.00 - WILD MARY 138KV CKT 1
FDNS	00NR	0	16WP	G15_084	FROM->TO	CIMARRON - DRAPER LAKE 345KV CKT 1	717	717	0.08215	101.4938	PARK LANE - SEMINOLE 138KV CKT 1
FDNS	00NR	0	16WP	G15_084	FROM->TO	CIMARRON - DRAPER LAKE 345KV CKT 1	717	717	0.08225	101.4886	GEN562655 1-G14_074_3 0.6900
FDNS	00NR	0	16WP	G15_084	FROM->TO	CIMARRON - DRAPER LAKE 345KV CKT 1	717	717	0.08225	101.4881	GEN562762 1-G15033_3 0.6900
FDNS	00NR	0	16WP	G15_084	FROM->TO	CIMARRON - DRAPER LAKE 345KV CKT 1	717	717	0.08225	101.4826	GEN657748 1-YOUNG 2 GENERATOR
FDNS	00NR	0	16WP	G15_084	FROM->TO	CIMARRON - DRAPER LAKE 345KV CKT 1	717	717	0.08096	101.468	FRANKLIN - FRANKLIN SW 138KV CKT 1
FDNS	00NR	0	16WP	G15_084	FROM->TO	CIMARRON - DRAPER LAKE 345KV CKT 1	717	717	0.08225	101.4312	GEN527901 1-HOBBS PLANT #1 (CT)
FDNS	00NR	0	16WP	G15_084	FROM->TO	CIMARRON - DRAPER LAKE 345KV CKT 1	717	717	0.08225	101.4312	GEN527902 1-HOBBS PLANT #2 (CT)
FDNS	00NR	0	16WP	G15_084	FROM->TO	CIMARRON - DRAPER LAKE 345KV CKT 1	717	717	0.08225	101.405	GEN563273 2-G15093_4 0.6900
FDNS	00NR	0	16WP	G15_084	FROM->TO	CIMARRON - DRAPER LAKE 345KV CKT 1	717	717	0.08225	101.389	GEN563043 1-G15068_4 0.6900
FDNS	00NR	0	16WP	G15_084	FROM->TO	CIMARRON - DRAPER LAKE 345KV CKT 1	717	717	0.07925	101.3853	LYDIA - WELSH 345KV CKT 1
FDNS	00NR	0	16WP	G15_084	FROM->TO	CIMARRON - DRAPER LAKE 345KV CKT 1	717	717	0.07925	101.3853	LYDIA - WELSH 345KV CKT 1
FDNS	00NR	0	16WP	G15_084	FROM->TO	CIMARRON - DRAPER LAKE 345KV CKT 1	717	717	0.08225	101.3678	GEN563052 1-G15069_3 0.6900
FDNS	00NR	0	16WP	G15_084	FROM->TO	CIMARRON - DRAPER LAKE 345KV CKT 1	717	717	0.08225	101.3481	GEN525845 1-ELK_2 1 138.00
FDNS	00NR	0	16WP	G15_084	FROM->TO	CIMARRON - DRAPER LAKE 345KV CKT 1	717	717	0.08225	101.3447	GEN525844 1-ELK_1 118.000
FDNS	00NR	0	16WP	G15_084	FROM->TO	CIMARRON - DRAPER LAKE 345KV CKT 1	717	717	0.08225	101.3169	GEN563242 1-G15090_3 0.6900
FDNS	00NR	0	16WP	G15_084	FROM->TO	CIMARRON - DRAPER LAKE 345KV CKT 1	717	717	0.08225	101.298	GEN526333 1-JONES GEN #3 21 KV
FDNS	00NR	0	16WP	G15_084	FROM->TO	CIMARRON - DRAPER LAKE 345KV CKT 1	717	717	0.08225	101.298	GEN526334 1-JONES_4 116.500
FDNS	00NR	0	16WP	G15_084	FROM->TO	CIMARRON - DRAPER LAKE 345KV CKT 1	717	717	0.0791	101.2942	P12:138:AEPW-OGE:CORNVIL4:CIMARON4
FDNS	00NR	0	16WP	G15_084	FROM->TO	CIMARRON - DRAPER LAKE 345KV CKT 1	717	717	0.08225	101.2934	GEN620315 1-BIG STONE GEN
FDNS	00NR	0	16WP	G15_084	FROM->TO	CIMARRON - DRAPER LAKE 345KV CKT 1	717	717	0.08344	101.2904	AIRDEPT4 138.00 - GM 138KV CKT 1
FDNS	00NR	0	16WP	G15_084	FROM->TO	CIMARRON - DRAPER LAKE 345KV CKT 1	717	717	0.08225	101.2796	GEN562772 1-G15034_3 0.6900
FDNS	00NR	0	16WP	G15_084	FROM->TO	CIMARRON - DRAPER LAKE 345KV CKT 1	717	717	0.08257	101.2661	HUNTERS7 345.00 - WOODRING 345KV CKT 1
FDNS	00NR	0	16WP	G15_084	FROM->TO	CIMARRON - DRAPER LAKE 345KV CKT 1	717	717	0.08225	101.2635	GEN523971 1-HARRINGTON GEN #1 24 KV
FDNS	00NR	0	16WP	G15_084	FROM->TO	CIMARRON - DRAPER LAKE 345KV CKT 1	717	717	0.08225	101.2635	GEN523972 1-HARRINGTON GEN #2 24 KV
FDNS	00NR	0	16WP	G15_084	FROM->TO	CIMARRON - DRAPER LAKE 345KV CKT 1	717	717	0.08225	101.2635	GEN523973 1-HARRINGTON GEN #3 24 KV
FDNS	00NR	0	16WP	G15_084	FROM->TO	CIMARRON - DRAPER LAKE 345KV CKT 1	717	717	0.08233	101.2533	RANCHRD7 345.00 - SOONER 345KV CKT 1
FDNS	00NR	0	16WP	G15_084	FROM->TO	CIMARRON - DRAPER LAKE 345KV CKT 1	717	717	0.08225	101.2384	GEN600004 2-PRAIRIE ISLAND G2
FDNS	00NR	0	16WP	G15_084	FROM->TO	CIMARRON - DRAPER LAKE 345KV CKT 1	717	717	0.08225	101.2354	GEN600003 1-PRAIRIE ISLAND G1
FDNSLock	00NR	0	16WP	G15_084	FROM->TO	CIMARRON - DRAPER LAKE 345KV CKT 1	717	717	0.08225	101.2218	GEN600006 1-AS KING
FDNSLock	00NR	0	16WP	G15_084	FROM->TO	CIMARRON - DRAPER LAKE 345KV CKT 1	717	717	0.08225	101.201	GEN636641 1-LOUISA UNIT 1
FDNS	00NR	0	16WP	G15_084	FROM->TO	CIMARRON - DRAPER LAKE 345KV CKT 1	717	717	0.06666	101.136	MUSKOGEE - SEMINOLE 345KV CKT 1
FDNS	00NR	0	16WP	G15_084	FROM->TO	CIMARRON - DRAPER LAKE 345KV CKT 1	717	717	0.08225	101.1035	GEN563292 1-G15095_3 0.6900
FDNS	00NR	0	16WP	G15_084	FROM->TO	CIMARRON - DRAPER LAKE 345KV CKT 1	717	717	0.08225	101.1	GEN542962 2-IATAN UNIT #2
FDNS	00NR	0	16WP	G15_084	FROM->TO	CIMARRON - DRAPER LAKE 345KV CKT 1	717	717	0.08225	101.1	GEN615002 2-COAL CREEK
FDNS	00NR	0	16WP	G15_084	FROM->TO	CIMARRON - DRAPER LAKE 345KV CKT 1	717	717	0.08757	101.0885	NORTHWEST - SPRING CREEK 345KV CKT 1
FDNS	00NR	0	16WP	G15_084	FROM->TO	CIMARRON - DRAPER LAKE 345KV CKT 1	717	717	0.08225	101.0833	GEN600005 1-MONTICELLO
FDNS	00NR	0	16WP	G15_084	FROM->TO	CIMARRON - DRAPER LAKE 345KV CKT 1	717	717	0.08344	101.082	DRAPER LAKE - GM 138KV CKT 1
FDNS	00NR	0	16WP	G15_084	FROM->TO	CIMARRON - DRAPER LAKE 345KV CKT 1	717	717	0.08225	101.0628	GEN527166 1-MUSTANG_6 118.000
FDNS	00NR	0	16WP	G15_084	FROM->TO	CIMARRON - DRAPER LAKE 345KV CKT 1	717	717	0.08225	101.0553	GEN525562 1-TOLK GEN #2 24 KV
FDNS	00NR	0	16WP	G15_084	FROM->TO	CIMARRON - DRAPER LAKE 345KV CKT 1	717	717	0.08757	101.0485	SOONER - SPRING CREEK 345KV CKT 1
FDNS	00NR	0	16WP	G15_084	FROM->TO	CIMARRON - DRAPER LAKE 345KV CKT 1	717	717	0.07876	101.0368	CLARKSVILLE - MUSKOGEE 345KV CKT 1
FDNS	00NR	0	16WP	G15_084	FROM->TO	CIMARRON - DRAPER LAKE 345KV CKT 1	717	717	0.07876	101.0368	CLARKSVILLE - MUSKOGEE 345KV CKT 1
FDNS	00NR	0	16WP	G15_084	FROM->TO	CIMARRON - DRAPER LAKE 345KV CKT 1	717	717	0.08225	101.0116	GEN562952 1-G15057_3 0.6500
FDNS	00NR	0	16WP	G15_084	FROM->TO	CIMARRON - DRAPER LAKE 345KV CKT 1	717	717	0.08225	101.0001	GEN563272 1-G15093_3 0.6900

SOLUTION	GROUP	SCENARIO	SEASON	SOURCE	DIRECTION	MONITORED ELEMENT	RATEA (MVA)	RATEB(MVA)	TDF	TC%LOADING (% MVA)	CONTINGENCY
FDNS	00NR	0	16WP	G15_084	FROM->TO	CIMARRON - DRAPER LAKE 345KV CKT 1	717	717	0.08225	101	GEN629074 1-ARNOLD LOWSIDE OF GSU XFMR
FDNS	00NR	0	16WP	G15_084	FROM->TO	CIMARRON - DRAPER LAKE 345KV CKT 1	717	717	0.08225	100.9585	GEN635213 3-NEAL UNIT 3
FDNS	00NR	0	16WP	G15_084	FROM->TO	CIMARRON - DRAPER LAKE 345KV CKT 1	717	717	0.08565	100.9479	FRANKLIN SW - MIDWEST TAP 138KV CKT 1
FDNS	00NR	0	16WP	G15_084	FROM->TO	CIMARRON - DRAPER LAKE 345KV CKT 1	717	717	0.07756	100.9426	DRAPER LAKE - SEMINOLE 345KV CKT 3
FDNS	00NR	0	16WP	G15_084	FROM->TO	CIMARRON - DRAPER LAKE 345KV CKT 1	717	717	0.08225	100.9128	GEN562892 1-G15048_3 0.6900
FDNS	00NR	0	16WP	G15_084	FROM->TO	CIMARRON - DRAPER LAKE 345KV CKT 1	717	717	0.08225	100.9011	BIG STONE 230/24.0KV TRANSFORMER CKT 1
FDNS	00NR	0	16WP	G15_084	FROM->TO	CIMARRON - DRAPER LAKE 345KV CKT 1	717	717	0.08225	100.8665	GEN563173 1-G15082_3 0.6900
FDNS	00NR	0	16WP	G15_084	FROM->TO	CIMARRON - DRAPER LAKE 345KV CKT 1	717	717	0.08195	100.8575	CHAMBER SPRINGS - CLARKSVILLE 345KV CKT 1
FDNS	00NR	0	16WP	G15_084	FROM->TO	CIMARRON - DRAPER LAKE 345KV CKT 1	717	717	0.08225	100.8263	GEN562902 1-G15052_3 0.6900
FDNS	00NR	0	16WP	G15_084	FROM->TO	CIMARRON - DRAPER LAKE 345KV CKT 1	717	717	0.07859	100.8149	LYDIA - VALLIANT 345KV CKT 1
FDNS	00NR	0	16WP	G15_084	FROM->TO	CIMARRON - DRAPER LAKE 345KV CKT 1	717	717	0.07859	100.8149	LYDIA - VALLIANT 345KV CKT 1
FDNS	00NR	0	16WP	G15_084	FROM->TO	CIMARRON - DRAPER LAKE 345KV CKT 1	717	717	0.08225	100.81	GEN514805 1-SOONER UNIT 1
FDNS	00NR	0	16WP	G15_084	FROM->TO	CIMARRON - DRAPER LAKE 345KV CKT 1	717	717	0.08225	100.787	GEN527903 1-HOBBS PLANT #3 (ST)
FDNS	00NR	0	16WP	G15_084	FROM->TO	CIMARRON - DRAPER LAKE 345KV CKT 1	717	717	0.08225	100.7504	GEN525561 1-TOLK GEN #1 24 KV
FDNSLock	00NR	0	16WP	G15_084	FROM->TO	CIMARRON - DRAPER LAKE 345KV CKT 1	717	717	0.08225	100.7392	GEN600000 1-SHERBURNECNTY G1
FDNS	00NR	0	16WP	G15_084	FROM->TO	CIMARRON - DRAPER LAKE 345KV CKT 1	717	717	0.08097	100.6808	P12:138:OKGE:3TERM23
FDNS	00NR	0	16WP	G15_084	FROM->TO	CIMARRON - DRAPER LAKE 345KV CKT 1	717	717	0.08225	100.6578	GEN600001 2-SHERBURNE CNTY G2
FDNS	00NR	0	16WP	G15_084	FROM->TO	CIMARRON - DRAPER LAKE 345KV CKT 1	717	717	0.08097	100.6216	BARNES 4 138.00 - DRAPER LAKE 138KV CKT 1
FDNS	00NR	0	16WP	G15_084	FROM->TO	CIMARRON - DRAPER LAKE 345KV CKT 1	717	717	0.08225	100.6	GEN344225 1-1CAL G1 25.000
FDNS	00NR	0	16WP	G15_084	FROM->TO	CIMARRON - DRAPER LAKE 345KV CKT 1	717	717	0.08225	100.5641	GEN514806 1-SOONER UNIT 2
FDNSLock	00NR	0	16WP	G15_084	FROM->TO	CIMARRON - DRAPER LAKE 345KV CKT 1	717	717	0.08225	100.5438	GEN629075 1-OTTUMWA GENERATOR FOR OTTUMWA UNIT NO 1
FDNS	00NR	0	16WP	G15_084	FROM->TO	CIMARRON - DRAPER LAKE 345KV CKT 1	717	717	0.08225	100.5167	GEN563162 1-G15081_3 0.6900
FDNS	00NR	0	16WP	G15_084	FROM->TO	CIMARRON - DRAPER LAKE 345KV CKT 1	717	717	0.08425	100.3768	DRAPER LAKE (DRAPER2) 345/138/13.8KV TRANSFORMER CKT 1
FDNS	00NR	0	16WP	G15_084	FROM->TO	CIMARRON - DRAPER LAKE 345KV CKT 1	717	717	0.08225	100.3192	SHERBURNE CO 345/24.0KV TRANSFORMER CKT 1
FDNS	00NR	0	16WP	G15_084	FROM->TO	CIMARRON - DRAPER LAKE 345KV CKT 1	717	717	0.08441	100.2891	CIMARRON - MATHWSN7 345.00 345KV CKT 1
FDNS	00NR	0	16WP	G15_084	FROM->TO	CIMARRON - DRAPER LAKE 345KV CKT 1	717	717	0.08441	100.2891	CIMARRON - MATHWSN7 345.00 345KV CKT 2
FDNS	00NR	0	16WP	G15_084	FROM->TO	CIMARRON - DRAPER LAKE 345KV CKT 1	717	717	0.08425	100.286	DRAPER LAKE (DRAPER3) 345/138/13.8KV TRANSFORMER CKT 1
FDNS	00NR	0	16WP	G15_084	FROM->TO	CIMARRON - DRAPER LAKE 345KV CKT 1	717	717	0.08425	100.286	DRAPER LAKE (DRAPER4) 345/138/13.8KV TRANSFORMER CKT 1
FDNSLock	00NR	0	16WP	G15_084	FROM->TO	CIMARRON - DRAPER LAKE 345KV CKT 1	717	717	0.08225	100.2812	GEN635214 4-NEAL UNIT 4
FDNS	00NR	0	16WP	G15_084	FROM->TO	CIMARRON - DRAPER LAKE 345KV CKT 1	717	717	0.08225	100.2003	GEN562882 1-G15047_3 0.6900
FDNS	00NR	0	16WP	G15_084	FROM->TO	CIMARRON - DRAPER LAKE 345KV CKT 1	717	717	0.08225	100.1889	GEN600002 3-SHERBURNE CNTY G3
FDNS	00NR	0	16WP	G15_084	FROM->TO	CIMARRON - DRAPER LAKE 345KV CKT 1	717	717	0.08225	99.8	GEN635023 3-WALTER SCOTT UNIT 3
FDNS	00NR	0	16WP	G15_084	FROM->TO	CIMARRON - DRAPER LAKE 345KV CKT 1	717	717	0.08225	99.7	GEN562023 1-G11_020_3 0.6900
FDNS	00NR	0	16WP	G15_084	FROM->TO	CIMARRON - DRAPER LAKE 345KV CKT 1	717	717	0.08225	99.7	GEN562026 1-G11_019_3 0.6900
FDNS	00NR	0	16WP	G15_084	FROM->TO	CIMARRON - DRAPER LAKE 345KV CKT 1	717	717	0.08225	99.6	EASTDC - ERCOT EQUIVALENCE 345KV CKT 1
FDNS	00NR	0	16WP	G15_084	FROM->TO	CIMARRON - DRAPER LAKE 345KV CKT 1	717	717	0.0735	99.5	DRAPER LAKE - SEMINOLE 345KV CKT 1
FDNS	00NR	0	16WP	G15_084	FROM->TO	CIMARRON - DRAPER LAKE 345KV CKT 1	717	717	0.0735	99.5	DRAPER LAKE - SEMINOLE 345KV CKT 2
FDNS	00NR	0	20WP	G15_084	TO->FROM	CIMARRON - MINCO 345KV CKT 1	956	956	0.33411	113.1031	G14-057T 345.00 - SUNNYSIDE 345KV CKT 1
FDNS	00NR	0	16WP	G15_084	TO->FROM	CIMARRON - MINCO 345KV CKT 1	956	956	0.33503	112.6453	G14-057T 345.00 - SUNNYSIDE 345KV CKT 1
FDNS	00NR	0	17SP	G15_084	TO->FROM	CLEAVELAND - CLEVLND 4 138.00 138KV CKT Z1	305	371	0.04311	110.1318	CLEVELAND - TULSA NORTH 345KV CKT 1
FDNS	00NR	0	17SP	G15_084	TO->FROM	CLEAVELAND - CLEVLND 4 138.00 138KV CKT Z1	305	371	0.04311	110.1318	CLEVELAND - TULSA NORTH 345KV CKT 1
FDNS	00NR	0	20SP	G15_084	TO->FROM	CLEAVELAND - CLEVLND 4 138.00 138KV CKT Z1	305	371	0.04183	109.3313	CLEVELAND - TULSA NORTH 345KV CKT 1
FDNS	00NR	0	20SP	G15_084	TO->FROM	CLEAVELAND - CLEVLND 4 138.00 138KV CKT Z1	305	371	0.04183	109.3313	CLEVELAND - TULSA NORTH 345KV CKT 1
FDNS	00NR	0	20WP	G15_084	FROM->TO	ELDORADO - ELDORADO JCT 69KV CKT 1	29	32	0.32332	235.3612	G15085_T 138.00 - RUSSELL 138KV CKT 1
FDNS	00NR	0	16WP	G15_084	FROM->TO	ELDORADO - ELDORADO JCT 69KV CKT 1	29	32	0.32332	229.6961	G15085_T 138.00 - RUSSELL 138KV CKT 1
FDNS	07NR	0	20L	G15_084	FROM->TO	ELDORADO - ELDORADO JCT 69KV CKT 1	22	27	0.32302	227.5666	G15085_T 138.00 - RUSSELL 138KV CKT 1
FDNS	07ALL	0	20L	G15_084	FROM->TO	ELDORADO - ELDORADO JCT 69KV CKT 1	22	27	0.321	218.3703	G15085_T 138.00 - RUSSELL 138KV CKT 1
FDNS	00NR	0	17SP	G15_084	FROM->TO	ELDORADO - ELDORADO JCT 69KV CKT 1	22	27	0.32342	218.0255	G15085_T 138.00 - RUSSELL 138KV CKT 1
FDNS	00NR	0	20SP	G15_084	FROM->TO	ELDORADO - ELDORADO JCT 69KV CKT 1	22	27	0.32342	217.2361	G15085_T 138.00 - RUSSELL 138KV CKT 1
FDNS	07NR	0	17G	G15_084	FROM->TO	ELDORADO - ELDORADO JCT 69KV CKT 1	22	27	0.32332	213.5492	G15085_T 138.00 - RUSSELL 138KV CKT 1
FDNS	07ALL	0	17G	G15_084	FROM->TO	ELDORADO - ELDORADO JCT 69KV CKT 1	22	27	0.32154	205.7584	G15085_T 138.00 - RUSSELL 138KV CKT 1
FDNS	07ALL	0	20WP	G15_084	FROM->TO	ELDORADO - ELDORADO JCT 69KV CKT 1	29	32	0.32132	187.6239	G15085_T 138.00 - RUSSELL 138KV CKT 1
FDNS	07ALL	0	17SP	G15_084	FROM->TO	ELDORADO - ELDORADO JCT 69KV CKT 1	22	27	0.32155	180.5242	G15085_T 138.00 - RUSSELL 138KV CKT 1
FDNS	07ALL	0	20SP	G15_084	FROM->TO	ELDORADO - ELDORADO JCT 69KV CKT 1	22	27	0.3215	179.5693	G15085_T 138.00 - RUSSELL 138KV CKT 1
FDNS	07ALL	0	16WP	G15_084	FROM->TO	ELDORADO - ELDORADO JCT 69KV CKT 1	29	32	0.32158	179.0768	G15085_T 138.00 - RUSSELL 138KV CKT 1
FDNS	00NR	0	25SP	G15_084	FROM->TO	ELDORADO - ELDORADO JCT 69KV CKT 1	22	27	0.32313	157.9422	G15085_T 138.00 - RUSSELL 138KV CKT 1
FDNS	00NR	0	20WP	G15_084	FROM->TO	ELDORADO - ELDORADO JCT 69KV CKT 1	29	32	0.19785	128.2162	ALTUS JUNCTION - RUSSELL 138KV CKT 1
FDNS	00NR	0	20WP	G15_084	FROM->TO	ELDORADO - ELDORADO JCT 69KV CKT 1	29	32	0.19785	128.2162	ALTUS JUNCTION - RUSSELL 138KV CKT 1
FDNS	07ALL	0	25SP	G15_084	FROM->TO	ELDORADO - ELDORADO JCT 69KV CKT 1	22	27	0.32156	126.8067	G15085_T 138.00 - RUSSELL 138KV CKT 1
FDNS	00NR	0	16WP	G15_084	FROM->TO	ELDORADO - ELDORADO JCT 69KV CKT 1	29	32	0.19785	125.1324	ALTUS JUNCTION - RUSSELL 138KV CKT 1
FDNS	00NR	0	16WP	G15_084	FROM->TO	ELDORADO - ELDORADO JCT 69KV CKT 1	29	32	0.19785	125.1324	ALTUS JUNCTION - RUSSELL 138KV CKT 1
FDNS	07NR	0	20L	G15_084	FROM->TO	ELDORADO - ELDORADO JCT 69KV CKT 1	22	27	0.19767	120.6131	ALTUS JUNCTION - RUSSELL 138KV CKT 1
FDNS	07NR	0	20L	G15_084	FROM->TO	ELDORADO - ELDORADO JCT 69KV CKT 1	22	27	0.19767	120.6131	ALTUS JUNCTION - RUSSELL 138KV CKT 1
FDNS	07ALL	0	20L	G15_084	FROM->TO	ELDORADO - ELDORADO JCT 69KV CKT 1	22	27	0.19645	115.1738	ALTUS JUNCTION - RUSSELL 138KV CKT 1
FDNS	07ALL	0	20L	G15_084	FROM->TO	ELDORADO - ELDORADO JCT 69KV CKT 1	22	27	0.19645	115.1738	ALTUS JUNCTION - RUSSELL 138KV CKT 1
FDNS	00NR	0	17SP	G15_084	FROM->TO	ELDORADO - ELDORADO JCT 69KV CKT 1	22	27	0.1979	114.6879	ALTUS JUNCTION - RUSSELL 138KV CKT 1
FDNS	00NR	0	17SP	G15_084	FROM->TO	ELDORADO - ELDORADO JCT 69KV CKT 1	22	27	0.1979	114.6879	ALTUS JUNCTION - RUSSELL 138KV CKT 1
FDNS	00NR	0	20SP	G15_084	FROM->TO	ELDORADO - ELDORADO JCT 69KV CKT 1	22	27	0.19791	113.7958	ALTUS JUNCTION - RUSSELL 138KV CKT 1
FDNS	00NR	0	20SP	G15_084	FROM->TO	ELDORADO - ELDORADO JCT 69KV CKT 1	22	27	0.19791	113.7958	ALTUS JUNCTION - RUSSELL 138KV CKT 1
FDNS	07NR	0	17G	G15_084	FROM->TO	ELDORADO - ELDORADO JCT 69KV CKT 1	22	27	0.19786	111.3408	ALTUS JUNCTION - RUSSELL 138KV CKT 1
FDNS	07NR	0	17G	G15_084	FROM->TO	ELDORADO - ELDORADO JCT 69KV CKT 1	22	27	0.19786	111.3408	ALTUS JUNCTION - RUSSELL 138KV CKT 1
FDNS	07ALL	0	17G	G15_084	FROM->TO	ELDORADO - ELDORADO JCT 69KV CKT 1	22	27	0.19678	106.0748	ALTUS JUNCTION - RUSSELL 138KV CKT 1
FDNS	00NR	0	20WP	G15_084	TO->FROM	ELDORADO - LAKE PAULINE 69KV CKT 1	26	33	0.32332	232.3957	G15085_T 138.00 - RUSSELL 138KV CKT 1
FDNS	00NR	0	16WP	G15_084	TO->FROM	ELDORADO - LAKE PAULINE 69KV CKT 1	26	33	0.32332	226.8661	G15085_T 138.00 - RUSSELL 138KV CKT 1
FDNS	07NR	0	20L	G15_084	TO->FROM	ELDORADO - LAKE PAULINE 69KV CKT 1	26	33	0.32302	188.2443	G15085_T 138.00 - RUSSELL 138KV CKT 1
FDNS	07ALL	0	20WP	G15_084	TO->FROM	ELDORADO - LAKE PAULINE 69KV CKT 1	26	33	0.32132	185.9825	G15085_T 138.00 - RUSSELL 138KV CKT 1
FDNS	00NR	0	20SP	G15_084	TO->FROM	ELDORADO - LAKE PAULINE 69KV CKT 1	26	33	0.32342	185.1796	G15085_T 138.00 - RUSSELL 138KV CKT 1
FDNS	00NR	0	17SP	G15_084	TO->FROM	ELDORADO - LAKE PAULINE 69KV CKT 1	26	33	0.32342	185.1542	G15085_T 138.00 - RUSSELL 138KV CKT 1
FDNS	07ALL	0	20L	G15_084	TO->FROM	ELDORADO - LAKE PAULINE 69KV CKT 1	26	33	0.321	180.7235	G15085_T 138.00 - RUSSELL 138KV CKT 1

SOLUTION	GROUP	SCENARIO	SEASON	SOURCE	DIRECTION	MONITORED ELEMENT	RATEA (MVA)	RATEB(MVA)	TDF	TC%LOADING (% MVA)	CONTINGENCY
FDNS	07NR	0	17G	G15_084	TO->FROM	ELDORADO - LAKE PAULINE 69KV CKT 1	26	33	0.32332	177.8985	G15085_T 138.00 - RUSSELL 138KV CKT 1
FDNS	07ALL	0	16WP	G15_084	TO->FROM	ELDORADO - LAKE PAULINE 69KV CKT 1	26	33	0.32158	177.6684	G15085_T 138.00 - RUSSELL 138KV CKT 1
FDNS	07ALL	0	17G	G15_084	TO->FROM	ELDORADO - LAKE PAULINE 69KV CKT 1	26	33	0.32154	171.5496	G15085_T 138.00 - RUSSELL 138KV CKT 1
FDNS	07ALL	0	17SP	G15_084	TO->FROM	ELDORADO - LAKE PAULINE 69KV CKT 1	26	33	0.32155	154.3965	G15085_T 138.00 - RUSSELL 138KV CKT 1
FDNS	07ALL	0	20SP	G15_084	TO->FROM	ELDORADO - LAKE PAULINE 69KV CKT 1	26	33	0.3215	154.2536	G15085_T 138.00 - RUSSELL 138KV CKT 1
FDNS	00NR	0	25SP	G15_084	TO->FROM	ELDORADO - LAKE PAULINE 69KV CKT 1	26	33	0.32313	135.8108	G15085_T 138.00 - RUSSELL 138KV CKT 1
FDNS	00NR	0	20WP	G15_084	TO->FROM	ELDORADO - LAKE PAULINE 69KV CKT 1	26	33	0.19785	128.3517	ALTUS JUNCTION - RUSSELL 138KV CKT 1
FDNS	00NR	0	20WP	G15_084	TO->FROM	ELDORADO - LAKE PAULINE 69KV CKT 1	26	33	0.19785	128.3517	ALTUS JUNCTION - RUSSELL 138KV CKT 1
FDNS	00NR	0	16WP	G15_084	TO->FROM	ELDORADO - LAKE PAULINE 69KV CKT 1	26	33	0.19785	125.3676	ALTUS JUNCTION - RUSSELL 138KV CKT 1
FDNS	00NR	0	16WP	G15_084	TO->FROM	ELDORADO - LAKE PAULINE 69KV CKT 1	26	33	0.19785	125.3676	ALTUS JUNCTION - RUSSELL 138KV CKT 1
FDNS	07ALL	0	25SP	G15_084	TO->FROM	ELDORADO - LAKE PAULINE 69KV CKT 1	26	33	0.32156	110.3013	G15085_T 138.00 - RUSSELL 138KV CKT 1
FDNS	07NR	0	20L	G15_084	TO->FROM	ELDORADO - LAKE PAULINE 69KV CKT 1	26	33	0.19767	100.72	ALTUS JUNCTION - RUSSELL 138KV CKT 1
FDNS	07NR	0	20L	G15_084	TO->FROM	ELDORADO - LAKE PAULINE 69KV CKT 1	26	33	0.19767	100.72	ALTUS JUNCTION - RUSSELL 138KV CKT 1
FDNS	00NR	0	20SP	G15_084	TO->FROM	ELDORADO - LAKE PAULINE 69KV CKT 1	26	33	0.19791	100.4725	ALTUS JUNCTION - RUSSELL 138KV CKT 1
FDNS	00NR	0	20SP	G15_084	TO->FROM	ELDORADO - LAKE PAULINE 69KV CKT 1	26	33	0.19791	100.4725	ALTUS JUNCTION - RUSSELL 138KV CKT 1
FDNS	00NR	0	17SP	G15_084	TO->FROM	ELDORADO - LAKE PAULINE 69KV CKT 1	26	33	0.1979	100.4211	ALTUS JUNCTION - RUSSELL 138KV CKT 1
FDNS	00NR	0	17SP	G15_084	TO->FROM	ELDORADO - LAKE PAULINE 69KV CKT 1	26	33	0.1979	100.4211	ALTUS JUNCTION - RUSSELL 138KV CKT 1
FDNS	07ALL	0	20WP	G15_084	TO->FROM	ELDORADO - LAKE PAULINE 69KV CKT 1	26	33	0.19665	100.2782	ALTUS JUNCTION - RUSSELL 138KV CKT 1
FDNS	07ALL	0	20WP	G15_084	TO->FROM	ELDORADO - LAKE PAULINE 69KV CKT 1	26	33	0.19665	100.2782	ALTUS JUNCTION - RUSSELL 138KV CKT 1
FDNS	00NR	0	20WP	G15_084	FROM->TO	ELDORADO JCT - GYPSUM 69KV CKT 1	29	32	0.32332	231.5083	G15085_T 138.00 - RUSSELL 138KV CKT 1
FDNS	00NR	0	16WP	G15_084	FROM->TO	ELDORADO JCT - GYPSUM 69KV CKT 1	29	32	0.32332	225.8441	G15085_T 138.00 - RUSSELL 138KV CKT 1
FDNS	07NR	0	20L	G15_084	FROM->TO	ELDORADO JCT - GYPSUM 69KV CKT 1	22	27	0.32302	224.1071	G15085_T 138.00 - RUSSELL 138KV CKT 1
FDNS	07ALL	0	20L	G15_084	FROM->TO	ELDORADO JCT - GYPSUM 69KV CKT 1	22	27	0.321	214.8687	G15085_T 138.00 - RUSSELL 138KV CKT 1
FDNS	00NR	0	17SP	G15_084	FROM->TO	ELDORADO JCT - GYPSUM 69KV CKT 1	22	27	0.32342	208.9731	G15085_T 138.00 - RUSSELL 138KV CKT 1
FDNS	07NR	0	17G	G15_084	FROM->TO	ELDORADO JCT - GYPSUM 69KV CKT 1	22	27	0.32332	208.5391	G15085_T 138.00 - RUSSELL 138KV CKT 1
FDNS	00NR	0	20SP	G15_084	FROM->TO	ELDORADO JCT - GYPSUM 69KV CKT 1	22	27	0.32342	207.2902	G15085_T 138.00 - RUSSELL 138KV CKT 1
FDNS	07ALL	0	17G	G15_084	FROM->TO	ELDORADO JCT - GYPSUM 69KV CKT 1	22	27	0.32154	200.6398	G15085_T 138.00 - RUSSELL 138KV CKT 1
FDNS	07ALL	0	20WP	G15_084	FROM->TO	ELDORADO JCT - GYPSUM 69KV CKT 1	29	32	0.32132	183.5986	G15085_T 138.00 - RUSSELL 138KV CKT 1
FDNS	07ALL	0	16WP	G15_084	FROM->TO	ELDORADO JCT - GYPSUM 69KV CKT 1	29	32	0.32158	175.0715	G15085_T 138.00 - RUSSELL 138KV CKT 1
FDNS	07ALL	0	17SP	G15_084	FROM->TO	ELDORADO JCT - GYPSUM 69KV CKT 1	22	27	0.32155	171.2919	G15085_T 138.00 - RUSSELL 138KV CKT 1
FDNS	07ALL	0	20SP	G15_084	FROM->TO	ELDORADO JCT - GYPSUM 69KV CKT 1	22	27	0.3215	169.4286	G15085_T 138.00 - RUSSELL 138KV CKT 1
FDNS	00NR	0	25SP	G15_084	FROM->TO	ELDORADO JCT - GYPSUM 69KV CKT 1	22	27	0.32313	148.8559	G15085_T 138.00 - RUSSELL 138KV CKT 1
FDNS	00NR	0	20WP	G15_084	FROM->TO	ELDORADO JCT - GYPSUM 69KV CKT 1	29	32	0.19785	123.9841	ALTUS JUNCTION - RUSSELL 138KV CKT 1
FDNS	00NR	0	20WP	G15_084	FROM->TO	ELDORADO JCT - GYPSUM 69KV CKT 1	29	32	0.19785	123.9841	ALTUS JUNCTION - RUSSELL 138KV CKT 1
FDNS	00NR	0	16WP	G15_084	FROM->TO	ELDORADO JCT - GYPSUM 69KV CKT 1	29	32	0.19785	120.856	ALTUS JUNCTION - RUSSELL 138KV CKT 1
FDNS	00NR	0	16WP	G15_084	FROM->TO	ELDORADO JCT - GYPSUM 69KV CKT 1	29	32	0.19785	120.856	ALTUS JUNCTION - RUSSELL 138KV CKT 1
FDNS	07ALL	0	25SP	G15_084	FROM->TO	ELDORADO JCT - GYPSUM 69KV CKT 1	22	27	0.32156	117.7703	G15085_T 138.00 - RUSSELL 138KV CKT 1
FDNS	07NR	0	20L	G15_084	FROM->TO	ELDORADO JCT - GYPSUM 69KV CKT 1	22	27	0.19767	116.9607	ALTUS JUNCTION - RUSSELL 138KV CKT 1
FDNS	07NR	0	20L	G15_084	FROM->TO	ELDORADO JCT - GYPSUM 69KV CKT 1	22	27	0.19767	116.9607	ALTUS JUNCTION - RUSSELL 138KV CKT 1
FDNS	07ALL	0	20L	G15_084	FROM->TO	ELDORADO JCT - GYPSUM 69KV CKT 1	22	27	0.19645	111.3092	ALTUS JUNCTION - RUSSELL 138KV CKT 1
FDNS	07ALL	0	20L	G15_084	FROM->TO	ELDORADO JCT - GYPSUM 69KV CKT 1	22	27	0.19645	111.3092	ALTUS JUNCTION - RUSSELL 138KV CKT 1
FDNS	07NR	0	17G	G15_084	FROM->TO	ELDORADO JCT - GYPSUM 69KV CKT 1	22	27	0.19786	105.9597	ALTUS JUNCTION - RUSSELL 138KV CKT 1
FDNS	07NR	0	17G	G15_084	FROM->TO	ELDORADO JCT - GYPSUM 69KV CKT 1	22	27	0.19786	105.9597	ALTUS JUNCTION - RUSSELL 138KV CKT 1
FDNS	00NR	0	17SP	G15_084	FROM->TO	ELDORADO JCT - GYPSUM 69KV CKT 1	22	27	0.1979	105.2274	ALTUS JUNCTION - RUSSELL 138KV CKT 1
FDNS	00NR	0	17SP	G15_084	FROM->TO	ELDORADO JCT - GYPSUM 69KV CKT 1	22	27	0.1979	105.2274	ALTUS JUNCTION - RUSSELL 138KV CKT 1
FDNS	00NR	0	20SP	G15_084	FROM->TO	ELDORADO JCT - GYPSUM 69KV CKT 1	22	27	0.19791	103.1145	ALTUS JUNCTION - RUSSELL 138KV CKT 1
FDNS	00NR	0	20SP	G15_084	FROM->TO	ELDORADO JCT - GYPSUM 69KV CKT 1	22	27	0.19791	103.1145	ALTUS JUNCTION - RUSSELL 138KV CKT 1
FDNS	07ALL	0	17G	G15_084	FROM->TO	ELDORADO JCT - GYPSUM 69KV CKT 1	22	27	0.19678	100.5522	ALTUS JUNCTION - RUSSELL 138KV CKT 1
FDNS	00NR	0	16WP	G15_084	FROM->TO	G14-057T 345.00 - SUNNYSIDE 345KV CKT 1	717	789	0.26488	141.3261	CIMARRON - MINCO 345KV CKT 1
FDNS	00NR	0	20WP	G15_084	FROM->TO	G14-057T 345.00 - SUNNYSIDE 345KV CKT 1	717	789	0.26574	139.8556	CIMARRON - MINCO 345KV CKT 1
FDNS	00NR	0	16WP	G15_084	FROM->TO	G14-057T 345.00 - SUNNYSIDE 345KV CKT 1	717	789	0.26488	130.2319	GRACEMONT - MINCO 345KV CKT 1
FDNS	00NR	0	20WP	G15_084	FROM->TO	G14-057T 345.00 - SUNNYSIDE 345KV CKT 1	717	789	0.26574	128.6283	GRACEMONT - MINCO 345KV CKT 1
FDNS	00NR	0	16WP	G15_084	FROM->TO	G14-057T 345.00 - SUNNYSIDE 345KV CKT 1	717	789	0.20111	125.8516	PITTSBURG - SEMINOLE 345KV CKT 1
FDNS	00NR	0	16WP	G15_084	FROM->TO	G14-057T 345.00 - SUNNYSIDE 345KV CKT 1	717	789	0.20111	125.8516	PITTSBURG - SEMINOLE 345KV CKT 1
FDNS	00NR	0	16WP	G15_084	FROM->TO	G14-057T 345.00 - SUNNYSIDE 345KV CKT 1	717	789	0.18594	125.7317	BASE CASE
FDNS	00NR	0	20WP	G15_084	FROM->TO	G14-057T 345.00 - SUNNYSIDE 345KV CKT 1	717	789	0.18744	123.4961	BASE CASE
FDNS	00NR	0	16WP	G15_084	FROM->TO	G14-057T 345.00 - SUNNYSIDE 345KV CKT 1	717	789	0.19357	123.2027	CIMARRON - DRAPER LAKE 345KV CKT 1
FDNS	00NR	0	20WP	G15_084	FROM->TO	G14-057T 345.00 - SUNNYSIDE 345KV CKT 1	717	789	0.20312	122.942	PITTSBURG - SEMINOLE 345KV CKT 1
FDNS	00NR	0	20WP	G15_084	FROM->TO	G14-057T 345.00 - SUNNYSIDE 345KV CKT 1	717	789	0.20312	122.942	PITTSBURG - SEMINOLE 345KV CKT 1
FDNS	00NR	0	20WP	G15_084	FROM->TO	G14-057T 345.00 - SUNNYSIDE 345KV CKT 1	717	789	0.19509	120.8155	CIMARRON - DRAPER LAKE 345KV CKT 1
FDNS	00NR	0	16WP	G15_084	FROM->TO	G14-057T 345.00 - SUNNYSIDE 345KV CKT 1	717	789	0.20261	120.3338	P12:138:WFEC:MSL03
FDNS	00NR	0	16WP	G15_084	FROM->TO	G14-057T 345.00 - SUNNYSIDE 345KV CKT 1	717	789	0.19277	119.7169	PITTSBURG - VALLIANT 345KV CKT 1
FDNS	00NR	0	16WP	G15_084	FROM->TO	G14-057T 345.00 - SUNNYSIDE 345KV CKT 1	717	789	0.19277	119.7169	PITTSBURG - VALLIANT 345KV CKT 1
FDNSLock	00NR	0	16WP	G15_084	FROM->TO	G14-057T 345.00 - SUNNYSIDE 345KV CKT 1	717	789	0.18594	119.4097	GEN509403 1-PIRKEY GENERATION
FDNS	00NR	0	16WP	G15_084	FROM->TO	G14-057T 345.00 - SUNNYSIDE 345KV CKT 1	717	789	0.18594	119.3291	GEN509416 1-TURK GENERATION
FDNS	00NR	0	16WP	G15_084	FROM->TO	G14-057T 345.00 - SUNNYSIDE 345KV CKT 1	717	789	0.19135	119.038	CLEVELAND - G15066_T 345.00 345KV CKT 1
FDNS	00NR	0	16WP	G15_084	FROM->TO	G14-057T 345.00 - SUNNYSIDE 345KV CKT 1	717	789	0.19135	118.7424	G15066_T 345.00 - SOONER 345KV CKT 1
FDNS	00NR	0	20WP	G15_084	FROM->TO	G14-057T 345.00 - SUNNYSIDE 345KV CKT 1	717	789	0.20427	118.4531	P12:138:WFEC:MSL03
FDNS	00NR	0	16WP	G15_084	FROM->TO	G14-057T 345.00 - SUNNYSIDE 345KV CKT 1	717	789	0.18594	118.4277	GEN501801 1-DOLET HILLS UNIT1
FDNS	00NR	0	16WP	G15_084	FROM->TO	G14-057T 345.00 - SUNNYSIDE 345KV CKT 1	717	789	0.18594	118.0417	GEN509404 1-WELSH #1
FDNS	00NR	0	16WP	G15_084	FROM->TO	G14-057T 345.00 - SUNNYSIDE 345KV CKT 1	717	789	0.18594	118.0417	GEN509406 1-WELSH #3
FDNS	00NR	0	16WP	G15_084	FROM->TO	G14-057T 345.00 - SUNNYSIDE 345KV CKT 1	717	789	0.19237	117.7945	BORDER 7345.00 - WOODWARD DISTRICT EHV 345KV CKT 1
FDNS	00NR	0	16WP	G15_084	FROM->TO	G14-057T 345.00 - SUNNYSIDE 345KV CKT 1	717	789	0.18951	117.3154	7SAREPTA% 345.00 - LONGWOOD 345KV CKT 1
FDNS	00NR	0	16WP	G15_084	FROM->TO	G14-057T 345.00 - SUNNYSIDE 345KV CKT 1	717	789	0.18951	117.3154	7SAREPTA% 345.00 - LONGWOOD 345KV CKT 1
FDNS	00NR	0	20WP	G15_084	FROM->TO	G14-057T 345.00 - SUNNYSIDE 345KV CKT 1	717	789	0.18744	117.2677	GEN509403 1-PIRKEY GENERATION
FDNS	00NR	0	16WP	G15_084	FROM->TO	G14-057T 345.00 - SUNNYSIDE 345KV CKT 1	717	789	0.19052	117.2341	CORN TAP - NAPLESTP 138.00 138KV CKT 1
FDNS	00NR	0	20WP	G15_084	FROM->TO	G14-057T 345.00 - SUNNYSIDE 345KV CKT 1	717	789	0.18744	117.1868	GEN509416 1-TURK GENERATION
FDNS	00NR	0	16WP	G15_084	FROM->TO	G14-057T 345.00 - SUNNYSIDE 345KV CKT 1	717	789	0.19052	117.1497	NAPLESTP 138.00 - PAYNE 138.00 138KV CKT 1
FDNS	00NR	0	16WP	G15_084	FROM->TO	G14-057T 345.00 - SUNNYSIDE 345KV CKT 1	717	789	0.18736	117.1471	DOLET HILLS - SOUTHWEST SHREVEPORT 345KV CKT 1

SOLUTION	GROUP	SCENARIO	SEASON	SOURCE	DIRECTION	MONITORED ELEMENT	RATEA (MVA)	RATEB(MVA)	TDF	TC%LOADING (% MVA)	CONTINGENCY
FDNS	00NR	0	16WP	G15_084	FROM->TO	G14-057T 345.00 - SUNNYSIDE 345KV CKT 1	717	789	0.18736	117.1471	DOLET HILLS - SOUTHWEST SHREVEPORT 345KV CKT 1
FDNS	00NR	0	16WP	G15_084	FROM->TO	G14-057T 345.00 - SUNNYSIDE 345KV CKT 1	717	789	0.19041	117.1448	ANADARKO - POCASSETT 138KV CKT 1
FDNSLock	00NR	0	16WP	G15_084	FROM->TO	G14-057T 345.00 - SUNNYSIDE 345KV CKT 1	717	789	0.18594	117.1301	GEN336821 1-GRAND GULF UNIT
FDNS	00NR	0	16WP	G15_084	FROM->TO	G14-057T 345.00 - SUNNYSIDE 345KV CKT 1	717	789	0.18987	117.0898	CLEVELAND - TULSA NORTH 345KV CKT 1
FDNS	00NR	0	16WP	G15_084	FROM->TO	G14-057T 345.00 - SUNNYSIDE 345KV CKT 1	717	789	0.18987	117.0898	CLEVELAND - TULSA NORTH 345KV CKT 1
FDNS	00NR	0	16WP	G15_084	FROM->TO	G14-057T 345.00 - SUNNYSIDE 345KV CKT 1	717	789	0.19035	117.0742	COMANCHE - LOCO 138KV CKT 1
FDNSLock	00NR	0	16WP	G15_084	FROM->TO	G14-057T 345.00 - SUNNYSIDE 345KV CKT 1	717	789	0.18594	117.0352	GEN336153 1-WATERFORD UNIT#3
FDNS	00NR	0	16WP	G15_084	FROM->TO	G14-057T 345.00 - SUNNYSIDE 345KV CKT 1	717	789	0.18166	117.0161	CANADIAN RIVER - MUSKOGEE 345KV CKT 1
FDNS	00NR	0	16WP	G15_084	FROM->TO	G14-057T 345.00 - SUNNYSIDE 345KV CKT 1	717	789	0.19041	116.9961	POCASSETT - TUTTLE 138KV CKT 1
FDNS	00NR	0	20WP	G15_084	FROM->TO	G14-057T 345.00 - SUNNYSIDE 345KV CKT 1	717	789	0.1926	116.9383	CLEVELAND - G15066_T 345.00 345KV CKT 1
FDNSLock	00NR	0	16WP	G15_084	FROM->TO	G14-057T 345.00 - SUNNYSIDE 345KV CKT 1	717	789	0.18728	116.891	MATHWSN7 345.00 - TATONGA7 345.00 345KV CKT 1
FDNS	00NR	0	16WP	G15_084	FROM->TO	G14-057T 345.00 - SUNNYSIDE 345KV CKT 1	717	789	0.19237	116.8671	BORDER 7345.00 - TUCO_2 345.00 345KV CKT 1
FDNS	00NR	0	20WP	G15_084	FROM->TO	G14-057T 345.00 - SUNNYSIDE 345KV CKT 1	717	789	0.19462	116.8606	PITTSBURG - VALLIANT 345KV CKT 1
FDNS	00NR	0	20WP	G15_084	FROM->TO	G14-057T 345.00 - SUNNYSIDE 345KV CKT 1	717	789	0.19462	116.8606	PITTSBURG - VALLIANT 345KV CKT 1
FDNS	00NR	0	16WP	G15_084	FROM->TO	G14-057T 345.00 - SUNNYSIDE 345KV CKT 1	717	789	0.19079	116.8117	ARCADIA - NORTHWEST 345KV CKT 1
FDNS	00NR	0	16WP	G15_084	FROM->TO	G14-057T 345.00 - SUNNYSIDE 345KV CKT 1	717	789	0.18594	116.7419	GRAND GULF 500/22.0KV TRANSFORMER CKT 1
FDNSLock	00NR	0	16WP	G15_084	FROM->TO	G14-057T 345.00 - SUNNYSIDE 345KV CKT 1	717	789	0.18594	116.7414	GEN335831 1-RIVERBEND UNIT#1
FDNS	00NR	0	16WP	G15_084	FROM->TO	G14-057T 345.00 - SUNNYSIDE 345KV CKT 1	717	789	0.18594	116.7065	GEN515577 1-ARBWND11 0.6900
FDNS	00NR	0	16WP	G15_084	FROM->TO	G14-057T 345.00 - SUNNYSIDE 345KV CKT 1	717	789	0.18691	116.6977	ARCADIA - SEMINOLE 345KV CKT 1
FDNS	00NR	0	16WP	G15_084	FROM->TO	G14-057T 345.00 - SUNNYSIDE 345KV CKT 1	717	789	0.18594	116.6641	GEN509409 1-WILKES #3
FDNS	00NR	0	16WP	G15_084	FROM->TO	G14-057T 345.00 - SUNNYSIDE 345KV CKT 1	717	789	0.18782	116.6569	7SAREPTA% 345.00 - ELDORADO EHV 345KV CKT 1
FDNS	00NR	0	16WP	G15_084	FROM->TO	G14-057T 345.00 - SUNNYSIDE 345KV CKT 1	717	789	0.18782	116.6567	3TR3AR8EL7EL
FDNS	00NR	0	16WP	G15_084	FROM->TO	G14-057T 345.00 - SUNNYSIDE 345KV CKT 1	717	789	0.18782	116.6476	ELDORADO EHV 500/345KV TRANSFORMER CKT 1
FDNS	00NR	0	20WP	G15_084	FROM->TO	G14-057T 345.00 - SUNNYSIDE 345KV CKT 1	717	789	0.1926	116.6463	G15066_T 345.00 - SOONER 345KV CKT 1
FDNS	00NR	0	16WP	G15_084	FROM->TO	G14-057T 345.00 - SUNNYSIDE 345KV CKT 1	717	789	0.18833	116.6347	P12:138:AEPW:DUNCAN-4:L.E.S.-4
FDNS	00NR	0	16WP	G15_084	FROM->TO	G14-057T 345.00 - SUNNYSIDE 345KV CKT 1	717	789	0.19041	116.6144	BRIDGECR 138.00 - TUTTLE 138KV CKT 1
FDNS	00NR	0	16WP	G15_084	FROM->TO	G14-057T 345.00 - SUNNYSIDE 345KV CKT 1	717	789	0.18838	116.5237	COMANCHE TAP - OMPA-DUNCAN 840 138KV CKT 1
FDNS	00NR	0	16WP	G15_084	FROM->TO	G14-057T 345.00 - SUNNYSIDE 345KV CKT 1	717	789	0.19122	116.4781	HEALDTON - LOCO 138KV CKT 1
FDNS	00NR	0	20WP	G15_084	FROM->TO	G14-057T 345.00 - SUNNYSIDE 345KV CKT 1	717	789	0.18744	116.4704	GEN501801 1-DOLET HILLS UNIT1
FDNS	00NR	0	16WP	G15_084	FROM->TO	G14-057T 345.00 - SUNNYSIDE 345KV CKT 1	717	789	0.19154	116.4505	FINNEY SWITCHING STATION - HOLCOMB 345KV CKT 1
FDNS	00NR	0	16WP	G15_084	FROM->TO	G14-057T 345.00 - SUNNYSIDE 345KV CKT 1	717	789	0.19154	116.4505	FINNEY SWITCHING STATION - HOLCOMB 345KV CKT 1
FDNS	00NR	0	16WP	G15_084	FROM->TO	G14-057T 345.00 - SUNNYSIDE 345KV CKT 1	717	789	0.18594	116.4	GEN300006 1-NEW MADRID UNIT 1
FDNS	00NR	0	16WP	G15_084	FROM->TO	G14-057T 345.00 - SUNNYSIDE 345KV CKT 1	717	789	0.18594	116.4	GEN300007 1-NEW MADRID UNIT 2
FDNS	00NR	0	16WP	G15_084	FROM->TO	G14-057T 345.00 - SUNNYSIDE 345KV CKT 1	717	789	0.18649	116.3928	LACYGNE - WAVERLY7 345.00 345KV CKT 1
FDNS	00NR	0	16WP	G15_084	FROM->TO	G14-057T 345.00 - SUNNYSIDE 345KV CKT 1	717	789	0.18594	116.369	GEN501813 1-RODEMACHER UNIT 3
FDNS	00NR	0	16WP	G15_084	FROM->TO	G14-057T 345.00 - SUNNYSIDE 345KV CKT 1	717	789	0.19041	116.3452	P12:138:WFEC:MSL01
FDNS	00NR	0	16WP	G15_084	FROM->TO	G14-057T 345.00 - SUNNYSIDE 345KV CKT 1	717	789	0.19041	116.3403	BRIDGECR 138.00 - SUNSHINE CANYON 138KV CKT 1
FDNS	00NR	0	16WP	G15_084	FROM->TO	G14-057T 345.00 - SUNNYSIDE 345KV CKT 1	717	789	0.19122	116.3386	HEALDTON - RINGLING 138KV CKT 1
FDNS	00NR	0	16WP	G15_084	FROM->TO	G14-057T 345.00 - SUNNYSIDE 345KV CKT 1	717	789	0.18649	116.2527	WAVERLY7 345.00 - WOLF CREEK 345KV CKT 1
FDNS	00NR	0	16WP	G15_084	FROM->TO	G14-057T 345.00 - SUNNYSIDE 345KV CKT 1	717	789	0.18594	116.2503	GEN520947 1-HUGO1
FDNS	00NR	0	16WP	G15_084	FROM->TO	G14-057T 345.00 - SUNNYSIDE 345KV CKT 1	717	789	0.18838	116.2417	DUNCAN - OMPA-DUNCAN 840 138KV CKT 1
FDNS	00NR	0	16WP	G15_084	FROM->TO	G14-057T 345.00 - SUNNYSIDE 345KV CKT 1	717	789	0.18838	116.2417	DUNCAN - OMPA-DUNCAN 840 138KV CKT 1
FDNS	00NR	0	20WP	G15_084	FROM->TO	G14-057T 345.00 - SUNNYSIDE 345KV CKT 1	717	789	0.19384	116.2407	BORDER 7345.00 - WOODWARD DISTRICT EHV 345KV CKT 1
FDNSLock	00NR	0	16WP	G15_084	FROM->TO	G14-057T 345.00 - SUNNYSIDE 345KV CKT 1	717	789	0.18728	116.2034	G11_051T 345.00 - TATONGA7 345.00 345KV CKT 1
FDNS	00NR	0	16WP	G15_084	FROM->TO	G14-057T 345.00 - SUNNYSIDE 345KV CKT 1	717	789	0.19122	116.1742	RINGLING - SOUTH WILSON 138KV CKT 1
FDNS	00NR	0	16WP	G15_084	FROM->TO	G14-057T 345.00 - SUNNYSIDE 345KV CKT 1	717	789	0.18594	116.1685	GEN335206 1-NELSON UNIT 6
FDNS	00NR	0	16WP	G15_084	FROM->TO	G14-057T 345.00 - SUNNYSIDE 345KV CKT 1	717	789	0.19154	116.0651	FINNEY SWITCHING STATION - Hitchland Interchange 345KV CKT 1
FDNS	00NR	0	16WP	G15_084	FROM->TO	G14-057T 345.00 - SUNNYSIDE 345KV CKT 1	717	789	0.18594	116.0517	DOLET HILLS 345/24.0KV TRANSFORMER CKT 1
FDNS	00NR	0	16WP	G15_084	FROM->TO	G14-057T 345.00 - SUNNYSIDE 345KV CKT 1	717	789	0.18476	116.0067	P12:138:AEPW:SHERID4:112GORE4
FDNS	00NR	0	16WP	G15_084	FROM->TO	G14-057T 345.00 - SUNNYSIDE 345KV CKT 1	717	789	0.18605	115.998	PARK LANE - SEMINOLE 138KV CKT 1
FDNSLock	00NR	0	16WP	G15_084	FROM->TO	G14-057T 345.00 - SUNNYSIDE 345KV CKT 1	717	789	0.18594	115.9851	GEN590011 2-ERCOT EQUIVALENCE
FDNS	00NR	0	16WP	G15_084	FROM->TO	G14-057T 345.00 - SUNNYSIDE 345KV CKT 1	717	789	0.18594	115.9826	GEN501812 1-RODEMACHER UNIT 2
FDNS	00NR	0	16WP	G15_084	FROM->TO	G14-057T 345.00 - SUNNYSIDE 345KV CKT 1	717	789	0.18778	115.9522	THISTLE7 345.00 - WOODWARD DISTRICT EHV 345KV CKT 1
FDNS	00NR	0	16WP	G15_084	FROM->TO	G14-057T 345.00 - SUNNYSIDE 345KV CKT 1	717	789	0.18778	115.9522	THISTLE7 345.00 - WOODWARD DISTRICT EHV 345KV CKT 1
FDNS	00NR	0	16WP	G15_084	FROM->TO	G14-057T 345.00 - SUNNYSIDE 345KV CKT 1	717	789	0.18778	115.9522	THISTLE7 345.00 - WOODWARD DISTRICT EHV 345KV CKT 2
FDNS	00NR	0	16WP	G15_084	FROM->TO	G14-057T 345.00 - SUNNYSIDE 345KV CKT 1	717	789	0.18778	115.9522	THISTLE7 345.00 - WOODWARD DISTRICT EHV 345KV CKT 2
FDNS	00NR	0	20WP	G15_084	FROM->TO	G14-057T 345.00 - SUNNYSIDE 345KV CKT 1	717	789	0.18744	115.9478	GEN509406 1-WELSH #3
FDNS	00NR	0	20WP	G15_084	FROM->TO	G14-057T 345.00 - SUNNYSIDE 345KV CKT 1	717	789	0.18744	115.9475	GEN509404 1-WELSH #1
FDNS	00NR	0	16WP	G15_084	FROM->TO	G14-057T 345.00 - SUNNYSIDE 345KV CKT 1	717	789	0.18727	115.9348	CANEYRV7 345.00 - NEOSHO 345KV CKT 1
FDNS	00NR	0	16WP	G15_084	FROM->TO	G14-057T 345.00 - SUNNYSIDE 345KV CKT 1	717	789	0.18594	115.9221	GEN515564 1-ORIGIN11 0.6900
FDNS	00NR	0	16WP	G15_084	FROM->TO	G14-057T 345.00 - SUNNYSIDE 345KV CKT 1	717	789	0.18594	115.9221	GEN515565 1-ORIGIN21 0.6900
FDNSLock	00NR	0	16WP	G15_084	FROM->TO	G14-057T 345.00 - SUNNYSIDE 345KV CKT 1	717	789	0.18594	115.9096	GEN590010 1-ERCOT EQUIVALENCE
FDNS	00NR	0	16WP	G15_084	FROM->TO	G14-057T 345.00 - SUNNYSIDE 345KV CKT 1	717	789	0.19122	115.8986	MARIETTA - SOUTH WILSON 138KV CKT 1
FDNS	00NR	0	16WP	G15_084	FROM->TO	G14-057T 345.00 - SUNNYSIDE 345KV CKT 1	717	789	0.18594	115.8352	GEN509408 1-WILKES #2
FDNS	00NR	0	16WP	G15_084	FROM->TO	G14-057T 345.00 - SUNNYSIDE 345KV CKT 1	717	789	0.19122	115.8012	P12:138:WFEC:MSL17
FDNS	00NR	0	16WP	G15_084	FROM->TO	G14-057T 345.00 - SUNNYSIDE 345KV CKT 1	717	789	0.18727	115.7954	CANEYRV7 345.00 - LATHAMS7 345.00 345KV CKT 1
FDNS	00NR	0	16WP	G15_084	FROM->TO	G14-057T 345.00 - SUNNYSIDE 345KV CKT 1	717	789	0.18724	115.7632	P12:138:WFEC:MSL02
FDNS	00NR	0	16WP	G15_084	FROM->TO	G14-057T 345.00 - SUNNYSIDE 345KV CKT 1	717	789	0.18594	115.7471	P12:161:AEPW:DYESS 5:HYLAND 5
FDNS	00NR	0	16WP	G15_084	FROM->TO	G14-057T 345.00 - SUNNYSIDE 345KV CKT 1	717	789	0.18594	115.7452	GEN506754 1-LEBROCK STEAM 1
FDNS	00NR	0	16WP	G15_084	FROM->TO	G14-057T 345.00 - SUNNYSIDE 345KV CKT 1	717	789	0.18594	115.7417	P12:69:AEPW:L.E.S.-2:LAW WC2
FDNS	00NR	0	16WP	G15_084	FROM->TO	G14-057T 345.00 - SUNNYSIDE 345KV CKT 1	717	789	0.1901	115.7311	REDBUD - RIVERSIDE STATION 345KV CKT 1
FDNS	00NR	0	16WP	G15_084	FROM->TO	G14-057T 345.00 - SUNNYSIDE 345KV CKT 1	717	789	0.1901	115.7311	REDBUD - RIVERSIDE STATION 345KV CKT 1
FDNS	00NR	0	16WP	G15_084	FROM->TO	G14-057T 345.00 - SUNNYSIDE 345KV CKT 1	717	789	0.1866	115.7085	ELDORADO EHV - MOUNT OLIVE 500KV CKT 1
FDNS	00NR	0	16WP	G15_084	FROM->TO	G14-057T 345.00 - SUNNYSIDE 345KV CKT 1	717	789	0.18594	115.6998	GEN334440 1-SABINE UNIT 4
FDNS	00NR	0	16WP	G15_084	FROM->TO	G14-057T 345.00 - SUNNYSIDE 345KV CKT 1	717	789	0.18954	115.6769	CIVIT - PAOLI 138KV CKT 1
FDNS	00NR	0	16WP	G15_084	FROM->TO	G14-057T 345.00 - SUNNYSIDE 345KV CKT 1	717	789	0.18692	115.675	ANADARKO - GEORGIA 138KV CKT 1
FDNS	00NR	0	16WP	G15_084	FROM->TO	G14-057T 345.00 - SUNNYSIDE 345KV CKT 1	717	789	0.18699	115.6471	MATHWSN7 345.00 - NORTHWEST 345KV CKT 1
FDNS	00NR	0	16WP	G15_084	FROM->TO	G14-057T 345.00 - SUNNYSIDE 345KV CKT 1	717	789	0.18485	115.6371	P12:138:AEPW:112GORE4:L.E.S.-4
FDNS	00NR	0	16WP	G15_084	FROM->TO	G14-057T 345.00 - SUNNYSIDE 345KV CKT 1	717	789	0.18695	115.6268	ELDORADO EHV - SHERIDAN EHV 500KV CKT 1

SOLUTION	GROUP	SCENARIO	SEASON	SOURCE	DIRECTION	MONITORED ELEMENT	RATEA (MVA)	RATEB(MVA)	TDF	TC%LOADING (% MVA)	CONTINGENCY
FDNS	00NR	0	16WP	G15_084	FROM->TO	G14-057T 345.00 - SUNNYSIDE 345KV CKT 1	717	789	0.18965	115.6192	P12:138:AEPW-OGE:CORNVIL4:MAUD 4
FDNS	00NR	0	16WP	G15_084	FROM->TO	G14-057T 345.00 - SUNNYSIDE 345KV CKT 1	717	789	0.18594	115.6004	NEW MADRID 161/22.0KV TRANSFORMER CKT 1
FDNS	00NR	0	16WP	G15_084	FROM->TO	G14-057T 345.00 - SUNNYSIDE 345KV CKT 1	717	789	0.18672	115.5963	WEBRE - WELLS 500KV CKT 1
FDNS	00NR	0	16WP	G15_084	FROM->TO	G14-057T 345.00 - SUNNYSIDE 345KV CKT 1	717	789	0.18675	115.5952	PAOLI - PAYNE 138.00 138KV CKT 1
FDNS	00NR	0	16WP	G15_084	FROM->TO	G14-057T 345.00 - SUNNYSIDE 345KV CKT 1	717	789	0.18594	115.5952	GEN503909 1-FULTONU1 1 16.000
FDNS	00NR	0	16WP	G15_084	FROM->TO	G14-057T 345.00 - SUNNYSIDE 345KV CKT 1	717	789	0.18594	115.5865	NEW MADRID 345/22.0KV TRANSFORMER CKT 1
FDNS	00NR	0	16WP	G15_084	FROM->TO	G14-057T 345.00 - SUNNYSIDE 345KV CKT 1	717	789	0.18692	115.5859	FLETCHER - GEORGIA 138KV CKT 1
FDNS	00NR	0	16WP	G15_084	FROM->TO	G14-057T 345.00 - SUNNYSIDE 345KV CKT 1	717	789	0.18727	115.5778	LATHAMS7 345.00 - ROSE HILL 345KV CKT 1
FDNS	00NR	0	16WP	G15_084	FROM->TO	G14-057T 345.00 - SUNNYSIDE 345KV CKT 1	717	789	0.17751	115.5671	LAWTON EASTSIDE (LES 5) 345/138/13.8KV TRANSFORMER CKT 2
FDNS	00NR	0	16WP	G15_084	FROM->TO	G14-057T 345.00 - SUNNYSIDE 345KV CKT 1	717	789	0.17751	115.5671	LAWTON EASTSIDE (LES 5) 345/138/13.8KV TRANSFORMER CKT 2
FDNS	00NR	0	16WP	G15_084	FROM->TO	G14-057T 345.00 - SUNNYSIDE 345KV CKT 1	717	789	0.18594	115.5633	FRONTIER - GRIMES 345KV CKT 1
FDNS	00NR	0	16WP	G15_084	FROM->TO	G14-057T 345.00 - SUNNYSIDE 345KV CKT 1	717	789	0.18707	115.5527	EMPIRE - FLETCHER 138KV CKT 1
FDNS	00NR	0	16WP	G15_084	FROM->TO	G14-057T 345.00 - SUNNYSIDE 345KV CKT 1	717	789	0.18965	115.5491	BLANCHARD - CORNVILLE 138KV CKT 1
FDNS	00NR	0	16WP	G15_084	FROM->TO	G14-057T 345.00 - SUNNYSIDE 345KV CKT 1	717	789	0.18954	115.5364	CIVIT - STRATFORD 138KV CKT 1
FDNS	00NR	0	16WP	G15_084	FROM->TO	G14-057T 345.00 - SUNNYSIDE 345KV CKT 1	717	789	0.18833	115.5229	TUPELO - TUPELO TAP 138KV CKT 1
FDNS	00NR	0	16WP	G15_084	FROM->TO	G14-057T 345.00 - SUNNYSIDE 345KV CKT 1	717	789	0.18707	115.4711	COMANCHE - EMPIRE 138KV CKT 1
FDNS	00NR	0	16WP	G15_084	FROM->TO	G14-057T 345.00 - SUNNYSIDE 345KV CKT 1	717	789	0.18684	115.4691	G1524G1525 345.00 - THISTLE7 345.00 345KV CKT 1
FDNS	00NR	0	16WP	G15_084	FROM->TO	G14-057T 345.00 - SUNNYSIDE 345KV CKT 1	717	789	0.18684	115.4691	G1524G1525 345.00 - THISTLE7 345.00 345KV CKT 2
FDNS	00NR	0	16WP	G15_084	FROM->TO	G14-057T 345.00 - SUNNYSIDE 345KV CKT 1	717	789	0.18594	115.4679	GEN509393 S1-ARSENAL HILL GENS #4 (STALL)
FDNS	00NR	0	16WP	G15_084	FROM->TO	G14-057T 345.00 - SUNNYSIDE 345KV CKT 1	717	789	0.18594	115.4437	GEN509392 G2-ARSENAL HILL GENS #3 (STALL)
FDNS	00NR	0	16WP	G15_084	FROM->TO	G14-057T 345.00 - SUNNYSIDE 345KV CKT 1	717	789	0.18594	115.4436	GEN509391 G1-ARSENAL HILL GENS #2 (STALL)
FDNS	00NR	0	16WP	G15_084	FROM->TO	G14-057T 345.00 - SUNNYSIDE 345KV CKT 1	717	789	0.18594	115.429	GEN336252 1-NINEMILE POINT UNIT#5
FDNS	00NR	0	16WP	G15_084	FROM->TO	G14-057T 345.00 - SUNNYSIDE 345KV CKT 1	717	789	0.18954	115.419	OIL CENTER - STRATFORD 138KV CKT 1
FDNS	00NR	0	16WP	G15_084	FROM->TO	G14-057T 345.00 - SUNNYSIDE 345KV CKT 1	717	789	0.18594	115.4027	DELL 500 - ESSEX UNIT 2 500KV CKT Z1
FDNS	00NR	0	16WP	G15_084	FROM->TO	G14-057T 345.00 - SUNNYSIDE 345KV CKT 1	717	789	0.18594	115.3907	GEN334071 1-LEWIS CREEK 2
FDNS	00NR	0	16WP	G15_084	FROM->TO	G14-057T 345.00 - SUNNYSIDE 345KV CKT 1	717	789	0.18594	115.3817	GEN334070 1-LEWIS CREEK 1
FDNS	00NR	0	16WP	G15_084	FROM->TO	G14-057T 345.00 - SUNNYSIDE 345KV CKT 1	717	789	0.18594	115.3782	GEN335204 1-NELSON UNIT 4
FDNS	00NR	0	20WP	G15_084	FROM->TO	G14-057T 345.00 - SUNNYSIDE 345KV CKT 1	717	789	0.19135	115.3748	7SAREPTA% 345.00 - LONGWOOD 345KV CKT 1
FDNS	00NR	0	20WP	G15_084	FROM->TO	G14-057T 345.00 - SUNNYSIDE 345KV CKT 1	717	789	0.19135	115.3748	7SAREPTA% 345.00 - LONGWOOD 345KV CKT 1
FDNS	00NR	0	20WP	G15_084	FROM->TO	G14-057T 345.00 - SUNNYSIDE 345KV CKT 1	717	789	0.19209	115.3669	CORN TAP - NAPLESTP 138.00 138KV CKT 1
FDNS	00NR	0	16WP	G15_084	FROM->TO	G14-057T 345.00 - SUNNYSIDE 345KV CKT 1	717	789	0.18627	115.3542	DUNCAN (DUNCAN) 138/69/13.8KV TRANSFORMER CKT 1
FDNS	00NR	0	16WP	G15_084	FROM->TO	G14-057T 345.00 - SUNNYSIDE 345KV CKT 1	717	789	0.18627	115.3542	DUNCAN (DUNCAN) 138/69/13.8KV TRANSFORMER CKT 1
FDNS	00NR	0	16WP	G15_084	FROM->TO	G14-057T 345.00 - SUNNYSIDE 345KV CKT 1	717	789	0.18965	115.3522	BLANCHARD - MAUD 138KV CKT 1
FDNS	00NR	0	16WP	G15_084	FROM->TO	G14-057T 345.00 - SUNNYSIDE 345KV CKT 1	717	789	0.18594	115.3434	GEN334441 1-SABINE UNIT 5
FDNS	00NR	0	16WP	G15_084	FROM->TO	G14-057T 345.00 - SUNNYSIDE 345KV CKT 1	717	789	0.18594	115.3149	GEN337653 1-WHITE BLUFF UNIT #2
FDNS	00NR	0	20WP	G15_084	FROM->TO	G14-057T 345.00 - SUNNYSIDE 345KV CKT 1	717	789	0.19384	115.3146	BORDER 7345.00 - TUCO_2 345.00 345KV CKT 1
FDNS	00NR	0	16WP	G15_084	FROM->TO	G14-057T 345.00 - SUNNYSIDE 345KV CKT 1	717	789	0.18593	115.3081	P12:138:AEPW:CATOOSA4:T.S.E.-4
FDNS	00NR	0	16WP	G15_084	FROM->TO	G14-057T 345.00 - SUNNYSIDE 345KV CKT 1	717	789	0.18593	115.3065	P12:161:AEPW-SWPA:BEAVERS:EROGERS5
FDNS	00NR	0	16WP	G15_084	FROM->TO	G14-057T 345.00 - SUNNYSIDE 345KV CKT 1	717	789	0.18594	115.3	GEN300003 1-THOMAS HILL UNIT 3
FDNS	00NR	0	16WP	G15_084	FROM->TO	G14-057T 345.00 - SUNNYSIDE 345KV CKT 1	717	789	0.18702	115.2966	6LAYFLD 230.00 - CARROLL 230KV CKT 1
FDNS	00NR	0	16WP	G15_084	FROM->TO	G14-057T 345.00 - SUNNYSIDE 345KV CKT 1	717	789	0.18594	115.2935	GEN506752 1-LEBROCK GAS 1
FDNS	00NR	0	16WP	G15_084	FROM->TO	G14-057T 345.00 - SUNNYSIDE 345KV CKT 1	717	789	0.18594	115.2933	GEN506753 1-LEBROCK GAS 2
FDNS	00NR	0	16WP	G15_084	FROM->TO	G14-057T 345.00 - SUNNYSIDE 345KV CKT 1	717	789	0.18594	115.2879	GEN334030 1-FRONTIER UNIT 1
FDNS	00NR	0	16WP	G15_084	FROM->TO	G14-057T 345.00 - SUNNYSIDE 345KV CKT 1	717	789	0.18892	115.2871	TUTTLE - TUTTLE CONOCO TAP 138KV CKT 1
FDNS	00NR	0	16WP	G15_084	FROM->TO	G14-057T 345.00 - SUNNYSIDE 345KV CKT 1	717	789	0.18594	115.2864	GEN334031 1-FRONTIER UNIT 2
FDNS	00NR	0	20WP	G15_084	FROM->TO	G14-057T 345.00 - SUNNYSIDE 345KV CKT 1	717	789	0.19209	115.2754	NAPLESTP 138.00 - PAYNE 138.00 138KV CKT 1
FDNS	00NR	0	16WP	G15_084	FROM->TO	G14-057T 345.00 - SUNNYSIDE 345KV CKT 1	717	789	0.19025	115.2707	BAILEY4 138.00 - SUNSHINE CANYON 138KV CKT 1
FDNS	00NR	0	16WP	G15_084	FROM->TO	G14-057T 345.00 - SUNNYSIDE 345KV CKT 1	717	789	0.18594	115.2699	GEN515040 1-SEMINOLE 1G
FDNS	00NR	0	16WP	G15_084	FROM->TO	G14-057T 345.00 - SUNNYSIDE 345KV CKT 1	717	789	0.19482	115.2647	GRACEMONT - LAWTON EASTSIDE 345KV CKT 1
FDNS	00NR	0	16WP	G15_084	FROM->TO	G14-057T 345.00 - SUNNYSIDE 345KV CKT 1	717	789	0.19482	115.2647	GRACEMONT - LAWTON EASTSIDE 345KV CKT 1
FDNS	00NR	0	16WP	G15_084	FROM->TO	G14-057T 345.00 - SUNNYSIDE 345KV CKT 1	717	789	0.18614	115.2642	FULTON 115 - HOPE 115KV CKT 1
FDNS	00NR	0	16WP	G15_084	FROM->TO	G14-057T 345.00 - SUNNYSIDE 345KV CKT 1	717	789	0.18614	115.2642	FULTON 115 - HOPE 115KV CKT 1
FDNS	00NR	0	16WP	G15_084	FROM->TO	G14-057T 345.00 - SUNNYSIDE 345KV CKT 1	717	789	0.18607	115.249	8DANIEL8 500.00 - MCKNIGHT 500KV CKT 1
FDNS	00NR	0	16WP	G15_084	FROM->TO	G14-057T 345.00 - SUNNYSIDE 345KV CKT 1	717	789	0.18954	115.2478	LATTA JCT - OIL CENTER 138KV CKT 1
FDNS	00NR	0	16WP	G15_084	FROM->TO	G14-057T 345.00 - SUNNYSIDE 345KV CKT 1	717	789	0.18594	115.2473	GEN515226 1-MUSKOGEE 6G
FDNS	00NR	0	16WP	G15_084	FROM->TO	G14-057T 345.00 - SUNNYSIDE 345KV CKT 1	717	789	0.18957	115.2426	P12:138:AEPW-OGE:WTH_JCT4:JENSEN4
FDNS	00NR	0	16WP	G15_084	FROM->TO	G14-057T 345.00 - SUNNYSIDE 345KV CKT 1	717	789	0.18594	115.2333	GEN300015 1-1SGPDEL 18.000
FDNSLock	00NR	0	16WP	G15_084	FROM->TO	G14-057T 345.00 - SUNNYSIDE 345KV CKT 1	717	789	0.18594	115.2307	GEN337911 1-ARKANSAS NUCLEAR ONE UNIT #2
FDNS	00NR	0	16WP	G15_084	FROM->TO	G14-057T 345.00 - SUNNYSIDE 345KV CKT 1	717	789	0.18594	115.2299	P12:161:AEPW:DYESS5:ELMSPRNG:TONTITN5
FDNS	00NR	0	16WP	G15_084	FROM->TO	G14-057T 345.00 - SUNNYSIDE 345KV CKT 1	717	789	0.18594	115.2278	GEN337652 1-WHITE BLUFF UNIT #1
FDNS	00NR	0	16WP	G15_084	FROM->TO	G14-057T 345.00 - SUNNYSIDE 345KV CKT 1	717	789	0.18594	115.2235	GEN336251 1-NINEMILE POINT UNIT#4
FDNS	00NR	0	16WP	G15_084	FROM->TO	G14-057T 345.00 - SUNNYSIDE 345KV CKT 1	717	789	0.18709	115.2215	P12:138:AEPW:CORNVIL4:S.W.S.-4
FDNS	00NR	0	16WP	G15_084	FROM->TO	G14-057T 345.00 - SUNNYSIDE 345KV CKT 1	717	789	0.18594	115.2199	GEN501811 1-RODEMACHER UNIT 1
FDNS	00NR	0	16WP	G15_084	FROM->TO	G14-057T 345.00 - SUNNYSIDE 345KV CKT 1	717	789	0.18594	115.2185	GEN336831 1-BAXTER WILSON SES
FDNS	00NR	0	16WP	G15_084	FROM->TO	G14-057T 345.00 - SUNNYSIDE 345KV CKT 1	717	789	0.18737	115.2077	P12:138:AEPW:CORNVIL4:DUNCAN-4
FDNS	00NR	0	16WP	G15_084	FROM->TO	G14-057T 345.00 - SUNNYSIDE 345KV CKT 1	717	789	0.18618	115.2071	G15074_T 345.00 - HOYT 345KV CKT 1
FDNS	00NR	0	16WP	G15_084	FROM->TO	G14-057T 345.00 - SUNNYSIDE 345KV CKT 1	717	789	0.18892	115.206	CIMARRON - TUTTLE CONOCO TAP 138KV CKT 1
FDNS	00NR	0	20WP	G15_084	FROM->TO	G14-057T 345.00 - SUNNYSIDE 345KV CKT 1	717	789	0.18744	115.2011	GEN336821 1-GRAND GULF UNIT
FDNS	00NR	0	16WP	G15_084	FROM->TO	G14-057T 345.00 - SUNNYSIDE 345KV CKT 1	717	789	0.18615	115.2	G15088_T 345.00 - MOORE 345KV CKT 1
FDNS	00NR	0	16WP	G15_084	FROM->TO	G14-057T 345.00 - SUNNYSIDE 345KV CKT 1	717	789	0.18594	115.1975	GEN334433 1-SABINE UNIT 3
FDNS	00NR	0	16WP	G15_084	FROM->TO	G14-057T 345.00 - SUNNYSIDE 345KV CKT 1	717	789	0.18627	115.1706	P12:69:WFEC-AEPW:COMANCH2:DUNCAN-2
FDNS	00NR	0	16WP	G15_084	FROM->TO	G14-057T 345.00 - SUNNYSIDE 345KV CKT 1	717	789	0.18687	115.1663	BUCKNER7 345.00 - SPEARVILLE 345KV CKT 1
FDNS	00NR	0	16WP	G15_084	FROM->TO	G14-057T 345.00 - SUNNYSIDE 345KV CKT 1	717	789	0.18687	115.1663	BUCKNER7 345.00 - SPEARVILLE 345KV CKT 1
FDNS	00NR	0	16WP	G15_084	FROM->TO	G14-057T 345.00 - SUNNYSIDE 345KV CKT 1	717	789	0.18594	115.164	GEN562783 1-G15036_4 0.6900
FDNS	00NR	0	16WP	G15_084	FROM->TO	G14-057T 345.00 - SUNNYSIDE 345KV CKT 1	717	789	0.18594	115.164	GEN562784 1-G15036_5 0.6900
FDNSLock	00NR	0	16WP	G15_084	FROM->TO	G14-057T 345.00 - SUNNYSIDE 345KV CKT 1	717	789	0.18594	115.1601	GEN505432 1-SIKESTON
FDNS	00NR	0	16WP	G15_084	FROM->TO	G14-057T 345.00 - SUNNYSIDE 345KV CKT 1	717	789	0.18648	115.158	CIMARRON - CZECH HALL 138KV CKT 1
FDNS	00NR	0	16WP	G15_084	FROM->TO	G14-057T 345.00 - SUNNYSIDE 345KV CKT 1	717	789	0.18594	115.1483	GEN515223 1-MUSKOGEE 4G
FDNS	00NR	0	16WP	G15_084	FROM->TO	G14-057T 345.00 - SUNNYSIDE 345KV CKT 1	717	789	0.18594	115.1483	GEN515225 1-MUSKOGEE 5G

SOLUTION	GROUP	SCENARIO	SEASON	SOURCE	DIRECTION	MONITORED ELEMENT	RATEA (MVA)	RATEB(MVA)	TDF	TC%LOADING (% MVA)	CONTINGENCY
FDNS	00NR	0	16WP	G15_084	FROM->TO	G14-057T 345.00 - SUNNYSIDE 345KV CKT 1	717	789	0.18806	115.1473	P12:138:AEPW:WTHWF4:CLINTJC4
FDNS	00NR	0	16WP	G15_084	FROM->TO	G14-057T 345.00 - SUNNYSIDE 345KV CKT 1	717	789	0.18631	115.1258	CIMARRON - SARA 138KV CKT 1
FDNS	00NR	0	16WP	G15_084	FROM->TO	G14-057T 345.00 - SUNNYSIDE 345KV CKT 1	717	789	0.18594	115.1244	P12:161:AEPW:EROGERS5:ECNTRTN5
FDNS	00NR	0	16WP	G15_084	FROM->TO	G14-057T 345.00 - SUNNYSIDE 345KV CKT 1	717	789	0.18652	115.1205	LAYFLD8 500.00 - MOUNT OLIVE 500KV CKT 1
FDNS	00NR	0	16WP	G15_084	FROM->TO	G14-057T 345.00 - SUNNYSIDE 345KV CKT 1	717	789	0.18652	115.1205	LAYFLD8 500.00 - MOUNT OLIVE 500KV CKT 1
FDNS	00NR	0	16WP	G15_084	FROM->TO	G14-057T 345.00 - SUNNYSIDE 345KV CKT 1	717	789	0.18627	115.1191	DUNCAN - TOSCO 69KV CKT 1
FDNS	00NR	0	16WP	G15_084	FROM->TO	G14-057T 345.00 - SUNNYSIDE 345KV CKT 1	717	789	0.18594	115.1185	RODEMACHER 230/22.0KV TRANSFORMER CKT 1
FDNS	00NR	0	16WP	G15_084	FROM->TO	G14-057T 345.00 - SUNNYSIDE 345KV CKT 1	717	789	0.18594	115.118	WHITE BLUFF 500/26.0KV TRANSFORMER CKT 1
FDNS	00NR	0	16WP	G15_084	FROM->TO	G14-057T 345.00 - SUNNYSIDE 345KV CKT 1	717	789	0.18806	115.1125	P12:138:AEPW:WTHWF4:WTH_SE4
FDNS	00NR	0	16WP	G15_084	FROM->TO	G14-057T 345.00 - SUNNYSIDE 345KV CKT 1	717	789	0.18624	115.1104	MC NIEL 500/115KV TRANSFORMER CKT 1
FDNS	00NR	0	16WP	G15_084	FROM->TO	G14-057T 345.00 - SUNNYSIDE 345KV CKT 1	717	789	0.18126	115.1076	CANADIAN RIVER - PITTSBURG 345KV CKT 1
FDNS	00NR	0	16WP	G15_084	FROM->TO	G14-057T 345.00 - SUNNYSIDE 345KV CKT 1	717	789	0.18126	115.1076	CANADIAN RIVER - PITTSBURG 345KV CKT 1
FDNS	00NR	0	20WP	G15_084	FROM->TO	G14-057T 345.00 - SUNNYSIDE 345KV CKT 1	717	789	0.19195	115.1068	ANADARKO - POCASSETT 138KV CKT 1
FDNS	00NR	0	16WP	G15_084	FROM->TO	G14-057T 345.00 - SUNNYSIDE 345KV CKT 1	717	789	0.18618	115.1055	BISMARK - HOT SPRINGS WEST BUS 115KV CKT 1
FDNS	00NR	0	16WP	G15_084	FROM->TO	G14-057T 345.00 - SUNNYSIDE 345KV CKT 1	717	789	0.18594	115.1045	GEN303007 1-1BC2 U2
FDNS	00NR	0	16WP	G15_084	FROM->TO	G14-057T 345.00 - SUNNYSIDE 345KV CKT 1	717	789	0.19025	115.1009	BAILEY4 138.00 - WESTMOORE 138KV CKT 1
FDNS	00NR	0	16WP	G15_084	FROM->TO	G14-057T 345.00 - SUNNYSIDE 345KV CKT 1	717	789	0.18625	115.1003	HOT SPRINGS EHV - MAGNET COVE 500KV CKT 1
FDNS	00NR	0	16WP	G15_084	FROM->TO	G14-057T 345.00 - SUNNYSIDE 345KV CKT 1	717	789	0.18594	115.0992	GEN303006 1-1BC2 U1
FDNS	00NR	0	16WP	G15_084	FROM->TO	G14-057T 345.00 - SUNNYSIDE 345KV CKT 1	717	789	0.18636	115.0967	CLEO CORNER - CLEOPLT4 138.00 138KV CKT 1
FDNS	00NR	0	16WP	G15_084	FROM->TO	G14-057T 345.00 - SUNNYSIDE 345KV CKT 1	717	789	0.18563	115.0929	ARBWIND4 138.00 - CARTER 138KV CKT 1
FDNS	00NR	0	16WP	G15_084	FROM->TO	G14-057T 345.00 - SUNNYSIDE 345KV CKT 1	717	789	0.18632	115.0928	G15095_T 138.00 - ROSE_VALLEY 138.00 138KV CKT 1
FDNS	00NR	0	16WP	G15_084	FROM->TO	G14-057T 345.00 - SUNNYSIDE 345KV CKT 1	717	789	0.18414	115.0921	P12:69:AEPW-OMPA:COMANC-2:OMWALTR2
FDNS	00NR	0	20WP	G15_084	FROM->TO	G14-057T 345.00 - SUNNYSIDE 345KV CKT 1	717	789	0.18744	115.0919	GEN336153 1-WATERFORD UNIT#3
FDNS	00NR	0	16WP	G15_084	FROM->TO	G14-057T 345.00 - SUNNYSIDE 345KV CKT 1	717	789	0.18594	115.0853	GEN337910 1-ARKANSAS NUCLEAR ONE UNIT #1
FDNS	00NR	0	16WP	G15_084	FROM->TO	G14-057T 345.00 - SUNNYSIDE 345KV CKT 1	717	789	0.18586	115.0838	SEMINOLE - VANOSTP4 138.00 138KV CKT 1
FDNS	00NR	0	16WP	G15_084	FROM->TO	G14-057T 345.00 - SUNNYSIDE 345KV CKT 1	717	789	0.18636	115.0828	CLEOPLT4 138.00 - MEN TAP 138KV CKT 1
FDNS	00NR	0	16WP	G15_084	FROM->TO	G14-057T 345.00 - SUNNYSIDE 345KV CKT 1	717	789	0.18594	115.0797	GEN300010 1-ST FRANCIS UNIT 1
FDNS	00NR	0	16WP	G15_084	FROM->TO	G14-057T 345.00 - SUNNYSIDE 345KV CKT 1	717	789	0.18594	115.0766	GEN336191 1-LITTLE GYPSY UNIT#3
FDNS	00NR	0	16WP	G15_084	FROM->TO	G14-057T 345.00 - SUNNYSIDE 345KV CKT 1	717	789	0.18636	115.0709	IMO TAP - MEN TAP 138KV CKT 1
FDNS	00NR	0	16WP	G15_084	FROM->TO	G14-057T 345.00 - SUNNYSIDE 345KV CKT 1	717	789	0.18648	115.0701	CZECH HALL - XEROX 138KV CKT 1
FDNS	00NR	0	16WP	G15_084	FROM->TO	G14-057T 345.00 - SUNNYSIDE 345KV CKT 1	717	789	0.18648	115.0657	MORGAN - XEROX 138KV CKT 1
FDNS	00NR	0	16WP	G15_084	FROM->TO	G14-057T 345.00 - SUNNYSIDE 345KV CKT 1	717	789	0.18585	115.057	P12:138:AEPW:N.E.S.-4:CATOOSA4
FDNS	00NR	0	16WP	G15_084	FROM->TO	G14-057T 345.00 - SUNNYSIDE 345KV CKT 1	717	789	0.18594	115.0559	NELSON 230/20.0KV TRANSFORMER CKT 1
FDNS	00NR	0	16WP	G15_084	FROM->TO	G14-057T 345.00 - SUNNYSIDE 345KV CKT 1	717	789	0.18618	115.0529	ALPINE AECC - BISMARK 115KV CKT 1
FDNS	00NR	0	16WP	G15_084	FROM->TO	G14-057T 345.00 - SUNNYSIDE 345KV CKT 1	717	789	0.18594	115.0513	GEN335614 1-WILLOW GLENN UNIT#4
FDNS	00NR	0	16WP	G15_084	FROM->TO	G14-057T 345.00 - SUNNYSIDE 345KV CKT 1	717	789	0.18627	115.0494	COMANCHE TAP - TOSCO 69KV CKT 1
FDNS	00NR	0	16WP	G15_084	FROM->TO	G14-057T 345.00 - SUNNYSIDE 345KV CKT 1	717	789	0.18648	115.0419	MORGAN - MUSTANG 138KV CKT 1
FDNS	00NR	0	16WP	G15_084	FROM->TO	G14-057T 345.00 - SUNNYSIDE 345KV CKT 1	717	789	0.18681	115.0417	BENTON - WICHITA 345KV CKT 1
FDNS	00NR	0	16WP	G15_084	FROM->TO	G14-057T 345.00 - SUNNYSIDE 345KV CKT 1	717	789	0.18594	115.0396	GEN303008 1-1BC2 U3
FDNS	00NR	0	16WP	G15_084	FROM->TO	G14-057T 345.00 - SUNNYSIDE 345KV CKT 1	717	789	0.18594	115.03	GEN300011 1-ST FRANCIS UNIT 2
FDNS	00NR	0	16WP	G15_084	FROM->TO	G14-057T 345.00 - SUNNYSIDE 345KV CKT 1	717	789	0.18632	115.0247	NOEL_SW 138.00 - ROSE_VALLEY 138.00 138KV CKT 1
FDNS	00NR	0	16WP	G15_084	FROM->TO	G14-057T 345.00 - SUNNYSIDE 345KV CKT 1	717	789	0.18594	115.0126	GEN336170 1-GULF OXY U4
FDNS	00NR	0	16WP	G15_084	FROM->TO	G14-057T 345.00 - SUNNYSIDE 345KV CKT 1	717	789	0.18956	115.0103	WEATHERFORD JCT. - WEATHERFORD SOUTHEAST 138KV CKT 1
FDNS	00NR	0	16WP	G15_084	FROM->TO	G14-057T 345.00 - SUNNYSIDE 345KV CKT 1	717	789	0.18956	115.0103	WEATHERFORD JCT. - WEATHERFORD SOUTHEAST 138KV CKT 1
FDNS	00NR	0	16WP	G15_084	FROM->TO	G14-057T 345.00 - SUNNYSIDE 345KV CKT 1	717	789	0.18609	115.0093	CYPRESS - HARTBURG 500KV CKT 1
FDNS	00NR	0	16WP	G15_084	FROM->TO	G14-057T 345.00 - SUNNYSIDE 345KV CKT 1	717	789	0.18618	115.0092	ALPINE AECC - AMITY SS 115KV CKT 1
FDNS	00NR	0	16WP	G15_084	FROM->TO	G14-057T 345.00 - SUNNYSIDE 345KV CKT 1	717	789	0.18594	115.0076	GEN336464 1-MICHOUD UNIT #3
FDNS	00NR	0	20WP	G15_084	FROM->TO	G14-057T 345.00 - SUNNYSIDE 345KV CKT 1	717	789	0.1912	115.0036	CLEVELAND - TULSA NORTH 345KV CKT 1
FDNS	00NR	0	20WP	G15_084	FROM->TO	G14-057T 345.00 - SUNNYSIDE 345KV CKT 1	717	789	0.1912	115.0036	CLEVELAND - TULSA NORTH 345KV CKT 1
FDNS	00NR	0	16WP	G15_084	FROM->TO	G14-057T 345.00 - SUNNYSIDE 345KV CKT 1	717	789	0.18619	114.998	HOYT - STRANGER CREEK 345KV CKT 1
FDNS	00NR	0	16WP	G15_084	FROM->TO	G14-057T 345.00 - SUNNYSIDE 345KV CKT 1	717	789	0.18498	114.9964	CHISHOLM6 230.00 - ELK CITY 230KV 230KV CKT 1
FDNS	00NR	0	20WP	G15_084	FROM->TO	G14-057T 345.00 - SUNNYSIDE 345KV CKT 1	717	789	0.19188	114.9957	COMANCHE - LOCO 138KV CKT 1
FDNS	00NR	0	16WP	G15_084	FROM->TO	G14-057T 345.00 - SUNNYSIDE 345KV CKT 1	717	789	0.18627	114.9952	COMANCHE - COMANCHE TAP 69KV CKT 1
FDNS	00NR	0	16WP	G15_084	FROM->TO	G14-057T 345.00 - SUNNYSIDE 345KV CKT 1	717	789	0.18498	114.9949	ELK CITY 230KV (ELKCTY-6) 230/138/13.8KV TRANSFORMER CKT 1
FDNS	00NR	0	16WP	G15_084	FROM->TO	G14-057T 345.00 - SUNNYSIDE 345KV CKT 1	717	789	0.18498	114.9949	ELK CITY 230KV (ELKCTY-6) 230/138/13.8KV TRANSFORMER CKT 1
FDNS	00NR	0	16WP	G15_084	FROM->TO	G14-057T 345.00 - SUNNYSIDE 345KV CKT 1	717	789	0.18594	114.9914	GEN300016 1-1G1GPDEL 18.000
FDNS	00NR	0	16WP	G15_084	FROM->TO	G14-057T 345.00 - SUNNYSIDE 345KV CKT 1	717	789	0.18594	114.9913	8CAJUN2 500/24.0KV TRANSFORMER CKT 1
FDNS	00NR	0	20WP	G15_084	FROM->TO	G14-057T 345.00 - SUNNYSIDE 345KV CKT 1	717	789	0.19579	114.9873	GRACEMONT - LAWTON EASTSIDE 345KV CKT 1
FDNS	00NR	0	20WP	G15_084	FROM->TO	G14-057T 345.00 - SUNNYSIDE 345KV CKT 1	717	789	0.19579	114.9873	GRACEMONT - LAWTON EASTSIDE 345KV CKT 1
FDNS	00NR	0	16WP	G15_084	FROM->TO	G14-057T 345.00 - SUNNYSIDE 345KV CKT 1	717	789	0.18723	114.9818	P12:138:OKGE-AEPW:JENSEN4:REDROCKRD4
FDNS	00NR	0	16WP	G15_084	FROM->TO	G14-057T 345.00 - SUNNYSIDE 345KV CKT 1	717	789	0.18594	114.9768	GEN337041 1-GERALD ANDRUS
FDNS	00NR	0	16WP	G15_084	FROM->TO	G14-057T 345.00 - SUNNYSIDE 345KV CKT 1	717	789	0.18749	114.9721	CANADIAN - NOBLE 138KV CKT 1
FDNS	00NR	0	16WP	G15_084	FROM->TO	G14-057T 345.00 - SUNNYSIDE 345KV CKT 1	717	789	0.18594	114.9655	GEN501910 1-ACADIA UNIT ST1
FDNS	00NR	0	16WP	G15_084	FROM->TO	G14-057T 345.00 - SUNNYSIDE 345KV CKT 1	717	789	0.18594	114.9604	P12:138:AEPW:R.S.S.-4:S.HUD.-4
FDNS	00NR	0	16WP	G15_084	FROM->TO	G14-057T 345.00 - SUNNYSIDE 345KV CKT 1	717	789	0.18956	114.9568	P12:138:AEPW:REDROCKRD4:WTH_JCT4
FDNS	00NR	0	16WP	G15_084	FROM->TO	G14-057T 345.00 - SUNNYSIDE 345KV CKT 1	717	789	0.18954	114.9568	LASALLE - LATTA JCT 138KV CKT 1
FDNS	00NR	0	16WP	G15_084	FROM->TO	G14-057T 345.00 - SUNNYSIDE 345KV CKT 1	717	789	0.18608	114.9566	7JASPER 345.00 - BLACKBERRY 345KV CKT 1
FDNS	00NR	0	16WP	G15_084	FROM->TO	G14-057T 345.00 - SUNNYSIDE 345KV CKT 1	717	789	0.18776	114.955	WALTERS - WALTERS 69KV CKT 1
FDNS	00NR	0	16WP	G15_084	FROM->TO	G14-057T 345.00 - SUNNYSIDE 345KV CKT 1	717	789	0.18761	114.9539	P12:138:OKGE:3TERM27
FDNS	00NR	0	20WP	G15_084	FROM->TO	G14-057T 345.00 - SUNNYSIDE 345KV CKT 1	717	789	0.19195	114.9532	POCASSETT - TUTTLE 138KV CKT 1
FDNS	00NR	0	16WP	G15_084	FROM->TO	G14-057T 345.00 - SUNNYSIDE 345KV CKT 1	717	789	0.18618	114.9521	G15074_T 345.00 - JEFFREY ENERGY CENTER 345KV CKT 1
FDNS	00NR	0	16WP	G15_084	FROM->TO	G14-057T 345.00 - SUNNYSIDE 345KV CKT 1	717	789	0.18639	114.9482	BLACKBERRY - NEOSHO 345KV CKT 1
FDNS	00NR	0	16WP	G15_084	FROM->TO	G14-057T 345.00 - SUNNYSIDE 345KV CKT 1	717	789	0.18627	114.9468	SWISSVALE - WEST GARDNER 345KV CKT 1
FDNS	00NR	0	16WP	G15_084	FROM->TO	G14-057T 345.00 - SUNNYSIDE 345KV CKT 1	717	789	0.18717	114.9464	NORGE ROAD - SOUTHWESTERN STATION 138KV CKT 1
FDNS	00NR	0	16WP	G15_084	FROM->TO	G14-057T 345.00 - SUNNYSIDE 345KV CKT 1	717	789	0.18717	114.9464	NORGE ROAD - SOUTHWESTERN STATION 138KV CKT 1
FDNS	00NR	0	16WP	G15_084	FROM->TO	G14-057T 345.00 - SUNNYSIDE 345KV CKT 1	717	789	0.19025	114.9431	FRANKLIN SW - WESTMOORE 138KV CKT 1
FDNS	00NR	0	16WP	G15_084	FROM->TO	G14-057T 345.00 - SUNNYSIDE 345KV CKT 1	717	789	0.18777	114.9374	DRAPER LAKE - SEMINOLE 345KV CKT 2
FDNS	00NR	0	16WP	G15_084	FROM->TO	G14-057T 345.00 - SUNNYSIDE 345KV CKT 1	717	789	0.18777	114.9373	DRAPER LAKE - SEMINOLE 345KV CKT 1
FDNS	00NR	0	20WP	G15_084	FROM->TO	G14-057T 345.00 - SUNNYSIDE 345KV CKT 1	717	789	0.189	114.9356	DOLET HILLS - SOUTHWEST SHREVEPORT 345KV CKT 1

SOLUTION	GROUP	SCENARIO	SEASON	SOURCE	DIRECTION	MONITORED ELEMENT	RATEA (MVA)	RATEB(MVA)	TDF	TC%LOADING (% MVA)	CONTINGENCY
FDNS	00NR	0	20WP	G15_084	FROM->TO	G14-057T 345.00 - SUNNYSIDE 345KV CKT 1	717	789	0.189	114.9356	DOLET HILLS - SOUTHWEST SHREVEPORT 345KV CKT 1
FDNS	00NR	0	16WP	G15_084	FROM->TO	G14-057T 345.00 - SUNNYSIDE 345KV CKT 1	717	789	0.18631	114.933	SARA - STHLAKE4 138.00 138KV CKT 1
FDNS	00NR	0	16WP	G15_084	FROM->TO	G14-057T 345.00 - SUNNYSIDE 345KV CKT 1	717	789	0.19232	114.9289	G14_038T 345.00 - Hitchland Interchange 345KV CKT 1
FDNS	00NR	0	16WP	G15_084	FROM->TO	G14-057T 345.00 - SUNNYSIDE 345KV CKT 1	717	789	0.18631	114.9274	ETTA (DUKE HOTSPRINGS) - MC NIEL 500KV CKT 1
FDNS	00NR	0	16WP	G15_084	FROM->TO	G14-057T 345.00 - SUNNYSIDE 345KV CKT 1	717	789	0.18594	114.9218	P12:138:AEPW:YARCH-S4:T.S.E.-4
FDNS	00NR	0	16WP	G15_084	FROM->TO	G14-057T 345.00 - SUNNYSIDE 345KV CKT 1	717	789	0.18414	114.9213	LAWTON RELIFT TAP - OMPA-WALTERS 69KV CKT 1
FDNS	00NR	0	16WP	G15_084	FROM->TO	G14-057T 345.00 - SUNNYSIDE 345KV CKT 1	717	789	0.18594	114.9181	SABINE 230/24.0KV TRANSFORMER CKT 1
FDNS	00NR	0	16WP	G15_084	FROM->TO	G14-057T 345.00 - SUNNYSIDE 345KV CKT 1	717	789	0.18594	114.9164	ESSEX UNIT 2 500/18.0KV TRANSFORMER CKT 1
FDNS	00NR	0	16WP	G15_084	FROM->TO	G14-057T 345.00 - SUNNYSIDE 345KV CKT 1	717	789	0.18594	114.9157	P12:69:AEPW:NROGERS2:ECNTRTN2
FDNS	00NR	0	16WP	G15_084	FROM->TO	G14-057T 345.00 - SUNNYSIDE 345KV CKT 1	717	789	0.18594	114.9156	P12:138:AEPW:BA_71ST4:T.S.E.-4
FDNS	00NR	0	16WP	G15_084	FROM->TO	G14-057T 345.00 - SUNNYSIDE 345KV CKT 1	717	789	0.18594	114.9151	GEN336801 1-BAXTER WILSON UNIT #1
FDNS	00NR	0	16WP	G15_084	FROM->TO	G14-057T 345.00 - SUNNYSIDE 345KV CKT 1	717	789	0.18645	114.9126	EMPORIA ENERGY CENTER - G14_001T 345.00 345KV CKT 1
FDNS	00NR	0	16WP	G15_084	FROM->TO	G14-057T 345.00 - SUNNYSIDE 345KV CKT 1	717	789	0.18611	114.9076	7LUTESVIL 345.00 - 7ST FRANC 345.00 345KV CKT 1
FDNS	00NR	0	16WP	G15_084	FROM->TO	G14-057T 345.00 - SUNNYSIDE 345KV CKT 1	717	789	0.18631	114.9039	MCCLAIN - STHLAKE4 138.00 138KV CKT 1
FDNS	00NR	0	16WP	G15_084	FROM->TO	G14-057T 345.00 - SUNNYSIDE 345KV CKT 1	717	789	0.18594	114.8963	FRONTIER 345/18.0KV TRANSFORMER CKT 1
FDNS	00NR	0	16WP	G15_084	FROM->TO	G14-057T 345.00 - SUNNYSIDE 345KV CKT 1	717	789	0.18614	114.8959	HOPE - MCNAB REC 115KV CKT 1
FDNS	00NR	0	16WP	G15_084	FROM->TO	G14-057T 345.00 - SUNNYSIDE 345KV CKT 1	717	789	0.18594	114.8947	FRONTIER 345/18.0KV TRANSFORMER CKT 1
FDNS	00NR	0	16WP	G15_084	FROM->TO	G14-057T 345.00 - SUNNYSIDE 345KV CKT 1	717	789	0.18634	114.888	P12:138:AEPW-OGE:SHIDLER4:OSAGE 4
FDNS	00NR	0	16WP	G15_084	FROM->TO	G14-057T 345.00 - SUNNYSIDE 345KV CKT 1	717	789	0.18614	114.887	P12:115:AEPW:TURK3:HOPE3
FDNS	00NR	0	16WP	G15_084	FROM->TO	G14-057T 345.00 - SUNNYSIDE 345KV CKT 1	717	789	0.18594	114.8839	P12:161:AEPW:CHAMSPR5:FARMING5
FDNS	00NR	0	16WP	G15_084	FROM->TO	G14-057T 345.00 - SUNNYSIDE 345KV CKT 1	717	789	0.18709	114.8809	SOUTHWESTERN STATION - VERDEN 138KV CKT 1
FDNS	00NR	0	16WP	G15_084	FROM->TO	G14-057T 345.00 - SUNNYSIDE 345KV CKT 1	717	789	0.18749	114.8807	NOBLE - PURCELL4 138.00 138KV CKT 1
FDNS	00NR	0	16WP	G15_084	FROM->TO	G14-057T 345.00 - SUNNYSIDE 345KV CKT 1	717	789	0.18956	114.8796	HINTON - WEATHERFORD JCT. 138KV CKT 1
FDNS	00NR	0	16WP	G15_084	FROM->TO	G14-057T 345.00 - SUNNYSIDE 345KV CKT 1	717	789	0.18668	114.8773	ENOWILT - LONE OAK 138KV CKT 1
FDNS	00NR	0	16WP	G15_084	FROM->TO	G14-057T 345.00 - SUNNYSIDE 345KV CKT 1	717	789	0.18742	114.8748	ANADARKO - SEQUOYAHJ4 138.00 138KV CKT 1
FDNS	00NR	0	16WP	G15_084	FROM->TO	G14-057T 345.00 - SUNNYSIDE 345KV CKT 1	717	789	0.18742	114.8744	CORN TAP - SEQUOYAHJ4 138.00 138KV CKT 1
FDNS	00NR	0	16WP	G15_084	FROM->TO	G14-057T 345.00 - SUNNYSIDE 345KV CKT 1	717	789	0.18555	114.8724	ARBUCKLE - VANOSTP4 138.00 138KV CKT 1
FDNS	00NR	0	16WP	G15_084	FROM->TO	G14-057T 345.00 - SUNNYSIDE 345KV CKT 1	717	789	0.18806	114.872	WEATHERFORD TAP - WEATHERFORD WIND FARM 138KV CKT 1
FDNS	00NR	0	16WP	G15_084	FROM->TO	G14-057T 345.00 - SUNNYSIDE 345KV CKT 1	717	789	0.18668	114.8684	ENOWILT - SARDIS 138KV CKT 1
FDNS	00NR	0	16WP	G15_084	FROM->TO	G14-057T 345.00 - SUNNYSIDE 345KV CKT 1	717	789	0.18617	114.8684	8WNEWMADRID 500.00 - DELL 500 500KV CKT 1
FDNS	00NR	0	16WP	G15_084	FROM->TO	G14-057T 345.00 - SUNNYSIDE 345KV CKT 1	717	789	0.18594	114.8662	GEN505616 1-BROKEN BOW
FDNS	00NR	0	16WP	G15_084	FROM->TO	G14-057T 345.00 - SUNNYSIDE 345KV CKT 1	717	789	0.18803	114.8654	CLINTON JUNCTION - ELK CITY 138KV CKT 1
FDNS	00NR	0	16WP	G15_084	FROM->TO	G14-057T 345.00 - SUNNYSIDE 345KV CKT 1	717	789	0.18803	114.8654	CLINTON JUNCTION - ELK CITY 138KV CKT 1
FDNS	00NR	0	16WP	G15_084	FROM->TO	G14-057T 345.00 - SUNNYSIDE 345KV CKT 1	717	789	0.18614	114.8645	MCNAB REC - Turk 115 115KV CKT 1
FDNS	00NR	0	16WP	G15_084	FROM->TO	G14-057T 345.00 - SUNNYSIDE 345KV CKT 1	717	789	0.18614	114.8645	TURK (TURK 1) 138/115/13.2KV TRANSFORMER CKT 1
FDNS	00NR	0	16WP	G15_084	FROM->TO	G14-057T 345.00 - SUNNYSIDE 345KV CKT 1	717	789	0.18614	114.8645	TURK (TURK 1) 138/115/13.2KV TRANSFORMER CKT 1
FDNS	00NR	0	16WP	G15_084	FROM->TO	G14-057T 345.00 - SUNNYSIDE 345KV CKT 1	717	789	0.18709	114.86	NORTH 29TH CHICKASHA - VERDEN 138KV CKT 1
FDNS	00NR	0	16WP	G15_084	FROM->TO	G14-057T 345.00 - SUNNYSIDE 345KV CKT 1	717	789	0.18645	114.8591	G14_001T 345.00 - WICHITA 345KV CKT 1
FDNS	00NR	0	16WP	G15_084	FROM->TO	G14-057T 345.00 - SUNNYSIDE 345KV CKT 1	717	789	0.18594	114.8585	LEWIS CREEK SWITCHYARD 138/22.0KV TRANSFORMER CKT 1
FDNS	00NR	0	16WP	G15_084	FROM->TO	G14-057T 345.00 - SUNNYSIDE 345KV CKT 1	717	789	0.18665	114.8545	G13-010T 345.00 - POST ROCK 345KV CKT 1
FDNS	00NR	0	16WP	G15_084	FROM->TO	G14-057T 345.00 - SUNNYSIDE 345KV CKT 1	717	789	0.18414	114.8545	OMPA-WALTERS - WALTERS 69KV CKT 1
FDNS	00NR	0	16WP	G15_084	FROM->TO	G14-057T 345.00 - SUNNYSIDE 345KV CKT 1	717	789	0.18414	114.8545	OMPA-WALTERS - WALTERS 69KV CKT 1
FDNS	00NR	0	16WP	G15_084	FROM->TO	G14-057T 345.00 - SUNNYSIDE 345KV CKT 1	717	789	0.18625	114.8539	COUCH SES - MC NIEL 115KV CKT 1
FDNS	00NR	0	16WP	G15_084	FROM->TO	G14-057T 345.00 - SUNNYSIDE 345KV CKT 1	717	789	0.18594	114.8536	LEWIS CREEK SWITCHYARD 138/22.0KV TRANSFORMER CKT 1
FDNS	00NR	0	16WP	G15_084	FROM->TO	G14-057T 345.00 - SUNNYSIDE 345KV CKT 1	717	789	0.1862	114.8433	EMPORIA ENERGY CENTER - SWISSVALE 345KV CKT 1
FDNS	00NR	0	16WP	G15_084	FROM->TO	G14-057T 345.00 - SUNNYSIDE 345KV CKT 1	717	789	0.18776	114.8397	P12:69:WFEC-AEPW:COMANCH2:WALTRS-2
FDNS	00NR	0	16WP	G15_084	FROM->TO	G14-057T 345.00 - SUNNYSIDE 345KV CKT 1	717	789	0.18594	114.8396	GEN501970 1-EVANGELINE UNIT 7
FDNS	00NR	0	16WP	G15_084	FROM->TO	G14-057T 345.00 - SUNNYSIDE 345KV CKT 1	717	789	0.18617	114.835	MORISNT4 138.00 - STILLWATER 138KV CKT 1
FDNS	00NR	0	16WP	G15_084	FROM->TO	G14-057T 345.00 - SUNNYSIDE 345KV CKT 1	717	789	0.18668	114.8336	CLAYTON - SARDIS 138KV CKT 1
FDNS	00NR	0	16WP	G15_084	FROM->TO	G14-057T 345.00 - SUNNYSIDE 345KV CKT 1	717	789	0.18618	114.8296	P12:138:OKGE:3TERM2
FDNS	00NR	0	16WP	G15_084	FROM->TO	G14-057T 345.00 - SUNNYSIDE 345KV CKT 1	717	789	0.18956	114.8285	HINTON - REDROCKRD4 138.00 138KV CKT 1
FDNS	00NR	0	16WP	G15_084	FROM->TO	G14-057T 345.00 - SUNNYSIDE 345KV CKT 1	717	789	0.18594	114.8271	GEN334392 1-EXXON MOBIL IPP 1
FDNS	00NR	0	16WP	G15_084	FROM->TO	G14-057T 345.00 - SUNNYSIDE 345KV CKT 1	717	789	0.18717	114.826	CORNVILLE - NORGE ROAD 138KV CKT 1
FDNS	00NR	0	16WP	G15_084	FROM->TO	G14-057T 345.00 - SUNNYSIDE 345KV CKT 1	717	789	0.18717	114.826	CORNVILLE - NORGE ROAD 138KV CKT 1
FDNS	00NR	0	16WP	G15_084	FROM->TO	G14-057T 345.00 - SUNNYSIDE 345KV CKT 1	717	789	0.18954	114.822	LASALLE - STONEWAL LH138.00 138KV CKT 1
FDNS	00NR	0	16WP	G15_084	FROM->TO	G14-057T 345.00 - SUNNYSIDE 345KV CKT 1	717	789	0.18594	114.8203	GEN334393 1-EXXON MOBIL IPP 2
FDNS	00NR	0	16WP	G15_084	FROM->TO	G14-057T 345.00 - SUNNYSIDE 345KV CKT 1	717	789	0.18594	114.8203	GEN334394 1-EXXON MOBIL IPP 3
FDNS	00NR	0	16WP	G15_084	FROM->TO	G14-057T 345.00 - SUNNYSIDE 345KV CKT 1	717	789	0.186	114.8155	P12:138:OKGE:3TERM12
FDNS	00NR	0	16WP	G15_084	FROM->TO	G14-057T 345.00 - SUNNYSIDE 345KV CKT 1	717	789	0.18594	114.812	GEN336222 1-LITTLE GYPSY UNIT#2
FDNS	00NR	0	16WP	G15_084	FROM->TO	G14-057T 345.00 - SUNNYSIDE 345KV CKT 1	717	789	0.18954	114.807	STONEWAL LH138.00 - TUPELO TAP 138KV CKT 1
FDNS	00NR	0	16WP	G15_084	FROM->TO	G14-057T 345.00 - SUNNYSIDE 345KV CKT 1	717	789	0.18668	114.8059	P12:138:AEPW-SWPA:LONEOAK4:BRKNBW4
FDNS	00NR	0	16WP	G15_084	FROM->TO	G14-057T 345.00 - SUNNYSIDE 345KV CKT 1	717	789	0.18617	114.803	FLETCHER - MARLOW JCT 69KV CKT 1
FDNS	00NR	0	20WP	G15_084	FROM->TO	G14-057T 345.00 - SUNNYSIDE 345KV CKT 1	717	789	0.18744	114.7966	GEN335831 1-RIVERBEND UNIT#1
FDNS	00NR	0	16WP	G15_084	FROM->TO	G14-057T 345.00 - SUNNYSIDE 345KV CKT 1	717	789	0.18613	114.7955	7JASPER 345.00 - MORGAN 345KV CKT 1
FDNS	00NR	0	16WP	G15_084	FROM->TO	G14-057T 345.00 - SUNNYSIDE 345KV CKT 1	717	789	0.18595	114.7941	P12:138:AEPW:R.S.S-4:T.P.S.-4
FDNS	00NR	0	16WP	G15_084	FROM->TO	G14-057T 345.00 - SUNNYSIDE 345KV CKT 1	717	789	0.18594	114.7937	GEN506749 1-EASTMAN GENERATION A
FDNS	00NR	0	16WP	G15_084	FROM->TO	G14-057T 345.00 - SUNNYSIDE 345KV CKT 1	717	789	0.18668	114.792	CLAYTON - NASHOBA 138KV CKT 1
FDNS	00NR	0	16WP	G15_084	FROM->TO	G14-057T 345.00 - SUNNYSIDE 345KV CKT 1	717	789	0.18709	114.7904	CORNVILLE - NORTH 29TH CHICKASHA 138KV CKT 1
FDNS	00NR	0	16WP	G15_084	FROM->TO	G14-057T 345.00 - SUNNYSIDE 345KV CKT 1	717	789	0.18492	114.7904	CLARKSVILLE - ONETA 345KV CKT 1
FDNS	00NR	0	16WP	G15_084	FROM->TO	G14-057T 345.00 - SUNNYSIDE 345KV CKT 1	717	789	0.18492	114.7904	CLARKSVILLE - ONETA 345KV CKT 1
FDNS	00NR	0	16WP	G15_084	FROM->TO	G14-057T 345.00 - SUNNYSIDE 345KV CKT 1	717	789	0.18594	114.7901	GEN334431 1-SABINE UNIT 1
FDNS	00NR	0	16WP	G15_084	FROM->TO	G14-057T 345.00 - SUNNYSIDE 345KV CKT 1	717	789	0.18594	114.79	GEN334432 1-SABINE UNIT 2
FDNS	00NR	0	16WP	G15_084	FROM->TO	G14-057T 345.00 - SUNNYSIDE 345KV CKT 1	717	789	0.18638	114.785	FRANKLIN - FRANKLIN SW 138KV CKT 1
FDNS	00NR	0	16WP	G15_084	FROM->TO	G14-057T 345.00 - SUNNYSIDE 345KV CKT 1	717	789	0.18806	114.7845	WEATHERFORD SOUTHEAST - WEATHERFORD TAP 138KV CKT 1
FDNS	00NR	0	16WP	G15_084	FROM->TO	G14-057T 345.00 - SUNNYSIDE 345KV CKT 1	717	789	0.18594	114.7829	GEN501972 1-EVANGELINE UNIT 7-2
FDNS	00NR	0	16WP	G15_084	FROM->TO	G14-057T 345.00 - SUNNYSIDE 345KV CKT 1	717	789	0.18594	114.7828	GEN501971 1-EVANGELINE UNIT 7-1
FDNS	00NR	0	16WP	G15_084	FROM->TO	G14-057T 345.00 - SUNNYSIDE 345KV CKT 1	717	789	0.18594	114.7826	GEN336152 1-WATERFORD UNIT#2
FDNS	00NR	0	16WP	G15_084	FROM->TO	G14-057T 345.00 - SUNNYSIDE 345KV CKT 1	717	789	0.18594	114.7815	GEN336151 1-WATERFORD UNIT#1
FDNS	00NR	0	16WP	G15_084	FROM->TO	G14-057T 345.00 - SUNNYSIDE 345KV CKT 1	717	789	0.18668	114.779	BETHEL - NASHOBA 138KV CKT 1

SOLUTION	GROUP	SCENARIO	SEASON	SOURCE	DIRECTION	MONITORED ELEMENT	RATEA (MVA)	RATEB(MVA)	TDF	TC%LOADING (% MVA)	CONTINGENCY
FDNS	00NR	0	16WP	G15_084	FROM->TO	G14-057T 345.00 - SUNNYSIDE 345KV CKT 1	717	789	0.18594	114.7698	P12:138:AEPW:R.S.S.-4:R:96YALE-4
FDNS	00NR	0	20WP	G15_084	FROM->TO	G14-057T 345.00 - SUNNYSIDE 345KV CKT 1	717	789	0.19222	114.7697	ARCADIA - NORTHWEST 345KV CKT 1
FDNS	00NR	0	20WP	G15_084	FROM->TO	G14-057T 345.00 - SUNNYSIDE 345KV CKT 1	717	789	0.18744	114.7537	GRAND GULF 500/22.0KV TRANSFORMER CKT 1
FDNS	00NR	0	16WP	G15_084	FROM->TO	G14-057T 345.00 - SUNNYSIDE 345KV CKT 1	717	789	0.19122	114.7505	MARIETTA - MARIETTA4 138.00 138KV CKT 1
FDNS	00NR	0	16WP	G15_084	FROM->TO	G14-057T 345.00 - SUNNYSIDE 345KV CKT 1	717	789	0.18723	114.7347	Canadian Pump Station - REDROCKRD4 138.00 138KV CKT 1
FDNS	00NR	0	16WP	G15_084	FROM->TO	G14-057T 345.00 - SUNNYSIDE 345KV CKT 1	717	789	0.18806	114.73	CLINTON JUNCTION - CLINTON NATURAL GAS TAP 138KV CKT 1
FDNS	00NR	0	16WP	G15_084	FROM->TO	G14-057T 345.00 - SUNNYSIDE 345KV CKT 1	717	789	0.1864	114.7223	P12:138:OKGE:3TERM47
FDNS	00NR	0	16WP	G15_084	FROM->TO	G14-057T 345.00 - SUNNYSIDE 345KV CKT 1	717	789	0.18785	114.7209	CIMARRON - NORTHWEST 345KV CKT 1
FDNS	00NR	0	16WP	G15_084	FROM->TO	G14-057T 345.00 - SUNNYSIDE 345KV CKT 1	717	789	0.18646	114.7076	HAMMETT TAP - HORSESHOE LAKE 138KV CKT 1
FDNS	00NR	0	20WP	G15_084	FROM->TO	G14-057T 345.00 - SUNNYSIDE 345KV CKT 1	717	789	0.1895	114.7044	7SAREPTA% 345.00 - ELDORADO EHV 345KV CKT 1
FDNS	00NR	0	20WP	G15_084	FROM->TO	G14-057T 345.00 - SUNNYSIDE 345KV CKT 1	717	789	0.1895	114.7042	3TR3AR8EL7EL
FDNS	00NR	0	20WP	G15_084	FROM->TO	G14-057T 345.00 - SUNNYSIDE 345KV CKT 1	717	789	0.1895	114.6934	ELDORADO EHV 500/345KV TRANSFORMER CKT 1
FDNS	00NR	0	20WP	G15_084	FROM->TO	G14-057T 345.00 - SUNNYSIDE 345KV CKT 1	717	789	0.18975	114.6786	P12:138:AEPW:DUNCAN-4:L.E.S.-4
FDNS	00NR	0	16WP	G15_084	FROM->TO	G14-057T 345.00 - SUNNYSIDE 345KV CKT 1	717	789	0.18776	114.6677	COMANCHE - WALTERS 69KV CKT 1
FDNS	00NR	0	20WP	G15_084	FROM->TO	G14-057T 345.00 - SUNNYSIDE 345KV CKT 1	717	789	0.18744	114.608	GEN515577 1-ARBWND11 0.6900
FDNS	00NR	0	20WP	G15_084	FROM->TO	G14-057T 345.00 - SUNNYSIDE 345KV CKT 1	717	789	0.18872	114.5615	MATHWSN7 345.00 - TATONGA7 345.00 345KV CKT 1
FDNS	00NR	0	20WP	G15_084	FROM->TO	G14-057T 345.00 - SUNNYSIDE 345KV CKT 1	717	789	0.1898	114.5571	COMANCHE TAP - OMPA-DUNCAN 840 138KV CKT 1
FDNS	00NR	0	20WP	G15_084	FROM->TO	G14-057T 345.00 - SUNNYSIDE 345KV CKT 1	717	789	0.19195	114.5549	BRIDGECR 138.00 - TUTTLE 138KV CKT 1
FDNS	00NR	0	20WP	G15_084	FROM->TO	G14-057T 345.00 - SUNNYSIDE 345KV CKT 1	717	789	0.18368	114.5467	CANADIAN RIVER - MUSKOGEE 345KV CKT 1
FDNS	00NR	0	20WP	G15_084	FROM->TO	G14-057T 345.00 - SUNNYSIDE 345KV CKT 1	717	789	0.18744	114.4684	GEN509409 1-WILKES #3
FDNS	00NR	0	20WP	G15_084	FROM->TO	G14-057T 345.00 - SUNNYSIDE 345KV CKT 1	717	789	0.19328	114.4388	Hitchland Interchange - WALKTAP7 345.00 345KV CKT 1
FDNS	00NR	0	20WP	G15_084	FROM->TO	G14-057T 345.00 - SUNNYSIDE 345KV CKT 1	717	789	0.19328	114.4388	Hitchland Interchange - WALKTAP7 345.00 345KV CKT 1
FDNS	00NR	0	20WP	G15_084	FROM->TO	G14-057T 345.00 - SUNNYSIDE 345KV CKT 1	717	789	0.19279	114.4317	HEALDTON - LOCO 138KV CKT 1
FDNS	00NR	0	20WP	G15_084	FROM->TO	G14-057T 345.00 - SUNNYSIDE 345KV CKT 1	717	789	0.18846	114.4268	ARCADIA - SEMINOLE 345KV CKT 1
FDNS	00NR	0	20WP	G15_084	FROM->TO	G14-057T 345.00 - SUNNYSIDE 345KV CKT 1	717	789	0.19328	114.4189	P12:345:SPS:J07.1.FINN.HITCH
FDNS	00NR	0	20WP	G15_084	FROM->TO	G14-057T 345.00 - SUNNYSIDE 345KV CKT 1	717	789	0.18744	114.4089	GEN501813 1-RODEMACHER UNIT 3
FDNS	00NR	0	20WP	G15_084	FROM->TO	G14-057T 345.00 - SUNNYSIDE 345KV CKT 1	717	789	0.18744	114.3121	GEN300006 1-NEW MADRID UNIT 1
FDNS	00NR	0	20WP	G15_084	FROM->TO	G14-057T 345.00 - SUNNYSIDE 345KV CKT 1	717	789	0.18744	114.2922	GEN300007 1-NEW MADRID UNIT 2
FDNS	00NR	0	20WP	G15_084	FROM->TO	G14-057T 345.00 - SUNNYSIDE 345KV CKT 1	717	789	0.19279	114.2876	HEALDTON - RINGLING 138KV CKT 1
FDNS	00NR	0	20WP	G15_084	FROM->TO	G14-057T 345.00 - SUNNYSIDE 345KV CKT 1	717	789	0.188	114.2757	LACYGNE - WAVERLY7 345.00 345KV CKT 1
FDNS	00NR	0	20WP	G15_084	FROM->TO	G14-057T 345.00 - SUNNYSIDE 345KV CKT 1	717	789	0.1898	114.2686	DUNCAN - OMPA-DUNCAN 840 138KV CKT 1
FDNS	00NR	0	20WP	G15_084	FROM->TO	G14-057T 345.00 - SUNNYSIDE 345KV CKT 1	717	789	0.1898	114.2686	DUNCAN - OMPA-DUNCAN 840 138KV CKT 1
FDNS	00NR	0	20WP	G15_084	FROM->TO	G14-057T 345.00 - SUNNYSIDE 345KV CKT 1	717	789	0.19195	114.2678	P12:138:WFEC:MSL01
FDNS	00NR	0	16WP	G15_084	FROM->TO	G14-057T 345.00 - SUNNYSIDE 345KV CKT 1	717	789	0.18594	114.2581	803-OKLAUNION
FDNS	00NR	0	20WP	G15_084	FROM->TO	G14-057T 345.00 - SUNNYSIDE 345KV CKT 1	717	789	0.19195	114.2563	BRIDGECR 138.00 - SUNSHINE CANYON 138KV CKT 1
FDNS	00NR	0	20WP	G15_084	FROM->TO	G14-057T 345.00 - SUNNYSIDE 345KV CKT 1	717	789	0.18744	114.1972	GEN335206 1-NELSON UNIT 6
FDNS	00NR	0	20WP	G15_084	FROM->TO	G14-057T 345.00 - SUNNYSIDE 345KV CKT 1	717	789	0.188	114.1543	WAVERLY7 345.00 - WOLF CREEK 345KV CKT 1
FDNS	00NR	0	20WP	G15_084	FROM->TO	G14-057T 345.00 - SUNNYSIDE 345KV CKT 1	717	789	0.18744	114.1257	GEN520947 1-HUGO1
FDNS	00NR	0	20WP	G15_084	FROM->TO	G14-057T 345.00 - SUNNYSIDE 345KV CKT 1	717	789	0.19279	114.1171	RINGLING - SOUTH WILSON 138KV CKT 1
FDNS	00NR	0	16WP	G15_084	FROM->TO	G14-057T 345.00 - SUNNYSIDE 345KV CKT 1	717	789	0.18518	114.0994	P12:138:OKGE:3TERM39
FDNS	00NR	0	20WP	G15_084	FROM->TO	G14-057T 345.00 - SUNNYSIDE 345KV CKT 1	717	789	0.18872	114.0411	G11_051T 345.00 - TATONGA7 345.00 345KV CKT 1
FDNS	00NR	0	20WP	G15_084	FROM->TO	G14-057T 345.00 - SUNNYSIDE 345KV CKT 1	717	789	0.18817	114.0258	ELDORADO EHV - MOUNT OLIVE 500KV CKT 1
FDNS	00NR	0	20WP	G15_084	FROM->TO	G14-057T 345.00 - SUNNYSIDE 345KV CKT 1	717	789	0.18744	114.0121	GEN501812 1-RODEMACHER UNIT 2
FDNS	00NR	0	20WP	G15_084	FROM->TO	G14-057T 345.00 - SUNNYSIDE 345KV CKT 1	717	789	0.18628	114.0071	P12:138:AEPW:SHERID4:112GORE4
FDNS	00NR	0	20WP	G15_084	FROM->TO	G14-057T 345.00 - SUNNYSIDE 345KV CKT 1	717	789	0.18744	114.0013	DOLET HILLS 345/24.0KV TRANSFORMER CKT 1
FDNS	00NR	0	20WP	G15_084	FROM->TO	G14-057T 345.00 - SUNNYSIDE 345KV CKT 1	717	789	0.18923	113.9961	THISTLE7 345.00 - WOODWARD DISTRICT EHV 345KV CKT 1
FDNS	00NR	0	20WP	G15_084	FROM->TO	G14-057T 345.00 - SUNNYSIDE 345KV CKT 1	717	789	0.18923	113.9961	THISTLE7 345.00 - WOODWARD DISTRICT EHV 345KV CKT 1
FDNS	00NR	0	20WP	G15_084	FROM->TO	G14-057T 345.00 - SUNNYSIDE 345KV CKT 1	717	789	0.18923	113.9961	THISTLE7 345.00 - WOODWARD DISTRICT EHV 345KV CKT 2
FDNS	00NR	0	20WP	G15_084	FROM->TO	G14-057T 345.00 - SUNNYSIDE 345KV CKT 1	717	789	0.18923	113.9961	THISTLE7 345.00 - WOODWARD DISTRICT EHV 345KV CKT 2
FDNS	00NR	0	20WP	G15_084	FROM->TO	G14-057T 345.00 - SUNNYSIDE 345KV CKT 1	717	789	0.18759	113.9283	PARK LANE - SEMINOLE 138KV CKT 1
FDNS	00NR	0	20WP	G15_084	FROM->TO	G14-057T 345.00 - SUNNYSIDE 345KV CKT 1	717	789	0.1883	113.8762	WEBRE - WELLS 500KV CKT 1
FDNS	00NR	0	20WP	G15_084	FROM->TO	G14-057T 345.00 - SUNNYSIDE 345KV CKT 1	717	789	0.18744	113.875	GEN515564 1-ORIGIN11 0.6900
FDNS	00NR	0	20WP	G15_084	FROM->TO	G14-057T 345.00 - SUNNYSIDE 345KV CKT 1	717	789	0.18744	113.875	GEN515565 1-ORIGIN21 0.6900
FDNS	00NR	0	16WP	G15_084	FROM->TO	G14-057T 345.00 - SUNNYSIDE 345KV CKT 1	717	789	0.1859	113.8718	MAYSVILLE - MAYSVLT4 138.00 138KV CKT 1
FDNS	00NR	0	16WP	G15_084	FROM->TO	G14-057T 345.00 - SUNNYSIDE 345KV CKT 1	717	789	0.18652	113.8663	DRAPER LAKE - MIDWEST TAP 138KV CKT 1
FDNS	00NR	0	16WP	G15_084	FROM->TO	G14-057T 345.00 - SUNNYSIDE 345KV CKT 1	717	789	0.18612	113.8628	GLASSES - MADILL INDUSTRIAL TAP 138KV CKT 1
FDNS	00NR	0	20WP	G15_084	FROM->TO	G14-057T 345.00 - SUNNYSIDE 345KV CKT 1	717	789	0.18744	113.8527	GEN334440 1-SABINE UNIT 4
FDNS	00NR	0	16WP	G15_084	FROM->TO	G14-057T 345.00 - SUNNYSIDE 345KV CKT 1	717	789	0.18628	113.8517	CIMARRON - MATHWSN7 345.00 345KV CKT 1
FDNS	00NR	0	16WP	G15_084	FROM->TO	G14-057T 345.00 - SUNNYSIDE 345KV CKT 1	717	789	0.18628	113.8517	CIMARRON - MATHWSN7 345.00 345KV CKT 2
FDNS	00NR	0	16WP	G15_084	FROM->TO	G14-057T 345.00 - SUNNYSIDE 345KV CKT 1	717	789	0.18594	113.8451	GEN562691 1-G15_015_3 0.6900
FDNS	00NR	0	16WP	G15_084	FROM->TO	G14-057T 345.00 - SUNNYSIDE 345KV CKT 1	717	789	0.18594	113.8449	GEN562772 1-G15034_3 0.6900
FDNS	00NR	0	16WP	G15_084	FROM->TO	G14-057T 345.00 - SUNNYSIDE 345KV CKT 1	717	789	0.18666	113.8438	P12:138:OKGE:3TERM21
FDNS	00NR	0	16WP	G15_084	FROM->TO	G14-057T 345.00 - SUNNYSIDE 345KV CKT 1	717	789	0.18632	113.8375	HUGO (HUGO 1) 345/138/13.8KV TRANSFORMER CKT 1
FDNS	00NR	0	20WP	G15_084	FROM->TO	G14-057T 345.00 - SUNNYSIDE 345KV CKT 1	717	789	0.18873	113.8344	CANEYRV7 345.00 - NEOSHO 345KV CKT 1
FDNS	00NR	0	20WP	G15_084	FROM->TO	G14-057T 345.00 - SUNNYSIDE 345KV CKT 1	717	789	0.19279	113.8289	MARIETTA - SOUTH WILSON 138KV CKT 1
FDNS	00NR	0	20WP	G15_084	FROM->TO	G14-057T 345.00 - SUNNYSIDE 345KV CKT 1	717	789	0.18744	113.8232	GEN590011 2-ERCOT EQUIVALENCE
FDNS	00NR	0	16WP	G15_084	FROM->TO	G14-057T 345.00 - SUNNYSIDE 345KV CKT 1	717	789	0.18594	113.8171	GEN521103 1-BLUE CANYON WIND FARM
FDNS	00NR	0	16WP	G15_084	FROM->TO	G14-057T 345.00 - SUNNYSIDE 345KV CKT 1	717	789	0.18594	113.8166	GEN520812 1-ANADRK5
FDNS	00NR	0	16WP	G15_084	FROM->TO	G14-057T 345.00 - SUNNYSIDE 345KV CKT 1	717	789	0.18594	113.8165	GEN520813 1-ANADRK6
FDNS	00NR	0	16WP	G15_084	FROM->TO	G14-057T 345.00 - SUNNYSIDE 345KV CKT 1	717	789	0.1859	113.8102	MAYSVLT4 138.00 - PRAIRIE POINT 138KV CKT 1
FDNS	00NR	0	16WP	G15_084	FROM->TO	G14-057T 345.00 - SUNNYSIDE 345KV CKT 1	717	789	0.18612	113.8033	GLASSES - RUSSETT 138KV CKT 1
FDNS	00NR	0	20WP	G15_084	FROM->TO	G14-057T 345.00 - SUNNYSIDE 345KV CKT 1	717	789	0.18744	113.7939	DELL 500 - ESSEX UNIT 2 500KV CKT Z1
FDNS	00NR	0	20WP	G15_084	FROM->TO	G14-057T 345.00 - SUNNYSIDE 345KV CKT 1	717	789	0.18744	113.7926	P12:161:AEPW:DYESS 5:HYLAND 5
FDNS	00NR	0	16WP	G15_084	FROM->TO	G14-057T 345.00 - SUNNYSIDE 345KV CKT 1	717	789	0.18563	113.785	ARBUCKLE - SULPHR 4 138.00 138KV CKT 1
FDNS	00NR	0	20WP	G15_084	FROM->TO	G14-057T 345.00 - SUNNYSIDE 345KV CKT 1	717	789	0.1914	113.7845	REDBUD - RIVERSIDE STATION 345KV CKT 1
FDNS	00NR	0	20WP	G15_084	FROM->TO	G14-057T 345.00 - SUNNYSIDE 345KV CKT 1	717	789	0.1914	113.7845	REDBUD - RIVERSIDE STATION 345KV CKT 1
FDNS	00NR	0	16WP	G15_084	FROM->TO	G14-057T 345.00 - SUNNYSIDE 345KV CKT 1	717	789	0.186	113.7802	P12:138:WFEC:MSL11
FDNS	00NR	0	16WP	G15_084	FROM->TO	G14-057T 345.00 - SUNNYSIDE 345KV CKT 1	717	789	0.186	113.7802	P12:138:WFEC-AEPW:PHAROAH4:LONEOAK4
FDNS	00NR	0	16WP	G15_084	FROM->TO	G14-057T 345.00 - SUNNYSIDE 345KV CKT 1	717	789	0.18607	113.7755	CANEY CREEK - JOHNSON COUNTY 138KV CKT 1

SOLUTION	GROUP	SCENARIO	SEASON	SOURCE	DIRECTION	MONITORED ELEMENT	RATEA (MVA)	RATEB(MVA)	TDF	TC%LOADING (% MVA)	CONTINGENCY
FDNS	00NR	0	16WP	G15_084	FROM->TO	G14-057T 345.00 - SUNNYSIDE 345KV CKT 1	717	789	0.18594	113.7736	GEN511961 1-DEMPSEY-WTG10.7000
FDNS	00NR	0	16WP	G15_084	FROM->TO	G14-057T 345.00 - SUNNYSIDE 345KV CKT 1	717	789	0.18594	113.758	P12:069:OKGE:3TERM42
FDNS	00NR	0	20WP	G15_084	FROM->TO	G14-057T 345.00 - SUNNYSIDE 345KV CKT 1	717	789	0.18744	113.7534	GEN590010 1-ERCOT EQUIVALENCE
FDNS	00NR	0	20WP	G15_084	FROM->TO	G14-057T 345.00 - SUNNYSIDE 345KV CKT 1	717	789	0.18744	113.7453	P12:69:AEPW:L.E.S.-2:LAW WC2
FDNS	00NR	0	20WP	G15_084	FROM->TO	G14-057T 345.00 - SUNNYSIDE 345KV CKT 1	717	789	0.17904	113.7442	LAWTON EASTSIDE (LES 5) 345/138/13.8KV TRANSFORMER CKT 2
FDNS	00NR	0	20WP	G15_084	FROM->TO	G14-057T 345.00 - SUNNYSIDE 345KV CKT 1	717	789	0.17904	113.7442	LAWTON EASTSIDE (LES 5) 345/138/13.8KV TRANSFORMER CKT 2
FDNS	00NR	0	16WP	G15_084	FROM->TO	G14-057T 345.00 - SUNNYSIDE 345KV CKT 1	717	789	0.18594	113.7348	GEN629070 2-BEAVER CHANNEL GENERATORFOR UNIT NO 2
FDNS	00NR	0	16WP	G15_084	FROM->TO	G14-057T 345.00 - SUNNYSIDE 345KV CKT 1	717	789	0.18602	113.7272	GRPRAR1-LNX3345.00 - HOLT.CO3 345.00 345KV CKT 1
FDNS	00NR	0	20WP	G15_084	FROM->TO	G14-057T 345.00 - SUNNYSIDE 345KV CKT 1	717	789	0.19279	113.7272	P12:138:WFEC:MSL17
FDNS	00NR	0	16WP	G15_084	FROM->TO	G14-057T 345.00 - SUNNYSIDE 345KV CKT 1	717	789	0.18594	113.7271	GEN515443 1-MNCOWND1 0.7000
FDNS	00NR	0	16WP	G15_084	FROM->TO	G14-057T 345.00 - SUNNYSIDE 345KV CKT 1	717	789	0.18602	113.7234	GRPRAR1-LNX3345.00 - YANKTON 345KV CKT Z
FDNS	00NR	0	20WP	G15_084	FROM->TO	G14-057T 345.00 - SUNNYSIDE 345KV CKT 1	717	789	0.18877	113.7227	P12:138:WFEC:MSL02
FDNS	00NR	0	16WP	G15_084	FROM->TO	G14-057T 345.00 - SUNNYSIDE 345KV CKT 1	717	789	0.18638	113.7218	P12:138:WFEC:MSL08
FDNS	00NR	0	16WP	G15_084	FROM->TO	G14-057T 345.00 - SUNNYSIDE 345KV CKT 1	717	789	0.18594	113.7183	GEN615021 1-GRE-ER 14G 16.000
FDNS	00NR	0	16WP	G15_084	FROM->TO	G14-057T 345.00 - SUNNYSIDE 345KV CKT 1	717	789	0.18594	113.7147	GEN562902 1-G15052_3 0.6900
FDNS	00NR	0	16WP	G15_084	FROM->TO	G14-057T 345.00 - SUNNYSIDE 345KV CKT 1	717	789	0.1859	113.7129	PRAIRIE POINT - RATLIFF 138KV CKT 1
FDNS	00NR	0	16WP	G15_084	FROM->TO	G14-057T 345.00 - SUNNYSIDE 345KV CKT 1	717	789	0.18581	113.7093	CARTER - CHICKASAW 138KV CKT 1
FDNS	00NR	0	16WP	G15_084	FROM->TO	G14-057T 345.00 - SUNNYSIDE 345KV CKT 1	717	789	0.18594	113.7078	GEN563242 1-G15090_3 0.6900
FDNS	00NR	0	16WP	G15_084	FROM->TO	G14-057T 345.00 - SUNNYSIDE 345KV CKT 1	717	789	0.18594	113.7066	GEN560183 1-REDHIL-WTG1 12.000
FDNS	00NR	0	16WP	G15_084	FROM->TO	G14-057T 345.00 - SUNNYSIDE 345KV CKT 1	717	789	0.18594	113.7049	GEN629071 1-BURLINGTON GENERATOR FOR UNIT NO 1 E
FDNS	00NR	0	16WP	G15_084	FROM->TO	G14-057T 345.00 - SUNNYSIDE 345KV CKT 1	717	789	0.1859	113.7009	CANADIAN RIVER - MCALESTER SOUTH 138KV CKT 1
FDNS	00NR	0	16WP	G15_084	FROM->TO	G14-057T 345.00 - SUNNYSIDE 345KV CKT 1	717	789	0.1859	113.7009	CANADIAN RIVER - MCALESTER SOUTH 138KV CKT 1
FDNS	00NR	0	16WP	G15_084	FROM->TO	G14-057T 345.00 - SUNNYSIDE 345KV CKT 1	717	789	0.1859	113.6996	CANADIAN RIVER () 345/138/13.8KV TRANSFORMER CKT 1
FDNS	00NR	0	16WP	G15_084	FROM->TO	G14-057T 345.00 - SUNNYSIDE 345KV CKT 1	717	789	0.1859	113.6996	CANADIAN RIVER () 345/138/13.8KV TRANSFORMER CKT 1
FDNS	00NR	0	16WP	G15_084	FROM->TO	G14-057T 345.00 - SUNNYSIDE 345KV CKT 1	717	789	0.18761	113.6995	NORTHWEST - SPRING CREEK 345KV CKT 1
FDNS	00NR	0	16WP	G15_084	FROM->TO	G14-057T 345.00 - SUNNYSIDE 345KV CKT 1	717	789	0.19008	113.6963	MOREWOOD SW - NINE MILE 138KV CKT 1
FDNS	00NR	0	16WP	G15_084	FROM->TO	G14-057T 345.00 - SUNNYSIDE 345KV CKT 1	717	789	0.18565	113.6922	ROCKY POINT - SPRINGDALE 138KV CKT 1
FDNS	00NR	0	16WP	G15_084	FROM->TO	G14-057T 345.00 - SUNNYSIDE 345KV CKT 1	717	789	0.18761	113.6897	SOONER - SPRING CREEK 345KV CKT 1
FDNS	00NR	0	20WP	G15_084	FROM->TO	G14-057T 345.00 - SUNNYSIDE 345KV CKT 1	717	789	0.18873	113.687	CANEYRV7 345.00 - LATHAMS7 345.00 345KV CKT 1
FDNS	00NR	0	16WP	G15_084	FROM->TO	G14-057T 345.00 - SUNNYSIDE 345KV CKT 1	717	789	0.18594	113.679	INDEPENDENCE 500/26.0KV TRANSFORMER CKT 1
FDNS	00NR	0	16WP	G15_084	FROM->TO	G14-057T 345.00 - SUNNYSIDE 345KV CKT 1	717	789	0.18594	113.6766	BURLINGTON NO1 + NO 2 + NO 3 161/20.0KV TRANSFORMER CKT 1
FDNS	00NR	0	20WP	G15_084	FROM->TO	G14-057T 345.00 - SUNNYSIDE 345KV CKT 1	717	789	0.18744	113.676	GEN509408 1-WILKES #2
FDNS	00NR	0	16WP	G15_084	FROM->TO	G14-057T 345.00 - SUNNYSIDE 345KV CKT 1	717	789	0.17083	113.6747	ALTUS JUNCTION - RUSSELL 138KV CKT 1
FDNS	00NR	0	16WP	G15_084	FROM->TO	G14-057T 345.00 - SUNNYSIDE 345KV CKT 1	717	789	0.17083	113.6747	ALTUS JUNCTION - RUSSELL 138KV CKT 1
FDNS	00NR	0	16WP	G15_084	FROM->TO	G14-057T 345.00 - SUNNYSIDE 345KV CKT 1	717	789	0.1845	113.6724	NORTHWEST TEXARKANA - WELSH 345KV CKT 1
FDNS	00NR	0	16WP	G15_084	FROM->TO	G14-057T 345.00 - SUNNYSIDE 345KV CKT 1	717	789	0.1845	113.6724	NORTHWEST TEXARKANA - WELSH 345KV CKT 1
FDNS	00NR	0	16WP	G15_084	FROM->TO	G14-057T 345.00 - SUNNYSIDE 345KV CKT 1	717	789	0.18594	113.6705	GEN514805 1-SOONER UNIT 1
FDNS	00NR	0	16WP	G15_084	FROM->TO	G14-057T 345.00 - SUNNYSIDE 345KV CKT 1	717	789	0.18594	113.6637	GEN514806 1-SOONER UNIT 2
FDNS	00NR	0	20WP	G15_084	FROM->TO	G14-057T 345.00 - SUNNYSIDE 345KV CKT 1	717	789	0.18854	113.6598	ELDORADO EHV - SHERIDAN EHV 500KV CKT 1
FDNS	00NR	0	20WP	G15_084	FROM->TO	G14-057T 345.00 - SUNNYSIDE 345KV CKT 1	717	789	0.18827	113.6598	PAOLI - PAYNE 138.00 138KV CKT 1
FDNS	00NR	0	16WP	G15_084	FROM->TO	G14-057T 345.00 - SUNNYSIDE 345KV CKT 1	717	789	0.18614	113.6579	KEO EHV - WEST MEMPHIS 500 500KV CKT 1
FDNS	00NR	0	16WP	G15_084	FROM->TO	G14-057T 345.00 - SUNNYSIDE 345KV CKT 1	717	789	0.18585	113.6508	CHAMBER SPRINGS - CLARKSVILLE 345KV CKT 1
FDNS	00NR	0	20WP	G15_084	FROM->TO	G14-057T 345.00 - SUNNYSIDE 345KV CKT 1	717	789	0.18744	113.6501	GEN506754 1-LEBROCK STEAM 1
FDNS	00NR	0	16WP	G15_084	FROM->TO	G14-057T 345.00 - SUNNYSIDE 345KV CKT 1	717	789	0.18594	113.6474	GEN562078 1-G11_051_3 0.6900
FDNS	00NR	0	20WP	G15_084	FROM->TO	G14-057T 345.00 - SUNNYSIDE 345KV CKT 1	717	789	0.18845	113.6428	ANADARKO - GEORGIA 138KV CKT 1
FDNS	00NR	0	16WP	G15_084	FROM->TO	G14-057T 345.00 - SUNNYSIDE 345KV CKT 1	717	789	0.18594	113.6379	P12:230:UMZB:# 112 #: NU IN SD. NU-RCDC & DRY CREEK XFMR
FDNS	00NR	0	16WP	G15_084	FROM->TO	G14-057T 345.00 - SUNNYSIDE 345KV CKT 1	717	789	0.18594	113.6365	RCDC EAST 4230.00 - RED CEDAR DC 230KV CKT 1
FDNS	00NR	0	16WP	G15_084	FROM->TO	G14-057T 345.00 - SUNNYSIDE 345KV CKT 1	717	789	0.18563	113.6334	JOLLYVILLE - SULPHR 4 138.00 138KV CKT 1
FDNS	00NR	0	16WP	G15_084	FROM->TO	G14-057T 345.00 - SUNNYSIDE 345KV CKT 1	717	789	0.18594	113.6189	GEN562802 1-G15039_3 0.3570
FDNS	00NR	0	20WP	G15_084	FROM->TO	G14-057T 345.00 - SUNNYSIDE 345KV CKT 1	717	789	0.18637	113.6137	P12:138:AEPW:112GORE4:L.E.S.-4
FDNS	00NR	0	16WP	G15_084	FROM->TO	G14-057T 345.00 - SUNNYSIDE 345KV CKT 1	717	789	0.18594	113.6124	GEN524285 1-WILDORADO WIND GEN
FDNS	00NR	0	20WP	G15_084	FROM->TO	G14-057T 345.00 - SUNNYSIDE 345KV CKT 1	717	789	0.19107	113.6016	CIVIT - PAOLI 138KV CKT 1
FDNS	00NR	0	20WP	G15_084	FROM->TO	G14-057T 345.00 - SUNNYSIDE 345KV CKT 1	717	789	0.18847	113.5945	MATHWSN7 345.00 - NORTHWEST 345KV CKT 1
FDNS	00NR	0	16WP	G15_084	FROM->TO	G14-057T 345.00 - SUNNYSIDE 345KV CKT 1	717	789	0.18594	113.5926	GEN524295 1-SPNSPUR_WND10.6900
FDNS	00NR	0	16WP	G15_084	FROM->TO	G14-057T 345.00 - SUNNYSIDE 345KV CKT 1	717	789	0.18594	113.5923	GEN562587 1-G14_056_3 0.6900
FDNS	00NR	0	16WP	G15_084	FROM->TO	G14-057T 345.00 - SUNNYSIDE 345KV CKT 1	717	789	0.18594	113.5856	GEN560331 1-G10-46 13.800
FDNS	00NR	0	16WP	G15_084	FROM->TO	G14-057T 345.00 - SUNNYSIDE 345KV CKT 1	717	789	0.18665	113.5745	ARKANSAS NUCLEAR ONE - FT SMITH 500KV CKT 1
FDNS	00NR	0	16WP	G15_084	FROM->TO	G14-057T 345.00 - SUNNYSIDE 345KV CKT 1	717	789	0.18665	113.5745	ARKANSAS NUCLEAR ONE - FT SMITH 500KV CKT 1
FDNSLock	00NR	0	16WP	G15_084	FROM->TO	G14-057T 345.00 - SUNNYSIDE 345KV CKT 1	717	789	0.18594	113.5733	GEN629072 4-LANSING GENERATOR FOR UNITS NO4 EIA CODE 1
FDNS	00NR	0	20WP	G15_084	FROM->TO	G14-057T 345.00 - SUNNYSIDE 345KV CKT 1	717	789	0.18744	113.5691	GEN336252 1-NINEMILE POINT UNIT#5
FDNS	00NR	0	16WP	G15_084	FROM->TO	G14-057T 345.00 - SUNNYSIDE 345KV CKT 1	717	789	0.18563	113.5649	JOLLYVILLE - KERR MCGEE CIMARRON 138KV CKT 1
FDNS	00NR	0	16WP	G15_084	FROM->TO	G14-057T 345.00 - SUNNYSIDE 345KV CKT 1	717	789	0.18594	113.5641	GEN562882 1-G15047_3 0.6900
FDNS	00NR	0	16WP	G15_084	FROM->TO	G14-057T 345.00 - SUNNYSIDE 345KV CKT 1	717	789	0.19008	113.5619	BEARCAT 138.00 - NINE MILE 138KV CKT 1
FDNS	00NR	0	16WP	G15_084	FROM->TO	G14-057T 345.00 - SUNNYSIDE 345KV CKT 1	717	789	0.18594	113.555	GEN562269 1-G12-020-1 0.6900
FDNS	00NR	0	16WP	G15_084	FROM->TO	G14-057T 345.00 - SUNNYSIDE 345KV CKT 1	717	789	0.18594	113.5529	GEN657749 1-YOUNG 1 GENERATOR
FDNS	00NR	0	20WP	G15_084	FROM->TO	G14-057T 345.00 - SUNNYSIDE 345KV CKT 1	717	789	0.18845	113.5467	FLETCHER - GEORGIA 138KV CKT 1
FDNS	00NR	0	20WP	G15_084	FROM->TO	G14-057T 345.00 - SUNNYSIDE 345KV CKT 1	717	789	0.19119	113.5386	P12:138:AEPW-OGE:CORNVIL4:MAUD 4
FDNS	00NR	0	20WP	G15_084	FROM->TO	G14-057T 345.00 - SUNNYSIDE 345KV CKT 1	717	789	0.18744	113.5228	FRONTIER - GRIMES 345KV CKT 1
FDNS	00NR	0	16WP	G15_084	FROM->TO	G14-057T 345.00 - SUNNYSIDE 345KV CKT 1	717	789	0.18563	113.5143	ARBWIND4 138.00 - KERR MCGEE CIMARRON 138KV CKT 1
FDNS	00NR	0	20WP	G15_084	FROM->TO	G14-057T 345.00 - SUNNYSIDE 345KV CKT 1	717	789	0.18744	113.5117	GEN335204 1-NELSON UNIT 4
FDNS	00NR	0	16WP	G15_084	FROM->TO	G14-057T 345.00 - SUNNYSIDE 345KV CKT 1	717	789	0.18594	113.51	GEN562270 1-G12-020-2 0.6900
FDNS	00NR	0	20WP	G15_084	FROM->TO	G14-057T 345.00 - SUNNYSIDE 345KV CKT 1	717	789	0.18744	113.5052	GEN503909 1-FULTONU1 1 16.000
FDNS	00NR	0	20WP	G15_084	FROM->TO	G14-057T 345.00 - SUNNYSIDE 345KV CKT 1	717	789	0.18744	113.5045	GEN334441 1-SABINE UNIT 5
FDNS	00NR	0	16WP	G15_084	FROM->TO	G14-057T 345.00 - SUNNYSIDE 345KV CKT 1	717	789	0.18594	113.5044	GEN562812 1-G15040_3 0.3570
FDNS	00NR	0	20WP	G15_084	FROM->TO	G14-057T 345.00 - SUNNYSIDE 345KV CKT 1	717	789	0.18859	113.5041	EMPIRE - FLETCHER 138KV CKT 1
FDNS	00NR	0	16WP	G15_084	FROM->TO	G14-057T 345.00 - SUNNYSIDE 345KV CKT 1	717	789	0.16064	113.503	P12:138:AEPW:112GORE4:SNYDER-4
FDNS	00NR	0	16WP	G15_084	FROM->TO	G14-057T 345.00 - SUNNYSIDE 345KV CKT 1	717	789	0.1844	113.5027	CLARKSVILLE - MUSKOGEE 345KV CKT 1
FDNS	00NR	0	16WP	G15_084	FROM->TO	G14-057T 345.00 - SUNNYSIDE 345KV CKT 1	717	789	0.1844	113.5027	CLARKSVILLE - MUSKOGEE 345KV CKT 1
FDNS	00NR	0	16WP	G15_084	FROM->TO	G14-057T 345.00 - SUNNYSIDE 345KV CKT 1	717	789	0.18594	113.5015	GEN563102 1-G15075_3 0.5500

SOLUTION	GROUP	SCENARIO	SEASON	SOURCE	DIRECTION	MONITORED ELEMENT	RATEA (MVA)	RATEB(MVA)	TDF	TC%LOADING (% MVA)	CONTINGENCY
FDNS	00NR	0	16WP	G15_084	FROM->TO	G14-057T 345.00 - SUNNYSIDE 345KV CKT 1	717	789	0.18594	113.4982	GEN562974 1-G15060_5 0.6900
FDNS	00NR	0	16WP	G15_084	FROM->TO	G14-057T 345.00 - SUNNYSIDE 345KV CKT 1	717	789	0.18594	113.4946	GEN563062 1-G15071_3 0.6900
FDNS	00NR	0	16WP	G15_084	FROM->TO	G14-057T 345.00 - SUNNYSIDE 345KV CKT 1	717	789	0.18594	113.4938	GEN563132 1-G15078_3 0.3570
FDNS	00NR	0	16WP	G15_084	FROM->TO	G14-057T 345.00 - SUNNYSIDE 345KV CKT 1	717	789	0.18594	113.4887	GEN562973 1-G15060_4 0.6900
FDNS	00NR	0	20WP	G15_084	FROM->TO	G14-057T 345.00 - SUNNYSIDE 345KV CKT 1	717	789	0.18985	113.4836	TUPELO - TUPELO TAP 138KV CKT 1
FDNSLock	00NR	0	16WP	G15_084	FROM->TO	G14-057T 345.00 - SUNNYSIDE 345KV CKT 1	717	789	0.18594	113.4834	GEN681522 3-GENOA 3
FDNS	00NR	0	16WP	G15_084	FROM->TO	G14-057T 345.00 - SUNNYSIDE 345KV CKT 1	717	789	0.19008	113.4794	P12:138:WFEC:MSL14
FDNS	00NR	0	20WP	G15_084	FROM->TO	G14-057T 345.00 - SUNNYSIDE 345KV CKT 1	717	789	0.18873	113.4741	LATHAMS7 345.00 - ROSE HILL 345KV CKT 1
FDNS	00NR	0	16WP	G15_084	FROM->TO	G14-057T 345.00 - SUNNYSIDE 345KV CKT 1	717	789	0.19008	113.4666	BEARCAT 138.00 - MOORELAND 138KV CKT 1
FDNS	00NR	0	20WP	G15_084	FROM->TO	G14-057T 345.00 - SUNNYSIDE 345KV CKT 1	717	789	0.19119	113.4632	BLANCHARD - CORNVILLE 138KV CKT 1
FDNS	00NR	0	20WP	G15_084	FROM->TO	G14-057T 345.00 - SUNNYSIDE 345KV CKT 1	717	789	0.19107	113.4605	CIVIT - STRATFORD 138KV CKT 1
FDNS	00NR	0	16WP	G15_084	FROM->TO	G14-057T 345.00 - SUNNYSIDE 345KV CKT 1	717	789	0.18541	113.4561	BROWN - RUSSETT 138KV CKT 1
FDNS	00NR	0	16WP	G15_084	FROM->TO	G14-057T 345.00 - SUNNYSIDE 345KV CKT 1	717	789	0.18569	113.4351	CHICKASAW - TOTAL 138KV CKT 1
FDNS	00NR	0	16WP	G15_084	FROM->TO	G14-057T 345.00 - SUNNYSIDE 345KV CKT 1	717	789	0.18548	113.4301	RUSSETT - SPRINGDALE 138KV CKT 1
FDNS	00NR	0	16WP	G15_084	FROM->TO	G14-057T 345.00 - SUNNYSIDE 345KV CKT 1	717	789	0.18594	113.4267	GEN345671 2-1RUSH G2 18.000
FDNS	00NR	0	16WP	G15_084	FROM->TO	G14-057T 345.00 - SUNNYSIDE 345KV CKT 1	717	789	0.18594	113.4248	GEN345670 1-1RUSH G1 18.000
FDNS	00NR	0	20WP	G15_084	FROM->TO	G14-057T 345.00 - SUNNYSIDE 345KV CKT 1	717	789	0.18859	113.4227	COMANCHE - EMPIRE 138KV CKT 1
FDNS	00NR	0	20WP	G15_084	FROM->TO	G14-057T 345.00 - SUNNYSIDE 345KV CKT 1	717	789	0.18808	113.4172	LAYFLD8 500.00 - MOUNT OLIVE 500KV CKT 1
FDNS	00NR	0	20WP	G15_084	FROM->TO	G14-057T 345.00 - SUNNYSIDE 345KV CKT 1	717	789	0.18808	113.4172	LAYFLD8 500.00 - MOUNT OLIVE 500KV CKT 1
FDNS	00NR	0	16WP	G15_084	FROM->TO	G14-057T 345.00 - SUNNYSIDE 345KV CKT 1	717	789	0.18594	113.4132	GEN526331 1-JONES GEN #1 22 KV
FDNS	00NR	0	16WP	G15_084	FROM->TO	G14-057T 345.00 - SUNNYSIDE 345KV CKT 1	717	789	0.18594	113.4131	GEN526332 1-JONES GEN #2 21 KV
FDNS	00NR	0	16WP	G15_084	FROM->TO	G14-057T 345.00 - SUNNYSIDE 345KV CKT 1	717	789	0.18594	113.4028	GEN560105 1-G08-22 0.6900
FDNS	00NR	0	16WP	G15_084	FROM->TO	G14-057T 345.00 - SUNNYSIDE 345KV CKT 1	717	789	0.18594	113.3993	GEN562550 1-G14_040_3 0.6900
FDNS	00NR	0	16WP	G15_084	FROM->TO	G14-057T 345.00 - SUNNYSIDE 345KV CKT 1	717	789	0.18557	113.3982	ROCKY POINT - SUNNYSIDE 138KV CKT 1
FDNS	00NR	0	20WP	G15_084	FROM->TO	G14-057T 345.00 - SUNNYSIDE 345KV CKT 1	717	789	0.18744	113.3982	GEN336251 1-NINEMILE POINT UNIT#4
FDNS	00NR	0	20WP	G15_084	FROM->TO	G14-057T 345.00 - SUNNYSIDE 345KV CKT 1	717	789	0.18832	113.393	G1524G1525 345.00 - THISTLE7 345.00 345KV CKT 1
FDNS	00NR	0	20WP	G15_084	FROM->TO	G14-057T 345.00 - SUNNYSIDE 345KV CKT 1	717	789	0.18832	113.393	G1524G1525 345.00 - THISTLE7 345.00 345KV CKT 2
FDNS	00NR	0	20WP	G15_084	FROM->TO	G14-057T 345.00 - SUNNYSIDE 345KV CKT 1	717	789	0.19096	113.3929	FINNEY SWITCHING STATION - HOLCOMB 345KV CKT 1
FDNS	00NR	0	20WP	G15_084	FROM->TO	G14-057T 345.00 - SUNNYSIDE 345KV CKT 1	717	789	0.19096	113.3929	FINNEY SWITCHING STATION - HOLCOMB 345KV CKT 1
FDNS	00NR	0	20WP	G15_084	FROM->TO	G14-057T 345.00 - SUNNYSIDE 345KV CKT 1	717	789	0.18744	113.3927	GEN334071 1-LEWIS CREEK 2
FDNS	00NR	0	16WP	G15_084	FROM->TO	G14-057T 345.00 - SUNNYSIDE 345KV CKT 1	717	789	0.18541	113.3879	RUSSETT - RUSSETT 138KV CKT 1
FDNS	00NR	0	20WP	G15_084	FROM->TO	G14-057T 345.00 - SUNNYSIDE 345KV CKT 1	717	789	0.18744	113.3843	GEN334070 1-LEWIS CREEK 1
FDNS	00NR	0	16WP	G15_084	FROM->TO	G14-057T 345.00 - SUNNYSIDE 345KV CKT 1	717	789	0.18594	113.3775	4SIOUX 1 138.00 138/18.0KV TRANSFORMER CKT 1
FDNS	00NR	0	16WP	G15_084	FROM->TO	G14-057T 345.00 - SUNNYSIDE 345KV CKT 1	717	789	0.187	113.3694	P12:138:WFEC:MSL07
FDNS	00NR	0	16WP	G15_084	FROM->TO	G14-057T 345.00 - SUNNYSIDE 345KV CKT 1	717	789	0.187	113.3694	P12:138:WFEC-AEPW:HUGOPP4:ATOKA--4
FDNS	00NR	0	20WP	G15_084	FROM->TO	G14-057T 345.00 - SUNNYSIDE 345KV CKT 1	717	789	0.18744	113.3642	P12:161:AEPW-SWPA:BEAVER5:EROGERS5
FDNS	00NR	0	20WP	G15_084	FROM->TO	G14-057T 345.00 - SUNNYSIDE 345KV CKT 1	717	789	0.18744	113.3603	GEN509392 G2-ARSENAL HILL GENS #3 (STALL)
FDNS	00NR	0	20WP	G15_084	FROM->TO	G14-057T 345.00 - SUNNYSIDE 345KV CKT 1	717	789	0.18744	113.3602	GEN509391 G1-ARSENAL HILL GENS #2 (STALL)
FDNS	00NR	0	16WP	G15_084	FROM->TO	G14-057T 345.00 - SUNNYSIDE 345KV CKT 1	717	789	0.18594	113.3591	GEN511962 2-RKYRDGW2-1 0.7000
FDNS	00NR	0	20WP	G15_084	FROM->TO	G14-057T 345.00 - SUNNYSIDE 345KV CKT 1	717	789	0.18744	113.3581	GEN509393 S1-ARSENAL HILL GENS #4 (STALL)
FDNS	00NR	0	16WP	G15_084	FROM->TO	G14-057T 345.00 - SUNNYSIDE 345KV CKT 1	717	789	0.18594	113.3577	GEN521112 1-ORME3 13.800
FDNS	00NR	0	16WP	G15_084	FROM->TO	G14-057T 345.00 - SUNNYSIDE 345KV CKT 1	717	789	0.18594	113.3553	CLAY BOSWELL 230/20.9KV TRANSFORMER CKT 1
FDNS	00NR	0	16WP	G15_084	FROM->TO	G14-057T 345.00 - SUNNYSIDE 345KV CKT 1	717	789	0.18594	113.3532	GEN527882 1-CUNNINGHAM GEN #2 20 KV
FDNS	00NR	0	20WP	G15_084	FROM->TO	G14-057T 345.00 - SUNNYSIDE 345KV CKT 1	717	789	0.18744	113.3465	GEN334433 1-SABINE UNIT 3
FDNS	00NR	0	20WP	G15_084	FROM->TO	G14-057T 345.00 - SUNNYSIDE 345KV CKT 1	717	789	0.19107	113.3428	OIL CENTER - STRATFORD 138KV CKT 1
FDNS	00NR	0	16WP	G15_084	FROM->TO	G14-057T 345.00 - SUNNYSIDE 345KV CKT 1	717	789	0.18594	113.3369	GEN562892 1-G15048_3 0.6900
FDNS	00NR	0	20WP	G15_084	FROM->TO	G14-057T 345.00 - SUNNYSIDE 345KV CKT 1	717	789	0.18744	113.3339	GEN337653 1-WHITE BLUFF UNIT #2
FDNS	00NR	0	16WP	G15_084	FROM->TO	G14-057T 345.00 - SUNNYSIDE 345KV CKT 1	717	789	0.18529	113.3312	ARDMORE WEST - CARTER 138KV CKT 1
FDNS	00NR	0	16WP	G15_084	FROM->TO	G14-057T 345.00 - SUNNYSIDE 345KV CKT 1	717	789	0.18594	113.3247	GEN562512 1-G14_020_3 0.6900
FDNS	00NR	0	20WP	G15_084	FROM->TO	G14-057T 345.00 - SUNNYSIDE 345KV CKT 1	717	789	0.18744	113.323	GEN336831 1-BAXTER WILSON SES
FDNS	00NR	0	16WP	G15_084	FROM->TO	G14-057T 345.00 - SUNNYSIDE 345KV CKT 1	717	789	0.18594	113.3179	GEN672321 1-SHAND GENERATOR 1
FDNS	00NR	0	16WP	G15_084	FROM->TO	G14-057T 345.00 - SUNNYSIDE 345KV CKT 1	717	789	0.18594	113.3158	GEN563192 1-G15084_3 0.5500
FDNS	00NR	0	20WP	G15_084	FROM->TO	G14-057T 345.00 - SUNNYSIDE 345KV CKT 1	717	789	0.19216	113.3115	P12:138:AEPW:S.W.S.-4:L.E.S.-4
FDNS	00NR	0	16WP	G15_084	FROM->TO	G14-057T 345.00 - SUNNYSIDE 345KV CKT 1	717	789	0.18594	113.3067	GEN511853 1-COMANCHE #3
FDNS	00NR	0	20WP	G15_084	FROM->TO	G14-057T 345.00 - SUNNYSIDE 345KV CKT 1	717	789	0.18744	113.3019	P12:161:AEPW:DYESS5:ELMSPRNG:TONTITN5
FDNS	00NR	0	20WP	G15_084	FROM->TO	G14-057T 345.00 - SUNNYSIDE 345KV CKT 1	717	789	0.18778	113.2967	DUNCAN (DUNCAN) 138/69/13.8KV TRANSFORMER CKT 1
FDNS	00NR	0	20WP	G15_084	FROM->TO	G14-057T 345.00 - SUNNYSIDE 345KV CKT 1	717	789	0.18778	113.2967	DUNCAN (DUNCAN) 138/69/13.8KV TRANSFORMER CKT 1
FDNS	00NR	0	16WP	G15_084	FROM->TO	G14-057T 345.00 - SUNNYSIDE 345KV CKT 1	717	789	0.18594	113.2937	GEN672310 1-POPLAR RIVER GENERATOR 1
FDNS	00NR	0	16WP	G15_084	FROM->TO	G14-057T 345.00 - SUNNYSIDE 345KV CKT 1	717	789	0.18594	113.2937	GEN672311 2-POPLAR RIVER GENERATOR 2
FDNS	00NR	0	16WP	G15_084	FROM->TO	G14-057T 345.00 - SUNNYSIDE 345KV CKT 1	717	789	0.18617	113.2933	P12:138:WFEC:MSL16
FDNS	00NR	0	16WP	G15_084	FROM->TO	G14-057T 345.00 - SUNNYSIDE 345KV CKT 1	717	789	0.18567	113.2886	P12:138:WFEC-AEPW:GOLDENSW4:CRAIGJT4
FDNS	00NR	0	16WP	G15_084	FROM->TO	G14-057T 345.00 - SUNNYSIDE 345KV CKT 1	717	789	0.18594	113.2851	GEN672306 6-BOUNDARY DAM GENERATOR 6
FDNS	00NR	0	16WP	G15_084	FROM->TO	G14-057T 345.00 - SUNNYSIDE 345KV CKT 1	717	789	0.18541	113.2851	SUNNYSIDE (SUNNYSD5) 345/138/13.8KV TRANSFORMER CKT 1
FDNS	00NR	0	20WP	G15_084	FROM->TO	G14-057T 345.00 - SUNNYSIDE 345KV CKT 1	717	789	0.18744	113.2821	GEN337911 1-ARKANSAS NUCLEAR ONE UNIT #2
FDNS	00NR	0	20WP	G15_084	FROM->TO	G14-057T 345.00 - SUNNYSIDE 345KV CKT 1	717	789	0.18744	113.2788	GEN515040 1-SEMINOLE 1G
FDNS	00NR	0	20WP	G15_084	FROM->TO	G14-057T 345.00 - SUNNYSIDE 345KV CKT 1	717	789	0.19388	113.2722	G14_038T 345.00 - Hitchland Interchange 345KV CKT 1
FDNS	00NR	0	20WP	G15_084	FROM->TO	G14-057T 345.00 - SUNNYSIDE 345KV CKT 1	717	789	0.18744	113.2716	GEN334030 1-FRONTIER UNIT 1
FDNS	00NR	0	16WP	G15_084	FROM->TO	G14-057T 345.00 - SUNNYSIDE 345KV CKT 1	717	789	0.18594	113.271	GEN344895 2-1LAB G2 20.000
FDNS	00NR	0	20WP	G15_084	FROM->TO	G14-057T 345.00 - SUNNYSIDE 345KV CKT 1	717	789	0.18744	113.2693	GEN334031 1-FRONTIER UNIT 2
FDNS	00NR	0	16WP	G15_084	FROM->TO	G14-057T 345.00 - SUNNYSIDE 345KV CKT 1	717	789	0.18594	113.2581	GEN523461 1-BLACKHAWK GEN #1
FDNS	00NR	0	16WP	G15_084	FROM->TO	G14-057T 345.00 - SUNNYSIDE 345KV CKT 1	717	789	0.18594	113.258	GEN523462 1-BLACKHAWK GEN #2
FDNS	00NR	0	20WP	G15_084	FROM->TO	G14-057T 345.00 - SUNNYSIDE 345KV CKT 1	717	789	0.19046	113.2548	TUTTLE - TUTTLE CONOCO TAP 138KV CKT 1
FDNS	00NR	0	16WP	G15_084	FROM->TO	G14-057T 345.00 - SUNNYSIDE 345KV CKT 1	717	789	0.18594	113.2537	GEN511852 1-COMANCHE #2
FDNS	00NR	0	20WP	G15_084	FROM->TO	G14-057T 345.00 - SUNNYSIDE 345KV CKT 1	717	789	0.18743	113.2501	P12:138:AEPW:CATOOSA4:T.S.E.-4
FDNS	00NR	0	20WP	G15_084	FROM->TO	G14-057T 345.00 - SUNNYSIDE 345KV CKT 1	717	789	0.19119	113.2433	BLANCHARD - MAUD 138KV CKT 1
FDNS	00NR	0	16WP	G15_084	FROM->TO	G14-057T 345.00 - SUNNYSIDE 345KV CKT 1	717	789	0.18594	113.2389	GEN344896 3-1LAB G3 20.000
FDNS	00NR	0	16WP	G15_084	FROM->TO	G14-057T 345.00 - SUNNYSIDE 345KV CKT 1	717	789	0.18594	113.2375	GEN344894 1-1LAB G1 20.000
FDNS	00NR	0	16WP	G15_084	FROM->TO	G14-057T 345.00 - SUNNYSIDE 345KV CKT 1	717	789	0.18594	113.2361	GEN344897 4-1LAB G4 20.000
FDNS	00NR	0	20WP	G15_084	FROM->TO	G14-057T 345.00 - SUNNYSIDE 345KV CKT 1	717	789	0.18769	113.2345	FULTON 115 - HOPE 115KV CKT 1

SOLUTION	GROUP	SCENARIO	SEASON	SOURCE	DIRECTION	MONITORED ELEMENT	RATEA (MVA)	RATEB(MVA)	TDF	TC%LOADING (% MVA)	CONTINGENCY
FDNS	00NR	0	20WP	G15_084	FROM->TO	G14-057T 345.00 - SUNNYSIDE 345KV CKT 1	717	789	0.18769	113.2345	FULTON 115 - HOPE 115KV CKT 1
FDNS	00NR	0	20WP	G15_084	FROM->TO	G14-057T 345.00 - SUNNYSIDE 345KV CKT 1	717	789	0.19099	113.2314	P12:138:AEPW-OGE:WTH_JCT4:JENSEN4
FDNS	00NR	0	20WP	G15_084	FROM->TO	G14-057T 345.00 - SUNNYSIDE 345KV CKT 1	717	789	0.18744	113.2306	GEN337652 1-WHITE BLUFF UNIT #1
FDNS	00NR	0	20WP	G15_084	FROM->TO	G14-057T 345.00 - SUNNYSIDE 345KV CKT 1	717	789	0.18744	113.2297	GEN501811 1-RODEMACHER UNIT 1
FDNS	00NR	0	20WP	G15_084	FROM->TO	G14-057T 345.00 - SUNNYSIDE 345KV CKT 1	717	789	0.18881	113.2296	P12:138:AEPW:CORNVIL4:DUNCAN-4
FDNS	00NR	0	20WP	G15_084	FROM->TO	G14-057T 345.00 - SUNNYSIDE 345KV CKT 1	717	789	0.18744	113.2154	GEN506752 1-LEBROCK GAS 1
FDNS	00NR	0	16WP	G15_084	FROM->TO	G14-057T 345.00 - SUNNYSIDE 345KV CKT 1	717	789	0.18529	113.2152	ARDMORE WEST - UNIROYAL 138KV CKT 1
FDNS	00NR	0	20WP	G15_084	FROM->TO	G14-057T 345.00 - SUNNYSIDE 345KV CKT 1	717	789	0.18744	113.2151	GEN506753 1-LEBROCK GAS 2
FDNS	00NR	0	20WP	G15_084	FROM->TO	G14-057T 345.00 - SUNNYSIDE 345KV CKT 1	717	789	0.18744	113.212	GEN300015 1-1SGPDEL 18.000
FDNS	00NR	0	20WP	G15_084	FROM->TO	G14-057T 345.00 - SUNNYSIDE 345KV CKT 1	717	789	0.18744	113.2097	GEN515226 1-MUSKOGEE 6G
FDNS	00NR	0	20WP	G15_084	FROM->TO	G14-057T 345.00 - SUNNYSIDE 345KV CKT 1	717	789	0.18744	113.2086	GEN300003 1-THOMAS HILL UNIT 3
FDNS	00NR	0	16WP	G15_084	FROM->TO	G14-057T 345.00 - SUNNYSIDE 345KV CKT 1	717	789	0.18582	113.2023	P12:138:AEPW-SWPA:LONEOAK4:TUPELO4
FDNS	00NR	0	16WP	G15_084	FROM->TO	G14-057T 345.00 - SUNNYSIDE 345KV CKT 1	717	789	0.18582	113.2023	P12:138:WFEC:MSL06
FDNS	00NR	0	16WP	G15_084	FROM->TO	G14-057T 345.00 - SUNNYSIDE 345KV CKT 1	717	789	0.18537	113.2022	P12:138:OKGE:3TERM40
FDNS	00NR	0	20WP	G15_084	FROM->TO	G14-057T 345.00 - SUNNYSIDE 345KV CKT 1	717	789	0.18744	113.197	GEN336191 1-LITTLE GYPSY UNIT#3
FDNS	00NR	0	16WP	G15_084	FROM->TO	G14-057T 345.00 - SUNNYSIDE 345KV CKT 1	717	789	0.18594	113.1818	GEN563162 1-G15081_3 0.6900
FDNSLock	00NR	0	16WP	G15_084	FROM->TO	G14-057T 345.00 - SUNNYSIDE 345KV CKT 1	717	789	0.18594	113.1814	GEN681542 6-JP MADGETT
FDNS	00NR	0	16WP	G15_084	FROM->TO	G14-057T 345.00 - SUNNYSIDE 345KV CKT 1	717	789	0.18594	113.1784	GEN521110 1-ORME1 13.800
FDNS	00NR	0	16WP	G15_084	FROM->TO	G14-057T 345.00 - SUNNYSIDE 345KV CKT 1	717	789	0.18594	113.1784	GEN521111 1-ORME2 13.800
FDNS	00NR	0	20WP	G15_084	FROM->TO	G14-057T 345.00 - SUNNYSIDE 345KV CKT 1	717	789	0.18863	113.1781	P12:138:AEPW:CORNVIL4:S.W.S.-4
FDNS	00NR	0	20WP	G15_084	FROM->TO	G14-057T 345.00 - SUNNYSIDE 345KV CKT 1	717	789	0.18862	113.1775	6LAYFLD 230.00 - CARROLL 230KV CKT 1
FDNS	00NR	0	16WP	G15_084	FROM->TO	G14-057T 345.00 - SUNNYSIDE 345KV CKT 1	717	789	0.18594	113.1714	GEN562699 1-G15_018_3 0.6900
FDNS	00NR	0	16WP	G15_084	FROM->TO	G14-057T 345.00 - SUNNYSIDE 345KV CKT 1	717	789	0.16785	113.1706	G15085_T 138.00 - RUSSELL 138KV CKT 1
FDNS	00NR	0	16WP	G15_084	FROM->TO	G14-057T 345.00 - SUNNYSIDE 345KV CKT 1	717	789	0.18591	113.1705	CARTRCO4 138.00 - RATLIFF 138KV CKT 1
FDNS	00NR	0	20WP	G15_084	FROM->TO	G14-057T 345.00 - SUNNYSIDE 345KV CKT 1	717	789	0.19107	113.1702	LATTA JCT - OIL CENTER 138KV CKT 1
FDNS	00NR	0	20WP	G15_084	FROM->TO	G14-057T 345.00 - SUNNYSIDE 345KV CKT 1	717	789	0.18744	113.1681	GEN335614 1-WILLOW GLENN UNIT#4
FDNS	00NR	0	20WP	G15_084	FROM->TO	G14-057T 345.00 - SUNNYSIDE 345KV CKT 1	717	789	0.19046	113.162	CIMARRON - TUTTLE CONOCO TAP 138KV CKT 1
FDNS	00NR	0	16WP	G15_084	FROM->TO	G14-057T 345.00 - SUNNYSIDE 345KV CKT 1	717	789	0.18594	113.159	GEN563292 1-G15095_3 0.6900
FDNS	00NR	0	20WP	G15_084	FROM->TO	G14-057T 345.00 - SUNNYSIDE 345KV CKT 1	717	789	0.18759	113.1529	8DANIEL8 500.00 - MCKNIGHT 500KV CKT 1
FDNS	00NR	0	20WP	G15_084	FROM->TO	G14-057T 345.00 - SUNNYSIDE 345KV CKT 1	717	789	0.19178	113.1398	BAILEY4 138.00 - SUNSHINE CANYON 138KV CKT 1
FDNS	00NR	0	20WP	G15_084	FROM->TO	G14-057T 345.00 - SUNNYSIDE 345KV CKT 1	717	789	0.18781	113.1297	G15095_T 138.00 - ROSE_VALLEY 138.00 138KV CKT 1
FDNS	00NR	0	16WP	G15_084	FROM->TO	G14-057T 345.00 - SUNNYSIDE 345KV CKT 1	717	789	0.18771	113.1295	G15063_T 345.00 - MATHWSN7 345.00 345KV CKT 1
FDNS	00NR	0	20WP	G15_084	FROM->TO	G14-057T 345.00 - SUNNYSIDE 345KV CKT 1	717	789	0.18744	113.1261	GEN337910 1-ARKANSAS NUCLEAR ONE UNIT #1
FDNS	00NR	0	20WP	G15_084	FROM->TO	G14-057T 345.00 - SUNNYSIDE 345KV CKT 1	717	789	0.18744	113.1241	P12:161:AEPW:EROGERS5:ECNTRTN5
FDNS	00NR	0	20WP	G15_084	FROM->TO	G14-057T 345.00 - SUNNYSIDE 345KV CKT 1	717	789	0.18828	113.1228	BUCKNER7 345.00 - SPEARVILLE 345KV CKT 1
FDNS	00NR	0	20WP	G15_084	FROM->TO	G14-057T 345.00 - SUNNYSIDE 345KV CKT 1	717	789	0.18828	113.1228	BUCKNER7 345.00 - SPEARVILLE 345KV CKT 1
FDNS	00NR	0	20WP	G15_084	FROM->TO	G14-057T 345.00 - SUNNYSIDE 345KV CKT 1	717	789	0.18744	113.122	GEN303007 1-1BC2 U2
FDNS	00NR	0	20WP	G15_084	FROM->TO	G14-057T 345.00 - SUNNYSIDE 345KV CKT 1	717	789	0.19096	113.1199	FINNEY SWITCHING STATION - WALKTAP7 345.00 345KV CKT 1
FDNS	00NR	0	20WP	G15_084	FROM->TO	G14-057T 345.00 - SUNNYSIDE 345KV CKT 1	717	789	0.19096	113.1199	FINNEY SWITCHING STATION - WALKTAP7 345.00 345KV CKT 1
FDNS	00NR	0	16WP	G15_084	FROM->TO	G14-057T 345.00 - SUNNYSIDE 345KV CKT 1	717	789	0.16064	113.1195	CACHE - SNYDER 138KV CKT 1
FDNS	00NR	0	20WP	G15_084	FROM->TO	G14-057T 345.00 - SUNNYSIDE 345KV CKT 1	717	789	0.18744	113.1171	GEN336464 1-MICHOUD UNIT #3
FDNS	00NR	0	20WP	G15_084	FROM->TO	G14-057T 345.00 - SUNNYSIDE 345KV CKT 1	717	789	0.18744	113.116	GEN303006 1-1BC2 U1
FDNS	00NR	0	20WP	G15_084	FROM->TO	G14-057T 345.00 - SUNNYSIDE 345KV CKT 1	717	789	0.18952	113.1158	P12:138:AEPW:WTHWF4:CLINTJC4
FDNS	00NR	0	20WP	G15_084	FROM->TO	G14-057T 345.00 - SUNNYSIDE 345KV CKT 1	717	789	0.18744	113.1142	WHITE BLUFF 500/26.0KV TRANSFORMER CKT 1
FDNS	00NR	0	20WP	G15_084	FROM->TO	G14-057T 345.00 - SUNNYSIDE 345KV CKT 1	717	789	0.18778	113.1123	P12:69:WFEC-AEPW:COMANCH2:DUNCAN-2
FDNS	00NR	0	20WP	G15_084	FROM->TO	G14-057T 345.00 - SUNNYSIDE 345KV CKT 1	717	789	0.18744	113.1123	GEN515223 1-MUSKOGEE 4G
FDNS	00NR	0	20WP	G15_084	FROM->TO	G14-057T 345.00 - SUNNYSIDE 345KV CKT 1	717	789	0.18744	113.1123	GEN515225 1-MUSKOGEE 5G
FDNS	00NR	0	20WP	G15_084	FROM->TO	G14-057T 345.00 - SUNNYSIDE 345KV CKT 1	717	789	0.18744	113.1096	GEN562783 1-G15036_4 0.6900
FDNS	00NR	0	20WP	G15_084	FROM->TO	G14-057T 345.00 - SUNNYSIDE 345KV CKT 1	717	789	0.18744	113.1096	GEN562784 1-G15036_5 0.6900
FDNS	00NR	0	20WP	G15_084	FROM->TO	G14-057T 345.00 - SUNNYSIDE 345KV CKT 1	717	789	0.18764	113.1077	G15088_T 345.00 - MOORE 345KV CKT 1
FDNS	00NR	0	20WP	G15_084	FROM->TO	G14-057T 345.00 - SUNNYSIDE 345KV CKT 1	717	789	0.18566	113.1046	P12:69:AEPW-OMPA:COMANC-2:OMWALTR2
FDNS	00NR	0	20WP	G15_084	FROM->TO	G14-057T 345.00 - SUNNYSIDE 345KV CKT 1	717	789	0.18772	113.0985	BISMARK - HOT SPRINGS WEST BUS 115KV CKT 1
FDNS	00NR	0	20WP	G15_084	FROM->TO	G14-057T 345.00 - SUNNYSIDE 345KV CKT 1	717	789	0.18797	113.0959	CIMARRON - CZECH HALL 138KV CKT 1
FDNS	00NR	0	20WP	G15_084	FROM->TO	G14-057T 345.00 - SUNNYSIDE 345KV CKT 1	717	789	0.18769	113.0936	G15074_T 345.00 - HOYT 345KV CKT 1
FDNS	00NR	0	20WP	G15_084	FROM->TO	G14-057T 345.00 - SUNNYSIDE 345KV CKT 1	717	789	0.18777	113.0914	MC NIEL 500/115KV TRANSFORMER CKT 1
FDNS	00NR	0	20WP	G15_084	FROM->TO	G14-057T 345.00 - SUNNYSIDE 345KV CKT 1	717	789	0.18744	113.0857	GEN300010 1-ST FRANCIS UNIT 1
FDNS	00NR	0	20WP	G15_084	FROM->TO	G14-057T 345.00 - SUNNYSIDE 345KV CKT 1	717	789	0.18778	113.0853	DUNCAN - TOSCO 69KV CKT 1
FDNS	00NR	0	20WP	G15_084	FROM->TO	G14-057T 345.00 - SUNNYSIDE 345KV CKT 1	717	789	0.18952	113.0823	P12:138:AEPW:WTHWF4:WTH_SE4
FDNS	00NR	0	16WP	G15_084	FROM->TO	G14-057T 345.00 - SUNNYSIDE 345KV CKT 1	717	789	0.18594	113.0731	GEN563122 1-G15077_3 0.3850
FDNS	00NR	0	16WP	G15_084	FROM->TO	G14-057T 345.00 - SUNNYSIDE 345KV CKT 1	717	789	0.18594	113.0722	GEN661015 1-COYOTE
FDNS	00NR	0	20WP	G15_084	FROM->TO	G14-057T 345.00 - SUNNYSIDE 345KV CKT 1	717	789	0.18778	113.0703	HOT SPRINGS EHV - MAGNET COVE 500KV CKT 1
FDNS	00NR	0	20WP	G15_084	FROM->TO	G14-057T 345.00 - SUNNYSIDE 345KV CKT 1	717	789	0.18785	113.0696	CLEO CORNER - CLEOPLT4 138.00 138KV CKT 1
FDNS	00NR	0	20WP	G15_084	FROM->TO	G14-057T 345.00 - SUNNYSIDE 345KV CKT 1	717	789	0.18744	113.0607	GEN337041 1-GERALD ANDRUS
FDNS	00NR	0	20WP	G15_084	FROM->TO	G14-057T 345.00 - SUNNYSIDE 345KV CKT 1	717	789	0.18744	113.059	GEN505432 1-SIKESTON
FDNS	00NR	0	16WP	G15_084	FROM->TO	G14-057T 345.00 - SUNNYSIDE 345KV CKT 1	717	789	0.18594	113.0554	GEN562861 1-G15045_2 0.4800
FDNS	00NR	0	20WP	G15_084	FROM->TO	G14-057T 345.00 - SUNNYSIDE 345KV CKT 1	717	789	0.18744	113.0543	GEN303008 1-1BC2 U3
FDNS	00NR	0	20WP	G15_084	FROM->TO	G14-057T 345.00 - SUNNYSIDE 345KV CKT 1	717	789	0.18662	113.0517	CHISHOLM6 230.00 - ELK CITY 230KV 230KV CKT 1
FDNS	00NR	0	20WP	G15_084	FROM->TO	G14-057T 345.00 - SUNNYSIDE 345KV CKT 1	717	789	0.18781	113.0491	NOEL_SW 138.00 - ROSE_VALLEY 138.00 138KV CKT 1
FDNS	00NR	0	20WP	G15_084	FROM->TO	G14-057T 345.00 - SUNNYSIDE 345KV CKT 1	717	789	0.18785	113.0487	CLEOPLT4 138.00 - MEN TAP 138KV CKT 1
FDNS	00NR	0	20WP	G15_084	FROM->TO	G14-057T 345.00 - SUNNYSIDE 345KV CKT 1	717	789	0.18662	113.0487	ELK CITY 230KV (ELKCTY-6) 230/138/13.8KV TRANSFORMER CKT 1
FDNS	00NR	0	20WP	G15_084	FROM->TO	G14-057T 345.00 - SUNNYSIDE 345KV CKT 1	717	789	0.18662	113.0487	ELK CITY 230KV (ELKCTY-6) 230/138/13.8KV TRANSFORMER CKT 1
FDNS	00NR	0	20WP	G15_084	FROM->TO	G14-057T 345.00 - SUNNYSIDE 345KV CKT 1	717	789	0.18772	113.047	ALPINE AECC - BISMARK 115KV CKT 1
FDNS	00NR	0	16WP	G15_084	FROM->TO	G14-057T 345.00 - SUNNYSIDE 345KV CKT 1	717	789	0.18594	113.0454	GEN520811 1-ANADRK4
FDNS	00NR	0	20WP	G15_084	FROM->TO	G14-057T 345.00 - SUNNYSIDE 345KV CKT 1	717	789	0.18782	113.0419	CIMARRON - SARA 138KV CKT 1
FDNS	00NR	0	20WP	G15_084	FROM->TO	G14-057T 345.00 - SUNNYSIDE 345KV CKT 1	717	789	0.18785	113.0367	IMO TAP - MEN TAP 138KV CKT 1
FDNS	00NR	0	20WP	G15_084	FROM->TO	G14-057T 345.00 - SUNNYSIDE 345KV CKT 1	717	789	0.18744	113.0282	GEN300011 1-ST FRANCIS UNIT 2
FDNS	00NR	0	20WP	G15_084	FROM->TO	G14-057T 345.00 - SUNNYSIDE 345KV CKT 1	717	789	0.18744	113.0251	GEN336170 1-GULF OXY U4
FDNS	00NR	0	20WP	G15_084	FROM->TO	G14-057T 345.00 - SUNNYSIDE 345KV CKT 1	717	789	0.18734	113.0227	P12:138:AEPW:N.E.S.-4:CATOOSA4
FDNSLock	00NR	0	16WP	G15_084	FROM->TO	G14-057T 345.00 - SUNNYSIDE 345KV CKT 1	717	789	0.18594	113.0211	GEN532751 1-WOLF CREEK GENERATING STATION UNIT 1

SOLUTION	GROUP	SCENARIO	SEASON	SOURCE	DIRECTION	MONITORED ELEMENT	RATEA (MVA)	RATEB(MVA)	TDF	TC%LOADING (% MVA)	CONTINGENCY
FDNS	00NR	0	20WP	G15_084	FROM->TO	G14-057T 345.00 - SUNNYSIDE 345KV CKT 1	717	789	0.18739	113.0209	SEMINOLE - VANOSTP4 138.00 138KV CKT 1
FDNS	00NR	0	20WP	G15_084	FROM->TO	G14-057T 345.00 - SUNNYSIDE 345KV CKT 1	717	789	0.18797	113.0172	CZECH HALL - XEROX 138KV CKT 1
FDNS	00NR	0	20WP	G15_084	FROM->TO	G14-057T 345.00 - SUNNYSIDE 345KV CKT 1	717	789	0.18778	113.0167	COMANCHE TAP - TOSCO 69KV CKT 1
FDNS	00NR	0	20WP	G15_084	FROM->TO	G14-057T 345.00 - SUNNYSIDE 345KV CKT 1	717	789	0.18744	113.0167	NELSON 230/20.0KV TRANSFORMER CKT 1
FDNS	00NR	0	16WP	G15_084	FROM->TO	G14-057T 345.00 - SUNNYSIDE 345KV CKT 1	717	789	0.18628	113.0164	P12:138:WFEC:MSL15
FDNS	00NR	0	20WP	G15_084	FROM->TO	G14-057T 345.00 - SUNNYSIDE 345KV CKT 1	717	789	0.18797	113.0131	MORGAN - XEROX 138KV CKT 1
FDNS	00NR	0	20WP	G15_084	FROM->TO	G14-057T 345.00 - SUNNYSIDE 345KV CKT 1	717	789	0.18744	113.0062	GEN336801 1-BAXTER WILSON UNIT #1
FDNS	00NR	0	20WP	G15_084	FROM->TO	G14-057T 345.00 - SUNNYSIDE 345KV CKT 1	717	789	0.18772	112.9982	ALPINE AECC - AMITY SS 115KV CKT 1
FDNS	00NR	0	20WP	G15_084	FROM->TO	G14-057T 345.00 - SUNNYSIDE 345KV CKT 1	717	789	0.18716	112.9962	ARBWIND4 138.00 - CARTER 138KV CKT 1
FDNS	00NR	0	16WP	G15_084	FROM->TO	G14-057T 345.00 - SUNNYSIDE 345KV CKT 1	717	789	0.18529	112.9937	SUNNYSIDE - UNIROYAL 138KV CKT 1
FDNS	00NR	0	20WP	G15_084	FROM->TO	G14-057T 345.00 - SUNNYSIDE 345KV CKT 1	717	789	0.18797	112.9905	MORGAN - MUSTANG 138KV CKT 1
FDNS	00NR	0	20WP	G15_084	FROM->TO	G14-057T 345.00 - SUNNYSIDE 345KV CKT 1	717	789	0.19098	112.9897	WEATHERFORD JCT. - WEATHERFORD SOUTHEAST 138KV CKT 1
FDNS	00NR	0	20WP	G15_084	FROM->TO	G14-057T 345.00 - SUNNYSIDE 345KV CKT 1	717	789	0.19098	112.9897	WEATHERFORD JCT. - WEATHERFORD SOUTHEAST 138KV CKT 1
FDNS	00NR	0	20WP	G15_084	FROM->TO	G14-057T 345.00 - SUNNYSIDE 345KV CKT 1	717	789	0.18744	112.9775	8CAJUN2 500/24.0KV TRANSFORMER CKT 1
FDNS	00NR	0	20WP	G15_084	FROM->TO	G14-057T 345.00 - SUNNYSIDE 345KV CKT 1	717	789	0.18744	112.9766	GEN501910 1-ACADIA UNIT ST1
FDNS	00NR	0	16WP	G15_084	FROM->TO	G14-057T 345.00 - SUNNYSIDE 345KV CKT 1	717	789	0.18594	112.9741	GEN562992 1-G15063_3 0.6900
FDNS	00NR	0	20WP	G15_084	FROM->TO	G14-057T 345.00 - SUNNYSIDE 345KV CKT 1	717	789	0.18893	112.9676	ANADARKO - SEQUOYAHJ4 138.00 138KV CKT 1
FDNS	00NR	0	20WP	G15_084	FROM->TO	G14-057T 345.00 - SUNNYSIDE 345KV CKT 1	717	789	0.18893	112.9661	CORN TAP - SEQUOYAHJ4 138.00 138KV CKT 1
FDNS	00NR	0	20WP	G15_084	FROM->TO	G14-057T 345.00 - SUNNYSIDE 345KV CKT 1	717	789	0.18778	112.9645	COMANCHE - COMANCHE TAP 69KV CKT 1
FDNS	00NR	0	20WP	G15_084	FROM->TO	G14-057T 345.00 - SUNNYSIDE 345KV CKT 1	717	789	0.19178	112.9615	BAILEY4 138.00 - WESTMOORE 138KV CKT 1
FDNS	00NR	0	16WP	G15_084	FROM->TO	G14-057T 345.00 - SUNNYSIDE 345KV CKT 1	717	789	0.18594	112.9554	GEN657748 1-YOUNG 2 GENERATOR
FDNS	00NR	0	16WP	G15_084	FROM->TO	G14-057T 345.00 - SUNNYSIDE 345KV CKT 1	717	789	0.18309	112.9501	GRAPEVINE INTERCHANGE - STATELINE INTERCHANGE 230KV CKT 1
FDNS	00NR	0	16WP	G15_084	FROM->TO	G14-057T 345.00 - SUNNYSIDE 345KV CKT 1	717	789	0.18309	112.9501	GRAPEVINE INTERCHANGE - STATELINE INTERCHANGE 230KV CKT 1
FDNS	00NR	0	20WP	G15_084	FROM->TO	G14-057T 345.00 - SUNNYSIDE 345KV CKT 1	717	789	0.1887	112.95	P12:138:OKGE-AEPW:JENSEN4:REDROCKRD4
FDNS	00NR	0	20WP	G15_084	FROM->TO	G14-057T 345.00 - SUNNYSIDE 345KV CKT 1	717	789	0.18924	112.94	WALTERS - WALTERS 69KV CKT 1
FDNS	00NR	0	20WP	G15_084	FROM->TO	G14-057T 345.00 - SUNNYSIDE 345KV CKT 1	717	789	0.19098	112.9379	P12:138:AEPW:REDROCKRD4:WTH_JCT4
FDNS	00NR	0	20WP	G15_084	FROM->TO	G14-057T 345.00 - SUNNYSIDE 345KV CKT 1	717	789	0.18744	112.9375	SABINE 230/24.0KV TRANSFORMER CKT 1
FDNS	00NR	0	20WP	G15_084	FROM->TO	G14-057T 345.00 - SUNNYSIDE 345KV CKT 1	717	789	0.18744	112.9335	GEN300016 1-1G1GPDEL 18.000
FDNS	00NR	0	20WP	G15_084	FROM->TO	G14-057T 345.00 - SUNNYSIDE 345KV CKT 1	717	789	0.18782	112.9306	SARA - STHLAKE4 138.00 138KV CKT 1
FDNS	00NR	0	16WP	G15_084	FROM->TO	G14-057T 345.00 - SUNNYSIDE 345KV CKT 1	717	789	0.19122	112.9294	CANEY CREEK - TEXOMA JCT 138KV CKT 1
FDNS	00NR	0	20WP	G15_084	FROM->TO	G14-057T 345.00 - SUNNYSIDE 345KV CKT 1	717	789	0.18744	112.9286	P12:138:AEPW:R.S.S.-4:S.HUD.-4
FDNS	00NR	0	20WP	G15_084	FROM->TO	G14-057T 345.00 - SUNNYSIDE 345KV CKT 1	717	789	0.18784	112.9232	ETTA (DUKE HOTSPRINGS) - MC NIEL 500KV CKT 1
FDNS	00NR	0	20WP	G15_084	FROM->TO	G14-057T 345.00 - SUNNYSIDE 345KV CKT 1	717	789	0.18744	112.9218	GEN336222 1-LITTLE GYPSY UNIT#2
FDNS	00NR	0	16WP	G15_084	FROM->TO	G14-057T 345.00 - SUNNYSIDE 345KV CKT 1	717	789	0.20186	112.9113	P12:138:AEPW:SHAM4WT:CHILD4WT
FDNS	00NR	0	20WP	G15_084	FROM->TO	G14-057T 345.00 - SUNNYSIDE 345KV CKT 1	717	789	0.18566	112.9105	LAWTON RELIFT TAP - OMPA-WALTERS 69KV CKT 1
FDNS	00NR	0	20WP	G15_084	FROM->TO	G14-057T 345.00 - SUNNYSIDE 345KV CKT 1	717	789	0.18782	112.9005	MCCLAIN - STHLAKE4 138.00 138KV CKT 1
FDNS	00NR	0	20WP	G15_084	FROM->TO	G14-057T 345.00 - SUNNYSIDE 345KV CKT 1	717	789	0.18744	112.897	P12:69:AEPW:NROGERS2:ECNTRTN2
FDNS	00NR	0	20WP	G15_084	FROM->TO	G14-057T 345.00 - SUNNYSIDE 345KV CKT 1	717	789	0.18817	112.8964	G13-010T 345.00 - POST ROCK 345KV CKT 1
FDNS	00NR	0	16WP	G15_084	FROM->TO	G14-057T 345.00 - SUNNYSIDE 345KV CKT 1	717	789	0.18594	112.8952	GEN562704 1-G15_020_3 0.3550
FDNS	00NR	0	20WP	G15_084	FROM->TO	G14-057T 345.00 - SUNNYSIDE 345KV CKT 1	717	789	0.19107	112.8932	LASALLE - LATTA JCT 138KV CKT 1
FDNS	00NR	0	20WP	G15_084	FROM->TO	G14-057T 345.00 - SUNNYSIDE 345KV CKT 1	717	789	0.18871	112.8928	NORGE ROAD - SOUTHWESTERN STATION 138KV CKT 1
FDNS	00NR	0	20WP	G15_084	FROM->TO	G14-057T 345.00 - SUNNYSIDE 345KV CKT 1	717	789	0.18871	112.8928	NORGE ROAD - SOUTHWESTERN STATION 138KV CKT 1
FDNS	00NR	0	16WP	G15_084	FROM->TO	G14-057T 345.00 - SUNNYSIDE 345KV CKT 1	717	789	0.18594	112.8914	GEN562952 1-G15057_3 0.6500
FDNS	00NR	0	20WP	G15_084	FROM->TO	G14-057T 345.00 - SUNNYSIDE 345KV CKT 1	717	789	0.18744	112.8872	GEN336152 1-WATERFORD UNIT#2
FDNS	00NR	0	20WP	G15_084	FROM->TO	G14-057T 345.00 - SUNNYSIDE 345KV CKT 1	717	789	0.18744	112.8868	P12:138:AEPW:BA_71ST4:T.S.E.-4
FDNS	00NR	0	20WP	G15_084	FROM->TO	G14-057T 345.00 - SUNNYSIDE 345KV CKT 1	717	789	0.18744	112.8864	GEN336151 1-WATERFORD UNIT#1
FDNS	00NR	0	20WP	G15_084	FROM->TO	G14-057T 345.00 - SUNNYSIDE 345KV CKT 1	717	789	0.18744	112.882	P12:138:AEPW:YARCH-S4:T.S.E.-4
FDNS	00NR	0	20WP	G15_084	FROM->TO	G14-057T 345.00 - SUNNYSIDE 345KV CKT 1	717	789	0.18796	112.8781	EMPORIA ENERGY CENTER - G14_001T 345.00 345KV CKT 1
FDNS	00NR	0	20WP	G15_084	FROM->TO	G14-057T 345.00 - SUNNYSIDE 345KV CKT 1	717	789	0.1877	112.8777	HOYT - STRANGER CREEK 345KV CKT 1
FDNS	00NR	0	20WP	G15_084	FROM->TO	G14-057T 345.00 - SUNNYSIDE 345KV CKT 1	717	789	0.18783	112.8772	P12:138:AEPW-OGE:SHIDLER4:OSAGE 4
FDNS	00NR	0	20WP	G15_084	FROM->TO	G14-057T 345.00 - SUNNYSIDE 345KV CKT 1	717	789	0.18744	112.875	GEN300017 1-1G2GPDEL 18.000
FDNS	00NR	0	20WP	G15_084	FROM->TO	G14-057T 345.00 - SUNNYSIDE 345KV CKT 1	717	789	0.18744	112.8749	FRONTIER 345/18.0KV TRANSFORMER CKT 1
FDNS	00NR	0	20WP	G15_084	FROM->TO	G14-057T 345.00 - SUNNYSIDE 345KV CKT 1	717	789	0.18744	112.8727	FRONTIER 345/18.0KV TRANSFORMER CKT 1
FDNS	00NR	0	20WP	G15_084	FROM->TO	G14-057T 345.00 - SUNNYSIDE 345KV CKT 1	717	789	0.18766	112.8685	P12:138:OKGE:3TERM2
FDNS	00NR	0	20WP	G15_084	FROM->TO	G14-057T 345.00 - SUNNYSIDE 345KV CKT 1	717	789	0.18944	112.8667	CLINTON JUNCTION - ELK CITY 138KV CKT 1
FDNS	00NR	0	20WP	G15_084	FROM->TO	G14-057T 345.00 - SUNNYSIDE 345KV CKT 1	717	789	0.18944	112.8667	CLINTON JUNCTION - ELK CITY 138KV CKT 1
FDNS	00NR	0	20WP	G15_084	FROM->TO	G14-057T 345.00 - SUNNYSIDE 345KV CKT 1	717	789	0.18769	112.8667	HOPE - MCNAB REC 115KV CKT 1
FDNS	00NR	0	20WP	G15_084	FROM->TO	G14-057T 345.00 - SUNNYSIDE 345KV CKT 1	717	789	0.18765	112.8653	MORISNT4 138.00 - STILLWATER 138KV CKT 1
FDNS	00NR	0	20WP	G15_084	FROM->TO	G14-057T 345.00 - SUNNYSIDE 345KV CKT 1	717	789	0.18769	112.856	P12:115:AEPW:TURK3:HOPE3
FDNS	00NR	0	20WP	G15_084	FROM->TO	G14-057T 345.00 - SUNNYSIDE 345KV CKT 1	717	789	0.1882	112.8552	BENTON - WICHITA 345KV CKT 1
FDNS	00NR	0	20WP	G15_084	FROM->TO	G14-057T 345.00 - SUNNYSIDE 345KV CKT 1	717	789	0.18769	112.853	G15074_T 345.00 - JEFFREY ENERGY CENTER 345KV CKT 1
FDNS	00NR	0	16WP	G15_084	FROM->TO	G14-057T 345.00 - SUNNYSIDE 345KV CKT 1	717	789	0.18594	112.8518	GEN563173 1-G15082_3 0.6900
FDNS	00NR	0	20WP	G15_084	FROM->TO	G14-057T 345.00 - SUNNYSIDE 345KV CKT 1	717	789	0.18817	112.8505	G13-010T 345.00 - SPEARVILLE 345KV CKT 1
FDNS	00NR	0	20WP	G15_084	FROM->TO	G14-057T 345.00 - SUNNYSIDE 345KV CKT 1	717	789	0.18779	112.8485	COUCH SES - MC NIEL 115KV CKT 1
FDNS	00NR	0	20WP	G15_084	FROM->TO	G14-057T 345.00 - SUNNYSIDE 345KV CKT 1	717	789	0.18952	112.8447	WEATHERFORD TAP - WEATHERFORD WIND FARM 138KV CKT 1
FDNS	00NR	0	20WP	G15_084	FROM->TO	G14-057T 345.00 - SUNNYSIDE 345KV CKT 1	717	789	0.18788	112.8444	BLACKBERRY - NEOSHO 345KV CKT 1
FDNS	00NR	0	20WP	G15_084	FROM->TO	G14-057T 345.00 - SUNNYSIDE 345KV CKT 1	717	789	0.18744	112.8441	LEWIS CREEK SWITCHYARD 138/22.0KV TRANSFORMER CKT 1
FDNS	00NR	0	20WP	G15_084	FROM->TO	G14-057T 345.00 - SUNNYSIDE 345KV CKT 1	717	789	0.19098	112.8435	HINTON - WEATHERFORD JCT. 138KV CKT 1
FDNS	00NR	0	20WP	G15_084	FROM->TO	G14-057T 345.00 - SUNNYSIDE 345KV CKT 1	717	789	0.18744	112.8396	LEWIS CREEK SWITCHYARD 138/22.0KV TRANSFORMER CKT 1
FDNS	00NR	0	16WP	G15_084	FROM->TO	G14-057T 345.00 - SUNNYSIDE 345KV CKT 1	717	789	0.19003	112.8375	GRAPEVINE INTERCHANGE - NICHOLS STATION 230KV CKT 1
FDNS	00NR	0	16WP	G15_084	FROM->TO	G14-057T 345.00 - SUNNYSIDE 345KV CKT 1	717	789	0.19003	112.8375	GRAPEVINE INTERCHANGE - NICHOLS STATION 230KV CKT 1
FDNS	00NR	0	20WP	G15_084	FROM->TO	G14-057T 345.00 - SUNNYSIDE 345KV CKT 1	717	789	0.18566	112.8369	OMPA-WALTERS - WALTERS 69KV CKT 1
FDNS	00NR	0	20WP	G15_084	FROM->TO	G14-057T 345.00 - SUNNYSIDE 345KV CKT 1	717	789	0.18566	112.8369	OMPA-WALTERS - WALTERS 69KV CKT 1
FDNS	00NR	0	20WP	G15_084	FROM->TO	G14-057T 345.00 - SUNNYSIDE 345KV CKT 1	717	789	0.18756	112.8359	CYPRESS - HARTBURG 500KV CKT 1
FDNS	00NR	0	20WP	G15_084	FROM->TO	G14-057T 345.00 - SUNNYSIDE 345KV CKT 1	717	789	0.18863	112.8325	SOUTHWESTERN STATION - VERDEN 138KV CKT 1
FDNS	00NR	0	20WP	G15_084	FROM->TO	G14-057T 345.00 - SUNNYSIDE 345KV CKT 1	717	789	0.18744	112.8315	GEN334432 1-SABINE UNIT 2
FDNS	00NR	0	20WP	G15_084	FROM->TO	G14-057T 345.00 - SUNNYSIDE 345KV CKT 1	717	789	0.18744	112.831	GEN334431 1-SABINE UNIT 1
FDNS	00NR	0	20WP	G15_084	FROM->TO	G14-057T 345.00 - SUNNYSIDE 345KV CKT 1	717	789	0.18769	112.8308	TURK (TURK 1) 138/115/13.2KV TRANSFORMER CKT 1
FDNS	00NR	0	20WP	G15_084	FROM->TO	G14-057T 345.00 - SUNNYSIDE 345KV CKT 1	717	789	0.18769	112.8308	TURK (TURK 1) 138/115/13.2KV TRANSFORMER CKT 1

SOLUTION	GROUP	SCENARIO	SEASON	SOURCE	DIRECTION	MONITORED ELEMENT	RATEA (MVA)	RATEB(MVA)	TDF	TC%LOADING (% MVA)	CONTINGENCY
FDNS	00NR	0	20WP	G15_084	FROM->TO	G14-057T 345.00 - SUNNYSIDE 345KV CKT 1	717	789	0.18769	112.8307	MCNAB REC - Turk 115 115KV CKT 1
FDNS	00NR	0	20WP	G15_084	FROM->TO	G14-057T 345.00 - SUNNYSIDE 345KV CKT 1	717	789	0.18759	112.8301	7JASPER 345.00 - BLACKBERRY 345KV CKT 1
FDNS	00NR	0	20WP	G15_084	FROM->TO	G14-057T 345.00 - SUNNYSIDE 345KV CKT 1	717	789	0.18744	112.8268	GEN501823 1-TECHE UNIT 3
FDNS	00NR	0	20WP	G15_084	FROM->TO	G14-057T 345.00 - SUNNYSIDE 345KV CKT 1	717	789	0.18744	112.8248	GEN501970 1-EVANGELINE UNIT 7
FDNS	00NR	0	20WP	G15_084	FROM->TO	G14-057T 345.00 - SUNNYSIDE 345KV CKT 1	717	789	0.18744	112.8197	GEN505616 1-BROKEN BOW
FDNS	00NR	0	20WP	G15_084	FROM->TO	G14-057T 345.00 - SUNNYSIDE 345KV CKT 1	717	789	0.18924	112.8185	P12:69:WFEC-AEPW:COMANCH2:WALTRS-2
FDNS	00NR	0	20WP	G15_084	FROM->TO	G14-057T 345.00 - SUNNYSIDE 345KV CKT 1	717	789	0.18903	112.8114	CANADIAN - NOBLE 138KV CKT 1
FDNS	00NR	0	20WP	G15_084	FROM->TO	G14-057T 345.00 - SUNNYSIDE 345KV CKT 1	717	789	0.18863	112.8107	NORTH 29TH CHICKASHA - VERDEN 138KV CKT 1
FDNS	00NR	0	20WP	G15_084	FROM->TO	G14-057T 345.00 - SUNNYSIDE 345KV CKT 1	717	789	0.18744	112.8098	P12:161:AEPW:CHAMSPR5:FARMING5
FDNS	00NR	0	16WP	G15_084	FROM->TO	G14-057T 345.00 - SUNNYSIDE 345KV CKT 1	717	789	0.18594	112.8084	GEN562710 1-G15_022_3 0.5500
FDNS	00NR	0	20WP	G15_084	FROM->TO	G14-057T 345.00 - SUNNYSIDE 345KV CKT 1	717	789	0.18762	112.8043	7LUTESVIL 345.00 - 7ST FRANC 345.00 345KV CKT 1
FDNS	00NR	0	20WP	G15_084	FROM->TO	G14-057T 345.00 - SUNNYSIDE 345KV CKT 1	717	789	0.18744	112.8033	GEN334392 1-EXXON MOBIL IPP 1
FDNS	00NR	0	20WP	G15_084	FROM->TO	G14-057T 345.00 - SUNNYSIDE 345KV CKT 1	717	789	0.18796	112.8	G14_001T 345.00 - WICHITA 345KV CKT 1
FDNS	00NR	0	20WP	G15_084	FROM->TO	G14-057T 345.00 - SUNNYSIDE 345KV CKT 1	717	789	0.18744	112.7969	GEN334393 1-EXXON MOBIL IPP 2
FDNS	00NR	0	20WP	G15_084	FROM->TO	G14-057T 345.00 - SUNNYSIDE 345KV CKT 1	717	789	0.18744	112.7969	GEN334394 1-EXXON MOBIL IPP 3
FDNS	00NR	0	20WP	G15_084	FROM->TO	G14-057T 345.00 - SUNNYSIDE 345KV CKT 1	717	789	0.19178	112.7939	FRANKLIN SW - WESTMOORE 138KV CKT 1
FDNS	00NR	0	20WP	G15_084	FROM->TO	G14-057T 345.00 - SUNNYSIDE 345KV CKT 1	717	789	0.18775	112.7921	LAKEOVER - MCADAMS 500KV CKT 1
FDNS	00NR	0	16WP	G15_084	FROM->TO	G14-057T 345.00 - SUNNYSIDE 345KV CKT 1	717	789	0.18594	112.7898	GEN620315 1-BIG STONE GEN
FDNS	00NR	0	20WP	G15_084	FROM->TO	G14-057T 345.00 - SUNNYSIDE 345KV CKT 1	717	789	0.18915	112.7872	P12:138:OKGE:3TERM27
FDNS	00NR	0	20WP	G15_084	FROM->TO	G14-057T 345.00 - SUNNYSIDE 345KV CKT 1	717	789	0.1877	112.7859	EMPORIA ENERGY CENTER - SWISSVALE 345KV CKT 1
FDNS	00NR	0	20WP	G15_084	FROM->TO	G14-057T 345.00 - SUNNYSIDE 345KV CKT 1	717	789	0.18744	112.7835	ST FRANCIS - ST FRANCIS 1 161KV CKT Z1
FDNS	00NR	0	20WP	G15_084	FROM->TO	G14-057T 345.00 - SUNNYSIDE 345KV CKT 1	717	789	0.18798	112.7809	MCADAMS - WOLF CREEK 500KV CKT 1
FDNS	00NR	0	20WP	G15_084	FROM->TO	G14-057T 345.00 - SUNNYSIDE 345KV CKT 1	717	789	0.18744	112.779	SABINE 230/22.0KV TRANSFORMER CKT 1
FDNS	00NR	0	20WP	G15_084	FROM->TO	G14-057T 345.00 - SUNNYSIDE 345KV CKT 1	717	789	0.18768	112.7787	FLETCHER - MARLOW JCT 69KV CKT 1
FDNS	00NR	0	20WP	G15_084	FROM->TO	G14-057T 345.00 - SUNNYSIDE 345KV CKT 1	717	789	0.18776	112.7734	SWISSVALE - WEST GARDNER 345KV CKT 1
FDNS	00NR	0	20WP	G15_084	FROM->TO	G14-057T 345.00 - SUNNYSIDE 345KV CKT 1	717	789	0.19098	112.7689	HINTON - REDROCKRD4 138.00 138KV CKT 1
FDNS	00NR	0	16WP	G15_084	FROM->TO	G14-057T 345.00 - SUNNYSIDE 345KV CKT 1	717	789	0.18594	112.7677	GEN511851 1-COMANCHE #1
FDNS	00NR	0	20WP	G15_084	FROM->TO	G14-057T 345.00 - SUNNYSIDE 345KV CKT 1	717	789	0.18744	112.7667	GEN501972 1-EVANGELINE UNIT 7-2
FDNS	00NR	0	20WP	G15_084	FROM->TO	G14-057T 345.00 - SUNNYSIDE 345KV CKT 1	717	789	0.18744	112.7666	GEN501971 1-EVANGELINE UNIT 7-1
FDNS	00NR	0	20WP	G15_084	FROM->TO	G14-057T 345.00 - SUNNYSIDE 345KV CKT 1	717	789	0.18746	112.7601	P12:138:AEPW:R.S.S-4:T.P.S.-4
FDNS	00NR	0	20WP	G15_084	FROM->TO	G14-057T 345.00 - SUNNYSIDE 345KV CKT 1	717	789	0.18871	112.7558	CORNVILLE - NORGE ROAD 138KV CKT 1
FDNS	00NR	0	20WP	G15_084	FROM->TO	G14-057T 345.00 - SUNNYSIDE 345KV CKT 1	717	789	0.18871	112.7558	CORNVILLE - NORGE ROAD 138KV CKT 1
FDNS	00NR	0	20WP	G15_084	FROM->TO	G14-057T 345.00 - SUNNYSIDE 345KV CKT 1	717	789	0.18751	112.7544	P12:138:OKGE:3TERM12
FDNS	00NR	0	20WP	G15_084	FROM->TO	G14-057T 345.00 - SUNNYSIDE 345KV CKT 1	717	789	0.18824	112.7529	ENOWILT - LONE OAK 138KV CKT 1
FDNS	00NR	0	20WP	G15_084	FROM->TO	G14-057T 345.00 - SUNNYSIDE 345KV CKT 1	717	789	0.18952	112.7506	WEATHERFORD SOUTHEAST - WEATHERFORD TAP 138KV CKT 1
FDNS	00NR	0	20WP	G15_084	FROM->TO	G14-057T 345.00 - SUNNYSIDE 345KV CKT 1	717	789	0.18824	112.7442	ENOWILT - SARDIS 138KV CKT 1
FDNS	00NR	0	20WP	G15_084	FROM->TO	G14-057T 345.00 - SUNNYSIDE 345KV CKT 1	717	789	0.18744	112.7431	GEN501912 1-ACADIA UNIT CT1B
FDNS	00NR	0	20WP	G15_084	FROM->TO	G14-057T 345.00 - SUNNYSIDE 345KV CKT 1	717	789	0.18788	112.743	FRANKLIN - FRANKLIN SW 138KV CKT 1
FDNS	00NR	0	20WP	G15_084	FROM->TO	G14-057T 345.00 - SUNNYSIDE 345KV CKT 1	717	789	0.18761	112.7424	P12:138:WFEC-AEPW:ELKCTY-4:ERICK4
FDNS	00NR	0	20WP	G15_084	FROM->TO	G14-057T 345.00 - SUNNYSIDE 345KV CKT 1	717	789	0.18744	112.7423	GEN501911 1-ACADIA UNIT CT1A
FDNS	00NR	0	20WP	G15_084	FROM->TO	G14-057T 345.00 - SUNNYSIDE 345KV CKT 1	717	789	0.19107	112.7421	LASALLE - STONEWAL LH138.00 138KV CKT 1
FDNS	00NR	0	20WP	G15_084	FROM->TO	G14-057T 345.00 - SUNNYSIDE 345KV CKT 1	717	789	0.18772	112.7364	AMITY SS - MURFREESBORO EAST (AECC) 115KV CKT 1
FDNS	00NR	0	20WP	G15_084	FROM->TO	G14-057T 345.00 - SUNNYSIDE 345KV CKT 1	717	789	0.18744	112.7343	P12:138:AEPW:R.S.S.-4:R:96YALE-4
FDNS	00NR	0	16WP	G15_084	FROM->TO	G14-057T 345.00 - SUNNYSIDE 345KV CKT 1	717	789	0.18594	112.7303	GEN600004 2-PRAIRIE ISLAND G2
FDNS	00NR	0	16WP	G15_084	FROM->TO	G14-057T 345.00 - SUNNYSIDE 345KV CKT 1	717	789	0.18594	112.7275	GEN600003 1-PRAIRIE ISLAND G1
FDNS	00NR	0	20WP	G15_084	FROM->TO	G14-057T 345.00 - SUNNYSIDE 345KV CKT 1	717	789	0.18863	112.7268	CORNVILLE - NORTH 29TH CHICKASHA 138KV CKT 1
FDNS	00NR	0	20WP	G15_084	FROM->TO	G14-057T 345.00 - SUNNYSIDE 345KV CKT 1	717	789	0.19107	112.724	STONEWAL LH138.00 - TUPELO TAP 138KV CKT 1
FDNS	00NR	0	20WP	G15_084	FROM->TO	G14-057T 345.00 - SUNNYSIDE 345KV CKT 1	717	789	0.18903	112.7182	NOBLE - PURCELL4 138.00 138KV CKT 1
FDNSLock	00NR	0	16WP	G15_084	FROM->TO	G14-057T 345.00 - SUNNYSIDE 345KV CKT 1	717	789	0.18594	112.715	GEN600006 1-AS KING
FDNS	00NR	0	20WP	G15_084	FROM->TO	G14-057T 345.00 - SUNNYSIDE 345KV CKT 1	717	789	0.18932	112.7058	CIMARRON - NORTHWEST 345KV CKT 1
FDNS	00NR	0	20WP	G15_084	FROM->TO	G14-057T 345.00 - SUNNYSIDE 345KV CKT 1	717	789	0.18952	112.7001	CLINTON JUNCTION - CLINTON NATURAL GAS TAP 138KV CKT 1
FDNS	00NR	0	20WP	G15_084	FROM->TO	G14-057T 345.00 - SUNNYSIDE 345KV CKT 1	717	789	0.1887	112.6983	Canadian Pump Station - REDROCKRD4 138.00 138KV CKT 1
FDNS	00NR	0	20WP	G15_084	FROM->TO	G14-057T 345.00 - SUNNYSIDE 345KV CKT 1	717	789	0.18913	112.6767	CRINER - PAYNE 138.00 138KV CKT 1
FDNS	00NR	0	16WP	G15_084	FROM->TO	G14-057T 345.00 - SUNNYSIDE 345KV CKT 1	717	789	0.18613	112.6686	P12:138:WFEC:MSL09
FDNS	00NR	0	16WP	G15_084	FROM->TO	G14-057T 345.00 - SUNNYSIDE 345KV CKT 1	717	789	0.18892	112.6633	P12:138:AEPW-OGE:CORNVIL4:CIMARON4
FDNS	00NR	0	20WP	G15_084	FROM->TO	G14-057T 345.00 - SUNNYSIDE 345KV CKT 1	717	789	0.18924	112.6419	COMANCHE - WALTERS 69KV CKT 1
FDNSLock	00NR	0	16WP	G15_084	FROM->TO	G14-057T 345.00 - SUNNYSIDE 345KV CKT 1	717	789	0.18594	112.6382	GEN636641 1-LOUISA UNIT 1
FDNS	00NR	0	16WP	G15_084	FROM->TO	G14-057T 345.00 - SUNNYSIDE 345KV CKT 1	717	789	0.18594	112.6	GEN615002 2-COAL CREEK
FDNS	00NR	0	16WP	G15_084	FROM->TO	G14-057T 345.00 - SUNNYSIDE 345KV CKT 1	717	789	0.18594	112.5883	GEN600005 1-MONTICELLO
FDNS	00NR	0	16WP	G15_084	FROM->TO	G14-057T 345.00 - SUNNYSIDE 345KV CKT 1	717	789	0.1761	112.5634	CHISHOLM7 345.00 (CHISHOLM) 345/230/13.2KV TRANSFORMER CKT 1
FDNS	00NR	0	16WP	G15_084	FROM->TO	G14-057T 345.00 - SUNNYSIDE 345KV CKT 1	717	789	0.18594	112.5594	GEN562754 1-G15031_5 0.6900
FDNS	00NR	0	16WP	G15_084	FROM->TO	G14-057T 345.00 - SUNNYSIDE 345KV CKT 1	717	789	0.18594	112.5259	GEN635213 3-NEAL UNIT 3
FDNS	00NR	0	16WP	G15_084	FROM->TO	G14-057T 345.00 - SUNNYSIDE 345KV CKT 1	717	789	0.18594	112.5005	GEN562756 1-G15031_7 0.6900
FDNS	00NR	0	16WP	G15_084	FROM->TO	G14-057T 345.00 - SUNNYSIDE 345KV CKT 1	717	789	0.18594	112.5	GEN629074 1-ARNOLD LOWSIDE OF GSU XFMR
FDNS	00NR	0	16WP	G15_084	FROM->TO	G14-057T 345.00 - SUNNYSIDE 345KV CKT 1	717	789	0.18594	112.4623	GEN562023 1-G11_020_3 0.6900
FDNS	00NR	0	16WP	G15_084	FROM->TO	G14-057T 345.00 - SUNNYSIDE 345KV CKT 1	717	789	0.18594	112.4623	GEN562026 1-G11_019_3 0.6900
FDNS	00NR	0	16WP	G15_084	FROM->TO	G14-057T 345.00 - SUNNYSIDE 345KV CKT 1	717	789	0.18594	112.4584	GEN562556 1-G14_046_3 0.3420
FDNS	00NR	0	16WP	G15_084	FROM->TO	G14-057T 345.00 - SUNNYSIDE 345KV CKT 1	717	789	0.1761	112.4526	CHISHOLM7 345.00 - GRACEMONT 345KV CKT 1
FDNS	00NR	0	16WP	G15_084	FROM->TO	G14-057T 345.00 - SUNNYSIDE 345KV CKT 1	717	789	0.18594	112.451	BIG STONE 230/24.0KV TRANSFORMER CKT 1
FDNS	00NR	0	16WP	G15_084	FROM->TO	G14-057T 345.00 - SUNNYSIDE 345KV CKT 1	717	789	0.18594	112.3702	GEN563142 1-G15079_3 0.5500
FDNS	00NR	0	16WP	G15_084	FROM->TO	G14-057T 345.00 - SUNNYSIDE 345KV CKT 1	717	789	0.18594	112.3702	GEN563151 1-G15080_2 0.5500
FDNS	00NR	0	16WP	G15_084	FROM->TO	G14-057T 345.00 - SUNNYSIDE 345KV CKT 1	717	789	0.18594	112.3332	GEN523971 1-HARRINGTON GEN #1 24 KV
FDNS	00NR	0	16WP	G15_084	FROM->TO	G14-057T 345.00 - SUNNYSIDE 345KV CKT 1	717	789	0.18594	112.3331	GEN523973 1-HARRINGTON GEN #3 24 KV
FDNS	00NR	0	16WP	G15_084	FROM->TO	G14-057T 345.00 - SUNNYSIDE 345KV CKT 1	717	789	0.18594	112.333	GEN523972 1-HARRINGTON GEN #2 24 KV
FDNS	00NR	0	16WP	G15_084	FROM->TO	G14-057T 345.00 - SUNNYSIDE 345KV CKT 1	717	789	0.1826	112.293	NORTHWEST TEXARKANA - VALLIANT 345KV CKT 1
FDNS	00NR	0	16WP	G15_084	FROM->TO	G14-057T 345.00 - SUNNYSIDE 345KV CKT 1	717	789	0.1826	112.293	NORTHWEST TEXARKANA - VALLIANT 345KV CKT 1
FDNS	00NR	0	16WP	G15_084	FROM->TO	G14-057T 345.00 - SUNNYSIDE 345KV CKT 1	717	789	0.17939	112.2788	P12:230:AEPW-SPS:SWEETWT6:WHEELER 6
FDNS	00NR	0	16WP	G15_084	FROM->TO	G14-057T 345.00 - SUNNYSIDE 345KV CKT 1	717	789	0.17939	112.2782	STLN-DEMARC6 - SWEETWATER 230KV CKT 1
FDNS	00NR	0	16WP	G15_084	FROM->TO	G14-057T 345.00 - SUNNYSIDE 345KV CKT 1	717	789	0.17939	112.2771	STATELINE INTERCHANGE - STLN-DEMARC6 230KV CKT 1

SOLUTION	GROUP	SCENARIO	SEASON	SOURCE	DIRECTION	MONITORED ELEMENT	RATEA (MVA)	RATEB(MVA)	TDF	TC%LOADING (% MVA)	CONTINGENCY
FDNSLock	00NR	0	16WP	G15_084	FROM->TO	G14-057T 345.00 - SUNNYSIDE 345KV CKT 1	717	789	0.18594	112.2748	GEN600000 1-SHERBURNECNTY G1
FDNS	00NR	0	16WP	G15_084	FROM->TO	G14-057T 345.00 - SUNNYSIDE 345KV CKT 1	717	789	0.18594	112.2359	GEN511848 1-SOUTHWESTERN STATION #3
FDNS	00NR	0	20WP	G15_084	FROM->TO	G14-057T 345.00 - SUNNYSIDE 345KV CKT 1	717	789	0.18744	112.2265	803-OKLAUNION
FDNS	00NR	0	16WP	G15_084	FROM->TO	G14-057T 345.00 - SUNNYSIDE 345KV CKT 1	717	789	0.18594	112.2003	GEN600001 2-SHERBURNE CNTY G2
FDNS	00NR	0	16WP	G15_084	FROM->TO	G14-057T 345.00 - SUNNYSIDE 345KV CKT 1	717	789	0.18594	112.163	GEN563042 1-G15068_3 0.6900
FDNS	00NR	0	16WP	G15_084	FROM->TO	G14-057T 345.00 - SUNNYSIDE 345KV CKT 1	717	789	0.18594	112.1422	GEN527901 1-HOBBS PLANT #1 (CT)
FDNS	00NR	0	16WP	G15_084	FROM->TO	G14-057T 345.00 - SUNNYSIDE 345KV CKT 1	717	789	0.18594	112.1422	GEN527902 1-HOBBS PLANT #2 (CT)
FDNSLock	00NR	0	16WP	G15_084	FROM->TO	G14-057T 345.00 - SUNNYSIDE 345KV CKT 1	717	789	0.18594	112.0855	GEN629075 1-OTTUMWA GENERATOR FOR OTTUMWA UNIT NO 1
FDNS	00NR	0	20WP	G15_084	FROM->TO	G14-057T 345.00 - SUNNYSIDE 345KV CKT 1	717	789	0.18673	111.9515	P12:138:OKGE:3TERM39
FDNSLock	00NR	0	16WP	G15_084	FROM->TO	G14-057T 345.00 - SUNNYSIDE 345KV CKT 1	717	789	0.18594	111.9266	GEN635214 4-NEAL UNIT 4
FDNS	00NR	0	16WP	G15_084	FROM->TO	G14-057T 345.00 - SUNNYSIDE 345KV CKT 1	717	789	0.18594	111.9233	SHERBURNE CO 345/24.0KV TRANSFORMER CKT 1
FDNS	00NR	0	20WP	G15_084	FROM->TO	G14-057T 345.00 - SUNNYSIDE 345KV CKT 1	717	789	0.18746	111.9074	RANCHRD7 345.00 - SOONER 345KV CKT 1
FDNS	00NR	0	20WP	G15_084	FROM->TO	G14-057T 345.00 - SUNNYSIDE 345KV CKT 1	717	789	0.15161	111.8943	CHILDRESS - LAKE PAULINE 138KV CKT 1
FDNS	00NR	0	20WP	G15_084	FROM->TO	G14-057T 345.00 - SUNNYSIDE 345KV CKT 1	717	789	0.15161	111.8943	CHILDRESS - LAKE PAULINE 138KV CKT 1
FDNS	00NR	0	20WP	G15_084	FROM->TO	G14-057T 345.00 - SUNNYSIDE 345KV CKT 1	717	789	0.15485	111.8901	CHILDRESS - HOLLIS TAP 138KV CKT 1
FDNS	00NR	0	20WP	G15_084	FROM->TO	G14-057T 345.00 - SUNNYSIDE 345KV CKT 1	717	789	0.18744	111.8664	GEN562084 1-G11_050_3 0.6900
FDNS	00NR	0	16WP	G15_084	FROM->TO	G14-057T 345.00 - SUNNYSIDE 345KV CKT 1	717	789	0.18594	111.861	GEN563043 1-G15068_4 0.6900
FDNS	00NR	0	16WP	G15_084	FROM->TO	G14-057T 345.00 - SUNNYSIDE 345KV CKT 1	717	789	0.18594	111.8591	GEN563273 2-G15093_4 0.6900
FDNS	00NR	0	20WP	G15_084	FROM->TO	G14-057T 345.00 - SUNNYSIDE 345KV CKT 1	717	789	0.18746	111.847	MAYSVILLE - PAOLI 138KV CKT 1
FDNS	00NR	0	20WP	G15_084	FROM->TO	G14-057T 345.00 - SUNNYSIDE 345KV CKT 1	717	789	0.18744	111.8386	GEN560187 1-WTH WIND 0.5750
FDNS	00NR	0	16WP	G15_084	FROM->TO	G14-057T 345.00 - SUNNYSIDE 345KV CKT 1	717	789	0.18594	111.8362	GEN526333 1-JONES GEN #3 21 KV
FDNS	00NR	0	16WP	G15_084	FROM->TO	G14-057T 345.00 - SUNNYSIDE 345KV CKT 1	717	789	0.18594	111.8361	GEN526334 1-JONES_4 116.500
FDNS	00NR	0	20WP	G15_084	FROM->TO	G14-057T 345.00 - SUNNYSIDE 345KV CKT 1	717	789	0.18778	111.8224	CIMARRON - MATHWSN7 345.00 345KV CKT 1
FDNS	00NR	0	20WP	G15_084	FROM->TO	G14-057T 345.00 - SUNNYSIDE 345KV CKT 1	717	789	0.18778	111.8224	CIMARRON - MATHWSN7 345.00 345KV CKT 2
FDNS	00NR	0	20WP	G15_084	FROM->TO	G14-057T 345.00 - SUNNYSIDE 345KV CKT 1	717	789	0.18744	111.8182	GEN560112 1-G08_037_3 0.6900
FDNS	00NR	0	16WP	G15_084	FROM->TO	G14-057T 345.00 - SUNNYSIDE 345KV CKT 1	717	789	0.18594	111.8	GEN344225 1-1CAL G1 25.000
FDNS	00NR	0	16WP	G15_084	FROM->TO	G14-057T 345.00 - SUNNYSIDE 345KV CKT 1	717	789	0.17518	111.7926	P12:230:AEPW:ELKCITY6:SWEETWT6
FDNS	00NR	0	16WP	G15_084	FROM->TO	G14-057T 345.00 - SUNNYSIDE 345KV CKT 1	717	789	0.18594	111.7857	GEN525844 1-ELK_1 118.000
FDNS	00NR	0	20WP	G15_084	FROM->TO	G14-057T 345.00 - SUNNYSIDE 345KV CKT 1	717	789	0.18744	111.7821	GEN521103 1-BLUE CANYON WIND FARM
FDNS	00NR	0	20WP	G15_084	FROM->TO	G14-057T 345.00 - SUNNYSIDE 345KV CKT 1	717	789	0.18744	111.7799	GEN520812 1-ANADRK5
FDNS	00NR	0	20WP	G15_084	FROM->TO	G14-057T 345.00 - SUNNYSIDE 345KV CKT 1	717	789	0.18744	111.7798	GEN520813 1-ANADRK6
FDNS	00NR	0	20WP	G15_084	FROM->TO	G14-057T 345.00 - SUNNYSIDE 345KV CKT 1	717	789	0.18802	111.7795	DRAPER LAKE - MIDWEST TAP 138KV CKT 1
FDNS	00NR	0	16WP	G15_084	FROM->TO	G14-057T 345.00 - SUNNYSIDE 345KV CKT 1	717	789	0.18594	111.779	GEN525845 1-ELK_2 1 138.00
FDNS	00NR	0	20WP	G15_084	FROM->TO	G14-057T 345.00 - SUNNYSIDE 345KV CKT 1	717	789	0.18744	111.7781	GEN563052 1-G15069_3 0.6900
FDNS	00NR	0	16WP	G15_084	FROM->TO	G14-057T 345.00 - SUNNYSIDE 345KV CKT 1	717	789	0.18594	111.7743	GEN600002 3-SHERBURNE CNTY G3
FDNS	00NR	0	20WP	G15_084	FROM->TO	G14-057T 345.00 - SUNNYSIDE 345KV CKT 1	717	789	0.18746	111.7716	MAYSVILLE - MAYSVLT4 138.00 138KV CKT 1
FDNS	00NR	0	20WP	G15_084	FROM->TO	G14-057T 345.00 - SUNNYSIDE 345KV CKT 1	717	789	0.18816	111.7619	P12:138:OKGE:3TERM21
FDNS	00NR	0	20WP	G15_084	FROM->TO	G14-057T 345.00 - SUNNYSIDE 345KV CKT 1	717	789	0.18744	111.7611	GEN562691 1-G15_015_3 0.6900
FDNS	00NR	0	20WP	G15_084	FROM->TO	G14-057T 345.00 - SUNNYSIDE 345KV CKT 1	717	789	0.18744	111.7556	GEN562772 1-G15034_3 0.6900
FDNS	00NR	0	20WP	G15_084	FROM->TO	G14-057T 345.00 - SUNNYSIDE 345KV CKT 1	717	789	0.18744	111.7408	GEN511961 1-DEMPSEY-WTG10.7000
FDNS	00NR	0	20WP	G15_084	FROM->TO	G14-057T 345.00 - SUNNYSIDE 345KV CKT 1	717	789	0.18905	111.7297	SOONER - SPRING CREEK 345KV CKT 1
FDNS	00NR	0	20WP	G15_084	FROM->TO	G14-057T 345.00 - SUNNYSIDE 345KV CKT 1	717	789	0.18745	111.7267	P12:069:OKGE:3TERM42
FDNS	00NR	0	20WP	G15_084	FROM->TO	G14-057T 345.00 - SUNNYSIDE 345KV CKT 1	717	789	0.18905	111.7265	NORTHWEST - SPRING CREEK 345KV CKT 1
FDNS	00NR	0	20WP	G15_084	FROM->TO	G14-057T 345.00 - SUNNYSIDE 345KV CKT 1	717	789	0.18716	111.7238	ARBUCKLE - SULPHR 4 138.00 138KV CKT 1
FDNS	00NR	0	20WP	G15_084	FROM->TO	G14-057T 345.00 - SUNNYSIDE 345KV CKT 1	717	789	0.18762	111.7062	GLASSES - MADILL INDUSTRIAL TAP 138KV CKT 1
FDNS	00NR	0	20WP	G15_084	FROM->TO	G14-057T 345.00 - SUNNYSIDE 345KV CKT 1	717	789	0.18746	111.7055	MAYSVLT4 138.00 - PRAIRIE POINT 138KV CKT 1
FDNS	00NR	0	20WP	G15_084	FROM->TO	G14-057T 345.00 - SUNNYSIDE 345KV CKT 1	717	789	0.18752	111.7005	P12:138:WFEC:MSL11
FDNS	00NR	0	20WP	G15_084	FROM->TO	G14-057T 345.00 - SUNNYSIDE 345KV CKT 1	717	789	0.18752	111.7005	P12:138:WFEC-AEPW:PHAROAH4:LONEOAK4
FDNS	00NR	0	20WP	G15_084	FROM->TO	G14-057T 345.00 - SUNNYSIDE 345KV CKT 1	717	789	0.18757	111.6941	CANEY CREEK - JOHNSON COUNTY 138KV CKT 1
FDNS	00NR	0	20WP	G15_084	FROM->TO	G14-057T 345.00 - SUNNYSIDE 345KV CKT 1	717	789	0.18744	111.689	GEN515443 1-MNCOWND1 0.7000
FDNS	00NR	0	20WP	G15_084	FROM->TO	G14-057T 345.00 - SUNNYSIDE 345KV CKT 1	717	789	0.19147	111.6853	MOREWOOD SW - NINE MILE 138KV CKT 1
FDNS	00NR	0	20WP	G15_084	FROM->TO	G14-057T 345.00 - SUNNYSIDE 345KV CKT 1	717	789	0.17238	111.6712	ALTUS JUNCTION - RUSSELL 138KV CKT 1
FDNS	00NR	0	20WP	G15_084	FROM->TO	G14-057T 345.00 - SUNNYSIDE 345KV CKT 1	717	789	0.17238	111.6712	ALTUS JUNCTION - RUSSELL 138KV CKT 1
FDNS	00NR	0	20WP	G15_084	FROM->TO	G14-057T 345.00 - SUNNYSIDE 345KV CKT 1	717	789	0.18744	111.6708	GEN560183 1-REDHIL-WTG1 12.000
FDNS	00NR	0	20WP	G15_084	FROM->TO	G14-057T 345.00 - SUNNYSIDE 345KV CKT 1	717	789	0.18744	111.6625	INDEPENDENCE 500/26.0KV TRANSFORMER CKT 1
FDNS	00NR	0	20WP	G15_084	FROM->TO	G14-057T 345.00 - SUNNYSIDE 345KV CKT 1	717	789	0.18762	111.6578	GLASSES - RUSSETT 138KV CKT 1
FDNS	00NR	0	20WP	G15_084	FROM->TO	G14-057T 345.00 - SUNNYSIDE 345KV CKT 1	717	789	0.18744	111.654	GEN600067 9-HIGH BRIDGE
FDNS	00NR	0	20WP	G15_084	FROM->TO	G14-057T 345.00 - SUNNYSIDE 345KV CKT 1	717	789	0.18779	111.6529	OVEXFRMCCOVE
FDNS	00NR	0	20WP	G15_084	FROM->TO	G14-057T 345.00 - SUNNYSIDE 345KV CKT 1	717	789	0.18788	111.6441	P12:138:WFEC:MSL08
FDNS	00NR	0	16WP	G15_084	FROM->TO	G14-057T 345.00 - SUNNYSIDE 345KV CKT 1	717	789	0.18594	111.6433	GEN525562 1-TOLK GEN #2 24 KV
FDNS	00NR	0	20WP	G15_084	FROM->TO	G14-057T 345.00 - SUNNYSIDE 345KV CKT 1	717	789	0.18732	111.6433	CARTER - CHICKASAW 138KV CKT 1
FDNS	00NR	0	16WP	G15_084	FROM->TO	G14-057T 345.00 - SUNNYSIDE 345KV CKT 1	717	789	0.18594	111.6359	GEN563202 1-G15085_3 0.5500
FDNS	00NR	0	20WP	G15_084	FROM->TO	G14-057T 345.00 - SUNNYSIDE 345KV CKT 1	717	789	0.18739	111.6359	CANADIAN RIVER - MCALESTER SOUTH 138KV CKT 1
FDNS	00NR	0	20WP	G15_084	FROM->TO	G14-057T 345.00 - SUNNYSIDE 345KV CKT 1	717	789	0.18739	111.6359	CANADIAN RIVER - MCALESTER SOUTH 138KV CKT 1
FDNS	00NR	0	20WP	G15_084	FROM->TO	G14-057T 345.00 - SUNNYSIDE 345KV CKT 1	717	789	0.19279	111.6344	LEBANON - TEXOMA JCT 138KV CKT 1
FDNS	00NR	0	20WP	G15_084	FROM->TO	G14-057T 345.00 - SUNNYSIDE 345KV CKT 1	717	789	0.18739	111.6341	CANADIAN RIVER () 345/138/13.8KV TRANSFORMER CKT 1
FDNS	00NR	0	20WP	G15_084	FROM->TO	G14-057T 345.00 - SUNNYSIDE 345KV CKT 1	717	789	0.18739	111.6341	CANADIAN RIVER () 345/138/13.8KV TRANSFORMER CKT 1
FDNS	00NR	0	20WP	G15_084	FROM->TO	G14-057T 345.00 - SUNNYSIDE 345KV CKT 1	717	789	0.18744	111.6328	P12:230:UMZB:# 112 #: NU IN SD. NU-RCDC & DRY CREEK XFMR
FDNS	00NR	0	16WP	G15_084	FROM->TO	G14-057T 345.00 - SUNNYSIDE 345KV CKT 1	717	789	0.18011	111.6299	LYDIA - WELSH 345KV CKT 1
FDNS	00NR	0	16WP	G15_084	FROM->TO	G14-057T 345.00 - SUNNYSIDE 345KV CKT 1	717	789	0.18011	111.6299	LYDIA - WELSH 345KV CKT 1
FDNS	00NR	0	20WP	G15_084	FROM->TO	G14-057T 345.00 - SUNNYSIDE 345KV CKT 1	717	789	0.18744	111.627	RCDC EAST 4230.00 - RED CEDAR DC 230KV CKT 1
FDNS	00NR	0	20WP	G15_084	FROM->TO	G14-057T 345.00 - SUNNYSIDE 345KV CKT 1	717	789	0.18716	111.6223	ROCKY POINT - SPRINGDALE 138KV CKT 1
FDNS	00NR	0	20WP	G15_084	FROM->TO	G14-057T 345.00 - SUNNYSIDE 345KV CKT 1	717	789	0.18744	111.6211	GEN562902 1-G15052_3 0.6900
FDNS	00NR	0	20WP	G15_084	FROM->TO	G14-057T 345.00 - SUNNYSIDE 345KV CKT 1	717	789	0.18785	111.621	HUGO (HUGO 1) 345/138/13.8KV TRANSFORMER CKT 1
FDNS	00NR	0	20WP	G15_084	FROM->TO	G14-057T 345.00 - SUNNYSIDE 345KV CKT 1	717	789	0.18744	111.6184	GEN563242 1-G15090_3 0.6900
FDNS	00NR	0	20WP	G15_084	FROM->TO	G14-057T 345.00 - SUNNYSIDE 345KV CKT 1	717	789	0.18746	111.6131	PRAIRIE POINT - RATLIFF 138KV CKT 1
FDNS	00NR	0	20WP	G15_084	FROM->TO	G14-057T 345.00 - SUNNYSIDE 345KV CKT 1	717	789	0.18732	111.6118	CHAMBER SPRINGS - CLARKSVILLE 345KV CKT 1
FDNS	00NR	0	20WP	G15_084	FROM->TO	G14-057T 345.00 - SUNNYSIDE 345KV CKT 1	717	789	0.18757	111.6064	GRPRAR1-LNX3345.00 - YANKTON 345KV CKT Z
FDNS	00NR	0	20WP	G15_084	FROM->TO	G14-057T 345.00 - SUNNYSIDE 345KV CKT 1	717	789	0.18757	111.606	GRPRAR1-LNX3345.00 - HOLT.CO3 345.00 345KV CKT 1

SOLUTION	GROUP	SCENARIO	SEASON	SOURCE	DIRECTION	MONITORED ELEMENT	RATEA (MVA)	RATEB(MVA)	TDF	TC%LOADING (% MVA)	CONTINGENCY
FDNS	00NR	0	16WP	G15_084	FROM->TO	G14-057T 345.00 - SUNNYSIDE 345KV CKT 1	717	789	0.18594	111.5979	GEN527166 1-MUSTANG_6 118.000
FDNS	00NR	0	20WP	G15_084	FROM->TO	G14-057T 345.00 - SUNNYSIDE 345KV CKT 1	717	789	0.18744	111.5943	GEN629072 4-LANSING GENERATOR FOR UNITS NO4 EIA CODE 1
FDNS	00NR	0	16WP	G15_084	FROM->TO	G14-057T 345.00 - SUNNYSIDE 345KV CKT 1	717	789	0.17939	111.5888	CHISHOLM6 230.00 - SWEETWATER 230KV CKT 1
FDNS	00NR	0	20WP	G15_084	FROM->TO	G14-057T 345.00 - SUNNYSIDE 345KV CKT 1	717	789	0.18744	111.5796	GEN562078 1-G11_051_3 0.6900
FDNS	00NR	0	20WP	G15_084	FROM->TO	G14-057T 345.00 - SUNNYSIDE 345KV CKT 1	717	789	0.16264	111.5767	P12:138:AEPW:112GORE4:SNYDER-4
FDNS	00NR	0	20WP	G15_084	FROM->TO	G14-057T 345.00 - SUNNYSIDE 345KV CKT 1	717	789	0.18744	111.5711	GEN524285 1-WILDORADO WIND GEN
FDNS	00NR	0	20WP	G15_084	FROM->TO	G14-057T 345.00 - SUNNYSIDE 345KV CKT 1	717	789	0.18716	111.5694	JOLLYVILLE - SULPHR 4 138.00 138KV CKT 1
FDNS	00NR	0	20WP	G15_084	FROM->TO	G14-057T 345.00 - SUNNYSIDE 345KV CKT 1	717	789	0.18744	111.5522	GEN562587 1-G14_056_3 0.6900
FDNS	00NR	0	20WP	G15_084	FROM->TO	G14-057T 345.00 - SUNNYSIDE 345KV CKT 1	717	789	0.18744	111.5512	GEN514805 1-SOONER UNIT 1
FDNS	00NR	0	20WP	G15_084	FROM->TO	G14-057T 345.00 - SUNNYSIDE 345KV CKT 1	717	789	0.19147	111.5491	BEARCAT 138.00 - NINE MILE 138KV CKT 1
FDNS	00NR	0	20WP	G15_084	FROM->TO	G14-057T 345.00 - SUNNYSIDE 345KV CKT 1	717	789	0.18744	111.5454	GEN524295 1-SPNSPUR_WND10.6900
FDNS	00NR	0	20WP	G15_084	FROM->TO	G14-057T 345.00 - SUNNYSIDE 345KV CKT 1	717	789	0.18744	111.5399	GEN657749 1-YOUNG 1 GENERATOR
FDNS	00NR	0	16WP	G15_084	FROM->TO	G14-057T 345.00 - SUNNYSIDE 345KV CKT 1	717	789	0.18662	111.5346	JOHNSON COUNTY (JOHNCO) 345/138/13.8KV TRANSFORMER CKT 1
FDNS	00NR	0	16WP	G15_084	FROM->TO	G14-057T 345.00 - SUNNYSIDE 345KV CKT 1	717	789	0.18594	111.5255	GEN635023 3-WALTER SCOTT UNIT 3
FDNS	00NR	0	20WP	G15_084	FROM->TO	G14-057T 345.00 - SUNNYSIDE 345KV CKT 1	717	789	0.18744	111.5198	GEN514806 1-SOONER UNIT 2
FDNS	00NR	0	20WP	G15_084	FROM->TO	G14-057T 345.00 - SUNNYSIDE 345KV CKT 1	717	789	0.18744	111.5196	GEN524023 1-NICHOLS GEN #3 22 KV
FDNS	00NR	0	16WP	G15_084	FROM->TO	G14-057T 345.00 - SUNNYSIDE 345KV CKT 1	717	789	0.18594	111.5165	GEN562590 1-G14_057_3 0.6900
FDNS	00NR	0	20WP	G15_084	FROM->TO	G14-057T 345.00 - SUNNYSIDE 345KV CKT 1	717	789	0.18847	111.5107	CROCKETT - TENASKA RUSK COUNTY 345KV CKT 1
FDNS	00NR	0	20WP	G15_084	FROM->TO	G14-057T 345.00 - SUNNYSIDE 345KV CKT 1	717	789	0.18847	111.5059	LEBROCK - TENASKA RUSK COUNTY 345KV CKT 1
FDNS	00NR	0	20WP	G15_084	FROM->TO	G14-057T 345.00 - SUNNYSIDE 345KV CKT 1	717	789	0.18716	111.4877	JOLLYVILLE - KERR MCGEE CIMARRON 138KV CKT 1
FDNS	00NR	0	20WP	G15_084	FROM->TO	G14-057T 345.00 - SUNNYSIDE 345KV CKT 1	717	789	0.18744	111.4834	GEN562812 1-G15040_3 0.3570
FDNS	00NR	0	20WP	G15_084	FROM->TO	G14-057T 345.00 - SUNNYSIDE 345KV CKT 1	717	789	0.18744	111.4785	GEN562270 1-G12-020-2 0.6900
FDNS	00NR	0	20WP	G15_084	FROM->TO	G14-057T 345.00 - SUNNYSIDE 345KV CKT 1	717	789	0.18744	111.4769	GEN562882 1-G15047_3 0.6900
FDNS	00NR	0	20WP	G15_084	FROM->TO	G14-057T 345.00 - SUNNYSIDE 345KV CKT 1	717	789	0.18744	111.4766	GEN563132 1-G15078_3 0.3570
FDNS	00NR	0	20WP	G15_084	FROM->TO	G14-057T 345.00 - SUNNYSIDE 345KV CKT 1	717	789	0.18744	111.4697	GEN563102 1-G15075_3 0.5500
FDNS	00NR	0	20WP	G15_084	FROM->TO	G14-057T 345.00 - SUNNYSIDE 345KV CKT 1	717	789	0.18744	111.4569	GEN563062 1-G15071_3 0.6900
FDNS	00NR	0	20WP	G15_084	FROM->TO	G14-057T 345.00 - SUNNYSIDE 345KV CKT 1	717	789	0.19147	111.4547	BEARCAT 138.00 - MOORELAND 138KV CKT 1
FDNS	00NR	0	20WP	G15_084	FROM->TO	G14-057T 345.00 - SUNNYSIDE 345KV CKT 1	717	789	0.19147	111.4501	P12:138:WFEC:MSL14
FDNS	00NR	0	20WP	G15_084	FROM->TO	G14-057T 345.00 - SUNNYSIDE 345KV CKT 1	717	789	0.18716	111.4369	ARBWIND4 138.00 - KERR MCGEE CIMARRON 138KV CKT 1
FDNS	00NR	0	20WP	G15_084	FROM->TO	G14-057T 345.00 - SUNNYSIDE 345KV CKT 1	717	789	0.18744	111.4202	GEN562974 1-G15060_5 0.6900
FDNS	00NR	0	20WP	G15_084	FROM->TO	G14-057T 345.00 - SUNNYSIDE 345KV CKT 1	717	789	0.18744	111.4197	GEN521112 1-ORME3 13.800
FDNS	00NR	0	20WP	G15_084	FROM->TO	G14-057T 345.00 - SUNNYSIDE 345KV CKT 1	717	789	0.1869	111.4177	BROWN - RUSSETT 138KV CKT 1
FDNS	00NR	0	16WP	G15_084	FROM->TO	G14-057T 345.00 - SUNNYSIDE 345KV CKT 1	717	789	0.18594	111.4166	GEN562762 1-G15033_3 0.6900
FDNS	00NR	0	20WP	G15_084	FROM->TO	G14-057T 345.00 - SUNNYSIDE 345KV CKT 1	717	789	0.18744	111.4113	GEN345671 2-1RUSH G2 18.000
FDNS	00NR	0	20WP	G15_084	FROM->TO	G14-057T 345.00 - SUNNYSIDE 345KV CKT 1	717	789	0.18744	111.4104	GEN562973 1-G15060_4 0.6900
FDNS	00NR	0	20WP	G15_084	FROM->TO	G14-057T 345.00 - SUNNYSIDE 345KV CKT 1	717	789	0.18744	111.4094	GEN345670 1-1RUSH G1 18.000
FDNS	00NR	0	16WP	G15_084	FROM->TO	G14-057T 345.00 - SUNNYSIDE 345KV CKT 1	717	789	0.18594	111.4055	GEN562655 1-G14_074_3 0.6900
FDNS	00NR	0	20WP	G15_084	FROM->TO	G14-057T 345.00 - SUNNYSIDE 345KV CKT 1	717	789	0.18722	111.3964	CHICKASAW - TOTAL 138KV CKT 1
FDNS	00NR	0	20WP	G15_084	FROM->TO	G14-057T 345.00 - SUNNYSIDE 345KV CKT 1	717	789	0.18744	111.3839	GEN560105 1-G08-22 0.6900
FDNS	00NR	0	20WP	G15_084	FROM->TO	G14-057T 345.00 - SUNNYSIDE 345KV CKT 1	717	789	0.18744	111.3817	4SIOUX 1 138.00 138/18.0KV TRANSFORMER CKT 1
FDNS	00NR	0	20WP	G15_084	FROM->TO	G14-057T 345.00 - SUNNYSIDE 345KV CKT 1	717	789	0.1869	111.372	RUSSETT - RUSSETT 138KV CKT 1
FDNS	00NR	0	20WP	G15_084	FROM->TO	G14-057T 345.00 - SUNNYSIDE 345KV CKT 1	717	789	0.18744	111.3666	GEN562550 1-G14_040_3 0.6900
FDNS	00NR	0	20WP	G15_084	FROM->TO	G14-057T 345.00 - SUNNYSIDE 345KV CKT 1	717	789	0.18744	111.3633	GEN681522 3-GENOA 3
FDNS	00NR	0	16WP	G15_084	FROM->TO	G14-057T 345.00 - SUNNYSIDE 345KV CKT 1	717	789	0.18594	111.3403	GEN562685 1-G15_013_3 0.3550
FDNS	00NR	0	20WP	G15_084	FROM->TO	G14-057T 345.00 - SUNNYSIDE 345KV CKT 1	717	789	0.18744	111.3293	GEN511853 1-COMANCHE #3
FDNS	00NR	0	20WP	G15_084	FROM->TO	G14-057T 345.00 - SUNNYSIDE 345KV CKT 1	717	789	0.18744	111.3226	GEN527161 1-MUSTANG GEN #1
FDNS	00NR	0	20WP	G15_084	FROM->TO	G14-057T 345.00 - SUNNYSIDE 345KV CKT 1	717	789	0.18744	111.3226	GEN527162 1-MUSTANG GEN #2
FDNS	00NR	0	20WP	G15_084	FROM->TO	G14-057T 345.00 - SUNNYSIDE 345KV CKT 1	717	789	0.18708	111.3211	ROCKY POINT - SUNNYSIDE 138KV CKT 1
FDNS	00NR	0	20WP	G15_084	FROM->TO	G14-057T 345.00 - SUNNYSIDE 345KV CKT 1	717	789	0.18744	111.3161	EASTDC - ERCOT EQUIVALENCE 345KV CKT 1
FDNS	00NR	0	20WP	G15_084	FROM->TO	G14-057T 345.00 - SUNNYSIDE 345KV CKT 1	717	789	0.18744	111.3113	GEN511962 2-RKYRDGW2-1 0.7000
FDNS	00NR	0	20WP	G15_084	FROM->TO	G14-057T 345.00 - SUNNYSIDE 345KV CKT 1	717	789	0.18744	111.2988	GEN672321 1-SHAND GENERATOR 1
FDNS	00NR	0	20WP	G15_084	FROM->TO	G14-057T 345.00 - SUNNYSIDE 345KV CKT 1	717	789	0.18698	111.2978	RUSSETT - SPRINGDALE 138KV CKT 1
FDNS	00NR	0	20WP	G15_084	FROM->TO	G14-057T 345.00 - SUNNYSIDE 345KV CKT 1	717	789	0.18744	111.2896	GEN525494 1-PLANT X GEN #4 20 KV
FDNS	00NR	0	20WP	G15_084	FROM->TO	G14-057T 345.00 - SUNNYSIDE 345KV CKT 1	717	789	0.18919	111.2832	G15063_T 345.00 - MATHWSN7 345.00 345KV CKT 1
FDNS	00NR	0	20WP	G15_084	FROM->TO	G14-057T 345.00 - SUNNYSIDE 345KV CKT 1	717	789	0.18744	111.2755	GEN672310 1-POPLAR RIVER GENERATOR 1
FDNS	00NR	0	20WP	G15_084	FROM->TO	G14-057T 345.00 - SUNNYSIDE 345KV CKT 1	717	789	0.18744	111.2755	GEN672311 2-POPLAR RIVER GENERATOR 2
FDNS	00NR	0	20WP	G15_084	FROM->TO	G14-057T 345.00 - SUNNYSIDE 345KV CKT 1	717	789	0.18744	111.2739	GEN527882 1-CUNNINGHAM GEN #2 20 KV
FDNS	00NR	0	20WP	G15_084	FROM->TO	G14-057T 345.00 - SUNNYSIDE 345KV CKT 1	717	789	0.18744	111.266	GEN672306 6-BOUNDARY DAM GENERATOR 6
FDNS	00NR	0	20WP	G15_084	FROM->TO	G14-057T 345.00 - SUNNYSIDE 345KV CKT 1	717	789	0.18744	111.2655	GEN563192 1-G15084_3 0.5500
FDNS	00NR	0	20WP	G15_084	FROM->TO	G14-057T 345.00 - SUNNYSIDE 345KV CKT 1	717	789	0.18744	111.2616	GEN562512 1-G14_020_3 0.6900
FDNS	00NR	0	20WP	G15_084	FROM->TO	G14-057T 345.00 - SUNNYSIDE 345KV CKT 1	717	789	0.18744	111.2595	GEN511852 1-COMANCHE #2
FDNS	00NR	0	20WP	G15_084	FROM->TO	G14-057T 345.00 - SUNNYSIDE 345KV CKT 1	717	789	0.18744	111.2591	GEN344895 2-1LAB G2 20.000
FDNS	00NR	0	20WP	G15_084	FROM->TO	G14-057T 345.00 - SUNNYSIDE 345KV CKT 1	717	789	0.18744	111.258	GEN527163 1-MUSTANG GEN #3 22 KV
FDNS	00NR	0	20WP	G15_084	FROM->TO	G14-057T 345.00 - SUNNYSIDE 345KV CKT 1	717	789	0.18716	111.2526	P12:138:WFEC-AEPW:GOLDENSW4:CRAIGJT4
FDNS	00NR	0	20WP	G15_084	FROM->TO	G14-057T 345.00 - SUNNYSIDE 345KV CKT 1	717	789	0.18744	111.2434	GEN562892 1-G15048_3 0.6900
FDNS	00NR	0	20WP	G15_084	FROM->TO	G14-057T 345.00 - SUNNYSIDE 345KV CKT 1	717	789	0.18744	111.2366	GEN681542 6-JP MADGETT
FDNS	00NR	0	20WP	G15_084	FROM->TO	G14-057T 345.00 - SUNNYSIDE 345KV CKT 1	717	789	0.18821	111.235	ARKANSAS NUCLEAR ONE - FT SMITH 500KV CKT 1
FDNS	00NR	0	20WP	G15_084	FROM->TO	G14-057T 345.00 - SUNNYSIDE 345KV CKT 1	717	789	0.18821	111.235	ARKANSAS NUCLEAR ONE - FT SMITH 500KV CKT 1
FDNS	00NR	0	20WP	G15_084	FROM->TO	G14-057T 345.00 - SUNNYSIDE 345KV CKT 1	717	789	0.18744	111.2295	GEN344896 3-1LAB G3 20.000
FDNS	00NR	0	20WP	G15_084	FROM->TO	G14-057T 345.00 - SUNNYSIDE 345KV CKT 1	717	789	0.18744	111.2284	GEN344897 4-1LAB G4 20.000
FDNS	00NR	0	20WP	G15_084	FROM->TO	G14-057T 345.00 - SUNNYSIDE 345KV CKT 1	717	789	0.18744	111.2281	GEN344894 1-1LAB G1 20.000
FDNS	00NR	0	20WP	G15_084	FROM->TO	G14-057T 345.00 - SUNNYSIDE 345KV CKT 1	717	789	0.18767	111.2223	P12:138:WFEC:MSL16
FDNS	00NR	0	20WP	G15_084	FROM->TO	G14-057T 345.00 - SUNNYSIDE 345KV CKT 1	717	789	0.18683	111.2221	ARDMORE WEST - CARTER 138KV CKT 1
FDNS	00NR	0	16WP	G15_084	FROM->TO	G14-057T 345.00 - SUNNYSIDE 345KV CKT 1	717	789	0.18594	111.2074	GEN525561 1-TOLK GEN #1 24 KV
FDNS	00NR	0	16WP	G15_084	FROM->TO	G14-057T 345.00 - SUNNYSIDE 345KV CKT 1	717	789	0.18594	111.2074	GEN527903 1-HOBBS PLANT #3 (ST)
FDNS	00NR	0	16WP	G15_084	FROM->TO	G14-057T 345.00 - SUNNYSIDE 345KV CKT 1	717	789	0.18594	111.2054	GEN563272 1-G15093_3 0.6900
FDNS	00NR	0	20WP	G15_084	FROM->TO	G14-057T 345.00 - SUNNYSIDE 345KV CKT 1	717	789	0.18744	111.2032	GEN523461 1-BLACKHAWK GEN #1
FDNS	00NR	0	20WP	G15_084	FROM->TO	G14-057T 345.00 - SUNNYSIDE 345KV CKT 1	717	789	0.18744	111.2031	GEN523462 1-BLACKHAWK GEN #2
FDNS	00NR	0	20WP	G15_084	FROM->TO	G14-057T 345.00 - SUNNYSIDE 345KV CKT 1	717	789	0.16264	111.1791	CACHE - SNYDER 138KV CKT 1

SOLUTION	GROUP	SCENARIO	SEASON	SOURCE	DIRECTION	MONITORED ELEMENT	RATEA (MVA)	RATEB(MVA)	TDF	TC%LOADING (% MVA)	CONTINGENCY
FDNS	00NR	0	20WP	G15_084	FROM->TO	G14-057T 345.00 - SUNNYSIDE 345KV CKT 1	717	789	0.18856	111.1605	P12:138:WFEC:MSL07
FDNS	00NR	0	20WP	G15_084	FROM->TO	G14-057T 345.00 - SUNNYSIDE 345KV CKT 1	717	789	0.18856	111.1605	P12:138:WFEC-AEPW:HUGOPP4:ATOKA--4
FDNS	00NR	0	20WP	G15_084	FROM->TO	G14-057T 345.00 - SUNNYSIDE 345KV CKT 1	717	789	0.18733	111.1553	P12:138:AEPW-SWPA:LONEOAK4:TUPELO4
FDNS	00NR	0	20WP	G15_084	FROM->TO	G14-057T 345.00 - SUNNYSIDE 345KV CKT 1	717	789	0.18733	111.1553	P12:138:WFEC:MSL06
FDNS	00NR	0	20WP	G15_084	FROM->TO	G14-057T 345.00 - SUNNYSIDE 345KV CKT 1	717	789	0.18744	111.1514	GEN521111 1-ORME2 13.800
FDNS	00NR	0	20WP	G15_084	FROM->TO	G14-057T 345.00 - SUNNYSIDE 345KV CKT 1	717	789	0.18744	111.1465	GEN562699 1-G15_018_3 0.6900
FDNS	00NR	0	20WP	G15_084	FROM->TO	G14-057T 345.00 - SUNNYSIDE 345KV CKT 1	717	789	0.18694	111.1385	SUNNYSIDE (SUNNYSD5) 345/138/13.8KV TRANSFORMER CKT 1
FDNS	00NR	0	20WP	G15_084	FROM->TO	G14-057T 345.00 - SUNNYSIDE 345KV CKT 1	717	789	0.18744	111.1382	GEN521110 1-ORME1 13.800
FDNS	00NR	0	20WP	G15_084	FROM->TO	G14-057T 345.00 - SUNNYSIDE 345KV CKT 1	717	789	0.18613	111.1308	CLARKSVILLE - MUSKOGEE 345KV CKT 1
FDNS	00NR	0	20WP	G15_084	FROM->TO	G14-057T 345.00 - SUNNYSIDE 345KV CKT 1	717	789	0.18613	111.1308	CLARKSVILLE - MUSKOGEE 345KV CKT 1
FDNS	00NR	0	20WP	G15_084	FROM->TO	G14-057T 345.00 - SUNNYSIDE 345KV CKT 1	717	789	0.16942	111.1294	G15085_T 138.00 - RUSSELL 138KV CKT 1
FDNS	00NR	0	20WP	G15_084	FROM->TO	G14-057T 345.00 - SUNNYSIDE 345KV CKT 1	717	789	0.18683	111.1097	ARDMORE WEST - UNIROYAL 138KV CKT 1
FDNS	00NR	0	16WP	G15_084	FROM->TO	G14-057T 345.00 - SUNNYSIDE 345KV CKT 1	717	789	0.18594	111.1021	GEN635024 4-WALTER SCOTT UNIT 4
FDNS	00NR	0	20WP	G15_084	FROM->TO	G14-057T 345.00 - SUNNYSIDE 345KV CKT 1	717	789	0.18744	111.0967	GEN520811 1-ANADRK4
FDNS	00NR	0	20WP	G15_084	FROM->TO	G14-057T 345.00 - SUNNYSIDE 345KV CKT 1	717	789	0.18744	111.0961	GEN563162 1-G15081_3 0.6900
FDNS	00NR	0	20WP	G15_084	FROM->TO	G14-057T 345.00 - SUNNYSIDE 345KV CKT 1	717	789	0.18744	111.0703	GEN661015 1-COYOTE
FDNS	00NR	0	20WP	G15_084	FROM->TO	G14-057T 345.00 - SUNNYSIDE 345KV CKT 1	717	789	0.18744	111.0659	GEN563292 1-G15095_3 0.6900
FDNS	00NR	0	20WP	G15_084	FROM->TO	G14-057T 345.00 - SUNNYSIDE 345KV CKT 1	717	789	0.18688	111.0612	P12:138:OKGE:3TERM40
FDNS	00NR	0	20WP	G15_084	FROM->TO	G14-057T 345.00 - SUNNYSIDE 345KV CKT 1	717	789	0.18745	111.0535	CARTRCO4 138.00 - RATLIFF 138KV CKT 1
FDNS	00NR	0	20WP	G15_084	FROM->TO	G14-057T 345.00 - SUNNYSIDE 345KV CKT 1	717	789	0.18744	111.0431	GEN563122 1-G15077_3 0.3850
FDNS	00NR	0	20WP	G15_084	FROM->TO	G14-057T 345.00 - SUNNYSIDE 345KV CKT 1	717	789	0.18744	111.0154	GEN562861 1-G15045_2 0.4800
FDNS	00NR	0	20WP	G15_084	FROM->TO	G14-057T 345.00 - SUNNYSIDE 345KV CKT 1	717	789	0.18744	110.9573	GEN657748 1-YOUNG 2 GENERATOR
FDNS	00NR	0	20WP	G15_084	FROM->TO	G14-057T 345.00 - SUNNYSIDE 345KV CKT 1	717	789	0.18744	110.9312	GEN527883 1-CUNNINGHAM GEN #3 22 KV
FDNS	00NR	0	20WP	G15_084	FROM->TO	G14-057T 345.00 - SUNNYSIDE 345KV CKT 1	717	789	0.18744	110.9282	GEN527884 1-CUNNINGHAM GEN #4 22 KV
FDNS	00NR	0	20WP	G15_084	FROM->TO	G14-057T 345.00 - SUNNYSIDE 345KV CKT 1	717	789	0.18778	110.9202	P12:138:WFEC:MSL15
FDNS	00NR	0	20WP	G15_084	FROM->TO	G14-057T 345.00 - SUNNYSIDE 345KV CKT 1	717	789	0.18744	110.8807	GEN562992 1-G15063_3 0.6900
FDNS	00NR	0	20WP	G15_084	FROM->TO	G14-057T 345.00 - SUNNYSIDE 345KV CKT 1	717	789	0.18683	110.8733	SUNNYSIDE - UNIROYAL 138KV CKT 1
FDNS	00NR	0	20WP	G15_084	FROM->TO	G14-057T 345.00 - SUNNYSIDE 345KV CKT 1	717	789	0.20327	110.8647	P12:138:AEPW:SHAM4WT:CHILD4WT
FDNS	00NR	0	20WP	G15_084	FROM->TO	G14-057T 345.00 - SUNNYSIDE 345KV CKT 1	717	789	0.18744	110.8625	GEN562704 1-G15_020_3 0.3550
FDNS	00NR	0	20WP	G15_084	FROM->TO	G14-057T 345.00 - SUNNYSIDE 345KV CKT 1	717	789	0.18744	110.8623	GEN526331 1-JONES GEN #1 22 KV
FDNS	00NR	0	20WP	G15_084	FROM->TO	G14-057T 345.00 - SUNNYSIDE 345KV CKT 1	717	789	0.18744	110.8621	GEN526332 1-JONES GEN #2 21 KV
FDNS	00NR	0	20WP	G15_084	FROM->TO	G14-057T 345.00 - SUNNYSIDE 345KV CKT 1	717	789	0.18744	110.8621	GEN620315 1-BIG STONE GEN
FDNS	00NR	0	20WP	G15_084	FROM->TO	G14-057T 345.00 - SUNNYSIDE 345KV CKT 1	717	789	0.18744	110.8294	GEN562952 1-G15057_3 0.6500
FDNS	00NR	0	20WP	G15_084	FROM->TO	G14-057T 345.00 - SUNNYSIDE 345KV CKT 1	717	789	0.18744	110.7897	GEN511851 1-COMANCHE #1
FDNS	00NR	0	20WP	G15_084	FROM->TO	G14-057T 345.00 - SUNNYSIDE 345KV CKT 1	717	789	0.18744	110.7889	GEN600004 2-PRAIRIE ISLAND G2
FDNS	00NR	0	17SP	G15_084	FROM->TO	G14-057T 345.00 - SUNNYSIDE 345KV CKT 1	717	789	0.26349	110.7884	CIMARRON - MINCO 345KV CKT 1
FDNS	00NR	0	20WP	G15_084	FROM->TO	G14-057T 345.00 - SUNNYSIDE 345KV CKT 1	717	789	0.18744	110.7863	GEN600003 1-PRAIRIE ISLAND G1
FDNS	00NR	0	20WP	G15_084	FROM->TO	G14-057T 345.00 - SUNNYSIDE 345KV CKT 1	717	789	0.18744	110.7686	GEN600006 1-AS KING
FDNS	00NR	0	20WP	G15_084	FROM->TO	G14-057T 345.00 - SUNNYSIDE 345KV CKT 1	717	789	0.18744	110.7635	GEN563173 1-G15082_3 0.6900
FDNS	00NR	0	20WP	G15_084	FROM->TO	G14-057T 345.00 - SUNNYSIDE 345KV CKT 1	717	789	0.18744	110.7507	GEN562710 1-G15_022_3 0.5500
FDNS	00NR	0	20WP	G15_084	FROM->TO	G14-057T 345.00 - SUNNYSIDE 345KV CKT 1	717	789	0.19279	110.7451	CANEY CREEK - TEXOMA JCT 138KV CKT 1
FDNS	00NR	0	20WP	G15_084	FROM->TO	G14-057T 345.00 - SUNNYSIDE 345KV CKT 1	717	789	0.18462	110.7436	GRAPEVINE INTERCHANGE - STATELINE INTERCHANGE 230KV CKT 1
FDNS	00NR	0	20WP	G15_084	FROM->TO	G14-057T 345.00 - SUNNYSIDE 345KV CKT 1	717	789	0.18462	110.7436	GRAPEVINE INTERCHANGE - STATELINE INTERCHANGE 230KV CKT 1
FDNS	00NR	0	20WP	G15_084	FROM->TO	G14-057T 345.00 - SUNNYSIDE 345KV CKT 1	717	789	0.18744	110.7218	GEN532751 1-WOLF CREEK GENERATING STATION UNIT 1
FDNS	00NR	0	20WP	G15_084	FROM->TO	G14-057T 345.00 - SUNNYSIDE 345KV CKT 1	717	789	0.19046	110.6708	P12:138:AEPW-OGE:CORNVIL4:CIMARON4
FDNS	00NR	0	20WP	G15_084	FROM->TO	G14-057T 345.00 - SUNNYSIDE 345KV CKT 1	717	789	0.1915	110.6105	GRAPEVINE INTERCHANGE - NICHOLS STATION 230KV CKT 1
FDNS	00NR	0	20WP	G15_084	FROM->TO	G14-057T 345.00 - SUNNYSIDE 345KV CKT 1	717	789	0.1915	110.6105	GRAPEVINE INTERCHANGE - NICHOLS STATION 230KV CKT 1
FDNS	00NR	0	20WP	G15_084	FROM->TO	G14-057T 345.00 - SUNNYSIDE 345KV CKT 1	717	789	0.18744	110.6	GEN615002 2-COAL CREEK
FDNS	00NR	0	20WP	G15_084	FROM->TO	G14-057T 345.00 - SUNNYSIDE 345KV CKT 1	717	789	0.18744	110.5967	GEN635213 3-NEAL UNIT 3
FDNS	00NR	0	20WP	G15_084	FROM->TO	G14-057T 345.00 - SUNNYSIDE 345KV CKT 1	717	789	0.18744	110.5961	GEN629074 1-ARNOLD LOWSIDE OF GSU XFMR
FDNS	00NR	0	20WP	G15_084	FROM->TO	G14-057T 345.00 - SUNNYSIDE 345KV CKT 1	717	789	0.18393	110.531	NORTHWEST TEXARKANA - VALLIANT 345KV CKT 1
FDNS	00NR	0	20WP	G15_084	FROM->TO	G14-057T 345.00 - SUNNYSIDE 345KV CKT 1	717	789	0.18393	110.531	NORTHWEST TEXARKANA - VALLIANT 345KV CKT 1
FDNS	00NR	0	20WP	G15_084	FROM->TO	G14-057T 345.00 - SUNNYSIDE 345KV CKT 1	717	789	0.18761	110.5277	P12:138:WFEC:MSL09
FDNS	00NR	0	16WP	G15_084	FROM->TO	G14-057T 345.00 - SUNNYSIDE 345KV CKT 1	717	789	0.17873	110.5148	LYDIA - VALLIANT 345KV CKT 1
FDNS	00NR	0	16WP	G15_084	FROM->TO	G14-057T 345.00 - SUNNYSIDE 345KV CKT 1	717	789	0.17873	110.5148	LYDIA - VALLIANT 345KV CKT 1
FDNS	00NR	0	20WP	G15_084	FROM->TO	G14-057T 345.00 - SUNNYSIDE 345KV CKT 1	717	789	0.18744	110.5037	GEN636641 1-LOUISA UNIT 1
FDNS	00NR	0	20WP	G15_084	FROM->TO	G14-057T 345.00 - SUNNYSIDE 345KV CKT 1	717	789	0.18744	110.5028	GEN562754 1-G15031_5 0.6900
FDNS	00NR	0	20WP	G15_084	FROM->TO	G14-057T 345.00 - SUNNYSIDE 345KV CKT 1	717	789	0.18744	110.469	GEN600005 1-MONTICELLO
FDNS	00NR	0	20WP	G15_084	FROM->TO	G14-057T 345.00 - SUNNYSIDE 345KV CKT 1	717	789	0.17789	110.4636	CHISHOLM7 345.00 () 345/230/13.2KV TRANSFORMER CKT 1
FDNS	00NR	0	20WP	G15_084	FROM->TO	G14-057T 345.00 - SUNNYSIDE 345KV CKT 1	717	789	0.18744	110.445	GEN562556 1-G14_046_3 0.3420
FDNS	00NR	0	20WP	G15_084	FROM->TO	G14-057T 345.00 - SUNNYSIDE 345KV CKT 1	717	789	0.18744	110.444	GEN562756 1-G15031_7 0.6900
FDNS	00NR	0	20WP	G15_084	FROM->TO	G14-057T 345.00 - SUNNYSIDE 345KV CKT 1	717	789	0.17789	110.3828	CHISHOLM7 345.00 - GRACEMONT 345KV CKT 1
FDNS	00NR	0	20WP	G15_084	FROM->TO	G14-057T 345.00 - SUNNYSIDE 345KV CKT 1	717	789	0.18744	110.3618	GEN563142 1-G15079_3 0.5500
FDNS	00NR	0	20WP	G15_084	FROM->TO	G14-057T 345.00 - SUNNYSIDE 345KV CKT 1	717	789	0.18744	110.3618	GEN563151 1-G15080_2 0.5500
FDNS	00NR	0	20WP	G15_084	FROM->TO	G14-057T 345.00 - SUNNYSIDE 345KV CKT 1	717	789	0.18744	110.3553	GEN562023 1-G11_020_3 0.6900
FDNS	00NR	0	20WP	G15_084	FROM->TO	G14-057T 345.00 - SUNNYSIDE 345KV CKT 1	717	789	0.18744	110.3553	GEN562026 1-G11_019_3 0.6900
FDNS	00NR	0	20WP	G15_084	FROM->TO	G14-057T 345.00 - SUNNYSIDE 345KV CKT 1	717	789	0.18744	110.3434	GEN600000 1-SHERBURNECNTY G1
FDNS	00NR	0	20WP	G15_084	FROM->TO	G14-057T 345.00 - SUNNYSIDE 345KV CKT 1	717	789	0.18744	110.3082	GEN629075 1-OTTUMWA GENERATOR FOR OTTUMWA UNIT NO 1
FDNS	00NR	0	20WP	G15_084	FROM->TO	G14-057T 345.00 - SUNNYSIDE 345KV CKT 1	717	789	0.18744	110.2904	GEN600001 2-SHERBURNE CNTY G2
FDNS	00NR	0	20WP	G15_084	FROM->TO	G14-057T 345.00 - SUNNYSIDE 345KV CKT 1	717	789	0.18744	110.2626	GEN523971 1-HARRINGTON GEN #1 24 KV
FDNS	00NR	0	20WP	G15_084	FROM->TO	G14-057T 345.00 - SUNNYSIDE 345KV CKT 1	717	789	0.18744	110.2626	GEN523972 1-HARRINGTON GEN #2 24 KV
FDNS	00NR	0	20WP	G15_084	FROM->TO	G14-057T 345.00 - SUNNYSIDE 345KV CKT 1	717	789	0.18744	110.2626	GEN523973 1-HARRINGTON GEN #3 24 KV
FDNS	00NR	0	20WP	G15_084	FROM->TO	G14-057T 345.00 - SUNNYSIDE 345KV CKT 1	717	789	0.18744	110.2331	GEN511848 1-SOUTHWESTERN STATION #3
FDNS	00NR	0	20WP	G15_084	FROM->TO	G14-057T 345.00 - SUNNYSIDE 345KV CKT 1	717	789	0.18128	110.1764	LYDIA - WELSH 345KV CKT 1
FDNS	00NR	0	20WP	G15_084	FROM->TO	G14-057T 345.00 - SUNNYSIDE 345KV CKT 1	717	789	0.18128	110.1764	LYDIA - WELSH 345KV CKT 1
FDNS	00NR	0	20WP	G15_084	FROM->TO	G14-057T 345.00 - SUNNYSIDE 345KV CKT 1	717	789	0.18744	110.163	GEN527901 1-HOBBS PLANT #1 (CT)
FDNS	00NR	0	20WP	G15_084	FROM->TO	G14-057T 345.00 - SUNNYSIDE 345KV CKT 1	717	789	0.18744	110.163	GEN527902 1-HOBBS PLANT #2 (CT)
FDNS	00NR	0	20WP	G15_084	FROM->TO	G14-057T 345.00 - SUNNYSIDE 345KV CKT 1	717	789	0.18744	110.1255	GEN563042 1-G15068_3 0.6900
FDNS	00NR	0	20WP	G15_084	FROM->TO	G14-057T 345.00 - SUNNYSIDE 345KV CKT 1	717	789	0.18744	110.028	GEN635214 4-NEAL UNIT 4

SOLUTION	GROUP	SCENARIO	SEASON	SOURCE	DIRECTION	MONITORED ELEMENT	RATEA (MVA)	RATEB(MVA)	TDF	TC%LOADING (% MVA)	CONTINGENCY
FDNS	00NR	0	20WP	G15_084	FROM->TO	G14-057T 345.00 - SUNNYSIDE 345KV CKT 1	717	789	0.18096	109.9254	STATELINE INTERCHANGE - STLN-DEMARC6 230KV CKT 1
FDNS	00NR	0	20WP	G15_084	FROM->TO	G14-057T 345.00 - SUNNYSIDE 345KV CKT 1	717	789	0.18096	109.9227	STLN-DEMARC6 - SWEETWATER 230KV CKT 1
FDNS	00NR	0	20WP	G15_084	FROM->TO	G14-057T 345.00 - SUNNYSIDE 345KV CKT 1	717	789	0.18096	109.9175	P12:230:AEPW-SPS:SWEETWT6:WHEELER 6
FDNS	00NR	0	20WP	G15_084	FROM->TO	G14-057T 345.00 - SUNNYSIDE 345KV CKT 1	717	789	0.18744	109.8577	GEN600002 3-SHERBURNE CNTY G3
FDNS	00NR	0	20WP	G15_084	FROM->TO	G14-057T 345.00 - SUNNYSIDE 345KV CKT 1	717	789	0.18744	109.827	GEN563043 1-G15068_4 0.6900
FDNS	00NR	0	20WP	G15_084	FROM->TO	G14-057T 345.00 - SUNNYSIDE 345KV CKT 1	717	789	0.18744	109.8013	GEN526333 1-JONES GEN #3 21 KV
FDNS	00NR	0	20WP	G15_084	FROM->TO	G14-057T 345.00 - SUNNYSIDE 345KV CKT 1	717	789	0.18744	109.8012	GEN526334 1-JONES_4 116.500
FDNS	00NR	0	20WP	G15_084	FROM->TO	G14-057T 345.00 - SUNNYSIDE 345KV CKT 1	717	789	0.18744	109.7846	GEN563273 2-G15093_4 0.6900
FDNS	00NR	0	20WP	G15_084	FROM->TO	G14-057T 345.00 - SUNNYSIDE 345KV CKT 1	717	789	0.18744	109.7685	GEN344225 1-1CAL G1 25.000
FDNS	00NR	0	20WP	G15_084	FROM->TO	G14-057T 345.00 - SUNNYSIDE 345KV CKT 1	717	789	0.18744	109.7635	GEN525844 1-ELK_1 118.000
FDNS	00NR	0	20WP	G15_084	FROM->TO	G14-057T 345.00 - SUNNYSIDE 345KV CKT 1	717	789	0.18744	109.7458	GEN525845 1-ELK_2 1 18.000
FDNS	00NR	0	20WP	G15_084	FROM->TO	G14-057T 345.00 - SUNNYSIDE 345KV CKT 1	717	789	0.18744	109.6155	GEN527166 1-MUSTANG_6 118.000
FDNS	00NR	0	20WP	G15_084	FROM->TO	G14-057T 345.00 - SUNNYSIDE 345KV CKT 1	717	789	0.18744	109.5706	GEN635023 3-WALTER SCOTT UNIT 3
FDNS	00NR	0	20WP	G15_084	FROM->TO	G14-057T 345.00 - SUNNYSIDE 345KV CKT 1	717	789	0.18744	109.5526	GEN563202 1-G15085_3 0.5500
FDNS	00NR	0	20WP	G15_084	FROM->TO	G14-057T 345.00 - SUNNYSIDE 345KV CKT 1	717	789	0.18744	109.5515	GEN528501 1-G14_012 24.000
FDNS	00NR	0	20WP	G15_084	FROM->TO	G14-057T 345.00 - SUNNYSIDE 345KV CKT 1	717	789	0.17697	109.4942	P12:230:AEPW:ELKCITY6:SWEETWT6
FDNS	00NR	0	20WP	G15_084	FROM->TO	G14-057T 345.00 - SUNNYSIDE 345KV CKT 1	717	789	0.18744	109.4928	GEN562590 1-G14_057_3 0.6900
FDNS	00NR	0	16WP	G15_084	FROM->TO	G14-057T 345.00 - SUNNYSIDE 345KV CKT 1	717	789	0.18594	109.4478	EASTDC - ERCOT EQUIVALENCE 345KV CKT 1
FDNS	00NR	0	20WP	G15_084	FROM->TO	G14-057T 345.00 - SUNNYSIDE 345KV CKT 1	717	789	0.18744	109.3772	GEN562762 1-G15033_3 0.6900
FDNS	00NR	0	20WP	G15_084	FROM->TO	G14-057T 345.00 - SUNNYSIDE 345KV CKT 1	717	789	0.18744	109.3658	GEN562655 1-G14_074_3 0.6900
FDNS	00NR	0	20WP	G15_084	FROM->TO	G14-057T 345.00 - SUNNYSIDE 345KV CKT 1	717	789	0.18744	109.3638	GEN525562 1-TOLK GEN #2 24 KV
FDNS	00NR	0	20WP	G15_084	FROM->TO	G14-057T 345.00 - SUNNYSIDE 345KV CKT 1	717	789	0.18816	109.2753	JOHNSON COUNTY (JOHNCO) 345/138/13.8KV TRANSFORMER CKT 1
FDNS	00NR	0	20WP	G15_084	FROM->TO	G14-057T 345.00 - SUNNYSIDE 345KV CKT 1	717	789	0.18744	109.27	GEN562685 1-G15_013_3 0.3550
FDNS	00NR	0	20WP	G15_084	FROM->TO	G14-057T 345.00 - SUNNYSIDE 345KV CKT 1	717	789	0.18744	109.2675	GEN527903 1-HOBBS PLANT #3 (ST)
FDNS	00NR	0	20WP	G15_084	FROM->TO	G14-057T 345.00 - SUNNYSIDE 345KV CKT 1	717	789	0.18096	109.2452	CHISHOLM6 230.00 - SWEETWATER 230KV CKT 1
FDNS	00NR	0	20WP	G15_084	FROM->TO	G14-057T 345.00 - SUNNYSIDE 345KV CKT 1	717	789	0.18744	109.1665	GEN635024 4-WALTER SCOTT UNIT 4
FDNS	00NR	0	20WP	G15_084	FROM->TO	G14-057T 345.00 - SUNNYSIDE 345KV CKT 1	717	789	0.18744	109.1256	GEN563272 1-G15093_3 0.6900
FDNS	00NR	0	20WP	G15_084	FROM->TO	G14-057T 345.00 - SUNNYSIDE 345KV CKT 1	717	789	0.17984	109.1187	LYDIA - VALLIANT 345KV CKT 1
FDNS	00NR	0	20WP	G15_084	FROM->TO	G14-057T 345.00 - SUNNYSIDE 345KV CKT 1	717	789	0.17984	109.1187	LYDIA - VALLIANT 345KV CKT 1
FDNS	00NR	0	20WP	G15_084	FROM->TO	G14-057T 345.00 - SUNNYSIDE 345KV CKT 1	717	789	0.18744	108.7846	GEN525561 1-TOLK GEN #1 24 KV
FDNS	00NR	0	16WP	G15_084	FROM->TO	G14-057T 345.00 - SUNNYSIDE 345KV CKT 1	717	789	0.16372	108.4243	JOHNSON COUNTY - PITTSBURG 345KV CKT 1
FDNS	00NR	0	16WP	G15_084	FROM->TO	G14-057T 345.00 - SUNNYSIDE 345KV CKT 1	717	789	0.16372	108.4243	JOHNSON COUNTY - PITTSBURG 345KV CKT 1
FDNS	00NR	0	16WP	G15_084	FROM->TO	G14-057T 345.00 - SUNNYSIDE 345KV CKT 1	717	789	0.18594	108.057	GEN563263 1-G15092_4 0.6900
FDNS	00NR	0	16WP	G15_084	FROM->TO	G14-057T 345.00 - SUNNYSIDE 345KV CKT 1	717	789	0.17152	107.6655	HUGO - VALLIANT 345KV CKT 1
FDNS	00NR	0	16WP	G15_084	FROM->TO	G14-057T 345.00 - SUNNYSIDE 345KV CKT 1	717	789	0.17152	107.6655	HUGO - VALLIANT 345KV CKT 1
FDNS	00NR	0	20WP	G15_084	FROM->TO	G14-057T 345.00 - SUNNYSIDE 345KV CKT 1	717	789	0.16539	106.869	JOHNSON COUNTY - PITTSBURG 345KV CKT 1
FDNS	00NR	0	20WP	G15_084	FROM->TO	G14-057T 345.00 - SUNNYSIDE 345KV CKT 1	717	789	0.16539	106.869	JOHNSON COUNTY - PITTSBURG 345KV CKT 1
FDNS	00NR	0	20WP	G15_084	FROM->TO	G14-057T 345.00 - SUNNYSIDE 345KV CKT 1	717	789	0.17252	106.5939	HUGO - VALLIANT 345KV CKT 1
FDNS	00NR	0	20WP	G15_084	FROM->TO	G14-057T 345.00 - SUNNYSIDE 345KV CKT 1	717	789	0.17252	106.5939	HUGO - VALLIANT 345KV CKT 1
FDNS	00NR	0	16WP	G15_084	FROM->TO	G14-057T 345.00 - SUNNYSIDE 345KV CKT 1	717	789	0.18594	106.381	GEN563262 1-G15092_3 0.6900
FDNS	00NR	0	20WP	G15_084	FROM->TO	G14-057T 345.00 - SUNNYSIDE 345KV CKT 1	717	789	0.18744	105.9962	GEN563263 1-G15092_4 0.6900
FDNS	00NR	0	16WP	G15_084	FROM->TO	G14-057T 345.00 - SUNNYSIDE 345KV CKT 1	717	789	0.17604	104.8432	G14-074T 345.00 - TUCO INTERCHANGE 345KV CKT 1
FDNS	00NR	0	20WP	G15_084	FROM->TO	G14-057T 345.00 - SUNNYSIDE 345KV CKT 1	717	789	0.18744	104.3167	GEN563262 1-G15092_3 0.6900
FDNS	00NR	0	16WP	G15_084	FROM->TO	G14-057T 345.00 - SUNNYSIDE 345KV CKT 1	717	789	0.16302	102.6669	JOHNSON COUNTY - SUNNYSIDE 345KV CKT 1
FDNS	00NR	0	20WP	G15_084	FROM->TO	G14-057T 345.00 - SUNNYSIDE 345KV CKT 1	717	789	0.17738	101.6269	G14-074T 345.00 - TUCO INTERCHANGE 345KV CKT 1
FDNS	00NR	0	20SP	G15_084	FROM->TO	G14-057T 345.00 - SUNNYSIDE 345KV CKT 1	717	789	0.2615	100.8006	CIMARRON - MINCO 345KV CKT 1
FDNS	00NR	0	17SP	G15_084	FROM->TO	G14-057T 345.00 - SUNNYSIDE 345KV CKT 1	717	789	0.26349	100.4284	GRACEMONT - MINCO 345KV CKT 1
FDNS	00NR	0	20WP	G15_084	FROM->TO	G14-057T 345.00 - SUNNYSIDE 345KV CKT 1	717	789	0.16481	100.3152	JOHNSON COUNTY - SUNNYSIDE 345KV CKT 1
FDNS	00NR	0	20WP	G15_084	FROM->TO	G15085_T 138.00 - RUSSELL 138KV CKT 1	108	118	0.47842	145.7007	P12:230:AEPW:ELKCITY6:SWEETWT6
FDNS	00NR	0	20WP	G15_084	FROM->TO	G15085_T 138.00 - RUSSELL 138KV CKT 1	108	118	0.47939	145.3074	CHISHOLM6 230.00 - SWEETWATER 230KV CKT 1
FDNS	00NR	0	16WP	G15_084	FROM->TO	G15085_T 138.00 - RUSSELL 138KV CKT 1	108	118	0.47788	141.276	P12:230:AEPW:ELKCITY6:SWEETWT6
FDNS	00NR	0	16WP	G15_084	FROM->TO	G15085_T 138.00 - RUSSELL 138KV CKT 1	108	118	0.47898	140.9324	CHISHOLM6 230.00 - SWEETWATER 230KV CKT 1
FDNS	00NR	0	20WP	G15_084	FROM->TO	G15085_T 138.00 - RUSSELL 138KV CKT 1	108	118	0.47939	139.0999	STATELINE INTERCHANGE - STLN-DEMARC6 230KV CKT 1
FDNS	00NR	0	20WP	G15_084	FROM->TO	G15085_T 138.00 - RUSSELL 138KV CKT 1	108	118	0.47939	139.0798	P12:230:AEPW-SPS:SWEETWT6:WHEELER 6
FDNS	00NR	0	20WP	G15_084	FROM->TO	G15085_T 138.00 - RUSSELL 138KV CKT 1	108	118	0.47939	138.8008	STLN-DEMARC6 - SWEETWATER 230KV CKT 1
FDNS	00NR	0	20WP	G15_084	FROM->TO	G15085_T 138.00 - RUSSELL 138KV CKT 1	108	118	0.46995	134.6602	G14-074T 345.00 - OKLAUNION 345KV CKT 1
FDNS	00NR	0	16WP	G15_084	FROM->TO	G15085_T 138.00 - RUSSELL 138KV CKT 1	108	118	0.47898	134.4981	P12:230:AEPW-SPS:SWEETWT6:WHEELER 6
FDNS	00NR	0	16WP	G15_084	FROM->TO	G15085_T 138.00 - RUSSELL 138KV CKT 1	108	118	0.47898	134.4975	STATELINE INTERCHANGE - STLN-DEMARC6 230KV CKT 1
FDNS	00NR	0	16WP	G15_084	FROM->TO	G15085_T 138.00 - RUSSELL 138KV CKT 1	108	118	0.47898	134.4603	STLN-DEMARC6 - SWEETWATER 230KV CKT 1
FDNS	00NR	0	20WP	G15_084	FROM->TO	G15085_T 138.00 - RUSSELL 138KV CKT 1	108	118	0.55297	132.5011	LAKE PAULINE (LAKEPAUL) 138/69/14.4KV TRANSFORMER CKT 1
FDNS	00NR	0	20WP	G15_084	FROM->TO	G15085_T 138.00 - RUSSELL 138KV CKT 1	108	118	0.55297	132.5011	LAKE PAULINE (LAKEPAUL) 138/69/14.4KV TRANSFORMER CKT 1
FDNS	00NR	0	20WP	G15_084	FROM->TO	G15085_T 138.00 - RUSSELL 138KV CKT 1	108	118	0.55297	132.5004	ELDORADO - LAKE PAULINE 69KV CKT 1
FDNS	00NR	0	20WP	G15_084	FROM->TO	G15085_T 138.00 - RUSSELL 138KV CKT 1	108	118	0.55297	131.5203	ELDORADO - ELDORADO JCT 69KV CKT 1
FDNS	00NR	0	20WP	G15_084	FROM->TO	G15085_T 138.00 - RUSSELL 138KV CKT 1	108	118	0.4694	130.8974	MATHWSN7 345.00 - TATONGA7 345.00 345KV CKT 1
FDNS	00NR	0	16WP	G15_084	FROM->TO	G15085_T 138.00 - RUSSELL 138KV CKT 1	108	118	0.4694	130.8522	G14-074T 345.00 - OKLAUNION 345KV CKT 1
FDNS	00NR	0	20WP	G15_084	FROM->TO	G15085_T 138.00 - RUSSELL 138KV CKT 1	108	118	0.46884	130.3142	BASE CASE
FDNS	00NR	0	20WP	G15_084	FROM->TO	G15085_T 138.00 - RUSSELL 138KV CKT 1	108	118	0.55297	130.1837	ELDORADO JCT - GYPSUM 69KV CKT 1
FDNS	00NR	0	20WP	G15_084	FROM->TO	G15085_T 138.00 - RUSSELL 138KV CKT 1	108	118	0.47265	129.7044	GRAPEVINE INTERCHANGE - STATELINE INTERCHANGE 230KV CKT 1
FDNS	00NR	0	20WP	G15_084	FROM->TO	G15085_T 138.00 - RUSSELL 138KV CKT 1	108	118	0.47265	129.7044	GRAPEVINE INTERCHANGE - STATELINE INTERCHANGE 230KV CKT 1
FDNS	00NR	0	16WP	G15_084	FROM->TO	G15085_T 138.00 - RUSSELL 138KV CKT 1	108	118	0.55252	129.4412	LAKE PAULINE (LAKEPAUL) 138/69/14.4KV TRANSFORMER CKT 1
FDNS	00NR	0	16WP	G15_084	FROM->TO	G15085_T 138.00 - RUSSELL 138KV CKT 1	108	118	0.55252	129.4412	LAKE PAULINE (LAKEPAUL) 138/69/14.4KV TRANSFORMER CKT 1
FDNS	00NR	0	16WP	G15_084	FROM->TO	G15085_T 138.00 - RUSSELL 138KV CKT 1	108	118	0.55252	129.4395	ELDORADO - LAKE PAULINE 69KV CKT 1
FDNS	00NR	0	20WP	G15_084	FROM->TO	G15085_T 138.00 - RUSSELL 138KV CKT 1	108	118	0.4694	128.7794	G11_051T 345.00 - TATONGA7 345.00 345KV CKT 1
FDNS	00NR	0	16WP	G15_084	FROM->TO	G15085_T 138.00 - RUSSELL 138KV CKT 1	108	118	0.55252	128.4628	ELDORADO - ELDORADO JCT 69KV CKT 1
FDNSLock	00NR	0	16WP	G15_084	FROM->TO	G15085_T 138.00 - RUSSELL 138KV CKT 1	108	118	0.46889	128.1476	MATHWSN7 345.00 - TATONGA7 345.00 345KV CKT 1
FDNS	00NR	0	16WP	G15_084	FROM->TO	G15085_T 138.00 - RUSSELL 138KV CKT 1	108	118	0.46831	127.3543	BASE CASE
FDNS	00NR	0	20WP	G15_084	FROM->TO	G15085_T 138.00 - RUSSELL 138KV CKT 1	108	118	0.55297	127.1563	GYPSUM - RUSSELL 69KV CKT 1
FDNS	00NR	0	16WP	G15_084	FROM->TO	G15085_T 138.00 - RUSSELL 138KV CKT 1	108	118	0.55252	127.1337	ELDORADO JCT - GYPSUM 69KV CKT 1
FDNS	00NR	0	20WP	G15_084	FROM->TO	G15085_T 138.00 - RUSSELL 138KV CKT 1	108	118	0.46995	126.6115	G14-074T 345.00 - TUCO INTERCHANGE 345KV CKT 1

SOLUTION	GROUP	SCENARIO	SEASON	SOURCE	DIRECTION	MONITORED ELEMENT	RATEA (MVA)	RATEB(MVA)	TDF	TC%LOADING (% MVA)	CONTINGENCY
FDNS	00NR	0	16WP	G15_084	FROM->TO	G15085_T 138.00 - RUSSELL 138KV CKT 1	108	118	0.47216	126.0793	GRAPEVINE INTERCHANGE - STATELINE INTERCHANGE 230KV CKT 1
FDNS	00NR	0	16WP	G15_084	FROM->TO	G15085_T 138.00 - RUSSELL 138KV CKT 1	108	118	0.47216	126.0793	GRAPEVINE INTERCHANGE - STATELINE INTERCHANGE 230KV CKT 1
FDNSLock	00NR	0	16WP	G15_084	FROM->TO	G15085_T 138.00 - RUSSELL 138KV CKT 1	108	118	0.46889	125.8376	G11_051T 345.00 - TATONGA7 345.00 345KV CKT 1
FDNS	00NR	0	20WP	G15_084	FROM->TO	G15085_T 138.00 - RUSSELL 138KV CKT 1	108	118	0.4694	125.598	G11_051T 345.00 - WOODWARD DISTRICT EHV 345KV CKT 1
FDNS	00NR	0	20WP	G15_084	FROM->TO	G15085_T 138.00 - RUSSELL 138KV CKT 1	108	118	0.52572	124.5059	GRAPEVINE INTERCHANGE - KIRBY SWITCHING STATION 115KV CKT 1
FDNS	00NR	0	20WP	G15_084	FROM->TO	G15085_T 138.00 - RUSSELL 138KV CKT 1	108	118	0.52572	124.5059	GRAPEVINE INTERCHANGE - KIRBY SWITCHING STATION 115KV CKT 1
FDNS	00NR	0	20WP	G15_084	FROM->TO	G15085_T 138.00 - RUSSELL 138KV CKT 1	108	118	0.46811	124.3365	CHISHOLM6 230.00 - ELK CITY 230KV 230KV CKT 1
FDNS	00NR	0	20WP	G15_084	FROM->TO	G15085_T 138.00 - RUSSELL 138KV CKT 1	108	118	0.46811	124.3304	ELK CITY 230KV (ELKCTY-6) 230/138/13.8KV TRANSFORMER CKT 1
FDNS	00NR	0	20WP	G15_084	FROM->TO	G15085_T 138.00 - RUSSELL 138KV CKT 1	108	118	0.46811	124.3304	ELK CITY 230KV (ELKCTY-6) 230/138/13.8KV TRANSFORMER CKT 1
FDNS	00NR	0	16WP	G15_084	FROM->TO	G15085_T 138.00 - RUSSELL 138KV CKT 1	108	118	0.55252	124.1333	GYPSUM - RUSSELL 69KV CKT 1
FDNS	00NR	0	20WP	G15_084	FROM->TO	G15085_T 138.00 - RUSSELL 138KV CKT 1	108	118	0.47204	123.9607	CHISHOLM7 345.00 - GRACEMONT 345KV CKT 1
FDNS	00NR	0	20WP	G15_084	FROM->TO	G15085_T 138.00 - RUSSELL 138KV CKT 1	108	118	0.46884	123.9543	GEN562685 1-G15_013_3 0.3550
FDNS	07NR	0	20L	G15_084	FROM->TO	G15085_T 138.00 - RUSSELL 138KV CKT 1	108	118	0.47877	123.808	CHISHOLM6 230.00 - SWEETWATER 230KV CKT 1
FDNS	07NR	0	20L	G15_084	FROM->TO	G15085_T 138.00 - RUSSELL 138KV CKT 1	108	118	0.4778	123.4166	P12:230:AEPW:ELKCITY6:SWEETWT6
FDNS	00NR	0	16WP	G15_084	FROM->TO	G15085_T 138.00 - RUSSELL 138KV CKT 1	108	118	0.4694	123.3692	G14-074T 345.00 - TUCO INTERCHANGE 345KV CKT 1
FDNS	00NR	0	20WP	G15_084	FROM->TO	G15085_T 138.00 - RUSSELL 138KV CKT 1	108	118	0.47204	123.008	CHISHOLM7 345.00 () 345/230/13.2KV TRANSFORMER CKT 1
FDNS	00NR	0	20WP	G15_084	FROM->TO	G15085_T 138.00 - RUSSELL 138KV CKT 1	108	118	0.46928	122.6963	BORDER 7345.00 - WOODWARD DISTRICT EHV 345KV CKT 1
FDNSLock	00NR	0	16WP	G15_084	FROM->TO	G15085_T 138.00 - RUSSELL 138KV CKT 1	108	118	0.46889	122.6935	G11_051T 345.00 - WOODWARD DISTRICT EHV 345KV CKT 1
FDNS	07ALL	0	20WP	G15_084	FROM->TO	G15085_T 138.00 - RUSSELL 138KV CKT 1	108	118	0.4746	122.6475	CHISHOLM6 230.00 - SWEETWATER 230KV CKT 1
FDNS	07ALL	0	20WP	G15_084	FROM->TO	G15085_T 138.00 - RUSSELL 138KV CKT 1	108	118	0.47369	122.4796	P12:230:AEPW:ELKCITY6:SWEETWT6
FDNS	00NR	0	20WP	G15_084	FROM->TO	G15085_T 138.00 - RUSSELL 138KV CKT 1	108	118	0.46985	122.3427	Hitchland Interchange - WALKTAP7 345.00 345KV CKT 1
FDNS	00NR	0	20WP	G15_084	FROM->TO	G15085_T 138.00 - RUSSELL 138KV CKT 1	108	118	0.46985	122.3427	Hitchland Interchange - WALKTAP7 345.00 345KV CKT 1
FDNS	00NR	0	20WP	G15_084	FROM->TO	G15085_T 138.00 - RUSSELL 138KV CKT 1	108	118	0.46985	122.339	P12:345:SPS:J07.1.FINN.HITCH
FDNS	00NR	0	20WP	G15_084	FROM->TO	G15085_T 138.00 - RUSSELL 138KV CKT 1	108	118	0.51619	122.1848	P12:69:AEPW:NWMEMPH2:CHLDR2WT
FDNS	00NR	0	20WP	G15_084	FROM->TO	G15085_T 138.00 - RUSSELL 138KV CKT 1	108	118	0.51619	121.7765	P12:69:AEPW:CHLDR2WT:MEMPHIS2
FDNS	00NR	0	16WP	G15_084	FROM->TO	G15085_T 138.00 - RUSSELL 138KV CKT 1	108	118	0.52523	121.4462	GRAPEVINE INTERCHANGE - KIRBY SWITCHING STATION 115KV CKT 1
FDNS	00NR	0	16WP	G15_084	FROM->TO	G15085_T 138.00 - RUSSELL 138KV CKT 1	108	118	0.52523	121.4462	GRAPEVINE INTERCHANGE - KIRBY SWITCHING STATION 115KV CKT 1
FDNS	00NR	0	16WP	G15_084	FROM->TO	G15085_T 138.00 - RUSSELL 138KV CKT 1	108	118	0.46831	121.356	GEN562685 1-G15_013_3 0.3550
FDNS	00NR	0	16WP	G15_084	FROM->TO	G15085_T 138.00 - RUSSELL 138KV CKT 1	108	118	0.46743	121.1309	CHISHOLM6 230.00 - ELK CITY 230KV 230KV CKT 1
FDNS	00NR	0	16WP	G15_084	FROM->TO	G15085_T 138.00 - RUSSELL 138KV CKT 1	108	118	0.46743	121.1268	ELK CITY 230KV (ELKCTY-6) 230/138/13.8KV TRANSFORMER CKT 1
FDNS	00NR	0	16WP	G15_084	FROM->TO	G15085_T 138.00 - RUSSELL 138KV CKT 1	108	118	0.46743	121.1268	ELK CITY 230KV (ELKCTY-6) 230/138/13.8KV TRANSFORMER CKT 1
FDNS	00NR	0	16WP	G15_084	FROM->TO	G15085_T 138.00 - RUSSELL 138KV CKT 1	108	118	0.47152	120.9469	CHISHOLM7 345.00 - GRACEMONT 345KV CKT 1
FDNS	07ALL	0	20L	G15_084	FROM->TO	G15085_T 138.00 - RUSSELL 138KV CKT 1	108	118	0.47387	120.893	CHISHOLM6 230.00 - SWEETWATER 230KV CKT 1
FDNS	07ALL	0	20L	G15_084	FROM->TO	G15085_T 138.00 - RUSSELL 138KV CKT 1	108	118	0.47294	120.3139	P12:230:AEPW:ELKCITY6:SWEETWT6
FDNS	00NR	0	16WP	G15_084	FROM->TO	G15085_T 138.00 - RUSSELL 138KV CKT 1	108	118	0.47152	120.073	CHISHOLM7 345.00 (CHISHOLM) 345/230/13.2KV TRANSFORMER CKT 1
FDNS	00NR	0	16WP	G15_084	FROM->TO	G15085_T 138.00 - RUSSELL 138KV CKT 1	108	118	0.51567	119.9471	P12:69:AEPW:NWMEMPH2:CHLDR2WT
FDNS	00NR	0	16WP	G15_084	FROM->TO	G15085_T 138.00 - RUSSELL 138KV CKT 1	108	118	0.46929	119.5028	FINNEY SWITCHING STATION - HOLCOMB 345KV CKT 1
FDNS	00NR	0	16WP	G15_084	FROM->TO	G15085_T 138.00 - RUSSELL 138KV CKT 1	108	118	0.46929	119.5028	FINNEY SWITCHING STATION - HOLCOMB 345KV CKT 1
FDNSLock	00NR	0	16WP	G15_084	FROM->TO	G15085_T 138.00 - RUSSELL 138KV CKT 1	108	118	0.51567	119.0348	CHILDRESS (CHLDR2WT) 138/69/12.47KV TRANSFORMER CKT 1
FDNSLock	00NR	0	16WP	G15_084	FROM->TO	G15085_T 138.00 - RUSSELL 138KV CKT 1	108	118	0.51567	119.0345	AMOCO TAP - CHILDRESS 69KV CKT 1
FDNS	00NR	0	20WP	G15_084	FROM->TO	G15085_T 138.00 - RUSSELL 138KV CKT 1	108	118	0.47182	116.7281	SNYDER (SNYDER) 138/69/13.8KV TRANSFORMER CKT 1
FDNS	00NR	0	20WP	G15_084	FROM->TO	G15085_T 138.00 - RUSSELL 138KV CKT 1	108	118	0.46787	116.5927	G14-057T 345.00 - LAWTON EASTSIDE 345KV CKT 1
FDNS	00NR	0	20WP	G15_084	FROM->TO	G15085_T 138.00 - RUSSELL 138KV CKT 1	108	118	0.51619	116.3263	HEDLEY - NORTH MEMPHIS REC 69KV CKT 1
FDNS	00NR	0	20WP	G15_084	FROM->TO	G15085_T 138.00 - RUSSELL 138KV CKT 1	108	118	0.46884	116.2971	GEN523973 1-HARRINGTON GEN #3 24 KV
FDNS	00NR	0	20WP	G15_084	FROM->TO	G15085_T 138.00 - RUSSELL 138KV CKT 1	108	118	0.46884	116.297	GEN523971 1-HARRINGTON GEN #1 24 KV
FDNS	00NR	0	20WP	G15_084	FROM->TO	G15085_T 138.00 - RUSSELL 138KV CKT 1	108	118	0.46884	116.2969	GEN523972 1-HARRINGTON GEN #2 24 KV
FDNS	00NR	0	20WP	G15_084	FROM->TO	G15085_T 138.00 - RUSSELL 138KV CKT 1	108	118	0.46752	116.2966	CIMARRON - MINCO 345KV CKT 1
FDNS	00NR	0	20WP	G15_084	FROM->TO	G15085_T 138.00 - RUSSELL 138KV CKT 1	108	118	0.44459	116.1116	OMPA-ALTUS TAMARACK - OMPVET 138KV CKT 1
FDNS	00NR	0	20WP	G15_084	FROM->TO	G15085_T 138.00 - RUSSELL 138KV CKT 1	108	118	0.51619	115.8705	CLARENDON REC - HEDLEY 69KV CKT 1
FDNS	07NR	0	17G	G15_084	FROM->TO	G15085_T 138.00 - RUSSELL 138KV CKT 1	108	118	0.47788	115.7658	P12:230:AEPW:ELKCITY6:SWEETWT6
FDNS	07NR	0	20L	G15_084	FROM->TO	G15085_T 138.00 - RUSSELL 138KV CKT 1	108	118	0.67558	115.7101	HOLLIS TAP - WELLINGTON 138KV CKT 1
FDNS	07NR	0	17G	G15_084	FROM->TO	G15085_T 138.00 - RUSSELL 138KV CKT 1	108	118	0.47898	115.5794	CHISHOLM6 230.00 - SWEETWATER 230KV CKT 1
FDNS	07ALL	0	16WP	G15_084	FROM->TO	G15085_T 138.00 - RUSSELL 138KV CKT 1	108	118	0.47479	115.2764	CHISHOLM6 230.00 - SWEETWATER 230KV CKT 1
FDNS	00NR	0	20WP	G15_084	FROM->TO	G15085_T 138.00 - RUSSELL 138KV CKT 1	108	118	0.44459	115.1353	OMPA-ALTUS PARK - OMPVET 138KV CKT 1
FDNS	00NR	0	20WP	G15_084	FROM->TO	G15085_T 138.00 - RUSSELL 138KV CKT 1	108	118	0.46787	115.0547	G14-057T 345.00 - SUNNYSIDE 345KV CKT 1
FDNS	00NR	0	20WP	G15_084	FROM->TO	G15085_T 138.00 - RUSSELL 138KV CKT 1	108	118	0.51619	115.0444	CLARENDON - CLARENDON REC 69KV CKT 1
FDNS	00NR	0	20WP	G15_084	FROM->TO	G15085_T 138.00 - RUSSELL 138KV CKT 1	108	118	0.67582	115.004	SHAMROCK - WELLINGTON 138KV CKT 1
FDNS	07ALL	0	16WP	G15_084	FROM->TO	G15085_T 138.00 - RUSSELL 138KV CKT 1	108	118	0.47376	114.9548	P12:230:AEPW:ELKCITY6:SWEETWT6
FDNS	00NR	0	20WP	G15_084	FROM->TO	G15085_T 138.00 - RUSSELL 138KV CKT 1	108	118	0.67582	114.74	SHAMROCK (SHAMRCK2) 138/69/14.4KV TRANSFORMER CKT 1
FDNS	00NR	0	20WP	G15_084	FROM->TO	G15085_T 138.00 - RUSSELL 138KV CKT 1	108	118	0.67582	114.74	SHAMROCK (SHAMRCK2) 138/69/14.4KV TRANSFORMER CKT 1
FDNS	00NR	0	20WP	G15_084	FROM->TO	G15085_T 138.00 - RUSSELL 138KV CKT 1	108	118	0.46093	114.568	RUSSELL (RUSSELL) 138/69/13.8KV TRANSFORMER CKT 1
FDNS	00NR	0	20WP	G15_084	FROM->TO	G15085_T 138.00 - RUSSELL 138KV CKT 1	108	118	0.44459	114.5258	ALTUS JUNCTION - OMPA-ALTUS PARK 138KV CKT 1
FDNS	00NR	0	20WP	G15_084	FROM->TO	G15085_T 138.00 - RUSSELL 138KV CKT 1	108	118	0.44459	114.5258	ALTUS JUNCTION - OMPA-ALTUS PARK 138KV CKT 1
FDNS	00NR	0	20WP	G15_084	FROM->TO	G15085_T 138.00 - RUSSELL 138KV CKT 1	108	118	0.45237	114.4081	CACHE - SNYDER 138KV CKT 1
FDNS	00NR	0	20WP	G15_084	FROM->TO	G15085_T 138.00 - RUSSELL 138KV CKT 1	108	118	0.45237	114.3543	P12:138:AEPW:112GORE4:SNYDER-4
FDNS	07ALL	0	20L	G15_084	FROM->TO	G15085_T 138.00 - RUSSELL 138KV CKT 1	108	118	0.67422	114.281	HOLLIS TAP - WELLINGTON 138KV CKT 1
FDNS	00NR	0	16WP	G15_084	FROM->TO	G15085_T 138.00 - RUSSELL 138KV CKT 1	108	118	0.47129	114.144	SNYDER (SNYDER) 138/69/13.8KV TRANSFORMER CKT 1
FDNS	00NR	0	16WP	G15_084	FROM->TO	G15085_T 138.00 - RUSSELL 138KV CKT 1	108	118	0.67533	113.9166	SHAMROCK - WELLINGTON 138KV CKT 1
FDNS	00NR	0	16WP	G15_084	FROM->TO	G15085_T 138.00 - RUSSELL 138KV CKT 1	108	118	0.46734	113.8297	G14-057T 345.00 - LAWTON EASTSIDE 345KV CKT 1
FDNS	00NR	0	16WP	G15_084	FROM->TO	G15085_T 138.00 - RUSSELL 138KV CKT 1	108	118	0.67533	113.7228	SHAMROCK (SHAMRCK2) 138/69/14.4KV TRANSFORMER CKT 1
FDNS	00NR	0	16WP	G15_084	FROM->TO	G15085_T 138.00 - RUSSELL 138KV CKT 1	108	118	0.67533	113.7228	SHAMROCK (SHAMRCK2) 138/69/14.4KV TRANSFORMER CKT 1
FDNS	00NR	0	16WP	G15_084	FROM->TO	G15085_T 138.00 - RUSSELL 138KV CKT 1	108	118	0.51567	113.6706	CLARENDON REC - HEDLEY 69KV CKT 1
FDNS	00NR	0	16WP	G15_084	FROM->TO	G15085_T 138.00 - RUSSELL 138KV CKT 1	108	118	0.44441	113.6507	OMPA-ALTUS TAMARACK - OMPVET 138KV CKT 1
FDNS	00NR	0	16WP	G15_084	FROM->TO	G15085_T 138.00 - RUSSELL 138KV CKT 1	108	118	0.46831	113.6208	GEN523973 1-HARRINGTON GEN #3 24 KV
FDNS	00NR	0	16WP	G15_084	FROM->TO	G15085_T 138.00 - RUSSELL 138KV CKT 1	108	118	0.46831	113.6207	GEN523971 1-HARRINGTON GEN #1 24 KV
FDNS	00NR	0	16WP	G15_084	FROM->TO	G15085_T 138.00 - RUSSELL 138KV CKT 1	108	118	0.46831	113.62	GEN523972 1-HARRINGTON GEN #2 24 KV
FDNS	00NR	0	16WP	G15_084	FROM->TO	G15085_T 138.00 - RUSSELL 138KV CKT 1	108	118	0.46698	113.588	CIMARRON - MINCO 345KV CKT 1
FDNS	00NR	0	20WP	G15_084	FROM->TO	G15085_T 138.00 - RUSSELL 138KV CKT 1	108	118	0.48304	113.33	P12:115:SPS:T53.1.NICHLS.KIRBY
FDNS	00NR	0	20WP	G15_084	FROM->TO	G15085_T 138.00 - RUSSELL 138KV CKT 1	108	118	0.48304	113.303	CONWAY SUB - KIRBY SWITCHING STATION 115KV CKT 1

SOLUTION	GROUP	SCENARIO	SEASON	SOURCE	DIRECTION	MONITORED ELEMENT	RATEA (MVA)	RATEB(MVA)	TDF	TC%LOADING (% MVA)	CONTINGENCY
FDNS	07ALL	0	17G	G15_084	FROM->TO	G15085_T 138.00 - RUSSELL 138KV CKT 1	108	118	0.47471	113.261	CHISHOLM6 230.00 - SWEETWATER 230KV CKT 1
FDNS	07NR	0	20L	G15_084	FROM->TO	G15085_T 138.00 - RUSSELL 138KV CKT 1	108	118	0.46835	113.2464	BASE CASE
FDNS	00NR	0	20WP	G15_084	FROM->TO	G15085_T 138.00 - RUSSELL 138KV CKT 1	108	118	0.43321	113.1349	ALTUS JUNCTION - SNYDER 138KV CKT 1
FDNS	00NR	0	20WP	G15_084	FROM->TO	G15085_T 138.00 - RUSSELL 138KV CKT 1	108	118	0.43321	113.1349	ALTUS JUNCTION - SNYDER 138KV CKT 1
FDNSLock	00NR	0	20WP	G15_084	FROM->TO	G15085_T 138.00 - RUSSELL 138KV CKT 1	108	118	0.51619	112.9248	CLARENDON - HWRDWCK2 69.000 69KV CKT 1
FDNS	00NR	0	16WP	G15_084	FROM->TO	G15085_T 138.00 - RUSSELL 138KV CKT 1	108	118	0.51567	112.9198	CLARENDON - CLARENDON REC 69KV CKT 1
FDNS	07NR	0	20L	G15_084	FROM->TO	G15085_T 138.00 - RUSSELL 138KV CKT 1	108	118	0.67558	112.806	SHAMROCK - WELLINGTON 138KV CKT 1
FDNS	00NR	0	16WP	G15_084	FROM->TO	G15085_T 138.00 - RUSSELL 138KV CKT 1	108	118	0.44441	112.719	OMPA-ALTUS PARK - OMPVET 138KV CKT 1
FDNS	07NR	0	20L	G15_084	FROM->TO	G15085_T 138.00 - RUSSELL 138KV CKT 1	108	118	0.67558	112.5847	SHAMROCK (SHAMRCK2) 138/69/14.4KV TRANSFORMER CKT 1
FDNS	07NR	0	20L	G15_084	FROM->TO	G15085_T 138.00 - RUSSELL 138KV CKT 1	108	118	0.67558	112.5847	SHAMROCK (SHAMRCK2) 138/69/14.4KV TRANSFORMER CKT 1
FDNSLock	07NR	0	20L	G15_084	FROM->TO	G15085_T 138.00 - RUSSELL 138KV CKT 1	108	118	0.55242	112.563	LAKE PAULINE (LAKEPAUL) 138/69/14.4KV TRANSFORMER CKT 1
FDNSLock	07NR	0	20L	G15_084	FROM->TO	G15085_T 138.00 - RUSSELL 138KV CKT 1	108	118	0.55242	112.563	LAKE PAULINE (LAKEPAUL) 138/69/14.4KV TRANSFORMER CKT 1
FDNS	07NR	0	20L	G15_084	FROM->TO	G15085_T 138.00 - RUSSELL 138KV CKT 1	108	118	0.55242	112.5627	ELDORADO - LAKE PAULINE 69KV CKT 1
FDNSLock	00NR	0	20WP	G15_084	FROM->TO	G15085_T 138.00 - RUSSELL 138KV CKT 1	108	118	0.51619	112.5479	HWRDWCK2 69.000 - JERICHO 69KV CKT 1
FDNSLock	00NR	0	20WP	G15_084	FROM->TO	G15085_T 138.00 - RUSSELL 138KV CKT 1	108	118	0.51619	112.5384	JERICHO (JERIC2WT) 115/69/14.4KV TRANSFORMER CKT 1
FDNSLock	00NR	0	20WP	G15_084	FROM->TO	G15085_T 138.00 - RUSSELL 138KV CKT 1	108	118	0.51619	112.5358	JERICHO - KIRBY SWITCHING STATION 115KV CKT 1
FDNS	00NR	0	20WP	G15_084	FROM->TO	G15085_T 138.00 - RUSSELL 138KV CKT 1	108	118	0.48304	112.5044	CONWAY SUB - NICHOLS STATION 115KV CKT 1
FDNS	00NR	0	16WP	G15_084	FROM->TO	G15085_T 138.00 - RUSSELL 138KV CKT 1	108	118	0.46734	112.2203	G14-057T 345.00 - SUNNYSIDE 345KV CKT 1
FDNS	00NR	0	16WP	G15_084	FROM->TO	G15085_T 138.00 - RUSSELL 138KV CKT 1	108	118	0.44441	112.1543	ALTUS JUNCTION - OMPA-ALTUS PARK 138KV CKT 1
FDNS	00NR	0	16WP	G15_084	FROM->TO	G15085_T 138.00 - RUSSELL 138KV CKT 1	108	118	0.44441	112.1543	ALTUS JUNCTION - OMPA-ALTUS PARK 138KV CKT 1
FDNS	07NR	0	20L	G15_084	FROM->TO	G15085_T 138.00 - RUSSELL 138KV CKT 1	108	118	0.55242	112.0364	ELDORADO - ELDORADO JCT 69KV CKT 1
FDNS	00NR	0	16WP	G15_084	FROM->TO	G15085_T 138.00 - RUSSELL 138KV CKT 1	108	118	0.46031	111.8658	RUSSELL (RUSSELL) 138/69/13.8KV TRANSFORMER CKT 1
FDNS	00NR	0	20WP	G15_084	FROM->TO	G15085_T 138.00 - RUSSELL 138KV CKT 1	108	118	0.47219	111.4292	GRAPEVINE INTERCHANGE - NICHOLS STATION 230KV CKT 1
FDNS	00NR	0	20WP	G15_084	FROM->TO	G15085_T 138.00 - RUSSELL 138KV CKT 1	108	118	0.47219	111.4292	GRAPEVINE INTERCHANGE - NICHOLS STATION 230KV CKT 1
FDNS	07ALL	0	20L	G15_084	FROM->TO	G15085_T 138.00 - RUSSELL 138KV CKT 1	108	118	0.67422	111.372	SHAMROCK - WELLINGTON 138KV CKT 1
FDNS	00NR	0	16WP	G15_084	FROM->TO	G15085_T 138.00 - RUSSELL 138KV CKT 1	108	118	0.45124	111.2645	CACHE - SNYDER 138KV CKT 1
FDNS	00NR	0	16WP	G15_084	FROM->TO	G15085_T 138.00 - RUSSELL 138KV CKT 1	108	118	0.48248	111.262	P12:115:SPS:T53.1.NICHLS.KIRBY
FDNS	00NR	0	16WP	G15_084	FROM->TO	G15085_T 138.00 - RUSSELL 138KV CKT 1	108	118	0.48248	111.2382	CONWAY SUB - KIRBY SWITCHING STATION 115KV CKT 1
FDNS	00NR	0	16WP	G15_084	FROM->TO	G15085_T 138.00 - RUSSELL 138KV CKT 1	108	118	0.45124	111.2307	P12:138:AEPW:112GORE4:SNYDER-4
FDNS	07ALL	0	20L	G15_084	FROM->TO	G15085_T 138.00 - RUSSELL 138KV CKT 1	108	118	0.67422	111.1527	SHAMROCK (SHAMRCK2) 138/69/14.4KV TRANSFORMER CKT 1
FDNS	07ALL	0	20L	G15_084	FROM->TO	G15085_T 138.00 - RUSSELL 138KV CKT 1	108	118	0.67422	111.1527	SHAMROCK (SHAMRCK2) 138/69/14.4KV TRANSFORMER CKT 1
FDNS	07NR	0	20L	G15_084	FROM->TO	G15085_T 138.00 - RUSSELL 138KV CKT 1	108	118	0.55242	111.1264	ELDORADO JCT - GYPSUM 69KV CKT 1
FDNS	07ALL	0	20WP	G15_084	FROM->TO	G15085_T 138.00 - RUSSELL 138KV CKT 1	108	118	0.67444	110.8599	HOLLIS TAP - WELLINGTON 138KV CKT 1
FDNSLock	00NR	0	16WP	G15_084	FROM->TO	G15085_T 138.00 - RUSSELL 138KV CKT 1	108	118	0.51567	110.8178	CLARENDON - HWRDWCK2 69.000 69KV CKT 1
FDNS	07NR	0	20L	G15_084	FROM->TO	G15085_T 138.00 - RUSSELL 138KV CKT 1	108	118	0.47155	110.7866	CHISHOLM7 345.00 - GRACEMONT 345KV CKT 1
FDNS	00NR	0	16WP	G15_084	FROM->TO	G15085_T 138.00 - RUSSELL 138KV CKT 1	108	118	0.48248	110.499	CONWAY SUB - NICHOLS STATION 115KV CKT 1
FDNSLock	00NR	0	16WP	G15_084	FROM->TO	G15085_T 138.00 - RUSSELL 138KV CKT 1	108	118	0.51567	110.4771	HWRDWCK2 69.000 - JERICHO 69KV CKT 1
FDNSLock	00NR	0	16WP	G15_084	FROM->TO	G15085_T 138.00 - RUSSELL 138KV CKT 1	108	118	0.51567	110.4661	JERICHO (JERIC2WT) 115/69/14.4KV TRANSFORMER CKT 1
FDNSLock	00NR	0	16WP	G15_084	FROM->TO	G15085_T 138.00 - RUSSELL 138KV CKT 1	108	118	0.51567	110.4642	JERICHO - KIRBY SWITCHING STATION 115KV CKT 1
FDNS	07NR	0	20L	G15_084	FROM->TO	G15085_T 138.00 - RUSSELL 138KV CKT 1	108	118	0.67558	110.3658	P12:115:SPS:T54.1.KIRBY.SHM(520)
FDNS	07NR	0	20L	G15_084	FROM->TO	G15085_T 138.00 - RUSSELL 138KV CKT 1	108	118	0.67558	110.3658	P12:115:SPS-AEPW:KIRBY3:SHAM3WT
FDNS	00NR	0	20WP	G15_084	FROM->TO	G15085_T 138.00 - RUSSELL 138KV CKT 1	108	118	0.67582	110.3127	P12:115:SPS:T54.1.KIRBY.SHM(520)
FDNS	00NR	0	20WP	G15_084	FROM->TO	G15085_T 138.00 - RUSSELL 138KV CKT 1	108	118	0.67582	110.3127	P12:115:SPS-AEPW:KIRBY3:SHAM3WT
FDNS	07NR	0	20L	G15_084	FROM->TO	G15085_T 138.00 - RUSSELL 138KV CKT 1	108	118	0.67558	110.2834	MCLEAN RURAL SUB - SHAMROCK 115KV CKT 1
FDNS	07NR	0	20L	G15_084	FROM->TO	G15085_T 138.00 - RUSSELL 138KV CKT 1	108	118	0.67558	110.2834	MCLEAN RURAL SUB - SHAMROCK 115KV CKT 1
FDNS	07NR	0	20L	G15_084	FROM->TO	G15085_T 138.00 - RUSSELL 138KV CKT 1	108	118	0.67558	110.2799	SHAMROCK (SHAMRCK1) 115/69/14.4KV TRANSFORMER CKT 1
FDNS	07NR	0	20L	G15_084	FROM->TO	G15085_T 138.00 - RUSSELL 138KV CKT 1	108	118	0.67558	110.2799	SHAMROCK (SHAMRCK1) 115/69/14.4KV TRANSFORMER CKT 1
FDNS	00NR	0	20WP	G15_084	FROM->TO	G15085_T 138.00 - RUSSELL 138KV CKT 1	108	118	0.67582	110.1799	SHAMROCK (SHAMRCK1) 115/69/14.4KV TRANSFORMER CKT 1
FDNS	00NR	0	20WP	G15_084	FROM->TO	G15085_T 138.00 - RUSSELL 138KV CKT 1	108	118	0.67582	110.1799	SHAMROCK (SHAMRCK1) 115/69/14.4KV TRANSFORMER CKT 1
FDNS	00NR	0	20WP	G15_084	FROM->TO	G15085_T 138.00 - RUSSELL 138KV CKT 1	108	118	0.67582	110.1685	MCLEAN RURAL SUB - SHAMROCK 115KV CKT 1
FDNS	00NR	0	20WP	G15_084	FROM->TO	G15085_T 138.00 - RUSSELL 138KV CKT 1	108	118	0.67582	110.1685	MCLEAN RURAL SUB - SHAMROCK 115KV CKT 1
FDNS	00NR	0	16WP	G15_084	FROM->TO	G15085_T 138.00 - RUSSELL 138KV CKT 1	108	118	0.43184	110.1638	ALTUS JUNCTION - SNYDER 138KV CKT 1
FDNS	00NR	0	16WP	G15_084	FROM->TO	G15085_T 138.00 - RUSSELL 138KV CKT 1	108	118	0.43184	110.1638	ALTUS JUNCTION - SNYDER 138KV CKT 1
FDNS	07NR	0	17G	G15_084	FROM->TO	G15085_T 138.00 - RUSSELL 138KV CKT 1	108	118	0.67533	109.6856	HOLLIS TAP - WELLINGTON 138KV CKT 1
FDNS	00NR	0	16WP	G15_084	FROM->TO	G15085_T 138.00 - RUSSELL 138KV CKT 1	108	118	0.47162	109.5875	GRAPEVINE INTERCHANGE - NICHOLS STATION 230KV CKT 1
FDNS	00NR	0	16WP	G15_084	FROM->TO	G15085_T 138.00 - RUSSELL 138KV CKT 1	108	118	0.47162	109.5875	GRAPEVINE INTERCHANGE - NICHOLS STATION 230KV CKT 1
FDNS	07ALL	0	20L	G15_084	FROM->TO	G15085_T 138.00 - RUSSELL 138KV CKT 1	108	118	0.46537	109.5073	BASE CASE
FDNS	07NR	0	20L	G15_084	FROM->TO	G15085_T 138.00 - RUSSELL 138KV CKT 1	108	118	0.55242	109.4992	GYPSUM - RUSSELL 69KV CKT 1
FDNS	00NR	0	16WP	G15_084	FROM->TO	G15085_T 138.00 - RUSSELL 138KV CKT 1	108	118	0.67533	109.26	P12:115:SPS:T54.1.KIRBY.SHM(520)
FDNS	00NR	0	16WP	G15_084	FROM->TO	G15085_T 138.00 - RUSSELL 138KV CKT 1	108	118	0.67533	109.26	P12:115:SPS-AEPW:KIRBY3:SHAM3WT
FDNS	00NR	0	16WP	G15_084	FROM->TO	G15085_T 138.00 - RUSSELL 138KV CKT 1	108	118	0.67533	109.1395	SHAMROCK (SHAMRCK1) 115/69/14.4KV TRANSFORMER CKT 1
FDNS	00NR	0	16WP	G15_084	FROM->TO	G15085_T 138.00 - RUSSELL 138KV CKT 1	108	118	0.67533	109.1395	SHAMROCK (SHAMRCK1) 115/69/14.4KV TRANSFORMER CKT 1
FDNS	00NR	0	16WP	G15_084	FROM->TO	G15085_T 138.00 - RUSSELL 138KV CKT 1	108	118	0.67533	109.1289	MCLEAN RURAL SUB - SHAMROCK 115KV CKT 1
FDNS	00NR	0	16WP	G15_084	FROM->TO	G15085_T 138.00 - RUSSELL 138KV CKT 1	108	118	0.67533	109.1289	MCLEAN RURAL SUB - SHAMROCK 115KV CKT 1
FDNS	07ALL	0	20L	G15_084	FROM->TO	G15085_T 138.00 - RUSSELL 138KV CKT 1	108	118	0.67422	108.9298	P12:115:SPS:T54.1.KIRBY.SHM(520)
FDNS	07ALL	0	20L	G15_084	FROM->TO	G15085_T 138.00 - RUSSELL 138KV CKT 1	108	118	0.67422	108.9298	P12:115:SPS-AEPW:KIRBY3:SHAM3WT
FDNS	07NR	0	20L	G15_084	FROM->TO	G15085_T 138.00 - RUSSELL 138KV CKT 1	108	118	0.46889	108.88	MATHWSN7 345.00 - TATONGA7 345.00 345KV CKT 1
FDNS	07ALL	0	20L	G15_084	FROM->TO	G15085_T 138.00 - RUSSELL 138KV CKT 1	108	118	0.67422	108.847	MCLEAN RURAL SUB - SHAMROCK 115KV CKT 1
FDNS	07ALL	0	20L	G15_084	FROM->TO	G15085_T 138.00 - RUSSELL 138KV CKT 1	108	118	0.67422	108.847	MCLEAN RURAL SUB - SHAMROCK 115KV CKT 1
FDNS	07ALL	0	20L	G15_084	FROM->TO	G15085_T 138.00 - RUSSELL 138KV CKT 1	108	118	0.67422	108.8422	SHAMROCK (SHAMRCK1) 115/69/14.4KV TRANSFORMER CKT 1
FDNS	07ALL	0	20L	G15_084	FROM->TO	G15085_T 138.00 - RUSSELL 138KV CKT 1	108	118	0.67422	108.8422	SHAMROCK (SHAMRCK1) 115/69/14.4KV TRANSFORMER CKT 1
FDNS	07NR	0	20L	G15_084	FROM->TO	G15085_T 138.00 - RUSSELL 138KV CKT 1	108	118	0.67558	108.8378	MCCLELLAN SUB - MCLEAN RURAL SUB 115KV CKT 1
FDNS	07ALL	0	20WP	G15_084	FROM->TO	G15085_T 138.00 - RUSSELL 138KV CKT 1	108	118	0.54951	108.7577	ELDORADO - LAKE PAULINE 69KV CKT 1
FDNS	07ALL	0	20WP	G15_084	FROM->TO	G15085_T 138.00 - RUSSELL 138KV CKT 1	108	118	0.54951	108.7575	LAKE PAULINE (LAKEPAUL) 138/69/14.4KV TRANSFORMER CKT 1
FDNS	07ALL	0	20WP	G15_084	FROM->TO	G15085_T 138.00 - RUSSELL 138KV CKT 1	108	118	0.54951	108.7575	LAKE PAULINE (LAKEPAUL) 138/69/14.4KV TRANSFORMER CKT 1
FDNS	07NR	0	20L	G15_084	FROM->TO	G15085_T 138.00 - RUSSELL 138KV CKT 1	108	118	0.67558	108.7206	KIRBY SWITCHING STATION - MCCLELLAN SUB 115KV CKT 1
FDNS	07NR	0	20L	G15_084	FROM->TO	G15085_T 138.00 - RUSSELL 138KV CKT 1	108	118	0.51578	108.7083	P12:69:AEPW:NWMEMPH2:CHLDR2WT
FDNS	07ALL	0	16WP	G15_084	FROM->TO	G15085_T 138.00 - RUSSELL 138KV CKT 1	108	118	0.67412	108.6224	HOLLIS TAP - WELLINGTON 138KV CKT 1
FDNS	07ALL	0	20L	G15_084	FROM->TO	G15085_T 138.00 - RUSSELL 138KV CKT 1	108	118	0.46819	108.6123	CHISHOLM7 345.00 - GRACEMONT 345KV CKT 1

SOLUTION	GROUP	SCENARIO	SEASON	SOURCE	DIRECTION	MONITORED ELEMENT	RATEA (MVA)	RATEB(MVA)	TDF	TC%LOADING (% MVA)	CONTINGENCY
FDNS	07ALL	0	20L	G15_084	FROM->TO	G15085_T 138.00 - RUSSELL 138KV CKT 1	108	118	0.54896	108.6086	ELDORADO - LAKE PAULINE 69KV CKT 1
FDNSLock	07ALL	0	20L	G15_084	FROM->TO	G15085_T 138.00 - RUSSELL 138KV CKT 1	108	118	0.54896	108.608	LAKE PAULINE (LAKEPAUL) 138/69/14.4KV TRANSFORMER CKT 1
FDNSLock	07ALL	0	20L	G15_084	FROM->TO	G15085_T 138.00 - RUSSELL 138KV CKT 1	108	118	0.54896	108.608	LAKE PAULINE (LAKEPAUL) 138/69/14.4KV TRANSFORMER CKT 1
FDNS	07NR	0	20L	G15_084	FROM->TO	G15085_T 138.00 - RUSSELL 138KV CKT 1	108	118	0.46835	108.5576	GEN562685 1-G15_013_3 0.3550
FDNS	07NR	0	20L	G15_084	FROM->TO	G15085_T 138.00 - RUSSELL 138KV CKT 1	108	118	0.51578	108.4919	P12:69:AEPW:CHLDR2WT:MEMPHIS2
FDNS	07ALL	0	17G	G15_084	FROM->TO	G15085_T 138.00 - RUSSELL 138KV CKT 1	108	118	0.67411	108.4357	HOLLIS TAP - WELLINGTON 138KV CKT 1
FDNS	00NR	0	17SP	G15_084	FROM->TO	G15085_T 138.00 - RUSSELL 138KV CKT 1	108	118	0.47868	108.2739	P12:230:AEPW:ELKCITY6:SWEETWT6
FDNSLock	07NR	0	20L	G15_084	FROM->TO	G15085_T 138.00 - RUSSELL 138KV CKT 1	108	118	0.51578	108.2445	CHILDRESS (CHLDR2WT) 138/69/12.47KV TRANSFORMER CKT 1
FDNSLock	07NR	0	20L	G15_084	FROM->TO	G15085_T 138.00 - RUSSELL 138KV CKT 1	108	118	0.51578	108.2445	CHILDRESS (CHLDR2WT) 138/69/12.47KV TRANSFORMER CKT 1
FDNS	07NR	0	20L	G15_084	FROM->TO	G15085_T 138.00 - RUSSELL 138KV CKT 1	108	118	0.51578	108.2398	AMOCO TAP - CHILDRESS 69KV CKT 1
FDNS	07NR	0	20L	G15_084	FROM->TO	G15085_T 138.00 - RUSSELL 138KV CKT 1	108	118	0.46335	108.1624	SNYDER - SNYDER 138KV CKT 1
FDNS	07NR	0	20L	G15_084	FROM->TO	G15085_T 138.00 - RUSSELL 138KV CKT 1	108	118	0.46335	108.1624	SNYDER - SNYDER 138KV CKT 1
FDNS	07ALL	0	20L	G15_084	FROM->TO	G15085_T 138.00 - RUSSELL 138KV CKT 1	108	118	0.54896	108.0819	ELDORADO - ELDORADO JCT 69KV CKT 1
FDNS	07ALL	0	20WP	G15_084	FROM->TO	G15085_T 138.00 - RUSSELL 138KV CKT 1	108	118	0.46584	107.8999	BASE CASE
FDNS	00NR	0	20WP	G15_084	FROM->TO	G15085_T 138.00 - RUSSELL 138KV CKT 1	108	118	0.67582	107.8715	KIRBY SWITCHING STATION - MCCLELLAN SUB 115KV CKT 1
FDNS	07ALL	0	20WP	G15_084	FROM->TO	G15085_T 138.00 - RUSSELL 138KV CKT 1	108	118	0.54951	107.7941	ELDORADO - ELDORADO JCT 69KV CKT 1
FDNS	07NR	0	20L	G15_084	FROM->TO	G15085_T 138.00 - RUSSELL 138KV CKT 1	108	118	0.47155	107.7615	CHISHOLM7 345.00 () 345/230/13.2KV TRANSFORMER CKT 1
FDNS	00NR	0	17SP	G15_084	FROM->TO	G15085_T 138.00 - RUSSELL 138KV CKT 1	108	118	0.47963	107.5855	CHISHOLM6 230.00 - SWEETWATER 230KV CKT 1
FDNS	07ALL	0	20L	G15_084	FROM->TO	G15085_T 138.00 - RUSSELL 138KV CKT 1	108	118	0.67422	107.4051	MCCLELLAN SUB - MCLEAN RURAL SUB 115KV CKT 1
FDNS	07ALL	0	20WP	G15_084	FROM->TO	G15085_T 138.00 - RUSSELL 138KV CKT 1	108	118	0.46868	107.3386	CHISHOLM7 345.00 - GRACEMONT 345KV CKT 1
FDNS	00NR	0	20WP	G15_084	FROM->TO	G15085_T 138.00 - RUSSELL 138KV CKT 1	108	118	0.67582	107.3126	MCCLELLAN SUB - MCLEAN RURAL SUB 115KV CKT 1
FDNS	07ALL	0	20L	G15_084	FROM->TO	G15085_T 138.00 - RUSSELL 138KV CKT 1	108	118	0.67422	107.2871	KIRBY SWITCHING STATION - MCCLELLAN SUB 115KV CKT 1
FDNS	07ALL	0	20L	G15_084	FROM->TO	G15085_T 138.00 - RUSSELL 138KV CKT 1	108	118	0.54896	107.174	ELDORADO JCT - GYPSUM 69KV CKT 1
FDNS	00NR	0	16WP	G15_084	FROM->TO	G15085_T 138.00 - RUSSELL 138KV CKT 1	108	118	0.67533	107.1503	KIRBY SWITCHING STATION - MCCLELLAN SUB 115KV CKT 1
FDNS	00NR	0	20SP	G15_084	FROM->TO	G15085_T 138.00 - RUSSELL 138KV CKT 1	108	118	0.47866	106.8073	P12:230:AEPW:ELKCITY6:SWEETWT6
FDNS	00NR	0	17SP	G15_084	FROM->TO	G15085_T 138.00 - RUSSELL 138KV CKT 1	108	118	0.55312	106.723	ELDORADO - LAKE PAULINE 69KV CKT 1
FDNSLock	00NR	0	17SP	G15_084	FROM->TO	G15085_T 138.00 - RUSSELL 138KV CKT 1	108	118	0.55312	106.723	LAKE PAULINE (LAKEPAUL) 138/69/14.4KV TRANSFORMER CKT 1
FDNSLock	00NR	0	17SP	G15_084	FROM->TO	G15085_T 138.00 - RUSSELL 138KV CKT 1	108	118	0.55312	106.723	LAKE PAULINE (LAKEPAUL) 138/69/14.4KV TRANSFORMER CKT 1
FDNS	00NR	0	17SP	G15_084	FROM->TO	G15085_T 138.00 - RUSSELL 138KV CKT 1	108	118	0.67587	106.7031	HOLLIS TAP - WELLINGTON 138KV CKT 1
FDNS	07NR	0	20L	G15_084	FROM->TO	G15085_T 138.00 - RUSSELL 138KV CKT 1	108	118	0.46889	106.6382	G11_051T 345.00 - TATONGA7 345.00 345KV CKT 1
FDNS	00NR	0	16WP	G15_084	FROM->TO	G15085_T 138.00 - RUSSELL 138KV CKT 1	108	118	0.67533	106.5451	MCCLELLAN SUB - MCLEAN RURAL SUB 115KV CKT 1
FDNS	07ALL	0	20WP	G15_084	FROM->TO	G15085_T 138.00 - RUSSELL 138KV CKT 1	108	118	0.54951	106.48	ELDORADO JCT - GYPSUM 69KV CKT 1
FDNS	07ALL	0	20WP	G15_084	FROM->TO	G15085_T 138.00 - RUSSELL 138KV CKT 1	108	118	0.67444	106.2439	SHAMROCK - WELLINGTON 138KV CKT 1
FDNS	07ALL	0	20WP	G15_084	FROM->TO	G15085_T 138.00 - RUSSELL 138KV CKT 1	108	118	0.67444	106.0384	SHAMROCK (SHAMRCK2) 138/69/14.4KV TRANSFORMER CKT 1
FDNS	07ALL	0	20WP	G15_084	FROM->TO	G15085_T 138.00 - RUSSELL 138KV CKT 1	108	118	0.67444	106.0384	SHAMROCK (SHAMRCK2) 138/69/14.4KV TRANSFORMER CKT 1
FDNS	00NR	0	20SP	G15_084	FROM->TO	G15085_T 138.00 - RUSSELL 138KV CKT 1	108	118	0.55316	105.9303	ELDORADO - LAKE PAULINE 69KV CKT 1
FDNS	07ALL	0	20L	G15_084	FROM->TO	G15085_T 138.00 - RUSSELL 138KV CKT 1	108	118	0.51332	105.9281	P12:69:AEPW:NWMEMPH2:CHLDR2WT
FDNSLock	00NR	0	20SP	G15_084	FROM->TO	G15085_T 138.00 - RUSSELL 138KV CKT 1	108	118	0.55316	105.9279	LAKE PAULINE (LAKEPAUL) 138/69/14.4KV TRANSFORMER CKT 1
FDNS	00NR	0	20SP	G15_084	FROM->TO	G15085_T 138.00 - RUSSELL 138KV CKT 1	108	118	0.47962	105.8678	CHISHOLM6 230.00 - SWEETWATER 230KV CKT 1
FDNS	07ALL	0	20L	G15_084	FROM->TO	G15085_T 138.00 - RUSSELL 138KV CKT 1	108	118	0.51332	105.724	P12:69:AEPW:CHLDR2WT:MEMPHIS2
FDNS	00NR	0	20SP	G15_084	FROM->TO	G15085_T 138.00 - RUSSELL 138KV CKT 1	108	118	0.67591	105.6164	HOLLIS TAP - WELLINGTON 138KV CKT 1
FDNS	07ALL	0	20L	G15_084	FROM->TO	G15085_T 138.00 - RUSSELL 138KV CKT 1	108	118	0.54896	105.5482	GYPSUM - RUSSELL 69KV CKT 1
FDNS	07ALL	0	20L	G15_084	FROM->TO	G15085_T 138.00 - RUSSELL 138KV CKT 1	108	118	0.51332	105.5037	AMOCO TAP - CHILDRESS 69KV CKT 1
FDNSLock	07ALL	0	20L	G15_084	FROM->TO	G15085_T 138.00 - RUSSELL 138KV CKT 1	108	118	0.51332	105.5033	CHILDRESS (CHLDR2WT) 138/69/12.47KV TRANSFORMER CKT 1
FDNSLock	07ALL	0	20L	G15_084	FROM->TO	G15085_T 138.00 - RUSSELL 138KV CKT 1	108	118	0.51332	105.5033	CHILDRESS (CHLDR2WT) 138/69/12.47KV TRANSFORMER CKT 1
FDNS	07ALL	0	20L	G15_084	FROM->TO	G15085_T 138.00 - RUSSELL 138KV CKT 1	108	118	0.46537	105.1975	GEN562685 1-G15_013_3 0.3550
FDNS	07ALL	0	20L	G15_084	FROM->TO	G15085_T 138.00 - RUSSELL 138KV CKT 1	108	118	0.4604	105.1341	SNYDER - SNYDER 138KV CKT 1
FDNS	07ALL	0	20L	G15_084	FROM->TO	G15085_T 138.00 - RUSSELL 138KV CKT 1	108	118	0.4604	105.1341	SNYDER - SNYDER 138KV CKT 1
FDNS	07ALL	0	20L	G15_084	FROM->TO	G15085_T 138.00 - RUSSELL 138KV CKT 1	108	118	0.46551	105.1206	MATHWSN7 345.00 - TATONGA7 345.00 345KV CKT 1
FDNS	07NR	0	17G	G15_084	FROM->TO	G15085_T 138.00 - RUSSELL 138KV CKT 1	108	118	0.67533	105.1164	SHAMROCK - WELLINGTON 138KV CKT 1
FDNS	07ALL	0	20WP	G15_084	FROM->TO	G15085_T 138.00 - RUSSELL 138KV CKT 1	108	118	0.51371	105.11	P12:69:AEPW:NWMEMPH2:CHLDR2WT
FDNS	07NR	0	17G	G15_084	FROM->TO	G15085_T 138.00 - RUSSELL 138KV CKT 1	108	118	0.55253	105.0967	LAKE PAULINE (LAKEPAUL) 138/69/14.4KV TRANSFORMER CKT 1
FDNS	07NR	0	17G	G15_084	FROM->TO	G15085_T 138.00 - RUSSELL 138KV CKT 1	108	118	0.55253	105.0967	LAKE PAULINE (LAKEPAUL) 138/69/14.4KV TRANSFORMER CKT 1
FDNS	07NR	0	17G	G15_084	FROM->TO	G15085_T 138.00 - RUSSELL 138KV CKT 1	108	118	0.55253	105.0963	ELDORADO - LAKE PAULINE 69KV CKT 1
FDNS	07NR	0	17G	G15_084	FROM->TO	G15085_T 138.00 - RUSSELL 138KV CKT 1	108	118	0.67533	104.8996	SHAMROCK (SHAMRCK2) 138/69/14.4KV TRANSFORMER CKT 1
FDNS	07NR	0	17G	G15_084	FROM->TO	G15085_T 138.00 - RUSSELL 138KV CKT 1	108	118	0.67533	104.8996	SHAMROCK (SHAMRCK2) 138/69/14.4KV TRANSFORMER CKT 1
FDNS	07ALL	0	20L	G15_084	FROM->TO	G15085_T 138.00 - RUSSELL 138KV CKT 1	108	118	0.46819	104.7928	CHISHOLM7 345.00 () 345/230/13.2KV TRANSFORMER CKT 1
FDNS	00NR	0	17SP	G15_084	FROM->TO	G15085_T 138.00 - RUSSELL 138KV CKT 1	108	118	0.55312	104.7687	ELDORADO - ELDORADO JCT 69KV CKT 1
FDNS	07NR	0	17G	G15_084	FROM->TO	G15085_T 138.00 - RUSSELL 138KV CKT 1	108	118	0.46831	104.7655	BASE CASE
FDNS	07ALL	0	20WP	G15_084	FROM->TO	G15085_T 138.00 - RUSSELL 138KV CKT 1	108	118	0.51371	104.7421	P12:69:AEPW:CHLDR2WT:MEMPHIS2
FDNS	00NR	0	17SP	G15_084	FROM->TO	G15085_T 138.00 - RUSSELL 138KV CKT 1	108	118	0.47007	104.4259	G14-074T 345.00 - OKLAUNION 345KV CKT 1
FDNS	00NR	0	17SP	G15_084	FROM->TO	G15085_T 138.00 - RUSSELL 138KV CKT 1	108	118	0.46897	104.374	BASE CASE
FDNSLock	07ALL	0	20WP	G15_084	FROM->TO	G15085_T 138.00 - RUSSELL 138KV CKT 1	108	118	0.51371	104.3062	AMOCO TAP - CHILDRESS 69KV CKT 1
FDNSLock	07ALL	0	20WP	G15_084	FROM->TO	G15085_T 138.00 - RUSSELL 138KV CKT 1	108	118	0.51371	104.3058	CHILDRESS (CHLDR2WT) 138/69/12.47KV TRANSFORMER CKT 1
FDNS	07NR	0	17G	G15_084	FROM->TO	G15085_T 138.00 - RUSSELL 138KV CKT 1	108	118	0.55253	104.2001	ELDORADO - ELDORADO JCT 69KV CKT 1
FDNS	07ALL	0	16WP	G15_084	FROM->TO	G15085_T 138.00 - RUSSELL 138KV CKT 1	108	118	0.67412	104.1839	SHAMROCK - WELLINGTON 138KV CKT 1
FDNS	07ALL	0	16WP	G15_084	FROM->TO	G15085_T 138.00 - RUSSELL 138KV CKT 1	108	118	0.67412	103.9675	SHAMROCK (SHAMRCK2) 138/69/14.4KV TRANSFORMER CKT 1
FDNS	07ALL	0	16WP	G15_084	FROM->TO	G15085_T 138.00 - RUSSELL 138KV CKT 1	108	118	0.67412	103.9675	SHAMROCK (SHAMRCK2) 138/69/14.4KV TRANSFORMER CKT 1
FDNS	07ALL	0	17G	G15_084	FROM->TO	G15085_T 138.00 - RUSSELL 138KV CKT 1	108	118	0.67411	103.8554	SHAMROCK - WELLINGTON 138KV CKT 1
FDNS	00NR	0	20SP	G15_084	FROM->TO	G15085_T 138.00 - RUSSELL 138KV CKT 1	108	118	0.55316	103.7861	ELDORADO - ELDORADO JCT 69KV CKT 1
FDNS	00NR	0	17SP	G15_084	FROM->TO	G15085_T 138.00 - RUSSELL 138KV CKT 1	108	118	0.46954	103.7161	MATHWSN7 345.00 - TATONGA7 345.00 345KV CKT 1
FDNS	07ALL	0	20WP	G15_084	FROM->TO	G15085_T 138.00 - RUSSELL 138KV CKT 1	108	118	0.46598	103.6616	MATHWSN7 345.00 - TATONGA7 345.00 345KV CKT 1
FDNS	07ALL	0	20WP	G15_084	FROM->TO	G15085_T 138.00 - RUSSELL 138KV CKT 1	108	118	0.46584	103.6529	GEN562685 1-G15_013_3 0.3550
FDNS	07ALL	0	17G	G15_084	FROM->TO	G15085_T 138.00 - RUSSELL 138KV CKT 1	108	118	0.67411	103.6433	SHAMROCK (SHAMRCK2) 138/69/14.4KV TRANSFORMER CKT 1
FDNS	07ALL	0	20WP	G15_084	FROM->TO	G15085_T 138.00 - RUSSELL 138KV CKT 1	108	118	0.54951	103.5141	GYPSUM - RUSSELL 69KV CKT 1
FDNS	07NR	0	17G	G15_084	FROM->TO	G15085_T 138.00 - RUSSELL 138KV CKT 1	108	118	0.51567	103.4607	P12:69:AEPW:NWMEMPH2:CHLDR2WT
FDNS	07ALL	0	20WP	G15_084	FROM->TO	G15085_T 138.00 - RUSSELL 138KV CKT 1	108	118	0.46868	103.3966	CHISHOLM7 345.00 () 345/230/13.2KV TRANSFORMER CKT 1
FDNS	07ALL	0	16WP	G15_084	FROM->TO	G15085_T 138.00 - RUSSELL 138KV CKT 1	108	118	0.54951	103.2765	LAKE PAULINE (LAKEPAUL) 138/69/14.4KV TRANSFORMER CKT 1
FDNS	07ALL	0	16WP	G15_084	FROM->TO	G15085_T 138.00 - RUSSELL 138KV CKT 1	108	118	0.54951	103.2765	LAKE PAULINE (LAKEPAUL) 138/69/14.4KV TRANSFORMER CKT 1

SOLUTION	GROUP	SCENARIO	SEASON	SOURCE	DIRECTION	MONITORED ELEMENT	RATEA (MVA)	RATEB(MVA)	TDF	TC%LOADING (% MVA)	CONTINGENCY
FDNS	07ALL	0	16WP	G15_084	FROM->TO	G15085_T 138.00 - RUSSELL 138KV CKT 1	108	118	0.54951	103.2761	ELDORADO - LAKE PAULINE 69KV CKT 1
FDNS	00NR	0	20SP	G15_084	FROM->TO	G15085_T 138.00 - RUSSELL 138KV CKT 1	108	118	0.46901	103.0823	BASE CASE
FDNS	07ALL	0	20L	G15_084	FROM->TO	G15085_T 138.00 - RUSSELL 138KV CKT 1	108	118	0.51332	102.9938	P12:69:AEPW:NWMEMPH2:CLARDON2
FDNS	07ALL	0	20L	G15_084	FROM->TO	G15085_T 138.00 - RUSSELL 138KV CKT 1	108	118	0.46551	102.9342	G11_051T 345.00 - TATONGA7 345.00 345KV CKT 1
FDNS	07ALL	0	20L	G15_084	FROM->TO	G15085_T 138.00 - RUSSELL 138KV CKT 1	108	118	0.51332	102.8436	MEMPHIS - NW MEMPHIS 69KV CKT 1
FDNS	07ALL	0	20L	G15_084	FROM->TO	G15085_T 138.00 - RUSSELL 138KV CKT 1	108	118	0.51332	102.8405	NORTH MEMPHIS REC - NW MEMPHIS 69KV CKT 1
FDNS	07ALL	0	20WP	G15_084	FROM->TO	G15085_T 138.00 - RUSSELL 138KV CKT 1	108	118	0.46084	102.8401	SNYDER - SNYDER 138KV CKT 1
FDNS	07ALL	0	20WP	G15_084	FROM->TO	G15085_T 138.00 - RUSSELL 138KV CKT 1	108	118	0.46084	102.8401	SNYDER - SNYDER 138KV CKT 1
FDNS	07ALL	0	20L	G15_084	FROM->TO	G15085_T 138.00 - RUSSELL 138KV CKT 1	108	118	0.46537	102.6835	GEN511962 2-RKYRDGW2-1 0.7000
FDNS	07NR	0	17G	G15_084	FROM->TO	G15085_T 138.00 - RUSSELL 138KV CKT 1	108	118	0.55253	102.6303	ELDORADO JCT - GYPSUM 69KV CKT 1
FDNS	07ALL	0	20L	G15_084	FROM->TO	G15085_T 138.00 - RUSSELL 138KV CKT 1	108	118	0.46537	102.6191	GEN511963 1-RKYRDGW1-1 0.7000
FDNS	07ALL	0	16WP	G15_084	FROM->TO	G15085_T 138.00 - RUSSELL 138KV CKT 1	108	118	0.46569	102.6015	BASE CASE
FDNS	07NR	0	17G	G15_084	FROM->TO	G15085_T 138.00 - RUSSELL 138KV CKT 1	108	118	0.51567	102.6	AMOCO TAP - CHILDRESS 69KV CKT 1
FDNS	00NR	0	17SP	G15_084	FROM->TO	G15085_T 138.00 - RUSSELL 138KV CKT 1	108	118	0.51629	102.5433	P12:69:AEPW:NWMEMPH2:CHLDR2WT
FDNS	00NR	0	20SP	G15_084	FROM->TO	G15085_T 138.00 - RUSSELL 138KV CKT 1	108	118	0.47015	102.4944	G14-074T 345.00 - OKLAUNION 345KV CKT 1
FDNS	07NR	0	17G	G15_084	FROM->TO	G15085_T 138.00 - RUSSELL 138KV CKT 1	108	118	0.51567	102.428	P12:69:AEPW:CHLDR2WT:MEMPHIS2
FDNS	07ALL	0	20WP	G15_084	FROM->TO	G15085_T 138.00 - RUSSELL 138KV CKT 1	108	118	0.67444	102.3752	P12:115:SPS:T54.1.KIRBY.SHM(520)
FDNS	07ALL	0	20WP	G15_084	FROM->TO	G15085_T 138.00 - RUSSELL 138KV CKT 1	108	118	0.67444	102.3752	P12:115:SPS-AEPW:KIRBY3:SHAM3WT
FDNS	07ALL	0	16WP	G15_084	FROM->TO	G15085_T 138.00 - RUSSELL 138KV CKT 1	108	118	0.54951	102.3156	ELDORADO - ELDORADO JCT 69KV CKT 1
FDNS	00NR	0	20SP	G15_084	FROM->TO	G15085_T 138.00 - RUSSELL 138KV CKT 1	108	118	0.46958	102.2824	MATHWSN7 345.00 - TATONGA7 345.00 345KV CKT 1
FDNS	07ALL	0	20WP	G15_084	FROM->TO	G15085_T 138.00 - RUSSELL 138KV CKT 1	108	118	0.67444	102.2055	MCLEAN RURAL SUB - SHAMROCK 115KV CKT 1
FDNS	07ALL	0	20WP	G15_084	FROM->TO	G15085_T 138.00 - RUSSELL 138KV CKT 1	108	118	0.67444	102.2055	MCLEAN RURAL SUB - SHAMROCK 115KV CKT 1
FDNS	07ALL	0	20WP	G15_084	FROM->TO	G15085_T 138.00 - RUSSELL 138KV CKT 1	108	118	0.46495	102.205	CHISHOLM6 230.00 - ELK CITY 230KV 230KV CKT 1
FDNS	07ALL	0	20WP	G15_084	FROM->TO	G15085_T 138.00 - RUSSELL 138KV CKT 1	108	118	0.46495	102.2007	ELK CITY 230KV (ELKCTY-6) 230/138/13.8KV TRANSFORMER CKT 1
FDNS	07ALL	0	20WP	G15_084	FROM->TO	G15085_T 138.00 - RUSSELL 138KV CKT 1	108	118	0.46495	102.2007	ELK CITY 230KV (ELKCTY-6) 230/138/13.8KV TRANSFORMER CKT 1
FDNSLock	00NR	0	17SP	G15_084	FROM->TO	G15085_T 138.00 - RUSSELL 138KV CKT 1	108	118	0.51629	102.0937	P12:69:AEPW:CHLDR2WT:MEMPHIS2
FDNS	07ALL	0	20WP	G15_084	FROM->TO	G15085_T 138.00 - RUSSELL 138KV CKT 1	108	118	0.46598	102.0935	G11_051T 345.00 - TATONGA7 345.00 345KV CKT 1
FDNS	07NR	0	17G	G15_084	FROM->TO	G15085_T 138.00 - RUSSELL 138KV CKT 1	108	118	0.47152	102.085	CHISHOLM7 345.00 - GRACEMONT 345KV CKT 1
FDNS	00NR	0	17SP	G15_084	FROM->TO	G15085_T 138.00 - RUSSELL 138KV CKT 1	108	118	0.46954	102.0446	G11_051T 345.00 - TATONGA7 345.00 345KV CKT 1
FDNS	07ALL	0	20WP	G15_084	FROM->TO	G15085_T 138.00 - RUSSELL 138KV CKT 1	108	118	0.67444	102.027	SHAMROCK (SHAMRCK1) 115/69/14.4KV TRANSFORMER CKT 1
FDNS	07ALL	0	20WP	G15_084	FROM->TO	G15085_T 138.00 - RUSSELL 138KV CKT 1	108	118	0.67444	102.027	SHAMROCK (SHAMRCK1) 115/69/14.4KV TRANSFORMER CKT 1
FDNSLock	07NR	0	17G	G15_084	FROM->TO	G15085_T 138.00 - RUSSELL 138KV CKT 1	108	118	0.51567	102.0046	CHILDRESS (CHLDR2WT) 138/69/12.47KV TRANSFORMER CKT 1
FDNSLock	00NR	0	17SP	G15_084	FROM->TO	G15085_T 138.00 - RUSSELL 138KV CKT 1	108	118	0.51629	101.9465	CHILDRESS (CHLDR2WT) 138/69/12.47KV TRANSFORMER CKT 1
FDNSLock	00NR	0	17SP	G15_084	FROM->TO	G15085_T 138.00 - RUSSELL 138KV CKT 1	108	118	0.51629	101.9465	CHILDRESS (CHLDR2WT) 138/69/12.47KV TRANSFORMER CKT 1
FDNS	07ALL	0	16WP	G15_084	FROM->TO	G15085_T 138.00 - RUSSELL 138KV CKT 1	108	118	0.46859	101.8648	CHISHOLM7 345.00 - GRACEMONT 345KV CKT 1
FDNS	00NR	0	17SP	G15_084	FROM->TO	G15085_T 138.00 - RUSSELL 138KV CKT 1	108	118	0.55312	101.7145	ELDORADO JCT - GYPSUM 69KV CKT 1
FDNS	00NR	0	20SP	G15_084	FROM->TO	G15085_T 138.00 - RUSSELL 138KV CKT 1	108	118	0.51633	101.6451	P12:69:AEPW:NWMEMPH2:CHLDR2WT
FDNS	07ALL	0	20WP	G15_084	FROM->TO	G15085_T 138.00 - RUSSELL 138KV CKT 1	108	118	0.46598	101.6143	G11_051T 345.00 - WOODWARD DISTRICT EHV 345KV CKT 1
FDNS	07ALL	0	20WP	G15_084	FROM->TO	G15085_T 138.00 - RUSSELL 138KV CKT 1	108	118	0.46573	101.5507	G14-074T 345.00 - OKLAUNION 345KV CKT 1
FDNSLock	00NR	0	17SP	G15_084	FROM->TO	G15085_T 138.00 - RUSSELL 138KV CKT 1	108	118	0.51629	101.4622	AMOCO TAP - CHILDRESS 69KV CKT 1
FDNS	07ALL	0	17G	G15_084	FROM->TO	G15085_T 138.00 - RUSSELL 138KV CKT 1	108	118	0.54945	101.4537	ELDORADO - LAKE PAULINE 69KV CKT 1
FDNS	07ALL	0	17G	G15_084	FROM->TO	G15085_T 138.00 - RUSSELL 138KV CKT 1	108	118	0.54945	101.4523	LAKE PAULINE (LAKEPAUL) 138/69/14.4KV TRANSFORMER CKT 1
FDNS	07ALL	0	17G	G15_084	FROM->TO	G15085_T 138.00 - RUSSELL 138KV CKT 1	108	118	0.46566	101.3626	BASE CASE
FDNS	00NR	0	20SP	G15_084	FROM->TO	G15085_T 138.00 - RUSSELL 138KV CKT 1	108	118	0.51633	101.1717	P12:69:AEPW:CHLDR2WT:MEMPHIS2
FDNS	07NR	0	20L	G15_084	FROM->TO	G15085_T 138.00 - RUSSELL 138KV CKT 1	108	118	0.44408	101.157	OMPA-ALTUS PARK - OMPVET 138KV CKT 1
FDNS	07ALL	0	20WP	G15_084	FROM->TO	G15085_T 138.00 - RUSSELL 138KV CKT 1	108	118	0.46584	101.122	GEN511962 2-RKYRDGW2-1 0.7000
FDNS	07NR	0	17G	G15_084	FROM->TO	G15085_T 138.00 - RUSSELL 138KV CKT 1	108	118	0.67533	101.1119	P12:115:SPS:T54.1.KIRBY.SHM(520)
FDNS	07NR	0	17G	G15_084	FROM->TO	G15085_T 138.00 - RUSSELL 138KV CKT 1	108	118	0.67533	101.1119	P12:115:SPS-AEPW:KIRBY3:SHAM3WT
FDNS	00NR	0	17SP	G15_084	FROM->TO	G15085_T 138.00 - RUSSELL 138KV CKT 1	108	118	0.47963	101.1056	STLN-DEMARC6 - SWEETWATER 230KV CKT 1
FDNS	07ALL	0	16WP	G15_084	FROM->TO	G15085_T 138.00 - RUSSELL 138KV CKT 1	108	118	0.5135	101.1044	P12:69:AEPW:NWMEMPH2:CHLDR2WT
FDNS	00NR	0	17SP	G15_084	FROM->TO	G15085_T 138.00 - RUSSELL 138KV CKT 1	108	118	0.47963	101.0828	STATELINE INTERCHANGE - STLN-DEMARC6 230KV CKT 1
FDNS	00NR	0	17SP	G15_084	FROM->TO	G15085_T 138.00 - RUSSELL 138KV CKT 1	108	118	0.47963	101.0764	P12:230:AEPW-SPS:SWEETWT6:WHEELER 6
FDNS	07NR	0	20L	G15_084	FROM->TO	G15085_T 138.00 - RUSSELL 138KV CKT 1	108	118	0.46043	101.0731	RUSSELL (RUSSELL) 138/69/13.8KV TRANSFORMER CKT 1
FDNS	07ALL	0	16WP	G15_084	FROM->TO	G15085_T 138.00 - RUSSELL 138KV CKT 1	108	118	0.54951	101.0178	ELDORADO JCT - GYPSUM 69KV CKT 1
FDNS	00NR	0	20SP	G15_084	FROM->TO	G15085_T 138.00 - RUSSELL 138KV CKT 1	108	118	0.51633	100.9829	CHILDRESS (CHLDR2WT) 138/69/12.47KV TRANSFORMER CKT 1
FDNS	00NR	0	20SP	G15_084	FROM->TO	G15085_T 138.00 - RUSSELL 138KV CKT 1	108	118	0.51633	100.9829	CHILDRESS (CHLDR2WT) 138/69/12.47KV TRANSFORMER CKT 1
FDNS	07NR	0	17G	G15_084	FROM->TO	G15085_T 138.00 - RUSSELL 138KV CKT 1	108	118	0.67533	100.9822	MCLEAN RURAL SUB - SHAMROCK 115KV CKT 1
FDNS	07NR	0	17G	G15_084	FROM->TO	G15085_T 138.00 - RUSSELL 138KV CKT 1	108	118	0.67533	100.9822	MCLEAN RURAL SUB - SHAMROCK 115KV CKT 1
FDNS	07NR	0	17G	G15_084	FROM->TO	G15085_T 138.00 - RUSSELL 138KV CKT 1	108	118	0.67533	100.9819	SHAMROCK (SHAMRCK1) 115/69/14.4KV TRANSFORMER CKT 1
FDNS	07NR	0	17G	G15_084	FROM->TO	G15085_T 138.00 - RUSSELL 138KV CKT 1	108	118	0.67533	100.9819	SHAMROCK (SHAMRCK1) 115/69/14.4KV TRANSFORMER CKT 1
FDNS	07NR	0	20L	G15_084	FROM->TO	G15085_T 138.00 - RUSSELL 138KV CKT 1	108	118	0.47877	100.9088	P12:230:AEPW-SPS:SWEETWT6:WHEELER 6
FDNS	07NR	0	20L	G15_084	FROM->TO	G15085_T 138.00 - RUSSELL 138KV CKT 1	108	118	0.47877	100.9084	STATELINE INTERCHANGE - STLN-DEMARC6 230KV CKT 1
FDNS	07NR	0	20L	G15_084	FROM->TO	G15085_T 138.00 - RUSSELL 138KV CKT 1	108	118	0.47877	100.8948	STLN-DEMARC6 - SWEETWATER 230KV CKT 1
FDNS	07NR	0	17G	G15_084	FROM->TO	G15085_T 138.00 - RUSSELL 138KV CKT 1	108	118	0.46831	100.8733	GEN562685 1-G15_013_3 0.3550
FDNS	07NR	0	20L	G15_084	FROM->TO	G15085_T 138.00 - RUSSELL 138KV CKT 1	108	118	0.465	100.8372	ANADARKO - BLUCAN5 4 138.00 138KV CKT 1
FDNS	07ALL	0	16WP	G15_084	FROM->TO	G15085_T 138.00 - RUSSELL 138KV CKT 1	108	118	0.5135	100.7413	P12:69:AEPW:CHLDR2WT:MEMPHIS2
FDNS	07ALL	0	17SP	G15_084	FROM->TO	G15085_T 138.00 - RUSSELL 138KV CKT 1	108	118	0.67456	100.6497	HOLLIS TAP - WELLINGTON 138KV CKT 1
FDNS	00NR	0	20SP	G15_084	FROM->TO	G15085_T 138.00 - RUSSELL 138KV CKT 1	108	118	0.46958	100.6393	G11_051T 345.00 - TATONGA7 345.00 345KV CKT 1
FDNS	00NR	0	20SP	G15_084	FROM->TO	G15085_T 138.00 - RUSSELL 138KV CKT 1	108	118	0.51633	100.5869	AMOCO TAP - CHILDRESS 69KV CKT 1
FDNS	07NR	0	20L	G15_084	FROM->TO	G15085_T 138.00 - RUSSELL 138KV CKT 1	108	118	0.46835	100.5703	GEN523971 1-HARRINGTON GEN #1 24 KV
FDNS	07NR	0	20L	G15_084	FROM->TO	G15085_T 138.00 - RUSSELL 138KV CKT 1	108	118	0.46835	100.5701	GEN523972 1-HARRINGTON GEN #2 24 KV
FDNS	07NR	0	20L	G15_084	FROM->TO	G15085_T 138.00 - RUSSELL 138KV CKT 1	108	118	0.46835	100.5701	GEN523973 1-HARRINGTON GEN #3 24 KV
FDNS	07NR	0	17G	G15_084	FROM->TO	G15085_T 138.00 - RUSSELL 138KV CKT 1	108	118	0.46309	100.5604	SNYDER - SNYDER 138KV CKT 1
FDNS	07NR	0	17G	G15_084	FROM->TO	G15085_T 138.00 - RUSSELL 138KV CKT 1	108	118	0.46309	100.5604	SNYDER - SNYDER 138KV CKT 1
FDNS	07NR	0	20L	G15_084	FROM->TO	G15085_T 138.00 - RUSSELL 138KV CKT 1	108	118	0.44408	100.5596	ALTUS JUNCTION - OMPA-ALTUS PARK 138KV CKT 1
FDNS	07NR	0	20L	G15_084	FROM->TO	G15085_T 138.00 - RUSSELL 138KV CKT 1	108	118	0.44408	100.5596	ALTUS JUNCTION - OMPA-ALTUS PARK 138KV CKT 1
FDNS	07ALL	0	17G	G15_084	FROM->TO	G15085_T 138.00 - RUSSELL 138KV CKT 1	108	118	0.54945	100.5516	ELDORADO - ELDORADO JCT 69KV CKT 1
FDNS	00NR	0	17SP	G15_084	FROM->TO	G15085_T 138.00 - RUSSELL 138KV CKT 1	108	118	0.46897	100.439	GEN562685 1-G15_013_3 0.3550
FDNS	00NR	0	20SP	G15_084	FROM->TO	G15085_T 138.00 - RUSSELL 138KV CKT 1	108	118	0.55316	100.4358	ELDORADO JCT - GYPSUM 69KV CKT 1

SOLUTION	GROUP	SCENARIO	SEASON	SOURCE	DIRECTION	MONITORED ELEMENT	RATEA (MVA)	RATEB(MVA)	TDF	TC%LOADING (% MVA)	CONTINGENCY
FDNS	07ALL	0	16WP	G15_084	FROM->TO	G15085_T 138.00 - RUSSELL 138KV CKT 1	108	118	0.67412	100.3548	P12:115:SPS:T54.1.KIRBY.SHM(520)
FDNS	07ALL	0	16WP	G15_084	FROM->TO	G15085_T 138.00 - RUSSELL 138KV CKT 1	108	118	0.67412	100.3548	P12:115:SPS-AEPW:KIRBY3:SHAM3WT
FDNSLock	07ALL	0	16WP	G15_084	FROM->TO	G15085_T 138.00 - RUSSELL 138KV CKT 1	108	118	0.5135	100.3213	AMOCO TAP - CHILDRESS 69KV CKT 1
FDNSLock	07ALL	0	16WP	G15_084	FROM->TO	G15085_T 138.00 - RUSSELL 138KV CKT 1	108	118	0.5135	100.3206	CHILDRESS (CHLDR2WT) 138/69/12.47KV TRANSFORMER CKT 1
FDNS	07ALL	0	17G	G15_084	FROM->TO	G15085_T 138.00 - RUSSELL 138KV CKT 1	108	118	0.46856	100.2973	CHISHOLM7 345.00 - GRACEMONT 345KV CKT 1
FDNS	07ALL	0	16WP	G15_084	FROM->TO	G15085_T 138.00 - RUSSELL 138KV CKT 1	108	118	0.67412	100.2069	MCLEAN RURAL SUB - SHAMROCK 115KV CKT 1
FDNS	07ALL	0	16WP	G15_084	FROM->TO	G15085_T 138.00 - RUSSELL 138KV CKT 1	108	118	0.67412	100.2069	MCLEAN RURAL SUB - SHAMROCK 115KV CKT 1
FDNS	07ALL	0	16WP	G15_084	FROM->TO	G15085_T 138.00 - RUSSELL 138KV CKT 1	108	118	0.67412	100.2057	SHAMROCK (SHAMRCK1) 115/69/14.4KV TRANSFORMER CKT 1
FDNS	07ALL	0	16WP	G15_084	FROM->TO	G15085_T 138.00 - RUSSELL 138KV CKT 1	108	118	0.67412	100.2057	SHAMROCK (SHAMRCK1) 115/69/14.4KV TRANSFORMER CKT 1
FDNS	07NR	0	17G	G15_084	FROM->TO	G15085_T 138.00 - RUSSELL 138KV CKT 1	108	118	0.46889	100.077	MATHWSN7 345.00 - TATONGA7 345.00 345KV CKT 1
FDNS	00NR	0	17SP	G15_084	FROM->TO	G15085_T 138.00 - RUSSELL 138KV CKT 1	108	118	0.47283	100	GRAPEVINE INTERCHANGE - STATELINE INTERCHANGE 230KV CKT 1
FDNS	00NR	0	17SP	G15_084	FROM->TO	G15085_T 138.00 - RUSSELL 138KV CKT 1	108	118	0.47283	100	GRAPEVINE INTERCHANGE - STATELINE INTERCHANGE 230KV CKT 1
FDNS	07NR	0	17G	G15_084	FROM->TO	G15085_T 138.00 - RUSSELL 138KV CKT 1	108	118	0.55253	99.7	GYPSUM - RUSSELL 69KV CKT 1
FDNS	00NR	0	17SP	G15_084	FROM->TO	G15085_T 138.00 - RUSSELL 138KV CKT 1	108	118	0.67587	99.7	SHAMROCK - WELLINGTON 138KV CKT 1
FDNS	07NR	0	20L	G15_084	FROM->TO	G15085_T 138.00 - RUSSELL 138KV CKT 1	108	118	0.463	99.7	CARNEGIE - HOBART JUNCTION 138KV CKT 1
FDNS	07NR	0	20L	G15_084	FROM->TO	G15085_T 138.00 - RUSSELL 138KV CKT 1	108	118	0.463	99.7	CARNEGIE - SOUTHWESTERN STATION 138KV CKT 1
FDNS	07NR	0	20L	G15_084	FROM->TO	G15085_T 138.00 - RUSSELL 138KV CKT 1	108	118	0.46289	99.7	P12:138:AEPW:S.W.S.-4:L.E.S.-4
FDNS	00NR	0	17SP	G15_084	FROM->TO	G15085_T 138.00 - RUSSELL 138KV CKT 1	108	118	0.46954	99.6	G11_051T 345.00 - WOODWARD DISTRICT EHV 345KV CKT 1
FDNS	07NR	0	20L	G15_084	FROM->TO	G15085_T 138.00 - RUSSELL 138KV CKT 1	108	118	0.463	99.6	P12:138:AEPW:S.W.S.-4:HOB-JCT4
FDNS	07NR	0	17G	G15_084	FROM->TO	G15085_T 138.00 - RUSSELL 138KV CKT 1	108	118	0.46743	99.5	CHISHOLM6 230.00 - ELK CITY 230KV 230KV CKT 1
FDNS	07NR	0	17G	G15_084	FROM->TO	G15085_T 138.00 - RUSSELL 138KV CKT 1	108	118	0.46743	99.5	ELK CITY 230KV (ELKCTY-6) 230/138/13.8KV TRANSFORMER CKT 1
FDNS	07NR	0	17G	G15_084	FROM->TO	G15085_T 138.00 - RUSSELL 138KV CKT 1	108	118	0.46743	99.5	ELK CITY 230KV (ELKCTY-6) 230/138/13.8KV TRANSFORMER CKT 1
FDNS	00NR	0	17SP	G15_084	FROM->TO	G15085_T 138.00 - RUSSELL 138KV CKT 1	108	118	0.67587	99.5	SHAMROCK (SHAMRCK2) 138/69/14.4KV TRANSFORMER CKT 1
FDNS	00NR	0	17SP	G15_084	FROM->TO	G15085_T 138.00 - RUSSELL 138KV CKT 1	108	118	0.67587	99.5	SHAMROCK (SHAMRCK2) 138/69/14.4KV TRANSFORMER CKT 1
FDNSLock	07ALL	0	17G	G15_084	FROM->TO	G15085_T 138.00 - RUSSELL 138KV CKT 1	108	118	0.51347	99.5	CHILDRESS (CHLDR2WT) 138/69/12.47KV TRANSFORMER CKT 1
FDNS	00NR	0	20WP	G15_084	FROM->TO	GYPSUM - RUSSELL 69KV CKT 1	29	32	0.32332	226.0391	G15085_T 138.00 - RUSSELL 138KV CKT 1
FDNS	00NR	0	16WP	G15_084	FROM->TO	GYPSUM - RUSSELL 69KV CKT 1	29	32	0.32332	220.3269	G15085_T 138.00 - RUSSELL 138KV CKT 1
FDNS	07NR	0	20L	G15_084	FROM->TO	GYPSUM - RUSSELL 69KV CKT 1	22	27	0.32302	219.7915	G15085_T 138.00 - RUSSELL 138KV CKT 1
FDNS	07ALL	0	20L	G15_084	FROM->TO	GYPSUM - RUSSELL 69KV CKT 1	22	27	0.321	210.4587	G15085_T 138.00 - RUSSELL 138KV CKT 1
FDNS	00NR	0	17SP	G15_084	FROM->TO	GYPSUM - RUSSELL 69KV CKT 1	22	27	0.32342	201.7365	G15085_T 138.00 - RUSSELL 138KV CKT 1
FDNS	07NR	0	17G	G15_084	FROM->TO	GYPSUM - RUSSELL 69KV CKT 1	22	27	0.32332	201.2715	G15085_T 138.00 - RUSSELL 138KV CKT 1
FDNS	00NR	0	20SP	G15_084	FROM->TO	GYPSUM - RUSSELL 69KV CKT 1	22	27	0.32342	199.5479	G15085_T 138.00 - RUSSELL 138KV CKT 1
FDNS	07ALL	0	17G	G15_084	FROM->TO	GYPSUM - RUSSELL 69KV CKT 1	22	27	0.32154	193.246	G15085_T 138.00 - RUSSELL 138KV CKT 1
FDNS	07ALL	0	20WP	G15_084	FROM->TO	GYPSUM - RUSSELL 69KV CKT 1	29	32	0.32132	177.5253	G15085_T 138.00 - RUSSELL 138KV CKT 1
FDNS	07ALL	0	16WP	G15_084	FROM->TO	GYPSUM - RUSSELL 69KV CKT 1	29	32	0.32158	169.0562	G15085_T 138.00 - RUSSELL 138KV CKT 1
FDNS	07ALL	0	17SP	G15_084	FROM->TO	GYPSUM - RUSSELL 69KV CKT 1	22	27	0.32155	163.9791	G15085_T 138.00 - RUSSELL 138KV CKT 1
FDNS	07ALL	0	20SP	G15_084	FROM->TO	GYPSUM - RUSSELL 69KV CKT 1	22	27	0.3215	161.58	G15085_T 138.00 - RUSSELL 138KV CKT 1
FDNS	00NR	0	25SP	G15_084	FROM->TO	GYPSUM - RUSSELL 69KV CKT 1	22	27	0.32313	141.9494	G15085_T 138.00 - RUSSELL 138KV CKT 1
FDNS	00NR	0	20WP	G15_084	FROM->TO	GYPSUM - RUSSELL 69KV CKT 1	29	32	0.19785	117.3719	ALTUS JUNCTION - RUSSELL 138KV CKT 1
FDNS	00NR	0	20WP	G15_084	FROM->TO	GYPSUM - RUSSELL 69KV CKT 1	29	32	0.19785	117.3719	ALTUS JUNCTION - RUSSELL 138KV CKT 1
FDNS	00NR	0	16WP	G15_084	FROM->TO	GYPSUM - RUSSELL 69KV CKT 1	29	32	0.19785	114.1723	ALTUS JUNCTION - RUSSELL 138KV CKT 1
FDNS	00NR	0	16WP	G15_084	FROM->TO	GYPSUM - RUSSELL 69KV CKT 1	29	32	0.19785	114.1723	ALTUS JUNCTION - RUSSELL 138KV CKT 1
FDNS	07NR	0	20L	G15_084	FROM->TO	GYPSUM - RUSSELL 69KV CKT 1	22	27	0.19767	112.0402	ALTUS JUNCTION - RUSSELL 138KV CKT 1
FDNS	07NR	0	20L	G15_084	FROM->TO	GYPSUM - RUSSELL 69KV CKT 1	22	27	0.19767	112.0402	ALTUS JUNCTION - RUSSELL 138KV CKT 1
FDNS	07ALL	0	25SP	G15_084	FROM->TO	GYPSUM - RUSSELL 69KV CKT 1	22	27	0.32156	111.4628	G15085_T 138.00 - RUSSELL 138KV CKT 1
FDNS	07ALL	0	20L	G15_084	FROM->TO	GYPSUM - RUSSELL 69KV CKT 1	22	27	0.19645	106.2065	ALTUS JUNCTION - RUSSELL 138KV CKT 1
FDNS	07ALL	0	20L	G15_084	FROM->TO	GYPSUM - RUSSELL 69KV CKT 1	22	27	0.19645	106.2065	ALTUS JUNCTION - RUSSELL 138KV CKT 1
FDNS	00NR	0	20WP	G15_084	FROM->TO	LAKE PAULINE (LAKEPAUL) 138/69/14.4KV TRANSFORMER CKT 1	63	69	0.32332	112.9373	G15085_T 138.00 - RUSSELL 138KV CKT 1
FDNS	00NR	0	20WP	G15_084	FROM->TO	LAKE PAULINE (LAKEPAUL) 138/69/14.4KV TRANSFORMER CKT 1	63	69	0.32332	111.5567	G15085_T 138.00 - RUSSELL 138KV CKT 1
FDNS	00NR	0	16WP	G15_084	FROM->TO	LAKE PAULINE (LAKEPAUL) 138/69/14.4KV TRANSFORMER CKT 1	63	69	0.32332	110.5116	G15085_T 138.00 - RUSSELL 138KV CKT 1
FDNS	00NR	0	16WP	G15_084	FROM->TO	LAKE PAULINE (LAKEPAUL) 138/69/14.4KV TRANSFORMER CKT 1	63	69	0.32332	109.0838	G15085_T 138.00 - RUSSELL 138KV CKT 1
FDNS	00NR	0	20WP	G15_084	TO->FROM	MATHWSN7 345.00 - TATONGA7 345.00 345KV CKT 1	1195	1195	0.06818	110.9769	G14-074T 345.00 - OKLAUNION 345KV CKT 1
FDNS	00NR	0	16WP	G15_084	TO->FROM	MATHWSN7 345.00 - TATONGA7 345.00 345KV CKT 1	1195	1195	0.06965	108.6268	G14-074T 345.00 - OKLAUNION 345KV CKT 1
FDNS	00NR	0	20WP	G15_084	TO->FROM	MATHWSN7 345.00 - TATONGA7 345.00 345KV CKT 1	1195	1195	0.06901	102.7399	THISTLE7 345.00 - WOODWARD DISTRICT EHV 345KV CKT 1
FDNS	00NR	0	20WP	G15_084	TO->FROM	MATHWSN7 345.00 - TATONGA7 345.00 345KV CKT 1	1195	1195	0.06901	102.7399	THISTLE7 345.00 - WOODWARD DISTRICT EHV 345KV CKT 1
FDNS	00NR	0	20WP	G15_084	TO->FROM	MATHWSN7 345.00 - TATONGA7 345.00 345KV CKT 1	1195	1195	0.06901	102.7399	THISTLE7 345.00 - WOODWARD DISTRICT EHV 345KV CKT 2
FDNS	00NR	0	20WP	G15_084	TO->FROM	MATHWSN7 345.00 - TATONGA7 345.00 345KV CKT 1	1195	1195	0.06901	102.7399	THISTLE7 345.00 - WOODWARD DISTRICT EHV 345KV CKT 2
FDNS	00NR	0	20WP	G15_084	TO->FROM	MATHWSN7 345.00 - TATONGA7 345.00 345KV CKT 1	1195	1195	0.08517	102.4191	CHISHOLM6 230.00 - SWEETWATER 230KV CKT 1
FDNS	00NR	0	20WP	G15_084	TO->FROM	MATHWSN7 345.00 - TATONGA7 345.00 345KV CKT 1	1195	1195	0.06818	102.4108	G14-074T 345.00 - TUCO INTERCHANGE 345KV CKT 1
FDNS	00NR	0	20WP	G15_084	TO->FROM	MATHWSN7 345.00 - TATONGA7 345.00 345KV CKT 1	1195	1195	0.08938	102.1811	P12:230:AEPW:ELKCITY6:SWEETWT6
FDNS	00NR	0	16WP	G15_084	TO->FROM	MATHWSN7 345.00 - TATONGA7 345.00 345KV CKT 1	1195	1195	0.0707	101.0086	THISTLE7 345.00 - WOODWARD DISTRICT EHV 345KV CKT 1
FDNS	00NR	0	16WP	G15_084	TO->FROM	MATHWSN7 345.00 - TATONGA7 345.00 345KV CKT 1	1195	1195	0.0707	101.0086	THISTLE7 345.00 - WOODWARD DISTRICT EHV 345KV CKT 1
FDNS	00NR	0	16WP	G15_084	TO->FROM	MATHWSN7 345.00 - TATONGA7 345.00 345KV CKT 1	1195	1195	0.0707	101.0086	THISTLE7 345.00 - WOODWARD DISTRICT EHV 345KV CKT 2
FDNS	00NR	0	16WP	G15_084	TO->FROM	MATHWSN7 345.00 - TATONGA7 345.00 345KV CKT 1	1195	1195	0.0707	101.0086	THISTLE7 345.00 - WOODWARD DISTRICT EHV 345KV CKT 2
FDNS	00NR	0	20WP	G15_084	TO->FROM	MATHWSN7 345.00 - TATONGA7 345.00 345KV CKT 1	1195	1195	0.08558	100.869	CIMARRON - MINCO 345KV CKT 1
FDNS	00NR	0	16WP	G15_084	TO->FROM	MATHWSN7 345.00 - TATONGA7 345.00 345KV CKT 1	1195	1195	0.06965	100.5612	G14-074T 345.00 - TUCO INTERCHANGE 345KV CKT 1
FDNS	00NR	0	16WP	G15_084	TO->FROM	MATHWSN7 345.00 - TATONGA7 345.00 345KV CKT 1	1195	1195	0.0871	100.4392	CHISHOLM6 230.00 - SWEETWATER 230KV CKT 1
FDNS	00NR	0	20WP	G15_084	TO->FROM	MATHWSN7 345.00 - TATONGA7 345.00 345KV CKT 1	1195	1195	0.08517	100.3181	STLN-DEMARC6 - SWEETWATER 230KV CKT 1
FDNS	00NR	0	20WP	G15_084	TO->FROM	MATHWSN7 345.00 - TATONGA7 345.00 345KV CKT 1	1195	1195	0.08517	100.2999	STATELINE INTERCHANGE - STLN-DEMARC6 230KV CKT 1
FDNS	00NR	0	16WP	G15_084	TO->FROM	MATHWSN7 345.00 - TATONGA7 345.00 345KV CKT 1	1195	1195	0.0916	100.2694	P12:230:AEPW:ELKCITY6:SWEETWT6
FDNS	00NR	0	20WP	G15_084	TO->FROM	MATHWSN7 345.00 - TATONGA7 345.00 345KV CKT 1	1195	1195	0.08517	100.26	P12:230:AEPW-SPS:SWEETWT6:WHEELER 6
FDNS	00NR	0	20WP	G15_084	TO->FROM	MATHWSN7 345.00 - TATONGA7 345.00 345KV CKT 1	1195	1195	0.06287	100.09	G1524G1525 345.00 - THISTLE7 345.00 345KV CKT 1
FDNS	00NR	0	20WP	G15_084	TO->FROM	MATHWSN7 345.00 - TATONGA7 345.00 345KV CKT 1	1195	1195	0.06287	100.09	G1524G1525 345.00 - THISTLE7 345.00 345KV CKT 2
FDNS	00NR	0	16WP	G15_084	FROM->TO	NAPLESTP 138.00 - PAYNE 138.00 138KV CKT 1	132	143	0.04679	158.4426	G14-057T 345.00 - SUNNYSIDE 345KV CKT 1
FDNS	00NR	0	16WP	G15_084	FROM->TO	NAPLESTP 138.00 - PAYNE 138.00 138KV CKT 1	132	143	0.04955	144.2618	CIMARRON - MINCO 345KV CKT 1
FDNS	00NR	0	16WP	G15_084	FROM->TO	NAPLESTP 138.00 - PAYNE 138.00 138KV CKT 1	132	143	0.04679	142.7232	G14-057T 345.00 - LAWTON EASTSIDE 345KV CKT 1
FDNS	00NR	0	17SP	G15_084	FROM->TO	NAPLESTP 138.00 - PAYNE 138.00 138KV CKT 1	132	143	0.04624	135.2234	G14-057T 345.00 - SUNNYSIDE 345KV CKT 1
FDNS	00NR	0	16WP	G15_084	FROM->TO	NAPLESTP 138.00 - PAYNE 138.00 138KV CKT 1	132	143	0.04955	132.5573	GRACEMONT - MINCO 345KV CKT 1
FDNS	00NR	0	16WP	G15_084	FROM->TO	NAPLESTP 138.00 - PAYNE 138.00 138KV CKT 1	132	143	0.03672	131.0989	CIMARRON - DRAPER LAKE 345KV CKT 1

SOLUTION	GROUP	SCENARIO	SEASON	SOURCE	DIRECTION	MONITORED ELEMENT	RATEA (MVA)	RATEB(MVA)	TDF	TC%LOADING (% MVA)	CONTINGENCY
FDNS	00NR	0	16WP	G15_084	FROM->TO	NAPLESTP 138.00 - PAYNE 138.00 138KV CKT 1	132	143	0.03905	130.8119	COMANCHE - LOCO 138KV CKT 1
FDNS	00NR	0	16WP	G15_084	FROM->TO	NAPLESTP 138.00 - PAYNE 138.00 138KV CKT 1	132	143	0.03652	129.1518	P12:138:WFEC:MSL02
FDNS	00NR	0	16WP	G15_084	FROM->TO	NAPLESTP 138.00 - PAYNE 138.00 138KV CKT 1	132	143	0.03611	129.0927	ANADARKO - GEORGIA 138KV CKT 1
FDNS	00NR	0	16WP	G15_084	FROM->TO	NAPLESTP 138.00 - PAYNE 138.00 138KV CKT 1	132	143	0.03611	128.3228	FLETCHER - GEORGIA 138KV CKT 1
FDNS	00NR	0	16WP	G15_084	FROM->TO	NAPLESTP 138.00 - PAYNE 138.00 138KV CKT 1	132	143	0.03824	128.2658	ANADARKO - POCASSETT 138KV CKT 1
FDNS	00NR	0	16WP	G15_084	FROM->TO	NAPLESTP 138.00 - PAYNE 138.00 138KV CKT 1	132	143	0.03824	127.654	POCASSETT - TUTTLE 138KV CKT 1
FDNS	00NR	0	16WP	G15_084	FROM->TO	NAPLESTP 138.00 - PAYNE 138.00 138KV CKT 1	132	143	0.04099	127.343	TUTTLE - TUTTLE CONOCO TAP 138KV CKT 1
FDNS	00NR	0	17SP	G15_084	FROM->TO	NAPLESTP 138.00 - PAYNE 138.00 138KV CKT 1	132	143	0.04855	127.0275	CIMARRON - MINCO 345KV CKT 1
FDNS	00NR	0	16WP	G15_084	FROM->TO	NAPLESTP 138.00 - PAYNE 138.00 138KV CKT 1	132	143	0.04099	126.4207	CIMARRON - TUTTLE CONOCO TAP 138KV CKT 1
FDNS	00NR	0	16WP	G15_084	FROM->TO	NAPLESTP 138.00 - PAYNE 138.00 138KV CKT 1	132	143	0.03612	126.1176	EMPIRE - FLETCHER 138KV CKT 1
FDNS	00NR	0	16WP	G15_084	FROM->TO	NAPLESTP 138.00 - PAYNE 138.00 138KV CKT 1	132	143	0.03824	126.0651	BRIDGECR 138.00 - TUTTLE 138KV CKT 1
FDNS	00NR	0	16WP	G15_084	FROM->TO	NAPLESTP 138.00 - PAYNE 138.00 138KV CKT 1	132	143	0.03432	125.5716	BASE CASE
FDNS	00NR	0	16WP	G15_084	FROM->TO	NAPLESTP 138.00 - PAYNE 138.00 138KV CKT 1	132	143	0.03612	125.5267	COMANCHE - EMPIRE 138KV CKT 1
FDNS	00NR	0	16WP	G15_084	FROM->TO	NAPLESTP 138.00 - PAYNE 138.00 138KV CKT 1	132	143	0.03824	124.9383	P12:138:WFEC:MSL01
FDNS	00NR	0	16WP	G15_084	FROM->TO	NAPLESTP 138.00 - PAYNE 138.00 138KV CKT 1	132	143	0.03824	124.9165	BRIDGECR 138.00 - SUNSHINE CANYON 138KV CKT 1
FDNS	00NR	0	16WP	G15_084	FROM->TO	NAPLESTP 138.00 - PAYNE 138.00 138KV CKT 1	132	143	0.03205	123.9259	P12:138:OKGE:3TERM21
FDNS	00NR	0	16WP	G15_084	FROM->TO	NAPLESTP 138.00 - PAYNE 138.00 138KV CKT 1	132	143	0.03602	123.6971	LOCO - PINTO 138KV CKT 1
FDNS	00NR	0	16WP	G15_084	FROM->TO	NAPLESTP 138.00 - PAYNE 138.00 138KV CKT 1	132	143	0.03867	123.479	BLANCHARD - CORNVILLE 138KV CKT 1
FDNS	00NR	0	16WP	G15_084	FROM->TO	NAPLESTP 138.00 - PAYNE 138.00 138KV CKT 1	132	143	0.03867	123.4553	P12:138:AEPW-OGE:CORNVIL4:MAUD 4
FDNS	00NR	0	16WP	G15_084	FROM->TO	NAPLESTP 138.00 - PAYNE 138.00 138KV CKT 1	132	143	0.03501	123.1756	FLETCHER - MARLOW JCT 69KV CKT 1
FDNS	00NR	0	16WP	G15_084	FROM->TO	NAPLESTP 138.00 - PAYNE 138.00 138KV CKT 1	132	143	0.03233	122.4642	FRANKLIN SW - MIDWEST TAP 138KV CKT 1
FDNS	00NR	0	16WP	G15_084	FROM->TO	NAPLESTP 138.00 - PAYNE 138.00 138KV CKT 1	132	143	0.03867	122.3171	BLANCHARD - MAUD 138KV CKT 1
FDNS	00NR	0	16WP	G15_084	FROM->TO	NAPLESTP 138.00 - PAYNE 138.00 138KV CKT 1	132	143	0.03602	121.8475	ARCO - PINTO 138KV CKT 1
FDNS	00NR	0	16WP	G15_084	FROM->TO	NAPLESTP 138.00 - PAYNE 138.00 138KV CKT 1	132	143	0.0347	121.6611	DUNCAN (DUNCAN) 138/69/13.8KV TRANSFORMER CKT 1
FDNS	00NR	0	16WP	G15_084	FROM->TO	NAPLESTP 138.00 - PAYNE 138.00 138KV CKT 1	132	143	0.0347	121.6611	DUNCAN (DUNCAN) 138/69/13.8KV TRANSFORMER CKT 1
FDNS	00NR	0	16WP	G15_084	FROM->TO	NAPLESTP 138.00 - PAYNE 138.00 138KV CKT 1	132	143	0.03501	121.6508	FARWELLJ2 69.000 - MARLOW JCT 69KV CKT 1
FDNS	00NR	0	16WP	G15_084	FROM->TO	NAPLESTP 138.00 - PAYNE 138.00 138KV CKT 1	132	143	0.03477	121.4751	CIMARRON - SARA 138KV CKT 1
FDNS	00NR	0	16WP	G15_084	FROM->TO	NAPLESTP 138.00 - PAYNE 138.00 138KV CKT 1	132	143	0.03466	121.2304	ETNA - PARK LANE 138KV CKT 1
FDNS	00NR	0	16WP	G15_084	FROM->TO	NAPLESTP 138.00 - PAYNE 138.00 138KV CKT 1	132	143	0.03309	121.1108	DRAPER LAKE - MIDWEST TAP 138KV CKT 1
FDNS	00NR	0	16WP	G15_084	FROM->TO	NAPLESTP 138.00 - PAYNE 138.00 138KV CKT 1	132	143	0.03501	120.9735	FARWELLJ2 69.000 - RUSH SPRINGS 69KV CKT 1
FDNS	00NR	0	16WP	G15_084	FROM->TO	NAPLESTP 138.00 - PAYNE 138.00 138KV CKT 1	132	143	0.03466	120.8068	ETNA - HARDEN 4 138.00 138KV CKT 1
FDNS	00NR	0	16WP	G15_084	FROM->TO	NAPLESTP 138.00 - PAYNE 138.00 138KV CKT 1	132	143	0.03583	120.6179	HUGO - SUNNYSIDE 345KV CKT 1
FDNS	00NR	0	16WP	G15_084	FROM->TO	NAPLESTP 138.00 - PAYNE 138.00 138KV CKT 1	132	143	0.03481	120.6021	LULA - TUPELO TAP 138KV CKT 1
FDNS	00NR	0	17SP	G15_084	FROM->TO	NAPLESTP 138.00 - PAYNE 138.00 138KV CKT 1	132	143	0.04624	120.543	G14-057T 345.00 - LAWTON EASTSIDE 345KV CKT 1
FDNS	00NR	0	16WP	G15_084	FROM->TO	NAPLESTP 138.00 - PAYNE 138.00 138KV CKT 1	132	143	0.03822	120.5234	BAILEY4 138.00 - SUNSHINE CANYON 138KV CKT 1
FDNS	00NR	0	16WP	G15_084	FROM->TO	NAPLESTP 138.00 - PAYNE 138.00 138KV CKT 1	132	143	0.0347	120.5113	DUNCAN - TOSCO 69KV CKT 1
FDNS	00NR	0	16WP	G15_084	FROM->TO	NAPLESTP 138.00 - PAYNE 138.00 138KV CKT 1	132	143	0.03569	120.2763	JOHNSON COUNTY - SUNNYSIDE 345KV CKT 1
FDNS	00NR	0	16WP	G15_084	FROM->TO	NAPLESTP 138.00 - PAYNE 138.00 138KV CKT 1	132	143	0.0347	120.2758	P12:69:WFEC-AEPW:COMANCH2:DUNCAN-2
FDNS	00NR	0	16WP	G15_084	FROM->TO	NAPLESTP 138.00 - PAYNE 138.00 138KV CKT 1	132	143	0.0347	120.2715	COMANCHE TAP - TOSCO 69KV CKT 1
FDNS	00NR	0	16WP	G15_084	FROM->TO	NAPLESTP 138.00 - PAYNE 138.00 138KV CKT 1	132	143	0.03477	120.2527	SARA - STHLAKE4 138.00 138KV CKT 1
FDNS	00NR	0	16WP	G15_084	FROM->TO	NAPLESTP 138.00 - PAYNE 138.00 138KV CKT 1	132	143	0.0352	120.2034	BRADLEY - RUSH SPRINGS 69KV CKT 1
FDNS	00NR	0	16WP	G15_084	FROM->TO	NAPLESTP 138.00 - PAYNE 138.00 138KV CKT 1	132	143	0.03477	120.0747	MCCLAIN - STHLAKE4 138.00 138KV CKT 1
FDNS	00NR	0	16WP	G15_084	FROM->TO	NAPLESTP 138.00 - PAYNE 138.00 138KV CKT 1	132	143	0.03281	119.9591	ACME - FRANKLIN SW 138KV CKT 1
FDNS	00NR	0	16WP	G15_084	FROM->TO	NAPLESTP 138.00 - PAYNE 138.00 138KV CKT 1	132	143	0.0347	119.932	COMANCHE - COMANCHE TAP 69KV CKT 1
FDNSLock	00NR	0	16WP	G15_084	FROM->TO	NAPLESTP 138.00 - PAYNE 138.00 138KV CKT 1	132	143	0.03464	119.8434	MATHWSN7 345.00 - TATONGA7 345.00 345KV CKT 1
FDNS	00NR	0	16WP	G15_084	FROM->TO	NAPLESTP 138.00 - PAYNE 138.00 138KV CKT 1	132	143	0.03466	119.7936	FRISCCO4 138.00 - HARDEN 4 138.00 138KV CKT 1
FDNS	00NR	0	16WP	G15_084	FROM->TO	NAPLESTP 138.00 - PAYNE 138.00 138KV CKT 1	132	143	0.03822	119.7566	BAILEY4 138.00 - WESTMOORE 138KV CKT 1
FDNS	00NR	0	16WP	G15_084	FROM->TO	NAPLESTP 138.00 - PAYNE 138.00 138KV CKT 1	132	143	0.03503	119.6886	CLEVELAND - G15066_T 345.00 345KV CKT 1
FDNS	00NR	0	16WP	G15_084	FROM->TO	NAPLESTP 138.00 - PAYNE 138.00 138KV CKT 1	132	143	0.03474	119.5928	CIMARRON - CZECH HALL 138KV CKT 1
FDNS	00NR	0	16WP	G15_084	FROM->TO	NAPLESTP 138.00 - PAYNE 138.00 138KV CKT 1	132	143	0.03281	119.5636	CANEY CREEK - TEXOMA JCT 138KV CKT 1
FDNS	00NR	0	16WP	G15_084	FROM->TO	NAPLESTP 138.00 - PAYNE 138.00 138KV CKT 1	132	143	0.03503	119.4516	G15066_T 345.00 - SOONER 345KV CKT 1
FDNS	00NR	0	16WP	G15_084	FROM->TO	NAPLESTP 138.00 - PAYNE 138.00 138KV CKT 1	132	143	0.03466	119.4076	FRISCCO4 138.00 - LULA 138KV CKT 1
FDNS	00NR	0	16WP	G15_084	FROM->TO	NAPLESTP 138.00 - PAYNE 138.00 138KV CKT 1	132	143	0.0352	119.3211	BRADLEY - LINDSAY SW 69KV CKT 1
FDNS	00NR	0	16WP	G15_084	FROM->TO	NAPLESTP 138.00 - PAYNE 138.00 138KV CKT 1	132	143	0.03474	119.2452	CZECH HALL - XEROX 138KV CKT 1
FDNS	00NR	0	16WP	G15_084	FROM->TO	NAPLESTP 138.00 - PAYNE 138.00 138KV CKT 1	132	143	0.03474	119.2263	MORGAN - XEROX 138KV CKT 1
FDNS	00NR	0	16WP	G15_084	FROM->TO	NAPLESTP 138.00 - PAYNE 138.00 138KV CKT 1	132	143	0.03474	119.1271	MORGAN - MUSTANG 138KV CKT 1
FDNS	00NR	0	16WP	G15_084	FROM->TO	NAPLESTP 138.00 - PAYNE 138.00 138KV CKT 1	132	143	0.03822	119.0339	FRANKLIN SW - WESTMOORE 138KV CKT 1
FDNS	00NR	0	16WP	G15_084	FROM->TO	NAPLESTP 138.00 - PAYNE 138.00 138KV CKT 1	132	143	0.0342	118.923	JOHNSON COUNTY (JOHNCO) 345/138/13.8KV TRANSFORMER CKT 1
FDNS	00NR	0	16WP	G15_084	FROM->TO	NAPLESTP 138.00 - PAYNE 138.00 138KV CKT 1	132	143	0.03281	118.9075	ACME - WEST NORMAN 138KV CKT 1
FDNSLock	00NR	0	16WP	G15_084	FROM->TO	NAPLESTP 138.00 - PAYNE 138.00 138KV CKT 1	132	143	0.03464	118.8607	G11_051T 345.00 - TATONGA7 345.00 345KV CKT 1
FDNS	00NR	0	16WP	G15_084	FROM->TO	NAPLESTP 138.00 - PAYNE 138.00 138KV CKT 1	132	143	0.0337	118.7804	CANADIAN SW (CANADIAN) 138/69/12.47KV TRANSFORMER CKT 1
FDNS	00NR	0	16WP	G15_084	FROM->TO	NAPLESTP 138.00 - PAYNE 138.00 138KV CKT 1	132	143	0.0337	118.7755	CANADIAN SW - LITTLE AXE 69KV CKT 1
FDNS	00NR	0	16WP	G15_084	FROM->TO	NAPLESTP 138.00 - PAYNE 138.00 138KV CKT 1	132	143	0.03522	118.6635	ARCADIA - NORTHWEST 345KV CKT 1
FDNS	00NR	0	17SP	G15_084	FROM->TO	NAPLESTP 138.00 - PAYNE 138.00 138KV CKT 1	132	143	0.03843	116.3005	COMANCHE - LOCO 138KV CKT 1
FDNS	00NR	0	17SP	G15_084	FROM->TO	NAPLESTP 138.00 - PAYNE 138.00 138KV CKT 1	132	143	0.04855	116.193	GRACEMONT - MINCO 345KV CKT 1
FDNS	00NR	0	17SP	G15_084	FROM->TO	NAPLESTP 138.00 - PAYNE 138.00 138KV CKT 1	132	143	0.03589	115.6582	P12:138:WFEC:MSL02
FDNS	00NR	0	17SP	G15_084	FROM->TO	NAPLESTP 138.00 - PAYNE 138.00 138KV CKT 1	132	143	0.03548	115.6064	ANADARKO - GEORGIA 138KV CKT 1
FDNS	00NR	0	17SP	G15_084	FROM->TO	NAPLESTP 138.00 - PAYNE 138.00 138KV CKT 1	132	143	0.03613	115.1241	CIMARRON - DRAPER LAKE 345KV CKT 1
FDNS	00NR	0	17SP	G15_084	FROM->TO	NAPLESTP 138.00 - PAYNE 138.00 138KV CKT 1	132	143	0.0402	115.0481	TUTTLE - TUTTLE CONOCO TAP 138KV CKT 1
FDNS	00NR	0	17SP	G15_084	FROM->TO	NAPLESTP 138.00 - PAYNE 138.00 138KV CKT 1	132	143	0.03548	114.6518	FLETCHER - GEORGIA 138KV CKT 1
FDNS	00NR	0	17SP	G15_084	FROM->TO	NAPLESTP 138.00 - PAYNE 138.00 138KV CKT 1	132	143	0.03755	114.4787	ANADARKO - POCASSETT 138KV CKT 1
FDNS	00NR	0	17SP	G15_084	FROM->TO	NAPLESTP 138.00 - PAYNE 138.00 138KV CKT 1	132	143	0.0402	114.136	CIMARRON - TUTTLE CONOCO TAP 138KV CKT 1
FDNS	00NR	0	17SP	G15_084	FROM->TO	NAPLESTP 138.00 - PAYNE 138.00 138KV CKT 1	132	143	0.03755	114.0307	POCASSETT - TUTTLE 138KV CKT 1
FDNS	00NR	0	16WP	G15_084	FROM->TO	NAPLESTP 138.00 - PAYNE 138.00 138KV CKT 1	132	143	0.03432	113.8885	GEN562084 1-G11_050_3 0.6900
FDNS	00NR	0	16WP	G15_084	FROM->TO	NAPLESTP 138.00 - PAYNE 138.00 138KV CKT 1	132	143	0.03432	113.5916	GEN521112 1-ORME3 13.800
FDNS	00NR	0	16WP	G15_084	FROM->TO	NAPLESTP 138.00 - PAYNE 138.00 138KV CKT 1	132	143	0.03255	113.5903	DUNCAN EASTSIDE - OMPA-DUNCAN 821 138KV CKT 1
FDNS	00NR	0	16WP	G15_084	FROM->TO	NAPLESTP 138.00 - PAYNE 138.00 138KV CKT 1	132	143	0.03397	113.4576	P12:138:WFEC:MSL06
FDNS	00NR	0	16WP	G15_084	FROM->TO	NAPLESTP 138.00 - PAYNE 138.00 138KV CKT 1	132	143	0.03397	113.457	P12:138:AEPW-SWPA:LONEOAK4:TUPELO4
FDNS	00NR	0	16WP	G15_084	FROM->TO	NAPLESTP 138.00 - PAYNE 138.00 138KV CKT 1	132	143	0.0359	113.3618	GRAPEVINE INTERCHANGE - NICHOLS STATION 230KV CKT 1

SOLUTION	GROUP	SCENARIO	SEASON	SOURCE	DIRECTION	MONITORED ELEMENT	RATEA (MVA)	RATEB(MVA)	TDF	TC%LOADING (% MVA)	CONTINGENCY
FDNS	00NR	0	16WP	G15_084	FROM->TO	NAPLESTP 138.00 - PAYNE 138.00 138KV CKT 1	132	143	0.0359	113.3618	GRAPEVINE INTERCHANGE - NICHOLS STATION 230KV CKT 1
FDNS	00NR	0	16WP	G15_084	FROM->TO	NAPLESTP 138.00 - PAYNE 138.00 138KV CKT 1	132	143	0.03432	113.2495	GEN563272 1-G15093_3 0.6900
FDNS	00NR	0	16WP	G15_084	FROM->TO	NAPLESTP 138.00 - PAYNE 138.00 138KV CKT 1	132	143	0.03255	113.2145	DUNCAN EASTSIDE - DUNCHERTP4 138.00 138KV CKT 1
FDNS	00NR	0	16WP	G15_084	FROM->TO	NAPLESTP 138.00 - PAYNE 138.00 138KV CKT 1	132	143	0.03255	113.2143	DUNCAN - DUNCHERTP4 138.00 138KV CKT 1
FDNS	00NR	0	16WP	G15_084	FROM->TO	NAPLESTP 138.00 - PAYNE 138.00 138KV CKT 1	132	143	0.03255	113.2143	DUNCAN - DUNCHERTP4 138.00 138KV CKT 1
FDNS	00NR	0	16WP	G15_084	FROM->TO	NAPLESTP 138.00 - PAYNE 138.00 138KV CKT 1	132	143	0.03376	113.1507	P12:138:WFEC:MSL07
FDNS	00NR	0	16WP	G15_084	FROM->TO	NAPLESTP 138.00 - PAYNE 138.00 138KV CKT 1	132	143	0.03376	113.1507	P12:138:WFEC-AEPW:HUGOPP4:ATOKA--4
FDNS	00NR	0	16WP	G15_084	FROM->TO	NAPLESTP 138.00 - PAYNE 138.00 138KV CKT 1	132	143	0.03281	113.1419	MARIETTA - SOUTH WILSON 138KV CKT 1
FDNS	00NR	0	16WP	G15_084	FROM->TO	NAPLESTP 138.00 - PAYNE 138.00 138KV CKT 1	132	143	0.03432	113.1374	GEN521110 1-ORME1 13.800
FDNS	00NR	0	16WP	G15_084	FROM->TO	NAPLESTP 138.00 - PAYNE 138.00 138KV CKT 1	132	143	0.03432	113.1374	GEN521111 1-ORME2 13.800
FDNS	00NR	0	16WP	G15_084	FROM->TO	NAPLESTP 138.00 - PAYNE 138.00 138KV CKT 1	132	143	0.03396	113.0023	P12:138:WFEC:MSL08
FDNS	00NR	0	17SP	G15_084	FROM->TO	NAPLESTP 138.00 - PAYNE 138.00 138KV CKT 1	132	143	0.0355	113.0008	EMPIRE - FLETCHER 138KV CKT 1
FDNS	00NR	0	16WP	G15_084	FROM->TO	NAPLESTP 138.00 - PAYNE 138.00 138KV CKT 1	132	143	0.03192	112.8062	P12:230:AEPW-SPS:SWEETWT6:WHEELER 6
FDNS	00NR	0	16WP	G15_084	FROM->TO	NAPLESTP 138.00 - PAYNE 138.00 138KV CKT 1	132	143	0.03192	112.8056	STATELINE INTERCHANGE - STLN-DEMARC6 230KV CKT 1
FDNS	00NR	0	16WP	G15_084	FROM->TO	NAPLESTP 138.00 - PAYNE 138.00 138KV CKT 1	132	143	0.03192	112.8043	STLN-DEMARC6 - SWEETWATER 230KV CKT 1
FDNS	00NR	0	16WP	G15_084	FROM->TO	NAPLESTP 138.00 - PAYNE 138.00 138KV CKT 1	132	143	0.03432	112.7737	GEN520811 1-ANADRK4
FDNS	00NR	0	16WP	G15_084	FROM->TO	NAPLESTP 138.00 - PAYNE 138.00 138KV CKT 1	132	143	0.03281	112.7031	RINGLING - SOUTH WILSON 138KV CKT 1
FDNS	00NR	0	17SP	G15_084	FROM->TO	NAPLESTP 138.00 - PAYNE 138.00 138KV CKT 1	132	143	0.03755	112.6997	BRIDGECR 138.00 - TUTTLE 138KV CKT 1
FDNS	00NR	0	16WP	G15_084	FROM->TO	NAPLESTP 138.00 - PAYNE 138.00 138KV CKT 1	132	143	0.03432	112.6167	GEN563202 1-G15085_3 0.5500
FDNS	00NR	0	17SP	G15_084	FROM->TO	NAPLESTP 138.00 - PAYNE 138.00 138KV CKT 1	132	143	0.0355	112.4854	COMANCHE - EMPIRE 138KV CKT 1
FDNS	00NR	0	16WP	G15_084	FROM->TO	NAPLESTP 138.00 - PAYNE 138.00 138KV CKT 1	132	143	0.03281	112.4479	HEALDTON - RINGLING 138KV CKT 1
FDNS	00NR	0	16WP	G15_084	FROM->TO	NAPLESTP 138.00 - PAYNE 138.00 138KV CKT 1	132	143	0.03729	112.4404	BASELINE - PERNELL 138.00 138KV CKT 1
FDNS	00NR	0	16WP	G15_084	FROM->TO	NAPLESTP 138.00 - PAYNE 138.00 138KV CKT 1	132	143	0.03482	112.3596	PAOLI (PAOLI) 138/69/13.8KV TRANSFORMER CKT 1
FDNS	00NR	0	16WP	G15_084	FROM->TO	NAPLESTP 138.00 - PAYNE 138.00 138KV CKT 1	132	143	0.03335	112.2357	P12:138:AEPW:DUNCAN-4:L.E.S.-4
FDNS	00NR	0	16WP	G15_084	FROM->TO	NAPLESTP 138.00 - PAYNE 138.00 138KV CKT 1	132	143	0.03432	112.2268	GEN562685 1-G15_013_3 0.3550
FDNS	00NR	0	16WP	G15_084	FROM->TO	NAPLESTP 138.00 - PAYNE 138.00 138KV CKT 1	132	143	0.03281	112.177	HEALDTON - LOCO 138KV CKT 1
FDNS	00NR	0	16WP	G15_084	FROM->TO	NAPLESTP 138.00 - PAYNE 138.00 138KV CKT 1	132	143	0.03334	111.9199	DUNCAN - OMPA-DUNCAN 840 138KV CKT 1
FDNS	00NR	0	16WP	G15_084	FROM->TO	NAPLESTP 138.00 - PAYNE 138.00 138KV CKT 1	132	143	0.03334	111.9199	DUNCAN - OMPA-DUNCAN 840 138KV CKT 1
FDNS	00NR	0	17SP	G15_084	FROM->TO	NAPLESTP 138.00 - PAYNE 138.00 138KV CKT 1	132	143	0.03755	111.8264	P12:138:WFEC:MSL01
FDNS	00NR	0	16WP	G15_084	FROM->TO	NAPLESTP 138.00 - PAYNE 138.00 138KV CKT 1	132	143	0.03356	111.8041	G14-074T 345.00 - TUCO INTERCHANGE 345KV CKT 1
FDNS	00NR	0	17SP	G15_084	FROM->TO	NAPLESTP 138.00 - PAYNE 138.00 138KV CKT 1	132	143	0.03755	111.7973	BRIDGECR 138.00 - SUNSHINE CANYON 138KV CKT 1
FDNS	00NR	0	17SP	G15_084	FROM->TO	NAPLESTP 138.00 - PAYNE 138.00 138KV CKT 1	132	143	0.03373	111.7093	BASE CASE
FDNS	00NR	0	16WP	G15_084	FROM->TO	NAPLESTP 138.00 - PAYNE 138.00 138KV CKT 1	132	143	0.0344	111.6361	P12:138:WFEC:MSL15
FDNS	00NR	0	16WP	G15_084	FROM->TO	NAPLESTP 138.00 - PAYNE 138.00 138KV CKT 1	132	143	0.03192	111.5715	CHISHOLM6 230.00 - SWEETWATER 230KV CKT 1
FDNS	00NR	0	16WP	G15_084	FROM->TO	NAPLESTP 138.00 - PAYNE 138.00 138KV CKT 1	132	143	0.03729	111.3905	PAOLI - PERNELL 138.00 138KV CKT 1
FDNS	00NR	0	16WP	G15_084	FROM->TO	NAPLESTP 138.00 - PAYNE 138.00 138KV CKT 1	132	143	0.03281	111.357	P12:138:WFEC:MSL17
FDNS	00NR	0	16WP	G15_084	FROM->TO	NAPLESTP 138.00 - PAYNE 138.00 138KV CKT 1	132	143	0.03264	111.3324	P12:230:AEPW:ELKCITY6:SWEETWT6
FDNS	00NR	0	16WP	G15_084	FROM->TO	NAPLESTP 138.00 - PAYNE 138.00 138KV CKT 1	132	143	0.03334	111.3081	COMANCHE TAP - OMPA-DUNCAN 840 138KV CKT 1
FDNS	00NR	0	16WP	G15_084	FROM->TO	NAPLESTP 138.00 - PAYNE 138.00 138KV CKT 1	132	143	0.03442	111.0332	P12:138:WFEC:MSL09
FDNS	00NR	0	16WP	G15_084	FROM->TO	NAPLESTP 138.00 - PAYNE 138.00 138KV CKT 1	132	143	0.03197	110.7805	P12:138:AEPW:CORNVIL4:S.W.S.-4
FDNS	00NR	0	16WP	G15_084	FROM->TO	NAPLESTP 138.00 - PAYNE 138.00 138KV CKT 1	132	143	0.03432	110.6617	GEN562512 1-G14_020_3 0.6900
FDNS	00NR	0	17SP	G15_084	FROM->TO	NAPLESTP 138.00 - PAYNE 138.00 138KV CKT 1	132	143	0.03538	110.626	LOCO - PINTO 138KV CKT 1
FDNS	00NR	0	16WP	G15_084	FROM->TO	NAPLESTP 138.00 - PAYNE 138.00 138KV CKT 1	132	143	0.03179	110.398	CORNVILLE - NORGE ROAD 138KV CKT 1
FDNS	00NR	0	16WP	G15_084	FROM->TO	NAPLESTP 138.00 - PAYNE 138.00 138KV CKT 1	132	143	0.03179	110.398	CORNVILLE - NORGE ROAD 138KV CKT 1
FDNS	00NR	0	17SP	G15_084	FROM->TO	NAPLESTP 138.00 - PAYNE 138.00 138KV CKT 1	132	143	0.03798	110.1562	BLANCHARD - CORNVILLE 138KV CKT 1
FDNS	00NR	0	16WP	G15_084	FROM->TO	NAPLESTP 138.00 - PAYNE 138.00 138KV CKT 1	132	143	0.03197	110.1291	CORNVILLE - NORTH 29TH CHICKASHA 138KV CKT 1
FDNS	00NR	0	17SP	G15_084	FROM->TO	NAPLESTP 138.00 - PAYNE 138.00 138KV CKT 1	132	143	0.03798	110.1032	P12:138:AEPW-OGE:CORNVIL4:MAUD 4
FDNS	00NR	0	17SP	G15_084	FROM->TO	NAPLESTP 138.00 - PAYNE 138.00 138KV CKT 1	132	143	0.03152	110.0841	P12:138:OKGE:3TERM21
FDNS	00NR	0	16WP	G15_084	FROM->TO	NAPLESTP 138.00 - PAYNE 138.00 138KV CKT 1	132	143	0.03432	110.0463	GEN511848 1-SOUTHWESTERN STATION #3
FDNS	07NR	0	17G	G15_084	FROM->TO	NAPLESTP 138.00 - PAYNE 138.00 138KV CKT 1	132	143	0.04679	109.8948	G14-057T 345.00 - SUNNYSIDE 345KV CKT 1
FDNS	00NR	0	16WP	G15_084	FROM->TO	NAPLESTP 138.00 - PAYNE 138.00 138KV CKT 1	132	143	0.03929	109.8107	GRACEMONT (BANK 1) 345/138/13.8KV TRANSFORMER CKT 1
FDNS	07NR	0	17G	G15_084	FROM->TO	NAPLESTP 138.00 - PAYNE 138.00 138KV CKT 1	132	143	0.04955	109.7389	CIMARRON - MINCO 345KV CKT 1
FDNS	00NR	0	16WP	G15_084	FROM->TO	NAPLESTP 138.00 - PAYNE 138.00 138KV CKT 1	132	143	0.03197	109.4026	NORTH 29TH CHICKASHA - VERDEN 138KV CKT 1
FDNS	00NR	0	16WP	G15_084	FROM->TO	NAPLESTP 138.00 - PAYNE 138.00 138KV CKT 1	132	143	0.03723	109.3683	P12:138:WFEC:MSL16
FDNS	00NR	0	17SP	G15_084	FROM->TO	NAPLESTP 138.00 - PAYNE 138.00 138KV CKT 1	132	143	0.0344	109.364	FLETCHER - MARLOW JCT 69KV CKT 1
FDNS	00NR	0	16WP	G15_084	FROM->TO	NAPLESTP 138.00 - PAYNE 138.00 138KV CKT 1	132	143	0.03197	109.1809	SOUTHWESTERN STATION - VERDEN 138KV CKT 1
FDNS	00NR	0	16WP	G15_084	FROM->TO	NAPLESTP 138.00 - PAYNE 138.00 138KV CKT 1	132	143	0.03179	109.1153	NORGE ROAD - SOUTHWESTERN STATION 138KV CKT 1
FDNS	00NR	0	16WP	G15_084	FROM->TO	NAPLESTP 138.00 - PAYNE 138.00 138KV CKT 1	132	143	0.03179	109.1153	NORGE ROAD - SOUTHWESTERN STATION 138KV CKT 1
FDNS	00NR	0	17SP	G15_084	FROM->TO	NAPLESTP 138.00 - PAYNE 138.00 138KV CKT 1	132	143	0.03538	108.9978	ARCO - PINTO 138KV CKT 1
FDNS	00NR	0	17SP	G15_084	FROM->TO	NAPLESTP 138.00 - PAYNE 138.00 138KV CKT 1	132	143	0.03179	108.6664	FRANKLIN SW - MIDWEST TAP 138KV CKT 1
FDNS	00NR	0	17SP	G15_084	FROM->TO	NAPLESTP 138.00 - PAYNE 138.00 138KV CKT 1	132	143	0.0344	108.5066	FARWELLJ2 69.000 - MARLOW JCT 69KV CKT 1
FDNS	00NR	0	17SP	G15_084	FROM->TO	NAPLESTP 138.00 - PAYNE 138.00 138KV CKT 1	132	143	0.03754	108.4318	BAILEY4 138.00 - SUNSHINE CANYON 138KV CKT 1
FDNS	00NR	0	17SP	G15_084	FROM->TO	NAPLESTP 138.00 - PAYNE 138.00 138KV CKT 1	132	143	0.03798	108.4197	BLANCHARD - MAUD 138KV CKT 1
FDNS	00NR	0	17SP	G15_084	FROM->TO	NAPLESTP 138.00 - PAYNE 138.00 138KV CKT 1	132	143	0.03411	108.1642	DUNCAN (DUNCAN) 138/69/13.8KV TRANSFORMER CKT 1
FDNS	00NR	0	17SP	G15_084	FROM->TO	NAPLESTP 138.00 - PAYNE 138.00 138KV CKT 1	132	143	0.03411	108.1642	DUNCAN (DUNCAN) 138/69/13.8KV TRANSFORMER CKT 1
FDNS	00NR	0	17SP	G15_084	FROM->TO	NAPLESTP 138.00 - PAYNE 138.00 138KV CKT 1	132	143	0.03252	107.9719	DRAPER LAKE - MIDWEST TAP 138KV CKT 1
FDNS	00NR	0	17SP	G15_084	FROM->TO	NAPLESTP 138.00 - PAYNE 138.00 138KV CKT 1	132	143	0.0344	107.9262	FARWELLJ2 69.000 - RUSH SPRINGS 69KV CKT 1
FDNS	00NR	0	17SP	G15_084	FROM->TO	NAPLESTP 138.00 - PAYNE 138.00 138KV CKT 1	132	143	0.03408	107.6915	ETNA - PARK LANE 138KV CKT 1
FDNS	00NR	0	17SP	G15_084	FROM->TO	NAPLESTP 138.00 - PAYNE 138.00 138KV CKT 1	132	143	0.03754	107.5459	BAILEY4 138.00 - WESTMOORE 138KV CKT 1
FDNS	00NR	0	16WP	G15_084	FROM->TO	NAPLESTP 138.00 - PAYNE 138.00 138KV CKT 1	132	143	0.03356	107.3699	G14-074T 345.00 - OKLAUNION 345KV CKT 1
FDNS	00NR	0	17SP	G15_084	FROM->TO	NAPLESTP 138.00 - PAYNE 138.00 138KV CKT 1	132	143	0.03227	107.3489	ACME - FRANKLIN SW 138KV CKT 1
FDNS	00NR	0	17SP	G15_084	FROM->TO	NAPLESTP 138.00 - PAYNE 138.00 138KV CKT 1	132	143	0.0346	107.2482	BRADLEY - RUSH SPRINGS 69KV CKT 1
FDNS	00NR	0	16WP	G15_084	FROM->TO	NAPLESTP 138.00 - PAYNE 138.00 138KV CKT 1	132	143	0.03143	107.1782	TUPELO - TUPELO TAP 138KV CKT 1
FDNS	00NR	0	17SP	G15_084	FROM->TO	NAPLESTP 138.00 - PAYNE 138.00 138KV CKT 1	132	143	0.03408	107.0683	ETNA - HARDEN 4 138.00 138KV CKT 1
FDNS	00NR	0	17SP	G15_084	FROM->TO	NAPLESTP 138.00 - PAYNE 138.00 138KV CKT 1	132	143	0.03196	107.0032	P12:138:AEPW:CORNVIL4:DUNCAN-4
FDNS	00NR	0	17SP	G15_084	FROM->TO	NAPLESTP 138.00 - PAYNE 138.00 138KV CKT 1	132	143	0.03418	106.9197	CIMARRON - SARA 138KV CKT 1
FDNS	00NR	0	17SP	G15_084	FROM->TO	NAPLESTP 138.00 - PAYNE 138.00 138KV CKT 1	132	143	0.03754	106.7546	FRANKLIN SW - WESTMOORE 138KV CKT 1
FDNS	00NR	0	17SP	G15_084	FROM->TO	NAPLESTP 138.00 - PAYNE 138.00 138KV CKT 1	132	143	0.0336	106.7307	JOHNSON COUNTY (JOHNCO) 345/138/13.8KV TRANSFORMER CKT 1
FDNS	00NR	0	17SP	G15_084	FROM->TO	NAPLESTP 138.00 - PAYNE 138.00 138KV CKT 1	132	143	0.03413	106.6091	CIMARRON - CZECH HALL 138KV CKT 1

SOLUTION	GROUP	SCENARIO	SEASON	SOURCE	DIRECTION	MONITORED ELEMENT	RATEA (MVA)	RATEB(MVA)	TDF	TC%LOADING (% MVA)	CONTINGENCY
FDNS	00NR	0	17SP	G15_084	FROM->TO	NAPLESTP 138.00 - PAYNE 138.00 138KV CKT 1	132	143	0.03507	106.5609	JOHNSON COUNTY - SUNNYSIDE 345KV CKT 1
FDNS	00NR	0	17SP	G15_084	FROM->TO	NAPLESTP 138.00 - PAYNE 138.00 138KV CKT 1	132	143	0.03405	106.5577	MATHWSN7 345.00 - TATONGA7 345.00 345KV CKT 1
FDNS	00NR	0	17SP	G15_084	FROM->TO	NAPLESTP 138.00 - PAYNE 138.00 138KV CKT 1	132	143	0.0346	106.4696	BRADLEY - LINDSAY SW 69KV CKT 1
FDNS	00NR	0	17SP	G15_084	FROM->TO	NAPLESTP 138.00 - PAYNE 138.00 138KV CKT 1	132	143	0.03441	106.4334	CLEVELAND - G15066_T 345.00 345KV CKT 1
FDNS	00NR	0	17SP	G15_084	FROM->TO	NAPLESTP 138.00 - PAYNE 138.00 138KV CKT 1	132	143	0.03411	106.4172	DUNCAN - TOSCO 69KV CKT 1
FDNS	00NR	0	17SP	G15_084	FROM->TO	NAPLESTP 138.00 - PAYNE 138.00 138KV CKT 1	132	143	0.03425	106.3836	LULA - TUPELO TAP 138KV CKT 1
FDNS	00NR	0	17SP	G15_084	FROM->TO	NAPLESTP 138.00 - PAYNE 138.00 138KV CKT 1	132	143	0.03196	106.332	RUSH SPRINGS NATURAL GAS TAP - RUSH SPRINGS TAP 138KV CKT 1
FDNS	00NR	0	17SP	G15_084	FROM->TO	NAPLESTP 138.00 - PAYNE 138.00 138KV CKT 1	132	143	0.03441	106.1922	G15066_T 345.00 - SOONER 345KV CKT 1
FDNS	00NR	0	17SP	G15_084	FROM->TO	NAPLESTP 138.00 - PAYNE 138.00 138KV CKT 1	132	143	0.03408	106.1896	FRISCCO4 138.00 - HARDEN 4 138.00 138KV CKT 1
FDNS	00NR	0	17SP	G15_084	FROM->TO	NAPLESTP 138.00 - PAYNE 138.00 138KV CKT 1	132	143	0.03413	106.1682	CZECH HALL - XEROX 138KV CKT 1
FDNS	00NR	0	17SP	G15_084	FROM->TO	NAPLESTP 138.00 - PAYNE 138.00 138KV CKT 1	132	143	0.03413	106.1436	MORGAN - XEROX 138KV CKT 1
FDNS	00NR	0	17SP	G15_084	FROM->TO	NAPLESTP 138.00 - PAYNE 138.00 138KV CKT 1	132	143	0.03411	106.092	P12:69:WFEC-AEPW:COMANCH2:DUNCAN-2
FDNS	00NR	0	17SP	G15_084	FROM->TO	NAPLESTP 138.00 - PAYNE 138.00 138KV CKT 1	132	143	0.03411	106.0697	COMANCHE TAP - TOSCO 69KV CKT 1
FDNS	00NR	0	17SP	G15_084	FROM->TO	NAPLESTP 138.00 - PAYNE 138.00 138KV CKT 1	132	143	0.03413	106.0031	MORGAN - MUSTANG 138KV CKT 1
FDNS	00NR	0	17SP	G15_084	FROM->TO	NAPLESTP 138.00 - PAYNE 138.00 138KV CKT 1	132	143	0.03405	105.8029	G11_051T 345.00 - TATONGA7 345.00 345KV CKT 1
FDNS	00NR	0	17SP	G15_084	FROM->TO	NAPLESTP 138.00 - PAYNE 138.00 138KV CKT 1	132	143	0.03227	105.6665	ACME - WEST NORMAN 138KV CKT 1
FDNS	00NR	0	17SP	G15_084	FROM->TO	NAPLESTP 138.00 - PAYNE 138.00 138KV CKT 1	132	143	0.03408	105.6556	FRISCCO4 138.00 - LULA 138KV CKT 1
FDNS	00NR	0	17SP	G15_084	FROM->TO	NAPLESTP 138.00 - PAYNE 138.00 138KV CKT 1	132	143	0.03529	105.6313	HUGO - SUNNYSIDE 345KV CKT 1
FDNS	00NR	0	17SP	G15_084	FROM->TO	NAPLESTP 138.00 - PAYNE 138.00 138KV CKT 1	132	143	0.03196	105.5892	OMPA-MARLOW - RUSH SPRINGS TAP 138KV CKT 1
FDNS	00NR	0	17SP	G15_084	FROM->TO	NAPLESTP 138.00 - PAYNE 138.00 138KV CKT 1	132	143	0.03411	105.549	COMANCHE - COMANCHE TAP 69KV CKT 1
FDNS	00NR	0	17SP	G15_084	FROM->TO	NAPLESTP 138.00 - PAYNE 138.00 138KV CKT 1	132	143	0.03384	105.4785	MCCLAIN - PLEASANT VALLEY 138KV CKT 1
FDNS	00NR	0	17SP	G15_084	FROM->TO	NAPLESTP 138.00 - PAYNE 138.00 138KV CKT 1	132	143	0.03363	105.2373	P12:138:AEPW:CORNVIL4:LWATER4
FDNS	07NR	0	17G	G15_084	FROM->TO	NAPLESTP 138.00 - PAYNE 138.00 138KV CKT 1	132	143	0.04679	105.0888	G14-057T 345.00 - LAWTON EASTSIDE 345KV CKT 1
FDNS	07NR	0	17G	G15_084	FROM->TO	NAPLESTP 138.00 - PAYNE 138.00 138KV CKT 1	132	143	0.04955	103.4279	GRACEMONT - MINCO 345KV CKT 1
FDNS	00NR	0	17SP	G15_084	FROM->TO	NAPLESTP 138.00 - PAYNE 138.00 138KV CKT 1	132	143	0.03373	100.779	GEN525562 1-TOLK GEN #2 24 KV
FDNS	00NR	0	17SP	G15_084	FROM->TO	NAPLESTP 138.00 - PAYNE 138.00 138KV CKT 1	132	143	0.03337	100.728	P12:138:WFEC:MSL08
FDNS	00NR	0	17SP	G15_084	FROM->TO	NAPLESTP 138.00 - PAYNE 138.00 138KV CKT 1	132	143	0.03373	100.6336	GEN525561 1-TOLK GEN #1 24 KV
FDNS	00NR	0	17SP	G15_084	FROM->TO	NAPLESTP 138.00 - PAYNE 138.00 138KV CKT 1	132	143	0.03202	100.6206	P12:230:AEPW:ELKCITY6:SWEETWT6
FDNS	00NR	0	17SP	G15_084	FROM->TO	NAPLESTP 138.00 - PAYNE 138.00 138KV CKT 1	132	143	0.03373	100.6143	GEN511850 1-SOUTHWESTERN STATION #5
FDNS	00NR	0	17SP	G15_084	FROM->TO	NAPLESTP 138.00 - PAYNE 138.00 138KV CKT 1	132	143	0.03373	100.6142	GEN511849 1-SOUTHWESTERN STATION #4
FDNS	00NR	0	17SP	G15_084	FROM->TO	NAPLESTP 138.00 - PAYNE 138.00 138KV CKT 1	132	143	0.03373	100.5938	GEN511847 1-SOUTHWESTERN STATION #2
FDNS	00NR	0	17SP	G15_084	FROM->TO	NAPLESTP 138.00 - PAYNE 138.00 138KV CKT 1	132	143	0.03373	100.5764	GEN563272 1-G15093_3 0.6900
FDNS	00NR	0	17SP	G15_084	FROM->TO	NAPLESTP 138.00 - PAYNE 138.00 138KV CKT 1	132	143	0.03196	100.5519	DUNCAN EASTSIDE - OMPA-DUNCAN 821 138KV CKT 1
FDNS	00NR	0	17SP	G15_084	FROM->TO	NAPLESTP 138.00 - PAYNE 138.00 138KV CKT 1	132	143	0.03373	100.4395	GEN521110 1-ORME1 13.800
FDNS	00NR	0	17SP	G15_084	FROM->TO	NAPLESTP 138.00 - PAYNE 138.00 138KV CKT 1	132	143	0.03221	100.4395	RINGLING - SOUTH WILSON 138KV CKT 1
FDNS	00NR	0	17SP	G15_084	FROM->TO	NAPLESTP 138.00 - PAYNE 138.00 138KV CKT 1	132	143	0.03373	100.2796	GEN520811 1-ANADRK4
FDNS	00NR	0	17SP	G15_084	FROM->TO	NAPLESTP 138.00 - PAYNE 138.00 138KV CKT 1	132	143	0.03221	100.2192	HEALDTON - RINGLING 138KV CKT 1
FDNS	00NR	0	17SP	G15_084	FROM->TO	NAPLESTP 138.00 - PAYNE 138.00 138KV CKT 1	132	143	0.03423	100.0626	PAOLI (PAOLI) 138/69/13.8KV TRANSFORMER CKT 1
FDNS	00NR	0	17SP	G15_084	FROM->TO	NAPLESTP 138.00 - PAYNE 138.00 138KV CKT 1	132	143	0.03221	100	HEALDTON - LOCO 138KV CKT 1
FDNS	00NR	0	17SP	G15_084	FROM->TO	NAPLESTP 138.00 - PAYNE 138.00 138KV CKT 1	132	143	0.03196	100	DUNCAN - DUNCHERTP4 138.00 138KV CKT 1
FDNS	00NR	0	17SP	G15_084	FROM->TO	NAPLESTP 138.00 - PAYNE 138.00 138KV CKT 1	132	143	0.03196	100	DUNCAN - DUNCHERTP4 138.00 138KV CKT 1
FDNS	00NR	0	17SP	G15_084	FROM->TO	NAPLESTP 138.00 - PAYNE 138.00 138KV CKT 1	132	143	0.03196	100	DUNCAN EASTSIDE - DUNCHERTP4 138.00 138KV CKT 1
FDNS	00NR	0	17SP	G15_084	FROM->TO	NAPLESTP 138.00 - PAYNE 138.00 138KV CKT 1	132	143	0.03373	99.8	GEN563202 1-G15085_3 0.5500
FDNS	00NR	0	17SP	G15_084	FROM->TO	NAPLESTP 138.00 - PAYNE 138.00 138KV CKT 1	132	143	0.03275	99.8	P12:138:AEPW:DUNCAN-4:L.E.S.-4
FDNS	00NR	0	17SP	G15_084	FROM->TO	NAPLESTP 138.00 - PAYNE 138.00 138KV CKT 1	132	143	0.03664	99.6	BASELINE - PERNELL 138.00 138KV CKT 1
FDNS	00NR	0	17SP	G15_084	FROM->TO	NAPLESTP 138.00 - PAYNE 138.00 138KV CKT 1	132	143	0.03383	99.6	P12:138:WFEC:MSL09
FDNS	00NR	0	17SP	G15_084	FROM->TO	NAPLESTP 138.00 - PAYNE 138.00 138KV CKT 1	132	143	0.03373	99.5	GEN562685 1-G15_013_3 0.3550
FDNS	00NR	0	17SP	G15_084	TO->FROM	NORGE ROAD - SOUTHWESTERN STATION 138KV CKT 1	136	136	0.03587	101.3795	CIMARRON - MINCO 345KV CKT 1
FDNS	00NR	0	20SP	G15_084	TO->FROM	OMPA-MANGUM - RUSSELL 69KV CKT 1	48	48	0.04224	107.8828	ELK CITY (ELKCTY-4) 138/69/13.8KV TRANSFORMER CKT 1
FDNS	00NR	0	20SP	G15_084	TO->FROM	OMPA-MANGUM - RUSSELL 69KV CKT 1	48	48	0.04224	107.8828	ELK CITY (ELKCTY-4) 138/69/13.8KV TRANSFORMER CKT 1
FDNS	00NR	0	16WP	G15_084	TO->FROM	PITTSBURG - SEMINOLE 345KV CKT 1	717	717	0.13603	101.4082	G14-057T 345.00 - SUNNYSIDE 345KV CKT 1
FDNS	00NR	0	20WP	G15_084	FROM->TO	RUSSELL (RUSSELL) 138/69/13.8KV TRANSFORMER CKT 1	70	70	0.20381	105.8368	ALTUS JUNCTION - RUSSELL 138KV CKT 1
FDNS	00NR	0	20WP	G15_084	FROM->TO	RUSSELL (RUSSELL) 138/69/13.8KV TRANSFORMER CKT 1	70	70	0.20381	105.8368	ALTUS JUNCTION - RUSSELL 138KV CKT 1
FDNS	00NR	0	20WP	G15_084	FROM->TO	RUSSELL (RUSSELL) 138/69/13.8KV TRANSFORMER CKT 1	70	70	0.20381	101.2202	ALTUS JUNCTION - RUSSELL 138KV CKT 1
FDNS	00NR	0	20WP	G15_084	FROM->TO	RUSSELL (RUSSELL) 138/69/13.8KV TRANSFORMER CKT 1	70	70	0.20381	101.2202	ALTUS JUNCTION - RUSSELL 138KV CKT 1
FDNS	00NR	0	16WP	G15_084	FROM->TO	RUSSELL (RUSSELL) 138/69/13.8KV TRANSFORMER CKT 1	70	70	0.20381	100.7638	ALTUS JUNCTION - RUSSELL 138KV CKT 1
FDNS	00NR	0	16WP	G15_084	FROM->TO	RUSSELL (RUSSELL) 138/69/13.8KV TRANSFORMER CKT 1	70	70	0.20381	100.7638	ALTUS JUNCTION - RUSSELL 138KV CKT 1
FDNS	07ALL	0	20L	G15_084	FROM->TO	SHAMROCK (SHAMRCK2) 138/69/14.4KV TRANSFORMER CKT 1	63	69	0.50605	99.5	G15085_T 138.00 - RUSSELL 138KV CKT 1
FDNS	00NR	0	17SP	G15_084	FROM->TO	SWISSVALE - WEST GARDNER 345KV CKT 1	717	717	0.03951	105.8268	HOYT - STRANGER CREEK 345KV CKT 1
FDNS	00NR	0	17SP	G15_084	FROM->TO	SWISSVALE - WEST GARDNER 345KV CKT 1	717	717	0.03704	104.7282	G15074_T 345.00 - HOYT 345KV CKT 1
FDNS	00NR	0	16WP	G15_084	FROM->TO	SWISSVALE - WEST GARDNER 345KV CKT 1	717	717	0.03993	101.7741	HOYT - STRANGER CREEK 345KV CKT 1
FDNS	00NR	0	16WP	G15_084	FROM->TO	SWISSVALE - WEST GARDNER 345KV CKT 1	717	717	0.03785	101.0038	LACYGNE - WAVERLY7 345.00 345KV CKT 1
FDNS	00NR	0	16WP	G15_084	FROM->TO	SWISSVALE - WEST GARDNER 345KV CKT 1	717	717	0.03748	99.7	G15074_T 345.00 - HOYT 345KV CKT 1
FDNS	00NR	0	16WP	G15_084	FROM->TO	SWISSVALE - WEST GARDNER 345KV CKT 1	717	717	0.03785	99.6	WAVERLY7 345.00 - WOLF CREEK 345KV CKT 1
FDNS	00NR	0	16WP	G15_084	TO->FROM	TUPELO - TUPELO TAP 138KV CKT 1	143	143	0.03633	121.4293	PITTSBURG - VALLIANT 345KV CKT 1
FDNS	00NR	0	16WP	G15_084	TO->FROM	TUPELO - TUPELO TAP 138KV CKT 1	143	143	0.03633	121.4293	PITTSBURG - VALLIANT 345KV CKT 1
FDNS	00NR	0	16WP	G15_084	TO->FROM	TUPELO - TUPELO TAP 138KV CKT 1	143	143	0.03826	118.2481	G14-057T 345.00 - SUNNYSIDE 345KV CKT 1
FDNS	00NR	0	20WP	G15_084	TO->FROM	TUPELO - TUPELO TAP 138KV CKT 1	143	143	0.03706	116.9923	PITTSBURG - VALLIANT 345KV CKT 1
FDNS	00NR	0	20WP	G15_084	TO->FROM	TUPELO - TUPELO TAP 138KV CKT 1	143	143	0.03706	116.9923	PITTSBURG - VALLIANT 345KV CKT 1
FDNS	00NR	0	20WP	G15_084	TO->FROM	TUPELO - TUPELO TAP 138KV CKT 1	143	143	0.03866	116.2031	G14-057T 345.00 - SUNNYSIDE 345KV CKT 1
FDNS	00NR	0	16WP	G15_084	TO->FROM	TUPELO - TUPELO TAP 138KV CKT 1	143	143	0.03513	116.0635	PITTSBURG - SEMINOLE 345KV CKT 1
FDNS	00NR	0	16WP	G15_084	TO->FROM	TUPELO - TUPELO TAP 138KV CKT 1	143	143	0.03513	116.0635	PITTSBURG - SEMINOLE 345KV CKT 1
FDNS	00NR	0	16WP	G15_084	TO->FROM	TUPELO - TUPELO TAP 138KV CKT 1	143	143	0.03609	113.6166	HUGO - SUNNYSIDE 345KV CKT 1
FDNS	00NR	0	20WP	G15_084	TO->FROM	TUPELO - TUPELO TAP 138KV CKT 1	143	143	0.03566	112.7334	PITTSBURG - SEMINOLE 345KV CKT 1
FDNS	00NR	0	20WP	G15_084	TO->FROM	TUPELO - TUPELO TAP 138KV CKT 1	143	143	0.03566	112.7334	PITTSBURG - SEMINOLE 345KV CKT 1
FDNS	00NR	0	20WP	G15_084	TO->FROM	TUPELO - TUPELO TAP 138KV CKT 1	143	143	0.03661	110.2278	HUGO - SUNNYSIDE 345KV CKT 1
FDNS	00NR	0	16WP	G15_084	TO->FROM	TUPELO - TUPELO TAP 138KV CKT 1	143	143	0.03826	108.8007	G14-057T 345.00 - LAWTON EASTSIDE 345KV CKT 1
FDNS	00NR	0	20WP	G15_084	TO->FROM	TUPELO - TUPELO TAP 138KV CKT 1	143	143	0.03866	106.6819	G14-057T 345.00 - LAWTON EASTSIDE 345KV CKT 1
FDNS	00NR	0	16WP	G15_084	TO->FROM	TUPELO - TUPELO TAP 138KV CKT 1	143	143	0.03004	105.4472	CANADIAN RIVER () 345/138/13.8KV TRANSFORMER CKT 1

SOLUTION	GROUP	SCENARIO	SEASON	SOURCE	DIRECTION	MONITORED ELEMENT	RATEA (MVA)	RATEB(MVA)	TDF	TC%LOADING (% MVA)	CONTINGENCY
FDNS	00NR	0	16WP	G15_084	TO->FROM	TUPELO - TUPELO TAP 138KV CKT 1	143	143	0.03004	105.4472	CANADIAN RIVER () 345/138/13.8KV TRANSFORMER CKT 1
FDNS	00NR	0	16WP	G15_084	TO->FROM	TUPELO - TUPELO TAP 138KV CKT 1	143	143	0.03004	105.4191	CANADIAN RIVER - MCALESTER SOUTH 138KV CKT 1
FDNS	00NR	0	16WP	G15_084	TO->FROM	TUPELO - TUPELO TAP 138KV CKT 1	143	143	0.03004	105.4191	CANADIAN RIVER - MCALESTER SOUTH 138KV CKT 1
FDNS	00NR	0	16WP	G15_084	TO->FROM	TUPELO - TUPELO TAP 138KV CKT 1	143	143	0.0311	104.4273	RUSSETT - RUSSETT 138KV CKT 1
FDNS	00NR	0	20WP	G15_084	TO->FROM	TUPELO - TUPELO TAP 138KV CKT 1	143	143	0.03041	104.3412	CANADIAN RIVER () 345/138/13.8KV TRANSFORMER CKT 1
FDNS	00NR	0	20WP	G15_084	TO->FROM	TUPELO - TUPELO TAP 138KV CKT 1	143	143	0.03041	104.3412	CANADIAN RIVER () 345/138/13.8KV TRANSFORMER CKT 1
FDNS	00NR	0	20WP	G15_084	TO->FROM	TUPELO - TUPELO TAP 138KV CKT 1	143	143	0.03041	104.3172	CANADIAN RIVER - MCALESTER SOUTH 138KV CKT 1
FDNS	00NR	0	20WP	G15_084	TO->FROM	TUPELO - TUPELO TAP 138KV CKT 1	143	143	0.03041	104.3172	CANADIAN RIVER - MCALESTER SOUTH 138KV CKT 1
FDNS	00NR	0	16WP	G15_084	TO->FROM	TUPELO - TUPELO TAP 138KV CKT 1	143	143	0.03187	103.5211	CLEVELAND - G15066_T 345.00 345KV CKT 1
FDNS	00NR	0	16WP	G15_084	TO->FROM	TUPELO - TUPELO TAP 138KV CKT 1	143	143	0.0311	103.3688	BROWN - RUSSETT 138KV CKT 1
FDNS	00NR	0	20WP	G15_084	TO->FROM	TUPELO - TUPELO TAP 138KV CKT 1	143	143	0.03149	102.9022	RUSSETT - RUSSETT 138KV CKT 1
FDNS	00NR	0	16WP	G15_084	TO->FROM	TUPELO - TUPELO TAP 138KV CKT 1	143	143	0.03187	102.8494	G15066_T 345.00 - SOONER 345KV CKT 1
FDNS	00NR	0	16WP	G15_084	TO->FROM	TUPELO - TUPELO TAP 138KV CKT 1	143	143	0.03025	102.5905	P12:138:AEPW:MCALEST4:LONEOAK4
FDNS	00NR	0	20WP	G15_084	TO->FROM	TUPELO - TUPELO TAP 138KV CKT 1	143	143	0.03213	101.9106	CLEVELAND - G15066_T 345.00 345KV CKT 1
FDNS	00NR	0	20WP	G15_084	TO->FROM	TUPELO - TUPELO TAP 138KV CKT 1	143	143	0.03149	101.8195	BROWN - RUSSETT 138KV CKT 1
FDNS	00NR	0	20WP	G15_084	TO->FROM	TUPELO - TUPELO TAP 138KV CKT 1	143	143	0.03213	101.2456	G15066_T 345.00 - SOONER 345KV CKT 1
FDNS	00NR	0	16WP	G15_084	TO->FROM	TUPELO - TUPELO TAP 138KV CKT 1	143	143	0.02987	100.743	GEN509416 1-TURK GENERATION
FDNS	00NR	0	20WP	G15_084	TO->FROM	TUPELO - TUPELO TAP 138KV CKT 1	143	143	0.03068	100.7361	P12:138:AEPW:MCALEST4:LONEOAK4
FDNSLock	00NR	0	16WP	G15_084	TO->FROM	TUPELO - TUPELO TAP 138KV CKT 1	143	143	0.02987	100.5503	GEN509403 1-PIRKEY GENERATION
FDNS	00NR	0	16WP	G15_084	TO->FROM	TUPELO - TUPELO TAP 138KV CKT 1	143	143	0.0327	100	HEALDTON - LOCO 138KV CKT 1
FDNS	00NR	2	20WP	G15_084	TO->FROM	CHISHOLM6 230.00 - SWEETWATER 230KV CKT 1	421	439	0.12836	105.2487	G14-074T 345.00 - OKLAUNION 345KV CKT 1
FDNS	00NR	2	20WP	G15_084	TO->FROM	CHISHOLM6 230.00 - SWEETWATER 230KV CKT 1	421	439	0.12529	99.6	MATHWSN7 345.00 - TATONGA7 345.00 345KV CKT 1
FDNS	00NR	2	16WP	G15_084	FROM->TO	CIMARRON - DRAPER LAKE 345KV CKT 1	717	717	0.12553	132.2858	G14-057T 345.00 - SUNNYSIDE 345KV CKT 1
FDNS	00NR	2	16WP	G15_084	FROM->TO	CIMARRON - DRAPER LAKE 345KV CKT 1	717	717	0.12553	121.653	G14-057T 345.00 - LAWTON EASTSIDE 345KV CKT 1
FDNS	00NR	2	16WP	G15_084	FROM->TO	CIMARRON - DRAPER LAKE 345KV CKT 1	717	717	0.08663	116.2986	ARCADIA - SEMINOLE 345KV CKT 1
FDNS	00NR	2	16WP	G15_084	FROM->TO	CIMARRON - DRAPER LAKE 345KV CKT 1	717	717	0.09508	115.3464	CLEVELAND - G15066_T 345.00 345KV CKT 1
FDNS	00NR	2	16WP	G15_084	FROM->TO	CIMARRON - DRAPER LAKE 345KV CKT 1	717	717	0.10468	115.007	ARCADIA - NORTHWEST 345KV CKT 1
FDNS	00NR	2	16WP	G15_084	FROM->TO	CIMARRON - DRAPER LAKE 345KV CKT 1	717	717	0.09508	114.5672	G15066_T 345.00 - SOONER 345KV CKT 1
FDNS	00NR	2	16WP	G15_084	FROM->TO	CIMARRON - DRAPER LAKE 345KV CKT 1	717	717	0.09108	110.0545	CLEVELAND - TULSA NORTH 345KV CKT 1
FDNS	00NR	2	16WP	G15_084	FROM->TO	CIMARRON - DRAPER LAKE 345KV CKT 1	717	717	0.09108	110.0545	CLEVELAND - TULSA NORTH 345KV CKT 1
FDNS	00NR	2	16WP	G15_084	FROM->TO	CIMARRON - DRAPER LAKE 345KV CKT 1	717	717	0.08664	109.8574	MATHWSN7 345.00 - NORTHWEST 345KV CKT 1
FDNS	00NR	2	16WP	G15_084	FROM->TO	CIMARRON - DRAPER LAKE 345KV CKT 1	717	717	0.08427	108.9846	CIMARRON - SARA 138KV CKT 1
FDNS	00NR	2	16WP	G15_084	FROM->TO	CIMARRON - DRAPER LAKE 345KV CKT 1	717	717	0.09012	108.6997	P12:138:WFEC:MSL03
FDNS	00NR	2	16WP	G15_084	FROM->TO	CIMARRON - DRAPER LAKE 345KV CKT 1	717	717	0.08056	107.8143	CIMARRON (CIMARON2) 345/138/13.8KV TRANSFORMER CKT 1
FDNS	00NR	2	16WP	G15_084	FROM->TO	CIMARRON - DRAPER LAKE 345KV CKT 1	717	717	0.08427	107.6928	SARA - STHLAKE4 138.00 138KV CKT 1
FDNS	00NR	2	16WP	G15_084	FROM->TO	CIMARRON - DRAPER LAKE 345KV CKT 1	717	717	0.0806	107.6451	CIMARRON (CIMARON1) 345/138/13.8KV TRANSFORMER CKT 1
FDNS	00NR	2	16WP	G15_084	FROM->TO	CIMARRON - DRAPER LAKE 345KV CKT 1	717	717	0.08427	107.4934	MCCLAIN - STHLAKE4 138.00 138KV CKT 1
FDNS	00NR	2	16WP	G15_084	FROM->TO	CIMARRON - DRAPER LAKE 345KV CKT 1	717	717	0.08437	107.2231	CIMARRON - CZECH HALL 138KV CKT 1
FDNS	00NR	2	16WP	G15_084	FROM->TO	CIMARRON - DRAPER LAKE 345KV CKT 1	717	717	0.08437	106.8696	CZECH HALL - XEROX 138KV CKT 1
FDNS	00NR	2	16WP	G15_084	FROM->TO	CIMARRON - DRAPER LAKE 345KV CKT 1	717	717	0.08437	106.8501	MORGAN - XEROX 138KV CKT 1
FDNS	00NR	2	16WP	G15_084	FROM->TO	CIMARRON - DRAPER LAKE 345KV CKT 1	717	717	0.08437	106.733	MORGAN - MUSTANG 138KV CKT 1
FDNS	00NR	2	16WP	G15_084	FROM->TO	CIMARRON - DRAPER LAKE 345KV CKT 1	717	717	0.0879	106.6653	ANADARKO - POCASSETT 138KV CKT 1
FDNS	00NR	2	16WP	G15_084	FROM->TO	CIMARRON - DRAPER LAKE 345KV CKT 1	717	717	0.0879	106.4685	POCASSETT - TUTTLE 138KV CKT 1
FDNS	00NR	2	16WP	G15_084	FROM->TO	CIMARRON - DRAPER LAKE 345KV CKT 1	717	717	0.08166	106.4502	GEN515040 1-SEMINOLE 1G
FDNS	00NR	2	16WP	G15_084	FROM->TO	CIMARRON - DRAPER LAKE 345KV CKT 1	717	717	0.08254	106.4159	LACYGNE - WAVERLY7 345.00 345KV CKT 1
FDNS	00NR	2	16WP	G15_084	FROM->TO	CIMARRON - DRAPER LAKE 345KV CKT 1	717	717	0.08682	106.3829	CORN TAP - NAPLESTP 138.00 138KV CKT 1
FDNS	00NR	2	16WP	G15_084	FROM->TO	CIMARRON - DRAPER LAKE 345KV CKT 1	717	717	0.0879	106.3288	JOHNSON COUNTY - SUNNYSIDE 345KV CKT 1
FDNS	00NR	2	16WP	G15_084	FROM->TO	CIMARRON - DRAPER LAKE 345KV CKT 1	717	717	0.08682	106.2872	NAPLESTP 138.00 - PAYNE 138.00 138KV CKT 1
FDNS	00NR	2	16WP	G15_084	FROM->TO	CIMARRON - DRAPER LAKE 345KV CKT 1	717	717	0.08254	106.2133	WAVERLY7 345.00 - WOLF CREEK 345KV CKT 1
FDNSLock	00NR	2	16WP	G15_084	FROM->TO	CIMARRON - DRAPER LAKE 345KV CKT 1	717	717	0.08166	106.211	GEN509403 1-PIRKEY GENERATION
FDNS	00NR	2	16WP	G15_084	FROM->TO	CIMARRON - DRAPER LAKE 345KV CKT 1	717	717	0.08166	106.1349	GEN509416 1-TURK GENERATION
FDNS	00NR	2	16WP	G15_084	FROM->TO	CIMARRON - DRAPER LAKE 345KV CKT 1	717	717	0.08166	106.1171	GEN501801 1-DOLET HILLS UNIT1
FDNS	00NR	2	16WP	G15_084	FROM->TO	CIMARRON - DRAPER LAKE 345KV CKT 1	717	717	0.084	106.0006	CANEYRV7 345.00 - NEOSHO 345KV CKT 1
FDNS	00NR	2	16WP	G15_084	FROM->TO	CIMARRON - DRAPER LAKE 345KV CKT 1	717	717	0.0879	105.9607	BRIDGECR 138.00 - TUTTLE 138KV CKT 1
FDNS	00NR	2	17SP	G15_084	FROM->TO	CIMARRON - DRAPER LAKE 345KV CKT 1	717	717	0.1259	105.796	G14-057T 345.00 - SUNNYSIDE 345KV CKT 1
FDNSLock	00NR	2	16WP	G15_084	FROM->TO	CIMARRON - DRAPER LAKE 345KV CKT 1	717	717	0.08166	105.7859	GEN336821 1-GRAND GULF UNIT
FDNS	00NR	2	16WP	G15_084	FROM->TO	CIMARRON - DRAPER LAKE 345KV CKT 1	717	717	0.08166	105.7689	GEN515042 1-SEMINOLE 3G
FDNS	00NR	2	16WP	G15_084	FROM->TO	CIMARRON - DRAPER LAKE 345KV CKT 1	717	717	0.084	105.7184	CANEYRV7 345.00 - LATHAMS7 345.00 345KV CKT 1
FDNS	00NR	2	16WP	G15_084	FROM->TO	CIMARRON - DRAPER LAKE 345KV CKT 1	717	717	0.0879	105.5913	BRIDGECR 138.00 - SUNSHINE CANYON 138KV CKT 1
FDNS	00NR	2	16WP	G15_084	FROM->TO	CIMARRON - DRAPER LAKE 345KV CKT 1	717	717	0.0879	105.5799	P12:138:WFEC:MSL01
FDNS	00NR	2	16WP	G15_084	FROM->TO	CIMARRON - DRAPER LAKE 345KV CKT 1	717	717	0.08166	105.5352	GEN515041 1-SEMINOLE 2G
FDNSLock	00NR	2	16WP	G15_084	FROM->TO	CIMARRON - DRAPER LAKE 345KV CKT 1	717	717	0.08166	105.4883	GEN336153 1-WATERFORD UNIT#3
FDNS	00NR	2	16WP	G15_084	FROM->TO	CIMARRON - DRAPER LAKE 345KV CKT 1	717	717	0.09242	105.2987	CIMARRON - NORTHWEST 345KV CKT 1
FDNS	00NR	2	16WP	G15_084	FROM->TO	CIMARRON - DRAPER LAKE 345KV CKT 1	717	717	0.08166	105.2844	GEN509406 1-WELSH #3
FDNS	00NR	2	16WP	G15_084	FROM->TO	CIMARRON - DRAPER LAKE 345KV CKT 1	717	717	0.08166	105.2843	GEN509404 1-WELSH #1
FDNS	00NR	2	16WP	G15_084	FROM->TO	CIMARRON - DRAPER LAKE 345KV CKT 1	717	717	0.084	105.2825	LATHAMS7 345.00 - ROSE HILL 345KV CKT 1
FDNSLock	00NR	2	16WP	G15_084	FROM->TO	CIMARRON - DRAPER LAKE 345KV CKT 1	717	717	0.08166	105.1837	GEN335831 1-RIVERBEND UNIT#1
FDNSLock	00NR	2	16WP	G15_084	FROM->TO	CIMARRON - DRAPER LAKE 345KV CKT 1	717	717	0.08166	105.1676	GEN337911 1-ARKANSAS NUCLEAR ONE UNIT #2
FDNS	00NR	2	16WP	G15_084	FROM->TO	CIMARRON - DRAPER LAKE 345KV CKT 1	717	717	0.08546	104.9003	HUGO - SUNNYSIDE 345KV CKT 1
FDNS	00NR	2	16WP	G15_084	FROM->TO	CIMARRON - DRAPER LAKE 345KV CKT 1	717	717	0.07858	104.8702	CANADIAN RIVER - MUSKOGEE 345KV CKT 1
FDNS	00NR	2	16WP	G15_084	FROM->TO	CIMARRON - DRAPER LAKE 345KV CKT 1	717	717	0.08166	104.7987	GRAND GULF 500/22.0KV TRANSFORMER CKT 1
FDNS	00NR	2	16WP	G15_084	FROM->TO	CIMARRON - DRAPER LAKE 345KV CKT 1	717	717	0.08147	104.7932	P12:138:OKGE:3TERM14
FDNS	00NR	2	16WP	G15_084	FROM->TO	CIMARRON - DRAPER LAKE 345KV CKT 1	717	717	0.08166	104.7893	GEN337910 1-ARKANSAS NUCLEAR ONE UNIT #1
FDNS	00NR	2	16WP	G15_084	FROM->TO	CIMARRON - DRAPER LAKE 345KV CKT 1	717	717	0.08858	104.7694	JOHNSON COUNTY - PITTSBURG 345KV CKT 1
FDNS	00NR	2	16WP	G15_084	FROM->TO	CIMARRON - DRAPER LAKE 345KV CKT 1	717	717	0.08858	104.7694	JOHNSON COUNTY - PITTSBURG 345KV CKT 1
FDNS	00NR	2	16WP	G15_084	FROM->TO	CIMARRON - DRAPER LAKE 345KV CKT 1	717	717	0.08253	104.7523	HORSESHOE LAKE - JONES TAP 138KV CKT 1
FDNS	00NR	2	16WP	G15_084	FROM->TO	CIMARRON - DRAPER LAKE 345KV CKT 1	717	717	0.08241	104.7272	MORISNT4 138.00 - STILLWATER 138KV CKT 1
FDNS	00NR	2	16WP	G15_084	FROM->TO	CIMARRON - DRAPER LAKE 345KV CKT 1	717	717	0.08242	104.7226	P12:138:OKGE:3TERM2
FDNS	00NR	2	16WP	G15_084	FROM->TO	CIMARRON - DRAPER LAKE 345KV CKT 1	717	717	0.08694	104.7077	REDBUD - RIVERSIDE STATION 345KV CKT 1

SOLUTION	GROUP	SCENARIO	SEASON	SOURCE	DIRECTION	MONITORED ELEMENT	RATEA (MVA)	RATEB(MVA)	TDF	TC%LOADING (% MVA)	CONTINGENCY
FDNS	00NR	2	16WP	G15_084	FROM->TO	CIMARRON - DRAPER LAKE 345KV CKT 1	717	717	0.08694	104.7077	REDBUD - RIVERSIDE STATION 345KV CKT 1
FDNS	00NR	2	16WP	G15_084	FROM->TO	CIMARRON - DRAPER LAKE 345KV CKT 1	717	717	0.08166	104.6532	GEN515226 1-MUSKOGEE 6G
FDNS	00NR	2	16WP	G15_084	FROM->TO	CIMARRON - DRAPER LAKE 345KV CKT 1	717	717	0.08166	104.6355	GEN501813 1-RODEMACHER UNIT 3
FDNS	00NR	2	16WP	G15_084	FROM->TO	CIMARRON - DRAPER LAKE 345KV CKT 1	717	717	0.08347	104.5384	7SAREPTA% 345.00 - LONGWOOD 345KV CKT 1
FDNS	00NR	2	16WP	G15_084	FROM->TO	CIMARRON - DRAPER LAKE 345KV CKT 1	717	717	0.08347	104.5384	7SAREPTA% 345.00 - LONGWOOD 345KV CKT 1
FDNS	00NR	2	16WP	G15_084	FROM->TO	CIMARRON - DRAPER LAKE 345KV CKT 1	717	717	0.08175	104.5379	NORTHWEST (NORTWST2) 345/138/13.8KV TRANSFORMER CKT 1
FDNS	00NR	2	16WP	G15_084	FROM->TO	CIMARRON - DRAPER LAKE 345KV CKT 1	717	717	0.08174	104.534	ARCADIA - KAMO MEMORIAL 138KV CKT 1
FDNS	00NR	2	16WP	G15_084	FROM->TO	CIMARRON - DRAPER LAKE 345KV CKT 1	717	717	0.0893	104.5266	BAILEY4 138.00 - SUNSHINE CANYON 138KV CKT 1
FDNS	00NR	2	16WP	G15_084	FROM->TO	CIMARRON - DRAPER LAKE 345KV CKT 1	717	717	0.0817	104.5182	P12:138:OKGE:3TERM12
FDNS	00NR	2	16WP	G15_084	FROM->TO	CIMARRON - DRAPER LAKE 345KV CKT 1	717	717	0.08241	104.501	DOLET HILLS - SOUTHWEST SHREVEPORT 345KV CKT 1
FDNS	00NR	2	16WP	G15_084	FROM->TO	CIMARRON - DRAPER LAKE 345KV CKT 1	717	717	0.08241	104.501	DOLET HILLS - SOUTHWEST SHREVEPORT 345KV CKT 1
FDNS	00NR	2	16WP	G15_084	FROM->TO	CIMARRON - DRAPER LAKE 345KV CKT 1	717	717	0.08166	104.4549	GEN515225 1-MUSKOGEE 5G
FDNS	00NR	2	16WP	G15_084	FROM->TO	CIMARRON - DRAPER LAKE 345KV CKT 1	717	717	0.08166	104.4548	GEN515223 1-MUSKOGEE 4G
FDNS	00NR	2	16WP	G15_084	FROM->TO	CIMARRON - DRAPER LAKE 345KV CKT 1	717	717	0.08166	104.447	GEN335206 1-NELSON UNIT 6
FDNS	00NR	2	16WP	G15_084	FROM->TO	CIMARRON - DRAPER LAKE 345KV CKT 1	717	717	0.08202	104.4391	MEMORIAL - SKYLINE 138KV CKT 1
FDNS	00NR	2	16WP	G15_084	FROM->TO	CIMARRON - DRAPER LAKE 345KV CKT 1	717	717	0.07495	104.3944	GRACEMONT (BANK 1) 345/138/13.8KV TRANSFORMER CKT 1
FDNS	00NR	2	16WP	G15_084	FROM->TO	CIMARRON - DRAPER LAKE 345KV CKT 1	717	717	0.0824	104.3285	QUAIL CREEK - SKYLINE 138KV CKT 1
FDNS	00NR	2	16WP	G15_084	FROM->TO	CIMARRON - DRAPER LAKE 345KV CKT 1	717	717	0.08166	104.3093	GEN509409 1-WILKES #3
FDNS	00NR	2	16WP	G15_084	FROM->TO	CIMARRON - DRAPER LAKE 345KV CKT 1	717	717	0.08166	104.3078	GEN337653 1-WHITE BLUFF UNIT #2
FDNS	00NR	2	16WP	G15_084	FROM->TO	CIMARRON - DRAPER LAKE 345KV CKT 1	717	717	0.08204	104.2877	P12:138:OKGE:3TERM18
FDNS	00NR	2	16WP	G15_084	FROM->TO	CIMARRON - DRAPER LAKE 345KV CKT 1	717	717	0.08166	104.2759	GEN501812 1-RODEMACHER UNIT 2
FDNS	00NR	2	16WP	G15_084	FROM->TO	CIMARRON - DRAPER LAKE 345KV CKT 1	717	717	0.08174	104.2748	NORTHWEST (NORTWST4) 345/138/13.8KV TRANSFORMER CKT 1
FDNS	00NR	2	16WP	G15_084	FROM->TO	CIMARRON - DRAPER LAKE 345KV CKT 1	717	717	0.0893	104.2279	BAILEY4 138.00 - WESTMOORE 138KV CKT 1
FDNS	00NR	2	16WP	G15_084	FROM->TO	CIMARRON - DRAPER LAKE 345KV CKT 1	717	717	0.08166	104.2172	NEW MADRID 161/22.0KV TRANSFORMER CKT 1
FDNS	00NR	2	16WP	G15_084	FROM->TO	CIMARRON - DRAPER LAKE 345KV CKT 1	717	717	0.08198	104.2066	36 & MERIDIAN - CHEMTRON 138KV CKT 1
FDNS	00NR	2	16WP	G15_084	FROM->TO	CIMARRON - DRAPER LAKE 345KV CKT 1	717	717	0.08166	104.2039	NEW MADRID 345/22.0KV TRANSFORMER CKT 1
FDNS	00NR	2	16WP	G15_084	FROM->TO	CIMARRON - DRAPER LAKE 345KV CKT 1	717	717	0.08166	104.1834	GEN520947 1-HUGO1
FDNS	00NR	2	16WP	G15_084	FROM->TO	CIMARRON - DRAPER LAKE 345KV CKT 1	717	717	0.08326	104.1783	THISTLE7 345.00 - WOODWARD DISTRICT EHV 345KV CKT 1
FDNS	00NR	2	16WP	G15_084	FROM->TO	CIMARRON - DRAPER LAKE 345KV CKT 1	717	717	0.08326	104.1783	THISTLE7 345.00 - WOODWARD DISTRICT EHV 345KV CKT 1
FDNS	00NR	2	16WP	G15_084	FROM->TO	CIMARRON - DRAPER LAKE 345KV CKT 1	717	717	0.08326	104.1783	THISTLE7 345.00 - WOODWARD DISTRICT EHV 345KV CKT 2
FDNS	00NR	2	16WP	G15_084	FROM->TO	CIMARRON - DRAPER LAKE 345KV CKT 1	717	717	0.08326	104.1783	THISTLE7 345.00 - WOODWARD DISTRICT EHV 345KV CKT 2
FDNS	00NR	2	16WP	G15_084	FROM->TO	CIMARRON - DRAPER LAKE 345KV CKT 1	717	717	0.08166	104.1769	GEN337652 1-WHITE BLUFF UNIT #1
FDNS	00NR	2	16WP	G15_084	FROM->TO	CIMARRON - DRAPER LAKE 345KV CKT 1	717	717	0.08174	104.1499	NORTHWEST (NORTWST3) 345/138/13.8KV TRANSFORMER CKT 1
FDNS	00NR	2	16WP	G15_084	FROM->TO	CIMARRON - DRAPER LAKE 345KV CKT 1	717	717	0.08261	104.1354	7SAREPTA% 345.00 - ELDORADO EHV 345KV CKT 1
FDNS	00NR	2	16WP	G15_084	FROM->TO	CIMARRON - DRAPER LAKE 345KV CKT 1	717	717	0.08261	104.1353	3TR3AR8EL7EL
FDNS	00NR	2	16WP	G15_084	FROM->TO	CIMARRON - DRAPER LAKE 345KV CKT 1	717	717	0.08261	104.1287	ELDORADO EHV 500/345KV TRANSFORMER CKT 1
FDNS	00NR	2	16WP	G15_084	FROM->TO	CIMARRON - DRAPER LAKE 345KV CKT 1	717	717	0.08198	104.1197	CHEMTRON - PENNSYLVANIA 138KV CKT 1
FDNS	00NR	2	16WP	G15_084	FROM->TO	CIMARRON - DRAPER LAKE 345KV CKT 1	717	717	0.08177	104.1015	G15052_T 345.00 - ROSE HILL 345KV CKT 1
FDNS	00NR	2	16WP	G15_084	FROM->TO	CIMARRON - DRAPER LAKE 345KV CKT 1	717	717	0.08198	104.098	G15074_T 345.00 - HOYT 345KV CKT 1
FDNS	00NR	2	16WP	G15_084	FROM->TO	CIMARRON - DRAPER LAKE 345KV CKT 1	717	717	0.08554	104.0801	BLANCHARD - CORNVILLE 138KV CKT 1
FDNS	00NR	2	16WP	G15_084	FROM->TO	CIMARRON - DRAPER LAKE 345KV CKT 1	717	717	0.08367	104.0467	COMANCHE - LOCO 138KV CKT 1
FDNS	00NR	2	16WP	G15_084	FROM->TO	CIMARRON - DRAPER LAKE 345KV CKT 1	717	717	0.08183	104.0399	P12:138:OKGE:3TERM17
FDNS	00NR	2	16WP	G15_084	FROM->TO	CIMARRON - DRAPER LAKE 345KV CKT 1	717	717	0.08166	104.0215	GEN515577 1-ARBWND11 0.6900
FDNS	00NR	2	16WP	G15_084	FROM->TO	CIMARRON - DRAPER LAKE 345KV CKT 1	717	717	0.08232	103.9977	P12:138:OKGE:3TERM11
FDNS	00NR	2	16WP	G15_084	FROM->TO	CIMARRON - DRAPER LAKE 345KV CKT 1	717	717	0.08554	103.9907	P12:138:AEPW-OGE:CORNVIL4:MAUD 4
FDNS	00NR	2	16WP	G15_084	FROM->TO	CIMARRON - DRAPER LAKE 345KV CKT 1	717	717	0.08166	103.9807	GEN334440 1-SABINE UNIT 4
FDNS	00NR	2	16WP	G15_084	FROM->TO	CIMARRON - DRAPER LAKE 345KV CKT 1	717	717	0.08176	103.9772	LONEOAK - NORTHWEST 138KV CKT 1
FDNS	00NR	2	16WP	G15_084	FROM->TO	CIMARRON - DRAPER LAKE 345KV CKT 1	717	717	0.08166	103.973	DELL 500 - ESSEX UNIT 2 500KV CKT Z1
FDNS	00NR	2	16WP	G15_084	FROM->TO	CIMARRON - DRAPER LAKE 345KV CKT 1	717	717	0.0824	103.9634	KETCH TAP - NORTHWEST 138KV CKT 1
FDNS	00NR	2	16WP	G15_084	FROM->TO	CIMARRON - DRAPER LAKE 345KV CKT 1	717	717	0.0822	103.9551	DIVISION AVE - LAKESIDE 138KV CKT 1
FDNS	00NR	2	16WP	G15_084	FROM->TO	CIMARRON - DRAPER LAKE 345KV CKT 1	717	717	0.0893	103.9475	FRANKLIN SW - WESTMOORE 138KV CKT 1
FDNS	00NR	2	16WP	G15_084	FROM->TO	CIMARRON - DRAPER LAKE 345KV CKT 1	717	717	0.0811	103.9322	HORSESHOE LAKE - KAMO MEMORIAL 138KV CKT 1
FDNS	00NR	2	16WP	G15_084	FROM->TO	CIMARRON - DRAPER LAKE 345KV CKT 1	717	717	0.0829	103.9267	G14-074T 345.00 - OKLAUNION 345KV CKT 1
FDNS	00NR	2	16WP	G15_084	FROM->TO	CIMARRON - DRAPER LAKE 345KV CKT 1	717	717	0.08149	103.8906	NORTHWEST - PANTHER 138KV CKT 1
FDNS	00NR	2	16WP	G15_084	FROM->TO	CIMARRON - DRAPER LAKE 345KV CKT 1	717	717	0.08554	103.8877	BLANCHARD - MAUD 138KV CKT 1
FDNS	00NR	2	16WP	G15_084	FROM->TO	CIMARRON - DRAPER LAKE 345KV CKT 1	717	717	0.07955	103.8843	CLARKSVILLE - ONETA 345KV CKT 1
FDNS	00NR	2	16WP	G15_084	FROM->TO	CIMARRON - DRAPER LAKE 345KV CKT 1	717	717	0.07955	103.8843	CLARKSVILLE - ONETA 345KV CKT 1
FDNS	00NR	2	16WP	G15_084	FROM->TO	CIMARRON - DRAPER LAKE 345KV CKT 1	717	717	0.08114	103.8701	P12:138:OKGE:3TERM20
FDNS	00NR	2	16WP	G15_084	FROM->TO	CIMARRON - DRAPER LAKE 345KV CKT 1	717	717	0.08449	103.8699	FINNEY SWITCHING STATION - HOLCOMB 345KV CKT 1
FDNS	00NR	2	16WP	G15_084	FROM->TO	CIMARRON - DRAPER LAKE 345KV CKT 1	717	717	0.08449	103.8699	FINNEY SWITCHING STATION - HOLCOMB 345KV CKT 1
FDNS	00NR	2	16WP	G15_084	FROM->TO	CIMARRON - DRAPER LAKE 345KV CKT 1	717	717	0.083	103.8644	CIMARRON - HAYMAKER 138KV CKT 1
FDNS	00NR	2	16WP	G15_084	FROM->TO	CIMARRON - DRAPER LAKE 345KV CKT 1	717	717	0.08231	103.8595	P12:138:OKGE:3TERM47
FDNS	00NR	2	16WP	G15_084	FROM->TO	CIMARRON - DRAPER LAKE 345KV CKT 1	717	717	0.0822	103.8546	HEFNER - LAKESIDE 138KV CKT 1
FDNS	00NR	2	16WP	G15_084	FROM->TO	CIMARRON - DRAPER LAKE 345KV CKT 1	717	717	0.08166	103.854	GEN336252 1-NINEMILE POINT UNIT#5
FDNS	00NR	2	16WP	G15_084	FROM->TO	CIMARRON - DRAPER LAKE 345KV CKT 1	717	717	0.08166	103.8496	DOLET HILLS 345/24.0KV TRANSFORMER CKT 1
FDNS	00NR	2	16WP	G15_084	FROM->TO	CIMARRON - DRAPER LAKE 345KV CKT 1	717	717	0.08149	103.8403	PANTHER - SILVER LAKE 138KV CKT 1
FDNS	00NR	2	16WP	G15_084	FROM->TO	CIMARRON - DRAPER LAKE 345KV CKT 1	717	717	0.08232	103.812	BLACKBERRY - NEOSHO 345KV CKT 1
FDNS	00NR	2	16WP	G15_084	FROM->TO	CIMARRON - DRAPER LAKE 345KV CKT 1	717	717	0.08232	103.812	BLACKBERRY - NEOSHO 345KV CKT 1
FDNS	00NR	2	16WP	G15_084	FROM->TO	CIMARRON - DRAPER LAKE 345KV CKT 1	717	717	0.08166	103.8065	WHITE BLUFF 500/26.0KV TRANSFORMER CKT 1
FDNS	00NR	2	16WP	G15_084	FROM->TO	CIMARRON - DRAPER LAKE 345KV CKT 1	717	717	0.08166	103.8	GEN300006 1-NEW MADRID UNIT 1
FDNS	00NR	2	16WP	G15_084	FROM->TO	CIMARRON - DRAPER LAKE 345KV CKT 1	717	717	0.08166	103.8	GEN300007 1-NEW MADRID UNIT 2
FDNS	00NR	2	16WP	G15_084	FROM->TO	CIMARRON - DRAPER LAKE 345KV CKT 1	717	717	0.08177	103.7877	KETCH - KETCH TAP 138KV CKT 1
FDNS	00NR	2	16WP	G15_084	FROM->TO	CIMARRON - DRAPER LAKE 345KV CKT 1	717	717	0.08198	103.781	HOYT - STRANGER CREEK 345KV CKT 1
FDNS	00NR	2	16WP	G15_084	FROM->TO	CIMARRON - DRAPER LAKE 345KV CKT 1	717	717	0.08242	103.7805	EMPORIA ENERGY CENTER - G14_001T 345.00 345KV CKT 1
FDNS	00NR	2	16WP	G15_084	FROM->TO	CIMARRON - DRAPER LAKE 345KV CKT 1	717	717	0.08149	103.7671	DIVISION AVE - MUSTANG 138KV CKT 1
FDNS	00NR	2	16WP	G15_084	FROM->TO	CIMARRON - DRAPER LAKE 345KV CKT 1	717	717	0.083	103.7585	DIVISION AVE - HAYMAKER 138KV CKT 1
FDNS	00NR	2	16WP	G15_084	FROM->TO	CIMARRON - DRAPER LAKE 345KV CKT 1	717	717	0.08255	103.7498	P12:138:AEPW-OGE:SHIDLER4:OSAGE 4
FDNS	00NR	2	16WP	G15_084	FROM->TO	CIMARRON - DRAPER LAKE 345KV CKT 1	717	717	0.08211	103.7469	SWISSVALE - WEST GARDNER 345KV CKT 1
FDNS	00NR	2	16WP	G15_084	FROM->TO	CIMARRON - DRAPER LAKE 345KV CKT 1	717	717	0.08221	103.7308	MCCLAIN - PLEASANT VALLEY 138KV CKT 1

SOLUTION	GROUP	SCENARIO	SEASON	SOURCE	DIRECTION	MONITORED ELEMENT	RATEA (MVA)	RATEB(MVA)	TDF	TC%LOADING (% MVA)	CONTINGENCY
FDNS	00NR	2	16WP	G15_084	FROM->TO	CIMARRON - DRAPER LAKE 345KV CKT 1	717	717	0.08198	103.7268	G15074_T 345.00 - JEFFREY ENERGY CENTER 345KV CKT 1
FDNS	00NR	2	16WP	G15_084	FROM->TO	CIMARRON - DRAPER LAKE 345KV CKT 1	717	717	0.08166	103.7245	GEN509408 1-WILKES #2
FDNS	00NR	2	16WP	G15_084	FROM->TO	CIMARRON - DRAPER LAKE 345KV CKT 1	717	717	0.0825	103.7165	P12:138:WFEC:MSL02
FDNS	00NR	2	16WP	G15_084	FROM->TO	CIMARRON - DRAPER LAKE 345KV CKT 1	717	717	0.08166	103.7149	GEN336831 1-BAXTER WILSON SES
FDNS	00NR	2	16WP	G15_084	FROM->TO	CIMARRON - DRAPER LAKE 345KV CKT 1	717	717	0.08166	103.71	GEN335204 1-NELSON UNIT 4
FDNS	00NR	2	16WP	G15_084	FROM->TO	CIMARRON - DRAPER LAKE 345KV CKT 1	717	717	0.08187	103.7	G15088_T 345.00 - MOORE 345KV CKT 1
FDNS	00NR	2	16WP	G15_084	FROM->TO	CIMARRON - DRAPER LAKE 345KV CKT 1	717	717	0.08028	103.697	P12:138:AEPW:OKMULGE4:R.S.S-4
FDNS	00NR	2	16WP	G15_084	FROM->TO	CIMARRON - DRAPER LAKE 345KV CKT 1	717	717	0.08166	103.6811	GEN506754 1-LEBROCK STEAM 1
FDNS	00NR	2	16WP	G15_084	FROM->TO	CIMARRON - DRAPER LAKE 345KV CKT 1	717	717	0.08231	103.6808	ANADARKO - GEORGIA 138KV CKT 1
FDNS	00NR	2	16WP	G15_084	FROM->TO	CIMARRON - DRAPER LAKE 345KV CKT 1	717	717	0.08224	103.6772	CLASSEN - ROBINSON 138KV CKT 1
FDNS	00NR	2	16WP	G15_084	FROM->TO	CIMARRON - DRAPER LAKE 345KV CKT 1	717	717	0.08166	103.6587	GEN334441 1-SABINE UNIT 5
FDNS	00NR	2	16WP	G15_084	FROM->TO	CIMARRON - DRAPER LAKE 345KV CKT 1	717	717	0.08449	103.6579	FINNEY SWITCHING STATION - Hitchland Interchange 345KV CKT 1
FDNS	00NR	2	16WP	G15_084	FROM->TO	CIMARRON - DRAPER LAKE 345KV CKT 1	717	717	0.08263	103.6575	BENTON - WICHITA 345KV CKT 1
FDNS	00NR	2	16WP	G15_084	FROM->TO	CIMARRON - DRAPER LAKE 345KV CKT 1	717	717	0.08541	103.6548	CRINER - PAYNE 138.00 138KV CKT 1
FDNS	00NR	2	16WP	G15_084	FROM->TO	CIMARRON - DRAPER LAKE 345KV CKT 1	717	717	0.08166	103.6537	GEN334071 1-LEWIS CREEK 2
FDNS	00NR	2	16WP	G15_084	FROM->TO	CIMARRON - DRAPER LAKE 345KV CKT 1	717	717	0.08242	103.6536	G14_001T 345.00 - WICHITA 345KV CKT 1
FDNS	00NR	2	16WP	G15_084	FROM->TO	CIMARRON - DRAPER LAKE 345KV CKT 1	717	717	0.08235	103.6481	LACYGNE - NEOSHO 345KV CKT 1
FDNS	00NR	2	16WP	G15_084	FROM->TO	CIMARRON - DRAPER LAKE 345KV CKT 1	717	717	0.08166	103.6458	GEN334070 1-LEWIS CREEK 1
FDNS	00NR	2	16WP	G15_084	FROM->TO	CIMARRON - DRAPER LAKE 345KV CKT 1	717	717	0.08214	103.6422	WEBRE - WELLS 500KV CKT 1
FDNSLock	00NR	2	16WP	G15_084	FROM->TO	CIMARRON - DRAPER LAKE 345KV CKT 1	717	717	0.08166	103.6347	GEN590011 2-ERCOT EQUIVALENCE
FDNS	00NR	2	16WP	G15_084	FROM->TO	CIMARRON - DRAPER LAKE 345KV CKT 1	717	717	0.08166	103.6296	GEN336251 1-NINEMILE POINT UNIT#4
FDNS	00NR	2	16WP	G15_084	FROM->TO	CIMARRON - DRAPER LAKE 345KV CKT 1	717	717	0.08203	103.623	EMPORIA ENERGY CENTER - SWISSVALE 345KV CKT 1
FDNS	00NR	2	16WP	G15_084	FROM->TO	CIMARRON - DRAPER LAKE 345KV CKT 1	717	717	0.08231	103.6205	FLETCHER - GEORGIA 138KV CKT 1
FDNSLock	00NR	2	16WP	G15_084	FROM->TO	CIMARRON - DRAPER LAKE 345KV CKT 1	717	717	0.08166	103.5924	GEN590010 1-ERCOT EQUIVALENCE
FDNS	00NR	2	16WP	G15_084	FROM->TO	CIMARRON - DRAPER LAKE 345KV CKT 1	717	717	0.08224	103.5849	G1524G1525 345.00 - THISTLE7 345.00 345KV CKT 1
FDNS	00NR	2	16WP	G15_084	FROM->TO	CIMARRON - DRAPER LAKE 345KV CKT 1	717	717	0.08224	103.5849	G1524G1525 345.00 - THISTLE7 345.00 345KV CKT 2
FDNS	00NR	2	16WP	G15_084	FROM->TO	CIMARRON - DRAPER LAKE 345KV CKT 1	717	717	0.08166	103.5789	GEN503909 1-FULTONU1 1 16.000
FDNSLock	00NR	2	16WP	G15_084	FROM->TO	CIMARRON - DRAPER LAKE 345KV CKT 1	717	717	0.08166	103.5759	GEN338146 1-INDEPENDENCE UNIT #2
FDNS	00NR	2	16WP	G15_084	FROM->TO	CIMARRON - DRAPER LAKE 345KV CKT 1	717	717	0.08176	103.5715	LONEOAK - QUAIL CREEK 138KV CKT 1
FDNS	00NR	2	16WP	G15_084	FROM->TO	CIMARRON - DRAPER LAKE 345KV CKT 1	717	717	0.08147	103.5689	WOODRING (WOODRNG2) 345/138/13.8KV TRANSFORMER CKT 1
FDNS	00NR	2	16WP	G15_084	FROM->TO	CIMARRON - DRAPER LAKE 345KV CKT 1	717	717	0.08166	103.5686	GEN501811 1-RODEMACHER UNIT 1
FDNS	00NR	2	16WP	G15_084	FROM->TO	CIMARRON - DRAPER LAKE 345KV CKT 1	717	717	0.08238	103.5651	EMPIRE - FLETCHER 138KV CKT 1
FDNS	00NR	2	16WP	G15_084	FROM->TO	CIMARRON - DRAPER LAKE 345KV CKT 1	717	717	0.08541	103.5547	COLE - CRINER 138KV CKT 1
FDNS	00NR	2	16WP	G15_084	FROM->TO	CIMARRON - DRAPER LAKE 345KV CKT 1	717	717	0.08255	103.5434	OSAGE - WEBB CITY TAP 138KV CKT 1
FDNS	00NR	2	16WP	G15_084	FROM->TO	CIMARRON - DRAPER LAKE 345KV CKT 1	717	717	0.08166	103.5349	FRONTIER - GRIMES 345KV CKT 1
FDNS	00NR	2	16WP	G15_084	FROM->TO	CIMARRON - DRAPER LAKE 345KV CKT 1	717	717	0.08166	103.5316	P12:069:OKGE:3TERM4
FDNS	00NR	2	16WP	G15_084	FROM->TO	CIMARRON - DRAPER LAKE 345KV CKT 1	717	717	0.08166	103.5313	GEN334433 1-SABINE UNIT 3
FDNS	00NR	2	16WP	G15_084	FROM->TO	CIMARRON - DRAPER LAKE 345KV CKT 1	717	717	0.08239	103.53	SPVALLY4 138.00 - STILLWATER 138KV CKT 1
FDNS	00NR	2	16WP	G15_084	FROM->TO	CIMARRON - DRAPER LAKE 345KV CKT 1	717	717	0.08166	103.5268	GEN334030 1-FRONTIER UNIT 1
FDNS	00NR	2	16WP	G15_084	FROM->TO	CIMARRON - DRAPER LAKE 345KV CKT 1	717	717	0.08166	103.5258	GEN334031 1-FRONTIER UNIT 2
FDNS	00NR	2	16WP	G15_084	FROM->TO	CIMARRON - DRAPER LAKE 345KV CKT 1	717	717	0.08166	103.5251	P12:161:AEPW:DYESS 5:HYLAND 5
FDNS	00NR	2	16WP	G15_084	FROM->TO	CIMARRON - DRAPER LAKE 345KV CKT 1	717	717	0.08166	103.5236	GEN303007 1-1BC2 U2
FDNS	00NR	2	16WP	G15_084	FROM->TO	CIMARRON - DRAPER LAKE 345KV CKT 1	717	717	0.08166	103.5214	GEN337041 1-GERALD ANDRUS
FDNS	00NR	2	16WP	G15_084	FROM->TO	CIMARRON - DRAPER LAKE 345KV CKT 1	717	717	0.08166	103.5183	GEN303006 1-1BC2 U1
FDNS	00NR	2	16WP	G15_084	FROM->TO	CIMARRON - DRAPER LAKE 345KV CKT 1	717	717	0.08238	103.505	COMANCHE - EMPIRE 138KV CKT 1
FDNS	00NR	2	16WP	G15_084	FROM->TO	CIMARRON - DRAPER LAKE 345KV CKT 1	717	717	0.08239	103.5039	PAYNESB4 138.00 - SPVALLY4 138.00 138KV CKT 1
FDNS	00NR	2	16WP	G15_084	FROM->TO	CIMARRON - DRAPER LAKE 345KV CKT 1	717	717	0.08166	103.5012	GEN336191 1-LITTLE GYPSY UNIT#3
FDNS	00NR	2	16WP	G15_084	FROM->TO	CIMARRON - DRAPER LAKE 345KV CKT 1	717	717	0.08175	103.4994	8DANIEL8 500.00 - MCKNIGHT 500KV CKT 1
FDNS	00NR	2	16WP	G15_084	FROM->TO	CIMARRON - DRAPER LAKE 345KV CKT 1	717	717	0.08196	103.498	CLEAVELAND - CLEVLND 4 138.00 138KV CKT Z1
FDNS	00NR	2	16WP	G15_084	FROM->TO	CIMARRON - DRAPER LAKE 345KV CKT 1	717	717	0.08196	103.498	CLEAVELAND - CLEVLND 4 138.00 138KV CKT Z1
FDNS	00NR	2	16WP	G15_084	FROM->TO	CIMARRON - DRAPER LAKE 345KV CKT 1	717	717	0.08196	103.4977	CLEVELAND (CLVAUTO1) 345/138/13.8KV TRANSFORMER CKT 1
FDNS	00NR	2	16WP	G15_084	FROM->TO	CIMARRON - DRAPER LAKE 345KV CKT 1	717	717	0.08196	103.4977	CLEVELAND (CLVAUTO1) 345/138/13.8KV TRANSFORMER CKT 1
FDNS	00NR	2	16WP	G15_084	FROM->TO	CIMARRON - DRAPER LAKE 345KV CKT 1	717	717	0.08166	103.495	GEN509393 S1-ARSENAL HILL GENS #4 (STALL)
FDNS	00NR	2	16WP	G15_084	FROM->TO	CIMARRON - DRAPER LAKE 345KV CKT 1	717	717	0.08173	103.4931	P12:138:OKGE:3TERM13
FDNS	00NR	2	16WP	G15_084	FROM->TO	CIMARRON - DRAPER LAKE 345KV CKT 1	717	717	0.08239	103.49	CUSHING - PAYNESB4 138.00 138KV CKT 1
FDNS	00NR	2	16WP	G15_084	FROM->TO	CIMARRON - DRAPER LAKE 345KV CKT 1	717	717	0.08091	103.4873	ARKANSAS NUCLEAR ONE - FT SMITH 500KV CKT 1
FDNS	00NR	2	16WP	G15_084	FROM->TO	CIMARRON - DRAPER LAKE 345KV CKT 1	717	717	0.08091	103.4873	ARKANSAS NUCLEAR ONE - FT SMITH 500KV CKT 1
FDNS	00NR	2	16WP	G15_084	FROM->TO	CIMARRON - DRAPER LAKE 345KV CKT 1	717	717	0.08166	103.4784	GEN509392 G2-ARSENAL HILL GENS #3 (STALL)
FDNS	00NR	2	16WP	G15_084	FROM->TO	CIMARRON - DRAPER LAKE 345KV CKT 1	717	717	0.08166	103.4783	GEN509391 G1-ARSENAL HILL GENS #2 (STALL)
FDNS	00NR	2	16WP	G15_084	FROM->TO	CIMARRON - DRAPER LAKE 345KV CKT 1	717	717	0.08166	103.4706	GEN335614 1-WILLOW GLENN UNIT#4
FDNS	00NR	2	16WP	G15_084	FROM->TO	CIMARRON - DRAPER LAKE 345KV CKT 1	717	717	0.0819	103.4674	DAYTON - MUSTANG 138KV CKT 1
FDNS	00NR	2	16WP	G15_084	FROM->TO	CIMARRON - DRAPER LAKE 345KV CKT 1	717	717	0.0819	103.4624	DAYTON - HOBBY LOBBY 138KV CKT 1
FDNS	00NR	2	16WP	G15_084	FROM->TO	CIMARRON - DRAPER LAKE 345KV CKT 1	717	717	0.08166	103.4582	GEN303008 1-1BC2 U3
FDNS	00NR	2	16WP	G15_084	FROM->TO	CIMARRON - DRAPER LAKE 345KV CKT 1	717	717	0.08166	103.4486	GEN338143 1-INDEPENDENCE UNIT #1
FDNS	00NR	2	16WP	G15_084	FROM->TO	CIMARRON - DRAPER LAKE 345KV CKT 1	717	717	0.08204	103.4474	MUSTANG - SW 5TH 138KV CKT 1
FDNS	00NR	2	16WP	G15_084	FROM->TO	CIMARRON - DRAPER LAKE 345KV CKT 1	717	717	0.08195	103.4368	ELDORADO EHV - MOUNT OLIVE 500KV CKT 1
FDNS	00NR	2	16WP	G15_084	FROM->TO	CIMARRON - DRAPER LAKE 345KV CKT 1	717	717	0.08166	103.4362	GEN336170 1-GULF OXY U4
FDNS	00NR	2	16WP	G15_084	FROM->TO	CIMARRON - DRAPER LAKE 345KV CKT 1	717	717	0.08166	103.4348	GEN336464 1-MICHOUD UNIT #3
FDNS	00NR	2	16WP	G15_084	FROM->TO	CIMARRON - DRAPER LAKE 345KV CKT 1	717	717	0.07817	103.4296	CANADIAN RIVER - PITTSBURG 345KV CKT 1
FDNS	00NR	2	16WP	G15_084	FROM->TO	CIMARRON - DRAPER LAKE 345KV CKT 1	717	717	0.07817	103.4296	CANADIAN RIVER - PITTSBURG 345KV CKT 1
FDNS	00NR	2	16WP	G15_084	FROM->TO	CIMARRON - DRAPER LAKE 345KV CKT 1	717	717	0.08166	103.4242	ESSEX UNIT 2 500/18.0KV TRANSFORMER CKT 1
FDNS	00NR	2	16WP	G15_084	FROM->TO	CIMARRON - DRAPER LAKE 345KV CKT 1	717	717	0.08169	103.4154	P12:069:OKGE:3TERM19
FDNS	00NR	2	16WP	G15_084	FROM->TO	CIMARRON - DRAPER LAKE 345KV CKT 1	717	717	0.08183	103.4042	7LUTESVIL 345.00 - 7ST FRANC 345.00 345KV CKT 1
FDNS	00NR	2	16WP	G15_084	FROM->TO	CIMARRON - DRAPER LAKE 345KV CKT 1	717	717	0.08194	103.3925	OUMED 4 - STONEWALL 138KV CKT 1
FDNS	00NR	2	16WP	G15_084	FROM->TO	CIMARRON - DRAPER LAKE 345KV CKT 1	717	717	0.08166	103.3899	GEN336801 1-BAXTER WILSON UNIT #1
FDNS	00NR	2	16WP	G15_084	FROM->TO	CIMARRON - DRAPER LAKE 345KV CKT 1	717	717	0.08224	103.3846	LIGHTNING CREEK - ROBINSON 138KV CKT 1
FDNS	00NR	2	16WP	G15_084	FROM->TO	CIMARRON - DRAPER LAKE 345KV CKT 1	717	717	0.08141	103.383	ARCADIA - LGARBER4 138.00 138KV CKT 1
FDNS	00NR	2	16WP	G15_084	FROM->TO	CIMARRON - DRAPER LAKE 345KV CKT 1	717	717	0.08179	103.3768	7JASPER 345.00 - BLACKBERRY 345KV CKT 1
FDNS	00NR	2	16WP	G15_084	FROM->TO	CIMARRON - DRAPER LAKE 345KV CKT 1	717	717	0.08166	103.3763	GEN506752 1-LEBROCK GAS 1

SOLUTION	GROUP	SCENARIO	SEASON	SOURCE	DIRECTION	MONITORED ELEMENT	RATEA (MVA)	RATEB(MVA)	TDF	TC%LOADING (% MVA)	CONTINGENCY
FDNS	00NR	2	16WP	G15_084	FROM->TO	CIMARRON - DRAPER LAKE 345KV CKT 1	717	717	0.08166	103.3762	GEN506753 1-LEBROCK GAS 2
FDNS	00NR	2	16WP	G15_084	FROM->TO	CIMARRON - DRAPER LAKE 345KV CKT 1	717	717	0.08141	103.3644	CHITWOOD - LGARBER4 138.00 138KV CKT 1
FDNS	00NR	2	16WP	G15_084	FROM->TO	CIMARRON - DRAPER LAKE 345KV CKT 1	717	717	0.08255	103.3637	FAIRFAX TAP - SHIDLER 138KV CKT 1
FDNS	00NR	2	16WP	G15_084	FROM->TO	CIMARRON - DRAPER LAKE 345KV CKT 1	717	717	0.08255	103.3636	FAIRFAX TAP - WEBB CITY TAP 138KV CKT 1
FDNS	00NR	2	16WP	G15_084	FROM->TO	CIMARRON - DRAPER LAKE 345KV CKT 1	717	717	0.08166	103.3524	GEN501910 1-ACADIA UNIT ST1
FDNS	00NR	2	16WP	G15_084	FROM->TO	CIMARRON - DRAPER LAKE 345KV CKT 1	717	717	0.08166	103.3438	RODEMACHER 230/22.0KV TRANSFORMER CKT 1
FDNS	00NR	2	16WP	G15_084	FROM->TO	CIMARRON - DRAPER LAKE 345KV CKT 1	717	717	0.08141	103.341	CHITWOOD - JONES TAP 138KV CKT 1
FDNS	00NR	2	16WP	G15_084	FROM->TO	CIMARRON - DRAPER LAKE 345KV CKT 1	717	717	0.08166	103.3397	GEN511843 1-RIVERSIDE STATION #2
FDNS	00NR	2	16WP	G15_084	FROM->TO	CIMARRON - DRAPER LAKE 345KV CKT 1	717	717	0.08108	103.3364	P12:138:AEPW-OGE:WTH_JCT4:JENSEN4
FDNS	00NR	2	16WP	G15_084	FROM->TO	CIMARRON - DRAPER LAKE 345KV CKT 1	717	717	0.08221	103.3329	TULSA NORTH - WEKIWA 345KV CKT 1
FDNS	00NR	2	16WP	G15_084	FROM->TO	CIMARRON - DRAPER LAKE 345KV CKT 1	717	717	0.08221	103.3329	TULSA NORTH - WEKIWA 345KV CKT 1
FDNS	00NR	2	16WP	G15_084	FROM->TO	CIMARRON - DRAPER LAKE 345KV CKT 1	717	717	0.08223	103.3311	6LAYFLD 230.00 - CARROLL 230KV CKT 1
FDNS	00NR	2	16WP	G15_084	FROM->TO	CIMARRON - DRAPER LAKE 345KV CKT 1	717	717	0.08187	103.3263	8WNEWMADRID 500.00 - DELL 500 500KV CKT 1
FDNS	00NR	2	16WP	G15_084	FROM->TO	CIMARRON - DRAPER LAKE 345KV CKT 1	717	717	0.08168	103.3256	P12:345:GRDA:CHOUTEAU-SPORTSMANACRES
FDNS	00NR	2	16WP	G15_084	FROM->TO	CIMARRON - DRAPER LAKE 345KV CKT 1	717	717	0.08205	103.318	ELDORADO EHV - SHERIDAN EHV 500KV CKT 1
FDNS	00NR	2	16WP	G15_084	FROM->TO	CIMARRON - DRAPER LAKE 345KV CKT 1	717	717	0.08232	103.3111	G13-010T 345.00 - POST ROCK 345KV CKT 1
FDNS	00NR	2	16WP	G15_084	FROM->TO	CIMARRON - DRAPER LAKE 345KV CKT 1	717	717	0.08079	103.3092	CHISHOLM6 230.00 - ELK CITY 230KV 230KV CKT 1
FDNS	00NR	2	16WP	G15_084	FROM->TO	CIMARRON - DRAPER LAKE 345KV CKT 1	717	717	0.08079	103.3062	ELK CITY 230KV (ELKCTY-6) 230/138/13.8KV TRANSFORMER CKT 1
FDNS	00NR	2	16WP	G15_084	FROM->TO	CIMARRON - DRAPER LAKE 345KV CKT 1	717	717	0.08079	103.3062	ELK CITY 230KV (ELKCTY-6) 230/138/13.8KV TRANSFORMER CKT 1
FDNS	00NR	2	16WP	G15_084	FROM->TO	CIMARRON - DRAPER LAKE 345KV CKT 1	717	717	0.08143	103.2962	P12:138:AEPW:N.E.S.-4:CATOOSA4
FDNS	00NR	2	16WP	G15_084	FROM->TO	CIMARRON - DRAPER LAKE 345KV CKT 1	717	717	0.08194	103.2914	OUMED 4 - PARK PLACE 138KV CKT 1
FDNS	00NR	2	16WP	G15_084	FROM->TO	CIMARRON - DRAPER LAKE 345KV CKT 1	717	717	0.08274	103.2909	ANADARKO - SEQUOYAHJ4 138.00 138KV CKT 1
FDNS	00NR	2	16WP	G15_084	FROM->TO	CIMARRON - DRAPER LAKE 345KV CKT 1	717	717	0.08274	103.2905	CORN TAP - SEQUOYAHJ4 138.00 138KV CKT 1
FDNS	00NR	2	16WP	G15_084	FROM->TO	CIMARRON - DRAPER LAKE 345KV CKT 1	717	717	0.08176	103.2886	FULTON 115 - HOPE 115KV CKT 1
FDNS	00NR	2	16WP	G15_084	FROM->TO	CIMARRON - DRAPER LAKE 345KV CKT 1	717	717	0.08176	103.2886	FULTON 115 - HOPE 115KV CKT 1
FDNS	00NR	2	16WP	G15_084	FROM->TO	CIMARRON - DRAPER LAKE 345KV CKT 1	717	717	0.08541	103.2814	COLE - OUSW4 138KV CKT 1
FDNS	00NR	2	16WP	G15_084	FROM->TO	CIMARRON - DRAPER LAKE 345KV CKT 1	717	717	0.08184	103.2811	P13:138-161:WERE:NSES_TX-4OR5::
FDNS	00NR	2	16WP	G15_084	FROM->TO	CIMARRON - DRAPER LAKE 345KV CKT 1	717	717	0.08045	103.2805	ANADARKO - GRACMNT4 138.00 138KV CKT 1
FDNS	00NR	2	16WP	G15_084	FROM->TO	CIMARRON - DRAPER LAKE 345KV CKT 1	717	717	0.08166	103.2781	8CAJUN2 500/24.0KV TRANSFORMER CKT 1
FDNS	00NR	2	16WP	G15_084	FROM->TO	CIMARRON - DRAPER LAKE 345KV CKT 1	717	717	0.08178	103.2772	MORISNT4 138.00 - SOONER 138KV CKT 1
FDNS	00NR	2	16WP	G15_084	FROM->TO	CIMARRON - DRAPER LAKE 345KV CKT 1	717	717	0.08185	103.2734	7JASPER 345.00 - MORGAN 345KV CKT 1
FDNS	00NR	2	16WP	G15_084	FROM->TO	CIMARRON - DRAPER LAKE 345KV CKT 1	717	717	0.08166	103.267	ST FRANCIS 161/16.0KV TRANSFORMER CKT 1
FDNS	00NR	2	16WP	G15_084	FROM->TO	CIMARRON - DRAPER LAKE 345KV CKT 1	717	717	0.08166	103.2669	ST FRANCIS - ST FRANCIS 1 161KV CKT Z1
FDNS	00NR	2	16WP	G15_084	FROM->TO	CIMARRON - DRAPER LAKE 345KV CKT 1	717	717	0.08166	103.2599	P12:069:OKGE:3TERM3
FDNS	00NR	2	16WP	G15_084	FROM->TO	CIMARRON - DRAPER LAKE 345KV CKT 1	717	717	0.08164	103.253	P12:138:AEPW:CATOOSA4:T.S.E.-4
FDNS	00NR	2	16WP	G15_084	FROM->TO	CIMARRON - DRAPER LAKE 345KV CKT 1	717	717	0.08356	103.2523	HUGO - VALLIANT 345KV CKT 1
FDNS	00NR	2	16WP	G15_084	FROM->TO	CIMARRON - DRAPER LAKE 345KV CKT 1	717	717	0.08356	103.2523	HUGO - VALLIANT 345KV CKT 1
FDNS	00NR	2	16WP	G15_084	FROM->TO	CIMARRON - DRAPER LAKE 345KV CKT 1	717	717	0.08217	103.2522	DALE - HORSESHOE LAKE 138KV CKT 1
FDNS	00NR	2	16WP	G15_084	FROM->TO	CIMARRON - DRAPER LAKE 345KV CKT 1	717	717	0.08232	103.252	G13-010T 345.00 - SPEARVILLE 345KV CKT 1
FDNS	00NR	2	16WP	G15_084	FROM->TO	CIMARRON - DRAPER LAKE 345KV CKT 1	717	717	0.08166	103.2517	GEN300015 1-1SGPDEL 18.000
FDNS	00NR	2	16WP	G15_084	FROM->TO	CIMARRON - DRAPER LAKE 345KV CKT 1	717	717	0.08166	103.2512	GEN509394 1-FLINT CREEK
FDNS	00NR	2	16WP	G15_084	FROM->TO	CIMARRON - DRAPER LAKE 345KV CKT 1	717	717	0.08224	103.2475	LIGHTNING CREEK - TROSPER 138KV CKT 1
FDNS	00NR	2	16WP	G15_084	FROM->TO	CIMARRON - DRAPER LAKE 345KV CKT 1	717	717	0.08166	103.2393	GEN337766 1-TRACTEBEL UNIT S1
FDNS	00NR	2	16WP	G15_084	FROM->TO	CIMARRON - DRAPER LAKE 345KV CKT 1	717	717	0.08172	103.2379	P12:138:AEPW:SHERID4:112GORE4
FDNS	00NR	2	16WP	G15_084	FROM->TO	CIMARRON - DRAPER LAKE 345KV CKT 1	717	717	0.08196	103.2367	HAMMETT TAP - HAMMETT2 138KV CKT 1
FDNS	00NR	2	16WP	G15_084	FROM->TO	CIMARRON - DRAPER LAKE 345KV CKT 1	717	717	0.08166	103.2356	GEN515564 1-ORIGIN11 0.6900
FDNS	00NR	2	16WP	G15_084	FROM->TO	CIMARRON - DRAPER LAKE 345KV CKT 1	717	717	0.08166	103.2356	GEN515565 1-ORIGIN21 0.6900
FDNS	00NR	2	16WP	G15_084	FROM->TO	CIMARRON - DRAPER LAKE 345KV CKT 1	717	717	0.08175	103.2337	P12:138:OKGE:3TERM28
FDNS	00NR	2	16WP	G15_084	FROM->TO	CIMARRON - DRAPER LAKE 345KV CKT 1	717	717	0.0819	103.2332	36 & MERIDIAN - HOBBY LOBBY 138KV CKT 1
FDNS	00NR	2	16WP	G15_084	FROM->TO	CIMARRON - DRAPER LAKE 345KV CKT 1	717	717	0.08166	103.233	GEN336222 1-LITTLE GYPSY UNIT#2
FDNS	00NR	2	16WP	G15_084	FROM->TO	CIMARRON - DRAPER LAKE 345KV CKT 1	717	717	0.08264	103.2296	NORTHEAST STATION - ONETA 345KV CKT 1
FDNS	00NR	2	16WP	G15_084	FROM->TO	CIMARRON - DRAPER LAKE 345KV CKT 1	717	717	0.08264	103.2296	NORTHEAST STATION - ONETA 345KV CKT 1
FDNS	00NR	2	16WP	G15_084	FROM->TO	CIMARRON - DRAPER LAKE 345KV CKT 1	717	717	0.08166	103.2223	NELSON 230/20.0KV TRANSFORMER CKT 1
FDNS	00NR	2	16WP	G15_084	FROM->TO	CIMARRON - DRAPER LAKE 345KV CKT 1	717	717	0.08166	103.2221	GEN501970 1-EVANGELINE UNIT 7
FDNS	00NR	2	16WP	G15_084	FROM->TO	CIMARRON - DRAPER LAKE 345KV CKT 1	717	717	0.08166	103.2206	P12:161:AEPW:EROGERS5:ECNTRTN5
FDNS	00NR	2	16WP	G15_084	FROM->TO	CIMARRON - DRAPER LAKE 345KV CKT 1	717	717	0.0815	103.2183	P12:138:OKGE-AEPW:JENSEN4:REDROCKRD4
FDNS	00NR	2	16WP	G15_084	FROM->TO	CIMARRON - DRAPER LAKE 345KV CKT 1	717	717	0.08153	103.218	NW164TH4 138.00 - PIEDMONT 138KV CKT 1
FDNS	00NR	2	16WP	G15_084	FROM->TO	CIMARRON - DRAPER LAKE 345KV CKT 1	717	717	0.08169	103.2179	P12:161:AEPW-SWPA:BEAVER5:EROGERS5
FDNS	00NR	2	16WP	G15_084	FROM->TO	CIMARRON - DRAPER LAKE 345KV CKT 1	717	717	0.08166	103.2174	ESSEX UNIT 2 500/18.0KV TRANSFORMER CKT 1
FDNS	00NR	2	16WP	G15_084	FROM->TO	CIMARRON - DRAPER LAKE 345KV CKT 1	717	717	0.08295	103.2169	HEALDTON - LOCO 138KV CKT 1
FDNS	00NR	2	16WP	G15_084	FROM->TO	CIMARRON - DRAPER LAKE 345KV CKT 1	717	717	0.08153	103.2161	NORTHWEST - NW164TH4 138.00 138KV CKT 1
FDNS	00NR	2	16WP	G15_084	FROM->TO	CIMARRON - DRAPER LAKE 345KV CKT 1	717	717	0.08176	103.2129	HEFNER - TULSA 138KV CKT 1
FDNS	00NR	2	16WP	G15_084	FROM->TO	CIMARRON - DRAPER LAKE 345KV CKT 1	717	717	0.08217	103.2106	DALE - SQUIRL CREEK 138KV CKT 1
FDNS	00NR	2	16WP	G15_084	FROM->TO	CIMARRON - DRAPER LAKE 345KV CKT 1	717	717	0.08166	103.2089	P12:161:AEPW:DYESS5:ELMSPRNG:TONTITN5
FDNS	00NR	2	16WP	G15_084	FROM->TO	CIMARRON - DRAPER LAKE 345KV CKT 1	717	717	0.08189	103.2073	FLETCHER - MARLOW JCT 69KV CKT 1
FDNS	00NR	2	16WP	G15_084	FROM->TO	CIMARRON - DRAPER LAKE 345KV CKT 1	717	717	0.08169	103.2052	AS KING - EAU CLAIRE 345KV CKT 1
FDNS	00NR	2	16WP	G15_084	FROM->TO	CIMARRON - DRAPER LAKE 345KV CKT 1	717	717	0.08217	103.2032	COMANCHE TAP - OMPA-DUNCAN 840 138KV CKT 1
FDNS	00NR	2	16WP	G15_084	FROM->TO	CIMARRON - DRAPER LAKE 345KV CKT 1	717	717	0.08166	103.2028	ST FRANCIS 2 161/16.0KV TRANSFORMER CKT 2
FDNS	00NR	2	16WP	G15_084	FROM->TO	CIMARRON - DRAPER LAKE 345KV CKT 1	717	717	0.08166	103.2028	ST FRANCIS 345/161KV TRANSFORMER CKT 1
FDNS	00NR	2	16WP	G15_084	FROM->TO	CIMARRON - DRAPER LAKE 345KV CKT 1	717	717	0.08166	103.2025	GEN336152 1-WATERFORD UNIT#2
FDNS	00NR	2	16WP	G15_084	FROM->TO	CIMARRON - DRAPER LAKE 345KV CKT 1	717	717	0.08166	103.2014	GEN336151 1-WATERFORD UNIT#1
FDNS	00NR	2	16WP	G15_084	FROM->TO	CIMARRON - DRAPER LAKE 345KV CKT 1	717	717	0.08173	103.1916	COTTONWOOD CREEK - MARSHALL 138KV CKT 1
FDNS	00NR	2	16WP	G15_084	FROM->TO	CIMARRON - DRAPER LAKE 345KV CKT 1	717	717	0.08173	103.1915	MARSHALL - WOODRING 138KV CKT 1
FDNS	00NR	2	16WP	G15_084	FROM->TO	CIMARRON - DRAPER LAKE 345KV CKT 1	717	717	0.08166	103.1902	GEN334392 1-EXXON MOBIL IPP 1
FDNS	00NR	2	16WP	G15_084	FROM->TO	CIMARRON - DRAPER LAKE 345KV CKT 1	717	717	0.08181	103.1884	MC NIEL 500/115KV TRANSFORMER CKT 1
FDNS	00NR	2	16WP	G15_084	FROM->TO	CIMARRON - DRAPER LAKE 345KV CKT 1	717	717	0.08225	103.1855	P12:138:AEPW:MOUNDRD4:SHIDLER4
FDNS	00NR	2	16WP	G15_084	FROM->TO	CIMARRON - DRAPER LAKE 345KV CKT 1	717	717	0.08178	103.1841	BISMARK - HOT SPRINGS WEST BUS 115KV CKT 1
FDNS	00NR	2	16WP	G15_084	FROM->TO	CIMARRON - DRAPER LAKE 345KV CKT 1	717	717	0.08166	103.1836	GEN334393 1-EXXON MOBIL IPP 2
FDNS	00NR	2	16WP	G15_084	FROM->TO	CIMARRON - DRAPER LAKE 345KV CKT 1	717	717	0.08166	103.1836	GEN334394 1-EXXON MOBIL IPP 3

SOLUTION	GROUP	SCENARIO	SEASON	SOURCE	DIRECTION	MONITORED ELEMENT	RATEA (MVA)	RATEB(MVA)	TDF	TC%LOADING (% MVA)	CONTINGENCY
FDNS	00NR	2	16WP	G15_084	FROM->TO	CIMARRON - DRAPER LAKE 345KV CKT 1	717	717	0.08181	103.1767	EL RENO SW - MUSTANG2 69.000 69KV CKT 1
FDNS	00NR	2	16WP	G15_084	FROM->TO	CIMARRON - DRAPER LAKE 345KV CKT 1	717	717	0.08295	103.1752	HEALDTON - RINGLING 138KV CKT 1
FDNS	00NR	2	16WP	G15_084	FROM->TO	CIMARRON - DRAPER LAKE 345KV CKT 1	717	717	0.08146	103.1752	BRISTOW - SILVER CITY 138KV CKT 1
FDNS	00NR	2	16WP	G15_084	FROM->TO	CIMARRON - DRAPER LAKE 345KV CKT 1	717	717	0.08153	103.1718	KELLYAV4 138.00 - MEMORIAL 138KV CKT 1
FDNS	00NR	2	16WP	G15_084	FROM->TO	CIMARRON - DRAPER LAKE 345KV CKT 1	717	717	0.08225	103.1685	SHIDLER - WEST PAWHUSKA 138KV CKT 1
FDNS	00NR	2	16WP	G15_084	FROM->TO	CIMARRON - DRAPER LAKE 345KV CKT 1	717	717	0.08166	103.1684	GEN501971 1-EVANGELINE UNIT 7-1
FDNS	00NR	2	16WP	G15_084	FROM->TO	CIMARRON - DRAPER LAKE 345KV CKT 1	717	717	0.08166	103.1684	GEN501972 1-EVANGELINE UNIT 7-2
FDNS	00NR	2	16WP	G15_084	FROM->TO	CIMARRON - DRAPER LAKE 345KV CKT 1	717	717	0.08228	103.1607	P12:138:AEPW:CORNVIL4:S.W.S.-4
FDNS	00NR	2	16WP	G15_084	FROM->TO	CIMARRON - DRAPER LAKE 345KV CKT 1	717	717	0.08166	103.1587	GEN334431 1-SABINE UNIT 1
FDNS	00NR	2	16WP	G15_084	FROM->TO	CIMARRON - DRAPER LAKE 345KV CKT 1	717	717	0.08166	103.1586	GEN334432 1-SABINE UNIT 2
FDNS	00NR	2	16WP	G15_084	FROM->TO	CIMARRON - DRAPER LAKE 345KV CKT 1	717	717	0.08178	103.1561	BROOKLINE - MORGAN 345KV CKT 1
FDNS	00NR	2	16WP	G15_084	FROM->TO	CIMARRON - DRAPER LAKE 345KV CKT 1	717	717	0.08178	103.1561	BROOKLINE - MORGAN 345KV CKT 1
FDNS	00NR	2	16WP	G15_084	FROM->TO	CIMARRON - DRAPER LAKE 345KV CKT 1	717	717	0.08166	103.156	GEN336242 1-1NMIL ST1 18.000
FDNS	00NR	2	16WP	G15_084	FROM->TO	CIMARRON - DRAPER LAKE 345KV CKT 1	717	717	0.08166	103.1554	GEN337764 1-TRACTEBEL UNIT C1
FDNS	00NR	2	16WP	G15_084	FROM->TO	CIMARRON - DRAPER LAKE 345KV CKT 1	717	717	0.08166	103.1554	GEN337765 1-TRACTEBEL UNIT C2
FDNS	00NR	2	16WP	G15_084	FROM->TO	CIMARRON - DRAPER LAKE 345KV CKT 1	717	717	0.08166	103.1538	GEN501912 1-ACADIA UNIT CT1B
FDNS	00NR	2	16WP	G15_084	FROM->TO	CIMARRON - DRAPER LAKE 345KV CKT 1	717	717	0.08166	103.1532	GEN501911 1-ACADIA UNIT CT1A
FDNS	00NR	2	16WP	G15_084	FROM->TO	CIMARRON - DRAPER LAKE 345KV CKT 1	717	717	0.08191	103.1524	COUNCIL - MUSTANG 138KV CKT 1
FDNS	00NR	2	16WP	G15_084	FROM->TO	CIMARRON - DRAPER LAKE 345KV CKT 1	717	717	0.08194	103.1519	BODLE - PARK PLACE 138KV CKT 1
FDNS	00NR	2	16WP	G15_084	FROM->TO	CIMARRON - DRAPER LAKE 345KV CKT 1	717	717	0.08225	103.151	PAWHUSKA TAP - WEST PAWHUSKA 138KV CKT 1
FDNS	00NR	2	16WP	G15_084	FROM->TO	CIMARRON - DRAPER LAKE 345KV CKT 1	717	717	0.08174	103.1509	CYPRESS - HARTBURG 500KV CKT 1
FDNS	00NR	2	16WP	G15_084	FROM->TO	CIMARRON - DRAPER LAKE 345KV CKT 1	717	717	0.08178	103.1508	ALPINE AECC - BISMARK 115KV CKT 1
FDNS	00NR	2	16WP	G15_084	FROM->TO	CIMARRON - DRAPER LAKE 345KV CKT 1	717	717	0.08288	103.1504	BRYANT - MEMORIAL 138KV CKT 1
FDNS	00NR	2	16WP	G15_084	FROM->TO	CIMARRON - DRAPER LAKE 345KV CKT 1	717	717	0.08196	103.1445	HAMMETT2 - MEEKER 138KV CKT 1
FDNS	00NR	2	16WP	G15_084	FROM->TO	CIMARRON - DRAPER LAKE 345KV CKT 1	717	717	0.08194	103.143	CORN TAP - CORNVILLE 138KV CKT 1
FDNS	00NR	2	16WP	G15_084	FROM->TO	CIMARRON - DRAPER LAKE 345KV CKT 1	717	717	0.08153	103.1426	PIEDMONT - RICHRDS 138KV CKT 1
FDNS	00NR	2	16WP	G15_084	FROM->TO	CIMARRON - DRAPER LAKE 345KV CKT 1	717	717	0.08166	103.1419	P12:69:AEPW:L.E.S.-2:LAW WC2
FDNS	00NR	2	16WP	G15_084	FROM->TO	CIMARRON - DRAPER LAKE 345KV CKT 1	717	717	0.08282	103.1414	CIVIT - PAOLI 138KV CKT 1
FDNS	00NR	2	16WP	G15_084	FROM->TO	CIMARRON - DRAPER LAKE 345KV CKT 1	717	717	0.08153	103.1404	KELLYAV4 138.00 - REMNGTON PARK 138KV CKT 1
FDNS	00NR	2	16WP	G15_084	FROM->TO	CIMARRON - DRAPER LAKE 345KV CKT 1	717	717	0.08224	103.1384	HAMMETT TAP - HORSESHOE LAKE 138KV CKT 1
FDNS	00NR	2	16WP	G15_084	FROM->TO	CIMARRON - DRAPER LAKE 345KV CKT 1	717	717	0.08295	103.1335	RINGLING - SOUTH WILSON 138KV CKT 1
FDNS	00NR	2	16WP	G15_084	FROM->TO	CIMARRON - DRAPER LAKE 345KV CKT 1	717	717	0.08191	103.1325	LAYFLD8 500.00 - MOUNT OLIVE 500KV CKT 1
FDNS	00NR	2	16WP	G15_084	FROM->TO	CIMARRON - DRAPER LAKE 345KV CKT 1	717	717	0.08191	103.1325	LAYFLD8 500.00 - MOUNT OLIVE 500KV CKT 1
FDNS	00NR	2	16WP	G15_084	FROM->TO	CIMARRON - DRAPER LAKE 345KV CKT 1	717	717	0.08167	103.1042	LACYGNE - STILWELL 345KV CKT 1
FDNS	00NR	2	16WP	G15_084	FROM->TO	CIMARRON - DRAPER LAKE 345KV CKT 1	717	717	0.08191	103.0969	COUNCIL - WESTOAKS 138KV CKT 1
FDNS	00NR	2	16WP	G15_084	FROM->TO	CIMARRON - DRAPER LAKE 345KV CKT 1	717	717	0.07782	103.0507	GRACEMONT - LAWTON EASTSIDE 345KV CKT 1
FDNS	00NR	2	16WP	G15_084	FROM->TO	CIMARRON - DRAPER LAKE 345KV CKT 1	717	717	0.07782	103.0507	GRACEMONT - LAWTON EASTSIDE 345KV CKT 1
FDNS	00NR	2	16WP	G15_084	FROM->TO	CIMARRON - DRAPER LAKE 345KV CKT 1	717	717	0.08166	102.6721	BASE CASE
FDNS	00NR	2	16WP	G15_084	FROM->TO	CIMARRON - DRAPER LAKE 345KV CKT 1	717	717	0.08242	102.3707	GRAPEVINE INTERCHANGE - NICHOLS STATION 230KV CKT 1
FDNS	00NR	2	16WP	G15_084	FROM->TO	CIMARRON - DRAPER LAKE 345KV CKT 1	717	717	0.08242	102.3707	GRAPEVINE INTERCHANGE - NICHOLS STATION 230KV CKT 1
FDNS	00NR	2	16WP	G15_084	FROM->TO	CIMARRON - DRAPER LAKE 345KV CKT 1	717	717	0.08941	102.3542	G15063_T 345.00 - WOODRING 345KV CKT 1
FDNS	00NR	2	16WP	G15_084	FROM->TO	CIMARRON - DRAPER LAKE 345KV CKT 1	717	717	0.08212	102.2982	BURGETT4 138.00 - RNDBARN4 138.00 138KV CKT 1
FDNS	00NR	2	16WP	G15_084	FROM->TO	CIMARRON - DRAPER LAKE 345KV CKT 1	717	717	0.08212	102.2979	BURGETT4 138.00 - DANFORTH 138KV CKT 1
FDNS	00NR	2	16WP	G15_084	FROM->TO	CIMARRON - DRAPER LAKE 345KV CKT 1	717	717	0.08212	102.2857	ARCADIA - RNDBARN4 138.00 138KV CKT 1
FDNS	00NR	2	16WP	G15_084	FROM->TO	CIMARRON - DRAPER LAKE 345KV CKT 1	717	717	0.08166	102.2562	GEN659125 1-COVEY
FDNS	00NR	2	16WP	G15_084	FROM->TO	CIMARRON - DRAPER LAKE 345KV CKT 1	717	717	0.08089	102.2524	GRAPEVINE INTERCHANGE - STATELINE INTERCHANGE 230KV CKT 1
FDNS	00NR	2	16WP	G15_084	FROM->TO	CIMARRON - DRAPER LAKE 345KV CKT 1	717	717	0.08089	102.2524	GRAPEVINE INTERCHANGE - STATELINE INTERCHANGE 230KV CKT 1
FDNS	00NR	2	16WP	G15_084	FROM->TO	CIMARRON - DRAPER LAKE 345KV CKT 1	717	717	0.08166	102.2516	GEN515550 1-MNCWND31 0.6900
FDNS	00NR	2	16WP	G15_084	FROM->TO	CIMARRON - DRAPER LAKE 345KV CKT 1	717	717	0.08166	102.2374	GEN562611 1-G14_064_3 0.6900
FDNS	00NR	2	16WP	G15_084	FROM->TO	CIMARRON - DRAPER LAKE 345KV CKT 1	717	717	0.08166	102.2371	GEN511848 1-SOUTHWESTERN STATION #3
FDNS	00NR	2	16WP	G15_084	FROM->TO	CIMARRON - DRAPER LAKE 345KV CKT 1	717	717	0.08166	102.2061	GEN515601 1-KNGFSR11 0.7000
FDNS	00NR	2	16WP	G15_084	FROM->TO	CIMARRON - DRAPER LAKE 345KV CKT 1	717	717	0.08166	102.2058	GEN600070 9-RIVER SIDE
FDNS	00NR	2	16WP	G15_084	FROM->TO	CIMARRON - DRAPER LAKE 345KV CKT 1	717	717	0.08166	102.2058	GEN600071 10-RIVER SIDE
FDNS	00NR	2	16WP	G15_084	FROM->TO	CIMARRON - DRAPER LAKE 345KV CKT 1	717	717	0.08166	102.2006	GEN672303 3-BOUNDARY DAM GENERATOR 3
FDNS	00NR	2	16WP	G15_084	FROM->TO	CIMARRON - DRAPER LAKE 345KV CKT 1	717	717	0.08166	102.2006	GEN672304 4-BOUNDARY DAM GENERATOR 4
FDNS	00NR	2	16WP	G15_084	FROM->TO	CIMARRON - DRAPER LAKE 345KV CKT 1	717	717	0.08166	102.2006	GEN672305 5-BOUNDARY DAM GENERATOR 5
FDNS	00NR	2	16WP	G15_084	FROM->TO	CIMARRON - DRAPER LAKE 345KV CKT 1	717	717	0.08166	102.2	GEN600011 5-BLACK DOG GEN 1
FDNS	00NR	2	16WP	G15_084	FROM->TO	CIMARRON - DRAPER LAKE 345KV CKT 1	717	717	0.08166	102.1997	GEN600007 7-RIVERSIDE GEN 7
FDNS	00NR	2	16WP	G15_084	FROM->TO	CIMARRON - DRAPER LAKE 345KV CKT 1	717	717	0.08166	102.1992	GEN600067 9-HIGH BRIDGE
FDNS	00NR	2	16WP	G15_084	FROM->TO	CIMARRON - DRAPER LAKE 345KV CKT 1	717	717	0.08166	102.1963	GEN563062 1-G15071_3 0.6900
FDNS	00NR	2	16WP	G15_084	FROM->TO	CIMARRON - DRAPER LAKE 345KV CKT 1	717	717	0.08166	102.1952	GEN615052 1-CAMBRIDGE GENERATING STATION
FDNS	00NR	2	16WP	G15_084	FROM->TO	CIMARRON - DRAPER LAKE 345KV CKT 1	717	717	0.08166	102.1907	GEN541151 3-SIBLEY GENERATING UNIT #3
FDNSLock	00NR	2	16WP	G15_084	FROM->TO	CIMARRON - DRAPER LAKE 345KV CKT 1	717	717	0.08166	102.1869	GEN600014 4-BLACK DOG GEN 4
FDNS	00NR	2	16WP	G15_084	FROM->TO	CIMARRON - DRAPER LAKE 345KV CKT 1	717	717	0.08166	102.1839	GEN563282 1-G15094_3 0.6900
FDNS	00NR	2	16WP	G15_084	FROM->TO	CIMARRON - DRAPER LAKE 345KV CKT 1	717	717	0.08166	102.1835	GEN652353 2-GR PRAIRIEG 0.6900
FDNS	00NR	2	16WP	G15_084	FROM->TO	CIMARRON - DRAPER LAKE 345KV CKT 1	717	717	0.08166	102.1813	GEN629067 1-EMERY GAS TURBINE 1
FDNS	00NR	2	16WP	G15_084	FROM->TO	CIMARRON - DRAPER LAKE 345KV CKT 1	717	717	0.08166	102.1808	GEN615032 2-PLEASANT VALLEY
FDNS	00NR	2	16WP	G15_084	FROM->TO	CIMARRON - DRAPER LAKE 345KV CKT 1	717	717	0.08203	102.1788	7MCCREDIE 345.00 - 7MONTGMRY 345.00 345KV CKT 1
FDNS	00NR	2	16WP	G15_084	FROM->TO	CIMARRON - DRAPER LAKE 345KV CKT 1	717	717	0.08036	102.1714	CHISNEY - CLARKSVILLE 138KV CKT 1
FDNS	00NR	2	16WP	G15_084	FROM->TO	CIMARRON - DRAPER LAKE 345KV CKT 1	717	717	0.08166	102.1663	GEN563102 1-G15075_3 0.5500
FDNS	00NR	2	16WP	G15_084	FROM->TO	CIMARRON - DRAPER LAKE 345KV CKT 1	717	717	0.08166	102.1631	GEN515591 1-PALDRW11 0.6900
FDNS	00NR	2	16WP	G15_084	FROM->TO	CIMARRON - DRAPER LAKE 345KV CKT 1	717	717	0.08166	102.1576	GEN562602 1-G15_029_3 0.6900
FDNS	00NR	2	16WP	G15_084	FROM->TO	CIMARRON - DRAPER LAKE 345KV CKT 1	717	717	0.08191	102.1565	FOREST HILL - MAUD 138KV CKT 1
FDNS	00NR	2	16WP	G15_084	FROM->TO	CIMARRON - DRAPER LAKE 345KV CKT 1	717	717	0.08172	102.1522	SEMINOLE - VANOSTP4 138.00 138KV CKT 1
FDNS	00NR	2	16WP	G15_084	FROM->TO	CIMARRON - DRAPER LAKE 345KV CKT 1	717	717	0.08166	102.1509	GEN600017 C-LS POWER CT
FDNS	00NR	2	16WP	G15_084	FROM->TO	CIMARRON - DRAPER LAKE 345KV CKT 1	717	717	0.08166	102.1458	GEN562812 1-G15040_3 0.3570
FDNS	00NR	2	16WP	G15_084	FROM->TO	CIMARRON - DRAPER LAKE 345KV CKT 1	717	717	0.08166	102.1396	GEN563132 1-G15078_3 0.3570
FDNS	00NR	2	16WP	G15_084	FROM->TO	CIMARRON - DRAPER LAKE 345KV CKT 1	717	717	0.08166	102.1296	GEN524285 1-WILDORADO WIND GEN
FDNS	00NR	2	16WP	G15_084	FROM->TO	CIMARRON - DRAPER LAKE 345KV CKT 1	717	717	0.08051	102.1264	P12:138:AEPW:WELETK4:EARLSBORO4

SOLUTION	GROUP	SCENARIO	SEASON	SOURCE	DIRECTION	MONITORED ELEMENT	RATEA (MVA)	RATEB(MVA)	TDF	TC%LOADING (% MVA)	CONTINGENCY
FDNS	00NR	2	16WP	G15_084	FROM->TO	CIMARRON - DRAPER LAKE 345KV CKT 1	717	717	0.08051	102.1264	P12:138:OKGE:3TERM36
FDNS	00NR	2	16WP	G15_084	FROM->TO	CIMARRON - DRAPER LAKE 345KV CKT 1	717	717	0.08166	102.125	GEN562074 1-G1149G1504 0.6900
FDNS	00NR	2	16WP	G15_084	FROM->TO	CIMARRON - DRAPER LAKE 345KV CKT 1	717	717	0.08166	102.1207	GEN672392 1-NBECGT1G 18.000
FDNS	00NR	2	16WP	G15_084	FROM->TO	CIMARRON - DRAPER LAKE 345KV CKT 1	717	717	0.08166	102.1199	GEN629070 2-BEAVER CHANNEL GENERATORFOR UNIT NO 2
FDNS	00NR	2	16WP	G15_084	FROM->TO	CIMARRON - DRAPER LAKE 345KV CKT 1	717	717	0.08081	102.1158	EARLSBORO 4138.00 - FIXICO TAP 138KV CKT 1
FDNS	00NR	2	16WP	G15_084	FROM->TO	CIMARRON - DRAPER LAKE 345KV CKT 1	717	717	0.08166	102.1078	GEN526331 1-JONES GEN #1 22 KV
FDNS	00NR	2	16WP	G15_084	FROM->TO	CIMARRON - DRAPER LAKE 345KV CKT 1	717	717	0.08166	102.1078	GEN526332 1-JONES GEN #2 21 KV
FDNS	00NR	2	16WP	G15_084	FROM->TO	CIMARRON - DRAPER LAKE 345KV CKT 1	717	717	0.08166	102.1051	GEN562596 1-G14_059_3 0.6900
FDNS	00NR	2	16WP	G15_084	FROM->TO	CIMARRON - DRAPER LAKE 345KV CKT 1	717	717	0.08162	102.1041	CANADIAN RIVER - MCALESTER SOUTH 138KV CKT 1
FDNS	00NR	2	16WP	G15_084	FROM->TO	CIMARRON - DRAPER LAKE 345KV CKT 1	717	717	0.08162	102.1041	CANADIAN RIVER - MCALESTER SOUTH 138KV CKT 1
FDNS	00NR	2	16WP	G15_084	FROM->TO	CIMARRON - DRAPER LAKE 345KV CKT 1	717	717	0.08162	102.1026	CANADIAN RIVER () 345/138/13.8KV TRANSFORMER CKT 1
FDNS	00NR	2	16WP	G15_084	FROM->TO	CIMARRON - DRAPER LAKE 345KV CKT 1	717	717	0.08162	102.1026	CANADIAN RIVER () 345/138/13.8KV TRANSFORMER CKT 1
FDNS	00NR	2	16WP	G15_084	FROM->TO	CIMARRON - DRAPER LAKE 345KV CKT 1	717	717	0.08166	102.1007	GEN615010 1-STANTON4
FDNS	00NR	2	16WP	G15_084	FROM->TO	CIMARRON - DRAPER LAKE 345KV CKT 1	717	717	0.08166	102.1	GEN300003 1-THOMAS HILL UNIT 3
FDNS	00NR	2	16WP	G15_084	FROM->TO	CIMARRON - DRAPER LAKE 345KV CKT 1	717	717	0.08166	102.0978	GEN629071 1-BURLINGTON GENERATOR FOR UNIT NO 1 E
FDNS	00NR	2	16WP	G15_084	FROM->TO	CIMARRON - DRAPER LAKE 345KV CKT 1	717	717	0.08166	102.0929	GEN515365 1-CENT 21 0.7000
FDNS	00NR	2	16WP	G15_084	FROM->TO	CIMARRON - DRAPER LAKE 345KV CKT 1	717	717	0.08147	102.0915	P12:138:WFEC:MSL07
FDNS	00NR	2	16WP	G15_084	FROM->TO	CIMARRON - DRAPER LAKE 345KV CKT 1	717	717	0.08147	102.0915	P12:138:WFEC-AEPW:HUGOPP4:ATOKA--4
FDNS	00NR	2	16WP	G15_084	FROM->TO	CIMARRON - DRAPER LAKE 345KV CKT 1	717	717	0.08174	102.0866	GRPRAR1-LNX3345.00 - HOLT.CO3 345.00 345KV CKT 1
FDNS	00NR	2	16WP	G15_084	FROM->TO	CIMARRON - DRAPER LAKE 345KV CKT 1	717	717	0.07545	102.0854	P12:138:AEPW:SHAM4WT:CHILD4WT
FDNS	00NR	2	16WP	G15_084	FROM->TO	CIMARRON - DRAPER LAKE 345KV CKT 1	717	717	0.08174	102.083	GRPRAR1-LNX3345.00 - YANKTON 345KV CKT Z
FDNS	00NR	2	16WP	G15_084	FROM->TO	CIMARRON - DRAPER LAKE 345KV CKT 1	717	717	0.08166	102.0803	GEN562983 1-G15061_4 0.6900
FDNS	00NR	2	16WP	G15_084	FROM->TO	CIMARRON - DRAPER LAKE 345KV CKT 1	717	717	0.08166	102.0803	GEN562984 1-G15061_5 0.6900
FDNS	00NR	2	16WP	G15_084	FROM->TO	CIMARRON - DRAPER LAKE 345KV CKT 1	717	717	0.08166	102.0786	GEN615021 1-GRE-ER 14G 16.000
FDNS	00NR	2	16WP	G15_084	FROM->TO	CIMARRON - DRAPER LAKE 345KV CKT 1	717	717	0.08166	102.0775	GEN562017 1-G11_022_3 0.6900
FDNS	00NR	2	16WP	G15_084	FROM->TO	CIMARRON - DRAPER LAKE 345KV CKT 1	717	717	0.08036	102.0756	CHISNEY - HIGHLAND 138KV CKT 1
FDNS	00NR	2	16WP	G15_084	FROM->TO	CIMARRON - DRAPER LAKE 345KV CKT 1	717	717	0.08152	102.0707	P12:138:AEPW-SWPA:LONEOAK4:TUPELO4
FDNS	00NR	2	16WP	G15_084	FROM->TO	CIMARRON - DRAPER LAKE 345KV CKT 1	717	717	0.08152	102.0706	P12:138:WFEC:MSL06
FDNS	00NR	2	16WP	G15_084	FROM->TO	CIMARRON - DRAPER LAKE 345KV CKT 1	717	717	0.08208	102.0688	OVEXFRMCCOVE
FDNS	00NR	2	16WP	G15_084	FROM->TO	CIMARRON - DRAPER LAKE 345KV CKT 1	717	717	0.08166	102.0651	GEN560105 1-G08-22 0.6900
FDNS	00NR	2	16WP	G15_084	FROM->TO	CIMARRON - DRAPER LAKE 345KV CKT 1	717	717	0.08166	102.065	INDEPENDENCE 500/26.0KV TRANSFORMER CKT 1
FDNS	00NR	2	16WP	G15_084	FROM->TO	CIMARRON - DRAPER LAKE 345KV CKT 1	717	717	0.08166	102.0642	GEN562429 1-G13-029 0.6900
FDNS	00NR	2	16WP	G15_084	FROM->TO	CIMARRON - DRAPER LAKE 345KV CKT 1	717	717	0.08166	102.0638	GEN562432 1-G13-030 0.6900
FDNS	00NR	2	16WP	G15_084	FROM->TO	CIMARRON - DRAPER LAKE 345KV CKT 1	717	717	0.08166	102.0614	GEN532663 1-LAWRENCE ENERGY CENTER UNIT 5
FDNS	00NR	2	16WP	G15_084	FROM->TO	CIMARRON - DRAPER LAKE 345KV CKT 1	717	717	0.07701	102.0567	P12:230:AEPW:ELKCITY6:SWEETWT6
FDNS	00NR	2	16WP	G15_084	FROM->TO	CIMARRON - DRAPER LAKE 345KV CKT 1	717	717	0.08166	102.0539	BURLINGTON NO1 + NO 2 + NO 3 161/20.0KV TRANSFORMER CKT 1
FDNS	00NR	2	16WP	G15_084	FROM->TO	CIMARRON - DRAPER LAKE 345KV CKT 1	717	717	0.08051	102.0469	P12:138:AEPW-OGE:WELETK4:MAUD 4
FDNS	00NR	2	16WP	G15_084	FROM->TO	CIMARRON - DRAPER LAKE 345KV CKT 1	717	717	0.08182	102.045	DELL 500 - INDEPENDENCE 500KV CKT 1
FDNS	00NR	2	16WP	G15_084	FROM->TO	CIMARRON - DRAPER LAKE 345KV CKT 1	717	717	0.08209	102.0408	MAUD - SEMINOLE 138KV CKT 1
FDNS	00NR	2	16WP	G15_084	FROM->TO	CIMARRON - DRAPER LAKE 345KV CKT 1	717	717	0.08215	102.0405	P12:138:WFEC:MSL16
FDNS	00NR	2	16WP	G15_084	FROM->TO	CIMARRON - DRAPER LAKE 345KV CKT 1	717	717	0.08166	102.0391	GEN527882 1-CUNNINGHAM GEN #2 20 KV
FDNS	00NR	2	16WP	G15_084	FROM->TO	CIMARRON - DRAPER LAKE 345KV CKT 1	717	717	0.08081	102.032	EARLSBORO 4138.00 - MAUD 138KV CKT 1
FDNS	00NR	2	16WP	G15_084	FROM->TO	CIMARRON - DRAPER LAKE 345KV CKT 1	717	717	0.08081	102.032	EARLSBORO 4138.00 - MAUD 138KV CKT 1
FDNS	00NR	2	16WP	G15_084	FROM->TO	CIMARRON - DRAPER LAKE 345KV CKT 1	717	717	0.08166	102.0305	GEN562550 1-G14_040_3 0.6900
FDNS	00NR	2	16WP	G15_084	FROM->TO	CIMARRON - DRAPER LAKE 345KV CKT 1	717	717	0.08166	102.0264	GEN524295 1-SPNSPUR_WND10.6900
FDNS	00NR	2	16WP	G15_084	FROM->TO	CIMARRON - DRAPER LAKE 345KV CKT 1	717	717	0.0798	102.0245	P12:230:AEPW-SPS:SWEETWT6:WHEELER 6
FDNS	00NR	2	16WP	G15_084	FROM->TO	CIMARRON - DRAPER LAKE 345KV CKT 1	717	717	0.0798	102.0239	STLN-DEMARC6 - SWEETWATER 230KV CKT 1
FDNS	00NR	2	16WP	G15_084	FROM->TO	CIMARRON - DRAPER LAKE 345KV CKT 1	717	717	0.0798	102.0225	STATELINE INTERCHANGE - STLN-DEMARC6 230KV CKT 1
FDNS	00NR	2	16WP	G15_084	FROM->TO	CIMARRON - DRAPER LAKE 345KV CKT 1	717	717	0.08166	102.018	GEN562832 1-G15042_3 0.6900
FDNS	00NR	2	16WP	G15_084	FROM->TO	CIMARRON - DRAPER LAKE 345KV CKT 1	717	717	0.08166	101.9948	P12:230:UMZB:# 112 #: NU IN SD. NU-RCDC & DRY CREEK XFMR
FDNS	00NR	2	16WP	G15_084	FROM->TO	CIMARRON - DRAPER LAKE 345KV CKT 1	717	717	0.08166	101.9934	RCDC EAST 4230.00 - RED CEDAR DC 230KV CKT 1
FDNS	00NR	2	16WP	G15_084	FROM->TO	CIMARRON - DRAPER LAKE 345KV CKT 1	717	717	0.08166	101.9804	GEN345671 2-1RUSH G2 18.000
FDNS	00NR	2	16WP	G15_084	FROM->TO	CIMARRON - DRAPER LAKE 345KV CKT 1	717	717	0.08166	101.9792	GEN645011 1-NEBRASKA CITY 1
FDNS	00NR	2	16WP	G15_084	FROM->TO	CIMARRON - DRAPER LAKE 345KV CKT 1	717	717	0.08166	101.9785	GEN345670 1-1RUSH G1 18.000
FDNS	00NR	2	16WP	G15_084	FROM->TO	CIMARRON - DRAPER LAKE 345KV CKT 1	717	717	0.08166	101.976	GEN531447 1-HOLCOMB GENERATOR
FDNS	00NR	2	16WP	G15_084	FROM->TO	CIMARRON - DRAPER LAKE 345KV CKT 1	717	717	0.08166	101.974	GEN515606 1-CANDN11 0.6900
FDNS	00NR	2	16WP	G15_084	FROM->TO	CIMARRON - DRAPER LAKE 345KV CKT 1	717	717	0.08166	101.974	GEN515607 1-CANDN12 0.6900
FDNS	00NR	2	16WP	G15_084	FROM->TO	CIMARRON - DRAPER LAKE 345KV CKT 1	717	717	0.08166	101.9681	THOMAS HILL 161/22.0KV TRANSFORMER CKT 1
FDNS	00NR	2	16WP	G15_084	FROM->TO	CIMARRON - DRAPER LAKE 345KV CKT 1	717	717	0.0809	101.9518	FT SMITH - MUSKOGEE 345KV CKT 1
FDNS	00NR	2	16WP	G15_084	FROM->TO	CIMARRON - DRAPER LAKE 345KV CKT 1	717	717	0.08166	101.9473	GEN515443 1-MNCOWND1 0.7000
FDNS	00NR	2	16WP	G15_084	FROM->TO	CIMARRON - DRAPER LAKE 345KV CKT 1	717	717	0.08036	101.9473	HIGHLAND - PINK SW 138KV CKT 1
FDNS	00NR	2	16WP	G15_084	FROM->TO	CIMARRON - DRAPER LAKE 345KV CKT 1	717	717	0.08166	101.9459	GEN562794 1-G15038_5 0.6900
FDNS	00NR	2	16WP	G15_084	FROM->TO	CIMARRON - DRAPER LAKE 345KV CKT 1	717	717	0.08166	101.9459	GEN562795 1-G15038_6 0.6900
FDNS	00NR	2	16WP	G15_084	FROM->TO	CIMARRON - DRAPER LAKE 345KV CKT 1	717	717	0.08166	101.9455	GEN563092 1-G15074_3 0.6900
FDNS	00NR	2	16WP	G15_084	FROM->TO	CIMARRON - DRAPER LAKE 345KV CKT 1	717	717	0.08166	101.9404	GEN542951 5-HAWTHORN UNIT #5
FDNS	00NR	2	16WP	G15_084	FROM->TO	CIMARRON - DRAPER LAKE 345KV CKT 1	717	717	0.08166	101.935	GEN645012 2-NEBRASKA CITY 2
FDNSLock	00NR	2	16WP	G15_084	FROM->TO	CIMARRON - DRAPER LAKE 345KV CKT 1	717	717	0.08166	101.9297	GEN629072 4-LANSING GENERATOR FOR UNITS NO4 EIA CODE 1
FDNS	00NR	2	16WP	G15_084	FROM->TO	CIMARRON - DRAPER LAKE 345KV CKT 1	717	717	0.0798	101.9222	CHISHOLM6 230.00 - SWEETWATER 230KV CKT 1
FDNS	00NR	2	16WP	G15_084	FROM->TO	CIMARRON - DRAPER LAKE 345KV CKT 1	717	717	0.08189	101.9182	KEO EHV - WEST MEMPHIS 500 500KV CKT 1
FDNS	00NR	2	16WP	G15_084	FROM->TO	CIMARRON - DRAPER LAKE 345KV CKT 1	717	717	0.08166	101.9109	GEN562512 1-G14_020_3 0.6900
FDNS	00NR	2	16WP	G15_084	FROM->TO	CIMARRON - DRAPER LAKE 345KV CKT 1	717	717	0.08166	101.8993	GEN657749 1-YOUNG 1 GENERATOR
FDNS	00NR	2	16WP	G15_084	FROM->TO	CIMARRON - DRAPER LAKE 345KV CKT 1	717	717	0.08166	101.8927	GEN562699 1-G15_018_3 0.6900
FDNS	00NR	2	16WP	G15_084	FROM->TO	CIMARRON - DRAPER LAKE 345KV CKT 1	717	717	0.08166	101.8741	GEN640009 1-COOPER NUCLEAR STATION
FDNS	00NR	2	16WP	G15_084	FROM->TO	CIMARRON - DRAPER LAKE 345KV CKT 1	717	717	0.08166	101.8678	GEN529201 1-OMCDLEC1 13.800
FDNS	00NR	2	16WP	G15_084	FROM->TO	CIMARRON - DRAPER LAKE 345KV CKT 1	717	717	0.08124	101.8639	FRISCCO4 138.00 - LULA 138KV CKT 1
FDNS	00NR	2	16WP	G15_084	FROM->TO	CIMARRON - DRAPER LAKE 345KV CKT 1	717	717	0.08166	101.855	GEN563122 1-G15077_3 0.3850
FDNS	00NR	2	16WP	G15_084	FROM->TO	CIMARRON - DRAPER LAKE 345KV CKT 1	717	717	0.08166	101.8456	GEN563182 1-G15083_3 0.6900
FDNSLock	00NR	2	16WP	G15_084	FROM->TO	CIMARRON - DRAPER LAKE 345KV CKT 1	717	717	0.08166	101.8316	GEN681522 3-GENOA 3
FDNS	00NR	2	16WP	G15_084	FROM->TO	CIMARRON - DRAPER LAKE 345KV CKT 1	717	717	0.08166	101.8265	GEN562685 1-G15_013_3 0.3550

SOLUTION	GROUP	SCENARIO	SEASON	SOURCE	DIRECTION	MONITORED ELEMENT	RATEA (MVA)	RATEB(MVA)	TDF	TC%LOADING (% MVA)	CONTINGENCY
FDNS	00NR	2	16WP	G15_084	FROM->TO	CIMARRON - DRAPER LAKE 345KV CKT 1	717	717	0.08183	101.8039	HOLLYWOOD - MIDWEST TAP 138KV CKT 1
FDNS	00NR	2	16WP	G15_084	FROM->TO	CIMARRON - DRAPER LAKE 345KV CKT 1	717	717	0.08166	101.8006	GEN344895 2-1LAB G2 20.000
FDNS	00NR	2	16WP	G15_084	FROM->TO	CIMARRON - DRAPER LAKE 345KV CKT 1	717	717	0.08029	101.7981	TUPELO - TUPELO TAP 138KV CKT 1
FDNS	00NR	2	16WP	G15_084	FROM->TO	CIMARRON - DRAPER LAKE 345KV CKT 1	717	717	0.07647	101.795	CHISHOLM7 345.00 - GRACEMONT 345KV CKT 1
FDNS	00NR	2	16WP	G15_084	FROM->TO	CIMARRON - DRAPER LAKE 345KV CKT 1	717	717	0.08166	101.7863	4SIOUX 1 138.00 138/18.0KV TRANSFORMER CKT 1
FDNS	00NR	2	16WP	G15_084	FROM->TO	CIMARRON - DRAPER LAKE 345KV CKT 1	717	717	0.08124	101.7844	FRISCCO4 138.00 - HARDEN 4 138.00 138KV CKT 1
FDNS	00NR	2	16WP	G15_084	FROM->TO	CIMARRON - DRAPER LAKE 345KV CKT 1	717	717	0.08166	101.7829	GEN563222 1-G15088_3 0.6900
FDNS	00NR	2	16WP	G15_084	FROM->TO	CIMARRON - DRAPER LAKE 345KV CKT 1	717	717	0.08166	101.7726	GEN344896 3-1LAB G3 20.000
FDNS	00NR	2	16WP	G15_084	FROM->TO	CIMARRON - DRAPER LAKE 345KV CKT 1	717	717	0.08166	101.7711	GEN344894 1-1LAB G1 20.000
FDNS	00NR	2	16WP	G15_084	FROM->TO	CIMARRON - DRAPER LAKE 345KV CKT 1	717	717	0.08166	101.7707	GEN523461 1-BLACKHAWK GEN #1
FDNS	00NR	2	16WP	G15_084	FROM->TO	CIMARRON - DRAPER LAKE 345KV CKT 1	717	717	0.08166	101.7706	GEN523462 1-BLACKHAWK GEN #2
FDNS	00NR	2	16WP	G15_084	FROM->TO	CIMARRON - DRAPER LAKE 345KV CKT 1	717	717	0.08166	101.77	GEN344897 4-1LAB G4 20.000
FDNS	00NR	2	16WP	G15_084	FROM->TO	CIMARRON - DRAPER LAKE 345KV CKT 1	717	717	0.08166	101.7621	GEN562587 1-G14_056_3 0.6900
FDNS	00NR	2	16WP	G15_084	FROM->TO	CIMARRON - DRAPER LAKE 345KV CKT 1	717	717	0.07842	101.7615	CIMARRON - TUTTLE CONOCO TAP 138KV CKT 1
FDNS	00NR	2	16WP	G15_084	FROM->TO	CIMARRON - DRAPER LAKE 345KV CKT 1	717	717	0.08166	101.7381	GEN515602 1-KNGFSR12 0.7000
FDNS	00NR	2	16WP	G15_084	FROM->TO	CIMARRON - DRAPER LAKE 345KV CKT 1	717	717	0.08166	101.721	GEN563082 1-G15073_3 0.6900
FDNS	00NR	2	16WP	G15_084	FROM->TO	CIMARRON - DRAPER LAKE 345KV CKT 1	717	717	0.07647	101.7075	CHISHOLM7 345.00 (CHISHOLM) 345/230/13.2KV TRANSFORMER CKT 1
FDNS	00NR	2	16WP	G15_084	FROM->TO	CIMARRON - DRAPER LAKE 345KV CKT 1	717	717	0.08166	101.7016	GEN562704 1-G15_020_3 0.3550
FDNS	00NR	2	16WP	G15_084	FROM->TO	CIMARRON - DRAPER LAKE 345KV CKT 1	717	717	0.08166	101.6966	GEN563202 1-G15085_3 0.5500
FDNS	00NR	2	16WP	G15_084	FROM->TO	CIMARRON - DRAPER LAKE 345KV CKT 1	717	717	0.07842	101.6898	TUTTLE - TUTTLE CONOCO TAP 138KV CKT 1
FDNS	00NR	2	16WP	G15_084	FROM->TO	CIMARRON - DRAPER LAKE 345KV CKT 1	717	717	0.08166	101.6843	CLAY BOSWELL 230/20.9KV TRANSFORMER CKT 1
FDNS	00NR	2	16WP	G15_084	FROM->TO	CIMARRON - DRAPER LAKE 345KV CKT 1	717	717	0.08166	101.6588	GEN640010 1-GERALD GENTLEMAN STATION UNIT 1
FDNS	00NR	2	16WP	G15_084	FROM->TO	CIMARRON - DRAPER LAKE 345KV CKT 1	717	717	0.08166	101.6326	GEN672321 1-SHAND GENERATOR 1
FDNS	00NR	2	16WP	G15_084	FROM->TO	CIMARRON - DRAPER LAKE 345KV CKT 1	717	717	0.08105	101.6149	LULA - TUPELO TAP 138KV CKT 1
FDNS	00NR	2	16WP	G15_084	FROM->TO	CIMARRON - DRAPER LAKE 345KV CKT 1	717	717	0.08166	101.6146	GEN562710 1-G15_022_3 0.5500
FDNS	00NR	2	16WP	G15_084	FROM->TO	CIMARRON - DRAPER LAKE 345KV CKT 1	717	717	0.08215	101.6089	SEMINOLE (SEMINOL1) 345/138/14.4KV TRANSFORMER CKT 1
FDNS	00NR	2	16WP	G15_084	FROM->TO	CIMARRON - DRAPER LAKE 345KV CKT 1	717	717	0.07998	101.6084	NORTHWEST TEXARKANA - VALLIANT 345KV CKT 1
FDNS	00NR	2	16WP	G15_084	FROM->TO	CIMARRON - DRAPER LAKE 345KV CKT 1	717	717	0.07998	101.6084	NORTHWEST TEXARKANA - VALLIANT 345KV CKT 1
FDNS	00NR	2	16WP	G15_084	FROM->TO	CIMARRON - DRAPER LAKE 345KV CKT 1	717	717	0.08166	101.6068	GEN672311 2-POPLAR RIVER GENERATOR 2
FDNS	00NR	2	16WP	G15_084	FROM->TO	CIMARRON - DRAPER LAKE 345KV CKT 1	717	717	0.08166	101.6067	GEN672310 1-POPLAR RIVER GENERATOR 1
FDNS	00NR	2	16WP	G15_084	FROM->TO	CIMARRON - DRAPER LAKE 345KV CKT 1	717	717	0.08166	101.5968	GEN672306 6-BOUNDARY DAM GENERATOR 6
FDNS	00NR	2	16WP	G15_084	FROM->TO	CIMARRON - DRAPER LAKE 345KV CKT 1	717	717	0.08166	101.591	GEN640011 2-GERALD GENTLEMAN STATION UNIT 2
FDNS	00NR	2	16WP	G15_084	FROM->TO	CIMARRON - DRAPER LAKE 345KV CKT 1	717	717	0.08166	101.5906	GEN542956 2-LACYGNE UNIT #2
FDNS	00NR	2	16WP	G15_084	FROM->TO	CIMARRON - DRAPER LAKE 345KV CKT 1	717	717	0.08166	101.579	GEN659118 1-LARAMIE RIVER UNIT1
FDNS	00NR	2	16WP	G15_084	FROM->TO	CIMARRON - DRAPER LAKE 345KV CKT 1	717	717	0.08124	101.5558	ETNA - HARDEN 4 138.00 138KV CKT 1
FDNS	00NR	2	16WP	G15_084	FROM->TO	CIMARRON - DRAPER LAKE 345KV CKT 1	717	717	0.08223	101.5495	RENFROW7 345.00 - VIOLA 7 345.00 345KV CKT 1
FDNS	00NR	2	16WP	G15_084	FROM->TO	CIMARRON - DRAPER LAKE 345KV CKT 1	717	717	0.0827	101.541	P12:138:OKGE:3TERM22
FDNS	00NR	2	16WP	G15_084	FROM->TO	CIMARRON - DRAPER LAKE 345KV CKT 1	717	717	0.08268	101.5387	DRAPER LAKE - SOONER TAP 138KV CKT 1
FDNS	00NR	2	16WP	G15_084	FROM->TO	CIMARRON - DRAPER LAKE 345KV CKT 1	717	717	0.08036	101.5344	P12:138:WFEC:MSL08
FDNS	00NR	2	16WP	G15_084	FROM->TO	CIMARRON - DRAPER LAKE 345KV CKT 1	717	717	0.08036	101.5147	FRANKLIN - PINK SW 138KV CKT 1
FDNS	00NR	2	16WP	G15_084	FROM->TO	CIMARRON - DRAPER LAKE 345KV CKT 1	717	717	0.08196	101.5141	P12:138:WFEC:MSL09
FDNS	00NR	2	16WP	G15_084	FROM->TO	CIMARRON - DRAPER LAKE 345KV CKT 1	717	717	0.08284	101.5066	OAKCREEK - WILD MARY 138KV CKT 1
FDNS	00NR	2	16WP	G15_084	FROM->TO	CIMARRON - DRAPER LAKE 345KV CKT 1	717	717	0.08166	101.5028	GEN542957 1-IATAN UNIT #1
FDNSLock	00NR	2	16WP	G15_084	FROM->TO	CIMARRON - DRAPER LAKE 345KV CKT 1	717	717	0.08166	101.5018	GEN681542 6-JP MADGETT
FDNS	00NR	2	16WP	G15_084	FROM->TO	CIMARRON - DRAPER LAKE 345KV CKT 1	717	717	0.08166	101.4777	GEN530690 1-PRWINDG1 0.6900
FDNS	00NR	2	16WP	G15_084	FROM->TO	CIMARRON - DRAPER LAKE 345KV CKT 1	717	717	0.08124	101.4682	ETNA - PARK LANE 138KV CKT 1
FDNS	00NR	2	16WP	G15_084	FROM->TO	CIMARRON - DRAPER LAKE 345KV CKT 1	717	717	0.08204	101.4627	HUNTERS7 345.00 - RENFROW7 345.00 345KV CKT 1
FDNS	00NR	2	16WP	G15_084	FROM->TO	CIMARRON - DRAPER LAKE 345KV CKT 1	717	717	0.08166	101.423	GEN542955 1-LACYGNE UNIT #1
FDNS	00NR	2	16WP	G15_084	FROM->TO	CIMARRON - DRAPER LAKE 345KV CKT 1	717	717	0.08166	101.4191	GEN562754 1-G15031_5 0.6900
FDNS	00NR	2	16WP	G15_084	FROM->TO	CIMARRON - DRAPER LAKE 345KV CKT 1	717	717	0.08166	101.4073	GEN562556 1-G14_046_3 0.3420
FDNS	00NR	2	16WP	G15_084	FROM->TO	CIMARRON - DRAPER LAKE 345KV CKT 1	717	717	0.08166	101.4	GEN645001 1-FORT CALHOUN 1
FDNS	00NR	2	16WP	G15_084	FROM->TO	CIMARRON - DRAPER LAKE 345KV CKT 1	717	717	0.08225	101.3988	SEMINOLE (SEMINOL2) 345/138/14.4KV TRANSFORMER CKT 1
FDNS	00NR	2	16WP	G15_084	FROM->TO	CIMARRON - DRAPER LAKE 345KV CKT 1	717	717	0.08166	101.3772	GEN661015 1-COYOTE
FDNS	00NR	2	16WP	G15_084	FROM->TO	CIMARRON - DRAPER LAKE 345KV CKT 1	717	717	0.08166	101.3757	GEN562756 1-G15031_7 0.6900
FDNS	00NR	2	16WP	G15_084	FROM->TO	CIMARRON - DRAPER LAKE 345KV CKT 1	717	717	0.08166	101.3657	GEN532653 1-JEFFREY ENERGY CENTER UNIT 3
FDNS	00NR	2	16WP	G15_084	FROM->TO	CIMARRON - DRAPER LAKE 345KV CKT 1	717	717	0.08166	101.3655	GEN532652 1-JEFFREY ENERGY CENTER UNIT 2
FDNS	00NR	2	16WP	G15_084	FROM->TO	CIMARRON - DRAPER LAKE 345KV CKT 1	717	717	0.08166	101.3614	GEN532651 1-JEFFREY ENERGY CENTER UNIT 1
FDNS	00NR	2	16WP	G15_084	FROM->TO	CIMARRON - DRAPER LAKE 345KV CKT 1	717	717	0.08166	101.3601	GEN563142 1-G15079_3 0.5500
FDNS	00NR	2	16WP	G15_084	FROM->TO	CIMARRON - DRAPER LAKE 345KV CKT 1	717	717	0.08166	101.3601	GEN563151 1-G15080_2 0.5500
FDNS	00NR	2	16WP	G15_084	FROM->TO	CIMARRON - DRAPER LAKE 345KV CKT 1	717	717	0.08166	101.3568	GEN562974 1-G15060_5 0.6900
FDNS	00NR	2	16WP	G15_084	FROM->TO	CIMARRON - DRAPER LAKE 345KV CKT 1	717	717	0.08166	101.3499	GEN563042 1-G15068_3 0.6900
FDNS	00NR	2	16WP	G15_084	FROM->TO	CIMARRON - DRAPER LAKE 345KV CKT 1	717	717	0.08166	101.3408	GEN562973 1-G15060_4 0.6900
FDNS	00NR	2	16WP	G15_084	FROM->TO	CIMARRON - DRAPER LAKE 345KV CKT 1	717	717	0.08166	101.3096	GEN562078 1-G11_051_3 0.6900
FDNS	00NR	2	16WP	G15_084	FROM->TO	CIMARRON - DRAPER LAKE 345KV CKT 1	717	717	0.08166	101.2951	GEN562691 1-G15_015_3 0.6900
FDNS	00NR	2	16WP	G15_084	FROM->TO	CIMARRON - DRAPER LAKE 345KV CKT 1	717	717	0.08284	101.2802	AIRDEPT4 138.00 - WILD MARY 138KV CKT 1
FDNS	00NR	2	16WP	G15_084	FROM->TO	CIMARRON - DRAPER LAKE 345KV CKT 1	717	717	0.08166	101.2618	GEN562655 1-G14_074_3 0.6900
FDNS	00NR	2	16WP	G15_084	FROM->TO	CIMARRON - DRAPER LAKE 345KV CKT 1	717	717	0.08166	101.2613	GEN562762 1-G15033_3 0.6900
FDNS	00NR	2	16WP	G15_084	FROM->TO	CIMARRON - DRAPER LAKE 345KV CKT 1	717	717	0.08158	101.2592	PARK LANE - SEMINOLE 138KV CKT 1
FDNS	00NR	2	16WP	G15_084	FROM->TO	CIMARRON - DRAPER LAKE 345KV CKT 1	717	717	0.08166	101.2492	GEN657748 1-YOUNG 2 GENERATOR
FDNS	00NR	2	16WP	G15_084	FROM->TO	CIMARRON - DRAPER LAKE 345KV CKT 1	717	717	0.08036	101.2315	FRANKLIN - FRANKLIN SW 138KV CKT 1
FDNS	00NR	2	16WP	G15_084	FROM->TO	CIMARRON - DRAPER LAKE 345KV CKT 1	717	717	0.08166	101.2034	GEN527901 1-HOBBS PLANT #1 (CT)
FDNS	00NR	2	16WP	G15_084	FROM->TO	CIMARRON - DRAPER LAKE 345KV CKT 1	717	717	0.08166	101.2034	GEN527902 1-HOBBS PLANT #2 (CT)
FDNS	00NR	2	16WP	G15_084	FROM->TO	CIMARRON - DRAPER LAKE 345KV CKT 1	717	717	0.07865	101.1788	LYDIA - WELSH 345KV CKT 1
FDNS	00NR	2	16WP	G15_084	FROM->TO	CIMARRON - DRAPER LAKE 345KV CKT 1	717	717	0.07865	101.1788	LYDIA - WELSH 345KV CKT 1
FDNS	00NR	2	16WP	G15_084	FROM->TO	CIMARRON - DRAPER LAKE 345KV CKT 1	717	717	0.08166	101.1745	GEN563273 2-G15093_4 0.6900
FDNS	00NR	2	16WP	G15_084	FROM->TO	CIMARRON - DRAPER LAKE 345KV CKT 1	717	717	0.08166	101.1617	GEN563043 1-G15068_4 0.6900
FDNS	00NR	2	16WP	G15_084	FROM->TO	CIMARRON - DRAPER LAKE 345KV CKT 1	717	717	0.08166	101.1326	GEN563052 1-G15069_3 0.6900
FDNS	00NR	2	16WP	G15_084	FROM->TO	CIMARRON - DRAPER LAKE 345KV CKT 1	717	717	0.08166	101.1209	GEN525845 1-ELK_2 1 138.00
FDNS	00NR	2	16WP	G15_084	FROM->TO	CIMARRON - DRAPER LAKE 345KV CKT 1	717	717	0.08166	101.1175	GEN525844 1-ELK_1 118.000

SOLUTION	GROUP	SCENARIO	SEASON	SOURCE	DIRECTION	MONITORED ELEMENT	RATEA (MVA)	RATEB(MVA)	TDF	TC%LOADING (% MVA)	CONTINGENCY
FDNS	00NR	2	16WP	G15_084	FROM->TO	CIMARRON - DRAPER LAKE 345KV CKT 1	717	717	0.08166	101.0828	GEN563242 1-G15090_3 0.6900
FDNS	00NR	2	16WP	G15_084	FROM->TO	CIMARRON - DRAPER LAKE 345KV CKT 1	717	717	0.08166	101.0707	GEN526333 1-JONES GEN #3 21 KV
FDNS	00NR	2	16WP	G15_084	FROM->TO	CIMARRON - DRAPER LAKE 345KV CKT 1	717	717	0.08166	101.0707	GEN526334 1-JONES_4 116.500
FDNS	00NR	2	16WP	G15_084	FROM->TO	CIMARRON - DRAPER LAKE 345KV CKT 1	717	717	0.08166	101.0617	GEN620315 1-BIG STONE GEN
FDNS	00NR	2	16WP	G15_084	FROM->TO	CIMARRON - DRAPER LAKE 345KV CKT 1	717	717	0.08284	101.0507	AIRDEPT4 138.00 - GM 138KV CKT 1
FDNS	00NR	2	16WP	G15_084	FROM->TO	CIMARRON - DRAPER LAKE 345KV CKT 1	717	717	0.08166	101.0458	GEN562772 1-G15034_3 0.6900
FDNS	00NR	2	16WP	G15_084	FROM->TO	CIMARRON - DRAPER LAKE 345KV CKT 1	717	717	0.07842	101.0383	P12:138:AEPW-OGE:CORNVIL4:CIMARON4
FDNS	00NR	2	16WP	G15_084	FROM->TO	CIMARRON - DRAPER LAKE 345KV CKT 1	717	717	0.08166	101.0352	GEN523971 1-HARRINGTON GEN #1 24 KV
FDNS	00NR	2	16WP	G15_084	FROM->TO	CIMARRON - DRAPER LAKE 345KV CKT 1	717	717	0.08166	101.0351	GEN523972 1-HARRINGTON GEN #2 24 KV
FDNS	00NR	2	16WP	G15_084	FROM->TO	CIMARRON - DRAPER LAKE 345KV CKT 1	717	717	0.08166	101.0351	GEN523973 1-HARRINGTON GEN #3 24 KV
FDNS	00NR	2	16WP	G15_084	FROM->TO	CIMARRON - DRAPER LAKE 345KV CKT 1	717	717	0.08177	101.0286	RANCHRD7 345.00 - SOONER 345KV CKT 1
FDNS	00NR	2	16WP	G15_084	FROM->TO	CIMARRON - DRAPER LAKE 345KV CKT 1	717	717	0.08204	101.0273	HUNTERS7 345.00 - WOODRING 345KV CKT 1
FDNS	00NR	2	16WP	G15_084	FROM->TO	CIMARRON - DRAPER LAKE 345KV CKT 1	717	717	0.08166	101.0073	GEN600004 2-PRAIRIE ISLAND G2
FDNS	00NR	2	16WP	G15_084	FROM->TO	CIMARRON - DRAPER LAKE 345KV CKT 1	717	717	0.08166	101.0043	GEN600003 1-PRAIRIE ISLAND G1
FDNSLock	00NR	2	16WP	G15_084	FROM->TO	CIMARRON - DRAPER LAKE 345KV CKT 1	717	717	0.08166	100.991	GEN600006 1-AS KING
FDNSLock	00NR	2	16WP	G15_084	FROM->TO	CIMARRON - DRAPER LAKE 345KV CKT 1	717	717	0.08166	100.9708	GEN636641 1-LOUISA UNIT 1
FDNS	00NR	2	16WP	G15_084	FROM->TO	CIMARRON - DRAPER LAKE 345KV CKT 1	717	717	0.08166	100.9	GEN542962 2-IATAN UNIT #2
FDNS	00NR	2	16WP	G15_084	FROM->TO	CIMARRON - DRAPER LAKE 345KV CKT 1	717	717	0.06599	100.8874	MUSKOGEE - SEMINOLE 345KV CKT 1
FDNS	00NR	2	16WP	G15_084	FROM->TO	CIMARRON - DRAPER LAKE 345KV CKT 1	717	717	0.08166	100.8712	GEN563292 1-G15095_3 0.6900
FDNS	00NR	2	16WP	G15_084	FROM->TO	CIMARRON - DRAPER LAKE 345KV CKT 1	717	717	0.08166	100.853	GEN600005 1-MONTICELLO
FDNS	00NR	2	16WP	G15_084	FROM->TO	CIMARRON - DRAPER LAKE 345KV CKT 1	717	717	0.08704	100.8507	NORTHWEST - SPRING CREEK 345KV CKT 1
FDNS	00NR	2	16WP	G15_084	FROM->TO	CIMARRON - DRAPER LAKE 345KV CKT 1	717	717	0.08284	100.8425	DRAPER LAKE - GM 138KV CKT 1
FDNS	00NR	2	16WP	G15_084	FROM->TO	CIMARRON - DRAPER LAKE 345KV CKT 1	717	717	0.08166	100.8359	GEN527166 1-MUSTANG_6 118.000
FDNS	00NR	2	16WP	G15_084	FROM->TO	CIMARRON - DRAPER LAKE 345KV CKT 1	717	717	0.08166	100.8283	GEN525562 1-TOLK GEN #2 24 KV
FDNS	00NR	2	16WP	G15_084	FROM->TO	CIMARRON - DRAPER LAKE 345KV CKT 1	717	717	0.08704	100.8111	SOONER - SPRING CREEK 345KV CKT 1
FDNS	00NR	2	16WP	G15_084	FROM->TO	CIMARRON - DRAPER LAKE 345KV CKT 1	717	717	0.07814	100.8005	CLARKSVILLE - MUSKOGEE 345KV CKT 1
FDNS	00NR	2	16WP	G15_084	FROM->TO	CIMARRON - DRAPER LAKE 345KV CKT 1	717	717	0.07814	100.8005	CLARKSVILLE - MUSKOGEE 345KV CKT 1
FDNS	00NR	2	16WP	G15_084	FROM->TO	CIMARRON - DRAPER LAKE 345KV CKT 1	717	717	0.08166	100.8	GEN629074 1-ARNOLD LOWSIDE OF GSU XFMR
FDNS	00NR	2	16WP	G15_084	FROM->TO	CIMARRON - DRAPER LAKE 345KV CKT 1	717	717	0.08166	100.7774	GEN562952 1-G15057_3 0.6500
FDNS	00NR	2	16WP	G15_084	FROM->TO	CIMARRON - DRAPER LAKE 345KV CKT 1	717	717	0.08166	100.7712	GEN563272 1-G15093_3 0.6900
FDNS	00NR	2	16WP	G15_084	FROM->TO	CIMARRON - DRAPER LAKE 345KV CKT 1	717	717	0.08166	100.7282	GEN635213 3-NEAL UNIT 3
FDNS	00NR	2	16WP	G15_084	FROM->TO	CIMARRON - DRAPER LAKE 345KV CKT 1	717	717	0.08516	100.7221	FRANKLIN SW - MIDWEST TAP 138KV CKT 1
FDNS	00NR	2	16WP	G15_084	FROM->TO	CIMARRON - DRAPER LAKE 345KV CKT 1	717	717	0.07698	100.7064	DRAPER LAKE - SEMINOLE 345KV CKT 3
FDNS	00NR	2	16WP	G15_084	FROM->TO	CIMARRON - DRAPER LAKE 345KV CKT 1	717	717	0.08166	100.6801	BIG STONE 230/24.0KV TRANSFORMER CKT 1
FDNS	00NR	2	16WP	G15_084	FROM->TO	CIMARRON - DRAPER LAKE 345KV CKT 1	717	717	0.08166	100.6795	GEN562892 1-G15048_3 0.6900
FDNS	00NR	2	16WP	G15_084	FROM->TO	CIMARRON - DRAPER LAKE 345KV CKT 1	717	717	0.08166	100.6365	GEN563173 1-G15082_3 0.6900
FDNS	00NR	2	16WP	G15_084	FROM->TO	CIMARRON - DRAPER LAKE 345KV CKT 1	717	717	0.08136	100.6229	CHAMBER SPRINGS - CLARKSVILLE 345KV CKT 1
FDNS	00NR	2	16WP	G15_084	FROM->TO	CIMARRON - DRAPER LAKE 345KV CKT 1	717	717	0.08166	100.5923	GEN562902 1-G15052_3 0.6900
FDNS	00NR	2	16WP	G15_084	FROM->TO	CIMARRON - DRAPER LAKE 345KV CKT 1	717	717	0.07799	100.5885	LYDIA - VALLIANT 345KV CKT 1
FDNS	00NR	2	16WP	G15_084	FROM->TO	CIMARRON - DRAPER LAKE 345KV CKT 1	717	717	0.07799	100.5885	LYDIA - VALLIANT 345KV CKT 1
FDNS	00NR	2	16WP	G15_084	FROM->TO	CIMARRON - DRAPER LAKE 345KV CKT 1	717	717	0.08166	100.5713	GEN514805 1-SOONER UNIT 1
FDNS	00NR	2	16WP	G15_084	FROM->TO	CIMARRON - DRAPER LAKE 345KV CKT 1	717	717	0.08166	100.5608	GEN527903 1-HOBBS PLANT #3 (ST)
FDNS	00NR	2	16WP	G15_084	FROM->TO	CIMARRON - DRAPER LAKE 345KV CKT 1	717	717	0.08166	100.5246	GEN525561 1-TOLK GEN #1 24 KV
FDNSLock	00NR	2	16WP	G15_084	FROM->TO	CIMARRON - DRAPER LAKE 345KV CKT 1	717	717	0.08166	100.5089	GEN600000 1-SHERBURNECNTY G1
FDNS	00NR	2	16WP	G15_084	FROM->TO	CIMARRON - DRAPER LAKE 345KV CKT 1	717	717	0.08035	100.4405	P12:138:OKGE:3TERM23
FDNS	00NR	2	16WP	G15_084	FROM->TO	CIMARRON - DRAPER LAKE 345KV CKT 1	717	717	0.08166	100.4279	GEN600001 2-SHERBURNE CNTY G2
FDNS	00NR	2	16WP	G15_084	FROM->TO	CIMARRON - DRAPER LAKE 345KV CKT 1	717	717	0.08166	100.4	GEN344225 1-1CAL G1 25.000
FDNS	00NR	2	16WP	G15_084	FROM->TO	CIMARRON - DRAPER LAKE 345KV CKT 1	717	717	0.08035	100.3771	BARNES 4 138.00 - DRAPER LAKE 138KV CKT 1
FDNS	00NR	2	16WP	G15_084	FROM->TO	CIMARRON - DRAPER LAKE 345KV CKT 1	717	717	0.08166	100.327	GEN514806 1-SOONER UNIT 2
FDNSLock	00NR	2	16WP	G15_084	FROM->TO	CIMARRON - DRAPER LAKE 345KV CKT 1	717	717	0.08166	100.3141	GEN629075 1-OTTUMWA GENERATOR FOR OTTUMWA UNIT NO 1
FDNS	00NR	2	16WP	G15_084	FROM->TO	CIMARRON - DRAPER LAKE 345KV CKT 1	717	717	0.08166	100.2846	GEN563162 1-G15081_3 0.6900
FDNS	00NR	2	16WP	G15_084	FROM->TO	CIMARRON - DRAPER LAKE 345KV CKT 1	717	717	0.08369	100.1493	DRAPER LAKE (DRAPER2) 345/138/13.8KV TRANSFORMER CKT 1
FDNS	00NR	2	16WP	G15_084	FROM->TO	CIMARRON - DRAPER LAKE 345KV CKT 1	717	717	0.08166	100.0991	SHERBURNE CO 345/24.0KV TRANSFORMER CKT 1
FDNS	00NR	2	16WP	G15_084	FROM->TO	CIMARRON - DRAPER LAKE 345KV CKT 1	717	717	0.08369	100.0585	DRAPER LAKE (DRAPER3) 345/138/13.8KV TRANSFORMER CKT 1
FDNS	00NR	2	16WP	G15_084	FROM->TO	CIMARRON - DRAPER LAKE 345KV CKT 1	717	717	0.08369	100.0585	DRAPER LAKE (DRAPER4) 345/138/13.8KV TRANSFORMER CKT 1
FDNS	00NR	2	16WP	G15_084	FROM->TO	CIMARRON - DRAPER LAKE 345KV CKT 1	717	717	0.0839	100.0535	CIMARRON - MATHWSN7 345.00 345KV CKT 1
FDNS	00NR	2	16WP	G15_084	FROM->TO	CIMARRON - DRAPER LAKE 345KV CKT 1	717	717	0.0839	100.0535	CIMARRON - MATHWSN7 345.00 345KV CKT 2
FDNSLock	00NR	2	16WP	G15_084	FROM->TO	CIMARRON - DRAPER LAKE 345KV CKT 1	717	717	0.08166	100.0516	GEN635214 4-NEAL UNIT 4
FDNS	00NR	2	16WP	G15_084	FROM->TO	CIMARRON - DRAPER LAKE 345KV CKT 1	717	717	0.08166	100	GEN562882 1-G15047_3 0.6900
FDNS	00NR	2	16WP	G15_084	FROM->TO	CIMARRON - DRAPER LAKE 345KV CKT 1	717	717	0.08166	100	GEN600002 3-SHERBURNE CNTY G3
FDNS	00NR	2	16WP	G15_084	FROM->TO	CIMARRON - DRAPER LAKE 345KV CKT 1	717	717	0.08166	99.6	GEN635023 3-WALTER SCOTT UNIT 3
FDNS	00NR	2	16WP	G15_084	FROM->TO	CIMARRON - DRAPER LAKE 345KV CKT 1	717	717	0.08166	99.5	GEN562023 1-G11_020_3 0.6900
FDNS	00NR	2	16WP	G15_084	FROM->TO	CIMARRON - DRAPER LAKE 345KV CKT 1	717	717	0.08166	99.5	GEN562026 1-G11_019_3 0.6900
FDNS	00NR	2	20WP	G15_084	TO->FROM	CIMARRON - MINCO 345KV CKT 1	956	956	0.33721	113.0877	G14-057T 345.00 - SUNNYSIDE 345KV CKT 1
FDNS	00NR	2	16WP	G15_084	TO->FROM	CIMARRON - MINCO 345KV CKT 1	956	956	0.33812	111.9389	G14-057T 345.00 - SUNNYSIDE 345KV CKT 1
FDNS	00NR	2	17SP	G15_084	TO->FROM	CLEAVELAND - CLEVLND 4 138.00 138KV CKT Z1	305	371	0.04301	110.1106	CLEVELAND - TULSA NORTH 345KV CKT 1
FDNS	00NR	2	17SP	G15_084	TO->FROM	CLEAVELAND - CLEVLND 4 138.00 138KV CKT Z1	305	371	0.04301	110.1106	CLEVELAND - TULSA NORTH 345KV CKT 1
FDNS	00NR	2	20SP	G15_084	TO->FROM	CLEAVELAND - CLEVLND 4 138.00 138KV CKT Z1	305	371	0.04172	109.3332	CLEVELAND - TULSA NORTH 345KV CKT 1
FDNS	00NR	2	20SP	G15_084	TO->FROM	CLEAVELAND - CLEVLND 4 138.00 138KV CKT Z1	305	371	0.04172	109.3332	CLEVELAND - TULSA NORTH 345KV CKT 1
FDNS	00NR	2	16WP	G15_084	FROM->TO	G14-057T 345.00 - SUNNYSIDE 345KV CKT 1	717	789	0.26708	140.7677	CIMARRON - MINCO 345KV CKT 1
FDNS	00NR	2	20WP	G15_084	FROM->TO	G14-057T 345.00 - SUNNYSIDE 345KV CKT 1	717	789	0.26795	139.8286	CIMARRON - MINCO 345KV CKT 1
FDNS	00NR	2	16WP	G15_084	FROM->TO	G14-057T 345.00 - SUNNYSIDE 345KV CKT 1	717	789	0.26708	129.763	GRACEMONT - MINCO 345KV CKT 1
FDNS	00NR	2	20WP	G15_084	FROM->TO	G14-057T 345.00 - SUNNYSIDE 345KV CKT 1	717	789	0.26795	128.6479	GRACEMONT - MINCO 345KV CKT 1
FDNS	00NR	2	16WP	G15_084	FROM->TO	G14-057T 345.00 - SUNNYSIDE 345KV CKT 1	717	789	0.20259	125.7396	PITTSBURG - SEMINOLE 345KV CKT 1
FDNS	00NR	2	16WP	G15_084	FROM->TO	G14-057T 345.00 - SUNNYSIDE 345KV CKT 1	717	789	0.20259	125.7396	PITTSBURG - SEMINOLE 345KV CKT 1
FDNS	00NR	2	16WP	G15_084	FROM->TO	G14-057T 345.00 - SUNNYSIDE 345KV CKT 1	717	789	0.18745	125.55	BASE CASE
FDNS	00NR	2	20WP	G15_084	FROM->TO	G14-057T 345.00 - SUNNYSIDE 345KV CKT 1	717	789	0.18895	123.5665	BASE CASE
FDNS	00NR	2	20WP	G15_084	FROM->TO	G14-057T 345.00 - SUNNYSIDE 345KV CKT 1	717	789	0.20459	123.0201	PITTSBURG - SEMINOLE 345KV CKT 1
FDNS	00NR	2	20WP	G15_084	FROM->TO	G14-057T 345.00 - SUNNYSIDE 345KV CKT 1	717	789	0.20459	123.0201	PITTSBURG - SEMINOLE 345KV CKT 1

SOLUTION	GROUP	SCENARIO	SEASON	SOURCE	DIRECTION	MONITORED ELEMENT	RATEA (MVA)	RATEB(MVA)	TDF	TC%LOADING (% MVA)	CONTINGENCY
FDNS	00NR	2	16WP	G15_084	FROM->TO	G14-057T 345.00 - SUNNYSIDE 345KV CKT 1	717	789	0.19503	123.0076	CIMARRON - DRAPER LAKE 345KV CKT 1
FDNS	00NR	2	20WP	G15_084	FROM->TO	G14-057T 345.00 - SUNNYSIDE 345KV CKT 1	717	789	0.19654	120.8828	CIMARRON - DRAPER LAKE 345KV CKT 1
FDNS	00NR	2	16WP	G15_084	FROM->TO	G14-057T 345.00 - SUNNYSIDE 345KV CKT 1	717	789	0.20457	120.4177	P12:138:WFEC:MSL03
FDNS	00NR	2	16WP	G15_084	FROM->TO	G14-057T 345.00 - SUNNYSIDE 345KV CKT 1	717	789	0.19429	119.3708	PITTSBURG - VALLIANT 345KV CKT 1
FDNS	00NR	2	16WP	G15_084	FROM->TO	G14-057T 345.00 - SUNNYSIDE 345KV CKT 1	717	789	0.19429	119.3708	PITTSBURG - VALLIANT 345KV CKT 1
FDNSLock	00NR	2	16WP	G15_084	FROM->TO	G14-057T 345.00 - SUNNYSIDE 345KV CKT 1	717	789	0.18745	119.2589	GEN509403 1-PIRKEY GENERATION
FDNS	00NR	2	16WP	G15_084	FROM->TO	G14-057T 345.00 - SUNNYSIDE 345KV CKT 1	717	789	0.18745	119.1786	GEN509416 1-TURK GENERATION
FDNS	00NR	2	16WP	G15_084	FROM->TO	G14-057T 345.00 - SUNNYSIDE 345KV CKT 1	717	789	0.19286	118.8767	CLEVELAND - G15066_T 345.00 345KV CKT 1
FDNS	00NR	2	16WP	G15_084	FROM->TO	G14-057T 345.00 - SUNNYSIDE 345KV CKT 1	717	789	0.19286	118.5822	G15066_T 345.00 - SOONER 345KV CKT 1
FDNS	00NR	2	20WP	G15_084	FROM->TO	G14-057T 345.00 - SUNNYSIDE 345KV CKT 1	717	789	0.20624	118.5751	P12:138:WFEC:MSL03
FDNS	00NR	2	16WP	G15_084	FROM->TO	G14-057T 345.00 - SUNNYSIDE 345KV CKT 1	717	789	0.18745	118.2627	GEN501801 1-DOLET HILLS UNIT1
FDNS	00NR	2	16WP	G15_084	FROM->TO	G14-057T 345.00 - SUNNYSIDE 345KV CKT 1	717	789	0.18745	117.8895	GEN509404 1-WELSH #1
FDNS	00NR	2	16WP	G15_084	FROM->TO	G14-057T 345.00 - SUNNYSIDE 345KV CKT 1	717	789	0.18745	117.8895	GEN509406 1-WELSH #3
FDNS	00NR	2	16WP	G15_084	FROM->TO	G14-057T 345.00 - SUNNYSIDE 345KV CKT 1	717	789	0.19375	117.6042	BORDER 7345.00 - WOODWARD DISTRICT EHV 345KV CKT 1
FDNS	00NR	2	20WP	G15_084	FROM->TO	G14-057T 345.00 - SUNNYSIDE 345KV CKT 1	717	789	0.18895	117.3341	GEN509403 1-PIRKEY GENERATION
FDNS	00NR	2	16WP	G15_084	FROM->TO	G14-057T 345.00 - SUNNYSIDE 345KV CKT 1	717	789	0.19216	117.2715	CORN TAP - NAPLESTP 138.00 138KV CKT 1
FDNS	00NR	2	20WP	G15_084	FROM->TO	G14-057T 345.00 - SUNNYSIDE 345KV CKT 1	717	789	0.18895	117.2541	GEN509416 1-TURK GENERATION
FDNS	00NR	2	16WP	G15_084	FROM->TO	G14-057T 345.00 - SUNNYSIDE 345KV CKT 1	717	789	0.19216	117.1863	NAPLESTP 138.00 - PAYNE 138.00 138KV CKT 1
FDNS	00NR	2	16WP	G15_084	FROM->TO	G14-057T 345.00 - SUNNYSIDE 345KV CKT 1	717	789	0.19101	117.1435	7SAREPTA% 345.00 - LONGWOOD 345KV CKT 1
FDNS	00NR	2	16WP	G15_084	FROM->TO	G14-057T 345.00 - SUNNYSIDE 345KV CKT 1	717	789	0.19101	117.1435	7SAREPTA% 345.00 - LONGWOOD 345KV CKT 1
FDNS	00NR	2	20WP	G15_084	FROM->TO	G14-057T 345.00 - SUNNYSIDE 345KV CKT 1	717	789	0.1941	117.0025	CLEVELAND - G15066_T 345.00 345KV CKT 1
FDNSLock	00NR	2	16WP	G15_084	FROM->TO	G14-057T 345.00 - SUNNYSIDE 345KV CKT 1	717	789	0.18745	116.9789	GEN336821 1-GRAND GULF UNIT
FDNS	00NR	2	16WP	G15_084	FROM->TO	G14-057T 345.00 - SUNNYSIDE 345KV CKT 1	717	789	0.18887	116.9739	DOLET HILLS - SOUTHWEST SHREVEPORT 345KV CKT 1
FDNS	00NR	2	16WP	G15_084	FROM->TO	G14-057T 345.00 - SUNNYSIDE 345KV CKT 1	717	789	0.18887	116.9739	DOLET HILLS - SOUTHWEST SHREVEPORT 345KV CKT 1
FDNS	00NR	2	16WP	G15_084	FROM->TO	G14-057T 345.00 - SUNNYSIDE 345KV CKT 1	717	789	0.19138	116.939	CLEVELAND - TULSA NORTH 345KV CKT 1
FDNS	00NR	2	16WP	G15_084	FROM->TO	G14-057T 345.00 - SUNNYSIDE 345KV CKT 1	717	789	0.19138	116.939	CLEVELAND - TULSA NORTH 345KV CKT 1
FDNS	00NR	2	20WP	G15_084	FROM->TO	G14-057T 345.00 - SUNNYSIDE 345KV CKT 1	717	789	0.19613	116.9113	PITTSBURG - VALLIANT 345KV CKT 1
FDNS	00NR	2	20WP	G15_084	FROM->TO	G14-057T 345.00 - SUNNYSIDE 345KV CKT 1	717	789	0.19613	116.9113	PITTSBURG - VALLIANT 345KV CKT 1
FDNS	00NR	2	16WP	G15_084	FROM->TO	G14-057T 345.00 - SUNNYSIDE 345KV CKT 1	717	789	0.192	116.8889	ANADARKO - POCASSETT 138KV CKT 1
FDNSLock	00NR	2	16WP	G15_084	FROM->TO	G14-057T 345.00 - SUNNYSIDE 345KV CKT 1	717	789	0.18745	116.8842	GEN336153 1-WATERFORD UNIT#3
FDNS	00NR	2	16WP	G15_084	FROM->TO	G14-057T 345.00 - SUNNYSIDE 345KV CKT 1	717	789	0.19193	116.8687	COMANCHE - LOCO 138KV CKT 1
FDNS	00NR	2	16WP	G15_084	FROM->TO	G14-057T 345.00 - SUNNYSIDE 345KV CKT 1	717	789	0.18312	116.8399	CANADIAN RIVER - MUSKOGEE 345KV CKT 1
FDNS	00NR	2	16WP	G15_084	FROM->TO	G14-057T 345.00 - SUNNYSIDE 345KV CKT 1	717	789	0.192	116.7429	POCASSETT - TUTTLE 138KV CKT 1
FDNSLock	00NR	2	16WP	G15_084	FROM->TO	G14-057T 345.00 - SUNNYSIDE 345KV CKT 1	717	789	0.18873	116.708	MATHWSN7 345.00 - TATONGA7 345.00 345KV CKT 1
FDNS	00NR	2	20WP	G15_084	FROM->TO	G14-057T 345.00 - SUNNYSIDE 345KV CKT 1	717	789	0.1941	116.7056	G15066_T 345.00 - SOONER 345KV CKT 1
FDNS	00NR	2	16WP	G15_084	FROM->TO	G14-057T 345.00 - SUNNYSIDE 345KV CKT 1	717	789	0.19375	116.6717	BORDER 7345.00 - TUCO_2 345.00 345KV CKT 1
FDNS	00NR	2	16WP	G15_084	FROM->TO	G14-057T 345.00 - SUNNYSIDE 345KV CKT 1	717	789	0.19229	116.6217	ARCADIA - NORTHWEST 345KV CKT 1
FDNSLock	00NR	2	16WP	G15_084	FROM->TO	G14-057T 345.00 - SUNNYSIDE 345KV CKT 1	717	789	0.18745	116.5903	GEN335831 1-RIVERBEND UNIT#1
FDNS	00NR	2	16WP	G15_084	FROM->TO	G14-057T 345.00 - SUNNYSIDE 345KV CKT 1	717	789	0.18745	116.5857	GRAND GULF 500/22.0KV TRANSFORMER CKT 1
FDNS	00NR	2	16WP	G15_084	FROM->TO	G14-057T 345.00 - SUNNYSIDE 345KV CKT 1	717	789	0.18745	116.5501	GEN515577 1-ARBWND11 0.6900
FDNS	00NR	2	20WP	G15_084	FROM->TO	G14-057T 345.00 - SUNNYSIDE 345KV CKT 1	717	789	0.18895	116.537	GEN501801 1-DOLET HILLS UNIT1
FDNS	00NR	2	16WP	G15_084	FROM->TO	G14-057T 345.00 - SUNNYSIDE 345KV CKT 1	717	789	0.18839	116.5149	ARCADIA - SEMINOLE 345KV CKT 1
FDNS	00NR	2	16WP	G15_084	FROM->TO	G14-057T 345.00 - SUNNYSIDE 345KV CKT 1	717	789	0.18745	116.5084	GEN509409 1-WILKES #3
FDNS	00NR	2	16WP	G15_084	FROM->TO	G14-057T 345.00 - SUNNYSIDE 345KV CKT 1	717	789	0.18933	116.4842	7SAREPTA% 345.00 - ELDORADO EHV 345KV CKT 1
FDNS	00NR	2	16WP	G15_084	FROM->TO	G14-057T 345.00 - SUNNYSIDE 345KV CKT 1	717	789	0.18933	116.484	3TR3AR8EL7EL
FDNS	00NR	2	16WP	G15_084	FROM->TO	G14-057T 345.00 - SUNNYSIDE 345KV CKT 1	717	789	0.18933	116.4729	ELDORADO EHV 500/345KV TRANSFORMER CKT 1
FDNS	00NR	2	16WP	G15_084	FROM->TO	G14-057T 345.00 - SUNNYSIDE 345KV CKT 1	717	789	0.18988	116.4234	P12:138:AEPW:DUNCAN-4:L.E.S.-4
FDNS	00NR	2	16WP	G15_084	FROM->TO	G14-057T 345.00 - SUNNYSIDE 345KV CKT 1	717	789	0.192	116.3678	BRIDGECR 138.00 - TUTTLE 138KV CKT 1
FDNS	00NR	2	16WP	G15_084	FROM->TO	G14-057T 345.00 - SUNNYSIDE 345KV CKT 1	717	789	0.1928	116.3244	HEALDTON - LOCO 138KV CKT 1
FDNS	00NR	2	16WP	G15_084	FROM->TO	G14-057T 345.00 - SUNNYSIDE 345KV CKT 1	717	789	0.18993	116.3126	COMANCHE TAP - OMPA-DUNCAN 840 138KV CKT 1
FDNS	00NR	2	16WP	G15_084	FROM->TO	G14-057T 345.00 - SUNNYSIDE 345KV CKT 1	717	789	0.19292	116.31	FINNEY SWITCHING STATION - HOLCOMB 345KV CKT 1
FDNS	00NR	2	16WP	G15_084	FROM->TO	G14-057T 345.00 - SUNNYSIDE 345KV CKT 1	717	789	0.19292	116.31	FINNEY SWITCHING STATION - HOLCOMB 345KV CKT 1
FDNS	00NR	2	20WP	G15_084	FROM->TO	G14-057T 345.00 - SUNNYSIDE 345KV CKT 1	717	789	0.19521	116.2987	BORDER 7345.00 - WOODWARD DISTRICT EHV 345KV CKT 1
FDNS	00NR	2	16WP	G15_084	FROM->TO	G14-057T 345.00 - SUNNYSIDE 345KV CKT 1	717	789	0.18745	116.2	GEN300006 1-NEW MADRID UNIT 1
FDNS	00NR	2	16WP	G15_084	FROM->TO	G14-057T 345.00 - SUNNYSIDE 345KV CKT 1	717	789	0.18745	116.2	GEN300007 1-NEW MADRID UNIT 2
FDNS	00NR	2	16WP	G15_084	FROM->TO	G14-057T 345.00 - SUNNYSIDE 345KV CKT 1	717	789	0.18745	116.1996	GEN501813 1-RODEMACHER UNIT 3
FDNS	00NR	2	16WP	G15_084	FROM->TO	G14-057T 345.00 - SUNNYSIDE 345KV CKT 1	717	789	0.188	116.186	LACYGNE - WAVERLY7 345.00 345KV CKT 1
FDNS	00NR	2	16WP	G15_084	FROM->TO	G14-057T 345.00 - SUNNYSIDE 345KV CKT 1	717	789	0.1928	116.185	HEALDTON - RINGLING 138KV CKT 1
FDNS	00NR	2	16WP	G15_084	FROM->TO	G14-057T 345.00 - SUNNYSIDE 345KV CKT 1	717	789	0.192	116.1053	P12:138:WFEC:MSL01
FDNS	00NR	2	16WP	G15_084	FROM->TO	G14-057T 345.00 - SUNNYSIDE 345KV CKT 1	717	789	0.18745	116.1007	GEN520947 1-HUGO1
FDNS	00NR	2	16WP	G15_084	FROM->TO	G14-057T 345.00 - SUNNYSIDE 345KV CKT 1	717	789	0.192	116.0984	BRIDGECR 138.00 - SUNSHINE CANYON 138KV CKT 1
FDNS	00NR	2	16WP	G15_084	FROM->TO	G14-057T 345.00 - SUNNYSIDE 345KV CKT 1	717	789	0.188	116.0736	WAVERLY7 345.00 - WOLF CREEK 345KV CKT 1
FDNSLock	00NR	2	16WP	G15_084	FROM->TO	G14-057T 345.00 - SUNNYSIDE 345KV CKT 1	717	789	0.18873	116.0396	G11_051T 345.00 - TATONGA7 345.00 345KV CKT 1
FDNS	00NR	2	16WP	G15_084	FROM->TO	G14-057T 345.00 - SUNNYSIDE 345KV CKT 1	717	789	0.18993	116.0318	DUNCAN - OMPA-DUNCAN 840 138KV CKT 1
FDNS	00NR	2	16WP	G15_084	FROM->TO	G14-057T 345.00 - SUNNYSIDE 345KV CKT 1	717	789	0.18993	116.0318	DUNCAN - OMPA-DUNCAN 840 138KV CKT 1
FDNS	00NR	2	16WP	G15_084	FROM->TO	G14-057T 345.00 - SUNNYSIDE 345KV CKT 1	717	789	0.1928	116.0205	RINGLING - SOUTH WILSON 138KV CKT 1
FDNS	00NR	2	20WP	G15_084	FROM->TO	G14-057T 345.00 - SUNNYSIDE 345KV CKT 1	717	789	0.18895	116.0135	GEN509406 1-WELSH #3
FDNS	00NR	2	20WP	G15_084	FROM->TO	G14-057T 345.00 - SUNNYSIDE 345KV CKT 1	717	789	0.18895	116.0133	GEN509404 1-WELSH #1
FDNS	00NR	2	16WP	G15_084	FROM->TO	G14-057T 345.00 - SUNNYSIDE 345KV CKT 1	717	789	0.18745	115.9991	GEN335206 1-NELSON UNIT 6
FDNS	00NR	2	16WP	G15_084	FROM->TO	G14-057T 345.00 - SUNNYSIDE 345KV CKT 1	717	789	0.19292	115.9177	FINNEY SWITCHING STATION - Hitchland Interchange 345KV CKT 1
FDNS	00NR	2	16WP	G15_084	FROM->TO	G14-057T 345.00 - SUNNYSIDE 345KV CKT 1	717	789	0.18745	115.8951	DOLET HILLS 345/24.0KV TRANSFORMER CKT 1
FDNSLock	00NR	2	16WP	G15_084	FROM->TO	G14-057T 345.00 - SUNNYSIDE 345KV CKT 1	717	789	0.18745	115.833	GEN590011 2-ERCOT EQUIVALENCE
FDNS	00NR	2	16WP	G15_084	FROM->TO	G14-057T 345.00 - SUNNYSIDE 345KV CKT 1	717	789	0.18622	115.8267	P12:138:AEPW:SHERID4:112GORE4
FDNS	00NR	2	16WP	G15_084	FROM->TO	G14-057T 345.00 - SUNNYSIDE 345KV CKT 1	717	789	0.18755	115.8236	PARK LANE - SEMINOLE 138KV CKT 1
FDNS	00NR	2	16WP	G15_084	FROM->TO	G14-057T 345.00 - SUNNYSIDE 345KV CKT 1	717	789	0.18745	115.8132	GEN501812 1-RODEMACHER UNIT 2
FDNS	00NR	2	16WP	G15_084	FROM->TO	G14-057T 345.00 - SUNNYSIDE 345KV CKT 1	717	789	0.18877	115.7762	CANEYRV7 345.00 - NEOSHO 345KV CKT 1
FDNS	00NR	2	16WP	G15_084	FROM->TO	G14-057T 345.00 - SUNNYSIDE 345KV CKT 1	717	789	0.18926	115.7647	THISTLE7 345.00 - WOODWARD DISTRICT EHV 345KV CKT 1
FDNS	00NR	2	16WP	G15_084	FROM->TO	G14-057T 345.00 - SUNNYSIDE 345KV CKT 1	717	789	0.18926	115.7647	THISTLE7 345.00 - WOODWARD DISTRICT EHV 345KV CKT 1
FDNS	00NR	2	16WP	G15_084	FROM->TO	G14-057T 345.00 - SUNNYSIDE 345KV CKT 1	717	789	0.18926	115.7647	THISTLE7 345.00 - WOODWARD DISTRICT EHV 345KV CKT 2

SOLUTION	GROUP	SCENARIO	SEASON	SOURCE	DIRECTION	MONITORED ELEMENT	RATEA (MVA)	RATEB(MVA)	TDF	TC%LOADING (% MVA)	CONTINGENCY
FDNS	00NR	2	16WP	G15_084	FROM->TO	G14-057T 345.00 - SUNNYSIDE 345KV CKT 1	717	789	0.18926	115.7647	THISTLE7 345.00 - WOODWARD DISTRICT EHV 345KV CKT 2
FDNSLock	00NR	2	16WP	G15_084	FROM->TO	G14-057T 345.00 - SUNNYSIDE 345KV CKT 1	717	789	0.18745	115.7573	GEN590010 1-ERCOT EQUIVALENCE
FDNS	00NR	2	16WP	G15_084	FROM->TO	G14-057T 345.00 - SUNNYSIDE 345KV CKT 1	717	789	0.18745	115.7564	GEN515564 1-ORIGIN11 0.6900
FDNS	00NR	2	16WP	G15_084	FROM->TO	G14-057T 345.00 - SUNNYSIDE 345KV CKT 1	717	789	0.18745	115.7564	GEN515565 1-ORIGIN21 0.6900
FDNS	00NR	2	16WP	G15_084	FROM->TO	G14-057T 345.00 - SUNNYSIDE 345KV CKT 1	717	789	0.1928	115.7447	MARIETTA - SOUTH WILSON 138KV CKT 1
FDNS	00NR	2	16WP	G15_084	FROM->TO	G14-057T 345.00 - SUNNYSIDE 345KV CKT 1	717	789	0.1928	115.649	P12:138:WFEC:MSL17
FDNS	00NR	2	16WP	G15_084	FROM->TO	G14-057T 345.00 - SUNNYSIDE 345KV CKT 1	717	789	0.18745	115.6437	GEN509408 1-WILKES #2
FDNS	00NR	2	16WP	G15_084	FROM->TO	G14-057T 345.00 - SUNNYSIDE 345KV CKT 1	717	789	0.18877	115.634	CANEYRV7 345.00 - LATHAMS7 345.00 345KV CKT 1
FDNS	00NR	2	16WP	G15_084	FROM->TO	G14-057T 345.00 - SUNNYSIDE 345KV CKT 1	717	789	0.18745	115.5927	P12:161:AEPW:DYESS 5:HYLAND 5
FDNS	00NR	2	16WP	G15_084	FROM->TO	G14-057T 345.00 - SUNNYSIDE 345KV CKT 1	717	789	0.18745	115.5891	GEN506754 1-LEBROCK STEAM 1
FDNS	00NR	2	16WP	G15_084	FROM->TO	G14-057T 345.00 - SUNNYSIDE 345KV CKT 1	717	789	0.18745	115.5642	P12:69:AEPW:L.E.S.-2:LAW WC2
FDNS	00NR	2	16WP	G15_084	FROM->TO	G14-057T 345.00 - SUNNYSIDE 345KV CKT 1	717	789	0.1911	115.5622	CIVIT - PAOLI 138KV CKT 1
FDNS	00NR	2	16WP	G15_084	FROM->TO	G14-057T 345.00 - SUNNYSIDE 345KV CKT 1	717	789	0.19162	115.5609	REDBUD - RIVERSIDE STATION 345KV CKT 1
FDNS	00NR	2	16WP	G15_084	FROM->TO	G14-057T 345.00 - SUNNYSIDE 345KV CKT 1	717	789	0.19162	115.5609	REDBUD - RIVERSIDE STATION 345KV CKT 1
FDNS	00NR	2	16WP	G15_084	FROM->TO	G14-057T 345.00 - SUNNYSIDE 345KV CKT 1	717	789	0.18877	115.5372	P12:138:WFEC:MSL02
FDNS	00NR	2	16WP	G15_084	FROM->TO	G14-057T 345.00 - SUNNYSIDE 345KV CKT 1	717	789	0.18812	115.5328	ELDORADO EHV - MOUNT OLIVE 500KV CKT 1
FDNS	00NR	2	16WP	G15_084	FROM->TO	G14-057T 345.00 - SUNNYSIDE 345KV CKT 1	717	789	0.18745	115.5302	GEN334440 1-SABINE UNIT 4
FDNS	00NR	2	16WP	G15_084	FROM->TO	G14-057T 345.00 - SUNNYSIDE 345KV CKT 1	717	789	0.18828	115.5134	PAOLI - PAYNE 138.00 138KV CKT 1
FDNS	00NR	2	16WP	G15_084	FROM->TO	G14-057T 345.00 - SUNNYSIDE 345KV CKT 1	717	789	0.18849	115.4657	MATHWSN7 345.00 - NORTHWEST 345KV CKT 1
FDNS	00NR	2	16WP	G15_084	FROM->TO	G14-057T 345.00 - SUNNYSIDE 345KV CKT 1	717	789	0.18631	115.4626	P12:138:AEPW:112GORE4:L.E.S.-4
FDNS	00NR	2	16WP	G15_084	FROM->TO	G14-057T 345.00 - SUNNYSIDE 345KV CKT 1	717	789	0.19125	115.4625	P12:138:AEPW-OGE:CORNVIL4:MAUD 4
FDNS	00NR	2	20WP	G15_084	FROM->TO	G14-057T 345.00 - SUNNYSIDE 345KV CKT 1	717	789	0.19372	115.4534	CORN TAP - NAPLESTP 138.00 138KV CKT 1
FDNS	00NR	2	16WP	G15_084	FROM->TO	G14-057T 345.00 - SUNNYSIDE 345KV CKT 1	717	789	0.18846	115.4522	ELDORADO EHV - SHERIDAN EHV 500KV CKT 1
FDNS	00NR	2	16WP	G15_084	FROM->TO	G14-057T 345.00 - SUNNYSIDE 345KV CKT 1	717	789	0.18845	115.4503	ANADARKO - GEORGIA 138KV CKT 1
FDNS	00NR	2	16WP	G15_084	FROM->TO	G14-057T 345.00 - SUNNYSIDE 345KV CKT 1	717	789	0.18745	115.449	NEW MADRID 161/22.0KV TRANSFORMER CKT 1
FDNS	00NR	2	20WP	G15_084	FROM->TO	G14-057T 345.00 - SUNNYSIDE 345KV CKT 1	717	789	0.19284	115.4421	7SAREPTA% 345.00 - LONGWOOD 345KV CKT 1
FDNS	00NR	2	20WP	G15_084	FROM->TO	G14-057T 345.00 - SUNNYSIDE 345KV CKT 1	717	789	0.19284	115.4421	7SAREPTA% 345.00 - LONGWOOD 345KV CKT 1
FDNS	00NR	2	16WP	G15_084	FROM->TO	G14-057T 345.00 - SUNNYSIDE 345KV CKT 1	717	789	0.18745	115.439	GEN503909 1-FULTONU1 1 16.000
FDNS	00NR	2	16WP	G15_084	FROM->TO	G14-057T 345.00 - SUNNYSIDE 345KV CKT 1	717	789	0.18745	115.4353	NEW MADRID 345/22.0KV TRANSFORMER CKT 1
FDNS	00NR	2	16WP	G15_084	FROM->TO	G14-057T 345.00 - SUNNYSIDE 345KV CKT 1	717	789	0.18823	115.4207	WEBRE - WELLS 500KV CKT 1
FDNS	00NR	2	16WP	G15_084	FROM->TO	G14-057T 345.00 - SUNNYSIDE 345KV CKT 1	717	789	0.1911	115.4197	CIVIT - STRATFORD 138KV CKT 1
FDNS	00NR	2	16WP	G15_084	FROM->TO	G14-057T 345.00 - SUNNYSIDE 345KV CKT 1	717	789	0.18877	115.4184	LATHAMS7 345.00 - ROSE HILL 345KV CKT 1
FDNS	00NR	2	16WP	G15_084	FROM->TO	G14-057T 345.00 - SUNNYSIDE 345KV CKT 1	717	789	0.17862	115.3932	LAWTON EASTSIDE (LES 5) 345/138/13.8KV TRANSFORMER CKT 2
FDNS	00NR	2	16WP	G15_084	FROM->TO	G14-057T 345.00 - SUNNYSIDE 345KV CKT 1	717	789	0.17862	115.3932	LAWTON EASTSIDE (LES 5) 345/138/13.8KV TRANSFORMER CKT 2
FDNS	00NR	2	16WP	G15_084	FROM->TO	G14-057T 345.00 - SUNNYSIDE 345KV CKT 1	717	789	0.19125	115.3885	BLANCHARD - CORNVILLE 138KV CKT 1
FDNS	00NR	2	16WP	G15_084	FROM->TO	G14-057T 345.00 - SUNNYSIDE 345KV CKT 1	717	789	0.18745	115.3871	FRONTIER - GRIMES 345KV CKT 1
FDNS	00NR	2	16WP	G15_084	FROM->TO	G14-057T 345.00 - SUNNYSIDE 345KV CKT 1	717	789	0.18986	115.377	TUPELO - TUPELO TAP 138KV CKT 1
FDNS	00NR	2	16WP	G15_084	FROM->TO	G14-057T 345.00 - SUNNYSIDE 345KV CKT 1	717	789	0.18845	115.366	FLETCHER - GEORGIA 138KV CKT 1
FDNS	00NR	2	20WP	G15_084	FROM->TO	G14-057T 345.00 - SUNNYSIDE 345KV CKT 1	717	789	0.19521	115.3658	BORDER 7345.00 - TUCO_2 345.00 345KV CKT 1
FDNS	00NR	2	20WP	G15_084	FROM->TO	G14-057T 345.00 - SUNNYSIDE 345KV CKT 1	717	789	0.19372	115.3609	NAPLESTP 138.00 - PAYNE 138.00 138KV CKT 1
FDNS	00NR	2	16WP	G15_084	FROM->TO	G14-057T 345.00 - SUNNYSIDE 345KV CKT 1	717	789	0.18859	115.3357	EMPIRE - FLETCHER 138KV CKT 1
FDNS	00NR	2	16WP	G15_084	FROM->TO	G14-057T 345.00 - SUNNYSIDE 345KV CKT 1	717	789	0.18745	115.3117	GEN509393 S1-ARSENAL HILL GENS #4 (STALL)
FDNS	00NR	2	16WP	G15_084	FROM->TO	G14-057T 345.00 - SUNNYSIDE 345KV CKT 1	717	789	0.18833	115.3084	G1524G1525 345.00 - THISTLE7 345.00 345KV CKT 1
FDNS	00NR	2	16WP	G15_084	FROM->TO	G14-057T 345.00 - SUNNYSIDE 345KV CKT 1	717	789	0.18833	115.3084	G1524G1525 345.00 - THISTLE7 345.00 345KV CKT 2
FDNS	00NR	2	16WP	G15_084	FROM->TO	G14-057T 345.00 - SUNNYSIDE 345KV CKT 1	717	789	0.1911	115.3008	OIL CENTER - STRATFORD 138KV CKT 1
FDNS	00NR	2	16WP	G15_084	FROM->TO	G14-057T 345.00 - SUNNYSIDE 345KV CKT 1	717	789	0.18745	115.2876	GEN509392 G2-ARSENAL HILL GENS #3 (STALL)
FDNS	00NR	2	16WP	G15_084	FROM->TO	G14-057T 345.00 - SUNNYSIDE 345KV CKT 1	717	789	0.18745	115.2875	GEN509391 G1-ARSENAL HILL GENS #2 (STALL)
FDNS	00NR	2	16WP	G15_084	FROM->TO	G14-057T 345.00 - SUNNYSIDE 345KV CKT 1	717	789	0.18745	115.2731	GEN336252 1-NINEMILE POINT UNIT#5
FDNS	00NR	2	20WP	G15_084	FROM->TO	G14-057T 345.00 - SUNNYSIDE 345KV CKT 1	717	789	0.18895	115.2619	GEN336821 1-GRAND GULF UNIT
FDNS	00NR	2	16WP	G15_084	FROM->TO	G14-057T 345.00 - SUNNYSIDE 345KV CKT 1	717	789	0.18859	115.2559	COMANCHE - EMPIRE 138KV CKT 1
FDNS	00NR	2	16WP	G15_084	FROM->TO	G14-057T 345.00 - SUNNYSIDE 345KV CKT 1	717	789	0.18745	115.2484	DELL 500 - ESSEX UNIT 2 500KV CKT Z1
FDNS	00NR	2	16WP	G15_084	FROM->TO	G14-057T 345.00 - SUNNYSIDE 345KV CKT 1	717	789	0.18745	115.2213	GEN334071 1-LEWIS CREEK 2
FDNS	00NR	2	16WP	G15_084	FROM->TO	G14-057T 345.00 - SUNNYSIDE 345KV CKT 1	717	789	0.18745	115.2123	GEN334070 1-LEWIS CREEK 1
FDNS	00NR	2	16WP	G15_084	FROM->TO	G14-057T 345.00 - SUNNYSIDE 345KV CKT 1	717	789	0.18745	115.2088	GEN335204 1-NELSON UNIT 4
FDNS	00NR	2	16WP	G15_084	FROM->TO	G14-057T 345.00 - SUNNYSIDE 345KV CKT 1	717	789	0.18745	115.2	GEN300003 1-THOMAS HILL UNIT 3
FDNS	00NR	2	16WP	G15_084	FROM->TO	G14-057T 345.00 - SUNNYSIDE 345KV CKT 1	717	789	0.19125	115.1943	BLANCHARD - MAUD 138KV CKT 1
FDNS	00NR	2	16WP	G15_084	FROM->TO	G14-057T 345.00 - SUNNYSIDE 345KV CKT 1	717	789	0.1878	115.1827	DUNCAN (DUNCAN) 138/69/13.8KV TRANSFORMER CKT 1
FDNS	00NR	2	16WP	G15_084	FROM->TO	G14-057T 345.00 - SUNNYSIDE 345KV CKT 1	717	789	0.1878	115.1827	DUNCAN (DUNCAN) 138/69/13.8KV TRANSFORMER CKT 1
FDNS	00NR	2	16WP	G15_084	FROM->TO	G14-057T 345.00 - SUNNYSIDE 345KV CKT 1	717	789	0.18745	115.174	GEN334441 1-SABINE UNIT 5
FDNS	00NR	2	20WP	G15_084	FROM->TO	G14-057T 345.00 - SUNNYSIDE 345KV CKT 1	717	789	0.19354	115.1626	ANADARKO - POCASSETT 138KV CKT 1
FDNS	00NR	2	16WP	G15_084	FROM->TO	G14-057T 345.00 - SUNNYSIDE 345KV CKT 1	717	789	0.18745	115.1589	GEN337653 1-WHITE BLUFF UNIT #2
FDNS	00NR	2	20WP	G15_084	FROM->TO	G14-057T 345.00 - SUNNYSIDE 345KV CKT 1	717	789	0.18895	115.1539	GEN336153 1-WATERFORD UNIT#3
FDNS	00NR	2	16WP	G15_084	FROM->TO	G14-057T 345.00 - SUNNYSIDE 345KV CKT 1	717	789	0.19752	115.1478	GRACEMONT - LAWTON EASTSIDE 345KV CKT 1
FDNS	00NR	2	16WP	G15_084	FROM->TO	G14-057T 345.00 - SUNNYSIDE 345KV CKT 1	717	789	0.19752	115.1478	GRACEMONT - LAWTON EASTSIDE 345KV CKT 1
FDNS	00NR	2	16WP	G15_084	FROM->TO	G14-057T 345.00 - SUNNYSIDE 345KV CKT 1	717	789	0.18745	115.142	GEN506752 1-LEBROCK GAS 1
FDNS	00NR	2	16WP	G15_084	FROM->TO	G14-057T 345.00 - SUNNYSIDE 345KV CKT 1	717	789	0.18745	115.1418	GEN506753 1-LEBROCK GAS 2
FDNS	00NR	2	16WP	G15_084	FROM->TO	G14-057T 345.00 - SUNNYSIDE 345KV CKT 1	717	789	0.19056	115.1414	TUTTLE - TUTTLE CONOCO TAP 138KV CKT 1
FDNS	00NR	2	16WP	G15_084	FROM->TO	G14-057T 345.00 - SUNNYSIDE 345KV CKT 1	717	789	0.18745	115.1361	P12:161:AEPW-SWPA:BEAVER5:EROGERS5
FDNS	00NR	2	16WP	G15_084	FROM->TO	G14-057T 345.00 - SUNNYSIDE 345KV CKT 1	717	789	0.1911	115.1283	LATTA JCT - OIL CENTER 138KV CKT 1
FDNS	00NR	2	16WP	G15_084	FROM->TO	G14-057T 345.00 - SUNNYSIDE 345KV CKT 1	717	789	0.18853	115.1264	6LAYFLD 230.00 - CARROLL 230KV CKT 1
FDNS	00NR	2	16WP	G15_084	FROM->TO	G14-057T 345.00 - SUNNYSIDE 345KV CKT 1	717	789	0.18745	115.1231	GEN334030 1-FRONTIER UNIT 1
FDNS	00NR	2	16WP	G15_084	FROM->TO	G14-057T 345.00 - SUNNYSIDE 345KV CKT 1	717	789	0.18745	115.1215	GEN334031 1-FRONTIER UNIT 2
FDNS	00NR	2	16WP	G15_084	FROM->TO	G14-057T 345.00 - SUNNYSIDE 345KV CKT 1	717	789	0.18745	115.1127	P12:138:AEPW:CATOOSA4:T.S.E.-4
FDNS	00NR	2	16WP	G15_084	FROM->TO	G14-057T 345.00 - SUNNYSIDE 345KV CKT 1	717	789	0.18745	115.1092	GEN515040 1-SEMINOLE 1G
FDNS	00NR	2	16WP	G15_084	FROM->TO	G14-057T 345.00 - SUNNYSIDE 345KV CKT 1	717	789	0.18766	115.1	G15088_T 345.00 - MOORE 345KV CKT 1
FDNS	00NR	2	16WP	G15_084	FROM->TO	G14-057T 345.00 - SUNNYSIDE 345KV CKT 1	717	789	0.18745	115.0947	GEN515226 1-MUSKOGEE 6G
FDNS	00NR	2	16WP	G15_084	FROM->TO	G14-057T 345.00 - SUNNYSIDE 345KV CKT 1	717	789	0.18765	115.0939	FULTON 115 - HOPE 115KV CKT 1
FDNS	00NR	2	16WP	G15_084	FROM->TO	G14-057T 345.00 - SUNNYSIDE 345KV CKT 1	717	789	0.18765	115.0939	FULTON 115 - HOPE 115KV CKT 1
FDNS	00NR	2	16WP	G15_084	FROM->TO	G14-057T 345.00 - SUNNYSIDE 345KV CKT 1	717	789	0.18745	115.0813	GEN300015 1-1SGPDEL 18.000

SOLUTION	GROUP	SCENARIO	SEASON	SOURCE	DIRECTION	MONITORED ELEMENT	RATEA (MVA)	RATEB(MVA)	TDF	TC%LOADING (% MVA)	CONTINGENCY
FDNSLock	00NR	2	16WP	G15_084	FROM->TO	G14-057T 345.00 - SUNNYSIDE 345KV CKT 1	717	789	0.18745	115.0788	GEN337911 1-ARKANSAS NUCLEAR ONE UNIT #2
FDNS	00NR	2	16WP	G15_084	FROM->TO	G14-057T 345.00 - SUNNYSIDE 345KV CKT 1	717	789	0.18758	115.0778	8DANIEL8 500.00 - MCKNIGHT 500KV CKT 1
FDNS	00NR	2	16WP	G15_084	FROM->TO	G14-057T 345.00 - SUNNYSIDE 345KV CKT 1	717	789	0.18745	115.0759	GEN337652 1-WHITE BLUFF UNIT #1
FDNS	00NR	2	20WP	G15_084	FROM->TO	G14-057T 345.00 - SUNNYSIDE 345KV CKT 1	717	789	0.19847	115.0757	GRACEMONT - LAWTON EASTSIDE 345KV CKT 1
FDNS	00NR	2	20WP	G15_084	FROM->TO	G14-057T 345.00 - SUNNYSIDE 345KV CKT 1	717	789	0.19847	115.0757	GRACEMONT - LAWTON EASTSIDE 345KV CKT 1
FDNS	00NR	2	16WP	G15_084	FROM->TO	G14-057T 345.00 - SUNNYSIDE 345KV CKT 1	717	789	0.18745	115.0671	GEN336831 1-BAXTER WILSON SES
FDNS	00NR	2	20WP	G15_084	FROM->TO	G14-057T 345.00 - SUNNYSIDE 345KV CKT 1	717	789	0.1927	115.0628	CLEVELAND - TULSA NORTH 345KV CKT 1
FDNS	00NR	2	20WP	G15_084	FROM->TO	G14-057T 345.00 - SUNNYSIDE 345KV CKT 1	717	789	0.1927	115.0628	CLEVELAND - TULSA NORTH 345KV CKT 1
FDNS	00NR	2	16WP	G15_084	FROM->TO	G14-057T 345.00 - SUNNYSIDE 345KV CKT 1	717	789	0.1911	115.0626	P12:138:AEPW-OGE:WTH_JCT4:JENSEN4
FDNS	00NR	2	16WP	G15_084	FROM->TO	G14-057T 345.00 - SUNNYSIDE 345KV CKT 1	717	789	0.18745	115.0596	P12:161:AEPW:DYESS5:ELMSPRNG:TONTITN5
FDNS	00NR	2	16WP	G15_084	FROM->TO	G14-057T 345.00 - SUNNYSIDE 345KV CKT 1	717	789	0.19056	115.0585	CIMARRON - TUTTLE CONOCO TAP 138KV CKT 1
FDNS	00NR	2	20WP	G15_084	FROM->TO	G14-057T 345.00 - SUNNYSIDE 345KV CKT 1	717	789	0.19345	115.0581	COMANCHE - LOCO 138KV CKT 1
FDNS	00NR	2	16WP	G15_084	FROM->TO	G14-057T 345.00 - SUNNYSIDE 345KV CKT 1	717	789	0.19182	115.0569	BAILEY4 138.00 - SUNSHINE CANYON 138KV CKT 1
FDNS	00NR	2	16WP	G15_084	FROM->TO	G14-057T 345.00 - SUNNYSIDE 345KV CKT 1	717	789	0.18745	115.055	GEN501811 1-RODEMACHER UNIT 1
FDNS	00NR	2	16WP	G15_084	FROM->TO	G14-057T 345.00 - SUNNYSIDE 345KV CKT 1	717	789	0.18745	115.0372	GEN336251 1-NINEMILE POINT UNIT#4
FDNS	00NR	2	16WP	G15_084	FROM->TO	G14-057T 345.00 - SUNNYSIDE 345KV CKT 1	717	789	0.1877	115.0366	G15074_T 345.00 - HOYT 345KV CKT 1
FDNS	00NR	2	16WP	G15_084	FROM->TO	G14-057T 345.00 - SUNNYSIDE 345KV CKT 1	717	789	0.18745	115.0325	GEN334433 1-SABINE UNIT 3
FDNS	00NR	2	16WP	G15_084	FROM->TO	G14-057T 345.00 - SUNNYSIDE 345KV CKT 1	717	789	0.18836	115.0101	BUCKNER7 345.00 - SPEARVILLE 345KV CKT 1
FDNS	00NR	2	16WP	G15_084	FROM->TO	G14-057T 345.00 - SUNNYSIDE 345KV CKT 1	717	789	0.18836	115.0101	BUCKNER7 345.00 - SPEARVILLE 345KV CKT 1
FDNS	00NR	2	20WP	G15_084	FROM->TO	G14-057T 345.00 - SUNNYSIDE 345KV CKT 1	717	789	0.19354	115.0094	POCASSETT - TUTTLE 138KV CKT 1
FDNSLock	00NR	2	16WP	G15_084	FROM->TO	G14-057T 345.00 - SUNNYSIDE 345KV CKT 1	717	789	0.18745	115.0081	GEN505432 1-SIKESTON
FDNS	00NR	2	16WP	G15_084	FROM->TO	G14-057T 345.00 - SUNNYSIDE 345KV CKT 1	717	789	0.18889	115.007	P12:138:AEPW:CORNVIL4:DUNCAN-4
FDNS	00NR	2	16WP	G15_084	FROM->TO	G14-057T 345.00 - SUNNYSIDE 345KV CKT 1	717	789	0.18857	115.0031	P12:138:AEPW:CORNVIL4:S.W.S.-4
FDNS	00NR	2	16WP	G15_084	FROM->TO	G14-057T 345.00 - SUNNYSIDE 345KV CKT 1	717	789	0.18745	114.9991	GEN562783 1-G15036_4 0.6900
FDNS	00NR	2	16WP	G15_084	FROM->TO	G14-057T 345.00 - SUNNYSIDE 345KV CKT 1	717	789	0.18745	114.9991	GEN562784 1-G15036_5 0.6900
FDNS	00NR	2	20WP	G15_084	FROM->TO	G14-057T 345.00 - SUNNYSIDE 345KV CKT 1	717	789	0.1905	114.9983	DOLET HILLS - SOUTHWEST SHREVEPORT 345KV CKT 1
FDNS	00NR	2	20WP	G15_084	FROM->TO	G14-057T 345.00 - SUNNYSIDE 345KV CKT 1	717	789	0.1905	114.9983	DOLET HILLS - SOUTHWEST SHREVEPORT 345KV CKT 1
FDNS	00NR	2	16WP	G15_084	FROM->TO	G14-057T 345.00 - SUNNYSIDE 345KV CKT 1	717	789	0.1878	114.9964	P12:69:WFEC-AEPW:COMANCH2:DUNCAN-2
FDNS	00NR	2	16WP	G15_084	FROM->TO	G14-057T 345.00 - SUNNYSIDE 345KV CKT 1	717	789	0.18745	114.9958	GEN515223 1-MUSKOGEE 4G
FDNS	00NR	2	16WP	G15_084	FROM->TO	G14-057T 345.00 - SUNNYSIDE 345KV CKT 1	717	789	0.18745	114.9958	GEN515225 1-MUSKOGEE 5G
FDNS	00NR	2	16WP	G15_084	FROM->TO	G14-057T 345.00 - SUNNYSIDE 345KV CKT 1	717	789	0.188	114.9789	CIMARRON - CZECH HALL 138KV CKT 1
FDNS	00NR	2	16WP	G15_084	FROM->TO	G14-057T 345.00 - SUNNYSIDE 345KV CKT 1	717	789	0.18959	114.9714	P12:138:AEPW:WTHWF4:CLINTJC4
FDNS	00NR	2	16WP	G15_084	FROM->TO	G14-057T 345.00 - SUNNYSIDE 345KV CKT 1	717	789	0.18745	114.9665	WHITE BLUFF 500/26.0KV TRANSFORMER CKT 1
FDNS	00NR	2	16WP	G15_084	FROM->TO	G14-057T 345.00 - SUNNYSIDE 345KV CKT 1	717	789	0.18745	114.9539	P12:161:AEPW:EROGERS5:ECNTRTN5
FDNS	00NR	2	16WP	G15_084	FROM->TO	G14-057T 345.00 - SUNNYSIDE 345KV CKT 1	717	789	0.18803	114.9502	LAYFLD8 500.00 - MOUNT OLIVE 500KV CKT 1
FDNS	00NR	2	16WP	G15_084	FROM->TO	G14-057T 345.00 - SUNNYSIDE 345KV CKT 1	717	789	0.18803	114.9502	LAYFLD8 500.00 - MOUNT OLIVE 500KV CKT 1
FDNS	00NR	2	16WP	G15_084	FROM->TO	G14-057T 345.00 - SUNNYSIDE 345KV CKT 1	717	789	0.18745	114.9474	RODEMACHER 230/22.0KV TRANSFORMER CKT 1
FDNS	00NR	2	16WP	G15_084	FROM->TO	G14-057T 345.00 - SUNNYSIDE 345KV CKT 1	717	789	0.1878	114.9465	DUNCAN - TOSCO 69KV CKT 1
FDNS	00NR	2	16WP	G15_084	FROM->TO	G14-057T 345.00 - SUNNYSIDE 345KV CKT 1	717	789	0.18782	114.9428	CIMARRON - SARA 138KV CKT 1
FDNS	00NR	2	16WP	G15_084	FROM->TO	G14-057T 345.00 - SUNNYSIDE 345KV CKT 1	717	789	0.18775	114.9396	MC NIEL 500/115KV TRANSFORMER CKT 1
FDNS	00NR	2	16WP	G15_084	FROM->TO	G14-057T 345.00 - SUNNYSIDE 345KV CKT 1	717	789	0.18745	114.9395	GEN303007 1-1BC2 U2
FDNS	00NR	2	16WP	G15_084	FROM->TO	G14-057T 345.00 - SUNNYSIDE 345KV CKT 1	717	789	0.18959	114.9349	P12:138:AEPW:WTHWF4:WTH_SE4
FDNS	00NR	2	16WP	G15_084	FROM->TO	G14-057T 345.00 - SUNNYSIDE 345KV CKT 1	717	789	0.18769	114.9346	BISMARK - HOT SPRINGS WEST BUS 115KV CKT 1
FDNS	00NR	2	16WP	G15_084	FROM->TO	G14-057T 345.00 - SUNNYSIDE 345KV CKT 1	717	789	0.18745	114.9343	GEN303006 1-1BC2 U1
FDNS	00NR	2	16WP	G15_084	FROM->TO	G14-057T 345.00 - SUNNYSIDE 345KV CKT 1	717	789	0.18745	114.9336	GEN337910 1-ARKANSAS NUCLEAR ONE UNIT #1
FDNS	00NR	2	16WP	G15_084	FROM->TO	G14-057T 345.00 - SUNNYSIDE 345KV CKT 1	717	789	0.18776	114.9296	HOT SPRINGS EHV - MAGNET COVE 500KV CKT 1
FDNS	00NR	2	16WP	G15_084	FROM->TO	G14-057T 345.00 - SUNNYSIDE 345KV CKT 1	717	789	0.18745	114.9277	GEN300010 1-ST FRANCIS UNIT 1
FDNS	00NR	2	16WP	G15_084	FROM->TO	G14-057T 345.00 - SUNNYSIDE 345KV CKT 1	717	789	0.18272	114.9266	CANADIAN RIVER - PITTSBURG 345KV CKT 1
FDNS	00NR	2	16WP	G15_084	FROM->TO	G14-057T 345.00 - SUNNYSIDE 345KV CKT 1	717	789	0.18272	114.9266	CANADIAN RIVER - PITTSBURG 345KV CKT 1
FDNS	00NR	2	16WP	G15_084	FROM->TO	G14-057T 345.00 - SUNNYSIDE 345KV CKT 1	717	789	0.18565	114.9207	P12:69:AEPW-OMPA:COMANC-2:OMWALTR2
FDNS	00NR	2	16WP	G15_084	FROM->TO	G14-057T 345.00 - SUNNYSIDE 345KV CKT 1	717	789	0.18787	114.9158	CLEO CORNER - CLEOPLT4 138.00 138KV CKT 1
FDNS	00NR	2	16WP	G15_084	FROM->TO	G14-057T 345.00 - SUNNYSIDE 345KV CKT 1	717	789	0.18745	114.9116	GEN336191 1-LITTLE GYPSY UNIT#3
FDNS	00NR	2	16WP	G15_084	FROM->TO	G14-057T 345.00 - SUNNYSIDE 345KV CKT 1	717	789	0.18783	114.9098	G15095_T 138.00 - ROSE_VALLEY 138.00 138KV CKT 1
FDNS	00NR	2	16WP	G15_084	FROM->TO	G14-057T 345.00 - SUNNYSIDE 345KV CKT 1	717	789	0.18713	114.9049	ARBWIND4 138.00 - CARTER 138KV CKT 1
FDNS	00NR	2	16WP	G15_084	FROM->TO	G14-057T 345.00 - SUNNYSIDE 345KV CKT 1	717	789	0.18787	114.9022	CLEOPLT4 138.00 - MEN TAP 138KV CKT 1
FDNS	00NR	2	16WP	G15_084	FROM->TO	G14-057T 345.00 - SUNNYSIDE 345KV CKT 1	717	789	0.1878	114.901	COMANCHE TAP - TOSCO 69KV CKT 1
FDNS	00NR	2	16WP	G15_084	FROM->TO	G14-057T 345.00 - SUNNYSIDE 345KV CKT 1	717	789	0.18737	114.8986	SEMINOLE - VANOSTP4 138.00 138KV CKT 1
FDNS	00NR	2	16WP	G15_084	FROM->TO	G14-057T 345.00 - SUNNYSIDE 345KV CKT 1	717	789	0.188	114.8962	CZECH HALL - XEROX 138KV CKT 1
FDNS	00NR	2	16WP	G15_084	FROM->TO	G14-057T 345.00 - SUNNYSIDE 345KV CKT 1	717	789	0.188	114.8919	MORGAN - XEROX 138KV CKT 1
FDNS	00NR	2	16WP	G15_084	FROM->TO	G14-057T 345.00 - SUNNYSIDE 345KV CKT 1	717	789	0.18787	114.8902	IMO TAP - MEN TAP 138KV CKT 1
FDNS	00NR	2	16WP	G15_084	FROM->TO	G14-057T 345.00 - SUNNYSIDE 345KV CKT 1	717	789	0.19182	114.8899	BAILEY4 138.00 - WESTMOORE 138KV CKT 1
FDNS	00NR	2	16WP	G15_084	FROM->TO	G14-057T 345.00 - SUNNYSIDE 345KV CKT 1	717	789	0.18831	114.8882	BENTON - WICHITA 345KV CKT 1
FDNS	00NR	2	16WP	G15_084	FROM->TO	G14-057T 345.00 - SUNNYSIDE 345KV CKT 1	717	789	0.18736	114.8864	P12:138:AEPW:N.E.S.-4:CATOOSA4
FDNS	00NR	2	16WP	G15_084	FROM->TO	G14-057T 345.00 - SUNNYSIDE 345KV CKT 1	717	789	0.18745	114.8863	GEN335614 1-WILLOW GLENN UNIT#4
FDNS	00NR	2	16WP	G15_084	FROM->TO	G14-057T 345.00 - SUNNYSIDE 345KV CKT 1	717	789	0.18769	114.8821	ALPINE AECC - BISMARK 115KV CKT 1
FDNS	00NR	2	16WP	G15_084	FROM->TO	G14-057T 345.00 - SUNNYSIDE 345KV CKT 1	717	789	0.18745	114.8797	NELSON 230/20.0KV TRANSFORMER CKT 1
FDNS	00NR	2	16WP	G15_084	FROM->TO	G14-057T 345.00 - SUNNYSIDE 345KV CKT 1	717	789	0.18745	114.8781	GEN300011 1-ST FRANCIS UNIT 2
FDNS	00NR	2	16WP	G15_084	FROM->TO	G14-057T 345.00 - SUNNYSIDE 345KV CKT 1	717	789	0.18745	114.8746	GEN303008 1-1BC2 U3
FDNS	00NR	2	16WP	G15_084	FROM->TO	G14-057T 345.00 - SUNNYSIDE 345KV CKT 1	717	789	0.188	114.8682	MORGAN - MUSTANG 138KV CKT 1
FDNS	00NR	2	20WP	G15_084	FROM->TO	G14-057T 345.00 - SUNNYSIDE 345KV CKT 1	717	789	0.18895	114.858	GEN335831 1-RIVERBEND UNIT#1
FDNS	00NR	2	16WP	G15_084	FROM->TO	G14-057T 345.00 - SUNNYSIDE 345KV CKT 1	717	789	0.1911	114.8524	LASALLE - LATTA JCT 138KV CKT 1
FDNS	00NR	2	16WP	G15_084	FROM->TO	G14-057T 345.00 - SUNNYSIDE 345KV CKT 1	717	789	0.18745	114.8476	GEN336170 1-GULF OXY U4
FDNS	00NR	2	16WP	G15_084	FROM->TO	G14-057T 345.00 - SUNNYSIDE 345KV CKT 1	717	789	0.18783	114.8444	NOEL_SW 138.00 - ROSE_VALLEY 138.00 138KV CKT 1
FDNS	00NR	2	16WP	G15_084	FROM->TO	G14-057T 345.00 - SUNNYSIDE 345KV CKT 1	717	789	0.18745	114.8426	GEN336464 1-MICHOUD UNIT #3
FDNS	00NR	2	16WP	G15_084	FROM->TO	G14-057T 345.00 - SUNNYSIDE 345KV CKT 1	717	789	0.18745	114.8394	GEN300016 1-1G1GPDEL 18.000
FDNS	00NR	2	16WP	G15_084	FROM->TO	G14-057T 345.00 - SUNNYSIDE 345KV CKT 1	717	789	0.1876	114.839	CYPRESS - HARTBURG 500KV CKT 1
FDNS	00NR	2	16WP	G15_084	FROM->TO	G14-057T 345.00 - SUNNYSIDE 345KV CKT 1	717	789	0.18769	114.8384	ALPINE AECC - AMITY SS 115KV CKT 1
FDNS	00NR	2	16WP	G15_084	FROM->TO	G14-057T 345.00 - SUNNYSIDE 345KV CKT 1	717	789	0.19109	114.8303	WEATHERFORD JCT. - WEATHERFORD SOUTHEAST 138KV CKT 1
FDNS	00NR	2	16WP	G15_084	FROM->TO	G14-057T 345.00 - SUNNYSIDE 345KV CKT 1	717	789	0.19109	114.8303	WEATHERFORD JCT. - WEATHERFORD SOUTHEAST 138KV CKT 1

SOLUTION	GROUP	SCENARIO	SEASON	SOURCE	DIRECTION	MONITORED ELEMENT	RATEA (MVA)	RATEB(MVA)	TDF	TC%LOADING (% MVA)	CONTINGENCY
FDNS	00NR	2	20WP	G15_084	FROM->TO	G14-057T 345.00 - SUNNYSIDE 345KV CKT 1	717	789	0.19372	114.8287	ARCADIA - NORTHWEST 345KV CKT 1
FDNS	00NR	2	16WP	G15_084	FROM->TO	G14-057T 345.00 - SUNNYSIDE 345KV CKT 1	717	789	0.1877	114.8264	HOYT - STRANGER CREEK 345KV CKT 1
FDNS	00NR	2	16WP	G15_084	FROM->TO	G14-057T 345.00 - SUNNYSIDE 345KV CKT 1	717	789	0.18745	114.8253	GEN337041 1-GERALD ANDRUS
FDNS	00NR	2	16WP	G15_084	FROM->TO	G14-057T 345.00 - SUNNYSIDE 345KV CKT 1	717	789	0.1878	114.8215	COMANCHE - COMANCHE TAP 69KV CKT 1
FDNS	00NR	2	16WP	G15_084	FROM->TO	G14-057T 345.00 - SUNNYSIDE 345KV CKT 1	717	789	0.18745	114.8203	8CAJUN2 500/24.0KV TRANSFORMER CKT 1
FDNS	00NR	2	16WP	G15_084	FROM->TO	G14-057T 345.00 - SUNNYSIDE 345KV CKT 1	717	789	0.1863	114.8186	CHISHOLM6 230.00 - ELK CITY 230KV 230KV CKT 1
FDNS	00NR	2	16WP	G15_084	FROM->TO	G14-057T 345.00 - SUNNYSIDE 345KV CKT 1	717	789	0.18901	114.8184	CANADIAN - NOBLE 138KV CKT 1
FDNS	00NR	2	20WP	G15_084	FROM->TO	G14-057T 345.00 - SUNNYSIDE 345KV CKT 1	717	789	0.18895	114.8183	GRAND GULF 500/22.0KV TRANSFORMER CKT 1
FDNS	00NR	2	16WP	G15_084	FROM->TO	G14-057T 345.00 - SUNNYSIDE 345KV CKT 1	717	789	0.1863	114.8171	ELK CITY 230KV (ELKCTY-6) 230/138/13.8KV TRANSFORMER CKT 1
FDNS	00NR	2	16WP	G15_084	FROM->TO	G14-057T 345.00 - SUNNYSIDE 345KV CKT 1	717	789	0.1863	114.8171	ELK CITY 230KV (ELKCTY-6) 230/138/13.8KV TRANSFORMER CKT 1
FDNS	00NR	2	16WP	G15_084	FROM->TO	G14-057T 345.00 - SUNNYSIDE 345KV CKT 1	717	789	0.1876	114.8082	7JASPER 345.00 - BLACKBERRY 345KV CKT 1
FDNS	00NR	2	16WP	G15_084	FROM->TO	G14-057T 345.00 - SUNNYSIDE 345KV CKT 1	717	789	0.18874	114.8066	P12:138:OKGE-AEPW:JENSEN4:REDROCKRD4
FDNS	00NR	2	16WP	G15_084	FROM->TO	G14-057T 345.00 - SUNNYSIDE 345KV CKT 1	717	789	0.18745	114.8006	GEN501910 1-ACADIA UNIT ST1
FDNS	00NR	2	16WP	G15_084	FROM->TO	G14-057T 345.00 - SUNNYSIDE 345KV CKT 1	717	789	0.18912	114.7985	P12:138:OKGE:3TERM27
FDNS	00NR	2	16WP	G15_084	FROM->TO	G14-057T 345.00 - SUNNYSIDE 345KV CKT 1	717	789	0.1879	114.7969	BLACKBERRY - NEOSHO 345KV CKT 1
FDNS	00NR	2	16WP	G15_084	FROM->TO	G14-057T 345.00 - SUNNYSIDE 345KV CKT 1	717	789	0.1879	114.7969	BLACKBERRY - NEOSHO 345KV CKT 1
FDNS	00NR	2	16WP	G15_084	FROM->TO	G14-057T 345.00 - SUNNYSIDE 345KV CKT 1	717	789	0.18778	114.7954	SWISSVALE - WEST GARDNER 345KV CKT 1
FDNS	00NR	2	16WP	G15_084	FROM->TO	G14-057T 345.00 - SUNNYSIDE 345KV CKT 1	717	789	0.18745	114.79	P12:138:AEPW:R.S.S.-4:S.HUD.-4
FDNS	00NR	2	16WP	G15_084	FROM->TO	G14-057T 345.00 - SUNNYSIDE 345KV CKT 1	717	789	0.1877	114.7796	G15074_T 345.00 - JEFFREY ENERGY CENTER 345KV CKT 1
FDNS	00NR	2	16WP	G15_084	FROM->TO	G14-057T 345.00 - SUNNYSIDE 345KV CKT 1	717	789	0.19109	114.7775	P12:138:AEPW:REDROCKRD4:WTH_JCT4
FDNS	00NR	2	16WP	G15_084	FROM->TO	G14-057T 345.00 - SUNNYSIDE 345KV CKT 1	717	789	0.1893	114.7755	WALTERS - WALTERS 69KV CKT 1
FDNS	00NR	2	16WP	G15_084	FROM->TO	G14-057T 345.00 - SUNNYSIDE 345KV CKT 1	717	789	0.1889	114.7749	ANADARKO - SEQUOYAHJ4 138.00 138KV CKT 1
FDNS	00NR	2	16WP	G15_084	FROM->TO	G14-057T 345.00 - SUNNYSIDE 345KV CKT 1	717	789	0.1888	114.7735	NORGE ROAD - SOUTHWESTERN STATION 138KV CKT 1
FDNS	00NR	2	16WP	G15_084	FROM->TO	G14-057T 345.00 - SUNNYSIDE 345KV CKT 1	717	789	0.1888	114.7735	NORGE ROAD - SOUTHWESTERN STATION 138KV CKT 1
FDNS	00NR	2	16WP	G15_084	FROM->TO	G14-057T 345.00 - SUNNYSIDE 345KV CKT 1	717	789	0.1889	114.7734	CORN TAP - SEQUOYAHJ4 138.00 138KV CKT 1
FDNS	00NR	2	20WP	G15_084	FROM->TO	G14-057T 345.00 - SUNNYSIDE 345KV CKT 1	717	789	0.191	114.7706	7SAREPTA% 345.00 - ELDORADO EHV 345KV CKT 1
FDNS	00NR	2	20WP	G15_084	FROM->TO	G14-057T 345.00 - SUNNYSIDE 345KV CKT 1	717	789	0.191	114.7704	3TR3AR8EL7EL
FDNS	00NR	2	16WP	G15_084	FROM->TO	G14-057T 345.00 - SUNNYSIDE 345KV CKT 1	717	789	0.18928	114.7677	DRAPER LAKE - SEMINOLE 345KV CKT 1
FDNS	00NR	2	16WP	G15_084	FROM->TO	G14-057T 345.00 - SUNNYSIDE 345KV CKT 1	717	789	0.18928	114.7677	DRAPER LAKE - SEMINOLE 345KV CKT 2
FDNS	00NR	2	16WP	G15_084	FROM->TO	G14-057T 345.00 - SUNNYSIDE 345KV CKT 1	717	789	0.18745	114.7662	ESSEX UNIT 2 500/18.0KV TRANSFORMER CKT 1
FDNS	00NR	2	20WP	G15_084	FROM->TO	G14-057T 345.00 - SUNNYSIDE 345KV CKT 1	717	789	0.191	114.7596	ELDORADO EHV 500/345KV TRANSFORMER CKT 1
FDNS	00NR	2	16WP	G15_084	FROM->TO	G14-057T 345.00 - SUNNYSIDE 345KV CKT 1	717	789	0.18782	114.7568	ETTA (DUKE HOTSPRINGS) - MC NIEL 500KV CKT 1
FDNS	00NR	2	16WP	G15_084	FROM->TO	G14-057T 345.00 - SUNNYSIDE 345KV CKT 1	717	789	0.18782	114.756	SARA - STHLAKE4 138.00 138KV CKT 1
FDNS	00NR	2	16WP	G15_084	FROM->TO	G14-057T 345.00 - SUNNYSIDE 345KV CKT 1	717	789	0.18745	114.7513	P12:138:AEPW:YARCH-S4:T.S.E.-4
FDNS	00NR	2	16WP	G15_084	FROM->TO	G14-057T 345.00 - SUNNYSIDE 345KV CKT 1	717	789	0.18745	114.7501	GEN336801 1-BAXTER WILSON UNIT #1
FDNS	00NR	2	16WP	G15_084	FROM->TO	G14-057T 345.00 - SUNNYSIDE 345KV CKT 1	717	789	0.18565	114.75	LAWTON RELIFT TAP - OMPA-WALTERS 69KV CKT 1
FDNS	00NR	2	16WP	G15_084	FROM->TO	G14-057T 345.00 - SUNNYSIDE 345KV CKT 1	717	789	0.19363	114.7471	G14_038T 345.00 - Hitchland Interchange 345KV CKT 1
FDNS	00NR	2	16WP	G15_084	FROM->TO	G14-057T 345.00 - SUNNYSIDE 345KV CKT 1	717	789	0.18745	114.7452	P12:69:AEPW:NROGERS2:ECNTRTN2
FDNS	00NR	2	16WP	G15_084	FROM->TO	G14-057T 345.00 - SUNNYSIDE 345KV CKT 1	717	789	0.18746	114.7451	P12:138:AEPW:BA_71ST4:T.S.E.-4
FDNS	00NR	2	16WP	G15_084	FROM->TO	G14-057T 345.00 - SUNNYSIDE 345KV CKT 1	717	789	0.18745	114.7421	SABINE 230/24.0KV TRANSFORMER CKT 1
FDNS	00NR	2	16WP	G15_084	FROM->TO	G14-057T 345.00 - SUNNYSIDE 345KV CKT 1	717	789	0.18797	114.7399	EMPORIA ENERGY CENTER - G14_001T 345.00 345KV CKT 1
FDNS	00NR	2	16WP	G15_084	FROM->TO	G14-057T 345.00 - SUNNYSIDE 345KV CKT 1	717	789	0.18762	114.7358	7LUTESVIL 345.00 - 7ST FRANC 345.00 345KV CKT 1
FDNS	00NR	2	16WP	G15_084	FROM->TO	G14-057T 345.00 - SUNNYSIDE 345KV CKT 1	717	789	0.19182	114.7346	FRANKLIN SW - WESTMOORE 138KV CKT 1
FDNS	00NR	2	16WP	G15_084	FROM->TO	G14-057T 345.00 - SUNNYSIDE 345KV CKT 1	717	789	0.18782	114.7271	MCCLAIN - STHLAKE4 138.00 138KV CKT 1
FDNS	00NR	2	16WP	G15_084	FROM->TO	G14-057T 345.00 - SUNNYSIDE 345KV CKT 1	717	789	0.18901	114.7269	NOBLE - PURCELL4 138.00 138KV CKT 1
FDNS	00NR	2	16WP	G15_084	FROM->TO	G14-057T 345.00 - SUNNYSIDE 345KV CKT 1	717	789	0.18745	114.7256	FRONTIER 345/18.0KV TRANSFORMER CKT 1
FDNS	00NR	2	16WP	G15_084	FROM->TO	G14-057T 345.00 - SUNNYSIDE 345KV CKT 1	717	789	0.18765	114.7255	HOPE - MCNAB REC 115KV CKT 1
FDNS	00NR	2	16WP	G15_084	FROM->TO	G14-057T 345.00 - SUNNYSIDE 345KV CKT 1	717	789	0.18745	114.724	FRONTIER 345/18.0KV TRANSFORMER CKT 1
FDNS	00NR	2	20WP	G15_084	FROM->TO	G14-057T 345.00 - SUNNYSIDE 345KV CKT 1	717	789	0.19129	114.7232	P12:138:AEPW:DUNCAN-4:L.E.S.-4
FDNS	00NR	2	16WP	G15_084	FROM->TO	G14-057T 345.00 - SUNNYSIDE 345KV CKT 1	717	789	0.18785	114.7169	P12:138:AEPW-OGE:SHIDLER4:OSAGE 4
FDNS	00NR	2	16WP	G15_084	FROM->TO	G14-057T 345.00 - SUNNYSIDE 345KV CKT 1	717	789	0.18765	114.7166	P12:115:AEPW:TURK3:HOPE3
FDNS	00NR	2	16WP	G15_084	FROM->TO	G14-057T 345.00 - SUNNYSIDE 345KV CKT 1	717	789	0.18745	114.7133	P12:161:AEPW:CHAMSPR5:FARMING5
FDNS	00NR	2	16WP	G15_084	FROM->TO	G14-057T 345.00 - SUNNYSIDE 345KV CKT 1	717	789	0.19109	114.7095	HINTON - WEATHERFORD JCT. 138KV CKT 1
FDNS	00NR	2	16WP	G15_084	FROM->TO	G14-057T 345.00 - SUNNYSIDE 345KV CKT 1	717	789	0.18705	114.7086	ARBUCKLE - VANOSTP4 138.00 138KV CKT 1
FDNS	00NR	2	16WP	G15_084	FROM->TO	G14-057T 345.00 - SUNNYSIDE 345KV CKT 1	717	789	0.18819	114.7085	ENOWILT - LONE OAK 138KV CKT 1
FDNS	00NR	2	16WP	G15_084	FROM->TO	G14-057T 345.00 - SUNNYSIDE 345KV CKT 1	717	789	0.18959	114.7039	WEATHERFORD TAP - WEATHERFORD WIND FARM 138KV CKT 1
FDNS	00NR	2	16WP	G15_084	FROM->TO	G14-057T 345.00 - SUNNYSIDE 345KV CKT 1	717	789	0.18745	114.7016	GEN505616 1-BROKEN BOW
FDNS	00NR	2	16WP	G15_084	FROM->TO	G14-057T 345.00 - SUNNYSIDE 345KV CKT 1	717	789	0.18819	114.6995	ENOWILT - SARDIS 138KV CKT 1
FDNS	00NR	2	16WP	G15_084	FROM->TO	G14-057T 345.00 - SUNNYSIDE 345KV CKT 1	717	789	0.18768	114.6973	8WNEWMADRID 500.00 - DELL 500 500KV CKT 1
FDNS	00NR	2	16WP	G15_084	FROM->TO	G14-057T 345.00 - SUNNYSIDE 345KV CKT 1	717	789	0.18954	114.6962	CLINTON JUNCTION - ELK CITY 138KV CKT 1
FDNS	00NR	2	16WP	G15_084	FROM->TO	G14-057T 345.00 - SUNNYSIDE 345KV CKT 1	717	789	0.18954	114.6962	CLINTON JUNCTION - ELK CITY 138KV CKT 1
FDNS	00NR	2	16WP	G15_084	FROM->TO	G14-057T 345.00 - SUNNYSIDE 345KV CKT 1	717	789	0.18765	114.6936	MCNAB REC - Turk 115 115KV CKT 1
FDNS	00NR	2	16WP	G15_084	FROM->TO	G14-057T 345.00 - SUNNYSIDE 345KV CKT 1	717	789	0.18765	114.6936	TURK (TURK 1) 138/115/13.2KV TRANSFORMER CKT 1
FDNS	00NR	2	16WP	G15_084	FROM->TO	G14-057T 345.00 - SUNNYSIDE 345KV CKT 1	717	789	0.18765	114.6936	TURK (TURK 1) 138/115/13.2KV TRANSFORMER CKT 1
FDNS	00NR	2	16WP	G15_084	FROM->TO	G14-057T 345.00 - SUNNYSIDE 345KV CKT 1	717	789	0.1911	114.6932	LASALLE - STONEWAL LH138.00 138KV CKT 1
FDNS	00NR	2	16WP	G15_084	FROM->TO	G14-057T 345.00 - SUNNYSIDE 345KV CKT 1	717	789	0.18745	114.6878	LEWIS CREEK SWITCHYARD 138/22.0KV TRANSFORMER CKT 1
FDNS	00NR	2	16WP	G15_084	FROM->TO	G14-057T 345.00 - SUNNYSIDE 345KV CKT 1	717	789	0.18797	114.6877	G14_001T 345.00 - WICHITA 345KV CKT 1
FDNS	00NR	2	16WP	G15_084	FROM->TO	G14-057T 345.00 - SUNNYSIDE 345KV CKT 1	717	789	0.18565	114.6875	OMPA-WALTERS - WALTERS 69KV CKT 1
FDNS	00NR	2	16WP	G15_084	FROM->TO	G14-057T 345.00 - SUNNYSIDE 345KV CKT 1	717	789	0.18565	114.6875	OMPA-WALTERS - WALTERS 69KV CKT 1
FDNS	00NR	2	16WP	G15_084	FROM->TO	G14-057T 345.00 - SUNNYSIDE 345KV CKT 1	717	789	0.18815	114.6838	G13-010T 345.00 - POST ROCK 345KV CKT 1
FDNS	00NR	2	16WP	G15_084	FROM->TO	G14-057T 345.00 - SUNNYSIDE 345KV CKT 1	717	789	0.18745	114.6829	LEWIS CREEK SWITCHYARD 138/22.0KV TRANSFORMER CKT 1
FDNS	00NR	2	16WP	G15_084	FROM->TO	G14-057T 345.00 - SUNNYSIDE 345KV CKT 1	717	789	0.18776	114.6827	COUCH SES - MC NIEL 115KV CKT 1
FDNS	00NR	2	16WP	G15_084	FROM->TO	G14-057T 345.00 - SUNNYSIDE 345KV CKT 1	717	789	0.1911	114.6778	STONEWAL LH138.00 - TUPELO TAP 138KV CKT 1
FDNS	00NR	2	16WP	G15_084	FROM->TO	G14-057T 345.00 - SUNNYSIDE 345KV CKT 1	717	789	0.18745	114.6747	GEN501970 1-EVANGELINE UNIT 7
FDNS	00NR	2	20WP	G15_084	FROM->TO	G14-057T 345.00 - SUNNYSIDE 345KV CKT 1	717	789	0.18895	114.6741	GEN515577 1-ARBWND11 0.6900
FDNS	00NR	2	16WP	G15_084	FROM->TO	G14-057T 345.00 - SUNNYSIDE 345KV CKT 1	717	789	0.18772	114.6709	EMPORIA ENERGY CENTER - SWISSVALE 345KV CKT 1
FDNS	00NR	2	16WP	G15_084	FROM->TO	G14-057T 345.00 - SUNNYSIDE 345KV CKT 1	717	789	0.18819	114.6646	CLAYTON - SARDIS 138KV CKT 1
FDNS	00NR	2	16WP	G15_084	FROM->TO	G14-057T 345.00 - SUNNYSIDE 345KV CKT 1	717	789	0.18745	114.6622	GEN334392 1-EXXON MOBIL IPP 1
FDNS	00NR	2	16WP	G15_084	FROM->TO	G14-057T 345.00 - SUNNYSIDE 345KV CKT 1	717	789	0.18768	114.6617	MORISNT4 138.00 - STILLWATER 138KV CKT 1

SOLUTION	GROUP	SCENARIO	SEASON	SOURCE	DIRECTION	MONITORED ELEMENT	RATEA (MVA)	RATEB(MVA)	TDF	TC%LOADING (% MVA)	CONTINGENCY
FDNS	00NR	2	16WP	G15_084	FROM->TO	G14-057T 345.00 - SUNNYSIDE 345KV CKT 1	717	789	0.1893	114.6616	P12:69:WFEC-AEPW:COMANCH2:WALTRS-2
FDNS	00NR	2	16WP	G15_084	FROM->TO	G14-057T 345.00 - SUNNYSIDE 345KV CKT 1	717	789	0.18857	114.6611	SOUTHWESTERN STATION - VERDEN 138KV CKT 1
FDNS	00NR	2	16WP	G15_084	FROM->TO	G14-057T 345.00 - SUNNYSIDE 345KV CKT 1	717	789	0.18769	114.6562	P12:138:OKGE:3TERM2
FDNS	00NR	2	16WP	G15_084	FROM->TO	G14-057T 345.00 - SUNNYSIDE 345KV CKT 1	717	789	0.18745	114.6549	GEN334393 1-EXXON MOBIL IPP 2
FDNS	00NR	2	16WP	G15_084	FROM->TO	G14-057T 345.00 - SUNNYSIDE 345KV CKT 1	717	789	0.18745	114.6549	GEN334394 1-EXXON MOBIL IPP 3
FDNS	00NR	2	16WP	G15_084	FROM->TO	G14-057T 345.00 - SUNNYSIDE 345KV CKT 1	717	789	0.1888	114.6526	CORNVILLE - NORGE ROAD 138KV CKT 1
FDNS	00NR	2	16WP	G15_084	FROM->TO	G14-057T 345.00 - SUNNYSIDE 345KV CKT 1	717	789	0.1888	114.6526	CORNVILLE - NORGE ROAD 138KV CKT 1
FDNS	00NR	2	16WP	G15_084	FROM->TO	G14-057T 345.00 - SUNNYSIDE 345KV CKT 1	717	789	0.19109	114.6498	HINTON - REDROCKRD4 138.00 138KV CKT 1
FDNS	00NR	2	16WP	G15_084	FROM->TO	G14-057T 345.00 - SUNNYSIDE 345KV CKT 1	717	789	0.18745	114.647	GEN336222 1-LITTLE GYPSY UNIT#2
FDNS	00NR	2	16WP	G15_084	FROM->TO	G14-057T 345.00 - SUNNYSIDE 345KV CKT 1	717	789	0.18764	114.6446	7JASPER 345.00 - MORGAN 345KV CKT 1
FDNS	00NR	2	16WP	G15_084	FROM->TO	G14-057T 345.00 - SUNNYSIDE 345KV CKT 1	717	789	0.18752	114.6446	P12:138:OKGE:3TERM12
FDNS	00NR	2	16WP	G15_084	FROM->TO	G14-057T 345.00 - SUNNYSIDE 345KV CKT 1	717	789	0.18857	114.6403	NORTH 29TH CHICKASHA - VERDEN 138KV CKT 1
FDNS	00NR	2	16WP	G15_084	FROM->TO	G14-057T 345.00 - SUNNYSIDE 345KV CKT 1	717	789	0.18819	114.6375	P12:138:AEPW-SWPA:LONEOAK4:BRKNBW4
FDNS	00NR	2	16WP	G15_084	FROM->TO	G14-057T 345.00 - SUNNYSIDE 345KV CKT 1	717	789	0.18745	114.6289	GEN506749 1-EASTMAN GENERATION A
FDNS	00NR	2	16WP	G15_084	FROM->TO	G14-057T 345.00 - SUNNYSIDE 345KV CKT 1	717	789	0.18745	114.6252	GEN334431 1-SABINE UNIT 1
FDNS	00NR	2	16WP	G15_084	FROM->TO	G14-057T 345.00 - SUNNYSIDE 345KV CKT 1	717	789	0.18745	114.6251	GEN334432 1-SABINE UNIT 2
FDNS	00NR	2	16WP	G15_084	FROM->TO	G14-057T 345.00 - SUNNYSIDE 345KV CKT 1	717	789	0.18747	114.6237	P12:138:AEPW:R.S.S-4:T.P.S.-4
FDNS	00NR	2	16WP	G15_084	FROM->TO	G14-057T 345.00 - SUNNYSIDE 345KV CKT 1	717	789	0.18819	114.6234	CLAYTON - NASHOBA 138KV CKT 1
FDNS	00NR	2	20WP	G15_084	FROM->TO	G14-057T 345.00 - SUNNYSIDE 345KV CKT 1	717	789	0.19016	114.6198	MATHWSN7 345.00 - TATONGA7 345.00 345KV CKT 1
FDNS	00NR	2	16WP	G15_084	FROM->TO	G14-057T 345.00 - SUNNYSIDE 345KV CKT 1	717	789	0.18643	114.6194	CLARKSVILLE - ONETA 345KV CKT 1
FDNS	00NR	2	16WP	G15_084	FROM->TO	G14-057T 345.00 - SUNNYSIDE 345KV CKT 1	717	789	0.18643	114.6194	CLARKSVILLE - ONETA 345KV CKT 1
FDNS	00NR	2	16WP	G15_084	FROM->TO	G14-057T 345.00 - SUNNYSIDE 345KV CKT 1	717	789	0.18745	114.618	GEN501971 1-EVANGELINE UNIT 7-1
FDNS	00NR	2	16WP	G15_084	FROM->TO	G14-057T 345.00 - SUNNYSIDE 345KV CKT 1	717	789	0.18745	114.618	GEN501972 1-EVANGELINE UNIT 7-2
FDNS	00NR	2	16WP	G15_084	FROM->TO	G14-057T 345.00 - SUNNYSIDE 345KV CKT 1	717	789	0.18745	114.6176	GEN336152 1-WATERFORD UNIT#2
FDNS	00NR	2	16WP	G15_084	FROM->TO	G14-057T 345.00 - SUNNYSIDE 345KV CKT 1	717	789	0.18745	114.6166	GEN336151 1-WATERFORD UNIT#1
FDNS	00NR	2	16WP	G15_084	FROM->TO	G14-057T 345.00 - SUNNYSIDE 345KV CKT 1	717	789	0.1879	114.6143	FRANKLIN - FRANKLIN SW 138KV CKT 1
FDNS	00NR	2	16WP	G15_084	FROM->TO	G14-057T 345.00 - SUNNYSIDE 345KV CKT 1	717	789	0.1928	114.612	MARIETTA - MARIETTA4 138.00 138KV CKT 1
FDNS	00NR	2	16WP	G15_084	FROM->TO	G14-057T 345.00 - SUNNYSIDE 345KV CKT 1	717	789	0.18819	114.6103	BETHEL - NASHOBA 138KV CKT 1
FDNS	00NR	2	20WP	G15_084	FROM->TO	G14-057T 345.00 - SUNNYSIDE 345KV CKT 1	717	789	0.18514	114.6103	CANADIAN RIVER - MUSKOGEE 345KV CKT 1
FDNS	00NR	2	16WP	G15_084	FROM->TO	G14-057T 345.00 - SUNNYSIDE 345KV CKT 1	717	789	0.18959	114.6078	WEATHERFORD SOUTHEAST - WEATHERFORD TAP 138KV CKT 1
FDNS	00NR	2	16WP	G15_084	FROM->TO	G14-057T 345.00 - SUNNYSIDE 345KV CKT 1	717	789	0.18769	114.6065	FLETCHER - MARLOW JCT 69KV CKT 1
FDNS	00NR	2	20WP	G15_084	FROM->TO	G14-057T 345.00 - SUNNYSIDE 345KV CKT 1	717	789	0.19134	114.6038	COMANCHE TAP - OMPA-DUNCAN 840 138KV CKT 1
FDNS	00NR	2	20WP	G15_084	FROM->TO	G14-057T 345.00 - SUNNYSIDE 345KV CKT 1	717	789	0.19354	114.6032	BRIDGECR 138.00 - TUTTLE 138KV CKT 1
FDNS	00NR	2	16WP	G15_084	FROM->TO	G14-057T 345.00 - SUNNYSIDE 345KV CKT 1	717	789	0.18857	114.5774	CORNVILLE - NORTH 29TH CHICKASHA 138KV CKT 1
FDNS	00NR	2	16WP	G15_084	FROM->TO	G14-057T 345.00 - SUNNYSIDE 345KV CKT 1	717	789	0.18959	114.5609	CLINTON JUNCTION - CLINTON NATURAL GAS TAP 138KV CKT 1
FDNS	00NR	2	16WP	G15_084	FROM->TO	G14-057T 345.00 - SUNNYSIDE 345KV CKT 1	717	789	0.18874	114.5572	Canadian Pump Station - REDROCKRD4 138.00 138KV CKT 1
FDNS	00NR	2	16WP	G15_084	FROM->TO	G14-057T 345.00 - SUNNYSIDE 345KV CKT 1	717	789	0.18792	114.551	P12:138:OKGE:3TERM47
FDNS	00NR	2	16WP	G15_084	FROM->TO	G14-057T 345.00 - SUNNYSIDE 345KV CKT 1	717	789	0.18917	114.5389	CRINER - PAYNE 138.00 138KV CKT 1
FDNS	00NR	2	16WP	G15_084	FROM->TO	G14-057T 345.00 - SUNNYSIDE 345KV CKT 1	717	789	0.18797	114.5371	HAMMETT TAP - HORSESHOE LAKE 138KV CKT 1
FDNS	00NR	2	20WP	G15_084	FROM->TO	G14-057T 345.00 - SUNNYSIDE 345KV CKT 1	717	789	0.18895	114.5351	GEN509409 1-WILKES #3
FDNS	00NR	2	20WP	G15_084	FROM->TO	G14-057T 345.00 - SUNNYSIDE 345KV CKT 1	717	789	0.19437	114.4999	HEALDTON - LOCO 138KV CKT 1
FDNS	00NR	2	20WP	G15_084	FROM->TO	G14-057T 345.00 - SUNNYSIDE 345KV CKT 1	717	789	0.19465	114.4953	Hitchland Interchange - WALKTAP7 345.00 345KV CKT 1
FDNS	00NR	2	20WP	G15_084	FROM->TO	G14-057T 345.00 - SUNNYSIDE 345KV CKT 1	717	789	0.19465	114.4953	Hitchland Interchange - WALKTAP7 345.00 345KV CKT 1
FDNS	00NR	2	20WP	G15_084	FROM->TO	G14-057T 345.00 - SUNNYSIDE 345KV CKT 1	717	789	0.18994	114.4896	ARCADIA - SEMINOLE 345KV CKT 1
FDNS	00NR	2	20WP	G15_084	FROM->TO	G14-057T 345.00 - SUNNYSIDE 345KV CKT 1	717	789	0.18895	114.4753	GEN501813 1-RODEMACHER UNIT 3
FDNS	00NR	2	20WP	G15_084	FROM->TO	G14-057T 345.00 - SUNNYSIDE 345KV CKT 1	717	789	0.19465	114.474	P12:345:SPS:J07.1.FINN.HITCH
FDNS	00NR	2	20WP	G15_084	FROM->TO	G14-057T 345.00 - SUNNYSIDE 345KV CKT 1	717	789	0.18895	114.3772	GEN300006 1-NEW MADRID UNIT 1
FDNS	00NR	2	20WP	G15_084	FROM->TO	G14-057T 345.00 - SUNNYSIDE 345KV CKT 1	717	789	0.19437	114.3578	HEALDTON - RINGLING 138KV CKT 1
FDNS	00NR	2	20WP	G15_084	FROM->TO	G14-057T 345.00 - SUNNYSIDE 345KV CKT 1	717	789	0.18895	114.3573	GEN300007 1-NEW MADRID UNIT 2
FDNS	00NR	2	20WP	G15_084	FROM->TO	G14-057T 345.00 - SUNNYSIDE 345KV CKT 1	717	789	0.18951	114.3393	LACYGNE - WAVERLY7 345.00 345KV CKT 1
FDNS	00NR	2	20WP	G15_084	FROM->TO	G14-057T 345.00 - SUNNYSIDE 345KV CKT 1	717	789	0.19354	114.3268	P12:138:WFEC:MSL01
FDNS	00NR	2	20WP	G15_084	FROM->TO	G14-057T 345.00 - SUNNYSIDE 345KV CKT 1	717	789	0.19354	114.3147	BRIDGECR 138.00 - SUNSHINE CANYON 138KV CKT 1
FDNS	00NR	2	20WP	G15_084	FROM->TO	G14-057T 345.00 - SUNNYSIDE 345KV CKT 1	717	789	0.19134	114.3144	DUNCAN - OMPA-DUNCAN 840 138KV CKT 1
FDNS	00NR	2	20WP	G15_084	FROM->TO	G14-057T 345.00 - SUNNYSIDE 345KV CKT 1	717	789	0.19134	114.3144	DUNCAN - OMPA-DUNCAN 840 138KV CKT 1
FDNS	00NR	2	20WP	G15_084	FROM->TO	G14-057T 345.00 - SUNNYSIDE 345KV CKT 1	717	789	0.18895	114.2639	GEN335206 1-NELSON UNIT 6
FDNS	00NR	2	20WP	G15_084	FROM->TO	G14-057T 345.00 - SUNNYSIDE 345KV CKT 1	717	789	0.18951	114.2179	WAVERLY7 345.00 - WOLF CREEK 345KV CKT 1
FDNS	00NR	2	20WP	G15_084	FROM->TO	G14-057T 345.00 - SUNNYSIDE 345KV CKT 1	717	789	0.18895	114.1921	GEN520947 1-HUGO1
FDNS	00NR	2	20WP	G15_084	FROM->TO	G14-057T 345.00 - SUNNYSIDE 345KV CKT 1	717	789	0.19437	114.1856	RINGLING - SOUTH WILSON 138KV CKT 1
FDNS	00NR	2	20WP	G15_084	FROM->TO	G14-057T 345.00 - SUNNYSIDE 345KV CKT 1	717	789	0.19016	114.1094	G11_051T 345.00 - TATONGA7 345.00 345KV CKT 1
FDNS	00NR	2	16WP	G15_084	FROM->TO	G14-057T 345.00 - SUNNYSIDE 345KV CKT 1	717	789	0.18745	114.0929	803-OKLAUNION
FDNS	00NR	2	20WP	G15_084	FROM->TO	G14-057T 345.00 - SUNNYSIDE 345KV CKT 1	717	789	0.18968	114.0902	ELDORADO EHV - MOUNT OLIVE 500KV CKT 1
FDNS	00NR	2	20WP	G15_084	FROM->TO	G14-057T 345.00 - SUNNYSIDE 345KV CKT 1	717	789	0.18895	114.0785	GEN501812 1-RODEMACHER UNIT 2
FDNS	00NR	2	20WP	G15_084	FROM->TO	G14-057T 345.00 - SUNNYSIDE 345KV CKT 1	717	789	0.18773	114.0689	P12:138:AEPW:SHERID4:112GORE4
FDNS	00NR	2	20WP	G15_084	FROM->TO	G14-057T 345.00 - SUNNYSIDE 345KV CKT 1	717	789	0.18895	114.0656	DOLET HILLS 345/24.0KV TRANSFORMER CKT 1
FDNS	00NR	2	20WP	G15_084	FROM->TO	G14-057T 345.00 - SUNNYSIDE 345KV CKT 1	717	789	0.19071	114.0515	THISTLE7 345.00 - WOODWARD DISTRICT EHV 345KV CKT 1
FDNS	00NR	2	20WP	G15_084	FROM->TO	G14-057T 345.00 - SUNNYSIDE 345KV CKT 1	717	789	0.19071	114.0515	THISTLE7 345.00 - WOODWARD DISTRICT EHV 345KV CKT 1
FDNS	00NR	2	20WP	G15_084	FROM->TO	G14-057T 345.00 - SUNNYSIDE 345KV CKT 1	717	789	0.19071	114.0515	THISTLE7 345.00 - WOODWARD DISTRICT EHV 345KV CKT 2
FDNS	00NR	2	20WP	G15_084	FROM->TO	G14-057T 345.00 - SUNNYSIDE 345KV CKT 1	717	789	0.19071	114.0515	THISTLE7 345.00 - WOODWARD DISTRICT EHV 345KV CKT 2
FDNS	00NR	2	16WP	G15_084	FROM->TO	G14-057T 345.00 - SUNNYSIDE 345KV CKT 1	717	789	0.18745	114.0158	OKLAUNION 345KV SWITCHED SHUNT
FDNS	00NR	2	20WP	G15_084	FROM->TO	G14-057T 345.00 - SUNNYSIDE 345KV CKT 1	717	789	0.18908	113.9926	PARK LANE - SEMINOLE 138KV CKT 1
FDNS	00NR	2	20WP	G15_084	FROM->TO	G14-057T 345.00 - SUNNYSIDE 345KV CKT 1	717	789	0.1898	113.9408	WEBRE - WELLS 500KV CKT 1
FDNS	00NR	2	20WP	G15_084	FROM->TO	G14-057T 345.00 - SUNNYSIDE 345KV CKT 1	717	789	0.18895	113.9399	GEN515564 1-ORIGIN11 0.6900
FDNS	00NR	2	20WP	G15_084	FROM->TO	G14-057T 345.00 - SUNNYSIDE 345KV CKT 1	717	789	0.18895	113.9399	GEN515565 1-ORIGIN21 0.6900
FDNS	00NR	2	16WP	G15_084	FROM->TO	G14-057T 345.00 - SUNNYSIDE 345KV CKT 1	717	789	0.18668	113.9192	P12:138:OKGE:3TERM39
FDNS	00NR	2	20WP	G15_084	FROM->TO	G14-057T 345.00 - SUNNYSIDE 345KV CKT 1	717	789	0.18895	113.9183	GEN334440 1-SABINE UNIT 4
FDNS	00NR	2	20WP	G15_084	FROM->TO	G14-057T 345.00 - SUNNYSIDE 345KV CKT 1	717	789	0.19437	113.8974	MARIETTA - SOUTH WILSON 138KV CKT 1
FDNS	00NR	2	20WP	G15_084	FROM->TO	G14-057T 345.00 - SUNNYSIDE 345KV CKT 1	717	789	0.19023	113.8926	CANEYRV7 345.00 - NEOSHO 345KV CKT 1
FDNS	00NR	2	20WP	G15_084	FROM->TO	G14-057T 345.00 - SUNNYSIDE 345KV CKT 1	717	789	0.18895	113.8885	GEN590011 2-ERCOT EQUIVALENCE
FDNS	00NR	2	20WP	G15_084	FROM->TO	G14-057T 345.00 - SUNNYSIDE 345KV CKT 1	717	789	0.18895	113.8578	DELL 500 - ESSEX UNIT 2 500KV CKT Z1

SOLUTION	GROUP	SCENARIO	SEASON	SOURCE	DIRECTION	MONITORED ELEMENT	RATEA (MVA)	RATEB(MVA)	TDF	TC%LOADING (% MVA)	CONTINGENCY
FDNS	00NR	2	20WP	G15_084	FROM->TO	G14-057T 345.00 - SUNNYSIDE 345KV CKT 1	717	789	0.18895	113.8573	P12:161:AEPW:DYESS 5:HYLAND 5
FDNS	00NR	2	20WP	G15_084	FROM->TO	G14-057T 345.00 - SUNNYSIDE 345KV CKT 1	717	789	0.19291	113.8508	REDBUD - RIVERSIDE STATION 345KV CKT 1
FDNS	00NR	2	20WP	G15_084	FROM->TO	G14-057T 345.00 - SUNNYSIDE 345KV CKT 1	717	789	0.19291	113.8508	REDBUD - RIVERSIDE STATION 345KV CKT 1
FDNS	00NR	2	20WP	G15_084	FROM->TO	G14-057T 345.00 - SUNNYSIDE 345KV CKT 1	717	789	0.18895	113.8189	GEN590010 1-ERCOT EQUIVALENCE
FDNS	00NR	2	20WP	G15_084	FROM->TO	G14-057T 345.00 - SUNNYSIDE 345KV CKT 1	717	789	0.18895	113.8083	P12:69:AEPW:L.E.S.-2:LAW WC2
FDNS	00NR	2	20WP	G15_084	FROM->TO	G14-057T 345.00 - SUNNYSIDE 345KV CKT 1	717	789	0.19437	113.798	P12:138:WFEC:MSL17
FDNS	00NR	2	20WP	G15_084	FROM->TO	G14-057T 345.00 - SUNNYSIDE 345KV CKT 1	717	789	0.18014	113.7891	LAWTON EASTSIDE (LES 5) 345/138/13.8KV TRANSFORMER CKT 2
FDNS	00NR	2	20WP	G15_084	FROM->TO	G14-057T 345.00 - SUNNYSIDE 345KV CKT 1	717	789	0.18014	113.7891	LAWTON EASTSIDE (LES 5) 345/138/13.8KV TRANSFORMER CKT 2
FDNS	00NR	2	20WP	G15_084	FROM->TO	G14-057T 345.00 - SUNNYSIDE 345KV CKT 1	717	789	0.19029	113.7769	P12:138:WFEC:MSL02
FDNS	00NR	2	20WP	G15_084	FROM->TO	G14-057T 345.00 - SUNNYSIDE 345KV CKT 1	717	789	0.19023	113.7513	CANEYRV7 345.00 - LATHAMS7 345.00 345KV CKT 1
FDNS	00NR	2	16WP	G15_084	FROM->TO	G14-057T 345.00 - SUNNYSIDE 345KV CKT 1	717	789	0.1499	113.7308	CHILDRESS - LAKE PAULINE 138KV CKT 1
FDNS	00NR	2	16WP	G15_084	FROM->TO	G14-057T 345.00 - SUNNYSIDE 345KV CKT 1	717	789	0.1499	113.7308	CHILDRESS - LAKE PAULINE 138KV CKT 1
FDNS	00NR	2	20WP	G15_084	FROM->TO	G14-057T 345.00 - SUNNYSIDE 345KV CKT 1	717	789	0.1898	113.7258	PAOLI - PAYNE 138.00 138KV CKT 1
FDNS	00NR	2	20WP	G15_084	FROM->TO	G14-057T 345.00 - SUNNYSIDE 345KV CKT 1	717	789	0.19005	113.7242	ELDORADO EHV - SHERIDAN EHV 500KV CKT 1
FDNS	00NR	2	20WP	G15_084	FROM->TO	G14-057T 345.00 - SUNNYSIDE 345KV CKT 1	717	789	0.18895	113.716	GEN506754 1-LEBROCK STEAM 1
FDNS	00NR	2	16WP	G15_084	FROM->TO	G14-057T 345.00 - SUNNYSIDE 345KV CKT 1	717	789	0.17633	113.7142	ALTUS JUNCTION - SNYDER 138KV CKT 1
FDNS	00NR	2	16WP	G15_084	FROM->TO	G14-057T 345.00 - SUNNYSIDE 345KV CKT 1	717	789	0.17633	113.7142	ALTUS JUNCTION - SNYDER 138KV CKT 1
FDNS	00NR	2	20WP	G15_084	FROM->TO	G14-057T 345.00 - SUNNYSIDE 345KV CKT 1	717	789	0.18895	113.7141	GEN509408 1-WILKES #2
FDNS	00NR	2	16WP	G15_084	FROM->TO	G14-057T 345.00 - SUNNYSIDE 345KV CKT 1	717	789	0.1874	113.7132	MAYSVILLE - MAYSVLT4 138.00 138KV CKT 1
FDNS	00NR	2	16WP	G15_084	FROM->TO	G14-057T 345.00 - SUNNYSIDE 345KV CKT 1	717	789	0.15324	113.7125	CHILDRESS - HOLLIS TAP 138KV CKT 1
FDNS	00NR	2	16WP	G15_084	FROM->TO	G14-057T 345.00 - SUNNYSIDE 345KV CKT 1	717	789	0.18747	113.704	JOHNSON COUNTY - RUSSETT 138KV CKT 1
FDNS	00NR	2	20WP	G15_084	FROM->TO	G14-057T 345.00 - SUNNYSIDE 345KV CKT 1	717	789	0.18997	113.6958	ANADARKO - GEORGIA 138KV CKT 1
FDNS	00NR	2	16WP	G15_084	FROM->TO	G14-057T 345.00 - SUNNYSIDE 345KV CKT 1	717	789	0.18745	113.6944	GEN562772 1-G15034_3 0.6900
FDNS	00NR	2	16WP	G15_084	FROM->TO	G14-057T 345.00 - SUNNYSIDE 345KV CKT 1	717	789	0.18764	113.6886	GLASSES - MADILL INDUSTRIAL TAP 138KV CKT 1
FDNS	00NR	2	16WP	G15_084	FROM->TO	G14-057T 345.00 - SUNNYSIDE 345KV CKT 1	717	789	0.18804	113.6839	DRAPER LAKE - MIDWEST TAP 138KV CKT 1
FDNS	00NR	2	16WP	G15_084	FROM->TO	G14-057T 345.00 - SUNNYSIDE 345KV CKT 1	717	789	0.1878	113.6817	CIMARRON - MATHWSN7 345.00 345KV CKT 1
FDNS	00NR	2	16WP	G15_084	FROM->TO	G14-057T 345.00 - SUNNYSIDE 345KV CKT 1	717	789	0.1878	113.6817	CIMARRON - MATHWSN7 345.00 345KV CKT 2
FDNS	00NR	2	20WP	G15_084	FROM->TO	G14-057T 345.00 - SUNNYSIDE 345KV CKT 1	717	789	0.18782	113.6753	P12:138:AEPW:112GORE4:L.E.S.-4
FDNS	00NR	2	20WP	G15_084	FROM->TO	G14-057T 345.00 - SUNNYSIDE 345KV CKT 1	717	789	0.19262	113.6705	CIVIT - PAOLI 138KV CKT 1
FDNS	00NR	2	16WP	G15_084	FROM->TO	G14-057T 345.00 - SUNNYSIDE 345KV CKT 1	717	789	0.18783	113.6682	HUGO (HUGO 1) 345/138/13.8KV TRANSFORMER CKT 1
FDNS	00NR	2	16WP	G15_084	FROM->TO	G14-057T 345.00 - SUNNYSIDE 345KV CKT 1	717	789	0.18819	113.6681	P12:138:OKGE:3TERM21
FDNS	00NR	2	20WP	G15_084	FROM->TO	G14-057T 345.00 - SUNNYSIDE 345KV CKT 1	717	789	0.18996	113.6571	MATHWSN7 345.00 - NORTHWEST 345KV CKT 1
FDNS	00NR	2	16WP	G15_084	FROM->TO	G14-057T 345.00 - SUNNYSIDE 345KV CKT 1	717	789	0.18745	113.6549	GEN520812 1-ANADRK5
FDNS	00NR	2	16WP	G15_084	FROM->TO	G14-057T 345.00 - SUNNYSIDE 345KV CKT 1	717	789	0.18745	113.6548	GEN520813 1-ANADRK6
FDNS	00NR	2	16WP	G15_084	FROM->TO	G14-057T 345.00 - SUNNYSIDE 345KV CKT 1	717	789	0.18745	113.6542	GEN521103 1-BLUE CANYON WIND FARM
FDNS	00NR	2	16WP	G15_084	FROM->TO	G14-057T 345.00 - SUNNYSIDE 345KV CKT 1	717	789	0.1874	113.6516	MAYSVLT4 138.00 - PRAIRIE POINT 138KV CKT 1
FDNS	00NR	2	20WP	G15_084	FROM->TO	G14-057T 345.00 - SUNNYSIDE 345KV CKT 1	717	789	0.18895	113.6355	GEN336252 1-NINEMILE POINT UNIT#5
FDNS	00NR	2	16WP	G15_084	FROM->TO	G14-057T 345.00 - SUNNYSIDE 345KV CKT 1	717	789	0.18764	113.6297	GLASSES - RUSSETT 138KV CKT 1
FDNS	00NR	2	20WP	G15_084	FROM->TO	G14-057T 345.00 - SUNNYSIDE 345KV CKT 1	717	789	0.19279	113.622	P12:138:AEPW-OGE:CORNVIL4:MAUD 4
FDNS	00NR	2	16WP	G15_084	FROM->TO	G14-057T 345.00 - SUNNYSIDE 345KV CKT 1	717	789	0.18713	113.6217	ARBUCKLE - SULPHR 4 138.00 138KV CKT 1
FDNS	00NR	2	16WP	G15_084	FROM->TO	G14-057T 345.00 - SUNNYSIDE 345KV CKT 1	717	789	0.18745	113.6152	GEN511961 1-DEMPSEY-WTG10.7000
FDNS	00NR	2	16WP	G15_084	FROM->TO	G14-057T 345.00 - SUNNYSIDE 345KV CKT 1	717	789	0.18751	113.613	P12:138:WFEC:MSL11
FDNS	00NR	2	16WP	G15_084	FROM->TO	G14-057T 345.00 - SUNNYSIDE 345KV CKT 1	717	789	0.18751	113.613	P12:138:WFEC-AEPW:PHAROAH4:LONEOAK4
FDNS	00NR	2	20WP	G15_084	FROM->TO	G14-057T 345.00 - SUNNYSIDE 345KV CKT 1	717	789	0.18997	113.6031	FLETCHER - GEORGIA 138KV CKT 1
FDNS	00NR	2	16WP	G15_084	FROM->TO	G14-057T 345.00 - SUNNYSIDE 345KV CKT 1	717	789	0.18746	113.5901	P12:069:OKGE:3TERM42
FDNS	00NR	2	16WP	G15_084	FROM->TO	G14-057T 345.00 - SUNNYSIDE 345KV CKT 1	717	789	0.18759	113.5871	DELL 500 - INDEPENDENCE 500KV CKT 1
FDNS	00NR	2	20WP	G15_084	FROM->TO	G14-057T 345.00 - SUNNYSIDE 345KV CKT 1	717	789	0.18895	113.5866	FRONTIER - GRIMES 345KV CKT 1
FDNS	00NR	2	20WP	G15_084	FROM->TO	G14-057T 345.00 - SUNNYSIDE 345KV CKT 1	717	789	0.18895	113.5774	GEN335204 1-NELSON UNIT 4
FDNS	00NR	2	16WP	G15_084	FROM->TO	G14-057T 345.00 - SUNNYSIDE 345KV CKT 1	717	789	0.18759	113.5713	CANEY CREEK - JOHNSON COUNTY 138KV CKT 1
FDNS	00NR	2	20WP	G15_084	FROM->TO	G14-057T 345.00 - SUNNYSIDE 345KV CKT 1	717	789	0.18895	113.5712	GEN503909 1-FULTONU1 1 16.000
FDNS	00NR	2	20WP	G15_084	FROM->TO	G14-057T 345.00 - SUNNYSIDE 345KV CKT 1	717	789	0.18895	113.5702	GEN334441 1-SABINE UNIT 5
FDNS	00NR	2	16WP	G15_084	FROM->TO	G14-057T 345.00 - SUNNYSIDE 345KV CKT 1	717	789	0.18745	113.5667	GEN615021 1-GRE-ER 14G 16.000
FDNS	00NR	2	16WP	G15_084	FROM->TO	G14-057T 345.00 - SUNNYSIDE 345KV CKT 1	717	789	0.1879	113.5647	P12:138:WFEC:MSL08
FDNS	00NR	2	16WP	G15_084	FROM->TO	G14-057T 345.00 - SUNNYSIDE 345KV CKT 1	717	789	0.18745	113.5645	GEN562902 1-G15052_3 0.6900
FDNS	00NR	2	16WP	G15_084	FROM->TO	G14-057T 345.00 - SUNNYSIDE 345KV CKT 1	717	789	0.18745	113.5628	GEN515443 1-MNCOWND1 0.7000
FDNS	00NR	2	20WP	G15_084	FROM->TO	G14-057T 345.00 - SUNNYSIDE 345KV CKT 1	717	789	0.19011	113.5606	EMPIRE - FLETCHER 138KV CKT 1
FDNS	00NR	2	16WP	G15_084	FROM->TO	G14-057T 345.00 - SUNNYSIDE 345KV CKT 1	717	789	0.18745	113.5576	GEN563242 1-G15090_3 0.6900
FDNS	00NR	2	16WP	G15_084	FROM->TO	G14-057T 345.00 - SUNNYSIDE 345KV CKT 1	717	789	0.1874	113.5543	PRAIRIE POINT - RATLIFF 138KV CKT 1
FDNS	00NR	2	20WP	G15_084	FROM->TO	G14-057T 345.00 - SUNNYSIDE 345KV CKT 1	717	789	0.19138	113.5499	TUPELO - TUPELO TAP 138KV CKT 1
FDNS	00NR	2	20WP	G15_084	FROM->TO	G14-057T 345.00 - SUNNYSIDE 345KV CKT 1	717	789	0.19279	113.5451	BLANCHARD - CORNVILLE 138KV CKT 1
FDNS	00NR	2	16WP	G15_084	FROM->TO	G14-057T 345.00 - SUNNYSIDE 345KV CKT 1	717	789	0.18745	113.5415	GEN560183 1-REDHIL-WTG1 12.000
FDNS	00NR	2	16WP	G15_084	FROM->TO	G14-057T 345.00 - SUNNYSIDE 345KV CKT 1	717	789	0.18745	113.5402	GEN629071 1-BURLINGTON GENERATOR FOR UNIT NO 1 E
FDNS	00NR	2	16WP	G15_084	FROM->TO	G14-057T 345.00 - SUNNYSIDE 345KV CKT 1	717	789	0.18733	113.5393	CARTER - CHICKASAW 138KV CKT 1
FDNS	00NR	2	20WP	G15_084	FROM->TO	G14-057T 345.00 - SUNNYSIDE 345KV CKT 1	717	789	0.19023	113.5375	LATHAMS7 345.00 - ROSE HILL 345KV CKT 1
FDNS	00NR	2	20WP	G15_084	FROM->TO	G14-057T 345.00 - SUNNYSIDE 345KV CKT 1	717	789	0.19262	113.5294	CIVIT - STRATFORD 138KV CKT 1
FDNS	00NR	2	16WP	G15_084	FROM->TO	G14-057T 345.00 - SUNNYSIDE 345KV CKT 1	717	789	0.18716	113.5291	ROCKY POINT - SPRINGDALE 138KV CKT 1
FDNS	00NR	2	16WP	G15_084	FROM->TO	G14-057T 345.00 - SUNNYSIDE 345KV CKT 1	717	789	0.18914	113.5289	NORTHWEST - SPRING CREEK 345KV CKT 1
FDNS	00NR	2	16WP	G15_084	FROM->TO	G14-057T 345.00 - SUNNYSIDE 345KV CKT 1	717	789	0.19163	113.5271	MOREWOOD SW - NINE MILE 138KV CKT 1
FDNS	00NR	2	16WP	G15_084	FROM->TO	G14-057T 345.00 - SUNNYSIDE 345KV CKT 1	717	789	0.18741	113.5248	CANADIAN RIVER - MCALESTER SOUTH 138KV CKT 1
FDNS	00NR	2	16WP	G15_084	FROM->TO	G14-057T 345.00 - SUNNYSIDE 345KV CKT 1	717	789	0.18741	113.5248	CANADIAN RIVER - MCALESTER SOUTH 138KV CKT 1
FDNS	00NR	2	16WP	G15_084	FROM->TO	G14-057T 345.00 - SUNNYSIDE 345KV CKT 1	717	789	0.18741	113.5235	CANADIAN RIVER () 345/138/13.8KV TRANSFORMER CKT 1
FDNS	00NR	2	16WP	G15_084	FROM->TO	G14-057T 345.00 - SUNNYSIDE 345KV CKT 1	717	789	0.18741	113.5235	CANADIAN RIVER () 345/138/13.8KV TRANSFORMER CKT 1
FDNS	00NR	2	16WP	G15_084	FROM->TO	G14-057T 345.00 - SUNNYSIDE 345KV CKT 1	717	789	0.18914	113.5201	SOONER - SPRING CREEK 345KV CKT 1
FDNS	00NR	2	16WP	G15_084	FROM->TO	G14-057T 345.00 - SUNNYSIDE 345KV CKT 1	717	789	0.18745	113.5182	GEN514805 1-SOONER UNIT 1
FDNS	00NR	2	16WP	G15_084	FROM->TO	G14-057T 345.00 - SUNNYSIDE 345KV CKT 1	717	789	0.18745	113.5119	GEN514806 1-SOONER UNIT 2
FDNS	00NR	2	16WP	G15_084	FROM->TO	G14-057T 345.00 - SUNNYSIDE 345KV CKT 1	717	789	0.18745	113.5091	INDEPENDENCE 500/26.0KV TRANSFORMER CKT 1
FDNS	00NR	2	16WP	G15_084	FROM->TO	G14-057T 345.00 - SUNNYSIDE 345KV CKT 1	717	789	0.18765	113.5081	KEO EHV - WEST MEMPHIS 500 500KV CKT 1
FDNS	00NR	2	16WP	G15_084	FROM->TO	G14-057T 345.00 - SUNNYSIDE 345KV CKT 1	717	789	0.18745	113.5065	BURLINGTON NO1 + NO 2 + NO 3 161/20.0KV TRANSFORMER CKT 1
FDNS	00NR	2	16WP	G15_084	FROM->TO	G14-057T 345.00 - SUNNYSIDE 345KV CKT 1	717	789	0.18601	113.5008	NORTHWEST TEXARKANA - WELSH 345KV CKT 1

SOLUTION	GROUP	SCENARIO	SEASON	SOURCE	DIRECTION	MONITORED ELEMENT	RATEA (MVA)	RATEB(MVA)	TDF	TC%LOADING (% MVA)	CONTINGENCY
FDNS	00NR	2	16WP	G15_084	FROM->TO	G14-057T 345.00 - SUNNYSIDE 345KV CKT 1	717	789	0.18601	113.5008	NORTHWEST TEXARKANA - WELSH 345KV CKT 1
FDNS	00NR	2	16WP	G15_084	FROM->TO	G14-057T 345.00 - SUNNYSIDE 345KV CKT 1	717	789	0.18745	113.497	GEN562078 1-G11_051_3 0.6900
FDNS	00NR	2	16WP	G15_084	FROM->TO	G14-057T 345.00 - SUNNYSIDE 345KV CKT 1	717	789	0.18745	113.4885	P12:230:UMZB:# 112 #: NU IN SD. NU-RCDC & DRY CREEK XFMR
FDNS	00NR	2	16WP	G15_084	FROM->TO	G14-057T 345.00 - SUNNYSIDE 345KV CKT 1	717	789	0.18745	113.4873	RCDC EAST 4230.00 - RED CEDAR DC 230KV CKT 1
FDNS	00NR	2	20WP	G15_084	FROM->TO	G14-057T 345.00 - SUNNYSIDE 345KV CKT 1	717	789	0.18959	113.4818	LAYFLD8 500.00 - MOUNT OLIVE 500KV CKT 1
FDNS	00NR	2	20WP	G15_084	FROM->TO	G14-057T 345.00 - SUNNYSIDE 345KV CKT 1	717	789	0.18959	113.4818	LAYFLD8 500.00 - MOUNT OLIVE 500KV CKT 1
FDNS	00NR	2	16WP	G15_084	FROM->TO	G14-057T 345.00 - SUNNYSIDE 345KV CKT 1	717	789	0.18736	113.4817	CHAMBER SPRINGS - CLARKSVILLE 345KV CKT 1
FDNS	00NR	2	16WP	G15_084	FROM->TO	G14-057T 345.00 - SUNNYSIDE 345KV CKT 1	717	789	0.18713	113.4701	JOLLYVILLE - SULPHR 4 138.00 138KV CKT 1
FDNS	00NR	2	20WP	G15_084	FROM->TO	G14-057T 345.00 - SUNNYSIDE 345KV CKT 1	717	789	0.19011	113.4662	COMANCHE - EMPIRE 138KV CKT 1
FDNS	00NR	2	20WP	G15_084	FROM->TO	G14-057T 345.00 - SUNNYSIDE 345KV CKT 1	717	789	0.18895	113.4638	GEN336251 1-NINEMILE POINT UNIT#4
FDNS	00NR	2	20WP	G15_084	FROM->TO	G14-057T 345.00 - SUNNYSIDE 345KV CKT 1	717	789	0.18895	113.4588	GEN334071 1-LEWIS CREEK 2
FDNS	00NR	2	20WP	G15_084	FROM->TO	G14-057T 345.00 - SUNNYSIDE 345KV CKT 1	717	789	0.18981	113.4553	G1524G1525 345.00 - THISTLE7 345.00 345KV CKT 1
FDNS	00NR	2	20WP	G15_084	FROM->TO	G14-057T 345.00 - SUNNYSIDE 345KV CKT 1	717	789	0.18981	113.4553	G1524G1525 345.00 - THISTLE7 345.00 345KV CKT 2
FDNS	00NR	2	20WP	G15_084	FROM->TO	G14-057T 345.00 - SUNNYSIDE 345KV CKT 1	717	789	0.19238	113.4539	FINNEY SWITCHING STATION - HOLCOMB 345KV CKT 1
FDNS	00NR	2	20WP	G15_084	FROM->TO	G14-057T 345.00 - SUNNYSIDE 345KV CKT 1	717	789	0.19238	113.4539	FINNEY SWITCHING STATION - HOLCOMB 345KV CKT 1
FDNS	00NR	2	16WP	G15_084	FROM->TO	G14-057T 345.00 - SUNNYSIDE 345KV CKT 1	717	789	0.18745	113.4538	GEN562802 1-G15039_3 0.3570
FDNS	00NR	2	20WP	G15_084	FROM->TO	G14-057T 345.00 - SUNNYSIDE 345KV CKT 1	717	789	0.18895	113.4503	GEN334070 1-LEWIS CREEK 1
FDNS	00NR	2	16WP	G15_084	FROM->TO	G14-057T 345.00 - SUNNYSIDE 345KV CKT 1	717	789	0.18745	113.4469	GEN524285 1-WILDORADO WIND GEN
FDNS	00NR	2	16WP	G15_084	FROM->TO	G14-057T 345.00 - SUNNYSIDE 345KV CKT 1	717	789	0.18745	113.434	THOMAS HILL 161/22.0KV TRANSFORMER CKT 1
FDNS	00NR	2	16WP	G15_084	FROM->TO	G14-057T 345.00 - SUNNYSIDE 345KV CKT 1	717	789	0.18745	113.4282	GEN562587 1-G14_056_3 0.6900
FDNS	00NR	2	16WP	G15_084	FROM->TO	G14-057T 345.00 - SUNNYSIDE 345KV CKT 1	717	789	0.18745	113.4268	GEN524295 1-SPNSPUR_WND10.6900
FDNS	00NR	2	20WP	G15_084	FROM->TO	G14-057T 345.00 - SUNNYSIDE 345KV CKT 1	717	789	0.18894	113.4264	P12:161:AEPW-SWPA:BEAVER5:EROGERS5
FDNS	00NR	2	20WP	G15_084	FROM->TO	G14-057T 345.00 - SUNNYSIDE 345KV CKT 1	717	789	0.18895	113.4262	GEN509392 G2-ARSENAL HILL GENS #3 (STALL)
FDNS	00NR	2	20WP	G15_084	FROM->TO	G14-057T 345.00 - SUNNYSIDE 345KV CKT 1	717	789	0.18895	113.4261	GEN509391 G1-ARSENAL HILL GENS #2 (STALL)
FDNS	00NR	2	20WP	G15_084	FROM->TO	G14-057T 345.00 - SUNNYSIDE 345KV CKT 1	717	789	0.18895	113.424	GEN509393 S1-ARSENAL HILL GENS #4 (STALL)
FDNSLock	00NR	2	16WP	G15_084	FROM->TO	G14-057T 345.00 - SUNNYSIDE 345KV CKT 1	717	789	0.18745	113.4222	GEN629072 4-LANSING GENERATOR FOR UNITS NO4 EIA CODE 1
FDNS	00NR	2	16WP	G15_084	FROM->TO	G14-057T 345.00 - SUNNYSIDE 345KV CKT 1	717	789	0.18745	113.421	GEN560331 1-G10-46 13.800
FDNS	00NR	2	16WP	G15_084	FROM->TO	G14-057T 345.00 - SUNNYSIDE 345KV CKT 1	717	789	0.18745	113.4125	GEN562882 1-G15047_3 0.6900
FDNS	00NR	2	20WP	G15_084	FROM->TO	G14-057T 345.00 - SUNNYSIDE 345KV CKT 1	717	789	0.18895	113.412	GEN334433 1-SABINE UNIT 3
FDNS	00NR	2	20WP	G15_084	FROM->TO	G14-057T 345.00 - SUNNYSIDE 345KV CKT 1	717	789	0.19262	113.4117	OIL CENTER - STRATFORD 138KV CKT 1
FDNS	00NR	2	20WP	G15_084	FROM->TO	G14-057T 345.00 - SUNNYSIDE 345KV CKT 1	717	789	0.19393	113.4106	P12:138:AEPW:S.W.S.-4:L.E.S.-4
FDNS	00NR	2	16WP	G15_084	FROM->TO	G14-057T 345.00 - SUNNYSIDE 345KV CKT 1	717	789	0.18816	113.4035	ARKANSAS NUCLEAR ONE - FT SMITH 500KV CKT 1
FDNS	00NR	2	16WP	G15_084	FROM->TO	G14-057T 345.00 - SUNNYSIDE 345KV CKT 1	717	789	0.18816	113.4035	ARKANSAS NUCLEAR ONE - FT SMITH 500KV CKT 1
FDNS	00NR	2	16WP	G15_084	FROM->TO	G14-057T 345.00 - SUNNYSIDE 345KV CKT 1	717	789	0.18713	113.4017	JOLLYVILLE - KERR MCGEE CIMARRON 138KV CKT 1
FDNS	00NR	2	16WP	G15_084	FROM->TO	G14-057T 345.00 - SUNNYSIDE 345KV CKT 1	717	789	0.18745	113.4015	GEN657749 1-YOUNG 1 GENERATOR
FDNS	00NR	2	20WP	G15_084	FROM->TO	G14-057T 345.00 - SUNNYSIDE 345KV CKT 1	717	789	0.18895	113.4001	GEN337653 1-WHITE BLUFF UNIT #2
FDNS	00NR	2	16WP	G15_084	FROM->TO	G14-057T 345.00 - SUNNYSIDE 345KV CKT 1	717	789	0.19163	113.393	BEARCAT 138.00 - NINE MILE 138KV CKT 1
FDNS	00NR	2	16WP	G15_084	FROM->TO	G14-057T 345.00 - SUNNYSIDE 345KV CKT 1	717	789	0.18745	113.3904	GEN562269 1-G12-020-1 0.6900
FDNS	00NR	2	20WP	G15_084	FROM->TO	G14-057T 345.00 - SUNNYSIDE 345KV CKT 1	717	789	0.18895	113.3895	GEN336831 1-BAXTER WILSON SES
FDNS	00NR	2	20WP	G15_084	FROM->TO	G14-057T 345.00 - SUNNYSIDE 345KV CKT 1	717	789	0.18895	113.3671	P12:161:AEPW:DYESS5:ELMSPRNG:TONTITN5
FDNS	00NR	2	20WP	G15_084	FROM->TO	G14-057T 345.00 - SUNNYSIDE 345KV CKT 1	717	789	0.1893	113.3648	DUNCAN (DUNCAN) 138/69/13.8KV TRANSFORMER CKT 1
FDNS	00NR	2	20WP	G15_084	FROM->TO	G14-057T 345.00 - SUNNYSIDE 345KV CKT 1	717	789	0.1893	113.3648	DUNCAN (DUNCAN) 138/69/13.8KV TRANSFORMER CKT 1
FDNS	00NR	2	16WP	G15_084	FROM->TO	G14-057T 345.00 - SUNNYSIDE 345KV CKT 1	717	789	0.18713	113.3511	ARBWIND4 138.00 - KERR MCGEE CIMARRON 138KV CKT 1
FDNS	00NR	2	16WP	G15_084	FROM->TO	G14-057T 345.00 - SUNNYSIDE 345KV CKT 1	717	789	0.18745	113.3483	GEN562974 1-G15060_5 0.6900
FDNS	00NR	2	20WP	G15_084	FROM->TO	G14-057T 345.00 - SUNNYSIDE 345KV CKT 1	717	789	0.18895	113.346	GEN337911 1-ARKANSAS NUCLEAR ONE UNIT #2
FDNS	00NR	2	16WP	G15_084	FROM->TO	G14-057T 345.00 - SUNNYSIDE 345KV CKT 1	717	789	0.18745	113.3454	GEN562270 1-G12-020-2 0.6900
FDNS	00NR	2	20WP	G15_084	FROM->TO	G14-057T 345.00 - SUNNYSIDE 345KV CKT 1	717	789	0.18895	113.3429	GEN515040 1-SEMINOLE 1G
FDNS	00NR	2	16WP	G15_084	FROM->TO	G14-057T 345.00 - SUNNYSIDE 345KV CKT 1	717	789	0.18745	113.3395	GEN562812 1-G15040_3 0.3570
FDNS	00NR	2	20WP	G15_084	FROM->TO	G14-057T 345.00 - SUNNYSIDE 345KV CKT 1	717	789	0.19209	113.3393	TUTTLE - TUTTLE CONOCO TAP 138KV CKT 1
FDNS	00NR	2	16WP	G15_084	FROM->TO	G14-057T 345.00 - SUNNYSIDE 345KV CKT 1	717	789	0.18745	113.339	GEN562973 1-G15060_4 0.6900
FDNS	00NR	2	20WP	G15_084	FROM->TO	G14-057T 345.00 - SUNNYSIDE 345KV CKT 1	717	789	0.18895	113.3376	GEN334030 1-FRONTIER UNIT 1
FDNS	00NR	2	16WP	G15_084	FROM->TO	G14-057T 345.00 - SUNNYSIDE 345KV CKT 1	717	789	0.18745	113.3369	GEN563102 1-G15075_3 0.5500
FDNS	00NR	2	20WP	G15_084	FROM->TO	G14-057T 345.00 - SUNNYSIDE 345KV CKT 1	717	789	0.18895	113.3353	GEN334031 1-FRONTIER UNIT 2
FDNS	00NR	2	20WP	G15_084	FROM->TO	G14-057T 345.00 - SUNNYSIDE 345KV CKT 1	717	789	0.19279	113.3336	BLANCHARD - MAUD 138KV CKT 1
FDNS	00NR	2	16WP	G15_084	FROM->TO	G14-057T 345.00 - SUNNYSIDE 345KV CKT 1	717	789	0.1859	113.3326	CLARKSVILLE - MUSKOGEE 345KV CKT 1
FDNS	00NR	2	16WP	G15_084	FROM->TO	G14-057T 345.00 - SUNNYSIDE 345KV CKT 1	717	789	0.1859	113.3326	CLARKSVILLE - MUSKOGEE 345KV CKT 1
FDNSLock	00NR	2	16WP	G15_084	FROM->TO	G14-057T 345.00 - SUNNYSIDE 345KV CKT 1	717	789	0.18745	113.3321	GEN681522 3-GENOA 3
FDNS	00NR	2	16WP	G15_084	FROM->TO	G14-057T 345.00 - SUNNYSIDE 345KV CKT 1	717	789	0.18745	113.3307	GEN563062 1-G15071_3 0.6900
FDNS	00NR	2	16WP	G15_084	FROM->TO	G14-057T 345.00 - SUNNYSIDE 345KV CKT 1	717	789	0.18745	113.329	GEN563132 1-G15078_3 0.3570
FDNS	00NR	2	20WP	G15_084	FROM->TO	G14-057T 345.00 - SUNNYSIDE 345KV CKT 1	717	789	0.19518	113.3174	G14_038T 345.00 - Hitchland Interchange 345KV CKT 1
FDNS	00NR	2	20WP	G15_084	FROM->TO	G14-057T 345.00 - SUNNYSIDE 345KV CKT 1	717	789	0.18894	113.3143	P12:138:AEPW:CATOOSA4:T.S.E.-4
FDNS	00NR	2	16WP	G15_084	FROM->TO	G14-057T 345.00 - SUNNYSIDE 345KV CKT 1	717	789	0.19163	113.3117	P12:138:WFEC:MSL14
FDNS	00NR	2	20WP	G15_084	FROM->TO	G14-057T 345.00 - SUNNYSIDE 345KV CKT 1	717	789	0.18919	113.2996	FULTON 115 - HOPE 115KV CKT 1
FDNS	00NR	2	20WP	G15_084	FROM->TO	G14-057T 345.00 - SUNNYSIDE 345KV CKT 1	717	789	0.18919	113.2996	FULTON 115 - HOPE 115KV CKT 1
FDNS	00NR	2	16WP	G15_084	FROM->TO	G14-057T 345.00 - SUNNYSIDE 345KV CKT 1	717	789	0.19163	113.2975	BEARCAT 138.00 - MOORELAND 138KV CKT 1
FDNS	00NR	2	20WP	G15_084	FROM->TO	G14-057T 345.00 - SUNNYSIDE 345KV CKT 1	717	789	0.18895	113.2958	GEN337652 1-WHITE BLUFF UNIT #1
FDNS	00NR	2	20WP	G15_084	FROM->TO	G14-057T 345.00 - SUNNYSIDE 345KV CKT 1	717	789	0.18895	113.2951	GEN501811 1-RODEMACHER UNIT 1
FDNS	00NR	2	20WP	G15_084	FROM->TO	G14-057T 345.00 - SUNNYSIDE 345KV CKT 1	717	789	0.19252	113.2942	P12:138:AEPW-OGE:WTH_JCT4:JENSEN4
FDNS	00NR	2	16WP	G15_084	FROM->TO	G14-057T 345.00 - SUNNYSIDE 345KV CKT 1	717	789	0.16104	113.2855	P12:138:AEPW:112GORE4:SNYDER-4
FDNS	00NR	2	20WP	G15_084	FROM->TO	G14-057T 345.00 - SUNNYSIDE 345KV CKT 1	717	789	0.18895	113.2813	GEN506752 1-LEBROCK GAS 1
FDNS	00NR	2	20WP	G15_084	FROM->TO	G14-057T 345.00 - SUNNYSIDE 345KV CKT 1	717	789	0.18895	113.281	GEN506753 1-LEBROCK GAS 2
FDNS	00NR	2	16WP	G15_084	FROM->TO	G14-057T 345.00 - SUNNYSIDE 345KV CKT 1	717	789	0.18692	113.2806	BROWN - RUSSETT 138KV CKT 1
FDNS	00NR	2	20WP	G15_084	FROM->TO	G14-057T 345.00 - SUNNYSIDE 345KV CKT 1	717	789	0.19032	113.2785	P12:138:AEPW:CORNVIL4:DUNCAN-4
FDNS	00NR	2	20WP	G15_084	FROM->TO	G14-057T 345.00 - SUNNYSIDE 345KV CKT 1	717	789	0.18895	113.2771	GEN300015 1-1SGPDEL 18.000
FDNS	00NR	2	20WP	G15_084	FROM->TO	G14-057T 345.00 - SUNNYSIDE 345KV CKT 1	717	789	0.18895	113.2757	GEN515226 1-MUSKOGEE 6G
FDNS	00NR	2	16WP	G15_084	FROM->TO	G14-057T 345.00 - SUNNYSIDE 345KV CKT 1	717	789	0.18745	113.2751	GEN345671 2-1RUSH G2 18.000
FDNS	00NR	2	20WP	G15_084	FROM->TO	G14-057T 345.00 - SUNNYSIDE 345KV CKT 1	717	789	0.18895	113.2746	GEN300003 1-THOMAS HILL UNIT 3
FDNS	00NR	2	16WP	G15_084	FROM->TO	G14-057T 345.00 - SUNNYSIDE 345KV CKT 1	717	789	0.18745	113.2733	GEN345670 1-1RUSH G1 18.000
FDNS	00NR	2	16WP	G15_084	FROM->TO	G14-057T 345.00 - SUNNYSIDE 345KV CKT 1	717	789	0.18719	113.2654	CHICKASAW - TOTAL 138KV CKT 1

SOLUTION	GROUP	SCENARIO	SEASON	SOURCE	DIRECTION	MONITORED ELEMENT	RATEA (MVA)	RATEB(MVA)	TDF	TC%LOADING (% MVA)	CONTINGENCY
FDNS	00NR	2	20WP	G15_084	FROM->TO	G14-057T 345.00 - SUNNYSIDE 345KV CKT 1	717	789	0.18895	113.2625	GEN336191 1-LITTLE GYPSY UNIT#3
FDNS	00NR	2	16WP	G15_084	FROM->TO	G14-057T 345.00 - SUNNYSIDE 345KV CKT 1	717	789	0.18699	113.2607	RUSSETT - SPRINGDALE 138KV CKT 1
FDNS	00NR	2	20WP	G15_084	FROM->TO	G14-057T 345.00 - SUNNYSIDE 345KV CKT 1	717	789	0.19209	113.2576	CIMARRON - TUTTLE CONOCO TAP 138KV CKT 1
FDNS	00NR	2	16WP	G15_084	FROM->TO	G14-057T 345.00 - SUNNYSIDE 345KV CKT 1	717	789	0.18745	113.2485	GEN526331 1-JONES GEN #1 22 KV
FDNS	00NR	2	16WP	G15_084	FROM->TO	G14-057T 345.00 - SUNNYSIDE 345KV CKT 1	717	789	0.18745	113.2484	GEN526332 1-JONES GEN #2 21 KV
FDNS	00NR	2	20WP	G15_084	FROM->TO	G14-057T 345.00 - SUNNYSIDE 345KV CKT 1	717	789	0.19012	113.2412	6LAYFLD 230.00 - CARROLL 230KV CKT 1
FDNS	00NR	2	20WP	G15_084	FROM->TO	G14-057T 345.00 - SUNNYSIDE 345KV CKT 1	717	789	0.19262	113.2391	LATTA JCT - OIL CENTER 138KV CKT 1
FDNS	00NR	2	16WP	G15_084	FROM->TO	G14-057T 345.00 - SUNNYSIDE 345KV CKT 1	717	789	0.18745	113.2379	GEN560105 1-G08-22 0.6900
FDNS	00NR	2	16WP	G15_084	FROM->TO	G14-057T 345.00 - SUNNYSIDE 345KV CKT 1	717	789	0.18707	113.236	ROCKY POINT - SUNNYSIDE 138KV CKT 1
FDNS	00NR	2	16WP	G15_084	FROM->TO	G14-057T 345.00 - SUNNYSIDE 345KV CKT 1	717	789	0.18745	113.2341	GEN562550 1-G14_040_3 0.6900
FDNS	00NR	2	20WP	G15_084	FROM->TO	G14-057T 345.00 - SUNNYSIDE 345KV CKT 1	717	789	0.18895	113.2336	GEN335614 1-WILLOW GLENN UNIT#4
FDNS	00NR	2	20WP	G15_084	FROM->TO	G14-057T 345.00 - SUNNYSIDE 345KV CKT 1	717	789	0.19011	113.2182	P12:138:AEPW:CORNVIL4:S.W.S.-4
FDNS	00NR	2	20WP	G15_084	FROM->TO	G14-057T 345.00 - SUNNYSIDE 345KV CKT 1	717	789	0.18909	113.2169	8DANIEL8 500.00 - MCKNIGHT 500KV CKT 1
FDNS	00NR	2	16WP	G15_084	FROM->TO	G14-057T 345.00 - SUNNYSIDE 345KV CKT 1	717	789	0.18692	113.2115	RUSSETT - RUSSETT 138KV CKT 1
FDNS	00NR	2	16WP	G15_084	FROM->TO	G14-057T 345.00 - SUNNYSIDE 345KV CKT 1	717	789	0.18852	113.2083	P12:138:WFEC:MSL07
FDNS	00NR	2	16WP	G15_084	FROM->TO	G14-057T 345.00 - SUNNYSIDE 345KV CKT 1	717	789	0.18852	113.2083	P12:138:WFEC-AEPW:HUGOPP4:ATOKA--4
FDNS	00NR	2	16WP	G15_084	FROM->TO	G14-057T 345.00 - SUNNYSIDE 345KV CKT 1	717	789	0.18745	113.2077	4SIOUX 1 138.00 138/18.0KV TRANSFORMER CKT 1
FDNS	00NR	2	16WP	G15_084	FROM->TO	G14-057T 345.00 - SUNNYSIDE 345KV CKT 1	717	789	0.18745	113.2074	CLAY BOSWELL 230/20.9KV TRANSFORMER CKT 1
FDNS	00NR	2	20WP	G15_084	FROM->TO	G14-057T 345.00 - SUNNYSIDE 345KV CKT 1	717	789	0.19335	113.2008	BAILEY4 138.00 - SUNSHINE CANYON 138KV CKT 1
FDNS	00NR	2	16WP	G15_084	FROM->TO	G14-057T 345.00 - SUNNYSIDE 345KV CKT 1	717	789	0.18745	113.1988	GEN521112 1-ORME3 13.800
FDNS	00NR	2	16WP	G15_084	FROM->TO	G14-057T 345.00 - SUNNYSIDE 345KV CKT 1	717	789	0.18745	113.1983	GEN511962 2-RKYRDGW2-1 0.7000
FDNS	00NR	2	20WP	G15_084	FROM->TO	G14-057T 345.00 - SUNNYSIDE 345KV CKT 1	717	789	0.18932	113.1928	G15095_T 138.00 - ROSE_VALLEY 138.00 138KV CKT 1
FDNS	00NR	2	20WP	G15_084	FROM->TO	G14-057T 345.00 - SUNNYSIDE 345KV CKT 1	717	789	0.18895	113.191	GEN337910 1-ARKANSAS NUCLEAR ONE UNIT #1
FDNS	00NR	2	16WP	G15_084	FROM->TO	G14-057T 345.00 - SUNNYSIDE 345KV CKT 1	717	789	0.18745	113.1893	GEN527882 1-CUNNINGHAM GEN #2 20 KV
FDNS	00NR	2	20WP	G15_084	FROM->TO	G14-057T 345.00 - SUNNYSIDE 345KV CKT 1	717	789	0.19238	113.1885	FINNEY SWITCHING STATION - WALKTAP7 345.00 345KV CKT 1
FDNS	00NR	2	20WP	G15_084	FROM->TO	G14-057T 345.00 - SUNNYSIDE 345KV CKT 1	717	789	0.19238	113.1885	FINNEY SWITCHING STATION - WALKTAP7 345.00 345KV CKT 1
FDNS	00NR	2	20WP	G15_084	FROM->TO	G14-057T 345.00 - SUNNYSIDE 345KV CKT 1	717	789	0.18894	113.1882	P12:161:AEPW:EROGERS5:ECNTRTN5
FDNS	00NR	2	20WP	G15_084	FROM->TO	G14-057T 345.00 - SUNNYSIDE 345KV CKT 1	717	789	0.18895	113.1874	GEN303007 1-1BC2 U2
FDNS	00NR	2	16WP	G15_084	FROM->TO	G14-057T 345.00 - SUNNYSIDE 345KV CKT 1	717	789	0.18745	113.187	GEN562892 1-G15048_3 0.6900
FDNS	00NR	2	20WP	G15_084	FROM->TO	G14-057T 345.00 - SUNNYSIDE 345KV CKT 1	717	789	0.18976	113.1868	BUCKNER7 345.00 - SPEARVILLE 345KV CKT 1
FDNS	00NR	2	20WP	G15_084	FROM->TO	G14-057T 345.00 - SUNNYSIDE 345KV CKT 1	717	789	0.18976	113.1868	BUCKNER7 345.00 - SPEARVILLE 345KV CKT 1
FDNS	00NR	2	20WP	G15_084	FROM->TO	G14-057T 345.00 - SUNNYSIDE 345KV CKT 1	717	789	0.18895	113.1824	GEN336464 1-MICHOUD UNIT #3
FDNS	00NR	2	20WP	G15_084	FROM->TO	G14-057T 345.00 - SUNNYSIDE 345KV CKT 1	717	789	0.18895	113.1813	GEN303006 1-1BC2 U1
FDNS	00NR	2	20WP	G15_084	FROM->TO	G14-057T 345.00 - SUNNYSIDE 345KV CKT 1	717	789	0.1893	113.1806	P12:69:WFEC-AEPW:COMANCH2:DUNCAN-2
FDNS	00NR	2	20WP	G15_084	FROM->TO	G14-057T 345.00 - SUNNYSIDE 345KV CKT 1	717	789	0.19103	113.1795	P12:138:AEPW:WTHWF4:CLINTJC4
FDNS	00NR	2	20WP	G15_084	FROM->TO	G14-057T 345.00 - SUNNYSIDE 345KV CKT 1	717	789	0.18895	113.178	GEN515223 1-MUSKOGEE 4G
FDNS	00NR	2	20WP	G15_084	FROM->TO	G14-057T 345.00 - SUNNYSIDE 345KV CKT 1	717	789	0.18895	113.178	GEN515225 1-MUSKOGEE 5G
FDNS	00NR	2	20WP	G15_084	FROM->TO	G14-057T 345.00 - SUNNYSIDE 345KV CKT 1	717	789	0.18895	113.178	WHITE BLUFF 500/26.0KV TRANSFORMER CKT 1
FDNS	00NR	2	20WP	G15_084	FROM->TO	G14-057T 345.00 - SUNNYSIDE 345KV CKT 1	717	789	0.18895	113.1752	GEN562783 1-G15036_4 0.6900
FDNS	00NR	2	20WP	G15_084	FROM->TO	G14-057T 345.00 - SUNNYSIDE 345KV CKT 1	717	789	0.18895	113.1752	GEN562784 1-G15036_5 0.6900
FDNS	00NR	2	20WP	G15_084	FROM->TO	G14-057T 345.00 - SUNNYSIDE 345KV CKT 1	717	789	0.18914	113.1714	G15088_T 345.00 - MOORE 345KV CKT 1
FDNS	00NR	2	16WP	G15_084	FROM->TO	G14-057T 345.00 - SUNNYSIDE 345KV CKT 1	717	789	0.1868	113.1696	ARDMORE WEST - CARTER 138KV CKT 1
FDNS	00NR	2	16WP	G15_084	FROM->TO	G14-057T 345.00 - SUNNYSIDE 345KV CKT 1	717	789	0.18745	113.1686	GEN562512 1-G14_020_3 0.6900
FDNS	00NR	2	20WP	G15_084	FROM->TO	G14-057T 345.00 - SUNNYSIDE 345KV CKT 1	717	789	0.18895	113.1671	RODEMACHER 230/22.0KV TRANSFORMER CKT 1
FDNS	00NR	2	16WP	G15_084	FROM->TO	G14-057T 345.00 - SUNNYSIDE 345KV CKT 1	717	789	0.18745	113.1668	GEN672321 1-SHAND GENERATOR 1
FDNS	00NR	2	20WP	G15_084	FROM->TO	G14-057T 345.00 - SUNNYSIDE 345KV CKT 1	717	789	0.18922	113.1619	BISMARK - HOT SPRINGS WEST BUS 115KV CKT 1
FDNS	00NR	2	20WP	G15_084	FROM->TO	G14-057T 345.00 - SUNNYSIDE 345KV CKT 1	717	789	0.18948	113.1611	CIMARRON - CZECH HALL 138KV CKT 1
FDNS	00NR	2	20WP	G15_084	FROM->TO	G14-057T 345.00 - SUNNYSIDE 345KV CKT 1	717	789	0.18927	113.1544	MC NIEL 500/115KV TRANSFORMER CKT 1
FDNS	00NR	2	20WP	G15_084	FROM->TO	G14-057T 345.00 - SUNNYSIDE 345KV CKT 1	717	789	0.1893	113.1534	DUNCAN - TOSCO 69KV CKT 1
FDNS	00NR	2	20WP	G15_084	FROM->TO	G14-057T 345.00 - SUNNYSIDE 345KV CKT 1	717	789	0.18919	113.1531	G15074_T 345.00 - HOYT 345KV CKT 1
FDNS	00NR	2	20WP	G15_084	FROM->TO	G14-057T 345.00 - SUNNYSIDE 345KV CKT 1	717	789	0.18895	113.1507	GEN300010 1-ST FRANCIS UNIT 1
FDNS	00NR	2	20WP	G15_084	FROM->TO	G14-057T 345.00 - SUNNYSIDE 345KV CKT 1	717	789	0.19103	113.1449	P12:138:AEPW:WTHWF4:WTH_SE4
FDNS	00NR	2	16WP	G15_084	FROM->TO	G14-057T 345.00 - SUNNYSIDE 345KV CKT 1	717	789	0.18745	113.1427	GEN672310 1-POPLAR RIVER GENERATOR 1
FDNS	00NR	2	16WP	G15_084	FROM->TO	G14-057T 345.00 - SUNNYSIDE 345KV CKT 1	717	789	0.18745	113.1427	GEN672311 2-POPLAR RIVER GENERATOR 2
FDNS	00NR	2	20WP	G15_084	FROM->TO	G14-057T 345.00 - SUNNYSIDE 345KV CKT 1	717	789	0.18716	113.1411	P12:69:AEPW-OMPA:COMANC-2:OMWALTR2
FDNS	00NR	2	16WP	G15_084	FROM->TO	G14-057T 345.00 - SUNNYSIDE 345KV CKT 1	717	789	0.18745	113.1364	GEN511853 1-COMANCHE #3
FDNS	00NR	2	16WP	G15_084	FROM->TO	G14-057T 345.00 - SUNNYSIDE 345KV CKT 1	717	789	0.18768	113.1346	P12:138:WFEC:MSL16
FDNS	00NR	2	16WP	G15_084	FROM->TO	G14-057T 345.00 - SUNNYSIDE 345KV CKT 1	717	789	0.18745	113.1343	GEN672306 6-BOUNDARY DAM GENERATOR 6
FDNS	00NR	2	20WP	G15_084	FROM->TO	G14-057T 345.00 - SUNNYSIDE 345KV CKT 1	717	789	0.18929	113.1334	HOT SPRINGS EHV - MAGNET COVE 500KV CKT 1
FDNS	00NR	2	20WP	G15_084	FROM->TO	G14-057T 345.00 - SUNNYSIDE 345KV CKT 1	717	789	0.18935	113.1327	CLEO CORNER - CLEOPLT4 138.00 138KV CKT 1
FDNS	00NR	2	20WP	G15_084	FROM->TO	G14-057T 345.00 - SUNNYSIDE 345KV CKT 1	717	789	0.18895	113.1266	GEN337041 1-GERALD ANDRUS
FDNS	00NR	2	16WP	G15_084	FROM->TO	G14-057T 345.00 - SUNNYSIDE 345KV CKT 1	717	789	0.18691	113.1239	SUNNYSIDE (SUNNYSD5) 345/138/13.8KV TRANSFORMER CKT 1
FDNS	00NR	2	20WP	G15_084	FROM->TO	G14-057T 345.00 - SUNNYSIDE 345KV CKT 1	717	789	0.18895	113.1239	GEN505432 1-SIKESTON
FDNS	00NR	2	16WP	G15_084	FROM->TO	G14-057T 345.00 - SUNNYSIDE 345KV CKT 1	717	789	0.18718	113.1209	P12:138:WFEC-AEPW:GOLDENSW4:CRAIGJT4
FDNS	00NR	2	16WP	G15_084	FROM->TO	G14-057T 345.00 - SUNNYSIDE 345KV CKT 1	717	789	0.18745	113.1197	GEN344895 2-1LAB G2 20.000
FDNS	00NR	2	16WP	G15_084	FROM->TO	G14-057T 345.00 - SUNNYSIDE 345KV CKT 1	717	789	0.18745	113.1196	GEN563192 1-G15084_3 0.5500
FDNS	00NR	2	20WP	G15_084	FROM->TO	G14-057T 345.00 - SUNNYSIDE 345KV CKT 1	717	789	0.18895	113.1196	GEN303008 1-1BC2 U3
FDNS	00NR	2	20WP	G15_084	FROM->TO	G14-057T 345.00 - SUNNYSIDE 345KV CKT 1	717	789	0.18932	113.1122	NOEL_SW 138.00 - ROSE_VALLEY 138.00 138KV CKT 1
FDNS	00NR	2	20WP	G15_084	FROM->TO	G14-057T 345.00 - SUNNYSIDE 345KV CKT 1	717	789	0.18935	113.1119	CLEOPLT4 138.00 - MEN TAP 138KV CKT 1
FDNS	00NR	2	20WP	G15_084	FROM->TO	G14-057T 345.00 - SUNNYSIDE 345KV CKT 1	717	789	0.18922	113.1101	ALPINE AECC - BISMARK 115KV CKT 1
FDNS	00NR	2	20WP	G15_084	FROM->TO	G14-057T 345.00 - SUNNYSIDE 345KV CKT 1	717	789	0.18932	113.1071	CIMARRON - SARA 138KV CKT 1
FDNS	00NR	2	20WP	G15_084	FROM->TO	G14-057T 345.00 - SUNNYSIDE 345KV CKT 1	717	789	0.18794	113.1067	CHISHOLM6 230.00 - ELK CITY 230KV 230KV CKT 1
FDNS	00NR	2	20WP	G15_084	FROM->TO	G14-057T 345.00 - SUNNYSIDE 345KV CKT 1	717	789	0.18794	113.104	ELK CITY 230KV (ELKCTY-6) 230/138/13.8KV TRANSFORMER CKT 1
FDNS	00NR	2	20WP	G15_084	FROM->TO	G14-057T 345.00 - SUNNYSIDE 345KV CKT 1	717	789	0.18794	113.104	ELK CITY 230KV (ELKCTY-6) 230/138/13.8KV TRANSFORMER CKT 1
FDNS	00NR	2	20WP	G15_084	FROM->TO	G14-057T 345.00 - SUNNYSIDE 345KV CKT 1	717	789	0.18935	113.0999	IMO TAP - MEN TAP 138KV CKT 1
FDNS	00NR	2	20WP	G15_084	FROM->TO	G14-057T 345.00 - SUNNYSIDE 345KV CKT 1	717	789	0.18895	113.0931	GEN300011 1-ST FRANCIS UNIT 2
FDNS	00NR	2	20WP	G15_084	FROM->TO	G14-057T 345.00 - SUNNYSIDE 345KV CKT 1	717	789	0.18889	113.092	SEMINOLE - VANOSTP4 138.00 138KV CKT 1
FDNS	00NR	2	16WP	G15_084	FROM->TO	G14-057T 345.00 - SUNNYSIDE 345KV CKT 1	717	789	0.18745	113.0912	GEN523461 1-BLACKHAWK GEN #1
FDNS	00NR	2	16WP	G15_084	FROM->TO	G14-057T 345.00 - SUNNYSIDE 345KV CKT 1	717	789	0.18745	113.0911	GEN523462 1-BLACKHAWK GEN #2

SOLUTION	GROUP	SCENARIO	SEASON	SOURCE	DIRECTION	MONITORED ELEMENT	RATEA (MVA)	RATEB(MVA)	TDF	TC%LOADING (% MVA)	CONTINGENCY
FDNS	00NR	2	20WP	G15_084	FROM->TO	G14-057T 345.00 - SUNNYSIDE 345KV CKT 1	717	789	0.18895	113.0904	GEN336170 1-GULF OXY U4
FDNS	00NR	2	16WP	G15_084	FROM->TO	G14-057T 345.00 - SUNNYSIDE 345KV CKT 1	717	789	0.18745	113.0894	GEN511852 1-COMANCHE #2
FDNS	00NR	2	16WP	G15_084	FROM->TO	G14-057T 345.00 - SUNNYSIDE 345KV CKT 1	717	789	0.18745	113.0876	GEN344896 3-1LAB G3 20.000
FDNS	00NR	2	20WP	G15_084	FROM->TO	G14-057T 345.00 - SUNNYSIDE 345KV CKT 1	717	789	0.18885	113.0867	P12:138:AEPW:N.E.S.-4:CATOOSA4
FDNS	00NR	2	16WP	G15_084	FROM->TO	G14-057T 345.00 - SUNNYSIDE 345KV CKT 1	717	789	0.18745	113.0863	GEN344894 1-1LAB G1 20.000
FDNS	00NR	2	20WP	G15_084	FROM->TO	G14-057T 345.00 - SUNNYSIDE 345KV CKT 1	717	789	0.1893	113.086	COMANCHE TAP - TOSCO 69KV CKT 1
FDNS	00NR	2	20WP	G15_084	FROM->TO	G14-057T 345.00 - SUNNYSIDE 345KV CKT 1	717	789	0.18866	113.0851	ARBWIND4 138.00 - CARTER 138KV CKT 1
FDNS	00NR	2	16WP	G15_084	FROM->TO	G14-057T 345.00 - SUNNYSIDE 345KV CKT 1	717	789	0.18745	113.0848	GEN344897 4-1LAB G4 20.000
FDNS	00NR	2	20WP	G15_084	FROM->TO	G14-057T 345.00 - SUNNYSIDE 345KV CKT 1	717	789	0.18948	113.083	CZECH HALL - XEROX 138KV CKT 1
FDNS	00NR	2	20WP	G15_084	FROM->TO	G14-057T 345.00 - SUNNYSIDE 345KV CKT 1	717	789	0.18895	113.0808	NELSON 230/20.0KV TRANSFORMER CKT 1
FDNS	00NR	2	20WP	G15_084	FROM->TO	G14-057T 345.00 - SUNNYSIDE 345KV CKT 1	717	789	0.18948	113.0789	MORGAN - XEROX 138KV CKT 1
FDNS	00NR	2	20WP	G15_084	FROM->TO	G14-057T 345.00 - SUNNYSIDE 345KV CKT 1	717	789	0.18895	113.0714	GEN336801 1-BAXTER WILSON UNIT #1
FDNS	00NR	2	20WP	G15_084	FROM->TO	G14-057T 345.00 - SUNNYSIDE 345KV CKT 1	717	789	0.18922	113.0627	ALPINE AECC - AMITY SS 115KV CKT 1
FDNS	00NR	2	20WP	G15_084	FROM->TO	G14-057T 345.00 - SUNNYSIDE 345KV CKT 1	717	789	0.18948	113.0563	MORGAN - MUSTANG 138KV CKT 1
FDNS	00NR	2	16WP	G15_084	FROM->TO	G14-057T 345.00 - SUNNYSIDE 345KV CKT 1	717	789	0.1868	113.0535	ARDMORE WEST - UNIROYAL 138KV CKT 1
FDNS	00NR	2	20WP	G15_084	FROM->TO	G14-057T 345.00 - SUNNYSIDE 345KV CKT 1	717	789	0.1925	113.0528	WEATHERFORD JCT. - WEATHERFORD SOUTHEAST 138KV CKT 1
FDNS	00NR	2	20WP	G15_084	FROM->TO	G14-057T 345.00 - SUNNYSIDE 345KV CKT 1	717	789	0.1925	113.0528	WEATHERFORD JCT. - WEATHERFORD SOUTHEAST 138KV CKT 1
FDNS	00NR	2	20WP	G15_084	FROM->TO	G14-057T 345.00 - SUNNYSIDE 345KV CKT 1	717	789	0.18895	113.0418	GEN501910 1-ACADIA UNIT ST1
FDNS	00NR	2	20WP	G15_084	FROM->TO	G14-057T 345.00 - SUNNYSIDE 345KV CKT 1	717	789	0.18895	113.0412	8CAJUN2 500/24.0KV TRANSFORMER CKT 1
FDNS	00NR	2	16WP	G15_084	FROM->TO	G14-057T 345.00 - SUNNYSIDE 345KV CKT 1	717	789	0.18733	113.0407	P12:138:AEPW-SWPA:LONEOAK4:TUPELO4
FDNS	00NR	2	16WP	G15_084	FROM->TO	G14-057T 345.00 - SUNNYSIDE 345KV CKT 1	717	789	0.18733	113.0406	P12:138:WFEC:MSL06
FDNS	00NR	2	16WP	G15_084	FROM->TO	G14-057T 345.00 - SUNNYSIDE 345KV CKT 1	717	789	0.18688	113.0327	P12:138:OKGE:3TERM40
FDNS	00NR	2	16WP	G15_084	FROM->TO	G14-057T 345.00 - SUNNYSIDE 345KV CKT 1	717	789	0.18745	113.032	GEN563162 1-G15081_3 0.6900
FDNS	00NR	2	20WP	G15_084	FROM->TO	G14-057T 345.00 - SUNNYSIDE 345KV CKT 1	717	789	0.1893	113.032	COMANCHE - COMANCHE TAP 69KV CKT 1
FDNSLock	00NR	2	16WP	G15_084	FROM->TO	G14-057T 345.00 - SUNNYSIDE 345KV CKT 1	717	789	0.18745	113.0306	GEN681542 6-JP MADGETT
FDNS	00NR	2	20WP	G15_084	FROM->TO	G14-057T 345.00 - SUNNYSIDE 345KV CKT 1	717	789	0.19335	113.0229	BAILEY4 138.00 - WESTMOORE 138KV CKT 1
FDNS	00NR	2	16WP	G15_084	FROM->TO	G14-057T 345.00 - SUNNYSIDE 345KV CKT 1	717	789	0.18745	113.0206	GEN521110 1-ORME1 13.800
FDNS	00NR	2	16WP	G15_084	FROM->TO	G14-057T 345.00 - SUNNYSIDE 345KV CKT 1	717	789	0.18745	113.0206	GEN521111 1-ORME2 13.800
FDNS	00NR	2	20WP	G15_084	FROM->TO	G14-057T 345.00 - SUNNYSIDE 345KV CKT 1	717	789	0.1902	113.0136	P12:138:OKGE-AEPW:JENSEN4:REDROCKRD4
FDNS	00NR	2	16WP	G15_084	FROM->TO	G14-057T 345.00 - SUNNYSIDE 345KV CKT 1	717	789	0.18745	113.0118	GEN562699 1-G15_018_3 0.6900
FDNS	00NR	2	16WP	G15_084	FROM->TO	G14-057T 345.00 - SUNNYSIDE 345KV CKT 1	717	789	0.18745	113.0094	GEN563292 1-G15095_3 0.6900
FDNS	00NR	2	16WP	G15_084	FROM->TO	G14-057T 345.00 - SUNNYSIDE 345KV CKT 1	717	789	0.18741	113.0024	CARTRCO4 138.00 - RATLIFF 138KV CKT 1
FDNS	00NR	2	20WP	G15_084	FROM->TO	G14-057T 345.00 - SUNNYSIDE 345KV CKT 1	717	789	0.18895	113.0016	SABINE 230/24.0KV TRANSFORMER CKT 1
FDNS	00NR	2	20WP	G15_084	FROM->TO	G14-057T 345.00 - SUNNYSIDE 345KV CKT 1	717	789	0.1925	113.0007	P12:138:AEPW:REDROCKRD4:WTH_JCT4
FDNS	00NR	2	20WP	G15_084	FROM->TO	G14-057T 345.00 - SUNNYSIDE 345KV CKT 1	717	789	0.19041	113.0006	ANADARKO - SEQUOYAHJ4 138.00 138KV CKT 1
FDNS	00NR	2	20WP	G15_084	FROM->TO	G14-057T 345.00 - SUNNYSIDE 345KV CKT 1	717	789	0.19077	113.0002	WALTERS - WALTERS 69KV CKT 1
FDNS	00NR	2	20WP	G15_084	FROM->TO	G14-057T 345.00 - SUNNYSIDE 345KV CKT 1	717	789	0.19041	112.9993	CORN TAP - SEQUOYAHJ4 138.00 138KV CKT 1
FDNS	00NR	2	20WP	G15_084	FROM->TO	G14-057T 345.00 - SUNNYSIDE 345KV CKT 1	717	789	0.18895	112.9985	GEN300016 1-1G1GPDEL 18.000
FDNS	00NR	2	20WP	G15_084	FROM->TO	G14-057T 345.00 - SUNNYSIDE 345KV CKT 1	717	789	0.18932	112.9956	SARA - STHLAKE4 138.00 138KV CKT 1
FDNS	00NR	2	20WP	G15_084	FROM->TO	G14-057T 345.00 - SUNNYSIDE 345KV CKT 1	717	789	0.18895	112.9923	P12:138:AEPW:R.S.S.-4:S.HUD.-4
FDNS	00NR	2	20WP	G15_084	FROM->TO	G14-057T 345.00 - SUNNYSIDE 345KV CKT 1	717	789	0.18895	112.9868	GEN336222 1-LITTLE GYPSY UNIT#2
FDNS	00NR	2	20WP	G15_084	FROM->TO	G14-057T 345.00 - SUNNYSIDE 345KV CKT 1	717	789	0.18935	112.9862	ETTA (DUKE HOTSPRINGS) - MC NIEL 500KV CKT 1
FDNS	00NR	2	20WP	G15_084	FROM->TO	G14-057T 345.00 - SUNNYSIDE 345KV CKT 1	717	789	0.19034	112.9823	NORGE ROAD - SOUTHWESTERN STATION 138KV CKT 1
FDNS	00NR	2	20WP	G15_084	FROM->TO	G14-057T 345.00 - SUNNYSIDE 345KV CKT 1	717	789	0.19034	112.9823	NORGE ROAD - SOUTHWESTERN STATION 138KV CKT 1
FDNS	00NR	2	20WP	G15_084	FROM->TO	G14-057T 345.00 - SUNNYSIDE 345KV CKT 1	717	789	0.18967	112.9787	G13-010T 345.00 - POST ROCK 345KV CKT 1
FDNS	00NR	2	20WP	G15_084	FROM->TO	G14-057T 345.00 - SUNNYSIDE 345KV CKT 1	717	789	0.18716	112.9711	LAWTON RELIFT TAP - OMPA-WALTERS 69KV CKT 1
FDNS	00NR	2	20WP	G15_084	FROM->TO	G14-057T 345.00 - SUNNYSIDE 345KV CKT 1	717	789	0.18932	112.9655	MCCLAIN - STHLAKE4 138.00 138KV CKT 1
FDNS	00NR	2	20WP	G15_084	FROM->TO	G14-057T 345.00 - SUNNYSIDE 345KV CKT 1	717	789	0.19262	112.9629	LASALLE - LATTA JCT 138KV CKT 1
FDNS	00NR	2	20WP	G15_084	FROM->TO	G14-057T 345.00 - SUNNYSIDE 345KV CKT 1	717	789	0.18895	112.9608	P12:69:AEPW:NROGERS2:ECNTRTN2
FDNS	00NR	2	16WP	G15_084	FROM->TO	G14-057T 345.00 - SUNNYSIDE 345KV CKT 1	717	789	0.18745	112.9573	GEN520811 1-ANADRK4
FDNS	00NR	2	16WP	G15_084	FROM->TO	G14-057T 345.00 - SUNNYSIDE 345KV CKT 1	717	789	0.18925	112.956	G15063_T 345.00 - MATHWSN7 345.00 345KV CKT 1
FDNS	00NR	2	20WP	G15_084	FROM->TO	G14-057T 345.00 - SUNNYSIDE 345KV CKT 1	717	789	0.18895	112.9522	GEN336152 1-WATERFORD UNIT#2
FDNS	00NR	2	20WP	G15_084	FROM->TO	G14-057T 345.00 - SUNNYSIDE 345KV CKT 1	717	789	0.18895	112.9514	GEN336151 1-WATERFORD UNIT#1
FDNS	00NR	2	20WP	G15_084	FROM->TO	G14-057T 345.00 - SUNNYSIDE 345KV CKT 1	717	789	0.18895	112.9505	P12:138:AEPW:BA_71ST4:T.S.E.-4
FDNS	00NR	2	20WP	G15_084	FROM->TO	G14-057T 345.00 - SUNNYSIDE 345KV CKT 1	717	789	0.18895	112.9457	P12:138:AEPW:YARCH-S4:T.S.E.-4
FDNS	00NR	2	20WP	G15_084	FROM->TO	G14-057T 345.00 - SUNNYSIDE 345KV CKT 1	717	789	0.1892	112.9424	HOYT - STRANGER CREEK 345KV CKT 1
FDNS	00NR	2	20WP	G15_084	FROM->TO	G14-057T 345.00 - SUNNYSIDE 345KV CKT 1	717	789	0.18933	112.9414	P12:138:AEPW-OGE:SHIDLER4:OSAGE 4
FDNS	00NR	2	20WP	G15_084	FROM->TO	G14-057T 345.00 - SUNNYSIDE 345KV CKT 1	717	789	0.18895	112.9408	GEN300017 1-1G2GPDEL 18.000
FDNS	00NR	2	20WP	G15_084	FROM->TO	G14-057T 345.00 - SUNNYSIDE 345KV CKT 1	717	789	0.18895	112.9384	FRONTIER 345/18.0KV TRANSFORMER CKT 1
FDNS	00NR	2	20WP	G15_084	FROM->TO	G14-057T 345.00 - SUNNYSIDE 345KV CKT 1	717	789	0.18915	112.9383	MORISNT4 138.00 - STILLWATER 138KV CKT 1
FDNS	00NR	2	20WP	G15_084	FROM->TO	G14-057T 345.00 - SUNNYSIDE 345KV CKT 1	717	789	0.18895	112.9362	FRONTIER 345/18.0KV TRANSFORMER CKT 1
FDNS	00NR	2	20WP	G15_084	FROM->TO	G14-057T 345.00 - SUNNYSIDE 345KV CKT 1	717	789	0.19094	112.9349	CLINTON JUNCTION - ELK CITY 138KV CKT 1
FDNS	00NR	2	20WP	G15_084	FROM->TO	G14-057T 345.00 - SUNNYSIDE 345KV CKT 1	717	789	0.19094	112.9349	CLINTON JUNCTION - ELK CITY 138KV CKT 1
FDNS	00NR	2	20WP	G15_084	FROM->TO	G14-057T 345.00 - SUNNYSIDE 345KV CKT 1	717	789	0.18916	112.9317	P12:138:OKGE:3TERM2
FDNS	00NR	2	20WP	G15_084	FROM->TO	G14-057T 345.00 - SUNNYSIDE 345KV CKT 1	717	789	0.18919	112.9301	HOPE - MCNAB REC 115KV CKT 1
FDNS	00NR	2	20WP	G15_084	FROM->TO	G14-057T 345.00 - SUNNYSIDE 345KV CKT 1	717	789	0.18946	112.9232	EMPORIA ENERGY CENTER - G14_001T 345.00 345KV CKT 1
FDNS	00NR	2	16WP	G15_084	FROM->TO	G14-057T 345.00 - SUNNYSIDE 345KV CKT 1	717	789	0.18745	112.9213	GEN661015 1-COYOTE
FDNS	00NR	2	20WP	G15_084	FROM->TO	G14-057T 345.00 - SUNNYSIDE 345KV CKT 1	717	789	0.18919	112.9194	P12:115:AEPW:TURK3:HOPE3
FDNS	00NR	2	20WP	G15_084	FROM->TO	G14-057T 345.00 - SUNNYSIDE 345KV CKT 1	717	789	0.18969	112.9186	BENTON - WICHITA 345KV CKT 1
FDNS	00NR	2	20WP	G15_084	FROM->TO	G14-057T 345.00 - SUNNYSIDE 345KV CKT 1	717	789	0.18919	112.9165	G15074_T 345.00 - JEFFREY ENERGY CENTER 345KV CKT 1
FDNS	00NR	2	16WP	G15_084	FROM->TO	G14-057T 345.00 - SUNNYSIDE 345KV CKT 1	717	789	0.18745	112.9136	GEN563122 1-G15077_3 0.3850
FDNS	00NR	2	20WP	G15_084	FROM->TO	G14-057T 345.00 - SUNNYSIDE 345KV CKT 1	717	789	0.18967	112.9136	G13-010T 345.00 - SPEARVILLE 345KV CKT 1
FDNS	00NR	2	20WP	G15_084	FROM->TO	G14-057T 345.00 - SUNNYSIDE 345KV CKT 1	717	789	0.18929	112.9116	COUCH SES - MC NIEL 115KV CKT 1
FDNS	00NR	2	20WP	G15_084	FROM->TO	G14-057T 345.00 - SUNNYSIDE 345KV CKT 1	717	789	0.18895	112.9085	LEWIS CREEK SWITCHYARD 138/22.0KV TRANSFORMER CKT 1
FDNS	00NR	2	20WP	G15_084	FROM->TO	G14-057T 345.00 - SUNNYSIDE 345KV CKT 1	717	789	0.18716	112.908	OMPA-WALTERS - WALTERS 69KV CKT 1
FDNS	00NR	2	20WP	G15_084	FROM->TO	G14-057T 345.00 - SUNNYSIDE 345KV CKT 1	717	789	0.18716	112.908	OMPA-WALTERS - WALTERS 69KV CKT 1
FDNS	00NR	2	20WP	G15_084	FROM->TO	G14-057T 345.00 - SUNNYSIDE 345KV CKT 1	717	789	0.19103	112.9072	WEATHERFORD TAP - WEATHERFORD WIND FARM 138KV CKT 1
FDNS	00NR	2	20WP	G15_084	FROM->TO	G14-057T 345.00 - SUNNYSIDE 345KV CKT 1	717	789	0.18939	112.9067	BLACKBERRY - NEOSHO 345KV CKT 1
FDNS	00NR	2	20WP	G15_084	FROM->TO	G14-057T 345.00 - SUNNYSIDE 345KV CKT 1	717	789	0.1925	112.9062	HINTON - WEATHERFORD JCT. 138KV CKT 1

SOLUTION	GROUP	SCENARIO	SEASON	SOURCE	DIRECTION	MONITORED ELEMENT	RATEA (MVA)	RATEB(MVA)	TDF	TC%LOADING (% MVA)	CONTINGENCY
FDNS	00NR	2	20WP	G15_084	FROM->TO	G14-057T 345.00 - SUNNYSIDE 345KV CKT 1	717	789	0.18895	112.9041	LEWIS CREEK SWITCHYARD 138/22.0KV TRANSFORMER CKT 1
FDNS	00NR	2	16WP	G15_084	FROM->TO	G14-057T 345.00 - SUNNYSIDE 345KV CKT 1	717	789	0.16104	112.9036	CACHE - SNYDER 138KV CKT 1
FDNS	00NR	2	20WP	G15_084	FROM->TO	G14-057T 345.00 - SUNNYSIDE 345KV CKT 1	717	789	0.18907	112.8999	CYPRESS - HARTBURG 500KV CKT 1
FDNS	00NR	2	20WP	G15_084	FROM->TO	G14-057T 345.00 - SUNNYSIDE 345KV CKT 1	717	789	0.18895	112.8965	GEN334432 1-SABINE UNIT 2
FDNS	00NR	2	20WP	G15_084	FROM->TO	G14-057T 345.00 - SUNNYSIDE 345KV CKT 1	717	789	0.18895	112.896	GEN334431 1-SABINE UNIT 1
FDNS	00NR	2	16WP	G15_084	FROM->TO	G14-057T 345.00 - SUNNYSIDE 345KV CKT 1	717	789	0.18745	112.8943	GEN562861 1-G15045_2 0.4800
FDNS	00NR	2	20WP	G15_084	FROM->TO	G14-057T 345.00 - SUNNYSIDE 345KV CKT 1	717	789	0.18919	112.8942	TURK (TURK 1) 138/115/13.2KV TRANSFORMER CKT 1
FDNS	00NR	2	20WP	G15_084	FROM->TO	G14-057T 345.00 - SUNNYSIDE 345KV CKT 1	717	789	0.18919	112.8942	TURK (TURK 1) 138/115/13.2KV TRANSFORMER CKT 1
FDNS	00NR	2	20WP	G15_084	FROM->TO	G14-057T 345.00 - SUNNYSIDE 345KV CKT 1	717	789	0.18919	112.8941	MCNAB REC - Turk 115 115KV CKT 1
FDNS	00NR	2	20WP	G15_084	FROM->TO	G14-057T 345.00 - SUNNYSIDE 345KV CKT 1	717	789	0.1891	112.8923	7JASPER 345.00 - BLACKBERRY 345KV CKT 1
FDNS	00NR	2	20WP	G15_084	FROM->TO	G14-057T 345.00 - SUNNYSIDE 345KV CKT 1	717	789	0.18895	112.892	GEN501823 1-TECHE UNIT 3
FDNS	00NR	2	20WP	G15_084	FROM->TO	G14-057T 345.00 - SUNNYSIDE 345KV CKT 1	717	789	0.18895	112.8898	GEN501970 1-EVANGELINE UNIT 7
FDNS	00NR	2	20WP	G15_084	FROM->TO	G14-057T 345.00 - SUNNYSIDE 345KV CKT 1	717	789	0.18895	112.8852	GEN505616 1-BROKEN BOW
FDNS	00NR	2	16WP	G15_084	FROM->TO	G14-057T 345.00 - SUNNYSIDE 345KV CKT 1	717	789	0.18779	112.8844	P12:138:WFEC:MSL15
FDNS	00NR	2	20WP	G15_084	FROM->TO	G14-057T 345.00 - SUNNYSIDE 345KV CKT 1	717	789	0.19077	112.8802	P12:69:WFEC-AEPW:COMANCH2:WALTRS-2
FDNS	00NR	2	20WP	G15_084	FROM->TO	G14-057T 345.00 - SUNNYSIDE 345KV CKT 1	717	789	0.19054	112.8773	CANADIAN - NOBLE 138KV CKT 1
FDNS	00NR	2	20WP	G15_084	FROM->TO	G14-057T 345.00 - SUNNYSIDE 345KV CKT 1	717	789	0.18895	112.8734	P12:161:AEPW:CHAMSPR5:FARMING5
FDNSLock	00NR	2	16WP	G15_084	FROM->TO	G14-057T 345.00 - SUNNYSIDE 345KV CKT 1	717	789	0.18745	112.87	GEN532751 1-WOLF CREEK GENERATING STATION UNIT 1
FDNS	00NR	2	20WP	G15_084	FROM->TO	G14-057T 345.00 - SUNNYSIDE 345KV CKT 1	717	789	0.18895	112.8683	GEN334392 1-EXXON MOBIL IPP 1
FDNS	00NR	2	20WP	G15_084	FROM->TO	G14-057T 345.00 - SUNNYSIDE 345KV CKT 1	717	789	0.18912	112.8677	7LUTESVIL 345.00 - 7ST FRANC 345.00 345KV CKT 1
FDNS	00NR	2	20WP	G15_084	FROM->TO	G14-057T 345.00 - SUNNYSIDE 345KV CKT 1	717	789	0.18946	112.8637	G14_001T 345.00 - WICHITA 345KV CKT 1
FDNS	00NR	2	20WP	G15_084	FROM->TO	G14-057T 345.00 - SUNNYSIDE 345KV CKT 1	717	789	0.18895	112.8619	GEN334393 1-EXXON MOBIL IPP 2
FDNS	00NR	2	20WP	G15_084	FROM->TO	G14-057T 345.00 - SUNNYSIDE 345KV CKT 1	717	789	0.18895	112.8619	GEN334394 1-EXXON MOBIL IPP 3
FDNS	00NR	2	20WP	G15_084	FROM->TO	G14-057T 345.00 - SUNNYSIDE 345KV CKT 1	717	789	0.19011	112.8597	SOUTHWESTERN STATION - VERDEN 138KV CKT 1
FDNS	00NR	2	20WP	G15_084	FROM->TO	G14-057T 345.00 - SUNNYSIDE 345KV CKT 1	717	789	0.19335	112.8578	FRANKLIN SW - WESTMOORE 138KV CKT 1
FDNS	00NR	2	20WP	G15_084	FROM->TO	G14-057T 345.00 - SUNNYSIDE 345KV CKT 1	717	789	0.18926	112.8555	LAKEOVER - MCADAMS 500KV CKT 1
FDNS	00NR	2	20WP	G15_084	FROM->TO	G14-057T 345.00 - SUNNYSIDE 345KV CKT 1	717	789	0.19066	112.8541	P12:138:OKGE:3TERM27
FDNS	00NR	2	20WP	G15_084	FROM->TO	G14-057T 345.00 - SUNNYSIDE 345KV CKT 1	717	789	0.19034	112.8499	CORNVILLE - NORGE ROAD 138KV CKT 1
FDNS	00NR	2	20WP	G15_084	FROM->TO	G14-057T 345.00 - SUNNYSIDE 345KV CKT 1	717	789	0.19034	112.8499	CORNVILLE - NORGE ROAD 138KV CKT 1
FDNS	00NR	2	20WP	G15_084	FROM->TO	G14-057T 345.00 - SUNNYSIDE 345KV CKT 1	717	789	0.18921	112.8481	EMPORIA ENERGY CENTER - SWISSVALE 345KV CKT 1
FDNS	00NR	2	20WP	G15_084	FROM->TO	G14-057T 345.00 - SUNNYSIDE 345KV CKT 1	717	789	0.18895	112.847	ST FRANCIS - ST FRANCIS 1 161KV CKT Z1
FDNS	00NR	2	20WP	G15_084	FROM->TO	G14-057T 345.00 - SUNNYSIDE 345KV CKT 1	717	789	0.18948	112.8443	MCADAMS - WOLF CREEK 500KV CKT 1
FDNS	00NR	2	20WP	G15_084	FROM->TO	G14-057T 345.00 - SUNNYSIDE 345KV CKT 1	717	789	0.18895	112.8422	SABINE 230/22.0KV TRANSFORMER CKT 1
FDNS	00NR	2	20WP	G15_084	FROM->TO	G14-057T 345.00 - SUNNYSIDE 345KV CKT 1	717	789	0.19011	112.839	NORTH 29TH CHICKASHA - VERDEN 138KV CKT 1
FDNS	00NR	2	20WP	G15_084	FROM->TO	G14-057T 345.00 - SUNNYSIDE 345KV CKT 1	717	789	0.18919	112.8385	FLETCHER - MARLOW JCT 69KV CKT 1
FDNS	00NR	2	20WP	G15_084	FROM->TO	G14-057T 345.00 - SUNNYSIDE 345KV CKT 1	717	789	0.1925	112.8353	HINTON - REDROCKRD4 138.00 138KV CKT 1
FDNS	00NR	2	20WP	G15_084	FROM->TO	G14-057T 345.00 - SUNNYSIDE 345KV CKT 1	717	789	0.18895	112.8316	GEN501971 1-EVANGELINE UNIT 7-1
FDNS	00NR	2	20WP	G15_084	FROM->TO	G14-057T 345.00 - SUNNYSIDE 345KV CKT 1	717	789	0.18895	112.8316	GEN501972 1-EVANGELINE UNIT 7-2
FDNS	00NR	2	20WP	G15_084	FROM->TO	G14-057T 345.00 - SUNNYSIDE 345KV CKT 1	717	789	0.18926	112.8309	SWISSVALE - WEST GARDNER 345KV CKT 1
FDNS	00NR	2	20WP	G15_084	FROM->TO	G14-057T 345.00 - SUNNYSIDE 345KV CKT 1	717	789	0.18896	112.8237	P12:138:AEPW:R.S.S-4:T.P.S.-4
FDNS	00NR	2	20WP	G15_084	FROM->TO	G14-057T 345.00 - SUNNYSIDE 345KV CKT 1	717	789	0.19262	112.8229	LASALLE - STONEWAL LH138.00 138KV CKT 1
FDNS	00NR	2	16WP	G15_084	FROM->TO	G14-057T 345.00 - SUNNYSIDE 345KV CKT 1	717	789	0.18745	112.8225	GEN562992 1-G15063_3 0.6900
FDNS	00NR	2	20WP	G15_084	FROM->TO	G14-057T 345.00 - SUNNYSIDE 345KV CKT 1	717	789	0.19103	112.8188	WEATHERFORD SOUTHEAST - WEATHERFORD TAP 138KV CKT 1
FDNS	00NR	2	20WP	G15_084	FROM->TO	G14-057T 345.00 - SUNNYSIDE 345KV CKT 1	717	789	0.18901	112.8173	P12:138:OKGE:3TERM12
FDNS	00NR	2	20WP	G15_084	FROM->TO	G14-057T 345.00 - SUNNYSIDE 345KV CKT 1	717	789	0.18975	112.8163	ENOWILT - LONE OAK 138KV CKT 1
FDNS	00NR	2	16WP	G15_084	FROM->TO	G14-057T 345.00 - SUNNYSIDE 345KV CKT 1	717	789	0.1868	112.811	SUNNYSIDE - UNIROYAL 138KV CKT 1
FDNS	00NR	2	20WP	G15_084	FROM->TO	G14-057T 345.00 - SUNNYSIDE 345KV CKT 1	717	789	0.18895	112.808	GEN501912 1-ACADIA UNIT CT1B
FDNS	00NR	2	20WP	G15_084	FROM->TO	G14-057T 345.00 - SUNNYSIDE 345KV CKT 1	717	789	0.18975	112.8075	ENOWILT - SARDIS 138KV CKT 1
FDNS	00NR	2	20WP	G15_084	FROM->TO	G14-057T 345.00 - SUNNYSIDE 345KV CKT 1	717	789	0.19262	112.8073	STONEWAL LH138.00 - TUPELO TAP 138KV CKT 1
FDNS	00NR	2	20WP	G15_084	FROM->TO	G14-057T 345.00 - SUNNYSIDE 345KV CKT 1	717	789	0.18895	112.8072	GEN501911 1-ACADIA UNIT CT1A
FDNS	00NR	2	16WP	G15_084	FROM->TO	G14-057T 345.00 - SUNNYSIDE 345KV CKT 1	717	789	0.18482	112.8071	GRAPEVINE INTERCHANGE - STATELINE INTERCHANGE 230KV CKT 1
FDNS	00NR	2	16WP	G15_084	FROM->TO	G14-057T 345.00 - SUNNYSIDE 345KV CKT 1	717	789	0.18482	112.8071	GRAPEVINE INTERCHANGE - STATELINE INTERCHANGE 230KV CKT 1
FDNS	00NR	2	20WP	G15_084	FROM->TO	G14-057T 345.00 - SUNNYSIDE 345KV CKT 1	717	789	0.18912	112.8049	P12:138:WFEC-AEPW:ELKCTY-4:ERICK4
FDNS	00NR	2	20WP	G15_084	FROM->TO	G14-057T 345.00 - SUNNYSIDE 345KV CKT 1	717	789	0.18939	112.8048	FRANKLIN - FRANKLIN SW 138KV CKT 1
FDNS	00NR	2	16WP	G15_084	FROM->TO	G14-057T 345.00 - SUNNYSIDE 345KV CKT 1	717	789	0.18745	112.8044	GEN657748 1-YOUNG 2 GENERATOR
FDNS	00NR	2	20WP	G15_084	FROM->TO	G14-057T 345.00 - SUNNYSIDE 345KV CKT 1	717	789	0.18922	112.7996	AMITY SS - MURFREESBORO EAST (AECC) 115KV CKT 1
FDNS	00NR	2	20WP	G15_084	FROM->TO	G14-057T 345.00 - SUNNYSIDE 345KV CKT 1	717	789	0.18895	112.7978	P12:138:AEPW:R.S.S.-4:R:96YALE-4
FDNS	00NR	2	20WP	G15_084	FROM->TO	G14-057T 345.00 - SUNNYSIDE 345KV CKT 1	717	789	0.19054	112.7841	NOBLE - PURCELL4 138.00 138KV CKT 1
FDNS	00NR	2	20WP	G15_084	FROM->TO	G14-057T 345.00 - SUNNYSIDE 345KV CKT 1	717	789	0.19011	112.7769	CORNVILLE - NORTH 29TH CHICKASHA 138KV CKT 1
FDNS	00NR	2	16WP	G15_084	FROM->TO	G14-057T 345.00 - SUNNYSIDE 345KV CKT 1	717	789	0.1928	112.7702	CANEY CREEK - TEXOMA JCT 138KV CKT 1
FDNS	00NR	2	20WP	G15_084	FROM->TO	G14-057T 345.00 - SUNNYSIDE 345KV CKT 1	717	789	0.19085	112.7691	CIMARRON - NORTHWEST 345KV CKT 1
FDNS	00NR	2	20WP	G15_084	FROM->TO	G14-057T 345.00 - SUNNYSIDE 345KV CKT 1	717	789	0.19103	112.7684	CLINTON JUNCTION - CLINTON NATURAL GAS TAP 138KV CKT 1
FDNS	00NR	2	20WP	G15_084	FROM->TO	G14-057T 345.00 - SUNNYSIDE 345KV CKT 1	717	789	0.1902	112.7548	Canadian Pump Station - REDROCKRD4 138.00 138KV CKT 1
FDNS	00NR	2	16WP	G15_084	FROM->TO	G14-057T 345.00 - SUNNYSIDE 345KV CKT 1	717	789	0.18745	112.7496	GEN562704 1-G15_020_3 0.3550
FDNS	00NR	2	20WP	G15_084	FROM->TO	G14-057T 345.00 - SUNNYSIDE 345KV CKT 1	717	789	0.19069	112.7432	CRINER - PAYNE 138.00 138KV CKT 1
FDNS	00NR	2	16WP	G15_084	FROM->TO	G14-057T 345.00 - SUNNYSIDE 345KV CKT 1	717	789	0.18745	112.7414	GEN562952 1-G15057_3 0.6500
FDNS	00NR	2	16WP	G15_084	FROM->TO	G14-057T 345.00 - SUNNYSIDE 345KV CKT 1	717	789	0.18745	112.7061	GEN563173 1-G15082_3 0.6900
FDNS	00NR	2	20WP	G15_084	FROM->TO	G14-057T 345.00 - SUNNYSIDE 345KV CKT 1	717	789	0.19077	112.7042	COMANCHE - WALTERS 69KV CKT 1
FDNS	00NR	2	16WP	G15_084	FROM->TO	G14-057T 345.00 - SUNNYSIDE 345KV CKT 1	717	789	0.20305	112.6908	P12:138:AEPW:SHAM4WT:CHILD4WT
FDNS	00NR	2	16WP	G15_084	FROM->TO	G14-057T 345.00 - SUNNYSIDE 345KV CKT 1	717	789	0.19142	112.6676	GRAPEVINE INTERCHANGE - NICHOLS STATION 230KV CKT 1
FDNS	00NR	2	16WP	G15_084	FROM->TO	G14-057T 345.00 - SUNNYSIDE 345KV CKT 1	717	789	0.19142	112.6676	GRAPEVINE INTERCHANGE - NICHOLS STATION 230KV CKT 1
FDNS	00NR	2	16WP	G15_084	FROM->TO	G14-057T 345.00 - SUNNYSIDE 345KV CKT 1	717	789	0.18745	112.6627	GEN562710 1-G15_022_3 0.5500
FDNS	00NR	2	16WP	G15_084	FROM->TO	G14-057T 345.00 - SUNNYSIDE 345KV CKT 1	717	789	0.18745	112.6417	GEN620315 1-BIG STONE GEN
FDNS	00NR	2	16WP	G15_084	FROM->TO	G14-057T 345.00 - SUNNYSIDE 345KV CKT 1	717	789	0.18745	112.6037	GEN511851 1-COMANCHE #1
FDNS	00NR	2	16WP	G15_084	FROM->TO	G14-057T 345.00 - SUNNYSIDE 345KV CKT 1	717	789	0.18745	112.5834	GEN600004 2-PRAIRIE ISLAND G2
FDNS	00NR	2	16WP	G15_084	FROM->TO	G14-057T 345.00 - SUNNYSIDE 345KV CKT 1	717	789	0.18745	112.5806	GEN600003 1-PRAIRIE ISLAND G1
FDNSLock	00NR	2	16WP	G15_084	FROM->TO	G14-057T 345.00 - SUNNYSIDE 345KV CKT 1	717	789	0.18745	112.5686	GEN600006 1-AS KING
FDNS	00NR	2	16WP	G15_084	FROM->TO	G14-057T 345.00 - SUNNYSIDE 345KV CKT 1	717	789	0.19056	112.5159	P12:138:AEPW-OGE:CORNVIL4:CIMARON4
FDNS	00NR	2	16WP	G15_084	FROM->TO	G14-057T 345.00 - SUNNYSIDE 345KV CKT 1	717	789	0.18764	112.5156	P12:138:WFEC:MSL09

SOLUTION	GROUP	SCENARIO	SEASON	SOURCE	DIRECTION	MONITORED ELEMENT	RATEA (MVA)	RATEB(MVA)	TDF	TC%LOADING (% MVA)	CONTINGENCY
FDNSLock	00NR	2	16WP	G15_084	FROM->TO	G14-057T 345.00 - SUNNYSIDE 345KV CKT 1	717	789	0.18745	112.4927	GEN636641 1-LOUISA UNIT 1
FDNS	00NR	2	16WP	G15_084	FROM->TO	G14-057T 345.00 - SUNNYSIDE 345KV CKT 1	717	789	0.18745	112.4426	GEN600005 1-MONTICELLO
FDNS	00NR	2	16WP	G15_084	FROM->TO	G14-057T 345.00 - SUNNYSIDE 345KV CKT 1	717	789	0.17786	112.4144	CHISHOLM7 345.00 (CHISHOLM) 345/230/13.2KV TRANSFORMER CKT 1
FDNS	00NR	2	16WP	G15_084	FROM->TO	G14-057T 345.00 - SUNNYSIDE 345KV CKT 1	717	789	0.18745	112.4135	GEN562754 1-G15031_5 0.6900
FDNS	00NR	2	16WP	G15_084	FROM->TO	G14-057T 345.00 - SUNNYSIDE 345KV CKT 1	717	789	0.18745	112.4	GEN629074 1-ARNOLD LOWSIDE OF GSU XFMR
FDNS	00NR	2	16WP	G15_084	FROM->TO	G14-057T 345.00 - SUNNYSIDE 345KV CKT 1	717	789	0.18745	112.3803	GEN635213 3-NEAL UNIT 3
FDNS	00NR	2	16WP	G15_084	FROM->TO	G14-057T 345.00 - SUNNYSIDE 345KV CKT 1	717	789	0.18745	112.3546	GEN562756 1-G15031_7 0.6900
FDNS	00NR	2	16WP	G15_084	FROM->TO	G14-057T 345.00 - SUNNYSIDE 345KV CKT 1	717	789	0.18745	112.318	GEN562023 1-G11_020_3 0.6900
FDNS	00NR	2	16WP	G15_084	FROM->TO	G14-057T 345.00 - SUNNYSIDE 345KV CKT 1	717	789	0.18745	112.318	GEN562026 1-G11_019_3 0.6900
FDNS	00NR	2	16WP	G15_084	FROM->TO	G14-057T 345.00 - SUNNYSIDE 345KV CKT 1	717	789	0.18745	112.3128	GEN562556 1-G14_046_3 0.3420
FDNS	00NR	2	16WP	G15_084	FROM->TO	G14-057T 345.00 - SUNNYSIDE 345KV CKT 1	717	789	0.18745	112.3077	BIG STONE 230/24.0KV TRANSFORMER CKT 1
FDNS	00NR	2	16WP	G15_084	FROM->TO	G14-057T 345.00 - SUNNYSIDE 345KV CKT 1	717	789	0.17786	112.2999	CHISHOLM7 345.00 - GRACEMONT 345KV CKT 1
FDNS	00NR	2	20WP	G15_084	FROM->TO	G14-057T 345.00 - SUNNYSIDE 345KV CKT 1	717	789	0.18895	112.2905	803-OKLAUNION
FDNS	00NR	2	16WP	G15_084	FROM->TO	G14-057T 345.00 - SUNNYSIDE 345KV CKT 1	717	789	0.18745	112.2246	GEN563142 1-G15079_3 0.5500
FDNS	00NR	2	16WP	G15_084	FROM->TO	G14-057T 345.00 - SUNNYSIDE 345KV CKT 1	717	789	0.18745	112.2246	GEN563151 1-G15080_2 0.5500
FDNS	00NR	2	16WP	G15_084	FROM->TO	G14-057T 345.00 - SUNNYSIDE 345KV CKT 1	717	789	0.18745	112.1861	GEN523971 1-HARRINGTON GEN #1 24 KV
FDNS	00NR	2	16WP	G15_084	FROM->TO	G14-057T 345.00 - SUNNYSIDE 345KV CKT 1	717	789	0.18745	112.1861	GEN523973 1-HARRINGTON GEN #3 24 KV
FDNS	00NR	2	16WP	G15_084	FROM->TO	G14-057T 345.00 - SUNNYSIDE 345KV CKT 1	717	789	0.18745	112.186	GEN523972 1-HARRINGTON GEN #2 24 KV
FDNS	00NR	2	16WP	G15_084	FROM->TO	G14-057T 345.00 - SUNNYSIDE 345KV CKT 1	717	789	0.18139	112.1766	STLN-DEMARC6 - SWEETWATER 230KV CKT 1
FDNS	00NR	2	16WP	G15_084	FROM->TO	G14-057T 345.00 - SUNNYSIDE 345KV CKT 1	717	789	0.18139	112.1759	P12:230:AEPW-SPS:SWEETWT6:WHEELER 6
FDNS	00NR	2	16WP	G15_084	FROM->TO	G14-057T 345.00 - SUNNYSIDE 345KV CKT 1	717	789	0.18139	112.1742	STATELINE INTERCHANGE - STLN-DEMARC6 230KV CKT 1
FDNSLock	00NR	2	16WP	G15_084	FROM->TO	G14-057T 345.00 - SUNNYSIDE 345KV CKT 1	717	789	0.18745	112.129	GEN600000 1-SHERBURNECNTY G1
FDNS	00NR	2	16WP	G15_084	FROM->TO	G14-057T 345.00 - SUNNYSIDE 345KV CKT 1	717	789	0.18411	112.1231	NORTHWEST TEXARKANA - VALLIANT 345KV CKT 1
FDNS	00NR	2	16WP	G15_084	FROM->TO	G14-057T 345.00 - SUNNYSIDE 345KV CKT 1	717	789	0.18411	112.1231	NORTHWEST TEXARKANA - VALLIANT 345KV CKT 1
FDNS	00NR	2	16WP	G15_084	FROM->TO	G14-057T 345.00 - SUNNYSIDE 345KV CKT 1	717	789	0.18745	112.081	GEN511848 1-SOUTHWESTERN STATION #3
FDNS	00NR	2	16WP	G15_084	FROM->TO	G14-057T 345.00 - SUNNYSIDE 345KV CKT 1	717	789	0.18745	112.0547	GEN600001 2-SHERBURNE CNTY G2
FDNS	00NR	2	16WP	G15_084	FROM->TO	G14-057T 345.00 - SUNNYSIDE 345KV CKT 1	717	789	0.18745	112.0179	GEN563042 1-G15068_3 0.6900
FDNS	00NR	2	20WP	G15_084	FROM->TO	G14-057T 345.00 - SUNNYSIDE 345KV CKT 1	717	789	0.18822	112.0156	P12:138:OKGE:3TERM39
FDNS	00NR	2	16WP	G15_084	FROM->TO	G14-057T 345.00 - SUNNYSIDE 345KV CKT 1	717	789	0.18745	111.9966	GEN527901 1-HOBBS PLANT #1 (CT)
FDNS	00NR	2	16WP	G15_084	FROM->TO	G14-057T 345.00 - SUNNYSIDE 345KV CKT 1	717	789	0.18745	111.9966	GEN527902 1-HOBBS PLANT #2 (CT)
FDNS	00NR	2	20WP	G15_084	FROM->TO	G14-057T 345.00 - SUNNYSIDE 345KV CKT 1	717	789	0.18897	111.9707	RANCHRD7 345.00 - SOONER 345KV CKT 1
FDNSLock	00NR	2	16WP	G15_084	FROM->TO	G14-057T 345.00 - SUNNYSIDE 345KV CKT 1	717	789	0.18745	111.9402	GEN629075 1-OTTUMWA GENERATOR FOR OTTUMWA UNIT NO 1
FDNS	00NR	2	20WP	G15_084	FROM->TO	G14-057T 345.00 - SUNNYSIDE 345KV CKT 1	717	789	0.18895	111.9126	MAYSVILLE - PAOLI 138KV CKT 1
FDNS	00NR	2	20WP	G15_084	FROM->TO	G14-057T 345.00 - SUNNYSIDE 345KV CKT 1	717	789	0.18895	111.9028	GEN560187 1-WTH WIND 0.5750
FDNS	00NR	2	20WP	G15_084	FROM->TO	G14-057T 345.00 - SUNNYSIDE 345KV CKT 1	717	789	0.15489	111.8943	CHILDRESS - HOLLIS TAP 138KV CKT 1
FDNS	00NR	2	20WP	G15_084	FROM->TO	G14-057T 345.00 - SUNNYSIDE 345KV CKT 1	717	789	0.1893	111.8929	CIMARRON - MATHWSN7 345.00 345KV CKT 1
FDNS	00NR	2	20WP	G15_084	FROM->TO	G14-057T 345.00 - SUNNYSIDE 345KV CKT 1	717	789	0.1893	111.8929	CIMARRON - MATHWSN7 345.00 345KV CKT 2
FDNS	00NR	2	20WP	G15_084	FROM->TO	G14-057T 345.00 - SUNNYSIDE 345KV CKT 1	717	789	0.15157	111.892	CHILDRESS - LAKE PAULINE 138KV CKT 1
FDNS	00NR	2	20WP	G15_084	FROM->TO	G14-057T 345.00 - SUNNYSIDE 345KV CKT 1	717	789	0.15157	111.892	CHILDRESS - LAKE PAULINE 138KV CKT 1
FDNS	00NR	2	20WP	G15_084	FROM->TO	G14-057T 345.00 - SUNNYSIDE 345KV CKT 1	717	789	0.18895	111.8831	GEN560112 1-G08_037_3 0.6900
FDNS	00NR	2	20WP	G15_084	FROM->TO	G14-057T 345.00 - SUNNYSIDE 345KV CKT 1	717	789	0.18895	111.8473	GEN520812 1-ANADRK5
FDNS	00NR	2	20WP	G15_084	FROM->TO	G14-057T 345.00 - SUNNYSIDE 345KV CKT 1	717	789	0.18895	111.8472	GEN520813 1-ANADRK6
FDNS	00NR	2	20WP	G15_084	FROM->TO	G14-057T 345.00 - SUNNYSIDE 345KV CKT 1	717	789	0.18895	111.8468	GEN521103 1-BLUE CANYON WIND FARM
FDNS	00NR	2	20WP	G15_084	FROM->TO	G14-057T 345.00 - SUNNYSIDE 345KV CKT 1	717	789	0.18954	111.8461	DRAPER LAKE - MIDWEST TAP 138KV CKT 1
FDNS	00NR	2	20WP	G15_084	FROM->TO	G14-057T 345.00 - SUNNYSIDE 345KV CKT 1	717	789	0.18895	111.8424	GEN563052 1-G15069_3 0.6900
FDNS	00NR	2	20WP	G15_084	FROM->TO	G14-057T 345.00 - SUNNYSIDE 345KV CKT 1	717	789	0.18895	111.8372	MAYSVILLE - MAYSVLT4 138.00 138KV CKT 1
FDNS	00NR	2	20WP	G15_084	FROM->TO	G14-057T 345.00 - SUNNYSIDE 345KV CKT 1	717	789	0.18969	111.826	P12:138:OKGE:3TERM21
FDNS	00NR	2	20WP	G15_084	FROM->TO	G14-057T 345.00 - SUNNYSIDE 345KV CKT 1	717	789	0.18895	111.8253	GEN562691 1-G15_015_3 0.6900
FDNS	00NR	2	20WP	G15_084	FROM->TO	G14-057T 345.00 - SUNNYSIDE 345KV CKT 1	717	789	0.18895	111.82	GEN562772 1-G15034_3 0.6900
FDNS	00NR	2	20WP	G15_084	FROM->TO	G14-057T 345.00 - SUNNYSIDE 345KV CKT 1	717	789	0.18895	111.8044	GEN511961 1-DEMPSEY-WTG10.7000
FDNS	00NR	2	20WP	G15_084	FROM->TO	G14-057T 345.00 - SUNNYSIDE 345KV CKT 1	717	789	0.19057	111.796	SOONER - SPRING CREEK 345KV CKT 1
FDNS	00NR	2	20WP	G15_084	FROM->TO	G14-057T 345.00 - SUNNYSIDE 345KV CKT 1	717	789	0.18895	111.7933	P12:069:OKGE:3TERM42
FDNS	00NR	2	20WP	G15_084	FROM->TO	G14-057T 345.00 - SUNNYSIDE 345KV CKT 1	717	789	0.19057	111.7922	NORTHWEST - SPRING CREEK 345KV CKT 1
FDNS	00NR	2	20WP	G15_084	FROM->TO	G14-057T 345.00 - SUNNYSIDE 345KV CKT 1	717	789	0.18866	111.7882	ARBUCKLE - SULPHR 4 138.00 138KV CKT 1
FDNS	00NR	2	16WP	G15_084	FROM->TO	G14-057T 345.00 - SUNNYSIDE 345KV CKT 1	717	789	0.18745	111.7813	SHERBURNE CO 345/24.0KV TRANSFORMER CKT 1
FDNSLock	00NR	2	16WP	G15_084	FROM->TO	G14-057T 345.00 - SUNNYSIDE 345KV CKT 1	717	789	0.18745	111.7809	GEN635214 4-NEAL UNIT 4
FDNS	00NR	2	20WP	G15_084	FROM->TO	G14-057T 345.00 - SUNNYSIDE 345KV CKT 1	717	789	0.18895	111.771	MAYSVLT4 138.00 - PRAIRIE POINT 138KV CKT 1
FDNS	00NR	2	20WP	G15_084	FROM->TO	G14-057T 345.00 - SUNNYSIDE 345KV CKT 1	717	789	0.18902	111.7697	P12:138:WFEC:MSL11
FDNS	00NR	2	20WP	G15_084	FROM->TO	G14-057T 345.00 - SUNNYSIDE 345KV CKT 1	717	789	0.18902	111.7697	P12:138:WFEC-AEPW:PHAROAH4:LONEOAK4
FDNS	00NR	2	20WP	G15_084	FROM->TO	G14-057T 345.00 - SUNNYSIDE 345KV CKT 1	717	789	0.18913	111.7639	GLASSES - MADILL INDUSTRIAL TAP 138KV CKT 1
FDNS	00NR	2	20WP	G15_084	FROM->TO	G14-057T 345.00 - SUNNYSIDE 345KV CKT 1	717	789	0.18908	111.7581	CANEY CREEK - JOHNSON COUNTY 138KV CKT 1
FDNS	00NR	2	20WP	G15_084	FROM->TO	G14-057T 345.00 - SUNNYSIDE 345KV CKT 1	717	789	0.18895	111.7538	GEN515443 1-MNCOWND1 0.7000
FDNS	00NR	2	20WP	G15_084	FROM->TO	G14-057T 345.00 - SUNNYSIDE 345KV CKT 1	717	789	0.19302	111.751	MOREWOOD SW - NINE MILE 138KV CKT 1
FDNS	00NR	2	20WP	G15_084	FROM->TO	G14-057T 345.00 - SUNNYSIDE 345KV CKT 1	717	789	0.18895	111.7343	GEN560183 1-REDHIL-WTG1 12.000
FDNS	00NR	2	20WP	G15_084	FROM->TO	G14-057T 345.00 - SUNNYSIDE 345KV CKT 1	717	789	0.18895	111.7258	INDEPENDENCE 500/26.0KV TRANSFORMER CKT 1
FDNS	00NR	2	20WP	G15_084	FROM->TO	G14-057T 345.00 - SUNNYSIDE 345KV CKT 1	717	789	0.18913	111.7216	GLASSES - RUSSETT 138KV CKT 1
FDNS	00NR	2	20WP	G15_084	FROM->TO	G14-057T 345.00 - SUNNYSIDE 345KV CKT 1	717	789	0.18939	111.7196	P12:138:WFEC:MSL08
FDNS	00NR	2	20WP	G15_084	FROM->TO	G14-057T 345.00 - SUNNYSIDE 345KV CKT 1	717	789	0.18895	111.7174	GEN600067 9-HIGH BRIDGE
FDNS	00NR	2	16WP	G15_084	FROM->TO	G14-057T 345.00 - SUNNYSIDE 345KV CKT 1	717	789	0.18745	111.7158	GEN563043 1-G15068_4 0.6900
FDNS	00NR	2	20WP	G15_084	FROM->TO	G14-057T 345.00 - SUNNYSIDE 345KV CKT 1	717	789	0.18929	111.715	OVEXFRMCCOVE
FDNS	00NR	2	16WP	G15_084	FROM->TO	G14-057T 345.00 - SUNNYSIDE 345KV CKT 1	717	789	0.18745	111.7121	GEN563273 2-G15093_4 0.6900
FDNS	00NR	2	20WP	G15_084	FROM->TO	G14-057T 345.00 - SUNNYSIDE 345KV CKT 1	717	789	0.18882	111.7074	CARTER - CHICKASAW 138KV CKT 1
FDNS	00NR	2	20WP	G15_084	FROM->TO	G14-057T 345.00 - SUNNYSIDE 345KV CKT 1	717	789	0.19437	111.7004	LEBANON - TEXOMA JCT 138KV CKT 1
FDNS	00NR	2	20WP	G15_084	FROM->TO	G14-057T 345.00 - SUNNYSIDE 345KV CKT 1	717	789	0.1889	111.6987	CANADIAN RIVER - MCALESTER SOUTH 138KV CKT 1
FDNS	00NR	2	20WP	G15_084	FROM->TO	G14-057T 345.00 - SUNNYSIDE 345KV CKT 1	717	789	0.1889	111.6987	CANADIAN RIVER - MCALESTER SOUTH 138KV CKT 1
FDNS	00NR	2	20WP	G15_084	FROM->TO	G14-057T 345.00 - SUNNYSIDE 345KV CKT 1	717	789	0.1889	111.6969	CANADIAN RIVER () 345/138/13.8KV TRANSFORMER CKT 1
FDNS	00NR	2	20WP	G15_084	FROM->TO	G14-057T 345.00 - SUNNYSIDE 345KV CKT 1	717	789	0.1889	111.6969	CANADIAN RIVER () 345/138/13.8KV TRANSFORMER CKT 1
FDNS	00NR	2	20WP	G15_084	FROM->TO	G14-057T 345.00 - SUNNYSIDE 345KV CKT 1	717	789	0.18895	111.6955	P12:230:UMZB:# 112 #: NU IN SD. NU-RCDC & DRY CREEK XFMR
FDNS	00NR	2	20WP	G15_084	FROM->TO	G14-057T 345.00 - SUNNYSIDE 345KV CKT 1	717	789	0.18895	111.6952	RCDC EAST 4230.00 - RED CEDAR DC 230KV CKT 1

SOLUTION	GROUP	SCENARIO	SEASON	SOURCE	DIRECTION	MONITORED ELEMENT	RATEA (MVA)	RATEB(MVA)	TDF	TC%LOADING (% MVA)	CONTINGENCY
FDNS	00NR	2	16WP	G15_084	FROM->TO	G14-057T 345.00 - SUNNYSIDE 345KV CKT 1	717	789	0.18745	111.6908	GEN526333 1-JONES GEN #3 21 KV
FDNS	00NR	2	16WP	G15_084	FROM->TO	G14-057T 345.00 - SUNNYSIDE 345KV CKT 1	717	789	0.18745	111.6908	GEN526334 1-JONES_4 116.500
FDNS	00NR	2	20WP	G15_084	FROM->TO	G14-057T 345.00 - SUNNYSIDE 345KV CKT 1	717	789	0.18935	111.6867	HUGO (HUGO 1) 345/138/13.8KV TRANSFORMER CKT 1
FDNS	00NR	2	20WP	G15_084	FROM->TO	G14-057T 345.00 - SUNNYSIDE 345KV CKT 1	717	789	0.18866	111.6866	ROCKY POINT - SPRINGDALE 138KV CKT 1
FDNS	00NR	2	20WP	G15_084	FROM->TO	G14-057T 345.00 - SUNNYSIDE 345KV CKT 1	717	789	0.18895	111.6858	GEN562902 1-G15052_3 0.6900
FDNS	00NR	2	16WP	G15_084	FROM->TO	G14-057T 345.00 - SUNNYSIDE 345KV CKT 1	717	789	0.17707	111.6848	P12:230:AEPW:ELKCITY6:SWEETWT6
FDNS	00NR	2	20WP	G15_084	FROM->TO	G14-057T 345.00 - SUNNYSIDE 345KV CKT 1	717	789	0.18895	111.6818	GEN563242 1-G15090_3 0.6900
FDNS	00NR	2	20WP	G15_084	FROM->TO	G14-057T 345.00 - SUNNYSIDE 345KV CKT 1	717	789	0.18895	111.6787	PRAIRIE POINT - RATLIFF 138KV CKT 1
FDNS	00NR	2	20WP	G15_084	FROM->TO	G14-057T 345.00 - SUNNYSIDE 345KV CKT 1	717	789	0.18882	111.6745	CHAMBER SPRINGS - CLARKSVILLE 345KV CKT 1
FDNS	00NR	2	20WP	G15_084	FROM->TO	G14-057T 345.00 - SUNNYSIDE 345KV CKT 1	717	789	0.18907	111.6684	GRPRAR1-LNX3345.00 - YANKTON 345KV CKT Z
FDNS	00NR	2	20WP	G15_084	FROM->TO	G14-057T 345.00 - SUNNYSIDE 345KV CKT 1	717	789	0.18907	111.6681	GRPRAR1-LNX3345.00 - HOLT.CO3 345.00 345KV CKT 1
FDNS	00NR	2	20WP	G15_084	FROM->TO	G14-057T 345.00 - SUNNYSIDE 345KV CKT 1	717	789	0.18895	111.6577	GEN629072 4-LANSING GENERATOR FOR UNITS NO4 EIA CODE 1
FDNS	00NR	2	20WP	G15_084	FROM->TO	G14-057T 345.00 - SUNNYSIDE 345KV CKT 1	717	789	0.18895	111.6434	GEN562078 1-G11_051_3 0.6900
FDNS	00NR	2	20WP	G15_084	FROM->TO	G14-057T 345.00 - SUNNYSIDE 345KV CKT 1	717	789	0.18866	111.6425	JOLLYVILLE - SULPHR 4 138.00 138KV CKT 1
FDNS	00NR	2	16WP	G15_084	FROM->TO	G14-057T 345.00 - SUNNYSIDE 345KV CKT 1	717	789	0.18745	111.6406	GEN525844 1-ELK_1 118.000
FDNS	00NR	2	20WP	G15_084	FROM->TO	G14-057T 345.00 - SUNNYSIDE 345KV CKT 1	717	789	0.18895	111.6348	GEN524285 1-WILDORADO WIND GEN
FDNS	00NR	2	16WP	G15_084	FROM->TO	G14-057T 345.00 - SUNNYSIDE 345KV CKT 1	717	789	0.18745	111.634	GEN525845 1-ELK_2 1 138.00
FDNS	00NR	2	16WP	G15_084	FROM->TO	G14-057T 345.00 - SUNNYSIDE 345KV CKT 1	717	789	0.18745	111.6284	GEN600002 3-SHERBURNE CNTY G3
FDNS	00NR	2	20WP	G15_084	FROM->TO	G14-057T 345.00 - SUNNYSIDE 345KV CKT 1	717	789	0.19302	111.6182	BEARCAT 138.00 - NINE MILE 138KV CKT 1
FDNS	00NR	2	20WP	G15_084	FROM->TO	G14-057T 345.00 - SUNNYSIDE 345KV CKT 1	717	789	0.18895	111.6172	GEN562587 1-G14_056_3 0.6900
FDNS	00NR	2	20WP	G15_084	FROM->TO	G14-057T 345.00 - SUNNYSIDE 345KV CKT 1	717	789	0.18895	111.615	GEN514805 1-SOONER UNIT 1
FDNS	00NR	2	20WP	G15_084	FROM->TO	G14-057T 345.00 - SUNNYSIDE 345KV CKT 1	717	789	0.18895	111.6091	GEN524295 1-SPNSPUR_WND10.6900
FDNS	00NR	2	20WP	G15_084	FROM->TO	G14-057T 345.00 - SUNNYSIDE 345KV CKT 1	717	789	0.18895	111.6033	GEN657749 1-YOUNG 1 GENERATOR
FDNS	00NR	2	20WP	G15_084	FROM->TO	G14-057T 345.00 - SUNNYSIDE 345KV CKT 1	717	789	0.16306	111.6008	P12:138:AEPW:112GORE4:SNYDER-4
FDNS	00NR	2	16WP	G15_084	FROM->TO	G14-057T 345.00 - SUNNYSIDE 345KV CKT 1	717	789	0.18745	111.6	GEN344225 1-1CAL G1 25.000
FDNS	00NR	2	20WP	G15_084	FROM->TO	G14-057T 345.00 - SUNNYSIDE 345KV CKT 1	717	789	0.18895	111.5876	GEN562269 1-G12-020-1 0.6900
FDNS	00NR	2	20WP	G15_084	FROM->TO	G14-057T 345.00 - SUNNYSIDE 345KV CKT 1	717	789	0.18895	111.5853	GEN514806 1-SOONER UNIT 2
FDNS	00NR	2	20WP	G15_084	FROM->TO	G14-057T 345.00 - SUNNYSIDE 345KV CKT 1	717	789	0.18895	111.5829	GEN524023 1-NICHOLS GEN #3 22 KV
FDNS	00NR	2	20WP	G15_084	FROM->TO	G14-057T 345.00 - SUNNYSIDE 345KV CKT 1	717	789	0.18866	111.5775	JOLLYVILLE - KERR MCGEE CIMARRON 138KV CKT 1
FDNS	00NR	2	20WP	G15_084	FROM->TO	G14-057T 345.00 - SUNNYSIDE 345KV CKT 1	717	789	0.18998	111.5723	CROCKETT - TENASKA RUSK COUNTY 345KV CKT 1
FDNS	00NR	2	20WP	G15_084	FROM->TO	G14-057T 345.00 - SUNNYSIDE 345KV CKT 1	717	789	0.18998	111.5675	LEBROCK - TENASKA RUSK COUNTY 345KV CKT 1
FDNS	00NR	2	20WP	G15_084	FROM->TO	G14-057T 345.00 - SUNNYSIDE 345KV CKT 1	717	789	0.18895	111.5471	GEN562812 1-G15040_3 0.3570
FDNS	00NR	2	20WP	G15_084	FROM->TO	G14-057T 345.00 - SUNNYSIDE 345KV CKT 1	717	789	0.18895	111.5424	GEN562270 1-G12-020-2 0.6900
FDNS	00NR	2	20WP	G15_084	FROM->TO	G14-057T 345.00 - SUNNYSIDE 345KV CKT 1	717	789	0.18895	111.542	GEN562882 1-G15047_3 0.6900
FDNS	00NR	2	20WP	G15_084	FROM->TO	G14-057T 345.00 - SUNNYSIDE 345KV CKT 1	717	789	0.18895	111.5403	GEN563132 1-G15078_3 0.3570
FDNS	00NR	2	20WP	G15_084	FROM->TO	G14-057T 345.00 - SUNNYSIDE 345KV CKT 1	717	789	0.18895	111.5336	GEN563102 1-G15075_3 0.5500
FDNS	00NR	2	20WP	G15_084	FROM->TO	G14-057T 345.00 - SUNNYSIDE 345KV CKT 1	717	789	0.18866	111.5291	ARBWIND4 138.00 - KERR MCGEE CIMARRON 138KV CKT 1
FDNS	00NR	2	20WP	G15_084	FROM->TO	G14-057T 345.00 - SUNNYSIDE 345KV CKT 1	717	789	0.18895	111.5209	GEN563062 1-G15071_3 0.6900
FDNS	00NR	2	20WP	G15_084	FROM->TO	G14-057T 345.00 - SUNNYSIDE 345KV CKT 1	717	789	0.19302	111.5159	BEARCAT 138.00 - MOORELAND 138KV CKT 1
FDNS	00NR	2	20WP	G15_084	FROM->TO	G14-057T 345.00 - SUNNYSIDE 345KV CKT 1	717	789	0.19302	111.5153	P12:138:WFEC:MSL14
FDNS	00NR	2	16WP	G15_084	FROM->TO	G14-057T 345.00 - SUNNYSIDE 345KV CKT 1	717	789	0.18745	111.4978	GEN525562 1-TOLK GEN #2 24 KV
FDNS	00NR	2	20WP	G15_084	FROM->TO	G14-057T 345.00 - SUNNYSIDE 345KV CKT 1	717	789	0.18895	111.4872	GEN521112 1-ORME3 13.800
FDNS	00NR	2	16WP	G15_084	FROM->TO	G14-057T 345.00 - SUNNYSIDE 345KV CKT 1	717	789	0.18139	111.4857	CHISHOLM6 230.00 - SWEETWATER 230KV CKT 1
FDNS	00NR	2	20WP	G15_084	FROM->TO	G14-057T 345.00 - SUNNYSIDE 345KV CKT 1	717	789	0.18895	111.4845	GEN562974 1-G15060_5 0.6900
FDNS	00NR	2	16WP	G15_084	FROM->TO	G14-057T 345.00 - SUNNYSIDE 345KV CKT 1	717	789	0.18161	111.4844	LYDIA - WELSH 345KV CKT 1
FDNS	00NR	2	16WP	G15_084	FROM->TO	G14-057T 345.00 - SUNNYSIDE 345KV CKT 1	717	789	0.18161	111.4844	LYDIA - WELSH 345KV CKT 1
FDNS	00NR	2	20WP	G15_084	FROM->TO	G14-057T 345.00 - SUNNYSIDE 345KV CKT 1	717	789	0.18841	111.4814	BROWN - RUSSETT 138KV CKT 1
FDNS	00NR	2	20WP	G15_084	FROM->TO	G14-057T 345.00 - SUNNYSIDE 345KV CKT 1	717	789	0.18895	111.4748	GEN345671 2-1RUSH G2 18.000
FDNS	00NR	2	20WP	G15_084	FROM->TO	G14-057T 345.00 - SUNNYSIDE 345KV CKT 1	717	789	0.18895	111.4747	GEN562973 1-G15060_4 0.6900
FDNS	00NR	2	20WP	G15_084	FROM->TO	G14-057T 345.00 - SUNNYSIDE 345KV CKT 1	717	789	0.18895	111.4729	GEN345670 1-1RUSH G1 18.000
FDNS	00NR	2	20WP	G15_084	FROM->TO	G14-057T 345.00 - SUNNYSIDE 345KV CKT 1	717	789	0.18872	111.4587	CHICKASAW - TOTAL 138KV CKT 1
FDNS	00NR	2	16WP	G15_084	FROM->TO	G14-057T 345.00 - SUNNYSIDE 345KV CKT 1	717	789	0.18745	111.4525	GEN527166 1-MUSTANG_6 118.000
FDNS	00NR	2	20WP	G15_084	FROM->TO	G14-057T 345.00 - SUNNYSIDE 345KV CKT 1	717	789	0.18895	111.4478	GEN560105 1-G08-22 0.6900
FDNS	00NR	2	20WP	G15_084	FROM->TO	G14-057T 345.00 - SUNNYSIDE 345KV CKT 1	717	789	0.18895	111.4438	4SIOUX 1 138.00 138/18.0KV TRANSFORMER CKT 1
FDNS	00NR	2	20WP	G15_084	FROM->TO	G14-057T 345.00 - SUNNYSIDE 345KV CKT 1	717	789	0.18841	111.4342	RUSSETT - RUSSETT 138KV CKT 1
FDNS	00NR	2	20WP	G15_084	FROM->TO	G14-057T 345.00 - SUNNYSIDE 345KV CKT 1	717	789	0.18895	111.4303	GEN562550 1-G14_040_3 0.6900
FDNS	00NR	2	20WP	G15_084	FROM->TO	G14-057T 345.00 - SUNNYSIDE 345KV CKT 1	717	789	0.18895	111.4266	GEN681522 3-GENOA 3
FDNS	00NR	2	16WP	G15_084	FROM->TO	G14-057T 345.00 - SUNNYSIDE 345KV CKT 1	717	789	0.18745	111.4048	GEN563202 1-G15085_3 0.5500
FDNS	00NR	2	20WP	G15_084	FROM->TO	G14-057T 345.00 - SUNNYSIDE 345KV CKT 1	717	789	0.18895	111.3896	GEN511853 1-COMANCHE #3
FDNS	00NR	2	20WP	G15_084	FROM->TO	G14-057T 345.00 - SUNNYSIDE 345KV CKT 1	717	789	0.18895	111.3863	GEN527161 1-MUSTANG GEN #1
FDNS	00NR	2	20WP	G15_084	FROM->TO	G14-057T 345.00 - SUNNYSIDE 345KV CKT 1	717	789	0.18895	111.3862	GEN527162 1-MUSTANG GEN #2
FDNS	00NR	2	20WP	G15_084	FROM->TO	G14-057T 345.00 - SUNNYSIDE 345KV CKT 1	717	789	0.18858	111.386	ROCKY POINT - SUNNYSIDE 138KV CKT 1
FDNS	00NR	2	16WP	G15_084	FROM->TO	G14-057T 345.00 - SUNNYSIDE 345KV CKT 1	717	789	0.18745	111.3801	GEN635023 3-WALTER SCOTT UNIT 3
FDNS	00NR	2	20WP	G15_084	FROM->TO	G14-057T 345.00 - SUNNYSIDE 345KV CKT 1	717	789	0.18895	111.3786	EASTDC - ERCOT EQUIVALENCE 345KV CKT 1
FDNS	00NR	2	20WP	G15_084	FROM->TO	G14-057T 345.00 - SUNNYSIDE 345KV CKT 1	717	789	0.18895	111.3775	GEN511962 2-RKYRDGW2-1 0.7000
FDNS	00NR	2	16WP	G15_084	FROM->TO	G14-057T 345.00 - SUNNYSIDE 345KV CKT 1	717	789	0.18814	111.3772	JOHNSON COUNTY (JOHNCO) 345/138/13.8KV TRANSFORMER CKT 1
FDNS	00NR	2	20WP	G15_084	FROM->TO	G14-057T 345.00 - SUNNYSIDE 345KV CKT 1	717	789	0.18895	111.362	GEN672321 1-SHAND GENERATOR 1
FDNS	00NR	2	20WP	G15_084	FROM->TO	G14-057T 345.00 - SUNNYSIDE 345KV CKT 1	717	789	0.18849	111.3618	RUSSETT - SPRINGDALE 138KV CKT 1
FDNS	00NR	2	16WP	G15_084	FROM->TO	G14-057T 345.00 - SUNNYSIDE 345KV CKT 1	717	789	0.18745	111.3534	GEN562590 1-G14_057_3 0.6900
FDNS	00NR	2	20WP	G15_084	FROM->TO	G14-057T 345.00 - SUNNYSIDE 345KV CKT 1	717	789	0.18895	111.3533	GEN525494 1-PLANT X GEN #4 20 KV
FDNS	00NR	2	20WP	G15_084	FROM->TO	G14-057T 345.00 - SUNNYSIDE 345KV CKT 1	717	789	0.19072	111.3484	G15063_T 345.00 - MATHWSN7 345.00 345KV CKT 1
FDNS	00NR	2	20WP	G15_084	FROM->TO	G14-057T 345.00 - SUNNYSIDE 345KV CKT 1	717	789	0.18895	111.3388	GEN672310 1-POPLAR RIVER GENERATOR 1
FDNS	00NR	2	20WP	G15_084	FROM->TO	G14-057T 345.00 - SUNNYSIDE 345KV CKT 1	717	789	0.18895	111.3388	GEN672311 2-POPLAR RIVER GENERATOR 2
FDNS	00NR	2	20WP	G15_084	FROM->TO	G14-057T 345.00 - SUNNYSIDE 345KV CKT 1	717	789	0.18895	111.3377	GEN527882 1-CUNNINGHAM GEN #2 20 KV
FDNS	00NR	2	20WP	G15_084	FROM->TO	G14-057T 345.00 - SUNNYSIDE 345KV CKT 1	717	789	0.18895	111.3293	GEN672306 6-BOUNDARY DAM GENERATOR 6
FDNS	00NR	2	20WP	G15_084	FROM->TO	G14-057T 345.00 - SUNNYSIDE 345KV CKT 1	717	789	0.18895	111.3235	GEN511852 1-COMANCHE #2
FDNS	00NR	2	20WP	G15_084	FROM->TO	G14-057T 345.00 - SUNNYSIDE 345KV CKT 1	717	789	0.18895	111.3225	GEN344895 2-1LAB G2 20.000
FDNS	00NR	2	20WP	G15_084	FROM->TO	G14-057T 345.00 - SUNNYSIDE 345KV CKT 1	717	789	0.18895	111.3217	GEN527163 1-MUSTANG GEN #3 22 KV
FDNS	00NR	2	20WP	G15_084	FROM->TO	G14-057T 345.00 - SUNNYSIDE 345KV CKT 1	717	789	0.18895	111.3211	GEN562512 1-G14_020_3 0.6900

SOLUTION	GROUP	SCENARIO	SEASON	SOURCE	DIRECTION	MONITORED ELEMENT	RATEA (MVA)	RATEB(MVA)	TDF	TC%LOADING (% MVA)	CONTINGENCY
FDNS	00NR	2	20WP	G15_084	FROM->TO	G14-057T 345.00 - SUNNYSIDE 345KV CKT 1	717	789	0.18867	111.3193	P12:138:WFEC-AEPW:GOLDENSW4:CRAIGJT4
FDNS	00NR	2	20WP	G15_084	FROM->TO	G14-057T 345.00 - SUNNYSIDE 345KV CKT 1	717	789	0.18895	111.3076	GEN562892 1-G15048_3 0.6900
FDNS	00NR	2	20WP	G15_084	FROM->TO	G14-057T 345.00 - SUNNYSIDE 345KV CKT 1	717	789	0.18895	111.2998	GEN681542 6-JP MADGETT
FDNS	00NR	2	20WP	G15_084	FROM->TO	G14-057T 345.00 - SUNNYSIDE 345KV CKT 1	717	789	0.18972	111.2985	ARKANSAS NUCLEAR ONE - FT SMITH 500KV CKT 1
FDNS	00NR	2	20WP	G15_084	FROM->TO	G14-057T 345.00 - SUNNYSIDE 345KV CKT 1	717	789	0.18972	111.2985	ARKANSAS NUCLEAR ONE - FT SMITH 500KV CKT 1
FDNS	00NR	2	20WP	G15_084	FROM->TO	G14-057T 345.00 - SUNNYSIDE 345KV CKT 1	717	789	0.18895	111.2972	GEN563192 1-G15084_3 0.5500
FDNS	00NR	2	20WP	G15_084	FROM->TO	G14-057T 345.00 - SUNNYSIDE 345KV CKT 1	717	789	0.18895	111.293	GEN344896 3-1LAB G3 20.000
FDNS	00NR	2	20WP	G15_084	FROM->TO	G14-057T 345.00 - SUNNYSIDE 345KV CKT 1	717	789	0.18895	111.2919	GEN344897 4-1LAB G4 20.000
FDNS	00NR	2	20WP	G15_084	FROM->TO	G14-057T 345.00 - SUNNYSIDE 345KV CKT 1	717	789	0.18895	111.2916	GEN344894 1-1LAB G1 20.000
FDNS	00NR	2	20WP	G15_084	FROM->TO	G14-057T 345.00 - SUNNYSIDE 345KV CKT 1	717	789	0.18832	111.2871	ARDMORE WEST - CARTER 138KV CKT 1
FDNS	00NR	2	20WP	G15_084	FROM->TO	G14-057T 345.00 - SUNNYSIDE 345KV CKT 1	717	789	0.18918	111.2863	P12:138:WFEC:MSL16
FDNS	00NR	2	16WP	G15_084	FROM->TO	G14-057T 345.00 - SUNNYSIDE 345KV CKT 1	717	789	0.18745	111.2725	GEN562762 1-G15033_3 0.6900
FDNS	00NR	2	20WP	G15_084	FROM->TO	G14-057T 345.00 - SUNNYSIDE 345KV CKT 1	717	789	0.18895	111.2676	GEN523461 1-BLACKHAWK GEN #1
FDNS	00NR	2	20WP	G15_084	FROM->TO	G14-057T 345.00 - SUNNYSIDE 345KV CKT 1	717	789	0.18895	111.2675	GEN523462 1-BLACKHAWK GEN #2
FDNS	00NR	2	16WP	G15_084	FROM->TO	G14-057T 345.00 - SUNNYSIDE 345KV CKT 1	717	789	0.18745	111.2615	GEN562655 1-G14_074_3 0.6900
FDNS	00NR	2	20WP	G15_084	FROM->TO	G14-057T 345.00 - SUNNYSIDE 345KV CKT 1	717	789	0.19007	111.2265	P12:138:WFEC:MSL07
FDNS	00NR	2	20WP	G15_084	FROM->TO	G14-057T 345.00 - SUNNYSIDE 345KV CKT 1	717	789	0.19007	111.2265	P12:138:WFEC-AEPW:HUGOPP4:ATOKA--4
FDNS	00NR	2	20WP	G15_084	FROM->TO	G14-057T 345.00 - SUNNYSIDE 345KV CKT 1	717	789	0.18895	111.2196	GEN521111 1-ORME2 13.800
FDNS	00NR	2	20WP	G15_084	FROM->TO	G14-057T 345.00 - SUNNYSIDE 345KV CKT 1	717	789	0.18883	111.2194	P12:138:AEPW-SWPA:LONEOAK4:TUPELO4
FDNS	00NR	2	20WP	G15_084	FROM->TO	G14-057T 345.00 - SUNNYSIDE 345KV CKT 1	717	789	0.18883	111.2194	P12:138:WFEC:MSL06
FDNS	00NR	2	20WP	G15_084	FROM->TO	G14-057T 345.00 - SUNNYSIDE 345KV CKT 1	717	789	0.18844	111.2132	SUNNYSIDE (SUNNYSD5) 345/138/13.8KV TRANSFORMER CKT 1
FDNS	00NR	2	20WP	G15_084	FROM->TO	G14-057T 345.00 - SUNNYSIDE 345KV CKT 1	717	789	0.18895	111.2106	GEN562699 1-G15_018_3 0.6900
FDNS	00NR	2	20WP	G15_084	FROM->TO	G14-057T 345.00 - SUNNYSIDE 345KV CKT 1	717	789	0.18895	111.2064	GEN521110 1-ORME1 13.800
FDNS	00NR	2	20WP	G15_084	FROM->TO	G14-057T 345.00 - SUNNYSIDE 345KV CKT 1	717	789	0.16306	111.2032	CACHE - SNYDER 138KV CKT 1
FDNS	00NR	2	16WP	G15_084	FROM->TO	G14-057T 345.00 - SUNNYSIDE 345KV CKT 1	717	789	0.18745	111.1965	GEN562685 1-G15_013_3 0.3550
FDNS	00NR	2	20WP	G15_084	FROM->TO	G14-057T 345.00 - SUNNYSIDE 345KV CKT 1	717	789	0.18762	111.1928	CLARKSVILLE - MUSKOGEE 345KV CKT 1
FDNS	00NR	2	20WP	G15_084	FROM->TO	G14-057T 345.00 - SUNNYSIDE 345KV CKT 1	717	789	0.18762	111.1928	CLARKSVILLE - MUSKOGEE 345KV CKT 1
FDNS	00NR	2	20WP	G15_084	FROM->TO	G14-057T 345.00 - SUNNYSIDE 345KV CKT 1	717	789	0.18832	111.1747	ARDMORE WEST - UNIROYAL 138KV CKT 1
FDNS	00NR	2	20WP	G15_084	FROM->TO	G14-057T 345.00 - SUNNYSIDE 345KV CKT 1	717	789	0.18895	111.1701	GEN520811 1-ANADRK4
FDNS	00NR	2	20WP	G15_084	FROM->TO	G14-057T 345.00 - SUNNYSIDE 345KV CKT 1	717	789	0.18895	111.16	GEN563162 1-G15081_3 0.6900
FDNS	00NR	2	20WP	G15_084	FROM->TO	G14-057T 345.00 - SUNNYSIDE 345KV CKT 1	717	789	0.18895	111.1336	GEN661015 1-COYOTE
FDNS	00NR	2	20WP	G15_084	FROM->TO	G14-057T 345.00 - SUNNYSIDE 345KV CKT 1	717	789	0.18895	111.1297	GEN563292 1-G15095_3 0.6900
FDNS	00NR	2	20WP	G15_084	FROM->TO	G14-057T 345.00 - SUNNYSIDE 345KV CKT 1	717	789	0.18838	111.1254	P12:138:OKGE:3TERM40
FDNS	00NR	2	20WP	G15_084	FROM->TO	G14-057T 345.00 - SUNNYSIDE 345KV CKT 1	717	789	0.18895	111.1163	CARTRCO4 138.00 - RATLIFF 138KV CKT 1
FDNS	00NR	2	20WP	G15_084	FROM->TO	G14-057T 345.00 - SUNNYSIDE 345KV CKT 1	717	789	0.18895	111.1079	GEN563122 1-G15077_3 0.3850
FDNS	00NR	2	20WP	G15_084	FROM->TO	G14-057T 345.00 - SUNNYSIDE 345KV CKT 1	717	789	0.18895	111.0804	GEN562861 1-G15045_2 0.4800
FDNS	00NR	2	16WP	G15_084	FROM->TO	G14-057T 345.00 - SUNNYSIDE 345KV CKT 1	717	789	0.18745	111.0624	GEN525561 1-TOLK GEN #1 24 KV
FDNS	00NR	2	16WP	G15_084	FROM->TO	G14-057T 345.00 - SUNNYSIDE 345KV CKT 1	717	789	0.18745	111.0619	GEN527903 1-HOBBS PLANT #3 (ST)
FDNS	00NR	2	16WP	G15_084	FROM->TO	G14-057T 345.00 - SUNNYSIDE 345KV CKT 1	717	789	0.18745	111.0596	GEN563272 1-G15093_3 0.6900
FDNS	00NR	2	20WP	G15_084	FROM->TO	G14-057T 345.00 - SUNNYSIDE 345KV CKT 1	717	789	0.18895	111.0205	GEN657748 1-YOUNG 2 GENERATOR
FDNS	00NR	2	20WP	G15_084	FROM->TO	G14-057T 345.00 - SUNNYSIDE 345KV CKT 1	717	789	0.18895	110.9989	GEN527883 1-CUNNINGHAM GEN #3 22 KV
FDNS	00NR	2	20WP	G15_084	FROM->TO	G14-057T 345.00 - SUNNYSIDE 345KV CKT 1	717	789	0.18895	110.9959	GEN527884 1-CUNNINGHAM GEN #4 22 KV
FDNS	00NR	2	20WP	G15_084	FROM->TO	G14-057T 345.00 - SUNNYSIDE 345KV CKT 1	717	789	0.18928	110.9886	P12:138:WFEC:MSL15
FDNS	00NR	2	20WP	G15_084	FROM->TO	G14-057T 345.00 - SUNNYSIDE 345KV CKT 1	717	789	0.18895	110.9598	GEN562992 1-G15063_3 0.6900
FDNS	00NR	2	16WP	G15_084	FROM->TO	G14-057T 345.00 - SUNNYSIDE 345KV CKT 1	717	789	0.18745	110.9566	GEN635024 4-WALTER SCOTT UNIT 4
FDNS	00NR	2	20WP	G15_084	FROM->TO	G14-057T 345.00 - SUNNYSIDE 345KV CKT 1	717	789	0.18832	110.9361	SUNNYSIDE - UNIROYAL 138KV CKT 1
FDNS	00NR	2	20WP	G15_084	FROM->TO	G14-057T 345.00 - SUNNYSIDE 345KV CKT 1	717	789	0.18895	110.9303	GEN562704 1-G15_020_3 0.3550
FDNS	00NR	2	20WP	G15_084	FROM->TO	G14-057T 345.00 - SUNNYSIDE 345KV CKT 1	717	789	0.18895	110.9301	GEN526331 1-JONES GEN #1 22 KV
FDNS	00NR	2	20WP	G15_084	FROM->TO	G14-057T 345.00 - SUNNYSIDE 345KV CKT 1	717	789	0.18895	110.93	GEN526332 1-JONES GEN #2 21 KV
FDNS	00NR	2	20WP	G15_084	FROM->TO	G14-057T 345.00 - SUNNYSIDE 345KV CKT 1	717	789	0.18895	110.9252	GEN620315 1-BIG STONE GEN
FDNS	00NR	2	20WP	G15_084	FROM->TO	G14-057T 345.00 - SUNNYSIDE 345KV CKT 1	717	789	0.18895	110.8942	GEN562952 1-G15057_3 0.6500
FDNS	00NR	2	20WP	G15_084	FROM->TO	G14-057T 345.00 - SUNNYSIDE 345KV CKT 1	717	789	0.20445	110.8728	P12:138:AEPW:SHAM4WT:CHILD4WT
FDNS	00NR	2	20WP	G15_084	FROM->TO	G14-057T 345.00 - SUNNYSIDE 345KV CKT 1	717	789	0.18895	110.8528	GEN511851 1-COMANCHE #1
FDNS	00NR	2	20WP	G15_084	FROM->TO	G14-057T 345.00 - SUNNYSIDE 345KV CKT 1	717	789	0.18895	110.852	GEN600004 2-PRAIRIE ISLAND G2
FDNS	00NR	2	20WP	G15_084	FROM->TO	G14-057T 345.00 - SUNNYSIDE 345KV CKT 1	717	789	0.18895	110.8494	GEN600003 1-PRAIRIE ISLAND G1
FDNS	00NR	2	20WP	G15_084	FROM->TO	G14-057T 345.00 - SUNNYSIDE 345KV CKT 1	717	789	0.18895	110.8317	GEN600006 1-AS KING
FDNS	00NR	2	20WP	G15_084	FROM->TO	G14-057T 345.00 - SUNNYSIDE 345KV CKT 1	717	789	0.18895	110.8281	GEN563173 1-G15082_3 0.6900
FDNS	00NR	2	20WP	G15_084	FROM->TO	G14-057T 345.00 - SUNNYSIDE 345KV CKT 1	717	789	0.18634	110.8255	GRAPEVINE INTERCHANGE - STATELINE INTERCHANGE 230KV CKT 1
FDNS	00NR	2	20WP	G15_084	FROM->TO	G14-057T 345.00 - SUNNYSIDE 345KV CKT 1	717	789	0.18634	110.8255	GRAPEVINE INTERCHANGE - STATELINE INTERCHANGE 230KV CKT 1
FDNS	00NR	2	20WP	G15_084	FROM->TO	G14-057T 345.00 - SUNNYSIDE 345KV CKT 1	717	789	0.18895	110.8183	GEN562710 1-G15_022_3 0.5500
FDNS	00NR	2	20WP	G15_084	FROM->TO	G14-057T 345.00 - SUNNYSIDE 345KV CKT 1	717	789	0.19437	110.8116	CANEY CREEK - TEXOMA JCT 138KV CKT 1
FDNS	00NR	2	20WP	G15_084	FROM->TO	G14-057T 345.00 - SUNNYSIDE 345KV CKT 1	717	789	0.18895	110.7852	GEN532751 1-WOLF CREEK GENERATING STATION UNIT 1
FDNS	00NR	2	20WP	G15_084	FROM->TO	G14-057T 345.00 - SUNNYSIDE 345KV CKT 1	717	789	0.19209	110.7474	P12:138:AEPW-OGE:CORNVIL4:CIMARON4
FDNS	00NR	2	20WP	G15_084	FROM->TO	G14-057T 345.00 - SUNNYSIDE 345KV CKT 1	717	789	0.19288	110.6606	GRAPEVINE INTERCHANGE - NICHOLS STATION 230KV CKT 1
FDNS	00NR	2	20WP	G15_084	FROM->TO	G14-057T 345.00 - SUNNYSIDE 345KV CKT 1	717	789	0.19288	110.6606	GRAPEVINE INTERCHANGE - NICHOLS STATION 230KV CKT 1
FDNS	00NR	2	20WP	G15_084	FROM->TO	G14-057T 345.00 - SUNNYSIDE 345KV CKT 1	717	789	0.18895	110.6597	GEN635213 3-NEAL UNIT 3
FDNS	00NR	2	20WP	G15_084	FROM->TO	G14-057T 345.00 - SUNNYSIDE 345KV CKT 1	717	789	0.18895	110.6591	GEN629074 1-ARNOLD LOWSIDE OF GSU XFMR
FDNS	00NR	2	20WP	G15_084	FROM->TO	G14-057T 345.00 - SUNNYSIDE 345KV CKT 1	717	789	0.18895	110.626	GEN615002 2-COAL CREEK
FDNS	00NR	2	20WP	G15_084	FROM->TO	G14-057T 345.00 - SUNNYSIDE 345KV CKT 1	717	789	0.18911	110.5933	P12:138:WFEC:MSL09
FDNS	00NR	2	20WP	G15_084	FROM->TO	G14-057T 345.00 - SUNNYSIDE 345KV CKT 1	717	789	0.18543	110.5894	NORTHWEST TEXARKANA - VALLIANT 345KV CKT 1
FDNS	00NR	2	20WP	G15_084	FROM->TO	G14-057T 345.00 - SUNNYSIDE 345KV CKT 1	717	789	0.18543	110.5894	NORTHWEST TEXARKANA - VALLIANT 345KV CKT 1
FDNS	00NR	2	20WP	G15_084	FROM->TO	G14-057T 345.00 - SUNNYSIDE 345KV CKT 1	717	789	0.18895	110.5702	GEN562754 1-G15031_5 0.6900
FDNS	00NR	2	20WP	G15_084	FROM->TO	G14-057T 345.00 - SUNNYSIDE 345KV CKT 1	717	789	0.18895	110.5666	GEN636641 1-LOUISA UNIT 1
FDNS	00NR	2	20WP	G15_084	FROM->TO	G14-057T 345.00 - SUNNYSIDE 345KV CKT 1	717	789	0.17965	110.5484	CHISHOLM7 345.00 () 345/230/13.2KV TRANSFORMER CKT 1
FDNS	00NR	2	20WP	G15_084	FROM->TO	G14-057T 345.00 - SUNNYSIDE 345KV CKT 1	717	789	0.18895	110.5321	GEN600005 1-MONTICELLO
FDNS	00NR	2	20WP	G15_084	FROM->TO	G14-057T 345.00 - SUNNYSIDE 345KV CKT 1	717	789	0.18895	110.5127	GEN562556 1-G14_046_3 0.3420
FDNS	00NR	2	20WP	G15_084	FROM->TO	G14-057T 345.00 - SUNNYSIDE 345KV CKT 1	717	789	0.18895	110.5114	GEN562756 1-G15031_7 0.6900
FDNS	00NR	2	20WP	G15_084	FROM->TO	G14-057T 345.00 - SUNNYSIDE 345KV CKT 1	717	789	0.17965	110.4641	CHISHOLM7 345.00 - GRACEMONT 345KV CKT 1
FDNS	00NR	2	20WP	G15_084	FROM->TO	G14-057T 345.00 - SUNNYSIDE 345KV CKT 1	717	789	0.18895	110.4295	GEN563142 1-G15079_3 0.5500

SOLUTION	GROUP	SCENARIO	SEASON	SOURCE	DIRECTION	MONITORED ELEMENT	RATEA (MVA)	RATEB(MVA)	TDF	TC%LOADING (% MVA)	CONTINGENCY
FDNS	00NR	2	20WP	G15_084	FROM->TO	G14-057T 345.00 - SUNNYSIDE 345KV CKT 1	717	789	0.18895	110.4295	GEN563151 1-G15080_2 0.5500
FDNS	00NR	2	20WP	G15_084	FROM->TO	G14-057T 345.00 - SUNNYSIDE 345KV CKT 1	717	789	0.18895	110.4228	GEN562023 1-G11_020_3 0.6900
FDNS	00NR	2	20WP	G15_084	FROM->TO	G14-057T 345.00 - SUNNYSIDE 345KV CKT 1	717	789	0.18895	110.4228	GEN562026 1-G11_019_3 0.6900
FDNS	00NR	2	20WP	G15_084	FROM->TO	G14-057T 345.00 - SUNNYSIDE 345KV CKT 1	717	789	0.18895	110.4063	GEN600000 1-SHERBURNECNTY G1
FDNS	00NR	2	20WP	G15_084	FROM->TO	G14-057T 345.00 - SUNNYSIDE 345KV CKT 1	717	789	0.18895	110.371	GEN629075 1-OTTUMWA GENERATOR FOR OTTUMWA UNIT NO 1
FDNS	00NR	2	16WP	G15_084	FROM->TO	G14-057T 345.00 - SUNNYSIDE 345KV CKT 1	717	789	0.18023	110.3647	LYDIA - VALLIANT 345KV CKT 1
FDNS	00NR	2	16WP	G15_084	FROM->TO	G14-057T 345.00 - SUNNYSIDE 345KV CKT 1	717	789	0.18023	110.3647	LYDIA - VALLIANT 345KV CKT 1
FDNS	00NR	2	20WP	G15_084	FROM->TO	G14-057T 345.00 - SUNNYSIDE 345KV CKT 1	717	789	0.18895	110.3533	GEN600001 2-SHERBURNE CNTY G2
FDNS	00NR	2	20WP	G15_084	FROM->TO	G14-057T 345.00 - SUNNYSIDE 345KV CKT 1	717	789	0.18895	110.329	GEN523971 1-HARRINGTON GEN #1 24 KV
FDNS	00NR	2	20WP	G15_084	FROM->TO	G14-057T 345.00 - SUNNYSIDE 345KV CKT 1	717	789	0.18895	110.329	GEN523973 1-HARRINGTON GEN #3 24 KV
FDNS	00NR	2	20WP	G15_084	FROM->TO	G14-057T 345.00 - SUNNYSIDE 345KV CKT 1	717	789	0.18895	110.3289	GEN523972 1-HARRINGTON GEN #2 24 KV
FDNS	00NR	2	20WP	G15_084	FROM->TO	G14-057T 345.00 - SUNNYSIDE 345KV CKT 1	717	789	0.18895	110.2971	GEN511848 1-SOUTHWESTERN STATION #3
FDNS	00NR	2	17SP	G15_084	FROM->TO	G14-057T 345.00 - SUNNYSIDE 345KV CKT 1	717	789	0.26572	110.2771	CIMARRON - MINCO 345KV CKT 1
FDNS	00NR	2	20WP	G15_084	FROM->TO	G14-057T 345.00 - SUNNYSIDE 345KV CKT 1	717	789	0.18278	110.233	LYDIA - WELSH 345KV CKT 1
FDNS	00NR	2	20WP	G15_084	FROM->TO	G14-057T 345.00 - SUNNYSIDE 345KV CKT 1	717	789	0.18278	110.233	LYDIA - WELSH 345KV CKT 1
FDNS	00NR	2	20WP	G15_084	FROM->TO	G14-057T 345.00 - SUNNYSIDE 345KV CKT 1	717	789	0.18895	110.2306	GEN527901 1-HOBBS PLANT #1 (CT)
FDNS	00NR	2	20WP	G15_084	FROM->TO	G14-057T 345.00 - SUNNYSIDE 345KV CKT 1	717	789	0.18895	110.2306	GEN527902 1-HOBBS PLANT #2 (CT)
FDNS	00NR	2	20WP	G15_084	FROM->TO	G14-057T 345.00 - SUNNYSIDE 345KV CKT 1	717	789	0.18895	110.1933	GEN563042 1-G15068_3 0.6900
FDNS	00NR	2	20WP	G15_084	FROM->TO	G14-057T 345.00 - SUNNYSIDE 345KV CKT 1	717	789	0.18895	110.0973	SHERBURNE CO 345/24.0KV TRANSFORMER CKT 1
FDNS	00NR	2	20WP	G15_084	FROM->TO	G14-057T 345.00 - SUNNYSIDE 345KV CKT 1	717	789	0.18895	110.0952	GEN635214 4-NEAL UNIT 4
FDNS	00NR	2	20WP	G15_084	FROM->TO	G14-057T 345.00 - SUNNYSIDE 345KV CKT 1	717	789	0.18295	110.0303	P12:230:AEPW-SPS:SWEETWT6:WHEELER 6
FDNS	00NR	2	20WP	G15_084	FROM->TO	G14-057T 345.00 - SUNNYSIDE 345KV CKT 1	717	789	0.18295	110.0283	STATELINE INTERCHANGE - STLN-DEMARC6 230KV CKT 1
FDNS	00NR	2	20WP	G15_084	FROM->TO	G14-057T 345.00 - SUNNYSIDE 345KV CKT 1	717	789	0.18295	110.0252	STLN-DEMARC6 - SWEETWATER 230KV CKT 1
FDNS	00NR	2	20WP	G15_084	FROM->TO	G14-057T 345.00 - SUNNYSIDE 345KV CKT 1	717	789	0.18895	109.9249	GEN600002 3-SHERBURNE CNTY G3
FDNS	00NR	2	20WP	G15_084	FROM->TO	G14-057T 345.00 - SUNNYSIDE 345KV CKT 1	717	789	0.18895	109.8947	GEN563043 1-G15068_4 0.6900
FDNS	00NR	2	20WP	G15_084	FROM->TO	G14-057T 345.00 - SUNNYSIDE 345KV CKT 1	717	789	0.18895	109.8689	GEN526333 1-JONES GEN #3 21 KV
FDNS	00NR	2	20WP	G15_084	FROM->TO	G14-057T 345.00 - SUNNYSIDE 345KV CKT 1	717	789	0.18895	109.8687	GEN526334 1-JONES_4 116.500
FDNS	00NR	2	20WP	G15_084	FROM->TO	G14-057T 345.00 - SUNNYSIDE 345KV CKT 1	717	789	0.18895	109.8501	GEN563273 2-G15093_4 0.6900
FDNS	00NR	2	20WP	G15_084	FROM->TO	G14-057T 345.00 - SUNNYSIDE 345KV CKT 1	717	789	0.18895	109.8356	GEN344225 1-1CAL G1 25.000
FDNS	00NR	2	20WP	G15_084	FROM->TO	G14-057T 345.00 - SUNNYSIDE 345KV CKT 1	717	789	0.18895	109.8312	GEN525844 1-ELK_1 118.000
FDNS	00NR	2	20WP	G15_084	FROM->TO	G14-057T 345.00 - SUNNYSIDE 345KV CKT 1	717	789	0.18895	109.8136	GEN525845 1-ELK_2 1 18.000
FDNS	00NR	2	20WP	G15_084	FROM->TO	G14-057T 345.00 - SUNNYSIDE 345KV CKT 1	717	789	0.18895	109.6828	GEN527166 1-MUSTANG_6 118.000
FDNS	00NR	2	20WP	G15_084	FROM->TO	G14-057T 345.00 - SUNNYSIDE 345KV CKT 1	717	789	0.18895	109.6382	GEN635023 3-WALTER SCOTT UNIT 3
FDNS	00NR	2	20WP	G15_084	FROM->TO	G14-057T 345.00 - SUNNYSIDE 345KV CKT 1	717	789	0.18895	109.6188	GEN528501 1-G14_012 24.000
FDNS	00NR	2	20WP	G15_084	FROM->TO	G14-057T 345.00 - SUNNYSIDE 345KV CKT 1	717	789	0.17885	109.6042	P12:230:AEPW:ELKCITY6:SWEETWT6
FDNS	00NR	2	20WP	G15_084	FROM->TO	G14-057T 345.00 - SUNNYSIDE 345KV CKT 1	717	789	0.18895	109.5585	GEN562590 1-G14_057_3 0.6900
FDNS	00NR	2	20WP	G15_084	FROM->TO	G14-057T 345.00 - SUNNYSIDE 345KV CKT 1	717	789	0.18895	109.5334	GEN563202 1-G15085_3 0.5500
FDNS	00NR	2	20WP	G15_084	FROM->TO	G14-057T 345.00 - SUNNYSIDE 345KV CKT 1	717	789	0.18895	109.4459	GEN562762 1-G15033_3 0.6900
FDNS	00NR	2	20WP	G15_084	FROM->TO	G14-057T 345.00 - SUNNYSIDE 345KV CKT 1	717	789	0.18895	109.4344	GEN562655 1-G14_074_3 0.6900
FDNS	00NR	2	20WP	G15_084	FROM->TO	G14-057T 345.00 - SUNNYSIDE 345KV CKT 1	717	789	0.18895	109.4307	GEN525562 1-TOLK GEN #2 24 KV
FDNS	00NR	2	20WP	G15_084	FROM->TO	G14-057T 345.00 - SUNNYSIDE 345KV CKT 1	717	789	0.18295	109.3448	CHISHOLM6 230.00 - SWEETWATER 230KV CKT 1
FDNS	00NR	2	20WP	G15_084	FROM->TO	G14-057T 345.00 - SUNNYSIDE 345KV CKT 1	717	789	0.18895	109.338	GEN562685 1-G15_013_3 0.3550
FDNS	00NR	2	20WP	G15_084	FROM->TO	G14-057T 345.00 - SUNNYSIDE 345KV CKT 1	717	789	0.18967	109.3373	JOHNSON COUNTY (JOHNCO) 345/138/13.8KV TRANSFORMER CKT 1
FDNS	00NR	2	20WP	G15_084	FROM->TO	G14-057T 345.00 - SUNNYSIDE 345KV CKT 1	717	789	0.18895	109.3347	GEN527903 1-HOBBS PLANT #3 (ST)
FDNS	00NR	2	16WP	G15_084	FROM->TO	G14-057T 345.00 - SUNNYSIDE 345KV CKT 1	717	789	0.18745	109.3043	EASTDC - ERCOT EQUIVALENCE 345KV CKT 1
FDNS	00NR	2	20WP	G15_084	FROM->TO	G14-057T 345.00 - SUNNYSIDE 345KV CKT 1	717	789	0.18895	109.2334	GEN635024 4-WALTER SCOTT UNIT 4
FDNS	00NR	2	20WP	G15_084	FROM->TO	G14-057T 345.00 - SUNNYSIDE 345KV CKT 1	717	789	0.18895	109.1911	GEN563272 1-G15093_3 0.6900
FDNS	00NR	2	20WP	G15_084	FROM->TO	G14-057T 345.00 - SUNNYSIDE 345KV CKT 1	717	789	0.18133	109.1737	LYDIA - VALLIANT 345KV CKT 1
FDNS	00NR	2	20WP	G15_084	FROM->TO	G14-057T 345.00 - SUNNYSIDE 345KV CKT 1	717	789	0.18133	109.1737	LYDIA - VALLIANT 345KV CKT 1
FDNS	00NR	2	20WP	G15_084	FROM->TO	G14-057T 345.00 - SUNNYSIDE 345KV CKT 1	717	789	0.18895	108.8578	GEN525561 1-TOLK GEN #1 24 KV
FDNS	00NR	2	16WP	G15_084	FROM->TO	G14-057T 345.00 - SUNNYSIDE 345KV CKT 1	717	789	0.165	108.2531	JOHNSON COUNTY - PITTSBURG 345KV CKT 1
FDNS	00NR	2	16WP	G15_084	FROM->TO	G14-057T 345.00 - SUNNYSIDE 345KV CKT 1	717	789	0.165	108.2531	JOHNSON COUNTY - PITTSBURG 345KV CKT 1
FDNS	00NR	2	16WP	G15_084	FROM->TO	G14-057T 345.00 - SUNNYSIDE 345KV CKT 1	717	789	0.18745	107.9106	GEN563263 1-G15092_4 0.6900
FDNS	00NR	2	16WP	G15_084	FROM->TO	G14-057T 345.00 - SUNNYSIDE 345KV CKT 1	717	789	0.17296	107.488	HUGO - VALLIANT 345KV CKT 1
FDNS	00NR	2	16WP	G15_084	FROM->TO	G14-057T 345.00 - SUNNYSIDE 345KV CKT 1	717	789	0.17296	107.488	HUGO - VALLIANT 345KV CKT 1
FDNS	00NR	2	20WP	G15_084	FROM->TO	G14-057T 345.00 - SUNNYSIDE 345KV CKT 1	717	789	0.16666	106.9199	JOHNSON COUNTY - PITTSBURG 345KV CKT 1
FDNS	00NR	2	20WP	G15_084	FROM->TO	G14-057T 345.00 - SUNNYSIDE 345KV CKT 1	717	789	0.16666	106.9199	JOHNSON COUNTY - PITTSBURG 345KV CKT 1
FDNS	00NR	2	20WP	G15_084	FROM->TO	G14-057T 345.00 - SUNNYSIDE 345KV CKT 1	717	789	0.17396	106.6479	HUGO - VALLIANT 345KV CKT 1
FDNS	00NR	2	20WP	G15_084	FROM->TO	G14-057T 345.00 - SUNNYSIDE 345KV CKT 1	717	789	0.17396	106.6479	HUGO - VALLIANT 345KV CKT 1
FDNS	00NR	2	16WP	G15_084	FROM->TO	G14-057T 345.00 - SUNNYSIDE 345KV CKT 1	717	789	0.18745	106.2363	GEN563262 1-G15092_3 0.6900
FDNS	00NR	2	20WP	G15_084	FROM->TO	G14-057T 345.00 - SUNNYSIDE 345KV CKT 1	717	789	0.18895	106.0637	GEN563263 1-G15092_4 0.6900
FDNS	00NR	2	16WP	G15_084	FROM->TO	G14-057T 345.00 - SUNNYSIDE 345KV CKT 1	717	789	0.17849	104.7399	G14-074T 345.00 - TUCO INTERCHANGE 345KV CKT 1
FDNS	00NR	2	20WP	G15_084	FROM->TO	G14-057T 345.00 - SUNNYSIDE 345KV CKT 1	717	789	0.18895	104.3858	GEN563262 1-G15092_3 0.6900
FDNS	00NR	2	16WP	G15_084	FROM->TO	G14-057T 345.00 - SUNNYSIDE 345KV CKT 1	717	789	0.16428	102.5136	JOHNSON COUNTY - SUNNYSIDE 345KV CKT 1
FDNS	00NR	2	20WP	G15_084	FROM->TO	G14-057T 345.00 - SUNNYSIDE 345KV CKT 1	717	789	0.17984	101.7321	G14-074T 345.00 - TUCO INTERCHANGE 345KV CKT 1
FDNS	00NR	2	20SP	G15_084	FROM->TO	G14-057T 345.00 - SUNNYSIDE 345KV CKT 1	717	789	0.26372	100.802	CIMARRON - MINCO 345KV CKT 1
FDNS	00NR	2	20WP	G15_084	FROM->TO	G14-057T 345.00 - SUNNYSIDE 345KV CKT 1	717	789	0.16607	100.3727	JOHNSON COUNTY - SUNNYSIDE 345KV CKT 1
FDNS	00NR	2	17SP	G15_084	FROM->TO	G14-057T 345.00 - SUNNYSIDE 345KV CKT 1	717	789	0.26572	100	GRACEMONT - MINCO 345KV CKT 1
FDNS	00NR	2	20WP	G15_084	TO->FROM	MATHWSN7 345.00 - TATONGA7 345.00 345KV CKT 1	1195	1195	0.06425	110.8353	G14-074T 345.00 - OKLAUNION 345KV CKT 1
FDNS	00NR	2	16WP	G15_084	TO->FROM	MATHWSN7 345.00 - TATONGA7 345.00 345KV CKT 1	1195	1195	0.06572	108.4359	G14-074T 345.00 - OKLAUNION 345KV CKT 1
FDNS	00NR	2	20WP	G15_084	TO->FROM	MATHWSN7 345.00 - TATONGA7 345.00 345KV CKT 1	1195	1195	0.06593	102.6266	THISTLE7 345.00 - WOODWARD DISTRICT EHV 345KV CKT 1
FDNS	00NR	2	20WP	G15_084	TO->FROM	MATHWSN7 345.00 - TATONGA7 345.00 345KV CKT 1	1195	1195	0.06593	102.6266	THISTLE7 345.00 - WOODWARD DISTRICT EHV 345KV CKT 1
FDNS	00NR	2	20WP	G15_084	TO->FROM	MATHWSN7 345.00 - TATONGA7 345.00 345KV CKT 1	1195	1195	0.06593	102.6266	THISTLE7 345.00 - WOODWARD DISTRICT EHV 345KV CKT 2
FDNS	00NR	2	20WP	G15_084	TO->FROM	MATHWSN7 345.00 - TATONGA7 345.00 345KV CKT 1	1195	1195	0.06593	102.6266	THISTLE7 345.00 - WOODWARD DISTRICT EHV 345KV CKT 2
FDNS	00NR	2	20WP	G15_084	TO->FROM	MATHWSN7 345.00 - TATONGA7 345.00 345KV CKT 1	1195	1195	0.06425	102.3	G14-074T 345.00 - TUCO INTERCHANGE 345KV CKT 1
FDNS	00NR	2	20WP	G15_084	TO->FROM	MATHWSN7 345.00 - TATONGA7 345.00 345KV CKT 1	1195	1195	0.08035	102.2156	CHISHOLM6 230.00 - SWEETWATER 230KV CKT 1
FDNS	00NR	2	20WP	G15_084	TO->FROM	MATHWSN7 345.00 - TATONGA7 345.00 345KV CKT 1	1195	1195	0.08467	101.992	P12:230:AEPW:ELKCITY6:SWEETWT6
FDNS	00NR	2	16WP	G15_084	TO->FROM	MATHWSN7 345.00 - TATONGA7 345.00 345KV CKT 1	1195	1195	0.06762	100.8214	THISTLE7 345.00 - WOODWARD DISTRICT EHV 345KV CKT 1
FDNS	00NR	2	16WP	G15_084	TO->FROM	MATHWSN7 345.00 - TATONGA7 345.00 345KV CKT 1	1195	1195	0.06762	100.8214	THISTLE7 345.00 - WOODWARD DISTRICT EHV 345KV CKT 1

SOLUTION	GROUP	SCENARIO	SEASON	SOURCE	DIRECTION	MONITORED ELEMENT	RATEA (MVA)	RATEB(MVA)	TDF	TC%LOADING (% MVA)	CONTINGENCY
FDNS	00NR	2	16WP	G15_084	TO->FROM	MATHWSN7 345.00 - TATONGA7 345.00 345KV CKT 1	1195	1195	0.06762	100.8214	THISTLE7 345.00 - WOODWARD DISTRICT EHV 345KV CKT 2
FDNS	00NR	2	16WP	G15_084	TO->FROM	MATHWSN7 345.00 - TATONGA7 345.00 345KV CKT 1	1195	1195	0.06762	100.8214	THISTLE7 345.00 - WOODWARD DISTRICT EHV 345KV CKT 2
FDNS	00NR	2	20WP	G15_084	TO->FROM	MATHWSN7 345.00 - TATONGA7 345.00 345KV CKT 1	1195	1195	0.08295	100.7283	CIMARRON - MINCO 345KV CKT 1
FDNS	00NR	2	16WP	G15_084	TO->FROM	MATHWSN7 345.00 - TATONGA7 345.00 345KV CKT 1	1195	1195	0.06572	100.4119	G14-074T 345.00 - TUCO INTERCHANGE 345KV CKT 1
FDNS	00NR	2	16WP	G15_084	TO->FROM	MATHWSN7 345.00 - TATONGA7 345.00 345KV CKT 1	1195	1195	0.08224	100.2191	CHISHOLM6 230.00 - SWEETWATER 230KV CKT 1
FDNS	00NR	2	20WP	G15_084	TO->FROM	MATHWSN7 345.00 - TATONGA7 345.00 345KV CKT 1	1195	1195	0.08035	100.1319	STLN-DEMARC6 - SWEETWATER 230KV CKT 1
FDNS	00NR	2	20WP	G15_084	TO->FROM	MATHWSN7 345.00 - TATONGA7 345.00 345KV CKT 1	1195	1195	0.08035	100.1138	P12:230:AEPW-SPS:SWEETWT6:WHEELER 6
FDNS	00NR	2	20WP	G15_084	TO->FROM	MATHWSN7 345.00 - TATONGA7 345.00 345KV CKT 1	1195	1195	0.08035	100.113	STATELINE INTERCHANGE - STLN-DEMARC6 230KV CKT 1
FDNS	00NR	2	16WP	G15_084	TO->FROM	MATHWSN7 345.00 - TATONGA7 345.00 345KV CKT 1	1195	1195	0.08686	100.051	P12:230:AEPW:ELKCITY6:SWEETWT6
FDNS	00NR	2	20WP	G15_084	TO->FROM	MATHWSN7 345.00 - TATONGA7 345.00 345KV CKT 1	1195	1195	0.05986	100	G1524G1525 345.00 - THISTLE7 345.00 345KV CKT 1
FDNS	00NR	2	20WP	G15_084	TO->FROM	MATHWSN7 345.00 - TATONGA7 345.00 345KV CKT 1	1195	1195	0.05986	100	G1524G1525 345.00 - THISTLE7 345.00 345KV CKT 2
FDNS	00NR	2	20SP	G15_084	TO->FROM	OMPA-MANGUM - RUSSELL 69KV CKT 1	48	48	0.03862	107.6878	ELK CITY (ELKCTY-4) 138/69/13.8KV TRANSFORMER CKT 1
FDNS	00NR	2	20SP	G15_084	TO->FROM	OMPA-MANGUM - RUSSELL 69KV CKT 1	48	48	0.03862	107.6878	ELK CITY (ELKCTY-4) 138/69/13.8KV TRANSFORMER CKT 1
FDNS	00NR	2	16WP	G15_084	TO->FROM	PITTSBURG - SEMINOLE 345KV CKT 1	717	717	0.13626	101.4368	G14-057T 345.00 - SUNNYSIDE 345KV CKT 1
FDNS	00NR	2	17SP	G15_084	FROM->TO	SWISSVALE - WEST GARDNER 345KV CKT 1	717	717	0.03911	105.8319	HOYT - STRANGER CREEK 345KV CKT 1
FDNS	00NR	2	17SP	G15_084	FROM->TO	SWISSVALE - WEST GARDNER 345KV CKT 1	717	717	0.03666	104.7338	G15074_T 345.00 - HOYT 345KV CKT 1
FDNS	00NR	2	16WP	G15_084	FROM->TO	SWISSVALE - WEST GARDNER 345KV CKT 1	717	717	0.03953	101.7897	HOYT - STRANGER CREEK 345KV CKT 1
FDNS	00NR	2	16WP	G15_084	FROM->TO	SWISSVALE - WEST GARDNER 345KV CKT 1	717	717	0.03751	100.9924	LACYGNE - WAVERLY7 345.00 345KV CKT 1
FDNS	00NR	2	16WP	G15_084	FROM->TO	SWISSVALE - WEST GARDNER 345KV CKT 1	717	717	0.03711	99.7	G15074_T 345.00 - HOYT 345KV CKT 1
FDNS	00NR	2	16WP	G15_084	FROM->TO	SWISSVALE - WEST GARDNER 345KV CKT 1	717	717	0.03751	99.6	WAVERLY7 345.00 - WOLF CREEK 345KV CKT 1
FDNS	00NR	2	16WP	G15_084	TO->FROM	TUPELO - TUPELO TAP 138KV CKT 1	143	143	0.03655	123.3524	PITTSBURG - VALLIANT 345KV CKT 1
FDNS	00NR	2	16WP	G15_084	TO->FROM	TUPELO - TUPELO TAP 138KV CKT 1	143	143	0.03655	123.3524	PITTSBURG - VALLIANT 345KV CKT 1
FDNS	00NR	2	16WP	G15_084	TO->FROM	TUPELO - TUPELO TAP 138KV CKT 1	143	143	0.03855	119.4059	G14-057T 345.00 - SUNNYSIDE 345KV CKT 1
FDNS	00NR	2	20WP	G15_084	TO->FROM	TUPELO - TUPELO TAP 138KV CKT 1	143	143	0.03729	117.236	PITTSBURG - VALLIANT 345KV CKT 1
FDNS	00NR	2	20WP	G15_084	TO->FROM	TUPELO - TUPELO TAP 138KV CKT 1	143	143	0.03729	117.236	PITTSBURG - VALLIANT 345KV CKT 1
FDNS	00NR	2	16WP	G15_084	TO->FROM	TUPELO - TUPELO TAP 138KV CKT 1	143	143	0.03533	116.998	PITTSBURG - SEMINOLE 345KV CKT 1
FDNS	00NR	2	16WP	G15_084	TO->FROM	TUPELO - TUPELO TAP 138KV CKT 1	143	143	0.03533	116.998	PITTSBURG - SEMINOLE 345KV CKT 1
FDNS	00NR	2	20WP	G15_084	TO->FROM	TUPELO - TUPELO TAP 138KV CKT 1	143	143	0.03896	116.5039	G14-057T 345.00 - SUNNYSIDE 345KV CKT 1
FDNS	00NR	2	16WP	G15_084	TO->FROM	TUPELO - TUPELO TAP 138KV CKT 1	143	143	0.03634	114.0357	HUGO - SUNNYSIDE 345KV CKT 1
FDNS	00NR	2	20WP	G15_084	TO->FROM	TUPELO - TUPELO TAP 138KV CKT 1	143	143	0.03587	112.9658	PITTSBURG - SEMINOLE 345KV CKT 1
FDNS	00NR	2	20WP	G15_084	TO->FROM	TUPELO - TUPELO TAP 138KV CKT 1	143	143	0.03587	112.9658	PITTSBURG - SEMINOLE 345KV CKT 1
FDNS	00NR	2	20WP	G15_084	TO->FROM	TUPELO - TUPELO TAP 138KV CKT 1	143	143	0.03687	110.4781	HUGO - SUNNYSIDE 345KV CKT 1
FDNS	00NR	2	16WP	G15_084	TO->FROM	TUPELO - TUPELO TAP 138KV CKT 1	143	143	0.03855	109.9342	G14-057T 345.00 - LAWTON EASTSIDE 345KV CKT 1
FDNS	00NR	2	20WP	G15_084	TO->FROM	TUPELO - TUPELO TAP 138KV CKT 1	143	143	0.03896	107.0678	G14-057T 345.00 - LAWTON EASTSIDE 345KV CKT 1
FDNS	00NR	2	16WP	G15_084	TO->FROM	TUPELO - TUPELO TAP 138KV CKT 1	143	143	0.03026	106.294	CANADIAN RIVER () 345/138/13.8KV TRANSFORMER CKT 1
FDNS	00NR	2	16WP	G15_084	TO->FROM	TUPELO - TUPELO TAP 138KV CKT 1	143	143	0.03026	106.294	CANADIAN RIVER () 345/138/13.8KV TRANSFORMER CKT 1
FDNS	00NR	2	16WP	G15_084	TO->FROM	TUPELO - TUPELO TAP 138KV CKT 1	143	143	0.03026	106.2671	CANADIAN RIVER - MCALESTER SOUTH 138KV CKT 1
FDNS	00NR	2	16WP	G15_084	TO->FROM	TUPELO - TUPELO TAP 138KV CKT 1	143	143	0.03026	106.2671	CANADIAN RIVER - MCALESTER SOUTH 138KV CKT 1
FDNS	00NR	2	16WP	G15_084	TO->FROM	TUPELO - TUPELO TAP 138KV CKT 1	143	143	0.03132	105.2632	RUSSETT - RUSSETT 138KV CKT 1
FDNS	00NR	2	20WP	G15_084	TO->FROM	TUPELO - TUPELO TAP 138KV CKT 1	143	143	0.03063	104.5558	CANADIAN RIVER () 345/138/13.8KV TRANSFORMER CKT 1
FDNS	00NR	2	20WP	G15_084	TO->FROM	TUPELO - TUPELO TAP 138KV CKT 1	143	143	0.03063	104.5558	CANADIAN RIVER () 345/138/13.8KV TRANSFORMER CKT 1
FDNS	00NR	2	20WP	G15_084	TO->FROM	TUPELO - TUPELO TAP 138KV CKT 1	143	143	0.03063	104.5323	CANADIAN RIVER - MCALESTER SOUTH 138KV CKT 1
FDNS	00NR	2	20WP	G15_084	TO->FROM	TUPELO - TUPELO TAP 138KV CKT 1	143	143	0.03063	104.5323	CANADIAN RIVER - MCALESTER SOUTH 138KV CKT 1
FDNS	00NR	2	16WP	G15_084	TO->FROM	TUPELO - TUPELO TAP 138KV CKT 1	143	143	0.03209	104.4008	CLEVELAND - G15066_T 345.00 345KV CKT 1
FDNS	00NR	2	16WP	G15_084	TO->FROM	TUPELO - TUPELO TAP 138KV CKT 1	143	143	0.03132	104.205	BROWN - RUSSETT 138KV CKT 1
FDNS	00NR	2	16WP	G15_084	TO->FROM	TUPELO - TUPELO TAP 138KV CKT 1	143	143	0.03209	103.7292	G15066_T 345.00 - SOONER 345KV CKT 1
FDNS	00NR	2	16WP	G15_084	TO->FROM	TUPELO - TUPELO TAP 138KV CKT 1	143	143	0.03046	103.4315	P12:138:AEPW:MCALEST4:LONEOAK4
FDNS	00NR	2	20WP	G15_084	TO->FROM	TUPELO - TUPELO TAP 138KV CKT 1	143	143	0.03172	103.1219	RUSSETT - RUSSETT 138KV CKT 1
FDNS	00NR	2	20WP	G15_084	TO->FROM	TUPELO - TUPELO TAP 138KV CKT 1	143	143	0.03235	102.1334	CLEVELAND - G15066_T 345.00 345KV CKT 1
FDNS	00NR	2	20WP	G15_084	TO->FROM	TUPELO - TUPELO TAP 138KV CKT 1	143	143	0.03172	102.0395	BROWN - RUSSETT 138KV CKT 1
FDNS	00NR	2	16WP	G15_084	TO->FROM	TUPELO - TUPELO TAP 138KV CKT 1	143	143	0.03009	101.6511	GEN509416 1-TURK GENERATION
FDNSLock	00NR	2	16WP	G15_084	TO->FROM	TUPELO - TUPELO TAP 138KV CKT 1	143	143	0.03009	101.4609	GEN509403 1-PIRKEY GENERATION
FDNS	00NR	2	20WP	G15_084	TO->FROM	TUPELO - TUPELO TAP 138KV CKT 1	143	143	0.03235	101.4512	G15066_T 345.00 - SOONER 345KV CKT 1
FDNS	00NR	2	20WP	G15_084	TO->FROM	TUPELO - TUPELO TAP 138KV CKT 1	143	143	0.0309	100.9549	P12:138:AEPW:MCALEST4:LONEOAK4
FDNS	00NR	2	16WP	G15_084	TO->FROM	TUPELO - TUPELO TAP 138KV CKT 1	143	143	0.03295	100.8383	HEALDTON - LOCO 138KV CKT 1
FDNS	00NR	2	16WP	G15_084	TO->FROM	TUPELO - TUPELO TAP 138KV CKT 1	143	143	0.03295	100.3282	HEALDTON - RINGLING 138KV CKT 1
FDNS	00NR	2	16WP	G15_084	TO->FROM	TUPELO - TUPELO TAP 138KV CKT 1	143	143	0.03167	100	CANEY CREEK - LITTLE CITY 138KV CKT 1
FDNS	00NR	2	16WP	G15_084	TO->FROM	TUPELO - TUPELO TAP 138KV CKT 1	143	143	0.03009	100	GEN501801 1-DOLET HILLS UNIT1
FDNS	00NR	2	16WP	G15_084	TO->FROM	TUPELO - TUPELO TAP 138KV CKT 1	143	143	0.03167	99.9	BROWN TAP - LITTLE CITY 138KV CKT 1
FDNS	00NR	2	16WP	G15_084	TO->FROM	TUPELO - TUPELO TAP 138KV CKT 1	143	143	0.03295	99.8	RINGLING - SOUTH WILSON 138KV CKT 1
FDNS	00NR	2	16WP	G15_084	TO->FROM	TUPELO - TUPELO TAP 138KV CKT 1	143	143	0.03295	99.7	P12:138:WFEC:MSL17
FDNS	00NR	2	16WP	G15_084	TO->FROM	TUPELO - TUPELO TAP 138KV CKT 1	143	143	0.03009	99.6	GEN509404 1-WELSH #1
FDNS	00NR	2	16WP	G15_084	TO->FROM	TUPELO - TUPELO TAP 138KV CKT 1	143	143	0.03009	99.6	GEN509406 1-WELSH #3
FDNS	00NR	0	16WP	G15_085	FROM->TO	CIMARRON - DRAPER LAKE 345KV CKT 1	717	717	0.12305	132.6508	G14-057T 345.00 - SUNNYSIDE 345KV CKT 1
FDNS	00NR	0	16WP	G15_085	FROM->TO	CIMARRON - DRAPER LAKE 345KV CKT 1	717	717	0.12305	122.0003	G14-057T 345.00 - LAWTON EASTSIDE 345KV CKT 1
FDNS	00NR	0	16WP	G15_085	FROM->TO	CIMARRON - DRAPER LAKE 345KV CKT 1	717	717	0.07881	116.5817	ARCADIA - SEMINOLE 345KV CKT 1
FDNS	00NR	0	16WP	G15_085	FROM->TO	CIMARRON - DRAPER LAKE 345KV CKT 1	717	717	0.08854	115.588	CLEVELAND - G15066_T 345.00 345KV CKT 1
FDNS	00NR	0	16WP	G15_085	FROM->TO	CIMARRON - DRAPER LAKE 345KV CKT 1	717	717	0.09769	115.2993	ARCADIA - NORTHWEST 345KV CKT 1
FDNS	00NR	0	16WP	G15_085	FROM->TO	CIMARRON - DRAPER LAKE 345KV CKT 1	717	717	0.08854	114.8063	G15066_T 345.00 - SOONER 345KV CKT 1
FDNS	00NR	0	16WP	G15_085	FROM->TO	CIMARRON - DRAPER LAKE 345KV CKT 1	717	717	0.08465	110.2756	CLEVELAND - TULSA NORTH 345KV CKT 1
FDNS	00NR	0	16WP	G15_085	FROM->TO	CIMARRON - DRAPER LAKE 345KV CKT 1	717	717	0.08465	110.2756	CLEVELAND - TULSA NORTH 345KV CKT 1
FDNS	00NR	0	16WP	G15_085	FROM->TO	CIMARRON - DRAPER LAKE 345KV CKT 1	717	717	0.07957	110.1142	MATHWSN7 345.00 - NORTHWEST 345KV CKT 1
FDNS	00NR	0	16WP	G15_085	FROM->TO	CIMARRON - DRAPER LAKE 345KV CKT 1	717	717	0.07771	109.2409	CIMARRON - SARA 138KV CKT 1
FDNS	00NR	0	16WP	G15_085	FROM->TO	CIMARRON - DRAPER LAKE 345KV CKT 1	717	717	0.08529	108.713	P12:138:WFEC:MSL03
FDNS	00NR	0	16WP	G15_085	FROM->TO	CIMARRON - DRAPER LAKE 345KV CKT 1	717	717	0.07359	108.0689	CIMARRON (CIMARON2) 345/138/13.8KV TRANSFORMER CKT 1
FDNS	00NR	0	16WP	G15_085	FROM->TO	CIMARRON - DRAPER LAKE 345KV CKT 1	717	717	0.07771	107.9446	SARA - STHLAKE4 138.00 138KV CKT 1
FDNS	00NR	0	16WP	G15_085	FROM->TO	CIMARRON - DRAPER LAKE 345KV CKT 1	717	717	0.07365	107.899	CIMARRON (CIMARON1) 345/138/13.8KV TRANSFORMER CKT 1
FDNS	00NR	0	16WP	G15_085	FROM->TO	CIMARRON - DRAPER LAKE 345KV CKT 1	717	717	0.07771	107.745	MCCLAIN - STHLAKE4 138.00 138KV CKT 1
FDNS	00NR	0	16WP	G15_085	FROM->TO	CIMARRON - DRAPER LAKE 345KV CKT 1	717	717	0.07817	107.4685	CIMARRON - CZECH HALL 138KV CKT 1

SOLUTION	GROUP	SCENARIO	SEASON	SOURCE	DIRECTION	MONITORED ELEMENT	RATEA (MVA)	RATEB(MVA)	TDF	TC%LOADING (% MVA)	CONTINGENCY
FDNS	00NR	0	16WP	G15_085	FROM->TO	CIMARRON - DRAPER LAKE 345KV CKT 1	717	717	0.07817	107.112	CZECH HALL - XEROX 138KV CKT 1
FDNS	00NR	0	16WP	G15_085	FROM->TO	CIMARRON - DRAPER LAKE 345KV CKT 1	717	717	0.07817	107.0924	MORGAN - XEROX 138KV CKT 1
FDNS	00NR	0	16WP	G15_085	FROM->TO	CIMARRON - DRAPER LAKE 345KV CKT 1	717	717	0.08314	106.9919	ANADARKO - POCASSETT 138KV CKT 1
FDNS	00NR	0	16WP	G15_085	FROM->TO	CIMARRON - DRAPER LAKE 345KV CKT 1	717	717	0.07817	106.9752	MORGAN - MUSTANG 138KV CKT 1
FDNS	00NR	0	16WP	G15_085	FROM->TO	CIMARRON - DRAPER LAKE 345KV CKT 1	717	717	0.08314	106.7926	POCASSETT - TUTTLE 138KV CKT 1
FDNS	00NR	0	16WP	G15_085	FROM->TO	CIMARRON - DRAPER LAKE 345KV CKT 1	717	717	0.07532	106.703	GEN515040 1-SEMINOLE 1G
FDNS	00NR	0	16WP	G15_085	FROM->TO	CIMARRON - DRAPER LAKE 345KV CKT 1	717	717	0.07616	106.6763	LACYGNE - WAVERLY7 345.00 345KV CKT 1
FDNS	00NR	0	16WP	G15_085	FROM->TO	CIMARRON - DRAPER LAKE 345KV CKT 1	717	717	0.08228	106.5853	JOHNSON COUNTY - SUNNYSIDE 345KV CKT 1
FDNS	00NR	0	16WP	G15_085	FROM->TO	CIMARRON - DRAPER LAKE 345KV CKT 1	717	717	0.07616	106.4587	WAVERLY7 345.00 - WOLF CREEK 345KV CKT 1
FDNSLock	00NR	0	16WP	G15_085	FROM->TO	CIMARRON - DRAPER LAKE 345KV CKT 1	717	717	0.07532	106.456	GEN509403 1-PIRKEY GENERATION
FDNS	00NR	0	16WP	G15_085	FROM->TO	CIMARRON - DRAPER LAKE 345KV CKT 1	717	717	0.08152	106.4058	CORN TAP - NAPLESTP 138.00 138KV CKT 1
FDNS	00NR	0	16WP	G15_085	FROM->TO	CIMARRON - DRAPER LAKE 345KV CKT 1	717	717	0.07532	106.3792	GEN509416 1-TURK GENERATION
FDNS	00NR	0	16WP	G15_085	FROM->TO	CIMARRON - DRAPER LAKE 345KV CKT 1	717	717	0.07532	106.3605	GEN501801 1-DOLET HILLS UNIT1
FDNS	00NR	0	16WP	G15_085	FROM->TO	CIMARRON - DRAPER LAKE 345KV CKT 1	717	717	0.08152	106.3121	NAPLESTP 138.00 - PAYNE 138.00 138KV CKT 1
FDNS	00NR	0	16WP	G15_085	FROM->TO	CIMARRON - DRAPER LAKE 345KV CKT 1	717	717	0.08314	106.2787	BRIDGECR 138.00 - TUTTLE 138KV CKT 1
FDNS	00NR	0	16WP	G15_085	FROM->TO	CIMARRON - DRAPER LAKE 345KV CKT 1	717	717	0.07747	106.2342	CANEYRV7 345.00 - NEOSHO 345KV CKT 1
FDNS	00NR	0	17SP	G15_085	FROM->TO	CIMARRON - DRAPER LAKE 345KV CKT 1	717	717	0.12337	106.1697	G14-057T 345.00 - SUNNYSIDE 345KV CKT 1
FDNSLock	00NR	0	16WP	G15_085	FROM->TO	CIMARRON - DRAPER LAKE 345KV CKT 1	717	717	0.07532	106.0246	GEN336821 1-GRAND GULF UNIT
FDNS	00NR	0	16WP	G15_085	FROM->TO	CIMARRON - DRAPER LAKE 345KV CKT 1	717	717	0.07532	105.9922	GEN515042 1-SEMINOLE 3G
FDNS	00NR	0	16WP	G15_085	FROM->TO	CIMARRON - DRAPER LAKE 345KV CKT 1	717	717	0.07747	105.9562	CANEYRV7 345.00 - LATHAMS7 345.00 345KV CKT 1
FDNS	00NR	0	16WP	G15_085	FROM->TO	CIMARRON - DRAPER LAKE 345KV CKT 1	717	717	0.08314	105.9048	BRIDGECR 138.00 - SUNSHINE CANYON 138KV CKT 1
FDNS	00NR	0	16WP	G15_085	FROM->TO	CIMARRON - DRAPER LAKE 345KV CKT 1	717	717	0.08314	105.894	P12:138:WFEC:MSL01
FDNS	00NR	0	16WP	G15_085	FROM->TO	CIMARRON - DRAPER LAKE 345KV CKT 1	717	717	0.07532	105.7583	GEN515041 1-SEMINOLE 2G
FDNSLock	00NR	0	16WP	G15_085	FROM->TO	CIMARRON - DRAPER LAKE 345KV CKT 1	717	717	0.07532	105.7266	GEN336153 1-WATERFORD UNIT#3
FDNS	00NR	0	16WP	G15_085	FROM->TO	CIMARRON - DRAPER LAKE 345KV CKT 1	717	717	0.08726	105.5516	CIMARRON - NORTHWEST 345KV CKT 1
FDNS	00NR	0	16WP	G15_085	FROM->TO	CIMARRON - DRAPER LAKE 345KV CKT 1	717	717	0.07532	105.5263	GEN509406 1-WELSH #3
FDNS	00NR	0	16WP	G15_085	FROM->TO	CIMARRON - DRAPER LAKE 345KV CKT 1	717	717	0.07532	105.5261	GEN509404 1-WELSH #1
FDNS	00NR	0	16WP	G15_085	FROM->TO	CIMARRON - DRAPER LAKE 345KV CKT 1	717	717	0.07747	105.5155	LATHAMS7 345.00 - ROSE HILL 345KV CKT 1
FDNSLock	00NR	0	16WP	G15_085	FROM->TO	CIMARRON - DRAPER LAKE 345KV CKT 1	717	717	0.07532	105.4219	GEN335831 1-RIVERBEND UNIT#1
FDNSLock	00NR	0	16WP	G15_085	FROM->TO	CIMARRON - DRAPER LAKE 345KV CKT 1	717	717	0.07532	105.406	GEN337911 1-ARKANSAS NUCLEAR ONE UNIT #2
FDNS	00NR	0	16WP	G15_085	FROM->TO	CIMARRON - DRAPER LAKE 345KV CKT 1	717	717	0.07933	105.1336	HUGO - SUNNYSIDE 345KV CKT 1
FDNS	00NR	0	16WP	G15_085	FROM->TO	CIMARRON - DRAPER LAKE 345KV CKT 1	717	717	0.07179	105.1183	CANADIAN RIVER - MUSKOGEE 345KV CKT 1
FDNS	00NR	0	16WP	G15_085	FROM->TO	CIMARRON - DRAPER LAKE 345KV CKT 1	717	717	0.07503	105.0337	P12:138:OKGE:3TERM14
FDNS	00NR	0	16WP	G15_085	FROM->TO	CIMARRON - DRAPER LAKE 345KV CKT 1	717	717	0.07532	105.0296	GRAND GULF 500/22.0KV TRANSFORMER CKT 1
FDNS	00NR	0	16WP	G15_085	FROM->TO	CIMARRON - DRAPER LAKE 345KV CKT 1	717	717	0.07532	105.0273	GEN337910 1-ARKANSAS NUCLEAR ONE UNIT #1
FDNS	00NR	0	16WP	G15_085	FROM->TO	CIMARRON - DRAPER LAKE 345KV CKT 1	717	717	0.08304	105.0144	JOHNSON COUNTY - PITTSBURG 345KV CKT 1
FDNS	00NR	0	16WP	G15_085	FROM->TO	CIMARRON - DRAPER LAKE 345KV CKT 1	717	717	0.08304	105.0144	JOHNSON COUNTY - PITTSBURG 345KV CKT 1
FDNS	00NR	0	16WP	G15_085	FROM->TO	CIMARRON - DRAPER LAKE 345KV CKT 1	717	717	0.07604	104.9951	HORSESHOE LAKE - JONES TAP 138KV CKT 1
FDNS	00NR	0	16WP	G15_085	FROM->TO	CIMARRON - DRAPER LAKE 345KV CKT 1	717	717	0.07599	104.9687	MORISNT4 138.00 - STILLWATER 138KV CKT 1
FDNS	00NR	0	16WP	G15_085	FROM->TO	CIMARRON - DRAPER LAKE 345KV CKT 1	717	717	0.076	104.9641	P12:138:OKGE:3TERM2
FDNS	00NR	0	16WP	G15_085	FROM->TO	CIMARRON - DRAPER LAKE 345KV CKT 1	717	717	0.08076	104.9439	REDBUD - RIVERSIDE STATION 345KV CKT 1
FDNS	00NR	0	16WP	G15_085	FROM->TO	CIMARRON - DRAPER LAKE 345KV CKT 1	717	717	0.08076	104.9439	REDBUD - RIVERSIDE STATION 345KV CKT 1
FDNS	00NR	0	16WP	G15_085	FROM->TO	CIMARRON - DRAPER LAKE 345KV CKT 1	717	717	0.07532	104.8928	GEN515226 1-MUSKOGEE 6G
FDNS	00NR	0	16WP	G15_085	FROM->TO	CIMARRON - DRAPER LAKE 345KV CKT 1	717	717	0.07532	104.879	GEN501813 1-RODEMACHER UNIT 3
FDNS	00NR	0	16WP	G15_085	FROM->TO	CIMARRON - DRAPER LAKE 345KV CKT 1	717	717	0.0847	104.8291	BAILEY4 138.00 - SUNSHINE CANYON 138KV CKT 1
FDNS	00NR	0	16WP	G15_085	FROM->TO	CIMARRON - DRAPER LAKE 345KV CKT 1	717	717	0.07531	104.7782	NORTHWEST (NORTWST2) 345/138/13.8KV TRANSFORMER CKT 1
FDNS	00NR	0	16WP	G15_085	FROM->TO	CIMARRON - DRAPER LAKE 345KV CKT 1	717	717	0.07705	104.7766	7SAREPTA% 345.00 - LONGWOOD 345KV CKT 1
FDNS	00NR	0	16WP	G15_085	FROM->TO	CIMARRON - DRAPER LAKE 345KV CKT 1	717	717	0.07705	104.7766	7SAREPTA% 345.00 - LONGWOOD 345KV CKT 1
FDNS	00NR	0	16WP	G15_085	FROM->TO	CIMARRON - DRAPER LAKE 345KV CKT 1	717	717	0.07533	104.7749	ARCADIA - KAMO MEMORIAL 138KV CKT 1
FDNS	00NR	0	16WP	G15_085	FROM->TO	CIMARRON - DRAPER LAKE 345KV CKT 1	717	717	0.07535	104.7555	P12:138:OKGE:3TERM12
FDNS	00NR	0	16WP	G15_085	FROM->TO	CIMARRON - DRAPER LAKE 345KV CKT 1	717	717	0.07604	104.7399	DOLET HILLS - SOUTHWEST SHREVEPORT 345KV CKT 1
FDNS	00NR	0	16WP	G15_085	FROM->TO	CIMARRON - DRAPER LAKE 345KV CKT 1	717	717	0.07604	104.7399	DOLET HILLS - SOUTHWEST SHREVEPORT 345KV CKT 1
FDNS	00NR	0	16WP	G15_085	FROM->TO	CIMARRON - DRAPER LAKE 345KV CKT 1	717	717	0.07532	104.6942	GEN515225 1-MUSKOGEE 5G
FDNS	00NR	0	16WP	G15_085	FROM->TO	CIMARRON - DRAPER LAKE 345KV CKT 1	717	717	0.07532	104.694	GEN515223 1-MUSKOGEE 4G
FDNS	00NR	0	16WP	G15_085	FROM->TO	CIMARRON - DRAPER LAKE 345KV CKT 1	717	717	0.07532	104.6904	GEN335206 1-NELSON UNIT 6
FDNS	00NR	0	16WP	G15_085	FROM->TO	CIMARRON - DRAPER LAKE 345KV CKT 1	717	717	0.07557	104.68	MEMORIAL - SKYLINE 138KV CKT 1
FDNS	00NR	0	16WP	G15_085	FROM->TO	CIMARRON - DRAPER LAKE 345KV CKT 1	717	717	0.06424	104.583	GRACEMONT (BANK 1) 345/138/13.8KV TRANSFORMER CKT 1
FDNS	00NR	0	16WP	G15_085	FROM->TO	CIMARRON - DRAPER LAKE 345KV CKT 1	717	717	0.07601	104.5721	QUAIL CREEK - SKYLINE 138KV CKT 1
FDNS	00NR	0	16WP	G15_085	FROM->TO	CIMARRON - DRAPER LAKE 345KV CKT 1	717	717	0.07532	104.5492	GEN509409 1-WILKES #3
FDNS	00NR	0	16WP	G15_085	FROM->TO	CIMARRON - DRAPER LAKE 345KV CKT 1	717	717	0.07532	104.5474	GEN337653 1-WHITE BLUFF UNIT #2
FDNS	00NR	0	16WP	G15_085	FROM->TO	CIMARRON - DRAPER LAKE 345KV CKT 1	717	717	0.07546	104.5355	P12:138:OKGE:3TERM18
FDNS	00NR	0	16WP	G15_085	FROM->TO	CIMARRON - DRAPER LAKE 345KV CKT 1	717	717	0.0847	104.5271	BAILEY4 138.00 - WESTMOORE 138KV CKT 1
FDNS	00NR	0	16WP	G15_085	FROM->TO	CIMARRON - DRAPER LAKE 345KV CKT 1	717	717	0.07532	104.519	GEN501812 1-RODEMACHER UNIT 2
FDNS	00NR	0	16WP	G15_085	FROM->TO	CIMARRON - DRAPER LAKE 345KV CKT 1	717	717	0.07531	104.5145	NORTHWEST (NORTWST4) 345/138/13.8KV TRANSFORMER CKT 1
FDNS	00NR	0	16WP	G15_085	FROM->TO	CIMARRON - DRAPER LAKE 345KV CKT 1	717	717	0.07532	104.4548	NEW MADRID 161/22.0KV TRANSFORMER CKT 1
FDNS	00NR	0	16WP	G15_085	FROM->TO	CIMARRON - DRAPER LAKE 345KV CKT 1	717	717	0.0754	104.4542	36 & MERIDIAN - CHEMTRON 138KV CKT 1
FDNS	00NR	0	16WP	G15_085	FROM->TO	CIMARRON - DRAPER LAKE 345KV CKT 1	717	717	0.07662	104.4515	THISTLE7 345.00 - WOODWARD DISTRICT EHV 345KV CKT 1
FDNS	00NR	0	16WP	G15_085	FROM->TO	CIMARRON - DRAPER LAKE 345KV CKT 1	717	717	0.07662	104.4515	THISTLE7 345.00 - WOODWARD DISTRICT EHV 345KV CKT 1
FDNS	00NR	0	16WP	G15_085	FROM->TO	CIMARRON - DRAPER LAKE 345KV CKT 1	717	717	0.07662	104.4515	THISTLE7 345.00 - WOODWARD DISTRICT EHV 345KV CKT 2
FDNS	00NR	0	16WP	G15_085	FROM->TO	CIMARRON - DRAPER LAKE 345KV CKT 1	717	717	0.07662	104.4515	THISTLE7 345.00 - WOODWARD DISTRICT EHV 345KV CKT 2
FDNS	00NR	0	16WP	G15_085	FROM->TO	CIMARRON - DRAPER LAKE 345KV CKT 1	717	717	0.07532	104.4411	NEW MADRID 345/22.0KV TRANSFORMER CKT 1
FDNS	00NR	0	16WP	G15_085	FROM->TO	CIMARRON - DRAPER LAKE 345KV CKT 1	717	717	0.07532	104.4225	GEN520947 1-HUGO1
FDNS	00NR	0	16WP	G15_085	FROM->TO	CIMARRON - DRAPER LAKE 345KV CKT 1	717	717	0.07532	104.4148	GEN337652 1-WHITE BLUFF UNIT #1
FDNS	00NR	0	16WP	G15_085	FROM->TO	CIMARRON - DRAPER LAKE 345KV CKT 1	717	717	0.07531	104.3894	NORTHWEST (NORTWST3) 345/138/13.8KV TRANSFORMER CKT 1
FDNS	00NR	0	16WP	G15_085	FROM->TO	CIMARRON - DRAPER LAKE 345KV CKT 1	717	717	0.07623	104.376	3TR3AR8EL7EL
FDNS	00NR	0	16WP	G15_085	FROM->TO	CIMARRON - DRAPER LAKE 345KV CKT 1	717	717	0.07623	104.376	7SAREPTA% 345.00 - ELDORADO EHV 345KV CKT 1
FDNS	00NR	0	16WP	G15_085	FROM->TO	CIMARRON - DRAPER LAKE 345KV CKT 1	717	717	0.07623	104.3682	ELDORADO EHV 500/345KV TRANSFORMER CKT 1
FDNS	00NR	0	16WP	G15_085	FROM->TO	CIMARRON - DRAPER LAKE 345KV CKT 1	717	717	0.0754	104.3672	CHEMTRON - PENNSYLVANIA 138KV CKT 1
FDNS	00NR	0	16WP	G15_085	FROM->TO	CIMARRON - DRAPER LAKE 345KV CKT 1	717	717	0.07572	104.3371	G15052_T 345.00 - ROSE HILL 345KV CKT 1

SOLUTION	GROUP	SCENARIO	SEASON	SOURCE	DIRECTION	MONITORED ELEMENT	RATEA (MVA)	RATEB(MVA)	TDF	TC%LOADING (% MVA)	CONTINGENCY
FDNS	00NR	0	16WP	G15_085	FROM->TO	CIMARRON - DRAPER LAKE 345KV CKT 1	717	717	0.07561	104.3332	G15074_T 345.00 - HOYT 345KV CKT 1
FDNS	00NR	0	16WP	G15_085	FROM->TO	CIMARRON - DRAPER LAKE 345KV CKT 1	717	717	0.07996	104.3021	BLANCHARD - CORNVILLE 138KV CKT 1
FDNS	00NR	0	16WP	G15_085	FROM->TO	CIMARRON - DRAPER LAKE 345KV CKT 1	717	717	0.07777	104.3015	COMANCHE - LOCO 138KV CKT 1
FDNS	00NR	0	16WP	G15_085	FROM->TO	CIMARRON - DRAPER LAKE 345KV CKT 1	717	717	0.07543	104.2791	P12:138:OKGE:3TERM17
FDNS	00NR	0	16WP	G15_085	FROM->TO	CIMARRON - DRAPER LAKE 345KV CKT 1	717	717	0.07532	104.2625	GEN515577 1-ARBWND11 0.6900
FDNS	00NR	0	16WP	G15_085	FROM->TO	CIMARRON - DRAPER LAKE 345KV CKT 1	717	717	0.0847	104.2438	FRANKLIN SW - WESTMOORE 138KV CKT 1
FDNS	00NR	0	16WP	G15_085	FROM->TO	CIMARRON - DRAPER LAKE 345KV CKT 1	717	717	0.07595	104.2374	P12:138:OKGE:3TERM11
FDNS	00NR	0	16WP	G15_085	FROM->TO	CIMARRON - DRAPER LAKE 345KV CKT 1	717	717	0.07532	104.2237	GEN334440 1-SABINE UNIT 4
FDNS	00NR	0	16WP	G15_085	FROM->TO	CIMARRON - DRAPER LAKE 345KV CKT 1	717	717	0.07537	104.2165	LONEOAK - NORTHWEST 138KV CKT 1
FDNS	00NR	0	16WP	G15_085	FROM->TO	CIMARRON - DRAPER LAKE 345KV CKT 1	717	717	0.07996	104.211	P12:138:AEPW-OGE:CORNVIL4:MAUD 4
FDNS	00NR	0	16WP	G15_085	FROM->TO	CIMARRON - DRAPER LAKE 345KV CKT 1	717	717	0.07604	104.2024	KETCH TAP - NORTHWEST 138KV CKT 1
FDNS	00NR	0	16WP	G15_085	FROM->TO	CIMARRON - DRAPER LAKE 345KV CKT 1	717	717	0.07532	104.2023	DELL 500 - ESSEX UNIT 2 500KV CKT Z1
FDNS	00NR	0	16WP	G15_085	FROM->TO	CIMARRON - DRAPER LAKE 345KV CKT 1	717	717	0.07586	104.1938	DIVISION AVE - LAKESIDE 138KV CKT 1
FDNS	00NR	0	16WP	G15_085	FROM->TO	CIMARRON - DRAPER LAKE 345KV CKT 1	717	717	0.07462	104.1729	HORSESHOE LAKE - KAMO MEMORIAL 138KV CKT 1
FDNS	00NR	0	16WP	G15_085	FROM->TO	CIMARRON - DRAPER LAKE 345KV CKT 1	717	717	0.07506	104.1303	NORTHWEST - PANTHER 138KV CKT 1
FDNS	00NR	0	16WP	G15_085	FROM->TO	CIMARRON - DRAPER LAKE 345KV CKT 1	717	717	0.075	104.1253	G14-074T 345.00 - OKLAUNION 345KV CKT 1
FDNS	00NR	0	16WP	G15_085	FROM->TO	CIMARRON - DRAPER LAKE 345KV CKT 1	717	717	0.07311	104.1217	CLARKSVILLE - ONETA 345KV CKT 1
FDNS	00NR	0	16WP	G15_085	FROM->TO	CIMARRON - DRAPER LAKE 345KV CKT 1	717	717	0.07311	104.1217	CLARKSVILLE - ONETA 345KV CKT 1
FDNS	00NR	0	16WP	G15_085	FROM->TO	CIMARRON - DRAPER LAKE 345KV CKT 1	717	717	0.0745	104.1144	P12:138:OKGE:3TERM20
FDNS	00NR	0	16WP	G15_085	FROM->TO	CIMARRON - DRAPER LAKE 345KV CKT 1	717	717	0.07996	104.1089	BLANCHARD - MAUD 138KV CKT 1
FDNS	00NR	0	16WP	G15_085	FROM->TO	CIMARRON - DRAPER LAKE 345KV CKT 1	717	717	0.07681	104.1015	CIMARRON - HAYMAKER 138KV CKT 1
FDNS	00NR	0	16WP	G15_085	FROM->TO	CIMARRON - DRAPER LAKE 345KV CKT 1	717	717	0.07597	104.0977	P12:138:OKGE:3TERM47
FDNS	00NR	0	16WP	G15_085	FROM->TO	CIMARRON - DRAPER LAKE 345KV CKT 1	717	717	0.07532	104.0931	GEN336252 1-NINEMILE POINT UNIT#5
FDNS	00NR	0	16WP	G15_085	FROM->TO	CIMARRON - DRAPER LAKE 345KV CKT 1	717	717	0.07726	104.0857	FINNEY SWITCHING STATION - HOLCOMB 345KV CKT 1
FDNS	00NR	0	16WP	G15_085	FROM->TO	CIMARRON - DRAPER LAKE 345KV CKT 1	717	717	0.07726	104.0857	FINNEY SWITCHING STATION - HOLCOMB 345KV CKT 1
FDNS	00NR	0	16WP	G15_085	FROM->TO	CIMARRON - DRAPER LAKE 345KV CKT 1	717	717	0.07532	104.0808	DOLET HILLS 345/24.0KV TRANSFORMER CKT 1
FDNS	00NR	0	16WP	G15_085	FROM->TO	CIMARRON - DRAPER LAKE 345KV CKT 1	717	717	0.07506	104.08	PANTHER - SILVER LAKE 138KV CKT 1
FDNS	00NR	0	16WP	G15_085	FROM->TO	CIMARRON - DRAPER LAKE 345KV CKT 1	717	717	0.07586	104.0723	HEFNER - LAKESIDE 138KV CKT 1
FDNS	00NR	0	16WP	G15_085	FROM->TO	CIMARRON - DRAPER LAKE 345KV CKT 1	717	717	0.07592	104.041	BLACKBERRY - NEOSHO 345KV CKT 1
FDNS	00NR	0	16WP	G15_085	FROM->TO	CIMARRON - DRAPER LAKE 345KV CKT 1	717	717	0.07532	104.0356	WHITE BLUFF 500/26.0KV TRANSFORMER CKT 1
FDNS	00NR	0	16WP	G15_085	FROM->TO	CIMARRON - DRAPER LAKE 345KV CKT 1	717	717	0.07534	104.0273	KETCH - KETCH TAP 138KV CKT 1
FDNS	00NR	0	16WP	G15_085	FROM->TO	CIMARRON - DRAPER LAKE 345KV CKT 1	717	717	0.07603	104.02	EMPORIA ENERGY CENTER - G14_001T 345.00 345KV CKT 1
FDNS	00NR	0	16WP	G15_085	FROM->TO	CIMARRON - DRAPER LAKE 345KV CKT 1	717	717	0.07561	104.0189	HOYT - STRANGER CREEK 345KV CKT 1
FDNS	00NR	0	16WP	G15_085	FROM->TO	CIMARRON - DRAPER LAKE 345KV CKT 1	717	717	0.07504	104.0086	DIVISION AVE - MUSTANG 138KV CKT 1
FDNS	00NR	0	16WP	G15_085	FROM->TO	CIMARRON - DRAPER LAKE 345KV CKT 1	717	717	0.07549	104	G15088_T 345.00 - MOORE 345KV CKT 1
FDNS	00NR	0	16WP	G15_085	FROM->TO	CIMARRON - DRAPER LAKE 345KV CKT 1	717	717	0.07532	104	GEN300006 1-NEW MADRID UNIT 1
FDNS	00NR	0	16WP	G15_085	FROM->TO	CIMARRON - DRAPER LAKE 345KV CKT 1	717	717	0.07532	104	GEN300007 1-NEW MADRID UNIT 2
FDNS	00NR	0	16WP	G15_085	FROM->TO	CIMARRON - DRAPER LAKE 345KV CKT 1	717	717	0.0763	103.999	P12:138:WFEC:MSL02
FDNS	00NR	0	16WP	G15_085	FROM->TO	CIMARRON - DRAPER LAKE 345KV CKT 1	717	717	0.07681	103.998	DIVISION AVE - HAYMAKER 138KV CKT 1
FDNS	00NR	0	16WP	G15_085	FROM->TO	CIMARRON - DRAPER LAKE 345KV CKT 1	717	717	0.07532	103.9886	GEN509408 1-WILKES #2
FDNS	00NR	0	16WP	G15_085	FROM->TO	CIMARRON - DRAPER LAKE 345KV CKT 1	717	717	0.07618	103.9879	P12:138:AEPW-OGE:SHIDLER4:OSAGE 4
FDNS	00NR	0	16WP	G15_085	FROM->TO	CIMARRON - DRAPER LAKE 345KV CKT 1	717	717	0.07572	103.975	MCCLAIN - PLEASANT VALLEY 138KV CKT 1
FDNS	00NR	0	16WP	G15_085	FROM->TO	CIMARRON - DRAPER LAKE 345KV CKT 1	717	717	0.07572	103.9746	SWISSVALE - WEST GARDNER 345KV CKT 1
FDNS	00NR	0	16WP	G15_085	FROM->TO	CIMARRON - DRAPER LAKE 345KV CKT 1	717	717	0.07561	103.9659	G15074_T 345.00 - JEFFREY ENERGY CENTER 345KV CKT 1
FDNS	00NR	0	16WP	G15_085	FROM->TO	CIMARRON - DRAPER LAKE 345KV CKT 1	717	717	0.07608	103.962	ANADARKO - GEORGIA 138KV CKT 1
FDNS	00NR	0	16WP	G15_085	FROM->TO	CIMARRON - DRAPER LAKE 345KV CKT 1	717	717	0.07532	103.9525	GEN335204 1-NELSON UNIT 4
FDNS	00NR	0	16WP	G15_085	FROM->TO	CIMARRON - DRAPER LAKE 345KV CKT 1	717	717	0.07532	103.9519	GEN336831 1-BAXTER WILSON SES
FDNS	00NR	0	16WP	G15_085	FROM->TO	CIMARRON - DRAPER LAKE 345KV CKT 1	717	717	0.07383	103.9391	P12:138:AEPW:OKMULGE4:R.S.S-4
FDNS	00NR	0	16WP	G15_085	FROM->TO	CIMARRON - DRAPER LAKE 345KV CKT 1	717	717	0.07532	103.9208	GEN506754 1-LEBROCK STEAM 1
FDNS	00NR	0	16WP	G15_085	FROM->TO	CIMARRON - DRAPER LAKE 345KV CKT 1	717	717	0.07584	103.919	CLASSEN - ROBINSON 138KV CKT 1
FDNS	00NR	0	16WP	G15_085	FROM->TO	CIMARRON - DRAPER LAKE 345KV CKT 1	717	717	0.07532	103.9013	GEN334441 1-SABINE UNIT 5
FDNS	00NR	0	16WP	G15_085	FROM->TO	CIMARRON - DRAPER LAKE 345KV CKT 1	717	717	0.07532	103.8962	GEN334071 1-LEWIS CREEK 2
FDNS	00NR	0	16WP	G15_085	FROM->TO	CIMARRON - DRAPER LAKE 345KV CKT 1	717	717	0.07608	103.8953	FLETCHER - GEORGIA 138KV CKT 1
FDNS	00NR	0	16WP	G15_085	FROM->TO	CIMARRON - DRAPER LAKE 345KV CKT 1	717	717	0.07603	103.8915	G14_001T 345.00 - WICHITA 345KV CKT 1
FDNS	00NR	0	16WP	G15_085	FROM->TO	CIMARRON - DRAPER LAKE 345KV CKT 1	717	717	0.07532	103.8883	GEN334070 1-LEWIS CREEK 1
FDNS	00NR	0	16WP	G15_085	FROM->TO	CIMARRON - DRAPER LAKE 345KV CKT 1	717	717	0.0761	103.8865	BENTON - WICHITA 345KV CKT 1
FDNS	00NR	0	16WP	G15_085	FROM->TO	CIMARRON - DRAPER LAKE 345KV CKT 1	717	717	0.07726	103.8864	FINNEY SWITCHING STATION - Hitchland Interchange 345KV CKT 1
FDNS	00NR	0	16WP	G15_085	FROM->TO	CIMARRON - DRAPER LAKE 345KV CKT 1	717	717	0.07532	103.8862	GEN336251 1-NINEMILE POINT UNIT#4
FDNS	00NR	0	16WP	G15_085	FROM->TO	CIMARRON - DRAPER LAKE 345KV CKT 1	717	717	0.07578	103.8786	WEBRE - WELLS 500KV CKT 1
FDNS	00NR	0	16WP	G15_085	FROM->TO	CIMARRON - DRAPER LAKE 345KV CKT 1	717	717	0.0759	103.8775	LACYGNE - NEOSHO 345KV CKT 1
FDNSLock	00NR	0	16WP	G15_085	FROM->TO	CIMARRON - DRAPER LAKE 345KV CKT 1	717	717	0.07532	103.8742	GEN590011 2-ERCOT EQUIVALENCE
FDNS	00NR	0	16WP	G15_085	FROM->TO	CIMARRON - DRAPER LAKE 345KV CKT 1	717	717	0.07566	103.862	EMPORIA ENERGY CENTER - SWISSVALE 345KV CKT 1
FDNS	00NR	0	16WP	G15_085	FROM->TO	CIMARRON - DRAPER LAKE 345KV CKT 1	717	717	0.07615	103.8385	EMPIRE - FLETCHER 138KV CKT 1
FDNSLock	00NR	0	16WP	G15_085	FROM->TO	CIMARRON - DRAPER LAKE 345KV CKT 1	717	717	0.07532	103.8317	GEN590010 1-ERCOT EQUIVALENCE
FDNS	00NR	0	16WP	G15_085	FROM->TO	CIMARRON - DRAPER LAKE 345KV CKT 1	717	717	0.07576	103.8223	G1524G1525 345.00 - THISTLE7 345.00 345KV CKT 1
FDNS	00NR	0	16WP	G15_085	FROM->TO	CIMARRON - DRAPER LAKE 345KV CKT 1	717	717	0.07576	103.8223	G1524G1525 345.00 - THISTLE7 345.00 345KV CKT 2
FDNS	00NR	0	16WP	G15_085	FROM->TO	CIMARRON - DRAPER LAKE 345KV CKT 1	717	717	0.07532	103.8186	GEN503909 1-FULTONU1 1 16.000
FDNSLock	00NR	0	16WP	G15_085	FROM->TO	CIMARRON - DRAPER LAKE 345KV CKT 1	717	717	0.07532	103.8129	GEN338146 1-INDEPENDENCE UNIT #2
FDNS	00NR	0	16WP	G15_085	FROM->TO	CIMARRON - DRAPER LAKE 345KV CKT 1	717	717	0.07537	103.8126	LONEOAK - QUAIL CREEK 138KV CKT 1
FDNS	00NR	0	16WP	G15_085	FROM->TO	CIMARRON - DRAPER LAKE 345KV CKT 1	717	717	0.07532	103.809	GEN501811 1-RODEMACHER UNIT 1
FDNS	00NR	0	16WP	G15_085	FROM->TO	CIMARRON - DRAPER LAKE 345KV CKT 1	717	717	0.07511	103.8044	WOODRING (WOODRNG2) 345/138/13.8KV TRANSFORMER CKT 1
FDNS	00NR	0	16WP	G15_085	FROM->TO	CIMARRON - DRAPER LAKE 345KV CKT 1	717	717	0.08009	103.7918	CRINER - PAYNE 138.00 138KV CKT 1
FDNS	00NR	0	16WP	G15_085	FROM->TO	CIMARRON - DRAPER LAKE 345KV CKT 1	717	717	0.07618	103.7817	OSAGE - WEBB CITY TAP 138KV CKT 1
FDNS	00NR	0	16WP	G15_085	FROM->TO	CIMARRON - DRAPER LAKE 345KV CKT 1	717	717	0.07615	103.7768	COMANCHE - EMPIRE 138KV CKT 1
FDNS	00NR	0	16WP	G15_085	FROM->TO	CIMARRON - DRAPER LAKE 345KV CKT 1	717	717	0.07532	103.7748	FRONTIER - GRIMES 345KV CKT 1
FDNS	00NR	0	16WP	G15_085	FROM->TO	CIMARRON - DRAPER LAKE 345KV CKT 1	717	717	0.07532	103.7716	GEN334433 1-SABINE UNIT 3
FDNS	00NR	0	16WP	G15_085	FROM->TO	CIMARRON - DRAPER LAKE 345KV CKT 1	717	717	0.07533	103.7693	P12:069:OKGE:3TERM4
FDNS	00NR	0	16WP	G15_085	FROM->TO	CIMARRON - DRAPER LAKE 345KV CKT 1	717	717	0.07532	103.7671	GEN334030 1-FRONTIER UNIT 1
FDNS	00NR	0	16WP	G15_085	FROM->TO	CIMARRON - DRAPER LAKE 345KV CKT 1	717	717	0.07532	103.7661	GEN334031 1-FRONTIER UNIT 2

SOLUTION	GROUP	SCENARIO	SEASON	SOURCE	DIRECTION	MONITORED ELEMENT	RATEA (MVA)	RATEB(MVA)	TDF	TC%LOADING (% MVA)	CONTINGENCY
FDNS	00NR	0	16WP	G15_085	FROM->TO	CIMARRON - DRAPER LAKE 345KV CKT 1	717	717	0.07532	103.764	GEN303007 1-1BC2 U2
FDNS	00NR	0	16WP	G15_085	FROM->TO	CIMARRON - DRAPER LAKE 345KV CKT 1	717	717	0.07603	103.7619	SPVALLY4 138.00 - STILLWATER 138KV CKT 1
FDNS	00NR	0	16WP	G15_085	FROM->TO	CIMARRON - DRAPER LAKE 345KV CKT 1	717	717	0.07532	103.7587	GEN303006 1-1BC2 U1
FDNS	00NR	0	16WP	G15_085	FROM->TO	CIMARRON - DRAPER LAKE 345KV CKT 1	717	717	0.07532	103.7582	GEN337041 1-GERALD ANDRUS
FDNS	00NR	0	16WP	G15_085	FROM->TO	CIMARRON - DRAPER LAKE 345KV CKT 1	717	717	0.07532	103.7551	P12:161:AEPW:DYESS 5:HYLAND 5
FDNS	00NR	0	16WP	G15_085	FROM->TO	CIMARRON - DRAPER LAKE 345KV CKT 1	717	717	0.07532	103.7415	GEN336191 1-LITTLE GYPSY UNIT#3
FDNS	00NR	0	16WP	G15_085	FROM->TO	CIMARRON - DRAPER LAKE 345KV CKT 1	717	717	0.07541	103.7374	8DANIEL8 500.00 - MCKNIGHT 500KV CKT 1
FDNS	00NR	0	16WP	G15_085	FROM->TO	CIMARRON - DRAPER LAKE 345KV CKT 1	717	717	0.07532	103.7345	GEN509393 S1-ARSENAL HILL GENS #4 (STALL)
FDNS	00NR	0	16WP	G15_085	FROM->TO	CIMARRON - DRAPER LAKE 345KV CKT 1	717	717	0.0756	103.7342	CLEAVELAND - CLEVLND 4 138.00 138KV CKT Z1
FDNS	00NR	0	16WP	G15_085	FROM->TO	CIMARRON - DRAPER LAKE 345KV CKT 1	717	717	0.0756	103.7339	CLEVELAND (CLVAUTO1) 345/138/13.8KV TRANSFORMER CKT 1
FDNS	00NR	0	16WP	G15_085	FROM->TO	CIMARRON - DRAPER LAKE 345KV CKT 1	717	717	0.0756	103.7339	CLEVELAND (CLVAUTO1) 345/138/13.8KV TRANSFORMER CKT 1
FDNS	00NR	0	16WP	G15_085	FROM->TO	CIMARRON - DRAPER LAKE 345KV CKT 1	717	717	0.07603	103.7325	PAYNESB4 138.00 - SPVALLY4 138.00 138KV CKT 1
FDNS	00NR	0	16WP	G15_085	FROM->TO	CIMARRON - DRAPER LAKE 345KV CKT 1	717	717	0.07538	103.7308	P12:138:OKGE:3TERM13
FDNS	00NR	0	16WP	G15_085	FROM->TO	CIMARRON - DRAPER LAKE 345KV CKT 1	717	717	0.07453	103.7266	ARKANSAS NUCLEAR ONE - FT SMITH 500KV CKT 1
FDNS	00NR	0	16WP	G15_085	FROM->TO	CIMARRON - DRAPER LAKE 345KV CKT 1	717	717	0.07453	103.7266	ARKANSAS NUCLEAR ONE - FT SMITH 500KV CKT 1
FDNS	00NR	0	16WP	G15_085	FROM->TO	CIMARRON - DRAPER LAKE 345KV CKT 1	717	717	0.07532	103.7179	GEN509392 G2-ARSENAL HILL GENS #3 (STALL)
FDNS	00NR	0	16WP	G15_085	FROM->TO	CIMARRON - DRAPER LAKE 345KV CKT 1	717	717	0.07532	103.7178	GEN509391 G1-ARSENAL HILL GENS #2 (STALL)
FDNS	00NR	0	16WP	G15_085	FROM->TO	CIMARRON - DRAPER LAKE 345KV CKT 1	717	717	0.07603	103.7169	CUSHING - PAYNESB4 138.00 138KV CKT 1
FDNS	00NR	0	16WP	G15_085	FROM->TO	CIMARRON - DRAPER LAKE 345KV CKT 1	717	717	0.07532	103.711	GEN335614 1-WILLOW GLENN UNIT#4
FDNS	00NR	0	16WP	G15_085	FROM->TO	CIMARRON - DRAPER LAKE 345KV CKT 1	717	717	0.07552	103.7087	DAYTON - MUSTANG 138KV CKT 1
FDNS	00NR	0	16WP	G15_085	FROM->TO	CIMARRON - DRAPER LAKE 345KV CKT 1	717	717	0.07552	103.7038	DAYTON - HOBBY LOBBY 138KV CKT 1
FDNS	00NR	0	16WP	G15_085	FROM->TO	CIMARRON - DRAPER LAKE 345KV CKT 1	717	717	0.07532	103.6985	GEN303008 1-1BC2 U3
FDNS	00NR	0	16WP	G15_085	FROM->TO	CIMARRON - DRAPER LAKE 345KV CKT 1	717	717	0.07134	103.6895	CANADIAN RIVER - PITTSBURG 345KV CKT 1
FDNS	00NR	0	16WP	G15_085	FROM->TO	CIMARRON - DRAPER LAKE 345KV CKT 1	717	717	0.07134	103.6895	CANADIAN RIVER - PITTSBURG 345KV CKT 1
FDNS	00NR	0	16WP	G15_085	FROM->TO	CIMARRON - DRAPER LAKE 345KV CKT 1	717	717	0.07569	103.6882	MUSTANG - SW 5TH 138KV CKT 1
FDNS	00NR	0	16WP	G15_085	FROM->TO	CIMARRON - DRAPER LAKE 345KV CKT 1	717	717	0.07532	103.6855	GEN338143 1-INDEPENDENCE UNIT #1
FDNS	00NR	0	16WP	G15_085	FROM->TO	CIMARRON - DRAPER LAKE 345KV CKT 1	717	717	0.0756	103.6766	ELDORADO EHV - MOUNT OLIVE 500KV CKT 1
FDNS	00NR	0	16WP	G15_085	FROM->TO	CIMARRON - DRAPER LAKE 345KV CKT 1	717	717	0.07532	103.6764	GEN336170 1-GULF OXY U4
FDNS	00NR	0	16WP	G15_085	FROM->TO	CIMARRON - DRAPER LAKE 345KV CKT 1	717	717	0.07532	103.6751	GEN336464 1-MICHOUD UNIT #3
FDNS	00NR	0	16WP	G15_085	FROM->TO	CIMARRON - DRAPER LAKE 345KV CKT 1	717	717	0.08009	103.6693	COLE - CRINER 138KV CKT 1
FDNS	00NR	0	16WP	G15_085	FROM->TO	CIMARRON - DRAPER LAKE 345KV CKT 1	717	717	0.07535	103.6516	P12:069:OKGE:3TERM19
FDNS	00NR	0	16WP	G15_085	FROM->TO	CIMARRON - DRAPER LAKE 345KV CKT 1	717	717	0.07532	103.6516	ESSEX UNIT 2 500/18.0KV TRANSFORMER CKT 1
FDNS	00NR	0	16WP	G15_085	FROM->TO	CIMARRON - DRAPER LAKE 345KV CKT 1	717	717	0.07547	103.6427	7LUTESVIL 345.00 - 7ST FRANC 345.00 345KV CKT 1
FDNS	00NR	0	16WP	G15_085	FROM->TO	CIMARRON - DRAPER LAKE 345KV CKT 1	717	717	0.07555	103.6334	OUMED 4 - STONEWALL 138KV CKT 1
FDNS	00NR	0	16WP	G15_085	FROM->TO	CIMARRON - DRAPER LAKE 345KV CKT 1	717	717	0.07532	103.6302	GEN336801 1-BAXTER WILSON UNIT #1
FDNS	00NR	0	16WP	G15_085	FROM->TO	CIMARRON - DRAPER LAKE 345KV CKT 1	717	717	0.07584	103.6262	LIGHTNING CREEK - ROBINSON 138KV CKT 1
FDNS	00NR	0	16WP	G15_085	FROM->TO	CIMARRON - DRAPER LAKE 345KV CKT 1	717	717	0.07503	103.6225	ARCADIA - LGARBER4 138.00 138KV CKT 1
FDNS	00NR	0	16WP	G15_085	FROM->TO	CIMARRON - DRAPER LAKE 345KV CKT 1	717	717	0.07532	103.6136	GEN506752 1-LEBROCK GAS 1
FDNS	00NR	0	16WP	G15_085	FROM->TO	CIMARRON - DRAPER LAKE 345KV CKT 1	717	717	0.07532	103.6135	GEN506753 1-LEBROCK GAS 2
FDNS	00NR	0	16WP	G15_085	FROM->TO	CIMARRON - DRAPER LAKE 345KV CKT 1	717	717	0.07545	103.6057	7JASPER 345.00 - BLACKBERRY 345KV CKT 1
FDNS	00NR	0	16WP	G15_085	FROM->TO	CIMARRON - DRAPER LAKE 345KV CKT 1	717	717	0.07618	103.6018	FAIRFAX TAP - SHIDLER 138KV CKT 1
FDNS	00NR	0	16WP	G15_085	FROM->TO	CIMARRON - DRAPER LAKE 345KV CKT 1	717	717	0.07618	103.6017	FAIRFAX TAP - WEBB CITY TAP 138KV CKT 1
FDNS	00NR	0	16WP	G15_085	FROM->TO	CIMARRON - DRAPER LAKE 345KV CKT 1	717	717	0.07503	103.5927	CHITWOOD - LGARBER4 138.00 138KV CKT 1
FDNS	00NR	0	16WP	G15_085	FROM->TO	CIMARRON - DRAPER LAKE 345KV CKT 1	717	717	0.07532	103.5925	GEN501910 1-ACADIA UNIT ST1
FDNS	00NR	0	16WP	G15_085	FROM->TO	CIMARRON - DRAPER LAKE 345KV CKT 1	717	717	0.07532	103.5817	RODEMACHER 230/22.0KV TRANSFORMER CKT 1
FDNS	00NR	0	16WP	G15_085	FROM->TO	CIMARRON - DRAPER LAKE 345KV CKT 1	717	717	0.07503	103.5804	CHITWOOD - JONES TAP 138KV CKT 1
FDNS	00NR	0	16WP	G15_085	FROM->TO	CIMARRON - DRAPER LAKE 345KV CKT 1	717	717	0.07532	103.5784	GEN511843 1-RIVERSIDE STATION #2
FDNS	00NR	0	16WP	G15_085	FROM->TO	CIMARRON - DRAPER LAKE 345KV CKT 1	717	717	0.07469	103.5772	P12:138:AEPW-OGE:WTH_JCT4:JENSEN4
FDNS	00NR	0	16WP	G15_085	FROM->TO	CIMARRON - DRAPER LAKE 345KV CKT 1	717	717	0.07577	103.571	TULSA NORTH - WEKIWA 345KV CKT 1
FDNS	00NR	0	16WP	G15_085	FROM->TO	CIMARRON - DRAPER LAKE 345KV CKT 1	717	717	0.07577	103.571	TULSA NORTH - WEKIWA 345KV CKT 1
FDNS	00NR	0	16WP	G15_085	FROM->TO	CIMARRON - DRAPER LAKE 345KV CKT 1	717	717	0.07587	103.5684	6LAYFLD 230.00 - CARROLL 230KV CKT 1
FDNS	00NR	0	16WP	G15_085	FROM->TO	CIMARRON - DRAPER LAKE 345KV CKT 1	717	717	0.07551	103.5641	8WNEWMADRID 500.00 - DELL 500 500KV CKT 1
FDNS	00NR	0	16WP	G15_085	FROM->TO	CIMARRON - DRAPER LAKE 345KV CKT 1	717	717	0.07534	103.5615	P12:345:GRDA:CHOUTEAU-SPORTSMANACRES
FDNS	00NR	0	16WP	G15_085	FROM->TO	CIMARRON - DRAPER LAKE 345KV CKT 1	717	717	0.0757	103.5548	ELDORADO EHV - SHERIDAN EHV 500KV CKT 1
FDNS	00NR	0	16WP	G15_085	FROM->TO	CIMARRON - DRAPER LAKE 345KV CKT 1	717	717	0.07245	103.5535	CHISHOLM6 230.00 - ELK CITY 230KV 230KV CKT 1
FDNS	00NR	0	16WP	G15_085	FROM->TO	CIMARRON - DRAPER LAKE 345KV CKT 1	717	717	0.07245	103.5504	ELK CITY 230KV (ELKCTY-6) 230/138/13.8KV TRANSFORMER CKT 1
FDNS	00NR	0	16WP	G15_085	FROM->TO	CIMARRON - DRAPER LAKE 345KV CKT 1	717	717	0.07245	103.5504	ELK CITY 230KV (ELKCTY-6) 230/138/13.8KV TRANSFORMER CKT 1
FDNS	00NR	0	16WP	G15_085	FROM->TO	CIMARRON - DRAPER LAKE 345KV CKT 1	717	717	0.07585	103.5453	G13-010T 345.00 - POST ROCK 345KV CKT 1
FDNS	00NR	0	16WP	G15_085	FROM->TO	CIMARRON - DRAPER LAKE 345KV CKT 1	717	717	0.07509	103.5337	P12:138:AEPW:N.E.S.-4:CATOOSA4
FDNS	00NR	0	16WP	G15_085	FROM->TO	CIMARRON - DRAPER LAKE 345KV CKT 1	717	717	0.07555	103.5322	OUMED 4 - PARK PLACE 138KV CKT 1
FDNS	00NR	0	16WP	G15_085	FROM->TO	CIMARRON - DRAPER LAKE 345KV CKT 1	717	717	0.07539	103.5255	FULTON 115 - HOPE 115KV CKT 1
FDNS	00NR	0	16WP	G15_085	FROM->TO	CIMARRON - DRAPER LAKE 345KV CKT 1	717	717	0.07539	103.5255	FULTON 115 - HOPE 115KV CKT 1
FDNS	00NR	0	16WP	G15_085	FROM->TO	CIMARRON - DRAPER LAKE 345KV CKT 1	717	717	0.07549	103.5186	P13:138-161:WERE:NSES_TX-4OR5::
FDNS	00NR	0	16WP	G15_085	FROM->TO	CIMARRON - DRAPER LAKE 345KV CKT 1	717	717	0.07532	103.5156	8CAJUN2 500/24.0KV TRANSFORMER CKT 1
FDNS	00NR	0	16WP	G15_085	FROM->TO	CIMARRON - DRAPER LAKE 345KV CKT 1	717	717	0.07542	103.5154	MORISNT4 138.00 - SOONER 138KV CKT 1
FDNS	00NR	0	16WP	G15_085	FROM->TO	CIMARRON - DRAPER LAKE 345KV CKT 1	717	717	0.07529	103.5113	P12:138:AEPW:CATOOSA4:T.S.E.-4
FDNS	00NR	0	16WP	G15_085	FROM->TO	CIMARRON - DRAPER LAKE 345KV CKT 1	717	717	0.07532	103.5052	ST FRANCIS - ST FRANCIS 1 161KV CKT Z1
FDNS	00NR	0	16WP	G15_085	FROM->TO	CIMARRON - DRAPER LAKE 345KV CKT 1	717	717	0.0755	103.5015	7JASPER 345.00 - MORGAN 345KV CKT 1
FDNS	00NR	0	16WP	G15_085	FROM->TO	CIMARRON - DRAPER LAKE 345KV CKT 1	717	717	0.07532	103.4974	P12:069:OKGE:3TERM3
FDNS	00NR	0	16WP	G15_085	FROM->TO	CIMARRON - DRAPER LAKE 345KV CKT 1	717	717	0.07732	103.4908	HUGO - VALLIANT 345KV CKT 1
FDNS	00NR	0	16WP	G15_085	FROM->TO	CIMARRON - DRAPER LAKE 345KV CKT 1	717	717	0.07732	103.4908	HUGO - VALLIANT 345KV CKT 1
FDNS	00NR	0	16WP	G15_085	FROM->TO	CIMARRON - DRAPER LAKE 345KV CKT 1	717	717	0.07532	103.4903	GEN509394 1-FLINT CREEK
FDNS	00NR	0	16WP	G15_085	FROM->TO	CIMARRON - DRAPER LAKE 345KV CKT 1	717	717	0.07532	103.4898	GEN300015 1-1SGPDEL 18.000
FDNS	00NR	0	16WP	G15_085	FROM->TO	CIMARRON - DRAPER LAKE 345KV CKT 1	717	717	0.07585	103.4897	G13-010T 345.00 - SPEARVILLE 345KV CKT 1
FDNS	00NR	0	16WP	G15_085	FROM->TO	CIMARRON - DRAPER LAKE 345KV CKT 1	717	717	0.07574	103.4895	DALE - HORSESHOE LAKE 138KV CKT 1
FDNS	00NR	0	16WP	G15_085	FROM->TO	CIMARRON - DRAPER LAKE 345KV CKT 1	717	717	0.07584	103.4888	LIGHTNING CREEK - TROSPER 138KV CKT 1
FDNS	00NR	0	16WP	G15_085	FROM->TO	CIMARRON - DRAPER LAKE 345KV CKT 1	717	717	0.07532	103.4794	GEN337766 1-TRACTEBEL UNIT S1
FDNS	00NR	0	16WP	G15_085	FROM->TO	CIMARRON - DRAPER LAKE 345KV CKT 1	717	717	0.07541	103.4788	P12:138:AEPW:SHERID4:112GORE4
FDNS	00NR	0	16WP	G15_085	FROM->TO	CIMARRON - DRAPER LAKE 345KV CKT 1	717	717	0.07532	103.4762	GEN515564 1-ORIGIN11 0.6900

SOLUTION	GROUP	SCENARIO	SEASON	SOURCE	DIRECTION	MONITORED ELEMENT	RATEA (MVA)	RATEB(MVA)	TDF	TC%LOADING (% MVA)	CONTINGENCY
FDNS	00NR	0	16WP	G15_085	FROM->TO	CIMARRON - DRAPER LAKE 345KV CKT 1	717	717	0.07532	103.4762	GEN515565 1-ORIGIN21 0.6900
FDNS	00NR	0	16WP	G15_085	FROM->TO	CIMARRON - DRAPER LAKE 345KV CKT 1	717	717	0.07552	103.4744	36 & MERIDIAN - HOBBY LOBBY 138KV CKT 1
FDNS	00NR	0	16WP	G15_085	FROM->TO	CIMARRON - DRAPER LAKE 345KV CKT 1	717	717	0.07562	103.474	HAMMETT TAP - HAMMETT2 138KV CKT 1
FDNS	00NR	0	16WP	G15_085	FROM->TO	CIMARRON - DRAPER LAKE 345KV CKT 1	717	717	0.07308	103.4732	ANADARKO - GRACMNT4 138.00 138KV CKT 1
FDNS	00NR	0	16WP	G15_085	FROM->TO	CIMARRON - DRAPER LAKE 345KV CKT 1	717	717	0.07532	103.4731	GEN336222 1-LITTLE GYPSY UNIT#2
FDNS	00NR	0	16WP	G15_085	FROM->TO	CIMARRON - DRAPER LAKE 345KV CKT 1	717	717	0.07616	103.4701	NORTHEAST STATION - ONETA 345KV CKT 1
FDNS	00NR	0	16WP	G15_085	FROM->TO	CIMARRON - DRAPER LAKE 345KV CKT 1	717	717	0.07616	103.4701	NORTHEAST STATION - ONETA 345KV CKT 1
FDNS	00NR	0	16WP	G15_085	FROM->TO	CIMARRON - DRAPER LAKE 345KV CKT 1	717	717	0.07542	103.4701	P12:138:OKGE:3TERM28
FDNS	00NR	0	16WP	G15_085	FROM->TO	CIMARRON - DRAPER LAKE 345KV CKT 1	717	717	0.07559	103.4665	FLETCHER - MARLOW JCT 69KV CKT 1
FDNS	00NR	0	16WP	G15_085	FROM->TO	CIMARRON - DRAPER LAKE 345KV CKT 1	717	717	0.07532	103.4622	GEN501970 1-EVANGELINE UNIT 7
FDNS	00NR	0	16WP	G15_085	FROM->TO	CIMARRON - DRAPER LAKE 345KV CKT 1	717	717	0.07532	103.4621	NELSON 230/20.0KV TRANSFORMER CKT 1
FDNS	00NR	0	16WP	G15_085	FROM->TO	CIMARRON - DRAPER LAKE 345KV CKT 1	717	717	0.07514	103.4586	NW164TH4 138.00 - PIEDMONT 138KV CKT 1
FDNS	00NR	0	16WP	G15_085	FROM->TO	CIMARRON - DRAPER LAKE 345KV CKT 1	717	717	0.07532	103.458	P12:161:AEPW:EROGERS5:ECNTRTN5
FDNS	00NR	0	16WP	G15_085	FROM->TO	CIMARRON - DRAPER LAKE 345KV CKT 1	717	717	0.07516	103.4577	P12:138:OKGE-AEPW:JENSEN4:REDROCKRD4
FDNS	00NR	0	16WP	G15_085	FROM->TO	CIMARRON - DRAPER LAKE 345KV CKT 1	717	717	0.07514	103.4567	NORTHWEST - NW164TH4 138.00 138KV CKT 1
FDNS	00NR	0	16WP	G15_085	FROM->TO	CIMARRON - DRAPER LAKE 345KV CKT 1	717	717	0.07532	103.4555	ESSEX UNIT 2 500/18.0KV TRANSFORMER CKT 1
FDNS	00NR	0	16WP	G15_085	FROM->TO	CIMARRON - DRAPER LAKE 345KV CKT 1	717	717	0.07535	103.4553	P12:161:AEPW-SWPA:BEAVER5:EROGERS5
FDNS	00NR	0	16WP	G15_085	FROM->TO	CIMARRON - DRAPER LAKE 345KV CKT 1	717	717	0.07595	103.4548	COMANCHE TAP - OMPA-DUNCAN 840 138KV CKT 1
FDNS	00NR	0	16WP	G15_085	FROM->TO	CIMARRON - DRAPER LAKE 345KV CKT 1	717	717	0.07669	103.4517	CORN TAP - SEQUOYAHJ4 138.00 138KV CKT 1
FDNS	00NR	0	16WP	G15_085	FROM->TO	CIMARRON - DRAPER LAKE 345KV CKT 1	717	717	0.07613	103.4516	P12:138:AEPW:CORNVIL4:S.W.S.-4
FDNS	00NR	0	16WP	G15_085	FROM->TO	CIMARRON - DRAPER LAKE 345KV CKT 1	717	717	0.07669	103.4513	ANADARKO - SEQUOYAHJ4 138.00 138KV CKT 1
FDNS	00NR	0	16WP	G15_085	FROM->TO	CIMARRON - DRAPER LAKE 345KV CKT 1	717	717	0.07574	103.448	DALE - SQUIRL CREEK 138KV CKT 1
FDNS	00NR	0	16WP	G15_085	FROM->TO	CIMARRON - DRAPER LAKE 345KV CKT 1	717	717	0.07685	103.4464	HEALDTON - LOCO 138KV CKT 1
FDNS	00NR	0	16WP	G15_085	FROM->TO	CIMARRON - DRAPER LAKE 345KV CKT 1	717	717	0.07532	103.4463	P12:161:AEPW:DYESS5:ELMSPRNG:TONTITN5
FDNS	00NR	0	16WP	G15_085	FROM->TO	CIMARRON - DRAPER LAKE 345KV CKT 1	717	717	0.07532	103.4425	GEN336152 1-WATERFORD UNIT#2
FDNS	00NR	0	16WP	G15_085	FROM->TO	CIMARRON - DRAPER LAKE 345KV CKT 1	717	717	0.07532	103.4415	GEN336151 1-WATERFORD UNIT#1
FDNS	00NR	0	16WP	G15_085	FROM->TO	CIMARRON - DRAPER LAKE 345KV CKT 1	717	717	0.07532	103.4407	ST FRANCIS 345/161KV TRANSFORMER CKT 1
FDNS	00NR	0	16WP	G15_085	FROM->TO	CIMARRON - DRAPER LAKE 345KV CKT 1	717	717	0.07558	103.4351	CORN TAP - CORNVILLE 138KV CKT 1
FDNS	00NR	0	16WP	G15_085	FROM->TO	CIMARRON - DRAPER LAKE 345KV CKT 1	717	717	0.07533	103.4322	MARSHALL - WOODRING 138KV CKT 1
FDNS	00NR	0	16WP	G15_085	FROM->TO	CIMARRON - DRAPER LAKE 345KV CKT 1	717	717	0.07532	103.4302	GEN334392 1-EXXON MOBIL IPP 1
FDNS	00NR	0	16WP	G15_085	FROM->TO	CIMARRON - DRAPER LAKE 345KV CKT 1	717	717	0.07533	103.4299	COTTONWOOD CREEK - MARSHALL 138KV CKT 1
FDNS	00NR	0	16WP	G15_085	FROM->TO	CIMARRON - DRAPER LAKE 345KV CKT 1	717	717	0.0754	103.4289	HEFNER - TULSA 138KV CKT 1
FDNS	00NR	0	16WP	G15_085	FROM->TO	CIMARRON - DRAPER LAKE 345KV CKT 1	717	717	0.08009	103.4279	COLE - OUSW4 138KV CKT 1
FDNS	00NR	0	16WP	G15_085	FROM->TO	CIMARRON - DRAPER LAKE 345KV CKT 1	717	717	0.07546	103.426	MC NIEL 500/115KV TRANSFORMER CKT 1
FDNS	00NR	0	16WP	G15_085	FROM->TO	CIMARRON - DRAPER LAKE 345KV CKT 1	717	717	0.07532	103.424	GEN334393 1-EXXON MOBIL IPP 2
FDNS	00NR	0	16WP	G15_085	FROM->TO	CIMARRON - DRAPER LAKE 345KV CKT 1	717	717	0.07532	103.424	GEN334394 1-EXXON MOBIL IPP 3
FDNS	00NR	0	16WP	G15_085	FROM->TO	CIMARRON - DRAPER LAKE 345KV CKT 1	717	717	0.07591	103.4222	P12:138:AEPW:MOUNDRD4:SHIDLER4
FDNS	00NR	0	16WP	G15_085	FROM->TO	CIMARRON - DRAPER LAKE 345KV CKT 1	717	717	0.07542	103.4218	BISMARK - HOT SPRINGS WEST BUS 115KV CKT 1
FDNS	00NR	0	16WP	G15_085	FROM->TO	CIMARRON - DRAPER LAKE 345KV CKT 1	717	717	0.07537	103.4138	EL RENO SW - MUSTANG2 69.000 69KV CKT 1
FDNS	00NR	0	16WP	G15_085	FROM->TO	CIMARRON - DRAPER LAKE 345KV CKT 1	717	717	0.07508	103.4132	BRISTOW - SILVER CITY 138KV CKT 1
FDNS	00NR	0	16WP	G15_085	FROM->TO	CIMARRON - DRAPER LAKE 345KV CKT 1	717	717	0.07515	103.4123	KELLYAV4 138.00 - MEMORIAL 138KV CKT 1
FDNS	00NR	0	16WP	G15_085	FROM->TO	CIMARRON - DRAPER LAKE 345KV CKT 1	717	717	0.07532	103.4084	GEN501972 1-EVANGELINE UNIT 7-2
FDNS	00NR	0	16WP	G15_085	FROM->TO	CIMARRON - DRAPER LAKE 345KV CKT 1	717	717	0.07532	103.4083	GEN501971 1-EVANGELINE UNIT 7-1
FDNS	00NR	0	16WP	G15_085	FROM->TO	CIMARRON - DRAPER LAKE 345KV CKT 1	717	717	0.07591	103.4049	SHIDLER - WEST PAWHUSKA 138KV CKT 1
FDNS	00NR	0	16WP	G15_085	FROM->TO	CIMARRON - DRAPER LAKE 345KV CKT 1	717	717	0.07685	103.4047	HEALDTON - RINGLING 138KV CKT 1
FDNS	00NR	0	16WP	G15_085	FROM->TO	CIMARRON - DRAPER LAKE 345KV CKT 1	717	717	0.07532	103.3987	GEN334431 1-SABINE UNIT 1
FDNS	00NR	0	16WP	G15_085	FROM->TO	CIMARRON - DRAPER LAKE 345KV CKT 1	717	717	0.07532	103.3986	GEN334432 1-SABINE UNIT 2
FDNS	00NR	0	16WP	G15_085	FROM->TO	CIMARRON - DRAPER LAKE 345KV CKT 1	717	717	0.07532	103.3959	GEN336242 1-1NMIL ST1 18.000
FDNS	00NR	0	16WP	G15_085	FROM->TO	CIMARRON - DRAPER LAKE 345KV CKT 1	717	717	0.07532	103.3954	GEN337764 1-TRACTEBEL UNIT C1
FDNS	00NR	0	16WP	G15_085	FROM->TO	CIMARRON - DRAPER LAKE 345KV CKT 1	717	717	0.07532	103.3954	GEN337765 1-TRACTEBEL UNIT C2
FDNS	00NR	0	16WP	G15_085	FROM->TO	CIMARRON - DRAPER LAKE 345KV CKT 1	717	717	0.07543	103.3939	BROOKLINE - MORGAN 345KV CKT 1
FDNS	00NR	0	16WP	G15_085	FROM->TO	CIMARRON - DRAPER LAKE 345KV CKT 1	717	717	0.07543	103.3939	BROOKLINE - MORGAN 345KV CKT 1
FDNS	00NR	0	16WP	G15_085	FROM->TO	CIMARRON - DRAPER LAKE 345KV CKT 1	717	717	0.07532	103.3938	GEN501912 1-ACADIA UNIT CT1B
FDNS	00NR	0	16WP	G15_085	FROM->TO	CIMARRON - DRAPER LAKE 345KV CKT 1	717	717	0.07532	103.3931	GEN501911 1-ACADIA UNIT CT1A
FDNS	00NR	0	16WP	G15_085	FROM->TO	CIMARRON - DRAPER LAKE 345KV CKT 1	717	717	0.07555	103.3919	BODLE - PARK PLACE 138KV CKT 1
FDNS	00NR	0	16WP	G15_085	FROM->TO	CIMARRON - DRAPER LAKE 345KV CKT 1	717	717	0.07558	103.3911	COUNCIL - MUSTANG 138KV CKT 1
FDNS	00NR	0	16WP	G15_085	FROM->TO	CIMARRON - DRAPER LAKE 345KV CKT 1	717	717	0.07651	103.391	BRYANT - MEMORIAL 138KV CKT 1
FDNS	00NR	0	16WP	G15_085	FROM->TO	CIMARRON - DRAPER LAKE 345KV CKT 1	717	717	0.07591	103.3884	PAWHUSKA TAP - WEST PAWHUSKA 138KV CKT 1
FDNS	00NR	0	16WP	G15_085	FROM->TO	CIMARRON - DRAPER LAKE 345KV CKT 1	717	717	0.07542	103.3884	ALPINE AECC - BISMARK 115KV CKT 1
FDNS	00NR	0	16WP	G15_085	FROM->TO	CIMARRON - DRAPER LAKE 345KV CKT 1	717	717	0.0754	103.388	CYPRESS - HARTBURG 500KV CKT 1
FDNS	00NR	0	16WP	G15_085	FROM->TO	CIMARRON - DRAPER LAKE 345KV CKT 1	717	717	0.07514	103.3831	PIEDMONT - RICHRDS 138KV CKT 1
FDNS	00NR	0	16WP	G15_085	FROM->TO	CIMARRON - DRAPER LAKE 345KV CKT 1	717	717	0.07532	103.3827	P12:69:AEPW:L.E.S.-2:LAW WC2
FDNS	00NR	0	16WP	G15_085	FROM->TO	CIMARRON - DRAPER LAKE 345KV CKT 1	717	717	0.07515	103.3809	KELLYAV4 138.00 - REMNGTON PARK 138KV CKT 1
FDNS	00NR	0	16WP	G15_085	FROM->TO	CIMARRON - DRAPER LAKE 345KV CKT 1	717	717	0.07562	103.3808	HAMMETT2 - MEEKER 138KV CKT 1
FDNS	00NR	0	16WP	G15_085	FROM->TO	CIMARRON - DRAPER LAKE 345KV CKT 1	717	717	0.07591	103.375	HAMMETT TAP - HORSESHOE LAKE 138KV CKT 1
FDNS	00NR	0	16WP	G15_085	FROM->TO	CIMARRON - DRAPER LAKE 345KV CKT 1	717	717	0.07556	103.3697	LAYFLD8 500.00 - MOUNT OLIVE 500KV CKT 1
FDNS	00NR	0	16WP	G15_085	FROM->TO	CIMARRON - DRAPER LAKE 345KV CKT 1	717	717	0.07556	103.3697	LAYFLD8 500.00 - MOUNT OLIVE 500KV CKT 1
FDNS	00NR	0	16WP	G15_085	FROM->TO	CIMARRON - DRAPER LAKE 345KV CKT 1	717	717	0.07685	103.3631	RINGLING - SOUTH WILSON 138KV CKT 1
FDNS	00NR	0	16WP	G15_085	FROM->TO	CIMARRON - DRAPER LAKE 345KV CKT 1	717	717	0.07665	103.3457	CIVIT - PAOLI 138KV CKT 1
FDNS	00NR	0	16WP	G15_085	FROM->TO	CIMARRON - DRAPER LAKE 345KV CKT 1	717	717	0.07534	103.3404	LACYGNE - STILWELL 345KV CKT 1
FDNS	00NR	0	16WP	G15_085	FROM->TO	CIMARRON - DRAPER LAKE 345KV CKT 1	717	717	0.0671	103.3399	GRACEMONT - LAWTON EASTSIDE 345KV CKT 1
FDNS	00NR	0	16WP	G15_085	FROM->TO	CIMARRON - DRAPER LAKE 345KV CKT 1	717	717	0.0671	103.3399	GRACEMONT - LAWTON EASTSIDE 345KV CKT 1
FDNS	00NR	0	16WP	G15_085	FROM->TO	CIMARRON - DRAPER LAKE 345KV CKT 1	717	717	0.07558	103.3365	COUNCIL - WESTOAKS 138KV CKT 1
FDNS	00NR	0	16WP	G15_085	FROM->TO	CIMARRON - DRAPER LAKE 345KV CKT 1	717	717	0.07532	102.9113	BASE CASE
FDNS	00NR	0	16WP	G15_085	FROM->TO	CIMARRON - DRAPER LAKE 345KV CKT 1	717	717	0.07577	102.5994	GRAPEVINE INTERCHANGE - NICHOLS STATION 230KV CKT 1
FDNS	00NR	0	16WP	G15_085	FROM->TO	CIMARRON - DRAPER LAKE 345KV CKT 1	717	717	0.07577	102.5994	GRAPEVINE INTERCHANGE - NICHOLS STATION 230KV CKT 1
FDNS	00NR	0	16WP	G15_085	FROM->TO	CIMARRON - DRAPER LAKE 345KV CKT 1	717	717	0.08434	102.5967	G15063_T 345.00 - WOODRING 345KV CKT 1
FDNS	00NR	0	16WP	G15_085	FROM->TO	CIMARRON - DRAPER LAKE 345KV CKT 1	717	717	0.0758	102.5371	BURGETT4 138.00 - RNDBARN4 138.00 138KV CKT 1
FDNS	00NR	0	16WP	G15_085	FROM->TO	CIMARRON - DRAPER LAKE 345KV CKT 1	717	717	0.0758	102.5354	BURGETT4 138.00 - DANFORTH 138KV CKT 1

SOLUTION	GROUP	SCENARIO	SEASON	SOURCE	DIRECTION	MONITORED ELEMENT	RATEA (MVA)	RATEB(MVA)	TDF	TC%LOADING (% MVA)	CONTINGENCY
FDNS	00NR	0	16WP	G15_085	FROM->TO	CIMARRON - DRAPER LAKE 345KV CKT 1	717	717	0.0758	102.5245	ARCADIA - RNDBARN4 138.00 138KV CKT 1
FDNS	00NR	0	16WP	G15_085	FROM->TO	CIMARRON - DRAPER LAKE 345KV CKT 1	717	717	0.07532	102.495	GEN659125 1-COVEY
FDNS	00NR	0	16WP	G15_085	FROM->TO	CIMARRON - DRAPER LAKE 345KV CKT 1	717	717	0.07532	102.4903	GEN515550 1-MNCWND31 0.6900
FDNS	00NR	0	16WP	G15_085	FROM->TO	CIMARRON - DRAPER LAKE 345KV CKT 1	717	717	0.07531	102.482	GRAPEVINE INTERCHANGE - STATELINE INTERCHANGE 230KV CKT 1
FDNS	00NR	0	16WP	G15_085	FROM->TO	CIMARRON - DRAPER LAKE 345KV CKT 1	717	717	0.07531	102.482	GRAPEVINE INTERCHANGE - STATELINE INTERCHANGE 230KV CKT 1
FDNS	00NR	0	16WP	G15_085	FROM->TO	CIMARRON - DRAPER LAKE 345KV CKT 1	717	717	0.07532	102.477	GEN562611 1-G14_064_3 0.6900
FDNS	00NR	0	16WP	G15_085	FROM->TO	CIMARRON - DRAPER LAKE 345KV CKT 1	717	717	0.07532	102.4715	GEN511848 1-SOUTHWESTERN STATION #3
FDNS	00NR	0	16WP	G15_085	FROM->TO	CIMARRON - DRAPER LAKE 345KV CKT 1	717	717	0.07532	102.4453	GEN515601 1-KNGFSR11 0.7000
FDNS	00NR	0	16WP	G15_085	FROM->TO	CIMARRON - DRAPER LAKE 345KV CKT 1	717	717	0.07532	102.4414	GEN600071 10-RIVER SIDE
FDNS	00NR	0	16WP	G15_085	FROM->TO	CIMARRON - DRAPER LAKE 345KV CKT 1	717	717	0.07532	102.4413	GEN600070 9-RIVER SIDE
FDNS	00NR	0	16WP	G15_085	FROM->TO	CIMARRON - DRAPER LAKE 345KV CKT 1	717	717	0.07532	102.4362	GEN672303 3-BOUNDARY DAM GENERATOR 3
FDNS	00NR	0	16WP	G15_085	FROM->TO	CIMARRON - DRAPER LAKE 345KV CKT 1	717	717	0.07532	102.4362	GEN672304 4-BOUNDARY DAM GENERATOR 4
FDNS	00NR	0	16WP	G15_085	FROM->TO	CIMARRON - DRAPER LAKE 345KV CKT 1	717	717	0.07532	102.4362	GEN672305 5-BOUNDARY DAM GENERATOR 5
FDNS	00NR	0	16WP	G15_085	FROM->TO	CIMARRON - DRAPER LAKE 345KV CKT 1	717	717	0.07532	102.4353	GEN600007 7-RIVERSIDE GEN 7
FDNS	00NR	0	16WP	G15_085	FROM->TO	CIMARRON - DRAPER LAKE 345KV CKT 1	717	717	0.07532	102.4347	GEN600067 9-HIGH BRIDGE
FDNS	00NR	0	16WP	G15_085	FROM->TO	CIMARRON - DRAPER LAKE 345KV CKT 1	717	717	0.07532	102.4338	GEN563062 1-G15071_3 0.6900
FDNS	00NR	0	16WP	G15_085	FROM->TO	CIMARRON - DRAPER LAKE 345KV CKT 1	717	717	0.07532	102.4307	GEN615052 1-CAMBRIDGE GENERATING STATION
FDNS	00NR	0	16WP	G15_085	FROM->TO	CIMARRON - DRAPER LAKE 345KV CKT 1	717	717	0.07532	102.4274	GEN541151 3-SIBLEY GENERATING UNIT #3
FDNS	00NR	0	16WP	G15_085	FROM->TO	CIMARRON - DRAPER LAKE 345KV CKT 1	717	717	0.07391	102.4256	CHISNEY - CLARKSVILLE 138KV CKT 1
FDNSLock	00NR	0	16WP	G15_085	FROM->TO	CIMARRON - DRAPER LAKE 345KV CKT 1	717	717	0.07532	102.4224	GEN600014 4-BLACK DOG GEN 4
FDNS	00NR	0	16WP	G15_085	FROM->TO	CIMARRON - DRAPER LAKE 345KV CKT 1	717	717	0.07532	102.4218	GEN563282 1-G15094_3 0.6900
FDNS	00NR	0	16WP	G15_085	FROM->TO	CIMARRON - DRAPER LAKE 345KV CKT 1	717	717	0.07532	102.4212	GEN652353 2-GR PRAIRIEG 0.6900
FDNS	00NR	0	16WP	G15_085	FROM->TO	CIMARRON - DRAPER LAKE 345KV CKT 1	717	717	0.07532	102.4168	GEN629067 1-EMERY GAS TURBINE 1
FDNS	00NR	0	16WP	G15_085	FROM->TO	CIMARRON - DRAPER LAKE 345KV CKT 1	717	717	0.07565	102.4148	7MCCREDIE 345.00 - 7MONTGMRY 345.00 345KV CKT 1
FDNS	00NR	0	16WP	G15_085	FROM->TO	CIMARRON - DRAPER LAKE 345KV CKT 1	717	717	0.07532	102.4032	GEN563102 1-G15075_3 0.5500
FDNS	00NR	0	16WP	G15_085	FROM->TO	CIMARRON - DRAPER LAKE 345KV CKT 1	717	717	0.07532	102.4015	GEN515591 1-PALDRW11 0.6900
FDNS	00NR	0	16WP	G15_085	FROM->TO	CIMARRON - DRAPER LAKE 345KV CKT 1	717	717	0.07532	102.4	GEN300003 1-THOMAS HILL UNIT 3
FDNS	00NR	0	16WP	G15_085	FROM->TO	CIMARRON - DRAPER LAKE 345KV CKT 1	717	717	0.07532	102.4	GEN600011 5-BLACK DOG GEN 1
FDNS	00NR	0	16WP	G15_085	FROM->TO	CIMARRON - DRAPER LAKE 345KV CKT 1	717	717	0.07532	102.4	GEN615032 2-PLEASANT VALLEY
FDNS	00NR	0	16WP	G15_085	FROM->TO	CIMARRON - DRAPER LAKE 345KV CKT 1	717	717	0.07532	102.3966	GEN562602 1-G15_029_3 0.6900
FDNS	00NR	0	16WP	G15_085	FROM->TO	CIMARRON - DRAPER LAKE 345KV CKT 1	717	717	0.07545	102.3868	SEMINOLE - VANOSTP4 138.00 138KV CKT 1
FDNS	00NR	0	16WP	G15_085	FROM->TO	CIMARRON - DRAPER LAKE 345KV CKT 1	717	717	0.07532	102.3864	GEN600017 C-LS POWER CT
FDNS	00NR	0	16WP	G15_085	FROM->TO	CIMARRON - DRAPER LAKE 345KV CKT 1	717	717	0.07532	102.3828	GEN562812 1-G15040_3 0.3570
FDNS	00NR	0	16WP	G15_085	FROM->TO	CIMARRON - DRAPER LAKE 345KV CKT 1	717	717	0.07532	102.3765	GEN563132 1-G15078_3 0.3570
FDNS	00NR	0	16WP	G15_085	FROM->TO	CIMARRON - DRAPER LAKE 345KV CKT 1	717	717	0.07539	102.3681	FOREST HILL - MAUD 138KV CKT 1
FDNS	00NR	0	16WP	G15_085	FROM->TO	CIMARRON - DRAPER LAKE 345KV CKT 1	717	717	0.07532	102.3672	GEN524285 1-WILDORADO WIND GEN
FDNS	00NR	0	16WP	G15_085	FROM->TO	CIMARRON - DRAPER LAKE 345KV CKT 1	717	717	0.07409	102.366	P12:138:AEPW:WELETK4:EARLSBORO4
FDNS	00NR	0	16WP	G15_085	FROM->TO	CIMARRON - DRAPER LAKE 345KV CKT 1	717	717	0.07409	102.366	P12:138:OKGE:3TERM36
FDNS	00NR	0	16WP	G15_085	FROM->TO	CIMARRON - DRAPER LAKE 345KV CKT 1	717	717	0.07532	102.3624	GEN562074 1-G1149G1504 0.6900
FDNS	00NR	0	16WP	G15_085	FROM->TO	CIMARRON - DRAPER LAKE 345KV CKT 1	717	717	0.07532	102.3559	GEN672392 1-NBECGT1G 18.000
FDNS	00NR	0	16WP	G15_085	FROM->TO	CIMARRON - DRAPER LAKE 345KV CKT 1	717	717	0.07532	102.3552	GEN629070 2-BEAVER CHANNEL GENERATORFOR UNIT NO 2
FDNS	00NR	0	16WP	G15_085	FROM->TO	CIMARRON - DRAPER LAKE 345KV CKT 1	717	717	0.07441	102.3552	EARLSBORO 4138.00 - FIXICO TAP 138KV CKT 1
FDNS	00NR	0	16WP	G15_085	FROM->TO	CIMARRON - DRAPER LAKE 345KV CKT 1	717	717	0.07532	102.3445	GEN526331 1-JONES GEN #1 22 KV
FDNS	00NR	0	16WP	G15_085	FROM->TO	CIMARRON - DRAPER LAKE 345KV CKT 1	717	717	0.07532	102.3445	GEN526332 1-JONES GEN #2 21 KV
FDNS	00NR	0	16WP	G15_085	FROM->TO	CIMARRON - DRAPER LAKE 345KV CKT 1	717	717	0.07528	102.3431	CANADIAN RIVER - MCALESTER SOUTH 138KV CKT 1
FDNS	00NR	0	16WP	G15_085	FROM->TO	CIMARRON - DRAPER LAKE 345KV CKT 1	717	717	0.07528	102.3431	CANADIAN RIVER - MCALESTER SOUTH 138KV CKT 1
FDNS	00NR	0	16WP	G15_085	FROM->TO	CIMARRON - DRAPER LAKE 345KV CKT 1	717	717	0.07532	102.343	GEN562596 1-G14_059_3 0.6900
FDNS	00NR	0	16WP	G15_085	FROM->TO	CIMARRON - DRAPER LAKE 345KV CKT 1	717	717	0.07528	102.3417	CANADIAN RIVER () 345/138/13.8KV TRANSFORMER CKT 1
FDNS	00NR	0	16WP	G15_085	FROM->TO	CIMARRON - DRAPER LAKE 345KV CKT 1	717	717	0.07528	102.3417	CANADIAN RIVER () 345/138/13.8KV TRANSFORMER CKT 1
FDNS	00NR	0	16WP	G15_085	FROM->TO	CIMARRON - DRAPER LAKE 345KV CKT 1	717	717	0.07532	102.336	GEN615010 1-STANTON4
FDNS	00NR	0	16WP	G15_085	FROM->TO	CIMARRON - DRAPER LAKE 345KV CKT 1	717	717	0.07532	102.3359	GEN629071 1-BURLINGTON GENERATOR FOR UNIT NO 1 E
FDNS	00NR	0	16WP	G15_085	FROM->TO	CIMARRON - DRAPER LAKE 345KV CKT 1	717	717	0.07391	102.3342	CHISNEY - HIGHLAND 138KV CKT 1
FDNS	00NR	0	16WP	G15_085	FROM->TO	CIMARRON - DRAPER LAKE 345KV CKT 1	717	717	0.07532	102.3307	GEN515365 1-CENT 21 0.7000
FDNS	00NR	0	16WP	G15_085	FROM->TO	CIMARRON - DRAPER LAKE 345KV CKT 1	717	717	0.07532	102.3205	GEN562983 1-G15061_4 0.6900
FDNS	00NR	0	16WP	G15_085	FROM->TO	CIMARRON - DRAPER LAKE 345KV CKT 1	717	717	0.07532	102.3205	GEN562984 1-G15061_5 0.6900
FDNS	00NR	0	16WP	G15_085	FROM->TO	CIMARRON - DRAPER LAKE 345KV CKT 1	717	717	0.07512	102.3203	P12:138:WFEC:MSL07
FDNS	00NR	0	16WP	G15_085	FROM->TO	CIMARRON - DRAPER LAKE 345KV CKT 1	717	717	0.07512	102.3203	P12:138:WFEC-AEPW:HUGOPP4:ATOKA--4
FDNS	00NR	0	16WP	G15_085	FROM->TO	CIMARRON - DRAPER LAKE 345KV CKT 1	717	717	0.07532	102.3161	GEN562017 1-G11_022_3 0.6900
FDNS	00NR	0	16WP	G15_085	FROM->TO	CIMARRON - DRAPER LAKE 345KV CKT 1	717	717	0.07532	102.3138	GEN615021 1-GRE-ER 14G 16.000
FDNS	00NR	0	16WP	G15_085	FROM->TO	CIMARRON - DRAPER LAKE 345KV CKT 1	717	717	0.07539	102.3122	GRPRAR1-LNX3345.00 - HOLT.CO3 345.00 345KV CKT 1
FDNS	00NR	0	16WP	G15_085	FROM->TO	CIMARRON - DRAPER LAKE 345KV CKT 1	717	717	0.07324	102.3107	P12:138:AEPW:SHAM4WT:CHILD4WT
FDNS	00NR	0	16WP	G15_085	FROM->TO	CIMARRON - DRAPER LAKE 345KV CKT 1	717	717	0.07539	102.3086	GRPRAR1-LNX3345.00 - YANKTON 345KV CKT Z
FDNS	00NR	0	16WP	G15_085	FROM->TO	CIMARRON - DRAPER LAKE 345KV CKT 1	717	717	0.07532	102.3034	GEN562429 1-G13-029 0.6900
FDNS	00NR	0	16WP	G15_085	FROM->TO	CIMARRON - DRAPER LAKE 345KV CKT 1	717	717	0.07532	102.3021	GEN562432 1-G13-030 0.6900
FDNS	00NR	0	16WP	G15_085	FROM->TO	CIMARRON - DRAPER LAKE 345KV CKT 1	717	717	0.07532	102.3019	GEN560105 1-G08-22 0.6900
FDNS	00NR	0	16WP	G15_085	FROM->TO	CIMARRON - DRAPER LAKE 345KV CKT 1	717	717	0.07532	102.3006	INDEPENDENCE 500/26.0KV TRANSFORMER CKT 1
FDNS	00NR	0	16WP	G15_085	FROM->TO	CIMARRON - DRAPER LAKE 345KV CKT 1	717	717	0.07532	102.2985	GEN532663 1-LAWRENCE ENERGY CENTER UNIT 5
FDNS	00NR	0	16WP	G15_085	FROM->TO	CIMARRON - DRAPER LAKE 345KV CKT 1	717	717	0.07517	102.2985	P12:138:AEPW-SWPA:LONEOAK4:TUPELO4
FDNS	00NR	0	16WP	G15_085	FROM->TO	CIMARRON - DRAPER LAKE 345KV CKT 1	717	717	0.07517	102.2984	P12:138:WFEC:MSL06
FDNS	00NR	0	16WP	G15_085	FROM->TO	CIMARRON - DRAPER LAKE 345KV CKT 1	717	717	0.0757	102.2966	OVEXFRMCCOVE
FDNS	00NR	0	16WP	G15_085	FROM->TO	CIMARRON - DRAPER LAKE 345KV CKT 1	717	717	0.07546	102.2931	DELL 500 - INDEPENDENCE 500KV CKT 1
FDNS	00NR	0	16WP	G15_085	FROM->TO	CIMARRON - DRAPER LAKE 345KV CKT 1	717	717	0.07532	102.2894	BURLINGTON NO1 + NO 2 + NO 3 161/20.0KV TRANSFORMER CKT 1
FDNS	00NR	0	16WP	G15_085	FROM->TO	CIMARRON - DRAPER LAKE 345KV CKT 1	717	717	0.07409	102.2839	P12:138:AEPW-OGE:WELETK4:MAUD 4
FDNS	00NR	0	16WP	G15_085	FROM->TO	CIMARRON - DRAPER LAKE 345KV CKT 1	717	717	0.07134	102.2797	P12:230:AEPW:ELKCITY6:SWEETWT6
FDNS	00NR	0	16WP	G15_085	FROM->TO	CIMARRON - DRAPER LAKE 345KV CKT 1	717	717	0.07532	102.2752	GEN527882 1-CUNNINGHAM GEN #2 20 KV
FDNS	00NR	0	16WP	G15_085	FROM->TO	CIMARRON - DRAPER LAKE 345KV CKT 1	717	717	0.07595	102.2741	P12:138:WFEC:MSL16
FDNS	00NR	0	16WP	G15_085	FROM->TO	CIMARRON - DRAPER LAKE 345KV CKT 1	717	717	0.07441	102.2712	EARLSBORO 4138.00 - MAUD 138KV CKT 1
FDNS	00NR	0	16WP	G15_085	FROM->TO	CIMARRON - DRAPER LAKE 345KV CKT 1	717	717	0.07441	102.2712	EARLSBORO 4138.00 - MAUD 138KV CKT 1
FDNS	00NR	0	16WP	G15_085	FROM->TO	CIMARRON - DRAPER LAKE 345KV CKT 1	717	717	0.07532	102.2674	GEN562550 1-G14_040_3 0.6900

SOLUTION	GROUP	SCENARIO	SEASON	SOURCE	DIRECTION	MONITORED ELEMENT	RATEA (MVA)	RATEB(MVA)	TDF	TC%LOADING (% MVA)	CONTINGENCY
FDNS	00NR	0	16WP	G15_085	FROM->TO	CIMARRON - DRAPER LAKE 345KV CKT 1	717	717	0.07532	102.2642	GEN524295 1-SPNSPUR_WND10.6900
FDNS	00NR	0	16WP	G15_085	FROM->TO	CIMARRON - DRAPER LAKE 345KV CKT 1	717	717	0.07532	102.2579	GEN562832 1-G15042_3 0.6900
FDNS	00NR	0	16WP	G15_085	FROM->TO	CIMARRON - DRAPER LAKE 345KV CKT 1	717	717	0.07581	102.2486	MAUD - SEMINOLE 138KV CKT 1
FDNS	00NR	0	16WP	G15_085	FROM->TO	CIMARRON - DRAPER LAKE 345KV CKT 1	717	717	0.07514	102.2397	STLN-DEMARC6 - SWEETWATER 230KV CKT 1
FDNS	00NR	0	16WP	G15_085	FROM->TO	CIMARRON - DRAPER LAKE 345KV CKT 1	717	717	0.07514	102.2392	P12:230:AEPW-SPS:SWEETWT6:WHEELER 6
FDNS	00NR	0	16WP	G15_085	FROM->TO	CIMARRON - DRAPER LAKE 345KV CKT 1	717	717	0.07514	102.2372	STATELINE INTERCHANGE - STLN-DEMARC6 230KV CKT 1
FDNS	00NR	0	16WP	G15_085	FROM->TO	CIMARRON - DRAPER LAKE 345KV CKT 1	717	717	0.07532	102.221	GEN531447 1-HOLCOMB GENERATOR
FDNS	00NR	0	16WP	G15_085	FROM->TO	CIMARRON - DRAPER LAKE 345KV CKT 1	717	717	0.07532	102.2207	P12:230:UMZB:# 112 #: NU IN SD. NU-RCDC & DRY CREEK XFMR
FDNS	00NR	0	16WP	G15_085	FROM->TO	CIMARRON - DRAPER LAKE 345KV CKT 1	717	717	0.07532	102.2195	RCDC EAST 4230.00 - RED CEDAR DC 230KV CKT 1
FDNS	00NR	0	16WP	G15_085	FROM->TO	CIMARRON - DRAPER LAKE 345KV CKT 1	717	717	0.07532	102.2165	GEN645011 1-NEBRASKA CITY 1
FDNS	00NR	0	16WP	G15_085	FROM->TO	CIMARRON - DRAPER LAKE 345KV CKT 1	717	717	0.07532	102.2156	GEN345671 2-1RUSH G2 18.000
FDNS	00NR	0	16WP	G15_085	FROM->TO	CIMARRON - DRAPER LAKE 345KV CKT 1	717	717	0.07532	102.2137	GEN345670 1-1RUSH G1 18.000
FDNS	00NR	0	16WP	G15_085	FROM->TO	CIMARRON - DRAPER LAKE 345KV CKT 1	717	717	0.07532	102.2132	GEN515606 1-CANDN11 0.6900
FDNS	00NR	0	16WP	G15_085	FROM->TO	CIMARRON - DRAPER LAKE 345KV CKT 1	717	717	0.07532	102.2132	GEN515607 1-CANDN12 0.6900
FDNS	00NR	0	16WP	G15_085	FROM->TO	CIMARRON - DRAPER LAKE 345KV CKT 1	717	717	0.07391	102.2079	HIGHLAND - PINK SW 138KV CKT 1
FDNS	00NR	0	16WP	G15_085	FROM->TO	CIMARRON - DRAPER LAKE 345KV CKT 1	717	717	0.07532	102.1858	GEN515443 1-MNCOWND1 0.7000
FDNS	00NR	0	16WP	G15_085	FROM->TO	CIMARRON - DRAPER LAKE 345KV CKT 1	717	717	0.07532	102.1851	GEN562794 1-G15038_5 0.6900
FDNS	00NR	0	16WP	G15_085	FROM->TO	CIMARRON - DRAPER LAKE 345KV CKT 1	717	717	0.07532	102.1851	GEN562795 1-G15038_6 0.6900
FDNS	00NR	0	16WP	G15_085	FROM->TO	CIMARRON - DRAPER LAKE 345KV CKT 1	717	717	0.07532	102.1817	GEN563092 1-G15074_3 0.6900
FDNS	00NR	0	16WP	G15_085	FROM->TO	CIMARRON - DRAPER LAKE 345KV CKT 1	717	717	0.07451	102.1805	FT SMITH - MUSKOGEE 345KV CKT 1
FDNS	00NR	0	16WP	G15_085	FROM->TO	CIMARRON - DRAPER LAKE 345KV CKT 1	717	717	0.07532	102.1774	GEN542951 5-HAWTHORN UNIT #5
FDNS	00NR	0	16WP	G15_085	FROM->TO	CIMARRON - DRAPER LAKE 345KV CKT 1	717	717	0.07532	102.1724	GEN645012 2-NEBRASKA CITY 2
FDNSLock	00NR	0	16WP	G15_085	FROM->TO	CIMARRON - DRAPER LAKE 345KV CKT 1	717	717	0.07532	102.1642	GEN629072 4-LANSING GENERATOR FOR UNITS NO4 EIA CODE 1
FDNS	00NR	0	16WP	G15_085	FROM->TO	CIMARRON - DRAPER LAKE 345KV CKT 1	717	717	0.07532	102.1533	GEN562512 1-G14_020_3 0.6900
FDNS	00NR	0	16WP	G15_085	FROM->TO	CIMARRON - DRAPER LAKE 345KV CKT 1	717	717	0.07552	102.1446	KEO EHV - WEST MEMPHIS 500 500KV CKT 1
FDNS	00NR	0	16WP	G15_085	FROM->TO	CIMARRON - DRAPER LAKE 345KV CKT 1	717	717	0.07514	102.1408	CHISHOLM6 230.00 - SWEETWATER 230KV CKT 1
FDNS	00NR	0	16WP	G15_085	FROM->TO	CIMARRON - DRAPER LAKE 345KV CKT 1	717	717	0.07532	102.134	GEN657749 1-YOUNG 1 GENERATOR
FDNS	00NR	0	16WP	G15_085	FROM->TO	CIMARRON - DRAPER LAKE 345KV CKT 1	717	717	0.07532	102.1262	GEN562699 1-G15_018_3 0.6900
FDNS	00NR	0	16WP	G15_085	FROM->TO	CIMARRON - DRAPER LAKE 345KV CKT 1	717	717	0.07532	102.1114	GEN640009 1-COOPER NUCLEAR STATION
FDNS	00NR	0	16WP	G15_085	FROM->TO	CIMARRON - DRAPER LAKE 345KV CKT 1	717	717	0.07532	102.1042	GEN529201 1-OMCDLEC1 13.800
FDNS	00NR	0	16WP	G15_085	FROM->TO	CIMARRON - DRAPER LAKE 345KV CKT 1	717	717	0.07495	102.1014	FRISCCO4 138.00 - LULA 138KV CKT 1
FDNS	00NR	0	16WP	G15_085	FROM->TO	CIMARRON - DRAPER LAKE 345KV CKT 1	717	717	0.07532	102.0883	GEN563122 1-G15077_3 0.3850
FDNS	00NR	0	16WP	G15_085	FROM->TO	CIMARRON - DRAPER LAKE 345KV CKT 1	717	717	0.07532	102.0793	GEN563182 1-G15083_3 0.6900
FDNSLock	00NR	0	16WP	G15_085	FROM->TO	CIMARRON - DRAPER LAKE 345KV CKT 1	717	717	0.07532	102.0662	GEN681522 3-GENOA 3
FDNS	00NR	0	16WP	G15_085	FROM->TO	CIMARRON - DRAPER LAKE 345KV CKT 1	717	717	0.07532	102.0608	GEN562685 1-G15_013_3 0.3550
FDNS	00NR	0	16WP	G15_085	FROM->TO	CIMARRON - DRAPER LAKE 345KV CKT 1	717	717	0.07513	102.0437	HOLLYWOOD - MIDWEST TAP 138KV CKT 1
FDNS	00NR	0	16WP	G15_085	FROM->TO	CIMARRON - DRAPER LAKE 345KV CKT 1	717	717	0.07532	102.0354	GEN344895 2-1LAB G2 20.000
FDNS	00NR	0	16WP	G15_085	FROM->TO	CIMARRON - DRAPER LAKE 345KV CKT 1	717	717	0.07384	102.0328	TUPELO - TUPELO TAP 138KV CKT 1
FDNS	00NR	0	16WP	G15_085	FROM->TO	CIMARRON - DRAPER LAKE 345KV CKT 1	717	717	0.07161	102.0286	CHISHOLM7 345.00 - GRACEMONT 345KV CKT 1
FDNS	00NR	0	16WP	G15_085	FROM->TO	CIMARRON - DRAPER LAKE 345KV CKT 1	717	717	0.07532	102.0223	GEN563222 1-G15088_3 0.6900
FDNS	00NR	0	16WP	G15_085	FROM->TO	CIMARRON - DRAPER LAKE 345KV CKT 1	717	717	0.07532	102.0212	4SIOUX 1 138.00 138/18.0KV TRANSFORMER CKT 1
FDNS	00NR	0	16WP	G15_085	FROM->TO	CIMARRON - DRAPER LAKE 345KV CKT 1	717	717	0.07104	102.0151	CIMARRON - TUTTLE CONOCO TAP 138KV CKT 1
FDNS	00NR	0	16WP	G15_085	FROM->TO	CIMARRON - DRAPER LAKE 345KV CKT 1	717	717	0.07495	102.0133	FRISCCO4 138.00 - HARDEN 4 138.00 138KV CKT 1
FDNS	00NR	0	16WP	G15_085	FROM->TO	CIMARRON - DRAPER LAKE 345KV CKT 1	717	717	0.07532	102.0083	GEN523461 1-BLACKHAWK GEN #1
FDNS	00NR	0	16WP	G15_085	FROM->TO	CIMARRON - DRAPER LAKE 345KV CKT 1	717	717	0.07532	102.0082	GEN523462 1-BLACKHAWK GEN #2
FDNS	00NR	0	16WP	G15_085	FROM->TO	CIMARRON - DRAPER LAKE 345KV CKT 1	717	717	0.07532	102.0073	GEN344896 3-1LAB G3 20.000
FDNS	00NR	0	16WP	G15_085	FROM->TO	CIMARRON - DRAPER LAKE 345KV CKT 1	717	717	0.07532	102.0058	GEN344894 1-1LAB G1 20.000
FDNS	00NR	0	16WP	G15_085	FROM->TO	CIMARRON - DRAPER LAKE 345KV CKT 1	717	717	0.07532	102.0047	GEN344897 4-1LAB G4 20.000
FDNS	00NR	0	16WP	G15_085	FROM->TO	CIMARRON - DRAPER LAKE 345KV CKT 1	717	717	0.07532	102.0003	GEN562587 1-G14_056_3 0.6900
FDNS	00NR	0	16WP	G15_085	FROM->TO	CIMARRON - DRAPER LAKE 345KV CKT 1	717	717	0.07532	101.9772	GEN515602 1-KNGFSR12 0.7000
FDNS	00NR	0	16WP	G15_085	FROM->TO	CIMARRON - DRAPER LAKE 345KV CKT 1	717	717	0.07532	101.9571	GEN563082 1-G15073_3 0.6900
FDNS	00NR	0	16WP	G15_085	FROM->TO	CIMARRON - DRAPER LAKE 345KV CKT 1	717	717	0.07104	101.9436	TUTTLE - TUTTLE CONOCO TAP 138KV CKT 1
FDNS	00NR	0	16WP	G15_085	FROM->TO	CIMARRON - DRAPER LAKE 345KV CKT 1	717	717	0.07161	101.9367	CHISHOLM7 345.00 (CHISHOLM) 345/230/13.2KV TRANSFORMER CKT 1
FDNS	00NR	0	16WP	G15_085	FROM->TO	CIMARRON - DRAPER LAKE 345KV CKT 1	717	717	0.07532	101.9307	GEN562704 1-G15_020_3 0.3550
FDNS	00NR	0	16WP	G15_085	FROM->TO	CIMARRON - DRAPER LAKE 345KV CKT 1	717	717	0.07532	101.9129	GEN563202 1-G15085_3 0.5500
FDNS	00NR	0	16WP	G15_085	FROM->TO	CIMARRON - DRAPER LAKE 345KV CKT 1	717	717	0.07532	101.9087	CLAY BOSWELL 230/20.9KV TRANSFORMER CKT 1
FDNS	00NR	0	16WP	G15_085	FROM->TO	CIMARRON - DRAPER LAKE 345KV CKT 1	717	717	0.07532	101.8974	GEN640010 1-GERALD GENTLEMAN STATION UNIT 1
FDNS	00NR	0	16WP	G15_085	FROM->TO	CIMARRON - DRAPER LAKE 345KV CKT 1	717	717	0.07532	101.8665	GEN672321 1-SHAND GENERATOR 1
FDNS	00NR	0	16WP	G15_085	FROM->TO	CIMARRON - DRAPER LAKE 345KV CKT 1	717	717	0.07478	101.8497	LULA - TUPELO TAP 138KV CKT 1
FDNS	00NR	0	16WP	G15_085	FROM->TO	CIMARRON - DRAPER LAKE 345KV CKT 1	717	717	0.07359	101.8468	NORTHWEST TEXARKANA - VALLIANT 345KV CKT 1
FDNS	00NR	0	16WP	G15_085	FROM->TO	CIMARRON - DRAPER LAKE 345KV CKT 1	717	717	0.07359	101.8468	NORTHWEST TEXARKANA - VALLIANT 345KV CKT 1
FDNS	00NR	0	16WP	G15_085	FROM->TO	CIMARRON - DRAPER LAKE 345KV CKT 1	717	717	0.07532	101.8436	GEN562710 1-G15_022_3 0.5500
FDNS	00NR	0	16WP	G15_085	FROM->TO	CIMARRON - DRAPER LAKE 345KV CKT 1	717	717	0.076	101.8429	SEMINOLE (SEMINOL1) 345/138/14.4KV TRANSFORMER CKT 1
FDNS	00NR	0	16WP	G15_085	FROM->TO	CIMARRON - DRAPER LAKE 345KV CKT 1	717	717	0.07532	101.8407	GEN672310 1-POPLAR RIVER GENERATOR 1
FDNS	00NR	0	16WP	G15_085	FROM->TO	CIMARRON - DRAPER LAKE 345KV CKT 1	717	717	0.07532	101.8406	GEN672311 2-POPLAR RIVER GENERATOR 2
FDNS	00NR	0	16WP	G15_085	FROM->TO	CIMARRON - DRAPER LAKE 345KV CKT 1	717	717	0.07532	101.8304	GEN672306 6-BOUNDARY DAM GENERATOR 6
FDNS	00NR	0	16WP	G15_085	FROM->TO	CIMARRON - DRAPER LAKE 345KV CKT 1	717	717	0.07532	101.8297	GEN640011 2-GERALD GENTLEMAN STATION UNIT 2
FDNS	00NR	0	16WP	G15_085	FROM->TO	CIMARRON - DRAPER LAKE 345KV CKT 1	717	717	0.07532	101.8274	GEN542956 2-LACYGNE UNIT #2
FDNS	00NR	0	16WP	G15_085	FROM->TO	CIMARRON - DRAPER LAKE 345KV CKT 1	717	717	0.07532	101.8181	GEN659118 1-LARAMIE RIVER UNIT1
FDNS	00NR	0	16WP	G15_085	FROM->TO	CIMARRON - DRAPER LAKE 345KV CKT 1	717	717	0.07495	101.7929	ETNA - HARDEN 4 138.00 138KV CKT 1
FDNS	00NR	0	16WP	G15_085	FROM->TO	CIMARRON - DRAPER LAKE 345KV CKT 1	717	717	0.0765	101.7872	RENFROW7 345.00 - VIOLA 7 345.00 345KV CKT 1
FDNS	00NR	0	16WP	G15_085	FROM->TO	CIMARRON - DRAPER LAKE 345KV CKT 1	717	717	0.07658	101.7737	P12:138:OKGE:3TERM22
FDNS	00NR	0	16WP	G15_085	FROM->TO	CIMARRON - DRAPER LAKE 345KV CKT 1	717	717	0.07655	101.7718	DRAPER LAKE - SOONER TAP 138KV CKT 1
FDNS	00NR	0	16WP	G15_085	FROM->TO	CIMARRON - DRAPER LAKE 345KV CKT 1	717	717	0.07391	101.7634	P12:138:WFEC:MSL08
FDNS	00NR	0	16WP	G15_085	FROM->TO	CIMARRON - DRAPER LAKE 345KV CKT 1	717	717	0.07391	101.7516	FRANKLIN - PINK SW 138KV CKT 1
FDNS	00NR	0	16WP	G15_085	FROM->TO	CIMARRON - DRAPER LAKE 345KV CKT 1	717	717	0.07562	101.7502	P12:138:WFEC:MSL09
FDNS	00NR	0	16WP	G15_085	FROM->TO	CIMARRON - DRAPER LAKE 345KV CKT 1	717	717	0.07642	101.7466	OAKCREEK - WILD MARY 138KV CKT 1
FDNS	00NR	0	16WP	G15_085	FROM->TO	CIMARRON - DRAPER LAKE 345KV CKT 1	717	717	0.07532	101.7397	GEN542957 1-IATAN UNIT #1
FDNSLock	00NR	0	16WP	G15_085	FROM->TO	CIMARRON - DRAPER LAKE 345KV CKT 1	717	717	0.07532	101.7355	GEN681542 6-JP MADGETT

SOLUTION	GROUP	SCENARIO	SEASON	SOURCE	DIRECTION	MONITORED ELEMENT	RATEA (MVA)	RATEB(MVA)	TDF	TC%LOADING (% MVA)	CONTINGENCY
FDNS	00NR	0	16WP	G15_085	FROM->TO	CIMARRON - DRAPER LAKE 345KV CKT 1	717	717	0.07532	101.7124	GEN530690 1-PRWINDG1 0.6900
FDNS	00NR	0	16WP	G15_085	FROM->TO	CIMARRON - DRAPER LAKE 345KV CKT 1	717	717	0.07495	101.7075	ETNA - PARK LANE 138KV CKT 1
FDNS	00NR	0	16WP	G15_085	FROM->TO	CIMARRON - DRAPER LAKE 345KV CKT 1	717	717	0.07532	101.7	GEN645001 1-FORT CALHOUN 1
FDNS	00NR	0	16WP	G15_085	FROM->TO	CIMARRON - DRAPER LAKE 345KV CKT 1	717	717	0.07631	101.6997	HUNTERS7 345.00 - RENFROW7 345.00 345KV CKT 1
FDNS	00NR	0	16WP	G15_085	FROM->TO	CIMARRON - DRAPER LAKE 345KV CKT 1	717	717	0.07532	101.658	GEN542955 1-LACYGNE UNIT #1
FDNS	00NR	0	16WP	G15_085	FROM->TO	CIMARRON - DRAPER LAKE 345KV CKT 1	717	717	0.07532	101.6477	GEN562754 1-G15031_5 0.6900
FDNS	00NR	0	16WP	G15_085	FROM->TO	CIMARRON - DRAPER LAKE 345KV CKT 1	717	717	0.07532	101.6356	GEN562556 1-G14_046_3 0.3420
FDNS	00NR	0	16WP	G15_085	FROM->TO	CIMARRON - DRAPER LAKE 345KV CKT 1	717	717	0.07613	101.6321	SEMINOLE (SEMINOL2) 345/138/14.4KV TRANSFORMER CKT 1
FDNS	00NR	0	16WP	G15_085	FROM->TO	CIMARRON - DRAPER LAKE 345KV CKT 1	717	717	0.07532	101.6108	GEN661015 1-COYOTE
FDNS	00NR	0	16WP	G15_085	FROM->TO	CIMARRON - DRAPER LAKE 345KV CKT 1	717	717	0.07532	101.6042	GEN562756 1-G15031_7 0.6900
FDNS	00NR	0	16WP	G15_085	FROM->TO	CIMARRON - DRAPER LAKE 345KV CKT 1	717	717	0.07532	101.6013	GEN532653 1-JEFFREY ENERGY CENTER UNIT 3
FDNS	00NR	0	16WP	G15_085	FROM->TO	CIMARRON - DRAPER LAKE 345KV CKT 1	717	717	0.07532	101.6012	GEN532652 1-JEFFREY ENERGY CENTER UNIT 2
FDNS	00NR	0	16WP	G15_085	FROM->TO	CIMARRON - DRAPER LAKE 345KV CKT 1	717	717	0.07532	101.5971	GEN532651 1-JEFFREY ENERGY CENTER UNIT 1
FDNS	00NR	0	16WP	G15_085	FROM->TO	CIMARRON - DRAPER LAKE 345KV CKT 1	717	717	0.07532	101.5894	GEN562974 1-G15060_5 0.6900
FDNS	00NR	0	16WP	G15_085	FROM->TO	CIMARRON - DRAPER LAKE 345KV CKT 1	717	717	0.07532	101.5883	GEN563142 1-G15079_3 0.5500
FDNS	00NR	0	16WP	G15_085	FROM->TO	CIMARRON - DRAPER LAKE 345KV CKT 1	717	717	0.07532	101.5883	GEN563151 1-G15080_2 0.5500
FDNS	00NR	0	16WP	G15_085	FROM->TO	CIMARRON - DRAPER LAKE 345KV CKT 1	717	717	0.07532	101.5778	GEN563042 1-G15068_3 0.6900
FDNS	00NR	0	16WP	G15_085	FROM->TO	CIMARRON - DRAPER LAKE 345KV CKT 1	717	717	0.07532	101.5733	GEN562973 1-G15060_4 0.6900
FDNS	00NR	0	16WP	G15_085	FROM->TO	CIMARRON - DRAPER LAKE 345KV CKT 1	717	717	0.07532	101.5428	GEN562078 1-G11_051_3 0.6900
FDNS	00NR	0	16WP	G15_085	FROM->TO	CIMARRON - DRAPER LAKE 345KV CKT 1	717	717	0.07532	101.531	GEN562691 1-G15_015_3 0.6900
FDNS	00NR	0	16WP	G15_085	FROM->TO	CIMARRON - DRAPER LAKE 345KV CKT 1	717	717	0.07642	101.52	AIRDEPT4 138.00 - WILD MARY 138KV CKT 1
FDNS	00NR	0	16WP	G15_085	FROM->TO	CIMARRON - DRAPER LAKE 345KV CKT 1	717	717	0.07536	101.4938	PARK LANE - SEMINOLE 138KV CKT 1
FDNS	00NR	0	16WP	G15_085	FROM->TO	CIMARRON - DRAPER LAKE 345KV CKT 1	717	717	0.07532	101.4886	GEN562655 1-G14_074_3 0.6900
FDNS	00NR	0	16WP	G15_085	FROM->TO	CIMARRON - DRAPER LAKE 345KV CKT 1	717	717	0.07532	101.4881	GEN562762 1-G15033_3 0.6900
FDNS	00NR	0	16WP	G15_085	FROM->TO	CIMARRON - DRAPER LAKE 345KV CKT 1	717	717	0.07532	101.4826	GEN657748 1-YOUNG 2 GENERATOR
FDNS	00NR	0	16WP	G15_085	FROM->TO	CIMARRON - DRAPER LAKE 345KV CKT 1	717	717	0.07391	101.468	FRANKLIN - FRANKLIN SW 138KV CKT 1
FDNS	00NR	0	16WP	G15_085	FROM->TO	CIMARRON - DRAPER LAKE 345KV CKT 1	717	717	0.07532	101.4312	GEN527901 1-HOBBS PLANT #1 (CT)
FDNS	00NR	0	16WP	G15_085	FROM->TO	CIMARRON - DRAPER LAKE 345KV CKT 1	717	717	0.07532	101.4312	GEN527902 1-HOBBS PLANT #2 (CT)
FDNS	00NR	0	16WP	G15_085	FROM->TO	CIMARRON - DRAPER LAKE 345KV CKT 1	717	717	0.07532	101.405	GEN563273 2-G15093_4 0.6900
FDNS	00NR	0	16WP	G15_085	FROM->TO	CIMARRON - DRAPER LAKE 345KV CKT 1	717	717	0.07532	101.389	GEN563043 1-G15068_4 0.6900
FDNS	00NR	0	16WP	G15_085	FROM->TO	CIMARRON - DRAPER LAKE 345KV CKT 1	717	717	0.07224	101.3853	LYDIA - WELSH 345KV CKT 1
FDNS	00NR	0	16WP	G15_085	FROM->TO	CIMARRON - DRAPER LAKE 345KV CKT 1	717	717	0.07224	101.3853	LYDIA - WELSH 345KV CKT 1
FDNS	00NR	0	16WP	G15_085	FROM->TO	CIMARRON - DRAPER LAKE 345KV CKT 1	717	717	0.07532	101.3678	GEN563052 1-G15069_3 0.6900
FDNS	00NR	0	16WP	G15_085	FROM->TO	CIMARRON - DRAPER LAKE 345KV CKT 1	717	717	0.07532	101.3481	GEN525845 1-ELK_2 1 138.00
FDNS	00NR	0	16WP	G15_085	FROM->TO	CIMARRON - DRAPER LAKE 345KV CKT 1	717	717	0.07532	101.3447	GEN525844 1-ELK_1 118.000
FDNS	00NR	0	16WP	G15_085	FROM->TO	CIMARRON - DRAPER LAKE 345KV CKT 1	717	717	0.07532	101.3169	GEN563242 1-G15090_3 0.6900
FDNS	00NR	0	16WP	G15_085	FROM->TO	CIMARRON - DRAPER LAKE 345KV CKT 1	717	717	0.07532	101.298	GEN526333 1-JONES GEN #3 21 KV
FDNS	00NR	0	16WP	G15_085	FROM->TO	CIMARRON - DRAPER LAKE 345KV CKT 1	717	717	0.07532	101.298	GEN526334 1-JONES_4 116.500
FDNS	00NR	0	16WP	G15_085	FROM->TO	CIMARRON - DRAPER LAKE 345KV CKT 1	717	717	0.07104	101.2942	P12:138:AEPW-OGE:CORNVIL4:CIMARON4
FDNS	00NR	0	16WP	G15_085	FROM->TO	CIMARRON - DRAPER LAKE 345KV CKT 1	717	717	0.07532	101.2934	GEN620315 1-BIG STONE GEN
FDNS	00NR	0	16WP	G15_085	FROM->TO	CIMARRON - DRAPER LAKE 345KV CKT 1	717	717	0.07642	101.2904	AIRDEPT4 138.00 - GM 138KV CKT 1
FDNS	00NR	0	16WP	G15_085	FROM->TO	CIMARRON - DRAPER LAKE 345KV CKT 1	717	717	0.07532	101.2796	GEN562772 1-G15034_3 0.6900
FDNS	00NR	0	16WP	G15_085	FROM->TO	CIMARRON - DRAPER LAKE 345KV CKT 1	717	717	0.07631	101.2661	HUNTERS7 345.00 - WOODRING 345KV CKT 1
FDNS	00NR	0	16WP	G15_085	FROM->TO	CIMARRON - DRAPER LAKE 345KV CKT 1	717	717	0.07532	101.2635	GEN523971 1-HARRINGTON GEN #1 24 KV
FDNS	00NR	0	16WP	G15_085	FROM->TO	CIMARRON - DRAPER LAKE 345KV CKT 1	717	717	0.07532	101.2635	GEN523972 1-HARRINGTON GEN #2 24 KV
FDNS	00NR	0	16WP	G15_085	FROM->TO	CIMARRON - DRAPER LAKE 345KV CKT 1	717	717	0.07532	101.2635	GEN523973 1-HARRINGTON GEN #3 24 KV
FDNS	00NR	0	16WP	G15_085	FROM->TO	CIMARRON - DRAPER LAKE 345KV CKT 1	717	717	0.07572	101.2533	RANCHRD7 345.00 - SOONER 345KV CKT 1
FDNS	00NR	0	16WP	G15_085	FROM->TO	CIMARRON - DRAPER LAKE 345KV CKT 1	717	717	0.07532	101.2384	GEN600004 2-PRAIRIE ISLAND G2
FDNS	00NR	0	16WP	G15_085	FROM->TO	CIMARRON - DRAPER LAKE 345KV CKT 1	717	717	0.07532	101.2354	GEN600003 1-PRAIRIE ISLAND G1
FDNSLock	00NR	0	16WP	G15_085	FROM->TO	CIMARRON - DRAPER LAKE 345KV CKT 1	717	717	0.07532	101.2218	GEN600006 1-AS KING
FDNSLock	00NR	0	16WP	G15_085	FROM->TO	CIMARRON - DRAPER LAKE 345KV CKT 1	717	717	0.07532	101.201	GEN636641 1-LOUISA UNIT 1
FDNS	00NR	0	16WP	G15_085	FROM->TO	CIMARRON - DRAPER LAKE 345KV CKT 1	717	717	0.05869	101.136	MUSKOGEE - SEMINOLE 345KV CKT 1
FDNS	00NR	0	16WP	G15_085	FROM->TO	CIMARRON - DRAPER LAKE 345KV CKT 1	717	717	0.07532	101.1035	GEN563292 1-G15095_3 0.6900
FDNS	00NR	0	16WP	G15_085	FROM->TO	CIMARRON - DRAPER LAKE 345KV CKT 1	717	717	0.07532	101.1	GEN542962 2-IATAN UNIT #2
FDNS	00NR	0	16WP	G15_085	FROM->TO	CIMARRON - DRAPER LAKE 345KV CKT 1	717	717	0.07532	101.1	GEN615002 2-COAL CREEK
FDNS	00NR	0	16WP	G15_085	FROM->TO	CIMARRON - DRAPER LAKE 345KV CKT 1	717	717	0.08135	101.0885	NORTHWEST - SPRING CREEK 345KV CKT 1
FDNS	00NR	0	16WP	G15_085	FROM->TO	CIMARRON - DRAPER LAKE 345KV CKT 1	717	717	0.07532	101.0833	GEN600005 1-MONTICELLO
FDNS	00NR	0	16WP	G15_085	FROM->TO	CIMARRON - DRAPER LAKE 345KV CKT 1	717	717	0.07642	101.082	DRAPER LAKE - GM 138KV CKT 1
FDNS	00NR	0	16WP	G15_085	FROM->TO	CIMARRON - DRAPER LAKE 345KV CKT 1	717	717	0.07532	101.0628	GEN527166 1-MUSTANG_6 118.000
FDNS	00NR	0	16WP	G15_085	FROM->TO	CIMARRON - DRAPER LAKE 345KV CKT 1	717	717	0.07532	101.0553	GEN525562 1-TOLK GEN #2 24 KV
FDNS	00NR	0	16WP	G15_085	FROM->TO	CIMARRON - DRAPER LAKE 345KV CKT 1	717	717	0.08135	101.0485	SOONER - SPRING CREEK 345KV CKT 1
FDNS	00NR	0	16WP	G15_085	FROM->TO	CIMARRON - DRAPER LAKE 345KV CKT 1	717	717	0.0715	101.0368	CLARKSVILLE - MUSKOGEE 345KV CKT 1
FDNS	00NR	0	16WP	G15_085	FROM->TO	CIMARRON - DRAPER LAKE 345KV CKT 1	717	717	0.0715	101.0368	CLARKSVILLE - MUSKOGEE 345KV CKT 1
FDNS	00NR	0	16WP	G15_085	FROM->TO	CIMARRON - DRAPER LAKE 345KV CKT 1	717	717	0.07532	101.0116	GEN562952 1-G15057_3 0.6500
FDNS	00NR	0	16WP	G15_085	FROM->TO	CIMARRON - DRAPER LAKE 345KV CKT 1	717	717	0.07532	101.0001	GEN563272 1-G15093_3 0.6900
FDNS	00NR	0	16WP	G15_085	FROM->TO	CIMARRON - DRAPER LAKE 345KV CKT 1	717	717	0.07532	101	GEN629074 1-ARNOLD LOWSIDE OF GSU XFMR
FDNS	00NR	0	16WP	G15_085	FROM->TO	CIMARRON - DRAPER LAKE 345KV CKT 1	717	717	0.07532	100.9585	GEN635213 3-NEAL UNIT 3
FDNS	00NR	0	16WP	G15_085	FROM->TO	CIMARRON - DRAPER LAKE 345KV CKT 1	717	717	0.0799	100.9479	FRANKLIN SW - MIDWEST TAP 138KV CKT 1
FDNS	00NR	0	16WP	G15_085	FROM->TO	CIMARRON - DRAPER LAKE 345KV CKT 1	717	717	0.0706	100.9426	DRAPER LAKE - SEMINOLE 345KV CKT 3
FDNS	00NR	0	16WP	G15_085	FROM->TO	CIMARRON - DRAPER LAKE 345KV CKT 1	717	717	0.07532	100.9128	GEN562892 1-G15048_3 0.6900
FDNS	00NR	0	16WP	G15_085	FROM->TO	CIMARRON - DRAPER LAKE 345KV CKT 1	717	717	0.07532	100.9011	BIG STONE 230/24.0KV TRANSFORMER CKT 1
FDNS	00NR	0	16WP	G15_085	FROM->TO	CIMARRON - DRAPER LAKE 345KV CKT 1	717	717	0.07532	100.8665	GEN563173 1-G15082_3 0.6900
FDNS	00NR	0	16WP	G15_085	FROM->TO	CIMARRON - DRAPER LAKE 345KV CKT 1	717	717	0.07493	100.8575	CHAMBER SPRINGS - CLARKSVILLE 345KV CKT 1
FDNS	00NR	0	16WP	G15_085	FROM->TO	CIMARRON - DRAPER LAKE 345KV CKT 1	717	717	0.07532	100.8263	GEN562902 1-G15052_3 0.6900
FDNS	00NR	0	16WP	G15_085	FROM->TO	CIMARRON - DRAPER LAKE 345KV CKT 1	717	717	0.07155	100.8149	LYDIA - VALLIANT 345KV CKT 1
FDNS	00NR	0	16WP	G15_085	FROM->TO	CIMARRON - DRAPER LAKE 345KV CKT 1	717	717	0.07155	100.8149	LYDIA - VALLIANT 345KV CKT 1
FDNS	00NR	0	16WP	G15_085	FROM->TO	CIMARRON - DRAPER LAKE 345KV CKT 1	717	717	0.07532	100.81	GEN514805 1-SOONER UNIT 1
FDNS	00NR	0	16WP	G15_085	FROM->TO	CIMARRON - DRAPER LAKE 345KV CKT 1	717	717	0.07532	100.787	GEN527903 1-HOBBS PLANT #3 (ST)
FDNS	00NR	0	16WP	G15_085	FROM->TO	CIMARRON - DRAPER LAKE 345KV CKT 1	717	717	0.07532	100.7504	GEN525561 1-TOLK GEN #1 24 KV

SOLUTION	GROUP	SCENARIO	SEASON	SOURCE	DIRECTION	MONITORED ELEMENT	RATEA (MVA)	RATEB(MVA)	TDF	TC%LOADING (% MVA)	CONTINGENCY
FDNSLock	00NR	0	16WP	G15_085	FROM->TO	CIMARRON - DRAPER LAKE 345KV CKT 1	717	717	0.07532	100.7392	GEN600000 1-SHERBURNECNTY G1
FDNS	00NR	0	16WP	G15_085	FROM->TO	CIMARRON - DRAPER LAKE 345KV CKT 1	717	717	0.07371	100.6808	P12:138:OKGE:3TERM23
FDNS	00NR	0	16WP	G15_085	FROM->TO	CIMARRON - DRAPER LAKE 345KV CKT 1	717	717	0.07532	100.6578	GEN600001 2-SHERBURNE CNTY G2
FDNS	00NR	0	16WP	G15_085	FROM->TO	CIMARRON - DRAPER LAKE 345KV CKT 1	717	717	0.07371	100.6216	BARNES 4 138.00 - DRAPER LAKE 138KV CKT 1
FDNS	00NR	0	16WP	G15_085	FROM->TO	CIMARRON - DRAPER LAKE 345KV CKT 1	717	717	0.07532	100.6	GEN344225 1-1CAL G1 25.000
FDNS	00NR	0	16WP	G15_085	FROM->TO	CIMARRON - DRAPER LAKE 345KV CKT 1	717	717	0.07532	100.5641	GEN514806 1-SOONER UNIT 2
FDNSLock	00NR	0	16WP	G15_085	FROM->TO	CIMARRON - DRAPER LAKE 345KV CKT 1	717	717	0.07532	100.5438	GEN629075 1-OTTUMWA GENERATOR FOR OTTUMWA UNIT NO 1
FDNS	00NR	0	16WP	G15_085	FROM->TO	CIMARRON - DRAPER LAKE 345KV CKT 1	717	717	0.07532	100.5167	GEN563162 1-G15081_3 0.6900
FDNS	00NR	0	16WP	G15_085	FROM->TO	CIMARRON - DRAPER LAKE 345KV CKT 1	717	717	0.0777	100.3768	DRAPER LAKE (DRAPER2) 345/138/13.8KV TRANSFORMER CKT 1
FDNS	00NR	0	16WP	G15_085	FROM->TO	CIMARRON - DRAPER LAKE 345KV CKT 1	717	717	0.07532	100.3192	SHERBURNE CO 345/24.0KV TRANSFORMER CKT 1
FDNS	00NR	0	16WP	G15_085	FROM->TO	CIMARRON - DRAPER LAKE 345KV CKT 1	717	717	0.0785	100.2891	CIMARRON - MATHWSN7 345.00 345KV CKT 1
FDNS	00NR	0	16WP	G15_085	FROM->TO	CIMARRON - DRAPER LAKE 345KV CKT 1	717	717	0.0785	100.2891	CIMARRON - MATHWSN7 345.00 345KV CKT 2
FDNS	00NR	0	16WP	G15_085	FROM->TO	CIMARRON - DRAPER LAKE 345KV CKT 1	717	717	0.0777	100.286	DRAPER LAKE (DRAPER3) 345/138/13.8KV TRANSFORMER CKT 1
FDNS	00NR	0	16WP	G15_085	FROM->TO	CIMARRON - DRAPER LAKE 345KV CKT 1	717	717	0.0777	100.286	DRAPER LAKE (DRAPER4) 345/138/13.8KV TRANSFORMER CKT 1
FDNSLock	00NR	0	16WP	G15_085	FROM->TO	CIMARRON - DRAPER LAKE 345KV CKT 1	717	717	0.07532	100.2812	GEN635214 4-NEAL UNIT 4
FDNS	00NR	0	16WP	G15_085	FROM->TO	CIMARRON - DRAPER LAKE 345KV CKT 1	717	717	0.07532	100.2003	GEN562882 1-G15047_3 0.6900
FDNS	00NR	0	16WP	G15_085	FROM->TO	CIMARRON - DRAPER LAKE 345KV CKT 1	717	717	0.07532	100.1889	GEN600002 3-SHERBURNE CNTY G3
FDNS	00NR	0	16WP	G15_085	FROM->TO	CIMARRON - DRAPER LAKE 345KV CKT 1	717	717	0.07532	99.8	GEN635023 3-WALTER SCOTT UNIT 3
FDNS	00NR	0	16WP	G15_085	FROM->TO	CIMARRON - DRAPER LAKE 345KV CKT 1	717	717	0.07532	99.7	GEN562023 1-G11_020_3 0.6900
FDNS	00NR	0	16WP	G15_085	FROM->TO	CIMARRON - DRAPER LAKE 345KV CKT 1	717	717	0.07532	99.7	GEN562026 1-G11_019_3 0.6900
FDNS	00NR	0	16WP	G15_085	FROM->TO	CIMARRON - DRAPER LAKE 345KV CKT 1	717	717	0.07532	99.6	EASTDC - ERCOT EQUIVALENCE 345KV CKT 1
FDNS	00NR	0	16WP	G15_085	FROM->TO	CIMARRON - DRAPER LAKE 345KV CKT 1	717	717	0.06651	99.5	DRAPER LAKE - SEMINOLE 345KV CKT 1
FDNS	00NR	0	16WP	G15_085	FROM->TO	CIMARRON - DRAPER LAKE 345KV CKT 1	717	717	0.06651	99.5	DRAPER LAKE - SEMINOLE 345KV CKT 2
FDNS	00NR	0	20WP	G15_085	TO->FROM	CIMARRON - MINCO 345KV CKT 1	956	956	0.37456	113.1031	G14-057T 345.00 - SUNNYSIDE 345KV CKT 1
FDNS	00NR	0	16WP	G15_085	TO->FROM	CIMARRON - MINCO 345KV CKT 1	956	956	0.3754	112.6453	G14-057T 345.00 - SUNNYSIDE 345KV CKT 1
FDNS	00NR	0	17SP	G15_085	TO->FROM	CLEAVELAND - CLEVLND 4 138.00 138KV CKT Z1	305	371	0.04193	110.1318	CLEVELAND - TULSA NORTH 345KV CKT 1
FDNS	00NR	0	17SP	G15_085	TO->FROM	CLEAVELAND - CLEVLND 4 138.00 138KV CKT Z1	305	371	0.04193	110.1318	CLEVELAND - TULSA NORTH 345KV CKT 1
FDNS	00NR	0	20SP	G15_085	TO->FROM	CLEAVELAND - CLEVLND 4 138.00 138KV CKT Z1	305	371	0.0406	109.3313	CLEVELAND - TULSA NORTH 345KV CKT 1
FDNS	00NR	0	20SP	G15_085	TO->FROM	CLEAVELAND - CLEVLND 4 138.00 138KV CKT Z1	305	371	0.0406	109.3313	CLEVELAND - TULSA NORTH 345KV CKT 1
FDNS	00NR	0	20WP	G15_085	FROM->TO	ELDORADO - ELDORADO JCT 69KV CKT 1	29	32	0.42772	235.3612	G15085_T 138.00 - RUSSELL 138KV CKT 1
FDNS	00NR	0	16WP	G15_085	FROM->TO	ELDORADO - ELDORADO JCT 69KV CKT 1	29	32	0.42768	229.6961	G15085_T 138.00 - RUSSELL 138KV CKT 1
FDNS	07NR	0	20L	G15_085	FROM->TO	ELDORADO - ELDORADO JCT 69KV CKT 1	22	27	0.42742	227.5666	G15085_T 138.00 - RUSSELL 138KV CKT 1
FDNS	07ALL	0	20L	G15_085	FROM->TO	ELDORADO - ELDORADO JCT 69KV CKT 1	22	27	0.42541	218.3703	G15085_T 138.00 - RUSSELL 138KV CKT 1
FDNS	00NR	0	17SP	G15_085	FROM->TO	ELDORADO - ELDORADO JCT 69KV CKT 1	22	27	0.42781	218.0255	G15085_T 138.00 - RUSSELL 138KV CKT 1
FDNS	00NR	0	20SP	G15_085	FROM->TO	ELDORADO - ELDORADO JCT 69KV CKT 1	22	27	0.42782	217.2361	G15085_T 138.00 - RUSSELL 138KV CKT 1
FDNS	07NR	0	17G	G15_085	FROM->TO	ELDORADO - ELDORADO JCT 69KV CKT 1	22	27	0.42768	213.5492	G15085_T 138.00 - RUSSELL 138KV CKT 1
FDNS	07ALL	0	17G	G15_085	FROM->TO	ELDORADO - ELDORADO JCT 69KV CKT 1	22	27	0.42591	205.7584	G15085_T 138.00 - RUSSELL 138KV CKT 1
FDNS	07ALL	0	20WP	G15_085	FROM->TO	ELDORADO - ELDORADO JCT 69KV CKT 1	29	32	0.42574	187.6239	G15085_T 138.00 - RUSSELL 138KV CKT 1
FDNS	07ALL	0	17SP	G15_085	FROM->TO	ELDORADO - ELDORADO JCT 69KV CKT 1	22	27	0.42595	180.5242	G15085_T 138.00 - RUSSELL 138KV CKT 1
FDNS	07ALL	0	20SP	G15_085	FROM->TO	ELDORADO - ELDORADO JCT 69KV CKT 1	22	27	0.42591	179.5693	G15085_T 138.00 - RUSSELL 138KV CKT 1
FDNS	07ALL	0	16WP	G15_085	FROM->TO	ELDORADO - ELDORADO JCT 69KV CKT 1	29	32	0.42595	179.0768	G15085_T 138.00 - RUSSELL 138KV CKT 1
FDNS	00NR	0	25SP	G15_085	FROM->TO	ELDORADO - ELDORADO JCT 69KV CKT 1	22	27	0.42756	157.9422	G15085_T 138.00 - RUSSELL 138KV CKT 1
FDNS	00NR	0	20WP	G15_085	FROM->TO	ELDORADO - ELDORADO JCT 69KV CKT 1	29	32	0.21244	128.2162	ALTUS JUNCTION - RUSSELL 138KV CKT 1
FDNS	00NR	0	20WP	G15_085	FROM->TO	ELDORADO - ELDORADO JCT 69KV CKT 1	29	32	0.21244	128.2162	ALTUS JUNCTION - RUSSELL 138KV CKT 1
FDNS	07ALL	0	25SP	G15_085	FROM->TO	ELDORADO - ELDORADO JCT 69KV CKT 1	22	27	0.42601	126.8067	G15085_T 138.00 - RUSSELL 138KV CKT 1
FDNS	00NR	0	16WP	G15_085	FROM->TO	ELDORADO - ELDORADO JCT 69KV CKT 1	29	32	0.21241	125.1324	ALTUS JUNCTION - RUSSELL 138KV CKT 1
FDNS	00NR	0	16WP	G15_085	FROM->TO	ELDORADO - ELDORADO JCT 69KV CKT 1	29	32	0.21241	125.1324	ALTUS JUNCTION - RUSSELL 138KV CKT 1
FDNS	07NR	0	20L	G15_085	FROM->TO	ELDORADO - ELDORADO JCT 69KV CKT 1	22	27	0.21226	120.6131	ALTUS JUNCTION - RUSSELL 138KV CKT 1
FDNS	07NR	0	20L	G15_085	FROM->TO	ELDORADO - ELDORADO JCT 69KV CKT 1	22	27	0.21226	120.6131	ALTUS JUNCTION - RUSSELL 138KV CKT 1
FDNS	07ALL	0	20L	G15_085	FROM->TO	ELDORADO - ELDORADO JCT 69KV CKT 1	22	27	0.21105	115.1738	ALTUS JUNCTION - RUSSELL 138KV CKT 1
FDNS	07ALL	0	20L	G15_085	FROM->TO	ELDORADO - ELDORADO JCT 69KV CKT 1	22	27	0.21105	115.1738	ALTUS JUNCTION - RUSSELL 138KV CKT 1
FDNS	00NR	0	17SP	G15_085	FROM->TO	ELDORADO - ELDORADO JCT 69KV CKT 1	22	27	0.21247	114.6879	ALTUS JUNCTION - RUSSELL 138KV CKT 1
FDNS	00NR	0	17SP	G15_085	FROM->TO	ELDORADO - ELDORADO JCT 69KV CKT 1	22	27	0.21247	114.6879	ALTUS JUNCTION - RUSSELL 138KV CKT 1
FDNS	00NR	0	20SP	G15_085	FROM->TO	ELDORADO - ELDORADO JCT 69KV CKT 1	22	27	0.2125	113.7958	ALTUS JUNCTION - RUSSELL 138KV CKT 1
FDNS	00NR	0	20SP	G15_085	FROM->TO	ELDORADO - ELDORADO JCT 69KV CKT 1	22	27	0.2125	113.7958	ALTUS JUNCTION - RUSSELL 138KV CKT 1
FDNS	07NR	0	17G	G15_085	FROM->TO	ELDORADO - ELDORADO JCT 69KV CKT 1	22	27	0.21241	111.3408	ALTUS JUNCTION - RUSSELL 138KV CKT 1
FDNS	07NR	0	17G	G15_085	FROM->TO	ELDORADO - ELDORADO JCT 69KV CKT 1	22	27	0.21241	111.3408	ALTUS JUNCTION - RUSSELL 138KV CKT 1
FDNS	07ALL	0	17G	G15_085	FROM->TO	ELDORADO - ELDORADO JCT 69KV CKT 1	22	27	0.21135	106.0748	ALTUS JUNCTION - RUSSELL 138KV CKT 1
FDNS	00NR	0	20WP	G15_085	TO->FROM	ELDORADO - LAKE PAULINE 69KV CKT 1	26	33	0.42772	232.3957	G15085_T 138.00 - RUSSELL 138KV CKT 1
FDNS	00NR	0	16WP	G15_085	TO->FROM	ELDORADO - LAKE PAULINE 69KV CKT 1	26	33	0.42768	226.8661	G15085_T 138.00 - RUSSELL 138KV CKT 1
FDNS	07NR	0	20L	G15_085	TO->FROM	ELDORADO - LAKE PAULINE 69KV CKT 1	26	33	0.42742	188.2443	G15085_T 138.00 - RUSSELL 138KV CKT 1
FDNS	07ALL	0	20WP	G15_085	TO->FROM	ELDORADO - LAKE PAULINE 69KV CKT 1	26	33	0.42574	185.9825	G15085_T 138.00 - RUSSELL 138KV CKT 1
FDNS	00NR	0	20SP	G15_085	TO->FROM	ELDORADO - LAKE PAULINE 69KV CKT 1	26	33	0.42782	185.1796	G15085_T 138.00 - RUSSELL 138KV CKT 1
FDNS	00NR	0	17SP	G15_085	TO->FROM	ELDORADO - LAKE PAULINE 69KV CKT 1	26	33	0.42781	185.1542	G15085_T 138.00 - RUSSELL 138KV CKT 1
FDNS	07ALL	0	20L	G15_085	TO->FROM	ELDORADO - LAKE PAULINE 69KV CKT 1	26	33	0.42541	180.7235	G15085_T 138.00 - RUSSELL 138KV CKT 1
FDNS	07NR	0	17G	G15_085	TO->FROM	ELDORADO - LAKE PAULINE 69KV CKT 1	26	33	0.42768	177.8985	G15085_T 138.00 - RUSSELL 138KV CKT 1
FDNS	07ALL	0	16WP	G15_085	TO->FROM	ELDORADO - LAKE PAULINE 69KV CKT 1	26	33	0.42595	177.6684	G15085_T 138.00 - RUSSELL 138KV CKT 1
FDNS	07ALL	0	17G	G15_085	TO->FROM	ELDORADO - LAKE PAULINE 69KV CKT 1	26	33	0.42591	171.5496	G15085_T 138.00 - RUSSELL 138KV CKT 1
FDNS	07ALL	0	17SP	G15_085	TO->FROM	ELDORADO - LAKE PAULINE 69KV CKT 1	26	33	0.42595	154.3965	G15085_T 138.00 - RUSSELL 138KV CKT 1
FDNS	07ALL	0	20SP	G15_085	TO->FROM	ELDORADO - LAKE PAULINE 69KV CKT 1	26	33	0.42591	154.2536	G15085_T 138.00 - RUSSELL 138KV CKT 1
FDNS	00NR	0	25SP	G15_085	TO->FROM	ELDORADO - LAKE PAULINE 69KV CKT 1	26	33	0.42756	135.8108	G15085_T 138.00 - RUSSELL 138KV CKT 1
FDNS	00NR	0	20WP	G15_085	TO->FROM	ELDORADO - LAKE PAULINE 69KV CKT 1	26	33	0.21244	128.3517	ALTUS JUNCTION - RUSSELL 138KV CKT 1
FDNS	00NR	0	20WP	G15_085	TO->FROM	ELDORADO - LAKE PAULINE 69KV CKT 1	26	33	0.21244	128.3517	ALTUS JUNCTION - RUSSELL 138KV CKT 1
FDNS	00NR	0	16WP	G15_085	TO->FROM	ELDORADO - LAKE PAULINE 69KV CKT 1	26	33	0.21241	125.3676	ALTUS JUNCTION - RUSSELL 138KV CKT 1
FDNS	00NR	0	16WP	G15_085	TO->FROM	ELDORADO - LAKE PAULINE 69KV CKT 1	26	33	0.21241	125.3676	ALTUS JUNCTION - RUSSELL 138KV CKT 1
FDNS	07ALL	0	25SP	G15_085	TO->FROM	ELDORADO - LAKE PAULINE 69KV CKT 1	26	33	0.42601	110.3013	G15085_T 138.00 - RUSSELL 138KV CKT 1
FDNS	07NR	0	20L	G15_085	TO->FROM	ELDORADO - LAKE PAULINE 69KV CKT 1	26	33	0.21226	100.72	ALTUS JUNCTION - RUSSELL 138KV CKT 1
FDNS	07NR	0	20L	G15_085	TO->FROM	ELDORADO - LAKE PAULINE 69KV CKT 1	26	33	0.21226	100.72	ALTUS JUNCTION - RUSSELL 138KV CKT 1
FDNS	00NR	0	20SP	G15_085	TO->FROM	ELDORADO - LAKE PAULINE 69KV CKT 1	26	33	0.2125	100.4725	ALTUS JUNCTION - RUSSELL 138KV CKT 1

SOLUTION	GROUP	SCENARIO	SEASON	SOURCE	DIRECTION	MONITORED ELEMENT	RATEA (MVA)	RATEB(MVA)	TDF	TC%LOADING (% MVA)	CONTINGENCY
FDNS	00NR	0	20SP	G15_085	TO->FROM	ELDORADO - LAKE PAULINE 69KV CKT 1	26	33	0.2125	100.4725	ALTUS JUNCTION - RUSSELL 138KV CKT 1
FDNS	00NR	0	17SP	G15_085	TO->FROM	ELDORADO - LAKE PAULINE 69KV CKT 1	26	33	0.21247	100.4211	ALTUS JUNCTION - RUSSELL 138KV CKT 1
FDNS	00NR	0	17SP	G15_085	TO->FROM	ELDORADO - LAKE PAULINE 69KV CKT 1	26	33	0.21247	100.4211	ALTUS JUNCTION - RUSSELL 138KV CKT 1
FDNS	07ALL	0	20WP	G15_085	TO->FROM	ELDORADO - LAKE PAULINE 69KV CKT 1	26	33	0.21125	100.2782	ALTUS JUNCTION - RUSSELL 138KV CKT 1
FDNS	07ALL	0	20WP	G15_085	TO->FROM	ELDORADO - LAKE PAULINE 69KV CKT 1	26	33	0.21125	100.2782	ALTUS JUNCTION - RUSSELL 138KV CKT 1
FDNS	00NR	0	20WP	G15_085	FROM->TO	ELDORADO JCT - GYPSUM 69KV CKT 1	29	32	0.42772	231.5083	G15085_T 138.00 - RUSSELL 138KV CKT 1
FDNS	00NR	0	16WP	G15_085	FROM->TO	ELDORADO JCT - GYPSUM 69KV CKT 1	29	32	0.42768	225.8441	G15085_T 138.00 - RUSSELL 138KV CKT 1
FDNS	07NR	0	20L	G15_085	FROM->TO	ELDORADO JCT - GYPSUM 69KV CKT 1	22	27	0.42742	224.1071	G15085_T 138.00 - RUSSELL 138KV CKT 1
FDNS	07ALL	0	20L	G15_085	FROM->TO	ELDORADO JCT - GYPSUM 69KV CKT 1	22	27	0.42541	214.8687	G15085_T 138.00 - RUSSELL 138KV CKT 1
FDNS	00NR	0	17SP	G15_085	FROM->TO	ELDORADO JCT - GYPSUM 69KV CKT 1	22	27	0.42781	208.9731	G15085_T 138.00 - RUSSELL 138KV CKT 1
FDNS	07NR	0	17G	G15_085	FROM->TO	ELDORADO JCT - GYPSUM 69KV CKT 1	22	27	0.42768	208.5391	G15085_T 138.00 - RUSSELL 138KV CKT 1
FDNS	00NR	0	20SP	G15_085	FROM->TO	ELDORADO JCT - GYPSUM 69KV CKT 1	22	27	0.42782	207.2902	G15085_T 138.00 - RUSSELL 138KV CKT 1
FDNS	07ALL	0	17G	G15_085	FROM->TO	ELDORADO JCT - GYPSUM 69KV CKT 1	22	27	0.42591	200.6398	G15085_T 138.00 - RUSSELL 138KV CKT 1
FDNS	07ALL	0	20WP	G15_085	FROM->TO	ELDORADO JCT - GYPSUM 69KV CKT 1	29	32	0.42574	183.5986	G15085_T 138.00 - RUSSELL 138KV CKT 1
FDNS	07ALL	0	16WP	G15_085	FROM->TO	ELDORADO JCT - GYPSUM 69KV CKT 1	29	32	0.42595	175.0715	G15085_T 138.00 - RUSSELL 138KV CKT 1
FDNS	07ALL	0	17SP	G15_085	FROM->TO	ELDORADO JCT - GYPSUM 69KV CKT 1	22	27	0.42595	171.2919	G15085_T 138.00 - RUSSELL 138KV CKT 1
FDNS	07ALL	0	20SP	G15_085	FROM->TO	ELDORADO JCT - GYPSUM 69KV CKT 1	22	27	0.42591	169.4286	G15085_T 138.00 - RUSSELL 138KV CKT 1
FDNS	00NR	0	25SP	G15_085	FROM->TO	ELDORADO JCT - GYPSUM 69KV CKT 1	22	27	0.42756	148.8559	G15085_T 138.00 - RUSSELL 138KV CKT 1
FDNS	00NR	0	20WP	G15_085	FROM->TO	ELDORADO JCT - GYPSUM 69KV CKT 1	29	32	0.21244	123.9841	ALTUS JUNCTION - RUSSELL 138KV CKT 1
FDNS	00NR	0	20WP	G15_085	FROM->TO	ELDORADO JCT - GYPSUM 69KV CKT 1	29	32	0.21244	123.9841	ALTUS JUNCTION - RUSSELL 138KV CKT 1
FDNS	00NR	0	16WP	G15_085	FROM->TO	ELDORADO JCT - GYPSUM 69KV CKT 1	29	32	0.21241	120.856	ALTUS JUNCTION - RUSSELL 138KV CKT 1
FDNS	00NR	0	16WP	G15_085	FROM->TO	ELDORADO JCT - GYPSUM 69KV CKT 1	29	32	0.21241	120.856	ALTUS JUNCTION - RUSSELL 138KV CKT 1
FDNS	07ALL	0	25SP	G15_085	FROM->TO	ELDORADO JCT - GYPSUM 69KV CKT 1	22	27	0.42601	117.7703	G15085_T 138.00 - RUSSELL 138KV CKT 1
FDNS	07NR	0	20L	G15_085	FROM->TO	ELDORADO JCT - GYPSUM 69KV CKT 1	22	27	0.21226	116.9607	ALTUS JUNCTION - RUSSELL 138KV CKT 1
FDNS	07NR	0	20L	G15_085	FROM->TO	ELDORADO JCT - GYPSUM 69KV CKT 1	22	27	0.21226	116.9607	ALTUS JUNCTION - RUSSELL 138KV CKT 1
FDNS	07ALL	0	20L	G15_085	FROM->TO	ELDORADO JCT - GYPSUM 69KV CKT 1	22	27	0.21105	111.3092	ALTUS JUNCTION - RUSSELL 138KV CKT 1
FDNS	07ALL	0	20L	G15_085	FROM->TO	ELDORADO JCT - GYPSUM 69KV CKT 1	22	27	0.21105	111.3092	ALTUS JUNCTION - RUSSELL 138KV CKT 1
FDNS	07NR	0	17G	G15_085	FROM->TO	ELDORADO JCT - GYPSUM 69KV CKT 1	22	27	0.21241	105.9597	ALTUS JUNCTION - RUSSELL 138KV CKT 1
FDNS	07NR	0	17G	G15_085	FROM->TO	ELDORADO JCT - GYPSUM 69KV CKT 1	22	27	0.21241	105.9597	ALTUS JUNCTION - RUSSELL 138KV CKT 1
FDNS	00NR	0	17SP	G15_085	FROM->TO	ELDORADO JCT - GYPSUM 69KV CKT 1	22	27	0.21247	105.2274	ALTUS JUNCTION - RUSSELL 138KV CKT 1
FDNS	00NR	0	17SP	G15_085	FROM->TO	ELDORADO JCT - GYPSUM 69KV CKT 1	22	27	0.21247	105.2274	ALTUS JUNCTION - RUSSELL 138KV CKT 1
FDNS	00NR	0	20SP	G15_085	FROM->TO	ELDORADO JCT - GYPSUM 69KV CKT 1	22	27	0.2125	103.1145	ALTUS JUNCTION - RUSSELL 138KV CKT 1
FDNS	00NR	0	20SP	G15_085	FROM->TO	ELDORADO JCT - GYPSUM 69KV CKT 1	22	27	0.2125	103.1145	ALTUS JUNCTION - RUSSELL 138KV CKT 1
FDNS	07ALL	0	17G	G15_085	FROM->TO	ELDORADO JCT - GYPSUM 69KV CKT 1	22	27	0.21135	100.5522	ALTUS JUNCTION - RUSSELL 138KV CKT 1
FDNS	00NR	0	16WP	G15_085	FROM->TO	G14-057T 345.00 - SUNNYSIDE 345KV CKT 1	717	789	0.29307	141.3261	CIMARRON - MINCO 345KV CKT 1
FDNS	00NR	0	20WP	G15_085	FROM->TO	G14-057T 345.00 - SUNNYSIDE 345KV CKT 1	717	789	0.29389	139.8556	CIMARRON - MINCO 345KV CKT 1
FDNS	00NR	0	16WP	G15_085	FROM->TO	G14-057T 345.00 - SUNNYSIDE 345KV CKT 1	717	789	0.29307	130.2319	GRACEMONT - MINCO 345KV CKT 1
FDNS	00NR	0	20WP	G15_085	FROM->TO	G14-057T 345.00 - SUNNYSIDE 345KV CKT 1	717	789	0.29389	128.6283	GRACEMONT - MINCO 345KV CKT 1
FDNS	00NR	0	16WP	G15_085	FROM->TO	G14-057T 345.00 - SUNNYSIDE 345KV CKT 1	717	789	0.21855	125.8516	PITTSBURG - SEMINOLE 345KV CKT 1
FDNS	00NR	0	16WP	G15_085	FROM->TO	G14-057T 345.00 - SUNNYSIDE 345KV CKT 1	717	789	0.21855	125.8516	PITTSBURG - SEMINOLE 345KV CKT 1
FDNS	00NR	0	16WP	G15_085	FROM->TO	G14-057T 345.00 - SUNNYSIDE 345KV CKT 1	717	789	0.20384	125.7317	BASE CASE
FDNS	00NR	0	20WP	G15_085	FROM->TO	G14-057T 345.00 - SUNNYSIDE 345KV CKT 1	717	789	0.20527	123.4961	BASE CASE
FDNS	00NR	0	16WP	G15_085	FROM->TO	G14-057T 345.00 - SUNNYSIDE 345KV CKT 1	717	789	0.21083	123.2027	CIMARRON - DRAPER LAKE 345KV CKT 1
FDNS	00NR	0	20WP	G15_085	FROM->TO	G14-057T 345.00 - SUNNYSIDE 345KV CKT 1	717	789	0.22049	122.942	PITTSBURG - SEMINOLE 345KV CKT 1
FDNS	00NR	0	20WP	G15_085	FROM->TO	G14-057T 345.00 - SUNNYSIDE 345KV CKT 1	717	789	0.22049	122.942	PITTSBURG - SEMINOLE 345KV CKT 1
FDNS	00NR	0	20WP	G15_085	FROM->TO	G14-057T 345.00 - SUNNYSIDE 345KV CKT 1	717	789	0.21228	120.8155	CIMARRON - DRAPER LAKE 345KV CKT 1
FDNS	00NR	0	16WP	G15_085	FROM->TO	G14-057T 345.00 - SUNNYSIDE 345KV CKT 1	717	789	0.225	120.3338	P12:138:WFEC:MSL03
FDNS	00NR	0	16WP	G15_085	FROM->TO	G14-057T 345.00 - SUNNYSIDE 345KV CKT 1	717	789	0.21072	119.7169	PITTSBURG - VALLIANT 345KV CKT 1
FDNS	00NR	0	16WP	G15_085	FROM->TO	G14-057T 345.00 - SUNNYSIDE 345KV CKT 1	717	789	0.21072	119.7169	PITTSBURG - VALLIANT 345KV CKT 1
FDNSLock	00NR	0	16WP	G15_085	FROM->TO	G14-057T 345.00 - SUNNYSIDE 345KV CKT 1	717	789	0.20384	119.4097	GEN509403 1-PIRKEY GENERATION
FDNS	00NR	0	16WP	G15_085	FROM->TO	G14-057T 345.00 - SUNNYSIDE 345KV CKT 1	717	789	0.20384	119.3291	GEN509416 1-TURK GENERATION
FDNS	00NR	0	16WP	G15_085	FROM->TO	G14-057T 345.00 - SUNNYSIDE 345KV CKT 1	717	789	0.20917	119.038	CLEVELAND - G15066_T 345.00 345KV CKT 1
FDNS	00NR	0	16WP	G15_085	FROM->TO	G14-057T 345.00 - SUNNYSIDE 345KV CKT 1	717	789	0.20917	118.7424	G15066_T 345.00 - SOONER 345KV CKT 1
FDNS	00NR	0	20WP	G15_085	FROM->TO	G14-057T 345.00 - SUNNYSIDE 345KV CKT 1	717	789	0.22667	118.4531	P12:138:WFEC:MSL03
FDNS	00NR	0	16WP	G15_085	FROM->TO	G14-057T 345.00 - SUNNYSIDE 345KV CKT 1	717	789	0.20384	118.4277	GEN501801 1-DOLET HILLS UNIT1
FDNS	00NR	0	16WP	G15_085	FROM->TO	G14-057T 345.00 - SUNNYSIDE 345KV CKT 1	717	789	0.20384	118.0417	GEN509404 1-WELSH #1
FDNS	00NR	0	16WP	G15_085	FROM->TO	G14-057T 345.00 - SUNNYSIDE 345KV CKT 1	717	789	0.20384	118.0417	GEN509406 1-WELSH #3
FDNS	00NR	0	16WP	G15_085	FROM->TO	G14-057T 345.00 - SUNNYSIDE 345KV CKT 1	717	789	0.20839	117.7945	BORDER 7345.00 - WOODWARD DISTRICT EHV 345KV CKT 1
FDNS	00NR	0	16WP	G15_085	FROM->TO	G14-057T 345.00 - SUNNYSIDE 345KV CKT 1	717	789	0.20726	117.3154	7SAREPTA% 345.00 - LONGWOOD 345KV CKT 1
FDNS	00NR	0	16WP	G15_085	FROM->TO	G14-057T 345.00 - SUNNYSIDE 345KV CKT 1	717	789	0.20726	117.3154	7SAREPTA% 345.00 - LONGWOOD 345KV CKT 1
FDNS	00NR	0	20WP	G15_085	FROM->TO	G14-057T 345.00 - SUNNYSIDE 345KV CKT 1	717	789	0.20527	117.2677	GEN509403 1-PIRKEY GENERATION
FDNS	00NR	0	16WP	G15_085	FROM->TO	G14-057T 345.00 - SUNNYSIDE 345KV CKT 1	717	789	0.20949	117.2341	CORN TAP - NAPLESTP 138.00 138KV CKT 1
FDNS	00NR	0	20WP	G15_085	FROM->TO	G14-057T 345.00 - SUNNYSIDE 345KV CKT 1	717	789	0.20527	117.1868	GEN509416 1-TURK GENERATION
FDNS	00NR	0	16WP	G15_085	FROM->TO	G14-057T 345.00 - SUNNYSIDE 345KV CKT 1	717	789	0.20949	117.1497	NAPLESTP 138.00 - PAYNE 138.00 138KV CKT 1
FDNS	00NR	0	16WP	G15_085	FROM->TO	G14-057T 345.00 - SUNNYSIDE 345KV CKT 1	717	789	0.20519	117.1471	DOLET HILLS - SOUTHWEST SHREVEPORT 345KV CKT 1
FDNS	00NR	0	16WP	G15_085	FROM->TO	G14-057T 345.00 - SUNNYSIDE 345KV CKT 1	717	789	0.20519	117.1471	DOLET HILLS - SOUTHWEST SHREVEPORT 345KV CKT 1
FDNS	00NR	0	16WP	G15_085	FROM->TO	G14-057T 345.00 - SUNNYSIDE 345KV CKT 1	717	789	0.20955	117.1448	ANADARKO - POCASSETT 138KV CKT 1
FDNSLock	00NR	0	16WP	G15_085	FROM->TO	G14-057T 345.00 - SUNNYSIDE 345KV CKT 1	717	789	0.20384	117.1301	GEN336821 1-GRAND GULF UNIT
FDNS	00NR	0	16WP	G15_085	FROM->TO	G14-057T 345.00 - SUNNYSIDE 345KV CKT 1	717	789	0.20774	117.0898	CLEVELAND - TULSA NORTH 345KV CKT 1
FDNS	00NR	0	16WP	G15_085	FROM->TO	G14-057T 345.00 - SUNNYSIDE 345KV CKT 1	717	789	0.20774	117.0898	CLEVELAND - TULSA NORTH 345KV CKT 1
FDNS	00NR	0	16WP	G15_085	FROM->TO	G14-057T 345.00 - SUNNYSIDE 345KV CKT 1	717	789	0.20929	117.0742	COMANCHE - LOCO 138KV CKT 1
FDNSLock	00NR	0	16WP	G15_085	FROM->TO	G14-057T 345.00 - SUNNYSIDE 345KV CKT 1	717	789	0.20384	117.0352	GEN336153 1-WATERFORD UNIT#3
FDNS	00NR	0	16WP	G15_085	FROM->TO	G14-057T 345.00 - SUNNYSIDE 345KV CKT 1	717	789	0.19888	117.0161	CANADIAN RIVER - MUSKOGEE 345KV CKT 1
FDNS	00NR	0	16WP	G15_085	FROM->TO	G14-057T 345.00 - SUNNYSIDE 345KV CKT 1	717	789	0.20955	116.9961	POCASSETT - TUTTLE 138KV CKT 1
FDNS	00NR	0	20WP	G15_085	FROM->TO	G14-057T 345.00 - SUNNYSIDE 345KV CKT 1	717	789	0.21034	116.9383	CLEVELAND - G15066_T 345.00 345KV CKT 1
FDNSLock	00NR	0	16WP	G15_085	FROM->TO	G14-057T 345.00 - SUNNYSIDE 345KV CKT 1	717	789	0.20433	116.891	MATHWSN7 345.00 - TATONGA7 345.00 345KV CKT 1
FDNS	00NR	0	16WP	G15_085	FROM->TO	G14-057T 345.00 - SUNNYSIDE 345KV CKT 1	717	789	0.20839	116.8671	BORDER 7345.00 - TUCO_2 345.00 345KV CKT 1
FDNS	00NR	0	20WP	G15_085	FROM->TO	G14-057T 345.00 - SUNNYSIDE 345KV CKT 1	717	789	0.2125	116.8606	PITTSBURG - VALLIANT 345KV CKT 1
FDNS	00NR	0	20WP	G15_085	FROM->TO	G14-057T 345.00 - SUNNYSIDE 345KV CKT 1	717	789	0.2125	116.8606	PITTSBURG - VALLIANT 345KV CKT 1

SOLUTION	GROUP	SCENARIO	SEASON	SOURCE	DIRECTION	MONITORED ELEMENT	RATEA (MVA)	RATEB(MVA)	TDF	TC%LOADING (% MVA)	CONTINGENCY
FDNS	00NR	0	16WP	G15_085	FROM->TO	G14-057T 345.00 - SUNNYSIDE 345KV CKT 1	717	789	0.20854	116.8117	ARCADIA - NORTHWEST 345KV CKT 1
FDNS	00NR	0	16WP	G15_085	FROM->TO	G14-057T 345.00 - SUNNYSIDE 345KV CKT 1	717	789	0.20384	116.7419	GRAND GULF 500/22.0KV TRANSFORMER CKT 1
FDNSLock	00NR	0	16WP	G15_085	FROM->TO	G14-057T 345.00 - SUNNYSIDE 345KV CKT 1	717	789	0.20384	116.7414	GEN335831 1-RIVERBEND UNIT#1
FDNS	00NR	0	16WP	G15_085	FROM->TO	G14-057T 345.00 - SUNNYSIDE 345KV CKT 1	717	789	0.20384	116.7065	GEN515577 1-ARBWND11 0.6900
FDNS	00NR	0	16WP	G15_085	FROM->TO	G14-057T 345.00 - SUNNYSIDE 345KV CKT 1	717	789	0.2045	116.6977	ARCADIA - SEMINOLE 345KV CKT 1
FDNS	00NR	0	16WP	G15_085	FROM->TO	G14-057T 345.00 - SUNNYSIDE 345KV CKT 1	717	789	0.20384	116.6641	GEN509409 1-WILKES #3
FDNS	00NR	0	16WP	G15_085	FROM->TO	G14-057T 345.00 - SUNNYSIDE 345KV CKT 1	717	789	0.20564	116.6569	7SAREPTA% 345.00 - ELDORADO EHV 345KV CKT 1
FDNS	00NR	0	16WP	G15_085	FROM->TO	G14-057T 345.00 - SUNNYSIDE 345KV CKT 1	717	789	0.20564	116.6567	3TR3AR8EL7EL
FDNS	00NR	0	16WP	G15_085	FROM->TO	G14-057T 345.00 - SUNNYSIDE 345KV CKT 1	717	789	0.20564	116.6476	ELDORADO EHV 500/345KV TRANSFORMER CKT 1
FDNS	00NR	0	20WP	G15_085	FROM->TO	G14-057T 345.00 - SUNNYSIDE 345KV CKT 1	717	789	0.21034	116.6463	G15066_T 345.00 - SOONER 345KV CKT 1
FDNS	00NR	0	16WP	G15_085	FROM->TO	G14-057T 345.00 - SUNNYSIDE 345KV CKT 1	717	789	0.20683	116.6347	P12:138:AEPW:DUNCAN-4:L.E.S.-4
FDNS	00NR	0	16WP	G15_085	FROM->TO	G14-057T 345.00 - SUNNYSIDE 345KV CKT 1	717	789	0.20955	116.6144	BRIDGECR 138.00 - TUTTLE 138KV CKT 1
FDNS	00NR	0	16WP	G15_085	FROM->TO	G14-057T 345.00 - SUNNYSIDE 345KV CKT 1	717	789	0.2069	116.5237	COMANCHE TAP - OMPA-DUNCAN 840 138KV CKT 1
FDNS	00NR	0	16WP	G15_085	FROM->TO	G14-057T 345.00 - SUNNYSIDE 345KV CKT 1	717	789	0.21019	116.4781	HEALDTON - LOCO 138KV CKT 1
FDNS	00NR	0	20WP	G15_085	FROM->TO	G14-057T 345.00 - SUNNYSIDE 345KV CKT 1	717	789	0.20527	116.4704	GEN501801 1-DOLET HILLS UNIT1
FDNS	00NR	0	16WP	G15_085	FROM->TO	G14-057T 345.00 - SUNNYSIDE 345KV CKT 1	717	789	0.20757	116.4505	FINNEY SWITCHING STATION - HOLCOMB 345KV CKT 1
FDNS	00NR	0	16WP	G15_085	FROM->TO	G14-057T 345.00 - SUNNYSIDE 345KV CKT 1	717	789	0.20757	116.4505	FINNEY SWITCHING STATION - HOLCOMB 345KV CKT 1
FDNS	00NR	0	16WP	G15_085	FROM->TO	G14-057T 345.00 - SUNNYSIDE 345KV CKT 1	717	789	0.20384	116.4	GEN300006 1-NEW MADRID UNIT 1
FDNS	00NR	0	16WP	G15_085	FROM->TO	G14-057T 345.00 - SUNNYSIDE 345KV CKT 1	717	789	0.20384	116.4	GEN300007 1-NEW MADRID UNIT 2
FDNS	00NR	0	16WP	G15_085	FROM->TO	G14-057T 345.00 - SUNNYSIDE 345KV CKT 1	717	789	0.20437	116.3928	LACYGNE - WAVERLY7 345.00 345KV CKT 1
FDNS	00NR	0	16WP	G15_085	FROM->TO	G14-057T 345.00 - SUNNYSIDE 345KV CKT 1	717	789	0.20384	116.369	GEN501813 1-RODEMACHER UNIT 3
FDNS	00NR	0	16WP	G15_085	FROM->TO	G14-057T 345.00 - SUNNYSIDE 345KV CKT 1	717	789	0.20955	116.3452	P12:138:WFEC:MSL01
FDNS	00NR	0	16WP	G15_085	FROM->TO	G14-057T 345.00 - SUNNYSIDE 345KV CKT 1	717	789	0.20955	116.3403	BRIDGECR 138.00 - SUNSHINE CANYON 138KV CKT 1
FDNS	00NR	0	16WP	G15_085	FROM->TO	G14-057T 345.00 - SUNNYSIDE 345KV CKT 1	717	789	0.21019	116.3386	HEALDTON - RINGLING 138KV CKT 1
FDNS	00NR	0	16WP	G15_085	FROM->TO	G14-057T 345.00 - SUNNYSIDE 345KV CKT 1	717	789	0.20437	116.2527	WAVERLY7 345.00 - WOLF CREEK 345KV CKT 1
FDNS	00NR	0	16WP	G15_085	FROM->TO	G14-057T 345.00 - SUNNYSIDE 345KV CKT 1	717	789	0.20384	116.2503	GEN520947 1-HUGO1
FDNS	00NR	0	16WP	G15_085	FROM->TO	G14-057T 345.00 - SUNNYSIDE 345KV CKT 1	717	789	0.2069	116.2417	DUNCAN - OMPA-DUNCAN 840 138KV CKT 1
FDNS	00NR	0	16WP	G15_085	FROM->TO	G14-057T 345.00 - SUNNYSIDE 345KV CKT 1	717	789	0.2069	116.2417	DUNCAN - OMPA-DUNCAN 840 138KV CKT 1
FDNS	00NR	0	20WP	G15_085	FROM->TO	G14-057T 345.00 - SUNNYSIDE 345KV CKT 1	717	789	0.20971	116.2407	BORDER 7345.00 - WOODWARD DISTRICT EHV 345KV CKT 1
FDNSLock	00NR	0	16WP	G15_085	FROM->TO	G14-057T 345.00 - SUNNYSIDE 345KV CKT 1	717	789	0.20433	116.2034	G11_051T 345.00 - TATONGA7 345.00 345KV CKT 1
FDNS	00NR	0	16WP	G15_085	FROM->TO	G14-057T 345.00 - SUNNYSIDE 345KV CKT 1	717	789	0.21019	116.1742	RINGLING - SOUTH WILSON 138KV CKT 1
FDNS	00NR	0	16WP	G15_085	FROM->TO	G14-057T 345.00 - SUNNYSIDE 345KV CKT 1	717	789	0.20384	116.1685	GEN335206 1-NELSON UNIT 6
FDNS	00NR	0	16WP	G15_085	FROM->TO	G14-057T 345.00 - SUNNYSIDE 345KV CKT 1	717	789	0.20757	116.0651	FINNEY SWITCHING STATION - Hitchland Interchange 345KV CKT 1
FDNS	00NR	0	16WP	G15_085	FROM->TO	G14-057T 345.00 - SUNNYSIDE 345KV CKT 1	717	789	0.20384	116.0517	DOLET HILLS 345/24.0KV TRANSFORMER CKT 1
FDNS	00NR	0	16WP	G15_085	FROM->TO	G14-057T 345.00 - SUNNYSIDE 345KV CKT 1	717	789	0.2021	116.0067	P12:138:AEPW:SHERID4:112GORE4
FDNS	00NR	0	16WP	G15_085	FROM->TO	G14-057T 345.00 - SUNNYSIDE 345KV CKT 1	717	789	0.2038	115.998	PARK LANE - SEMINOLE 138KV CKT 1
FDNSLock	00NR	0	16WP	G15_085	FROM->TO	G14-057T 345.00 - SUNNYSIDE 345KV CKT 1	717	789	0.20384	115.9851	GEN590011 2-ERCOT EQUIVALENCE
FDNS	00NR	0	16WP	G15_085	FROM->TO	G14-057T 345.00 - SUNNYSIDE 345KV CKT 1	717	789	0.20384	115.9826	GEN501812 1-RODEMACHER UNIT 2
FDNS	00NR	0	16WP	G15_085	FROM->TO	G14-057T 345.00 - SUNNYSIDE 345KV CKT 1	717	789	0.20532	115.9522	THISTLE7 345.00 - WOODWARD DISTRICT EHV 345KV CKT 1
FDNS	00NR	0	16WP	G15_085	FROM->TO	G14-057T 345.00 - SUNNYSIDE 345KV CKT 1	717	789	0.20532	115.9522	THISTLE7 345.00 - WOODWARD DISTRICT EHV 345KV CKT 1
FDNS	00NR	0	16WP	G15_085	FROM->TO	G14-057T 345.00 - SUNNYSIDE 345KV CKT 1	717	789	0.20532	115.9522	THISTLE7 345.00 - WOODWARD DISTRICT EHV 345KV CKT 2
FDNS	00NR	0	16WP	G15_085	FROM->TO	G14-057T 345.00 - SUNNYSIDE 345KV CKT 1	717	789	0.20532	115.9522	THISTLE7 345.00 - WOODWARD DISTRICT EHV 345KV CKT 2
FDNS	00NR	0	20WP	G15_085	FROM->TO	G14-057T 345.00 - SUNNYSIDE 345KV CKT 1	717	789	0.20527	115.9478	GEN509406 1-WELSH #3
FDNS	00NR	0	20WP	G15_085	FROM->TO	G14-057T 345.00 - SUNNYSIDE 345KV CKT 1	717	789	0.20527	115.9475	GEN509404 1-WELSH #1
FDNS	00NR	0	16WP	G15_085	FROM->TO	G14-057T 345.00 - SUNNYSIDE 345KV CKT 1	717	789	0.20505	115.9348	CANEYRV7 345.00 - NEOSHO 345KV CKT 1
FDNS	00NR	0	16WP	G15_085	FROM->TO	G14-057T 345.00 - SUNNYSIDE 345KV CKT 1	717	789	0.20384	115.9221	GEN515564 1-ORIGIN11 0.6900
FDNS	00NR	0	16WP	G15_085	FROM->TO	G14-057T 345.00 - SUNNYSIDE 345KV CKT 1	717	789	0.20384	115.9221	GEN515565 1-ORIGIN21 0.6900
FDNSLock	00NR	0	16WP	G15_085	FROM->TO	G14-057T 345.00 - SUNNYSIDE 345KV CKT 1	717	789	0.20384	115.9096	GEN590010 1-ERCOT EQUIVALENCE
FDNS	00NR	0	16WP	G15_085	FROM->TO	G14-057T 345.00 - SUNNYSIDE 345KV CKT 1	717	789	0.21019	115.8986	MARIETTA - SOUTH WILSON 138KV CKT 1
FDNS	00NR	0	16WP	G15_085	FROM->TO	G14-057T 345.00 - SUNNYSIDE 345KV CKT 1	717	789	0.20384	115.8352	GEN509408 1-WILKES #2
FDNS	00NR	0	16WP	G15_085	FROM->TO	G14-057T 345.00 - SUNNYSIDE 345KV CKT 1	717	789	0.21019	115.8012	P12:138:WFEC:MSL17
FDNS	00NR	0	16WP	G15_085	FROM->TO	G14-057T 345.00 - SUNNYSIDE 345KV CKT 1	717	789	0.20505	115.7954	CANEYRV7 345.00 - LATHAMS7 345.00 345KV CKT 1
FDNS	00NR	0	16WP	G15_085	FROM->TO	G14-057T 345.00 - SUNNYSIDE 345KV CKT 1	717	789	0.20537	115.7632	P12:138:WFEC:MSL02
FDNS	00NR	0	16WP	G15_085	FROM->TO	G14-057T 345.00 - SUNNYSIDE 345KV CKT 1	717	789	0.20384	115.7471	P12:161:AEPW:DYESS 5:HYLAND 5
FDNS	00NR	0	16WP	G15_085	FROM->TO	G14-057T 345.00 - SUNNYSIDE 345KV CKT 1	717	789	0.20384	115.7452	GEN506754 1-LEBROCK STEAM 1
FDNS	00NR	0	16WP	G15_085	FROM->TO	G14-057T 345.00 - SUNNYSIDE 345KV CKT 1	717	789	0.20384	115.7417	P12:69:AEPW:L.E.S.-2:LAW WC2
FDNS	00NR	0	16WP	G15_085	FROM->TO	G14-057T 345.00 - SUNNYSIDE 345KV CKT 1	717	789	0.20814	115.7311	REDBUD - RIVERSIDE STATION 345KV CKT 1
FDNS	00NR	0	16WP	G15_085	FROM->TO	G14-057T 345.00 - SUNNYSIDE 345KV CKT 1	717	789	0.20814	115.7311	REDBUD - RIVERSIDE STATION 345KV CKT 1
FDNS	00NR	0	16WP	G15_085	FROM->TO	G14-057T 345.00 - SUNNYSIDE 345KV CKT 1	717	789	0.20449	115.7085	ELDORADO EHV - MOUNT OLIVE 500KV CKT 1
FDNS	00NR	0	16WP	G15_085	FROM->TO	G14-057T 345.00 - SUNNYSIDE 345KV CKT 1	717	789	0.20384	115.6998	GEN334440 1-SABINE UNIT 4
FDNS	00NR	0	16WP	G15_085	FROM->TO	G14-057T 345.00 - SUNNYSIDE 345KV CKT 1	717	789	0.20803	115.6769	CIVIT - PAOLI 138KV CKT 1
FDNS	00NR	0	16WP	G15_085	FROM->TO	G14-057T 345.00 - SUNNYSIDE 345KV CKT 1	717	789	0.20501	115.675	ANADARKO - GEORGIA 138KV CKT 1
FDNS	00NR	0	16WP	G15_085	FROM->TO	G14-057T 345.00 - SUNNYSIDE 345KV CKT 1	717	789	0.20473	115.6471	MATHWSN7 345.00 - NORTHWEST 345KV CKT 1
FDNS	00NR	0	16WP	G15_085	FROM->TO	G14-057T 345.00 - SUNNYSIDE 345KV CKT 1	717	789	0.20224	115.6371	P12:138:AEPW:112GORE4:L.E.S.-4
FDNS	00NR	0	16WP	G15_085	FROM->TO	G14-057T 345.00 - SUNNYSIDE 345KV CKT 1	717	789	0.20482	115.6268	ELDORADO EHV - SHERIDAN EHV 500KV CKT 1
FDNS	00NR	0	16WP	G15_085	FROM->TO	G14-057T 345.00 - SUNNYSIDE 345KV CKT 1	717	789	0.20838	115.6192	P12:138:AEPW-OGE:CORNVIL4:MAUD 4
FDNS	00NR	0	16WP	G15_085	FROM->TO	G14-057T 345.00 - SUNNYSIDE 345KV CKT 1	717	789	0.20384	115.6004	NEW MADRID 161/22.0KV TRANSFORMER CKT 1
FDNS	00NR	0	16WP	G15_085	FROM->TO	G14-057T 345.00 - SUNNYSIDE 345KV CKT 1	717	789	0.20458	115.5963	WEBRE - WELLS 500KV CKT 1
FDNS	00NR	0	16WP	G15_085	FROM->TO	G14-057T 345.00 - SUNNYSIDE 345KV CKT 1	717	789	0.20469	115.5952	PAOLI - PAYNE 138.00 138KV CKT 1
FDNS	00NR	0	16WP	G15_085	FROM->TO	G14-057T 345.00 - SUNNYSIDE 345KV CKT 1	717	789	0.20384	115.5952	GEN503909 1-FULTONU1 1 16.000
FDNS	00NR	0	16WP	G15_085	FROM->TO	G14-057T 345.00 - SUNNYSIDE 345KV CKT 1	717	789	0.20384	115.5865	NEW MADRID 345/22.0KV TRANSFORMER CKT 1
FDNS	00NR	0	16WP	G15_085	FROM->TO	G14-057T 345.00 - SUNNYSIDE 345KV CKT 1	717	789	0.20501	115.5859	FLETCHER - GEORGIA 138KV CKT 1
FDNS	00NR	0	16WP	G15_085	FROM->TO	G14-057T 345.00 - SUNNYSIDE 345KV CKT 1	717	789	0.20505	115.5778	LATHAMS7 345.00 - ROSE HILL 345KV CKT 1
FDNS	00NR	0	16WP	G15_085	FROM->TO	G14-057T 345.00 - SUNNYSIDE 345KV CKT 1	717	789	0.19062	115.5671	LAWTON EASTSIDE (LES 5) 345/138/13.8KV TRANSFORMER CKT 2
FDNS	00NR	0	16WP	G15_085	FROM->TO	G14-057T 345.00 - SUNNYSIDE 345KV CKT 1	717	789	0.19062	115.5671	LAWTON EASTSIDE (LES 5) 345/138/13.8KV TRANSFORMER CKT 2
FDNS	00NR	0	16WP	G15_085	FROM->TO	G14-057T 345.00 - SUNNYSIDE 345KV CKT 1	717	789	0.20384	115.5633	FRONTIER - GRIMES 345KV CKT 1
FDNS	00NR	0	16WP	G15_085	FROM->TO	G14-057T 345.00 - SUNNYSIDE 345KV CKT 1	717	789	0.20516	115.5527	EMPIRE - FLETCHER 138KV CKT 1
FDNS	00NR	0	16WP	G15_085	FROM->TO	G14-057T 345.00 - SUNNYSIDE 345KV CKT 1	717	789	0.20838	115.5491	BLANCHARD - CORNVILLE 138KV CKT 1
FDNS	00NR	0	16WP	G15_085	FROM->TO	G14-057T 345.00 - SUNNYSIDE 345KV CKT 1	717	789	0.20803	115.5364	CIVIT - STRATFORD 138KV CKT 1

SOLUTION	GROUP	SCENARIO	SEASON	SOURCE	DIRECTION	MONITORED ELEMENT	RATEA (MVA)	RATEB(MVA)	TDF	TC%LOADING (% MVA)	CONTINGENCY
FDNS	00NR	0	16WP	G15_085	FROM->TO	G14-057T 345.00 - SUNNYSIDE 345KV CKT 1	717	789	0.20645	115.5229	TUPELO - TUPELO TAP 138KV CKT 1
FDNS	00NR	0	16WP	G15_085	FROM->TO	G14-057T 345.00 - SUNNYSIDE 345KV CKT 1	717	789	0.20516	115.4711	COMANCHE - EMPIRE 138KV CKT 1
FDNS	00NR	0	16WP	G15_085	FROM->TO	G14-057T 345.00 - SUNNYSIDE 345KV CKT 1	717	789	0.2045	115.4691	G1524G1525 345.00 - THISTLE7 345.00 345KV CKT 1
FDNS	00NR	0	16WP	G15_085	FROM->TO	G14-057T 345.00 - SUNNYSIDE 345KV CKT 1	717	789	0.2045	115.4691	G1524G1525 345.00 - THISTLE7 345.00 345KV CKT 2
FDNS	00NR	0	16WP	G15_085	FROM->TO	G14-057T 345.00 - SUNNYSIDE 345KV CKT 1	717	789	0.20384	115.4679	GEN509393 S1-ARSENAL HILL GENS #4 (STALL)
FDNS	00NR	0	16WP	G15_085	FROM->TO	G14-057T 345.00 - SUNNYSIDE 345KV CKT 1	717	789	0.20384	115.4437	GEN509392 G2-ARSENAL HILL GENS #3 (STALL)
FDNS	00NR	0	16WP	G15_085	FROM->TO	G14-057T 345.00 - SUNNYSIDE 345KV CKT 1	717	789	0.20384	115.4436	GEN509391 G1-ARSENAL HILL GENS #2 (STALL)
FDNS	00NR	0	16WP	G15_085	FROM->TO	G14-057T 345.00 - SUNNYSIDE 345KV CKT 1	717	789	0.20384	115.429	GEN336252 1-NINEMILE POINT UNIT#5
FDNS	00NR	0	16WP	G15_085	FROM->TO	G14-057T 345.00 - SUNNYSIDE 345KV CKT 1	717	789	0.20803	115.419	OIL CENTER - STRATFORD 138KV CKT 1
FDNS	00NR	0	16WP	G15_085	FROM->TO	G14-057T 345.00 - SUNNYSIDE 345KV CKT 1	717	789	0.20384	115.4027	DELL 500 - ESSEX UNIT 2 500KV CKT Z1
FDNS	00NR	0	16WP	G15_085	FROM->TO	G14-057T 345.00 - SUNNYSIDE 345KV CKT 1	717	789	0.20384	115.3907	GEN334071 1-LEWIS CREEK 2
FDNS	00NR	0	16WP	G15_085	FROM->TO	G14-057T 345.00 - SUNNYSIDE 345KV CKT 1	717	789	0.20384	115.3817	GEN334070 1-LEWIS CREEK 1
FDNS	00NR	0	16WP	G15_085	FROM->TO	G14-057T 345.00 - SUNNYSIDE 345KV CKT 1	717	789	0.20384	115.3782	GEN335204 1-NELSON UNIT 4
FDNS	00NR	0	20WP	G15_085	FROM->TO	G14-057T 345.00 - SUNNYSIDE 345KV CKT 1	717	789	0.20901	115.3748	7SAREPTA% 345.00 - LONGWOOD 345KV CKT 1
FDNS	00NR	0	20WP	G15_085	FROM->TO	G14-057T 345.00 - SUNNYSIDE 345KV CKT 1	717	789	0.20901	115.3748	7SAREPTA% 345.00 - LONGWOOD 345KV CKT 1
FDNS	00NR	0	20WP	G15_085	FROM->TO	G14-057T 345.00 - SUNNYSIDE 345KV CKT 1	717	789	0.211	115.3669	CORN TAP - NAPLESTP 138.00 138KV CKT 1
FDNS	00NR	0	16WP	G15_085	FROM->TO	G14-057T 345.00 - SUNNYSIDE 345KV CKT 1	717	789	0.20418	115.3542	DUNCAN (DUNCAN) 138/69/13.8KV TRANSFORMER CKT 1
FDNS	00NR	0	16WP	G15_085	FROM->TO	G14-057T 345.00 - SUNNYSIDE 345KV CKT 1	717	789	0.20418	115.3542	DUNCAN (DUNCAN) 138/69/13.8KV TRANSFORMER CKT 1
FDNS	00NR	0	16WP	G15_085	FROM->TO	G14-057T 345.00 - SUNNYSIDE 345KV CKT 1	717	789	0.20838	115.3522	BLANCHARD - MAUD 138KV CKT 1
FDNS	00NR	0	16WP	G15_085	FROM->TO	G14-057T 345.00 - SUNNYSIDE 345KV CKT 1	717	789	0.20384	115.3434	GEN334441 1-SABINE UNIT 5
FDNS	00NR	0	16WP	G15_085	FROM->TO	G14-057T 345.00 - SUNNYSIDE 345KV CKT 1	717	789	0.20384	115.3149	GEN337653 1-WHITE BLUFF UNIT #2
FDNS	00NR	0	20WP	G15_085	FROM->TO	G14-057T 345.00 - SUNNYSIDE 345KV CKT 1	717	789	0.20971	115.3146	BORDER 7345.00 - TUCO_2 345.00 345KV CKT 1
FDNS	00NR	0	16WP	G15_085	FROM->TO	G14-057T 345.00 - SUNNYSIDE 345KV CKT 1	717	789	0.20383	115.3081	P12:138:AEPW:CATOOSA4:T.S.E.-4
FDNS	00NR	0	16WP	G15_085	FROM->TO	G14-057T 345.00 - SUNNYSIDE 345KV CKT 1	717	789	0.20384	115.3065	P12:161:AEPW-SWPA:BEAVER5:EROGERS5
FDNS	00NR	0	16WP	G15_085	FROM->TO	G14-057T 345.00 - SUNNYSIDE 345KV CKT 1	717	789	0.20384	115.3	GEN300003 1-THOMAS HILL UNIT 3
FDNS	00NR	0	16WP	G15_085	FROM->TO	G14-057T 345.00 - SUNNYSIDE 345KV CKT 1	717	789	0.20487	115.2966	6LAYFLD 230.00 - CARROLL 230KV CKT 1
FDNS	00NR	0	16WP	G15_085	FROM->TO	G14-057T 345.00 - SUNNYSIDE 345KV CKT 1	717	789	0.20384	115.2935	GEN506752 1-LEBROCK GAS 1
FDNS	00NR	0	16WP	G15_085	FROM->TO	G14-057T 345.00 - SUNNYSIDE 345KV CKT 1	717	789	0.20384	115.2933	GEN506753 1-LEBROCK GAS 2
FDNS	00NR	0	16WP	G15_085	FROM->TO	G14-057T 345.00 - SUNNYSIDE 345KV CKT 1	717	789	0.20384	115.2879	GEN334030 1-FRONTIER UNIT 1
FDNS	00NR	0	16WP	G15_085	FROM->TO	G14-057T 345.00 - SUNNYSIDE 345KV CKT 1	717	789	0.2079	115.2871	TUTTLE - TUTTLE CONOCO TAP 138KV CKT 1
FDNS	00NR	0	16WP	G15_085	FROM->TO	G14-057T 345.00 - SUNNYSIDE 345KV CKT 1	717	789	0.20384	115.2864	GEN334031 1-FRONTIER UNIT 2
FDNS	00NR	0	20WP	G15_085	FROM->TO	G14-057T 345.00 - SUNNYSIDE 345KV CKT 1	717	789	0.211	115.2754	NAPLESTP 138.00 - PAYNE 138.00 138KV CKT 1
FDNS	00NR	0	16WP	G15_085	FROM->TO	G14-057T 345.00 - SUNNYSIDE 345KV CKT 1	717	789	0.20922	115.2707	BAILEY4 138.00 - SUNSHINE CANYON 138KV CKT 1
FDNS	00NR	0	16WP	G15_085	FROM->TO	G14-057T 345.00 - SUNNYSIDE 345KV CKT 1	717	789	0.20384	115.2699	GEN515040 1-SEMINOLE 1G
FDNS	00NR	0	16WP	G15_085	FROM->TO	G14-057T 345.00 - SUNNYSIDE 345KV CKT 1	717	789	0.2254	115.2647	GRACEMONT - LAWTON EASTSIDE 345KV CKT 1
FDNS	00NR	0	16WP	G15_085	FROM->TO	G14-057T 345.00 - SUNNYSIDE 345KV CKT 1	717	789	0.2254	115.2647	GRACEMONT - LAWTON EASTSIDE 345KV CKT 1
FDNS	00NR	0	16WP	G15_085	FROM->TO	G14-057T 345.00 - SUNNYSIDE 345KV CKT 1	717	789	0.20398	115.2642	FULTON 115 - HOPE 115KV CKT 1
FDNS	00NR	0	16WP	G15_085	FROM->TO	G14-057T 345.00 - SUNNYSIDE 345KV CKT 1	717	789	0.20398	115.2642	FULTON 115 - HOPE 115KV CKT 1
FDNS	00NR	0	16WP	G15_085	FROM->TO	G14-057T 345.00 - SUNNYSIDE 345KV CKT 1	717	789	0.20396	115.249	8DANIEL8 500.00 - MCKNIGHT 500KV CKT 1
FDNS	00NR	0	16WP	G15_085	FROM->TO	G14-057T 345.00 - SUNNYSIDE 345KV CKT 1	717	789	0.20803	115.2478	LATTA JCT - OIL CENTER 138KV CKT 1
FDNS	00NR	0	16WP	G15_085	FROM->TO	G14-057T 345.00 - SUNNYSIDE 345KV CKT 1	717	789	0.20384	115.2473	GEN515226 1-MUSKOGEE 6G
FDNS	00NR	0	16WP	G15_085	FROM->TO	G14-057T 345.00 - SUNNYSIDE 345KV CKT 1	717	789	0.20787	115.2426	P12:138:AEPW-OGE:WTH_JCT4:JENSEN4
FDNS	00NR	0	16WP	G15_085	FROM->TO	G14-057T 345.00 - SUNNYSIDE 345KV CKT 1	717	789	0.20384	115.2333	GEN300015 1-1SGPDEL 18.000
FDNSLock	00NR	0	16WP	G15_085	FROM->TO	G14-057T 345.00 - SUNNYSIDE 345KV CKT 1	717	789	0.20384	115.2307	GEN337911 1-ARKANSAS NUCLEAR ONE UNIT #2
FDNS	00NR	0	16WP	G15_085	FROM->TO	G14-057T 345.00 - SUNNYSIDE 345KV CKT 1	717	789	0.20384	115.2299	P12:161:AEPW:DYESS5:ELMSPRNG:TONTITN5
FDNS	00NR	0	16WP	G15_085	FROM->TO	G14-057T 345.00 - SUNNYSIDE 345KV CKT 1	717	789	0.20384	115.2278	GEN337652 1-WHITE BLUFF UNIT #1
FDNS	00NR	0	16WP	G15_085	FROM->TO	G14-057T 345.00 - SUNNYSIDE 345KV CKT 1	717	789	0.20384	115.2235	GEN336251 1-NINEMILE POINT UNIT#4
FDNS	00NR	0	16WP	G15_085	FROM->TO	G14-057T 345.00 - SUNNYSIDE 345KV CKT 1	717	789	0.20531	115.2215	P12:138:AEPW:CORNVIL4:S.W.S.-4
FDNS	00NR	0	16WP	G15_085	FROM->TO	G14-057T 345.00 - SUNNYSIDE 345KV CKT 1	717	789	0.20384	115.2199	GEN501811 1-RODEMACHER UNIT 1
FDNS	00NR	0	16WP	G15_085	FROM->TO	G14-057T 345.00 - SUNNYSIDE 345KV CKT 1	717	789	0.20384	115.2185	GEN336831 1-BAXTER WILSON SES
FDNS	00NR	0	16WP	G15_085	FROM->TO	G14-057T 345.00 - SUNNYSIDE 345KV CKT 1	717	789	0.20572	115.2077	P12:138:AEPW:CORNVIL4:DUNCAN-4
FDNS	00NR	0	16WP	G15_085	FROM->TO	G14-057T 345.00 - SUNNYSIDE 345KV CKT 1	717	789	0.20406	115.2071	G15074_T 345.00 - HOYT 345KV CKT 1
FDNS	00NR	0	16WP	G15_085	FROM->TO	G14-057T 345.00 - SUNNYSIDE 345KV CKT 1	717	789	0.2079	115.206	CIMARRON - TUTTLE CONOCO TAP 138KV CKT 1
FDNS	00NR	0	20WP	G15_085	FROM->TO	G14-057T 345.00 - SUNNYSIDE 345KV CKT 1	717	789	0.20527	115.2011	GEN336821 1-GRAND GULF UNIT
FDNS	00NR	0	16WP	G15_085	FROM->TO	G14-057T 345.00 - SUNNYSIDE 345KV CKT 1	717	789	0.20401	115.2	G15088_T 345.00 - MOORE 345KV CKT 1
FDNS	00NR	0	16WP	G15_085	FROM->TO	G14-057T 345.00 - SUNNYSIDE 345KV CKT 1	717	789	0.20384	115.1975	GEN334433 1-SABINE UNIT 3
FDNS	00NR	0	16WP	G15_085	FROM->TO	G14-057T 345.00 - SUNNYSIDE 345KV CKT 1	717	789	0.20418	115.1706	P12:69:WFEC-AEPW:COMANCH2:DUNCAN-2
FDNS	00NR	0	16WP	G15_085	FROM->TO	G14-057T 345.00 - SUNNYSIDE 345KV CKT 1	717	789	0.20441	115.1663	BUCKNER7 345.00 - SPEARVILLE 345KV CKT 1
FDNS	00NR	0	16WP	G15_085	FROM->TO	G14-057T 345.00 - SUNNYSIDE 345KV CKT 1	717	789	0.20441	115.1663	BUCKNER7 345.00 - SPEARVILLE 345KV CKT 1
FDNS	00NR	0	16WP	G15_085	FROM->TO	G14-057T 345.00 - SUNNYSIDE 345KV CKT 1	717	789	0.20384	115.164	GEN562783 1-G15036_4 0.6900
FDNS	00NR	0	16WP	G15_085	FROM->TO	G14-057T 345.00 - SUNNYSIDE 345KV CKT 1	717	789	0.20384	115.164	GEN562784 1-G15036_5 0.6900
FDNSLock	00NR	0	16WP	G15_085	FROM->TO	G14-057T 345.00 - SUNNYSIDE 345KV CKT 1	717	789	0.20384	115.1601	GEN505432 1-SIKESTON
FDNS	00NR	0	16WP	G15_085	FROM->TO	G14-057T 345.00 - SUNNYSIDE 345KV CKT 1	717	789	0.20441	115.158	CIMARRON - CZECH HALL 138KV CKT 1
FDNS	00NR	0	16WP	G15_085	FROM->TO	G14-057T 345.00 - SUNNYSIDE 345KV CKT 1	717	789	0.20384	115.1483	GEN515223 1-MUSKOGEE 4G
FDNS	00NR	0	16WP	G15_085	FROM->TO	G14-057T 345.00 - SUNNYSIDE 345KV CKT 1	717	789	0.20384	115.1483	GEN515225 1-MUSKOGEE 5G
FDNS	00NR	0	16WP	G15_085	FROM->TO	G14-057T 345.00 - SUNNYSIDE 345KV CKT 1	717	789	0.2062	115.1473	P12:138:AEPW:WTHWF4:CLINTJC4
FDNS	00NR	0	16WP	G15_085	FROM->TO	G14-057T 345.00 - SUNNYSIDE 345KV CKT 1	717	789	0.20418	115.1258	CIMARRON - SARA 138KV CKT 1
FDNS	00NR	0	16WP	G15_085	FROM->TO	G14-057T 345.00 - SUNNYSIDE 345KV CKT 1	717	789	0.20384	115.1244	P12:161:AEPW:EROGERS5:ECNTRTN5
FDNS	00NR	0	16WP	G15_085	FROM->TO	G14-057T 345.00 - SUNNYSIDE 345KV CKT 1	717	789	0.2044	115.1205	LAYFLD8 500.00 - MOUNT OLIVE 500KV CKT 1
FDNS	00NR	0	16WP	G15_085	FROM->TO	G14-057T 345.00 - SUNNYSIDE 345KV CKT 1	717	789	0.2044	115.1205	LAYFLD8 500.00 - MOUNT OLIVE 500KV CKT 1
FDNS	00NR	0	16WP	G15_085	FROM->TO	G14-057T 345.00 - SUNNYSIDE 345KV CKT 1	717	789	0.20418	115.1191	DUNCAN - TOSCO 69KV CKT 1
FDNS	00NR	0	16WP	G15_085	FROM->TO	G14-057T 345.00 - SUNNYSIDE 345KV CKT 1	717	789	0.20384	115.1185	RODEMACHER 230/22.0KV TRANSFORMER CKT 1
FDNS	00NR	0	16WP	G15_085	FROM->TO	G14-057T 345.00 - SUNNYSIDE 345KV CKT 1	717	789	0.20384	115.118	WHITE BLUFF 500/26.0KV TRANSFORMER CKT 1
FDNS	00NR	0	16WP	G15_085	FROM->TO	G14-057T 345.00 - SUNNYSIDE 345KV CKT 1	717	789	0.2062	115.1125	P12:138:AEPW:WTHWF4:WTH_SE4
FDNS	00NR	0	16WP	G15_085	FROM->TO	G14-057T 345.00 - SUNNYSIDE 345KV CKT 1	717	789	0.20412	115.1104	MC NIEL 500/115KV TRANSFORMER CKT 1
FDNS	00NR	0	16WP	G15_085	FROM->TO	G14-057T 345.00 - SUNNYSIDE 345KV CKT 1	717	789	0.19844	115.1076	CANADIAN RIVER - PITTSBURG 345KV CKT 1
FDNS	00NR	0	16WP	G15_085	FROM->TO	G14-057T 345.00 - SUNNYSIDE 345KV CKT 1	717	789	0.19844	115.1076	CANADIAN RIVER - PITTSBURG 345KV CKT 1
FDNS	00NR	0	20WP	G15_085	FROM->TO	G14-057T 345.00 - SUNNYSIDE 345KV CKT 1	717	789	0.21104	115.1068	ANADARKO - POCASSETT 138KV CKT 1
FDNS	00NR	0	16WP	G15_085	FROM->TO	G14-057T 345.00 - SUNNYSIDE 345KV CKT 1	717	789	0.20404	115.1055	BISMARK - HOT SPRINGS WEST BUS 115KV CKT 1

SOLUTION	GROUP	SCENARIO	SEASON	SOURCE	DIRECTION	MONITORED ELEMENT	RATEA (MVA)	RATEB(MVA)	TDF	TC%LOADING (% MVA)	CONTINGENCY
FDNS	00NR	0	16WP	G15_085	FROM->TO	G14-057T 345.00 - SUNNYSIDE 345KV CKT 1	717	789	0.20384	115.1045	GEN303007 1-1BC2 U2
FDNS	00NR	0	16WP	G15_085	FROM->TO	G14-057T 345.00 - SUNNYSIDE 345KV CKT 1	717	789	0.20922	115.1009	BAILEY4 138.00 - WESTMOORE 138KV CKT 1
FDNS	00NR	0	16WP	G15_085	FROM->TO	G14-057T 345.00 - SUNNYSIDE 345KV CKT 1	717	789	0.20414	115.1003	HOT SPRINGS EHV - MAGNET COVE 500KV CKT 1
FDNS	00NR	0	16WP	G15_085	FROM->TO	G14-057T 345.00 - SUNNYSIDE 345KV CKT 1	717	789	0.20384	115.0992	GEN303006 1-1BC2 U1
FDNS	00NR	0	16WP	G15_085	FROM->TO	G14-057T 345.00 - SUNNYSIDE 345KV CKT 1	717	789	0.20423	115.0967	CLEO CORNER - CLEOPLT4 138.00 138KV CKT 1
FDNS	00NR	0	16WP	G15_085	FROM->TO	G14-057T 345.00 - SUNNYSIDE 345KV CKT 1	717	789	0.20342	115.0929	ARBWIND4 138.00 - CARTER 138KV CKT 1
FDNS	00NR	0	16WP	G15_085	FROM->TO	G14-057T 345.00 - SUNNYSIDE 345KV CKT 1	717	789	0.2042	115.0928	G15095_T 138.00 - ROSE_VALLEY 138.00 138KV CKT 1
FDNS	00NR	0	16WP	G15_085	FROM->TO	G14-057T 345.00 - SUNNYSIDE 345KV CKT 1	717	789	0.20137	115.0921	P12:69:AEPW-OMPA:COMANC-2:OMWALTR2
FDNS	00NR	0	20WP	G15_085	FROM->TO	G14-057T 345.00 - SUNNYSIDE 345KV CKT 1	717	789	0.20527	115.0919	GEN336153 1-WATERFORD UNIT#3
FDNS	00NR	0	16WP	G15_085	FROM->TO	G14-057T 345.00 - SUNNYSIDE 345KV CKT 1	717	789	0.20384	115.0853	GEN337910 1-ARKANSAS NUCLEAR ONE UNIT #1
FDNS	00NR	0	16WP	G15_085	FROM->TO	G14-057T 345.00 - SUNNYSIDE 345KV CKT 1	717	789	0.20365	115.0838	SEMINOLE - VANOSTP4 138.00 138KV CKT 1
FDNS	00NR	0	16WP	G15_085	FROM->TO	G14-057T 345.00 - SUNNYSIDE 345KV CKT 1	717	789	0.20423	115.0828	CLEOPLT4 138.00 - MEN TAP 138KV CKT 1
FDNS	00NR	0	16WP	G15_085	FROM->TO	G14-057T 345.00 - SUNNYSIDE 345KV CKT 1	717	789	0.20384	115.0797	GEN300010 1-ST FRANCIS UNIT 1
FDNS	00NR	0	16WP	G15_085	FROM->TO	G14-057T 345.00 - SUNNYSIDE 345KV CKT 1	717	789	0.20384	115.0766	GEN336191 1-LITTLE GYPSY UNIT#3
FDNS	00NR	0	16WP	G15_085	FROM->TO	G14-057T 345.00 - SUNNYSIDE 345KV CKT 1	717	789	0.20423	115.0709	IMO TAP - MEN TAP 138KV CKT 1
FDNS	00NR	0	16WP	G15_085	FROM->TO	G14-057T 345.00 - SUNNYSIDE 345KV CKT 1	717	789	0.20441	115.0701	CZECH HALL - XEROX 138KV CKT 1
FDNS	00NR	0	16WP	G15_085	FROM->TO	G14-057T 345.00 - SUNNYSIDE 345KV CKT 1	717	789	0.20441	115.0657	MORGAN - XEROX 138KV CKT 1
FDNS	00NR	0	16WP	G15_085	FROM->TO	G14-057T 345.00 - SUNNYSIDE 345KV CKT 1	717	789	0.20375	115.057	P12:138:AEPW:N.E.S.-4:CATOOSA4
FDNS	00NR	0	16WP	G15_085	FROM->TO	G14-057T 345.00 - SUNNYSIDE 345KV CKT 1	717	789	0.20384	115.0559	NELSON 230/20.0KV TRANSFORMER CKT 1
FDNS	00NR	0	16WP	G15_085	FROM->TO	G14-057T 345.00 - SUNNYSIDE 345KV CKT 1	717	789	0.20404	115.0529	ALPINE AECC - BISMARK 115KV CKT 1
FDNS	00NR	0	16WP	G15_085	FROM->TO	G14-057T 345.00 - SUNNYSIDE 345KV CKT 1	717	789	0.20384	115.0513	GEN335614 1-WILLOW GLENN UNIT#4
FDNS	00NR	0	16WP	G15_085	FROM->TO	G14-057T 345.00 - SUNNYSIDE 345KV CKT 1	717	789	0.20418	115.0494	COMANCHE TAP - TOSCO 69KV CKT 1
FDNS	00NR	0	16WP	G15_085	FROM->TO	G14-057T 345.00 - SUNNYSIDE 345KV CKT 1	717	789	0.20441	115.0419	MORGAN - MUSTANG 138KV CKT 1
FDNS	00NR	0	16WP	G15_085	FROM->TO	G14-057T 345.00 - SUNNYSIDE 345KV CKT 1	717	789	0.20453	115.0417	BENTON - WICHITA 345KV CKT 1
FDNS	00NR	0	16WP	G15_085	FROM->TO	G14-057T 345.00 - SUNNYSIDE 345KV CKT 1	717	789	0.20384	115.0396	GEN303008 1-1BC2 U3
FDNS	00NR	0	16WP	G15_085	FROM->TO	G14-057T 345.00 - SUNNYSIDE 345KV CKT 1	717	789	0.20384	115.03	GEN300011 1-ST FRANCIS UNIT 2
FDNS	00NR	0	16WP	G15_085	FROM->TO	G14-057T 345.00 - SUNNYSIDE 345KV CKT 1	717	789	0.2042	115.0247	NOEL_SW 138.00 - ROSE_VALLEY 138.00 138KV CKT 1
FDNS	00NR	0	16WP	G15_085	FROM->TO	G14-057T 345.00 - SUNNYSIDE 345KV CKT 1	717	789	0.20384	115.0126	GEN336170 1-GULF OXY U4
FDNS	00NR	0	16WP	G15_085	FROM->TO	G14-057T 345.00 - SUNNYSIDE 345KV CKT 1	717	789	0.20786	115.0103	WEATHERFORD JCT. - WEATHERFORD SOUTHEAST 138KV CKT 1
FDNS	00NR	0	16WP	G15_085	FROM->TO	G14-057T 345.00 - SUNNYSIDE 345KV CKT 1	717	789	0.20786	115.0103	WEATHERFORD JCT. - WEATHERFORD SOUTHEAST 138KV CKT 1
FDNS	00NR	0	16WP	G15_085	FROM->TO	G14-057T 345.00 - SUNNYSIDE 345KV CKT 1	717	789	0.20399	115.0093	CYPRESS - HARTBURG 500KV CKT 1
FDNS	00NR	0	16WP	G15_085	FROM->TO	G14-057T 345.00 - SUNNYSIDE 345KV CKT 1	717	789	0.20404	115.0092	ALPINE AECC - AMITY SS 115KV CKT 1
FDNS	00NR	0	16WP	G15_085	FROM->TO	G14-057T 345.00 - SUNNYSIDE 345KV CKT 1	717	789	0.20384	115.0076	GEN336464 1-MICHOUD UNIT #3
FDNS	00NR	0	20WP	G15_085	FROM->TO	G14-057T 345.00 - SUNNYSIDE 345KV CKT 1	717	789	0.20898	115.0036	CLEVELAND - TULSA NORTH 345KV CKT 1
FDNS	00NR	0	20WP	G15_085	FROM->TO	G14-057T 345.00 - SUNNYSIDE 345KV CKT 1	717	789	0.20898	115.0036	CLEVELAND - TULSA NORTH 345KV CKT 1
FDNS	00NR	0	16WP	G15_085	FROM->TO	G14-057T 345.00 - SUNNYSIDE 345KV CKT 1	717	789	0.20406	114.998	HOYT - STRANGER CREEK 345KV CKT 1
FDNS	00NR	0	16WP	G15_085	FROM->TO	G14-057T 345.00 - SUNNYSIDE 345KV CKT 1	717	789	0.20009	114.9964	CHISHOLM6 230.00 - ELK CITY 230KV 230KV CKT 1
FDNS	00NR	0	20WP	G15_085	FROM->TO	G14-057T 345.00 - SUNNYSIDE 345KV CKT 1	717	789	0.21075	114.9957	COMANCHE - LOCO 138KV CKT 1
FDNS	00NR	0	16WP	G15_085	FROM->TO	G14-057T 345.00 - SUNNYSIDE 345KV CKT 1	717	789	0.20418	114.9952	COMANCHE - COMANCHE TAP 69KV CKT 1
FDNS	00NR	0	16WP	G15_085	FROM->TO	G14-057T 345.00 - SUNNYSIDE 345KV CKT 1	717	789	0.20009	114.9949	ELK CITY 230KV (ELKCTY-6) 230/138/13.8KV TRANSFORMER CKT 1
FDNS	00NR	0	16WP	G15_085	FROM->TO	G14-057T 345.00 - SUNNYSIDE 345KV CKT 1	717	789	0.20009	114.9949	ELK CITY 230KV (ELKCTY-6) 230/138/13.8KV TRANSFORMER CKT 1
FDNS	00NR	0	16WP	G15_085	FROM->TO	G14-057T 345.00 - SUNNYSIDE 345KV CKT 1	717	789	0.20384	114.9914	GEN300016 1-1G1GPDEL 18.000
FDNS	00NR	0	16WP	G15_085	FROM->TO	G14-057T 345.00 - SUNNYSIDE 345KV CKT 1	717	789	0.20384	114.9913	8CAJUN2 500/24.0KV TRANSFORMER CKT 1
FDNS	00NR	0	20WP	G15_085	FROM->TO	G14-057T 345.00 - SUNNYSIDE 345KV CKT 1	717	789	0.22606	114.9873	GRACEMONT - LAWTON EASTSIDE 345KV CKT 1
FDNS	00NR	0	20WP	G15_085	FROM->TO	G14-057T 345.00 - SUNNYSIDE 345KV CKT 1	717	789	0.22606	114.9873	GRACEMONT - LAWTON EASTSIDE 345KV CKT 1
FDNS	00NR	0	16WP	G15_085	FROM->TO	G14-057T 345.00 - SUNNYSIDE 345KV CKT 1	717	789	0.20518	114.9818	P12:138:OKGE-AEPW:JENSEN4:REDROCKRD4
FDNS	00NR	0	16WP	G15_085	FROM->TO	G14-057T 345.00 - SUNNYSIDE 345KV CKT 1	717	789	0.20384	114.9768	GEN337041 1-GERALD ANDRUS
FDNS	00NR	0	16WP	G15_085	FROM->TO	G14-057T 345.00 - SUNNYSIDE 345KV CKT 1	717	789	0.20543	114.9721	CANADIAN - NOBLE 138KV CKT 1
FDNS	00NR	0	16WP	G15_085	FROM->TO	G14-057T 345.00 - SUNNYSIDE 345KV CKT 1	717	789	0.20384	114.9655	GEN501910 1-ACADIA UNIT ST1
FDNS	00NR	0	16WP	G15_085	FROM->TO	G14-057T 345.00 - SUNNYSIDE 345KV CKT 1	717	789	0.20384	114.9604	P12:138:AEPW:R.S.S.-4:S.HUD.-4
FDNS	00NR	0	16WP	G15_085	FROM->TO	G14-057T 345.00 - SUNNYSIDE 345KV CKT 1	717	789	0.20803	114.9568	LASALLE - LATTA JCT 138KV CKT 1
FDNS	00NR	0	16WP	G15_085	FROM->TO	G14-057T 345.00 - SUNNYSIDE 345KV CKT 1	717	789	0.20786	114.9568	P12:138:AEPW:REDROCKRD4:WTH_JCT4
FDNS	00NR	0	16WP	G15_085	FROM->TO	G14-057T 345.00 - SUNNYSIDE 345KV CKT 1	717	789	0.20399	114.9566	7JASPER 345.00 - BLACKBERRY 345KV CKT 1
FDNS	00NR	0	16WP	G15_085	FROM->TO	G14-057T 345.00 - SUNNYSIDE 345KV CKT 1	717	789	0.20634	114.955	WALTERS - WALTERS 69KV CKT 1
FDNS	00NR	0	16WP	G15_085	FROM->TO	G14-057T 345.00 - SUNNYSIDE 345KV CKT 1	717	789	0.20559	114.9539	P12:138:OKGE:3TERM27
FDNS	00NR	0	20WP	G15_085	FROM->TO	G14-057T 345.00 - SUNNYSIDE 345KV CKT 1	717	789	0.21104	114.9532	POCASSETT - TUTTLE 138KV CKT 1
FDNS	00NR	0	16WP	G15_085	FROM->TO	G14-057T 345.00 - SUNNYSIDE 345KV CKT 1	717	789	0.20406	114.9521	G15074_T 345.00 - JEFFREY ENERGY CENTER 345KV CKT 1
FDNS	00NR	0	16WP	G15_085	FROM->TO	G14-057T 345.00 - SUNNYSIDE 345KV CKT 1	717	789	0.20425	114.9482	BLACKBERRY - NEOSHO 345KV CKT 1
FDNS	00NR	0	16WP	G15_085	FROM->TO	G14-057T 345.00 - SUNNYSIDE 345KV CKT 1	717	789	0.20413	114.9468	SWISSVALE - WEST GARDNER 345KV CKT 1
FDNS	00NR	0	16WP	G15_085	FROM->TO	G14-057T 345.00 - SUNNYSIDE 345KV CKT 1	717	789	0.20542	114.9464	NORGE ROAD - SOUTHWESTERN STATION 138KV CKT 1
FDNS	00NR	0	16WP	G15_085	FROM->TO	G14-057T 345.00 - SUNNYSIDE 345KV CKT 1	717	789	0.20542	114.9464	NORGE ROAD - SOUTHWESTERN STATION 138KV CKT 1
FDNS	00NR	0	16WP	G15_085	FROM->TO	G14-057T 345.00 - SUNNYSIDE 345KV CKT 1	717	789	0.20922	114.9431	FRANKLIN SW - WESTMOORE 138KV CKT 1
FDNS	00NR	0	16WP	G15_085	FROM->TO	G14-057T 345.00 - SUNNYSIDE 345KV CKT 1	717	789	0.20568	114.9374	DRAPER LAKE - SEMINOLE 345KV CKT 2
FDNS	00NR	0	16WP	G15_085	FROM->TO	G14-057T 345.00 - SUNNYSIDE 345KV CKT 1	717	789	0.20568	114.9373	DRAPER LAKE - SEMINOLE 345KV CKT 1
FDNS	00NR	0	20WP	G15_085	FROM->TO	G14-057T 345.00 - SUNNYSIDE 345KV CKT 1	717	789	0.20675	114.9356	DOLET HILLS - SOUTHWEST SHREVEPORT 345KV CKT 1
FDNS	00NR	0	20WP	G15_085	FROM->TO	G14-057T 345.00 - SUNNYSIDE 345KV CKT 1	717	789	0.20675	114.9356	DOLET HILLS - SOUTHWEST SHREVEPORT 345KV CKT 1
FDNS	00NR	0	16WP	G15_085	FROM->TO	G14-057T 345.00 - SUNNYSIDE 345KV CKT 1	717	789	0.20418	114.933	SARA - STHLAKE4 138.00 138KV CKT 1
FDNS	00NR	0	16WP	G15_085	FROM->TO	G14-057T 345.00 - SUNNYSIDE 345KV CKT 1	717	789	0.2074	114.9289	G14_038T 345.00 - Hitchland Interchange 345KV CKT 1
FDNS	00NR	0	16WP	G15_085	FROM->TO	G14-057T 345.00 - SUNNYSIDE 345KV CKT 1	717	789	0.2042	114.9274	ETTA (DUKE HOTSPRINGS) - MC NIEL 500KV CKT 1
FDNS	00NR	0	16WP	G15_085	FROM->TO	G14-057T 345.00 - SUNNYSIDE 345KV CKT 1	717	789	0.20384	114.9218	P12:138:AEPW:YARCH-S4:T.S.E.-4
FDNS	00NR	0	16WP	G15_085	FROM->TO	G14-057T 345.00 - SUNNYSIDE 345KV CKT 1	717	789	0.20137	114.9213	LAWTON RELIFT TAP - OMPA-WALTERS 69KV CKT 1
FDNS	00NR	0	16WP	G15_085	FROM->TO	G14-057T 345.00 - SUNNYSIDE 345KV CKT 1	717	789	0.20384	114.9181	SABINE 230/24.0KV TRANSFORMER CKT 1
FDNS	00NR	0	16WP	G15_085	FROM->TO	G14-057T 345.00 - SUNNYSIDE 345KV CKT 1	717	789	0.20384	114.9164	ESSEX UNIT 2 500/18.0KV TRANSFORMER CKT 1
FDNS	00NR	0	16WP	G15_085	FROM->TO	G14-057T 345.00 - SUNNYSIDE 345KV CKT 1	717	789	0.20384	114.9157	P12:69:AEPW:NROGERS2:ECNTRTN2
FDNS	00NR	0	16WP	G15_085	FROM->TO	G14-057T 345.00 - SUNNYSIDE 345KV CKT 1	717	789	0.20385	114.9156	P12:138:AEPW:BA_71ST4:T.S.E.-4
FDNS	00NR	0	16WP	G15_085	FROM->TO	G14-057T 345.00 - SUNNYSIDE 345KV CKT 1	717	789	0.20384	114.9151	GEN336801 1-BAXTER WILSON UNIT #1
FDNS	00NR	0	16WP	G15_085	FROM->TO	G14-057T 345.00 - SUNNYSIDE 345KV CKT 1	717	789	0.20432	114.9126	EMPORIA ENERGY CENTER - G14_001T 345.00 345KV CKT 1
FDNS	00NR	0	16WP	G15_085	FROM->TO	G14-057T 345.00 - SUNNYSIDE 345KV CKT 1	717	789	0.204	114.9076	7LUTESVIL 345.00 - 7ST FRANC 345.00 345KV CKT 1
FDNS	00NR	0	16WP	G15_085	FROM->TO	G14-057T 345.00 - SUNNYSIDE 345KV CKT 1	717	789	0.20418	114.9039	MCCLAIN - STHLAKE4 138.00 138KV CKT 1

SOLUTION	GROUP	SCENARIO	SEASON	SOURCE	DIRECTION	MONITORED ELEMENT	RATEA (MVA)	RATEB(MVA)	TDF	TC%LOADING (% MVA)	CONTINGENCY
FDNS	00NR	0	16WP	G15_085	FROM->TO	G14-057T 345.00 - SUNNYSIDE 345KV CKT 1	717	789	0.20384	114.8963	FRONTIER 345/18.0KV TRANSFORMER CKT 1
FDNS	00NR	0	16WP	G15_085	FROM->TO	G14-057T 345.00 - SUNNYSIDE 345KV CKT 1	717	789	0.20398	114.8959	HOPE - MCNAB REC 115KV CKT 1
FDNS	00NR	0	16WP	G15_085	FROM->TO	G14-057T 345.00 - SUNNYSIDE 345KV CKT 1	717	789	0.20384	114.8947	FRONTIER 345/18.0KV TRANSFORMER CKT 1
FDNS	00NR	0	16WP	G15_085	FROM->TO	G14-057T 345.00 - SUNNYSIDE 345KV CKT 1	717	789	0.20423	114.888	P12:138:AEPW-OGE:SHIDLER4:OSAGE 4
FDNS	00NR	0	16WP	G15_085	FROM->TO	G14-057T 345.00 - SUNNYSIDE 345KV CKT 1	717	789	0.20398	114.887	P12:115:AEPW:TURK3:HOPE3
FDNS	00NR	0	16WP	G15_085	FROM->TO	G14-057T 345.00 - SUNNYSIDE 345KV CKT 1	717	789	0.20384	114.8839	P12:161:AEPW:CHAMSPR5:FARMING5
FDNS	00NR	0	16WP	G15_085	FROM->TO	G14-057T 345.00 - SUNNYSIDE 345KV CKT 1	717	789	0.20531	114.8809	SOUTHWESTERN STATION - VERDEN 138KV CKT 1
FDNS	00NR	0	16WP	G15_085	FROM->TO	G14-057T 345.00 - SUNNYSIDE 345KV CKT 1	717	789	0.20543	114.8807	NOBLE - PURCELL4 138.00 138KV CKT 1
FDNS	00NR	0	16WP	G15_085	FROM->TO	G14-057T 345.00 - SUNNYSIDE 345KV CKT 1	717	789	0.20786	114.8796	HINTON - WEATHERFORD JCT. 138KV CKT 1
FDNS	00NR	0	16WP	G15_085	FROM->TO	G14-057T 345.00 - SUNNYSIDE 345KV CKT 1	717	789	0.20458	114.8773	ENOWILT - LONE OAK 138KV CKT 1
FDNS	00NR	0	16WP	G15_085	FROM->TO	G14-057T 345.00 - SUNNYSIDE 345KV CKT 1	717	789	0.2057	114.8748	ANADARKO - SEQUOYAHJ4 138.00 138KV CKT 1
FDNS	00NR	0	16WP	G15_085	FROM->TO	G14-057T 345.00 - SUNNYSIDE 345KV CKT 1	717	789	0.2057	114.8744	CORN TAP - SEQUOYAHJ4 138.00 138KV CKT 1
FDNS	00NR	0	16WP	G15_085	FROM->TO	G14-057T 345.00 - SUNNYSIDE 345KV CKT 1	717	789	0.20327	114.8724	ARBUCKLE - VANOSTP4 138.00 138KV CKT 1
FDNS	00NR	0	16WP	G15_085	FROM->TO	G14-057T 345.00 - SUNNYSIDE 345KV CKT 1	717	789	0.2062	114.872	WEATHERFORD TAP - WEATHERFORD WIND FARM 138KV CKT 1
FDNS	00NR	0	16WP	G15_085	FROM->TO	G14-057T 345.00 - SUNNYSIDE 345KV CKT 1	717	789	0.20458	114.8684	ENOWILT - SARDIS 138KV CKT 1
FDNS	00NR	0	16WP	G15_085	FROM->TO	G14-057T 345.00 - SUNNYSIDE 345KV CKT 1	717	789	0.20405	114.8684	8WNEWMADRID 500.00 - DELL 500 500KV CKT 1
FDNS	00NR	0	16WP	G15_085	FROM->TO	G14-057T 345.00 - SUNNYSIDE 345KV CKT 1	717	789	0.20384	114.8662	GEN505616 1-BROKEN BOW
FDNS	00NR	0	16WP	G15_085	FROM->TO	G14-057T 345.00 - SUNNYSIDE 345KV CKT 1	717	789	0.20593	114.8654	CLINTON JUNCTION - ELK CITY 138KV CKT 1
FDNS	00NR	0	16WP	G15_085	FROM->TO	G14-057T 345.00 - SUNNYSIDE 345KV CKT 1	717	789	0.20593	114.8654	CLINTON JUNCTION - ELK CITY 138KV CKT 1
FDNS	00NR	0	16WP	G15_085	FROM->TO	G14-057T 345.00 - SUNNYSIDE 345KV CKT 1	717	789	0.20398	114.8645	MCNAB REC - Turk 115 115KV CKT 1
FDNS	00NR	0	16WP	G15_085	FROM->TO	G14-057T 345.00 - SUNNYSIDE 345KV CKT 1	717	789	0.20398	114.8645	TURK (TURK 1) 138/115/13.2KV TRANSFORMER CKT 1
FDNS	00NR	0	16WP	G15_085	FROM->TO	G14-057T 345.00 - SUNNYSIDE 345KV CKT 1	717	789	0.20398	114.8645	TURK (TURK 1) 138/115/13.2KV TRANSFORMER CKT 1
FDNS	00NR	0	16WP	G15_085	FROM->TO	G14-057T 345.00 - SUNNYSIDE 345KV CKT 1	717	789	0.20531	114.86	NORTH 29TH CHICKASHA - VERDEN 138KV CKT 1
FDNS	00NR	0	16WP	G15_085	FROM->TO	G14-057T 345.00 - SUNNYSIDE 345KV CKT 1	717	789	0.20432	114.8591	G14_001T 345.00 - WICHITA 345KV CKT 1
FDNS	00NR	0	16WP	G15_085	FROM->TO	G14-057T 345.00 - SUNNYSIDE 345KV CKT 1	717	789	0.20384	114.8585	LEWIS CREEK SWITCHYARD 138/22.0KV TRANSFORMER CKT 1
FDNS	00NR	0	16WP	G15_085	FROM->TO	G14-057T 345.00 - SUNNYSIDE 345KV CKT 1	717	789	0.2044	114.8545	G13-010T 345.00 - POST ROCK 345KV CKT 1
FDNS	00NR	0	16WP	G15_085	FROM->TO	G14-057T 345.00 - SUNNYSIDE 345KV CKT 1	717	789	0.20137	114.8545	OMPA-WALTERS - WALTERS 69KV CKT 1
FDNS	00NR	0	16WP	G15_085	FROM->TO	G14-057T 345.00 - SUNNYSIDE 345KV CKT 1	717	789	0.20137	114.8545	OMPA-WALTERS - WALTERS 69KV CKT 1
FDNS	00NR	0	16WP	G15_085	FROM->TO	G14-057T 345.00 - SUNNYSIDE 345KV CKT 1	717	789	0.20411	114.8539	COUCH SES - MC NIEL 115KV CKT 1
FDNS	00NR	0	16WP	G15_085	FROM->TO	G14-057T 345.00 - SUNNYSIDE 345KV CKT 1	717	789	0.20384	114.8536	LEWIS CREEK SWITCHYARD 138/22.0KV TRANSFORMER CKT 1
FDNS	00NR	0	16WP	G15_085	FROM->TO	G14-057T 345.00 - SUNNYSIDE 345KV CKT 1	717	789	0.20408	114.8433	EMPORIA ENERGY CENTER - SWISSVALE 345KV CKT 1
FDNS	00NR	0	16WP	G15_085	FROM->TO	G14-057T 345.00 - SUNNYSIDE 345KV CKT 1	717	789	0.20634	114.8397	P12:69:WFEC-AEPW:COMANCH2:WALTRS-2
FDNS	00NR	0	16WP	G15_085	FROM->TO	G14-057T 345.00 - SUNNYSIDE 345KV CKT 1	717	789	0.20384	114.8396	GEN501970 1-EVANGELINE UNIT 7
FDNS	00NR	0	16WP	G15_085	FROM->TO	G14-057T 345.00 - SUNNYSIDE 345KV CKT 1	717	789	0.20405	114.835	MORISNT4 138.00 - STILLWATER 138KV CKT 1
FDNS	00NR	0	16WP	G15_085	FROM->TO	G14-057T 345.00 - SUNNYSIDE 345KV CKT 1	717	789	0.20458	114.8336	CLAYTON - SARDIS 138KV CKT 1
FDNS	00NR	0	16WP	G15_085	FROM->TO	G14-057T 345.00 - SUNNYSIDE 345KV CKT 1	717	789	0.20406	114.8296	P12:138:OKGE:3TERM2
FDNS	00NR	0	16WP	G15_085	FROM->TO	G14-057T 345.00 - SUNNYSIDE 345KV CKT 1	717	789	0.20786	114.8285	HINTON - REDROCKRD4 138.00 138KV CKT 1
FDNS	00NR	0	16WP	G15_085	FROM->TO	G14-057T 345.00 - SUNNYSIDE 345KV CKT 1	717	789	0.20384	114.8271	GEN334392 1-EXXON MOBIL IPP 1
FDNS	00NR	0	16WP	G15_085	FROM->TO	G14-057T 345.00 - SUNNYSIDE 345KV CKT 1	717	789	0.20542	114.826	CORNVILLE - NORGE ROAD 138KV CKT 1
FDNS	00NR	0	16WP	G15_085	FROM->TO	G14-057T 345.00 - SUNNYSIDE 345KV CKT 1	717	789	0.20542	114.826	CORNVILLE - NORGE ROAD 138KV CKT 1
FDNS	00NR	0	16WP	G15_085	FROM->TO	G14-057T 345.00 - SUNNYSIDE 345KV CKT 1	717	789	0.20803	114.822	LASALLE - STONEWAL LH138.00 138KV CKT 1
FDNS	00NR	0	16WP	G15_085	FROM->TO	G14-057T 345.00 - SUNNYSIDE 345KV CKT 1	717	789	0.20384	114.8203	GEN334393 1-EXXON MOBIL IPP 2
FDNS	00NR	0	16WP	G15_085	FROM->TO	G14-057T 345.00 - SUNNYSIDE 345KV CKT 1	717	789	0.20384	114.8203	GEN334394 1-EXXON MOBIL IPP 3
FDNS	00NR	0	16WP	G15_085	FROM->TO	G14-057T 345.00 - SUNNYSIDE 345KV CKT 1	717	789	0.20392	114.8155	P12:138:OKGE:3TERM12
FDNS	00NR	0	16WP	G15_085	FROM->TO	G14-057T 345.00 - SUNNYSIDE 345KV CKT 1	717	789	0.20384	114.812	GEN336222 1-LITTLE GYPSY UNIT#2
FDNS	00NR	0	16WP	G15_085	FROM->TO	G14-057T 345.00 - SUNNYSIDE 345KV CKT 1	717	789	0.20803	114.807	STONEWAL LH138.00 - TUPELO TAP 138KV CKT 1
FDNS	00NR	0	16WP	G15_085	FROM->TO	G14-057T 345.00 - SUNNYSIDE 345KV CKT 1	717	789	0.20458	114.8059	P12:138:AEPW-SWPA:LONEOAK4:BRKNBW4
FDNS	00NR	0	16WP	G15_085	FROM->TO	G14-057T 345.00 - SUNNYSIDE 345KV CKT 1	717	789	0.20412	114.803	FLETCHER - MARLOW JCT 69KV CKT 1
FDNS	00NR	0	20WP	G15_085	FROM->TO	G14-057T 345.00 - SUNNYSIDE 345KV CKT 1	717	789	0.20527	114.7966	GEN335831 1-RIVERBEND UNIT#1
FDNS	00NR	0	16WP	G15_085	FROM->TO	G14-057T 345.00 - SUNNYSIDE 345KV CKT 1	717	789	0.20403	114.7955	7JASPER 345.00 - MORGAN 345KV CKT 1
FDNS	00NR	0	16WP	G15_085	FROM->TO	G14-057T 345.00 - SUNNYSIDE 345KV CKT 1	717	789	0.20386	114.7941	P12:138:AEPW:R.S.S-4:T.P.S.-4
FDNS	00NR	0	16WP	G15_085	FROM->TO	G14-057T 345.00 - SUNNYSIDE 345KV CKT 1	717	789	0.20384	114.7937	GEN506749 1-EASTMAN GENERATION A
FDNS	00NR	0	16WP	G15_085	FROM->TO	G14-057T 345.00 - SUNNYSIDE 345KV CKT 1	717	789	0.20458	114.792	CLAYTON - NASHOBA 138KV CKT 1
FDNS	00NR	0	16WP	G15_085	FROM->TO	G14-057T 345.00 - SUNNYSIDE 345KV CKT 1	717	789	0.20531	114.7904	CORNVILLE - NORTH 29TH CHICKASHA 138KV CKT 1
FDNS	00NR	0	16WP	G15_085	FROM->TO	G14-057T 345.00 - SUNNYSIDE 345KV CKT 1	717	789	0.20277	114.7904	CLARKSVILLE - ONETA 345KV CKT 1
FDNS	00NR	0	16WP	G15_085	FROM->TO	G14-057T 345.00 - SUNNYSIDE 345KV CKT 1	717	789	0.20277	114.7904	CLARKSVILLE - ONETA 345KV CKT 1
FDNS	00NR	0	16WP	G15_085	FROM->TO	G14-057T 345.00 - SUNNYSIDE 345KV CKT 1	717	789	0.20384	114.7901	GEN334431 1-SABINE UNIT 1
FDNS	00NR	0	16WP	G15_085	FROM->TO	G14-057T 345.00 - SUNNYSIDE 345KV CKT 1	717	789	0.20384	114.79	GEN334432 1-SABINE UNIT 2
FDNS	00NR	0	16WP	G15_085	FROM->TO	G14-057T 345.00 - SUNNYSIDE 345KV CKT 1	717	789	0.20433	114.785	FRANKLIN - FRANKLIN SW 138KV CKT 1
FDNS	00NR	0	16WP	G15_085	FROM->TO	G14-057T 345.00 - SUNNYSIDE 345KV CKT 1	717	789	0.2062	114.7845	WEATHERFORD SOUTHEAST - WEATHERFORD TAP 138KV CKT 1
FDNS	00NR	0	16WP	G15_085	FROM->TO	G14-057T 345.00 - SUNNYSIDE 345KV CKT 1	717	789	0.20384	114.7829	GEN501972 1-EVANGELINE UNIT 7-2
FDNS	00NR	0	16WP	G15_085	FROM->TO	G14-057T 345.00 - SUNNYSIDE 345KV CKT 1	717	789	0.20384	114.7828	GEN501971 1-EVANGELINE UNIT 7-1
FDNS	00NR	0	16WP	G15_085	FROM->TO	G14-057T 345.00 - SUNNYSIDE 345KV CKT 1	717	789	0.20384	114.7826	GEN336152 1-WATERFORD UNIT#2
FDNS	00NR	0	16WP	G15_085	FROM->TO	G14-057T 345.00 - SUNNYSIDE 345KV CKT 1	717	789	0.20384	114.7815	GEN336151 1-WATERFORD UNIT#1
FDNS	00NR	0	16WP	G15_085	FROM->TO	G14-057T 345.00 - SUNNYSIDE 345KV CKT 1	717	789	0.20458	114.779	BETHEL - NASHOBA 138KV CKT 1
FDNS	00NR	0	16WP	G15_085	FROM->TO	G14-057T 345.00 - SUNNYSIDE 345KV CKT 1	717	789	0.20384	114.7698	P12:138:AEPW:R.S.S.-4:R:96YALE-4
FDNS	00NR	0	20WP	G15_085	FROM->TO	G14-057T 345.00 - SUNNYSIDE 345KV CKT 1	717	789	0.2099	114.7697	ARCADIA - NORTHWEST 345KV CKT 1
FDNS	00NR	0	20WP	G15_085	FROM->TO	G14-057T 345.00 - SUNNYSIDE 345KV CKT 1	717	789	0.20527	114.7537	GRAND GULF 500/22.0KV TRANSFORMER CKT 1
FDNS	00NR	0	16WP	G15_085	FROM->TO	G14-057T 345.00 - SUNNYSIDE 345KV CKT 1	717	789	0.21019	114.7505	MARIETTA - MARIETTA4 138.00 138KV CKT 1
FDNS	00NR	0	16WP	G15_085	FROM->TO	G14-057T 345.00 - SUNNYSIDE 345KV CKT 1	717	789	0.20518	114.7347	Canadian Pump Station - REDROCKRD4 138.00 138KV CKT 1
FDNS	00NR	0	16WP	G15_085	FROM->TO	G14-057T 345.00 - SUNNYSIDE 345KV CKT 1	717	789	0.2062	114.73	CLINTON JUNCTION - CLINTON NATURAL GAS TAP 138KV CKT 1
FDNS	00NR	0	16WP	G15_085	FROM->TO	G14-057T 345.00 - SUNNYSIDE 345KV CKT 1	717	789	0.20432	114.7223	P12:138:OKGE:3TERM47
FDNS	00NR	0	16WP	G15_085	FROM->TO	G14-057T 345.00 - SUNNYSIDE 345KV CKT 1	717	789	0.20598	114.7209	CIMARRON - NORTHWEST 345KV CKT 1
FDNS	00NR	0	16WP	G15_085	FROM->TO	G14-057T 345.00 - SUNNYSIDE 345KV CKT 1	717	789	0.20437	114.7076	HAMMETT TAP - HORSESHOE LAKE 138KV CKT 1
FDNS	00NR	0	20WP	G15_085	FROM->TO	G14-057T 345.00 - SUNNYSIDE 345KV CKT 1	717	789	0.20723	114.7044	7SAREPTA% 345.00 - ELDORADO EHV 345KV CKT 1
FDNS	00NR	0	20WP	G15_085	FROM->TO	G14-057T 345.00 - SUNNYSIDE 345KV CKT 1	717	789	0.20723	114.7042	3TR3AR8EL7EL
FDNS	00NR	0	20WP	G15_085	FROM->TO	G14-057T 345.00 - SUNNYSIDE 345KV CKT 1	717	789	0.20723	114.6934	ELDORADO EHV 500/345KV TRANSFORMER CKT 1
FDNS	00NR	0	20WP	G15_085	FROM->TO	G14-057T 345.00 - SUNNYSIDE 345KV CKT 1	717	789	0.20814	114.6786	P12:138:AEPW:DUNCAN-4:L.E.S.-4
FDNS	00NR	0	16WP	G15_085	FROM->TO	G14-057T 345.00 - SUNNYSIDE 345KV CKT 1	717	789	0.20634	114.6677	COMANCHE - WALTERS 69KV CKT 1

SOLUTION	GROUP	SCENARIO	SEASON	SOURCE	DIRECTION	MONITORED ELEMENT	RATEA (MVA)	RATEB(MVA)	TDF	TC%LOADING (% MVA)	CONTINGENCY
FDNS	00NR	0	20WP	G15_085	FROM->TO	G14-057T 345.00 - SUNNYSIDE 345KV CKT 1	717	789	0.20527	114.608	GEN515577 1-ARBWND11 0.6900
FDNS	00NR	0	20WP	G15_085	FROM->TO	G14-057T 345.00 - SUNNYSIDE 345KV CKT 1	717	789	0.20572	114.5615	MATHWSN7 345.00 - TATONGA7 345.00 345KV CKT 1
FDNS	00NR	0	20WP	G15_085	FROM->TO	G14-057T 345.00 - SUNNYSIDE 345KV CKT 1	717	789	0.20822	114.5571	COMANCHE TAP - OMPA-DUNCAN 840 138KV CKT 1
FDNS	00NR	0	20WP	G15_085	FROM->TO	G14-057T 345.00 - SUNNYSIDE 345KV CKT 1	717	789	0.21104	114.5549	BRIDGECR 138.00 - TUTTLE 138KV CKT 1
FDNS	00NR	0	20WP	G15_085	FROM->TO	G14-057T 345.00 - SUNNYSIDE 345KV CKT 1	717	789	0.20083	114.5467	CANADIAN RIVER - MUSKOGEE 345KV CKT 1
FDNS	00NR	0	20WP	G15_085	FROM->TO	G14-057T 345.00 - SUNNYSIDE 345KV CKT 1	717	789	0.20527	114.4684	GEN509409 1-WILKES #3
FDNS	00NR	0	20WP	G15_085	FROM->TO	G14-057T 345.00 - SUNNYSIDE 345KV CKT 1	717	789	0.20915	114.4388	Hitchland Interchange - WALKTAP7 345.00 345KV CKT 1
FDNS	00NR	0	20WP	G15_085	FROM->TO	G14-057T 345.00 - SUNNYSIDE 345KV CKT 1	717	789	0.20915	114.4388	Hitchland Interchange - WALKTAP7 345.00 345KV CKT 1
FDNS	00NR	0	20WP	G15_085	FROM->TO	G14-057T 345.00 - SUNNYSIDE 345KV CKT 1	717	789	0.21169	114.4317	HEALDTON - LOCO 138KV CKT 1
FDNS	00NR	0	20WP	G15_085	FROM->TO	G14-057T 345.00 - SUNNYSIDE 345KV CKT 1	717	789	0.20598	114.4268	ARCADIA - SEMINOLE 345KV CKT 1
FDNS	00NR	0	20WP	G15_085	FROM->TO	G14-057T 345.00 - SUNNYSIDE 345KV CKT 1	717	789	0.20915	114.4189	P12:345:SPS:J07.1.FINN.HITCH
FDNS	00NR	0	20WP	G15_085	FROM->TO	G14-057T 345.00 - SUNNYSIDE 345KV CKT 1	717	789	0.20527	114.4089	GEN501813 1-RODEMACHER UNIT 3
FDNS	00NR	0	20WP	G15_085	FROM->TO	G14-057T 345.00 - SUNNYSIDE 345KV CKT 1	717	789	0.20527	114.3121	GEN300006 1-NEW MADRID UNIT 1
FDNS	00NR	0	20WP	G15_085	FROM->TO	G14-057T 345.00 - SUNNYSIDE 345KV CKT 1	717	789	0.20527	114.2922	GEN300007 1-NEW MADRID UNIT 2
FDNS	00NR	0	20WP	G15_085	FROM->TO	G14-057T 345.00 - SUNNYSIDE 345KV CKT 1	717	789	0.21169	114.2876	HEALDTON - RINGLING 138KV CKT 1
FDNS	00NR	0	20WP	G15_085	FROM->TO	G14-057T 345.00 - SUNNYSIDE 345KV CKT 1	717	789	0.2058	114.2757	LACYGNE - WAVERLY7 345.00 345KV CKT 1
FDNS	00NR	0	20WP	G15_085	FROM->TO	G14-057T 345.00 - SUNNYSIDE 345KV CKT 1	717	789	0.20822	114.2686	DUNCAN - OMPA-DUNCAN 840 138KV CKT 1
FDNS	00NR	0	20WP	G15_085	FROM->TO	G14-057T 345.00 - SUNNYSIDE 345KV CKT 1	717	789	0.20822	114.2686	DUNCAN - OMPA-DUNCAN 840 138KV CKT 1
FDNS	00NR	0	20WP	G15_085	FROM->TO	G14-057T 345.00 - SUNNYSIDE 345KV CKT 1	717	789	0.21104	114.2678	P12:138:WFEC:MSL01
FDNS	00NR	0	16WP	G15_085	FROM->TO	G14-057T 345.00 - SUNNYSIDE 345KV CKT 1	717	789	0.20384	114.2581	803-OKLAUNION
FDNS	00NR	0	20WP	G15_085	FROM->TO	G14-057T 345.00 - SUNNYSIDE 345KV CKT 1	717	789	0.21104	114.2563	BRIDGECR 138.00 - SUNSHINE CANYON 138KV CKT 1
FDNS	00NR	0	20WP	G15_085	FROM->TO	G14-057T 345.00 - SUNNYSIDE 345KV CKT 1	717	789	0.20527	114.1972	GEN335206 1-NELSON UNIT 6
FDNS	00NR	0	20WP	G15_085	FROM->TO	G14-057T 345.00 - SUNNYSIDE 345KV CKT 1	717	789	0.2058	114.1543	WAVERLY7 345.00 - WOLF CREEK 345KV CKT 1
FDNS	00NR	0	20WP	G15_085	FROM->TO	G14-057T 345.00 - SUNNYSIDE 345KV CKT 1	717	789	0.20527	114.1257	GEN520947 1-HUGO1
FDNS	00NR	0	20WP	G15_085	FROM->TO	G14-057T 345.00 - SUNNYSIDE 345KV CKT 1	717	789	0.21169	114.1171	RINGLING - SOUTH WILSON 138KV CKT 1
FDNS	00NR	0	16WP	G15_085	FROM->TO	G14-057T 345.00 - SUNNYSIDE 345KV CKT 1	717	789	0.20289	114.0994	P12:138:OKGE:3TERM39
FDNS	00NR	0	20WP	G15_085	FROM->TO	G14-057T 345.00 - SUNNYSIDE 345KV CKT 1	717	789	0.20572	114.0411	G11_051T 345.00 - TATONGA7 345.00 345KV CKT 1
FDNS	00NR	0	20WP	G15_085	FROM->TO	G14-057T 345.00 - SUNNYSIDE 345KV CKT 1	717	789	0.20598	114.0258	ELDORADO EHV - MOUNT OLIVE 500KV CKT 1
FDNS	00NR	0	20WP	G15_085	FROM->TO	G14-057T 345.00 - SUNNYSIDE 345KV CKT 1	717	789	0.20527	114.0121	GEN501812 1-RODEMACHER UNIT 2
FDNS	00NR	0	20WP	G15_085	FROM->TO	G14-057T 345.00 - SUNNYSIDE 345KV CKT 1	717	789	0.20355	114.0071	P12:138:AEPW:SHERID4:112GORE4
FDNS	00NR	0	20WP	G15_085	FROM->TO	G14-057T 345.00 - SUNNYSIDE 345KV CKT 1	717	789	0.20527	114.0013	DOLET HILLS 345/24.0KV TRANSFORMER CKT 1
FDNS	00NR	0	20WP	G15_085	FROM->TO	G14-057T 345.00 - SUNNYSIDE 345KV CKT 1	717	789	0.2067	113.9961	THISTLE7 345.00 - WOODWARD DISTRICT EHV 345KV CKT 1
FDNS	00NR	0	20WP	G15_085	FROM->TO	G14-057T 345.00 - SUNNYSIDE 345KV CKT 1	717	789	0.2067	113.9961	THISTLE7 345.00 - WOODWARD DISTRICT EHV 345KV CKT 1
FDNS	00NR	0	20WP	G15_085	FROM->TO	G14-057T 345.00 - SUNNYSIDE 345KV CKT 1	717	789	0.2067	113.9961	THISTLE7 345.00 - WOODWARD DISTRICT EHV 345KV CKT 2
FDNS	00NR	0	20WP	G15_085	FROM->TO	G14-057T 345.00 - SUNNYSIDE 345KV CKT 1	717	789	0.2067	113.9961	THISTLE7 345.00 - WOODWARD DISTRICT EHV 345KV CKT 2
FDNS	00NR	0	20WP	G15_085	FROM->TO	G14-057T 345.00 - SUNNYSIDE 345KV CKT 1	717	789	0.20526	113.9283	PARK LANE - SEMINOLE 138KV CKT 1
FDNS	00NR	0	20WP	G15_085	FROM->TO	G14-057T 345.00 - SUNNYSIDE 345KV CKT 1	717	789	0.20608	113.8762	WEBRE - WELLS 500KV CKT 1
FDNS	00NR	0	20WP	G15_085	FROM->TO	G14-057T 345.00 - SUNNYSIDE 345KV CKT 1	717	789	0.20527	113.875	GEN515564 1-ORIGIN11 0.6900
FDNS	00NR	0	20WP	G15_085	FROM->TO	G14-057T 345.00 - SUNNYSIDE 345KV CKT 1	717	789	0.20527	113.875	GEN515565 1-ORIGIN21 0.6900
FDNS	00NR	0	16WP	G15_085	FROM->TO	G14-057T 345.00 - SUNNYSIDE 345KV CKT 1	717	789	0.20361	113.8718	MAYSVILLE - MAYSVLT4 138.00 138KV CKT 1
FDNS	00NR	0	16WP	G15_085	FROM->TO	G14-057T 345.00 - SUNNYSIDE 345KV CKT 1	717	789	0.20456	113.8663	DRAPER LAKE - MIDWEST TAP 138KV CKT 1
FDNS	00NR	0	16WP	G15_085	FROM->TO	G14-057T 345.00 - SUNNYSIDE 345KV CKT 1	717	789	0.20408	113.8628	GLASSES - MADILL INDUSTRIAL TAP 138KV CKT 1
FDNS	00NR	0	20WP	G15_085	FROM->TO	G14-057T 345.00 - SUNNYSIDE 345KV CKT 1	717	789	0.20527	113.8527	GEN334440 1-SABINE UNIT 4
FDNS	00NR	0	16WP	G15_085	FROM->TO	G14-057T 345.00 - SUNNYSIDE 345KV CKT 1	717	789	0.20434	113.8517	CIMARRON - MATHWSN7 345.00 345KV CKT 1
FDNS	00NR	0	16WP	G15_085	FROM->TO	G14-057T 345.00 - SUNNYSIDE 345KV CKT 1	717	789	0.20434	113.8517	CIMARRON - MATHWSN7 345.00 345KV CKT 2
FDNS	00NR	0	16WP	G15_085	FROM->TO	G14-057T 345.00 - SUNNYSIDE 345KV CKT 1	717	789	0.20384	113.8451	GEN562691 1-G15_015_3 0.6900
FDNS	00NR	0	16WP	G15_085	FROM->TO	G14-057T 345.00 - SUNNYSIDE 345KV CKT 1	717	789	0.20384	113.8449	GEN562772 1-G15034_3 0.6900
FDNS	00NR	0	16WP	G15_085	FROM->TO	G14-057T 345.00 - SUNNYSIDE 345KV CKT 1	717	789	0.20476	113.8438	P12:138:OKGE:3TERM21
FDNS	00NR	0	16WP	G15_085	FROM->TO	G14-057T 345.00 - SUNNYSIDE 345KV CKT 1	717	789	0.20423	113.8375	HUGO (HUGO 1) 345/138/13.8KV TRANSFORMER CKT 1
FDNS	00NR	0	20WP	G15_085	FROM->TO	G14-057T 345.00 - SUNNYSIDE 345KV CKT 1	717	789	0.20644	113.8344	CANEYRV7 345.00 - NEOSHO 345KV CKT 1
FDNS	00NR	0	20WP	G15_085	FROM->TO	G14-057T 345.00 - SUNNYSIDE 345KV CKT 1	717	789	0.21169	113.8289	MARIETTA - SOUTH WILSON 138KV CKT 1
FDNS	00NR	0	20WP	G15_085	FROM->TO	G14-057T 345.00 - SUNNYSIDE 345KV CKT 1	717	789	0.20527	113.8232	GEN590011 2-ERCOT EQUIVALENCE
FDNS	00NR	0	16WP	G15_085	FROM->TO	G14-057T 345.00 - SUNNYSIDE 345KV CKT 1	717	789	0.20384	113.8171	GEN521103 1-BLUE CANYON WIND FARM
FDNS	00NR	0	16WP	G15_085	FROM->TO	G14-057T 345.00 - SUNNYSIDE 345KV CKT 1	717	789	0.20384	113.8166	GEN520812 1-ANADRK5
FDNS	00NR	0	16WP	G15_085	FROM->TO	G14-057T 345.00 - SUNNYSIDE 345KV CKT 1	717	789	0.20384	113.8165	GEN520813 1-ANADRK6
FDNS	00NR	0	16WP	G15_085	FROM->TO	G14-057T 345.00 - SUNNYSIDE 345KV CKT 1	717	789	0.20361	113.8102	MAYSVLT4 138.00 - PRAIRIE POINT 138KV CKT 1
FDNS	00NR	0	16WP	G15_085	FROM->TO	G14-057T 345.00 - SUNNYSIDE 345KV CKT 1	717	789	0.20408	113.8033	GLASSES - RUSSETT 138KV CKT 1
FDNS	00NR	0	20WP	G15_085	FROM->TO	G14-057T 345.00 - SUNNYSIDE 345KV CKT 1	717	789	0.20527	113.7939	DELL 500 - ESSEX UNIT 2 500KV CKT Z1
FDNS	00NR	0	20WP	G15_085	FROM->TO	G14-057T 345.00 - SUNNYSIDE 345KV CKT 1	717	789	0.20527	113.7926	P12:161:AEPW:DYESS 5:HYLAND 5
FDNS	00NR	0	16WP	G15_085	FROM->TO	G14-057T 345.00 - SUNNYSIDE 345KV CKT 1	717	789	0.20342	113.785	ARBUCKLE - SULPHR 4 138.00 138KV CKT 1
FDNS	00NR	0	20WP	G15_085	FROM->TO	G14-057T 345.00 - SUNNYSIDE 345KV CKT 1	717	789	0.20936	113.7845	REDBUD - RIVERSIDE STATION 345KV CKT 1
FDNS	00NR	0	20WP	G15_085	FROM->TO	G14-057T 345.00 - SUNNYSIDE 345KV CKT 1	717	789	0.20936	113.7845	REDBUD - RIVERSIDE STATION 345KV CKT 1
FDNS	00NR	0	16WP	G15_085	FROM->TO	G14-057T 345.00 - SUNNYSIDE 345KV CKT 1	717	789	0.20389	113.7802	P12:138:WFEC:MSL11
FDNS	00NR	0	16WP	G15_085	FROM->TO	G14-057T 345.00 - SUNNYSIDE 345KV CKT 1	717	789	0.20389	113.7802	P12:138:WFEC-AEPW:PHAROAH4:LONEOAK4
FDNS	00NR	0	16WP	G15_085	FROM->TO	G14-057T 345.00 - SUNNYSIDE 345KV CKT 1	717	789	0.20403	113.7755	CANEY CREEK - JOHNSON COUNTY 138KV CKT 1
FDNS	00NR	0	16WP	G15_085	FROM->TO	G14-057T 345.00 - SUNNYSIDE 345KV CKT 1	717	789	0.20384	113.7736	GEN511961 1-DEMPSEY-WTG10.7000
FDNS	00NR	0	16WP	G15_085	FROM->TO	G14-057T 345.00 - SUNNYSIDE 345KV CKT 1	717	789	0.20385	113.758	P12:069:OKGE:3TERM42
FDNS	00NR	0	20WP	G15_085	FROM->TO	G14-057T 345.00 - SUNNYSIDE 345KV CKT 1	717	789	0.20527	113.7534	GEN590010 1-ERCOT EQUIVALENCE
FDNS	00NR	0	20WP	G15_085	FROM->TO	G14-057T 345.00 - SUNNYSIDE 345KV CKT 1	717	789	0.20527	113.7453	P12:69:AEPW:L.E.S.-2:LAW WC2
FDNS	00NR	0	20WP	G15_085	FROM->TO	G14-057T 345.00 - SUNNYSIDE 345KV CKT 1	717	789	0.19207	113.7442	LAWTON EASTSIDE (LES 5) 345/138/13.8KV TRANSFORMER CKT 2
FDNS	00NR	0	20WP	G15_085	FROM->TO	G14-057T 345.00 - SUNNYSIDE 345KV CKT 1	717	789	0.19207	113.7442	LAWTON EASTSIDE (LES 5) 345/138/13.8KV TRANSFORMER CKT 2
FDNS	00NR	0	16WP	G15_085	FROM->TO	G14-057T 345.00 - SUNNYSIDE 345KV CKT 1	717	789	0.20384	113.7348	GEN629070 2-BEAVER CHANNEL GENERATORFOR UNIT NO 2
FDNS	00NR	0	16WP	G15_085	FROM->TO	G14-057T 345.00 - SUNNYSIDE 345KV CKT 1	717	789	0.20391	113.7272	GRPRAR1-LNX3345.00 - HOLT.CO3 345.00 345KV CKT 1
FDNS	00NR	0	20WP	G15_085	FROM->TO	G14-057T 345.00 - SUNNYSIDE 345KV CKT 1	717	789	0.21169	113.7272	P12:138:WFEC:MSL17
FDNS	00NR	0	16WP	G15_085	FROM->TO	G14-057T 345.00 - SUNNYSIDE 345KV CKT 1	717	789	0.20384	113.7271	GEN515443 1-MNCOWND1 0.7000
FDNS	00NR	0	16WP	G15_085	FROM->TO	G14-057T 345.00 - SUNNYSIDE 345KV CKT 1	717	789	0.20391	113.7234	GRPRAR1-LNX3345.00 - YANKTON 345KV CKT Z
FDNS	00NR	0	20WP	G15_085	FROM->TO	G14-057T 345.00 - SUNNYSIDE 345KV CKT 1	717	789	0.20683	113.7227	P12:138:WFEC:MSL02
FDNS	00NR	0	16WP	G15_085	FROM->TO	G14-057T 345.00 - SUNNYSIDE 345KV CKT 1	717	789	0.20433	113.7218	P12:138:WFEC:MSL08
FDNS	00NR	0	16WP	G15_085	FROM->TO	G14-057T 345.00 - SUNNYSIDE 345KV CKT 1	717	789	0.20384	113.7183	GEN615021 1-GRE-ER 14G 16.000

SOLUTION	GROUP	SCENARIO	SEASON	SOURCE	DIRECTION	MONITORED ELEMENT	RATEA (MVA)	RATEB(MVA)	TDF	TC%LOADING (% MVA)	CONTINGENCY
FDNS	00NR	0	16WP	G15_085	FROM->TO	G14-057T 345.00 - SUNNYSIDE 345KV CKT 1	717	789	0.20384	113.7147	GEN562902 1-G15052_3 0.6900
FDNS	00NR	0	16WP	G15_085	FROM->TO	G14-057T 345.00 - SUNNYSIDE 345KV CKT 1	717	789	0.20361	113.7129	PRAIRIE POINT - RATLIFF 138KV CKT 1
FDNS	00NR	0	16WP	G15_085	FROM->TO	G14-057T 345.00 - SUNNYSIDE 345KV CKT 1	717	789	0.20371	113.7093	CARTER - CHICKASAW 138KV CKT 1
FDNS	00NR	0	16WP	G15_085	FROM->TO	G14-057T 345.00 - SUNNYSIDE 345KV CKT 1	717	789	0.20384	113.7078	GEN563242 1-G15090_3 0.6900
FDNS	00NR	0	16WP	G15_085	FROM->TO	G14-057T 345.00 - SUNNYSIDE 345KV CKT 1	717	789	0.20384	113.7066	GEN560183 1-REDHIL-WTG1 12.000
FDNS	00NR	0	16WP	G15_085	FROM->TO	G14-057T 345.00 - SUNNYSIDE 345KV CKT 1	717	789	0.20384	113.7049	GEN629071 1-BURLINGTON GENERATOR FOR UNIT NO 1 E
FDNS	00NR	0	16WP	G15_085	FROM->TO	G14-057T 345.00 - SUNNYSIDE 345KV CKT 1	717	789	0.2038	113.7009	CANADIAN RIVER - MCALESTER SOUTH 138KV CKT 1
FDNS	00NR	0	16WP	G15_085	FROM->TO	G14-057T 345.00 - SUNNYSIDE 345KV CKT 1	717	789	0.2038	113.7009	CANADIAN RIVER - MCALESTER SOUTH 138KV CKT 1
FDNS	00NR	0	16WP	G15_085	FROM->TO	G14-057T 345.00 - SUNNYSIDE 345KV CKT 1	717	789	0.2038	113.6996	CANADIAN RIVER () 345/138/13.8KV TRANSFORMER CKT 1
FDNS	00NR	0	16WP	G15_085	FROM->TO	G14-057T 345.00 - SUNNYSIDE 345KV CKT 1	717	789	0.2038	113.6996	CANADIAN RIVER () 345/138/13.8KV TRANSFORMER CKT 1
FDNS	00NR	0	16WP	G15_085	FROM->TO	G14-057T 345.00 - SUNNYSIDE 345KV CKT 1	717	789	0.20573	113.6995	NORTHWEST - SPRING CREEK 345KV CKT 1
FDNS	00NR	0	16WP	G15_085	FROM->TO	G14-057T 345.00 - SUNNYSIDE 345KV CKT 1	717	789	0.20864	113.6963	MOREWOOD SW - NINE MILE 138KV CKT 1
FDNS	00NR	0	16WP	G15_085	FROM->TO	G14-057T 345.00 - SUNNYSIDE 345KV CKT 1	717	789	0.20352	113.6922	ROCKY POINT - SPRINGDALE 138KV CKT 1
FDNS	00NR	0	16WP	G15_085	FROM->TO	G14-057T 345.00 - SUNNYSIDE 345KV CKT 1	717	789	0.20573	113.6897	SOONER - SPRING CREEK 345KV CKT 1
FDNS	00NR	0	20WP	G15_085	FROM->TO	G14-057T 345.00 - SUNNYSIDE 345KV CKT 1	717	789	0.20644	113.687	CANEYRV7 345.00 - LATHAMS7 345.00 345KV CKT 1
FDNS	00NR	0	16WP	G15_085	FROM->TO	G14-057T 345.00 - SUNNYSIDE 345KV CKT 1	717	789	0.20384	113.679	INDEPENDENCE 500/26.0KV TRANSFORMER CKT 1
FDNS	00NR	0	16WP	G15_085	FROM->TO	G14-057T 345.00 - SUNNYSIDE 345KV CKT 1	717	789	0.20384	113.6766	BURLINGTON NO1 + NO 2 + NO 3 161/20.0KV TRANSFORMER CKT 1
FDNS	00NR	0	20WP	G15_085	FROM->TO	G14-057T 345.00 - SUNNYSIDE 345KV CKT 1	717	789	0.20527	113.676	GEN509408 1-WILKES #2
FDNS	00NR	0	16WP	G15_085	FROM->TO	G14-057T 345.00 - SUNNYSIDE 345KV CKT 1	717	789	0.17956	113.6747	ALTUS JUNCTION - RUSSELL 138KV CKT 1
FDNS	00NR	0	16WP	G15_085	FROM->TO	G14-057T 345.00 - SUNNYSIDE 345KV CKT 1	717	789	0.17956	113.6747	ALTUS JUNCTION - RUSSELL 138KV CKT 1
FDNS	00NR	0	16WP	G15_085	FROM->TO	G14-057T 345.00 - SUNNYSIDE 345KV CKT 1	717	789	0.20237	113.6724	NORTHWEST TEXARKANA - WELSH 345KV CKT 1
FDNS	00NR	0	16WP	G15_085	FROM->TO	G14-057T 345.00 - SUNNYSIDE 345KV CKT 1	717	789	0.20237	113.6724	NORTHWEST TEXARKANA - WELSH 345KV CKT 1
FDNS	00NR	0	16WP	G15_085	FROM->TO	G14-057T 345.00 - SUNNYSIDE 345KV CKT 1	717	789	0.20384	113.6705	GEN514805 1-SOONER UNIT 1
FDNS	00NR	0	16WP	G15_085	FROM->TO	G14-057T 345.00 - SUNNYSIDE 345KV CKT 1	717	789	0.20384	113.6637	GEN514806 1-SOONER UNIT 2
FDNS	00NR	0	20WP	G15_085	FROM->TO	G14-057T 345.00 - SUNNYSIDE 345KV CKT 1	717	789	0.20633	113.6598	ELDORADO EHV - SHERIDAN EHV 500KV CKT 1
FDNS	00NR	0	20WP	G15_085	FROM->TO	G14-057T 345.00 - SUNNYSIDE 345KV CKT 1	717	789	0.20614	113.6598	PAOLI - PAYNE 138.00 138KV CKT 1
FDNS	00NR	0	16WP	G15_085	FROM->TO	G14-057T 345.00 - SUNNYSIDE 345KV CKT 1	717	789	0.20402	113.6579	KEO EHV - WEST MEMPHIS 500 500KV CKT 1
FDNS	00NR	0	16WP	G15_085	FROM->TO	G14-057T 345.00 - SUNNYSIDE 345KV CKT 1	717	789	0.20372	113.6508	CHAMBER SPRINGS - CLARKSVILLE 345KV CKT 1
FDNS	00NR	0	20WP	G15_085	FROM->TO	G14-057T 345.00 - SUNNYSIDE 345KV CKT 1	717	789	0.20527	113.6501	GEN506754 1-LEBROCK STEAM 1
FDNS	00NR	0	16WP	G15_085	FROM->TO	G14-057T 345.00 - SUNNYSIDE 345KV CKT 1	717	789	0.20384	113.6474	GEN562078 1-G11_051_3 0.6900
FDNS	00NR	0	20WP	G15_085	FROM->TO	G14-057T 345.00 - SUNNYSIDE 345KV CKT 1	717	789	0.20647	113.6428	ANADARKO - GEORGIA 138KV CKT 1
FDNS	00NR	0	16WP	G15_085	FROM->TO	G14-057T 345.00 - SUNNYSIDE 345KV CKT 1	717	789	0.20384	113.6379	P12:230:UMZB:# 112 #: NU IN SD. NU-RCDC & DRY CREEK XFMR
FDNS	00NR	0	16WP	G15_085	FROM->TO	G14-057T 345.00 - SUNNYSIDE 345KV CKT 1	717	789	0.20384	113.6365	RCDC EAST 4230.00 - RED CEDAR DC 230KV CKT 1
FDNS	00NR	0	16WP	G15_085	FROM->TO	G14-057T 345.00 - SUNNYSIDE 345KV CKT 1	717	789	0.20342	113.6334	JOLLYVILLE - SULPHR 4 138.00 138KV CKT 1
FDNS	00NR	0	16WP	G15_085	FROM->TO	G14-057T 345.00 - SUNNYSIDE 345KV CKT 1	717	789	0.20384	113.6189	GEN562802 1-G15039_3 0.3570
FDNS	00NR	0	20WP	G15_085	FROM->TO	G14-057T 345.00 - SUNNYSIDE 345KV CKT 1	717	789	0.20368	113.6137	P12:138:AEPW:112GORE4:L.E.S.-4
FDNS	00NR	0	16WP	G15_085	FROM->TO	G14-057T 345.00 - SUNNYSIDE 345KV CKT 1	717	789	0.20384	113.6124	GEN524285 1-WILDORADO WIND GEN
FDNS	00NR	0	20WP	G15_085	FROM->TO	G14-057T 345.00 - SUNNYSIDE 345KV CKT 1	717	789	0.20949	113.6016	CIVIT - PAOLI 138KV CKT 1
FDNS	00NR	0	20WP	G15_085	FROM->TO	G14-057T 345.00 - SUNNYSIDE 345KV CKT 1	717	789	0.20613	113.5945	MATHWSN7 345.00 - NORTHWEST 345KV CKT 1
FDNS	00NR	0	16WP	G15_085	FROM->TO	G14-057T 345.00 - SUNNYSIDE 345KV CKT 1	717	789	0.20384	113.5926	GEN524295 1-SPNSPUR_WND10.6900
FDNS	00NR	0	16WP	G15_085	FROM->TO	G14-057T 345.00 - SUNNYSIDE 345KV CKT 1	717	789	0.20384	113.5923	GEN562587 1-G14_056_3 0.6900
FDNS	00NR	0	16WP	G15_085	FROM->TO	G14-057T 345.00 - SUNNYSIDE 345KV CKT 1	717	789	0.20384	113.5856	GEN560331 1-G10-46 13.800
FDNS	00NR	0	16WP	G15_085	FROM->TO	G14-057T 345.00 - SUNNYSIDE 345KV CKT 1	717	789	0.2046	113.5745	ARKANSAS NUCLEAR ONE - FT SMITH 500KV CKT 1
FDNS	00NR	0	16WP	G15_085	FROM->TO	G14-057T 345.00 - SUNNYSIDE 345KV CKT 1	717	789	0.2046	113.5745	ARKANSAS NUCLEAR ONE - FT SMITH 500KV CKT 1
FDNSLock	00NR	0	16WP	G15_085	FROM->TO	G14-057T 345.00 - SUNNYSIDE 345KV CKT 1	717	789	0.20384	113.5733	GEN629072 4-LANSING GENERATOR FOR UNITS NO4 EIA CODE 1
FDNS	00NR	0	20WP	G15_085	FROM->TO	G14-057T 345.00 - SUNNYSIDE 345KV CKT 1	717	789	0.20527	113.5691	GEN336252 1-NINEMILE POINT UNIT#5
FDNS	00NR	0	16WP	G15_085	FROM->TO	G14-057T 345.00 - SUNNYSIDE 345KV CKT 1	717	789	0.20342	113.5649	JOLLYVILLE - KERR MCGEE CIMARRON 138KV CKT 1
FDNS	00NR	0	16WP	G15_085	FROM->TO	G14-057T 345.00 - SUNNYSIDE 345KV CKT 1	717	789	0.20384	113.5641	GEN562882 1-G15047_3 0.6900
FDNS	00NR	0	16WP	G15_085	FROM->TO	G14-057T 345.00 - SUNNYSIDE 345KV CKT 1	717	789	0.20864	113.5619	BEARCAT 138.00 - NINE MILE 138KV CKT 1
FDNS	00NR	0	16WP	G15_085	FROM->TO	G14-057T 345.00 - SUNNYSIDE 345KV CKT 1	717	789	0.20384	113.555	GEN562269 1-G12-020-1 0.6900
FDNS	00NR	0	16WP	G15_085	FROM->TO	G14-057T 345.00 - SUNNYSIDE 345KV CKT 1	717	789	0.20384	113.5529	GEN657749 1-YOUNG 1 GENERATOR
FDNS	00NR	0	20WP	G15_085	FROM->TO	G14-057T 345.00 - SUNNYSIDE 345KV CKT 1	717	789	0.20647	113.5467	FLETCHER - GEORGIA 138KV CKT 1
FDNS	00NR	0	20WP	G15_085	FROM->TO	G14-057T 345.00 - SUNNYSIDE 345KV CKT 1	717	789	0.20986	113.5386	P12:138:AEPW-OGE:CORNVIL4:MAUD 4
FDNS	00NR	0	20WP	G15_085	FROM->TO	G14-057T 345.00 - SUNNYSIDE 345KV CKT 1	717	789	0.20527	113.5228	FRONTIER - GRIMES 345KV CKT 1
FDNS	00NR	0	16WP	G15_085	FROM->TO	G14-057T 345.00 - SUNNYSIDE 345KV CKT 1	717	789	0.20342	113.5143	ARBWIND4 138.00 - KERR MCGEE CIMARRON 138KV CKT 1
FDNS	00NR	0	20WP	G15_085	FROM->TO	G14-057T 345.00 - SUNNYSIDE 345KV CKT 1	717	789	0.20527	113.5117	GEN335204 1-NELSON UNIT 4
FDNS	00NR	0	16WP	G15_085	FROM->TO	G14-057T 345.00 - SUNNYSIDE 345KV CKT 1	717	789	0.20384	113.51	GEN562270 1-G12-020-2 0.6900
FDNS	00NR	0	20WP	G15_085	FROM->TO	G14-057T 345.00 - SUNNYSIDE 345KV CKT 1	717	789	0.20527	113.5052	GEN503909 1-FULTONU1 1 16.000
FDNS	00NR	0	20WP	G15_085	FROM->TO	G14-057T 345.00 - SUNNYSIDE 345KV CKT 1	717	789	0.20527	113.5045	GEN334441 1-SABINE UNIT 5
FDNS	00NR	0	16WP	G15_085	FROM->TO	G14-057T 345.00 - SUNNYSIDE 345KV CKT 1	717	789	0.20384	113.5044	GEN562812 1-G15040_3 0.3570
FDNS	00NR	0	20WP	G15_085	FROM->TO	G14-057T 345.00 - SUNNYSIDE 345KV CKT 1	717	789	0.20661	113.5041	EMPIRE - FLETCHER 138KV CKT 1
FDNS	00NR	0	16WP	G15_085	FROM->TO	G14-057T 345.00 - SUNNYSIDE 345KV CKT 1	717	789	0.16665	113.503	P12:138:AEPW:112GORE4:SNYDER-4
FDNS	00NR	0	16WP	G15_085	FROM->TO	G14-057T 345.00 - SUNNYSIDE 345KV CKT 1	717	789	0.20216	113.5027	CLARKSVILLE - MUSKOGEE 345KV CKT 1
FDNS	00NR	0	16WP	G15_085	FROM->TO	G14-057T 345.00 - SUNNYSIDE 345KV CKT 1	717	789	0.20216	113.5027	CLARKSVILLE - MUSKOGEE 345KV CKT 1
FDNS	00NR	0	16WP	G15_085	FROM->TO	G14-057T 345.00 - SUNNYSIDE 345KV CKT 1	717	789	0.20384	113.5015	GEN563102 1-G15075_3 0.5500
FDNS	00NR	0	16WP	G15_085	FROM->TO	G14-057T 345.00 - SUNNYSIDE 345KV CKT 1	717	789	0.20384	113.4982	GEN562974 1-G15060_5 0.6900
FDNS	00NR	0	16WP	G15_085	FROM->TO	G14-057T 345.00 - SUNNYSIDE 345KV CKT 1	717	789	0.20384	113.4946	GEN563062 1-G15071_3 0.6900
FDNS	00NR	0	16WP	G15_085	FROM->TO	G14-057T 345.00 - SUNNYSIDE 345KV CKT 1	717	789	0.20384	113.4938	GEN563132 1-G15078_3 0.3570
FDNS	00NR	0	16WP	G15_085	FROM->TO	G14-057T 345.00 - SUNNYSIDE 345KV CKT 1	717	789	0.20384	113.4887	GEN562973 1-G15060_4 0.6900
FDNS	00NR	0	20WP	G15_085	FROM->TO	G14-057T 345.00 - SUNNYSIDE 345KV CKT 1	717	789	0.20789	113.4836	TUPELO - TUPELO TAP 138KV CKT 1
FDNSLock	00NR	0	16WP	G15_085	FROM->TO	G14-057T 345.00 - SUNNYSIDE 345KV CKT 1	717	789	0.20384	113.4834	GEN681522 3-GENOA 3
FDNS	00NR	0	16WP	G15_085	FROM->TO	G14-057T 345.00 - SUNNYSIDE 345KV CKT 1	717	789	0.20864	113.4794	P12:138:WFEC:MSL14
FDNS	00NR	0	20WP	G15_085	FROM->TO	G14-057T 345.00 - SUNNYSIDE 345KV CKT 1	717	789	0.20644	113.4741	LATHAMS7 345.00 - ROSE HILL 345KV CKT 1
FDNS	00NR	0	16WP	G15_085	FROM->TO	G14-057T 345.00 - SUNNYSIDE 345KV CKT 1	717	789	0.20864	113.4666	BEARCAT 138.00 - MOORELAND 138KV CKT 1
FDNS	00NR	0	20WP	G15_085	FROM->TO	G14-057T 345.00 - SUNNYSIDE 345KV CKT 1	717	789	0.20986	113.4632	BLANCHARD - CORNVILLE 138KV CKT 1
FDNS	00NR	0	20WP	G15_085	FROM->TO	G14-057T 345.00 - SUNNYSIDE 345KV CKT 1	717	789	0.20949	113.4605	CIVIT - STRATFORD 138KV CKT 1
FDNS	00NR	0	16WP	G15_085	FROM->TO	G14-057T 345.00 - SUNNYSIDE 345KV CKT 1	717	789	0.20329	113.4561	BROWN - RUSSETT 138KV CKT 1
FDNS	00NR	0	16WP	G15_085	FROM->TO	G14-057T 345.00 - SUNNYSIDE 345KV CKT 1	717	789	0.20349	113.4351	CHICKASAW - TOTAL 138KV CKT 1
FDNS	00NR	0	16WP	G15_085	FROM->TO	G14-057T 345.00 - SUNNYSIDE 345KV CKT 1	717	789	0.20339	113.4301	RUSSETT - SPRINGDALE 138KV CKT 1

SOLUTION	GROUP	SCENARIO	SEASON	SOURCE	DIRECTION	MONITORED ELEMENT	RATEA (MVA)	RATEB(MVA)	TDF	TC%LOADING (% MVA)	CONTINGENCY
FDNS	00NR	0	16WP	G15_085	FROM->TO	G14-057T 345.00 - SUNNYSIDE 345KV CKT 1	717	789	0.20384	113.4267	GEN345671 2-1RUSH G2 18.000
FDNS	00NR	0	16WP	G15_085	FROM->TO	G14-057T 345.00 - SUNNYSIDE 345KV CKT 1	717	789	0.20384	113.4248	GEN345670 1-1RUSH G1 18.000
FDNS	00NR	0	20WP	G15_085	FROM->TO	G14-057T 345.00 - SUNNYSIDE 345KV CKT 1	717	789	0.20661	113.4227	COMANCHE - EMPIRE 138KV CKT 1
FDNS	00NR	0	20WP	G15_085	FROM->TO	G14-057T 345.00 - SUNNYSIDE 345KV CKT 1	717	789	0.20589	113.4172	LAYFLD8 500.00 - MOUNT OLIVE 500KV CKT 1
FDNS	00NR	0	20WP	G15_085	FROM->TO	G14-057T 345.00 - SUNNYSIDE 345KV CKT 1	717	789	0.20589	113.4172	LAYFLD8 500.00 - MOUNT OLIVE 500KV CKT 1
FDNS	00NR	0	16WP	G15_085	FROM->TO	G14-057T 345.00 - SUNNYSIDE 345KV CKT 1	717	789	0.20384	113.4132	GEN526331 1-JONES GEN #1 22 KV
FDNS	00NR	0	16WP	G15_085	FROM->TO	G14-057T 345.00 - SUNNYSIDE 345KV CKT 1	717	789	0.20384	113.4131	GEN526332 1-JONES GEN #2 21 KV
FDNS	00NR	0	16WP	G15_085	FROM->TO	G14-057T 345.00 - SUNNYSIDE 345KV CKT 1	717	789	0.20384	113.4028	GEN560105 1-G08-22 0.6900
FDNS	00NR	0	16WP	G15_085	FROM->TO	G14-057T 345.00 - SUNNYSIDE 345KV CKT 1	717	789	0.20384	113.3993	GEN562550 1-G14_040_3 0.6900
FDNS	00NR	0	16WP	G15_085	FROM->TO	G14-057T 345.00 - SUNNYSIDE 345KV CKT 1	717	789	0.20342	113.3982	ROCKY POINT - SUNNYSIDE 138KV CKT 1
FDNS	00NR	0	20WP	G15_085	FROM->TO	G14-057T 345.00 - SUNNYSIDE 345KV CKT 1	717	789	0.20527	113.3982	GEN336251 1-NINEMILE POINT UNIT#4
FDNS	00NR	0	20WP	G15_085	FROM->TO	G14-057T 345.00 - SUNNYSIDE 345KV CKT 1	717	789	0.20591	113.393	G1524G1525 345.00 - THISTLE7 345.00 345KV CKT 1
FDNS	00NR	0	20WP	G15_085	FROM->TO	G14-057T 345.00 - SUNNYSIDE 345KV CKT 1	717	789	0.20591	113.393	G1524G1525 345.00 - THISTLE7 345.00 345KV CKT 2
FDNS	00NR	0	20WP	G15_085	FROM->TO	G14-057T 345.00 - SUNNYSIDE 345KV CKT 1	717	789	0.20761	113.3929	FINNEY SWITCHING STATION - HOLCOMB 345KV CKT 1
FDNS	00NR	0	20WP	G15_085	FROM->TO	G14-057T 345.00 - SUNNYSIDE 345KV CKT 1	717	789	0.20761	113.3929	FINNEY SWITCHING STATION - HOLCOMB 345KV CKT 1
FDNS	00NR	0	20WP	G15_085	FROM->TO	G14-057T 345.00 - SUNNYSIDE 345KV CKT 1	717	789	0.20527	113.3927	GEN334071 1-LEWIS CREEK 2
FDNS	00NR	0	16WP	G15_085	FROM->TO	G14-057T 345.00 - SUNNYSIDE 345KV CKT 1	717	789	0.20329	113.3879	RUSSETT - RUSSETT 138KV CKT 1
FDNS	00NR	0	20WP	G15_085	FROM->TO	G14-057T 345.00 - SUNNYSIDE 345KV CKT 1	717	789	0.20527	113.3843	GEN334070 1-LEWIS CREEK 1
FDNS	00NR	0	16WP	G15_085	FROM->TO	G14-057T 345.00 - SUNNYSIDE 345KV CKT 1	717	789	0.20384	113.3775	4SIOUX 1 138.00 138/18.0KV TRANSFORMER CKT 1
FDNS	00NR	0	16WP	G15_085	FROM->TO	G14-057T 345.00 - SUNNYSIDE 345KV CKT 1	717	789	0.20494	113.3694	P12:138:WFEC:MSL07
FDNS	00NR	0	16WP	G15_085	FROM->TO	G14-057T 345.00 - SUNNYSIDE 345KV CKT 1	717	789	0.20494	113.3694	P12:138:WFEC-AEPW:HUGOPP4:ATOKA--4
FDNS	00NR	0	20WP	G15_085	FROM->TO	G14-057T 345.00 - SUNNYSIDE 345KV CKT 1	717	789	0.20526	113.3642	P12:161:AEPW-SWPA:BEAVER5:EROGERS5
FDNS	00NR	0	20WP	G15_085	FROM->TO	G14-057T 345.00 - SUNNYSIDE 345KV CKT 1	717	789	0.20527	113.3603	GEN509392 G2-ARSENAL HILL GENS #3 (STALL)
FDNS	00NR	0	20WP	G15_085	FROM->TO	G14-057T 345.00 - SUNNYSIDE 345KV CKT 1	717	789	0.20527	113.3602	GEN509391 G1-ARSENAL HILL GENS #2 (STALL)
FDNS	00NR	0	16WP	G15_085	FROM->TO	G14-057T 345.00 - SUNNYSIDE 345KV CKT 1	717	789	0.20384	113.3591	GEN511962 2-RKYRDGW2-1 0.7000
FDNS	00NR	0	20WP	G15_085	FROM->TO	G14-057T 345.00 - SUNNYSIDE 345KV CKT 1	717	789	0.20527	113.3581	GEN509393 S1-ARSENAL HILL GENS #4 (STALL)
FDNS	00NR	0	16WP	G15_085	FROM->TO	G14-057T 345.00 - SUNNYSIDE 345KV CKT 1	717	789	0.20384	113.3577	GEN521112 1-ORME3 13.800
FDNS	00NR	0	16WP	G15_085	FROM->TO	G14-057T 345.00 - SUNNYSIDE 345KV CKT 1	717	789	0.20384	113.3553	CLAY BOSWELL 230/20.9KV TRANSFORMER CKT 1
FDNS	00NR	0	16WP	G15_085	FROM->TO	G14-057T 345.00 - SUNNYSIDE 345KV CKT 1	717	789	0.20384	113.3532	GEN527882 1-CUNNINGHAM GEN #2 20 KV
FDNS	00NR	0	20WP	G15_085	FROM->TO	G14-057T 345.00 - SUNNYSIDE 345KV CKT 1	717	789	0.20527	113.3465	GEN334433 1-SABINE UNIT 3
FDNS	00NR	0	20WP	G15_085	FROM->TO	G14-057T 345.00 - SUNNYSIDE 345KV CKT 1	717	789	0.20949	113.3428	OIL CENTER - STRATFORD 138KV CKT 1
FDNS	00NR	0	16WP	G15_085	FROM->TO	G14-057T 345.00 - SUNNYSIDE 345KV CKT 1	717	789	0.20384	113.3369	GEN562892 1-G15048_3 0.6900
FDNS	00NR	0	20WP	G15_085	FROM->TO	G14-057T 345.00 - SUNNYSIDE 345KV CKT 1	717	789	0.20527	113.3339	GEN337653 1-WHITE BLUFF UNIT #2
FDNS	00NR	0	16WP	G15_085	FROM->TO	G14-057T 345.00 - SUNNYSIDE 345KV CKT 1	717	789	0.20306	113.3312	ARDMORE WEST - CARTER 138KV CKT 1
FDNS	00NR	0	16WP	G15_085	FROM->TO	G14-057T 345.00 - SUNNYSIDE 345KV CKT 1	717	789	0.20384	113.3247	GEN562512 1-G14_020_3 0.6900
FDNS	00NR	0	20WP	G15_085	FROM->TO	G14-057T 345.00 - SUNNYSIDE 345KV CKT 1	717	789	0.20527	113.323	GEN336831 1-BAXTER WILSON SES
FDNS	00NR	0	16WP	G15_085	FROM->TO	G14-057T 345.00 - SUNNYSIDE 345KV CKT 1	717	789	0.20384	113.3179	GEN672321 1-SHAND GENERATOR 1
FDNS	00NR	0	16WP	G15_085	FROM->TO	G14-057T 345.00 - SUNNYSIDE 345KV CKT 1	717	789	0.20384	113.3158	GEN563192 1-G15084_3 0.5500
FDNS	00NR	0	20WP	G15_085	FROM->TO	G14-057T 345.00 - SUNNYSIDE 345KV CKT 1	717	789	0.21181	113.3115	P12:138:AEPW:S.W.S.-4:L.E.S.-4
FDNS	00NR	0	16WP	G15_085	FROM->TO	G14-057T 345.00 - SUNNYSIDE 345KV CKT 1	717	789	0.20384	113.3067	GEN511853 1-COMANCHE #3
FDNS	00NR	0	20WP	G15_085	FROM->TO	G14-057T 345.00 - SUNNYSIDE 345KV CKT 1	717	789	0.20527	113.3019	P12:161:AEPW:DYESS5:ELMSPRNG:TONTITN5
FDNS	00NR	0	20WP	G15_085	FROM->TO	G14-057T 345.00 - SUNNYSIDE 345KV CKT 1	717	789	0.20561	113.2967	DUNCAN (DUNCAN) 138/69/13.8KV TRANSFORMER CKT 1
FDNS	00NR	0	20WP	G15_085	FROM->TO	G14-057T 345.00 - SUNNYSIDE 345KV CKT 1	717	789	0.20561	113.2967	DUNCAN (DUNCAN) 138/69/13.8KV TRANSFORMER CKT 1
FDNS	00NR	0	16WP	G15_085	FROM->TO	G14-057T 345.00 - SUNNYSIDE 345KV CKT 1	717	789	0.20384	113.2937	GEN672310 1-POPLAR RIVER GENERATOR 1
FDNS	00NR	0	16WP	G15_085	FROM->TO	G14-057T 345.00 - SUNNYSIDE 345KV CKT 1	717	789	0.20384	113.2937	GEN672311 2-POPLAR RIVER GENERATOR 2
FDNS	00NR	0	16WP	G15_085	FROM->TO	G14-057T 345.00 - SUNNYSIDE 345KV CKT 1	717	789	0.20413	113.2933	P12:138:WFEC:MSL16
FDNS	00NR	0	16WP	G15_085	FROM->TO	G14-057T 345.00 - SUNNYSIDE 345KV CKT 1	717	789	0.20355	113.2886	P12:138:WFEC-AEPW:GOLDENSW4:CRAIGJT4
FDNS	00NR	0	16WP	G15_085	FROM->TO	G14-057T 345.00 - SUNNYSIDE 345KV CKT 1	717	789	0.20384	113.2851	GEN672306 6-BOUNDARY DAM GENERATOR 6
FDNS	00NR	0	16WP	G15_085	FROM->TO	G14-057T 345.00 - SUNNYSIDE 345KV CKT 1	717	789	0.20318	113.2851	SUNNYSIDE (SUNNYSD5) 345/138/13.8KV TRANSFORMER CKT 1
FDNS	00NR	0	20WP	G15_085	FROM->TO	G14-057T 345.00 - SUNNYSIDE 345KV CKT 1	717	789	0.20527	113.2821	GEN337911 1-ARKANSAS NUCLEAR ONE UNIT #2
FDNS	00NR	0	20WP	G15_085	FROM->TO	G14-057T 345.00 - SUNNYSIDE 345KV CKT 1	717	789	0.20527	113.2788	GEN515040 1-SEMINOLE 1G
FDNS	00NR	0	20WP	G15_085	FROM->TO	G14-057T 345.00 - SUNNYSIDE 345KV CKT 1	717	789	0.20884	113.2722	G14_038T 345.00 - Hitchland Interchange 345KV CKT 1
FDNS	00NR	0	20WP	G15_085	FROM->TO	G14-057T 345.00 - SUNNYSIDE 345KV CKT 1	717	789	0.20527	113.2716	GEN334030 1-FRONTIER UNIT 1
FDNS	00NR	0	16WP	G15_085	FROM->TO	G14-057T 345.00 - SUNNYSIDE 345KV CKT 1	717	789	0.20384	113.271	GEN344895 2-1LAB G2 20.000
FDNS	00NR	0	20WP	G15_085	FROM->TO	G14-057T 345.00 - SUNNYSIDE 345KV CKT 1	717	789	0.20527	113.2693	GEN334031 1-FRONTIER UNIT 2
FDNS	00NR	0	16WP	G15_085	FROM->TO	G14-057T 345.00 - SUNNYSIDE 345KV CKT 1	717	789	0.20384	113.2581	GEN523461 1-BLACKHAWK GEN #1
FDNS	00NR	0	16WP	G15_085	FROM->TO	G14-057T 345.00 - SUNNYSIDE 345KV CKT 1	717	789	0.20384	113.258	GEN523462 1-BLACKHAWK GEN #2
FDNS	00NR	0	20WP	G15_085	FROM->TO	G14-057T 345.00 - SUNNYSIDE 345KV CKT 1	717	789	0.20938	113.2548	TUTTLE - TUTTLE CONOCO TAP 138KV CKT 1
FDNS	00NR	0	16WP	G15_085	FROM->TO	G14-057T 345.00 - SUNNYSIDE 345KV CKT 1	717	789	0.20384	113.2537	GEN511852 1-COMANCHE #2
FDNS	00NR	0	20WP	G15_085	FROM->TO	G14-057T 345.00 - SUNNYSIDE 345KV CKT 1	717	789	0.20525	113.2501	P12:138:AEPW:CATOOSA4:T.S.E.-4
FDNS	00NR	0	20WP	G15_085	FROM->TO	G14-057T 345.00 - SUNNYSIDE 345KV CKT 1	717	789	0.20986	113.2433	BLANCHARD - MAUD 138KV CKT 1
FDNS	00NR	0	16WP	G15_085	FROM->TO	G14-057T 345.00 - SUNNYSIDE 345KV CKT 1	717	789	0.20384	113.2389	GEN344896 3-1LAB G3 20.000
FDNS	00NR	0	16WP	G15_085	FROM->TO	G14-057T 345.00 - SUNNYSIDE 345KV CKT 1	717	789	0.20384	113.2375	GEN344894 1-1LAB G1 20.000
FDNS	00NR	0	16WP	G15_085	FROM->TO	G14-057T 345.00 - SUNNYSIDE 345KV CKT 1	717	789	0.20384	113.2361	GEN344897 4-1LAB G4 20.000
FDNS	00NR	0	20WP	G15_085	FROM->TO	G14-057T 345.00 - SUNNYSIDE 345KV CKT 1	717	789	0.20544	113.2345	FULTON 115 - HOPE 115KV CKT 1
FDNS	00NR	0	20WP	G15_085	FROM->TO	G14-057T 345.00 - SUNNYSIDE 345KV CKT 1	717	789	0.20544	113.2345	FULTON 115 - HOPE 115KV CKT 1
FDNS	00NR	0	20WP	G15_085	FROM->TO	G14-057T 345.00 - SUNNYSIDE 345KV CKT 1	717	789	0.20919	113.2314	P12:138:AEPW-OGE:WTH_JCT4:JENSEN4
FDNS	00NR	0	20WP	G15_085	FROM->TO	G14-057T 345.00 - SUNNYSIDE 345KV CKT 1	717	789	0.20527	113.2306	GEN337652 1-WHITE BLUFF UNIT #1
FDNS	00NR	0	20WP	G15_085	FROM->TO	G14-057T 345.00 - SUNNYSIDE 345KV CKT 1	717	789	0.20527	113.2297	GEN501811 1-RODEMACHER UNIT 1
FDNS	00NR	0	20WP	G15_085	FROM->TO	G14-057T 345.00 - SUNNYSIDE 345KV CKT 1	717	789	0.20706	113.2296	P12:138:AEPW:CORNVIL4:DUNCAN-4
FDNS	00NR	0	20WP	G15_085	FROM->TO	G14-057T 345.00 - SUNNYSIDE 345KV CKT 1	717	789	0.20527	113.2154	GEN506752 1-LEBROCK GAS 1
FDNS	00NR	0	16WP	G15_085	FROM->TO	G14-057T 345.00 - SUNNYSIDE 345KV CKT 1	717	789	0.20306	113.2152	ARDMORE WEST - UNIROYAL 138KV CKT 1
FDNS	00NR	0	20WP	G15_085	FROM->TO	G14-057T 345.00 - SUNNYSIDE 345KV CKT 1	717	789	0.20527	113.2151	GEN506753 1-LEBROCK GAS 2
FDNS	00NR	0	20WP	G15_085	FROM->TO	G14-057T 345.00 - SUNNYSIDE 345KV CKT 1	717	789	0.20527	113.212	GEN300015 1-1SGPDEL 18.000
FDNS	00NR	0	20WP	G15_085	FROM->TO	G14-057T 345.00 - SUNNYSIDE 345KV CKT 1	717	789	0.20527	113.2097	GEN515226 1-MUSKOGEE 6G
FDNS	00NR	0	20WP	G15_085	FROM->TO	G14-057T 345.00 - SUNNYSIDE 345KV CKT 1	717	789	0.20527	113.2086	GEN300003 1-THOMAS HILL UNIT 3
FDNS	00NR	0	16WP	G15_085	FROM->TO	G14-057T 345.00 - SUNNYSIDE 345KV CKT 1	717	789	0.20371	113.2023	P12:138:AEPW-SWPA:LONEOAK4:TUPELO4
FDNS	00NR	0	16WP	G15_085	FROM->TO	G14-057T 345.00 - SUNNYSIDE 345KV CKT 1	717	789	0.20371	113.2023	P12:138:WFEC:MSL06
FDNS	00NR	0	16WP	G15_085	FROM->TO	G14-057T 345.00 - SUNNYSIDE 345KV CKT 1	717	789	0.20325	113.2022	P12:138:OKGE:3TERM40

SOLUTION	GROUP	SCENARIO	SEASON	SOURCE	DIRECTION	MONITORED ELEMENT	RATEA (MVA)	RATEB(MVA)	TDF	TC%LOADING (% MVA)	CONTINGENCY
FDNS	00NR	0	20WP	G15_085	FROM->TO	G14-057T 345.00 - SUNNYSIDE 345KV CKT 1	717	789	0.20527	113.197	GEN336191 1-LITTLE GYPSY UNIT#3
FDNS	00NR	0	16WP	G15_085	FROM->TO	G14-057T 345.00 - SUNNYSIDE 345KV CKT 1	717	789	0.20384	113.1818	GEN563162 1-G15081_3 0.6900
FDNSLock	00NR	0	16WP	G15_085	FROM->TO	G14-057T 345.00 - SUNNYSIDE 345KV CKT 1	717	789	0.20384	113.1814	GEN681542 6-JP MADGETT
FDNS	00NR	0	16WP	G15_085	FROM->TO	G14-057T 345.00 - SUNNYSIDE 345KV CKT 1	717	789	0.20384	113.1784	GEN521110 1-ORME1 13.800
FDNS	00NR	0	16WP	G15_085	FROM->TO	G14-057T 345.00 - SUNNYSIDE 345KV CKT 1	717	789	0.20384	113.1784	GEN521111 1-ORME2 13.800
FDNS	00NR	0	20WP	G15_085	FROM->TO	G14-057T 345.00 - SUNNYSIDE 345KV CKT 1	717	789	0.20679	113.1781	P12:138:AEPW:CORNVIL4:S.W.S.-4
FDNS	00NR	0	20WP	G15_085	FROM->TO	G14-057T 345.00 - SUNNYSIDE 345KV CKT 1	717	789	0.20639	113.1775	6LAYFLD 230.00 - CARROLL 230KV CKT 1
FDNS	00NR	0	16WP	G15_085	FROM->TO	G14-057T 345.00 - SUNNYSIDE 345KV CKT 1	717	789	0.20384	113.1714	GEN562699 1-G15_018_3 0.6900
FDNS	00NR	0	16WP	G15_085	FROM->TO	G14-057T 345.00 - SUNNYSIDE 345KV CKT 1	717	789	0.17363	113.1706	G15085_T 138.00 - RUSSELL 138KV CKT 1
FDNS	00NR	0	16WP	G15_085	FROM->TO	G14-057T 345.00 - SUNNYSIDE 345KV CKT 1	717	789	0.20369	113.1705	CARTRCO4 138.00 - RATLIFF 138KV CKT 1
FDNS	00NR	0	20WP	G15_085	FROM->TO	G14-057T 345.00 - SUNNYSIDE 345KV CKT 1	717	789	0.20949	113.1702	LATTA JCT - OIL CENTER 138KV CKT 1
FDNS	00NR	0	20WP	G15_085	FROM->TO	G14-057T 345.00 - SUNNYSIDE 345KV CKT 1	717	789	0.20527	113.1681	GEN335614 1-WILLOW GLENN UNIT#4
FDNS	00NR	0	20WP	G15_085	FROM->TO	G14-057T 345.00 - SUNNYSIDE 345KV CKT 1	717	789	0.20938	113.162	CIMARRON - TUTTLE CONOCO TAP 138KV CKT 1
FDNS	00NR	0	16WP	G15_085	FROM->TO	G14-057T 345.00 - SUNNYSIDE 345KV CKT 1	717	789	0.20384	113.159	GEN563292 1-G15095_3 0.6900
FDNS	00NR	0	20WP	G15_085	FROM->TO	G14-057T 345.00 - SUNNYSIDE 345KV CKT 1	717	789	0.2054	113.1529	8DANIEL8 500.00 - MCKNIGHT 500KV CKT 1
FDNS	00NR	0	20WP	G15_085	FROM->TO	G14-057T 345.00 - SUNNYSIDE 345KV CKT 1	717	789	0.21069	113.1398	BAILEY4 138.00 - SUNSHINE CANYON 138KV CKT 1
FDNS	00NR	0	20WP	G15_085	FROM->TO	G14-057T 345.00 - SUNNYSIDE 345KV CKT 1	717	789	0.20562	113.1297	G15095_T 138.00 - ROSE_VALLEY 138.00 138KV CKT 1
FDNS	00NR	0	16WP	G15_085	FROM->TO	G14-057T 345.00 - SUNNYSIDE 345KV CKT 1	717	789	0.20594	113.1295	G15063_T 345.00 - MATHWSN7 345.00 345KV CKT 1
FDNS	00NR	0	20WP	G15_085	FROM->TO	G14-057T 345.00 - SUNNYSIDE 345KV CKT 1	717	789	0.20527	113.1261	GEN337910 1-ARKANSAS NUCLEAR ONE UNIT #1
FDNS	00NR	0	20WP	G15_085	FROM->TO	G14-057T 345.00 - SUNNYSIDE 345KV CKT 1	717	789	0.20526	113.1241	P12:161:AEPW:EROGERS5:ECNTRTN5
FDNS	00NR	0	20WP	G15_085	FROM->TO	G14-057T 345.00 - SUNNYSIDE 345KV CKT 1	717	789	0.20576	113.1228	BUCKNER7 345.00 - SPEARVILLE 345KV CKT 1
FDNS	00NR	0	20WP	G15_085	FROM->TO	G14-057T 345.00 - SUNNYSIDE 345KV CKT 1	717	789	0.20576	113.1228	BUCKNER7 345.00 - SPEARVILLE 345KV CKT 1
FDNS	00NR	0	20WP	G15_085	FROM->TO	G14-057T 345.00 - SUNNYSIDE 345KV CKT 1	717	789	0.20527	113.122	GEN303007 1-1BC2 U2
FDNS	00NR	0	20WP	G15_085	FROM->TO	G14-057T 345.00 - SUNNYSIDE 345KV CKT 1	717	789	0.20761	113.1199	FINNEY SWITCHING STATION - WALKTAP7 345.00 345KV CKT 1
FDNS	00NR	0	20WP	G15_085	FROM->TO	G14-057T 345.00 - SUNNYSIDE 345KV CKT 1	717	789	0.20761	113.1199	FINNEY SWITCHING STATION - WALKTAP7 345.00 345KV CKT 1
FDNS	00NR	0	16WP	G15_085	FROM->TO	G14-057T 345.00 - SUNNYSIDE 345KV CKT 1	717	789	0.16665	113.1195	CACHE - SNYDER 138KV CKT 1
FDNS	00NR	0	20WP	G15_085	FROM->TO	G14-057T 345.00 - SUNNYSIDE 345KV CKT 1	717	789	0.20527	113.1171	GEN336464 1-MICHOUD UNIT #3
FDNS	00NR	0	20WP	G15_085	FROM->TO	G14-057T 345.00 - SUNNYSIDE 345KV CKT 1	717	789	0.20527	113.116	GEN303006 1-1BC2 U1
FDNS	00NR	0	20WP	G15_085	FROM->TO	G14-057T 345.00 - SUNNYSIDE 345KV CKT 1	717	789	0.20756	113.1158	P12:138:AEPW:WTHWF4:CLINTJC4
FDNS	00NR	0	20WP	G15_085	FROM->TO	G14-057T 345.00 - SUNNYSIDE 345KV CKT 1	717	789	0.20527	113.1142	WHITE BLUFF 500/26.0KV TRANSFORMER CKT 1
FDNS	00NR	0	20WP	G15_085	FROM->TO	G14-057T 345.00 - SUNNYSIDE 345KV CKT 1	717	789	0.20561	113.1123	P12:69:WFEC-AEPW:COMANCH2:DUNCAN-2
FDNS	00NR	0	20WP	G15_085	FROM->TO	G14-057T 345.00 - SUNNYSIDE 345KV CKT 1	717	789	0.20527	113.1123	GEN515223 1-MUSKOGEE 4G
FDNS	00NR	0	20WP	G15_085	FROM->TO	G14-057T 345.00 - SUNNYSIDE 345KV CKT 1	717	789	0.20527	113.1123	GEN515225 1-MUSKOGEE 5G
FDNS	00NR	0	20WP	G15_085	FROM->TO	G14-057T 345.00 - SUNNYSIDE 345KV CKT 1	717	789	0.20527	113.1096	GEN562783 1-G15036_4 0.6900
FDNS	00NR	0	20WP	G15_085	FROM->TO	G14-057T 345.00 - SUNNYSIDE 345KV CKT 1	717	789	0.20527	113.1096	GEN562784 1-G15036_5 0.6900
FDNS	00NR	0	20WP	G15_085	FROM->TO	G14-057T 345.00 - SUNNYSIDE 345KV CKT 1	717	789	0.20542	113.1077	G15088_T 345.00 - MOORE 345KV CKT 1
FDNS	00NR	0	20WP	G15_085	FROM->TO	G14-057T 345.00 - SUNNYSIDE 345KV CKT 1	717	789	0.20282	113.1046	P12:69:AEPW-OMPA:COMANC-2:OMWALTR2
FDNS	00NR	0	20WP	G15_085	FROM->TO	G14-057T 345.00 - SUNNYSIDE 345KV CKT 1	717	789	0.2055	113.0985	BISMARK - HOT SPRINGS WEST BUS 115KV CKT 1
FDNS	00NR	0	20WP	G15_085	FROM->TO	G14-057T 345.00 - SUNNYSIDE 345KV CKT 1	717	789	0.20582	113.0959	CIMARRON - CZECH HALL 138KV CKT 1
FDNS	00NR	0	20WP	G15_085	FROM->TO	G14-057T 345.00 - SUNNYSIDE 345KV CKT 1	717	789	0.20548	113.0936	G15074_T 345.00 - HOYT 345KV CKT 1
FDNS	00NR	0	20WP	G15_085	FROM->TO	G14-057T 345.00 - SUNNYSIDE 345KV CKT 1	717	789	0.20557	113.0914	MC NIEL 500/115KV TRANSFORMER CKT 1
FDNS	00NR	0	20WP	G15_085	FROM->TO	G14-057T 345.00 - SUNNYSIDE 345KV CKT 1	717	789	0.20527	113.0857	GEN300010 1-ST FRANCIS UNIT 1
FDNS	00NR	0	20WP	G15_085	FROM->TO	G14-057T 345.00 - SUNNYSIDE 345KV CKT 1	717	789	0.20561	113.0853	DUNCAN - TOSCO 69KV CKT 1
FDNS	00NR	0	20WP	G15_085	FROM->TO	G14-057T 345.00 - SUNNYSIDE 345KV CKT 1	717	789	0.20756	113.0823	P12:138:AEPW:WTHWF4:WTH_SE4
FDNS	00NR	0	16WP	G15_085	FROM->TO	G14-057T 345.00 - SUNNYSIDE 345KV CKT 1	717	789	0.20384	113.0731	GEN563122 1-G15077_3 0.3850
FDNS	00NR	0	16WP	G15_085	FROM->TO	G14-057T 345.00 - SUNNYSIDE 345KV CKT 1	717	789	0.20384	113.0722	GEN661015 1-COYOTE
FDNS	00NR	0	20WP	G15_085	FROM->TO	G14-057T 345.00 - SUNNYSIDE 345KV CKT 1	717	789	0.20559	113.0703	HOT SPRINGS EHV - MAGNET COVE 500KV CKT 1
FDNS	00NR	0	20WP	G15_085	FROM->TO	G14-057T 345.00 - SUNNYSIDE 345KV CKT 1	717	789	0.20564	113.0696	CLEO CORNER - CLEOPLT4 138.00 138KV CKT 1
FDNS	00NR	0	20WP	G15_085	FROM->TO	G14-057T 345.00 - SUNNYSIDE 345KV CKT 1	717	789	0.20527	113.0607	GEN337041 1-GERALD ANDRUS
FDNS	00NR	0	20WP	G15_085	FROM->TO	G14-057T 345.00 - SUNNYSIDE 345KV CKT 1	717	789	0.20527	113.059	GEN505432 1-SIKESTON
FDNS	00NR	0	16WP	G15_085	FROM->TO	G14-057T 345.00 - SUNNYSIDE 345KV CKT 1	717	789	0.20384	113.0554	GEN562861 1-G15045_2 0.4800
FDNS	00NR	0	20WP	G15_085	FROM->TO	G14-057T 345.00 - SUNNYSIDE 345KV CKT 1	717	789	0.20527	113.0543	GEN303008 1-1BC2 U3
FDNS	00NR	0	20WP	G15_085	FROM->TO	G14-057T 345.00 - SUNNYSIDE 345KV CKT 1	717	789	0.20172	113.0517	CHISHOLM6 230.00 - ELK CITY 230KV 230KV CKT 1
FDNS	00NR	0	20WP	G15_085	FROM->TO	G14-057T 345.00 - SUNNYSIDE 345KV CKT 1	717	789	0.20562	113.0491	NOEL_SW 138.00 - ROSE_VALLEY 138.00 138KV CKT 1
FDNS	00NR	0	20WP	G15_085	FROM->TO	G14-057T 345.00 - SUNNYSIDE 345KV CKT 1	717	789	0.20564	113.0487	CLEOPLT4 138.00 - MEN TAP 138KV CKT 1
FDNS	00NR	0	20WP	G15_085	FROM->TO	G14-057T 345.00 - SUNNYSIDE 345KV CKT 1	717	789	0.20172	113.0487	ELK CITY 230KV (ELKCTY-6) 230/138/13.8KV TRANSFORMER CKT 1
FDNS	00NR	0	20WP	G15_085	FROM->TO	G14-057T 345.00 - SUNNYSIDE 345KV CKT 1	717	789	0.20172	113.0487	ELK CITY 230KV (ELKCTY-6) 230/138/13.8KV TRANSFORMER CKT 1
FDNS	00NR	0	20WP	G15_085	FROM->TO	G14-057T 345.00 - SUNNYSIDE 345KV CKT 1	717	789	0.2055	113.047	ALPINE AECC - BISMARK 115KV CKT 1
FDNS	00NR	0	16WP	G15_085	FROM->TO	G14-057T 345.00 - SUNNYSIDE 345KV CKT 1	717	789	0.20384	113.0454	GEN520811 1-ANADRK4
FDNS	00NR	0	20WP	G15_085	FROM->TO	G14-057T 345.00 - SUNNYSIDE 345KV CKT 1	717	789	0.20561	113.0419	CIMARRON - SARA 138KV CKT 1
FDNS	00NR	0	20WP	G15_085	FROM->TO	G14-057T 345.00 - SUNNYSIDE 345KV CKT 1	717	789	0.20564	113.0367	IMO TAP - MEN TAP 138KV CKT 1
FDNS	00NR	0	20WP	G15_085	FROM->TO	G14-057T 345.00 - SUNNYSIDE 345KV CKT 1	717	789	0.20527	113.0282	GEN300011 1-ST FRANCIS UNIT 2
FDNS	00NR	0	20WP	G15_085	FROM->TO	G14-057T 345.00 - SUNNYSIDE 345KV CKT 1	717	789	0.20527	113.0251	GEN336170 1-GULF OXY U4
FDNS	00NR	0	20WP	G15_085	FROM->TO	G14-057T 345.00 - SUNNYSIDE 345KV CKT 1	717	789	0.20517	113.0227	P12:138:AEPW:N.E.S.-4:CATOOSA4
FDNSLock	00NR	0	16WP	G15_085	FROM->TO	G14-057T 345.00 - SUNNYSIDE 345KV CKT 1	717	789	0.20384	113.0211	GEN532751 1-WOLF CREEK GENERATING STATION UNIT 1
FDNS	00NR	0	20WP	G15_085	FROM->TO	G14-057T 345.00 - SUNNYSIDE 345KV CKT 1	717	789	0.2051	113.0209	SEMINOLE - VANOSTP4 138.00 138KV CKT 1
FDNS	00NR	0	20WP	G15_085	FROM->TO	G14-057T 345.00 - SUNNYSIDE 345KV CKT 1	717	789	0.20582	113.0172	CZECH HALL - XEROX 138KV CKT 1
FDNS	00NR	0	20WP	G15_085	FROM->TO	G14-057T 345.00 - SUNNYSIDE 345KV CKT 1	717	789	0.20561	113.0167	COMANCHE TAP - TOSCO 69KV CKT 1
FDNS	00NR	0	20WP	G15_085	FROM->TO	G14-057T 345.00 - SUNNYSIDE 345KV CKT 1	717	789	0.20527	113.0167	NELSON 230/20.0KV TRANSFORMER CKT 1
FDNS	00NR	0	16WP	G15_085	FROM->TO	G14-057T 345.00 - SUNNYSIDE 345KV CKT 1	717	789	0.20418	113.0164	P12:138:WFEC:MSL15
FDNS	00NR	0	20WP	G15_085	FROM->TO	G14-057T 345.00 - SUNNYSIDE 345KV CKT 1	717	789	0.20582	113.0131	MORGAN - XEROX 138KV CKT 1
FDNS	00NR	0	20WP	G15_085	FROM->TO	G14-057T 345.00 - SUNNYSIDE 345KV CKT 1	717	789	0.20527	113.0062	GEN336801 1-BAXTER WILSON UNIT #1
FDNS	00NR	0	20WP	G15_085	FROM->TO	G14-057T 345.00 - SUNNYSIDE 345KV CKT 1	717	789	0.2055	112.9982	ALPINE AECC - AMITY SS 115KV CKT 1
FDNS	00NR	0	20WP	G15_085	FROM->TO	G14-057T 345.00 - SUNNYSIDE 345KV CKT 1	717	789	0.20487	112.9962	ARBWIND4 138.00 - CARTER 138KV CKT 1
FDNS	00NR	0	16WP	G15_085	FROM->TO	G14-057T 345.00 - SUNNYSIDE 345KV CKT 1	717	789	0.20306	112.9937	SUNNYSIDE - UNIROYAL 138KV CKT 1
FDNS	00NR	0	20WP	G15_085	FROM->TO	G14-057T 345.00 - SUNNYSIDE 345KV CKT 1	717	789	0.20582	112.9905	MORGAN - MUSTANG 138KV CKT 1
FDNS	00NR	0	20WP	G15_085	FROM->TO	G14-057T 345.00 - SUNNYSIDE 345KV CKT 1	717	789	0.20918	112.9897	WEATHERFORD JCT. - WEATHERFORD SOUTHEAST 138KV CKT 1
FDNS	00NR	0	20WP	G15_085	FROM->TO	G14-057T 345.00 - SUNNYSIDE 345KV CKT 1	717	789	0.20918	112.9897	WEATHERFORD JCT. - WEATHERFORD SOUTHEAST 138KV CKT 1
FDNS	00NR	0	20WP	G15_085	FROM->TO	G14-057T 345.00 - SUNNYSIDE 345KV CKT 1	717	789	0.20527	112.9775	8CAJUN2 500/24.0KV TRANSFORMER CKT 1

SOLUTION	GROUP	SCENARIO	SEASON	SOURCE	DIRECTION	MONITORED ELEMENT	RATEA (MVA)	RATEB(MVA)	TDF	TC%LOADING (% MVA)	CONTINGENCY
FDNS	00NR	0	20WP	G15_085	FROM->TO	G14-057T 345.00 - SUNNYSIDE 345KV CKT 1	717	789	0.20527	112.9766	GEN501910 1-ACADIA UNIT ST1
FDNS	00NR	0	16WP	G15_085	FROM->TO	G14-057T 345.00 - SUNNYSIDE 345KV CKT 1	717	789	0.20384	112.9741	GEN562992 1-G15063_3 0.6900
FDNS	00NR	0	20WP	G15_085	FROM->TO	G14-057T 345.00 - SUNNYSIDE 345KV CKT 1	717	789	0.20713	112.9676	ANADARKO - SEQUOYAHJ4 138.00 138KV CKT 1
FDNS	00NR	0	20WP	G15_085	FROM->TO	G14-057T 345.00 - SUNNYSIDE 345KV CKT 1	717	789	0.20713	112.9661	CORN TAP - SEQUOYAHJ4 138.00 138KV CKT 1
FDNS	00NR	0	20WP	G15_085	FROM->TO	G14-057T 345.00 - SUNNYSIDE 345KV CKT 1	717	789	0.20561	112.9645	COMANCHE - COMANCHE TAP 69KV CKT 1
FDNS	00NR	0	20WP	G15_085	FROM->TO	G14-057T 345.00 - SUNNYSIDE 345KV CKT 1	717	789	0.21069	112.9615	BAILEY4 138.00 - WESTMOORE 138KV CKT 1
FDNS	00NR	0	16WP	G15_085	FROM->TO	G14-057T 345.00 - SUNNYSIDE 345KV CKT 1	717	789	0.20384	112.9554	GEN657748 1-YOUNG 2 GENERATOR
FDNS	00NR	0	16WP	G15_085	FROM->TO	G14-057T 345.00 - SUNNYSIDE 345KV CKT 1	717	789	0.20379	112.9501	GRAPEVINE INTERCHANGE - STATELINE INTERCHANGE 230KV CKT 1
FDNS	00NR	0	16WP	G15_085	FROM->TO	G14-057T 345.00 - SUNNYSIDE 345KV CKT 1	717	789	0.20379	112.9501	GRAPEVINE INTERCHANGE - STATELINE INTERCHANGE 230KV CKT 1
FDNS	00NR	0	20WP	G15_085	FROM->TO	G14-057T 345.00 - SUNNYSIDE 345KV CKT 1	717	789	0.20656	112.95	P12:138:OKGE-AEPW:JENSEN4:REDROCKRD4
FDNS	00NR	0	20WP	G15_085	FROM->TO	G14-057T 345.00 - SUNNYSIDE 345KV CKT 1	717	789	0.20772	112.94	WALTERS - WALTERS 69KV CKT 1
FDNS	00NR	0	20WP	G15_085	FROM->TO	G14-057T 345.00 - SUNNYSIDE 345KV CKT 1	717	789	0.20918	112.9379	P12:138:AEPW:REDROCKRD4:WTH_JCT4
FDNS	00NR	0	20WP	G15_085	FROM->TO	G14-057T 345.00 - SUNNYSIDE 345KV CKT 1	717	789	0.20527	112.9375	SABINE 230/24.0KV TRANSFORMER CKT 1
FDNS	00NR	0	20WP	G15_085	FROM->TO	G14-057T 345.00 - SUNNYSIDE 345KV CKT 1	717	789	0.20527	112.9335	GEN300016 1-1G1GPDEL 18.000
FDNS	00NR	0	20WP	G15_085	FROM->TO	G14-057T 345.00 - SUNNYSIDE 345KV CKT 1	717	789	0.20561	112.9306	SARA - STHLAKE4 138.00 138KV CKT 1
FDNS	00NR	0	16WP	G15_085	FROM->TO	G14-057T 345.00 - SUNNYSIDE 345KV CKT 1	717	789	0.21019	112.9294	CANEY CREEK - TEXOMA JCT 138KV CKT 1
FDNS	00NR	0	20WP	G15_085	FROM->TO	G14-057T 345.00 - SUNNYSIDE 345KV CKT 1	717	789	0.20527	112.9286	P12:138:AEPW:R.S.S.-4:S.HUD.-4
FDNS	00NR	0	20WP	G15_085	FROM->TO	G14-057T 345.00 - SUNNYSIDE 345KV CKT 1	717	789	0.20565	112.9232	ETTA (DUKE HOTSPRINGS) - MC NIEL 500KV CKT 1
FDNS	00NR	0	20WP	G15_085	FROM->TO	G14-057T 345.00 - SUNNYSIDE 345KV CKT 1	717	789	0.20527	112.9218	GEN336222 1-LITTLE GYPSY UNIT#2
FDNS	00NR	0	16WP	G15_085	FROM->TO	G14-057T 345.00 - SUNNYSIDE 345KV CKT 1	717	789	0.20907	112.9113	P12:138:AEPW:SHAM4WT:CHILD4WT
FDNS	00NR	0	20WP	G15_085	FROM->TO	G14-057T 345.00 - SUNNYSIDE 345KV CKT 1	717	789	0.20282	112.9105	LAWTON RELIFT TAP - OMPA-WALTERS 69KV CKT 1
FDNS	00NR	0	20WP	G15_085	FROM->TO	G14-057T 345.00 - SUNNYSIDE 345KV CKT 1	717	789	0.20561	112.9005	MCCLAIN - STHLAKE4 138.00 138KV CKT 1
FDNS	00NR	0	20WP	G15_085	FROM->TO	G14-057T 345.00 - SUNNYSIDE 345KV CKT 1	717	789	0.20527	112.897	P12:69:AEPW:NROGERS2:ECNTRTN2
FDNS	00NR	0	20WP	G15_085	FROM->TO	G14-057T 345.00 - SUNNYSIDE 345KV CKT 1	717	789	0.20584	112.8964	G13-010T 345.00 - POST ROCK 345KV CKT 1
FDNS	00NR	0	16WP	G15_085	FROM->TO	G14-057T 345.00 - SUNNYSIDE 345KV CKT 1	717	789	0.20384	112.8952	GEN562704 1-G15_020_3 0.3550
FDNS	00NR	0	20WP	G15_085	FROM->TO	G14-057T 345.00 - SUNNYSIDE 345KV CKT 1	717	789	0.20949	112.8932	LASALLE - LATTA JCT 138KV CKT 1
FDNS	00NR	0	20WP	G15_085	FROM->TO	G14-057T 345.00 - SUNNYSIDE 345KV CKT 1	717	789	0.2069	112.8928	NORGE ROAD - SOUTHWESTERN STATION 138KV CKT 1
FDNS	00NR	0	20WP	G15_085	FROM->TO	G14-057T 345.00 - SUNNYSIDE 345KV CKT 1	717	789	0.2069	112.8928	NORGE ROAD - SOUTHWESTERN STATION 138KV CKT 1
FDNS	00NR	0	16WP	G15_085	FROM->TO	G14-057T 345.00 - SUNNYSIDE 345KV CKT 1	717	789	0.20384	112.8914	GEN562952 1-G15057_3 0.6500
FDNS	00NR	0	20WP	G15_085	FROM->TO	G14-057T 345.00 - SUNNYSIDE 345KV CKT 1	717	789	0.20527	112.8872	GEN336152 1-WATERFORD UNIT#2
FDNS	00NR	0	20WP	G15_085	FROM->TO	G14-057T 345.00 - SUNNYSIDE 345KV CKT 1	717	789	0.20527	112.8868	P12:138:AEPW:BA_71ST4:T.S.E.-4
FDNS	00NR	0	20WP	G15_085	FROM->TO	G14-057T 345.00 - SUNNYSIDE 345KV CKT 1	717	789	0.20527	112.8864	GEN336151 1-WATERFORD UNIT#1
FDNS	00NR	0	20WP	G15_085	FROM->TO	G14-057T 345.00 - SUNNYSIDE 345KV CKT 1	717	789	0.20527	112.882	P12:138:AEPW:YARCH-S4:T.S.E.-4
FDNS	00NR	0	20WP	G15_085	FROM->TO	G14-057T 345.00 - SUNNYSIDE 345KV CKT 1	717	789	0.20575	112.8781	EMPORIA ENERGY CENTER - G14_001T 345.00 345KV CKT 1
FDNS	00NR	0	20WP	G15_085	FROM->TO	G14-057T 345.00 - SUNNYSIDE 345KV CKT 1	717	789	0.20549	112.8777	HOYT - STRANGER CREEK 345KV CKT 1
FDNS	00NR	0	20WP	G15_085	FROM->TO	G14-057T 345.00 - SUNNYSIDE 345KV CKT 1	717	789	0.20564	112.8772	P12:138:AEPW-OGE:SHIDLER4:OSAGE 4
FDNS	00NR	0	20WP	G15_085	FROM->TO	G14-057T 345.00 - SUNNYSIDE 345KV CKT 1	717	789	0.20527	112.875	GEN300017 1-1G2GPDEL 18.000
FDNS	00NR	0	20WP	G15_085	FROM->TO	G14-057T 345.00 - SUNNYSIDE 345KV CKT 1	717	789	0.20527	112.8749	FRONTIER 345/18.0KV TRANSFORMER CKT 1
FDNS	00NR	0	20WP	G15_085	FROM->TO	G14-057T 345.00 - SUNNYSIDE 345KV CKT 1	717	789	0.20527	112.8727	FRONTIER 345/18.0KV TRANSFORMER CKT 1
FDNS	00NR	0	20WP	G15_085	FROM->TO	G14-057T 345.00 - SUNNYSIDE 345KV CKT 1	717	789	0.20544	112.8685	P12:138:OKGE:3TERM2
FDNS	00NR	0	20WP	G15_085	FROM->TO	G14-057T 345.00 - SUNNYSIDE 345KV CKT 1	717	789	0.20723	112.8667	CLINTON JUNCTION - ELK CITY 138KV CKT 1
FDNS	00NR	0	20WP	G15_085	FROM->TO	G14-057T 345.00 - SUNNYSIDE 345KV CKT 1	717	789	0.20723	112.8667	CLINTON JUNCTION - ELK CITY 138KV CKT 1
FDNS	00NR	0	20WP	G15_085	FROM->TO	G14-057T 345.00 - SUNNYSIDE 345KV CKT 1	717	789	0.20544	112.8667	HOPE - MCNAB REC 115KV CKT 1
FDNS	00NR	0	20WP	G15_085	FROM->TO	G14-057T 345.00 - SUNNYSIDE 345KV CKT 1	717	789	0.20544	112.8653	MORISNT4 138.00 - STILLWATER 138KV CKT 1
FDNS	00NR	0	20WP	G15_085	FROM->TO	G14-057T 345.00 - SUNNYSIDE 345KV CKT 1	717	789	0.20544	112.856	P12:115:AEPW:TURK3:HOPE3
FDNS	00NR	0	20WP	G15_085	FROM->TO	G14-057T 345.00 - SUNNYSIDE 345KV CKT 1	717	789	0.20585	112.8552	BENTON - WICHITA 345KV CKT 1
FDNS	00NR	0	20WP	G15_085	FROM->TO	G14-057T 345.00 - SUNNYSIDE 345KV CKT 1	717	789	0.20548	112.853	G15074_T 345.00 - JEFFREY ENERGY CENTER 345KV CKT 1
FDNS	00NR	0	16WP	G15_085	FROM->TO	G14-057T 345.00 - SUNNYSIDE 345KV CKT 1	717	789	0.20384	112.8518	GEN563173 1-G15082_3 0.6900
FDNS	00NR	0	20WP	G15_085	FROM->TO	G14-057T 345.00 - SUNNYSIDE 345KV CKT 1	717	789	0.20584	112.8505	G13-010T 345.00 - SPEARVILLE 345KV CKT 1
FDNS	00NR	0	20WP	G15_085	FROM->TO	G14-057T 345.00 - SUNNYSIDE 345KV CKT 1	717	789	0.20558	112.8485	COUCH SES - MC NIEL 115KV CKT 1
FDNS	00NR	0	20WP	G15_085	FROM->TO	G14-057T 345.00 - SUNNYSIDE 345KV CKT 1	717	789	0.20756	112.8447	WEATHERFORD TAP - WEATHERFORD WIND FARM 138KV CKT 1
FDNS	00NR	0	20WP	G15_085	FROM->TO	G14-057T 345.00 - SUNNYSIDE 345KV CKT 1	717	789	0.20567	112.8444	BLACKBERRY - NEOSHO 345KV CKT 1
FDNS	00NR	0	20WP	G15_085	FROM->TO	G14-057T 345.00 - SUNNYSIDE 345KV CKT 1	717	789	0.20527	112.8441	LEWIS CREEK SWITCHYARD 138/22.0KV TRANSFORMER CKT 1
FDNS	00NR	0	20WP	G15_085	FROM->TO	G14-057T 345.00 - SUNNYSIDE 345KV CKT 1	717	789	0.20918	112.8435	HINTON - WEATHERFORD JCT. 138KV CKT 1
FDNS	00NR	0	20WP	G15_085	FROM->TO	G14-057T 345.00 - SUNNYSIDE 345KV CKT 1	717	789	0.20527	112.8396	LEWIS CREEK SWITCHYARD 138/22.0KV TRANSFORMER CKT 1
FDNS	00NR	0	16WP	G15_085	FROM->TO	G14-057T 345.00 - SUNNYSIDE 345KV CKT 1	717	789	0.20618	112.8375	GRAPEVINE INTERCHANGE - NICHOLS STATION 230KV CKT 1
FDNS	00NR	0	16WP	G15_085	FROM->TO	G14-057T 345.00 - SUNNYSIDE 345KV CKT 1	717	789	0.20618	112.8375	GRAPEVINE INTERCHANGE - NICHOLS STATION 230KV CKT 1
FDNS	00NR	0	20WP	G15_085	FROM->TO	G14-057T 345.00 - SUNNYSIDE 345KV CKT 1	717	789	0.20282	112.8369	OMPA-WALTERS - WALTERS 69KV CKT 1
FDNS	00NR	0	20WP	G15_085	FROM->TO	G14-057T 345.00 - SUNNYSIDE 345KV CKT 1	717	789	0.20282	112.8369	OMPA-WALTERS - WALTERS 69KV CKT 1
FDNS	00NR	0	20WP	G15_085	FROM->TO	G14-057T 345.00 - SUNNYSIDE 345KV CKT 1	717	789	0.20538	112.8359	CYPRESS - HARTBURG 500KV CKT 1
FDNS	00NR	0	20WP	G15_085	FROM->TO	G14-057T 345.00 - SUNNYSIDE 345KV CKT 1	717	789	0.20679	112.8325	SOUTHWESTERN STATION - VERDEN 138KV CKT 1
FDNS	00NR	0	20WP	G15_085	FROM->TO	G14-057T 345.00 - SUNNYSIDE 345KV CKT 1	717	789	0.20527	112.8315	GEN334432 1-SABINE UNIT 2
FDNS	00NR	0	20WP	G15_085	FROM->TO	G14-057T 345.00 - SUNNYSIDE 345KV CKT 1	717	789	0.20527	112.831	GEN334431 1-SABINE UNIT 1
FDNS	00NR	0	20WP	G15_085	FROM->TO	G14-057T 345.00 - SUNNYSIDE 345KV CKT 1	717	789	0.20544	112.8308	TURK (TURK 1) 138/115/13.2KV TRANSFORMER CKT 1
FDNS	00NR	0	20WP	G15_085	FROM->TO	G14-057T 345.00 - SUNNYSIDE 345KV CKT 1	717	789	0.20544	112.8308	TURK (TURK 1) 138/115/13.2KV TRANSFORMER CKT 1
FDNS	00NR	0	20WP	G15_085	FROM->TO	G14-057T 345.00 - SUNNYSIDE 345KV CKT 1	717	789	0.20544	112.8307	MCNAB REC - Turk 115 115KV CKT 1
FDNS	00NR	0	20WP	G15_085	FROM->TO	G14-057T 345.00 - SUNNYSIDE 345KV CKT 1	717	789	0.20542	112.8301	7JASPER 345.00 - BLACKBERRY 345KV CKT 1
FDNS	00NR	0	20WP	G15_085	FROM->TO	G14-057T 345.00 - SUNNYSIDE 345KV CKT 1	717	789	0.20527	112.8268	GEN501823 1-TECHE UNIT 3
FDNS	00NR	0	20WP	G15_085	FROM->TO	G14-057T 345.00 - SUNNYSIDE 345KV CKT 1	717	789	0.20527	112.8248	GEN501970 1-EVANGELINE UNIT 7
FDNS	00NR	0	20WP	G15_085	FROM->TO	G14-057T 345.00 - SUNNYSIDE 345KV CKT 1	717	789	0.20527	112.8197	GEN505616 1-BROKEN BOW
FDNS	00NR	0	20WP	G15_085	FROM->TO	G14-057T 345.00 - SUNNYSIDE 345KV CKT 1	717	789	0.20772	112.8185	P12:69:WFEC-AEPW:COMANCH2:WALTRS-2
FDNS	00NR	0	20WP	G15_085	FROM->TO	G14-057T 345.00 - SUNNYSIDE 345KV CKT 1	717	789	0.20689	112.8114	CANADIAN - NOBLE 138KV CKT 1
FDNS	00NR	0	20WP	G15_085	FROM->TO	G14-057T 345.00 - SUNNYSIDE 345KV CKT 1	717	789	0.20679	112.8107	NORTH 29TH CHICKASHA - VERDEN 138KV CKT 1
FDNS	00NR	0	20WP	G15_085	FROM->TO	G14-057T 345.00 - SUNNYSIDE 345KV CKT 1	717	789	0.20527	112.8098	P12:161:AEPW:CHAMSPR5:FARMING5
FDNS	00NR	0	16WP	G15_085	FROM->TO	G14-057T 345.00 - SUNNYSIDE 345KV CKT 1	717	789	0.20384	112.8084	GEN562710 1-G15_022_3 0.5500
FDNS	00NR	0	20WP	G15_085	FROM->TO	G14-057T 345.00 - SUNNYSIDE 345KV CKT 1	717	789	0.20543	112.8043	7LUTESVIL 345.00 - 7ST FRANC 345.00 345KV CKT 1
FDNS	00NR	0	20WP	G15_085	FROM->TO	G14-057T 345.00 - SUNNYSIDE 345KV CKT 1	717	789	0.20527	112.8033	GEN334392 1-EXXON MOBIL IPP 1
FDNS	00NR	0	20WP	G15_085	FROM->TO	G14-057T 345.00 - SUNNYSIDE 345KV CKT 1	717	789	0.20575	112.8	G14_001T 345.00 - WICHITA 345KV CKT 1
FDNS	00NR	0	20WP	G15_085	FROM->TO	G14-057T 345.00 - SUNNYSIDE 345KV CKT 1	717	789	0.20527	112.7969	GEN334393 1-EXXON MOBIL IPP 2

SOLUTION	GROUP	SCENARIO	SEASON	SOURCE	DIRECTION	MONITORED ELEMENT	RATEA (MVA)	RATEB(MVA)	TDF	TC%LOADING (% MVA)	CONTINGENCY
FDNS	00NR	0	20WP	G15_085	FROM->TO	G14-057T 345.00 - SUNNYSIDE 345KV CKT 1	717	789	0.20527	112.7969	GEN334394 1-EXXON MOBIL IPP 3
FDNS	00NR	0	20WP	G15_085	FROM->TO	G14-057T 345.00 - SUNNYSIDE 345KV CKT 1	717	789	0.21069	112.7939	FRANKLIN SW - WESTMOORE 138KV CKT 1
FDNS	00NR	0	20WP	G15_085	FROM->TO	G14-057T 345.00 - SUNNYSIDE 345KV CKT 1	717	789	0.20555	112.7921	LAKEOVER - MCADAMS 500KV CKT 1
FDNS	00NR	0	16WP	G15_085	FROM->TO	G14-057T 345.00 - SUNNYSIDE 345KV CKT 1	717	789	0.20384	112.7898	GEN620315 1-BIG STONE GEN
FDNS	00NR	0	20WP	G15_085	FROM->TO	G14-057T 345.00 - SUNNYSIDE 345KV CKT 1	717	789	0.20706	112.7872	P12:138:OKGE:3TERM27
FDNS	00NR	0	20WP	G15_085	FROM->TO	G14-057T 345.00 - SUNNYSIDE 345KV CKT 1	717	789	0.2055	112.7859	EMPORIA ENERGY CENTER - SWISSVALE 345KV CKT 1
FDNS	00NR	0	20WP	G15_085	FROM->TO	G14-057T 345.00 - SUNNYSIDE 345KV CKT 1	717	789	0.20527	112.7835	ST FRANCIS - ST FRANCIS 1 161KV CKT Z1
FDNS	00NR	0	20WP	G15_085	FROM->TO	G14-057T 345.00 - SUNNYSIDE 345KV CKT 1	717	789	0.20576	112.7809	MCADAMS - WOLF CREEK 500KV CKT 1
FDNS	00NR	0	20WP	G15_085	FROM->TO	G14-057T 345.00 - SUNNYSIDE 345KV CKT 1	717	789	0.20527	112.779	SABINE 230/22.0KV TRANSFORMER CKT 1
FDNS	00NR	0	20WP	G15_085	FROM->TO	G14-057T 345.00 - SUNNYSIDE 345KV CKT 1	717	789	0.20555	112.7787	FLETCHER - MARLOW JCT 69KV CKT 1
FDNS	00NR	0	20WP	G15_085	FROM->TO	G14-057T 345.00 - SUNNYSIDE 345KV CKT 1	717	789	0.20554	112.7734	SWISSVALE - WEST GARDNER 345KV CKT 1
FDNS	00NR	0	20WP	G15_085	FROM->TO	G14-057T 345.00 - SUNNYSIDE 345KV CKT 1	717	789	0.20918	112.7689	HINTON - REDROCKRD4 138.00 138KV CKT 1
FDNS	00NR	0	16WP	G15_085	FROM->TO	G14-057T 345.00 - SUNNYSIDE 345KV CKT 1	717	789	0.20384	112.7677	GEN511851 1-COMANCHE #1
FDNS	00NR	0	20WP	G15_085	FROM->TO	G14-057T 345.00 - SUNNYSIDE 345KV CKT 1	717	789	0.20527	112.7667	GEN501972 1-EVANGELINE UNIT 7-2
FDNS	00NR	0	20WP	G15_085	FROM->TO	G14-057T 345.00 - SUNNYSIDE 345KV CKT 1	717	789	0.20527	112.7666	GEN501971 1-EVANGELINE UNIT 7-1
FDNS	00NR	0	20WP	G15_085	FROM->TO	G14-057T 345.00 - SUNNYSIDE 345KV CKT 1	717	789	0.20528	112.7601	P12:138:AEPW:R.S.S-4:T.P.S.-4
FDNS	00NR	0	20WP	G15_085	FROM->TO	G14-057T 345.00 - SUNNYSIDE 345KV CKT 1	717	789	0.2069	112.7558	CORNVILLE - NORGE ROAD 138KV CKT 1
FDNS	00NR	0	20WP	G15_085	FROM->TO	G14-057T 345.00 - SUNNYSIDE 345KV CKT 1	717	789	0.2069	112.7558	CORNVILLE - NORGE ROAD 138KV CKT 1
FDNS	00NR	0	20WP	G15_085	FROM->TO	G14-057T 345.00 - SUNNYSIDE 345KV CKT 1	717	789	0.20534	112.7544	P12:138:OKGE:3TERM12
FDNS	00NR	0	20WP	G15_085	FROM->TO	G14-057T 345.00 - SUNNYSIDE 345KV CKT 1	717	789	0.20606	112.7529	ENOWILT - LONE OAK 138KV CKT 1
FDNS	00NR	0	20WP	G15_085	FROM->TO	G14-057T 345.00 - SUNNYSIDE 345KV CKT 1	717	789	0.20756	112.7506	WEATHERFORD SOUTHEAST - WEATHERFORD TAP 138KV CKT 1
FDNS	00NR	0	20WP	G15_085	FROM->TO	G14-057T 345.00 - SUNNYSIDE 345KV CKT 1	717	789	0.20606	112.7442	ENOWILT - SARDIS 138KV CKT 1
FDNS	00NR	0	20WP	G15_085	FROM->TO	G14-057T 345.00 - SUNNYSIDE 345KV CKT 1	717	789	0.20527	112.7431	GEN501912 1-ACADIA UNIT CT1B
FDNS	00NR	0	20WP	G15_085	FROM->TO	G14-057T 345.00 - SUNNYSIDE 345KV CKT 1	717	789	0.20574	112.743	FRANKLIN - FRANKLIN SW 138KV CKT 1
FDNS	00NR	0	20WP	G15_085	FROM->TO	G14-057T 345.00 - SUNNYSIDE 345KV CKT 1	717	789	0.20546	112.7424	P12:138:WFEC-AEPW:ELKCTY-4:ERICK4
FDNS	00NR	0	20WP	G15_085	FROM->TO	G14-057T 345.00 - SUNNYSIDE 345KV CKT 1	717	789	0.20527	112.7423	GEN501911 1-ACADIA UNIT CT1A
FDNS	00NR	0	20WP	G15_085	FROM->TO	G14-057T 345.00 - SUNNYSIDE 345KV CKT 1	717	789	0.20949	112.7421	LASALLE - STONEWAL LH138.00 138KV CKT 1
FDNS	00NR	0	20WP	G15_085	FROM->TO	G14-057T 345.00 - SUNNYSIDE 345KV CKT 1	717	789	0.2055	112.7364	AMITY SS - MURFREESBORO EAST (AECC) 115KV CKT 1
FDNS	00NR	0	20WP	G15_085	FROM->TO	G14-057T 345.00 - SUNNYSIDE 345KV CKT 1	717	789	0.20527	112.7343	P12:138:AEPW:R.S.S.-4:R:96YALE-4
FDNS	00NR	0	16WP	G15_085	FROM->TO	G14-057T 345.00 - SUNNYSIDE 345KV CKT 1	717	789	0.20384	112.7303	GEN600004 2-PRAIRIE ISLAND G2
FDNS	00NR	0	16WP	G15_085	FROM->TO	G14-057T 345.00 - SUNNYSIDE 345KV CKT 1	717	789	0.20384	112.7275	GEN600003 1-PRAIRIE ISLAND G1
FDNS	00NR	0	20WP	G15_085	FROM->TO	G14-057T 345.00 - SUNNYSIDE 345KV CKT 1	717	789	0.20679	112.7268	CORNVILLE - NORTH 29TH CHICKASHA 138KV CKT 1
FDNS	00NR	0	20WP	G15_085	FROM->TO	G14-057T 345.00 - SUNNYSIDE 345KV CKT 1	717	789	0.20949	112.724	STONEWAL LH138.00 - TUPELO TAP 138KV CKT 1
FDNS	00NR	0	20WP	G15_085	FROM->TO	G14-057T 345.00 - SUNNYSIDE 345KV CKT 1	717	789	0.20689	112.7182	NOBLE - PURCELL4 138.00 138KV CKT 1
FDNSLock	00NR	0	16WP	G15_085	FROM->TO	G14-057T 345.00 - SUNNYSIDE 345KV CKT 1	717	789	0.20384	112.715	GEN600006 1-AS KING
FDNS	00NR	0	20WP	G15_085	FROM->TO	G14-057T 345.00 - SUNNYSIDE 345KV CKT 1	717	789	0.20738	112.7058	CIMARRON - NORTHWEST 345KV CKT 1
FDNS	00NR	0	20WP	G15_085	FROM->TO	G14-057T 345.00 - SUNNYSIDE 345KV CKT 1	717	789	0.20756	112.7001	CLINTON JUNCTION - CLINTON NATURAL GAS TAP 138KV CKT 1
FDNS	00NR	0	20WP	G15_085	FROM->TO	G14-057T 345.00 - SUNNYSIDE 345KV CKT 1	717	789	0.20656	112.6983	Canadian Pump Station - REDROCKRD4 138.00 138KV CKT 1
FDNS	00NR	0	20WP	G15_085	FROM->TO	G14-057T 345.00 - SUNNYSIDE 345KV CKT 1	717	789	0.20748	112.6767	CRINER - PAYNE 138.00 138KV CKT 1
FDNS	00NR	0	16WP	G15_085	FROM->TO	G14-057T 345.00 - SUNNYSIDE 345KV CKT 1	717	789	0.20403	112.6686	P12:138:WFEC:MSL09
FDNS	00NR	0	16WP	G15_085	FROM->TO	G14-057T 345.00 - SUNNYSIDE 345KV CKT 1	717	789	0.2079	112.6633	P12:138:AEPW-OGE:CORNVIL4:CIMARON4
FDNS	00NR	0	20WP	G15_085	FROM->TO	G14-057T 345.00 - SUNNYSIDE 345KV CKT 1	717	789	0.20772	112.6419	COMANCHE - WALTERS 69KV CKT 1
FDNSLock	00NR	0	16WP	G15_085	FROM->TO	G14-057T 345.00 - SUNNYSIDE 345KV CKT 1	717	789	0.20384	112.6382	GEN636641 1-LOUISA UNIT 1
FDNS	00NR	0	16WP	G15_085	FROM->TO	G14-057T 345.00 - SUNNYSIDE 345KV CKT 1	717	789	0.20384	112.6	GEN615002 2-COAL CREEK
FDNS	00NR	0	16WP	G15_085	FROM->TO	G14-057T 345.00 - SUNNYSIDE 345KV CKT 1	717	789	0.20384	112.5883	GEN600005 1-MONTICELLO
FDNS	00NR	0	16WP	G15_085	FROM->TO	G14-057T 345.00 - SUNNYSIDE 345KV CKT 1	717	789	0.19696	112.5634	CHISHOLM7 345.00 (CHISHOLM) 345/230/13.2KV TRANSFORMER CKT 1
FDNS	00NR	0	16WP	G15_085	FROM->TO	G14-057T 345.00 - SUNNYSIDE 345KV CKT 1	717	789	0.20384	112.5594	GEN562754 1-G15031_5 0.6900
FDNS	00NR	0	16WP	G15_085	FROM->TO	G14-057T 345.00 - SUNNYSIDE 345KV CKT 1	717	789	0.20384	112.5259	GEN635213 3-NEAL UNIT 3
FDNS	00NR	0	16WP	G15_085	FROM->TO	G14-057T 345.00 - SUNNYSIDE 345KV CKT 1	717	789	0.20384	112.5005	GEN562756 1-G15031_7 0.6900
FDNS	00NR	0	16WP	G15_085	FROM->TO	G14-057T 345.00 - SUNNYSIDE 345KV CKT 1	717	789	0.20384	112.5	GEN629074 1-ARNOLD LOWSIDE OF GSU XFMR
FDNS	00NR	0	16WP	G15_085	FROM->TO	G14-057T 345.00 - SUNNYSIDE 345KV CKT 1	717	789	0.20384	112.4623	GEN562023 1-G11_020_3 0.6900
FDNS	00NR	0	16WP	G15_085	FROM->TO	G14-057T 345.00 - SUNNYSIDE 345KV CKT 1	717	789	0.20384	112.4623	GEN562026 1-G11_019_3 0.6900
FDNS	00NR	0	16WP	G15_085	FROM->TO	G14-057T 345.00 - SUNNYSIDE 345KV CKT 1	717	789	0.20384	112.4584	GEN562556 1-G14_046_3 0.3420
FDNS	00NR	0	16WP	G15_085	FROM->TO	G14-057T 345.00 - SUNNYSIDE 345KV CKT 1	717	789	0.19696	112.4526	CHISHOLM7 345.00 - GRACEMONT 345KV CKT 1
FDNS	00NR	0	16WP	G15_085	FROM->TO	G14-057T 345.00 - SUNNYSIDE 345KV CKT 1	717	789	0.20384	112.451	BIG STONE 230/24.0KV TRANSFORMER CKT 1
FDNS	00NR	0	16WP	G15_085	FROM->TO	G14-057T 345.00 - SUNNYSIDE 345KV CKT 1	717	789	0.20384	112.3702	GEN563142 1-G15079_3 0.5500
FDNS	00NR	0	16WP	G15_085	FROM->TO	G14-057T 345.00 - SUNNYSIDE 345KV CKT 1	717	789	0.20384	112.3702	GEN563151 1-G15080_2 0.5500
FDNS	00NR	0	16WP	G15_085	FROM->TO	G14-057T 345.00 - SUNNYSIDE 345KV CKT 1	717	789	0.20384	112.3332	GEN523971 1-HARRINGTON GEN #1 24 KV
FDNS	00NR	0	16WP	G15_085	FROM->TO	G14-057T 345.00 - SUNNYSIDE 345KV CKT 1	717	789	0.20384	112.3331	GEN523973 1-HARRINGTON GEN #3 24 KV
FDNS	00NR	0	16WP	G15_085	FROM->TO	G14-057T 345.00 - SUNNYSIDE 345KV CKT 1	717	789	0.20384	112.333	GEN523972 1-HARRINGTON GEN #2 24 KV
FDNS	00NR	0	16WP	G15_085	FROM->TO	G14-057T 345.00 - SUNNYSIDE 345KV CKT 1	717	789	0.20039	112.293	NORTHWEST TEXARKANA - VALLIANT 345KV CKT 1
FDNS	00NR	0	16WP	G15_085	FROM->TO	G14-057T 345.00 - SUNNYSIDE 345KV CKT 1	717	789	0.20039	112.293	NORTHWEST TEXARKANA - VALLIANT 345KV CKT 1
FDNS	00NR	0	16WP	G15_085	FROM->TO	G14-057T 345.00 - SUNNYSIDE 345KV CKT 1	717	789	0.20323	112.2788	P12:230:AEPW-SPS:SWEETWT6:WHEELER 6
FDNS	00NR	0	16WP	G15_085	FROM->TO	G14-057T 345.00 - SUNNYSIDE 345KV CKT 1	717	789	0.20323	112.2782	STLN-DEMARC6 - SWEETWATER 230KV CKT 1
FDNS	00NR	0	16WP	G15_085	FROM->TO	G14-057T 345.00 - SUNNYSIDE 345KV CKT 1	717	789	0.20323	112.2771	STATELINE INTERCHANGE - STLN-DEMARC6 230KV CKT 1
FDNSLock	00NR	0	16WP	G15_085	FROM->TO	G14-057T 345.00 - SUNNYSIDE 345KV CKT 1	717	789	0.20384	112.2748	GEN600000 1-SHERBURNECNTY G1
FDNS	00NR	0	16WP	G15_085	FROM->TO	G14-057T 345.00 - SUNNYSIDE 345KV CKT 1	717	789	0.20384	112.2359	GEN511848 1-SOUTHWESTERN STATION #3
FDNS	00NR	0	20WP	G15_085	FROM->TO	G14-057T 345.00 - SUNNYSIDE 345KV CKT 1	717	789	0.20527	112.2265	803-OKLAUNION
FDNS	00NR	0	16WP	G15_085	FROM->TO	G14-057T 345.00 - SUNNYSIDE 345KV CKT 1	717	789	0.20384	112.2003	GEN600001 2-SHERBURNE CNTY G2
FDNS	00NR	0	16WP	G15_085	FROM->TO	G14-057T 345.00 - SUNNYSIDE 345KV CKT 1	717	789	0.20384	112.163	GEN563042 1-G15068_3 0.6900
FDNS	00NR	0	16WP	G15_085	FROM->TO	G14-057T 345.00 - SUNNYSIDE 345KV CKT 1	717	789	0.20384	112.1422	GEN527901 1-HOBBS PLANT #1 (CT)
FDNS	00NR	0	16WP	G15_085	FROM->TO	G14-057T 345.00 - SUNNYSIDE 345KV CKT 1	717	789	0.20384	112.1422	GEN527902 1-HOBBS PLANT #2 (CT)
FDNSLock	00NR	0	16WP	G15_085	FROM->TO	G14-057T 345.00 - SUNNYSIDE 345KV CKT 1	717	789	0.20384	112.0855	GEN629075 1-OTTUMWA GENERATOR FOR OTTUMWA UNIT NO 1
FDNS	00NR	0	20WP	G15_085	FROM->TO	G14-057T 345.00 - SUNNYSIDE 345KV CKT 1	717	789	0.20436	111.9515	P12:138:OKGE:3TERM39
FDNSLock	00NR	0	16WP	G15_085	FROM->TO	G14-057T 345.00 - SUNNYSIDE 345KV CKT 1	717	789	0.20384	111.9266	GEN635214 4-NEAL UNIT 4
FDNS	00NR	0	16WP	G15_085	FROM->TO	G14-057T 345.00 - SUNNYSIDE 345KV CKT 1	717	789	0.20384	111.9233	SHERBURNE CO 345/24.0KV TRANSFORMER CKT 1
FDNS	00NR	0	20WP	G15_085	FROM->TO	G14-057T 345.00 - SUNNYSIDE 345KV CKT 1	717	789	0.20533	111.9074	RANCHRD7 345.00 - SOONER 345KV CKT 1
FDNS	00NR	0	20WP	G15_085	FROM->TO	G14-057T 345.00 - SUNNYSIDE 345KV CKT 1	717	789	0.21471	111.8943	CHILDRESS - LAKE PAULINE 138KV CKT 1
FDNS	00NR	0	20WP	G15_085	FROM->TO	G14-057T 345.00 - SUNNYSIDE 345KV CKT 1	717	789	0.21471	111.8943	CHILDRESS - LAKE PAULINE 138KV CKT 1

SOLUTION	GROUP	SCENARIO	SEASON	SOURCE	DIRECTION	MONITORED ELEMENT	RATEA (MVA)	RATEB(MVA)	TDF	TC%LOADING (% MVA)	CONTINGENCY
FDNS	00NR	0	20WP	G15_085	FROM->TO	G14-057T 345.00 - SUNNYSIDE 345KV CKT 1	717	789	0.21044	111.8901	CHILDRESS - HOLLIS TAP 138KV CKT 1
FDNS	00NR	0	20WP	G15_085	FROM->TO	G14-057T 345.00 - SUNNYSIDE 345KV CKT 1	717	789	0.20527	111.8664	GEN562084 1-G11_050_3 0.6900
FDNS	00NR	0	16WP	G15_085	FROM->TO	G14-057T 345.00 - SUNNYSIDE 345KV CKT 1	717	789	0.20384	111.861	GEN563043 1-G15068_4 0.6900
FDNS	00NR	0	16WP	G15_085	FROM->TO	G14-057T 345.00 - SUNNYSIDE 345KV CKT 1	717	789	0.20384	111.8591	GEN563273 2-G15093_4 0.6900
FDNS	00NR	0	20WP	G15_085	FROM->TO	G14-057T 345.00 - SUNNYSIDE 345KV CKT 1	717	789	0.20509	111.847	MAYSVILLE - PAOLI 138KV CKT 1
FDNS	00NR	0	20WP	G15_085	FROM->TO	G14-057T 345.00 - SUNNYSIDE 345KV CKT 1	717	789	0.20527	111.8386	GEN560187 1-WTH WIND 0.5750
FDNS	00NR	0	16WP	G15_085	FROM->TO	G14-057T 345.00 - SUNNYSIDE 345KV CKT 1	717	789	0.20384	111.8362	GEN526333 1-JONES GEN #3 21 KV
FDNS	00NR	0	16WP	G15_085	FROM->TO	G14-057T 345.00 - SUNNYSIDE 345KV CKT 1	717	789	0.20384	111.8361	GEN526334 1-JONES_4 116.500
FDNS	00NR	0	20WP	G15_085	FROM->TO	G14-057T 345.00 - SUNNYSIDE 345KV CKT 1	717	789	0.20576	111.8224	CIMARRON - MATHWSN7 345.00 345KV CKT 1
FDNS	00NR	0	20WP	G15_085	FROM->TO	G14-057T 345.00 - SUNNYSIDE 345KV CKT 1	717	789	0.20576	111.8224	CIMARRON - MATHWSN7 345.00 345KV CKT 2
FDNS	00NR	0	20WP	G15_085	FROM->TO	G14-057T 345.00 - SUNNYSIDE 345KV CKT 1	717	789	0.20527	111.8182	GEN560112 1-G08_037_3 0.6900
FDNS	00NR	0	16WP	G15_085	FROM->TO	G14-057T 345.00 - SUNNYSIDE 345KV CKT 1	717	789	0.20384	111.8	GEN344225 1-1CAL G1 25.000
FDNS	00NR	0	16WP	G15_085	FROM->TO	G14-057T 345.00 - SUNNYSIDE 345KV CKT 1	717	789	0.19735	111.7926	P12:230:AEPW:ELKCITY6:SWEETWT6
FDNS	00NR	0	16WP	G15_085	FROM->TO	G14-057T 345.00 - SUNNYSIDE 345KV CKT 1	717	789	0.20384	111.7857	GEN525844 1-ELK_1 118.000
FDNS	00NR	0	20WP	G15_085	FROM->TO	G14-057T 345.00 - SUNNYSIDE 345KV CKT 1	717	789	0.20527	111.7821	GEN521103 1-BLUE CANYON WIND FARM
FDNS	00NR	0	20WP	G15_085	FROM->TO	G14-057T 345.00 - SUNNYSIDE 345KV CKT 1	717	789	0.20527	111.7799	GEN520812 1-ANADRK5
FDNS	00NR	0	20WP	G15_085	FROM->TO	G14-057T 345.00 - SUNNYSIDE 345KV CKT 1	717	789	0.20527	111.7798	GEN520813 1-ANADRK6
FDNS	00NR	0	20WP	G15_085	FROM->TO	G14-057T 345.00 - SUNNYSIDE 345KV CKT 1	717	789	0.20598	111.7795	DRAPER LAKE - MIDWEST TAP 138KV CKT 1
FDNS	00NR	0	16WP	G15_085	FROM->TO	G14-057T 345.00 - SUNNYSIDE 345KV CKT 1	717	789	0.20384	111.779	GEN525845 1-ELK_2 1 138.00
FDNS	00NR	0	20WP	G15_085	FROM->TO	G14-057T 345.00 - SUNNYSIDE 345KV CKT 1	717	789	0.20527	111.7781	GEN563052 1-G15069_3 0.6900
FDNS	00NR	0	16WP	G15_085	FROM->TO	G14-057T 345.00 - SUNNYSIDE 345KV CKT 1	717	789	0.20384	111.7743	GEN600002 3-SHERBURNE CNTY G3
FDNS	00NR	0	20WP	G15_085	FROM->TO	G14-057T 345.00 - SUNNYSIDE 345KV CKT 1	717	789	0.20509	111.7716	MAYSVILLE - MAYSVLT4 138.00 138KV CKT 1
FDNS	00NR	0	20WP	G15_085	FROM->TO	G14-057T 345.00 - SUNNYSIDE 345KV CKT 1	717	789	0.20619	111.7619	P12:138:OKGE:3TERM21
FDNS	00NR	0	20WP	G15_085	FROM->TO	G14-057T 345.00 - SUNNYSIDE 345KV CKT 1	717	789	0.20527	111.7611	GEN562691 1-G15_015_3 0.6900
FDNS	00NR	0	20WP	G15_085	FROM->TO	G14-057T 345.00 - SUNNYSIDE 345KV CKT 1	717	789	0.20527	111.7556	GEN562772 1-G15034_3 0.6900
FDNS	00NR	0	20WP	G15_085	FROM->TO	G14-057T 345.00 - SUNNYSIDE 345KV CKT 1	717	789	0.20527	111.7408	GEN511961 1-DEMPSEY-WTG10.7000
FDNS	00NR	0	20WP	G15_085	FROM->TO	G14-057T 345.00 - SUNNYSIDE 345KV CKT 1	717	789	0.20709	111.7297	SOONER - SPRING CREEK 345KV CKT 1
FDNS	00NR	0	20WP	G15_085	FROM->TO	G14-057T 345.00 - SUNNYSIDE 345KV CKT 1	717	789	0.20527	111.7267	P12:069:OKGE:3TERM42
FDNS	00NR	0	20WP	G15_085	FROM->TO	G14-057T 345.00 - SUNNYSIDE 345KV CKT 1	717	789	0.20709	111.7265	NORTHWEST - SPRING CREEK 345KV CKT 1
FDNS	00NR	0	20WP	G15_085	FROM->TO	G14-057T 345.00 - SUNNYSIDE 345KV CKT 1	717	789	0.20487	111.7238	ARBUCKLE - SULPHR 4 138.00 138KV CKT 1
FDNS	00NR	0	20WP	G15_085	FROM->TO	G14-057T 345.00 - SUNNYSIDE 345KV CKT 1	717	789	0.20551	111.7062	GLASSES - MADILL INDUSTRIAL TAP 138KV CKT 1
FDNS	00NR	0	20WP	G15_085	FROM->TO	G14-057T 345.00 - SUNNYSIDE 345KV CKT 1	717	789	0.20509	111.7055	MAYSVLT4 138.00 - PRAIRIE POINT 138KV CKT 1
FDNS	00NR	0	20WP	G15_085	FROM->TO	G14-057T 345.00 - SUNNYSIDE 345KV CKT 1	717	789	0.20533	111.7005	P12:138:WFEC:MSL11
FDNS	00NR	0	20WP	G15_085	FROM->TO	G14-057T 345.00 - SUNNYSIDE 345KV CKT 1	717	789	0.20533	111.7005	P12:138:WFEC-AEPW:PHAROAH4:LONEOAK4
FDNS	00NR	0	20WP	G15_085	FROM->TO	G14-057T 345.00 - SUNNYSIDE 345KV CKT 1	717	789	0.20545	111.6941	CANEY CREEK - JOHNSON COUNTY 138KV CKT 1
FDNS	00NR	0	20WP	G15_085	FROM->TO	G14-057T 345.00 - SUNNYSIDE 345KV CKT 1	717	789	0.20527	111.689	GEN515443 1-MNCOWND1 0.7000
FDNS	00NR	0	20WP	G15_085	FROM->TO	G14-057T 345.00 - SUNNYSIDE 345KV CKT 1	717	789	0.20992	111.6853	MOREWOOD SW - NINE MILE 138KV CKT 1
FDNS	00NR	0	20WP	G15_085	FROM->TO	G14-057T 345.00 - SUNNYSIDE 345KV CKT 1	717	789	0.18105	111.6712	ALTUS JUNCTION - RUSSELL 138KV CKT 1
FDNS	00NR	0	20WP	G15_085	FROM->TO	G14-057T 345.00 - SUNNYSIDE 345KV CKT 1	717	789	0.18105	111.6712	ALTUS JUNCTION - RUSSELL 138KV CKT 1
FDNS	00NR	0	20WP	G15_085	FROM->TO	G14-057T 345.00 - SUNNYSIDE 345KV CKT 1	717	789	0.20527	111.6708	GEN560183 1-REDHIL-WTG1 12.000
FDNS	00NR	0	20WP	G15_085	FROM->TO	G14-057T 345.00 - SUNNYSIDE 345KV CKT 1	717	789	0.20527	111.6625	INDEPENDENCE 500/26.0KV TRANSFORMER CKT 1
FDNS	00NR	0	20WP	G15_085	FROM->TO	G14-057T 345.00 - SUNNYSIDE 345KV CKT 1	717	789	0.20551	111.6578	GLASSES - RUSSETT 138KV CKT 1
FDNS	00NR	0	20WP	G15_085	FROM->TO	G14-057T 345.00 - SUNNYSIDE 345KV CKT 1	717	789	0.20527	111.654	GEN600067 9-HIGH BRIDGE
FDNS	00NR	0	20WP	G15_085	FROM->TO	G14-057T 345.00 - SUNNYSIDE 345KV CKT 1	717	789	0.20558	111.6529	OVEXFRMCCOVE
FDNS	00NR	0	20WP	G15_085	FROM->TO	G14-057T 345.00 - SUNNYSIDE 345KV CKT 1	717	789	0.20574	111.6441	P12:138:WFEC:MSL08
FDNS	00NR	0	16WP	G15_085	FROM->TO	G14-057T 345.00 - SUNNYSIDE 345KV CKT 1	717	789	0.20384	111.6433	GEN525562 1-TOLK GEN #2 24 KV
FDNS	00NR	0	20WP	G15_085	FROM->TO	G14-057T 345.00 - SUNNYSIDE 345KV CKT 1	717	789	0.20513	111.6433	CARTER - CHICKASAW 138KV CKT 1
FDNS	00NR	0	16WP	G15_085	FROM->TO	G14-057T 345.00 - SUNNYSIDE 345KV CKT 1	717	789	0.20384	111.6359	GEN563202 1-G15085_3 0.5500
FDNS	00NR	0	20WP	G15_085	FROM->TO	G14-057T 345.00 - SUNNYSIDE 345KV CKT 1	717	789	0.20522	111.6359	CANADIAN RIVER - MCALESTER SOUTH 138KV CKT 1
FDNS	00NR	0	20WP	G15_085	FROM->TO	G14-057T 345.00 - SUNNYSIDE 345KV CKT 1	717	789	0.20522	111.6359	CANADIAN RIVER - MCALESTER SOUTH 138KV CKT 1
FDNS	00NR	0	20WP	G15_085	FROM->TO	G14-057T 345.00 - SUNNYSIDE 345KV CKT 1	717	789	0.21169	111.6344	LEBANON - TEXOMA JCT 138KV CKT 1
FDNS	00NR	0	20WP	G15_085	FROM->TO	G14-057T 345.00 - SUNNYSIDE 345KV CKT 1	717	789	0.20522	111.6341	CANADIAN RIVER () 345/138/13.8KV TRANSFORMER CKT 1
FDNS	00NR	0	20WP	G15_085	FROM->TO	G14-057T 345.00 - SUNNYSIDE 345KV CKT 1	717	789	0.20522	111.6341	CANADIAN RIVER () 345/138/13.8KV TRANSFORMER CKT 1
FDNS	00NR	0	20WP	G15_085	FROM->TO	G14-057T 345.00 - SUNNYSIDE 345KV CKT 1	717	789	0.20527	111.6328	P12:230:UMZB:# 112 #: NU IN SD. NU-RCDC & DRY CREEK XFMR
FDNS	00NR	0	16WP	G15_085	FROM->TO	G14-057T 345.00 - SUNNYSIDE 345KV CKT 1	717	789	0.19785	111.6299	LYDIA - WELSH 345KV CKT 1
FDNS	00NR	0	16WP	G15_085	FROM->TO	G14-057T 345.00 - SUNNYSIDE 345KV CKT 1	717	789	0.19785	111.6299	LYDIA - WELSH 345KV CKT 1
FDNS	00NR	0	20WP	G15_085	FROM->TO	G14-057T 345.00 - SUNNYSIDE 345KV CKT 1	717	789	0.20527	111.627	RCDC EAST 4230.00 - RED CEDAR DC 230KV CKT 1
FDNS	00NR	0	20WP	G15_085	FROM->TO	G14-057T 345.00 - SUNNYSIDE 345KV CKT 1	717	789	0.20495	111.6223	ROCKY POINT - SPRINGDALE 138KV CKT 1
FDNS	00NR	0	20WP	G15_085	FROM->TO	G14-057T 345.00 - SUNNYSIDE 345KV CKT 1	717	789	0.20527	111.6211	GEN562902 1-G15052_3 0.6900
FDNS	00NR	0	20WP	G15_085	FROM->TO	G14-057T 345.00 - SUNNYSIDE 345KV CKT 1	717	789	0.20568	111.621	HUGO (HUGO 1) 345/138/13.8KV TRANSFORMER CKT 1
FDNS	00NR	0	20WP	G15_085	FROM->TO	G14-057T 345.00 - SUNNYSIDE 345KV CKT 1	717	789	0.20527	111.6184	GEN563242 1-G15090_3 0.6900
FDNS	00NR	0	20WP	G15_085	FROM->TO	G14-057T 345.00 - SUNNYSIDE 345KV CKT 1	717	789	0.20509	111.6131	PRAIRIE POINT - RATLIFF 138KV CKT 1
FDNS	00NR	0	20WP	G15_085	FROM->TO	G14-057T 345.00 - SUNNYSIDE 345KV CKT 1	717	789	0.20511	111.6118	CHAMBER SPRINGS - CLARKSVILLE 345KV CKT 1
FDNS	00NR	0	20WP	G15_085	FROM->TO	G14-057T 345.00 - SUNNYSIDE 345KV CKT 1	717	789	0.20537	111.6064	GRPRAR1-LNX3345.00 - YANKTON 345KV CKT Z
FDNS	00NR	0	20WP	G15_085	FROM->TO	G14-057T 345.00 - SUNNYSIDE 345KV CKT 1	717	789	0.20537	111.606	GRPRAR1-LNX3345.00 - HOLT.CO3 345.00 345KV CKT 1
FDNS	00NR	0	16WP	G15_085	FROM->TO	G14-057T 345.00 - SUNNYSIDE 345KV CKT 1	717	789	0.20384	111.5979	GEN527166 1-MUSTANG_6 118.000
FDNS	00NR	0	20WP	G15_085	FROM->TO	G14-057T 345.00 - SUNNYSIDE 345KV CKT 1	717	789	0.20527	111.5943	GEN629072 4-LANSING GENERATOR FOR UNITS NO4 EIA CODE 1
FDNS	00NR	0	16WP	G15_085	FROM->TO	G14-057T 345.00 - SUNNYSIDE 345KV CKT 1	717	789	0.20323	111.5888	CHISHOLM6 230.00 - SWEETWATER 230KV CKT 1
FDNS	00NR	0	20WP	G15_085	FROM->TO	G14-057T 345.00 - SUNNYSIDE 345KV CKT 1	717	789	0.20527	111.5796	GEN562078 1-G11_051_3 0.6900
FDNS	00NR	0	20WP	G15_085	FROM->TO	G14-057T 345.00 - SUNNYSIDE 345KV CKT 1	717	789	0.1688	111.5767	P12:138:AEPW:112GORE4:SNYDER-4
FDNS	00NR	0	20WP	G15_085	FROM->TO	G14-057T 345.00 - SUNNYSIDE 345KV CKT 1	717	789	0.20527	111.5711	GEN524285 1-WILDORADO WIND GEN
FDNS	00NR	0	20WP	G15_085	FROM->TO	G14-057T 345.00 - SUNNYSIDE 345KV CKT 1	717	789	0.20487	111.5694	JOLLYVILLE - SULPHR 4 138.00 138KV CKT 1
FDNS	00NR	0	20WP	G15_085	FROM->TO	G14-057T 345.00 - SUNNYSIDE 345KV CKT 1	717	789	0.20527	111.5522	GEN562587 1-G14_056_3 0.6900
FDNS	00NR	0	20WP	G15_085	FROM->TO	G14-057T 345.00 - SUNNYSIDE 345KV CKT 1	717	789	0.20527	111.5512	GEN514805 1-SOONER UNIT 1
FDNS	00NR	0	20WP	G15_085	FROM->TO	G14-057T 345.00 - SUNNYSIDE 345KV CKT 1	717	789	0.20992	111.5491	BEARCAT 138.00 - NINE MILE 138KV CKT 1
FDNS	00NR	0	20WP	G15_085	FROM->TO	G14-057T 345.00 - SUNNYSIDE 345KV CKT 1	717	789	0.20527	111.5454	GEN524295 1-SPNSPUR_WND10.6900
FDNS	00NR	0	20WP	G15_085	FROM->TO	G14-057T 345.00 - SUNNYSIDE 345KV CKT 1	717	789	0.20527	111.5399	GEN657749 1-YOUNG 1 GENERATOR
FDNS	00NR	0	16WP	G15_085	FROM->TO	G14-057T 345.00 - SUNNYSIDE 345KV CKT 1	717	789	0.20461	111.5346	JOHNSON COUNTY (JOHNCO) 345/138/13.8KV TRANSFORMER CKT 1
FDNS	00NR	0	16WP	G15_085	FROM->TO	G14-057T 345.00 - SUNNYSIDE 345KV CKT 1	717	789	0.20384	111.5255	GEN635023 3-WALTER SCOTT UNIT 3

SOLUTION	GROUP	SCENARIO	SEASON	SOURCE	DIRECTION	MONITORED ELEMENT	RATEA (MVA)	RATEB(MVA)	TDF	TC%LOADING (% MVA)	CONTINGENCY
FDNS	00NR	0	20WP	G15_085	FROM->TO	G14-057T 345.00 - SUNNYSIDE 345KV CKT 1	717	789	0.20527	111.5198	GEN514806 1-SOONER UNIT 2
FDNS	00NR	0	20WP	G15_085	FROM->TO	G14-057T 345.00 - SUNNYSIDE 345KV CKT 1	717	789	0.20527	111.5196	GEN524023 1-NICHOLS GEN #3 22 KV
FDNS	00NR	0	16WP	G15_085	FROM->TO	G14-057T 345.00 - SUNNYSIDE 345KV CKT 1	717	789	0.20384	111.5165	GEN562590 1-G14_057_3 0.6900
FDNS	00NR	0	20WP	G15_085	FROM->TO	G14-057T 345.00 - SUNNYSIDE 345KV CKT 1	717	789	0.20625	111.5107	CROCKETT - TENASKA RUSK COUNTY 345KV CKT 1
FDNS	00NR	0	20WP	G15_085	FROM->TO	G14-057T 345.00 - SUNNYSIDE 345KV CKT 1	717	789	0.20625	111.5059	LEBROCK - TENASKA RUSK COUNTY 345KV CKT 1
FDNS	00NR	0	20WP	G15_085	FROM->TO	G14-057T 345.00 - SUNNYSIDE 345KV CKT 1	717	789	0.20487	111.4877	JOLLYVILLE - KERR MCGEE CIMARRON 138KV CKT 1
FDNS	00NR	0	20WP	G15_085	FROM->TO	G14-057T 345.00 - SUNNYSIDE 345KV CKT 1	717	789	0.20527	111.4834	GEN562812 1-G15040_3 0.3570
FDNS	00NR	0	20WP	G15_085	FROM->TO	G14-057T 345.00 - SUNNYSIDE 345KV CKT 1	717	789	0.20527	111.4785	GEN562270 1-G12-020-2 0.6900
FDNS	00NR	0	20WP	G15_085	FROM->TO	G14-057T 345.00 - SUNNYSIDE 345KV CKT 1	717	789	0.20527	111.4769	GEN562882 1-G15047_3 0.6900
FDNS	00NR	0	20WP	G15_085	FROM->TO	G14-057T 345.00 - SUNNYSIDE 345KV CKT 1	717	789	0.20527	111.4766	GEN563132 1-G15078_3 0.3570
FDNS	00NR	0	20WP	G15_085	FROM->TO	G14-057T 345.00 - SUNNYSIDE 345KV CKT 1	717	789	0.20527	111.4697	GEN563102 1-G15075_3 0.5500
FDNS	00NR	0	20WP	G15_085	FROM->TO	G14-057T 345.00 - SUNNYSIDE 345KV CKT 1	717	789	0.20527	111.4569	GEN563062 1-G15071_3 0.6900
FDNS	00NR	0	20WP	G15_085	FROM->TO	G14-057T 345.00 - SUNNYSIDE 345KV CKT 1	717	789	0.20992	111.4547	BEARCAT 138.00 - MOORELAND 138KV CKT 1
FDNS	00NR	0	20WP	G15_085	FROM->TO	G14-057T 345.00 - SUNNYSIDE 345KV CKT 1	717	789	0.20992	111.4501	P12:138:WFEC:MSL14
FDNS	00NR	0	20WP	G15_085	FROM->TO	G14-057T 345.00 - SUNNYSIDE 345KV CKT 1	717	789	0.20487	111.4369	ARBWIND4 138.00 - KERR MCGEE CIMARRON 138KV CKT 1
FDNS	00NR	0	20WP	G15_085	FROM->TO	G14-057T 345.00 - SUNNYSIDE 345KV CKT 1	717	789	0.20527	111.4202	GEN562974 1-G15060_5 0.6900
FDNS	00NR	0	20WP	G15_085	FROM->TO	G14-057T 345.00 - SUNNYSIDE 345KV CKT 1	717	789	0.20527	111.4197	GEN521112 1-ORME3 13.800
FDNS	00NR	0	20WP	G15_085	FROM->TO	G14-057T 345.00 - SUNNYSIDE 345KV CKT 1	717	789	0.2047	111.4177	BROWN - RUSSETT 138KV CKT 1
FDNS	00NR	0	16WP	G15_085	FROM->TO	G14-057T 345.00 - SUNNYSIDE 345KV CKT 1	717	789	0.20384	111.4166	GEN562762 1-G15033_3 0.6900
FDNS	00NR	0	20WP	G15_085	FROM->TO	G14-057T 345.00 - SUNNYSIDE 345KV CKT 1	717	789	0.20527	111.4113	GEN345671 2-1RUSH G2 18.000
FDNS	00NR	0	20WP	G15_085	FROM->TO	G14-057T 345.00 - SUNNYSIDE 345KV CKT 1	717	789	0.20527	111.4104	GEN562973 1-G15060_4 0.6900
FDNS	00NR	0	20WP	G15_085	FROM->TO	G14-057T 345.00 - SUNNYSIDE 345KV CKT 1	717	789	0.20527	111.4094	GEN345670 1-1RUSH G1 18.000
FDNS	00NR	0	16WP	G15_085	FROM->TO	G14-057T 345.00 - SUNNYSIDE 345KV CKT 1	717	789	0.20384	111.4055	GEN562655 1-G14_074_3 0.6900
FDNS	00NR	0	20WP	G15_085	FROM->TO	G14-057T 345.00 - SUNNYSIDE 345KV CKT 1	717	789	0.20494	111.3964	CHICKASAW - TOTAL 138KV CKT 1
FDNS	00NR	0	20WP	G15_085	FROM->TO	G14-057T 345.00 - SUNNYSIDE 345KV CKT 1	717	789	0.20527	111.3839	GEN560105 1-G08-22 0.6900
FDNS	00NR	0	20WP	G15_085	FROM->TO	G14-057T 345.00 - SUNNYSIDE 345KV CKT 1	717	789	0.20527	111.3817	4SIOUX 1 138.00 138/18.0KV TRANSFORMER CKT 1
FDNS	00NR	0	20WP	G15_085	FROM->TO	G14-057T 345.00 - SUNNYSIDE 345KV CKT 1	717	789	0.2047	111.372	RUSSETT - RUSSETT 138KV CKT 1
FDNS	00NR	0	20WP	G15_085	FROM->TO	G14-057T 345.00 - SUNNYSIDE 345KV CKT 1	717	789	0.20527	111.3666	GEN562550 1-G14_040_3 0.6900
FDNS	00NR	0	20WP	G15_085	FROM->TO	G14-057T 345.00 - SUNNYSIDE 345KV CKT 1	717	789	0.20527	111.3633	GEN681522 3-GENOA 3
FDNS	00NR	0	16WP	G15_085	FROM->TO	G14-057T 345.00 - SUNNYSIDE 345KV CKT 1	717	789	0.20384	111.3403	GEN562685 1-G15_013_3 0.3550
FDNS	00NR	0	20WP	G15_085	FROM->TO	G14-057T 345.00 - SUNNYSIDE 345KV CKT 1	717	789	0.20527	111.3293	GEN511853 1-COMANCHE #3
FDNS	00NR	0	20WP	G15_085	FROM->TO	G14-057T 345.00 - SUNNYSIDE 345KV CKT 1	717	789	0.20527	111.3226	GEN527161 1-MUSTANG GEN #1
FDNS	00NR	0	20WP	G15_085	FROM->TO	G14-057T 345.00 - SUNNYSIDE 345KV CKT 1	717	789	0.20527	111.3226	GEN527162 1-MUSTANG GEN #2
FDNS	00NR	0	20WP	G15_085	FROM->TO	G14-057T 345.00 - SUNNYSIDE 345KV CKT 1	717	789	0.20485	111.3211	ROCKY POINT - SUNNYSIDE 138KV CKT 1
FDNS	00NR	0	20WP	G15_085	FROM->TO	G14-057T 345.00 - SUNNYSIDE 345KV CKT 1	717	789	0.20527	111.3161	EASTDC - ERCOT EQUIVALENCE 345KV CKT 1
FDNS	00NR	0	20WP	G15_085	FROM->TO	G14-057T 345.00 - SUNNYSIDE 345KV CKT 1	717	789	0.20527	111.3113	GEN511962 2-RKYRDGW2-1 0.7000
FDNS	00NR	0	20WP	G15_085	FROM->TO	G14-057T 345.00 - SUNNYSIDE 345KV CKT 1	717	789	0.20527	111.2988	GEN672321 1-SHAND GENERATOR 1
FDNS	00NR	0	20WP	G15_085	FROM->TO	G14-057T 345.00 - SUNNYSIDE 345KV CKT 1	717	789	0.20481	111.2978	RUSSETT - SPRINGDALE 138KV CKT 1
FDNS	00NR	0	20WP	G15_085	FROM->TO	G14-057T 345.00 - SUNNYSIDE 345KV CKT 1	717	789	0.20527	111.2896	GEN525494 1-PLANT X GEN #4 20 KV
FDNS	00NR	0	20WP	G15_085	FROM->TO	G14-057T 345.00 - SUNNYSIDE 345KV CKT 1	717	789	0.20734	111.2832	G15063_T 345.00 - MATHWSN7 345.00 345KV CKT 1
FDNS	00NR	0	20WP	G15_085	FROM->TO	G14-057T 345.00 - SUNNYSIDE 345KV CKT 1	717	789	0.20527	111.2755	GEN672310 1-POPLAR RIVER GENERATOR 1
FDNS	00NR	0	20WP	G15_085	FROM->TO	G14-057T 345.00 - SUNNYSIDE 345KV CKT 1	717	789	0.20527	111.2755	GEN672311 2-POPLAR RIVER GENERATOR 2
FDNS	00NR	0	20WP	G15_085	FROM->TO	G14-057T 345.00 - SUNNYSIDE 345KV CKT 1	717	789	0.20527	111.2739	GEN527882 1-CUNNINGHAM GEN #2 20 KV
FDNS	00NR	0	20WP	G15_085	FROM->TO	G14-057T 345.00 - SUNNYSIDE 345KV CKT 1	717	789	0.20527	111.266	GEN672306 6-BOUNDARY DAM GENERATOR 6
FDNS	00NR	0	20WP	G15_085	FROM->TO	G14-057T 345.00 - SUNNYSIDE 345KV CKT 1	717	789	0.20527	111.2655	GEN563192 1-G15084_3 0.5500
FDNS	00NR	0	20WP	G15_085	FROM->TO	G14-057T 345.00 - SUNNYSIDE 345KV CKT 1	717	789	0.20527	111.2616	GEN562512 1-G14_020_3 0.6900
FDNS	00NR	0	20WP	G15_085	FROM->TO	G14-057T 345.00 - SUNNYSIDE 345KV CKT 1	717	789	0.20527	111.2595	GEN511852 1-COMANCHE #2
FDNS	00NR	0	20WP	G15_085	FROM->TO	G14-057T 345.00 - SUNNYSIDE 345KV CKT 1	717	789	0.20527	111.2591	GEN344895 2-1LAB G2 20.000
FDNS	00NR	0	20WP	G15_085	FROM->TO	G14-057T 345.00 - SUNNYSIDE 345KV CKT 1	717	789	0.20527	111.258	GEN527163 1-MUSTANG GEN #3 22 KV
FDNS	00NR	0	20WP	G15_085	FROM->TO	G14-057T 345.00 - SUNNYSIDE 345KV CKT 1	717	789	0.20497	111.2526	P12:138:WFEC-AEPW:GOLDENSW4:CRAIGJT4
FDNS	00NR	0	20WP	G15_085	FROM->TO	G14-057T 345.00 - SUNNYSIDE 345KV CKT 1	717	789	0.20527	111.2434	GEN562892 1-G15048_3 0.6900
FDNS	00NR	0	20WP	G15_085	FROM->TO	G14-057T 345.00 - SUNNYSIDE 345KV CKT 1	717	789	0.20527	111.2366	GEN681542 6-JP MADGETT
FDNS	00NR	0	20WP	G15_085	FROM->TO	G14-057T 345.00 - SUNNYSIDE 345KV CKT 1	717	789	0.20608	111.235	ARKANSAS NUCLEAR ONE - FT SMITH 500KV CKT 1
FDNS	00NR	0	20WP	G15_085	FROM->TO	G14-057T 345.00 - SUNNYSIDE 345KV CKT 1	717	789	0.20608	111.235	ARKANSAS NUCLEAR ONE - FT SMITH 500KV CKT 1
FDNS	00NR	0	20WP	G15_085	FROM->TO	G14-057T 345.00 - SUNNYSIDE 345KV CKT 1	717	789	0.20527	111.2295	GEN344896 3-1LAB G3 20.000
FDNS	00NR	0	20WP	G15_085	FROM->TO	G14-057T 345.00 - SUNNYSIDE 345KV CKT 1	717	789	0.20527	111.2284	GEN344897 4-1LAB G4 20.000
FDNS	00NR	0	20WP	G15_085	FROM->TO	G14-057T 345.00 - SUNNYSIDE 345KV CKT 1	717	789	0.20527	111.2281	GEN344894 1-1LAB G1 20.000
FDNS	00NR	0	20WP	G15_085	FROM->TO	G14-057T 345.00 - SUNNYSIDE 345KV CKT 1	717	789	0.20555	111.2223	P12:138:WFEC:MSL16
FDNS	00NR	0	20WP	G15_085	FROM->TO	G14-057T 345.00 - SUNNYSIDE 345KV CKT 1	717	789	0.20452	111.2221	ARDMORE WEST - CARTER 138KV CKT 1
FDNS	00NR	0	16WP	G15_085	FROM->TO	G14-057T 345.00 - SUNNYSIDE 345KV CKT 1	717	789	0.20384	111.2074	GEN525561 1-TOLK GEN #1 24 KV
FDNS	00NR	0	16WP	G15_085	FROM->TO	G14-057T 345.00 - SUNNYSIDE 345KV CKT 1	717	789	0.20384	111.2074	GEN527903 1-HOBBS PLANT #3 (ST)
FDNS	00NR	0	16WP	G15_085	FROM->TO	G14-057T 345.00 - SUNNYSIDE 345KV CKT 1	717	789	0.20384	111.2054	GEN563272 1-G15093_3 0.6900
FDNS	00NR	0	20WP	G15_085	FROM->TO	G14-057T 345.00 - SUNNYSIDE 345KV CKT 1	717	789	0.20527	111.2032	GEN523461 1-BLACKHAWK GEN #1
FDNS	00NR	0	20WP	G15_085	FROM->TO	G14-057T 345.00 - SUNNYSIDE 345KV CKT 1	717	789	0.20527	111.2031	GEN523462 1-BLACKHAWK GEN #2
FDNS	00NR	0	20WP	G15_085	FROM->TO	G14-057T 345.00 - SUNNYSIDE 345KV CKT 1	717	789	0.1688	111.1791	CACHE - SNYDER 138KV CKT 1
FDNS	00NR	0	20WP	G15_085	FROM->TO	G14-057T 345.00 - SUNNYSIDE 345KV CKT 1	717	789	0.20642	111.1605	P12:138:WFEC:MSL07
FDNS	00NR	0	20WP	G15_085	FROM->TO	G14-057T 345.00 - SUNNYSIDE 345KV CKT 1	717	789	0.20642	111.1605	P12:138:WFEC-AEPW:HUGOPP4:ATOKA--4
FDNS	00NR	0	20WP	G15_085	FROM->TO	G14-057T 345.00 - SUNNYSIDE 345KV CKT 1	717	789	0.20513	111.1553	P12:138:AEPW-SWPA:LONEOAK4:TUPELO4
FDNS	00NR	0	20WP	G15_085	FROM->TO	G14-057T 345.00 - SUNNYSIDE 345KV CKT 1	717	789	0.20513	111.1553	P12:138:WFEC:MSL06
FDNS	00NR	0	20WP	G15_085	FROM->TO	G14-057T 345.00 - SUNNYSIDE 345KV CKT 1	717	789	0.20527	111.1514	GEN521111 1-ORME2 13.800
FDNS	00NR	0	20WP	G15_085	FROM->TO	G14-057T 345.00 - SUNNYSIDE 345KV CKT 1	717	789	0.20527	111.1465	GEN562699 1-G15_018_3 0.6900
FDNS	00NR	0	20WP	G15_085	FROM->TO	G14-057T 345.00 - SUNNYSIDE 345KV CKT 1	717	789	0.20463	111.1385	SUNNYSIDE (SUNNYSD5) 345/138/13.8KV TRANSFORMER CKT 1
FDNS	00NR	0	20WP	G15_085	FROM->TO	G14-057T 345.00 - SUNNYSIDE 345KV CKT 1	717	789	0.20527	111.1382	GEN521110 1-ORME1 13.800
FDNS	00NR	0	20WP	G15_085	FROM->TO	G14-057T 345.00 - SUNNYSIDE 345KV CKT 1	717	789	0.20381	111.1308	CLARKSVILLE - MUSKOGEE 345KV CKT 1
FDNS	00NR	0	20WP	G15_085	FROM->TO	G14-057T 345.00 - SUNNYSIDE 345KV CKT 1	717	789	0.20381	111.1308	CLARKSVILLE - MUSKOGEE 345KV CKT 1
FDNS	00NR	0	20WP	G15_085	FROM->TO	G14-057T 345.00 - SUNNYSIDE 345KV CKT 1	717	789	0.17517	111.1294	G15085_T 138.00 - RUSSELL 138KV CKT 1
FDNS	00NR	0	20WP	G15_085	FROM->TO	G14-057T 345.00 - SUNNYSIDE 345KV CKT 1	717	789	0.20452	111.1097	ARDMORE WEST - UNIROYAL 138KV CKT 1
FDNS	00NR	0	16WP	G15_085	FROM->TO	G14-057T 345.00 - SUNNYSIDE 345KV CKT 1	717	789	0.20384	111.1021	GEN635024 4-WALTER SCOTT UNIT 4
FDNS	00NR	0	20WP	G15_085	FROM->TO	G14-057T 345.00 - SUNNYSIDE 345KV CKT 1	717	789	0.20527	111.0967	GEN520811 1-ANADRK4

SOLUTION	GROUP	SCENARIO	SEASON	SOURCE	DIRECTION	MONITORED ELEMENT	RATEA (MVA)	RATEB(MVA)	TDF	TC%LOADING (% MVA)	CONTINGENCY
FDNS	00NR	0	20WP	G15_085	FROM->TO	G14-057T 345.00 - SUNNYSIDE 345KV CKT 1	717	789	0.20527	111.0961	GEN563162 1-G15081_3 0.6900
FDNS	00NR	0	20WP	G15_085	FROM->TO	G14-057T 345.00 - SUNNYSIDE 345KV CKT 1	717	789	0.20527	111.0703	GEN661015 1-COYOTE
FDNS	00NR	0	20WP	G15_085	FROM->TO	G14-057T 345.00 - SUNNYSIDE 345KV CKT 1	717	789	0.20527	111.0659	GEN563292 1-G15095_3 0.6900
FDNS	00NR	0	20WP	G15_085	FROM->TO	G14-057T 345.00 - SUNNYSIDE 345KV CKT 1	717	789	0.20467	111.0612	P12:138:OKGE:3TERM40
FDNS	00NR	0	20WP	G15_085	FROM->TO	G14-057T 345.00 - SUNNYSIDE 345KV CKT 1	717	789	0.20515	111.0535	CARTRCO4 138.00 - RATLIFF 138KV CKT 1
FDNS	00NR	0	20WP	G15_085	FROM->TO	G14-057T 345.00 - SUNNYSIDE 345KV CKT 1	717	789	0.20527	111.0431	GEN563122 1-G15077_3 0.3850
FDNS	00NR	0	20WP	G15_085	FROM->TO	G14-057T 345.00 - SUNNYSIDE 345KV CKT 1	717	789	0.20527	111.0154	GEN562861 1-G15045_2 0.4800
FDNS	00NR	0	20WP	G15_085	FROM->TO	G14-057T 345.00 - SUNNYSIDE 345KV CKT 1	717	789	0.20527	110.9573	GEN657748 1-YOUNG 2 GENERATOR
FDNS	00NR	0	20WP	G15_085	FROM->TO	G14-057T 345.00 - SUNNYSIDE 345KV CKT 1	717	789	0.20527	110.9312	GEN527883 1-CUNNINGHAM GEN #3 22 KV
FDNS	00NR	0	20WP	G15_085	FROM->TO	G14-057T 345.00 - SUNNYSIDE 345KV CKT 1	717	789	0.20527	110.9282	GEN527884 1-CUNNINGHAM GEN #4 22 KV
FDNS	00NR	0	20WP	G15_085	FROM->TO	G14-057T 345.00 - SUNNYSIDE 345KV CKT 1	717	789	0.20559	110.9202	P12:138:WFEC:MSL15
FDNS	00NR	0	20WP	G15_085	FROM->TO	G14-057T 345.00 - SUNNYSIDE 345KV CKT 1	717	789	0.20527	110.8807	GEN562992 1-G15063_3 0.6900
FDNS	00NR	0	20WP	G15_085	FROM->TO	G14-057T 345.00 - SUNNYSIDE 345KV CKT 1	717	789	0.20452	110.8733	SUNNYSIDE - UNIROYAL 138KV CKT 1
FDNS	00NR	0	20WP	G15_085	FROM->TO	G14-057T 345.00 - SUNNYSIDE 345KV CKT 1	717	789	0.21044	110.8647	P12:138:AEPW:SHAM4WT:CHILD4WT
FDNS	00NR	0	20WP	G15_085	FROM->TO	G14-057T 345.00 - SUNNYSIDE 345KV CKT 1	717	789	0.20527	110.8625	GEN562704 1-G15_020_3 0.3550
FDNS	00NR	0	20WP	G15_085	FROM->TO	G14-057T 345.00 - SUNNYSIDE 345KV CKT 1	717	789	0.20527	110.8623	GEN526331 1-JONES GEN #1 22 KV
FDNS	00NR	0	20WP	G15_085	FROM->TO	G14-057T 345.00 - SUNNYSIDE 345KV CKT 1	717	789	0.20527	110.8621	GEN526332 1-JONES GEN #2 21 KV
FDNS	00NR	0	20WP	G15_085	FROM->TO	G14-057T 345.00 - SUNNYSIDE 345KV CKT 1	717	789	0.20527	110.8621	GEN620315 1-BIG STONE GEN
FDNS	00NR	0	20WP	G15_085	FROM->TO	G14-057T 345.00 - SUNNYSIDE 345KV CKT 1	717	789	0.20527	110.8294	GEN562952 1-G15057_3 0.6500
FDNS	00NR	0	20WP	G15_085	FROM->TO	G14-057T 345.00 - SUNNYSIDE 345KV CKT 1	717	789	0.20527	110.7897	GEN511851 1-COMANCHE #1
FDNS	00NR	0	20WP	G15_085	FROM->TO	G14-057T 345.00 - SUNNYSIDE 345KV CKT 1	717	789	0.20527	110.7889	GEN600004 2-PRAIRIE ISLAND G2
FDNS	00NR	0	17SP	G15_085	FROM->TO	G14-057T 345.00 - SUNNYSIDE 345KV CKT 1	717	789	0.2918	110.7884	CIMARRON - MINCO 345KV CKT 1
FDNS	00NR	0	20WP	G15_085	FROM->TO	G14-057T 345.00 - SUNNYSIDE 345KV CKT 1	717	789	0.20527	110.7863	GEN600003 1-PRAIRIE ISLAND G1
FDNS	00NR	0	20WP	G15_085	FROM->TO	G14-057T 345.00 - SUNNYSIDE 345KV CKT 1	717	789	0.20527	110.7686	GEN600006 1-AS KING
FDNS	00NR	0	20WP	G15_085	FROM->TO	G14-057T 345.00 - SUNNYSIDE 345KV CKT 1	717	789	0.20527	110.7635	GEN563173 1-G15082_3 0.6900
FDNS	00NR	0	20WP	G15_085	FROM->TO	G14-057T 345.00 - SUNNYSIDE 345KV CKT 1	717	789	0.20527	110.7507	GEN562710 1-G15_022_3 0.5500
FDNS	00NR	0	20WP	G15_085	FROM->TO	G14-057T 345.00 - SUNNYSIDE 345KV CKT 1	717	789	0.21169	110.7451	CANEY CREEK - TEXOMA JCT 138KV CKT 1
FDNS	00NR	0	20WP	G15_085	FROM->TO	G14-057T 345.00 - SUNNYSIDE 345KV CKT 1	717	789	0.2052	110.7436	GRAPEVINE INTERCHANGE - STATELINE INTERCHANGE 230KV CKT 1
FDNS	00NR	0	20WP	G15_085	FROM->TO	G14-057T 345.00 - SUNNYSIDE 345KV CKT 1	717	789	0.2052	110.7436	GRAPEVINE INTERCHANGE - STATELINE INTERCHANGE 230KV CKT 1
FDNS	00NR	0	20WP	G15_085	FROM->TO	G14-057T 345.00 - SUNNYSIDE 345KV CKT 1	717	789	0.20527	110.7218	GEN532751 1-WOLF CREEK GENERATING STATION UNIT 1
FDNS	00NR	0	20WP	G15_085	FROM->TO	G14-057T 345.00 - SUNNYSIDE 345KV CKT 1	717	789	0.20938	110.6708	P12:138:AEPW-OGE:CORNVIL4:CIMARON4
FDNS	00NR	0	20WP	G15_085	FROM->TO	G14-057T 345.00 - SUNNYSIDE 345KV CKT 1	717	789	0.20756	110.6105	GRAPEVINE INTERCHANGE - NICHOLS STATION 230KV CKT 1
FDNS	00NR	0	20WP	G15_085	FROM->TO	G14-057T 345.00 - SUNNYSIDE 345KV CKT 1	717	789	0.20756	110.6105	GRAPEVINE INTERCHANGE - NICHOLS STATION 230KV CKT 1
FDNS	00NR	0	20WP	G15_085	FROM->TO	G14-057T 345.00 - SUNNYSIDE 345KV CKT 1	717	789	0.20527	110.6	GEN615002 2-COAL CREEK
FDNS	00NR	0	20WP	G15_085	FROM->TO	G14-057T 345.00 - SUNNYSIDE 345KV CKT 1	717	789	0.20527	110.5967	GEN635213 3-NEAL UNIT 3
FDNS	00NR	0	20WP	G15_085	FROM->TO	G14-057T 345.00 - SUNNYSIDE 345KV CKT 1	717	789	0.20527	110.5961	GEN629074 1-ARNOLD LOWSIDE OF GSU XFMR
FDNS	00NR	0	20WP	G15_085	FROM->TO	G14-057T 345.00 - SUNNYSIDE 345KV CKT 1	717	789	0.20163	110.531	NORTHWEST TEXARKANA - VALLIANT 345KV CKT 1
FDNS	00NR	0	20WP	G15_085	FROM->TO	G14-057T 345.00 - SUNNYSIDE 345KV CKT 1	717	789	0.20163	110.531	NORTHWEST TEXARKANA - VALLIANT 345KV CKT 1
FDNS	00NR	0	20WP	G15_085	FROM->TO	G14-057T 345.00 - SUNNYSIDE 345KV CKT 1	717	789	0.20543	110.5277	P12:138:WFEC:MSL09
FDNS	00NR	0	16WP	G15_085	FROM->TO	G14-057T 345.00 - SUNNYSIDE 345KV CKT 1	717	789	0.19641	110.5148	LYDIA - VALLIANT 345KV CKT 1
FDNS	00NR	0	16WP	G15_085	FROM->TO	G14-057T 345.00 - SUNNYSIDE 345KV CKT 1	717	789	0.19641	110.5148	LYDIA - VALLIANT 345KV CKT 1
FDNS	00NR	0	20WP	G15_085	FROM->TO	G14-057T 345.00 - SUNNYSIDE 345KV CKT 1	717	789	0.20527	110.5037	GEN636641 1-LOUISA UNIT 1
FDNS	00NR	0	20WP	G15_085	FROM->TO	G14-057T 345.00 - SUNNYSIDE 345KV CKT 1	717	789	0.20527	110.5028	GEN562754 1-G15031_5 0.6900
FDNS	00NR	0	20WP	G15_085	FROM->TO	G14-057T 345.00 - SUNNYSIDE 345KV CKT 1	717	789	0.20527	110.469	GEN600005 1-MONTICELLO
FDNS	00NR	0	20WP	G15_085	FROM->TO	G14-057T 345.00 - SUNNYSIDE 345KV CKT 1	717	789	0.19871	110.4636	CHISHOLM7 345.00 () 345/230/13.2KV TRANSFORMER CKT 1
FDNS	00NR	0	20WP	G15_085	FROM->TO	G14-057T 345.00 - SUNNYSIDE 345KV CKT 1	717	789	0.20527	110.445	GEN562556 1-G14_046_3 0.3420
FDNS	00NR	0	20WP	G15_085	FROM->TO	G14-057T 345.00 - SUNNYSIDE 345KV CKT 1	717	789	0.20527	110.444	GEN562756 1-G15031_7 0.6900
FDNS	00NR	0	20WP	G15_085	FROM->TO	G14-057T 345.00 - SUNNYSIDE 345KV CKT 1	717	789	0.19871	110.3828	CHISHOLM7 345.00 - GRACEMONT 345KV CKT 1
FDNS	00NR	0	20WP	G15_085	FROM->TO	G14-057T 345.00 - SUNNYSIDE 345KV CKT 1	717	789	0.20527	110.3618	GEN563142 1-G15079_3 0.5500
FDNS	00NR	0	20WP	G15_085	FROM->TO	G14-057T 345.00 - SUNNYSIDE 345KV CKT 1	717	789	0.20527	110.3618	GEN563151 1-G15080_2 0.5500
FDNS	00NR	0	20WP	G15_085	FROM->TO	G14-057T 345.00 - SUNNYSIDE 345KV CKT 1	717	789	0.20527	110.3553	GEN562023 1-G11_020_3 0.6900
FDNS	00NR	0	20WP	G15_085	FROM->TO	G14-057T 345.00 - SUNNYSIDE 345KV CKT 1	717	789	0.20527	110.3553	GEN562026 1-G11_019_3 0.6900
FDNS	00NR	0	20WP	G15_085	FROM->TO	G14-057T 345.00 - SUNNYSIDE 345KV CKT 1	717	789	0.20527	110.3434	GEN600000 1-SHERBURNECNTY G1
FDNS	00NR	0	20WP	G15_085	FROM->TO	G14-057T 345.00 - SUNNYSIDE 345KV CKT 1	717	789	0.20527	110.3082	GEN629075 1-OTTUMWA GENERATOR FOR OTTUMWA UNIT NO 1
FDNS	00NR	0	20WP	G15_085	FROM->TO	G14-057T 345.00 - SUNNYSIDE 345KV CKT 1	717	789	0.20527	110.2904	GEN600001 2-SHERBURNE CNTY G2
FDNS	00NR	0	20WP	G15_085	FROM->TO	G14-057T 345.00 - SUNNYSIDE 345KV CKT 1	717	789	0.20527	110.2626	GEN523971 1-HARRINGTON GEN #1 24 KV
FDNS	00NR	0	20WP	G15_085	FROM->TO	G14-057T 345.00 - SUNNYSIDE 345KV CKT 1	717	789	0.20527	110.2626	GEN523972 1-HARRINGTON GEN #2 24 KV
FDNS	00NR	0	20WP	G15_085	FROM->TO	G14-057T 345.00 - SUNNYSIDE 345KV CKT 1	717	789	0.20527	110.2626	GEN523973 1-HARRINGTON GEN #3 24 KV
FDNS	00NR	0	20WP	G15_085	FROM->TO	G14-057T 345.00 - SUNNYSIDE 345KV CKT 1	717	789	0.20527	110.2331	GEN511848 1-SOUTHWESTERN STATION #3
FDNS	00NR	0	20WP	G15_085	FROM->TO	G14-057T 345.00 - SUNNYSIDE 345KV CKT 1	717	789	0.19894	110.1764	LYDIA - WELSH 345KV CKT 1
FDNS	00NR	0	20WP	G15_085	FROM->TO	G14-057T 345.00 - SUNNYSIDE 345KV CKT 1	717	789	0.19894	110.1764	LYDIA - WELSH 345KV CKT 1
FDNS	00NR	0	20WP	G15_085	FROM->TO	G14-057T 345.00 - SUNNYSIDE 345KV CKT 1	717	789	0.20527	110.163	GEN527901 1-HOBBS PLANT #1 (CT)
FDNS	00NR	0	20WP	G15_085	FROM->TO	G14-057T 345.00 - SUNNYSIDE 345KV CKT 1	717	789	0.20527	110.163	GEN527902 1-HOBBS PLANT #2 (CT)
FDNS	00NR	0	20WP	G15_085	FROM->TO	G14-057T 345.00 - SUNNYSIDE 345KV CKT 1	717	789	0.20527	110.1255	GEN563042 1-G15068_3 0.6900
FDNS	00NR	0	20WP	G15_085	FROM->TO	G14-057T 345.00 - SUNNYSIDE 345KV CKT 1	717	789	0.20527	110.028	GEN635214 4-NEAL UNIT 4
FDNS	00NR	0	20WP	G15_085	FROM->TO	G14-057T 345.00 - SUNNYSIDE 345KV CKT 1	717	789	0.20463	109.9254	STATELINE INTERCHANGE - STLN-DEMARC6 230KV CKT 1
FDNS	00NR	0	20WP	G15_085	FROM->TO	G14-057T 345.00 - SUNNYSIDE 345KV CKT 1	717	789	0.20463	109.9227	STLN-DEMARC6 - SWEETWATER 230KV CKT 1
FDNS	00NR	0	20WP	G15_085	FROM->TO	G14-057T 345.00 - SUNNYSIDE 345KV CKT 1	717	789	0.20463	109.9175	P12:230:AEPW-SPS:SWEETWT6:WHEELER 6
FDNS	00NR	0	20WP	G15_085	FROM->TO	G14-057T 345.00 - SUNNYSIDE 345KV CKT 1	717	789	0.20527	109.8577	GEN600002 3-SHERBURNE CNTY G3
FDNS	00NR	0	20WP	G15_085	FROM->TO	G14-057T 345.00 - SUNNYSIDE 345KV CKT 1	717	789	0.20527	109.827	GEN563043 1-G15068_4 0.6900
FDNS	00NR	0	20WP	G15_085	FROM->TO	G14-057T 345.00 - SUNNYSIDE 345KV CKT 1	717	789	0.20527	109.8013	GEN526333 1-JONES GEN #3 21 KV
FDNS	00NR	0	20WP	G15_085	FROM->TO	G14-057T 345.00 - SUNNYSIDE 345KV CKT 1	717	789	0.20527	109.8012	GEN526334 1-JONES_4 116.500
FDNS	00NR	0	20WP	G15_085	FROM->TO	G14-057T 345.00 - SUNNYSIDE 345KV CKT 1	717	789	0.20527	109.7846	GEN563273 2-G15093_4 0.6900
FDNS	00NR	0	20WP	G15_085	FROM->TO	G14-057T 345.00 - SUNNYSIDE 345KV CKT 1	717	789	0.20527	109.7685	GEN344225 1-1CAL G1 25.000
FDNS	00NR	0	20WP	G15_085	FROM->TO	G14-057T 345.00 - SUNNYSIDE 345KV CKT 1	717	789	0.20527	109.7635	GEN525844 1-ELK_1 118.000
FDNS	00NR	0	20WP	G15_085	FROM->TO	G14-057T 345.00 - SUNNYSIDE 345KV CKT 1	717	789	0.20527	109.7458	GEN525845 1-ELK_2 1 18.000
FDNS	00NR	0	20WP	G15_085	FROM->TO	G14-057T 345.00 - SUNNYSIDE 345KV CKT 1	717	789	0.20527	109.6155	GEN527166 1-MUSTANG_6 118.000
FDNS	00NR	0	20WP	G15_085	FROM->TO	G14-057T 345.00 - SUNNYSIDE 345KV CKT 1	717	789	0.20527	109.5706	GEN635023 3-WALTER SCOTT UNIT 3
FDNS	00NR	0	20WP	G15_085	FROM->TO	G14-057T 345.00 - SUNNYSIDE 345KV CKT 1	717	789	0.20527	109.5526	GEN563202 1-G15085_3 0.5500

SOLUTION	GROUP	SCENARIO	SEASON	SOURCE	DIRECTION	MONITORED ELEMENT	RATEA (MVA)	RATEB(MVA)	TDF	TC%LOADING (% MVA)	CONTINGENCY
FDNS	00NR	0	20WP	G15_085	FROM->TO	G14-057T 345.00 - SUNNYSIDE 345KV CKT 1	717	789	0.20527	109.5515	GEN528501 1-G14_012 24.000
FDNS	00NR	0	20WP	G15_085	FROM->TO	G14-057T 345.00 - SUNNYSIDE 345KV CKT 1	717	789	0.19907	109.4942	P12:230:AEPW:ELKCITY6:SWEETWT6
FDNS	00NR	0	20WP	G15_085	FROM->TO	G14-057T 345.00 - SUNNYSIDE 345KV CKT 1	717	789	0.20527	109.4928	GEN562590 1-G14_057_3 0.6900
FDNS	00NR	0	16WP	G15_085	FROM->TO	G14-057T 345.00 - SUNNYSIDE 345KV CKT 1	717	789	0.20384	109.4478	EASTDC - ERCOT EQUIVALENCE 345KV CKT 1
FDNS	00NR	0	20WP	G15_085	FROM->TO	G14-057T 345.00 - SUNNYSIDE 345KV CKT 1	717	789	0.20527	109.3772	GEN562762 1-G15033_3 0.6900
FDNS	00NR	0	20WP	G15_085	FROM->TO	G14-057T 345.00 - SUNNYSIDE 345KV CKT 1	717	789	0.20527	109.3658	GEN562655 1-G14_074_3 0.6900
FDNS	00NR	0	20WP	G15_085	FROM->TO	G14-057T 345.00 - SUNNYSIDE 345KV CKT 1	717	789	0.20527	109.3638	GEN525562 1-TOLK GEN #2 24 KV
FDNS	00NR	0	20WP	G15_085	FROM->TO	G14-057T 345.00 - SUNNYSIDE 345KV CKT 1	717	789	0.20607	109.2753	JOHNSON COUNTY (JOHNCO) 345/138/13.8KV TRANSFORMER CKT 1
FDNS	00NR	0	20WP	G15_085	FROM->TO	G14-057T 345.00 - SUNNYSIDE 345KV CKT 1	717	789	0.20527	109.27	GEN562685 1-G15_013_3 0.3550
FDNS	00NR	0	20WP	G15_085	FROM->TO	G14-057T 345.00 - SUNNYSIDE 345KV CKT 1	717	789	0.20527	109.2675	GEN527903 1-HOBBS PLANT #3 (ST)
FDNS	00NR	0	20WP	G15_085	FROM->TO	G14-057T 345.00 - SUNNYSIDE 345KV CKT 1	717	789	0.20463	109.2452	CHISHOLM6 230.00 - SWEETWATER 230KV CKT 1
FDNS	00NR	0	20WP	G15_085	FROM->TO	G14-057T 345.00 - SUNNYSIDE 345KV CKT 1	717	789	0.20527	109.1665	GEN635024 4-WALTER SCOTT UNIT 4
FDNS	00NR	0	20WP	G15_085	FROM->TO	G14-057T 345.00 - SUNNYSIDE 345KV CKT 1	717	789	0.20527	109.1256	GEN563272 1-G15093_3 0.6900
FDNS	00NR	0	20WP	G15_085	FROM->TO	G14-057T 345.00 - SUNNYSIDE 345KV CKT 1	717	789	0.19743	109.1187	LYDIA - VALLIANT 345KV CKT 1
FDNS	00NR	0	20WP	G15_085	FROM->TO	G14-057T 345.00 - SUNNYSIDE 345KV CKT 1	717	789	0.19743	109.1187	LYDIA - VALLIANT 345KV CKT 1
FDNS	00NR	0	20WP	G15_085	FROM->TO	G14-057T 345.00 - SUNNYSIDE 345KV CKT 1	717	789	0.20527	108.7846	GEN525561 1-TOLK GEN #1 24 KV
FDNS	00NR	0	16WP	G15_085	FROM->TO	G14-057T 345.00 - SUNNYSIDE 345KV CKT 1	717	789	0.17881	108.4243	JOHNSON COUNTY - PITTSBURG 345KV CKT 1
FDNS	00NR	0	16WP	G15_085	FROM->TO	G14-057T 345.00 - SUNNYSIDE 345KV CKT 1	717	789	0.17881	108.4243	JOHNSON COUNTY - PITTSBURG 345KV CKT 1
FDNS	00NR	0	16WP	G15_085	FROM->TO	G14-057T 345.00 - SUNNYSIDE 345KV CKT 1	717	789	0.20384	108.057	GEN563263 1-G15092_4 0.6900
FDNS	00NR	0	16WP	G15_085	FROM->TO	G14-057T 345.00 - SUNNYSIDE 345KV CKT 1	717	789	0.18859	107.6655	HUGO - VALLIANT 345KV CKT 1
FDNS	00NR	0	16WP	G15_085	FROM->TO	G14-057T 345.00 - SUNNYSIDE 345KV CKT 1	717	789	0.18859	107.6655	HUGO - VALLIANT 345KV CKT 1
FDNS	00NR	0	20WP	G15_085	FROM->TO	G14-057T 345.00 - SUNNYSIDE 345KV CKT 1	717	789	0.18041	106.869	JOHNSON COUNTY - PITTSBURG 345KV CKT 1
FDNS	00NR	0	20WP	G15_085	FROM->TO	G14-057T 345.00 - SUNNYSIDE 345KV CKT 1	717	789	0.18041	106.869	JOHNSON COUNTY - PITTSBURG 345KV CKT 1
FDNS	00NR	0	20WP	G15_085	FROM->TO	G14-057T 345.00 - SUNNYSIDE 345KV CKT 1	717	789	0.18951	106.5939	HUGO - VALLIANT 345KV CKT 1
FDNS	00NR	0	20WP	G15_085	FROM->TO	G14-057T 345.00 - SUNNYSIDE 345KV CKT 1	717	789	0.18951	106.5939	HUGO - VALLIANT 345KV CKT 1
FDNS	00NR	0	16WP	G15_085	FROM->TO	G14-057T 345.00 - SUNNYSIDE 345KV CKT 1	717	789	0.20384	106.381	GEN563262 1-G15092_3 0.6900
FDNS	00NR	0	20WP	G15_085	FROM->TO	G14-057T 345.00 - SUNNYSIDE 345KV CKT 1	717	789	0.20527	105.9962	GEN563263 1-G15092_4 0.6900
FDNS	00NR	0	16WP	G15_085	FROM->TO	G14-057T 345.00 - SUNNYSIDE 345KV CKT 1	717	789	0.20621	104.8432	G14-074T 345.00 - TUCO INTERCHANGE 345KV CKT 1
FDNS	00NR	0	20WP	G15_085	FROM->TO	G14-057T 345.00 - SUNNYSIDE 345KV CKT 1	717	789	0.20527	104.3167	GEN563262 1-G15092_3 0.6900
FDNS	00NR	0	16WP	G15_085	FROM->TO	G14-057T 345.00 - SUNNYSIDE 345KV CKT 1	717	789	0.17801	102.6669	JOHNSON COUNTY - SUNNYSIDE 345KV CKT 1
FDNS	00NR	0	20WP	G15_085	FROM->TO	G14-057T 345.00 - SUNNYSIDE 345KV CKT 1	717	789	0.20767	101.6269	G14-074T 345.00 - TUCO INTERCHANGE 345KV CKT 1
FDNS	00NR	0	20SP	G15_085	FROM->TO	G14-057T 345.00 - SUNNYSIDE 345KV CKT 1	717	789	0.28964	100.8006	CIMARRON - MINCO 345KV CKT 1
FDNS	00NR	0	17SP	G15_085	FROM->TO	G14-057T 345.00 - SUNNYSIDE 345KV CKT 1	717	789	0.2918	100.4284	GRACEMONT - MINCO 345KV CKT 1
FDNS	00NR	0	20WP	G15_085	FROM->TO	G14-057T 345.00 - SUNNYSIDE 345KV CKT 1	717	789	0.17974	100.3152	JOHNSON COUNTY - SUNNYSIDE 345KV CKT 1
FDNS	07ALL	0	25SP	G15_085	FROM->TO	G15085_T 138.00 - LAKE PAULINE 138KV CKT 1	108	118	1	102.006	G15085_T 138.00 - RUSSELL 138KV CKT 1
FDNS	00NR	0	20WP	G15_085	FROM->TO	G15085_T 138.00 - LAKE PAULINE 138KV CKT 1	108	118	1	101.8311	G15085_T 138.00 - RUSSELL 138KV CKT 1
FDNS	00NR	0	16WP	G15_085	FROM->TO	G15085_T 138.00 - LAKE PAULINE 138KV CKT 1	108	118	1	101.8042	G15085_T 138.00 - RUSSELL 138KV CKT 1
FDNS	00NR	0	25SP	G15_085	FROM->TO	G15085_T 138.00 - LAKE PAULINE 138KV CKT 1	108	118	1	101.7954	G15085_T 138.00 - RUSSELL 138KV CKT 1
FDNS	07ALL	0	20SP	G15_085	FROM->TO	G15085_T 138.00 - LAKE PAULINE 138KV CKT 1	108	118	1	101.7659	G15085_T 138.00 - RUSSELL 138KV CKT 1
FDNS	07ALL	0	17G	G15_085	FROM->TO	G15085_T 138.00 - LAKE PAULINE 138KV CKT 1	108	118	1	101.7584	G15085_T 138.00 - RUSSELL 138KV CKT 1
FDNS	00NR	0	20SP	G15_085	FROM->TO	G15085_T 138.00 - LAKE PAULINE 138KV CKT 1	108	118	1	101.7424	G15085_T 138.00 - RUSSELL 138KV CKT 1
FDNS	07ALL	0	20L	G15_085	FROM->TO	G15085_T 138.00 - LAKE PAULINE 138KV CKT 1	108	118	1	101.7395	G15085_T 138.00 - RUSSELL 138KV CKT 1
FDNS	07ALL	0	16WP	G15_085	FROM->TO	G15085_T 138.00 - LAKE PAULINE 138KV CKT 1	108	118	1	101.737	G15085_T 138.00 - RUSSELL 138KV CKT 1
FDNS	07NR	0	17G	G15_085	FROM->TO	G15085_T 138.00 - LAKE PAULINE 138KV CKT 1	108	118	1	101.7367	G15085_T 138.00 - RUSSELL 138KV CKT 1
FDNS	07ALL	0	17SP	G15_085	FROM->TO	G15085_T 138.00 - LAKE PAULINE 138KV CKT 1	108	118	1	101.7329	G15085_T 138.00 - RUSSELL 138KV CKT 1
FDNS	07NR	0	20L	G15_085	FROM->TO	G15085_T 138.00 - LAKE PAULINE 138KV CKT 1	108	118	1	101.7291	G15085_T 138.00 - RUSSELL 138KV CKT 1
FDNS	07ALL	0	20WP	G15_085	FROM->TO	G15085_T 138.00 - LAKE PAULINE 138KV CKT 1	108	118	1	101.72	G15085_T 138.00 - RUSSELL 138KV CKT 1
FDNS	00NR	0	17SP	G15_085	FROM->TO	G15085_T 138.00 - LAKE PAULINE 138KV CKT 1	108	118	1	101.7198	G15085_T 138.00 - RUSSELL 138KV CKT 1
FDNS	00NR	0	20WP	G15_085	FROM->TO	G15085_T 138.00 - RUSSELL 138KV CKT 1	108	118	0.7826	145.7007	P12:230:AEPW:ELKCITY6:SWEETWT6
FDNS	00NR	0	20WP	G15_085	FROM->TO	G15085_T 138.00 - RUSSELL 138KV CKT 1	108	118	0.78395	145.3074	CHISHOLM6 230.00 - SWEETWATER 230KV CKT 1
FDNS	00NR	0	16WP	G15_085	FROM->TO	G15085_T 138.00 - RUSSELL 138KV CKT 1	108	118	0.78154	141.276	P12:230:AEPW:ELKCITY6:SWEETWT6
FDNS	00NR	0	16WP	G15_085	FROM->TO	G15085_T 138.00 - RUSSELL 138KV CKT 1	108	118	0.78308	140.9324	CHISHOLM6 230.00 - SWEETWATER 230KV CKT 1
FDNS	00NR	0	20WP	G15_085	FROM->TO	G15085_T 138.00 - RUSSELL 138KV CKT 1	108	118	0.78395	139.0999	STATELINE INTERCHANGE - STLN-DEMARC6 230KV CKT 1
FDNS	00NR	0	20WP	G15_085	FROM->TO	G15085_T 138.00 - RUSSELL 138KV CKT 1	108	118	0.78395	139.0798	P12:230:AEPW-SPS:SWEETWT6:WHEELER 6
FDNS	00NR	0	20WP	G15_085	FROM->TO	G15085_T 138.00 - RUSSELL 138KV CKT 1	108	118	0.78395	138.8008	STLN-DEMARC6 - SWEETWATER 230KV CKT 1
FDNS	00NR	0	20WP	G15_085	FROM->TO	G15085_T 138.00 - RUSSELL 138KV CKT 1	108	118	0.78266	134.6602	G14-074T 345.00 - OKLAUNION 345KV CKT 1
FDNS	00NR	0	16WP	G15_085	FROM->TO	G15085_T 138.00 - RUSSELL 138KV CKT 1	108	118	0.78308	134.4981	P12:230:AEPW-SPS:SWEETWT6:WHEELER 6
FDNS	00NR	0	16WP	G15_085	FROM->TO	G15085_T 138.00 - RUSSELL 138KV CKT 1	108	118	0.78308	134.4975	STATELINE INTERCHANGE - STLN-DEMARC6 230KV CKT 1
FDNS	00NR	0	16WP	G15_085	FROM->TO	G15085_T 138.00 - RUSSELL 138KV CKT 1	108	118	0.78308	134.4603	STLN-DEMARC6 - SWEETWATER 230KV CKT 1
FDNS	00NR	0	20WP	G15_085	FROM->TO	G15085_T 138.00 - RUSSELL 138KV CKT 1	108	118	0.83466	132.5011	LAKE PAULINE (LAKEPAUL) 138/69/14.4KV TRANSFORMER CKT 1
FDNS	00NR	0	20WP	G15_085	FROM->TO	G15085_T 138.00 - RUSSELL 138KV CKT 1	108	118	0.83466	132.5011	LAKE PAULINE (LAKEPAUL) 138/69/14.4KV TRANSFORMER CKT 1
FDNS	00NR	0	20WP	G15_085	FROM->TO	G15085_T 138.00 - RUSSELL 138KV CKT 1	108	118	0.83466	132.5004	ELDORADO - LAKE PAULINE 69KV CKT 1
FDNS	00NR	0	20WP	G15_085	FROM->TO	G15085_T 138.00 - RUSSELL 138KV CKT 1	108	118	0.83466	131.5203	ELDORADO - ELDORADO JCT 69KV CKT 1
FDNS	00NR	0	20WP	G15_085	FROM->TO	G15085_T 138.00 - RUSSELL 138KV CKT 1	108	118	0.78312	130.8974	MATHWSN7 345.00 - TATONGA7 345.00 345KV CKT 1
FDNS	00NR	0	16WP	G15_085	FROM->TO	G15085_T 138.00 - RUSSELL 138KV CKT 1	108	118	0.78182	130.8522	G14-074T 345.00 - OKLAUNION 345KV CKT 1
FDNS	00NR	0	20WP	G15_085	FROM->TO	G15085_T 138.00 - RUSSELL 138KV CKT 1	108	118	0.78292	130.3142	BASE CASE
FDNS	00NR	0	20WP	G15_085	FROM->TO	G15085_T 138.00 - RUSSELL 138KV CKT 1	108	118	0.83466	130.1837	ELDORADO JCT - GYPSUM 69KV CKT 1
FDNS	00NR	0	20WP	G15_085	FROM->TO	G15085_T 138.00 - RUSSELL 138KV CKT 1	108	118	0.78301	129.7044	GRAPEVINE INTERCHANGE - STATELINE INTERCHANGE 230KV CKT 1
FDNS	00NR	0	20WP	G15_085	FROM->TO	G15085_T 138.00 - RUSSELL 138KV CKT 1	108	118	0.78301	129.7044	GRAPEVINE INTERCHANGE - STATELINE INTERCHANGE 230KV CKT 1
FDNS	00NR	0	16WP	G15_085	FROM->TO	G15085_T 138.00 - RUSSELL 138KV CKT 1	108	118	0.83392	129.4412	LAKE PAULINE (LAKEPAUL) 138/69/14.4KV TRANSFORMER CKT 1
FDNS	00NR	0	16WP	G15_085	FROM->TO	G15085_T 138.00 - RUSSELL 138KV CKT 1	108	118	0.83392	129.4412	LAKE PAULINE (LAKEPAUL) 138/69/14.4KV TRANSFORMER CKT 1
FDNS	00NR	0	16WP	G15_085	FROM->TO	G15085_T 138.00 - RUSSELL 138KV CKT 1	108	118	0.83392	129.4395	ELDORADO - LAKE PAULINE 69KV CKT 1
FDNS	00NR	0	20WP	G15_085	FROM->TO	G15085_T 138.00 - RUSSELL 138KV CKT 1	108	118	0.78312	128.7794	G11_051T 345.00 - TATONGA7 345.00 345KV CKT 1
FDNS	00NR	0	16WP	G15_085	FROM->TO	G15085_T 138.00 - RUSSELL 138KV CKT 1	108	118	0.83392	128.4628	ELDORADO - ELDORADO JCT 69KV CKT 1
FDNSLock	00NR	0	16WP	G15_085	FROM->TO	G15085_T 138.00 - RUSSELL 138KV CKT 1	108	118	0.78229	128.1476	MATHWSN7 345.00 - TATONGA7 345.00 345KV CKT 1
FDNS	00NR	0	16WP	G15_085	FROM->TO	G15085_T 138.00 - RUSSELL 138KV CKT 1	108	118	0.78208	127.3543	BASE CASE
FDNS	00NR	0	20WP	G15_085	FROM->TO	G15085_T 138.00 - RUSSELL 138KV CKT 1	108	118	0.83466	127.1563	GYPSUM - RUSSELL 69KV CKT 1
FDNS	00NR	0	16WP	G15_085	FROM->TO	G15085_T 138.00 - RUSSELL 138KV CKT 1	108	118	0.83392	127.1337	ELDORADO JCT - GYPSUM 69KV CKT 1
FDNS	00NR	0	20WP	G15_085	FROM->TO	G15085_T 138.00 - RUSSELL 138KV CKT 1	108	118	0.78266	126.6115	G14-074T 345.00 - TUCO INTERCHANGE 345KV CKT 1

SOLUTION	GROUP	SCENARIO	SEASON	SOURCE	DIRECTION	MONITORED ELEMENT	RATEA (MVA)	RATEB(MVA)	TDF	TC%LOADING (% MVA)	CONTINGENCY
FDNS	00NR	0	16WP	G15_085	FROM->TO	G15085_T 138.00 - RUSSELL 138KV CKT 1	108	118	0.78215	126.0793	GRAPEVINE INTERCHANGE - STATELINE INTERCHANGE 230KV CKT 1
FDNS	00NR	0	16WP	G15_085	FROM->TO	G15085_T 138.00 - RUSSELL 138KV CKT 1	108	118	0.78215	126.0793	GRAPEVINE INTERCHANGE - STATELINE INTERCHANGE 230KV CKT 1
FDNSLock	00NR	0	16WP	G15_085	FROM->TO	G15085_T 138.00 - RUSSELL 138KV CKT 1	108	118	0.78229	125.8376	G11_051T 345.00 - TATONGA7 345.00 345KV CKT 1
FDNS	00NR	0	20WP	G15_085	FROM->TO	G15085_T 138.00 - RUSSELL 138KV CKT 1	108	118	0.78312	125.598	G11_051T 345.00 - WOODWARD DISTRICT EHV 345KV CKT 1
FDNS	00NR	0	20WP	G15_085	FROM->TO	G15085_T 138.00 - RUSSELL 138KV CKT 1	108	118	0.80224	124.5059	GRAPEVINE INTERCHANGE - KIRBY SWITCHING STATION 115KV CKT 1
FDNS	00NR	0	20WP	G15_085	FROM->TO	G15085_T 138.00 - RUSSELL 138KV CKT 1	108	118	0.80224	124.5059	GRAPEVINE INTERCHANGE - KIRBY SWITCHING STATION 115KV CKT 1
FDNS	00NR	0	20WP	G15_085	FROM->TO	G15085_T 138.00 - RUSSELL 138KV CKT 1	108	118	0.77977	124.3365	CHISHOLM6 230.00 - ELK CITY 230KV 230KV CKT 1
FDNS	00NR	0	20WP	G15_085	FROM->TO	G15085_T 138.00 - RUSSELL 138KV CKT 1	108	118	0.77977	124.3304	ELK CITY 230KV (ELKCTY-6) 230/138/13.8KV TRANSFORMER CKT 1
FDNS	00NR	0	20WP	G15_085	FROM->TO	G15085_T 138.00 - RUSSELL 138KV CKT 1	108	118	0.77977	124.3304	ELK CITY 230KV (ELKCTY-6) 230/138/13.8KV TRANSFORMER CKT 1
FDNS	00NR	0	16WP	G15_085	FROM->TO	G15085_T 138.00 - RUSSELL 138KV CKT 1	108	118	0.83392	124.1333	GYPSUM - RUSSELL 69KV CKT 1
FDNS	00NR	0	20WP	G15_085	FROM->TO	G15085_T 138.00 - RUSSELL 138KV CKT 1	108	118	0.78512	123.9607	CHISHOLM7 345.00 - GRACEMONT 345KV CKT 1
FDNS	00NR	0	20WP	G15_085	FROM->TO	G15085_T 138.00 - RUSSELL 138KV CKT 1	108	118	0.78292	123.9543	GEN562685 1-G15_013_3 0.3550
FDNS	07NR	0	20L	G15_085	FROM->TO	G15085_T 138.00 - RUSSELL 138KV CKT 1	108	118	0.78334	123.808	CHISHOLM6 230.00 - SWEETWATER 230KV CKT 1
FDNS	07NR	0	20L	G15_085	FROM->TO	G15085_T 138.00 - RUSSELL 138KV CKT 1	108	118	0.78198	123.4166	P12:230:AEPW:ELKCITY6:SWEETWT6
FDNS	00NR	0	16WP	G15_085	FROM->TO	G15085_T 138.00 - RUSSELL 138KV CKT 1	108	118	0.78182	123.3692	G14-074T 345.00 - TUCO INTERCHANGE 345KV CKT 1
FDNS	00NR	0	20WP	G15_085	FROM->TO	G15085_T 138.00 - RUSSELL 138KV CKT 1	108	118	0.78512	123.008	CHISHOLM7 345.00 () 345/230/13.2KV TRANSFORMER CKT 1
FDNS	00NR	0	20WP	G15_085	FROM->TO	G15085_T 138.00 - RUSSELL 138KV CKT 1	108	118	0.78323	122.6963	BORDER 7345.00 - WOODWARD DISTRICT EHV 345KV CKT 1
FDNSLock	00NR	0	16WP	G15_085	FROM->TO	G15085_T 138.00 - RUSSELL 138KV CKT 1	108	118	0.78229	122.6935	G11_051T 345.00 - WOODWARD DISTRICT EHV 345KV CKT 1
FDNS	07ALL	0	20WP	G15_085	FROM->TO	G15085_T 138.00 - RUSSELL 138KV CKT 1	108	118	0.7793	122.6475	CHISHOLM6 230.00 - SWEETWATER 230KV CKT 1
FDNS	07ALL	0	20WP	G15_085	FROM->TO	G15085_T 138.00 - RUSSELL 138KV CKT 1	108	118	0.77803	122.4796	P12:230:AEPW:ELKCITY6:SWEETWT6
FDNS	00NR	0	20WP	G15_085	FROM->TO	G15085_T 138.00 - RUSSELL 138KV CKT 1	108	118	0.78359	122.3427	Hitchland Interchange - WALKTAP7 345.00 345KV CKT 1
FDNS	00NR	0	20WP	G15_085	FROM->TO	G15085_T 138.00 - RUSSELL 138KV CKT 1	108	118	0.78359	122.3427	Hitchland Interchange - WALKTAP7 345.00 345KV CKT 1
FDNS	00NR	0	20WP	G15_085	FROM->TO	G15085_T 138.00 - RUSSELL 138KV CKT 1	108	118	0.78359	122.339	P12:345:SPS:J07.1.FINN.HITCH
FDNS	00NR	0	20WP	G15_085	FROM->TO	G15085_T 138.00 - RUSSELL 138KV CKT 1	108	118	0.80459	122.1848	P12:69:AEPW:NWMEMPH2:CHLDR2WT
FDNS	00NR	0	20WP	G15_085	FROM->TO	G15085_T 138.00 - RUSSELL 138KV CKT 1	108	118	0.80459	121.7765	P12:69:AEPW:CHLDR2WT:MEMPHIS2
FDNS	00NR	0	16WP	G15_085	FROM->TO	G15085_T 138.00 - RUSSELL 138KV CKT 1	108	118	0.80146	121.4462	GRAPEVINE INTERCHANGE - KIRBY SWITCHING STATION 115KV CKT 1
FDNS	00NR	0	16WP	G15_085	FROM->TO	G15085_T 138.00 - RUSSELL 138KV CKT 1	108	118	0.80146	121.4462	GRAPEVINE INTERCHANGE - KIRBY SWITCHING STATION 115KV CKT 1
FDNS	00NR	0	16WP	G15_085	FROM->TO	G15085_T 138.00 - RUSSELL 138KV CKT 1	108	118	0.78208	121.356	GEN562685 1-G15_013_3 0.3550
FDNS	00NR	0	16WP	G15_085	FROM->TO	G15085_T 138.00 - RUSSELL 138KV CKT 1	108	118	0.77863	121.1309	CHISHOLM6 230.00 - ELK CITY 230KV 230KV CKT 1
FDNS	00NR	0	16WP	G15_085	FROM->TO	G15085_T 138.00 - RUSSELL 138KV CKT 1	108	118	0.77863	121.1268	ELK CITY 230KV (ELKCTY-6) 230/138/13.8KV TRANSFORMER CKT 1
FDNS	00NR	0	16WP	G15_085	FROM->TO	G15085_T 138.00 - RUSSELL 138KV CKT 1	108	118	0.77863	121.1268	ELK CITY 230KV (ELKCTY-6) 230/138/13.8KV TRANSFORMER CKT 1
FDNS	00NR	0	16WP	G15_085	FROM->TO	G15085_T 138.00 - RUSSELL 138KV CKT 1	108	118	0.78432	120.9469	CHISHOLM7 345.00 - GRACEMONT 345KV CKT 1
FDNS	07ALL	0	20L	G15_085	FROM->TO	G15085_T 138.00 - RUSSELL 138KV CKT 1	108	118	0.77857	120.893	CHISHOLM6 230.00 - SWEETWATER 230KV CKT 1
FDNS	07ALL	0	20L	G15_085	FROM->TO	G15085_T 138.00 - RUSSELL 138KV CKT 1	108	118	0.77728	120.3139	P12:230:AEPW:ELKCITY6:SWEETWT6
FDNS	00NR	0	16WP	G15_085	FROM->TO	G15085_T 138.00 - RUSSELL 138KV CKT 1	108	118	0.78432	120.073	CHISHOLM7 345.00 (CHISHOLM) 345/230/13.2KV TRANSFORMER CKT 1
FDNS	00NR	0	16WP	G15_085	FROM->TO	G15085_T 138.00 - RUSSELL 138KV CKT 1	108	118	0.80382	119.9471	P12:69:AEPW:NWMEMPH2:CHLDR2WT
FDNS	00NR	0	16WP	G15_085	FROM->TO	G15085_T 138.00 - RUSSELL 138KV CKT 1	108	118	0.78273	119.5028	FINNEY SWITCHING STATION - HOLCOMB 345KV CKT 1
FDNS	00NR	0	16WP	G15_085	FROM->TO	G15085_T 138.00 - RUSSELL 138KV CKT 1	108	118	0.78273	119.5028	FINNEY SWITCHING STATION - HOLCOMB 345KV CKT 1
FDNSLock	00NR	0	16WP	G15_085	FROM->TO	G15085_T 138.00 - RUSSELL 138KV CKT 1	108	118	0.80382	119.0348	CHILDRESS (CHLDR2WT) 138/69/12.47KV TRANSFORMER CKT 1
FDNSLock	00NR	0	16WP	G15_085	FROM->TO	G15085_T 138.00 - RUSSELL 138KV CKT 1	108	118	0.80382	119.0345	AMOCO TAP - CHILDRESS 69KV CKT 1
FDNS	00NR	0	20WP	G15_085	FROM->TO	G15085_T 138.00 - RUSSELL 138KV CKT 1	108	118	0.78467	116.7281	SNYDER (SNYDER) 138/69/13.8KV TRANSFORMER CKT 1
FDNS	00NR	0	20WP	G15_085	FROM->TO	G15085_T 138.00 - RUSSELL 138KV CKT 1	108	118	0.78186	116.5927	G14-057T 345.00 - LAWTON EASTSIDE 345KV CKT 1
FDNS	00NR	0	20WP	G15_085	FROM->TO	G15085_T 138.00 - RUSSELL 138KV CKT 1	108	118	0.80459	116.3263	HEDLEY - NORTH MEMPHIS REC 69KV CKT 1
FDNS	00NR	0	20WP	G15_085	FROM->TO	G15085_T 138.00 - RUSSELL 138KV CKT 1	108	118	0.78292	116.2971	GEN523973 1-HARRINGTON GEN #3 24 KV
FDNS	00NR	0	20WP	G15_085	FROM->TO	G15085_T 138.00 - RUSSELL 138KV CKT 1	108	118	0.78292	116.297	GEN523971 1-HARRINGTON GEN #1 24 KV
FDNS	00NR	0	20WP	G15_085	FROM->TO	G15085_T 138.00 - RUSSELL 138KV CKT 1	108	118	0.78292	116.2969	GEN523972 1-HARRINGTON GEN #2 24 KV
FDNS	00NR	0	20WP	G15_085	FROM->TO	G15085_T 138.00 - RUSSELL 138KV CKT 1	108	118	0.78143	116.2966	CIMARRON - MINCO 345KV CKT 1
FDNS	00NR	0	20WP	G15_085	FROM->TO	G15085_T 138.00 - RUSSELL 138KV CKT 1	108	118	0.74409	116.1116	OMPA-ALTUS TAMARACK - OMPVET 138KV CKT 1
FDNS	00NR	0	20WP	G15_085	FROM->TO	G15085_T 138.00 - RUSSELL 138KV CKT 1	108	118	0.80459	115.8705	CLARENDON REC - HEDLEY 69KV CKT 1
FDNS	07NR	0	17G	G15_085	FROM->TO	G15085_T 138.00 - RUSSELL 138KV CKT 1	108	118	0.78154	115.7658	P12:230:AEPW:ELKCITY6:SWEETWT6
FDNS	07NR	0	20L	G15_085	FROM->TO	G15085_T 138.00 - RUSSELL 138KV CKT 1	108	118	0.85036	115.7101	HOLLIS TAP - WELLINGTON 138KV CKT 1
FDNS	07NR	0	17G	G15_085	FROM->TO	G15085_T 138.00 - RUSSELL 138KV CKT 1	108	118	0.78308	115.5794	CHISHOLM6 230.00 - SWEETWATER 230KV CKT 1
FDNS	07ALL	0	16WP	G15_085	FROM->TO	G15085_T 138.00 - RUSSELL 138KV CKT 1	108	118	0.77904	115.2764	CHISHOLM6 230.00 - SWEETWATER 230KV CKT 1
FDNS	00NR	0	20WP	G15_085	FROM->TO	G15085_T 138.00 - RUSSELL 138KV CKT 1	108	118	0.74409	115.1353	OMPA-ALTUS PARK - OMPVET 138KV CKT 1
FDNS	00NR	0	20WP	G15_085	FROM->TO	G15085_T 138.00 - RUSSELL 138KV CKT 1	108	118	0.78186	115.0547	G14-057T 345.00 - SUNNYSIDE 345KV CKT 1
FDNS	00NR	0	20WP	G15_085	FROM->TO	G15085_T 138.00 - RUSSELL 138KV CKT 1	108	118	0.80459	115.0444	CLARENDON - CLARENDON REC 69KV CKT 1
FDNS	00NR	0	20WP	G15_085	FROM->TO	G15085_T 138.00 - RUSSELL 138KV CKT 1	108	118	0.8506	115.004	SHAMROCK - WELLINGTON 138KV CKT 1
FDNS	07ALL	0	16WP	G15_085	FROM->TO	G15085_T 138.00 - RUSSELL 138KV CKT 1	108	118	0.77758	114.9548	P12:230:AEPW:ELKCITY6:SWEETWT6
FDNS	00NR	0	20WP	G15_085	FROM->TO	G15085_T 138.00 - RUSSELL 138KV CKT 1	108	118	0.8506	114.74	SHAMROCK (SHAMRCK2) 138/69/14.4KV TRANSFORMER CKT 1
FDNS	00NR	0	20WP	G15_085	FROM->TO	G15085_T 138.00 - RUSSELL 138KV CKT 1	108	118	0.8506	114.74	SHAMROCK (SHAMRCK2) 138/69/14.4KV TRANSFORMER CKT 1
FDNS	00NR	0	20WP	G15_085	FROM->TO	G15085_T 138.00 - RUSSELL 138KV CKT 1	108	118	0.76126	114.568	RUSSELL (RUSSELL) 138/69/13.8KV TRANSFORMER CKT 1
FDNS	00NR	0	20WP	G15_085	FROM->TO	G15085_T 138.00 - RUSSELL 138KV CKT 1	108	118	0.74409	114.5258	ALTUS JUNCTION - OMPA-ALTUS PARK 138KV CKT 1
FDNS	00NR	0	20WP	G15_085	FROM->TO	G15085_T 138.00 - RUSSELL 138KV CKT 1	108	118	0.74409	114.5258	ALTUS JUNCTION - OMPA-ALTUS PARK 138KV CKT 1
FDNS	00NR	0	20WP	G15_085	FROM->TO	G15085_T 138.00 - RUSSELL 138KV CKT 1	108	118	0.7587	114.4081	CACHE - SNYDER 138KV CKT 1
FDNS	00NR	0	20WP	G15_085	FROM->TO	G15085_T 138.00 - RUSSELL 138KV CKT 1	108	118	0.7587	114.3543	P12:138:AEPW:112GORE4:SNYDER-4
FDNS	07ALL	0	20L	G15_085	FROM->TO	G15085_T 138.00 - RUSSELL 138KV CKT 1	108	118	0.849	114.281	HOLLIS TAP - WELLINGTON 138KV CKT 1
FDNS	00NR	0	16WP	G15_085	FROM->TO	G15085_T 138.00 - RUSSELL 138KV CKT 1	108	118	0.78381	114.144	SNYDER (SNYDER) 138/69/13.8KV TRANSFORMER CKT 1
FDNS	00NR	0	16WP	G15_085	FROM->TO	G15085_T 138.00 - RUSSELL 138KV CKT 1	108	118	0.85002	113.9166	SHAMROCK - WELLINGTON 138KV CKT 1
FDNS	00NR	0	16WP	G15_085	FROM->TO	G15085_T 138.00 - RUSSELL 138KV CKT 1	108	118	0.78102	113.8297	G14-057T 345.00 - LAWTON EASTSIDE 345KV CKT 1
FDNS	00NR	0	16WP	G15_085	FROM->TO	G15085_T 138.00 - RUSSELL 138KV CKT 1	108	118	0.85002	113.7228	SHAMROCK (SHAMRCK2) 138/69/14.4KV TRANSFORMER CKT 1
FDNS	00NR	0	16WP	G15_085	FROM->TO	G15085_T 138.00 - RUSSELL 138KV CKT 1	108	118	0.85002	113.7228	SHAMROCK (SHAMRCK2) 138/69/14.4KV TRANSFORMER CKT 1
FDNS	00NR	0	16WP	G15_085	FROM->TO	G15085_T 138.00 - RUSSELL 138KV CKT 1	108	118	0.80382	113.6706	CLARENDON REC - HEDLEY 69KV CKT 1
FDNS	00NR	0	16WP	G15_085	FROM->TO	G15085_T 138.00 - RUSSELL 138KV CKT 1	108	118	0.7437	113.6507	OMPA-ALTUS TAMARACK - OMPVET 138KV CKT 1
FDNS	00NR	0	16WP	G15_085	FROM->TO	G15085_T 138.00 - RUSSELL 138KV CKT 1	108	118	0.78208	113.6208	GEN523973 1-HARRINGTON GEN #3 24 KV
FDNS	00NR	0	16WP	G15_085	FROM->TO	G15085_T 138.00 - RUSSELL 138KV CKT 1	108	118	0.78208	113.6207	GEN523971 1-HARRINGTON GEN #1 24 KV
FDNS	00NR	0	16WP	G15_085	FROM->TO	G15085_T 138.00 - RUSSELL 138KV CKT 1	108	118	0.78208	113.62	GEN523972 1-HARRINGTON GEN #2 24 KV
FDNS	00NR	0	16WP	G15_085	FROM->TO	G15085_T 138.00 - RUSSELL 138KV CKT 1	108	118	0.78058	113.588	CIMARRON - MINCO 345KV CKT 1
FDNS	00NR	0	20WP	G15_085	FROM->TO	G15085_T 138.00 - RUSSELL 138KV CKT 1	108	118	0.7885	113.33	P12:115:SPS:T53.1.NICHLS.KIRBY
FDNS	00NR	0	20WP	G15_085	FROM->TO	G15085_T 138.00 - RUSSELL 138KV CKT 1	108	118	0.7885	113.303	CONWAY SUB - KIRBY SWITCHING STATION 115KV CKT 1

SOLUTION	GROUP	SCENARIO	SEASON	SOURCE	DIRECTION	MONITORED ELEMENT	RATEA (MVA)	RATEB(MVA)	TDF	TC%LOADING (% MVA)	CONTINGENCY
FDNS	07ALL	0	17G	G15_085	FROM->TO	G15085_T 138.00 - RUSSELL 138KV CKT 1	108	118	0.77896	113.261	CHISHOLM6 230.00 - SWEETWATER 230KV CKT 1
FDNS	07NR	0	20L	G15_085	FROM->TO	G15085_T 138.00 - RUSSELL 138KV CKT 1	108	118	0.78243	113.2464	BASE CASE
FDNS	00NR	0	20WP	G15_085	FROM->TO	G15085_T 138.00 - RUSSELL 138KV CKT 1	108	118	0.72575	113.1349	ALTUS JUNCTION - SNYDER 138KV CKT 1
FDNS	00NR	0	20WP	G15_085	FROM->TO	G15085_T 138.00 - RUSSELL 138KV CKT 1	108	118	0.72575	113.1349	ALTUS JUNCTION - SNYDER 138KV CKT 1
FDNSLock	00NR	0	20WP	G15_085	FROM->TO	G15085_T 138.00 - RUSSELL 138KV CKT 1	108	118	0.80459	112.9248	CLARENDON - HWRDWCK2 69.000 69KV CKT 1
FDNS	00NR	0	16WP	G15_085	FROM->TO	G15085_T 138.00 - RUSSELL 138KV CKT 1	108	118	0.80382	112.9198	CLARENDON - CLARENDON REC 69KV CKT 1
FDNS	07NR	0	20L	G15_085	FROM->TO	G15085_T 138.00 - RUSSELL 138KV CKT 1	108	118	0.85036	112.806	SHAMROCK - WELLINGTON 138KV CKT 1
FDNS	00NR	0	16WP	G15_085	FROM->TO	G15085_T 138.00 - RUSSELL 138KV CKT 1	108	118	0.7437	112.719	OMPA-ALTUS PARK - OMPVET 138KV CKT 1
FDNS	07NR	0	20L	G15_085	FROM->TO	G15085_T 138.00 - RUSSELL 138KV CKT 1	108	118	0.85036	112.5847	SHAMROCK (SHAMRCK2) 138/69/14.4KV TRANSFORMER CKT 1
FDNS	07NR	0	20L	G15_085	FROM->TO	G15085_T 138.00 - RUSSELL 138KV CKT 1	108	118	0.85036	112.5847	SHAMROCK (SHAMRCK2) 138/69/14.4KV TRANSFORMER CKT 1
FDNSLock	07NR	0	20L	G15_085	FROM->TO	G15085_T 138.00 - RUSSELL 138KV CKT 1	108	118	0.83411	112.563	LAKE PAULINE (LAKEPAUL) 138/69/14.4KV TRANSFORMER CKT 1
FDNSLock	07NR	0	20L	G15_085	FROM->TO	G15085_T 138.00 - RUSSELL 138KV CKT 1	108	118	0.83411	112.563	LAKE PAULINE (LAKEPAUL) 138/69/14.4KV TRANSFORMER CKT 1
FDNS	07NR	0	20L	G15_085	FROM->TO	G15085_T 138.00 - RUSSELL 138KV CKT 1	108	118	0.83411	112.5627	ELDORADO - LAKE PAULINE 69KV CKT 1
FDNSLock	00NR	0	20WP	G15_085	FROM->TO	G15085_T 138.00 - RUSSELL 138KV CKT 1	108	118	0.80459	112.5479	HWRDWCK2 69.000 - JERICHO 69KV CKT 1
FDNSLock	00NR	0	20WP	G15_085	FROM->TO	G15085_T 138.00 - RUSSELL 138KV CKT 1	108	118	0.80459	112.5384	JERICHO (JERIC2WT) 115/69/14.4KV TRANSFORMER CKT 1
FDNSLock	00NR	0	20WP	G15_085	FROM->TO	G15085_T 138.00 - RUSSELL 138KV CKT 1	108	118	0.80459	112.5358	JERICHO - KIRBY SWITCHING STATION 115KV CKT 1
FDNS	00NR	0	20WP	G15_085	FROM->TO	G15085_T 138.00 - RUSSELL 138KV CKT 1	108	118	0.7885	112.5044	CONWAY SUB - NICHOLS STATION 115KV CKT 1
FDNS	00NR	0	16WP	G15_085	FROM->TO	G15085_T 138.00 - RUSSELL 138KV CKT 1	108	118	0.78102	112.2203	G14-057T 345.00 - SUNNYSIDE 345KV CKT 1
FDNS	00NR	0	16WP	G15_085	FROM->TO	G15085_T 138.00 - RUSSELL 138KV CKT 1	108	118	0.7437	112.1543	ALTUS JUNCTION - OMPA-ALTUS PARK 138KV CKT 1
FDNS	00NR	0	16WP	G15_085	FROM->TO	G15085_T 138.00 - RUSSELL 138KV CKT 1	108	118	0.7437	112.1543	ALTUS JUNCTION - OMPA-ALTUS PARK 138KV CKT 1
FDNS	07NR	0	20L	G15_085	FROM->TO	G15085_T 138.00 - RUSSELL 138KV CKT 1	108	118	0.83411	112.0364	ELDORADO - ELDORADO JCT 69KV CKT 1
FDNS	00NR	0	16WP	G15_085	FROM->TO	G15085_T 138.00 - RUSSELL 138KV CKT 1	108	118	0.76028	111.8658	RUSSELL (RUSSELL) 138/69/13.8KV TRANSFORMER CKT 1
FDNS	00NR	0	20WP	G15_085	FROM->TO	G15085_T 138.00 - RUSSELL 138KV CKT 1	108	118	0.78482	111.4292	GRAPEVINE INTERCHANGE - NICHOLS STATION 230KV CKT 1
FDNS	00NR	0	20WP	G15_085	FROM->TO	G15085_T 138.00 - RUSSELL 138KV CKT 1	108	118	0.78482	111.4292	GRAPEVINE INTERCHANGE - NICHOLS STATION 230KV CKT 1
FDNS	07ALL	0	20L	G15_085	FROM->TO	G15085_T 138.00 - RUSSELL 138KV CKT 1	108	118	0.849	111.372	SHAMROCK - WELLINGTON 138KV CKT 1
FDNS	00NR	0	16WP	G15_085	FROM->TO	G15085_T 138.00 - RUSSELL 138KV CKT 1	108	118	0.75698	111.2645	CACHE - SNYDER 138KV CKT 1
FDNS	00NR	0	16WP	G15_085	FROM->TO	G15085_T 138.00 - RUSSELL 138KV CKT 1	108	118	0.78768	111.262	P12:115:SPS:T53.1.NICHLS.KIRBY
FDNS	00NR	0	16WP	G15_085	FROM->TO	G15085_T 138.00 - RUSSELL 138KV CKT 1	108	118	0.78768	111.2382	CONWAY SUB - KIRBY SWITCHING STATION 115KV CKT 1
FDNS	00NR	0	16WP	G15_085	FROM->TO	G15085_T 138.00 - RUSSELL 138KV CKT 1	108	118	0.75698	111.2307	P12:138:AEPW:112GORE4:SNYDER-4
FDNS	07ALL	0	20L	G15_085	FROM->TO	G15085_T 138.00 - RUSSELL 138KV CKT 1	108	118	0.849	111.1527	SHAMROCK (SHAMRCK2) 138/69/14.4KV TRANSFORMER CKT 1
FDNS	07ALL	0	20L	G15_085	FROM->TO	G15085_T 138.00 - RUSSELL 138KV CKT 1	108	118	0.849	111.1527	SHAMROCK (SHAMRCK2) 138/69/14.4KV TRANSFORMER CKT 1
FDNS	07NR	0	20L	G15_085	FROM->TO	G15085_T 138.00 - RUSSELL 138KV CKT 1	108	118	0.83411	111.1264	ELDORADO JCT - GYPSUM 69KV CKT 1
FDNS	07ALL	0	20WP	G15_085	FROM->TO	G15085_T 138.00 - RUSSELL 138KV CKT 1	108	118	0.84922	110.8599	HOLLIS TAP - WELLINGTON 138KV CKT 1
FDNSLock	00NR	0	16WP	G15_085	FROM->TO	G15085_T 138.00 - RUSSELL 138KV CKT 1	108	118	0.80382	110.8178	CLARENDON - HWRDWCK2 69.000 69KV CKT 1
FDNS	07NR	0	20L	G15_085	FROM->TO	G15085_T 138.00 - RUSSELL 138KV CKT 1	108	118	0.78463	110.7866	CHISHOLM7 345.00 - GRACEMONT 345KV CKT 1
FDNS	00NR	0	16WP	G15_085	FROM->TO	G15085_T 138.00 - RUSSELL 138KV CKT 1	108	118	0.78768	110.499	CONWAY SUB - NICHOLS STATION 115KV CKT 1
FDNSLock	00NR	0	16WP	G15_085	FROM->TO	G15085_T 138.00 - RUSSELL 138KV CKT 1	108	118	0.80382	110.4771	HWRDWCK2 69.000 - JERICHO 69KV CKT 1
FDNSLock	00NR	0	16WP	G15_085	FROM->TO	G15085_T 138.00 - RUSSELL 138KV CKT 1	108	118	0.80382	110.4661	JERICHO (JERIC2WT) 115/69/14.4KV TRANSFORMER CKT 1
FDNSLock	00NR	0	16WP	G15_085	FROM->TO	G15085_T 138.00 - RUSSELL 138KV CKT 1	108	118	0.80382	110.4642	JERICHO - KIRBY SWITCHING STATION 115KV CKT 1
FDNS	07NR	0	20L	G15_085	FROM->TO	G15085_T 138.00 - RUSSELL 138KV CKT 1	108	118	0.85036	110.3658	P12:115:SPS:T54.1.KIRBY.SHM(520)
FDNS	07NR	0	20L	G15_085	FROM->TO	G15085_T 138.00 - RUSSELL 138KV CKT 1	108	118	0.85036	110.3658	P12:115:SPS-AEPW:KIRBY3:SHAM3WT
FDNS	00NR	0	20WP	G15_085	FROM->TO	G15085_T 138.00 - RUSSELL 138KV CKT 1	108	118	0.8506	110.3127	P12:115:SPS:T54.1.KIRBY.SHM(520)
FDNS	00NR	0	20WP	G15_085	FROM->TO	G15085_T 138.00 - RUSSELL 138KV CKT 1	108	118	0.8506	110.3127	P12:115:SPS-AEPW:KIRBY3:SHAM3WT
FDNS	07NR	0	20L	G15_085	FROM->TO	G15085_T 138.00 - RUSSELL 138KV CKT 1	108	118	0.85036	110.2834	MCLEAN RURAL SUB - SHAMROCK 115KV CKT 1
FDNS	07NR	0	20L	G15_085	FROM->TO	G15085_T 138.00 - RUSSELL 138KV CKT 1	108	118	0.85036	110.2834	MCLEAN RURAL SUB - SHAMROCK 115KV CKT 1
FDNS	07NR	0	20L	G15_085	FROM->TO	G15085_T 138.00 - RUSSELL 138KV CKT 1	108	118	0.85036	110.2799	SHAMROCK (SHAMRCK1) 115/69/14.4KV TRANSFORMER CKT 1
FDNS	07NR	0	20L	G15_085	FROM->TO	G15085_T 138.00 - RUSSELL 138KV CKT 1	108	118	0.85036	110.2799	SHAMROCK (SHAMRCK1) 115/69/14.4KV TRANSFORMER CKT 1
FDNS	00NR	0	20WP	G15_085	FROM->TO	G15085_T 138.00 - RUSSELL 138KV CKT 1	108	118	0.8506	110.1799	SHAMROCK (SHAMRCK1) 115/69/14.4KV TRANSFORMER CKT 1
FDNS	00NR	0	20WP	G15_085	FROM->TO	G15085_T 138.00 - RUSSELL 138KV CKT 1	108	118	0.8506	110.1799	SHAMROCK (SHAMRCK1) 115/69/14.4KV TRANSFORMER CKT 1
FDNS	00NR	0	20WP	G15_085	FROM->TO	G15085_T 138.00 - RUSSELL 138KV CKT 1	108	118	0.8506	110.1685	MCLEAN RURAL SUB - SHAMROCK 115KV CKT 1
FDNS	00NR	0	20WP	G15_085	FROM->TO	G15085_T 138.00 - RUSSELL 138KV CKT 1	108	118	0.8506	110.1685	MCLEAN RURAL SUB - SHAMROCK 115KV CKT 1
FDNS	00NR	0	16WP	G15_085	FROM->TO	G15085_T 138.00 - RUSSELL 138KV CKT 1	108	118	0.72365	110.1638	ALTUS JUNCTION - SNYDER 138KV CKT 1
FDNS	00NR	0	16WP	G15_085	FROM->TO	G15085_T 138.00 - RUSSELL 138KV CKT 1	108	118	0.72365	110.1638	ALTUS JUNCTION - SNYDER 138KV CKT 1
FDNS	07NR	0	17G	G15_085	FROM->TO	G15085_T 138.00 - RUSSELL 138KV CKT 1	108	118	0.85002	109.6856	HOLLIS TAP - WELLINGTON 138KV CKT 1
FDNS	00NR	0	16WP	G15_085	FROM->TO	G15085_T 138.00 - RUSSELL 138KV CKT 1	108	118	0.78397	109.5875	GRAPEVINE INTERCHANGE - NICHOLS STATION 230KV CKT 1
FDNS	00NR	0	16WP	G15_085	FROM->TO	G15085_T 138.00 - RUSSELL 138KV CKT 1	108	118	0.78397	109.5875	GRAPEVINE INTERCHANGE - NICHOLS STATION 230KV CKT 1
FDNS	07ALL	0	20L	G15_085	FROM->TO	G15085_T 138.00 - RUSSELL 138KV CKT 1	108	118	0.7795	109.5073	BASE CASE
FDNS	07NR	0	20L	G15_085	FROM->TO	G15085_T 138.00 - RUSSELL 138KV CKT 1	108	118	0.83411	109.4992	GYPSUM - RUSSELL 69KV CKT 1
FDNS	00NR	0	16WP	G15_085	FROM->TO	G15085_T 138.00 - RUSSELL 138KV CKT 1	108	118	0.85002	109.26	P12:115:SPS:T54.1.KIRBY.SHM(520)
FDNS	00NR	0	16WP	G15_085	FROM->TO	G15085_T 138.00 - RUSSELL 138KV CKT 1	108	118	0.85002	109.26	P12:115:SPS-AEPW:KIRBY3:SHAM3WT
FDNS	00NR	0	16WP	G15_085	FROM->TO	G15085_T 138.00 - RUSSELL 138KV CKT 1	108	118	0.85002	109.1395	SHAMROCK (SHAMRCK1) 115/69/14.4KV TRANSFORMER CKT 1
FDNS	00NR	0	16WP	G15_085	FROM->TO	G15085_T 138.00 - RUSSELL 138KV CKT 1	108	118	0.85002	109.1395	SHAMROCK (SHAMRCK1) 115/69/14.4KV TRANSFORMER CKT 1
FDNS	00NR	0	16WP	G15_085	FROM->TO	G15085_T 138.00 - RUSSELL 138KV CKT 1	108	118	0.85002	109.1289	MCLEAN RURAL SUB - SHAMROCK 115KV CKT 1
FDNS	00NR	0	16WP	G15_085	FROM->TO	G15085_T 138.00 - RUSSELL 138KV CKT 1	108	118	0.85002	109.1289	MCLEAN RURAL SUB - SHAMROCK 115KV CKT 1
FDNS	07ALL	0	20L	G15_085	FROM->TO	G15085_T 138.00 - RUSSELL 138KV CKT 1	108	118	0.849	108.9298	P12:115:SPS:T54.1.KIRBY.SHM(520)
FDNS	07ALL	0	20L	G15_085	FROM->TO	G15085_T 138.00 - RUSSELL 138KV CKT 1	108	118	0.849	108.9298	P12:115:SPS-AEPW:KIRBY3:SHAM3WT
FDNS	07NR	0	20L	G15_085	FROM->TO	G15085_T 138.00 - RUSSELL 138KV CKT 1	108	118	0.78261	108.88	MATHWSN7 345.00 - TATONGA7 345.00 345KV CKT 1
FDNS	07ALL	0	20L	G15_085	FROM->TO	G15085_T 138.00 - RUSSELL 138KV CKT 1	108	118	0.849	108.847	MCLEAN RURAL SUB - SHAMROCK 115KV CKT 1
FDNS	07ALL	0	20L	G15_085	FROM->TO	G15085_T 138.00 - RUSSELL 138KV CKT 1	108	118	0.849	108.847	MCLEAN RURAL SUB - SHAMROCK 115KV CKT 1
FDNS	07ALL	0	20L	G15_085	FROM->TO	G15085_T 138.00 - RUSSELL 138KV CKT 1	108	118	0.849	108.8422	SHAMROCK (SHAMRCK1) 115/69/14.4KV TRANSFORMER CKT 1
FDNS	07ALL	0	20L	G15_085	FROM->TO	G15085_T 138.00 - RUSSELL 138KV CKT 1	108	118	0.849	108.8422	SHAMROCK (SHAMRCK1) 115/69/14.4KV TRANSFORMER CKT 1
FDNS	07NR	0	20L	G15_085	FROM->TO	G15085_T 138.00 - RUSSELL 138KV CKT 1	108	118	0.85036	108.8378	MCCLELLAN SUB - MCLEAN RURAL SUB 115KV CKT 1
FDNS	07ALL	0	20WP	G15_085	FROM->TO	G15085_T 138.00 - RUSSELL 138KV CKT 1	108	118	0.83126	108.7577	ELDORADO - LAKE PAULINE 69KV CKT 1
FDNS	07ALL	0	20WP	G15_085	FROM->TO	G15085_T 138.00 - RUSSELL 138KV CKT 1	108	118	0.83126	108.7575	LAKE PAULINE (LAKEPAUL) 138/69/14.4KV TRANSFORMER CKT 1
FDNS	07ALL	0	20WP	G15_085	FROM->TO	G15085_T 138.00 - RUSSELL 138KV CKT 1	108	118	0.83126	108.7575	LAKE PAULINE (LAKEPAUL) 138/69/14.4KV TRANSFORMER CKT 1
FDNS	07NR	0	20L	G15_085	FROM->TO	G15085_T 138.00 - RUSSELL 138KV CKT 1	108	118	0.85036	108.7206	KIRBY SWITCHING STATION - MCCLELLAN SUB 115KV CKT 1
FDNS	07NR	0	20L	G15_085	FROM->TO	G15085_T 138.00 - RUSSELL 138KV CKT 1	108	118	0.80418	108.7083	P12:69:AEPW:NWMEMPH2:CHLDR2WT
FDNS	07ALL	0	16WP	G15_085	FROM->TO	G15085_T 138.00 - RUSSELL 138KV CKT 1	108	118	0.84882	108.6224	HOLLIS TAP - WELLINGTON 138KV CKT 1
FDNS	07ALL	0	20L	G15_085	FROM->TO	G15085_T 138.00 - RUSSELL 138KV CKT 1	108	118	0.78132	108.6123	CHISHOLM7 345.00 - GRACEMONT 345KV CKT 1

SOLUTION	GROUP	SCENARIO	SEASON	SOURCE	DIRECTION	MONITORED ELEMENT	RATEA (MVA)	RATEB(MVA)	TDF	TC%LOADING (% MVA)	CONTINGENCY
FDNS	07ALL	0	20L	G15_085	FROM->TO	G15085_T 138.00 - RUSSELL 138KV CKT 1	108	118	0.83071	108.6086	ELDORADO - LAKE PAULINE 69KV CKT 1
FDNSLock	07ALL	0	20L	G15_085	FROM->TO	G15085_T 138.00 - RUSSELL 138KV CKT 1	108	118	0.83071	108.608	LAKE PAULINE (LAKEPAUL) 138/69/14.4KV TRANSFORMER CKT 1
FDNSLock	07ALL	0	20L	G15_085	FROM->TO	G15085_T 138.00 - RUSSELL 138KV CKT 1	108	118	0.83071	108.608	LAKE PAULINE (LAKEPAUL) 138/69/14.4KV TRANSFORMER CKT 1
FDNS	07NR	0	20L	G15_085	FROM->TO	G15085_T 138.00 - RUSSELL 138KV CKT 1	108	118	0.78243	108.5576	GEN562685 1-G15_013_3 0.3550
FDNS	07NR	0	20L	G15_085	FROM->TO	G15085_T 138.00 - RUSSELL 138KV CKT 1	108	118	0.80418	108.4919	P12:69:AEPW:CHLDR2WT:MEMPHIS2
FDNS	07ALL	0	17G	G15_085	FROM->TO	G15085_T 138.00 - RUSSELL 138KV CKT 1	108	118	0.84881	108.4357	HOLLIS TAP - WELLINGTON 138KV CKT 1
FDNS	00NR	0	17SP	G15_085	FROM->TO	G15085_T 138.00 - RUSSELL 138KV CKT 1	108	118	0.78275	108.2739	P12:230:AEPW:ELKCITY6:SWEETWT6
FDNSLock	07NR	0	20L	G15_085	FROM->TO	G15085_T 138.00 - RUSSELL 138KV CKT 1	108	118	0.80418	108.2445	CHILDRESS (CHLDR2WT) 138/69/12.47KV TRANSFORMER CKT 1
FDNSLock	07NR	0	20L	G15_085	FROM->TO	G15085_T 138.00 - RUSSELL 138KV CKT 1	108	118	0.80418	108.2445	CHILDRESS (CHLDR2WT) 138/69/12.47KV TRANSFORMER CKT 1
FDNS	07NR	0	20L	G15_085	FROM->TO	G15085_T 138.00 - RUSSELL 138KV CKT 1	108	118	0.80418	108.2398	AMOCO TAP - CHILDRESS 69KV CKT 1
FDNS	07NR	0	20L	G15_085	FROM->TO	G15085_T 138.00 - RUSSELL 138KV CKT 1	108	118	0.77269	108.1624	SNYDER - SNYDER 138KV CKT 1
FDNS	07NR	0	20L	G15_085	FROM->TO	G15085_T 138.00 - RUSSELL 138KV CKT 1	108	118	0.77269	108.1624	SNYDER - SNYDER 138KV CKT 1
FDNS	07ALL	0	20L	G15_085	FROM->TO	G15085_T 138.00 - RUSSELL 138KV CKT 1	108	118	0.83071	108.0819	ELDORADO - ELDORADO JCT 69KV CKT 1
FDNS	07ALL	0	20WP	G15_085	FROM->TO	G15085_T 138.00 - RUSSELL 138KV CKT 1	108	118	0.77997	107.8999	BASE CASE
FDNS	00NR	0	20WP	G15_085	FROM->TO	G15085_T 138.00 - RUSSELL 138KV CKT 1	108	118	0.8506	107.8715	KIRBY SWITCHING STATION - MCCLELLAN SUB 115KV CKT 1
FDNS	07ALL	0	20WP	G15_085	FROM->TO	G15085_T 138.00 - RUSSELL 138KV CKT 1	108	118	0.83126	107.7941	ELDORADO - ELDORADO JCT 69KV CKT 1
FDNS	07NR	0	20L	G15_085	FROM->TO	G15085_T 138.00 - RUSSELL 138KV CKT 1	108	118	0.78463	107.7615	CHISHOLM7 345.00 () 345/230/13.2KV TRANSFORMER CKT 1
FDNS	00NR	0	17SP	G15_085	FROM->TO	G15085_T 138.00 - RUSSELL 138KV CKT 1	108	118	0.78409	107.5855	CHISHOLM6 230.00 - SWEETWATER 230KV CKT 1
FDNS	07ALL	0	20L	G15_085	FROM->TO	G15085_T 138.00 - RUSSELL 138KV CKT 1	108	118	0.849	107.4051	MCCLELLAN SUB - MCLEAN RURAL SUB 115KV CKT 1
FDNS	07ALL	0	20WP	G15_085	FROM->TO	G15085_T 138.00 - RUSSELL 138KV CKT 1	108	118	0.78181	107.3386	CHISHOLM7 345.00 - GRACEMONT 345KV CKT 1
FDNS	00NR	0	20WP	G15_085	FROM->TO	G15085_T 138.00 - RUSSELL 138KV CKT 1	108	118	0.8506	107.3126	MCCLELLAN SUB - MCLEAN RURAL SUB 115KV CKT 1
FDNS	07ALL	0	20L	G15_085	FROM->TO	G15085_T 138.00 - RUSSELL 138KV CKT 1	108	118	0.849	107.2871	KIRBY SWITCHING STATION - MCCLELLAN SUB 115KV CKT 1
FDNS	07ALL	0	20L	G15_085	FROM->TO	G15085_T 138.00 - RUSSELL 138KV CKT 1	108	118	0.83071	107.174	ELDORADO JCT - GYPSUM 69KV CKT 1
FDNS	00NR	0	16WP	G15_085	FROM->TO	G15085_T 138.00 - RUSSELL 138KV CKT 1	108	118	0.85002	107.1503	KIRBY SWITCHING STATION - MCCLELLAN SUB 115KV CKT 1
FDNS	00NR	0	20SP	G15_085	FROM->TO	G15085_T 138.00 - RUSSELL 138KV CKT 1	108	118	0.78285	106.8073	P12:230:AEPW:ELKCITY6:SWEETWT6
FDNS	00NR	0	17SP	G15_085	FROM->TO	G15085_T 138.00 - RUSSELL 138KV CKT 1	108	118	0.83474	106.723	ELDORADO - LAKE PAULINE 69KV CKT 1
FDNSLock	00NR	0	17SP	G15_085	FROM->TO	G15085_T 138.00 - RUSSELL 138KV CKT 1	108	118	0.83474	106.723	LAKE PAULINE (LAKEPAUL) 138/69/14.4KV TRANSFORMER CKT 1
FDNSLock	00NR	0	17SP	G15_085	FROM->TO	G15085_T 138.00 - RUSSELL 138KV CKT 1	108	118	0.83474	106.723	LAKE PAULINE (LAKEPAUL) 138/69/14.4KV TRANSFORMER CKT 1
FDNS	00NR	0	17SP	G15_085	FROM->TO	G15085_T 138.00 - RUSSELL 138KV CKT 1	108	118	0.85064	106.7031	HOLLIS TAP - WELLINGTON 138KV CKT 1
FDNS	07NR	0	20L	G15_085	FROM->TO	G15085_T 138.00 - RUSSELL 138KV CKT 1	108	118	0.78261	106.6382	G11_051T 345.00 - TATONGA7 345.00 345KV CKT 1
FDNS	00NR	0	16WP	G15_085	FROM->TO	G15085_T 138.00 - RUSSELL 138KV CKT 1	108	118	0.85002	106.5451	MCCLELLAN SUB - MCLEAN RURAL SUB 115KV CKT 1
FDNS	07ALL	0	20WP	G15_085	FROM->TO	G15085_T 138.00 - RUSSELL 138KV CKT 1	108	118	0.83126	106.48	ELDORADO JCT - GYPSUM 69KV CKT 1
FDNS	07ALL	0	20WP	G15_085	FROM->TO	G15085_T 138.00 - RUSSELL 138KV CKT 1	108	118	0.84922	106.2439	SHAMROCK - WELLINGTON 138KV CKT 1
FDNS	07ALL	0	20WP	G15_085	FROM->TO	G15085_T 138.00 - RUSSELL 138KV CKT 1	108	118	0.84922	106.0384	SHAMROCK (SHAMRCK2) 138/69/14.4KV TRANSFORMER CKT 1
FDNS	07ALL	0	20WP	G15_085	FROM->TO	G15085_T 138.00 - RUSSELL 138KV CKT 1	108	118	0.84922	106.0384	SHAMROCK (SHAMRCK2) 138/69/14.4KV TRANSFORMER CKT 1
FDNS	00NR	0	20SP	G15_085	FROM->TO	G15085_T 138.00 - RUSSELL 138KV CKT 1	108	118	0.83485	105.9303	ELDORADO - LAKE PAULINE 69KV CKT 1
FDNS	07ALL	0	20L	G15_085	FROM->TO	G15085_T 138.00 - RUSSELL 138KV CKT 1	108	118	0.80175	105.9281	P12:69:AEPW:NWMEMPH2:CHLDR2WT
FDNSLock	00NR	0	20SP	G15_085	FROM->TO	G15085_T 138.00 - RUSSELL 138KV CKT 1	108	118	0.83485	105.9279	LAKE PAULINE (LAKEPAUL) 138/69/14.4KV TRANSFORMER CKT 1
FDNS	00NR	0	20SP	G15_085	FROM->TO	G15085_T 138.00 - RUSSELL 138KV CKT 1	108	118	0.78419	105.8678	CHISHOLM6 230.00 - SWEETWATER 230KV CKT 1
FDNS	07ALL	0	20L	G15_085	FROM->TO	G15085_T 138.00 - RUSSELL 138KV CKT 1	108	118	0.80175	105.724	P12:69:AEPW:CHLDR2WT:MEMPHIS2
FDNS	00NR	0	20SP	G15_085	FROM->TO	G15085_T 138.00 - RUSSELL 138KV CKT 1	108	118	0.85068	105.6164	HOLLIS TAP - WELLINGTON 138KV CKT 1
FDNS	07ALL	0	20L	G15_085	FROM->TO	G15085_T 138.00 - RUSSELL 138KV CKT 1	108	118	0.83071	105.5482	GYPSUM - RUSSELL 69KV CKT 1
FDNS	07ALL	0	20L	G15_085	FROM->TO	G15085_T 138.00 - RUSSELL 138KV CKT 1	108	118	0.80175	105.5037	AMOCO TAP - CHILDRESS 69KV CKT 1
FDNSLock	07ALL	0	20L	G15_085	FROM->TO	G15085_T 138.00 - RUSSELL 138KV CKT 1	108	118	0.80175	105.5033	CHILDRESS (CHLDR2WT) 138/69/12.47KV TRANSFORMER CKT 1
FDNSLock	07ALL	0	20L	G15_085	FROM->TO	G15085_T 138.00 - RUSSELL 138KV CKT 1	108	118	0.80175	105.5033	CHILDRESS (CHLDR2WT) 138/69/12.47KV TRANSFORMER CKT 1
FDNS	07ALL	0	20L	G15_085	FROM->TO	G15085_T 138.00 - RUSSELL 138KV CKT 1	108	118	0.7795	105.1975	GEN562685 1-G15_013_3 0.3550
FDNS	07ALL	0	20L	G15_085	FROM->TO	G15085_T 138.00 - RUSSELL 138KV CKT 1	108	118	0.76979	105.1341	SNYDER - SNYDER 138KV CKT 1
FDNS	07ALL	0	20L	G15_085	FROM->TO	G15085_T 138.00 - RUSSELL 138KV CKT 1	108	118	0.76979	105.1341	SNYDER - SNYDER 138KV CKT 1
FDNS	07ALL	0	20L	G15_085	FROM->TO	G15085_T 138.00 - RUSSELL 138KV CKT 1	108	118	0.77929	105.1206	MATHWSN7 345.00 - TATONGA7 345.00 345KV CKT 1
FDNS	07NR	0	17G	G15_085	FROM->TO	G15085_T 138.00 - RUSSELL 138KV CKT 1	108	118	0.85002	105.1164	SHAMROCK - WELLINGTON 138KV CKT 1
FDNS	07ALL	0	20WP	G15_085	FROM->TO	G15085_T 138.00 - RUSSELL 138KV CKT 1	108	118	0.80214	105.11	P12:69:AEPW:NWMEMPH2:CHLDR2WT
FDNS	07NR	0	17G	G15_085	FROM->TO	G15085_T 138.00 - RUSSELL 138KV CKT 1	108	118	0.83392	105.0967	LAKE PAULINE (LAKEPAUL) 138/69/14.4KV TRANSFORMER CKT 1
FDNS	07NR	0	17G	G15_085	FROM->TO	G15085_T 138.00 - RUSSELL 138KV CKT 1	108	118	0.83392	105.0967	LAKE PAULINE (LAKEPAUL) 138/69/14.4KV TRANSFORMER CKT 1
FDNS	07NR	0	17G	G15_085	FROM->TO	G15085_T 138.00 - RUSSELL 138KV CKT 1	108	118	0.83392	105.0963	ELDORADO - LAKE PAULINE 69KV CKT 1
FDNS	07NR	0	17G	G15_085	FROM->TO	G15085_T 138.00 - RUSSELL 138KV CKT 1	108	118	0.85002	104.8996	SHAMROCK (SHAMRCK2) 138/69/14.4KV TRANSFORMER CKT 1
FDNS	07NR	0	17G	G15_085	FROM->TO	G15085_T 138.00 - RUSSELL 138KV CKT 1	108	118	0.85002	104.8996	SHAMROCK (SHAMRCK2) 138/69/14.4KV TRANSFORMER CKT 1
FDNS	07ALL	0	20L	G15_085	FROM->TO	G15085_T 138.00 - RUSSELL 138KV CKT 1	108	118	0.78132	104.7928	CHISHOLM7 345.00 () 345/230/13.2KV TRANSFORMER CKT 1
FDNS	00NR	0	17SP	G15_085	FROM->TO	G15085_T 138.00 - RUSSELL 138KV CKT 1	108	118	0.83474	104.7687	ELDORADO - ELDORADO JCT 69KV CKT 1
FDNS	07NR	0	17G	G15_085	FROM->TO	G15085_T 138.00 - RUSSELL 138KV CKT 1	108	118	0.78208	104.7655	BASE CASE
FDNS	07ALL	0	20WP	G15_085	FROM->TO	G15085_T 138.00 - RUSSELL 138KV CKT 1	108	118	0.80214	104.7421	P12:69:AEPW:CHLDR2WT:MEMPHIS2
FDNS	00NR	0	17SP	G15_085	FROM->TO	G15085_T 138.00 - RUSSELL 138KV CKT 1	108	118	0.78275	104.4259	G14-074T 345.00 - OKLAUNION 345KV CKT 1
FDNS	00NR	0	17SP	G15_085	FROM->TO	G15085_T 138.00 - RUSSELL 138KV CKT 1	108	118	0.78301	104.374	BASE CASE
FDNSLock	07ALL	0	20WP	G15_085	FROM->TO	G15085_T 138.00 - RUSSELL 138KV CKT 1	108	118	0.80214	104.3062	AMOCO TAP - CHILDRESS 69KV CKT 1
FDNSLock	07ALL	0	20WP	G15_085	FROM->TO	G15085_T 138.00 - RUSSELL 138KV CKT 1	108	118	0.80214	104.3058	CHILDRESS (CHLDR2WT) 138/69/12.47KV TRANSFORMER CKT 1
FDNS	07NR	0	17G	G15_085	FROM->TO	G15085_T 138.00 - RUSSELL 138KV CKT 1	108	118	0.83392	104.2001	ELDORADO - ELDORADO JCT 69KV CKT 1
FDNS	07ALL	0	16WP	G15_085	FROM->TO	G15085_T 138.00 - RUSSELL 138KV CKT 1	108	118	0.84882	104.1839	SHAMROCK - WELLINGTON 138KV CKT 1
FDNS	07ALL	0	16WP	G15_085	FROM->TO	G15085_T 138.00 - RUSSELL 138KV CKT 1	108	118	0.84882	103.9675	SHAMROCK (SHAMRCK2) 138/69/14.4KV TRANSFORMER CKT 1
FDNS	07ALL	0	16WP	G15_085	FROM->TO	G15085_T 138.00 - RUSSELL 138KV CKT 1	108	118	0.84882	103.9675	SHAMROCK (SHAMRCK2) 138/69/14.4KV TRANSFORMER CKT 1
FDNS	07ALL	0	17G	G15_085	FROM->TO	G15085_T 138.00 - RUSSELL 138KV CKT 1	108	118	0.84881	103.8554	SHAMROCK - WELLINGTON 138KV CKT 1
FDNS	00NR	0	20SP	G15_085	FROM->TO	G15085_T 138.00 - RUSSELL 138KV CKT 1	108	118	0.83485	103.7861	ELDORADO - ELDORADO JCT 69KV CKT 1
FDNS	00NR	0	17SP	G15_085	FROM->TO	G15085_T 138.00 - RUSSELL 138KV CKT 1	108	118	0.78321	103.7161	MATHWSN7 345.00 - TATONGA7 345.00 345KV CKT 1
FDNS	07ALL	0	20WP	G15_085	FROM->TO	G15085_T 138.00 - RUSSELL 138KV CKT 1	108	118	0.77975	103.6616	MATHWSN7 345.00 - TATONGA7 345.00 345KV CKT 1
FDNS	07ALL	0	20WP	G15_085	FROM->TO	G15085_T 138.00 - RUSSELL 138KV CKT 1	108	118	0.77997	103.6529	GEN562685 1-G15_013_3 0.3550
FDNS	07ALL	0	17G	G15_085	FROM->TO	G15085_T 138.00 - RUSSELL 138KV CKT 1	108	118	0.84881	103.6433	SHAMROCK (SHAMRCK2) 138/69/14.4KV TRANSFORMER CKT 1
FDNS	07ALL	0	20WP	G15_085	FROM->TO	G15085_T 138.00 - RUSSELL 138KV CKT 1	108	118	0.83126	103.5141	GYPSUM - RUSSELL 69KV CKT 1
FDNS	07NR	0	17G	G15_085	FROM->TO	G15085_T 138.00 - RUSSELL 138KV CKT 1	108	118	0.80382	103.4607	P12:69:AEPW:NWMEMPH2:CHLDR2WT
FDNS	07ALL	0	20WP	G15_085	FROM->TO	G15085_T 138.00 - RUSSELL 138KV CKT 1	108	118	0.78181	103.3966	CHISHOLM7 345.00 () 345/230/13.2KV TRANSFORMER CKT 1
FDNS	07ALL	0	16WP	G15_085	FROM->TO	G15085_T 138.00 - RUSSELL 138KV CKT 1	108	118	0.83097	103.2765	LAKE PAULINE (LAKEPAUL) 138/69/14.4KV TRANSFORMER CKT 1
FDNS	07ALL	0	16WP	G15_085	FROM->TO	G15085_T 138.00 - RUSSELL 138KV CKT 1	108	118	0.83097	103.2765	LAKE PAULINE (LAKEPAUL) 138/69/14.4KV TRANSFORMER CKT 1

SOLUTION	GROUP	SCENARIO	SEASON	SOURCE	DIRECTION	MONITORED ELEMENT	RATEA (MVA)	RATEB(MVA)	TDF	TC%LOADING (% MVA)	CONTINGENCY
FDNS	07ALL	0	16WP	G15_085	FROM->TO	G15085_T 138.00 - RUSSELL 138KV CKT 1	108	118	0.83097	103.2761	ELDORADO - LAKE PAULINE 69KV CKT 1
FDNS	00NR	0	20SP	G15_085	FROM->TO	G15085_T 138.00 - RUSSELL 138KV CKT 1	108	118	0.7831	103.0823	BASE CASE
FDNS	07ALL	0	20L	G15_085	FROM->TO	G15085_T 138.00 - RUSSELL 138KV CKT 1	108	118	0.80175	102.9938	P12:69:AEPW:NWMEMPH2:CLARDON2
FDNS	07ALL	0	20L	G15_085	FROM->TO	G15085_T 138.00 - RUSSELL 138KV CKT 1	108	118	0.77929	102.9342	G11_051T 345.00 - TATONGA7 345.00 345KV CKT 1
FDNS	07ALL	0	20L	G15_085	FROM->TO	G15085_T 138.00 - RUSSELL 138KV CKT 1	108	118	0.80175	102.8436	MEMPHIS - NW MEMPHIS 69KV CKT 1
FDNS	07ALL	0	20L	G15_085	FROM->TO	G15085_T 138.00 - RUSSELL 138KV CKT 1	108	118	0.80175	102.8405	NORTH MEMPHIS REC - NW MEMPHIS 69KV CKT 1
FDNS	07ALL	0	20WP	G15_085	FROM->TO	G15085_T 138.00 - RUSSELL 138KV CKT 1	108	118	0.77022	102.8401	SNYDER - SNYDER 138KV CKT 1
FDNS	07ALL	0	20WP	G15_085	FROM->TO	G15085_T 138.00 - RUSSELL 138KV CKT 1	108	118	0.77022	102.8401	SNYDER - SNYDER 138KV CKT 1
FDNS	07ALL	0	20L	G15_085	FROM->TO	G15085_T 138.00 - RUSSELL 138KV CKT 1	108	118	0.7795	102.6835	GEN511962 2-RKYRDGW2-1 0.7000
FDNS	07NR	0	17G	G15_085	FROM->TO	G15085_T 138.00 - RUSSELL 138KV CKT 1	108	118	0.83392	102.6303	ELDORADO JCT - GYPSUM 69KV CKT 1
FDNS	07ALL	0	20L	G15_085	FROM->TO	G15085_T 138.00 - RUSSELL 138KV CKT 1	108	118	0.7795	102.6191	GEN511963 1-RKYRDGW1-1 0.7000
FDNS	07ALL	0	16WP	G15_085	FROM->TO	G15085_T 138.00 - RUSSELL 138KV CKT 1	108	118	0.77951	102.6015	BASE CASE
FDNS	07NR	0	17G	G15_085	FROM->TO	G15085_T 138.00 - RUSSELL 138KV CKT 1	108	118	0.80382	102.6	AMOCO TAP - CHILDRESS 69KV CKT 1
FDNS	00NR	0	17SP	G15_085	FROM->TO	G15085_T 138.00 - RUSSELL 138KV CKT 1	108	118	0.80465	102.5433	P12:69:AEPW:NWMEMPH2:CHLDR2WT
FDNS	00NR	0	20SP	G15_085	FROM->TO	G15085_T 138.00 - RUSSELL 138KV CKT 1	108	118	0.78286	102.4944	G14-074T 345.00 - OKLAUNION 345KV CKT 1
FDNS	07ALL	0	25SP	G15_085	FROM->TO	G15085_T 138.00 - RUSSELL 138KV CKT 1	108	118	1	102.4316	G15085_T 138.00 - LAKE PAULINE 138KV CKT 1
FDNS	07NR	0	17G	G15_085	FROM->TO	G15085_T 138.00 - RUSSELL 138KV CKT 1	108	118	0.80382	102.428	P12:69:AEPW:CHLDR2WT:MEMPHIS2
FDNS	07ALL	0	20WP	G15_085	FROM->TO	G15085_T 138.00 - RUSSELL 138KV CKT 1	108	118	0.84922	102.3752	P12:115:SPS:T54.1.KIRBY.SHM(520)
FDNS	07ALL	0	20WP	G15_085	FROM->TO	G15085_T 138.00 - RUSSELL 138KV CKT 1	108	118	0.84922	102.3752	P12:115:SPS-AEPW:KIRBY3:SHAM3WT
FDNS	07ALL	0	16WP	G15_085	FROM->TO	G15085_T 138.00 - RUSSELL 138KV CKT 1	108	118	0.83097	102.3156	ELDORADO - ELDORADO JCT 69KV CKT 1
FDNS	00NR	0	20SP	G15_085	FROM->TO	G15085_T 138.00 - RUSSELL 138KV CKT 1	108	118	0.7833	102.2824	MATHWSN7 345.00 - TATONGA7 345.00 345KV CKT 1
FDNS	07ALL	0	20WP	G15_085	FROM->TO	G15085_T 138.00 - RUSSELL 138KV CKT 1	108	118	0.84922	102.2055	MCLEAN RURAL SUB - SHAMROCK 115KV CKT 1
FDNS	07ALL	0	20WP	G15_085	FROM->TO	G15085_T 138.00 - RUSSELL 138KV CKT 1	108	118	0.84922	102.2055	MCLEAN RURAL SUB - SHAMROCK 115KV CKT 1
FDNS	07ALL	0	20WP	G15_085	FROM->TO	G15085_T 138.00 - RUSSELL 138KV CKT 1	108	118	0.77669	102.205	CHISHOLM6 230.00 - ELK CITY 230KV 230KV CKT 1
FDNS	07ALL	0	20WP	G15_085	FROM->TO	G15085_T 138.00 - RUSSELL 138KV CKT 1	108	118	0.77669	102.2007	ELK CITY 230KV (ELKCTY-6) 230/138/13.8KV TRANSFORMER CKT 1
FDNS	07ALL	0	20WP	G15_085	FROM->TO	G15085_T 138.00 - RUSSELL 138KV CKT 1	108	118	0.77669	102.2007	ELK CITY 230KV (ELKCTY-6) 230/138/13.8KV TRANSFORMER CKT 1
FDNS	07ALL	0	20SP	G15_085	FROM->TO	G15085_T 138.00 - RUSSELL 138KV CKT 1	108	118	1	102.1938	G15085_T 138.00 - LAKE PAULINE 138KV CKT 1
FDNS	00NR	0	25SP	G15_085	FROM->TO	G15085_T 138.00 - RUSSELL 138KV CKT 1	108	118	1	102.1277	G15085_T 138.00 - LAKE PAULINE 138KV CKT 1
FDNS	07ALL	0	17G	G15_085	FROM->TO	G15085_T 138.00 - RUSSELL 138KV CKT 1	108	118	1	102.1167	G15085_T 138.00 - LAKE PAULINE 138KV CKT 1
FDNSLock	00NR	0	17SP	G15_085	FROM->TO	G15085_T 138.00 - RUSSELL 138KV CKT 1	108	118	0.80465	102.0937	P12:69:AEPW:CHLDR2WT:MEMPHIS2
FDNS	07ALL	0	20WP	G15_085	FROM->TO	G15085_T 138.00 - RUSSELL 138KV CKT 1	108	118	0.77975	102.0935	G11_051T 345.00 - TATONGA7 345.00 345KV CKT 1
FDNS	07NR	0	17G	G15_085	FROM->TO	G15085_T 138.00 - RUSSELL 138KV CKT 1	108	118	0.78432	102.085	CHISHOLM7 345.00 - GRACEMONT 345KV CKT 1
FDNS	07ALL	0	17SP	G15_085	FROM->TO	G15085_T 138.00 - RUSSELL 138KV CKT 1	108	118	1	102.0767	G15085_T 138.00 - LAKE PAULINE 138KV CKT 1
FDNS	00NR	0	20WP	G15_085	FROM->TO	G15085_T 138.00 - RUSSELL 138KV CKT 1	108	118	1	102.0628	G15085_T 138.00 - LAKE PAULINE 138KV CKT 1
FDNS	00NR	0	17SP	G15_085	FROM->TO	G15085_T 138.00 - RUSSELL 138KV CKT 1	108	118	0.78321	102.0446	G11_051T 345.00 - TATONGA7 345.00 345KV CKT 1
FDNS	07ALL	0	20WP	G15_085	FROM->TO	G15085_T 138.00 - RUSSELL 138KV CKT 1	108	118	0.84922	102.027	SHAMROCK (SHAMRCK1) 115/69/14.4KV TRANSFORMER CKT 1
FDNS	07ALL	0	20WP	G15_085	FROM->TO	G15085_T 138.00 - RUSSELL 138KV CKT 1	108	118	0.84922	102.027	SHAMROCK (SHAMRCK1) 115/69/14.4KV TRANSFORMER CKT 1
FDNSLock	07NR	0	17G	G15_085	FROM->TO	G15085_T 138.00 - RUSSELL 138KV CKT 1	108	118	0.80382	102.0046	CHILDRESS (CHLDR2WT) 138/69/12.47KV TRANSFORMER CKT 1
FDNS	07ALL	0	16WP	G15_085	FROM->TO	G15085_T 138.00 - RUSSELL 138KV CKT 1	108	118	1	101.9905	G15085_T 138.00 - LAKE PAULINE 138KV CKT 1
FDNS	00NR	0	20SP	G15_085	FROM->TO	G15085_T 138.00 - RUSSELL 138KV CKT 1	108	118	1	101.9728	G15085_T 138.00 - LAKE PAULINE 138KV CKT 1
FDNS	00NR	0	16WP	G15_085	FROM->TO	G15085_T 138.00 - RUSSELL 138KV CKT 1	108	118	1	101.9673	G15085_T 138.00 - LAKE PAULINE 138KV CKT 1
FDNS	07NR	0	17G	G15_085	FROM->TO	G15085_T 138.00 - RUSSELL 138KV CKT 1	108	118	1	101.949	G15085_T 138.00 - LAKE PAULINE 138KV CKT 1
FDNSLock	00NR	0	17SP	G15_085	FROM->TO	G15085_T 138.00 - RUSSELL 138KV CKT 1	108	118	0.80465	101.9465	CHILDRESS (CHLDR2WT) 138/69/12.47KV TRANSFORMER CKT 1
FDNSLock	00NR	0	17SP	G15_085	FROM->TO	G15085_T 138.00 - RUSSELL 138KV CKT 1	108	118	0.80465	101.9465	CHILDRESS (CHLDR2WT) 138/69/12.47KV TRANSFORMER CKT 1
FDNS	00NR	0	17SP	G15_085	FROM->TO	G15085_T 138.00 - RUSSELL 138KV CKT 1	108	118	1	101.8921	G15085_T 138.00 - LAKE PAULINE 138KV CKT 1
FDNS	07ALL	0	16WP	G15_085	FROM->TO	G15085_T 138.00 - RUSSELL 138KV CKT 1	108	118	0.78145	101.8648	CHISHOLM7 345.00 - GRACEMONT 345KV CKT 1
FDNS	00NR	0	17SP	G15_085	FROM->TO	G15085_T 138.00 - RUSSELL 138KV CKT 1	108	118	0.83474	101.7145	ELDORADO JCT - GYPSUM 69KV CKT 1
FDNS	00NR	0	20SP	G15_085	FROM->TO	G15085_T 138.00 - RUSSELL 138KV CKT 1	108	118	0.80473	101.6451	P12:69:AEPW:NWMEMPH2:CHLDR2WT
FDNS	07ALL	0	20WP	G15_085	FROM->TO	G15085_T 138.00 - RUSSELL 138KV CKT 1	108	118	0.77975	101.6143	G11_051T 345.00 - WOODWARD DISTRICT EHV 345KV CKT 1
FDNS	07ALL	0	20WP	G15_085	FROM->TO	G15085_T 138.00 - RUSSELL 138KV CKT 1	108	118	0.7785	101.5507	G14-074T 345.00 - OKLAUNION 345KV CKT 1
FDNSLock	00NR	0	17SP	G15_085	FROM->TO	G15085_T 138.00 - RUSSELL 138KV CKT 1	108	118	0.80465	101.4622	AMOCO TAP - CHILDRESS 69KV CKT 1
FDNS	07ALL	0	17G	G15_085	FROM->TO	G15085_T 138.00 - RUSSELL 138KV CKT 1	108	118	0.83091	101.4537	ELDORADO - LAKE PAULINE 69KV CKT 1
FDNS	07ALL	0	17G	G15_085	FROM->TO	G15085_T 138.00 - RUSSELL 138KV CKT 1	108	118	0.83091	101.4523	LAKE PAULINE (LAKEPAUL) 138/69/14.4KV TRANSFORMER CKT 1
FDNS	07ALL	0	17G	G15_085	FROM->TO	G15085_T 138.00 - RUSSELL 138KV CKT 1	108	118	0.77948	101.3626	BASE CASE
FDNS	00NR	0	20SP	G15_085	FROM->TO	G15085_T 138.00 - RUSSELL 138KV CKT 1	108	118	0.80473	101.1717	P12:69:AEPW:CHLDR2WT:MEMPHIS2
FDNS	07NR	0	20L	G15_085	FROM->TO	G15085_T 138.00 - RUSSELL 138KV CKT 1	108	118	0.74358	101.157	OMPA-ALTUS PARK - OMPVET 138KV CKT 1
FDNS	07ALL	0	20WP	G15_085	FROM->TO	G15085_T 138.00 - RUSSELL 138KV CKT 1	108	118	0.77997	101.122	GEN511962 2-RKYRDGW2-1 0.7000
FDNS	07NR	0	17G	G15_085	FROM->TO	G15085_T 138.00 - RUSSELL 138KV CKT 1	108	118	0.85002	101.1119	P12:115:SPS:T54.1.KIRBY.SHM(520)
FDNS	07NR	0	17G	G15_085	FROM->TO	G15085_T 138.00 - RUSSELL 138KV CKT 1	108	118	0.85002	101.1119	P12:115:SPS-AEPW:KIRBY3:SHAM3WT
FDNS	00NR	0	17SP	G15_085	FROM->TO	G15085_T 138.00 - RUSSELL 138KV CKT 1	108	118	0.78409	101.1056	STLN-DEMARC6 - SWEETWATER 230KV CKT 1
FDNS	07ALL	0	16WP	G15_085	FROM->TO	G15085_T 138.00 - RUSSELL 138KV CKT 1	108	118	0.80169	101.1044	P12:69:AEPW:NWMEMPH2:CHLDR2WT
FDNS	00NR	0	17SP	G15_085	FROM->TO	G15085_T 138.00 - RUSSELL 138KV CKT 1	108	118	0.78409	101.0828	STATELINE INTERCHANGE - STLN-DEMARC6 230KV CKT 1
FDNS	00NR	0	17SP	G15_085	FROM->TO	G15085_T 138.00 - RUSSELL 138KV CKT 1	108	118	0.78409	101.0764	P12:230:AEPW-SPS:SWEETWT6:WHEELER 6
FDNS	07NR	0	20L	G15_085	FROM->TO	G15085_T 138.00 - RUSSELL 138KV CKT 1	108	118	0.76077	101.0731	RUSSELL (RUSSELL) 138/69/13.8KV TRANSFORMER CKT 1
FDNS	07ALL	0	16WP	G15_085	FROM->TO	G15085_T 138.00 - RUSSELL 138KV CKT 1	108	118	0.83097	101.0178	ELDORADO JCT - GYPSUM 69KV CKT 1
FDNS	00NR	0	20SP	G15_085	FROM->TO	G15085_T 138.00 - RUSSELL 138KV CKT 1	108	118	0.80473	100.9829	CHILDRESS (CHLDR2WT) 138/69/12.47KV TRANSFORMER CKT 1
FDNS	00NR	0	20SP	G15_085	FROM->TO	G15085_T 138.00 - RUSSELL 138KV CKT 1	108	118	0.80473	100.9829	CHILDRESS (CHLDR2WT) 138/69/12.47KV TRANSFORMER CKT 1
FDNS	07NR	0	17G	G15_085	FROM->TO	G15085_T 138.00 - RUSSELL 138KV CKT 1	108	118	0.85002	100.9822	MCLEAN RURAL SUB - SHAMROCK 115KV CKT 1
FDNS	07NR	0	17G	G15_085	FROM->TO	G15085_T 138.00 - RUSSELL 138KV CKT 1	108	118	0.85002	100.9822	MCLEAN RURAL SUB - SHAMROCK 115KV CKT 1
FDNS	07NR	0	17G	G15_085	FROM->TO	G15085_T 138.00 - RUSSELL 138KV CKT 1	108	118	0.85002	100.9819	SHAMROCK (SHAMRCK1) 115/69/14.4KV TRANSFORMER CKT 1
FDNS	07NR	0	17G	G15_085	FROM->TO	G15085_T 138.00 - RUSSELL 138KV CKT 1	108	118	0.85002	100.9819	SHAMROCK (SHAMRCK1) 115/69/14.4KV TRANSFORMER CKT 1
FDNS	07NR	0	20L	G15_085	FROM->TO	G15085_T 138.00 - RUSSELL 138KV CKT 1	108	118	0.78334	100.9088	P12:230:AEPW-SPS:SWEETWT6:WHEELER 6
FDNS	07NR	0	20L	G15_085	FROM->TO	G15085_T 138.00 - RUSSELL 138KV CKT 1	108	118	0.78334	100.9084	STATELINE INTERCHANGE - STLN-DEMARC6 230KV CKT 1
FDNS	07NR	0	20L	G15_085	FROM->TO	G15085_T 138.00 - RUSSELL 138KV CKT 1	108	118	0.78334	100.8948	STLN-DEMARC6 - SWEETWATER 230KV CKT 1
FDNS	07NR	0	17G	G15_085	FROM->TO	G15085_T 138.00 - RUSSELL 138KV CKT 1	108	118	0.78208	100.8733	GEN562685 1-G15_013_3 0.3550
FDNS	07NR	0	20L	G15_085	FROM->TO	G15085_T 138.00 - RUSSELL 138KV CKT 1	108	118	0.77763	100.8372	ANADARKO - BLUCAN5 4 138.00 138KV CKT 1
FDNS	07ALL	0	16WP	G15_085	FROM->TO	G15085_T 138.00 - RUSSELL 138KV CKT 1	108	118	0.80169	100.7413	P12:69:AEPW:CHLDR2WT:MEMPHIS2
FDNS	07ALL	0	17SP	G15_085	FROM->TO	G15085_T 138.00 - RUSSELL 138KV CKT 1	108	118	0.84933	100.6497	HOLLIS TAP - WELLINGTON 138KV CKT 1
FDNS	00NR	0	20SP	G15_085	FROM->TO	G15085_T 138.00 - RUSSELL 138KV CKT 1	108	118	0.7833	100.6393	G11_051T 345.00 - TATONGA7 345.00 345KV CKT 1

SOLUTION	GROUP	SCENARIO	SEASON	SOURCE	DIRECTION	MONITORED ELEMENT	RATEA (MVA)	RATEB(MVA)	TDF	TC%LOADING (% MVA)	CONTINGENCY
FDNS	00NR	0	20SP	G15_085	FROM->TO	G15085_T 138.00 - RUSSELL 138KV CKT 1	108	118	0.80473	100.5869	AMOCO TAP - CHILDRESS 69KV CKT 1
FDNS	07NR	0	20L	G15_085	FROM->TO	G15085_T 138.00 - RUSSELL 138KV CKT 1	108	118	0.78243	100.5703	GEN523971 1-HARRINGTON GEN #1 24 KV
FDNS	07NR	0	20L	G15_085	FROM->TO	G15085_T 138.00 - RUSSELL 138KV CKT 1	108	118	0.78243	100.5701	GEN523972 1-HARRINGTON GEN #2 24 KV
FDNS	07NR	0	20L	G15_085	FROM->TO	G15085_T 138.00 - RUSSELL 138KV CKT 1	108	118	0.78243	100.5701	GEN523973 1-HARRINGTON GEN #3 24 KV
FDNS	07NR	0	17G	G15_085	FROM->TO	G15085_T 138.00 - RUSSELL 138KV CKT 1	108	118	0.77201	100.5604	SNYDER - SNYDER 138KV CKT 1
FDNS	07NR	0	17G	G15_085	FROM->TO	G15085_T 138.00 - RUSSELL 138KV CKT 1	108	118	0.77201	100.5604	SNYDER - SNYDER 138KV CKT 1
FDNS	07NR	0	20L	G15_085	FROM->TO	G15085_T 138.00 - RUSSELL 138KV CKT 1	108	118	0.74358	100.5596	ALTUS JUNCTION - OMPA-ALTUS PARK 138KV CKT 1
FDNS	07NR	0	20L	G15_085	FROM->TO	G15085_T 138.00 - RUSSELL 138KV CKT 1	108	118	0.74358	100.5596	ALTUS JUNCTION - OMPA-ALTUS PARK 138KV CKT 1
FDNS	07ALL	0	17G	G15_085	FROM->TO	G15085_T 138.00 - RUSSELL 138KV CKT 1	108	118	0.83091	100.5516	ELDORADO - ELDORADO JCT 69KV CKT 1
FDNS	00NR	0	17SP	G15_085	FROM->TO	G15085_T 138.00 - RUSSELL 138KV CKT 1	108	118	0.78301	100.439	GEN562685 1-G15_013_3 0.3550
FDNS	00NR	0	20SP	G15_085	FROM->TO	G15085_T 138.00 - RUSSELL 138KV CKT 1	108	118	0.83485	100.4358	ELDORADO JCT - GYPSUM 69KV CKT 1
FDNS	07ALL	0	16WP	G15_085	FROM->TO	G15085_T 138.00 - RUSSELL 138KV CKT 1	108	118	0.84882	100.3548	P12:115:SPS:T54.1.KIRBY.SHM(520)
FDNS	07ALL	0	16WP	G15_085	FROM->TO	G15085_T 138.00 - RUSSELL 138KV CKT 1	108	118	0.84882	100.3548	P12:115:SPS-AEPW:KIRBY3:SHAM3WT
FDNSLock	07ALL	0	16WP	G15_085	FROM->TO	G15085_T 138.00 - RUSSELL 138KV CKT 1	108	118	0.80169	100.3213	AMOCO TAP - CHILDRESS 69KV CKT 1
FDNSLock	07ALL	0	16WP	G15_085	FROM->TO	G15085_T 138.00 - RUSSELL 138KV CKT 1	108	118	0.80169	100.3206	CHILDRESS (CHLDR2WT) 138/69/12.47KV TRANSFORMER CKT 1
FDNS	07ALL	0	17G	G15_085	FROM->TO	G15085_T 138.00 - RUSSELL 138KV CKT 1	108	118	0.78142	100.2973	CHISHOLM7 345.00 - GRACEMONT 345KV CKT 1
FDNS	07ALL	0	16WP	G15_085	FROM->TO	G15085_T 138.00 - RUSSELL 138KV CKT 1	108	118	0.84882	100.2069	MCLEAN RURAL SUB - SHAMROCK 115KV CKT 1
FDNS	07ALL	0	16WP	G15_085	FROM->TO	G15085_T 138.00 - RUSSELL 138KV CKT 1	108	118	0.84882	100.2069	MCLEAN RURAL SUB - SHAMROCK 115KV CKT 1
FDNS	07ALL	0	16WP	G15_085	FROM->TO	G15085_T 138.00 - RUSSELL 138KV CKT 1	108	118	0.84882	100.2057	SHAMROCK (SHAMRCK1) 115/69/14.4KV TRANSFORMER CKT 1
FDNS	07ALL	0	16WP	G15_085	FROM->TO	G15085_T 138.00 - RUSSELL 138KV CKT 1	108	118	0.84882	100.2057	SHAMROCK (SHAMRCK1) 115/69/14.4KV TRANSFORMER CKT 1
FDNS	07NR	0	17G	G15_085	FROM->TO	G15085_T 138.00 - RUSSELL 138KV CKT 1	108	118	0.78229	100.077	MATHWSN7 345.00 - TATONGA7 345.00 345KV CKT 1
FDNS	00NR	0	17SP	G15_085	FROM->TO	G15085_T 138.00 - RUSSELL 138KV CKT 1	108	118	0.78312	100	GRAPEVINE INTERCHANGE - STATELINE INTERCHANGE 230KV CKT 1
FDNS	00NR	0	17SP	G15_085	FROM->TO	G15085_T 138.00 - RUSSELL 138KV CKT 1	108	118	0.78312	100	GRAPEVINE INTERCHANGE - STATELINE INTERCHANGE 230KV CKT 1
FDNS	07NR	0	17G	G15_085	FROM->TO	G15085_T 138.00 - RUSSELL 138KV CKT 1	108	118	0.83392	99.7	GYPSUM - RUSSELL 69KV CKT 1
FDNS	00NR	0	17SP	G15_085	FROM->TO	G15085_T 138.00 - RUSSELL 138KV CKT 1	108	118	0.85064	99.7	SHAMROCK - WELLINGTON 138KV CKT 1
FDNS	07NR	0	20L	G15_085	FROM->TO	G15085_T 138.00 - RUSSELL 138KV CKT 1	108	118	0.77484	99.7	CARNEGIE - HOBART JUNCTION 138KV CKT 1
FDNS	07NR	0	20L	G15_085	FROM->TO	G15085_T 138.00 - RUSSELL 138KV CKT 1	108	118	0.77484	99.7	CARNEGIE - SOUTHWESTERN STATION 138KV CKT 1
FDNS	07NR	0	20L	G15_085	FROM->TO	G15085_T 138.00 - RUSSELL 138KV CKT 1	108	118	0.77469	99.7	P12:138:AEPW:S.W.S.-4:L.E.S.-4
FDNS	00NR	0	17SP	G15_085	FROM->TO	G15085_T 138.00 - RUSSELL 138KV CKT 1	108	118	0.78321	99.6	G11_051T 345.00 - WOODWARD DISTRICT EHV 345KV CKT 1
FDNS	07NR	0	20L	G15_085	FROM->TO	G15085_T 138.00 - RUSSELL 138KV CKT 1	108	118	0.77484	99.6	P12:138:AEPW:S.W.S.-4:HOB-JCT4
FDNS	07NR	0	17G	G15_085	FROM->TO	G15085_T 138.00 - RUSSELL 138KV CKT 1	108	118	0.77863	99.5	CHISHOLM6 230.00 - ELK CITY 230KV 230KV CKT 1
FDNS	07NR	0	17G	G15_085	FROM->TO	G15085_T 138.00 - RUSSELL 138KV CKT 1	108	118	0.77863	99.5	ELK CITY 230KV (ELKCTY-6) 230/138/13.8KV TRANSFORMER CKT 1
FDNS	07NR	0	17G	G15_085	FROM->TO	G15085_T 138.00 - RUSSELL 138KV CKT 1	108	118	0.77863	99.5	ELK CITY 230KV (ELKCTY-6) 230/138/13.8KV TRANSFORMER CKT 1
FDNS	00NR	0	17SP	G15_085	FROM->TO	G15085_T 138.00 - RUSSELL 138KV CKT 1	108	118	0.85064	99.5	SHAMROCK (SHAMRCK2) 138/69/14.4KV TRANSFORMER CKT 1
FDNS	00NR	0	17SP	G15_085	FROM->TO	G15085_T 138.00 - RUSSELL 138KV CKT 1	108	118	0.85064	99.5	SHAMROCK (SHAMRCK2) 138/69/14.4KV TRANSFORMER CKT 1
FDNSLock	07ALL	0	17G	G15_085	FROM->TO	G15085_T 138.00 - RUSSELL 138KV CKT 1	108	118	0.80166	99.5	CHILDRESS (CHLDR2WT) 138/69/12.47KV TRANSFORMER CKT 1
FDNS	00NR	0	20WP	G15_085	FROM->TO	GYPSUM - RUSSELL 69KV CKT 1	29	32	0.42772	226.0391	G15085_T 138.00 - RUSSELL 138KV CKT 1
FDNS	00NR	0	16WP	G15_085	FROM->TO	GYPSUM - RUSSELL 69KV CKT 1	29	32	0.42768	220.3269	G15085_T 138.00 - RUSSELL 138KV CKT 1
FDNS	07NR	0	20L	G15_085	FROM->TO	GYPSUM - RUSSELL 69KV CKT 1	22	27	0.42742	219.7915	G15085_T 138.00 - RUSSELL 138KV CKT 1
FDNS	07ALL	0	20L	G15_085	FROM->TO	GYPSUM - RUSSELL 69KV CKT 1	22	27	0.42541	210.4587	G15085_T 138.00 - RUSSELL 138KV CKT 1
FDNS	00NR	0	17SP	G15_085	FROM->TO	GYPSUM - RUSSELL 69KV CKT 1	22	27	0.42781	201.7365	G15085_T 138.00 - RUSSELL 138KV CKT 1
FDNS	07NR	0	17G	G15_085	FROM->TO	GYPSUM - RUSSELL 69KV CKT 1	22	27	0.42768	201.2715	G15085_T 138.00 - RUSSELL 138KV CKT 1
FDNS	00NR	0	20SP	G15_085	FROM->TO	GYPSUM - RUSSELL 69KV CKT 1	22	27	0.42782	199.5479	G15085_T 138.00 - RUSSELL 138KV CKT 1
FDNS	07ALL	0	17G	G15_085	FROM->TO	GYPSUM - RUSSELL 69KV CKT 1	22	27	0.42591	193.246	G15085_T 138.00 - RUSSELL 138KV CKT 1
FDNS	07ALL	0	20WP	G15_085	FROM->TO	GYPSUM - RUSSELL 69KV CKT 1	29	32	0.42574	177.5253	G15085_T 138.00 - RUSSELL 138KV CKT 1
FDNS	07ALL	0	16WP	G15_085	FROM->TO	GYPSUM - RUSSELL 69KV CKT 1	29	32	0.42595	169.0562	G15085_T 138.00 - RUSSELL 138KV CKT 1
FDNS	07ALL	0	17SP	G15_085	FROM->TO	GYPSUM - RUSSELL 69KV CKT 1	22	27	0.42595	163.9791	G15085_T 138.00 - RUSSELL 138KV CKT 1
FDNS	07ALL	0	20SP	G15_085	FROM->TO	GYPSUM - RUSSELL 69KV CKT 1	22	27	0.42591	161.58	G15085_T 138.00 - RUSSELL 138KV CKT 1
FDNS	00NR	0	25SP	G15_085	FROM->TO	GYPSUM - RUSSELL 69KV CKT 1	22	27	0.42756	141.9494	G15085_T 138.00 - RUSSELL 138KV CKT 1
FDNS	00NR	0	20WP	G15_085	FROM->TO	GYPSUM - RUSSELL 69KV CKT 1	29	32	0.21244	117.3719	ALTUS JUNCTION - RUSSELL 138KV CKT 1
FDNS	00NR	0	20WP	G15_085	FROM->TO	GYPSUM - RUSSELL 69KV CKT 1	29	32	0.21244	117.3719	ALTUS JUNCTION - RUSSELL 138KV CKT 1
FDNS	00NR	0	16WP	G15_085	FROM->TO	GYPSUM - RUSSELL 69KV CKT 1	29	32	0.21241	114.1723	ALTUS JUNCTION - RUSSELL 138KV CKT 1
FDNS	00NR	0	16WP	G15_085	FROM->TO	GYPSUM - RUSSELL 69KV CKT 1	29	32	0.21241	114.1723	ALTUS JUNCTION - RUSSELL 138KV CKT 1
FDNS	07NR	0	20L	G15_085	FROM->TO	GYPSUM - RUSSELL 69KV CKT 1	22	27	0.21226	112.0402	ALTUS JUNCTION - RUSSELL 138KV CKT 1
FDNS	07NR	0	20L	G15_085	FROM->TO	GYPSUM - RUSSELL 69KV CKT 1	22	27	0.21226	112.0402	ALTUS JUNCTION - RUSSELL 138KV CKT 1
FDNS	07ALL	0	25SP	G15_085	FROM->TO	GYPSUM - RUSSELL 69KV CKT 1	22	27	0.42601	111.4628	G15085_T 138.00 - RUSSELL 138KV CKT 1
FDNS	07ALL	0	20L	G15_085	FROM->TO	GYPSUM - RUSSELL 69KV CKT 1	22	27	0.21105	106.2065	ALTUS JUNCTION - RUSSELL 138KV CKT 1
FDNS	07ALL	0	20L	G15_085	FROM->TO	GYPSUM - RUSSELL 69KV CKT 1	22	27	0.21105	106.2065	ALTUS JUNCTION - RUSSELL 138KV CKT 1
FDNS	00NR	0	20WP	G15_085	FROM->TO	LAKE PAULINE (LAKEPAUL) 138/69/14.4KV TRANSFORMER CKT 1	63	69	0.42772	112.9373	G15085_T 138.00 - RUSSELL 138KV CKT 1
FDNS	00NR	0	20WP	G15_085	FROM->TO	LAKE PAULINE (LAKEPAUL) 138/69/14.4KV TRANSFORMER CKT 1	63	69	0.42772	111.5567	G15085_T 138.00 - RUSSELL 138KV CKT 1
FDNS	00NR	0	16WP	G15_085	FROM->TO	LAKE PAULINE (LAKEPAUL) 138/69/14.4KV TRANSFORMER CKT 1	63	69	0.42768	110.5116	G15085_T 138.00 - RUSSELL 138KV CKT 1
FDNS	00NR	0	16WP	G15_085	FROM->TO	LAKE PAULINE (LAKEPAUL) 138/69/14.4KV TRANSFORMER CKT 1	63	69	0.42768	109.0838	G15085_T 138.00 - RUSSELL 138KV CKT 1
FDNS	00NR	0	20WP	G15_085	TO->FROM	MATHWSN7 345.00 - TATONGA7 345.00 345KV CKT 1	1195	1195	0.02955	102.7399	THISTLE7 345.00 - WOODWARD DISTRICT EHV 345KV CKT 1
FDNS	00NR	0	20WP	G15_085	TO->FROM	MATHWSN7 345.00 - TATONGA7 345.00 345KV CKT 1	1195	1195	0.02955	102.7399	THISTLE7 345.00 - WOODWARD DISTRICT EHV 345KV CKT 1
FDNS	00NR	0	20WP	G15_085	TO->FROM	MATHWSN7 345.00 - TATONGA7 345.00 345KV CKT 1	1195	1195	0.02955	102.7399	THISTLE7 345.00 - WOODWARD DISTRICT EHV 345KV CKT 2
FDNS	00NR	0	20WP	G15_085	TO->FROM	MATHWSN7 345.00 - TATONGA7 345.00 345KV CKT 1	1195	1195	0.02955	102.7399	THISTLE7 345.00 - WOODWARD DISTRICT EHV 345KV CKT 2
FDNS	00NR	0	16WP	G15_085	TO->FROM	MATHWSN7 345.00 - TATONGA7 345.00 345KV CKT 1	1195	1195	0.031	101.0086	THISTLE7 345.00 - WOODWARD DISTRICT EHV 345KV CKT 1
FDNS	00NR	0	16WP	G15_085	TO->FROM	MATHWSN7 345.00 - TATONGA7 345.00 345KV CKT 1	1195	1195	0.031	101.0086	THISTLE7 345.00 - WOODWARD DISTRICT EHV 345KV CKT 1
FDNS	00NR	0	16WP	G15_085	TO->FROM	MATHWSN7 345.00 - TATONGA7 345.00 345KV CKT 1	1195	1195	0.031	101.0086	THISTLE7 345.00 - WOODWARD DISTRICT EHV 345KV CKT 2
FDNS	00NR	0	16WP	G15_085	TO->FROM	MATHWSN7 345.00 - TATONGA7 345.00 345KV CKT 1	1195	1195	0.031	101.0086	THISTLE7 345.00 - WOODWARD DISTRICT EHV 345KV CKT 2
FDNS	00NR	0	20WP	G15_085	TO->FROM	MATHWSN7 345.00 - TATONGA7 345.00 345KV CKT 1	1195	1195	0.0522	100.869	CIMARRON - MINCO 345KV CKT 1
FDNS	00NR	0	16WP	G15_085	TO->FROM	MATHWSN7 345.00 - TATONGA7 345.00 345KV CKT 1	1195	1195	0.03038	100.2694	P12:230:AEPW:ELKCITY6:SWEETWT6
FDNS	00NR	0	16WP	G15_085	FROM->TO	NAPLESTP 138.00 - PAYNE 138.00 138KV CKT 1	132	143	0.0559	158.4426	G14-057T 345.00 - SUNNYSIDE 345KV CKT 1
FDNS	00NR	0	16WP	G15_085	FROM->TO	NAPLESTP 138.00 - PAYNE 138.00 138KV CKT 1	132	143	0.05945	144.2618	CIMARRON - MINCO 345KV CKT 1
FDNS	00NR	0	16WP	G15_085	FROM->TO	NAPLESTP 138.00 - PAYNE 138.00 138KV CKT 1	132	143	0.0559	142.7232	G14-057T 345.00 - LAWTON EASTSIDE 345KV CKT 1
FDNS	00NR	0	17SP	G15_085	FROM->TO	NAPLESTP 138.00 - PAYNE 138.00 138KV CKT 1	132	143	0.05558	135.2234	G14-057T 345.00 - SUNNYSIDE 345KV CKT 1
FDNS	00NR	0	16WP	G15_085	FROM->TO	NAPLESTP 138.00 - PAYNE 138.00 138KV CKT 1	132	143	0.05945	132.5573	GRACEMONT - MINCO 345KV CKT 1
FDNS	00NR	0	16WP	G15_085	FROM->TO	NAPLESTP 138.00 - PAYNE 138.00 138KV CKT 1	132	143	0.04443	131.0989	CIMARRON - DRAPER LAKE 345KV CKT 1
FDNS	00NR	0	16WP	G15_085	FROM->TO	NAPLESTP 138.00 - PAYNE 138.00 138KV CKT 1	132	143	0.04807	130.8119	COMANCHE - LOCO 138KV CKT 1

SOLUTION	GROUP	SCENARIO	SEASON	SOURCE	DIRECTION	MONITORED ELEMENT	RATEA (MVA)	RATEB(MVA)	TDF	TC%LOADING (% MVA)	CONTINGENCY
FDNS	00NR	0	16WP	G15_085	FROM->TO	NAPLESTP 138.00 - PAYNE 138.00 138KV CKT 1	132	143	0.04483	129.1518	P12:138:WFEC:MSL02
FDNS	00NR	0	16WP	G15_085	FROM->TO	NAPLESTP 138.00 - PAYNE 138.00 138KV CKT 1	132	143	0.04437	129.0927	ANADARKO - GEORGIA 138KV CKT 1
FDNS	00NR	0	16WP	G15_085	FROM->TO	NAPLESTP 138.00 - PAYNE 138.00 138KV CKT 1	132	143	0.04437	128.3228	FLETCHER - GEORGIA 138KV CKT 1
FDNS	00NR	0	16WP	G15_085	FROM->TO	NAPLESTP 138.00 - PAYNE 138.00 138KV CKT 1	132	143	0.04724	128.2658	ANADARKO - POCASSETT 138KV CKT 1
FDNS	00NR	0	16WP	G15_085	FROM->TO	NAPLESTP 138.00 - PAYNE 138.00 138KV CKT 1	132	143	0.04724	127.654	POCASSETT - TUTTLE 138KV CKT 1
FDNS	00NR	0	16WP	G15_085	FROM->TO	NAPLESTP 138.00 - PAYNE 138.00 138KV CKT 1	132	143	0.0513	127.343	TUTTLE - TUTTLE CONOCO TAP 138KV CKT 1
FDNS	00NR	0	17SP	G15_085	FROM->TO	NAPLESTP 138.00 - PAYNE 138.00 138KV CKT 1	132	143	0.05868	127.0275	CIMARRON - MINCO 345KV CKT 1
FDNS	00NR	0	16WP	G15_085	FROM->TO	NAPLESTP 138.00 - PAYNE 138.00 138KV CKT 1	132	143	0.0513	126.4207	CIMARRON - TUTTLE CONOCO TAP 138KV CKT 1
FDNS	00NR	0	16WP	G15_085	FROM->TO	NAPLESTP 138.00 - PAYNE 138.00 138KV CKT 1	132	143	0.04433	126.1176	EMPIRE - FLETCHER 138KV CKT 1
FDNS	00NR	0	16WP	G15_085	FROM->TO	NAPLESTP 138.00 - PAYNE 138.00 138KV CKT 1	132	143	0.04724	126.0651	BRIDGECR 138.00 - TUTTLE 138KV CKT 1
FDNS	00NR	0	16WP	G15_085	FROM->TO	NAPLESTP 138.00 - PAYNE 138.00 138KV CKT 1	132	143	0.04224	125.5716	BASE CASE
FDNS	00NR	0	16WP	G15_085	FROM->TO	NAPLESTP 138.00 - PAYNE 138.00 138KV CKT 1	132	143	0.04433	125.5267	COMANCHE - EMPIRE 138KV CKT 1
FDNS	00NR	0	16WP	G15_085	FROM->TO	NAPLESTP 138.00 - PAYNE 138.00 138KV CKT 1	132	143	0.04724	124.9383	P12:138:WFEC:MSL01
FDNS	00NR	0	16WP	G15_085	FROM->TO	NAPLESTP 138.00 - PAYNE 138.00 138KV CKT 1	132	143	0.04724	124.9165	BRIDGECR 138.00 - SUNSHINE CANYON 138KV CKT 1
FDNS	00NR	0	16WP	G15_085	FROM->TO	NAPLESTP 138.00 - PAYNE 138.00 138KV CKT 1	132	143	0.03923	123.9259	P12:138:OKGE:3TERM21
FDNS	00NR	0	16WP	G15_085	FROM->TO	NAPLESTP 138.00 - PAYNE 138.00 138KV CKT 1	132	143	0.04448	123.6971	LOCO - PINTO 138KV CKT 1
FDNS	00NR	0	16WP	G15_085	FROM->TO	NAPLESTP 138.00 - PAYNE 138.00 138KV CKT 1	132	143	0.04755	123.479	BLANCHARD - CORNVILLE 138KV CKT 1
FDNS	00NR	0	16WP	G15_085	FROM->TO	NAPLESTP 138.00 - PAYNE 138.00 138KV CKT 1	132	143	0.04755	123.4553	P12:138:AEPW-OGE:CORNVIL4:MAUD 4
FDNS	00NR	0	16WP	G15_085	FROM->TO	NAPLESTP 138.00 - PAYNE 138.00 138KV CKT 1	132	143	0.04304	123.1756	FLETCHER - MARLOW JCT 69KV CKT 1
FDNS	00NR	0	16WP	G15_085	FROM->TO	NAPLESTP 138.00 - PAYNE 138.00 138KV CKT 1	132	143	0.03955	122.4642	FRANKLIN SW - MIDWEST TAP 138KV CKT 1
FDNS	00NR	0	16WP	G15_085	FROM->TO	NAPLESTP 138.00 - PAYNE 138.00 138KV CKT 1	132	143	0.04755	122.3171	BLANCHARD - MAUD 138KV CKT 1
FDNS	00NR	0	16WP	G15_085	FROM->TO	NAPLESTP 138.00 - PAYNE 138.00 138KV CKT 1	132	143	0.04448	121.8475	ARCO - PINTO 138KV CKT 1
FDNS	00NR	0	16WP	G15_085	FROM->TO	NAPLESTP 138.00 - PAYNE 138.00 138KV CKT 1	132	143	0.04262	121.6611	DUNCAN (DUNCAN) 138/69/13.8KV TRANSFORMER CKT 1
FDNS	00NR	0	16WP	G15_085	FROM->TO	NAPLESTP 138.00 - PAYNE 138.00 138KV CKT 1	132	143	0.04262	121.6611	DUNCAN (DUNCAN) 138/69/13.8KV TRANSFORMER CKT 1
FDNS	00NR	0	16WP	G15_085	FROM->TO	NAPLESTP 138.00 - PAYNE 138.00 138KV CKT 1	132	143	0.04304	121.6508	FARWELLJ2 69.000 - MARLOW JCT 69KV CKT 1
FDNS	00NR	0	16WP	G15_085	FROM->TO	NAPLESTP 138.00 - PAYNE 138.00 138KV CKT 1	132	143	0.04264	121.4751	CIMARRON - SARA 138KV CKT 1
FDNS	00NR	0	16WP	G15_085	FROM->TO	NAPLESTP 138.00 - PAYNE 138.00 138KV CKT 1	132	143	0.04253	121.2304	ETNA - PARK LANE 138KV CKT 1
FDNS	00NR	0	16WP	G15_085	FROM->TO	NAPLESTP 138.00 - PAYNE 138.00 138KV CKT 1	132	143	0.04071	121.1108	DRAPER LAKE - MIDWEST TAP 138KV CKT 1
FDNS	00NR	0	16WP	G15_085	FROM->TO	NAPLESTP 138.00 - PAYNE 138.00 138KV CKT 1	132	143	0.04304	120.9735	FARWELLJ2 69.000 - RUSH SPRINGS 69KV CKT 1
FDNS	00NR	0	16WP	G15_085	FROM->TO	NAPLESTP 138.00 - PAYNE 138.00 138KV CKT 1	132	143	0.04253	120.8068	ETNA - HARDEN 4 138.00 138KV CKT 1
FDNS	00NR	0	16WP	G15_085	FROM->TO	NAPLESTP 138.00 - PAYNE 138.00 138KV CKT 1	132	143	0.04384	120.6179	HUGO - SUNNYSIDE 345KV CKT 1
FDNS	00NR	0	16WP	G15_085	FROM->TO	NAPLESTP 138.00 - PAYNE 138.00 138KV CKT 1	132	143	0.04267	120.6021	LULA - TUPELO TAP 138KV CKT 1
FDNS	00NR	0	17SP	G15_085	FROM->TO	NAPLESTP 138.00 - PAYNE 138.00 138KV CKT 1	132	143	0.05558	120.543	G14-057T 345.00 - LAWTON EASTSIDE 345KV CKT 1
FDNS	00NR	0	16WP	G15_085	FROM->TO	NAPLESTP 138.00 - PAYNE 138.00 138KV CKT 1	132	143	0.0471	120.5234	BAILEY4 138.00 - SUNSHINE CANYON 138KV CKT 1
FDNS	00NR	0	16WP	G15_085	FROM->TO	NAPLESTP 138.00 - PAYNE 138.00 138KV CKT 1	132	143	0.04262	120.5113	DUNCAN - TOSCO 69KV CKT 1
FDNS	00NR	0	16WP	G15_085	FROM->TO	NAPLESTP 138.00 - PAYNE 138.00 138KV CKT 1	132	143	0.04378	120.2763	JOHNSON COUNTY - SUNNYSIDE 345KV CKT 1
FDNS	00NR	0	16WP	G15_085	FROM->TO	NAPLESTP 138.00 - PAYNE 138.00 138KV CKT 1	132	143	0.04262	120.2758	P12:69:WFEC-AEPW:COMANCH2:DUNCAN-2
FDNS	00NR	0	16WP	G15_085	FROM->TO	NAPLESTP 138.00 - PAYNE 138.00 138KV CKT 1	132	143	0.04262	120.2715	COMANCHE TAP - TOSCO 69KV CKT 1
FDNS	00NR	0	16WP	G15_085	FROM->TO	NAPLESTP 138.00 - PAYNE 138.00 138KV CKT 1	132	143	0.04264	120.2527	SARA - STHLAKE4 138.00 138KV CKT 1
FDNS	00NR	0	16WP	G15_085	FROM->TO	NAPLESTP 138.00 - PAYNE 138.00 138KV CKT 1	132	143	0.04333	120.2034	BRADLEY - RUSH SPRINGS 69KV CKT 1
FDNS	00NR	0	16WP	G15_085	FROM->TO	NAPLESTP 138.00 - PAYNE 138.00 138KV CKT 1	132	143	0.04264	120.0747	MCCLAIN - STHLAKE4 138.00 138KV CKT 1
FDNS	00NR	0	16WP	G15_085	FROM->TO	NAPLESTP 138.00 - PAYNE 138.00 138KV CKT 1	132	143	0.04023	119.9591	ACME - FRANKLIN SW 138KV CKT 1
FDNS	00NR	0	16WP	G15_085	FROM->TO	NAPLESTP 138.00 - PAYNE 138.00 138KV CKT 1	132	143	0.04262	119.932	COMANCHE - COMANCHE TAP 69KV CKT 1
FDNSLock	00NR	0	16WP	G15_085	FROM->TO	NAPLESTP 138.00 - PAYNE 138.00 138KV CKT 1	132	143	0.04235	119.8434	MATHWSN7 345.00 - TATONGA7 345.00 345KV CKT 1
FDNS	00NR	0	16WP	G15_085	FROM->TO	NAPLESTP 138.00 - PAYNE 138.00 138KV CKT 1	132	143	0.04253	119.7936	FRISCCO4 138.00 - HARDEN 4 138.00 138KV CKT 1
FDNS	00NR	0	16WP	G15_085	FROM->TO	NAPLESTP 138.00 - PAYNE 138.00 138KV CKT 1	132	143	0.0471	119.7566	BAILEY4 138.00 - WESTMOORE 138KV CKT 1
FDNS	00NR	0	16WP	G15_085	FROM->TO	NAPLESTP 138.00 - PAYNE 138.00 138KV CKT 1	132	143	0.04294	119.6886	CLEVELAND - G15066_T 345.00 345KV CKT 1
FDNS	00NR	0	16WP	G15_085	FROM->TO	NAPLESTP 138.00 - PAYNE 138.00 138KV CKT 1	132	143	0.04267	119.5928	CIMARRON - CZECH HALL 138KV CKT 1
FDNS	00NR	0	16WP	G15_085	FROM->TO	NAPLESTP 138.00 - PAYNE 138.00 138KV CKT 1	132	143	0.04041	119.5636	CANEY CREEK - TEXOMA JCT 138KV CKT 1
FDNS	00NR	0	16WP	G15_085	FROM->TO	NAPLESTP 138.00 - PAYNE 138.00 138KV CKT 1	132	143	0.04294	119.4516	G15066_T 345.00 - SOONER 345KV CKT 1
FDNS	00NR	0	16WP	G15_085	FROM->TO	NAPLESTP 138.00 - PAYNE 138.00 138KV CKT 1	132	143	0.04253	119.4076	FRISCCO4 138.00 - LULA 138KV CKT 1
FDNS	00NR	0	16WP	G15_085	FROM->TO	NAPLESTP 138.00 - PAYNE 138.00 138KV CKT 1	132	143	0.04333	119.3211	BRADLEY - LINDSAY SW 69KV CKT 1
FDNS	00NR	0	16WP	G15_085	FROM->TO	NAPLESTP 138.00 - PAYNE 138.00 138KV CKT 1	132	143	0.04267	119.2452	CZECH HALL - XEROX 138KV CKT 1
FDNS	00NR	0	16WP	G15_085	FROM->TO	NAPLESTP 138.00 - PAYNE 138.00 138KV CKT 1	132	143	0.04267	119.2263	MORGAN - XEROX 138KV CKT 1
FDNS	00NR	0	16WP	G15_085	FROM->TO	NAPLESTP 138.00 - PAYNE 138.00 138KV CKT 1	132	143	0.04267	119.1271	MORGAN - MUSTANG 138KV CKT 1
FDNS	00NR	0	16WP	G15_085	FROM->TO	NAPLESTP 138.00 - PAYNE 138.00 138KV CKT 1	132	143	0.0471	119.0339	FRANKLIN SW - WESTMOORE 138KV CKT 1
FDNS	00NR	0	16WP	G15_085	FROM->TO	NAPLESTP 138.00 - PAYNE 138.00 138KV CKT 1	132	143	0.0421	118.923	JOHNSON COUNTY (JOHNCO) 345/138/13.8KV TRANSFORMER CKT 1
FDNS	00NR	0	16WP	G15_085	FROM->TO	NAPLESTP 138.00 - PAYNE 138.00 138KV CKT 1	132	143	0.04023	118.9075	ACME - WEST NORMAN 138KV CKT 1
FDNSLock	00NR	0	16WP	G15_085	FROM->TO	NAPLESTP 138.00 - PAYNE 138.00 138KV CKT 1	132	143	0.04235	118.8607	G11_051T 345.00 - TATONGA7 345.00 345KV CKT 1
FDNS	00NR	0	16WP	G15_085	FROM->TO	NAPLESTP 138.00 - PAYNE 138.00 138KV CKT 1	132	143	0.0414	118.7804	CANADIAN SW (CANADIAN) 138/69/12.47KV TRANSFORMER CKT 1
FDNS	00NR	0	16WP	G15_085	FROM->TO	NAPLESTP 138.00 - PAYNE 138.00 138KV CKT 1	132	143	0.0414	118.7755	CANADIAN SW - LITTLE AXE 69KV CKT 1
FDNS	00NR	0	16WP	G15_085	FROM->TO	NAPLESTP 138.00 - PAYNE 138.00 138KV CKT 1	132	143	0.04311	118.6635	ARCADIA - NORTHWEST 345KV CKT 1
FDNS	00NR	0	17SP	G15_085	FROM->TO	NAPLESTP 138.00 - PAYNE 138.00 138KV CKT 1	132	143	0.04768	116.3005	COMANCHE - LOCO 138KV CKT 1
FDNS	00NR	0	17SP	G15_085	FROM->TO	NAPLESTP 138.00 - PAYNE 138.00 138KV CKT 1	132	143	0.05868	116.193	GRACEMONT - MINCO 345KV CKT 1
FDNS	00NR	0	17SP	G15_085	FROM->TO	NAPLESTP 138.00 - PAYNE 138.00 138KV CKT 1	132	143	0.04444	115.6582	P12:138:WFEC:MSL02
FDNS	00NR	0	17SP	G15_085	FROM->TO	NAPLESTP 138.00 - PAYNE 138.00 138KV CKT 1	132	143	0.04398	115.6064	ANADARKO - GEORGIA 138KV CKT 1
FDNS	00NR	0	17SP	G15_085	FROM->TO	NAPLESTP 138.00 - PAYNE 138.00 138KV CKT 1	132	143	0.04407	115.1241	CIMARRON - DRAPER LAKE 345KV CKT 1
FDNS	00NR	0	17SP	G15_085	FROM->TO	NAPLESTP 138.00 - PAYNE 138.00 138KV CKT 1	132	143	0.05078	115.0481	TUTTLE - TUTTLE CONOCO TAP 138KV CKT 1
FDNS	00NR	0	17SP	G15_085	FROM->TO	NAPLESTP 138.00 - PAYNE 138.00 138KV CKT 1	132	143	0.04398	114.6518	FLETCHER - GEORGIA 138KV CKT 1
FDNS	00NR	0	17SP	G15_085	FROM->TO	NAPLESTP 138.00 - PAYNE 138.00 138KV CKT 1	132	143	0.04679	114.4787	ANADARKO - POCASSETT 138KV CKT 1
FDNS	00NR	0	17SP	G15_085	FROM->TO	NAPLESTP 138.00 - PAYNE 138.00 138KV CKT 1	132	143	0.05078	114.136	CIMARRON - TUTTLE CONOCO TAP 138KV CKT 1
FDNS	00NR	0	17SP	G15_085	FROM->TO	NAPLESTP 138.00 - PAYNE 138.00 138KV CKT 1	132	143	0.04679	114.0307	POCASSETT - TUTTLE 138KV CKT 1
FDNS	00NR	0	16WP	G15_085	FROM->TO	NAPLESTP 138.00 - PAYNE 138.00 138KV CKT 1	132	143	0.04224	113.8885	GEN562084 1-G11_050_3 0.6900
FDNS	00NR	0	16WP	G15_085	FROM->TO	NAPLESTP 138.00 - PAYNE 138.00 138KV CKT 1	132	143	0.04224	113.5916	GEN521112 1-ORME3 13.800
FDNS	00NR	0	16WP	G15_085	FROM->TO	NAPLESTP 138.00 - PAYNE 138.00 138KV CKT 1	132	143	0.03991	113.5903	DUNCAN EASTSIDE - OMPA-DUNCAN 821 138KV CKT 1
FDNS	00NR	0	16WP	G15_085	FROM->TO	NAPLESTP 138.00 - PAYNE 138.00 138KV CKT 1	132	143	0.03414	113.4836	P12:138:AEPW:S.W.S.-4:L.E.S.-4
FDNS	00NR	0	16WP	G15_085	FROM->TO	NAPLESTP 138.00 - PAYNE 138.00 138KV CKT 1	132	143	0.04183	113.4576	P12:138:WFEC:MSL06
FDNS	00NR	0	16WP	G15_085	FROM->TO	NAPLESTP 138.00 - PAYNE 138.00 138KV CKT 1	132	143	0.04183	113.457	P12:138:AEPW-SWPA:LONEOAK4:TUPELO4
FDNS	00NR	0	16WP	G15_085	FROM->TO	NAPLESTP 138.00 - PAYNE 138.00 138KV CKT 1	132	143	0.04314	113.3618	GRAPEVINE INTERCHANGE - NICHOLS STATION 230KV CKT 1

SOLUTION	GROUP	SCENARIO	SEASON	SOURCE	DIRECTION	MONITORED ELEMENT	RATEA (MVA)	RATEB(MVA)	TDF	TC%LOADING (% MVA)	CONTINGENCY
FDNS	00NR	0	16WP	G15_085	FROM->TO	NAPLESTP 138.00 - PAYNE 138.00 138KV CKT 1	132	143	0.04314	113.3618	GRAPEVINE INTERCHANGE - NICHOLS STATION 230KV CKT 1
FDNS	00NR	0	16WP	G15_085	FROM->TO	NAPLESTP 138.00 - PAYNE 138.00 138KV CKT 1	132	143	0.04224	113.2495	GEN563272 1-G15093_3 0.6900
FDNS	00NR	0	16WP	G15_085	FROM->TO	NAPLESTP 138.00 - PAYNE 138.00 138KV CKT 1	132	143	0.03991	113.2145	DUNCAN EASTSIDE - DUNCHERTP4 138.00 138KV CKT 1
FDNS	00NR	0	16WP	G15_085	FROM->TO	NAPLESTP 138.00 - PAYNE 138.00 138KV CKT 1	132	143	0.03991	113.2143	DUNCAN - DUNCHERTP4 138.00 138KV CKT 1
FDNS	00NR	0	16WP	G15_085	FROM->TO	NAPLESTP 138.00 - PAYNE 138.00 138KV CKT 1	132	143	0.03991	113.2143	DUNCAN - DUNCHERTP4 138.00 138KV CKT 1
FDNS	00NR	0	16WP	G15_085	FROM->TO	NAPLESTP 138.00 - PAYNE 138.00 138KV CKT 1	132	143	0.04166	113.1507	P12:138:WFEC:MSL07
FDNS	00NR	0	16WP	G15_085	FROM->TO	NAPLESTP 138.00 - PAYNE 138.00 138KV CKT 1	132	143	0.04166	113.1507	P12:138:WFEC-AEPW:HUGOPP4:ATOKA--4
FDNS	00NR	0	16WP	G15_085	FROM->TO	NAPLESTP 138.00 - PAYNE 138.00 138KV CKT 1	132	143	0.04041	113.1419	MARIETTA - SOUTH WILSON 138KV CKT 1
FDNS	00NR	0	16WP	G15_085	FROM->TO	NAPLESTP 138.00 - PAYNE 138.00 138KV CKT 1	132	143	0.04224	113.1374	GEN521110 1-ORME1 13.800
FDNS	00NR	0	16WP	G15_085	FROM->TO	NAPLESTP 138.00 - PAYNE 138.00 138KV CKT 1	132	143	0.04224	113.1374	GEN521111 1-ORME2 13.800
FDNS	00NR	0	16WP	G15_085	FROM->TO	NAPLESTP 138.00 - PAYNE 138.00 138KV CKT 1	132	143	0.04184	113.0023	P12:138:WFEC:MSL08
FDNS	00NR	0	17SP	G15_085	FROM->TO	NAPLESTP 138.00 - PAYNE 138.00 138KV CKT 1	132	143	0.04395	113.0008	EMPIRE - FLETCHER 138KV CKT 1
FDNS	00NR	0	16WP	G15_085	FROM->TO	NAPLESTP 138.00 - PAYNE 138.00 138KV CKT 1	132	143	0.04201	112.8062	P12:230:AEPW-SPS:SWEETWT6:WHEELER 6
FDNS	00NR	0	16WP	G15_085	FROM->TO	NAPLESTP 138.00 - PAYNE 138.00 138KV CKT 1	132	143	0.04201	112.8056	STATELINE INTERCHANGE - STLN-DEMARC6 230KV CKT 1
FDNS	00NR	0	16WP	G15_085	FROM->TO	NAPLESTP 138.00 - PAYNE 138.00 138KV CKT 1	132	143	0.04201	112.8043	STLN-DEMARC6 - SWEETWATER 230KV CKT 1
FDNS	00NR	0	16WP	G15_085	FROM->TO	NAPLESTP 138.00 - PAYNE 138.00 138KV CKT 1	132	143	0.04224	112.7737	GEN520811 1-ANADRK4
FDNS	00NR	0	16WP	G15_085	FROM->TO	NAPLESTP 138.00 - PAYNE 138.00 138KV CKT 1	132	143	0.04041	112.7031	RINGLING - SOUTH WILSON 138KV CKT 1
FDNS	00NR	0	17SP	G15_085	FROM->TO	NAPLESTP 138.00 - PAYNE 138.00 138KV CKT 1	132	143	0.04679	112.6997	BRIDGECR 138.00 - TUTTLE 138KV CKT 1
FDNS	00NR	0	16WP	G15_085	FROM->TO	NAPLESTP 138.00 - PAYNE 138.00 138KV CKT 1	132	143	0.04224	112.6167	GEN563202 1-G15085_3 0.5500
FDNS	00NR	0	17SP	G15_085	FROM->TO	NAPLESTP 138.00 - PAYNE 138.00 138KV CKT 1	132	143	0.04395	112.4854	COMANCHE - EMPIRE 138KV CKT 1
FDNS	00NR	0	16WP	G15_085	FROM->TO	NAPLESTP 138.00 - PAYNE 138.00 138KV CKT 1	132	143	0.04041	112.4479	HEALDTON - RINGLING 138KV CKT 1
FDNS	00NR	0	16WP	G15_085	FROM->TO	NAPLESTP 138.00 - PAYNE 138.00 138KV CKT 1	132	143	0.04608	112.4404	BASELINE - PERNELL 138.00 138KV CKT 1
FDNS	00NR	0	16WP	G15_085	FROM->TO	NAPLESTP 138.00 - PAYNE 138.00 138KV CKT 1	132	143	0.0428	112.3596	PAOLI (PAOLI) 138/69/13.8KV TRANSFORMER CKT 1
FDNS	00NR	0	16WP	G15_085	FROM->TO	NAPLESTP 138.00 - PAYNE 138.00 138KV CKT 1	132	143	0.04101	112.2357	P12:138:AEPW:DUNCAN-4:L.E.S.-4
FDNS	00NR	0	16WP	G15_085	FROM->TO	NAPLESTP 138.00 - PAYNE 138.00 138KV CKT 1	132	143	0.04224	112.2268	GEN562685 1-G15_013_3 0.3550
FDNS	00NR	0	16WP	G15_085	FROM->TO	NAPLESTP 138.00 - PAYNE 138.00 138KV CKT 1	132	143	0.04041	112.177	HEALDTON - LOCO 138KV CKT 1
FDNS	00NR	0	16WP	G15_085	FROM->TO	NAPLESTP 138.00 - PAYNE 138.00 138KV CKT 1	132	143	0.041	111.9199	DUNCAN - OMPA-DUNCAN 840 138KV CKT 1
FDNS	00NR	0	16WP	G15_085	FROM->TO	NAPLESTP 138.00 - PAYNE 138.00 138KV CKT 1	132	143	0.041	111.9199	DUNCAN - OMPA-DUNCAN 840 138KV CKT 1
FDNS	00NR	0	17SP	G15_085	FROM->TO	NAPLESTP 138.00 - PAYNE 138.00 138KV CKT 1	132	143	0.04679	111.8264	P12:138:WFEC:MSL01
FDNS	00NR	0	16WP	G15_085	FROM->TO	NAPLESTP 138.00 - PAYNE 138.00 138KV CKT 1	132	143	0.04242	111.8041	G14-074T 345.00 - TUCO INTERCHANGE 345KV CKT 1
FDNS	00NR	0	17SP	G15_085	FROM->TO	NAPLESTP 138.00 - PAYNE 138.00 138KV CKT 1	132	143	0.04679	111.7973	BRIDGECR 138.00 - SUNSHINE CANYON 138KV CKT 1
FDNS	00NR	0	17SP	G15_085	FROM->TO	NAPLESTP 138.00 - PAYNE 138.00 138KV CKT 1	132	143	0.04187	111.7093	BASE CASE
FDNS	00NR	0	16WP	G15_085	FROM->TO	NAPLESTP 138.00 - PAYNE 138.00 138KV CKT 1	132	143	0.04232	111.6361	P12:138:WFEC:MSL15
FDNS	00NR	0	16WP	G15_085	FROM->TO	NAPLESTP 138.00 - PAYNE 138.00 138KV CKT 1	132	143	0.04201	111.5715	CHISHOLM6 230.00 - SWEETWATER 230KV CKT 1
FDNS	00NR	0	16WP	G15_085	FROM->TO	NAPLESTP 138.00 - PAYNE 138.00 138KV CKT 1	132	143	0.04608	111.3905	PAOLI - PERNELL 138.00 138KV CKT 1
FDNS	00NR	0	16WP	G15_085	FROM->TO	NAPLESTP 138.00 - PAYNE 138.00 138KV CKT 1	132	143	0.04041	111.357	P12:138:WFEC:MSL17
FDNS	00NR	0	16WP	G15_085	FROM->TO	NAPLESTP 138.00 - PAYNE 138.00 138KV CKT 1	132	143	0.04302	111.3324	P12:230:AEPW:ELKCITY6:SWEETWT6
FDNS	00NR	0	16WP	G15_085	FROM->TO	NAPLESTP 138.00 - PAYNE 138.00 138KV CKT 1	132	143	0.041	111.3081	COMANCHE TAP - OMPA-DUNCAN 840 138KV CKT 1
FDNS	00NR	0	16WP	G15_085	FROM->TO	NAPLESTP 138.00 - PAYNE 138.00 138KV CKT 1	132	143	0.04234	111.0332	P12:138:WFEC:MSL09
FDNS	00NR	0	16WP	G15_085	FROM->TO	NAPLESTP 138.00 - PAYNE 138.00 138KV CKT 1	132	143	0.03923	110.7805	P12:138:AEPW:CORNVIL4:S.W.S.-4
FDNS	00NR	0	16WP	G15_085	FROM->TO	NAPLESTP 138.00 - PAYNE 138.00 138KV CKT 1	132	143	0.04224	110.6617	GEN562512 1-G14_020_3 0.6900
FDNS	00NR	0	17SP	G15_085	FROM->TO	NAPLESTP 138.00 - PAYNE 138.00 138KV CKT 1	132	143	0.04406	110.626	LOCO - PINTO 138KV CKT 1
FDNS	00NR	0	16WP	G15_085	FROM->TO	NAPLESTP 138.00 - PAYNE 138.00 138KV CKT 1	132	143	0.039	110.398	CORNVILLE - NORGE ROAD 138KV CKT 1
FDNS	00NR	0	16WP	G15_085	FROM->TO	NAPLESTP 138.00 - PAYNE 138.00 138KV CKT 1	132	143	0.039	110.398	CORNVILLE - NORGE ROAD 138KV CKT 1
FDNS	00NR	0	17SP	G15_085	FROM->TO	NAPLESTP 138.00 - PAYNE 138.00 138KV CKT 1	132	143	0.04712	110.1562	BLANCHARD - CORNVILLE 138KV CKT 1
FDNS	00NR	0	16WP	G15_085	FROM->TO	NAPLESTP 138.00 - PAYNE 138.00 138KV CKT 1	132	143	0.03923	110.1291	CORNVILLE - NORTH 29TH CHICKASHA 138KV CKT 1
FDNS	00NR	0	17SP	G15_085	FROM->TO	NAPLESTP 138.00 - PAYNE 138.00 138KV CKT 1	132	143	0.04712	110.1032	P12:138:AEPW-OGE:CORNVIL4:MAUD 4
FDNS	00NR	0	17SP	G15_085	FROM->TO	NAPLESTP 138.00 - PAYNE 138.00 138KV CKT 1	132	143	0.03891	110.0841	P12:138:OKGE:3TERM21
FDNS	00NR	0	16WP	G15_085	FROM->TO	NAPLESTP 138.00 - PAYNE 138.00 138KV CKT 1	132	143	0.04224	110.0463	GEN511848 1-SOUTHWESTERN STATION #3
FDNS	07NR	0	17G	G15_085	FROM->TO	NAPLESTP 138.00 - PAYNE 138.00 138KV CKT 1	132	143	0.05591	109.8948	G14-057T 345.00 - SUNNYSIDE 345KV CKT 1
FDNS	00NR	0	16WP	G15_085	FROM->TO	NAPLESTP 138.00 - PAYNE 138.00 138KV CKT 1	132	143	0.05086	109.8107	GRACEMONT (BANK 1) 345/138/13.8KV TRANSFORMER CKT 1
FDNS	07NR	0	17G	G15_085	FROM->TO	NAPLESTP 138.00 - PAYNE 138.00 138KV CKT 1	132	143	0.05945	109.7389	CIMARRON - MINCO 345KV CKT 1
FDNS	00NR	0	16WP	G15_085	FROM->TO	NAPLESTP 138.00 - PAYNE 138.00 138KV CKT 1	132	143	0.03923	109.4026	NORTH 29TH CHICKASHA - VERDEN 138KV CKT 1
FDNS	00NR	0	16WP	G15_085	FROM->TO	NAPLESTP 138.00 - PAYNE 138.00 138KV CKT 1	132	143	0.04602	109.3683	P12:138:WFEC:MSL16
FDNS	00NR	0	17SP	G15_085	FROM->TO	NAPLESTP 138.00 - PAYNE 138.00 138KV CKT 1	132	143	0.04266	109.364	FLETCHER - MARLOW JCT 69KV CKT 1
FDNS	00NR	0	16WP	G15_085	FROM->TO	NAPLESTP 138.00 - PAYNE 138.00 138KV CKT 1	132	143	0.03923	109.1809	SOUTHWESTERN STATION - VERDEN 138KV CKT 1
FDNS	00NR	0	16WP	G15_085	FROM->TO	NAPLESTP 138.00 - PAYNE 138.00 138KV CKT 1	132	143	0.039	109.1153	NORGE ROAD - SOUTHWESTERN STATION 138KV CKT 1
FDNS	00NR	0	16WP	G15_085	FROM->TO	NAPLESTP 138.00 - PAYNE 138.00 138KV CKT 1	132	143	0.039	109.1153	NORGE ROAD - SOUTHWESTERN STATION 138KV CKT 1
FDNS	00NR	0	16WP	G15_085	FROM->TO	NAPLESTP 138.00 - PAYNE 138.00 138KV CKT 1	132	143	0.03414	109.0947	STONEWAL LH138.00 - TUPELO TAP 138KV CKT 1
FDNS	00NR	0	17SP	G15_085	FROM->TO	NAPLESTP 138.00 - PAYNE 138.00 138KV CKT 1	132	143	0.04406	108.9978	ARCO - PINTO 138KV CKT 1
FDNS	00NR	0	16WP	G15_085	FROM->TO	NAPLESTP 138.00 - PAYNE 138.00 138KV CKT 1	132	143	0.03414	108.9238	LASALLE - STONEWAL LH138.00 138KV CKT 1
FDNS	00NR	0	17SP	G15_085	FROM->TO	NAPLESTP 138.00 - PAYNE 138.00 138KV CKT 1	132	143	0.03923	108.6664	FRANKLIN SW - MIDWEST TAP 138KV CKT 1
FDNS	00NR	0	17SP	G15_085	FROM->TO	NAPLESTP 138.00 - PAYNE 138.00 138KV CKT 1	132	143	0.04266	108.5066	FARWELLJ2 69.000 - MARLOW JCT 69KV CKT 1
FDNS	00NR	0	17SP	G15_085	FROM->TO	NAPLESTP 138.00 - PAYNE 138.00 138KV CKT 1	132	143	0.04666	108.4318	BAILEY4 138.00 - SUNSHINE CANYON 138KV CKT 1
FDNS	00NR	0	17SP	G15_085	FROM->TO	NAPLESTP 138.00 - PAYNE 138.00 138KV CKT 1	132	143	0.04712	108.4197	BLANCHARD - MAUD 138KV CKT 1
FDNS	00NR	0	17SP	G15_085	FROM->TO	NAPLESTP 138.00 - PAYNE 138.00 138KV CKT 1	132	143	0.04225	108.1642	DUNCAN (DUNCAN) 138/69/13.8KV TRANSFORMER CKT 1
FDNS	00NR	0	17SP	G15_085	FROM->TO	NAPLESTP 138.00 - PAYNE 138.00 138KV CKT 1	132	143	0.04225	108.1642	DUNCAN (DUNCAN) 138/69/13.8KV TRANSFORMER CKT 1
FDNS	00NR	0	17SP	G15_085	FROM->TO	NAPLESTP 138.00 - PAYNE 138.00 138KV CKT 1	132	143	0.04036	107.9719	DRAPER LAKE - MIDWEST TAP 138KV CKT 1
FDNS	00NR	0	17SP	G15_085	FROM->TO	NAPLESTP 138.00 - PAYNE 138.00 138KV CKT 1	132	143	0.04266	107.9262	FARWELLJ2 69.000 - RUSH SPRINGS 69KV CKT 1
FDNS	00NR	0	17SP	G15_085	FROM->TO	NAPLESTP 138.00 - PAYNE 138.00 138KV CKT 1	132	143	0.04218	107.6915	ETNA - PARK LANE 138KV CKT 1
FDNS	00NR	0	17SP	G15_085	FROM->TO	NAPLESTP 138.00 - PAYNE 138.00 138KV CKT 1	132	143	0.04666	107.5459	BAILEY4 138.00 - WESTMOORE 138KV CKT 1
FDNS	00NR	0	16WP	G15_085	FROM->TO	NAPLESTP 138.00 - PAYNE 138.00 138KV CKT 1	132	143	0.04242	107.3699	G14-074T 345.00 - OKLAUNION 345KV CKT 1
FDNS	00NR	0	17SP	G15_085	FROM->TO	NAPLESTP 138.00 - PAYNE 138.00 138KV CKT 1	132	143	0.03991	107.3489	ACME - FRANKLIN SW 138KV CKT 1
FDNS	00NR	0	16WP	G15_085	FROM->TO	NAPLESTP 138.00 - PAYNE 138.00 138KV CKT 1	132	143	0.03414	107.2789	LASALLE - LATTA JCT 138KV CKT 1
FDNS	00NR	0	17SP	G15_085	FROM->TO	NAPLESTP 138.00 - PAYNE 138.00 138KV CKT 1	132	143	0.04295	107.2482	BRADLEY - RUSH SPRINGS 69KV CKT 1
FDNS	00NR	0	16WP	G15_085	FROM->TO	NAPLESTP 138.00 - PAYNE 138.00 138KV CKT 1	132	143	0.03908	107.1782	TUPELO - TUPELO TAP 138KV CKT 1
FDNS	00NR	0	17SP	G15_085	FROM->TO	NAPLESTP 138.00 - PAYNE 138.00 138KV CKT 1	132	143	0.04218	107.0683	ETNA - HARDEN 4 138.00 138KV CKT 1
FDNS	00NR	0	17SP	G15_085	FROM->TO	NAPLESTP 138.00 - PAYNE 138.00 138KV CKT 1	132	143	0.03957	107.0032	P12:138:AEPW:CORNVIL4:DUNCAN-4
FDNS	00NR	0	17SP	G15_085	FROM->TO	NAPLESTP 138.00 - PAYNE 138.00 138KV CKT 1	132	143	0.04227	106.9197	CIMARRON - SARA 138KV CKT 1

SOLUTION	GROUP	SCENARIO	SEASON	SOURCE	DIRECTION	MONITORED ELEMENT	RATEA (MVA)	RATEB(MVA)	TDF	TC%LOADING (% MVA)	CONTINGENCY
FDNS	00NR	0	17SP	G15_085	FROM->TO	NAPLESTP 138.00 - PAYNE 138.00 138KV CKT 1	132	143	0.04666	106.7546	FRANKLIN SW - WESTMOORE 138KV CKT 1
FDNS	00NR	0	17SP	G15_085	FROM->TO	NAPLESTP 138.00 - PAYNE 138.00 138KV CKT 1	132	143	0.04172	106.7307	JOHNSON COUNTY (JOHNCO) 345/138/13.8KV TRANSFORMER CKT 1
FDNS	00NR	0	17SP	G15_085	FROM->TO	NAPLESTP 138.00 - PAYNE 138.00 138KV CKT 1	132	143	0.0423	106.6091	CIMARRON - CZECH HALL 138KV CKT 1
FDNS	00NR	0	17SP	G15_085	FROM->TO	NAPLESTP 138.00 - PAYNE 138.00 138KV CKT 1	132	143	0.04338	106.5609	JOHNSON COUNTY - SUNNYSIDE 345KV CKT 1
FDNS	00NR	0	17SP	G15_085	FROM->TO	NAPLESTP 138.00 - PAYNE 138.00 138KV CKT 1	132	143	0.04198	106.5577	MATHWSN7 345.00 - TATONGA7 345.00 345KV CKT 1
FDNS	00NR	0	17SP	G15_085	FROM->TO	NAPLESTP 138.00 - PAYNE 138.00 138KV CKT 1	132	143	0.04295	106.4696	BRADLEY - LINDSAY SW 69KV CKT 1
FDNS	00NR	0	17SP	G15_085	FROM->TO	NAPLESTP 138.00 - PAYNE 138.00 138KV CKT 1	132	143	0.04253	106.4334	CLEVELAND - G15066_T 345.00 345KV CKT 1
FDNS	00NR	0	17SP	G15_085	FROM->TO	NAPLESTP 138.00 - PAYNE 138.00 138KV CKT 1	132	143	0.04225	106.4172	DUNCAN - TOSCO 69KV CKT 1
FDNS	00NR	0	17SP	G15_085	FROM->TO	NAPLESTP 138.00 - PAYNE 138.00 138KV CKT 1	132	143	0.04232	106.3836	LULA - TUPELO TAP 138KV CKT 1
FDNS	00NR	0	17SP	G15_085	FROM->TO	NAPLESTP 138.00 - PAYNE 138.00 138KV CKT 1	132	143	0.03957	106.332	RUSH SPRINGS NATURAL GAS TAP - RUSH SPRINGS TAP 138KV CKT 1
FDNS	00NR	0	17SP	G15_085	FROM->TO	NAPLESTP 138.00 - PAYNE 138.00 138KV CKT 1	132	143	0.04253	106.1922	G15066_T 345.00 - SOONER 345KV CKT 1
FDNS	00NR	0	17SP	G15_085	FROM->TO	NAPLESTP 138.00 - PAYNE 138.00 138KV CKT 1	132	143	0.04218	106.1896	FRISCCO4 138.00 - HARDEN 4 138.00 138KV CKT 1
FDNS	00NR	0	17SP	G15_085	FROM->TO	NAPLESTP 138.00 - PAYNE 138.00 138KV CKT 1	132	143	0.0423	106.1682	CZECH HALL - XEROX 138KV CKT 1
FDNS	00NR	0	17SP	G15_085	FROM->TO	NAPLESTP 138.00 - PAYNE 138.00 138KV CKT 1	132	143	0.0423	106.1436	MORGAN - XEROX 138KV CKT 1
FDNS	00NR	0	17SP	G15_085	FROM->TO	NAPLESTP 138.00 - PAYNE 138.00 138KV CKT 1	132	143	0.04225	106.092	P12:69:WFEC-AEPW:COMANCH2:DUNCAN-2
FDNS	00NR	0	17SP	G15_085	FROM->TO	NAPLESTP 138.00 - PAYNE 138.00 138KV CKT 1	132	143	0.04225	106.0697	COMANCHE TAP - TOSCO 69KV CKT 1
FDNS	00NR	0	17SP	G15_085	FROM->TO	NAPLESTP 138.00 - PAYNE 138.00 138KV CKT 1	132	143	0.0423	106.0031	MORGAN - MUSTANG 138KV CKT 1
FDNS	00NR	0	17SP	G15_085	FROM->TO	NAPLESTP 138.00 - PAYNE 138.00 138KV CKT 1	132	143	0.04198	105.8029	G11_051T 345.00 - TATONGA7 345.00 345KV CKT 1
FDNS	00NR	0	17SP	G15_085	FROM->TO	NAPLESTP 138.00 - PAYNE 138.00 138KV CKT 1	132	143	0.03991	105.6665	ACME - WEST NORMAN 138KV CKT 1
FDNS	00NR	0	17SP	G15_085	FROM->TO	NAPLESTP 138.00 - PAYNE 138.00 138KV CKT 1	132	143	0.04218	105.6556	FRISCCO4 138.00 - LULA 138KV CKT 1
FDNS	00NR	0	17SP	G15_085	FROM->TO	NAPLESTP 138.00 - PAYNE 138.00 138KV CKT 1	132	143	0.04352	105.6313	HUGO - SUNNYSIDE 345KV CKT 1
FDNS	00NR	0	17SP	G15_085	FROM->TO	NAPLESTP 138.00 - PAYNE 138.00 138KV CKT 1	132	143	0.03957	105.5892	OMPA-MARLOW - RUSH SPRINGS TAP 138KV CKT 1
FDNS	00NR	0	17SP	G15_085	FROM->TO	NAPLESTP 138.00 - PAYNE 138.00 138KV CKT 1	132	143	0.04225	105.549	COMANCHE - COMANCHE TAP 69KV CKT 1
FDNS	00NR	0	17SP	G15_085	FROM->TO	NAPLESTP 138.00 - PAYNE 138.00 138KV CKT 1	132	143	0.04195	105.4785	MCCLAIN - PLEASANT VALLEY 138KV CKT 1
FDNS	00NR	0	17SP	G15_085	FROM->TO	NAPLESTP 138.00 - PAYNE 138.00 138KV CKT 1	132	143	0.04174	105.2373	P12:138:AEPW:CORNVIL4:LWATER4
FDNS	07NR	0	17G	G15_085	FROM->TO	NAPLESTP 138.00 - PAYNE 138.00 138KV CKT 1	132	143	0.05591	105.0888	G14-057T 345.00 - LAWTON EASTSIDE 345KV CKT 1
FDNS	00NR	0	16WP	G15_085	FROM->TO	NAPLESTP 138.00 - PAYNE 138.00 138KV CKT 1	132	143	0.03414	104.0308	LATTA JCT - OIL CENTER 138KV CKT 1
FDNS	07NR	0	17G	G15_085	FROM->TO	NAPLESTP 138.00 - PAYNE 138.00 138KV CKT 1	132	143	0.05945	103.4279	GRACEMONT - MINCO 345KV CKT 1
FDNS	00NR	0	16WP	G15_085	FROM->TO	NAPLESTP 138.00 - PAYNE 138.00 138KV CKT 1	132	143	0.03414	102.1151	OIL CENTER - STRATFORD 138KV CKT 1
FDNS	00NR	0	16WP	G15_085	FROM->TO	NAPLESTP 138.00 - PAYNE 138.00 138KV CKT 1	132	143	0.03414	100.8642	CIVIT - STRATFORD 138KV CKT 1
FDNS	00NR	0	17SP	G15_085	FROM->TO	NAPLESTP 138.00 - PAYNE 138.00 138KV CKT 1	132	143	0.04187	100.779	GEN525562 1-TOLK GEN #2 24 KV
FDNS	00NR	0	17SP	G15_085	FROM->TO	NAPLESTP 138.00 - PAYNE 138.00 138KV CKT 1	132	143	0.04148	100.728	P12:138:WFEC:MSL08
FDNS	00NR	0	17SP	G15_085	FROM->TO	NAPLESTP 138.00 - PAYNE 138.00 138KV CKT 1	132	143	0.04187	100.6336	GEN525561 1-TOLK GEN #1 24 KV
FDNS	00NR	0	17SP	G15_085	FROM->TO	NAPLESTP 138.00 - PAYNE 138.00 138KV CKT 1	132	143	0.04265	100.6206	P12:230:AEPW:ELKCITY6:SWEETWT6
FDNS	00NR	0	17SP	G15_085	FROM->TO	NAPLESTP 138.00 - PAYNE 138.00 138KV CKT 1	132	143	0.04187	100.6143	GEN511850 1-SOUTHWESTERN STATION #5
FDNS	00NR	0	17SP	G15_085	FROM->TO	NAPLESTP 138.00 - PAYNE 138.00 138KV CKT 1	132	143	0.04187	100.6142	GEN511849 1-SOUTHWESTERN STATION #4
FDNS	00NR	0	17SP	G15_085	FROM->TO	NAPLESTP 138.00 - PAYNE 138.00 138KV CKT 1	132	143	0.04187	100.5938	GEN511847 1-SOUTHWESTERN STATION #2
FDNS	00NR	0	17SP	G15_085	FROM->TO	NAPLESTP 138.00 - PAYNE 138.00 138KV CKT 1	132	143	0.04187	100.5764	GEN563272 1-G15093_3 0.6900
FDNS	00NR	0	17SP	G15_085	FROM->TO	NAPLESTP 138.00 - PAYNE 138.00 138KV CKT 1	132	143	0.03957	100.5519	DUNCAN EASTSIDE - OMPA-DUNCAN 821 138KV CKT 1
FDNS	00NR	0	17SP	G15_085	FROM->TO	NAPLESTP 138.00 - PAYNE 138.00 138KV CKT 1	132	143	0.04187	100.4395	GEN521110 1-ORME1 13.800
FDNS	00NR	0	17SP	G15_085	FROM->TO	NAPLESTP 138.00 - PAYNE 138.00 138KV CKT 1	132	143	0.04004	100.4395	RINGLING - SOUTH WILSON 138KV CKT 1
FDNS	00NR	0	17SP	G15_085	FROM->TO	NAPLESTP 138.00 - PAYNE 138.00 138KV CKT 1	132	143	0.04187	100.2796	GEN520811 1-ANADRK4
FDNS	00NR	0	17SP	G15_085	FROM->TO	NAPLESTP 138.00 - PAYNE 138.00 138KV CKT 1	132	143	0.04004	100.2192	HEALDTON - RINGLING 138KV CKT 1
FDNS	00NR	0	17SP	G15_085	FROM->TO	NAPLESTP 138.00 - PAYNE 138.00 138KV CKT 1	132	143	0.04243	100.0626	PAOLI (PAOLI) 138/69/13.8KV TRANSFORMER CKT 1
FDNS	00NR	0	17SP	G15_085	FROM->TO	NAPLESTP 138.00 - PAYNE 138.00 138KV CKT 1	132	143	0.04004	100	HEALDTON - LOCO 138KV CKT 1
FDNS	00NR	0	17SP	G15_085	FROM->TO	NAPLESTP 138.00 - PAYNE 138.00 138KV CKT 1	132	143	0.03957	100	DUNCAN - DUNCHERTP4 138.00 138KV CKT 1
FDNS	00NR	0	17SP	G15_085	FROM->TO	NAPLESTP 138.00 - PAYNE 138.00 138KV CKT 1	132	143	0.03957	100	DUNCAN - DUNCHERTP4 138.00 138KV CKT 1
FDNS	00NR	0	17SP	G15_085	FROM->TO	NAPLESTP 138.00 - PAYNE 138.00 138KV CKT 1	132	143	0.03957	100	DUNCAN EASTSIDE - DUNCHERTP4 138.00 138KV CKT 1
FDNS	00NR	0	17SP	G15_085	FROM->TO	NAPLESTP 138.00 - PAYNE 138.00 138KV CKT 1	132	143	0.04187	99.8	GEN563202 1-G15085_3 0.5500
FDNS	00NR	0	17SP	G15_085	FROM->TO	NAPLESTP 138.00 - PAYNE 138.00 138KV CKT 1	132	143	0.04066	99.8	P12:138:AEPW:DUNCAN-4:L.E.S.-4
FDNS	00NR	0	16WP	G15_085	FROM->TO	NAPLESTP 138.00 - PAYNE 138.00 138KV CKT 1	132	143	0.03379	99.7	CORN TAP - SEQUOYAHJ4 138.00 138KV CKT 1
FDNS	00NR	0	17SP	G15_085	FROM->TO	NAPLESTP 138.00 - PAYNE 138.00 138KV CKT 1	132	143	0.04565	99.6	BASELINE - PERNELL 138.00 138KV CKT 1
FDNS	00NR	0	17SP	G15_085	FROM->TO	NAPLESTP 138.00 - PAYNE 138.00 138KV CKT 1	132	143	0.04197	99.6	P12:138:WFEC:MSL09
FDNS	00NR	0	16WP	G15_085	FROM->TO	NAPLESTP 138.00 - PAYNE 138.00 138KV CKT 1	132	143	0.03379	99.5	ANADARKO - SEQUOYAHJ4 138.00 138KV CKT 1
FDNS	00NR	0	17SP	G15_085	FROM->TO	NAPLESTP 138.00 - PAYNE 138.00 138KV CKT 1	132	143	0.04187	99.5	GEN562685 1-G15_013_3 0.3550
FDNS	07ALL	0	20SP	G15_085	TO->FROM	NORGE ROAD - SOUTHWESTERN STATION 138KV CKT 1	136	136	0.03201	103.2647	BASE CASE
FDNS	00NR	0	17SP	G15_085	TO->FROM	NORGE ROAD - SOUTHWESTERN STATION 138KV CKT 1	136	136	0.03814	101.5889	SOUTHWESTERN STATION - VERDEN 138KV CKT 1
FDNS	00NR	0	17SP	G15_085	TO->FROM	NORGE ROAD - SOUTHWESTERN STATION 138KV CKT 1	136	136	0.04456	101.3795	CIMARRON - MINCO 345KV CKT 1
FDNS	00NR	0	17SP	G15_085	TO->FROM	NORGE ROAD - SOUTHWESTERN STATION 138KV CKT 1	136	136	0.03814	100.6355	NORTH 29TH CHICKASHA - VERDEN 138KV CKT 1
FDNS	00NR	0	20SP	G15_085	TO->FROM	OMPA-MANGUM - RUSSELL 69KV CKT 1	48	48	0.05015	107.8828	ELK CITY (ELKCTY-4) 138/69/13.8KV TRANSFORMER CKT 1
FDNS	00NR	0	20SP	G15_085	TO->FROM	OMPA-MANGUM - RUSSELL 69KV CKT 1	48	48	0.05015	107.8828	ELK CITY (ELKCTY-4) 138/69/13.8KV TRANSFORMER CKT 1
FDNS	00NR	0	16WP	G15_085	TO->FROM	PITTSBURG - SEMINOLE 345KV CKT 1	717	717	0.13897	101.4082	G14-057T 345.00 - SUNNYSIDE 345KV CKT 1
FDNS	00NR	0	20WP	G15_085	FROM->TO	RUSSELL (RUSSELL) 138/69/13.8KV TRANSFORMER CKT 1	70	70	0.35701	105.8368	ALTUS JUNCTION - RUSSELL 138KV CKT 1
FDNS	00NR	0	20WP	G15_085	FROM->TO	RUSSELL (RUSSELL) 138/69/13.8KV TRANSFORMER CKT 1	70	70	0.35701	105.8368	ALTUS JUNCTION - RUSSELL 138KV CKT 1
FDNS	00NR	0	20WP	G15_085	FROM->TO	RUSSELL (RUSSELL) 138/69/13.8KV TRANSFORMER CKT 1	70	70	0.35701	101.2202	ALTUS JUNCTION - RUSSELL 138KV CKT 1
FDNS	00NR	0	20WP	G15_085	FROM->TO	RUSSELL (RUSSELL) 138/69/13.8KV TRANSFORMER CKT 1	70	70	0.35701	101.2202	ALTUS JUNCTION - RUSSELL 138KV CKT 1
FDNS	00NR	0	16WP	G15_085	FROM->TO	RUSSELL (RUSSELL) 138/69/13.8KV TRANSFORMER CKT 1	70	70	0.35699	100.7638	ALTUS JUNCTION - RUSSELL 138KV CKT 1
FDNS	00NR	0	16WP	G15_085	FROM->TO	RUSSELL (RUSSELL) 138/69/13.8KV TRANSFORMER CKT 1	70	70	0.35699	100.7638	ALTUS JUNCTION - RUSSELL 138KV CKT 1
FDNS	07ALL	0	20L	G15_085	FROM->TO	SHAMROCK (SHAMRCK2) 138/69/14.4KV TRANSFORMER CKT 1	63	69	0.40492	99.5	G15085_T 138.00 - RUSSELL 138KV CKT 1
FDNS	00NR	0	17SP	G15_085	FROM->TO	SWISSVALE - WEST GARDNER 345KV CKT 1	717	717	0.03436	105.8268	HOYT - STRANGER CREEK 345KV CKT 1
FDNS	00NR	0	17SP	G15_085	FROM->TO	SWISSVALE - WEST GARDNER 345KV CKT 1	717	717	0.0322	104.7282	G15074_T 345.00 - HOYT 345KV CKT 1
FDNS	00NR	0	16WP	G15_085	FROM->TO	SWISSVALE - WEST GARDNER 345KV CKT 1	717	717	0.03484	101.7741	HOYT - STRANGER CREEK 345KV CKT 1
FDNS	00NR	0	16WP	G15_085	FROM->TO	SWISSVALE - WEST GARDNER 345KV CKT 1	717	717	0.03348	101.0038	LACYGNE - WAVERLY7 345.00 345KV CKT 1
FDNS	00NR	0	16WP	G15_085	FROM->TO	SWISSVALE - WEST GARDNER 345KV CKT 1	717	717	0.03269	99.7	G15074_T 345.00 - HOYT 345KV CKT 1
FDNS	00NR	0	16WP	G15_085	FROM->TO	SWISSVALE - WEST GARDNER 345KV CKT 1	717	717	0.03348	99.6	WAVERLY7 345.00 - WOLF CREEK 345KV CKT 1
FDNS	00NR	0	16WP	G15_085	TO->FROM	TUPELO - TUPELO TAP 138KV CKT 1	143	143	0.03906	121.4293	PITTSBURG - VALLIANT 345KV CKT 1
FDNS	00NR	0	16WP	G15_085	TO->FROM	TUPELO - TUPELO TAP 138KV CKT 1	143	143	0.03906	121.4293	PITTSBURG - VALLIANT 345KV CKT 1
FDNS	00NR	0	16WP	G15_085	TO->FROM	TUPELO - TUPELO TAP 138KV CKT 1	143	143	0.04174	118.2481	G14-057T 345.00 - SUNNYSIDE 345KV CKT 1
FDNS	00NR	0	20WP	G15_085	TO->FROM	TUPELO - TUPELO TAP 138KV CKT 1	143	143	0.03983	116.9923	PITTSBURG - VALLIANT 345KV CKT 1

SOLUTION	GROUP	SCENARIO	SEASON	SOURCE	DIRECTION	MONITORED ELEMENT	RATEA (MVA)	RATEB(MVA)	TDF	TC%LOADING (% MVA)	CONTINGENCY
FDNS	00NR	0	20WP	G15_085	TO->FROM	TUPELO - TUPELO TAP 138KV CKT 1	143	143	0.03983	116.9923	PITTSBURG - VALLIANT 345KV CKT 1
FDNS	00NR	0	20WP	G15_085	TO->FROM	TUPELO - TUPELO TAP 138KV CKT 1	143	143	0.04218	116.2031	G14-057T 345.00 - SUNNYSIDE 345KV CKT 1
FDNS	00NR	0	16WP	G15_085	TO->FROM	TUPELO - TUPELO TAP 138KV CKT 1	143	143	0.03764	116.0635	PITTSBURG - SEMINOLE 345KV CKT 1
FDNS	00NR	0	16WP	G15_085	TO->FROM	TUPELO - TUPELO TAP 138KV CKT 1	143	143	0.03764	116.0635	PITTSBURG - SEMINOLE 345KV CKT 1
FDNS	00NR	0	16WP	G15_085	TO->FROM	TUPELO - TUPELO TAP 138KV CKT 1	143	143	0.03915	113.6166	HUGO - SUNNYSIDE 345KV CKT 1
FDNS	00NR	0	20WP	G15_085	TO->FROM	TUPELO - TUPELO TAP 138KV CKT 1	143	143	0.03821	112.7334	PITTSBURG - SEMINOLE 345KV CKT 1
FDNS	00NR	0	20WP	G15_085	TO->FROM	TUPELO - TUPELO TAP 138KV CKT 1	143	143	0.03821	112.7334	PITTSBURG - SEMINOLE 345KV CKT 1
FDNS	00NR	0	20WP	G15_085	TO->FROM	TUPELO - TUPELO TAP 138KV CKT 1	143	143	0.03971	110.2278	HUGO - SUNNYSIDE 345KV CKT 1
FDNS	00NR	0	16WP	G15_085	TO->FROM	TUPELO - TUPELO TAP 138KV CKT 1	143	143	0.04174	108.8007	G14-057T 345.00 - LAWTON EASTSIDE 345KV CKT 1
FDNS	00NR	0	20WP	G15_085	TO->FROM	TUPELO - TUPELO TAP 138KV CKT 1	143	143	0.04218	106.6819	G14-057T 345.00 - LAWTON EASTSIDE 345KV CKT 1
FDNS	00NR	0	16WP	G15_085	TO->FROM	TUPELO - TUPELO TAP 138KV CKT 1	143	143	0.03271	105.4472	CANADIAN RIVER () 345/138/13.8KV TRANSFORMER CKT 1
FDNS	00NR	0	16WP	G15_085	TO->FROM	TUPELO - TUPELO TAP 138KV CKT 1	143	143	0.03271	105.4472	CANADIAN RIVER () 345/138/13.8KV TRANSFORMER CKT 1
FDNS	00NR	0	16WP	G15_085	TO->FROM	TUPELO - TUPELO TAP 138KV CKT 1	143	143	0.03271	105.4191	CANADIAN RIVER - MCALESTER SOUTH 138KV CKT 1
FDNS	00NR	0	16WP	G15_085	TO->FROM	TUPELO - TUPELO TAP 138KV CKT 1	143	143	0.03271	105.4191	CANADIAN RIVER - MCALESTER SOUTH 138KV CKT 1
FDNS	00NR	0	16WP	G15_085	TO->FROM	TUPELO - TUPELO TAP 138KV CKT 1	143	143	0.03383	104.4273	RUSSETT - RUSSETT 138KV CKT 1
FDNS	00NR	0	20WP	G15_085	TO->FROM	TUPELO - TUPELO TAP 138KV CKT 1	143	143	0.03313	104.3412	CANADIAN RIVER () 345/138/13.8KV TRANSFORMER CKT 1
FDNS	00NR	0	20WP	G15_085	TO->FROM	TUPELO - TUPELO TAP 138KV CKT 1	143	143	0.03313	104.3412	CANADIAN RIVER () 345/138/13.8KV TRANSFORMER CKT 1
FDNS	00NR	0	20WP	G15_085	TO->FROM	TUPELO - TUPELO TAP 138KV CKT 1	143	143	0.03313	104.3172	CANADIAN RIVER - MCALESTER SOUTH 138KV CKT 1
FDNS	00NR	0	20WP	G15_085	TO->FROM	TUPELO - TUPELO TAP 138KV CKT 1	143	143	0.03313	104.3172	CANADIAN RIVER - MCALESTER SOUTH 138KV CKT 1
FDNS	00NR	0	16WP	G15_085	TO->FROM	TUPELO - TUPELO TAP 138KV CKT 1	143	143	0.03452	103.5211	CLEVELAND - G15066_T 345.00 345KV CKT 1
FDNS	00NR	0	16WP	G15_085	TO->FROM	TUPELO - TUPELO TAP 138KV CKT 1	143	143	0.03383	103.3688	BROWN - RUSSETT 138KV CKT 1
FDNS	00NR	0	20WP	G15_085	TO->FROM	TUPELO - TUPELO TAP 138KV CKT 1	143	143	0.03426	102.9022	RUSSETT - RUSSETT 138KV CKT 1
FDNS	00NR	0	16WP	G15_085	TO->FROM	TUPELO - TUPELO TAP 138KV CKT 1	143	143	0.03452	102.8494	G15066_T 345.00 - SOONER 345KV CKT 1
FDNS	00NR	0	16WP	G15_085	TO->FROM	TUPELO - TUPELO TAP 138KV CKT 1	143	143	0.03287	102.5905	P12:138:AEPW:MCALEST4:LONEOAK4
FDNS	00NR	0	20WP	G15_085	TO->FROM	TUPELO - TUPELO TAP 138KV CKT 1	143	143	0.03481	101.9106	CLEVELAND - G15066_T 345.00 345KV CKT 1
FDNS	00NR	0	20WP	G15_085	TO->FROM	TUPELO - TUPELO TAP 138KV CKT 1	143	143	0.03426	101.8195	BROWN - RUSSETT 138KV CKT 1
FDNS	00NR	0	20WP	G15_085	TO->FROM	TUPELO - TUPELO TAP 138KV CKT 1	143	143	0.03481	101.2456	G15066_T 345.00 - SOONER 345KV CKT 1
FDNS	00NR	0	16WP	G15_085	TO->FROM	TUPELO - TUPELO TAP 138KV CKT 1	143	143	0.03255	100.743	GEN509416 1-TURK GENERATION
FDNS	00NR	0	20WP	G15_085	TO->FROM	TUPELO - TUPELO TAP 138KV CKT 1	143	143	0.03335	100.7361	P12:138:AEPW:MCALEST4:LONEOAK4
FDNSLock	00NR	0	16WP	G15_085	TO->FROM	TUPELO - TUPELO TAP 138KV CKT 1	143	143	0.03255	100.5503	GEN509403 1-PIRKEY GENERATION
FDNS	00NR	0	16WP	G15_085	TO->FROM	TUPELO - TUPELO TAP 138KV CKT 1	143	143	0.03594	100	HEALDTON - LOCO 138KV CKT 1
FDNS	00NR	2	16WP	G15_085	FROM->TO	CIMARRON - DRAPER LAKE 345KV CKT 1	717	717	0.12267	132.2858	G14-057T 345.00 - SUNNYSIDE 345KV CKT 1
FDNS	00NR	2	16WP	G15_085	FROM->TO	CIMARRON - DRAPER LAKE 345KV CKT 1	717	717	0.12267	121.653	G14-057T 345.00 - LAWTON EASTSIDE 345KV CKT 1
FDNS	00NR	2	16WP	G15_085	FROM->TO	CIMARRON - DRAPER LAKE 345KV CKT 1	717	717	0.07764	116.2986	ARCADIA - SEMINOLE 345KV CKT 1
FDNS	00NR	2	16WP	G15_085	FROM->TO	CIMARRON - DRAPER LAKE 345KV CKT 1	717	717	0.08757	115.3464	CLEVELAND - G15066_T 345.00 345KV CKT 1
FDNS	00NR	2	16WP	G15_085	FROM->TO	CIMARRON - DRAPER LAKE 345KV CKT 1	717	717	0.09665	115.007	ARCADIA - NORTHWEST 345KV CKT 1
FDNS	00NR	2	16WP	G15_085	FROM->TO	CIMARRON - DRAPER LAKE 345KV CKT 1	717	717	0.08757	114.5672	G15066_T 345.00 - SOONER 345KV CKT 1
FDNS	00NR	2	16WP	G15_085	FROM->TO	CIMARRON - DRAPER LAKE 345KV CKT 1	717	717	0.08369	110.0545	CLEVELAND - TULSA NORTH 345KV CKT 1
FDNS	00NR	2	16WP	G15_085	FROM->TO	CIMARRON - DRAPER LAKE 345KV CKT 1	717	717	0.08369	110.0545	CLEVELAND - TULSA NORTH 345KV CKT 1
FDNS	00NR	2	16WP	G15_085	FROM->TO	CIMARRON - DRAPER LAKE 345KV CKT 1	717	717	0.07852	109.8574	MATHWSN7 345.00 - NORTHWEST 345KV CKT 1
FDNS	00NR	2	16WP	G15_085	FROM->TO	CIMARRON - DRAPER LAKE 345KV CKT 1	717	717	0.07673	108.9846	CIMARRON - SARA 138KV CKT 1
FDNS	00NR	2	16WP	G15_085	FROM->TO	CIMARRON - DRAPER LAKE 345KV CKT 1	717	717	0.08463	108.6997	P12:138:WFEC:MSL03
FDNS	00NR	2	16WP	G15_085	FROM->TO	CIMARRON - DRAPER LAKE 345KV CKT 1	717	717	0.07255	107.8143	CIMARRON (CIMARON2) 345/138/13.8KV TRANSFORMER CKT 1
FDNS	00NR	2	16WP	G15_085	FROM->TO	CIMARRON - DRAPER LAKE 345KV CKT 1	717	717	0.07673	107.6928	SARA - STHLAKE4 138.00 138KV CKT 1
FDNS	00NR	2	16WP	G15_085	FROM->TO	CIMARRON - DRAPER LAKE 345KV CKT 1	717	717	0.07262	107.6451	CIMARRON (CIMARON1) 345/138/13.8KV TRANSFORMER CKT 1
FDNS	00NR	2	16WP	G15_085	FROM->TO	CIMARRON - DRAPER LAKE 345KV CKT 1	717	717	0.07673	107.4934	MCCLAIN - STHLAKE4 138.00 138KV CKT 1
FDNS	00NR	2	16WP	G15_085	FROM->TO	CIMARRON - DRAPER LAKE 345KV CKT 1	717	717	0.07724	107.2231	CIMARRON - CZECH HALL 138KV CKT 1
FDNS	00NR	2	16WP	G15_085	FROM->TO	CIMARRON - DRAPER LAKE 345KV CKT 1	717	717	0.07724	106.8696	CZECH HALL - XEROX 138KV CKT 1
FDNS	00NR	2	16WP	G15_085	FROM->TO	CIMARRON - DRAPER LAKE 345KV CKT 1	717	717	0.07724	106.8501	MORGAN - XEROX 138KV CKT 1
FDNS	00NR	2	16WP	G15_085	FROM->TO	CIMARRON - DRAPER LAKE 345KV CKT 1	717	717	0.07724	106.733	MORGAN - MUSTANG 138KV CKT 1
FDNS	00NR	2	16WP	G15_085	FROM->TO	CIMARRON - DRAPER LAKE 345KV CKT 1	717	717	0.08238	106.6653	ANADARKO - POCASSETT 138KV CKT 1
FDNS	00NR	2	16WP	G15_085	FROM->TO	CIMARRON - DRAPER LAKE 345KV CKT 1	717	717	0.08238	106.4685	POCASSETT - TUTTLE 138KV CKT 1
FDNS	00NR	2	16WP	G15_085	FROM->TO	CIMARRON - DRAPER LAKE 345KV CKT 1	717	717	0.07438	106.4502	GEN515040 1-SEMINOLE 1G
FDNS	00NR	2	16WP	G15_085	FROM->TO	CIMARRON - DRAPER LAKE 345KV CKT 1	717	717	0.07521	106.4159	LACYGNE - WAVERLY7 345.00 345KV CKT 1
FDNS	00NR	2	16WP	G15_085	FROM->TO	CIMARRON - DRAPER LAKE 345KV CKT 1	717	717	0.08077	106.3829	CORN TAP - NAPLESTP 138.00 138KV CKT 1
FDNS	00NR	2	16WP	G15_085	FROM->TO	CIMARRON - DRAPER LAKE 345KV CKT 1	717	717	0.08144	106.3288	JOHNSON COUNTY - SUNNYSIDE 345KV CKT 1
FDNS	00NR	2	16WP	G15_085	FROM->TO	CIMARRON - DRAPER LAKE 345KV CKT 1	717	717	0.08077	106.2872	NAPLESTP 138.00 - PAYNE 138.00 138KV CKT 1
FDNS	00NR	2	16WP	G15_085	FROM->TO	CIMARRON - DRAPER LAKE 345KV CKT 1	717	717	0.07521	106.2133	WAVERLY7 345.00 - WOLF CREEK 345KV CKT 1
FDNSLock	00NR	2	16WP	G15_085	FROM->TO	CIMARRON - DRAPER LAKE 345KV CKT 1	717	717	0.07438	106.211	GEN509403 1-PIRKEY GENERATION
FDNS	00NR	2	16WP	G15_085	FROM->TO	CIMARRON - DRAPER LAKE 345KV CKT 1	717	717	0.07438	106.1349	GEN509416 1-TURK GENERATION
FDNS	00NR	2	16WP	G15_085	FROM->TO	CIMARRON - DRAPER LAKE 345KV CKT 1	717	717	0.07438	106.1171	GEN501801 1-DOLET HILLS UNIT1
FDNS	00NR	2	16WP	G15_085	FROM->TO	CIMARRON - DRAPER LAKE 345KV CKT 1	717	717	0.07649	106.0006	CANEYRV7 345.00 - NEOSHO 345KV CKT 1
FDNS	00NR	2	16WP	G15_085	FROM->TO	CIMARRON - DRAPER LAKE 345KV CKT 1	717	717	0.08238	105.9607	BRIDGECR 138.00 - TUTTLE 138KV CKT 1
FDNS	00NR	2	17SP	G15_085	FROM->TO	CIMARRON - DRAPER LAKE 345KV CKT 1	717	717	0.12297	105.796	G14-057T 345.00 - SUNNYSIDE 345KV CKT 1
FDNSLock	00NR	2	16WP	G15_085	FROM->TO	CIMARRON - DRAPER LAKE 345KV CKT 1	717	717	0.07438	105.7859	GEN336821 1-GRAND GULF UNIT
FDNS	00NR	2	16WP	G15_085	FROM->TO	CIMARRON - DRAPER LAKE 345KV CKT 1	717	717	0.07438	105.7689	GEN515042 1-SEMINOLE 3G
FDNS	00NR	2	16WP	G15_085	FROM->TO	CIMARRON - DRAPER LAKE 345KV CKT 1	717	717	0.07649	105.7184	CANEYRV7 345.00 - LATHAMS7 345.00 345KV CKT 1
FDNS	00NR	2	16WP	G15_085	FROM->TO	CIMARRON - DRAPER LAKE 345KV CKT 1	717	717	0.08238	105.5913	BRIDGECR 138.00 - SUNSHINE CANYON 138KV CKT 1
FDNS	00NR	2	16WP	G15_085	FROM->TO	CIMARRON - DRAPER LAKE 345KV CKT 1	717	717	0.08238	105.5799	P12:138:WFEC:MSL01
FDNS	00NR	2	16WP	G15_085	FROM->TO	CIMARRON - DRAPER LAKE 345KV CKT 1	717	717	0.07438	105.5352	GEN515041 1-SEMINOLE 2G
FDNSLock	00NR	2	16WP	G15_085	FROM->TO	CIMARRON - DRAPER LAKE 345KV CKT 1	717	717	0.07438	105.4883	GEN336153 1-WATERFORD UNIT#3
FDNS	00NR	2	16WP	G15_085	FROM->TO	CIMARRON - DRAPER LAKE 345KV CKT 1	717	717	0.08648	105.2987	CIMARRON - NORTHWEST 345KV CKT 1
FDNS	00NR	2	16WP	G15_085	FROM->TO	CIMARRON - DRAPER LAKE 345KV CKT 1	717	717	0.07438	105.2844	GEN509406 1-WELSH #3
FDNS	00NR	2	16WP	G15_085	FROM->TO	CIMARRON - DRAPER LAKE 345KV CKT 1	717	717	0.07438	105.2843	GEN509404 1-WELSH #1
FDNS	00NR	2	16WP	G15_085	FROM->TO	CIMARRON - DRAPER LAKE 345KV CKT 1	717	717	0.07649	105.2825	LATHAMS7 345.00 - ROSE HILL 345KV CKT 1
FDNSLock	00NR	2	16WP	G15_085	FROM->TO	CIMARRON - DRAPER LAKE 345KV CKT 1	717	717	0.07438	105.1837	GEN335831 1-RIVERBEND UNIT#1
FDNSLock	00NR	2	16WP	G15_085	FROM->TO	CIMARRON - DRAPER LAKE 345KV CKT 1	717	717	0.07438	105.1676	GEN337911 1-ARKANSAS NUCLEAR ONE UNIT #2
FDNS	00NR	2	16WP	G15_085	FROM->TO	CIMARRON - DRAPER LAKE 345KV CKT 1	717	717	0.07841	104.9003	HUGO - SUNNYSIDE 345KV CKT 1
FDNS	00NR	2	16WP	G15_085	FROM->TO	CIMARRON - DRAPER LAKE 345KV CKT 1	717	717	0.07078	104.8702	CANADIAN RIVER - MUSKOGEE 345KV CKT 1

SOLUTION	GROUP	SCENARIO	SEASON	SOURCE	DIRECTION	MONITORED ELEMENT	RATEA (MVA)	RATEB(MVA)	TDF	TC%LOADING (% MVA)	CONTINGENCY
FDNS	00NR	2	16WP	G15_085	FROM->TO	CIMARRON - DRAPER LAKE 345KV CKT 1	717	717	0.07438	104.7987	GRAND GULF 500/22.0KV TRANSFORMER CKT 1
FDNS	00NR	2	16WP	G15_085	FROM->TO	CIMARRON - DRAPER LAKE 345KV CKT 1	717	717	0.07407	104.7932	P12:138:OKGE:3TERM14
FDNS	00NR	2	16WP	G15_085	FROM->TO	CIMARRON - DRAPER LAKE 345KV CKT 1	717	717	0.07438	104.7893	GEN337910 1-ARKANSAS NUCLEAR ONE UNIT #1
FDNS	00NR	2	16WP	G15_085	FROM->TO	CIMARRON - DRAPER LAKE 345KV CKT 1	717	717	0.08221	104.7694	JOHNSON COUNTY - PITTSBURG 345KV CKT 1
FDNS	00NR	2	16WP	G15_085	FROM->TO	CIMARRON - DRAPER LAKE 345KV CKT 1	717	717	0.08221	104.7694	JOHNSON COUNTY - PITTSBURG 345KV CKT 1
FDNS	00NR	2	16WP	G15_085	FROM->TO	CIMARRON - DRAPER LAKE 345KV CKT 1	717	717	0.07507	104.7523	HORSESHOE LAKE - JONES TAP 138KV CKT 1
FDNS	00NR	2	16WP	G15_085	FROM->TO	CIMARRON - DRAPER LAKE 345KV CKT 1	717	717	0.07503	104.7272	MORISNT4 138.00 - STILLWATER 138KV CKT 1
FDNS	00NR	2	16WP	G15_085	FROM->TO	CIMARRON - DRAPER LAKE 345KV CKT 1	717	717	0.07504	104.7226	P12:138:OKGE:3TERM2
FDNS	00NR	2	16WP	G15_085	FROM->TO	CIMARRON - DRAPER LAKE 345KV CKT 1	717	717	0.07984	104.7077	REDBUD - RIVERSIDE STATION 345KV CKT 1
FDNS	00NR	2	16WP	G15_085	FROM->TO	CIMARRON - DRAPER LAKE 345KV CKT 1	717	717	0.07984	104.7077	REDBUD - RIVERSIDE STATION 345KV CKT 1
FDNS	00NR	2	16WP	G15_085	FROM->TO	CIMARRON - DRAPER LAKE 345KV CKT 1	717	717	0.07438	104.6532	GEN515226 1-MUSKOGEE 6G
FDNS	00NR	2	16WP	G15_085	FROM->TO	CIMARRON - DRAPER LAKE 345KV CKT 1	717	717	0.07438	104.6355	GEN501813 1-RODEMACHER UNIT 3
FDNS	00NR	2	16WP	G15_085	FROM->TO	CIMARRON - DRAPER LAKE 345KV CKT 1	717	717	0.0761	104.5384	7SAREPTA% 345.00 - LONGWOOD 345KV CKT 1
FDNS	00NR	2	16WP	G15_085	FROM->TO	CIMARRON - DRAPER LAKE 345KV CKT 1	717	717	0.0761	104.5384	7SAREPTA% 345.00 - LONGWOOD 345KV CKT 1
FDNS	00NR	2	16WP	G15_085	FROM->TO	CIMARRON - DRAPER LAKE 345KV CKT 1	717	717	0.07435	104.5379	NORTHWEST (NORTWST2) 345/138/13.8KV TRANSFORMER CKT 1
FDNS	00NR	2	16WP	G15_085	FROM->TO	CIMARRON - DRAPER LAKE 345KV CKT 1	717	717	0.07437	104.534	ARCADIA - KAMO MEMORIAL 138KV CKT 1
FDNS	00NR	2	16WP	G15_085	FROM->TO	CIMARRON - DRAPER LAKE 345KV CKT 1	717	717	0.08396	104.5266	BAILEY4 138.00 - SUNSHINE CANYON 138KV CKT 1
FDNS	00NR	2	16WP	G15_085	FROM->TO	CIMARRON - DRAPER LAKE 345KV CKT 1	717	717	0.07441	104.5182	P12:138:OKGE:3TERM12
FDNS	00NR	2	16WP	G15_085	FROM->TO	CIMARRON - DRAPER LAKE 345KV CKT 1	717	717	0.07509	104.501	DOLET HILLS - SOUTHWEST SHREVEPORT 345KV CKT 1
FDNS	00NR	2	16WP	G15_085	FROM->TO	CIMARRON - DRAPER LAKE 345KV CKT 1	717	717	0.07509	104.501	DOLET HILLS - SOUTHWEST SHREVEPORT 345KV CKT 1
FDNS	00NR	2	16WP	G15_085	FROM->TO	CIMARRON - DRAPER LAKE 345KV CKT 1	717	717	0.07438	104.4549	GEN515225 1-MUSKOGEE 5G
FDNS	00NR	2	16WP	G15_085	FROM->TO	CIMARRON - DRAPER LAKE 345KV CKT 1	717	717	0.07438	104.4548	GEN515223 1-MUSKOGEE 4G
FDNS	00NR	2	16WP	G15_085	FROM->TO	CIMARRON - DRAPER LAKE 345KV CKT 1	717	717	0.07438	104.447	GEN335206 1-NELSON UNIT 6
FDNS	00NR	2	16WP	G15_085	FROM->TO	CIMARRON - DRAPER LAKE 345KV CKT 1	717	717	0.07461	104.4391	MEMORIAL - SKYLINE 138KV CKT 1
FDNS	00NR	2	16WP	G15_085	FROM->TO	CIMARRON - DRAPER LAKE 345KV CKT 1	717	717	0.06277	104.3944	GRACEMONT (BANK 1) 345/138/13.8KV TRANSFORMER CKT 1
FDNS	00NR	2	16WP	G15_085	FROM->TO	CIMARRON - DRAPER LAKE 345KV CKT 1	717	717	0.07506	104.3285	QUAIL CREEK - SKYLINE 138KV CKT 1
FDNS	00NR	2	16WP	G15_085	FROM->TO	CIMARRON - DRAPER LAKE 345KV CKT 1	717	717	0.07438	104.3093	GEN509409 1-WILKES #3
FDNS	00NR	2	16WP	G15_085	FROM->TO	CIMARRON - DRAPER LAKE 345KV CKT 1	717	717	0.07438	104.3078	GEN337653 1-WHITE BLUFF UNIT #2
FDNS	00NR	2	16WP	G15_085	FROM->TO	CIMARRON - DRAPER LAKE 345KV CKT 1	717	717	0.07448	104.2877	P12:138:OKGE:3TERM18
FDNS	00NR	2	16WP	G15_085	FROM->TO	CIMARRON - DRAPER LAKE 345KV CKT 1	717	717	0.07438	104.2759	GEN501812 1-RODEMACHER UNIT 2
FDNS	00NR	2	16WP	G15_085	FROM->TO	CIMARRON - DRAPER LAKE 345KV CKT 1	717	717	0.07435	104.2748	NORTHWEST (NORTWST4) 345/138/13.8KV TRANSFORMER CKT 1
FDNS	00NR	2	16WP	G15_085	FROM->TO	CIMARRON - DRAPER LAKE 345KV CKT 1	717	717	0.08396	104.2279	BAILEY4 138.00 - WESTMOORE 138KV CKT 1
FDNS	00NR	2	16WP	G15_085	FROM->TO	CIMARRON - DRAPER LAKE 345KV CKT 1	717	717	0.07438	104.2172	NEW MADRID 161/22.0KV TRANSFORMER CKT 1
FDNS	00NR	2	16WP	G15_085	FROM->TO	CIMARRON - DRAPER LAKE 345KV CKT 1	717	717	0.07442	104.2066	36 & MERIDIAN - CHEMTRON 138KV CKT 1
FDNS	00NR	2	16WP	G15_085	FROM->TO	CIMARRON - DRAPER LAKE 345KV CKT 1	717	717	0.07438	104.2039	NEW MADRID 345/22.0KV TRANSFORMER CKT 1
FDNS	00NR	2	16WP	G15_085	FROM->TO	CIMARRON - DRAPER LAKE 345KV CKT 1	717	717	0.07438	104.1834	GEN520947 1-HUGO1
FDNS	00NR	2	16WP	G15_085	FROM->TO	CIMARRON - DRAPER LAKE 345KV CKT 1	717	717	0.07564	104.1783	THISTLE7 345.00 - WOODWARD DISTRICT EHV 345KV CKT 1
FDNS	00NR	2	16WP	G15_085	FROM->TO	CIMARRON - DRAPER LAKE 345KV CKT 1	717	717	0.07564	104.1783	THISTLE7 345.00 - WOODWARD DISTRICT EHV 345KV CKT 1
FDNS	00NR	2	16WP	G15_085	FROM->TO	CIMARRON - DRAPER LAKE 345KV CKT 1	717	717	0.07564	104.1783	THISTLE7 345.00 - WOODWARD DISTRICT EHV 345KV CKT 2
FDNS	00NR	2	16WP	G15_085	FROM->TO	CIMARRON - DRAPER LAKE 345KV CKT 1	717	717	0.07564	104.1783	THISTLE7 345.00 - WOODWARD DISTRICT EHV 345KV CKT 2
FDNS	00NR	2	16WP	G15_085	FROM->TO	CIMARRON - DRAPER LAKE 345KV CKT 1	717	717	0.07438	104.1769	GEN337652 1-WHITE BLUFF UNIT #1
FDNS	00NR	2	16WP	G15_085	FROM->TO	CIMARRON - DRAPER LAKE 345KV CKT 1	717	717	0.07435	104.1499	NORTHWEST (NORTWST3) 345/138/13.8KV TRANSFORMER CKT 1
FDNS	00NR	2	16WP	G15_085	FROM->TO	CIMARRON - DRAPER LAKE 345KV CKT 1	717	717	0.07528	104.1354	7SAREPTA% 345.00 - ELDORADO EHV 345KV CKT 1
FDNS	00NR	2	16WP	G15_085	FROM->TO	CIMARRON - DRAPER LAKE 345KV CKT 1	717	717	0.07528	104.1353	3TR3AR8EL7EL
FDNS	00NR	2	16WP	G15_085	FROM->TO	CIMARRON - DRAPER LAKE 345KV CKT 1	717	717	0.07528	104.1287	ELDORADO EHV 500/345KV TRANSFORMER CKT 1
FDNS	00NR	2	16WP	G15_085	FROM->TO	CIMARRON - DRAPER LAKE 345KV CKT 1	717	717	0.07442	104.1197	CHEMTRON - PENNSYLVANIA 138KV CKT 1
FDNS	00NR	2	16WP	G15_085	FROM->TO	CIMARRON - DRAPER LAKE 345KV CKT 1	717	717	0.07482	104.1015	G15052_T 345.00 - ROSE HILL 345KV CKT 1
FDNS	00NR	2	16WP	G15_085	FROM->TO	CIMARRON - DRAPER LAKE 345KV CKT 1	717	717	0.07466	104.098	G15074_T 345.00 - HOYT 345KV CKT 1
FDNS	00NR	2	16WP	G15_085	FROM->TO	CIMARRON - DRAPER LAKE 345KV CKT 1	717	717	0.07916	104.0801	BLANCHARD - CORNVILLE 138KV CKT 1
FDNS	00NR	2	16WP	G15_085	FROM->TO	CIMARRON - DRAPER LAKE 345KV CKT 1	717	717	0.07687	104.0467	COMANCHE - LOCO 138KV CKT 1
FDNS	00NR	2	16WP	G15_085	FROM->TO	CIMARRON - DRAPER LAKE 345KV CKT 1	717	717	0.07447	104.0399	P12:138:OKGE:3TERM17
FDNS	00NR	2	16WP	G15_085	FROM->TO	CIMARRON - DRAPER LAKE 345KV CKT 1	717	717	0.07438	104.0215	GEN515577 1-ARBWND11 0.6900
FDNS	00NR	2	16WP	G15_085	FROM->TO	CIMARRON - DRAPER LAKE 345KV CKT 1	717	717	0.075	103.9977	P12:138:OKGE:3TERM11
FDNS	00NR	2	16WP	G15_085	FROM->TO	CIMARRON - DRAPER LAKE 345KV CKT 1	717	717	0.07916	103.9907	P12:138:AEPW-OGE:CORNVIL4:MAUD 4
FDNS	00NR	2	16WP	G15_085	FROM->TO	CIMARRON - DRAPER LAKE 345KV CKT 1	717	717	0.07438	103.9807	GEN334440 1-SABINE UNIT 4
FDNS	00NR	2	16WP	G15_085	FROM->TO	CIMARRON - DRAPER LAKE 345KV CKT 1	717	717	0.07441	103.9772	LONEOAK - NORTHWEST 138KV CKT 1
FDNS	00NR	2	16WP	G15_085	FROM->TO	CIMARRON - DRAPER LAKE 345KV CKT 1	717	717	0.07438	103.973	DELL 500 - ESSEX UNIT 2 500KV CKT Z1
FDNS	00NR	2	16WP	G15_085	FROM->TO	CIMARRON - DRAPER LAKE 345KV CKT 1	717	717	0.07509	103.9634	KETCH TAP - NORTHWEST 138KV CKT 1
FDNS	00NR	2	16WP	G15_085	FROM->TO	CIMARRON - DRAPER LAKE 345KV CKT 1	717	717	0.07491	103.9551	DIVISION AVE - LAKESIDE 138KV CKT 1
FDNS	00NR	2	16WP	G15_085	FROM->TO	CIMARRON - DRAPER LAKE 345KV CKT 1	717	717	0.08396	103.9475	FRANKLIN SW - WESTMOORE 138KV CKT 1
FDNS	00NR	2	16WP	G15_085	FROM->TO	CIMARRON - DRAPER LAKE 345KV CKT 1	717	717	0.07365	103.9322	HORSESHOE LAKE - KAMO MEMORIAL 138KV CKT 1
FDNS	00NR	2	16WP	G15_085	FROM->TO	CIMARRON - DRAPER LAKE 345KV CKT 1	717	717	0.07384	103.9267	G14-074T 345.00 - OKLAUNION 345KV CKT 1
FDNS	00NR	2	16WP	G15_085	FROM->TO	CIMARRON - DRAPER LAKE 345KV CKT 1	717	717	0.0741	103.8906	NORTHWEST - PANTHER 138KV CKT 1
FDNS	00NR	2	16WP	G15_085	FROM->TO	CIMARRON - DRAPER LAKE 345KV CKT 1	717	717	0.07916	103.8877	BLANCHARD - MAUD 138KV CKT 1
FDNS	00NR	2	16WP	G15_085	FROM->TO	CIMARRON - DRAPER LAKE 345KV CKT 1	717	717	0.07215	103.8843	CLARKSVILLE - ONETA 345KV CKT 1
FDNS	00NR	2	16WP	G15_085	FROM->TO	CIMARRON - DRAPER LAKE 345KV CKT 1	717	717	0.07215	103.8843	CLARKSVILLE - ONETA 345KV CKT 1
FDNS	00NR	2	16WP	G15_085	FROM->TO	CIMARRON - DRAPER LAKE 345KV CKT 1	717	717	0.07351	103.8701	P12:138:OKGE:3TERM20
FDNS	00NR	2	16WP	G15_085	FROM->TO	CIMARRON - DRAPER LAKE 345KV CKT 1	717	717	0.07619	103.8699	FINNEY SWITCHING STATION - HOLCOMB 345KV CKT 1
FDNS	00NR	2	16WP	G15_085	FROM->TO	CIMARRON - DRAPER LAKE 345KV CKT 1	717	717	0.07619	103.8699	FINNEY SWITCHING STATION - HOLCOMB 345KV CKT 1
FDNS	00NR	2	16WP	G15_085	FROM->TO	CIMARRON - DRAPER LAKE 345KV CKT 1	717	717	0.07588	103.8644	CIMARRON - HAYMAKER 138KV CKT 1
FDNS	00NR	2	16WP	G15_085	FROM->TO	CIMARRON - DRAPER LAKE 345KV CKT 1	717	717	0.07502	103.8595	P12:138:OKGE:3TERM47
FDNS	00NR	2	16WP	G15_085	FROM->TO	CIMARRON - DRAPER LAKE 345KV CKT 1	717	717	0.07491	103.8546	HEFNER - LAKESIDE 138KV CKT 1
FDNS	00NR	2	16WP	G15_085	FROM->TO	CIMARRON - DRAPER LAKE 345KV CKT 1	717	717	0.07438	103.854	GEN336252 1-NINEMILE POINT UNIT#5
FDNS	00NR	2	16WP	G15_085	FROM->TO	CIMARRON - DRAPER LAKE 345KV CKT 1	717	717	0.07438	103.8496	DOLET HILLS 345/24.0KV TRANSFORMER CKT 1
FDNS	00NR	2	16WP	G15_085	FROM->TO	CIMARRON - DRAPER LAKE 345KV CKT 1	717	717	0.0741	103.8403	PANTHER - SILVER LAKE 138KV CKT 1
FDNS	00NR	2	16WP	G15_085	FROM->TO	CIMARRON - DRAPER LAKE 345KV CKT 1	717	717	0.07496	103.812	BLACKBERRY - NEOSHO 345KV CKT 1
FDNS	00NR	2	16WP	G15_085	FROM->TO	CIMARRON - DRAPER LAKE 345KV CKT 1	717	717	0.07496	103.812	BLACKBERRY - NEOSHO 345KV CKT 1
FDNS	00NR	2	16WP	G15_085	FROM->TO	CIMARRON - DRAPER LAKE 345KV CKT 1	717	717	0.07438	103.8065	WHITE BLUFF 500/26.0KV TRANSFORMER CKT 1
FDNS	00NR	2	16WP	G15_085	FROM->TO	CIMARRON - DRAPER LAKE 345KV CKT 1	717	717	0.07438	103.8	GEN300006 1-NEW MADRID UNIT 1

SOLUTION	GROUP	SCENARIO	SEASON	SOURCE	DIRECTION	MONITORED ELEMENT	RATEA (MVA)	RATEB(MVA)	TDF	TC%LOADING (% MVA)	CONTINGENCY
FDNS	00NR	2	16WP	G15_085	FROM->TO	CIMARRON - DRAPER LAKE 345KV CKT 1	717	717	0.07438	103.8	GEN300007 1-NEW MADRID UNIT 2
FDNS	00NR	2	16WP	G15_085	FROM->TO	CIMARRON - DRAPER LAKE 345KV CKT 1	717	717	0.07438	103.7877	KETCH - KETCH TAP 138KV CKT 1
FDNS	00NR	2	16WP	G15_085	FROM->TO	CIMARRON - DRAPER LAKE 345KV CKT 1	717	717	0.07466	103.781	HOYT - STRANGER CREEK 345KV CKT 1
FDNS	00NR	2	16WP	G15_085	FROM->TO	CIMARRON - DRAPER LAKE 345KV CKT 1	717	717	0.07508	103.7805	EMPORIA ENERGY CENTER - G14_001T 345.00 345KV CKT 1
FDNS	00NR	2	16WP	G15_085	FROM->TO	CIMARRON - DRAPER LAKE 345KV CKT 1	717	717	0.07408	103.7671	DIVISION AVE - MUSTANG 138KV CKT 1
FDNS	00NR	2	16WP	G15_085	FROM->TO	CIMARRON - DRAPER LAKE 345KV CKT 1	717	717	0.07588	103.7585	DIVISION AVE - HAYMAKER 138KV CKT 1
FDNS	00NR	2	16WP	G15_085	FROM->TO	CIMARRON - DRAPER LAKE 345KV CKT 1	717	717	0.07523	103.7498	P12:138:AEPW-OGE:SHIDLER4:OSAGE 4
FDNS	00NR	2	16WP	G15_085	FROM->TO	CIMARRON - DRAPER LAKE 345KV CKT 1	717	717	0.07477	103.7469	SWISSVALE - WEST GARDNER 345KV CKT 1
FDNS	00NR	2	16WP	G15_085	FROM->TO	CIMARRON - DRAPER LAKE 345KV CKT 1	717	717	0.07476	103.7308	MCCLAIN - PLEASANT VALLEY 138KV CKT 1
FDNS	00NR	2	16WP	G15_085	FROM->TO	CIMARRON - DRAPER LAKE 345KV CKT 1	717	717	0.07466	103.7268	G15074_T 345.00 - JEFFREY ENERGY CENTER 345KV CKT 1
FDNS	00NR	2	16WP	G15_085	FROM->TO	CIMARRON - DRAPER LAKE 345KV CKT 1	717	717	0.07438	103.7245	GEN509408 1-WILKES #2
FDNS	00NR	2	16WP	G15_085	FROM->TO	CIMARRON - DRAPER LAKE 345KV CKT 1	717	717	0.07537	103.7165	P12:138:WFEC:MSL02
FDNS	00NR	2	16WP	G15_085	FROM->TO	CIMARRON - DRAPER LAKE 345KV CKT 1	717	717	0.07438	103.7149	GEN336831 1-BAXTER WILSON SES
FDNS	00NR	2	16WP	G15_085	FROM->TO	CIMARRON - DRAPER LAKE 345KV CKT 1	717	717	0.07438	103.71	GEN335204 1-NELSON UNIT 4
FDNS	00NR	2	16WP	G15_085	FROM->TO	CIMARRON - DRAPER LAKE 345KV CKT 1	717	717	0.07454	103.7	G15088_T 345.00 - MOORE 345KV CKT 1
FDNS	00NR	2	16WP	G15_085	FROM->TO	CIMARRON - DRAPER LAKE 345KV CKT 1	717	717	0.07287	103.697	P12:138:AEPW:OKMULGE4:R.S.S-4
FDNS	00NR	2	16WP	G15_085	FROM->TO	CIMARRON - DRAPER LAKE 345KV CKT 1	717	717	0.07438	103.6811	GEN506754 1-LEBROCK STEAM 1
FDNS	00NR	2	16WP	G15_085	FROM->TO	CIMARRON - DRAPER LAKE 345KV CKT 1	717	717	0.07515	103.6808	ANADARKO - GEORGIA 138KV CKT 1
FDNS	00NR	2	16WP	G15_085	FROM->TO	CIMARRON - DRAPER LAKE 345KV CKT 1	717	717	0.07489	103.6772	CLASSEN - ROBINSON 138KV CKT 1
FDNS	00NR	2	16WP	G15_085	FROM->TO	CIMARRON - DRAPER LAKE 345KV CKT 1	717	717	0.07438	103.6587	GEN334441 1-SABINE UNIT 5
FDNS	00NR	2	16WP	G15_085	FROM->TO	CIMARRON - DRAPER LAKE 345KV CKT 1	717	717	0.07619	103.6579	FINNEY SWITCHING STATION - Hitchland Interchange 345KV CKT 1
FDNS	00NR	2	16WP	G15_085	FROM->TO	CIMARRON - DRAPER LAKE 345KV CKT 1	717	717	0.07513	103.6575	BENTON - WICHITA 345KV CKT 1
FDNS	00NR	2	16WP	G15_085	FROM->TO	CIMARRON - DRAPER LAKE 345KV CKT 1	717	717	0.0793	103.6548	CRINER - PAYNE 138.00 138KV CKT 1
FDNS	00NR	2	16WP	G15_085	FROM->TO	CIMARRON - DRAPER LAKE 345KV CKT 1	717	717	0.07438	103.6537	GEN334071 1-LEWIS CREEK 2
FDNS	00NR	2	16WP	G15_085	FROM->TO	CIMARRON - DRAPER LAKE 345KV CKT 1	717	717	0.07508	103.6536	G14_001T 345.00 - WICHITA 345KV CKT 1
FDNS	00NR	2	16WP	G15_085	FROM->TO	CIMARRON - DRAPER LAKE 345KV CKT 1	717	717	0.07494	103.6481	LACYGNE - NEOSHO 345KV CKT 1
FDNS	00NR	2	16WP	G15_085	FROM->TO	CIMARRON - DRAPER LAKE 345KV CKT 1	717	717	0.07438	103.6458	GEN334070 1-LEWIS CREEK 1
FDNS	00NR	2	16WP	G15_085	FROM->TO	CIMARRON - DRAPER LAKE 345KV CKT 1	717	717	0.07483	103.6422	WEBRE - WELLS 500KV CKT 1
FDNSLock	00NR	2	16WP	G15_085	FROM->TO	CIMARRON - DRAPER LAKE 345KV CKT 1	717	717	0.07438	103.6347	GEN590011 2-ERCOT EQUIVALENCE
FDNS	00NR	2	16WP	G15_085	FROM->TO	CIMARRON - DRAPER LAKE 345KV CKT 1	717	717	0.07438	103.6296	GEN336251 1-NINEMILE POINT UNIT#4
FDNS	00NR	2	16WP	G15_085	FROM->TO	CIMARRON - DRAPER LAKE 345KV CKT 1	717	717	0.07471	103.623	EMPORIA ENERGY CENTER - SWISSVALE 345KV CKT 1
FDNS	00NR	2	16WP	G15_085	FROM->TO	CIMARRON - DRAPER LAKE 345KV CKT 1	717	717	0.07515	103.6205	FLETCHER - GEORGIA 138KV CKT 1
FDNSLock	00NR	2	16WP	G15_085	FROM->TO	CIMARRON - DRAPER LAKE 345KV CKT 1	717	717	0.07438	103.5924	GEN590010 1-ERCOT EQUIVALENCE
FDNS	00NR	2	16WP	G15_085	FROM->TO	CIMARRON - DRAPER LAKE 345KV CKT 1	717	717	0.07479	103.5849	G1524G1525 345.00 - THISTLE7 345.00 345KV CKT 1
FDNS	00NR	2	16WP	G15_085	FROM->TO	CIMARRON - DRAPER LAKE 345KV CKT 1	717	717	0.07479	103.5849	G1524G1525 345.00 - THISTLE7 345.00 345KV CKT 2
FDNS	00NR	2	16WP	G15_085	FROM->TO	CIMARRON - DRAPER LAKE 345KV CKT 1	717	717	0.07438	103.5789	GEN503909 1-FULTONU1 1 16.000
FDNSLock	00NR	2	16WP	G15_085	FROM->TO	CIMARRON - DRAPER LAKE 345KV CKT 1	717	717	0.07438	103.5759	GEN338146 1-INDEPENDENCE UNIT #2
FDNS	00NR	2	16WP	G15_085	FROM->TO	CIMARRON - DRAPER LAKE 345KV CKT 1	717	717	0.07441	103.5715	LONEOAK - QUAIL CREEK 138KV CKT 1
FDNS	00NR	2	16WP	G15_085	FROM->TO	CIMARRON - DRAPER LAKE 345KV CKT 1	717	717	0.07417	103.5689	WOODRING (WOODRNG2) 345/138/13.8KV TRANSFORMER CKT 1
FDNS	00NR	2	16WP	G15_085	FROM->TO	CIMARRON - DRAPER LAKE 345KV CKT 1	717	717	0.07438	103.5686	GEN501811 1-RODEMACHER UNIT 1
FDNS	00NR	2	16WP	G15_085	FROM->TO	CIMARRON - DRAPER LAKE 345KV CKT 1	717	717	0.07522	103.5651	EMPIRE - FLETCHER 138KV CKT 1
FDNS	00NR	2	16WP	G15_085	FROM->TO	CIMARRON - DRAPER LAKE 345KV CKT 1	717	717	0.0793	103.5547	COLE - CRINER 138KV CKT 1
FDNS	00NR	2	16WP	G15_085	FROM->TO	CIMARRON - DRAPER LAKE 345KV CKT 1	717	717	0.07523	103.5434	OSAGE - WEBB CITY TAP 138KV CKT 1
FDNS	00NR	2	16WP	G15_085	FROM->TO	CIMARRON - DRAPER LAKE 345KV CKT 1	717	717	0.07438	103.5349	FRONTIER - GRIMES 345KV CKT 1
FDNS	00NR	2	16WP	G15_085	FROM->TO	CIMARRON - DRAPER LAKE 345KV CKT 1	717	717	0.07438	103.5316	P12:069:OKGE:3TERM4
FDNS	00NR	2	16WP	G15_085	FROM->TO	CIMARRON - DRAPER LAKE 345KV CKT 1	717	717	0.07438	103.5313	GEN334433 1-SABINE UNIT 3
FDNS	00NR	2	16WP	G15_085	FROM->TO	CIMARRON - DRAPER LAKE 345KV CKT 1	717	717	0.07508	103.53	SPVALLY4 138.00 - STILLWATER 138KV CKT 1
FDNS	00NR	2	16WP	G15_085	FROM->TO	CIMARRON - DRAPER LAKE 345KV CKT 1	717	717	0.07438	103.5268	GEN334030 1-FRONTIER UNIT 1
FDNS	00NR	2	16WP	G15_085	FROM->TO	CIMARRON - DRAPER LAKE 345KV CKT 1	717	717	0.07438	103.5258	GEN334031 1-FRONTIER UNIT 2
FDNS	00NR	2	16WP	G15_085	FROM->TO	CIMARRON - DRAPER LAKE 345KV CKT 1	717	717	0.07438	103.5251	P12:161:AEPW:DYESS 5:HYLAND 5
FDNS	00NR	2	16WP	G15_085	FROM->TO	CIMARRON - DRAPER LAKE 345KV CKT 1	717	717	0.07438	103.5236	GEN303007 1-1BC2 U2
FDNS	00NR	2	16WP	G15_085	FROM->TO	CIMARRON - DRAPER LAKE 345KV CKT 1	717	717	0.07438	103.5214	GEN337041 1-GERALD ANDRUS
FDNS	00NR	2	16WP	G15_085	FROM->TO	CIMARRON - DRAPER LAKE 345KV CKT 1	717	717	0.07438	103.5183	GEN303006 1-1BC2 U1
FDNS	00NR	2	16WP	G15_085	FROM->TO	CIMARRON - DRAPER LAKE 345KV CKT 1	717	717	0.07522	103.505	COMANCHE - EMPIRE 138KV CKT 1
FDNS	00NR	2	16WP	G15_085	FROM->TO	CIMARRON - DRAPER LAKE 345KV CKT 1	717	717	0.07508	103.5039	PAYNESB4 138.00 - SPVALLY4 138.00 138KV CKT 1
FDNS	00NR	2	16WP	G15_085	FROM->TO	CIMARRON - DRAPER LAKE 345KV CKT 1	717	717	0.07438	103.5012	GEN336191 1-LITTLE GYPSY UNIT#3
FDNS	00NR	2	16WP	G15_085	FROM->TO	CIMARRON - DRAPER LAKE 345KV CKT 1	717	717	0.07446	103.4994	8DANIEL8 500.00 - MCKNIGHT 500KV CKT 1
FDNS	00NR	2	16WP	G15_085	FROM->TO	CIMARRON - DRAPER LAKE 345KV CKT 1	717	717	0.07465	103.498	CLEAVELAND - CLEVLND 4 138.00 138KV CKT Z1
FDNS	00NR	2	16WP	G15_085	FROM->TO	CIMARRON - DRAPER LAKE 345KV CKT 1	717	717	0.07465	103.498	CLEAVELAND - CLEVLND 4 138.00 138KV CKT Z1
FDNS	00NR	2	16WP	G15_085	FROM->TO	CIMARRON - DRAPER LAKE 345KV CKT 1	717	717	0.07465	103.4977	CLEVELAND (CLVAUTO1) 345/138/13.8KV TRANSFORMER CKT 1
FDNS	00NR	2	16WP	G15_085	FROM->TO	CIMARRON - DRAPER LAKE 345KV CKT 1	717	717	0.07465	103.4977	CLEVELAND (CLVAUTO1) 345/138/13.8KV TRANSFORMER CKT 1
FDNS	00NR	2	16WP	G15_085	FROM->TO	CIMARRON - DRAPER LAKE 345KV CKT 1	717	717	0.07438	103.495	GEN509393 S1-ARSENAL HILL GENS #4 (STALL)
FDNS	00NR	2	16WP	G15_085	FROM->TO	CIMARRON - DRAPER LAKE 345KV CKT 1	717	717	0.07443	103.4931	P12:138:OKGE:3TERM13
FDNS	00NR	2	16WP	G15_085	FROM->TO	CIMARRON - DRAPER LAKE 345KV CKT 1	717	717	0.07508	103.49	CUSHING - PAYNESB4 138.00 138KV CKT 1
FDNS	00NR	2	16WP	G15_085	FROM->TO	CIMARRON - DRAPER LAKE 345KV CKT 1	717	717	0.07358	103.4873	ARKANSAS NUCLEAR ONE - FT SMITH 500KV CKT 1
FDNS	00NR	2	16WP	G15_085	FROM->TO	CIMARRON - DRAPER LAKE 345KV CKT 1	717	717	0.07358	103.4873	ARKANSAS NUCLEAR ONE - FT SMITH 500KV CKT 1
FDNS	00NR	2	16WP	G15_085	FROM->TO	CIMARRON - DRAPER LAKE 345KV CKT 1	717	717	0.07438	103.4784	GEN509392 G2-ARSENAL HILL GENS #3 (STALL)
FDNS	00NR	2	16WP	G15_085	FROM->TO	CIMARRON - DRAPER LAKE 345KV CKT 1	717	717	0.07438	103.4783	GEN509391 G1-ARSENAL HILL GENS #2 (STALL)
FDNS	00NR	2	16WP	G15_085	FROM->TO	CIMARRON - DRAPER LAKE 345KV CKT 1	717	717	0.07438	103.4706	GEN335614 1-WILLOW GLENN UNIT#4
FDNS	00NR	2	16WP	G15_085	FROM->TO	CIMARRON - DRAPER LAKE 345KV CKT 1	717	717	0.07456	103.4674	DAYTON - MUSTANG 138KV CKT 1
FDNS	00NR	2	16WP	G15_085	FROM->TO	CIMARRON - DRAPER LAKE 345KV CKT 1	717	717	0.07456	103.4624	DAYTON - HOBBY LOBBY 138KV CKT 1
FDNS	00NR	2	16WP	G15_085	FROM->TO	CIMARRON - DRAPER LAKE 345KV CKT 1	717	717	0.07438	103.4582	GEN303008 1-1BC2 U3
FDNS	00NR	2	16WP	G15_085	FROM->TO	CIMARRON - DRAPER LAKE 345KV CKT 1	717	717	0.07438	103.4486	GEN338143 1-INDEPENDENCE UNIT #1
FDNS	00NR	2	16WP	G15_085	FROM->TO	CIMARRON - DRAPER LAKE 345KV CKT 1	717	717	0.07474	103.4474	MUSTANG - SW 5TH 138KV CKT 1
FDNS	00NR	2	16WP	G15_085	FROM->TO	CIMARRON - DRAPER LAKE 345KV CKT 1	717	717	0.07465	103.4368	ELDORADO EHV - MOUNT OLIVE 500KV CKT 1
FDNS	00NR	2	16WP	G15_085	FROM->TO	CIMARRON - DRAPER LAKE 345KV CKT 1	717	717	0.07438	103.4362	GEN336170 1-GULF OXY U4
FDNS	00NR	2	16WP	G15_085	FROM->TO	CIMARRON - DRAPER LAKE 345KV CKT 1	717	717	0.07438	103.4348	GEN336464 1-MICHOUD UNIT #3
FDNS	00NR	2	16WP	G15_085	FROM->TO	CIMARRON - DRAPER LAKE 345KV CKT 1	717	717	0.07033	103.4296	CANADIAN RIVER - PITTSBURG 345KV CKT 1
FDNS	00NR	2	16WP	G15_085	FROM->TO	CIMARRON - DRAPER LAKE 345KV CKT 1	717	717	0.07033	103.4296	CANADIAN RIVER - PITTSBURG 345KV CKT 1

SOLUTION	GROUP	SCENARIO	SEASON	SOURCE	DIRECTION	MONITORED ELEMENT	RATEA (MVA)	RATEB(MVA)	TDF	TC%LOADING (% MVA)	CONTINGENCY
FDNS	00NR	2	16WP	G15_085	FROM->TO	CIMARRON - DRAPER LAKE 345KV CKT 1	717	717	0.07438	103.4242	ESSEX UNIT 2 500/18.0KV TRANSFORMER CKT 1
FDNS	00NR	2	16WP	G15_085	FROM->TO	CIMARRON - DRAPER LAKE 345KV CKT 1	717	717	0.0744	103.4154	P12:069:OKGE:3TERM19
FDNS	00NR	2	16WP	G15_085	FROM->TO	CIMARRON - DRAPER LAKE 345KV CKT 1	717	717	0.07453	103.4042	7LUTESVIL 345.00 - 7ST FRANC 345.00 345KV CKT 1
FDNS	00NR	2	16WP	G15_085	FROM->TO	CIMARRON - DRAPER LAKE 345KV CKT 1	717	717	0.0746	103.3925	OUMED 4 - STONEWALL 138KV CKT 1
FDNS	00NR	2	16WP	G15_085	FROM->TO	CIMARRON - DRAPER LAKE 345KV CKT 1	717	717	0.07438	103.3899	GEN336801 1-BAXTER WILSON UNIT #1
FDNS	00NR	2	16WP	G15_085	FROM->TO	CIMARRON - DRAPER LAKE 345KV CKT 1	717	717	0.07489	103.3846	LIGHTNING CREEK - ROBINSON 138KV CKT 1
FDNS	00NR	2	16WP	G15_085	FROM->TO	CIMARRON - DRAPER LAKE 345KV CKT 1	717	717	0.07408	103.383	ARCADIA - LGARBER4 138.00 138KV CKT 1
FDNS	00NR	2	16WP	G15_085	FROM->TO	CIMARRON - DRAPER LAKE 345KV CKT 1	717	717	0.07451	103.3768	7JASPER 345.00 - BLACKBERRY 345KV CKT 1
FDNS	00NR	2	16WP	G15_085	FROM->TO	CIMARRON - DRAPER LAKE 345KV CKT 1	717	717	0.07438	103.3763	GEN506752 1-LEBROCK GAS 1
FDNS	00NR	2	16WP	G15_085	FROM->TO	CIMARRON - DRAPER LAKE 345KV CKT 1	717	717	0.07438	103.3762	GEN506753 1-LEBROCK GAS 2
FDNS	00NR	2	16WP	G15_085	FROM->TO	CIMARRON - DRAPER LAKE 345KV CKT 1	717	717	0.07408	103.3644	CHITWOOD - LGARBER4 138.00 138KV CKT 1
FDNS	00NR	2	16WP	G15_085	FROM->TO	CIMARRON - DRAPER LAKE 345KV CKT 1	717	717	0.07523	103.3637	FAIRFAX TAP - SHIDLER 138KV CKT 1
FDNS	00NR	2	16WP	G15_085	FROM->TO	CIMARRON - DRAPER LAKE 345KV CKT 1	717	717	0.07523	103.3636	FAIRFAX TAP - WEBB CITY TAP 138KV CKT 1
FDNS	00NR	2	16WP	G15_085	FROM->TO	CIMARRON - DRAPER LAKE 345KV CKT 1	717	717	0.07438	103.3524	GEN501910 1-ACADIA UNIT ST1
FDNS	00NR	2	16WP	G15_085	FROM->TO	CIMARRON - DRAPER LAKE 345KV CKT 1	717	717	0.07438	103.3438	RODEMACHER 230/22.0KV TRANSFORMER CKT 1
FDNS	00NR	2	16WP	G15_085	FROM->TO	CIMARRON - DRAPER LAKE 345KV CKT 1	717	717	0.07408	103.341	CHITWOOD - JONES TAP 138KV CKT 1
FDNS	00NR	2	16WP	G15_085	FROM->TO	CIMARRON - DRAPER LAKE 345KV CKT 1	717	717	0.07438	103.3397	GEN511843 1-RIVERSIDE STATION #2
FDNS	00NR	2	16WP	G15_085	FROM->TO	CIMARRON - DRAPER LAKE 345KV CKT 1	717	717	0.07373	103.3364	P12:138:AEPW-OGE:WTH_JCT4:JENSEN4
FDNS	00NR	2	16WP	G15_085	FROM->TO	CIMARRON - DRAPER LAKE 345KV CKT 1	717	717	0.07481	103.3329	TULSA NORTH - WEKIWA 345KV CKT 1
FDNS	00NR	2	16WP	G15_085	FROM->TO	CIMARRON - DRAPER LAKE 345KV CKT 1	717	717	0.07481	103.3329	TULSA NORTH - WEKIWA 345KV CKT 1
FDNS	00NR	2	16WP	G15_085	FROM->TO	CIMARRON - DRAPER LAKE 345KV CKT 1	717	717	0.07492	103.3311	6LAYFLD 230.00 - CARROLL 230KV CKT 1
FDNS	00NR	2	16WP	G15_085	FROM->TO	CIMARRON - DRAPER LAKE 345KV CKT 1	717	717	0.07457	103.3263	8WNEWMADRID 500.00 - DELL 500 500KV CKT 1
FDNS	00NR	2	16WP	G15_085	FROM->TO	CIMARRON - DRAPER LAKE 345KV CKT 1	717	717	0.07439	103.3256	P12:345:GRDA:CHOUTEAU-SPORTSMANACRES
FDNS	00NR	2	16WP	G15_085	FROM->TO	CIMARRON - DRAPER LAKE 345KV CKT 1	717	717	0.07475	103.318	ELDORADO EHV - SHERIDAN EHV 500KV CKT 1
FDNS	00NR	2	16WP	G15_085	FROM->TO	CIMARRON - DRAPER LAKE 345KV CKT 1	717	717	0.07489	103.3111	G13-010T 345.00 - POST ROCK 345KV CKT 1
FDNS	00NR	2	16WP	G15_085	FROM->TO	CIMARRON - DRAPER LAKE 345KV CKT 1	717	717	0.07127	103.3092	CHISHOLM6 230.00 - ELK CITY 230KV 230KV CKT 1
FDNS	00NR	2	16WP	G15_085	FROM->TO	CIMARRON - DRAPER LAKE 345KV CKT 1	717	717	0.07127	103.3062	ELK CITY 230KV (ELKCTY-6) 230/138/13.8KV TRANSFORMER CKT 1
FDNS	00NR	2	16WP	G15_085	FROM->TO	CIMARRON - DRAPER LAKE 345KV CKT 1	717	717	0.07127	103.3062	ELK CITY 230KV (ELKCTY-6) 230/138/13.8KV TRANSFORMER CKT 1
FDNS	00NR	2	16WP	G15_085	FROM->TO	CIMARRON - DRAPER LAKE 345KV CKT 1	717	717	0.07414	103.2962	P12:138:AEPW:N.E.S.-4:CATOOSA4
FDNS	00NR	2	16WP	G15_085	FROM->TO	CIMARRON - DRAPER LAKE 345KV CKT 1	717	717	0.0746	103.2914	OUMED 4 - PARK PLACE 138KV CKT 1
FDNS	00NR	2	16WP	G15_085	FROM->TO	CIMARRON - DRAPER LAKE 345KV CKT 1	717	717	0.07574	103.2909	ANADARKO - SEQUOYAHJ4 138.00 138KV CKT 1
FDNS	00NR	2	16WP	G15_085	FROM->TO	CIMARRON - DRAPER LAKE 345KV CKT 1	717	717	0.07574	103.2905	CORN TAP - SEQUOYAHJ4 138.00 138KV CKT 1
FDNS	00NR	2	16WP	G15_085	FROM->TO	CIMARRON - DRAPER LAKE 345KV CKT 1	717	717	0.07444	103.2886	FULTON 115 - HOPE 115KV CKT 1
FDNS	00NR	2	16WP	G15_085	FROM->TO	CIMARRON - DRAPER LAKE 345KV CKT 1	717	717	0.07444	103.2886	FULTON 115 - HOPE 115KV CKT 1
FDNS	00NR	2	16WP	G15_085	FROM->TO	CIMARRON - DRAPER LAKE 345KV CKT 1	717	717	0.0793	103.2814	COLE - OUSW4 138KV CKT 1
FDNS	00NR	2	16WP	G15_085	FROM->TO	CIMARRON - DRAPER LAKE 345KV CKT 1	717	717	0.07454	103.2811	P13:138-161:WERE:NSES_TX-4OR5::
FDNS	00NR	2	16WP	G15_085	FROM->TO	CIMARRON - DRAPER LAKE 345KV CKT 1	717	717	0.07202	103.2805	ANADARKO - GRACMNT4 138.00 138KV CKT 1
FDNS	00NR	2	16WP	G15_085	FROM->TO	CIMARRON - DRAPER LAKE 345KV CKT 1	717	717	0.07438	103.2781	8CAJUN2 500/24.0KV TRANSFORMER CKT 1
FDNS	00NR	2	16WP	G15_085	FROM->TO	CIMARRON - DRAPER LAKE 345KV CKT 1	717	717	0.07447	103.2772	MORISNT4 138.00 - SOONER 138KV CKT 1
FDNS	00NR	2	16WP	G15_085	FROM->TO	CIMARRON - DRAPER LAKE 345KV CKT 1	717	717	0.07456	103.2734	7JASPER 345.00 - MORGAN 345KV CKT 1
FDNS	00NR	2	16WP	G15_085	FROM->TO	CIMARRON - DRAPER LAKE 345KV CKT 1	717	717	0.07438	103.267	ST FRANCIS 161/16.0KV TRANSFORMER CKT 1
FDNS	00NR	2	16WP	G15_085	FROM->TO	CIMARRON - DRAPER LAKE 345KV CKT 1	717	717	0.07438	103.2669	ST FRANCIS - ST FRANCIS 1 161KV CKT Z1
FDNS	00NR	2	16WP	G15_085	FROM->TO	CIMARRON - DRAPER LAKE 345KV CKT 1	717	717	0.07438	103.2599	P12:069:OKGE:3TERM3
FDNS	00NR	2	16WP	G15_085	FROM->TO	CIMARRON - DRAPER LAKE 345KV CKT 1	717	717	0.07434	103.253	P12:138:AEPW:CATOOSA4:T.S.E.-4
FDNS	00NR	2	16WP	G15_085	FROM->TO	CIMARRON - DRAPER LAKE 345KV CKT 1	717	717	0.07639	103.2523	HUGO - VALLIANT 345KV CKT 1
FDNS	00NR	2	16WP	G15_085	FROM->TO	CIMARRON - DRAPER LAKE 345KV CKT 1	717	717	0.07639	103.2523	HUGO - VALLIANT 345KV CKT 1
FDNS	00NR	2	16WP	G15_085	FROM->TO	CIMARRON - DRAPER LAKE 345KV CKT 1	717	717	0.07478	103.2522	DALE - HORSESHOE LAKE 138KV CKT 1
FDNS	00NR	2	16WP	G15_085	FROM->TO	CIMARRON - DRAPER LAKE 345KV CKT 1	717	717	0.07489	103.252	G13-010T 345.00 - SPEARVILLE 345KV CKT 1
FDNS	00NR	2	16WP	G15_085	FROM->TO	CIMARRON - DRAPER LAKE 345KV CKT 1	717	717	0.07438	103.2517	GEN300015 1-1SGPDEL 18.000
FDNS	00NR	2	16WP	G15_085	FROM->TO	CIMARRON - DRAPER LAKE 345KV CKT 1	717	717	0.07438	103.2512	GEN509394 1-FLINT CREEK
FDNS	00NR	2	16WP	G15_085	FROM->TO	CIMARRON - DRAPER LAKE 345KV CKT 1	717	717	0.07489	103.2475	LIGHTNING CREEK - TROSPER 138KV CKT 1
FDNS	00NR	2	16WP	G15_085	FROM->TO	CIMARRON - DRAPER LAKE 345KV CKT 1	717	717	0.07438	103.2393	GEN337766 1-TRACTEBEL UNIT S1
FDNS	00NR	2	16WP	G15_085	FROM->TO	CIMARRON - DRAPER LAKE 345KV CKT 1	717	717	0.07447	103.2379	P12:138:AEPW:SHERID4:112GORE4
FDNS	00NR	2	16WP	G15_085	FROM->TO	CIMARRON - DRAPER LAKE 345KV CKT 1	717	717	0.07467	103.2367	HAMMETT TAP - HAMMETT2 138KV CKT 1
FDNS	00NR	2	16WP	G15_085	FROM->TO	CIMARRON - DRAPER LAKE 345KV CKT 1	717	717	0.07438	103.2356	GEN515564 1-ORIGIN11 0.6900
FDNS	00NR	2	16WP	G15_085	FROM->TO	CIMARRON - DRAPER LAKE 345KV CKT 1	717	717	0.07438	103.2356	GEN515565 1-ORIGIN21 0.6900
FDNS	00NR	2	16WP	G15_085	FROM->TO	CIMARRON - DRAPER LAKE 345KV CKT 1	717	717	0.07447	103.2337	P12:138:OKGE:3TERM28
FDNS	00NR	2	16WP	G15_085	FROM->TO	CIMARRON - DRAPER LAKE 345KV CKT 1	717	717	0.07456	103.2332	36 & MERIDIAN - HOBBY LOBBY 138KV CKT 1
FDNS	00NR	2	16WP	G15_085	FROM->TO	CIMARRON - DRAPER LAKE 345KV CKT 1	717	717	0.07438	103.233	GEN336222 1-LITTLE GYPSY UNIT#2
FDNS	00NR	2	16WP	G15_085	FROM->TO	CIMARRON - DRAPER LAKE 345KV CKT 1	717	717	0.07519	103.2296	NORTHEAST STATION - ONETA 345KV CKT 1
FDNS	00NR	2	16WP	G15_085	FROM->TO	CIMARRON - DRAPER LAKE 345KV CKT 1	717	717	0.07519	103.2296	NORTHEAST STATION - ONETA 345KV CKT 1
FDNS	00NR	2	16WP	G15_085	FROM->TO	CIMARRON - DRAPER LAKE 345KV CKT 1	717	717	0.07438	103.2223	NELSON 230/20.0KV TRANSFORMER CKT 1
FDNS	00NR	2	16WP	G15_085	FROM->TO	CIMARRON - DRAPER LAKE 345KV CKT 1	717	717	0.07438	103.2221	GEN501970 1-EVANGELINE UNIT 7
FDNS	00NR	2	16WP	G15_085	FROM->TO	CIMARRON - DRAPER LAKE 345KV CKT 1	717	717	0.07437	103.2206	P12:161:AEPW:EROGERS5:ECNTRTN5
FDNS	00NR	2	16WP	G15_085	FROM->TO	CIMARRON - DRAPER LAKE 345KV CKT 1	717	717	0.07421	103.2183	P12:138:OKGE-AEPW:JENSEN4:REDROCKRD4
FDNS	00NR	2	16WP	G15_085	FROM->TO	CIMARRON - DRAPER LAKE 345KV CKT 1	717	717	0.07419	103.218	NW164TH4 138.00 - PIEDMONT 138KV CKT 1
FDNS	00NR	2	16WP	G15_085	FROM->TO	CIMARRON - DRAPER LAKE 345KV CKT 1	717	717	0.0744	103.2179	P12:161:AEPW-SWPA:BEAVER5:EROGERS5
FDNS	00NR	2	16WP	G15_085	FROM->TO	CIMARRON - DRAPER LAKE 345KV CKT 1	717	717	0.07438	103.2174	ESSEX UNIT 2 500/18.0KV TRANSFORMER CKT 1
FDNS	00NR	2	16WP	G15_085	FROM->TO	CIMARRON - DRAPER LAKE 345KV CKT 1	717	717	0.07593	103.2169	HEALDTON - LOCO 138KV CKT 1
FDNS	00NR	2	16WP	G15_085	FROM->TO	CIMARRON - DRAPER LAKE 345KV CKT 1	717	717	0.07419	103.2161	NORTHWEST - NW164TH4 138.00 138KV CKT 1
FDNS	00NR	2	16WP	G15_085	FROM->TO	CIMARRON - DRAPER LAKE 345KV CKT 1	717	717	0.07446	103.2129	HEFNER - TULSA 138KV CKT 1
FDNS	00NR	2	16WP	G15_085	FROM->TO	CIMARRON - DRAPER LAKE 345KV CKT 1	717	717	0.07478	103.2106	DALE - SQUIRL CREEK 138KV CKT 1
FDNS	00NR	2	16WP	G15_085	FROM->TO	CIMARRON - DRAPER LAKE 345KV CKT 1	717	717	0.07438	103.2089	P12:161:AEPW:DYESS5:ELMSPRNG:TONTITN5
FDNS	00NR	2	16WP	G15_085	FROM->TO	CIMARRON - DRAPER LAKE 345KV CKT 1	717	717	0.07464	103.2073	FLETCHER - MARLOW JCT 69KV CKT 1
FDNS	00NR	2	16WP	G15_085	FROM->TO	CIMARRON - DRAPER LAKE 345KV CKT 1	717	717	0.0744	103.2052	AS KING - EAU CLAIRE 345KV CKT 1
FDNS	00NR	2	16WP	G15_085	FROM->TO	CIMARRON - DRAPER LAKE 345KV CKT 1	717	717	0.07502	103.2032	COMANCHE TAP - OMPA-DUNCAN 840 138KV CKT 1
FDNS	00NR	2	16WP	G15_085	FROM->TO	CIMARRON - DRAPER LAKE 345KV CKT 1	717	717	0.07438	103.2028	ST FRANCIS 2 161/16.0KV TRANSFORMER CKT 2
FDNS	00NR	2	16WP	G15_085	FROM->TO	CIMARRON - DRAPER LAKE 345KV CKT 1	717	717	0.07438	103.2028	ST FRANCIS 345/161KV TRANSFORMER CKT 1
FDNS	00NR	2	16WP	G15_085	FROM->TO	CIMARRON - DRAPER LAKE 345KV CKT 1	717	717	0.07438	103.2025	GEN336152 1-WATERFORD UNIT#2

SOLUTION	GROUP	SCENARIO	SEASON	SOURCE	DIRECTION	MONITORED ELEMENT	RATEA (MVA)	RATEB(MVA)	TDF	TC%LOADING (% MVA)	CONTINGENCY
FDNS	00NR	2	16WP	G15_085	FROM->TO	CIMARRON - DRAPER LAKE 345KV CKT 1	717	717	0.07438	103.2014	GEN336151 1-WATERFORD UNIT#1
FDNS	00NR	2	16WP	G15_085	FROM->TO	CIMARRON - DRAPER LAKE 345KV CKT 1	717	717	0.07438	103.1916	COTTONWOOD CREEK - MARSHALL 138KV CKT 1
FDNS	00NR	2	16WP	G15_085	FROM->TO	CIMARRON - DRAPER LAKE 345KV CKT 1	717	717	0.07438	103.1915	MARSHALL - WOODRING 138KV CKT 1
FDNS	00NR	2	16WP	G15_085	FROM->TO	CIMARRON - DRAPER LAKE 345KV CKT 1	717	717	0.07438	103.1902	GEN334392 1-EXXON MOBIL IPP 1
FDNS	00NR	2	16WP	G15_085	FROM->TO	CIMARRON - DRAPER LAKE 345KV CKT 1	717	717	0.07451	103.1884	MC NIEL 500/115KV TRANSFORMER CKT 1
FDNS	00NR	2	16WP	G15_085	FROM->TO	CIMARRON - DRAPER LAKE 345KV CKT 1	717	717	0.07497	103.1855	P12:138:AEPW:MOUNDRD4:SHIDLER4
FDNS	00NR	2	16WP	G15_085	FROM->TO	CIMARRON - DRAPER LAKE 345KV CKT 1	717	717	0.07447	103.1841	BISMARK - HOT SPRINGS WEST BUS 115KV CKT 1
FDNS	00NR	2	16WP	G15_085	FROM->TO	CIMARRON - DRAPER LAKE 345KV CKT 1	717	717	0.07438	103.1836	GEN334393 1-EXXON MOBIL IPP 2
FDNS	00NR	2	16WP	G15_085	FROM->TO	CIMARRON - DRAPER LAKE 345KV CKT 1	717	717	0.07438	103.1836	GEN334394 1-EXXON MOBIL IPP 3
FDNS	00NR	2	16WP	G15_085	FROM->TO	CIMARRON - DRAPER LAKE 345KV CKT 1	717	717	0.0744	103.1767	EL RENO SW - MUSTANG2 69.000 69KV CKT 1
FDNS	00NR	2	16WP	G15_085	FROM->TO	CIMARRON - DRAPER LAKE 345KV CKT 1	717	717	0.07593	103.1752	HEALDTON - RINGLING 138KV CKT 1
FDNS	00NR	2	16WP	G15_085	FROM->TO	CIMARRON - DRAPER LAKE 345KV CKT 1	717	717	0.07413	103.1752	BRISTOW - SILVER CITY 138KV CKT 1
FDNS	00NR	2	16WP	G15_085	FROM->TO	CIMARRON - DRAPER LAKE 345KV CKT 1	717	717	0.07419	103.1718	KELLYAV4 138.00 - MEMORIAL 138KV CKT 1
FDNS	00NR	2	16WP	G15_085	FROM->TO	CIMARRON - DRAPER LAKE 345KV CKT 1	717	717	0.07497	103.1685	SHIDLER - WEST PAWHUSKA 138KV CKT 1
FDNS	00NR	2	16WP	G15_085	FROM->TO	CIMARRON - DRAPER LAKE 345KV CKT 1	717	717	0.07438	103.1684	GEN501971 1-EVANGELINE UNIT 7-1
FDNS	00NR	2	16WP	G15_085	FROM->TO	CIMARRON - DRAPER LAKE 345KV CKT 1	717	717	0.07438	103.1684	GEN501972 1-EVANGELINE UNIT 7-2
FDNS	00NR	2	16WP	G15_085	FROM->TO	CIMARRON - DRAPER LAKE 345KV CKT 1	717	717	0.07517	103.1607	P12:138:AEPW:CORNVIL4:S.W.S.-4
FDNS	00NR	2	16WP	G15_085	FROM->TO	CIMARRON - DRAPER LAKE 345KV CKT 1	717	717	0.07438	103.1587	GEN334431 1-SABINE UNIT 1
FDNS	00NR	2	16WP	G15_085	FROM->TO	CIMARRON - DRAPER LAKE 345KV CKT 1	717	717	0.07438	103.1586	GEN334432 1-SABINE UNIT 2
FDNS	00NR	2	16WP	G15_085	FROM->TO	CIMARRON - DRAPER LAKE 345KV CKT 1	717	717	0.07448	103.1561	BROOKLINE - MORGAN 345KV CKT 1
FDNS	00NR	2	16WP	G15_085	FROM->TO	CIMARRON - DRAPER LAKE 345KV CKT 1	717	717	0.07448	103.1561	BROOKLINE - MORGAN 345KV CKT 1
FDNS	00NR	2	16WP	G15_085	FROM->TO	CIMARRON - DRAPER LAKE 345KV CKT 1	717	717	0.07438	103.156	GEN336242 1-1NMIL ST1 18.000
FDNS	00NR	2	16WP	G15_085	FROM->TO	CIMARRON - DRAPER LAKE 345KV CKT 1	717	717	0.07438	103.1554	GEN337764 1-TRACTEBEL UNIT C1
FDNS	00NR	2	16WP	G15_085	FROM->TO	CIMARRON - DRAPER LAKE 345KV CKT 1	717	717	0.07438	103.1554	GEN337765 1-TRACTEBEL UNIT C2
FDNS	00NR	2	16WP	G15_085	FROM->TO	CIMARRON - DRAPER LAKE 345KV CKT 1	717	717	0.07438	103.1538	GEN501912 1-ACADIA UNIT CT1B
FDNS	00NR	2	16WP	G15_085	FROM->TO	CIMARRON - DRAPER LAKE 345KV CKT 1	717	717	0.07438	103.1532	GEN501911 1-ACADIA UNIT CT1A
FDNS	00NR	2	16WP	G15_085	FROM->TO	CIMARRON - DRAPER LAKE 345KV CKT 1	717	717	0.07464	103.1524	COUNCIL - MUSTANG 138KV CKT 1
FDNS	00NR	2	16WP	G15_085	FROM->TO	CIMARRON - DRAPER LAKE 345KV CKT 1	717	717	0.0746	103.1519	BODLE - PARK PLACE 138KV CKT 1
FDNS	00NR	2	16WP	G15_085	FROM->TO	CIMARRON - DRAPER LAKE 345KV CKT 1	717	717	0.07497	103.151	PAWHUSKA TAP - WEST PAWHUSKA 138KV CKT 1
FDNS	00NR	2	16WP	G15_085	FROM->TO	CIMARRON - DRAPER LAKE 345KV CKT 1	717	717	0.07445	103.1509	CYPRESS - HARTBURG 500KV CKT 1
FDNS	00NR	2	16WP	G15_085	FROM->TO	CIMARRON - DRAPER LAKE 345KV CKT 1	717	717	0.07447	103.1508	ALPINE AECC - BISMARK 115KV CKT 1
FDNS	00NR	2	16WP	G15_085	FROM->TO	CIMARRON - DRAPER LAKE 345KV CKT 1	717	717	0.07556	103.1504	BRYANT - MEMORIAL 138KV CKT 1
FDNS	00NR	2	16WP	G15_085	FROM->TO	CIMARRON - DRAPER LAKE 345KV CKT 1	717	717	0.07467	103.1445	HAMMETT2 - MEEKER 138KV CKT 1
FDNS	00NR	2	16WP	G15_085	FROM->TO	CIMARRON - DRAPER LAKE 345KV CKT 1	717	717	0.07469	103.143	CORN TAP - CORNVILLE 138KV CKT 1
FDNS	00NR	2	16WP	G15_085	FROM->TO	CIMARRON - DRAPER LAKE 345KV CKT 1	717	717	0.07419	103.1426	PIEDMONT - RICHRDS 138KV CKT 1
FDNS	00NR	2	16WP	G15_085	FROM->TO	CIMARRON - DRAPER LAKE 345KV CKT 1	717	717	0.07438	103.1419	P12:69:AEPW:L.E.S.-2:LAW WC2
FDNS	00NR	2	16WP	G15_085	FROM->TO	CIMARRON - DRAPER LAKE 345KV CKT 1	717	717	0.07573	103.1414	CIVIT - PAOLI 138KV CKT 1
FDNS	00NR	2	16WP	G15_085	FROM->TO	CIMARRON - DRAPER LAKE 345KV CKT 1	717	717	0.07419	103.1404	KELLYAV4 138.00 - REMNGTON PARK 138KV CKT 1
FDNS	00NR	2	16WP	G15_085	FROM->TO	CIMARRON - DRAPER LAKE 345KV CKT 1	717	717	0.07497	103.1384	HAMMETT TAP - HORSESHOE LAKE 138KV CKT 1
FDNS	00NR	2	16WP	G15_085	FROM->TO	CIMARRON - DRAPER LAKE 345KV CKT 1	717	717	0.07593	103.1335	RINGLING - SOUTH WILSON 138KV CKT 1
FDNS	00NR	2	16WP	G15_085	FROM->TO	CIMARRON - DRAPER LAKE 345KV CKT 1	717	717	0.07462	103.1325	LAYFLD8 500.00 - MOUNT OLIVE 500KV CKT 1
FDNS	00NR	2	16WP	G15_085	FROM->TO	CIMARRON - DRAPER LAKE 345KV CKT 1	717	717	0.07462	103.1325	LAYFLD8 500.00 - MOUNT OLIVE 500KV CKT 1
FDNS	00NR	2	16WP	G15_085	FROM->TO	CIMARRON - DRAPER LAKE 345KV CKT 1	717	717	0.0744	103.1042	LACYGNE - STILWELL 345KV CKT 1
FDNS	00NR	2	16WP	G15_085	FROM->TO	CIMARRON - DRAPER LAKE 345KV CKT 1	717	717	0.07464	103.0969	COUNCIL - WESTOAKS 138KV CKT 1
FDNS	00NR	2	16WP	G15_085	FROM->TO	CIMARRON - DRAPER LAKE 345KV CKT 1	717	717	0.06542	103.0507	GRACEMONT - LAWTON EASTSIDE 345KV CKT 1
FDNS	00NR	2	16WP	G15_085	FROM->TO	CIMARRON - DRAPER LAKE 345KV CKT 1	717	717	0.06542	103.0507	GRACEMONT - LAWTON EASTSIDE 345KV CKT 1
FDNS	00NR	2	16WP	G15_085	FROM->TO	CIMARRON - DRAPER LAKE 345KV CKT 1	717	717	0.07438	102.6721	BASE CASE
FDNS	00NR	2	16WP	G15_085	FROM->TO	CIMARRON - DRAPER LAKE 345KV CKT 1	717	717	0.07478	102.3707	GRAPEVINE INTERCHANGE - NICHOLS STATION 230KV CKT 1
FDNS	00NR	2	16WP	G15_085	FROM->TO	CIMARRON - DRAPER LAKE 345KV CKT 1	717	717	0.07478	102.3707	GRAPEVINE INTERCHANGE - NICHOLS STATION 230KV CKT 1
FDNS	00NR	2	16WP	G15_085	FROM->TO	CIMARRON - DRAPER LAKE 345KV CKT 1	717	717	0.08358	102.3542	G15063_T 345.00 - WOODRING 345KV CKT 1
FDNS	00NR	2	16WP	G15_085	FROM->TO	CIMARRON - DRAPER LAKE 345KV CKT 1	717	717	0.07486	102.2982	BURGETT4 138.00 - RNDBARN4 138.00 138KV CKT 1
FDNS	00NR	2	16WP	G15_085	FROM->TO	CIMARRON - DRAPER LAKE 345KV CKT 1	717	717	0.07486	102.2979	BURGETT4 138.00 - DANFORTH 138KV CKT 1
FDNS	00NR	2	16WP	G15_085	FROM->TO	CIMARRON - DRAPER LAKE 345KV CKT 1	717	717	0.07486	102.2857	ARCADIA - RNDBARN4 138.00 138KV CKT 1
FDNS	00NR	2	16WP	G15_085	FROM->TO	CIMARRON - DRAPER LAKE 345KV CKT 1	717	717	0.07438	102.2562	GEN659125 1-COVEY
FDNS	00NR	2	16WP	G15_085	FROM->TO	CIMARRON - DRAPER LAKE 345KV CKT 1	717	717	0.07446	102.2524	GRAPEVINE INTERCHANGE - STATELINE INTERCHANGE 230KV CKT 1
FDNS	00NR	2	16WP	G15_085	FROM->TO	CIMARRON - DRAPER LAKE 345KV CKT 1	717	717	0.07446	102.2524	GRAPEVINE INTERCHANGE - STATELINE INTERCHANGE 230KV CKT 1
FDNS	00NR	2	16WP	G15_085	FROM->TO	CIMARRON - DRAPER LAKE 345KV CKT 1	717	717	0.07438	102.2516	GEN515550 1-MNCWND31 0.6900
FDNS	00NR	2	16WP	G15_085	FROM->TO	CIMARRON - DRAPER LAKE 345KV CKT 1	717	717	0.07438	102.2374	GEN562611 1-G14_064_3 0.6900
FDNS	00NR	2	16WP	G15_085	FROM->TO	CIMARRON - DRAPER LAKE 345KV CKT 1	717	717	0.07438	102.2371	GEN511848 1-SOUTHWESTERN STATION #3
FDNS	00NR	2	16WP	G15_085	FROM->TO	CIMARRON - DRAPER LAKE 345KV CKT 1	717	717	0.07438	102.2061	GEN515601 1-KNGFSR11 0.7000
FDNS	00NR	2	16WP	G15_085	FROM->TO	CIMARRON - DRAPER LAKE 345KV CKT 1	717	717	0.07438	102.2058	GEN600070 9-RIVER SIDE
FDNS	00NR	2	16WP	G15_085	FROM->TO	CIMARRON - DRAPER LAKE 345KV CKT 1	717	717	0.07438	102.2058	GEN600071 10-RIVER SIDE
FDNS	00NR	2	16WP	G15_085	FROM->TO	CIMARRON - DRAPER LAKE 345KV CKT 1	717	717	0.07438	102.2006	GEN672303 3-BOUNDARY DAM GENERATOR 3
FDNS	00NR	2	16WP	G15_085	FROM->TO	CIMARRON - DRAPER LAKE 345KV CKT 1	717	717	0.07438	102.2006	GEN672304 4-BOUNDARY DAM GENERATOR 4
FDNS	00NR	2	16WP	G15_085	FROM->TO	CIMARRON - DRAPER LAKE 345KV CKT 1	717	717	0.07438	102.2006	GEN672305 5-BOUNDARY DAM GENERATOR 5
FDNS	00NR	2	16WP	G15_085	FROM->TO	CIMARRON - DRAPER LAKE 345KV CKT 1	717	717	0.07438	102.2	GEN600011 5-BLACK DOG GEN 1
FDNS	00NR	2	16WP	G15_085	FROM->TO	CIMARRON - DRAPER LAKE 345KV CKT 1	717	717	0.07438	102.1997	GEN600007 7-RIVERSIDE GEN 7
FDNS	00NR	2	16WP	G15_085	FROM->TO	CIMARRON - DRAPER LAKE 345KV CKT 1	717	717	0.07438	102.1992	GEN600067 9-HIGH BRIDGE
FDNS	00NR	2	16WP	G15_085	FROM->TO	CIMARRON - DRAPER LAKE 345KV CKT 1	717	717	0.07438	102.1963	GEN563062 1-G15071_3 0.6900
FDNS	00NR	2	16WP	G15_085	FROM->TO	CIMARRON - DRAPER LAKE 345KV CKT 1	717	717	0.07438	102.1952	GEN615052 1-CAMBRIDGE GENERATING STATION
FDNS	00NR	2	16WP	G15_085	FROM->TO	CIMARRON - DRAPER LAKE 345KV CKT 1	717	717	0.07438	102.1907	GEN541151 3-SIBLEY GENERATING UNIT #3
FDNSLock	00NR	2	16WP	G15_085	FROM->TO	CIMARRON - DRAPER LAKE 345KV CKT 1	717	717	0.07438	102.1869	GEN600014 4-BLACK DOG GEN 4
FDNS	00NR	2	16WP	G15_085	FROM->TO	CIMARRON - DRAPER LAKE 345KV CKT 1	717	717	0.07438	102.1839	GEN563282 1-G15094_3 0.6900
FDNS	00NR	2	16WP	G15_085	FROM->TO	CIMARRON - DRAPER LAKE 345KV CKT 1	717	717	0.07438	102.1835	GEN652353 2-GR PRAIRIEG 0.6900
FDNS	00NR	2	16WP	G15_085	FROM->TO	CIMARRON - DRAPER LAKE 345KV CKT 1	717	717	0.07438	102.1813	GEN629067 1-EMERY GAS TURBINE 1
FDNS	00NR	2	16WP	G15_085	FROM->TO	CIMARRON - DRAPER LAKE 345KV CKT 1	717	717	0.07438	102.1808	GEN615032 2-PLEASANT VALLEY
FDNS	00NR	2	16WP	G15_085	FROM->TO	CIMARRON - DRAPER LAKE 345KV CKT 1	717	717	0.0747	102.1788	7MCCREDIE 345.00 - 7MONTGMRY 345.00 345KV CKT 1
FDNS	00NR	2	16WP	G15_085	FROM->TO	CIMARRON - DRAPER LAKE 345KV CKT 1	717	717	0.07295	102.1714	CHISNEY - CLARKSVILLE 138KV CKT 1
FDNS	00NR	2	16WP	G15_085	FROM->TO	CIMARRON - DRAPER LAKE 345KV CKT 1	717	717	0.07438	102.1663	GEN563102 1-G15075_3 0.5500

SOLUTION	GROUP	SCENARIO	SEASON	SOURCE	DIRECTION	MONITORED ELEMENT	RATEA (MVA)	RATEB(MVA)	TDF	TC%LOADING (% MVA)	CONTINGENCY
FDNS	00NR	2	16WP	G15_085	FROM->TO	CIMARRON - DRAPER LAKE 345KV CKT 1	717	717	0.07438	102.1631	GEN515591 1-PALDRW11 0.6900
FDNS	00NR	2	16WP	G15_085	FROM->TO	CIMARRON - DRAPER LAKE 345KV CKT 1	717	717	0.07438	102.1576	GEN562602 1-G15_029_3 0.6900
FDNS	00NR	2	16WP	G15_085	FROM->TO	CIMARRON - DRAPER LAKE 345KV CKT 1	717	717	0.07441	102.1565	FOREST HILL - MAUD 138KV CKT 1
FDNS	00NR	2	16WP	G15_085	FROM->TO	CIMARRON - DRAPER LAKE 345KV CKT 1	717	717	0.07451	102.1522	SEMINOLE - VANOSTP4 138.00 138KV CKT 1
FDNS	00NR	2	16WP	G15_085	FROM->TO	CIMARRON - DRAPER LAKE 345KV CKT 1	717	717	0.07438	102.1509	GEN600017 C-LS POWER CT
FDNS	00NR	2	16WP	G15_085	FROM->TO	CIMARRON - DRAPER LAKE 345KV CKT 1	717	717	0.07438	102.1458	GEN562812 1-G15040_3 0.3570
FDNS	00NR	2	16WP	G15_085	FROM->TO	CIMARRON - DRAPER LAKE 345KV CKT 1	717	717	0.07438	102.1396	GEN563132 1-G15078_3 0.3570
FDNS	00NR	2	16WP	G15_085	FROM->TO	CIMARRON - DRAPER LAKE 345KV CKT 1	717	717	0.07438	102.1296	GEN524285 1-WILDORADO WIND GEN
FDNS	00NR	2	16WP	G15_085	FROM->TO	CIMARRON - DRAPER LAKE 345KV CKT 1	717	717	0.07313	102.1264	P12:138:AEPW:WELETK4:EARLSBORO4
FDNS	00NR	2	16WP	G15_085	FROM->TO	CIMARRON - DRAPER LAKE 345KV CKT 1	717	717	0.07313	102.1264	P12:138:OKGE:3TERM36
FDNS	00NR	2	16WP	G15_085	FROM->TO	CIMARRON - DRAPER LAKE 345KV CKT 1	717	717	0.07438	102.125	GEN562074 1-G1149G1504 0.6900
FDNS	00NR	2	16WP	G15_085	FROM->TO	CIMARRON - DRAPER LAKE 345KV CKT 1	717	717	0.07438	102.1207	GEN672392 1-NBECGT1G 18.000
FDNS	00NR	2	16WP	G15_085	FROM->TO	CIMARRON - DRAPER LAKE 345KV CKT 1	717	717	0.07438	102.1199	GEN629070 2-BEAVER CHANNEL GENERATORFOR UNIT NO 2
FDNS	00NR	2	16WP	G15_085	FROM->TO	CIMARRON - DRAPER LAKE 345KV CKT 1	717	717	0.07345	102.1158	EARLSBORO 4138.00 - FIXICO TAP 138KV CKT 1
FDNS	00NR	2	16WP	G15_085	FROM->TO	CIMARRON - DRAPER LAKE 345KV CKT 1	717	717	0.07438	102.1078	GEN526331 1-JONES GEN #1 22 KV
FDNS	00NR	2	16WP	G15_085	FROM->TO	CIMARRON - DRAPER LAKE 345KV CKT 1	717	717	0.07438	102.1078	GEN526332 1-JONES GEN #2 21 KV
FDNS	00NR	2	16WP	G15_085	FROM->TO	CIMARRON - DRAPER LAKE 345KV CKT 1	717	717	0.07438	102.1051	GEN562596 1-G14_059_3 0.6900
FDNS	00NR	2	16WP	G15_085	FROM->TO	CIMARRON - DRAPER LAKE 345KV CKT 1	717	717	0.07434	102.1041	CANADIAN RIVER - MCALESTER SOUTH 138KV CKT 1
FDNS	00NR	2	16WP	G15_085	FROM->TO	CIMARRON - DRAPER LAKE 345KV CKT 1	717	717	0.07434	102.1041	CANADIAN RIVER - MCALESTER SOUTH 138KV CKT 1
FDNS	00NR	2	16WP	G15_085	FROM->TO	CIMARRON - DRAPER LAKE 345KV CKT 1	717	717	0.07434	102.1026	CANADIAN RIVER () 345/138/13.8KV TRANSFORMER CKT 1
FDNS	00NR	2	16WP	G15_085	FROM->TO	CIMARRON - DRAPER LAKE 345KV CKT 1	717	717	0.07434	102.1026	CANADIAN RIVER () 345/138/13.8KV TRANSFORMER CKT 1
FDNS	00NR	2	16WP	G15_085	FROM->TO	CIMARRON - DRAPER LAKE 345KV CKT 1	717	717	0.07438	102.1007	GEN615010 1-STANTON4
FDNS	00NR	2	16WP	G15_085	FROM->TO	CIMARRON - DRAPER LAKE 345KV CKT 1	717	717	0.07438	102.1	GEN300003 1-THOMAS HILL UNIT 3
FDNS	00NR	2	16WP	G15_085	FROM->TO	CIMARRON - DRAPER LAKE 345KV CKT 1	717	717	0.07438	102.0978	GEN629071 1-BURLINGTON GENERATOR FOR UNIT NO 1 E
FDNS	00NR	2	16WP	G15_085	FROM->TO	CIMARRON - DRAPER LAKE 345KV CKT 1	717	717	0.07438	102.0929	GEN515365 1-CENT 21 0.7000
FDNS	00NR	2	16WP	G15_085	FROM->TO	CIMARRON - DRAPER LAKE 345KV CKT 1	717	717	0.07418	102.0915	P12:138:WFEC:MSL07
FDNS	00NR	2	16WP	G15_085	FROM->TO	CIMARRON - DRAPER LAKE 345KV CKT 1	717	717	0.07418	102.0915	P12:138:WFEC-AEPW:HUGOPP4:ATOKA--4
FDNS	00NR	2	16WP	G15_085	FROM->TO	CIMARRON - DRAPER LAKE 345KV CKT 1	717	717	0.07444	102.0866	GRPRAR1-LNX3345.00 - HOLT.CO3 345.00 345KV CKT 1
FDNS	00NR	2	16WP	G15_085	FROM->TO	CIMARRON - DRAPER LAKE 345KV CKT 1	717	717	0.07271	102.0854	P12:138:AEPW:SHAM4WT:CHILD4WT
FDNS	00NR	2	16WP	G15_085	FROM->TO	CIMARRON - DRAPER LAKE 345KV CKT 1	717	717	0.07444	102.083	GRPRAR1-LNX3345.00 - YANKTON 345KV CKT Z
FDNS	00NR	2	16WP	G15_085	FROM->TO	CIMARRON - DRAPER LAKE 345KV CKT 1	717	717	0.07438	102.0803	GEN562983 1-G15061_4 0.6900
FDNS	00NR	2	16WP	G15_085	FROM->TO	CIMARRON - DRAPER LAKE 345KV CKT 1	717	717	0.07438	102.0803	GEN562984 1-G15061_5 0.6900
FDNS	00NR	2	16WP	G15_085	FROM->TO	CIMARRON - DRAPER LAKE 345KV CKT 1	717	717	0.07438	102.0786	GEN615021 1-GRE-ER 14G 16.000
FDNS	00NR	2	16WP	G15_085	FROM->TO	CIMARRON - DRAPER LAKE 345KV CKT 1	717	717	0.07438	102.0775	GEN562017 1-G11_022_3 0.6900
FDNS	00NR	2	16WP	G15_085	FROM->TO	CIMARRON - DRAPER LAKE 345KV CKT 1	717	717	0.07295	102.0756	CHISNEY - HIGHLAND 138KV CKT 1
FDNS	00NR	2	16WP	G15_085	FROM->TO	CIMARRON - DRAPER LAKE 345KV CKT 1	717	717	0.07422	102.0707	P12:138:AEPW-SWPA:LONEOAK4:TUPELO4
FDNS	00NR	2	16WP	G15_085	FROM->TO	CIMARRON - DRAPER LAKE 345KV CKT 1	717	717	0.07422	102.0706	P12:138:WFEC:MSL06
FDNS	00NR	2	16WP	G15_085	FROM->TO	CIMARRON - DRAPER LAKE 345KV CKT 1	717	717	0.07475	102.0688	OVEXFRMCCOVE
FDNS	00NR	2	16WP	G15_085	FROM->TO	CIMARRON - DRAPER LAKE 345KV CKT 1	717	717	0.07438	102.0651	GEN560105 1-G08-22 0.6900
FDNS	00NR	2	16WP	G15_085	FROM->TO	CIMARRON - DRAPER LAKE 345KV CKT 1	717	717	0.07438	102.065	INDEPENDENCE 500/26.0KV TRANSFORMER CKT 1
FDNS	00NR	2	16WP	G15_085	FROM->TO	CIMARRON - DRAPER LAKE 345KV CKT 1	717	717	0.07438	102.0642	GEN562429 1-G13-029 0.6900
FDNS	00NR	2	16WP	G15_085	FROM->TO	CIMARRON - DRAPER LAKE 345KV CKT 1	717	717	0.07438	102.0638	GEN562432 1-G13-030 0.6900
FDNS	00NR	2	16WP	G15_085	FROM->TO	CIMARRON - DRAPER LAKE 345KV CKT 1	717	717	0.07438	102.0614	GEN532663 1-LAWRENCE ENERGY CENTER UNIT 5
FDNS	00NR	2	16WP	G15_085	FROM->TO	CIMARRON - DRAPER LAKE 345KV CKT 1	717	717	0.0705	102.0567	P12:230:AEPW:ELKCITY6:SWEETWT6
FDNS	00NR	2	16WP	G15_085	FROM->TO	CIMARRON - DRAPER LAKE 345KV CKT 1	717	717	0.07438	102.0539	BURLINGTON NO1 + NO 2 + NO 3 161/20.0KV TRANSFORMER CKT 1
FDNS	00NR	2	16WP	G15_085	FROM->TO	CIMARRON - DRAPER LAKE 345KV CKT 1	717	717	0.07313	102.0469	P12:138:AEPW-OGE:WELETK4:MAUD 4
FDNS	00NR	2	16WP	G15_085	FROM->TO	CIMARRON - DRAPER LAKE 345KV CKT 1	717	717	0.07451	102.045	DELL 500 - INDEPENDENCE 500KV CKT 1
FDNS	00NR	2	16WP	G15_085	FROM->TO	CIMARRON - DRAPER LAKE 345KV CKT 1	717	717	0.07488	102.0408	MAUD - SEMINOLE 138KV CKT 1
FDNS	00NR	2	16WP	G15_085	FROM->TO	CIMARRON - DRAPER LAKE 345KV CKT 1	717	717	0.07501	102.0405	P12:138:WFEC:MSL16
FDNS	00NR	2	16WP	G15_085	FROM->TO	CIMARRON - DRAPER LAKE 345KV CKT 1	717	717	0.07438	102.0391	GEN527882 1-CUNNINGHAM GEN #2 20 KV
FDNS	00NR	2	16WP	G15_085	FROM->TO	CIMARRON - DRAPER LAKE 345KV CKT 1	717	717	0.07345	102.032	EARLSBORO 4138.00 - MAUD 138KV CKT 1
FDNS	00NR	2	16WP	G15_085	FROM->TO	CIMARRON - DRAPER LAKE 345KV CKT 1	717	717	0.07345	102.032	EARLSBORO 4138.00 - MAUD 138KV CKT 1
FDNS	00NR	2	16WP	G15_085	FROM->TO	CIMARRON - DRAPER LAKE 345KV CKT 1	717	717	0.07438	102.0305	GEN562550 1-G14_040_3 0.6900
FDNS	00NR	2	16WP	G15_085	FROM->TO	CIMARRON - DRAPER LAKE 345KV CKT 1	717	717	0.07438	102.0264	GEN524295 1-SPNSPUR_WND10.6900
FDNS	00NR	2	16WP	G15_085	FROM->TO	CIMARRON - DRAPER LAKE 345KV CKT 1	717	717	0.07441	102.0245	P12:230:AEPW-SPS:SWEETWT6:WHEELER 6
FDNS	00NR	2	16WP	G15_085	FROM->TO	CIMARRON - DRAPER LAKE 345KV CKT 1	717	717	0.07441	102.0239	STLN-DEMARC6 - SWEETWATER 230KV CKT 1
FDNS	00NR	2	16WP	G15_085	FROM->TO	CIMARRON - DRAPER LAKE 345KV CKT 1	717	717	0.07441	102.0225	STATELINE INTERCHANGE - STLN-DEMARC6 230KV CKT 1
FDNS	00NR	2	16WP	G15_085	FROM->TO	CIMARRON - DRAPER LAKE 345KV CKT 1	717	717	0.07438	102.018	GEN562832 1-G15042_3 0.6900
FDNS	00NR	2	16WP	G15_085	FROM->TO	CIMARRON - DRAPER LAKE 345KV CKT 1	717	717	0.07438	101.9948	P12:230:UMZB:# 112 #: NU IN SD. NU-RCDC & DRY CREEK XFMR
FDNS	00NR	2	16WP	G15_085	FROM->TO	CIMARRON - DRAPER LAKE 345KV CKT 1	717	717	0.07438	101.9934	RCDC EAST 4230.00 - RED CEDAR DC 230KV CKT 1
FDNS	00NR	2	16WP	G15_085	FROM->TO	CIMARRON - DRAPER LAKE 345KV CKT 1	717	717	0.07438	101.9804	GEN345671 2-1RUSH G2 18.000
FDNS	00NR	2	16WP	G15_085	FROM->TO	CIMARRON - DRAPER LAKE 345KV CKT 1	717	717	0.07438	101.9792	GEN645011 1-NEBRASKA CITY 1
FDNS	00NR	2	16WP	G15_085	FROM->TO	CIMARRON - DRAPER LAKE 345KV CKT 1	717	717	0.07438	101.9785	GEN345670 1-1RUSH G1 18.000
FDNS	00NR	2	16WP	G15_085	FROM->TO	CIMARRON - DRAPER LAKE 345KV CKT 1	717	717	0.07438	101.976	GEN531447 1-HOLCOMB GENERATOR
FDNS	00NR	2	16WP	G15_085	FROM->TO	CIMARRON - DRAPER LAKE 345KV CKT 1	717	717	0.07438	101.974	GEN515606 1-CANDN11 0.6900
FDNS	00NR	2	16WP	G15_085	FROM->TO	CIMARRON - DRAPER LAKE 345KV CKT 1	717	717	0.07438	101.974	GEN515607 1-CANDN12 0.6900
FDNS	00NR	2	16WP	G15_085	FROM->TO	CIMARRON - DRAPER LAKE 345KV CKT 1	717	717	0.07438	101.9681	THOMAS HILL 161/22.0KV TRANSFORMER CKT 1
FDNS	00NR	2	16WP	G15_085	FROM->TO	CIMARRON - DRAPER LAKE 345KV CKT 1	717	717	0.07355	101.9518	FT SMITH - MUSKOGEE 345KV CKT 1
FDNS	00NR	2	16WP	G15_085	FROM->TO	CIMARRON - DRAPER LAKE 345KV CKT 1	717	717	0.07438	101.9473	GEN515443 1-MNCOWND1 0.7000
FDNS	00NR	2	16WP	G15_085	FROM->TO	CIMARRON - DRAPER LAKE 345KV CKT 1	717	717	0.07295	101.9473	HIGHLAND - PINK SW 138KV CKT 1
FDNS	00NR	2	16WP	G15_085	FROM->TO	CIMARRON - DRAPER LAKE 345KV CKT 1	717	717	0.07438	101.9459	GEN562794 1-G15038_5 0.6900
FDNS	00NR	2	16WP	G15_085	FROM->TO	CIMARRON - DRAPER LAKE 345KV CKT 1	717	717	0.07438	101.9459	GEN562795 1-G15038_6 0.6900
FDNS	00NR	2	16WP	G15_085	FROM->TO	CIMARRON - DRAPER LAKE 345KV CKT 1	717	717	0.07438	101.9455	GEN563092 1-G15074_3 0.6900
FDNS	00NR	2	16WP	G15_085	FROM->TO	CIMARRON - DRAPER LAKE 345KV CKT 1	717	717	0.07438	101.9404	GEN542951 5-HAWTHORN UNIT #5
FDNS	00NR	2	16WP	G15_085	FROM->TO	CIMARRON - DRAPER LAKE 345KV CKT 1	717	717	0.07438	101.935	GEN645012 2-NEBRASKA CITY 2
FDNSLock	00NR	2	16WP	G15_085	FROM->TO	CIMARRON - DRAPER LAKE 345KV CKT 1	717	717	0.07438	101.9297	GEN629072 4-LANSING GENERATOR FOR UNITS NO4 EIA CODE 1
FDNS	00NR	2	16WP	G15_085	FROM->TO	CIMARRON - DRAPER LAKE 345KV CKT 1	717	717	0.07441	101.9222	CHISHOLM6 230.00 - SWEETWATER 230KV CKT 1
FDNS	00NR	2	16WP	G15_085	FROM->TO	CIMARRON - DRAPER LAKE 345KV CKT 1	717	717	0.07457	101.9182	KEO EHV - WEST MEMPHIS 500 500KV CKT 1
FDNS	00NR	2	16WP	G15_085	FROM->TO	CIMARRON - DRAPER LAKE 345KV CKT 1	717	717	0.07438	101.9109	GEN562512 1-G14_020_3 0.6900

SOLUTION	GROUP	SCENARIO	SEASON	SOURCE	DIRECTION	MONITORED ELEMENT	RATEA (MVA)	RATEB(MVA)	TDF	TC%LOADING (% MVA)	CONTINGENCY
FDNS	00NR	2	16WP	G15_085	FROM->TO	CIMARRON - DRAPER LAKE 345KV CKT 1	717	717	0.07438	101.8993	GEN657749 1-YOUNG 1 GENERATOR
FDNS	00NR	2	16WP	G15_085	FROM->TO	CIMARRON - DRAPER LAKE 345KV CKT 1	717	717	0.07438	101.8927	GEN562699 1-G15_018_3 0.6900
FDNS	00NR	2	16WP	G15_085	FROM->TO	CIMARRON - DRAPER LAKE 345KV CKT 1	717	717	0.07438	101.8741	GEN640009 1-COOPER NUCLEAR STATION
FDNS	00NR	2	16WP	G15_085	FROM->TO	CIMARRON - DRAPER LAKE 345KV CKT 1	717	717	0.07438	101.8678	GEN529201 1-OMCDLEC1 13.800
FDNS	00NR	2	16WP	G15_085	FROM->TO	CIMARRON - DRAPER LAKE 345KV CKT 1	717	717	0.07401	101.8639	FRISCCO4 138.00 - LULA 138KV CKT 1
FDNS	00NR	2	16WP	G15_085	FROM->TO	CIMARRON - DRAPER LAKE 345KV CKT 1	717	717	0.07438	101.855	GEN563122 1-G15077_3 0.3850
FDNS	00NR	2	16WP	G15_085	FROM->TO	CIMARRON - DRAPER LAKE 345KV CKT 1	717	717	0.07438	101.8456	GEN563182 1-G15083_3 0.6900
FDNSLock	00NR	2	16WP	G15_085	FROM->TO	CIMARRON - DRAPER LAKE 345KV CKT 1	717	717	0.07438	101.8316	GEN681522 3-GENOA 3
FDNS	00NR	2	16WP	G15_085	FROM->TO	CIMARRON - DRAPER LAKE 345KV CKT 1	717	717	0.07438	101.8265	GEN562685 1-G15_013_3 0.3550
FDNS	00NR	2	16WP	G15_085	FROM->TO	CIMARRON - DRAPER LAKE 345KV CKT 1	717	717	0.07414	101.8039	HOLLYWOOD - MIDWEST TAP 138KV CKT 1
FDNS	00NR	2	16WP	G15_085	FROM->TO	CIMARRON - DRAPER LAKE 345KV CKT 1	717	717	0.07438	101.8006	GEN344895 2-1LAB G2 20.000
FDNS	00NR	2	16WP	G15_085	FROM->TO	CIMARRON - DRAPER LAKE 345KV CKT 1	717	717	0.07288	101.7981	TUPELO - TUPELO TAP 138KV CKT 1
FDNS	00NR	2	16WP	G15_085	FROM->TO	CIMARRON - DRAPER LAKE 345KV CKT 1	717	717	0.07086	101.795	CHISHOLM7 345.00 - GRACEMONT 345KV CKT 1
FDNS	00NR	2	16WP	G15_085	FROM->TO	CIMARRON - DRAPER LAKE 345KV CKT 1	717	717	0.07438	101.7863	4SIOUX 1 138.00 138/18.0KV TRANSFORMER CKT 1
FDNS	00NR	2	16WP	G15_085	FROM->TO	CIMARRON - DRAPER LAKE 345KV CKT 1	717	717	0.07401	101.7844	FRISCCO4 138.00 - HARDEN 4 138.00 138KV CKT 1
FDNS	00NR	2	16WP	G15_085	FROM->TO	CIMARRON - DRAPER LAKE 345KV CKT 1	717	717	0.07438	101.7829	GEN563222 1-G15088_3 0.6900
FDNS	00NR	2	16WP	G15_085	FROM->TO	CIMARRON - DRAPER LAKE 345KV CKT 1	717	717	0.07438	101.7726	GEN344896 3-1LAB G3 20.000
FDNS	00NR	2	16WP	G15_085	FROM->TO	CIMARRON - DRAPER LAKE 345KV CKT 1	717	717	0.07438	101.7711	GEN344894 1-1LAB G1 20.000
FDNS	00NR	2	16WP	G15_085	FROM->TO	CIMARRON - DRAPER LAKE 345KV CKT 1	717	717	0.07438	101.7707	GEN523461 1-BLACKHAWK GEN #1
FDNS	00NR	2	16WP	G15_085	FROM->TO	CIMARRON - DRAPER LAKE 345KV CKT 1	717	717	0.07438	101.7706	GEN523462 1-BLACKHAWK GEN #2
FDNS	00NR	2	16WP	G15_085	FROM->TO	CIMARRON - DRAPER LAKE 345KV CKT 1	717	717	0.07438	101.77	GEN344897 4-1LAB G4 20.000
FDNS	00NR	2	16WP	G15_085	FROM->TO	CIMARRON - DRAPER LAKE 345KV CKT 1	717	717	0.07438	101.7621	GEN562587 1-G14_056_3 0.6900
FDNS	00NR	2	16WP	G15_085	FROM->TO	CIMARRON - DRAPER LAKE 345KV CKT 1	717	717	0.06995	101.7615	CIMARRON - TUTTLE CONOCO TAP 138KV CKT 1
FDNS	00NR	2	16WP	G15_085	FROM->TO	CIMARRON - DRAPER LAKE 345KV CKT 1	717	717	0.07438	101.7381	GEN515602 1-KNGFSR12 0.7000
FDNS	00NR	2	16WP	G15_085	FROM->TO	CIMARRON - DRAPER LAKE 345KV CKT 1	717	717	0.07438	101.721	GEN563082 1-G15073_3 0.6900
FDNS	00NR	2	16WP	G15_085	FROM->TO	CIMARRON - DRAPER LAKE 345KV CKT 1	717	717	0.07086	101.7075	CHISHOLM7 345.00 (CHISHOLM) 345/230/13.2KV TRANSFORMER CKT 1
FDNS	00NR	2	16WP	G15_085	FROM->TO	CIMARRON - DRAPER LAKE 345KV CKT 1	717	717	0.07438	101.7016	GEN562704 1-G15_020_3 0.3550
FDNS	00NR	2	16WP	G15_085	FROM->TO	CIMARRON - DRAPER LAKE 345KV CKT 1	717	717	0.07438	101.6966	GEN563202 1-G15085_3 0.5500
FDNS	00NR	2	16WP	G15_085	FROM->TO	CIMARRON - DRAPER LAKE 345KV CKT 1	717	717	0.06995	101.6898	TUTTLE - TUTTLE CONOCO TAP 138KV CKT 1
FDNS	00NR	2	16WP	G15_085	FROM->TO	CIMARRON - DRAPER LAKE 345KV CKT 1	717	717	0.07438	101.6843	CLAY BOSWELL 230/20.9KV TRANSFORMER CKT 1
FDNS	00NR	2	16WP	G15_085	FROM->TO	CIMARRON - DRAPER LAKE 345KV CKT 1	717	717	0.07438	101.6588	GEN640010 1-GERALD GENTLEMAN STATION UNIT 1
FDNS	00NR	2	16WP	G15_085	FROM->TO	CIMARRON - DRAPER LAKE 345KV CKT 1	717	717	0.07438	101.6326	GEN672321 1-SHAND GENERATOR 1
FDNS	00NR	2	16WP	G15_085	FROM->TO	CIMARRON - DRAPER LAKE 345KV CKT 1	717	717	0.07384	101.6149	LULA - TUPELO TAP 138KV CKT 1
FDNS	00NR	2	16WP	G15_085	FROM->TO	CIMARRON - DRAPER LAKE 345KV CKT 1	717	717	0.07438	101.6146	GEN562710 1-G15_022_3 0.5500
FDNS	00NR	2	16WP	G15_085	FROM->TO	CIMARRON - DRAPER LAKE 345KV CKT 1	717	717	0.07508	101.6089	SEMINOLE (SEMINOL1) 345/138/14.4KV TRANSFORMER CKT 1
FDNS	00NR	2	16WP	G15_085	FROM->TO	CIMARRON - DRAPER LAKE 345KV CKT 1	717	717	0.07264	101.6084	NORTHWEST TEXARKANA - VALLIANT 345KV CKT 1
FDNS	00NR	2	16WP	G15_085	FROM->TO	CIMARRON - DRAPER LAKE 345KV CKT 1	717	717	0.07264	101.6084	NORTHWEST TEXARKANA - VALLIANT 345KV CKT 1
FDNS	00NR	2	16WP	G15_085	FROM->TO	CIMARRON - DRAPER LAKE 345KV CKT 1	717	717	0.07438	101.6068	GEN672311 2-POPLAR RIVER GENERATOR 2
FDNS	00NR	2	16WP	G15_085	FROM->TO	CIMARRON - DRAPER LAKE 345KV CKT 1	717	717	0.07438	101.6067	GEN672310 1-POPLAR RIVER GENERATOR 1
FDNS	00NR	2	16WP	G15_085	FROM->TO	CIMARRON - DRAPER LAKE 345KV CKT 1	717	717	0.07438	101.5968	GEN672306 6-BOUNDARY DAM GENERATOR 6
FDNS	00NR	2	16WP	G15_085	FROM->TO	CIMARRON - DRAPER LAKE 345KV CKT 1	717	717	0.07438	101.591	GEN640011 2-GERALD GENTLEMAN STATION UNIT 2
FDNS	00NR	2	16WP	G15_085	FROM->TO	CIMARRON - DRAPER LAKE 345KV CKT 1	717	717	0.07438	101.5906	GEN542956 2-LACYGNE UNIT #2
FDNS	00NR	2	16WP	G15_085	FROM->TO	CIMARRON - DRAPER LAKE 345KV CKT 1	717	717	0.07438	101.579	GEN659118 1-LARAMIE RIVER UNIT1
FDNS	00NR	2	16WP	G15_085	FROM->TO	CIMARRON - DRAPER LAKE 345KV CKT 1	717	717	0.07401	101.5558	ETNA - HARDEN 4 138.00 138KV CKT 1
FDNS	00NR	2	16WP	G15_085	FROM->TO	CIMARRON - DRAPER LAKE 345KV CKT 1	717	717	0.07563	101.5495	RENFROW7 345.00 - VIOLA 7 345.00 345KV CKT 1
FDNS	00NR	2	16WP	G15_085	FROM->TO	CIMARRON - DRAPER LAKE 345KV CKT 1	717	717	0.07567	101.541	P12:138:OKGE:3TERM22
FDNS	00NR	2	16WP	G15_085	FROM->TO	CIMARRON - DRAPER LAKE 345KV CKT 1	717	717	0.07564	101.5387	DRAPER LAKE - SOONER TAP 138KV CKT 1
FDNS	00NR	2	16WP	G15_085	FROM->TO	CIMARRON - DRAPER LAKE 345KV CKT 1	717	717	0.07295	101.5344	P12:138:WFEC:MSL08
FDNS	00NR	2	16WP	G15_085	FROM->TO	CIMARRON - DRAPER LAKE 345KV CKT 1	717	717	0.07295	101.5147	FRANKLIN - PINK SW 138KV CKT 1
FDNS	00NR	2	16WP	G15_085	FROM->TO	CIMARRON - DRAPER LAKE 345KV CKT 1	717	717	0.07467	101.5141	P12:138:WFEC:MSL09
FDNS	00NR	2	16WP	G15_085	FROM->TO	CIMARRON - DRAPER LAKE 345KV CKT 1	717	717	0.07546	101.5066	OAKCREEK - WILD MARY 138KV CKT 1
FDNS	00NR	2	16WP	G15_085	FROM->TO	CIMARRON - DRAPER LAKE 345KV CKT 1	717	717	0.07438	101.5028	GEN542957 1-IATAN UNIT #1
FDNSLock	00NR	2	16WP	G15_085	FROM->TO	CIMARRON - DRAPER LAKE 345KV CKT 1	717	717	0.07438	101.5018	GEN681542 6-JP MADGETT
FDNS	00NR	2	16WP	G15_085	FROM->TO	CIMARRON - DRAPER LAKE 345KV CKT 1	717	717	0.07438	101.4777	GEN530690 1-PRWINDG1 0.6900
FDNS	00NR	2	16WP	G15_085	FROM->TO	CIMARRON - DRAPER LAKE 345KV CKT 1	717	717	0.07401	101.4682	ETNA - PARK LANE 138KV CKT 1
FDNS	00NR	2	16WP	G15_085	FROM->TO	CIMARRON - DRAPER LAKE 345KV CKT 1	717	717	0.07545	101.4627	HUNTERS7 345.00 - RENFROW7 345.00 345KV CKT 1
FDNS	00NR	2	16WP	G15_085	FROM->TO	CIMARRON - DRAPER LAKE 345KV CKT 1	717	717	0.07438	101.423	GEN542955 1-LACYGNE UNIT #1
FDNS	00NR	2	16WP	G15_085	FROM->TO	CIMARRON - DRAPER LAKE 345KV CKT 1	717	717	0.07438	101.4191	GEN562754 1-G15031_5 0.6900
FDNS	00NR	2	16WP	G15_085	FROM->TO	CIMARRON - DRAPER LAKE 345KV CKT 1	717	717	0.07438	101.4073	GEN562556 1-G14_046_3 0.3420
FDNS	00NR	2	16WP	G15_085	FROM->TO	CIMARRON - DRAPER LAKE 345KV CKT 1	717	717	0.07438	101.4	GEN645001 1-FORT CALHOUN 1
FDNS	00NR	2	16WP	G15_085	FROM->TO	CIMARRON - DRAPER LAKE 345KV CKT 1	717	717	0.07522	101.3988	SEMINOLE (SEMINOL2) 345/138/14.4KV TRANSFORMER CKT 1
FDNS	00NR	2	16WP	G15_085	FROM->TO	CIMARRON - DRAPER LAKE 345KV CKT 1	717	717	0.07438	101.3772	GEN661015 1-COYOTE
FDNS	00NR	2	16WP	G15_085	FROM->TO	CIMARRON - DRAPER LAKE 345KV CKT 1	717	717	0.07438	101.3757	GEN562756 1-G15031_7 0.6900
FDNS	00NR	2	16WP	G15_085	FROM->TO	CIMARRON - DRAPER LAKE 345KV CKT 1	717	717	0.07438	101.3657	GEN532653 1-JEFFREY ENERGY CENTER UNIT 3
FDNS	00NR	2	16WP	G15_085	FROM->TO	CIMARRON - DRAPER LAKE 345KV CKT 1	717	717	0.07438	101.3655	GEN532652 1-JEFFREY ENERGY CENTER UNIT 2
FDNS	00NR	2	16WP	G15_085	FROM->TO	CIMARRON - DRAPER LAKE 345KV CKT 1	717	717	0.07438	101.3614	GEN532651 1-JEFFREY ENERGY CENTER UNIT 1
FDNS	00NR	2	16WP	G15_085	FROM->TO	CIMARRON - DRAPER LAKE 345KV CKT 1	717	717	0.07438	101.3601	GEN563142 1-G15079_3 0.5500
FDNS	00NR	2	16WP	G15_085	FROM->TO	CIMARRON - DRAPER LAKE 345KV CKT 1	717	717	0.07438	101.3601	GEN563151 1-G15080_2 0.5500
FDNS	00NR	2	16WP	G15_085	FROM->TO	CIMARRON - DRAPER LAKE 345KV CKT 1	717	717	0.07438	101.3568	GEN562974 1-G15060_5 0.6900
FDNS	00NR	2	16WP	G15_085	FROM->TO	CIMARRON - DRAPER LAKE 345KV CKT 1	717	717	0.07438	101.3499	GEN563042 1-G15068_3 0.6900
FDNS	00NR	2	16WP	G15_085	FROM->TO	CIMARRON - DRAPER LAKE 345KV CKT 1	717	717	0.07438	101.3408	GEN562973 1-G15060_4 0.6900
FDNS	00NR	2	16WP	G15_085	FROM->TO	CIMARRON - DRAPER LAKE 345KV CKT 1	717	717	0.07438	101.3096	GEN562078 1-G11_051_3 0.6900
FDNS	00NR	2	16WP	G15_085	FROM->TO	CIMARRON - DRAPER LAKE 345KV CKT 1	717	717	0.07438	101.2951	GEN562691 1-G15_015_3 0.6900
FDNS	00NR	2	16WP	G15_085	FROM->TO	CIMARRON - DRAPER LAKE 345KV CKT 1	717	717	0.07546	101.2802	AIRDEPT4 138.00 - WILD MARY 138KV CKT 1
FDNS	00NR	2	16WP	G15_085	FROM->TO	CIMARRON - DRAPER LAKE 345KV CKT 1	717	717	0.07438	101.2618	GEN562655 1-G14_074_3 0.6900
FDNS	00NR	2	16WP	G15_085	FROM->TO	CIMARRON - DRAPER LAKE 345KV CKT 1	717	717	0.07438	101.2613	GEN562762 1-G15033_3 0.6900
FDNS	00NR	2	16WP	G15_085	FROM->TO	CIMARRON - DRAPER LAKE 345KV CKT 1	717	717	0.07443	101.2592	PARK LANE - SEMINOLE 138KV CKT 1
FDNS	00NR	2	16WP	G15_085	FROM->TO	CIMARRON - DRAPER LAKE 345KV CKT 1	717	717	0.07438	101.2492	GEN657748 1-YOUNG 2 GENERATOR
FDNS	00NR	2	16WP	G15_085	FROM->TO	CIMARRON - DRAPER LAKE 345KV CKT 1	717	717	0.07295	101.2315	FRANKLIN - FRANKLIN SW 138KV CKT 1

SOLUTION	GROUP	SCENARIO	SEASON	SOURCE	DIRECTION	MONITORED ELEMENT	RATEA (MVA)	RATEB(MVA)	TDF	TC%LOADING (% MVA)	CONTINGENCY
FDNS	00NR	2	16WP	G15_085	FROM->TO	CIMARRON - DRAPER LAKE 345KV CKT 1	717	717	0.07438	101.2034	GEN527901 1-HOBBS PLANT #1 (CT)
FDNS	00NR	2	16WP	G15_085	FROM->TO	CIMARRON - DRAPER LAKE 345KV CKT 1	717	717	0.07438	101.2034	GEN527902 1-HOBBS PLANT #2 (CT)
FDNS	00NR	2	16WP	G15_085	FROM->TO	CIMARRON - DRAPER LAKE 345KV CKT 1	717	717	0.07128	101.1788	LYDIA - WELSH 345KV CKT 1
FDNS	00NR	2	16WP	G15_085	FROM->TO	CIMARRON - DRAPER LAKE 345KV CKT 1	717	717	0.07128	101.1788	LYDIA - WELSH 345KV CKT 1
FDNS	00NR	2	16WP	G15_085	FROM->TO	CIMARRON - DRAPER LAKE 345KV CKT 1	717	717	0.07438	101.1745	GEN563273 2-G15093_4 0.6900
FDNS	00NR	2	16WP	G15_085	FROM->TO	CIMARRON - DRAPER LAKE 345KV CKT 1	717	717	0.07438	101.1617	GEN563043 1-G15068_4 0.6900
FDNS	00NR	2	16WP	G15_085	FROM->TO	CIMARRON - DRAPER LAKE 345KV CKT 1	717	717	0.07438	101.1326	GEN563052 1-G15069_3 0.6900
FDNS	00NR	2	16WP	G15_085	FROM->TO	CIMARRON - DRAPER LAKE 345KV CKT 1	717	717	0.07438	101.1209	GEN525845 1-ELK_2 1 138.00
FDNS	00NR	2	16WP	G15_085	FROM->TO	CIMARRON - DRAPER LAKE 345KV CKT 1	717	717	0.07438	101.1175	GEN525844 1-ELK_1 118.000
FDNS	00NR	2	16WP	G15_085	FROM->TO	CIMARRON - DRAPER LAKE 345KV CKT 1	717	717	0.07438	101.0828	GEN563242 1-G15090_3 0.6900
FDNS	00NR	2	16WP	G15_085	FROM->TO	CIMARRON - DRAPER LAKE 345KV CKT 1	717	717	0.07438	101.0707	GEN526333 1-JONES GEN #3 21 KV
FDNS	00NR	2	16WP	G15_085	FROM->TO	CIMARRON - DRAPER LAKE 345KV CKT 1	717	717	0.07438	101.0707	GEN526334 1-JONES_4 116.500
FDNS	00NR	2	16WP	G15_085	FROM->TO	CIMARRON - DRAPER LAKE 345KV CKT 1	717	717	0.07438	101.0617	GEN620315 1-BIG STONE GEN
FDNS	00NR	2	16WP	G15_085	FROM->TO	CIMARRON - DRAPER LAKE 345KV CKT 1	717	717	0.07546	101.0507	AIRDEPT4 138.00 - GM 138KV CKT 1
FDNS	00NR	2	16WP	G15_085	FROM->TO	CIMARRON - DRAPER LAKE 345KV CKT 1	717	717	0.07438	101.0458	GEN562772 1-G15034_3 0.6900
FDNS	00NR	2	16WP	G15_085	FROM->TO	CIMARRON - DRAPER LAKE 345KV CKT 1	717	717	0.06995	101.0383	P12:138:AEPW-OGE:CORNVIL4:CIMARON4
FDNS	00NR	2	16WP	G15_085	FROM->TO	CIMARRON - DRAPER LAKE 345KV CKT 1	717	717	0.07438	101.0352	GEN523971 1-HARRINGTON GEN #1 24 KV
FDNS	00NR	2	16WP	G15_085	FROM->TO	CIMARRON - DRAPER LAKE 345KV CKT 1	717	717	0.07438	101.0351	GEN523972 1-HARRINGTON GEN #2 24 KV
FDNS	00NR	2	16WP	G15_085	FROM->TO	CIMARRON - DRAPER LAKE 345KV CKT 1	717	717	0.07438	101.0351	GEN523973 1-HARRINGTON GEN #3 24 KV
FDNS	00NR	2	16WP	G15_085	FROM->TO	CIMARRON - DRAPER LAKE 345KV CKT 1	717	717	0.07482	101.0286	RANCHRD7 345.00 - SOONER 345KV CKT 1
FDNS	00NR	2	16WP	G15_085	FROM->TO	CIMARRON - DRAPER LAKE 345KV CKT 1	717	717	0.07545	101.0273	HUNTERS7 345.00 - WOODRING 345KV CKT 1
FDNS	00NR	2	16WP	G15_085	FROM->TO	CIMARRON - DRAPER LAKE 345KV CKT 1	717	717	0.07438	101.0073	GEN600004 2-PRAIRIE ISLAND G2
FDNS	00NR	2	16WP	G15_085	FROM->TO	CIMARRON - DRAPER LAKE 345KV CKT 1	717	717	0.07438	101.0043	GEN600003 1-PRAIRIE ISLAND G1
FDNSLock	00NR	2	16WP	G15_085	FROM->TO	CIMARRON - DRAPER LAKE 345KV CKT 1	717	717	0.07438	100.991	GEN600006 1-AS KING
FDNSLock	00NR	2	16WP	G15_085	FROM->TO	CIMARRON - DRAPER LAKE 345KV CKT 1	717	717	0.07438	100.9708	GEN636641 1-LOUISA UNIT 1
FDNS	00NR	2	16WP	G15_085	FROM->TO	CIMARRON - DRAPER LAKE 345KV CKT 1	717	717	0.07438	100.9	GEN542962 2-IATAN UNIT #2
FDNS	00NR	2	16WP	G15_085	FROM->TO	CIMARRON - DRAPER LAKE 345KV CKT 1	717	717	0.05761	100.8874	MUSKOGEE - SEMINOLE 345KV CKT 1
FDNS	00NR	2	16WP	G15_085	FROM->TO	CIMARRON - DRAPER LAKE 345KV CKT 1	717	717	0.07438	100.8712	GEN563292 1-G15095_3 0.6900
FDNS	00NR	2	16WP	G15_085	FROM->TO	CIMARRON - DRAPER LAKE 345KV CKT 1	717	717	0.07438	100.853	GEN600005 1-MONTICELLO
FDNS	00NR	2	16WP	G15_085	FROM->TO	CIMARRON - DRAPER LAKE 345KV CKT 1	717	717	0.08049	100.8507	NORTHWEST - SPRING CREEK 345KV CKT 1
FDNS	00NR	2	16WP	G15_085	FROM->TO	CIMARRON - DRAPER LAKE 345KV CKT 1	717	717	0.07546	100.8425	DRAPER LAKE - GM 138KV CKT 1
FDNS	00NR	2	16WP	G15_085	FROM->TO	CIMARRON - DRAPER LAKE 345KV CKT 1	717	717	0.07438	100.8359	GEN527166 1-MUSTANG_6 118.000
FDNS	00NR	2	16WP	G15_085	FROM->TO	CIMARRON - DRAPER LAKE 345KV CKT 1	717	717	0.07438	100.8283	GEN525562 1-TOLK GEN #2 24 KV
FDNS	00NR	2	16WP	G15_085	FROM->TO	CIMARRON - DRAPER LAKE 345KV CKT 1	717	717	0.08049	100.8111	SOONER - SPRING CREEK 345KV CKT 1
FDNS	00NR	2	16WP	G15_085	FROM->TO	CIMARRON - DRAPER LAKE 345KV CKT 1	717	717	0.07051	100.8005	CLARKSVILLE - MUSKOGEE 345KV CKT 1
FDNS	00NR	2	16WP	G15_085	FROM->TO	CIMARRON - DRAPER LAKE 345KV CKT 1	717	717	0.07051	100.8005	CLARKSVILLE - MUSKOGEE 345KV CKT 1
FDNS	00NR	2	16WP	G15_085	FROM->TO	CIMARRON - DRAPER LAKE 345KV CKT 1	717	717	0.07438	100.8	GEN629074 1-ARNOLD LOWSIDE OF GSU XFMR
FDNS	00NR	2	16WP	G15_085	FROM->TO	CIMARRON - DRAPER LAKE 345KV CKT 1	717	717	0.07438	100.7774	GEN562952 1-G15057_3 0.6500
FDNS	00NR	2	16WP	G15_085	FROM->TO	CIMARRON - DRAPER LAKE 345KV CKT 1	717	717	0.07438	100.7712	GEN563272 1-G15093_3 0.6900
FDNS	00NR	2	16WP	G15_085	FROM->TO	CIMARRON - DRAPER LAKE 345KV CKT 1	717	717	0.07438	100.7282	GEN635213 3-NEAL UNIT 3
FDNS	00NR	2	16WP	G15_085	FROM->TO	CIMARRON - DRAPER LAKE 345KV CKT 1	717	717	0.0791	100.7221	FRANKLIN SW - MIDWEST TAP 138KV CKT 1
FDNS	00NR	2	16WP	G15_085	FROM->TO	CIMARRON - DRAPER LAKE 345KV CKT 1	717	717	0.06966	100.7064	DRAPER LAKE - SEMINOLE 345KV CKT 3
FDNS	00NR	2	16WP	G15_085	FROM->TO	CIMARRON - DRAPER LAKE 345KV CKT 1	717	717	0.07438	100.6801	BIG STONE 230/24.0KV TRANSFORMER CKT 1
FDNS	00NR	2	16WP	G15_085	FROM->TO	CIMARRON - DRAPER LAKE 345KV CKT 1	717	717	0.07438	100.6795	GEN562892 1-G15048_3 0.6900
FDNS	00NR	2	16WP	G15_085	FROM->TO	CIMARRON - DRAPER LAKE 345KV CKT 1	717	717	0.07438	100.6365	GEN563173 1-G15082_3 0.6900
FDNS	00NR	2	16WP	G15_085	FROM->TO	CIMARRON - DRAPER LAKE 345KV CKT 1	717	717	0.07397	100.6229	CHAMBER SPRINGS - CLARKSVILLE 345KV CKT 1
FDNS	00NR	2	16WP	G15_085	FROM->TO	CIMARRON - DRAPER LAKE 345KV CKT 1	717	717	0.07438	100.5923	GEN562902 1-G15052_3 0.6900
FDNS	00NR	2	16WP	G15_085	FROM->TO	CIMARRON - DRAPER LAKE 345KV CKT 1	717	717	0.07059	100.5885	LYDIA - VALLIANT 345KV CKT 1
FDNS	00NR	2	16WP	G15_085	FROM->TO	CIMARRON - DRAPER LAKE 345KV CKT 1	717	717	0.07059	100.5885	LYDIA - VALLIANT 345KV CKT 1
FDNS	00NR	2	16WP	G15_085	FROM->TO	CIMARRON - DRAPER LAKE 345KV CKT 1	717	717	0.07438	100.5713	GEN514805 1-SOONER UNIT 1
FDNS	00NR	2	16WP	G15_085	FROM->TO	CIMARRON - DRAPER LAKE 345KV CKT 1	717	717	0.07438	100.5608	GEN527903 1-HOBBS PLANT #3 (ST)
FDNS	00NR	2	16WP	G15_085	FROM->TO	CIMARRON - DRAPER LAKE 345KV CKT 1	717	717	0.07438	100.5246	GEN525561 1-TOLK GEN #1 24 KV
FDNSLock	00NR	2	16WP	G15_085	FROM->TO	CIMARRON - DRAPER LAKE 345KV CKT 1	717	717	0.07438	100.5089	GEN600000 1-SHERBURNECNTY G1
FDNS	00NR	2	16WP	G15_085	FROM->TO	CIMARRON - DRAPER LAKE 345KV CKT 1	717	717	0.07272	100.4405	P12:138:OKGE:3TERM23
FDNS	00NR	2	16WP	G15_085	FROM->TO	CIMARRON - DRAPER LAKE 345KV CKT 1	717	717	0.07438	100.4279	GEN600001 2-SHERBURNE CNTY G2
FDNS	00NR	2	16WP	G15_085	FROM->TO	CIMARRON - DRAPER LAKE 345KV CKT 1	717	717	0.07438	100.4	GEN344225 1-1CAL G1 25.000
FDNS	00NR	2	16WP	G15_085	FROM->TO	CIMARRON - DRAPER LAKE 345KV CKT 1	717	717	0.07272	100.3771	BARNES 4 138.00 - DRAPER LAKE 138KV CKT 1
FDNS	00NR	2	16WP	G15_085	FROM->TO	CIMARRON - DRAPER LAKE 345KV CKT 1	717	717	0.07438	100.327	GEN514806 1-SOONER UNIT 2
FDNSLock	00NR	2	16WP	G15_085	FROM->TO	CIMARRON - DRAPER LAKE 345KV CKT 1	717	717	0.07438	100.3141	GEN629075 1-OTTUMWA GENERATOR FOR OTTUMWA UNIT NO 1
FDNS	00NR	2	16WP	G15_085	FROM->TO	CIMARRON - DRAPER LAKE 345KV CKT 1	717	717	0.07438	100.2846	GEN563162 1-G15081_3 0.6900
FDNS	00NR	2	16WP	G15_085	FROM->TO	CIMARRON - DRAPER LAKE 345KV CKT 1	717	717	0.0768	100.1493	DRAPER LAKE (DRAPER2) 345/138/13.8KV TRANSFORMER CKT 1
FDNS	00NR	2	16WP	G15_085	FROM->TO	CIMARRON - DRAPER LAKE 345KV CKT 1	717	717	0.07438	100.0991	SHERBURNE CO 345/24.0KV TRANSFORMER CKT 1
FDNS	00NR	2	16WP	G15_085	FROM->TO	CIMARRON - DRAPER LAKE 345KV CKT 1	717	717	0.0768	100.0585	DRAPER LAKE (DRAPER3) 345/138/13.8KV TRANSFORMER CKT 1
FDNS	00NR	2	16WP	G15_085	FROM->TO	CIMARRON - DRAPER LAKE 345KV CKT 1	717	717	0.0768	100.0585	DRAPER LAKE (DRAPER4) 345/138/13.8KV TRANSFORMER CKT 1
FDNS	00NR	2	16WP	G15_085	FROM->TO	CIMARRON - DRAPER LAKE 345KV CKT 1	717	717	0.07769	100.0535	CIMARRON - MATHWSN7 345.00 345KV CKT 1
FDNS	00NR	2	16WP	G15_085	FROM->TO	CIMARRON - DRAPER LAKE 345KV CKT 1	717	717	0.07769	100.0535	CIMARRON - MATHWSN7 345.00 345KV CKT 2
FDNSLock	00NR	2	16WP	G15_085	FROM->TO	CIMARRON - DRAPER LAKE 345KV CKT 1	717	717	0.07438	100.0516	GEN635214 4-NEAL UNIT 4
FDNS	00NR	2	16WP	G15_085	FROM->TO	CIMARRON - DRAPER LAKE 345KV CKT 1	717	717	0.07438	100	GEN562882 1-G15047_3 0.6900
FDNS	00NR	2	16WP	G15_085	FROM->TO	CIMARRON - DRAPER LAKE 345KV CKT 1	717	717	0.07438	100	GEN600002 3-SHERBURNE CNTY G3
FDNS	00NR	2	16WP	G15_085	FROM->TO	CIMARRON - DRAPER LAKE 345KV CKT 1	717	717	0.07438	99.6	GEN635023 3-WALTER SCOTT UNIT 3
FDNS	00NR	2	16WP	G15_085	FROM->TO	CIMARRON - DRAPER LAKE 345KV CKT 1	717	717	0.07438	99.5	GEN562023 1-G11_020_3 0.6900
FDNS	00NR	2	16WP	G15_085	FROM->TO	CIMARRON - DRAPER LAKE 345KV CKT 1	717	717	0.07438	99.5	GEN562026 1-G11_019_3 0.6900
FDNS	00NR	2	20WP	G15_085	TO->FROM	CIMARRON - MINCO 345KV CKT 1	956	956	0.37977	113.0877	G14-057T 345.00 - SUNNYSIDE 345KV CKT 1
FDNS	00NR	2	16WP	G15_085	TO->FROM	CIMARRON - MINCO 345KV CKT 1	956	956	0.3806	111.9389	G14-057T 345.00 - SUNNYSIDE 345KV CKT 1
FDNS	00NR	2	17SP	G15_085	TO->FROM	CLEAVELAND - CLEVLND 4 138.00 138KV CKT Z1	305	371	0.04177	110.1106	CLEVELAND - TULSA NORTH 345KV CKT 1
FDNS	00NR	2	17SP	G15_085	TO->FROM	CLEAVELAND - CLEVLND 4 138.00 138KV CKT Z1	305	371	0.04177	110.1106	CLEVELAND - TULSA NORTH 345KV CKT 1
FDNS	00NR	2	20SP	G15_085	TO->FROM	CLEAVELAND - CLEVLND 4 138.00 138KV CKT Z1	305	371	0.04043	109.3332	CLEVELAND - TULSA NORTH 345KV CKT 1
FDNS	00NR	2	20SP	G15_085	TO->FROM	CLEAVELAND - CLEVLND 4 138.00 138KV CKT Z1	305	371	0.04043	109.3332	CLEVELAND - TULSA NORTH 345KV CKT 1
FDNS	00NR	2	16WP	G15_085	FROM->TO	G14-057T 345.00 - SUNNYSIDE 345KV CKT 1	717	789	0.29679	140.7677	CIMARRON - MINCO 345KV CKT 1

SOLUTION	GROUP	SCENARIO	SEASON	SOURCE	DIRECTION	MONITORED ELEMENT	RATEA (MVA)	RATEB(MVA)	TDF	TC%LOADING (% MVA)	CONTINGENCY
FDNS	00NR	2	20WP	G15_085	FROM->TO	G14-057T 345.00 - SUNNYSIDE 345KV CKT 1	717	789	0.2976	139.8286	CIMARRON - MINCO 345KV CKT 1
FDNS	00NR	2	16WP	G15_085	FROM->TO	G14-057T 345.00 - SUNNYSIDE 345KV CKT 1	717	789	0.29679	129.763	GRACEMONT - MINCO 345KV CKT 1
FDNS	00NR	2	20WP	G15_085	FROM->TO	G14-057T 345.00 - SUNNYSIDE 345KV CKT 1	717	789	0.2976	128.6479	GRACEMONT - MINCO 345KV CKT 1
FDNS	00NR	2	16WP	G15_085	FROM->TO	G14-057T 345.00 - SUNNYSIDE 345KV CKT 1	717	789	0.22099	125.7396	PITTSBURG - SEMINOLE 345KV CKT 1
FDNS	00NR	2	16WP	G15_085	FROM->TO	G14-057T 345.00 - SUNNYSIDE 345KV CKT 1	717	789	0.22099	125.7396	PITTSBURG - SEMINOLE 345KV CKT 1
FDNS	00NR	2	16WP	G15_085	FROM->TO	G14-057T 345.00 - SUNNYSIDE 345KV CKT 1	717	789	0.20635	125.55	BASE CASE
FDNS	00NR	2	20WP	G15_085	FROM->TO	G14-057T 345.00 - SUNNYSIDE 345KV CKT 1	717	789	0.20776	123.5665	BASE CASE
FDNS	00NR	2	20WP	G15_085	FROM->TO	G14-057T 345.00 - SUNNYSIDE 345KV CKT 1	717	789	0.22292	123.0201	PITTSBURG - SEMINOLE 345KV CKT 1
FDNS	00NR	2	20WP	G15_085	FROM->TO	G14-057T 345.00 - SUNNYSIDE 345KV CKT 1	717	789	0.22292	123.0201	PITTSBURG - SEMINOLE 345KV CKT 1
FDNS	00NR	2	16WP	G15_085	FROM->TO	G14-057T 345.00 - SUNNYSIDE 345KV CKT 1	717	789	0.21325	123.0076	CIMARRON - DRAPER LAKE 345KV CKT 1
FDNS	00NR	2	20WP	G15_085	FROM->TO	G14-057T 345.00 - SUNNYSIDE 345KV CKT 1	717	789	0.21469	120.8828	CIMARRON - DRAPER LAKE 345KV CKT 1
FDNS	00NR	2	16WP	G15_085	FROM->TO	G14-057T 345.00 - SUNNYSIDE 345KV CKT 1	717	789	0.22821	120.4177	P12:138:WFEC:MSL03
FDNS	00NR	2	16WP	G15_085	FROM->TO	G14-057T 345.00 - SUNNYSIDE 345KV CKT 1	717	789	0.21323	119.3708	PITTSBURG - VALLIANT 345KV CKT 1
FDNS	00NR	2	16WP	G15_085	FROM->TO	G14-057T 345.00 - SUNNYSIDE 345KV CKT 1	717	789	0.21323	119.3708	PITTSBURG - VALLIANT 345KV CKT 1
FDNSLock	00NR	2	16WP	G15_085	FROM->TO	G14-057T 345.00 - SUNNYSIDE 345KV CKT 1	717	789	0.20635	119.2589	GEN509403 1-PIRKEY GENERATION
FDNS	00NR	2	16WP	G15_085	FROM->TO	G14-057T 345.00 - SUNNYSIDE 345KV CKT 1	717	789	0.20635	119.1786	GEN509416 1-TURK GENERATION
FDNS	00NR	2	16WP	G15_085	FROM->TO	G14-057T 345.00 - SUNNYSIDE 345KV CKT 1	717	789	0.21166	118.8767	CLEVELAND - G15066_T 345.00 345KV CKT 1
FDNS	00NR	2	16WP	G15_085	FROM->TO	G14-057T 345.00 - SUNNYSIDE 345KV CKT 1	717	789	0.21166	118.5822	G15066_T 345.00 - SOONER 345KV CKT 1
FDNS	00NR	2	20WP	G15_085	FROM->TO	G14-057T 345.00 - SUNNYSIDE 345KV CKT 1	717	789	0.22989	118.5751	P12:138:WFEC:MSL03
FDNS	00NR	2	16WP	G15_085	FROM->TO	G14-057T 345.00 - SUNNYSIDE 345KV CKT 1	717	789	0.20635	118.2627	GEN501801 1-DOLET HILLS UNIT1
FDNS	00NR	2	16WP	G15_085	FROM->TO	G14-057T 345.00 - SUNNYSIDE 345KV CKT 1	717	789	0.20635	117.8895	GEN509404 1-WELSH #1
FDNS	00NR	2	16WP	G15_085	FROM->TO	G14-057T 345.00 - SUNNYSIDE 345KV CKT 1	717	789	0.20635	117.8895	GEN509406 1-WELSH #3
FDNS	00NR	2	16WP	G15_085	FROM->TO	G14-057T 345.00 - SUNNYSIDE 345KV CKT 1	717	789	0.21068	117.6042	BORDER 7345.00 - WOODWARD DISTRICT EHV 345KV CKT 1
FDNS	00NR	2	20WP	G15_085	FROM->TO	G14-057T 345.00 - SUNNYSIDE 345KV CKT 1	717	789	0.20776	117.3341	GEN509403 1-PIRKEY GENERATION
FDNS	00NR	2	16WP	G15_085	FROM->TO	G14-057T 345.00 - SUNNYSIDE 345KV CKT 1	717	789	0.21218	117.2715	CORN TAP - NAPLESTP 138.00 138KV CKT 1
FDNS	00NR	2	20WP	G15_085	FROM->TO	G14-057T 345.00 - SUNNYSIDE 345KV CKT 1	717	789	0.20776	117.2541	GEN509416 1-TURK GENERATION
FDNS	00NR	2	16WP	G15_085	FROM->TO	G14-057T 345.00 - SUNNYSIDE 345KV CKT 1	717	789	0.21218	117.1863	NAPLESTP 138.00 - PAYNE 138.00 138KV CKT 1
FDNS	00NR	2	16WP	G15_085	FROM->TO	G14-057T 345.00 - SUNNYSIDE 345KV CKT 1	717	789	0.20974	117.1435	7SAREPTA% 345.00 - LONGWOOD 345KV CKT 1
FDNS	00NR	2	16WP	G15_085	FROM->TO	G14-057T 345.00 - SUNNYSIDE 345KV CKT 1	717	789	0.20974	117.1435	7SAREPTA% 345.00 - LONGWOOD 345KV CKT 1
FDNS	00NR	2	20WP	G15_085	FROM->TO	G14-057T 345.00 - SUNNYSIDE 345KV CKT 1	717	789	0.21282	117.0025	CLEVELAND - G15066_T 345.00 345KV CKT 1
FDNSLock	00NR	2	16WP	G15_085	FROM->TO	G14-057T 345.00 - SUNNYSIDE 345KV CKT 1	717	789	0.20635	116.9789	GEN336821 1-GRAND GULF UNIT
FDNS	00NR	2	16WP	G15_085	FROM->TO	G14-057T 345.00 - SUNNYSIDE 345KV CKT 1	717	789	0.20769	116.9739	DOLET HILLS - SOUTHWEST SHREVEPORT 345KV CKT 1
FDNS	00NR	2	16WP	G15_085	FROM->TO	G14-057T 345.00 - SUNNYSIDE 345KV CKT 1	717	789	0.20769	116.9739	DOLET HILLS - SOUTHWEST SHREVEPORT 345KV CKT 1
FDNS	00NR	2	16WP	G15_085	FROM->TO	G14-057T 345.00 - SUNNYSIDE 345KV CKT 1	717	789	0.21024	116.939	CLEVELAND - TULSA NORTH 345KV CKT 1
FDNS	00NR	2	16WP	G15_085	FROM->TO	G14-057T 345.00 - SUNNYSIDE 345KV CKT 1	717	789	0.21024	116.939	CLEVELAND - TULSA NORTH 345KV CKT 1
FDNS	00NR	2	20WP	G15_085	FROM->TO	G14-057T 345.00 - SUNNYSIDE 345KV CKT 1	717	789	0.215	116.9113	PITTSBURG - VALLIANT 345KV CKT 1
FDNS	00NR	2	20WP	G15_085	FROM->TO	G14-057T 345.00 - SUNNYSIDE 345KV CKT 1	717	789	0.215	116.9113	PITTSBURG - VALLIANT 345KV CKT 1
FDNS	00NR	2	16WP	G15_085	FROM->TO	G14-057T 345.00 - SUNNYSIDE 345KV CKT 1	717	789	0.21219	116.8889	ANADARKO - POCASSETT 138KV CKT 1
FDNSLock	00NR	2	16WP	G15_085	FROM->TO	G14-057T 345.00 - SUNNYSIDE 345KV CKT 1	717	789	0.20635	116.8842	GEN336153 1-WATERFORD UNIT#3
FDNS	00NR	2	16WP	G15_085	FROM->TO	G14-057T 345.00 - SUNNYSIDE 345KV CKT 1	717	789	0.2119	116.8687	COMANCHE - LOCO 138KV CKT 1
FDNS	00NR	2	16WP	G15_085	FROM->TO	G14-057T 345.00 - SUNNYSIDE 345KV CKT 1	717	789	0.2013	116.8399	CANADIAN RIVER - MUSKOGEE 345KV CKT 1
FDNS	00NR	2	16WP	G15_085	FROM->TO	G14-057T 345.00 - SUNNYSIDE 345KV CKT 1	717	789	0.21219	116.7429	POCASSETT - TUTTLE 138KV CKT 1
FDNSLock	00NR	2	16WP	G15_085	FROM->TO	G14-057T 345.00 - SUNNYSIDE 345KV CKT 1	717	789	0.20673	116.708	MATHWSN7 345.00 - TATONGA7 345.00 345KV CKT 1
FDNS	00NR	2	20WP	G15_085	FROM->TO	G14-057T 345.00 - SUNNYSIDE 345KV CKT 1	717	789	0.21282	116.7056	G15066_T 345.00 - SOONER 345KV CKT 1
FDNS	00NR	2	16WP	G15_085	FROM->TO	G14-057T 345.00 - SUNNYSIDE 345KV CKT 1	717	789	0.21068	116.6717	BORDER 7345.00 - TUCO_2 345.00 345KV CKT 1
FDNS	00NR	2	16WP	G15_085	FROM->TO	G14-057T 345.00 - SUNNYSIDE 345KV CKT 1	717	789	0.21103	116.6217	ARCADIA - NORTHWEST 345KV CKT 1
FDNSLock	00NR	2	16WP	G15_085	FROM->TO	G14-057T 345.00 - SUNNYSIDE 345KV CKT 1	717	789	0.20635	116.5903	GEN335831 1-RIVERBEND UNIT#1
FDNS	00NR	2	16WP	G15_085	FROM->TO	G14-057T 345.00 - SUNNYSIDE 345KV CKT 1	717	789	0.20635	116.5857	GRAND GULF 500/22.0KV TRANSFORMER CKT 1
FDNS	00NR	2	16WP	G15_085	FROM->TO	G14-057T 345.00 - SUNNYSIDE 345KV CKT 1	717	789	0.20635	116.5501	GEN515577 1-ARBWND11 0.6900
FDNS	00NR	2	20WP	G15_085	FROM->TO	G14-057T 345.00 - SUNNYSIDE 345KV CKT 1	717	789	0.20776	116.537	GEN501801 1-DOLET HILLS UNIT1
FDNS	00NR	2	16WP	G15_085	FROM->TO	G14-057T 345.00 - SUNNYSIDE 345KV CKT 1	717	789	0.20697	116.5149	ARCADIA - SEMINOLE 345KV CKT 1
FDNS	00NR	2	16WP	G15_085	FROM->TO	G14-057T 345.00 - SUNNYSIDE 345KV CKT 1	717	789	0.20635	116.5084	GEN509409 1-WILKES #3
FDNS	00NR	2	16WP	G15_085	FROM->TO	G14-057T 345.00 - SUNNYSIDE 345KV CKT 1	717	789	0.20813	116.4842	7SAREPTA% 345.00 - ELDORADO EHV 345KV CKT 1
FDNS	00NR	2	16WP	G15_085	FROM->TO	G14-057T 345.00 - SUNNYSIDE 345KV CKT 1	717	789	0.20813	116.484	3TR3AR8EL7EL
FDNS	00NR	2	16WP	G15_085	FROM->TO	G14-057T 345.00 - SUNNYSIDE 345KV CKT 1	717	789	0.20813	116.4729	ELDORADO EHV 500/345KV TRANSFORMER CKT 1
FDNS	00NR	2	16WP	G15_085	FROM->TO	G14-057T 345.00 - SUNNYSIDE 345KV CKT 1	717	789	0.2094	116.4234	P12:138:AEPW:DUNCAN-4:L.E.S.-4
FDNS	00NR	2	16WP	G15_085	FROM->TO	G14-057T 345.00 - SUNNYSIDE 345KV CKT 1	717	789	0.21219	116.3678	BRIDGECR 138.00 - TUTTLE 138KV CKT 1
FDNS	00NR	2	16WP	G15_085	FROM->TO	G14-057T 345.00 - SUNNYSIDE 345KV CKT 1	717	789	0.21282	116.3244	HEALDTON - LOCO 138KV CKT 1
FDNS	00NR	2	16WP	G15_085	FROM->TO	G14-057T 345.00 - SUNNYSIDE 345KV CKT 1	717	789	0.20949	116.3126	COMANCHE TAP - OMPA-DUNCAN 840 138KV CKT 1
FDNS	00NR	2	16WP	G15_085	FROM->TO	G14-057T 345.00 - SUNNYSIDE 345KV CKT 1	717	789	0.20985	116.31	FINNEY SWITCHING STATION - HOLCOMB 345KV CKT 1
FDNS	00NR	2	16WP	G15_085	FROM->TO	G14-057T 345.00 - SUNNYSIDE 345KV CKT 1	717	789	0.20985	116.31	FINNEY SWITCHING STATION - HOLCOMB 345KV CKT 1
FDNS	00NR	2	20WP	G15_085	FROM->TO	G14-057T 345.00 - SUNNYSIDE 345KV CKT 1	717	789	0.21199	116.2987	BORDER 7345.00 - WOODWARD DISTRICT EHV 345KV CKT 1
FDNS	00NR	2	16WP	G15_085	FROM->TO	G14-057T 345.00 - SUNNYSIDE 345KV CKT 1	717	789	0.20635	116.2	GEN300006 1-NEW MADRID UNIT 1
FDNS	00NR	2	16WP	G15_085	FROM->TO	G14-057T 345.00 - SUNNYSIDE 345KV CKT 1	717	789	0.20635	116.2	GEN300007 1-NEW MADRID UNIT 2
FDNS	00NR	2	16WP	G15_085	FROM->TO	G14-057T 345.00 - SUNNYSIDE 345KV CKT 1	717	789	0.20635	116.1996	GEN501813 1-RODEMACHER UNIT 3
FDNS	00NR	2	16WP	G15_085	FROM->TO	G14-057T 345.00 - SUNNYSIDE 345KV CKT 1	717	789	0.20687	116.186	LACYGNE - WAVERLY7 345.00 345KV CKT 1
FDNS	00NR	2	16WP	G15_085	FROM->TO	G14-057T 345.00 - SUNNYSIDE 345KV CKT 1	717	789	0.21282	116.185	HEALDTON - RINGLING 138KV CKT 1
FDNS	00NR	2	16WP	G15_085	FROM->TO	G14-057T 345.00 - SUNNYSIDE 345KV CKT 1	717	789	0.21219	116.1053	P12:138:WFEC:MSL01
FDNS	00NR	2	16WP	G15_085	FROM->TO	G14-057T 345.00 - SUNNYSIDE 345KV CKT 1	717	789	0.20635	116.1007	GEN520947 1-HUGO1
FDNS	00NR	2	16WP	G15_085	FROM->TO	G14-057T 345.00 - SUNNYSIDE 345KV CKT 1	717	789	0.21219	116.0984	BRIDGECR 138.00 - SUNSHINE CANYON 138KV CKT 1
FDNS	00NR	2	16WP	G15_085	FROM->TO	G14-057T 345.00 - SUNNYSIDE 345KV CKT 1	717	789	0.20687	116.0736	WAVERLY7 345.00 - WOLF CREEK 345KV CKT 1
FDNSLock	00NR	2	16WP	G15_085	FROM->TO	G14-057T 345.00 - SUNNYSIDE 345KV CKT 1	717	789	0.20673	116.0396	G11_051T 345.00 - TATONGA7 345.00 345KV CKT 1
FDNS	00NR	2	16WP	G15_085	FROM->TO	G14-057T 345.00 - SUNNYSIDE 345KV CKT 1	717	789	0.20949	116.0318	DUNCAN - OMPA-DUNCAN 840 138KV CKT 1
FDNS	00NR	2	16WP	G15_085	FROM->TO	G14-057T 345.00 - SUNNYSIDE 345KV CKT 1	717	789	0.20949	116.0318	DUNCAN - OMPA-DUNCAN 840 138KV CKT 1
FDNS	00NR	2	16WP	G15_085	FROM->TO	G14-057T 345.00 - SUNNYSIDE 345KV CKT 1	717	789	0.21282	116.0205	RINGLING - SOUTH WILSON 138KV CKT 1
FDNS	00NR	2	20WP	G15_085	FROM->TO	G14-057T 345.00 - SUNNYSIDE 345KV CKT 1	717	789	0.20776	116.0135	GEN509406 1-WELSH #3
FDNS	00NR	2	20WP	G15_085	FROM->TO	G14-057T 345.00 - SUNNYSIDE 345KV CKT 1	717	789	0.20776	116.0133	GEN509404 1-WELSH #1
FDNS	00NR	2	16WP	G15_085	FROM->TO	G14-057T 345.00 - SUNNYSIDE 345KV CKT 1	717	789	0.20635	115.9991	GEN335206 1-NELSON UNIT 6
FDNS	00NR	2	16WP	G15_085	FROM->TO	G14-057T 345.00 - SUNNYSIDE 345KV CKT 1	717	789	0.20985	115.9177	FINNEY SWITCHING STATION - Hitchland Interchange 345KV CKT 1

SOLUTION	GROUP	SCENARIO	SEASON	SOURCE	DIRECTION	MONITORED ELEMENT	RATEA (MVA)	RATEB(MVA)	TDF	TC%LOADING (% MVA)	CONTINGENCY
FDNS	00NR	2	16WP	G15_085	FROM->TO	G14-057T 345.00 - SUNNYSIDE 345KV CKT 1	717	789	0.20635	115.8951	DOLET HILLS 345/24.0KV TRANSFORMER CKT 1
FDNSLock	00NR	2	16WP	G15_085	FROM->TO	G14-057T 345.00 - SUNNYSIDE 345KV CKT 1	717	789	0.20635	115.833	GEN590011 2-ERCOT EQUIVALENCE
FDNS	00NR	2	16WP	G15_085	FROM->TO	G14-057T 345.00 - SUNNYSIDE 345KV CKT 1	717	789	0.20452	115.8267	P12:138:AEPW:SHERID4:112GORE4
FDNS	00NR	2	16WP	G15_085	FROM->TO	G14-057T 345.00 - SUNNYSIDE 345KV CKT 1	717	789	0.20629	115.8236	PARK LANE - SEMINOLE 138KV CKT 1
FDNS	00NR	2	16WP	G15_085	FROM->TO	G14-057T 345.00 - SUNNYSIDE 345KV CKT 1	717	789	0.20635	115.8132	GEN501812 1-RODEMACHER UNIT 2
FDNS	00NR	2	16WP	G15_085	FROM->TO	G14-057T 345.00 - SUNNYSIDE 345KV CKT 1	717	789	0.20754	115.7762	CANEYRV7 345.00 - NEOSHO 345KV CKT 1
FDNS	00NR	2	16WP	G15_085	FROM->TO	G14-057T 345.00 - SUNNYSIDE 345KV CKT 1	717	789	0.20778	115.7647	THISTLE7 345.00 - WOODWARD DISTRICT EHV 345KV CKT 1
FDNS	00NR	2	16WP	G15_085	FROM->TO	G14-057T 345.00 - SUNNYSIDE 345KV CKT 1	717	789	0.20778	115.7647	THISTLE7 345.00 - WOODWARD DISTRICT EHV 345KV CKT 1
FDNS	00NR	2	16WP	G15_085	FROM->TO	G14-057T 345.00 - SUNNYSIDE 345KV CKT 1	717	789	0.20778	115.7647	THISTLE7 345.00 - WOODWARD DISTRICT EHV 345KV CKT 2
FDNS	00NR	2	16WP	G15_085	FROM->TO	G14-057T 345.00 - SUNNYSIDE 345KV CKT 1	717	789	0.20778	115.7647	THISTLE7 345.00 - WOODWARD DISTRICT EHV 345KV CKT 2
FDNSLock	00NR	2	16WP	G15_085	FROM->TO	G14-057T 345.00 - SUNNYSIDE 345KV CKT 1	717	789	0.20635	115.7573	GEN590010 1-ERCOT EQUIVALENCE
FDNS	00NR	2	16WP	G15_085	FROM->TO	G14-057T 345.00 - SUNNYSIDE 345KV CKT 1	717	789	0.20635	115.7564	GEN515564 1-ORIGIN11 0.6900
FDNS	00NR	2	16WP	G15_085	FROM->TO	G14-057T 345.00 - SUNNYSIDE 345KV CKT 1	717	789	0.20635	115.7564	GEN515565 1-ORIGIN21 0.6900
FDNS	00NR	2	16WP	G15_085	FROM->TO	G14-057T 345.00 - SUNNYSIDE 345KV CKT 1	717	789	0.21282	115.7447	MARIETTA - SOUTH WILSON 138KV CKT 1
FDNS	00NR	2	16WP	G15_085	FROM->TO	G14-057T 345.00 - SUNNYSIDE 345KV CKT 1	717	789	0.21282	115.649	P12:138:WFEC:MSL17
FDNS	00NR	2	16WP	G15_085	FROM->TO	G14-057T 345.00 - SUNNYSIDE 345KV CKT 1	717	789	0.20635	115.6437	GEN509408 1-WILKES #2
FDNS	00NR	2	16WP	G15_085	FROM->TO	G14-057T 345.00 - SUNNYSIDE 345KV CKT 1	717	789	0.20754	115.634	CANEYRV7 345.00 - LATHAMS7 345.00 345KV CKT 1
FDNS	00NR	2	16WP	G15_085	FROM->TO	G14-057T 345.00 - SUNNYSIDE 345KV CKT 1	717	789	0.20635	115.5927	P12:161:AEPW:DYESS 5:HYLAND 5
FDNS	00NR	2	16WP	G15_085	FROM->TO	G14-057T 345.00 - SUNNYSIDE 345KV CKT 1	717	789	0.20635	115.5891	GEN506754 1-LEBROCK STEAM 1
FDNS	00NR	2	16WP	G15_085	FROM->TO	G14-057T 345.00 - SUNNYSIDE 345KV CKT 1	717	789	0.20635	115.5642	P12:69:AEPW:L.E.S.-2:LAW WC2
FDNS	00NR	2	16WP	G15_085	FROM->TO	G14-057T 345.00 - SUNNYSIDE 345KV CKT 1	717	789	0.21061	115.5622	CIVIT - PAOLI 138KV CKT 1
FDNS	00NR	2	16WP	G15_085	FROM->TO	G14-057T 345.00 - SUNNYSIDE 345KV CKT 1	717	789	0.21067	115.5609	REDBUD - RIVERSIDE STATION 345KV CKT 1
FDNS	00NR	2	16WP	G15_085	FROM->TO	G14-057T 345.00 - SUNNYSIDE 345KV CKT 1	717	789	0.21067	115.5609	REDBUD - RIVERSIDE STATION 345KV CKT 1
FDNS	00NR	2	16WP	G15_085	FROM->TO	G14-057T 345.00 - SUNNYSIDE 345KV CKT 1	717	789	0.2079	115.5372	P12:138:WFEC:MSL02
FDNS	00NR	2	16WP	G15_085	FROM->TO	G14-057T 345.00 - SUNNYSIDE 345KV CKT 1	717	789	0.20699	115.5328	ELDORADO EHV - MOUNT OLIVE 500KV CKT 1
FDNS	00NR	2	16WP	G15_085	FROM->TO	G14-057T 345.00 - SUNNYSIDE 345KV CKT 1	717	789	0.20635	115.5302	GEN334440 1-SABINE UNIT 4
FDNS	00NR	2	16WP	G15_085	FROM->TO	G14-057T 345.00 - SUNNYSIDE 345KV CKT 1	717	789	0.20722	115.5134	PAOLI - PAYNE 138.00 138KV CKT 1
FDNS	00NR	2	16WP	G15_085	FROM->TO	G14-057T 345.00 - SUNNYSIDE 345KV CKT 1	717	789	0.20721	115.4657	MATHWSN7 345.00 - NORTHWEST 345KV CKT 1
FDNS	00NR	2	16WP	G15_085	FROM->TO	G14-057T 345.00 - SUNNYSIDE 345KV CKT 1	717	789	0.20466	115.4626	P12:138:AEPW:112GORE4:L.E.S.-4
FDNS	00NR	2	16WP	G15_085	FROM->TO	G14-057T 345.00 - SUNNYSIDE 345KV CKT 1	717	789	0.21103	115.4625	P12:138:AEPW-OGE:CORNVIL4:MAUD 4
FDNS	00NR	2	20WP	G15_085	FROM->TO	G14-057T 345.00 - SUNNYSIDE 345KV CKT 1	717	789	0.21369	115.4534	CORN TAP - NAPLESTP 138.00 138KV CKT 1
FDNS	00NR	2	16WP	G15_085	FROM->TO	G14-057T 345.00 - SUNNYSIDE 345KV CKT 1	717	789	0.20732	115.4522	ELDORADO EHV - SHERIDAN EHV 500KV CKT 1
FDNS	00NR	2	16WP	G15_085	FROM->TO	G14-057T 345.00 - SUNNYSIDE 345KV CKT 1	717	789	0.20755	115.4503	ANADARKO - GEORGIA 138KV CKT 1
FDNS	00NR	2	16WP	G15_085	FROM->TO	G14-057T 345.00 - SUNNYSIDE 345KV CKT 1	717	789	0.20635	115.449	NEW MADRID 161/22.0KV TRANSFORMER CKT 1
FDNS	00NR	2	20WP	G15_085	FROM->TO	G14-057T 345.00 - SUNNYSIDE 345KV CKT 1	717	789	0.21148	115.4421	7SAREPTA% 345.00 - LONGWOOD 345KV CKT 1
FDNS	00NR	2	20WP	G15_085	FROM->TO	G14-057T 345.00 - SUNNYSIDE 345KV CKT 1	717	789	0.21148	115.4421	7SAREPTA% 345.00 - LONGWOOD 345KV CKT 1
FDNS	00NR	2	16WP	G15_085	FROM->TO	G14-057T 345.00 - SUNNYSIDE 345KV CKT 1	717	789	0.20635	115.439	GEN503909 1-FULTONU1 1 16.000
FDNS	00NR	2	16WP	G15_085	FROM->TO	G14-057T 345.00 - SUNNYSIDE 345KV CKT 1	717	789	0.20635	115.4353	NEW MADRID 345/22.0KV TRANSFORMER CKT 1
FDNS	00NR	2	16WP	G15_085	FROM->TO	G14-057T 345.00 - SUNNYSIDE 345KV CKT 1	717	789	0.20708	115.4207	WEBRE - WELLS 500KV CKT 1
FDNS	00NR	2	16WP	G15_085	FROM->TO	G14-057T 345.00 - SUNNYSIDE 345KV CKT 1	717	789	0.21061	115.4197	CIVIT - STRATFORD 138KV CKT 1
FDNS	00NR	2	16WP	G15_085	FROM->TO	G14-057T 345.00 - SUNNYSIDE 345KV CKT 1	717	789	0.20754	115.4184	LATHAMS7 345.00 - ROSE HILL 345KV CKT 1
FDNS	00NR	2	16WP	G15_085	FROM->TO	G14-057T 345.00 - SUNNYSIDE 345KV CKT 1	717	789	0.19246	115.3932	LAWTON EASTSIDE (LES 5) 345/138/13.8KV TRANSFORMER CKT 2
FDNS	00NR	2	16WP	G15_085	FROM->TO	G14-057T 345.00 - SUNNYSIDE 345KV CKT 1	717	789	0.19246	115.3932	LAWTON EASTSIDE (LES 5) 345/138/13.8KV TRANSFORMER CKT 2
FDNS	00NR	2	16WP	G15_085	FROM->TO	G14-057T 345.00 - SUNNYSIDE 345KV CKT 1	717	789	0.21103	115.3885	BLANCHARD - CORNVILLE 138KV CKT 1
FDNS	00NR	2	16WP	G15_085	FROM->TO	G14-057T 345.00 - SUNNYSIDE 345KV CKT 1	717	789	0.20635	115.3871	FRONTIER - GRIMES 345KV CKT 1
FDNS	00NR	2	16WP	G15_085	FROM->TO	G14-057T 345.00 - SUNNYSIDE 345KV CKT 1	717	789	0.20899	115.377	TUPELO - TUPELO TAP 138KV CKT 1
FDNS	00NR	2	16WP	G15_085	FROM->TO	G14-057T 345.00 - SUNNYSIDE 345KV CKT 1	717	789	0.20755	115.366	FLETCHER - GEORGIA 138KV CKT 1
FDNS	00NR	2	20WP	G15_085	FROM->TO	G14-057T 345.00 - SUNNYSIDE 345KV CKT 1	717	789	0.21199	115.3658	BORDER 7345.00 - TUCO_2 345.00 345KV CKT 1
FDNS	00NR	2	20WP	G15_085	FROM->TO	G14-057T 345.00 - SUNNYSIDE 345KV CKT 1	717	789	0.21369	115.3609	NAPLESTP 138.00 - PAYNE 138.00 138KV CKT 1
FDNS	00NR	2	16WP	G15_085	FROM->TO	G14-057T 345.00 - SUNNYSIDE 345KV CKT 1	717	789	0.20768	115.3357	EMPIRE - FLETCHER 138KV CKT 1
FDNS	00NR	2	16WP	G15_085	FROM->TO	G14-057T 345.00 - SUNNYSIDE 345KV CKT 1	717	789	0.20635	115.3117	GEN509393 S1-ARSENAL HILL GENS #4 (STALL)
FDNS	00NR	2	16WP	G15_085	FROM->TO	G14-057T 345.00 - SUNNYSIDE 345KV CKT 1	717	789	0.20698	115.3084	G1524G1525 345.00 - THISTLE7 345.00 345KV CKT 1
FDNS	00NR	2	16WP	G15_085	FROM->TO	G14-057T 345.00 - SUNNYSIDE 345KV CKT 1	717	789	0.20698	115.3084	G1524G1525 345.00 - THISTLE7 345.00 345KV CKT 2
FDNS	00NR	2	16WP	G15_085	FROM->TO	G14-057T 345.00 - SUNNYSIDE 345KV CKT 1	717	789	0.21061	115.3008	OIL CENTER - STRATFORD 138KV CKT 1
FDNS	00NR	2	16WP	G15_085	FROM->TO	G14-057T 345.00 - SUNNYSIDE 345KV CKT 1	717	789	0.20635	115.2876	GEN509392 G2-ARSENAL HILL GENS #3 (STALL)
FDNS	00NR	2	16WP	G15_085	FROM->TO	G14-057T 345.00 - SUNNYSIDE 345KV CKT 1	717	789	0.20635	115.2875	GEN509391 G1-ARSENAL HILL GENS #2 (STALL)
FDNS	00NR	2	16WP	G15_085	FROM->TO	G14-057T 345.00 - SUNNYSIDE 345KV CKT 1	717	789	0.20635	115.2731	GEN336252 1-NINEMILE POINT UNIT#5
FDNS	00NR	2	20WP	G15_085	FROM->TO	G14-057T 345.00 - SUNNYSIDE 345KV CKT 1	717	789	0.20776	115.2619	GEN336821 1-GRAND GULF UNIT
FDNS	00NR	2	16WP	G15_085	FROM->TO	G14-057T 345.00 - SUNNYSIDE 345KV CKT 1	717	789	0.20768	115.2559	COMANCHE - EMPIRE 138KV CKT 1
FDNS	00NR	2	16WP	G15_085	FROM->TO	G14-057T 345.00 - SUNNYSIDE 345KV CKT 1	717	789	0.20635	115.2484	DELL 500 - ESSEX UNIT 2 500KV CKT Z1
FDNS	00NR	2	16WP	G15_085	FROM->TO	G14-057T 345.00 - SUNNYSIDE 345KV CKT 1	717	789	0.20635	115.2213	GEN334071 1-LEWIS CREEK 2
FDNS	00NR	2	16WP	G15_085	FROM->TO	G14-057T 345.00 - SUNNYSIDE 345KV CKT 1	717	789	0.20635	115.2123	GEN334070 1-LEWIS CREEK 1
FDNS	00NR	2	16WP	G15_085	FROM->TO	G14-057T 345.00 - SUNNYSIDE 345KV CKT 1	717	789	0.20635	115.2088	GEN335204 1-NELSON UNIT 4
FDNS	00NR	2	16WP	G15_085	FROM->TO	G14-057T 345.00 - SUNNYSIDE 345KV CKT 1	717	789	0.20635	115.2	GEN300003 1-THOMAS HILL UNIT 3
FDNS	00NR	2	16WP	G15_085	FROM->TO	G14-057T 345.00 - SUNNYSIDE 345KV CKT 1	717	789	0.21103	115.1943	BLANCHARD - MAUD 138KV CKT 1
FDNS	00NR	2	16WP	G15_085	FROM->TO	G14-057T 345.00 - SUNNYSIDE 345KV CKT 1	717	789	0.20672	115.1827	DUNCAN (DUNCAN) 138/69/13.8KV TRANSFORMER CKT 1
FDNS	00NR	2	16WP	G15_085	FROM->TO	G14-057T 345.00 - SUNNYSIDE 345KV CKT 1	717	789	0.20672	115.1827	DUNCAN (DUNCAN) 138/69/13.8KV TRANSFORMER CKT 1
FDNS	00NR	2	16WP	G15_085	FROM->TO	G14-057T 345.00 - SUNNYSIDE 345KV CKT 1	717	789	0.20635	115.174	GEN334441 1-SABINE UNIT 5
FDNS	00NR	2	20WP	G15_085	FROM->TO	G14-057T 345.00 - SUNNYSIDE 345KV CKT 1	717	789	0.21367	115.1626	ANADARKO - POCASSETT 138KV CKT 1
FDNS	00NR	2	16WP	G15_085	FROM->TO	G14-057T 345.00 - SUNNYSIDE 345KV CKT 1	717	789	0.20635	115.1589	GEN337653 1-WHITE BLUFF UNIT #2
FDNS	00NR	2	20WP	G15_085	FROM->TO	G14-057T 345.00 - SUNNYSIDE 345KV CKT 1	717	789	0.20776	115.1539	GEN336153 1-WATERFORD UNIT#3
FDNS	00NR	2	16WP	G15_085	FROM->TO	G14-057T 345.00 - SUNNYSIDE 345KV CKT 1	717	789	0.22985	115.1478	GRACEMONT - LAWTON EASTSIDE 345KV CKT 1
FDNS	00NR	2	16WP	G15_085	FROM->TO	G14-057T 345.00 - SUNNYSIDE 345KV CKT 1	717	789	0.22985	115.1478	GRACEMONT - LAWTON EASTSIDE 345KV CKT 1
FDNS	00NR	2	16WP	G15_085	FROM->TO	G14-057T 345.00 - SUNNYSIDE 345KV CKT 1	717	789	0.20635	115.142	GEN506752 1-LEBROCK GAS 1
FDNS	00NR	2	16WP	G15_085	FROM->TO	G14-057T 345.00 - SUNNYSIDE 345KV CKT 1	717	789	0.20635	115.1418	GEN506753 1-LEBROCK GAS 2
FDNS	00NR	2	16WP	G15_085	FROM->TO	G14-057T 345.00 - SUNNYSIDE 345KV CKT 1	717	789	0.21059	115.1414	TUTTLE - TUTTLE CONOCO TAP 138KV CKT 1
FDNS	00NR	2	16WP	G15_085	FROM->TO	G14-057T 345.00 - SUNNYSIDE 345KV CKT 1	717	789	0.20635	115.1361	P12:161:AEPW-SWPA:BEAVER5:EROGERS5
FDNS	00NR	2	16WP	G15_085	FROM->TO	G14-057T 345.00 - SUNNYSIDE 345KV CKT 1	717	789	0.21061	115.1283	LATTA JCT - OIL CENTER 138KV CKT 1
FDNS	00NR	2	16WP	G15_085	FROM->TO	G14-057T 345.00 - SUNNYSIDE 345KV CKT 1	717	789	0.20737	115.1264	6LAYFLD 230.00 - CARROLL 230KV CKT 1

SOLUTION	GROUP	SCENARIO	SEASON	SOURCE	DIRECTION	MONITORED ELEMENT	RATEA (MVA)	RATEB(MVA)	TDF	TC%LOADING (% MVA)	CONTINGENCY
FDNS	00NR	2	16WP	G15_085	FROM->TO	G14-057T 345.00 - SUNNYSIDE 345KV CKT 1	717	789	0.20635	115.1231	GEN334030 1-FRONTIER UNIT 1
FDNS	00NR	2	16WP	G15_085	FROM->TO	G14-057T 345.00 - SUNNYSIDE 345KV CKT 1	717	789	0.20635	115.1215	GEN334031 1-FRONTIER UNIT 2
FDNS	00NR	2	16WP	G15_085	FROM->TO	G14-057T 345.00 - SUNNYSIDE 345KV CKT 1	717	789	0.20634	115.1127	P12:138:AEPW:CATOOSA4:T.S.E.-4
FDNS	00NR	2	16WP	G15_085	FROM->TO	G14-057T 345.00 - SUNNYSIDE 345KV CKT 1	717	789	0.20635	115.1092	GEN515040 1-SEMINOLE 1G
FDNS	00NR	2	16WP	G15_085	FROM->TO	G14-057T 345.00 - SUNNYSIDE 345KV CKT 1	717	789	0.20651	115.1	G15088_T 345.00 - MOORE 345KV CKT 1
FDNS	00NR	2	16WP	G15_085	FROM->TO	G14-057T 345.00 - SUNNYSIDE 345KV CKT 1	717	789	0.20635	115.0947	GEN515226 1-MUSKOGEE 6G
FDNS	00NR	2	16WP	G15_085	FROM->TO	G14-057T 345.00 - SUNNYSIDE 345KV CKT 1	717	789	0.20648	115.0939	FULTON 115 - HOPE 115KV CKT 1
FDNS	00NR	2	16WP	G15_085	FROM->TO	G14-057T 345.00 - SUNNYSIDE 345KV CKT 1	717	789	0.20648	115.0939	FULTON 115 - HOPE 115KV CKT 1
FDNS	00NR	2	16WP	G15_085	FROM->TO	G14-057T 345.00 - SUNNYSIDE 345KV CKT 1	717	789	0.20635	115.0813	GEN300015 1-1SGPDEL 18.000
FDNSLock	00NR	2	16WP	G15_085	FROM->TO	G14-057T 345.00 - SUNNYSIDE 345KV CKT 1	717	789	0.20635	115.0788	GEN337911 1-ARKANSAS NUCLEAR ONE UNIT #2
FDNS	00NR	2	16WP	G15_085	FROM->TO	G14-057T 345.00 - SUNNYSIDE 345KV CKT 1	717	789	0.20647	115.0778	8DANIEL8 500.00 - MCKNIGHT 500KV CKT 1
FDNS	00NR	2	16WP	G15_085	FROM->TO	G14-057T 345.00 - SUNNYSIDE 345KV CKT 1	717	789	0.20635	115.0759	GEN337652 1-WHITE BLUFF UNIT #1
FDNS	00NR	2	20WP	G15_085	FROM->TO	G14-057T 345.00 - SUNNYSIDE 345KV CKT 1	717	789	0.23047	115.0757	GRACEMONT - LAWTON EASTSIDE 345KV CKT 1
FDNS	00NR	2	20WP	G15_085	FROM->TO	G14-057T 345.00 - SUNNYSIDE 345KV CKT 1	717	789	0.23047	115.0757	GRACEMONT - LAWTON EASTSIDE 345KV CKT 1
FDNS	00NR	2	16WP	G15_085	FROM->TO	G14-057T 345.00 - SUNNYSIDE 345KV CKT 1	717	789	0.20635	115.0671	GEN336831 1-BAXTER WILSON SES
FDNS	00NR	2	20WP	G15_085	FROM->TO	G14-057T 345.00 - SUNNYSIDE 345KV CKT 1	717	789	0.21147	115.0628	CLEVELAND - TULSA NORTH 345KV CKT 1
FDNS	00NR	2	20WP	G15_085	FROM->TO	G14-057T 345.00 - SUNNYSIDE 345KV CKT 1	717	789	0.21147	115.0628	CLEVELAND - TULSA NORTH 345KV CKT 1
FDNS	00NR	2	16WP	G15_085	FROM->TO	G14-057T 345.00 - SUNNYSIDE 345KV CKT 1	717	789	0.21041	115.0626	P12:138:AEPW-OGE:WTH_JCT4:JENSEN4
FDNS	00NR	2	16WP	G15_085	FROM->TO	G14-057T 345.00 - SUNNYSIDE 345KV CKT 1	717	789	0.20635	115.0596	P12:161:AEPW:DYESS5:ELMSPRNG:TONTITN5
FDNS	00NR	2	16WP	G15_085	FROM->TO	G14-057T 345.00 - SUNNYSIDE 345KV CKT 1	717	789	0.21059	115.0585	CIMARRON - TUTTLE CONOCO TAP 138KV CKT 1
FDNS	00NR	2	20WP	G15_085	FROM->TO	G14-057T 345.00 - SUNNYSIDE 345KV CKT 1	717	789	0.21334	115.0581	COMANCHE - LOCO 138KV CKT 1
FDNS	00NR	2	16WP	G15_085	FROM->TO	G14-057T 345.00 - SUNNYSIDE 345KV CKT 1	717	789	0.21183	115.0569	BAILEY4 138.00 - SUNSHINE CANYON 138KV CKT 1
FDNS	00NR	2	16WP	G15_085	FROM->TO	G14-057T 345.00 - SUNNYSIDE 345KV CKT 1	717	789	0.20635	115.055	GEN501811 1-RODEMACHER UNIT 1
FDNS	00NR	2	16WP	G15_085	FROM->TO	G14-057T 345.00 - SUNNYSIDE 345KV CKT 1	717	789	0.20635	115.0372	GEN336251 1-NINEMILE POINT UNIT#4
FDNS	00NR	2	16WP	G15_085	FROM->TO	G14-057T 345.00 - SUNNYSIDE 345KV CKT 1	717	789	0.20656	115.0366	G15074_T 345.00 - HOYT 345KV CKT 1
FDNS	00NR	2	16WP	G15_085	FROM->TO	G14-057T 345.00 - SUNNYSIDE 345KV CKT 1	717	789	0.20635	115.0325	GEN334433 1-SABINE UNIT 3
FDNS	00NR	2	16WP	G15_085	FROM->TO	G14-057T 345.00 - SUNNYSIDE 345KV CKT 1	717	789	0.20687	115.0101	BUCKNER7 345.00 - SPEARVILLE 345KV CKT 1
FDNS	00NR	2	16WP	G15_085	FROM->TO	G14-057T 345.00 - SUNNYSIDE 345KV CKT 1	717	789	0.20687	115.0101	BUCKNER7 345.00 - SPEARVILLE 345KV CKT 1
FDNS	00NR	2	20WP	G15_085	FROM->TO	G14-057T 345.00 - SUNNYSIDE 345KV CKT 1	717	789	0.21367	115.0094	POCASSETT - TUTTLE 138KV CKT 1
FDNSLock	00NR	2	16WP	G15_085	FROM->TO	G14-057T 345.00 - SUNNYSIDE 345KV CKT 1	717	789	0.20635	115.0081	GEN505432 1-SIKESTON
FDNS	00NR	2	16WP	G15_085	FROM->TO	G14-057T 345.00 - SUNNYSIDE 345KV CKT 1	717	789	0.20825	115.007	P12:138:AEPW:CORNVIL4:DUNCAN-4
FDNS	00NR	2	16WP	G15_085	FROM->TO	G14-057T 345.00 - SUNNYSIDE 345KV CKT 1	717	789	0.20779	115.0031	P12:138:AEPW:CORNVIL4:S.W.S.-4
FDNS	00NR	2	16WP	G15_085	FROM->TO	G14-057T 345.00 - SUNNYSIDE 345KV CKT 1	717	789	0.20635	114.9991	GEN562783 1-G15036_4 0.6900
FDNS	00NR	2	16WP	G15_085	FROM->TO	G14-057T 345.00 - SUNNYSIDE 345KV CKT 1	717	789	0.20635	114.9991	GEN562784 1-G15036_5 0.6900
FDNS	00NR	2	20WP	G15_085	FROM->TO	G14-057T 345.00 - SUNNYSIDE 345KV CKT 1	717	789	0.20924	114.9983	DOLET HILLS - SOUTHWEST SHREVEPORT 345KV CKT 1
FDNS	00NR	2	20WP	G15_085	FROM->TO	G14-057T 345.00 - SUNNYSIDE 345KV CKT 1	717	789	0.20924	114.9983	DOLET HILLS - SOUTHWEST SHREVEPORT 345KV CKT 1
FDNS	00NR	2	16WP	G15_085	FROM->TO	G14-057T 345.00 - SUNNYSIDE 345KV CKT 1	717	789	0.20672	114.9964	P12:69:WFEC-AEPW:COMANCH2:DUNCAN-2
FDNS	00NR	2	16WP	G15_085	FROM->TO	G14-057T 345.00 - SUNNYSIDE 345KV CKT 1	717	789	0.20635	114.9958	GEN515223 1-MUSKOGEE 4G
FDNS	00NR	2	16WP	G15_085	FROM->TO	G14-057T 345.00 - SUNNYSIDE 345KV CKT 1	717	789	0.20635	114.9958	GEN515225 1-MUSKOGEE 5G
FDNS	00NR	2	16WP	G15_085	FROM->TO	G14-057T 345.00 - SUNNYSIDE 345KV CKT 1	717	789	0.20692	114.9789	CIMARRON - CZECH HALL 138KV CKT 1
FDNS	00NR	2	16WP	G15_085	FROM->TO	G14-057T 345.00 - SUNNYSIDE 345KV CKT 1	717	789	0.20873	114.9714	P12:138:AEPW:WTHWF4:CLINTJC4
FDNS	00NR	2	16WP	G15_085	FROM->TO	G14-057T 345.00 - SUNNYSIDE 345KV CKT 1	717	789	0.20635	114.9665	WHITE BLUFF 500/26.0KV TRANSFORMER CKT 1
FDNS	00NR	2	16WP	G15_085	FROM->TO	G14-057T 345.00 - SUNNYSIDE 345KV CKT 1	717	789	0.20635	114.9539	P12:161:AEPW:EROGERS5:ECNTRTN5
FDNS	00NR	2	16WP	G15_085	FROM->TO	G14-057T 345.00 - SUNNYSIDE 345KV CKT 1	717	789	0.20691	114.9502	LAYFLD8 500.00 - MOUNT OLIVE 500KV CKT 1
FDNS	00NR	2	16WP	G15_085	FROM->TO	G14-057T 345.00 - SUNNYSIDE 345KV CKT 1	717	789	0.20691	114.9502	LAYFLD8 500.00 - MOUNT OLIVE 500KV CKT 1
FDNS	00NR	2	16WP	G15_085	FROM->TO	G14-057T 345.00 - SUNNYSIDE 345KV CKT 1	717	789	0.20635	114.9474	RODEMACHER 230/22.0KV TRANSFORMER CKT 1
FDNS	00NR	2	16WP	G15_085	FROM->TO	G14-057T 345.00 - SUNNYSIDE 345KV CKT 1	717	789	0.20672	114.9465	DUNCAN - TOSCO 69KV CKT 1
FDNS	00NR	2	16WP	G15_085	FROM->TO	G14-057T 345.00 - SUNNYSIDE 345KV CKT 1	717	789	0.20668	114.9428	CIMARRON - SARA 138KV CKT 1
FDNS	00NR	2	16WP	G15_085	FROM->TO	G14-057T 345.00 - SUNNYSIDE 345KV CKT 1	717	789	0.20662	114.9396	MC NIEL 500/115KV TRANSFORMER CKT 1
FDNS	00NR	2	16WP	G15_085	FROM->TO	G14-057T 345.00 - SUNNYSIDE 345KV CKT 1	717	789	0.20635	114.9395	GEN303007 1-1BC2 U2
FDNS	00NR	2	16WP	G15_085	FROM->TO	G14-057T 345.00 - SUNNYSIDE 345KV CKT 1	717	789	0.20873	114.9349	P12:138:AEPW:WTHWF4:WTH_SE4
FDNS	00NR	2	16WP	G15_085	FROM->TO	G14-057T 345.00 - SUNNYSIDE 345KV CKT 1	717	789	0.20654	114.9346	BISMARK - HOT SPRINGS WEST BUS 115KV CKT 1
FDNS	00NR	2	16WP	G15_085	FROM->TO	G14-057T 345.00 - SUNNYSIDE 345KV CKT 1	717	789	0.20635	114.9343	GEN303006 1-1BC2 U1
FDNS	00NR	2	16WP	G15_085	FROM->TO	G14-057T 345.00 - SUNNYSIDE 345KV CKT 1	717	789	0.20635	114.9336	GEN337910 1-ARKANSAS NUCLEAR ONE UNIT #1
FDNS	00NR	2	16WP	G15_085	FROM->TO	G14-057T 345.00 - SUNNYSIDE 345KV CKT 1	717	789	0.20664	114.9296	HOT SPRINGS EHV - MAGNET COVE 500KV CKT 1
FDNS	00NR	2	16WP	G15_085	FROM->TO	G14-057T 345.00 - SUNNYSIDE 345KV CKT 1	717	789	0.20635	114.9277	GEN300010 1-ST FRANCIS UNIT 1
FDNS	00NR	2	16WP	G15_085	FROM->TO	G14-057T 345.00 - SUNNYSIDE 345KV CKT 1	717	789	0.20086	114.9266	CANADIAN RIVER - PITTSBURG 345KV CKT 1
FDNS	00NR	2	16WP	G15_085	FROM->TO	G14-057T 345.00 - SUNNYSIDE 345KV CKT 1	717	789	0.20086	114.9266	CANADIAN RIVER - PITTSBURG 345KV CKT 1
FDNS	00NR	2	16WP	G15_085	FROM->TO	G14-057T 345.00 - SUNNYSIDE 345KV CKT 1	717	789	0.20387	114.9207	P12:69:AEPW-OMPA:COMANC-2:OMWALTR2
FDNS	00NR	2	16WP	G15_085	FROM->TO	G14-057T 345.00 - SUNNYSIDE 345KV CKT 1	717	789	0.20673	114.9158	CLEO CORNER - CLEOPLT4 138.00 138KV CKT 1
FDNS	00NR	2	16WP	G15_085	FROM->TO	G14-057T 345.00 - SUNNYSIDE 345KV CKT 1	717	789	0.20635	114.9116	GEN336191 1-LITTLE GYPSY UNIT#3
FDNS	00NR	2	16WP	G15_085	FROM->TO	G14-057T 345.00 - SUNNYSIDE 345KV CKT 1	717	789	0.2067	114.9098	G15095_T 138.00 - ROSE_VALLEY 138.00 138KV CKT 1
FDNS	00NR	2	16WP	G15_085	FROM->TO	G14-057T 345.00 - SUNNYSIDE 345KV CKT 1	717	789	0.20591	114.9049	ARBWIND4 138.00 - CARTER 138KV CKT 1
FDNS	00NR	2	16WP	G15_085	FROM->TO	G14-057T 345.00 - SUNNYSIDE 345KV CKT 1	717	789	0.20673	114.9022	CLEOPLT4 138.00 - MEN TAP 138KV CKT 1
FDNS	00NR	2	16WP	G15_085	FROM->TO	G14-057T 345.00 - SUNNYSIDE 345KV CKT 1	717	789	0.20672	114.901	COMANCHE TAP - TOSCO 69KV CKT 1
FDNS	00NR	2	16WP	G15_085	FROM->TO	G14-057T 345.00 - SUNNYSIDE 345KV CKT 1	717	789	0.20614	114.8986	SEMINOLE - VANOSTP4 138.00 138KV CKT 1
FDNS	00NR	2	16WP	G15_085	FROM->TO	G14-057T 345.00 - SUNNYSIDE 345KV CKT 1	717	789	0.20692	114.8962	CZECH HALL - XEROX 138KV CKT 1
FDNS	00NR	2	16WP	G15_085	FROM->TO	G14-057T 345.00 - SUNNYSIDE 345KV CKT 1	717	789	0.20692	114.8919	MORGAN - XEROX 138KV CKT 1
FDNS	00NR	2	16WP	G15_085	FROM->TO	G14-057T 345.00 - SUNNYSIDE 345KV CKT 1	717	789	0.20673	114.8902	IMO TAP - MEN TAP 138KV CKT 1
FDNS	00NR	2	16WP	G15_085	FROM->TO	G14-057T 345.00 - SUNNYSIDE 345KV CKT 1	717	789	0.21183	114.8899	BAILEY4 138.00 - WESTMOORE 138KV CKT 1
FDNS	00NR	2	16WP	G15_085	FROM->TO	G14-057T 345.00 - SUNNYSIDE 345KV CKT 1	717	789	0.20701	114.8882	BENTON - WICHITA 345KV CKT 1
FDNS	00NR	2	16WP	G15_085	FROM->TO	G14-057T 345.00 - SUNNYSIDE 345KV CKT 1	717	789	0.20625	114.8864	P12:138:AEPW:N.E.S.-4:CATOOSA4
FDNS	00NR	2	16WP	G15_085	FROM->TO	G14-057T 345.00 - SUNNYSIDE 345KV CKT 1	717	789	0.20635	114.8863	GEN335614 1-WILLOW GLENN UNIT#4
FDNS	00NR	2	16WP	G15_085	FROM->TO	G14-057T 345.00 - SUNNYSIDE 345KV CKT 1	717	789	0.20654	114.8821	ALPINE AECC - BISMARK 115KV CKT 1
FDNS	00NR	2	16WP	G15_085	FROM->TO	G14-057T 345.00 - SUNNYSIDE 345KV CKT 1	717	789	0.20635	114.8797	NELSON 230/20.0KV TRANSFORMER CKT 1
FDNS	00NR	2	16WP	G15_085	FROM->TO	G14-057T 345.00 - SUNNYSIDE 345KV CKT 1	717	789	0.20635	114.8781	GEN300011 1-ST FRANCIS UNIT 2
FDNS	00NR	2	16WP	G15_085	FROM->TO	G14-057T 345.00 - SUNNYSIDE 345KV CKT 1	717	789	0.20635	114.8746	GEN303008 1-1BC2 U3
FDNS	00NR	2	16WP	G15_085	FROM->TO	G14-057T 345.00 - SUNNYSIDE 345KV CKT 1	717	789	0.20692	114.8682	MORGAN - MUSTANG 138KV CKT 1
FDNS	00NR	2	20WP	G15_085	FROM->TO	G14-057T 345.00 - SUNNYSIDE 345KV CKT 1	717	789	0.20776	114.858	GEN335831 1-RIVERBEND UNIT#1

SOLUTION	GROUP	SCENARIO	SEASON	SOURCE	DIRECTION	MONITORED ELEMENT	RATEA (MVA)	RATEB(MVA)	TDF	TC%LOADING (% MVA)	CONTINGENCY
FDNS	00NR	2	16WP	G15_085	FROM->TO	G14-057T 345.00 - SUNNYSIDE 345KV CKT 1	717	789	0.21061	114.8524	LASALLE - LATTA JCT 138KV CKT 1
FDNS	00NR	2	16WP	G15_085	FROM->TO	G14-057T 345.00 - SUNNYSIDE 345KV CKT 1	717	789	0.20635	114.8476	GEN336170 1-GULF OXY U4
FDNS	00NR	2	16WP	G15_085	FROM->TO	G14-057T 345.00 - SUNNYSIDE 345KV CKT 1	717	789	0.2067	114.8444	NOEL_SW 138.00 - ROSE_VALLEY 138.00 138KV CKT 1
FDNS	00NR	2	16WP	G15_085	FROM->TO	G14-057T 345.00 - SUNNYSIDE 345KV CKT 1	717	789	0.20635	114.8426	GEN336464 1-MICHOUD UNIT #3
FDNS	00NR	2	16WP	G15_085	FROM->TO	G14-057T 345.00 - SUNNYSIDE 345KV CKT 1	717	789	0.20635	114.8394	GEN300016 1-1G1GPDEL 18.000
FDNS	00NR	2	16WP	G15_085	FROM->TO	G14-057T 345.00 - SUNNYSIDE 345KV CKT 1	717	789	0.20649	114.839	CYPRESS - HARTBURG 500KV CKT 1
FDNS	00NR	2	16WP	G15_085	FROM->TO	G14-057T 345.00 - SUNNYSIDE 345KV CKT 1	717	789	0.20654	114.8384	ALPINE AECC - AMITY SS 115KV CKT 1
FDNS	00NR	2	16WP	G15_085	FROM->TO	G14-057T 345.00 - SUNNYSIDE 345KV CKT 1	717	789	0.2104	114.8303	WEATHERFORD JCT. - WEATHERFORD SOUTHEAST 138KV CKT 1
FDNS	00NR	2	16WP	G15_085	FROM->TO	G14-057T 345.00 - SUNNYSIDE 345KV CKT 1	717	789	0.2104	114.8303	WEATHERFORD JCT. - WEATHERFORD SOUTHEAST 138KV CKT 1
FDNS	00NR	2	20WP	G15_085	FROM->TO	G14-057T 345.00 - SUNNYSIDE 345KV CKT 1	717	789	0.21238	114.8287	ARCADIA - NORTHWEST 345KV CKT 1
FDNS	00NR	2	16WP	G15_085	FROM->TO	G14-057T 345.00 - SUNNYSIDE 345KV CKT 1	717	789	0.20657	114.8264	HOYT - STRANGER CREEK 345KV CKT 1
FDNS	00NR	2	16WP	G15_085	FROM->TO	G14-057T 345.00 - SUNNYSIDE 345KV CKT 1	717	789	0.20635	114.8253	GEN337041 1-GERALD ANDRUS
FDNS	00NR	2	16WP	G15_085	FROM->TO	G14-057T 345.00 - SUNNYSIDE 345KV CKT 1	717	789	0.20672	114.8215	COMANCHE - COMANCHE TAP 69KV CKT 1
FDNS	00NR	2	16WP	G15_085	FROM->TO	G14-057T 345.00 - SUNNYSIDE 345KV CKT 1	717	789	0.20635	114.8203	8CAJUN2 500/24.0KV TRANSFORMER CKT 1
FDNS	00NR	2	16WP	G15_085	FROM->TO	G14-057T 345.00 - SUNNYSIDE 345KV CKT 1	717	789	0.20226	114.8186	CHISHOLM6 230.00 - ELK CITY 230KV 230KV CKT 1
FDNS	00NR	2	16WP	G15_085	FROM->TO	G14-057T 345.00 - SUNNYSIDE 345KV CKT 1	717	789	0.20794	114.8184	CANADIAN - NOBLE 138KV CKT 1
FDNS	00NR	2	20WP	G15_085	FROM->TO	G14-057T 345.00 - SUNNYSIDE 345KV CKT 1	717	789	0.20776	114.8183	GRAND GULF 500/22.0KV TRANSFORMER CKT 1
FDNS	00NR	2	16WP	G15_085	FROM->TO	G14-057T 345.00 - SUNNYSIDE 345KV CKT 1	717	789	0.20226	114.8171	ELK CITY 230KV (ELKCTY-6) 230/138/13.8KV TRANSFORMER CKT 1
FDNS	00NR	2	16WP	G15_085	FROM->TO	G14-057T 345.00 - SUNNYSIDE 345KV CKT 1	717	789	0.20226	114.8171	ELK CITY 230KV (ELKCTY-6) 230/138/13.8KV TRANSFORMER CKT 1
FDNS	00NR	2	16WP	G15_085	FROM->TO	G14-057T 345.00 - SUNNYSIDE 345KV CKT 1	717	789	0.2065	114.8082	7JASPER 345.00 - BLACKBERRY 345KV CKT 1
FDNS	00NR	2	16WP	G15_085	FROM->TO	G14-057T 345.00 - SUNNYSIDE 345KV CKT 1	717	789	0.20769	114.8066	P12:138:OKGE-AEPW:JENSEN4:REDROCKRD4
FDNS	00NR	2	16WP	G15_085	FROM->TO	G14-057T 345.00 - SUNNYSIDE 345KV CKT 1	717	789	0.20635	114.8006	GEN501910 1-ACADIA UNIT ST1
FDNS	00NR	2	16WP	G15_085	FROM->TO	G14-057T 345.00 - SUNNYSIDE 345KV CKT 1	717	789	0.2081	114.7985	P12:138:OKGE:3TERM27
FDNS	00NR	2	16WP	G15_085	FROM->TO	G14-057T 345.00 - SUNNYSIDE 345KV CKT 1	717	789	0.20675	114.7969	BLACKBERRY - NEOSHO 345KV CKT 1
FDNS	00NR	2	16WP	G15_085	FROM->TO	G14-057T 345.00 - SUNNYSIDE 345KV CKT 1	717	789	0.20675	114.7969	BLACKBERRY - NEOSHO 345KV CKT 1
FDNS	00NR	2	16WP	G15_085	FROM->TO	G14-057T 345.00 - SUNNYSIDE 345KV CKT 1	717	789	0.20663	114.7954	SWISSVALE - WEST GARDNER 345KV CKT 1
FDNS	00NR	2	16WP	G15_085	FROM->TO	G14-057T 345.00 - SUNNYSIDE 345KV CKT 1	717	789	0.20635	114.79	P12:138:AEPW:R.S.S.-4:S.HUD.-4
FDNS	00NR	2	16WP	G15_085	FROM->TO	G14-057T 345.00 - SUNNYSIDE 345KV CKT 1	717	789	0.20656	114.7796	G15074_T 345.00 - JEFFREY ENERGY CENTER 345KV CKT 1
FDNS	00NR	2	16WP	G15_085	FROM->TO	G14-057T 345.00 - SUNNYSIDE 345KV CKT 1	717	789	0.2104	114.7775	P12:138:AEPW:REDROCKRD4:WTH_JCT4
FDNS	00NR	2	16WP	G15_085	FROM->TO	G14-057T 345.00 - SUNNYSIDE 345KV CKT 1	717	789	0.20889	114.7755	WALTERS - WALTERS 69KV CKT 1
FDNS	00NR	2	16WP	G15_085	FROM->TO	G14-057T 345.00 - SUNNYSIDE 345KV CKT 1	717	789	0.20818	114.7749	ANADARKO - SEQUOYAHJ4 138.00 138KV CKT 1
FDNS	00NR	2	16WP	G15_085	FROM->TO	G14-057T 345.00 - SUNNYSIDE 345KV CKT 1	717	789	0.20809	114.7735	NORGE ROAD - SOUTHWESTERN STATION 138KV CKT 1
FDNS	00NR	2	16WP	G15_085	FROM->TO	G14-057T 345.00 - SUNNYSIDE 345KV CKT 1	717	789	0.20809	114.7735	NORGE ROAD - SOUTHWESTERN STATION 138KV CKT 1
FDNS	00NR	2	16WP	G15_085	FROM->TO	G14-057T 345.00 - SUNNYSIDE 345KV CKT 1	717	789	0.20818	114.7734	CORN TAP - SEQUOYAHJ4 138.00 138KV CKT 1
FDNS	00NR	2	20WP	G15_085	FROM->TO	G14-057T 345.00 - SUNNYSIDE 345KV CKT 1	717	789	0.20972	114.7706	7SAREPTA% 345.00 - ELDORADO EHV 345KV CKT 1
FDNS	00NR	2	20WP	G15_085	FROM->TO	G14-057T 345.00 - SUNNYSIDE 345KV CKT 1	717	789	0.20972	114.7704	3TR3AR8EL7EL
FDNS	00NR	2	16WP	G15_085	FROM->TO	G14-057T 345.00 - SUNNYSIDE 345KV CKT 1	717	789	0.20819	114.7677	DRAPER LAKE - SEMINOLE 345KV CKT 1
FDNS	00NR	2	16WP	G15_085	FROM->TO	G14-057T 345.00 - SUNNYSIDE 345KV CKT 1	717	789	0.20819	114.7677	DRAPER LAKE - SEMINOLE 345KV CKT 2
FDNS	00NR	2	16WP	G15_085	FROM->TO	G14-057T 345.00 - SUNNYSIDE 345KV CKT 1	717	789	0.20635	114.7662	ESSEX UNIT 2 500/18.0KV TRANSFORMER CKT 1
FDNS	00NR	2	20WP	G15_085	FROM->TO	G14-057T 345.00 - SUNNYSIDE 345KV CKT 1	717	789	0.20972	114.7596	ELDORADO EHV 500/345KV TRANSFORMER CKT 1
FDNS	00NR	2	16WP	G15_085	FROM->TO	G14-057T 345.00 - SUNNYSIDE 345KV CKT 1	717	789	0.2067	114.7568	ETTA (DUKE HOTSPRINGS) - MC NIEL 500KV CKT 1
FDNS	00NR	2	16WP	G15_085	FROM->TO	G14-057T 345.00 - SUNNYSIDE 345KV CKT 1	717	789	0.20668	114.756	SARA - STHLAKE4 138.00 138KV CKT 1
FDNS	00NR	2	16WP	G15_085	FROM->TO	G14-057T 345.00 - SUNNYSIDE 345KV CKT 1	717	789	0.20635	114.7513	P12:138:AEPW:YARCH-S4:T.S.E.-4
FDNS	00NR	2	16WP	G15_085	FROM->TO	G14-057T 345.00 - SUNNYSIDE 345KV CKT 1	717	789	0.20635	114.7501	GEN336801 1-BAXTER WILSON UNIT #1
FDNS	00NR	2	16WP	G15_085	FROM->TO	G14-057T 345.00 - SUNNYSIDE 345KV CKT 1	717	789	0.20387	114.75	LAWTON RELIFT TAP - OMPA-WALTERS 69KV CKT 1
FDNS	00NR	2	16WP	G15_085	FROM->TO	G14-057T 345.00 - SUNNYSIDE 345KV CKT 1	717	789	0.20957	114.7471	G14_038T 345.00 - Hitchland Interchange 345KV CKT 1
FDNS	00NR	2	16WP	G15_085	FROM->TO	G14-057T 345.00 - SUNNYSIDE 345KV CKT 1	717	789	0.20635	114.7452	P12:69:AEPW:NROGERS2:ECNTRTN2
FDNS	00NR	2	16WP	G15_085	FROM->TO	G14-057T 345.00 - SUNNYSIDE 345KV CKT 1	717	789	0.20636	114.7451	P12:138:AEPW:BA_71ST4:T.S.E.-4
FDNS	00NR	2	16WP	G15_085	FROM->TO	G14-057T 345.00 - SUNNYSIDE 345KV CKT 1	717	789	0.20635	114.7421	SABINE 230/24.0KV TRANSFORMER CKT 1
FDNS	00NR	2	16WP	G15_085	FROM->TO	G14-057T 345.00 - SUNNYSIDE 345KV CKT 1	717	789	0.20683	114.7399	EMPORIA ENERGY CENTER - G14_001T 345.00 345KV CKT 1
FDNS	00NR	2	16WP	G15_085	FROM->TO	G14-057T 345.00 - SUNNYSIDE 345KV CKT 1	717	789	0.2065	114.7358	7LUTESVIL 345.00 - 7ST FRANC 345.00 345KV CKT 1
FDNS	00NR	2	16WP	G15_085	FROM->TO	G14-057T 345.00 - SUNNYSIDE 345KV CKT 1	717	789	0.21183	114.7346	FRANKLIN SW - WESTMOORE 138KV CKT 1
FDNS	00NR	2	16WP	G15_085	FROM->TO	G14-057T 345.00 - SUNNYSIDE 345KV CKT 1	717	789	0.20668	114.7271	MCCLAIN - STHLAKE4 138.00 138KV CKT 1
FDNS	00NR	2	16WP	G15_085	FROM->TO	G14-057T 345.00 - SUNNYSIDE 345KV CKT 1	717	789	0.20794	114.7269	NOBLE - PURCELL4 138.00 138KV CKT 1
FDNS	00NR	2	16WP	G15_085	FROM->TO	G14-057T 345.00 - SUNNYSIDE 345KV CKT 1	717	789	0.20635	114.7256	FRONTIER 345/18.0KV TRANSFORMER CKT 1
FDNS	00NR	2	16WP	G15_085	FROM->TO	G14-057T 345.00 - SUNNYSIDE 345KV CKT 1	717	789	0.20648	114.7255	HOPE - MCNAB REC 115KV CKT 1
FDNS	00NR	2	16WP	G15_085	FROM->TO	G14-057T 345.00 - SUNNYSIDE 345KV CKT 1	717	789	0.20635	114.724	FRONTIER 345/18.0KV TRANSFORMER CKT 1
FDNS	00NR	2	20WP	G15_085	FROM->TO	G14-057T 345.00 - SUNNYSIDE 345KV CKT 1	717	789	0.2107	114.7232	P12:138:AEPW:DUNCAN-4:L.E.S.-4
FDNS	00NR	2	16WP	G15_085	FROM->TO	G14-057T 345.00 - SUNNYSIDE 345KV CKT 1	717	789	0.20673	114.7169	P12:138:AEPW-OGE:SHIDLER4:OSAGE 4
FDNS	00NR	2	16WP	G15_085	FROM->TO	G14-057T 345.00 - SUNNYSIDE 345KV CKT 1	717	789	0.20648	114.7166	P12:115:AEPW:TURK3:HOPE3
FDNS	00NR	2	16WP	G15_085	FROM->TO	G14-057T 345.00 - SUNNYSIDE 345KV CKT 1	717	789	0.20635	114.7133	P12:161:AEPW:CHAMSPR5:FARMING5
FDNS	00NR	2	16WP	G15_085	FROM->TO	G14-057T 345.00 - SUNNYSIDE 345KV CKT 1	717	789	0.2104	114.7095	HINTON - WEATHERFORD JCT. 138KV CKT 1
FDNS	00NR	2	16WP	G15_085	FROM->TO	G14-057T 345.00 - SUNNYSIDE 345KV CKT 1	717	789	0.20575	114.7086	ARBUCKLE - VANOSTP4 138.00 138KV CKT 1
FDNS	00NR	2	16WP	G15_085	FROM->TO	G14-057T 345.00 - SUNNYSIDE 345KV CKT 1	717	789	0.20708	114.7085	ENOWILT - LONE OAK 138KV CKT 1
FDNS	00NR	2	16WP	G15_085	FROM->TO	G14-057T 345.00 - SUNNYSIDE 345KV CKT 1	717	789	0.20873	114.7039	WEATHERFORD TAP - WEATHERFORD WIND FARM 138KV CKT 1
FDNS	00NR	2	16WP	G15_085	FROM->TO	G14-057T 345.00 - SUNNYSIDE 345KV CKT 1	717	789	0.20635	114.7016	GEN505616 1-BROKEN BOW
FDNS	00NR	2	16WP	G15_085	FROM->TO	G14-057T 345.00 - SUNNYSIDE 345KV CKT 1	717	789	0.20708	114.6995	ENOWILT - SARDIS 138KV CKT 1
FDNS	00NR	2	16WP	G15_085	FROM->TO	G14-057T 345.00 - SUNNYSIDE 345KV CKT 1	717	789	0.20655	114.6973	8WNEWMADRID 500.00 - DELL 500 500KV CKT 1
FDNS	00NR	2	16WP	G15_085	FROM->TO	G14-057T 345.00 - SUNNYSIDE 345KV CKT 1	717	789	0.20843	114.6962	CLINTON JUNCTION - ELK CITY 138KV CKT 1
FDNS	00NR	2	16WP	G15_085	FROM->TO	G14-057T 345.00 - SUNNYSIDE 345KV CKT 1	717	789	0.20843	114.6962	CLINTON JUNCTION - ELK CITY 138KV CKT 1
FDNS	00NR	2	16WP	G15_085	FROM->TO	G14-057T 345.00 - SUNNYSIDE 345KV CKT 1	717	789	0.20648	114.6936	MCNAB REC - Turk 115 115KV CKT 1
FDNS	00NR	2	16WP	G15_085	FROM->TO	G14-057T 345.00 - SUNNYSIDE 345KV CKT 1	717	789	0.20648	114.6936	TURK (TURK 1) 138/115/13.2KV TRANSFORMER CKT 1
FDNS	00NR	2	16WP	G15_085	FROM->TO	G14-057T 345.00 - SUNNYSIDE 345KV CKT 1	717	789	0.20648	114.6936	TURK (TURK 1) 138/115/13.2KV TRANSFORMER CKT 1
FDNS	00NR	2	16WP	G15_085	FROM->TO	G14-057T 345.00 - SUNNYSIDE 345KV CKT 1	717	789	0.21061	114.6932	LASALLE - STONEWAL LH138.00 138KV CKT 1
FDNS	00NR	2	16WP	G15_085	FROM->TO	G14-057T 345.00 - SUNNYSIDE 345KV CKT 1	717	789	0.20635	114.6878	LEWIS CREEK SWITCHYARD 138/22.0KV TRANSFORMER CKT 1
FDNS	00NR	2	16WP	G15_085	FROM->TO	G14-057T 345.00 - SUNNYSIDE 345KV CKT 1	717	789	0.20683	114.6877	G14_001T 345.00 - WICHITA 345KV CKT 1
FDNS	00NR	2	16WP	G15_085	FROM->TO	G14-057T 345.00 - SUNNYSIDE 345KV CKT 1	717	789	0.20387	114.6875	OMPA-WALTERS - WALTERS 69KV CKT 1
FDNS	00NR	2	16WP	G15_085	FROM->TO	G14-057T 345.00 - SUNNYSIDE 345KV CKT 1	717	789	0.20387	114.6875	OMPA-WALTERS - WALTERS 69KV CKT 1
FDNS	00NR	2	16WP	G15_085	FROM->TO	G14-057T 345.00 - SUNNYSIDE 345KV CKT 1	717	789	0.20689	114.6838	G13-010T 345.00 - POST ROCK 345KV CKT 1

SOLUTION	GROUP	SCENARIO	SEASON	SOURCE	DIRECTION	MONITORED ELEMENT	RATEA (MVA)	RATEB(MVA)	TDF	TC%LOADING (% MVA)	CONTINGENCY
FDNS	00NR	2	16WP	G15_085	FROM->TO	G14-057T 345.00 - SUNNYSIDE 345KV CKT 1	717	789	0.20635	114.6829	LEWIS CREEK SWITCHYARD 138/22.0KV TRANSFORMER CKT 1
FDNS	00NR	2	16WP	G15_085	FROM->TO	G14-057T 345.00 - SUNNYSIDE 345KV CKT 1	717	789	0.20662	114.6827	COUCH SES - MC NIEL 115KV CKT 1
FDNS	00NR	2	16WP	G15_085	FROM->TO	G14-057T 345.00 - SUNNYSIDE 345KV CKT 1	717	789	0.21061	114.6778	STONEWAL LH138.00 - TUPELO TAP 138KV CKT 1
FDNS	00NR	2	16WP	G15_085	FROM->TO	G14-057T 345.00 - SUNNYSIDE 345KV CKT 1	717	789	0.20635	114.6747	GEN501970 1-EVANGELINE UNIT 7
FDNS	00NR	2	20WP	G15_085	FROM->TO	G14-057T 345.00 - SUNNYSIDE 345KV CKT 1	717	789	0.20776	114.6741	GEN515577 1-ARBWND11 0.6900
FDNS	00NR	2	16WP	G15_085	FROM->TO	G14-057T 345.00 - SUNNYSIDE 345KV CKT 1	717	789	0.20658	114.6709	EMPORIA ENERGY CENTER - SWISSVALE 345KV CKT 1
FDNS	00NR	2	16WP	G15_085	FROM->TO	G14-057T 345.00 - SUNNYSIDE 345KV CKT 1	717	789	0.20708	114.6646	CLAYTON - SARDIS 138KV CKT 1
FDNS	00NR	2	16WP	G15_085	FROM->TO	G14-057T 345.00 - SUNNYSIDE 345KV CKT 1	717	789	0.20635	114.6622	GEN334392 1-EXXON MOBIL IPP 1
FDNS	00NR	2	16WP	G15_085	FROM->TO	G14-057T 345.00 - SUNNYSIDE 345KV CKT 1	717	789	0.20655	114.6617	MORISNT4 138.00 - STILLWATER 138KV CKT 1
FDNS	00NR	2	16WP	G15_085	FROM->TO	G14-057T 345.00 - SUNNYSIDE 345KV CKT 1	717	789	0.20889	114.6616	P12:69:WFEC-AEPW:COMANCH2:WALTRS-2
FDNS	00NR	2	16WP	G15_085	FROM->TO	G14-057T 345.00 - SUNNYSIDE 345KV CKT 1	717	789	0.20779	114.6611	SOUTHWESTERN STATION - VERDEN 138KV CKT 1
FDNS	00NR	2	16WP	G15_085	FROM->TO	G14-057T 345.00 - SUNNYSIDE 345KV CKT 1	717	789	0.20656	114.6562	P12:138:OKGE:3TERM2
FDNS	00NR	2	16WP	G15_085	FROM->TO	G14-057T 345.00 - SUNNYSIDE 345KV CKT 1	717	789	0.20635	114.6549	GEN334393 1-EXXON MOBIL IPP 2
FDNS	00NR	2	16WP	G15_085	FROM->TO	G14-057T 345.00 - SUNNYSIDE 345KV CKT 1	717	789	0.20635	114.6549	GEN334394 1-EXXON MOBIL IPP 3
FDNS	00NR	2	16WP	G15_085	FROM->TO	G14-057T 345.00 - SUNNYSIDE 345KV CKT 1	717	789	0.20809	114.6526	CORNVILLE - NORGE ROAD 138KV CKT 1
FDNS	00NR	2	16WP	G15_085	FROM->TO	G14-057T 345.00 - SUNNYSIDE 345KV CKT 1	717	789	0.20809	114.6526	CORNVILLE - NORGE ROAD 138KV CKT 1
FDNS	00NR	2	16WP	G15_085	FROM->TO	G14-057T 345.00 - SUNNYSIDE 345KV CKT 1	717	789	0.2104	114.6498	HINTON - REDROCKRD4 138.00 138KV CKT 1
FDNS	00NR	2	16WP	G15_085	FROM->TO	G14-057T 345.00 - SUNNYSIDE 345KV CKT 1	717	789	0.20635	114.647	GEN336222 1-LITTLE GYPSY UNIT#2
FDNS	00NR	2	16WP	G15_085	FROM->TO	G14-057T 345.00 - SUNNYSIDE 345KV CKT 1	717	789	0.20654	114.6446	7JASPER 345.00 - MORGAN 345KV CKT 1
FDNS	00NR	2	16WP	G15_085	FROM->TO	G14-057T 345.00 - SUNNYSIDE 345KV CKT 1	717	789	0.20642	114.6446	P12:138:OKGE:3TERM12
FDNS	00NR	2	16WP	G15_085	FROM->TO	G14-057T 345.00 - SUNNYSIDE 345KV CKT 1	717	789	0.20779	114.6403	NORTH 29TH CHICKASHA - VERDEN 138KV CKT 1
FDNS	00NR	2	16WP	G15_085	FROM->TO	G14-057T 345.00 - SUNNYSIDE 345KV CKT 1	717	789	0.20708	114.6375	P12:138:AEPW-SWPA:LONEOAK4:BRKNBW4
FDNS	00NR	2	16WP	G15_085	FROM->TO	G14-057T 345.00 - SUNNYSIDE 345KV CKT 1	717	789	0.20635	114.6289	GEN506749 1-EASTMAN GENERATION A
FDNS	00NR	2	16WP	G15_085	FROM->TO	G14-057T 345.00 - SUNNYSIDE 345KV CKT 1	717	789	0.20635	114.6252	GEN334431 1-SABINE UNIT 1
FDNS	00NR	2	16WP	G15_085	FROM->TO	G14-057T 345.00 - SUNNYSIDE 345KV CKT 1	717	789	0.20635	114.6251	GEN334432 1-SABINE UNIT 2
FDNS	00NR	2	16WP	G15_085	FROM->TO	G14-057T 345.00 - SUNNYSIDE 345KV CKT 1	717	789	0.20636	114.6237	P12:138:AEPW:R.S.S-4:T.P.S.-4
FDNS	00NR	2	16WP	G15_085	FROM->TO	G14-057T 345.00 - SUNNYSIDE 345KV CKT 1	717	789	0.20708	114.6234	CLAYTON - NASHOBA 138KV CKT 1
FDNS	00NR	2	20WP	G15_085	FROM->TO	G14-057T 345.00 - SUNNYSIDE 345KV CKT 1	717	789	0.20811	114.6198	MATHWSN7 345.00 - TATONGA7 345.00 345KV CKT 1
FDNS	00NR	2	16WP	G15_085	FROM->TO	G14-057T 345.00 - SUNNYSIDE 345KV CKT 1	717	789	0.20527	114.6194	CLARKSVILLE - ONETA 345KV CKT 1
FDNS	00NR	2	16WP	G15_085	FROM->TO	G14-057T 345.00 - SUNNYSIDE 345KV CKT 1	717	789	0.20527	114.6194	CLARKSVILLE - ONETA 345KV CKT 1
FDNS	00NR	2	16WP	G15_085	FROM->TO	G14-057T 345.00 - SUNNYSIDE 345KV CKT 1	717	789	0.20635	114.618	GEN501971 1-EVANGELINE UNIT 7-1
FDNS	00NR	2	16WP	G15_085	FROM->TO	G14-057T 345.00 - SUNNYSIDE 345KV CKT 1	717	789	0.20635	114.618	GEN501972 1-EVANGELINE UNIT 7-2
FDNS	00NR	2	16WP	G15_085	FROM->TO	G14-057T 345.00 - SUNNYSIDE 345KV CKT 1	717	789	0.20635	114.6176	GEN336152 1-WATERFORD UNIT#2
FDNS	00NR	2	16WP	G15_085	FROM->TO	G14-057T 345.00 - SUNNYSIDE 345KV CKT 1	717	789	0.20635	114.6166	GEN336151 1-WATERFORD UNIT#1
FDNS	00NR	2	16WP	G15_085	FROM->TO	G14-057T 345.00 - SUNNYSIDE 345KV CKT 1	717	789	0.20684	114.6143	FRANKLIN - FRANKLIN SW 138KV CKT 1
FDNS	00NR	2	16WP	G15_085	FROM->TO	G14-057T 345.00 - SUNNYSIDE 345KV CKT 1	717	789	0.21282	114.612	MARIETTA - MARIETTA4 138.00 138KV CKT 1
FDNS	00NR	2	16WP	G15_085	FROM->TO	G14-057T 345.00 - SUNNYSIDE 345KV CKT 1	717	789	0.20708	114.6103	BETHEL - NASHOBA 138KV CKT 1
FDNS	00NR	2	20WP	G15_085	FROM->TO	G14-057T 345.00 - SUNNYSIDE 345KV CKT 1	717	789	0.20324	114.6103	CANADIAN RIVER - MUSKOGEE 345KV CKT 1
FDNS	00NR	2	16WP	G15_085	FROM->TO	G14-057T 345.00 - SUNNYSIDE 345KV CKT 1	717	789	0.20873	114.6078	WEATHERFORD SOUTHEAST - WEATHERFORD TAP 138KV CKT 1
FDNS	00NR	2	16WP	G15_085	FROM->TO	G14-057T 345.00 - SUNNYSIDE 345KV CKT 1	717	789	0.20663	114.6065	FLETCHER - MARLOW JCT 69KV CKT 1
FDNS	00NR	2	20WP	G15_085	FROM->TO	G14-057T 345.00 - SUNNYSIDE 345KV CKT 1	717	789	0.21078	114.6038	COMANCHE TAP - OMPA-DUNCAN 840 138KV CKT 1
FDNS	00NR	2	20WP	G15_085	FROM->TO	G14-057T 345.00 - SUNNYSIDE 345KV CKT 1	717	789	0.21367	114.6032	BRIDGECR 138.00 - TUTTLE 138KV CKT 1
FDNS	00NR	2	16WP	G15_085	FROM->TO	G14-057T 345.00 - SUNNYSIDE 345KV CKT 1	717	789	0.20779	114.5774	CORNVILLE - NORTH 29TH CHICKASHA 138KV CKT 1
FDNS	00NR	2	16WP	G15_085	FROM->TO	G14-057T 345.00 - SUNNYSIDE 345KV CKT 1	717	789	0.20873	114.5609	CLINTON JUNCTION - CLINTON NATURAL GAS TAP 138KV CKT 1
FDNS	00NR	2	16WP	G15_085	FROM->TO	G14-057T 345.00 - SUNNYSIDE 345KV CKT 1	717	789	0.20769	114.5572	Canadian Pump Station - REDROCKRD4 138.00 138KV CKT 1
FDNS	00NR	2	16WP	G15_085	FROM->TO	G14-057T 345.00 - SUNNYSIDE 345KV CKT 1	717	789	0.20683	114.551	P12:138:OKGE:3TERM47
FDNS	00NR	2	16WP	G15_085	FROM->TO	G14-057T 345.00 - SUNNYSIDE 345KV CKT 1	717	789	0.20861	114.5389	CRINER - PAYNE 138.00 138KV CKT 1
FDNS	00NR	2	16WP	G15_085	FROM->TO	G14-057T 345.00 - SUNNYSIDE 345KV CKT 1	717	789	0.20688	114.5371	HAMMETT TAP - HORSESHOE LAKE 138KV CKT 1
FDNS	00NR	2	20WP	G15_085	FROM->TO	G14-057T 345.00 - SUNNYSIDE 345KV CKT 1	717	789	0.20776	114.5351	GEN509409 1-WILKES #3
FDNS	00NR	2	20WP	G15_085	FROM->TO	G14-057T 345.00 - SUNNYSIDE 345KV CKT 1	717	789	0.21431	114.4999	HEALDTON - LOCO 138KV CKT 1
FDNS	00NR	2	20WP	G15_085	FROM->TO	G14-057T 345.00 - SUNNYSIDE 345KV CKT 1	717	789	0.21141	114.4953	Hitchland Interchange - WALKTAP7 345.00 345KV CKT 1
FDNS	00NR	2	20WP	G15_085	FROM->TO	G14-057T 345.00 - SUNNYSIDE 345KV CKT 1	717	789	0.21141	114.4953	Hitchland Interchange - WALKTAP7 345.00 345KV CKT 1
FDNS	00NR	2	20WP	G15_085	FROM->TO	G14-057T 345.00 - SUNNYSIDE 345KV CKT 1	717	789	0.20843	114.4896	ARCADIA - SEMINOLE 345KV CKT 1
FDNS	00NR	2	20WP	G15_085	FROM->TO	G14-057T 345.00 - SUNNYSIDE 345KV CKT 1	717	789	0.20776	114.4753	GEN501813 1-RODEMACHER UNIT 3
FDNS	00NR	2	20WP	G15_085	FROM->TO	G14-057T 345.00 - SUNNYSIDE 345KV CKT 1	717	789	0.21141	114.474	P12:345:SPS:J07.1.FINN.HITCH
FDNS	00NR	2	20WP	G15_085	FROM->TO	G14-057T 345.00 - SUNNYSIDE 345KV CKT 1	717	789	0.20776	114.3772	GEN300006 1-NEW MADRID UNIT 1
FDNS	00NR	2	20WP	G15_085	FROM->TO	G14-057T 345.00 - SUNNYSIDE 345KV CKT 1	717	789	0.21431	114.3578	HEALDTON - RINGLING 138KV CKT 1
FDNS	00NR	2	20WP	G15_085	FROM->TO	G14-057T 345.00 - SUNNYSIDE 345KV CKT 1	717	789	0.20776	114.3573	GEN300007 1-NEW MADRID UNIT 2
FDNS	00NR	2	20WP	G15_085	FROM->TO	G14-057T 345.00 - SUNNYSIDE 345KV CKT 1	717	789	0.2083	114.3393	LACYGNE - WAVERLY7 345.00 345KV CKT 1
FDNS	00NR	2	20WP	G15_085	FROM->TO	G14-057T 345.00 - SUNNYSIDE 345KV CKT 1	717	789	0.21367	114.3268	P12:138:WFEC:MSL01
FDNS	00NR	2	20WP	G15_085	FROM->TO	G14-057T 345.00 - SUNNYSIDE 345KV CKT 1	717	789	0.21367	114.3147	BRIDGECR 138.00 - SUNSHINE CANYON 138KV CKT 1
FDNS	00NR	2	20WP	G15_085	FROM->TO	G14-057T 345.00 - SUNNYSIDE 345KV CKT 1	717	789	0.21078	114.3144	DUNCAN - OMPA-DUNCAN 840 138KV CKT 1
FDNS	00NR	2	20WP	G15_085	FROM->TO	G14-057T 345.00 - SUNNYSIDE 345KV CKT 1	717	789	0.21078	114.3144	DUNCAN - OMPA-DUNCAN 840 138KV CKT 1
FDNS	00NR	2	20WP	G15_085	FROM->TO	G14-057T 345.00 - SUNNYSIDE 345KV CKT 1	717	789	0.20776	114.2639	GEN335206 1-NELSON UNIT 6
FDNS	00NR	2	20WP	G15_085	FROM->TO	G14-057T 345.00 - SUNNYSIDE 345KV CKT 1	717	789	0.2083	114.2179	WAVERLY7 345.00 - WOLF CREEK 345KV CKT 1
FDNS	00NR	2	20WP	G15_085	FROM->TO	G14-057T 345.00 - SUNNYSIDE 345KV CKT 1	717	789	0.20776	114.1921	GEN520947 1-HUGO1
FDNS	00NR	2	20WP	G15_085	FROM->TO	G14-057T 345.00 - SUNNYSIDE 345KV CKT 1	717	789	0.21431	114.1856	RINGLING - SOUTH WILSON 138KV CKT 1
FDNS	00NR	2	20WP	G15_085	FROM->TO	G14-057T 345.00 - SUNNYSIDE 345KV CKT 1	717	789	0.20811	114.1094	G11_051T 345.00 - TATONGA7 345.00 345KV CKT 1
FDNS	00NR	2	16WP	G15_085	FROM->TO	G14-057T 345.00 - SUNNYSIDE 345KV CKT 1	717	789	0.20635	114.0929	803-OKLAUNION
FDNS	00NR	2	20WP	G15_085	FROM->TO	G14-057T 345.00 - SUNNYSIDE 345KV CKT 1	717	789	0.20847	114.0902	ELDORADO EHV - MOUNT OLIVE 500KV CKT 1
FDNS	00NR	2	20WP	G15_085	FROM->TO	G14-057T 345.00 - SUNNYSIDE 345KV CKT 1	717	789	0.20776	114.0785	GEN501812 1-RODEMACHER UNIT 2
FDNS	00NR	2	20WP	G15_085	FROM->TO	G14-057T 345.00 - SUNNYSIDE 345KV CKT 1	717	789	0.20596	114.0689	P12:138:AEPW:SHERID4:112GORE4
FDNS	00NR	2	20WP	G15_085	FROM->TO	G14-057T 345.00 - SUNNYSIDE 345KV CKT 1	717	789	0.20776	114.0656	DOLET HILLS 345/24.0KV TRANSFORMER CKT 1
FDNS	00NR	2	20WP	G15_085	FROM->TO	G14-057T 345.00 - SUNNYSIDE 345KV CKT 1	717	789	0.20915	114.0515	THISTLE7 345.00 - WOODWARD DISTRICT EHV 345KV CKT 1
FDNS	00NR	2	20WP	G15_085	FROM->TO	G14-057T 345.00 - SUNNYSIDE 345KV CKT 1	717	789	0.20915	114.0515	THISTLE7 345.00 - WOODWARD DISTRICT EHV 345KV CKT 1
FDNS	00NR	2	20WP	G15_085	FROM->TO	G14-057T 345.00 - SUNNYSIDE 345KV CKT 1	717	789	0.20915	114.0515	THISTLE7 345.00 - WOODWARD DISTRICT EHV 345KV CKT 2
FDNS	00NR	2	20WP	G15_085	FROM->TO	G14-057T 345.00 - SUNNYSIDE 345KV CKT 1	717	789	0.20915	114.0515	THISTLE7 345.00 - WOODWARD DISTRICT EHV 345KV CKT 2
FDNS	00NR	2	16WP	G15_085	FROM->TO	G14-057T 345.00 - SUNNYSIDE 345KV CKT 1	717	789	0.20635	114.0158	OKLAUNION 345KV SWITCHED SHUNT
FDNS	00NR	2	20WP	G15_085	FROM->TO	G14-057T 345.00 - SUNNYSIDE 345KV CKT 1	717	789	0.20773	113.9926	PARK LANE - SEMINOLE 138KV CKT 1

SOLUTION	GROUP	SCENARIO	SEASON	SOURCE	DIRECTION	MONITORED ELEMENT	RATEA (MVA)	RATEB(MVA)	TDF	TC%LOADING (% MVA)	CONTINGENCY
FDNS	00NR	2	20WP	G15_085	FROM->TO	G14-057T 345.00 - SUNNYSIDE 345KV CKT 1	717	789	0.20857	113.9408	WEBRE - WELLS 500KV CKT 1
FDNS	00NR	2	20WP	G15_085	FROM->TO	G14-057T 345.00 - SUNNYSIDE 345KV CKT 1	717	789	0.20776	113.9399	GEN515564 1-ORIGIN11 0.6900
FDNS	00NR	2	20WP	G15_085	FROM->TO	G14-057T 345.00 - SUNNYSIDE 345KV CKT 1	717	789	0.20776	113.9399	GEN515565 1-ORIGIN21 0.6900
FDNS	00NR	2	16WP	G15_085	FROM->TO	G14-057T 345.00 - SUNNYSIDE 345KV CKT 1	717	789	0.20537	113.9192	P12:138:OKGE:3TERM39
FDNS	00NR	2	20WP	G15_085	FROM->TO	G14-057T 345.00 - SUNNYSIDE 345KV CKT 1	717	789	0.20776	113.9183	GEN334440 1-SABINE UNIT 4
FDNS	00NR	2	20WP	G15_085	FROM->TO	G14-057T 345.00 - SUNNYSIDE 345KV CKT 1	717	789	0.21431	113.8974	MARIETTA - SOUTH WILSON 138KV CKT 1
FDNS	00NR	2	20WP	G15_085	FROM->TO	G14-057T 345.00 - SUNNYSIDE 345KV CKT 1	717	789	0.20892	113.8926	CANEYRV7 345.00 - NEOSHO 345KV CKT 1
FDNS	00NR	2	20WP	G15_085	FROM->TO	G14-057T 345.00 - SUNNYSIDE 345KV CKT 1	717	789	0.20776	113.8885	GEN590011 2-ERCOT EQUIVALENCE
FDNS	00NR	2	20WP	G15_085	FROM->TO	G14-057T 345.00 - SUNNYSIDE 345KV CKT 1	717	789	0.20776	113.8578	DELL 500 - ESSEX UNIT 2 500KV CKT Z1
FDNS	00NR	2	20WP	G15_085	FROM->TO	G14-057T 345.00 - SUNNYSIDE 345KV CKT 1	717	789	0.20776	113.8573	P12:161:AEPW:DYESS 5:HYLAND 5
FDNS	00NR	2	20WP	G15_085	FROM->TO	G14-057T 345.00 - SUNNYSIDE 345KV CKT 1	717	789	0.21187	113.8508	REDBUD - RIVERSIDE STATION 345KV CKT 1
FDNS	00NR	2	20WP	G15_085	FROM->TO	G14-057T 345.00 - SUNNYSIDE 345KV CKT 1	717	789	0.21187	113.8508	REDBUD - RIVERSIDE STATION 345KV CKT 1
FDNS	00NR	2	20WP	G15_085	FROM->TO	G14-057T 345.00 - SUNNYSIDE 345KV CKT 1	717	789	0.20776	113.8189	GEN590010 1-ERCOT EQUIVALENCE
FDNS	00NR	2	20WP	G15_085	FROM->TO	G14-057T 345.00 - SUNNYSIDE 345KV CKT 1	717	789	0.20776	113.8083	P12:69:AEPW:L.E.S.-2:LAW WC2
FDNS	00NR	2	20WP	G15_085	FROM->TO	G14-057T 345.00 - SUNNYSIDE 345KV CKT 1	717	789	0.21431	113.798	P12:138:WFEC:MSL17
FDNS	00NR	2	20WP	G15_085	FROM->TO	G14-057T 345.00 - SUNNYSIDE 345KV CKT 1	717	789	0.1939	113.7891	LAWTON EASTSIDE (LES 5) 345/138/13.8KV TRANSFORMER CKT 2
FDNS	00NR	2	20WP	G15_085	FROM->TO	G14-057T 345.00 - SUNNYSIDE 345KV CKT 1	717	789	0.1939	113.7891	LAWTON EASTSIDE (LES 5) 345/138/13.8KV TRANSFORMER CKT 2
FDNS	00NR	2	20WP	G15_085	FROM->TO	G14-057T 345.00 - SUNNYSIDE 345KV CKT 1	717	789	0.20936	113.7769	P12:138:WFEC:MSL02
FDNS	00NR	2	20WP	G15_085	FROM->TO	G14-057T 345.00 - SUNNYSIDE 345KV CKT 1	717	789	0.20892	113.7513	CANEYRV7 345.00 - LATHAMS7 345.00 345KV CKT 1
FDNS	00NR	2	16WP	G15_085	FROM->TO	G14-057T 345.00 - SUNNYSIDE 345KV CKT 1	717	789	0.21391	113.7308	CHILDRESS - LAKE PAULINE 138KV CKT 1
FDNS	00NR	2	16WP	G15_085	FROM->TO	G14-057T 345.00 - SUNNYSIDE 345KV CKT 1	717	789	0.21391	113.7308	CHILDRESS - LAKE PAULINE 138KV CKT 1
FDNS	00NR	2	20WP	G15_085	FROM->TO	G14-057T 345.00 - SUNNYSIDE 345KV CKT 1	717	789	0.20866	113.7258	PAOLI - PAYNE 138.00 138KV CKT 1
FDNS	00NR	2	20WP	G15_085	FROM->TO	G14-057T 345.00 - SUNNYSIDE 345KV CKT 1	717	789	0.20882	113.7242	ELDORADO EHV - SHERIDAN EHV 500KV CKT 1
FDNS	00NR	2	20WP	G15_085	FROM->TO	G14-057T 345.00 - SUNNYSIDE 345KV CKT 1	717	789	0.20776	113.716	GEN506754 1-LEBROCK STEAM 1
FDNS	00NR	2	16WP	G15_085	FROM->TO	G14-057T 345.00 - SUNNYSIDE 345KV CKT 1	717	789	0.1885	113.7142	ALTUS JUNCTION - SNYDER 138KV CKT 1
FDNS	00NR	2	16WP	G15_085	FROM->TO	G14-057T 345.00 - SUNNYSIDE 345KV CKT 1	717	789	0.1885	113.7142	ALTUS JUNCTION - SNYDER 138KV CKT 1
FDNS	00NR	2	20WP	G15_085	FROM->TO	G14-057T 345.00 - SUNNYSIDE 345KV CKT 1	717	789	0.20776	113.7141	GEN509408 1-WILKES #2
FDNS	00NR	2	16WP	G15_085	FROM->TO	G14-057T 345.00 - SUNNYSIDE 345KV CKT 1	717	789	0.20609	113.7132	MAYSVILLE - MAYSVLT4 138.00 138KV CKT 1
FDNS	00NR	2	16WP	G15_085	FROM->TO	G14-057T 345.00 - SUNNYSIDE 345KV CKT 1	717	789	0.21055	113.7125	CHILDRESS - HOLLIS TAP 138KV CKT 1
FDNS	00NR	2	16WP	G15_085	FROM->TO	G14-057T 345.00 - SUNNYSIDE 345KV CKT 1	717	789	0.20639	113.704	JOHNSON COUNTY - RUSSETT 138KV CKT 1
FDNS	00NR	2	20WP	G15_085	FROM->TO	G14-057T 345.00 - SUNNYSIDE 345KV CKT 1	717	789	0.20899	113.6958	ANADARKO - GEORGIA 138KV CKT 1
FDNS	00NR	2	16WP	G15_085	FROM->TO	G14-057T 345.00 - SUNNYSIDE 345KV CKT 1	717	789	0.20635	113.6944	GEN562772 1-G15034_3 0.6900
FDNS	00NR	2	16WP	G15_085	FROM->TO	G14-057T 345.00 - SUNNYSIDE 345KV CKT 1	717	789	0.2066	113.6886	GLASSES - MADILL INDUSTRIAL TAP 138KV CKT 1
FDNS	00NR	2	16WP	G15_085	FROM->TO	G14-057T 345.00 - SUNNYSIDE 345KV CKT 1	717	789	0.20708	113.6839	DRAPER LAKE - MIDWEST TAP 138KV CKT 1
FDNS	00NR	2	16WP	G15_085	FROM->TO	G14-057T 345.00 - SUNNYSIDE 345KV CKT 1	717	789	0.20687	113.6817	CIMARRON - MATHWSN7 345.00 345KV CKT 1
FDNS	00NR	2	16WP	G15_085	FROM->TO	G14-057T 345.00 - SUNNYSIDE 345KV CKT 1	717	789	0.20687	113.6817	CIMARRON - MATHWSN7 345.00 345KV CKT 2
FDNS	00NR	2	20WP	G15_085	FROM->TO	G14-057T 345.00 - SUNNYSIDE 345KV CKT 1	717	789	0.2061	113.6753	P12:138:AEPW:112GORE4:L.E.S.-4
FDNS	00NR	2	20WP	G15_085	FROM->TO	G14-057T 345.00 - SUNNYSIDE 345KV CKT 1	717	789	0.21206	113.6705	CIVIT - PAOLI 138KV CKT 1
FDNS	00NR	2	16WP	G15_085	FROM->TO	G14-057T 345.00 - SUNNYSIDE 345KV CKT 1	717	789	0.20674	113.6682	HUGO (HUGO 1) 345/138/13.8KV TRANSFORMER CKT 1
FDNS	00NR	2	16WP	G15_085	FROM->TO	G14-057T 345.00 - SUNNYSIDE 345KV CKT 1	717	789	0.20729	113.6681	P12:138:OKGE:3TERM21
FDNS	00NR	2	20WP	G15_085	FROM->TO	G14-057T 345.00 - SUNNYSIDE 345KV CKT 1	717	789	0.2086	113.6571	MATHWSN7 345.00 - NORTHWEST 345KV CKT 1
FDNS	00NR	2	16WP	G15_085	FROM->TO	G14-057T 345.00 - SUNNYSIDE 345KV CKT 1	717	789	0.20635	113.6549	GEN520812 1-ANADRK5
FDNS	00NR	2	16WP	G15_085	FROM->TO	G14-057T 345.00 - SUNNYSIDE 345KV CKT 1	717	789	0.20635	113.6548	GEN520813 1-ANADRK6
FDNS	00NR	2	16WP	G15_085	FROM->TO	G14-057T 345.00 - SUNNYSIDE 345KV CKT 1	717	789	0.20635	113.6542	GEN521103 1-BLUE CANYON WIND FARM
FDNS	00NR	2	16WP	G15_085	FROM->TO	G14-057T 345.00 - SUNNYSIDE 345KV CKT 1	717	789	0.20609	113.6516	MAYSVLT4 138.00 - PRAIRIE POINT 138KV CKT 1
FDNS	00NR	2	20WP	G15_085	FROM->TO	G14-057T 345.00 - SUNNYSIDE 345KV CKT 1	717	789	0.20776	113.6355	GEN336252 1-NINEMILE POINT UNIT#5
FDNS	00NR	2	16WP	G15_085	FROM->TO	G14-057T 345.00 - SUNNYSIDE 345KV CKT 1	717	789	0.2066	113.6297	GLASSES - RUSSETT 138KV CKT 1
FDNS	00NR	2	20WP	G15_085	FROM->TO	G14-057T 345.00 - SUNNYSIDE 345KV CKT 1	717	789	0.2125	113.622	P12:138:AEPW-OGE:CORNVIL4:MAUD 4
FDNS	00NR	2	16WP	G15_085	FROM->TO	G14-057T 345.00 - SUNNYSIDE 345KV CKT 1	717	789	0.20591	113.6217	ARBUCKLE - SULPHR 4 138.00 138KV CKT 1
FDNS	00NR	2	16WP	G15_085	FROM->TO	G14-057T 345.00 - SUNNYSIDE 345KV CKT 1	717	789	0.20635	113.6152	GEN511961 1-DEMPSEY-WTG10.7000
FDNS	00NR	2	16WP	G15_085	FROM->TO	G14-057T 345.00 - SUNNYSIDE 345KV CKT 1	717	789	0.20639	113.613	P12:138:WFEC:MSL11
FDNS	00NR	2	16WP	G15_085	FROM->TO	G14-057T 345.00 - SUNNYSIDE 345KV CKT 1	717	789	0.20639	113.613	P12:138:WFEC-AEPW:PHAROAH4:LONEOAK4
FDNS	00NR	2	20WP	G15_085	FROM->TO	G14-057T 345.00 - SUNNYSIDE 345KV CKT 1	717	789	0.20899	113.6031	FLETCHER - GEORGIA 138KV CKT 1
FDNS	00NR	2	16WP	G15_085	FROM->TO	G14-057T 345.00 - SUNNYSIDE 345KV CKT 1	717	789	0.20635	113.5901	P12:069:OKGE:3TERM42
FDNS	00NR	2	16WP	G15_085	FROM->TO	G14-057T 345.00 - SUNNYSIDE 345KV CKT 1	717	789	0.20647	113.5871	DELL 500 - INDEPENDENCE 500KV CKT 1
FDNS	00NR	2	20WP	G15_085	FROM->TO	G14-057T 345.00 - SUNNYSIDE 345KV CKT 1	717	789	0.20776	113.5866	FRONTIER - GRIMES 345KV CKT 1
FDNS	00NR	2	20WP	G15_085	FROM->TO	G14-057T 345.00 - SUNNYSIDE 345KV CKT 1	717	789	0.20776	113.5774	GEN335204 1-NELSON UNIT 4
FDNS	00NR	2	16WP	G15_085	FROM->TO	G14-057T 345.00 - SUNNYSIDE 345KV CKT 1	717	789	0.20654	113.5713	CANEY CREEK - JOHNSON COUNTY 138KV CKT 1
FDNS	00NR	2	20WP	G15_085	FROM->TO	G14-057T 345.00 - SUNNYSIDE 345KV CKT 1	717	789	0.20776	113.5712	GEN503909 1-FULTONU1 1 16.000
FDNS	00NR	2	20WP	G15_085	FROM->TO	G14-057T 345.00 - SUNNYSIDE 345KV CKT 1	717	789	0.20776	113.5702	GEN334441 1-SABINE UNIT 5
FDNS	00NR	2	16WP	G15_085	FROM->TO	G14-057T 345.00 - SUNNYSIDE 345KV CKT 1	717	789	0.20635	113.5667	GEN615021 1-GRE-ER 14G 16.000
FDNS	00NR	2	16WP	G15_085	FROM->TO	G14-057T 345.00 - SUNNYSIDE 345KV CKT 1	717	789	0.20684	113.5647	P12:138:WFEC:MSL08
FDNS	00NR	2	16WP	G15_085	FROM->TO	G14-057T 345.00 - SUNNYSIDE 345KV CKT 1	717	789	0.20635	113.5645	GEN562902 1-G15052_3 0.6900
FDNS	00NR	2	16WP	G15_085	FROM->TO	G14-057T 345.00 - SUNNYSIDE 345KV CKT 1	717	789	0.20635	113.5628	GEN515443 1-MNCOWND1 0.7000
FDNS	00NR	2	20WP	G15_085	FROM->TO	G14-057T 345.00 - SUNNYSIDE 345KV CKT 1	717	789	0.20913	113.5606	EMPIRE - FLETCHER 138KV CKT 1
FDNS	00NR	2	16WP	G15_085	FROM->TO	G14-057T 345.00 - SUNNYSIDE 345KV CKT 1	717	789	0.20635	113.5576	GEN563242 1-G15090_3 0.6900
FDNS	00NR	2	16WP	G15_085	FROM->TO	G14-057T 345.00 - SUNNYSIDE 345KV CKT 1	717	789	0.20609	113.5543	PRAIRIE POINT - RATLIFF 138KV CKT 1
FDNS	00NR	2	20WP	G15_085	FROM->TO	G14-057T 345.00 - SUNNYSIDE 345KV CKT 1	717	789	0.21042	113.5499	TUPELO - TUPELO TAP 138KV CKT 1
FDNS	00NR	2	20WP	G15_085	FROM->TO	G14-057T 345.00 - SUNNYSIDE 345KV CKT 1	717	789	0.2125	113.5451	BLANCHARD - CORNVILLE 138KV CKT 1
FDNS	00NR	2	16WP	G15_085	FROM->TO	G14-057T 345.00 - SUNNYSIDE 345KV CKT 1	717	789	0.20635	113.5415	GEN560183 1-REDHIL-WTG1 12.000
FDNS	00NR	2	16WP	G15_085	FROM->TO	G14-057T 345.00 - SUNNYSIDE 345KV CKT 1	717	789	0.20635	113.5402	GEN629071 1-BURLINGTON GENERATOR FOR UNIT NO 1 E
FDNS	00NR	2	16WP	G15_085	FROM->TO	G14-057T 345.00 - SUNNYSIDE 345KV CKT 1	717	789	0.20621	113.5393	CARTER - CHICKASAW 138KV CKT 1
FDNS	00NR	2	20WP	G15_085	FROM->TO	G14-057T 345.00 - SUNNYSIDE 345KV CKT 1	717	789	0.20892	113.5375	LATHAMS7 345.00 - ROSE HILL 345KV CKT 1
FDNS	00NR	2	20WP	G15_085	FROM->TO	G14-057T 345.00 - SUNNYSIDE 345KV CKT 1	717	789	0.21206	113.5294	CIVIT - STRATFORD 138KV CKT 1
FDNS	00NR	2	16WP	G15_085	FROM->TO	G14-057T 345.00 - SUNNYSIDE 345KV CKT 1	717	789	0.20602	113.5291	ROCKY POINT - SPRINGDALE 138KV CKT 1
FDNS	00NR	2	16WP	G15_085	FROM->TO	G14-057T 345.00 - SUNNYSIDE 345KV CKT 1	717	789	0.20827	113.5289	NORTHWEST - SPRING CREEK 345KV CKT 1
FDNS	00NR	2	16WP	G15_085	FROM->TO	G14-057T 345.00 - SUNNYSIDE 345KV CKT 1	717	789	0.21122	113.5271	MOREWOOD SW - NINE MILE 138KV CKT 1
FDNS	00NR	2	16WP	G15_085	FROM->TO	G14-057T 345.00 - SUNNYSIDE 345KV CKT 1	717	789	0.20631	113.5248	CANADIAN RIVER - MCALESTER SOUTH 138KV CKT 1
FDNS	00NR	2	16WP	G15_085	FROM->TO	G14-057T 345.00 - SUNNYSIDE 345KV CKT 1	717	789	0.20631	113.5248	CANADIAN RIVER - MCALESTER SOUTH 138KV CKT 1

SOLUTION	GROUP	SCENARIO	SEASON	SOURCE	DIRECTION	MONITORED ELEMENT	RATEA (MVA)	RATEB(MVA)	TDF	TC%LOADING (% MVA)	CONTINGENCY
FDNS	00NR	2	16WP	G15_085	FROM->TO	G14-057T 345.00 - SUNNYSIDE 345KV CKT 1	717	789	0.20631	113.5235	CANADIAN RIVER () 345/138/13.8KV TRANSFORMER CKT 1
FDNS	00NR	2	16WP	G15_085	FROM->TO	G14-057T 345.00 - SUNNYSIDE 345KV CKT 1	717	789	0.20631	113.5235	CANADIAN RIVER () 345/138/13.8KV TRANSFORMER CKT 1
FDNS	00NR	2	16WP	G15_085	FROM->TO	G14-057T 345.00 - SUNNYSIDE 345KV CKT 1	717	789	0.20827	113.5201	SOONER - SPRING CREEK 345KV CKT 1
FDNS	00NR	2	16WP	G15_085	FROM->TO	G14-057T 345.00 - SUNNYSIDE 345KV CKT 1	717	789	0.20635	113.5182	GEN514805 1-SOONER UNIT 1
FDNS	00NR	2	16WP	G15_085	FROM->TO	G14-057T 345.00 - SUNNYSIDE 345KV CKT 1	717	789	0.20635	113.5119	GEN514806 1-SOONER UNIT 2
FDNS	00NR	2	16WP	G15_085	FROM->TO	G14-057T 345.00 - SUNNYSIDE 345KV CKT 1	717	789	0.20635	113.5091	INDEPENDENCE 500/26.0KV TRANSFORMER CKT 1
FDNS	00NR	2	16WP	G15_085	FROM->TO	G14-057T 345.00 - SUNNYSIDE 345KV CKT 1	717	789	0.20652	113.5081	KEO EHV - WEST MEMPHIS 500 500KV CKT 1
FDNS	00NR	2	16WP	G15_085	FROM->TO	G14-057T 345.00 - SUNNYSIDE 345KV CKT 1	717	789	0.20635	113.5065	BURLINGTON NO1 + NO 2 + NO 3 161/20.0KV TRANSFORMER CKT 1
FDNS	00NR	2	16WP	G15_085	FROM->TO	G14-057T 345.00 - SUNNYSIDE 345KV CKT 1	717	789	0.20487	113.5008	NORTHWEST TEXARKANA - WELSH 345KV CKT 1
FDNS	00NR	2	16WP	G15_085	FROM->TO	G14-057T 345.00 - SUNNYSIDE 345KV CKT 1	717	789	0.20487	113.5008	NORTHWEST TEXARKANA - WELSH 345KV CKT 1
FDNS	00NR	2	16WP	G15_085	FROM->TO	G14-057T 345.00 - SUNNYSIDE 345KV CKT 1	717	789	0.20635	113.497	GEN562078 1-G11_051_3 0.6900
FDNS	00NR	2	16WP	G15_085	FROM->TO	G14-057T 345.00 - SUNNYSIDE 345KV CKT 1	717	789	0.20635	113.4885	P12:230:UMZB:# 112 #: NU IN SD. NU-RCDC & DRY CREEK XFMR
FDNS	00NR	2	16WP	G15_085	FROM->TO	G14-057T 345.00 - SUNNYSIDE 345KV CKT 1	717	789	0.20635	113.4873	RCDC EAST 4230.00 - RED CEDAR DC 230KV CKT 1
FDNS	00NR	2	20WP	G15_085	FROM->TO	G14-057T 345.00 - SUNNYSIDE 345KV CKT 1	717	789	0.20838	113.4818	LAYFLD8 500.00 - MOUNT OLIVE 500KV CKT 1
FDNS	00NR	2	20WP	G15_085	FROM->TO	G14-057T 345.00 - SUNNYSIDE 345KV CKT 1	717	789	0.20838	113.4818	LAYFLD8 500.00 - MOUNT OLIVE 500KV CKT 1
FDNS	00NR	2	16WP	G15_085	FROM->TO	G14-057T 345.00 - SUNNYSIDE 345KV CKT 1	717	789	0.20622	113.4817	CHAMBER SPRINGS - CLARKSVILLE 345KV CKT 1
FDNS	00NR	2	16WP	G15_085	FROM->TO	G14-057T 345.00 - SUNNYSIDE 345KV CKT 1	717	789	0.20591	113.4701	JOLLYVILLE - SULPHR 4 138.00 138KV CKT 1
FDNS	00NR	2	20WP	G15_085	FROM->TO	G14-057T 345.00 - SUNNYSIDE 345KV CKT 1	717	789	0.20913	113.4662	COMANCHE - EMPIRE 138KV CKT 1
FDNS	00NR	2	20WP	G15_085	FROM->TO	G14-057T 345.00 - SUNNYSIDE 345KV CKT 1	717	789	0.20776	113.4638	GEN336251 1-NINEMILE POINT UNIT#4
FDNS	00NR	2	20WP	G15_085	FROM->TO	G14-057T 345.00 - SUNNYSIDE 345KV CKT 1	717	789	0.20776	113.4588	GEN334071 1-LEWIS CREEK 2
FDNS	00NR	2	20WP	G15_085	FROM->TO	G14-057T 345.00 - SUNNYSIDE 345KV CKT 1	717	789	0.20837	113.4553	G1524G1525 345.00 - THISTLE7 345.00 345KV CKT 1
FDNS	00NR	2	20WP	G15_085	FROM->TO	G14-057T 345.00 - SUNNYSIDE 345KV CKT 1	717	789	0.20837	113.4553	G1524G1525 345.00 - THISTLE7 345.00 345KV CKT 2
FDNS	00NR	2	20WP	G15_085	FROM->TO	G14-057T 345.00 - SUNNYSIDE 345KV CKT 1	717	789	0.20996	113.4539	FINNEY SWITCHING STATION - HOLCOMB 345KV CKT 1
FDNS	00NR	2	20WP	G15_085	FROM->TO	G14-057T 345.00 - SUNNYSIDE 345KV CKT 1	717	789	0.20996	113.4539	FINNEY SWITCHING STATION - HOLCOMB 345KV CKT 1
FDNS	00NR	2	16WP	G15_085	FROM->TO	G14-057T 345.00 - SUNNYSIDE 345KV CKT 1	717	789	0.20635	113.4538	GEN562802 1-G15039_3 0.3570
FDNS	00NR	2	20WP	G15_085	FROM->TO	G14-057T 345.00 - SUNNYSIDE 345KV CKT 1	717	789	0.20776	113.4503	GEN334070 1-LEWIS CREEK 1
FDNS	00NR	2	16WP	G15_085	FROM->TO	G14-057T 345.00 - SUNNYSIDE 345KV CKT 1	717	789	0.20635	113.4469	GEN524285 1-WILDORADO WIND GEN
FDNS	00NR	2	16WP	G15_085	FROM->TO	G14-057T 345.00 - SUNNYSIDE 345KV CKT 1	717	789	0.20635	113.434	THOMAS HILL 161/22.0KV TRANSFORMER CKT 1
FDNS	00NR	2	16WP	G15_085	FROM->TO	G14-057T 345.00 - SUNNYSIDE 345KV CKT 1	717	789	0.20635	113.4282	GEN562587 1-G14_056_3 0.6900
FDNS	00NR	2	16WP	G15_085	FROM->TO	G14-057T 345.00 - SUNNYSIDE 345KV CKT 1	717	789	0.20635	113.4268	GEN524295 1-SPNSPUR_WND10.6900
FDNS	00NR	2	20WP	G15_085	FROM->TO	G14-057T 345.00 - SUNNYSIDE 345KV CKT 1	717	789	0.20776	113.4264	P12:161:AEPW-SWPA:BEAVER5:EROGERS5
FDNS	00NR	2	20WP	G15_085	FROM->TO	G14-057T 345.00 - SUNNYSIDE 345KV CKT 1	717	789	0.20776	113.4262	GEN509392 G2-ARSENAL HILL GENS #3 (STALL)
FDNS	00NR	2	20WP	G15_085	FROM->TO	G14-057T 345.00 - SUNNYSIDE 345KV CKT 1	717	789	0.20776	113.4261	GEN509391 G1-ARSENAL HILL GENS #2 (STALL)
FDNS	00NR	2	20WP	G15_085	FROM->TO	G14-057T 345.00 - SUNNYSIDE 345KV CKT 1	717	789	0.20776	113.424	GEN509393 S1-ARSENAL HILL GENS #4 (STALL)
FDNSLock	00NR	2	16WP	G15_085	FROM->TO	G14-057T 345.00 - SUNNYSIDE 345KV CKT 1	717	789	0.20635	113.4222	GEN629072 4-LANSING GENERATOR FOR UNITS NO4 EIA CODE 1
FDNS	00NR	2	16WP	G15_085	FROM->TO	G14-057T 345.00 - SUNNYSIDE 345KV CKT 1	717	789	0.20635	113.421	GEN560331 1-G10-46 13.800
FDNS	00NR	2	16WP	G15_085	FROM->TO	G14-057T 345.00 - SUNNYSIDE 345KV CKT 1	717	789	0.20635	113.4125	GEN562882 1-G15047_3 0.6900
FDNS	00NR	2	20WP	G15_085	FROM->TO	G14-057T 345.00 - SUNNYSIDE 345KV CKT 1	717	789	0.20776	113.412	GEN334433 1-SABINE UNIT 3
FDNS	00NR	2	20WP	G15_085	FROM->TO	G14-057T 345.00 - SUNNYSIDE 345KV CKT 1	717	789	0.21206	113.4117	OIL CENTER - STRATFORD 138KV CKT 1
FDNS	00NR	2	20WP	G15_085	FROM->TO	G14-057T 345.00 - SUNNYSIDE 345KV CKT 1	717	789	0.21473	113.4106	P12:138:AEPW:S.W.S.-4:L.E.S.-4
FDNS	00NR	2	16WP	G15_085	FROM->TO	G14-057T 345.00 - SUNNYSIDE 345KV CKT 1	717	789	0.20711	113.4035	ARKANSAS NUCLEAR ONE - FT SMITH 500KV CKT 1
FDNS	00NR	2	16WP	G15_085	FROM->TO	G14-057T 345.00 - SUNNYSIDE 345KV CKT 1	717	789	0.20711	113.4035	ARKANSAS NUCLEAR ONE - FT SMITH 500KV CKT 1
FDNS	00NR	2	16WP	G15_085	FROM->TO	G14-057T 345.00 - SUNNYSIDE 345KV CKT 1	717	789	0.20591	113.4017	JOLLYVILLE - KERR MCGEE CIMARRON 138KV CKT 1
FDNS	00NR	2	16WP	G15_085	FROM->TO	G14-057T 345.00 - SUNNYSIDE 345KV CKT 1	717	789	0.20635	113.4015	GEN657749 1-YOUNG 1 GENERATOR
FDNS	00NR	2	20WP	G15_085	FROM->TO	G14-057T 345.00 - SUNNYSIDE 345KV CKT 1	717	789	0.20776	113.4001	GEN337653 1-WHITE BLUFF UNIT #2
FDNS	00NR	2	16WP	G15_085	FROM->TO	G14-057T 345.00 - SUNNYSIDE 345KV CKT 1	717	789	0.21122	113.393	BEARCAT 138.00 - NINE MILE 138KV CKT 1
FDNS	00NR	2	16WP	G15_085	FROM->TO	G14-057T 345.00 - SUNNYSIDE 345KV CKT 1	717	789	0.20635	113.3904	GEN562269 1-G12-020-1 0.6900
FDNS	00NR	2	20WP	G15_085	FROM->TO	G14-057T 345.00 - SUNNYSIDE 345KV CKT 1	717	789	0.20776	113.3895	GEN336831 1-BAXTER WILSON SES
FDNS	00NR	2	20WP	G15_085	FROM->TO	G14-057T 345.00 - SUNNYSIDE 345KV CKT 1	717	789	0.20776	113.3671	P12:161:AEPW:DYESS5:ELMSPRNG:TONTITN5
FDNS	00NR	2	20WP	G15_085	FROM->TO	G14-057T 345.00 - SUNNYSIDE 345KV CKT 1	717	789	0.20813	113.3648	DUNCAN (DUNCAN) 138/69/13.8KV TRANSFORMER CKT 1
FDNS	00NR	2	20WP	G15_085	FROM->TO	G14-057T 345.00 - SUNNYSIDE 345KV CKT 1	717	789	0.20813	113.3648	DUNCAN (DUNCAN) 138/69/13.8KV TRANSFORMER CKT 1
FDNS	00NR	2	16WP	G15_085	FROM->TO	G14-057T 345.00 - SUNNYSIDE 345KV CKT 1	717	789	0.20591	113.3511	ARBWIND4 138.00 - KERR MCGEE CIMARRON 138KV CKT 1
FDNS	00NR	2	16WP	G15_085	FROM->TO	G14-057T 345.00 - SUNNYSIDE 345KV CKT 1	717	789	0.20635	113.3483	GEN562974 1-G15060_5 0.6900
FDNS	00NR	2	20WP	G15_085	FROM->TO	G14-057T 345.00 - SUNNYSIDE 345KV CKT 1	717	789	0.20776	113.346	GEN337911 1-ARKANSAS NUCLEAR ONE UNIT #2
FDNS	00NR	2	16WP	G15_085	FROM->TO	G14-057T 345.00 - SUNNYSIDE 345KV CKT 1	717	789	0.20635	113.3454	GEN562270 1-G12-020-2 0.6900
FDNS	00NR	2	20WP	G15_085	FROM->TO	G14-057T 345.00 - SUNNYSIDE 345KV CKT 1	717	789	0.20776	113.3429	GEN515040 1-SEMINOLE 1G
FDNS	00NR	2	16WP	G15_085	FROM->TO	G14-057T 345.00 - SUNNYSIDE 345KV CKT 1	717	789	0.20635	113.3395	GEN562812 1-G15040_3 0.3570
FDNS	00NR	2	20WP	G15_085	FROM->TO	G14-057T 345.00 - SUNNYSIDE 345KV CKT 1	717	789	0.21207	113.3393	TUTTLE - TUTTLE CONOCO TAP 138KV CKT 1
FDNS	00NR	2	16WP	G15_085	FROM->TO	G14-057T 345.00 - SUNNYSIDE 345KV CKT 1	717	789	0.20635	113.339	GEN562973 1-G15060_4 0.6900
FDNS	00NR	2	20WP	G15_085	FROM->TO	G14-057T 345.00 - SUNNYSIDE 345KV CKT 1	717	789	0.20776	113.3376	GEN334030 1-FRONTIER UNIT 1
FDNS	00NR	2	16WP	G15_085	FROM->TO	G14-057T 345.00 - SUNNYSIDE 345KV CKT 1	717	789	0.20635	113.3369	GEN563102 1-G15075_3 0.5500
FDNS	00NR	2	20WP	G15_085	FROM->TO	G14-057T 345.00 - SUNNYSIDE 345KV CKT 1	717	789	0.20776	113.3353	GEN334031 1-FRONTIER UNIT 2
FDNS	00NR	2	20WP	G15_085	FROM->TO	G14-057T 345.00 - SUNNYSIDE 345KV CKT 1	717	789	0.2125	113.3336	BLANCHARD - MAUD 138KV CKT 1
FDNS	00NR	2	16WP	G15_085	FROM->TO	G14-057T 345.00 - SUNNYSIDE 345KV CKT 1	717	789	0.20464	113.3326	CLARKSVILLE - MUSKOGEE 345KV CKT 1
FDNS	00NR	2	16WP	G15_085	FROM->TO	G14-057T 345.00 - SUNNYSIDE 345KV CKT 1	717	789	0.20464	113.3326	CLARKSVILLE - MUSKOGEE 345KV CKT 1
FDNSLock	00NR	2	16WP	G15_085	FROM->TO	G14-057T 345.00 - SUNNYSIDE 345KV CKT 1	717	789	0.20635	113.3321	GEN681522 3-GENOA 3
FDNS	00NR	2	16WP	G15_085	FROM->TO	G14-057T 345.00 - SUNNYSIDE 345KV CKT 1	717	789	0.20635	113.3307	GEN563062 1-G15071_3 0.6900
FDNS	00NR	2	16WP	G15_085	FROM->TO	G14-057T 345.00 - SUNNYSIDE 345KV CKT 1	717	789	0.20635	113.329	GEN563132 1-G15078_3 0.3570
FDNS	00NR	2	20WP	G15_085	FROM->TO	G14-057T 345.00 - SUNNYSIDE 345KV CKT 1	717	789	0.211	113.3174	G14_038T 345.00 - Hitchland Interchange 345KV CKT 1
FDNS	00NR	2	20WP	G15_085	FROM->TO	G14-057T 345.00 - SUNNYSIDE 345KV CKT 1	717	789	0.20775	113.3143	P12:138:AEPW:CATOOSA4:T.S.E.-4
FDNS	00NR	2	16WP	G15_085	FROM->TO	G14-057T 345.00 - SUNNYSIDE 345KV CKT 1	717	789	0.21122	113.3117	P12:138:WFEC:MSL14
FDNS	00NR	2	20WP	G15_085	FROM->TO	G14-057T 345.00 - SUNNYSIDE 345KV CKT 1	717	789	0.20793	113.2996	FULTON 115 - HOPE 115KV CKT 1
FDNS	00NR	2	20WP	G15_085	FROM->TO	G14-057T 345.00 - SUNNYSIDE 345KV CKT 1	717	789	0.20793	113.2996	FULTON 115 - HOPE 115KV CKT 1
FDNS	00NR	2	16WP	G15_085	FROM->TO	G14-057T 345.00 - SUNNYSIDE 345KV CKT 1	717	789	0.21122	113.2975	BEARCAT 138.00 - MOORELAND 138KV CKT 1
FDNS	00NR	2	20WP	G15_085	FROM->TO	G14-057T 345.00 - SUNNYSIDE 345KV CKT 1	717	789	0.20776	113.2958	GEN337652 1-WHITE BLUFF UNIT #1
FDNS	00NR	2	20WP	G15_085	FROM->TO	G14-057T 345.00 - SUNNYSIDE 345KV CKT 1	717	789	0.20776	113.2951	GEN501811 1-RODEMACHER UNIT 1
FDNS	00NR	2	20WP	G15_085	FROM->TO	G14-057T 345.00 - SUNNYSIDE 345KV CKT 1	717	789	0.21171	113.2942	P12:138:AEPW-OGE:WTH_JCT4:JENSEN4
FDNS	00NR	2	16WP	G15_085	FROM->TO	G14-057T 345.00 - SUNNYSIDE 345KV CKT 1	717	789	0.16735	113.2855	P12:138:AEPW:112GORE4:SNYDER-4
FDNS	00NR	2	20WP	G15_085	FROM->TO	G14-057T 345.00 - SUNNYSIDE 345KV CKT 1	717	789	0.20776	113.2813	GEN506752 1-LEBROCK GAS 1

SOLUTION	GROUP	SCENARIO	SEASON	SOURCE	DIRECTION	MONITORED ELEMENT	RATEA (MVA)	RATEB(MVA)	TDF	TC%LOADING (% MVA)	CONTINGENCY
FDNS	00NR	2	20WP	G15_085	FROM->TO	G14-057T 345.00 - SUNNYSIDE 345KV CKT 1	717	789	0.20776	113.281	GEN506753 1-LEBROCK GAS 2
FDNS	00NR	2	16WP	G15_085	FROM->TO	G14-057T 345.00 - SUNNYSIDE 345KV CKT 1	717	789	0.20579	113.2806	BROWN - RUSSETT 138KV CKT 1
FDNS	00NR	2	20WP	G15_085	FROM->TO	G14-057T 345.00 - SUNNYSIDE 345KV CKT 1	717	789	0.20958	113.2785	P12:138:AEPW:CORNVIL4:DUNCAN-4
FDNS	00NR	2	20WP	G15_085	FROM->TO	G14-057T 345.00 - SUNNYSIDE 345KV CKT 1	717	789	0.20776	113.2771	GEN300015 1-1SGPDEL 18.000
FDNS	00NR	2	20WP	G15_085	FROM->TO	G14-057T 345.00 - SUNNYSIDE 345KV CKT 1	717	789	0.20776	113.2757	GEN515226 1-MUSKOGEE 6G
FDNS	00NR	2	16WP	G15_085	FROM->TO	G14-057T 345.00 - SUNNYSIDE 345KV CKT 1	717	789	0.20635	113.2751	GEN345671 2-1RUSH G2 18.000
FDNS	00NR	2	20WP	G15_085	FROM->TO	G14-057T 345.00 - SUNNYSIDE 345KV CKT 1	717	789	0.20776	113.2746	GEN300003 1-THOMAS HILL UNIT 3
FDNS	00NR	2	16WP	G15_085	FROM->TO	G14-057T 345.00 - SUNNYSIDE 345KV CKT 1	717	789	0.20635	113.2733	GEN345670 1-1RUSH G1 18.000
FDNS	00NR	2	16WP	G15_085	FROM->TO	G14-057T 345.00 - SUNNYSIDE 345KV CKT 1	717	789	0.20598	113.2654	CHICKASAW - TOTAL 138KV CKT 1
FDNS	00NR	2	20WP	G15_085	FROM->TO	G14-057T 345.00 - SUNNYSIDE 345KV CKT 1	717	789	0.20776	113.2625	GEN336191 1-LITTLE GYPSY UNIT#3
FDNS	00NR	2	16WP	G15_085	FROM->TO	G14-057T 345.00 - SUNNYSIDE 345KV CKT 1	717	789	0.20589	113.2607	RUSSETT - SPRINGDALE 138KV CKT 1
FDNS	00NR	2	20WP	G15_085	FROM->TO	G14-057T 345.00 - SUNNYSIDE 345KV CKT 1	717	789	0.21207	113.2576	CIMARRON - TUTTLE CONOCO TAP 138KV CKT 1
FDNS	00NR	2	16WP	G15_085	FROM->TO	G14-057T 345.00 - SUNNYSIDE 345KV CKT 1	717	789	0.20635	113.2485	GEN526331 1-JONES GEN #1 22 KV
FDNS	00NR	2	16WP	G15_085	FROM->TO	G14-057T 345.00 - SUNNYSIDE 345KV CKT 1	717	789	0.20635	113.2484	GEN526332 1-JONES GEN #2 21 KV
FDNS	00NR	2	20WP	G15_085	FROM->TO	G14-057T 345.00 - SUNNYSIDE 345KV CKT 1	717	789	0.20888	113.2412	6LAYFLD 230.00 - CARROLL 230KV CKT 1
FDNS	00NR	2	20WP	G15_085	FROM->TO	G14-057T 345.00 - SUNNYSIDE 345KV CKT 1	717	789	0.21206	113.2391	LATTA JCT - OIL CENTER 138KV CKT 1
FDNS	00NR	2	16WP	G15_085	FROM->TO	G14-057T 345.00 - SUNNYSIDE 345KV CKT 1	717	789	0.20635	113.2379	GEN560105 1-G08-22 0.6900
FDNS	00NR	2	16WP	G15_085	FROM->TO	G14-057T 345.00 - SUNNYSIDE 345KV CKT 1	717	789	0.20591	113.236	ROCKY POINT - SUNNYSIDE 138KV CKT 1
FDNS	00NR	2	16WP	G15_085	FROM->TO	G14-057T 345.00 - SUNNYSIDE 345KV CKT 1	717	789	0.20635	113.2341	GEN562550 1-G14_040_3 0.6900
FDNS	00NR	2	20WP	G15_085	FROM->TO	G14-057T 345.00 - SUNNYSIDE 345KV CKT 1	717	789	0.20776	113.2336	GEN335614 1-WILLOW GLENN UNIT#4
FDNS	00NR	2	20WP	G15_085	FROM->TO	G14-057T 345.00 - SUNNYSIDE 345KV CKT 1	717	789	0.20926	113.2182	P12:138:AEPW:CORNVIL4:S.W.S.-4
FDNS	00NR	2	20WP	G15_085	FROM->TO	G14-057T 345.00 - SUNNYSIDE 345KV CKT 1	717	789	0.2079	113.2169	8DANIEL8 500.00 - MCKNIGHT 500KV CKT 1
FDNS	00NR	2	16WP	G15_085	FROM->TO	G14-057T 345.00 - SUNNYSIDE 345KV CKT 1	717	789	0.20579	113.2115	RUSSETT - RUSSETT 138KV CKT 1
FDNS	00NR	2	16WP	G15_085	FROM->TO	G14-057T 345.00 - SUNNYSIDE 345KV CKT 1	717	789	0.20746	113.2083	P12:138:WFEC:MSL07
FDNS	00NR	2	16WP	G15_085	FROM->TO	G14-057T 345.00 - SUNNYSIDE 345KV CKT 1	717	789	0.20746	113.2083	P12:138:WFEC-AEPW:HUGOPP4:ATOKA--4
FDNS	00NR	2	16WP	G15_085	FROM->TO	G14-057T 345.00 - SUNNYSIDE 345KV CKT 1	717	789	0.20635	113.2077	4SIOUX 1 138.00 138/18.0KV TRANSFORMER CKT 1
FDNS	00NR	2	16WP	G15_085	FROM->TO	G14-057T 345.00 - SUNNYSIDE 345KV CKT 1	717	789	0.20635	113.2074	CLAY BOSWELL 230/20.9KV TRANSFORMER CKT 1
FDNS	00NR	2	20WP	G15_085	FROM->TO	G14-057T 345.00 - SUNNYSIDE 345KV CKT 1	717	789	0.2133	113.2008	BAILEY4 138.00 - SUNSHINE CANYON 138KV CKT 1
FDNS	00NR	2	16WP	G15_085	FROM->TO	G14-057T 345.00 - SUNNYSIDE 345KV CKT 1	717	789	0.20635	113.1988	GEN521112 1-ORME3 13.800
FDNS	00NR	2	16WP	G15_085	FROM->TO	G14-057T 345.00 - SUNNYSIDE 345KV CKT 1	717	789	0.20635	113.1983	GEN511962 2-RKYRDGW2-1 0.7000
FDNS	00NR	2	20WP	G15_085	FROM->TO	G14-057T 345.00 - SUNNYSIDE 345KV CKT 1	717	789	0.20811	113.1928	G15095_T 138.00 - ROSE_VALLEY 138.00 138KV CKT 1
FDNS	00NR	2	20WP	G15_085	FROM->TO	G14-057T 345.00 - SUNNYSIDE 345KV CKT 1	717	789	0.20776	113.191	GEN337910 1-ARKANSAS NUCLEAR ONE UNIT #1
FDNS	00NR	2	16WP	G15_085	FROM->TO	G14-057T 345.00 - SUNNYSIDE 345KV CKT 1	717	789	0.20635	113.1893	GEN527882 1-CUNNINGHAM GEN #2 20 KV
FDNS	00NR	2	20WP	G15_085	FROM->TO	G14-057T 345.00 - SUNNYSIDE 345KV CKT 1	717	789	0.20996	113.1885	FINNEY SWITCHING STATION - WALKTAP7 345.00 345KV CKT 1
FDNS	00NR	2	20WP	G15_085	FROM->TO	G14-057T 345.00 - SUNNYSIDE 345KV CKT 1	717	789	0.20996	113.1885	FINNEY SWITCHING STATION - WALKTAP7 345.00 345KV CKT 1
FDNS	00NR	2	20WP	G15_085	FROM->TO	G14-057T 345.00 - SUNNYSIDE 345KV CKT 1	717	789	0.20776	113.1882	P12:161:AEPW:EROGERS5:ECNTRTN5
FDNS	00NR	2	20WP	G15_085	FROM->TO	G14-057T 345.00 - SUNNYSIDE 345KV CKT 1	717	789	0.20776	113.1874	GEN303007 1-1BC2 U2
FDNS	00NR	2	16WP	G15_085	FROM->TO	G14-057T 345.00 - SUNNYSIDE 345KV CKT 1	717	789	0.20635	113.187	GEN562892 1-G15048_3 0.6900
FDNS	00NR	2	20WP	G15_085	FROM->TO	G14-057T 345.00 - SUNNYSIDE 345KV CKT 1	717	789	0.20822	113.1868	BUCKNER7 345.00 - SPEARVILLE 345KV CKT 1
FDNS	00NR	2	20WP	G15_085	FROM->TO	G14-057T 345.00 - SUNNYSIDE 345KV CKT 1	717	789	0.20822	113.1868	BUCKNER7 345.00 - SPEARVILLE 345KV CKT 1
FDNS	00NR	2	20WP	G15_085	FROM->TO	G14-057T 345.00 - SUNNYSIDE 345KV CKT 1	717	789	0.20776	113.1824	GEN336464 1-MICHOUD UNIT #3
FDNS	00NR	2	20WP	G15_085	FROM->TO	G14-057T 345.00 - SUNNYSIDE 345KV CKT 1	717	789	0.20776	113.1813	GEN303006 1-1BC2 U1
FDNS	00NR	2	20WP	G15_085	FROM->TO	G14-057T 345.00 - SUNNYSIDE 345KV CKT 1	717	789	0.20813	113.1806	P12:69:WFEC-AEPW:COMANCH2:DUNCAN-2
FDNS	00NR	2	20WP	G15_085	FROM->TO	G14-057T 345.00 - SUNNYSIDE 345KV CKT 1	717	789	0.21008	113.1795	P12:138:AEPW:WTHWF4:CLINTJC4
FDNS	00NR	2	20WP	G15_085	FROM->TO	G14-057T 345.00 - SUNNYSIDE 345KV CKT 1	717	789	0.20776	113.178	GEN515223 1-MUSKOGEE 4G
FDNS	00NR	2	20WP	G15_085	FROM->TO	G14-057T 345.00 - SUNNYSIDE 345KV CKT 1	717	789	0.20776	113.178	GEN515225 1-MUSKOGEE 5G
FDNS	00NR	2	20WP	G15_085	FROM->TO	G14-057T 345.00 - SUNNYSIDE 345KV CKT 1	717	789	0.20776	113.178	WHITE BLUFF 500/26.0KV TRANSFORMER CKT 1
FDNS	00NR	2	20WP	G15_085	FROM->TO	G14-057T 345.00 - SUNNYSIDE 345KV CKT 1	717	789	0.20776	113.1752	GEN562783 1-G15036_4 0.6900
FDNS	00NR	2	20WP	G15_085	FROM->TO	G14-057T 345.00 - SUNNYSIDE 345KV CKT 1	717	789	0.20776	113.1752	GEN562784 1-G15036_5 0.6900
FDNS	00NR	2	20WP	G15_085	FROM->TO	G14-057T 345.00 - SUNNYSIDE 345KV CKT 1	717	789	0.20791	113.1714	G15088_T 345.00 - MOORE 345KV CKT 1
FDNS	00NR	2	16WP	G15_085	FROM->TO	G14-057T 345.00 - SUNNYSIDE 345KV CKT 1	717	789	0.20555	113.1696	ARDMORE WEST - CARTER 138KV CKT 1
FDNS	00NR	2	16WP	G15_085	FROM->TO	G14-057T 345.00 - SUNNYSIDE 345KV CKT 1	717	789	0.20635	113.1686	GEN562512 1-G14_020_3 0.6900
FDNS	00NR	2	20WP	G15_085	FROM->TO	G14-057T 345.00 - SUNNYSIDE 345KV CKT 1	717	789	0.20776	113.1671	RODEMACHER 230/22.0KV TRANSFORMER CKT 1
FDNS	00NR	2	16WP	G15_085	FROM->TO	G14-057T 345.00 - SUNNYSIDE 345KV CKT 1	717	789	0.20635	113.1668	GEN672321 1-SHAND GENERATOR 1
FDNS	00NR	2	20WP	G15_085	FROM->TO	G14-057T 345.00 - SUNNYSIDE 345KV CKT 1	717	789	0.20799	113.1619	BISMARK - HOT SPRINGS WEST BUS 115KV CKT 1
FDNS	00NR	2	20WP	G15_085	FROM->TO	G14-057T 345.00 - SUNNYSIDE 345KV CKT 1	717	789	0.20832	113.1611	CIMARRON - CZECH HALL 138KV CKT 1
FDNS	00NR	2	20WP	G15_085	FROM->TO	G14-057T 345.00 - SUNNYSIDE 345KV CKT 1	717	789	0.20806	113.1544	MC NIEL 500/115KV TRANSFORMER CKT 1
FDNS	00NR	2	20WP	G15_085	FROM->TO	G14-057T 345.00 - SUNNYSIDE 345KV CKT 1	717	789	0.20813	113.1534	DUNCAN - TOSCO 69KV CKT 1
FDNS	00NR	2	20WP	G15_085	FROM->TO	G14-057T 345.00 - SUNNYSIDE 345KV CKT 1	717	789	0.20798	113.1531	G15074_T 345.00 - HOYT 345KV CKT 1
FDNS	00NR	2	20WP	G15_085	FROM->TO	G14-057T 345.00 - SUNNYSIDE 345KV CKT 1	717	789	0.20776	113.1507	GEN300010 1-ST FRANCIS UNIT 1
FDNS	00NR	2	20WP	G15_085	FROM->TO	G14-057T 345.00 - SUNNYSIDE 345KV CKT 1	717	789	0.21008	113.1449	P12:138:AEPW:WTHWF4:WTH_SE4
FDNS	00NR	2	16WP	G15_085	FROM->TO	G14-057T 345.00 - SUNNYSIDE 345KV CKT 1	717	789	0.20635	113.1427	GEN672310 1-POPLAR RIVER GENERATOR 1
FDNS	00NR	2	16WP	G15_085	FROM->TO	G14-057T 345.00 - SUNNYSIDE 345KV CKT 1	717	789	0.20635	113.1427	GEN672311 2-POPLAR RIVER GENERATOR 2
FDNS	00NR	2	20WP	G15_085	FROM->TO	G14-057T 345.00 - SUNNYSIDE 345KV CKT 1	717	789	0.2053	113.1411	P12:69:AEPW-OMPA:COMANC-2:OMWALTR2
FDNS	00NR	2	16WP	G15_085	FROM->TO	G14-057T 345.00 - SUNNYSIDE 345KV CKT 1	717	789	0.20635	113.1364	GEN511853 1-COMANCHE #3
FDNS	00NR	2	16WP	G15_085	FROM->TO	G14-057T 345.00 - SUNNYSIDE 345KV CKT 1	717	789	0.20664	113.1346	P12:138:WFEC:MSL16
FDNS	00NR	2	16WP	G15_085	FROM->TO	G14-057T 345.00 - SUNNYSIDE 345KV CKT 1	717	789	0.20635	113.1343	GEN672306 6-BOUNDARY DAM GENERATOR 6
FDNS	00NR	2	20WP	G15_085	FROM->TO	G14-057T 345.00 - SUNNYSIDE 345KV CKT 1	717	789	0.20808	113.1334	HOT SPRINGS EHV - MAGNET COVE 500KV CKT 1
FDNS	00NR	2	20WP	G15_085	FROM->TO	G14-057T 345.00 - SUNNYSIDE 345KV CKT 1	717	789	0.20812	113.1327	CLEO CORNER - CLEOPLT4 138.00 138KV CKT 1
FDNS	00NR	2	20WP	G15_085	FROM->TO	G14-057T 345.00 - SUNNYSIDE 345KV CKT 1	717	789	0.20776	113.1266	GEN337041 1-GERALD ANDRUS
FDNS	00NR	2	16WP	G15_085	FROM->TO	G14-057T 345.00 - SUNNYSIDE 345KV CKT 1	717	789	0.20566	113.1239	SUNNYSIDE (SUNNYSD5) 345/138/13.8KV TRANSFORMER CKT 1
FDNS	00NR	2	20WP	G15_085	FROM->TO	G14-057T 345.00 - SUNNYSIDE 345KV CKT 1	717	789	0.20776	113.1239	GEN505432 1-SIKESTON
FDNS	00NR	2	16WP	G15_085	FROM->TO	G14-057T 345.00 - SUNNYSIDE 345KV CKT 1	717	789	0.20606	113.1209	P12:138:WFEC-AEPW:GOLDENSW4:CRAIGJT4
FDNS	00NR	2	16WP	G15_085	FROM->TO	G14-057T 345.00 - SUNNYSIDE 345KV CKT 1	717	789	0.20635	113.1197	GEN344895 2-1LAB G2 20.000
FDNS	00NR	2	16WP	G15_085	FROM->TO	G14-057T 345.00 - SUNNYSIDE 345KV CKT 1	717	789	0.20635	113.1196	GEN563192 1-G15084_3 0.5500
FDNS	00NR	2	20WP	G15_085	FROM->TO	G14-057T 345.00 - SUNNYSIDE 345KV CKT 1	717	789	0.20776	113.1196	GEN303008 1-1BC2 U3
FDNS	00NR	2	20WP	G15_085	FROM->TO	G14-057T 345.00 - SUNNYSIDE 345KV CKT 1	717	789	0.20811	113.1122	NOEL_SW 138.00 - ROSE_VALLEY 138.00 138KV CKT 1
FDNS	00NR	2	20WP	G15_085	FROM->TO	G14-057T 345.00 - SUNNYSIDE 345KV CKT 1	717	789	0.20812	113.1119	CLEOPLT4 138.00 - MEN TAP 138KV CKT 1
FDNS	00NR	2	20WP	G15_085	FROM->TO	G14-057T 345.00 - SUNNYSIDE 345KV CKT 1	717	789	0.20799	113.1101	ALPINE AECC - BISMARK 115KV CKT 1

SOLUTION	GROUP	SCENARIO	SEASON	SOURCE	DIRECTION	MONITORED ELEMENT	RATEA (MVA)	RATEB(MVA)	TDF	TC%LOADING (% MVA)	CONTINGENCY
FDNS	00NR	2	20WP	G15_085	FROM->TO	G14-057T 345.00 - SUNNYSIDE 345KV CKT 1	717	789	0.2081	113.1071	CIMARRON - SARA 138KV CKT 1
FDNS	00NR	2	20WP	G15_085	FROM->TO	G14-057T 345.00 - SUNNYSIDE 345KV CKT 1	717	789	0.2039	113.1067	CHISHOLM6 230.00 - ELK CITY 230KV 230KV CKT 1
FDNS	00NR	2	20WP	G15_085	FROM->TO	G14-057T 345.00 - SUNNYSIDE 345KV CKT 1	717	789	0.2039	113.104	ELK CITY 230KV (ELKCTY-6) 230/138/13.8KV TRANSFORMER CKT 1
FDNS	00NR	2	20WP	G15_085	FROM->TO	G14-057T 345.00 - SUNNYSIDE 345KV CKT 1	717	789	0.2039	113.104	ELK CITY 230KV (ELKCTY-6) 230/138/13.8KV TRANSFORMER CKT 1
FDNS	00NR	2	20WP	G15_085	FROM->TO	G14-057T 345.00 - SUNNYSIDE 345KV CKT 1	717	789	0.20812	113.0999	IMO TAP - MEN TAP 138KV CKT 1
FDNS	00NR	2	20WP	G15_085	FROM->TO	G14-057T 345.00 - SUNNYSIDE 345KV CKT 1	717	789	0.20776	113.0931	GEN300011 1-ST FRANCIS UNIT 2
FDNS	00NR	2	20WP	G15_085	FROM->TO	G14-057T 345.00 - SUNNYSIDE 345KV CKT 1	717	789	0.20758	113.092	SEMINOLE - VANOSTP4 138.00 138KV CKT 1
FDNS	00NR	2	16WP	G15_085	FROM->TO	G14-057T 345.00 - SUNNYSIDE 345KV CKT 1	717	789	0.20635	113.0912	GEN523461 1-BLACKHAWK GEN #1
FDNS	00NR	2	16WP	G15_085	FROM->TO	G14-057T 345.00 - SUNNYSIDE 345KV CKT 1	717	789	0.20635	113.0911	GEN523462 1-BLACKHAWK GEN #2
FDNS	00NR	2	20WP	G15_085	FROM->TO	G14-057T 345.00 - SUNNYSIDE 345KV CKT 1	717	789	0.20776	113.0904	GEN336170 1-GULF OXY U4
FDNS	00NR	2	16WP	G15_085	FROM->TO	G14-057T 345.00 - SUNNYSIDE 345KV CKT 1	717	789	0.20635	113.0894	GEN511852 1-COMANCHE #2
FDNS	00NR	2	16WP	G15_085	FROM->TO	G14-057T 345.00 - SUNNYSIDE 345KV CKT 1	717	789	0.20635	113.0876	GEN344896 3-1LAB G3 20.000
FDNS	00NR	2	20WP	G15_085	FROM->TO	G14-057T 345.00 - SUNNYSIDE 345KV CKT 1	717	789	0.20766	113.0867	P12:138:AEPW:N.E.S.-4:CATOOSA4
FDNS	00NR	2	16WP	G15_085	FROM->TO	G14-057T 345.00 - SUNNYSIDE 345KV CKT 1	717	789	0.20635	113.0863	GEN344894 1-1LAB G1 20.000
FDNS	00NR	2	20WP	G15_085	FROM->TO	G14-057T 345.00 - SUNNYSIDE 345KV CKT 1	717	789	0.20813	113.086	COMANCHE TAP - TOSCO 69KV CKT 1
FDNS	00NR	2	20WP	G15_085	FROM->TO	G14-057T 345.00 - SUNNYSIDE 345KV CKT 1	717	789	0.20735	113.0851	ARBWIND4 138.00 - CARTER 138KV CKT 1
FDNS	00NR	2	16WP	G15_085	FROM->TO	G14-057T 345.00 - SUNNYSIDE 345KV CKT 1	717	789	0.20635	113.0848	GEN344897 4-1LAB G4 20.000
FDNS	00NR	2	20WP	G15_085	FROM->TO	G14-057T 345.00 - SUNNYSIDE 345KV CKT 1	717	789	0.20832	113.083	CZECH HALL - XEROX 138KV CKT 1
FDNS	00NR	2	20WP	G15_085	FROM->TO	G14-057T 345.00 - SUNNYSIDE 345KV CKT 1	717	789	0.20776	113.0808	NELSON 230/20.0KV TRANSFORMER CKT 1
FDNS	00NR	2	20WP	G15_085	FROM->TO	G14-057T 345.00 - SUNNYSIDE 345KV CKT 1	717	789	0.20832	113.0789	MORGAN - XEROX 138KV CKT 1
FDNS	00NR	2	20WP	G15_085	FROM->TO	G14-057T 345.00 - SUNNYSIDE 345KV CKT 1	717	789	0.20776	113.0714	GEN336801 1-BAXTER WILSON UNIT #1
FDNS	00NR	2	20WP	G15_085	FROM->TO	G14-057T 345.00 - SUNNYSIDE 345KV CKT 1	717	789	0.20799	113.0627	ALPINE AECC - AMITY SS 115KV CKT 1
FDNS	00NR	2	20WP	G15_085	FROM->TO	G14-057T 345.00 - SUNNYSIDE 345KV CKT 1	717	789	0.20832	113.0563	MORGAN - MUSTANG 138KV CKT 1
FDNS	00NR	2	16WP	G15_085	FROM->TO	G14-057T 345.00 - SUNNYSIDE 345KV CKT 1	717	789	0.20555	113.0535	ARDMORE WEST - UNIROYAL 138KV CKT 1
FDNS	00NR	2	20WP	G15_085	FROM->TO	G14-057T 345.00 - SUNNYSIDE 345KV CKT 1	717	789	0.21171	113.0528	WEATHERFORD JCT. - WEATHERFORD SOUTHEAST 138KV CKT 1
FDNS	00NR	2	20WP	G15_085	FROM->TO	G14-057T 345.00 - SUNNYSIDE 345KV CKT 1	717	789	0.21171	113.0528	WEATHERFORD JCT. - WEATHERFORD SOUTHEAST 138KV CKT 1
FDNS	00NR	2	20WP	G15_085	FROM->TO	G14-057T 345.00 - SUNNYSIDE 345KV CKT 1	717	789	0.20776	113.0418	GEN501910 1-ACADIA UNIT ST1
FDNS	00NR	2	20WP	G15_085	FROM->TO	G14-057T 345.00 - SUNNYSIDE 345KV CKT 1	717	789	0.20776	113.0412	8CAJUN2 500/24.0KV TRANSFORMER CKT 1
FDNS	00NR	2	16WP	G15_085	FROM->TO	G14-057T 345.00 - SUNNYSIDE 345KV CKT 1	717	789	0.20622	113.0407	P12:138:AEPW-SWPA:LONEOAK4:TUPELO4
FDNS	00NR	2	16WP	G15_085	FROM->TO	G14-057T 345.00 - SUNNYSIDE 345KV CKT 1	717	789	0.20622	113.0406	P12:138:WFEC:MSL06
FDNS	00NR	2	16WP	G15_085	FROM->TO	G14-057T 345.00 - SUNNYSIDE 345KV CKT 1	717	789	0.20575	113.0327	P12:138:OKGE:3TERM40
FDNS	00NR	2	16WP	G15_085	FROM->TO	G14-057T 345.00 - SUNNYSIDE 345KV CKT 1	717	789	0.20635	113.032	GEN563162 1-G15081_3 0.6900
FDNS	00NR	2	20WP	G15_085	FROM->TO	G14-057T 345.00 - SUNNYSIDE 345KV CKT 1	717	789	0.20813	113.032	COMANCHE - COMANCHE TAP 69KV CKT 1
FDNSLock	00NR	2	16WP	G15_085	FROM->TO	G14-057T 345.00 - SUNNYSIDE 345KV CKT 1	717	789	0.20635	113.0306	GEN681542 6-JP MADGETT
FDNS	00NR	2	20WP	G15_085	FROM->TO	G14-057T 345.00 - SUNNYSIDE 345KV CKT 1	717	789	0.2133	113.0229	BAILEY4 138.00 - WESTMOORE 138KV CKT 1
FDNS	00NR	2	16WP	G15_085	FROM->TO	G14-057T 345.00 - SUNNYSIDE 345KV CKT 1	717	789	0.20635	113.0206	GEN521110 1-ORME1 13.800
FDNS	00NR	2	16WP	G15_085	FROM->TO	G14-057T 345.00 - SUNNYSIDE 345KV CKT 1	717	789	0.20635	113.0206	GEN521111 1-ORME2 13.800
FDNS	00NR	2	20WP	G15_085	FROM->TO	G14-057T 345.00 - SUNNYSIDE 345KV CKT 1	717	789	0.20906	113.0136	P12:138:OKGE-AEPW:JENSEN4:REDROCKRD4
FDNS	00NR	2	16WP	G15_085	FROM->TO	G14-057T 345.00 - SUNNYSIDE 345KV CKT 1	717	789	0.20635	113.0118	GEN562699 1-G15_018_3 0.6900
FDNS	00NR	2	16WP	G15_085	FROM->TO	G14-057T 345.00 - SUNNYSIDE 345KV CKT 1	717	789	0.20635	113.0094	GEN563292 1-G15095_3 0.6900
FDNS	00NR	2	16WP	G15_085	FROM->TO	G14-057T 345.00 - SUNNYSIDE 345KV CKT 1	717	789	0.20617	113.0024	CARTRCO4 138.00 - RATLIFF 138KV CKT 1
FDNS	00NR	2	20WP	G15_085	FROM->TO	G14-057T 345.00 - SUNNYSIDE 345KV CKT 1	717	789	0.20776	113.0016	SABINE 230/24.0KV TRANSFORMER CKT 1
FDNS	00NR	2	20WP	G15_085	FROM->TO	G14-057T 345.00 - SUNNYSIDE 345KV CKT 1	717	789	0.21171	113.0007	P12:138:AEPW:REDROCKRD4:WTH_JCT4
FDNS	00NR	2	20WP	G15_085	FROM->TO	G14-057T 345.00 - SUNNYSIDE 345KV CKT 1	717	789	0.2096	113.0006	ANADARKO - SEQUOYAHJ4 138.00 138KV CKT 1
FDNS	00NR	2	20WP	G15_085	FROM->TO	G14-057T 345.00 - SUNNYSIDE 345KV CKT 1	717	789	0.21026	113.0002	WALTERS - WALTERS 69KV CKT 1
FDNS	00NR	2	20WP	G15_085	FROM->TO	G14-057T 345.00 - SUNNYSIDE 345KV CKT 1	717	789	0.2096	112.9993	CORN TAP - SEQUOYAHJ4 138.00 138KV CKT 1
FDNS	00NR	2	20WP	G15_085	FROM->TO	G14-057T 345.00 - SUNNYSIDE 345KV CKT 1	717	789	0.20776	112.9985	GEN300016 1-1G1GPDEL 18.000
FDNS	00NR	2	20WP	G15_085	FROM->TO	G14-057T 345.00 - SUNNYSIDE 345KV CKT 1	717	789	0.2081	112.9956	SARA - STHLAKE4 138.00 138KV CKT 1
FDNS	00NR	2	20WP	G15_085	FROM->TO	G14-057T 345.00 - SUNNYSIDE 345KV CKT 1	717	789	0.20776	112.9923	P12:138:AEPW:R.S.S.-4:S.HUD.-4
FDNS	00NR	2	20WP	G15_085	FROM->TO	G14-057T 345.00 - SUNNYSIDE 345KV CKT 1	717	789	0.20776	112.9868	GEN336222 1-LITTLE GYPSY UNIT#2
FDNS	00NR	2	20WP	G15_085	FROM->TO	G14-057T 345.00 - SUNNYSIDE 345KV CKT 1	717	789	0.20815	112.9862	ETTA (DUKE HOTSPRINGS) - MC NIEL 500KV CKT 1
FDNS	00NR	2	20WP	G15_085	FROM->TO	G14-057T 345.00 - SUNNYSIDE 345KV CKT 1	717	789	0.20956	112.9823	NORGE ROAD - SOUTHWESTERN STATION 138KV CKT 1
FDNS	00NR	2	20WP	G15_085	FROM->TO	G14-057T 345.00 - SUNNYSIDE 345KV CKT 1	717	789	0.20956	112.9823	NORGE ROAD - SOUTHWESTERN STATION 138KV CKT 1
FDNS	00NR	2	20WP	G15_085	FROM->TO	G14-057T 345.00 - SUNNYSIDE 345KV CKT 1	717	789	0.20832	112.9787	G13-010T 345.00 - POST ROCK 345KV CKT 1
FDNS	00NR	2	20WP	G15_085	FROM->TO	G14-057T 345.00 - SUNNYSIDE 345KV CKT 1	717	789	0.2053	112.9711	LAWTON RELIFT TAP - OMPA-WALTERS 69KV CKT 1
FDNS	00NR	2	20WP	G15_085	FROM->TO	G14-057T 345.00 - SUNNYSIDE 345KV CKT 1	717	789	0.2081	112.9655	MCCLAIN - STHLAKE4 138.00 138KV CKT 1
FDNS	00NR	2	20WP	G15_085	FROM->TO	G14-057T 345.00 - SUNNYSIDE 345KV CKT 1	717	789	0.21206	112.9629	LASALLE - LATTA JCT 138KV CKT 1
FDNS	00NR	2	20WP	G15_085	FROM->TO	G14-057T 345.00 - SUNNYSIDE 345KV CKT 1	717	789	0.20776	112.9608	P12:69:AEPW:NROGERS2:ECNTRTN2
FDNS	00NR	2	16WP	G15_085	FROM->TO	G14-057T 345.00 - SUNNYSIDE 345KV CKT 1	717	789	0.20635	112.9573	GEN520811 1-ANADRK4
FDNS	00NR	2	16WP	G15_085	FROM->TO	G14-057T 345.00 - SUNNYSIDE 345KV CKT 1	717	789	0.20849	112.956	G15063_T 345.00 - MATHWSN7 345.00 345KV CKT 1
FDNS	00NR	2	20WP	G15_085	FROM->TO	G14-057T 345.00 - SUNNYSIDE 345KV CKT 1	717	789	0.20776	112.9522	GEN336152 1-WATERFORD UNIT#2
FDNS	00NR	2	20WP	G15_085	FROM->TO	G14-057T 345.00 - SUNNYSIDE 345KV CKT 1	717	789	0.20776	112.9514	GEN336151 1-WATERFORD UNIT#1
FDNS	00NR	2	20WP	G15_085	FROM->TO	G14-057T 345.00 - SUNNYSIDE 345KV CKT 1	717	789	0.20776	112.9505	P12:138:AEPW:BA_71ST4:T.S.E.-4
FDNS	00NR	2	20WP	G15_085	FROM->TO	G14-057T 345.00 - SUNNYSIDE 345KV CKT 1	717	789	0.20776	112.9457	P12:138:AEPW:YARCH-S4:T.S.E.-4
FDNS	00NR	2	20WP	G15_085	FROM->TO	G14-057T 345.00 - SUNNYSIDE 345KV CKT 1	717	789	0.20798	112.9424	HOYT - STRANGER CREEK 345KV CKT 1
FDNS	00NR	2	20WP	G15_085	FROM->TO	G14-057T 345.00 - SUNNYSIDE 345KV CKT 1	717	789	0.20813	112.9414	P12:138:AEPW-OGE:SHIDLER4:OSAGE 4
FDNS	00NR	2	20WP	G15_085	FROM->TO	G14-057T 345.00 - SUNNYSIDE 345KV CKT 1	717	789	0.20776	112.9408	GEN300017 1-1G2GPDEL 18.000
FDNS	00NR	2	20WP	G15_085	FROM->TO	G14-057T 345.00 - SUNNYSIDE 345KV CKT 1	717	789	0.20776	112.9384	FRONTIER 345/18.0KV TRANSFORMER CKT 1
FDNS	00NR	2	20WP	G15_085	FROM->TO	G14-057T 345.00 - SUNNYSIDE 345KV CKT 1	717	789	0.20793	112.9383	MORISNT4 138.00 - STILLWATER 138KV CKT 1
FDNS	00NR	2	20WP	G15_085	FROM->TO	G14-057T 345.00 - SUNNYSIDE 345KV CKT 1	717	789	0.20776	112.9362	FRONTIER 345/18.0KV TRANSFORMER CKT 1
FDNS	00NR	2	20WP	G15_085	FROM->TO	G14-057T 345.00 - SUNNYSIDE 345KV CKT 1	717	789	0.20972	112.9349	CLINTON JUNCTION - ELK CITY 138KV CKT 1
FDNS	00NR	2	20WP	G15_085	FROM->TO	G14-057T 345.00 - SUNNYSIDE 345KV CKT 1	717	789	0.20972	112.9349	CLINTON JUNCTION - ELK CITY 138KV CKT 1
FDNS	00NR	2	20WP	G15_085	FROM->TO	G14-057T 345.00 - SUNNYSIDE 345KV CKT 1	717	789	0.20794	112.9317	P12:138:OKGE:3TERM2
FDNS	00NR	2	20WP	G15_085	FROM->TO	G14-057T 345.00 - SUNNYSIDE 345KV CKT 1	717	789	0.20793	112.9301	HOPE - MCNAB REC 115KV CKT 1
FDNS	00NR	2	20WP	G15_085	FROM->TO	G14-057T 345.00 - SUNNYSIDE 345KV CKT 1	717	789	0.20824	112.9232	EMPORIA ENERGY CENTER - G14_001T 345.00 345KV CKT 1
FDNS	00NR	2	16WP	G15_085	FROM->TO	G14-057T 345.00 - SUNNYSIDE 345KV CKT 1	717	789	0.20635	112.9213	GEN661015 1-COYOTE
FDNS	00NR	2	20WP	G15_085	FROM->TO	G14-057T 345.00 - SUNNYSIDE 345KV CKT 1	717	789	0.20793	112.9194	P12:115:AEPW:TURK3:HOPE3
FDNS	00NR	2	20WP	G15_085	FROM->TO	G14-057T 345.00 - SUNNYSIDE 345KV CKT 1	717	789	0.20832	112.9186	BENTON - WICHITA 345KV CKT 1
FDNS	00NR	2	20WP	G15_085	FROM->TO	G14-057T 345.00 - SUNNYSIDE 345KV CKT 1	717	789	0.20798	112.9165	G15074_T 345.00 - JEFFREY ENERGY CENTER 345KV CKT 1

SOLUTION	GROUP	SCENARIO	SEASON	SOURCE	DIRECTION	MONITORED ELEMENT	RATEA (MVA)	RATEB(MVA)	TDF	TC%LOADING (% MVA)	CONTINGENCY
FDNS	00NR	2	16WP	G15_085	FROM->TO	G14-057T 345.00 - SUNNYSIDE 345KV CKT 1	717	789	0.20635	112.9136	GEN563122 1-G15077_3 0.3850
FDNS	00NR	2	20WP	G15_085	FROM->TO	G14-057T 345.00 - SUNNYSIDE 345KV CKT 1	717	789	0.20832	112.9136	G13-010T 345.00 - SPEARVILLE 345KV CKT 1
FDNS	00NR	2	20WP	G15_085	FROM->TO	G14-057T 345.00 - SUNNYSIDE 345KV CKT 1	717	789	0.20807	112.9116	COUCH SES - MC NIEL 115KV CKT 1
FDNS	00NR	2	20WP	G15_085	FROM->TO	G14-057T 345.00 - SUNNYSIDE 345KV CKT 1	717	789	0.20776	112.9085	LEWIS CREEK SWITCHYARD 138/22.0KV TRANSFORMER CKT 1
FDNS	00NR	2	20WP	G15_085	FROM->TO	G14-057T 345.00 - SUNNYSIDE 345KV CKT 1	717	789	0.2053	112.908	OMPA-WALTERS - WALTERS 69KV CKT 1
FDNS	00NR	2	20WP	G15_085	FROM->TO	G14-057T 345.00 - SUNNYSIDE 345KV CKT 1	717	789	0.2053	112.908	OMPA-WALTERS - WALTERS 69KV CKT 1
FDNS	00NR	2	20WP	G15_085	FROM->TO	G14-057T 345.00 - SUNNYSIDE 345KV CKT 1	717	789	0.21008	112.9072	WEATHERFORD TAP - WEATHERFORD WIND FARM 138KV CKT 1
FDNS	00NR	2	20WP	G15_085	FROM->TO	G14-057T 345.00 - SUNNYSIDE 345KV CKT 1	717	789	0.20816	112.9067	BLACKBERRY - NEOSHO 345KV CKT 1
FDNS	00NR	2	20WP	G15_085	FROM->TO	G14-057T 345.00 - SUNNYSIDE 345KV CKT 1	717	789	0.21171	112.9062	HINTON - WEATHERFORD JCT. 138KV CKT 1
FDNS	00NR	2	20WP	G15_085	FROM->TO	G14-057T 345.00 - SUNNYSIDE 345KV CKT 1	717	789	0.20776	112.9041	LEWIS CREEK SWITCHYARD 138/22.0KV TRANSFORMER CKT 1
FDNS	00NR	2	16WP	G15_085	FROM->TO	G14-057T 345.00 - SUNNYSIDE 345KV CKT 1	717	789	0.16735	112.9036	CACHE - SNYDER 138KV CKT 1
FDNS	00NR	2	20WP	G15_085	FROM->TO	G14-057T 345.00 - SUNNYSIDE 345KV CKT 1	717	789	0.20788	112.8999	CYPRESS - HARTBURG 500KV CKT 1
FDNS	00NR	2	20WP	G15_085	FROM->TO	G14-057T 345.00 - SUNNYSIDE 345KV CKT 1	717	789	0.20776	112.8965	GEN334432 1-SABINE UNIT 2
FDNS	00NR	2	20WP	G15_085	FROM->TO	G14-057T 345.00 - SUNNYSIDE 345KV CKT 1	717	789	0.20776	112.896	GEN334431 1-SABINE UNIT 1
FDNS	00NR	2	16WP	G15_085	FROM->TO	G14-057T 345.00 - SUNNYSIDE 345KV CKT 1	717	789	0.20635	112.8943	GEN562861 1-G15045_2 0.4800
FDNS	00NR	2	20WP	G15_085	FROM->TO	G14-057T 345.00 - SUNNYSIDE 345KV CKT 1	717	789	0.20793	112.8942	TURK (TURK 1) 138/115/13.2KV TRANSFORMER CKT 1
FDNS	00NR	2	20WP	G15_085	FROM->TO	G14-057T 345.00 - SUNNYSIDE 345KV CKT 1	717	789	0.20793	112.8942	TURK (TURK 1) 138/115/13.2KV TRANSFORMER CKT 1
FDNS	00NR	2	20WP	G15_085	FROM->TO	G14-057T 345.00 - SUNNYSIDE 345KV CKT 1	717	789	0.20793	112.8941	MCNAB REC - Turk 115 115KV CKT 1
FDNS	00NR	2	20WP	G15_085	FROM->TO	G14-057T 345.00 - SUNNYSIDE 345KV CKT 1	717	789	0.20792	112.8923	7JASPER 345.00 - BLACKBERRY 345KV CKT 1
FDNS	00NR	2	20WP	G15_085	FROM->TO	G14-057T 345.00 - SUNNYSIDE 345KV CKT 1	717	789	0.20776	112.892	GEN501823 1-TECHE UNIT 3
FDNS	00NR	2	20WP	G15_085	FROM->TO	G14-057T 345.00 - SUNNYSIDE 345KV CKT 1	717	789	0.20776	112.8898	GEN501970 1-EVANGELINE UNIT 7
FDNS	00NR	2	20WP	G15_085	FROM->TO	G14-057T 345.00 - SUNNYSIDE 345KV CKT 1	717	789	0.20776	112.8852	GEN505616 1-BROKEN BOW
FDNS	00NR	2	16WP	G15_085	FROM->TO	G14-057T 345.00 - SUNNYSIDE 345KV CKT 1	717	789	0.20668	112.8844	P12:138:WFEC:MSL15
FDNS	00NR	2	20WP	G15_085	FROM->TO	G14-057T 345.00 - SUNNYSIDE 345KV CKT 1	717	789	0.21026	112.8802	P12:69:WFEC-AEPW:COMANCH2:WALTRS-2
FDNS	00NR	2	20WP	G15_085	FROM->TO	G14-057T 345.00 - SUNNYSIDE 345KV CKT 1	717	789	0.20939	112.8773	CANADIAN - NOBLE 138KV CKT 1
FDNS	00NR	2	20WP	G15_085	FROM->TO	G14-057T 345.00 - SUNNYSIDE 345KV CKT 1	717	789	0.20776	112.8734	P12:161:AEPW:CHAMSPR5:FARMING5
FDNSLock	00NR	2	16WP	G15_085	FROM->TO	G14-057T 345.00 - SUNNYSIDE 345KV CKT 1	717	789	0.20635	112.87	GEN532751 1-WOLF CREEK GENERATING STATION UNIT 1
FDNS	00NR	2	20WP	G15_085	FROM->TO	G14-057T 345.00 - SUNNYSIDE 345KV CKT 1	717	789	0.20776	112.8683	GEN334392 1-EXXON MOBIL IPP 1
FDNS	00NR	2	20WP	G15_085	FROM->TO	G14-057T 345.00 - SUNNYSIDE 345KV CKT 1	717	789	0.20792	112.8677	7LUTESVIL 345.00 - 7ST FRANC 345.00 345KV CKT 1
FDNS	00NR	2	20WP	G15_085	FROM->TO	G14-057T 345.00 - SUNNYSIDE 345KV CKT 1	717	789	0.20824	112.8637	G14_001T 345.00 - WICHITA 345KV CKT 1
FDNS	00NR	2	20WP	G15_085	FROM->TO	G14-057T 345.00 - SUNNYSIDE 345KV CKT 1	717	789	0.20776	112.8619	GEN334393 1-EXXON MOBIL IPP 2
FDNS	00NR	2	20WP	G15_085	FROM->TO	G14-057T 345.00 - SUNNYSIDE 345KV CKT 1	717	789	0.20776	112.8619	GEN334394 1-EXXON MOBIL IPP 3
FDNS	00NR	2	20WP	G15_085	FROM->TO	G14-057T 345.00 - SUNNYSIDE 345KV CKT 1	717	789	0.20926	112.8597	SOUTHWESTERN STATION - VERDEN 138KV CKT 1
FDNS	00NR	2	20WP	G15_085	FROM->TO	G14-057T 345.00 - SUNNYSIDE 345KV CKT 1	717	789	0.2133	112.8578	FRANKLIN SW - WESTMOORE 138KV CKT 1
FDNS	00NR	2	20WP	G15_085	FROM->TO	G14-057T 345.00 - SUNNYSIDE 345KV CKT 1	717	789	0.20805	112.8555	LAKEOVER - MCADAMS 500KV CKT 1
FDNS	00NR	2	20WP	G15_085	FROM->TO	G14-057T 345.00 - SUNNYSIDE 345KV CKT 1	717	789	0.20956	112.8541	P12:138:OKGE:3TERM27
FDNS	00NR	2	20WP	G15_085	FROM->TO	G14-057T 345.00 - SUNNYSIDE 345KV CKT 1	717	789	0.20956	112.8499	CORNVILLE - NORGE ROAD 138KV CKT 1
FDNS	00NR	2	20WP	G15_085	FROM->TO	G14-057T 345.00 - SUNNYSIDE 345KV CKT 1	717	789	0.20956	112.8499	CORNVILLE - NORGE ROAD 138KV CKT 1
FDNS	00NR	2	20WP	G15_085	FROM->TO	G14-057T 345.00 - SUNNYSIDE 345KV CKT 1	717	789	0.20799	112.8481	EMPORIA ENERGY CENTER - SWISSVALE 345KV CKT 1
FDNS	00NR	2	20WP	G15_085	FROM->TO	G14-057T 345.00 - SUNNYSIDE 345KV CKT 1	717	789	0.20776	112.847	ST FRANCIS - ST FRANCIS 1 161KV CKT Z1
FDNS	00NR	2	20WP	G15_085	FROM->TO	G14-057T 345.00 - SUNNYSIDE 345KV CKT 1	717	789	0.20825	112.8443	MCADAMS - WOLF CREEK 500KV CKT 1
FDNS	00NR	2	20WP	G15_085	FROM->TO	G14-057T 345.00 - SUNNYSIDE 345KV CKT 1	717	789	0.20776	112.8422	SABINE 230/22.0KV TRANSFORMER CKT 1
FDNS	00NR	2	20WP	G15_085	FROM->TO	G14-057T 345.00 - SUNNYSIDE 345KV CKT 1	717	789	0.20926	112.839	NORTH 29TH CHICKASHA - VERDEN 138KV CKT 1
FDNS	00NR	2	20WP	G15_085	FROM->TO	G14-057T 345.00 - SUNNYSIDE 345KV CKT 1	717	789	0.20805	112.8385	FLETCHER - MARLOW JCT 69KV CKT 1
FDNS	00NR	2	20WP	G15_085	FROM->TO	G14-057T 345.00 - SUNNYSIDE 345KV CKT 1	717	789	0.21171	112.8353	HINTON - REDROCKRD4 138.00 138KV CKT 1
FDNS	00NR	2	20WP	G15_085	FROM->TO	G14-057T 345.00 - SUNNYSIDE 345KV CKT 1	717	789	0.20776	112.8316	GEN501971 1-EVANGELINE UNIT 7-1
FDNS	00NR	2	20WP	G15_085	FROM->TO	G14-057T 345.00 - SUNNYSIDE 345KV CKT 1	717	789	0.20776	112.8316	GEN501972 1-EVANGELINE UNIT 7-2
FDNS	00NR	2	20WP	G15_085	FROM->TO	G14-057T 345.00 - SUNNYSIDE 345KV CKT 1	717	789	0.20803	112.8309	SWISSVALE - WEST GARDNER 345KV CKT 1
FDNS	00NR	2	20WP	G15_085	FROM->TO	G14-057T 345.00 - SUNNYSIDE 345KV CKT 1	717	789	0.20778	112.8237	P12:138:AEPW:R.S.S-4:T.P.S.-4
FDNS	00NR	2	20WP	G15_085	FROM->TO	G14-057T 345.00 - SUNNYSIDE 345KV CKT 1	717	789	0.21206	112.8229	LASALLE - STONEWAL LH138.00 138KV CKT 1
FDNS	00NR	2	16WP	G15_085	FROM->TO	G14-057T 345.00 - SUNNYSIDE 345KV CKT 1	717	789	0.20635	112.8225	GEN562992 1-G15063_3 0.6900
FDNS	00NR	2	20WP	G15_085	FROM->TO	G14-057T 345.00 - SUNNYSIDE 345KV CKT 1	717	789	0.21008	112.8188	WEATHERFORD SOUTHEAST - WEATHERFORD TAP 138KV CKT 1
FDNS	00NR	2	20WP	G15_085	FROM->TO	G14-057T 345.00 - SUNNYSIDE 345KV CKT 1	717	789	0.20784	112.8173	P12:138:OKGE:3TERM12
FDNS	00NR	2	20WP	G15_085	FROM->TO	G14-057T 345.00 - SUNNYSIDE 345KV CKT 1	717	789	0.20856	112.8163	ENOWILT - LONE OAK 138KV CKT 1
FDNS	00NR	2	16WP	G15_085	FROM->TO	G14-057T 345.00 - SUNNYSIDE 345KV CKT 1	717	789	0.20555	112.811	SUNNYSIDE - UNIROYAL 138KV CKT 1
FDNS	00NR	2	20WP	G15_085	FROM->TO	G14-057T 345.00 - SUNNYSIDE 345KV CKT 1	717	789	0.20776	112.808	GEN501912 1-ACADIA UNIT CT1B
FDNS	00NR	2	20WP	G15_085	FROM->TO	G14-057T 345.00 - SUNNYSIDE 345KV CKT 1	717	789	0.20856	112.8075	ENOWILT - SARDIS 138KV CKT 1
FDNS	00NR	2	20WP	G15_085	FROM->TO	G14-057T 345.00 - SUNNYSIDE 345KV CKT 1	717	789	0.21206	112.8073	STONEWAL LH138.00 - TUPELO TAP 138KV CKT 1
FDNS	00NR	2	20WP	G15_085	FROM->TO	G14-057T 345.00 - SUNNYSIDE 345KV CKT 1	717	789	0.20776	112.8072	GEN501911 1-ACADIA UNIT CT1A
FDNS	00NR	2	16WP	G15_085	FROM->TO	G14-057T 345.00 - SUNNYSIDE 345KV CKT 1	717	789	0.20663	112.8071	GRAPEVINE INTERCHANGE - STATELINE INTERCHANGE 230KV CKT 1
FDNS	00NR	2	16WP	G15_085	FROM->TO	G14-057T 345.00 - SUNNYSIDE 345KV CKT 1	717	789	0.20663	112.8071	GRAPEVINE INTERCHANGE - STATELINE INTERCHANGE 230KV CKT 1
FDNS	00NR	2	20WP	G15_085	FROM->TO	G14-057T 345.00 - SUNNYSIDE 345KV CKT 1	717	789	0.20796	112.8049	P12:138:WFEC-AEPW:ELKCTY-4:ERICK4
FDNS	00NR	2	20WP	G15_085	FROM->TO	G14-057T 345.00 - SUNNYSIDE 345KV CKT 1	717	789	0.20824	112.8048	FRANKLIN - FRANKLIN SW 138KV CKT 1
FDNS	00NR	2	16WP	G15_085	FROM->TO	G14-057T 345.00 - SUNNYSIDE 345KV CKT 1	717	789	0.20635	112.8044	GEN657748 1-YOUNG 2 GENERATOR
FDNS	00NR	2	20WP	G15_085	FROM->TO	G14-057T 345.00 - SUNNYSIDE 345KV CKT 1	717	789	0.20799	112.7996	AMITY SS - MURFREESBORO EAST (AECC) 115KV CKT 1
FDNS	00NR	2	20WP	G15_085	FROM->TO	G14-057T 345.00 - SUNNYSIDE 345KV CKT 1	717	789	0.20776	112.7978	P12:138:AEPW:R.S.S.-4:R:96YALE-4
FDNS	00NR	2	20WP	G15_085	FROM->TO	G14-057T 345.00 - SUNNYSIDE 345KV CKT 1	717	789	0.20939	112.7841	NOBLE - PURCELL4 138.00 138KV CKT 1
FDNS	00NR	2	20WP	G15_085	FROM->TO	G14-057T 345.00 - SUNNYSIDE 345KV CKT 1	717	789	0.20926	112.7769	CORNVILLE - NORTH 29TH CHICKASHA 138KV CKT 1
FDNS	00NR	2	16WP	G15_085	FROM->TO	G14-057T 345.00 - SUNNYSIDE 345KV CKT 1	717	789	0.21282	112.7702	CANEY CREEK - TEXOMA JCT 138KV CKT 1
FDNS	00NR	2	20WP	G15_085	FROM->TO	G14-057T 345.00 - SUNNYSIDE 345KV CKT 1	717	789	0.2099	112.7691	CIMARRON - NORTHWEST 345KV CKT 1
FDNS	00NR	2	20WP	G15_085	FROM->TO	G14-057T 345.00 - SUNNYSIDE 345KV CKT 1	717	789	0.21008	112.7684	CLINTON JUNCTION - CLINTON NATURAL GAS TAP 138KV CKT 1
FDNS	00NR	2	20WP	G15_085	FROM->TO	G14-057T 345.00 - SUNNYSIDE 345KV CKT 1	717	789	0.20906	112.7548	Canadian Pump Station - REDROCKRD4 138.00 138KV CKT 1
FDNS	00NR	2	16WP	G15_085	FROM->TO	G14-057T 345.00 - SUNNYSIDE 345KV CKT 1	717	789	0.20635	112.7496	GEN562704 1-G15_020_3 0.3550
FDNS	00NR	2	20WP	G15_085	FROM->TO	G14-057T 345.00 - SUNNYSIDE 345KV CKT 1	717	789	0.21005	112.7432	CRINER - PAYNE 138.00 138KV CKT 1
FDNS	00NR	2	16WP	G15_085	FROM->TO	G14-057T 345.00 - SUNNYSIDE 345KV CKT 1	717	789	0.20635	112.7414	GEN562952 1-G15057_3 0.6500
FDNS	00NR	2	16WP	G15_085	FROM->TO	G14-057T 345.00 - SUNNYSIDE 345KV CKT 1	717	789	0.20635	112.7061	GEN563173 1-G15082_3 0.6900
FDNS	00NR	2	20WP	G15_085	FROM->TO	G14-057T 345.00 - SUNNYSIDE 345KV CKT 1	717	789	0.21026	112.7042	COMANCHE - WALTERS 69KV CKT 1
FDNS	00NR	2	16WP	G15_085	FROM->TO	G14-057T 345.00 - SUNNYSIDE 345KV CKT 1	717	789	0.21055	112.6908	P12:138:AEPW:SHAM4WT:CHILD4WT
FDNS	00NR	2	16WP	G15_085	FROM->TO	G14-057T 345.00 - SUNNYSIDE 345KV CKT 1	717	789	0.20848	112.6676	GRAPEVINE INTERCHANGE - NICHOLS STATION 230KV CKT 1

SOLUTION	GROUP	SCENARIO	SEASON	SOURCE	DIRECTION	MONITORED ELEMENT	RATEA (MVA)	RATEB(MVA)	TDF	TC%LOADING (% MVA)	CONTINGENCY
FDNS	00NR	2	16WP	G15_085	FROM->TO	G14-057T 345.00 - SUNNYSIDE 345KV CKT 1	717	789	0.20848	112.6676	GRAPEVINE INTERCHANGE - NICHOLS STATION 230KV CKT 1
FDNS	00NR	2	16WP	G15_085	FROM->TO	G14-057T 345.00 - SUNNYSIDE 345KV CKT 1	717	789	0.20635	112.6627	GEN562710 1-G15_022_3 0.5500
FDNS	00NR	2	16WP	G15_085	FROM->TO	G14-057T 345.00 - SUNNYSIDE 345KV CKT 1	717	789	0.20635	112.6417	GEN620315 1-BIG STONE GEN
FDNS	00NR	2	16WP	G15_085	FROM->TO	G14-057T 345.00 - SUNNYSIDE 345KV CKT 1	717	789	0.20635	112.6037	GEN511851 1-COMANCHE #1
FDNS	00NR	2	16WP	G15_085	FROM->TO	G14-057T 345.00 - SUNNYSIDE 345KV CKT 1	717	789	0.20635	112.5834	GEN600004 2-PRAIRIE ISLAND G2
FDNS	00NR	2	16WP	G15_085	FROM->TO	G14-057T 345.00 - SUNNYSIDE 345KV CKT 1	717	789	0.20635	112.5806	GEN600003 1-PRAIRIE ISLAND G1
FDNSLock	00NR	2	16WP	G15_085	FROM->TO	G14-057T 345.00 - SUNNYSIDE 345KV CKT 1	717	789	0.20635	112.5686	GEN600006 1-AS KING
FDNS	00NR	2	16WP	G15_085	FROM->TO	G14-057T 345.00 - SUNNYSIDE 345KV CKT 1	717	789	0.21059	112.5159	P12:138:AEPW-OGE:CORNVIL4:CIMARON4
FDNS	00NR	2	16WP	G15_085	FROM->TO	G14-057T 345.00 - SUNNYSIDE 345KV CKT 1	717	789	0.20654	112.5156	P12:138:WFEC:MSL09
FDNSLock	00NR	2	16WP	G15_085	FROM->TO	G14-057T 345.00 - SUNNYSIDE 345KV CKT 1	717	789	0.20635	112.4927	GEN636641 1-LOUISA UNIT 1
FDNS	00NR	2	16WP	G15_085	FROM->TO	G14-057T 345.00 - SUNNYSIDE 345KV CKT 1	717	789	0.20635	112.4426	GEN600005 1-MONTICELLO
FDNS	00NR	2	16WP	G15_085	FROM->TO	G14-057T 345.00 - SUNNYSIDE 345KV CKT 1	717	789	0.19986	112.4144	CHISHOLM7 345.00 (CHISHOLM) 345/230/13.2KV TRANSFORMER CKT 1
FDNS	00NR	2	16WP	G15_085	FROM->TO	G14-057T 345.00 - SUNNYSIDE 345KV CKT 1	717	789	0.20635	112.4135	GEN562754 1-G15031_5 0.6900
FDNS	00NR	2	16WP	G15_085	FROM->TO	G14-057T 345.00 - SUNNYSIDE 345KV CKT 1	717	789	0.20635	112.4	GEN629074 1-ARNOLD LOWSIDE OF GSU XFMR
FDNS	00NR	2	16WP	G15_085	FROM->TO	G14-057T 345.00 - SUNNYSIDE 345KV CKT 1	717	789	0.20635	112.3803	GEN635213 3-NEAL UNIT 3
FDNS	00NR	2	16WP	G15_085	FROM->TO	G14-057T 345.00 - SUNNYSIDE 345KV CKT 1	717	789	0.20635	112.3546	GEN562756 1-G15031_7 0.6900
FDNS	00NR	2	16WP	G15_085	FROM->TO	G14-057T 345.00 - SUNNYSIDE 345KV CKT 1	717	789	0.20635	112.318	GEN562023 1-G11_020_3 0.6900
FDNS	00NR	2	16WP	G15_085	FROM->TO	G14-057T 345.00 - SUNNYSIDE 345KV CKT 1	717	789	0.20635	112.318	GEN562026 1-G11_019_3 0.6900
FDNS	00NR	2	16WP	G15_085	FROM->TO	G14-057T 345.00 - SUNNYSIDE 345KV CKT 1	717	789	0.20635	112.3128	GEN562556 1-G14_046_3 0.3420
FDNS	00NR	2	16WP	G15_085	FROM->TO	G14-057T 345.00 - SUNNYSIDE 345KV CKT 1	717	789	0.20635	112.3077	BIG STONE 230/24.0KV TRANSFORMER CKT 1
FDNS	00NR	2	16WP	G15_085	FROM->TO	G14-057T 345.00 - SUNNYSIDE 345KV CKT 1	717	789	0.19986	112.2999	CHISHOLM7 345.00 - GRACEMONT 345KV CKT 1
FDNS	00NR	2	20WP	G15_085	FROM->TO	G14-057T 345.00 - SUNNYSIDE 345KV CKT 1	717	789	0.20776	112.2905	803-OKLAUNION
FDNS	00NR	2	16WP	G15_085	FROM->TO	G14-057T 345.00 - SUNNYSIDE 345KV CKT 1	717	789	0.20635	112.2246	GEN563142 1-G15079_3 0.5500
FDNS	00NR	2	16WP	G15_085	FROM->TO	G14-057T 345.00 - SUNNYSIDE 345KV CKT 1	717	789	0.20635	112.2246	GEN563151 1-G15080_2 0.5500
FDNS	00NR	2	16WP	G15_085	FROM->TO	G14-057T 345.00 - SUNNYSIDE 345KV CKT 1	717	789	0.20635	112.1861	GEN523971 1-HARRINGTON GEN #1 24 KV
FDNS	00NR	2	16WP	G15_085	FROM->TO	G14-057T 345.00 - SUNNYSIDE 345KV CKT 1	717	789	0.20635	112.1861	GEN523973 1-HARRINGTON GEN #3 24 KV
FDNS	00NR	2	16WP	G15_085	FROM->TO	G14-057T 345.00 - SUNNYSIDE 345KV CKT 1	717	789	0.20635	112.186	GEN523972 1-HARRINGTON GEN #2 24 KV
FDNS	00NR	2	16WP	G15_085	FROM->TO	G14-057T 345.00 - SUNNYSIDE 345KV CKT 1	717	789	0.20645	112.1766	STLN-DEMARC6 - SWEETWATER 230KV CKT 1
FDNS	00NR	2	16WP	G15_085	FROM->TO	G14-057T 345.00 - SUNNYSIDE 345KV CKT 1	717	789	0.20645	112.1759	P12:230:AEPW-SPS:SWEETWT6:WHEELER 6
FDNS	00NR	2	16WP	G15_085	FROM->TO	G14-057T 345.00 - SUNNYSIDE 345KV CKT 1	717	789	0.20645	112.1742	STATELINE INTERCHANGE - STLN-DEMARC6 230KV CKT 1
FDNSLock	00NR	2	16WP	G15_085	FROM->TO	G14-057T 345.00 - SUNNYSIDE 345KV CKT 1	717	789	0.20635	112.129	GEN600000 1-SHERBURNECNTY G1
FDNS	00NR	2	16WP	G15_085	FROM->TO	G14-057T 345.00 - SUNNYSIDE 345KV CKT 1	717	789	0.20288	112.1231	NORTHWEST TEXARKANA - VALLIANT 345KV CKT 1
FDNS	00NR	2	16WP	G15_085	FROM->TO	G14-057T 345.00 - SUNNYSIDE 345KV CKT 1	717	789	0.20288	112.1231	NORTHWEST TEXARKANA - VALLIANT 345KV CKT 1
FDNS	00NR	2	16WP	G15_085	FROM->TO	G14-057T 345.00 - SUNNYSIDE 345KV CKT 1	717	789	0.20635	112.081	GEN511848 1-SOUTHWESTERN STATION #3
FDNS	00NR	2	16WP	G15_085	FROM->TO	G14-057T 345.00 - SUNNYSIDE 345KV CKT 1	717	789	0.20635	112.0547	GEN600001 2-SHERBURNE CNTY G2
FDNS	00NR	2	16WP	G15_085	FROM->TO	G14-057T 345.00 - SUNNYSIDE 345KV CKT 1	717	789	0.20635	112.0179	GEN563042 1-G15068_3 0.6900
FDNS	00NR	2	20WP	G15_085	FROM->TO	G14-057T 345.00 - SUNNYSIDE 345KV CKT 1	717	789	0.20683	112.0156	P12:138:OKGE:3TERM39
FDNS	00NR	2	16WP	G15_085	FROM->TO	G14-057T 345.00 - SUNNYSIDE 345KV CKT 1	717	789	0.20635	111.9966	GEN527901 1-HOBBS PLANT #1 (CT)
FDNS	00NR	2	16WP	G15_085	FROM->TO	G14-057T 345.00 - SUNNYSIDE 345KV CKT 1	717	789	0.20635	111.9966	GEN527902 1-HOBBS PLANT #2 (CT)
FDNS	00NR	2	20WP	G15_085	FROM->TO	G14-057T 345.00 - SUNNYSIDE 345KV CKT 1	717	789	0.20784	111.9707	RANCHRD7 345.00 - SOONER 345KV CKT 1
FDNSLock	00NR	2	16WP	G15_085	FROM->TO	G14-057T 345.00 - SUNNYSIDE 345KV CKT 1	717	789	0.20635	111.9402	GEN629075 1-OTTUMWA GENERATOR FOR OTTUMWA UNIT NO 1
FDNS	00NR	2	20WP	G15_085	FROM->TO	G14-057T 345.00 - SUNNYSIDE 345KV CKT 1	717	789	0.20756	111.9126	MAYSVILLE - PAOLI 138KV CKT 1
FDNS	00NR	2	20WP	G15_085	FROM->TO	G14-057T 345.00 - SUNNYSIDE 345KV CKT 1	717	789	0.20776	111.9028	GEN560187 1-WTH WIND 0.5750
FDNS	00NR	2	20WP	G15_085	FROM->TO	G14-057T 345.00 - SUNNYSIDE 345KV CKT 1	717	789	0.21191	111.8943	CHILDRESS - HOLLIS TAP 138KV CKT 1
FDNS	00NR	2	20WP	G15_085	FROM->TO	G14-057T 345.00 - SUNNYSIDE 345KV CKT 1	717	789	0.20828	111.8929	CIMARRON - MATHWSN7 345.00 345KV CKT 1
FDNS	00NR	2	20WP	G15_085	FROM->TO	G14-057T 345.00 - SUNNYSIDE 345KV CKT 1	717	789	0.20828	111.8929	CIMARRON - MATHWSN7 345.00 345KV CKT 2
FDNS	00NR	2	20WP	G15_085	FROM->TO	G14-057T 345.00 - SUNNYSIDE 345KV CKT 1	717	789	0.21523	111.892	CHILDRESS - LAKE PAULINE 138KV CKT 1
FDNS	00NR	2	20WP	G15_085	FROM->TO	G14-057T 345.00 - SUNNYSIDE 345KV CKT 1	717	789	0.21523	111.892	CHILDRESS - LAKE PAULINE 138KV CKT 1
FDNS	00NR	2	20WP	G15_085	FROM->TO	G14-057T 345.00 - SUNNYSIDE 345KV CKT 1	717	789	0.20776	111.8831	GEN560112 1-G08_037_3 0.6900
FDNS	00NR	2	20WP	G15_085	FROM->TO	G14-057T 345.00 - SUNNYSIDE 345KV CKT 1	717	789	0.20776	111.8473	GEN520812 1-ANADRK5
FDNS	00NR	2	20WP	G15_085	FROM->TO	G14-057T 345.00 - SUNNYSIDE 345KV CKT 1	717	789	0.20776	111.8472	GEN520813 1-ANADRK6
FDNS	00NR	2	20WP	G15_085	FROM->TO	G14-057T 345.00 - SUNNYSIDE 345KV CKT 1	717	789	0.20776	111.8468	GEN521103 1-BLUE CANYON WIND FARM
FDNS	00NR	2	20WP	G15_085	FROM->TO	G14-057T 345.00 - SUNNYSIDE 345KV CKT 1	717	789	0.2085	111.8461	DRAPER LAKE - MIDWEST TAP 138KV CKT 1
FDNS	00NR	2	20WP	G15_085	FROM->TO	G14-057T 345.00 - SUNNYSIDE 345KV CKT 1	717	789	0.20776	111.8424	GEN563052 1-G15069_3 0.6900
FDNS	00NR	2	20WP	G15_085	FROM->TO	G14-057T 345.00 - SUNNYSIDE 345KV CKT 1	717	789	0.20756	111.8372	MAYSVILLE - MAYSVLT4 138.00 138KV CKT 1
FDNS	00NR	2	20WP	G15_085	FROM->TO	G14-057T 345.00 - SUNNYSIDE 345KV CKT 1	717	789	0.20871	111.826	P12:138:OKGE:3TERM21
FDNS	00NR	2	20WP	G15_085	FROM->TO	G14-057T 345.00 - SUNNYSIDE 345KV CKT 1	717	789	0.20776	111.8253	GEN562691 1-G15_015_3 0.6900
FDNS	00NR	2	20WP	G15_085	FROM->TO	G14-057T 345.00 - SUNNYSIDE 345KV CKT 1	717	789	0.20776	111.82	GEN562772 1-G15034_3 0.6900
FDNS	00NR	2	20WP	G15_085	FROM->TO	G14-057T 345.00 - SUNNYSIDE 345KV CKT 1	717	789	0.20776	111.8044	GEN511961 1-DEMPSEY-WTG10.7000
FDNS	00NR	2	20WP	G15_085	FROM->TO	G14-057T 345.00 - SUNNYSIDE 345KV CKT 1	717	789	0.20962	111.796	SOONER - SPRING CREEK 345KV CKT 1
FDNS	00NR	2	20WP	G15_085	FROM->TO	G14-057T 345.00 - SUNNYSIDE 345KV CKT 1	717	789	0.20777	111.7933	P12:069:OKGE:3TERM42
FDNS	00NR	2	20WP	G15_085	FROM->TO	G14-057T 345.00 - SUNNYSIDE 345KV CKT 1	717	789	0.20962	111.7922	NORTHWEST - SPRING CREEK 345KV CKT 1
FDNS	00NR	2	20WP	G15_085	FROM->TO	G14-057T 345.00 - SUNNYSIDE 345KV CKT 1	717	789	0.20735	111.7882	ARBUCKLE - SULPHR 4 138.00 138KV CKT 1
FDNS	00NR	2	16WP	G15_085	FROM->TO	G14-057T 345.00 - SUNNYSIDE 345KV CKT 1	717	789	0.20635	111.7813	SHERBURNE CO 345/24.0KV TRANSFORMER CKT 1
FDNSLock	00NR	2	16WP	G15_085	FROM->TO	G14-057T 345.00 - SUNNYSIDE 345KV CKT 1	717	789	0.20635	111.7809	GEN635214 4-NEAL UNIT 4
FDNS	00NR	2	20WP	G15_085	FROM->TO	G14-057T 345.00 - SUNNYSIDE 345KV CKT 1	717	789	0.20756	111.771	MAYSVLT4 138.00 - PRAIRIE POINT 138KV CKT 1
FDNS	00NR	2	20WP	G15_085	FROM->TO	G14-057T 345.00 - SUNNYSIDE 345KV CKT 1	717	789	0.20782	111.7697	P12:138:WFEC:MSL11
FDNS	00NR	2	20WP	G15_085	FROM->TO	G14-057T 345.00 - SUNNYSIDE 345KV CKT 1	717	789	0.20782	111.7697	P12:138:WFEC-AEPW:PHAROAH4:LONEOAK4
FDNS	00NR	2	20WP	G15_085	FROM->TO	G14-057T 345.00 - SUNNYSIDE 345KV CKT 1	717	789	0.20801	111.7639	GLASSES - MADILL INDUSTRIAL TAP 138KV CKT 1
FDNS	00NR	2	20WP	G15_085	FROM->TO	G14-057T 345.00 - SUNNYSIDE 345KV CKT 1	717	789	0.20796	111.7581	CANEY CREEK - JOHNSON COUNTY 138KV CKT 1
FDNS	00NR	2	20WP	G15_085	FROM->TO	G14-057T 345.00 - SUNNYSIDE 345KV CKT 1	717	789	0.20776	111.7538	GEN515443 1-MNCOWND1 0.7000
FDNS	00NR	2	20WP	G15_085	FROM->TO	G14-057T 345.00 - SUNNYSIDE 345KV CKT 1	717	789	0.21248	111.751	MOREWOOD SW - NINE MILE 138KV CKT 1
FDNS	00NR	2	20WP	G15_085	FROM->TO	G14-057T 345.00 - SUNNYSIDE 345KV CKT 1	717	789	0.20776	111.7343	GEN560183 1-REDHIL-WTG1 12.000
FDNS	00NR	2	20WP	G15_085	FROM->TO	G14-057T 345.00 - SUNNYSIDE 345KV CKT 1	717	789	0.20776	111.7258	INDEPENDENCE 500/26.0KV TRANSFORMER CKT 1
FDNS	00NR	2	20WP	G15_085	FROM->TO	G14-057T 345.00 - SUNNYSIDE 345KV CKT 1	717	789	0.20801	111.7216	GLASSES - RUSSETT 138KV CKT 1
FDNS	00NR	2	20WP	G15_085	FROM->TO	G14-057T 345.00 - SUNNYSIDE 345KV CKT 1	717	789	0.20824	111.7196	P12:138:WFEC:MSL08
FDNS	00NR	2	20WP	G15_085	FROM->TO	G14-057T 345.00 - SUNNYSIDE 345KV CKT 1	717	789	0.20776	111.7174	GEN600067 9-HIGH BRIDGE
FDNS	00NR	2	16WP	G15_085	FROM->TO	G14-057T 345.00 - SUNNYSIDE 345KV CKT 1	717	789	0.20635	111.7158	GEN563043 1-G15068_4 0.6900
FDNS	00NR	2	20WP	G15_085	FROM->TO	G14-057T 345.00 - SUNNYSIDE 345KV CKT 1	717	789	0.20807	111.715	OVEXFRMCCOVE

SOLUTION	GROUP	SCENARIO	SEASON	SOURCE	DIRECTION	MONITORED ELEMENT	RATEA (MVA)	RATEB(MVA)	TDF	TC%LOADING (% MVA)	CONTINGENCY
FDNS	00NR	2	16WP	G15_085	FROM->TO	G14-057T 345.00 - SUNNYSIDE 345KV CKT 1	717	789	0.20635	111.7121	GEN563273 2-G15093_4 0.6900
FDNS	00NR	2	20WP	G15_085	FROM->TO	G14-057T 345.00 - SUNNYSIDE 345KV CKT 1	717	789	0.20763	111.7074	CARTER - CHICKASAW 138KV CKT 1
FDNS	00NR	2	20WP	G15_085	FROM->TO	G14-057T 345.00 - SUNNYSIDE 345KV CKT 1	717	789	0.21431	111.7004	LEBANON - TEXOMA JCT 138KV CKT 1
FDNS	00NR	2	20WP	G15_085	FROM->TO	G14-057T 345.00 - SUNNYSIDE 345KV CKT 1	717	789	0.20772	111.6987	CANADIAN RIVER - MCALESTER SOUTH 138KV CKT 1
FDNS	00NR	2	20WP	G15_085	FROM->TO	G14-057T 345.00 - SUNNYSIDE 345KV CKT 1	717	789	0.20772	111.6987	CANADIAN RIVER - MCALESTER SOUTH 138KV CKT 1
FDNS	00NR	2	20WP	G15_085	FROM->TO	G14-057T 345.00 - SUNNYSIDE 345KV CKT 1	717	789	0.20772	111.6969	CANADIAN RIVER () 345/138/13.8KV TRANSFORMER CKT 1
FDNS	00NR	2	20WP	G15_085	FROM->TO	G14-057T 345.00 - SUNNYSIDE 345KV CKT 1	717	789	0.20772	111.6969	CANADIAN RIVER () 345/138/13.8KV TRANSFORMER CKT 1
FDNS	00NR	2	20WP	G15_085	FROM->TO	G14-057T 345.00 - SUNNYSIDE 345KV CKT 1	717	789	0.20776	111.6955	P12:230:UMZB:# 112 #: NU IN SD. NU-RCDC & DRY CREEK XFMR
FDNS	00NR	2	20WP	G15_085	FROM->TO	G14-057T 345.00 - SUNNYSIDE 345KV CKT 1	717	789	0.20776	111.6952	RCDC EAST 4230.00 - RED CEDAR DC 230KV CKT 1
FDNS	00NR	2	16WP	G15_085	FROM->TO	G14-057T 345.00 - SUNNYSIDE 345KV CKT 1	717	789	0.20635	111.6908	GEN526333 1-JONES GEN #3 21 KV
FDNS	00NR	2	16WP	G15_085	FROM->TO	G14-057T 345.00 - SUNNYSIDE 345KV CKT 1	717	789	0.20635	111.6908	GEN526334 1-JONES_4 116.500
FDNS	00NR	2	20WP	G15_085	FROM->TO	G14-057T 345.00 - SUNNYSIDE 345KV CKT 1	717	789	0.20818	111.6867	HUGO (HUGO 1) 345/138/13.8KV TRANSFORMER CKT 1
FDNS	00NR	2	20WP	G15_085	FROM->TO	G14-057T 345.00 - SUNNYSIDE 345KV CKT 1	717	789	0.20744	111.6866	ROCKY POINT - SPRINGDALE 138KV CKT 1
FDNS	00NR	2	20WP	G15_085	FROM->TO	G14-057T 345.00 - SUNNYSIDE 345KV CKT 1	717	789	0.20776	111.6858	GEN562902 1-G15052_3 0.6900
FDNS	00NR	2	16WP	G15_085	FROM->TO	G14-057T 345.00 - SUNNYSIDE 345KV CKT 1	717	789	0.20039	111.6848	P12:230:AEPW:ELKCITY6:SWEETWT6
FDNS	00NR	2	20WP	G15_085	FROM->TO	G14-057T 345.00 - SUNNYSIDE 345KV CKT 1	717	789	0.20776	111.6818	GEN563242 1-G15090_3 0.6900
FDNS	00NR	2	20WP	G15_085	FROM->TO	G14-057T 345.00 - SUNNYSIDE 345KV CKT 1	717	789	0.20756	111.6787	PRAIRIE POINT - RATLIFF 138KV CKT 1
FDNS	00NR	2	20WP	G15_085	FROM->TO	G14-057T 345.00 - SUNNYSIDE 345KV CKT 1	717	789	0.2076	111.6745	CHAMBER SPRINGS - CLARKSVILLE 345KV CKT 1
FDNS	00NR	2	20WP	G15_085	FROM->TO	G14-057T 345.00 - SUNNYSIDE 345KV CKT 1	717	789	0.20786	111.6684	GRPRAR1-LNX3345.00 - YANKTON 345KV CKT Z
FDNS	00NR	2	20WP	G15_085	FROM->TO	G14-057T 345.00 - SUNNYSIDE 345KV CKT 1	717	789	0.20786	111.6681	GRPRAR1-LNX3345.00 - HOLT.CO3 345.00 345KV CKT 1
FDNS	00NR	2	20WP	G15_085	FROM->TO	G14-057T 345.00 - SUNNYSIDE 345KV CKT 1	717	789	0.20776	111.6577	GEN629072 4-LANSING GENERATOR FOR UNITS NO4 EIA CODE 1
FDNS	00NR	2	20WP	G15_085	FROM->TO	G14-057T 345.00 - SUNNYSIDE 345KV CKT 1	717	789	0.20776	111.6434	GEN562078 1-G11_051_3 0.6900
FDNS	00NR	2	20WP	G15_085	FROM->TO	G14-057T 345.00 - SUNNYSIDE 345KV CKT 1	717	789	0.20735	111.6425	JOLLYVILLE - SULPHR 4 138.00 138KV CKT 1
FDNS	00NR	2	16WP	G15_085	FROM->TO	G14-057T 345.00 - SUNNYSIDE 345KV CKT 1	717	789	0.20635	111.6406	GEN525844 1-ELK_1 118.000
FDNS	00NR	2	20WP	G15_085	FROM->TO	G14-057T 345.00 - SUNNYSIDE 345KV CKT 1	717	789	0.20776	111.6348	GEN524285 1-WILDORADO WIND GEN
FDNS	00NR	2	16WP	G15_085	FROM->TO	G14-057T 345.00 - SUNNYSIDE 345KV CKT 1	717	789	0.20635	111.634	GEN525845 1-ELK_2 1 138.00
FDNS	00NR	2	16WP	G15_085	FROM->TO	G14-057T 345.00 - SUNNYSIDE 345KV CKT 1	717	789	0.20635	111.6284	GEN600002 3-SHERBURNE CNTY G3
FDNS	00NR	2	20WP	G15_085	FROM->TO	G14-057T 345.00 - SUNNYSIDE 345KV CKT 1	717	789	0.21248	111.6182	BEARCAT 138.00 - NINE MILE 138KV CKT 1
FDNS	00NR	2	20WP	G15_085	FROM->TO	G14-057T 345.00 - SUNNYSIDE 345KV CKT 1	717	789	0.20776	111.6172	GEN562587 1-G14_056_3 0.6900
FDNS	00NR	2	20WP	G15_085	FROM->TO	G14-057T 345.00 - SUNNYSIDE 345KV CKT 1	717	789	0.20776	111.615	GEN514805 1-SOONER UNIT 1
FDNS	00NR	2	20WP	G15_085	FROM->TO	G14-057T 345.00 - SUNNYSIDE 345KV CKT 1	717	789	0.20776	111.6091	GEN524295 1-SPNSPUR_WND10.6900
FDNS	00NR	2	20WP	G15_085	FROM->TO	G14-057T 345.00 - SUNNYSIDE 345KV CKT 1	717	789	0.20776	111.6033	GEN657749 1-YOUNG 1 GENERATOR
FDNS	00NR	2	20WP	G15_085	FROM->TO	G14-057T 345.00 - SUNNYSIDE 345KV CKT 1	717	789	0.16951	111.6008	P12:138:AEPW:112GORE4:SNYDER-4
FDNS	00NR	2	16WP	G15_085	FROM->TO	G14-057T 345.00 - SUNNYSIDE 345KV CKT 1	717	789	0.20635	111.6	GEN344225 1-1CAL G1 25.000
FDNS	00NR	2	20WP	G15_085	FROM->TO	G14-057T 345.00 - SUNNYSIDE 345KV CKT 1	717	789	0.20776	111.5876	GEN562269 1-G12-020-1 0.6900
FDNS	00NR	2	20WP	G15_085	FROM->TO	G14-057T 345.00 - SUNNYSIDE 345KV CKT 1	717	789	0.20776	111.5853	GEN514806 1-SOONER UNIT 2
FDNS	00NR	2	20WP	G15_085	FROM->TO	G14-057T 345.00 - SUNNYSIDE 345KV CKT 1	717	789	0.20776	111.5829	GEN524023 1-NICHOLS GEN #3 22 KV
FDNS	00NR	2	20WP	G15_085	FROM->TO	G14-057T 345.00 - SUNNYSIDE 345KV CKT 1	717	789	0.20735	111.5775	JOLLYVILLE - KERR MCGEE CIMARRON 138KV CKT 1
FDNS	00NR	2	20WP	G15_085	FROM->TO	G14-057T 345.00 - SUNNYSIDE 345KV CKT 1	717	789	0.20875	111.5723	CROCKETT - TENASKA RUSK COUNTY 345KV CKT 1
FDNS	00NR	2	20WP	G15_085	FROM->TO	G14-057T 345.00 - SUNNYSIDE 345KV CKT 1	717	789	0.20875	111.5675	LEBROCK - TENASKA RUSK COUNTY 345KV CKT 1
FDNS	00NR	2	20WP	G15_085	FROM->TO	G14-057T 345.00 - SUNNYSIDE 345KV CKT 1	717	789	0.20776	111.5471	GEN562812 1-G15040_3 0.3570
FDNS	00NR	2	20WP	G15_085	FROM->TO	G14-057T 345.00 - SUNNYSIDE 345KV CKT 1	717	789	0.20776	111.5424	GEN562270 1-G12-020-2 0.6900
FDNS	00NR	2	20WP	G15_085	FROM->TO	G14-057T 345.00 - SUNNYSIDE 345KV CKT 1	717	789	0.20776	111.542	GEN562882 1-G15047_3 0.6900
FDNS	00NR	2	20WP	G15_085	FROM->TO	G14-057T 345.00 - SUNNYSIDE 345KV CKT 1	717	789	0.20776	111.5403	GEN563132 1-G15078_3 0.3570
FDNS	00NR	2	20WP	G15_085	FROM->TO	G14-057T 345.00 - SUNNYSIDE 345KV CKT 1	717	789	0.20776	111.5336	GEN563102 1-G15075_3 0.5500
FDNS	00NR	2	20WP	G15_085	FROM->TO	G14-057T 345.00 - SUNNYSIDE 345KV CKT 1	717	789	0.20735	111.5291	ARBWIND4 138.00 - KERR MCGEE CIMARRON 138KV CKT 1
FDNS	00NR	2	20WP	G15_085	FROM->TO	G14-057T 345.00 - SUNNYSIDE 345KV CKT 1	717	789	0.20776	111.5209	GEN563062 1-G15071_3 0.6900
FDNS	00NR	2	20WP	G15_085	FROM->TO	G14-057T 345.00 - SUNNYSIDE 345KV CKT 1	717	789	0.21248	111.5159	BEARCAT 138.00 - MOORELAND 138KV CKT 1
FDNS	00NR	2	20WP	G15_085	FROM->TO	G14-057T 345.00 - SUNNYSIDE 345KV CKT 1	717	789	0.21248	111.5153	P12:138:WFEC:MSL14
FDNS	00NR	2	16WP	G15_085	FROM->TO	G14-057T 345.00 - SUNNYSIDE 345KV CKT 1	717	789	0.20635	111.4978	GEN525562 1-TOLK GEN #2 24 KV
FDNS	00NR	2	20WP	G15_085	FROM->TO	G14-057T 345.00 - SUNNYSIDE 345KV CKT 1	717	789	0.20776	111.4872	GEN521112 1-ORME3 13.800
FDNS	00NR	2	16WP	G15_085	FROM->TO	G14-057T 345.00 - SUNNYSIDE 345KV CKT 1	717	789	0.20645	111.4857	CHISHOLM6 230.00 - SWEETWATER 230KV CKT 1
FDNS	00NR	2	20WP	G15_085	FROM->TO	G14-057T 345.00 - SUNNYSIDE 345KV CKT 1	717	789	0.20776	111.4845	GEN562974 1-G15060_5 0.6900
FDNS	00NR	2	16WP	G15_085	FROM->TO	G14-057T 345.00 - SUNNYSIDE 345KV CKT 1	717	789	0.20034	111.4844	LYDIA - WELSH 345KV CKT 1
FDNS	00NR	2	16WP	G15_085	FROM->TO	G14-057T 345.00 - SUNNYSIDE 345KV CKT 1	717	789	0.20034	111.4844	LYDIA - WELSH 345KV CKT 1
FDNS	00NR	2	20WP	G15_085	FROM->TO	G14-057T 345.00 - SUNNYSIDE 345KV CKT 1	717	789	0.2072	111.4814	BROWN - RUSSETT 138KV CKT 1
FDNS	00NR	2	20WP	G15_085	FROM->TO	G14-057T 345.00 - SUNNYSIDE 345KV CKT 1	717	789	0.20776	111.4748	GEN345671 2-1RUSH G2 18.000
FDNS	00NR	2	20WP	G15_085	FROM->TO	G14-057T 345.00 - SUNNYSIDE 345KV CKT 1	717	789	0.20776	111.4747	GEN562973 1-G15060_4 0.6900
FDNS	00NR	2	20WP	G15_085	FROM->TO	G14-057T 345.00 - SUNNYSIDE 345KV CKT 1	717	789	0.20776	111.4729	GEN345670 1-1RUSH G1 18.000
FDNS	00NR	2	20WP	G15_085	FROM->TO	G14-057T 345.00 - SUNNYSIDE 345KV CKT 1	717	789	0.20742	111.4587	CHICKASAW - TOTAL 138KV CKT 1
FDNS	00NR	2	16WP	G15_085	FROM->TO	G14-057T 345.00 - SUNNYSIDE 345KV CKT 1	717	789	0.20635	111.4525	GEN527166 1-MUSTANG_6 118.000
FDNS	00NR	2	20WP	G15_085	FROM->TO	G14-057T 345.00 - SUNNYSIDE 345KV CKT 1	717	789	0.20776	111.4478	GEN560105 1-G08-22 0.6900
FDNS	00NR	2	20WP	G15_085	FROM->TO	G14-057T 345.00 - SUNNYSIDE 345KV CKT 1	717	789	0.20776	111.4438	4SIOUX 1 138.00 138/18.0KV TRANSFORMER CKT 1
FDNS	00NR	2	20WP	G15_085	FROM->TO	G14-057T 345.00 - SUNNYSIDE 345KV CKT 1	717	789	0.2072	111.4342	RUSSETT - RUSSETT 138KV CKT 1
FDNS	00NR	2	20WP	G15_085	FROM->TO	G14-057T 345.00 - SUNNYSIDE 345KV CKT 1	717	789	0.20776	111.4303	GEN562550 1-G14_040_3 0.6900
FDNS	00NR	2	20WP	G15_085	FROM->TO	G14-057T 345.00 - SUNNYSIDE 345KV CKT 1	717	789	0.20776	111.4266	GEN681522 3-GENOA 3
FDNS	00NR	2	16WP	G15_085	FROM->TO	G14-057T 345.00 - SUNNYSIDE 345KV CKT 1	717	789	0.20635	111.4048	GEN563202 1-G15085_3 0.5500
FDNS	00NR	2	20WP	G15_085	FROM->TO	G14-057T 345.00 - SUNNYSIDE 345KV CKT 1	717	789	0.20776	111.3896	GEN511853 1-COMANCHE #3
FDNS	00NR	2	20WP	G15_085	FROM->TO	G14-057T 345.00 - SUNNYSIDE 345KV CKT 1	717	789	0.20776	111.3863	GEN527161 1-MUSTANG GEN #1
FDNS	00NR	2	20WP	G15_085	FROM->TO	G14-057T 345.00 - SUNNYSIDE 345KV CKT 1	717	789	0.20776	111.3862	GEN527162 1-MUSTANG GEN #2
FDNS	00NR	2	20WP	G15_085	FROM->TO	G14-057T 345.00 - SUNNYSIDE 345KV CKT 1	717	789	0.20734	111.386	ROCKY POINT - SUNNYSIDE 138KV CKT 1
FDNS	00NR	2	16WP	G15_085	FROM->TO	G14-057T 345.00 - SUNNYSIDE 345KV CKT 1	717	789	0.20635	111.3801	GEN635023 3-WALTER SCOTT UNIT 3
FDNS	00NR	2	20WP	G15_085	FROM->TO	G14-057T 345.00 - SUNNYSIDE 345KV CKT 1	717	789	0.20776	111.3786	EASTDC - ERCOT EQUIVALENCE 345KV CKT 1
FDNS	00NR	2	20WP	G15_085	FROM->TO	G14-057T 345.00 - SUNNYSIDE 345KV CKT 1	717	789	0.20776	111.3775	GEN511962 2-RKYRDGW2-1 0.7000
FDNS	00NR	2	16WP	G15_085	FROM->TO	G14-057T 345.00 - SUNNYSIDE 345KV CKT 1	717	789	0.20712	111.3772	JOHNSON COUNTY (JOHNCO) 345/138/13.8KV TRANSFORMER CKT 1
FDNS	00NR	2	20WP	G15_085	FROM->TO	G14-057T 345.00 - SUNNYSIDE 345KV CKT 1	717	789	0.20776	111.362	GEN672321 1-SHAND GENERATOR 1
FDNS	00NR	2	20WP	G15_085	FROM->TO	G14-057T 345.00 - SUNNYSIDE 345KV CKT 1	717	789	0.2073	111.3618	RUSSETT - SPRINGDALE 138KV CKT 1
FDNS	00NR	2	16WP	G15_085	FROM->TO	G14-057T 345.00 - SUNNYSIDE 345KV CKT 1	717	789	0.20635	111.3534	GEN562590 1-G14_057_3 0.6900
FDNS	00NR	2	20WP	G15_085	FROM->TO	G14-057T 345.00 - SUNNYSIDE 345KV CKT 1	717	789	0.20776	111.3533	GEN525494 1-PLANT X GEN #4 20 KV

SOLUTION	GROUP	SCENARIO	SEASON	SOURCE	DIRECTION	MONITORED ELEMENT	RATEA (MVA)	RATEB(MVA)	TDF	TC%LOADING (% MVA)	CONTINGENCY
FDNS	00NR	2	20WP	G15_085	FROM->TO	G14-057T 345.00 - SUNNYSIDE 345KV CKT 1	717	789	0.20988	111.3484	G15063_T 345.00 - MATHWSN7 345.00 345KV CKT 1
FDNS	00NR	2	20WP	G15_085	FROM->TO	G14-057T 345.00 - SUNNYSIDE 345KV CKT 1	717	789	0.20776	111.3388	GEN672310 1-POPLAR RIVER GENERATOR 1
FDNS	00NR	2	20WP	G15_085	FROM->TO	G14-057T 345.00 - SUNNYSIDE 345KV CKT 1	717	789	0.20776	111.3388	GEN672311 2-POPLAR RIVER GENERATOR 2
FDNS	00NR	2	20WP	G15_085	FROM->TO	G14-057T 345.00 - SUNNYSIDE 345KV CKT 1	717	789	0.20776	111.3377	GEN527882 1-CUNNINGHAM GEN #2 20 KV
FDNS	00NR	2	20WP	G15_085	FROM->TO	G14-057T 345.00 - SUNNYSIDE 345KV CKT 1	717	789	0.20776	111.3293	GEN672306 6-BOUNDARY DAM GENERATOR 6
FDNS	00NR	2	20WP	G15_085	FROM->TO	G14-057T 345.00 - SUNNYSIDE 345KV CKT 1	717	789	0.20776	111.3235	GEN511852 1-COMANCHE #2
FDNS	00NR	2	20WP	G15_085	FROM->TO	G14-057T 345.00 - SUNNYSIDE 345KV CKT 1	717	789	0.20776	111.3225	GEN344895 2-1LAB G2 20.000
FDNS	00NR	2	20WP	G15_085	FROM->TO	G14-057T 345.00 - SUNNYSIDE 345KV CKT 1	717	789	0.20776	111.3217	GEN527163 1-MUSTANG GEN #3 22 KV
FDNS	00NR	2	20WP	G15_085	FROM->TO	G14-057T 345.00 - SUNNYSIDE 345KV CKT 1	717	789	0.20776	111.3211	GEN562512 1-G14_020_3 0.6900
FDNS	00NR	2	20WP	G15_085	FROM->TO	G14-057T 345.00 - SUNNYSIDE 345KV CKT 1	717	789	0.20746	111.3193	P12:138:WFEC-AEPW:GOLDENSW4:CRAIGJT4
FDNS	00NR	2	20WP	G15_085	FROM->TO	G14-057T 345.00 - SUNNYSIDE 345KV CKT 1	717	789	0.20776	111.3076	GEN562892 1-G15048_3 0.6900
FDNS	00NR	2	20WP	G15_085	FROM->TO	G14-057T 345.00 - SUNNYSIDE 345KV CKT 1	717	789	0.20776	111.2998	GEN681542 6-JP MADGETT
FDNS	00NR	2	20WP	G15_085	FROM->TO	G14-057T 345.00 - SUNNYSIDE 345KV CKT 1	717	789	0.20858	111.2985	ARKANSAS NUCLEAR ONE - FT SMITH 500KV CKT 1
FDNS	00NR	2	20WP	G15_085	FROM->TO	G14-057T 345.00 - SUNNYSIDE 345KV CKT 1	717	789	0.20858	111.2985	ARKANSAS NUCLEAR ONE - FT SMITH 500KV CKT 1
FDNS	00NR	2	20WP	G15_085	FROM->TO	G14-057T 345.00 - SUNNYSIDE 345KV CKT 1	717	789	0.20776	111.2972	GEN563192 1-G15084_3 0.5500
FDNS	00NR	2	20WP	G15_085	FROM->TO	G14-057T 345.00 - SUNNYSIDE 345KV CKT 1	717	789	0.20776	111.293	GEN344896 3-1LAB G3 20.000
FDNS	00NR	2	20WP	G15_085	FROM->TO	G14-057T 345.00 - SUNNYSIDE 345KV CKT 1	717	789	0.20776	111.2919	GEN344897 4-1LAB G4 20.000
FDNS	00NR	2	20WP	G15_085	FROM->TO	G14-057T 345.00 - SUNNYSIDE 345KV CKT 1	717	789	0.20776	111.2916	GEN344894 1-1LAB G1 20.000
FDNS	00NR	2	20WP	G15_085	FROM->TO	G14-057T 345.00 - SUNNYSIDE 345KV CKT 1	717	789	0.207	111.2871	ARDMORE WEST - CARTER 138KV CKT 1
FDNS	00NR	2	20WP	G15_085	FROM->TO	G14-057T 345.00 - SUNNYSIDE 345KV CKT 1	717	789	0.20805	111.2863	P12:138:WFEC:MSL16
FDNS	00NR	2	16WP	G15_085	FROM->TO	G14-057T 345.00 - SUNNYSIDE 345KV CKT 1	717	789	0.20635	111.2725	GEN562762 1-G15033_3 0.6900
FDNS	00NR	2	20WP	G15_085	FROM->TO	G14-057T 345.00 - SUNNYSIDE 345KV CKT 1	717	789	0.20776	111.2676	GEN523461 1-BLACKHAWK GEN #1
FDNS	00NR	2	20WP	G15_085	FROM->TO	G14-057T 345.00 - SUNNYSIDE 345KV CKT 1	717	789	0.20776	111.2675	GEN523462 1-BLACKHAWK GEN #2
FDNS	00NR	2	16WP	G15_085	FROM->TO	G14-057T 345.00 - SUNNYSIDE 345KV CKT 1	717	789	0.20635	111.2615	GEN562655 1-G14_074_3 0.6900
FDNS	00NR	2	20WP	G15_085	FROM->TO	G14-057T 345.00 - SUNNYSIDE 345KV CKT 1	717	789	0.20892	111.2265	P12:138:WFEC:MSL07
FDNS	00NR	2	20WP	G15_085	FROM->TO	G14-057T 345.00 - SUNNYSIDE 345KV CKT 1	717	789	0.20892	111.2265	P12:138:WFEC-AEPW:HUGOPP4:ATOKA--4
FDNS	00NR	2	20WP	G15_085	FROM->TO	G14-057T 345.00 - SUNNYSIDE 345KV CKT 1	717	789	0.20776	111.2196	GEN521111 1-ORME2 13.800
FDNS	00NR	2	20WP	G15_085	FROM->TO	G14-057T 345.00 - SUNNYSIDE 345KV CKT 1	717	789	0.20763	111.2194	P12:138:AEPW-SWPA:LONEOAK4:TUPELO4
FDNS	00NR	2	20WP	G15_085	FROM->TO	G14-057T 345.00 - SUNNYSIDE 345KV CKT 1	717	789	0.20763	111.2194	P12:138:WFEC:MSL06
FDNS	00NR	2	20WP	G15_085	FROM->TO	G14-057T 345.00 - SUNNYSIDE 345KV CKT 1	717	789	0.20711	111.2132	SUNNYSIDE (SUNNYSD5) 345/138/13.8KV TRANSFORMER CKT 1
FDNS	00NR	2	20WP	G15_085	FROM->TO	G14-057T 345.00 - SUNNYSIDE 345KV CKT 1	717	789	0.20776	111.2106	GEN562699 1-G15_018_3 0.6900
FDNS	00NR	2	20WP	G15_085	FROM->TO	G14-057T 345.00 - SUNNYSIDE 345KV CKT 1	717	789	0.20776	111.2064	GEN521110 1-ORME1 13.800
FDNS	00NR	2	20WP	G15_085	FROM->TO	G14-057T 345.00 - SUNNYSIDE 345KV CKT 1	717	789	0.16951	111.2032	CACHE - SNYDER 138KV CKT 1
FDNS	00NR	2	16WP	G15_085	FROM->TO	G14-057T 345.00 - SUNNYSIDE 345KV CKT 1	717	789	0.20635	111.1965	GEN562685 1-G15_013_3 0.3550
FDNS	00NR	2	20WP	G15_085	FROM->TO	G14-057T 345.00 - SUNNYSIDE 345KV CKT 1	717	789	0.20628	111.1928	CLARKSVILLE - MUSKOGEE 345KV CKT 1
FDNS	00NR	2	20WP	G15_085	FROM->TO	G14-057T 345.00 - SUNNYSIDE 345KV CKT 1	717	789	0.20628	111.1928	CLARKSVILLE - MUSKOGEE 345KV CKT 1
FDNS	00NR	2	20WP	G15_085	FROM->TO	G14-057T 345.00 - SUNNYSIDE 345KV CKT 1	717	789	0.207	111.1747	ARDMORE WEST - UNIROYAL 138KV CKT 1
FDNS	00NR	2	20WP	G15_085	FROM->TO	G14-057T 345.00 - SUNNYSIDE 345KV CKT 1	717	789	0.20776	111.1701	GEN520811 1-ANADRK4
FDNS	00NR	2	20WP	G15_085	FROM->TO	G14-057T 345.00 - SUNNYSIDE 345KV CKT 1	717	789	0.20776	111.16	GEN563162 1-G15081_3 0.6900
FDNS	00NR	2	20WP	G15_085	FROM->TO	G14-057T 345.00 - SUNNYSIDE 345KV CKT 1	717	789	0.20776	111.1336	GEN661015 1-COYOTE
FDNS	00NR	2	20WP	G15_085	FROM->TO	G14-057T 345.00 - SUNNYSIDE 345KV CKT 1	717	789	0.20776	111.1297	GEN563292 1-G15095_3 0.6900
FDNS	00NR	2	20WP	G15_085	FROM->TO	G14-057T 345.00 - SUNNYSIDE 345KV CKT 1	717	789	0.20716	111.1254	P12:138:OKGE:3TERM40
FDNS	00NR	2	20WP	G15_085	FROM->TO	G14-057T 345.00 - SUNNYSIDE 345KV CKT 1	717	789	0.20763	111.1163	CARTRCO4 138.00 - RATLIFF 138KV CKT 1
FDNS	00NR	2	20WP	G15_085	FROM->TO	G14-057T 345.00 - SUNNYSIDE 345KV CKT 1	717	789	0.20776	111.1079	GEN563122 1-G15077_3 0.3850
FDNS	00NR	2	20WP	G15_085	FROM->TO	G14-057T 345.00 - SUNNYSIDE 345KV CKT 1	717	789	0.20776	111.0804	GEN562861 1-G15045_2 0.4800
FDNS	00NR	2	16WP	G15_085	FROM->TO	G14-057T 345.00 - SUNNYSIDE 345KV CKT 1	717	789	0.20635	111.0624	GEN525561 1-TOLK GEN #1 24 KV
FDNS	00NR	2	16WP	G15_085	FROM->TO	G14-057T 345.00 - SUNNYSIDE 345KV CKT 1	717	789	0.20635	111.0619	GEN527903 1-HOBBS PLANT #3 (ST)
FDNS	00NR	2	16WP	G15_085	FROM->TO	G14-057T 345.00 - SUNNYSIDE 345KV CKT 1	717	789	0.20635	111.0596	GEN563272 1-G15093_3 0.6900
FDNS	00NR	2	20WP	G15_085	FROM->TO	G14-057T 345.00 - SUNNYSIDE 345KV CKT 1	717	789	0.20776	111.0205	GEN657748 1-YOUNG 2 GENERATOR
FDNS	00NR	2	20WP	G15_085	FROM->TO	G14-057T 345.00 - SUNNYSIDE 345KV CKT 1	717	789	0.20776	110.9989	GEN527883 1-CUNNINGHAM GEN #3 22 KV
FDNS	00NR	2	20WP	G15_085	FROM->TO	G14-057T 345.00 - SUNNYSIDE 345KV CKT 1	717	789	0.20776	110.9959	GEN527884 1-CUNNINGHAM GEN #4 22 KV
FDNS	00NR	2	20WP	G15_085	FROM->TO	G14-057T 345.00 - SUNNYSIDE 345KV CKT 1	717	789	0.20809	110.9886	P12:138:WFEC:MSL15
FDNS	00NR	2	20WP	G15_085	FROM->TO	G14-057T 345.00 - SUNNYSIDE 345KV CKT 1	717	789	0.20776	110.9598	GEN562992 1-G15063_3 0.6900
FDNS	00NR	2	16WP	G15_085	FROM->TO	G14-057T 345.00 - SUNNYSIDE 345KV CKT 1	717	789	0.20635	110.9566	GEN635024 4-WALTER SCOTT UNIT 4
FDNS	00NR	2	20WP	G15_085	FROM->TO	G14-057T 345.00 - SUNNYSIDE 345KV CKT 1	717	789	0.207	110.9361	SUNNYSIDE - UNIROYAL 138KV CKT 1
FDNS	00NR	2	20WP	G15_085	FROM->TO	G14-057T 345.00 - SUNNYSIDE 345KV CKT 1	717	789	0.20776	110.9303	GEN562704 1-G15_020_3 0.3550
FDNS	00NR	2	20WP	G15_085	FROM->TO	G14-057T 345.00 - SUNNYSIDE 345KV CKT 1	717	789	0.20776	110.9301	GEN526331 1-JONES GEN #1 22 KV
FDNS	00NR	2	20WP	G15_085	FROM->TO	G14-057T 345.00 - SUNNYSIDE 345KV CKT 1	717	789	0.20776	110.93	GEN526332 1-JONES GEN #2 21 KV
FDNS	00NR	2	20WP	G15_085	FROM->TO	G14-057T 345.00 - SUNNYSIDE 345KV CKT 1	717	789	0.20776	110.9252	GEN620315 1-BIG STONE GEN
FDNS	00NR	2	20WP	G15_085	FROM->TO	G14-057T 345.00 - SUNNYSIDE 345KV CKT 1	717	789	0.20776	110.8942	GEN562952 1-G15057_3 0.6500
FDNS	00NR	2	20WP	G15_085	FROM->TO	G14-057T 345.00 - SUNNYSIDE 345KV CKT 1	717	789	0.21191	110.8728	P12:138:AEPW:SHAM4WT:CHILD4WT
FDNS	00NR	2	20WP	G15_085	FROM->TO	G14-057T 345.00 - SUNNYSIDE 345KV CKT 1	717	789	0.20776	110.8528	GEN511851 1-COMANCHE #1
FDNS	00NR	2	20WP	G15_085	FROM->TO	G14-057T 345.00 - SUNNYSIDE 345KV CKT 1	717	789	0.20776	110.852	GEN600004 2-PRAIRIE ISLAND G2
FDNS	00NR	2	20WP	G15_085	FROM->TO	G14-057T 345.00 - SUNNYSIDE 345KV CKT 1	717	789	0.20776	110.8494	GEN600003 1-PRAIRIE ISLAND G1
FDNS	00NR	2	20WP	G15_085	FROM->TO	G14-057T 345.00 - SUNNYSIDE 345KV CKT 1	717	789	0.20776	110.8317	GEN600006 1-AS KING
FDNS	00NR	2	20WP	G15_085	FROM->TO	G14-057T 345.00 - SUNNYSIDE 345KV CKT 1	717	789	0.20776	110.8281	GEN563173 1-G15082_3 0.6900
FDNS	00NR	2	20WP	G15_085	FROM->TO	G14-057T 345.00 - SUNNYSIDE 345KV CKT 1	717	789	0.20802	110.8255	GRAPEVINE INTERCHANGE - STATELINE INTERCHANGE 230KV CKT 1
FDNS	00NR	2	20WP	G15_085	FROM->TO	G14-057T 345.00 - SUNNYSIDE 345KV CKT 1	717	789	0.20802	110.8255	GRAPEVINE INTERCHANGE - STATELINE INTERCHANGE 230KV CKT 1
FDNS	00NR	2	20WP	G15_085	FROM->TO	G14-057T 345.00 - SUNNYSIDE 345KV CKT 1	717	789	0.20776	110.8183	GEN562710 1-G15_022_3 0.5500
FDNS	00NR	2	20WP	G15_085	FROM->TO	G14-057T 345.00 - SUNNYSIDE 345KV CKT 1	717	789	0.21431	110.8116	CANEY CREEK - TEXOMA JCT 138KV CKT 1
FDNS	00NR	2	20WP	G15_085	FROM->TO	G14-057T 345.00 - SUNNYSIDE 345KV CKT 1	717	789	0.20776	110.7852	GEN532751 1-WOLF CREEK GENERATING STATION UNIT 1
FDNS	00NR	2	20WP	G15_085	FROM->TO	G14-057T 345.00 - SUNNYSIDE 345KV CKT 1	717	789	0.21207	110.7474	P12:138:AEPW-OGE:CORNVIL4:CIMARON4
FDNS	00NR	2	20WP	G15_085	FROM->TO	G14-057T 345.00 - SUNNYSIDE 345KV CKT 1	717	789	0.20985	110.6606	GRAPEVINE INTERCHANGE - NICHOLS STATION 230KV CKT 1
FDNS	00NR	2	20WP	G15_085	FROM->TO	G14-057T 345.00 - SUNNYSIDE 345KV CKT 1	717	789	0.20985	110.6606	GRAPEVINE INTERCHANGE - NICHOLS STATION 230KV CKT 1
FDNS	00NR	2	20WP	G15_085	FROM->TO	G14-057T 345.00 - SUNNYSIDE 345KV CKT 1	717	789	0.20776	110.6597	GEN635213 3-NEAL UNIT 3
FDNS	00NR	2	20WP	G15_085	FROM->TO	G14-057T 345.00 - SUNNYSIDE 345KV CKT 1	717	789	0.20776	110.6591	GEN629074 1-ARNOLD LOWSIDE OF GSU XFMR
FDNS	00NR	2	20WP	G15_085	FROM->TO	G14-057T 345.00 - SUNNYSIDE 345KV CKT 1	717	789	0.20776	110.626	GEN615002 2-COAL CREEK
FDNS	00NR	2	20WP	G15_085	FROM->TO	G14-057T 345.00 - SUNNYSIDE 345KV CKT 1	717	789	0.20792	110.5933	P12:138:WFEC:MSL09
FDNS	00NR	2	20WP	G15_085	FROM->TO	G14-057T 345.00 - SUNNYSIDE 345KV CKT 1	717	789	0.20412	110.5894	NORTHWEST TEXARKANA - VALLIANT 345KV CKT 1

SOLUTION	GROUP	SCENARIO	SEASON	SOURCE	DIRECTION	MONITORED ELEMENT	RATEA (MVA)	RATEB(MVA)	TDF	TC%LOADING (% MVA)	CONTINGENCY
FDNS	00NR	2	20WP	G15_085	FROM->TO	G14-057T 345.00 - SUNNYSIDE 345KV CKT 1	717	789	0.20412	110.5894	NORTHWEST TEXARKANA - VALLIANT 345KV CKT 1
FDNS	00NR	2	20WP	G15_085	FROM->TO	G14-057T 345.00 - SUNNYSIDE 345KV CKT 1	717	789	0.20776	110.5702	GEN562754 1-G15031_5 0.6900
FDNS	00NR	2	20WP	G15_085	FROM->TO	G14-057T 345.00 - SUNNYSIDE 345KV CKT 1	717	789	0.20776	110.5666	GEN636641 1-LOUISA UNIT 1
FDNS	00NR	2	20WP	G15_085	FROM->TO	G14-057T 345.00 - SUNNYSIDE 345KV CKT 1	717	789	0.20161	110.5484	CHISHOLM7 345.00 () 345/230/13.2KV TRANSFORMER CKT 1
FDNS	00NR	2	20WP	G15_085	FROM->TO	G14-057T 345.00 - SUNNYSIDE 345KV CKT 1	717	789	0.20776	110.5321	GEN600005 1-MONTICELLO
FDNS	00NR	2	20WP	G15_085	FROM->TO	G14-057T 345.00 - SUNNYSIDE 345KV CKT 1	717	789	0.20776	110.5127	GEN562556 1-G14_046_3 0.3420
FDNS	00NR	2	20WP	G15_085	FROM->TO	G14-057T 345.00 - SUNNYSIDE 345KV CKT 1	717	789	0.20776	110.5114	GEN562756 1-G15031_7 0.6900
FDNS	00NR	2	20WP	G15_085	FROM->TO	G14-057T 345.00 - SUNNYSIDE 345KV CKT 1	717	789	0.20161	110.4641	CHISHOLM7 345.00 - GRACEMONT 345KV CKT 1
FDNS	00NR	2	20WP	G15_085	FROM->TO	G14-057T 345.00 - SUNNYSIDE 345KV CKT 1	717	789	0.20776	110.4295	GEN563142 1-G15079_3 0.5500
FDNS	00NR	2	20WP	G15_085	FROM->TO	G14-057T 345.00 - SUNNYSIDE 345KV CKT 1	717	789	0.20776	110.4295	GEN563151 1-G15080_2 0.5500
FDNS	00NR	2	20WP	G15_085	FROM->TO	G14-057T 345.00 - SUNNYSIDE 345KV CKT 1	717	789	0.20776	110.4228	GEN562023 1-G11_020_3 0.6900
FDNS	00NR	2	20WP	G15_085	FROM->TO	G14-057T 345.00 - SUNNYSIDE 345KV CKT 1	717	789	0.20776	110.4228	GEN562026 1-G11_019_3 0.6900
FDNS	00NR	2	20WP	G15_085	FROM->TO	G14-057T 345.00 - SUNNYSIDE 345KV CKT 1	717	789	0.20776	110.4063	GEN600000 1-SHERBURNECNTY G1
FDNS	00NR	2	20WP	G15_085	FROM->TO	G14-057T 345.00 - SUNNYSIDE 345KV CKT 1	717	789	0.20776	110.371	GEN629075 1-OTTUMWA GENERATOR FOR OTTUMWA UNIT NO 1
FDNS	00NR	2	16WP	G15_085	FROM->TO	G14-057T 345.00 - SUNNYSIDE 345KV CKT 1	717	789	0.19889	110.3647	LYDIA - VALLIANT 345KV CKT 1
FDNS	00NR	2	16WP	G15_085	FROM->TO	G14-057T 345.00 - SUNNYSIDE 345KV CKT 1	717	789	0.19889	110.3647	LYDIA - VALLIANT 345KV CKT 1
FDNS	00NR	2	20WP	G15_085	FROM->TO	G14-057T 345.00 - SUNNYSIDE 345KV CKT 1	717	789	0.20776	110.3533	GEN600001 2-SHERBURNE CNTY G2
FDNS	00NR	2	20WP	G15_085	FROM->TO	G14-057T 345.00 - SUNNYSIDE 345KV CKT 1	717	789	0.20776	110.329	GEN523971 1-HARRINGTON GEN #1 24 KV
FDNS	00NR	2	20WP	G15_085	FROM->TO	G14-057T 345.00 - SUNNYSIDE 345KV CKT 1	717	789	0.20776	110.329	GEN523973 1-HARRINGTON GEN #3 24 KV
FDNS	00NR	2	20WP	G15_085	FROM->TO	G14-057T 345.00 - SUNNYSIDE 345KV CKT 1	717	789	0.20776	110.3289	GEN523972 1-HARRINGTON GEN #2 24 KV
FDNS	00NR	2	20WP	G15_085	FROM->TO	G14-057T 345.00 - SUNNYSIDE 345KV CKT 1	717	789	0.20776	110.2971	GEN511848 1-SOUTHWESTERN STATION #3
FDNS	00NR	2	17SP	G15_085	FROM->TO	G14-057T 345.00 - SUNNYSIDE 345KV CKT 1	717	789	0.29554	110.2771	CIMARRON - MINCO 345KV CKT 1
FDNS	00NR	2	20WP	G15_085	FROM->TO	G14-057T 345.00 - SUNNYSIDE 345KV CKT 1	717	789	0.20142	110.233	LYDIA - WELSH 345KV CKT 1
FDNS	00NR	2	20WP	G15_085	FROM->TO	G14-057T 345.00 - SUNNYSIDE 345KV CKT 1	717	789	0.20142	110.233	LYDIA - WELSH 345KV CKT 1
FDNS	00NR	2	20WP	G15_085	FROM->TO	G14-057T 345.00 - SUNNYSIDE 345KV CKT 1	717	789	0.20776	110.2306	GEN527901 1-HOBBS PLANT #1 (CT)
FDNS	00NR	2	20WP	G15_085	FROM->TO	G14-057T 345.00 - SUNNYSIDE 345KV CKT 1	717	789	0.20776	110.2306	GEN527902 1-HOBBS PLANT #2 (CT)
FDNS	00NR	2	20WP	G15_085	FROM->TO	G14-057T 345.00 - SUNNYSIDE 345KV CKT 1	717	789	0.20776	110.1933	GEN563042 1-G15068_3 0.6900
FDNS	00NR	2	20WP	G15_085	FROM->TO	G14-057T 345.00 - SUNNYSIDE 345KV CKT 1	717	789	0.20776	110.0973	SHERBURNE CO 345/24.0KV TRANSFORMER CKT 1
FDNS	00NR	2	20WP	G15_085	FROM->TO	G14-057T 345.00 - SUNNYSIDE 345KV CKT 1	717	789	0.20776	110.0952	GEN635214 4-NEAL UNIT 4
FDNS	00NR	2	20WP	G15_085	FROM->TO	G14-057T 345.00 - SUNNYSIDE 345KV CKT 1	717	789	0.20783	110.0303	P12:230:AEPW-SPS:SWEETWT6:WHEELER 6
FDNS	00NR	2	20WP	G15_085	FROM->TO	G14-057T 345.00 - SUNNYSIDE 345KV CKT 1	717	789	0.20783	110.0283	STATELINE INTERCHANGE - STLN-DEMARC6 230KV CKT 1
FDNS	00NR	2	20WP	G15_085	FROM->TO	G14-057T 345.00 - SUNNYSIDE 345KV CKT 1	717	789	0.20783	110.0252	STLN-DEMARC6 - SWEETWATER 230KV CKT 1
FDNS	00NR	2	20WP	G15_085	FROM->TO	G14-057T 345.00 - SUNNYSIDE 345KV CKT 1	717	789	0.20776	109.9249	GEN600002 3-SHERBURNE CNTY G3
FDNS	00NR	2	20WP	G15_085	FROM->TO	G14-057T 345.00 - SUNNYSIDE 345KV CKT 1	717	789	0.20776	109.8947	GEN563043 1-G15068_4 0.6900
FDNS	00NR	2	20WP	G15_085	FROM->TO	G14-057T 345.00 - SUNNYSIDE 345KV CKT 1	717	789	0.20776	109.8689	GEN526333 1-JONES GEN #3 21 KV
FDNS	00NR	2	20WP	G15_085	FROM->TO	G14-057T 345.00 - SUNNYSIDE 345KV CKT 1	717	789	0.20776	109.8687	GEN526334 1-JONES_4 116.500
FDNS	00NR	2	20WP	G15_085	FROM->TO	G14-057T 345.00 - SUNNYSIDE 345KV CKT 1	717	789	0.20776	109.8501	GEN563273 2-G15093_4 0.6900
FDNS	00NR	2	20WP	G15_085	FROM->TO	G14-057T 345.00 - SUNNYSIDE 345KV CKT 1	717	789	0.20776	109.8356	GEN344225 1-1CAL G1 25.000
FDNS	00NR	2	20WP	G15_085	FROM->TO	G14-057T 345.00 - SUNNYSIDE 345KV CKT 1	717	789	0.20776	109.8312	GEN525844 1-ELK_1 118.000
FDNS	00NR	2	20WP	G15_085	FROM->TO	G14-057T 345.00 - SUNNYSIDE 345KV CKT 1	717	789	0.20776	109.8136	GEN525845 1-ELK_2 1 18.000
FDNS	00NR	2	20WP	G15_085	FROM->TO	G14-057T 345.00 - SUNNYSIDE 345KV CKT 1	717	789	0.20776	109.6828	GEN527166 1-MUSTANG_6 118.000
FDNS	00NR	2	20WP	G15_085	FROM->TO	G14-057T 345.00 - SUNNYSIDE 345KV CKT 1	717	789	0.20776	109.6382	GEN635023 3-WALTER SCOTT UNIT 3
FDNS	00NR	2	20WP	G15_085	FROM->TO	G14-057T 345.00 - SUNNYSIDE 345KV CKT 1	717	789	0.20776	109.6188	GEN528501 1-G14_012 24.000
FDNS	00NR	2	20WP	G15_085	FROM->TO	G14-057T 345.00 - SUNNYSIDE 345KV CKT 1	717	789	0.2021	109.6042	P12:230:AEPW:ELKCITY6:SWEETWT6
FDNS	00NR	2	20WP	G15_085	FROM->TO	G14-057T 345.00 - SUNNYSIDE 345KV CKT 1	717	789	0.20776	109.5585	GEN562590 1-G14_057_3 0.6900
FDNS	00NR	2	20WP	G15_085	FROM->TO	G14-057T 345.00 - SUNNYSIDE 345KV CKT 1	717	789	0.20776	109.5334	GEN563202 1-G15085_3 0.5500
FDNS	00NR	2	20WP	G15_085	FROM->TO	G14-057T 345.00 - SUNNYSIDE 345KV CKT 1	717	789	0.20776	109.4459	GEN562762 1-G15033_3 0.6900
FDNS	00NR	2	20WP	G15_085	FROM->TO	G14-057T 345.00 - SUNNYSIDE 345KV CKT 1	717	789	0.20776	109.4344	GEN562655 1-G14_074_3 0.6900
FDNS	00NR	2	20WP	G15_085	FROM->TO	G14-057T 345.00 - SUNNYSIDE 345KV CKT 1	717	789	0.20776	109.4307	GEN525562 1-TOLK GEN #2 24 KV
FDNS	00NR	2	20WP	G15_085	FROM->TO	G14-057T 345.00 - SUNNYSIDE 345KV CKT 1	717	789	0.20783	109.3448	CHISHOLM6 230.00 - SWEETWATER 230KV CKT 1
FDNS	00NR	2	20WP	G15_085	FROM->TO	G14-057T 345.00 - SUNNYSIDE 345KV CKT 1	717	789	0.20776	109.338	GEN562685 1-G15_013_3 0.3550
FDNS	00NR	2	20WP	G15_085	FROM->TO	G14-057T 345.00 - SUNNYSIDE 345KV CKT 1	717	789	0.20857	109.3373	JOHNSON COUNTY (JOHNCO) 345/138/13.8KV TRANSFORMER CKT 1
FDNS	00NR	2	20WP	G15_085	FROM->TO	G14-057T 345.00 - SUNNYSIDE 345KV CKT 1	717	789	0.20776	109.3347	GEN527903 1-HOBBS PLANT #3 (ST)
FDNS	00NR	2	16WP	G15_085	FROM->TO	G14-057T 345.00 - SUNNYSIDE 345KV CKT 1	717	789	0.20635	109.3043	EASTDC - ERCOT EQUIVALENCE 345KV CKT 1
FDNS	00NR	2	20WP	G15_085	FROM->TO	G14-057T 345.00 - SUNNYSIDE 345KV CKT 1	717	789	0.20776	109.2334	GEN635024 4-WALTER SCOTT UNIT 4
FDNS	00NR	2	20WP	G15_085	FROM->TO	G14-057T 345.00 - SUNNYSIDE 345KV CKT 1	717	789	0.20776	109.1911	GEN563272 1-G15093_3 0.6900
FDNS	00NR	2	20WP	G15_085	FROM->TO	G14-057T 345.00 - SUNNYSIDE 345KV CKT 1	717	789	0.1999	109.1737	LYDIA - VALLIANT 345KV CKT 1
FDNS	00NR	2	20WP	G15_085	FROM->TO	G14-057T 345.00 - SUNNYSIDE 345KV CKT 1	717	789	0.1999	109.1737	LYDIA - VALLIANT 345KV CKT 1
FDNS	00NR	2	20WP	G15_085	FROM->TO	G14-057T 345.00 - SUNNYSIDE 345KV CKT 1	717	789	0.20776	108.8578	GEN525561 1-TOLK GEN #1 24 KV
FDNS	00NR	2	16WP	G15_085	FROM->TO	G14-057T 345.00 - SUNNYSIDE 345KV CKT 1	717	789	0.18093	108.2531	JOHNSON COUNTY - PITTSBURG 345KV CKT 1
FDNS	00NR	2	16WP	G15_085	FROM->TO	G14-057T 345.00 - SUNNYSIDE 345KV CKT 1	717	789	0.18093	108.2531	JOHNSON COUNTY - PITTSBURG 345KV CKT 1
FDNS	00NR	2	16WP	G15_085	FROM->TO	G14-057T 345.00 - SUNNYSIDE 345KV CKT 1	717	789	0.20635	107.9106	GEN563263 1-G15092_4 0.6900
FDNS	00NR	2	16WP	G15_085	FROM->TO	G14-057T 345.00 - SUNNYSIDE 345KV CKT 1	717	789	0.19099	107.488	HUGO - VALLIANT 345KV CKT 1
FDNS	00NR	2	16WP	G15_085	FROM->TO	G14-057T 345.00 - SUNNYSIDE 345KV CKT 1	717	789	0.19099	107.488	HUGO - VALLIANT 345KV CKT 1
FDNS	00NR	2	20WP	G15_085	FROM->TO	G14-057T 345.00 - SUNNYSIDE 345KV CKT 1	717	789	0.18252	106.9199	JOHNSON COUNTY - PITTSBURG 345KV CKT 1
FDNS	00NR	2	20WP	G15_085	FROM->TO	G14-057T 345.00 - SUNNYSIDE 345KV CKT 1	717	789	0.18252	106.9199	JOHNSON COUNTY - PITTSBURG 345KV CKT 1
FDNS	00NR	2	20WP	G15_085	FROM->TO	G14-057T 345.00 - SUNNYSIDE 345KV CKT 1	717	789	0.19189	106.6479	HUGO - VALLIANT 345KV CKT 1
FDNS	00NR	2	20WP	G15_085	FROM->TO	G14-057T 345.00 - SUNNYSIDE 345KV CKT 1	717	789	0.19189	106.6479	HUGO - VALLIANT 345KV CKT 1
FDNS	00NR	2	16WP	G15_085	FROM->TO	G14-057T 345.00 - SUNNYSIDE 345KV CKT 1	717	789	0.20635	106.2363	GEN563262 1-G15092_3 0.6900
FDNS	00NR	2	20WP	G15_085	FROM->TO	G14-057T 345.00 - SUNNYSIDE 345KV CKT 1	717	789	0.20776	106.0637	GEN563263 1-G15092_4 0.6900
FDNS	00NR	2	16WP	G15_085	FROM->TO	G14-057T 345.00 - SUNNYSIDE 345KV CKT 1	717	789	0.21025	104.7399	G14-074T 345.00 - TUCO INTERCHANGE 345KV CKT 1
FDNS	00NR	2	20WP	G15_085	FROM->TO	G14-057T 345.00 - SUNNYSIDE 345KV CKT 1	717	789	0.20776	104.3858	GEN563262 1-G15092_3 0.6900
FDNS	00NR	2	16WP	G15_085	FROM->TO	G14-057T 345.00 - SUNNYSIDE 345KV CKT 1	717	789	0.1801	102.5136	JOHNSON COUNTY - SUNNYSIDE 345KV CKT 1
FDNS	00NR	2	20WP	G15_085	FROM->TO	G14-057T 345.00 - SUNNYSIDE 345KV CKT 1	717	789	0.21172	101.7321	G14-074T 345.00 - TUCO INTERCHANGE 345KV CKT 1
FDNS	00NR	2	20SP	G15_085	FROM->TO	G14-057T 345.00 - SUNNYSIDE 345KV CKT 1	717	789	0.29337	100.802	CIMARRON - MINCO 345KV CKT 1
FDNS	00NR	2	20WP	G15_085	FROM->TO	G14-057T 345.00 - SUNNYSIDE 345KV CKT 1	717	789	0.18182	100.3727	JOHNSON COUNTY - SUNNYSIDE 345KV CKT 1
FDNS	00NR	2	17SP	G15_085	FROM->TO	G14-057T 345.00 - SUNNYSIDE 345KV CKT 1	717	789	0.29554	100	GRACEMONT - MINCO 345KV CKT 1
FDNS	00NR	2	20WP	G15_085	TO->FROM	MATHWSN7 345.00 - TATONGA7 345.00 345KV CKT 1	1195	1195	0.04793	100.7283	CIMARRON - MINCO 345KV CKT 1
FDNS	00NR	2	20SP	G15_085	TO->FROM	OMPA-MANGUM - RUSSELL 69KV CKT 1	48	48	0.04424	107.6878	ELK CITY (ELKCTY-4) 138/69/13.8KV TRANSFORMER CKT 1

SOLUTION	GROUP	SCENARIO	SEASON	SOURCE	DIRECTION	MONITORED ELEMENT	RATEA (MVA)	RATEB(MVA)	TDF	TC%LOADING (% MVA)	CONTINGENCY
FDNS	00NR	2	20SP	G15_085	TO->FROM	OMPA-MANGUM - RUSSELL 69KV CKT 1	48	48	0.04424	107.6878	ELK CITY (ELKCTY-4) 138/69/13.8KV TRANSFORMER CKT 1
FDNS	00NR	2	16WP	G15_085	TO->FROM	PITTSBURG - SEMINOLE 345KV CKT 1	717	717	0.13936	101.4368	G14-057T 345.00 - SUNNYSIDE 345KV CKT 1
FDNS	00NR	2	17SP	G15_085	FROM->TO	SWISSVALE - WEST GARDNER 345KV CKT 1	717	717	0.0337	105.8319	HOYT - STRANGER CREEK 345KV CKT 1
FDNS	00NR	2	17SP	G15_085	FROM->TO	SWISSVALE - WEST GARDNER 345KV CKT 1	717	717	0.03158	104.7338	G15074_T 345.00 - HOYT 345KV CKT 1
FDNS	00NR	2	16WP	G15_085	FROM->TO	SWISSVALE - WEST GARDNER 345KV CKT 1	717	717	0.03419	101.7897	HOYT - STRANGER CREEK 345KV CKT 1
FDNS	00NR	2	16WP	G15_085	FROM->TO	SWISSVALE - WEST GARDNER 345KV CKT 1	717	717	0.03292	100.9924	LACYGNE - WAVERLY7 345.00 345KV CKT 1
FDNS	00NR	2	16WP	G15_085	FROM->TO	SWISSVALE - WEST GARDNER 345KV CKT 1	717	717	0.03208	99.7	G15074_T 345.00 - HOYT 345KV CKT 1
FDNS	00NR	2	16WP	G15_085	FROM->TO	SWISSVALE - WEST GARDNER 345KV CKT 1	717	717	0.03292	99.6	WAVERLY7 345.00 - WOLF CREEK 345KV CKT 1
FDNS	00NR	2	16WP	G15_085	TO->FROM	TUPELO - TUPELO TAP 138KV CKT 1	143	143	0.03941	123.3524	PITTSBURG - VALLIANT 345KV CKT 1
FDNS	00NR	2	16WP	G15_085	TO->FROM	TUPELO - TUPELO TAP 138KV CKT 1	143	143	0.03941	123.3524	PITTSBURG - VALLIANT 345KV CKT 1
FDNS	00NR	2	16WP	G15_085	TO->FROM	TUPELO - TUPELO TAP 138KV CKT 1	143	143	0.04221	119.4059	G14-057T 345.00 - SUNNYSIDE 345KV CKT 1
FDNS	00NR	2	20WP	G15_085	TO->FROM	TUPELO - TUPELO TAP 138KV CKT 1	143	143	0.04019	117.236	PITTSBURG - VALLIANT 345KV CKT 1
FDNS	00NR	2	20WP	G15_085	TO->FROM	TUPELO - TUPELO TAP 138KV CKT 1	143	143	0.04019	117.236	PITTSBURG - VALLIANT 345KV CKT 1
FDNS	00NR	2	16WP	G15_085	TO->FROM	TUPELO - TUPELO TAP 138KV CKT 1	143	143	0.03796	116.998	PITTSBURG - SEMINOLE 345KV CKT 1
FDNS	00NR	2	16WP	G15_085	TO->FROM	TUPELO - TUPELO TAP 138KV CKT 1	143	143	0.03796	116.998	PITTSBURG - SEMINOLE 345KV CKT 1
FDNS	00NR	2	20WP	G15_085	TO->FROM	TUPELO - TUPELO TAP 138KV CKT 1	143	143	0.04265	116.5039	G14-057T 345.00 - SUNNYSIDE 345KV CKT 1
FDNS	00NR	2	16WP	G15_085	TO->FROM	TUPELO - TUPELO TAP 138KV CKT 1	143	143	0.03954	114.0357	HUGO - SUNNYSIDE 345KV CKT 1
FDNS	00NR	2	20WP	G15_085	TO->FROM	TUPELO - TUPELO TAP 138KV CKT 1	143	143	0.03855	112.9658	PITTSBURG - SEMINOLE 345KV CKT 1
FDNS	00NR	2	20WP	G15_085	TO->FROM	TUPELO - TUPELO TAP 138KV CKT 1	143	143	0.03855	112.9658	PITTSBURG - SEMINOLE 345KV CKT 1
FDNS	00NR	2	20WP	G15_085	TO->FROM	TUPELO - TUPELO TAP 138KV CKT 1	143	143	0.04012	110.4781	HUGO - SUNNYSIDE 345KV CKT 1
FDNS	00NR	2	16WP	G15_085	TO->FROM	TUPELO - TUPELO TAP 138KV CKT 1	143	143	0.04221	109.9342	G14-057T 345.00 - LAWTON EASTSIDE 345KV CKT 1
FDNS	00NR	2	20WP	G15_085	TO->FROM	TUPELO - TUPELO TAP 138KV CKT 1	143	143	0.04265	107.0678	G14-057T 345.00 - LAWTON EASTSIDE 345KV CKT 1
FDNS	00NR	2	16WP	G15_085	TO->FROM	TUPELO - TUPELO TAP 138KV CKT 1	143	143	0.03306	106.294	CANADIAN RIVER () 345/138/13.8KV TRANSFORMER CKT 1
FDNS	00NR	2	16WP	G15_085	TO->FROM	TUPELO - TUPELO TAP 138KV CKT 1	143	143	0.03306	106.294	CANADIAN RIVER () 345/138/13.8KV TRANSFORMER CKT 1
FDNS	00NR	2	16WP	G15_085	TO->FROM	TUPELO - TUPELO TAP 138KV CKT 1	143	143	0.03306	106.2671	CANADIAN RIVER - MCALESTER SOUTH 138KV CKT 1
FDNS	00NR	2	16WP	G15_085	TO->FROM	TUPELO - TUPELO TAP 138KV CKT 1	143	143	0.03306	106.2671	CANADIAN RIVER - MCALESTER SOUTH 138KV CKT 1
FDNS	00NR	2	16WP	G15_085	TO->FROM	TUPELO - TUPELO TAP 138KV CKT 1	143	143	0.03419	105.2632	RUSSETT - RUSSETT 138KV CKT 1
FDNS	00NR	2	20WP	G15_085	TO->FROM	TUPELO - TUPELO TAP 138KV CKT 1	143	143	0.03348	104.5558	CANADIAN RIVER () 345/138/13.8KV TRANSFORMER CKT 1
FDNS	00NR	2	20WP	G15_085	TO->FROM	TUPELO - TUPELO TAP 138KV CKT 1	143	143	0.03348	104.5558	CANADIAN RIVER () 345/138/13.8KV TRANSFORMER CKT 1
FDNS	00NR	2	20WP	G15_085	TO->FROM	TUPELO - TUPELO TAP 138KV CKT 1	143	143	0.03348	104.5323	CANADIAN RIVER - MCALESTER SOUTH 138KV CKT 1
FDNS	00NR	2	20WP	G15_085	TO->FROM	TUPELO - TUPELO TAP 138KV CKT 1	143	143	0.03348	104.5323	CANADIAN RIVER - MCALESTER SOUTH 138KV CKT 1
FDNS	00NR	2	16WP	G15_085	TO->FROM	TUPELO - TUPELO TAP 138KV CKT 1	143	143	0.03486	104.4008	CLEVELAND - G15066_T 345.00 345KV CKT 1
FDNS	00NR	2	16WP	G15_085	TO->FROM	TUPELO - TUPELO TAP 138KV CKT 1	143	143	0.03419	104.205	BROWN - RUSSETT 138KV CKT 1
FDNS	00NR	2	16WP	G15_085	TO->FROM	TUPELO - TUPELO TAP 138KV CKT 1	143	143	0.03486	103.7292	G15066_T 345.00 - SOONER 345KV CKT 1
FDNS	00NR	2	16WP	G15_085	TO->FROM	TUPELO - TUPELO TAP 138KV CKT 1	143	143	0.03321	103.4315	P12:138:AEPW:MCALEST4:LONEOAK4
FDNS	00NR	2	20WP	G15_085	TO->FROM	TUPELO - TUPELO TAP 138KV CKT 1	143	143	0.03462	103.1219	RUSSETT - RUSSETT 138KV CKT 1
FDNS	00NR	2	20WP	G15_085	TO->FROM	TUPELO - TUPELO TAP 138KV CKT 1	143	143	0.03516	102.1334	CLEVELAND - G15066_T 345.00 345KV CKT 1
FDNS	00NR	2	20WP	G15_085	TO->FROM	TUPELO - TUPELO TAP 138KV CKT 1	143	143	0.03462	102.0395	BROWN - RUSSETT 138KV CKT 1
FDNS	00NR	2	16WP	G15_085	TO->FROM	TUPELO - TUPELO TAP 138KV CKT 1	143	143	0.03289	101.6511	GEN509416 1-TURK GENERATION
FDNSLock	00NR	2	16WP	G15_085	TO->FROM	TUPELO - TUPELO TAP 138KV CKT 1	143	143	0.03289	101.4609	GEN509403 1-PIRKEY GENERATION
FDNS	00NR	2	20WP	G15_085	TO->FROM	TUPELO - TUPELO TAP 138KV CKT 1	143	143	0.03516	101.4512	G15066_T 345.00 - SOONER 345KV CKT 1
FDNS	00NR	2	20WP	G15_085	TO->FROM	TUPELO - TUPELO TAP 138KV CKT 1	143	143	0.0337	100.9549	P12:138:AEPW:MCALEST4:LONEOAK4
FDNS	00NR	2	16WP	G15_085	TO->FROM	TUPELO - TUPELO TAP 138KV CKT 1	143	143	0.03635	100.8383	HEALDTON - LOCO 138KV CKT 1
FDNS	00NR	2	16WP	G15_085	TO->FROM	TUPELO - TUPELO TAP 138KV CKT 1	143	143	0.03635	100.3282	HEALDTON - RINGLING 138KV CKT 1
FDNS	00NR	2	16WP	G15_085	TO->FROM	TUPELO - TUPELO TAP 138KV CKT 1	143	143	0.03467	100	CANEY CREEK - LITTLE CITY 138KV CKT 1
FDNS	00NR	2	16WP	G15_085	TO->FROM	TUPELO - TUPELO TAP 138KV CKT 1	143	143	0.03289	100	GEN501801 1-DOLET HILLS UNIT1
FDNS	00NR	2	16WP	G15_085	TO->FROM	TUPELO - TUPELO TAP 138KV CKT 1	143	143	0.03467	99.9	BROWN TAP - LITTLE CITY 138KV CKT 1
FDNS	00NR	2	16WP	G15_085	TO->FROM	TUPELO - TUPELO TAP 138KV CKT 1	143	143	0.0312	99.9	P12:138:AEPW:OKMULGE4:R.S.S-4
FDNS	00NR	2	16WP	G15_085	TO->FROM	TUPELO - TUPELO TAP 138KV CKT 1	143	143	0.03635	99.8	RINGLING - SOUTH WILSON 138KV CKT 1
FDNS	00NR	2	16WP	G15_085	TO->FROM	TUPELO - TUPELO TAP 138KV CKT 1	143	143	0.03635	99.7	P12:138:WFEC:MSL17
FDNS	00NR	2	16WP	G15_085	TO->FROM	TUPELO - TUPELO TAP 138KV CKT 1	143	143	0.03289	99.6	GEN509404 1-WELSH #1
FDNS	00NR	2	16WP	G15_085	TO->FROM	TUPELO - TUPELO TAP 138KV CKT 1	143	143	0.03289	99.6	GEN509406 1-WELSH #3
FDNS	09ALL	0	17G	G15_087	TO->FROM	BEATRICE - HARBINE 115KV CKT 1	99	99	0.36	101.5612	KNOB HILL - STEELE CITY 115KV CKT 1
FDNS	09ALL	0	16WP	G15_087	TO->FROM	BEATRICE - HARBINE 115KV CKT 1	99	99	0.35999	100.2876	KNOB HILL - STEELE CITY 115KV CKT 1
FDNS	09NR	0	17G	G15_087	TO->FROM	GERALD GENTLEMAN STATION - OGALLALA 230KV CKT 1	320	320	0.02982	119.5022	GERALD GENTLEMAN STATION - KEYSTONE 345KV CKT 1
FDNS	09ALL	2	17G	G15_087	TO->FROM	BEATRICE - HARBINE 115KV CKT 1	99	99	0.36001	101.7082	KNOB HILL - STEELE CITY 115KV CKT 1
FDNS	09ALL	2	16WP	G15_087	TO->FROM	BEATRICE - HARBINE 115KV CKT 1	99	99	0.36	100.2972	KNOB HILL - STEELE CITY 115KV CKT 1
FDNS	09NR	0	17G	G15_088	TO->FROM	GERALD GENTLEMAN STATION - OGALLALA 230KV CKT 1	320	320	0.03033	119.5022	GERALD GENTLEMAN STATION - KEYSTONE 345KV CKT 1
FDNS	00NR	0	17SP	G15_090	FROM->TO	EVANS ENERGY CENTER NORTH - MAIZEW 4 138.00 138KV CKT 1	369	382	0.03914	100.625	BENTON - WICHITA 345KV CKT 1
FDNS	00NR	0	20WP	G15_090	TO->FROM	MATHWSN7 345.00 - TATONGA7 345.00 345KV CKT 1	1195	1195	0.03511	111.0527	G14-074T 345.00 - OKLAUNION 345KV CKT 1
FDNS	00NR	0	16WP	G15_090	TO->FROM	MATHWSN7 345.00 - TATONGA7 345.00 345KV CKT 1	1195	1195	0.03505	109.4708	G14-074T 345.00 - OKLAUNION 345KV CKT 1
FDNS	00NR	0	20WP	G15_090	TO->FROM	MATHWSN7 345.00 - TATONGA7 345.00 345KV CKT 1	1195	1195	0.03357	102.755	CHISHOLM6 230.00 - SWEETWATER 230KV CKT 1
FDNS	00NR	0	20WP	G15_090	TO->FROM	MATHWSN7 345.00 - TATONGA7 345.00 345KV CKT 1	1195	1195	0.03511	102.648	G14-074T 345.00 - TUCO INTERCHANGE 345KV CKT 1
FDNS	00NR	0	20WP	G15_090	TO->FROM	MATHWSN7 345.00 - TATONGA7 345.00 345KV CKT 1	1195	1195	0.03369	102.5313	P12:230:AEPW:ELKCITY6:SWEETWT6
FDNS	00NR	0	16WP	G15_090	TO->FROM	MATHWSN7 345.00 - TATONGA7 345.00 345KV CKT 1	1195	1195	0.03505	101.336	G14-074T 345.00 - TUCO INTERCHANGE 345KV CKT 1
FDNS	00NR	0	16WP	G15_090	TO->FROM	MATHWSN7 345.00 - TATONGA7 345.00 345KV CKT 1	1195	1195	0.0335	101.2796	CHISHOLM6 230.00 - SWEETWATER 230KV CKT 1
FDNS	00NR	0	16WP	G15_090	TO->FROM	MATHWSN7 345.00 - TATONGA7 345.00 345KV CKT 1	1195	1195	0.03362	101.1173	P12:230:AEPW:ELKCITY6:SWEETWT6
FDNS	00NR	0	20WP	G15_090	TO->FROM	MATHWSN7 345.00 - TATONGA7 345.00 345KV CKT 1	1195	1195	0.03234	101.0657	CIMARRON - MINCO 345KV CKT 1
FDNS	00NR	0	20WP	G15_090	TO->FROM	MATHWSN7 345.00 - TATONGA7 345.00 345KV CKT 1	1195	1195	0.03357	100.5522	STLN-DEMARC6 - SWEETWATER 230KV CKT 1
FDNS	00NR	0	20WP	G15_090	TO->FROM	MATHWSN7 345.00 - TATONGA7 345.00 345KV CKT 1	1195	1195	0.03357	100.5393	P12:230:AEPW-SPS:SWEETWT6:WHEELER 6
FDNS	00NR	0	20WP	G15_090	TO->FROM	MATHWSN7 345.00 - TATONGA7 345.00 345KV CKT 1	1195	1195	0.03357	100.5385	STATELINE INTERCHANGE - STLN-DEMARC6 230KV CKT 1
FDNS	00NR	0	16WP	G15_090	TO->FROM	MATHWSN7 345.00 - TATONGA7 345.00 345KV CKT 1	1195	1195	0.03224	100.2834	CIMARRON - MINCO 345KV CKT 1
FDNS	00NR	2	17SP	G15_090	FROM->TO	EVANS ENERGY CENTER NORTH - MAIZEW 4 138.00 138KV CKT 1	369	382	0.03914	100.5975	BENTON - WICHITA 345KV CKT 1
FDNSLock-Blown up	16ALL_B10T_DCTIE	0	16WP	G15_091		Non-Converged Contingency	460	460	0.80643	-	BELFIELD - DAGLUM 4230.00 230KV CKT 1
FDNSLock-Blown up	16ALL	0	16WP	G15_091		Non-Converged Contingency	460	460	0.80641	-	BELFIELD - DAGLUM 4230.00 230KV CKT 1
FDNSLock-Blown up	16ALL	0	17G	G15_091		Non-Converged Contingency	460	460	0.8067	-	BELFIELD - DAGLUM 4230.00 230KV CKT 1
FDNSLock-Blown up	16ALL	0	17SP	G15_091		Non-Converged Contingency	460	460	0.80628	-	BELFIELD - DAGLUM 4230.00 230KV CKT 1
FDNSLock-Blown up	16ALL_B10T_DCTIE	0	17SP	G15_091		Non-Converged Contingency	460	460	0.80625	-	BELFIELD - DAGLUM 4230.00 230KV CKT 1
FDNSLock-Blown up	16ALL	0	17SP	G15_091		Non-Converged Contingency	717	789	0.10831	-	G09_001IST 345.00 - GROTON 345KV CKT 1

SOLUTION	GROUP	SCENARIO	SEASON	SOURCE	DIRECTION	MONITORED ELEMENT	RATEA (MVA)	RATEB(MVA)	TDF	TC%LOADING (% MVA)	CONTINGENCY
FDNSLock-Blown up	16ALL	0	17SP	G15_091		Non-Converged Contingency	717	789	0.10831	-	G09_001IST 345.00 - WATERTOWN 345KV CKT 1
FDNSLock-Blown up	16ALL_B10T_DCTIE	0	17SP	G15_091		Non-Converged Contingency	717	789	0.10828	-	G09_001IST 345.00 - GROTON 345KV CKT 1
FDNSLock-Blown up	16ALL_B10T_DCTIE	0	17SP	G15_091		Non-Converged Contingency	717	789	0.10828	-	G09_001IST 345.00 - WATERTOWN 345KV CKT 1
FDNSLock-Blown up	16ALL	0	20L	G15_091		Non-Converged Contingency	460	460	0.807	-	BELFIELD - DAGLUM 4230.00 230KV CKT 1
FDNSLock-Blown up	16ALL	0	20SP	G15_091		Non-Converged Contingency	460	460	0.80788	-	BELFIELD - DAGLUM 4230.00 230KV CKT 1
FDNSLock-Blown up	16ALL	0	20WP	G15_091		Non-Converged Contingency	460	460	0.80799	-	BELFIELD - DAGLUM 4230.00 230KV CKT 1
FDNSLock-Blown up	16ALL	0	25SP	G15_091		Non-Converged Contingency	460	460	0.80762	-	BELFIELD - DAGLUM 4230.00 230KV CKT 1
FDNSLock-Blown up	16ALL	2	17SP	G15_091		Non-Converged Contingency	717	789	0.10802	-	G09_001IST 345.00 - GROTON 345KV CKT 1
FDNSLock-Blown up	16ALL	2	17SP	G15_091		Non-Converged Contingency	717	789	0.10802	-	G09_001IST 345.00 - WATERTOWN 345KV CKT 1
FDNS	16ALL_B10T_DCTIE	0	17SP	G15_091	FROM->TO	BROADLAND - HURON 230KV CKT 1	400	480	0.12035	104.0318	BASE CASE
FDNS	16ALL	0	17SP	G15_091	FROM->TO	BROADLAND - HURON 230KV CKT 1	400	480	0.12034	100.6167	BASE CASE
FDNS	16ALL	0	25SP	G15_091	FROM->TO	DICKINSON (KW1A 100) 230/115/13.8KV TRANSFORMER CKT 1	100	125	0.05731	114.896	BASE CASE
FDNS	16ALL	0	25SP	G15_091	FROM->TO	DICKINSON (KW1A 100) 230/115/13.8KV TRANSFORMER CKT 1	100	125	0.05731	114.2019	BASE CASE
FDNS	16ALL	0	20SP	G15_091	FROM->TO	DICKINSON (KW1A 100) 230/115/13.8KV TRANSFORMER CKT 1	100	125	0.05722	105.7876	BASE CASE
FDNS	16ALL_B10T_DCTIE	0	17SP	G15_091	FROM->TO	DICKINSON (KW1A 100) 230/115/13.8KV TRANSFORMER CKT 1	100	125	0.05763	105.6562	BASE CASE
FDNS	16ALL	0	20SP	G15_091	FROM->TO	DICKINSON (KW1A 100) 230/115/13.8KV TRANSFORMER CKT 1	100	125	0.05722	104.7331	BASE CASE
FDNS	16ALL_B10T_DCTIE	0	17SP	G15_091	FROM->TO	DICKINSON (KW1A 100) 230/115/13.8KV TRANSFORMER CKT 1	100	125	0.05763	104.59	BASE CASE
FDNS	16ALL	0	20WP	G15_091	FROM->TO	DICKINSON (KW1A 100) 230/115/13.8KV TRANSFORMER CKT 1	100	125	0.05702	103.2861	BASE CASE
FDNS	16ALL	0	20WP	G15_091	FROM->TO	DICKINSON (KW1A 100) 230/115/13.8KV TRANSFORMER CKT 1	100	125	0.05702	103.0294	BASE CASE
FDNS	16ALL	0	16WP	G15_091	FROM->TO	DICKINSON (KW1A 100) 230/115/13.8KV TRANSFORMER CKT 1	100	125	0.05747	102.1232	BASE CASE
FDNS	16ALL	0	17SP	G15_091	FROM->TO	DICKINSON (KW1A 100) 230/115/13.8KV TRANSFORMER CKT 1	100	125	0.05762	102.1179	BASE CASE
FDNS	16ALL	0	16WP	G15_091	FROM->TO	DICKINSON (KW1A 100) 230/115/13.8KV TRANSFORMER CKT 1	100	125	0.05747	101.1533	BASE CASE
FDNS	16ALL	0	17SP	G15_091	FROM->TO	DICKINSON (KW1A 100) 230/115/13.8KV TRANSFORMER CKT 1	100	125	0.05762	101.0837	BASE CASE
FDNS	16ALL_B10T_DCTIE	0	17SP	G15_091	FROM->TO	HURON (BD KU2A) 345/230/13.8KV TRANSFORMER CKT 1	400	400	0.12035	101.098	BASE CASE
FDNS	16ALL	2	17SP	G15_091	FROM->TO	BROADLAND - HURON 230KV CKT 1	400	480	0.11888	100.4387	BASE CASE
FDNS	00NR	0	16WP	G15_092	FROM->TO	CIMARRON - DRAPER LAKE 345KV CKT 1	717	717	0.1454	132.6508	G14-057T 345.00 - SUNNYSIDE 345KV CKT 1
FDNS	00NR	0	16WP	G15_092	FROM->TO	CIMARRON - DRAPER LAKE 345KV CKT 1	717	717	0.04537	115.588	CLEVELAND - G15066_T 345.00 345KV CKT 1
FDNS	00NR	0	16WP	G15_092	FROM->TO	CIMARRON - DRAPER LAKE 345KV CKT 1	717	717	0.04999	115.2993	ARCADIA - NORTHWEST 345KV CKT 1
FDNS	00NR	0	16WP	G15_092	FROM->TO	CIMARRON - DRAPER LAKE 345KV CKT 1	717	717	0.04537	114.8063	G15066_T 345.00 - SOONER 345KV CKT 1
FDNS	00NR	0	16WP	G15_092	FROM->TO	CIMARRON - DRAPER LAKE 345KV CKT 1	717	717	0.04211	110.2756	CLEVELAND - TULSA NORTH 345KV CKT 1
FDNS	00NR	0	16WP	G15_092	FROM->TO	CIMARRON - DRAPER LAKE 345KV CKT 1	717	717	0.04211	110.2756	CLEVELAND - TULSA NORTH 345KV CKT 1
FDNS	00NR	0	16WP	G15_092	FROM->TO	CIMARRON - DRAPER LAKE 345KV CKT 1	717	717	0.03696	110.1142	MATHWSN7 345.00 - NORTHWEST 345KV CKT 1
FDNS	00NR	0	16WP	G15_092	FROM->TO	CIMARRON - DRAPER LAKE 345KV CKT 1	717	717	0.03483	109.2409	CIMARRON - SARA 138KV CKT 1
FDNS	00NR	0	16WP	G15_092	FROM->TO	CIMARRON - DRAPER LAKE 345KV CKT 1	717	717	0.03813	108.713	P12:138:WFEC:MSL03
FDNS	00NR	0	16WP	G15_092	FROM->TO	CIMARRON - DRAPER LAKE 345KV CKT 1	717	717	0.03415	108.0689	CIMARRON (CIMARON2) 345/138/13.8KV TRANSFORMER CKT 1
FDNS	00NR	0	16WP	G15_092	FROM->TO	CIMARRON - DRAPER LAKE 345KV CKT 1	717	717	0.03483	107.9446	SARA - STHLAKE4 138.00 138KV CKT 1
FDNS	00NR	0	16WP	G15_092	FROM->TO	CIMARRON - DRAPER LAKE 345KV CKT 1	717	717	0.03415	107.899	CIMARRON (CIMARON1) 345/138/13.8KV TRANSFORMER CKT 1
FDNS	00NR	0	16WP	G15_092	FROM->TO	CIMARRON - DRAPER LAKE 345KV CKT 1	717	717	0.03483	107.745	MCCLAIN - STHLAKE4 138.00 138KV CKT 1
FDNS	00NR	0	16WP	G15_092	FROM->TO	CIMARRON - DRAPER LAKE 345KV CKT 1	717	717	0.03567	107.4685	CIMARRON - CZECH HALL 138KV CKT 1
FDNS	00NR	0	16WP	G15_092	FROM->TO	CIMARRON - DRAPER LAKE 345KV CKT 1	717	717	0.03567	107.112	CZECH HALL - XEROX 138KV CKT 1
FDNS	00NR	0	16WP	G15_092	FROM->TO	CIMARRON - DRAPER LAKE 345KV CKT 1	717	717	0.03567	107.0924	MORGAN - XEROX 138KV CKT 1
FDNS	00NR	0	16WP	G15_092	FROM->TO	CIMARRON - DRAPER LAKE 345KV CKT 1	717	717	0.03757	106.9919	ANADARKO - POCASSETT 138KV CKT 1
FDNS	00NR	0	16WP	G15_092	FROM->TO	CIMARRON - DRAPER LAKE 345KV CKT 1	717	717	0.03567	106.9752	MORGAN - MUSTANG 138KV CKT 1
FDNS	00NR	0	16WP	G15_092	FROM->TO	CIMARRON - DRAPER LAKE 345KV CKT 1	717	717	0.03757	106.7926	POCASSETT - TUTTLE 138KV CKT 1
FDNS	00NR	0	16WP	G15_092	FROM->TO	CIMARRON - DRAPER LAKE 345KV CKT 1	717	717	0.03408	106.703	GEN515040 1-SEMINOLE 1G
FDNS	00NR	0	16WP	G15_092	FROM->TO	CIMARRON - DRAPER LAKE 345KV CKT 1	717	717	0.03475	106.6763	LACYGNE - WAVERLY7 345.00 345KV CKT 1
FDNS	00NR	0	16WP	G15_092	FROM->TO	CIMARRON - DRAPER LAKE 345KV CKT 1	717	717	0.05321	106.5853	JOHNSON COUNTY - SUNNYSIDE 345KV CKT 1
FDNS	00NR	0	16WP	G15_092	FROM->TO	CIMARRON - DRAPER LAKE 345KV CKT 1	717	717	0.03475	106.4587	WAVERLY7 345.00 - WOLF CREEK 345KV CKT 1
FDNSLock	00NR	0	16WP	G15_092	FROM->TO	CIMARRON - DRAPER LAKE 345KV CKT 1	717	717	0.03408	106.456	GEN509403 1-PIRKEY GENERATION
FDNS	00NR	0	16WP	G15_092	FROM->TO	CIMARRON - DRAPER LAKE 345KV CKT 1	717	717	0.03666	106.4058	CORN TAP - NAPLESTP 138.00 138KV CKT 1
FDNS	00NR	0	16WP	G15_092	FROM->TO	CIMARRON - DRAPER LAKE 345KV CKT 1	717	717	0.03408	106.3792	GEN509416 1-TURK GENERATION
FDNS	00NR	0	16WP	G15_092	FROM->TO	CIMARRON - DRAPER LAKE 345KV CKT 1	717	717	0.03408	106.3605	GEN501801 1-DOLET HILLS UNIT1
FDNS	00NR	0	16WP	G15_092	FROM->TO	CIMARRON - DRAPER LAKE 345KV CKT 1	717	717	0.03666	106.3121	NAPLESTP 138.00 - PAYNE 138.00 138KV CKT 1
FDNS	00NR	0	16WP	G15_092	FROM->TO	CIMARRON - DRAPER LAKE 345KV CKT 1	717	717	0.03757	106.2787	BRIDGECR 138.00 - TUTTLE 138KV CKT 1
FDNS	00NR	0	16WP	G15_092	FROM->TO	CIMARRON - DRAPER LAKE 345KV CKT 1	717	717	0.03578	106.2342	CANEYRV7 345.00 - NEOSHO 345KV CKT 1
FDNS	00NR	0	17SP	G15_092	FROM->TO	CIMARRON - DRAPER LAKE 345KV CKT 1	717	717	0.14614	106.1697	G14-057T 345.00 - SUNNYSIDE 345KV CKT 1
FDNSLock	00NR	0	16WP	G15_092	FROM->TO	CIMARRON - DRAPER LAKE 345KV CKT 1	717	717	0.03408	106.0246	GEN336821 1-GRAND GULF UNIT
FDNS	00NR	0	16WP	G15_092	FROM->TO	CIMARRON - DRAPER LAKE 345KV CKT 1	717	717	0.03408	105.9922	GEN515042 1-SEMINOLE 3G
FDNS	00NR	0	16WP	G15_092	FROM->TO	CIMARRON - DRAPER LAKE 345KV CKT 1	717	717	0.03578	105.9562	CANEYRV7 345.00 - LATHAMS7 345.00 345KV CKT 1
FDNS	00NR	0	16WP	G15_092	FROM->TO	CIMARRON - DRAPER LAKE 345KV CKT 1	717	717	0.03757	105.9048	BRIDGECR 138.00 - SUNSHINE CANYON 138KV CKT 1
FDNS	00NR	0	16WP	G15_092	FROM->TO	CIMARRON - DRAPER LAKE 345KV CKT 1	717	717	0.03757	105.894	P12:138:WFEC:MSL01
FDNS	00NR	0	16WP	G15_092	FROM->TO	CIMARRON - DRAPER LAKE 345KV CKT 1	717	717	0.03408	105.7583	GEN515041 1-SEMINOLE 2G
FDNSLock	00NR	0	16WP	G15_092	FROM->TO	CIMARRON - DRAPER LAKE 345KV CKT 1	717	717	0.03408	105.7266	GEN336153 1-WATERFORD UNIT#3
FDNS	00NR	0	16WP	G15_092	FROM->TO	CIMARRON - DRAPER LAKE 345KV CKT 1	717	717	0.04513	105.5516	CIMARRON - NORTHWEST 345KV CKT 1
FDNS	00NR	0	16WP	G15_092	FROM->TO	CIMARRON - DRAPER LAKE 345KV CKT 1	717	717	0.03408	105.5263	GEN509406 1-WELSH #3
FDNS	00NR	0	16WP	G15_092	FROM->TO	CIMARRON - DRAPER LAKE 345KV CKT 1	717	717	0.03408	105.5261	GEN509404 1-WELSH #1
FDNS	00NR	0	16WP	G15_092	FROM->TO	CIMARRON - DRAPER LAKE 345KV CKT 1	717	717	0.03578	105.5155	LATHAMS7 345.00 - ROSE HILL 345KV CKT 1
FDNSLock	00NR	0	16WP	G15_092	FROM->TO	CIMARRON - DRAPER LAKE 345KV CKT 1	717	717	0.03408	105.4219	GEN335831 1-RIVERBEND UNIT#1
FDNSLock	00NR	0	16WP	G15_092	FROM->TO	CIMARRON - DRAPER LAKE 345KV CKT 1	717	717	0.03408	105.406	GEN337911 1-ARKANSAS NUCLEAR ONE UNIT #2
FDNS	00NR	0	16WP	G15_092	FROM->TO	CIMARRON - DRAPER LAKE 345KV CKT 1	717	717	0.04048	105.1336	HUGO - SUNNYSIDE 345KV CKT 1
FDNS	00NR	0	16WP	G15_092	FROM->TO	CIMARRON - DRAPER LAKE 345KV CKT 1	717	717	0.03387	105.0337	P12:138:OKGE:3TERM14
FDNS	00NR	0	16WP	G15_092	FROM->TO	CIMARRON - DRAPER LAKE 345KV CKT 1	717	717	0.03408	105.0296	GRAND GULF 500/22.0KV TRANSFORMER CKT 1
FDNS	00NR	0	16WP	G15_092	FROM->TO	CIMARRON - DRAPER LAKE 345KV CKT 1	717	717	0.03408	105.0273	GEN337910 1-ARKANSAS NUCLEAR ONE UNIT #1
FDNS	00NR	0	16WP	G15_092	FROM->TO	CIMARRON - DRAPER LAKE 345KV CKT 1	717	717	0.0511	105.0144	JOHNSON COUNTY - PITTSBURG 345KV CKT 1
FDNS	00NR	0	16WP	G15_092	FROM->TO	CIMARRON - DRAPER LAKE 345KV CKT 1	717	717	0.0511	105.0144	JOHNSON COUNTY - PITTSBURG 345KV CKT 1
FDNS	00NR	0	16WP	G15_092	FROM->TO	CIMARRON - DRAPER LAKE 345KV CKT 1	717	717	0.03421	104.9951	HORSESHOE LAKE - JONES TAP 138KV CKT 1
FDNS	00NR	0	16WP	G15_092	FROM->TO	CIMARRON - DRAPER LAKE 345KV CKT 1	717	717	0.03454	104.9687	MORISNT4 138.00 - STILLWATER 138KV CKT 1
FDNS	00NR	0	16WP	G15_092	FROM->TO	CIMARRON - DRAPER LAKE 345KV CKT 1	717	717	0.03455	104.9641	P12:138:OKGE:3TERM2
FDNS	00NR	0	16WP	G15_092	FROM->TO	CIMARRON - DRAPER LAKE 345KV CKT 1	717	717	0.03908	104.9439	REDBUD - RIVERSIDE STATION 345KV CKT 1

SOLUTION	GROUP	SCENARIO	SEASON	SOURCE	DIRECTION	MONITORED ELEMENT	RATEA (MVA)	RATEB(MVA)	TDF	TC%LOADING (% MVA)	CONTINGENCY
FDNS	00NR	0	16WP	G15_092	FROM->TO	CIMARRON - DRAPER LAKE 345KV CKT 1	717	717	0.03908	104.9439	REDBUD - RIVERSIDE STATION 345KV CKT 1
FDNS	00NR	0	16WP	G15_092	FROM->TO	CIMARRON - DRAPER LAKE 345KV CKT 1	717	717	0.03408	104.8928	GEN515226 1-MUSKOGEE 6G
FDNS	00NR	0	16WP	G15_092	FROM->TO	CIMARRON - DRAPER LAKE 345KV CKT 1	717	717	0.03408	104.879	GEN501813 1-RODEMACHER UNIT 3
FDNS	00NR	0	16WP	G15_092	FROM->TO	CIMARRON - DRAPER LAKE 345KV CKT 1	717	717	0.03809	104.8291	BAILEY4 138.00 - SUNSHINE CANYON 138KV CKT 1
FDNS	00NR	0	16WP	G15_092	FROM->TO	CIMARRON - DRAPER LAKE 345KV CKT 1	717	717	0.03408	104.7782	NORTHWEST (NORTWST2) 345/138/13.8KV TRANSFORMER CKT 1
FDNS	00NR	0	16WP	G15_092	FROM->TO	CIMARRON - DRAPER LAKE 345KV CKT 1	717	717	0.03543	104.7766	7SAREPTA% 345.00 - LONGWOOD 345KV CKT 1
FDNS	00NR	0	16WP	G15_092	FROM->TO	CIMARRON - DRAPER LAKE 345KV CKT 1	717	717	0.03543	104.7766	7SAREPTA% 345.00 - LONGWOOD 345KV CKT 1
FDNS	00NR	0	16WP	G15_092	FROM->TO	CIMARRON - DRAPER LAKE 345KV CKT 1	717	717	0.034	104.7749	ARCADIA - KAMO MEMORIAL 138KV CKT 1
FDNS	00NR	0	16WP	G15_092	FROM->TO	CIMARRON - DRAPER LAKE 345KV CKT 1	717	717	0.03409	104.7555	P12:138:OKGE:3TERM12
FDNS	00NR	0	16WP	G15_092	FROM->TO	CIMARRON - DRAPER LAKE 345KV CKT 1	717	717	0.03463	104.7399	DOLET HILLS - SOUTHWEST SHREVEPORT 345KV CKT 1
FDNS	00NR	0	16WP	G15_092	FROM->TO	CIMARRON - DRAPER LAKE 345KV CKT 1	717	717	0.03463	104.7399	DOLET HILLS - SOUTHWEST SHREVEPORT 345KV CKT 1
FDNS	00NR	0	16WP	G15_092	FROM->TO	CIMARRON - DRAPER LAKE 345KV CKT 1	717	717	0.03408	104.6942	GEN515225 1-MUSKOGEE 5G
FDNS	00NR	0	16WP	G15_092	FROM->TO	CIMARRON - DRAPER LAKE 345KV CKT 1	717	717	0.03408	104.694	GEN515223 1-MUSKOGEE 4G
FDNS	00NR	0	16WP	G15_092	FROM->TO	CIMARRON - DRAPER LAKE 345KV CKT 1	717	717	0.03408	104.6904	GEN335206 1-NELSON UNIT 6
FDNS	00NR	0	16WP	G15_092	FROM->TO	CIMARRON - DRAPER LAKE 345KV CKT 1	717	717	0.03413	104.68	MEMORIAL - SKYLINE 138KV CKT 1
FDNS	00NR	0	16WP	G15_092	FROM->TO	CIMARRON - DRAPER LAKE 345KV CKT 1	717	717	0.03702	104.583	GRACEMONT (BANK 1) 345/138/13.8KV TRANSFORMER CKT 1
FDNS	00NR	0	16WP	G15_092	FROM->TO	CIMARRON - DRAPER LAKE 345KV CKT 1	717	717	0.03453	104.5721	QUAIL CREEK - SKYLINE 138KV CKT 1
FDNS	00NR	0	16WP	G15_092	FROM->TO	CIMARRON - DRAPER LAKE 345KV CKT 1	717	717	0.03408	104.5492	GEN509409 1-WILKES #3
FDNS	00NR	0	16WP	G15_092	FROM->TO	CIMARRON - DRAPER LAKE 345KV CKT 1	717	717	0.03408	104.5474	GEN337653 1-WHITE BLUFF UNIT #2
FDNS	00NR	0	16WP	G15_092	FROM->TO	CIMARRON - DRAPER LAKE 345KV CKT 1	717	717	0.03372	104.5355	P12:138:OKGE:3TERM18
FDNS	00NR	0	16WP	G15_092	FROM->TO	CIMARRON - DRAPER LAKE 345KV CKT 1	717	717	0.03809	104.5271	BAILEY4 138.00 - WESTMOORE 138KV CKT 1
FDNS	00NR	0	16WP	G15_092	FROM->TO	CIMARRON - DRAPER LAKE 345KV CKT 1	717	717	0.03408	104.519	GEN501812 1-RODEMACHER UNIT 2
FDNS	00NR	0	16WP	G15_092	FROM->TO	CIMARRON - DRAPER LAKE 345KV CKT 1	717	717	0.03408	104.5145	NORTHWEST (NORTWST4) 345/138/13.8KV TRANSFORMER CKT 1
FDNS	00NR	0	16WP	G15_092	FROM->TO	CIMARRON - DRAPER LAKE 345KV CKT 1	717	717	0.03408	104.4548	NEW MADRID 161/22.0KV TRANSFORMER CKT 1
FDNS	00NR	0	16WP	G15_092	FROM->TO	CIMARRON - DRAPER LAKE 345KV CKT 1	717	717	0.03369	104.4542	36 & MERIDIAN - CHEMTRON 138KV CKT 1
FDNS	00NR	0	16WP	G15_092	FROM->TO	CIMARRON - DRAPER LAKE 345KV CKT 1	717	717	0.03496	104.4515	THISTLE7 345.00 - WOODWARD DISTRICT EHV 345KV CKT 1
FDNS	00NR	0	16WP	G15_092	FROM->TO	CIMARRON - DRAPER LAKE 345KV CKT 1	717	717	0.03496	104.4515	THISTLE7 345.00 - WOODWARD DISTRICT EHV 345KV CKT 1
FDNS	00NR	0	16WP	G15_092	FROM->TO	CIMARRON - DRAPER LAKE 345KV CKT 1	717	717	0.03496	104.4515	THISTLE7 345.00 - WOODWARD DISTRICT EHV 345KV CKT 2
FDNS	00NR	0	16WP	G15_092	FROM->TO	CIMARRON - DRAPER LAKE 345KV CKT 1	717	717	0.03496	104.4515	THISTLE7 345.00 - WOODWARD DISTRICT EHV 345KV CKT 2
FDNS	00NR	0	16WP	G15_092	FROM->TO	CIMARRON - DRAPER LAKE 345KV CKT 1	717	717	0.03408	104.4411	NEW MADRID 345/22.0KV TRANSFORMER CKT 1
FDNS	00NR	0	16WP	G15_092	FROM->TO	CIMARRON - DRAPER LAKE 345KV CKT 1	717	717	0.03408	104.4225	GEN520947 1-HUGO1
FDNS	00NR	0	16WP	G15_092	FROM->TO	CIMARRON - DRAPER LAKE 345KV CKT 1	717	717	0.03408	104.4148	GEN337652 1-WHITE BLUFF UNIT #1
FDNS	00NR	0	16WP	G15_092	FROM->TO	CIMARRON - DRAPER LAKE 345KV CKT 1	717	717	0.03408	104.3894	NORTHWEST (NORTWST3) 345/138/13.8KV TRANSFORMER CKT 1
FDNS	00NR	0	16WP	G15_092	FROM->TO	CIMARRON - DRAPER LAKE 345KV CKT 1	717	717	0.03478	104.376	3TR3AR8EL7EL
FDNS	00NR	0	16WP	G15_092	FROM->TO	CIMARRON - DRAPER LAKE 345KV CKT 1	717	717	0.03478	104.376	7SAREPTA% 345.00 - ELDORADO EHV 345KV CKT 1
FDNS	00NR	0	16WP	G15_092	FROM->TO	CIMARRON - DRAPER LAKE 345KV CKT 1	717	717	0.03478	104.3682	ELDORADO EHV 500/345KV TRANSFORMER CKT 1
FDNS	00NR	0	16WP	G15_092	FROM->TO	CIMARRON - DRAPER LAKE 345KV CKT 1	717	717	0.03369	104.3672	CHEMTRON - PENNSYLVANIA 138KV CKT 1
FDNS	00NR	0	16WP	G15_092	FROM->TO	CIMARRON - DRAPER LAKE 345KV CKT 1	717	717	0.03462	104.3371	G15052_T 345.00 - ROSE HILL 345KV CKT 1
FDNS	00NR	0	16WP	G15_092	FROM->TO	CIMARRON - DRAPER LAKE 345KV CKT 1	717	717	0.03429	104.3332	G15074_T 345.00 - HOYT 345KV CKT 1
FDNS	00NR	0	16WP	G15_092	FROM->TO	CIMARRON - DRAPER LAKE 345KV CKT 1	717	717	0.03631	104.3021	BLANCHARD - CORNVILLE 138KV CKT 1
FDNS	00NR	0	16WP	G15_092	FROM->TO	CIMARRON - DRAPER LAKE 345KV CKT 1	717	717	0.03481	104.3015	COMANCHE - LOCO 138KV CKT 1
FDNS	00NR	0	16WP	G15_092	FROM->TO	CIMARRON - DRAPER LAKE 345KV CKT 1	717	717	0.03404	104.2791	P12:138:OKGE:3TERM17
FDNS	00NR	0	16WP	G15_092	FROM->TO	CIMARRON - DRAPER LAKE 345KV CKT 1	717	717	0.03408	104.2625	GEN515577 1-ARBWND11 0.6900
FDNS	00NR	0	16WP	G15_092	FROM->TO	CIMARRON - DRAPER LAKE 345KV CKT 1	717	717	0.03809	104.2438	FRANKLIN SW - WESTMOORE 138KV CKT 1
FDNS	00NR	0	16WP	G15_092	FROM->TO	CIMARRON - DRAPER LAKE 345KV CKT 1	717	717	0.03455	104.2374	P12:138:OKGE:3TERM11
FDNS	00NR	0	16WP	G15_092	FROM->TO	CIMARRON - DRAPER LAKE 345KV CKT 1	717	717	0.03408	104.2237	GEN334440 1-SABINE UNIT 4
FDNS	00NR	0	16WP	G15_092	FROM->TO	CIMARRON - DRAPER LAKE 345KV CKT 1	717	717	0.0341	104.2165	LONEOAK - NORTHWEST 138KV CKT 1
FDNS	00NR	0	16WP	G15_092	FROM->TO	CIMARRON - DRAPER LAKE 345KV CKT 1	717	717	0.03631	104.211	P12:138:AEPW-OGE:CORNVIL4:MAUD 4
FDNS	00NR	0	16WP	G15_092	FROM->TO	CIMARRON - DRAPER LAKE 345KV CKT 1	717	717	0.03466	104.2024	KETCH TAP - NORTHWEST 138KV CKT 1
FDNS	00NR	0	16WP	G15_092	FROM->TO	CIMARRON - DRAPER LAKE 345KV CKT 1	717	717	0.03408	104.2023	DELL 500 - ESSEX UNIT 2 500KV CKT Z1
FDNS	00NR	0	16WP	G15_092	FROM->TO	CIMARRON - DRAPER LAKE 345KV CKT 1	717	717	0.0344	104.1938	DIVISION AVE - LAKESIDE 138KV CKT 1
FDNS	00NR	0	16WP	G15_092	FROM->TO	CIMARRON - DRAPER LAKE 345KV CKT 1	717	717	0.03331	104.1729	HORSESHOE LAKE - KAMO MEMORIAL 138KV CKT 1
FDNS	00NR	0	16WP	G15_092	FROM->TO	CIMARRON - DRAPER LAKE 345KV CKT 1	717	717	0.03389	104.1303	NORTHWEST - PANTHER 138KV CKT 1
FDNS	00NR	0	16WP	G15_092	FROM->TO	CIMARRON - DRAPER LAKE 345KV CKT 1	717	717	0.03175	104.1253	G14-074T 345.00 - OKLAUNION 345KV CKT 1
FDNS	00NR	0	16WP	G15_092	FROM->TO	CIMARRON - DRAPER LAKE 345KV CKT 1	717	717	0.03126	104.1217	CLARKSVILLE - ONETA 345KV CKT 1
FDNS	00NR	0	16WP	G15_092	FROM->TO	CIMARRON - DRAPER LAKE 345KV CKT 1	717	717	0.03126	104.1217	CLARKSVILLE - ONETA 345KV CKT 1
FDNS	00NR	0	16WP	G15_092	FROM->TO	CIMARRON - DRAPER LAKE 345KV CKT 1	717	717	0.03306	104.1144	P12:138:OKGE:3TERM20
FDNS	00NR	0	16WP	G15_092	FROM->TO	CIMARRON - DRAPER LAKE 345KV CKT 1	717	717	0.03631	104.1089	BLANCHARD - MAUD 138KV CKT 1
FDNS	00NR	0	16WP	G15_092	FROM->TO	CIMARRON - DRAPER LAKE 345KV CKT 1	717	717	0.03499	104.1015	CIMARRON - HAYMAKER 138KV CKT 1
FDNS	00NR	0	16WP	G15_092	FROM->TO	CIMARRON - DRAPER LAKE 345KV CKT 1	717	717	0.03461	104.0977	P12:138:OKGE:3TERM47
FDNS	00NR	0	16WP	G15_092	FROM->TO	CIMARRON - DRAPER LAKE 345KV CKT 1	717	717	0.03408	104.0931	GEN336252 1-NINEMILE POINT UNIT#5
FDNS	00NR	0	16WP	G15_092	FROM->TO	CIMARRON - DRAPER LAKE 345KV CKT 1	717	717	0.03518	104.0857	FINNEY SWITCHING STATION - HOLCOMB 345KV CKT 1
FDNS	00NR	0	16WP	G15_092	FROM->TO	CIMARRON - DRAPER LAKE 345KV CKT 1	717	717	0.03518	104.0857	FINNEY SWITCHING STATION - HOLCOMB 345KV CKT 1
FDNS	00NR	0	16WP	G15_092	FROM->TO	CIMARRON - DRAPER LAKE 345KV CKT 1	717	717	0.03408	104.0808	DOLET HILLS 345/24.0KV TRANSFORMER CKT 1
FDNS	00NR	0	16WP	G15_092	FROM->TO	CIMARRON - DRAPER LAKE 345KV CKT 1	717	717	0.03389	104.08	PANTHER - SILVER LAKE 138KV CKT 1
FDNS	00NR	0	16WP	G15_092	FROM->TO	CIMARRON - DRAPER LAKE 345KV CKT 1	717	717	0.0344	104.0723	HEFNER - LAKESIDE 138KV CKT 1
FDNS	00NR	0	16WP	G15_092	FROM->TO	CIMARRON - DRAPER LAKE 345KV CKT 1	717	717	0.03452	104.041	BLACKBERRY - NEOSHO 345KV CKT 1
FDNS	00NR	0	16WP	G15_092	FROM->TO	CIMARRON - DRAPER LAKE 345KV CKT 1	717	717	0.03408	104.0356	WHITE BLUFF 500/26.0KV TRANSFORMER CKT 1
FDNS	00NR	0	16WP	G15_092	FROM->TO	CIMARRON - DRAPER LAKE 345KV CKT 1	717	717	0.03394	104.0273	KETCH - KETCH TAP 138KV CKT 1
FDNS	00NR	0	16WP	G15_092	FROM->TO	CIMARRON - DRAPER LAKE 345KV CKT 1	717	717	0.03463	104.02	EMPORIA ENERGY CENTER - G14_001T 345.00 345KV CKT 1
FDNS	00NR	0	16WP	G15_092	FROM->TO	CIMARRON - DRAPER LAKE 345KV CKT 1	717	717	0.0343	104.0189	HOYT - STRANGER CREEK 345KV CKT 1
FDNS	00NR	0	16WP	G15_092	FROM->TO	CIMARRON - DRAPER LAKE 345KV CKT 1	717	717	0.03382	104.0086	DIVISION AVE - MUSTANG 138KV CKT 1
FDNS	00NR	0	16WP	G15_092	FROM->TO	CIMARRON - DRAPER LAKE 345KV CKT 1	717	717	0.0342	104	G15088_T 345.00 - MOORE 345KV CKT 1
FDNS	00NR	0	16WP	G15_092	FROM->TO	CIMARRON - DRAPER LAKE 345KV CKT 1	717	717	0.03408	104	GEN300006 1-NEW MADRID UNIT 1
FDNS	00NR	0	16WP	G15_092	FROM->TO	CIMARRON - DRAPER LAKE 345KV CKT 1	717	717	0.03408	104	GEN300007 1-NEW MADRID UNIT 2
FDNS	00NR	0	16WP	G15_092	FROM->TO	CIMARRON - DRAPER LAKE 345KV CKT 1	717	717	0.03423	103.999	P12:138:WFEC:MSL02
FDNS	00NR	0	16WP	G15_092	FROM->TO	CIMARRON - DRAPER LAKE 345KV CKT 1	717	717	0.03499	103.998	DIVISION AVE - HAYMAKER 138KV CKT 1
FDNS	00NR	0	16WP	G15_092	FROM->TO	CIMARRON - DRAPER LAKE 345KV CKT 1	717	717	0.03408	103.9886	GEN509408 1-WILKES #2
FDNS	00NR	0	16WP	G15_092	FROM->TO	CIMARRON - DRAPER LAKE 345KV CKT 1	717	717	0.0348	103.9879	P12:138:AEPW-OGE:SHIDLER4:OSAGE 4

SOLUTION	GROUP	SCENARIO	SEASON	SOURCE	DIRECTION	MONITORED ELEMENT	RATEA (MVA)	RATEB(MVA)	TDF	TC%LOADING (% MVA)	CONTINGENCY
FDNS	00NR	0	16WP	G15_092	FROM->TO	CIMARRON - DRAPER LAKE 345KV CKT 1	717	717	0.03403	103.975	MCCLAIN - PLEASANT VALLEY 138KV CKT 1
FDNS	00NR	0	16WP	G15_092	FROM->TO	CIMARRON - DRAPER LAKE 345KV CKT 1	717	717	0.03438	103.9746	SWISSVALE - WEST GARDNER 345KV CKT 1
FDNS	00NR	0	16WP	G15_092	FROM->TO	CIMARRON - DRAPER LAKE 345KV CKT 1	717	717	0.03429	103.9659	G15074_T 345.00 - JEFFREY ENERGY CENTER 345KV CKT 1
FDNS	00NR	0	16WP	G15_092	FROM->TO	CIMARRON - DRAPER LAKE 345KV CKT 1	717	717	0.03422	103.962	ANADARKO - GEORGIA 138KV CKT 1
FDNS	00NR	0	16WP	G15_092	FROM->TO	CIMARRON - DRAPER LAKE 345KV CKT 1	717	717	0.03408	103.9525	GEN335204 1-NELSON UNIT 4
FDNS	00NR	0	16WP	G15_092	FROM->TO	CIMARRON - DRAPER LAKE 345KV CKT 1	717	717	0.03408	103.9519	GEN336831 1-BAXTER WILSON SES
FDNS	00NR	0	16WP	G15_092	FROM->TO	CIMARRON - DRAPER LAKE 345KV CKT 1	717	717	0.03236	103.9391	P12:138:AEPW:OKMULGE4:R.S.S-4
FDNS	00NR	0	16WP	G15_092	FROM->TO	CIMARRON - DRAPER LAKE 345KV CKT 1	717	717	0.03408	103.9208	GEN506754 1-LEBROCK STEAM 1
FDNS	00NR	0	16WP	G15_092	FROM->TO	CIMARRON - DRAPER LAKE 345KV CKT 1	717	717	0.03425	103.919	CLASSEN - ROBINSON 138KV CKT 1
FDNS	00NR	0	16WP	G15_092	FROM->TO	CIMARRON - DRAPER LAKE 345KV CKT 1	717	717	0.03408	103.9013	GEN334441 1-SABINE UNIT 5
FDNS	00NR	0	16WP	G15_092	FROM->TO	CIMARRON - DRAPER LAKE 345KV CKT 1	717	717	0.03408	103.8962	GEN334071 1-LEWIS CREEK 2
FDNS	00NR	0	16WP	G15_092	FROM->TO	CIMARRON - DRAPER LAKE 345KV CKT 1	717	717	0.03422	103.8953	FLETCHER - GEORGIA 138KV CKT 1
FDNS	00NR	0	16WP	G15_092	FROM->TO	CIMARRON - DRAPER LAKE 345KV CKT 1	717	717	0.03463	103.8915	G14_001T 345.00 - WICHITA 345KV CKT 1
FDNS	00NR	0	16WP	G15_092	FROM->TO	CIMARRON - DRAPER LAKE 345KV CKT 1	717	717	0.03408	103.8883	GEN334070 1-LEWIS CREEK 1
FDNS	00NR	0	16WP	G15_092	FROM->TO	CIMARRON - DRAPER LAKE 345KV CKT 1	717	717	0.03462	103.8865	BENTON - WICHITA 345KV CKT 1
FDNS	00NR	0	16WP	G15_092	FROM->TO	CIMARRON - DRAPER LAKE 345KV CKT 1	717	717	0.03518	103.8864	FINNEY SWITCHING STATION - Hitchland Interchange 345KV CKT 1
FDNS	00NR	0	16WP	G15_092	FROM->TO	CIMARRON - DRAPER LAKE 345KV CKT 1	717	717	0.03408	103.8862	GEN336251 1-NINEMILE POINT UNIT#4
FDNS	00NR	0	16WP	G15_092	FROM->TO	CIMARRON - DRAPER LAKE 345KV CKT 1	717	717	0.03443	103.8786	WEBRE - WELLS 500KV CKT 1
FDNS	00NR	0	16WP	G15_092	FROM->TO	CIMARRON - DRAPER LAKE 345KV CKT 1	717	717	0.03453	103.8775	LACYGNE - NEOSHO 345KV CKT 1
FDNSLock	00NR	0	16WP	G15_092	FROM->TO	CIMARRON - DRAPER LAKE 345KV CKT 1	717	717	0.03408	103.8742	GEN590011 2-ERCOT EQUIVALENCE
FDNS	00NR	0	16WP	G15_092	FROM->TO	CIMARRON - DRAPER LAKE 345KV CKT 1	717	717	0.03433	103.862	EMPORIA ENERGY CENTER - SWISSVALE 345KV CKT 1
FDNS	00NR	0	16WP	G15_092	FROM->TO	CIMARRON - DRAPER LAKE 345KV CKT 1	717	717	0.03419	103.8385	EMPIRE - FLETCHER 138KV CKT 1
FDNSLock	00NR	0	16WP	G15_092	FROM->TO	CIMARRON - DRAPER LAKE 345KV CKT 1	717	717	0.03408	103.8317	GEN590010 1-ERCOT EQUIVALENCE
FDNS	00NR	0	16WP	G15_092	FROM->TO	CIMARRON - DRAPER LAKE 345KV CKT 1	717	717	0.03436	103.8223	G1524G1525 345.00 - THISTLE7 345.00 345KV CKT 1
FDNS	00NR	0	16WP	G15_092	FROM->TO	CIMARRON - DRAPER LAKE 345KV CKT 1	717	717	0.03436	103.8223	G1524G1525 345.00 - THISTLE7 345.00 345KV CKT 2
FDNS	00NR	0	16WP	G15_092	FROM->TO	CIMARRON - DRAPER LAKE 345KV CKT 1	717	717	0.03408	103.8186	GEN503909 1-FULTONU1 1 16.000
FDNSLock	00NR	0	16WP	G15_092	FROM->TO	CIMARRON - DRAPER LAKE 345KV CKT 1	717	717	0.03408	103.8129	GEN338146 1-INDEPENDENCE UNIT #2
FDNS	00NR	0	16WP	G15_092	FROM->TO	CIMARRON - DRAPER LAKE 345KV CKT 1	717	717	0.0341	103.8126	LONEOAK - QUAIL CREEK 138KV CKT 1
FDNS	00NR	0	16WP	G15_092	FROM->TO	CIMARRON - DRAPER LAKE 345KV CKT 1	717	717	0.03408	103.809	GEN501811 1-RODEMACHER UNIT 1
FDNS	00NR	0	16WP	G15_092	FROM->TO	CIMARRON - DRAPER LAKE 345KV CKT 1	717	717	0.03418	103.8044	WOODRING (WOODRNG2) 345/138/13.8KV TRANSFORMER CKT 1
FDNS	00NR	0	16WP	G15_092	FROM->TO	CIMARRON - DRAPER LAKE 345KV CKT 1	717	717	0.03652	103.7918	CRINER - PAYNE 138.00 138KV CKT 1
FDNS	00NR	0	16WP	G15_092	FROM->TO	CIMARRON - DRAPER LAKE 345KV CKT 1	717	717	0.0348	103.7817	OSAGE - WEBB CITY TAP 138KV CKT 1
FDNS	00NR	0	16WP	G15_092	FROM->TO	CIMARRON - DRAPER LAKE 345KV CKT 1	717	717	0.03419	103.7768	COMANCHE - EMPIRE 138KV CKT 1
FDNS	00NR	0	16WP	G15_092	FROM->TO	CIMARRON - DRAPER LAKE 345KV CKT 1	717	717	0.03408	103.7748	FRONTIER - GRIMES 345KV CKT 1
FDNS	00NR	0	16WP	G15_092	FROM->TO	CIMARRON - DRAPER LAKE 345KV CKT 1	717	717	0.03408	103.7716	GEN334433 1-SABINE UNIT 3
FDNS	00NR	0	16WP	G15_092	FROM->TO	CIMARRON - DRAPER LAKE 345KV CKT 1	717	717	0.03409	103.7693	P12:069:OKGE:3TERM4
FDNS	00NR	0	16WP	G15_092	FROM->TO	CIMARRON - DRAPER LAKE 345KV CKT 1	717	717	0.03408	103.7671	GEN334030 1-FRONTIER UNIT 1
FDNS	00NR	0	16WP	G15_092	FROM->TO	CIMARRON - DRAPER LAKE 345KV CKT 1	717	717	0.03408	103.7661	GEN334031 1-FRONTIER UNIT 2
FDNS	00NR	0	16WP	G15_092	FROM->TO	CIMARRON - DRAPER LAKE 345KV CKT 1	717	717	0.03408	103.764	GEN303007 1-1BC2 U2
FDNS	00NR	0	16WP	G15_092	FROM->TO	CIMARRON - DRAPER LAKE 345KV CKT 1	717	717	0.03464	103.7619	SPVALLY4 138.00 - STILLWATER 138KV CKT 1
FDNS	00NR	0	16WP	G15_092	FROM->TO	CIMARRON - DRAPER LAKE 345KV CKT 1	717	717	0.03408	103.7587	GEN303006 1-1BC2 U1
FDNS	00NR	0	16WP	G15_092	FROM->TO	CIMARRON - DRAPER LAKE 345KV CKT 1	717	717	0.03408	103.7582	GEN337041 1-GERALD ANDRUS
FDNS	00NR	0	16WP	G15_092	FROM->TO	CIMARRON - DRAPER LAKE 345KV CKT 1	717	717	0.03408	103.7551	P12:161:AEPW:DYESS 5:HYLAND 5
FDNS	00NR	0	16WP	G15_092	FROM->TO	CIMARRON - DRAPER LAKE 345KV CKT 1	717	717	0.03408	103.7415	GEN336191 1-LITTLE GYPSY UNIT#3
FDNS	00NR	0	16WP	G15_092	FROM->TO	CIMARRON - DRAPER LAKE 345KV CKT 1	717	717	0.03415	103.7374	8DANIEL8 500.00 - MCKNIGHT 500KV CKT 1
FDNS	00NR	0	16WP	G15_092	FROM->TO	CIMARRON - DRAPER LAKE 345KV CKT 1	717	717	0.03408	103.7345	GEN509393 S1-ARSENAL HILL GENS #4 (STALL)
FDNS	00NR	0	16WP	G15_092	FROM->TO	CIMARRON - DRAPER LAKE 345KV CKT 1	717	717	0.03429	103.7342	CLEAVELAND - CLEVLND 4 138.00 138KV CKT Z1
FDNS	00NR	0	16WP	G15_092	FROM->TO	CIMARRON - DRAPER LAKE 345KV CKT 1	717	717	0.03429	103.7339	CLEVELAND (CLVAUTO1) 345/138/13.8KV TRANSFORMER CKT 1
FDNS	00NR	0	16WP	G15_092	FROM->TO	CIMARRON - DRAPER LAKE 345KV CKT 1	717	717	0.03429	103.7339	CLEVELAND (CLVAUTO1) 345/138/13.8KV TRANSFORMER CKT 1
FDNS	00NR	0	16WP	G15_092	FROM->TO	CIMARRON - DRAPER LAKE 345KV CKT 1	717	717	0.03464	103.7325	PAYNESB4 138.00 - SPVALLY4 138.00 138KV CKT 1
FDNS	00NR	0	16WP	G15_092	FROM->TO	CIMARRON - DRAPER LAKE 345KV CKT 1	717	717	0.03409	103.7308	P12:138:OKGE:3TERM13
FDNS	00NR	0	16WP	G15_092	FROM->TO	CIMARRON - DRAPER LAKE 345KV CKT 1	717	717	0.03338	103.7266	ARKANSAS NUCLEAR ONE - FT SMITH 500KV CKT 1
FDNS	00NR	0	16WP	G15_092	FROM->TO	CIMARRON - DRAPER LAKE 345KV CKT 1	717	717	0.03338	103.7266	ARKANSAS NUCLEAR ONE - FT SMITH 500KV CKT 1
FDNS	00NR	0	16WP	G15_092	FROM->TO	CIMARRON - DRAPER LAKE 345KV CKT 1	717	717	0.03408	103.7179	GEN509392 G2-ARSENAL HILL GENS #3 (STALL)
FDNS	00NR	0	16WP	G15_092	FROM->TO	CIMARRON - DRAPER LAKE 345KV CKT 1	717	717	0.03408	103.7178	GEN509391 G1-ARSENAL HILL GENS #2 (STALL)
FDNS	00NR	0	16WP	G15_092	FROM->TO	CIMARRON - DRAPER LAKE 345KV CKT 1	717	717	0.03464	103.7169	CUSHING - PAYNESB4 138.00 138KV CKT 1
FDNS	00NR	0	16WP	G15_092	FROM->TO	CIMARRON - DRAPER LAKE 345KV CKT 1	717	717	0.03408	103.711	GEN335614 1-WILLOW GLENN UNIT#4
FDNS	00NR	0	16WP	G15_092	FROM->TO	CIMARRON - DRAPER LAKE 345KV CKT 1	717	717	0.0341	103.7087	DAYTON - MUSTANG 138KV CKT 1
FDNS	00NR	0	16WP	G15_092	FROM->TO	CIMARRON - DRAPER LAKE 345KV CKT 1	717	717	0.0341	103.7038	DAYTON - HOBBY LOBBY 138KV CKT 1
FDNS	00NR	0	16WP	G15_092	FROM->TO	CIMARRON - DRAPER LAKE 345KV CKT 1	717	717	0.03408	103.6985	GEN303008 1-1BC2 U3
FDNS	00NR	0	16WP	G15_092	FROM->TO	CIMARRON - DRAPER LAKE 345KV CKT 1	717	717	0.03425	103.6882	MUSTANG - SW 5TH 138KV CKT 1
FDNS	00NR	0	16WP	G15_092	FROM->TO	CIMARRON - DRAPER LAKE 345KV CKT 1	717	717	0.03408	103.6855	GEN338143 1-INDEPENDENCE UNIT #1
FDNS	00NR	0	16WP	G15_092	FROM->TO	CIMARRON - DRAPER LAKE 345KV CKT 1	717	717	0.03431	103.6766	ELDORADO EHV - MOUNT OLIVE 500KV CKT 1
FDNS	00NR	0	16WP	G15_092	FROM->TO	CIMARRON - DRAPER LAKE 345KV CKT 1	717	717	0.03408	103.6764	GEN336170 1-GULF OXY U4
FDNS	00NR	0	16WP	G15_092	FROM->TO	CIMARRON - DRAPER LAKE 345KV CKT 1	717	717	0.03408	103.6751	GEN336464 1-MICHOUD UNIT #3
FDNS	00NR	0	16WP	G15_092	FROM->TO	CIMARRON - DRAPER LAKE 345KV CKT 1	717	717	0.03652	103.6693	COLE - CRINER 138KV CKT 1
FDNS	00NR	0	16WP	G15_092	FROM->TO	CIMARRON - DRAPER LAKE 345KV CKT 1	717	717	0.03408	103.6516	ESSEX UNIT 2 500/18.0KV TRANSFORMER CKT 1
FDNS	00NR	0	16WP	G15_092	FROM->TO	CIMARRON - DRAPER LAKE 345KV CKT 1	717	717	0.03408	103.6516	P12:069:OKGE:3TERM19
FDNS	00NR	0	16WP	G15_092	FROM->TO	CIMARRON - DRAPER LAKE 345KV CKT 1	717	717	0.03419	103.6427	7LUTESVIL 345.00 - 7ST FRANC 345.00 345KV CKT 1
FDNS	00NR	0	16WP	G15_092	FROM->TO	CIMARRON - DRAPER LAKE 345KV CKT 1	717	717	0.03414	103.6334	OUMED 4 - STONEWALL 138KV CKT 1
FDNS	00NR	0	16WP	G15_092	FROM->TO	CIMARRON - DRAPER LAKE 345KV CKT 1	717	717	0.03408	103.6302	GEN336801 1-BAXTER WILSON UNIT #1
FDNS	00NR	0	16WP	G15_092	FROM->TO	CIMARRON - DRAPER LAKE 345KV CKT 1	717	717	0.03425	103.6262	LIGHTNING CREEK - ROBINSON 138KV CKT 1
FDNS	00NR	0	16WP	G15_092	FROM->TO	CIMARRON - DRAPER LAKE 345KV CKT 1	717	717	0.03381	103.6225	ARCADIA - LGARBER4 138.00 138KV CKT 1
FDNS	00NR	0	16WP	G15_092	FROM->TO	CIMARRON - DRAPER LAKE 345KV CKT 1	717	717	0.03408	103.6136	GEN506752 1-LEBROCK GAS 1
FDNS	00NR	0	16WP	G15_092	FROM->TO	CIMARRON - DRAPER LAKE 345KV CKT 1	717	717	0.03408	103.6135	GEN506753 1-LEBROCK GAS 2
FDNS	00NR	0	16WP	G15_092	FROM->TO	CIMARRON - DRAPER LAKE 345KV CKT 1	717	717	0.03417	103.6057	7JASPER 345.00 - BLACKBERRY 345KV CKT 1
FDNS	00NR	0	16WP	G15_092	FROM->TO	CIMARRON - DRAPER LAKE 345KV CKT 1	717	717	0.0348	103.6018	FAIRFAX TAP - SHIDLER 138KV CKT 1
FDNS	00NR	0	16WP	G15_092	FROM->TO	CIMARRON - DRAPER LAKE 345KV CKT 1	717	717	0.0348	103.6017	FAIRFAX TAP - WEBB CITY TAP 138KV CKT 1
FDNS	00NR	0	16WP	G15_092	FROM->TO	CIMARRON - DRAPER LAKE 345KV CKT 1	717	717	0.03381	103.5927	CHITWOOD - LGARBER4 138.00 138KV CKT 1

SOLUTION	GROUP	SCENARIO	SEASON	SOURCE	DIRECTION	MONITORED ELEMENT	RATEA (MVA)	RATEB(MVA)	TDF	TC%LOADING (% MVA)	CONTINGENCY
FDNS	00NR	0	16WP	G15_092	FROM->TO	CIMARRON - DRAPER LAKE 345KV CKT 1	717	717	0.03408	103.5925	GEN501910 1-ACADIA UNIT ST1
FDNS	00NR	0	16WP	G15_092	FROM->TO	CIMARRON - DRAPER LAKE 345KV CKT 1	717	717	0.03408	103.5817	RODEMACHER 230/22.0KV TRANSFORMER CKT 1
FDNS	00NR	0	16WP	G15_092	FROM->TO	CIMARRON - DRAPER LAKE 345KV CKT 1	717	717	0.03381	103.5804	CHITWOOD - JONES TAP 138KV CKT 1
FDNS	00NR	0	16WP	G15_092	FROM->TO	CIMARRON - DRAPER LAKE 345KV CKT 1	717	717	0.03408	103.5784	GEN511843 1-RIVERSIDE STATION #2
FDNS	00NR	0	16WP	G15_092	FROM->TO	CIMARRON - DRAPER LAKE 345KV CKT 1	717	717	0.03391	103.5772	P12:138:AEPW-OGE:WTH_JCT4:JENSEN4
FDNS	00NR	0	16WP	G15_092	FROM->TO	CIMARRON - DRAPER LAKE 345KV CKT 1	717	717	0.03432	103.571	TULSA NORTH - WEKIWA 345KV CKT 1
FDNS	00NR	0	16WP	G15_092	FROM->TO	CIMARRON - DRAPER LAKE 345KV CKT 1	717	717	0.03432	103.571	TULSA NORTH - WEKIWA 345KV CKT 1
FDNS	00NR	0	16WP	G15_092	FROM->TO	CIMARRON - DRAPER LAKE 345KV CKT 1	717	717	0.03451	103.5684	6LAYFLD 230.00 - CARROLL 230KV CKT 1
FDNS	00NR	0	16WP	G15_092	FROM->TO	CIMARRON - DRAPER LAKE 345KV CKT 1	717	717	0.03421	103.5641	8WNEWMADRID 500.00 - DELL 500 500KV CKT 1
FDNS	00NR	0	16WP	G15_092	FROM->TO	CIMARRON - DRAPER LAKE 345KV CKT 1	717	717	0.03409	103.5615	P12:345:GRDA:CHOUTEAU-SPORTSMANACRES
FDNS	00NR	0	16WP	G15_092	FROM->TO	CIMARRON - DRAPER LAKE 345KV CKT 1	717	717	0.03438	103.5548	ELDORADO EHV - SHERIDAN EHV 500KV CKT 1
FDNS	00NR	0	16WP	G15_092	FROM->TO	CIMARRON - DRAPER LAKE 345KV CKT 1	717	717	0.0344	103.5535	CHISHOLM6 230.00 - ELK CITY 230KV 230KV CKT 1
FDNS	00NR	0	16WP	G15_092	FROM->TO	CIMARRON - DRAPER LAKE 345KV CKT 1	717	717	0.0344	103.5504	ELK CITY 230KV (ELKCTY-6) 230/138/13.8KV TRANSFORMER CKT 1
FDNS	00NR	0	16WP	G15_092	FROM->TO	CIMARRON - DRAPER LAKE 345KV CKT 1	717	717	0.0344	103.5504	ELK CITY 230KV (ELKCTY-6) 230/138/13.8KV TRANSFORMER CKT 1
FDNS	00NR	0	16WP	G15_092	FROM->TO	CIMARRON - DRAPER LAKE 345KV CKT 1	717	717	0.03444	103.5453	G13-010T 345.00 - POST ROCK 345KV CKT 1
FDNS	00NR	0	16WP	G15_092	FROM->TO	CIMARRON - DRAPER LAKE 345KV CKT 1	717	717	0.03384	103.5337	P12:138:AEPW:N.E.S.-4:CATOOSA4
FDNS	00NR	0	16WP	G15_092	FROM->TO	CIMARRON - DRAPER LAKE 345KV CKT 1	717	717	0.03414	103.5322	OUMED 4 - PARK PLACE 138KV CKT 1
FDNS	00NR	0	16WP	G15_092	FROM->TO	CIMARRON - DRAPER LAKE 345KV CKT 1	717	717	0.034	103.5255	FULTON 115 - HOPE 115KV CKT 1
FDNS	00NR	0	16WP	G15_092	FROM->TO	CIMARRON - DRAPER LAKE 345KV CKT 1	717	717	0.034	103.5255	FULTON 115 - HOPE 115KV CKT 1
FDNS	00NR	0	16WP	G15_092	FROM->TO	CIMARRON - DRAPER LAKE 345KV CKT 1	717	717	0.03421	103.5186	P13:138-161:WERE:NSES_TX-4OR5::
FDNS	00NR	0	16WP	G15_092	FROM->TO	CIMARRON - DRAPER LAKE 345KV CKT 1	717	717	0.03408	103.5156	8CAJUN2 500/24.0KV TRANSFORMER CKT 1
FDNS	00NR	0	16WP	G15_092	FROM->TO	CIMARRON - DRAPER LAKE 345KV CKT 1	717	717	0.03415	103.5154	MORISNT4 138.00 - SOONER 138KV CKT 1
FDNS	00NR	0	16WP	G15_092	FROM->TO	CIMARRON - DRAPER LAKE 345KV CKT 1	717	717	0.03403	103.5113	P12:138:AEPW:CATOOSA4:T.S.E.-4
FDNS	00NR	0	16WP	G15_092	FROM->TO	CIMARRON - DRAPER LAKE 345KV CKT 1	717	717	0.03408	103.5052	ST FRANCIS - ST FRANCIS 1 161KV CKT Z1
FDNS	00NR	0	16WP	G15_092	FROM->TO	CIMARRON - DRAPER LAKE 345KV CKT 1	717	717	0.03421	103.5015	7JASPER 345.00 - MORGAN 345KV CKT 1
FDNS	00NR	0	16WP	G15_092	FROM->TO	CIMARRON - DRAPER LAKE 345KV CKT 1	717	717	0.03409	103.4974	P12:069:OKGE:3TERM3
FDNS	00NR	0	16WP	G15_092	FROM->TO	CIMARRON - DRAPER LAKE 345KV CKT 1	717	717	0.03697	103.4908	HUGO - VALLIANT 345KV CKT 1
FDNS	00NR	0	16WP	G15_092	FROM->TO	CIMARRON - DRAPER LAKE 345KV CKT 1	717	717	0.03697	103.4908	HUGO - VALLIANT 345KV CKT 1
FDNS	00NR	0	16WP	G15_092	FROM->TO	CIMARRON - DRAPER LAKE 345KV CKT 1	717	717	0.03408	103.4903	GEN509394 1-FLINT CREEK
FDNS	00NR	0	16WP	G15_092	FROM->TO	CIMARRON - DRAPER LAKE 345KV CKT 1	717	717	0.03408	103.4898	GEN300015 1-1SGPDEL 18.000
FDNS	00NR	0	16WP	G15_092	FROM->TO	CIMARRON - DRAPER LAKE 345KV CKT 1	717	717	0.03444	103.4897	G13-010T 345.00 - SPEARVILLE 345KV CKT 1
FDNS	00NR	0	16WP	G15_092	FROM->TO	CIMARRON - DRAPER LAKE 345KV CKT 1	717	717	0.03398	103.4895	DALE - HORSESHOE LAKE 138KV CKT 1
FDNS	00NR	0	16WP	G15_092	FROM->TO	CIMARRON - DRAPER LAKE 345KV CKT 1	717	717	0.03425	103.4888	LIGHTNING CREEK - TROSPER 138KV CKT 1
FDNS	00NR	0	16WP	G15_092	FROM->TO	CIMARRON - DRAPER LAKE 345KV CKT 1	717	717	0.03408	103.4794	GEN337766 1-TRACTEBEL UNIT S1
FDNS	00NR	0	16WP	G15_092	FROM->TO	CIMARRON - DRAPER LAKE 345KV CKT 1	717	717	0.03408	103.4788	P12:138:AEPW:SHERID4:112GORE4
FDNS	00NR	0	16WP	G15_092	FROM->TO	CIMARRON - DRAPER LAKE 345KV CKT 1	717	717	0.03408	103.4762	GEN515564 1-ORIGIN11 0.6900
FDNS	00NR	0	16WP	G15_092	FROM->TO	CIMARRON - DRAPER LAKE 345KV CKT 1	717	717	0.03408	103.4762	GEN515565 1-ORIGIN21 0.6900
FDNS	00NR	0	16WP	G15_092	FROM->TO	CIMARRON - DRAPER LAKE 345KV CKT 1	717	717	0.0341	103.4744	36 & MERIDIAN - HOBBY LOBBY 138KV CKT 1
FDNS	00NR	0	16WP	G15_092	FROM->TO	CIMARRON - DRAPER LAKE 345KV CKT 1	717	717	0.0343	103.474	HAMMETT TAP - HAMMETT2 138KV CKT 1
FDNS	00NR	0	16WP	G15_092	FROM->TO	CIMARRON - DRAPER LAKE 345KV CKT 1	717	717	0.035	103.4732	ANADARKO - GRACMNT4 138.00 138KV CKT 1
FDNS	00NR	0	16WP	G15_092	FROM->TO	CIMARRON - DRAPER LAKE 345KV CKT 1	717	717	0.03408	103.4731	GEN336222 1-LITTLE GYPSY UNIT#2
FDNS	00NR	0	16WP	G15_092	FROM->TO	CIMARRON - DRAPER LAKE 345KV CKT 1	717	717	0.03459	103.4701	NORTHEAST STATION - ONETA 345KV CKT 1
FDNS	00NR	0	16WP	G15_092	FROM->TO	CIMARRON - DRAPER LAKE 345KV CKT 1	717	717	0.03459	103.4701	NORTHEAST STATION - ONETA 345KV CKT 1
FDNS	00NR	0	16WP	G15_092	FROM->TO	CIMARRON - DRAPER LAKE 345KV CKT 1	717	717	0.03415	103.4701	P12:138:OKGE:3TERM28
FDNS	00NR	0	16WP	G15_092	FROM->TO	CIMARRON - DRAPER LAKE 345KV CKT 1	717	717	0.03415	103.4665	FLETCHER - MARLOW JCT 69KV CKT 1
FDNS	00NR	0	16WP	G15_092	FROM->TO	CIMARRON - DRAPER LAKE 345KV CKT 1	717	717	0.03408	103.4622	GEN501970 1-EVANGELINE UNIT 7
FDNS	00NR	0	16WP	G15_092	FROM->TO	CIMARRON - DRAPER LAKE 345KV CKT 1	717	717	0.03408	103.4621	NELSON 230/20.0KV TRANSFORMER CKT 1
FDNS	00NR	0	16WP	G15_092	FROM->TO	CIMARRON - DRAPER LAKE 345KV CKT 1	717	717	0.03395	103.4586	NW164TH4 138.00 - PIEDMONT 138KV CKT 1
FDNS	00NR	0	16WP	G15_092	FROM->TO	CIMARRON - DRAPER LAKE 345KV CKT 1	717	717	0.03408	103.458	P12:161:AEPW:EROGERS5:ECNTRTN5
FDNS	00NR	0	16WP	G15_092	FROM->TO	CIMARRON - DRAPER LAKE 345KV CKT 1	717	717	0.03405	103.4577	P12:138:OKGE-AEPW:JENSEN4:REDROCKRD4
FDNS	00NR	0	16WP	G15_092	FROM->TO	CIMARRON - DRAPER LAKE 345KV CKT 1	717	717	0.03395	103.4567	NORTHWEST - NW164TH4 138.00 138KV CKT 1
FDNS	00NR	0	16WP	G15_092	FROM->TO	CIMARRON - DRAPER LAKE 345KV CKT 1	717	717	0.03408	103.4555	ESSEX UNIT 2 500/18.0KV TRANSFORMER CKT 1
FDNS	00NR	0	16WP	G15_092	FROM->TO	CIMARRON - DRAPER LAKE 345KV CKT 1	717	717	0.03411	103.4553	P12:161:AEPW-SWPA:BEAVER5:EROGERS5
FDNS	00NR	0	16WP	G15_092	FROM->TO	CIMARRON - DRAPER LAKE 345KV CKT 1	717	717	0.03503	103.4548	COMANCHE TAP - OMPA-DUNCAN 840 138KV CKT 1
FDNS	00NR	0	16WP	G15_092	FROM->TO	CIMARRON - DRAPER LAKE 345KV CKT 1	717	717	0.03446	103.4517	CORN TAP - SEQUOYAHJ4 138.00 138KV CKT 1
FDNS	00NR	0	16WP	G15_092	FROM->TO	CIMARRON - DRAPER LAKE 345KV CKT 1	717	717	0.03436	103.4516	P12:138:AEPW:CORNVIL4:S.W.S.-4
FDNS	00NR	0	16WP	G15_092	FROM->TO	CIMARRON - DRAPER LAKE 345KV CKT 1	717	717	0.03446	103.4513	ANADARKO - SEQUOYAHJ4 138.00 138KV CKT 1
FDNS	00NR	0	16WP	G15_092	FROM->TO	CIMARRON - DRAPER LAKE 345KV CKT 1	717	717	0.03398	103.448	DALE - SQUIRL CREEK 138KV CKT 1
FDNS	00NR	0	16WP	G15_092	FROM->TO	CIMARRON - DRAPER LAKE 345KV CKT 1	717	717	0.03419	103.4464	HEALDTON - LOCO 138KV CKT 1
FDNS	00NR	0	16WP	G15_092	FROM->TO	CIMARRON - DRAPER LAKE 345KV CKT 1	717	717	0.03408	103.4463	P12:161:AEPW:DYESS5:ELMSPRNG:TONTITN5
FDNS	00NR	0	16WP	G15_092	FROM->TO	CIMARRON - DRAPER LAKE 345KV CKT 1	717	717	0.03408	103.4425	GEN336152 1-WATERFORD UNIT#2
FDNS	00NR	0	16WP	G15_092	FROM->TO	CIMARRON - DRAPER LAKE 345KV CKT 1	717	717	0.03408	103.4415	GEN336151 1-WATERFORD UNIT#1
FDNS	00NR	0	16WP	G15_092	FROM->TO	CIMARRON - DRAPER LAKE 345KV CKT 1	717	717	0.03408	103.4407	ST FRANCIS 345/161KV TRANSFORMER CKT 1
FDNS	00NR	0	16WP	G15_092	FROM->TO	CIMARRON - DRAPER LAKE 345KV CKT 1	717	717	0.0345	103.4351	CORN TAP - CORNVILLE 138KV CKT 1
FDNS	00NR	0	16WP	G15_092	FROM->TO	CIMARRON - DRAPER LAKE 345KV CKT 1	717	717	0.03398	103.4322	MARSHALL - WOODRING 138KV CKT 1
FDNS	00NR	0	16WP	G15_092	FROM->TO	CIMARRON - DRAPER LAKE 345KV CKT 1	717	717	0.03408	103.4302	GEN334392 1-EXXON MOBIL IPP 1
FDNS	00NR	0	16WP	G15_092	FROM->TO	CIMARRON - DRAPER LAKE 345KV CKT 1	717	717	0.03398	103.4299	COTTONWOOD CREEK - MARSHALL 138KV CKT 1
FDNS	00NR	0	16WP	G15_092	FROM->TO	CIMARRON - DRAPER LAKE 345KV CKT 1	717	717	0.03411	103.4289	HEFNER - TULSA 138KV CKT 1
FDNS	00NR	0	16WP	G15_092	FROM->TO	CIMARRON - DRAPER LAKE 345KV CKT 1	717	717	0.03652	103.4279	COLE - OUSW4 138KV CKT 1
FDNS	00NR	0	16WP	G15_092	FROM->TO	CIMARRON - DRAPER LAKE 345KV CKT 1	717	717	0.03417	103.426	MC NIEL 500/115KV TRANSFORMER CKT 1
FDNS	00NR	0	16WP	G15_092	FROM->TO	CIMARRON - DRAPER LAKE 345KV CKT 1	717	717	0.03408	103.424	GEN334393 1-EXXON MOBIL IPP 2
FDNS	00NR	0	16WP	G15_092	FROM->TO	CIMARRON - DRAPER LAKE 345KV CKT 1	717	717	0.03408	103.424	GEN334394 1-EXXON MOBIL IPP 3
FDNS	00NR	0	16WP	G15_092	FROM->TO	CIMARRON - DRAPER LAKE 345KV CKT 1	717	717	0.03461	103.4222	P12:138:AEPW:MOUNDRD4:SHIDLER4
FDNS	00NR	0	16WP	G15_092	FROM->TO	CIMARRON - DRAPER LAKE 345KV CKT 1	717	717	0.03407	103.4218	BISMARK - HOT SPRINGS WEST BUS 115KV CKT 1
FDNS	00NR	0	16WP	G15_092	FROM->TO	CIMARRON - DRAPER LAKE 345KV CKT 1	717	717	0.03398	103.4138	EL RENO SW - MUSTANG2 69.000 69KV CKT 1
FDNS	00NR	0	16WP	G15_092	FROM->TO	CIMARRON - DRAPER LAKE 345KV CKT 1	717	717	0.03373	103.4132	BRISTOW - SILVER CITY 138KV CKT 1
FDNS	00NR	0	16WP	G15_092	FROM->TO	CIMARRON - DRAPER LAKE 345KV CKT 1	717	717	0.03392	103.4123	KELLYAV4 138.00 - MEMORIAL 138KV CKT 1
FDNS	00NR	0	16WP	G15_092	FROM->TO	CIMARRON - DRAPER LAKE 345KV CKT 1	717	717	0.03408	103.4084	GEN501972 1-EVANGELINE UNIT 7-2
FDNS	00NR	0	16WP	G15_092	FROM->TO	CIMARRON - DRAPER LAKE 345KV CKT 1	717	717	0.03408	103.4083	GEN501971 1-EVANGELINE UNIT 7-1

SOLUTION	GROUP	SCENARIO	SEASON	SOURCE	DIRECTION	MONITORED ELEMENT	RATEA (MVA)	RATEB(MVA)	TDF	TC%LOADING (% MVA)	CONTINGENCY
FDNS	00NR	0	16WP	G15_092	FROM->TO	CIMARRON - DRAPER LAKE 345KV CKT 1	717	717	0.03461	103.4049	SHIDLER - WEST PAWHUSKA 138KV CKT 1
FDNS	00NR	0	16WP	G15_092	FROM->TO	CIMARRON - DRAPER LAKE 345KV CKT 1	717	717	0.03419	103.4047	HEALDTON - RINGLING 138KV CKT 1
FDNS	00NR	0	16WP	G15_092	FROM->TO	CIMARRON - DRAPER LAKE 345KV CKT 1	717	717	0.03408	103.3987	GEN334431 1-SABINE UNIT 1
FDNS	00NR	0	16WP	G15_092	FROM->TO	CIMARRON - DRAPER LAKE 345KV CKT 1	717	717	0.03408	103.3986	GEN334432 1-SABINE UNIT 2
FDNS	00NR	0	16WP	G15_092	FROM->TO	CIMARRON - DRAPER LAKE 345KV CKT 1	717	717	0.03408	103.3959	GEN336242 1-1NMIL ST1 18.000
FDNS	00NR	0	16WP	G15_092	FROM->TO	CIMARRON - DRAPER LAKE 345KV CKT 1	717	717	0.03408	103.3954	GEN337764 1-TRACTEBEL UNIT C1
FDNS	00NR	0	16WP	G15_092	FROM->TO	CIMARRON - DRAPER LAKE 345KV CKT 1	717	717	0.03408	103.3954	GEN337765 1-TRACTEBEL UNIT C2
FDNS	00NR	0	16WP	G15_092	FROM->TO	CIMARRON - DRAPER LAKE 345KV CKT 1	717	717	0.03417	103.3939	BROOKLINE - MORGAN 345KV CKT 1
FDNS	00NR	0	16WP	G15_092	FROM->TO	CIMARRON - DRAPER LAKE 345KV CKT 1	717	717	0.03417	103.3939	BROOKLINE - MORGAN 345KV CKT 1
FDNS	00NR	0	16WP	G15_092	FROM->TO	CIMARRON - DRAPER LAKE 345KV CKT 1	717	717	0.03408	103.3938	GEN501912 1-ACADIA UNIT CT1B
FDNS	00NR	0	16WP	G15_092	FROM->TO	CIMARRON - DRAPER LAKE 345KV CKT 1	717	717	0.03408	103.3931	GEN501911 1-ACADIA UNIT CT1A
FDNS	00NR	0	16WP	G15_092	FROM->TO	CIMARRON - DRAPER LAKE 345KV CKT 1	717	717	0.03414	103.3919	BODLE - PARK PLACE 138KV CKT 1
FDNS	00NR	0	16WP	G15_092	FROM->TO	CIMARRON - DRAPER LAKE 345KV CKT 1	717	717	0.03423	103.3911	COUNCIL - MUSTANG 138KV CKT 1
FDNS	00NR	0	16WP	G15_092	FROM->TO	CIMARRON - DRAPER LAKE 345KV CKT 1	717	717	0.03476	103.391	BRYANT - MEMORIAL 138KV CKT 1
FDNS	00NR	0	16WP	G15_092	FROM->TO	CIMARRON - DRAPER LAKE 345KV CKT 1	717	717	0.03461	103.3884	PAWHUSKA TAP - WEST PAWHUSKA 138KV CKT 1
FDNS	00NR	0	16WP	G15_092	FROM->TO	CIMARRON - DRAPER LAKE 345KV CKT 1	717	717	0.03407	103.3884	ALPINE AECC - BISMARK 115KV CKT 1
FDNS	00NR	0	16WP	G15_092	FROM->TO	CIMARRON - DRAPER LAKE 345KV CKT 1	717	717	0.03415	103.388	CYPRESS - HARTBURG 500KV CKT 1
FDNS	00NR	0	16WP	G15_092	FROM->TO	CIMARRON - DRAPER LAKE 345KV CKT 1	717	717	0.03395	103.3831	PIEDMONT - RICHRDS 138KV CKT 1
FDNS	00NR	0	16WP	G15_092	FROM->TO	CIMARRON - DRAPER LAKE 345KV CKT 1	717	717	0.03408	103.3827	P12:69:AEPW:L.E.S.-2:LAW WC2
FDNS	00NR	0	16WP	G15_092	FROM->TO	CIMARRON - DRAPER LAKE 345KV CKT 1	717	717	0.03392	103.3809	KELLYAV4 138.00 - REMNGTON PARK 138KV CKT 1
FDNS	00NR	0	16WP	G15_092	FROM->TO	CIMARRON - DRAPER LAKE 345KV CKT 1	717	717	0.0343	103.3808	HAMMETT2 - MEEKER 138KV CKT 1
FDNS	00NR	0	16WP	G15_092	FROM->TO	CIMARRON - DRAPER LAKE 345KV CKT 1	717	717	0.03454	103.375	HAMMETT TAP - HORSESHOE LAKE 138KV CKT 1
FDNS	00NR	0	16WP	G15_092	FROM->TO	CIMARRON - DRAPER LAKE 345KV CKT 1	717	717	0.03428	103.3697	LAYFLD8 500.00 - MOUNT OLIVE 500KV CKT 1
FDNS	00NR	0	16WP	G15_092	FROM->TO	CIMARRON - DRAPER LAKE 345KV CKT 1	717	717	0.03428	103.3697	LAYFLD8 500.00 - MOUNT OLIVE 500KV CKT 1
FDNS	00NR	0	16WP	G15_092	FROM->TO	CIMARRON - DRAPER LAKE 345KV CKT 1	717	717	0.03419	103.3631	RINGLING - SOUTH WILSON 138KV CKT 1
FDNS	00NR	0	16WP	G15_092	FROM->TO	CIMARRON - DRAPER LAKE 345KV CKT 1	717	717	0.03463	103.3457	CIVIT - PAOLI 138KV CKT 1
FDNS	00NR	0	16WP	G15_092	FROM->TO	CIMARRON - DRAPER LAKE 345KV CKT 1	717	717	0.0341	103.3404	LACYGNE - STILWELL 345KV CKT 1
FDNS	00NR	0	16WP	G15_092	FROM->TO	CIMARRON - DRAPER LAKE 345KV CKT 1	717	717	0.03423	103.3365	COUNCIL - WESTOAKS 138KV CKT 1
FDNS	00NR	0	16WP	G15_092	FROM->TO	CIMARRON - DRAPER LAKE 345KV CKT 1	717	717	0.03408	102.9113	BASE CASE
FDNS	00NR	0	16WP	G15_092	FROM->TO	CIMARRON - DRAPER LAKE 345KV CKT 1	717	717	0.03416	102.5994	GRAPEVINE INTERCHANGE - NICHOLS STATION 230KV CKT 1
FDNS	00NR	0	16WP	G15_092	FROM->TO	CIMARRON - DRAPER LAKE 345KV CKT 1	717	717	0.03416	102.5994	GRAPEVINE INTERCHANGE - NICHOLS STATION 230KV CKT 1
FDNS	00NR	0	16WP	G15_092	FROM->TO	CIMARRON - DRAPER LAKE 345KV CKT 1	717	717	0.04342	102.5967	G15063_T 345.00 - WOODRING 345KV CKT 1
FDNS	00NR	0	16WP	G15_092	FROM->TO	CIMARRON - DRAPER LAKE 345KV CKT 1	717	717	0.03442	102.5371	BURGETT4 138.00 - RNDBARN4 138.00 138KV CKT 1
FDNS	00NR	0	16WP	G15_092	FROM->TO	CIMARRON - DRAPER LAKE 345KV CKT 1	717	717	0.03442	102.5354	BURGETT4 138.00 - DANFORTH 138KV CKT 1
FDNS	00NR	0	16WP	G15_092	FROM->TO	CIMARRON - DRAPER LAKE 345KV CKT 1	717	717	0.03442	102.5245	ARCADIA - RNDBARN4 138.00 138KV CKT 1
FDNS	00NR	0	16WP	G15_092	FROM->TO	CIMARRON - DRAPER LAKE 345KV CKT 1	717	717	0.03408	102.495	GEN659125 1-COVEY
FDNS	00NR	0	16WP	G15_092	FROM->TO	CIMARRON - DRAPER LAKE 345KV CKT 1	717	717	0.03408	102.4903	GEN515550 1-MNCWND31 0.6900
FDNS	00NR	0	16WP	G15_092	FROM->TO	CIMARRON - DRAPER LAKE 345KV CKT 1	717	717	0.0342	102.482	GRAPEVINE INTERCHANGE - STATELINE INTERCHANGE 230KV CKT 1
FDNS	00NR	0	16WP	G15_092	FROM->TO	CIMARRON - DRAPER LAKE 345KV CKT 1	717	717	0.0342	102.482	GRAPEVINE INTERCHANGE - STATELINE INTERCHANGE 230KV CKT 1
FDNS	00NR	0	16WP	G15_092	FROM->TO	CIMARRON - DRAPER LAKE 345KV CKT 1	717	717	0.03408	102.477	GEN562611 1-G14_064_3 0.6900
FDNS	00NR	0	16WP	G15_092	FROM->TO	CIMARRON - DRAPER LAKE 345KV CKT 1	717	717	0.03408	102.4715	GEN511848 1-SOUTHWESTERN STATION #3
FDNS	00NR	0	16WP	G15_092	FROM->TO	CIMARRON - DRAPER LAKE 345KV CKT 1	717	717	0.03408	102.4453	GEN515601 1-KNGFSR11 0.7000
FDNS	00NR	0	16WP	G15_092	FROM->TO	CIMARRON - DRAPER LAKE 345KV CKT 1	717	717	0.03408	102.4414	GEN600071 10-RIVER SIDE
FDNS	00NR	0	16WP	G15_092	FROM->TO	CIMARRON - DRAPER LAKE 345KV CKT 1	717	717	0.03408	102.4413	GEN600070 9-RIVER SIDE
FDNS	00NR	0	16WP	G15_092	FROM->TO	CIMARRON - DRAPER LAKE 345KV CKT 1	717	717	0.03408	102.4362	GEN672303 3-BOUNDARY DAM GENERATOR 3
FDNS	00NR	0	16WP	G15_092	FROM->TO	CIMARRON - DRAPER LAKE 345KV CKT 1	717	717	0.03408	102.4362	GEN672304 4-BOUNDARY DAM GENERATOR 4
FDNS	00NR	0	16WP	G15_092	FROM->TO	CIMARRON - DRAPER LAKE 345KV CKT 1	717	717	0.03408	102.4362	GEN672305 5-BOUNDARY DAM GENERATOR 5
FDNS	00NR	0	16WP	G15_092	FROM->TO	CIMARRON - DRAPER LAKE 345KV CKT 1	717	717	0.03408	102.4353	GEN600007 7-RIVERSIDE GEN 7
FDNS	00NR	0	16WP	G15_092	FROM->TO	CIMARRON - DRAPER LAKE 345KV CKT 1	717	717	0.03408	102.4347	GEN600067 9-HIGH BRIDGE
FDNS	00NR	0	16WP	G15_092	FROM->TO	CIMARRON - DRAPER LAKE 345KV CKT 1	717	717	0.03408	102.4338	GEN563062 1-G15071_3 0.6900
FDNS	00NR	0	16WP	G15_092	FROM->TO	CIMARRON - DRAPER LAKE 345KV CKT 1	717	717	0.03408	102.4307	GEN615052 1-CAMBRIDGE GENERATING STATION
FDNS	00NR	0	16WP	G15_092	FROM->TO	CIMARRON - DRAPER LAKE 345KV CKT 1	717	717	0.03408	102.4274	GEN541151 3-SIBLEY GENERATING UNIT #3
FDNS	00NR	0	16WP	G15_092	FROM->TO	CIMARRON - DRAPER LAKE 345KV CKT 1	717	717	0.033	102.4256	CHISNEY - CLARKSVILLE 138KV CKT 1
FDNSLock	00NR	0	16WP	G15_092	FROM->TO	CIMARRON - DRAPER LAKE 345KV CKT 1	717	717	0.03408	102.4224	GEN600014 4-BLACK DOG GEN 4
FDNS	00NR	0	16WP	G15_092	FROM->TO	CIMARRON - DRAPER LAKE 345KV CKT 1	717	717	0.03408	102.4218	GEN563282 1-G15094_3 0.6900
FDNS	00NR	0	16WP	G15_092	FROM->TO	CIMARRON - DRAPER LAKE 345KV CKT 1	717	717	0.03408	102.4212	GEN652353 2-GR PRAIRIEG 0.6900
FDNS	00NR	0	16WP	G15_092	FROM->TO	CIMARRON - DRAPER LAKE 345KV CKT 1	717	717	0.03408	102.4168	GEN629067 1-EMERY GAS TURBINE 1
FDNS	00NR	0	16WP	G15_092	FROM->TO	CIMARRON - DRAPER LAKE 345KV CKT 1	717	717	0.03432	102.4148	7MCCREDIE 345.00 - 7MONTGMRY 345.00 345KV CKT 1
FDNS	00NR	0	16WP	G15_092	FROM->TO	CIMARRON - DRAPER LAKE 345KV CKT 1	717	717	0.03408	102.4032	GEN563102 1-G15075_3 0.5500
FDNS	00NR	0	16WP	G15_092	FROM->TO	CIMARRON - DRAPER LAKE 345KV CKT 1	717	717	0.03408	102.4015	GEN515591 1-PALDRW11 0.6900
FDNS	00NR	0	16WP	G15_092	FROM->TO	CIMARRON - DRAPER LAKE 345KV CKT 1	717	717	0.03408	102.4	GEN300003 1-THOMAS HILL UNIT 3
FDNS	00NR	0	16WP	G15_092	FROM->TO	CIMARRON - DRAPER LAKE 345KV CKT 1	717	717	0.03408	102.4	GEN600011 5-BLACK DOG GEN 1
FDNS	00NR	0	16WP	G15_092	FROM->TO	CIMARRON - DRAPER LAKE 345KV CKT 1	717	717	0.03408	102.4	GEN615032 2-PLEASANT VALLEY
FDNS	00NR	0	16WP	G15_092	FROM->TO	CIMARRON - DRAPER LAKE 345KV CKT 1	717	717	0.03408	102.3966	GEN562602 1-G15_029_3 0.6900
FDNS	00NR	0	16WP	G15_092	FROM->TO	CIMARRON - DRAPER LAKE 345KV CKT 1	717	717	0.03504	102.3868	SEMINOLE - VANOSTP4 138.00 138KV CKT 1
FDNS	00NR	0	16WP	G15_092	FROM->TO	CIMARRON - DRAPER LAKE 345KV CKT 1	717	717	0.03408	102.3864	GEN600017 C-LS POWER CT
FDNS	00NR	0	16WP	G15_092	FROM->TO	CIMARRON - DRAPER LAKE 345KV CKT 1	717	717	0.03408	102.3828	GEN562812 1-G15040_3 0.3570
FDNS	00NR	0	16WP	G15_092	FROM->TO	CIMARRON - DRAPER LAKE 345KV CKT 1	717	717	0.03408	102.3765	GEN563132 1-G15078_3 0.3570
FDNS	00NR	0	16WP	G15_092	FROM->TO	CIMARRON - DRAPER LAKE 345KV CKT 1	717	717	0.03333	102.3681	FOREST HILL - MAUD 138KV CKT 1
FDNS	00NR	0	16WP	G15_092	FROM->TO	CIMARRON - DRAPER LAKE 345KV CKT 1	717	717	0.03408	102.3672	GEN524285 1-WILDORADO WIND GEN
FDNS	00NR	0	16WP	G15_092	FROM->TO	CIMARRON - DRAPER LAKE 345KV CKT 1	717	717	0.03289	102.366	P12:138:AEPW:WELETK4:EARLSBORO4
FDNS	00NR	0	16WP	G15_092	FROM->TO	CIMARRON - DRAPER LAKE 345KV CKT 1	717	717	0.03289	102.366	P12:138:OKGE:3TERM36
FDNS	00NR	0	16WP	G15_092	FROM->TO	CIMARRON - DRAPER LAKE 345KV CKT 1	717	717	0.03408	102.3624	GEN562074 1-G1149G1504 0.6900
FDNS	00NR	0	16WP	G15_092	FROM->TO	CIMARRON - DRAPER LAKE 345KV CKT 1	717	717	0.03408	102.3559	GEN672392 1-NBECGT1G 18.000
FDNS	00NR	0	16WP	G15_092	FROM->TO	CIMARRON - DRAPER LAKE 345KV CKT 1	717	717	0.03408	102.3552	GEN629070 2-BEAVER CHANNEL GENERATORFOR UNIT NO 2
FDNS	00NR	0	16WP	G15_092	FROM->TO	CIMARRON - DRAPER LAKE 345KV CKT 1	717	717	0.0332	102.3552	EARLSBORO 4138.00 - FIXICO TAP 138KV CKT 1
FDNS	00NR	0	16WP	G15_092	FROM->TO	CIMARRON - DRAPER LAKE 345KV CKT 1	717	717	0.03408	102.3445	GEN526331 1-JONES GEN #1 22 KV
FDNS	00NR	0	16WP	G15_092	FROM->TO	CIMARRON - DRAPER LAKE 345KV CKT 1	717	717	0.03408	102.3445	GEN526332 1-JONES GEN #2 21 KV
FDNS	00NR	0	16WP	G15_092	FROM->TO	CIMARRON - DRAPER LAKE 345KV CKT 1	717	717	0.03387	102.3431	CANADIAN RIVER - MCALESTER SOUTH 138KV CKT 1

SOLUTION	GROUP	SCENARIO	SEASON	SOURCE	DIRECTION	MONITORED ELEMENT	RATEA (MVA)	RATEB(MVA)	TDF	TC%LOADING (% MVA)	CONTINGENCY
FDNS	00NR	0	16WP	G15_092	FROM->TO	CIMARRON - DRAPER LAKE 345KV CKT 1	717	717	0.03387	102.3431	CANADIAN RIVER - MCALESTER SOUTH 138KV CKT 1
FDNS	00NR	0	16WP	G15_092	FROM->TO	CIMARRON - DRAPER LAKE 345KV CKT 1	717	717	0.03408	102.343	GEN562596 1-G14_059_3 0.6900
FDNS	00NR	0	16WP	G15_092	FROM->TO	CIMARRON - DRAPER LAKE 345KV CKT 1	717	717	0.03387	102.3417	CANADIAN RIVER () 345/138/13.8KV TRANSFORMER CKT 1
FDNS	00NR	0	16WP	G15_092	FROM->TO	CIMARRON - DRAPER LAKE 345KV CKT 1	717	717	0.03387	102.3417	CANADIAN RIVER () 345/138/13.8KV TRANSFORMER CKT 1
FDNS	00NR	0	16WP	G15_092	FROM->TO	CIMARRON - DRAPER LAKE 345KV CKT 1	717	717	0.03408	102.336	GEN615010 1-STANTON4
FDNS	00NR	0	16WP	G15_092	FROM->TO	CIMARRON - DRAPER LAKE 345KV CKT 1	717	717	0.03408	102.3359	GEN629071 1-BURLINGTON GENERATOR FOR UNIT NO 1 E
FDNS	00NR	0	16WP	G15_092	FROM->TO	CIMARRON - DRAPER LAKE 345KV CKT 1	717	717	0.033	102.3342	CHISNEY - HIGHLAND 138KV CKT 1
FDNS	00NR	0	16WP	G15_092	FROM->TO	CIMARRON - DRAPER LAKE 345KV CKT 1	717	717	0.03408	102.3307	GEN515365 1-CENT 21 0.7000
FDNS	00NR	0	16WP	G15_092	FROM->TO	CIMARRON - DRAPER LAKE 345KV CKT 1	717	717	0.03408	102.3205	GEN562983 1-G15061_4 0.6900
FDNS	00NR	0	16WP	G15_092	FROM->TO	CIMARRON - DRAPER LAKE 345KV CKT 1	717	717	0.03408	102.3205	GEN562984 1-G15061_5 0.6900
FDNS	00NR	0	16WP	G15_092	FROM->TO	CIMARRON - DRAPER LAKE 345KV CKT 1	717	717	0.03397	102.3203	P12:138:WFEC:MSL07
FDNS	00NR	0	16WP	G15_092	FROM->TO	CIMARRON - DRAPER LAKE 345KV CKT 1	717	717	0.03397	102.3203	P12:138:WFEC-AEPW:HUGOPP4:ATOKA--4
FDNS	00NR	0	16WP	G15_092	FROM->TO	CIMARRON - DRAPER LAKE 345KV CKT 1	717	717	0.03408	102.3161	GEN562017 1-G11_022_3 0.6900
FDNS	00NR	0	16WP	G15_092	FROM->TO	CIMARRON - DRAPER LAKE 345KV CKT 1	717	717	0.03408	102.3138	GEN615021 1-GRE-ER 14G 16.000
FDNS	00NR	0	16WP	G15_092	FROM->TO	CIMARRON - DRAPER LAKE 345KV CKT 1	717	717	0.03413	102.3122	GRPRAR1-LNX3345.00 - HOLT.CO3 345.00 345KV CKT 1
FDNS	00NR	0	16WP	G15_092	FROM->TO	CIMARRON - DRAPER LAKE 345KV CKT 1	717	717	0.03404	102.3107	P12:138:AEPW:SHAM4WT:CHILD4WT
FDNS	00NR	0	16WP	G15_092	FROM->TO	CIMARRON - DRAPER LAKE 345KV CKT 1	717	717	0.03413	102.3086	GRPRAR1-LNX3345.00 - GRPRAR 345KV CKT Z
FDNS	00NR	0	16WP	G15_092	FROM->TO	CIMARRON - DRAPER LAKE 345KV CKT 1	717	717	0.03408	102.3034	GEN562429 1-G13-029 0.6900
FDNS	00NR	0	16WP	G15_092	FROM->TO	CIMARRON - DRAPER LAKE 345KV CKT 1	717	717	0.03408	102.3021	GEN562432 1-G13-030 0.6900
FDNS	00NR	0	16WP	G15_092	FROM->TO	CIMARRON - DRAPER LAKE 345KV CKT 1	717	717	0.03408	102.3019	GEN560105 1-G08-22 0.6900
FDNS	00NR	0	16WP	G15_092	FROM->TO	CIMARRON - DRAPER LAKE 345KV CKT 1	717	717	0.03408	102.3006	INDEPENDENCE 500/26.0KV TRANSFORMER CKT 1
FDNS	00NR	0	16WP	G15_092	FROM->TO	CIMARRON - DRAPER LAKE 345KV CKT 1	717	717	0.03408	102.2985	GEN532663 1-LAWRENCE ENERGY CENTER UNIT 5
FDNS	00NR	0	16WP	G15_092	FROM->TO	CIMARRON - DRAPER LAKE 345KV CKT 1	717	717	0.03392	102.2985	P12:138:AEPW-SWPA:LONEOAK4:TUPELO4
FDNS	00NR	0	16WP	G15_092	FROM->TO	CIMARRON - DRAPER LAKE 345KV CKT 1	717	717	0.03392	102.2984	P12:138:WFEC:MSL06
FDNS	00NR	0	16WP	G15_092	FROM->TO	CIMARRON - DRAPER LAKE 345KV CKT 1	717	717	0.03435	102.2966	OVEXFRMCCOVE
FDNS	00NR	0	16WP	G15_092	FROM->TO	CIMARRON - DRAPER LAKE 345KV CKT 1	717	717	0.03417	102.2931	DELL 500 - INDEPENDENCE 500KV CKT 1
FDNS	00NR	0	16WP	G15_092	FROM->TO	CIMARRON - DRAPER LAKE 345KV CKT 1	717	717	0.03408	102.2894	BURLINGTON NO1 + NO 2 + NO 3 161/20.0KV TRANSFORMER CKT 1
FDNS	00NR	0	16WP	G15_092	FROM->TO	CIMARRON - DRAPER LAKE 345KV CKT 1	717	717	0.03289	102.2839	P12:138:AEPW-OGE:WELETK4:MAUD 4
FDNS	00NR	0	16WP	G15_092	FROM->TO	CIMARRON - DRAPER LAKE 345KV CKT 1	717	717	0.03489	102.2797	P12:230:AEPW:ELKCITY6:SWEETWT6
FDNS	00NR	0	16WP	G15_092	FROM->TO	CIMARRON - DRAPER LAKE 345KV CKT 1	717	717	0.03408	102.2752	GEN527882 1-CUNNINGHAM GEN #2 20 KV
FDNS	00NR	0	16WP	G15_092	FROM->TO	CIMARRON - DRAPER LAKE 345KV CKT 1	717	717	0.03453	102.2741	P12:138:WFEC:MSL16
FDNS	00NR	0	16WP	G15_092	FROM->TO	CIMARRON - DRAPER LAKE 345KV CKT 1	717	717	0.0332	102.2712	EARLSBORO 4138.00 - MAUD 138KV CKT 1
FDNS	00NR	0	16WP	G15_092	FROM->TO	CIMARRON - DRAPER LAKE 345KV CKT 1	717	717	0.0332	102.2712	EARLSBORO 4138.00 - MAUD 138KV CKT 1
FDNS	00NR	0	16WP	G15_092	FROM->TO	CIMARRON - DRAPER LAKE 345KV CKT 1	717	717	0.03408	102.2674	GEN562550 1-G14_040_3 0.6900
FDNS	00NR	0	16WP	G15_092	FROM->TO	CIMARRON - DRAPER LAKE 345KV CKT 1	717	717	0.03408	102.2642	GEN524295 1-SPNSPUR_WND10.6900
FDNS	00NR	0	16WP	G15_092	FROM->TO	CIMARRON - DRAPER LAKE 345KV CKT 1	717	717	0.03408	102.2579	GEN562832 1-G15042_3 0.6900
FDNS	00NR	0	16WP	G15_092	FROM->TO	CIMARRON - DRAPER LAKE 345KV CKT 1	717	717	0.03365	102.2486	MAUD - SEMINOLE 138KV CKT 1
FDNS	00NR	0	16WP	G15_092	FROM->TO	CIMARRON - DRAPER LAKE 345KV CKT 1	717	717	0.0343	102.2397	STLN-DEMARC6 - SWEETWATER 230KV CKT 1
FDNS	00NR	0	16WP	G15_092	FROM->TO	CIMARRON - DRAPER LAKE 345KV CKT 1	717	717	0.0343	102.2392	P12:230:AEPW-SPS:SWEETWT6:WHEELER 6
FDNS	00NR	0	16WP	G15_092	FROM->TO	CIMARRON - DRAPER LAKE 345KV CKT 1	717	717	0.0343	102.2372	STATELINE INTERCHANGE - STLN-DEMARC6 230KV CKT 1
FDNS	00NR	0	16WP	G15_092	FROM->TO	CIMARRON - DRAPER LAKE 345KV CKT 1	717	717	0.03408	102.221	GEN531447 1-HOLCOMB GENERATOR
FDNS	00NR	0	16WP	G15_092	FROM->TO	CIMARRON - DRAPER LAKE 345KV CKT 1	717	717	0.03408	102.2207	P12:230:UMZB:# 112 #: NU IN SD. NU-RCDC & DRY CREEK XFMR
FDNS	00NR	0	16WP	G15_092	FROM->TO	CIMARRON - DRAPER LAKE 345KV CKT 1	717	717	0.03408	102.2195	RCDC EAST 4230.00 - RED CEDAR DC 230KV CKT 1
FDNS	00NR	0	16WP	G15_092	FROM->TO	CIMARRON - DRAPER LAKE 345KV CKT 1	717	717	0.03408	102.2165	GEN645011 1-NEBRASKA CITY 1
FDNS	00NR	0	16WP	G15_092	FROM->TO	CIMARRON - DRAPER LAKE 345KV CKT 1	717	717	0.03408	102.2156	GEN345671 2-1RUSH G2 18.000
FDNS	00NR	0	16WP	G15_092	FROM->TO	CIMARRON - DRAPER LAKE 345KV CKT 1	717	717	0.03408	102.2137	GEN345670 1-1RUSH G1 18.000
FDNS	00NR	0	16WP	G15_092	FROM->TO	CIMARRON - DRAPER LAKE 345KV CKT 1	717	717	0.03408	102.2132	GEN515606 1-CANDN11 0.6900
FDNS	00NR	0	16WP	G15_092	FROM->TO	CIMARRON - DRAPER LAKE 345KV CKT 1	717	717	0.03408	102.2132	GEN515607 1-CANDN12 0.6900
FDNS	00NR	0	16WP	G15_092	FROM->TO	CIMARRON - DRAPER LAKE 345KV CKT 1	717	717	0.033	102.2079	HIGHLAND - PINK SW 138KV CKT 1
FDNS	00NR	0	16WP	G15_092	FROM->TO	CIMARRON - DRAPER LAKE 345KV CKT 1	717	717	0.03408	102.1858	GEN515443 1-MNCOWND1 0.7000
FDNS	00NR	0	16WP	G15_092	FROM->TO	CIMARRON - DRAPER LAKE 345KV CKT 1	717	717	0.03408	102.1851	GEN562794 1-G15038_5 0.6900
FDNS	00NR	0	16WP	G15_092	FROM->TO	CIMARRON - DRAPER LAKE 345KV CKT 1	717	717	0.03408	102.1851	GEN562795 1-G15038_6 0.6900
FDNS	00NR	0	16WP	G15_092	FROM->TO	CIMARRON - DRAPER LAKE 345KV CKT 1	717	717	0.03408	102.1817	GEN563092 1-G15074_3 0.6900
FDNS	00NR	0	16WP	G15_092	FROM->TO	CIMARRON - DRAPER LAKE 345KV CKT 1	717	717	0.03333	102.1805	FT SMITH - MUSKOGEE 345KV CKT 1
FDNS	00NR	0	16WP	G15_092	FROM->TO	CIMARRON - DRAPER LAKE 345KV CKT 1	717	717	0.03408	102.1774	GEN542951 5-HAWTHORN UNIT #5
FDNS	00NR	0	16WP	G15_092	FROM->TO	CIMARRON - DRAPER LAKE 345KV CKT 1	717	717	0.03408	102.1724	GEN645012 2-NEBRASKA CITY 2
FDNSLock	00NR	0	16WP	G15_092	FROM->TO	CIMARRON - DRAPER LAKE 345KV CKT 1	717	717	0.03408	102.1642	GEN629072 4-LANSING GENERATOR FOR UNITS NO4 EIA CODE 1
FDNS	00NR	0	16WP	G15_092	FROM->TO	CIMARRON - DRAPER LAKE 345KV CKT 1	717	717	0.03408	102.1533	GEN562512 1-G14_020_3 0.6900
FDNS	00NR	0	16WP	G15_092	FROM->TO	CIMARRON - DRAPER LAKE 345KV CKT 1	717	717	0.03421	102.1446	KEO EHV - WEST MEMPHIS 500 500KV CKT 1
FDNS	00NR	0	16WP	G15_092	FROM->TO	CIMARRON - DRAPER LAKE 345KV CKT 1	717	717	0.0343	102.1408	CHISHOLM6 230.00 - SWEETWATER 230KV CKT 1
FDNS	00NR	0	16WP	G15_092	FROM->TO	CIMARRON - DRAPER LAKE 345KV CKT 1	717	717	0.03408	102.134	GEN657749 1-YOUNG 1 GENERATOR
FDNS	00NR	0	16WP	G15_092	FROM->TO	CIMARRON - DRAPER LAKE 345KV CKT 1	717	717	0.03408	102.1262	GEN562699 1-G15_018_3 0.6900
FDNS	00NR	0	16WP	G15_092	FROM->TO	CIMARRON - DRAPER LAKE 345KV CKT 1	717	717	0.03408	102.1114	GEN640009 1-COOPER NUCLEAR STATION
FDNS	00NR	0	16WP	G15_092	FROM->TO	CIMARRON - DRAPER LAKE 345KV CKT 1	717	717	0.03408	102.1042	GEN529201 1-OMCDLEC1 13.800
FDNS	00NR	0	16WP	G15_092	FROM->TO	CIMARRON - DRAPER LAKE 345KV CKT 1	717	717	0.03362	102.1014	FRISCCO4 138.00 - LULA 138KV CKT 1
FDNS	00NR	0	16WP	G15_092	FROM->TO	CIMARRON - DRAPER LAKE 345KV CKT 1	717	717	0.03408	102.0883	GEN563122 1-G15077_3 0.3850
FDNS	00NR	0	16WP	G15_092	FROM->TO	CIMARRON - DRAPER LAKE 345KV CKT 1	717	717	0.03408	102.0793	GEN563182 1-G15083_3 0.6900
FDNSLock	00NR	0	16WP	G15_092	FROM->TO	CIMARRON - DRAPER LAKE 345KV CKT 1	717	717	0.03408	102.0662	GEN681522 3-GENOA 3
FDNS	00NR	0	16WP	G15_092	FROM->TO	CIMARRON - DRAPER LAKE 345KV CKT 1	717	717	0.03408	102.0608	GEN562685 1-G15_013_3 0.3550
FDNS	00NR	0	16WP	G15_092	FROM->TO	CIMARRON - DRAPER LAKE 345KV CKT 1	717	717	0.0338	102.0437	HOLLYWOOD - MIDWEST TAP 138KV CKT 1
FDNS	00NR	0	16WP	G15_092	FROM->TO	CIMARRON - DRAPER LAKE 345KV CKT 1	717	717	0.03408	102.0354	GEN344895 2-1LAB G2 20.000
FDNS	00NR	0	16WP	G15_092	FROM->TO	CIMARRON - DRAPER LAKE 345KV CKT 1	717	717	0.03321	102.0328	TUPELO - TUPELO TAP 138KV CKT 1
FDNS	00NR	0	16WP	G15_092	FROM->TO	CIMARRON - DRAPER LAKE 345KV CKT 1	717	717	0.03493	102.0286	CHISHOLM7 345.00 - GRACEMONT 345KV CKT 1
FDNS	00NR	0	16WP	G15_092	FROM->TO	CIMARRON - DRAPER LAKE 345KV CKT 1	717	717	0.03408	102.0223	GEN563222 1-G15088_3 0.6900
FDNS	00NR	0	16WP	G15_092	FROM->TO	CIMARRON - DRAPER LAKE 345KV CKT 1	717	717	0.03408	102.0212	4SIOUX 1 138.00 138/18.0KV TRANSFORMER CKT 1
FDNS	00NR	0	16WP	G15_092	FROM->TO	CIMARRON - DRAPER LAKE 345KV CKT 1	717	717	0.03176	102.0151	CIMARRON - TUTTLE CONOCO TAP 138KV CKT 1
FDNS	00NR	0	16WP	G15_092	FROM->TO	CIMARRON - DRAPER LAKE 345KV CKT 1	717	717	0.03362	102.0133	FRISCCO4 138.00 - HARDEN 4 138.00 138KV CKT 1
FDNS	00NR	0	16WP	G15_092	FROM->TO	CIMARRON - DRAPER LAKE 345KV CKT 1	717	717	0.03408	102.0083	GEN523461 1-BLACKHAWK GEN #1
FDNS	00NR	0	16WP	G15_092	FROM->TO	CIMARRON - DRAPER LAKE 345KV CKT 1	717	717	0.03408	102.0082	GEN523462 1-BLACKHAWK GEN #2

SOLUTION	GROUP	SCENARIO	SEASON	SOURCE	DIRECTION	MONITORED ELEMENT	RATEA (MVA)	RATEB(MVA)	TDF	TC%LOADING (% MVA)	CONTINGENCY
FDNS	00NR	0	16WP	G15_092	FROM->TO	CIMARRON - DRAPER LAKE 345KV CKT 1	717	717	0.03408	102.0073	GEN344896 3-1LAB G3 20.000
FDNS	00NR	0	16WP	G15_092	FROM->TO	CIMARRON - DRAPER LAKE 345KV CKT 1	717	717	0.03408	102.0058	GEN344894 1-1LAB G1 20.000
FDNS	00NR	0	16WP	G15_092	FROM->TO	CIMARRON - DRAPER LAKE 345KV CKT 1	717	717	0.03408	102.0047	GEN344897 4-1LAB G4 20.000
FDNS	00NR	0	16WP	G15_092	FROM->TO	CIMARRON - DRAPER LAKE 345KV CKT 1	717	717	0.03408	102.0003	GEN562587 1-G14_056_3 0.6900
FDNS	00NR	0	16WP	G15_092	FROM->TO	CIMARRON - DRAPER LAKE 345KV CKT 1	717	717	0.03408	101.9772	GEN515602 1-KNGFSR12 0.7000
FDNS	00NR	0	16WP	G15_092	FROM->TO	CIMARRON - DRAPER LAKE 345KV CKT 1	717	717	0.03408	101.9571	GEN563082 1-G15073_3 0.6900
FDNS	00NR	0	16WP	G15_092	FROM->TO	CIMARRON - DRAPER LAKE 345KV CKT 1	717	717	0.03176	101.9436	TUTTLE - TUTTLE CONOCO TAP 138KV CKT 1
FDNS	00NR	0	16WP	G15_092	FROM->TO	CIMARRON - DRAPER LAKE 345KV CKT 1	717	717	0.03493	101.9367	CHISHOLM7 345.00 (CHISHOLM) 345/230/13.2KV TRANSFORMER CKT 1
FDNS	00NR	0	16WP	G15_092	FROM->TO	CIMARRON - DRAPER LAKE 345KV CKT 1	717	717	0.03408	101.9307	GEN562704 1-G15_020_3 0.3550
FDNS	00NR	0	16WP	G15_092	FROM->TO	CIMARRON - DRAPER LAKE 345KV CKT 1	717	717	0.03408	101.9129	GEN563202 1-G15085_3 0.5500
FDNS	00NR	0	16WP	G15_092	FROM->TO	CIMARRON - DRAPER LAKE 345KV CKT 1	717	717	0.03408	101.9087	CLAY BOSWELL 230/20.9KV TRANSFORMER CKT 1
FDNS	00NR	0	16WP	G15_092	FROM->TO	CIMARRON - DRAPER LAKE 345KV CKT 1	717	717	0.03408	101.8974	GEN640010 1-GERALD GENTLEMAN STATION UNIT 1
FDNS	00NR	0	16WP	G15_092	FROM->TO	CIMARRON - DRAPER LAKE 345KV CKT 1	717	717	0.03408	101.8665	GEN672321 1-SHAND GENERATOR 1
FDNS	00NR	0	16WP	G15_092	FROM->TO	CIMARRON - DRAPER LAKE 345KV CKT 1	717	717	0.03343	101.8497	LULA - TUPELO TAP 138KV CKT 1
FDNS	00NR	0	16WP	G15_092	FROM->TO	CIMARRON - DRAPER LAKE 345KV CKT 1	717	717	0.03207	101.8468	NORTHWEST TEXARKANA - VALLIANT 345KV CKT 1
FDNS	00NR	0	16WP	G15_092	FROM->TO	CIMARRON - DRAPER LAKE 345KV CKT 1	717	717	0.03207	101.8468	NORTHWEST TEXARKANA - VALLIANT 345KV CKT 1
FDNS	00NR	0	16WP	G15_092	FROM->TO	CIMARRON - DRAPER LAKE 345KV CKT 1	717	717	0.03408	101.8436	GEN562710 1-G15_022_3 0.5500
FDNS	00NR	0	16WP	G15_092	FROM->TO	CIMARRON - DRAPER LAKE 345KV CKT 1	717	717	0.03546	101.8429	SEMINOLE (SEMINOL1) 345/138/14.4KV TRANSFORMER CKT 1
FDNS	00NR	0	16WP	G15_092	FROM->TO	CIMARRON - DRAPER LAKE 345KV CKT 1	717	717	0.03408	101.8407	GEN672310 1-POPLAR RIVER GENERATOR 1
FDNS	00NR	0	16WP	G15_092	FROM->TO	CIMARRON - DRAPER LAKE 345KV CKT 1	717	717	0.03408	101.8406	GEN672311 2-POPLAR RIVER GENERATOR 2
FDNS	00NR	0	16WP	G15_092	FROM->TO	CIMARRON - DRAPER LAKE 345KV CKT 1	717	717	0.03408	101.8304	GEN672306 6-BOUNDARY DAM GENERATOR 6
FDNS	00NR	0	16WP	G15_092	FROM->TO	CIMARRON - DRAPER LAKE 345KV CKT 1	717	717	0.03408	101.8297	GEN640011 2-GERALD GENTLEMAN STATION UNIT 2
FDNS	00NR	0	16WP	G15_092	FROM->TO	CIMARRON - DRAPER LAKE 345KV CKT 1	717	717	0.03408	101.8274	GEN542956 2-LACYGNE UNIT #2
FDNS	00NR	0	16WP	G15_092	FROM->TO	CIMARRON - DRAPER LAKE 345KV CKT 1	717	717	0.03408	101.8181	GEN659118 1-LARAMIE RIVER UNIT1
FDNS	00NR	0	16WP	G15_092	FROM->TO	CIMARRON - DRAPER LAKE 345KV CKT 1	717	717	0.03362	101.7929	ETNA - HARDEN 4 138.00 138KV CKT 1
FDNS	00NR	0	16WP	G15_092	FROM->TO	CIMARRON - DRAPER LAKE 345KV CKT 1	717	717	0.03539	101.7872	RENFROW7 345.00 - VIOLA 7 345.00 345KV CKT 1
FDNS	00NR	0	16WP	G15_092	FROM->TO	CIMARRON - DRAPER LAKE 345KV CKT 1	717	717	0.03496	101.7737	P12:138:OKGE:3TERM22
FDNS	00NR	0	16WP	G15_092	FROM->TO	CIMARRON - DRAPER LAKE 345KV CKT 1	717	717	0.03492	101.7718	DRAPER LAKE - SOONER TAP 138KV CKT 1
FDNS	00NR	0	16WP	G15_092	FROM->TO	CIMARRON - DRAPER LAKE 345KV CKT 1	717	717	0.033	101.7634	P12:138:WFEC:MSL08
FDNS	00NR	0	16WP	G15_092	FROM->TO	CIMARRON - DRAPER LAKE 345KV CKT 1	717	717	0.033	101.7516	FRANKLIN - PINK SW 138KV CKT 1
FDNS	00NR	0	16WP	G15_092	FROM->TO	CIMARRON - DRAPER LAKE 345KV CKT 1	717	717	0.0343	101.7502	P12:138:WFEC:MSL09
FDNS	00NR	0	16WP	G15_092	FROM->TO	CIMARRON - DRAPER LAKE 345KV CKT 1	717	717	0.03408	101.7466	OAKCREEK - WILD MARY 138KV CKT 1
FDNS	00NR	0	16WP	G15_092	FROM->TO	CIMARRON - DRAPER LAKE 345KV CKT 1	717	717	0.03408	101.7397	GEN542957 1-IATAN UNIT #1
FDNSLock	00NR	0	16WP	G15_092	FROM->TO	CIMARRON - DRAPER LAKE 345KV CKT 1	717	717	0.03408	101.7355	GEN681542 6-JP MADGETT
FDNS	00NR	0	16WP	G15_092	FROM->TO	CIMARRON - DRAPER LAKE 345KV CKT 1	717	717	0.03408	101.7124	GEN530690 1-PRWINDG1 0.6900
FDNS	00NR	0	16WP	G15_092	FROM->TO	CIMARRON - DRAPER LAKE 345KV CKT 1	717	717	0.03362	101.7075	ETNA - PARK LANE 138KV CKT 1
FDNS	00NR	0	16WP	G15_092	FROM->TO	CIMARRON - DRAPER LAKE 345KV CKT 1	717	717	0.03408	101.7	GEN645001 1-FORT CALHOUN 1
FDNS	00NR	0	16WP	G15_092	FROM->TO	CIMARRON - DRAPER LAKE 345KV CKT 1	717	717	0.03545	101.6997	HUNTERS7 345.00 - RENFROW7 345.00 345KV CKT 1
FDNS	00NR	0	16WP	G15_092	FROM->TO	CIMARRON - DRAPER LAKE 345KV CKT 1	717	717	0.03408	101.658	GEN542955 1-LACYGNE UNIT #1
FDNS	00NR	0	16WP	G15_092	FROM->TO	CIMARRON - DRAPER LAKE 345KV CKT 1	717	717	0.03408	101.6477	GEN562754 1-G15031_5 0.6900
FDNS	00NR	0	16WP	G15_092	FROM->TO	CIMARRON - DRAPER LAKE 345KV CKT 1	717	717	0.03408	101.6356	GEN562556 1-G14_046_3 0.3420
FDNS	00NR	0	16WP	G15_092	FROM->TO	CIMARRON - DRAPER LAKE 345KV CKT 1	717	717	0.03574	101.6321	SEMINOLE (SEMINOL2) 345/138/14.4KV TRANSFORMER CKT 1
FDNS	00NR	0	16WP	G15_092	FROM->TO	CIMARRON - DRAPER LAKE 345KV CKT 1	717	717	0.03408	101.6108	GEN661015 1-COYOTE
FDNS	00NR	0	16WP	G15_092	FROM->TO	CIMARRON - DRAPER LAKE 345KV CKT 1	717	717	0.03408	101.6042	GEN562756 1-G15031_7 0.6900
FDNS	00NR	0	16WP	G15_092	FROM->TO	CIMARRON - DRAPER LAKE 345KV CKT 1	717	717	0.03408	101.6013	GEN532653 1-JEFFREY ENERGY CENTER UNIT 3
FDNS	00NR	0	16WP	G15_092	FROM->TO	CIMARRON - DRAPER LAKE 345KV CKT 1	717	717	0.03408	101.6012	GEN532652 1-JEFFREY ENERGY CENTER UNIT 2
FDNS	00NR	0	16WP	G15_092	FROM->TO	CIMARRON - DRAPER LAKE 345KV CKT 1	717	717	0.03408	101.5971	GEN532651 1-JEFFREY ENERGY CENTER UNIT 1
FDNS	00NR	0	16WP	G15_092	FROM->TO	CIMARRON - DRAPER LAKE 345KV CKT 1	717	717	0.03408	101.5894	GEN562974 1-G15060_5 0.6900
FDNS	00NR	0	16WP	G15_092	FROM->TO	CIMARRON - DRAPER LAKE 345KV CKT 1	717	717	0.03408	101.5883	GEN563142 1-G15079_3 0.5500
FDNS	00NR	0	16WP	G15_092	FROM->TO	CIMARRON - DRAPER LAKE 345KV CKT 1	717	717	0.03408	101.5883	GEN563151 1-G15080_2 0.5500
FDNS	00NR	0	16WP	G15_092	FROM->TO	CIMARRON - DRAPER LAKE 345KV CKT 1	717	717	0.03408	101.5778	GEN563042 1-G15068_3 0.6900
FDNS	00NR	0	16WP	G15_092	FROM->TO	CIMARRON - DRAPER LAKE 345KV CKT 1	717	717	0.03408	101.5733	GEN562973 1-G15060_4 0.6900
FDNS	00NR	0	16WP	G15_092	FROM->TO	CIMARRON - DRAPER LAKE 345KV CKT 1	717	717	0.03408	101.5428	GEN562078 1-G11_051_3 0.6900
FDNS	00NR	0	16WP	G15_092	FROM->TO	CIMARRON - DRAPER LAKE 345KV CKT 1	717	717	0.03408	101.531	GEN562691 1-G15_015_3 0.6900
FDNS	00NR	0	16WP	G15_092	FROM->TO	CIMARRON - DRAPER LAKE 345KV CKT 1	717	717	0.03408	101.52	AIRDEPT4 138.00 - WILD MARY 138KV CKT 1
FDNS	00NR	0	16WP	G15_092	FROM->TO	CIMARRON - DRAPER LAKE 345KV CKT 1	717	717	0.03534	101.4938	PARK LANE - SEMINOLE 138KV CKT 1
FDNS	00NR	0	16WP	G15_092	FROM->TO	CIMARRON - DRAPER LAKE 345KV CKT 1	717	717	0.03408	101.4886	GEN562655 1-G14_074_3 0.6900
FDNS	00NR	0	16WP	G15_092	FROM->TO	CIMARRON - DRAPER LAKE 345KV CKT 1	717	717	0.03408	101.4881	GEN562762 1-G15033_3 0.6900
FDNS	00NR	0	16WP	G15_092	FROM->TO	CIMARRON - DRAPER LAKE 345KV CKT 1	717	717	0.03408	101.4826	GEN657748 1-YOUNG 2 GENERATOR
FDNS	00NR	0	16WP	G15_092	FROM->TO	CIMARRON - DRAPER LAKE 345KV CKT 1	717	717	0.033	101.468	FRANKLIN - FRANKLIN SW 138KV CKT 1
FDNS	00NR	0	16WP	G15_092	FROM->TO	CIMARRON - DRAPER LAKE 345KV CKT 1	717	717	0.03408	101.4312	GEN527901 1-HOBBS PLANT #1 (CT)
FDNS	00NR	0	16WP	G15_092	FROM->TO	CIMARRON - DRAPER LAKE 345KV CKT 1	717	717	0.03408	101.4312	GEN527902 1-HOBBS PLANT #2 (CT)
FDNS	00NR	0	16WP	G15_092	FROM->TO	CIMARRON - DRAPER LAKE 345KV CKT 1	717	717	0.03408	101.405	GEN563273 2-G15093_4 0.6900
FDNS	00NR	0	16WP	G15_092	FROM->TO	CIMARRON - DRAPER LAKE 345KV CKT 1	717	717	0.03408	101.389	GEN563043 1-G15068_4 0.6900
FDNS	00NR	0	16WP	G15_092	FROM->TO	CIMARRON - DRAPER LAKE 345KV CKT 1	717	717	0.03061	101.3853	LYDIA - WELSH 345KV CKT 1
FDNS	00NR	0	16WP	G15_092	FROM->TO	CIMARRON - DRAPER LAKE 345KV CKT 1	717	717	0.03061	101.3853	LYDIA - WELSH 345KV CKT 1
FDNS	00NR	0	16WP	G15_092	FROM->TO	CIMARRON - DRAPER LAKE 345KV CKT 1	717	717	0.03408	101.3678	GEN563052 1-G15069_3 0.6900
FDNS	00NR	0	16WP	G15_092	FROM->TO	CIMARRON - DRAPER LAKE 345KV CKT 1	717	717	0.03408	101.3481	GEN525845 1-ELK_2 1 138.00
FDNS	00NR	0	16WP	G15_092	FROM->TO	CIMARRON - DRAPER LAKE 345KV CKT 1	717	717	0.03408	101.3447	GEN525844 1-ELK_1 118.000
FDNS	00NR	0	16WP	G15_092	FROM->TO	CIMARRON - DRAPER LAKE 345KV CKT 1	717	717	0.03408	101.3169	GEN563242 1-G15090_3 0.6900
FDNS	00NR	0	16WP	G15_092	FROM->TO	CIMARRON - DRAPER LAKE 345KV CKT 1	717	717	0.03408	101.298	GEN526333 1-JONES GEN #3 21 KV
FDNS	00NR	0	16WP	G15_092	FROM->TO	CIMARRON - DRAPER LAKE 345KV CKT 1	717	717	0.03408	101.298	GEN526334 1-JONES_4 116.500
FDNS	00NR	0	16WP	G15_092	FROM->TO	CIMARRON - DRAPER LAKE 345KV CKT 1	717	717	0.03176	101.2942	P12:138:AEPW-OGE:CORNVIL4:CIMARON4
FDNS	00NR	0	16WP	G15_092	FROM->TO	CIMARRON - DRAPER LAKE 345KV CKT 1	717	717	0.03408	101.2934	GEN620315 1-BIG STONE GEN
FDNS	00NR	0	16WP	G15_092	FROM->TO	CIMARRON - DRAPER LAKE 345KV CKT 1	717	717	0.03408	101.2904	AIRDEPT4 138.00 - GM 138KV CKT 1
FDNS	00NR	0	16WP	G15_092	FROM->TO	CIMARRON - DRAPER LAKE 345KV CKT 1	717	717	0.03408	101.2796	GEN562772 1-G15034_3 0.6900
FDNS	00NR	0	16WP	G15_092	FROM->TO	CIMARRON - DRAPER LAKE 345KV CKT 1	717	717	0.03545	101.2661	HUNTERS7 345.00 - WOODRING 345KV CKT 1
FDNS	00NR	0	16WP	G15_092	FROM->TO	CIMARRON - DRAPER LAKE 345KV CKT 1	717	717	0.03408	101.2635	GEN523971 1-HARRINGTON GEN #1 24 KV
FDNS	00NR	0	16WP	G15_092	FROM->TO	CIMARRON - DRAPER LAKE 345KV CKT 1	717	717	0.03408	101.2635	GEN523972 1-HARRINGTON GEN #2 24 KV

SOLUTION	GROUP	SCENARIO	SEASON	SOURCE	DIRECTION	MONITORED ELEMENT	RATEA (MVA)	RATEB(MVA)	TDF	TC%LOADING (% MVA)	CONTINGENCY
FDNS	00NR	0	16WP	G15_092	FROM->TO	CIMARRON - DRAPER LAKE 345KV CKT 1	717	717	0.03408	101.2635	GEN523973 1-HARRINGTON GEN #3 24 KV
FDNS	00NR	0	16WP	G15_092	FROM->TO	CIMARRON - DRAPER LAKE 345KV CKT 1	717	717	0.03462	101.2533	RANCHRD7 345.00 - SOONER 345KV CKT 1
FDNS	00NR	0	16WP	G15_092	FROM->TO	CIMARRON - DRAPER LAKE 345KV CKT 1	717	717	0.03408	101.2384	GEN600004 2-PRAIRIE ISLAND G2
FDNS	00NR	0	16WP	G15_092	FROM->TO	CIMARRON - DRAPER LAKE 345KV CKT 1	717	717	0.03408	101.2354	GEN600003 1-PRAIRIE ISLAND G1
FDNSLock	00NR	0	16WP	G15_092	FROM->TO	CIMARRON - DRAPER LAKE 345KV CKT 1	717	717	0.03408	101.2218	GEN600006 1-AS KING
FDNSLock	00NR	0	16WP	G15_092	FROM->TO	CIMARRON - DRAPER LAKE 345KV CKT 1	717	717	0.03408	101.201	GEN636641 1-LOUISA UNIT 1
FDNS	00NR	0	16WP	G15_092	FROM->TO	CIMARRON - DRAPER LAKE 345KV CKT 1	717	717	0.03408	101.1035	GEN563292 1-G15095_3 0.6900
FDNS	00NR	0	16WP	G15_092	FROM->TO	CIMARRON - DRAPER LAKE 345KV CKT 1	717	717	0.03408	101.1	GEN542962 2-IATAN UNIT #2
FDNS	00NR	0	16WP	G15_092	FROM->TO	CIMARRON - DRAPER LAKE 345KV CKT 1	717	717	0.03408	101.1	GEN615002 2-COAL CREEK
FDNS	00NR	0	16WP	G15_092	FROM->TO	CIMARRON - DRAPER LAKE 345KV CKT 1	717	717	0.03997	101.0885	NORTHWEST - SPRING CREEK 345KV CKT 1
FDNS	00NR	0	16WP	G15_092	FROM->TO	CIMARRON - DRAPER LAKE 345KV CKT 1	717	717	0.03408	101.0833	GEN600005 1-MONTICELLO
FDNS	00NR	0	16WP	G15_092	FROM->TO	CIMARRON - DRAPER LAKE 345KV CKT 1	717	717	0.03408	101.082	DRAPER LAKE - GM 138KV CKT 1
FDNS	00NR	0	16WP	G15_092	FROM->TO	CIMARRON - DRAPER LAKE 345KV CKT 1	717	717	0.03408	101.0628	GEN527166 1-MUSTANG_6 118.000
FDNS	00NR	0	16WP	G15_092	FROM->TO	CIMARRON - DRAPER LAKE 345KV CKT 1	717	717	0.03408	101.0553	GEN525562 1-TOLK GEN #2 24 KV
FDNS	00NR	0	16WP	G15_092	FROM->TO	CIMARRON - DRAPER LAKE 345KV CKT 1	717	717	0.03997	101.0485	SOONER - SPRING CREEK 345KV CKT 1
FDNS	00NR	0	16WP	G15_092	FROM->TO	CIMARRON - DRAPER LAKE 345KV CKT 1	717	717	0.03408	101.0116	GEN562952 1-G15057_3 0.6500
FDNS	00NR	0	16WP	G15_092	FROM->TO	CIMARRON - DRAPER LAKE 345KV CKT 1	717	717	0.03408	101.0001	GEN563272 1-G15093_3 0.6900
FDNS	00NR	0	16WP	G15_092	FROM->TO	CIMARRON - DRAPER LAKE 345KV CKT 1	717	717	0.03408	101	GEN629074 1-ARNOLD LOWSIDE OF GSU XFMR
FDNS	00NR	0	16WP	G15_092	FROM->TO	CIMARRON - DRAPER LAKE 345KV CKT 1	717	717	0.03408	100.9585	GEN635213 3-NEAL UNIT 3
FDNS	00NR	0	16WP	G15_092	FROM->TO	CIMARRON - DRAPER LAKE 345KV CKT 1	717	717	0.03648	100.9479	FRANKLIN SW - MIDWEST TAP 138KV CKT 1
FDNS	00NR	0	16WP	G15_092	FROM->TO	CIMARRON - DRAPER LAKE 345KV CKT 1	717	717	0.03207	100.9426	DRAPER LAKE - SEMINOLE 345KV CKT 3
FDNS	00NR	0	16WP	G15_092	FROM->TO	CIMARRON - DRAPER LAKE 345KV CKT 1	717	717	0.03408	100.9128	GEN562892 1-G15048_3 0.6900
FDNS	00NR	0	16WP	G15_092	FROM->TO	CIMARRON - DRAPER LAKE 345KV CKT 1	717	717	0.03408	100.9011	BIG STONE 230/24.0KV TRANSFORMER CKT 1
FDNS	00NR	0	16WP	G15_092	FROM->TO	CIMARRON - DRAPER LAKE 345KV CKT 1	717	717	0.03408	100.8665	GEN563173 1-G15082_3 0.6900
FDNS	00NR	0	16WP	G15_092	FROM->TO	CIMARRON - DRAPER LAKE 345KV CKT 1	717	717	0.03353	100.8575	CHAMBER SPRINGS - CLARKSVILLE 345KV CKT 1
FDNS	00NR	0	16WP	G15_092	FROM->TO	CIMARRON - DRAPER LAKE 345KV CKT 1	717	717	0.03408	100.8263	GEN562902 1-G15052_3 0.6900
FDNS	00NR	0	16WP	G15_092	FROM->TO	CIMARRON - DRAPER LAKE 345KV CKT 1	717	717	0.02976	100.8149	LYDIA - VALLIANT 345KV CKT 1
FDNS	00NR	0	16WP	G15_092	FROM->TO	CIMARRON - DRAPER LAKE 345KV CKT 1	717	717	0.02976	100.8149	LYDIA - VALLIANT 345KV CKT 1
FDNS	00NR	0	16WP	G15_092	FROM->TO	CIMARRON - DRAPER LAKE 345KV CKT 1	717	717	0.03408	100.81	GEN514805 1-SOONER UNIT 1
FDNS	00NR	0	16WP	G15_092	FROM->TO	CIMARRON - DRAPER LAKE 345KV CKT 1	717	717	0.03408	100.787	GEN527903 1-HOBBS PLANT #3 (ST)
FDNS	00NR	0	16WP	G15_092	FROM->TO	CIMARRON - DRAPER LAKE 345KV CKT 1	717	717	0.03408	100.7504	GEN525561 1-TOLK GEN #1 24 KV
FDNSLock	00NR	0	16WP	G15_092	FROM->TO	CIMARRON - DRAPER LAKE 345KV CKT 1	717	717	0.03408	100.7392	GEN600000 1-SHERBURNECNTY G1
FDNS	00NR	0	16WP	G15_092	FROM->TO	CIMARRON - DRAPER LAKE 345KV CKT 1	717	717	0.03229	100.6808	P12:138:OKGE:3TERM23
FDNS	00NR	0	16WP	G15_092	FROM->TO	CIMARRON - DRAPER LAKE 345KV CKT 1	717	717	0.03408	100.6578	GEN600001 2-SHERBURNE CNTY G2
FDNS	00NR	0	16WP	G15_092	FROM->TO	CIMARRON - DRAPER LAKE 345KV CKT 1	717	717	0.03229	100.6216	BARNES 4 138.00 - DRAPER LAKE 138KV CKT 1
FDNS	00NR	0	16WP	G15_092	FROM->TO	CIMARRON - DRAPER LAKE 345KV CKT 1	717	717	0.03408	100.6	GEN344225 1-1CAL G1 25.000
FDNS	00NR	0	16WP	G15_092	FROM->TO	CIMARRON - DRAPER LAKE 345KV CKT 1	717	717	0.03408	100.5641	GEN514806 1-SOONER UNIT 2
FDNSLock	00NR	0	16WP	G15_092	FROM->TO	CIMARRON - DRAPER LAKE 345KV CKT 1	717	717	0.03408	100.5438	GEN629075 1-OTTUMWA GENERATOR FOR OTTUMWA UNIT NO 1
FDNS	00NR	0	16WP	G15_092	FROM->TO	CIMARRON - DRAPER LAKE 345KV CKT 1	717	717	0.03408	100.5167	GEN563162 1-G15081_3 0.6900
FDNS	00NR	0	16WP	G15_092	FROM->TO	CIMARRON - DRAPER LAKE 345KV CKT 1	717	717	0.035	100.3768	DRAPER LAKE (DRAPER2) 345/138/13.8KV TRANSFORMER CKT 1
FDNS	00NR	0	16WP	G15_092	FROM->TO	CIMARRON - DRAPER LAKE 345KV CKT 1	717	717	0.03408	100.3192	SHERBURNE CO 345/24.0KV TRANSFORMER CKT 1
FDNS	00NR	0	16WP	G15_092	FROM->TO	CIMARRON - DRAPER LAKE 345KV CKT 1	717	717	0.03759	100.2891	CIMARRON - MATHWSN7 345.00 345KV CKT 1
FDNS	00NR	0	16WP	G15_092	FROM->TO	CIMARRON - DRAPER LAKE 345KV CKT 1	717	717	0.03759	100.2891	CIMARRON - MATHWSN7 345.00 345KV CKT 2
FDNS	00NR	0	16WP	G15_092	FROM->TO	CIMARRON - DRAPER LAKE 345KV CKT 1	717	717	0.035	100.286	DRAPER LAKE (DRAPER3) 345/138/13.8KV TRANSFORMER CKT 1
FDNS	00NR	0	16WP	G15_092	FROM->TO	CIMARRON - DRAPER LAKE 345KV CKT 1	717	717	0.035	100.286	DRAPER LAKE (DRAPER4) 345/138/13.8KV TRANSFORMER CKT 1
FDNSLock	00NR	0	16WP	G15_092	FROM->TO	CIMARRON - DRAPER LAKE 345KV CKT 1	717	717	0.03408	100.2812	GEN635214 4-NEAL UNIT 4
FDNS	00NR	0	16WP	G15_092	FROM->TO	CIMARRON - DRAPER LAKE 345KV CKT 1	717	717	0.03408	100.2003	GEN562882 1-G15047_3 0.6900
FDNS	00NR	0	16WP	G15_092	FROM->TO	CIMARRON - DRAPER LAKE 345KV CKT 1	717	717	0.03408	100.1889	GEN600002 3-SHERBURNE CNTY G3
FDNS	00NR	0	16WP	G15_092	FROM->TO	CIMARRON - DRAPER LAKE 345KV CKT 1	717	717	0.03408	99.8	GEN635023 3-WALTER SCOTT UNIT 3
FDNS	00NR	0	16WP	G15_092	FROM->TO	CIMARRON - DRAPER LAKE 345KV CKT 1	717	717	0.03408	99.7	GEN562023 1-G11_020_3 0.6900
FDNS	00NR	0	16WP	G15_092	FROM->TO	CIMARRON - DRAPER LAKE 345KV CKT 1	717	717	0.03408	99.7	GEN562026 1-G11_019_3 0.6900
FDNS	00NR	0	16WP	G15_092	FROM->TO	CIMARRON - DRAPER LAKE 345KV CKT 1	717	717	0.03408	99.6	EASTDC - ERCOT EQUIVALENCE 345KV CKT 1
FDNS	00NR	0	16WP	G15_092	FROM->TO	CIMARRON - DRAPER LAKE 345KV CKT 1	717	717	0.03033	99.5	DRAPER LAKE - SEMINOLE 345KV CKT 1
FDNS	00NR	0	16WP	G15_092	FROM->TO	CIMARRON - DRAPER LAKE 345KV CKT 1	717	717	0.03033	99.5	DRAPER LAKE - SEMINOLE 345KV CKT 2
FDNS	00NR	0	20WP	G15_092	TO->FROM	CIMARRON - MINCO 345KV CKT 1	956	956	0.5051	113.1031	G14-057T 345.00 - SUNNYSIDE 345KV CKT 1
FDNS	00NR	0	16WP	G15_092	TO->FROM	CIMARRON - MINCO 345KV CKT 1	956	956	0.50726	112.6453	G14-057T 345.00 - SUNNYSIDE 345KV CKT 1
FDNS	00NR	0	17SP	G15_092	TO->FROM	CLEAVELAND - CLEVLND 4 138.00 138KV CKT Z1	305	371	0.03498	110.1318	CLEVELAND - TULSA NORTH 345KV CKT 1
FDNS	00NR	0	17SP	G15_092	TO->FROM	CLEAVELAND - CLEVLND 4 138.00 138KV CKT Z1	305	371	0.03498	110.1318	CLEVELAND - TULSA NORTH 345KV CKT 1
FDNS	00NR	0	20SP	G15_092	TO->FROM	CLEAVELAND - CLEVLND 4 138.00 138KV CKT Z1	305	371	0.0337	109.3313	CLEVELAND - TULSA NORTH 345KV CKT 1
FDNS	00NR	0	20SP	G15_092	TO->FROM	CLEAVELAND - CLEVLND 4 138.00 138KV CKT Z1	305	371	0.0337	109.3313	CLEVELAND - TULSA NORTH 345KV CKT 1
FDNS	00NR	0	16WP	G15_092	FROM->TO	G14-057T 345.00 - SUNNYSIDE 345KV CKT 1	717	789	0.56094	141.3261	CIMARRON - MINCO 345KV CKT 1
FDNS	00NR	0	20WP	G15_092	FROM->TO	G14-057T 345.00 - SUNNYSIDE 345KV CKT 1	717	789	0.56132	139.8556	CIMARRON - MINCO 345KV CKT 1
FDNS	00NR	0	16WP	G15_092	FROM->TO	G14-057T 345.00 - SUNNYSIDE 345KV CKT 1	717	789	0.56094	130.2319	GRACEMONT - MINCO 345KV CKT 1
FDNS	00NR	0	20WP	G15_092	FROM->TO	G14-057T 345.00 - SUNNYSIDE 345KV CKT 1	717	789	0.56132	128.6283	GRACEMONT - MINCO 345KV CKT 1
FDNS	00NR	0	16WP	G15_092	FROM->TO	G14-057T 345.00 - SUNNYSIDE 345KV CKT 1	717	789	0.47475	125.8516	PITTSBURG - SEMINOLE 345KV CKT 1
FDNS	00NR	0	16WP	G15_092	FROM->TO	G14-057T 345.00 - SUNNYSIDE 345KV CKT 1	717	789	0.47475	125.8516	PITTSBURG - SEMINOLE 345KV CKT 1
FDNS	00NR	0	16WP	G15_092	FROM->TO	G14-057T 345.00 - SUNNYSIDE 345KV CKT 1	717	789	0.47479	125.7317	BASE CASE
FDNS	00NR	0	20WP	G15_092	FROM->TO	G14-057T 345.00 - SUNNYSIDE 345KV CKT 1	717	789	0.47624	123.4961	BASE CASE
FDNS	00NR	0	16WP	G15_092	FROM->TO	G14-057T 345.00 - SUNNYSIDE 345KV CKT 1	717	789	0.47796	123.2027	CIMARRON - DRAPER LAKE 345KV CKT 1
FDNS	00NR	0	20WP	G15_092	FROM->TO	G14-057T 345.00 - SUNNYSIDE 345KV CKT 1	717	789	0.47678	122.942	PITTSBURG - SEMINOLE 345KV CKT 1
FDNS	00NR	0	20WP	G15_092	FROM->TO	G14-057T 345.00 - SUNNYSIDE 345KV CKT 1	717	789	0.47678	122.942	PITTSBURG - SEMINOLE 345KV CKT 1
FDNS	00NR	0	20WP	G15_092	FROM->TO	G14-057T 345.00 - SUNNYSIDE 345KV CKT 1	717	789	0.47948	120.8155	CIMARRON - DRAPER LAKE 345KV CKT 1
FDNS	00NR	0	16WP	G15_092	FROM->TO	G14-057T 345.00 - SUNNYSIDE 345KV CKT 1	717	789	0.48586	120.3338	P12:138:WFEC:MSL03
FDNS	00NR	0	16WP	G15_092	FROM->TO	G14-057T 345.00 - SUNNYSIDE 345KV CKT 1	717	789	0.48067	119.7169	PITTSBURG - VALLIANT 345KV CKT 1
FDNS	00NR	0	16WP	G15_092	FROM->TO	G14-057T 345.00 - SUNNYSIDE 345KV CKT 1	717	789	0.48067	119.7169	PITTSBURG - VALLIANT 345KV CKT 1
FDNSLock	00NR	0	16WP	G15_092	FROM->TO	G14-057T 345.00 - SUNNYSIDE 345KV CKT 1	717	789	0.47479	119.4097	GEN509403 1-PIRKEY GENERATION
FDNS	00NR	0	16WP	G15_092	FROM->TO	G14-057T 345.00 - SUNNYSIDE 345KV CKT 1	717	789	0.47479	119.3291	GEN509416 1-TURK GENERATION
FDNS	00NR	0	16WP	G15_092	FROM->TO	G14-057T 345.00 - SUNNYSIDE 345KV CKT 1	717	789	0.47934	119.038	CLEVELAND - G15066_T 345.00 345KV CKT 1
FDNS	00NR	0	16WP	G15_092	FROM->TO	G14-057T 345.00 - SUNNYSIDE 345KV CKT 1	717	789	0.47934	118.7424	G15066_T 345.00 - SOONER 345KV CKT 1

SOLUTION	GROUP	SCENARIO	SEASON	SOURCE	DIRECTION	MONITORED ELEMENT	RATEA (MVA)	RATEB(MVA)	TDF	TC%LOADING (% MVA)	CONTINGENCY
FDNS	00NR	0	20WP	G15_092	FROM->TO	G14-057T 345.00 - SUNNYSIDE 345KV CKT 1	717	789	0.48733	118.4531	P12:138:WFEC:MSL03
FDNS	00NR	0	16WP	G15_092	FROM->TO	G14-057T 345.00 - SUNNYSIDE 345KV CKT 1	717	789	0.47479	118.4277	GEN501801 1-DOLET HILLS UNIT1
FDNS	00NR	0	16WP	G15_092	FROM->TO	G14-057T 345.00 - SUNNYSIDE 345KV CKT 1	717	789	0.47479	118.0417	GEN509404 1-WELSH #1
FDNS	00NR	0	16WP	G15_092	FROM->TO	G14-057T 345.00 - SUNNYSIDE 345KV CKT 1	717	789	0.47479	118.0417	GEN509406 1-WELSH #3
FDNS	00NR	0	16WP	G15_092	FROM->TO	G14-057T 345.00 - SUNNYSIDE 345KV CKT 1	717	789	0.47905	117.7945	BORDER 7345.00 - WOODWARD DISTRICT EHV 345KV CKT 1
FDNS	00NR	0	16WP	G15_092	FROM->TO	G14-057T 345.00 - SUNNYSIDE 345KV CKT 1	717	789	0.47746	117.3154	7SAREPTA% 345.00 - LONGWOOD 345KV CKT 1
FDNS	00NR	0	16WP	G15_092	FROM->TO	G14-057T 345.00 - SUNNYSIDE 345KV CKT 1	717	789	0.47746	117.3154	7SAREPTA% 345.00 - LONGWOOD 345KV CKT 1
FDNS	00NR	0	20WP	G15_092	FROM->TO	G14-057T 345.00 - SUNNYSIDE 345KV CKT 1	717	789	0.47624	117.2677	GEN509403 1-PIRKEY GENERATION
FDNS	00NR	0	16WP	G15_092	FROM->TO	G14-057T 345.00 - SUNNYSIDE 345KV CKT 1	717	789	0.47713	117.2341	CORN TAP - NAPLESTP 138.00 138KV CKT 1
FDNS	00NR	0	20WP	G15_092	FROM->TO	G14-057T 345.00 - SUNNYSIDE 345KV CKT 1	717	789	0.47624	117.1868	GEN509416 1-TURK GENERATION
FDNS	00NR	0	16WP	G15_092	FROM->TO	G14-057T 345.00 - SUNNYSIDE 345KV CKT 1	717	789	0.47713	117.1497	NAPLESTP 138.00 - PAYNE 138.00 138KV CKT 1
FDNS	00NR	0	16WP	G15_092	FROM->TO	G14-057T 345.00 - SUNNYSIDE 345KV CKT 1	717	789	0.47583	117.1471	DOLET HILLS - SOUTHWEST SHREVEPORT 345KV CKT 1
FDNS	00NR	0	16WP	G15_092	FROM->TO	G14-057T 345.00 - SUNNYSIDE 345KV CKT 1	717	789	0.47583	117.1471	DOLET HILLS - SOUTHWEST SHREVEPORT 345KV CKT 1
FDNS	00NR	0	16WP	G15_092	FROM->TO	G14-057T 345.00 - SUNNYSIDE 345KV CKT 1	717	789	0.47735	117.1448	ANADARKO - POCASSETT 138KV CKT 1
FDNSLock	00NR	0	16WP	G15_092	FROM->TO	G14-057T 345.00 - SUNNYSIDE 345KV CKT 1	717	789	0.47479	117.1301	GEN336821 1-GRAND GULF UNIT
FDNS	00NR	0	16WP	G15_092	FROM->TO	G14-057T 345.00 - SUNNYSIDE 345KV CKT 1	717	789	0.47814	117.0898	CLEVELAND - TULSA NORTH 345KV CKT 1
FDNS	00NR	0	16WP	G15_092	FROM->TO	G14-057T 345.00 - SUNNYSIDE 345KV CKT 1	717	789	0.47814	117.0898	CLEVELAND - TULSA NORTH 345KV CKT 1
FDNS	00NR	0	16WP	G15_092	FROM->TO	G14-057T 345.00 - SUNNYSIDE 345KV CKT 1	717	789	0.4764	117.0742	COMANCHE - LOCO 138KV CKT 1
FDNSLock	00NR	0	16WP	G15_092	FROM->TO	G14-057T 345.00 - SUNNYSIDE 345KV CKT 1	717	789	0.47479	117.0352	GEN336153 1-WATERFORD UNIT#3
FDNS	00NR	0	16WP	G15_092	FROM->TO	G14-057T 345.00 - SUNNYSIDE 345KV CKT 1	717	789	0.46599	117.0161	CANADIAN RIVER - MUSKOGEE 345KV CKT 1
FDNS	00NR	0	16WP	G15_092	FROM->TO	G14-057T 345.00 - SUNNYSIDE 345KV CKT 1	717	789	0.47735	116.9961	POCASSETT - TUTTLE 138KV CKT 1
FDNS	00NR	0	20WP	G15_092	FROM->TO	G14-057T 345.00 - SUNNYSIDE 345KV CKT 1	717	789	0.48055	116.9383	CLEVELAND - G15066_T 345.00 345KV CKT 1
FDNSLock	00NR	0	16WP	G15_092	FROM->TO	G14-057T 345.00 - SUNNYSIDE 345KV CKT 1	717	789	0.47461	116.891	MATHWSN7 345.00 - TATONGA7 345.00 345KV CKT 1
FDNS	00NR	0	16WP	G15_092	FROM->TO	G14-057T 345.00 - SUNNYSIDE 345KV CKT 1	717	789	0.47905	116.8671	BORDER 7345.00 - TUCO_2 345.00 345KV CKT 1
FDNS	00NR	0	20WP	G15_092	FROM->TO	G14-057T 345.00 - SUNNYSIDE 345KV CKT 1	717	789	0.48249	116.8606	PITTSBURG - VALLIANT 345KV CKT 1
FDNS	00NR	0	20WP	G15_092	FROM->TO	G14-057T 345.00 - SUNNYSIDE 345KV CKT 1	717	789	0.48249	116.8606	PITTSBURG - VALLIANT 345KV CKT 1
FDNS	00NR	0	16WP	G15_092	FROM->TO	G14-057T 345.00 - SUNNYSIDE 345KV CKT 1	717	789	0.47814	116.8117	ARCADIA - NORTHWEST 345KV CKT 1
FDNS	00NR	0	16WP	G15_092	FROM->TO	G14-057T 345.00 - SUNNYSIDE 345KV CKT 1	717	789	0.47479	116.7419	GRAND GULF 500/22.0KV TRANSFORMER CKT 1
FDNSLock	00NR	0	16WP	G15_092	FROM->TO	G14-057T 345.00 - SUNNYSIDE 345KV CKT 1	717	789	0.47479	116.7414	GEN335831 1-RIVERBEND UNIT#1
FDNS	00NR	0	16WP	G15_092	FROM->TO	G14-057T 345.00 - SUNNYSIDE 345KV CKT 1	717	789	0.47479	116.7065	GEN515577 1-ARBWND11 0.6900
FDNS	00NR	0	16WP	G15_092	FROM->TO	G14-057T 345.00 - SUNNYSIDE 345KV CKT 1	717	789	0.47374	116.6977	ARCADIA - SEMINOLE 345KV CKT 1
FDNS	00NR	0	16WP	G15_092	FROM->TO	G14-057T 345.00 - SUNNYSIDE 345KV CKT 1	717	789	0.47479	116.6641	GEN509409 1-WILKES #3
FDNS	00NR	0	16WP	G15_092	FROM->TO	G14-057T 345.00 - SUNNYSIDE 345KV CKT 1	717	789	0.47617	116.6569	7SAREPTA% 345.00 - ELDORADO EHV 345KV CKT 1
FDNS	00NR	0	16WP	G15_092	FROM->TO	G14-057T 345.00 - SUNNYSIDE 345KV CKT 1	717	789	0.47617	116.6567	3TR3AR8EL7EL
FDNS	00NR	0	16WP	G15_092	FROM->TO	G14-057T 345.00 - SUNNYSIDE 345KV CKT 1	717	789	0.47617	116.6476	ELDORADO EHV 500/345KV TRANSFORMER CKT 1
FDNS	00NR	0	20WP	G15_092	FROM->TO	G14-057T 345.00 - SUNNYSIDE 345KV CKT 1	717	789	0.48055	116.6463	G15066_T 345.00 - SOONER 345KV CKT 1
FDNS	00NR	0	16WP	G15_092	FROM->TO	G14-057T 345.00 - SUNNYSIDE 345KV CKT 1	717	789	0.47943	116.6347	P12:138:AEPW:DUNCAN-4:L.E.S.-4
FDNS	00NR	0	16WP	G15_092	FROM->TO	G14-057T 345.00 - SUNNYSIDE 345KV CKT 1	717	789	0.47735	116.6144	BRIDGECR 138.00 - TUTTLE 138KV CKT 1
FDNS	00NR	0	16WP	G15_092	FROM->TO	G14-057T 345.00 - SUNNYSIDE 345KV CKT 1	717	789	0.4794	116.5237	COMANCHE TAP - OMPA-DUNCAN 840 138KV CKT 1
FDNS	00NR	0	16WP	G15_092	FROM->TO	G14-057T 345.00 - SUNNYSIDE 345KV CKT 1	717	789	0.47522	116.4781	HEALDTON - LOCO 138KV CKT 1
FDNS	00NR	0	20WP	G15_092	FROM->TO	G14-057T 345.00 - SUNNYSIDE 345KV CKT 1	717	789	0.47624	116.4704	GEN501801 1-DOLET HILLS UNIT1
FDNS	00NR	0	16WP	G15_092	FROM->TO	G14-057T 345.00 - SUNNYSIDE 345KV CKT 1	717	789	0.47692	116.4505	FINNEY SWITCHING STATION - HOLCOMB 345KV CKT 1
FDNS	00NR	0	16WP	G15_092	FROM->TO	G14-057T 345.00 - SUNNYSIDE 345KV CKT 1	717	789	0.47692	116.4505	FINNEY SWITCHING STATION - HOLCOMB 345KV CKT 1
FDNS	00NR	0	16WP	G15_092	FROM->TO	G14-057T 345.00 - SUNNYSIDE 345KV CKT 1	717	789	0.47479	116.4	GEN300006 1-NEW MADRID UNIT 1
FDNS	00NR	0	16WP	G15_092	FROM->TO	G14-057T 345.00 - SUNNYSIDE 345KV CKT 1	717	789	0.47479	116.4	GEN300007 1-NEW MADRID UNIT 2
FDNS	00NR	0	16WP	G15_092	FROM->TO	G14-057T 345.00 - SUNNYSIDE 345KV CKT 1	717	789	0.47521	116.3928	LACYGNE - WAVERLY7 345.00 345KV CKT 1
FDNS	00NR	0	16WP	G15_092	FROM->TO	G14-057T 345.00 - SUNNYSIDE 345KV CKT 1	717	789	0.47479	116.369	GEN501813 1-RODEMACHER UNIT 3
FDNS	00NR	0	16WP	G15_092	FROM->TO	G14-057T 345.00 - SUNNYSIDE 345KV CKT 1	717	789	0.47735	116.3452	P12:138:WFEC:MSL01
FDNS	00NR	0	16WP	G15_092	FROM->TO	G14-057T 345.00 - SUNNYSIDE 345KV CKT 1	717	789	0.47735	116.3403	BRIDGECR 138.00 - SUNSHINE CANYON 138KV CKT 1
FDNS	00NR	0	16WP	G15_092	FROM->TO	G14-057T 345.00 - SUNNYSIDE 345KV CKT 1	717	789	0.47522	116.3386	HEALDTON - RINGLING 138KV CKT 1
FDNS	00NR	0	16WP	G15_092	FROM->TO	G14-057T 345.00 - SUNNYSIDE 345KV CKT 1	717	789	0.47521	116.2527	WAVERLY7 345.00 - WOLF CREEK 345KV CKT 1
FDNS	00NR	0	16WP	G15_092	FROM->TO	G14-057T 345.00 - SUNNYSIDE 345KV CKT 1	717	789	0.47479	116.2503	GEN520947 1-HUGO1
FDNS	00NR	0	16WP	G15_092	FROM->TO	G14-057T 345.00 - SUNNYSIDE 345KV CKT 1	717	789	0.4794	116.2417	DUNCAN - OMPA-DUNCAN 840 138KV CKT 1
FDNS	00NR	0	16WP	G15_092	FROM->TO	G14-057T 345.00 - SUNNYSIDE 345KV CKT 1	717	789	0.4794	116.2417	DUNCAN - OMPA-DUNCAN 840 138KV CKT 1
FDNS	00NR	0	20WP	G15_092	FROM->TO	G14-057T 345.00 - SUNNYSIDE 345KV CKT 1	717	789	0.48034	116.2407	BORDER 7345.00 - WOODWARD DISTRICT EHV 345KV CKT 1
FDNSLock	00NR	0	16WP	G15_092	FROM->TO	G14-057T 345.00 - SUNNYSIDE 345KV CKT 1	717	789	0.47461	116.2034	G11_051T 345.00 - TATONGA7 345.00 345KV CKT 1
FDNS	00NR	0	16WP	G15_092	FROM->TO	G14-057T 345.00 - SUNNYSIDE 345KV CKT 1	717	789	0.47522	116.1742	RINGLING - SOUTH WILSON 138KV CKT 1
FDNS	00NR	0	16WP	G15_092	FROM->TO	G14-057T 345.00 - SUNNYSIDE 345KV CKT 1	717	789	0.47479	116.1685	GEN335206 1-NELSON UNIT 6
FDNS	00NR	0	16WP	G15_092	FROM->TO	G14-057T 345.00 - SUNNYSIDE 345KV CKT 1	717	789	0.47692	116.0651	FINNEY SWITCHING STATION - Hitchland Interchange 345KV CKT 1
FDNS	00NR	0	16WP	G15_092	FROM->TO	G14-057T 345.00 - SUNNYSIDE 345KV CKT 1	717	789	0.47479	116.0517	DOLET HILLS 345/24.0KV TRANSFORMER CKT 1
FDNS	00NR	0	16WP	G15_092	FROM->TO	G14-057T 345.00 - SUNNYSIDE 345KV CKT 1	717	789	0.47493	116.0067	P12:138:AEPW:SHERID4:112GORE4
FDNS	00NR	0	16WP	G15_092	FROM->TO	G14-057T 345.00 - SUNNYSIDE 345KV CKT 1	717	789	0.47331	115.998	PARK LANE - SEMINOLE 138KV CKT 1
FDNSLock	00NR	0	16WP	G15_092	FROM->TO	G14-057T 345.00 - SUNNYSIDE 345KV CKT 1	717	789	0.47479	115.9851	GEN590011 2-ERCOT EQUIVALENCE
FDNS	00NR	0	16WP	G15_092	FROM->TO	G14-057T 345.00 - SUNNYSIDE 345KV CKT 1	717	789	0.47479	115.9826	GEN501812 1-RODEMACHER UNIT 2
FDNS	00NR	0	16WP	G15_092	FROM->TO	G14-057T 345.00 - SUNNYSIDE 345KV CKT 1	717	789	0.47579	115.9522	THISTLE7 345.00 - WOODWARD DISTRICT EHV 345KV CKT 1
FDNS	00NR	0	16WP	G15_092	FROM->TO	G14-057T 345.00 - SUNNYSIDE 345KV CKT 1	717	789	0.47579	115.9522	THISTLE7 345.00 - WOODWARD DISTRICT EHV 345KV CKT 1
FDNS	00NR	0	16WP	G15_092	FROM->TO	G14-057T 345.00 - SUNNYSIDE 345KV CKT 1	717	789	0.47579	115.9522	THISTLE7 345.00 - WOODWARD DISTRICT EHV 345KV CKT 2
FDNS	00NR	0	16WP	G15_092	FROM->TO	G14-057T 345.00 - SUNNYSIDE 345KV CKT 1	717	789	0.47579	115.9522	THISTLE7 345.00 - WOODWARD DISTRICT EHV 345KV CKT 2
FDNS	00NR	0	20WP	G15_092	FROM->TO	G14-057T 345.00 - SUNNYSIDE 345KV CKT 1	717	789	0.47624	115.9478	GEN509406 1-WELSH #3
FDNS	00NR	0	20WP	G15_092	FROM->TO	G14-057T 345.00 - SUNNYSIDE 345KV CKT 1	717	789	0.47624	115.9475	GEN509404 1-WELSH #1
FDNS	00NR	0	16WP	G15_092	FROM->TO	G14-057T 345.00 - SUNNYSIDE 345KV CKT 1	717	789	0.47575	115.9348	CANEYRV7 345.00 - NEOSHO 345KV CKT 1
FDNS	00NR	0	16WP	G15_092	FROM->TO	G14-057T 345.00 - SUNNYSIDE 345KV CKT 1	717	789	0.47479	115.9221	GEN515564 1-ORIGIN11 0.6900
FDNS	00NR	0	16WP	G15_092	FROM->TO	G14-057T 345.00 - SUNNYSIDE 345KV CKT 1	717	789	0.47479	115.9221	GEN515565 1-ORIGIN21 0.6900
FDNSLock	00NR	0	16WP	G15_092	FROM->TO	G14-057T 345.00 - SUNNYSIDE 345KV CKT 1	717	789	0.47479	115.9096	GEN590010 1-ERCOT EQUIVALENCE
FDNS	00NR	0	16WP	G15_092	FROM->TO	G14-057T 345.00 - SUNNYSIDE 345KV CKT 1	717	789	0.47522	115.8986	MARIETTA - SOUTH WILSON 138KV CKT 1
FDNS	00NR	0	16WP	G15_092	FROM->TO	G14-057T 345.00 - SUNNYSIDE 345KV CKT 1	717	789	0.47479	115.8352	GEN509408 1-WILKES #2
FDNS	00NR	0	16WP	G15_092	FROM->TO	G14-057T 345.00 - SUNNYSIDE 345KV CKT 1	717	789	0.47522	115.8012	P12:138:WFEC:MSL17
FDNS	00NR	0	16WP	G15_092	FROM->TO	G14-057T 345.00 - SUNNYSIDE 345KV CKT 1	717	789	0.47575	115.7954	CANEYRV7 345.00 - LATHAMS7 345.00 345KV CKT 1
FDNS	00NR	0	16WP	G15_092	FROM->TO	G14-057T 345.00 - SUNNYSIDE 345KV CKT 1	717	789	0.47502	115.7632	P12:138:WFEC:MSL02

SOLUTION	GROUP	SCENARIO	SEASON	SOURCE	DIRECTION	MONITORED ELEMENT	RATEA (MVA)	RATEB(MVA)	TDF	TC%LOADING (% MVA)	CONTINGENCY
FDNS	00NR	0	16WP	G15_092	FROM->TO	G14-057T 345.00 - SUNNYSIDE 345KV CKT 1	717	789	0.47479	115.7471	P12:161:AEPW:DYESS 5:HYLAND 5
FDNS	00NR	0	16WP	G15_092	FROM->TO	G14-057T 345.00 - SUNNYSIDE 345KV CKT 1	717	789	0.47479	115.7452	GEN506754 1-LEBROCK STEAM 1
FDNS	00NR	0	16WP	G15_092	FROM->TO	G14-057T 345.00 - SUNNYSIDE 345KV CKT 1	717	789	0.47479	115.7417	P12:69:AEPW:L.E.S.-2:LAW WC2
FDNS	00NR	0	16WP	G15_092	FROM->TO	G14-057T 345.00 - SUNNYSIDE 345KV CKT 1	717	789	0.47874	115.7311	REDBUD - RIVERSIDE STATION 345KV CKT 1
FDNS	00NR	0	16WP	G15_092	FROM->TO	G14-057T 345.00 - SUNNYSIDE 345KV CKT 1	717	789	0.47874	115.7311	REDBUD - RIVERSIDE STATION 345KV CKT 1
FDNS	00NR	0	16WP	G15_092	FROM->TO	G14-057T 345.00 - SUNNYSIDE 345KV CKT 1	717	789	0.47531	115.7085	ELDORADO EHV - MOUNT OLIVE 500KV CKT 1
FDNS	00NR	0	16WP	G15_092	FROM->TO	G14-057T 345.00 - SUNNYSIDE 345KV CKT 1	717	789	0.47479	115.6998	GEN334440 1-SABINE UNIT 4
FDNS	00NR	0	16WP	G15_092	FROM->TO	G14-057T 345.00 - SUNNYSIDE 345KV CKT 1	717	789	0.47654	115.6769	CIVIT - PAOLI 138KV CKT 1
FDNS	00NR	0	16WP	G15_092	FROM->TO	G14-057T 345.00 - SUNNYSIDE 345KV CKT 1	717	789	0.47501	115.675	ANADARKO - GEORGIA 138KV CKT 1
FDNS	00NR	0	16WP	G15_092	FROM->TO	G14-057T 345.00 - SUNNYSIDE 345KV CKT 1	717	789	0.47539	115.6471	MATHWSN7 345.00 - NORTHWEST 345KV CKT 1
FDNS	00NR	0	16WP	G15_092	FROM->TO	G14-057T 345.00 - SUNNYSIDE 345KV CKT 1	717	789	0.47492	115.6371	P12:138:AEPW:112GORE4:L.E.S.-4
FDNS	00NR	0	16WP	G15_092	FROM->TO	G14-057T 345.00 - SUNNYSIDE 345KV CKT 1	717	789	0.47555	115.6268	ELDORADO EHV - SHERIDAN EHV 500KV CKT 1
FDNS	00NR	0	16WP	G15_092	FROM->TO	G14-057T 345.00 - SUNNYSIDE 345KV CKT 1	717	789	0.47697	115.6192	P12:138:AEPW-OGE:CORNVIL4:MAUD 4
FDNS	00NR	0	16WP	G15_092	FROM->TO	G14-057T 345.00 - SUNNYSIDE 345KV CKT 1	717	789	0.47479	115.6004	NEW MADRID 161/22.0KV TRANSFORMER CKT 1
FDNS	00NR	0	16WP	G15_092	FROM->TO	G14-057T 345.00 - SUNNYSIDE 345KV CKT 1	717	789	0.47536	115.5963	WEBRE - WELLS 500KV CKT 1
FDNS	00NR	0	16WP	G15_092	FROM->TO	G14-057T 345.00 - SUNNYSIDE 345KV CKT 1	717	789	0.4749	115.5952	PAOLI - PAYNE 138.00 138KV CKT 1
FDNS	00NR	0	16WP	G15_092	FROM->TO	G14-057T 345.00 - SUNNYSIDE 345KV CKT 1	717	789	0.47479	115.5952	GEN503909 1-FULTONU1 1 16.000
FDNS	00NR	0	16WP	G15_092	FROM->TO	G14-057T 345.00 - SUNNYSIDE 345KV CKT 1	717	789	0.47479	115.5865	NEW MADRID 345/22.0KV TRANSFORMER CKT 1
FDNS	00NR	0	16WP	G15_092	FROM->TO	G14-057T 345.00 - SUNNYSIDE 345KV CKT 1	717	789	0.47501	115.5859	FLETCHER - GEORGIA 138KV CKT 1
FDNS	00NR	0	16WP	G15_092	FROM->TO	G14-057T 345.00 - SUNNYSIDE 345KV CKT 1	717	789	0.47575	115.5778	LATHAMS7 345.00 - ROSE HILL 345KV CKT 1
FDNS	00NR	0	16WP	G15_092	FROM->TO	G14-057T 345.00 - SUNNYSIDE 345KV CKT 1	717	789	0.48213	115.5671	LAWTON EASTSIDE (LES 5) 345/138/13.8KV TRANSFORMER CKT 2
FDNS	00NR	0	16WP	G15_092	FROM->TO	G14-057T 345.00 - SUNNYSIDE 345KV CKT 1	717	789	0.48213	115.5671	LAWTON EASTSIDE (LES 5) 345/138/13.8KV TRANSFORMER CKT 2
FDNS	00NR	0	16WP	G15_092	FROM->TO	G14-057T 345.00 - SUNNYSIDE 345KV CKT 1	717	789	0.47479	115.5633	FRONTIER - GRIMES 345KV CKT 1
FDNS	00NR	0	16WP	G15_092	FROM->TO	G14-057T 345.00 - SUNNYSIDE 345KV CKT 1	717	789	0.47495	115.5527	EMPIRE - FLETCHER 138KV CKT 1
FDNS	00NR	0	16WP	G15_092	FROM->TO	G14-057T 345.00 - SUNNYSIDE 345KV CKT 1	717	789	0.47697	115.5491	BLANCHARD - CORNVILLE 138KV CKT 1
FDNS	00NR	0	16WP	G15_092	FROM->TO	G14-057T 345.00 - SUNNYSIDE 345KV CKT 1	717	789	0.47654	115.5364	CIVIT - STRATFORD 138KV CKT 1
FDNS	00NR	0	16WP	G15_092	FROM->TO	G14-057T 345.00 - SUNNYSIDE 345KV CKT 1	717	789	0.4763	115.5229	TUPELO - TUPELO TAP 138KV CKT 1
FDNS	00NR	0	16WP	G15_092	FROM->TO	G14-057T 345.00 - SUNNYSIDE 345KV CKT 1	717	789	0.47495	115.4711	COMANCHE - EMPIRE 138KV CKT 1
FDNS	00NR	0	16WP	G15_092	FROM->TO	G14-057T 345.00 - SUNNYSIDE 345KV CKT 1	717	789	0.47521	115.4691	G1524G1525 345.00 - THISTLE7 345.00 345KV CKT 1
FDNS	00NR	0	16WP	G15_092	FROM->TO	G14-057T 345.00 - SUNNYSIDE 345KV CKT 1	717	789	0.47521	115.4691	G1524G1525 345.00 - THISTLE7 345.00 345KV CKT 2
FDNS	00NR	0	16WP	G15_092	FROM->TO	G14-057T 345.00 - SUNNYSIDE 345KV CKT 1	717	789	0.47479	115.4679	GEN509393 S1-ARSENAL HILL GENS #4 (STALL)
FDNS	00NR	0	16WP	G15_092	FROM->TO	G14-057T 345.00 - SUNNYSIDE 345KV CKT 1	717	789	0.47479	115.4437	GEN509392 G2-ARSENAL HILL GENS #3 (STALL)
FDNS	00NR	0	16WP	G15_092	FROM->TO	G14-057T 345.00 - SUNNYSIDE 345KV CKT 1	717	789	0.47479	115.4436	GEN509391 G1-ARSENAL HILL GENS #2 (STALL)
FDNS	00NR	0	16WP	G15_092	FROM->TO	G14-057T 345.00 - SUNNYSIDE 345KV CKT 1	717	789	0.47479	115.429	GEN336252 1-NINEMILE POINT UNIT#5
FDNS	00NR	0	16WP	G15_092	FROM->TO	G14-057T 345.00 - SUNNYSIDE 345KV CKT 1	717	789	0.47654	115.419	OIL CENTER - STRATFORD 138KV CKT 1
FDNS	00NR	0	16WP	G15_092	FROM->TO	G14-057T 345.00 - SUNNYSIDE 345KV CKT 1	717	789	0.47479	115.4027	DELL 500 - ESSEX UNIT 2 500KV CKT Z1
FDNS	00NR	0	16WP	G15_092	FROM->TO	G14-057T 345.00 - SUNNYSIDE 345KV CKT 1	717	789	0.47479	115.3907	GEN334071 1-LEWIS CREEK 2
FDNS	00NR	0	16WP	G15_092	FROM->TO	G14-057T 345.00 - SUNNYSIDE 345KV CKT 1	717	789	0.47479	115.3817	GEN334070 1-LEWIS CREEK 1
FDNS	00NR	0	16WP	G15_092	FROM->TO	G14-057T 345.00 - SUNNYSIDE 345KV CKT 1	717	789	0.47479	115.3782	GEN335204 1-NELSON UNIT 4
FDNS	00NR	0	20WP	G15_092	FROM->TO	G14-057T 345.00 - SUNNYSIDE 345KV CKT 1	717	789	0.47923	115.3748	7SAREPTA% 345.00 - LONGWOOD 345KV CKT 1
FDNS	00NR	0	20WP	G15_092	FROM->TO	G14-057T 345.00 - SUNNYSIDE 345KV CKT 1	717	789	0.47923	115.3748	7SAREPTA% 345.00 - LONGWOOD 345KV CKT 1
FDNS	00NR	0	20WP	G15_092	FROM->TO	G14-057T 345.00 - SUNNYSIDE 345KV CKT 1	717	789	0.47865	115.3669	CORN TAP - NAPLESTP 138.00 138KV CKT 1
FDNS	00NR	0	16WP	G15_092	FROM->TO	G14-057T 345.00 - SUNNYSIDE 345KV CKT 1	717	789	0.4756	115.3542	DUNCAN (DUNCAN) 138/69/13.8KV TRANSFORMER CKT 1
FDNS	00NR	0	16WP	G15_092	FROM->TO	G14-057T 345.00 - SUNNYSIDE 345KV CKT 1	717	789	0.4756	115.3542	DUNCAN (DUNCAN) 138/69/13.8KV TRANSFORMER CKT 1
FDNS	00NR	0	16WP	G15_092	FROM->TO	G14-057T 345.00 - SUNNYSIDE 345KV CKT 1	717	789	0.47697	115.3522	BLANCHARD - MAUD 138KV CKT 1
FDNS	00NR	0	16WP	G15_092	FROM->TO	G14-057T 345.00 - SUNNYSIDE 345KV CKT 1	717	789	0.47479	115.3434	GEN334441 1-SABINE UNIT 5
FDNS	00NR	0	16WP	G15_092	FROM->TO	G14-057T 345.00 - SUNNYSIDE 345KV CKT 1	717	789	0.47479	115.3149	GEN337653 1-WHITE BLUFF UNIT #2
FDNS	00NR	0	20WP	G15_092	FROM->TO	G14-057T 345.00 - SUNNYSIDE 345KV CKT 1	717	789	0.48034	115.3146	BORDER 7345.00 - TUCO_2 345.00 345KV CKT 1
FDNS	00NR	0	16WP	G15_092	FROM->TO	G14-057T 345.00 - SUNNYSIDE 345KV CKT 1	717	789	0.47478	115.3081	P12:138:AEPW:CATOOSA4:T.S.E.-4
FDNS	00NR	0	16WP	G15_092	FROM->TO	G14-057T 345.00 - SUNNYSIDE 345KV CKT 1	717	789	0.47479	115.3065	P12:161:AEPW-SWPA:BEAVER5:EROGERS5
FDNS	00NR	0	16WP	G15_092	FROM->TO	G14-057T 345.00 - SUNNYSIDE 345KV CKT 1	717	789	0.47479	115.3	GEN300003 1-THOMAS HILL UNIT 3
FDNS	00NR	0	16WP	G15_092	FROM->TO	G14-057T 345.00 - SUNNYSIDE 345KV CKT 1	717	789	0.47559	115.2966	6LAYFLD 230.00 - CARROLL 230KV CKT 1
FDNS	00NR	0	16WP	G15_092	FROM->TO	G14-057T 345.00 - SUNNYSIDE 345KV CKT 1	717	789	0.47479	115.2935	GEN506752 1-LEBROCK GAS 1
FDNS	00NR	0	16WP	G15_092	FROM->TO	G14-057T 345.00 - SUNNYSIDE 345KV CKT 1	717	789	0.47479	115.2933	GEN506753 1-LEBROCK GAS 2
FDNS	00NR	0	16WP	G15_092	FROM->TO	G14-057T 345.00 - SUNNYSIDE 345KV CKT 1	717	789	0.47479	115.2879	GEN334030 1-FRONTIER UNIT 1
FDNS	00NR	0	16WP	G15_092	FROM->TO	G14-057T 345.00 - SUNNYSIDE 345KV CKT 1	717	789	0.47699	115.2871	TUTTLE - TUTTLE CONOCO TAP 138KV CKT 1
FDNS	00NR	0	16WP	G15_092	FROM->TO	G14-057T 345.00 - SUNNYSIDE 345KV CKT 1	717	789	0.47479	115.2864	GEN334031 1-FRONTIER UNIT 2
FDNS	00NR	0	20WP	G15_092	FROM->TO	G14-057T 345.00 - SUNNYSIDE 345KV CKT 1	717	789	0.47865	115.2754	NAPLESTP 138.00 - PAYNE 138.00 138KV CKT 1
FDNS	00NR	0	16WP	G15_092	FROM->TO	G14-057T 345.00 - SUNNYSIDE 345KV CKT 1	717	789	0.4771	115.2707	BAILEY4 138.00 - SUNSHINE CANYON 138KV CKT 1
FDNS	00NR	0	16WP	G15_092	FROM->TO	G14-057T 345.00 - SUNNYSIDE 345KV CKT 1	717	789	0.47479	115.2699	GEN515040 1-SEMINOLE 1G
FDNS	00NR	0	16WP	G15_092	FROM->TO	G14-057T 345.00 - SUNNYSIDE 345KV CKT 1	717	789	0.59807	115.2647	GRACEMONT - LAWTON EASTSIDE 345KV CKT 1
FDNS	00NR	0	16WP	G15_092	FROM->TO	G14-057T 345.00 - SUNNYSIDE 345KV CKT 1	717	789	0.59807	115.2647	GRACEMONT - LAWTON EASTSIDE 345KV CKT 1
FDNS	00NR	0	16WP	G15_092	FROM->TO	G14-057T 345.00 - SUNNYSIDE 345KV CKT 1	717	789	0.47463	115.2642	FULTON 115 - HOPE 115KV CKT 1
FDNS	00NR	0	16WP	G15_092	FROM->TO	G14-057T 345.00 - SUNNYSIDE 345KV CKT 1	717	789	0.47463	115.2642	FULTON 115 - HOPE 115KV CKT 1
FDNS	00NR	0	16WP	G15_092	FROM->TO	G14-057T 345.00 - SUNNYSIDE 345KV CKT 1	717	789	0.47488	115.249	8DANIEL8 500.00 - MCKNIGHT 500KV CKT 1
FDNS	00NR	0	16WP	G15_092	FROM->TO	G14-057T 345.00 - SUNNYSIDE 345KV CKT 1	717	789	0.47654	115.2478	LATTA JCT - OIL CENTER 138KV CKT 1
FDNS	00NR	0	16WP	G15_092	FROM->TO	G14-057T 345.00 - SUNNYSIDE 345KV CKT 1	717	789	0.47479	115.2473	GEN515226 1-MUSKOGEE 6G
FDNS	00NR	0	16WP	G15_092	FROM->TO	G14-057T 345.00 - SUNNYSIDE 345KV CKT 1	717	789	0.47588	115.2426	P12:138:AEPW-OGE:WTH_JCT4:JENSEN4
FDNS	00NR	0	16WP	G15_092	FROM->TO	G14-057T 345.00 - SUNNYSIDE 345KV CKT 1	717	789	0.47479	115.2333	GEN300015 1-1SGPDEL 18.000
FDNSLock	00NR	0	16WP	G15_092	FROM->TO	G14-057T 345.00 - SUNNYSIDE 345KV CKT 1	717	789	0.47479	115.2307	GEN337911 1-ARKANSAS NUCLEAR ONE UNIT #2
FDNS	00NR	0	16WP	G15_092	FROM->TO	G14-057T 345.00 - SUNNYSIDE 345KV CKT 1	717	789	0.47479	115.2299	P12:161:AEPW:DYESS5:ELMSPRNG:TONTITN5
FDNS	00NR	0	16WP	G15_092	FROM->TO	G14-057T 345.00 - SUNNYSIDE 345KV CKT 1	717	789	0.47479	115.2278	GEN337652 1-WHITE BLUFF UNIT #1
FDNS	00NR	0	16WP	G15_092	FROM->TO	G14-057T 345.00 - SUNNYSIDE 345KV CKT 1	717	789	0.47479	115.2235	GEN336251 1-NINEMILE POINT UNIT#4
FDNS	00NR	0	16WP	G15_092	FROM->TO	G14-057T 345.00 - SUNNYSIDE 345KV CKT 1	717	789	0.4753	115.2215	P12:138:AEPW:CORNVIL4:S.W.S.-4
FDNS	00NR	0	16WP	G15_092	FROM->TO	G14-057T 345.00 - SUNNYSIDE 345KV CKT 1	717	789	0.47479	115.2199	GEN501811 1-RODEMACHER UNIT 1
FDNS	00NR	0	16WP	G15_092	FROM->TO	G14-057T 345.00 - SUNNYSIDE 345KV CKT 1	717	789	0.47479	115.2185	GEN336831 1-BAXTER WILSON SES
FDNS	00NR	0	16WP	G15_092	FROM->TO	G14-057T 345.00 - SUNNYSIDE 345KV CKT 1	717	789	0.47731	115.2077	P12:138:AEPW:CORNVIL4:DUNCAN-4
FDNS	00NR	0	16WP	G15_092	FROM->TO	G14-057T 345.00 - SUNNYSIDE 345KV CKT 1	717	789	0.47495	115.2071	G15074_T 345.00 - HOYT 345KV CKT 1
FDNS	00NR	0	16WP	G15_092	FROM->TO	G14-057T 345.00 - SUNNYSIDE 345KV CKT 1	717	789	0.47699	115.206	CIMARRON - TUTTLE CONOCO TAP 138KV CKT 1

SOLUTION	GROUP	SCENARIO	SEASON	SOURCE	DIRECTION	MONITORED ELEMENT	RATEA (MVA)	RATEB(MVA)	TDF	TC%LOADING (% MVA)	CONTINGENCY
FDNS	00NR	0	20WP	G15_092	FROM->TO	G14-057T 345.00 - SUNNYSIDE 345KV CKT 1	717	789	0.47624	115.2011	GEN336821 1-GRAND GULF UNIT
FDNS	00NR	0	16WP	G15_092	FROM->TO	G14-057T 345.00 - SUNNYSIDE 345KV CKT 1	717	789	0.47491	115.2	G15088_T 345.00 - MOORE 345KV CKT 1
FDNS	00NR	0	16WP	G15_092	FROM->TO	G14-057T 345.00 - SUNNYSIDE 345KV CKT 1	717	789	0.47479	115.1975	GEN334433 1-SABINE UNIT 3
FDNS	00NR	0	16WP	G15_092	FROM->TO	G14-057T 345.00 - SUNNYSIDE 345KV CKT 1	717	789	0.4756	115.1706	P12:69:WFEC-AEPW:COMANCH2:DUNCAN-2
FDNS	00NR	0	16WP	G15_092	FROM->TO	G14-057T 345.00 - SUNNYSIDE 345KV CKT 1	717	789	0.47508	115.1663	BUCKNER7 345.00 - SPEARVILLE 345KV CKT 1
FDNS	00NR	0	16WP	G15_092	FROM->TO	G14-057T 345.00 - SUNNYSIDE 345KV CKT 1	717	789	0.47508	115.1663	BUCKNER7 345.00 - SPEARVILLE 345KV CKT 1
FDNS	00NR	0	16WP	G15_092	FROM->TO	G14-057T 345.00 - SUNNYSIDE 345KV CKT 1	717	789	0.47479	115.164	GEN562783 1-G15036_4 0.6900
FDNS	00NR	0	16WP	G15_092	FROM->TO	G14-057T 345.00 - SUNNYSIDE 345KV CKT 1	717	789	0.47479	115.164	GEN562784 1-G15036_5 0.6900
FDNSLock	00NR	0	16WP	G15_092	FROM->TO	G14-057T 345.00 - SUNNYSIDE 345KV CKT 1	717	789	0.47479	115.1601	GEN505432 1-SIKESTON
FDNS	00NR	0	16WP	G15_092	FROM->TO	G14-057T 345.00 - SUNNYSIDE 345KV CKT 1	717	789	0.47511	115.158	CIMARRON - CZECH HALL 138KV CKT 1
FDNS	00NR	0	16WP	G15_092	FROM->TO	G14-057T 345.00 - SUNNYSIDE 345KV CKT 1	717	789	0.47479	115.1483	GEN515223 1-MUSKOGEE 4G
FDNS	00NR	0	16WP	G15_092	FROM->TO	G14-057T 345.00 - SUNNYSIDE 345KV CKT 1	717	789	0.47479	115.1483	GEN515225 1-MUSKOGEE 5G
FDNS	00NR	0	16WP	G15_092	FROM->TO	G14-057T 345.00 - SUNNYSIDE 345KV CKT 1	717	789	0.47543	115.1473	P12:138:AEPW:WTHWF4:CLINTJC4
FDNS	00NR	0	16WP	G15_092	FROM->TO	G14-057T 345.00 - SUNNYSIDE 345KV CKT 1	717	789	0.4749	115.1258	CIMARRON - SARA 138KV CKT 1
FDNS	00NR	0	16WP	G15_092	FROM->TO	G14-057T 345.00 - SUNNYSIDE 345KV CKT 1	717	789	0.47479	115.1244	P12:161:AEPW:EROGERS5:ECNTRTN5
FDNS	00NR	0	16WP	G15_092	FROM->TO	G14-057T 345.00 - SUNNYSIDE 345KV CKT 1	717	789	0.47525	115.1205	LAYFLD8 500.00 - MOUNT OLIVE 500KV CKT 1
FDNS	00NR	0	16WP	G15_092	FROM->TO	G14-057T 345.00 - SUNNYSIDE 345KV CKT 1	717	789	0.47525	115.1205	LAYFLD8 500.00 - MOUNT OLIVE 500KV CKT 1
FDNS	00NR	0	16WP	G15_092	FROM->TO	G14-057T 345.00 - SUNNYSIDE 345KV CKT 1	717	789	0.4756	115.1191	DUNCAN - TOSCO 69KV CKT 1
FDNS	00NR	0	16WP	G15_092	FROM->TO	G14-057T 345.00 - SUNNYSIDE 345KV CKT 1	717	789	0.47479	115.1185	RODEMACHER 230/22.0KV TRANSFORMER CKT 1
FDNS	00NR	0	16WP	G15_092	FROM->TO	G14-057T 345.00 - SUNNYSIDE 345KV CKT 1	717	789	0.47479	115.118	WHITE BLUFF 500/26.0KV TRANSFORMER CKT 1
FDNS	00NR	0	16WP	G15_092	FROM->TO	G14-057T 345.00 - SUNNYSIDE 345KV CKT 1	717	789	0.47543	115.1125	P12:138:AEPW:WTHWF4:WTH_SE4
FDNS	00NR	0	16WP	G15_092	FROM->TO	G14-057T 345.00 - SUNNYSIDE 345KV CKT 1	717	789	0.47495	115.1104	MC NIEL 500/115KV TRANSFORMER CKT 1
FDNS	00NR	0	16WP	G15_092	FROM->TO	G14-057T 345.00 - SUNNYSIDE 345KV CKT 1	717	789	0.46469	115.1076	CANADIAN RIVER - PITTSBURG 345KV CKT 1
FDNS	00NR	0	16WP	G15_092	FROM->TO	G14-057T 345.00 - SUNNYSIDE 345KV CKT 1	717	789	0.46469	115.1076	CANADIAN RIVER - PITTSBURG 345KV CKT 1
FDNS	00NR	0	20WP	G15_092	FROM->TO	G14-057T 345.00 - SUNNYSIDE 345KV CKT 1	717	789	0.47875	115.1068	ANADARKO - POCASSETT 138KV CKT 1
FDNS	00NR	0	16WP	G15_092	FROM->TO	G14-057T 345.00 - SUNNYSIDE 345KV CKT 1	717	789	0.47477	115.1055	BISMARK - HOT SPRINGS WEST BUS 115KV CKT 1
FDNS	00NR	0	16WP	G15_092	FROM->TO	G14-057T 345.00 - SUNNYSIDE 345KV CKT 1	717	789	0.47479	115.1045	GEN303007 1-1BC2 U2
FDNS	00NR	0	16WP	G15_092	FROM->TO	G14-057T 345.00 - SUNNYSIDE 345KV CKT 1	717	789	0.4771	115.1009	BAILEY4 138.00 - WESTMOORE 138KV CKT 1
FDNS	00NR	0	16WP	G15_092	FROM->TO	G14-057T 345.00 - SUNNYSIDE 345KV CKT 1	717	789	0.475	115.1003	HOT SPRINGS EHV - MAGNET COVE 500KV CKT 1
FDNS	00NR	0	16WP	G15_092	FROM->TO	G14-057T 345.00 - SUNNYSIDE 345KV CKT 1	717	789	0.47479	115.0992	GEN303006 1-1BC2 U1
FDNS	00NR	0	16WP	G15_092	FROM->TO	G14-057T 345.00 - SUNNYSIDE 345KV CKT 1	717	789	0.47493	115.0967	CLEO CORNER - CLEOPLT4 138.00 138KV CKT 1
FDNS	00NR	0	16WP	G15_092	FROM->TO	G14-057T 345.00 - SUNNYSIDE 345KV CKT 1	717	789	0.47218	115.0929	ARBWIND4 138.00 - CARTER 138KV CKT 1
FDNS	00NR	0	16WP	G15_092	FROM->TO	G14-057T 345.00 - SUNNYSIDE 345KV CKT 1	717	789	0.47494	115.0928	G15095_T 138.00 - ROSE_VALLEY 138.00 138KV CKT 1
FDNS	00NR	0	16WP	G15_092	FROM->TO	G14-057T 345.00 - SUNNYSIDE 345KV CKT 1	717	789	0.47547	115.0921	P12:69:AEPW-OMPA:COMANC-2:OMWALTR2
FDNS	00NR	0	20WP	G15_092	FROM->TO	G14-057T 345.00 - SUNNYSIDE 345KV CKT 1	717	789	0.47624	115.0919	GEN336153 1-WATERFORD UNIT#3
FDNS	00NR	0	16WP	G15_092	FROM->TO	G14-057T 345.00 - SUNNYSIDE 345KV CKT 1	717	789	0.47479	115.0853	GEN337910 1-ARKANSAS NUCLEAR ONE UNIT #1
FDNS	00NR	0	16WP	G15_092	FROM->TO	G14-057T 345.00 - SUNNYSIDE 345KV CKT 1	717	789	0.47327	115.0838	SEMINOLE - VANOSTP4 138.00 138KV CKT 1
FDNS	00NR	0	16WP	G15_092	FROM->TO	G14-057T 345.00 - SUNNYSIDE 345KV CKT 1	717	789	0.47493	115.0828	CLEOPLT4 138.00 - MEN TAP 138KV CKT 1
FDNS	00NR	0	16WP	G15_092	FROM->TO	G14-057T 345.00 - SUNNYSIDE 345KV CKT 1	717	789	0.47479	115.0797	GEN300010 1-ST FRANCIS UNIT 1
FDNS	00NR	0	16WP	G15_092	FROM->TO	G14-057T 345.00 - SUNNYSIDE 345KV CKT 1	717	789	0.47479	115.0766	GEN336191 1-LITTLE GYPSY UNIT#3
FDNS	00NR	0	16WP	G15_092	FROM->TO	G14-057T 345.00 - SUNNYSIDE 345KV CKT 1	717	789	0.47493	115.0709	IMO TAP - MEN TAP 138KV CKT 1
FDNS	00NR	0	16WP	G15_092	FROM->TO	G14-057T 345.00 - SUNNYSIDE 345KV CKT 1	717	789	0.47511	115.0701	CZECH HALL - XEROX 138KV CKT 1
FDNS	00NR	0	16WP	G15_092	FROM->TO	G14-057T 345.00 - SUNNYSIDE 345KV CKT 1	717	789	0.47511	115.0657	MORGAN - XEROX 138KV CKT 1
FDNS	00NR	0	16WP	G15_092	FROM->TO	G14-057T 345.00 - SUNNYSIDE 345KV CKT 1	717	789	0.47469	115.057	P12:138:AEPW:N.E.S.-4:CATOOSA4
FDNS	00NR	0	16WP	G15_092	FROM->TO	G14-057T 345.00 - SUNNYSIDE 345KV CKT 1	717	789	0.47479	115.0559	NELSON 230/20.0KV TRANSFORMER CKT 1
FDNS	00NR	0	16WP	G15_092	FROM->TO	G14-057T 345.00 - SUNNYSIDE 345KV CKT 1	717	789	0.47477	115.0529	ALPINE AECC - BISMARK 115KV CKT 1
FDNS	00NR	0	16WP	G15_092	FROM->TO	G14-057T 345.00 - SUNNYSIDE 345KV CKT 1	717	789	0.47479	115.0513	GEN335614 1-WILLOW GLENN UNIT#4
FDNS	00NR	0	16WP	G15_092	FROM->TO	G14-057T 345.00 - SUNNYSIDE 345KV CKT 1	717	789	0.4756	115.0494	COMANCHE TAP - TOSCO 69KV CKT 1
FDNS	00NR	0	16WP	G15_092	FROM->TO	G14-057T 345.00 - SUNNYSIDE 345KV CKT 1	717	789	0.47511	115.0419	MORGAN - MUSTANG 138KV CKT 1
FDNS	00NR	0	16WP	G15_092	FROM->TO	G14-057T 345.00 - SUNNYSIDE 345KV CKT 1	717	789	0.47526	115.0417	BENTON - WICHITA 345KV CKT 1
FDNS	00NR	0	16WP	G15_092	FROM->TO	G14-057T 345.00 - SUNNYSIDE 345KV CKT 1	717	789	0.47479	115.0396	GEN303008 1-1BC2 U3
FDNS	00NR	0	16WP	G15_092	FROM->TO	G14-057T 345.00 - SUNNYSIDE 345KV CKT 1	717	789	0.47479	115.03	GEN300011 1-ST FRANCIS UNIT 2
FDNS	00NR	0	16WP	G15_092	FROM->TO	G14-057T 345.00 - SUNNYSIDE 345KV CKT 1	717	789	0.47494	115.0247	NOEL_SW 138.00 - ROSE_VALLEY 138.00 138KV CKT 1
FDNS	00NR	0	16WP	G15_092	FROM->TO	G14-057T 345.00 - SUNNYSIDE 345KV CKT 1	717	789	0.47479	115.0126	GEN336170 1-GULF OXY U4
FDNS	00NR	0	16WP	G15_092	FROM->TO	G14-057T 345.00 - SUNNYSIDE 345KV CKT 1	717	789	0.47588	115.0103	WEATHERFORD JCT. - WEATHERFORD SOUTHEAST 138KV CKT 1
FDNS	00NR	0	16WP	G15_092	FROM->TO	G14-057T 345.00 - SUNNYSIDE 345KV CKT 1	717	789	0.47588	115.0103	WEATHERFORD JCT. - WEATHERFORD SOUTHEAST 138KV CKT 1
FDNS	00NR	0	16WP	G15_092	FROM->TO	G14-057T 345.00 - SUNNYSIDE 345KV CKT 1	717	789	0.47491	115.0093	CYPRESS - HARTBURG 500KV CKT 1
FDNS	00NR	0	16WP	G15_092	FROM->TO	G14-057T 345.00 - SUNNYSIDE 345KV CKT 1	717	789	0.47477	115.0092	ALPINE AECC - AMITY SS 115KV CKT 1
FDNS	00NR	0	16WP	G15_092	FROM->TO	G14-057T 345.00 - SUNNYSIDE 345KV CKT 1	717	789	0.47479	115.0076	GEN336464 1-MICHOUD UNIT #3
FDNS	00NR	0	20WP	G15_092	FROM->TO	G14-057T 345.00 - SUNNYSIDE 345KV CKT 1	717	789	0.47943	115.0036	CLEVELAND - TULSA NORTH 345KV CKT 1
FDNS	00NR	0	20WP	G15_092	FROM->TO	G14-057T 345.00 - SUNNYSIDE 345KV CKT 1	717	789	0.47943	115.0036	CLEVELAND - TULSA NORTH 345KV CKT 1
FDNS	00NR	0	16WP	G15_092	FROM->TO	G14-057T 345.00 - SUNNYSIDE 345KV CKT 1	717	789	0.47496	114.998	HOYT - STRANGER CREEK 345KV CKT 1
FDNS	00NR	0	16WP	G15_092	FROM->TO	G14-057T 345.00 - SUNNYSIDE 345KV CKT 1	717	789	0.4752	114.9964	CHISHOLM6 230.00 - ELK CITY 230KV 230KV CKT 1
FDNS	00NR	0	20WP	G15_092	FROM->TO	G14-057T 345.00 - SUNNYSIDE 345KV CKT 1	717	789	0.47784	114.9957	COMANCHE - LOCO 138KV CKT 1
FDNS	00NR	0	16WP	G15_092	FROM->TO	G14-057T 345.00 - SUNNYSIDE 345KV CKT 1	717	789	0.4756	114.9952	COMANCHE - COMANCHE TAP 69KV CKT 1
FDNS	00NR	0	16WP	G15_092	FROM->TO	G14-057T 345.00 - SUNNYSIDE 345KV CKT 1	717	789	0.4752	114.9949	ELK CITY 230KV (ELKCTY-6) 230/138/13.8KV TRANSFORMER CKT 1
FDNS	00NR	0	16WP	G15_092	FROM->TO	G14-057T 345.00 - SUNNYSIDE 345KV CKT 1	717	789	0.4752	114.9949	ELK CITY 230KV (ELKCTY-6) 230/138/13.8KV TRANSFORMER CKT 1
FDNS	00NR	0	16WP	G15_092	FROM->TO	G14-057T 345.00 - SUNNYSIDE 345KV CKT 1	717	789	0.47479	114.9914	GEN300016 1-1G1GPDEL 18.000
FDNS	00NR	0	16WP	G15_092	FROM->TO	G14-057T 345.00 - SUNNYSIDE 345KV CKT 1	717	789	0.47479	114.9913	8CAJUN2 500/24.0KV TRANSFORMER CKT 1
FDNS	00NR	0	20WP	G15_092	FROM->TO	G14-057T 345.00 - SUNNYSIDE 345KV CKT 1	717	789	0.59869	114.9873	GRACEMONT - LAWTON EASTSIDE 345KV CKT 1
FDNS	00NR	0	20WP	G15_092	FROM->TO	G14-057T 345.00 - SUNNYSIDE 345KV CKT 1	717	789	0.59869	114.9873	GRACEMONT - LAWTON EASTSIDE 345KV CKT 1
FDNS	00NR	0	16WP	G15_092	FROM->TO	G14-057T 345.00 - SUNNYSIDE 345KV CKT 1	717	789	0.47509	114.9818	P12:138:OKGE-AEPW:JENSEN4:REDROCKRD4
FDNS	00NR	0	16WP	G15_092	FROM->TO	G14-057T 345.00 - SUNNYSIDE 345KV CKT 1	717	789	0.47479	114.9768	GEN337041 1-GERALD ANDRUS
FDNS	00NR	0	16WP	G15_092	FROM->TO	G14-057T 345.00 - SUNNYSIDE 345KV CKT 1	717	789	0.47302	114.9721	CANADIAN - NOBLE 138KV CKT 1
FDNS	00NR	0	16WP	G15_092	FROM->TO	G14-057T 345.00 - SUNNYSIDE 345KV CKT 1	717	789	0.47479	114.9655	GEN501910 1-ACADIA UNIT ST1
FDNS	00NR	0	16WP	G15_092	FROM->TO	G14-057T 345.00 - SUNNYSIDE 345KV CKT 1	717	789	0.47479	114.9604	P12:138:AEPW:R.S.S.-4:S.HUD.-4
FDNS	00NR	0	16WP	G15_092	FROM->TO	G14-057T 345.00 - SUNNYSIDE 345KV CKT 1	717	789	0.47654	114.9568	LASALLE - LATTA JCT 138KV CKT 1
FDNS	00NR	0	16WP	G15_092	FROM->TO	G14-057T 345.00 - SUNNYSIDE 345KV CKT 1	717	789	0.47588	114.9568	P12:138:AEPW:REDROCKRD4:WTH_JCT4
FDNS	00NR	0	16WP	G15_092	FROM->TO	G14-057T 345.00 - SUNNYSIDE 345KV CKT 1	717	789	0.4749	114.9566	7JASPER 345.00 - BLACKBERRY 345KV CKT 1

SOLUTION	GROUP	SCENARIO	SEASON	SOURCE	DIRECTION	MONITORED ELEMENT	RATEA (MVA)	RATEB(MVA)	TDF	TC%LOADING (% MVA)	CONTINGENCY
FDNS	00NR	0	16WP	G15_092	FROM->TO	G14-057T 345.00 - SUNNYSIDE 345KV CKT 1	717	789	0.47532	114.955	WALTERS - WALTERS 69KV CKT 1
FDNS	00NR	0	16WP	G15_092	FROM->TO	G14-057T 345.00 - SUNNYSIDE 345KV CKT 1	717	789	0.4731	114.9539	P12:138:OKGE:3TERM27
FDNS	00NR	0	20WP	G15_092	FROM->TO	G14-057T 345.00 - SUNNYSIDE 345KV CKT 1	717	789	0.47875	114.9532	POCASSETT - TUTTLE 138KV CKT 1
FDNS	00NR	0	16WP	G15_092	FROM->TO	G14-057T 345.00 - SUNNYSIDE 345KV CKT 1	717	789	0.47495	114.9521	G15074_T 345.00 - JEFFREY ENERGY CENTER 345KV CKT 1
FDNS	00NR	0	16WP	G15_092	FROM->TO	G14-057T 345.00 - SUNNYSIDE 345KV CKT 1	717	789	0.47509	114.9482	BLACKBERRY - NEOSHO 345KV CKT 1
FDNS	00NR	0	16WP	G15_092	FROM->TO	G14-057T 345.00 - SUNNYSIDE 345KV CKT 1	717	789	0.47501	114.9468	SWISSVALE - WEST GARDNER 345KV CKT 1
FDNS	00NR	0	16WP	G15_092	FROM->TO	G14-057T 345.00 - SUNNYSIDE 345KV CKT 1	717	789	0.47534	114.9464	NORGE ROAD - SOUTHWESTERN STATION 138KV CKT 1
FDNS	00NR	0	16WP	G15_092	FROM->TO	G14-057T 345.00 - SUNNYSIDE 345KV CKT 1	717	789	0.47534	114.9464	NORGE ROAD - SOUTHWESTERN STATION 138KV CKT 1
FDNS	00NR	0	16WP	G15_092	FROM->TO	G14-057T 345.00 - SUNNYSIDE 345KV CKT 1	717	789	0.4771	114.9431	FRANKLIN SW - WESTMOORE 138KV CKT 1
FDNS	00NR	0	16WP	G15_092	FROM->TO	G14-057T 345.00 - SUNNYSIDE 345KV CKT 1	717	789	0.47558	114.9374	DRAPER LAKE - SEMINOLE 345KV CKT 2
FDNS	00NR	0	16WP	G15_092	FROM->TO	G14-057T 345.00 - SUNNYSIDE 345KV CKT 1	717	789	0.47558	114.9373	DRAPER LAKE - SEMINOLE 345KV CKT 1
FDNS	00NR	0	20WP	G15_092	FROM->TO	G14-057T 345.00 - SUNNYSIDE 345KV CKT 1	717	789	0.4774	114.9356	DOLET HILLS - SOUTHWEST SHREVEPORT 345KV CKT 1
FDNS	00NR	0	20WP	G15_092	FROM->TO	G14-057T 345.00 - SUNNYSIDE 345KV CKT 1	717	789	0.4774	114.9356	DOLET HILLS - SOUTHWEST SHREVEPORT 345KV CKT 1
FDNS	00NR	0	16WP	G15_092	FROM->TO	G14-057T 345.00 - SUNNYSIDE 345KV CKT 1	717	789	0.4749	114.933	SARA - STHLAKE4 138.00 138KV CKT 1
FDNS	00NR	0	16WP	G15_092	FROM->TO	G14-057T 345.00 - SUNNYSIDE 345KV CKT 1	717	789	0.4764	114.9289	G14_038T 345.00 - Hitchland Interchange 345KV CKT 1
FDNS	00NR	0	16WP	G15_092	FROM->TO	G14-057T 345.00 - SUNNYSIDE 345KV CKT 1	717	789	0.47507	114.9274	ETTA (DUKE HOTSPRINGS) - MC NIEL 500KV CKT 1
FDNS	00NR	0	16WP	G15_092	FROM->TO	G14-057T 345.00 - SUNNYSIDE 345KV CKT 1	717	789	0.47479	114.9218	P12:138:AEPW:YARCH-S4:T.S.E.-4
FDNS	00NR	0	16WP	G15_092	FROM->TO	G14-057T 345.00 - SUNNYSIDE 345KV CKT 1	717	789	0.47547	114.9213	LAWTON RELIFT TAP - OMPA-WALTERS 69KV CKT 1
FDNS	00NR	0	16WP	G15_092	FROM->TO	G14-057T 345.00 - SUNNYSIDE 345KV CKT 1	717	789	0.47479	114.9181	SABINE 230/24.0KV TRANSFORMER CKT 1
FDNS	00NR	0	16WP	G15_092	FROM->TO	G14-057T 345.00 - SUNNYSIDE 345KV CKT 1	717	789	0.47479	114.9164	ESSEX UNIT 2 500/18.0KV TRANSFORMER CKT 1
FDNS	00NR	0	16WP	G15_092	FROM->TO	G14-057T 345.00 - SUNNYSIDE 345KV CKT 1	717	789	0.47479	114.9157	P12:69:AEPW:NROGERS2:ECNTRTN2
FDNS	00NR	0	16WP	G15_092	FROM->TO	G14-057T 345.00 - SUNNYSIDE 345KV CKT 1	717	789	0.4748	114.9156	P12:138:AEPW:BA_71ST4:T.S.E.-4
FDNS	00NR	0	16WP	G15_092	FROM->TO	G14-057T 345.00 - SUNNYSIDE 345KV CKT 1	717	789	0.47479	114.9151	GEN336801 1-BAXTER WILSON UNIT #1
FDNS	00NR	0	16WP	G15_092	FROM->TO	G14-057T 345.00 - SUNNYSIDE 345KV CKT 1	717	789	0.47516	114.9126	EMPORIA ENERGY CENTER - G14_001T 345.00 345KV CKT 1
FDNS	00NR	0	16WP	G15_092	FROM->TO	G14-057T 345.00 - SUNNYSIDE 345KV CKT 1	717	789	0.4749	114.9076	7LUTESVIL 345.00 - 7ST FRANC 345.00 345KV CKT 1
FDNS	00NR	0	16WP	G15_092	FROM->TO	G14-057T 345.00 - SUNNYSIDE 345KV CKT 1	717	789	0.4749	114.9039	MCCLAIN - STHLAKE4 138.00 138KV CKT 1
FDNS	00NR	0	16WP	G15_092	FROM->TO	G14-057T 345.00 - SUNNYSIDE 345KV CKT 1	717	789	0.47479	114.8963	FRONTIER 345/18.0KV TRANSFORMER CKT 1
FDNS	00NR	0	16WP	G15_092	FROM->TO	G14-057T 345.00 - SUNNYSIDE 345KV CKT 1	717	789	0.47463	114.8959	HOPE - MCNAB REC 115KV CKT 1
FDNS	00NR	0	16WP	G15_092	FROM->TO	G14-057T 345.00 - SUNNYSIDE 345KV CKT 1	717	789	0.47479	114.8947	FRONTIER 345/18.0KV TRANSFORMER CKT 1
FDNS	00NR	0	16WP	G15_092	FROM->TO	G14-057T 345.00 - SUNNYSIDE 345KV CKT 1	717	789	0.47511	114.888	P12:138:AEPW-OGE:SHIDLER4:OSAGE 4
FDNS	00NR	0	16WP	G15_092	FROM->TO	G14-057T 345.00 - SUNNYSIDE 345KV CKT 1	717	789	0.47463	114.887	P12:115:AEPW:TURK3:HOPE3
FDNS	00NR	0	16WP	G15_092	FROM->TO	G14-057T 345.00 - SUNNYSIDE 345KV CKT 1	717	789	0.47479	114.8839	P12:161:AEPW:CHAMSPR5:FARMING5
FDNS	00NR	0	16WP	G15_092	FROM->TO	G14-057T 345.00 - SUNNYSIDE 345KV CKT 1	717	789	0.4753	114.8809	SOUTHWESTERN STATION - VERDEN 138KV CKT 1
FDNS	00NR	0	16WP	G15_092	FROM->TO	G14-057T 345.00 - SUNNYSIDE 345KV CKT 1	717	789	0.47302	114.8807	NOBLE - PURCELL4 138.00 138KV CKT 1
FDNS	00NR	0	16WP	G15_092	FROM->TO	G14-057T 345.00 - SUNNYSIDE 345KV CKT 1	717	789	0.47588	114.8796	HINTON - WEATHERFORD JCT. 138KV CKT 1
FDNS	00NR	0	16WP	G15_092	FROM->TO	G14-057T 345.00 - SUNNYSIDE 345KV CKT 1	717	789	0.47524	114.8773	ENOWILT - LONE OAK 138KV CKT 1
FDNS	00NR	0	16WP	G15_092	FROM->TO	G14-057T 345.00 - SUNNYSIDE 345KV CKT 1	717	789	0.4753	114.8748	ANADARKO - SEQUOYAHJ4 138.00 138KV CKT 1
FDNS	00NR	0	16WP	G15_092	FROM->TO	G14-057T 345.00 - SUNNYSIDE 345KV CKT 1	717	789	0.4753	114.8744	CORN TAP - SEQUOYAHJ4 138.00 138KV CKT 1
FDNS	00NR	0	16WP	G15_092	FROM->TO	G14-057T 345.00 - SUNNYSIDE 345KV CKT 1	717	789	0.47164	114.8724	ARBUCKLE - VANOSTP4 138.00 138KV CKT 1
FDNS	00NR	0	16WP	G15_092	FROM->TO	G14-057T 345.00 - SUNNYSIDE 345KV CKT 1	717	789	0.47543	114.872	WEATHERFORD TAP - WEATHERFORD WIND FARM 138KV CKT 1
FDNS	00NR	0	16WP	G15_092	FROM->TO	G14-057T 345.00 - SUNNYSIDE 345KV CKT 1	717	789	0.47524	114.8684	ENOWILT - SARDIS 138KV CKT 1
FDNS	00NR	0	16WP	G15_092	FROM->TO	G14-057T 345.00 - SUNNYSIDE 345KV CKT 1	717	789	0.47493	114.8684	8WNEWMADRID 500.00 - DELL 500 500KV CKT 1
FDNS	00NR	0	16WP	G15_092	FROM->TO	G14-057T 345.00 - SUNNYSIDE 345KV CKT 1	717	789	0.47479	114.8662	GEN505616 1-BROKEN BOW
FDNS	00NR	0	16WP	G15_092	FROM->TO	G14-057T 345.00 - SUNNYSIDE 345KV CKT 1	717	789	0.47502	114.8654	CLINTON JUNCTION - ELK CITY 138KV CKT 1
FDNS	00NR	0	16WP	G15_092	FROM->TO	G14-057T 345.00 - SUNNYSIDE 345KV CKT 1	717	789	0.47502	114.8654	CLINTON JUNCTION - ELK CITY 138KV CKT 1
FDNS	00NR	0	16WP	G15_092	FROM->TO	G14-057T 345.00 - SUNNYSIDE 345KV CKT 1	717	789	0.47463	114.8645	MCNAB REC - Turk 115 115KV CKT 1
FDNS	00NR	0	16WP	G15_092	FROM->TO	G14-057T 345.00 - SUNNYSIDE 345KV CKT 1	717	789	0.47463	114.8645	TURK (TURK 1) 138/115/13.2KV TRANSFORMER CKT 1
FDNS	00NR	0	16WP	G15_092	FROM->TO	G14-057T 345.00 - SUNNYSIDE 345KV CKT 1	717	789	0.47463	114.8645	TURK (TURK 1) 138/115/13.2KV TRANSFORMER CKT 1
FDNS	00NR	0	16WP	G15_092	FROM->TO	G14-057T 345.00 - SUNNYSIDE 345KV CKT 1	717	789	0.4753	114.86	NORTH 29TH CHICKASHA - VERDEN 138KV CKT 1
FDNS	00NR	0	16WP	G15_092	FROM->TO	G14-057T 345.00 - SUNNYSIDE 345KV CKT 1	717	789	0.47516	114.8591	G14_001T 345.00 - WICHITA 345KV CKT 1
FDNS	00NR	0	16WP	G15_092	FROM->TO	G14-057T 345.00 - SUNNYSIDE 345KV CKT 1	717	789	0.47479	114.8585	LEWIS CREEK SWITCHYARD 138/22.0KV TRANSFORMER CKT 1
FDNS	00NR	0	16WP	G15_092	FROM->TO	G14-057T 345.00 - SUNNYSIDE 345KV CKT 1	717	789	0.47547	114.8545	OMPA-WALTERS - WALTERS 69KV CKT 1
FDNS	00NR	0	16WP	G15_092	FROM->TO	G14-057T 345.00 - SUNNYSIDE 345KV CKT 1	717	789	0.47547	114.8545	OMPA-WALTERS - WALTERS 69KV CKT 1
FDNS	00NR	0	16WP	G15_092	FROM->TO	G14-057T 345.00 - SUNNYSIDE 345KV CKT 1	717	789	0.47517	114.8545	G13-010T 345.00 - POST ROCK 345KV CKT 1
FDNS	00NR	0	16WP	G15_092	FROM->TO	G14-057T 345.00 - SUNNYSIDE 345KV CKT 1	717	789	0.4749	114.8539	COUCH SES - MC NIEL 115KV CKT 1
FDNS	00NR	0	16WP	G15_092	FROM->TO	G14-057T 345.00 - SUNNYSIDE 345KV CKT 1	717	789	0.47479	114.8536	LEWIS CREEK SWITCHYARD 138/22.0KV TRANSFORMER CKT 1
FDNS	00NR	0	16WP	G15_092	FROM->TO	G14-057T 345.00 - SUNNYSIDE 345KV CKT 1	717	789	0.47497	114.8433	EMPORIA ENERGY CENTER - SWISSVALE 345KV CKT 1
FDNS	00NR	0	16WP	G15_092	FROM->TO	G14-057T 345.00 - SUNNYSIDE 345KV CKT 1	717	789	0.47532	114.8397	P12:69:WFEC-AEPW:COMANCH2:WALTRS-2
FDNS	00NR	0	16WP	G15_092	FROM->TO	G14-057T 345.00 - SUNNYSIDE 345KV CKT 1	717	789	0.47479	114.8396	GEN501970 1-EVANGELINE UNIT 7
FDNS	00NR	0	16WP	G15_092	FROM->TO	G14-057T 345.00 - SUNNYSIDE 345KV CKT 1	717	789	0.47493	114.835	MORISNT4 138.00 - STILLWATER 138KV CKT 1
FDNS	00NR	0	16WP	G15_092	FROM->TO	G14-057T 345.00 - SUNNYSIDE 345KV CKT 1	717	789	0.47524	114.8336	CLAYTON - SARDIS 138KV CKT 1
FDNS	00NR	0	16WP	G15_092	FROM->TO	G14-057T 345.00 - SUNNYSIDE 345KV CKT 1	717	789	0.47494	114.8296	P12:138:OKGE:3TERM2
FDNS	00NR	0	16WP	G15_092	FROM->TO	G14-057T 345.00 - SUNNYSIDE 345KV CKT 1	717	789	0.47588	114.8285	HINTON - REDROCKRD4 138.00 138KV CKT 1
FDNS	00NR	0	16WP	G15_092	FROM->TO	G14-057T 345.00 - SUNNYSIDE 345KV CKT 1	717	789	0.47479	114.8271	GEN334392 1-EXXON MOBIL IPP 1
FDNS	00NR	0	16WP	G15_092	FROM->TO	G14-057T 345.00 - SUNNYSIDE 345KV CKT 1	717	789	0.47534	114.826	CORNVILLE - NORGE ROAD 138KV CKT 1
FDNS	00NR	0	16WP	G15_092	FROM->TO	G14-057T 345.00 - SUNNYSIDE 345KV CKT 1	717	789	0.47534	114.826	CORNVILLE - NORGE ROAD 138KV CKT 1
FDNS	00NR	0	16WP	G15_092	FROM->TO	G14-057T 345.00 - SUNNYSIDE 345KV CKT 1	717	789	0.47654	114.822	LASALLE - STONEWAL LH138.00 138KV CKT 1
FDNS	00NR	0	16WP	G15_092	FROM->TO	G14-057T 345.00 - SUNNYSIDE 345KV CKT 1	717	789	0.47479	114.8203	GEN334393 1-EXXON MOBIL IPP 2
FDNS	00NR	0	16WP	G15_092	FROM->TO	G14-057T 345.00 - SUNNYSIDE 345KV CKT 1	717	789	0.47479	114.8203	GEN334394 1-EXXON MOBIL IPP 3
FDNS	00NR	0	16WP	G15_092	FROM->TO	G14-057T 345.00 - SUNNYSIDE 345KV CKT 1	717	789	0.47484	114.8155	P12:138:OKGE:3TERM12
FDNS	00NR	0	16WP	G15_092	FROM->TO	G14-057T 345.00 - SUNNYSIDE 345KV CKT 1	717	789	0.47479	114.812	GEN336222 1-LITTLE GYPSY UNIT#2
FDNS	00NR	0	16WP	G15_092	FROM->TO	G14-057T 345.00 - SUNNYSIDE 345KV CKT 1	717	789	0.47654	114.807	STONEWAL LH138.00 - TUPELO TAP 138KV CKT 1
FDNS	00NR	0	16WP	G15_092	FROM->TO	G14-057T 345.00 - SUNNYSIDE 345KV CKT 1	717	789	0.47524	114.8059	P12:138:AEPW-SWPA:LONEOAK4:BRKNBW4
FDNS	00NR	0	16WP	G15_092	FROM->TO	G14-057T 345.00 - SUNNYSIDE 345KV CKT 1	717	789	0.47486	114.803	FLETCHER - MARLOW JCT 69KV CKT 1
FDNS	00NR	0	20WP	G15_092	FROM->TO	G14-057T 345.00 - SUNNYSIDE 345KV CKT 1	717	789	0.47624	114.7966	GEN335831 1-RIVERBEND UNIT#1
FDNS	00NR	0	16WP	G15_092	FROM->TO	G14-057T 345.00 - SUNNYSIDE 345KV CKT 1	717	789	0.47493	114.7955	7JASPER 345.00 - MORGAN 345KV CKT 1
FDNS	00NR	0	16WP	G15_092	FROM->TO	G14-057T 345.00 - SUNNYSIDE 345KV CKT 1	717	789	0.4748	114.7941	P12:138:AEPW:R.S.S-4:T.P.S.-4
FDNS	00NR	0	16WP	G15_092	FROM->TO	G14-057T 345.00 - SUNNYSIDE 345KV CKT 1	717	789	0.47479	114.7937	GEN506749 1-EASTMAN GENERATION A
FDNS	00NR	0	16WP	G15_092	FROM->TO	G14-057T 345.00 - SUNNYSIDE 345KV CKT 1	717	789	0.47524	114.792	CLAYTON - NASHOBA 138KV CKT 1

SOLUTION	GROUP	SCENARIO	SEASON	SOURCE	DIRECTION	MONITORED ELEMENT	RATEA (MVA)	RATEB(MVA)	TDF	TC%LOADING (% MVA)	CONTINGENCY
FDNS	00NR	0	16WP	G15_092	FROM->TO	G14-057T 345.00 - SUNNYSIDE 345KV CKT 1	717	789	0.4753	114.7904	CORNVILLE - NORTH 29TH CHICKASHA 138KV CKT 1
FDNS	00NR	0	16WP	G15_092	FROM->TO	G14-057T 345.00 - SUNNYSIDE 345KV CKT 1	717	789	0.47342	114.7904	CLARKSVILLE - ONETA 345KV CKT 1
FDNS	00NR	0	16WP	G15_092	FROM->TO	G14-057T 345.00 - SUNNYSIDE 345KV CKT 1	717	789	0.47342	114.7904	CLARKSVILLE - ONETA 345KV CKT 1
FDNS	00NR	0	16WP	G15_092	FROM->TO	G14-057T 345.00 - SUNNYSIDE 345KV CKT 1	717	789	0.47479	114.7901	GEN334431 1-SABINE UNIT 1
FDNS	00NR	0	16WP	G15_092	FROM->TO	G14-057T 345.00 - SUNNYSIDE 345KV CKT 1	717	789	0.47479	114.79	GEN334432 1-SABINE UNIT 2
FDNS	00NR	0	16WP	G15_092	FROM->TO	G14-057T 345.00 - SUNNYSIDE 345KV CKT 1	717	789	0.47516	114.785	FRANKLIN - FRANKLIN SW 138KV CKT 1
FDNS	00NR	0	16WP	G15_092	FROM->TO	G14-057T 345.00 - SUNNYSIDE 345KV CKT 1	717	789	0.47543	114.7845	WEATHERFORD SOUTHEAST - WEATHERFORD TAP 138KV CKT 1
FDNS	00NR	0	16WP	G15_092	FROM->TO	G14-057T 345.00 - SUNNYSIDE 345KV CKT 1	717	789	0.47479	114.7829	GEN501972 1-EVANGELINE UNIT 7-2
FDNS	00NR	0	16WP	G15_092	FROM->TO	G14-057T 345.00 - SUNNYSIDE 345KV CKT 1	717	789	0.47479	114.7828	GEN501971 1-EVANGELINE UNIT 7-1
FDNS	00NR	0	16WP	G15_092	FROM->TO	G14-057T 345.00 - SUNNYSIDE 345KV CKT 1	717	789	0.47479	114.7826	GEN336152 1-WATERFORD UNIT#2
FDNS	00NR	0	16WP	G15_092	FROM->TO	G14-057T 345.00 - SUNNYSIDE 345KV CKT 1	717	789	0.47479	114.7815	GEN336151 1-WATERFORD UNIT#1
FDNS	00NR	0	16WP	G15_092	FROM->TO	G14-057T 345.00 - SUNNYSIDE 345KV CKT 1	717	789	0.47524	114.779	BETHEL - NASHOBA 138KV CKT 1
FDNS	00NR	0	16WP	G15_092	FROM->TO	G14-057T 345.00 - SUNNYSIDE 345KV CKT 1	717	789	0.47479	114.7698	P12:138:AEPW:R.S.S.-4:R:96YALE-4
FDNS	00NR	0	20WP	G15_092	FROM->TO	G14-057T 345.00 - SUNNYSIDE 345KV CKT 1	717	789	0.47953	114.7697	ARCADIA - NORTHWEST 345KV CKT 1
FDNS	00NR	0	20WP	G15_092	FROM->TO	G14-057T 345.00 - SUNNYSIDE 345KV CKT 1	717	789	0.47624	114.7537	GRAND GULF 500/22.0KV TRANSFORMER CKT 1
FDNS	00NR	0	16WP	G15_092	FROM->TO	G14-057T 345.00 - SUNNYSIDE 345KV CKT 1	717	789	0.47522	114.7505	MARIETTA - MARIETTA4 138.00 138KV CKT 1
FDNS	00NR	0	16WP	G15_092	FROM->TO	G14-057T 345.00 - SUNNYSIDE 345KV CKT 1	717	789	0.47509	114.7347	Canadian Pump Station - REDROCKRD4 138.00 138KV CKT 1
FDNS	00NR	0	16WP	G15_092	FROM->TO	G14-057T 345.00 - SUNNYSIDE 345KV CKT 1	717	789	0.47543	114.73	CLINTON JUNCTION - CLINTON NATURAL GAS TAP 138KV CKT 1
FDNS	00NR	0	16WP	G15_092	FROM->TO	G14-057T 345.00 - SUNNYSIDE 345KV CKT 1	717	789	0.4752	114.7223	P12:138:OKGE:3TERM47
FDNS	00NR	0	16WP	G15_092	FROM->TO	G14-057T 345.00 - SUNNYSIDE 345KV CKT 1	717	789	0.47677	114.7209	CIMARRON - NORTHWEST 345KV CKT 1
FDNS	00NR	0	16WP	G15_092	FROM->TO	G14-057T 345.00 - SUNNYSIDE 345KV CKT 1	717	789	0.4752	114.7076	HAMMETT TAP - HORSESHOE LAKE 138KV CKT 1
FDNS	00NR	0	20WP	G15_092	FROM->TO	G14-057T 345.00 - SUNNYSIDE 345KV CKT 1	717	789	0.47779	114.7044	7SAREPTA% 345.00 - ELDORADO EHV 345KV CKT 1
FDNS	00NR	0	20WP	G15_092	FROM->TO	G14-057T 345.00 - SUNNYSIDE 345KV CKT 1	717	789	0.47779	114.7042	3TR3AR8EL7EL
FDNS	00NR	0	20WP	G15_092	FROM->TO	G14-057T 345.00 - SUNNYSIDE 345KV CKT 1	717	789	0.47779	114.6934	ELDORADO EHV 500/345KV TRANSFORMER CKT 1
FDNS	00NR	0	20WP	G15_092	FROM->TO	G14-057T 345.00 - SUNNYSIDE 345KV CKT 1	717	789	0.48083	114.6786	P12:138:AEPW:DUNCAN-4:L.E.S.-4
FDNS	00NR	0	16WP	G15_092	FROM->TO	G14-057T 345.00 - SUNNYSIDE 345KV CKT 1	717	789	0.47532	114.6677	COMANCHE - WALTERS 69KV CKT 1
FDNS	00NR	0	20WP	G15_092	FROM->TO	G14-057T 345.00 - SUNNYSIDE 345KV CKT 1	717	789	0.47624	114.608	GEN515577 1-ARBWND11 0.6900
FDNS	00NR	0	20WP	G15_092	FROM->TO	G14-057T 345.00 - SUNNYSIDE 345KV CKT 1	717	789	0.47606	114.5615	MATHWSN7 345.00 - TATONGA7 345.00 345KV CKT 1
FDNS	00NR	0	20WP	G15_092	FROM->TO	G14-057T 345.00 - SUNNYSIDE 345KV CKT 1	717	789	0.4808	114.5571	COMANCHE TAP - OMPA-DUNCAN 840 138KV CKT 1
FDNS	00NR	0	20WP	G15_092	FROM->TO	G14-057T 345.00 - SUNNYSIDE 345KV CKT 1	717	789	0.47875	114.5549	BRIDGECR 138.00 - TUTTLE 138KV CKT 1
FDNS	00NR	0	20WP	G15_092	FROM->TO	G14-057T 345.00 - SUNNYSIDE 345KV CKT 1	717	789	0.46798	114.5467	CANADIAN RIVER - MUSKOGEE 345KV CKT 1
FDNS	00NR	0	20WP	G15_092	FROM->TO	G14-057T 345.00 - SUNNYSIDE 345KV CKT 1	717	789	0.47624	114.4684	GEN509409 1-WILKES #3
FDNS	00NR	0	20WP	G15_092	FROM->TO	G14-057T 345.00 - SUNNYSIDE 345KV CKT 1	717	789	0.47848	114.4388	Hitchland Interchange - WALKTAP7 345.00 345KV CKT 1
FDNS	00NR	0	20WP	G15_092	FROM->TO	G14-057T 345.00 - SUNNYSIDE 345KV CKT 1	717	789	0.47848	114.4388	Hitchland Interchange - WALKTAP7 345.00 345KV CKT 1
FDNS	00NR	0	20WP	G15_092	FROM->TO	G14-057T 345.00 - SUNNYSIDE 345KV CKT 1	717	789	0.47671	114.4317	HEALDTON - LOCO 138KV CKT 1
FDNS	00NR	0	20WP	G15_092	FROM->TO	G14-057T 345.00 - SUNNYSIDE 345KV CKT 1	717	789	0.47526	114.4268	ARCADIA - SEMINOLE 345KV CKT 1
FDNS	00NR	0	20WP	G15_092	FROM->TO	G14-057T 345.00 - SUNNYSIDE 345KV CKT 1	717	789	0.47848	114.4189	P12:345:SPS:J07.1.FINN.HITCH
FDNS	00NR	0	20WP	G15_092	FROM->TO	G14-057T 345.00 - SUNNYSIDE 345KV CKT 1	717	789	0.47624	114.4089	GEN501813 1-RODEMACHER UNIT 3
FDNS	00NR	0	20WP	G15_092	FROM->TO	G14-057T 345.00 - SUNNYSIDE 345KV CKT 1	717	789	0.47624	114.3121	GEN300006 1-NEW MADRID UNIT 1
FDNS	00NR	0	20WP	G15_092	FROM->TO	G14-057T 345.00 - SUNNYSIDE 345KV CKT 1	717	789	0.47624	114.2922	GEN300007 1-NEW MADRID UNIT 2
FDNS	00NR	0	20WP	G15_092	FROM->TO	G14-057T 345.00 - SUNNYSIDE 345KV CKT 1	717	789	0.47671	114.2876	HEALDTON - RINGLING 138KV CKT 1
FDNS	00NR	0	20WP	G15_092	FROM->TO	G14-057T 345.00 - SUNNYSIDE 345KV CKT 1	717	789	0.47667	114.2757	LACYGNE - WAVERLY7 345.00 345KV CKT 1
FDNS	00NR	0	20WP	G15_092	FROM->TO	G14-057T 345.00 - SUNNYSIDE 345KV CKT 1	717	789	0.4808	114.2686	DUNCAN - OMPA-DUNCAN 840 138KV CKT 1
FDNS	00NR	0	20WP	G15_092	FROM->TO	G14-057T 345.00 - SUNNYSIDE 345KV CKT 1	717	789	0.4808	114.2686	DUNCAN - OMPA-DUNCAN 840 138KV CKT 1
FDNS	00NR	0	20WP	G15_092	FROM->TO	G14-057T 345.00 - SUNNYSIDE 345KV CKT 1	717	789	0.47875	114.2678	P12:138:WFEC:MSL01
FDNS	00NR	0	16WP	G15_092	FROM->TO	G14-057T 345.00 - SUNNYSIDE 345KV CKT 1	717	789	0.47479	114.2581	803-OKLAUNION
FDNS	00NR	0	20WP	G15_092	FROM->TO	G14-057T 345.00 - SUNNYSIDE 345KV CKT 1	717	789	0.47875	114.2563	BRIDGECR 138.00 - SUNSHINE CANYON 138KV CKT 1
FDNS	00NR	0	20WP	G15_092	FROM->TO	G14-057T 345.00 - SUNNYSIDE 345KV CKT 1	717	789	0.47624	114.1972	GEN335206 1-NELSON UNIT 6
FDNS	00NR	0	20WP	G15_092	FROM->TO	G14-057T 345.00 - SUNNYSIDE 345KV CKT 1	717	789	0.47667	114.1543	WAVERLY7 345.00 - WOLF CREEK 345KV CKT 1
FDNS	00NR	0	20WP	G15_092	FROM->TO	G14-057T 345.00 - SUNNYSIDE 345KV CKT 1	717	789	0.47624	114.1257	GEN520947 1-HUGO1
FDNS	00NR	0	20WP	G15_092	FROM->TO	G14-057T 345.00 - SUNNYSIDE 345KV CKT 1	717	789	0.47671	114.1171	RINGLING - SOUTH WILSON 138KV CKT 1
FDNS	00NR	0	16WP	G15_092	FROM->TO	G14-057T 345.00 - SUNNYSIDE 345KV CKT 1	717	789	0.46962	114.0994	P12:138:OKGE:3TERM39
FDNS	00NR	0	20WP	G15_092	FROM->TO	G14-057T 345.00 - SUNNYSIDE 345KV CKT 1	717	789	0.47606	114.0411	G11_051T 345.00 - TATONGA7 345.00 345KV CKT 1
FDNS	00NR	0	20WP	G15_092	FROM->TO	G14-057T 345.00 - SUNNYSIDE 345KV CKT 1	717	789	0.47682	114.0258	ELDORADO EHV - MOUNT OLIVE 500KV CKT 1
FDNS	00NR	0	20WP	G15_092	FROM->TO	G14-057T 345.00 - SUNNYSIDE 345KV CKT 1	717	789	0.47624	114.0121	GEN501812 1-RODEMACHER UNIT 2
FDNS	00NR	0	20WP	G15_092	FROM->TO	G14-057T 345.00 - SUNNYSIDE 345KV CKT 1	717	789	0.47638	114.0071	P12:138:AEPW:SHERID4:112GORE4
FDNS	00NR	0	20WP	G15_092	FROM->TO	G14-057T 345.00 - SUNNYSIDE 345KV CKT 1	717	789	0.47624	114.0013	DOLET HILLS 345/24.0KV TRANSFORMER CKT 1
FDNS	00NR	0	20WP	G15_092	FROM->TO	G14-057T 345.00 - SUNNYSIDE 345KV CKT 1	717	789	0.47721	113.9961	THISTLE7 345.00 - WOODWARD DISTRICT EHV 345KV CKT 1
FDNS	00NR	0	20WP	G15_092	FROM->TO	G14-057T 345.00 - SUNNYSIDE 345KV CKT 1	717	789	0.47721	113.9961	THISTLE7 345.00 - WOODWARD DISTRICT EHV 345KV CKT 1
FDNS	00NR	0	20WP	G15_092	FROM->TO	G14-057T 345.00 - SUNNYSIDE 345KV CKT 1	717	789	0.47721	113.9961	THISTLE7 345.00 - WOODWARD DISTRICT EHV 345KV CKT 2
FDNS	00NR	0	20WP	G15_092	FROM->TO	G14-057T 345.00 - SUNNYSIDE 345KV CKT 1	717	789	0.47721	113.9961	THISTLE7 345.00 - WOODWARD DISTRICT EHV 345KV CKT 2
FDNS	00NR	0	20WP	G15_092	FROM->TO	G14-057T 345.00 - SUNNYSIDE 345KV CKT 1	717	789	0.47479	113.9283	PARK LANE - SEMINOLE 138KV CKT 1
FDNS	00NR	0	20WP	G15_092	FROM->TO	G14-057T 345.00 - SUNNYSIDE 345KV CKT 1	717	789	0.47688	113.8762	WEBRE - WELLS 500KV CKT 1
FDNS	00NR	0	20WP	G15_092	FROM->TO	G14-057T 345.00 - SUNNYSIDE 345KV CKT 1	717	789	0.47624	113.875	GEN515564 1-ORIGIN11 0.6900
FDNS	00NR	0	20WP	G15_092	FROM->TO	G14-057T 345.00 - SUNNYSIDE 345KV CKT 1	717	789	0.47624	113.875	GEN515565 1-ORIGIN21 0.6900
FDNS	00NR	0	16WP	G15_092	FROM->TO	G14-057T 345.00 - SUNNYSIDE 345KV CKT 1	717	789	0.46994	113.8718	MAYSVILLE - MAYSVLT4 138.00 138KV CKT 1
FDNS	00NR	0	16WP	G15_092	FROM->TO	G14-057T 345.00 - SUNNYSIDE 345KV CKT 1	717	789	0.47514	113.8663	DRAPER LAKE - MIDWEST TAP 138KV CKT 1
FDNS	00NR	0	16WP	G15_092	FROM->TO	G14-057T 345.00 - SUNNYSIDE 345KV CKT 1	717	789	0.47445	113.8628	GLASSES - MADILL INDUSTRIAL TAP 138KV CKT 1
FDNS	00NR	0	20WP	G15_092	FROM->TO	G14-057T 345.00 - SUNNYSIDE 345KV CKT 1	717	789	0.47624	113.8527	GEN334440 1-SABINE UNIT 4
FDNS	00NR	0	16WP	G15_092	FROM->TO	G14-057T 345.00 - SUNNYSIDE 345KV CKT 1	717	789	0.47535	113.8517	CIMARRON - MATHWSN7 345.00 345KV CKT 1
FDNS	00NR	0	16WP	G15_092	FROM->TO	G14-057T 345.00 - SUNNYSIDE 345KV CKT 1	717	789	0.47535	113.8517	CIMARRON - MATHWSN7 345.00 345KV CKT 2
FDNS	00NR	0	16WP	G15_092	FROM->TO	G14-057T 345.00 - SUNNYSIDE 345KV CKT 1	717	789	0.47479	113.8451	GEN562691 1-G15_015_3 0.6900
FDNS	00NR	0	16WP	G15_092	FROM->TO	G14-057T 345.00 - SUNNYSIDE 345KV CKT 1	717	789	0.47479	113.8449	GEN562772 1-G15034_3 0.6900
FDNS	00NR	0	16WP	G15_092	FROM->TO	G14-057T 345.00 - SUNNYSIDE 345KV CKT 1	717	789	0.47525	113.8438	P12:138:OKGE:3TERM21
FDNS	00NR	0	16WP	G15_092	FROM->TO	G14-057T 345.00 - SUNNYSIDE 345KV CKT 1	717	789	0.47473	113.8375	HUGO (HUGO 1) 345/138/13.8KV TRANSFORMER CKT 1
FDNS	00NR	0	20WP	G15_092	FROM->TO	G14-057T 345.00 - SUNNYSIDE 345KV CKT 1	717	789	0.47717	113.8344	CANEYRV7 345.00 - NEOSHO 345KV CKT 1
FDNS	00NR	0	20WP	G15_092	FROM->TO	G14-057T 345.00 - SUNNYSIDE 345KV CKT 1	717	789	0.47671	113.8289	MARIETTA - SOUTH WILSON 138KV CKT 1
FDNS	00NR	0	20WP	G15_092	FROM->TO	G14-057T 345.00 - SUNNYSIDE 345KV CKT 1	717	789	0.47624	113.8232	GEN590011 2-ERCOT EQUIVALENCE
FDNS	00NR	0	16WP	G15_092	FROM->TO	G14-057T 345.00 - SUNNYSIDE 345KV CKT 1	717	789	0.47479	113.8171	GEN521103 1-BLUE CANYON WIND FARM

SOLUTION	GROUP	SCENARIO	SEASON	SOURCE	DIRECTION	MONITORED ELEMENT	RATEA (MVA)	RATEB(MVA)	TDF	TC%LOADING (% MVA)	CONTINGENCY
FDNS	00NR	0	16WP	G15_092	FROM->TO	G14-057T 345.00 - SUNNYSIDE 345KV CKT 1	717	789	0.47479	113.8166	GEN520812 1-ANADRK5
FDNS	00NR	0	16WP	G15_092	FROM->TO	G14-057T 345.00 - SUNNYSIDE 345KV CKT 1	717	789	0.47479	113.8165	GEN520813 1-ANADRK6
FDNS	00NR	0	16WP	G15_092	FROM->TO	G14-057T 345.00 - SUNNYSIDE 345KV CKT 1	717	789	0.46994	113.8102	MAYSVLT4 138.00 - PRAIRIE POINT 138KV CKT 1
FDNS	00NR	0	16WP	G15_092	FROM->TO	G14-057T 345.00 - SUNNYSIDE 345KV CKT 1	717	789	0.47445	113.8033	GLASSES - RUSSETT 138KV CKT 1
FDNS	00NR	0	20WP	G15_092	FROM->TO	G14-057T 345.00 - SUNNYSIDE 345KV CKT 1	717	789	0.47624	113.7939	DELL 500 - ESSEX UNIT 2 500KV CKT Z1
FDNS	00NR	0	20WP	G15_092	FROM->TO	G14-057T 345.00 - SUNNYSIDE 345KV CKT 1	717	789	0.47624	113.7926	P12:161:AEPW:DYESS 5:HYLAND 5
FDNS	00NR	0	16WP	G15_092	FROM->TO	G14-057T 345.00 - SUNNYSIDE 345KV CKT 1	717	789	0.47218	113.785	ARBUCKLE - SULPHR 4 138.00 138KV CKT 1
FDNS	00NR	0	20WP	G15_092	FROM->TO	G14-057T 345.00 - SUNNYSIDE 345KV CKT 1	717	789	0.47998	113.7845	REDBUD - RIVERSIDE STATION 345KV CKT 1
FDNS	00NR	0	20WP	G15_092	FROM->TO	G14-057T 345.00 - SUNNYSIDE 345KV CKT 1	717	789	0.47998	113.7845	REDBUD - RIVERSIDE STATION 345KV CKT 1
FDNS	00NR	0	16WP	G15_092	FROM->TO	G14-057T 345.00 - SUNNYSIDE 345KV CKT 1	717	789	0.47468	113.7802	P12:138:WFEC:MSL11
FDNS	00NR	0	16WP	G15_092	FROM->TO	G14-057T 345.00 - SUNNYSIDE 345KV CKT 1	717	789	0.47468	113.7802	P12:138:WFEC-AEPW:PHAROAH4:LONEOAK4
FDNS	00NR	0	16WP	G15_092	FROM->TO	G14-057T 345.00 - SUNNYSIDE 345KV CKT 1	717	789	0.47444	113.7755	CANEY CREEK - JOHNSON COUNTY 138KV CKT 1
FDNS	00NR	0	16WP	G15_092	FROM->TO	G14-057T 345.00 - SUNNYSIDE 345KV CKT 1	717	789	0.47479	113.7736	GEN511961 1-DEMPSEY-WTG10.7000
FDNS	00NR	0	16WP	G15_092	FROM->TO	G14-057T 345.00 - SUNNYSIDE 345KV CKT 1	717	789	0.4748	113.758	P12:069:OKGE:3TERM42
FDNS	00NR	0	20WP	G15_092	FROM->TO	G14-057T 345.00 - SUNNYSIDE 345KV CKT 1	717	789	0.47624	113.7534	GEN590010 1-ERCOT EQUIVALENCE
FDNS	00NR	0	20WP	G15_092	FROM->TO	G14-057T 345.00 - SUNNYSIDE 345KV CKT 1	717	789	0.47624	113.7453	P12:69:AEPW:L.E.S.-2:LAW WC2
FDNS	00NR	0	20WP	G15_092	FROM->TO	G14-057T 345.00 - SUNNYSIDE 345KV CKT 1	717	789	0.48358	113.7442	LAWTON EASTSIDE (LES 5) 345/138/13.8KV TRANSFORMER CKT 2
FDNS	00NR	0	20WP	G15_092	FROM->TO	G14-057T 345.00 - SUNNYSIDE 345KV CKT 1	717	789	0.48358	113.7442	LAWTON EASTSIDE (LES 5) 345/138/13.8KV TRANSFORMER CKT 2
FDNS	00NR	0	16WP	G15_092	FROM->TO	G14-057T 345.00 - SUNNYSIDE 345KV CKT 1	717	789	0.47479	113.7348	GEN629070 2-BEAVER CHANNEL GENERATORFOR UNIT NO 2
FDNS	00NR	0	16WP	G15_092	FROM->TO	G14-057T 345.00 - SUNNYSIDE 345KV CKT 1	717	789	0.47484	113.7272	GRPRAR1-LNX3345.00 - HOLT.CO3 345.00 345KV CKT 1
FDNS	00NR	0	20WP	G15_092	FROM->TO	G14-057T 345.00 - SUNNYSIDE 345KV CKT 1	717	789	0.47671	113.7272	P12:138:WFEC:MSL17
FDNS	00NR	0	16WP	G15_092	FROM->TO	G14-057T 345.00 - SUNNYSIDE 345KV CKT 1	717	789	0.47479	113.7271	GEN515443 1-MNCOWND1 0.7000
FDNS	00NR	0	16WP	G15_092	FROM->TO	G14-057T 345.00 - SUNNYSIDE 345KV CKT 1	717	789	0.47484	113.7234	GRPRAR1-LNX3345.00 - GRPRAR 345KV CKT Z
FDNS	00NR	0	20WP	G15_092	FROM->TO	G14-057T 345.00 - SUNNYSIDE 345KV CKT 1	717	789	0.47646	113.7227	P12:138:WFEC:MSL02
FDNS	00NR	0	16WP	G15_092	FROM->TO	G14-057T 345.00 - SUNNYSIDE 345KV CKT 1	717	789	0.47516	113.7218	P12:138:WFEC:MSL08
FDNS	00NR	0	16WP	G15_092	FROM->TO	G14-057T 345.00 - SUNNYSIDE 345KV CKT 1	717	789	0.47479	113.7183	GEN615021 1-GRE-ER 14G 16.000
FDNS	00NR	0	16WP	G15_092	FROM->TO	G14-057T 345.00 - SUNNYSIDE 345KV CKT 1	717	789	0.47479	113.7147	GEN562902 1-G15052_3 0.6900
FDNS	00NR	0	16WP	G15_092	FROM->TO	G14-057T 345.00 - SUNNYSIDE 345KV CKT 1	717	789	0.46994	113.7129	PRAIRIE POINT - RATLIFF 138KV CKT 1
FDNS	00NR	0	16WP	G15_092	FROM->TO	G14-057T 345.00 - SUNNYSIDE 345KV CKT 1	717	789	0.47423	113.7093	CARTER - CHICKASAW 138KV CKT 1
FDNS	00NR	0	16WP	G15_092	FROM->TO	G14-057T 345.00 - SUNNYSIDE 345KV CKT 1	717	789	0.47479	113.7078	GEN563242 1-G15090_3 0.6900
FDNS	00NR	0	16WP	G15_092	FROM->TO	G14-057T 345.00 - SUNNYSIDE 345KV CKT 1	717	789	0.47479	113.7066	GEN560183 1-REDHIL-WTG1 12.000
FDNS	00NR	0	16WP	G15_092	FROM->TO	G14-057T 345.00 - SUNNYSIDE 345KV CKT 1	717	789	0.47479	113.7049	GEN629071 1-BURLINGTON GENERATOR FOR UNIT NO 1 E
FDNS	00NR	0	16WP	G15_092	FROM->TO	G14-057T 345.00 - SUNNYSIDE 345KV CKT 1	717	789	0.47456	113.7009	CANADIAN RIVER - MCALESTER SOUTH 138KV CKT 1
FDNS	00NR	0	16WP	G15_092	FROM->TO	G14-057T 345.00 - SUNNYSIDE 345KV CKT 1	717	789	0.47456	113.7009	CANADIAN RIVER - MCALESTER SOUTH 138KV CKT 1
FDNS	00NR	0	16WP	G15_092	FROM->TO	G14-057T 345.00 - SUNNYSIDE 345KV CKT 1	717	789	0.47456	113.6996	CANADIAN RIVER () 345/138/13.8KV TRANSFORMER CKT 1
FDNS	00NR	0	16WP	G15_092	FROM->TO	G14-057T 345.00 - SUNNYSIDE 345KV CKT 1	717	789	0.47456	113.6996	CANADIAN RIVER () 345/138/13.8KV TRANSFORMER CKT 1
FDNS	00NR	0	16WP	G15_092	FROM->TO	G14-057T 345.00 - SUNNYSIDE 345KV CKT 1	717	789	0.47664	113.6995	NORTHWEST - SPRING CREEK 345KV CKT 1
FDNS	00NR	0	16WP	G15_092	FROM->TO	G14-057T 345.00 - SUNNYSIDE 345KV CKT 1	717	789	0.47617	113.6963	MOREWOOD SW - NINE MILE 138KV CKT 1
FDNS	00NR	0	16WP	G15_092	FROM->TO	G14-057T 345.00 - SUNNYSIDE 345KV CKT 1	717	789	0.47328	113.6922	ROCKY POINT - SPRINGDALE 138KV CKT 1
FDNS	00NR	0	16WP	G15_092	FROM->TO	G14-057T 345.00 - SUNNYSIDE 345KV CKT 1	717	789	0.47664	113.6897	SOONER - SPRING CREEK 345KV CKT 1
FDNS	00NR	0	20WP	G15_092	FROM->TO	G14-057T 345.00 - SUNNYSIDE 345KV CKT 1	717	789	0.47717	113.687	CANEYRV7 345.00 - LATHAMS7 345.00 345KV CKT 1
FDNS	00NR	0	16WP	G15_092	FROM->TO	G14-057T 345.00 - SUNNYSIDE 345KV CKT 1	717	789	0.47479	113.679	INDEPENDENCE 500/26.0KV TRANSFORMER CKT 1
FDNS	00NR	0	16WP	G15_092	FROM->TO	G14-057T 345.00 - SUNNYSIDE 345KV CKT 1	717	789	0.47479	113.6766	BURLINGTON NO1 + NO 2 + NO 3 161/20.0KV TRANSFORMER CKT 1
FDNS	00NR	0	20WP	G15_092	FROM->TO	G14-057T 345.00 - SUNNYSIDE 345KV CKT 1	717	789	0.47624	113.676	GEN509408 1-WILKES #2
FDNS	00NR	0	16WP	G15_092	FROM->TO	G14-057T 345.00 - SUNNYSIDE 345KV CKT 1	717	789	0.47491	113.6747	ALTUS JUNCTION - RUSSELL 138KV CKT 1
FDNS	00NR	0	16WP	G15_092	FROM->TO	G14-057T 345.00 - SUNNYSIDE 345KV CKT 1	717	789	0.47491	113.6747	ALTUS JUNCTION - RUSSELL 138KV CKT 1
FDNS	00NR	0	16WP	G15_092	FROM->TO	G14-057T 345.00 - SUNNYSIDE 345KV CKT 1	717	789	0.47317	113.6724	NORTHWEST TEXARKANA - WELSH 345KV CKT 1
FDNS	00NR	0	16WP	G15_092	FROM->TO	G14-057T 345.00 - SUNNYSIDE 345KV CKT 1	717	789	0.47317	113.6724	NORTHWEST TEXARKANA - WELSH 345KV CKT 1
FDNS	00NR	0	16WP	G15_092	FROM->TO	G14-057T 345.00 - SUNNYSIDE 345KV CKT 1	717	789	0.47479	113.6705	GEN514805 1-SOONER UNIT 1
FDNS	00NR	0	16WP	G15_092	FROM->TO	G14-057T 345.00 - SUNNYSIDE 345KV CKT 1	717	789	0.47479	113.6637	GEN514806 1-SOONER UNIT 2
FDNS	00NR	0	20WP	G15_092	FROM->TO	G14-057T 345.00 - SUNNYSIDE 345KV CKT 1	717	789	0.47709	113.6598	ELDORADO EHV - SHERIDAN EHV 500KV CKT 1
FDNS	00NR	0	20WP	G15_092	FROM->TO	G14-057T 345.00 - SUNNYSIDE 345KV CKT 1	717	789	0.47638	113.6598	PAOLI - PAYNE 138.00 138KV CKT 1
FDNS	00NR	0	16WP	G15_092	FROM->TO	G14-057T 345.00 - SUNNYSIDE 345KV CKT 1	717	789	0.4749	113.6579	KEO EHV - WEST MEMPHIS 500 500KV CKT 1
FDNS	00NR	0	16WP	G15_092	FROM->TO	G14-057T 345.00 - SUNNYSIDE 345KV CKT 1	717	789	0.47462	113.6508	CHAMBER SPRINGS - CLARKSVILLE 345KV CKT 1
FDNS	00NR	0	20WP	G15_092	FROM->TO	G14-057T 345.00 - SUNNYSIDE 345KV CKT 1	717	789	0.47624	113.6501	GEN506754 1-LEBROCK STEAM 1
FDNS	00NR	0	16WP	G15_092	FROM->TO	G14-057T 345.00 - SUNNYSIDE 345KV CKT 1	717	789	0.47479	113.6474	GEN562078 1-G11_051_3 0.6900
FDNS	00NR	0	20WP	G15_092	FROM->TO	G14-057T 345.00 - SUNNYSIDE 345KV CKT 1	717	789	0.47645	113.6428	ANADARKO - GEORGIA 138KV CKT 1
FDNS	00NR	0	16WP	G15_092	FROM->TO	G14-057T 345.00 - SUNNYSIDE 345KV CKT 1	717	789	0.47479	113.6379	P12:230:UMZB:# 112 #: NU IN SD. NU-RCDC & DRY CREEK XFMR
FDNS	00NR	0	16WP	G15_092	FROM->TO	G14-057T 345.00 - SUNNYSIDE 345KV CKT 1	717	789	0.47479	113.6365	RCDC EAST 4230.00 - RED CEDAR DC 230KV CKT 1
FDNS	00NR	0	16WP	G15_092	FROM->TO	G14-057T 345.00 - SUNNYSIDE 345KV CKT 1	717	789	0.47218	113.6334	JOLLYVILLE - SULPHR 4 138.00 138KV CKT 1
FDNS	00NR	0	16WP	G15_092	FROM->TO	G14-057T 345.00 - SUNNYSIDE 345KV CKT 1	717	789	0.47479	113.6189	GEN562802 1-G15039_3 0.3570
FDNS	00NR	0	20WP	G15_092	FROM->TO	G14-057T 345.00 - SUNNYSIDE 345KV CKT 1	717	789	0.47637	113.6137	P12:138:AEPW:112GORE4:L.E.S.-4
FDNS	00NR	0	16WP	G15_092	FROM->TO	G14-057T 345.00 - SUNNYSIDE 345KV CKT 1	717	789	0.47479	113.6124	GEN524285 1-WILDORADO WIND GEN
FDNS	00NR	0	20WP	G15_092	FROM->TO	G14-057T 345.00 - SUNNYSIDE 345KV CKT 1	717	789	0.47802	113.6016	CIVIT - PAOLI 138KV CKT 1
FDNS	00NR	0	20WP	G15_092	FROM->TO	G14-057T 345.00 - SUNNYSIDE 345KV CKT 1	717	789	0.47682	113.5945	MATHWSN7 345.00 - NORTHWEST 345KV CKT 1
FDNS	00NR	0	16WP	G15_092	FROM->TO	G14-057T 345.00 - SUNNYSIDE 345KV CKT 1	717	789	0.47479	113.5926	GEN524295 1-SPNSPUR_WND10.6900
FDNS	00NR	0	16WP	G15_092	FROM->TO	G14-057T 345.00 - SUNNYSIDE 345KV CKT 1	717	789	0.47479	113.5923	GEN562587 1-G14_056_3 0.6900
FDNS	00NR	0	16WP	G15_092	FROM->TO	G14-057T 345.00 - SUNNYSIDE 345KV CKT 1	717	789	0.47479	113.5856	GEN560331 1-G10-46 13.800
FDNS	00NR	0	16WP	G15_092	FROM->TO	G14-057T 345.00 - SUNNYSIDE 345KV CKT 1	717	789	0.47546	113.5745	ARKANSAS NUCLEAR ONE - FT SMITH 500KV CKT 1
FDNS	00NR	0	16WP	G15_092	FROM->TO	G14-057T 345.00 - SUNNYSIDE 345KV CKT 1	717	789	0.47546	113.5745	ARKANSAS NUCLEAR ONE - FT SMITH 500KV CKT 1
FDNSLock	00NR	0	16WP	G15_092	FROM->TO	G14-057T 345.00 - SUNNYSIDE 345KV CKT 1	717	789	0.47479	113.5733	GEN629072 4-LANSING GENERATOR FOR UNITS NO4 EIA CODE 1
FDNS	00NR	0	20WP	G15_092	FROM->TO	G14-057T 345.00 - SUNNYSIDE 345KV CKT 1	717	789	0.47624	113.5691	GEN336252 1-NINEMILE POINT UNIT#5
FDNS	00NR	0	16WP	G15_092	FROM->TO	G14-057T 345.00 - SUNNYSIDE 345KV CKT 1	717	789	0.47218	113.5649	JOLLYVILLE - KERR MCGEE CIMARRON 138KV CKT 1
FDNS	00NR	0	16WP	G15_092	FROM->TO	G14-057T 345.00 - SUNNYSIDE 345KV CKT 1	717	789	0.47479	113.5641	GEN562882 1-G15047_3 0.6900
FDNS	00NR	0	16WP	G15_092	FROM->TO	G14-057T 345.00 - SUNNYSIDE 345KV CKT 1	717	789	0.47617	113.5619	BEARCAT 138.00 - NINE MILE 138KV CKT 1
FDNS	00NR	0	16WP	G15_092	FROM->TO	G14-057T 345.00 - SUNNYSIDE 345KV CKT 1	717	789	0.47479	113.555	GEN562269 1-G12-020-1 0.6900
FDNS	00NR	0	16WP	G15_092	FROM->TO	G14-057T 345.00 - SUNNYSIDE 345KV CKT 1	717	789	0.47479	113.5529	GEN657749 1-YOUNG 1 GENERATOR
FDNS	00NR	0	20WP	G15_092	FROM->TO	G14-057T 345.00 - SUNNYSIDE 345KV CKT 1	717	789	0.47645	113.5467	FLETCHER - GEORGIA 138KV CKT 1
FDNS	00NR	0	20WP	G15_092	FROM->TO	G14-057T 345.00 - SUNNYSIDE 345KV CKT 1	717	789	0.47842	113.5386	P12:138:AEPW-OGE:CORNVIL4:MAUD 4

SOLUTION	GROUP	SCENARIO	SEASON	SOURCE	DIRECTION	MONITORED ELEMENT	RATEA (MVA)	RATEB(MVA)	TDF	TC%LOADING (% MVA)	CONTINGENCY
FDNS	00NR	0	20WP	G15_092	FROM->TO	G14-057T 345.00 - SUNNYSIDE 345KV CKT 1	717	789	0.47624	113.5228	FRONTIER - GRIMES 345KV CKT 1
FDNS	00NR	0	16WP	G15_092	FROM->TO	G14-057T 345.00 - SUNNYSIDE 345KV CKT 1	717	789	0.47218	113.5143	ARBWIND4 138.00 - KERR MCGEE CIMARRON 138KV CKT 1
FDNS	00NR	0	20WP	G15_092	FROM->TO	G14-057T 345.00 - SUNNYSIDE 345KV CKT 1	717	789	0.47624	113.5117	GEN335204 1-NELSON UNIT 4
FDNS	00NR	0	16WP	G15_092	FROM->TO	G14-057T 345.00 - SUNNYSIDE 345KV CKT 1	717	789	0.47479	113.51	GEN562270 1-G12-020-2 0.6900
FDNS	00NR	0	20WP	G15_092	FROM->TO	G14-057T 345.00 - SUNNYSIDE 345KV CKT 1	717	789	0.47624	113.5052	GEN503909 1-FULTONU1 1 16.000
FDNS	00NR	0	20WP	G15_092	FROM->TO	G14-057T 345.00 - SUNNYSIDE 345KV CKT 1	717	789	0.47624	113.5045	GEN334441 1-SABINE UNIT 5
FDNS	00NR	0	16WP	G15_092	FROM->TO	G14-057T 345.00 - SUNNYSIDE 345KV CKT 1	717	789	0.47479	113.5044	GEN562812 1-G15040_3 0.3570
FDNS	00NR	0	20WP	G15_092	FROM->TO	G14-057T 345.00 - SUNNYSIDE 345KV CKT 1	717	789	0.4764	113.5041	EMPIRE - FLETCHER 138KV CKT 1
FDNS	00NR	0	16WP	G15_092	FROM->TO	G14-057T 345.00 - SUNNYSIDE 345KV CKT 1	717	789	0.47728	113.503	P12:138:AEPW:112GORE4:SNYDER-4
FDNS	00NR	0	16WP	G15_092	FROM->TO	G14-057T 345.00 - SUNNYSIDE 345KV CKT 1	717	789	0.47261	113.5027	CLARKSVILLE - MUSKOGEE 345KV CKT 1
FDNS	00NR	0	16WP	G15_092	FROM->TO	G14-057T 345.00 - SUNNYSIDE 345KV CKT 1	717	789	0.47261	113.5027	CLARKSVILLE - MUSKOGEE 345KV CKT 1
FDNS	00NR	0	16WP	G15_092	FROM->TO	G14-057T 345.00 - SUNNYSIDE 345KV CKT 1	717	789	0.47479	113.5015	GEN563102 1-G15075_3 0.5500
FDNS	00NR	0	16WP	G15_092	FROM->TO	G14-057T 345.00 - SUNNYSIDE 345KV CKT 1	717	789	0.47479	113.4982	GEN562974 1-G15060_5 0.6900
FDNS	00NR	0	16WP	G15_092	FROM->TO	G14-057T 345.00 - SUNNYSIDE 345KV CKT 1	717	789	0.47479	113.4946	GEN563062 1-G15071_3 0.6900
FDNS	00NR	0	16WP	G15_092	FROM->TO	G14-057T 345.00 - SUNNYSIDE 345KV CKT 1	717	789	0.47479	113.4938	GEN563132 1-G15078_3 0.3570
FDNS	00NR	0	16WP	G15_092	FROM->TO	G14-057T 345.00 - SUNNYSIDE 345KV CKT 1	717	789	0.47479	113.4887	GEN562973 1-G15060_4 0.6900
FDNS	00NR	0	20WP	G15_092	FROM->TO	G14-057T 345.00 - SUNNYSIDE 345KV CKT 1	717	789	0.47778	113.4836	TUPELO - TUPELO TAP 138KV CKT 1
FDNSLock	00NR	0	16WP	G15_092	FROM->TO	G14-057T 345.00 - SUNNYSIDE 345KV CKT 1	717	789	0.47479	113.4834	GEN681522 3-GENOA 3
FDNS	00NR	0	16WP	G15_092	FROM->TO	G14-057T 345.00 - SUNNYSIDE 345KV CKT 1	717	789	0.47617	113.4794	P12:138:WFEC:MSL14
FDNS	00NR	0	20WP	G15_092	FROM->TO	G14-057T 345.00 - SUNNYSIDE 345KV CKT 1	717	789	0.47717	113.4741	LATHAMS7 345.00 - ROSE HILL 345KV CKT 1
FDNS	00NR	0	16WP	G15_092	FROM->TO	G14-057T 345.00 - SUNNYSIDE 345KV CKT 1	717	789	0.47617	113.4666	BEARCAT 138.00 - MOORELAND 138KV CKT 1
FDNS	00NR	0	20WP	G15_092	FROM->TO	G14-057T 345.00 - SUNNYSIDE 345KV CKT 1	717	789	0.47842	113.4632	BLANCHARD - CORNVILLE 138KV CKT 1
FDNS	00NR	0	20WP	G15_092	FROM->TO	G14-057T 345.00 - SUNNYSIDE 345KV CKT 1	717	789	0.47802	113.4605	CIVIT - STRATFORD 138KV CKT 1
FDNS	00NR	0	16WP	G15_092	FROM->TO	G14-057T 345.00 - SUNNYSIDE 345KV CKT 1	717	789	0.47359	113.4561	BROWN - RUSSETT 138KV CKT 1
FDNS	00NR	0	16WP	G15_092	FROM->TO	G14-057T 345.00 - SUNNYSIDE 345KV CKT 1	717	789	0.47255	113.4351	CHICKASAW - TOTAL 138KV CKT 1
FDNS	00NR	0	16WP	G15_092	FROM->TO	G14-057T 345.00 - SUNNYSIDE 345KV CKT 1	717	789	0.4732	113.4301	RUSSETT - SPRINGDALE 138KV CKT 1
FDNS	00NR	0	16WP	G15_092	FROM->TO	G14-057T 345.00 - SUNNYSIDE 345KV CKT 1	717	789	0.47479	113.4267	GEN345671 2-1RUSH G2 18.000
FDNS	00NR	0	16WP	G15_092	FROM->TO	G14-057T 345.00 - SUNNYSIDE 345KV CKT 1	717	789	0.47479	113.4248	GEN345670 1-1RUSH G1 18.000
FDNS	00NR	0	20WP	G15_092	FROM->TO	G14-057T 345.00 - SUNNYSIDE 345KV CKT 1	717	789	0.4764	113.4227	COMANCHE - EMPIRE 138KV CKT 1
FDNS	00NR	0	20WP	G15_092	FROM->TO	G14-057T 345.00 - SUNNYSIDE 345KV CKT 1	717	789	0.47676	113.4172	LAYFLD8 500.00 - MOUNT OLIVE 500KV CKT 1
FDNS	00NR	0	20WP	G15_092	FROM->TO	G14-057T 345.00 - SUNNYSIDE 345KV CKT 1	717	789	0.47676	113.4172	LAYFLD8 500.00 - MOUNT OLIVE 500KV CKT 1
FDNS	00NR	0	16WP	G15_092	FROM->TO	G14-057T 345.00 - SUNNYSIDE 345KV CKT 1	717	789	0.47479	113.4132	GEN526331 1-JONES GEN #1 22 KV
FDNS	00NR	0	16WP	G15_092	FROM->TO	G14-057T 345.00 - SUNNYSIDE 345KV CKT 1	717	789	0.47479	113.4131	GEN526332 1-JONES GEN #2 21 KV
FDNS	00NR	0	16WP	G15_092	FROM->TO	G14-057T 345.00 - SUNNYSIDE 345KV CKT 1	717	789	0.47479	113.4028	GEN560105 1-G08-22 0.6900
FDNS	00NR	0	16WP	G15_092	FROM->TO	G14-057T 345.00 - SUNNYSIDE 345KV CKT 1	717	789	0.47479	113.3993	GEN562550 1-G14_040_3 0.6900
FDNS	00NR	0	16WP	G15_092	FROM->TO	G14-057T 345.00 - SUNNYSIDE 345KV CKT 1	717	789	0.47278	113.3982	ROCKY POINT - SUNNYSIDE 138KV CKT 1
FDNS	00NR	0	20WP	G15_092	FROM->TO	G14-057T 345.00 - SUNNYSIDE 345KV CKT 1	717	789	0.47624	113.3982	GEN336251 1-NINEMILE POINT UNIT#4
FDNS	00NR	0	20WP	G15_092	FROM->TO	G14-057T 345.00 - SUNNYSIDE 345KV CKT 1	717	789	0.47664	113.393	G1524G1525 345.00 - THISTLE7 345.00 345KV CKT 1
FDNS	00NR	0	20WP	G15_092	FROM->TO	G14-057T 345.00 - SUNNYSIDE 345KV CKT 1	717	789	0.47664	113.393	G1524G1525 345.00 - THISTLE7 345.00 345KV CKT 2
FDNS	00NR	0	20WP	G15_092	FROM->TO	G14-057T 345.00 - SUNNYSIDE 345KV CKT 1	717	789	0.47759	113.3929	FINNEY SWITCHING STATION - HOLCOMB 345KV CKT 1
FDNS	00NR	0	20WP	G15_092	FROM->TO	G14-057T 345.00 - SUNNYSIDE 345KV CKT 1	717	789	0.47759	113.3929	FINNEY SWITCHING STATION - HOLCOMB 345KV CKT 1
FDNS	00NR	0	20WP	G15_092	FROM->TO	G14-057T 345.00 - SUNNYSIDE 345KV CKT 1	717	789	0.47624	113.3927	GEN334071 1-LEWIS CREEK 2
FDNS	00NR	0	16WP	G15_092	FROM->TO	G14-057T 345.00 - SUNNYSIDE 345KV CKT 1	717	789	0.47359	113.3879	RUSSETT - RUSSETT 138KV CKT 1
FDNS	00NR	0	20WP	G15_092	FROM->TO	G14-057T 345.00 - SUNNYSIDE 345KV CKT 1	717	789	0.47624	113.3843	GEN334070 1-LEWIS CREEK 1
FDNS	00NR	0	16WP	G15_092	FROM->TO	G14-057T 345.00 - SUNNYSIDE 345KV CKT 1	717	789	0.47479	113.3775	4SIOUX 1 138.00 138/18.0KV TRANSFORMER CKT 1
FDNS	00NR	0	16WP	G15_092	FROM->TO	G14-057T 345.00 - SUNNYSIDE 345KV CKT 1	717	789	0.47542	113.3694	P12:138:WFEC:MSL07
FDNS	00NR	0	16WP	G15_092	FROM->TO	G14-057T 345.00 - SUNNYSIDE 345KV CKT 1	717	789	0.47542	113.3694	P12:138:WFEC-AEPW:HUGOPP4:ATOKA--4
FDNS	00NR	0	20WP	G15_092	FROM->TO	G14-057T 345.00 - SUNNYSIDE 345KV CKT 1	717	789	0.47624	113.3642	P12:161:AEPW-SWPA:BEAVER5:EROGERS5
FDNS	00NR	0	20WP	G15_092	FROM->TO	G14-057T 345.00 - SUNNYSIDE 345KV CKT 1	717	789	0.47624	113.3603	GEN509392 G2-ARSENAL HILL GENS #3 (STALL)
FDNS	00NR	0	20WP	G15_092	FROM->TO	G14-057T 345.00 - SUNNYSIDE 345KV CKT 1	717	789	0.47624	113.3602	GEN509391 G1-ARSENAL HILL GENS #2 (STALL)
FDNS	00NR	0	16WP	G15_092	FROM->TO	G14-057T 345.00 - SUNNYSIDE 345KV CKT 1	717	789	0.47479	113.3591	GEN511962 2-RKYRDGW2-1 0.7000
FDNS	00NR	0	20WP	G15_092	FROM->TO	G14-057T 345.00 - SUNNYSIDE 345KV CKT 1	717	789	0.47624	113.3581	GEN509393 S1-ARSENAL HILL GENS #4 (STALL)
FDNS	00NR	0	16WP	G15_092	FROM->TO	G14-057T 345.00 - SUNNYSIDE 345KV CKT 1	717	789	0.47479	113.3577	GEN521112 1-ORME3 13.800
FDNS	00NR	0	16WP	G15_092	FROM->TO	G14-057T 345.00 - SUNNYSIDE 345KV CKT 1	717	789	0.47479	113.3553	CLAY BOSWELL 230/20.9KV TRANSFORMER CKT 1
FDNS	00NR	0	16WP	G15_092	FROM->TO	G14-057T 345.00 - SUNNYSIDE 345KV CKT 1	717	789	0.47479	113.3532	GEN527882 1-CUNNINGHAM GEN #2 20 KV
FDNS	00NR	0	20WP	G15_092	FROM->TO	G14-057T 345.00 - SUNNYSIDE 345KV CKT 1	717	789	0.47624	113.3465	GEN334433 1-SABINE UNIT 3
FDNS	00NR	0	20WP	G15_092	FROM->TO	G14-057T 345.00 - SUNNYSIDE 345KV CKT 1	717	789	0.47802	113.3428	OIL CENTER - STRATFORD 138KV CKT 1
FDNS	00NR	0	16WP	G15_092	FROM->TO	G14-057T 345.00 - SUNNYSIDE 345KV CKT 1	717	789	0.47479	113.3369	GEN562892 1-G15048_3 0.6900
FDNS	00NR	0	20WP	G15_092	FROM->TO	G14-057T 345.00 - SUNNYSIDE 345KV CKT 1	717	789	0.47624	113.3339	GEN337653 1-WHITE BLUFF UNIT #2
FDNS	00NR	0	16WP	G15_092	FROM->TO	G14-057T 345.00 - SUNNYSIDE 345KV CKT 1	717	789	0.4708	113.3312	ARDMORE WEST - CARTER 138KV CKT 1
FDNS	00NR	0	16WP	G15_092	FROM->TO	G14-057T 345.00 - SUNNYSIDE 345KV CKT 1	717	789	0.47479	113.3247	GEN562512 1-G14_020_3 0.6900
FDNS	00NR	0	20WP	G15_092	FROM->TO	G14-057T 345.00 - SUNNYSIDE 345KV CKT 1	717	789	0.47624	113.323	GEN336831 1-BAXTER WILSON SES
FDNS	00NR	0	16WP	G15_092	FROM->TO	G14-057T 345.00 - SUNNYSIDE 345KV CKT 1	717	789	0.47479	113.3179	GEN672321 1-SHAND GENERATOR 1
FDNS	00NR	0	16WP	G15_092	FROM->TO	G14-057T 345.00 - SUNNYSIDE 345KV CKT 1	717	789	0.47479	113.3158	GEN563192 1-G15084_3 0.5500
FDNS	00NR	0	20WP	G15_092	FROM->TO	G14-057T 345.00 - SUNNYSIDE 345KV CKT 1	717	789	0.48592	113.3115	P12:138:AEPW:S.W.S.-4:L.E.S.-4
FDNS	00NR	0	16WP	G15_092	FROM->TO	G14-057T 345.00 - SUNNYSIDE 345KV CKT 1	717	789	0.47479	113.3067	GEN511853 1-COMANCHE #3
FDNS	00NR	0	20WP	G15_092	FROM->TO	G14-057T 345.00 - SUNNYSIDE 345KV CKT 1	717	789	0.47624	113.3019	P12:161:AEPW:DYESS5:ELMSPRNG:TONTITN5
FDNS	00NR	0	20WP	G15_092	FROM->TO	G14-057T 345.00 - SUNNYSIDE 345KV CKT 1	717	789	0.47705	113.2967	DUNCAN (DUNCAN) 138/69/13.8KV TRANSFORMER CKT 1
FDNS	00NR	0	20WP	G15_092	FROM->TO	G14-057T 345.00 - SUNNYSIDE 345KV CKT 1	717	789	0.47705	113.2967	DUNCAN (DUNCAN) 138/69/13.8KV TRANSFORMER CKT 1
FDNS	00NR	0	16WP	G15_092	FROM->TO	G14-057T 345.00 - SUNNYSIDE 345KV CKT 1	717	789	0.47479	113.2937	GEN672310 1-POPLAR RIVER GENERATOR 1
FDNS	00NR	0	16WP	G15_092	FROM->TO	G14-057T 345.00 - SUNNYSIDE 345KV CKT 1	717	789	0.47479	113.2937	GEN672311 2-POPLAR RIVER GENERATOR 2
FDNS	00NR	0	16WP	G15_092	FROM->TO	G14-057T 345.00 - SUNNYSIDE 345KV CKT 1	717	789	0.47493	113.2933	P12:138:WFEC:MSL16
FDNS	00NR	0	16WP	G15_092	FROM->TO	G14-057T 345.00 - SUNNYSIDE 345KV CKT 1	717	789	0.47437	113.2886	P12:138:WFEC-AEPW:GOLDENSW4:CRAIGJT4
FDNS	00NR	0	16WP	G15_092	FROM->TO	G14-057T 345.00 - SUNNYSIDE 345KV CKT 1	717	789	0.47479	113.2851	GEN672306 6-BOUNDARY DAM GENERATOR 6
FDNS	00NR	0	16WP	G15_092	FROM->TO	G14-057T 345.00 - SUNNYSIDE 345KV CKT 1	717	789	0.47073	113.2851	SUNNYSIDE (SUNNYSD5) 345/138/13.8KV TRANSFORMER CKT 1
FDNS	00NR	0	20WP	G15_092	FROM->TO	G14-057T 345.00 - SUNNYSIDE 345KV CKT 1	717	789	0.47624	113.2821	GEN337911 1-ARKANSAS NUCLEAR ONE UNIT #2
FDNS	00NR	0	20WP	G15_092	FROM->TO	G14-057T 345.00 - SUNNYSIDE 345KV CKT 1	717	789	0.47624	113.2788	GEN515040 1-SEMINOLE 1G
FDNS	00NR	0	20WP	G15_092	FROM->TO	G14-057T 345.00 - SUNNYSIDE 345KV CKT 1	717	789	0.47789	113.2722	G14_038T 345.00 - Hitchland Interchange 345KV CKT 1
FDNS	00NR	0	20WP	G15_092	FROM->TO	G14-057T 345.00 - SUNNYSIDE 345KV CKT 1	717	789	0.47624	113.2716	GEN334030 1-FRONTIER UNIT 1

SOLUTION	GROUP	SCENARIO	SEASON	SOURCE	DIRECTION	MONITORED ELEMENT	RATEA (MVA)	RATEB(MVA)	TDF	TC%LOADING (% MVA)	CONTINGENCY
FDNS	00NR	0	16WP	G15_092	FROM->TO	G14-057T 345.00 - SUNNYSIDE 345KV CKT 1	717	789	0.47479	113.271	GEN344895 2-1LAB G2 20.000
FDNS	00NR	0	20WP	G15_092	FROM->TO	G14-057T 345.00 - SUNNYSIDE 345KV CKT 1	717	789	0.47624	113.2693	GEN334031 1-FRONTIER UNIT 2
FDNS	00NR	0	16WP	G15_092	FROM->TO	G14-057T 345.00 - SUNNYSIDE 345KV CKT 1	717	789	0.47479	113.2581	GEN523461 1-BLACKHAWK GEN #1
FDNS	00NR	0	16WP	G15_092	FROM->TO	G14-057T 345.00 - SUNNYSIDE 345KV CKT 1	717	789	0.47479	113.258	GEN523462 1-BLACKHAWK GEN #2
FDNS	00NR	0	20WP	G15_092	FROM->TO	G14-057T 345.00 - SUNNYSIDE 345KV CKT 1	717	789	0.47842	113.2548	TUTTLE - TUTTLE CONOCO TAP 138KV CKT 1
FDNS	00NR	0	16WP	G15_092	FROM->TO	G14-057T 345.00 - SUNNYSIDE 345KV CKT 1	717	789	0.47479	113.2537	GEN511852 1-COMANCHE #2
FDNS	00NR	0	20WP	G15_092	FROM->TO	G14-057T 345.00 - SUNNYSIDE 345KV CKT 1	717	789	0.47622	113.2501	P12:138:AEPW:CATOOSA4:T.S.E.-4
FDNS	00NR	0	20WP	G15_092	FROM->TO	G14-057T 345.00 - SUNNYSIDE 345KV CKT 1	717	789	0.47842	113.2433	BLANCHARD - MAUD 138KV CKT 1
FDNS	00NR	0	16WP	G15_092	FROM->TO	G14-057T 345.00 - SUNNYSIDE 345KV CKT 1	717	789	0.47479	113.2389	GEN344896 3-1LAB G3 20.000
FDNS	00NR	0	16WP	G15_092	FROM->TO	G14-057T 345.00 - SUNNYSIDE 345KV CKT 1	717	789	0.47479	113.2375	GEN344894 1-1LAB G1 20.000
FDNS	00NR	0	16WP	G15_092	FROM->TO	G14-057T 345.00 - SUNNYSIDE 345KV CKT 1	717	789	0.47479	113.2361	GEN344897 4-1LAB G4 20.000
FDNS	00NR	0	20WP	G15_092	FROM->TO	G14-057T 345.00 - SUNNYSIDE 345KV CKT 1	717	789	0.47612	113.2345	FULTON 115 - HOPE 115KV CKT 1
FDNS	00NR	0	20WP	G15_092	FROM->TO	G14-057T 345.00 - SUNNYSIDE 345KV CKT 1	717	789	0.47612	113.2345	FULTON 115 - HOPE 115KV CKT 1
FDNS	00NR	0	20WP	G15_092	FROM->TO	G14-057T 345.00 - SUNNYSIDE 345KV CKT 1	717	789	0.47731	113.2314	P12:138:AEPW-OGE:WTH_JCT4:JENSEN4
FDNS	00NR	0	20WP	G15_092	FROM->TO	G14-057T 345.00 - SUNNYSIDE 345KV CKT 1	717	789	0.47624	113.2306	GEN337652 1-WHITE BLUFF UNIT #1
FDNS	00NR	0	20WP	G15_092	FROM->TO	G14-057T 345.00 - SUNNYSIDE 345KV CKT 1	717	789	0.47624	113.2297	GEN501811 1-RODEMACHER UNIT 1
FDNS	00NR	0	20WP	G15_092	FROM->TO	G14-057T 345.00 - SUNNYSIDE 345KV CKT 1	717	789	0.47872	113.2296	P12:138:AEPW:CORNVIL4:DUNCAN-4
FDNS	00NR	0	20WP	G15_092	FROM->TO	G14-057T 345.00 - SUNNYSIDE 345KV CKT 1	717	789	0.47624	113.2154	GEN506752 1-LEBROCK GAS 1
FDNS	00NR	0	16WP	G15_092	FROM->TO	G14-057T 345.00 - SUNNYSIDE 345KV CKT 1	717	789	0.4708	113.2152	ARDMORE WEST - UNIROYAL 138KV CKT 1
FDNS	00NR	0	20WP	G15_092	FROM->TO	G14-057T 345.00 - SUNNYSIDE 345KV CKT 1	717	789	0.47624	113.2151	GEN506753 1-LEBROCK GAS 2
FDNS	00NR	0	20WP	G15_092	FROM->TO	G14-057T 345.00 - SUNNYSIDE 345KV CKT 1	717	789	0.47624	113.212	GEN300015 1-1SGPDEL 18.000
FDNS	00NR	0	20WP	G15_092	FROM->TO	G14-057T 345.00 - SUNNYSIDE 345KV CKT 1	717	789	0.47624	113.2097	GEN515226 1-MUSKOGEE 6G
FDNS	00NR	0	20WP	G15_092	FROM->TO	G14-057T 345.00 - SUNNYSIDE 345KV CKT 1	717	789	0.47624	113.2086	GEN300003 1-THOMAS HILL UNIT 3
FDNS	00NR	0	16WP	G15_092	FROM->TO	G14-057T 345.00 - SUNNYSIDE 345KV CKT 1	717	789	0.47465	113.2023	P12:138:AEPW-SWPA:LONEOAK4:TUPELO4
FDNS	00NR	0	16WP	G15_092	FROM->TO	G14-057T 345.00 - SUNNYSIDE 345KV CKT 1	717	789	0.47465	113.2023	P12:138:WFEC:MSL06
FDNS	00NR	0	16WP	G15_092	FROM->TO	G14-057T 345.00 - SUNNYSIDE 345KV CKT 1	717	789	0.47242	113.2022	P12:138:OKGE:3TERM40
FDNS	00NR	0	20WP	G15_092	FROM->TO	G14-057T 345.00 - SUNNYSIDE 345KV CKT 1	717	789	0.47624	113.197	GEN336191 1-LITTLE GYPSY UNIT#3
FDNS	00NR	0	16WP	G15_092	FROM->TO	G14-057T 345.00 - SUNNYSIDE 345KV CKT 1	717	789	0.47479	113.1818	GEN563162 1-G15081_3 0.6900
FDNSLock	00NR	0	16WP	G15_092	FROM->TO	G14-057T 345.00 - SUNNYSIDE 345KV CKT 1	717	789	0.47479	113.1814	GEN681542 6-JP MADGETT
FDNS	00NR	0	16WP	G15_092	FROM->TO	G14-057T 345.00 - SUNNYSIDE 345KV CKT 1	717	789	0.47479	113.1784	GEN521110 1-ORME1 13.800
FDNS	00NR	0	16WP	G15_092	FROM->TO	G14-057T 345.00 - SUNNYSIDE 345KV CKT 1	717	789	0.47479	113.1784	GEN521111 1-ORME2 13.800
FDNS	00NR	0	20WP	G15_092	FROM->TO	G14-057T 345.00 - SUNNYSIDE 345KV CKT 1	717	789	0.47673	113.1781	P12:138:AEPW:CORNVIL4:S.W.S.-4
FDNS	00NR	0	20WP	G15_092	FROM->TO	G14-057T 345.00 - SUNNYSIDE 345KV CKT 1	717	789	0.47714	113.1775	6LAYFLD 230.00 - CARROLL 230KV CKT 1
FDNS	00NR	0	16WP	G15_092	FROM->TO	G14-057T 345.00 - SUNNYSIDE 345KV CKT 1	717	789	0.47479	113.1714	GEN562699 1-G15_018_3 0.6900
FDNS	00NR	0	16WP	G15_092	FROM->TO	G14-057T 345.00 - SUNNYSIDE 345KV CKT 1	717	789	0.47492	113.1706	G15085_T 138.00 - RUSSELL 138KV CKT 1
FDNS	00NR	0	16WP	G15_092	FROM->TO	G14-057T 345.00 - SUNNYSIDE 345KV CKT 1	717	789	0.47156	113.1705	CARTRCO4 138.00 - RATLIFF 138KV CKT 1
FDNS	00NR	0	20WP	G15_092	FROM->TO	G14-057T 345.00 - SUNNYSIDE 345KV CKT 1	717	789	0.47802	113.1702	LATTA JCT - OIL CENTER 138KV CKT 1
FDNS	00NR	0	20WP	G15_092	FROM->TO	G14-057T 345.00 - SUNNYSIDE 345KV CKT 1	717	789	0.47624	113.1681	GEN335614 1-WILLOW GLENN UNIT#4
FDNS	00NR	0	20WP	G15_092	FROM->TO	G14-057T 345.00 - SUNNYSIDE 345KV CKT 1	717	789	0.47842	113.162	CIMARRON - TUTTLE CONOCO TAP 138KV CKT 1
FDNS	00NR	0	16WP	G15_092	FROM->TO	G14-057T 345.00 - SUNNYSIDE 345KV CKT 1	717	789	0.47479	113.159	GEN563292 1-G15095_3 0.6900
FDNS	00NR	0	20WP	G15_092	FROM->TO	G14-057T 345.00 - SUNNYSIDE 345KV CKT 1	717	789	0.47634	113.1529	8DANIEL8 500.00 - MCKNIGHT 500KV CKT 1
FDNS	00NR	0	20WP	G15_092	FROM->TO	G14-057T 345.00 - SUNNYSIDE 345KV CKT 1	717	789	0.47851	113.1398	BAILEY4 138.00 - SUNSHINE CANYON 138KV CKT 1
FDNS	00NR	0	20WP	G15_092	FROM->TO	G14-057T 345.00 - SUNNYSIDE 345KV CKT 1	717	789	0.47638	113.1297	G15095_T 138.00 - ROSE_VALLEY 138.00 138KV CKT 1
FDNS	00NR	0	16WP	G15_092	FROM->TO	G14-057T 345.00 - SUNNYSIDE 345KV CKT 1	717	789	0.47696	113.1295	G15063_T 345.00 - MATHWSN7 345.00 345KV CKT 1
FDNS	00NR	0	20WP	G15_092	FROM->TO	G14-057T 345.00 - SUNNYSIDE 345KV CKT 1	717	789	0.47624	113.1261	GEN337910 1-ARKANSAS NUCLEAR ONE UNIT #1
FDNS	00NR	0	20WP	G15_092	FROM->TO	G14-057T 345.00 - SUNNYSIDE 345KV CKT 1	717	789	0.47624	113.1241	P12:161:AEPW:EROGERS5:ECNTRTN5
FDNS	00NR	0	20WP	G15_092	FROM->TO	G14-057T 345.00 - SUNNYSIDE 345KV CKT 1	717	789	0.47649	113.1228	BUCKNER7 345.00 - SPEARVILLE 345KV CKT 1
FDNS	00NR	0	20WP	G15_092	FROM->TO	G14-057T 345.00 - SUNNYSIDE 345KV CKT 1	717	789	0.47649	113.1228	BUCKNER7 345.00 - SPEARVILLE 345KV CKT 1
FDNS	00NR	0	20WP	G15_092	FROM->TO	G14-057T 345.00 - SUNNYSIDE 345KV CKT 1	717	789	0.47624	113.122	GEN303007 1-1BC2 U2
FDNS	00NR	0	20WP	G15_092	FROM->TO	G14-057T 345.00 - SUNNYSIDE 345KV CKT 1	717	789	0.47759	113.1199	FINNEY SWITCHING STATION - WALKTAP7 345.00 345KV CKT 1
FDNS	00NR	0	20WP	G15_092	FROM->TO	G14-057T 345.00 - SUNNYSIDE 345KV CKT 1	717	789	0.47759	113.1199	FINNEY SWITCHING STATION - WALKTAP7 345.00 345KV CKT 1
FDNS	00NR	0	16WP	G15_092	FROM->TO	G14-057T 345.00 - SUNNYSIDE 345KV CKT 1	717	789	0.47728	113.1195	CACHE - SNYDER 138KV CKT 1
FDNS	00NR	0	20WP	G15_092	FROM->TO	G14-057T 345.00 - SUNNYSIDE 345KV CKT 1	717	789	0.47624	113.1171	GEN336464 1-MICHOUD UNIT #3
FDNS	00NR	0	20WP	G15_092	FROM->TO	G14-057T 345.00 - SUNNYSIDE 345KV CKT 1	717	789	0.47624	113.116	GEN303006 1-1BC2 U1
FDNS	00NR	0	20WP	G15_092	FROM->TO	G14-057T 345.00 - SUNNYSIDE 345KV CKT 1	717	789	0.47687	113.1158	P12:138:AEPW:WTHWF4:CLINTJC4
FDNS	00NR	0	20WP	G15_092	FROM->TO	G14-057T 345.00 - SUNNYSIDE 345KV CKT 1	717	789	0.47624	113.1142	WHITE BLUFF 500/26.0KV TRANSFORMER CKT 1
FDNS	00NR	0	20WP	G15_092	FROM->TO	G14-057T 345.00 - SUNNYSIDE 345KV CKT 1	717	789	0.47705	113.1123	P12:69:WFEC-AEPW:COMANCH2:DUNCAN-2
FDNS	00NR	0	20WP	G15_092	FROM->TO	G14-057T 345.00 - SUNNYSIDE 345KV CKT 1	717	789	0.47624	113.1123	GEN515223 1-MUSKOGEE 4G
FDNS	00NR	0	20WP	G15_092	FROM->TO	G14-057T 345.00 - SUNNYSIDE 345KV CKT 1	717	789	0.47624	113.1123	GEN515225 1-MUSKOGEE 5G
FDNS	00NR	0	20WP	G15_092	FROM->TO	G14-057T 345.00 - SUNNYSIDE 345KV CKT 1	717	789	0.47624	113.1096	GEN562783 1-G15036_4 0.6900
FDNS	00NR	0	20WP	G15_092	FROM->TO	G14-057T 345.00 - SUNNYSIDE 345KV CKT 1	717	789	0.47624	113.1096	GEN562784 1-G15036_5 0.6900
FDNS	00NR	0	20WP	G15_092	FROM->TO	G14-057T 345.00 - SUNNYSIDE 345KV CKT 1	717	789	0.47635	113.1077	G15088_T 345.00 - MOORE 345KV CKT 1
FDNS	00NR	0	20WP	G15_092	FROM->TO	G14-057T 345.00 - SUNNYSIDE 345KV CKT 1	717	789	0.47691	113.1046	P12:69:AEPW-OMPA:COMANC-2:OMWALTR2
FDNS	00NR	0	20WP	G15_092	FROM->TO	G14-057T 345.00 - SUNNYSIDE 345KV CKT 1	717	789	0.47625	113.0985	BISMARK - HOT SPRINGS WEST BUS 115KV CKT 1
FDNS	00NR	0	20WP	G15_092	FROM->TO	G14-057T 345.00 - SUNNYSIDE 345KV CKT 1	717	789	0.47655	113.0959	CIMARRON - CZECH HALL 138KV CKT 1
FDNS	00NR	0	20WP	G15_092	FROM->TO	G14-057T 345.00 - SUNNYSIDE 345KV CKT 1	717	789	0.4764	113.0936	G15074_T 345.00 - HOYT 345KV CKT 1
FDNS	00NR	0	20WP	G15_092	FROM->TO	G14-057T 345.00 - SUNNYSIDE 345KV CKT 1	717	789	0.47643	113.0914	MC NIEL 500/115KV TRANSFORMER CKT 1
FDNS	00NR	0	20WP	G15_092	FROM->TO	G14-057T 345.00 - SUNNYSIDE 345KV CKT 1	717	789	0.47624	113.0857	GEN300010 1-ST FRANCIS UNIT 1
FDNS	00NR	0	20WP	G15_092	FROM->TO	G14-057T 345.00 - SUNNYSIDE 345KV CKT 1	717	789	0.47705	113.0853	DUNCAN - TOSCO 69KV CKT 1
FDNS	00NR	0	20WP	G15_092	FROM->TO	G14-057T 345.00 - SUNNYSIDE 345KV CKT 1	717	789	0.47687	113.0823	P12:138:AEPW:WTHWF4:WTH_SE4
FDNS	00NR	0	16WP	G15_092	FROM->TO	G14-057T 345.00 - SUNNYSIDE 345KV CKT 1	717	789	0.47479	113.0731	GEN563122 1-G15077_3 0.3850
FDNS	00NR	0	16WP	G15_092	FROM->TO	G14-057T 345.00 - SUNNYSIDE 345KV CKT 1	717	789	0.47479	113.0722	GEN661015 1-COYOTE
FDNS	00NR	0	20WP	G15_092	FROM->TO	G14-057T 345.00 - SUNNYSIDE 345KV CKT 1	717	789	0.47647	113.0703	HOT SPRINGS EHV - MAGNET COVE 500KV CKT 1
FDNS	00NR	0	20WP	G15_092	FROM->TO	G14-057T 345.00 - SUNNYSIDE 345KV CKT 1	717	789	0.47637	113.0696	CLEO CORNER - CLEOPLT4 138.00 138KV CKT 1
FDNS	00NR	0	20WP	G15_092	FROM->TO	G14-057T 345.00 - SUNNYSIDE 345KV CKT 1	717	789	0.47624	113.0607	GEN337041 1-GERALD ANDRUS
FDNS	00NR	0	20WP	G15_092	FROM->TO	G14-057T 345.00 - SUNNYSIDE 345KV CKT 1	717	789	0.47624	113.059	GEN505432 1-SIKESTON
FDNS	00NR	0	16WP	G15_092	FROM->TO	G14-057T 345.00 - SUNNYSIDE 345KV CKT 1	717	789	0.47479	113.0554	GEN562861 1-G15045_2 0.4800
FDNS	00NR	0	20WP	G15_092	FROM->TO	G14-057T 345.00 - SUNNYSIDE 345KV CKT 1	717	789	0.47624	113.0543	GEN303008 1-1BC2 U3
FDNS	00NR	0	20WP	G15_092	FROM->TO	G14-057T 345.00 - SUNNYSIDE 345KV CKT 1	717	789	0.47664	113.0517	CHISHOLM6 230.00 - ELK CITY 230KV 230KV CKT 1

SOLUTION	GROUP	SCENARIO	SEASON	SOURCE	DIRECTION	MONITORED ELEMENT	RATEA (MVA)	RATEB(MVA)	TDF	TC%LOADING (% MVA)	CONTINGENCY
FDNS	00NR	0	20WP	G15_092	FROM->TO	G14-057T 345.00 - SUNNYSIDE 345KV CKT 1	717	789	0.47638	113.0491	NOEL_SW 138.00 - ROSE_VALLEY 138.00 138KV CKT 1
FDNS	00NR	0	20WP	G15_092	FROM->TO	G14-057T 345.00 - SUNNYSIDE 345KV CKT 1	717	789	0.47664	113.0487	ELK CITY 230KV (ELKCTY-6) 230/138/13.8KV TRANSFORMER CKT 1
FDNS	00NR	0	20WP	G15_092	FROM->TO	G14-057T 345.00 - SUNNYSIDE 345KV CKT 1	717	789	0.47664	113.0487	ELK CITY 230KV (ELKCTY-6) 230/138/13.8KV TRANSFORMER CKT 1
FDNS	00NR	0	20WP	G15_092	FROM->TO	G14-057T 345.00 - SUNNYSIDE 345KV CKT 1	717	789	0.47637	113.0487	CLEOPLT4 138.00 - MEN TAP 138KV CKT 1
FDNS	00NR	0	20WP	G15_092	FROM->TO	G14-057T 345.00 - SUNNYSIDE 345KV CKT 1	717	789	0.47625	113.047	ALPINE AECC - BISMARK 115KV CKT 1
FDNS	00NR	0	16WP	G15_092	FROM->TO	G14-057T 345.00 - SUNNYSIDE 345KV CKT 1	717	789	0.47479	113.0454	GEN520811 1-ANADRK4
FDNS	00NR	0	20WP	G15_092	FROM->TO	G14-057T 345.00 - SUNNYSIDE 345KV CKT 1	717	789	0.47635	113.0419	CIMARRON - SARA 138KV CKT 1
FDNS	00NR	0	20WP	G15_092	FROM->TO	G14-057T 345.00 - SUNNYSIDE 345KV CKT 1	717	789	0.47637	113.0367	IMO TAP - MEN TAP 138KV CKT 1
FDNS	00NR	0	20WP	G15_092	FROM->TO	G14-057T 345.00 - SUNNYSIDE 345KV CKT 1	717	789	0.47624	113.0282	GEN300011 1-ST FRANCIS UNIT 2
FDNS	00NR	0	20WP	G15_092	FROM->TO	G14-057T 345.00 - SUNNYSIDE 345KV CKT 1	717	789	0.47624	113.0251	GEN336170 1-GULF OXY U4
FDNS	00NR	0	20WP	G15_092	FROM->TO	G14-057T 345.00 - SUNNYSIDE 345KV CKT 1	717	789	0.47614	113.0227	P12:138:AEPW:N.E.S.-4:CATOOSA4
FDNSLock	00NR	0	16WP	G15_092	FROM->TO	G14-057T 345.00 - SUNNYSIDE 345KV CKT 1	717	789	0.47479	113.0211	GEN532751 1-WOLF CREEK GENERATING STATION UNIT 1
FDNS	00NR	0	20WP	G15_092	FROM->TO	G14-057T 345.00 - SUNNYSIDE 345KV CKT 1	717	789	0.47474	113.0209	SEMINOLE - VANOSTP4 138.00 138KV CKT 1
FDNS	00NR	0	20WP	G15_092	FROM->TO	G14-057T 345.00 - SUNNYSIDE 345KV CKT 1	717	789	0.47655	113.0172	CZECH HALL - XEROX 138KV CKT 1
FDNS	00NR	0	20WP	G15_092	FROM->TO	G14-057T 345.00 - SUNNYSIDE 345KV CKT 1	717	789	0.47705	113.0167	COMANCHE TAP - TOSCO 69KV CKT 1
FDNS	00NR	0	20WP	G15_092	FROM->TO	G14-057T 345.00 - SUNNYSIDE 345KV CKT 1	717	789	0.47624	113.0167	NELSON 230/20.0KV TRANSFORMER CKT 1
FDNS	00NR	0	16WP	G15_092	FROM->TO	G14-057T 345.00 - SUNNYSIDE 345KV CKT 1	717	789	0.47494	113.0164	P12:138:WFEC:MSL15
FDNS	00NR	0	20WP	G15_092	FROM->TO	G14-057T 345.00 - SUNNYSIDE 345KV CKT 1	717	789	0.47655	113.0131	MORGAN - XEROX 138KV CKT 1
FDNS	00NR	0	20WP	G15_092	FROM->TO	G14-057T 345.00 - SUNNYSIDE 345KV CKT 1	717	789	0.47624	113.0062	GEN336801 1-BAXTER WILSON UNIT #1
FDNS	00NR	0	20WP	G15_092	FROM->TO	G14-057T 345.00 - SUNNYSIDE 345KV CKT 1	717	789	0.47625	112.9982	ALPINE AECC - AMITY SS 115KV CKT 1
FDNS	00NR	0	20WP	G15_092	FROM->TO	G14-057T 345.00 - SUNNYSIDE 345KV CKT 1	717	789	0.47366	112.9962	ARBWIND4 138.00 - CARTER 138KV CKT 1
FDNS	00NR	0	16WP	G15_092	FROM->TO	G14-057T 345.00 - SUNNYSIDE 345KV CKT 1	717	789	0.4708	112.9937	SUNNYSIDE - UNIROYAL 138KV CKT 1
FDNS	00NR	0	20WP	G15_092	FROM->TO	G14-057T 345.00 - SUNNYSIDE 345KV CKT 1	717	789	0.47655	112.9905	MORGAN - MUSTANG 138KV CKT 1
FDNS	00NR	0	20WP	G15_092	FROM->TO	G14-057T 345.00 - SUNNYSIDE 345KV CKT 1	717	789	0.47732	112.9897	WEATHERFORD JCT. - WEATHERFORD SOUTHEAST 138KV CKT 1
FDNS	00NR	0	20WP	G15_092	FROM->TO	G14-057T 345.00 - SUNNYSIDE 345KV CKT 1	717	789	0.47732	112.9897	WEATHERFORD JCT. - WEATHERFORD SOUTHEAST 138KV CKT 1
FDNS	00NR	0	20WP	G15_092	FROM->TO	G14-057T 345.00 - SUNNYSIDE 345KV CKT 1	717	789	0.47624	112.9775	8CAJUN2 500/24.0KV TRANSFORMER CKT 1
FDNS	00NR	0	20WP	G15_092	FROM->TO	G14-057T 345.00 - SUNNYSIDE 345KV CKT 1	717	789	0.47624	112.9766	GEN501910 1-ACADIA UNIT ST1
FDNS	00NR	0	16WP	G15_092	FROM->TO	G14-057T 345.00 - SUNNYSIDE 345KV CKT 1	717	789	0.47479	112.9741	GEN562992 1-G15063_3 0.6900
FDNS	00NR	0	20WP	G15_092	FROM->TO	G14-057T 345.00 - SUNNYSIDE 345KV CKT 1	717	789	0.4768	112.9676	ANADARKO - SEQUOYAHJ4 138.00 138KV CKT 1
FDNS	00NR	0	20WP	G15_092	FROM->TO	G14-057T 345.00 - SUNNYSIDE 345KV CKT 1	717	789	0.4768	112.9661	CORN TAP - SEQUOYAHJ4 138.00 138KV CKT 1
FDNS	00NR	0	20WP	G15_092	FROM->TO	G14-057T 345.00 - SUNNYSIDE 345KV CKT 1	717	789	0.47705	112.9645	COMANCHE - COMANCHE TAP 69KV CKT 1
FDNS	00NR	0	20WP	G15_092	FROM->TO	G14-057T 345.00 - SUNNYSIDE 345KV CKT 1	717	789	0.47851	112.9615	BAILEY4 138.00 - WESTMOORE 138KV CKT 1
FDNS	00NR	0	16WP	G15_092	FROM->TO	G14-057T 345.00 - SUNNYSIDE 345KV CKT 1	717	789	0.47479	112.9554	GEN657748 1-YOUNG 2 GENERATOR
FDNS	00NR	0	16WP	G15_092	FROM->TO	G14-057T 345.00 - SUNNYSIDE 345KV CKT 1	717	789	0.4752	112.9501	GRAPEVINE INTERCHANGE - STATELINE INTERCHANGE 230KV CKT 1
FDNS	00NR	0	16WP	G15_092	FROM->TO	G14-057T 345.00 - SUNNYSIDE 345KV CKT 1	717	789	0.4752	112.9501	GRAPEVINE INTERCHANGE - STATELINE INTERCHANGE 230KV CKT 1
FDNS	00NR	0	20WP	G15_092	FROM->TO	G14-057T 345.00 - SUNNYSIDE 345KV CKT 1	717	789	0.47654	112.95	P12:138:OKGE-AEPW:JENSEN4:REDROCKRD4
FDNS	00NR	0	20WP	G15_092	FROM->TO	G14-057T 345.00 - SUNNYSIDE 345KV CKT 1	717	789	0.47676	112.94	WALTERS - WALTERS 69KV CKT 1
FDNS	00NR	0	20WP	G15_092	FROM->TO	G14-057T 345.00 - SUNNYSIDE 345KV CKT 1	717	789	0.47732	112.9379	P12:138:AEPW:REDROCKRD4:WTH_JCT4
FDNS	00NR	0	20WP	G15_092	FROM->TO	G14-057T 345.00 - SUNNYSIDE 345KV CKT 1	717	789	0.47624	112.9375	SABINE 230/24.0KV TRANSFORMER CKT 1
FDNS	00NR	0	20WP	G15_092	FROM->TO	G14-057T 345.00 - SUNNYSIDE 345KV CKT 1	717	789	0.47624	112.9335	GEN300016 1-1G1GPDEL 18.000
FDNS	00NR	0	20WP	G15_092	FROM->TO	G14-057T 345.00 - SUNNYSIDE 345KV CKT 1	717	789	0.47635	112.9306	SARA - STHLAKE4 138.00 138KV CKT 1
FDNS	00NR	0	16WP	G15_092	FROM->TO	G14-057T 345.00 - SUNNYSIDE 345KV CKT 1	717	789	0.47522	112.9294	CANEY CREEK - TEXOMA JCT 138KV CKT 1
FDNS	00NR	0	20WP	G15_092	FROM->TO	G14-057T 345.00 - SUNNYSIDE 345KV CKT 1	717	789	0.47624	112.9286	P12:138:AEPW:R.S.S.-4:S.HUD.-4
FDNS	00NR	0	20WP	G15_092	FROM->TO	G14-057T 345.00 - SUNNYSIDE 345KV CKT 1	717	789	0.47655	112.9232	ETTA (DUKE HOTSPRINGS) - MC NIEL 500KV CKT 1
FDNS	00NR	0	20WP	G15_092	FROM->TO	G14-057T 345.00 - SUNNYSIDE 345KV CKT 1	717	789	0.47624	112.9218	GEN336222 1-LITTLE GYPSY UNIT#2
FDNS	00NR	0	16WP	G15_092	FROM->TO	G14-057T 345.00 - SUNNYSIDE 345KV CKT 1	717	789	0.47491	112.9113	P12:138:AEPW:SHAM4WT:CHILD4WT
FDNS	00NR	0	20WP	G15_092	FROM->TO	G14-057T 345.00 - SUNNYSIDE 345KV CKT 1	717	789	0.47691	112.9105	LAWTON RELIFT TAP - OMPA-WALTERS 69KV CKT 1
FDNS	00NR	0	20WP	G15_092	FROM->TO	G14-057T 345.00 - SUNNYSIDE 345KV CKT 1	717	789	0.47635	112.9005	MCCLAIN - STHLAKE4 138.00 138KV CKT 1
FDNS	00NR	0	20WP	G15_092	FROM->TO	G14-057T 345.00 - SUNNYSIDE 345KV CKT 1	717	789	0.47624	112.897	P12:69:AEPW:NROGERS2:ECNTRTN2
FDNS	00NR	0	20WP	G15_092	FROM->TO	G14-057T 345.00 - SUNNYSIDE 345KV CKT 1	717	789	0.47663	112.8964	G13-010T 345.00 - POST ROCK 345KV CKT 1
FDNS	00NR	0	16WP	G15_092	FROM->TO	G14-057T 345.00 - SUNNYSIDE 345KV CKT 1	717	789	0.47479	112.8952	GEN562704 1-G15_020_3 0.3550
FDNS	00NR	0	20WP	G15_092	FROM->TO	G14-057T 345.00 - SUNNYSIDE 345KV CKT 1	717	789	0.47802	112.8932	LASALLE - LATTA JCT 138KV CKT 1
FDNS	00NR	0	20WP	G15_092	FROM->TO	G14-057T 345.00 - SUNNYSIDE 345KV CKT 1	717	789	0.47676	112.8928	NORGE ROAD - SOUTHWESTERN STATION 138KV CKT 1
FDNS	00NR	0	20WP	G15_092	FROM->TO	G14-057T 345.00 - SUNNYSIDE 345KV CKT 1	717	789	0.47676	112.8928	NORGE ROAD - SOUTHWESTERN STATION 138KV CKT 1
FDNS	00NR	0	16WP	G15_092	FROM->TO	G14-057T 345.00 - SUNNYSIDE 345KV CKT 1	717	789	0.47479	112.8914	GEN562952 1-G15057_3 0.6500
FDNS	00NR	0	20WP	G15_092	FROM->TO	G14-057T 345.00 - SUNNYSIDE 345KV CKT 1	717	789	0.47624	112.8872	GEN336152 1-WATERFORD UNIT#2
FDNS	00NR	0	20WP	G15_092	FROM->TO	G14-057T 345.00 - SUNNYSIDE 345KV CKT 1	717	789	0.47624	112.8868	P12:138:AEPW:BA_71ST4:T.S.E.-4
FDNS	00NR	0	20WP	G15_092	FROM->TO	G14-057T 345.00 - SUNNYSIDE 345KV CKT 1	717	789	0.47624	112.8864	GEN336151 1-WATERFORD UNIT#1
FDNS	00NR	0	20WP	G15_092	FROM->TO	G14-057T 345.00 - SUNNYSIDE 345KV CKT 1	717	789	0.47624	112.882	P12:138:AEPW:YARCH-S4:T.S.E.-4
FDNS	00NR	0	20WP	G15_092	FROM->TO	G14-057T 345.00 - SUNNYSIDE 345KV CKT 1	717	789	0.47661	112.8781	EMPORIA ENERGY CENTER - G14_001T 345.00 345KV CKT 1
FDNS	00NR	0	20WP	G15_092	FROM->TO	G14-057T 345.00 - SUNNYSIDE 345KV CKT 1	717	789	0.47641	112.8777	HOYT - STRANGER CREEK 345KV CKT 1
FDNS	00NR	0	20WP	G15_092	FROM->TO	G14-057T 345.00 - SUNNYSIDE 345KV CKT 1	717	789	0.47655	112.8772	P12:138:AEPW-OGE:SHIDLER4:OSAGE 4
FDNS	00NR	0	20WP	G15_092	FROM->TO	G14-057T 345.00 - SUNNYSIDE 345KV CKT 1	717	789	0.47624	112.875	GEN300017 1-1G2GPDEL 18.000
FDNS	00NR	0	20WP	G15_092	FROM->TO	G14-057T 345.00 - SUNNYSIDE 345KV CKT 1	717	789	0.47624	112.8749	FRONTIER 345/18.0KV TRANSFORMER CKT 1
FDNS	00NR	0	20WP	G15_092	FROM->TO	G14-057T 345.00 - SUNNYSIDE 345KV CKT 1	717	789	0.47624	112.8727	FRONTIER 345/18.0KV TRANSFORMER CKT 1
FDNS	00NR	0	20WP	G15_092	FROM->TO	G14-057T 345.00 - SUNNYSIDE 345KV CKT 1	717	789	0.47635	112.8685	P12:138:OKGE:3TERM2
FDNS	00NR	0	20WP	G15_092	FROM->TO	G14-057T 345.00 - SUNNYSIDE 345KV CKT 1	717	789	0.47646	112.8667	CLINTON JUNCTION - ELK CITY 138KV CKT 1
FDNS	00NR	0	20WP	G15_092	FROM->TO	G14-057T 345.00 - SUNNYSIDE 345KV CKT 1	717	789	0.47646	112.8667	CLINTON JUNCTION - ELK CITY 138KV CKT 1
FDNS	00NR	0	20WP	G15_092	FROM->TO	G14-057T 345.00 - SUNNYSIDE 345KV CKT 1	717	789	0.47612	112.8667	HOPE - MCNAB REC 115KV CKT 1
FDNS	00NR	0	20WP	G15_092	FROM->TO	G14-057T 345.00 - SUNNYSIDE 345KV CKT 1	717	789	0.47634	112.8653	MORISNT4 138.00 - STILLWATER 138KV CKT 1
FDNS	00NR	0	20WP	G15_092	FROM->TO	G14-057T 345.00 - SUNNYSIDE 345KV CKT 1	717	789	0.47612	112.856	P12:115:AEPW:TURK3:HOPE3
FDNS	00NR	0	20WP	G15_092	FROM->TO	G14-057T 345.00 - SUNNYSIDE 345KV CKT 1	717	789	0.47663	112.8552	BENTON - WICHITA 345KV CKT 1
FDNS	00NR	0	20WP	G15_092	FROM->TO	G14-057T 345.00 - SUNNYSIDE 345KV CKT 1	717	789	0.4764	112.853	G15074_T 345.00 - JEFFREY ENERGY CENTER 345KV CKT 1
FDNS	00NR	0	16WP	G15_092	FROM->TO	G14-057T 345.00 - SUNNYSIDE 345KV CKT 1	717	789	0.47479	112.8518	GEN563173 1-G15082_3 0.6900
FDNS	00NR	0	20WP	G15_092	FROM->TO	G14-057T 345.00 - SUNNYSIDE 345KV CKT 1	717	789	0.47663	112.8505	G13-010T 345.00 - SPEARVILLE 345KV CKT 1
FDNS	00NR	0	20WP	G15_092	FROM->TO	G14-057T 345.00 - SUNNYSIDE 345KV CKT 1	717	789	0.47638	112.8485	COUCH SES - MC NIEL 115KV CKT 1
FDNS	00NR	0	20WP	G15_092	FROM->TO	G14-057T 345.00 - SUNNYSIDE 345KV CKT 1	717	789	0.47687	112.8447	WEATHERFORD TAP - WEATHERFORD WIND FARM 138KV CKT 1
FDNS	00NR	0	20WP	G15_092	FROM->TO	G14-057T 345.00 - SUNNYSIDE 345KV CKT 1	717	789	0.47654	112.8444	BLACKBERRY - NEOSHO 345KV CKT 1
FDNS	00NR	0	20WP	G15_092	FROM->TO	G14-057T 345.00 - SUNNYSIDE 345KV CKT 1	717	789	0.47624	112.8441	LEWIS CREEK SWITCHYARD 138/22.0KV TRANSFORMER CKT 1

SOLUTION	GROUP	SCENARIO	SEASON	SOURCE	DIRECTION	MONITORED ELEMENT	RATEA (MVA)	RATEB(MVA)	TDF	TC%LOADING (% MVA)	CONTINGENCY
FDNS	00NR	0	20WP	G15_092	FROM->TO	G14-057T 345.00 - SUNNYSIDE 345KV CKT 1	717	789	0.47732	112.8435	HINTON - WEATHERFORD JCT. 138KV CKT 1
FDNS	00NR	0	20WP	G15_092	FROM->TO	G14-057T 345.00 - SUNNYSIDE 345KV CKT 1	717	789	0.47624	112.8396	LEWIS CREEK SWITCHYARD 138/22.0KV TRANSFORMER CKT 1
FDNS	00NR	0	16WP	G15_092	FROM->TO	G14-057T 345.00 - SUNNYSIDE 345KV CKT 1	717	789	0.47521	112.8375	GRAPEVINE INTERCHANGE - NICHOLS STATION 230KV CKT 1
FDNS	00NR	0	16WP	G15_092	FROM->TO	G14-057T 345.00 - SUNNYSIDE 345KV CKT 1	717	789	0.47521	112.8375	GRAPEVINE INTERCHANGE - NICHOLS STATION 230KV CKT 1
FDNS	00NR	0	20WP	G15_092	FROM->TO	G14-057T 345.00 - SUNNYSIDE 345KV CKT 1	717	789	0.47691	112.8369	OMPA-WALTERS - WALTERS 69KV CKT 1
FDNS	00NR	0	20WP	G15_092	FROM->TO	G14-057T 345.00 - SUNNYSIDE 345KV CKT 1	717	789	0.47691	112.8369	OMPA-WALTERS - WALTERS 69KV CKT 1
FDNS	00NR	0	20WP	G15_092	FROM->TO	G14-057T 345.00 - SUNNYSIDE 345KV CKT 1	717	789	0.47634	112.8359	CYPRESS - HARTBURG 500KV CKT 1
FDNS	00NR	0	20WP	G15_092	FROM->TO	G14-057T 345.00 - SUNNYSIDE 345KV CKT 1	717	789	0.47673	112.8325	SOUTHWESTERN STATION - VERDEN 138KV CKT 1
FDNS	00NR	0	20WP	G15_092	FROM->TO	G14-057T 345.00 - SUNNYSIDE 345KV CKT 1	717	789	0.47624	112.8315	GEN334432 1-SABINE UNIT 2
FDNS	00NR	0	20WP	G15_092	FROM->TO	G14-057T 345.00 - SUNNYSIDE 345KV CKT 1	717	789	0.47624	112.831	GEN334431 1-SABINE UNIT 1
FDNS	00NR	0	20WP	G15_092	FROM->TO	G14-057T 345.00 - SUNNYSIDE 345KV CKT 1	717	789	0.47612	112.8308	TURK (TURK 1) 138/115/13.2KV TRANSFORMER CKT 1
FDNS	00NR	0	20WP	G15_092	FROM->TO	G14-057T 345.00 - SUNNYSIDE 345KV CKT 1	717	789	0.47612	112.8308	TURK (TURK 1) 138/115/13.2KV TRANSFORMER CKT 1
FDNS	00NR	0	20WP	G15_092	FROM->TO	G14-057T 345.00 - SUNNYSIDE 345KV CKT 1	717	789	0.47612	112.8307	MCNAB REC - Turk 115 115KV CKT 1
FDNS	00NR	0	20WP	G15_092	FROM->TO	G14-057T 345.00 - SUNNYSIDE 345KV CKT 1	717	789	0.47636	112.8301	7JASPER 345.00 - BLACKBERRY 345KV CKT 1
FDNS	00NR	0	20WP	G15_092	FROM->TO	G14-057T 345.00 - SUNNYSIDE 345KV CKT 1	717	789	0.47624	112.8268	GEN501823 1-TECHE UNIT 3
FDNS	00NR	0	20WP	G15_092	FROM->TO	G14-057T 345.00 - SUNNYSIDE 345KV CKT 1	717	789	0.47624	112.8248	GEN501970 1-EVANGELINE UNIT 7
FDNS	00NR	0	20WP	G15_092	FROM->TO	G14-057T 345.00 - SUNNYSIDE 345KV CKT 1	717	789	0.47624	112.8197	GEN505616 1-BROKEN BOW
FDNS	00NR	0	20WP	G15_092	FROM->TO	G14-057T 345.00 - SUNNYSIDE 345KV CKT 1	717	789	0.47676	112.8185	P12:69:WFEC-AEPW:COMANCH2:WALTRS-2
FDNS	00NR	0	20WP	G15_092	FROM->TO	G14-057T 345.00 - SUNNYSIDE 345KV CKT 1	717	789	0.47451	112.8114	CANADIAN - NOBLE 138KV CKT 1
FDNS	00NR	0	20WP	G15_092	FROM->TO	G14-057T 345.00 - SUNNYSIDE 345KV CKT 1	717	789	0.47673	112.8107	NORTH 29TH CHICKASHA - VERDEN 138KV CKT 1
FDNS	00NR	0	20WP	G15_092	FROM->TO	G14-057T 345.00 - SUNNYSIDE 345KV CKT 1	717	789	0.47624	112.8098	P12:161:AEPW:CHAMSPR5:FARMING5
FDNS	00NR	0	16WP	G15_092	FROM->TO	G14-057T 345.00 - SUNNYSIDE 345KV CKT 1	717	789	0.47479	112.8084	GEN562710 1-G15_022_3 0.5500
FDNS	00NR	0	20WP	G15_092	FROM->TO	G14-057T 345.00 - SUNNYSIDE 345KV CKT 1	717	789	0.47635	112.8043	7LUTESVIL 345.00 - 7ST FRANC 345.00 345KV CKT 1
FDNS	00NR	0	20WP	G15_092	FROM->TO	G14-057T 345.00 - SUNNYSIDE 345KV CKT 1	717	789	0.47624	112.8033	GEN334392 1-EXXON MOBIL IPP 1
FDNS	00NR	0	20WP	G15_092	FROM->TO	G14-057T 345.00 - SUNNYSIDE 345KV CKT 1	717	789	0.47661	112.8	G14_001T 345.00 - WICHITA 345KV CKT 1
FDNS	00NR	0	20WP	G15_092	FROM->TO	G14-057T 345.00 - SUNNYSIDE 345KV CKT 1	717	789	0.47624	112.7969	GEN334393 1-EXXON MOBIL IPP 2
FDNS	00NR	0	20WP	G15_092	FROM->TO	G14-057T 345.00 - SUNNYSIDE 345KV CKT 1	717	789	0.47624	112.7969	GEN334394 1-EXXON MOBIL IPP 3
FDNS	00NR	0	20WP	G15_092	FROM->TO	G14-057T 345.00 - SUNNYSIDE 345KV CKT 1	717	789	0.47851	112.7939	FRANKLIN SW - WESTMOORE 138KV CKT 1
FDNS	00NR	0	20WP	G15_092	FROM->TO	G14-057T 345.00 - SUNNYSIDE 345KV CKT 1	717	789	0.47646	112.7921	LAKEOVER - MCADAMS 500KV CKT 1
FDNS	00NR	0	16WP	G15_092	FROM->TO	G14-057T 345.00 - SUNNYSIDE 345KV CKT 1	717	789	0.47479	112.7898	GEN620315 1-BIG STONE GEN
FDNS	00NR	0	20WP	G15_092	FROM->TO	G14-057T 345.00 - SUNNYSIDE 345KV CKT 1	717	789	0.47459	112.7872	P12:138:OKGE:3TERM27
FDNS	00NR	0	20WP	G15_092	FROM->TO	G14-057T 345.00 - SUNNYSIDE 345KV CKT 1	717	789	0.47642	112.7859	EMPORIA ENERGY CENTER - SWISSVALE 345KV CKT 1
FDNS	00NR	0	20WP	G15_092	FROM->TO	G14-057T 345.00 - SUNNYSIDE 345KV CKT 1	717	789	0.47624	112.7835	ST FRANCIS - ST FRANCIS 1 161KV CKT Z1
FDNS	00NR	0	20WP	G15_092	FROM->TO	G14-057T 345.00 - SUNNYSIDE 345KV CKT 1	717	789	0.47661	112.7809	MCADAMS - WOLF CREEK 500KV CKT 1
FDNS	00NR	0	20WP	G15_092	FROM->TO	G14-057T 345.00 - SUNNYSIDE 345KV CKT 1	717	789	0.47624	112.779	SABINE 230/22.0KV TRANSFORMER CKT 1
FDNS	00NR	0	20WP	G15_092	FROM->TO	G14-057T 345.00 - SUNNYSIDE 345KV CKT 1	717	789	0.47631	112.7787	FLETCHER - MARLOW JCT 69KV CKT 1
FDNS	00NR	0	20WP	G15_092	FROM->TO	G14-057T 345.00 - SUNNYSIDE 345KV CKT 1	717	789	0.47644	112.7734	SWISSVALE - WEST GARDNER 345KV CKT 1
FDNS	00NR	0	20WP	G15_092	FROM->TO	G14-057T 345.00 - SUNNYSIDE 345KV CKT 1	717	789	0.47732	112.7689	HINTON - REDROCKRD4 138.00 138KV CKT 1
FDNS	00NR	0	16WP	G15_092	FROM->TO	G14-057T 345.00 - SUNNYSIDE 345KV CKT 1	717	789	0.47479	112.7677	GEN511851 1-COMANCHE #1
FDNS	00NR	0	20WP	G15_092	FROM->TO	G14-057T 345.00 - SUNNYSIDE 345KV CKT 1	717	789	0.47624	112.7667	GEN501972 1-EVANGELINE UNIT 7-2
FDNS	00NR	0	20WP	G15_092	FROM->TO	G14-057T 345.00 - SUNNYSIDE 345KV CKT 1	717	789	0.47624	112.7666	GEN501971 1-EVANGELINE UNIT 7-1
FDNS	00NR	0	20WP	G15_092	FROM->TO	G14-057T 345.00 - SUNNYSIDE 345KV CKT 1	717	789	0.47625	112.7601	P12:138:AEPW:R.S.S-4:T.P.S.-4
FDNS	00NR	0	20WP	G15_092	FROM->TO	G14-057T 345.00 - SUNNYSIDE 345KV CKT 1	717	789	0.47676	112.7558	CORNVILLE - NORGE ROAD 138KV CKT 1
FDNS	00NR	0	20WP	G15_092	FROM->TO	G14-057T 345.00 - SUNNYSIDE 345KV CKT 1	717	789	0.47676	112.7558	CORNVILLE - NORGE ROAD 138KV CKT 1
FDNS	00NR	0	20WP	G15_092	FROM->TO	G14-057T 345.00 - SUNNYSIDE 345KV CKT 1	717	789	0.47629	112.7544	P12:138:OKGE:3TERM12
FDNS	00NR	0	20WP	G15_092	FROM->TO	G14-057T 345.00 - SUNNYSIDE 345KV CKT 1	717	789	0.47675	112.7529	ENOWILT - LONE OAK 138KV CKT 1
FDNS	00NR	0	20WP	G15_092	FROM->TO	G14-057T 345.00 - SUNNYSIDE 345KV CKT 1	717	789	0.47687	112.7506	WEATHERFORD SOUTHEAST - WEATHERFORD TAP 138KV CKT 1
FDNS	00NR	0	20WP	G15_092	FROM->TO	G14-057T 345.00 - SUNNYSIDE 345KV CKT 1	717	789	0.47675	112.7442	ENOWILT - SARDIS 138KV CKT 1
FDNS	00NR	0	20WP	G15_092	FROM->TO	G14-057T 345.00 - SUNNYSIDE 345KV CKT 1	717	789	0.47624	112.7431	GEN501912 1-ACADIA UNIT CT1B
FDNS	00NR	0	20WP	G15_092	FROM->TO	G14-057T 345.00 - SUNNYSIDE 345KV CKT 1	717	789	0.47661	112.743	FRANKLIN - FRANKLIN SW 138KV CKT 1
FDNS	00NR	0	20WP	G15_092	FROM->TO	G14-057T 345.00 - SUNNYSIDE 345KV CKT 1	717	789	0.4763	112.7424	P12:138:WFEC-AEPW:ELKCTY-4:ERICK4
FDNS	00NR	0	20WP	G15_092	FROM->TO	G14-057T 345.00 - SUNNYSIDE 345KV CKT 1	717	789	0.47624	112.7423	GEN501911 1-ACADIA UNIT CT1A
FDNS	00NR	0	20WP	G15_092	FROM->TO	G14-057T 345.00 - SUNNYSIDE 345KV CKT 1	717	789	0.47802	112.7421	LASALLE - STONEWAL LH138.00 138KV CKT 1
FDNS	00NR	0	20WP	G15_092	FROM->TO	G14-057T 345.00 - SUNNYSIDE 345KV CKT 1	717	789	0.47625	112.7364	AMITY SS - MURFREESBORO EAST (AECC) 115KV CKT 1
FDNS	00NR	0	20WP	G15_092	FROM->TO	G14-057T 345.00 - SUNNYSIDE 345KV CKT 1	717	789	0.47624	112.7343	P12:138:AEPW:R.S.S.-4:R:96YALE-4
FDNS	00NR	0	16WP	G15_092	FROM->TO	G14-057T 345.00 - SUNNYSIDE 345KV CKT 1	717	789	0.47479	112.7303	GEN600004 2-PRAIRIE ISLAND G2
FDNS	00NR	0	16WP	G15_092	FROM->TO	G14-057T 345.00 - SUNNYSIDE 345KV CKT 1	717	789	0.47479	112.7275	GEN600003 1-PRAIRIE ISLAND G1
FDNS	00NR	0	20WP	G15_092	FROM->TO	G14-057T 345.00 - SUNNYSIDE 345KV CKT 1	717	789	0.47673	112.7268	CORNVILLE - NORTH 29TH CHICKASHA 138KV CKT 1
FDNS	00NR	0	20WP	G15_092	FROM->TO	G14-057T 345.00 - SUNNYSIDE 345KV CKT 1	717	789	0.47802	112.724	STONEWAL LH138.00 - TUPELO TAP 138KV CKT 1
FDNS	00NR	0	20WP	G15_092	FROM->TO	G14-057T 345.00 - SUNNYSIDE 345KV CKT 1	717	789	0.47451	112.7182	NOBLE - PURCELL4 138.00 138KV CKT 1
FDNSLock	00NR	0	16WP	G15_092	FROM->TO	G14-057T 345.00 - SUNNYSIDE 345KV CKT 1	717	789	0.47479	112.715	GEN600006 1-AS KING
FDNS	00NR	0	20WP	G15_092	FROM->TO	G14-057T 345.00 - SUNNYSIDE 345KV CKT 1	717	789	0.47819	112.7058	CIMARRON - NORTHWEST 345KV CKT 1
FDNS	00NR	0	20WP	G15_092	FROM->TO	G14-057T 345.00 - SUNNYSIDE 345KV CKT 1	717	789	0.47687	112.7001	CLINTON JUNCTION - CLINTON NATURAL GAS TAP 138KV CKT 1
FDNS	00NR	0	20WP	G15_092	FROM->TO	G14-057T 345.00 - SUNNYSIDE 345KV CKT 1	717	789	0.47654	112.6983	Canadian Pump Station - REDROCKRD4 138.00 138KV CKT 1
FDNS	00NR	0	20WP	G15_092	FROM->TO	G14-057T 345.00 - SUNNYSIDE 345KV CKT 1	717	789	0.47737	112.6767	CRINER - PAYNE 138.00 138KV CKT 1
FDNS	00NR	0	16WP	G15_092	FROM->TO	G14-057T 345.00 - SUNNYSIDE 345KV CKT 1	717	789	0.47493	112.6686	P12:138:WFEC:MSL09
FDNS	00NR	0	16WP	G15_092	FROM->TO	G14-057T 345.00 - SUNNYSIDE 345KV CKT 1	717	789	0.47699	112.6633	P12:138:AEPW-OGE:CORNVIL4:CIMARON4
FDNS	00NR	0	20WP	G15_092	FROM->TO	G14-057T 345.00 - SUNNYSIDE 345KV CKT 1	717	789	0.47676	112.6419	COMANCHE - WALTERS 69KV CKT 1
FDNSLock	00NR	0	16WP	G15_092	FROM->TO	G14-057T 345.00 - SUNNYSIDE 345KV CKT 1	717	789	0.47479	112.6382	GEN636641 1-LOUISA UNIT 1
FDNS	00NR	0	16WP	G15_092	FROM->TO	G14-057T 345.00 - SUNNYSIDE 345KV CKT 1	717	789	0.47479	112.6	GEN615002 2-COAL CREEK
FDNS	00NR	0	16WP	G15_092	FROM->TO	G14-057T 345.00 - SUNNYSIDE 345KV CKT 1	717	789	0.47479	112.5883	GEN600005 1-MONTICELLO
FDNS	00NR	0	16WP	G15_092	FROM->TO	G14-057T 345.00 - SUNNYSIDE 345KV CKT 1	717	789	0.47635	112.5634	CHISHOLM7 345.00 (CHISHOLM) 345/230/13.2KV TRANSFORMER CKT 1
FDNS	00NR	0	16WP	G15_092	FROM->TO	G14-057T 345.00 - SUNNYSIDE 345KV CKT 1	717	789	0.47479	112.5594	GEN562754 1-G15031_5 0.6900
FDNS	00NR	0	16WP	G15_092	FROM->TO	G14-057T 345.00 - SUNNYSIDE 345KV CKT 1	717	789	0.47479	112.5259	GEN635213 3-NEAL UNIT 3
FDNS	00NR	0	16WP	G15_092	FROM->TO	G14-057T 345.00 - SUNNYSIDE 345KV CKT 1	717	789	0.47479	112.5005	GEN562756 1-G15031_7 0.6900
FDNS	00NR	0	16WP	G15_092	FROM->TO	G14-057T 345.00 - SUNNYSIDE 345KV CKT 1	717	789	0.47479	112.5	GEN629074 1-ARNOLD LOWSIDE OF GSU XFMR
FDNS	00NR	0	16WP	G15_092	FROM->TO	G14-057T 345.00 - SUNNYSIDE 345KV CKT 1	717	789	0.47479	112.4623	GEN562023 1-G11_020_3 0.6900
FDNS	00NR	0	16WP	G15_092	FROM->TO	G14-057T 345.00 - SUNNYSIDE 345KV CKT 1	717	789	0.47479	112.4623	GEN562026 1-G11_019_3 0.6900
FDNS	00NR	0	16WP	G15_092	FROM->TO	G14-057T 345.00 - SUNNYSIDE 345KV CKT 1	717	789	0.47479	112.4584	GEN562556 1-G14_046_3 0.3420

SOLUTION	GROUP	SCENARIO	SEASON	SOURCE	DIRECTION	MONITORED ELEMENT	RATEA (MVA)	RATEB(MVA)	TDF	TC%LOADING (% MVA)	CONTINGENCY
FDNS	00NR	0	16WP	G15_092	FROM->TO	G14-057T 345.00 - SUNNYSIDE 345KV CKT 1	717	789	0.47635	112.4526	CHISHOLM7 345.00 - GRACEMONT 345KV CKT 1
FDNS	00NR	0	16WP	G15_092	FROM->TO	G14-057T 345.00 - SUNNYSIDE 345KV CKT 1	717	789	0.47479	112.451	BIG STONE 230/24.0KV TRANSFORMER CKT 1
FDNS	00NR	0	16WP	G15_092	FROM->TO	G14-057T 345.00 - SUNNYSIDE 345KV CKT 1	717	789	0.47479	112.3702	GEN563142 1-G15079_3 0.5500
FDNS	00NR	0	16WP	G15_092	FROM->TO	G14-057T 345.00 - SUNNYSIDE 345KV CKT 1	717	789	0.47479	112.3702	GEN563151 1-G15080_2 0.5500
FDNS	00NR	0	16WP	G15_092	FROM->TO	G14-057T 345.00 - SUNNYSIDE 345KV CKT 1	717	789	0.47479	112.3332	GEN523971 1-HARRINGTON GEN #1 24 KV
FDNS	00NR	0	16WP	G15_092	FROM->TO	G14-057T 345.00 - SUNNYSIDE 345KV CKT 1	717	789	0.47479	112.3331	GEN523973 1-HARRINGTON GEN #3 24 KV
FDNS	00NR	0	16WP	G15_092	FROM->TO	G14-057T 345.00 - SUNNYSIDE 345KV CKT 1	717	789	0.47479	112.333	GEN523972 1-HARRINGTON GEN #2 24 KV
FDNS	00NR	0	16WP	G15_092	FROM->TO	G14-057T 345.00 - SUNNYSIDE 345KV CKT 1	717	789	0.47078	112.293	NORTHWEST TEXARKANA - VALLIANT 345KV CKT 1
FDNS	00NR	0	16WP	G15_092	FROM->TO	G14-057T 345.00 - SUNNYSIDE 345KV CKT 1	717	789	0.47078	112.293	NORTHWEST TEXARKANA - VALLIANT 345KV CKT 1
FDNS	00NR	0	16WP	G15_092	FROM->TO	G14-057T 345.00 - SUNNYSIDE 345KV CKT 1	717	789	0.4755	112.2788	P12:230:AEPW-SPS:SWEETWT6:WHEELER 6
FDNS	00NR	0	16WP	G15_092	FROM->TO	G14-057T 345.00 - SUNNYSIDE 345KV CKT 1	717	789	0.4755	112.2782	STLN-DEMARC6 - SWEETWATER 230KV CKT 1
FDNS	00NR	0	16WP	G15_092	FROM->TO	G14-057T 345.00 - SUNNYSIDE 345KV CKT 1	717	789	0.4755	112.2771	STATELINE INTERCHANGE - STLN-DEMARC6 230KV CKT 1
FDNSLock	00NR	0	16WP	G15_092	FROM->TO	G14-057T 345.00 - SUNNYSIDE 345KV CKT 1	717	789	0.47479	112.2748	GEN600000 1-SHERBURNECNTY G1
FDNS	00NR	0	16WP	G15_092	FROM->TO	G14-057T 345.00 - SUNNYSIDE 345KV CKT 1	717	789	0.47479	112.2359	GEN511848 1-SOUTHWESTERN STATION #3
FDNS	00NR	0	20WP	G15_092	FROM->TO	G14-057T 345.00 - SUNNYSIDE 345KV CKT 1	717	789	0.47624	112.2265	803-OKLAUNION
FDNS	00NR	0	16WP	G15_092	FROM->TO	G14-057T 345.00 - SUNNYSIDE 345KV CKT 1	717	789	0.47479	112.2003	GEN600001 2-SHERBURNE CNTY G2
FDNS	00NR	0	16WP	G15_092	FROM->TO	G14-057T 345.00 - SUNNYSIDE 345KV CKT 1	717	789	0.47479	112.163	GEN563042 1-G15068_3 0.6900
FDNS	00NR	0	16WP	G15_092	FROM->TO	G14-057T 345.00 - SUNNYSIDE 345KV CKT 1	717	789	0.47479	112.1422	GEN527901 1-HOBBS PLANT #1 (CT)
FDNS	00NR	0	16WP	G15_092	FROM->TO	G14-057T 345.00 - SUNNYSIDE 345KV CKT 1	717	789	0.47479	112.1422	GEN527902 1-HOBBS PLANT #2 (CT)
FDNSLock	00NR	0	16WP	G15_092	FROM->TO	G14-057T 345.00 - SUNNYSIDE 345KV CKT 1	717	789	0.47479	112.0855	GEN629075 1-OTTUMWA GENERATOR FOR OTTUMWA UNIT NO 1
FDNS	00NR	0	20WP	G15_092	FROM->TO	G14-057T 345.00 - SUNNYSIDE 345KV CKT 1	717	789	0.47111	111.9515	P12:138:OKGE:3TERM39
FDNSLock	00NR	0	16WP	G15_092	FROM->TO	G14-057T 345.00 - SUNNYSIDE 345KV CKT 1	717	789	0.47479	111.9266	GEN635214 4-NEAL UNIT 4
FDNS	00NR	0	16WP	G15_092	FROM->TO	G14-057T 345.00 - SUNNYSIDE 345KV CKT 1	717	789	0.47479	111.9233	SHERBURNE CO 345/24.0KV TRANSFORMER CKT 1
FDNS	00NR	0	20WP	G15_092	FROM->TO	G14-057T 345.00 - SUNNYSIDE 345KV CKT 1	717	789	0.47633	111.9074	RANCHRD7 345.00 - SOONER 345KV CKT 1
FDNS	00NR	0	20WP	G15_092	FROM->TO	G14-057T 345.00 - SUNNYSIDE 345KV CKT 1	717	789	0.47645	111.8943	CHILDRESS - LAKE PAULINE 138KV CKT 1
FDNS	00NR	0	20WP	G15_092	FROM->TO	G14-057T 345.00 - SUNNYSIDE 345KV CKT 1	717	789	0.47645	111.8943	CHILDRESS - LAKE PAULINE 138KV CKT 1
FDNS	00NR	0	20WP	G15_092	FROM->TO	G14-057T 345.00 - SUNNYSIDE 345KV CKT 1	717	789	0.47636	111.8901	CHILDRESS - HOLLIS TAP 138KV CKT 1
FDNS	00NR	0	20WP	G15_092	FROM->TO	G14-057T 345.00 - SUNNYSIDE 345KV CKT 1	717	789	0.47624	111.8664	GEN562084 1-G11_050_3 0.6900
FDNS	00NR	0	16WP	G15_092	FROM->TO	G14-057T 345.00 - SUNNYSIDE 345KV CKT 1	717	789	0.47479	111.861	GEN563043 1-G15068_4 0.6900
FDNS	00NR	0	16WP	G15_092	FROM->TO	G14-057T 345.00 - SUNNYSIDE 345KV CKT 1	717	789	0.47479	111.8591	GEN563273 2-G15093_4 0.6900
FDNS	00NR	0	20WP	G15_092	FROM->TO	G14-057T 345.00 - SUNNYSIDE 345KV CKT 1	717	789	0.47144	111.847	MAYSVILLE - PAOLI 138KV CKT 1
FDNS	00NR	0	20WP	G15_092	FROM->TO	G14-057T 345.00 - SUNNYSIDE 345KV CKT 1	717	789	0.47624	111.8386	GEN560187 1-WTH WIND 0.5750
FDNS	00NR	0	16WP	G15_092	FROM->TO	G14-057T 345.00 - SUNNYSIDE 345KV CKT 1	717	789	0.47479	111.8362	GEN526333 1-JONES GEN #3 21 KV
FDNS	00NR	0	16WP	G15_092	FROM->TO	G14-057T 345.00 - SUNNYSIDE 345KV CKT 1	717	789	0.47479	111.8361	GEN526334 1-JONES_4 116.500
FDNS	00NR	0	20WP	G15_092	FROM->TO	G14-057T 345.00 - SUNNYSIDE 345KV CKT 1	717	789	0.47679	111.8224	CIMARRON - MATHWSN7 345.00 345KV CKT 1
FDNS	00NR	0	20WP	G15_092	FROM->TO	G14-057T 345.00 - SUNNYSIDE 345KV CKT 1	717	789	0.47679	111.8224	CIMARRON - MATHWSN7 345.00 345KV CKT 2
FDNS	00NR	0	20WP	G15_092	FROM->TO	G14-057T 345.00 - SUNNYSIDE 345KV CKT 1	717	789	0.47624	111.8182	GEN560112 1-G08_037_3 0.6900
FDNS	00NR	0	16WP	G15_092	FROM->TO	G14-057T 345.00 - SUNNYSIDE 345KV CKT 1	717	789	0.47479	111.8	GEN344225 1-1CAL G1 25.000
FDNS	00NR	0	16WP	G15_092	FROM->TO	G14-057T 345.00 - SUNNYSIDE 345KV CKT 1	717	789	0.47641	111.7926	P12:230:AEPW:ELKCITY6:SWEETWT6
FDNS	00NR	0	16WP	G15_092	FROM->TO	G14-057T 345.00 - SUNNYSIDE 345KV CKT 1	717	789	0.47479	111.7857	GEN525844 1-ELK_1 118.000
FDNS	00NR	0	20WP	G15_092	FROM->TO	G14-057T 345.00 - SUNNYSIDE 345KV CKT 1	717	789	0.47624	111.7821	GEN521103 1-BLUE CANYON WIND FARM
FDNS	00NR	0	20WP	G15_092	FROM->TO	G14-057T 345.00 - SUNNYSIDE 345KV CKT 1	717	789	0.47624	111.7799	GEN520812 1-ANADRK5
FDNS	00NR	0	20WP	G15_092	FROM->TO	G14-057T 345.00 - SUNNYSIDE 345KV CKT 1	717	789	0.47624	111.7798	GEN520813 1-ANADRK6
FDNS	00NR	0	20WP	G15_092	FROM->TO	G14-057T 345.00 - SUNNYSIDE 345KV CKT 1	717	789	0.47659	111.7795	DRAPER LAKE - MIDWEST TAP 138KV CKT 1
FDNS	00NR	0	16WP	G15_092	FROM->TO	G14-057T 345.00 - SUNNYSIDE 345KV CKT 1	717	789	0.47479	111.779	GEN525845 1-ELK_2 1 138.00
FDNS	00NR	0	20WP	G15_092	FROM->TO	G14-057T 345.00 - SUNNYSIDE 345KV CKT 1	717	789	0.47624	111.7781	GEN563052 1-G15069_3 0.6900
FDNS	00NR	0	16WP	G15_092	FROM->TO	G14-057T 345.00 - SUNNYSIDE 345KV CKT 1	717	789	0.47479	111.7743	GEN600002 3-SHERBURNE CNTY G3
FDNS	00NR	0	20WP	G15_092	FROM->TO	G14-057T 345.00 - SUNNYSIDE 345KV CKT 1	717	789	0.47144	111.7716	MAYSVILLE - MAYSVLT4 138.00 138KV CKT 1
FDNS	00NR	0	20WP	G15_092	FROM->TO	G14-057T 345.00 - SUNNYSIDE 345KV CKT 1	717	789	0.4767	111.7619	P12:138:OKGE:3TERM21
FDNS	00NR	0	20WP	G15_092	FROM->TO	G14-057T 345.00 - SUNNYSIDE 345KV CKT 1	717	789	0.47624	111.7611	GEN562691 1-G15_015_3 0.6900
FDNS	00NR	0	20WP	G15_092	FROM->TO	G14-057T 345.00 - SUNNYSIDE 345KV CKT 1	717	789	0.47624	111.7556	GEN562772 1-G15034_3 0.6900
FDNS	00NR	0	20WP	G15_092	FROM->TO	G14-057T 345.00 - SUNNYSIDE 345KV CKT 1	717	789	0.47624	111.7408	GEN511961 1-DEMPSEY-WTG10.7000
FDNS	00NR	0	20WP	G15_092	FROM->TO	G14-057T 345.00 - SUNNYSIDE 345KV CKT 1	717	789	0.47802	111.7297	SOONER - SPRING CREEK 345KV CKT 1
FDNS	00NR	0	20WP	G15_092	FROM->TO	G14-057T 345.00 - SUNNYSIDE 345KV CKT 1	717	789	0.47625	111.7267	P12:069:OKGE:3TERM42
FDNS	00NR	0	20WP	G15_092	FROM->TO	G14-057T 345.00 - SUNNYSIDE 345KV CKT 1	717	789	0.47802	111.7265	NORTHWEST - SPRING CREEK 345KV CKT 1
FDNS	00NR	0	20WP	G15_092	FROM->TO	G14-057T 345.00 - SUNNYSIDE 345KV CKT 1	717	789	0.47366	111.7238	ARBUCKLE - SULPHR 4 138.00 138KV CKT 1
FDNS	00NR	0	20WP	G15_092	FROM->TO	G14-057T 345.00 - SUNNYSIDE 345KV CKT 1	717	789	0.4759	111.7062	GLASSES - MADILL INDUSTRIAL TAP 138KV CKT 1
FDNS	00NR	0	20WP	G15_092	FROM->TO	G14-057T 345.00 - SUNNYSIDE 345KV CKT 1	717	789	0.47144	111.7055	MAYSVLT4 138.00 - PRAIRIE POINT 138KV CKT 1
FDNS	00NR	0	20WP	G15_092	FROM->TO	G14-057T 345.00 - SUNNYSIDE 345KV CKT 1	717	789	0.47615	111.7005	P12:138:WFEC:MSL11
FDNS	00NR	0	20WP	G15_092	FROM->TO	G14-057T 345.00 - SUNNYSIDE 345KV CKT 1	717	789	0.47615	111.7005	P12:138:WFEC-AEPW:PHAROAH4:LONEOAK4
FDNS	00NR	0	20WP	G15_092	FROM->TO	G14-057T 345.00 - SUNNYSIDE 345KV CKT 1	717	789	0.47588	111.6941	CANEY CREEK - JOHNSON COUNTY 138KV CKT 1
FDNS	00NR	0	20WP	G15_092	FROM->TO	G14-057T 345.00 - SUNNYSIDE 345KV CKT 1	717	789	0.47624	111.689	GEN515443 1-MNCOWND1 0.7000
FDNS	00NR	0	20WP	G15_092	FROM->TO	G14-057T 345.00 - SUNNYSIDE 345KV CKT 1	717	789	0.47761	111.6853	MOREWOOD SW - NINE MILE 138KV CKT 1
FDNS	00NR	0	20WP	G15_092	FROM->TO	G14-057T 345.00 - SUNNYSIDE 345KV CKT 1	717	789	0.47636	111.6712	ALTUS JUNCTION - RUSSELL 138KV CKT 1
FDNS	00NR	0	20WP	G15_092	FROM->TO	G14-057T 345.00 - SUNNYSIDE 345KV CKT 1	717	789	0.47636	111.6712	ALTUS JUNCTION - RUSSELL 138KV CKT 1
FDNS	00NR	0	20WP	G15_092	FROM->TO	G14-057T 345.00 - SUNNYSIDE 345KV CKT 1	717	789	0.47624	111.6708	GEN560183 1-REDHIL-WTG1 12.000
FDNS	00NR	0	20WP	G15_092	FROM->TO	G14-057T 345.00 - SUNNYSIDE 345KV CKT 1	717	789	0.47624	111.6625	INDEPENDENCE 500/26.0KV TRANSFORMER CKT 1
FDNS	00NR	0	20WP	G15_092	FROM->TO	G14-057T 345.00 - SUNNYSIDE 345KV CKT 1	717	789	0.4759	111.6578	GLASSES - RUSSETT 138KV CKT 1
FDNS	00NR	0	20WP	G15_092	FROM->TO	G14-057T 345.00 - SUNNYSIDE 345KV CKT 1	717	789	0.47624	111.654	GEN600067 9-HIGH BRIDGE
FDNS	00NR	0	20WP	G15_092	FROM->TO	G14-057T 345.00 - SUNNYSIDE 345KV CKT 1	717	789	0.47647	111.6529	OVEXFRMCCOVE
FDNS	00NR	0	20WP	G15_092	FROM->TO	G14-057T 345.00 - SUNNYSIDE 345KV CKT 1	717	789	0.47661	111.6441	P12:138:WFEC:MSL08
FDNS	00NR	0	16WP	G15_092	FROM->TO	G14-057T 345.00 - SUNNYSIDE 345KV CKT 1	717	789	0.47479	111.6433	GEN525562 1-TOLK GEN #2 24 KV
FDNS	00NR	0	20WP	G15_092	FROM->TO	G14-057T 345.00 - SUNNYSIDE 345KV CKT 1	717	789	0.47568	111.6433	CARTER - CHICKASAW 138KV CKT 1
FDNS	00NR	0	16WP	G15_092	FROM->TO	G14-057T 345.00 - SUNNYSIDE 345KV CKT 1	717	789	0.47479	111.6359	GEN563202 1-G15085_3 0.5500
FDNS	00NR	0	20WP	G15_092	FROM->TO	G14-057T 345.00 - SUNNYSIDE 345KV CKT 1	717	789	0.476	111.6359	CANADIAN RIVER - MCALESTER SOUTH 138KV CKT 1
FDNS	00NR	0	20WP	G15_092	FROM->TO	G14-057T 345.00 - SUNNYSIDE 345KV CKT 1	717	789	0.476	111.6359	CANADIAN RIVER - MCALESTER SOUTH 138KV CKT 1
FDNS	00NR	0	20WP	G15_092	FROM->TO	G14-057T 345.00 - SUNNYSIDE 345KV CKT 1	717	789	0.47671	111.6344	LEBANON - TEXOMA JCT 138KV CKT 1
FDNS	00NR	0	20WP	G15_092	FROM->TO	G14-057T 345.00 - SUNNYSIDE 345KV CKT 1	717	789	0.476	111.6341	CANADIAN RIVER () 345/138/13.8KV TRANSFORMER CKT 1
FDNS	00NR	0	20WP	G15_092	FROM->TO	G14-057T 345.00 - SUNNYSIDE 345KV CKT 1	717	789	0.476	111.6341	CANADIAN RIVER () 345/138/13.8KV TRANSFORMER CKT 1

SOLUTION	GROUP	SCENARIO	SEASON	SOURCE	DIRECTION	MONITORED ELEMENT	RATEA (MVA)	RATEB(MVA)	TDF	TC%LOADING (% MVA)	CONTINGENCY
FDNS	00NR	0	20WP	G15_092	FROM->TO	G14-057T 345.00 - SUNNYSIDE 345KV CKT 1	717	789	0.47624	111.6328	P12:230:UMZB:# 112 #: NU IN SD. NU-RCDC & DRY CREEK XFMR
FDNS	00NR	0	16WP	G15_092	FROM->TO	G14-057T 345.00 - SUNNYSIDE 345KV CKT 1	717	789	0.46805	111.6299	LYDIA - WELSH 345KV CKT 1
FDNS	00NR	0	16WP	G15_092	FROM->TO	G14-057T 345.00 - SUNNYSIDE 345KV CKT 1	717	789	0.46805	111.6299	LYDIA - WELSH 345KV CKT 1
FDNS	00NR	0	20WP	G15_092	FROM->TO	G14-057T 345.00 - SUNNYSIDE 345KV CKT 1	717	789	0.47624	111.627	RCDC EAST 4230.00 - RED CEDAR DC 230KV CKT 1
FDNS	00NR	0	20WP	G15_092	FROM->TO	G14-057T 345.00 - SUNNYSIDE 345KV CKT 1	717	789	0.47474	111.6223	ROCKY POINT - SPRINGDALE 138KV CKT 1
FDNS	00NR	0	20WP	G15_092	FROM->TO	G14-057T 345.00 - SUNNYSIDE 345KV CKT 1	717	789	0.47624	111.6211	GEN562902 1-G15052_3 0.6900
FDNS	00NR	0	20WP	G15_092	FROM->TO	G14-057T 345.00 - SUNNYSIDE 345KV CKT 1	717	789	0.4762	111.621	HUGO (HUGO 1) 345/138/13.8KV TRANSFORMER CKT 1
FDNS	00NR	0	20WP	G15_092	FROM->TO	G14-057T 345.00 - SUNNYSIDE 345KV CKT 1	717	789	0.47624	111.6184	GEN563242 1-G15090_3 0.6900
FDNS	00NR	0	20WP	G15_092	FROM->TO	G14-057T 345.00 - SUNNYSIDE 345KV CKT 1	717	789	0.47144	111.6131	PRAIRIE POINT - RATLIFF 138KV CKT 1
FDNS	00NR	0	20WP	G15_092	FROM->TO	G14-057T 345.00 - SUNNYSIDE 345KV CKT 1	717	789	0.47604	111.6118	CHAMBER SPRINGS - CLARKSVILLE 345KV CKT 1
FDNS	00NR	0	20WP	G15_092	FROM->TO	G14-057T 345.00 - SUNNYSIDE 345KV CKT 1	717	789	0.47631	111.6064	GRPRAR1-LNX3345.00 - GRPRAR 345KV CKT Z
FDNS	00NR	0	20WP	G15_092	FROM->TO	G14-057T 345.00 - SUNNYSIDE 345KV CKT 1	717	789	0.47631	111.606	GRPRAR1-LNX3345.00 - HOLT.CO3 345.00 345KV CKT 1
FDNS	00NR	0	16WP	G15_092	FROM->TO	G14-057T 345.00 - SUNNYSIDE 345KV CKT 1	717	789	0.47479	111.5979	GEN527166 1-MUSTANG_6 118.000
FDNS	00NR	0	20WP	G15_092	FROM->TO	G14-057T 345.00 - SUNNYSIDE 345KV CKT 1	717	789	0.47624	111.5943	GEN629072 4-LANSING GENERATOR FOR UNITS NO4 EIA CODE 1
FDNS	00NR	0	16WP	G15_092	FROM->TO	G14-057T 345.00 - SUNNYSIDE 345KV CKT 1	717	789	0.4755	111.5888	CHISHOLM6 230.00 - SWEETWATER 230KV CKT 1
FDNS	00NR	0	20WP	G15_092	FROM->TO	G14-057T 345.00 - SUNNYSIDE 345KV CKT 1	717	789	0.47624	111.5796	GEN562078 1-G11_051_3 0.6900
FDNS	00NR	0	20WP	G15_092	FROM->TO	G14-057T 345.00 - SUNNYSIDE 345KV CKT 1	717	789	0.47871	111.5767	P12:138:AEPW:112GORE4:SNYDER-4
FDNS	00NR	0	20WP	G15_092	FROM->TO	G14-057T 345.00 - SUNNYSIDE 345KV CKT 1	717	789	0.47624	111.5711	GEN524285 1-WILDORADO WIND GEN
FDNS	00NR	0	20WP	G15_092	FROM->TO	G14-057T 345.00 - SUNNYSIDE 345KV CKT 1	717	789	0.47366	111.5694	JOLLYVILLE - SULPHR 4 138.00 138KV CKT 1
FDNS	00NR	0	20WP	G15_092	FROM->TO	G14-057T 345.00 - SUNNYSIDE 345KV CKT 1	717	789	0.47624	111.5522	GEN562587 1-G14_056_3 0.6900
FDNS	00NR	0	20WP	G15_092	FROM->TO	G14-057T 345.00 - SUNNYSIDE 345KV CKT 1	717	789	0.47624	111.5512	GEN514805 1-SOONER UNIT 1
FDNS	00NR	0	20WP	G15_092	FROM->TO	G14-057T 345.00 - SUNNYSIDE 345KV CKT 1	717	789	0.47761	111.5491	BEARCAT 138.00 - NINE MILE 138KV CKT 1
FDNS	00NR	0	20WP	G15_092	FROM->TO	G14-057T 345.00 - SUNNYSIDE 345KV CKT 1	717	789	0.47624	111.5454	GEN524295 1-SPNSPUR_WND10.6900
FDNS	00NR	0	20WP	G15_092	FROM->TO	G14-057T 345.00 - SUNNYSIDE 345KV CKT 1	717	789	0.47624	111.5399	GEN657749 1-YOUNG_1 GENERATOR
FDNS	00NR	0	16WP	G15_092	FROM->TO	G14-057T 345.00 - SUNNYSIDE 345KV CKT 1	717	789	0.47118	111.5346	JOHNSON COUNTY (JOHNCO) 345/138/13.8KV TRANSFORMER CKT 1
FDNS	00NR	0	16WP	G15_092	FROM->TO	G14-057T 345.00 - SUNNYSIDE 345KV CKT 1	717	789	0.47479	111.5255	GEN635023 3-WALTER SCOTT UNIT 3
FDNS	00NR	0	20WP	G15_092	FROM->TO	G14-057T 345.00 - SUNNYSIDE 345KV CKT 1	717	789	0.47624	111.5198	GEN514806 1-SOONER UNIT 2
FDNS	00NR	0	20WP	G15_092	FROM->TO	G14-057T 345.00 - SUNNYSIDE 345KV CKT 1	717	789	0.47624	111.5196	GEN524023 1-NICHOLS GEN #3 22 KV
FDNS	00NR	0	16WP	G15_092	FROM->TO	G14-057T 345.00 - SUNNYSIDE 345KV CKT 1	717	789	0.47479	111.5165	GEN562590 1-G14_057_3 0.6900
FDNS	00NR	0	20WP	G15_092	FROM->TO	G14-057T 345.00 - SUNNYSIDE 345KV CKT 1	717	789	0.47705	111.5107	CROCKETT - TENASKA RUSK COUNTY 345KV CKT 1
FDNS	00NR	0	20WP	G15_092	FROM->TO	G14-057T 345.00 - SUNNYSIDE 345KV CKT 1	717	789	0.47705	111.5059	LEBROCK - TENASKA RUSK COUNTY 345KV CKT 1
FDNS	00NR	0	20WP	G15_092	FROM->TO	G14-057T 345.00 - SUNNYSIDE 345KV CKT 1	717	789	0.47366	111.4877	JOLLYVILLE - KERR MCGEE CIMARRON 138KV CKT 1
FDNS	00NR	0	20WP	G15_092	FROM->TO	G14-057T 345.00 - SUNNYSIDE 345KV CKT 1	717	789	0.47624	111.4834	GEN562812 1-G15040_3 0.3570
FDNS	00NR	0	20WP	G15_092	FROM->TO	G14-057T 345.00 - SUNNYSIDE 345KV CKT 1	717	789	0.47624	111.4785	GEN562270 1-G12-020-2 0.6900
FDNS	00NR	0	20WP	G15_092	FROM->TO	G14-057T 345.00 - SUNNYSIDE 345KV CKT 1	717	789	0.47624	111.4769	GEN562882 1-G15047_3 0.6900
FDNS	00NR	0	20WP	G15_092	FROM->TO	G14-057T 345.00 - SUNNYSIDE 345KV CKT 1	717	789	0.47624	111.4766	GEN563132 1-G15078_3 0.3570
FDNS	00NR	0	20WP	G15_092	FROM->TO	G14-057T 345.00 - SUNNYSIDE 345KV CKT 1	717	789	0.47624	111.4697	GEN563102 1-G15075_3 0.5500
FDNS	00NR	0	20WP	G15_092	FROM->TO	G14-057T 345.00 - SUNNYSIDE 345KV CKT 1	717	789	0.47624	111.4569	GEN563062 1-G15071_3 0.6900
FDNS	00NR	0	20WP	G15_092	FROM->TO	G14-057T 345.00 - SUNNYSIDE 345KV CKT 1	717	789	0.47761	111.4547	BEARCAT 138.00 - MOORELAND 138KV CKT 1
FDNS	00NR	0	20WP	G15_092	FROM->TO	G14-057T 345.00 - SUNNYSIDE 345KV CKT 1	717	789	0.47761	111.4501	P12:138:WFEC:MSL14
FDNS	00NR	0	20WP	G15_092	FROM->TO	G14-057T 345.00 - SUNNYSIDE 345KV CKT 1	717	789	0.47366	111.4369	ARBWIND4 138.00 - KERR MCGEE CIMARRON 138KV CKT 1
FDNS	00NR	0	20WP	G15_092	FROM->TO	G14-057T 345.00 - SUNNYSIDE 345KV CKT 1	717	789	0.47624	111.4202	GEN562974 1-G15060_5 0.6900
FDNS	00NR	0	20WP	G15_092	FROM->TO	G14-057T 345.00 - SUNNYSIDE 345KV CKT 1	717	789	0.47624	111.4197	GEN521112 1-ORME3 13.800
FDNS	00NR	0	20WP	G15_092	FROM->TO	G14-057T 345.00 - SUNNYSIDE 345KV CKT 1	717	789	0.47503	111.4177	BROWN - RUSSETT 138KV CKT 1
FDNS	00NR	0	16WP	G15_092	FROM->TO	G14-057T 345.00 - SUNNYSIDE 345KV CKT 1	717	789	0.47479	111.4166	GEN562762 1-G15033_3 0.6900
FDNS	00NR	0	20WP	G15_092	FROM->TO	G14-057T 345.00 - SUNNYSIDE 345KV CKT 1	717	789	0.47624	111.4113	GEN345671 2-1RUSH G2 18.000
FDNS	00NR	0	20WP	G15_092	FROM->TO	G14-057T 345.00 - SUNNYSIDE 345KV CKT 1	717	789	0.47624	111.4104	GEN562973 1-G15060_4 0.6900
FDNS	00NR	0	20WP	G15_092	FROM->TO	G14-057T 345.00 - SUNNYSIDE 345KV CKT 1	717	789	0.47624	111.4094	GEN345670 1-1RUSH G1 18.000
FDNS	00NR	0	16WP	G15_092	FROM->TO	G14-057T 345.00 - SUNNYSIDE 345KV CKT 1	717	789	0.47479	111.4055	GEN562655 1-G14_074_3 0.6900
FDNS	00NR	0	20WP	G15_092	FROM->TO	G14-057T 345.00 - SUNNYSIDE 345KV CKT 1	717	789	0.47402	111.3964	CHICKASAW - TOTAL 138KV CKT 1
FDNS	00NR	0	20WP	G15_092	FROM->TO	G14-057T 345.00 - SUNNYSIDE 345KV CKT 1	717	789	0.47624	111.3839	GEN560105 1-G08-22 0.6900
FDNS	00NR	0	20WP	G15_092	FROM->TO	G14-057T 345.00 - SUNNYSIDE 345KV CKT 1	717	789	0.47624	111.3817	4SIOUX 1 138.00 138/18.0KV TRANSFORMER CKT 1
FDNS	00NR	0	20WP	G15_092	FROM->TO	G14-057T 345.00 - SUNNYSIDE 345KV CKT 1	717	789	0.47503	111.372	RUSSETT - RUSSETT 138KV CKT 1
FDNS	00NR	0	20WP	G15_092	FROM->TO	G14-057T 345.00 - SUNNYSIDE 345KV CKT 1	717	789	0.47624	111.3666	GEN562550 1-G14_040_3 0.6900
FDNS	00NR	0	20WP	G15_092	FROM->TO	G14-057T 345.00 - SUNNYSIDE 345KV CKT 1	717	789	0.47624	111.3633	GEN681522 3-GENOA 3
FDNS	00NR	0	16WP	G15_092	FROM->TO	G14-057T 345.00 - SUNNYSIDE 345KV CKT 1	717	789	0.47479	111.3403	GEN562685 1-G15_013_3 0.3550
FDNS	00NR	0	20WP	G15_092	FROM->TO	G14-057T 345.00 - SUNNYSIDE 345KV CKT 1	717	789	0.47624	111.3293	GEN511853 1-COMANCHE #3
FDNS	00NR	0	20WP	G15_092	FROM->TO	G14-057T 345.00 - SUNNYSIDE 345KV CKT 1	717	789	0.47624	111.3226	GEN527161 1-MUSTANG GEN #1
FDNS	00NR	0	20WP	G15_092	FROM->TO	G14-057T 345.00 - SUNNYSIDE 345KV CKT 1	717	789	0.47624	111.3226	GEN527162 1-MUSTANG GEN #2
FDNS	00NR	0	20WP	G15_092	FROM->TO	G14-057T 345.00 - SUNNYSIDE 345KV CKT 1	717	789	0.47424	111.3211	ROCKY POINT - SUNNYSIDE 138KV CKT 1
FDNS	00NR	0	20WP	G15_092	FROM->TO	G14-057T 345.00 - SUNNYSIDE 345KV CKT 1	717	789	0.47624	111.3161	EASTDC - ERCOT EQUIVALENCE 345KV CKT 1
FDNS	00NR	0	20WP	G15_092	FROM->TO	G14-057T 345.00 - SUNNYSIDE 345KV CKT 1	717	789	0.47624	111.3113	GEN511962 2-RKYRDGW2-1 0.7000
FDNS	00NR	0	20WP	G15_092	FROM->TO	G14-057T 345.00 - SUNNYSIDE 345KV CKT 1	717	789	0.47624	111.2988	GEN672321 1-SHAND GENERATOR 1
FDNS	00NR	0	20WP	G15_092	FROM->TO	G14-057T 345.00 - SUNNYSIDE 345KV CKT 1	717	789	0.47464	111.2978	RUSSETT - SPRINGDALE 138KV CKT 1
FDNS	00NR	0	20WP	G15_092	FROM->TO	G14-057T 345.00 - SUNNYSIDE 345KV CKT 1	717	789	0.47624	111.2896	GEN525494 1-PLANT X GEN #4 20 KV
FDNS	00NR	0	20WP	G15_092	FROM->TO	G14-057T 345.00 - SUNNYSIDE 345KV CKT 1	717	789	0.47838	111.2832	G15063_T 345.00 - MATHWSN7 345.00 345KV CKT 1
FDNS	00NR	0	20WP	G15_092	FROM->TO	G14-057T 345.00 - SUNNYSIDE 345KV CKT 1	717	789	0.47624	111.2755	GEN672310 1-POPLAR RIVER GENERATOR 1
FDNS	00NR	0	20WP	G15_092	FROM->TO	G14-057T 345.00 - SUNNYSIDE 345KV CKT 1	717	789	0.47624	111.2755	GEN672311 2-POPLAR RIVER GENERATOR 2
FDNS	00NR	0	20WP	G15_092	FROM->TO	G14-057T 345.00 - SUNNYSIDE 345KV CKT 1	717	789	0.47624	111.2739	GEN527882 1-CUNNINGHAM GEN #2 20 KV
FDNS	00NR	0	20WP	G15_092	FROM->TO	G14-057T 345.00 - SUNNYSIDE 345KV CKT 1	717	789	0.47624	111.266	GEN672306 6-BOUNDARY DAM GENERATOR 6
FDNS	00NR	0	20WP	G15_092	FROM->TO	G14-057T 345.00 - SUNNYSIDE 345KV CKT 1	717	789	0.47624	111.2655	GEN563192 1-G15084_3 0.5500
FDNS	00NR	0	20WP	G15_092	FROM->TO	G14-057T 345.00 - SUNNYSIDE 345KV CKT 1	717	789	0.47624	111.2616	GEN562512 1-G14_020_3 0.6900
FDNS	00NR	0	20WP	G15_092	FROM->TO	G14-057T 345.00 - SUNNYSIDE 345KV CKT 1	717	789	0.47624	111.2595	GEN511852 1-COMANCHE #2
FDNS	00NR	0	20WP	G15_092	FROM->TO	G14-057T 345.00 - SUNNYSIDE 345KV CKT 1	717	789	0.47624	111.2591	GEN344895 2-1LAB G2 20.000
FDNS	00NR	0	20WP	G15_092	FROM->TO	G14-057T 345.00 - SUNNYSIDE 345KV CKT 1	717	789	0.47624	111.258	GEN527163 1-MUSTANG GEN #3 22 KV
FDNS	00NR	0	20WP	G15_092	FROM->TO	G14-057T 345.00 - SUNNYSIDE 345KV CKT 1	717	789	0.47581	111.2526	P12:138:WFEC-AEPW:GOLDENSW4:CRAIGJT4
FDNS	00NR	0	20WP	G15_092	FROM->TO	G14-057T 345.00 - SUNNYSIDE 345KV CKT 1	717	789	0.47624	111.2434	GEN562892 1-G15048_3 0.6900
FDNS	00NR	0	20WP	G15_092	FROM->TO	G14-057T 345.00 - SUNNYSIDE 345KV CKT 1	717	789	0.47624	111.2366	GEN681542 6-JP MADGETT
FDNS	00NR	0	20WP	G15_092	FROM->TO	G14-057T 345.00 - SUNNYSIDE 345KV CKT 1	717	789	0.47697	111.235	ARKANSAS NUCLEAR ONE - FT SMITH 500KV CKT 1

SOLUTION	GROUP	SCENARIO	SEASON	SOURCE	DIRECTION	MONITORED ELEMENT	RATEA (MVA)	RATEB(MVA)	TDF	TC%LOADING (% MVA)	CONTINGENCY
FDNS	00NR	0	20WP	G15_092	FROM->TO	G14-057T 345.00 - SUNNYSIDE 345KV CKT 1	717	789	0.47697	111.235	ARKANSAS NUCLEAR ONE - FT SMITH 500KV CKT 1
FDNS	00NR	0	20WP	G15_092	FROM->TO	G14-057T 345.00 - SUNNYSIDE 345KV CKT 1	717	789	0.47624	111.2295	GEN344896 3-1LAB G3 20.000
FDNS	00NR	0	20WP	G15_092	FROM->TO	G14-057T 345.00 - SUNNYSIDE 345KV CKT 1	717	789	0.47624	111.2284	GEN344897 4-1LAB G4 20.000
FDNS	00NR	0	20WP	G15_092	FROM->TO	G14-057T 345.00 - SUNNYSIDE 345KV CKT 1	717	789	0.47624	111.2281	GEN344894 1-1LAB G1 20.000
FDNS	00NR	0	20WP	G15_092	FROM->TO	G14-057T 345.00 - SUNNYSIDE 345KV CKT 1	717	789	0.47636	111.2223	P12:138:WFEC:MSL16
FDNS	00NR	0	20WP	G15_092	FROM->TO	G14-057T 345.00 - SUNNYSIDE 345KV CKT 1	717	789	0.47228	111.2221	ARDMORE WEST - CARTER 138KV CKT 1
FDNS	00NR	0	16WP	G15_092	FROM->TO	G14-057T 345.00 - SUNNYSIDE 345KV CKT 1	717	789	0.47479	111.2074	GEN525561 1-TOLK GEN #1 24 KV
FDNS	00NR	0	16WP	G15_092	FROM->TO	G14-057T 345.00 - SUNNYSIDE 345KV CKT 1	717	789	0.47479	111.2074	GEN527903 1-HOBBS PLANT #3 (ST)
FDNS	00NR	0	16WP	G15_092	FROM->TO	G14-057T 345.00 - SUNNYSIDE 345KV CKT 1	717	789	0.47479	111.2054	GEN563272 1-G15093_3 0.6900
FDNS	00NR	0	20WP	G15_092	FROM->TO	G14-057T 345.00 - SUNNYSIDE 345KV CKT 1	717	789	0.47624	111.2032	GEN523461 1-BLACKHAWK GEN #1
FDNS	00NR	0	20WP	G15_092	FROM->TO	G14-057T 345.00 - SUNNYSIDE 345KV CKT 1	717	789	0.47624	111.2031	GEN523462 1-BLACKHAWK GEN #2
FDNS	00NR	0	20WP	G15_092	FROM->TO	G14-057T 345.00 - SUNNYSIDE 345KV CKT 1	717	789	0.47871	111.1791	CACHE - SNYDER 138KV CKT 1
FDNS	00NR	0	20WP	G15_092	FROM->TO	G14-057T 345.00 - SUNNYSIDE 345KV CKT 1	717	789	0.47692	111.1605	P12:138:WFEC:MSL07
FDNS	00NR	0	20WP	G15_092	FROM->TO	G14-057T 345.00 - SUNNYSIDE 345KV CKT 1	717	789	0.47692	111.1605	P12:138:WFEC-AEPW:HUGOPP4:ATOKA--4
FDNS	00NR	0	20WP	G15_092	FROM->TO	G14-057T 345.00 - SUNNYSIDE 345KV CKT 1	717	789	0.4761	111.1553	P12:138:AEPW-SWPA:LONEOAK4:TUPELO4
FDNS	00NR	0	20WP	G15_092	FROM->TO	G14-057T 345.00 - SUNNYSIDE 345KV CKT 1	717	789	0.4761	111.1553	P12:138:WFEC:MSL06
FDNS	00NR	0	20WP	G15_092	FROM->TO	G14-057T 345.00 - SUNNYSIDE 345KV CKT 1	717	789	0.47624	111.1514	GEN521111 1-ORME2 13.800
FDNS	00NR	0	20WP	G15_092	FROM->TO	G14-057T 345.00 - SUNNYSIDE 345KV CKT 1	717	789	0.47624	111.1465	GEN562699 1-G15_018_3 0.6900
FDNS	00NR	0	20WP	G15_092	FROM->TO	G14-057T 345.00 - SUNNYSIDE 345KV CKT 1	717	789	0.47221	111.1385	SUNNYSIDE (SUNNYSD5) 345/138/13.8KV TRANSFORMER CKT 1
FDNS	00NR	0	20WP	G15_092	FROM->TO	G14-057T 345.00 - SUNNYSIDE 345KV CKT 1	717	789	0.47624	111.1382	GEN521110 1-ORME1 13.800
FDNS	00NR	0	20WP	G15_092	FROM->TO	G14-057T 345.00 - SUNNYSIDE 345KV CKT 1	717	789	0.47429	111.1308	CLARKSVILLE - MUSKOGEE 345KV CKT 1
FDNS	00NR	0	20WP	G15_092	FROM->TO	G14-057T 345.00 - SUNNYSIDE 345KV CKT 1	717	789	0.47429	111.1308	CLARKSVILLE - MUSKOGEE 345KV CKT 1
FDNS	00NR	0	20WP	G15_092	FROM->TO	G14-057T 345.00 - SUNNYSIDE 345KV CKT 1	717	789	0.47636	111.1294	G15085_T 138.00 - RUSSELL 138KV CKT 1
FDNS	00NR	0	20WP	G15_092	FROM->TO	G14-057T 345.00 - SUNNYSIDE 345KV CKT 1	717	789	0.47228	111.1097	ARDMORE WEST - UNIROYAL 138KV CKT 1
FDNS	00NR	0	16WP	G15_092	FROM->TO	G14-057T 345.00 - SUNNYSIDE 345KV CKT 1	717	789	0.47479	111.1021	GEN635024 4-WALTER SCOTT UNIT 4
FDNS	00NR	0	20WP	G15_092	FROM->TO	G14-057T 345.00 - SUNNYSIDE 345KV CKT 1	717	789	0.47624	111.0967	GEN520811 1-ANADRK4
FDNS	00NR	0	20WP	G15_092	FROM->TO	G14-057T 345.00 - SUNNYSIDE 345KV CKT 1	717	789	0.47624	111.0961	GEN563162 1-G15081_3 0.6900
FDNS	00NR	0	20WP	G15_092	FROM->TO	G14-057T 345.00 - SUNNYSIDE 345KV CKT 1	717	789	0.47624	111.0703	GEN661015 1-COYOTE
FDNS	00NR	0	20WP	G15_092	FROM->TO	G14-057T 345.00 - SUNNYSIDE 345KV CKT 1	717	789	0.47624	111.0659	GEN563292 1-G15095_3 0.6900
FDNS	00NR	0	20WP	G15_092	FROM->TO	G14-057T 345.00 - SUNNYSIDE 345KV CKT 1	717	789	0.47387	111.0612	P12:138:OKGE:3TERM40
FDNS	00NR	0	20WP	G15_092	FROM->TO	G14-057T 345.00 - SUNNYSIDE 345KV CKT 1	717	789	0.47305	111.0535	CARTRCO4 138.00 - RATLIFF 138KV CKT 1
FDNS	00NR	0	20WP	G15_092	FROM->TO	G14-057T 345.00 - SUNNYSIDE 345KV CKT 1	717	789	0.47624	111.0431	GEN563122 1-G15077_3 0.3850
FDNS	00NR	0	20WP	G15_092	FROM->TO	G14-057T 345.00 - SUNNYSIDE 345KV CKT 1	717	789	0.47624	111.0154	GEN562861 1-G15045_2 0.4800
FDNS	00NR	0	20WP	G15_092	FROM->TO	G14-057T 345.00 - SUNNYSIDE 345KV CKT 1	717	789	0.47624	110.9573	GEN657748 1-YOUNG 2 GENERATOR
FDNS	00NR	0	20WP	G15_092	FROM->TO	G14-057T 345.00 - SUNNYSIDE 345KV CKT 1	717	789	0.47624	110.9312	GEN527883 1-CUNNINGHAM GEN #3 22 KV
FDNS	00NR	0	20WP	G15_092	FROM->TO	G14-057T 345.00 - SUNNYSIDE 345KV CKT 1	717	789	0.47624	110.9282	GEN527884 1-CUNNINGHAM GEN #4 22 KV
FDNS	00NR	0	20WP	G15_092	FROM->TO	G14-057T 345.00 - SUNNYSIDE 345KV CKT 1	717	789	0.47639	110.9202	P12:138:WFEC:MSL15
FDNS	00NR	0	20WP	G15_092	FROM->TO	G14-057T 345.00 - SUNNYSIDE 345KV CKT 1	717	789	0.47624	110.8807	GEN562992 1-G15063_3 0.6900
FDNS	00NR	0	20WP	G15_092	FROM->TO	G14-057T 345.00 - SUNNYSIDE 345KV CKT 1	717	789	0.47228	110.8733	SUNNYSIDE - UNIROYAL 138KV CKT 1
FDNS	00NR	0	20WP	G15_092	FROM->TO	G14-057T 345.00 - SUNNYSIDE 345KV CKT 1	717	789	0.47636	110.8647	P12:138:AEPW:SHAM4WT:CHILD4WT
FDNS	00NR	0	20WP	G15_092	FROM->TO	G14-057T 345.00 - SUNNYSIDE 345KV CKT 1	717	789	0.47624	110.8625	GEN562704 1-G15_020_3 0.3550
FDNS	00NR	0	20WP	G15_092	FROM->TO	G14-057T 345.00 - SUNNYSIDE 345KV CKT 1	717	789	0.47624	110.8623	GEN526331 1-JONES GEN #1 22 KV
FDNS	00NR	0	20WP	G15_092	FROM->TO	G14-057T 345.00 - SUNNYSIDE 345KV CKT 1	717	789	0.47624	110.8621	GEN526332 1-JONES GEN #2 21 KV
FDNS	00NR	0	20WP	G15_092	FROM->TO	G14-057T 345.00 - SUNNYSIDE 345KV CKT 1	717	789	0.47624	110.8621	GEN620315 1-BIG STONE GEN
FDNS	00NR	0	20WP	G15_092	FROM->TO	G14-057T 345.00 - SUNNYSIDE 345KV CKT 1	717	789	0.47624	110.8294	GEN562952 1-G15057_3 0.6500
FDNS	00NR	0	20WP	G15_092	FROM->TO	G14-057T 345.00 - SUNNYSIDE 345KV CKT 1	717	789	0.47624	110.7897	GEN511851 1-COMANCHE #1
FDNS	00NR	0	20WP	G15_092	FROM->TO	G14-057T 345.00 - SUNNYSIDE 345KV CKT 1	717	789	0.47624	110.7889	GEN600004 2-PRAIRIE ISLAND G2
FDNS	00NR	0	17SP	G15_092	FROM->TO	G14-057T 345.00 - SUNNYSIDE 345KV CKT 1	717	789	0.5597	110.7884	CIMARRON - MINCO 345KV CKT 1
FDNS	00NR	0	20WP	G15_092	FROM->TO	G14-057T 345.00 - SUNNYSIDE 345KV CKT 1	717	789	0.47624	110.7863	GEN600003 1-PRAIRIE ISLAND G1
FDNS	00NR	0	20WP	G15_092	FROM->TO	G14-057T 345.00 - SUNNYSIDE 345KV CKT 1	717	789	0.47624	110.7686	GEN600006 1-AS KING
FDNS	00NR	0	20WP	G15_092	FROM->TO	G14-057T 345.00 - SUNNYSIDE 345KV CKT 1	717	789	0.47624	110.7635	GEN563173 1-G15082_3 0.6900
FDNS	00NR	0	20WP	G15_092	FROM->TO	G14-057T 345.00 - SUNNYSIDE 345KV CKT 1	717	789	0.47624	110.7507	GEN562710 1-G15_022_3 0.5500
FDNS	00NR	0	20WP	G15_092	FROM->TO	G14-057T 345.00 - SUNNYSIDE 345KV CKT 1	717	789	0.47671	110.7451	CANEY CREEK - TEXOMA JCT 138KV CKT 1
FDNS	00NR	0	20WP	G15_092	FROM->TO	G14-057T 345.00 - SUNNYSIDE 345KV CKT 1	717	789	0.47663	110.7436	GRAPEVINE INTERCHANGE - STATELINE INTERCHANGE 230KV CKT 1
FDNS	00NR	0	20WP	G15_092	FROM->TO	G14-057T 345.00 - SUNNYSIDE 345KV CKT 1	717	789	0.47663	110.7436	GRAPEVINE INTERCHANGE - STATELINE INTERCHANGE 230KV CKT 1
FDNS	00NR	0	20WP	G15_092	FROM->TO	G14-057T 345.00 - SUNNYSIDE 345KV CKT 1	717	789	0.47624	110.7218	GEN532751 1-WOLF CREEK GENERATING STATION UNIT 1
FDNS	00NR	0	20WP	G15_092	FROM->TO	G14-057T 345.00 - SUNNYSIDE 345KV CKT 1	717	789	0.47842	110.6708	P12:138:AEPW-OGE:CORNVIL4:CIMARON4
FDNS	00NR	0	20WP	G15_092	FROM->TO	G14-057T 345.00 - SUNNYSIDE 345KV CKT 1	717	789	0.47664	110.6105	GRAPEVINE INTERCHANGE - NICHOLS STATION 230KV CKT 1
FDNS	00NR	0	20WP	G15_092	FROM->TO	G14-057T 345.00 - SUNNYSIDE 345KV CKT 1	717	789	0.47664	110.6105	GRAPEVINE INTERCHANGE - NICHOLS STATION 230KV CKT 1
FDNS	00NR	0	20WP	G15_092	FROM->TO	G14-057T 345.00 - SUNNYSIDE 345KV CKT 1	717	789	0.47624	110.6	GEN615002 2-COAL CREEK
FDNS	00NR	0	20WP	G15_092	FROM->TO	G14-057T 345.00 - SUNNYSIDE 345KV CKT 1	717	789	0.47624	110.5967	GEN635213 3-NEAL UNIT 3
FDNS	00NR	0	20WP	G15_092	FROM->TO	G14-057T 345.00 - SUNNYSIDE 345KV CKT 1	717	789	0.47624	110.5961	GEN629074 1-ARNOLD LOWSIDE OF GSU XFMR
FDNS	00NR	0	20WP	G15_092	FROM->TO	G14-057T 345.00 - SUNNYSIDE 345KV CKT 1	717	789	0.47205	110.531	NORTHWEST TEXARKANA - VALLIANT 345KV CKT 1
FDNS	00NR	0	20WP	G15_092	FROM->TO	G14-057T 345.00 - SUNNYSIDE 345KV CKT 1	717	789	0.47205	110.531	NORTHWEST TEXARKANA - VALLIANT 345KV CKT 1
FDNS	00NR	0	20WP	G15_092	FROM->TO	G14-057T 345.00 - SUNNYSIDE 345KV CKT 1	717	789	0.47635	110.5277	P12:138:WFEC:MSL09
FDNS	00NR	0	16WP	G15_092	FROM->TO	G14-057T 345.00 - SUNNYSIDE 345KV CKT 1	717	789	0.46629	110.5148	LYDIA - VALLIANT 345KV CKT 1
FDNS	00NR	0	16WP	G15_092	FROM->TO	G14-057T 345.00 - SUNNYSIDE 345KV CKT 1	717	789	0.46629	110.5148	LYDIA - VALLIANT 345KV CKT 1
FDNS	00NR	0	20WP	G15_092	FROM->TO	G14-057T 345.00 - SUNNYSIDE 345KV CKT 1	717	789	0.47624	110.5037	GEN636641 1-LOUISA UNIT 1
FDNS	00NR	0	20WP	G15_092	FROM->TO	G14-057T 345.00 - SUNNYSIDE 345KV CKT 1	717	789	0.47624	110.5028	GEN562754 1-G15031_5 0.6900
FDNS	00NR	0	20WP	G15_092	FROM->TO	G14-057T 345.00 - SUNNYSIDE 345KV CKT 1	717	789	0.47624	110.469	GEN600005 1-MONTICELLO
FDNS	00NR	0	20WP	G15_092	FROM->TO	G14-057T 345.00 - SUNNYSIDE 345KV CKT 1	717	789	0.47777	110.4636	CHISHOLM7 345.00 () 345/230/13.2KV TRANSFORMER CKT 1
FDNS	00NR	0	20WP	G15_092	FROM->TO	G14-057T 345.00 - SUNNYSIDE 345KV CKT 1	717	789	0.47624	110.445	GEN562556 1-G14_046_3 0.3420
FDNS	00NR	0	20WP	G15_092	FROM->TO	G14-057T 345.00 - SUNNYSIDE 345KV CKT 1	717	789	0.47624	110.444	GEN562756 1-G15031_7 0.6900
FDNS	00NR	0	20WP	G15_092	FROM->TO	G14-057T 345.00 - SUNNYSIDE 345KV CKT 1	717	789	0.47777	110.3828	CHISHOLM7 345.00 - GRACEMONT 345KV CKT 1
FDNS	00NR	0	20WP	G15_092	FROM->TO	G14-057T 345.00 - SUNNYSIDE 345KV CKT 1	717	789	0.47624	110.3618	GEN563142 1-G15079_3 0.5500
FDNS	00NR	0	20WP	G15_092	FROM->TO	G14-057T 345.00 - SUNNYSIDE 345KV CKT 1	717	789	0.47624	110.3618	GEN563151 1-G15080_2 0.5500
FDNS	00NR	0	20WP	G15_092	FROM->TO	G14-057T 345.00 - SUNNYSIDE 345KV CKT 1	717	789	0.47624	110.3553	GEN562023 1-G11_020_3 0.6900
FDNS	00NR	0	20WP	G15_092	FROM->TO	G14-057T 345.00 - SUNNYSIDE 345KV CKT 1	717	789	0.47624	110.3553	GEN562026 1-G11_019_3 0.6900
FDNS	00NR	0	20WP	G15_092	FROM->TO	G14-057T 345.00 - SUNNYSIDE 345KV CKT 1	717	789	0.47624	110.3434	GEN600000 1-SHERBURNECNTY G1

SOLUTION	GROUP	SCENARIO	SEASON	SOURCE	DIRECTION	MONITORED ELEMENT	RATEA (MVA)	RATEB(MVA)	TDF	TC%LOADING (% MVA)	CONTINGENCY
FDNS	00NR	0	20WP	G15_092	FROM->TO	G14-057T 345.00 - SUNNYSIDE 345KV CKT 1	717	789	0.47624	110.3082	GEN629075 1-OTTUMWA GENERATOR FOR OTTUMWA UNIT NO 1
FDNS	00NR	0	20WP	G15_092	FROM->TO	G14-057T 345.00 - SUNNYSIDE 345KV CKT 1	717	789	0.47624	110.2904	GEN600001 2-SHERBURNE CNTY G2
FDNS	00NR	0	20WP	G15_092	FROM->TO	G14-057T 345.00 - SUNNYSIDE 345KV CKT 1	717	789	0.47624	110.2626	GEN523971 1-HARRINGTON GEN #1 24 KV
FDNS	00NR	0	20WP	G15_092	FROM->TO	G14-057T 345.00 - SUNNYSIDE 345KV CKT 1	717	789	0.47624	110.2626	GEN523972 1-HARRINGTON GEN #2 24 KV
FDNS	00NR	0	20WP	G15_092	FROM->TO	G14-057T 345.00 - SUNNYSIDE 345KV CKT 1	717	789	0.47624	110.2626	GEN523973 1-HARRINGTON GEN #3 24 KV
FDNS	00NR	0	20WP	G15_092	FROM->TO	G14-057T 345.00 - SUNNYSIDE 345KV CKT 1	717	789	0.47624	110.2331	GEN511848 1-SOUTHWESTERN STATION #3
FDNS	00NR	0	20WP	G15_092	FROM->TO	G14-057T 345.00 - SUNNYSIDE 345KV CKT 1	717	789	0.46916	110.1764	LYDIA - WELSH 345KV CKT 1
FDNS	00NR	0	20WP	G15_092	FROM->TO	G14-057T 345.00 - SUNNYSIDE 345KV CKT 1	717	789	0.46916	110.1764	LYDIA - WELSH 345KV CKT 1
FDNS	00NR	0	20WP	G15_092	FROM->TO	G14-057T 345.00 - SUNNYSIDE 345KV CKT 1	717	789	0.47624	110.163	GEN527901 1-HOBBS PLANT #1 (CT)
FDNS	00NR	0	20WP	G15_092	FROM->TO	G14-057T 345.00 - SUNNYSIDE 345KV CKT 1	717	789	0.47624	110.163	GEN527902 1-HOBBS PLANT #2 (CT)
FDNS	00NR	0	20WP	G15_092	FROM->TO	G14-057T 345.00 - SUNNYSIDE 345KV CKT 1	717	789	0.47624	110.1255	GEN563042 1-G15068_3 0.6900
FDNS	00NR	0	20WP	G15_092	FROM->TO	G14-057T 345.00 - SUNNYSIDE 345KV CKT 1	717	789	0.47624	110.028	GEN635214 4-NEAL UNIT 4
FDNS	00NR	0	20WP	G15_092	FROM->TO	G14-057T 345.00 - SUNNYSIDE 345KV CKT 1	717	789	0.47693	109.9254	STATELINE INTERCHANGE - STLN-DEMARC6 230KV CKT 1
FDNS	00NR	0	20WP	G15_092	FROM->TO	G14-057T 345.00 - SUNNYSIDE 345KV CKT 1	717	789	0.47693	109.9227	STLN-DEMARC6 - SWEETWATER 230KV CKT 1
FDNS	00NR	0	20WP	G15_092	FROM->TO	G14-057T 345.00 - SUNNYSIDE 345KV CKT 1	717	789	0.47693	109.9175	P12:230:AEPW-SPS:SWEETWT6:WHEELER 6
FDNS	00NR	0	20WP	G15_092	FROM->TO	G14-057T 345.00 - SUNNYSIDE 345KV CKT 1	717	789	0.47624	109.8577	GEN600002 3-SHERBURNE CNTY G3
FDNS	00NR	0	20WP	G15_092	FROM->TO	G14-057T 345.00 - SUNNYSIDE 345KV CKT 1	717	789	0.47624	109.827	GEN563043 1-G15068_4 0.6900
FDNS	00NR	0	20WP	G15_092	FROM->TO	G14-057T 345.00 - SUNNYSIDE 345KV CKT 1	717	789	0.47624	109.8013	GEN526333 1-JONES GEN #3 21 KV
FDNS	00NR	0	20WP	G15_092	FROM->TO	G14-057T 345.00 - SUNNYSIDE 345KV CKT 1	717	789	0.47624	109.8012	GEN526334 1-JONES_4 116.500
FDNS	00NR	0	20WP	G15_092	FROM->TO	G14-057T 345.00 - SUNNYSIDE 345KV CKT 1	717	789	0.47624	109.7846	GEN563273 2-G15093_4 0.6900
FDNS	00NR	0	20WP	G15_092	FROM->TO	G14-057T 345.00 - SUNNYSIDE 345KV CKT 1	717	789	0.47624	109.7685	GEN344225 1-1CAL G1 25.000
FDNS	00NR	0	20WP	G15_092	FROM->TO	G14-057T 345.00 - SUNNYSIDE 345KV CKT 1	717	789	0.47624	109.7635	GEN525844 1-ELK_1 118.000
FDNS	00NR	0	20WP	G15_092	FROM->TO	G14-057T 345.00 - SUNNYSIDE 345KV CKT 1	717	789	0.47624	109.7458	GEN525845 1-ELK_2 1 18.000
FDNS	00NR	0	20WP	G15_092	FROM->TO	G14-057T 345.00 - SUNNYSIDE 345KV CKT 1	717	789	0.47624	109.6155	GEN527166 1-MUSTANG_6 118.000
FDNS	00NR	0	20WP	G15_092	FROM->TO	G14-057T 345.00 - SUNNYSIDE 345KV CKT 1	717	789	0.47624	109.5706	GEN635023 3-WALTER SCOTT UNIT 3
FDNS	00NR	0	20WP	G15_092	FROM->TO	G14-057T 345.00 - SUNNYSIDE 345KV CKT 1	717	789	0.47624	109.5526	GEN563202 1-G15085_3 0.5500
FDNS	00NR	0	20WP	G15_092	FROM->TO	G14-057T 345.00 - SUNNYSIDE 345KV CKT 1	717	789	0.47624	109.5515	GEN528501 1-G14_012 24.000
FDNS	00NR	0	20WP	G15_092	FROM->TO	G14-057T 345.00 - SUNNYSIDE 345KV CKT 1	717	789	0.47783	109.4942	P12:230:AEPW:ELKCITY6:SWEETWT6
FDNS	00NR	0	20WP	G15_092	FROM->TO	G14-057T 345.00 - SUNNYSIDE 345KV CKT 1	717	789	0.47624	109.4928	GEN562590 1-G14_057_3 0.6900
FDNS	00NR	0	16WP	G15_092	FROM->TO	G14-057T 345.00 - SUNNYSIDE 345KV CKT 1	717	789	0.47479	109.4478	EASTDC - ERCOT EQUIVALENCE 345KV CKT 1
FDNS	00NR	0	20WP	G15_092	FROM->TO	G14-057T 345.00 - SUNNYSIDE 345KV CKT 1	717	789	0.47624	109.3772	GEN562762 1-G15033_3 0.6900
FDNS	00NR	0	20WP	G15_092	FROM->TO	G14-057T 345.00 - SUNNYSIDE 345KV CKT 1	717	789	0.47624	109.3658	GEN562655 1-G14_074_3 0.6900
FDNS	00NR	0	20WP	G15_092	FROM->TO	G14-057T 345.00 - SUNNYSIDE 345KV CKT 1	717	789	0.47624	109.3638	GEN525562 1-TOLK GEN #2 24 KV
FDNS	00NR	0	20WP	G15_092	FROM->TO	G14-057T 345.00 - SUNNYSIDE 345KV CKT 1	717	789	0.47266	109.2753	JOHNSON COUNTY (JOHNCO) 345/138/13.8KV TRANSFORMER CKT 1
FDNS	00NR	0	20WP	G15_092	FROM->TO	G14-057T 345.00 - SUNNYSIDE 345KV CKT 1	717	789	0.47624	109.27	GEN562685 1-G15_013_3 0.3550
FDNS	00NR	0	20WP	G15_092	FROM->TO	G14-057T 345.00 - SUNNYSIDE 345KV CKT 1	717	789	0.47624	109.2675	GEN527903 1-HOBBS PLANT #3 (ST)
FDNS	00NR	0	20WP	G15_092	FROM->TO	G14-057T 345.00 - SUNNYSIDE 345KV CKT 1	717	789	0.47693	109.2452	CHISHOLM6 230.00 - SWEETWATER 230KV CKT 1
FDNS	00NR	0	20WP	G15_092	FROM->TO	G14-057T 345.00 - SUNNYSIDE 345KV CKT 1	717	789	0.47624	109.1665	GEN635024 4-WALTER SCOTT UNIT 4
FDNS	00NR	0	20WP	G15_092	FROM->TO	G14-057T 345.00 - SUNNYSIDE 345KV CKT 1	717	789	0.47624	109.1256	GEN563272 1-G15093_3 0.6900
FDNS	00NR	0	20WP	G15_092	FROM->TO	G14-057T 345.00 - SUNNYSIDE 345KV CKT 1	717	789	0.46733	109.1187	LYDIA - VALLIANT 345KV CKT 1
FDNS	00NR	0	20WP	G15_092	FROM->TO	G14-057T 345.00 - SUNNYSIDE 345KV CKT 1	717	789	0.46733	109.1187	LYDIA - VALLIANT 345KV CKT 1
FDNS	00NR	0	20WP	G15_092	FROM->TO	G14-057T 345.00 - SUNNYSIDE 345KV CKT 1	717	789	0.47624	108.7846	GEN525561 1-TOLK GEN #1 24 KV
FDNS	00NR	0	16WP	G15_092	FROM->TO	G14-057T 345.00 - SUNNYSIDE 345KV CKT 1	717	789	0.41963	108.4243	JOHNSON COUNTY - PITTSBURG 345KV CKT 1
FDNS	00NR	0	16WP	G15_092	FROM->TO	G14-057T 345.00 - SUNNYSIDE 345KV CKT 1	717	789	0.41963	108.4243	JOHNSON COUNTY - PITTSBURG 345KV CKT 1
FDNS	00NR	0	16WP	G15_092	FROM->TO	G14-057T 345.00 - SUNNYSIDE 345KV CKT 1	717	789	0.47479	108.057	GEN563263 1-G15092_4 0.6900
FDNS	00NR	0	16WP	G15_092	FROM->TO	G14-057T 345.00 - SUNNYSIDE 345KV CKT 1	717	789	0.45277	107.6655	HUGO - VALLIANT 345KV CKT 1
FDNS	00NR	0	16WP	G15_092	FROM->TO	G14-057T 345.00 - SUNNYSIDE 345KV CKT 1	717	789	0.45277	107.6655	HUGO - VALLIANT 345KV CKT 1
FDNS	00NR	0	20WP	G15_092	FROM->TO	G14-057T 345.00 - SUNNYSIDE 345KV CKT 1	717	789	0.42125	106.869	JOHNSON COUNTY - PITTSBURG 345KV CKT 1
FDNS	00NR	0	20WP	G15_092	FROM->TO	G14-057T 345.00 - SUNNYSIDE 345KV CKT 1	717	789	0.42125	106.869	JOHNSON COUNTY - PITTSBURG 345KV CKT 1
FDNS	00NR	0	20WP	G15_092	FROM->TO	G14-057T 345.00 - SUNNYSIDE 345KV CKT 1	717	789	0.45369	106.5939	HUGO - VALLIANT 345KV CKT 1
FDNS	00NR	0	20WP	G15_092	FROM->TO	G14-057T 345.00 - SUNNYSIDE 345KV CKT 1	717	789	0.45369	106.5939	HUGO - VALLIANT 345KV CKT 1
FDNS	00NR	0	16WP	G15_092	FROM->TO	G14-057T 345.00 - SUNNYSIDE 345KV CKT 1	717	789	0.47479	106.381	GEN563262 1-G15092_3 0.6900
FDNS	00NR	0	20WP	G15_092	FROM->TO	G14-057T 345.00 - SUNNYSIDE 345KV CKT 1	717	789	0.47624	105.9962	GEN563263 1-G15092_4 0.6900
FDNS	00NR	0	16WP	G15_092	FROM->TO	G14-057T 345.00 - SUNNYSIDE 345KV CKT 1	717	789	0.49173	104.8432	G14-074T 345.00 - TUCO INTERCHANGE 345KV CKT 1
FDNS	00NR	0	20WP	G15_092	FROM->TO	G14-057T 345.00 - SUNNYSIDE 345KV CKT 1	717	789	0.47624	104.3167	GEN563262 1-G15092_3 0.6900
FDNS	00NR	0	16WP	G15_092	FROM->TO	G14-057T 345.00 - SUNNYSIDE 345KV CKT 1	717	789	0.40379	102.6669	JOHNSON COUNTY - SUNNYSIDE 345KV CKT 1
FDNS	00NR	0	20WP	G15_092	FROM->TO	G14-057T 345.00 - SUNNYSIDE 345KV CKT 1	717	789	0.49322	101.6269	G14-074T 345.00 - TUCO INTERCHANGE 345KV CKT 1
FDNS	00NR	0	20SP	G15_092	FROM->TO	G14-057T 345.00 - SUNNYSIDE 345KV CKT 1	717	789	0.55707	100.8006	CIMARRON - MINCO 345KV CKT 1
FDNS	00NR	0	17SP	G15_092	FROM->TO	G14-057T 345.00 - SUNNYSIDE 345KV CKT 1	717	789	0.5597	100.4284	GRACEMONT - MINCO 345KV CKT 1
FDNS	00NR	0	20WP	G15_092	FROM->TO	G14-057T 345.00 - SUNNYSIDE 345KV CKT 1	717	789	0.40551	100.3152	JOHNSON COUNTY - SUNNYSIDE 345KV CKT 1
FDNS	00NR	0	16WP	G15_092	TO->FROM	PITTSBURG - SEMINOLE 345KV CKT 1	717	717	0.14345	101.4082	G14-057T 345.00 - SUNNYSIDE 345KV CKT 1
FDNS	00NR	0	16WP	G15_092	TO->FROM	TUPELO - TUPELO TAP 138KV CKT 1	143	143	0.04028	118.2481	G14-057T 345.00 - SUNNYSIDE 345KV CKT 1
FDNS	00NR	0	20WP	G15_092	TO->FROM	TUPELO - TUPELO TAP 138KV CKT 1	143	143	0.0407	116.2031	G14-057T 345.00 - SUNNYSIDE 345KV CKT 1
FDNS	00NR	0	20WP	G15_092	TO->FROM	TUPELO - TUPELO TAP 138KV CKT 1	143	143	0.02996	110.2278	HUGO - SUNNYSIDE 345KV CKT 1
FDNS	00NR	2	17SP	G15_092	TO->FROM	CLEAVELAND - CLEVLND 4 138.00 138KV CKT Z1	305	371	0.03493	110.0904	CLEVELAND - TULSA NORTH 345KV CKT 1
FDNS	00NR	2	17SP	G15_092	TO->FROM	CLEAVELAND - CLEVLND 4 138.00 138KV CKT Z1	305	371	0.03493	110.0904	CLEVELAND - TULSA NORTH 345KV CKT 1
FDNS	00NR	2	20SP	G15_092	TO->FROM	CLEAVELAND - CLEVLND 4 138.00 138KV CKT Z1	305	371	0.03365	109.2211	CLEVELAND - TULSA NORTH 345KV CKT 1
FDNS	00NR	2	20SP	G15_092	TO->FROM	CLEAVELAND - CLEVLND 4 138.00 138KV CKT Z1	305	371	0.03365	109.2211	CLEVELAND - TULSA NORTH 345KV CKT 1
FDNS	00NR	0	16WP	G15_093	FROM->TO	CIMARRON - DRAPER LAKE 345KV CKT 1	717	717	0.17997	132.6508	G14-057T 345.00 - SUNNYSIDE 345KV CKT 1
FDNS	00NR	0	16WP	G15_093	FROM->TO	CIMARRON - DRAPER LAKE 345KV CKT 1	717	717	0.17997	122.0003	G14-057T 345.00 - LAWTON EASTSIDE 345KV CKT 1
FDNS	00NR	0	16WP	G15_093	FROM->TO	CIMARRON - DRAPER LAKE 345KV CKT 1	717	717	0.13788	116.5817	ARCADIA - SEMINOLE 345KV CKT 1
FDNS	00NR	0	16WP	G15_093	FROM->TO	CIMARRON - DRAPER LAKE 345KV CKT 1	717	717	0.14192	115.588	CLEVELAND - G15066_T 345.00 345KV CKT 1
FDNS	00NR	0	16WP	G15_093	FROM->TO	CIMARRON - DRAPER LAKE 345KV CKT 1	717	717	0.18752	115.2993	ARCADIA - NORTHWEST 345KV CKT 1
FDNS	00NR	0	16WP	G15_093	FROM->TO	CIMARRON - DRAPER LAKE 345KV CKT 1	717	717	0.14192	114.8063	G15066_T 345.00 - SOONER 345KV CKT 1
FDNS	00NR	0	16WP	G15_093	FROM->TO	CIMARRON - DRAPER LAKE 345KV CKT 1	717	717	0.14092	110.2756	CLEVELAND - TULSA NORTH 345KV CKT 1
FDNS	00NR	0	16WP	G15_093	FROM->TO	CIMARRON - DRAPER LAKE 345KV CKT 1	717	717	0.14092	110.2756	CLEVELAND - TULSA NORTH 345KV CKT 1
FDNS	00NR	0	16WP	G15_093	FROM->TO	CIMARRON - DRAPER LAKE 345KV CKT 1	717	717	0.14647	110.1142	MATHWSN7 345.00 - NORTHWEST 345KV CKT 1
FDNS	00NR	0	16WP	G15_093	FROM->TO	CIMARRON - DRAPER LAKE 345KV CKT 1	717	717	0.14202	109.2409	CIMARRON - SARA 138KV CKT 1
FDNS	00NR	0	16WP	G15_093	FROM->TO	CIMARRON - DRAPER LAKE 345KV CKT 1	717	717	0.1466	108.713	P12:138:WFEC:MSL03

SOLUTION	GROUP	SCENARIO	SEASON	SOURCE	DIRECTION	MONITORED ELEMENT	RATEA (MVA)	RATEB(MVA)	TDF	TC%LOADING (% MVA)	CONTINGENCY
FDNS	00NR	0	16WP	G15_093	FROM->TO	CIMARRON - DRAPER LAKE 345KV CKT 1	717	717	0.14067	108.0689	CIMARRON (CIMARON2) 345/138/13.8KV TRANSFORMER CKT 1
FDNS	00NR	0	16WP	G15_093	FROM->TO	CIMARRON - DRAPER LAKE 345KV CKT 1	717	717	0.14202	107.9446	SARA - STHLAKE4 138.00 138KV CKT 1
FDNS	00NR	0	16WP	G15_093	FROM->TO	CIMARRON - DRAPER LAKE 345KV CKT 1	717	717	0.14059	107.899	CIMARRON (CIMARON1) 345/138/13.8KV TRANSFORMER CKT 1
FDNS	00NR	0	16WP	G15_093	FROM->TO	CIMARRON - DRAPER LAKE 345KV CKT 1	717	717	0.14202	107.745	MCCLAIN - STHLAKE4 138.00 138KV CKT 1
FDNS	00NR	0	16WP	G15_093	FROM->TO	CIMARRON - DRAPER LAKE 345KV CKT 1	717	717	0.14215	107.4685	CIMARRON - CZECH HALL 138KV CKT 1
FDNS	00NR	0	16WP	G15_093	FROM->TO	CIMARRON - DRAPER LAKE 345KV CKT 1	717	717	0.14215	107.112	CZECH HALL - XEROX 138KV CKT 1
FDNS	00NR	0	16WP	G15_093	FROM->TO	CIMARRON - DRAPER LAKE 345KV CKT 1	717	717	0.14215	107.0924	MORGAN - XEROX 138KV CKT 1
FDNS	00NR	0	16WP	G15_093	FROM->TO	CIMARRON - DRAPER LAKE 345KV CKT 1	717	717	0.14471	106.9919	ANADARKO - POCASSETT 138KV CKT 1
FDNS	00NR	0	16WP	G15_093	FROM->TO	CIMARRON - DRAPER LAKE 345KV CKT 1	717	717	0.14215	106.9752	MORGAN - MUSTANG 138KV CKT 1
FDNS	00NR	0	16WP	G15_093	FROM->TO	CIMARRON - DRAPER LAKE 345KV CKT 1	717	717	0.14471	106.7926	POCASSETT - TUTTLE 138KV CKT 1
FDNS	00NR	0	16WP	G15_093	FROM->TO	CIMARRON - DRAPER LAKE 345KV CKT 1	717	717	0.13864	106.703	GEN515040 1-SEMINOLE 1G
FDNS	00NR	0	16WP	G15_093	FROM->TO	CIMARRON - DRAPER LAKE 345KV CKT 1	717	717	0.13887	106.6763	LACYGNE - WAVERLY7 345.00 345KV CKT 1
FDNS	00NR	0	16WP	G15_093	FROM->TO	CIMARRON - DRAPER LAKE 345KV CKT 1	717	717	0.14684	106.5853	JOHNSON COUNTY - SUNNYSIDE 345KV CKT 1
FDNS	00NR	0	16WP	G15_093	FROM->TO	CIMARRON - DRAPER LAKE 345KV CKT 1	717	717	0.13887	106.4587	WAVERLY7 345.00 - WOLF CREEK 345KV CKT 1
FDNSLock	00NR	0	16WP	G15_093	FROM->TO	CIMARRON - DRAPER LAKE 345KV CKT 1	717	717	0.13864	106.456	GEN509403 1-PIRKEY GENERATION
FDNS	00NR	0	16WP	G15_093	FROM->TO	CIMARRON - DRAPER LAKE 345KV CKT 1	717	717	0.14306	106.4058	CORN TAP - NAPLESTP 138.00 138KV CKT 1
FDNS	00NR	0	16WP	G15_093	FROM->TO	CIMARRON - DRAPER LAKE 345KV CKT 1	717	717	0.13864	106.3792	GEN509416 1-TURK GENERATION
FDNS	00NR	0	16WP	G15_093	FROM->TO	CIMARRON - DRAPER LAKE 345KV CKT 1	717	717	0.13864	106.3605	GEN501801 1-DOLET HILLS UNIT1
FDNS	00NR	0	16WP	G15_093	FROM->TO	CIMARRON - DRAPER LAKE 345KV CKT 1	717	717	0.14306	106.3121	NAPLESTP 138.00 - PAYNE 138.00 138KV CKT 1
FDNS	00NR	0	16WP	G15_093	FROM->TO	CIMARRON - DRAPER LAKE 345KV CKT 1	717	717	0.14471	106.2787	BRIDGECR 138.00 - TUTTLE 138KV CKT 1
FDNS	00NR	0	16WP	G15_093	FROM->TO	CIMARRON - DRAPER LAKE 345KV CKT 1	717	717	0.13943	106.2342	CANEYRV7 345.00 - NEOSHO 345KV CKT 1
FDNS	00NR	0	17SP	G15_093	FROM->TO	CIMARRON - DRAPER LAKE 345KV CKT 1	717	717	0.16907	106.1697	G14-057T 345.00 - SUNNYSIDE 345KV CKT 1
FDNSLock	00NR	0	16WP	G15_093	FROM->TO	CIMARRON - DRAPER LAKE 345KV CKT 1	717	717	0.13864	106.0246	GEN336821 1-GRAND GULF UNIT
FDNS	00NR	0	16WP	G15_093	FROM->TO	CIMARRON - DRAPER LAKE 345KV CKT 1	717	717	0.13864	105.9922	GEN515042 1-SEMINOLE 3G
FDNS	00NR	0	16WP	G15_093	FROM->TO	CIMARRON - DRAPER LAKE 345KV CKT 1	717	717	0.13943	105.9562	CANEYRV7 345.00 - LATHAMS7 345.00 345KV CKT 1
FDNS	00NR	0	16WP	G15_093	FROM->TO	CIMARRON - DRAPER LAKE 345KV CKT 1	717	717	0.14471	105.9048	BRIDGECR 138.00 - SUNSHINE CANYON 138KV CKT 1
FDNS	00NR	0	16WP	G15_093	FROM->TO	CIMARRON - DRAPER LAKE 345KV CKT 1	717	717	0.14471	105.894	P12:138:WFEC:MSL01
FDNS	00NR	0	16WP	G15_093	FROM->TO	CIMARRON - DRAPER LAKE 345KV CKT 1	717	717	0.13864	105.7583	GEN515041 1-SEMINOLE 2G
FDNSLock	00NR	0	16WP	G15_093	FROM->TO	CIMARRON - DRAPER LAKE 345KV CKT 1	717	717	0.13864	105.7266	GEN336153 1-WATERFORD UNIT#3
FDNS	00NR	0	16WP	G15_093	FROM->TO	CIMARRON - DRAPER LAKE 345KV CKT 1	717	717	0.15984	105.5516	CIMARRON - NORTHWEST 345KV CKT 1
FDNS	00NR	0	16WP	G15_093	FROM->TO	CIMARRON - DRAPER LAKE 345KV CKT 1	717	717	0.13864	105.5263	GEN509406 1-WELSH #3
FDNS	00NR	0	16WP	G15_093	FROM->TO	CIMARRON - DRAPER LAKE 345KV CKT 1	717	717	0.13864	105.5261	GEN509404 1-WELSH #1
FDNS	00NR	0	16WP	G15_093	FROM->TO	CIMARRON - DRAPER LAKE 345KV CKT 1	717	717	0.13943	105.5155	LATHAMS7 345.00 - ROSE HILL 345KV CKT 1
FDNSLock	00NR	0	16WP	G15_093	FROM->TO	CIMARRON - DRAPER LAKE 345KV CKT 1	717	717	0.13864	105.4219	GEN335831 1-RIVERBEND UNIT#1
FDNSLock	00NR	0	16WP	G15_093	FROM->TO	CIMARRON - DRAPER LAKE 345KV CKT 1	717	717	0.13864	105.406	GEN337911 1-ARKANSAS NUCLEAR ONE UNIT #2
FDNS	00NR	0	16WP	G15_093	FROM->TO	CIMARRON - DRAPER LAKE 345KV CKT 1	717	717	0.14038	105.1336	HUGO - SUNNYSIDE 345KV CKT 1
FDNS	00NR	0	16WP	G15_093	FROM->TO	CIMARRON - DRAPER LAKE 345KV CKT 1	717	717	0.13344	105.1183	CANADIAN RIVER - MUSKOGEE 345KV CKT 1
FDNS	00NR	0	16WP	G15_093	FROM->TO	CIMARRON - DRAPER LAKE 345KV CKT 1	717	717	0.13852	105.0337	P12:138:OKGE:3TERM14
FDNS	00NR	0	16WP	G15_093	FROM->TO	CIMARRON - DRAPER LAKE 345KV CKT 1	717	717	0.13864	105.0296	GRAND GULF 500/22.0KV TRANSFORMER CKT 1
FDNS	00NR	0	16WP	G15_093	FROM->TO	CIMARRON - DRAPER LAKE 345KV CKT 1	717	717	0.13864	105.0273	GEN337910 1-ARKANSAS NUCLEAR ONE UNIT #1
FDNS	00NR	0	16WP	G15_093	FROM->TO	CIMARRON - DRAPER LAKE 345KV CKT 1	717	717	0.14631	105.0144	JOHNSON COUNTY - PITTSBURG 345KV CKT 1
FDNS	00NR	0	16WP	G15_093	FROM->TO	CIMARRON - DRAPER LAKE 345KV CKT 1	717	717	0.14631	105.0144	JOHNSON COUNTY - PITTSBURG 345KV CKT 1
FDNS	00NR	0	16WP	G15_093	FROM->TO	CIMARRON - DRAPER LAKE 345KV CKT 1	717	717	0.1391	104.9951	HORSESHOE LAKE - JONES TAP 138KV CKT 1
FDNS	00NR	0	16WP	G15_093	FROM->TO	CIMARRON - DRAPER LAKE 345KV CKT 1	717	717	0.13827	104.9687	MORISNT4 138.00 - STILLWATER 138KV CKT 1
FDNS	00NR	0	16WP	G15_093	FROM->TO	CIMARRON - DRAPER LAKE 345KV CKT 1	717	717	0.13829	104.9641	P12:138:OKGE:3TERM2
FDNS	00NR	0	16WP	G15_093	FROM->TO	CIMARRON - DRAPER LAKE 345KV CKT 1	717	717	0.13963	104.9439	REDBUD - RIVERSIDE STATION 345KV CKT 1
FDNS	00NR	0	16WP	G15_093	FROM->TO	CIMARRON - DRAPER LAKE 345KV CKT 1	717	717	0.13963	104.9439	REDBUD - RIVERSIDE STATION 345KV CKT 1
FDNS	00NR	0	16WP	G15_093	FROM->TO	CIMARRON - DRAPER LAKE 345KV CKT 1	717	717	0.13864	104.8928	GEN515226 1-MUSKOGEE 6G
FDNS	00NR	0	16WP	G15_093	FROM->TO	CIMARRON - DRAPER LAKE 345KV CKT 1	717	717	0.13864	104.879	GEN501813 1-RODEMACHER UNIT 3
FDNS	00NR	0	16WP	G15_093	FROM->TO	CIMARRON - DRAPER LAKE 345KV CKT 1	717	717	0.14588	104.8291	BAILEY4 138.00 - SUNSHINE CANYON 138KV CKT 1
FDNS	00NR	0	16WP	G15_093	FROM->TO	CIMARRON - DRAPER LAKE 345KV CKT 1	717	717	0.13896	104.7782	NORTHWEST (NORTWST2) 345/138/13.8KV TRANSFORMER CKT 1
FDNS	00NR	0	16WP	G15_093	FROM->TO	CIMARRON - DRAPER LAKE 345KV CKT 1	717	717	0.13831	104.7766	7SAREPTA% 345.00 - LONGWOOD 345KV CKT 1
FDNS	00NR	0	16WP	G15_093	FROM->TO	CIMARRON - DRAPER LAKE 345KV CKT 1	717	717	0.13831	104.7766	7SAREPTA% 345.00 - LONGWOOD 345KV CKT 1
FDNS	00NR	0	16WP	G15_093	FROM->TO	CIMARRON - DRAPER LAKE 345KV CKT 1	717	717	0.1379	104.7749	ARCADIA - KAMO MEMORIAL 138KV CKT 1
FDNS	00NR	0	16WP	G15_093	FROM->TO	CIMARRON - DRAPER LAKE 345KV CKT 1	717	717	0.13869	104.7555	P12:138:OKGE:3TERM12
FDNS	00NR	0	16WP	G15_093	FROM->TO	CIMARRON - DRAPER LAKE 345KV CKT 1	717	717	0.13851	104.7399	DOLET HILLS - SOUTHWEST SHREVEPORT 345KV CKT 1
FDNS	00NR	0	16WP	G15_093	FROM->TO	CIMARRON - DRAPER LAKE 345KV CKT 1	717	717	0.13851	104.7399	DOLET HILLS - SOUTHWEST SHREVEPORT 345KV CKT 1
FDNS	00NR	0	16WP	G15_093	FROM->TO	CIMARRON - DRAPER LAKE 345KV CKT 1	717	717	0.13864	104.6942	GEN515225 1-MUSKOGEE 5G
FDNS	00NR	0	16WP	G15_093	FROM->TO	CIMARRON - DRAPER LAKE 345KV CKT 1	717	717	0.13864	104.694	GEN515223 1-MUSKOGEE 4G
FDNS	00NR	0	16WP	G15_093	FROM->TO	CIMARRON - DRAPER LAKE 345KV CKT 1	717	717	0.13864	104.6904	GEN335206 1-NELSON UNIT 6
FDNS	00NR	0	16WP	G15_093	FROM->TO	CIMARRON - DRAPER LAKE 345KV CKT 1	717	717	0.13923	104.68	MEMORIAL - SKYLINE 138KV CKT 1
FDNS	00NR	0	16WP	G15_093	FROM->TO	CIMARRON - DRAPER LAKE 345KV CKT 1	717	717	0.15275	104.583	GRACEMONT (BANK 1) 345/138/13.8KV TRANSFORMER CKT 1
FDNS	00NR	0	16WP	G15_093	FROM->TO	CIMARRON - DRAPER LAKE 345KV CKT 1	717	717	0.13984	104.5721	QUAIL CREEK - SKYLINE 138KV CKT 1
FDNS	00NR	0	16WP	G15_093	FROM->TO	CIMARRON - DRAPER LAKE 345KV CKT 1	717	717	0.13864	104.5492	GEN509409 1-WILKES #3
FDNS	00NR	0	16WP	G15_093	FROM->TO	CIMARRON - DRAPER LAKE 345KV CKT 1	717	717	0.13864	104.5474	GEN337653 1-WHITE BLUFF UNIT #2
FDNS	00NR	0	16WP	G15_093	FROM->TO	CIMARRON - DRAPER LAKE 345KV CKT 1	717	717	0.13912	104.5355	P12:138:OKGE:3TERM18
FDNS	00NR	0	16WP	G15_093	FROM->TO	CIMARRON - DRAPER LAKE 345KV CKT 1	717	717	0.14588	104.5271	BAILEY4 138.00 - WESTMOORE 138KV CKT 1
FDNS	00NR	0	16WP	G15_093	FROM->TO	CIMARRON - DRAPER LAKE 345KV CKT 1	717	717	0.13864	104.519	GEN501812 1-RODEMACHER UNIT 2
FDNS	00NR	0	16WP	G15_093	FROM->TO	CIMARRON - DRAPER LAKE 345KV CKT 1	717	717	0.13893	104.5145	NORTHWEST (NORTWST4) 345/138/13.8KV TRANSFORMER CKT 1
FDNS	00NR	0	16WP	G15_093	FROM->TO	CIMARRON - DRAPER LAKE 345KV CKT 1	717	717	0.13864	104.4548	NEW MADRID 161/22.0KV TRANSFORMER CKT 1
FDNS	00NR	0	16WP	G15_093	FROM->TO	CIMARRON - DRAPER LAKE 345KV CKT 1	717	717	0.13905	104.4542	36 & MERIDIAN - CHEMTRON 138KV CKT 1
FDNS	00NR	0	16WP	G15_093	FROM->TO	CIMARRON - DRAPER LAKE 345KV CKT 1	717	717	0.13937	104.4515	THISTLE7 345.00 - WOODWARD DISTRICT EHV 345KV CKT 1
FDNS	00NR	0	16WP	G15_093	FROM->TO	CIMARRON - DRAPER LAKE 345KV CKT 1	717	717	0.13937	104.4515	THISTLE7 345.00 - WOODWARD DISTRICT EHV 345KV CKT 1
FDNS	00NR	0	16WP	G15_093	FROM->TO	CIMARRON - DRAPER LAKE 345KV CKT 1	717	717	0.13937	104.4515	THISTLE7 345.00 - WOODWARD DISTRICT EHV 345KV CKT 2
FDNS	00NR	0	16WP	G15_093	FROM->TO	CIMARRON - DRAPER LAKE 345KV CKT 1	717	717	0.13937	104.4515	THISTLE7 345.00 - WOODWARD DISTRICT EHV 345KV CKT 2
FDNS	00NR	0	16WP	G15_093	FROM->TO	CIMARRON - DRAPER LAKE 345KV CKT 1	717	717	0.13864	104.4411	NEW MADRID 345/22.0KV TRANSFORMER CKT 1
FDNS	00NR	0	16WP	G15_093	FROM->TO	CIMARRON - DRAPER LAKE 345KV CKT 1	717	717	0.13864	104.4225	GEN520947 1-HUGO1
FDNS	00NR	0	16WP	G15_093	FROM->TO	CIMARRON - DRAPER LAKE 345KV CKT 1	717	717	0.13864	104.4148	GEN337652 1-WHITE BLUFF UNIT #1
FDNS	00NR	0	16WP	G15_093	FROM->TO	CIMARRON - DRAPER LAKE 345KV CKT 1	717	717	0.13893	104.3894	NORTHWEST (NORTWST3) 345/138/13.8KV TRANSFORMER CKT 1

SOLUTION	GROUP	SCENARIO	SEASON	SOURCE	DIRECTION	MONITORED ELEMENT	RATEA (MVA)	RATEB(MVA)	TDF	TC%LOADING (% MVA)	CONTINGENCY
FDNS	00NR	0	16WP	G15_093	FROM->TO	CIMARRON - DRAPER LAKE 345KV CKT 1	717	717	0.13846	104.376	3TR3AR8EL7EL
FDNS	00NR	0	16WP	G15_093	FROM->TO	CIMARRON - DRAPER LAKE 345KV CKT 1	717	717	0.13846	104.376	7SAREPTA% 345.00 - ELDORADO EHV 345KV CKT 1
FDNS	00NR	0	16WP	G15_093	FROM->TO	CIMARRON - DRAPER LAKE 345KV CKT 1	717	717	0.13846	104.3682	ELDORADO EHV 500/345KV TRANSFORMER CKT 1
FDNS	00NR	0	16WP	G15_093	FROM->TO	CIMARRON - DRAPER LAKE 345KV CKT 1	717	717	0.13905	104.3672	CHEMTRON - PENNSYLVANIA 138KV CKT 1
FDNS	00NR	0	16WP	G15_093	FROM->TO	CIMARRON - DRAPER LAKE 345KV CKT 1	717	717	0.13821	104.3371	G15052_T 345.00 - ROSE HILL 345KV CKT 1
FDNS	00NR	0	16WP	G15_093	FROM->TO	CIMARRON - DRAPER LAKE 345KV CKT 1	717	717	0.13874	104.3332	G15074_T 345.00 - HOYT 345KV CKT 1
FDNS	00NR	0	16WP	G15_093	FROM->TO	CIMARRON - DRAPER LAKE 345KV CKT 1	717	717	0.14262	104.3021	BLANCHARD - CORNVILLE 138KV CKT 1
FDNS	00NR	0	16WP	G15_093	FROM->TO	CIMARRON - DRAPER LAKE 345KV CKT 1	717	717	0.1401	104.3015	COMANCHE - LOCO 138KV CKT 1
FDNS	00NR	0	16WP	G15_093	FROM->TO	CIMARRON - DRAPER LAKE 345KV CKT 1	717	717	0.13881	104.2791	P12:138:OKGE:3TERM17
FDNS	00NR	0	16WP	G15_093	FROM->TO	CIMARRON - DRAPER LAKE 345KV CKT 1	717	717	0.13864	104.2625	GEN515577 1-ARBWND11 0.6900
FDNS	00NR	0	16WP	G15_093	FROM->TO	CIMARRON - DRAPER LAKE 345KV CKT 1	717	717	0.14588	104.2438	FRANKLIN SW - WESTMOORE 138KV CKT 1
FDNS	00NR	0	16WP	G15_093	FROM->TO	CIMARRON - DRAPER LAKE 345KV CKT 1	717	717	0.13981	104.2374	P12:138:OKGE:3TERM11
FDNS	00NR	0	16WP	G15_093	FROM->TO	CIMARRON - DRAPER LAKE 345KV CKT 1	717	717	0.13864	104.2237	GEN334440 1-SABINE UNIT 4
FDNS	00NR	0	16WP	G15_093	FROM->TO	CIMARRON - DRAPER LAKE 345KV CKT 1	717	717	0.13889	104.2165	LONEOAK - NORTHWEST 138KV CKT 1
FDNS	00NR	0	16WP	G15_093	FROM->TO	CIMARRON - DRAPER LAKE 345KV CKT 1	717	717	0.14262	104.211	P12:138:AEPW-OGE:CORNVIL4:MAUD 4
FDNS	00NR	0	16WP	G15_093	FROM->TO	CIMARRON - DRAPER LAKE 345KV CKT 1	717	717	0.13991	104.2024	KETCH TAP - NORTHWEST 138KV CKT 1
FDNS	00NR	0	16WP	G15_093	FROM->TO	CIMARRON - DRAPER LAKE 345KV CKT 1	717	717	0.13864	104.2023	DELL 500 - ESSEX UNIT 2 500KV CKT Z1
FDNS	00NR	0	16WP	G15_093	FROM->TO	CIMARRON - DRAPER LAKE 345KV CKT 1	717	717	0.13941	104.1938	DIVISION AVE - LAKESIDE 138KV CKT 1
FDNS	00NR	0	16WP	G15_093	FROM->TO	CIMARRON - DRAPER LAKE 345KV CKT 1	717	717	0.13751	104.1729	HORSESHOE LAKE - KAMO MEMORIAL 138KV CKT 1
FDNS	00NR	0	16WP	G15_093	FROM->TO	CIMARRON - DRAPER LAKE 345KV CKT 1	717	717	0.13854	104.1303	NORTHWEST - PANTHER 138KV CKT 1
FDNS	00NR	0	16WP	G15_093	FROM->TO	CIMARRON - DRAPER LAKE 345KV CKT 1	717	717	0.13729	104.1253	G14-074T 345.00 - OKLAUNION 345KV CKT 1
FDNS	00NR	0	16WP	G15_093	FROM->TO	CIMARRON - DRAPER LAKE 345KV CKT 1	717	717	0.14055	104.1217	CLARKSVILLE - ONETA 345KV CKT 1
FDNS	00NR	0	16WP	G15_093	FROM->TO	CIMARRON - DRAPER LAKE 345KV CKT 1	717	717	0.14055	104.1217	CLARKSVILLE - ONETA 345KV CKT 1
FDNS	00NR	0	16WP	G15_093	FROM->TO	CIMARRON - DRAPER LAKE 345KV CKT 1	717	717	0.13795	104.1144	P12:138:OKGE:3TERM20
FDNS	00NR	0	16WP	G15_093	FROM->TO	CIMARRON - DRAPER LAKE 345KV CKT 1	717	717	0.14262	104.1089	BLANCHARD - MAUD 138KV CKT 1
FDNS	00NR	0	16WP	G15_093	FROM->TO	CIMARRON - DRAPER LAKE 345KV CKT 1	717	717	0.14033	104.1015	CIMARRON - HAYMAKER 138KV CKT 1
FDNS	00NR	0	16WP	G15_093	FROM->TO	CIMARRON - DRAPER LAKE 345KV CKT 1	717	717	0.13872	104.0977	P12:138:OKGE:3TERM47
FDNS	00NR	0	16WP	G15_093	FROM->TO	CIMARRON - DRAPER LAKE 345KV CKT 1	717	717	0.13864	104.0931	GEN336252 1-NINEMILE POINT UNIT#5
FDNS	00NR	0	16WP	G15_093	FROM->TO	CIMARRON - DRAPER LAKE 345KV CKT 1	717	717	0.13956	104.0857	FINNEY SWITCHING STATION - HOLCOMB 345KV CKT 1
FDNS	00NR	0	16WP	G15_093	FROM->TO	CIMARRON - DRAPER LAKE 345KV CKT 1	717	717	0.13956	104.0857	FINNEY SWITCHING STATION - HOLCOMB 345KV CKT 1
FDNS	00NR	0	16WP	G15_093	FROM->TO	CIMARRON - DRAPER LAKE 345KV CKT 1	717	717	0.13864	104.0808	DOLET HILLS 345/24.0KV TRANSFORMER CKT 1
FDNS	00NR	0	16WP	G15_093	FROM->TO	CIMARRON - DRAPER LAKE 345KV CKT 1	717	717	0.13854	104.08	PANTHER - SILVER LAKE 138KV CKT 1
FDNS	00NR	0	16WP	G15_093	FROM->TO	CIMARRON - DRAPER LAKE 345KV CKT 1	717	717	0.13941	104.0723	HEFNER - LAKESIDE 138KV CKT 1
FDNS	00NR	0	16WP	G15_093	FROM->TO	CIMARRON - DRAPER LAKE 345KV CKT 1	717	717	0.13886	104.041	BLACKBERRY - NEOSHO 345KV CKT 1
FDNS	00NR	0	16WP	G15_093	FROM->TO	CIMARRON - DRAPER LAKE 345KV CKT 1	717	717	0.13864	104.0356	WHITE BLUFF 500/26.0KV TRANSFORMER CKT 1
FDNS	00NR	0	16WP	G15_093	FROM->TO	CIMARRON - DRAPER LAKE 345KV CKT 1	717	717	0.139	104.0273	KETCH - KETCH TAP 138KV CKT 1
FDNS	00NR	0	16WP	G15_093	FROM->TO	CIMARRON - DRAPER LAKE 345KV CKT 1	717	717	0.13888	104.02	EMPORIA ENERGY CENTER - G14_001T 345.00 345KV CKT 1
FDNS	00NR	0	16WP	G15_093	FROM->TO	CIMARRON - DRAPER LAKE 345KV CKT 1	717	717	0.13874	104.0189	HOYT - STRANGER CREEK 345KV CKT 1
FDNS	00NR	0	16WP	G15_093	FROM->TO	CIMARRON - DRAPER LAKE 345KV CKT 1	717	717	0.13847	104.0086	DIVISION AVE - MUSTANG 138KV CKT 1
FDNS	00NR	0	16WP	G15_093	FROM->TO	CIMARRON - DRAPER LAKE 345KV CKT 1	717	717	0.13871	104	G15088_T 345.00 - MOORE 345KV CKT 1
FDNS	00NR	0	16WP	G15_093	FROM->TO	CIMARRON - DRAPER LAKE 345KV CKT 1	717	717	0.13864	104	GEN300006 1-NEW MADRID UNIT 1
FDNS	00NR	0	16WP	G15_093	FROM->TO	CIMARRON - DRAPER LAKE 345KV CKT 1	717	717	0.13864	104	GEN300007 1-NEW MADRID UNIT 2
FDNS	00NR	0	16WP	G15_093	FROM->TO	CIMARRON - DRAPER LAKE 345KV CKT 1	717	717	0.13948	103.999	P12:138:WFEC:MSL02
FDNS	00NR	0	16WP	G15_093	FROM->TO	CIMARRON - DRAPER LAKE 345KV CKT 1	717	717	0.14033	103.998	DIVISION AVE - HAYMAKER 138KV CKT 1
FDNS	00NR	0	16WP	G15_093	FROM->TO	CIMARRON - DRAPER LAKE 345KV CKT 1	717	717	0.13864	103.9886	GEN509408 1-WILKES #2
FDNS	00NR	0	16WP	G15_093	FROM->TO	CIMARRON - DRAPER LAKE 345KV CKT 1	717	717	0.1387	103.9879	P12:138:AEPW-OGE:SHIDLER4:OSAGE 4
FDNS	00NR	0	16WP	G15_093	FROM->TO	CIMARRON - DRAPER LAKE 345KV CKT 1	717	717	0.13935	103.975	MCCLAIN - PLEASANT VALLEY 138KV CKT 1
FDNS	00NR	0	16WP	G15_093	FROM->TO	CIMARRON - DRAPER LAKE 345KV CKT 1	717	717	0.1388	103.9746	SWISSVALE - WEST GARDNER 345KV CKT 1
FDNS	00NR	0	16WP	G15_093	FROM->TO	CIMARRON - DRAPER LAKE 345KV CKT 1	717	717	0.13874	103.9659	G15074_T 345.00 - JEFFREY ENERGY CENTER 345KV CKT 1
FDNS	00NR	0	16WP	G15_093	FROM->TO	CIMARRON - DRAPER LAKE 345KV CKT 1	717	717	0.13931	103.962	ANADARKO - GEORGIA 138KV CKT 1
FDNS	00NR	0	16WP	G15_093	FROM->TO	CIMARRON - DRAPER LAKE 345KV CKT 1	717	717	0.13864	103.9525	GEN335204 1-NELSON UNIT 4
FDNS	00NR	0	16WP	G15_093	FROM->TO	CIMARRON - DRAPER LAKE 345KV CKT 1	717	717	0.13864	103.9519	GEN336831 1-BAXTER WILSON SES
FDNS	00NR	0	16WP	G15_093	FROM->TO	CIMARRON - DRAPER LAKE 345KV CKT 1	717	717	0.13804	103.9391	P12:138:AEPW:OKMULGE4:R.S.S-4
FDNS	00NR	0	16WP	G15_093	FROM->TO	CIMARRON - DRAPER LAKE 345KV CKT 1	717	717	0.13864	103.9208	GEN506754 1-LEBROCK STEAM 1
FDNS	00NR	0	16WP	G15_093	FROM->TO	CIMARRON - DRAPER LAKE 345KV CKT 1	717	717	0.13936	103.919	CLASSEN - ROBINSON 138KV CKT 1
FDNS	00NR	0	16WP	G15_093	FROM->TO	CIMARRON - DRAPER LAKE 345KV CKT 1	717	717	0.13864	103.9013	GEN334441 1-SABINE UNIT 5
FDNS	00NR	0	16WP	G15_093	FROM->TO	CIMARRON - DRAPER LAKE 345KV CKT 1	717	717	0.13864	103.8962	GEN334071 1-LEWIS CREEK 2
FDNS	00NR	0	16WP	G15_093	FROM->TO	CIMARRON - DRAPER LAKE 345KV CKT 1	717	717	0.13931	103.8953	FLETCHER - GEORGIA 138KV CKT 1
FDNS	00NR	0	16WP	G15_093	FROM->TO	CIMARRON - DRAPER LAKE 345KV CKT 1	717	717	0.13888	103.8915	G14_001T 345.00 - WICHITA 345KV CKT 1
FDNS	00NR	0	16WP	G15_093	FROM->TO	CIMARRON - DRAPER LAKE 345KV CKT 1	717	717	0.13864	103.8883	GEN334070 1-LEWIS CREEK 1
FDNS	00NR	0	16WP	G15_093	FROM->TO	CIMARRON - DRAPER LAKE 345KV CKT 1	717	717	0.13915	103.8865	BENTON - WICHITA 345KV CKT 1
FDNS	00NR	0	16WP	G15_093	FROM->TO	CIMARRON - DRAPER LAKE 345KV CKT 1	717	717	0.13956	103.8864	FINNEY SWITCHING STATION - Hitchland Interchange 345KV CKT 1
FDNS	00NR	0	16WP	G15_093	FROM->TO	CIMARRON - DRAPER LAKE 345KV CKT 1	717	717	0.13864	103.8862	GEN336251 1-NINEMILE POINT UNIT#4
FDNS	00NR	0	16WP	G15_093	FROM->TO	CIMARRON - DRAPER LAKE 345KV CKT 1	717	717	0.13859	103.8786	WEBRE - WELLS 500KV CKT 1
FDNS	00NR	0	16WP	G15_093	FROM->TO	CIMARRON - DRAPER LAKE 345KV CKT 1	717	717	0.13896	103.8775	LACYGNE - NEOSHO 345KV CKT 1
FDNSLock	00NR	0	16WP	G15_093	FROM->TO	CIMARRON - DRAPER LAKE 345KV CKT 1	717	717	0.13864	103.8742	GEN590011 2-ERCOT EQUIVALENCE
FDNS	00NR	0	16WP	G15_093	FROM->TO	CIMARRON - DRAPER LAKE 345KV CKT 1	717	717	0.13877	103.862	EMPORIA ENERGY CENTER - SWISSVALE 345KV CKT 1
FDNS	00NR	0	16WP	G15_093	FROM->TO	CIMARRON - DRAPER LAKE 345KV CKT 1	717	717	0.13934	103.8385	EMPIRE - FLETCHER 138KV CKT 1
FDNSLock	00NR	0	16WP	G15_093	FROM->TO	CIMARRON - DRAPER LAKE 345KV CKT 1	717	717	0.13864	103.8317	GEN590010 1-ERCOT EQUIVALENCE
FDNS	00NR	0	16WP	G15_093	FROM->TO	CIMARRON - DRAPER LAKE 345KV CKT 1	717	717	0.1389	103.8223	G1524G1525 345.00 - THISTLE7 345.00 345KV CKT 1
FDNS	00NR	0	16WP	G15_093	FROM->TO	CIMARRON - DRAPER LAKE 345KV CKT 1	717	717	0.1389	103.8223	G1524G1525 345.00 - THISTLE7 345.00 345KV CKT 2
FDNS	00NR	0	16WP	G15_093	FROM->TO	CIMARRON - DRAPER LAKE 345KV CKT 1	717	717	0.13864	103.8186	GEN503909 1-FULTONU1 1 16.000
FDNSLock	00NR	0	16WP	G15_093	FROM->TO	CIMARRON - DRAPER LAKE 345KV CKT 1	717	717	0.13864	103.8129	GEN338146 1-INDEPENDENCE UNIT #2
FDNS	00NR	0	16WP	G15_093	FROM->TO	CIMARRON - DRAPER LAKE 345KV CKT 1	717	717	0.13889	103.8126	LONEOAK - QUAIL CREEK 138KV CKT 1
FDNS	00NR	0	16WP	G15_093	FROM->TO	CIMARRON - DRAPER LAKE 345KV CKT 1	717	717	0.13864	103.809	GEN501811 1-RODEMACHER UNIT 1
FDNS	00NR	0	16WP	G15_093	FROM->TO	CIMARRON - DRAPER LAKE 345KV CKT 1	717	717	0.13908	103.8044	WOODRING (WOODRNG2) 345/138/13.8KV TRANSFORMER CKT 1
FDNS	00NR	0	16WP	G15_093	FROM->TO	CIMARRON - DRAPER LAKE 345KV CKT 1	717	717	0.14231	103.7918	CRINER - PAYNE 138.00 138KV CKT 1
FDNS	00NR	0	16WP	G15_093	FROM->TO	CIMARRON - DRAPER LAKE 345KV CKT 1	717	717	0.1387	103.7817	OSAGE - WEBB CITY TAP 138KV CKT 1
FDNS	00NR	0	16WP	G15_093	FROM->TO	CIMARRON - DRAPER LAKE 345KV CKT 1	717	717	0.13934	103.7768	COMANCHE - EMPIRE 138KV CKT 1

SOLUTION	GROUP	SCENARIO	SEASON	SOURCE	DIRECTION	MONITORED ELEMENT	RATEA (MVA)	RATEB(MVA)	TDF	TC%LOADING (% MVA)	CONTINGENCY
FDNS	00NR	0	16WP	G15_093	FROM->TO	CIMARRON - DRAPER LAKE 345KV CKT 1	717	717	0.13864	103.7748	FRONTIER - GRIMES 345KV CKT 1
FDNS	00NR	0	16WP	G15_093	FROM->TO	CIMARRON - DRAPER LAKE 345KV CKT 1	717	717	0.13864	103.7716	GEN334433 1-SABINE UNIT 3
FDNS	00NR	0	16WP	G15_093	FROM->TO	CIMARRON - DRAPER LAKE 345KV CKT 1	717	717	0.13864	103.7693	P12:069:OKGE:3TERM4
FDNS	00NR	0	16WP	G15_093	FROM->TO	CIMARRON - DRAPER LAKE 345KV CKT 1	717	717	0.13864	103.7671	GEN334030 1-FRONTIER UNIT 1
FDNS	00NR	0	16WP	G15_093	FROM->TO	CIMARRON - DRAPER LAKE 345KV CKT 1	717	717	0.13864	103.7661	GEN334031 1-FRONTIER UNIT 2
FDNS	00NR	0	16WP	G15_093	FROM->TO	CIMARRON - DRAPER LAKE 345KV CKT 1	717	717	0.13864	103.764	GEN303007 1-1BC2 U2
FDNS	00NR	0	16WP	G15_093	FROM->TO	CIMARRON - DRAPER LAKE 345KV CKT 1	717	717	0.13879	103.7619	SPVALLY4 138.00 - STILLWATER 138KV CKT 1
FDNS	00NR	0	16WP	G15_093	FROM->TO	CIMARRON - DRAPER LAKE 345KV CKT 1	717	717	0.13864	103.7587	GEN303006 1-1BC2 U1
FDNS	00NR	0	16WP	G15_093	FROM->TO	CIMARRON - DRAPER LAKE 345KV CKT 1	717	717	0.13864	103.7582	GEN337041 1-GERALD ANDRUS
FDNS	00NR	0	16WP	G15_093	FROM->TO	CIMARRON - DRAPER LAKE 345KV CKT 1	717	717	0.13864	103.7551	P12:161:AEPW:DYESS 5:HYLAND 5
FDNS	00NR	0	16WP	G15_093	FROM->TO	CIMARRON - DRAPER LAKE 345KV CKT 1	717	717	0.13864	103.7415	GEN336191 1-LITTLE GYPSY UNIT#3
FDNS	00NR	0	16WP	G15_093	FROM->TO	CIMARRON - DRAPER LAKE 345KV CKT 1	717	717	0.13864	103.7374	8DANIEL8 500.00 - MCKNIGHT 500KV CKT 1
FDNS	00NR	0	16WP	G15_093	FROM->TO	CIMARRON - DRAPER LAKE 345KV CKT 1	717	717	0.13864	103.7345	GEN509393 S1-ARSENAL HILL GENS #4 (STALL)
FDNS	00NR	0	16WP	G15_093	FROM->TO	CIMARRON - DRAPER LAKE 345KV CKT 1	717	717	0.13872	103.7342	CLEAVELAND - CLEVLND 4 138.00 138KV CKT Z1
FDNS	00NR	0	16WP	G15_093	FROM->TO	CIMARRON - DRAPER LAKE 345KV CKT 1	717	717	0.13872	103.7339	CLEVELAND (CLVAUTO1) 345/138/13.8KV TRANSFORMER CKT 1
FDNS	00NR	0	16WP	G15_093	FROM->TO	CIMARRON - DRAPER LAKE 345KV CKT 1	717	717	0.13872	103.7339	CLEVELAND (CLVAUTO1) 345/138/13.8KV TRANSFORMER CKT 1
FDNS	00NR	0	16WP	G15_093	FROM->TO	CIMARRON - DRAPER LAKE 345KV CKT 1	717	717	0.13879	103.7325	PAYNESB4 138.00 - SPVALLY4 138.00 138KV CKT 1
FDNS	00NR	0	16WP	G15_093	FROM->TO	CIMARRON - DRAPER LAKE 345KV CKT 1	717	717	0.13875	103.7308	P12:138:OKGE:3TERM13
FDNS	00NR	0	16WP	G15_093	FROM->TO	CIMARRON - DRAPER LAKE 345KV CKT 1	717	717	0.13946	103.7266	ARKANSAS NUCLEAR ONE - FT SMITH 500KV CKT 1
FDNS	00NR	0	16WP	G15_093	FROM->TO	CIMARRON - DRAPER LAKE 345KV CKT 1	717	717	0.13946	103.7266	ARKANSAS NUCLEAR ONE - FT SMITH 500KV CKT 1
FDNS	00NR	0	16WP	G15_093	FROM->TO	CIMARRON - DRAPER LAKE 345KV CKT 1	717	717	0.13864	103.7179	GEN509392 G2-ARSENAL HILL GENS #3 (STALL)
FDNS	00NR	0	16WP	G15_093	FROM->TO	CIMARRON - DRAPER LAKE 345KV CKT 1	717	717	0.13864	103.7178	GEN509391 G1-ARSENAL HILL GENS #2 (STALL)
FDNS	00NR	0	16WP	G15_093	FROM->TO	CIMARRON - DRAPER LAKE 345KV CKT 1	717	717	0.13879	103.7169	CUSHING - PAYNESB4 138.00 138KV CKT 1
FDNS	00NR	0	16WP	G15_093	FROM->TO	CIMARRON - DRAPER LAKE 345KV CKT 1	717	717	0.13864	103.711	GEN335614 1-WILLOW GLENN UNIT#4
FDNS	00NR	0	16WP	G15_093	FROM->TO	CIMARRON - DRAPER LAKE 345KV CKT 1	717	717	0.13896	103.7087	DAYTON - MUSTANG 138KV CKT 1
FDNS	00NR	0	16WP	G15_093	FROM->TO	CIMARRON - DRAPER LAKE 345KV CKT 1	717	717	0.13896	103.7038	DAYTON - HOBBY LOBBY 138KV CKT 1
FDNS	00NR	0	16WP	G15_093	FROM->TO	CIMARRON - DRAPER LAKE 345KV CKT 1	717	717	0.13864	103.6985	GEN303008 1-1BC2 U3
FDNS	00NR	0	16WP	G15_093	FROM->TO	CIMARRON - DRAPER LAKE 345KV CKT 1	717	717	0.13324	103.6895	CANADIAN RIVER - PITTSBURG 345KV CKT 1
FDNS	00NR	0	16WP	G15_093	FROM->TO	CIMARRON - DRAPER LAKE 345KV CKT 1	717	717	0.13324	103.6895	CANADIAN RIVER - PITTSBURG 345KV CKT 1
FDNS	00NR	0	16WP	G15_093	FROM->TO	CIMARRON - DRAPER LAKE 345KV CKT 1	717	717	0.13913	103.6882	MUSTANG - SW 5TH 138KV CKT 1
FDNS	00NR	0	16WP	G15_093	FROM->TO	CIMARRON - DRAPER LAKE 345KV CKT 1	717	717	0.13864	103.6855	GEN338143 1-INDEPENDENCE UNIT #1
FDNS	00NR	0	16WP	G15_093	FROM->TO	CIMARRON - DRAPER LAKE 345KV CKT 1	717	717	0.13858	103.6766	ELDORADO EHV - MOUNT OLIVE 500KV CKT 1
FDNS	00NR	0	16WP	G15_093	FROM->TO	CIMARRON - DRAPER LAKE 345KV CKT 1	717	717	0.13864	103.6764	GEN336170 1-GULF OXY U4
FDNS	00NR	0	16WP	G15_093	FROM->TO	CIMARRON - DRAPER LAKE 345KV CKT 1	717	717	0.13864	103.6751	GEN336464 1-MICHOUD UNIT #3
FDNS	00NR	0	16WP	G15_093	FROM->TO	CIMARRON - DRAPER LAKE 345KV CKT 1	717	717	0.14231	103.6693	COLE - CRINER 138KV CKT 1
FDNS	00NR	0	16WP	G15_093	FROM->TO	CIMARRON - DRAPER LAKE 345KV CKT 1	717	717	0.13868	103.6516	P12:069:OKGE:3TERM19
FDNS	00NR	0	16WP	G15_093	FROM->TO	CIMARRON - DRAPER LAKE 345KV CKT 1	717	717	0.13864	103.6516	ESSEX UNIT 2 500/18.0KV TRANSFORMER CKT 1
FDNS	00NR	0	16WP	G15_093	FROM->TO	CIMARRON - DRAPER LAKE 345KV CKT 1	717	717	0.13867	103.6427	7LUTESVIL 345.00 - 7ST FRANC 345.00 345KV CKT 1
FDNS	00NR	0	16WP	G15_093	FROM->TO	CIMARRON - DRAPER LAKE 345KV CKT 1	717	717	0.13895	103.6334	OUMED 4 - STONEWALL 138KV CKT 1
FDNS	00NR	0	16WP	G15_093	FROM->TO	CIMARRON - DRAPER LAKE 345KV CKT 1	717	717	0.13864	103.6302	GEN336801 1-BAXTER WILSON UNIT #1
FDNS	00NR	0	16WP	G15_093	FROM->TO	CIMARRON - DRAPER LAKE 345KV CKT 1	717	717	0.13936	103.6262	LIGHTNING CREEK - ROBINSON 138KV CKT 1
FDNS	00NR	0	16WP	G15_093	FROM->TO	CIMARRON - DRAPER LAKE 345KV CKT 1	717	717	0.13803	103.6225	ARCADIA - LGARBER4 138.00 138KV CKT 1
FDNS	00NR	0	16WP	G15_093	FROM->TO	CIMARRON - DRAPER LAKE 345KV CKT 1	717	717	0.13864	103.6136	GEN506752 1-LEBROCK GAS 1
FDNS	00NR	0	16WP	G15_093	FROM->TO	CIMARRON - DRAPER LAKE 345KV CKT 1	717	717	0.13864	103.6135	GEN506753 1-LEBROCK GAS 2
FDNS	00NR	0	16WP	G15_093	FROM->TO	CIMARRON - DRAPER LAKE 345KV CKT 1	717	717	0.13863	103.6057	7JASPER 345.00 - BLACKBERRY 345KV CKT 1
FDNS	00NR	0	16WP	G15_093	FROM->TO	CIMARRON - DRAPER LAKE 345KV CKT 1	717	717	0.1387	103.6018	FAIRFAX TAP - SHIDLER 138KV CKT 1
FDNS	00NR	0	16WP	G15_093	FROM->TO	CIMARRON - DRAPER LAKE 345KV CKT 1	717	717	0.1387	103.6017	FAIRFAX TAP - WEBB CITY TAP 138KV CKT 1
FDNS	00NR	0	16WP	G15_093	FROM->TO	CIMARRON - DRAPER LAKE 345KV CKT 1	717	717	0.13803	103.5927	CHITWOOD - LGARBER4 138.00 138KV CKT 1
FDNS	00NR	0	16WP	G15_093	FROM->TO	CIMARRON - DRAPER LAKE 345KV CKT 1	717	717	0.13864	103.5925	GEN501910 1-ACADIA UNIT ST1
FDNS	00NR	0	16WP	G15_093	FROM->TO	CIMARRON - DRAPER LAKE 345KV CKT 1	717	717	0.13864	103.5817	RODEMACHER 230/22.0KV TRANSFORMER CKT 1
FDNS	00NR	0	16WP	G15_093	FROM->TO	CIMARRON - DRAPER LAKE 345KV CKT 1	717	717	0.13803	103.5804	CHITWOOD - JONES TAP 138KV CKT 1
FDNS	00NR	0	16WP	G15_093	FROM->TO	CIMARRON - DRAPER LAKE 345KV CKT 1	717	717	0.13864	103.5784	GEN511843 1-RIVERSIDE STATION #2
FDNS	00NR	0	16WP	G15_093	FROM->TO	CIMARRON - DRAPER LAKE 345KV CKT 1	717	717	0.13835	103.5772	P12:138:AEPW-OGE:WTH_JCT4:JENSEN4
FDNS	00NR	0	16WP	G15_093	FROM->TO	CIMARRON - DRAPER LAKE 345KV CKT 1	717	717	0.13909	103.571	TULSA NORTH - WEKIWA 345KV CKT 1
FDNS	00NR	0	16WP	G15_093	FROM->TO	CIMARRON - DRAPER LAKE 345KV CKT 1	717	717	0.13909	103.571	TULSA NORTH - WEKIWA 345KV CKT 1
FDNS	00NR	0	16WP	G15_093	FROM->TO	CIMARRON - DRAPER LAKE 345KV CKT 1	717	717	0.13855	103.5684	6LAYFLD 230.00 - CARROLL 230KV CKT 1
FDNS	00NR	0	16WP	G15_093	FROM->TO	CIMARRON - DRAPER LAKE 345KV CKT 1	717	717	0.13868	103.5641	8WNEWMADRID 500.00 - DELL 500 500KV CKT 1
FDNS	00NR	0	16WP	G15_093	FROM->TO	CIMARRON - DRAPER LAKE 345KV CKT 1	717	717	0.13866	103.5615	P12:345:GRDA:CHOUTEAU-SPORTSMANACRES
FDNS	00NR	0	16WP	G15_093	FROM->TO	CIMARRON - DRAPER LAKE 345KV CKT 1	717	717	0.13853	103.5548	ELDORADO EHV - SHERIDAN EHV 500KV CKT 1
FDNS	00NR	0	16WP	G15_093	FROM->TO	CIMARRON - DRAPER LAKE 345KV CKT 1	717	717	0.13963	103.5535	CHISHOLM6 230.00 - ELK CITY 230KV 230KV CKT 1
FDNS	00NR	0	16WP	G15_093	FROM->TO	CIMARRON - DRAPER LAKE 345KV CKT 1	717	717	0.13963	103.5504	ELK CITY 230KV (ELKCTY-6) 230/138/13.8KV TRANSFORMER CKT 1
FDNS	00NR	0	16WP	G15_093	FROM->TO	CIMARRON - DRAPER LAKE 345KV CKT 1	717	717	0.13963	103.5504	ELK CITY 230KV (ELKCTY-6) 230/138/13.8KV TRANSFORMER CKT 1
FDNS	00NR	0	16WP	G15_093	FROM->TO	CIMARRON - DRAPER LAKE 345KV CKT 1	717	717	0.13887	103.5453	G13-010T 345.00 - POST ROCK 345KV CKT 1
FDNS	00NR	0	16WP	G15_093	FROM->TO	CIMARRON - DRAPER LAKE 345KV CKT 1	717	717	0.13867	103.5337	P12:138:AEPW:N.E.S.-4:CATOOSA4
FDNS	00NR	0	16WP	G15_093	FROM->TO	CIMARRON - DRAPER LAKE 345KV CKT 1	717	717	0.13895	103.5322	OUMED 4 - PARK PLACE 138KV CKT 1
FDNS	00NR	0	16WP	G15_093	FROM->TO	CIMARRON - DRAPER LAKE 345KV CKT 1	717	717	0.13851	103.5255	FULTON 115 - HOPE 115KV CKT 1
FDNS	00NR	0	16WP	G15_093	FROM->TO	CIMARRON - DRAPER LAKE 345KV CKT 1	717	717	0.13851	103.5255	FULTON 115 - HOPE 115KV CKT 1
FDNS	00NR	0	16WP	G15_093	FROM->TO	CIMARRON - DRAPER LAKE 345KV CKT 1	717	717	0.1387	103.5186	P13:138-161:WERE:NSES_TX-4OR5::
FDNS	00NR	0	16WP	G15_093	FROM->TO	CIMARRON - DRAPER LAKE 345KV CKT 1	717	717	0.13864	103.5156	8CAJUN2 500/24.0KV TRANSFORMER CKT 1
FDNS	00NR	0	16WP	G15_093	FROM->TO	CIMARRON - DRAPER LAKE 345KV CKT 1	717	717	0.1384	103.5154	MORISNT4 138.00 - SOONER 138KV CKT 1
FDNS	00NR	0	16WP	G15_093	FROM->TO	CIMARRON - DRAPER LAKE 345KV CKT 1	717	717	0.13869	103.5113	P12:138:AEPW:CATOOSA4:T.S.E.-4
FDNS	00NR	0	16WP	G15_093	FROM->TO	CIMARRON - DRAPER LAKE 345KV CKT 1	717	717	0.13864	103.5052	ST FRANCIS - ST FRANCIS 1 161KV CKT Z1
FDNS	00NR	0	16WP	G15_093	FROM->TO	CIMARRON - DRAPER LAKE 345KV CKT 1	717	717	0.13865	103.5015	7JASPER 345.00 - MORGAN 345KV CKT 1
FDNS	00NR	0	16WP	G15_093	FROM->TO	CIMARRON - DRAPER LAKE 345KV CKT 1	717	717	0.13864	103.4974	P12:069:OKGE:3TERM3
FDNS	00NR	0	16WP	G15_093	FROM->TO	CIMARRON - DRAPER LAKE 345KV CKT 1	717	717	0.13938	103.4908	HUGO - VALLIANT 345KV CKT 1
FDNS	00NR	0	16WP	G15_093	FROM->TO	CIMARRON - DRAPER LAKE 345KV CKT 1	717	717	0.13938	103.4908	HUGO - VALLIANT 345KV CKT 1
FDNS	00NR	0	16WP	G15_093	FROM->TO	CIMARRON - DRAPER LAKE 345KV CKT 1	717	717	0.13864	103.4903	GEN509394 1-FLINT CREEK
FDNS	00NR	0	16WP	G15_093	FROM->TO	CIMARRON - DRAPER LAKE 345KV CKT 1	717	717	0.13864	103.4898	GEN300015 1-1SGPDEL 18.000
FDNS	00NR	0	16WP	G15_093	FROM->TO	CIMARRON - DRAPER LAKE 345KV CKT 1	717	717	0.13887	103.4897	G13-010T 345.00 - SPEARVILLE 345KV CKT 1

SOLUTION	GROUP	SCENARIO	SEASON	SOURCE	DIRECTION	MONITORED ELEMENT	RATEA (MVA)	RATEB(MVA)	TDF	TC%LOADING (% MVA)	CONTINGENCY
FDNS	00NR	0	16WP	G15_093	FROM->TO	CIMARRON - DRAPER LAKE 345KV CKT 1	717	717	0.13922	103.4895	DALE - HORSESHOE LAKE 138KV CKT 1
FDNS	00NR	0	16WP	G15_093	FROM->TO	CIMARRON - DRAPER LAKE 345KV CKT 1	717	717	0.13936	103.4888	LIGHTNING CREEK - TROSPER 138KV CKT 1
FDNS	00NR	0	16WP	G15_093	FROM->TO	CIMARRON - DRAPER LAKE 345KV CKT 1	717	717	0.13864	103.4794	GEN337766 1-TRACTEBEL UNIT S1
FDNS	00NR	0	16WP	G15_093	FROM->TO	CIMARRON - DRAPER LAKE 345KV CKT 1	717	717	0.13864	103.4788	P12:138:AEPW:SHERID4:112GORE4
FDNS	00NR	0	16WP	G15_093	FROM->TO	CIMARRON - DRAPER LAKE 345KV CKT 1	717	717	0.13864	103.4762	GEN515564 1-ORIGIN11 0.6900
FDNS	00NR	0	16WP	G15_093	FROM->TO	CIMARRON - DRAPER LAKE 345KV CKT 1	717	717	0.13864	103.4762	GEN515565 1-ORIGIN21 0.6900
FDNS	00NR	0	16WP	G15_093	FROM->TO	CIMARRON - DRAPER LAKE 345KV CKT 1	717	717	0.13896	103.4744	36 & MERIDIAN - HOBBY LOBBY 138KV CKT 1
FDNS	00NR	0	16WP	G15_093	FROM->TO	CIMARRON - DRAPER LAKE 345KV CKT 1	717	717	0.13873	103.474	HAMMETT TAP - HAMMETT2 138KV CKT 1
FDNS	00NR	0	16WP	G15_093	FROM->TO	CIMARRON - DRAPER LAKE 345KV CKT 1	717	717	0.14219	103.4732	ANADARKO - GRACMNT4 138.00 138KV CKT 1
FDNS	00NR	0	16WP	G15_093	FROM->TO	CIMARRON - DRAPER LAKE 345KV CKT 1	717	717	0.13864	103.4731	GEN336222 1-LITTLE GYPSY UNIT#2
FDNS	00NR	0	16WP	G15_093	FROM->TO	CIMARRON - DRAPER LAKE 345KV CKT 1	717	717	0.13949	103.4701	NORTHEAST STATION - ONETA 345KV CKT 1
FDNS	00NR	0	16WP	G15_093	FROM->TO	CIMARRON - DRAPER LAKE 345KV CKT 1	717	717	0.13949	103.4701	NORTHEAST STATION - ONETA 345KV CKT 1
FDNS	00NR	0	16WP	G15_093	FROM->TO	CIMARRON - DRAPER LAKE 345KV CKT 1	717	717	0.13875	103.4701	P12:138:OKGE:3TERM28
FDNS	00NR	0	16WP	G15_093	FROM->TO	CIMARRON - DRAPER LAKE 345KV CKT 1	717	717	0.13887	103.4665	FLETCHER - MARLOW JCT 69KV CKT 1
FDNS	00NR	0	16WP	G15_093	FROM->TO	CIMARRON - DRAPER LAKE 345KV CKT 1	717	717	0.13864	103.4622	GEN501970 1-EVANGELINE UNIT 7
FDNS	00NR	0	16WP	G15_093	FROM->TO	CIMARRON - DRAPER LAKE 345KV CKT 1	717	717	0.13864	103.4621	NELSON 230/20.0KV TRANSFORMER CKT 1
FDNS	00NR	0	16WP	G15_093	FROM->TO	CIMARRON - DRAPER LAKE 345KV CKT 1	717	717	0.13851	103.4586	NW164TH4 138.00 - PIEDMONT 138KV CKT 1
FDNS	00NR	0	16WP	G15_093	FROM->TO	CIMARRON - DRAPER LAKE 345KV CKT 1	717	717	0.13865	103.458	P12:161:AEPW:EROGERS5:ECNTRTN5
FDNS	00NR	0	16WP	G15_093	FROM->TO	CIMARRON - DRAPER LAKE 345KV CKT 1	717	717	0.13857	103.4577	P12:138:OKGE-AEPW:JENSEN4:REDROCKRD4
FDNS	00NR	0	16WP	G15_093	FROM->TO	CIMARRON - DRAPER LAKE 345KV CKT 1	717	717	0.13851	103.4567	NORTHWEST - NW164TH4 138.00 138KV CKT 1
FDNS	00NR	0	16WP	G15_093	FROM->TO	CIMARRON - DRAPER LAKE 345KV CKT 1	717	717	0.13864	103.4555	ESSEX UNIT 2 500/18.0KV TRANSFORMER CKT 1
FDNS	00NR	0	16WP	G15_093	FROM->TO	CIMARRON - DRAPER LAKE 345KV CKT 1	717	717	0.13867	103.4553	P12:161:AEPW-SWPA:BEAVER5:EROGERS5
FDNS	00NR	0	16WP	G15_093	FROM->TO	CIMARRON - DRAPER LAKE 345KV CKT 1	717	717	0.13916	103.4548	COMANCHE TAP - OMPA-DUNCAN 840 138KV CKT 1
FDNS	00NR	0	16WP	G15_093	FROM->TO	CIMARRON - DRAPER LAKE 345KV CKT 1	717	717	0.13958	103.4517	CORN TAP - SEQUOYAHJ4 138.00 138KV CKT 1
FDNS	00NR	0	16WP	G15_093	FROM->TO	CIMARRON - DRAPER LAKE 345KV CKT 1	717	717	0.13928	103.4516	P12:138:AEPW:CORNVIL4:S.W.S.-4
FDNS	00NR	0	16WP	G15_093	FROM->TO	CIMARRON - DRAPER LAKE 345KV CKT 1	717	717	0.13958	103.4513	ANADARKO - SEQUOYAHJ4 138.00 138KV CKT 1
FDNS	00NR	0	16WP	G15_093	FROM->TO	CIMARRON - DRAPER LAKE 345KV CKT 1	717	717	0.13922	103.448	DALE - SQUIRL CREEK 138KV CKT 1
FDNS	00NR	0	16WP	G15_093	FROM->TO	CIMARRON - DRAPER LAKE 345KV CKT 1	717	717	0.13943	103.4464	HEALDTON - LOCO 138KV CKT 1
FDNS	00NR	0	16WP	G15_093	FROM->TO	CIMARRON - DRAPER LAKE 345KV CKT 1	717	717	0.13864	103.4463	P12:161:AEPW:DYESS5:ELMSPRNG:TONTITN5
FDNS	00NR	0	16WP	G15_093	FROM->TO	CIMARRON - DRAPER LAKE 345KV CKT 1	717	717	0.13864	103.4425	GEN336152 1-WATERFORD UNIT#2
FDNS	00NR	0	16WP	G15_093	FROM->TO	CIMARRON - DRAPER LAKE 345KV CKT 1	717	717	0.13864	103.4415	GEN336151 1-WATERFORD UNIT#1
FDNS	00NR	0	16WP	G15_093	FROM->TO	CIMARRON - DRAPER LAKE 345KV CKT 1	717	717	0.13864	103.4407	ST FRANCIS 345/161KV TRANSFORMER CKT 1
FDNS	00NR	0	16WP	G15_093	FROM->TO	CIMARRON - DRAPER LAKE 345KV CKT 1	717	717	0.13888	103.4351	CORN TAP - CORNVILLE 138KV CKT 1
FDNS	00NR	0	16WP	G15_093	FROM->TO	CIMARRON - DRAPER LAKE 345KV CKT 1	717	717	0.1387	103.4322	MARSHALL - WOODRING 138KV CKT 1
FDNS	00NR	0	16WP	G15_093	FROM->TO	CIMARRON - DRAPER LAKE 345KV CKT 1	717	717	0.13864	103.4302	GEN334392 1-EXXON MOBIL IPP 1
FDNS	00NR	0	16WP	G15_093	FROM->TO	CIMARRON - DRAPER LAKE 345KV CKT 1	717	717	0.1387	103.4299	COTTONWOOD CREEK - MARSHALL 138KV CKT 1
FDNS	00NR	0	16WP	G15_093	FROM->TO	CIMARRON - DRAPER LAKE 345KV CKT 1	717	717	0.13878	103.4289	HEFNER - TULSA 138KV CKT 1
FDNS	00NR	0	16WP	G15_093	FROM->TO	CIMARRON - DRAPER LAKE 345KV CKT 1	717	717	0.14231	103.4279	COLE - OUSW4 138KV CKT 1
FDNS	00NR	0	16WP	G15_093	FROM->TO	CIMARRON - DRAPER LAKE 345KV CKT 1	717	717	0.13859	103.426	MC NIEL 500/115KV TRANSFORMER CKT 1
FDNS	00NR	0	16WP	G15_093	FROM->TO	CIMARRON - DRAPER LAKE 345KV CKT 1	717	717	0.13864	103.424	GEN334393 1-EXXON MOBIL IPP 2
FDNS	00NR	0	16WP	G15_093	FROM->TO	CIMARRON - DRAPER LAKE 345KV CKT 1	717	717	0.13864	103.424	GEN334394 1-EXXON MOBIL IPP 3
FDNS	00NR	0	16WP	G15_093	FROM->TO	CIMARRON - DRAPER LAKE 345KV CKT 1	717	717	0.1387	103.4222	P12:138:AEPW:MOUNDRD4:SHIDLER4
FDNS	00NR	0	16WP	G15_093	FROM->TO	CIMARRON - DRAPER LAKE 345KV CKT 1	717	717	0.13854	103.4218	BISMARK - HOT SPRINGS WEST BUS 115KV CKT 1
FDNS	00NR	0	16WP	G15_093	FROM->TO	CIMARRON - DRAPER LAKE 345KV CKT 1	717	717	0.13865	103.4138	EL RENO SW - MUSTANG2 69.000 69KV CKT 1
FDNS	00NR	0	16WP	G15_093	FROM->TO	CIMARRON - DRAPER LAKE 345KV CKT 1	717	717	0.13852	103.4132	BRISTOW - SILVER CITY 138KV CKT 1
FDNS	00NR	0	16WP	G15_093	FROM->TO	CIMARRON - DRAPER LAKE 345KV CKT 1	717	717	0.13844	103.4123	KELLYAV4 138.00 - MEMORIAL 138KV CKT 1
FDNS	00NR	0	16WP	G15_093	FROM->TO	CIMARRON - DRAPER LAKE 345KV CKT 1	717	717	0.13864	103.4084	GEN501972 1-EVANGELINE UNIT 7-2
FDNS	00NR	0	16WP	G15_093	FROM->TO	CIMARRON - DRAPER LAKE 345KV CKT 1	717	717	0.13864	103.4083	GEN501971 1-EVANGELINE UNIT 7-1
FDNS	00NR	0	16WP	G15_093	FROM->TO	CIMARRON - DRAPER LAKE 345KV CKT 1	717	717	0.1387	103.4049	SHIDLER - WEST PAWHUSKA 138KV CKT 1
FDNS	00NR	0	16WP	G15_093	FROM->TO	CIMARRON - DRAPER LAKE 345KV CKT 1	717	717	0.13943	103.4047	HEALDTON - RINGLING 138KV CKT 1
FDNS	00NR	0	16WP	G15_093	FROM->TO	CIMARRON - DRAPER LAKE 345KV CKT 1	717	717	0.13864	103.3987	GEN334431 1-SABINE UNIT 1
FDNS	00NR	0	16WP	G15_093	FROM->TO	CIMARRON - DRAPER LAKE 345KV CKT 1	717	717	0.13864	103.3986	GEN334432 1-SABINE UNIT 2
FDNS	00NR	0	16WP	G15_093	FROM->TO	CIMARRON - DRAPER LAKE 345KV CKT 1	717	717	0.13864	103.3959	GEN336242 1-1NMIL ST1 18.000
FDNS	00NR	0	16WP	G15_093	FROM->TO	CIMARRON - DRAPER LAKE 345KV CKT 1	717	717	0.13864	103.3954	GEN337764 1-TRACTEBEL UNIT C1
FDNS	00NR	0	16WP	G15_093	FROM->TO	CIMARRON - DRAPER LAKE 345KV CKT 1	717	717	0.13864	103.3954	GEN337765 1-TRACTEBEL UNIT C2
FDNS	00NR	0	16WP	G15_093	FROM->TO	CIMARRON - DRAPER LAKE 345KV CKT 1	717	717	0.1387	103.3939	BROOKLINE - MORGAN 345KV CKT 1
FDNS	00NR	0	16WP	G15_093	FROM->TO	CIMARRON - DRAPER LAKE 345KV CKT 1	717	717	0.1387	103.3939	BROOKLINE - MORGAN 345KV CKT 1
FDNS	00NR	0	16WP	G15_093	FROM->TO	CIMARRON - DRAPER LAKE 345KV CKT 1	717	717	0.13864	103.3938	GEN501912 1-ACADIA UNIT CT1B
FDNS	00NR	0	16WP	G15_093	FROM->TO	CIMARRON - DRAPER LAKE 345KV CKT 1	717	717	0.13864	103.3931	GEN501911 1-ACADIA UNIT CT1A
FDNS	00NR	0	16WP	G15_093	FROM->TO	CIMARRON - DRAPER LAKE 345KV CKT 1	717	717	0.13895	103.3919	BODLE - PARK PLACE 138KV CKT 1
FDNS	00NR	0	16WP	G15_093	FROM->TO	CIMARRON - DRAPER LAKE 345KV CKT 1	717	717	0.13897	103.3911	COUNCIL - MUSTANG 138KV CKT 1
FDNS	00NR	0	16WP	G15_093	FROM->TO	CIMARRON - DRAPER LAKE 345KV CKT 1	717	717	0.14029	103.391	BRYANT - MEMORIAL 138KV CKT 1
FDNS	00NR	0	16WP	G15_093	FROM->TO	CIMARRON - DRAPER LAKE 345KV CKT 1	717	717	0.1387	103.3884	PAWHUSKA TAP - WEST PAWHUSKA 138KV CKT 1
FDNS	00NR	0	16WP	G15_093	FROM->TO	CIMARRON - DRAPER LAKE 345KV CKT 1	717	717	0.13854	103.3884	ALPINE AECC - BISMARK 115KV CKT 1
FDNS	00NR	0	16WP	G15_093	FROM->TO	CIMARRON - DRAPER LAKE 345KV CKT 1	717	717	0.13863	103.388	CYPRESS - HARTBURG 500KV CKT 1
FDNS	00NR	0	16WP	G15_093	FROM->TO	CIMARRON - DRAPER LAKE 345KV CKT 1	717	717	0.13851	103.3831	PIEDMONT - RICHRDS 138KV CKT 1
FDNS	00NR	0	16WP	G15_093	FROM->TO	CIMARRON - DRAPER LAKE 345KV CKT 1	717	717	0.13864	103.3827	P12:69:AEPW:L.E.S.-2:LAW WC2
FDNS	00NR	0	16WP	G15_093	FROM->TO	CIMARRON - DRAPER LAKE 345KV CKT 1	717	717	0.13844	103.3809	KELLYAV4 138.00 - REMNGTON PARK 138KV CKT 1
FDNS	00NR	0	16WP	G15_093	FROM->TO	CIMARRON - DRAPER LAKE 345KV CKT 1	717	717	0.13873	103.3808	HAMMETT2 - MEEKER 138KV CKT 1
FDNS	00NR	0	16WP	G15_093	FROM->TO	CIMARRON - DRAPER LAKE 345KV CKT 1	717	717	0.13895	103.375	HAMMETT TAP - HORSESHOE LAKE 138KV CKT 1
FDNS	00NR	0	16WP	G15_093	FROM->TO	CIMARRON - DRAPER LAKE 345KV CKT 1	717	717	0.13859	103.3697	LAYFLD8 500.00 - MOUNT OLIVE 500KV CKT 1
FDNS	00NR	0	16WP	G15_093	FROM->TO	CIMARRON - DRAPER LAKE 345KV CKT 1	717	717	0.13859	103.3697	LAYFLD8 500.00 - MOUNT OLIVE 500KV CKT 1
FDNS	00NR	0	16WP	G15_093	FROM->TO	CIMARRON - DRAPER LAKE 345KV CKT 1	717	717	0.13943	103.3631	RINGLING - SOUTH WILSON 138KV CKT 1
FDNS	00NR	0	16WP	G15_093	FROM->TO	CIMARRON - DRAPER LAKE 345KV CKT 1	717	717	0.13943	103.3457	CIVIT - PAOLI 138KV CKT 1
FDNS	00NR	0	16WP	G15_093	FROM->TO	CIMARRON - DRAPER LAKE 345KV CKT 1	717	717	0.13864	103.3404	LACYGNE - STILWELL 345KV CKT 1
FDNS	00NR	0	16WP	G15_093	FROM->TO	CIMARRON - DRAPER LAKE 345KV CKT 1	717	717	0.17528	103.3399	GRACEMONT - LAWTON EASTSIDE 345KV CKT 1
FDNS	00NR	0	16WP	G15_093	FROM->TO	CIMARRON - DRAPER LAKE 345KV CKT 1	717	717	0.17528	103.3399	GRACEMONT - LAWTON EASTSIDE 345KV CKT 1
FDNS	00NR	0	16WP	G15_093	FROM->TO	CIMARRON - DRAPER LAKE 345KV CKT 1	717	717	0.13897	103.3365	COUNCIL - WESTOAKS 138KV CKT 1
FDNS	00NR	0	16WP	G15_093	FROM->TO	CIMARRON - DRAPER LAKE 345KV CKT 1	717	717	0.13864	102.9113	BASE CASE

SOLUTION	GROUP	SCENARIO	SEASON	SOURCE	DIRECTION	MONITORED ELEMENT	RATEA (MVA)	RATEB(MVA)	TDF	TC%LOADING (% MVA)	CONTINGENCY
FDNS	00NR	0	16WP	G15_093	FROM->TO	CIMARRON - DRAPER LAKE 345KV CKT 1	717	717	0.13882	102.5994	GRAPEVINE INTERCHANGE - NICHOLS STATION 230KV CKT 1
FDNS	00NR	0	16WP	G15_093	FROM->TO	CIMARRON - DRAPER LAKE 345KV CKT 1	717	717	0.13882	102.5994	GRAPEVINE INTERCHANGE - NICHOLS STATION 230KV CKT 1
FDNS	00NR	0	16WP	G15_093	FROM->TO	CIMARRON - DRAPER LAKE 345KV CKT 1	717	717	0.14906	102.5967	G15063_T 345.00 - WOODRING 345KV CKT 1
FDNS	00NR	0	16WP	G15_093	FROM->TO	CIMARRON - DRAPER LAKE 345KV CKT 1	717	717	0.13952	102.5371	BURGETT4 138.00 - RNDBARN4 138.00 138KV CKT 1
FDNS	00NR	0	16WP	G15_093	FROM->TO	CIMARRON - DRAPER LAKE 345KV CKT 1	717	717	0.13952	102.5354	BURGETT4 138.00 - DANFORTH 138KV CKT 1
FDNS	00NR	0	16WP	G15_093	FROM->TO	CIMARRON - DRAPER LAKE 345KV CKT 1	717	717	0.13952	102.5245	ARCADIA - RNDBARN4 138.00 138KV CKT 1
FDNS	00NR	0	16WP	G15_093	FROM->TO	CIMARRON - DRAPER LAKE 345KV CKT 1	717	717	0.13864	102.495	GEN659125 1-COVEY
FDNS	00NR	0	16WP	G15_093	FROM->TO	CIMARRON - DRAPER LAKE 345KV CKT 1	717	717	0.13864	102.4903	GEN515550 1-MNCWND31 0.6900
FDNS	00NR	0	16WP	G15_093	FROM->TO	CIMARRON - DRAPER LAKE 345KV CKT 1	717	717	0.13893	102.482	GRAPEVINE INTERCHANGE - STATELINE INTERCHANGE 230KV CKT 1
FDNS	00NR	0	16WP	G15_093	FROM->TO	CIMARRON - DRAPER LAKE 345KV CKT 1	717	717	0.13893	102.482	GRAPEVINE INTERCHANGE - STATELINE INTERCHANGE 230KV CKT 1
FDNS	00NR	0	16WP	G15_093	FROM->TO	CIMARRON - DRAPER LAKE 345KV CKT 1	717	717	0.13864	102.477	GEN562611 1-G14_064_3 0.6900
FDNS	00NR	0	16WP	G15_093	FROM->TO	CIMARRON - DRAPER LAKE 345KV CKT 1	717	717	0.13864	102.4715	GEN511848 1-SOUTHWESTERN STATION #3
FDNS	00NR	0	16WP	G15_093	FROM->TO	CIMARRON - DRAPER LAKE 345KV CKT 1	717	717	0.13864	102.4453	GEN515601 1-KNGFSR11 0.7000
FDNS	00NR	0	16WP	G15_093	FROM->TO	CIMARRON - DRAPER LAKE 345KV CKT 1	717	717	0.13864	102.4414	GEN600071 10-RIVER SIDE
FDNS	00NR	0	16WP	G15_093	FROM->TO	CIMARRON - DRAPER LAKE 345KV CKT 1	717	717	0.13864	102.4413	GEN600070 9-RIVER SIDE
FDNS	00NR	0	16WP	G15_093	FROM->TO	CIMARRON - DRAPER LAKE 345KV CKT 1	717	717	0.13864	102.4362	GEN672303 3-BOUNDARY DAM GENERATOR 3
FDNS	00NR	0	16WP	G15_093	FROM->TO	CIMARRON - DRAPER LAKE 345KV CKT 1	717	717	0.13864	102.4362	GEN672304 4-BOUNDARY DAM GENERATOR 4
FDNS	00NR	0	16WP	G15_093	FROM->TO	CIMARRON - DRAPER LAKE 345KV CKT 1	717	717	0.13864	102.4362	GEN672305 5-BOUNDARY DAM GENERATOR 5
FDNS	00NR	0	16WP	G15_093	FROM->TO	CIMARRON - DRAPER LAKE 345KV CKT 1	717	717	0.13864	102.4353	GEN600007 7-RIVERSIDE GEN 7
FDNS	00NR	0	16WP	G15_093	FROM->TO	CIMARRON - DRAPER LAKE 345KV CKT 1	717	717	0.13864	102.4347	GEN600067 9-HIGH BRIDGE
FDNS	00NR	0	16WP	G15_093	FROM->TO	CIMARRON - DRAPER LAKE 345KV CKT 1	717	717	0.13864	102.4338	GEN563062 1-G15071_3 0.6900
FDNS	00NR	0	16WP	G15_093	FROM->TO	CIMARRON - DRAPER LAKE 345KV CKT 1	717	717	0.13864	102.4307	GEN615052 1-CAMBRIDGE GENERATING STATION
FDNS	00NR	0	16WP	G15_093	FROM->TO	CIMARRON - DRAPER LAKE 345KV CKT 1	717	717	0.13864	102.4274	GEN541151 3-SIBLEY GENERATING UNIT #3
FDNS	00NR	0	16WP	G15_093	FROM->TO	CIMARRON - DRAPER LAKE 345KV CKT 1	717	717	0.13777	102.4256	CHISNEY - CLARKSVILLE 138KV CKT 1
FDNSLock	00NR	0	16WP	G15_093	FROM->TO	CIMARRON - DRAPER LAKE 345KV CKT 1	717	717	0.13864	102.4224	GEN600014 4-BLACK DOG GEN 4
FDNS	00NR	0	16WP	G15_093	FROM->TO	CIMARRON - DRAPER LAKE 345KV CKT 1	717	717	0.13864	102.4218	GEN563282 1-G15094_3 0.6900
FDNS	00NR	0	16WP	G15_093	FROM->TO	CIMARRON - DRAPER LAKE 345KV CKT 1	717	717	0.13864	102.4212	GEN652353 2-GR PRAIRIEG 0.6900
FDNS	00NR	0	16WP	G15_093	FROM->TO	CIMARRON - DRAPER LAKE 345KV CKT 1	717	717	0.13864	102.4168	GEN629067 1-EMERY GAS TURBINE 1
FDNS	00NR	0	16WP	G15_093	FROM->TO	CIMARRON - DRAPER LAKE 345KV CKT 1	717	717	0.13872	102.4148	7MCCREDIE 345.00 - 7MONTGMRY 345.00 345KV CKT 1
FDNS	00NR	0	16WP	G15_093	FROM->TO	CIMARRON - DRAPER LAKE 345KV CKT 1	717	717	0.13864	102.4032	GEN563102 1-G15075_3 0.5500
FDNS	00NR	0	16WP	G15_093	FROM->TO	CIMARRON - DRAPER LAKE 345KV CKT 1	717	717	0.13864	102.4015	GEN515591 1-PALDRW11 0.6900
FDNS	00NR	0	16WP	G15_093	FROM->TO	CIMARRON - DRAPER LAKE 345KV CKT 1	717	717	0.13864	102.4	GEN300003 1-THOMAS HILL UNIT 3
FDNS	00NR	0	16WP	G15_093	FROM->TO	CIMARRON - DRAPER LAKE 345KV CKT 1	717	717	0.13864	102.4	GEN600011 5-BLACK DOG GEN 1
FDNS	00NR	0	16WP	G15_093	FROM->TO	CIMARRON - DRAPER LAKE 345KV CKT 1	717	717	0.13864	102.4	GEN615032 2-PLEASANT VALLEY
FDNS	00NR	0	16WP	G15_093	FROM->TO	CIMARRON - DRAPER LAKE 345KV CKT 1	717	717	0.13864	102.3966	GEN562602 1-G15_029_3 0.6900
FDNS	00NR	0	16WP	G15_093	FROM->TO	CIMARRON - DRAPER LAKE 345KV CKT 1	717	717	0.1395	102.3868	SEMINOLE - VANOSTP4 138.00 138KV CKT 1
FDNS	00NR	0	16WP	G15_093	FROM->TO	CIMARRON - DRAPER LAKE 345KV CKT 1	717	717	0.13864	102.3864	GEN600017 C-LS POWER CT
FDNS	00NR	0	16WP	G15_093	FROM->TO	CIMARRON - DRAPER LAKE 345KV CKT 1	717	717	0.13864	102.3828	GEN562812 1-G15040_3 0.3570
FDNS	00NR	0	16WP	G15_093	FROM->TO	CIMARRON - DRAPER LAKE 345KV CKT 1	717	717	0.13864	102.3765	GEN563132 1-G15078_3 0.3570
FDNS	00NR	0	16WP	G15_093	FROM->TO	CIMARRON - DRAPER LAKE 345KV CKT 1	717	717	0.13937	102.3681	FOREST HILL - MAUD 138KV CKT 1
FDNS	00NR	0	16WP	G15_093	FROM->TO	CIMARRON - DRAPER LAKE 345KV CKT 1	717	717	0.13864	102.3672	GEN524285 1-WILDORADO WIND GEN
FDNS	00NR	0	16WP	G15_093	FROM->TO	CIMARRON - DRAPER LAKE 345KV CKT 1	717	717	0.13834	102.366	P12:138:AEPW:WELETK4:EARLSBORO4
FDNS	00NR	0	16WP	G15_093	FROM->TO	CIMARRON - DRAPER LAKE 345KV CKT 1	717	717	0.13834	102.366	P12:138:OKGE:3TERM36
FDNS	00NR	0	16WP	G15_093	FROM->TO	CIMARRON - DRAPER LAKE 345KV CKT 1	717	717	0.13864	102.3624	GEN562074 1-G1149G1504 0.6900
FDNS	00NR	0	16WP	G15_093	FROM->TO	CIMARRON - DRAPER LAKE 345KV CKT 1	717	717	0.13864	102.3559	GEN672392 1-NBECGT1G 18.000
FDNS	00NR	0	16WP	G15_093	FROM->TO	CIMARRON - DRAPER LAKE 345KV CKT 1	717	717	0.13864	102.3552	GEN629070 2-BEAVER CHANNEL GENERATORFOR UNIT NO 2
FDNS	00NR	0	16WP	G15_093	FROM->TO	CIMARRON - DRAPER LAKE 345KV CKT 1	717	717	0.13843	102.3552	EARLSBORO 4138.00 - FIXICO TAP 138KV CKT 1
FDNS	00NR	0	16WP	G15_093	FROM->TO	CIMARRON - DRAPER LAKE 345KV CKT 1	717	717	0.13864	102.3445	GEN526331 1-JONES GEN #1 22 KV
FDNS	00NR	0	16WP	G15_093	FROM->TO	CIMARRON - DRAPER LAKE 345KV CKT 1	717	717	0.13864	102.3445	GEN526332 1-JONES GEN #2 21 KV
FDNS	00NR	0	16WP	G15_093	FROM->TO	CIMARRON - DRAPER LAKE 345KV CKT 1	717	717	0.13875	102.3431	CANADIAN RIVER - MCALESTER SOUTH 138KV CKT 1
FDNS	00NR	0	16WP	G15_093	FROM->TO	CIMARRON - DRAPER LAKE 345KV CKT 1	717	717	0.13875	102.3431	CANADIAN RIVER - MCALESTER SOUTH 138KV CKT 1
FDNS	00NR	0	16WP	G15_093	FROM->TO	CIMARRON - DRAPER LAKE 345KV CKT 1	717	717	0.13864	102.343	GEN562596 1-G14_059_3 0.6900
FDNS	00NR	0	16WP	G15_093	FROM->TO	CIMARRON - DRAPER LAKE 345KV CKT 1	717	717	0.13875	102.3417	CANADIAN RIVER () 345/138/13.8KV TRANSFORMER CKT 1
FDNS	00NR	0	16WP	G15_093	FROM->TO	CIMARRON - DRAPER LAKE 345KV CKT 1	717	717	0.13875	102.3417	CANADIAN RIVER () 345/138/13.8KV TRANSFORMER CKT 1
FDNS	00NR	0	16WP	G15_093	FROM->TO	CIMARRON - DRAPER LAKE 345KV CKT 1	717	717	0.13864	102.336	GEN615010 1-STANTON4
FDNS	00NR	0	16WP	G15_093	FROM->TO	CIMARRON - DRAPER LAKE 345KV CKT 1	717	717	0.13864	102.3359	GEN629071 1-BURLINGTON GENERATOR FOR UNIT NO 1 E
FDNS	00NR	0	16WP	G15_093	FROM->TO	CIMARRON - DRAPER LAKE 345KV CKT 1	717	717	0.13777	102.3342	CHISNEY - HIGHLAND 138KV CKT 1
FDNS	00NR	0	16WP	G15_093	FROM->TO	CIMARRON - DRAPER LAKE 345KV CKT 1	717	717	0.13864	102.3307	GEN515365 1-CENT 21 0.7000
FDNS	00NR	0	16WP	G15_093	FROM->TO	CIMARRON - DRAPER LAKE 345KV CKT 1	717	717	0.13864	102.3205	GEN562983 1-G15061_4 0.6900
FDNS	00NR	0	16WP	G15_093	FROM->TO	CIMARRON - DRAPER LAKE 345KV CKT 1	717	717	0.13864	102.3205	GEN562984 1-G15061_5 0.6900
FDNS	00NR	0	16WP	G15_093	FROM->TO	CIMARRON - DRAPER LAKE 345KV CKT 1	717	717	0.13865	102.3203	P12:138:WFEC:MSL07
FDNS	00NR	0	16WP	G15_093	FROM->TO	CIMARRON - DRAPER LAKE 345KV CKT 1	717	717	0.13865	102.3203	P12:138:WFEC-AEPW:HUGOPP4:ATOKA--4
FDNS	00NR	0	16WP	G15_093	FROM->TO	CIMARRON - DRAPER LAKE 345KV CKT 1	717	717	0.13864	102.3161	GEN562017 1-G11_022_3 0.6900
FDNS	00NR	0	16WP	G15_093	FROM->TO	CIMARRON - DRAPER LAKE 345KV CKT 1	717	717	0.13864	102.3138	GEN615021 1-GRE-ER 14G 16.000
FDNS	00NR	0	16WP	G15_093	FROM->TO	CIMARRON - DRAPER LAKE 345KV CKT 1	717	717	0.13867	102.3122	GRPRAR1-LNX3345.00 - HOLT.CO3 345.00 345KV CKT 1
FDNS	00NR	0	16WP	G15_093	FROM->TO	CIMARRON - DRAPER LAKE 345KV CKT 1	717	717	0.13861	102.3107	P12:138:AEPW:SHAM4WT:CHILD4WT
FDNS	00NR	0	16WP	G15_093	FROM->TO	CIMARRON - DRAPER LAKE 345KV CKT 1	717	717	0.13867	102.3086	GRPRAR1-LNX3345.00 - GRPRAR 345KV CKT Z
FDNS	00NR	0	16WP	G15_093	FROM->TO	CIMARRON - DRAPER LAKE 345KV CKT 1	717	717	0.13864	102.3034	GEN562429 1-G13-029 0.6900
FDNS	00NR	0	16WP	G15_093	FROM->TO	CIMARRON - DRAPER LAKE 345KV CKT 1	717	717	0.13864	102.3021	GEN562432 1-G13-030 0.6900
FDNS	00NR	0	16WP	G15_093	FROM->TO	CIMARRON - DRAPER LAKE 345KV CKT 1	717	717	0.13864	102.3019	GEN560105 1-G08-22 0.6900
FDNS	00NR	0	16WP	G15_093	FROM->TO	CIMARRON - DRAPER LAKE 345KV CKT 1	717	717	0.13864	102.3006	INDEPENDENCE 500/26.0KV TRANSFORMER CKT 1
FDNS	00NR	0	16WP	G15_093	FROM->TO	CIMARRON - DRAPER LAKE 345KV CKT 1	717	717	0.13864	102.2985	GEN532663 1-LAWRENCE ENERGY CENTER UNIT 5
FDNS	00NR	0	16WP	G15_093	FROM->TO	CIMARRON - DRAPER LAKE 345KV CKT 1	717	717	0.13854	102.2985	P12:138:AEPW-SWPA:LONEOAK4:TUPELO4
FDNS	00NR	0	16WP	G15_093	FROM->TO	CIMARRON - DRAPER LAKE 345KV CKT 1	717	717	0.13854	102.2984	P12:138:WFEC:MSL06
FDNS	00NR	0	16WP	G15_093	FROM->TO	CIMARRON - DRAPER LAKE 345KV CKT 1	717	717	0.13873	102.2966	OVEXFRMCCOVE
FDNS	00NR	0	16WP	G15_093	FROM->TO	CIMARRON - DRAPER LAKE 345KV CKT 1	717	717	0.1387	102.2931	DELL 500 - INDEPENDENCE 500KV CKT 1
FDNS	00NR	0	16WP	G15_093	FROM->TO	CIMARRON - DRAPER LAKE 345KV CKT 1	717	717	0.13864	102.2894	BURLINGTON NO1 + NO 2 + NO 3 161/20.0KV TRANSFORMER CKT 1
FDNS	00NR	0	16WP	G15_093	FROM->TO	CIMARRON - DRAPER LAKE 345KV CKT 1	717	717	0.13834	102.2839	P12:138:AEPW-OGE:WELETK4:MAUD 4
FDNS	00NR	0	16WP	G15_093	FROM->TO	CIMARRON - DRAPER LAKE 345KV CKT 1	717	717	0.14091	102.2797	P12:230:AEPW:ELKCITY6:SWEETWT6

SOLUTION	GROUP	SCENARIO	SEASON	SOURCE	DIRECTION	MONITORED ELEMENT	RATEA (MVA)	RATEB(MVA)	TDF	TC%LOADING (% MVA)	CONTINGENCY
FDNS	00NR	0	16WP	G15_093	FROM->TO	CIMARRON - DRAPER LAKE 345KV CKT 1	717	717	0.13864	102.2752	GEN527882 1-CUNNINGHAM GEN #2 20 KV
FDNS	00NR	0	16WP	G15_093	FROM->TO	CIMARRON - DRAPER LAKE 345KV CKT 1	717	717	0.13909	102.2741	P12:138:WFEC:MSL16
FDNS	00NR	0	16WP	G15_093	FROM->TO	CIMARRON - DRAPER LAKE 345KV CKT 1	717	717	0.13843	102.2712	EARLSBORO 4138.00 - MAUD 138KV CKT 1
FDNS	00NR	0	16WP	G15_093	FROM->TO	CIMARRON - DRAPER LAKE 345KV CKT 1	717	717	0.13843	102.2712	EARLSBORO 4138.00 - MAUD 138KV CKT 1
FDNS	00NR	0	16WP	G15_093	FROM->TO	CIMARRON - DRAPER LAKE 345KV CKT 1	717	717	0.13864	102.2674	GEN562550 1-G14_040_3 0.6900
FDNS	00NR	0	16WP	G15_093	FROM->TO	CIMARRON - DRAPER LAKE 345KV CKT 1	717	717	0.13864	102.2642	GEN524295 1-SPNSPUR_WND10.6900
FDNS	00NR	0	16WP	G15_093	FROM->TO	CIMARRON - DRAPER LAKE 345KV CKT 1	717	717	0.13864	102.2579	GEN562832 1-G15042_3 0.6900
FDNS	00NR	0	16WP	G15_093	FROM->TO	CIMARRON - DRAPER LAKE 345KV CKT 1	717	717	0.13985	102.2486	MAUD - SEMINOLE 138KV CKT 1
FDNS	00NR	0	16WP	G15_093	FROM->TO	CIMARRON - DRAPER LAKE 345KV CKT 1	717	717	0.13918	102.2397	STLN-DEMARC6 - SWEETWATER 230KV CKT 1
FDNS	00NR	0	16WP	G15_093	FROM->TO	CIMARRON - DRAPER LAKE 345KV CKT 1	717	717	0.13918	102.2392	P12:230:AEPW-SPS:SWEETWT6:WHEELER 6
FDNS	00NR	0	16WP	G15_093	FROM->TO	CIMARRON - DRAPER LAKE 345KV CKT 1	717	717	0.13918	102.2372	STATELINE INTERCHANGE - STLN-DEMARC6 230KV CKT 1
FDNS	00NR	0	16WP	G15_093	FROM->TO	CIMARRON - DRAPER LAKE 345KV CKT 1	717	717	0.13864	102.221	GEN531447 1-HOLCOMB GENERATOR
FDNS	00NR	0	16WP	G15_093	FROM->TO	CIMARRON - DRAPER LAKE 345KV CKT 1	717	717	0.13864	102.2207	P12:230:UMZB:# 112 #: NU IN SD. NU-RCDC & DRY CREEK XFMR
FDNS	00NR	0	16WP	G15_093	FROM->TO	CIMARRON - DRAPER LAKE 345KV CKT 1	717	717	0.13864	102.2195	RCDC EAST 4230.00 - RED CEDAR DC 230KV CKT 1
FDNS	00NR	0	16WP	G15_093	FROM->TO	CIMARRON - DRAPER LAKE 345KV CKT 1	717	717	0.13864	102.2165	GEN645011 1-NEBRASKA CITY 1
FDNS	00NR	0	16WP	G15_093	FROM->TO	CIMARRON - DRAPER LAKE 345KV CKT 1	717	717	0.13864	102.2156	GEN345671 2-1RUSH G2 18.000
FDNS	00NR	0	16WP	G15_093	FROM->TO	CIMARRON - DRAPER LAKE 345KV CKT 1	717	717	0.13864	102.2137	GEN345670 1-1RUSH G1 18.000
FDNS	00NR	0	16WP	G15_093	FROM->TO	CIMARRON - DRAPER LAKE 345KV CKT 1	717	717	0.13864	102.2132	GEN515606 1-CANDN11 0.6900
FDNS	00NR	0	16WP	G15_093	FROM->TO	CIMARRON - DRAPER LAKE 345KV CKT 1	717	717	0.13864	102.2132	GEN515607 1-CANDN12 0.6900
FDNS	00NR	0	16WP	G15_093	FROM->TO	CIMARRON - DRAPER LAKE 345KV CKT 1	717	717	0.13777	102.2079	HIGHLAND - PINK SW 138KV CKT 1
FDNS	00NR	0	16WP	G15_093	FROM->TO	CIMARRON - DRAPER LAKE 345KV CKT 1	717	717	0.13864	102.1858	GEN515443 1-MNCOWND1 0.7000
FDNS	00NR	0	16WP	G15_093	FROM->TO	CIMARRON - DRAPER LAKE 345KV CKT 1	717	717	0.13864	102.1851	GEN562794 1-G15038_5 0.6900
FDNS	00NR	0	16WP	G15_093	FROM->TO	CIMARRON - DRAPER LAKE 345KV CKT 1	717	717	0.13864	102.1851	GEN562795 1-G15038_6 0.6900
FDNS	00NR	0	16WP	G15_093	FROM->TO	CIMARRON - DRAPER LAKE 345KV CKT 1	717	717	0.13864	102.1817	GEN563092 1-G15074_3 0.6900
FDNS	00NR	0	16WP	G15_093	FROM->TO	CIMARRON - DRAPER LAKE 345KV CKT 1	717	717	0.13911	102.1805	FT SMITH - MUSKOGEE 345KV CKT 1
FDNS	00NR	0	16WP	G15_093	FROM->TO	CIMARRON - DRAPER LAKE 345KV CKT 1	717	717	0.13864	102.1774	GEN542951 5-HAWTHORN UNIT #5
FDNS	00NR	0	16WP	G15_093	FROM->TO	CIMARRON - DRAPER LAKE 345KV CKT 1	717	717	0.13864	102.1724	GEN645012 2-NEBRASKA CITY 2
FDNSLock	00NR	0	16WP	G15_093	FROM->TO	CIMARRON - DRAPER LAKE 345KV CKT 1	717	717	0.13864	102.1642	GEN629072 4-LANSING GENERATOR FOR UNITS NO4 EIA CODE 1
FDNS	00NR	0	16WP	G15_093	FROM->TO	CIMARRON - DRAPER LAKE 345KV CKT 1	717	717	0.13864	102.1533	GEN562512 1-G14_020_3 0.6900
FDNS	00NR	0	16WP	G15_093	FROM->TO	CIMARRON - DRAPER LAKE 345KV CKT 1	717	717	0.13872	102.1446	KEO EHV - WEST MEMPHIS 500 500KV CKT 1
FDNS	00NR	0	16WP	G15_093	FROM->TO	CIMARRON - DRAPER LAKE 345KV CKT 1	717	717	0.13918	102.1408	CHISHOLM6 230.00 - SWEETWATER 230KV CKT 1
FDNS	00NR	0	16WP	G15_093	FROM->TO	CIMARRON - DRAPER LAKE 345KV CKT 1	717	717	0.13864	102.134	GEN657749 1-YOUNG 1 GENERATOR
FDNS	00NR	0	16WP	G15_093	FROM->TO	CIMARRON - DRAPER LAKE 345KV CKT 1	717	717	0.13864	102.1262	GEN562699 1-G15_018_3 0.6900
FDNS	00NR	0	16WP	G15_093	FROM->TO	CIMARRON - DRAPER LAKE 345KV CKT 1	717	717	0.13864	102.1114	GEN640009 1-COOPER NUCLEAR STATION
FDNS	00NR	0	16WP	G15_093	FROM->TO	CIMARRON - DRAPER LAKE 345KV CKT 1	717	717	0.13864	102.1042	GEN529201 1-OMCDLEC1 13.800
FDNS	00NR	0	16WP	G15_093	FROM->TO	CIMARRON - DRAPER LAKE 345KV CKT 1	717	717	0.13911	102.1014	FRISCCO4 138.00 - LULA 138KV CKT 1
FDNS	00NR	0	16WP	G15_093	FROM->TO	CIMARRON - DRAPER LAKE 345KV CKT 1	717	717	0.13864	102.0883	GEN563122 1-G15077_3 0.3850
FDNS	00NR	0	16WP	G15_093	FROM->TO	CIMARRON - DRAPER LAKE 345KV CKT 1	717	717	0.13864	102.0793	GEN563182 1-G15083_3 0.6900
FDNSLock	00NR	0	16WP	G15_093	FROM->TO	CIMARRON - DRAPER LAKE 345KV CKT 1	717	717	0.13864	102.0662	GEN681522 3-GENOA 3
FDNS	00NR	0	16WP	G15_093	FROM->TO	CIMARRON - DRAPER LAKE 345KV CKT 1	717	717	0.13864	102.0608	GEN562685 1-G15_013_3 0.3550
FDNS	00NR	0	16WP	G15_093	FROM->TO	CIMARRON - DRAPER LAKE 345KV CKT 1	717	717	0.13897	102.0437	HOLLYWOOD - MIDWEST TAP 138KV CKT 1
FDNS	00NR	0	16WP	G15_093	FROM->TO	CIMARRON - DRAPER LAKE 345KV CKT 1	717	717	0.13864	102.0354	GEN344895 2-1LAB G2 20.000
FDNS	00NR	0	16WP	G15_093	FROM->TO	CIMARRON - DRAPER LAKE 345KV CKT 1	717	717	0.13831	102.0328	TUPELO - TUPELO TAP 138KV CKT 1
FDNS	00NR	0	16WP	G15_093	FROM->TO	CIMARRON - DRAPER LAKE 345KV CKT 1	717	717	0.14098	102.0286	CHISHOLM7 345.00 - GRACEMONT 345KV CKT 1
FDNS	00NR	0	16WP	G15_093	FROM->TO	CIMARRON - DRAPER LAKE 345KV CKT 1	717	717	0.13864	102.0223	GEN563222 1-G15088_3 0.6900
FDNS	00NR	0	16WP	G15_093	FROM->TO	CIMARRON - DRAPER LAKE 345KV CKT 1	717	717	0.13864	102.0212	4SIOUX 1 138.00 138/18.0KV TRANSFORMER CKT 1
FDNS	00NR	0	16WP	G15_093	FROM->TO	CIMARRON - DRAPER LAKE 345KV CKT 1	717	717	0.13576	102.0151	CIMARRON - TUTTLE CONOCO TAP 138KV CKT 1
FDNS	00NR	0	16WP	G15_093	FROM->TO	CIMARRON - DRAPER LAKE 345KV CKT 1	717	717	0.13911	102.0133	FRISCCO4 138.00 - HARDEN 4 138.00 138KV CKT 1
FDNS	00NR	0	16WP	G15_093	FROM->TO	CIMARRON - DRAPER LAKE 345KV CKT 1	717	717	0.13864	102.0083	GEN523461 1-BLACKHAWK GEN #1
FDNS	00NR	0	16WP	G15_093	FROM->TO	CIMARRON - DRAPER LAKE 345KV CKT 1	717	717	0.13864	102.0082	GEN523462 1-BLACKHAWK GEN #2
FDNS	00NR	0	16WP	G15_093	FROM->TO	CIMARRON - DRAPER LAKE 345KV CKT 1	717	717	0.13864	102.0073	GEN344896 3-1LAB G3 20.000
FDNS	00NR	0	16WP	G15_093	FROM->TO	CIMARRON - DRAPER LAKE 345KV CKT 1	717	717	0.13864	102.0058	GEN344894 1-1LAB G1 20.000
FDNS	00NR	0	16WP	G15_093	FROM->TO	CIMARRON - DRAPER LAKE 345KV CKT 1	717	717	0.13864	102.0047	GEN344897 4-1LAB G4 20.000
FDNS	00NR	0	16WP	G15_093	FROM->TO	CIMARRON - DRAPER LAKE 345KV CKT 1	717	717	0.13864	102.0003	GEN562587 1-G14_056_3 0.6900
FDNS	00NR	0	16WP	G15_093	FROM->TO	CIMARRON - DRAPER LAKE 345KV CKT 1	717	717	0.13864	101.9772	GEN515602 1-KNGFSR12 0.7000
FDNS	00NR	0	16WP	G15_093	FROM->TO	CIMARRON - DRAPER LAKE 345KV CKT 1	717	717	0.13864	101.9571	GEN563082 1-G15073_3 0.6900
FDNS	00NR	0	16WP	G15_093	FROM->TO	CIMARRON - DRAPER LAKE 345KV CKT 1	717	717	0.13576	101.9436	TUTTLE - TUTTLE CONOCO TAP 138KV CKT 1
FDNS	00NR	0	16WP	G15_093	FROM->TO	CIMARRON - DRAPER LAKE 345KV CKT 1	717	717	0.14098	101.9367	CHISHOLM7 345.00 (CHISHOLM) 345/230/13.2KV TRANSFORMER CKT 1
FDNS	00NR	0	16WP	G15_093	FROM->TO	CIMARRON - DRAPER LAKE 345KV CKT 1	717	717	0.13864	101.9307	GEN562704 1-G15_020_3 0.3550
FDNS	00NR	0	16WP	G15_093	FROM->TO	CIMARRON - DRAPER LAKE 345KV CKT 1	717	717	0.13864	101.9129	GEN563202 1-G15085_3 0.5500
FDNS	00NR	0	16WP	G15_093	FROM->TO	CIMARRON - DRAPER LAKE 345KV CKT 1	717	717	0.13864	101.9087	CLAY BOSWELL 230/20.9KV TRANSFORMER CKT 1
FDNS	00NR	0	16WP	G15_093	FROM->TO	CIMARRON - DRAPER LAKE 345KV CKT 1	717	717	0.13864	101.8974	GEN640010 1-GERALD GENTLEMAN STATION UNIT 1
FDNS	00NR	0	16WP	G15_093	FROM->TO	CIMARRON - DRAPER LAKE 345KV CKT 1	717	717	0.13864	101.8665	GEN672321 1-SHAND GENERATOR 1
FDNS	00NR	0	16WP	G15_093	FROM->TO	CIMARRON - DRAPER LAKE 345KV CKT 1	717	717	0.13932	101.8497	LULA - TUPELO TAP 138KV CKT 1
FDNS	00NR	0	16WP	G15_093	FROM->TO	CIMARRON - DRAPER LAKE 345KV CKT 1	717	717	0.13841	101.8468	NORTHWEST TEXARKANA - VALLIANT 345KV CKT 1
FDNS	00NR	0	16WP	G15_093	FROM->TO	CIMARRON - DRAPER LAKE 345KV CKT 1	717	717	0.13841	101.8468	NORTHWEST TEXARKANA - VALLIANT 345KV CKT 1
FDNS	00NR	0	16WP	G15_093	FROM->TO	CIMARRON - DRAPER LAKE 345KV CKT 1	717	717	0.13864	101.8436	GEN562710 1-G15_022_3 0.5500
FDNS	00NR	0	16WP	G15_093	FROM->TO	CIMARRON - DRAPER LAKE 345KV CKT 1	717	717	0.1386	101.8429	SEMINOLE (SEMINOL1) 345/138/14.4KV TRANSFORMER CKT 1
FDNS	00NR	0	16WP	G15_093	FROM->TO	CIMARRON - DRAPER LAKE 345KV CKT 1	717	717	0.13864	101.8407	GEN672310 1-POPLAR RIVER GENERATOR 1
FDNS	00NR	0	16WP	G15_093	FROM->TO	CIMARRON - DRAPER LAKE 345KV CKT 1	717	717	0.13864	101.8406	GEN672311 2-POPLAR RIVER GENERATOR 2
FDNS	00NR	0	16WP	G15_093	FROM->TO	CIMARRON - DRAPER LAKE 345KV CKT 1	717	717	0.13864	101.8304	GEN672306 6-BOUNDARY DAM GENERATOR 6
FDNS	00NR	0	16WP	G15_093	FROM->TO	CIMARRON - DRAPER LAKE 345KV CKT 1	717	717	0.13864	101.8297	GEN640011 2-GERALD GENTLEMAN STATION UNIT 2
FDNS	00NR	0	16WP	G15_093	FROM->TO	CIMARRON - DRAPER LAKE 345KV CKT 1	717	717	0.13864	101.8274	GEN542956 2-LACYGNE UNIT #2
FDNS	00NR	0	16WP	G15_093	FROM->TO	CIMARRON - DRAPER LAKE 345KV CKT 1	717	717	0.13864	101.8181	GEN659118 1-LARAMIE RIVER UNIT1
FDNS	00NR	0	16WP	G15_093	FROM->TO	CIMARRON - DRAPER LAKE 345KV CKT 1	717	717	0.13911	101.7929	ETNA - HARDEN 4 138.00 138KV CKT 1
FDNS	00NR	0	16WP	G15_093	FROM->TO	CIMARRON - DRAPER LAKE 345KV CKT 1	717	717	0.13892	101.7872	RENFROW7 345.00 - VIOLA 7 345.00 345KV CKT 1
FDNS	01NR	0	17G	G15_093	FROM->TO	CIMARRON - DRAPER LAKE 345KV CKT 1	717	717	0.17998	101.7747	G14-057T 345.00 - SUNNYSIDE 345KV CKT 1
FDNS	00NR	0	16WP	G15_093	FROM->TO	CIMARRON - DRAPER LAKE 345KV CKT 1	717	717	0.13988	101.7737	P12:138:OKGE:3TERM22
FDNS	00NR	0	16WP	G15_093	FROM->TO	CIMARRON - DRAPER LAKE 345KV CKT 1	717	717	0.13986	101.7718	DRAPER LAKE - SOONER TAP 138KV CKT 1

SOLUTION	GROUP	SCENARIO	SEASON	SOURCE	DIRECTION	MONITORED ELEMENT	RATEA (MVA)	RATEB(MVA)	TDF	TC%LOADING (% MVA)	CONTINGENCY
FDNS	00NR	0	16WP	G15_093	FROM->TO	CIMARRON - DRAPER LAKE 345KV CKT 1	717	717	0.13777	101.7634	P12:138:WFEC:MSL08
FDNS	00NR	0	16WP	G15_093	FROM->TO	CIMARRON - DRAPER LAKE 345KV CKT 1	717	717	0.13777	101.7516	FRANKLIN - PINK SW 138KV CKT 1
FDNS	00NR	0	16WP	G15_093	FROM->TO	CIMARRON - DRAPER LAKE 345KV CKT 1	717	717	0.13873	101.7502	P12:138:WFEC:MSL09
FDNS	00NR	0	16WP	G15_093	FROM->TO	CIMARRON - DRAPER LAKE 345KV CKT 1	717	717	0.13999	101.7466	OAKCREEK - WILD MARY 138KV CKT 1
FDNS	00NR	0	16WP	G15_093	FROM->TO	CIMARRON - DRAPER LAKE 345KV CKT 1	717	717	0.13864	101.7397	GEN542957 1-IATAN UNIT #1
FDNSLock	00NR	0	16WP	G15_093	FROM->TO	CIMARRON - DRAPER LAKE 345KV CKT 1	717	717	0.13864	101.7355	GEN681542 6-JP MADGETT
FDNS	00NR	0	16WP	G15_093	FROM->TO	CIMARRON - DRAPER LAKE 345KV CKT 1	717	717	0.13864	101.7124	GEN530690 1-PRWINDG1 0.6900
FDNS	00NR	0	16WP	G15_093	FROM->TO	CIMARRON - DRAPER LAKE 345KV CKT 1	717	717	0.13911	101.7075	ETNA - PARK LANE 138KV CKT 1
FDNS	00NR	0	16WP	G15_093	FROM->TO	CIMARRON - DRAPER LAKE 345KV CKT 1	717	717	0.13864	101.7	GEN645001 1-FORT CALHOUN 1
FDNS	00NR	0	16WP	G15_093	FROM->TO	CIMARRON - DRAPER LAKE 345KV CKT 1	717	717	0.13913	101.6997	HUNTERS7 345.00 - RENFROW7 345.00 345KV CKT 1
FDNS	00NR	0	16WP	G15_093	FROM->TO	CIMARRON - DRAPER LAKE 345KV CKT 1	717	717	0.13864	101.658	GEN542955 1-LACYGNE UNIT #1
FDNS	00NR	0	16WP	G15_093	FROM->TO	CIMARRON - DRAPER LAKE 345KV CKT 1	717	717	0.13864	101.6477	GEN562754 1-G15031_5 0.6900
FDNS	00NR	0	16WP	G15_093	FROM->TO	CIMARRON - DRAPER LAKE 345KV CKT 1	717	717	0.13864	101.6356	GEN562556 1-G14_046_3 0.3420
FDNS	00NR	0	16WP	G15_093	FROM->TO	CIMARRON - DRAPER LAKE 345KV CKT 1	717	717	0.1386	101.6321	SEMINOLE (SEMINOL2) 345/138/14.4KV TRANSFORMER CKT 1
FDNS	00NR	0	16WP	G15_093	FROM->TO	CIMARRON - DRAPER LAKE 345KV CKT 1	717	717	0.13864	101.6108	GEN661015 1-COYOTE
FDNS	00NR	0	16WP	G15_093	FROM->TO	CIMARRON - DRAPER LAKE 345KV CKT 1	717	717	0.13864	101.6042	GEN562756 1-G15031_7 0.6900
FDNS	00NR	0	16WP	G15_093	FROM->TO	CIMARRON - DRAPER LAKE 345KV CKT 1	717	717	0.13864	101.6013	GEN532653 1-JEFFREY ENERGY CENTER UNIT 3
FDNS	00NR	0	16WP	G15_093	FROM->TO	CIMARRON - DRAPER LAKE 345KV CKT 1	717	717	0.13864	101.6012	GEN532652 1-JEFFREY ENERGY CENTER UNIT 2
FDNS	00NR	0	16WP	G15_093	FROM->TO	CIMARRON - DRAPER LAKE 345KV CKT 1	717	717	0.13864	101.5971	GEN532651 1-JEFFREY ENERGY CENTER UNIT 1
FDNS	00NR	0	16WP	G15_093	FROM->TO	CIMARRON - DRAPER LAKE 345KV CKT 1	717	717	0.13864	101.5894	GEN562974 1-G15060_5 0.6900
FDNS	00NR	0	16WP	G15_093	FROM->TO	CIMARRON - DRAPER LAKE 345KV CKT 1	717	717	0.13864	101.5883	GEN563142 1-G15079_3 0.5500
FDNS	00NR	0	16WP	G15_093	FROM->TO	CIMARRON - DRAPER LAKE 345KV CKT 1	717	717	0.13864	101.5883	GEN563151 1-G15080_2 0.5500
FDNS	00NR	0	16WP	G15_093	FROM->TO	CIMARRON - DRAPER LAKE 345KV CKT 1	717	717	0.13864	101.5778	GEN563042 1-G15068_3 0.6900
FDNS	00NR	0	16WP	G15_093	FROM->TO	CIMARRON - DRAPER LAKE 345KV CKT 1	717	717	0.13864	101.5733	GEN562973 1-G15060_4 0.6900
FDNS	00NR	0	16WP	G15_093	FROM->TO	CIMARRON - DRAPER LAKE 345KV CKT 1	717	717	0.13864	101.5428	GEN562078 1-G11_051_3 0.6900
FDNS	00NR	0	16WP	G15_093	FROM->TO	CIMARRON - DRAPER LAKE 345KV CKT 1	717	717	0.13864	101.531	GEN562691 1-G15_015_3 0.6900
FDNS	00NR	0	16WP	G15_093	FROM->TO	CIMARRON - DRAPER LAKE 345KV CKT 1	717	717	0.13999	101.52	AIRDEPT4 138.00 - WILD MARY 138KV CKT 1
FDNS	00NR	0	16WP	G15_093	FROM->TO	CIMARRON - DRAPER LAKE 345KV CKT 1	717	717	0.14013	101.4938	PARK LANE - SEMINOLE 138KV CKT 1
FDNS	00NR	0	16WP	G15_093	FROM->TO	CIMARRON - DRAPER LAKE 345KV CKT 1	717	717	0.13864	101.4886	GEN562655 1-G14_074_3 0.6900
FDNS	00NR	0	16WP	G15_093	FROM->TO	CIMARRON - DRAPER LAKE 345KV CKT 1	717	717	0.13864	101.4881	GEN562762 1-G15033_3 0.6900
FDNS	00NR	0	16WP	G15_093	FROM->TO	CIMARRON - DRAPER LAKE 345KV CKT 1	717	717	0.13864	101.4826	GEN657748 1-YOUNG 2 GENERATOR
FDNS	00NR	0	16WP	G15_093	FROM->TO	CIMARRON - DRAPER LAKE 345KV CKT 1	717	717	0.13777	101.468	FRANKLIN - FRANKLIN SW 138KV CKT 1
FDNS	00NR	0	16WP	G15_093	FROM->TO	CIMARRON - DRAPER LAKE 345KV CKT 1	717	717	0.13864	101.4312	GEN527901 1-HOBBS PLANT #1 (CT)
FDNS	00NR	0	16WP	G15_093	FROM->TO	CIMARRON - DRAPER LAKE 345KV CKT 1	717	717	0.13864	101.4312	GEN527902 1-HOBBS PLANT #2 (CT)
FDNS	00NR	0	16WP	G15_093	FROM->TO	CIMARRON - DRAPER LAKE 345KV CKT 1	717	717	0.13864	101.405	GEN563273 2-G15093_4 0.6900
FDNS	00NR	0	16WP	G15_093	FROM->TO	CIMARRON - DRAPER LAKE 345KV CKT 1	717	717	0.13864	101.389	GEN563043 1-G15068_4 0.6900
FDNS	00NR	0	16WP	G15_093	FROM->TO	CIMARRON - DRAPER LAKE 345KV CKT 1	717	717	0.13832	101.3853	LYDIA - WELSH 345KV CKT 1
FDNS	00NR	0	16WP	G15_093	FROM->TO	CIMARRON - DRAPER LAKE 345KV CKT 1	717	717	0.13832	101.3853	LYDIA - WELSH 345KV CKT 1
FDNS	00NR	0	16WP	G15_093	FROM->TO	CIMARRON - DRAPER LAKE 345KV CKT 1	717	717	0.13864	101.3678	GEN563052 1-G15069_3 0.6900
FDNS	00NR	0	16WP	G15_093	FROM->TO	CIMARRON - DRAPER LAKE 345KV CKT 1	717	717	0.13864	101.3481	GEN525845 1-ELK_2 1 138.00
FDNS	00NR	0	16WP	G15_093	FROM->TO	CIMARRON - DRAPER LAKE 345KV CKT 1	717	717	0.13864	101.3447	GEN525844 1-ELK_1 118.000
FDNS	00NR	0	16WP	G15_093	FROM->TO	CIMARRON - DRAPER LAKE 345KV CKT 1	717	717	0.13864	101.3169	GEN563242 1-G15090_3 0.6900
FDNS	00NR	0	16WP	G15_093	FROM->TO	CIMARRON - DRAPER LAKE 345KV CKT 1	717	717	0.13864	101.298	GEN526333 1-JONES GEN #3 21 KV
FDNS	00NR	0	16WP	G15_093	FROM->TO	CIMARRON - DRAPER LAKE 345KV CKT 1	717	717	0.13864	101.298	GEN526334 1-JONES_4 116.500
FDNS	00NR	0	16WP	G15_093	FROM->TO	CIMARRON - DRAPER LAKE 345KV CKT 1	717	717	0.13576	101.2942	P12:138:AEPW-OGE:CORNVIL4:CIMARON4
FDNS	00NR	0	16WP	G15_093	FROM->TO	CIMARRON - DRAPER LAKE 345KV CKT 1	717	717	0.13864	101.2934	GEN620315 1-BIG STONE GEN
FDNS	00NR	0	16WP	G15_093	FROM->TO	CIMARRON - DRAPER LAKE 345KV CKT 1	717	717	0.13999	101.2904	AIRDEPT4 138.00 - GM 138KV CKT 1
FDNS	00NR	0	16WP	G15_093	FROM->TO	CIMARRON - DRAPER LAKE 345KV CKT 1	717	717	0.13864	101.2796	GEN562772 1-G15034_3 0.6900
FDNS	00NR	0	16WP	G15_093	FROM->TO	CIMARRON - DRAPER LAKE 345KV CKT 1	717	717	0.13913	101.2661	HUNTERS7 345.00 - WOODRING 345KV CKT 1
FDNS	00NR	0	16WP	G15_093	FROM->TO	CIMARRON - DRAPER LAKE 345KV CKT 1	717	717	0.13864	101.2635	GEN523971 1-HARRINGTON GEN #1 24 KV
FDNS	00NR	0	16WP	G15_093	FROM->TO	CIMARRON - DRAPER LAKE 345KV CKT 1	717	717	0.13864	101.2635	GEN523972 1-HARRINGTON GEN #2 24 KV
FDNS	00NR	0	16WP	G15_093	FROM->TO	CIMARRON - DRAPER LAKE 345KV CKT 1	717	717	0.13864	101.2635	GEN523973 1-HARRINGTON GEN #3 24 KV
FDNS	00NR	0	16WP	G15_093	FROM->TO	CIMARRON - DRAPER LAKE 345KV CKT 1	717	717	0.13821	101.2533	RANCHRD7 345.00 - SOONER 345KV CKT 1
FDNS	00NR	0	16WP	G15_093	FROM->TO	CIMARRON - DRAPER LAKE 345KV CKT 1	717	717	0.13864	101.2384	GEN600004 2-PRAIRIE ISLAND G2
FDNS	00NR	0	16WP	G15_093	FROM->TO	CIMARRON - DRAPER LAKE 345KV CKT 1	717	717	0.13864	101.2354	GEN600003 1-PRAIRIE ISLAND G1
FDNSLock	00NR	0	16WP	G15_093	FROM->TO	CIMARRON - DRAPER LAKE 345KV CKT 1	717	717	0.13864	101.2218	GEN600006 1-AS KING
FDNSLock	00NR	0	16WP	G15_093	FROM->TO	CIMARRON - DRAPER LAKE 345KV CKT 1	717	717	0.13864	101.201	GEN636641 1-LOUISA UNIT 1
FDNS	00NR	0	16WP	G15_093	FROM->TO	CIMARRON - DRAPER LAKE 345KV CKT 1	717	717	0.12862	101.136	MUSKOGEE - SEMINOLE 345KV CKT 1
FDNS	00NR	0	16WP	G15_093	FROM->TO	CIMARRON - DRAPER LAKE 345KV CKT 1	717	717	0.13864	101.1035	GEN563292 1-G15095_3 0.6900
FDNS	00NR	0	16WP	G15_093	FROM->TO	CIMARRON - DRAPER LAKE 345KV CKT 1	717	717	0.13864	101.1	GEN542962 2-IATAN UNIT #2
FDNS	00NR	0	16WP	G15_093	FROM->TO	CIMARRON - DRAPER LAKE 345KV CKT 1	717	717	0.13864	101.1	GEN615002 2-COAL CREEK
FDNS	00NR	0	16WP	G15_093	FROM->TO	CIMARRON - DRAPER LAKE 345KV CKT 1	717	717	0.14496	101.0885	NORTHWEST - SPRING CREEK 345KV CKT 1
FDNS	00NR	0	16WP	G15_093	FROM->TO	CIMARRON - DRAPER LAKE 345KV CKT 1	717	717	0.13864	101.0833	GEN600005 1-MONTICELLO
FDNS	00NR	0	16WP	G15_093	FROM->TO	CIMARRON - DRAPER LAKE 345KV CKT 1	717	717	0.13999	101.082	DRAPER LAKE - GM 138KV CKT 1
FDNS	00NR	0	16WP	G15_093	FROM->TO	CIMARRON - DRAPER LAKE 345KV CKT 1	717	717	0.13864	101.0628	GEN527166 1-MUSTANG_6 118.000
FDNS	00NR	0	16WP	G15_093	FROM->TO	CIMARRON - DRAPER LAKE 345KV CKT 1	717	717	0.13864	101.0553	GEN525562 1-TOLK GEN #2 24 KV
FDNS	00NR	0	16WP	G15_093	FROM->TO	CIMARRON - DRAPER LAKE 345KV CKT 1	717	717	0.14496	101.0485	SOONER - SPRING CREEK 345KV CKT 1
FDNS	00NR	0	16WP	G15_093	FROM->TO	CIMARRON - DRAPER LAKE 345KV CKT 1	717	717	0.1424	101.0368	CLARKSVILLE - MUSKOGEE 345KV CKT 1
FDNS	00NR	0	16WP	G15_093	FROM->TO	CIMARRON - DRAPER LAKE 345KV CKT 1	717	717	0.1424	101.0368	CLARKSVILLE - MUSKOGEE 345KV CKT 1
FDNS	00NR	0	16WP	G15_093	FROM->TO	CIMARRON - DRAPER LAKE 345KV CKT 1	717	717	0.13864	101.0116	GEN562952 1-G15057_3 0.6500
FDNS	00NR	0	16WP	G15_093	FROM->TO	CIMARRON - DRAPER LAKE 345KV CKT 1	717	717	0.13864	101.0001	GEN563272 1-G15093_3 0.6900
FDNS	00NR	0	16WP	G15_093	FROM->TO	CIMARRON - DRAPER LAKE 345KV CKT 1	717	717	0.13864	101	GEN629074 1-ARNOLD LOWSIDE OF GSU XFMR
FDNS	00NR	0	16WP	G15_093	FROM->TO	CIMARRON - DRAPER LAKE 345KV CKT 1	717	717	0.13864	100.9585	GEN635213 3-NEAL UNIT 3
FDNS	00NR	0	16WP	G15_093	FROM->TO	CIMARRON - DRAPER LAKE 345KV CKT 1	717	717	0.14249	100.9479	FRANKLIN SW - MIDWEST TAP 138KV CKT 1
FDNS	00NR	0	16WP	G15_093	FROM->TO	CIMARRON - DRAPER LAKE 345KV CKT 1	717	717	0.13161	100.9426	DRAPER LAKE - SEMINOLE 345KV CKT 3
FDNS	00NR	0	16WP	G15_093	FROM->TO	CIMARRON - DRAPER LAKE 345KV CKT 1	717	717	0.13864	100.9128	GEN562892 1-G15048_3 0.6900
FDNS	00NR	0	16WP	G15_093	FROM->TO	CIMARRON - DRAPER LAKE 345KV CKT 1	717	717	0.13864	100.9011	BIG STONE 230/24.0KV TRANSFORMER CKT 1
FDNS	00NR	0	16WP	G15_093	FROM->TO	CIMARRON - DRAPER LAKE 345KV CKT 1	717	717	0.13864	100.8665	GEN563173 1-G15082_3 0.6900
FDNS	00NR	0	16WP	G15_093	FROM->TO	CIMARRON - DRAPER LAKE 345KV CKT 1	717	717	0.13926	100.8575	CHAMBER SPRINGS - CLARKSVILLE 345KV CKT 1

SOLUTION	GROUP	SCENARIO	SEASON	SOURCE	DIRECTION	MONITORED ELEMENT	RATEA (MVA)	RATEB(MVA)	TDF	TC%LOADING (% MVA)	CONTINGENCY
FDNS	00NR	0	16WP	G15_093	FROM->TO	CIMARRON - DRAPER LAKE 345KV CKT 1	717	717	0.13864	100.8263	GEN562902 1-G15052_3 0.6900
FDNS	00NR	0	16WP	G15_093	FROM->TO	CIMARRON - DRAPER LAKE 345KV CKT 1	717	717	0.13819	100.8149	LYDIA - VALLIANT 345KV CKT 1
FDNS	00NR	0	16WP	G15_093	FROM->TO	CIMARRON - DRAPER LAKE 345KV CKT 1	717	717	0.13819	100.8149	LYDIA - VALLIANT 345KV CKT 1
FDNS	00NR	0	16WP	G15_093	FROM->TO	CIMARRON - DRAPER LAKE 345KV CKT 1	717	717	0.13864	100.81	GEN514805 1-SOONER UNIT 1
FDNS	00NR	0	16WP	G15_093	FROM->TO	CIMARRON - DRAPER LAKE 345KV CKT 1	717	717	0.13864	100.787	GEN527903 1-HOBBS PLANT #3 (ST)
FDNS	00NR	0	16WP	G15_093	FROM->TO	CIMARRON - DRAPER LAKE 345KV CKT 1	717	717	0.13864	100.7504	GEN525561 1-TOLK GEN #1 24 KV
FDNSLock	00NR	0	16WP	G15_093	FROM->TO	CIMARRON - DRAPER LAKE 345KV CKT 1	717	717	0.13864	100.7392	GEN600000 1-SHERBURNECNTY G1
FDNS	00NR	0	16WP	G15_093	FROM->TO	CIMARRON - DRAPER LAKE 345KV CKT 1	717	717	0.13695	100.6808	P12:138:OKGE:3TERM23
FDNS	00NR	0	16WP	G15_093	FROM->TO	CIMARRON - DRAPER LAKE 345KV CKT 1	717	717	0.13864	100.6578	GEN600001 2-SHERBURNE CNTY G2
FDNS	00NR	0	16WP	G15_093	FROM->TO	CIMARRON - DRAPER LAKE 345KV CKT 1	717	717	0.13695	100.6216	BARNES 4 138.00 - DRAPER LAKE 138KV CKT 1
FDNS	00NR	0	16WP	G15_093	FROM->TO	CIMARRON - DRAPER LAKE 345KV CKT 1	717	717	0.13864	100.6	GEN344225 1-1CAL G1 25.000
FDNS	00NR	0	16WP	G15_093	FROM->TO	CIMARRON - DRAPER LAKE 345KV CKT 1	717	717	0.13864	100.5641	GEN514806 1-SOONER UNIT 2
FDNSLock	00NR	0	16WP	G15_093	FROM->TO	CIMARRON - DRAPER LAKE 345KV CKT 1	717	717	0.13864	100.5438	GEN629075 1-OTTUMWA GENERATOR FOR OTTUMWA UNIT NO 1
FDNS	00NR	0	16WP	G15_093	FROM->TO	CIMARRON - DRAPER LAKE 345KV CKT 1	717	717	0.13864	100.5167	GEN563162 1-G15081_3 0.6900
FDNS	00NR	0	16WP	G15_093	FROM->TO	CIMARRON - DRAPER LAKE 345KV CKT 1	717	717	0.14093	100.3768	DRAPER LAKE (DRAPER2) 345/138/13.8KV TRANSFORMER CKT 1
FDNS	00NR	0	16WP	G15_093	FROM->TO	CIMARRON - DRAPER LAKE 345KV CKT 1	717	717	0.13864	100.3192	SHERBURNE CO 345/24.0KV TRANSFORMER CKT 1
FDNS	00NR	0	16WP	G15_093	FROM->TO	CIMARRON - DRAPER LAKE 345KV CKT 1	717	717	0.14413	100.2891	CIMARRON - MATHWSN7 345.00 345KV CKT 1
FDNS	00NR	0	16WP	G15_093	FROM->TO	CIMARRON - DRAPER LAKE 345KV CKT 1	717	717	0.14413	100.2891	CIMARRON - MATHWSN7 345.00 345KV CKT 2
FDNS	00NR	0	16WP	G15_093	FROM->TO	CIMARRON - DRAPER LAKE 345KV CKT 1	717	717	0.14093	100.286	DRAPER LAKE (DRAPER3) 345/138/13.8KV TRANSFORMER CKT 1
FDNS	00NR	0	16WP	G15_093	FROM->TO	CIMARRON - DRAPER LAKE 345KV CKT 1	717	717	0.14093	100.286	DRAPER LAKE (DRAPER4) 345/138/13.8KV TRANSFORMER CKT 1
FDNSLock	00NR	0	16WP	G15_093	FROM->TO	CIMARRON - DRAPER LAKE 345KV CKT 1	717	717	0.13864	100.2812	GEN635214 4-NEAL UNIT 4
FDNS	00NR	0	16WP	G15_093	FROM->TO	CIMARRON - DRAPER LAKE 345KV CKT 1	717	717	0.13864	100.2003	GEN562882 1-G15047_3 0.6900
FDNS	00NR	0	16WP	G15_093	FROM->TO	CIMARRON - DRAPER LAKE 345KV CKT 1	717	717	0.13864	100.1889	GEN600002 3-SHERBURNE CNTY G3
FDNS	00NR	0	16WP	G15_093	FROM->TO	CIMARRON - DRAPER LAKE 345KV CKT 1	717	717	0.13864	99.8	GEN635023 3-WALTER SCOTT UNIT 3
FDNS	00NR	0	16WP	G15_093	FROM->TO	CIMARRON - DRAPER LAKE 345KV CKT 1	717	717	0.13864	99.7	GEN562023 1-G11_020_3 0.6900
FDNS	00NR	0	16WP	G15_093	FROM->TO	CIMARRON - DRAPER LAKE 345KV CKT 1	717	717	0.13864	99.7	GEN562026 1-G11_019_3 0.6900
FDNS	00NR	0	16WP	G15_093	FROM->TO	CIMARRON - DRAPER LAKE 345KV CKT 1	717	717	0.13864	99.6	EASTDC - ERCOT EQUIVALENCE 345KV CKT 1
FDNS	00NR	0	16WP	G15_093	FROM->TO	CIMARRON - DRAPER LAKE 345KV CKT 1	717	717	0.1255	99.5	DRAPER LAKE - SEMINOLE 345KV CKT 1
FDNS	00NR	0	16WP	G15_093	FROM->TO	CIMARRON - DRAPER LAKE 345KV CKT 1	717	717	0.1255	99.5	DRAPER LAKE - SEMINOLE 345KV CKT 2
FDNS	00NR	0	20WP	G15_093	TO->FROM	CIMARRON - MINCO 345KV CKT 1	956	956	0.64417	113.1031	G14-057T 345.00 - SUNNYSIDE 345KV CKT 1
FDNS	00NR	0	16WP	G15_093	TO->FROM	CIMARRON - MINCO 345KV CKT 1	956	956	0.64539	112.6453	G14-057T 345.00 - SUNNYSIDE 345KV CKT 1
FDNS	00NR	0	16WP	G15_093	FROM->TO	G14-057T 345.00 - SUNNYSIDE 345KV CKT 1	717	789	0.36019	141.3261	CIMARRON - MINCO 345KV CKT 1
FDNS	00NR	0	20WP	G15_093	FROM->TO	G14-057T 345.00 - SUNNYSIDE 345KV CKT 1	717	789	0.35881	139.8556	CIMARRON - MINCO 345KV CKT 1
FDNS	00NR	0	16WP	G15_093	FROM->TO	G14-057T 345.00 - SUNNYSIDE 345KV CKT 1	717	789	0.36019	130.2319	GRACEMONT - MINCO 345KV CKT 1
FDNS	00NR	0	20WP	G15_093	FROM->TO	G14-057T 345.00 - SUNNYSIDE 345KV CKT 1	717	789	0.35881	128.6283	GRACEMONT - MINCO 345KV CKT 1
FDNS	00NR	0	16WP	G15_093	FROM->TO	G14-057T 345.00 - SUNNYSIDE 345KV CKT 1	717	789	0.16933	125.8516	PITTSBURG - SEMINOLE 345KV CKT 1
FDNS	00NR	0	16WP	G15_093	FROM->TO	G14-057T 345.00 - SUNNYSIDE 345KV CKT 1	717	789	0.16933	125.8516	PITTSBURG - SEMINOLE 345KV CKT 1
FDNS	00NR	0	16WP	G15_093	FROM->TO	G14-057T 345.00 - SUNNYSIDE 345KV CKT 1	717	789	0.17626	125.7317	BASE CASE
FDNS	00NR	0	20WP	G15_093	FROM->TO	G14-057T 345.00 - SUNNYSIDE 345KV CKT 1	717	789	0.17581	123.4961	BASE CASE
FDNS	00NR	0	16WP	G15_093	FROM->TO	G14-057T 345.00 - SUNNYSIDE 345KV CKT 1	717	789	0.18914	123.2027	CIMARRON - DRAPER LAKE 345KV CKT 1
FDNS	00NR	0	20WP	G15_093	FROM->TO	G14-057T 345.00 - SUNNYSIDE 345KV CKT 1	717	789	0.16881	122.942	PITTSBURG - SEMINOLE 345KV CKT 1
FDNS	00NR	0	20WP	G15_093	FROM->TO	G14-057T 345.00 - SUNNYSIDE 345KV CKT 1	717	789	0.16881	122.942	PITTSBURG - SEMINOLE 345KV CKT 1
FDNS	00NR	0	20WP	G15_093	FROM->TO	G14-057T 345.00 - SUNNYSIDE 345KV CKT 1	717	789	0.18865	120.8155	CIMARRON - DRAPER LAKE 345KV CKT 1
FDNS	00NR	0	16WP	G15_093	FROM->TO	G14-057T 345.00 - SUNNYSIDE 345KV CKT 1	717	789	0.19198	120.3338	P12:138:WFEC:MSL03
FDNS	00NR	0	16WP	G15_093	FROM->TO	G14-057T 345.00 - SUNNYSIDE 345KV CKT 1	717	789	0.17533	119.7169	PITTSBURG - VALLIANT 345KV CKT 1
FDNS	00NR	0	16WP	G15_093	FROM->TO	G14-057T 345.00 - SUNNYSIDE 345KV CKT 1	717	789	0.17533	119.7169	PITTSBURG - VALLIANT 345KV CKT 1
FDNSLock	00NR	0	16WP	G15_093	FROM->TO	G14-057T 345.00 - SUNNYSIDE 345KV CKT 1	717	789	0.17626	119.4097	GEN509403 1-PIRKEY GENERATION
FDNS	00NR	0	16WP	G15_093	FROM->TO	G14-057T 345.00 - SUNNYSIDE 345KV CKT 1	717	789	0.17626	119.3291	GEN509416 1-TURK GENERATION
FDNS	00NR	0	16WP	G15_093	FROM->TO	G14-057T 345.00 - SUNNYSIDE 345KV CKT 1	717	789	0.17758	119.038	CLEVELAND - G15066_T 345.00 345KV CKT 1
FDNS	00NR	0	16WP	G15_093	FROM->TO	G14-057T 345.00 - SUNNYSIDE 345KV CKT 1	717	789	0.17758	118.7424	G15066_T 345.00 - SOONER 345KV CKT 1
FDNS	00NR	0	20WP	G15_093	FROM->TO	G14-057T 345.00 - SUNNYSIDE 345KV CKT 1	717	789	0.19171	118.4531	P12:138:WFEC:MSL03
FDNS	00NR	0	16WP	G15_093	FROM->TO	G14-057T 345.00 - SUNNYSIDE 345KV CKT 1	717	789	0.17626	118.4277	GEN501801 1-DOLET HILLS UNIT1
FDNS	00NR	0	16WP	G15_093	FROM->TO	G14-057T 345.00 - SUNNYSIDE 345KV CKT 1	717	789	0.17626	118.0417	GEN509404 1-WELSH #1
FDNS	00NR	0	16WP	G15_093	FROM->TO	G14-057T 345.00 - SUNNYSIDE 345KV CKT 1	717	789	0.17626	118.0417	GEN509406 1-WELSH #3
FDNS	00NR	0	16WP	G15_093	FROM->TO	G14-057T 345.00 - SUNNYSIDE 345KV CKT 1	717	789	0.17953	117.7945	BORDER 7345.00 - WOODWARD DISTRICT EHV 345KV CKT 1
FDNS	00NR	0	16WP	G15_093	FROM->TO	G14-057T 345.00 - SUNNYSIDE 345KV CKT 1	717	789	0.17559	117.3154	7SAREPTA% 345.00 - LONGWOOD 345KV CKT 1
FDNS	00NR	0	16WP	G15_093	FROM->TO	G14-057T 345.00 - SUNNYSIDE 345KV CKT 1	717	789	0.17559	117.3154	7SAREPTA% 345.00 - LONGWOOD 345KV CKT 1
FDNS	00NR	0	20WP	G15_093	FROM->TO	G14-057T 345.00 - SUNNYSIDE 345KV CKT 1	717	789	0.17581	117.2677	GEN509403 1-PIRKEY GENERATION
FDNS	00NR	0	16WP	G15_093	FROM->TO	G14-057T 345.00 - SUNNYSIDE 345KV CKT 1	717	789	0.18027	117.2341	CORN TAP - NAPLESTP 138.00 138KV CKT 1
FDNS	00NR	0	20WP	G15_093	FROM->TO	G14-057T 345.00 - SUNNYSIDE 345KV CKT 1	717	789	0.17581	117.1868	GEN509416 1-TURK GENERATION
FDNS	00NR	0	16WP	G15_093	FROM->TO	G14-057T 345.00 - SUNNYSIDE 345KV CKT 1	717	789	0.18027	117.1497	NAPLESTP 138.00 - PAYNE 138.00 138KV CKT 1
FDNS	00NR	0	16WP	G15_093	FROM->TO	G14-057T 345.00 - SUNNYSIDE 345KV CKT 1	717	789	0.176	117.1471	DOLET HILLS - SOUTHWEST SHREVEPORT 345KV CKT 1
FDNS	00NR	0	16WP	G15_093	FROM->TO	G14-057T 345.00 - SUNNYSIDE 345KV CKT 1	717	789	0.176	117.1471	DOLET HILLS - SOUTHWEST SHREVEPORT 345KV CKT 1
FDNS	00NR	0	16WP	G15_093	FROM->TO	G14-057T 345.00 - SUNNYSIDE 345KV CKT 1	717	789	0.1807	117.1448	ANADARKO - POCASSETT 138KV CKT 1
FDNSLock	00NR	0	16WP	G15_093	FROM->TO	G14-057T 345.00 - SUNNYSIDE 345KV CKT 1	717	789	0.17626	117.1301	GEN336821 1-GRAND GULF UNIT
FDNS	00NR	0	16WP	G15_093	FROM->TO	G14-057T 345.00 - SUNNYSIDE 345KV CKT 1	717	789	0.17721	117.0898	CLEVELAND - TULSA NORTH 345KV CKT 1
FDNS	00NR	0	16WP	G15_093	FROM->TO	G14-057T 345.00 - SUNNYSIDE 345KV CKT 1	717	789	0.17721	117.0898	CLEVELAND - TULSA NORTH 345KV CKT 1
FDNS	00NR	0	16WP	G15_093	FROM->TO	G14-057T 345.00 - SUNNYSIDE 345KV CKT 1	717	789	0.17948	117.0742	COMANCHE - LOCO 138KV CKT 1
FDNSLock	00NR	0	16WP	G15_093	FROM->TO	G14-057T 345.00 - SUNNYSIDE 345KV CKT 1	717	789	0.17626	117.0352	GEN336153 1-WATERFORD UNIT#3
FDNS	00NR	0	16WP	G15_093	FROM->TO	G14-057T 345.00 - SUNNYSIDE 345KV CKT 1	717	789	0.16896	117.0161	CANADIAN RIVER - MUSKOGEE 345KV CKT 1
FDNS	00NR	0	16WP	G15_093	FROM->TO	G14-057T 345.00 - SUNNYSIDE 345KV CKT 1	717	789	0.1807	116.9961	POCASSETT - TUTTLE 138KV CKT 1
FDNS	00NR	0	20WP	G15_093	FROM->TO	G14-057T 345.00 - SUNNYSIDE 345KV CKT 1	717	789	0.17708	116.9383	CLEVELAND - G15066_T 345.00 345KV CKT 1
FDNSLock	00NR	0	16WP	G15_093	FROM->TO	G14-057T 345.00 - SUNNYSIDE 345KV CKT 1	717	789	0.17629	116.891	MATHWSN7 345.00 - TATONGA7 345.00 345KV CKT 1
FDNS	00NR	0	16WP	G15_093	FROM->TO	G14-057T 345.00 - SUNNYSIDE 345KV CKT 1	717	789	0.17953	116.8671	BORDER 7345.00 - TUCO_2 345.00 345KV CKT 1
FDNS	00NR	0	20WP	G15_093	FROM->TO	G14-057T 345.00 - SUNNYSIDE 345KV CKT 1	717	789	0.17488	116.8606	PITTSBURG - VALLIANT 345KV CKT 1
FDNS	00NR	0	20WP	G15_093	FROM->TO	G14-057T 345.00 - SUNNYSIDE 345KV CKT 1	717	789	0.17488	116.8606	PITTSBURG - VALLIANT 345KV CKT 1
FDNS	00NR	0	16WP	G15_093	FROM->TO	G14-057T 345.00 - SUNNYSIDE 345KV CKT 1	717	789	0.18653	116.8117	ARCADIA - NORTHWEST 345KV CKT 1
FDNS	00NR	0	16WP	G15_093	FROM->TO	G14-057T 345.00 - SUNNYSIDE 345KV CKT 1	717	789	0.17626	116.7419	GRAND GULF 500/22.0KV TRANSFORMER CKT 1
FDNSLock	00NR	0	16WP	G15_093	FROM->TO	G14-057T 345.00 - SUNNYSIDE 345KV CKT 1	717	789	0.17626	116.7414	GEN335831 1-RIVERBEND UNIT#1

SOLUTION	GROUP	SCENARIO	SEASON	SOURCE	DIRECTION	MONITORED ELEMENT	RATEA (MVA)	RATEB(MVA)	TDF	TC%LOADING (% MVA)	CONTINGENCY
FDNS	00NR	0	16WP	G15_093	FROM->TO	G14-057T 345.00 - SUNNYSIDE 345KV CKT 1	717	789	0.17626	116.7065	GEN515577 1-ARBWND11 0.6900
FDNS	00NR	0	16WP	G15_093	FROM->TO	G14-057T 345.00 - SUNNYSIDE 345KV CKT 1	717	789	0.17611	116.6977	ARCADIA - SEMINOLE 345KV CKT 1
FDNS	00NR	0	16WP	G15_093	FROM->TO	G14-057T 345.00 - SUNNYSIDE 345KV CKT 1	717	789	0.17626	116.6641	GEN509409 1-WILKES #3
FDNS	00NR	0	16WP	G15_093	FROM->TO	G14-057T 345.00 - SUNNYSIDE 345KV CKT 1	717	789	0.17589	116.6569	7SAREPTA% 345.00 - ELDORADO EHV 345KV CKT 1
FDNS	00NR	0	16WP	G15_093	FROM->TO	G14-057T 345.00 - SUNNYSIDE 345KV CKT 1	717	789	0.17589	116.6567	3TR3AR8EL7EL
FDNS	00NR	0	16WP	G15_093	FROM->TO	G14-057T 345.00 - SUNNYSIDE 345KV CKT 1	717	789	0.17589	116.6476	ELDORADO EHV 500/345KV TRANSFORMER CKT 1
FDNS	00NR	0	20WP	G15_093	FROM->TO	G14-057T 345.00 - SUNNYSIDE 345KV CKT 1	717	789	0.17708	116.6463	G15066_T 345.00 - SOONER 345KV CKT 1
FDNS	00NR	0	16WP	G15_093	FROM->TO	G14-057T 345.00 - SUNNYSIDE 345KV CKT 1	717	789	0.17877	116.6347	P12:138:AEPW:DUNCAN-4:L.E.S.-4
FDNS	00NR	0	16WP	G15_093	FROM->TO	G14-057T 345.00 - SUNNYSIDE 345KV CKT 1	717	789	0.1807	116.6144	BRIDGECR 138.00 - TUTTLE 138KV CKT 1
FDNS	00NR	0	16WP	G15_093	FROM->TO	G14-057T 345.00 - SUNNYSIDE 345KV CKT 1	717	789	0.17876	116.5237	COMANCHE TAP - OMPA-DUNCAN 840 138KV CKT 1
FDNS	00NR	0	16WP	G15_093	FROM->TO	G14-057T 345.00 - SUNNYSIDE 345KV CKT 1	717	789	0.17952	116.4781	HEALDTON - LOCO 138KV CKT 1
FDNS	00NR	0	20WP	G15_093	FROM->TO	G14-057T 345.00 - SUNNYSIDE 345KV CKT 1	717	789	0.17581	116.4704	GEN501801 1-DOLET HILLS UNIT1
FDNS	00NR	0	16WP	G15_093	FROM->TO	G14-057T 345.00 - SUNNYSIDE 345KV CKT 1	717	789	0.17802	116.4505	FINNEY SWITCHING STATION - HOLCOMB 345KV CKT 1
FDNS	00NR	0	16WP	G15_093	FROM->TO	G14-057T 345.00 - SUNNYSIDE 345KV CKT 1	717	789	0.17802	116.4505	FINNEY SWITCHING STATION - HOLCOMB 345KV CKT 1
FDNS	00NR	0	16WP	G15_093	FROM->TO	G14-057T 345.00 - SUNNYSIDE 345KV CKT 1	717	789	0.17626	116.4	GEN300006 1-NEW MADRID UNIT 1
FDNS	00NR	0	16WP	G15_093	FROM->TO	G14-057T 345.00 - SUNNYSIDE 345KV CKT 1	717	789	0.17626	116.4	GEN300007 1-NEW MADRID UNIT 2
FDNS	00NR	0	16WP	G15_093	FROM->TO	G14-057T 345.00 - SUNNYSIDE 345KV CKT 1	717	789	0.1764	116.3928	LACYGNE - WAVERLY7 345.00 345KV CKT 1
FDNS	00NR	0	16WP	G15_093	FROM->TO	G14-057T 345.00 - SUNNYSIDE 345KV CKT 1	717	789	0.17626	116.369	GEN501813 1-RODEMACHER UNIT 3
FDNS	00NR	0	16WP	G15_093	FROM->TO	G14-057T 345.00 - SUNNYSIDE 345KV CKT 1	717	789	0.1807	116.3452	P12:138:WFEC:MSL01
FDNS	00NR	0	16WP	G15_093	FROM->TO	G14-057T 345.00 - SUNNYSIDE 345KV CKT 1	717	789	0.1807	116.3403	BRIDGECR 138.00 - SUNSHINE CANYON 138KV CKT 1
FDNS	00NR	0	16WP	G15_093	FROM->TO	G14-057T 345.00 - SUNNYSIDE 345KV CKT 1	717	789	0.17952	116.3386	HEALDTON - RINGLING 138KV CKT 1
FDNS	00NR	0	16WP	G15_093	FROM->TO	G14-057T 345.00 - SUNNYSIDE 345KV CKT 1	717	789	0.1764	116.2527	WAVERLY7 345.00 - WOLF CREEK 345KV CKT 1
FDNS	00NR	0	16WP	G15_093	FROM->TO	G14-057T 345.00 - SUNNYSIDE 345KV CKT 1	717	789	0.17626	116.2503	GEN520947 1-HUGO1
FDNS	00NR	0	16WP	G15_093	FROM->TO	G14-057T 345.00 - SUNNYSIDE 345KV CKT 1	717	789	0.17876	116.2417	DUNCAN - OMPA-DUNCAN 840 138KV CKT 1
FDNS	00NR	0	16WP	G15_093	FROM->TO	G14-057T 345.00 - SUNNYSIDE 345KV CKT 1	717	789	0.17876	116.2417	DUNCAN - OMPA-DUNCAN 840 138KV CKT 1
FDNS	00NR	0	20WP	G15_093	FROM->TO	G14-057T 345.00 - SUNNYSIDE 345KV CKT 1	717	789	0.179	116.2407	BORDER 7345.00 - WOODWARD DISTRICT EHV 345KV CKT 1
FDNSLock	00NR	0	16WP	G15_093	FROM->TO	G14-057T 345.00 - SUNNYSIDE 345KV CKT 1	717	789	0.17629	116.2034	G11_051T 345.00 - TATONGA7 345.00 345KV CKT 1
FDNS	00NR	0	16WP	G15_093	FROM->TO	G14-057T 345.00 - SUNNYSIDE 345KV CKT 1	717	789	0.17952	116.1742	RINGLING - SOUTH WILSON 138KV CKT 1
FDNS	00NR	0	16WP	G15_093	FROM->TO	G14-057T 345.00 - SUNNYSIDE 345KV CKT 1	717	789	0.17626	116.1685	GEN335206 1-NELSON UNIT 6
FDNS	00NR	0	16WP	G15_093	FROM->TO	G14-057T 345.00 - SUNNYSIDE 345KV CKT 1	717	789	0.17802	116.0651	FINNEY SWITCHING STATION - Hitchland Interchange 345KV CKT 1
FDNS	00NR	0	16WP	G15_093	FROM->TO	G14-057T 345.00 - SUNNYSIDE 345KV CKT 1	717	789	0.17626	116.0517	DOLET HILLS 345/24.0KV TRANSFORMER CKT 1
FDNS	00NR	0	16WP	G15_093	FROM->TO	G14-057T 345.00 - SUNNYSIDE 345KV CKT 1	717	789	0.17628	116.0067	P12:138:AEPW:SHERID4:112GORE4
FDNS	00NR	0	16WP	G15_093	FROM->TO	G14-057T 345.00 - SUNNYSIDE 345KV CKT 1	717	789	0.1745	115.998	PARK LANE - SEMINOLE 138KV CKT 1
FDNSLock	00NR	0	16WP	G15_093	FROM->TO	G14-057T 345.00 - SUNNYSIDE 345KV CKT 1	717	789	0.17626	115.9851	GEN590011 2-ERCOT EQUIVALENCE
FDNS	00NR	0	16WP	G15_093	FROM->TO	G14-057T 345.00 - SUNNYSIDE 345KV CKT 1	717	789	0.17626	115.9826	GEN501812 1-RODEMACHER UNIT 2
FDNS	00NR	0	16WP	G15_093	FROM->TO	G14-057T 345.00 - SUNNYSIDE 345KV CKT 1	717	789	0.17709	115.9522	THISTLE7 345.00 - WOODWARD DISTRICT EHV 345KV CKT 1
FDNS	00NR	0	16WP	G15_093	FROM->TO	G14-057T 345.00 - SUNNYSIDE 345KV CKT 1	717	789	0.17709	115.9522	THISTLE7 345.00 - WOODWARD DISTRICT EHV 345KV CKT 1
FDNS	00NR	0	16WP	G15_093	FROM->TO	G14-057T 345.00 - SUNNYSIDE 345KV CKT 1	717	789	0.17709	115.9522	THISTLE7 345.00 - WOODWARD DISTRICT EHV 345KV CKT 2
FDNS	00NR	0	16WP	G15_093	FROM->TO	G14-057T 345.00 - SUNNYSIDE 345KV CKT 1	717	789	0.17709	115.9522	THISTLE7 345.00 - WOODWARD DISTRICT EHV 345KV CKT 2
FDNS	00NR	0	20WP	G15_093	FROM->TO	G14-057T 345.00 - SUNNYSIDE 345KV CKT 1	717	789	0.17581	115.9478	GEN509406 1-WELSH #3
FDNS	00NR	0	20WP	G15_093	FROM->TO	G14-057T 345.00 - SUNNYSIDE 345KV CKT 1	717	789	0.17581	115.9475	GEN509404 1-WELSH #1
FDNS	00NR	0	16WP	G15_093	FROM->TO	G14-057T 345.00 - SUNNYSIDE 345KV CKT 1	717	789	0.1767	115.9348	CANEYRV7 345.00 - NEOSHO 345KV CKT 1
FDNS	00NR	0	16WP	G15_093	FROM->TO	G14-057T 345.00 - SUNNYSIDE 345KV CKT 1	717	789	0.17626	115.9221	GEN515564 1-ORIGIN11 0.6900
FDNS	00NR	0	16WP	G15_093	FROM->TO	G14-057T 345.00 - SUNNYSIDE 345KV CKT 1	717	789	0.17626	115.9221	GEN515565 1-ORIGIN21 0.6900
FDNSLock	00NR	0	16WP	G15_093	FROM->TO	G14-057T 345.00 - SUNNYSIDE 345KV CKT 1	717	789	0.17626	115.9096	GEN590010 1-ERCOT EQUIVALENCE
FDNS	00NR	0	16WP	G15_093	FROM->TO	G14-057T 345.00 - SUNNYSIDE 345KV CKT 1	717	789	0.17952	115.8986	MARIETTA - SOUTH WILSON 138KV CKT 1
FDNS	00NR	0	16WP	G15_093	FROM->TO	G14-057T 345.00 - SUNNYSIDE 345KV CKT 1	717	789	0.17626	115.8352	GEN509408 1-WILKES #2
FDNS	00NR	0	16WP	G15_093	FROM->TO	G14-057T 345.00 - SUNNYSIDE 345KV CKT 1	717	789	0.17952	115.8012	P12:138:WFEC:MSL17
FDNS	00NR	0	16WP	G15_093	FROM->TO	G14-057T 345.00 - SUNNYSIDE 345KV CKT 1	717	789	0.1767	115.7954	CANEYRV7 345.00 - LATHAMS7 345.00 345KV CKT 1
FDNS	00NR	0	16WP	G15_093	FROM->TO	G14-057T 345.00 - SUNNYSIDE 345KV CKT 1	717	789	0.17757	115.7632	P12:138:WFEC:MSL02
FDNS	00NR	0	16WP	G15_093	FROM->TO	G14-057T 345.00 - SUNNYSIDE 345KV CKT 1	717	789	0.17626	115.7471	P12:161:AEPW:DYESS 5:HYLAND 5
FDNS	00NR	0	16WP	G15_093	FROM->TO	G14-057T 345.00 - SUNNYSIDE 345KV CKT 1	717	789	0.17626	115.7452	GEN506754 1-LEBROCK STEAM 1
FDNS	00NR	0	16WP	G15_093	FROM->TO	G14-057T 345.00 - SUNNYSIDE 345KV CKT 1	717	789	0.17626	115.7417	P12:69:AEPW:L.E.S.-2:LAW WC2
FDNS	00NR	0	16WP	G15_093	FROM->TO	G14-057T 345.00 - SUNNYSIDE 345KV CKT 1	717	789	0.17704	115.7311	REDBUD - RIVERSIDE STATION 345KV CKT 1
FDNS	00NR	0	16WP	G15_093	FROM->TO	G14-057T 345.00 - SUNNYSIDE 345KV CKT 1	717	789	0.17704	115.7311	REDBUD - RIVERSIDE STATION 345KV CKT 1
FDNS	00NR	0	16WP	G15_093	FROM->TO	G14-057T 345.00 - SUNNYSIDE 345KV CKT 1	717	789	0.17611	115.7085	ELDORADO EHV - MOUNT OLIVE 500KV CKT 1
FDNS	00NR	0	16WP	G15_093	FROM->TO	G14-057T 345.00 - SUNNYSIDE 345KV CKT 1	717	789	0.17626	115.6998	GEN334440 1-SABINE UNIT 4
FDNS	00NR	0	16WP	G15_093	FROM->TO	G14-057T 345.00 - SUNNYSIDE 345KV CKT 1	717	789	0.17877	115.6769	CIVIT - PAOLI 138KV CKT 1
FDNS	00NR	0	16WP	G15_093	FROM->TO	G14-057T 345.00 - SUNNYSIDE 345KV CKT 1	717	789	0.17729	115.675	ANADARKO - GEORGIA 138KV CKT 1
FDNS	00NR	0	16WP	G15_093	FROM->TO	G14-057T 345.00 - SUNNYSIDE 345KV CKT 1	717	789	0.17789	115.6471	MATHWSN7 345.00 - NORTHWEST 345KV CKT 1
FDNS	00NR	0	16WP	G15_093	FROM->TO	G14-057T 345.00 - SUNNYSIDE 345KV CKT 1	717	789	0.17628	115.6371	P12:138:AEPW:112GORE4:L.E.S.-4
FDNS	00NR	0	16WP	G15_093	FROM->TO	G14-057T 345.00 - SUNNYSIDE 345KV CKT 1	717	789	0.17596	115.6268	ELDORADO EHV - SHERIDAN EHV 500KV CKT 1
FDNS	00NR	0	16WP	G15_093	FROM->TO	G14-057T 345.00 - SUNNYSIDE 345KV CKT 1	717	789	0.18014	115.6192	P12:138:AEPW-OGE:CORNVIL4:MAUD 4
FDNS	00NR	0	16WP	G15_093	FROM->TO	G14-057T 345.00 - SUNNYSIDE 345KV CKT 1	717	789	0.17626	115.6004	NEW MADRID 161/22.0KV TRANSFORMER CKT 1
FDNS	00NR	0	16WP	G15_093	FROM->TO	G14-057T 345.00 - SUNNYSIDE 345KV CKT 1	717	789	0.17617	115.5963	WEBRE - WELLS 500KV CKT 1
FDNS	00NR	0	16WP	G15_093	FROM->TO	G14-057T 345.00 - SUNNYSIDE 345KV CKT 1	717	789	0.1767	115.5952	PAOLI - PAYNE 138.00 138KV CKT 1
FDNS	00NR	0	16WP	G15_093	FROM->TO	G14-057T 345.00 - SUNNYSIDE 345KV CKT 1	717	789	0.17626	115.5952	GEN503909 1-FULTONU1 1 16.000
FDNS	00NR	0	16WP	G15_093	FROM->TO	G14-057T 345.00 - SUNNYSIDE 345KV CKT 1	717	789	0.17626	115.5865	NEW MADRID 345/22.0KV TRANSFORMER CKT 1
FDNS	00NR	0	16WP	G15_093	FROM->TO	G14-057T 345.00 - SUNNYSIDE 345KV CKT 1	717	789	0.17729	115.5859	FLETCHER - GEORGIA 138KV CKT 1
FDNS	00NR	0	16WP	G15_093	FROM->TO	G14-057T 345.00 - SUNNYSIDE 345KV CKT 1	717	789	0.1767	115.5778	LATHAMS7 345.00 - ROSE HILL 345KV CKT 1
FDNS	00NR	0	16WP	G15_093	FROM->TO	G14-057T 345.00 - SUNNYSIDE 345KV CKT 1	717	789	0.17769	115.5671	LAWTON EASTSIDE (LES 5) 345/138/13.8KV TRANSFORMER CKT 2
FDNS	00NR	0	16WP	G15_093	FROM->TO	G14-057T 345.00 - SUNNYSIDE 345KV CKT 1	717	789	0.17769	115.5671	LAWTON EASTSIDE (LES 5) 345/138/13.8KV TRANSFORMER CKT 2
FDNS	00NR	0	16WP	G15_093	FROM->TO	G14-057T 345.00 - SUNNYSIDE 345KV CKT 1	717	789	0.17626	115.5633	FRONTIER - GRIMES 345KV CKT 1
FDNS	00NR	0	16WP	G15_093	FROM->TO	G14-057T 345.00 - SUNNYSIDE 345KV CKT 1	717	789	0.17737	115.5527	EMPIRE - FLETCHER 138KV CKT 1
FDNS	00NR	0	16WP	G15_093	FROM->TO	G14-057T 345.00 - SUNNYSIDE 345KV CKT 1	717	789	0.18014	115.5491	BLANCHARD - CORNVILLE 138KV CKT 1
FDNS	00NR	0	16WP	G15_093	FROM->TO	G14-057T 345.00 - SUNNYSIDE 345KV CKT 1	717	789	0.17877	115.5364	CIVIT - STRATFORD 138KV CKT 1
FDNS	00NR	0	16WP	G15_093	FROM->TO	G14-057T 345.00 - SUNNYSIDE 345KV CKT 1	717	789	0.17684	115.5229	TUPELO - TUPELO TAP 138KV CKT 1
FDNS	00NR	0	16WP	G15_093	FROM->TO	G14-057T 345.00 - SUNNYSIDE 345KV CKT 1	717	789	0.17737	115.4711	COMANCHE - EMPIRE 138KV CKT 1
FDNS	00NR	0	16WP	G15_093	FROM->TO	G14-057T 345.00 - SUNNYSIDE 345KV CKT 1	717	789	0.17665	115.4691	G1524G1525 345.00 - THISTLE7 345.00 345KV CKT 1

SOLUTION	GROUP	SCENARIO	SEASON	SOURCE	DIRECTION	MONITORED ELEMENT	RATEA (MVA)	RATEB(MVA)	TDF	TC%LOADING (% MVA)	CONTINGENCY
FDNS	00NR	0	16WP	G15_093	FROM->TO	G14-057T 345.00 - SUNNYSIDE 345KV CKT 1	717	789	0.17665	115.4691	G1524G1525 345.00 - THISTLE7 345.00 345KV CKT 2
FDNS	00NR	0	16WP	G15_093	FROM->TO	G14-057T 345.00 - SUNNYSIDE 345KV CKT 1	717	789	0.17626	115.4679	GEN509393 S1-ARSENAL HILL GENS #4 (STALL)
FDNS	00NR	0	16WP	G15_093	FROM->TO	G14-057T 345.00 - SUNNYSIDE 345KV CKT 1	717	789	0.17626	115.4437	GEN509392 G2-ARSENAL HILL GENS #3 (STALL)
FDNS	00NR	0	16WP	G15_093	FROM->TO	G14-057T 345.00 - SUNNYSIDE 345KV CKT 1	717	789	0.17626	115.4436	GEN509391 G1-ARSENAL HILL GENS #2 (STALL)
FDNS	00NR	0	16WP	G15_093	FROM->TO	G14-057T 345.00 - SUNNYSIDE 345KV CKT 1	717	789	0.17626	115.429	GEN336252 1-NINEMILE POINT UNIT#5
FDNS	00NR	0	16WP	G15_093	FROM->TO	G14-057T 345.00 - SUNNYSIDE 345KV CKT 1	717	789	0.17877	115.419	OIL CENTER - STRATFORD 138KV CKT 1
FDNS	00NR	0	16WP	G15_093	FROM->TO	G14-057T 345.00 - SUNNYSIDE 345KV CKT 1	717	789	0.17626	115.4027	DELL 500 - ESSEX UNIT 2 500KV CKT Z1
FDNS	00NR	0	16WP	G15_093	FROM->TO	G14-057T 345.00 - SUNNYSIDE 345KV CKT 1	717	789	0.17626	115.3907	GEN334071 1-LEWIS CREEK 2
FDNS	00NR	0	16WP	G15_093	FROM->TO	G14-057T 345.00 - SUNNYSIDE 345KV CKT 1	717	789	0.17626	115.3817	GEN334070 1-LEWIS CREEK 1
FDNS	00NR	0	16WP	G15_093	FROM->TO	G14-057T 345.00 - SUNNYSIDE 345KV CKT 1	717	789	0.17626	115.3782	GEN335204 1-NELSON UNIT 4
FDNS	00NR	0	20WP	G15_093	FROM->TO	G14-057T 345.00 - SUNNYSIDE 345KV CKT 1	717	789	0.17515	115.3748	7SAREPTA% 345.00 - LONGWOOD 345KV CKT 1
FDNS	00NR	0	20WP	G15_093	FROM->TO	G14-057T 345.00 - SUNNYSIDE 345KV CKT 1	717	789	0.17515	115.3748	7SAREPTA% 345.00 - LONGWOOD 345KV CKT 1
FDNS	00NR	0	20WP	G15_093	FROM->TO	G14-057T 345.00 - SUNNYSIDE 345KV CKT 1	717	789	0.17998	115.3669	CORN TAP - NAPLESTP 138.00 138KV CKT 1
FDNS	00NR	0	16WP	G15_093	FROM->TO	G14-057T 345.00 - SUNNYSIDE 345KV CKT 1	717	789	0.17679	115.3542	DUNCAN (DUNCAN) 138/69/13.8KV TRANSFORMER CKT 1
FDNS	00NR	0	16WP	G15_093	FROM->TO	G14-057T 345.00 - SUNNYSIDE 345KV CKT 1	717	789	0.17679	115.3542	DUNCAN (DUNCAN) 138/69/13.8KV TRANSFORMER CKT 1
FDNS	00NR	0	16WP	G15_093	FROM->TO	G14-057T 345.00 - SUNNYSIDE 345KV CKT 1	717	789	0.18014	115.3522	BLANCHARD - MAUD 138KV CKT 1
FDNS	00NR	0	16WP	G15_093	FROM->TO	G14-057T 345.00 - SUNNYSIDE 345KV CKT 1	717	789	0.17626	115.3434	GEN334441 1-SABINE UNIT 5
FDNS	00NR	0	16WP	G15_093	FROM->TO	G14-057T 345.00 - SUNNYSIDE 345KV CKT 1	717	789	0.17626	115.3149	GEN337653 1-WHITE BLUFF UNIT #2
FDNS	00NR	0	20WP	G15_093	FROM->TO	G14-057T 345.00 - SUNNYSIDE 345KV CKT 1	717	789	0.179	115.3146	BORDER 7345.00 - TUCO_2 345.00 345KV CKT 1
FDNS	00NR	0	16WP	G15_093	FROM->TO	G14-057T 345.00 - SUNNYSIDE 345KV CKT 1	717	789	0.17627	115.3081	P12:138:AEPW:CATOOSA4:T.S.E.-4
FDNS	00NR	0	16WP	G15_093	FROM->TO	G14-057T 345.00 - SUNNYSIDE 345KV CKT 1	717	789	0.17625	115.3065	P12:161:AEPW-SWPA:BEAVERS:EROGERS5
FDNS	00NR	0	16WP	G15_093	FROM->TO	G14-057T 345.00 - SUNNYSIDE 345KV CKT 1	717	789	0.17626	115.3	GEN300003 1-THOMAS HILL UNIT 3
FDNS	00NR	0	16WP	G15_093	FROM->TO	G14-057T 345.00 - SUNNYSIDE 345KV CKT 1	717	789	0.17607	115.2966	6LAYFLD 230.00 - CARROLL 230KV CKT 1
FDNS	00NR	0	16WP	G15_093	FROM->TO	G14-057T 345.00 - SUNNYSIDE 345KV CKT 1	717	789	0.17626	115.2935	GEN506752 1-LEBROCK GAS 1
FDNS	00NR	0	16WP	G15_093	FROM->TO	G14-057T 345.00 - SUNNYSIDE 345KV CKT 1	717	789	0.17626	115.2933	GEN506753 1-LEBROCK GAS 2
FDNS	00NR	0	16WP	G15_093	FROM->TO	G14-057T 345.00 - SUNNYSIDE 345KV CKT 1	717	789	0.17626	115.2879	GEN334030 1-FRONTIER UNIT 1
FDNS	00NR	0	16WP	G15_093	FROM->TO	G14-057T 345.00 - SUNNYSIDE 345KV CKT 1	717	789	0.17898	115.2871	TUTTLE - TUTTLE CONOCO TAP 138KV CKT 1
FDNS	00NR	0	16WP	G15_093	FROM->TO	G14-057T 345.00 - SUNNYSIDE 345KV CKT 1	717	789	0.17626	115.2864	GEN334031 1-FRONTIER UNIT 2
FDNS	00NR	0	20WP	G15_093	FROM->TO	G14-057T 345.00 - SUNNYSIDE 345KV CKT 1	717	789	0.17998	115.2754	NAPLESTP 138.00 - PAYNE 138.00 138KV CKT 1
FDNS	00NR	0	16WP	G15_093	FROM->TO	G14-057T 345.00 - SUNNYSIDE 345KV CKT 1	717	789	0.18042	115.2707	BAILEY4 138.00 - SUNSHINE CANYON 138KV CKT 1
FDNS	00NR	0	16WP	G15_093	FROM->TO	G14-057T 345.00 - SUNNYSIDE 345KV CKT 1	717	789	0.17626	115.2699	GEN515040 1-SEMINOLE 1G
FDNS	00NR	0	16WP	G15_093	FROM->TO	G14-057T 345.00 - SUNNYSIDE 345KV CKT 1	717	789	0.08028	115.2647	GRACEMONT - LAWTON EASTSIDE 345KV CKT 1
FDNS	00NR	0	16WP	G15_093	FROM->TO	G14-057T 345.00 - SUNNYSIDE 345KV CKT 1	717	789	0.08028	115.2647	GRACEMONT - LAWTON EASTSIDE 345KV CKT 1
FDNS	00NR	0	16WP	G15_093	FROM->TO	G14-057T 345.00 - SUNNYSIDE 345KV CKT 1	717	789	0.176	115.2642	FULTON 115 - HOPE 115KV CKT 1
FDNS	00NR	0	16WP	G15_093	FROM->TO	G14-057T 345.00 - SUNNYSIDE 345KV CKT 1	717	789	0.176	115.2642	FULTON 115 - HOPE 115KV CKT 1
FDNS	00NR	0	16WP	G15_093	FROM->TO	G14-057T 345.00 - SUNNYSIDE 345KV CKT 1	717	789	0.17625	115.249	8DANIEL8 500.00 - MCKNIGHT 500KV CKT 1
FDNS	00NR	0	16WP	G15_093	FROM->TO	G14-057T 345.00 - SUNNYSIDE 345KV CKT 1	717	789	0.17877	115.2478	LATTA JCT - OIL CENTER 138KV CKT 1
FDNS	00NR	0	16WP	G15_093	FROM->TO	G14-057T 345.00 - SUNNYSIDE 345KV CKT 1	717	789	0.17626	115.2473	GEN515226 1-MUSKOGEE 6G
FDNS	00NR	0	16WP	G15_093	FROM->TO	G14-057T 345.00 - SUNNYSIDE 345KV CKT 1	717	789	0.17815	115.2426	P12:138:AEPW-OGE:WTH_JCT4:JENSEN4
FDNS	00NR	0	16WP	G15_093	FROM->TO	G14-057T 345.00 - SUNNYSIDE 345KV CKT 1	717	789	0.17626	115.2333	GEN300015 1-1SGPDEL 18.000
FDNSLock	00NR	0	16WP	G15_093	FROM->TO	G14-057T 345.00 - SUNNYSIDE 345KV CKT 1	717	789	0.17626	115.2307	GEN337911 1-ARKANSAS NUCLEAR ONE UNIT #2
FDNS	00NR	0	16WP	G15_093	FROM->TO	G14-057T 345.00 - SUNNYSIDE 345KV CKT 1	717	789	0.17626	115.2299	P12:161:AEPW:DYESS5:ELMSPRNG:TONTITN5
FDNS	00NR	0	16WP	G15_093	FROM->TO	G14-057T 345.00 - SUNNYSIDE 345KV CKT 1	717	789	0.17626	115.2278	GEN337652 1-WHITE BLUFF UNIT #1
FDNS	00NR	0	16WP	G15_093	FROM->TO	G14-057T 345.00 - SUNNYSIDE 345KV CKT 1	717	789	0.17626	115.2235	GEN336251 1-NINEMILE POINT UNIT#4
FDNS	00NR	0	16WP	G15_093	FROM->TO	G14-057T 345.00 - SUNNYSIDE 345KV CKT 1	717	789	0.17741	115.2215	P12:138:AEPW:CORNVIL4:S.W.S.-4
FDNS	00NR	0	16WP	G15_093	FROM->TO	G14-057T 345.00 - SUNNYSIDE 345KV CKT 1	717	789	0.17626	115.2199	GEN501811 1-RODEMACHER UNIT 1
FDNS	00NR	0	16WP	G15_093	FROM->TO	G14-057T 345.00 - SUNNYSIDE 345KV CKT 1	717	789	0.17626	115.2185	GEN336831 1-BAXTER WILSON SES
FDNS	00NR	0	16WP	G15_093	FROM->TO	G14-057T 345.00 - SUNNYSIDE 345KV CKT 1	717	789	0.17754	115.2077	P12:138:AEPW:CORNVIL4:DUNCAN-4
FDNS	00NR	0	16WP	G15_093	FROM->TO	G14-057T 345.00 - SUNNYSIDE 345KV CKT 1	717	789	0.17633	115.2071	G15074_T 345.00 - HOYT 345KV CKT 1
FDNS	00NR	0	16WP	G15_093	FROM->TO	G14-057T 345.00 - SUNNYSIDE 345KV CKT 1	717	789	0.17898	115.206	CIMARRON - TUTTLE CONOCO TAP 138KV CKT 1
FDNS	00NR	0	20WP	G15_093	FROM->TO	G14-057T 345.00 - SUNNYSIDE 345KV CKT 1	717	789	0.17581	115.2011	GEN336821 1-GRAND GULF UNIT
FDNS	00NR	0	16WP	G15_093	FROM->TO	G14-057T 345.00 - SUNNYSIDE 345KV CKT 1	717	789	0.17633	115.2	G15088_T 345.00 - MOORE 345KV CKT 1
FDNS	00NR	0	16WP	G15_093	FROM->TO	G14-057T 345.00 - SUNNYSIDE 345KV CKT 1	717	789	0.17626	115.1975	GEN334433 1-SABINE UNIT 3
FDNS	00NR	0	16WP	G15_093	FROM->TO	G14-057T 345.00 - SUNNYSIDE 345KV CKT 1	717	789	0.17679	115.1706	P12:69:WFEC-AEPW:COMANCH2:DUNCAN-2
FDNS	00NR	0	16WP	G15_093	FROM->TO	G14-057T 345.00 - SUNNYSIDE 345KV CKT 1	717	789	0.17655	115.1663	BUCKNER7 345.00 - SPEARVILLE 345KV CKT 1
FDNS	00NR	0	16WP	G15_093	FROM->TO	G14-057T 345.00 - SUNNYSIDE 345KV CKT 1	717	789	0.17655	115.1663	BUCKNER7 345.00 - SPEARVILLE 345KV CKT 1
FDNS	00NR	0	16WP	G15_093	FROM->TO	G14-057T 345.00 - SUNNYSIDE 345KV CKT 1	717	789	0.17626	115.164	GEN562783 1-G15036_4 0.6900
FDNS	00NR	0	16WP	G15_093	FROM->TO	G14-057T 345.00 - SUNNYSIDE 345KV CKT 1	717	789	0.17626	115.164	GEN562784 1-G15036_5 0.6900
FDNSLock	00NR	0	16WP	G15_093	FROM->TO	G14-057T 345.00 - SUNNYSIDE 345KV CKT 1	717	789	0.17626	115.1601	GEN505432 1-SIKESTON
FDNS	00NR	0	16WP	G15_093	FROM->TO	G14-057T 345.00 - SUNNYSIDE 345KV CKT 1	717	789	0.17696	115.158	CIMARRON - CZECH HALL 138KV CKT 1
FDNS	00NR	0	16WP	G15_093	FROM->TO	G14-057T 345.00 - SUNNYSIDE 345KV CKT 1	717	789	0.17626	115.1483	GEN515223 1-MUSKOGEE 4G
FDNS	00NR	0	16WP	G15_093	FROM->TO	G14-057T 345.00 - SUNNYSIDE 345KV CKT 1	717	789	0.17626	115.1483	GEN515225 1-MUSKOGEE 5G
FDNS	00NR	0	16WP	G15_093	FROM->TO	G14-057T 345.00 - SUNNYSIDE 345KV CKT 1	717	789	0.17737	115.1473	P12:138:AEPW:WTHWF4:CLINTJC4
FDNS	00NR	0	16WP	G15_093	FROM->TO	G14-057T 345.00 - SUNNYSIDE 345KV CKT 1	717	789	0.17673	115.1258	CIMARRON - SARA 138KV CKT 1
FDNS	00NR	0	16WP	G15_093	FROM->TO	G14-057T 345.00 - SUNNYSIDE 345KV CKT 1	717	789	0.17626	115.1244	P12:161:AEPW:EROGERS5:ECNTRTN5
FDNS	00NR	0	16WP	G15_093	FROM->TO	G14-057T 345.00 - SUNNYSIDE 345KV CKT 1	717	789	0.17613	115.1205	LAYFLD8 500.00 - MOUNT OLIVE 500KV CKT 1
FDNS	00NR	0	16WP	G15_093	FROM->TO	G14-057T 345.00 - SUNNYSIDE 345KV CKT 1	717	789	0.17613	115.1205	LAYFLD8 500.00 - MOUNT OLIVE 500KV CKT 1
FDNS	00NR	0	16WP	G15_093	FROM->TO	G14-057T 345.00 - SUNNYSIDE 345KV CKT 1	717	789	0.17679	115.1191	DUNCAN - TOSCO 69KV CKT 1
FDNS	00NR	0	16WP	G15_093	FROM->TO	G14-057T 345.00 - SUNNYSIDE 345KV CKT 1	717	789	0.17626	115.1185	RODEMACHER 230/22.0KV TRANSFORMER CKT 1
FDNS	00NR	0	16WP	G15_093	FROM->TO	G14-057T 345.00 - SUNNYSIDE 345KV CKT 1	717	789	0.17626	115.118	WHITE BLUFF 500/26.0KV TRANSFORMER CKT 1
FDNS	00NR	0	16WP	G15_093	FROM->TO	G14-057T 345.00 - SUNNYSIDE 345KV CKT 1	717	789	0.17737	115.1125	P12:138:AEPW:WTHWF4:WTH_SE4
FDNS	00NR	0	16WP	G15_093	FROM->TO	G14-057T 345.00 - SUNNYSIDE 345KV CKT 1	717	789	0.17616	115.1104	MC NIEL 500/115KV TRANSFORMER CKT 1
FDNS	00NR	0	16WP	G15_093	FROM->TO	G14-057T 345.00 - SUNNYSIDE 345KV CKT 1	717	789	0.16892	115.1076	CANADIAN RIVER - PITTSBURG 345KV CKT 1
FDNS	00NR	0	16WP	G15_093	FROM->TO	G14-057T 345.00 - SUNNYSIDE 345KV CKT 1	717	789	0.16892	115.1076	CANADIAN RIVER - PITTSBURG 345KV CKT 1
FDNS	00NR	0	20WP	G15_093	FROM->TO	G14-057T 345.00 - SUNNYSIDE 345KV CKT 1	717	789	0.18021	115.1068	ANADARKO - POCASSETT 138KV CKT 1
FDNS	00NR	0	16WP	G15_093	FROM->TO	G14-057T 345.00 - SUNNYSIDE 345KV CKT 1	717	789	0.17606	115.1055	BISMARK - HOT SPRINGS WEST BUS 115KV CKT 1
FDNS	00NR	0	16WP	G15_093	FROM->TO	G14-057T 345.00 - SUNNYSIDE 345KV CKT 1	717	789	0.17626	115.1045	GEN303007 1-1BC2 U2
FDNS	00NR	0	16WP	G15_093	FROM->TO	G14-057T 345.00 - SUNNYSIDE 345KV CKT 1	717	789	0.18042	115.1009	BAILEY4 138.00 - WESTMOORE 138KV CKT 1
FDNS	00NR	0	16WP	G15_093	FROM->TO	G14-057T 345.00 - SUNNYSIDE 345KV CKT 1	717	789	0.17616	115.1003	HOT SPRINGS EHV - MAGNET COVE 500KV CKT 1

SOLUTION	GROUP	SCENARIO	SEASON	SOURCE	DIRECTION	MONITORED ELEMENT	RATEA (MVA)	RATEB(MVA)	TDF	TC%LOADING (% MVA)	CONTINGENCY
FDNS	00NR	0	16WP	G15_093	FROM->TO	G14-057T 345.00 - SUNNYSIDE 345KV CKT 1	717	789	0.17626	115.0992	GEN303006 1-1BC2 U1
FDNS	00NR	0	16WP	G15_093	FROM->TO	G14-057T 345.00 - SUNNYSIDE 345KV CKT 1	717	789	0.17649	115.0967	CLEO CORNER - CLEOPLT4 138.00 138KV CKT 1
FDNS	00NR	0	16WP	G15_093	FROM->TO	G14-057T 345.00 - SUNNYSIDE 345KV CKT 1	717	789	0.17486	115.0929	ARBWIND4 138.00 - CARTER 138KV CKT 1
FDNS	00NR	0	16WP	G15_093	FROM->TO	G14-057T 345.00 - SUNNYSIDE 345KV CKT 1	717	789	0.17645	115.0928	G15095_T 138.00 - ROSE_VALLEY 138.00 138KV CKT 1
FDNS	00NR	0	16WP	G15_093	FROM->TO	G14-057T 345.00 - SUNNYSIDE 345KV CKT 1	717	789	0.17666	115.0921	P12:69:AEPW-OMPA:COMANC-2:OMWALTR2
FDNS	00NR	0	20WP	G15_093	FROM->TO	G14-057T 345.00 - SUNNYSIDE 345KV CKT 1	717	789	0.17581	115.0919	GEN336153 1-WATERFORD UNIT#3
FDNS	00NR	0	16WP	G15_093	FROM->TO	G14-057T 345.00 - SUNNYSIDE 345KV CKT 1	717	789	0.17626	115.0853	GEN337910 1-ARKANSAS NUCLEAR ONE UNIT #1
FDNS	00NR	0	16WP	G15_093	FROM->TO	G14-057T 345.00 - SUNNYSIDE 345KV CKT 1	717	789	0.17491	115.0838	SEMINOLE - VANOSTP4 138.00 138KV CKT 1
FDNS	00NR	0	16WP	G15_093	FROM->TO	G14-057T 345.00 - SUNNYSIDE 345KV CKT 1	717	789	0.17649	115.0828	CLEOPLT4 138.00 - MEN TAP 138KV CKT 1
FDNS	00NR	0	16WP	G15_093	FROM->TO	G14-057T 345.00 - SUNNYSIDE 345KV CKT 1	717	789	0.17626	115.0797	GEN300010 1-ST FRANCIS UNIT 1
FDNS	00NR	0	16WP	G15_093	FROM->TO	G14-057T 345.00 - SUNNYSIDE 345KV CKT 1	717	789	0.17626	115.0766	GEN336191 1-LITTLE GYPSY UNIT#3
FDNS	00NR	0	16WP	G15_093	FROM->TO	G14-057T 345.00 - SUNNYSIDE 345KV CKT 1	717	789	0.17649	115.0709	IMO TAP - MEN TAP 138KV CKT 1
FDNS	00NR	0	16WP	G15_093	FROM->TO	G14-057T 345.00 - SUNNYSIDE 345KV CKT 1	717	789	0.17696	115.0701	CZECH HALL - XEROX 138KV CKT 1
FDNS	00NR	0	16WP	G15_093	FROM->TO	G14-057T 345.00 - SUNNYSIDE 345KV CKT 1	717	789	0.17696	115.0657	MORGAN - XEROX 138KV CKT 1
FDNS	00NR	0	16WP	G15_093	FROM->TO	G14-057T 345.00 - SUNNYSIDE 345KV CKT 1	717	789	0.17627	115.057	P12:138:AEPW:N.E.S.-4:CATOOSA4
FDNS	00NR	0	16WP	G15_093	FROM->TO	G14-057T 345.00 - SUNNYSIDE 345KV CKT 1	717	789	0.17626	115.0559	NELSON 230/20.0KV TRANSFORMER CKT 1
FDNS	00NR	0	16WP	G15_093	FROM->TO	G14-057T 345.00 - SUNNYSIDE 345KV CKT 1	717	789	0.17606	115.0529	ALPINE AECC - BISMARK 115KV CKT 1
FDNS	00NR	0	16WP	G15_093	FROM->TO	G14-057T 345.00 - SUNNYSIDE 345KV CKT 1	717	789	0.17626	115.0513	GEN335614 1-WILLOW GLENN UNIT#4
FDNS	00NR	0	16WP	G15_093	FROM->TO	G14-057T 345.00 - SUNNYSIDE 345KV CKT 1	717	789	0.17679	115.0494	COMANCHE TAP - TOSCO 69KV CKT 1
FDNS	00NR	0	16WP	G15_093	FROM->TO	G14-057T 345.00 - SUNNYSIDE 345KV CKT 1	717	789	0.17696	115.0419	MORGAN - MUSTANG 138KV CKT 1
FDNS	00NR	0	16WP	G15_093	FROM->TO	G14-057T 345.00 - SUNNYSIDE 345KV CKT 1	717	789	0.1767	115.0417	BENTON - WICHITA 345KV CKT 1
FDNS	00NR	0	16WP	G15_093	FROM->TO	G14-057T 345.00 - SUNNYSIDE 345KV CKT 1	717	789	0.17626	115.0396	GEN303008 1-1BC2 U3
FDNS	00NR	0	16WP	G15_093	FROM->TO	G14-057T 345.00 - SUNNYSIDE 345KV CKT 1	717	789	0.17626	115.03	GEN300011 1-ST FRANCIS UNIT 2
FDNS	00NR	0	16WP	G15_093	FROM->TO	G14-057T 345.00 - SUNNYSIDE 345KV CKT 1	717	789	0.17645	115.0247	NOEL_SW 138.00 - ROSE_VALLEY 138.00 138KV CKT 1
FDNS	00NR	0	16WP	G15_093	FROM->TO	G14-057T 345.00 - SUNNYSIDE 345KV CKT 1	717	789	0.17626	115.0126	GEN336170 1-GULF OXY U4
FDNS	00NR	0	16WP	G15_093	FROM->TO	G14-057T 345.00 - SUNNYSIDE 345KV CKT 1	717	789	0.17815	115.0103	WEATHERFORD JCT. - WEATHERFORD SOUTHEAST 138KV CKT 1
FDNS	00NR	0	16WP	G15_093	FROM->TO	G14-057T 345.00 - SUNNYSIDE 345KV CKT 1	717	789	0.17815	115.0103	WEATHERFORD JCT. - WEATHERFORD SOUTHEAST 138KV CKT 1
FDNS	00NR	0	16WP	G15_093	FROM->TO	G14-057T 345.00 - SUNNYSIDE 345KV CKT 1	717	789	0.17624	115.0093	CYPRESS - HARTBURG 500KV CKT 1
FDNS	00NR	0	16WP	G15_093	FROM->TO	G14-057T 345.00 - SUNNYSIDE 345KV CKT 1	717	789	0.17606	115.0092	ALPINE AECC - AMITY SS 115KV CKT 1
FDNS	00NR	0	16WP	G15_093	FROM->TO	G14-057T 345.00 - SUNNYSIDE 345KV CKT 1	717	789	0.17626	115.0076	GEN336464 1-MICHOUD UNIT #3
FDNS	00NR	0	20WP	G15_093	FROM->TO	G14-057T 345.00 - SUNNYSIDE 345KV CKT 1	717	789	0.17674	115.0036	CLEVELAND - TULSA NORTH 345KV CKT 1
FDNS	00NR	0	20WP	G15_093	FROM->TO	G14-057T 345.00 - SUNNYSIDE 345KV CKT 1	717	789	0.17674	115.0036	CLEVELAND - TULSA NORTH 345KV CKT 1
FDNS	00NR	0	16WP	G15_093	FROM->TO	G14-057T 345.00 - SUNNYSIDE 345KV CKT 1	717	789	0.17634	114.998	HOYT - STRANGER CREEK 345KV CKT 1
FDNS	00NR	0	16WP	G15_093	FROM->TO	G14-057T 345.00 - SUNNYSIDE 345KV CKT 1	717	789	0.17755	114.9964	CHISHOLM6 230.00 - ELK CITY 230KV 230KV CKT 1
FDNS	00NR	0	20WP	G15_093	FROM->TO	G14-057T 345.00 - SUNNYSIDE 345KV CKT 1	717	789	0.17899	114.9957	COMANCHE - LOCO 138KV CKT 1
FDNS	00NR	0	16WP	G15_093	FROM->TO	G14-057T 345.00 - SUNNYSIDE 345KV CKT 1	717	789	0.17679	114.9952	COMANCHE - COMANCHE TAP 69KV CKT 1
FDNS	00NR	0	16WP	G15_093	FROM->TO	G14-057T 345.00 - SUNNYSIDE 345KV CKT 1	717	789	0.17755	114.9949	ELK CITY 230KV (ELKCTY-6) 230/138/13.8KV TRANSFORMER CKT 1
FDNS	00NR	0	16WP	G15_093	FROM->TO	G14-057T 345.00 - SUNNYSIDE 345KV CKT 1	717	789	0.17755	114.9949	ELK CITY 230KV (ELKCTY-6) 230/138/13.8KV TRANSFORMER CKT 1
FDNS	00NR	0	16WP	G15_093	FROM->TO	G14-057T 345.00 - SUNNYSIDE 345KV CKT 1	717	789	0.17626	114.9914	GEN300016 1-1G1GPDEL 18.000
FDNS	00NR	0	16WP	G15_093	FROM->TO	G14-057T 345.00 - SUNNYSIDE 345KV CKT 1	717	789	0.17626	114.9913	8CAJUN2 500/24.0KV TRANSFORMER CKT 1
FDNS	00NR	0	20WP	G15_093	FROM->TO	G14-057T 345.00 - SUNNYSIDE 345KV CKT 1	717	789	0.08008	114.9873	GRACEMONT - LAWTON EASTSIDE 345KV CKT 1
FDNS	00NR	0	20WP	G15_093	FROM->TO	G14-057T 345.00 - SUNNYSIDE 345KV CKT 1	717	789	0.08008	114.9873	GRACEMONT - LAWTON EASTSIDE 345KV CKT 1
FDNS	00NR	0	16WP	G15_093	FROM->TO	G14-057T 345.00 - SUNNYSIDE 345KV CKT 1	717	789	0.17684	114.9818	P12:138:OKGE-AEPW:JENSEN4:REDROCKRD4
FDNS	00NR	0	16WP	G15_093	FROM->TO	G14-057T 345.00 - SUNNYSIDE 345KV CKT 1	717	789	0.17626	114.9768	GEN337041 1-GERALD ANDRUS
FDNS	00NR	0	16WP	G15_093	FROM->TO	G14-057T 345.00 - SUNNYSIDE 345KV CKT 1	717	789	0.17726	114.9721	CANADIAN - NOBLE 138KV CKT 1
FDNS	00NR	0	16WP	G15_093	FROM->TO	G14-057T 345.00 - SUNNYSIDE 345KV CKT 1	717	789	0.17626	114.9655	GEN501910 1-ACADIA UNIT ST1
FDNS	00NR	0	16WP	G15_093	FROM->TO	G14-057T 345.00 - SUNNYSIDE 345KV CKT 1	717	789	0.17626	114.9604	P12:138:AEPW:R.S.S.-4:S.HUD.-4
FDNS	00NR	0	16WP	G15_093	FROM->TO	G14-057T 345.00 - SUNNYSIDE 345KV CKT 1	717	789	0.17877	114.9568	LASALLE - LATTA JCT 138KV CKT 1
FDNS	00NR	0	16WP	G15_093	FROM->TO	G14-057T 345.00 - SUNNYSIDE 345KV CKT 1	717	789	0.17815	114.9568	P12:138:AEPW:REDROCKRD4:WTH_JCT4
FDNS	00NR	0	16WP	G15_093	FROM->TO	G14-057T 345.00 - SUNNYSIDE 345KV CKT 1	717	789	0.17625	114.9566	7JASPER 345.00 - BLACKBERRY 345KV CKT 1
FDNS	00NR	0	16WP	G15_093	FROM->TO	G14-057T 345.00 - SUNNYSIDE 345KV CKT 1	717	789	0.17681	114.955	WALTERS - WALTERS 69KV CKT 1
FDNS	00NR	0	16WP	G15_093	FROM->TO	G14-057T 345.00 - SUNNYSIDE 345KV CKT 1	717	789	0.17738	114.9539	P12:138:OKGE:3TERM27
FDNS	00NR	0	20WP	G15_093	FROM->TO	G14-057T 345.00 - SUNNYSIDE 345KV CKT 1	717	789	0.18021	114.9532	POCASSETT - TUTTLE 138KV CKT 1
FDNS	00NR	0	16WP	G15_093	FROM->TO	G14-057T 345.00 - SUNNYSIDE 345KV CKT 1	717	789	0.17633	114.9521	G15074_T 345.00 - JEFFREY ENERGY CENTER 345KV CKT 1
FDNS	00NR	0	16WP	G15_093	FROM->TO	G14-057T 345.00 - SUNNYSIDE 345KV CKT 1	717	789	0.1764	114.9482	BLACKBERRY - NEOSHO 345KV CKT 1
FDNS	00NR	0	16WP	G15_093	FROM->TO	G14-057T 345.00 - SUNNYSIDE 345KV CKT 1	717	789	0.17637	114.9468	SWISSVALE - WEST GARDNER 345KV CKT 1
FDNS	00NR	0	16WP	G15_093	FROM->TO	G14-057T 345.00 - SUNNYSIDE 345KV CKT 1	717	789	0.1775	114.9464	NORGE ROAD - SOUTHWESTERN STATION 138KV CKT 1
FDNS	00NR	0	16WP	G15_093	FROM->TO	G14-057T 345.00 - SUNNYSIDE 345KV CKT 1	717	789	0.1775	114.9464	NORGE ROAD - SOUTHWESTERN STATION 138KV CKT 1
FDNS	00NR	0	16WP	G15_093	FROM->TO	G14-057T 345.00 - SUNNYSIDE 345KV CKT 1	717	789	0.18042	114.9431	FRANKLIN SW - WESTMOORE 138KV CKT 1
FDNS	00NR	0	16WP	G15_093	FROM->TO	G14-057T 345.00 - SUNNYSIDE 345KV CKT 1	717	789	0.179	114.9374	DRAPER LAKE - SEMINOLE 345KV CKT 2
FDNS	00NR	0	16WP	G15_093	FROM->TO	G14-057T 345.00 - SUNNYSIDE 345KV CKT 1	717	789	0.179	114.9373	DRAPER LAKE - SEMINOLE 345KV CKT 1
FDNS	00NR	0	20WP	G15_093	FROM->TO	G14-057T 345.00 - SUNNYSIDE 345KV CKT 1	717	789	0.17556	114.9356	DOLET HILLS - SOUTHWEST SHREVEPORT 345KV CKT 1
FDNS	00NR	0	20WP	G15_093	FROM->TO	G14-057T 345.00 - SUNNYSIDE 345KV CKT 1	717	789	0.17556	114.9356	DOLET HILLS - SOUTHWEST SHREVEPORT 345KV CKT 1
FDNS	00NR	0	16WP	G15_093	FROM->TO	G14-057T 345.00 - SUNNYSIDE 345KV CKT 1	717	789	0.17673	114.933	SARA - STHLAKE4 138.00 138KV CKT 1
FDNS	00NR	0	16WP	G15_093	FROM->TO	G14-057T 345.00 - SUNNYSIDE 345KV CKT 1	717	789	0.17784	114.9289	G14_038T 345.00 - Hitchland Interchange 345KV CKT 1
FDNS	00NR	0	16WP	G15_093	FROM->TO	G14-057T 345.00 - SUNNYSIDE 345KV CKT 1	717	789	0.17615	114.9274	ETTA (DUKE HOTSPRINGS) - MC NIEL 500KV CKT 1
FDNS	00NR	0	16WP	G15_093	FROM->TO	G14-057T 345.00 - SUNNYSIDE 345KV CKT 1	717	789	0.17626	114.9218	P12:138:AEPW:YARCH-S4:T.S.E.-4
FDNS	00NR	0	16WP	G15_093	FROM->TO	G14-057T 345.00 - SUNNYSIDE 345KV CKT 1	717	789	0.17666	114.9213	LAWTON RELIFT TAP - OMPA-WALTERS 69KV CKT 1
FDNS	00NR	0	16WP	G15_093	FROM->TO	G14-057T 345.00 - SUNNYSIDE 345KV CKT 1	717	789	0.17626	114.9181	SABINE 230/24.0KV TRANSFORMER CKT 1
FDNS	00NR	0	16WP	G15_093	FROM->TO	G14-057T 345.00 - SUNNYSIDE 345KV CKT 1	717	789	0.17626	114.9164	ESSEX UNIT 2 500/18.0KV TRANSFORMER CKT 1
FDNS	00NR	0	16WP	G15_093	FROM->TO	G14-057T 345.00 - SUNNYSIDE 345KV CKT 1	717	789	0.17626	114.9157	P12:69:AEPW:NROGERS2:ECNTRTN2
FDNS	00NR	0	16WP	G15_093	FROM->TO	G14-057T 345.00 - SUNNYSIDE 345KV CKT 1	717	789	0.17626	114.9156	P12:138:AEPW:BA_71ST4:T.S.E.-4
FDNS	00NR	0	16WP	G15_093	FROM->TO	G14-057T 345.00 - SUNNYSIDE 345KV CKT 1	717	789	0.17626	114.9151	GEN336801 1-BAXTER WILSON UNIT #1
FDNS	00NR	0	16WP	G15_093	FROM->TO	G14-057T 345.00 - SUNNYSIDE 345KV CKT 1	717	789	0.17642	114.9126	EMPORIA ENERGY CENTER - G14_001T 345.00 345KV CKT 1
FDNS	00NR	0	16WP	G15_093	FROM->TO	G14-057T 345.00 - SUNNYSIDE 345KV CKT 1	717	789	0.17629	114.9076	7LUTESVIL 345.00 - 7ST FRANC 345.00 345KV CKT 1
FDNS	00NR	0	16WP	G15_093	FROM->TO	G14-057T 345.00 - SUNNYSIDE 345KV CKT 1	717	789	0.17673	114.9039	MCCLAIN - STHLAKE4 138.00 138KV CKT 1
FDNS	00NR	0	16WP	G15_093	FROM->TO	G14-057T 345.00 - SUNNYSIDE 345KV CKT 1	717	789	0.17626	114.8963	FRONTIER 345/18.0KV TRANSFORMER CKT 1
FDNS	00NR	0	16WP	G15_093	FROM->TO	G14-057T 345.00 - SUNNYSIDE 345KV CKT 1	717	789	0.176	114.8959	HOPE - MCNAB REC 115KV CKT 1
FDNS	00NR	0	16WP	G15_093	FROM->TO	G14-057T 345.00 - SUNNYSIDE 345KV CKT 1	717	789	0.17626	114.8947	FRONTIER 345/18.0KV TRANSFORMER CKT 1

SOLUTION	GROUP	SCENARIO	SEASON	SOURCE	DIRECTION	MONITORED ELEMENT	RATEA (MVA)	RATEB(MVA)	TDF	TC%LOADING (% MVA)	CONTINGENCY
FDNS	00NR	0	16WP	G15_093	FROM->TO	G14-057T 345.00 - SUNNYSIDE 345KV CKT 1	717	789	0.17629	114.888	P12:138:AEPW-OGE:SHIDLER4:OSAGE 4
FDNS	00NR	0	16WP	G15_093	FROM->TO	G14-057T 345.00 - SUNNYSIDE 345KV CKT 1	717	789	0.176	114.887	P12:115:AEPW:TURK3:HOPE3
FDNS	00NR	0	16WP	G15_093	FROM->TO	G14-057T 345.00 - SUNNYSIDE 345KV CKT 1	717	789	0.17626	114.8839	P12:161:AEPW:CHAMSPR5:FARMING5
FDNS	00NR	0	16WP	G15_093	FROM->TO	G14-057T 345.00 - SUNNYSIDE 345KV CKT 1	717	789	0.17741	114.8809	SOUTHWESTERN STATION - VERDEN 138KV CKT 1
FDNS	00NR	0	16WP	G15_093	FROM->TO	G14-057T 345.00 - SUNNYSIDE 345KV CKT 1	717	789	0.17726	114.8807	NOBLE - PURCELL4 138.00 138KV CKT 1
FDNS	00NR	0	16WP	G15_093	FROM->TO	G14-057T 345.00 - SUNNYSIDE 345KV CKT 1	717	789	0.17815	114.8796	HINTON - WEATHERFORD JCT. 138KV CKT 1
FDNS	00NR	0	16WP	G15_093	FROM->TO	G14-057T 345.00 - SUNNYSIDE 345KV CKT 1	717	789	0.17603	114.8773	ENOWILT - LONE OAK 138KV CKT 1
FDNS	00NR	0	16WP	G15_093	FROM->TO	G14-057T 345.00 - SUNNYSIDE 345KV CKT 1	717	789	0.17753	114.8748	ANADARKO - SEQUOYAHJ4 138.00 138KV CKT 1
FDNS	00NR	0	16WP	G15_093	FROM->TO	G14-057T 345.00 - SUNNYSIDE 345KV CKT 1	717	789	0.17753	114.8744	CORN TAP - SEQUOYAHJ4 138.00 138KV CKT 1
FDNS	00NR	0	16WP	G15_093	FROM->TO	G14-057T 345.00 - SUNNYSIDE 345KV CKT 1	717	789	0.17401	114.8724	ARBUCKLE - VANOSTP4 138.00 138KV CKT 1
FDNS	00NR	0	16WP	G15_093	FROM->TO	G14-057T 345.00 - SUNNYSIDE 345KV CKT 1	717	789	0.17737	114.872	WEATHERFORD TAP - WEATHERFORD WIND FARM 138KV CKT 1
FDNS	00NR	0	16WP	G15_093	FROM->TO	G14-057T 345.00 - SUNNYSIDE 345KV CKT 1	717	789	0.17629	114.8684	8WNEWMADRID 500.00 - DELL 500 500KV CKT 1
FDNS	00NR	0	16WP	G15_093	FROM->TO	G14-057T 345.00 - SUNNYSIDE 345KV CKT 1	717	789	0.17603	114.8684	ENOWILT - SARDIS 138KV CKT 1
FDNS	00NR	0	16WP	G15_093	FROM->TO	G14-057T 345.00 - SUNNYSIDE 345KV CKT 1	717	789	0.17626	114.8662	GEN505616 1-BROKEN BOW
FDNS	00NR	0	16WP	G15_093	FROM->TO	G14-057T 345.00 - SUNNYSIDE 345KV CKT 1	717	789	0.17674	114.8654	CLINTON JUNCTION - ELK CITY 138KV CKT 1
FDNS	00NR	0	16WP	G15_093	FROM->TO	G14-057T 345.00 - SUNNYSIDE 345KV CKT 1	717	789	0.17674	114.8654	CLINTON JUNCTION - ELK CITY 138KV CKT 1
FDNS	00NR	0	16WP	G15_093	FROM->TO	G14-057T 345.00 - SUNNYSIDE 345KV CKT 1	717	789	0.176	114.8645	MCNAB REC - Turk 115 115KV CKT 1
FDNS	00NR	0	16WP	G15_093	FROM->TO	G14-057T 345.00 - SUNNYSIDE 345KV CKT 1	717	789	0.176	114.8645	TURK (TURK 1) 138/115/13.2KV TRANSFORMER CKT 1
FDNS	00NR	0	16WP	G15_093	FROM->TO	G14-057T 345.00 - SUNNYSIDE 345KV CKT 1	717	789	0.176	114.8645	TURK (TURK 1) 138/115/13.2KV TRANSFORMER CKT 1
FDNS	00NR	0	16WP	G15_093	FROM->TO	G14-057T 345.00 - SUNNYSIDE 345KV CKT 1	717	789	0.17741	114.86	NORTH 29TH CHICKASHA - VERDEN 138KV CKT 1
FDNS	00NR	0	16WP	G15_093	FROM->TO	G14-057T 345.00 - SUNNYSIDE 345KV CKT 1	717	789	0.17642	114.8591	G14_001T 345.00 - WICHITA 345KV CKT 1
FDNS	00NR	0	16WP	G15_093	FROM->TO	G14-057T 345.00 - SUNNYSIDE 345KV CKT 1	717	789	0.17626	114.8585	LEWIS CREEK SWITCHYARD 138/22.0KV TRANSFORMER CKT 1
FDNS	00NR	0	16WP	G15_093	FROM->TO	G14-057T 345.00 - SUNNYSIDE 345KV CKT 1	717	789	0.17666	114.8545	OMPA-WALTERS - WALTERS 69KV CKT 1
FDNS	00NR	0	16WP	G15_093	FROM->TO	G14-057T 345.00 - SUNNYSIDE 345KV CKT 1	717	789	0.17666	114.8545	OMPA-WALTERS - WALTERS 69KV CKT 1
FDNS	00NR	0	16WP	G15_093	FROM->TO	G14-057T 345.00 - SUNNYSIDE 345KV CKT 1	717	789	0.1765	114.8545	G13-010T 345.00 - POST ROCK 345KV CKT 1
FDNS	00NR	0	16WP	G15_093	FROM->TO	G14-057T 345.00 - SUNNYSIDE 345KV CKT 1	717	789	0.17611	114.8539	COUCH SES - MC NIEL 115KV CKT 1
FDNS	00NR	0	16WP	G15_093	FROM->TO	G14-057T 345.00 - SUNNYSIDE 345KV CKT 1	717	789	0.17626	114.8536	LEWIS CREEK SWITCHYARD 138/22.0KV TRANSFORMER CKT 1
FDNS	00NR	0	16WP	G15_093	FROM->TO	G14-057T 345.00 - SUNNYSIDE 345KV CKT 1	717	789	0.17635	114.8433	EMPORIA ENERGY CENTER - SWISSVALE 345KV CKT 1
FDNS	00NR	0	16WP	G15_093	FROM->TO	G14-057T 345.00 - SUNNYSIDE 345KV CKT 1	717	789	0.17681	114.8397	P12:69:WFEC-AEPW:COMANCH2:WALTRS-2
FDNS	00NR	0	16WP	G15_093	FROM->TO	G14-057T 345.00 - SUNNYSIDE 345KV CKT 1	717	789	0.17626	114.8396	GEN501970 1-EVANGELINE UNIT 7
FDNS	00NR	0	16WP	G15_093	FROM->TO	G14-057T 345.00 - SUNNYSIDE 345KV CKT 1	717	789	0.17614	114.835	MORISNT4 138.00 - STILLWATER 138KV CKT 1
FDNS	00NR	0	16WP	G15_093	FROM->TO	G14-057T 345.00 - SUNNYSIDE 345KV CKT 1	717	789	0.17603	114.8336	CLAYTON - SARDIS 138KV CKT 1
FDNS	00NR	0	16WP	G15_093	FROM->TO	G14-057T 345.00 - SUNNYSIDE 345KV CKT 1	717	789	0.17616	114.8296	P12:138:OKGE:3TERM2
FDNS	00NR	0	16WP	G15_093	FROM->TO	G14-057T 345.00 - SUNNYSIDE 345KV CKT 1	717	789	0.17815	114.8285	HINTON - REDROCKRD4 138.00 138KV CKT 1
FDNS	00NR	0	16WP	G15_093	FROM->TO	G14-057T 345.00 - SUNNYSIDE 345KV CKT 1	717	789	0.17626	114.8271	GEN334392 1-EXXON MOBIL IPP 1
FDNS	00NR	0	16WP	G15_093	FROM->TO	G14-057T 345.00 - SUNNYSIDE 345KV CKT 1	717	789	0.1775	114.826	CORNVILLE - NORGE ROAD 138KV CKT 1
FDNS	00NR	0	16WP	G15_093	FROM->TO	G14-057T 345.00 - SUNNYSIDE 345KV CKT 1	717	789	0.1775	114.826	CORNVILLE - NORGE ROAD 138KV CKT 1
FDNS	00NR	0	16WP	G15_093	FROM->TO	G14-057T 345.00 - SUNNYSIDE 345KV CKT 1	717	789	0.17877	114.822	LASALLE - STONEWAL LH138.00 138KV CKT 1
FDNS	00NR	0	16WP	G15_093	FROM->TO	G14-057T 345.00 - SUNNYSIDE 345KV CKT 1	717	789	0.17626	114.8203	GEN334393 1-EXXON MOBIL IPP 2
FDNS	00NR	0	16WP	G15_093	FROM->TO	G14-057T 345.00 - SUNNYSIDE 345KV CKT 1	717	789	0.17626	114.8203	GEN334394 1-EXXON MOBIL IPP 3
FDNS	00NR	0	16WP	G15_093	FROM->TO	G14-057T 345.00 - SUNNYSIDE 345KV CKT 1	717	789	0.17635	114.8155	P12:138:OKGE:3TERM12
FDNS	00NR	0	16WP	G15_093	FROM->TO	G14-057T 345.00 - SUNNYSIDE 345KV CKT 1	717	789	0.17626	114.812	GEN336222 1-LITTLE GYPSY UNIT#2
FDNS	00NR	0	16WP	G15_093	FROM->TO	G14-057T 345.00 - SUNNYSIDE 345KV CKT 1	717	789	0.17877	114.807	STONEWAL LH138.00 - TUPELO TAP 138KV CKT 1
FDNS	00NR	0	16WP	G15_093	FROM->TO	G14-057T 345.00 - SUNNYSIDE 345KV CKT 1	717	789	0.17603	114.8059	P12:138:AEPW-SWPA:LONEOAK4:BRKNBW4
FDNS	00NR	0	16WP	G15_093	FROM->TO	G14-057T 345.00 - SUNNYSIDE 345KV CKT 1	717	789	0.1765	114.803	FLETCHER - MARLOW JCT 69KV CKT 1
FDNS	00NR	0	20WP	G15_093	FROM->TO	G14-057T 345.00 - SUNNYSIDE 345KV CKT 1	717	789	0.17581	114.7966	GEN335831 1-RIVERBEND UNIT#1
FDNS	00NR	0	16WP	G15_093	FROM->TO	G14-057T 345.00 - SUNNYSIDE 345KV CKT 1	717	789	0.17627	114.7955	7JASPER 345.00 - MORGAN 345KV CKT 1
FDNS	00NR	0	16WP	G15_093	FROM->TO	G14-057T 345.00 - SUNNYSIDE 345KV CKT 1	717	789	0.17626	114.7941	P12:138:AEPW:R.S.S.-4:T.P.S.-4
FDNS	00NR	0	16WP	G15_093	FROM->TO	G14-057T 345.00 - SUNNYSIDE 345KV CKT 1	717	789	0.17626	114.7937	GEN506749 1-EASTMAN GENERATION A
FDNS	00NR	0	16WP	G15_093	FROM->TO	G14-057T 345.00 - SUNNYSIDE 345KV CKT 1	717	789	0.17603	114.792	CLAYTON - NASHOBA 138KV CKT 1
FDNS	00NR	0	16WP	G15_093	FROM->TO	G14-057T 345.00 - SUNNYSIDE 345KV CKT 1	717	789	0.17741	114.7904	CORNVILLE - NORTH 29TH CHICKASHA 138KV CKT 1
FDNS	00NR	0	16WP	G15_093	FROM->TO	G14-057T 345.00 - SUNNYSIDE 345KV CKT 1	717	789	0.17719	114.7904	CLARKSVILLE - ONETA 345KV CKT 1
FDNS	00NR	0	16WP	G15_093	FROM->TO	G14-057T 345.00 - SUNNYSIDE 345KV CKT 1	717	789	0.17719	114.7904	CLARKSVILLE - ONETA 345KV CKT 1
FDNS	00NR	0	16WP	G15_093	FROM->TO	G14-057T 345.00 - SUNNYSIDE 345KV CKT 1	717	789	0.17626	114.7901	GEN334431 1-SABINE UNIT 1
FDNS	00NR	0	16WP	G15_093	FROM->TO	G14-057T 345.00 - SUNNYSIDE 345KV CKT 1	717	789	0.17626	114.79	GEN334432 1-SABINE UNIT 2
FDNS	00NR	0	16WP	G15_093	FROM->TO	G14-057T 345.00 - SUNNYSIDE 345KV CKT 1	717	789	0.17656	114.785	FRANKLIN - FRANKLIN SW 138KV CKT 1
FDNS	00NR	0	16WP	G15_093	FROM->TO	G14-057T 345.00 - SUNNYSIDE 345KV CKT 1	717	789	0.17737	114.7845	WEATHERFORD SOUTHEAST - WEATHERFORD TAP 138KV CKT 1
FDNS	00NR	0	16WP	G15_093	FROM->TO	G14-057T 345.00 - SUNNYSIDE 345KV CKT 1	717	789	0.17626	114.7829	GEN501972 1-EVANGELINE UNIT 7-2
FDNS	00NR	0	16WP	G15_093	FROM->TO	G14-057T 345.00 - SUNNYSIDE 345KV CKT 1	717	789	0.17626	114.7828	GEN501971 1-EVANGELINE UNIT 7-1
FDNS	00NR	0	16WP	G15_093	FROM->TO	G14-057T 345.00 - SUNNYSIDE 345KV CKT 1	717	789	0.17626	114.7826	GEN336152 1-WATERFORD UNIT#2
FDNS	00NR	0	16WP	G15_093	FROM->TO	G14-057T 345.00 - SUNNYSIDE 345KV CKT 1	717	789	0.17626	114.7815	GEN336151 1-WATERFORD UNIT#1
FDNS	00NR	0	16WP	G15_093	FROM->TO	G14-057T 345.00 - SUNNYSIDE 345KV CKT 1	717	789	0.17603	114.779	BETHEL - NASHOBA 138KV CKT 1
FDNS	00NR	0	16WP	G15_093	FROM->TO	G14-057T 345.00 - SUNNYSIDE 345KV CKT 1	717	789	0.17626	114.7698	P12:138:AEPW:R.S.S.-4:R:96YALE-4
FDNS	00NR	0	20WP	G15_093	FROM->TO	G14-057T 345.00 - SUNNYSIDE 345KV CKT 1	717	789	0.18609	114.7697	ARCADIA - NORTHWEST 345KV CKT 1
FDNS	00NR	0	20WP	G15_093	FROM->TO	G14-057T 345.00 - SUNNYSIDE 345KV CKT 1	717	789	0.17581	114.7537	GRAND GULF 500/22.0KV TRANSFORMER CKT 1
FDNS	00NR	0	16WP	G15_093	FROM->TO	G14-057T 345.00 - SUNNYSIDE 345KV CKT 1	717	789	0.17952	114.7505	MARIETTA - MARIETTA4 138.00 138KV CKT 1
FDNS	00NR	0	16WP	G15_093	FROM->TO	G14-057T 345.00 - SUNNYSIDE 345KV CKT 1	717	789	0.17684	114.7347	Canadian Pump Station - REDROCKRD4 138.00 138KV CKT 1
FDNS	00NR	0	16WP	G15_093	FROM->TO	G14-057T 345.00 - SUNNYSIDE 345KV CKT 1	717	789	0.17737	114.73	CLINTON JUNCTION - CLINTON NATURAL GAS TAP 138KV CKT 1
FDNS	00NR	0	16WP	G15_093	FROM->TO	G14-057T 345.00 - SUNNYSIDE 345KV CKT 1	717	789	0.17643	114.7223	P12:138:OKGE:3TERM47
FDNS	00NR	0	16WP	G15_093	FROM->TO	G14-057T 345.00 - SUNNYSIDE 345KV CKT 1	717	789	0.18006	114.7209	CIMARRON - NORTHWEST 345KV CKT 1
FDNS	00NR	0	16WP	G15_093	FROM->TO	G14-057T 345.00 - SUNNYSIDE 345KV CKT 1	717	789	0.17653	114.7076	HAMMETT TAP - HORSESHOE LAKE 138KV CKT 1
FDNS	00NR	0	20WP	G15_093	FROM->TO	G14-057T 345.00 - SUNNYSIDE 345KV CKT 1	717	789	0.17544	114.7044	7SAREPTA% 345.00 - ELDORADO EHV 345KV CKT 1
FDNS	00NR	0	20WP	G15_093	FROM->TO	G14-057T 345.00 - SUNNYSIDE 345KV CKT 1	717	789	0.17544	114.7042	3TR3AR8EL7EL
FDNS	00NR	0	20WP	G15_093	FROM->TO	G14-057T 345.00 - SUNNYSIDE 345KV CKT 1	717	789	0.17544	114.6934	ELDORADO EHV 500/345KV TRANSFORMER CKT 1
FDNS	00NR	0	20WP	G15_093	FROM->TO	G14-057T 345.00 - SUNNYSIDE 345KV CKT 1	717	789	0.17828	114.6786	P12:138:AEPW:DUNCAN-4:L.E.S.-4
FDNS	00NR	0	16WP	G15_093	FROM->TO	G14-057T 345.00 - SUNNYSIDE 345KV CKT 1	717	789	0.17681	114.6677	COMANCHE - WALTERS 69KV CKT 1
FDNS	00NR	0	20WP	G15_093	FROM->TO	G14-057T 345.00 - SUNNYSIDE 345KV CKT 1	717	789	0.17581	114.608	GEN515577 1-ARBWND11 0.6900
FDNS	00NR	0	20WP	G15_093	FROM->TO	G14-057T 345.00 - SUNNYSIDE 345KV CKT 1	717	789	0.17584	114.5615	MATHWSN7 345.00 - TATONGA7 345.00 345KV CKT 1
FDNS	00NR	0	20WP	G15_093	FROM->TO	G14-057T 345.00 - SUNNYSIDE 345KV CKT 1	717	789	0.17828	114.5571	COMANCHE TAP - OMPA-DUNCAN 840 138KV CKT 1

SOLUTION	GROUP	SCENARIO	SEASON	SOURCE	DIRECTION	MONITORED ELEMENT	RATEA (MVA)	RATEB(MVA)	TDF	TC%LOADING (% MVA)	CONTINGENCY
FDNS	00NR	0	20WP	G15_093	FROM->TO	G14-057T 345.00 - SUNNYSIDE 345KV CKT 1	717	789	0.18021	114.5549	BRIDGECR 138.00 - TUTTLE 138KV CKT 1
FDNS	00NR	0	20WP	G15_093	FROM->TO	G14-057T 345.00 - SUNNYSIDE 345KV CKT 1	717	789	0.16857	114.5467	CANADIAN RIVER - MUSKOGEE 345KV CKT 1
FDNS	00NR	0	20WP	G15_093	FROM->TO	G14-057T 345.00 - SUNNYSIDE 345KV CKT 1	717	789	0.17581	114.4684	GEN509409 1-WILKES #3
FDNS	00NR	0	20WP	G15_093	FROM->TO	G14-057T 345.00 - SUNNYSIDE 345KV CKT 1	717	789	0.17765	114.4388	Hitchland Interchange - WALKTAP7 345.00 345KV CKT 1
FDNS	00NR	0	20WP	G15_093	FROM->TO	G14-057T 345.00 - SUNNYSIDE 345KV CKT 1	717	789	0.17765	114.4388	Hitchland Interchange - WALKTAP7 345.00 345KV CKT 1
FDNS	00NR	0	20WP	G15_093	FROM->TO	G14-057T 345.00 - SUNNYSIDE 345KV CKT 1	717	789	0.17908	114.4317	HEALDTON - LOCO 138KV CKT 1
FDNS	00NR	0	20WP	G15_093	FROM->TO	G14-057T 345.00 - SUNNYSIDE 345KV CKT 1	717	789	0.17565	114.4268	ARCADIA - SEMINOLE 345KV CKT 1
FDNS	00NR	0	20WP	G15_093	FROM->TO	G14-057T 345.00 - SUNNYSIDE 345KV CKT 1	717	789	0.17765	114.4189	P12:345:SPS:J07.1.FINN.HITCH
FDNS	00NR	0	20WP	G15_093	FROM->TO	G14-057T 345.00 - SUNNYSIDE 345KV CKT 1	717	789	0.17581	114.4089	GEN501813 1-RODEMACHER UNIT 3
FDNS	00NR	0	20WP	G15_093	FROM->TO	G14-057T 345.00 - SUNNYSIDE 345KV CKT 1	717	789	0.17581	114.3121	GEN300006 1-NEW MADRID UNIT 1
FDNS	00NR	0	20WP	G15_093	FROM->TO	G14-057T 345.00 - SUNNYSIDE 345KV CKT 1	717	789	0.17581	114.2922	GEN300007 1-NEW MADRID UNIT 2
FDNS	00NR	0	20WP	G15_093	FROM->TO	G14-057T 345.00 - SUNNYSIDE 345KV CKT 1	717	789	0.17908	114.2876	HEALDTON - RINGLING 138KV CKT 1
FDNS	00NR	0	20WP	G15_093	FROM->TO	G14-057T 345.00 - SUNNYSIDE 345KV CKT 1	717	789	0.17595	114.2757	LACYGNE - WAVERLY7 345.00 345KV CKT 1
FDNS	00NR	0	20WP	G15_093	FROM->TO	G14-057T 345.00 - SUNNYSIDE 345KV CKT 1	717	789	0.17828	114.2686	DUNCAN - OMPA-DUNCAN 840 138KV CKT 1
FDNS	00NR	0	20WP	G15_093	FROM->TO	G14-057T 345.00 - SUNNYSIDE 345KV CKT 1	717	789	0.17828	114.2686	DUNCAN - OMPA-DUNCAN 840 138KV CKT 1
FDNS	00NR	0	20WP	G15_093	FROM->TO	G14-057T 345.00 - SUNNYSIDE 345KV CKT 1	717	789	0.18021	114.2678	P12:138:WFEC:MSL01
FDNS	00NR	0	16WP	G15_093	FROM->TO	G14-057T 345.00 - SUNNYSIDE 345KV CKT 1	717	789	0.17626	114.2581	803-OKLAUNION
FDNS	00NR	0	20WP	G15_093	FROM->TO	G14-057T 345.00 - SUNNYSIDE 345KV CKT 1	717	789	0.18021	114.2563	BRIDGECR 138.00 - SUNSHINE CANYON 138KV CKT 1
FDNS	00NR	0	20WP	G15_093	FROM->TO	G14-057T 345.00 - SUNNYSIDE 345KV CKT 1	717	789	0.17581	114.1972	GEN335206 1-NELSON UNIT 6
FDNS	00NR	0	20WP	G15_093	FROM->TO	G14-057T 345.00 - SUNNYSIDE 345KV CKT 1	717	789	0.17595	114.1543	WAVERLY7 345.00 - WOLF CREEK 345KV CKT 1
FDNS	00NR	0	20WP	G15_093	FROM->TO	G14-057T 345.00 - SUNNYSIDE 345KV CKT 1	717	789	0.17581	114.1257	GEN520947 1-HUGO1
FDNS	00NR	0	20WP	G15_093	FROM->TO	G14-057T 345.00 - SUNNYSIDE 345KV CKT 1	717	789	0.17908	114.1171	RINGLING - SOUTH WILSON 138KV CKT 1
FDNS	00NR	0	16WP	G15_093	FROM->TO	G14-057T 345.00 - SUNNYSIDE 345KV CKT 1	717	789	0.17374	114.0994	P12:138:OKGE:3TERM39
FDNS	00NR	0	20WP	G15_093	FROM->TO	G14-057T 345.00 - SUNNYSIDE 345KV CKT 1	717	789	0.17584	114.0411	G11_051T 345.00 - TATONGA7 345.00 345KV CKT 1
FDNS	00NR	0	20WP	G15_093	FROM->TO	G14-057T 345.00 - SUNNYSIDE 345KV CKT 1	717	789	0.17566	114.0258	ELDORADO EHV - MOUNT OLIVE 500KV CKT 1
FDNS	00NR	0	20WP	G15_093	FROM->TO	G14-057T 345.00 - SUNNYSIDE 345KV CKT 1	717	789	0.17581	114.0121	GEN501812 1-RODEMACHER UNIT 2
FDNS	00NR	0	20WP	G15_093	FROM->TO	G14-057T 345.00 - SUNNYSIDE 345KV CKT 1	717	789	0.17584	114.0071	P12:138:AEPW:SHERID4:112GORE4
FDNS	00NR	0	20WP	G15_093	FROM->TO	G14-057T 345.00 - SUNNYSIDE 345KV CKT 1	717	789	0.17581	114.0013	DOLET HILLS 345/24.0KV TRANSFORMER CKT 1
FDNS	00NR	0	20WP	G15_093	FROM->TO	G14-057T 345.00 - SUNNYSIDE 345KV CKT 1	717	789	0.17662	113.9961	THISTLE7 345.00 - WOODWARD DISTRICT EHV 345KV CKT 1
FDNS	00NR	0	20WP	G15_093	FROM->TO	G14-057T 345.00 - SUNNYSIDE 345KV CKT 1	717	789	0.17662	113.9961	THISTLE7 345.00 - WOODWARD DISTRICT EHV 345KV CKT 1
FDNS	00NR	0	20WP	G15_093	FROM->TO	G14-057T 345.00 - SUNNYSIDE 345KV CKT 1	717	789	0.17662	113.9961	THISTLE7 345.00 - WOODWARD DISTRICT EHV 345KV CKT 2
FDNS	00NR	0	20WP	G15_093	FROM->TO	G14-057T 345.00 - SUNNYSIDE 345KV CKT 1	717	789	0.17662	113.9961	THISTLE7 345.00 - WOODWARD DISTRICT EHV 345KV CKT 2
FDNS	00NR	0	20WP	G15_093	FROM->TO	G14-057T 345.00 - SUNNYSIDE 345KV CKT 1	717	789	0.17404	113.9283	PARK LANE - SEMINOLE 138KV CKT 1
FDNS	00NR	0	20WP	G15_093	FROM->TO	G14-057T 345.00 - SUNNYSIDE 345KV CKT 1	717	789	0.17573	113.8762	WEBRE - WELLS 500KV CKT 1
FDNS	00NR	0	20WP	G15_093	FROM->TO	G14-057T 345.00 - SUNNYSIDE 345KV CKT 1	717	789	0.17581	113.875	GEN515564 1-ORIGIN11 0.6900
FDNS	00NR	0	20WP	G15_093	FROM->TO	G14-057T 345.00 - SUNNYSIDE 345KV CKT 1	717	789	0.17581	113.875	GEN515565 1-ORIGIN21 0.6900
FDNS	00NR	0	16WP	G15_093	FROM->TO	G14-057T 345.00 - SUNNYSIDE 345KV CKT 1	717	789	0.17411	113.8718	MAYSVILLE - MAYSVLT4 138.00 138KV CKT 1
FDNS	00NR	0	16WP	G15_093	FROM->TO	G14-057T 345.00 - SUNNYSIDE 345KV CKT 1	717	789	0.17693	113.8663	DRAPER LAKE - MIDWEST TAP 138KV CKT 1
FDNS	00NR	0	16WP	G15_093	FROM->TO	G14-057T 345.00 - SUNNYSIDE 345KV CKT 1	717	789	0.17637	113.8628	GLASSES - MADILL INDUSTRIAL TAP 138KV CKT 1
FDNS	00NR	0	20WP	G15_093	FROM->TO	G14-057T 345.00 - SUNNYSIDE 345KV CKT 1	717	789	0.17581	113.8527	GEN334440 1-SABINE UNIT 4
FDNS	00NR	0	16WP	G15_093	FROM->TO	G14-057T 345.00 - SUNNYSIDE 345KV CKT 1	717	789	0.17712	113.8517	CIMARRON - MATHWSN7 345.00 345KV CKT 1
FDNS	00NR	0	16WP	G15_093	FROM->TO	G14-057T 345.00 - SUNNYSIDE 345KV CKT 1	717	789	0.17712	113.8517	CIMARRON - MATHWSN7 345.00 345KV CKT 2
FDNS	00NR	0	16WP	G15_093	FROM->TO	G14-057T 345.00 - SUNNYSIDE 345KV CKT 1	717	789	0.17626	113.8451	GEN562691 1-G15_015_3 0.6900
FDNS	00NR	0	16WP	G15_093	FROM->TO	G14-057T 345.00 - SUNNYSIDE 345KV CKT 1	717	789	0.17626	113.8449	GEN562772 1-G15034_3 0.6900
FDNS	00NR	0	16WP	G15_093	FROM->TO	G14-057T 345.00 - SUNNYSIDE 345KV CKT 1	717	789	0.17708	113.8438	P12:138:OKGE:3TERM21
FDNS	00NR	0	16WP	G15_093	FROM->TO	G14-057T 345.00 - SUNNYSIDE 345KV CKT 1	717	789	0.17613	113.8375	HUGO (HUGO 1) 345/138/13.8KV TRANSFORMER CKT 1
FDNS	00NR	0	20WP	G15_093	FROM->TO	G14-057T 345.00 - SUNNYSIDE 345KV CKT 1	717	789	0.17625	113.8344	CANEYRV7 345.00 - NEOSHO 345KV CKT 1
FDNS	00NR	0	20WP	G15_093	FROM->TO	G14-057T 345.00 - SUNNYSIDE 345KV CKT 1	717	789	0.17908	113.8289	MARIETTA - SOUTH WILSON 138KV CKT 1
FDNS	00NR	0	20WP	G15_093	FROM->TO	G14-057T 345.00 - SUNNYSIDE 345KV CKT 1	717	789	0.17581	113.8232	GEN590011 2-ERCOT EQUIVALENCE
FDNS	00NR	0	16WP	G15_093	FROM->TO	G14-057T 345.00 - SUNNYSIDE 345KV CKT 1	717	789	0.17626	113.8171	GEN521103 1-BLUE CANYON WIND FARM
FDNS	00NR	0	16WP	G15_093	FROM->TO	G14-057T 345.00 - SUNNYSIDE 345KV CKT 1	717	789	0.17626	113.8166	GEN520812 1-ANADRK5
FDNS	00NR	0	16WP	G15_093	FROM->TO	G14-057T 345.00 - SUNNYSIDE 345KV CKT 1	717	789	0.17626	113.8165	GEN520813 1-ANADRK6
FDNS	00NR	0	16WP	G15_093	FROM->TO	G14-057T 345.00 - SUNNYSIDE 345KV CKT 1	717	789	0.17411	113.8102	MAYSVLT4 138.00 - PRAIRIE POINT 138KV CKT 1
FDNS	00NR	0	16WP	G15_093	FROM->TO	G14-057T 345.00 - SUNNYSIDE 345KV CKT 1	717	789	0.17637	113.8033	GLASSES - RUSSETT 138KV CKT 1
FDNS	00NR	0	20WP	G15_093	FROM->TO	G14-057T 345.00 - SUNNYSIDE 345KV CKT 1	717	789	0.17581	113.7939	DELL 500 - ESSEX UNIT 2 500KV CKT Z1
FDNS	00NR	0	20WP	G15_093	FROM->TO	G14-057T 345.00 - SUNNYSIDE 345KV CKT 1	717	789	0.17581	113.7926	P12:161:AEPW:DYESS 5:HYLAND 5
FDNS	00NR	0	16WP	G15_093	FROM->TO	G14-057T 345.00 - SUNNYSIDE 345KV CKT 1	717	789	0.17486	113.785	ARBUCKLE - SULPHR 4 138.00 138KV CKT 1
FDNS	00NR	0	20WP	G15_093	FROM->TO	G14-057T 345.00 - SUNNYSIDE 345KV CKT 1	717	789	0.1766	113.7845	REDBUD - RIVERSIDE STATION 345KV CKT 1
FDNS	00NR	0	20WP	G15_093	FROM->TO	G14-057T 345.00 - SUNNYSIDE 345KV CKT 1	717	789	0.1766	113.7845	REDBUD - RIVERSIDE STATION 345KV CKT 1
FDNS	00NR	0	16WP	G15_093	FROM->TO	G14-057T 345.00 - SUNNYSIDE 345KV CKT 1	717	789	0.17619	113.7802	P12:138:WFEC:MSL11
FDNS	00NR	0	16WP	G15_093	FROM->TO	G14-057T 345.00 - SUNNYSIDE 345KV CKT 1	717	789	0.17619	113.7802	P12:138:WFEC-AEPW:PHAROAH4:LONEOAK4
FDNS	00NR	0	16WP	G15_093	FROM->TO	G14-057T 345.00 - SUNNYSIDE 345KV CKT 1	717	789	0.17637	113.7755	CANEY CREEK - JOHNSON COUNTY 138KV CKT 1
FDNS	00NR	0	16WP	G15_093	FROM->TO	G14-057T 345.00 - SUNNYSIDE 345KV CKT 1	717	789	0.17626	113.7736	GEN511961 1-DEMPSEY-WTG10.7000
FDNS	00NR	0	16WP	G15_093	FROM->TO	G14-057T 345.00 - SUNNYSIDE 345KV CKT 1	717	789	0.17625	113.758	P12:069:OKGE:3TERM42
FDNS	00NR	0	20WP	G15_093	FROM->TO	G14-057T 345.00 - SUNNYSIDE 345KV CKT 1	717	789	0.17581	113.7534	GEN590010 1-ERCOT EQUIVALENCE
FDNS	00NR	0	20WP	G15_093	FROM->TO	G14-057T 345.00 - SUNNYSIDE 345KV CKT 1	717	789	0.17581	113.7453	P12:69:AEPW:L.E.S.-2:LAW WC2
FDNS	00NR	0	20WP	G15_093	FROM->TO	G14-057T 345.00 - SUNNYSIDE 345KV CKT 1	717	789	0.17724	113.7442	LAWTON EASTSIDE (LES 5) 345/138/13.8KV TRANSFORMER CKT 2
FDNS	00NR	0	20WP	G15_093	FROM->TO	G14-057T 345.00 - SUNNYSIDE 345KV CKT 1	717	789	0.17724	113.7442	LAWTON EASTSIDE (LES 5) 345/138/13.8KV TRANSFORMER CKT 2
FDNS	00NR	0	16WP	G15_093	FROM->TO	G14-057T 345.00 - SUNNYSIDE 345KV CKT 1	717	789	0.17626	113.7348	GEN629070 2-BEAVER CHANNEL GENERATORFOR UNIT NO 2
FDNS	00NR	0	16WP	G15_093	FROM->TO	G14-057T 345.00 - SUNNYSIDE 345KV CKT 1	717	789	0.17628	113.7272	GRPRAR1-LNX3345.00 - HOLT.CO3 345.00 345KV CKT 1
FDNS	00NR	0	20WP	G15_093	FROM->TO	G14-057T 345.00 - SUNNYSIDE 345KV CKT 1	717	789	0.17908	113.7272	P12:138:WFEC:MSL17
FDNS	00NR	0	16WP	G15_093	FROM->TO	G14-057T 345.00 - SUNNYSIDE 345KV CKT 1	717	789	0.17626	113.7271	GEN515443 1-MNCOWND1 0.7000
FDNS	00NR	0	16WP	G15_093	FROM->TO	G14-057T 345.00 - SUNNYSIDE 345KV CKT 1	717	789	0.17628	113.7234	GRPRAR1-LNX3345.00 - GRPRAR 345KV CKT Z
FDNS	00NR	0	20WP	G15_093	FROM->TO	G14-057T 345.00 - SUNNYSIDE 345KV CKT 1	717	789	0.1771	113.7227	P12:138:WFEC:MSL02
FDNS	00NR	0	16WP	G15_093	FROM->TO	G14-057T 345.00 - SUNNYSIDE 345KV CKT 1	717	789	0.17656	113.7218	P12:138:WFEC:MSL08
FDNS	00NR	0	16WP	G15_093	FROM->TO	G14-057T 345.00 - SUNNYSIDE 345KV CKT 1	717	789	0.17626	113.7183	GEN615021 1-GRE-ER 14G 16.000
FDNS	00NR	0	16WP	G15_093	FROM->TO	G14-057T 345.00 - SUNNYSIDE 345KV CKT 1	717	789	0.17626	113.7147	GEN562902 1-G15052_3 0.6900
FDNS	00NR	0	16WP	G15_093	FROM->TO	G14-057T 345.00 - SUNNYSIDE 345KV CKT 1	717	789	0.17411	113.7129	PRAIRIE POINT - RATLIFF 138KV CKT 1
FDNS	00NR	0	16WP	G15_093	FROM->TO	G14-057T 345.00 - SUNNYSIDE 345KV CKT 1	717	789	0.17607	113.7093	CARTER - CHICKASAW 138KV CKT 1

SOLUTION	GROUP	SCENARIO	SEASON	SOURCE	DIRECTION	MONITORED ELEMENT	RATEA (MVA)	RATEB(MVA)	TDF	TC%LOADING (% MVA)	CONTINGENCY
FDNS	00NR	0	16WP	G15_093	FROM->TO	G14-057T 345.00 - SUNNYSIDE 345KV CKT 1	717	789	0.17626	113.7078	GEN563242 1-G15090_3 0.6900
FDNS	00NR	0	16WP	G15_093	FROM->TO	G14-057T 345.00 - SUNNYSIDE 345KV CKT 1	717	789	0.17626	113.7066	GEN560183 1-REDHIL-WTG1 12.000
FDNS	00NR	0	16WP	G15_093	FROM->TO	G14-057T 345.00 - SUNNYSIDE 345KV CKT 1	717	789	0.17626	113.7049	GEN629071 1-BURLINGTON GENERATOR FOR UNIT NO 1 E
FDNS	00NR	0	16WP	G15_093	FROM->TO	G14-057T 345.00 - SUNNYSIDE 345KV CKT 1	717	789	0.17637	113.7009	CANADIAN RIVER - MCALESTER SOUTH 138KV CKT 1
FDNS	00NR	0	16WP	G15_093	FROM->TO	G14-057T 345.00 - SUNNYSIDE 345KV CKT 1	717	789	0.17637	113.7009	CANADIAN RIVER - MCALESTER SOUTH 138KV CKT 1
FDNS	00NR	0	16WP	G15_093	FROM->TO	G14-057T 345.00 - SUNNYSIDE 345KV CKT 1	717	789	0.17637	113.6996	CANADIAN RIVER () 345/138/13.8KV TRANSFORMER CKT 1
FDNS	00NR	0	16WP	G15_093	FROM->TO	G14-057T 345.00 - SUNNYSIDE 345KV CKT 1	717	789	0.17637	113.6996	CANADIAN RIVER () 345/138/13.8KV TRANSFORMER CKT 1
FDNS	00NR	0	16WP	G15_093	FROM->TO	G14-057T 345.00 - SUNNYSIDE 345KV CKT 1	717	789	0.17824	113.6995	NORTHWEST - SPRING CREEK 345KV CKT 1
FDNS	00NR	0	16WP	G15_093	FROM->TO	G14-057T 345.00 - SUNNYSIDE 345KV CKT 1	717	789	0.17841	113.6963	MOREWOOD SW - NINE MILE 138KV CKT 1
FDNS	00NR	0	16WP	G15_093	FROM->TO	G14-057T 345.00 - SUNNYSIDE 345KV CKT 1	717	789	0.17565	113.6922	ROCKY POINT - SPRINGDALE 138KV CKT 1
FDNS	00NR	0	16WP	G15_093	FROM->TO	G14-057T 345.00 - SUNNYSIDE 345KV CKT 1	717	789	0.17824	113.6897	SOONER - SPRING CREEK 345KV CKT 1
FDNS	00NR	0	20WP	G15_093	FROM->TO	G14-057T 345.00 - SUNNYSIDE 345KV CKT 1	717	789	0.17625	113.687	CANEYRV7 345.00 - LATHAMS7 345.00 345KV CKT 1
FDNS	00NR	0	16WP	G15_093	FROM->TO	G14-057T 345.00 - SUNNYSIDE 345KV CKT 1	717	789	0.17626	113.679	INDEPENDENCE 500/26.0KV TRANSFORMER CKT 1
FDNS	00NR	0	16WP	G15_093	FROM->TO	G14-057T 345.00 - SUNNYSIDE 345KV CKT 1	717	789	0.17626	113.6766	BURLINGTON NO1 + NO 2 + NO 3 161/20.0KV TRANSFORMER CKT 1
FDNS	00NR	0	20WP	G15_093	FROM->TO	G14-057T 345.00 - SUNNYSIDE 345KV CKT 1	717	789	0.17581	113.676	GEN509408 1-WILKES #2
FDNS	00NR	0	16WP	G15_093	FROM->TO	G14-057T 345.00 - SUNNYSIDE 345KV CKT 1	717	789	0.17635	113.6747	ALTUS JUNCTION - RUSSELL 138KV CKT 1
FDNS	00NR	0	16WP	G15_093	FROM->TO	G14-057T 345.00 - SUNNYSIDE 345KV CKT 1	717	789	0.17635	113.6747	ALTUS JUNCTION - RUSSELL 138KV CKT 1
FDNS	00NR	0	16WP	G15_093	FROM->TO	G14-057T 345.00 - SUNNYSIDE 345KV CKT 1	717	789	0.17613	113.6724	NORTHWEST TEXARKANA - WELSH 345KV CKT 1
FDNS	00NR	0	16WP	G15_093	FROM->TO	G14-057T 345.00 - SUNNYSIDE 345KV CKT 1	717	789	0.17613	113.6724	NORTHWEST TEXARKANA - WELSH 345KV CKT 1
FDNS	00NR	0	16WP	G15_093	FROM->TO	G14-057T 345.00 - SUNNYSIDE 345KV CKT 1	717	789	0.17626	113.6705	GEN514805 1-SOONER UNIT 1
FDNS	00NR	0	16WP	G15_093	FROM->TO	G14-057T 345.00 - SUNNYSIDE 345KV CKT 1	717	789	0.17626	113.6637	GEN514806 1-SOONER UNIT 2
FDNS	00NR	0	20WP	G15_093	FROM->TO	G14-057T 345.00 - SUNNYSIDE 345KV CKT 1	717	789	0.1763	113.6598	PAOLI - PAYNE 138.00 138KV CKT 1
FDNS	00NR	0	20WP	G15_093	FROM->TO	G14-057T 345.00 - SUNNYSIDE 345KV CKT 1	717	789	0.17552	113.6598	ELDORADO EHV - SHERIDAN EHV 500KV CKT 1
FDNS	00NR	0	16WP	G15_093	FROM->TO	G14-057T 345.00 - SUNNYSIDE 345KV CKT 1	717	789	0.17633	113.6579	KEO EHV - WEST MEMPHIS 500 500KV CKT 1
FDNS	00NR	0	16WP	G15_093	FROM->TO	G14-057T 345.00 - SUNNYSIDE 345KV CKT 1	717	789	0.17645	113.6508	CHAMBER SPRINGS - CLARKSVILLE 345KV CKT 1
FDNS	00NR	0	20WP	G15_093	FROM->TO	G14-057T 345.00 - SUNNYSIDE 345KV CKT 1	717	789	0.17581	113.6501	GEN506754 1-LEBROCK STEAM 1
FDNS	00NR	0	16WP	G15_093	FROM->TO	G14-057T 345.00 - SUNNYSIDE 345KV CKT 1	717	789	0.17626	113.6474	GEN562078 1-G11_051_3 0.6900
FDNS	00NR	0	20WP	G15_093	FROM->TO	G14-057T 345.00 - SUNNYSIDE 345KV CKT 1	717	789	0.17682	113.6428	ANADARKO - GEORGIA 138KV CKT 1
FDNS	00NR	0	16WP	G15_093	FROM->TO	G14-057T 345.00 - SUNNYSIDE 345KV CKT 1	717	789	0.17626	113.6379	P12:230:UMZB:# 112 #: NU IN SD. NU-RCDC & DRY CREEK XFMR
FDNS	00NR	0	16WP	G15_093	FROM->TO	G14-057T 345.00 - SUNNYSIDE 345KV CKT 1	717	789	0.17626	113.6365	RCDC EAST 4230.00 - RED CEDAR DC 230KV CKT 1
FDNS	00NR	0	16WP	G15_093	FROM->TO	G14-057T 345.00 - SUNNYSIDE 345KV CKT 1	717	789	0.17486	113.6334	JOLLYVILLE - SULPHR 4 138.00 138KV CKT 1
FDNS	00NR	0	16WP	G15_093	FROM->TO	G14-057T 345.00 - SUNNYSIDE 345KV CKT 1	717	789	0.17626	113.6189	GEN562802 1-G15039_3 0.3570
FDNS	00NR	0	20WP	G15_093	FROM->TO	G14-057T 345.00 - SUNNYSIDE 345KV CKT 1	717	789	0.17583	113.6137	P12:138:AEPW:112GORE4:L.E.S.-4
FDNS	00NR	0	16WP	G15_093	FROM->TO	G14-057T 345.00 - SUNNYSIDE 345KV CKT 1	717	789	0.17626	113.6124	GEN524285 1-WILDORADO WIND GEN
FDNS	00NR	0	20WP	G15_093	FROM->TO	G14-057T 345.00 - SUNNYSIDE 345KV CKT 1	717	789	0.17835	113.6016	CIVIT - PAOLI 138KV CKT 1
FDNS	00NR	0	20WP	G15_093	FROM->TO	G14-057T 345.00 - SUNNYSIDE 345KV CKT 1	717	789	0.17743	113.5945	MATHWSN7 345.00 - NORTHWEST 345KV CKT 1
FDNS	00NR	0	16WP	G15_093	FROM->TO	G14-057T 345.00 - SUNNYSIDE 345KV CKT 1	717	789	0.17626	113.5926	GEN524295 1-SPNSPUR_WND10.6900
FDNS	00NR	0	16WP	G15_093	FROM->TO	G14-057T 345.00 - SUNNYSIDE 345KV CKT 1	717	789	0.17626	113.5923	GEN562587 1-G14_056_3 0.6900
FDNS	00NR	0	16WP	G15_093	FROM->TO	G14-057T 345.00 - SUNNYSIDE 345KV CKT 1	717	789	0.17626	113.5856	GEN560331 1-G10-46 13.800
FDNS	00NR	0	16WP	G15_093	FROM->TO	G14-057T 345.00 - SUNNYSIDE 345KV CKT 1	717	789	0.17549	113.5745	ARKANSAS NUCLEAR ONE - FT SMITH 500KV CKT 1
FDNS	00NR	0	16WP	G15_093	FROM->TO	G14-057T 345.00 - SUNNYSIDE 345KV CKT 1	717	789	0.17549	113.5745	ARKANSAS NUCLEAR ONE - FT SMITH 500KV CKT 1
FDNSLock	00NR	0	16WP	G15_093	FROM->TO	G14-057T 345.00 - SUNNYSIDE 345KV CKT 1	717	789	0.17626	113.5733	GEN629072 4-LANSING GENERATOR FOR UNITS NO4 EIA CODE 1
FDNS	00NR	0	20WP	G15_093	FROM->TO	G14-057T 345.00 - SUNNYSIDE 345KV CKT 1	717	789	0.17581	113.5691	GEN336252 1-NINEMILE POINT UNIT#5
FDNS	00NR	0	16WP	G15_093	FROM->TO	G14-057T 345.00 - SUNNYSIDE 345KV CKT 1	717	789	0.17486	113.5649	JOLLYVILLE - KERR MCGEE CIMARRON 138KV CKT 1
FDNS	00NR	0	16WP	G15_093	FROM->TO	G14-057T 345.00 - SUNNYSIDE 345KV CKT 1	717	789	0.17626	113.5641	GEN562882 1-G15047_3 0.6900
FDNS	00NR	0	16WP	G15_093	FROM->TO	G14-057T 345.00 - SUNNYSIDE 345KV CKT 1	717	789	0.17841	113.5619	BEARCAT 138.00 - NINE MILE 138KV CKT 1
FDNS	00NR	0	16WP	G15_093	FROM->TO	G14-057T 345.00 - SUNNYSIDE 345KV CKT 1	717	789	0.17626	113.555	GEN562269 1-G12-020-1 0.6900
FDNS	00NR	0	16WP	G15_093	FROM->TO	G14-057T 345.00 - SUNNYSIDE 345KV CKT 1	717	789	0.17626	113.5529	GEN657749 1-YOUNG 1 GENERATOR
FDNS	00NR	0	20WP	G15_093	FROM->TO	G14-057T 345.00 - SUNNYSIDE 345KV CKT 1	717	789	0.17682	113.5467	FLETCHER - GEORGIA 138KV CKT 1
FDNS	00NR	0	20WP	G15_093	FROM->TO	G14-057T 345.00 - SUNNYSIDE 345KV CKT 1	717	789	0.17972	113.5386	P12:138:AEPW-OGE:CORNVIL4:MAUD 4
FDNS	00NR	0	20WP	G15_093	FROM->TO	G14-057T 345.00 - SUNNYSIDE 345KV CKT 1	717	789	0.17581	113.5228	FRONTIER - GRIMES 345KV CKT 1
FDNS	00NR	0	16WP	G15_093	FROM->TO	G14-057T 345.00 - SUNNYSIDE 345KV CKT 1	717	789	0.17486	113.5143	ARBWIND4 138.00 - KERR MCGEE CIMARRON 138KV CKT 1
FDNS	00NR	0	20WP	G15_093	FROM->TO	G14-057T 345.00 - SUNNYSIDE 345KV CKT 1	717	789	0.17581	113.5117	GEN335204 1-NELSON UNIT 4
FDNS	00NR	0	16WP	G15_093	FROM->TO	G14-057T 345.00 - SUNNYSIDE 345KV CKT 1	717	789	0.17626	113.51	GEN562270 1-G12-020-2 0.6900
FDNS	00NR	0	20WP	G15_093	FROM->TO	G14-057T 345.00 - SUNNYSIDE 345KV CKT 1	717	789	0.17581	113.5052	GEN503909 1-FULTONU1 1 16.000
FDNS	00NR	0	20WP	G15_093	FROM->TO	G14-057T 345.00 - SUNNYSIDE 345KV CKT 1	717	789	0.17581	113.5045	GEN334441 1-SABINE UNIT 5
FDNS	00NR	0	16WP	G15_093	FROM->TO	G14-057T 345.00 - SUNNYSIDE 345KV CKT 1	717	789	0.17626	113.5044	GEN562812 1-G15040_3 0.3570
FDNS	00NR	0	20WP	G15_093	FROM->TO	G14-057T 345.00 - SUNNYSIDE 345KV CKT 1	717	789	0.17689	113.5041	EMPIRE - FLETCHER 138KV CKT 1
FDNS	00NR	0	16WP	G15_093	FROM->TO	G14-057T 345.00 - SUNNYSIDE 345KV CKT 1	717	789	0.17672	113.503	P12:138:AEPW:112GORE4:SNYDER-4
FDNS	00NR	0	16WP	G15_093	FROM->TO	G14-057T 345.00 - SUNNYSIDE 345KV CKT 1	717	789	0.17792	113.5027	CLARKSVILLE - MUSKOGEE 345KV CKT 1
FDNS	00NR	0	16WP	G15_093	FROM->TO	G14-057T 345.00 - SUNNYSIDE 345KV CKT 1	717	789	0.17792	113.5027	CLARKSVILLE - MUSKOGEE 345KV CKT 1
FDNS	00NR	0	16WP	G15_093	FROM->TO	G14-057T 345.00 - SUNNYSIDE 345KV CKT 1	717	789	0.17626	113.5015	GEN563102 1-G15075_3 0.5500
FDNS	00NR	0	16WP	G15_093	FROM->TO	G14-057T 345.00 - SUNNYSIDE 345KV CKT 1	717	789	0.17626	113.4982	GEN562974 1-G15060_5 0.6900
FDNS	00NR	0	16WP	G15_093	FROM->TO	G14-057T 345.00 - SUNNYSIDE 345KV CKT 1	717	789	0.17626	113.4946	GEN563062 1-G15071_3 0.6900
FDNS	00NR	0	16WP	G15_093	FROM->TO	G14-057T 345.00 - SUNNYSIDE 345KV CKT 1	717	789	0.17626	113.4938	GEN563132 1-G15078_3 0.3570
FDNS	00NR	0	16WP	G15_093	FROM->TO	G14-057T 345.00 - SUNNYSIDE 345KV CKT 1	717	789	0.17626	113.4887	GEN562973 1-G15060_4 0.6900
FDNS	00NR	0	20WP	G15_093	FROM->TO	G14-057T 345.00 - SUNNYSIDE 345KV CKT 1	717	789	0.17639	113.4836	TUPELO - TUPELO TAP 138KV CKT 1
FDNSLock	00NR	0	16WP	G15_093	FROM->TO	G14-057T 345.00 - SUNNYSIDE 345KV CKT 1	717	789	0.17626	113.4834	GEN681522 3-GENOA 3
FDNS	00NR	0	16WP	G15_093	FROM->TO	G14-057T 345.00 - SUNNYSIDE 345KV CKT 1	717	789	0.17841	113.4794	P12:138:WFEC:MSL14
FDNS	00NR	0	20WP	G15_093	FROM->TO	G14-057T 345.00 - SUNNYSIDE 345KV CKT 1	717	789	0.17625	113.4741	LATHAMS7 345.00 - ROSE HILL 345KV CKT 1
FDNS	00NR	0	16WP	G15_093	FROM->TO	G14-057T 345.00 - SUNNYSIDE 345KV CKT 1	717	789	0.17841	113.4666	BEARCAT 138.00 - MOORELAND 138KV CKT 1
FDNS	00NR	0	20WP	G15_093	FROM->TO	G14-057T 345.00 - SUNNYSIDE 345KV CKT 1	717	789	0.17972	113.4632	BLANCHARD - CORNVILLE 138KV CKT 1
FDNS	00NR	0	20WP	G15_093	FROM->TO	G14-057T 345.00 - SUNNYSIDE 345KV CKT 1	717	789	0.17835	113.4605	CIVIT - STRATFORD 138KV CKT 1
FDNS	00NR	0	16WP	G15_093	FROM->TO	G14-057T 345.00 - SUNNYSIDE 345KV CKT 1	717	789	0.17596	113.4561	BROWN - RUSSETT 138KV CKT 1
FDNS	00NR	0	16WP	G15_093	FROM->TO	G14-057T 345.00 - SUNNYSIDE 345KV CKT 1	717	789	0.17503	113.4351	CHICKASAW - TOTAL 138KV CKT 1
FDNS	00NR	0	16WP	G15_093	FROM->TO	G14-057T 345.00 - SUNNYSIDE 345KV CKT 1	717	789	0.1759	113.4301	RUSSETT - SPRINGDALE 138KV CKT 1
FDNS	00NR	0	16WP	G15_093	FROM->TO	G14-057T 345.00 - SUNNYSIDE 345KV CKT 1	717	789	0.17626	113.4267	GEN345671 2-1RUSH G2 18.000
FDNS	00NR	0	16WP	G15_093	FROM->TO	G14-057T 345.00 - SUNNYSIDE 345KV CKT 1	717	789	0.17626	113.4248	GEN345670 1-1RUSH G1 18.000
FDNS	00NR	0	20WP	G15_093	FROM->TO	G14-057T 345.00 - SUNNYSIDE 345KV CKT 1	717	789	0.17689	113.4227	COMANCHE - EMPIRE 138KV CKT 1

SOLUTION	GROUP	SCENARIO	SEASON	SOURCE	DIRECTION	MONITORED ELEMENT	RATEA (MVA)	RATEB(MVA)	TDF	TC%LOADING (% MVA)	CONTINGENCY
FDNS	00NR	0	20WP	G15_093	FROM->TO	G14-057T 345.00 - SUNNYSIDE 345KV CKT 1	717	789	0.17568	113.4172	LAYFLD8 500.00 - MOUNT OLIVE 500KV CKT 1
FDNS	00NR	0	20WP	G15_093	FROM->TO	G14-057T 345.00 - SUNNYSIDE 345KV CKT 1	717	789	0.17568	113.4172	LAYFLD8 500.00 - MOUNT OLIVE 500KV CKT 1
FDNS	00NR	0	16WP	G15_093	FROM->TO	G14-057T 345.00 - SUNNYSIDE 345KV CKT 1	717	789	0.17626	113.4132	GEN526331 1-JONES GEN #1 22 KV
FDNS	00NR	0	16WP	G15_093	FROM->TO	G14-057T 345.00 - SUNNYSIDE 345KV CKT 1	717	789	0.17626	113.4131	GEN526332 1-JONES GEN #2 21 KV
FDNS	00NR	0	16WP	G15_093	FROM->TO	G14-057T 345.00 - SUNNYSIDE 345KV CKT 1	717	789	0.17626	113.4028	GEN560105 1-G08-22 0.6900
FDNS	00NR	0	16WP	G15_093	FROM->TO	G14-057T 345.00 - SUNNYSIDE 345KV CKT 1	717	789	0.17626	113.3993	GEN562550 1-G14_040_3 0.6900
FDNS	00NR	0	16WP	G15_093	FROM->TO	G14-057T 345.00 - SUNNYSIDE 345KV CKT 1	717	789	0.17543	113.3982	ROCKY POINT - SUNNYSIDE 138KV CKT 1
FDNS	00NR	0	20WP	G15_093	FROM->TO	G14-057T 345.00 - SUNNYSIDE 345KV CKT 1	717	789	0.17581	113.3982	GEN336251 1-NINEMILE POINT UNIT#4
FDNS	00NR	0	20WP	G15_093	FROM->TO	G14-057T 345.00 - SUNNYSIDE 345KV CKT 1	717	789	0.17619	113.393	G1524G1525 345.00 - THISTLE7 345.00 345KV CKT 1
FDNS	00NR	0	20WP	G15_093	FROM->TO	G14-057T 345.00 - SUNNYSIDE 345KV CKT 1	717	789	0.17619	113.393	G1524G1525 345.00 - THISTLE7 345.00 345KV CKT 2
FDNS	00NR	0	20WP	G15_093	FROM->TO	G14-057T 345.00 - SUNNYSIDE 345KV CKT 1	717	789	0.17692	113.3929	FINNEY SWITCHING STATION - HOLCOMB 345KV CKT 1
FDNS	00NR	0	20WP	G15_093	FROM->TO	G14-057T 345.00 - SUNNYSIDE 345KV CKT 1	717	789	0.17692	113.3929	FINNEY SWITCHING STATION - HOLCOMB 345KV CKT 1
FDNS	00NR	0	20WP	G15_093	FROM->TO	G14-057T 345.00 - SUNNYSIDE 345KV CKT 1	717	789	0.17581	113.3927	GEN334071 1-LEWIS CREEK 2
FDNS	00NR	0	16WP	G15_093	FROM->TO	G14-057T 345.00 - SUNNYSIDE 345KV CKT 1	717	789	0.17596	113.3879	RUSSETT - RUSSETT 138KV CKT 1
FDNS	00NR	0	20WP	G15_093	FROM->TO	G14-057T 345.00 - SUNNYSIDE 345KV CKT 1	717	789	0.17581	113.3843	GEN334070 1-LEWIS CREEK 1
FDNS	00NR	0	16WP	G15_093	FROM->TO	G14-057T 345.00 - SUNNYSIDE 345KV CKT 1	717	789	0.17626	113.3775	4SIOUX 1 138.00 138/18.0KV TRANSFORMER CKT 1
FDNS	00NR	0	16WP	G15_093	FROM->TO	G14-057T 345.00 - SUNNYSIDE 345KV CKT 1	717	789	0.17622	113.3694	P12:138:WFEC:MSL07
FDNS	00NR	0	16WP	G15_093	FROM->TO	G14-057T 345.00 - SUNNYSIDE 345KV CKT 1	717	789	0.17622	113.3694	P12:138:WFEC-AEPW:HUGOPP4:ATOKA--4
FDNS	00NR	0	20WP	G15_093	FROM->TO	G14-057T 345.00 - SUNNYSIDE 345KV CKT 1	717	789	0.17581	113.3642	P12:161:AEPW-SWPA:BEAVER5:EROGERS5
FDNS	00NR	0	20WP	G15_093	FROM->TO	G14-057T 345.00 - SUNNYSIDE 345KV CKT 1	717	789	0.17581	113.3603	GEN509392 G2-ARSENAL HILL GENS #3 (STALL)
FDNS	00NR	0	20WP	G15_093	FROM->TO	G14-057T 345.00 - SUNNYSIDE 345KV CKT 1	717	789	0.17581	113.3602	GEN509391 G1-ARSENAL HILL GENS #2 (STALL)
FDNS	00NR	0	16WP	G15_093	FROM->TO	G14-057T 345.00 - SUNNYSIDE 345KV CKT 1	717	789	0.17626	113.3591	GEN511962 2-RKYRDGW2-1 0.7000
FDNS	00NR	0	20WP	G15_093	FROM->TO	G14-057T 345.00 - SUNNYSIDE 345KV CKT 1	717	789	0.17581	113.3581	GEN509393 S1-ARSENAL HILL GENS #4 (STALL)
FDNS	00NR	0	16WP	G15_093	FROM->TO	G14-057T 345.00 - SUNNYSIDE 345KV CKT 1	717	789	0.17626	113.3577	GEN521112 1-ORME3 13.800
FDNS	00NR	0	16WP	G15_093	FROM->TO	G14-057T 345.00 - SUNNYSIDE 345KV CKT 1	717	789	0.17626	113.3553	CLAY BOSWELL 230/20.9KV TRANSFORMER CKT 1
FDNS	00NR	0	16WP	G15_093	FROM->TO	G14-057T 345.00 - SUNNYSIDE 345KV CKT 1	717	789	0.17626	113.3532	GEN527882 1-CUNNINGHAM GEN #2 20 KV
FDNS	00NR	0	20WP	G15_093	FROM->TO	G14-057T 345.00 - SUNNYSIDE 345KV CKT 1	717	789	0.17581	113.3465	GEN334433 1-SABINE UNIT 3
FDNS	00NR	0	20WP	G15_093	FROM->TO	G14-057T 345.00 - SUNNYSIDE 345KV CKT 1	717	789	0.17835	113.3428	OIL CENTER - STRATFORD 138KV CKT 1
FDNS	00NR	0	16WP	G15_093	FROM->TO	G14-057T 345.00 - SUNNYSIDE 345KV CKT 1	717	789	0.17626	113.3369	GEN562892 1-G15048_3 0.6900
FDNS	00NR	0	20WP	G15_093	FROM->TO	G14-057T 345.00 - SUNNYSIDE 345KV CKT 1	717	789	0.17581	113.3339	GEN337653 1-WHITE BLUFF UNIT #2
FDNS	00NR	0	16WP	G15_093	FROM->TO	G14-057T 345.00 - SUNNYSIDE 345KV CKT 1	717	789	0.17443	113.3312	ARDMORE WEST - CARTER 138KV CKT 1
FDNS	00NR	0	16WP	G15_093	FROM->TO	G14-057T 345.00 - SUNNYSIDE 345KV CKT 1	717	789	0.17626	113.3247	GEN562512 1-G14_020_3 0.6900
FDNS	00NR	0	20WP	G15_093	FROM->TO	G14-057T 345.00 - SUNNYSIDE 345KV CKT 1	717	789	0.17581	113.323	GEN336831 1-BAXTER WILSON SES
FDNS	00NR	0	16WP	G15_093	FROM->TO	G14-057T 345.00 - SUNNYSIDE 345KV CKT 1	717	789	0.17626	113.3179	GEN672321 1-SHAND GENERATOR 1
FDNS	00NR	0	16WP	G15_093	FROM->TO	G14-057T 345.00 - SUNNYSIDE 345KV CKT 1	717	789	0.17626	113.3158	GEN563192 1-G15084_3 0.5500
FDNS	00NR	0	20WP	G15_093	FROM->TO	G14-057T 345.00 - SUNNYSIDE 345KV CKT 1	717	789	0.17659	113.3115	P12:138:AEPW:S.W.S.-4:L.E.S.-4
FDNS	00NR	0	16WP	G15_093	FROM->TO	G14-057T 345.00 - SUNNYSIDE 345KV CKT 1	717	789	0.17626	113.3067	GEN511853 1-COMANCHE #3
FDNS	00NR	0	20WP	G15_093	FROM->TO	G14-057T 345.00 - SUNNYSIDE 345KV CKT 1	717	789	0.17581	113.3019	P12:161:AEPW:DYESS5:ELMSPRNG:TONTITN5
FDNS	00NR	0	20WP	G15_093	FROM->TO	G14-057T 345.00 - SUNNYSIDE 345KV CKT 1	717	789	0.17634	113.2967	DUNCAN (DUNCAN) 138/69/13.8KV TRANSFORMER CKT 1
FDNS	00NR	0	20WP	G15_093	FROM->TO	G14-057T 345.00 - SUNNYSIDE 345KV CKT 1	717	789	0.17634	113.2967	DUNCAN (DUNCAN) 138/69/13.8KV TRANSFORMER CKT 1
FDNS	00NR	0	16WP	G15_093	FROM->TO	G14-057T 345.00 - SUNNYSIDE 345KV CKT 1	717	789	0.17626	113.2937	GEN672310 1-POPLAR RIVER GENERATOR 1
FDNS	00NR	0	16WP	G15_093	FROM->TO	G14-057T 345.00 - SUNNYSIDE 345KV CKT 1	717	789	0.17626	113.2937	GEN672311 2-POPLAR RIVER GENERATOR 2
FDNS	00NR	0	16WP	G15_093	FROM->TO	G14-057T 345.00 - SUNNYSIDE 345KV CKT 1	717	789	0.17644	113.2933	P12:138:WFEC:MSL16
FDNS	00NR	0	16WP	G15_093	FROM->TO	G14-057T 345.00 - SUNNYSIDE 345KV CKT 1	717	789	0.17614	113.2886	P12:138:WFEC-AEPW:GOLDENSW4:CRAIGJT4
FDNS	00NR	0	16WP	G15_093	FROM->TO	G14-057T 345.00 - SUNNYSIDE 345KV CKT 1	717	789	0.17626	113.2851	GEN672306 6-BOUNDARY DAM GENERATOR 6
FDNS	00NR	0	16WP	G15_093	FROM->TO	G14-057T 345.00 - SUNNYSIDE 345KV CKT 1	717	789	0.17447	113.2851	SUNNYSIDE (SUNNYSD5) 345/138/13.8KV TRANSFORMER CKT 1
FDNS	00NR	0	20WP	G15_093	FROM->TO	G14-057T 345.00 - SUNNYSIDE 345KV CKT 1	717	789	0.17581	113.2821	GEN337911 1-ARKANSAS NUCLEAR ONE UNIT #2
FDNS	00NR	0	20WP	G15_093	FROM->TO	G14-057T 345.00 - SUNNYSIDE 345KV CKT 1	717	789	0.17581	113.2788	GEN515040 1-SEMINOLE 1G
FDNS	00NR	0	20WP	G15_093	FROM->TO	G14-057T 345.00 - SUNNYSIDE 345KV CKT 1	717	789	0.17743	113.2722	G14_038T 345.00 - Hitchland Interchange 345KV CKT 1
FDNS	00NR	0	20WP	G15_093	FROM->TO	G14-057T 345.00 - SUNNYSIDE 345KV CKT 1	717	789	0.17581	113.2716	GEN334030 1-FRONTIER UNIT 1
FDNS	00NR	0	16WP	G15_093	FROM->TO	G14-057T 345.00 - SUNNYSIDE 345KV CKT 1	717	789	0.17626	113.271	GEN344895 2-1LAB G2 20.000
FDNS	00NR	0	20WP	G15_093	FROM->TO	G14-057T 345.00 - SUNNYSIDE 345KV CKT 1	717	789	0.17581	113.2693	GEN334031 1-FRONTIER UNIT 2
FDNS	00NR	0	16WP	G15_093	FROM->TO	G14-057T 345.00 - SUNNYSIDE 345KV CKT 1	717	789	0.17626	113.2581	GEN523461 1-BLACKHAWK GEN #1
FDNS	00NR	0	16WP	G15_093	FROM->TO	G14-057T 345.00 - SUNNYSIDE 345KV CKT 1	717	789	0.17626	113.258	GEN523462 1-BLACKHAWK GEN #2
FDNS	00NR	0	20WP	G15_093	FROM->TO	G14-057T 345.00 - SUNNYSIDE 345KV CKT 1	717	789	0.17856	113.2548	TUTTLE - TUTTLE CONOCO TAP 138KV CKT 1
FDNS	00NR	0	16WP	G15_093	FROM->TO	G14-057T 345.00 - SUNNYSIDE 345KV CKT 1	717	789	0.17626	113.2537	GEN511852 1-COMANCHE #2
FDNS	00NR	0	20WP	G15_093	FROM->TO	G14-057T 345.00 - SUNNYSIDE 345KV CKT 1	717	789	0.17583	113.2501	P12:138:AEPW:CATOOSA4:T.S.E.-4
FDNS	00NR	0	20WP	G15_093	FROM->TO	G14-057T 345.00 - SUNNYSIDE 345KV CKT 1	717	789	0.17972	113.2433	BLANCHARD - MAUD 138KV CKT 1
FDNS	00NR	0	16WP	G15_093	FROM->TO	G14-057T 345.00 - SUNNYSIDE 345KV CKT 1	717	789	0.17626	113.2389	GEN344896 3-1LAB G3 20.000
FDNS	00NR	0	16WP	G15_093	FROM->TO	G14-057T 345.00 - SUNNYSIDE 345KV CKT 1	717	789	0.17626	113.2375	GEN344894 1-1LAB G1 20.000
FDNS	00NR	0	16WP	G15_093	FROM->TO	G14-057T 345.00 - SUNNYSIDE 345KV CKT 1	717	789	0.17626	113.2361	GEN344897 4-1LAB G4 20.000
FDNS	00NR	0	20WP	G15_093	FROM->TO	G14-057T 345.00 - SUNNYSIDE 345KV CKT 1	717	789	0.17555	113.2345	FULTON 115 - HOPE 115KV CKT 1
FDNS	00NR	0	20WP	G15_093	FROM->TO	G14-057T 345.00 - SUNNYSIDE 345KV CKT 1	717	789	0.17555	113.2345	FULTON 115 - HOPE 115KV CKT 1
FDNS	00NR	0	20WP	G15_093	FROM->TO	G14-057T 345.00 - SUNNYSIDE 345KV CKT 1	717	789	0.17769	113.2314	P12:138:AEPW-OGE:WTH_JCT4:JENSEN4
FDNS	00NR	0	20WP	G15_093	FROM->TO	G14-057T 345.00 - SUNNYSIDE 345KV CKT 1	717	789	0.17581	113.2306	GEN337652 1-WHITE BLUFF UNIT #1
FDNS	00NR	0	20WP	G15_093	FROM->TO	G14-057T 345.00 - SUNNYSIDE 345KV CKT 1	717	789	0.17581	113.2297	GEN501811 1-RODEMACHER UNIT 1
FDNS	00NR	0	20WP	G15_093	FROM->TO	G14-057T 345.00 - SUNNYSIDE 345KV CKT 1	717	789	0.17707	113.2296	P12:138:AEPW:CORNVIL4:DUNCAN-4
FDNS	00NR	0	20WP	G15_093	FROM->TO	G14-057T 345.00 - SUNNYSIDE 345KV CKT 1	717	789	0.17581	113.2154	GEN506752 1-LEBROCK GAS 1
FDNS	00NR	0	16WP	G15_093	FROM->TO	G14-057T 345.00 - SUNNYSIDE 345KV CKT 1	717	789	0.17443	113.2152	ARDMORE WEST - UNIROYAL 138KV CKT 1
FDNS	00NR	0	20WP	G15_093	FROM->TO	G14-057T 345.00 - SUNNYSIDE 345KV CKT 1	717	789	0.17581	113.2151	GEN506753 1-LEBROCK GAS 2
FDNS	00NR	0	20WP	G15_093	FROM->TO	G14-057T 345.00 - SUNNYSIDE 345KV CKT 1	717	789	0.17581	113.212	GEN300015 1-1SGPDEL 18.000
FDNS	00NR	0	20WP	G15_093	FROM->TO	G14-057T 345.00 - SUNNYSIDE 345KV CKT 1	717	789	0.17581	113.2097	GEN515226 1-MUSKOGEE 6G
FDNS	00NR	0	20WP	G15_093	FROM->TO	G14-057T 345.00 - SUNNYSIDE 345KV CKT 1	717	789	0.17581	113.2086	GEN300003 1-THOMAS HILL UNIT 3
FDNS	00NR	0	16WP	G15_093	FROM->TO	G14-057T 345.00 - SUNNYSIDE 345KV CKT 1	717	789	0.17618	113.2023	P12:138:AEPW-SWPA:LONEOAK4:TUPELO4
FDNS	00NR	0	16WP	G15_093	FROM->TO	G14-057T 345.00 - SUNNYSIDE 345KV CKT 1	717	789	0.17618	113.2023	P12:138:WFEC:MSL06
FDNS	00NR	0	16WP	G15_093	FROM->TO	G14-057T 345.00 - SUNNYSIDE 345KV CKT 1	717	789	0.17551	113.2022	P12:138:OKGE:3TERM40
FDNS	00NR	0	20WP	G15_093	FROM->TO	G14-057T 345.00 - SUNNYSIDE 345KV CKT 1	717	789	0.17581	113.197	GEN336191 1-LITTLE GYPSY UNIT#3
FDNS	00NR	0	16WP	G15_093	FROM->TO	G14-057T 345.00 - SUNNYSIDE 345KV CKT 1	717	789	0.17626	113.1818	GEN563162 1-G15081_3 0.6900
FDNSLock	00NR	0	16WP	G15_093	FROM->TO	G14-057T 345.00 - SUNNYSIDE 345KV CKT 1	717	789	0.17626	113.1814	GEN681542 6-JP MADGETT

SOLUTION	GROUP	SCENARIO	SEASON	SOURCE	DIRECTION	MONITORED ELEMENT	RATEA (MVA)	RATEB(MVA)	TDF	TC%LOADING (% MVA)	CONTINGENCY
FDNS	00NR	0	16WP	G15_093	FROM->TO	G14-057T 345.00 - SUNNYSIDE 345KV CKT 1	717	789	0.17626	113.1784	GEN521110 1-ORME1 13.800
FDNS	00NR	0	16WP	G15_093	FROM->TO	G14-057T 345.00 - SUNNYSIDE 345KV CKT 1	717	789	0.17626	113.1784	GEN521111 1-ORME2 13.800
FDNS	00NR	0	20WP	G15_093	FROM->TO	G14-057T 345.00 - SUNNYSIDE 345KV CKT 1	717	789	0.17692	113.1781	P12:138:AEPW:CORNVIL4:S.W.S.-4
FDNS	00NR	0	20WP	G15_093	FROM->TO	G14-057T 345.00 - SUNNYSIDE 345KV CKT 1	717	789	0.17563	113.1775	6LAYFLD 230.00 - CARROLL 230KV CKT 1
FDNS	00NR	0	16WP	G15_093	FROM->TO	G14-057T 345.00 - SUNNYSIDE 345KV CKT 1	717	789	0.17626	113.1714	GEN562699 1-G15_018_3 0.6900
FDNS	00NR	0	16WP	G15_093	FROM->TO	G14-057T 345.00 - SUNNYSIDE 345KV CKT 1	717	789	0.17635	113.1706	G15085_T 138.00 - RUSSELL 138KV CKT 1
FDNS	00NR	0	16WP	G15_093	FROM->TO	G14-057T 345.00 - SUNNYSIDE 345KV CKT 1	717	789	0.17483	113.1705	CARTRCO4 138.00 - RATLIFF 138KV CKT 1
FDNS	00NR	0	20WP	G15_093	FROM->TO	G14-057T 345.00 - SUNNYSIDE 345KV CKT 1	717	789	0.17835	113.1702	LATTA JCT - OIL CENTER 138KV CKT 1
FDNS	00NR	0	20WP	G15_093	FROM->TO	G14-057T 345.00 - SUNNYSIDE 345KV CKT 1	717	789	0.17581	113.1681	GEN335614 1-WILLOW GLENN UNIT#4
FDNS	00NR	0	20WP	G15_093	FROM->TO	G14-057T 345.00 - SUNNYSIDE 345KV CKT 1	717	789	0.17856	113.162	CIMARRON - TUTTLE CONOCO TAP 138KV CKT 1
FDNS	00NR	0	16WP	G15_093	FROM->TO	G14-057T 345.00 - SUNNYSIDE 345KV CKT 1	717	789	0.17626	113.159	GEN563292 1-G15095_3 0.6900
FDNS	00NR	0	20WP	G15_093	FROM->TO	G14-057T 345.00 - SUNNYSIDE 345KV CKT 1	717	789	0.17581	113.1529	8DANIEL8 500.00 - MCKNIGHT 500KV CKT 1
FDNS	00NR	0	20WP	G15_093	FROM->TO	G14-057T 345.00 - SUNNYSIDE 345KV CKT 1	717	789	0.17993	113.1398	BAILEY4 138.00 - SUNSHINE CANYON 138KV CKT 1
FDNS	00NR	0	20WP	G15_093	FROM->TO	G14-057T 345.00 - SUNNYSIDE 345KV CKT 1	717	789	0.17601	113.1297	G15095_T 138.00 - ROSE_VALLEY 138.00 138KV CKT 1
FDNS	00NR	0	16WP	G15_093	FROM->TO	G14-057T 345.00 - SUNNYSIDE 345KV CKT 1	717	789	0.17868	113.1295	G15063_T 345.00 - MATHWSN7 345.00 345KV CKT 1
FDNS	00NR	0	20WP	G15_093	FROM->TO	G14-057T 345.00 - SUNNYSIDE 345KV CKT 1	717	789	0.17581	113.1261	GEN337910 1-ARKANSAS NUCLEAR ONE UNIT #1
FDNS	00NR	0	20WP	G15_093	FROM->TO	G14-057T 345.00 - SUNNYSIDE 345KV CKT 1	717	789	0.17581	113.1241	P12:161:AEPW:EROGERS5:ECNTRTN5
FDNS	00NR	0	20WP	G15_093	FROM->TO	G14-057T 345.00 - SUNNYSIDE 345KV CKT 1	717	789	0.17607	113.1228	BUCKNER7 345.00 - SPEARVILLE 345KV CKT 1
FDNS	00NR	0	20WP	G15_093	FROM->TO	G14-057T 345.00 - SUNNYSIDE 345KV CKT 1	717	789	0.17607	113.1228	BUCKNER7 345.00 - SPEARVILLE 345KV CKT 1
FDNS	00NR	0	20WP	G15_093	FROM->TO	G14-057T 345.00 - SUNNYSIDE 345KV CKT 1	717	789	0.17581	113.122	GEN303007 1-1BC2 U2
FDNS	00NR	0	20WP	G15_093	FROM->TO	G14-057T 345.00 - SUNNYSIDE 345KV CKT 1	717	789	0.17692	113.1199	FINNEY SWITCHING STATION - WALKTAP7 345.00 345KV CKT 1
FDNS	00NR	0	20WP	G15_093	FROM->TO	G14-057T 345.00 - SUNNYSIDE 345KV CKT 1	717	789	0.17692	113.1199	FINNEY SWITCHING STATION - WALKTAP7 345.00 345KV CKT 1
FDNS	00NR	0	16WP	G15_093	FROM->TO	G14-057T 345.00 - SUNNYSIDE 345KV CKT 1	717	789	0.17672	113.1195	CACHE - SNYDER 138KV CKT 1
FDNS	00NR	0	20WP	G15_093	FROM->TO	G14-057T 345.00 - SUNNYSIDE 345KV CKT 1	717	789	0.17581	113.1171	GEN336464 1-MICHOUD UNIT #3
FDNS	00NR	0	20WP	G15_093	FROM->TO	G14-057T 345.00 - SUNNYSIDE 345KV CKT 1	717	789	0.17581	113.116	GEN303006 1-1BC2 U1
FDNS	00NR	0	20WP	G15_093	FROM->TO	G14-057T 345.00 - SUNNYSIDE 345KV CKT 1	717	789	0.17692	113.1158	P12:138:AEPW:WTHWF4:CLINTJC4
FDNS	00NR	0	20WP	G15_093	FROM->TO	G14-057T 345.00 - SUNNYSIDE 345KV CKT 1	717	789	0.17581	113.1142	WHITE BLUFF 500/26.0KV TRANSFORMER CKT 1
FDNS	00NR	0	20WP	G15_093	FROM->TO	G14-057T 345.00 - SUNNYSIDE 345KV CKT 1	717	789	0.17634	113.1123	P12:69:WFEC-AEPW:COMANCH2:DUNCAN-2
FDNS	00NR	0	20WP	G15_093	FROM->TO	G14-057T 345.00 - SUNNYSIDE 345KV CKT 1	717	789	0.17581	113.1123	GEN515223 1-MUSKOGEE 4G
FDNS	00NR	0	20WP	G15_093	FROM->TO	G14-057T 345.00 - SUNNYSIDE 345KV CKT 1	717	789	0.17581	113.1123	GEN515225 1-MUSKOGEE 5G
FDNS	00NR	0	20WP	G15_093	FROM->TO	G14-057T 345.00 - SUNNYSIDE 345KV CKT 1	717	789	0.17581	113.1096	GEN562783 1-G15036_4 0.6900
FDNS	00NR	0	20WP	G15_093	FROM->TO	G14-057T 345.00 - SUNNYSIDE 345KV CKT 1	717	789	0.17581	113.1096	GEN562784 1-G15036_5 0.6900
FDNS	00NR	0	20WP	G15_093	FROM->TO	G14-057T 345.00 - SUNNYSIDE 345KV CKT 1	717	789	0.17588	113.1077	G15088_T 345.00 - MOORE 345KV CKT 1
FDNS	00NR	0	20WP	G15_093	FROM->TO	G14-057T 345.00 - SUNNYSIDE 345KV CKT 1	717	789	0.17621	113.1046	P12:69:AEPW-OMPA:COMANC-2:OMWALTR2
FDNS	00NR	0	20WP	G15_093	FROM->TO	G14-057T 345.00 - SUNNYSIDE 345KV CKT 1	717	789	0.17561	113.0985	BISMARK - HOT SPRINGS WEST BUS 115KV CKT 1
FDNS	00NR	0	20WP	G15_093	FROM->TO	G14-057T 345.00 - SUNNYSIDE 345KV CKT 1	717	789	0.1765	113.0959	CIMARRON - CZECH HALL 138KV CKT 1
FDNS	00NR	0	20WP	G15_093	FROM->TO	G14-057T 345.00 - SUNNYSIDE 345KV CKT 1	717	789	0.17589	113.0936	G15074_T 345.00 - HOYT 345KV CKT 1
FDNS	00NR	0	20WP	G15_093	FROM->TO	G14-057T 345.00 - SUNNYSIDE 345KV CKT 1	717	789	0.17571	113.0914	MC NIEL 500/115KV TRANSFORMER CKT 1
FDNS	00NR	0	20WP	G15_093	FROM->TO	G14-057T 345.00 - SUNNYSIDE 345KV CKT 1	717	789	0.17581	113.0857	GEN300010 1-ST FRANCIS UNIT 1
FDNS	00NR	0	20WP	G15_093	FROM->TO	G14-057T 345.00 - SUNNYSIDE 345KV CKT 1	717	789	0.17634	113.0853	DUNCAN - TOSCO 69KV CKT 1
FDNS	00NR	0	20WP	G15_093	FROM->TO	G14-057T 345.00 - SUNNYSIDE 345KV CKT 1	717	789	0.17692	113.0823	P12:138:AEPW:WTHWF4:WTH_SE4
FDNS	00NR	0	16WP	G15_093	FROM->TO	G14-057T 345.00 - SUNNYSIDE 345KV CKT 1	717	789	0.17626	113.0731	GEN563122 1-G15077_3 0.3850
FDNS	00NR	0	16WP	G15_093	FROM->TO	G14-057T 345.00 - SUNNYSIDE 345KV CKT 1	717	789	0.17626	113.0722	GEN661015 1-COYOTE
FDNS	00NR	0	20WP	G15_093	FROM->TO	G14-057T 345.00 - SUNNYSIDE 345KV CKT 1	717	789	0.17571	113.0703	HOT SPRINGS EHV - MAGNET COVE 500KV CKT 1
FDNS	00NR	0	20WP	G15_093	FROM->TO	G14-057T 345.00 - SUNNYSIDE 345KV CKT 1	717	789	0.17604	113.0696	CLEO CORNER - CLEOPLT4 138.00 138KV CKT 1
FDNS	00NR	0	20WP	G15_093	FROM->TO	G14-057T 345.00 - SUNNYSIDE 345KV CKT 1	717	789	0.17581	113.0607	GEN337041 1-GERALD ANDRUS
FDNS	00NR	0	20WP	G15_093	FROM->TO	G14-057T 345.00 - SUNNYSIDE 345KV CKT 1	717	789	0.17581	113.059	GEN505432 1-SIKESTON
FDNS	00NR	0	16WP	G15_093	FROM->TO	G14-057T 345.00 - SUNNYSIDE 345KV CKT 1	717	789	0.17626	113.0554	GEN562861 1-G15045_2 0.4800
FDNS	00NR	0	20WP	G15_093	FROM->TO	G14-057T 345.00 - SUNNYSIDE 345KV CKT 1	717	789	0.17581	113.0543	GEN303008 1-1BC2 U3
FDNS	00NR	0	20WP	G15_093	FROM->TO	G14-057T 345.00 - SUNNYSIDE 345KV CKT 1	717	789	0.1771	113.0517	CHISHOLM6 230.00 - ELK CITY 230KV 230KV CKT 1
FDNS	00NR	0	20WP	G15_093	FROM->TO	G14-057T 345.00 - SUNNYSIDE 345KV CKT 1	717	789	0.17601	113.0491	NOEL_SW 138.00 - ROSE_VALLEY 138.00 138KV CKT 1
FDNS	00NR	0	20WP	G15_093	FROM->TO	G14-057T 345.00 - SUNNYSIDE 345KV CKT 1	717	789	0.1771	113.0487	ELK CITY 230KV (ELKCTY-6) 230/138/13.8KV TRANSFORMER CKT 1
FDNS	00NR	0	20WP	G15_093	FROM->TO	G14-057T 345.00 - SUNNYSIDE 345KV CKT 1	717	789	0.1771	113.0487	ELK CITY 230KV (ELKCTY-6) 230/138/13.8KV TRANSFORMER CKT 1
FDNS	00NR	0	20WP	G15_093	FROM->TO	G14-057T 345.00 - SUNNYSIDE 345KV CKT 1	717	789	0.17604	113.0487	CLEOPLT4 138.00 - MEN TAP 138KV CKT 1
FDNS	00NR	0	20WP	G15_093	FROM->TO	G14-057T 345.00 - SUNNYSIDE 345KV CKT 1	717	789	0.17561	113.047	ALPINE AECC - BISMARK 115KV CKT 1
FDNS	00NR	0	16WP	G15_093	FROM->TO	G14-057T 345.00 - SUNNYSIDE 345KV CKT 1	717	789	0.17626	113.0454	GEN520811 1-ANADRK4
FDNS	00NR	0	20WP	G15_093	FROM->TO	G14-057T 345.00 - SUNNYSIDE 345KV CKT 1	717	789	0.17629	113.0419	CIMARRON - SARA 138KV CKT 1
FDNS	00NR	0	20WP	G15_093	FROM->TO	G14-057T 345.00 - SUNNYSIDE 345KV CKT 1	717	789	0.17604	113.0367	IMO TAP - MEN TAP 138KV CKT 1
FDNS	00NR	0	20WP	G15_093	FROM->TO	G14-057T 345.00 - SUNNYSIDE 345KV CKT 1	717	789	0.17581	113.0282	GEN300011 1-ST FRANCIS UNIT 2
FDNS	00NR	0	20WP	G15_093	FROM->TO	G14-057T 345.00 - SUNNYSIDE 345KV CKT 1	717	789	0.17581	113.0251	GEN336170 1-GULF OXY U4
FDNS	00NR	0	20WP	G15_093	FROM->TO	G14-057T 345.00 - SUNNYSIDE 345KV CKT 1	717	789	0.17582	113.0227	P12:138:AEPW:N.E.S.-4:CATOOSA4
FDNSLock	00NR	0	16WP	G15_093	FROM->TO	G14-057T 345.00 - SUNNYSIDE 345KV CKT 1	717	789	0.17626	113.0211	GEN532751 1-WOLF CREEK GENERATING STATION UNIT 1
FDNS	00NR	0	20WP	G15_093	FROM->TO	G14-057T 345.00 - SUNNYSIDE 345KV CKT 1	717	789	0.17445	113.0209	SEMINOLE - VANOSTP4 138.00 138KV CKT 1
FDNS	00NR	0	20WP	G15_093	FROM->TO	G14-057T 345.00 - SUNNYSIDE 345KV CKT 1	717	789	0.1765	113.0172	CZECH HALL - XEROX 138KV CKT 1
FDNS	00NR	0	20WP	G15_093	FROM->TO	G14-057T 345.00 - SUNNYSIDE 345KV CKT 1	717	789	0.17634	113.0167	COMANCHE TAP - TOSCO 69KV CKT 1
FDNS	00NR	0	20WP	G15_093	FROM->TO	G14-057T 345.00 - SUNNYSIDE 345KV CKT 1	717	789	0.17581	113.0167	NELSON 230/20.0KV TRANSFORMER CKT 1
FDNS	00NR	0	16WP	G15_093	FROM->TO	G14-057T 345.00 - SUNNYSIDE 345KV CKT 1	717	789	0.17644	113.0164	P12:138:WFEC:MSL15
FDNS	00NR	0	20WP	G15_093	FROM->TO	G14-057T 345.00 - SUNNYSIDE 345KV CKT 1	717	789	0.1765	113.0131	MORGAN - XEROX 138KV CKT 1
FDNS	00NR	0	20WP	G15_093	FROM->TO	G14-057T 345.00 - SUNNYSIDE 345KV CKT 1	717	789	0.17581	113.0062	GEN336801 1-BAXTER WILSON UNIT #1
FDNS	00NR	0	20WP	G15_093	FROM->TO	G14-057T 345.00 - SUNNYSIDE 345KV CKT 1	717	789	0.17561	112.9982	ALPINE AECC - AMITY SS 115KV CKT 1
FDNS	00NR	0	20WP	G15_093	FROM->TO	G14-057T 345.00 - SUNNYSIDE 345KV CKT 1	717	789	0.17441	112.9962	ARBWIND4 138.00 - CARTER 138KV CKT 1
FDNS	00NR	0	16WP	G15_093	FROM->TO	G14-057T 345.00 - SUNNYSIDE 345KV CKT 1	717	789	0.17443	112.9937	SUNNYSIDE - UNIROYAL 138KV CKT 1
FDNS	00NR	0	20WP	G15_093	FROM->TO	G14-057T 345.00 - SUNNYSIDE 345KV CKT 1	717	789	0.1765	112.9905	MORGAN - MUSTANG 138KV CKT 1
FDNS	00NR	0	20WP	G15_093	FROM->TO	G14-057T 345.00 - SUNNYSIDE 345KV CKT 1	717	789	0.1777	112.9897	WEATHERFORD JCT. - WEATHERFORD SOUTHEAST 138KV CKT 1
FDNS	00NR	0	20WP	G15_093	FROM->TO	G14-057T 345.00 - SUNNYSIDE 345KV CKT 1	717	789	0.1777	112.9897	WEATHERFORD JCT. - WEATHERFORD SOUTHEAST 138KV CKT 1
FDNS	00NR	0	20WP	G15_093	FROM->TO	G14-057T 345.00 - SUNNYSIDE 345KV CKT 1	717	789	0.17581	112.9775	8CAJUN2 500/24.0KV TRANSFORMER CKT 1
FDNS	00NR	0	20WP	G15_093	FROM->TO	G14-057T 345.00 - SUNNYSIDE 345KV CKT 1	717	789	0.17581	112.9766	GEN501910 1-ACADIA UNIT ST1
FDNS	00NR	0	16WP	G15_093	FROM->TO	G14-057T 345.00 - SUNNYSIDE 345KV CKT 1	717	789	0.17626	112.9741	GEN562992 1-G15063_3 0.6900
FDNS	00NR	0	20WP	G15_093	FROM->TO	G14-057T 345.00 - SUNNYSIDE 345KV CKT 1	717	789	0.17723	112.9676	ANADARKO - SEQUOYAHJ4 138.00 138KV CKT 1

SOLUTION	GROUP	SCENARIO	SEASON	SOURCE	DIRECTION	MONITORED ELEMENT	RATEA (MVA)	RATEB(MVA)	TDF	TC%LOADING (% MVA)	CONTINGENCY
FDNS	00NR	0	20WP	G15_093	FROM->TO	G14-057T 345.00 - SUNNYSIDE 345KV CKT 1	717	789	0.17723	112.9661	CORN TAP - SEQUOYAHJ4 138.00 138KV CKT 1
FDNS	00NR	0	20WP	G15_093	FROM->TO	G14-057T 345.00 - SUNNYSIDE 345KV CKT 1	717	789	0.17634	112.9645	COMANCHE - COMANCHE TAP 69KV CKT 1
FDNS	00NR	0	20WP	G15_093	FROM->TO	G14-057T 345.00 - SUNNYSIDE 345KV CKT 1	717	789	0.17993	112.9615	BAILEY4 138.00 - WESTMOORE 138KV CKT 1
FDNS	00NR	0	16WP	G15_093	FROM->TO	G14-057T 345.00 - SUNNYSIDE 345KV CKT 1	717	789	0.17626	112.9554	GEN657748 1-YOUNG 2 GENERATOR
FDNS	00NR	0	16WP	G15_093	FROM->TO	G14-057T 345.00 - SUNNYSIDE 345KV CKT 1	717	789	0.17725	112.9501	GRAPEVINE INTERCHANGE - STATELINE INTERCHANGE 230KV CKT 1
FDNS	00NR	0	16WP	G15_093	FROM->TO	G14-057T 345.00 - SUNNYSIDE 345KV CKT 1	717	789	0.17725	112.9501	GRAPEVINE INTERCHANGE - STATELINE INTERCHANGE 230KV CKT 1
FDNS	00NR	0	20WP	G15_093	FROM->TO	G14-057T 345.00 - SUNNYSIDE 345KV CKT 1	717	789	0.17639	112.95	P12:138:OKGE-AEPW:JENSEN4:REDROCKRD4
FDNS	00NR	0	20WP	G15_093	FROM->TO	G14-057T 345.00 - SUNNYSIDE 345KV CKT 1	717	789	0.17636	112.94	WALTERS - WALTERS 69KV CKT 1
FDNS	00NR	0	20WP	G15_093	FROM->TO	G14-057T 345.00 - SUNNYSIDE 345KV CKT 1	717	789	0.1777	112.9379	P12:138:AEPW:REDROCKRD4:WTH_JCT4
FDNS	00NR	0	20WP	G15_093	FROM->TO	G14-057T 345.00 - SUNNYSIDE 345KV CKT 1	717	789	0.17581	112.9375	SABINE 230/24.0KV TRANSFORMER CKT 1
FDNS	00NR	0	20WP	G15_093	FROM->TO	G14-057T 345.00 - SUNNYSIDE 345KV CKT 1	717	789	0.17581	112.9335	GEN300016 1-1G1GPDEL 18.000
FDNS	00NR	0	20WP	G15_093	FROM->TO	G14-057T 345.00 - SUNNYSIDE 345KV CKT 1	717	789	0.17629	112.9306	SARA - STHLAKE4 138.00 138KV CKT 1
FDNS	00NR	0	16WP	G15_093	FROM->TO	G14-057T 345.00 - SUNNYSIDE 345KV CKT 1	717	789	0.17952	112.9294	CANEY CREEK - TEXOMA JCT 138KV CKT 1
FDNS	00NR	0	20WP	G15_093	FROM->TO	G14-057T 345.00 - SUNNYSIDE 345KV CKT 1	717	789	0.17581	112.9286	P12:138:AEPW:R.S.S.-4:S.HUD.-4
FDNS	00NR	0	20WP	G15_093	FROM->TO	G14-057T 345.00 - SUNNYSIDE 345KV CKT 1	717	789	0.1757	112.9232	ETTA (DUKE HOTSPRINGS) - MC NIEL 500KV CKT 1
FDNS	00NR	0	20WP	G15_093	FROM->TO	G14-057T 345.00 - SUNNYSIDE 345KV CKT 1	717	789	0.17581	112.9218	GEN336222 1-LITTLE GYPSY UNIT#2
FDNS	00NR	0	16WP	G15_093	FROM->TO	G14-057T 345.00 - SUNNYSIDE 345KV CKT 1	717	789	0.17635	112.9113	P12:138:AEPW:SHAM4WT:CHILD4WT
FDNS	00NR	0	20WP	G15_093	FROM->TO	G14-057T 345.00 - SUNNYSIDE 345KV CKT 1	717	789	0.17621	112.9105	LAWTON RELIFT TAP - OMPA-WALTERS 69KV CKT 1
FDNS	00NR	0	20WP	G15_093	FROM->TO	G14-057T 345.00 - SUNNYSIDE 345KV CKT 1	717	789	0.17629	112.9005	MCCLAIN - STHLAKE4 138.00 138KV CKT 1
FDNS	00NR	0	20WP	G15_093	FROM->TO	G14-057T 345.00 - SUNNYSIDE 345KV CKT 1	717	789	0.17581	112.897	P12:69:AEPW:NROGERS2:ECNTRTN2
FDNS	00NR	0	20WP	G15_093	FROM->TO	G14-057T 345.00 - SUNNYSIDE 345KV CKT 1	717	789	0.17606	112.8964	G13-010T 345.00 - POST ROCK 345KV CKT 1
FDNS	00NR	0	16WP	G15_093	FROM->TO	G14-057T 345.00 - SUNNYSIDE 345KV CKT 1	717	789	0.17626	112.8952	GEN562704 1-G15_020_3 0.3550
FDNS	00NR	0	20WP	G15_093	FROM->TO	G14-057T 345.00 - SUNNYSIDE 345KV CKT 1	717	789	0.17835	112.8932	LASALLE - LATTA JCT 138KV CKT 1
FDNS	00NR	0	20WP	G15_093	FROM->TO	G14-057T 345.00 - SUNNYSIDE 345KV CKT 1	717	789	0.177	112.8928	NORGE ROAD - SOUTHWESTERN STATION 138KV CKT 1
FDNS	00NR	0	20WP	G15_093	FROM->TO	G14-057T 345.00 - SUNNYSIDE 345KV CKT 1	717	789	0.177	112.8928	NORGE ROAD - SOUTHWESTERN STATION 138KV CKT 1
FDNS	00NR	0	16WP	G15_093	FROM->TO	G14-057T 345.00 - SUNNYSIDE 345KV CKT 1	717	789	0.17626	112.8914	GEN562952 1-G15057_3 0.6500
FDNS	00NR	0	20WP	G15_093	FROM->TO	G14-057T 345.00 - SUNNYSIDE 345KV CKT 1	717	789	0.17581	112.8872	GEN336152 1-WATERFORD UNIT#2
FDNS	00NR	0	20WP	G15_093	FROM->TO	G14-057T 345.00 - SUNNYSIDE 345KV CKT 1	717	789	0.17581	112.8868	P12:138:AEPW:BA_71ST4:T.S.E.-4
FDNS	00NR	0	20WP	G15_093	FROM->TO	G14-057T 345.00 - SUNNYSIDE 345KV CKT 1	717	789	0.17581	112.8864	GEN336151 1-WATERFORD UNIT#1
FDNS	00NR	0	20WP	G15_093	FROM->TO	G14-057T 345.00 - SUNNYSIDE 345KV CKT 1	717	789	0.17581	112.882	P12:138:AEPW:YARCH-S4:T.S.E.-4
FDNS	00NR	0	20WP	G15_093	FROM->TO	G14-057T 345.00 - SUNNYSIDE 345KV CKT 1	717	789	0.17597	112.8781	EMPORIA ENERGY CENTER - G14_001T 345.00 345KV CKT 1
FDNS	00NR	0	20WP	G15_093	FROM->TO	G14-057T 345.00 - SUNNYSIDE 345KV CKT 1	717	789	0.17589	112.8777	HOYT - STRANGER CREEK 345KV CKT 1
FDNS	00NR	0	20WP	G15_093	FROM->TO	G14-057T 345.00 - SUNNYSIDE 345KV CKT 1	717	789	0.17584	112.8772	P12:138:AEPW-OGE:SHIDLER4:OSAGE 4
FDNS	00NR	0	20WP	G15_093	FROM->TO	G14-057T 345.00 - SUNNYSIDE 345KV CKT 1	717	789	0.17581	112.875	GEN300017 1-1G2GPDEL 18.000
FDNS	00NR	0	20WP	G15_093	FROM->TO	G14-057T 345.00 - SUNNYSIDE 345KV CKT 1	717	789	0.17581	112.8749	FRONTIER 345/18.0KV TRANSFORMER CKT 1
FDNS	00NR	0	20WP	G15_093	FROM->TO	G14-057T 345.00 - SUNNYSIDE 345KV CKT 1	717	789	0.17581	112.8727	FRONTIER 345/18.0KV TRANSFORMER CKT 1
FDNS	00NR	0	20WP	G15_093	FROM->TO	G14-057T 345.00 - SUNNYSIDE 345KV CKT 1	717	789	0.17568	112.8685	P12:138:OKGE:3TERM2
FDNS	00NR	0	20WP	G15_093	FROM->TO	G14-057T 345.00 - SUNNYSIDE 345KV CKT 1	717	789	0.17629	112.8667	CLINTON JUNCTION - ELK CITY 138KV CKT 1
FDNS	00NR	0	20WP	G15_093	FROM->TO	G14-057T 345.00 - SUNNYSIDE 345KV CKT 1	717	789	0.17629	112.8667	CLINTON JUNCTION - ELK CITY 138KV CKT 1
FDNS	00NR	0	20WP	G15_093	FROM->TO	G14-057T 345.00 - SUNNYSIDE 345KV CKT 1	717	789	0.17555	112.8667	HOPE - MCNAB REC 115KV CKT 1
FDNS	00NR	0	20WP	G15_093	FROM->TO	G14-057T 345.00 - SUNNYSIDE 345KV CKT 1	717	789	0.17566	112.8653	MORISNT4 138.00 - STILLWATER 138KV CKT 1
FDNS	00NR	0	20WP	G15_093	FROM->TO	G14-057T 345.00 - SUNNYSIDE 345KV CKT 1	717	789	0.17555	112.856	P12:115:AEPW:TURK3:HOPE3
FDNS	00NR	0	20WP	G15_093	FROM->TO	G14-057T 345.00 - SUNNYSIDE 345KV CKT 1	717	789	0.1762	112.8552	BENTON - WICHITA 345KV CKT 1
FDNS	00NR	0	20WP	G15_093	FROM->TO	G14-057T 345.00 - SUNNYSIDE 345KV CKT 1	717	789	0.17589	112.853	G15074_T 345.00 - JEFFREY ENERGY CENTER 345KV CKT 1
FDNS	00NR	0	16WP	G15_093	FROM->TO	G14-057T 345.00 - SUNNYSIDE 345KV CKT 1	717	789	0.17626	112.8518	GEN563173 1-G15082_3 0.6900
FDNS	00NR	0	20WP	G15_093	FROM->TO	G14-057T 345.00 - SUNNYSIDE 345KV CKT 1	717	789	0.17606	112.8505	G13-010T 345.00 - SPEARVILLE 345KV CKT 1
FDNS	00NR	0	20WP	G15_093	FROM->TO	G14-057T 345.00 - SUNNYSIDE 345KV CKT 1	717	789	0.17567	112.8485	COUCH SES - MC NIEL 115KV CKT 1
FDNS	00NR	0	20WP	G15_093	FROM->TO	G14-057T 345.00 - SUNNYSIDE 345KV CKT 1	717	789	0.17692	112.8447	WEATHERFORD TAP - WEATHERFORD WIND FARM 138KV CKT 1
FDNS	00NR	0	20WP	G15_093	FROM->TO	G14-057T 345.00 - SUNNYSIDE 345KV CKT 1	717	789	0.17595	112.8444	BLACKBERRY - NEOSHO 345KV CKT 1
FDNS	00NR	0	20WP	G15_093	FROM->TO	G14-057T 345.00 - SUNNYSIDE 345KV CKT 1	717	789	0.17581	112.8441	LEWIS CREEK SWITCHYARD 138/22.0KV TRANSFORMER CKT 1
FDNS	00NR	0	20WP	G15_093	FROM->TO	G14-057T 345.00 - SUNNYSIDE 345KV CKT 1	717	789	0.1777	112.8435	HINTON - WEATHERFORD JCT. 138KV CKT 1
FDNS	00NR	0	20WP	G15_093	FROM->TO	G14-057T 345.00 - SUNNYSIDE 345KV CKT 1	717	789	0.17581	112.8396	LEWIS CREEK SWITCHYARD 138/22.0KV TRANSFORMER CKT 1
FDNS	00NR	0	16WP	G15_093	FROM->TO	G14-057T 345.00 - SUNNYSIDE 345KV CKT 1	717	789	0.17719	112.8375	GRAPEVINE INTERCHANGE - NICHOLS STATION 230KV CKT 1
FDNS	00NR	0	16WP	G15_093	FROM->TO	G14-057T 345.00 - SUNNYSIDE 345KV CKT 1	717	789	0.17719	112.8375	GRAPEVINE INTERCHANGE - NICHOLS STATION 230KV CKT 1
FDNS	00NR	0	20WP	G15_093	FROM->TO	G14-057T 345.00 - SUNNYSIDE 345KV CKT 1	717	789	0.17621	112.8369	OMPA-WALTERS - WALTERS 69KV CKT 1
FDNS	00NR	0	20WP	G15_093	FROM->TO	G14-057T 345.00 - SUNNYSIDE 345KV CKT 1	717	789	0.17621	112.8369	OMPA-WALTERS - WALTERS 69KV CKT 1
FDNS	00NR	0	20WP	G15_093	FROM->TO	G14-057T 345.00 - SUNNYSIDE 345KV CKT 1	717	789	0.17579	112.8359	CYPRESS - HARTBURG 500KV CKT 1
FDNS	00NR	0	20WP	G15_093	FROM->TO	G14-057T 345.00 - SUNNYSIDE 345KV CKT 1	717	789	0.17692	112.8325	SOUTHWESTERN STATION - VERDEN 138KV CKT 1
FDNS	00NR	0	20WP	G15_093	FROM->TO	G14-057T 345.00 - SUNNYSIDE 345KV CKT 1	717	789	0.17581	112.8315	GEN334432 1-SABINE UNIT 2
FDNS	00NR	0	20WP	G15_093	FROM->TO	G14-057T 345.00 - SUNNYSIDE 345KV CKT 1	717	789	0.17581	112.831	GEN334431 1-SABINE UNIT 1
FDNS	00NR	0	20WP	G15_093	FROM->TO	G14-057T 345.00 - SUNNYSIDE 345KV CKT 1	717	789	0.17555	112.8308	TURK (TURK 1) 138/115/13.2KV TRANSFORMER CKT 1
FDNS	00NR	0	20WP	G15_093	FROM->TO	G14-057T 345.00 - SUNNYSIDE 345KV CKT 1	717	789	0.17555	112.8308	TURK (TURK 1) 138/115/13.2KV TRANSFORMER CKT 1
FDNS	00NR	0	20WP	G15_093	FROM->TO	G14-057T 345.00 - SUNNYSIDE 345KV CKT 1	717	789	0.17555	112.8307	MCNAB REC - Turk 115 115KV CKT 1
FDNS	00NR	0	20WP	G15_093	FROM->TO	G14-057T 345.00 - SUNNYSIDE 345KV CKT 1	717	789	0.1758	112.8301	7JASPER 345.00 - BLACKBERRY 345KV CKT 1
FDNS	00NR	0	20WP	G15_093	FROM->TO	G14-057T 345.00 - SUNNYSIDE 345KV CKT 1	717	789	0.17581	112.8268	GEN501823 1-TECHE UNIT 3
FDNS	00NR	0	20WP	G15_093	FROM->TO	G14-057T 345.00 - SUNNYSIDE 345KV CKT 1	717	789	0.17581	112.8248	GEN501970 1-EVANGELINE UNIT 7
FDNS	00NR	0	20WP	G15_093	FROM->TO	G14-057T 345.00 - SUNNYSIDE 345KV CKT 1	717	789	0.17581	112.8197	GEN505616 1-BROKEN BOW
FDNS	00NR	0	20WP	G15_093	FROM->TO	G14-057T 345.00 - SUNNYSIDE 345KV CKT 1	717	789	0.17636	112.8185	P12:69:WFEC-AEPW:COMANCH2:WALTRS-2
FDNS	00NR	0	20WP	G15_093	FROM->TO	G14-057T 345.00 - SUNNYSIDE 345KV CKT 1	717	789	0.17681	112.8114	CANADIAN - NOBLE 138KV CKT 1
FDNS	00NR	0	20WP	G15_093	FROM->TO	G14-057T 345.00 - SUNNYSIDE 345KV CKT 1	717	789	0.17692	112.8107	NORTH 29TH CHICKASHA - VERDEN 138KV CKT 1
FDNS	00NR	0	20WP	G15_093	FROM->TO	G14-057T 345.00 - SUNNYSIDE 345KV CKT 1	717	789	0.17581	112.8098	P12:161:AEPW:CHAMSPR5:FARMING5
FDNS	00NR	0	16WP	G15_093	FROM->TO	G14-057T 345.00 - SUNNYSIDE 345KV CKT 1	717	789	0.17626	112.8084	GEN562710 1-G15_022_3 0.5500
FDNS	00NR	0	20WP	G15_093	FROM->TO	G14-057T 345.00 - SUNNYSIDE 345KV CKT 1	717	789	0.17584	112.8043	7LUTESVIL 345.00 - 7ST FRANC 345.00 345KV CKT 1
FDNS	00NR	0	20WP	G15_093	FROM->TO	G14-057T 345.00 - SUNNYSIDE 345KV CKT 1	717	789	0.17581	112.8033	GEN334392 1-EXXON MOBIL IPP 1
FDNS	00NR	0	20WP	G15_093	FROM->TO	G14-057T 345.00 - SUNNYSIDE 345KV CKT 1	717	789	0.17597	112.8	G14_001T 345.00 - WICHITA 345KV CKT 1
FDNS	00NR	0	20WP	G15_093	FROM->TO	G14-057T 345.00 - SUNNYSIDE 345KV CKT 1	717	789	0.17581	112.7969	GEN334393 1-EXXON MOBIL IPP 2
FDNS	00NR	0	20WP	G15_093	FROM->TO	G14-057T 345.00 - SUNNYSIDE 345KV CKT 1	717	789	0.17581	112.7969	GEN334394 1-EXXON MOBIL IPP 3
FDNS	00NR	0	20WP	G15_093	FROM->TO	G14-057T 345.00 - SUNNYSIDE 345KV CKT 1	717	789	0.17993	112.7939	FRANKLIN SW - WESTMOORE 138KV CKT 1
FDNS	00NR	0	20WP	G15_093	FROM->TO	G14-057T 345.00 - SUNNYSIDE 345KV CKT 1	717	789	0.1758	112.7921	LAKEOVER - MCADAMS 500KV CKT 1

SOLUTION	GROUP	SCENARIO	SEASON	SOURCE	DIRECTION	MONITORED ELEMENT	RATEA (MVA)	RATEB(MVA)	TDF	TC%LOADING (% MVA)	CONTINGENCY
FDNS	00NR	0	16WP	G15_093	FROM->TO	G14-057T 345.00 - SUNNYSIDE 345KV CKT 1	717	789	0.17626	112.7898	GEN620315 1-BIG STONE GEN
FDNS	00NR	0	20WP	G15_093	FROM->TO	G14-057T 345.00 - SUNNYSIDE 345KV CKT 1	717	789	0.17694	112.7872	P12:138:OKGE:3TERM27
FDNS	00NR	0	20WP	G15_093	FROM->TO	G14-057T 345.00 - SUNNYSIDE 345KV CKT 1	717	789	0.1759	112.7859	EMPORIA ENERGY CENTER - SWISSVALE 345KV CKT 1
FDNS	00NR	0	20WP	G15_093	FROM->TO	G14-057T 345.00 - SUNNYSIDE 345KV CKT 1	717	789	0.17581	112.7835	ST FRANCIS - ST FRANCIS 1 161KV CKT Z1
FDNS	00NR	0	20WP	G15_093	FROM->TO	G14-057T 345.00 - SUNNYSIDE 345KV CKT 1	717	789	0.17581	112.7809	MCADAMS - WOLF CREEK 500KV CKT 1
FDNS	00NR	0	20WP	G15_093	FROM->TO	G14-057T 345.00 - SUNNYSIDE 345KV CKT 1	717	789	0.17581	112.779	SABINE 230/22.0KV TRANSFORMER CKT 1
FDNS	00NR	0	20WP	G15_093	FROM->TO	G14-057T 345.00 - SUNNYSIDE 345KV CKT 1	717	789	0.17604	112.7787	FLETCHER - MARLOW JCT 69KV CKT 1
FDNS	00NR	0	20WP	G15_093	FROM->TO	G14-057T 345.00 - SUNNYSIDE 345KV CKT 1	717	789	0.17592	112.7734	SWISSVALE - WEST GARDNER 345KV CKT 1
FDNS	00NR	0	20WP	G15_093	FROM->TO	G14-057T 345.00 - SUNNYSIDE 345KV CKT 1	717	789	0.1777	112.7689	HINTON - REDROCKRD4 138.00 138KV CKT 1
FDNS	00NR	0	16WP	G15_093	FROM->TO	G14-057T 345.00 - SUNNYSIDE 345KV CKT 1	717	789	0.17626	112.7677	GEN511851 1-COMANCHE #1
FDNS	00NR	0	20WP	G15_093	FROM->TO	G14-057T 345.00 - SUNNYSIDE 345KV CKT 1	717	789	0.17581	112.7667	GEN501972 1-EVANGELINE UNIT 7-2
FDNS	00NR	0	20WP	G15_093	FROM->TO	G14-057T 345.00 - SUNNYSIDE 345KV CKT 1	717	789	0.17581	112.7666	GEN501971 1-EVANGELINE UNIT 7-1
FDNS	00NR	0	20WP	G15_093	FROM->TO	G14-057T 345.00 - SUNNYSIDE 345KV CKT 1	717	789	0.17581	112.7601	P12:138:AEPW:R.S.S-4:T.P.S.-4
FDNS	00NR	0	20WP	G15_093	FROM->TO	G14-057T 345.00 - SUNNYSIDE 345KV CKT 1	717	789	0.177	112.7558	CORNVILLE - NORGE ROAD 138KV CKT 1
FDNS	00NR	0	20WP	G15_093	FROM->TO	G14-057T 345.00 - SUNNYSIDE 345KV CKT 1	717	789	0.177	112.7558	CORNVILLE - NORGE ROAD 138KV CKT 1
FDNS	00NR	0	20WP	G15_093	FROM->TO	G14-057T 345.00 - SUNNYSIDE 345KV CKT 1	717	789	0.17591	112.7544	P12:138:OKGE:3TERM12
FDNS	00NR	0	20WP	G15_093	FROM->TO	G14-057T 345.00 - SUNNYSIDE 345KV CKT 1	717	789	0.17559	112.7529	ENOWILT - LONE OAK 138KV CKT 1
FDNS	00NR	0	20WP	G15_093	FROM->TO	G14-057T 345.00 - SUNNYSIDE 345KV CKT 1	717	789	0.17692	112.7506	WEATHERFORD SOUTHEAST - WEATHERFORD TAP 138KV CKT 1
FDNS	00NR	0	20WP	G15_093	FROM->TO	G14-057T 345.00 - SUNNYSIDE 345KV CKT 1	717	789	0.17559	112.7442	ENOWILT - SARDIS 138KV CKT 1
FDNS	00NR	0	20WP	G15_093	FROM->TO	G14-057T 345.00 - SUNNYSIDE 345KV CKT 1	717	789	0.17581	112.7431	GEN501912 1-ACADIA UNIT CT1B
FDNS	00NR	0	20WP	G15_093	FROM->TO	G14-057T 345.00 - SUNNYSIDE 345KV CKT 1	717	789	0.17611	112.743	FRANKLIN - FRANKLIN SW 138KV CKT 1
FDNS	00NR	0	20WP	G15_093	FROM->TO	G14-057T 345.00 - SUNNYSIDE 345KV CKT 1	717	789	0.1759	112.7424	P12:138:WFEC-AEPW:ELKCTY-4:ERICK4
FDNS	00NR	0	20WP	G15_093	FROM->TO	G14-057T 345.00 - SUNNYSIDE 345KV CKT 1	717	789	0.17581	112.7423	GEN501911 1-ACADIA UNIT CT1A
FDNS	00NR	0	20WP	G15_093	FROM->TO	G14-057T 345.00 - SUNNYSIDE 345KV CKT 1	717	789	0.17835	112.7421	LASALLE - STONEWAL LH138.00 138KV CKT 1
FDNS	00NR	0	20WP	G15_093	FROM->TO	G14-057T 345.00 - SUNNYSIDE 345KV CKT 1	717	789	0.17561	112.7364	AMITY SS - MURFREESBORO EAST (AECC) 115KV CKT 1
FDNS	00NR	0	20WP	G15_093	FROM->TO	G14-057T 345.00 - SUNNYSIDE 345KV CKT 1	717	789	0.17581	112.7343	P12:138:AEPW:R.S.S.-4:R:96YALE-4
FDNS	00NR	0	16WP	G15_093	FROM->TO	G14-057T 345.00 - SUNNYSIDE 345KV CKT 1	717	789	0.17626	112.7303	GEN600004 2-PRAIRIE ISLAND G2
FDNS	00NR	0	16WP	G15_093	FROM->TO	G14-057T 345.00 - SUNNYSIDE 345KV CKT 1	717	789	0.17626	112.7275	GEN600003 1-PRAIRIE ISLAND G1
FDNS	00NR	0	20WP	G15_093	FROM->TO	G14-057T 345.00 - SUNNYSIDE 345KV CKT 1	717	789	0.17692	112.7268	CORNVILLE - NORTH 29TH CHICKASHA 138KV CKT 1
FDNS	00NR	0	20WP	G15_093	FROM->TO	G14-057T 345.00 - SUNNYSIDE 345KV CKT 1	717	789	0.17835	112.724	STONEWAL LH138.00 - TUPELO TAP 138KV CKT 1
FDNS	00NR	0	20WP	G15_093	FROM->TO	G14-057T 345.00 - SUNNYSIDE 345KV CKT 1	717	789	0.17681	112.7182	NOBLE - PURCELL4 138.00 138KV CKT 1
FDNSLock	00NR	0	16WP	G15_093	FROM->TO	G14-057T 345.00 - SUNNYSIDE 345KV CKT 1	717	789	0.17626	112.715	GEN600006 1-AS KING
FDNS	00NR	0	20WP	G15_093	FROM->TO	G14-057T 345.00 - SUNNYSIDE 345KV CKT 1	717	789	0.17961	112.7058	CIMARRON - NORTHWEST 345KV CKT 1
FDNS	00NR	0	20WP	G15_093	FROM->TO	G14-057T 345.00 - SUNNYSIDE 345KV CKT 1	717	789	0.17692	112.7001	CLINTON JUNCTION - CLINTON NATURAL GAS TAP 138KV CKT 1
FDNS	00NR	0	20WP	G15_093	FROM->TO	G14-057T 345.00 - SUNNYSIDE 345KV CKT 1	717	789	0.17639	112.6983	Canadian Pump Station - REDROCKRD4 138.00 138KV CKT 1
FDNS	00NR	0	20WP	G15_093	FROM->TO	G14-057T 345.00 - SUNNYSIDE 345KV CKT 1	717	789	0.17755	112.6767	CRINER - PAYNE 138.00 138KV CKT 1
FDNS	00NR	0	16WP	G15_093	FROM->TO	G14-057T 345.00 - SUNNYSIDE 345KV CKT 1	717	789	0.17631	112.6686	P12:138:WFEC:MSL09
FDNS	00NR	0	16WP	G15_093	FROM->TO	G14-057T 345.00 - SUNNYSIDE 345KV CKT 1	717	789	0.17898	112.6633	P12:138:AEPW-OGE:CORNVIL4:CIMARON4
FDNS	00NR	0	20WP	G15_093	FROM->TO	G14-057T 345.00 - SUNNYSIDE 345KV CKT 1	717	789	0.17636	112.6419	COMANCHE - WALTERS 69KV CKT 1
FDNSLock	00NR	0	16WP	G15_093	FROM->TO	G14-057T 345.00 - SUNNYSIDE 345KV CKT 1	717	789	0.17626	112.6382	GEN636641 1-LOUISA UNIT 1
FDNS	00NR	0	16WP	G15_093	FROM->TO	G14-057T 345.00 - SUNNYSIDE 345KV CKT 1	717	789	0.17626	112.6	GEN615002 2-COAL CREEK
FDNS	00NR	0	16WP	G15_093	FROM->TO	G14-057T 345.00 - SUNNYSIDE 345KV CKT 1	717	789	0.17626	112.5883	GEN600005 1-MONTICELLO
FDNS	00NR	0	16WP	G15_093	FROM->TO	G14-057T 345.00 - SUNNYSIDE 345KV CKT 1	717	789	0.18059	112.5634	CHISHOLM7 345.00 (CHISHOLM) 345/230/13.2KV TRANSFORMER CKT 1
FDNS	00NR	0	16WP	G15_093	FROM->TO	G14-057T 345.00 - SUNNYSIDE 345KV CKT 1	717	789	0.17626	112.5594	GEN562754 1-G15031_5 0.6900
FDNS	00NR	0	16WP	G15_093	FROM->TO	G14-057T 345.00 - SUNNYSIDE 345KV CKT 1	717	789	0.17626	112.5259	GEN635213 3-NEAL UNIT 3
FDNS	00NR	0	16WP	G15_093	FROM->TO	G14-057T 345.00 - SUNNYSIDE 345KV CKT 1	717	789	0.17626	112.5005	GEN562756 1-G15031_7 0.6900
FDNS	00NR	0	16WP	G15_093	FROM->TO	G14-057T 345.00 - SUNNYSIDE 345KV CKT 1	717	789	0.17626	112.5	GEN629074 1-ARNOLD LOWSIDE OF GSU XFMR
FDNS	00NR	0	16WP	G15_093	FROM->TO	G14-057T 345.00 - SUNNYSIDE 345KV CKT 1	717	789	0.17626	112.4623	GEN562023 1-G11_020_3 0.6900
FDNS	00NR	0	16WP	G15_093	FROM->TO	G14-057T 345.00 - SUNNYSIDE 345KV CKT 1	717	789	0.17626	112.4623	GEN562026 1-G11_019_3 0.6900
FDNS	00NR	0	16WP	G15_093	FROM->TO	G14-057T 345.00 - SUNNYSIDE 345KV CKT 1	717	789	0.17626	112.4584	GEN562556 1-G14_046_3 0.3420
FDNS	00NR	0	16WP	G15_093	FROM->TO	G14-057T 345.00 - SUNNYSIDE 345KV CKT 1	717	789	0.18059	112.4526	CHISHOLM7 345.00 - GRACEMONT 345KV CKT 1
FDNS	00NR	0	16WP	G15_093	FROM->TO	G14-057T 345.00 - SUNNYSIDE 345KV CKT 1	717	789	0.17626	112.451	BIG STONE 230/24.0KV TRANSFORMER CKT 1
FDNS	00NR	0	16WP	G15_093	FROM->TO	G14-057T 345.00 - SUNNYSIDE 345KV CKT 1	717	789	0.17626	112.3702	GEN563142 1-G15079_3 0.5500
FDNS	00NR	0	16WP	G15_093	FROM->TO	G14-057T 345.00 - SUNNYSIDE 345KV CKT 1	717	789	0.17626	112.3702	GEN563151 1-G15080_2 0.5500
FDNS	00NR	0	16WP	G15_093	FROM->TO	G14-057T 345.00 - SUNNYSIDE 345KV CKT 1	717	789	0.17626	112.3332	GEN523971 1-HARRINGTON GEN #1 24 KV
FDNS	00NR	0	16WP	G15_093	FROM->TO	G14-057T 345.00 - SUNNYSIDE 345KV CKT 1	717	789	0.17626	112.3331	GEN523973 1-HARRINGTON GEN #3 24 KV
FDNS	00NR	0	16WP	G15_093	FROM->TO	G14-057T 345.00 - SUNNYSIDE 345KV CKT 1	717	789	0.17626	112.333	GEN523972 1-HARRINGTON GEN #2 24 KV
FDNS	00NR	0	16WP	G15_093	FROM->TO	G14-057T 345.00 - SUNNYSIDE 345KV CKT 1	717	789	0.17579	112.293	NORTHWEST TEXARKANA - VALLIANT 345KV CKT 1
FDNS	00NR	0	16WP	G15_093	FROM->TO	G14-057T 345.00 - SUNNYSIDE 345KV CKT 1	717	789	0.17579	112.293	NORTHWEST TEXARKANA - VALLIANT 345KV CKT 1
FDNS	00NR	0	16WP	G15_093	FROM->TO	G14-057T 345.00 - SUNNYSIDE 345KV CKT 1	717	789	0.17801	112.2788	P12:230:AEPW-SPS:SWEETWT6:WHEELER 6
FDNS	00NR	0	16WP	G15_093	FROM->TO	G14-057T 345.00 - SUNNYSIDE 345KV CKT 1	717	789	0.17801	112.2782	STLN-DEMARC6 - SWEETWATER 230KV CKT 1
FDNS	00NR	0	16WP	G15_093	FROM->TO	G14-057T 345.00 - SUNNYSIDE 345KV CKT 1	717	789	0.17801	112.2771	STATELINE INTERCHANGE - STLN-DEMARC6 230KV CKT 1
FDNSLock	00NR	0	16WP	G15_093	FROM->TO	G14-057T 345.00 - SUNNYSIDE 345KV CKT 1	717	789	0.17626	112.2748	GEN600000 1-SHERBURNECNTY G1
FDNS	00NR	0	16WP	G15_093	FROM->TO	G14-057T 345.00 - SUNNYSIDE 345KV CKT 1	717	789	0.17626	112.2359	GEN511848 1-SOUTHWESTERN STATION #3
FDNS	00NR	0	20WP	G15_093	FROM->TO	G14-057T 345.00 - SUNNYSIDE 345KV CKT 1	717	789	0.17581	112.2265	803-OKLAUNION
FDNS	00NR	0	16WP	G15_093	FROM->TO	G14-057T 345.00 - SUNNYSIDE 345KV CKT 1	717	789	0.17626	112.2003	GEN600001 2-SHERBURNE CNTY G2
FDNS	00NR	0	16WP	G15_093	FROM->TO	G14-057T 345.00 - SUNNYSIDE 345KV CKT 1	717	789	0.17626	112.163	GEN563042 1-G15068_3 0.6900
FDNS	00NR	0	16WP	G15_093	FROM->TO	G14-057T 345.00 - SUNNYSIDE 345KV CKT 1	717	789	0.17626	112.1422	GEN527901 1-HOBBS PLANT #1 (CT)
FDNS	00NR	0	16WP	G15_093	FROM->TO	G14-057T 345.00 - SUNNYSIDE 345KV CKT 1	717	789	0.17626	112.1422	GEN527902 1-HOBBS PLANT #2 (CT)
FDNSLock	00NR	0	16WP	G15_093	FROM->TO	G14-057T 345.00 - SUNNYSIDE 345KV CKT 1	717	789	0.17626	112.0855	GEN629075 1-OTTUMWA GENERATOR FOR OTTUMWA UNIT NO 1
FDNS	00NR	0	20WP	G15_093	FROM->TO	G14-057T 345.00 - SUNNYSIDE 345KV CKT 1	717	789	0.17329	111.9515	P12:138:OKGE:3TERM39
FDNSLock	00NR	0	16WP	G15_093	FROM->TO	G14-057T 345.00 - SUNNYSIDE 345KV CKT 1	717	789	0.17626	111.9266	GEN635214 4-NEAL UNIT 4
FDNS	00NR	0	16WP	G15_093	FROM->TO	G14-057T 345.00 - SUNNYSIDE 345KV CKT 1	717	789	0.17626	111.9233	SHERBURNE CO 345/24.0KV TRANSFORMER CKT 1
FDNS	00NR	0	20WP	G15_093	FROM->TO	G14-057T 345.00 - SUNNYSIDE 345KV CKT 1	717	789	0.17574	111.9074	RANCHRD7 345.00 - SOONER 345KV CKT 1
FDNS	00NR	0	20WP	G15_093	FROM->TO	G14-057T 345.00 - SUNNYSIDE 345KV CKT 1	717	789	0.17597	111.8943	CHILDRESS - LAKE PAULINE 138KV CKT 1
FDNS	00NR	0	20WP	G15_093	FROM->TO	G14-057T 345.00 - SUNNYSIDE 345KV CKT 1	717	789	0.17597	111.8943	CHILDRESS - LAKE PAULINE 138KV CKT 1
FDNS	00NR	0	20WP	G15_093	FROM->TO	G14-057T 345.00 - SUNNYSIDE 345KV CKT 1	717	789	0.1759	111.8901	CHILDRESS - HOLLIS TAP 138KV CKT 1
FDNS	00NR	0	20WP	G15_093	FROM->TO	G14-057T 345.00 - SUNNYSIDE 345KV CKT 1	717	789	0.17581	111.8664	GEN562084 1-G11_050_3 0.6900
FDNS	00NR	0	16WP	G15_093	FROM->TO	G14-057T 345.00 - SUNNYSIDE 345KV CKT 1	717	789	0.17626	111.861	GEN563043 1-G15068_4 0.6900

SOLUTION	GROUP	SCENARIO	SEASON	SOURCE	DIRECTION	MONITORED ELEMENT	RATEA (MVA)	RATEB(MVA)	TDF	TC%LOADING (% MVA)	CONTINGENCY
FDNS	00NR	0	16WP	G15_093	FROM->TO	G14-057T 345.00 - SUNNYSIDE 345KV CKT 1	717	789	0.17626	111.8591	GEN563273 2-G15093_4 0.6900
FDNS	00NR	0	20WP	G15_093	FROM->TO	G14-057T 345.00 - SUNNYSIDE 345KV CKT 1	717	789	0.17366	111.847	MAYSVILLE - PAOLI 138KV CKT 1
FDNS	00NR	0	20WP	G15_093	FROM->TO	G14-057T 345.00 - SUNNYSIDE 345KV CKT 1	717	789	0.17581	111.8386	GEN560187 1-WTH WIND 0.5750
FDNS	00NR	0	16WP	G15_093	FROM->TO	G14-057T 345.00 - SUNNYSIDE 345KV CKT 1	717	789	0.17626	111.8362	GEN526333 1-JONES GEN #3 21 KV
FDNS	00NR	0	16WP	G15_093	FROM->TO	G14-057T 345.00 - SUNNYSIDE 345KV CKT 1	717	789	0.17626	111.8361	GEN526334 1-JONES_4 116.500
FDNS	00NR	0	20WP	G15_093	FROM->TO	G14-057T 345.00 - SUNNYSIDE 345KV CKT 1	717	789	0.17668	111.8224	CIMARRON - MATHWSN7 345.00 345KV CKT 1
FDNS	00NR	0	20WP	G15_093	FROM->TO	G14-057T 345.00 - SUNNYSIDE 345KV CKT 1	717	789	0.17668	111.8224	CIMARRON - MATHWSN7 345.00 345KV CKT 2
FDNS	00NR	0	20WP	G15_093	FROM->TO	G14-057T 345.00 - SUNNYSIDE 345KV CKT 1	717	789	0.17581	111.8182	GEN560112 1-G08_037_3 0.6900
FDNS	00NR	0	16WP	G15_093	FROM->TO	G14-057T 345.00 - SUNNYSIDE 345KV CKT 1	717	789	0.17626	111.8	GEN344225 1-1CAL G1 25.000
FDNS	00NR	0	16WP	G15_093	FROM->TO	G14-057T 345.00 - SUNNYSIDE 345KV CKT 1	717	789	0.18069	111.7926	P12:230:AEPW:ELKCITY6:SWEETWT6
FDNS	00NR	0	16WP	G15_093	FROM->TO	G14-057T 345.00 - SUNNYSIDE 345KV CKT 1	717	789	0.17626	111.7857	GEN525844 1-ELK_1 118.000
FDNS	00NR	0	20WP	G15_093	FROM->TO	G14-057T 345.00 - SUNNYSIDE 345KV CKT 1	717	789	0.17581	111.7821	GEN521103 1-BLUE CANYON WIND FARM
FDNS	00NR	0	20WP	G15_093	FROM->TO	G14-057T 345.00 - SUNNYSIDE 345KV CKT 1	717	789	0.17581	111.7799	GEN520812 1-ANADRK5
FDNS	00NR	0	20WP	G15_093	FROM->TO	G14-057T 345.00 - SUNNYSIDE 345KV CKT 1	717	789	0.17581	111.7798	GEN520813 1-ANADRK6
FDNS	00NR	0	20WP	G15_093	FROM->TO	G14-057T 345.00 - SUNNYSIDE 345KV CKT 1	717	789	0.17648	111.7795	DRAPER LAKE - MIDWEST TAP 138KV CKT 1
FDNS	00NR	0	16WP	G15_093	FROM->TO	G14-057T 345.00 - SUNNYSIDE 345KV CKT 1	717	789	0.17626	111.779	GEN525845 1-ELK_2 1 138.00
FDNS	00NR	0	20WP	G15_093	FROM->TO	G14-057T 345.00 - SUNNYSIDE 345KV CKT 1	717	789	0.17581	111.7781	GEN563052 1-G15069_3 0.6900
FDNS	00NR	0	16WP	G15_093	FROM->TO	G14-057T 345.00 - SUNNYSIDE 345KV CKT 1	717	789	0.17626	111.7743	GEN600002 3-SHERBURNE CNTY G3
FDNS	00NR	0	20WP	G15_093	FROM->TO	G14-057T 345.00 - SUNNYSIDE 345KV CKT 1	717	789	0.17366	111.7716	MAYSVILLE - MAYSVLT4 138.00 138KV CKT 1
FDNS	00NR	0	20WP	G15_093	FROM->TO	G14-057T 345.00 - SUNNYSIDE 345KV CKT 1	717	789	0.17664	111.7619	P12:138:OKGE:3TERM21
FDNS	00NR	0	20WP	G15_093	FROM->TO	G14-057T 345.00 - SUNNYSIDE 345KV CKT 1	717	789	0.17581	111.7611	GEN562691 1-G15_015_3 0.6900
FDNS	00NR	0	20WP	G15_093	FROM->TO	G14-057T 345.00 - SUNNYSIDE 345KV CKT 1	717	789	0.17581	111.7556	GEN562772 1-G15034_3 0.6900
FDNS	00NR	0	20WP	G15_093	FROM->TO	G14-057T 345.00 - SUNNYSIDE 345KV CKT 1	717	789	0.17581	111.7408	GEN511961 1-DEMPSEY-WTG10.7000
FDNS	00NR	0	20WP	G15_093	FROM->TO	G14-057T 345.00 - SUNNYSIDE 345KV CKT 1	717	789	0.17776	111.7297	SOONER - SPRING CREEK 345KV CKT 1
FDNS	00NR	0	20WP	G15_093	FROM->TO	G14-057T 345.00 - SUNNYSIDE 345KV CKT 1	717	789	0.17581	111.7267	P12:069:OKGE:3TERM42
FDNS	00NR	0	20WP	G15_093	FROM->TO	G14-057T 345.00 - SUNNYSIDE 345KV CKT 1	717	789	0.17776	111.7265	NORTHWEST - SPRING CREEK 345KV CKT 1
FDNS	00NR	0	20WP	G15_093	FROM->TO	G14-057T 345.00 - SUNNYSIDE 345KV CKT 1	717	789	0.17441	111.7238	ARBUCKLE - SULPHR 4 138.00 138KV CKT 1
FDNS	00NR	0	20WP	G15_093	FROM->TO	G14-057T 345.00 - SUNNYSIDE 345KV CKT 1	717	789	0.17592	111.7062	GLASSES - MADILL INDUSTRIAL TAP 138KV CKT 1
FDNS	00NR	0	20WP	G15_093	FROM->TO	G14-057T 345.00 - SUNNYSIDE 345KV CKT 1	717	789	0.17366	111.7055	MAYSVLT4 138.00 - PRAIRIE POINT 138KV CKT 1
FDNS	00NR	0	20WP	G15_093	FROM->TO	G14-057T 345.00 - SUNNYSIDE 345KV CKT 1	717	789	0.17575	111.7005	P12:138:WFEC:MSL11
FDNS	00NR	0	20WP	G15_093	FROM->TO	G14-057T 345.00 - SUNNYSIDE 345KV CKT 1	717	789	0.17575	111.7005	P12:138:WFEC-AEPW:PHAROAH4:LONEOAK4
FDNS	00NR	0	20WP	G15_093	FROM->TO	G14-057T 345.00 - SUNNYSIDE 345KV CKT 1	717	789	0.17592	111.6941	CANEY CREEK - JOHNSON COUNTY 138KV CKT 1
FDNS	00NR	0	20WP	G15_093	FROM->TO	G14-057T 345.00 - SUNNYSIDE 345KV CKT 1	717	789	0.17581	111.689	GEN515443 1-MNCOWND1 0.7000
FDNS	00NR	0	20WP	G15_093	FROM->TO	G14-057T 345.00 - SUNNYSIDE 345KV CKT 1	717	789	0.17796	111.6853	MOREWOOD SW - NINE MILE 138KV CKT 1
FDNS	00NR	0	20WP	G15_093	FROM->TO	G14-057T 345.00 - SUNNYSIDE 345KV CKT 1	717	789	0.1759	111.6712	ALTUS JUNCTION - RUSSELL 138KV CKT 1
FDNS	00NR	0	20WP	G15_093	FROM->TO	G14-057T 345.00 - SUNNYSIDE 345KV CKT 1	717	789	0.1759	111.6712	ALTUS JUNCTION - RUSSELL 138KV CKT 1
FDNS	00NR	0	20WP	G15_093	FROM->TO	G14-057T 345.00 - SUNNYSIDE 345KV CKT 1	717	789	0.17581	111.6708	GEN560183 1-REDHIL-WTG1 12.000
FDNS	00NR	0	20WP	G15_093	FROM->TO	G14-057T 345.00 - SUNNYSIDE 345KV CKT 1	717	789	0.17581	111.6625	INDEPENDENCE 500/26.0KV TRANSFORMER CKT 1
FDNS	00NR	0	20WP	G15_093	FROM->TO	G14-057T 345.00 - SUNNYSIDE 345KV CKT 1	717	789	0.17592	111.6578	GLASSES - RUSSETT 138KV CKT 1
FDNS	00NR	0	20WP	G15_093	FROM->TO	G14-057T 345.00 - SUNNYSIDE 345KV CKT 1	717	789	0.17581	111.654	GEN600067 9-HIGH BRIDGE
FDNS	00NR	0	20WP	G15_093	FROM->TO	G14-057T 345.00 - SUNNYSIDE 345KV CKT 1	717	789	0.17588	111.6529	OVEXFRMCCOVE
FDNS	00NR	0	20WP	G15_093	FROM->TO	G14-057T 345.00 - SUNNYSIDE 345KV CKT 1	717	789	0.17611	111.6441	P12:138:WFEC:MSL08
FDNS	00NR	0	16WP	G15_093	FROM->TO	G14-057T 345.00 - SUNNYSIDE 345KV CKT 1	717	789	0.17626	111.6433	GEN525562 1-TOLK GEN #2 24 KV
FDNS	00NR	0	20WP	G15_093	FROM->TO	G14-057T 345.00 - SUNNYSIDE 345KV CKT 1	717	789	0.17562	111.6433	CARTER - CHICKASAW 138KV CKT 1
FDNS	00NR	0	16WP	G15_093	FROM->TO	G14-057T 345.00 - SUNNYSIDE 345KV CKT 1	717	789	0.17626	111.6359	GEN563202 1-G15085_3 0.5500
FDNS	00NR	0	20WP	G15_093	FROM->TO	G14-057T 345.00 - SUNNYSIDE 345KV CKT 1	717	789	0.17593	111.6359	CANADIAN RIVER - MCALESTER SOUTH 138KV CKT 1
FDNS	00NR	0	20WP	G15_093	FROM->TO	G14-057T 345.00 - SUNNYSIDE 345KV CKT 1	717	789	0.17593	111.6359	CANADIAN RIVER - MCALESTER SOUTH 138KV CKT 1
FDNS	00NR	0	20WP	G15_093	FROM->TO	G14-057T 345.00 - SUNNYSIDE 345KV CKT 1	717	789	0.17908	111.6344	LEBANON - TEXOMA JCT 138KV CKT 1
FDNS	00NR	0	20WP	G15_093	FROM->TO	G14-057T 345.00 - SUNNYSIDE 345KV CKT 1	717	789	0.17593	111.6341	CANADIAN RIVER () 345/138/13.8KV TRANSFORMER CKT 1
FDNS	00NR	0	20WP	G15_093	FROM->TO	G14-057T 345.00 - SUNNYSIDE 345KV CKT 1	717	789	0.17593	111.6341	CANADIAN RIVER () 345/138/13.8KV TRANSFORMER CKT 1
FDNS	00NR	0	20WP	G15_093	FROM->TO	G14-057T 345.00 - SUNNYSIDE 345KV CKT 1	717	789	0.17581	111.6328	P12:230:UMZB:# 112 #: NU IN SD. NU-RCDC & DRY CREEK XFMR
FDNS	00NR	0	16WP	G15_093	FROM->TO	G14-057T 345.00 - SUNNYSIDE 345KV CKT 1	717	789	0.17563	111.6299	LYDIA - WELSH 345KV CKT 1
FDNS	00NR	0	16WP	G15_093	FROM->TO	G14-057T 345.00 - SUNNYSIDE 345KV CKT 1	717	789	0.17563	111.6299	LYDIA - WELSH 345KV CKT 1
FDNS	00NR	0	20WP	G15_093	FROM->TO	G14-057T 345.00 - SUNNYSIDE 345KV CKT 1	717	789	0.17581	111.627	RCDC EAST 4230.00 - RED CEDAR DC 230KV CKT 1
FDNS	00NR	0	20WP	G15_093	FROM->TO	G14-057T 345.00 - SUNNYSIDE 345KV CKT 1	717	789	0.1752	111.6223	ROCKY POINT - SPRINGDALE 138KV CKT 1
FDNS	00NR	0	20WP	G15_093	FROM->TO	G14-057T 345.00 - SUNNYSIDE 345KV CKT 1	717	789	0.17581	111.6211	GEN562902 1-G15052_3 0.6900
FDNS	00NR	0	20WP	G15_093	FROM->TO	G14-057T 345.00 - SUNNYSIDE 345KV CKT 1	717	789	0.17569	111.621	HUGO (HUGO 1) 345/138/13.8KV TRANSFORMER CKT 1
FDNS	00NR	0	20WP	G15_093	FROM->TO	G14-057T 345.00 - SUNNYSIDE 345KV CKT 1	717	789	0.17581	111.6184	GEN563242 1-G15090_3 0.6900
FDNS	00NR	0	20WP	G15_093	FROM->TO	G14-057T 345.00 - SUNNYSIDE 345KV CKT 1	717	789	0.17366	111.6131	PRAIRIE POINT - RATLIFF 138KV CKT 1
FDNS	00NR	0	20WP	G15_093	FROM->TO	G14-057T 345.00 - SUNNYSIDE 345KV CKT 1	717	789	0.17601	111.6118	CHAMBER SPRINGS - CLARKSVILLE 345KV CKT 1
FDNS	00NR	0	20WP	G15_093	FROM->TO	G14-057T 345.00 - SUNNYSIDE 345KV CKT 1	717	789	0.17585	111.6064	GRPRAR1-LNX3345.00 - GRPRAR 345KV CKT Z
FDNS	00NR	0	20WP	G15_093	FROM->TO	G14-057T 345.00 - SUNNYSIDE 345KV CKT 1	717	789	0.17585	111.606	GRPRAR1-LNX3345.00 - HOLT.CO3 345.00 345KV CKT 1
FDNS	00NR	0	16WP	G15_093	FROM->TO	G14-057T 345.00 - SUNNYSIDE 345KV CKT 1	717	789	0.17626	111.5979	GEN527166 1-MUSTANG_6 118.000
FDNS	00NR	0	20WP	G15_093	FROM->TO	G14-057T 345.00 - SUNNYSIDE 345KV CKT 1	717	789	0.17581	111.5943	GEN629072 4-LANSING GENERATOR FOR UNITS NO4 EIA CODE 1
FDNS	00NR	0	16WP	G15_093	FROM->TO	G14-057T 345.00 - SUNNYSIDE 345KV CKT 1	717	789	0.17801	111.5888	CHISHOLM6 230.00 - SWEETWATER 230KV CKT 1
FDNS	00NR	0	20WP	G15_093	FROM->TO	G14-057T 345.00 - SUNNYSIDE 345KV CKT 1	717	789	0.17581	111.5796	GEN562078 1-G11_051_3 0.6900
FDNS	00NR	0	20WP	G15_093	FROM->TO	G14-057T 345.00 - SUNNYSIDE 345KV CKT 1	717	789	0.17627	111.5767	P12:138:AEPW:112GORE4:SNYDER-4
FDNS	00NR	0	20WP	G15_093	FROM->TO	G14-057T 345.00 - SUNNYSIDE 345KV CKT 1	717	789	0.17581	111.5711	GEN524285 1-WILDORADO WIND GEN
FDNS	00NR	0	20WP	G15_093	FROM->TO	G14-057T 345.00 - SUNNYSIDE 345KV CKT 1	717	789	0.17441	111.5694	JOLLYVILLE - SULPHR 4 138.00 138KV CKT 1
FDNS	00NR	0	20WP	G15_093	FROM->TO	G14-057T 345.00 - SUNNYSIDE 345KV CKT 1	717	789	0.17581	111.5522	GEN562587 1-G14_056_3 0.6900
FDNS	00NR	0	20WP	G15_093	FROM->TO	G14-057T 345.00 - SUNNYSIDE 345KV CKT 1	717	789	0.17581	111.5512	GEN514805 1-SOONER UNIT 1
FDNS	00NR	0	20WP	G15_093	FROM->TO	G14-057T 345.00 - SUNNYSIDE 345KV CKT 1	717	789	0.17796	111.5491	BEARCAT 138.00 - NINE MILE 138KV CKT 1
FDNS	00NR	0	20WP	G15_093	FROM->TO	G14-057T 345.00 - SUNNYSIDE 345KV CKT 1	717	789	0.17581	111.5454	GEN524295 1-SPNSPUR_WND10.6900
FDNS	00NR	0	20WP	G15_093	FROM->TO	G14-057T 345.00 - SUNNYSIDE 345KV CKT 1	717	789	0.17581	111.5399	GEN657749 1-YOUNG 1 GENERATOR
FDNS	00NR	0	16WP	G15_093	FROM->TO	G14-057T 345.00 - SUNNYSIDE 345KV CKT 1	717	789	0.17521	111.5346	JOHNSON COUNTY (JOHNCO) 345/138/13.8KV TRANSFORMER CKT 1
FDNS	00NR	0	16WP	G15_093	FROM->TO	G14-057T 345.00 - SUNNYSIDE 345KV CKT 1	717	789	0.17626	111.5255	GEN635023 3-WALTER SCOTT UNIT 3
FDNS	00NR	0	20WP	G15_093	FROM->TO	G14-057T 345.00 - SUNNYSIDE 345KV CKT 1	717	789	0.17581	111.5198	GEN514806 1-SOONER UNIT 2
FDNS	00NR	0	20WP	G15_093	FROM->TO	G14-057T 345.00 - SUNNYSIDE 345KV CKT 1	717	789	0.17581	111.5196	GEN524023 1-NICHOLS GEN #3 22 KV
FDNS	00NR	0	16WP	G15_093	FROM->TO	G14-057T 345.00 - SUNNYSIDE 345KV CKT 1	717	789	0.17626	111.5165	GEN562590 1-G14_057_3 0.6900

SOLUTION	GROUP	SCENARIO	SEASON	SOURCE	DIRECTION	MONITORED ELEMENT	RATEA (MVA)	RATEB(MVA)	TDF	TC%LOADING (% MVA)	CONTINGENCY
FDNS	00NR	0	20WP	G15_093	FROM->TO	G14-057T 345.00 - SUNNYSIDE 345KV CKT 1	717	789	0.17567	111.5107	CROCKETT - TENASKA RUSK COUNTY 345KV CKT 1
FDNS	00NR	0	20WP	G15_093	FROM->TO	G14-057T 345.00 - SUNNYSIDE 345KV CKT 1	717	789	0.17567	111.5059	LEBROCK - TENASKA RUSK COUNTY 345KV CKT 1
FDNS	00NR	0	20WP	G15_093	FROM->TO	G14-057T 345.00 - SUNNYSIDE 345KV CKT 1	717	789	0.17441	111.4877	JOLLYVILLE - KERR MCGEE CIMARRON 138KV CKT 1
FDNS	00NR	0	20WP	G15_093	FROM->TO	G14-057T 345.00 - SUNNYSIDE 345KV CKT 1	717	789	0.17581	111.4834	GEN562812 1-G15040_3 0.3570
FDNS	00NR	0	20WP	G15_093	FROM->TO	G14-057T 345.00 - SUNNYSIDE 345KV CKT 1	717	789	0.17581	111.4785	GEN562270 1-G12-020-2 0.6900
FDNS	00NR	0	20WP	G15_093	FROM->TO	G14-057T 345.00 - SUNNYSIDE 345KV CKT 1	717	789	0.17581	111.4769	GEN562882 1-G15047_3 0.6900
FDNS	00NR	0	20WP	G15_093	FROM->TO	G14-057T 345.00 - SUNNYSIDE 345KV CKT 1	717	789	0.17581	111.4766	GEN563132 1-G15078_3 0.3570
FDNS	00NR	0	20WP	G15_093	FROM->TO	G14-057T 345.00 - SUNNYSIDE 345KV CKT 1	717	789	0.17581	111.4697	GEN563102 1-G15075_3 0.5500
FDNS	00NR	0	20WP	G15_093	FROM->TO	G14-057T 345.00 - SUNNYSIDE 345KV CKT 1	717	789	0.17581	111.4569	GEN563062 1-G15071_3 0.6900
FDNS	00NR	0	20WP	G15_093	FROM->TO	G14-057T 345.00 - SUNNYSIDE 345KV CKT 1	717	789	0.17796	111.4547	BEARCAT 138.00 - MOORELAND 138KV CKT 1
FDNS	00NR	0	20WP	G15_093	FROM->TO	G14-057T 345.00 - SUNNYSIDE 345KV CKT 1	717	789	0.17796	111.4501	P12:138:WFEC:MSL14
FDNS	00NR	0	20WP	G15_093	FROM->TO	G14-057T 345.00 - SUNNYSIDE 345KV CKT 1	717	789	0.17441	111.4369	ARBWIND4 138.00 - KERR MCGEE CIMARRON 138KV CKT 1
FDNS	00NR	0	20WP	G15_093	FROM->TO	G14-057T 345.00 - SUNNYSIDE 345KV CKT 1	717	789	0.17581	111.4202	GEN562974 1-G15060_5 0.6900
FDNS	00NR	0	20WP	G15_093	FROM->TO	G14-057T 345.00 - SUNNYSIDE 345KV CKT 1	717	789	0.17581	111.4197	GEN521112 1-ORME3 13.800
FDNS	00NR	0	20WP	G15_093	FROM->TO	G14-057T 345.00 - SUNNYSIDE 345KV CKT 1	717	789	0.17552	111.4177	BROWN - RUSSETT 138KV CKT 1
FDNS	00NR	0	16WP	G15_093	FROM->TO	G14-057T 345.00 - SUNNYSIDE 345KV CKT 1	717	789	0.17626	111.4166	GEN562762 1-G15033_3 0.6900
FDNS	00NR	0	20WP	G15_093	FROM->TO	G14-057T 345.00 - SUNNYSIDE 345KV CKT 1	717	789	0.17581	111.4113	GEN345671 2-1RUSH G2 18.000
FDNS	00NR	0	20WP	G15_093	FROM->TO	G14-057T 345.00 - SUNNYSIDE 345KV CKT 1	717	789	0.17581	111.4104	GEN562973 1-G15060_4 0.6900
FDNS	00NR	0	20WP	G15_093	FROM->TO	G14-057T 345.00 - SUNNYSIDE 345KV CKT 1	717	789	0.17581	111.4094	GEN345670 1-1RUSH G1 18.000
FDNS	00NR	0	16WP	G15_093	FROM->TO	G14-057T 345.00 - SUNNYSIDE 345KV CKT 1	717	789	0.17626	111.4055	GEN562655 1-G14_074_3 0.6900
FDNS	00NR	0	20WP	G15_093	FROM->TO	G14-057T 345.00 - SUNNYSIDE 345KV CKT 1	717	789	0.17458	111.3964	CHICKASAW - TOTAL 138KV CKT 1
FDNS	00NR	0	20WP	G15_093	FROM->TO	G14-057T 345.00 - SUNNYSIDE 345KV CKT 1	717	789	0.17581	111.3839	GEN560105 1-G08-22 0.6900
FDNS	00NR	0	20WP	G15_093	FROM->TO	G14-057T 345.00 - SUNNYSIDE 345KV CKT 1	717	789	0.17581	111.3817	4SIOUX 1 138.00 138/18.0KV TRANSFORMER CKT 1
FDNS	00NR	0	20WP	G15_093	FROM->TO	G14-057T 345.00 - SUNNYSIDE 345KV CKT 1	717	789	0.17552	111.372	RUSSETT - RUSSETT 138KV CKT 1
FDNS	00NR	0	20WP	G15_093	FROM->TO	G14-057T 345.00 - SUNNYSIDE 345KV CKT 1	717	789	0.17581	111.3666	GEN562550 1-G14_040_3 0.6900
FDNS	00NR	0	20WP	G15_093	FROM->TO	G14-057T 345.00 - SUNNYSIDE 345KV CKT 1	717	789	0.17581	111.3633	GEN681522 3-GENOA 3
FDNS	00NR	0	16WP	G15_093	FROM->TO	G14-057T 345.00 - SUNNYSIDE 345KV CKT 1	717	789	0.17626	111.3403	GEN562685 1-G15_013_3 0.3550
FDNS	00NR	0	20WP	G15_093	FROM->TO	G14-057T 345.00 - SUNNYSIDE 345KV CKT 1	717	789	0.17581	111.3293	GEN511853 1-COMANCHE #3
FDNS	00NR	0	20WP	G15_093	FROM->TO	G14-057T 345.00 - SUNNYSIDE 345KV CKT 1	717	789	0.17581	111.3226	GEN527161 1-MUSTANG GEN #1
FDNS	00NR	0	20WP	G15_093	FROM->TO	G14-057T 345.00 - SUNNYSIDE 345KV CKT 1	717	789	0.17581	111.3226	GEN527162 1-MUSTANG GEN #2
FDNS	00NR	0	20WP	G15_093	FROM->TO	G14-057T 345.00 - SUNNYSIDE 345KV CKT 1	717	789	0.17498	111.3211	ROCKY POINT - SUNNYSIDE 138KV CKT 1
FDNS	00NR	0	20WP	G15_093	FROM->TO	G14-057T 345.00 - SUNNYSIDE 345KV CKT 1	717	789	0.17581	111.3161	EASTDC - ERCOT EQUIVALENCE 345KV CKT 1
FDNS	00NR	0	20WP	G15_093	FROM->TO	G14-057T 345.00 - SUNNYSIDE 345KV CKT 1	717	789	0.17581	111.3113	GEN511962 2-RKYRDGW2-1 0.7000
FDNS	00NR	0	20WP	G15_093	FROM->TO	G14-057T 345.00 - SUNNYSIDE 345KV CKT 1	717	789	0.17581	111.2988	GEN672321 1-SHAND GENERATOR 1
FDNS	00NR	0	20WP	G15_093	FROM->TO	G14-057T 345.00 - SUNNYSIDE 345KV CKT 1	717	789	0.17545	111.2978	RUSSETT - SPRINGDALE 138KV CKT 1
FDNS	00NR	0	20WP	G15_093	FROM->TO	G14-057T 345.00 - SUNNYSIDE 345KV CKT 1	717	789	0.17581	111.2896	GEN525494 1-PLANT X GEN #4 20 KV
FDNS	00NR	0	20WP	G15_093	FROM->TO	G14-057T 345.00 - SUNNYSIDE 345KV CKT 1	717	789	0.17822	111.2832	G15063_T 345.00 - MATHWSN7 345.00 345KV CKT 1
FDNS	00NR	0	20WP	G15_093	FROM->TO	G14-057T 345.00 - SUNNYSIDE 345KV CKT 1	717	789	0.17581	111.2755	GEN672310 1-POPLAR RIVER GENERATOR 1
FDNS	00NR	0	20WP	G15_093	FROM->TO	G14-057T 345.00 - SUNNYSIDE 345KV CKT 1	717	789	0.17581	111.2755	GEN672311 2-POPLAR RIVER GENERATOR 2
FDNS	00NR	0	20WP	G15_093	FROM->TO	G14-057T 345.00 - SUNNYSIDE 345KV CKT 1	717	789	0.17581	111.2739	GEN527882 1-CUNNINGHAM GEN #2 20 KV
FDNS	00NR	0	20WP	G15_093	FROM->TO	G14-057T 345.00 - SUNNYSIDE 345KV CKT 1	717	789	0.17581	111.266	GEN672306 6-BOUNDARY DAM GENERATOR 6
FDNS	00NR	0	20WP	G15_093	FROM->TO	G14-057T 345.00 - SUNNYSIDE 345KV CKT 1	717	789	0.17581	111.2655	GEN563192 1-G15084_3 0.5500
FDNS	00NR	0	20WP	G15_093	FROM->TO	G14-057T 345.00 - SUNNYSIDE 345KV CKT 1	717	789	0.17581	111.2616	GEN562512 1-G14_020_3 0.6900
FDNS	00NR	0	20WP	G15_093	FROM->TO	G14-057T 345.00 - SUNNYSIDE 345KV CKT 1	717	789	0.17581	111.2595	GEN511852 1-COMANCHE #2
FDNS	00NR	0	20WP	G15_093	FROM->TO	G14-057T 345.00 - SUNNYSIDE 345KV CKT 1	717	789	0.17581	111.2591	GEN344895 2-1LAB G2 20.000
FDNS	00NR	0	20WP	G15_093	FROM->TO	G14-057T 345.00 - SUNNYSIDE 345KV CKT 1	717	789	0.17581	111.258	GEN527163 1-MUSTANG GEN #3 22 KV
FDNS	00NR	0	20WP	G15_093	FROM->TO	G14-057T 345.00 - SUNNYSIDE 345KV CKT 1	717	789	0.17569	111.2526	P12:138:WFEC-AEPW:GOLDENSW4:CRAIGJT4
FDNS	00NR	0	20WP	G15_093	FROM->TO	G14-057T 345.00 - SUNNYSIDE 345KV CKT 1	717	789	0.17581	111.2434	GEN562892 1-G15048_3 0.6900
FDNS	00NR	0	20WP	G15_093	FROM->TO	G14-057T 345.00 - SUNNYSIDE 345KV CKT 1	717	789	0.17581	111.2366	GEN681542 6-JP MADGETT
FDNS	00NR	0	20WP	G15_093	FROM->TO	G14-057T 345.00 - SUNNYSIDE 345KV CKT 1	717	789	0.17505	111.235	ARKANSAS NUCLEAR ONE - FT SMITH 500KV CKT 1
FDNS	00NR	0	20WP	G15_093	FROM->TO	G14-057T 345.00 - SUNNYSIDE 345KV CKT 1	717	789	0.17505	111.235	ARKANSAS NUCLEAR ONE - FT SMITH 500KV CKT 1
FDNS	00NR	0	20WP	G15_093	FROM->TO	G14-057T 345.00 - SUNNYSIDE 345KV CKT 1	717	789	0.17581	111.2295	GEN344896 3-1LAB G3 20.000
FDNS	00NR	0	20WP	G15_093	FROM->TO	G14-057T 345.00 - SUNNYSIDE 345KV CKT 1	717	789	0.17581	111.2284	GEN344897 4-1LAB G4 20.000
FDNS	00NR	0	20WP	G15_093	FROM->TO	G14-057T 345.00 - SUNNYSIDE 345KV CKT 1	717	789	0.17581	111.2281	GEN344894 1-1LAB G1 20.000
FDNS	00NR	0	20WP	G15_093	FROM->TO	G14-057T 345.00 - SUNNYSIDE 345KV CKT 1	717	789	0.17598	111.2223	P12:138:WFEC:MSL16
FDNS	00NR	0	20WP	G15_093	FROM->TO	G14-057T 345.00 - SUNNYSIDE 345KV CKT 1	717	789	0.17398	111.2221	ARDMORE WEST - CARTER 138KV CKT 1
FDNS	00NR	0	16WP	G15_093	FROM->TO	G14-057T 345.00 - SUNNYSIDE 345KV CKT 1	717	789	0.17626	111.2074	GEN525561 1-TOLK GEN #1 24 KV
FDNS	00NR	0	16WP	G15_093	FROM->TO	G14-057T 345.00 - SUNNYSIDE 345KV CKT 1	717	789	0.17626	111.2074	GEN527903 1-HOBBS PLANT #3 (ST)
FDNS	00NR	0	16WP	G15_093	FROM->TO	G14-057T 345.00 - SUNNYSIDE 345KV CKT 1	717	789	0.17626	111.2054	GEN563272 1-G15093_3 0.6900
FDNS	00NR	0	20WP	G15_093	FROM->TO	G14-057T 345.00 - SUNNYSIDE 345KV CKT 1	717	789	0.17581	111.2032	GEN523461 1-BLACKHAWK GEN #1
FDNS	00NR	0	20WP	G15_093	FROM->TO	G14-057T 345.00 - SUNNYSIDE 345KV CKT 1	717	789	0.17581	111.2031	GEN523462 1-BLACKHAWK GEN #2
FDNS	00NR	0	20WP	G15_093	FROM->TO	G14-057T 345.00 - SUNNYSIDE 345KV CKT 1	717	789	0.17627	111.1791	CACHE - SNYDER 138KV CKT 1
FDNS	00NR	0	20WP	G15_093	FROM->TO	G14-057T 345.00 - SUNNYSIDE 345KV CKT 1	717	789	0.17577	111.1605	P12:138:WFEC:MSL07
FDNS	00NR	0	20WP	G15_093	FROM->TO	G14-057T 345.00 - SUNNYSIDE 345KV CKT 1	717	789	0.17577	111.1605	P12:138:WFEC-AEPW:HUGOPP4:ATOKA--4
FDNS	00NR	0	20WP	G15_093	FROM->TO	G14-057T 345.00 - SUNNYSIDE 345KV CKT 1	717	789	0.17573	111.1553	P12:138:AEPW-SWPA:LONEOAK4:TUPELO4
FDNS	00NR	0	20WP	G15_093	FROM->TO	G14-057T 345.00 - SUNNYSIDE 345KV CKT 1	717	789	0.17573	111.1553	P12:138:WFEC:MSL06
FDNS	00NR	0	20WP	G15_093	FROM->TO	G14-057T 345.00 - SUNNYSIDE 345KV CKT 1	717	789	0.17581	111.1514	GEN521111 1-ORME2 13.800
FDNS	00NR	0	20WP	G15_093	FROM->TO	G14-057T 345.00 - SUNNYSIDE 345KV CKT 1	717	789	0.17581	111.1465	GEN562699 1-G15_018_3 0.6900
FDNS	00NR	0	20WP	G15_093	FROM->TO	G14-057T 345.00 - SUNNYSIDE 345KV CKT 1	717	789	0.17402	111.1385	SUNNYSIDE (SUNNYSD5) 345/138/13.8KV TRANSFORMER CKT 1
FDNS	00NR	0	20WP	G15_093	FROM->TO	G14-057T 345.00 - SUNNYSIDE 345KV CKT 1	717	789	0.17581	111.1382	GEN521110 1-ORME1 13.800
FDNS	00NR	0	20WP	G15_093	FROM->TO	G14-057T 345.00 - SUNNYSIDE 345KV CKT 1	717	789	0.17748	111.1308	CLARKSVILLE - MUSKOGEE 345KV CKT 1
FDNS	00NR	0	20WP	G15_093	FROM->TO	G14-057T 345.00 - SUNNYSIDE 345KV CKT 1	717	789	0.17748	111.1308	CLARKSVILLE - MUSKOGEE 345KV CKT 1
FDNS	00NR	0	20WP	G15_093	FROM->TO	G14-057T 345.00 - SUNNYSIDE 345KV CKT 1	717	789	0.1759	111.1294	G15085_T 138.00 - RUSSELL 138KV CKT 1
FDNS	00NR	0	20WP	G15_093	FROM->TO	G14-057T 345.00 - SUNNYSIDE 345KV CKT 1	717	789	0.17398	111.1097	ARDMORE WEST - UNIROYAL 138KV CKT 1
FDNS	00NR	0	16WP	G15_093	FROM->TO	G14-057T 345.00 - SUNNYSIDE 345KV CKT 1	717	789	0.17626	111.1021	GEN635024 4-WALTER SCOTT UNIT 4
FDNS	00NR	0	20WP	G15_093	FROM->TO	G14-057T 345.00 - SUNNYSIDE 345KV CKT 1	717	789	0.17581	111.0967	GEN520811 1-ANADRK4
FDNS	00NR	0	20WP	G15_093	FROM->TO	G14-057T 345.00 - SUNNYSIDE 345KV CKT 1	717	789	0.17581	111.0961	GEN563162 1-G15081_3 0.6900
FDNS	00NR	0	20WP	G15_093	FROM->TO	G14-057T 345.00 - SUNNYSIDE 345KV CKT 1	717	789	0.17581	111.0703	GEN661015 1-COYOTE
FDNS	00NR	0	20WP	G15_093	FROM->TO	G14-057T 345.00 - SUNNYSIDE 345KV CKT 1	717	789	0.17581	111.0659	GEN563292 1-G15095_3 0.6900

SOLUTION	GROUP	SCENARIO	SEASON	SOURCE	DIRECTION	MONITORED ELEMENT	RATEA (MVA)	RATEB(MVA)	TDF	TC%LOADING (% MVA)	CONTINGENCY
FDNS	00NR	0	20WP	G15_093	FROM->TO	G14-057T 345.00 - SUNNYSIDE 345KV CKT 1	717	789	0.17507	111.0612	P12:138:OKGE:3TERM40
FDNS	00NR	0	20WP	G15_093	FROM->TO	G14-057T 345.00 - SUNNYSIDE 345KV CKT 1	717	789	0.17438	111.0535	CARTRCO4 138.00 - RATLIFF 138KV CKT 1
FDNS	00NR	0	20WP	G15_093	FROM->TO	G14-057T 345.00 - SUNNYSIDE 345KV CKT 1	717	789	0.17581	111.0431	GEN563122 1-G15077_3 0.3850
FDNS	00NR	0	20WP	G15_093	FROM->TO	G14-057T 345.00 - SUNNYSIDE 345KV CKT 1	717	789	0.17581	111.0154	GEN562861 1-G15045_2 0.4800
FDNS	00NR	0	20WP	G15_093	FROM->TO	G14-057T 345.00 - SUNNYSIDE 345KV CKT 1	717	789	0.17581	110.9573	GEN657748 1-YOUNG 2 GENERATOR
FDNS	00NR	0	20WP	G15_093	FROM->TO	G14-057T 345.00 - SUNNYSIDE 345KV CKT 1	717	789	0.17581	110.9312	GEN527883 1-CUNNINGHAM GEN #3 22 KV
FDNS	00NR	0	20WP	G15_093	FROM->TO	G14-057T 345.00 - SUNNYSIDE 345KV CKT 1	717	789	0.17581	110.9282	GEN527884 1-CUNNINGHAM GEN #4 22 KV
FDNS	00NR	0	20WP	G15_093	FROM->TO	G14-057T 345.00 - SUNNYSIDE 345KV CKT 1	717	789	0.17599	110.9202	P12:138:WFEC:MSL15
FDNS	00NR	0	20WP	G15_093	FROM->TO	G14-057T 345.00 - SUNNYSIDE 345KV CKT 1	717	789	0.17581	110.8807	GEN562992 1-G15063_3 0.6900
FDNS	00NR	0	20WP	G15_093	FROM->TO	G14-057T 345.00 - SUNNYSIDE 345KV CKT 1	717	789	0.17398	110.8733	SUNNYSIDE - UNIROYAL 138KV CKT 1
FDNS	00NR	0	20WP	G15_093	FROM->TO	G14-057T 345.00 - SUNNYSIDE 345KV CKT 1	717	789	0.1759	110.8647	P12:138:AEPW:SHAM4WT:CHILD4WT
FDNS	00NR	0	20WP	G15_093	FROM->TO	G14-057T 345.00 - SUNNYSIDE 345KV CKT 1	717	789	0.17581	110.8625	GEN562704 1-G15_020_3 0.3550
FDNS	00NR	0	20WP	G15_093	FROM->TO	G14-057T 345.00 - SUNNYSIDE 345KV CKT 1	717	789	0.17581	110.8623	GEN526331 1-JONES GEN #1 22 KV
FDNS	00NR	0	20WP	G15_093	FROM->TO	G14-057T 345.00 - SUNNYSIDE 345KV CKT 1	717	789	0.17581	110.8621	GEN526332 1-JONES GEN #2 21 KV
FDNS	00NR	0	20WP	G15_093	FROM->TO	G14-057T 345.00 - SUNNYSIDE 345KV CKT 1	717	789	0.17581	110.8621	GEN620315 1-BIG STONE GEN
FDNS	00NR	0	20WP	G15_093	FROM->TO	G14-057T 345.00 - SUNNYSIDE 345KV CKT 1	717	789	0.17581	110.8294	GEN562952 1-G15057_3 0.6500
FDNS	00NR	0	20WP	G15_093	FROM->TO	G14-057T 345.00 - SUNNYSIDE 345KV CKT 1	717	789	0.17581	110.7897	GEN511851 1-COMANCHE #1
FDNS	00NR	0	20WP	G15_093	FROM->TO	G14-057T 345.00 - SUNNYSIDE 345KV CKT 1	717	789	0.17581	110.7889	GEN600004 2-PRAIRIE ISLAND G2
FDNS	00NR	0	17SP	G15_093	FROM->TO	G14-057T 345.00 - SUNNYSIDE 345KV CKT 1	717	789	0.35365	110.7884	CIMARRON - MINCO 345KV CKT 1
FDNS	00NR	0	20WP	G15_093	FROM->TO	G14-057T 345.00 - SUNNYSIDE 345KV CKT 1	717	789	0.17581	110.7863	GEN600003 1-PRAIRIE ISLAND G1
FDNS	00NR	0	20WP	G15_093	FROM->TO	G14-057T 345.00 - SUNNYSIDE 345KV CKT 1	717	789	0.17581	110.7686	GEN600006 1-AS KING
FDNS	00NR	0	20WP	G15_093	FROM->TO	G14-057T 345.00 - SUNNYSIDE 345KV CKT 1	717	789	0.17581	110.7635	GEN563173 1-G15082_3 0.6900
FDNS	00NR	0	20WP	G15_093	FROM->TO	G14-057T 345.00 - SUNNYSIDE 345KV CKT 1	717	789	0.17581	110.7507	GEN562710 1-G15_022_3 0.5500
FDNS	00NR	0	20WP	G15_093	FROM->TO	G14-057T 345.00 - SUNNYSIDE 345KV CKT 1	717	789	0.17908	110.7451	CANEY CREEK - TEXOMA JCT 138KV CKT 1
FDNS	00NR	0	20WP	G15_093	FROM->TO	G14-057T 345.00 - SUNNYSIDE 345KV CKT 1	717	789	0.17679	110.7436	GRAPEVINE INTERCHANGE - STATELINE INTERCHANGE 230KV CKT 1
FDNS	00NR	0	20WP	G15_093	FROM->TO	G14-057T 345.00 - SUNNYSIDE 345KV CKT 1	717	789	0.17679	110.7436	GRAPEVINE INTERCHANGE - STATELINE INTERCHANGE 230KV CKT 1
FDNS	00NR	0	20WP	G15_093	FROM->TO	G14-057T 345.00 - SUNNYSIDE 345KV CKT 1	717	789	0.17581	110.7218	GEN532751 1-WOLF CREEK GENERATING STATION UNIT 1
FDNS	00NR	0	20WP	G15_093	FROM->TO	G14-057T 345.00 - SUNNYSIDE 345KV CKT 1	717	789	0.17856	110.6708	P12:138:AEPW-OGE:CORNVIL4:CIMARON4
FDNS	00NR	0	20WP	G15_093	FROM->TO	G14-057T 345.00 - SUNNYSIDE 345KV CKT 1	717	789	0.17673	110.6105	GRAPEVINE INTERCHANGE - NICHOLS STATION 230KV CKT 1
FDNS	00NR	0	20WP	G15_093	FROM->TO	G14-057T 345.00 - SUNNYSIDE 345KV CKT 1	717	789	0.17673	110.6105	GRAPEVINE INTERCHANGE - NICHOLS STATION 230KV CKT 1
FDNS	00NR	0	20WP	G15_093	FROM->TO	G14-057T 345.00 - SUNNYSIDE 345KV CKT 1	717	789	0.17581	110.6	GEN615002 2-COAL CREEK
FDNS	00NR	0	20WP	G15_093	FROM->TO	G14-057T 345.00 - SUNNYSIDE 345KV CKT 1	717	789	0.17581	110.5967	GEN635213 3-NEAL UNIT 3
FDNS	00NR	0	20WP	G15_093	FROM->TO	G14-057T 345.00 - SUNNYSIDE 345KV CKT 1	717	789	0.17581	110.5961	GEN629074 1-ARNOLD LOWSIDE OF GSU XFMR
FDNS	00NR	0	20WP	G15_093	FROM->TO	G14-057T 345.00 - SUNNYSIDE 345KV CKT 1	717	789	0.17535	110.531	NORTHWEST TEXARKANA - VALLIANT 345KV CKT 1
FDNS	00NR	0	20WP	G15_093	FROM->TO	G14-057T 345.00 - SUNNYSIDE 345KV CKT 1	717	789	0.17535	110.531	NORTHWEST TEXARKANA - VALLIANT 345KV CKT 1
FDNS	00NR	0	20WP	G15_093	FROM->TO	G14-057T 345.00 - SUNNYSIDE 345KV CKT 1	717	789	0.17585	110.5277	P12:138:WFEC:MSL09
FDNS	00NR	0	16WP	G15_093	FROM->TO	G14-057T 345.00 - SUNNYSIDE 345KV CKT 1	717	789	0.17537	110.5148	LYDIA - VALLIANT 345KV CKT 1
FDNS	00NR	0	16WP	G15_093	FROM->TO	G14-057T 345.00 - SUNNYSIDE 345KV CKT 1	717	789	0.17537	110.5148	LYDIA - VALLIANT 345KV CKT 1
FDNS	00NR	0	20WP	G15_093	FROM->TO	G14-057T 345.00 - SUNNYSIDE 345KV CKT 1	717	789	0.17581	110.5037	GEN636641 1-LOUISA UNIT 1
FDNS	00NR	0	20WP	G15_093	FROM->TO	G14-057T 345.00 - SUNNYSIDE 345KV CKT 1	717	789	0.17581	110.5028	GEN562754 1-G15031_5 0.6900
FDNS	00NR	0	20WP	G15_093	FROM->TO	G14-057T 345.00 - SUNNYSIDE 345KV CKT 1	717	789	0.17581	110.469	GEN600005 1-MONTICELLO
FDNS	00NR	0	20WP	G15_093	FROM->TO	G14-057T 345.00 - SUNNYSIDE 345KV CKT 1	717	789	0.1801	110.4636	CHISHOLM7 345.00 () 345/230/13.2KV TRANSFORMER CKT 1
FDNS	00NR	0	20WP	G15_093	FROM->TO	G14-057T 345.00 - SUNNYSIDE 345KV CKT 1	717	789	0.17581	110.445	GEN562556 1-G14_046_3 0.3420
FDNS	00NR	0	20WP	G15_093	FROM->TO	G14-057T 345.00 - SUNNYSIDE 345KV CKT 1	717	789	0.17581	110.444	GEN562756 1-G15031_7 0.6900
FDNS	00NR	0	20WP	G15_093	FROM->TO	G14-057T 345.00 - SUNNYSIDE 345KV CKT 1	717	789	0.1801	110.3828	CHISHOLM7 345.00 - GRACEMONT 345KV CKT 1
FDNS	00NR	0	20WP	G15_093	FROM->TO	G14-057T 345.00 - SUNNYSIDE 345KV CKT 1	717	789	0.17581	110.3618	GEN563142 1-G15079_3 0.5500
FDNS	00NR	0	20WP	G15_093	FROM->TO	G14-057T 345.00 - SUNNYSIDE 345KV CKT 1	717	789	0.17581	110.3618	GEN563151 1-G15080_2 0.5500
FDNS	00NR	0	20WP	G15_093	FROM->TO	G14-057T 345.00 - SUNNYSIDE 345KV CKT 1	717	789	0.17581	110.3553	GEN562023 1-G11_020_3 0.6900
FDNS	00NR	0	20WP	G15_093	FROM->TO	G14-057T 345.00 - SUNNYSIDE 345KV CKT 1	717	789	0.17581	110.3553	GEN562026 1-G11_019_3 0.6900
FDNS	00NR	0	20WP	G15_093	FROM->TO	G14-057T 345.00 - SUNNYSIDE 345KV CKT 1	717	789	0.17581	110.3434	GEN600000 1-SHERBURNECNTY G1
FDNS	00NR	0	20WP	G15_093	FROM->TO	G14-057T 345.00 - SUNNYSIDE 345KV CKT 1	717	789	0.17581	110.3082	GEN629075 1-OTTUMWA GENERATOR FOR OTTUMWA UNIT NO 1
FDNS	00NR	0	20WP	G15_093	FROM->TO	G14-057T 345.00 - SUNNYSIDE 345KV CKT 1	717	789	0.17581	110.2904	GEN600001 2-SHERBURNE CNTY G2
FDNS	00NR	0	20WP	G15_093	FROM->TO	G14-057T 345.00 - SUNNYSIDE 345KV CKT 1	717	789	0.17581	110.2626	GEN523971 1-HARRINGTON GEN #1 24 KV
FDNS	00NR	0	20WP	G15_093	FROM->TO	G14-057T 345.00 - SUNNYSIDE 345KV CKT 1	717	789	0.17581	110.2626	GEN523972 1-HARRINGTON GEN #2 24 KV
FDNS	00NR	0	20WP	G15_093	FROM->TO	G14-057T 345.00 - SUNNYSIDE 345KV CKT 1	717	789	0.17581	110.2626	GEN523973 1-HARRINGTON GEN #3 24 KV
FDNS	00NR	0	20WP	G15_093	FROM->TO	G14-057T 345.00 - SUNNYSIDE 345KV CKT 1	717	789	0.17581	110.2331	GEN511848 1-SOUTHWESTERN STATION #3
FDNS	00NR	0	20WP	G15_093	FROM->TO	G14-057T 345.00 - SUNNYSIDE 345KV CKT 1	717	789	0.17519	110.1764	LYDIA - WELSH 345KV CKT 1
FDNS	00NR	0	20WP	G15_093	FROM->TO	G14-057T 345.00 - SUNNYSIDE 345KV CKT 1	717	789	0.17519	110.1764	LYDIA - WELSH 345KV CKT 1
FDNS	00NR	0	20WP	G15_093	FROM->TO	G14-057T 345.00 - SUNNYSIDE 345KV CKT 1	717	789	0.17581	110.163	GEN527901 1-HOBBS PLANT #1 (CT)
FDNS	00NR	0	20WP	G15_093	FROM->TO	G14-057T 345.00 - SUNNYSIDE 345KV CKT 1	717	789	0.17581	110.163	GEN527902 1-HOBBS PLANT #2 (CT)
FDNS	00NR	0	20WP	G15_093	FROM->TO	G14-057T 345.00 - SUNNYSIDE 345KV CKT 1	717	789	0.17581	110.1255	GEN563042 1-G15068_3 0.6900
FDNS	00NR	0	20WP	G15_093	FROM->TO	G14-057T 345.00 - SUNNYSIDE 345KV CKT 1	717	789	0.17581	110.028	GEN635214 4-NEAL UNIT 4
FDNS	00NR	0	20WP	G15_093	FROM->TO	G14-057T 345.00 - SUNNYSIDE 345KV CKT 1	717	789	0.17754	109.9254	STATELINE INTERCHANGE - STLN-DEMARC6 230KV CKT 1
FDNS	00NR	0	20WP	G15_093	FROM->TO	G14-057T 345.00 - SUNNYSIDE 345KV CKT 1	717	789	0.17754	109.9227	STLN-DEMARC6 - SWEETWATER 230KV CKT 1
FDNS	00NR	0	20WP	G15_093	FROM->TO	G14-057T 345.00 - SUNNYSIDE 345KV CKT 1	717	789	0.17754	109.9175	P12:230:AEPW-SPS:SWEETWT6:WHEELER 6
FDNS	00NR	0	20WP	G15_093	FROM->TO	G14-057T 345.00 - SUNNYSIDE 345KV CKT 1	717	789	0.17581	109.8577	GEN600002 3-SHERBURNE CNTY G3
FDNS	00NR	0	20WP	G15_093	FROM->TO	G14-057T 345.00 - SUNNYSIDE 345KV CKT 1	717	789	0.17581	109.827	GEN563043 1-G15068_4 0.6900
FDNS	00NR	0	20WP	G15_093	FROM->TO	G14-057T 345.00 - SUNNYSIDE 345KV CKT 1	717	789	0.17581	109.8013	GEN526333 1-JONES GEN #3 21 KV
FDNS	00NR	0	20WP	G15_093	FROM->TO	G14-057T 345.00 - SUNNYSIDE 345KV CKT 1	717	789	0.17581	109.8012	GEN526334 1-JONES_4 116.500
FDNS	00NR	0	20WP	G15_093	FROM->TO	G14-057T 345.00 - SUNNYSIDE 345KV CKT 1	717	789	0.17581	109.7846	GEN563273 2-G15093_4 0.6900
FDNS	00NR	0	20WP	G15_093	FROM->TO	G14-057T 345.00 - SUNNYSIDE 345KV CKT 1	717	789	0.17581	109.7685	GEN344225 1-1CAL G1 25.000
FDNS	00NR	0	20WP	G15_093	FROM->TO	G14-057T 345.00 - SUNNYSIDE 345KV CKT 1	717	789	0.17581	109.7635	GEN525844 1-ELK_1 118.000
FDNS	00NR	0	20WP	G15_093	FROM->TO	G14-057T 345.00 - SUNNYSIDE 345KV CKT 1	717	789	0.17581	109.7458	GEN525845 1-ELK_2 1 18.000
FDNS	00NR	0	20WP	G15_093	FROM->TO	G14-057T 345.00 - SUNNYSIDE 345KV CKT 1	717	789	0.17581	109.6155	GEN527166 1-MUSTANG_6 118.000
FDNS	00NR	0	20WP	G15_093	FROM->TO	G14-057T 345.00 - SUNNYSIDE 345KV CKT 1	717	789	0.17581	109.5706	GEN635023 3-WALTER SCOTT UNIT 3
FDNS	00NR	0	20WP	G15_093	FROM->TO	G14-057T 345.00 - SUNNYSIDE 345KV CKT 1	717	789	0.17581	109.5526	GEN563202 1-G15085_3 0.5500
FDNS	00NR	0	20WP	G15_093	FROM->TO	G14-057T 345.00 - SUNNYSIDE 345KV CKT 1	717	789	0.17581	109.5515	GEN528501 1-G14_012 24.000
FDNS	00NR	0	20WP	G15_093	FROM->TO	G14-057T 345.00 - SUNNYSIDE 345KV CKT 1	717	789	0.18021	109.4942	P12:230:AEPW:ELKCITY6:SWEETWT6
FDNS	00NR	0	20WP	G15_093	FROM->TO	G14-057T 345.00 - SUNNYSIDE 345KV CKT 1	717	789	0.17581	109.4928	GEN562590 1-G14_057_3 0.6900

SOLUTION	GROUP	SCENARIO	SEASON	SOURCE	DIRECTION	MONITORED ELEMENT	RATEA (MVA)	RATEB(MVA)	TDF	TC%LOADING (% MVA)	CONTINGENCY
FDNS	00NR	0	16WP	G15_093	FROM->TO	G14-057T 345.00 - SUNNYSIDE 345KV CKT 1	717	789	0.17626	109.4478	EASTDC - ERCOT EQUIVALENCE 345KV CKT 1
FDNS	00NR	0	20WP	G15_093	FROM->TO	G14-057T 345.00 - SUNNYSIDE 345KV CKT 1	717	789	0.17581	109.3772	GEN562762 1-G15033_3 0.6900
FDNS	00NR	0	20WP	G15_093	FROM->TO	G14-057T 345.00 - SUNNYSIDE 345KV CKT 1	717	789	0.17581	109.3658	GEN562655 1-G14_074_3 0.6900
FDNS	00NR	0	20WP	G15_093	FROM->TO	G14-057T 345.00 - SUNNYSIDE 345KV CKT 1	717	789	0.17581	109.3638	GEN525562 1-TOLK GEN #2 24 KV
FDNS	00NR	0	20WP	G15_093	FROM->TO	G14-057T 345.00 - SUNNYSIDE 345KV CKT 1	717	789	0.17476	109.2753	JOHNSON COUNTY (JOHNCO) 345/138/13.8KV TRANSFORMER CKT 1
FDNS	00NR	0	20WP	G15_093	FROM->TO	G14-057T 345.00 - SUNNYSIDE 345KV CKT 1	717	789	0.17581	109.27	GEN562685 1-G15_013_3 0.3550
FDNS	00NR	0	20WP	G15_093	FROM->TO	G14-057T 345.00 - SUNNYSIDE 345KV CKT 1	717	789	0.17581	109.2675	GEN527903 1-HOBBS PLANT #3 (ST)
FDNS	00NR	0	20WP	G15_093	FROM->TO	G14-057T 345.00 - SUNNYSIDE 345KV CKT 1	717	789	0.17754	109.2452	CHISHOLM6 230.00 - SWEETWATER 230KV CKT 1
FDNS	00NR	0	20WP	G15_093	FROM->TO	G14-057T 345.00 - SUNNYSIDE 345KV CKT 1	717	789	0.17581	109.1665	GEN635024 4-WALTER SCOTT UNIT 4
FDNS	00NR	0	20WP	G15_093	FROM->TO	G14-057T 345.00 - SUNNYSIDE 345KV CKT 1	717	789	0.17581	109.1256	GEN563272 1-G15093_3 0.6900
FDNS	00NR	0	20WP	G15_093	FROM->TO	G14-057T 345.00 - SUNNYSIDE 345KV CKT 1	717	789	0.17492	109.1187	LYDIA - VALLIANT 345KV CKT 1
FDNS	00NR	0	20WP	G15_093	FROM->TO	G14-057T 345.00 - SUNNYSIDE 345KV CKT 1	717	789	0.17492	109.1187	LYDIA - VALLIANT 345KV CKT 1
FDNS	00NR	0	20WP	G15_093	FROM->TO	G14-057T 345.00 - SUNNYSIDE 345KV CKT 1	717	789	0.17581	108.7846	GEN525561 1-TOLK GEN #1 24 KV
FDNS	00NR	0	16WP	G15_093	FROM->TO	G14-057T 345.00 - SUNNYSIDE 345KV CKT 1	717	789	0.15141	108.4243	JOHNSON COUNTY - PITTSBURG 345KV CKT 1
FDNS	00NR	0	16WP	G15_093	FROM->TO	G14-057T 345.00 - SUNNYSIDE 345KV CKT 1	717	789	0.15141	108.4243	JOHNSON COUNTY - PITTSBURG 345KV CKT 1
FDNS	00NR	0	16WP	G15_093	FROM->TO	G14-057T 345.00 - SUNNYSIDE 345KV CKT 1	717	789	0.17626	108.057	GEN563263 1-G15092_4 0.6900
FDNS	00NR	0	16WP	G15_093	FROM->TO	G14-057T 345.00 - SUNNYSIDE 345KV CKT 1	717	789	0.17063	107.6655	HUGO - VALLIANT 345KV CKT 1
FDNS	00NR	0	16WP	G15_093	FROM->TO	G14-057T 345.00 - SUNNYSIDE 345KV CKT 1	717	789	0.17063	107.6655	HUGO - VALLIANT 345KV CKT 1
FDNS	00NR	0	20WP	G15_093	FROM->TO	G14-057T 345.00 - SUNNYSIDE 345KV CKT 1	717	789	0.15102	106.869	JOHNSON COUNTY - PITTSBURG 345KV CKT 1
FDNS	00NR	0	20WP	G15_093	FROM->TO	G14-057T 345.00 - SUNNYSIDE 345KV CKT 1	717	789	0.15102	106.869	JOHNSON COUNTY - PITTSBURG 345KV CKT 1
FDNS	00NR	0	20WP	G15_093	FROM->TO	G14-057T 345.00 - SUNNYSIDE 345KV CKT 1	717	789	0.1702	106.5939	HUGO - VALLIANT 345KV CKT 1
FDNS	00NR	0	20WP	G15_093	FROM->TO	G14-057T 345.00 - SUNNYSIDE 345KV CKT 1	717	789	0.1702	106.5939	HUGO - VALLIANT 345KV CKT 1
FDNS	00NR	0	16WP	G15_093	FROM->TO	G14-057T 345.00 - SUNNYSIDE 345KV CKT 1	717	789	0.17626	106.381	GEN563262 1-G15092_3 0.6900
FDNS	00NR	0	20WP	G15_093	FROM->TO	G14-057T 345.00 - SUNNYSIDE 345KV CKT 1	717	789	0.17581	105.9962	GEN563263 1-G15092_4 0.6900
FDNS	00NR	0	16WP	G15_093	FROM->TO	G14-057T 345.00 - SUNNYSIDE 345KV CKT 1	717	789	0.18605	104.8432	G14-074T 345.00 - TUCO INTERCHANGE 345KV CKT 1
FDNS	00NR	0	20WP	G15_093	FROM->TO	G14-057T 345.00 - SUNNYSIDE 345KV CKT 1	717	789	0.17581	104.3167	GEN563262 1-G15092_3 0.6900
FDNS	00NR	0	16WP	G15_093	FROM->TO	G14-057T 345.00 - SUNNYSIDE 345KV CKT 1	717	789	0.14582	102.6669	JOHNSON COUNTY - SUNNYSIDE 345KV CKT 1
FDNS	00NR	0	20WP	G15_093	FROM->TO	G14-057T 345.00 - SUNNYSIDE 345KV CKT 1	717	789	0.18566	101.6269	G14-074T 345.00 - TUCO INTERCHANGE 345KV CKT 1
FDNS	00NR	0	20SP	G15_093	FROM->TO	G14-057T 345.00 - SUNNYSIDE 345KV CKT 1	717	789	0.35252	100.8006	CIMARRON - MINCO 345KV CKT 1
FDNS	00NR	0	17SP	G15_093	FROM->TO	G14-057T 345.00 - SUNNYSIDE 345KV CKT 1	717	789	0.35365	100.4284	GRACEMONT - MINCO 345KV CKT 1
FDNS	00NR	0	20WP	G15_093	FROM->TO	G14-057T 345.00 - SUNNYSIDE 345KV CKT 1	717	789	0.14542	100.3152	JOHNSON COUNTY - SUNNYSIDE 345KV CKT 1
FDNS	00NR	0	20WP	G15_093	TO->FROM	MATHWSN7 345.00 - TATONGA7 345.00 345KV CKT 1	1195	1195	0.06734	100.869	CIMARRON - MINCO 345KV CKT 1
FDNS	00NR	0	17SP	G15_093	TO->FROM	NORGE ROAD - SOUTHWESTERN STATION 138KV CKT 1	136	136	0.03074	101.5889	SOUTHWESTERN STATION - VERDEN 138KV CKT 1
FDNS	00NR	0	17SP	G15_093	TO->FROM	NORGE ROAD - SOUTHWESTERN STATION 138KV CKT 1	136	136	0.05595	101.3795	CIMARRON - MINCO 345KV CKT 1
FDNS	00NR	0	17SP	G15_093	TO->FROM	NORGE ROAD - SOUTHWESTERN STATION 138KV CKT 1	136	136	0.03074	100.6355	NORTH 29TH CHICKASHA - VERDEN 138KV CKT 1
FDNS	00NR	2	16WP	G15_093	FROM->TO	CIMARRON - DRAPER LAKE 345KV CKT 1	717	717	0.1408	116.4604	CLEVELAND - TULSA NORTH 345KV CKT 1
FDNS	00NR	2	16WP	G15_093	FROM->TO	CIMARRON - DRAPER LAKE 345KV CKT 1	717	717	0.14678	115.0647	P12:138:WFEC:MSL03
FDNS	00NR	2	16WP	G15_093	FROM->TO	CIMARRON - DRAPER LAKE 345KV CKT 1	717	717	0.14457	111.8969	P12:138:WFEC:MSL01
FDNS	00NR	2	16WP	G15_093	FROM->TO	CIMARRON - DRAPER LAKE 345KV CKT 1	717	717	0.13854	111.2482	GRAND GULF 500/22.0KV TRANSFORMER CKT 1
FDNS	00NR	2	16WP	G15_093	FROM->TO	CIMARRON - DRAPER LAKE 345KV CKT 1	717	717	0.13842	111.2407	P12:138:OKGE:3TERM14
FDNS	00NR	2	16WP	G15_093	FROM->TO	CIMARRON - DRAPER LAKE 345KV CKT 1	717	717	0.13947	111.1914	REDBUD - RIVERSIDE STATION 345KV CKT 1
FDNS	00NR	2	16WP	G15_093	FROM->TO	CIMARRON - DRAPER LAKE 345KV CKT 1	717	717	0.14623	111.1158	JOHNSON COUNTY - PITTSBURG 345KV CKT 1
FDNS	00NR	2	16WP	G15_093	FROM->TO	CIMARRON - DRAPER LAKE 345KV CKT 1	717	717	0.13818	111.0878	P12:138:OKGE:3TERM2
FDNS	00NR	2	16WP	G15_093	FROM->TO	CIMARRON - DRAPER LAKE 345KV CKT 1	717	717	0.1382	110.9474	7SAREPTA% 345.00 - LONGWOOD 345KV CKT 1
FDNS	00NR	2	16WP	G15_093	FROM->TO	CIMARRON - DRAPER LAKE 345KV CKT 1	717	717	0.13859	110.9352	P12:138:OKGE:3TERM12
FDNS	00NR	2	16WP	G15_093	FROM->TO	CIMARRON - DRAPER LAKE 345KV CKT 1	717	717	0.1384	110.9233	DOLET HILLS - SOUTHWEST SHREVEPORT 345KV CKT 1
FDNS	00NR	2	16WP	G15_093	FROM->TO	CIMARRON - DRAPER LAKE 345KV CKT 1	717	717	0.13901	110.7684	P12:138:OKGE:3TERM18
FDNS	00NR	2	16WP	G15_093	FROM->TO	CIMARRON - DRAPER LAKE 345KV CKT 1	717	717	0.13854	110.6806	NEW MADRID 161/22.0KV TRANSFORMER CKT 1
FDNS	00NR	2	16WP	G15_093	FROM->TO	CIMARRON - DRAPER LAKE 345KV CKT 1	717	717	0.1395	110.6721	THISTLE7 345.00 - WOODWARD DISTRICT EHV 345KV CKT 1
FDNS	00NR	2	16WP	G15_093	FROM->TO	CIMARRON - DRAPER LAKE 345KV CKT 1	717	717	0.1395	110.6721	THISTLE7 345.00 - WOODWARD DISTRICT EHV 345KV CKT 2
FDNS	00NR	2	16WP	G15_093	FROM->TO	CIMARRON - DRAPER LAKE 345KV CKT 1	717	717	0.13854	110.6721	NEW MADRID 345/22.0KV TRANSFORMER CKT 1
FDNS	00NR	2	16WP	G15_093	FROM->TO	CIMARRON - DRAPER LAKE 345KV CKT 1	717	717	0.13835	110.542	7SAREPTA% 345.00 - ELDORADO EHV 345KV CKT 1
FDNS	00NR	2	16WP	G15_093	FROM->TO	CIMARRON - DRAPER LAKE 345KV CKT 1	717	717	0.13835	110.5352	ELDORADO EHV 500/345KV TRANSFORMER CKT 1
FDNS	00NR	2	16WP	G15_093	FROM->TO	CIMARRON - DRAPER LAKE 345KV CKT 1	717	717	0.13968	110.4913	P12:138:OKGE:3TERM11
FDNS	00NR	2	16WP	G15_093	FROM->TO	CIMARRON - DRAPER LAKE 345KV CKT 1	717	717	0.1387	110.4789	P12:138:OKGE:3TERM17
FDNS	00NR	2	16WP	G15_093	FROM->TO	CIMARRON - DRAPER LAKE 345KV CKT 1	717	717	0.13854	110.4198	DELL 500 - ESSEX UNIT 2 500KV CKT Z1
FDNS	00NR	2	16WP	G15_093	FROM->TO	CIMARRON - DRAPER LAKE 345KV CKT 1	717	717	0.14254	110.3524	P12:138:AEPW-OGE:CORNVIL4:MAUD 4
FDNS	00NR	2	16WP	G15_093	FROM->TO	CIMARRON - DRAPER LAKE 345KV CKT 1	717	717	0.13784	110.3362	P12:138:OKGE:3TERM20
FDNS	00NR	2	16WP	G15_093	FROM->TO	CIMARRON - DRAPER LAKE 345KV CKT 1	717	717	0.14045	110.2891	CLARKSVILLE - ONETA 345KV CKT 1
FDNS	00NR	2	16WP	G15_093	FROM->TO	CIMARRON - DRAPER LAKE 345KV CKT 1	717	717	0.1386	110.281	P12:138:OKGE:3TERM47
FDNS	00NR	2	16WP	G15_093	FROM->TO	CIMARRON - DRAPER LAKE 345KV CKT 1	717	717	0.13963	110.2624	FINNEY SWITCHING STATION - HOLCOMB 345KV CKT 1
FDNS	00NR	2	16WP	G15_093	FROM->TO	CIMARRON - DRAPER LAKE 345KV CKT 1	717	717	0.13854	110.2574	DOLET HILLS 345/24.0KV TRANSFORMER CKT 1
FDNS	00NR	2	16WP	G15_093	FROM->TO	CIMARRON - DRAPER LAKE 345KV CKT 1	717	717	0.13854	110.2508	WHITE BLUFF 500/26.0KV TRANSFORMER CKT 1
FDNS	00NR	2	16WP	G15_093	FROM->TO	CIMARRON - DRAPER LAKE 345KV CKT 1	717	717	0.13876	110.2117	BLACKBERRY - NEOSHO 345KV CKT 1
FDNS	00NR	2	16WP	G15_093	FROM->TO	CIMARRON - DRAPER LAKE 345KV CKT 1	717	717	0.1386	110.142	P12:138:AEPW-OGE:SHIDLER4:OSAGE 4
FDNS	00NR	2	16WP	G15_093	FROM->TO	CIMARRON - DRAPER LAKE 345KV CKT 1	717	717	0.13936	110.1103	P12:138:WFEC:MSL02
FDNS	00NR	2	16WP	G15_093	FROM->TO	CIMARRON - DRAPER LAKE 345KV CKT 1	717	717	0.1744	110.1089	GRACEMONT - LAWTON EASTSIDE 345KV CKT 1
FDNS	00NR	2	16WP	G15_093	FROM->TO	CIMARRON - DRAPER LAKE 345KV CKT 1	717	717	0.13793	110.0911	P12:138:AEPW:OKMULGE4:R.S.S-4
FDNS	00NR	2	16WP	G15_093	FROM->TO	CIMARRON - DRAPER LAKE 345KV CKT 1	717	717	0.13849	110.0582	WEBRE - WELLS 500KV CKT 1
FDNS	00NR	2	16WP	G15_093	FROM->TO	CIMARRON - DRAPER LAKE 345KV CKT 1	717	717	0.13854	109.9538	FRONTIER - GRIMES 345KV CKT 1
FDNS	00NR	2	16WP	G15_093	FROM->TO	CIMARRON - DRAPER LAKE 345KV CKT 1	717	717	0.13862	109.9445	CLEAVELAND - CLEVLND 4 138.00 138KV CKT Z1
FDNS	00NR	2	16WP	G15_093	FROM->TO	CIMARRON - DRAPER LAKE 345KV CKT 1	717	717	0.13862	109.9443	CLEVELAND (CLVAUTO1) 345/138/13.8KV TRANSFORMER CKT 1
FDNS	00NR	2	16WP	G15_093	FROM->TO	CIMARRON - DRAPER LAKE 345KV CKT 1	717	717	0.13854	109.9391	P12:069:OKGE:3TERM4
FDNS	00NR	2	16WP	G15_093	FROM->TO	CIMARRON - DRAPER LAKE 345KV CKT 1	717	717	0.1394	109.9301	ARKANSAS NUCLEAR ONE - FT SMITH 500KV CKT 1
FDNS	00NR	2	16WP	G15_093	FROM->TO	CIMARRON - DRAPER LAKE 345KV CKT 1	717	717	0.13854	109.9269	8DANIEL8 500.00 - MCKNIGHT 500KV CKT 1
FDNS	00NR	2	16WP	G15_093	FROM->TO	CIMARRON - DRAPER LAKE 345KV CKT 1	717	717	0.13865	109.9207	P12:138:OKGE:3TERM13
FDNS	00NR	2	16WP	G15_093	FROM->TO	CIMARRON - DRAPER LAKE 345KV CKT 1	717	717	0.13854	109.9018	P12:161:AEPW:DYESS 5:HYLAND 5
FDNS	00NR	2	16WP	G15_093	FROM->TO	CIMARRON - DRAPER LAKE 345KV CKT 1	717	717	0.13855	109.853	P12:345:GRDA:CHOUTEAU-SPORTSMANACRES
FDNS	00NR	2	16WP	G15_093	FROM->TO	CIMARRON - DRAPER LAKE 345KV CKT 1	717	717	0.13848	109.8424	ELDORADO EHV - MOUNT OLIVE 500KV CKT 1

SOLUTION	GROUP	SCENARIO	SEASON	SOURCE	DIRECTION	MONITORED ELEMENT	RATEA (MVA)	RATEB(MVA)	TDF	TC%LOADING (% MVA)	CONTINGENCY
FDNS	00NR	2	16WP	G15_093	FROM->TO	CIMARRON - DRAPER LAKE 345KV CKT 1	717	717	0.13854	109.8363	ESSEX UNIT 2 500/18.0KV TRANSFORMER CKT 1
FDNS	00NR	2	16WP	G15_093	FROM->TO	CIMARRON - DRAPER LAKE 345KV CKT 1	717	717	0.13858	109.8338	P12:069:OKGE:3TERM19
FDNS	00NR	2	16WP	G15_093	FROM->TO	CIMARRON - DRAPER LAKE 345KV CKT 1	717	717	0.13857	109.8302	7LUTESVIL 345.00 - 7ST FRANC 345.00 345KV CKT 1
FDNS	00NR	2	16WP	G15_093	FROM->TO	CIMARRON - DRAPER LAKE 345KV CKT 1	717	717	0.13854	109.7675	RODEMACHER 230/22.0KV TRANSFORMER CKT 1
FDNS	00NR	2	16WP	G15_093	FROM->TO	CIMARRON - DRAPER LAKE 345KV CKT 1	717	717	0.13853	109.765	7JASPER 345.00 - BLACKBERRY 345KV CKT 1
FDNS	00NR	2	16WP	G15_093	FROM->TO	CIMARRON - DRAPER LAKE 345KV CKT 1	717	717	0.13828	109.7538	P12:138:AEPW-OGE:WTH_JCT4:JENSEN4
FDNS	00NR	2	16WP	G15_093	FROM->TO	CIMARRON - DRAPER LAKE 345KV CKT 1	717	717	0.13309	109.7486	CANADIAN RIVER - PITTSBURG 345KV CKT 1
FDNS	00NR	2	16WP	G15_093	FROM->TO	CIMARRON - DRAPER LAKE 345KV CKT 1	717	717	0.13858	109.7457	8WNEWMADRID 500.00 - DELL 500 500KV CKT 1
FDNS	00NR	2	16WP	G15_093	FROM->TO	CIMARRON - DRAPER LAKE 345KV CKT 1	717	717	0.13844	109.7367	6LAYFLD 230.00 - CARROLL 230KV CKT 1
FDNS	00NR	2	16WP	G15_093	FROM->TO	CIMARRON - DRAPER LAKE 345KV CKT 1	717	717	0.13954	109.7329	ELK CITY 230KV (ELKCTY-6) 230/138/13.8KV TRANSFORMER CKT 1
FDNS	00NR	2	16WP	G15_093	FROM->TO	CIMARRON - DRAPER LAKE 345KV CKT 1	717	717	0.139	109.7216	TULSA NORTH - WEKIWA 345KV CKT 1
FDNS	00NR	2	16WP	G15_093	FROM->TO	CIMARRON - DRAPER LAKE 345KV CKT 1	717	717	0.13843	109.7203	ELDORADO EHV - SHERIDAN EHV 500KV CKT 1
FDNS	00NR	2	16WP	G15_093	FROM->TO	CIMARRON - DRAPER LAKE 345KV CKT 1	717	717	0.13857	109.7031	P12:138:AEPW:N.E.S.-4:CATOOSA4
FDNS	00NR	2	16WP	G15_093	FROM->TO	CIMARRON - DRAPER LAKE 345KV CKT 1	717	717	0.1386	109.7019	P13:138-161:WERE:NSES_TX-4OR5::
FDNS	00NR	2	16WP	G15_093	FROM->TO	CIMARRON - DRAPER LAKE 345KV CKT 1	717	717	0.13854	109.6988	ST FRANCIS 161/16.0KV TRANSFORMER CKT 1
FDNS	00NR	2	16WP	G15_093	FROM->TO	CIMARRON - DRAPER LAKE 345KV CKT 1	717	717	0.13854	109.6987	ST FRANCIS - ST FRANCIS 1 161KV CKT Z1
FDNS	00NR	2	16WP	G15_093	FROM->TO	CIMARRON - DRAPER LAKE 345KV CKT 1	717	717	0.1384	109.6925	FULTON 115 - HOPE 115KV CKT 1
FDNS	00NR	2	16WP	G15_093	FROM->TO	CIMARRON - DRAPER LAKE 345KV CKT 1	717	717	0.13854	109.6904	8CAJUN2 500/24.0KV TRANSFORMER CKT 1
FDNS	00NR	2	16WP	G15_093	FROM->TO	CIMARRON - DRAPER LAKE 345KV CKT 1	717	717	0.13927	109.6801	HUGO - VALLIANT 345KV CKT 1
FDNS	00NR	2	16WP	G15_093	FROM->TO	CIMARRON - DRAPER LAKE 345KV CKT 1	717	717	0.13855	109.6741	7JASPER 345.00 - MORGAN 345KV CKT 1
FDNS	00NR	2	16WP	G15_093	FROM->TO	CIMARRON - DRAPER LAKE 345KV CKT 1	717	717	0.13854	109.6734	P12:069:OKGE:3TERM3
FDNS	00NR	2	16WP	G15_093	FROM->TO	CIMARRON - DRAPER LAKE 345KV CKT 1	717	717	0.13852	109.6617	P12:138:OKGE-AEPW:JENSEN4:REDROCKRD4
FDNS	00NR	2	16WP	G15_093	FROM->TO	CIMARRON - DRAPER LAKE 345KV CKT 1	717	717	0.13859	109.6528	P12:138:AEPW:CATOOSA4:T.S.E.-4
FDNS	00NR	2	16WP	G15_093	FROM->TO	CIMARRON - DRAPER LAKE 345KV CKT 1	717	717	0.13865	109.6503	P12:138:OKGE:3TERM28
FDNS	00NR	2	16WP	G15_093	FROM->TO	CIMARRON - DRAPER LAKE 345KV CKT 1	717	717	0.13854	109.647	ESSEX UNIT 2 500/18.0KV TRANSFORMER CKT 1
FDNS	00NR	2	16WP	G15_093	FROM->TO	CIMARRON - DRAPER LAKE 345KV CKT 1	717	717	0.13854	109.6402	NELSON 230/20.0KV TRANSFORMER CKT 1
FDNS	00NR	2	16WP	G15_093	FROM->TO	CIMARRON - DRAPER LAKE 345KV CKT 1	717	717	0.13855	109.637	AS KING - EAU CLAIRE 345KV CKT 1
FDNS	00NR	2	16WP	G15_093	FROM->TO	CIMARRON - DRAPER LAKE 345KV CKT 1	717	717	0.13854	109.6339	ST FRANCIS 2 161/16.0KV TRANSFORMER CKT 2
FDNS	00NR	2	16WP	G15_093	FROM->TO	CIMARRON - DRAPER LAKE 345KV CKT 1	717	717	0.13854	109.6338	ST FRANCIS 345/161KV TRANSFORMER CKT 1
FDNS	00NR	2	16WP	G15_093	FROM->TO	CIMARRON - DRAPER LAKE 345KV CKT 1	717	717	0.13854	109.6287	P12:161:AEPW:EROGERS5:ECNTRTN5
FDNS	00NR	2	16WP	G15_093	FROM->TO	CIMARRON - DRAPER LAKE 345KV CKT 1	717	717	0.13854	109.6274	P12:138:AEPW:SHERID4:112GORE4
FDNS	00NR	2	16WP	G15_093	FROM->TO	CIMARRON - DRAPER LAKE 345KV CKT 1	717	717	0.13854	109.6228	P12:161:AEPW:DYESS5:ELMSPRNG:TONTITN5
FDNS	00NR	2	16WP	G15_093	FROM->TO	CIMARRON - DRAPER LAKE 345KV CKT 1	717	717	0.13916	109.6205	P12:138:AEPW:CORNVIL4:S.W.S.-4
FDNS	00NR	2	16WP	G15_093	FROM->TO	CIMARRON - DRAPER LAKE 345KV CKT 1	717	717	0.13857	109.6133	P12:161:AEPW-SWPA:BEAVER5:EROGERS5
FDNS	00NR	2	16WP	G15_093	FROM->TO	CIMARRON - DRAPER LAKE 345KV CKT 1	717	717	0.13849	109.5977	MC NIEL 500/115KV TRANSFORMER CKT 1
FDNS	00NR	2	16WP	G15_093	FROM->TO	CIMARRON - DRAPER LAKE 345KV CKT 1	717	717	0.1386	109.5932	BROOKLINE - MORGAN 345KV CKT 1
FDNS	00NR	2	16WP	G15_093	FROM->TO	CIMARRON - DRAPER LAKE 345KV CKT 1	717	717	0.1386	109.593	P12:138:AEPW:MOUNDRD4:SHIDLER4
FDNS	00NR	2	16WP	G15_093	FROM->TO	CIMARRON - DRAPER LAKE 345KV CKT 1	717	717	0.13844	109.5926	BISMARK - HOT SPRINGS WEST BUS 115KV CKT 1
FDNS	00NR	2	16WP	G15_093	FROM->TO	CIMARRON - DRAPER LAKE 345KV CKT 1	717	717	0.1394	109.5879	NORTHEAST STATION - ONETA 345KV CKT 1
FDNS	00NR	2	16WP	G15_093	FROM->TO	CIMARRON - DRAPER LAKE 345KV CKT 1	717	717	0.13856	109.5873	P12:138:WFEC:MSL15
FDNS	00NR	2	16WP	G15_093	FROM->TO	CIMARRON - DRAPER LAKE 345KV CKT 1	717	717	0.13842	109.5847	BRISTOW - SILVER CITY 138KV CKT 1
FDNS	00NR	2	16WP	G15_093	FROM->TO	CIMARRON - DRAPER LAKE 345KV CKT 1	717	717	0.13856	109.5683	ARPIN B4 345.00 - EAU CLAIRE 345KV CKT 1
FDNS	00NR	2	16WP	G15_093	FROM->TO	CIMARRON - DRAPER LAKE 345KV CKT 1	717	717	0.13853	109.565	CYPRESS - HARTBURG 500KV CKT 1
FDNS	00NR	2	16WP	G15_093	FROM->TO	CIMARRON - DRAPER LAKE 345KV CKT 1	717	717	0.13844	109.5595	ALPINE AECC - BISMARK 115KV CKT 1
FDNS	00NR	2	16WP	G15_093	FROM->TO	CIMARRON - DRAPER LAKE 345KV CKT 1	717	717	0.13854	109.5426	P12:69:AEPW:L.E.S.-2:LAW WC2
FDNS	00NR	2	16WP	G15_093	FROM->TO	CIMARRON - DRAPER LAKE 345KV CKT 1	717	717	0.13854	109.5408	SABINE 230/24.0KV TRANSFORMER CKT 1
FDNS	00NR	2	16WP	G15_093	FROM->TO	CIMARRON - DRAPER LAKE 345KV CKT 1	717	717	0.13849	109.5391	LAYFLD8 500.00 - MOUNT OLIVE 500KV CKT 1
FDNS	00NR	2	16WP	G15_093	FROM->TO	CIMARRON - DRAPER LAKE 345KV CKT 1	717	717	0.13854	109.0896	BASE CASE
FDNS	00NR	2	16WP	G15_093	FROM->TO	CIMARRON - DRAPER LAKE 345KV CKT 1	717	717	0.13859	108.6174	7MCCREDIE 345.00 - 7OVERTON 345.00 345KV CKT 1
FDNS	00NR	2	16WP	G15_093	FROM->TO	CIMARRON - DRAPER LAKE 345KV CKT 1	717	717	0.13808	108.6121	P12:138:WFEC:MSL10
FDNS	00NR	2	16WP	G15_093	FROM->TO	CIMARRON - DRAPER LAKE 345KV CKT 1	717	717	0.13907	108.5713	DELAWARE - NORTHEAST STATION 345KV CKT 1
FDNS	00NR	2	16WP	G15_093	FROM->TO	CIMARRON - DRAPER LAKE 345KV CKT 1	717	717	0.13862	108.5624	7MCCREDIE 345.00 - 7MONTGMRY 345.00 345KV CKT 1
FDNS	00NR	2	16WP	G15_093	FROM->TO	CIMARRON - DRAPER LAKE 345KV CKT 1	717	717	0.1385	108.5199	P12:138:AEPW:SHAM4WT:CHILD4WT
FDNS	00NR	2	16WP	G15_093	FROM->TO	CIMARRON - DRAPER LAKE 345KV CKT 1	717	717	0.13823	108.5167	P12:138:OKGE:3TERM36
FDNS	00NR	2	16WP	G15_093	FROM->TO	CIMARRON - DRAPER LAKE 345KV CKT 1	717	717	0.13855	108.5107	P12:138:WFEC:MSL07
FDNS	00NR	2	16WP	G15_093	FROM->TO	CIMARRON - DRAPER LAKE 345KV CKT 1	717	717	0.13855	108.5107	P12:138:WFEC-AEPW:HUGOPP4:ATOKA--4
FDNS	00NR	2	16WP	G15_093	FROM->TO	CIMARRON - DRAPER LAKE 345KV CKT 1	717	717	0.13865	108.5101	CANADIAN RIVER - MCALESTER SOUTH 138KV CKT 1
FDNS	00NR	2	16WP	G15_093	FROM->TO	CIMARRON - DRAPER LAKE 345KV CKT 1	717	717	0.13865	108.5091	CANADIAN RIVER () 345/138/13.8KV TRANSFORMER CKT 1
FDNS	00NR	2	16WP	G15_093	FROM->TO	CIMARRON - DRAPER LAKE 345KV CKT 1	717	717	0.13823	108.5058	P12:138:AEPW:WELETK4:EARLSBORO4
FDNS	00NR	2	16WP	G15_093	FROM->TO	CIMARRON - DRAPER LAKE 345KV CKT 1	717	717	0.13844	108.4969	P12:138:AEPW-SWPA:LONEOAK4:TUPELO4
FDNS	00NR	2	16WP	G15_093	FROM->TO	CIMARRON - DRAPER LAKE 345KV CKT 1	717	717	0.13844	108.4969	P12:138:WFEC:MSL06
FDNS	00NR	2	16WP	G15_093	FROM->TO	CIMARRON - DRAPER LAKE 345KV CKT 1	717	717	0.13897	108.485	P12:138:WFEC:MSL16
FDNS	00NR	2	16WP	G15_093	FROM->TO	CIMARRON - DRAPER LAKE 345KV CKT 1	717	717	0.13854	108.4672	INDEPENDENCE 500/26.0KV TRANSFORMER CKT 1
FDNS	00NR	2	16WP	G15_093	FROM->TO	CIMARRON - DRAPER LAKE 345KV CKT 1	717	717	0.13854	108.4545	BURLINGTON NO1 + NO 2 + NO 3 161/20.0KV TRANSFORMER CKT 1
FDNS	00NR	2	16WP	G15_093	FROM->TO	CIMARRON - DRAPER LAKE 345KV CKT 1	717	717	0.1389	108.436	MINGO - SETAB 345KV CKT 1
FDNS	00NR	2	16WP	G15_093	FROM->TO	CIMARRON - DRAPER LAKE 345KV CKT 1	717	717	0.1386	108.4316	DELL 500 - INDEPENDENCE 500KV CKT 1
FDNS	00NR	2	16WP	G15_093	FROM->TO	CIMARRON - DRAPER LAKE 345KV CKT 1	717	717	0.13823	108.4219	P12:138:AEPW-OGE:WELETK4:MAUD 4
FDNS	00NR	2	16WP	G15_093	FROM->TO	CIMARRON - DRAPER LAKE 345KV CKT 1	717	717	0.13833	108.4183	EARLSBORO 4138.00 - MAUD 138KV CKT 1
FDNS	00NR	2	16WP	G15_093	FROM->TO	CIMARRON - DRAPER LAKE 345KV CKT 1	717	717	0.13854	108.3752	THOMAS HILL 161/22.0KV TRANSFORMER CKT 1
FDNS	00NR	2	16WP	G15_093	FROM->TO	CIMARRON - DRAPER LAKE 345KV CKT 1	717	717	0.13854	108.3713	P12:230:UMZB:# 112 #: NU IN SD. NU-RCDC & DRY CREEK XFMR
FDNS	00NR	2	16WP	G15_093	FROM->TO	CIMARRON - DRAPER LAKE 345KV CKT 1	717	717	0.13863	108.2738	KEO EHV - WEST MEMPHIS 500 500KV CKT 1
FDNS	00NR	2	16WP	G15_093	FROM->TO	CIMARRON - DRAPER LAKE 345KV CKT 1	717	717	0.13854	108.1869	4SIOUX 1 138.00 138/18.0KV TRANSFORMER CKT 1
FDNS	00NR	2	16WP	G15_093	FROM->TO	CIMARRON - DRAPER LAKE 345KV CKT 1	717	717	0.13854	108.0523	CLAY BOSWELL 230/20.9KV TRANSFORMER CKT 1
FDNS	00NR	2	16WP	G15_093	FROM->TO	CIMARRON - DRAPER LAKE 345KV CKT 1	717	717	0.1383	107.9815	NORTHWEST TEXARKANA - VALLIANT 345KV CKT 1
FDNS	00NR	2	16WP	G15_093	FROM->TO	CIMARRON - DRAPER LAKE 345KV CKT 1	717	717	0.13862	107.9537	P12:138:WFEC:MSL09
FDNS	00NR	2	16WP	G15_093	FROM->TO	CIMARRON - DRAPER LAKE 345KV CKT 1	717	717	0.13979	107.9148	P12:138:OKGE:3TERM22
FDNS	00NR	2	16WP	G15_093	FROM->TO	CIMARRON - DRAPER LAKE 345KV CKT 1	717	717	0.13766	107.9092	P12:138:WFEC:MSL08
FDNS	00NR	2	16WP	G15_093	FROM->TO	CIMARRON - DRAPER LAKE 345KV CKT 1	717	717	0.1357	107.6099	P12:138:AEPW-OGE:CORNVIL4:CIMARON4
FDNS	00NR	2	16WP	G15_093	FROM->TO	CIMARRON - DRAPER LAKE 345KV CKT 1	717	717	0.13821	107.5056	LYDIA - WELSH 345KV CKT 1

SOLUTION	GROUP	SCENARIO	SEASON	SOURCE	DIRECTION	MONITORED ELEMENT	RATEA (MVA)	RATEB(MVA)	TDF	TC%LOADING (% MVA)	CONTINGENCY
FDNS	00NR	2	16WP	G15_093	FROM->TO	CIMARRON - DRAPER LAKE 345KV CKT 1	717	717	0.14233	107.1046	CLARKSVILLE - MUSKOGEE 345KV CKT 1
FDNS	00NR	2	16WP	G15_093	FROM->TO	CIMARRON - DRAPER LAKE 345KV CKT 1	717	717	0.13854	107.0031	BIG STONE 230/24.0KV TRANSFORMER CKT 1
FDNS	00NR	2	16WP	G15_093	FROM->TO	CIMARRON - DRAPER LAKE 345KV CKT 1	717	717	0.13808	106.9076	LYDIA - VALLIANT 345KV CKT 1
FDNS	00NR	2	16WP	G15_093	FROM->TO	CIMARRON - DRAPER LAKE 345KV CKT 1	717	717	0.13684	106.8165	P12:138:OKGE:3TERM23
FDNS	00NR	2	16WP	G15_093	FROM->TO	CIMARRON - DRAPER LAKE 345KV CKT 1	717	717	0.13854	106.4011	SHERBURNE CO 345/24.0KV TRANSFORMER CKT 1
FDNS	01ALL	2	16WP	G15_093	FROM->TO	CIMARRON - DRAPER LAKE 345KV CKT 1	717	717	0.08664	103.9899	BASE CASE
FDNS	00NR	2	16WP	G15_093	FROM->TO	CIMARRON - DRAPER LAKE 345KV CKT 1	717	717	0.14676	103.4591	P12:138:OKGE:3TERM21
FDNS	00NR	2	16WP	G15_093	FROM->TO	CIMARRON - DRAPER LAKE 345KV CKT 1	717	717	0.13988	101.6899	PITTSBURG - VALLIANT 345KV CKT 1
FDNS	00NR	2	16WP	G15_093	FROM->TO	G14-057T 345.00 - SUNNYSIDE 345KV CKT 1	717	789	0.16915	125.0762	PITTSBURG - SEMINOLE 345KV CKT 1
FDNS	00NR	2	16WP	G15_093	FROM->TO	G14-057T 345.00 - SUNNYSIDE 345KV CKT 1	717	789	0.17607	124.2437	BASE CASE
FDNS	00NR	2	20WP	G15_093	FROM->TO	G14-057T 345.00 - SUNNYSIDE 345KV CKT 1	717	789	0.16879	122.3486	PITTSBURG - SEMINOLE 345KV CKT 1
FDNS	00NR	2	20WP	G15_093	FROM->TO	G14-057T 345.00 - SUNNYSIDE 345KV CKT 1	717	789	0.1758	122.1851	BASE CASE
FDNS	00NR	2	16WP	G15_093	FROM->TO	G14-057T 345.00 - SUNNYSIDE 345KV CKT 1	717	789	0.19193	118.87	P12:138:WFEC:MSL03
FDNS	00NR	2	16WP	G15_093	FROM->TO	G14-057T 345.00 - SUNNYSIDE 345KV CKT 1	717	789	0.17514	118.2698	PITTSBURG - VALLIANT 345KV CKT 1
FDNS	00NR	2	20WP	G15_093	FROM->TO	G14-057T 345.00 - SUNNYSIDE 345KV CKT 1	717	789	0.19167	116.9352	P12:138:WFEC:MSL03
FDNS	00NR	2	16WP	G15_093	FROM->TO	G14-057T 345.00 - SUNNYSIDE 345KV CKT 1	717	789	0.1754	115.9008	7SAREPTA% 345.00 - LONGWOOD 345KV CKT 1
FDNS	00NR	2	20WP	G15_093	FROM->TO	G14-057T 345.00 - SUNNYSIDE 345KV CKT 1	717	789	0.17487	115.7887	PITTSBURG - VALLIANT 345KV CKT 1
FDNS	00NR	2	16WP	G15_093	FROM->TO	G14-057T 345.00 - SUNNYSIDE 345KV CKT 1	717	789	0.17581	115.7458	DOLET HILLS - SOUTHWEST SHREVEPORT 345KV CKT 1
FDNS	00NR	2	16WP	G15_093	FROM->TO	G14-057T 345.00 - SUNNYSIDE 345KV CKT 1	717	789	0.17702	115.7334	CLEVELAND - TULSA NORTH 345KV CKT 1
FDNS	00NR	2	16WP	G15_093	FROM->TO	G14-057T 345.00 - SUNNYSIDE 345KV CKT 1	717	789	0.17607	115.3409	GRAND GULF 500/22.0KV TRANSFORMER CKT 1
FDNS	00NR	2	16WP	G15_093	FROM->TO	G14-057T 345.00 - SUNNYSIDE 345KV CKT 1	717	789	0.1757	115.2476	7SAREPTA% 345.00 - ELDORADO EHV 345KV CKT 1
FDNS	00NR	2	16WP	G15_093	FROM->TO	G14-057T 345.00 - SUNNYSIDE 345KV CKT 1	717	789	0.1757	115.2364	ELDORADO EHV 500/345KV TRANSFORMER CKT 1
FDNS	00NR	2	16WP	G15_093	FROM->TO	G14-057T 345.00 - SUNNYSIDE 345KV CKT 1	717	789	0.17854	115.1782	P12:138:AEPW:DUNCAN-4:L.E.S.-4
FDNS	00NR	2	16WP	G15_093	FROM->TO	G14-057T 345.00 - SUNNYSIDE 345KV CKT 1	717	789	0.18044	114.8175	P12:138:WFEC:MSL01
FDNS	00NR	2	16WP	G15_093	FROM->TO	G14-057T 345.00 - SUNNYSIDE 345KV CKT 1	717	789	0.17854	114.7912	DUNCAN - OMPA-DUNCAN 840 138KV CKT 1
FDNS	00NR	2	16WP	G15_093	FROM->TO	G14-057T 345.00 - SUNNYSIDE 345KV CKT 1	717	789	0.17607	114.657	DOLET HILLS 345/24.0KV TRANSFORMER CKT 1
FDNS	00NR	2	16WP	G15_093	FROM->TO	G14-057T 345.00 - SUNNYSIDE 345KV CKT 1	717	789	0.17609	114.6276	P12:138:AEPW:SHERID4:112GORE4
FDNS	00NR	2	16WP	G15_093	FROM->TO	G14-057T 345.00 - SUNNYSIDE 345KV CKT 1	717	789	0.17777	114.6104	FINNEY SWITCHING STATION - HOLCOMB 345KV CKT 1
FDNS	00NR	2	16WP	G15_093	FROM->TO	G14-057T 345.00 - SUNNYSIDE 345KV CKT 1	717	789	0.17686	114.5304	REDBUD - RIVERSIDE STATION 345KV CKT 1
FDNS	00NR	2	16WP	G15_093	FROM->TO	G14-057T 345.00 - SUNNYSIDE 345KV CKT 1	717	789	0.17933	114.4751	P12:138:WFEC:MSL17
FDNS	00NR	2	16WP	G15_093	FROM->TO	G14-057T 345.00 - SUNNYSIDE 345KV CKT 1	717	789	0.17607	114.3715	P12:69:AEPW:L.E.S.-2:LAW WC2
FDNS	00NR	2	16WP	G15_093	FROM->TO	G14-057T 345.00 - SUNNYSIDE 345KV CKT 1	717	789	0.17607	114.3488	P12:161:AEPW:DYESS 5:HYLAND 5
FDNS	00NR	2	16WP	G15_093	FROM->TO	G14-057T 345.00 - SUNNYSIDE 345KV CKT 1	717	789	0.17592	114.3229	ELDORADO EHV - MOUNT OLIVE 500KV CKT 1
FDNS	00NR	2	16WP	G15_093	FROM->TO	G14-057T 345.00 - SUNNYSIDE 345KV CKT 1	717	789	0.17734	114.3189	P12:138:WFEC:MSL02
FDNS	00NR	2	16WP	G15_093	FROM->TO	G14-057T 345.00 - SUNNYSIDE 345KV CKT 1	717	789	0.17609	114.2825	P12:138:AEPW:112GORE4:L.E.S.-4
FDNS	00NR	2	16WP	G15_093	FROM->TO	G14-057T 345.00 - SUNNYSIDE 345KV CKT 1	717	789	0.17577	114.2476	ELDORADO EHV - SHERIDAN EHV 500KV CKT 1
FDNS	00NR	2	16WP	G15_093	FROM->TO	G14-057T 345.00 - SUNNYSIDE 345KV CKT 1	717	789	0.17607	114.2205	NEW MADRID 161/22.0KV TRANSFORMER CKT 1
FDNS	00NR	2	16WP	G15_093	FROM->TO	G14-057T 345.00 - SUNNYSIDE 345KV CKT 1	717	789	0.17996	114.2147	P12:138:AEPW-OGE:CORNVIL4:MAUD 4
FDNS	00NR	2	16WP	G15_093	FROM->TO	G14-057T 345.00 - SUNNYSIDE 345KV CKT 1	717	789	0.17607	114.2089	NEW MADRID 345/22.0KV TRANSFORMER CKT 1
FDNS	00NR	2	16WP	G15_093	FROM->TO	G14-057T 345.00 - SUNNYSIDE 345KV CKT 1	717	789	0.17598	114.2028	WEBRE - WELLS 500KV CKT 1
FDNS	00NR	2	16WP	G15_093	FROM->TO	G14-057T 345.00 - SUNNYSIDE 345KV CKT 1	717	789	0.17607	114.1815	FRONTIER - GRIMES 345KV CKT 1
FDNS	00NR	2	16WP	G15_093	FROM->TO	G14-057T 345.00 - SUNNYSIDE 345KV CKT 1	717	789	0.1775	114.1592	LAWTON EASTSIDE (LES 5) 345/138/13.8KV TRANSFORMER CKT 2
FDNS	00NR	2	20WP	G15_093	FROM->TO	G14-057T 345.00 - SUNNYSIDE 345KV CKT 1	717	789	0.17514	114.0928	7SAREPTA% 345.00 - LONGWOOD 345KV CKT 1
FDNS	00NR	2	16WP	G15_093	FROM->TO	G14-057T 345.00 - SUNNYSIDE 345KV CKT 1	717	789	0.17682	114.0392	THISTLE7 345.00 - WOODWARD DISTRICT EHV 345KV CKT 1
FDNS	00NR	2	16WP	G15_093	FROM->TO	G14-057T 345.00 - SUNNYSIDE 345KV CKT 1	717	789	0.17682	114.0392	THISTLE7 345.00 - WOODWARD DISTRICT EHV 345KV CKT 2
FDNS	00NR	2	16WP	G15_093	FROM->TO	G14-057T 345.00 - SUNNYSIDE 345KV CKT 1	717	789	0.17607	114.0181	DELL 500 - ESSEX UNIT 2 500KV CKT Z1
FDNS	00NR	2	16WP	G15_093	FROM->TO	G14-057T 345.00 - SUNNYSIDE 345KV CKT 1	717	789	0.1766	113.9738	DUNCAN (DUNCAN) 138/69/13.8KV TRANSFORMER CKT 1
FDNS	00NR	2	16WP	G15_093	FROM->TO	G14-057T 345.00 - SUNNYSIDE 345KV CKT 1	717	789	0.17606	113.9424	P12:161:AEPW-SWPA:BEAVERS:EROGERS5
FDNS	00NR	2	16WP	G15_093	FROM->TO	G14-057T 345.00 - SUNNYSIDE 345KV CKT 1	717	789	0.17608	113.9237	P12:138:AEPW:CATOOSA4:T.S.E.-4
FDNS	00NR	2	16WP	G15_093	FROM->TO	G14-057T 345.00 - SUNNYSIDE 345KV CKT 1	717	789	0.17588	113.9117	6LAYFLD 230.00 - CARROLL 230KV CKT 1
FDNS	00NR	2	16WP	G15_093	FROM->TO	G14-057T 345.00 - SUNNYSIDE 345KV CKT 1	717	789	0.1758	113.8781	FULTON 115 - HOPE 115KV CKT 1
FDNS	00NR	2	16WP	G15_093	FROM->TO	G14-057T 345.00 - SUNNYSIDE 345KV CKT 1	717	789	0.17606	113.8739	8DANIEL8 500.00 - MCKNIGHT 500KV CKT 1
FDNS	00NR	2	16WP	G15_093	FROM->TO	G14-057T 345.00 - SUNNYSIDE 345KV CKT 1	717	789	0.17607	113.8724	P12:161:AEPW:DYESS5:ELMSPRNG:TONTITN5
FDNS	00NR	2	20WP	G15_093	FROM->TO	G14-057T 345.00 - SUNNYSIDE 345KV CKT 1	717	789	0.17673	113.8412	CLEVELAND - TULSA NORTH 345KV CKT 1
FDNS	00NR	2	16WP	G15_093	FROM->TO	G14-057T 345.00 - SUNNYSIDE 345KV CKT 1	717	789	0.17717	113.8378	P12:138:AEPW:CORNVIL4:S.W.S.-4
FDNS	00NR	2	16WP	G15_093	FROM->TO	G14-057T 345.00 - SUNNYSIDE 345KV CKT 1	717	789	0.17732	113.8049	P12:138:AEPW:CORNVIL4:DUNCAN-4
FDNS	00NR	2	16WP	G15_093	FROM->TO	G14-057T 345.00 - SUNNYSIDE 345KV CKT 1	717	789	0.1766	113.8023	P12:69:WFEC-AEPW:COMANCH2:DUNCAN-2
FDNS	00NR	2	16WP	G15_093	FROM->TO	G14-057T 345.00 - SUNNYSIDE 345KV CKT 1	717	789	0.17794	113.7798	P12:138:AEPW-OGE:WTH_JCT4:JENSEN4
FDNS	00NR	2	16WP	G15_093	FROM->TO	G14-057T 345.00 - SUNNYSIDE 345KV CKT 1	717	789	0.17607	113.7588	P12:161:AEPW:EROGERS5:ECNTRTN5
FDNS	00NR	2	16WP	G15_093	FROM->TO	G14-057T 345.00 - SUNNYSIDE 345KV CKT 1	717	789	0.17594	113.7486	LAYFLD8 500.00 - MOUNT OLIVE 500KV CKT 1
FDNS	00NR	2	16WP	G15_093	FROM->TO	G14-057T 345.00 - SUNNYSIDE 345KV CKT 1	717	789	0.17607	113.7485	RODEMACHER 230/22.0KV TRANSFORMER CKT 1
FDNS	00NR	2	16WP	G15_093	FROM->TO	G14-057T 345.00 - SUNNYSIDE 345KV CKT 1	717	789	0.17607	113.7391	WHITE BLUFF 500/26.0KV TRANSFORMER CKT 1
FDNS	00NR	2	16WP	G15_093	FROM->TO	G14-057T 345.00 - SUNNYSIDE 345KV CKT 1	717	789	0.17717	113.7384	P12:138:AEPW:WTHWF4:CLINTJC4
FDNS	00NR	2	16WP	G15_093	FROM->TO	G14-057T 345.00 - SUNNYSIDE 345KV CKT 1	717	789	0.17597	113.7358	MC NIEL 500/115KV TRANSFORMER CKT 1
FDNS	00NR	2	16WP	G15_093	FROM->TO	G14-057T 345.00 - SUNNYSIDE 345KV CKT 1	717	789	0.17597	113.7307	HOT SPRINGS EHV - MAGNET COVE 500KV CKT 1
FDNS	00NR	2	16WP	G15_093	FROM->TO	G14-057T 345.00 - SUNNYSIDE 345KV CKT 1	717	789	0.17586	113.7275	BISMARK - HOT SPRINGS WEST BUS 115KV CKT 1
FDNS	00NR	2	16WP	G15_093	FROM->TO	G14-057T 345.00 - SUNNYSIDE 345KV CKT 1	717	789	0.17647	113.7242	P12:69:AEPW-OMPA:COMANC-2:OMWALTR2
FDNS	00NR	2	16WP	G15_093	FROM->TO	G14-057T 345.00 - SUNNYSIDE 345KV CKT 1	717	789	0.17635	113.7165	BUCKNER7 345.00 - SPEARVILLE 345KV CKT 1
FDNS	00NR	2	16WP	G15_093	FROM->TO	G14-057T 345.00 - SUNNYSIDE 345KV CKT 1	717	789	0.17717	113.6923	P12:138:AEPW:WTHWF4:WTH_SE4
FDNS	00NR	2	16WP	G15_093	FROM->TO	G14-057T 345.00 - SUNNYSIDE 345KV CKT 1	717	789	0.17608	113.6922	P12:138:AEPW:N.E.S.-4:CATOOSA4
FDNS	00NR	2	20WP	G15_093	FROM->TO	G14-057T 345.00 - SUNNYSIDE 345KV CKT 1	717	789	0.17555	113.6826	DOLET HILLS - SOUTHWEST SHREVEPORT 345KV CKT 1
FDNS	00NR	2	16WP	G15_093	FROM->TO	G14-057T 345.00 - SUNNYSIDE 345KV CKT 1	717	789	0.17607	113.6815	NELSON 230/20.0KV TRANSFORMER CKT 1
FDNS	00NR	2	16WP	G15_093	FROM->TO	G14-057T 345.00 - SUNNYSIDE 345KV CKT 1	717	789	0.17586	113.6759	ALPINE AECC - BISMARK 115KV CKT 1
FDNS	00NR	2	16WP	G15_093	FROM->TO	G14-057T 345.00 - SUNNYSIDE 345KV CKT 1	717	789	0.1772	113.6755	P12:138:OKGE:3TERM27
FDNS	00NR	2	16WP	G15_093	FROM->TO	G14-057T 345.00 - SUNNYSIDE 345KV CKT 1	717	789	0.17604	113.64	CYPRESS - HARTBURG 500KV CKT 1
FDNS	00NR	2	16WP	G15_093	FROM->TO	G14-057T 345.00 - SUNNYSIDE 345KV CKT 1	717	789	0.17736	113.6346	ELK CITY 230KV (ELKCTY-6) 230/138/13.8KV TRANSFORMER CKT 1
FDNS	00NR	2	16WP	G15_093	FROM->TO	G14-057T 345.00 - SUNNYSIDE 345KV CKT 1	717	789	0.17586	113.6333	ALPINE AECC - AMITY SS 115KV CKT 1
FDNS	00NR	2	16WP	G15_093	FROM->TO	G14-057T 345.00 - SUNNYSIDE 345KV CKT 1	717	789	0.17607	113.6232	8CAJUN2 500/24.0KV TRANSFORMER CKT 1
FDNS	00NR	2	16WP	G15_093	FROM->TO	G14-057T 345.00 - SUNNYSIDE 345KV CKT 1	717	789	0.16874	113.6224	CANADIAN RIVER - PITTSBURG 345KV CKT 1

SOLUTION	GROUP	SCENARIO	SEASON	SOURCE	DIRECTION	MONITORED ELEMENT	RATEA (MVA)	RATEB(MVA)	TDF	TC%LOADING (% MVA)	CONTINGENCY
FDNS	00NR	2	16WP	G15_093	FROM->TO	G14-057T 345.00 - SUNNYSIDE 345KV CKT 1	717	789	0.17606	113.609	7JASPER 345.00 - BLACKBERRY 345KV CKT 1
FDNS	00NR	2	16WP	G15_093	FROM->TO	G14-057T 345.00 - SUNNYSIDE 345KV CKT 1	717	789	0.17607	113.5983	P12:138:AEPW:R.S.S.-4:S.HUD.-4
FDNS	00NR	2	16WP	G15_093	FROM->TO	G14-057T 345.00 - SUNNYSIDE 345KV CKT 1	717	789	0.17596	113.5627	ETTA (DUKE HOTSPRINGS) - MC NIEL 500KV CKT 1
FDNS	00NR	2	16WP	G15_093	FROM->TO	G14-057T 345.00 - SUNNYSIDE 345KV CKT 1	717	789	0.17607	113.5603	P12:138:AEPW:YARCH-S4:T.S.E.-4
FDNS	00NR	2	16WP	G15_093	FROM->TO	G14-057T 345.00 - SUNNYSIDE 345KV CKT 1	717	789	0.17795	113.5565	WEATHERFORD JCT. - WEATHERFORD SOUTHEAST 138KV CKT 1
FDNS	00NR	2	16WP	G15_093	FROM->TO	G14-057T 345.00 - SUNNYSIDE 345KV CKT 1	717	789	0.17607	113.5542	P12:138:AEPW:BA_71ST4:T.S.E.-4
FDNS	00NR	2	16WP	G15_093	FROM->TO	G14-057T 345.00 - SUNNYSIDE 345KV CKT 1	717	789	0.17607	113.5534	P12:69:AEPW:NROGERS2:ECNTRTN2
FDNS	00NR	2	16WP	G15_093	FROM->TO	G14-057T 345.00 - SUNNYSIDE 345KV CKT 1	717	789	0.17607	113.5458	SABINE 230/24.0KV TRANSFORMER CKT 1
FDNS	00NR	2	16WP	G15_093	FROM->TO	G14-057T 345.00 - SUNNYSIDE 345KV CKT 1	717	789	0.17621	113.5397	BLACKBERRY - NEOSHO 345KV CKT 1
FDNS	00NR	2	16WP	G15_093	FROM->TO	G14-057T 345.00 - SUNNYSIDE 345KV CKT 1	717	789	0.1761	113.5342	7LUTESVIL 345.00 - 7ST FRANC 345.00 345KV CKT 1
FDNS	00NR	2	16WP	G15_093	FROM->TO	G14-057T 345.00 - SUNNYSIDE 345KV CKT 1	717	789	0.17607	113.5301	FRONTIER 345/18.0KV TRANSFORMER CKT 1
FDNS	00NR	2	20WP	G15_093	FROM->TO	G14-057T 345.00 - SUNNYSIDE 345KV CKT 1	717	789	0.1758	113.53	GRAND GULF 500/22.0KV TRANSFORMER CKT 1
FDNS	00NR	2	16WP	G15_093	FROM->TO	G14-057T 345.00 - SUNNYSIDE 345KV CKT 1	717	789	0.17607	113.5285	FRONTIER 345/18.0KV TRANSFORMER CKT 1
FDNS	00NR	2	16WP	G15_093	FROM->TO	G14-057T 345.00 - SUNNYSIDE 345KV CKT 1	717	789	0.17607	113.5223	P12:161:AEPW:CHAMSPR5:FARMING5
FDNS	00NR	2	16WP	G15_093	FROM->TO	G14-057T 345.00 - SUNNYSIDE 345KV CKT 1	717	789	0.17663	113.5201	P12:138:OKGE-AEPW:JENSEN4:REDROCKRD4
FDNS	00NR	2	16WP	G15_093	FROM->TO	G14-057T 345.00 - SUNNYSIDE 345KV CKT 1	717	789	0.17607	113.52	ESSEX UNIT 2 500/18.0KV TRANSFORMER CKT 1
FDNS	00NR	2	16WP	G15_093	FROM->TO	G14-057T 345.00 - SUNNYSIDE 345KV CKT 1	717	789	0.17609	113.5188	P12:138:AEPW-OGE:SHIDLER4:OSAGE 4
FDNS	00NR	2	16WP	G15_093	FROM->TO	G14-057T 345.00 - SUNNYSIDE 345KV CKT 1	717	789	0.17726	113.5131	NORGE ROAD - SOUTHWESTERN STATION 138KV CKT 1
FDNS	00NR	2	16WP	G15_093	FROM->TO	G14-057T 345.00 - SUNNYSIDE 345KV CKT 1	717	789	0.1758	113.5071	P12:115:AEPW:TURK3:HOPE3
FDNS	00NR	2	16WP	G15_093	FROM->TO	G14-057T 345.00 - SUNNYSIDE 345KV CKT 1	717	789	0.17795	113.5062	P12:138:AEPW:REDROCKRD4:WTH_JCT4
FDNS	00NR	2	16WP	G15_093	FROM->TO	G14-057T 345.00 - SUNNYSIDE 345KV CKT 1	717	789	0.1761	113.4943	8WNEWMADRID 500.00 - DELL 500 500KV CKT 1
FDNS	00NR	2	16WP	G15_093	FROM->TO	G14-057T 345.00 - SUNNYSIDE 345KV CKT 1	717	789	0.17607	113.4932	LEWIS CREEK SWITCHYARD 138/22.0KV TRANSFORMER CKT 1
FDNS	00NR	2	16WP	G15_093	FROM->TO	G14-057T 345.00 - SUNNYSIDE 345KV CKT 1	717	789	0.17607	113.4884	LEWIS CREEK SWITCHYARD 138/22.0KV TRANSFORMER CKT 1
FDNS	00NR	2	16WP	G15_093	FROM->TO	G14-057T 345.00 - SUNNYSIDE 345KV CKT 1	717	789	0.17647	113.4861	OMPA-WALTERS - WALTERS 69KV CKT 1
FDNS	00NR	2	16WP	G15_093	FROM->TO	G14-057T 345.00 - SUNNYSIDE 345KV CKT 1	717	789	0.1758	113.4852	TURK (TURK 1) 138/115/13.2KV TRANSFORMER CKT 1
FDNS	00NR	2	16WP	G15_093	FROM->TO	G14-057T 345.00 - SUNNYSIDE 345KV CKT 1	717	789	0.17592	113.4831	COUCH SES - MC NIEL 115KV CKT 1
FDNS	00NR	2	16WP	G15_093	FROM->TO	G14-057T 345.00 - SUNNYSIDE 345KV CKT 1	717	789	0.17616	113.4667	P12:138:OKGE:3TERM12
FDNS	00NR	2	16WP	G15_093	FROM->TO	G14-057T 345.00 - SUNNYSIDE 345KV CKT 1	717	789	0.17661	113.4631	P12:69:WFEC-AEPW:COMANCH2:WALTRS-2
FDNS	00NR	2	16WP	G15_093	FROM->TO	G14-057T 345.00 - SUNNYSIDE 345KV CKT 1	717	789	0.17584	113.4581	P12:138:AEPW-SWPA:LONEOAK4:BRKNBW4
FDNS	00NR	2	20WP	G15_093	FROM->TO	G14-057T 345.00 - SUNNYSIDE 345KV CKT 1	717	789	0.17543	113.452	7SAREPTA% 345.00 - ELDORADO EHV 345KV CKT 1
FDNS	00NR	2	16WP	G15_093	FROM->TO	G14-057T 345.00 - SUNNYSIDE 345KV CKT 1	717	789	0.17597	113.4484	P12:138:OKGE:3TERM2
FDNS	00NR	2	20WP	G15_093	FROM->TO	G14-057T 345.00 - SUNNYSIDE 345KV CKT 1	717	789	0.17543	113.4413	ELDORADO EHV 500/345KV TRANSFORMER CKT 1
FDNS	00NR	2	16WP	G15_093	FROM->TO	G14-057T 345.00 - SUNNYSIDE 345KV CKT 1	717	789	0.17608	113.4391	7JASPER 345.00 - MORGAN 345KV CKT 1
FDNS	00NR	2	16WP	G15_093	FROM->TO	G14-057T 345.00 - SUNNYSIDE 345KV CKT 1	717	789	0.17635	113.4377	BUCKNER7 345.00 - HOLCOMB 345KV CKT 1
FDNS	00NR	2	16WP	G15_093	FROM->TO	G14-057T 345.00 - SUNNYSIDE 345KV CKT 1	717	789	0.17607	113.434	P12:138:AEPW:R.S.S-4:T.P.S.-4
FDNS	00NR	2	16WP	G15_093	FROM->TO	G14-057T 345.00 - SUNNYSIDE 345KV CKT 1	717	789	0.17654	113.4303	CLINTON JUNCTION - ELK CITY 138KV CKT 1
FDNS	00NR	2	16WP	G15_093	FROM->TO	G14-057T 345.00 - SUNNYSIDE 345KV CKT 1	717	789	0.17699	113.4299	CLARKSVILLE - ONETA 345KV CKT 1
FDNS	00NR	2	20WP	G15_093	FROM->TO	G14-057T 345.00 - SUNNYSIDE 345KV CKT 1	717	789	0.17826	113.4146	P12:138:AEPW:DUNCAN-4:L.E.S.-4
FDNS	00NR	2	16WP	G15_093	FROM->TO	G14-057T 345.00 - SUNNYSIDE 345KV CKT 1	717	789	0.17607	113.4106	P12:138:AEPW:R.S.S.-4:R:96YALE-4
FDNS	00NR	2	16WP	G15_093	FROM->TO	G14-057T 345.00 - SUNNYSIDE 345KV CKT 1	717	789	0.17726	113.3952	CORNVILLE - NORGE ROAD 138KV CKT 1
FDNS	00NR	2	16WP	G15_093	FROM->TO	G14-057T 345.00 - SUNNYSIDE 345KV CKT 1	717	789	0.17607	113.3951	P12:138:AEPW:MOHAWK4:T.NO--4
FDNS	00NR	2	16WP	G15_093	FROM->TO	G14-057T 345.00 - SUNNYSIDE 345KV CKT 1	717	789	0.17607	113.3891	ST FRANCIS 161/16.0KV TRANSFORMER CKT 1
FDNS	00NR	2	16WP	G15_093	FROM->TO	G14-057T 345.00 - SUNNYSIDE 345KV CKT 1	717	789	0.17607	113.389	ST FRANCIS - ST FRANCIS 1 161KV CKT Z1
FDNS	00NR	2	16WP	G15_093	FROM->TO	G14-057T 345.00 - SUNNYSIDE 345KV CKT 1	717	789	0.17579	113.3855	P12:138:AEPW:OKMULGE4:R.S.S-4
FDNS	00NR	2	16WP	G15_093	FROM->TO	G14-057T 345.00 - SUNNYSIDE 345KV CKT 1	717	789	0.17596	113.385	LAYFLD8 500.00 (LAYFLD AUTO) 500/230/13.8KV TRANSFORMER CKT 1
FDNS	00NR	2	16WP	G15_093	FROM->TO	G14-057T 345.00 - SUNNYSIDE 345KV CKT 1	717	789	0.17607	113.3786	SABINE 230/22.0KV TRANSFORMER CKT 1
FDNS	00NR	2	16WP	G15_093	FROM->TO	G14-057T 345.00 - SUNNYSIDE 345KV CKT 1	717	789	0.17586	113.3764	AMITY SS - MURFREESBORO EAST (AECC) 115KV CKT 1
FDNS	00NR	2	16WP	G15_093	FROM->TO	G14-057T 345.00 - SUNNYSIDE 345KV CKT 1	717	789	0.17616	113.3747	P12:138:WFEC-AEPW:ELKCTY-4:ERICK4
FDNS	00NR	2	16WP	G15_093	FROM->TO	G14-057T 345.00 - SUNNYSIDE 345KV CKT 1	717	789	0.17624	113.3729	P12:138:OKGE:3TERM47
FDNS	00NR	2	20WP	G15_093	FROM->TO	G14-057T 345.00 - SUNNYSIDE 345KV CKT 1	717	789	0.17826	113.0115	DUNCAN - OMPA-DUNCAN 840 138KV CKT 1
FDNS	00NR	2	20WP	G15_093	FROM->TO	G14-057T 345.00 - SUNNYSIDE 345KV CKT 1	717	789	0.18019	112.9602	P12:138:WFEC:MSL01
FDNS	00NR	2	16WP	G15_093	FROM->TO	G14-057T 345.00 - SUNNYSIDE 345KV CKT 1	717	789	0.17607	112.9058	803-OKLAUNION
FDNS	00NR	2	20WP	G15_093	FROM->TO	G14-057T 345.00 - SUNNYSIDE 345KV CKT 1	717	789	0.17565	112.8133	ELDORADO EHV - MOUNT OLIVE 500KV CKT 1
FDNS	00NR	2	20WP	G15_093	FROM->TO	G14-057T 345.00 - SUNNYSIDE 345KV CKT 1	717	789	0.17582	112.8085	P12:138:AEPW:SHERID4:112GORE4
FDNS	00NR	2	20WP	G15_093	FROM->TO	G14-057T 345.00 - SUNNYSIDE 345KV CKT 1	717	789	0.1758	112.7873	DOLET HILLS 345/24.0KV TRANSFORMER CKT 1
FDNS	00NR	2	20WP	G15_093	FROM->TO	G14-057T 345.00 - SUNNYSIDE 345KV CKT 1	717	789	0.17759	112.7668	Hitchland Interchange - WALKTAP7 345.00 345KV CKT 1
FDNS	00NR	2	20WP	G15_093	FROM->TO	G14-057T 345.00 - SUNNYSIDE 345KV CKT 1	717	789	0.17759	112.7573	P12:345:SPS:J07.1.FINN.HITCH
FDNS	00NR	2	20WP	G15_093	FROM->TO	G14-057T 345.00 - SUNNYSIDE 345KV CKT 1	717	789	0.1766	112.7566	REDBUD - RIVERSIDE STATION 345KV CKT 1
FDNS	00NR	2	20WP	G15_093	FROM->TO	G14-057T 345.00 - SUNNYSIDE 345KV CKT 1	717	789	0.17572	112.653	WEBRE - WELLS 500KV CKT 1
FDNS	00NR	2	20WP	G15_093	FROM->TO	G14-057T 345.00 - SUNNYSIDE 345KV CKT 1	717	789	0.1758	112.6136	P12:161:AEPW:DYESS 5:HYLAND 5
FDNS	00NR	2	20WP	G15_093	FROM->TO	G14-057T 345.00 - SUNNYSIDE 345KV CKT 1	717	789	0.1758	112.5779	DELL 500 - ESSEX UNIT 2 500KV CKT Z1
FDNS	00NR	2	20WP	G15_093	FROM->TO	G14-057T 345.00 - SUNNYSIDE 345KV CKT 1	717	789	0.1758	112.5497	P12:69:AEPW:L.E.S.-2:LAW WC2
FDNS	00NR	2	20WP	G15_093	FROM->TO	G14-057T 345.00 - SUNNYSIDE 345KV CKT 1	717	789	0.17906	112.5491	P12:138:WFEC:MSL17
FDNS	00NR	2	20WP	G15_093	FROM->TO	G14-057T 345.00 - SUNNYSIDE 345KV CKT 1	717	789	0.17708	112.4804	P12:138:WFEC:MSL02
FDNS	00NR	2	20WP	G15_093	FROM->TO	G14-057T 345.00 - SUNNYSIDE 345KV CKT 1	717	789	0.17723	112.4648	LAWTON EASTSIDE (LES 5) 345/138/13.8KV TRANSFORMER CKT 2
FDNS	00NR	2	20WP	G15_093	FROM->TO	G14-057T 345.00 - SUNNYSIDE 345KV CKT 1	717	789	0.17551	112.4575	ELDORADO EHV - SHERIDAN EHV 500KV CKT 1
FDNS	00NR	2	16WP	G15_093	FROM->TO	G14-057T 345.00 - SUNNYSIDE 345KV CKT 1	717	789	0.17689	112.4486	P12:138:OKGE:3TERM21
FDNS	00NR	2	16WP	G15_093	FROM->TO	G14-057T 345.00 - SUNNYSIDE 345KV CKT 1	717	789	0.176	112.4396	P12:138:WFEC:MSL11
FDNS	00NR	2	16WP	G15_093	FROM->TO	G14-057T 345.00 - SUNNYSIDE 345KV CKT 1	717	789	0.176	112.4396	P12:138:WFEC-AEPW:PHAROAH4:LONEOAK4
FDNS	00NR	2	20WP	G15_093	FROM->TO	G14-057T 345.00 - SUNNYSIDE 345KV CKT 1	717	789	0.17582	112.4267	P12:138:AEPW:112GORE4:L.E.S.-4
FDNS	00NR	2	16WP	G15_093	FROM->TO	G14-057T 345.00 - SUNNYSIDE 345KV CKT 1	717	789	0.17606	112.4178	P12:069:OKGE:3TERM42
FDNS	00NR	2	16WP	G15_093	FROM->TO	G14-057T 345.00 - SUNNYSIDE 345KV CKT 1	717	789	0.17637	112.4163	P12:138:WFEC:MSL08
FDNS	00NR	2	16WP	G15_093	FROM->TO	G14-057T 345.00 - SUNNYSIDE 345KV CKT 1	717	789	0.17612	112.411	DELL 500 - INDEPENDENCE 500KV CKT 1
FDNS	00NR	2	16WP	G15_093	FROM->TO	G14-057T 345.00 - SUNNYSIDE 345KV CKT 1	717	789	0.17824	112.3839	P12:138:WFEC:MSL14
FDNS	00NR	2	16WP	G15_093	FROM->TO	G14-057T 345.00 - SUNNYSIDE 345KV CKT 1	717	789	0.17607	112.3439	BURLINGTON NO1 + NO 2 + NO 3 161/20.0KV TRANSFORMER CKT 1
FDNS	00NR	2	16WP	G15_093	FROM->TO	G14-057T 345.00 - SUNNYSIDE 345KV CKT 1	717	789	0.17607	112.3431	INDEPENDENCE 500/26.0KV TRANSFORMER CKT 1
FDNS	00NR	2	16WP	G15_093	FROM->TO	G14-057T 345.00 - SUNNYSIDE 345KV CKT 1	717	789	0.17618	112.3389	CANADIAN RIVER - MCALESTER SOUTH 138KV CKT 1
FDNS	00NR	2	16WP	G15_093	FROM->TO	G14-057T 345.00 - SUNNYSIDE 345KV CKT 1	717	789	0.17618	112.3377	CANADIAN RIVER () 345/138/13.8KV TRANSFORMER CKT 1
FDNS	00NR	2	16WP	G15_093	FROM->TO	G14-057T 345.00 - SUNNYSIDE 345KV CKT 1	717	789	0.17615	112.3253	ALTUS JUNCTION - RUSSELL 138KV CKT 1

SOLUTION	GROUP	SCENARIO	SEASON	SOURCE	DIRECTION	MONITORED ELEMENT	RATEA (MVA)	RATEB(MVA)	TDF	TC%LOADING (% MVA)	CONTINGENCY
FDNS	00NR	2	20WP	G15_093	FROM->TO	G14-057T 345.00 - SUNNYSIDE 345KV CKT 1	717	789	0.1758	112.3175	FRONTIER - GRIMES 345KV CKT 1
FDNS	00NR	2	16WP	G15_093	FROM->TO	G14-057T 345.00 - SUNNYSIDE 345KV CKT 1	717	789	0.17594	112.3173	NORTHWEST TEXARKANA - WELSH 345KV CKT 1
FDNS	00NR	2	16WP	G15_093	FROM->TO	G14-057T 345.00 - SUNNYSIDE 345KV CKT 1	717	789	0.17644	112.315	MINGO - SETAB 345KV CKT 1
FDNS	00NR	2	20WP	G15_093	FROM->TO	G14-057T 345.00 - SUNNYSIDE 345KV CKT 1	717	789	0.1797	112.3124	P12:138:AEPW-OGE:CORNVIL4:MAUD 4
FDNS	00NR	2	16WP	G15_093	FROM->TO	G14-057T 345.00 - SUNNYSIDE 345KV CKT 1	717	789	0.17607	112.3074	P12:230:UMZB:# 112 #: NU IN SD. NU-RCDC & DRY CREEK XFMR
FDNS	00NR	2	16WP	G15_093	FROM->TO	G14-057T 345.00 - SUNNYSIDE 345KV CKT 1	717	789	0.17614	112.2896	KEO EHV - WEST MEMPHIS 500 500KV CKT 1
FDNS	00NR	2	16WP	G15_093	FROM->TO	G14-057T 345.00 - SUNNYSIDE 345KV CKT 1	717	789	0.17607	112.2707	THOMAS HILL 161/22.0KV TRANSFORMER CKT 1
FDNS	00NR	2	16WP	G15_093	FROM->TO	G14-057T 345.00 - SUNNYSIDE 345KV CKT 1	717	789	0.17529	112.257	ARKANSAS NUCLEAR ONE - FT SMITH 500KV CKT 1
FDNS	00NR	2	20WP	G15_093	FROM->TO	G14-057T 345.00 - SUNNYSIDE 345KV CKT 1	717	789	0.17567	112.2143	LAYFLD8 500.00 - MOUNT OLIVE 500KV CKT 1
FDNS	00NR	2	20WP	G15_093	FROM->TO	G14-057T 345.00 - SUNNYSIDE 345KV CKT 1	717	789	0.17653	112.2058	THISTLE7 345.00 - WOODWARD DISTRICT EHV 345KV CKT 1
FDNS	00NR	2	20WP	G15_093	FROM->TO	G14-057T 345.00 - SUNNYSIDE 345KV CKT 1	717	789	0.17653	112.2058	THISTLE7 345.00 - WOODWARD DISTRICT EHV 345KV CKT 2
FDNS	00NR	2	20WP	G15_093	FROM->TO	G14-057T 345.00 - SUNNYSIDE 345KV CKT 1	717	789	0.17579	112.1722	P12:161:AEPW-SWPA:BEAVER5:EROGERS5
FDNS	00NR	2	16WP	G15_093	FROM->TO	G14-057T 345.00 - SUNNYSIDE 345KV CKT 1	717	789	0.17654	112.1653	P12:138:AEPW:112GORE4:SNYDER-4
FDNS	00NR	2	20WP	G15_093	FROM->TO	G14-057T 345.00 - SUNNYSIDE 345KV CKT 1	717	789	0.17633	112.1515	DUNCAN (DUNCAN) 138/69/13.8KV TRANSFORMER CKT 1
FDNS	00NR	2	20WP	G15_093	FROM->TO	G14-057T 345.00 - SUNNYSIDE 345KV CKT 1	717	789	0.1758	112.1323	P12:161:AEPW:DYESS5:ELMSPRNG:TONTITN5
FDNS	00NR	2	16WP	G15_093	FROM->TO	G14-057T 345.00 - SUNNYSIDE 345KV CKT 1	717	789	0.17772	112.1239	CLARKSVILLE - MUSKOGEE 345KV CKT 1
FDNS	00NR	2	20WP	G15_093	FROM->TO	G14-057T 345.00 - SUNNYSIDE 345KV CKT 1	717	789	0.17581	112.054	P12:138:AEPW:CATOOSA4:T.S.E.-4
FDNS	00NR	2	16WP	G15_093	FROM->TO	G14-057T 345.00 - SUNNYSIDE 345KV CKT 1	717	789	0.17607	112.0482	4SIOUX 1 138.00 138/18.0KV TRANSFORMER CKT 1
FDNS	00NR	2	16WP	G15_093	FROM->TO	G14-057T 345.00 - SUNNYSIDE 345KV CKT 1	717	789	0.17603	112.0471	P12:138:WFEC:MSL07
FDNS	00NR	2	16WP	G15_093	FROM->TO	G14-057T 345.00 - SUNNYSIDE 345KV CKT 1	717	789	0.17603	112.0471	P12:138:WFEC-AEPW:HUGOPP4:ATOKA--4
FDNS	00NR	2	16WP	G15_093	FROM->TO	G14-057T 345.00 - SUNNYSIDE 345KV CKT 1	717	789	0.17607	112.0336	CLAY BOSWELL 230/20.9KV TRANSFORMER CKT 1
FDNS	00NR	2	20WP	G15_093	FROM->TO	G14-057T 345.00 - SUNNYSIDE 345KV CKT 1	717	789	0.17554	112.0214	FULTON 115 - HOPE 115KV CKT 1
FDNS	00NR	2	20WP	G15_093	FROM->TO	G14-057T 345.00 - SUNNYSIDE 345KV CKT 1	717	789	0.17658	112.008	P12:138:AEPW:S.W.S.-4:L.E.S.-4
FDNS	00NR	2	16WP	G15_093	FROM->TO	G14-057T 345.00 - SUNNYSIDE 345KV CKT 1	717	789	0.17623	111.997	P12:138:WFEC:MSL16
FDNS	00NR	2	20WP	G15_093	FROM->TO	G14-057T 345.00 - SUNNYSIDE 345KV CKT 1	717	789	0.17705	111.993	P12:138:AEPW:CORNVIL4:DUNCAN-4
FDNS	00NR	2	20WP	G15_093	FROM->TO	G14-057T 345.00 - SUNNYSIDE 345KV CKT 1	717	789	0.17562	111.9655	6LAYFLD 230.00 - CARROLL 230KV CKT 1
FDNS	00NR	2	20WP	G15_093	FROM->TO	G14-057T 345.00 - SUNNYSIDE 345KV CKT 1	717	789	0.17633	111.9597	P12:69:WFEC-AEPW:COMANCH2:DUNCAN-2
FDNS	00NR	2	20WP	G15_093	FROM->TO	G14-057T 345.00 - SUNNYSIDE 345KV CKT 1	717	789	0.1758	111.9504	8DANIEL8 500.00 - MCKNIGHT 500KV CKT 1
FDNS	00NR	2	20WP	G15_093	FROM->TO	G14-057T 345.00 - SUNNYSIDE 345KV CKT 1	717	789	0.1769	111.9499	P12:138:AEPW:CORNVIL4:S.W.S.-4
FDNS	00NR	2	16WP	G15_093	FROM->TO	G14-057T 345.00 - SUNNYSIDE 345KV CKT 1	717	789	0.17595	111.9491	P12:138:WFEC-AEPW:GOLDENSW4:CRAIGJT4
FDNS	00NR	2	20WP	G15_093	FROM->TO	G14-057T 345.00 - SUNNYSIDE 345KV CKT 1	717	789	0.17767	111.9426	P12:138:AEPW-OGE:WTH_JCT4:JENSEN4
FDNS	00NR	2	20WP	G15_093	FROM->TO	G14-057T 345.00 - SUNNYSIDE 345KV CKT 1	717	789	0.1758	111.9316	P12:161:AEPW:EROGERS5:ECNTRTN5
FDNS	00NR	2	20WP	G15_093	FROM->TO	G14-057T 345.00 - SUNNYSIDE 345KV CKT 1	717	789	0.17688	111.9134	FINNEY SWITCHING STATION - HOLCOMB 345KV CKT 1
FDNS	00NR	2	20WP	G15_093	FROM->TO	G14-057T 345.00 - SUNNYSIDE 345KV CKT 1	717	789	0.1758	111.9095	WHITE BLUFF 500/26.0KV TRANSFORMER CKT 1
FDNS	00NR	2	20WP	G15_093	FROM->TO	G14-057T 345.00 - SUNNYSIDE 345KV CKT 1	717	789	0.1756	111.8936	BISMARK - HOT SPRINGS WEST BUS 115KV CKT 1
FDNS	00NR	2	20WP	G15_093	FROM->TO	G14-057T 345.00 - SUNNYSIDE 345KV CKT 1	717	789	0.1762	111.8896	P12:69:AEPW-OMPA:COMANC-2:OMWALTR2
FDNS	00NR	2	20WP	G15_093	FROM->TO	G14-057T 345.00 - SUNNYSIDE 345KV CKT 1	717	789	0.1758	111.8895	RODEMACHER 230/22.0KV TRANSFORMER CKT 1
FDNS	00NR	2	20WP	G15_093	FROM->TO	G14-057T 345.00 - SUNNYSIDE 345KV CKT 1	717	789	0.1757	111.8895	MC NIEL 500/115KV TRANSFORMER CKT 1
FDNS	00NR	2	20WP	G15_093	FROM->TO	G14-057T 345.00 - SUNNYSIDE 345KV CKT 1	717	789	0.1769	111.8774	P12:138:AEPW:WTHWF4:CLINTJC4
FDNS	00NR	2	20WP	G15_093	FROM->TO	G14-057T 345.00 - SUNNYSIDE 345KV CKT 1	717	789	0.1757	111.8739	HOT SPRINGS EHV - MAGNET COVE 500KV CKT 1
FDNS	00NR	2	16WP	G15_093	FROM->TO	G14-057T 345.00 - SUNNYSIDE 345KV CKT 1	717	789	0.17599	111.8719	P12:138:AEPW-SWPA:LONEOAK4:TUPELO4
FDNS	00NR	2	16WP	G15_093	FROM->TO	G14-057T 345.00 - SUNNYSIDE 345KV CKT 1	717	789	0.17599	111.8719	P12:138:WFEC:MSL06
FDNS	00NR	2	20WP	G15_093	FROM->TO	G14-057T 345.00 - SUNNYSIDE 345KV CKT 1	717	789	0.17708	111.866	ELK CITY 230KV (ELKCTY-6) 230/138/13.8KV TRANSFORMER CKT 1
FDNS	00NR	2	20WP	G15_093	FROM->TO	G14-057T 345.00 - SUNNYSIDE 345KV CKT 1	717	789	0.17606	111.8593	BUCKNER7 345.00 - SPEARVILLE 345KV CKT 1
FDNS	00NR	2	16WP	G15_093	FROM->TO	G14-057T 345.00 - SUNNYSIDE 345KV CKT 1	717	789	0.17532	111.8539	P12:138:OKGE:3TERM40
FDNS	00NR	2	20WP	G15_093	FROM->TO	G14-057T 345.00 - SUNNYSIDE 345KV CKT 1	717	789	0.1756	111.8396	ALPINE AECC - BISMARK 115KV CKT 1
FDNS	00NR	2	20WP	G15_093	FROM->TO	G14-057T 345.00 - SUNNYSIDE 345KV CKT 1	717	789	0.1769	111.8391	P12:138:AEPW:WTHWF4:WTH_SE4
FDNS	00NR	2	20WP	G15_093	FROM->TO	G14-057T 345.00 - SUNNYSIDE 345KV CKT 1	717	789	0.17581	111.8307	P12:138:AEPW:N.E.S.-4:CATOOSA4
FDNS	00NR	2	20WP	G15_093	FROM->TO	G14-057T 345.00 - SUNNYSIDE 345KV CKT 1	717	789	0.1758	111.8199	NELSON 230/20.0KV TRANSFORMER CKT 1
FDNS	00NR	2	16WP	G15_093	FROM->TO	G14-057T 345.00 - SUNNYSIDE 345KV CKT 1	717	789	0.08047	111.8167	GRACEMONT - LAWTON EASTSIDE 345KV CKT 1
FDNS	00NR	2	20WP	G15_093	FROM->TO	G14-057T 345.00 - SUNNYSIDE 345KV CKT 1	717	789	0.1756	111.7914	ALPINE AECC - AMITY SS 115KV CKT 1
FDNS	00NR	2	16WP	G15_093	FROM->TO	G14-057T 345.00 - SUNNYSIDE 345KV CKT 1	717	789	0.17709	111.7803	GRAPEVINE INTERCHANGE - STATELINE INTERCHANGE 230KV CKT 1
FDNS	00NR	2	20WP	G15_093	FROM->TO	G14-057T 345.00 - SUNNYSIDE 345KV CKT 1	717	789	0.1758	111.7693	8CAJUN2 500/24.0KV TRANSFORMER CKT 1
FDNS	00NR	2	20WP	G15_093	FROM->TO	G14-057T 345.00 - SUNNYSIDE 345KV CKT 1	717	789	0.1758	111.7376	P12:138:AEPW:R.S.S.-4:S.HUD.-4
FDNS	00NR	2	20WP	G15_093	FROM->TO	G14-057T 345.00 - SUNNYSIDE 345KV CKT 1	717	789	0.1758	111.7312	SABINE 230/24.0KV TRANSFORMER CKT 1
FDNS	00NR	2	20WP	G15_093	FROM->TO	G14-057T 345.00 - SUNNYSIDE 345KV CKT 1	717	789	0.17569	111.7295	ETTA (DUKE HOTSPRINGS) - MC NIEL 500KV CKT 1
FDNS	00NR	2	20WP	G15_093	FROM->TO	G14-057T 345.00 - SUNNYSIDE 345KV CKT 1	717	789	0.1765	111.727	LAWTON EASTSIDE (LES 4) 345/138/13.8KV TRANSFORMER CKT 1
FDNS	00NR	2	20WP	G15_093	FROM->TO	G14-057T 345.00 - SUNNYSIDE 345KV CKT 1	717	789	0.1758	111.7065	P12:69:AEPW:NROGERS2:ECNTRTN2
FDNS	00NR	2	20WP	G15_093	FROM->TO	G14-057T 345.00 - SUNNYSIDE 345KV CKT 1	717	789	0.17768	111.6987	WEATHERFORD JCT. - WEATHERFORD SOUTHEAST 138KV CKT 1
FDNS	00NR	2	20WP	G15_093	FROM->TO	G14-057T 345.00 - SUNNYSIDE 345KV CKT 1	717	789	0.1758	111.6968	P12:138:AEPW:BA_71ST4:T.S.E.-4
FDNS	00NR	2	20WP	G15_093	FROM->TO	G14-057T 345.00 - SUNNYSIDE 345KV CKT 1	717	789	0.1758	111.6915	P12:138:AEPW:YARCH-S4:T.S.E.-4
FDNS	00NR	2	20WP	G15_093	FROM->TO	G14-057T 345.00 - SUNNYSIDE 345KV CKT 1	717	789	0.17583	111.6801	P12:138:AEPW-OGE:SHIDLER4:OSAGE 4
FDNS	00NR	2	20WP	G15_093	FROM->TO	G14-057T 345.00 - SUNNYSIDE 345KV CKT 1	717	789	0.17579	111.6786	7JASPER 345.00 - BLACKBERRY 345KV CKT 1
FDNS	00NR	2	20WP	G15_093	FROM->TO	G14-057T 345.00 - SUNNYSIDE 345KV CKT 1	717	789	0.17699	111.6681	NORGE ROAD - SOUTHWESTERN STATION 138KV CKT 1
FDNS	00NR	2	20WP	G15_093	FROM->TO	G14-057T 345.00 - SUNNYSIDE 345KV CKT 1	717	789	0.1758	111.6665	FRONTIER 345/18.0KV TRANSFORMER CKT 1
FDNS	00NR	2	20WP	G15_093	FROM->TO	G14-057T 345.00 - SUNNYSIDE 345KV CKT 1	717	789	0.1758	111.6643	FRONTIER 345/18.0KV TRANSFORMER CKT 1
FDNS	00NR	2	20WP	G15_093	FROM->TO	G14-057T 345.00 - SUNNYSIDE 345KV CKT 1	717	789	0.17768	111.6636	P12:138:AEPW:REDROCKRD4:WTH_JCT4
FDNS	00NR	2	20WP	G15_093	FROM->TO	G14-057T 345.00 - SUNNYSIDE 345KV CKT 1	717	789	0.17693	111.6636	P12:138:OKGE:3TERM27
FDNS	00NR	2	20WP	G15_093	FROM->TO	G14-057T 345.00 - SUNNYSIDE 345KV CKT 1	717	789	0.17636	111.6606	P12:138:OKGE-AEPW:JENSEN4:REDROCKRD4
FDNS	00NR	2	20WP	G15_093	FROM->TO	G14-057T 345.00 - SUNNYSIDE 345KV CKT 1	717	789	0.17688	111.6573	FINNEY SWITCHING STATION - WALKTAP7 345.00 345KV CKT 1
FDNS	00NR	2	20WP	G15_093	FROM->TO	G14-057T 345.00 - SUNNYSIDE 345KV CKT 1	717	789	0.17554	111.6478	P12:115:AEPW:TURK3:HOPE3
FDNS	00NR	2	16WP	G15_093	FROM->TO	G14-057T 345.00 - SUNNYSIDE 345KV CKT 1	717	789	0.17703	111.6468	GRAPEVINE INTERCHANGE - NICHOLS STATION 230KV CKT 1
FDNS	00NR	2	20WP	G15_093	FROM->TO	G14-057T 345.00 - SUNNYSIDE 345KV CKT 1	717	789	0.17567	111.6463	P12:138:OKGE:3TERM2
FDNS	00NR	2	20WP	G15_093	FROM->TO	G14-057T 345.00 - SUNNYSIDE 345KV CKT 1	717	789	0.17565	111.646	COUCH SES - MC NIEL 115KV CKT 1
FDNS	00NR	2	20WP	G15_093	FROM->TO	G14-057T 345.00 - SUNNYSIDE 345KV CKT 1	717	789	0.1762	111.6439	OMPA-WALTERS - WALTERS 69KV CKT 1
FDNS	00NR	2	20WP	G15_093	FROM->TO	G14-057T 345.00 - SUNNYSIDE 345KV CKT 1	717	789	0.17578	111.6428	CYPRESS - HARTBURG 500KV CKT 1
FDNS	00NR	2	20WP	G15_093	FROM->TO	G14-057T 345.00 - SUNNYSIDE 345KV CKT 1	717	789	0.1758	111.6362	LEWIS CREEK SWITCHYARD 138/22.0KV TRANSFORMER CKT 1
FDNS	00NR	2	20WP	G15_093	FROM->TO	G14-057T 345.00 - SUNNYSIDE 345KV CKT 1	717	789	0.1758	111.6318	LEWIS CREEK SWITCHYARD 138/22.0KV TRANSFORMER CKT 1
FDNS	00NR	2	20WP	G15_093	FROM->TO	G14-057T 345.00 - SUNNYSIDE 345KV CKT 1	717	789	0.17554	111.6221	TURK (TURK 1) 138/115/13.2KV TRANSFORMER CKT 1

SOLUTION	GROUP	SCENARIO	SEASON	SOURCE	DIRECTION	MONITORED ELEMENT	RATEA (MVA)	RATEB(MVA)	TDF	TC%LOADING (% MVA)	CONTINGENCY
FDNS	00NR	2	16WP	G15_093	FROM->TO	G14-057T 345.00 - SUNNYSIDE 345KV CKT 1	717	789	0.17616	111.6209	P12:138:AEPW:SHAM4WT:CHILD4WT
FDNS	00NR	2	20WP	G15_093	FROM->TO	G14-057T 345.00 - SUNNYSIDE 345KV CKT 1	717	789	0.1758	111.6197	P12:161:AEPW:CHAMSPR5:FARMING5
FDNS	00NR	2	16WP	G15_093	FROM->TO	G14-057T 345.00 - SUNNYSIDE 345KV CKT 1	717	789	0.17624	111.6149	P12:138:WFEC:MSL15
FDNS	00NR	2	20WP	G15_093	FROM->TO	G14-057T 345.00 - SUNNYSIDE 345KV CKT 1	717	789	0.17634	111.6141	P12:69:WFEC-AEPW:COMANCH2:WALTRS-2
FDNS	00NR	2	20WP	G15_093	FROM->TO	G14-057T 345.00 - SUNNYSIDE 345KV CKT 1	717	789	0.17583	111.6003	7LUTESVIL 345.00 - 7ST FRANC 345.00 345KV CKT 1
FDNS	00NR	2	20WP	G15_093	FROM->TO	G14-057T 345.00 - SUNNYSIDE 345KV CKT 1	717	789	0.17628	111.5953	CLINTON JUNCTION - ELK CITY 138KV CKT 1
FDNS	00NR	2	20WP	G15_093	FROM->TO	G14-057T 345.00 - SUNNYSIDE 345KV CKT 1	717	789	0.1758	111.5867	ST FRANCIS - ST FRANCIS 1 161KV CKT Z1
FDNS	00NR	2	20WP	G15_093	FROM->TO	G14-057T 345.00 - SUNNYSIDE 345KV CKT 1	717	789	0.17606	111.5864	BUCKNER7 345.00 - HOLCOMB 345KV CKT 1
FDNS	00NR	2	20WP	G15_093	FROM->TO	G14-057T 345.00 - SUNNYSIDE 345KV CKT 1	717	789	0.17579	111.5758	LAKEOVER - MCADAMS 500KV CKT 1
FDNS	00NR	2	20WP	G15_093	FROM->TO	G14-057T 345.00 - SUNNYSIDE 345KV CKT 1	717	789	0.1758	111.5739	SABINE 230/22.0KV TRANSFORMER CKT 1
FDNS	00NR	2	20WP	G15_093	FROM->TO	G14-057T 345.00 - SUNNYSIDE 345KV CKT 1	717	789	0.17589	111.5724	P12:138:OKGE:3TERM12
FDNS	00NR	2	20WP	G15_093	FROM->TO	G14-057T 345.00 - SUNNYSIDE 345KV CKT 1	717	789	0.1758	111.5703	P12:138:AEPW:R.S.S-4:T.P.S.-4
FDNS	00NR	2	20WP	G15_093	FROM->TO	G14-057T 345.00 - SUNNYSIDE 345KV CKT 1	717	789	0.1758	111.5586	MCADAMS - WOLF CREEK 500KV CKT 1
FDNS	00NR	2	20WP	G15_093	FROM->TO	G14-057T 345.00 - SUNNYSIDE 345KV CKT 1	717	789	0.17589	111.5573	P12:138:WFEC-AEPW:ELKCTY-4:ERICK4
FDNS	00NR	2	20WP	G15_093	FROM->TO	G14-057T 345.00 - SUNNYSIDE 345KV CKT 1	717	789	0.1758	111.5451	P12:138:AEPW:R.S.S.-4:R:96YALE-4
FDNS	00NR	2	20WP	G15_093	FROM->TO	G14-057T 345.00 - SUNNYSIDE 345KV CKT 1	717	789	0.1756	111.5353	AMITY SS - MURFREESBORO EAST (AECC) 115KV CKT 1
FDNS	00NR	2	20WP	G15_093	FROM->TO	G14-057T 345.00 - SUNNYSIDE 345KV CKT 1	717	789	0.1758	111.5338	NELSON 230/24.0KV TRANSFORMER CKT 1
FDNS	00NR	2	20WP	G15_093	FROM->TO	G14-057T 345.00 - SUNNYSIDE 345KV CKT 1	717	789	0.17584	111.5289	8WNEWMADRID 500.00 - DELL 500 500KV CKT 1
FDNS	00NR	2	20WP	G15_093	FROM->TO	G14-057T 345.00 - SUNNYSIDE 345KV CKT 1	717	789	0.1758	111.5241	ST FRANCIS 345/161KV TRANSFORMER CKT 1
FDNS	00NR	2	20WP	G15_093	FROM->TO	G14-057T 345.00 - SUNNYSIDE 345KV CKT 1	717	789	0.1758	111.5229	P12:138:AEPW:MOHAWK4:T.NO--4
FDNS	00NR	2	20WP	G15_093	FROM->TO	G14-057T 345.00 - SUNNYSIDE 345KV CKT 1	717	789	0.17699	111.521	CORNVILLE - NORGE ROAD 138KV CKT 1
FDNS	00NR	2	20WP	G15_093	FROM->TO	G14-057T 345.00 - SUNNYSIDE 345KV CKT 1	717	789	0.1757	111.5172	LAYFLD8 500.00 (LAYFLD AUTO) 500/230/13.8KV TRANSFORMER CKT 1
FDNS	00NR	2	20WP	G15_093	FROM->TO	G14-057T 345.00 - SUNNYSIDE 345KV CKT 1	717	789	0.17558	111.5029	P12:138:AEPW-SWPA:LONEOAK4:BRKNBW4
FDNS	00NR	2	20WP	G15_093	FROM->TO	G14-057T 345.00 - SUNNYSIDE 345KV CKT 1	717	789	0.17581	111.4903	7JASPER 345.00 - MORGAN 345KV CKT 1
FDNS	00NR	2	20WP	G15_093	FROM->TO	G14-057T 345.00 - SUNNYSIDE 345KV CKT 1	717	789	0.1759	111.4562	P12:138:OKGE:3TERM20
FDNS	00NR	2	20WP	G15_093	FROM->TO	G14-057T 345.00 - SUNNYSIDE 345KV CKT 1	717	789	0.0804	111.4559	GRACEMONT - LAWTON EASTSIDE 345KV CKT 1
FDNS	00NR	2	16WP	G15_093	FROM->TO	G14-057T 345.00 - SUNNYSIDE 345KV CKT 1	717	789	0.17612	111.3775	P12:138:WFEC:MSL09
FDNS	00NR	2	16WP	G15_093	FROM->TO	G14-057T 345.00 - SUNNYSIDE 345KV CKT 1	717	789	0.17788	111.219	P12:230:AEPW-SPS:SWEETWT6:WHEELER 6
FDNS	00NR	2	16WP	G15_093	FROM->TO	G14-057T 345.00 - SUNNYSIDE 345KV CKT 1	717	789	0.1788	111.2158	P12:138:AEPW-OGE:CORNVIL4:CIMARON4
FDNS	00NR	2	16WP	G15_093	FROM->TO	G14-057T 345.00 - SUNNYSIDE 345KV CKT 1	717	789	0.17607	111.1543	BIG STONE 230/24.0KV TRANSFORMER CKT 1
FDNS	00NR	2	20WP	G15_093	FROM->TO	G14-057T 345.00 - SUNNYSIDE 345KV CKT 1	717	789	0.1758	111.0351	803-OKLAUNION
FDNS	00NR	2	16WP	G15_093	FROM->TO	G14-057T 345.00 - SUNNYSIDE 345KV CKT 1	717	789	0.1756	110.9204	NORTHWEST TEXARKANA - VALLIANT 345KV CKT 1
FDNS	00NR	2	16WP	G15_093	FROM->TO	G14-057T 345.00 - SUNNYSIDE 345KV CKT 1	717	789	0.18058	110.8617	P12:230:AEPW:ELKCITY6:SWEETWT6
FDNS	00NR	2	20WP	G15_093	FROM->TO	G14-057T 345.00 - SUNNYSIDE 345KV CKT 1	717	789	0.17328	110.81	P12:138:OKGE:3TERM39
FDNS	00NR	2	16WP	G15_093	FROM->TO	G14-057T 345.00 - SUNNYSIDE 345KV CKT 1	717	789	0.17607	110.6383	SHERBURNE CO 345/24.0KV TRANSFORMER CKT 1
FDNS	00NR	2	20WP	G15_093	FROM->TO	G14-057T 345.00 - SUNNYSIDE 345KV CKT 1	717	789	0.17567	110.6101	NORTHWEST TEXARKANA - WELSH 345KV CKT 1
FDNS	00NR	2	20WP	G15_093	FROM->TO	G14-057T 345.00 - SUNNYSIDE 345KV CKT 1	717	789	0.1758	110.549	P12:069:OKGE:3TERM42
FDNS	00NR	2	20WP	G15_093	FROM->TO	G14-057T 345.00 - SUNNYSIDE 345KV CKT 1	717	789	0.17797	110.5478	P12:138:WFEC:MSL14
FDNS	00NR	2	20WP	G15_093	FROM->TO	G14-057T 345.00 - SUNNYSIDE 345KV CKT 1	717	789	0.1758	110.5385	BURLINGTON NO1 + NO 2 + NO 3 161/20.0KV TRANSFORMER CKT 1
FDNS	00NR	2	20WP	G15_093	FROM->TO	G14-057T 345.00 - SUNNYSIDE 345KV CKT 1	717	789	0.17663	110.536	P12:138:OKGE:3TERM21
FDNS	00NR	2	20WP	G15_093	FROM->TO	G14-057T 345.00 - SUNNYSIDE 345KV CKT 1	717	789	0.17573	110.5303	P12:138:WFEC:MSL11
FDNS	00NR	2	20WP	G15_093	FROM->TO	G14-057T 345.00 - SUNNYSIDE 345KV CKT 1	717	789	0.17573	110.5303	P12:138:WFEC-AEPW:PHAROAH4:LONEOAK4
FDNS	00NR	2	20WP	G15_093	FROM->TO	G14-057T 345.00 - SUNNYSIDE 345KV CKT 1	717	789	0.1761	110.4954	P12:138:WFEC:MSL08
FDNS	00NR	2	20WP	G15_093	FROM->TO	G14-057T 345.00 - SUNNYSIDE 345KV CKT 1	717	789	0.1758	110.4869	INDEPENDENCE 500/26.0KV TRANSFORMER CKT 1
FDNS	00NR	2	20WP	G15_093	FROM->TO	G14-057T 345.00 - SUNNYSIDE 345KV CKT 1	717	789	0.1758	110.4606	P12:230:UMZB:# 112 #: NU IN SD. NU-RCDC & DRY CREEK XFMR
FDNS	00NR	2	20WP	G15_093	FROM->TO	G14-057T 345.00 - SUNNYSIDE 345KV CKT 1	717	789	0.17589	110.4558	ALTUS JUNCTION - RUSSELL 138KV CKT 1
FDNS	00NR	2	20WP	G15_093	FROM->TO	G14-057T 345.00 - SUNNYSIDE 345KV CKT 1	717	789	0.17592	110.4489	CANADIAN RIVER - MCALESTER SOUTH 138KV CKT 1
FDNS	00NR	2	20WP	G15_093	FROM->TO	G14-057T 345.00 - SUNNYSIDE 345KV CKT 1	717	789	0.17592	110.4471	CANADIAN RIVER () 345/138/13.8KV TRANSFORMER CKT 1
FDNS	00NR	2	20WP	G15_093	FROM->TO	G14-057T 345.00 - SUNNYSIDE 345KV CKT 1	717	789	0.17626	110.4101	P12:138:AEPW:112GORE4:SNYDER-4
FDNS	00NR	2	16WP	G15_093	FROM->TO	G14-057T 345.00 - SUNNYSIDE 345KV CKT 1	717	789	0.17544	110.2331	LYDIA - WELSH 345KV CKT 1
FDNS	00NR	2	20WP	G15_093	FROM->TO	G14-057T 345.00 - SUNNYSIDE 345KV CKT 1	717	789	0.1758	110.2097	4SIOUX 1 138.00 138/18.0KV TRANSFORMER CKT 1
FDNS	00NR	2	20WP	G15_093	FROM->TO	G14-057T 345.00 - SUNNYSIDE 345KV CKT 1	717	789	0.17568	110.0798	P12:138:WFEC-AEPW:GOLDENSW4:CRAIGJT4
FDNS	00NR	2	20WP	G15_093	FROM->TO	G14-057T 345.00 - SUNNYSIDE 345KV CKT 1	717	789	0.17503	110.0749	ARKANSAS NUCLEAR ONE - FT SMITH 500KV CKT 1
FDNS	00NR	2	20WP	G15_093	FROM->TO	G14-057T 345.00 - SUNNYSIDE 345KV CKT 1	717	789	0.1758	110.0725	CLAY BOSWELL 230/20.9KV TRANSFORMER CKT 1
FDNS	00NR	2	20WP	G15_093	FROM->TO	G14-057T 345.00 - SUNNYSIDE 345KV CKT 1	717	789	0.17596	110.0622	P12:138:WFEC:MSL16
FDNS	00NR	2	20WP	G15_093	FROM->TO	G14-057T 345.00 - SUNNYSIDE 345KV CKT 1	717	789	0.17576	110.0031	P12:138:WFEC:MSL07
FDNS	00NR	2	20WP	G15_093	FROM->TO	G14-057T 345.00 - SUNNYSIDE 345KV CKT 1	717	789	0.17576	110.0031	P12:138:WFEC-AEPW:HUGOPP4:ATOKA--4
FDNS	00NR	2	20WP	G15_093	FROM->TO	G14-057T 345.00 - SUNNYSIDE 345KV CKT 1	717	789	0.17572	109.9818	P12:138:AEPW-SWPA:LONEOAK4:TUPELO4
FDNS	00NR	2	20WP	G15_093	FROM->TO	G14-057T 345.00 - SUNNYSIDE 345KV CKT 1	717	789	0.17572	109.9818	P12:138:WFEC:MSL06
FDNS	00NR	2	20WP	G15_093	FROM->TO	G14-057T 345.00 - SUNNYSIDE 345KV CKT 1	717	789	0.17746	109.9188	CLARKSVILLE - MUSKOGEE 345KV CKT 1
FDNS	00NR	2	20WP	G15_093	FROM->TO	G14-057T 345.00 - SUNNYSIDE 345KV CKT 1	717	789	0.17506	109.883	P12:138:OKGE:3TERM40
FDNS	00NR	2	20WP	G15_093	FROM->TO	G14-057T 345.00 - SUNNYSIDE 345KV CKT 1	717	789	0.17681	109.7869	GRAPEVINE INTERCHANGE - STATELINE INTERCHANGE 230KV CKT 1
FDNS	00NR	2	20WP	G15_093	FROM->TO	G14-057T 345.00 - SUNNYSIDE 345KV CKT 1	717	789	0.17589	109.726	P12:138:AEPW:SHAM4WT:CHILD4WT
FDNS	00NR	2	20WP	G15_093	FROM->TO	G14-057T 345.00 - SUNNYSIDE 345KV CKT 1	717	789	0.17597	109.6934	P12:138:WFEC:MSL15
FDNS	00NR	2	20WP	G15_093	FROM->TO	G14-057T 345.00 - SUNNYSIDE 345KV CKT 1	717	789	0.17675	109.6263	GRAPEVINE INTERCHANGE - NICHOLS STATION 230KV CKT 1
FDNS	00NR	2	20WP	G15_093	FROM->TO	G14-057T 345.00 - SUNNYSIDE 345KV CKT 1	717	789	0.1758	109.4111	BIG STONE 230/24.0KV TRANSFORMER CKT 1
FDNS	00NR	2	20WP	G15_093	FROM->TO	G14-057T 345.00 - SUNNYSIDE 345KV CKT 1	717	789	0.17584	109.3862	P12:138:WFEC:MSL09
FDNS	00NR	2	20WP	G15_093	FROM->TO	G14-057T 345.00 - SUNNYSIDE 345KV CKT 1	717	789	0.17853	109.3646	P12:138:AEPW-OGE:CORNVIL4:CIMARON4
FDNS	00NR	2	20WP	G15_093	FROM->TO	G14-057T 345.00 - SUNNYSIDE 345KV CKT 1	717	789	0.17534	109.316	NORTHWEST TEXARKANA - VALLIANT 345KV CKT 1
FDNS	00NR	2	20WP	G15_093	FROM->TO	G14-057T 345.00 - SUNNYSIDE 345KV CKT 1	717	789	0.1776	109.1361	P12:230:AEPW-SPS:SWEETWT6:WHEELER 6
FDNS	00NR	2	16WP	G15_093	FROM->TO	G14-057T 345.00 - SUNNYSIDE 345KV CKT 1	717	789	0.17518	109.1144	LYDIA - VALLIANT 345KV CKT 1
FDNS	00NR	2	20WP	G15_093	FROM->TO	G14-057T 345.00 - SUNNYSIDE 345KV CKT 1	717	789	0.17518	108.9522	LYDIA - WELSH 345KV CKT 1
FDNS	00NR	2	20WP	G15_093	FROM->TO	G14-057T 345.00 - SUNNYSIDE 345KV CKT 1	717	789	0.1758	108.9029	SHERBURNE CO 345/24.0KV TRANSFORMER CKT 1
FDNS	00NR	2	20WP	G15_093	FROM->TO	G14-057T 345.00 - SUNNYSIDE 345KV CKT 1	717	789	0.18027	108.8988	P12:230:AEPW:ELKCITY6:SWEETWT6
FDNS	00NR	2	20WP	G15_093	FROM->TO	G14-057T 345.00 - SUNNYSIDE 345KV CKT 1	717	789	0.17491	107.8976	LYDIA - VALLIANT 345KV CKT 1
FDNS	00NR	2	16WP	G15_093	FROM->TO	G14-057T 345.00 - SUNNYSIDE 345KV CKT 1	717	789	0.15123	107.1829	JOHNSON COUNTY - PITTSBURG 345KV CKT 1
FDNS	00NR	2	16WP	G15_093	FROM->TO	G14-057T 345.00 - SUNNYSIDE 345KV CKT 1	717	789	0.17044	106.2395	HUGO - VALLIANT 345KV CKT 1
FDNS	00NR	2	20WP	G15_093	FROM->TO	G14-057T 345.00 - SUNNYSIDE 345KV CKT 1	717	789	0.151	105.821	JOHNSON COUNTY - PITTSBURG 345KV CKT 1
FDNS	00NR	2	20WP	G15_093	FROM->TO	G14-057T 345.00 - SUNNYSIDE 345KV CKT 1	717	789	0.17019	105.3214	HUGO - VALLIANT 345KV CKT 1

SOLUTION	GROUP	SCENARIO	SEASON	SOURCE	DIRECTION	MONITORED ELEMENT	RATEA (MVA)	RATEB(MVA)	TDF	TC%LOADING (% MVA)	CONTINGENCY
FDNS	00NR	3	16WP	G15_093	FROM->TO	G14-057T 345.00 - SUNNYSIDE 345KV CKT 1	717	789	0.35665	134.7924	CIMARRON - MINCO 345KV CKT 1
FDNS	00NR	3	20WP	G15_093	FROM->TO	G14-057T 345.00 - SUNNYSIDE 345KV CKT 1	717	789	0.35628	133.9604	CIMARRON - MINCO 345KV CKT 1
FDNS	00NR	3	16WP	G15_093	FROM->TO	G14-057T 345.00 - SUNNYSIDE 345KV CKT 1	717	789	0.16902	124.8136	PITTSBURG - SEMINOLE 345KV CKT 1
FDNS	00NR	3	16WP	G15_093	FROM->TO	G14-057T 345.00 - SUNNYSIDE 345KV CKT 1	717	789	0.16902	124.8136	PITTSBURG - SEMINOLE 345KV CKT 1
FDNS	00NR	3	16WP	G15_093	FROM->TO	G14-057T 345.00 - SUNNYSIDE 345KV CKT 1	717	789	0.35665	124.109	GRACEMONT - MINCO 345KV CKT 1
FDNS	00NR	3	16WP	G15_093	FROM->TO	G14-057T 345.00 - SUNNYSIDE 345KV CKT 1	717	789	0.17595	124.008	BASE CASE
FDNS	00NR	3	20WP	G15_093	FROM->TO	G14-057T 345.00 - SUNNYSIDE 345KV CKT 1	717	789	0.35628	123.2947	GRACEMONT - MINCO 345KV CKT 1
FDNS	00NR	3	20WP	G15_093	FROM->TO	G14-057T 345.00 - SUNNYSIDE 345KV CKT 1	717	789	0.16877	122.341	PITTSBURG - SEMINOLE 345KV CKT 1
FDNS	00NR	3	20WP	G15_093	FROM->TO	G14-057T 345.00 - SUNNYSIDE 345KV CKT 1	717	789	0.16877	122.341	PITTSBURG - SEMINOLE 345KV CKT 1
FDNS	00NR	3	20WP	G15_093	FROM->TO	G14-057T 345.00 - SUNNYSIDE 345KV CKT 1	717	789	0.17578	122.1742	BASE CASE
FDNS	00NR	3	16WP	G15_093	FROM->TO	G14-057T 345.00 - SUNNYSIDE 345KV CKT 1	717	789	0.18882	122.0119	CIMARRON - DRAPER LAKE 345KV CKT 1
FDNS	00NR	3	20WP	G15_093	FROM->TO	G14-057T 345.00 - SUNNYSIDE 345KV CKT 1	717	789	0.18866	120.1547	CIMARRON - DRAPER LAKE 345KV CKT 1
FDNS	00NR	3	16WP	G15_093	FROM->TO	G14-057T 345.00 - SUNNYSIDE 345KV CKT 1	717	789	0.19179	118.6121	P12:138:WFEC:MSL03
FDNS	00NR	3	16WP	G15_093	FROM->TO	G14-057T 345.00 - SUNNYSIDE 345KV CKT 1	717	789	0.17501	118.0416	PITTSBURG - VALLIANT 345KV CKT 1
FDNS	00NR	3	16WP	G15_093	FROM->TO	G14-057T 345.00 - SUNNYSIDE 345KV CKT 1	717	789	0.17501	118.0416	PITTSBURG - VALLIANT 345KV CKT 1
FDNS	00NR	3	16WP	G15_093	FROM->TO	G14-057T 345.00 - SUNNYSIDE 345KV CKT 1	717	789	0.17595	117.8049	GEN509403 1-PIRKEY GENERATION
FDNS	00NR	3	16WP	G15_093	FROM->TO	G14-057T 345.00 - SUNNYSIDE 345KV CKT 1	717	789	0.17595	117.7043	GEN509416 1-TURK GENERATION
FDNS	00NR	3	16WP	G15_093	FROM->TO	G14-057T 345.00 - SUNNYSIDE 345KV CKT 1	717	789	0.17727	117.4601	CLEVELAND - G15066_T 345.00 345KV CKT 1
FDNS	00NR	3	16WP	G15_093	FROM->TO	G14-057T 345.00 - SUNNYSIDE 345KV CKT 1	717	789	0.17727	117.173	G15066_T 345.00 - SOONER 345KV CKT 1
FDNS	00NR	3	20WP	G15_093	FROM->TO	G14-057T 345.00 - SUNNYSIDE 345KV CKT 1	717	789	0.19164	116.9133	P12:138:WFEC:MSL03
FDNS	00NR	3	16WP	G15_093	FROM->TO	G14-057T 345.00 - SUNNYSIDE 345KV CKT 1	717	789	0.17595	116.8021	GEN501801 1-DOLET HILLS UNIT1
FDNS	00NR	3	16WP	G15_093	FROM->TO	G14-057T 345.00 - SUNNYSIDE 345KV CKT 1	717	789	0.17923	116.6882	BORDER 7345.00 - WOODWARD DISTRICT EHV 345KV CKT 1
FDNS	00NR	3	16WP	G15_093	FROM->TO	G14-057T 345.00 - SUNNYSIDE 345KV CKT 1	717	789	0.17595	116.404	GEN509406 1-WELSH #3
FDNS	00NR	3	16WP	G15_093	FROM->TO	G14-057T 345.00 - SUNNYSIDE 345KV CKT 1	717	789	0.17595	116.4039	GEN509404 1-WELSH #1
FDNS	00NR	3	20WP	G15_093	FROM->TO	G14-057T 345.00 - SUNNYSIDE 345KV CKT 1	717	789	0.17578	116.0922	GEN509403 1-PIRKEY GENERATION
FDNS	00NR	3	20WP	G15_093	FROM->TO	G14-057T 345.00 - SUNNYSIDE 345KV CKT 1	717	789	0.17578	116.0108	GEN509416 1-TURK GENERATION
FDNS	00NR	3	20WP	G15_093	FROM->TO	G14-057T 345.00 - SUNNYSIDE 345KV CKT 1	717	789	0.17705	115.8354	CLEVELAND - G15066_T 345.00 345KV CKT 1
FDNS	00NR	3	20WP	G15_093	FROM->TO	G14-057T 345.00 - SUNNYSIDE 345KV CKT 1	717	789	0.17484	115.7845	PITTSBURG - VALLIANT 345KV CKT 1
FDNS	00NR	3	20WP	G15_093	FROM->TO	G14-057T 345.00 - SUNNYSIDE 345KV CKT 1	717	789	0.17484	115.7845	PITTSBURG - VALLIANT 345KV CKT 1
FDNS	00NR	3	16WP	G15_093	FROM->TO	G14-057T 345.00 - SUNNYSIDE 345KV CKT 1	717	789	0.1801	115.7786	CORN TAP - NAPLESTP 138.00 138KV CKT 1
FDNS	00NR	3	16WP	G15_093	FROM->TO	G14-057T 345.00 - SUNNYSIDE 345KV CKT 1	717	789	0.17923	115.7529	BORDER 7345.00 - TUCO_2 345.00 345KV CKT 1
FDNS	00NR	3	16WP	G15_093	FROM->TO	G14-057T 345.00 - SUNNYSIDE 345KV CKT 1	717	789	0.1801	115.6961	NAPLESTP 138.00 - PAYNE 138.00 138KV CKT 1
FDNS	00NR	3	16WP	G15_093	FROM->TO	G14-057T 345.00 - SUNNYSIDE 345KV CKT 1	717	789	0.17528	115.6773	7SAREPTA% 345.00 - LONGWOOD 345KV CKT 1
FDNS	00NR	3	16WP	G15_093	FROM->TO	G14-057T 345.00 - SUNNYSIDE 345KV CKT 1	717	789	0.17528	115.6773	7SAREPTA% 345.00 - LONGWOOD 345KV CKT 1
FDNS	00NR	3	20WP	G15_093	FROM->TO	G14-057T 345.00 - SUNNYSIDE 345KV CKT 1	717	789	0.17899	115.5781	BORDER 7345.00 - WOODWARD DISTRICT EHV 345KV CKT 1
FDNS	00NR	3	20WP	G15_093	FROM->TO	G14-057T 345.00 - SUNNYSIDE 345KV CKT 1	717	789	0.17705	115.5413	G15066_T 345.00 - SOONER 345KV CKT 1
FDNS	00NR	3	16WP	G15_093	FROM->TO	G14-057T 345.00 - SUNNYSIDE 345KV CKT 1	717	789	0.17569	115.5202	DOLET HILLS - SOUTHWEST SHREVEPORT 345KV CKT 1
FDNS	00NR	3	16WP	G15_093	FROM->TO	G14-057T 345.00 - SUNNYSIDE 345KV CKT 1	717	789	0.17569	115.5202	DOLET HILLS - SOUTHWEST SHREVEPORT 345KV CKT 1
FDNS	00NR	3	16WP	G15_093	FROM->TO	G14-057T 345.00 - SUNNYSIDE 345KV CKT 1	717	789	0.1769	115.5069	CLEVELAND - TULSA NORTH 345KV CKT 1
FDNS	00NR	3	16WP	G15_093	FROM->TO	G14-057T 345.00 - SUNNYSIDE 345KV CKT 1	717	789	0.1769	115.5069	CLEVELAND - TULSA NORTH 345KV CKT 1
FDNSLock	00NR	3	16WP	G15_093	FROM->TO	G14-057T 345.00 - SUNNYSIDE 345KV CKT 1	717	789	0.17595	115.4962	GEN336821 1-GRAND GULF UNIT
FDNS	00NR	3	16WP	G15_093	FROM->TO	G14-057T 345.00 - SUNNYSIDE 345KV CKT 1	717	789	0.18626	115.448	ARCADIA - NORTHWEST 345KV CKT 1
FDNSLock	00NR	3	16WP	G15_093	FROM->TO	G14-057T 345.00 - SUNNYSIDE 345KV CKT 1	717	789	0.17595	115.4165	GEN336153 1-WATERFORD UNIT#3
FDNS	00NR	3	16WP	G15_093	FROM->TO	G14-057T 345.00 - SUNNYSIDE 345KV CKT 1	717	789	0.17912	115.4159	COMANCHE - LOCO 138KV CKT 1
FDNS	00NR	3	16WP	G15_093	FROM->TO	G14-057T 345.00 - SUNNYSIDE 345KV CKT 1	717	789	0.18031	115.353	ANADARKO - POCASSETT 138KV CKT 1
FDNS	00NR	3	16WP	G15_093	FROM->TO	G14-057T 345.00 - SUNNYSIDE 345KV CKT 1	717	789	0.16866	115.3212	CANADIAN RIVER - MUSKOGEE 345KV CKT 1
FDNS	00NR	3	20WP	G15_093	FROM->TO	G14-057T 345.00 - SUNNYSIDE 345KV CKT 1	717	789	0.17578	115.253	GEN501801 1-DOLET HILLS UNIT1
FDNS	00NR	3	16WP	G15_093	FROM->TO	G14-057T 345.00 - SUNNYSIDE 345KV CKT 1	717	789	0.1758	115.2138	ARCADIA - SEMINOLE 345KV CKT 1
FDNS	00NR	3	16WP	G15_093	FROM->TO	G14-057T 345.00 - SUNNYSIDE 345KV CKT 1	717	789	0.18031	115.2125	POCASSETT - TUTTLE 138KV CKT 1
FDNSLock	00NR	3	16WP	G15_093	FROM->TO	G14-057T 345.00 - SUNNYSIDE 345KV CKT 1	717	789	0.17595	115.1249	GEN335831 1-RIVERBEND UNIT#1
FDNS	00NR	3	16WP	G15_093	FROM->TO	G14-057T 345.00 - SUNNYSIDE 345KV CKT 1	717	789	0.17595	115.1143	GRAND GULF 500/22.0KV TRANSFORMER CKT 1
FDNS	00NR	3	16WP	G15_093	FROM->TO	G14-057T 345.00 - SUNNYSIDE 345KV CKT 1	717	789	0.17595	115.0932	GEN515577 1-ARBWND11 0.6900
FDNS	00NR	3	16WP	G15_093	FROM->TO	G14-057T 345.00 - SUNNYSIDE 345KV CKT 1	717	789	0.17558	115.0342	7SAREPTA% 345.00 - ELDORADO EHV 345KV CKT 1
FDNS	00NR	3	16WP	G15_093	FROM->TO	G14-057T 345.00 - SUNNYSIDE 345KV CKT 1	717	789	0.17558	115.034	3TR3AR8EL7EL
FDNS	00NR	3	16WP	G15_093	FROM->TO	G14-057T 345.00 - SUNNYSIDE 345KV CKT 1	717	789	0.17595	115.0265	GEN509409 1-WILKES #3
FDNS	00NR	3	16WP	G15_093	FROM->TO	G14-057T 345.00 - SUNNYSIDE 345KV CKT 1	717	789	0.17558	115.0233	ELDORADO EHV 500/345KV TRANSFORMER CKT 1
FDNS	00NR	3	16WP	G15_093	FROM->TO	G14-057T 345.00 - SUNNYSIDE 345KV CKT 1	717	789	0.17842	114.9623	P12:138:AEPW:DUNCAN-4:L.E.S.-4
FDNS	00NR	3	16WP	G15_093	FROM->TO	G14-057T 345.00 - SUNNYSIDE 345KV CKT 1	717	789	0.17921	114.9274	HEALDTON - LOCO 138KV CKT 1
FDNS	00NR	3	16WP	G15_093	FROM->TO	G14-057T 345.00 - SUNNYSIDE 345KV CKT 1	717	789	0.18031	114.8486	BRIDGECR 138.00 - TUTTLE 138KV CKT 1
FDNS	00NR	3	16WP	G15_093	FROM->TO	G14-057T 345.00 - SUNNYSIDE 345KV CKT 1	717	789	0.17842	114.8474	COMANCHE TAP - OMPA-DUNCAN 840 138KV CKT 1
FDNS	00NR	3	16WP	G15_093	FROM->TO	G14-057T 345.00 - SUNNYSIDE 345KV CKT 1	717	789	0.17921	114.7868	HEALDTON - RINGLING 138KV CKT 1
FDNS	00NR	3	16WP	G15_093	FROM->TO	G14-057T 345.00 - SUNNYSIDE 345KV CKT 1	717	789	0.17595	114.7634	GEN501813 1-RODEMACHER UNIT 3
FDNSLock	00NR	3	16WP	G15_093	FROM->TO	G14-057T 345.00 - SUNNYSIDE 345KV CKT 1	717	789	0.17595	114.7487	GEN300006 1-NEW MADRID UNIT 1
FDNSLock	00NR	3	16WP	G15_093	FROM->TO	G14-057T 345.00 - SUNNYSIDE 345KV CKT 1	717	789	0.17595	114.7366	GEN300007 1-NEW MADRID UNIT 2
FDNS	00NR	3	20WP	G15_093	FROM->TO	G14-057T 345.00 - SUNNYSIDE 345KV CKT 1	717	789	0.17578	114.7319	GEN509406 1-WELSH #3
FDNS	00NR	3	20WP	G15_093	FROM->TO	G14-057T 345.00 - SUNNYSIDE 345KV CKT 1	717	789	0.17578	114.7317	GEN509404 1-WELSH #1
FDNS	00NR	3	16WP	G15_093	FROM->TO	G14-057T 345.00 - SUNNYSIDE 345KV CKT 1	717	789	0.17608	114.7109	LACYGNE - WAVERLY7 345.00 345KV CKT 1
FDNS	00NR	3	20WP	G15_093	FROM->TO	G14-057T 345.00 - SUNNYSIDE 345KV CKT 1	717	789	0.17899	114.6379	BORDER 7345.00 - TUCO_2 345.00 345KV CKT 1
FDNS	00NR	3	16WP	G15_093	FROM->TO	G14-057T 345.00 - SUNNYSIDE 345KV CKT 1	717	789	0.17595	114.6254	GEN520947 1-HUGO1
FDNS	00NR	3	16WP	G15_093	FROM->TO	G14-057T 345.00 - SUNNYSIDE 345KV CKT 1	717	789	0.17921	114.6225	RINGLING - SOUTH WILSON 138KV CKT 1
FDNS	00NR	3	16WP	G15_093	FROM->TO	G14-057T 345.00 - SUNNYSIDE 345KV CKT 1	717	789	0.17608	114.5992	WAVERLY7 345.00 - WOLF CREEK 345KV CKT 1
FDNS	00NR	3	16WP	G15_093	FROM->TO	G14-057T 345.00 - SUNNYSIDE 345KV CKT 1	717	789	0.18031	114.5952	P12:138:WFEC:MSL01
FDNS	00NR	3	16WP	G15_093	FROM->TO	G14-057T 345.00 - SUNNYSIDE 345KV CKT 1	717	789	0.18031	114.5868	BRIDGECR 138.00 - SUNSHINE CANYON 138KV CKT 1
FDNS	00NR	3	16WP	G15_093	FROM->TO	G14-057T 345.00 - SUNNYSIDE 345KV CKT 1	717	789	0.17842	114.5765	DUNCAN - OMPA-DUNCAN 840 138KV CKT 1
FDNS	00NR	3	16WP	G15_093	FROM->TO	G14-057T 345.00 - SUNNYSIDE 345KV CKT 1	717	789	0.17842	114.5765	DUNCAN - OMPA-DUNCAN 840 138KV CKT 1
FDNS	00NR	3	16WP	G15_093	FROM->TO	G14-057T 345.00 - SUNNYSIDE 345KV CKT 1	717	789	0.17595	114.566	GEN335206 1-NELSON UNIT 6
FDNS	00NR	3	16WP	G15_093	FROM->TO	G14-057T 345.00 - SUNNYSIDE 345KV CKT 1	717	789	0.17595	114.4229	DOLET HILLS 345/24.0KV TRANSFORMER CKT 1
FDNS	00NR	3	16WP	G15_093	FROM->TO	G14-057T 345.00 - SUNNYSIDE 345KV CKT 1	717	789	0.17597	114.4188	P12:138:AEPW:SHERID4:112GORE4
FDNS	00NR	3	16WP	G15_093	FROM->TO	G14-057T 345.00 - SUNNYSIDE 345KV CKT 1	717	789	0.17418	114.4101	PARK LANE - SEMINOLE 138KV CKT 1

SOLUTION	GROUP	SCENARIO	SEASON	SOURCE	DIRECTION	MONITORED ELEMENT	RATEA (MVA)	RATEB(MVA)	TDF	TC%LOADING (% MVA)	CONTINGENCY
FDNS	00NR	3	16WP	G15_093	FROM->TO	G14-057T 345.00 - SUNNYSIDE 345KV CKT 1	717	789	0.17595	114.3829	GEN501812 1-RODEMACHER UNIT 2
FDNS	00NR	3	16WP	G15_093	FROM->TO	G14-057T 345.00 - SUNNYSIDE 345KV CKT 1	717	789	0.17595	114.3533	GEN590011 2-ERCOT EQUIVALENCE
FDNS	00NR	3	16WP	G15_093	FROM->TO	G14-057T 345.00 - SUNNYSIDE 345KV CKT 1	717	789	0.17921	114.3473	MARIETTA - SOUTH WILSON 138KV CKT 1
FDNS	00NR	3	16WP	G15_093	FROM->TO	G14-057T 345.00 - SUNNYSIDE 345KV CKT 1	717	789	0.17595	114.3456	GEN515564 1-ORIGIN11 0.6900
FDNS	00NR	3	16WP	G15_093	FROM->TO	G14-057T 345.00 - SUNNYSIDE 345KV CKT 1	717	789	0.17595	114.3456	GEN515565 1-ORIGIN21 0.6900
FDNS	00NR	3	16WP	G15_093	FROM->TO	G14-057T 345.00 - SUNNYSIDE 345KV CKT 1	717	789	0.17673	114.3132	REDBUD - RIVERSIDE STATION 345KV CKT 1
FDNS	00NR	3	16WP	G15_093	FROM->TO	G14-057T 345.00 - SUNNYSIDE 345KV CKT 1	717	789	0.17673	114.3132	REDBUD - RIVERSIDE STATION 345KV CKT 1
FDNS	00NR	3	16WP	G15_093	FROM->TO	G14-057T 345.00 - SUNNYSIDE 345KV CKT 1	717	789	0.17775	114.2953	Hitchland Interchange - WALKTAP7 345.00 345KV CKT 1
FDNS	00NR	3	16WP	G15_093	FROM->TO	G14-057T 345.00 - SUNNYSIDE 345KV CKT 1	717	789	0.17775	114.2953	Hitchland Interchange - WALKTAP7 345.00 345KV CKT 1
FDNS	00NR	3	16WP	G15_093	FROM->TO	G14-057T 345.00 - SUNNYSIDE 345KV CKT 1	717	789	0.17762	114.2952	MATHWSN7 345.00 - NORTHWEST 345KV CKT 1
FDNS	00NR	3	16WP	G15_093	FROM->TO	G14-057T 345.00 - SUNNYSIDE 345KV CKT 1	717	789	0.17775	114.2807	P12:345:SPS:J07.1.FINN.HITCH
FDNS	00NR	3	16WP	G15_093	FROM->TO	G14-057T 345.00 - SUNNYSIDE 345KV CKT 1	717	789	0.17595	114.2786	GEN590010 1-ERCOT EQUIVALENCE
FDNS	00NR	3	16WP	G15_093	FROM->TO	G14-057T 345.00 - SUNNYSIDE 345KV CKT 1	717	789	0.17921	114.2632	P12:138:WFEC:MSL17
FDNS	00NR	3	16WP	G15_093	FROM->TO	G14-057T 345.00 - SUNNYSIDE 345KV CKT 1	717	789	0.17638	114.2419	CANEYRV7 345.00 - NEOSHO 345KV CKT 1
FDNS	00NR	3	16WP	G15_093	FROM->TO	G14-057T 345.00 - SUNNYSIDE 345KV CKT 1	717	789	0.17849	114.1859	CIVIT - PAOLI 138KV CKT 1
FDNS	00NR	3	16WP	G15_093	FROM->TO	G14-057T 345.00 - SUNNYSIDE 345KV CKT 1	717	789	0.17595	114.1631	P12:69:AEPW:L.E.S.-2:LAW WC2
FDNS	00NR	3	16WP	G15_093	FROM->TO	G14-057T 345.00 - SUNNYSIDE 345KV CKT 1	717	789	0.17595	114.1449	P12:161:AEPW:DYESS 5:HYLAND 5
FDNS	00NR	3	16WP	G15_093	FROM->TO	G14-057T 345.00 - SUNNYSIDE 345KV CKT 1	717	789	0.17595	114.1444	GEN509408 1-WILKES #2
FDNS	00NR	3	20WP	G15_093	FROM->TO	G14-057T 345.00 - SUNNYSIDE 345KV CKT 1	717	789	0.17994	114.1414	CORN TAP - NAPLESTP 138.00 138KV CKT 1
FDNS	00NR	3	16WP	G15_093	FROM->TO	G14-057T 345.00 - SUNNYSIDE 345KV CKT 1	717	789	0.17595	114.1339	GEN506754 1-LEBROCK STEAM 1
FDNS	00NR	3	16WP	G15_093	FROM->TO	G14-057T 345.00 - SUNNYSIDE 345KV CKT 1	717	789	0.1758	114.1161	ELDORADO EHV - MOUNT OLIVE 500KV CKT 1
FDNS	00NR	3	16WP	G15_093	FROM->TO	G14-057T 345.00 - SUNNYSIDE 345KV CKT 1	717	789	0.17638	114.1082	CANEYRV7 345.00 - LATHAMS7 345.00 345KV CKT 1
FDNS	00NR	3	16WP	G15_093	FROM->TO	G14-057T 345.00 - SUNNYSIDE 345KV CKT 1	717	789	0.17722	114.1072	P12:138:WFEC:MSL02
FDNS	00NR	3	16WP	G15_093	FROM->TO	G14-057T 345.00 - SUNNYSIDE 345KV CKT 1	717	789	0.17644	114.1066	PAOLI - PAYNE 138.00 138KV CKT 1
FDNS	00NR	3	16WP	G15_093	FROM->TO	G14-057T 345.00 - SUNNYSIDE 345KV CKT 1	717	789	0.17595	114.1045	GEN334440 1-SABINE UNIT 4
FDNS	00NR	3	20WP	G15_093	FROM->TO	G14-057T 345.00 - SUNNYSIDE 345KV CKT 1	717	789	0.17512	114.0897	7SAREPTA% 345.00 - LONGWOOD 345KV CKT 1
FDNS	00NR	3	20WP	G15_093	FROM->TO	G14-057T 345.00 - SUNNYSIDE 345KV CKT 1	717	789	0.17512	114.0897	7SAREPTA% 345.00 - LONGWOOD 345KV CKT 1
FDNS	00NR	3	16WP	G15_093	FROM->TO	G14-057T 345.00 - SUNNYSIDE 345KV CKT 1	717	789	0.17597	114.0744	P12:138:AEPW:112GORE4:L.E.S.-4
FDNS	00NR	3	20WP	G15_093	FROM->TO	G14-057T 345.00 - SUNNYSIDE 345KV CKT 1	717	789	0.17994	114.0575	NAPLESTP 138.00 - PAYNE 138.00 138KV CKT 1
FDNS	00NR	3	16WP	G15_093	FROM->TO	G14-057T 345.00 - SUNNYSIDE 345KV CKT 1	717	789	0.17849	114.0436	CIVIT - STRATFORD 138KV CKT 1
FDNS	00NR	3	16WP	G15_093	FROM->TO	G14-057T 345.00 - SUNNYSIDE 345KV CKT 1	717	789	0.17565	114.0419	ELDORADO EHV - SHERIDAN EHV 500KV CKT 1
FDNS	00NR	3	16WP	G15_093	FROM->TO	G14-057T 345.00 - SUNNYSIDE 345KV CKT 1	717	789	0.17695	114.0191	ANADARKO - GEORGIA 138KV CKT 1
FDNS	00NR	3	16WP	G15_093	FROM->TO	G14-057T 345.00 - SUNNYSIDE 345KV CKT 1	717	789	0.17654	114.0156	TUPELO - TUPELO TAP 138KV CKT 1
FDNS	00NR	3	16WP	G15_093	FROM->TO	G14-057T 345.00 - SUNNYSIDE 345KV CKT 1	717	789	0.17586	113.9972	WEBRE - WELLS 500KV CKT 1
FDNS	00NR	3	16WP	G15_093	FROM->TO	G14-057T 345.00 - SUNNYSIDE 345KV CKT 1	717	789	0.17984	113.9928	P12:138:AEPW-OGE:CORNVIL4:MAUD 4
FDNS	00NR	3	16WP	G15_093	FROM->TO	G14-057T 345.00 - SUNNYSIDE 345KV CKT 1	717	789	0.17595	113.9809	GEN503909 1-FULTONU1 1 16.000
FDNS	00NR	3	16WP	G15_093	FROM->TO	G14-057T 345.00 - SUNNYSIDE 345KV CKT 1	717	789	0.17595	113.9741	FRONTIER - GRIMES 345KV CKT 1
FDNS	00NR	3	20WP	G15_093	FROM->TO	G14-057T 345.00 - SUNNYSIDE 345KV CKT 1	717	789	0.17578	113.9718	GEN336821 1-GRAND GULF UNIT
FDNS	00NR	3	16WP	G15_093	FROM->TO	G14-057T 345.00 - SUNNYSIDE 345KV CKT 1	717	789	0.17695	113.9406	FLETCHER - GEORGIA 138KV CKT 1
FDNS	00NR	3	16WP	G15_093	FROM->TO	G14-057T 345.00 - SUNNYSIDE 345KV CKT 1	717	789	0.17738	113.9351	LAWTON EASTSIDE (LES 5) 345/138/13.8KV TRANSFORMER CKT 2
FDNS	00NR	3	16WP	G15_093	FROM->TO	G14-057T 345.00 - SUNNYSIDE 345KV CKT 1	717	789	0.17738	113.9351	LAWTON EASTSIDE (LES 5) 345/138/13.8KV TRANSFORMER CKT 2
FDNS	00NR	3	16WP	G15_093	FROM->TO	G14-057T 345.00 - SUNNYSIDE 345KV CKT 1	717	789	0.17849	113.9244	OIL CENTER - STRATFORD 138KV CKT 1
FDNS	00NR	3	16WP	G15_093	FROM->TO	G14-057T 345.00 - SUNNYSIDE 345KV CKT 1	717	789	0.17984	113.9189	BLANCHARD - CORNVILLE 138KV CKT 1
FDNS	00NR	3	16WP	G15_093	FROM->TO	G14-057T 345.00 - SUNNYSIDE 345KV CKT 1	717	789	0.17702	113.9064	EMPIRE - FLETCHER 138KV CKT 1
FDNS	00NR	3	16WP	G15_093	FROM->TO	G14-057T 345.00 - SUNNYSIDE 345KV CKT 1	717	789	0.17638	113.8979	LATHAMS7 345.00 - ROSE HILL 345KV CKT 1
FDNS	00NR	3	20WP	G15_093	FROM->TO	G14-057T 345.00 - SUNNYSIDE 345KV CKT 1	717	789	0.17578	113.8628	GEN336153 1-WATERFORD UNIT#3
FDNS	00NR	3	16WP	G15_093	FROM->TO	G14-057T 345.00 - SUNNYSIDE 345KV CKT 1	717	789	0.17595	113.855	GEN509393 S1-ARSENAL HILL GENS #4 (STALL)
FDNS	00NR	3	20WP	G15_093	FROM->TO	G14-057T 345.00 - SUNNYSIDE 345KV CKT 1	717	789	0.17671	113.8408	CLEVELAND - TULSA NORTH 345KV CKT 1
FDNS	00NR	3	20WP	G15_093	FROM->TO	G14-057T 345.00 - SUNNYSIDE 345KV CKT 1	717	789	0.17671	113.8408	CLEVELAND - TULSA NORTH 345KV CKT 1
FDNS	00NR	3	16WP	G15_093	FROM->TO	G14-057T 345.00 - SUNNYSIDE 345KV CKT 1	717	789	0.17595	113.8313	GEN509392 G2-ARSENAL HILL GENS #3 (STALL)
FDNS	00NR	3	16WP	G15_093	FROM->TO	G14-057T 345.00 - SUNNYSIDE 345KV CKT 1	717	789	0.17595	113.8312	GEN509391 G1-ARSENAL HILL GENS #2 (STALL)
FDNS	00NR	3	16WP	G15_093	FROM->TO	G14-057T 345.00 - SUNNYSIDE 345KV CKT 1	717	789	0.17702	113.8286	COMANCHE - EMPIRE 138KV CKT 1
FDNS	00NR	3	16WP	G15_093	FROM->TO	G14-057T 345.00 - SUNNYSIDE 345KV CKT 1	717	789	0.17595	113.8154	GEN336252 1-NINEMILE POINT UNIT#5
FDNS	00NR	3	20WP	G15_093	FROM->TO	G14-057T 345.00 - SUNNYSIDE 345KV CKT 1	717	789	0.18613	113.8144	ARCADIA - NORTHWEST 345KV CKT 1
FDNS	00NR	3	16WP	G15_093	FROM->TO	G14-057T 345.00 - SUNNYSIDE 345KV CKT 1	717	789	0.17595	113.7996	GEN334071 1-LEWIS CREEK 2
FDNS	00NR	3	16WP	G15_093	FROM->TO	G14-057T 345.00 - SUNNYSIDE 345KV CKT 1	717	789	0.17595	113.7967	DELL 500 - ESSEX UNIT 2 500KV CKT Z1
FDNS	00NR	3	16WP	G15_093	FROM->TO	G14-057T 345.00 - SUNNYSIDE 345KV CKT 1	717	789	0.17595	113.7907	GEN334070 1-LEWIS CREEK 1
FDNS	00NR	3	16WP	G15_093	FROM->TO	G14-057T 345.00 - SUNNYSIDE 345KV CKT 1	717	789	0.17595	113.7883	GEN335204 1-NELSON UNIT 4
FDNS	00NR	3	16WP	G15_093	FROM->TO	G14-057T 345.00 - SUNNYSIDE 345KV CKT 1	717	789	0.17667	113.7671	THISTLE7 345.00 - WOODWARD DISTRICT EHV 345KV CKT 1
FDNS	00NR	3	16WP	G15_093	FROM->TO	G14-057T 345.00 - SUNNYSIDE 345KV CKT 1	717	789	0.17667	113.7671	THISTLE7 345.00 - WOODWARD DISTRICT EHV 345KV CKT 1
FDNS	00NR	3	16WP	G15_093	FROM->TO	G14-057T 345.00 - SUNNYSIDE 345KV CKT 1	717	789	0.17667	113.7671	THISTLE7 345.00 - WOODWARD DISTRICT EHV 345KV CKT 2
FDNS	00NR	3	16WP	G15_093	FROM->TO	G14-057T 345.00 - SUNNYSIDE 345KV CKT 1	717	789	0.17667	113.7671	THISTLE7 345.00 - WOODWARD DISTRICT EHV 345KV CKT 2
FDNS	00NR	3	20WP	G15_093	FROM->TO	G14-057T 345.00 - SUNNYSIDE 345KV CKT 1	717	789	0.18017	113.7671	ANADARKO - POCASSETT 138KV CKT 1
FDNS	00NR	3	16WP	G15_093	FROM->TO	G14-057T 345.00 - SUNNYSIDE 345KV CKT 1	717	789	0.17648	113.7574	DUNCAN (DUNCAN) 138/69/13.8KV TRANSFORMER CKT 1
FDNS	00NR	3	16WP	G15_093	FROM->TO	G14-057T 345.00 - SUNNYSIDE 345KV CKT 1	717	789	0.17648	113.7574	DUNCAN (DUNCAN) 138/69/13.8KV TRANSFORMER CKT 1
FDNS	00NR	3	16WP	G15_093	FROM->TO	G14-057T 345.00 - SUNNYSIDE 345KV CKT 1	717	789	0.17595	113.7542	GEN334441 1-SABINE UNIT 5
FDNS	00NR	3	16WP	G15_093	FROM->TO	G14-057T 345.00 - SUNNYSIDE 345KV CKT 1	717	789	0.17849	113.7458	LATTA JCT - OIL CENTER 138KV CKT 1
FDNS	00NR	3	20WP	G15_093	FROM->TO	G14-057T 345.00 - SUNNYSIDE 345KV CKT 1	717	789	0.17895	113.7368	COMANCHE - LOCO 138KV CKT 1
FDNS	00NR	3	16WP	G15_093	FROM->TO	G14-057T 345.00 - SUNNYSIDE 345KV CKT 1	717	789	0.17594	113.7361	P12:161:AEPW-SWPA:BEAVER5:EROGERS5
FDNS	00NR	3	16WP	G15_093	FROM->TO	G14-057T 345.00 - SUNNYSIDE 345KV CKT 1	717	789	0.17984	113.7205	BLANCHARD - MAUD 138KV CKT 1
FDNS	00NR	3	16WP	G15_093	FROM->TO	G14-057T 345.00 - SUNNYSIDE 345KV CKT 1	717	789	0.17596	113.7186	P12:138:AEPW:CATOOSA4:T.S.E.-4
FDNS	00NR	3	16WP	G15_093	FROM->TO	G14-057T 345.00 - SUNNYSIDE 345KV CKT 1	717	789	0.17595	113.709	GEN337653 1-WHITE BLUFF UNIT #2
FDNS	00NR	3	16WP	G15_093	FROM->TO	G14-057T 345.00 - SUNNYSIDE 345KV CKT 1	717	789	0.17576	113.708	6LAYFLD 230.00 - CARROLL 230KV CKT 1
FDNS	00NR	3	16WP	G15_093	FROM->TO	G14-057T 345.00 - SUNNYSIDE 345KV CKT 1	717	789	0.17595	113.7044	GEN334030 1-FRONTIER UNIT 1
FDNS	00NR	3	16WP	G15_093	FROM->TO	G14-057T 345.00 - SUNNYSIDE 345KV CKT 1	717	789	0.17595	113.7028	GEN334031 1-FRONTIER UNIT 2
FDNS	00NR	3	16WP	G15_093	FROM->TO	G14-057T 345.00 - SUNNYSIDE 345KV CKT 1	717	789	0.17595	113.7	GEN300003 1-THOMAS HILL UNIT 3
FDNS	00NR	3	16WP	G15_093	FROM->TO	G14-057T 345.00 - SUNNYSIDE 345KV CKT 1	717	789	0.17595	113.6896	GEN506752 1-LEBROCK GAS 1
FDNS	00NR	3	16WP	G15_093	FROM->TO	G14-057T 345.00 - SUNNYSIDE 345KV CKT 1	717	789	0.17595	113.6894	GEN506753 1-LEBROCK GAS 2
FDNS	00NR	3	20WP	G15_093	FROM->TO	G14-057T 345.00 - SUNNYSIDE 345KV CKT 1	717	789	0.17552	113.6795	DOLET HILLS - SOUTHWEST SHREVEPORT 345KV CKT 1

SOLUTION	GROUP	SCENARIO	SEASON	SOURCE	DIRECTION	MONITORED ELEMENT	RATEA (MVA)	RATEB(MVA)	TDF	TC%LOADING (% MVA)	CONTINGENCY
FDNS	00NR	3	20WP	G15_093	FROM->TO	G14-057T 345.00 - SUNNYSIDE 345KV CKT 1	717	789	0.17552	113.6795	DOLET HILLS - SOUTHWEST SHREVEPORT 345KV CKT 1
FDNS	00NR	3	16WP	G15_093	FROM->TO	G14-057T 345.00 - SUNNYSIDE 345KV CKT 1	717	789	0.17568	113.6747	FULTON 115 - HOPE 115KV CKT 1
FDNS	00NR	3	16WP	G15_093	FROM->TO	G14-057T 345.00 - SUNNYSIDE 345KV CKT 1	717	789	0.17568	113.6747	FULTON 115 - HOPE 115KV CKT 1
FDNS	00NR	3	16WP	G15_093	FROM->TO	G14-057T 345.00 - SUNNYSIDE 345KV CKT 1	717	789	0.17594	113.6675	8DANIEL8 500.00 - MCKNIGHT 500KV CKT 1
FDNS	00NR	3	16WP	G15_093	FROM->TO	G14-057T 345.00 - SUNNYSIDE 345KV CKT 1	717	789	0.17595	113.6672	P12:161:AEPW:DYESS5:ELMSPRNG:TONTITN5
FDNS	00NR	3	16WP	G15_093	FROM->TO	G14-057T 345.00 - SUNNYSIDE 345KV CKT 1	717	789	0.17595	113.637	GEN515226 1-MUSKOGEE 6G
FDNS	00NR	3	16WP	G15_093	FROM->TO	G14-057T 345.00 - SUNNYSIDE 345KV CKT 1	717	789	0.17595	113.6367	GEN501811 1-RODEMACHER UNIT 1
FDNS	00NR	3	16WP	G15_093	FROM->TO	G14-057T 345.00 - SUNNYSIDE 345KV CKT 1	717	789	0.17595	113.6288	GEN300015 1-1SGPDEL 18.000
FDNS	00NR	3	16WP	G15_093	FROM->TO	G14-057T 345.00 - SUNNYSIDE 345KV CKT 1	717	789	0.17705	113.6265	P12:138:AEPW:CORNVIL4:S.W.S.-4
FDNS	00NR	3	16WP	G15_093	FROM->TO	G14-057T 345.00 - SUNNYSIDE 345KV CKT 1	717	789	0.17595	113.624	GEN337911 1-ARKANSAS NUCLEAR ONE UNIT #2
FDNS	00NR	3	16WP	G15_093	FROM->TO	G14-057T 345.00 - SUNNYSIDE 345KV CKT 1	717	789	0.17595	113.6187	GEN336251 1-NINEMILE POINT UNIT#4
FDNS	00NR	3	16WP	G15_093	FROM->TO	G14-057T 345.00 - SUNNYSIDE 345KV CKT 1	717	789	0.17595	113.618	GEN337652 1-WHITE BLUFF UNIT #1
FDNS	00NR	3	16WP	G15_093	FROM->TO	G14-057T 345.00 - SUNNYSIDE 345KV CKT 1	717	789	0.17595	113.6154	GEN334433 1-SABINE UNIT 3
FDNS	00NR	3	20WP	G15_093	FROM->TO	G14-057T 345.00 - SUNNYSIDE 345KV CKT 1	717	789	0.18017	113.6148	POCASSETT - TUTTLE 138KV CKT 1
FDNS	00NR	3	16WP	G15_093	FROM->TO	G14-057T 345.00 - SUNNYSIDE 345KV CKT 1	717	789	0.17595	113.6126	GEN336831 1-BAXTER WILSON SES
FDNS	00NR	3	16WP	G15_093	FROM->TO	G14-057T 345.00 - SUNNYSIDE 345KV CKT 1	717	789	0.17602	113.5975	G15074_T 345.00 - HOYT 345KV CKT 1
FDNS	00NR	3	16WP	G15_093	FROM->TO	G14-057T 345.00 - SUNNYSIDE 345KV CKT 1	717	789	0.1772	113.5963	P12:138:AEPW:CORNVIL4:DUNCAN-4
FDNS	00NR	3	16WP	G15_093	FROM->TO	G14-057T 345.00 - SUNNYSIDE 345KV CKT 1	717	789	0.17648	113.5953	P12:69:WFEC-AEPW:COMANCH2:DUNCAN-2
FDNS	00NR	3	16WP	G15_093	FROM->TO	G14-057T 345.00 - SUNNYSIDE 345KV CKT 1	717	789	0.17595	113.5846	GEN562783 1-G15036_4 0.6900
FDNS	00NR	3	16WP	G15_093	FROM->TO	G14-057T 345.00 - SUNNYSIDE 345KV CKT 1	717	789	0.17595	113.5846	GEN562784 1-G15036_5 0.6900
FDNS	00NR	3	16WP	G15_093	FROM->TO	G14-057T 345.00 - SUNNYSIDE 345KV CKT 1	717	789	0.18003	113.5764	BAILEY4 138.00 - SUNSHINE CANYON 138KV CKT 1
FDNS	00NR	3	16WP	G15_093	FROM->TO	G14-057T 345.00 - SUNNYSIDE 345KV CKT 1	717	789	0.17868	113.5753	TUTTLE - TUTTLE CONOCO TAP 138KV CKT 1
FDNSLock	00NR	3	16WP	G15_093	FROM->TO	G14-057T 345.00 - SUNNYSIDE 345KV CKT 1	717	789	0.17602	113.5721	G15088_T 345.00 - MOORE 345KV CKT 1
FDNS	00NR	3	16WP	G15_093	FROM->TO	G14-057T 345.00 - SUNNYSIDE 345KV CKT 1	717	789	0.17665	113.5699	CIMARRON - CZECH HALL 138KV CKT 1
FDNS	00NR	3	16WP	G15_093	FROM->TO	G14-057T 345.00 - SUNNYSIDE 345KV CKT 1	717	789	0.1763	113.565	G1524G1525 345.00 - THISTLE7 345.00 345KV CKT 1
FDNS	00NR	3	16WP	G15_093	FROM->TO	G14-057T 345.00 - SUNNYSIDE 345KV CKT 1	717	789	0.1763	113.565	G1524G1525 345.00 - THISTLE7 345.00 345KV CKT 2
FDNS	00NR	3	20WP	G15_093	FROM->TO	G14-057T 345.00 - SUNNYSIDE 345KV CKT 1	717	789	0.17578	113.5641	GEN335831 1-RIVERBEND UNIT#1
FDNS	00NR	3	16WP	G15_093	FROM->TO	G14-057T 345.00 - SUNNYSIDE 345KV CKT 1	717	789	0.17782	113.5595	P12:138:AEPW-OGE:WTH_JCT4:JENSEN4
FDNS	00NR	3	16WP	G15_093	FROM->TO	G14-057T 345.00 - SUNNYSIDE 345KV CKT 1	717	789	0.17595	113.5563	GEN505432 1-SIKESTON
FDNS	00NR	3	16WP	G15_093	FROM->TO	G14-057T 345.00 - SUNNYSIDE 345KV CKT 1	717	789	0.17595	113.554	P12:161:AEPW:EROGERS5:ECNTRTN5
FDNS	00NR	3	16WP	G15_093	FROM->TO	G14-057T 345.00 - SUNNYSIDE 345KV CKT 1	717	789	0.17642	113.5536	CIMARRON - SARA 138KV CKT 1
FDNS	00NR	3	16WP	G15_093	FROM->TO	G14-057T 345.00 - SUNNYSIDE 345KV CKT 1	717	789	0.17595	113.5512	GEN515040 1-SEMINOLE 1G
FDNS	00NR	3	16WP	G15_093	FROM->TO	G14-057T 345.00 - SUNNYSIDE 345KV CKT 1	717	789	0.17582	113.545	LAYFLD8 500.00 - MOUNT OLIVE 500KV CKT 1
FDNS	00NR	3	16WP	G15_093	FROM->TO	G14-057T 345.00 - SUNNYSIDE 345KV CKT 1	717	789	0.17582	113.545	LAYFLD8 500.00 - MOUNT OLIVE 500KV CKT 1
FDNS	00NR	3	16WP	G15_093	FROM->TO	G14-057T 345.00 - SUNNYSIDE 345KV CKT 1	717	789	0.17455	113.5433	ARBWIND4 138.00 - CARTER 138KV CKT 1
FDNS	00NR	3	16WP	G15_093	FROM->TO	G14-057T 345.00 - SUNNYSIDE 345KV CKT 1	717	789	0.17595	113.5426	RODEMACHER 230/22.0KV TRANSFORMER CKT 1
FDNS	00NR	3	16WP	G15_093	FROM->TO	G14-057T 345.00 - SUNNYSIDE 345KV CKT 1	717	789	0.17648	113.5415	DUNCAN - TOSCO 69KV CKT 1
FDNS	00NR	3	16WP	G15_093	FROM->TO	G14-057T 345.00 - SUNNYSIDE 345KV CKT 1	717	789	0.17595	113.5409	GEN515223 1-MUSKOGEE 4G
FDNS	00NR	3	16WP	G15_093	FROM->TO	G14-057T 345.00 - SUNNYSIDE 345KV CKT 1	717	789	0.17595	113.5409	GEN515225 1-MUSKOGEE 5G
FDNS	00NR	3	16WP	G15_093	FROM->TO	G14-057T 345.00 - SUNNYSIDE 345KV CKT 1	717	789	0.17757	113.5371	G14_038T 345.00 - Hitchland Interchange 345KV CKT 1
FDNS	00NR	3	16WP	G15_093	FROM->TO	G14-057T 345.00 - SUNNYSIDE 345KV CKT 1	717	789	0.17705	113.5328	P12:138:AEPW:WTHWF4:CLINTJC4
FDNS	00NR	3	16WP	G15_093	FROM->TO	G14-057T 345.00 - SUNNYSIDE 345KV CKT 1	717	789	0.17584	113.5321	MC NIEL 500/115KV TRANSFORMER CKT 1
FDNS	00NR	3	20WP	G15_093	FROM->TO	G14-057T 345.00 - SUNNYSIDE 345KV CKT 1	717	789	0.17578	113.527	GRAND GULF 500/22.0KV TRANSFORMER CKT 1
FDNS	00NR	3	16WP	G15_093	FROM->TO	G14-057T 345.00 - SUNNYSIDE 345KV CKT 1	717	789	0.17585	113.5264	HOT SPRINGS EHV - MAGNET COVE 500KV CKT 1
FDNS	00NR	3	16WP	G15_093	FROM->TO	G14-057T 345.00 - SUNNYSIDE 345KV CKT 1	717	789	0.17574	113.5229	BISMARK - HOT SPRINGS WEST BUS 115KV CKT 1
FDNS	00NR	3	16WP	G15_093	FROM->TO	G14-057T 345.00 - SUNNYSIDE 345KV CKT 1	717	789	0.17595	113.5226	GEN303007 1-1BC2 U2
FDNS	00NR	3	16WP	G15_093	FROM->TO	G14-057T 345.00 - SUNNYSIDE 345KV CKT 1	717	789	0.17595	113.5208	WHITE BLUFF 500/26.0KV TRANSFORMER CKT 1
FDNS	00NR	3	16WP	G15_093	FROM->TO	G14-057T 345.00 - SUNNYSIDE 345KV CKT 1	717	789	0.17595	113.5177	GEN303006 1-1BC2 U1
FDNS	00NR	3	16WP	G15_093	FROM->TO	G14-057T 345.00 - SUNNYSIDE 345KV CKT 1	717	789	0.17635	113.5176	P12:69:AEPW-OMPA:COMANC-2:OMWALTR2
FDNS	00NR	3	16WP	G15_093	FROM->TO	G14-057T 345.00 - SUNNYSIDE 345KV CKT 1	717	789	0.17459	113.5174	SEMINOLE - VANOSTP4 138.00 138KV CKT 1
FDNS	00NR	3	16WP	G15_093	FROM->TO	G14-057T 345.00 - SUNNYSIDE 345KV CKT 1	717	789	0.17648	113.4974	COMANCHE TAP - TOSCO 69KV CKT 1
FDNS	00NR	3	16WP	G15_093	FROM->TO	G14-057T 345.00 - SUNNYSIDE 345KV CKT 1	717	789	0.17868	113.4956	CIMARRON - TUTTLE CONOCO TAP 138KV CKT 1
FDNS	00NR	3	16WP	G15_093	FROM->TO	G14-057T 345.00 - SUNNYSIDE 345KV CKT 1	717	789	0.17595	113.4954	GEN336191 1-LITTLE GYPSY UNIT#3
FDNS	00NR	3	16WP	G15_093	FROM->TO	G14-057T 345.00 - SUNNYSIDE 345KV CKT 1	717	789	0.17696	113.4942	CANADIAN - NOBLE 138KV CKT 1
FDNS	00NR	3	16WP	G15_093	FROM->TO	G14-057T 345.00 - SUNNYSIDE 345KV CKT 1	717	789	0.17665	113.4938	CZECH HALL - XEROX 138KV CKT 1
FDNS	00NR	3	16WP	G15_093	FROM->TO	G14-057T 345.00 - SUNNYSIDE 345KV CKT 1	717	789	0.17665	113.4896	MORGAN - XEROX 138KV CKT 1
FDNS	00NR	3	16WP	G15_093	FROM->TO	G14-057T 345.00 - SUNNYSIDE 345KV CKT 1	717	789	0.17596	113.4871	P12:138:AEPW:N.E.S.-4:CATOOSA4
FDNS	00NR	3	16WP	G15_093	FROM->TO	G14-057T 345.00 - SUNNYSIDE 345KV CKT 1	717	789	0.17595	113.4833	GEN337910 1-ARKANSAS NUCLEAR ONE UNIT #1
FDNS	00NR	3	16WP	G15_093	FROM->TO	G14-057T 345.00 - SUNNYSIDE 345KV CKT 1	717	789	0.17622	113.4805	BUCKNER7 345.00 - SPEARVILLE 345KV CKT 1
FDNS	00NR	3	16WP	G15_093	FROM->TO	G14-057T 345.00 - SUNNYSIDE 345KV CKT 1	717	789	0.17622	113.4805	BUCKNER7 345.00 - SPEARVILLE 345KV CKT 1
FDNS	00NR	3	16WP	G15_093	FROM->TO	G14-057T 345.00 - SUNNYSIDE 345KV CKT 1	717	789	0.17595	113.4774	GEN300010 1-ST FRANCIS UNIT 1
FDNS	00NR	3	16WP	G15_093	FROM->TO	G14-057T 345.00 - SUNNYSIDE 345KV CKT 1	717	789	0.17705	113.4769	P12:138:AEPW:WTHWF4:WTH_SE4
FDNS	00NR	3	16WP	G15_093	FROM->TO	G14-057T 345.00 - SUNNYSIDE 345KV CKT 1	717	789	0.17849	113.473	LASALLE - LATTA JCT 138KV CKT 1
FDNS	00NR	3	16WP	G15_093	FROM->TO	G14-057T 345.00 - SUNNYSIDE 345KV CKT 1	717	789	0.17595	113.4723	NELSON 230/20.0KV TRANSFORMER CKT 1
FDNS	00NR	3	16WP	G15_093	FROM->TO	G14-057T 345.00 - SUNNYSIDE 345KV CKT 1	717	789	0.17574	113.4715	ALPINE AECC - BISMARK 115KV CKT 1
FDNS	00NR	3	16WP	G15_093	FROM->TO	G14-057T 345.00 - SUNNYSIDE 345KV CKT 1	717	789	0.17595	113.4706	GEN335614 1-WILLOW GLENN UNIT#4
FDNS	00NR	3	16WP	G15_093	FROM->TO	G14-057T 345.00 - SUNNYSIDE 345KV CKT 1	717	789	0.17665	113.4666	MORGAN - MUSTANG 138KV CKT 1
FDNS	00NR	3	16WP	G15_093	FROM->TO	G14-057T 345.00 - SUNNYSIDE 345KV CKT 1	717	789	0.17708	113.4645	P12:138:OKGE:3TERM27
FDNS	00NR	3	16WP	G15_093	FROM->TO	G14-057T 345.00 - SUNNYSIDE 345KV CKT 1	717	789	0.17595	113.4591	GEN303008 1-1BC2 U3
FDNS	00NR	3	16WP	G15_093	FROM->TO	G14-057T 345.00 - SUNNYSIDE 345KV CKT 1	717	789	0.17702	113.4492	FINNEY SWITCHING STATION - HOLCOMB 345KV CKT 1
FDNS	00NR	3	16WP	G15_093	FROM->TO	G14-057T 345.00 - SUNNYSIDE 345KV CKT 1	717	789	0.17702	113.4492	FINNEY SWITCHING STATION - HOLCOMB 345KV CKT 1
FDNS	00NR	3	20WP	G15_093	FROM->TO	G14-057T 345.00 - SUNNYSIDE 345KV CKT 1	717	789	0.17541	113.4437	7SAREPTA% 345.00 - ELDORADO EHV 345KV CKT 1
FDNS	00NR	3	20WP	G15_093	FROM->TO	G14-057T 345.00 - SUNNYSIDE 345KV CKT 1	717	789	0.17541	113.4435	3TR3AR8EL7EL
FDNS	00NR	3	16WP	G15_093	FROM->TO	G14-057T 345.00 - SUNNYSIDE 345KV CKT 1	717	789	0.17648	113.4348	COMANCHE - COMANCHE TAP 69KV CKT 1
FDNS	00NR	3	16WP	G15_093	FROM->TO	G14-057T 345.00 - SUNNYSIDE 345KV CKT 1	717	789	0.17592	113.4347	CYPRESS - HARTBURG 500KV CKT 1
FDNS	00NR	3	20WP	G15_093	FROM->TO	G14-057T 345.00 - SUNNYSIDE 345KV CKT 1	717	789	0.17541	113.4329	ELDORADO EHV 500/345KV TRANSFORMER CKT 1
FDNS	00NR	3	16WP	G15_093	FROM->TO	G14-057T 345.00 - SUNNYSIDE 345KV CKT 1	717	789	0.17595	113.4325	GEN336170 1-GULF OXY U4
FDNS	00NR	3	16WP	G15_093	FROM->TO	G14-057T 345.00 - SUNNYSIDE 345KV CKT 1	717	789	0.17574	113.4287	ALPINE AECC - AMITY SS 115KV CKT 1
FDNS	00NR	3	16WP	G15_093	FROM->TO	G14-057T 345.00 - SUNNYSIDE 345KV CKT 1	717	789	0.17595	113.4284	GEN300011 1-ST FRANCIS UNIT 2

SOLUTION	GROUP	SCENARIO	SEASON	SOURCE	DIRECTION	MONITORED ELEMENT	RATEA (MVA)	RATEB(MVA)	TDF	TC%LOADING (% MVA)	CONTINGENCY
FDNS	00NR	3	16WP	G15_093	FROM->TO	G14-057T 345.00 - SUNNYSIDE 345KV CKT 1	717	789	0.17595	113.4275	GEN336464 1-MICHOUD UNIT #3
FDNS	00NR	3	16WP	G15_093	FROM->TO	G14-057T 345.00 - SUNNYSIDE 345KV CKT 1	717	789	0.17724	113.4253	CHISHOLM6 230.00 - ELK CITY 230KV 230KV CKT 1
FDNS	00NR	3	16WP	G15_093	FROM->TO	G14-057T 345.00 - SUNNYSIDE 345KV CKT 1	717	789	0.16863	113.4235	CANADIAN RIVER - PITTSBURG 345KV CKT 1
FDNS	00NR	3	16WP	G15_093	FROM->TO	G14-057T 345.00 - SUNNYSIDE 345KV CKT 1	717	789	0.16863	113.4235	CANADIAN RIVER - PITTSBURG 345KV CKT 1
FDNS	00NR	3	16WP	G15_093	FROM->TO	G14-057T 345.00 - SUNNYSIDE 345KV CKT 1	717	789	0.17595	113.4182	8CAJUN2 500/24.0KV TRANSFORMER CKT 1
FDNS	00NR	3	16WP	G15_093	FROM->TO	G14-057T 345.00 - SUNNYSIDE 345KV CKT 1	717	789	0.17724	113.4176	ELK CITY 230KV (ELKCTY-6) 230/138/13.8KV TRANSFORMER CKT 1
FDNS	00NR	3	16WP	G15_093	FROM->TO	G14-057T 345.00 - SUNNYSIDE 345KV CKT 1	717	789	0.17724	113.4176	ELK CITY 230KV (ELKCTY-6) 230/138/13.8KV TRANSFORMER CKT 1
FDNS	00NR	3	16WP	G15_093	FROM->TO	G14-057T 345.00 - SUNNYSIDE 345KV CKT 1	717	789	0.1826	113.4121	GRACEMONT (BANK 1) 345/138/13.8KV TRANSFORMER CKT 1
FDNS	00NR	3	20WP	G15_093	FROM->TO	G14-057T 345.00 - SUNNYSIDE 345KV CKT 1	717	789	0.17824	113.4112	P12:138:AEPW:DUNCAN-4:L.E.S.-4
FDNS	00NR	3	16WP	G15_093	FROM->TO	G14-057T 345.00 - SUNNYSIDE 345KV CKT 1	717	789	0.18003	113.4106	BAILEY4 138.00 - WESTMOORE 138KV CKT 1
FDNS	00NR	3	20WP	G15_093	FROM->TO	G14-057T 345.00 - SUNNYSIDE 345KV CKT 1	717	789	0.17578	113.409	GEN515577 1-ARBWND11 0.6900
FDNS	00NR	3	16WP	G15_093	FROM->TO	G14-057T 345.00 - SUNNYSIDE 345KV CKT 1	717	789	0.1787	113.4036	DRAPER LAKE - SEMINOLE 345KV CKT 1
FDNS	00NR	3	16WP	G15_093	FROM->TO	G14-057T 345.00 - SUNNYSIDE 345KV CKT 1	717	789	0.1787	113.4036	DRAPER LAKE - SEMINOLE 345KV CKT 2
FDNS	00NR	3	16WP	G15_093	FROM->TO	G14-057T 345.00 - SUNNYSIDE 345KV CKT 1	717	789	0.17696	113.4027	NOBLE - PURCELL4 138.00 138KV CKT 1
FDNS	00NR	3	16WP	G15_093	FROM->TO	G14-057T 345.00 - SUNNYSIDE 345KV CKT 1	717	789	0.17602	113.3955	HOYT - STRANGER CREEK 345KV CKT 1
FDNS	00NR	3	16WP	G15_093	FROM->TO	G14-057T 345.00 - SUNNYSIDE 345KV CKT 1	717	789	0.17594	113.3936	7JASPER 345.00 - BLACKBERRY 345KV CKT 1
FDNS	00NR	3	16WP	G15_093	FROM->TO	G14-057T 345.00 - SUNNYSIDE 345KV CKT 1	717	789	0.17595	113.393	GEN300016 1-1G1GPDEL 18.000
FDNS	00NR	3	16WP	G15_093	FROM->TO	G14-057T 345.00 - SUNNYSIDE 345KV CKT 1	717	789	0.17595	113.3926	P12:138:AEPW:R.S.S.-4:S.HUD.-4
FDNS	00NR	3	16WP	G15_093	FROM->TO	G14-057T 345.00 - SUNNYSIDE 345KV CKT 1	717	789	0.17595	113.3866	GEN501910 1-ACADIA UNIT ST1
FDNS	00NR	3	16WP	G15_093	FROM->TO	G14-057T 345.00 - SUNNYSIDE 345KV CKT 1	717	789	0.17613	113.3762	G15095_T 138.00 - ROSE_VALLEY 138.00 138KV CKT 1
FDNS	00NR	3	16WP	G15_093	FROM->TO	G14-057T 345.00 - SUNNYSIDE 345KV CKT 1	717	789	0.17595	113.3742	GEN337041 1-GERALD ANDRUS
FDNS	00NR	3	16WP	G15_093	FROM->TO	G14-057T 345.00 - SUNNYSIDE 345KV CKT 1	717	789	0.17642	113.3698	SARA - STHLAKE4 138.00 138KV CKT 1
FDNS	00NR	3	16WP	G15_093	FROM->TO	G14-057T 345.00 - SUNNYSIDE 345KV CKT 1	717	789	0.17602	113.3592	G15074_T 345.00 - JEFFREY ENERGY CENTER 345KV CKT 1
FDNS	00NR	3	16WP	G15_093	FROM->TO	G14-057T 345.00 - SUNNYSIDE 345KV CKT 1	717	789	0.17584	113.3574	ETTA (DUKE HOTSPRINGS) - MC NIEL 500KV CKT 1
FDNS	00NR	3	16WP	G15_093	FROM->TO	G14-057T 345.00 - SUNNYSIDE 345KV CKT 1	717	789	0.17595	113.3546	P12:138:AEPW:YARCH-S4:T.S.E.-4
FDNS	00NR	3	16WP	G15_093	FROM->TO	G14-057T 345.00 - SUNNYSIDE 345KV CKT 1	717	789	0.17649	113.3531	WALTERS - WALTERS 69KV CKT 1
FDNS	00NR	3	16WP	G15_093	FROM->TO	G14-057T 345.00 - SUNNYSIDE 345KV CKT 1	717	789	0.17735	113.3511	ANADARKO - SEQUOYAHJ4 138.00 138KV CKT 1
FDNS	00NR	3	16WP	G15_093	FROM->TO	G14-057T 345.00 - SUNNYSIDE 345KV CKT 1	717	789	0.17595	113.3484	P12:138:AEPW:BA_71ST4:T.S.E.-4
FDNS	00NR	3	16WP	G15_093	FROM->TO	G14-057T 345.00 - SUNNYSIDE 345KV CKT 1	717	789	0.17595	113.3477	P12:69:AEPW:NROGERS2:ECNTRTN2
FDNS	00NR	3	16WP	G15_093	FROM->TO	G14-057T 345.00 - SUNNYSIDE 345KV CKT 1	717	789	0.17735	113.3455	CORN TAP - SEQUOYAHJ4 138.00 138KV CKT 1
FDNS	00NR	3	20WP	G15_093	FROM->TO	G14-057T 345.00 - SUNNYSIDE 345KV CKT 1	717	789	0.17561	113.3441	ARCADIA - SEMINOLE 345KV CKT 1
FDNS	00NR	3	16WP	G15_093	FROM->TO	G14-057T 345.00 - SUNNYSIDE 345KV CKT 1	717	789	0.17642	113.3421	MCCLAIN - STHLAKE4 138.00 138KV CKT 1
FDNS	00NR	3	16WP	G15_093	FROM->TO	G14-057T 345.00 - SUNNYSIDE 345KV CKT 1	717	789	0.17595	113.3405	SABINE 230/24.0KV TRANSFORMER CKT 1
FDNS	00NR	3	16WP	G15_093	FROM->TO	G14-057T 345.00 - SUNNYSIDE 345KV CKT 1	717	789	0.17595	113.3362	GEN336801 1-BAXTER WILSON UNIT #1
FDNS	00NR	3	16WP	G15_093	FROM->TO	G14-057T 345.00 - SUNNYSIDE 345KV CKT 1	717	789	0.17782	113.3355	WEATHERFORD JCT. - WEATHERFORD SOUTHEAST 138KV CKT 1
FDNS	00NR	3	16WP	G15_093	FROM->TO	G14-057T 345.00 - SUNNYSIDE 345KV CKT 1	717	789	0.17782	113.3355	WEATHERFORD JCT. - WEATHERFORD SOUTHEAST 138KV CKT 1
FDNS	00NR	3	16WP	G15_093	FROM->TO	G14-057T 345.00 - SUNNYSIDE 345KV CKT 1	717	789	0.17609	113.3323	BLACKBERRY - NEOSHO 345KV CKT 1
FDNS	00NR	3	16WP	G15_093	FROM->TO	G14-057T 345.00 - SUNNYSIDE 345KV CKT 1	717	789	0.17635	113.3317	LAWTON RELIFT TAP - OMPA-WALTERS 69KV CKT 1
FDNS	00NR	3	16WP	G15_093	FROM->TO	G14-057T 345.00 - SUNNYSIDE 345KV CKT 1	717	789	0.17598	113.3282	7LUTESVIL 345.00 - 7ST FRANC 345.00 345KV CKT 1
FDNS	00NR	3	16WP	G15_093	FROM->TO	G14-057T 345.00 - SUNNYSIDE 345KV CKT 1	717	789	0.17595	113.3247	FRONTIER 345/18.0KV TRANSFORMER CKT 1
FDNS	00NR	3	16WP	G15_093	FROM->TO	G14-057T 345.00 - SUNNYSIDE 345KV CKT 1	717	789	0.17606	113.3235	SWISSVALE - WEST GARDNER 345KV CKT 1
FDNS	00NR	3	16WP	G15_093	FROM->TO	G14-057T 345.00 - SUNNYSIDE 345KV CKT 1	717	789	0.17595	113.323	FRONTIER 345/18.0KV TRANSFORMER CKT 1
FDNS	00NR	3	16WP	G15_093	FROM->TO	G14-057T 345.00 - SUNNYSIDE 345KV CKT 1	717	789	0.17572	113.3228	ENOWILT - LONE OAK 138KV CKT 1
FDNS	00NR	3	16WP	G15_093	FROM->TO	G14-057T 345.00 - SUNNYSIDE 345KV CKT 1	717	789	0.17613	113.3201	NOEL_SW 138.00 - ROSE_VALLEY 138.00 138KV CKT 1
FDNS	00NR	3	16WP	G15_093	FROM->TO	G14-057T 345.00 - SUNNYSIDE 345KV CKT 1	717	789	0.17713	113.3193	NORGE ROAD - SOUTHWESTERN STATION 138KV CKT 1
FDNS	00NR	3	16WP	G15_093	FROM->TO	G14-057T 345.00 - SUNNYSIDE 345KV CKT 1	717	789	0.17713	113.3193	NORGE ROAD - SOUTHWESTERN STATION 138KV CKT 1
FDNS	00NR	3	16WP	G15_093	FROM->TO	G14-057T 345.00 - SUNNYSIDE 345KV CKT 1	717	789	0.17595	113.3188	GEN512688 2-GRDA1 GSU2 22
FDNS	00NR	3	16WP	G15_093	FROM->TO	G14-057T 345.00 - SUNNYSIDE 345KV CKT 1	717	789	0.17369	113.3185	ARBUCKLE - VANOSTP4 138.00 138KV CKT 1
FDNS	00NR	3	16WP	G15_093	FROM->TO	G14-057T 345.00 - SUNNYSIDE 345KV CKT 1	717	789	0.17849	113.3171	LASALLE - STONEWAL LH138.00 138KV CKT 1
FDNS	00NR	3	16WP	G15_093	FROM->TO	G14-057T 345.00 - SUNNYSIDE 345KV CKT 1	717	789	0.17595	113.3165	P12:161:AEPW:CHAMSPR5:FARMING5
FDNS	00NR	3	16WP	G15_093	FROM->TO	G14-057T 345.00 - SUNNYSIDE 345KV CKT 1	717	789	0.17572	113.3139	ENOWILT - SARDIS 138KV CKT 1
FDNS	00NR	3	16WP	G15_093	FROM->TO	G14-057T 345.00 - SUNNYSIDE 345KV CKT 1	717	789	0.17651	113.3124	P12:138:OKGE-AEPW:JENSEN4:REDROCKRD4
FDNS	00NR	3	16WP	G15_093	FROM->TO	G14-057T 345.00 - SUNNYSIDE 345KV CKT 1	717	789	0.17597	113.312	P12:138:AEPW-OGE:SHIDLER4:OSAGE 4
FDNS	00NR	3	16WP	G15_093	FROM->TO	G14-057T 345.00 - SUNNYSIDE 345KV CKT 1	717	789	0.17568	113.3118	HOPE - MCNAB REC 115KV CKT 1
FDNS	00NR	3	16WP	G15_093	FROM->TO	G14-057T 345.00 - SUNNYSIDE 345KV CKT 1	717	789	0.1761	113.3064	EMPORIA ENERGY CENTER - G14_001T 345.00 345KV CKT 1
FDNS	00NR	3	16WP	G15_093	FROM->TO	G14-057T 345.00 - SUNNYSIDE 345KV CKT 1	717	789	0.17568	113.3033	P12:115:AEPW:TURK3:HOPE3
FDNS	00NR	3	16WP	G15_093	FROM->TO	G14-057T 345.00 - SUNNYSIDE 345KV CKT 1	717	789	0.17849	113.3024	STONEWAL LH138.00 - TUPELO TAP 138KV CKT 1
FDNS	00NR	3	16WP	G15_093	FROM->TO	G14-057T 345.00 - SUNNYSIDE 345KV CKT 1	717	789	0.17637	113.2971	BENTON - WICHITA 345KV CKT 1
FDNS	00NR	3	16WP	G15_093	FROM->TO	G14-057T 345.00 - SUNNYSIDE 345KV CKT 1	717	789	0.17617	113.2951	CLEO CORNER - CLEOPLT4 138.00 138KV CKT 1
FDNS	00NR	3	20WP	G15_093	FROM->TO	G14-057T 345.00 - SUNNYSIDE 345KV CKT 1	717	789	0.17824	113.2941	COMANCHE TAP - OMPA-DUNCAN 840 138KV CKT 1
FDNS	00NR	3	16WP	G15_093	FROM->TO	G14-057T 345.00 - SUNNYSIDE 345KV CKT 1	717	789	0.17598	113.2889	8WNEWMADRID 500.00 - DELL 500 500KV CKT 1
FDNS	00NR	3	16WP	G15_093	FROM->TO	G14-057T 345.00 - SUNNYSIDE 345KV CKT 1	717	789	0.17595	113.2876	LEWIS CREEK SWITCHYARD 138/22.0KV TRANSFORMER CKT 1
FDNS	00NR	3	16WP	G15_093	FROM->TO	G14-057T 345.00 - SUNNYSIDE 345KV CKT 1	717	789	0.17595	113.2872	GEN505616 1-BROKEN BOW
FDNS	00NR	3	16WP	G15_093	FROM->TO	G14-057T 345.00 - SUNNYSIDE 345KV CKT 1	717	789	0.17782	113.2857	P12:138:AEPW:REDROCKRD4:WTH_JCT4
FDNS	00NR	3	16WP	G15_093	FROM->TO	G14-057T 345.00 - SUNNYSIDE 345KV CKT 1	717	789	0.17617	113.2836	CLEOPLT4 138.00 - MEN TAP 138KV CKT 1
FDNS	00NR	3	16WP	G15_093	FROM->TO	G14-057T 345.00 - SUNNYSIDE 345KV CKT 1	717	789	0.17595	113.2828	LEWIS CREEK SWITCHYARD 138/22.0KV TRANSFORMER CKT 1
FDNS	00NR	3	16WP	G15_093	FROM->TO	G14-057T 345.00 - SUNNYSIDE 345KV CKT 1	717	789	0.17568	113.2811	MCNAB REC - Turk 115 115KV CKT 1
FDNS	00NR	3	16WP	G15_093	FROM->TO	G14-057T 345.00 - SUNNYSIDE 345KV CKT 1	717	789	0.17568	113.2811	TURK (TURK 1) 138/115/13.2KV TRANSFORMER CKT 1
FDNS	00NR	3	16WP	G15_093	FROM->TO	G14-057T 345.00 - SUNNYSIDE 345KV CKT 1	717	789	0.17568	113.2811	TURK (TURK 1) 138/115/13.2KV TRANSFORMER CKT 1
FDNS	00NR	3	16WP	G15_093	FROM->TO	G14-057T 345.00 - SUNNYSIDE 345KV CKT 1	717	789	0.17572	113.2796	CLAYTON - SARDIS 138KV CKT 1
FDNS	00NR	3	16WP	G15_093	FROM->TO	G14-057T 345.00 - SUNNYSIDE 345KV CKT 1	717	789	0.17705	113.2795	SOUTHWESTERN STATION - VERDEN 138KV CKT 1
FDNS	00NR	3	16WP	G15_093	FROM->TO	G14-057T 345.00 - SUNNYSIDE 345KV CKT 1	717	789	0.1758	113.2784	COUCH SES - MC NIEL 115KV CKT 1
FDNS	00NR	3	16WP	G15_093	FROM->TO	G14-057T 345.00 - SUNNYSIDE 345KV CKT 1	717	789	0.17757	113.2751	G14_038T 345.00 - POTTER COUNTY INTERCHANGE 345KV CKT 1
FDNS	00NR	3	16WP	G15_093	FROM->TO	G14-057T 345.00 - SUNNYSIDE 345KV CKT 1	717	789	0.17617	113.2735	IMO TAP - MEN TAP 138KV CKT 1
FDNS	00NR	3	16WP	G15_093	FROM->TO	G14-057T 345.00 - SUNNYSIDE 345KV CKT 1	717	789	0.17635	113.2659	OMPA-WALTERS - WALTERS 69KV CKT 1
FDNS	00NR	3	16WP	G15_093	FROM->TO	G14-057T 345.00 - SUNNYSIDE 345KV CKT 1	717	789	0.17635	113.2659	OMPA-WALTERS - WALTERS 69KV CKT 1
FDNS	00NR	3	16WP	G15_093	FROM->TO	G14-057T 345.00 - SUNNYSIDE 345KV CKT 1	717	789	0.17595	113.2631	GEN501970 1-EVANGELINE UNIT 7
FDNS	00NR	3	16WP	G15_093	FROM->TO	G14-057T 345.00 - SUNNYSIDE 345KV CKT 1	717	789	0.17604	113.2597	P12:138:OKGE:3TERM12
FDNS	00NR	3	16WP	G15_093	FROM->TO	G14-057T 345.00 - SUNNYSIDE 345KV CKT 1	717	789	0.17705	113.2593	NORTH 29TH CHICKASHA - VERDEN 138KV CKT 1

SOLUTION	GROUP	SCENARIO	SEASON	SOURCE	DIRECTION	MONITORED ELEMENT	RATEA (MVA)	RATEB(MVA)	TDF	TC%LOADING (% MVA)	CONTINGENCY
FDNS	00NR	3	16WP	G15_093	FROM->TO	G14-057T 345.00 - SUNNYSIDE 345KV CKT 1	717	789	0.18003	113.2549	FRANKLIN SW - WESTMOORE 138KV CKT 1
FDNS	00NR	3	16WP	G15_093	FROM->TO	G14-057T 345.00 - SUNNYSIDE 345KV CKT 1	717	789	0.17649	113.254	P12:69:WFEC-AEPW:COMANCH2:WALTRS-2
FDNS	00NR	3	16WP	G15_093	FROM->TO	G14-057T 345.00 - SUNNYSIDE 345KV CKT 1	717	789	0.17603	113.2526	EMPORIA ENERGY CENTER - SWISSVALE 345KV CKT 1
FDNS	00NR	3	16WP	G15_093	FROM->TO	G14-057T 345.00 - SUNNYSIDE 345KV CKT 1	717	789	0.17572	113.2521	P12:138:AEPW-SWPA:LONEOAK4:BRKNBW4
FDNS	00NR	3	16WP	G15_093	FROM->TO	G14-057T 345.00 - SUNNYSIDE 345KV CKT 1	717	789	0.17595	113.2509	GEN334392 1-EXXON MOBIL IPP 1
FDNS	00NR	3	16WP	G15_093	FROM->TO	G14-057T 345.00 - SUNNYSIDE 345KV CKT 1	717	789	0.17583	113.2458	MORISNT4 138.00 - STILLWATER 138KV CKT 1
FDNS	00NR	3	20WP	G15_093	FROM->TO	G14-057T 345.00 - SUNNYSIDE 345KV CKT 1	717	789	0.17578	113.2451	GEN509409 1-WILKES #3
FDNS	00NR	3	16WP	G15_093	FROM->TO	G14-057T 345.00 - SUNNYSIDE 345KV CKT 1	717	789	0.17595	113.2443	GEN334393 1-EXXON MOBIL IPP 2
FDNS	00NR	3	16WP	G15_093	FROM->TO	G14-057T 345.00 - SUNNYSIDE 345KV CKT 1	717	789	0.17595	113.2443	GEN334394 1-EXXON MOBIL IPP 3
FDNS	00NR	3	16WP	G15_093	FROM->TO	G14-057T 345.00 - SUNNYSIDE 345KV CKT 1	717	789	0.1761	113.242	G14_001T 345.00 - WICHITA 345KV CKT 1
FDNS	00NR	3	16WP	G15_093	FROM->TO	G14-057T 345.00 - SUNNYSIDE 345KV CKT 1	717	789	0.17595	113.2419	GEN659125 1-COVEY
FDNS	00NR	3	20WP	G15_093	FROM->TO	G14-057T 345.00 - SUNNYSIDE 345KV CKT 1	717	789	0.17904	113.2416	HEALDTON - LOCO 138KV CKT 1
FDNS	00NR	3	16WP	G15_093	FROM->TO	G14-057T 345.00 - SUNNYSIDE 345KV CKT 1	717	789	0.17585	113.2403	P12:138:OKGE:3TERM2
FDNS	00NR	3	16WP	G15_093	FROM->TO	G14-057T 345.00 - SUNNYSIDE 345KV CKT 1	717	789	0.17705	113.2392	WEATHERFORD TAP - WEATHERFORD WIND FARM 138KV CKT 1
FDNS	00NR	3	16WP	G15_093	FROM->TO	G14-057T 345.00 - SUNNYSIDE 345KV CKT 1	717	789	0.17572	113.2392	CLAYTON - NASHOBA 138KV CKT 1
FDNS	00NR	3	16WP	G15_093	FROM->TO	G14-057T 345.00 - SUNNYSIDE 345KV CKT 1	717	789	0.17595	113.2373	GEN509394 1-FLINT CREEK
FDNS	00NR	3	20WP	G15_093	FROM->TO	G14-057T 345.00 - SUNNYSIDE 345KV CKT 1	717	789	0.16854	113.2365	CANADIAN RIVER - MUSKOGEE 345KV CKT 1
FDNS	00NR	3	16WP	G15_093	FROM->TO	G14-057T 345.00 - SUNNYSIDE 345KV CKT 1	717	789	0.17595	113.2355	GEN336222 1-LITTLE GYPSY UNIT#2
FDNS	00NR	3	16WP	G15_093	FROM->TO	G14-057T 345.00 - SUNNYSIDE 345KV CKT 1	717	789	0.17625	113.2354	FRANKLIN - FRANKLIN SW 138KV CKT 1
FDNS	00NR	3	16WP	G15_093	FROM->TO	G14-057T 345.00 - SUNNYSIDE 345KV CKT 1	717	789	0.17622	113.2312	BUCKNER7 345.00 - HOLCOMB 345KV CKT 1
FDNS	00NR	3	16WP	G15_093	FROM->TO	G14-057T 345.00 - SUNNYSIDE 345KV CKT 1	717	789	0.17622	113.2312	BUCKNER7 345.00 - HOLCOMB 345KV CKT 1
FDNS	00NR	3	16WP	G15_093	FROM->TO	G14-057T 345.00 - SUNNYSIDE 345KV CKT 1	717	789	0.17595	113.2279	P12:138:AEPW:R.S.S-4:T.P.S.-4
FDNS	00NR	3	16WP	G15_093	FROM->TO	G14-057T 345.00 - SUNNYSIDE 345KV CKT 1	717	789	0.17572	113.2263	BETHEL - NASHOBA 138KV CKT 1
FDNS	00NR	3	16WP	G15_093	FROM->TO	G14-057T 345.00 - SUNNYSIDE 345KV CKT 1	717	789	0.17921	113.2253	MARIETTA - MARIETTA4 138.00 138KV CKT 1
FDNS	00NR	3	16WP	G15_093	FROM->TO	G14-057T 345.00 - SUNNYSIDE 345KV CKT 1	717	789	0.17687	113.2238	CLARKSVILLE - ONETA 345KV CKT 1
FDNS	00NR	3	16WP	G15_093	FROM->TO	G14-057T 345.00 - SUNNYSIDE 345KV CKT 1	717	789	0.17687	113.2238	CLARKSVILLE - ONETA 345KV CKT 1
FDNS	00NR	3	20WP	G15_093	FROM->TO	G14-057T 345.00 - SUNNYSIDE 345KV CKT 1	717	789	0.18017	113.2232	BRIDGECR 138.00 - TUTTLE 138KV CKT 1
FDNS	00NR	3	16WP	G15_093	FROM->TO	G14-057T 345.00 - SUNNYSIDE 345KV CKT 1	717	789	0.17595	113.2174	GEN506749 1-EASTMAN GENERATION A
FDNS	00NR	3	16WP	G15_093	FROM->TO	G14-057T 345.00 - SUNNYSIDE 345KV CKT 1	717	789	0.17595	113.2146	GEN334432 1-SABINE UNIT 2
FDNS	00NR	3	16WP	G15_093	FROM->TO	G14-057T 345.00 - SUNNYSIDE 345KV CKT 1	717	789	0.17596	113.2145	7JASPER 345.00 - MORGAN 345KV CKT 1
FDNS	00NR	3	16WP	G15_093	FROM->TO	G14-057T 345.00 - SUNNYSIDE 345KV CKT 1	717	789	0.17595	113.2145	GEN334431 1-SABINE UNIT 1
FDNS	00NR	3	16WP	G15_093	FROM->TO	G14-057T 345.00 - SUNNYSIDE 345KV CKT 1	717	789	0.17782	113.2094	HINTON - WEATHERFORD JCT. 138KV CKT 1
FDNS	00NR	3	16WP	G15_093	FROM->TO	G14-057T 345.00 - SUNNYSIDE 345KV CKT 1	717	789	0.17595	113.2073	GEN501971 1-EVANGELINE UNIT 7-1
FDNS	00NR	3	16WP	G15_093	FROM->TO	G14-057T 345.00 - SUNNYSIDE 345KV CKT 1	717	789	0.17595	113.2073	GEN501972 1-EVANGELINE UNIT 7-2
FDNS	00NR	3	16WP	G15_093	FROM->TO	G14-057T 345.00 - SUNNYSIDE 345KV CKT 1	717	789	0.17595	113.2066	GEN336152 1-WATERFORD UNIT#2
FDNS	00NR	3	16WP	G15_093	FROM->TO	G14-057T 345.00 - SUNNYSIDE 345KV CKT 1	717	789	0.17595	113.2056	GEN336151 1-WATERFORD UNIT#1
FDNS	00NR	3	16WP	G15_093	FROM->TO	G14-057T 345.00 - SUNNYSIDE 345KV CKT 1	717	789	0.17595	113.2044	P12:138:AEPW:R.S.S.-4:R:96YALE-4
FDNS	00NR	3	16WP	G15_093	FROM->TO	G14-057T 345.00 - SUNNYSIDE 345KV CKT 1	717	789	0.17642	113.2038	CLINTON JUNCTION - ELK CITY 138KV CKT 1
FDNS	00NR	3	16WP	G15_093	FROM->TO	G14-057T 345.00 - SUNNYSIDE 345KV CKT 1	717	789	0.17642	113.2038	CLINTON JUNCTION - ELK CITY 138KV CKT 1
FDNS	00NR	3	16WP	G15_093	FROM->TO	G14-057T 345.00 - SUNNYSIDE 345KV CKT 1	717	789	0.17713	113.2005	CORNVILLE - NORGE ROAD 138KV CKT 1
FDNS	00NR	3	16WP	G15_093	FROM->TO	G14-057T 345.00 - SUNNYSIDE 345KV CKT 1	717	789	0.17713	113.2005	CORNVILLE - NORGE ROAD 138KV CKT 1
FDNS	00NR	3	16WP	G15_093	FROM->TO	G14-057T 345.00 - SUNNYSIDE 345KV CKT 1	717	789	0.17702	113.1938	FINNEY SWITCHING STATION - WALKTAP7 345.00 345KV CKT 1
FDNS	00NR	3	16WP	G15_093	FROM->TO	G14-057T 345.00 - SUNNYSIDE 345KV CKT 1	717	789	0.17702	113.1938	FINNEY SWITCHING STATION - WALKTAP7 345.00 345KV CKT 1
FDNS	00NR	3	16WP	G15_093	FROM->TO	G14-057T 345.00 - SUNNYSIDE 345KV CKT 1	717	789	0.17696	113.1938	PURCELL4 138.00 - WALNUT CREEK 138KV CKT 1
FDNS	00NR	3	16WP	G15_093	FROM->TO	G14-057T 345.00 - SUNNYSIDE 345KV CKT 1	717	789	0.17705	113.1935	CORNVILLE - NORTH 29TH CHICKASHA 138KV CKT 1
FDNS	00NR	3	16WP	G15_093	FROM->TO	G14-057T 345.00 - SUNNYSIDE 345KV CKT 1	717	789	0.17595	113.189	P12:138:AEPW:MOHAWK4:T.NO--4
FDNS	00NR	3	16WP	G15_093	FROM->TO	G14-057T 345.00 - SUNNYSIDE 345KV CKT 1	717	789	0.17595	113.1839	GEN501912 1-ACADIA UNIT CT1B
FDNS	00NR	3	16WP	G15_093	FROM->TO	G14-057T 345.00 - SUNNYSIDE 345KV CKT 1	717	789	0.17619	113.1837	G13-010T 345.00 - POST ROCK 345KV CKT 1
FDNS	00NR	3	16WP	G15_093	FROM->TO	G14-057T 345.00 - SUNNYSIDE 345KV CKT 1	717	789	0.17595	113.1832	GEN501911 1-ACADIA UNIT CT1A
FDNS	00NR	3	16WP	G15_093	FROM->TO	G14-057T 345.00 - SUNNYSIDE 345KV CKT 1	717	789	0.17595	113.1825	ST FRANCIS - ST FRANCIS 1 161KV CKT Z1
FDNS	00NR	3	20WP	G15_093	FROM->TO	G14-057T 345.00 - SUNNYSIDE 345KV CKT 1	717	789	0.17578	113.1822	GEN501813 1-RODEMACHER UNIT 3
FDNS	00NR	3	16WP	G15_093	FROM->TO	G14-057T 345.00 - SUNNYSIDE 345KV CKT 1	717	789	0.17622	113.181	HAMMETT TAP - HORSESHOE LAKE 138KV CKT 1
FDNS	00NR	3	16WP	G15_093	FROM->TO	G14-057T 345.00 - SUNNYSIDE 345KV CKT 1	717	789	0.17584	113.1799	LAYFLD8 500.00 (LAYFLD AUTO) 500/230/13.8KV TRANSFORMER CKT 1
FDNS	00NR	3	16WP	G15_093	FROM->TO	G14-057T 345.00 - SUNNYSIDE 345KV CKT 1	717	789	0.17584	113.1799	LAYFLD8 500.00 (LAYFLD AUTO) 500/230/13.8KV TRANSFORMER CKT 1
FDNS	00NR	3	16WP	G15_093	FROM->TO	G14-057T 345.00 - SUNNYSIDE 345KV CKT 1	717	789	0.17567	113.1784	P12:138:AEPW:OKMULGE4:R.S.S-4
FDNS	00NR	3	16WP	G15_093	FROM->TO	G14-057T 345.00 - SUNNYSIDE 345KV CKT 1	717	789	0.17475	113.1736	ARBUCKLE - MILLCREEK 138KV CKT 1
FDNS	00NR	3	16WP	G15_093	FROM->TO	G14-057T 345.00 - SUNNYSIDE 345KV CKT 1	717	789	0.17595	113.1727	SABINE 230/22.0KV TRANSFORMER CKT 1
FDNS	00NR	3	16WP	G15_093	FROM->TO	G14-057T 345.00 - SUNNYSIDE 345KV CKT 1	717	789	0.17572	113.1722	BETHEL - BROKEN BOW 138KV CKT 1
FDNS	00NR	3	16WP	G15_093	FROM->TO	G14-057T 345.00 - SUNNYSIDE 345KV CKT 1	717	789	0.17574	113.1713	AMITY SS - MURFREESBORO EAST (AECC) 115KV CKT 1
FDNS	00NR	3	16WP	G15_093	FROM->TO	G14-057T 345.00 - SUNNYSIDE 345KV CKT 1	717	789	0.17617	113.1701	FLETCHER - MARLOW JCT 69KV CKT 1
FDNS	00NR	3	16WP	G15_093	FROM->TO	G14-057T 345.00 - SUNNYSIDE 345KV CKT 1	717	789	0.17612	113.1658	P12:138:OKGE:3TERM47
FDNS	00NR	3	16WP	G15_093	FROM->TO	G14-057T 345.00 - SUNNYSIDE 345KV CKT 1	717	789	0.17604	113.1648	P12:138:WFEC-AEPW:ELKCTY-4:ERICK4
FDNS	00NR	3	16WP	G15_093	FROM->TO	G14-057T 345.00 - SUNNYSIDE 345KV CKT 1	717	789	0.17595	113.1593	GEN336242 1-1NMIL ST1 18.000
FDNS	00NR	3	16WP	G15_093	FROM->TO	G14-057T 345.00 - SUNNYSIDE 345KV CKT 1	717	789	0.17782	113.1531	HINTON - REDROCKRD4 138.00 138KV CKT 1
FDNS	00NR	3	16WP	G15_093	FROM->TO	G14-057T 345.00 - SUNNYSIDE 345KV CKT 1	717	789	0.17705	113.1518	WEATHERFORD SOUTHEAST - WEATHERFORD TAP 138KV CKT 1
FDNS	00NR	3	16WP	G15_093	FROM->TO	G14-057T 345.00 - SUNNYSIDE 345KV CKT 1	717	789	0.17974	113.1417	CIMARRON - NORTHWEST 345KV CKT 1
FDNS	00NR	3	16WP	G15_093	FROM->TO	G14-057T 345.00 - SUNNYSIDE 345KV CKT 1	717	789	0.17596	113.1395	SEMINOLE (SEMINOL2) 345/138/14.4KV TRANSFORMER CKT 1
FDNS	00NR	3	20WP	G15_093	FROM->TO	G14-057T 345.00 - SUNNYSIDE 345KV CKT 1	717	789	0.17578	113.11	GEN300006 1-NEW MADRID UNIT 1
FDNS	00NR	3	20WP	G15_093	FROM->TO	G14-057T 345.00 - SUNNYSIDE 345KV CKT 1	717	789	0.17904	113.0974	HEALDTON - RINGLING 138KV CKT 1
FDNS	00NR	3	20WP	G15_093	FROM->TO	G14-057T 345.00 - SUNNYSIDE 345KV CKT 1	717	789	0.17578	113.0898	GEN300007 1-NEW MADRID UNIT 2
FDNS	00NR	3	20WP	G15_093	FROM->TO	G14-057T 345.00 - SUNNYSIDE 345KV CKT 1	717	789	0.17592	113.0279	LACYGNE - WAVERLY7 345.00 345KV CKT 1
FDNS	00NR	3	20WP	G15_093	FROM->TO	G14-057T 345.00 - SUNNYSIDE 345KV CKT 1	717	789	0.17824	113.0084	DUNCAN - OMPA-DUNCAN 840 138KV CKT 1
FDNS	00NR	3	20WP	G15_093	FROM->TO	G14-057T 345.00 - SUNNYSIDE 345KV CKT 1	717	789	0.17824	113.0084	DUNCAN - OMPA-DUNCAN 840 138KV CKT 1
FDNS	00NR	3	20WP	G15_093	FROM->TO	G14-057T 345.00 - SUNNYSIDE 345KV CKT 1	717	789	0.17578	112.9726	GEN335206 1-NELSON UNIT 6
FDNS	00NR	3	20WP	G15_093	FROM->TO	G14-057T 345.00 - SUNNYSIDE 345KV CKT 1	717	789	0.18017	112.9475	P12:138:WFEC:MSL01
FDNS	00NR	3	20WP	G15_093	FROM->TO	G14-057T 345.00 - SUNNYSIDE 345KV CKT 1	717	789	0.17578	112.9471	GEN520947 1-HUGO1
FDNS	00NR	3	20WP	G15_093	FROM->TO	G14-057T 345.00 - SUNNYSIDE 345KV CKT 1	717	789	0.18017	112.9409	BRIDGECR 138.00 - SUNSHINE CANYON 138KV CKT 1
FDNS	00NR	3	20WP	G15_093	FROM->TO	G14-057T 345.00 - SUNNYSIDE 345KV CKT 1	717	789	0.17904	112.9263	RINGLING - SOUTH WILSON 138KV CKT 1
FDNS	00NR	3	20WP	G15_093	FROM->TO	G14-057T 345.00 - SUNNYSIDE 345KV CKT 1	717	789	0.17592	112.9164	WAVERLY7 345.00 - WOLF CREEK 345KV CKT 1

SOLUTION	GROUP	SCENARIO	SEASON	SOURCE	DIRECTION	MONITORED ELEMENT	RATEA (MVA)	RATEB(MVA)	TDF	TC%LOADING (% MVA)	CONTINGENCY
FDNS	00NR	3	20WP	G15_093	FROM->TO	G14-057T 345.00 - SUNNYSIDE 345KV CKT 1	717	789	0.17563	112.8103	ELDORADO EHV - MOUNT OLIVE 500KV CKT 1
FDNS	00NR	3	20WP	G15_093	FROM->TO	G14-057T 345.00 - SUNNYSIDE 345KV CKT 1	717	789	0.1758	112.8048	P12:138:AEPW:SHERID4:112GORE4
FDNS	00NR	3	20WP	G15_093	FROM->TO	G14-057T 345.00 - SUNNYSIDE 345KV CKT 1	717	789	0.17578	112.7894	GEN501812 1-RODEMACHER UNIT 2
FDNS	00NR	3	20WP	G15_093	FROM->TO	G14-057T 345.00 - SUNNYSIDE 345KV CKT 1	717	789	0.17578	112.7848	DOLET HILLS 345/24.0KV TRANSFORMER CKT 1
FDNS	00NR	3	20WP	G15_093	FROM->TO	G14-057T 345.00 - SUNNYSIDE 345KV CKT 1	717	789	0.17756	112.7635	Hitchland Interchange - WALKTAP7 345.00 345KV CKT 1
FDNS	00NR	3	20WP	G15_093	FROM->TO	G14-057T 345.00 - SUNNYSIDE 345KV CKT 1	717	789	0.17756	112.7635	Hitchland Interchange - WALKTAP7 345.00 345KV CKT 1
FDNS	00NR	3	20WP	G15_093	FROM->TO	G14-057T 345.00 - SUNNYSIDE 345KV CKT 1	717	789	0.17658	112.7532	REDBUD - RIVERSIDE STATION 345KV CKT 1
FDNS	00NR	3	20WP	G15_093	FROM->TO	G14-057T 345.00 - SUNNYSIDE 345KV CKT 1	717	789	0.17658	112.7532	REDBUD - RIVERSIDE STATION 345KV CKT 1
FDNS	00NR	3	20WP	G15_093	FROM->TO	G14-057T 345.00 - SUNNYSIDE 345KV CKT 1	717	789	0.17401	112.7515	PARK LANE - SEMINOLE 138KV CKT 1
FDNS	00NR	3	20WP	G15_093	FROM->TO	G14-057T 345.00 - SUNNYSIDE 345KV CKT 1	717	789	0.17756	112.7315	P12:345:SPS:J07.1.FINN.HITCH
FDNS	00NR	3	16WP	G15_093	FROM->TO	G14-057T 345.00 - SUNNYSIDE 345KV CKT 1	717	789	0.17595	112.6917	803-OKLAUNION
FDNS	00NR	3	20WP	G15_093	FROM->TO	G14-057T 345.00 - SUNNYSIDE 345KV CKT 1	717	789	0.17578	112.6663	GEN515564 1-ORIGIN11 0.6900
FDNS	00NR	3	20WP	G15_093	FROM->TO	G14-057T 345.00 - SUNNYSIDE 345KV CKT 1	717	789	0.17578	112.6663	GEN515565 1-ORIGIN21 0.6900
FDNS	00NR	3	20WP	G15_093	FROM->TO	G14-057T 345.00 - SUNNYSIDE 345KV CKT 1	717	789	0.17569	112.6503	WEBRE - WELLS 500KV CKT 1
FDNS	00NR	3	20WP	G15_093	FROM->TO	G14-057T 345.00 - SUNNYSIDE 345KV CKT 1	717	789	0.17744	112.6484	MATHWSN7 345.00 - NORTHWEST 345KV CKT 1
FDNS	00NR	3	20WP	G15_093	FROM->TO	G14-057T 345.00 - SUNNYSIDE 345KV CKT 1	717	789	0.17904	112.6402	MARIETTA - SOUTH WILSON 138KV CKT 1
FDNS	00NR	3	20WP	G15_093	FROM->TO	G14-057T 345.00 - SUNNYSIDE 345KV CKT 1	717	789	0.17578	112.6312	GEN334440 1-SABINE UNIT 4
FDNS	00NR	3	20WP	G15_093	FROM->TO	G14-057T 345.00 - SUNNYSIDE 345KV CKT 1	717	789	0.17578	112.6087	P12:161:AEPW:DYESS 5:HYLAND 5
FDNS	00NR	3	20WP	G15_093	FROM->TO	G14-057T 345.00 - SUNNYSIDE 345KV CKT 1	717	789	0.17578	112.6022	GEN590011 2-ERCOT EQUIVALENCE
FDNS	00NR	3	20WP	G15_093	FROM->TO	G14-057T 345.00 - SUNNYSIDE 345KV CKT 1	717	789	0.17621	112.5781	CANEYRV7 345.00 - NEOSHO 345KV CKT 1
FDNS	00NR	3	20WP	G15_093	FROM->TO	G14-057T 345.00 - SUNNYSIDE 345KV CKT 1	717	789	0.17578	112.5754	DELL 500 - ESSEX UNIT 2 500KV CKT Z1
FDNS	00NR	3	20WP	G15_093	FROM->TO	G14-057T 345.00 - SUNNYSIDE 345KV CKT 1	717	789	0.17578	112.5462	P12:69:AEPW:L.E.S.-2:LAW WC2
FDNS	00NR	3	20WP	G15_093	FROM->TO	G14-057T 345.00 - SUNNYSIDE 345KV CKT 1	717	789	0.17904	112.5445	P12:138:WFEC:MSL17
FDNS	00NR	3	20WP	G15_093	FROM->TO	G14-057T 345.00 - SUNNYSIDE 345KV CKT 1	717	789	0.17578	112.5331	GEN590010 1-ERCOT EQUIVALENCE
FDNS	00NR	3	20WP	G15_093	FROM->TO	G14-057T 345.00 - SUNNYSIDE 345KV CKT 1	717	789	0.17706	112.4743	P12:138:WFEC:MSL02
FDNS	00NR	3	20WP	G15_093	FROM->TO	G14-057T 345.00 - SUNNYSIDE 345KV CKT 1	717	789	0.17626	112.4659	PAOLI - PAYNE 138.00 138KV CKT 1
FDNS	00NR	3	20WP	G15_093	FROM->TO	G14-057T 345.00 - SUNNYSIDE 345KV CKT 1	717	789	0.17548	112.457	ELDORADO EHV - SHERIDAN EHV 500KV CKT 1
FDNS	00NR	3	20WP	G15_093	FROM->TO	G14-057T 345.00 - SUNNYSIDE 345KV CKT 1	717	789	0.1772	112.4554	LAWTON EASTSIDE (LES 5) 345/138/13.8KV TRANSFORMER CKT 2
FDNS	00NR	3	20WP	G15_093	FROM->TO	G14-057T 345.00 - SUNNYSIDE 345KV CKT 1	717	789	0.1772	112.4554	LAWTON EASTSIDE (LES 5) 345/138/13.8KV TRANSFORMER CKT 2
FDNS	00NR	3	20WP	G15_093	FROM->TO	G14-057T 345.00 - SUNNYSIDE 345KV CKT 1	717	789	0.17578	112.4511	GEN506754 1-LEBROCK STEAM 1
FDNS	00NR	3	20WP	G15_093	FROM->TO	G14-057T 345.00 - SUNNYSIDE 345KV CKT 1	717	789	0.17621	112.4369	CANEYRV7 345.00 - LATHAMS7 345.00 345KV CKT 1
FDNS	00NR	3	20WP	G15_093	FROM->TO	G14-057T 345.00 - SUNNYSIDE 345KV CKT 1	717	789	0.17831	112.4276	CIVIT - PAOLI 138KV CKT 1
FDNS	00NR	3	20WP	G15_093	FROM->TO	G14-057T 345.00 - SUNNYSIDE 345KV CKT 1	717	789	0.1758	112.4232	P12:138:AEPW:112GORE4:L.E.S.-4
FDNS	00NR	3	20WP	G15_093	FROM->TO	G14-057T 345.00 - SUNNYSIDE 345KV CKT 1	717	789	0.17578	112.4064	GEN509408 1-WILKES #2
FDNS	00NR	3	20WP	G15_093	FROM->TO	G14-057T 345.00 - SUNNYSIDE 345KV CKT 1	717	789	0.17679	112.4035	ANADARKO - GEORGIA 138KV CKT 1
FDNS	00NR	3	20WP	G15_093	FROM->TO	G14-057T 345.00 - SUNNYSIDE 345KV CKT 1	717	789	0.17578	112.3511	GEN336252 1-NINEMILE POINT UNIT#5
FDNS	00NR	3	20WP	G15_093	FROM->TO	G14-057T 345.00 - SUNNYSIDE 345KV CKT 1	717	789	0.17679	112.3173	FLETCHER - GEORGIA 138KV CKT 1
FDNS	00NR	3	20WP	G15_093	FROM->TO	G14-057T 345.00 - SUNNYSIDE 345KV CKT 1	717	789	0.17578	112.3147	FRONTIER - GRIMES 345KV CKT 1
FDNS	00NR	3	16WP	G15_093	FROM->TO	G14-057T 345.00 - SUNNYSIDE 345KV CKT 1	717	789	0.176	112.3105	JOHNSON COUNTY - RUSSETT 138KV CKT 1
FDNS	00NR	3	20WP	G15_093	FROM->TO	G14-057T 345.00 - SUNNYSIDE 345KV CKT 1	717	789	0.17968	112.3086	P12:138:AEPW-OGE:CORNVIL4:MAUD 4
FDNS	00NR	3	20WP	G15_093	FROM->TO	G14-057T 345.00 - SUNNYSIDE 345KV CKT 1	717	789	0.17578	112.3074	GEN503909 1-FULTONU1 1 16.000
FDNS	00NR	3	16WP	G15_093	FROM->TO	G14-057T 345.00 - SUNNYSIDE 345KV CKT 1	717	789	0.1738	112.305	MAYSVLT4 138.00 - PRAIRIE POINT 138KV CKT 1
FDNS	00NR	3	16WP	G15_093	FROM->TO	G14-057T 345.00 - SUNNYSIDE 345KV CKT 1	717	789	0.17797	112.3037	NORTHWEST - SPRING CREEK 345KV CKT 1
FDNS	00NR	3	20WP	G15_093	FROM->TO	G14-057T 345.00 - SUNNYSIDE 345KV CKT 1	717	789	0.17636	112.3024	TUPELO - TUPELO TAP 138KV CKT 1
FDNS	00NR	3	16WP	G15_093	FROM->TO	G14-057T 345.00 - SUNNYSIDE 345KV CKT 1	717	789	0.17606	112.2986	GLASSES - MADILL INDUSTRIAL TAP 138KV CKT 1
FDNS	00NR	3	16WP	G15_093	FROM->TO	G14-057T 345.00 - SUNNYSIDE 345KV CKT 1	717	789	0.17797	112.2965	SOONER - SPRING CREEK 345KV CKT 1
FDNS	00NR	3	20WP	G15_093	FROM->TO	G14-057T 345.00 - SUNNYSIDE 345KV CKT 1	717	789	0.17578	112.2943	GEN335204 1-NELSON UNIT 4
FDNS	00NR	3	20WP	G15_093	FROM->TO	G14-057T 345.00 - SUNNYSIDE 345KV CKT 1	717	789	0.17831	112.2874	CIVIT - STRATFORD 138KV CKT 1
FDNS	00NR	3	20WP	G15_093	FROM->TO	G14-057T 345.00 - SUNNYSIDE 345KV CKT 1	717	789	0.17578	112.2871	GEN334441 1-SABINE UNIT 5
FDNS	00NR	3	16WP	G15_093	FROM->TO	G14-057T 345.00 - SUNNYSIDE 345KV CKT 1	717	789	0.17595	112.2764	GEN562772 1-G15034_3 0.6900
FDNS	00NR	3	16WP	G15_093	FROM->TO	G14-057T 345.00 - SUNNYSIDE 345KV CKT 1	717	789	0.17582	112.2747	HUGO (HUGO 1) 345/138/13.8KV TRANSFORMER CKT 1
FDNS	00NR	3	16WP	G15_093	FROM->TO	G14-057T 345.00 - SUNNYSIDE 345KV CKT 1	717	789	0.17595	112.2677	GEN521103 1-BLUE CANYON WIND FARM
FDNS	00NR	3	16WP	G15_093	FROM->TO	G14-057T 345.00 - SUNNYSIDE 345KV CKT 1	717	789	0.17595	112.264	GEN562691 1-G15_015_3 0.6900
FDNS	00NR	3	20WP	G15_093	FROM->TO	G14-057T 345.00 - SUNNYSIDE 345KV CKT 1	717	789	0.17686	112.262	EMPIRE - FLETCHER 138KV CKT 1
FDNS	00NR	3	16WP	G15_093	FROM->TO	G14-057T 345.00 - SUNNYSIDE 345KV CKT 1	717	789	0.17662	112.2614	DRAPER LAKE - MIDWEST TAP 138KV CKT 1
FDNS	00NR	3	20WP	G15_093	FROM->TO	G14-057T 345.00 - SUNNYSIDE 345KV CKT 1	717	789	0.17742	112.2457	G14_038T 345.00 - Hitchland Interchange 345KV CKT 1
FDNS	00NR	3	16WP	G15_093	FROM->TO	G14-057T 345.00 - SUNNYSIDE 345KV CKT 1	717	789	0.17455	112.2436	ARBUCKLE - SULPHR 4 138.00 138KV CKT 1
FDNS	00NR	3	16WP	G15_093	FROM->TO	G14-057T 345.00 - SUNNYSIDE 345KV CKT 1	717	789	0.17595	112.2392	GEN520812 1-ANADRK5
FDNS	00NR	3	16WP	G15_093	FROM->TO	G14-057T 345.00 - SUNNYSIDE 345KV CKT 1	717	789	0.17595	112.2391	GEN520813 1-ANADRK6
FDNS	00NR	3	16WP	G15_093	FROM->TO	G14-057T 345.00 - SUNNYSIDE 345KV CKT 1	717	789	0.17606	112.2379	GLASSES - RUSSETT 138KV CKT 1
FDNS	00NR	3	16WP	G15_093	FROM->TO	G14-057T 345.00 - SUNNYSIDE 345KV CKT 1	717	789	0.17588	112.2346	P12:138:WFEC:MSL11
FDNS	00NR	3	16WP	G15_093	FROM->TO	G14-057T 345.00 - SUNNYSIDE 345KV CKT 1	717	789	0.17588	112.2346	P12:138:WFEC-AEPW:PHAROAH4:LONEOAK4
FDNS	00NR	3	16WP	G15_093	FROM->TO	G14-057T 345.00 - SUNNYSIDE 345KV CKT 1	717	789	0.17812	112.2325	BEARCAT 138.00 - NINE MILE 138KV CKT 1
FDNS	00NR	3	20WP	G15_093	FROM->TO	G14-057T 345.00 - SUNNYSIDE 345KV CKT 1	717	789	0.17968	112.2312	BLANCHARD - CORNVILLE 138KV CKT 1
FDNS	00NR	3	16WP	G15_093	FROM->TO	G14-057T 345.00 - SUNNYSIDE 345KV CKT 1	717	789	0.17595	112.2289	GEN511961 1-DEMPSEY-WTG10.7000
FDNS	00NR	3	16WP	G15_093	FROM->TO	G14-057T 345.00 - SUNNYSIDE 345KV CKT 1	717	789	0.17595	112.2149	GEN600017 C-LS POWER CT
FDNS	00NR	3	16WP	G15_093	FROM->TO	G14-057T 345.00 - SUNNYSIDE 345KV CKT 1	717	789	0.17625	112.2118	P12:138:WFEC:MSL08
FDNS	00NR	3	16WP	G15_093	FROM->TO	G14-057T 345.00 - SUNNYSIDE 345KV CKT 1	717	789	0.17594	112.2113	P12:069:OKGE:3TERM42
FDNS	00NR	3	20WP	G15_093	FROM->TO	G14-057T 345.00 - SUNNYSIDE 345KV CKT 1	717	789	0.17565	112.2112	LAYFLD8 500.00 - MOUNT OLIVE 500KV CKT 1
FDNS	00NR	3	20WP	G15_093	FROM->TO	G14-057T 345.00 - SUNNYSIDE 345KV CKT 1	717	789	0.17565	112.2112	LAYFLD8 500.00 - MOUNT OLIVE 500KV CKT 1
FDNS	00NR	3	20WP	G15_093	FROM->TO	G14-057T 345.00 - SUNNYSIDE 345KV CKT 1	717	789	0.17621	112.2105	LATHAMS7 345.00 - ROSE HILL 345KV CKT 1
FDNS	00NR	3	16WP	G15_093	FROM->TO	G14-057T 345.00 - SUNNYSIDE 345KV CKT 1	717	789	0.17677	112.2096	P12:138:OKGE:3TERM21
FDNS	00NR	3	16WP	G15_093	FROM->TO	G14-057T 345.00 - SUNNYSIDE 345KV CKT 1	717	789	0.1738	112.2081	PRAIRIE POINT - RATLIFF 138KV CKT 1
FDNS	00NR	3	16WP	G15_093	FROM->TO	G14-057T 345.00 - SUNNYSIDE 345KV CKT 1	717	789	0.176	112.2038	DELL 500 - INDEPENDENCE 500KV CKT 1
FDNS	00NR	3	20WP	G15_093	FROM->TO	G14-057T 345.00 - SUNNYSIDE 345KV CKT 1	717	789	0.17651	112.1996	THISTLE7 345.00 - WOODWARD DISTRICT EHV 345KV CKT 1
FDNS	00NR	3	20WP	G15_093	FROM->TO	G14-057T 345.00 - SUNNYSIDE 345KV CKT 1	717	789	0.17651	112.1996	THISTLE7 345.00 - WOODWARD DISTRICT EHV 345KV CKT 1
FDNS	00NR	3	20WP	G15_093	FROM->TO	G14-057T 345.00 - SUNNYSIDE 345KV CKT 1	717	789	0.17651	112.1996	THISTLE7 345.00 - WOODWARD DISTRICT EHV 345KV CKT 2
FDNS	00NR	3	20WP	G15_093	FROM->TO	G14-057T 345.00 - SUNNYSIDE 345KV CKT 1	717	789	0.17651	112.1996	THISTLE7 345.00 - WOODWARD DISTRICT EHV 345KV CKT 2
FDNS	00NR	3	16WP	G15_093	FROM->TO	G14-057T 345.00 - SUNNYSIDE 345KV CKT 1	717	789	0.17678	112.1984	CIMARRON - MATHWSN7 345.00 345KV CKT 1

SOLUTION	GROUP	SCENARIO	SEASON	SOURCE	DIRECTION	MONITORED ELEMENT	RATEA (MVA)	RATEB(MVA)	TDF	TC%LOADING (% MVA)	CONTINGENCY
FDNS	00NR	3	16WP	G15_093	FROM->TO	G14-057T 345.00 - SUNNYSIDE 345KV CKT 1	717	789	0.17678	112.1984	CIMARRON - MATHWSN7 345.00 345KV CKT 2
FDNS	00NR	3	20WP	G15_093	FROM->TO	G14-057T 345.00 - SUNNYSIDE 345KV CKT 1	717	789	0.17578	112.1966	GEN334071 1-LEWIS CREEK 2
FDNS	00NR	3	16WP	G15_093	FROM->TO	G14-057T 345.00 - SUNNYSIDE 345KV CKT 1	717	789	0.17595	112.1901	GEN672392 1-NBECGT1G 18.000
FDNS	00NR	3	20WP	G15_093	FROM->TO	G14-057T 345.00 - SUNNYSIDE 345KV CKT 1	717	789	0.17578	112.1883	GEN334070 1-LEWIS CREEK 1
FDNS	00NR	3	16WP	G15_093	FROM->TO	G14-057T 345.00 - SUNNYSIDE 345KV CKT 1	717	789	0.17603	112.1877	OVEXFRMCCOVE
FDNS	00NR	3	20WP	G15_093	FROM->TO	G14-057T 345.00 - SUNNYSIDE 345KV CKT 1	717	789	0.17686	112.1831	COMANCHE - EMPIRE 138KV CKT 1
FDNS	00NR	3	20WP	G15_093	FROM->TO	G14-057T 345.00 - SUNNYSIDE 345KV CKT 1	717	789	0.17578	112.1813	GEN336251 1-NINEMILE POINT UNIT#4
FDNS	00NR	3	16WP	G15_093	FROM->TO	G14-057T 345.00 - SUNNYSIDE 345KV CKT 1	717	789	0.17595	112.1744	GEN528361 1-MADDOX GEN #1
FDNS	00NR	3	16WP	G15_093	FROM->TO	G14-057T 345.00 - SUNNYSIDE 345KV CKT 1	717	789	0.17597	112.1735	GRPRAR1-LNX3345.00 - HOLT.CO3 345.00 345KV CKT 1
FDNS	00NR	3	16WP	G15_093	FROM->TO	G14-057T 345.00 - SUNNYSIDE 345KV CKT 1	717	789	0.17812	112.1726	P12:138:WFEC:MSL14
FDNS	00NR	3	16WP	G15_093	FROM->TO	G14-057T 345.00 - SUNNYSIDE 345KV CKT 1	717	789	0.17606	112.1714	CANEY CREEK - JOHNSON COUNTY 138KV CKT 1
FDNS	00NR	3	16WP	G15_093	FROM->TO	G14-057T 345.00 - SUNNYSIDE 345KV CKT 1	717	789	0.17595	112.1704	GEN615010 1-STANTON4
FDNS	00NR	3	20WP	G15_093	FROM->TO	G14-057T 345.00 - SUNNYSIDE 345KV CKT 1	717	789	0.17831	112.1703	OIL CENTER - STRATFORD 138KV CKT 1
FDNS	00NR	3	20WP	G15_093	FROM->TO	G14-057T 345.00 - SUNNYSIDE 345KV CKT 1	717	789	0.17577	112.1694	P12:161:AEPW-SWPA:BEAVER5:EROGERS5
FDNS	00NR	3	20WP	G15_093	FROM->TO	G14-057T 345.00 - SUNNYSIDE 345KV CKT 1	717	789	0.17578	112.1647	GEN509392 G2-ARSENAL HILL GENS #3 (STALL)
FDNS	00NR	3	16WP	G15_093	FROM->TO	G14-057T 345.00 - SUNNYSIDE 345KV CKT 1	717	789	0.17595	112.1645	GEN629070 2-BEAVER CHANNEL GENERATORFOR UNIT NO 2
FDNS	00NR	3	20WP	G15_093	FROM->TO	G14-057T 345.00 - SUNNYSIDE 345KV CKT 1	717	789	0.17578	112.1645	GEN509391 G1-ARSENAL HILL GENS #2 (STALL)
FDNS	00NR	3	16WP	G15_093	FROM->TO	G14-057T 345.00 - SUNNYSIDE 345KV CKT 1	717	789	0.17597	112.1628	GRPRAR1-LNX3345.00 - GRPRAR 345KV CKT Z
FDNS	00NR	3	20WP	G15_093	FROM->TO	G14-057T 345.00 - SUNNYSIDE 345KV CKT 1	717	789	0.17578	112.1625	GEN509393 S1-ARSENAL HILL GENS #4 (STALL)
FDNS	00NR	3	16WP	G15_093	FROM->TO	G14-057T 345.00 - SUNNYSIDE 345KV CKT 1	717	789	0.17595	112.155	GEN560183 1-REDHIL-WTG1 12.000
FDNS	00NR	3	16WP	G15_093	FROM->TO	G14-057T 345.00 - SUNNYSIDE 345KV CKT 1	717	789	0.17595	112.1545	GEN515443 1-MNCOWND1 0.7000
FDNS	00NR	3	16WP	G15_093	FROM->TO	G14-057T 345.00 - SUNNYSIDE 345KV CKT 1	717	789	0.17595	112.15	GEN629071 1-BURLINGTON GENERATOR FOR UNIT NO 1 E
FDNS	00NR	3	16WP	G15_093	FROM->TO	G14-057T 345.00 - SUNNYSIDE 345KV CKT 1	717	789	0.17595	112.1499	GEN615021 1-GRE-ER 14G 16.000
FDNS	00NR	3	20WP	G15_093	FROM->TO	G14-057T 345.00 - SUNNYSIDE 345KV CKT 1	717	789	0.1763	112.1481	DUNCAN (DUNCAN) 138/69/13.8KV TRANSFORMER CKT 1
FDNS	00NR	3	20WP	G15_093	FROM->TO	G14-057T 345.00 - SUNNYSIDE 345KV CKT 1	717	789	0.1763	112.1481	DUNCAN (DUNCAN) 138/69/13.8KV TRANSFORMER CKT 1
FDNS	00NR	3	16WP	G15_093	FROM->TO	G14-057T 345.00 - SUNNYSIDE 345KV CKT 1	717	789	0.17575	112.146	CARTER - CHICKASAW 138KV CKT 1
FDNS	00NR	3	16WP	G15_093	FROM->TO	G14-057T 345.00 - SUNNYSIDE 345KV CKT 1	717	789	0.17595	112.1366	INDEPENDENCE 500/26.0KV TRANSFORMER CKT 1
FDNS	00NR	3	16WP	G15_093	FROM->TO	G14-057T 345.00 - SUNNYSIDE 345KV CKT 1	717	789	0.17595	112.1349	GEN562902 1-G15052_3 0.6900
FDNS	00NR	3	16WP	G15_093	FROM->TO	G14-057T 345.00 - SUNNYSIDE 345KV CKT 1	717	789	0.17595	112.1348	GEN563242 1-G15090_3 0.6900
FDNS	00NR	3	16WP	G15_093	FROM->TO	G14-057T 345.00 - SUNNYSIDE 345KV CKT 1	717	789	0.17595	112.1346	BURLINGTON NO1 + NO 2 + NO 3 161/20.0KV TRANSFORMER CKT 1
FDNS	00NR	3	16WP	G15_093	FROM->TO	G14-057T 345.00 - SUNNYSIDE 345KV CKT 1	717	789	0.17534	112.1346	ROCKY POINT - SPRINGDALE 138KV CKT 1
FDNS	00NR	3	16WP	G15_093	FROM->TO	G14-057T 345.00 - SUNNYSIDE 345KV CKT 1	717	789	0.17812	112.134	BEARCAT 138.00 - MOORELAND 138KV CKT 1
FDNS	00NR	3	16WP	G15_093	FROM->TO	G14-057T 345.00 - SUNNYSIDE 345KV CKT 1	717	789	0.17606	112.131	CANADIAN RIVER - MCALESTER SOUTH 138KV CKT 1
FDNS	00NR	3	16WP	G15_093	FROM->TO	G14-057T 345.00 - SUNNYSIDE 345KV CKT 1	717	789	0.17606	112.131	CANADIAN RIVER - MCALESTER SOUTH 138KV CKT 1
FDNS	00NR	3	20WP	G15_093	FROM->TO	G14-057T 345.00 - SUNNYSIDE 345KV CKT 1	717	789	0.17578	112.1307	GEN334433 1-SABINE UNIT 3
FDNS	00NR	3	16WP	G15_093	FROM->TO	G14-057T 345.00 - SUNNYSIDE 345KV CKT 1	717	789	0.17606	112.1297	CANADIAN RIVER () 345/138/13.8KV TRANSFORMER CKT 1
FDNS	00NR	3	16WP	G15_093	FROM->TO	G14-057T 345.00 - SUNNYSIDE 345KV CKT 1	717	789	0.17606	112.1297	CANADIAN RIVER () 345/138/13.8KV TRANSFORMER CKT 1
FDNS	00NR	3	20WP	G15_093	FROM->TO	G14-057T 345.00 - SUNNYSIDE 345KV CKT 1	717	789	0.17578	112.1296	P12:161:AEPW:DYESS5:ELMSPRNG:TONTITN5
FDNS	00NR	3	20WP	G15_093	FROM->TO	G14-057T 345.00 - SUNNYSIDE 345KV CKT 1	717	789	0.17578	112.1167	GEN337653 1-WHITE BLUFF UNIT #2
FDNS	00NR	3	16WP	G15_093	FROM->TO	G14-057T 345.00 - SUNNYSIDE 345KV CKT 1	717	789	0.17603	112.1149	ALTUS JUNCTION - RUSSELL 138KV CKT 1
FDNS	00NR	3	16WP	G15_093	FROM->TO	G14-057T 345.00 - SUNNYSIDE 345KV CKT 1	717	789	0.17603	112.1149	ALTUS JUNCTION - RUSSELL 138KV CKT 1
FDNS	00NR	3	16WP	G15_093	FROM->TO	G14-057T 345.00 - SUNNYSIDE 345KV CKT 1	717	789	0.17582	112.1082	NORTHWEST TEXARKANA - WELSH 345KV CKT 1
FDNS	00NR	3	16WP	G15_093	FROM->TO	G14-057T 345.00 - SUNNYSIDE 345KV CKT 1	717	789	0.17582	112.1082	NORTHWEST TEXARKANA - WELSH 345KV CKT 1
FDNS	00NR	3	20WP	G15_093	FROM->TO	G14-057T 345.00 - SUNNYSIDE 345KV CKT 1	717	789	0.17578	112.1075	GEN336831 1-BAXTER WILSON SES
FDNS	00NR	3	16WP	G15_093	FROM->TO	G14-057T 345.00 - SUNNYSIDE 345KV CKT 1	717	789	0.17595	112.1003	GEN562078 1-G11_051_3 0.6900
FDNS	00NR	3	16WP	G15_093	FROM->TO	G14-057T 345.00 - SUNNYSIDE 345KV CKT 1	717	789	0.17632	112.0975	MINGO - SETAB 345KV CKT 1
FDNS	00NR	3	16WP	G15_093	FROM->TO	G14-057T 345.00 - SUNNYSIDE 345KV CKT 1	717	789	0.17632	112.0975	MINGO - SETAB 345KV CKT 1
FDNS	00NR	3	16WP	G15_093	FROM->TO	G14-057T 345.00 - SUNNYSIDE 345KV CKT 1	717	789	0.17614	112.0928	CHAMBER SPRINGS - CLARKSVILLE 345KV CKT 1
FDNS	00NR	3	16WP	G15_093	FROM->TO	G14-057T 345.00 - SUNNYSIDE 345KV CKT 1	717	789	0.17455	112.0919	JOLLYVILLE - SULPHR 4 138.00 138KV CKT 1
FDNS	00NR	3	16WP	G15_093	FROM->TO	G14-057T 345.00 - SUNNYSIDE 345KV CKT 1	717	789	0.17595	112.0854	P12:230:UMZB:# 112 #: NU IN SD. NU-RCDC & DRY CREEK XFMR
FDNS	00NR	3	16WP	G15_093	FROM->TO	G14-057T 345.00 - SUNNYSIDE 345KV CKT 1	717	789	0.17595	112.0839	RCDC EAST 4230.00 - RED CEDAR DC 230KV CKT 1
FDNS	00NR	3	16WP	G15_093	FROM->TO	G14-057T 345.00 - SUNNYSIDE 345KV CKT 1	717	789	0.17602	112.0816	KEO EHV - WEST MEMPHIS 500 500KV CKT 1
FDNS	00NR	3	20WP	G15_093	FROM->TO	G14-057T 345.00 - SUNNYSIDE 345KV CKT 1	717	789	0.17578	112.0763	GEN334030 1-FRONTIER UNIT 1
FDNS	00NR	3	16WP	G15_093	FROM->TO	G14-057T 345.00 - SUNNYSIDE 345KV CKT 1	717	789	0.17595	112.076	GEN562802 1-G15039_3 0.3570
FDNS	00NR	3	20WP	G15_093	FROM->TO	G14-057T 345.00 - SUNNYSIDE 345KV CKT 1	717	789	0.17578	112.074	GEN334031 1-FRONTIER UNIT 2
FDNS	00NR	3	16WP	G15_093	FROM->TO	G14-057T 345.00 - SUNNYSIDE 345KV CKT 1	717	789	0.17595	112.0707	GEN524285 1-WILDORADO WIND GEN
FDNS	00NR	3	16WP	G15_093	FROM->TO	G14-057T 345.00 - SUNNYSIDE 345KV CKT 1	717	789	0.17595	112.0633	GEN514805 1-SOONER UNIT 1
FDNS	00NR	3	20WP	G15_093	FROM->TO	G14-057T 345.00 - SUNNYSIDE 345KV CKT 1	717	789	0.17578	112.0614	GEN337911 1-ARKANSAS NUCLEAR ONE UNIT #2
FDNS	00NR	3	16WP	G15_093	FROM->TO	G14-057T 345.00 - SUNNYSIDE 345KV CKT 1	717	789	0.17595	112.0546	GEN524295 1-SPNSPUR_WND10.6900
FDNS	00NR	3	16WP	G15_093	FROM->TO	G14-057T 345.00 - SUNNYSIDE 345KV CKT 1	717	789	0.17595	112.0543	GEN514806 1-SOONER UNIT 2
FDNS	00NR	3	20WP	G15_093	FROM->TO	G14-057T 345.00 - SUNNYSIDE 345KV CKT 1	717	789	0.17579	112.0512	P12:138:AEPW:CATOOSA4:T.S.E.-4
FDNS	00NR	3	16WP	G15_093	FROM->TO	G14-057T 345.00 - SUNNYSIDE 345KV CKT 1	717	789	0.17595	112.0426	GEN560331 1-G10-46 13.800
FDNS	00NR	3	16WP	G15_093	FROM->TO	G14-057T 345.00 - SUNNYSIDE 345KV CKT 1	717	789	0.17517	112.0377	ARKANSAS NUCLEAR ONE - FT SMITH 500KV CKT 1
FDNS	00NR	3	16WP	G15_093	FROM->TO	G14-057T 345.00 - SUNNYSIDE 345KV CKT 1	717	789	0.17517	112.0377	ARKANSAS NUCLEAR ONE - FT SMITH 500KV CKT 1
FDNS	00NR	3	20WP	G15_093	FROM->TO	G14-057T 345.00 - SUNNYSIDE 345KV CKT 1	717	789	0.17968	112.026	BLANCHARD - MAUD 138KV CKT 1
FDNS	00NR	3	16WP	G15_093	FROM->TO	G14-057T 345.00 - SUNNYSIDE 345KV CKT 1	717	789	0.17455	112.0245	JOLLYVILLE - KERR MCGEE CIMARRON 138KV CKT 1
FDNS	00NR	3	20WP	G15_093	FROM->TO	G14-057T 345.00 - SUNNYSIDE 345KV CKT 1	717	789	0.17552	112.0213	FULTON 115 - HOPE 115KV CKT 1
FDNS	00NR	3	20WP	G15_093	FROM->TO	G14-057T 345.00 - SUNNYSIDE 345KV CKT 1	717	789	0.17552	112.0213	FULTON 115 - HOPE 115KV CKT 1
FDNS	00NR	3	20WP	G15_093	FROM->TO	G14-057T 345.00 - SUNNYSIDE 345KV CKT 1	717	789	0.17578	112.021	GEN506752 1-LEBROCK GAS 1
FDNS	00NR	3	20WP	G15_093	FROM->TO	G14-057T 345.00 - SUNNYSIDE 345KV CKT 1	717	789	0.17578	112.0206	GEN506753 1-LEBROCK GAS 2
FDNS	00NR	3	16WP	G15_093	FROM->TO	G14-057T 345.00 - SUNNYSIDE 345KV CKT 1	717	789	0.17595	112.0196	GEN562587 1-G14_056_3 0.6900
FDNS	00NR	3	20WP	G15_093	FROM->TO	G14-057T 345.00 - SUNNYSIDE 345KV CKT 1	717	789	0.17578	112.0151	GEN501811 1-RODEMACHER UNIT 1
FDNS	00NR	3	20WP	G15_093	FROM->TO	G14-057T 345.00 - SUNNYSIDE 345KV CKT 1	717	789	0.17578	112.0142	GEN337652 1-WHITE BLUFF UNIT #1
FDNS	00NR	3	16WP	G15_093	FROM->TO	G14-057T 345.00 - SUNNYSIDE 345KV CKT 1	717	789	0.17595	112.0133	GEN562269 1-G12-020-1 0.6900
FDNS	00NR	3	20WP	G15_093	FROM->TO	G14-057T 345.00 - SUNNYSIDE 345KV CKT 1	717	789	0.17655	112.0111	P12:138:AEPW:S.W.S.-4:L.E.S.-4
FDNS	00NR	3	20WP	G15_093	FROM->TO	G14-057T 345.00 - SUNNYSIDE 345KV CKT 1	717	789	0.17578	112.0088	GEN300003 1-THOMAS HILL UNIT 3
FDNS	00NR	3	16WP	G15_093	FROM->TO	G14-057T 345.00 - SUNNYSIDE 345KV CKT 1	717	789	0.17595	112.008	GEN629072 4-LANSING GENERATOR FOR UNITS NO4 EIA CODE 1
FDNS	00NR	3	20WP	G15_093	FROM->TO	G14-057T 345.00 - SUNNYSIDE 345KV CKT 1	717	789	0.17831	111.9975	LATTA JCT - OIL CENTER 138KV CKT 1
FDNS	00NR	3	20WP	G15_093	FROM->TO	G14-057T 345.00 - SUNNYSIDE 345KV CKT 1	717	789	0.17578	111.9962	GEN300015 1-1SGPDEL 18.000

SOLUTION	GROUP	SCENARIO	SEASON	SOURCE	DIRECTION	MONITORED ELEMENT	RATEA (MVA)	RATEB(MVA)	TDF	TC%LOADING (% MVA)	CONTINGENCY
FDNS	00NR	3	20WP	G15_093	FROM->TO	G14-057T 345.00 - SUNNYSIDE 345KV CKT 1	717	789	0.17578	111.9908	GEN515226 1-MUSKOGEE 6G
FDNS	00NR	3	20WP	G15_093	FROM->TO	G14-057T 345.00 - SUNNYSIDE 345KV CKT 1	717	789	0.17703	111.989	P12:138:AEPW:CORNVIL4:DUNCAN-4
FDNS	00NR	3	16WP	G15_093	FROM->TO	G14-057T 345.00 - SUNNYSIDE 345KV CKT 1	717	789	0.17595	111.9885	GEN657749 1-YOUNG 1 GENERATOR
FDNS	00NR	3	16WP	G15_093	FROM->TO	G14-057T 345.00 - SUNNYSIDE 345KV CKT 1	717	789	0.17595	111.9876	GEN562882 1-G15047_3 0.6900
FDNS	00NR	3	20WP	G15_093	FROM->TO	G14-057T 345.00 - SUNNYSIDE 345KV CKT 1	717	789	0.17578	111.9824	GEN336191 1-LITTLE GYPSY UNIT#3
FDNS	00NR	3	16WP	G15_093	FROM->TO	G14-057T 345.00 - SUNNYSIDE 345KV CKT 1	717	789	0.17455	111.9735	ARBWIND4 138.00 - KERR MCGEE CIMARRON 138KV CKT 1
FDNS	00NR	3	16WP	G15_093	FROM->TO	G14-057T 345.00 - SUNNYSIDE 345KV CKT 1	717	789	0.17595	111.9699	GEN562270 1-G12-020-2 0.6900
FDNS	00NR	3	16WP	G15_093	FROM->TO	G14-057T 345.00 - SUNNYSIDE 345KV CKT 1	717	789	0.17842	111.9688	G15063_T 345.00 - MATHWSN7 345.00 345KV CKT 1
FDNS	00NR	3	16WP	G15_093	FROM->TO	G14-057T 345.00 - SUNNYSIDE 345KV CKT 1	717	789	0.17595	111.964	GEN562812 1-G15040_3 0.3570
FDNS	00NR	3	20WP	G15_093	FROM->TO	G14-057T 345.00 - SUNNYSIDE 345KV CKT 1	717	789	0.17559	111.9635	6LAYFLD 230.00 - CARROLL 230KV CKT 1
FDNS	00NR	3	16WP	G15_093	FROM->TO	G14-057T 345.00 - SUNNYSIDE 345KV CKT 1	717	789	0.17595	111.9615	GEN563102 1-G15075_3 0.5500
FDNS	00NR	3	20WP	G15_093	FROM->TO	G14-057T 345.00 - SUNNYSIDE 345KV CKT 1	717	789	0.17613	111.9575	G1524G1525 345.00 - THISTLE7 345.00 345KV CKT 1
FDNS	00NR	3	20WP	G15_093	FROM->TO	G14-057T 345.00 - SUNNYSIDE 345KV CKT 1	717	789	0.17613	111.9575	G1524G1525 345.00 - THISTLE7 345.00 345KV CKT 2
FDNS	00NR	3	16WP	G15_093	FROM->TO	G14-057T 345.00 - SUNNYSIDE 345KV CKT 1	717	789	0.17595	111.9565	GEN562974 1-G15060_5 0.6900
FDNS	00NR	3	20WP	G15_093	FROM->TO	G14-057T 345.00 - SUNNYSIDE 345KV CKT 1	717	789	0.1763	111.9564	P12:69:WFEC-AEPW:COMANCH2:DUNCAN-2
FDNS	00NR	3	20WP	G15_093	FROM->TO	G14-057T 345.00 - SUNNYSIDE 345KV CKT 1	717	789	0.17578	111.9539	GEN335614 1-WILLOW GLENN UNIT#4
FDNS	00NR	3	16WP	G15_093	FROM->TO	G14-057T 345.00 - SUNNYSIDE 345KV CKT 1	717	789	0.17595	111.9538	GEN563132 1-G15078_3 0.3570
FDNS	00NR	3	16WP	G15_093	FROM->TO	G14-057T 345.00 - SUNNYSIDE 345KV CKT 1	717	789	0.17595	111.9476	GEN562973 1-G15060_4 0.6900
FDNS	00NR	3	20WP	G15_093	FROM->TO	G14-057T 345.00 - SUNNYSIDE 345KV CKT 1	717	789	0.17577	111.9476	8DANIEL8 500.00 - MCKNIGHT 500KV CKT 1
FDNS	00NR	3	20WP	G15_093	FROM->TO	G14-057T 345.00 - SUNNYSIDE 345KV CKT 1	717	789	0.17578	111.9452	GEN515040 1-SEMINOLE 1G
FDNS	00NR	3	16WP	G15_093	FROM->TO	G14-057T 345.00 - SUNNYSIDE 345KV CKT 1	717	789	0.17642	111.9451	P12:138:AEPW:112GORE4:SNYDER-4
FDNS	00NR	3	20WP	G15_093	FROM->TO	G14-057T 345.00 - SUNNYSIDE 345KV CKT 1	717	789	0.17688	111.9448	P12:138:AEPW:CORNVIL4:S.W.S.-4
FDNS	00NR	3	16WP	G15_093	FROM->TO	G14-057T 345.00 - SUNNYSIDE 345KV CKT 1	717	789	0.17595	111.9371	GEN563062 1-G15071_3 0.6900
FDNS	00NR	3	20WP	G15_093	FROM->TO	G14-057T 345.00 - SUNNYSIDE 345KV CKT 1	717	789	0.17742	111.9367	G14_038T 345.00 - POTTER COUNTY INTERCHANGE 345KV CKT 1
FDNS	00NR	3	20WP	G15_093	FROM->TO	G14-057T 345.00 - SUNNYSIDE 345KV CKT 1	717	789	0.17765	111.9306	P12:138:AEPW-OGE:WTH_JCT4:JENSEN4
FDNS	00NR	3	20WP	G15_093	FROM->TO	G14-057T 345.00 - SUNNYSIDE 345KV CKT 1	717	789	0.17578	111.9287	P12:161:AEPW:EROGERS5:ECNTRTN5
FDNS	00NR	3	16WP	G15_093	FROM->TO	G14-057T 345.00 - SUNNYSIDE 345KV CKT 1	717	789	0.1776	111.9195	CLARKSVILLE - MUSKOGEE 345KV CKT 1
FDNS	00NR	3	16WP	G15_093	FROM->TO	G14-057T 345.00 - SUNNYSIDE 345KV CKT 1	717	789	0.1776	111.9195	CLARKSVILLE - MUSKOGEE 345KV CKT 1
FDNS	00NR	3	20WP	G15_093	FROM->TO	G14-057T 345.00 - SUNNYSIDE 345KV CKT 1	717	789	0.17851	111.919	TUTTLE - TUTTLE CONOCO TAP 138KV CKT 1
FDNS	00NR	3	20WP	G15_093	FROM->TO	G14-057T 345.00 - SUNNYSIDE 345KV CKT 1	717	789	0.17685	111.9104	FINNEY SWITCHING STATION - HOLCOMB 345KV CKT 1
FDNS	00NR	3	20WP	G15_093	FROM->TO	G14-057T 345.00 - SUNNYSIDE 345KV CKT 1	717	789	0.17685	111.9104	FINNEY SWITCHING STATION - HOLCOMB 345KV CKT 1
FDNS	00NR	3	20WP	G15_093	FROM->TO	G14-057T 345.00 - SUNNYSIDE 345KV CKT 1	717	789	0.17578	111.9081	GEN303007 1-1BC2 U2
FDNS	00NR	3	20WP	G15_093	FROM->TO	G14-057T 345.00 - SUNNYSIDE 345KV CKT 1	717	789	0.17578	111.9079	GEN337910 1-ARKANSAS NUCLEAR ONE UNIT #1
FDNS	00NR	3	20WP	G15_093	FROM->TO	G14-057T 345.00 - SUNNYSIDE 345KV CKT 1	717	789	0.17578	111.9067	WHITE BLUFF 500/26.0KV TRANSFORMER CKT 1
FDNS	00NR	3	20WP	G15_093	FROM->TO	G14-057T 345.00 - SUNNYSIDE 345KV CKT 1	717	789	0.1763	111.9057	DUNCAN - TOSCO 69KV CKT 1
FDNS	00NR	3	20WP	G15_093	FROM->TO	G14-057T 345.00 - SUNNYSIDE 345KV CKT 1	717	789	0.17578	111.9033	GEN336464 1-MICHOUD UNIT #3
FDNS	00NR	3	20WP	G15_093	FROM->TO	G14-057T 345.00 - SUNNYSIDE 345KV CKT 1	717	789	0.17578	111.9023	GEN303006 1-1BC2 U1
FDNS	00NR	3	20WP	G15_093	FROM->TO	G14-057T 345.00 - SUNNYSIDE 345KV CKT 1	717	789	0.17646	111.9021	CIMARRON - CZECH HALL 138KV CKT 1
FDNS	00NR	3	16WP	G15_093	FROM->TO	G14-057T 345.00 - SUNNYSIDE 345KV CKT 1	717	789	0.17471	111.9015	CHICKASAW - TOTAL 138KV CKT 1
FDNS	00NR	3	16WP	G15_093	FROM->TO	G14-057T 345.00 - SUNNYSIDE 345KV CKT 1	717	789	0.17595	111.9	GEN681522 3-GENOA 3
FDNS	00NR	3	20WP	G15_093	FROM->TO	G14-057T 345.00 - SUNNYSIDE 345KV CKT 1	717	789	0.17578	111.8989	GEN562783 1-G15036_4 0.6900
FDNS	00NR	3	20WP	G15_093	FROM->TO	G14-057T 345.00 - SUNNYSIDE 345KV CKT 1	717	789	0.17578	111.8989	GEN562784 1-G15036_5 0.6900
FDNS	00NR	3	20WP	G15_093	FROM->TO	G14-057T 345.00 - SUNNYSIDE 345KV CKT 1	717	789	0.17578	111.8941	GEN515223 1-MUSKOGEE 4G
FDNS	00NR	3	20WP	G15_093	FROM->TO	G14-057T 345.00 - SUNNYSIDE 345KV CKT 1	717	789	0.17578	111.8941	GEN515225 1-MUSKOGEE 5G
FDNS	00NR	3	20WP	G15_093	FROM->TO	G14-057T 345.00 - SUNNYSIDE 345KV CKT 1	717	789	0.17558	111.8903	BISMARK - HOT SPRINGS WEST BUS 115KV CKT 1
FDNS	00NR	3	16WP	G15_093	FROM->TO	G14-057T 345.00 - SUNNYSIDE 345KV CKT 1	717	789	0.17565	111.887	BROWN - RUSSETT 138KV CKT 1
FDNS	00NR	3	20WP	G15_093	FROM->TO	G14-057T 345.00 - SUNNYSIDE 345KV CKT 1	717	789	0.17617	111.8865	P12:69:AEPW-OMPA:COMANC-2:OMWALTR2
FDNS	00NR	3	20WP	G15_093	FROM->TO	G14-057T 345.00 - SUNNYSIDE 345KV CKT 1	717	789	0.17578	111.8863	RODEMACHER 230/22.0KV TRANSFORMER CKT 1
FDNS	00NR	3	20WP	G15_093	FROM->TO	G14-057T 345.00 - SUNNYSIDE 345KV CKT 1	717	789	0.17568	111.8863	MC NIEL 500/115KV TRANSFORMER CKT 1
FDNS	00NR	3	16WP	G15_093	FROM->TO	G14-057T 345.00 - SUNNYSIDE 345KV CKT 1	717	789	0.17595	111.876	GEN526331 1-JONES GEN #1 22 KV
FDNS	00NR	3	16WP	G15_093	FROM->TO	G14-057T 345.00 - SUNNYSIDE 345KV CKT 1	717	789	0.17595	111.8759	GEN526332 1-JONES GEN #2 21 KV
FDNS	00NR	3	20WP	G15_093	FROM->TO	G14-057T 345.00 - SUNNYSIDE 345KV CKT 1	717	789	0.17584	111.8745	G15088_T 345.00 - MOORE 345KV CKT 1
FDNS	00NR	3	20WP	G15_093	FROM->TO	G14-057T 345.00 - SUNNYSIDE 345KV CKT 1	717	789	0.17568	111.8706	HOT SPRINGS EHV - MAGNET COVE 500KV CKT 1
FDNS	00NR	3	20WP	G15_093	FROM->TO	G14-057T 345.00 - SUNNYSIDE 345KV CKT 1	717	789	0.17578	111.8701	GEN300010 1-ST FRANCIS UNIT 1
FDNS	00NR	3	16WP	G15_093	FROM->TO	G14-057T 345.00 - SUNNYSIDE 345KV CKT 1	717	789	0.17559	111.87	RUSSETT - SPRINGDALE 138KV CKT 1
FDNS	00NR	3	20WP	G15_093	FROM->TO	G14-057T 345.00 - SUNNYSIDE 345KV CKT 1	717	789	0.17688	111.8695	P12:138:AEPW:WTHWF4:CLINTJC4
FDNS	00NR	3	20WP	G15_093	FROM->TO	G14-057T 345.00 - SUNNYSIDE 345KV CKT 1	717	789	0.17706	111.8682	CHISHOLM6 230.00 - ELK CITY 230KV 230KV CKT 1
FDNS	00NR	3	20WP	G15_093	FROM->TO	G14-057T 345.00 - SUNNYSIDE 345KV CKT 1	717	789	0.17706	111.8675	ELK CITY 230KV (ELKCTY-6) 230/138/13.8KV TRANSFORMER CKT 1
FDNS	00NR	3	20WP	G15_093	FROM->TO	G14-057T 345.00 - SUNNYSIDE 345KV CKT 1	717	789	0.17706	111.8675	ELK CITY 230KV (ELKCTY-6) 230/138/13.8KV TRANSFORMER CKT 1
FDNS	00NR	3	16WP	G15_093	FROM->TO	G14-057T 345.00 - SUNNYSIDE 345KV CKT 1	717	789	0.17595	111.8657	GEN560105 1-G08-22 0.6900
FDNS	00NR	3	16WP	G15_093	FROM->TO	G14-057T 345.00 - SUNNYSIDE 345KV CKT 1	717	789	0.17595	111.8633	GEN562550 1-G14_040_3 0.6900
FDNS	00NR	3	20WP	G15_093	FROM->TO	G14-057T 345.00 - SUNNYSIDE 345KV CKT 1	717	789	0.17626	111.8624	CIMARRON - SARA 138KV CKT 1
FDNS	00NR	3	20WP	G15_093	FROM->TO	G14-057T 345.00 - SUNNYSIDE 345KV CKT 1	717	789	0.17988	111.8621	BAILEY4 138.00 - SUNSHINE CANYON 138KV CKT 1
FDNS	00NR	3	20WP	G15_093	FROM->TO	G14-057T 345.00 - SUNNYSIDE 345KV CKT 1	717	789	0.1763	111.8602	COMANCHE TAP - TOSCO 69KV CKT 1
FDNS	00NR	3	16WP	G15_093	FROM->TO	G14-057T 345.00 - SUNNYSIDE 345KV CKT 1	717	789	0.17595	111.8567	GEN345671 2-1RUSH G2 18.000
FDNS	00NR	3	20WP	G15_093	FROM->TO	G14-057T 345.00 - SUNNYSIDE 345KV CKT 1	717	789	0.17603	111.8552	BUCKNER7 345.00 - SPEARVILLE 345KV CKT 1
FDNS	00NR	3	20WP	G15_093	FROM->TO	G14-057T 345.00 - SUNNYSIDE 345KV CKT 1	717	789	0.17603	111.8552	BUCKNER7 345.00 - SPEARVILLE 345KV CKT 1
FDNS	00NR	3	16WP	G15_093	FROM->TO	G14-057T 345.00 - SUNNYSIDE 345KV CKT 1	717	789	0.17595	111.8549	GEN345670 1-1RUSH G1 18.000
FDNS	00NR	3	20WP	G15_093	FROM->TO	G14-057T 345.00 - SUNNYSIDE 345KV CKT 1	717	789	0.17585	111.85	G15074_T 345.00 - HOYT 345KV CKT 1
FDNS	00NR	3	20WP	G15_093	FROM->TO	G14-057T 345.00 - SUNNYSIDE 345KV CKT 1	717	789	0.17578	111.847	GEN337041 1-GERALD ANDRUS
FDNS	00NR	3	16WP	G15_093	FROM->TO	G14-057T 345.00 - SUNNYSIDE 345KV CKT 1	717	789	0.17512	111.8445	ROCKY POINT - SUNNYSIDE 138KV CKT 1
FDNS	00NR	3	20WP	G15_093	FROM->TO	G14-057T 345.00 - SUNNYSIDE 345KV CKT 1	717	789	0.17578	111.8445	GEN505432 1-SIKESTON
FDNS	00NR	3	20WP	G15_093	FROM->TO	G14-057T 345.00 - SUNNYSIDE 345KV CKT 1	717	789	0.17442	111.8443	SEMINOLE - VANOSTP4 138.00 138KV CKT 1
FDNS	00NR	3	16WP	G15_093	FROM->TO	G14-057T 345.00 - SUNNYSIDE 345KV CKT 1	717	789	0.17591	111.8418	P12:138:WFEC:MSL07
FDNS	00NR	3	16WP	G15_093	FROM->TO	G14-057T 345.00 - SUNNYSIDE 345KV CKT 1	717	789	0.17591	111.8418	P12:138:WFEC-AEPW:HUGOPP4:ATOKA--4
FDNS	00NR	3	20WP	G15_093	FROM->TO	G14-057T 345.00 - SUNNYSIDE 345KV CKT 1	717	789	0.17578	111.8414	GEN303008 1-1BC2 U3
FDNS	00NR	3	20WP	G15_093	FROM->TO	G14-057T 345.00 - SUNNYSIDE 345KV CKT 1	717	789	0.17851	111.8396	CIMARRON - TUTTLE CONOCO TAP 138KV CKT 1
FDNS	00NR	3	16WP	G15_093	FROM->TO	G14-057T 345.00 - SUNNYSIDE 345KV CKT 1	717	789	0.17595	111.8382	4SIOUX 1 138.00 138/18.0KV TRANSFORMER CKT 1
FDNS	00NR	3	20WP	G15_093	FROM->TO	G14-057T 345.00 - SUNNYSIDE 345KV CKT 1	717	789	0.17558	111.8363	ALPINE AECC - BISMARK 115KV CKT 1

SOLUTION	GROUP	SCENARIO	SEASON	SOURCE	DIRECTION	MONITORED ELEMENT	RATEA (MVA)	RATEB(MVA)	TDF	TC%LOADING (% MVA)	CONTINGENCY
FDNS	00NR	3	20WP	G15_093	FROM->TO	G14-057T 345.00 - SUNNYSIDE 345KV CKT 1	717	789	0.17437	111.834	ARBWIND4 138.00 - CARTER 138KV CKT 1
FDNS	00NR	3	20WP	G15_093	FROM->TO	G14-057T 345.00 - SUNNYSIDE 345KV CKT 1	717	789	0.17688	111.8304	P12:138:AEPW:WTHWF4:WTH_SE4
FDNS	00NR	3	20WP	G15_093	FROM->TO	G14-057T 345.00 - SUNNYSIDE 345KV CKT 1	717	789	0.17579	111.8279	P12:138:AEPW:N.E.S.-4:CATOOSA4
FDNS	00NR	3	20WP	G15_093	FROM->TO	G14-057T 345.00 - SUNNYSIDE 345KV CKT 1	717	789	0.17646	111.8273	CZECH HALL - XEROX 138KV CKT 1
FDNS	00NR	3	16WP	G15_093	FROM->TO	G14-057T 345.00 - SUNNYSIDE 345KV CKT 1	717	789	0.17595	111.8246	GEN511962 2-RKYRDGW2-1 0.7000
FDNS	00NR	3	20WP	G15_093	FROM->TO	G14-057T 345.00 - SUNNYSIDE 345KV CKT 1	717	789	0.17646	111.8232	MORGAN - XEROX 138KV CKT 1
FDNS	00NR	3	16WP	G15_093	FROM->TO	G14-057T 345.00 - SUNNYSIDE 345KV CKT 1	717	789	0.17565	111.8183	RUSSETT - RUSSETT 138KV CKT 1
FDNS	00NR	3	16WP	G15_093	FROM->TO	G14-057T 345.00 - SUNNYSIDE 345KV CKT 1	717	789	0.17595	111.8177	GEN527882 1-CUNNINGHAM GEN #2 20 KV
FDNS	00NR	3	20WP	G15_093	FROM->TO	G14-057T 345.00 - SUNNYSIDE 345KV CKT 1	717	789	0.17578	111.8171	NELSON 230/20.0KV TRANSFORMER CKT 1
FDNS	00NR	3	20WP	G15_093	FROM->TO	G14-057T 345.00 - SUNNYSIDE 345KV CKT 1	717	789	0.17578	111.8136	GEN300011 1-ST FRANCIS UNIT 2
FDNS	00NR	3	20WP	G15_093	FROM->TO	G14-057T 345.00 - SUNNYSIDE 345KV CKT 1	717	789	0.17578	111.8124	GEN336170 1-GULF OXY U4
FDNS	00NR	3	20WP	G15_093	FROM->TO	G14-057T 345.00 - SUNNYSIDE 345KV CKT 1	717	789	0.18245	111.8108	GRACEMONT (BANK 1) 345/138/13.8KV TRANSFORMER CKT 1
FDNS	00NR	3	16WP	G15_093	FROM->TO	G14-057T 345.00 - SUNNYSIDE 345KV CKT 1	717	789	0.17595	111.8089	CLAY BOSWELL 230/20.9KV TRANSFORMER CKT 1
FDNS	00NR	3	20WP	G15_093	FROM->TO	G14-057T 345.00 - SUNNYSIDE 345KV CKT 1	717	789	0.17596	111.8014	G15095_T 138.00 - ROSE_VALLEY 138.00 138KV CKT 1
FDNS	00NR	3	20WP	G15_093	FROM->TO	G14-057T 345.00 - SUNNYSIDE 345KV CKT 1	717	789	0.17646	111.801	MORGAN - MUSTANG 138KV CKT 1
FDNS	00NR	3	16WP	G15_093	FROM->TO	G14-057T 345.00 - SUNNYSIDE 345KV CKT 1	717	789	0.17595	111.7989	GEN521112 1-ORME3 13.800
FDNS	00NR	3	16WP	G15_093	FROM->TO	G14-057T 345.00 - SUNNYSIDE 345KV CKT 1	717	789	0.17595	111.7937	GEN563192 1-G15084_3 0.5500
FDNS	00NR	3	20WP	G15_093	FROM->TO	G14-057T 345.00 - SUNNYSIDE 345KV CKT 1	717	789	0.17578	111.7932	GEN336801 1-BAXTER WILSON UNIT #1
FDNS	00NR	3	16WP	G15_093	FROM->TO	G14-057T 345.00 - SUNNYSIDE 345KV CKT 1	717	789	0.17611	111.7906	P12:138:WFEC:MSL16
FDNS	00NR	3	16WP	G15_093	FROM->TO	G14-057T 345.00 - SUNNYSIDE 345KV CKT 1	717	789	0.17412	111.7903	ARDMORE WEST - CARTER 138KV CKT 1
FDNS	00NR	3	20WP	G15_093	FROM->TO	G14-057T 345.00 - SUNNYSIDE 345KV CKT 1	717	789	0.17558	111.7887	ALPINE AECC - AMITY SS 115KV CKT 1
FDNS	00NR	3	20WP	G15_093	FROM->TO	G14-057T 345.00 - SUNNYSIDE 345KV CKT 1	717	789	0.1763	111.7828	COMANCHE - COMANCHE TAP 69KV CKT 1
FDNS	00NR	3	16WP	G15_093	FROM->TO	G14-057T 345.00 - SUNNYSIDE 345KV CKT 1	717	789	0.17595	111.7721	GEN562892 1-G15048_3 0.6900
FDNS	00NR	3	16WP	G15_093	FROM->TO	G14-057T 345.00 - SUNNYSIDE 345KV CKT 1	717	789	0.17595	111.7673	GEN520811 1-ANADRK4
FDNS	00NR	3	20WP	G15_093	FROM->TO	G14-057T 345.00 - SUNNYSIDE 345KV CKT 1	717	789	0.17578	111.7665	8CAJUN2 500/24.0KV TRANSFORMER CKT 1
FDNS	00NR	3	20WP	G15_093	FROM->TO	G14-057T 345.00 - SUNNYSIDE 345KV CKT 1	717	789	0.17578	111.7649	GEN501910 1-ACADIA UNIT ST1
FDNS	00NR	3	16WP	G15_093	FROM->TO	G14-057T 345.00 - SUNNYSIDE 345KV CKT 1	717	789	0.17595	111.7579	GEN672321 1-SHAND GENERATOR 1
FDNS	00NR	3	20WP	G15_093	FROM->TO	G14-057T 345.00 - SUNNYSIDE 345KV CKT 1	717	789	0.17626	111.7535	SARA - STHLAKE4 138.00 138KV CKT 1
FDNS	00NR	3	16WP	G15_093	FROM->TO	G14-057T 345.00 - SUNNYSIDE 345KV CKT 1	717	789	0.17416	111.7506	SUNNYSIDE (SUNNYSD5) 345/138/13.8KV TRANSFORMER CKT 1
FDNS	00NR	3	16WP	G15_093	FROM->TO	G14-057T 345.00 - SUNNYSIDE 345KV CKT 1	717	789	0.17582	111.7436	P12:138:WFEC-AEPW:GOLDENSW4:CRAIGJT4
FDNS	00NR	3	16WP	G15_093	FROM->TO	G14-057T 345.00 - SUNNYSIDE 345KV CKT 1	717	789	0.17595	111.7409	GEN562512 1-G14_020_3 0.6900
FDNS	00NR	3	20WP	G15_093	FROM->TO	G14-057T 345.00 - SUNNYSIDE 345KV CKT 1	717	789	0.17578	111.7346	P12:138:AEPW:R.S.S.-4:S.HUD.-4
FDNS	00NR	3	16WP	G15_093	FROM->TO	G14-057T 345.00 - SUNNYSIDE 345KV CKT 1	717	789	0.17595	111.7343	GEN672310 1-POPLAR RIVER GENERATOR 1
FDNS	00NR	3	20WP	G15_093	FROM->TO	G14-057T 345.00 - SUNNYSIDE 345KV CKT 1	717	789	0.17596	111.7343	NOEL_SW 138.00 - ROSE_VALLEY 138.00 138KV CKT 1
FDNS	00NR	3	16WP	G15_093	FROM->TO	G14-057T 345.00 - SUNNYSIDE 345KV CKT 1	717	789	0.17595	111.7342	GEN672311 2-POPLAR RIVER GENERATOR 2
FDNS	00NR	3	16WP	G15_093	FROM->TO	G14-057T 345.00 - SUNNYSIDE 345KV CKT 1	717	789	0.17595	111.7315	GEN523461 1-BLACKHAWK GEN #1
FDNS	00NR	3	16WP	G15_093	FROM->TO	G14-057T 345.00 - SUNNYSIDE 345KV CKT 1	717	789	0.17595	111.7314	GEN523462 1-BLACKHAWK GEN #2
FDNS	00NR	3	20WP	G15_093	FROM->TO	G14-057T 345.00 - SUNNYSIDE 345KV CKT 1	717	789	0.17578	111.7283	SABINE 230/24.0KV TRANSFORMER CKT 1
FDNS	00NR	3	20WP	G15_093	FROM->TO	G14-057T 345.00 - SUNNYSIDE 345KV CKT 1	717	789	0.17567	111.7263	ETTA (DUKE HOTSPRINGS) - MC NIEL 500KV CKT 1
FDNS	00NR	3	16WP	G15_093	FROM->TO	G14-057T 345.00 - SUNNYSIDE 345KV CKT 1	717	789	0.17595	111.7262	GEN672306 6-BOUNDARY DAM GENERATOR 6
FDNS	00NR	3	20WP	G15_093	FROM->TO	G14-057T 345.00 - SUNNYSIDE 345KV CKT 1	717	789	0.17626	111.7241	MCCLAIN - STHLAKE4 138.00 138KV CKT 1
FDNS	00NR	3	20WP	G15_093	FROM->TO	G14-057T 345.00 - SUNNYSIDE 345KV CKT 1	717	789	0.17632	111.7215	WALTERS - WALTERS 69KV CKT 1
FDNS	00NR	3	20WP	G15_093	FROM->TO	G14-057T 345.00 - SUNNYSIDE 345KV CKT 1	717	789	0.17578	111.7206	GEN300016 1-1G1GPDEL 18.000
FDNS	00NR	3	20WP	G15_093	FROM->TO	G14-057T 345.00 - SUNNYSIDE 345KV CKT 1	717	789	0.17831	111.7186	LASALLE - LATTA JCT 138KV CKT 1
FDNS	00NR	3	20WP	G15_093	FROM->TO	G14-057T 345.00 - SUNNYSIDE 345KV CKT 1	717	789	0.17648	111.7178	LAWTON EASTSIDE (LES 4) 345/138/13.8KV TRANSFORMER CKT 1
FDNS	00NR	3	20WP	G15_093	FROM->TO	G14-057T 345.00 - SUNNYSIDE 345KV CKT 1	717	789	0.17648	111.7178	LAWTON EASTSIDE (LES 4) 345/138/13.8KV TRANSFORMER CKT 1
FDNS	00NR	3	20WP	G15_093	FROM->TO	G14-057T 345.00 - SUNNYSIDE 345KV CKT 1	717	789	0.17578	111.7104	GEN336222 1-LITTLE GYPSY UNIT#2
FDNS	00NR	3	20WP	G15_093	FROM->TO	G14-057T 345.00 - SUNNYSIDE 345KV CKT 1	717	789	0.17578	111.7036	P12:69:AEPW:NROGERS2:ECNTRTN2
FDNS	00NR	3	20WP	G15_093	FROM->TO	G14-057T 345.00 - SUNNYSIDE 345KV CKT 1	717	789	0.17719	111.7013	ANADARKO - SEQUOYAHJ4 138.00 138KV CKT 1
FDNS	00NR	3	20WP	G15_093	FROM->TO	G14-057T 345.00 - SUNNYSIDE 345KV CKT 1	717	789	0.17617	111.7011	LAWTON RELIFT TAP - OMPA-WALTERS 69KV CKT 1
FDNS	00NR	3	20WP	G15_093	FROM->TO	G14-057T 345.00 - SUNNYSIDE 345KV CKT 1	717	789	0.17719	111.6985	CORN TAP - SEQUOYAHJ4 138.00 138KV CKT 1
FDNS	00NR	3	16WP	G15_093	FROM->TO	G14-057T 345.00 - SUNNYSIDE 345KV CKT 1	717	789	0.17595	111.6964	GEN344895 2-1LAB G2 20.000
FDNS	00NR	3	20WP	G15_093	FROM->TO	G14-057T 345.00 - SUNNYSIDE 345KV CKT 1	717	789	0.17578	111.6938	P12:138:AEPW:BA_71ST4:T.S.E.-4
FDNS	00NR	3	20WP	G15_093	FROM->TO	G14-057T 345.00 - SUNNYSIDE 345KV CKT 1	717	789	0.17578	111.6885	P12:138:AEPW:YARCH-S4:T.S.E.-4
FDNS	00NR	3	20WP	G15_093	FROM->TO	G14-057T 345.00 - SUNNYSIDE 345KV CKT 1	717	789	0.17988	111.6873	BAILEY4 138.00 - WESTMOORE 138KV CKT 1
FDNS	00NR	3	20WP	G15_093	FROM->TO	G14-057T 345.00 - SUNNYSIDE 345KV CKT 1	717	789	0.17678	111.6872	CANADIAN - NOBLE 138KV CKT 1
FDNS	00NR	3	20WP	G15_093	FROM->TO	G14-057T 345.00 - SUNNYSIDE 345KV CKT 1	717	789	0.17765	111.6867	WEATHERFORD JCT. - WEATHERFORD SOUTHEAST 138KV CKT 1
FDNS	00NR	3	20WP	G15_093	FROM->TO	G14-057T 345.00 - SUNNYSIDE 345KV CKT 1	717	789	0.17765	111.6867	WEATHERFORD JCT. - WEATHERFORD SOUTHEAST 138KV CKT 1
FDNS	00NR	3	20WP	G15_093	FROM->TO	G14-057T 345.00 - SUNNYSIDE 345KV CKT 1	717	789	0.1758	111.6785	P12:138:AEPW-OGE:SHIDLER4:OSAGE 4
FDNS	00NR	3	20WP	G15_093	FROM->TO	G14-057T 345.00 - SUNNYSIDE 345KV CKT 1	717	789	0.17577	111.6766	7JASPER 345.00 - BLACKBERRY 345KV CKT 1
FDNS	00NR	3	20WP	G15_093	FROM->TO	G14-057T 345.00 - SUNNYSIDE 345KV CKT 1	717	789	0.17578	111.6762	GEN336152 1-WATERFORD UNIT#2
FDNS	00NR	3	16WP	G15_093	FROM->TO	G14-057T 345.00 - SUNNYSIDE 345KV CKT 1	717	789	0.17412	111.6754	ARDMORE WEST - UNIROYAL 138KV CKT 1
FDNS	00NR	3	20WP	G15_093	FROM->TO	G14-057T 345.00 - SUNNYSIDE 345KV CKT 1	717	789	0.17578	111.6754	GEN336151 1-WATERFORD UNIT#1
FDNS	00NR	3	16WP	G15_093	FROM->TO	G14-057T 345.00 - SUNNYSIDE 345KV CKT 1	717	789	0.17595	111.6717	GEN511853 1-COMANCHE #3
FDNS	00NR	3	16WP	G15_093	FROM->TO	G14-057T 345.00 - SUNNYSIDE 345KV CKT 1	717	789	0.17586	111.6662	P12:138:AEPW-SWPA:LONEOAK4:TUPELO4
FDNS	00NR	3	16WP	G15_093	FROM->TO	G14-057T 345.00 - SUNNYSIDE 345KV CKT 1	717	789	0.17586	111.6662	P12:138:WFEC:MSL06
FDNS	00NR	3	16WP	G15_093	FROM->TO	G14-057T 345.00 - SUNNYSIDE 345KV CKT 1	717	789	0.17595	111.6643	GEN344896 3-1LAB G3 20.000
FDNS	00NR	3	20WP	G15_093	FROM->TO	G14-057T 345.00 - SUNNYSIDE 345KV CKT 1	717	789	0.17578	111.6636	FRONTIER 345/18.0KV TRANSFORMER CKT 1
FDNS	00NR	3	20WP	G15_093	FROM->TO	G14-057T 345.00 - SUNNYSIDE 345KV CKT 1	717	789	0.17696	111.6632	NORGE ROAD - SOUTHWESTERN STATION 138KV CKT 1
FDNS	00NR	3	20WP	G15_093	FROM->TO	G14-057T 345.00 - SUNNYSIDE 345KV CKT 1	717	789	0.17696	111.6632	NORGE ROAD - SOUTHWESTERN STATION 138KV CKT 1
FDNS	00NR	3	16WP	G15_093	FROM->TO	G14-057T 345.00 - SUNNYSIDE 345KV CKT 1	717	789	0.17595	111.663	GEN344894 1-1LAB G1 20.000
FDNS	00NR	3	20WP	G15_093	FROM->TO	G14-057T 345.00 - SUNNYSIDE 345KV CKT 1	717	789	0.17578	111.6629	GEN300017 1-1G2GPDEL 18.000
FDNS	00NR	3	16WP	G15_093	FROM->TO	G14-057T 345.00 - SUNNYSIDE 345KV CKT 1	717	789	0.17595	111.6622	GEN563162 1-G15081_3 0.6900
FDNS	00NR	3	16WP	G15_093	FROM->TO	G14-057T 345.00 - SUNNYSIDE 345KV CKT 1	717	789	0.17595	111.6615	GEN344897 4-1LAB G4 20.000
FDNS	00NR	3	20WP	G15_093	FROM->TO	G14-057T 345.00 - SUNNYSIDE 345KV CKT 1	717	789	0.17578	111.6613	FRONTIER 345/18.0KV TRANSFORMER CKT 1
FDNS	00NR	3	20WP	G15_093	FROM->TO	G14-057T 345.00 - SUNNYSIDE 345KV CKT 1	717	789	0.17634	111.6592	P12:138:OKGE-AEPW:JENSEN4:REDROCKRD4
FDNS	00NR	3	20WP	G15_093	FROM->TO	G14-057T 345.00 - SUNNYSIDE 345KV CKT 1	717	789	0.1769	111.6575	P12:138:OKGE:3TERM27
FDNS	00NR	3	16WP	G15_093	FROM->TO	G14-057T 345.00 - SUNNYSIDE 345KV CKT 1	717	789	0.17452	111.656	CARTRCO4 138.00 - RATLIFF 138KV CKT 1
FDNS	00NR	3	20WP	G15_093	FROM->TO	G14-057T 345.00 - SUNNYSIDE 345KV CKT 1	717	789	0.17685	111.6547	FINNEY SWITCHING STATION - WALKTAP7 345.00 345KV CKT 1

SOLUTION	GROUP	SCENARIO	SEASON	SOURCE	DIRECTION	MONITORED ELEMENT	RATEA (MVA)	RATEB(MVA)	TDF	TC%LOADING (% MVA)	CONTINGENCY
FDNS	00NR	3	20WP	G15_093	FROM->TO	G14-057T 345.00 - SUNNYSIDE 345KV CKT 1	717	789	0.17685	111.6547	FINNEY SWITCHING STATION - WALKTAP7 345.00 345KV CKT 1
FDNS	00NR	3	20WP	G15_093	FROM->TO	G14-057T 345.00 - SUNNYSIDE 345KV CKT 1	717	789	0.17552	111.6543	HOPE - MCNAB REC 115KV CKT 1
FDNS	00NR	3	20WP	G15_093	FROM->TO	G14-057T 345.00 - SUNNYSIDE 345KV CKT 1	717	789	0.17765	111.6513	P12:138:AEPW:REDROCKRD4:WTH_JCT4
FDNS	00NR	3	20WP	G15_093	FROM->TO	G14-057T 345.00 - SUNNYSIDE 345KV CKT 1	717	789	0.17563	111.6507	MORISNT4 138.00 - STILLWATER 138KV CKT 1
FDNS	00NR	3	16WP	G15_093	FROM->TO	G14-057T 345.00 - SUNNYSIDE 345KV CKT 1	717	789	0.1752	111.6475	P12:138:OKGE:3TERM40
FDNS	00NR	3	20WP	G15_093	FROM->TO	G14-057T 345.00 - SUNNYSIDE 345KV CKT 1	717	789	0.17565	111.6449	P12:138:OKGE:3TERM2
FDNS	00NR	3	20WP	G15_093	FROM->TO	G14-057T 345.00 - SUNNYSIDE 345KV CKT 1	717	789	0.176	111.6448	CLEO CORNER - CLEOPLT4 138.00 138KV CKT 1
FDNS	00NR	3	20WP	G15_093	FROM->TO	G14-057T 345.00 - SUNNYSIDE 345KV CKT 1	717	789	0.17552	111.6444	P12:115:AEPW:TURK3:HOPE3
FDNS	00NR	3	20WP	G15_093	FROM->TO	G14-057T 345.00 - SUNNYSIDE 345KV CKT 1	717	789	0.17563	111.6427	COUCH SES - MC NIEL 115KV CKT 1
FDNS	00NR	3	20WP	G15_093	FROM->TO	G14-057T 345.00 - SUNNYSIDE 345KV CKT 1	717	789	0.17585	111.6425	HOYT - STRANGER CREEK 345KV CKT 1
FDNS	00NR	3	20WP	G15_093	FROM->TO	G14-057T 345.00 - SUNNYSIDE 345KV CKT 1	717	789	0.17578	111.6414	GEN334432 1-SABINE UNIT 2
FDNS	00NR	3	16WP	G15_093	FROM->TO	G14-057T 345.00 - SUNNYSIDE 345KV CKT 1	717	789	0.17595	111.6412	GEN562699 1-G15_018_3 0.6900
FDNS	00NR	3	20WP	G15_093	FROM->TO	G14-057T 345.00 - SUNNYSIDE 345KV CKT 1	717	789	0.17578	111.6412	GEN334431 1-SABINE UNIT 1
FDNS	00NR	3	20WP	G15_093	FROM->TO	G14-057T 345.00 - SUNNYSIDE 345KV CKT 1	717	789	0.17576	111.6399	CYPRESS - HARTBURG 500KV CKT 1
FDNS	00NR	3	20WP	G15_093	FROM->TO	G14-057T 345.00 - SUNNYSIDE 345KV CKT 1	717	789	0.17851	111.6398	DRAPER LAKE - SEMINOLE 345KV CKT 1
FDNS	00NR	3	20WP	G15_093	FROM->TO	G14-057T 345.00 - SUNNYSIDE 345KV CKT 1	717	789	0.17851	111.6398	DRAPER LAKE - SEMINOLE 345KV CKT 2
FDNS	00NR	3	16WP	G15_093	FROM->TO	G14-057T 345.00 - SUNNYSIDE 345KV CKT 1	717	789	0.17595	111.6389	GEN511852 1-COMANCHE #2
FDNS	00NR	3	20WP	G15_093	FROM->TO	G14-057T 345.00 - SUNNYSIDE 345KV CKT 1	717	789	0.17352	111.6383	ARBUCKLE - VANOSTP4 138.00 138KV CKT 1
FDNS	00NR	3	20WP	G15_093	FROM->TO	G14-057T 345.00 - SUNNYSIDE 345KV CKT 1	717	789	0.17578	111.6369	GEN501823 1-TECHE UNIT 3
FDNS	00NR	3	20WP	G15_093	FROM->TO	G14-057T 345.00 - SUNNYSIDE 345KV CKT 1	717	789	0.17578	111.635	GEN501970 1-EVANGELINE UNIT 7
FDNS	00NR	3	20WP	G15_093	FROM->TO	G14-057T 345.00 - SUNNYSIDE 345KV CKT 1	717	789	0.17617	111.6342	OMPA-WALTERS - WALTERS 69KV CKT 1
FDNS	00NR	3	20WP	G15_093	FROM->TO	G14-057T 345.00 - SUNNYSIDE 345KV CKT 1	717	789	0.17617	111.6342	OMPA-WALTERS - WALTERS 69KV CKT 1
FDNS	00NR	3	20WP	G15_093	FROM->TO	G14-057T 345.00 - SUNNYSIDE 345KV CKT 1	717	789	0.17578	111.6333	LEWIS CREEK SWITCHYARD 138/22.0KV TRANSFORMER CKT 1
FDNS	00NR	3	20WP	G15_093	FROM->TO	G14-057T 345.00 - SUNNYSIDE 345KV CKT 1	717	789	0.17593	111.6323	EMPORIA ENERGY CENTER - G14_001T 345.00 345KV CKT 1
FDNS	00NR	3	20WP	G15_093	FROM->TO	G14-057T 345.00 - SUNNYSIDE 345KV CKT 1	717	789	0.17592	111.6296	BLACKBERRY - NEOSHO 345KV CKT 1
FDNS	00NR	3	20WP	G15_093	FROM->TO	G14-057T 345.00 - SUNNYSIDE 345KV CKT 1	717	789	0.17578	111.6288	LEWIS CREEK SWITCHYARD 138/22.0KV TRANSFORMER CKT 1
FDNS	00NR	3	20WP	G15_093	FROM->TO	G14-057T 345.00 - SUNNYSIDE 345KV CKT 1	717	789	0.17826	111.6282	G15063_T 345.00 - WOODRING 345KV CKT 1
FDNS	00NR	3	20WP	G15_093	FROM->TO	G14-057T 345.00 - SUNNYSIDE 345KV CKT 1	717	789	0.176	111.6279	CLEOPLT4 138.00 - MEN TAP 138KV CKT 1
FDNS	00NR	3	16WP	G15_093	FROM->TO	G14-057T 345.00 - SUNNYSIDE 345KV CKT 1	717	789	0.17595	111.6238	GEN521110 1-ORME1 13.800
FDNS	00NR	3	16WP	G15_093	FROM->TO	G14-057T 345.00 - SUNNYSIDE 345KV CKT 1	717	789	0.17595	111.6238	GEN521111 1-ORME2 13.800
FDNS	00NR	3	16WP	G15_093	FROM->TO	G14-057T 345.00 - SUNNYSIDE 345KV CKT 1	717	789	0.17595	111.6195	GEN563292 1-G15095_3 0.6900
FDNS	00NR	3	20WP	G15_093	FROM->TO	G14-057T 345.00 - SUNNYSIDE 345KV CKT 1	717	789	0.17552	111.6188	TURK (TURK 1) 138/115/13.2KV TRANSFORMER CKT 1
FDNS	00NR	3	20WP	G15_093	FROM->TO	G14-057T 345.00 - SUNNYSIDE 345KV CKT 1	717	789	0.17552	111.6188	TURK (TURK 1) 138/115/13.2KV TRANSFORMER CKT 1
FDNS	00NR	3	20WP	G15_093	FROM->TO	G14-057T 345.00 - SUNNYSIDE 345KV CKT 1	717	789	0.17552	111.6187	MCNAB REC - Turk 115 115KV CKT 1
FDNS	00NR	3	20WP	G15_093	FROM->TO	G14-057T 345.00 - SUNNYSIDE 345KV CKT 1	717	789	0.17585	111.6181	G15074_T 345.00 - JEFFREY ENERGY CENTER 345KV CKT 1
FDNS	00NR	3	20WP	G15_093	FROM->TO	G14-057T 345.00 - SUNNYSIDE 345KV CKT 1	717	789	0.176	111.618	IMO TAP - MEN TAP 138KV CKT 1
FDNS	00NR	3	20WP	G15_093	FROM->TO	G14-057T 345.00 - SUNNYSIDE 345KV CKT 1	717	789	0.17578	111.6167	P12:161:AEPW:CHAMSPR5:FARMING5
FDNS	00NR	3	20WP	G15_093	FROM->TO	G14-057T 345.00 - SUNNYSIDE 345KV CKT 1	717	789	0.17578	111.6138	GEN334392 1-EXXON MOBIL IPP 1
FDNS	00NR	3	20WP	G15_093	FROM->TO	G14-057T 345.00 - SUNNYSIDE 345KV CKT 1	717	789	0.17578	111.6109	GEN505616 1-BROKEN BOW
FDNS	00NR	3	20WP	G15_093	FROM->TO	G14-057T 345.00 - SUNNYSIDE 345KV CKT 1	717	789	0.17632	111.6104	P12:69:WFEC-AEPW:COMANCH2:WALTRS-2
FDNS	00NR	3	20WP	G15_093	FROM->TO	G14-057T 345.00 - SUNNYSIDE 345KV CKT 1	717	789	0.17578	111.6075	GEN334393 1-EXXON MOBIL IPP 2
FDNS	00NR	3	20WP	G15_093	FROM->TO	G14-057T 345.00 - SUNNYSIDE 345KV CKT 1	717	789	0.17578	111.6075	GEN334394 1-EXXON MOBIL IPP 3
FDNS	00NR	3	20WP	G15_093	FROM->TO	G14-057T 345.00 - SUNNYSIDE 345KV CKT 1	717	789	0.17578	111.606	GEN515042 1-SEMINOLE 3G
FDNS	00NR	3	16WP	G15_093	FROM->TO	G14-057T 345.00 - SUNNYSIDE 345KV CKT 1	717	789	0.17604	111.6031	G15085_T 138.00 - RUSSELL 138KV CKT 1
FDNS	00NR	3	20WP	G15_093	FROM->TO	G14-057T 345.00 - SUNNYSIDE 345KV CKT 1	717	789	0.17581	111.5974	7LUTESVIL 345.00 - 7ST FRANC 345.00 345KV CKT 1
FDNS	00NR	3	20WP	G15_093	FROM->TO	G14-057T 345.00 - SUNNYSIDE 345KV CKT 1	717	789	0.17688	111.5949	WEATHERFORD TAP - WEATHERFORD WIND FARM 138KV CKT 1
FDNS	00NR	3	20WP	G15_093	FROM->TO	G14-057T 345.00 - SUNNYSIDE 345KV CKT 1	717	789	0.17678	111.5943	NOBLE - PURCELL4 138.00 138KV CKT 1
FDNS	00NR	3	20WP	G15_093	FROM->TO	G14-057T 345.00 - SUNNYSIDE 345KV CKT 1	717	789	0.17688	111.5935	SOUTHWESTERN STATION - VERDEN 138KV CKT 1
FDNS	00NR	3	20WP	G15_093	FROM->TO	G14-057T 345.00 - SUNNYSIDE 345KV CKT 1	717	789	0.17602	111.592	G13-010T 345.00 - POST ROCK 345KV CKT 1
FDNS	00NR	3	20WP	G15_093	FROM->TO	G14-057T 345.00 - SUNNYSIDE 345KV CKT 1	717	789	0.17625	111.5879	CLINTON JUNCTION - ELK CITY 138KV CKT 1
FDNS	00NR	3	20WP	G15_093	FROM->TO	G14-057T 345.00 - SUNNYSIDE 345KV CKT 1	717	789	0.17625	111.5879	CLINTON JUNCTION - ELK CITY 138KV CKT 1
FDNS	00NR	3	20WP	G15_093	FROM->TO	G14-057T 345.00 - SUNNYSIDE 345KV CKT 1	717	789	0.17578	111.5838	ST FRANCIS - ST FRANCIS 1 161KV CKT Z1
FDNS	00NR	3	20WP	G15_093	FROM->TO	G14-057T 345.00 - SUNNYSIDE 345KV CKT 1	717	789	0.17603	111.5828	BUCKNER7 345.00 - HOLCOMB 345KV CKT 1
FDNS	00NR	3	20WP	G15_093	FROM->TO	G14-057T 345.00 - SUNNYSIDE 345KV CKT 1	717	789	0.17603	111.5828	BUCKNER7 345.00 - HOLCOMB 345KV CKT 1
FDNS	00NR	3	20WP	G15_093	FROM->TO	G14-057T 345.00 - SUNNYSIDE 345KV CKT 1	717	789	0.17831	111.5788	LASALLE - STONEWAL LH138.00 138KV CKT 1
FDNS	00NR	3	16WP	G15_093	FROM->TO	G14-057T 345.00 - SUNNYSIDE 345KV CKT 1	717	789	0.17698	111.5774	GRAPEVINE INTERCHANGE - STATELINE INTERCHANGE 230KV CKT 1
FDNS	00NR	3	16WP	G15_093	FROM->TO	G14-057T 345.00 - SUNNYSIDE 345KV CKT 1	717	789	0.17698	111.5774	GRAPEVINE INTERCHANGE - STATELINE INTERCHANGE 230KV CKT 1
FDNS	00NR	3	20WP	G15_093	FROM->TO	G14-057T 345.00 - SUNNYSIDE 345KV CKT 1	717	789	0.17578	111.5772	GEN501971 1-EVANGELINE UNIT 7-1
FDNS	00NR	3	20WP	G15_093	FROM->TO	G14-057T 345.00 - SUNNYSIDE 345KV CKT 1	717	789	0.17578	111.5772	GEN501972 1-EVANGELINE UNIT 7-2
FDNS	00NR	3	20WP	G15_093	FROM->TO	G14-057T 345.00 - SUNNYSIDE 345KV CKT 1	717	789	0.17593	111.5767	G14_001T 345.00 - WICHITA 345KV CKT 1
FDNS	00NR	3	20WP	G15_093	FROM->TO	G14-057T 345.00 - SUNNYSIDE 345KV CKT 1	717	789	0.17607	111.5754	FRANKLIN - FRANKLIN SW 138KV CKT 1
FDNS	00NR	3	20WP	G15_093	FROM->TO	G14-057T 345.00 - SUNNYSIDE 345KV CKT 1	717	789	0.17577	111.5725	LAKEOVER - MCADAMS 500KV CKT 1
FDNS	00NR	3	20WP	G15_093	FROM->TO	G14-057T 345.00 - SUNNYSIDE 345KV CKT 1	717	789	0.17688	111.5724	NORTH 29TH CHICKASHA - VERDEN 138KV CKT 1
FDNS	00NR	3	20WP	G15_093	FROM->TO	G14-057T 345.00 - SUNNYSIDE 345KV CKT 1	717	789	0.17578	111.5709	SABINE 230/22.0KV TRANSFORMER CKT 1
FDNS	00NR	3	20WP	G15_093	FROM->TO	G14-057T 345.00 - SUNNYSIDE 345KV CKT 1	717	789	0.17586	111.5705	EMPORIA ENERGY CENTER - SWISSVALE 345KV CKT 1
FDNS	00NR	3	20WP	G15_093	FROM->TO	G14-057T 345.00 - SUNNYSIDE 345KV CKT 1	717	789	0.17555	111.5696	ENOWILT - LONE OAK 138KV CKT 1
FDNS	00NR	3	20WP	G15_093	FROM->TO	G14-057T 345.00 - SUNNYSIDE 345KV CKT 1	717	789	0.17587	111.5693	P12:138:OKGE:3TERM12
FDNS	00NR	3	20WP	G15_093	FROM->TO	G14-057T 345.00 - SUNNYSIDE 345KV CKT 1	717	789	0.17601	111.5689	FLETCHER - MARLOW JCT 69KV CKT 1
FDNS	00NR	3	20WP	G15_093	FROM->TO	G14-057T 345.00 - SUNNYSIDE 345KV CKT 1	717	789	0.17578	111.5672	P12:138:AEPW:R.S.S-4:T.P.S.-4
FDNS	00NR	3	20WP	G15_093	FROM->TO	G14-057T 345.00 - SUNNYSIDE 345KV CKT 1	717	789	0.17831	111.5636	STONEWAL LH138.00 - TUPELO TAP 138KV CKT 1
FDNS	00NR	3	20WP	G15_093	FROM->TO	G14-057T 345.00 - SUNNYSIDE 345KV CKT 1	717	789	0.17555	111.5609	ENOWILT - SARDIS 138KV CKT 1
FDNS	00NR	3	16WP	G15_093	FROM->TO	G14-057T 345.00 - SUNNYSIDE 345KV CKT 1	717	789	0.17642	111.5593	CACHE - SNYDER 138KV CKT 1
FDNS	00NR	3	20WP	G15_093	FROM->TO	G14-057T 345.00 - SUNNYSIDE 345KV CKT 1	717	789	0.17765	111.5564	HINTON - WEATHERFORD JCT. 138KV CKT 1
FDNS	00NR	3	20WP	G15_093	FROM->TO	G14-057T 345.00 - SUNNYSIDE 345KV CKT 1	717	789	0.17577	111.5553	MCADAMS - WOLF CREEK 500KV CKT 1
FDNS	00NR	3	20WP	G15_093	FROM->TO	G14-057T 345.00 - SUNNYSIDE 345KV CKT 1	717	789	0.17578	111.5542	GEN501912 1-ACADIA UNIT CT1B
FDNS	00NR	3	20WP	G15_093	FROM->TO	G14-057T 345.00 - SUNNYSIDE 345KV CKT 1	717	789	0.17578	111.5534	GEN501911 1-ACADIA UNIT CT1A
FDNS	00NR	3	20WP	G15_093	FROM->TO	G14-057T 345.00 - SUNNYSIDE 345KV CKT 1	717	789	0.17587	111.5533	P12:138:WFEC-AEPW:ELKCTY-4:ERICK4
FDNS	00NR	3	20WP	G15_093	FROM->TO	G14-057T 345.00 - SUNNYSIDE 345KV CKT 1	717	789	0.17602	111.5453	G13-010T 345.00 - SPEARVILLE 345KV CKT 1
FDNS	00NR	3	20WP	G15_093	FROM->TO	G14-057T 345.00 - SUNNYSIDE 345KV CKT 1	717	789	0.17588	111.5441	SWISSVALE - WEST GARDNER 345KV CKT 1

SOLUTION	GROUP	SCENARIO	SEASON	SOURCE	DIRECTION	MONITORED ELEMENT	RATEA (MVA)	RATEB(MVA)	TDF	TC%LOADING (% MVA)	CONTINGENCY
FDNS	00NR	3	16WP	G15_093	FROM->TO	G14-057T 345.00 - SUNNYSIDE 345KV CKT 1	717	789	0.17595	111.5424	GEN563122 1-G15077_3 0.3850
FDNS	00NR	3	20WP	G15_093	FROM->TO	G14-057T 345.00 - SUNNYSIDE 345KV CKT 1	717	789	0.17578	111.5421	P12:138:AEPW:R.S.S.-4:R:96YALE-4
FDNS	00NR	3	20WP	G15_093	FROM->TO	G14-057T 345.00 - SUNNYSIDE 345KV CKT 1	717	789	0.17578	111.5379	GEN506749 1-EASTMAN GENERATION A
FDNS	00NR	3	16WP	G15_093	FROM->TO	G14-057T 345.00 - SUNNYSIDE 345KV CKT 1	717	789	0.17595	111.5346	GEN562861 1-G15045_2 0.4800
FDNS	00NR	3	20WP	G15_093	FROM->TO	G14-057T 345.00 - SUNNYSIDE 345KV CKT 1	717	789	0.17696	111.5342	CORNVILLE - NORGE ROAD 138KV CKT 1
FDNS	00NR	3	20WP	G15_093	FROM->TO	G14-057T 345.00 - SUNNYSIDE 345KV CKT 1	717	789	0.17696	111.5342	CORNVILLE - NORGE ROAD 138KV CKT 1
FDNS	00NR	3	20WP	G15_093	FROM->TO	G14-057T 345.00 - SUNNYSIDE 345KV CKT 1	717	789	0.17558	111.5319	AMITY SS - MURFREESBORO EAST (AECC) 115KV CKT 1
FDNS	00NR	3	20WP	G15_093	FROM->TO	G14-057T 345.00 - SUNNYSIDE 345KV CKT 1	717	789	0.17578	111.5307	NELSON 230/24.0KV TRANSFORMER CKT 1
FDNS	00NR	3	20WP	G15_093	FROM->TO	G14-057T 345.00 - SUNNYSIDE 345KV CKT 1	717	789	0.17578	111.5287	GEN336242 1-1NMIL ST1 18.000
FDNS	00NR	3	16WP	G15_093	FROM->TO	G14-057T 345.00 - SUNNYSIDE 345KV CKT 1	717	789	0.08035	111.5277	GRACEMONT - LAWTON EASTSIDE 345KV CKT 1
FDNS	00NR	3	16WP	G15_093	FROM->TO	G14-057T 345.00 - SUNNYSIDE 345KV CKT 1	717	789	0.08035	111.5277	GRACEMONT - LAWTON EASTSIDE 345KV CKT 1
FDNS	00NR	3	20WP	G15_093	FROM->TO	G14-057T 345.00 - SUNNYSIDE 345KV CKT 1	717	789	0.17581	111.5271	8WNEWMADRID 500.00 - DELL 500 500KV CKT 1
FDNS	00NR	3	20WP	G15_093	FROM->TO	G14-057T 345.00 - SUNNYSIDE 345KV CKT 1	717	789	0.17614	111.5252	BENTON - WICHITA 345KV CKT 1
FDNS	00NR	3	20WP	G15_093	FROM->TO	G14-057T 345.00 - SUNNYSIDE 345KV CKT 1	717	789	0.17988	111.5246	FRANKLIN SW - WESTMOORE 138KV CKT 1
FDNS	00NR	3	20WP	G15_093	FROM->TO	G14-057T 345.00 - SUNNYSIDE 345KV CKT 1	717	789	0.17555	111.5223	CLAYTON - SARDIS 138KV CKT 1
FDNS	00NR	3	20WP	G15_093	FROM->TO	G14-057T 345.00 - SUNNYSIDE 345KV CKT 1	717	789	0.17578	111.5212	ST FRANCIS 345/161KV TRANSFORMER CKT 1
FDNS	00NR	3	20WP	G15_093	FROM->TO	G14-057T 345.00 - SUNNYSIDE 345KV CKT 1	717	789	0.17578	111.5199	P12:138:AEPW:MOHAWK4:T.NO--4
FDNS	00NR	3	16WP	G15_093	FROM->TO	G14-057T 345.00 - SUNNYSIDE 345KV CKT 1	717	789	0.17595	111.5178	GEN661015 1-COYOTE
FDNS	00NR	3	20WP	G15_093	FROM->TO	G14-057T 345.00 - SUNNYSIDE 345KV CKT 1	717	789	0.17567	111.5138	LAYFLD8 500.00 (LAYFLD AUTO) 500/230/13.8KV TRANSFORMER CKT 1
FDNS	00NR	3	20WP	G15_093	FROM->TO	G14-057T 345.00 - SUNNYSIDE 345KV CKT 1	717	789	0.17567	111.5138	LAYFLD8 500.00 (LAYFLD AUTO) 500/230/13.8KV TRANSFORMER CKT 1
FDNS	00NR	3	20WP	G15_093	FROM->TO	G14-057T 345.00 - SUNNYSIDE 345KV CKT 1	717	789	0.17957	111.5114	CIMARRON - NORTHWEST 345KV CKT 1
FDNS	00NR	3	20WP	G15_093	FROM->TO	G14-057T 345.00 - SUNNYSIDE 345KV CKT 1	717	789	0.17688	111.5059	CORNVILLE - NORTH 29TH CHICKASHA 138KV CKT 1
FDNS	00NR	3	20WP	G15_093	FROM->TO	G14-057T 345.00 - SUNNYSIDE 345KV CKT 1	717	789	0.17457	111.5036	ARBUCKLE - MILLCREEK 138KV CKT 1
FDNS	00NR	3	20WP	G15_093	FROM->TO	G14-057T 345.00 - SUNNYSIDE 345KV CKT 1	717	789	0.17688	111.5033	WEATHERFORD SOUTHEAST - WEATHERFORD TAP 138KV CKT 1
FDNS	00NR	3	20WP	G15_093	FROM->TO	G14-057T 345.00 - SUNNYSIDE 345KV CKT 1	717	789	0.17555	111.5001	P12:138:AEPW-SWPA:LONEOAK4:BRKNBW4
FDNS	00NR	3	20WP	G15_093	FROM->TO	G14-057T 345.00 - SUNNYSIDE 345KV CKT 1	717	789	0.17578	111.4992	SABINE 138/22.0KV TRANSFORMER CKT 1
FDNS	00NR	3	20WP	G15_093	FROM->TO	G14-057T 345.00 - SUNNYSIDE 345KV CKT 1	717	789	0.17555	111.489	CLAYTON - NASHOBA 138KV CKT 1
FDNS	00NR	3	20WP	G15_093	FROM->TO	G14-057T 345.00 - SUNNYSIDE 345KV CKT 1	717	789	0.17579	111.4879	7JASPER 345.00 - MORGAN 345KV CKT 1
FDNS	00NR	3	20WP	G15_093	FROM->TO	G14-057T 345.00 - SUNNYSIDE 345KV CKT 1	717	789	0.17765	111.4844	HINTON - REDROCKRD4 138.00 138KV CKT 1
FDNS	00NR	3	20WP	G15_093	FROM->TO	G14-057T 345.00 - SUNNYSIDE 345KV CKT 1	717	789	0.1758	111.4828	SEMINOLE (SEMINOL2) 345/138/14.4KV TRANSFORMER CKT 1
FDNS	00NR	3	20WP	G15_093	FROM->TO	G14-057T 345.00 - SUNNYSIDE 345KV CKT 1	717	789	0.17578	111.4828	GEN338146 1-INDEPENDENCE UNIT #2
FDNS	00NR	3	16WP	G15_093	FROM->TO	G14-057T 345.00 - SUNNYSIDE 345KV CKT 1	717	789	0.17412	111.4571	SUNNYSIDE - UNIROYAL 138KV CKT 1
FDNS	00NR	3	20WP	G15_093	FROM->TO	G14-057T 345.00 - SUNNYSIDE 345KV CKT 1	717	789	0.17588	111.4536	P12:138:OKGE:3TERM20
FDNS	00NR	3	20WP	G15_093	FROM->TO	G14-057T 345.00 - SUNNYSIDE 345KV CKT 1	717	789	0.17688	111.4533	CLINTON JUNCTION - CLINTON NATURAL GAS TAP 138KV CKT 1
FDNS	00NR	3	20WP	G15_093	FROM->TO	G14-057T 345.00 - SUNNYSIDE 345KV CKT 1	717	789	0.08039	111.4488	GRACEMONT - LAWTON EASTSIDE 345KV CKT 1
FDNS	00NR	3	20WP	G15_093	FROM->TO	G14-057T 345.00 - SUNNYSIDE 345KV CKT 1	717	789	0.08039	111.4488	GRACEMONT - LAWTON EASTSIDE 345KV CKT 1
FDNS	00NR	3	20WP	G15_093	FROM->TO	G14-057T 345.00 - SUNNYSIDE 345KV CKT 1	717	789	0.17904	111.4413	MARIETTA - MARIETTA4 138.00 138KV CKT 1
FDNS	00NR	3	16WP	G15_093	FROM->TO	G14-057T 345.00 - SUNNYSIDE 345KV CKT 1	717	789	0.17692	111.44	GRAPEVINE INTERCHANGE - NICHOLS STATION 230KV CKT 1
FDNS	00NR	3	16WP	G15_093	FROM->TO	G14-057T 345.00 - SUNNYSIDE 345KV CKT 1	717	789	0.17692	111.44	GRAPEVINE INTERCHANGE - NICHOLS STATION 230KV CKT 1
FDNS	00NR	3	20WP	G15_093	FROM->TO	G14-057T 345.00 - SUNNYSIDE 345KV CKT 1	717	789	0.17632	111.4355	COMANCHE - WALTERS 69KV CKT 1
FDNS	00NR	3	16WP	G15_093	FROM->TO	G14-057T 345.00 - SUNNYSIDE 345KV CKT 1	717	789	0.17604	111.4174	P12:138:AEPW:SHAM4WT:CHILD4WT
FDNS	00NR	3	16WP	G15_093	FROM->TO	G14-057T 345.00 - SUNNYSIDE 345KV CKT 1	717	789	0.1761	111.4115	P12:138:WFEC:MSL15
FDNS	00NR	3	16WP	G15_093	FROM->TO	G14-057T 345.00 - SUNNYSIDE 345KV CKT 1	717	789	0.18037	111.4067	CHISHOLM7 345.00 (CHISHOLM) 345/230/13.2KV TRANSFORMER CKT 1
FDNS	00NR	3	16WP	G15_093	FROM->TO	G14-057T 345.00 - SUNNYSIDE 345KV CKT 1	717	789	0.17595	111.4034	GEN657748 1-YOUNG 2 GENERATOR
FDNS	00NR	3	16WP	G15_093	FROM->TO	G14-057T 345.00 - SUNNYSIDE 345KV CKT 1	717	789	0.17595	111.4	GEN532751 1-WOLF CREEK GENERATING STATION UNIT 1
FDNS	00NR	3	16WP	G15_093	FROM->TO	G14-057T 345.00 - SUNNYSIDE 345KV CKT 1	717	789	0.17595	111.3811	GEN562992 1-G15063_3 0.6900
FDNS	00NR	3	16WP	G15_093	FROM->TO	G14-057T 345.00 - SUNNYSIDE 345KV CKT 1	717	789	0.17595	111.3562	GEN562704 1-G15_020_3 0.3550
FDNS	00NR	3	16WP	G15_093	FROM->TO	G14-057T 345.00 - SUNNYSIDE 345KV CKT 1	717	789	0.17595	111.3542	GEN563173 1-G15082_3 0.6900
FDNS	00NR	3	16WP	G15_093	FROM->TO	G14-057T 345.00 - SUNNYSIDE 345KV CKT 1	717	789	0.17921	111.3478	CANEY CREEK - TEXOMA JCT 138KV CKT 1
FDNS	00NR	3	16WP	G15_093	FROM->TO	G14-057T 345.00 - SUNNYSIDE 345KV CKT 1	717	789	0.17595	111.3165	GEN562952 1-G15057_3 0.6500
FDNS	00NR	3	16WP	G15_093	FROM->TO	G14-057T 345.00 - SUNNYSIDE 345KV CKT 1	717	789	0.17595	111.2724	GEN562710 1-G15_022_3 0.5500
FDNS	00NR	3	16WP	G15_093	FROM->TO	G14-057T 345.00 - SUNNYSIDE 345KV CKT 1	717	789	0.17595	111.2411	GEN620315 1-BIG STONE GEN
FDNS	00NR	3	16WP	G15_093	FROM->TO	G14-057T 345.00 - SUNNYSIDE 345KV CKT 1	717	789	0.18037	111.1801	CHISHOLM7 345.00 - GRACEMONT 345KV CKT 1
FDNSLock	00NR	3	16WP	G15_093	FROM->TO	G14-057T 345.00 - SUNNYSIDE 345KV CKT 1	717	789	0.17595	111.1763	GEN600004 2-PRAIRIE ISLAND G2
FDNSLock	00NR	3	16WP	G15_093	FROM->TO	G14-057T 345.00 - SUNNYSIDE 345KV CKT 1	717	789	0.17595	111.1736	GEN600003 1-PRAIRIE ISLAND G1
FDNS	00NR	3	16WP	G15_093	FROM->TO	G14-057T 345.00 - SUNNYSIDE 345KV CKT 1	717	789	0.176	111.1734	P12:138:WFEC:MSL09
FDNSLock	00NR	3	16WP	G15_093	FROM->TO	G14-057T 345.00 - SUNNYSIDE 345KV CKT 1	717	789	0.17595	111.1659	GEN600006 1-AS KING
FDNS	00NR	3	16WP	G15_093	FROM->TO	G14-057T 345.00 - SUNNYSIDE 345KV CKT 1	717	789	0.17595	111.1295	GEN511851 1-COMANCHE #1
FDNS	00NR	3	16WP	G15_093	FROM->TO	G14-057T 345.00 - SUNNYSIDE 345KV CKT 1	717	789	0.17595	111.1	GEN636641 1-LOUISA UNIT 1
FDNS	00NR	3	16WP	G15_093	FROM->TO	G14-057T 345.00 - SUNNYSIDE 345KV CKT 1	717	789	0.17595	111.0396	GEN600005 1-MONTICELLO
FDNS	00NR	3	16WP	G15_093	FROM->TO	G14-057T 345.00 - SUNNYSIDE 345KV CKT 1	717	789	0.17778	111.0304	P12:230:AEPW-SPS:SWEETWT6:WHEELER 6
FDNS	00NR	3	16WP	G15_093	FROM->TO	G14-057T 345.00 - SUNNYSIDE 345KV CKT 1	717	789	0.17778	111.0294	STATELINE INTERCHANGE - STLN-DEMARC6 230KV CKT 1
FDNS	00NR	3	16WP	G15_093	FROM->TO	G14-057T 345.00 - SUNNYSIDE 345KV CKT 1	717	789	0.17778	111.0283	STLN-DEMARC6 - SWEETWATER 230KV CKT 1
FDNS	00NR	3	16WP	G15_093	FROM->TO	G14-057T 345.00 - SUNNYSIDE 345KV CKT 1	717	789	0.17595	111.0266	GEN562754 1-G15031_5 0.6900
FDNS	00NR	3	20WP	G15_093	FROM->TO	G14-057T 345.00 - SUNNYSIDE 345KV CKT 1	717	789	0.17578	111.0252	803-OKLAUNION
FDNS	00NR	3	16WP	G15_093	FROM->TO	G14-057T 345.00 - SUNNYSIDE 345KV CKT 1	717	789	0.17595	111.0089	GEN615002 2-COAL CREEK
FDNS	00NR	3	16WP	G15_093	FROM->TO	G14-057T 345.00 - SUNNYSIDE 345KV CKT 1	717	789	0.17595	111	GEN629074 1-ARNOLD LOWSIDE OF GSU XFMR
FDNS	00NR	3	16WP	G15_093	FROM->TO	G14-057T 345.00 - SUNNYSIDE 345KV CKT 1	717	789	0.17868	110.9877	P12:138:AEPW-OGE:CORNVIL4:CIMARON4
FDNS	00NR	3	16WP	G15_093	FROM->TO	G14-057T 345.00 - SUNNYSIDE 345KV CKT 1	717	789	0.17595	110.9862	GEN562023 1-G11_020_3 0.6900
FDNS	00NR	3	16WP	G15_093	FROM->TO	G14-057T 345.00 - SUNNYSIDE 345KV CKT 1	717	789	0.17595	110.9862	GEN562026 1-G11_019_3 0.6900
FDNS	00NR	3	16WP	G15_093	FROM->TO	G14-057T 345.00 - SUNNYSIDE 345KV CKT 1	717	789	0.17595	110.9797	GEN635213 3-NEAL UNIT 3
FDNS	00NR	3	16WP	G15_093	FROM->TO	G14-057T 345.00 - SUNNYSIDE 345KV CKT 1	717	789	0.17595	110.9682	GEN562756 1-G15031_7 0.6900
FDNS	00NR	3	16WP	G15_093	FROM->TO	G14-057T 345.00 - SUNNYSIDE 345KV CKT 1	717	789	0.17595	110.9258	BIG STONE 230/24.0KV TRANSFORMER CKT 1
FDNS	00NR	3	16WP	G15_093	FROM->TO	G14-057T 345.00 - SUNNYSIDE 345KV CKT 1	717	789	0.17595	110.9216	GEN562556 1-G14_046_3 0.3420
FDNS	00NR	3	16WP	G15_093	FROM->TO	G14-057T 345.00 - SUNNYSIDE 345KV CKT 1	717	789	0.17595	110.8335	GEN563142 1-G15079_3 0.5500
FDNS	00NR	3	16WP	G15_093	FROM->TO	G14-057T 345.00 - SUNNYSIDE 345KV CKT 1	717	789	0.17595	110.8335	GEN563151 1-G15080_2 0.5500
FDNS	00NR	3	16WP	G15_093	FROM->TO	G14-057T 345.00 - SUNNYSIDE 345KV CKT 1	717	789	0.17595	110.8185	GEN523971 1-HARRINGTON GEN #1 24 KV
FDNS	00NR	3	16WP	G15_093	FROM->TO	G14-057T 345.00 - SUNNYSIDE 345KV CKT 1	717	789	0.17595	110.8185	GEN523973 1-HARRINGTON GEN #3 24 KV
FDNS	00NR	3	16WP	G15_093	FROM->TO	G14-057T 345.00 - SUNNYSIDE 345KV CKT 1	717	789	0.17595	110.8184	GEN523972 1-HARRINGTON GEN #2 24 KV

SOLUTION	GROUP	SCENARIO	SEASON	SOURCE	DIRECTION	MONITORED ELEMENT	RATEA (MVA)	RATEB(MVA)	TDF	TC%LOADING (% MVA)	CONTINGENCY
FDNS	00NR	3	20WP	G15_093	FROM->TO	G14-057T 345.00 - SUNNYSIDE 345KV CKT 1	717	789	0.17326	110.8058	P12:138:OKGE:3TERM39
FDNS	00NR	3	16WP	G15_093	FROM->TO	G14-057T 345.00 - SUNNYSIDE 345KV CKT 1	717	789	0.17595	110.7304	GEN600000 1-SHERBURNECNTY G1
FDNS	00NR	3	16WP	G15_093	FROM->TO	G14-057T 345.00 - SUNNYSIDE 345KV CKT 1	717	789	0.17548	110.7146	NORTHWEST TEXARKANA - VALLIANT 345KV CKT 1
FDNS	00NR	3	16WP	G15_093	FROM->TO	G14-057T 345.00 - SUNNYSIDE 345KV CKT 1	717	789	0.17548	110.7146	NORTHWEST TEXARKANA - VALLIANT 345KV CKT 1
FDNS	00NR	3	16WP	G15_093	FROM->TO	G14-057T 345.00 - SUNNYSIDE 345KV CKT 1	717	789	0.18049	110.6535	P12:230:AEPW:ELKCITY6:SWEETWT6
FDNS	00NR	3	16WP	G15_093	FROM->TO	G14-057T 345.00 - SUNNYSIDE 345KV CKT 1	717	789	0.17595	110.6508	GEN600001 2-SHERBURNE CNTY G2
FDNS	00NR	3	20WP	G15_093	FROM->TO	G14-057T 345.00 - SUNNYSIDE 345KV CKT 1	717	789	0.17362	110.6277	MAYSVILLE - MAYSVLT4 138.00 138KV CKT 1
FDNS	00NR	3	16WP	G15_093	FROM->TO	G14-057T 345.00 - SUNNYSIDE 345KV CKT 1	717	789	0.17595	110.6206	GEN563042 1-G15068_3 0.6900
FDNS	00NR	3	16WP	G15_093	FROM->TO	G14-057T 345.00 - SUNNYSIDE 345KV CKT 1	717	789	0.17595	110.6069	GEN527901 1-HOBBS PLANT #1 (CT)
FDNS	00NR	3	16WP	G15_093	FROM->TO	G14-057T 345.00 - SUNNYSIDE 345KV CKT 1	717	789	0.17595	110.6069	GEN527902 1-HOBBS PLANT #2 (CT)
FDNS	00NR	3	16WP	G15_093	FROM->TO	G14-057T 345.00 - SUNNYSIDE 345KV CKT 1	717	789	0.17595	110.6027	GEN511848 1-SOUTHWESTERN STATION #3
FDNS	00NR	3	20WP	G15_093	FROM->TO	G14-057T 345.00 - SUNNYSIDE 345KV CKT 1	717	789	0.17795	110.5975	BEARCAT 138.00 - NINE MILE 138KV CKT 1
FDNS	00NR	3	20WP	G15_093	FROM->TO	G14-057T 345.00 - SUNNYSIDE 345KV CKT 1	717	789	0.17578	110.5893	GEN521103 1-BLUE CANYON WIND FARM
FDNS	00NR	3	20WP	G15_093	FROM->TO	G14-057T 345.00 - SUNNYSIDE 345KV CKT 1	717	789	0.17578	110.5787	GEN562691 1-G15_015_3 0.6900
FDNS	00NR	3	20WP	G15_093	FROM->TO	G14-057T 345.00 - SUNNYSIDE 345KV CKT 1	717	789	0.17578	110.5785	GEN520812 1-ANADRK5
FDNS	00NR	3	20WP	G15_093	FROM->TO	G14-057T 345.00 - SUNNYSIDE 345KV CKT 1	717	789	0.17578	110.5784	GEN520813 1-ANADRK6
FDNS	00NR	3	20WP	G15_093	FROM->TO	G14-057T 345.00 - SUNNYSIDE 345KV CKT 1	717	789	0.17578	110.5753	GEN563052 1-G15069_3 0.6900
FDNS	00NR	3	20WP	G15_093	FROM->TO	G14-057T 345.00 - SUNNYSIDE 345KV CKT 1	717	789	0.17578	110.5696	GEN562772 1-G15034_3 0.6900
FDNS	00NR	3	20WP	G15_093	FROM->TO	G14-057T 345.00 - SUNNYSIDE 345KV CKT 1	717	789	0.17644	110.5695	DRAPER LAKE - MIDWEST TAP 138KV CKT 1
FDNS	00NR	3	20WP	G15_093	FROM->TO	G14-057T 345.00 - SUNNYSIDE 345KV CKT 1	717	789	0.17578	110.5621	GEN600046 1-MECST
FDNS	00NR	3	20WP	G15_093	FROM->TO	G14-057T 345.00 - SUNNYSIDE 345KV CKT 1	717	789	0.17362	110.5618	MAYSVLT4 138.00 - PRAIRIE POINT 138KV CKT 1
FDNS	00NR	3	20WP	G15_093	FROM->TO	G14-057T 345.00 - SUNNYSIDE 345KV CKT 1	717	789	0.17578	110.5514	GEN629070 2-BEAVER CHANNEL GENERATORFOR UNIT NO 2
FDNS	00NR	3	20WP	G15_093	FROM->TO	G14-057T 345.00 - SUNNYSIDE 345KV CKT 1	717	789	0.17578	110.5496	GEN511961 1-DEMPSEY-WTG10.7000
FDNS	00NR	3	20WP	G15_093	FROM->TO	G14-057T 345.00 - SUNNYSIDE 345KV CKT 1	717	789	0.17578	110.5482	GEN600047 1-MECCT1
FDNS	00NR	3	20WP	G15_093	FROM->TO	G14-057T 345.00 - SUNNYSIDE 345KV CKT 1	717	789	0.17577	110.5464	P12:069:OKGE:3TERM42
FDNS	00NR	3	20WP	G15_093	FROM->TO	G14-057T 345.00 - SUNNYSIDE 345KV CKT 1	717	789	0.17437	110.546	ARBUCKLE - SULPHR 4 138.00 138KV CKT 1
FDNS	00NR	3	20WP	G15_093	FROM->TO	G14-057T 345.00 - SUNNYSIDE 345KV CKT 1	717	789	0.17578	110.5432	GEN629071 1-BURLINGTON GENERATOR FOR UNIT NO 1 E
FDNS	00NR	3	20WP	G15_093	FROM->TO	G14-057T 345.00 - SUNNYSIDE 345KV CKT 1	717	789	0.17661	110.5428	CIMARRON - MATHWSN7 345.00 345KV CKT 1
FDNS	00NR	3	20WP	G15_093	FROM->TO	G14-057T 345.00 - SUNNYSIDE 345KV CKT 1	717	789	0.17661	110.5428	CIMARRON - MATHWSN7 345.00 345KV CKT 2
FDNS	00NR	3	20WP	G15_093	FROM->TO	G14-057T 345.00 - SUNNYSIDE 345KV CKT 1	717	789	0.17795	110.5403	P12:138:WFEC:MSL14
FDNS	00NR	3	20WP	G15_093	FROM->TO	G14-057T 345.00 - SUNNYSIDE 345KV CKT 1	717	789	0.1766	110.5392	P12:138:OKGE:3TERM21
FDNS	00NR	3	20WP	G15_093	FROM->TO	G14-057T 345.00 - SUNNYSIDE 345KV CKT 1	717	789	0.17826	110.5365	G15063_T 345.00 - MATHWSN7 345.00 345KV CKT 1
FDNS	00NR	3	20WP	G15_093	FROM->TO	G14-057T 345.00 - SUNNYSIDE 345KV CKT 1	717	789	0.17578	110.5362	BURLINGTON NO1 + NO 2 + NO 3 161/20.0KV TRANSFORMER CKT 1
FDNSLock	00NR	3	16WP	G15_093	FROM->TO	G14-057T 345.00 - SUNNYSIDE 345KV CKT 1	717	789	0.17595	110.5323	GEN629075 1-OTTUMWA GENERATOR FOR OTTUMWA UNIT NO 1
FDNS	00NR	3	20WP	G15_093	FROM->TO	G14-057T 345.00 - SUNNYSIDE 345KV CKT 1	717	789	0.17571	110.5286	P12:138:WFEC:MSL11
FDNS	00NR	3	20WP	G15_093	FROM->TO	G14-057T 345.00 - SUNNYSIDE 345KV CKT 1	717	789	0.17571	110.5286	P12:138:WFEC-AEPW:PHAROAH4:LONEOAK4
FDNS	00NR	3	20WP	G15_093	FROM->TO	G14-057T 345.00 - SUNNYSIDE 345KV CKT 1	717	789	0.17578	110.525	GEN615010 1-STANTON4
FDNS	00NR	3	20WP	G15_093	FROM->TO	G14-057T 345.00 - SUNNYSIDE 345KV CKT 1	717	789	0.17578	110.5192	GEN615021 1-GRE-ER 14G 16.000
FDNS	00NR	3	20WP	G15_093	FROM->TO	G14-057T 345.00 - SUNNYSIDE 345KV CKT 1	717	789	0.17589	110.5122	GLASSES - MADILL INDUSTRIAL TAP 138KV CKT 1
FDNS	00NR	3	20WP	G15_093	FROM->TO	G14-057T 345.00 - SUNNYSIDE 345KV CKT 1	717	789	0.17589	110.4994	CANEY CREEK - JOHNSON COUNTY 138KV CKT 1
FDNS	00NR	3	20WP	G15_093	FROM->TO	G14-057T 345.00 - SUNNYSIDE 345KV CKT 1	717	789	0.17795	110.4961	BEARCAT 138.00 - MOORELAND 138KV CKT 1
FDNS	00NR	3	20WP	G15_093	FROM->TO	G14-057T 345.00 - SUNNYSIDE 345KV CKT 1	717	789	0.17607	110.4941	P12:138:WFEC:MSL08
FDNS	00NR	3	20WP	G15_093	FROM->TO	G14-057T 345.00 - SUNNYSIDE 345KV CKT 1	717	789	0.17578	110.4852	GEN531447 1-HOLCOMB GENERATOR
FDNS	00NR	3	20WP	G15_093	FROM->TO	G14-057T 345.00 - SUNNYSIDE 345KV CKT 1	717	789	0.17578	110.4848	GEN515443 1-MNCOWND1 0.7000
FDNS	00NR	3	20WP	G15_093	FROM->TO	G14-057T 345.00 - SUNNYSIDE 345KV CKT 1	717	789	0.17578	110.4842	INDEPENDENCE 500/26.0KV TRANSFORMER CKT 1
FDNS	00NR	3	20WP	G15_093	FROM->TO	G14-057T 345.00 - SUNNYSIDE 345KV CKT 1	717	789	0.17904	110.4812	LEBANON - TEXOMA JCT 138KV CKT 1
FDNS	00NR	3	20WP	G15_093	FROM->TO	G14-057T 345.00 - SUNNYSIDE 345KV CKT 1	717	789	0.17578	110.4761	GEN560183 1-REDHIL-WTG1 12.000
FDNS	00NR	3	20WP	G15_093	FROM->TO	G14-057T 345.00 - SUNNYSIDE 345KV CKT 1	717	789	0.17362	110.4698	PRAIRIE POINT - RATLIFF 138KV CKT 1
FDNS	00NR	3	20WP	G15_093	FROM->TO	G14-057T 345.00 - SUNNYSIDE 345KV CKT 1	717	789	0.17578	110.4591	GEN600067 9-HIGH BRIDGE
FDNS	00NR	3	20WP	G15_093	FROM->TO	G14-057T 345.00 - SUNNYSIDE 345KV CKT 1	717	789	0.17578	110.4575	P12:230:UMZB:# 112 #: NU IN SD. NU-RCDC & DRY CREEK XFMR
FDNS	00NR	3	20WP	G15_093	FROM->TO	G14-057T 345.00 - SUNNYSIDE 345KV CKT 1	717	789	0.17578	110.4571	RCDC EAST 4230.00 - RED CEDAR DC 230KV CKT 1
FDNS	00NR	3	20WP	G15_093	FROM->TO	G14-057T 345.00 - SUNNYSIDE 345KV CKT 1	717	789	0.17585	110.4567	OVEXFRMCCOVE
FDNS	00NR	3	20WP	G15_093	FROM->TO	G14-057T 345.00 - SUNNYSIDE 345KV CKT 1	717	789	0.17558	110.4537	CARTER - CHICKASAW 138KV CKT 1
FDNS	00NR	3	20WP	G15_093	FROM->TO	G14-057T 345.00 - SUNNYSIDE 345KV CKT 1	717	789	0.17586	110.4531	ALTUS JUNCTION - RUSSELL 138KV CKT 1
FDNS	00NR	3	20WP	G15_093	FROM->TO	G14-057T 345.00 - SUNNYSIDE 345KV CKT 1	717	789	0.17586	110.4531	ALTUS JUNCTION - RUSSELL 138KV CKT 1
FDNS	00NR	3	20WP	G15_093	FROM->TO	G14-057T 345.00 - SUNNYSIDE 345KV CKT 1	717	789	0.17589	110.4518	GLASSES - RUSSETT 138KV CKT 1
FDNS	00NR	3	20WP	G15_093	FROM->TO	G14-057T 345.00 - SUNNYSIDE 345KV CKT 1	717	789	0.17589	110.4453	CANADIAN RIVER - MCALESTER SOUTH 138KV CKT 1
FDNS	00NR	3	20WP	G15_093	FROM->TO	G14-057T 345.00 - SUNNYSIDE 345KV CKT 1	717	789	0.17589	110.4453	CANADIAN RIVER - MCALESTER SOUTH 138KV CKT 1
FDNS	00NR	3	20WP	G15_093	FROM->TO	G14-057T 345.00 - SUNNYSIDE 345KV CKT 1	717	789	0.17589	110.4435	CANADIAN RIVER () 345/138/13.8KV TRANSFORMER CKT 1
FDNS	00NR	3	20WP	G15_093	FROM->TO	G14-057T 345.00 - SUNNYSIDE 345KV CKT 1	717	789	0.17589	110.4435	CANADIAN RIVER () 345/138/13.8KV TRANSFORMER CKT 1
FDNS	00NR	3	20WP	G15_093	FROM->TO	G14-057T 345.00 - SUNNYSIDE 345KV CKT 1	717	789	0.17581	110.4405	GRPRAR1-LNX3345.00 - HOLT.CO3 345.00 345KV CKT 1
FDNS	00NR	3	20WP	G15_093	FROM->TO	G14-057T 345.00 - SUNNYSIDE 345KV CKT 1	717	789	0.17581	110.4383	GRPRAR1-LNX3345.00 - GRPRAR 345KV CKT Z
FDNS	00NR	3	20WP	G15_093	FROM->TO	G14-057T 345.00 - SUNNYSIDE 345KV CKT 1	717	789	0.17578	110.4359	GEN563242 1-G15090_3 0.6900
FDNS	00NR	3	20WP	G15_093	FROM->TO	G14-057T 345.00 - SUNNYSIDE 345KV CKT 1	717	789	0.17565	110.4311	HUGO (HUGO 1) 345/138/13.8KV TRANSFORMER CKT 1
FDNS	00NR	3	20WP	G15_093	FROM->TO	G14-057T 345.00 - SUNNYSIDE 345KV CKT 1	717	789	0.17517	110.4292	ROCKY POINT - SPRINGDALE 138KV CKT 1
FDNS	00NR	3	20WP	G15_093	FROM->TO	G14-057T 345.00 - SUNNYSIDE 345KV CKT 1	717	789	0.17597	110.419	CHAMBER SPRINGS - CLARKSVILLE 345KV CKT 1
FDNS	00NR	3	20WP	G15_093	FROM->TO	G14-057T 345.00 - SUNNYSIDE 345KV CKT 1	717	789	0.17578	110.4157	GEN562902 1-G15052_3 0.6900
FDNS	00NR	3	20WP	G15_093	FROM->TO	G14-057T 345.00 - SUNNYSIDE 345KV CKT 1	717	789	0.17624	110.4053	P12:138:AEPW:112GORE4:SNYDER-4
FDNS	00NR	3	16WP	G15_093	FROM->TO	G14-057T 345.00 - SUNNYSIDE 345KV CKT 1	717	789	0.17595	110.405	SHERBURNE CO 345/24.0KV TRANSFORMER CKT 1
FDNS	00NR	3	20WP	G15_093	FROM->TO	G14-057T 345.00 - SUNNYSIDE 345KV CKT 1	717	789	0.17578	110.4025	GEN562078 1-G11_051_3 0.6900
FDNS	00NR	3	20WP	G15_093	FROM->TO	G14-057T 345.00 - SUNNYSIDE 345KV CKT 1	717	789	0.17437	110.4003	JOLLYVILLE - SULPHR 4 138.00 138KV CKT 1
FDNS	00NR	3	16WP	G15_093	FROM->TO	G14-057T 345.00 - SUNNYSIDE 345KV CKT 1	717	789	0.17595	110.4	GEN635214 4-NEAL UNIT 4
FDNS	00NR	3	20WP	G15_093	FROM->TO	G14-057T 345.00 - SUNNYSIDE 345KV CKT 1	717	789	0.17578	110.3996	GEN629072 4-LANSING GENERATOR FOR UNITS NO4 EIA CODE 1
FDNS	00NR	3	20WP	G15_093	FROM->TO	G14-057T 345.00 - SUNNYSIDE 345KV CKT 1	717	789	0.17578	110.397	GEN562802 1-G15039_3 0.3570
FDNS	00NR	3	20WP	G15_093	FROM->TO	G14-057T 345.00 - SUNNYSIDE 345KV CKT 1	717	789	0.17578	110.3855	GEN524285 1-WILDORADO WIND GEN
FDNS	00NR	3	20WP	G15_093	FROM->TO	G14-057T 345.00 - SUNNYSIDE 345KV CKT 1	717	789	0.17578	110.368	GEN560331 1-G10-46 13.800
FDNS	00NR	3	20WP	G15_093	FROM->TO	G14-057T 345.00 - SUNNYSIDE 345KV CKT 1	717	789	0.17578	110.3627	GEN524295 1-SPNSPUR_WND10.6900
FDNS	00NR	3	20WP	G15_093	FROM->TO	G14-057T 345.00 - SUNNYSIDE 345KV CKT 1	717	789	0.17578	110.3483	GEN562587 1-G14_056_3 0.6900
FDNS	00NR	3	20WP	G15_093	FROM->TO	G14-057T 345.00 - SUNNYSIDE 345KV CKT 1	717	789	0.17578	110.3477	GEN657749 1-YOUNG 1 GENERATOR

SOLUTION	GROUP	SCENARIO	SEASON	SOURCE	DIRECTION	MONITORED ELEMENT	RATEA (MVA)	RATEB(MVA)	TDF	TC%LOADING (% MVA)	CONTINGENCY
FDNS	00NR	3	20WP	G15_093	FROM->TO	G14-057T 345.00 - SUNNYSIDE 345KV CKT 1	717	789	0.17578	110.342	GEN514805 1-SOONER UNIT 1
FDNS	00NR	3	20WP	G15_093	FROM->TO	G14-057T 345.00 - SUNNYSIDE 345KV CKT 1	717	789	0.17578	110.337	GEN562269 1-G12-020-1 0.6900
FDNS	00NR	3	20WP	G15_093	FROM->TO	G14-057T 345.00 - SUNNYSIDE 345KV CKT 1	717	789	0.17578	110.3367	GEN524023 1-NICHOLS GEN #3 22 KV
FDNS	00NR	3	20WP	G15_093	FROM->TO	G14-057T 345.00 - SUNNYSIDE 345KV CKT 1	717	789	0.17437	110.3364	JOLLYVILLE - KERR MCGEE CIMARRON 138KV CKT 1
FDNS	00NR	3	16WP	G15_093	FROM->TO	G14-057T 345.00 - SUNNYSIDE 345KV CKT 1	717	789	0.17595	110.328	GEN563273 2-G15093_4 0.6900
FDNS	00NR	3	20WP	G15_093	FROM->TO	G14-057T 345.00 - SUNNYSIDE 345KV CKT 1	717	789	0.17578	110.3222	GEN514806 1-SOONER UNIT 2
FDNS	00NR	3	20WP	G15_093	FROM->TO	G14-057T 345.00 - SUNNYSIDE 345KV CKT 1	717	789	0.17564	110.3219	CROCKETT - TENASKA RUSK COUNTY 345KV CKT 1
FDNS	00NR	3	16WP	G15_093	FROM->TO	G14-057T 345.00 - SUNNYSIDE 345KV CKT 1	717	789	0.17595	110.3185	GEN563043 1-G15068_4 0.6900
FDNS	00NR	3	20WP	G15_093	FROM->TO	G14-057T 345.00 - SUNNYSIDE 345KV CKT 1	717	789	0.17564	110.3172	LEBROCK - TENASKA RUSK COUNTY 345KV CKT 1
FDNS	00NR	3	16WP	G15_093	FROM->TO	G14-057T 345.00 - SUNNYSIDE 345KV CKT 1	717	789	0.17778	110.3023	CHISHOLM6 230.00 - SWEETWATER 230KV CKT 1
FDNS	00NR	3	16WP	G15_093	FROM->TO	G14-057T 345.00 - SUNNYSIDE 345KV CKT 1	717	789	0.17595	110.2979	GEN526333 1-JONES GEN #3 21 KV
FDNS	00NR	3	16WP	G15_093	FROM->TO	G14-057T 345.00 - SUNNYSIDE 345KV CKT 1	717	789	0.17595	110.2979	GEN526334 1-JONES_4 116.500
FDNS	00NR	3	20WP	G15_093	FROM->TO	G14-057T 345.00 - SUNNYSIDE 345KV CKT 1	717	789	0.17578	110.2978	GEN562812 1-G15040_3 0.3570
FDNS	00NR	3	20WP	G15_093	FROM->TO	G14-057T 345.00 - SUNNYSIDE 345KV CKT 1	717	789	0.17578	110.2935	GEN562270 1-G12-020-2 0.6900
FDNS	00NR	3	20WP	G15_093	FROM->TO	G14-057T 345.00 - SUNNYSIDE 345KV CKT 1	717	789	0.17437	110.2924	ARBWIND4 138.00 - KERR MCGEE CIMARRON 138KV CKT 1
FDNS	00NR	3	20WP	G15_093	FROM->TO	G14-057T 345.00 - SUNNYSIDE 345KV CKT 1	717	789	0.17578	110.2912	GEN563132 1-G15078_3 0.3570
FDNS	00NR	3	20WP	G15_093	FROM->TO	G14-057T 345.00 - SUNNYSIDE 345KV CKT 1	717	789	0.17578	110.2846	GEN563102 1-G15075_3 0.5500
FDNS	00NR	3	20WP	G15_093	FROM->TO	G14-057T 345.00 - SUNNYSIDE 345KV CKT 1	717	789	0.17578	110.2683	GEN562882 1-G15047_3 0.6900
FDNS	00NR	3	20WP	G15_093	FROM->TO	G14-057T 345.00 - SUNNYSIDE 345KV CKT 1	717	789	0.17578	110.2606	GEN562974 1-G15060_5 0.6900
FDNS	00NR	3	20WP	G15_093	FROM->TO	G14-057T 345.00 - SUNNYSIDE 345KV CKT 1	717	789	0.17578	110.2605	GEN563062 1-G15071_3 0.6900
FDNS	00NR	3	20WP	G15_093	FROM->TO	G14-057T 345.00 - SUNNYSIDE 345KV CKT 1	717	789	0.17578	110.251	GEN562973 1-G15060_4 0.6900
FDNS	00NR	3	16WP	G15_093	FROM->TO	G14-057T 345.00 - SUNNYSIDE 345KV CKT 1	717	789	0.17595	110.2441	GEN525844 1-ELK_1 118.000
FDNS	00NR	3	16WP	G15_093	FROM->TO	G14-057T 345.00 - SUNNYSIDE 345KV CKT 1	717	789	0.17595	110.2387	GEN525845 1-ELK_2 1 138.00
FDNS	00NR	3	20WP	G15_093	FROM->TO	G14-057T 345.00 - SUNNYSIDE 345KV CKT 1	717	789	0.17578	110.2364	GEN345671 2-1RUSH G2 18.000
FDNS	00NR	3	20WP	G15_093	FROM->TO	G14-057T 345.00 - SUNNYSIDE 345KV CKT 1	717	789	0.17454	110.235	CHICKASAW - TOTAL 138KV CKT 1
FDNS	00NR	3	20WP	G15_093	FROM->TO	G14-057T 345.00 - SUNNYSIDE 345KV CKT 1	717	789	0.17578	110.2345	GEN345670 1-1RUSH G1 18.000
FDNS	00NR	3	20WP	G15_093	FROM->TO	G14-057T 345.00 - SUNNYSIDE 345KV CKT 1	717	789	0.17548	110.229	BROWN - RUSSETT 138KV CKT 1
FDNS	00NR	3	20WP	G15_093	FROM->TO	G14-057T 345.00 - SUNNYSIDE 345KV CKT 1	717	789	0.17578	110.2248	GEN521112 1-ORME3 13.800
FDNS	00NR	3	16WP	G15_093	FROM->TO	G14-057T 345.00 - SUNNYSIDE 345KV CKT 1	717	789	0.17595	110.2242	GEN600002 3-SHERBURNE CNTY G3
FDNS	00NR	3	20WP	G15_093	FROM->TO	G14-057T 345.00 - SUNNYSIDE 345KV CKT 1	717	789	0.17578	110.2069	4SIOUX 1 138.00 138/18.0KV TRANSFORMER CKT 1
FDNS	00NR	3	20WP	G15_093	FROM->TO	G14-057T 345.00 - SUNNYSIDE 345KV CKT 1	717	789	0.17578	110.2006	GEN560105 1-G08-22 0.6900
FDNS	00NR	3	16WP	G15_093	FROM->TO	G14-057T 345.00 - SUNNYSIDE 345KV CKT 1	717	789	0.17595	110.2	GEN344225 1-1CAL G1 25.000
FDNS	00NR	3	20WP	G15_093	FROM->TO	G14-057T 345.00 - SUNNYSIDE 345KV CKT 1	717	789	0.17578	110.1843	GEN562550 1-G14_040_3 0.6900
FDNS	00NR	3	20WP	G15_093	FROM->TO	G14-057T 345.00 - SUNNYSIDE 345KV CKT 1	717	789	0.17578	110.1721	GEN681522 3-GENOA 3
FDNS	00NR	3	20WP	G15_093	FROM->TO	G14-057T 345.00 - SUNNYSIDE 345KV CKT 1	717	789	0.17548	110.1597	RUSSETT - RUSSETT 138KV CKT 1
FDNS	00NR	3	20WP	G15_093	FROM->TO	G14-057T 345.00 - SUNNYSIDE 345KV CKT 1	717	789	0.17578	110.1569	GEN520811 1-ANADRK4
FDNS	00NR	3	16WP	G15_093	FROM->TO	G14-057T 345.00 - SUNNYSIDE 345KV CKT 1	717	789	0.17595	110.1546	GEN563202 1-G15085_3 0.5500
FDNS	00NR	3	20WP	G15_093	FROM->TO	G14-057T 345.00 - SUNNYSIDE 345KV CKT 1	717	789	0.17578	110.1419	EASTDC - ERCOT EQUIVALENCE 345KV CKT 1
FDNS	00NR	3	20WP	G15_093	FROM->TO	G14-057T 345.00 - SUNNYSIDE 345KV CKT 1	717	789	0.17578	110.1409	GEN527161 1-MUSTANG GEN #1
FDNS	00NR	3	20WP	G15_093	FROM->TO	G14-057T 345.00 - SUNNYSIDE 345KV CKT 1	717	789	0.17578	110.1409	GEN527162 1-MUSTANG GEN #2
FDNS	00NR	3	20WP	G15_093	FROM->TO	G14-057T 345.00 - SUNNYSIDE 345KV CKT 1	717	789	0.17495	110.1322	ROCKY POINT - SUNNYSIDE 138KV CKT 1
FDNS	00NR	3	20WP	G15_093	FROM->TO	G14-057T 345.00 - SUNNYSIDE 345KV CKT 1	717	789	0.17578	110.1314	GEN511962 2-RKYRDGW2-1 0.7000
FDNS	00NR	3	20WP	G15_093	FROM->TO	G14-057T 345.00 - SUNNYSIDE 345KV CKT 1	717	789	0.17578	110.1099	GEN672321 1-SHAND GENERATOR 1
FDNS	00NR	3	20WP	G15_093	FROM->TO	G14-057T 345.00 - SUNNYSIDE 345KV CKT 1	717	789	0.17542	110.1098	RUSSETT - SPRINGDALE 138KV CKT 1
FDNS	00NR	3	20WP	G15_093	FROM->TO	G14-057T 345.00 - SUNNYSIDE 345KV CKT 1	717	789	0.17578	110.1087	GEN525494 1-PLANT X GEN #4 20 KV
FDNS	00NR	3	16WP	G15_093	FROM->TO	G14-057T 345.00 - SUNNYSIDE 345KV CKT 1	717	789	0.17595	110.1083	GEN525562 1-TOLK GEN #2 24 KV
FDNS	00NR	3	20WP	G15_093	FROM->TO	G14-057T 345.00 - SUNNYSIDE 345KV CKT 1	717	789	0.17578	110.0936	GEN563192 1-G15084_3 0.5500
FDNS	00NR	3	20WP	G15_093	FROM->TO	G14-057T 345.00 - SUNNYSIDE 345KV CKT 1	717	789	0.17578	110.0933	GEN527882 1-CUNNINGHAM GEN #2 20 KV
FDNS	00NR	3	20WP	G15_093	FROM->TO	G14-057T 345.00 - SUNNYSIDE 345KV CKT 1	717	789	0.17578	110.087	GEN672310 1-POPLAR RIVER GENERATOR 1
FDNS	00NR	3	20WP	G15_093	FROM->TO	G14-057T 345.00 - SUNNYSIDE 345KV CKT 1	717	789	0.17578	110.087	GEN672311 2-POPLAR RIVER GENERATOR 2
FDNS	00NR	3	20WP	G15_093	FROM->TO	G14-057T 345.00 - SUNNYSIDE 345KV CKT 1	717	789	0.17578	110.0849	GEN344895 2-1LAB G2 20.000
FDNS	00NR	3	20WP	G15_093	FROM->TO	G14-057T 345.00 - SUNNYSIDE 345KV CKT 1	717	789	0.17566	110.0781	P12:138:WFEC-AEPW:GOLDENSW4:CRAIGJT4
FDNS	00NR	3	20WP	G15_093	FROM->TO	G14-057T 345.00 - SUNNYSIDE 345KV CKT 1	717	789	0.17578	110.0779	GEN527163 1-MUSTANG GEN #3 22 KV
FDNS	00NR	3	20WP	G15_093	FROM->TO	G14-057T 345.00 - SUNNYSIDE 345KV CKT 1	717	789	0.17578	110.0777	GEN672306 6-BOUNDARY DAM GENERATOR 6
FDNS	00NR	3	20WP	G15_093	FROM->TO	G14-057T 345.00 - SUNNYSIDE 345KV CKT 1	717	789	0.17501	110.0767	ARKANSAS NUCLEAR ONE - FT SMITH 500KV CKT 1
FDNS	00NR	3	20WP	G15_093	FROM->TO	G14-057T 345.00 - SUNNYSIDE 345KV CKT 1	717	789	0.17501	110.0767	ARKANSAS NUCLEAR ONE - FT SMITH 500KV CKT 1
FDNS	00NR	3	20WP	G15_093	FROM->TO	G14-057T 345.00 - SUNNYSIDE 345KV CKT 1	717	789	0.17578	110.0692	CLAY BOSWELL 230/20.9KV TRANSFORMER CKT 1
FDNS	00NR	3	20WP	G15_093	FROM->TO	G14-057T 345.00 - SUNNYSIDE 345KV CKT 1	717	789	0.17578	110.0685	GEN511853 1-COMANCHE #3
FDNS	00NR	3	16WP	G15_093	FROM->TO	G14-057T 345.00 - SUNNYSIDE 345KV CKT 1	717	789	0.17595	110.0622	GEN527166 1-MUSTANG_6 118.000
FDNS	00NR	3	20WP	G15_093	FROM->TO	G14-057T 345.00 - SUNNYSIDE 345KV CKT 1	717	789	0.17578	110.0608	GEN562512 1-G14_020_3 0.6900
FDNS	00NR	3	20WP	G15_093	FROM->TO	G14-057T 345.00 - SUNNYSIDE 345KV CKT 1	717	789	0.17578	110.0598	GEN562892 1-G15048_3 0.6900
FDNS	00NR	3	20WP	G15_093	FROM->TO	G14-057T 345.00 - SUNNYSIDE 345KV CKT 1	717	789	0.17578	110.0557	GEN344896 3-1LAB G3 20.000
FDNS	00NR	3	20WP	G15_093	FROM->TO	G14-057T 345.00 - SUNNYSIDE 345KV CKT 1	717	789	0.17578	110.0546	GEN344897 4-1LAB G4 20.000
FDNS	00NR	3	20WP	G15_093	FROM->TO	G14-057T 345.00 - SUNNYSIDE 345KV CKT 1	717	789	0.17578	110.0543	GEN344894 1-1LAB G1 20.000
FDNS	00NR	3	20WP	G15_093	FROM->TO	G14-057T 345.00 - SUNNYSIDE 345KV CKT 1	717	789	0.17594	110.052	P12:138:WFEC:MSL16
FDNS	00NR	3	20WP	G15_093	FROM->TO	G14-057T 345.00 - SUNNYSIDE 345KV CKT 1	717	789	0.17578	110.048	GEN681542 6-JP MADGETT
FDNS	00NR	3	20WP	G15_093	FROM->TO	G14-057T 345.00 - SUNNYSIDE 345KV CKT 1	717	789	0.17395	110.045	ARDMORE WEST - CARTER 138KV CKT 1
FDNS	00NR	3	20WP	G15_093	FROM->TO	G14-057T 345.00 - SUNNYSIDE 345KV CKT 1	717	789	0.17578	110.0283	GEN523461 1-BLACKHAWK GEN #1
FDNS	00NR	3	20WP	G15_093	FROM->TO	G14-057T 345.00 - SUNNYSIDE 345KV CKT 1	717	789	0.17578	110.0282	GEN523462 1-BLACKHAWK GEN #2
FDNS	00NR	3	16WP	G15_093	FROM->TO	G14-057T 345.00 - SUNNYSIDE 345KV CKT 1	717	789	0.17532	110.0259	LYDIA - WELSH 345KV CKT 1
FDNS	00NR	3	16WP	G15_093	FROM->TO	G14-057T 345.00 - SUNNYSIDE 345KV CKT 1	717	789	0.17532	110.0259	LYDIA - WELSH 345KV CKT 1
FDNS	00NR	3	20WP	G15_093	FROM->TO	G14-057T 345.00 - SUNNYSIDE 345KV CKT 1	717	789	0.17578	110.0211	GEN511852 1-COMANCHE #2
FDNS	00NR	3	20WP	G15_093	FROM->TO	G14-057T 345.00 - SUNNYSIDE 345KV CKT 1	717	789	0.17574	110.0017	P12:138:WFEC:MSL07
FDNS	00NR	3	20WP	G15_093	FROM->TO	G14-057T 345.00 - SUNNYSIDE 345KV CKT 1	717	789	0.17574	110.0017	P12:138:WFEC-AEPW:HUGOPP4:ATOKA--4
FDNS	00NR	3	20WP	G15_093	FROM->TO	G14-057T 345.00 - SUNNYSIDE 345KV CKT 1	717	789	0.17624	109.9974	CACHE - SNYDER 138KV CKT 1
FDNS	00NR	3	16WP	G15_093	FROM->TO	G14-057T 345.00 - SUNNYSIDE 345KV CKT 1	717	789	0.1749	109.9851	JOHNSON COUNTY (JOHNCO) 345/138/13.8KV TRANSFORMER CKT 1
FDNS	00NR	3	20WP	G15_093	FROM->TO	G14-057T 345.00 - SUNNYSIDE 345KV CKT 1	717	789	0.17569	109.9835	P12:138:WFEC:MSL06
FDNS	00NR	3	20WP	G15_093	FROM->TO	G14-057T 345.00 - SUNNYSIDE 345KV CKT 1	717	789	0.17569	109.9834	P12:138:AEPW-SWPA:LONEOAK4:TUPELO4
FDNS	00NR	3	20WP	G15_093	FROM->TO	G14-057T 345.00 - SUNNYSIDE 345KV CKT 1	717	789	0.17399	109.9829	SUNNYSIDE (SUNNYSD5) 345/138/13.8KV TRANSFORMER CKT 1

SOLUTION	GROUP	SCENARIO	SEASON	SOURCE	DIRECTION	MONITORED ELEMENT	RATEA (MVA)	RATEB(MVA)	TDF	TC%LOADING (% MVA)	CONTINGENCY
FDNS	00NR	3	16WP	G15_093	FROM->TO	G14-057T 345.00 - SUNNYSIDE 345KV CKT 1	717	789	0.17595	109.9726	GEN635023 3-WALTER SCOTT UNIT 3
FDNS	00NR	3	20WP	G15_093	FROM->TO	G14-057T 345.00 - SUNNYSIDE 345KV CKT 1	717	789	0.17578	109.9691	GEN562699 1-G15_018_3 0.6900
FDNS	00NR	3	20WP	G15_093	FROM->TO	G14-057T 345.00 - SUNNYSIDE 345KV CKT 1	717	789	0.17578	109.9656	GEN521111 1-ORME2 13.800
FDNS	00NR	3	20WP	G15_093	FROM->TO	G14-057T 345.00 - SUNNYSIDE 345KV CKT 1	717	789	0.17578	109.9576	GEN563162 1-G15081_3 0.6900
FDNS	00NR	3	20WP	G15_093	FROM->TO	G14-057T 345.00 - SUNNYSIDE 345KV CKT 1	717	789	0.17587	109.9548	G15085_T 138.00 - RUSSELL 138KV CKT 1
FDNS	00NR	3	20WP	G15_093	FROM->TO	G14-057T 345.00 - SUNNYSIDE 345KV CKT 1	717	789	0.17578	109.9527	GEN521110 1-ORME1 13.800
FDNS	00NR	3	20WP	G15_093	FROM->TO	G14-057T 345.00 - SUNNYSIDE 345KV CKT 1	717	789	0.17395	109.9336	ARDMORE WEST - UNIROYAL 138KV CKT 1
FDNS	00NR	3	16WP	G15_093	FROM->TO	G14-057T 345.00 - SUNNYSIDE 345KV CKT 1	717	789	0.17595	109.9237	GEN562590 1-G14_057_3 0.6900
FDNS	00NR	3	20WP	G15_093	FROM->TO	G14-057T 345.00 - SUNNYSIDE 345KV CKT 1	717	789	0.17744	109.9147	CLARKSVILLE - MUSKOGEE 345KV CKT 1
FDNS	00NR	3	20WP	G15_093	FROM->TO	G14-057T 345.00 - SUNNYSIDE 345KV CKT 1	717	789	0.17744	109.9147	CLARKSVILLE - MUSKOGEE 345KV CKT 1
FDNS	00NR	3	20WP	G15_093	FROM->TO	G14-057T 345.00 - SUNNYSIDE 345KV CKT 1	717	789	0.17578	109.9067	GEN563292 1-G15095_3 0.6900
FDNS	00NR	3	20WP	G15_093	FROM->TO	G14-057T 345.00 - SUNNYSIDE 345KV CKT 1	717	789	0.17434	109.9062	CARTRCO4 138.00 - RATLIFF 138KV CKT 1
FDNS	00NR	3	16WP	G15_093	FROM->TO	G14-057T 345.00 - SUNNYSIDE 345KV CKT 1	717	789	0.17595	109.8862	GEN562762 1-G15033_3 0.6900
FDNS	00NR	3	20WP	G15_093	FROM->TO	G14-057T 345.00 - SUNNYSIDE 345KV CKT 1	717	789	0.17578	109.8853	GEN661015 1-COYOTE
FDNS	00NR	3	20WP	G15_093	FROM->TO	G14-057T 345.00 - SUNNYSIDE 345KV CKT 1	717	789	0.17503	109.8801	P12:138:OKGE:3TERM40
FDNS	00NR	3	16WP	G15_093	FROM->TO	G14-057T 345.00 - SUNNYSIDE 345KV CKT 1	717	789	0.17595	109.8763	GEN562655 1-G14_074_3 0.6900
FDNS	00NR	3	20WP	G15_093	FROM->TO	G14-057T 345.00 - SUNNYSIDE 345KV CKT 1	717	789	0.17578	109.868	GEN563122 1-G15077_3 0.3850
FDNS	00NR	3	20WP	G15_093	FROM->TO	G14-057T 345.00 - SUNNYSIDE 345KV CKT 1	717	789	0.17578	109.8597	GEN562861 1-G15045_2 0.4800
FDNS	00NR	3	16WP	G15_093	FROM->TO	G14-057T 345.00 - SUNNYSIDE 345KV CKT 1	717	789	0.17595	109.827	GEN562685 1-G15_013_3 0.3550
FDNS	00NR	3	16WP	G15_093	FROM->TO	G14-057T 345.00 - SUNNYSIDE 345KV CKT 1	717	789	0.17595	109.8155	GEN525561 1-TOLK GEN #1 24 KV
FDNS	00NR	3	20WP	G15_093	FROM->TO	G14-057T 345.00 - SUNNYSIDE 345KV CKT 1	717	789	0.17679	109.7898	GRAPEVINE INTERCHANGE - STATELINE INTERCHANGE 230KV CKT 1
FDNS	00NR	3	20WP	G15_093	FROM->TO	G14-057T 345.00 - SUNNYSIDE 345KV CKT 1	717	789	0.17679	109.7898	GRAPEVINE INTERCHANGE - STATELINE INTERCHANGE 230KV CKT 1
FDNS	00NR	3	20WP	G15_093	FROM->TO	G14-057T 345.00 - SUNNYSIDE 345KV CKT 1	717	789	0.17578	109.7741	GEN657748 1-YOUNG 2 GENERATOR
FDNS	00NR	3	20WP	G15_093	FROM->TO	G14-057T 345.00 - SUNNYSIDE 345KV CKT 1	717	789	0.17578	109.7573	GEN527883 1-CUNNINGHAM GEN #3 22 KV
FDNS	00NR	3	20WP	G15_093	FROM->TO	G14-057T 345.00 - SUNNYSIDE 345KV CKT 1	717	789	0.17578	109.7543	GEN527884 1-CUNNINGHAM GEN #4 22 KV
FDNS	00NR	3	20WP	G15_093	FROM->TO	G14-057T 345.00 - SUNNYSIDE 345KV CKT 1	717	789	0.17587	109.724	P12:138:AEPW:SHAM4WT:CHILD4WT
FDNS	00NR	3	20WP	G15_093	FROM->TO	G14-057T 345.00 - SUNNYSIDE 345KV CKT 1	717	789	0.17395	109.7208	SUNNYSIDE - UNIROYAL 138KV CKT 1
FDNS	00NR	3	20WP	G15_093	FROM->TO	G14-057T 345.00 - SUNNYSIDE 345KV CKT 1	717	789	0.17594	109.6964	P12:138:WFEC:MSL15
FDNS	00NR	3	20WP	G15_093	FROM->TO	G14-057T 345.00 - SUNNYSIDE 345KV CKT 1	717	789	0.18014	109.6947	CHISHOLM7 345.00 () 345/230/13.2KV TRANSFORMER CKT 1
FDNS	00NR	3	20WP	G15_093	FROM->TO	G14-057T 345.00 - SUNNYSIDE 345KV CKT 1	717	789	0.17578	109.6877	GEN562704 1-G15_020_3 0.3550
FDNS	00NR	3	16WP	G15_093	FROM->TO	G14-057T 345.00 - SUNNYSIDE 345KV CKT 1	717	789	0.17595	109.6872	GEN563272 1-G15093_3 0.6900
FDNS	00NR	3	20WP	G15_093	FROM->TO	G14-057T 345.00 - SUNNYSIDE 345KV CKT 1	717	789	0.17578	109.6868	GEN526331 1-JONES GEN #1 22 KV
FDNS	00NR	3	20WP	G15_093	FROM->TO	G14-057T 345.00 - SUNNYSIDE 345KV CKT 1	717	789	0.17578	109.6866	GEN526332 1-JONES GEN #2 21 KV
FDNS	00NR	3	20WP	G15_093	FROM->TO	G14-057T 345.00 - SUNNYSIDE 345KV CKT 1	717	789	0.17578	109.6806	GEN620315 1-BIG STONE GEN
FDNS	00NR	3	20WP	G15_093	FROM->TO	G14-057T 345.00 - SUNNYSIDE 345KV CKT 1	717	789	0.17578	109.6773	GEN562992 1-G15063_3 0.6900
FDNS	00NR	3	16WP	G15_093	FROM->TO	G14-057T 345.00 - SUNNYSIDE 345KV CKT 1	717	789	0.17595	109.6728	GEN527903 1-HOBBS PLANT #3 (ST)
FDNS	00NR	3	20WP	G15_093	FROM->TO	G14-057T 345.00 - SUNNYSIDE 345KV CKT 1	717	789	0.17578	109.6301	GEN562952 1-G15057_3 0.6500
FDNS	00NR	3	20WP	G15_093	FROM->TO	G14-057T 345.00 - SUNNYSIDE 345KV CKT 1	717	789	0.17673	109.6281	GRAPEVINE INTERCHANGE - NICHOLS STATION 230KV CKT 1
FDNS	00NR	3	20WP	G15_093	FROM->TO	G14-057T 345.00 - SUNNYSIDE 345KV CKT 1	717	789	0.17673	109.6281	GRAPEVINE INTERCHANGE - NICHOLS STATION 230KV CKT 1
FDNS	00NR	3	20WP	G15_093	FROM->TO	G14-057T 345.00 - SUNNYSIDE 345KV CKT 1	717	789	0.17578	109.6258	GEN563173 1-G15082_3 0.6900
FDNS	00NR	3	20WP	G15_093	FROM->TO	G14-057T 345.00 - SUNNYSIDE 345KV CKT 1	717	789	0.17578	109.6067	GEN600004 2-PRAIRIE ISLAND G2
FDNS	00NR	3	20WP	G15_093	FROM->TO	G14-057T 345.00 - SUNNYSIDE 345KV CKT 1	717	789	0.17578	109.6041	GEN600003 1-PRAIRIE ISLAND G1
FDNS	00NR	3	20WP	G15_093	FROM->TO	G14-057T 345.00 - SUNNYSIDE 345KV CKT 1	717	789	0.17578	109.5869	GEN600006 1-AS KING
FDNS	00NR	3	20WP	G15_093	FROM->TO	G14-057T 345.00 - SUNNYSIDE 345KV CKT 1	717	789	0.17578	109.5867	GEN562710 1-G15_022_3 0.5500
FDNS	00NR	3	16WP	G15_093	FROM->TO	G14-057T 345.00 - SUNNYSIDE 345KV CKT 1	717	789	0.17595	109.5478	GEN635024 4-WALTER SCOTT UNIT 4
FDNS	00NR	3	20WP	G15_093	FROM->TO	G14-057T 345.00 - SUNNYSIDE 345KV CKT 1	717	789	0.17904	109.5472	CANEY CREEK - TEXOMA JCT 138KV CKT 1
FDNS	00NR	3	20WP	G15_093	FROM->TO	G14-057T 345.00 - SUNNYSIDE 345KV CKT 1	717	789	0.17578	109.5368	GEN511851 1-COMANCHE #1
FDNS	00NR	3	20WP	G15_093	FROM->TO	G14-057T 345.00 - SUNNYSIDE 345KV CKT 1	717	789	0.18014	109.5187	CHISHOLM7 345.00 - GRACEMONT 345KV CKT 1
FDNS	00NR	3	20WP	G15_093	FROM->TO	G14-057T 345.00 - SUNNYSIDE 345KV CKT 1	717	789	0.17578	109.509	GEN532751 1-WOLF CREEK GENERATING STATION UNIT 1
FDNS	00NR	3	20WP	G15_093	FROM->TO	G14-057T 345.00 - SUNNYSIDE 345KV CKT 1	717	789	0.17578	109.421	GEN635213 3-NEAL UNIT 3
FDNS	00NR	3	20WP	G15_093	FROM->TO	G14-057T 345.00 - SUNNYSIDE 345KV CKT 1	717	789	0.17578	109.4142	GEN629074 1-ARNOLD LOWSIDE OF GSU XFMR
FDNS	00NR	3	20WP	G15_093	FROM->TO	G14-057T 345.00 - SUNNYSIDE 345KV CKT 1	717	789	0.17578	109.4059	BIG STONE 230/24.0KV TRANSFORMER CKT 1
FDNSLock	00NR	3	20WP	G15_093	FROM->TO	G14-057T 345.00 - SUNNYSIDE 345KV CKT 1	717	789	0.17578	109.3781	GEN615002 2-COAL CREEK
FDNS	00NR	3	20WP	G15_093	FROM->TO	G14-057T 345.00 - SUNNYSIDE 345KV CKT 1	717	789	0.17581	109.3754	P12:138:WFEC:MSL09
FDNS	00NR	3	20WP	G15_093	FROM->TO	G14-057T 345.00 - SUNNYSIDE 345KV CKT 1	717	789	0.17851	109.354	P12:138:AEPW-OGE:CORNVIL4:CIMARON4
FDNS	00NR	3	20WP	G15_093	FROM->TO	G14-057T 345.00 - SUNNYSIDE 345KV CKT 1	717	789	0.17578	109.3349	GEN562754 1-G15031_5 0.6900
FDNS	00NR	3	20WP	G15_093	FROM->TO	G14-057T 345.00 - SUNNYSIDE 345KV CKT 1	717	789	0.17578	109.322	GEN636641 1-LOUISA UNIT 1
FDNS	00NR	3	20WP	G15_093	FROM->TO	G14-057T 345.00 - SUNNYSIDE 345KV CKT 1	717	789	0.17531	109.312	NORTHWEST TEXARKANA - VALLIANT 345KV CKT 1
FDNS	00NR	3	20WP	G15_093	FROM->TO	G14-057T 345.00 - SUNNYSIDE 345KV CKT 1	717	789	0.17531	109.312	NORTHWEST TEXARKANA - VALLIANT 345KV CKT 1
FDNS	00NR	3	20WP	G15_093	FROM->TO	G14-057T 345.00 - SUNNYSIDE 345KV CKT 1	717	789	0.17578	109.2925	GEN600005 1-MONTICELLO
FDNS	00NR	3	20WP	G15_093	FROM->TO	G14-057T 345.00 - SUNNYSIDE 345KV CKT 1	717	789	0.17578	109.2751	GEN562756 1-G15031_7 0.6900
FDNS	00NR	3	20WP	G15_093	FROM->TO	G14-057T 345.00 - SUNNYSIDE 345KV CKT 1	717	789	0.17578	109.274	GEN562556 1-G14_046_3 0.3420
FDNS	00NR	3	20WP	G15_093	FROM->TO	G14-057T 345.00 - SUNNYSIDE 345KV CKT 1	717	789	0.17578	109.2337	GEN562023 1-G11_020_3 0.6900
FDNS	00NR	3	20WP	G15_093	FROM->TO	G14-057T 345.00 - SUNNYSIDE 345KV CKT 1	717	789	0.17578	109.2337	GEN562026 1-G11_019_3 0.6900
FDNS	00NR	3	20WP	G15_093	FROM->TO	G14-057T 345.00 - SUNNYSIDE 345KV CKT 1	717	789	0.17578	109.1895	GEN563142 1-G15079_3 0.5500
FDNS	00NR	3	20WP	G15_093	FROM->TO	G14-057T 345.00 - SUNNYSIDE 345KV CKT 1	717	789	0.17578	109.1895	GEN563151 1-G15080_2 0.5500
FDNS	00NR	3	20WP	G15_093	FROM->TO	G14-057T 345.00 - SUNNYSIDE 345KV CKT 1	717	789	0.17578	109.1688	GEN600000 1-SHERBURNECNTY G1
FDNS	00NR	3	20WP	G15_093	FROM->TO	G14-057T 345.00 - SUNNYSIDE 345KV CKT 1	717	789	0.17757	109.1401	STLN-DEMARC6 - SWEETWATER 230KV CKT 1
FDNS	00NR	3	20WP	G15_093	FROM->TO	G14-057T 345.00 - SUNNYSIDE 345KV CKT 1	717	789	0.17757	109.1394	P12:230:AEPW-SPS:SWEETWT6:WHEELER 6
FDNS	00NR	3	20WP	G15_093	FROM->TO	G14-057T 345.00 - SUNNYSIDE 345KV CKT 1	717	789	0.17757	109.1378	STATELINE INTERCHANGE - STLN-DEMARC6 230KV CKT 1
FDNS	00NR	3	20WP	G15_093	FROM->TO	G14-057T 345.00 - SUNNYSIDE 345KV CKT 1	717	789	0.17578	109.1289	GEN629075 1-OTTUMWA GENERATOR FOR OTTUMWA UNIT NO 1
FDNS	00NR	3	20WP	G15_093	FROM->TO	G14-057T 345.00 - SUNNYSIDE 345KV CKT 1	717	789	0.17578	109.1195	GEN600001 2-SHERBURNE CNTY G2
FDNS	00NR	3	20WP	G15_093	FROM->TO	G14-057T 345.00 - SUNNYSIDE 345KV CKT 1	717	789	0.17578	109.097	GEN523971 1-HARRINGTON GEN #1 24 KV
FDNS	00NR	3	20WP	G15_093	FROM->TO	G14-057T 345.00 - SUNNYSIDE 345KV CKT 1	717	789	0.17578	109.0969	GEN523972 1-HARRINGTON GEN #2 24 KV
FDNS	00NR	3	20WP	G15_093	FROM->TO	G14-057T 345.00 - SUNNYSIDE 345KV CKT 1	717	789	0.17578	109.0969	GEN523973 1-HARRINGTON GEN #3 24 KV
FDNS	00NR	3	20WP	G15_093	FROM->TO	G14-057T 345.00 - SUNNYSIDE 345KV CKT 1	717	789	0.17578	109.0143	GEN511848 1-SOUTHWESTERN STATION #3
FDNS	00NR	3	20WP	G15_093	FROM->TO	G14-057T 345.00 - SUNNYSIDE 345KV CKT 1	717	789	0.17578	108.9872	GEN527901 1-HOBBS PLANT #1 (CT)
FDNS	00NR	3	20WP	G15_093	FROM->TO	G14-057T 345.00 - SUNNYSIDE 345KV CKT 1	717	789	0.17578	108.9872	GEN527902 1-HOBBS PLANT #2 (CT)
FDNS	00NR	3	20WP	G15_093	FROM->TO	G14-057T 345.00 - SUNNYSIDE 345KV CKT 1	717	789	0.17516	108.9494	LYDIA - WELSH 345KV CKT 1

SOLUTION	GROUP	SCENARIO	SEASON	SOURCE	DIRECTION	MONITORED ELEMENT	RATEA (MVA)	RATEB(MVA)	TDF	TC%LOADING (% MVA)	CONTINGENCY
FDNS	00NR	3	20WP	G15_093	FROM->TO	G14-057T 345.00 - SUNNYSIDE 345KV CKT 1	717	789	0.17516	108.9494	LYDIA - WELSH 345KV CKT 1
FDNS	00NR	3	20WP	G15_093	FROM->TO	G14-057T 345.00 - SUNNYSIDE 345KV CKT 1	717	789	0.17578	108.9486	GEN563042 1-G15068_3 0.6900
FDNS	00NR	3	20WP	G15_093	FROM->TO	G14-057T 345.00 - SUNNYSIDE 345KV CKT 1	717	789	0.18025	108.9039	P12:230:AEPW:ELKCITY6:SWEETWT6
FDNS	00NR	3	20WP	G15_093	FROM->TO	G14-057T 345.00 - SUNNYSIDE 345KV CKT 1	717	789	0.17578	108.8995	SHERBURNE CO 345/24.0KV TRANSFORMER CKT 1
FDNS	00NR	3	16WP	G15_093	FROM->TO	G14-057T 345.00 - SUNNYSIDE 345KV CKT 1	717	789	0.17506	108.8865	LYDIA - VALLIANT 345KV CKT 1
FDNS	00NR	3	16WP	G15_093	FROM->TO	G14-057T 345.00 - SUNNYSIDE 345KV CKT 1	717	789	0.17506	108.8865	LYDIA - VALLIANT 345KV CKT 1
FDNS	00NR	3	20WP	G15_093	FROM->TO	G14-057T 345.00 - SUNNYSIDE 345KV CKT 1	717	789	0.17578	108.8563	GEN635214 4-NEAL UNIT 4
FDNS	00NR	3	20WP	G15_093	FROM->TO	G14-057T 345.00 - SUNNYSIDE 345KV CKT 1	717	789	0.17578	108.6853	GEN600002 3-SHERBURNE CNTY G3
FDNS	00NR	3	20WP	G15_093	FROM->TO	G14-057T 345.00 - SUNNYSIDE 345KV CKT 1	717	789	0.17578	108.6493	GEN563043 1-G15068_4 0.6900
FDNS	00NR	3	20WP	G15_093	FROM->TO	G14-057T 345.00 - SUNNYSIDE 345KV CKT 1	717	789	0.17578	108.6374	GEN563273 2-G15093_4 0.6900
FDNS	00NR	3	20WP	G15_093	FROM->TO	G14-057T 345.00 - SUNNYSIDE 345KV CKT 1	717	789	0.17578	108.6252	GEN526333 1-JONES GEN #3 21 KV
FDNS	00NR	3	20WP	G15_093	FROM->TO	G14-057T 345.00 - SUNNYSIDE 345KV CKT 1	717	789	0.17578	108.6251	GEN526334 1-JONES_4 116.500
FDNS	00NR	3	20WP	G15_093	FROM->TO	G14-057T 345.00 - SUNNYSIDE 345KV CKT 1	717	789	0.17578	108.6086	GEN344225 1-1CAL G1 25.000
FDNS	00NR	3	20WP	G15_093	FROM->TO	G14-057T 345.00 - SUNNYSIDE 345KV CKT 1	717	789	0.17578	108.5859	GEN525844 1-ELK_1 118.000
FDNS	00NR	3	20WP	G15_093	FROM->TO	G14-057T 345.00 - SUNNYSIDE 345KV CKT 1	717	789	0.17578	108.5697	GEN525845 1-ELK_2 1 18.000
FDNS	00NR	3	20WP	G15_093	FROM->TO	G14-057T 345.00 - SUNNYSIDE 345KV CKT 1	717	789	0.17757	108.5198	CHISHOLM6 230.00 - SWEETWATER 230KV CKT 1
FDNS	00NR	3	20WP	G15_093	FROM->TO	G14-057T 345.00 - SUNNYSIDE 345KV CKT 1	717	789	0.17578	108.4391	GEN527166 1-MUSTANG_6 118.000
FDNS	00NR	3	20WP	G15_093	FROM->TO	G14-057T 345.00 - SUNNYSIDE 345KV CKT 1	717	789	0.17578	108.4294	GEN563202 1-G15085_3 0.5500
FDNS	00NR	3	20WP	G15_093	FROM->TO	G14-057T 345.00 - SUNNYSIDE 345KV CKT 1	717	789	0.17578	108.3924	GEN635023 3-WALTER SCOTT UNIT 3
FDNS	00NR	3	20WP	G15_093	FROM->TO	G14-057T 345.00 - SUNNYSIDE 345KV CKT 1	717	789	0.17578	108.3748	GEN528501 1-G14_012 24.000
FDNS	00NR	3	20WP	G15_093	FROM->TO	G14-057T 345.00 - SUNNYSIDE 345KV CKT 1	717	789	0.17578	108.2669	GEN562590 1-G14_057_3 0.6900
FDNS	00NR	3	20WP	G15_093	FROM->TO	G14-057T 345.00 - SUNNYSIDE 345KV CKT 1	717	789	0.17578	108.2159	GEN562762 1-G15033_3 0.6900
FDNS	00NR	3	20WP	G15_093	FROM->TO	G14-057T 345.00 - SUNNYSIDE 345KV CKT 1	717	789	0.17578	108.2058	GEN562655 1-G14_074_3 0.6900
FDNS	00NR	3	20WP	G15_093	FROM->TO	G14-057T 345.00 - SUNNYSIDE 345KV CKT 1	717	789	0.17578	108.1862	GEN525562 1-TOLK GEN #2 24 KV
FDNS	00NR	3	20WP	G15_093	FROM->TO	G14-057T 345.00 - SUNNYSIDE 345KV CKT 1	717	789	0.17473	108.1302	JOHNSON COUNTY (JOHNCO) 345/138/13.8KV TRANSFORMER CKT 1
FDNS	00NR	3	20WP	G15_093	FROM->TO	G14-057T 345.00 - SUNNYSIDE 345KV CKT 1	717	789	0.17578	108.1293	GEN562685 1-G15_013_3 0.3550
FDNS	00NR	3	20WP	G15_093	FROM->TO	G14-057T 345.00 - SUNNYSIDE 345KV CKT 1	717	789	0.17578	108.0904	GEN527903 1-HOBBS PLANT #3 (ST)
FDNS	00NR	3	20WP	G15_093	FROM->TO	G14-057T 345.00 - SUNNYSIDE 345KV CKT 1	717	789	0.17578	107.9849	GEN563272 1-G15093_3 0.6900
FDNS	00NR	3	20WP	G15_093	FROM->TO	G14-057T 345.00 - SUNNYSIDE 345KV CKT 1	717	789	0.17578	107.9844	GEN635024 4-WALTER SCOTT UNIT 4
FDNS	00NR	3	16WP	G15_093	FROM->TO	G14-057T 345.00 - SUNNYSIDE 345KV CKT 1	717	789	0.17595	107.8948	EASTDC - ERCOT EQUIVALENCE 345KV CKT 1
FDNS	00NR	3	20WP	G15_093	FROM->TO	G14-057T 345.00 - SUNNYSIDE 345KV CKT 1	717	789	0.17489	107.8931	LYDIA - VALLIANT 345KV CKT 1
FDNS	00NR	3	20WP	G15_093	FROM->TO	G14-057T 345.00 - SUNNYSIDE 345KV CKT 1	717	789	0.17489	107.8931	LYDIA - VALLIANT 345KV CKT 1
FDNS	00NR	3	20WP	G15_093	FROM->TO	G14-057T 345.00 - SUNNYSIDE 345KV CKT 1	717	789	0.17578	107.7483	GEN525561 1-TOLK GEN #1 24 KV
FDNS	00NR	3	16WP	G15_093	FROM->TO	G14-057T 345.00 - SUNNYSIDE 345KV CKT 1	717	789	0.15112	106.9904	JOHNSON COUNTY - PITTSBURG 345KV CKT 1
FDNS	00NR	3	16WP	G15_093	FROM->TO	G14-057T 345.00 - SUNNYSIDE 345KV CKT 1	717	789	0.15112	106.9904	JOHNSON COUNTY - PITTSBURG 345KV CKT 1
FDNS	00NR	3	16WP	G15_093	FROM->TO	G14-057T 345.00 - SUNNYSIDE 345KV CKT 1	717	789	0.17595	106.4713	GEN563263 1-G15092_4 0.6900
FDNS	00NR	3	16WP	G15_093	FROM->TO	G14-057T 345.00 - SUNNYSIDE 345KV CKT 1	717	789	0.17033	106.0336	HUGO - VALLIANT 345KV CKT 1
FDNS	00NR	3	16WP	G15_093	FROM->TO	G14-057T 345.00 - SUNNYSIDE 345KV CKT 1	717	789	0.17033	106.0336	HUGO - VALLIANT 345KV CKT 1
FDNS	00NR	3	17SP	G15_093	FROM->TO	G14-057T 345.00 - SUNNYSIDE 345KV CKT 1	717	789	0.35011	105.9521	CIMARRON - MINCO 345KV CKT 1
FDNS	00NR	3	20WP	G15_093	FROM->TO	G14-057T 345.00 - SUNNYSIDE 345KV CKT 1	717	789	0.15098	105.8204	JOHNSON COUNTY - PITTSBURG 345KV CKT 1
FDNS	00NR	3	20WP	G15_093	FROM->TO	G14-057T 345.00 - SUNNYSIDE 345KV CKT 1	717	789	0.15098	105.8204	JOHNSON COUNTY - PITTSBURG 345KV CKT 1
FDNS	00NR	3	20WP	G15_093	FROM->TO	G14-057T 345.00 - SUNNYSIDE 345KV CKT 1	717	789	0.17017	105.3179	HUGO - VALLIANT 345KV CKT 1
FDNS	00NR	3	20WP	G15_093	FROM->TO	G14-057T 345.00 - SUNNYSIDE 345KV CKT 1	717	789	0.17017	105.3179	HUGO - VALLIANT 345KV CKT 1
FDNS	00NR	3	16WP	G15_093	FROM->TO	G14-057T 345.00 - SUNNYSIDE 345KV CKT 1	717	789	0.18575	105.0413	G14-074T 345.00 - TUCO INTERCHANGE 345KV CKT 1
FDNS	00NR	3	20WP	G15_093	FROM->TO	G14-057T 345.00 - SUNNYSIDE 345KV CKT 1	717	789	0.17578	104.8195	GEN563263 1-G15092_4 0.6900
FDNS	00NR	3	16WP	G15_093	FROM->TO	G14-057T 345.00 - SUNNYSIDE 345KV CKT 1	717	789	0.17595	104.7958	GEN563262 1-G15092_3 0.6900
FDNS	00NR	3	20WP	G15_093	FROM->TO	G14-057T 345.00 - SUNNYSIDE 345KV CKT 1	717	789	0.17578	103.1549	GEN563262 1-G15092_3 0.6900
FDNS	00NR	3	20WP	G15_093	FROM->TO	G14-057T 345.00 - SUNNYSIDE 345KV CKT 1	717	789	0.18559	102.2467	G14-074T 345.00 - TUCO INTERCHANGE 345KV CKT 1
FDNS	00NR	3	16WP	G15_093	FROM->TO	G14-057T 345.00 - SUNNYSIDE 345KV CKT 1	717	789	0.14554	101.3793	JOHNSON COUNTY - SUNNYSIDE 345KV CKT 1
FDNS	00NR	0	25SP	G15_094	TO->FROM	CHAPPEL - COLTON 7 115.00 115KV CKT 1	109	109	0.03238	105.1836	P12:115:TSGT:GRANTNB7-OGALALA7_2
FDNS	00NR	0	17SP	G15_094	TO->FROM	CHAPPEL - COLTON 7 115.00 115KV CKT 1	109	109	0.08663	103.1798	SIDNEY - SIDNEY1-LNX3345.00 345KV CKT Z
FDNS	00NR	0	17SP	G15_094	TO->FROM	CHAPPEL - COLTON 7 115.00 115KV CKT 1	109	109	0.08663	103.1009	KEYSTONE - SIDNEY1-LNX3345.00 345KV CKT 1
FDNS	00NR	0	17SP	G15_094	TO->FROM	CHAPPEL - COLTON 7 115.00 115KV CKT 1	109	109	0.03304	101.5047	P12:115:TSGT:GRANTNB7-OGALALA7_2
FDNS	00NR	0	20SP	G15_094	TO->FROM	CHAPPEL - COLTON 7 115.00 115KV CKT 1	109	109	0.03237	101.0434	P12:115:TSGT:GRANTNB7-OGALALA7_2
FDNS	00NR	0	25SP	G15_094	TO->FROM	COLTON 7 115.00 - SIDNEY 115KV CKT 1	109	109	0.03238	108.3279	P12:115:TSGT:GRANTNB7-OGALALA7_2
FDNS	00NR	0	17SP	G15_094	TO->FROM	COLTON 7 115.00 - SIDNEY 115KV CKT 1	109	109	0.08663	106.2157	SIDNEY - SIDNEY1-LNX3345.00 345KV CKT Z
FDNS	00NR	0	17SP	G15_094	TO->FROM	COLTON 7 115.00 - SIDNEY 115KV CKT 1	109	109	0.08663	106.1369	KEYSTONE - SIDNEY1-LNX3345.00 345KV CKT 1
FDNS	00NR	0	17SP	G15_094	TO->FROM	COLTON 7 115.00 - SIDNEY 115KV CKT 1	109	109	0.03304	104.7239	P12:115:TSGT:GRANTNB7-OGALALA7_2
FDNS	00NR	0	20SP	G15_094	TO->FROM	COLTON 7 115.00 - SIDNEY 115KV CKT 1	109	109	0.03237	104.2051	P12:115:TSGT:GRANTNB7-OGALALA7_2
FDNS	00NR	0	25SP	G15_094	TO->FROM	COLTON 7 115.00 - SIDNEY 115KV CKT 1	109	109	0.08817	101.9868	SIDNEY - SIDNEY1-LNX3345.00 345KV CKT Z
FDNS	00NR	0	25SP	G15_094	TO->FROM	COLTON 7 115.00 - SIDNEY 115KV CKT 1	109	109	0.08817	101.8225	KEYSTONE - SIDNEY1-LNX3345.00 345KV CKT 1
FDNS	00NR	0	20SP	G15_094	TO->FROM	COLTON 7 115.00 - SIDNEY 115KV CKT 1	109	109	0.08816	100.8041	SIDNEY - SIDNEY1-LNX3345.00 345KV CKT Z
FDNSLock	00NR	0	20SP	G15_094	TO->FROM	COLTON 7 115.00 - SIDNEY 115KV CKT 1	109	109	0.08816	100.3427	KEYSTONE - SIDNEY1-LNX3345.00 345KV CKT 1
FDNS	09NR	0	17G	G15_094	FROM->TO	DIXONCO 230.00 - TWIN CHURCH 230KV CKT 1	320	320	0.03037	129.9787	HOSKINS - RAUN 345KV CKT 1
FDNS	00NR	0	17SP	G15_094	FROM->TO	G14-059T 230.00 - OGALLALA 230KV CKT 1	320	320	0.44479	169.5112	SIDNEY - SIDNEY1-LNX3345.00 345KV CKT Z
FDNS	00NR	0	17SP	G15_094	FROM->TO	G14-059T 230.00 - OGALLALA 230KV CKT 1	320	320	0.44479	169.4494	KEYSTONE - SIDNEY1-LNX3345.00 345KV CKT 1
FDNSLock	00NR	0	20SP	G15_094	FROM->TO	G14-059T 230.00 - OGALLALA 230KV CKT 1	320	320	0.45374	158.627	KEYSTONE - SIDNEY1-LNX3345.00 345KV CKT 1
FDNS	00NR	0	20SP	G15_094	FROM->TO	G14-059T 230.00 - OGALLALA 230KV CKT 1	320	320	0.45374	158.2466	SIDNEY - SIDNEY1-LNX3345.00 345KV CKT Z
FDNS	00NR	0	25SP	G15_094	FROM->TO	G14-059T 230.00 - OGALLALA 230KV CKT 1	320	320	0.45374	157.6276	SIDNEY - SIDNEY1-LNX3345.00 345KV CKT Z
FDNS	00NR	0	25SP	G15_094	FROM->TO	G14-059T 230.00 - OGALLALA 230KV CKT 1	320	320	0.45374	157.369	KEYSTONE - SIDNEY1-LNX3345.00 345KV CKT 1
FDNS	09ALL	0	17G	G15_094	FROM->TO	G14-059T 230.00 - OGALLALA 230KV CKT 1	320	320	0.53835	149.5595	KEYSTONE - SIDNEY1-LNX3345.00 345KV CKT 1
FDNS	09ALL	0	17G	G15_094	FROM->TO	G14-059T 230.00 - OGALLALA 230KV CKT 1	320	320	0.53835	149.4129	SIDNEY - SIDNEY1-LNX3345.00 345KV CKT Z
FDNS	09ALL	0	17SP	G15_094	FROM->TO	G14-059T 230.00 - OGALLALA 230KV CKT 1	320	320	0.53329	148.8943	KEYSTONE - SIDNEY1-LNX3345.00 345KV CKT 1
FDNS	09ALL	0	17SP	G15_094	FROM->TO	G14-059T 230.00 - OGALLALA 230KV CKT 1	320	320	0.53329	148.7484	SIDNEY - SIDNEY1-LNX3345.00 345KV CKT Z
FDNS	09NR	0	17G	G15_094	FROM->TO	G14-059T 230.00 - OGALLALA 230KV CKT 1	320	320	0.44017	148.0014	KEYSTONE - SIDNEY1-LNX3345.00 345KV CKT 1
FDNS	09NR	0	17G	G15_094	FROM->TO	G14-059T 230.00 - OGALLALA 230KV CKT 1	320	320	0.44017	147.9713	SIDNEY - SIDNEY1-LNX3345.00 345KV CKT Z
FDNS	09ALL	0	16WP	G15_094	FROM->TO	G14-059T 230.00 - OGALLALA 230KV CKT 1	320	320	0.53763	144.4749	SIDNEY - SIDNEY1-LNX3345.00 345KV CKT Z
FDNS	09ALL	0	16WP	G15_094	FROM->TO	G14-059T 230.00 - OGALLALA 230KV CKT 1	320	320	0.53763	144.3246	KEYSTONE - SIDNEY1-LNX3345.00 345KV CKT 1
FDNS	09ALL	0	20SP	G15_094	FROM->TO	G14-059T 230.00 - OGALLALA 230KV CKT 1	320	320	0.53589	143.748	KEYSTONE - SIDNEY1-LNX3345.00 345KV CKT 1

SOLUTION	GROUP	SCENARIO	SEASON	SOURCE	DIRECTION	MONITORED ELEMENT	RATEA (MVA)	RATEB(MVA)	TDF	TC%LOADING (% MVA)	CONTINGENCY
FDNS	09ALL	0	20SP	G15_094	FROM->TO	G14-059T 230.00 - OGALLALA 230KV CKT 1	320	320	0.53589	143.6257	SIDNEY - SIDNEY1-LNX3345.00 345KV CKT Z
FDNS	09ALL	0	25SP	G15_094	FROM->TO	G14-059T 230.00 - OGALLALA 230KV CKT 1	320	320	0.53643	143.1778	SIDNEY - SIDNEY1-LNX3345.00 345KV CKT Z
FDNS	09ALL	0	25SP	G15_094	FROM->TO	G14-059T 230.00 - OGALLALA 230KV CKT 1	320	320	0.53643	143.1011	KEYSTONE - SIDNEY1-LNX3345.00 345KV CKT 1
FDNSLock	00NR	0	16WP	G15_094	FROM->TO	G14-059T 230.00 - OGALLALA 230KV CKT 1	320	320	0.45039	141.3538	KEYSTONE - SIDNEY1-LNX3345.00 345KV CKT 1
FDNSLock	00NR	0	16WP	G15_094	FROM->TO	G14-059T 230.00 - OGALLALA 230KV CKT 1	320	320	0.45039	141.3219	SIDNEY - SIDNEY1-LNX3345.00 345KV CKT Z
FDNS	09ALL	0	20WP	G15_094	FROM->TO	G14-059T 230.00 - OGALLALA 230KV CKT 1	320	320	0.53269	135.843	SIDNEY - SIDNEY1-LNX3345.00 345KV CKT Z
FDNS	09ALL	0	20WP	G15_094	FROM->TO	G14-059T 230.00 - OGALLALA 230KV CKT 1	320	320	0.53269	135.4242	KEYSTONE - SIDNEY1-LNX3345.00 345KV CKT 1
FDNS	00NR	0	20WP	G15_094	FROM->TO	G14-059T 230.00 - OGALLALA 230KV CKT 1	320	320	0.45017	134.2017	KEYSTONE - SIDNEY1-LNX3345.00 345KV CKT 1
FDNS	00NR	0	20WP	G15_094	FROM->TO	G14-059T 230.00 - OGALLALA 230KV CKT 1	320	320	0.45017	134.1981	SIDNEY - SIDNEY1-LNX3345.00 345KV CKT Z
FDNS	00NR	0	17SP	G15_094	FROM->TO	G14-059T 230.00 - OGALLALA 230KV CKT 1	320	320	0.26654	110.7678	GERALD GENTLEMAN STATION - KEYSTONE 345KV CKT 1
FDNS	00NR	0	20SP	G15_094	FROM->TO	G14-059T 230.00 - OGALLALA 230KV CKT 1	320	320	0.27218	104.3758	GERALD GENTLEMAN STATION - KEYSTONE 345KV CKT 1
FDNS	00NR	0	25SP	G15_094	FROM->TO	G14-059T 230.00 - OGALLALA 230KV CKT 1	320	320	0.27221	103.7458	GERALD GENTLEMAN STATION - KEYSTONE 345KV CKT 1
FDNS	09ALL	0	17G	G15_094	FROM->TO	G14-059T 230.00 - OGALLALA 230KV CKT 1	320	320	0.32118	101.2543	GERALD GENTLEMAN STATION - KEYSTONE 345KV CKT 1
FDNS	09NR	0	17G	G15_094	FROM->TO	G14-059T 230.00 - OGALLALA 230KV CKT 1	320	320	0.26234	100.413	GERALD GENTLEMAN STATION - KEYSTONE 345KV CKT 1
FDNS	00	0	17SP	G15_094	FROM->TO	G14-059T 230.00 - OGALLALA 230KV CKT 1	320	320	0.53305	99.9	KEYSTONE - SIDNEY1-LNX3345.00 345KV CKT 1
FDNS	00	0	17SP	G15_094	FROM->TO	G14-059T 230.00 - OGALLALA 230KV CKT 1	320	320	0.53305	99.9	SIDNEY - SIDNEY1-LNX3345.00 345KV CKT Z
FDNS	00NR	0	17SP	G15_094	TO->FROM	G14-059T 230.00 - SIDNEY 230KV CKT 1	320	320	0.44479	118.5049	SIDNEY - SIDNEY1-LNX3345.00 345KV CKT Z
FDNS	00NR	0	17SP	G15_094	TO->FROM	G14-059T 230.00 - SIDNEY 230KV CKT 1	320	320	0.44479	118.4199	KEYSTONE - SIDNEY1-LNX3345.00 345KV CKT 1
FDNSLock	00NR	0	20SP	G15_094	TO->FROM	G14-059T 230.00 - SIDNEY 230KV CKT 1	320	320	0.45374	107.9039	KEYSTONE - SIDNEY1-LNX3345.00 345KV CKT 1
FDNS	00NR	0	20SP	G15_094	TO->FROM	G14-059T 230.00 - SIDNEY 230KV CKT 1	320	320	0.45374	107.36	SIDNEY - SIDNEY1-LNX3345.00 345KV CKT Z
FDNS	00NR	0	25SP	G15_094	TO->FROM	G14-059T 230.00 - SIDNEY 230KV CKT 1	320	320	0.45374	106.544	SIDNEY - SIDNEY1-LNX3345.00 345KV CKT Z
FDNS	00NR	0	25SP	G15_094	TO->FROM	G14-059T 230.00 - SIDNEY 230KV CKT 1	320	320	0.45374	106.2859	KEYSTONE - SIDNEY1-LNX3345.00 345KV CKT 1
FDNS	09ALL	0	17G	G15_094	TO->FROM	GERALD GENTLEMAN STATION - OGALLALA 230KV CKT 1	320	320	0.53146	120.3434	GERALD GENTLEMAN STATION - KEYSTONE 345KV CKT 1
FDNS	09NR	0	17G	G15_094	TO->FROM	GERALD GENTLEMAN STATION - OGALLALA 230KV CKT 1	320	320	0.43287	119.5022	GERALD GENTLEMAN STATION - KEYSTONE 345KV CKT 1
FDNSLock	00NR	0	16WP	G15_094	TO->FROM	GERALD GENTLEMAN STATION - OGALLALA 230KV CKT 1	320	320	0.44309	113.6765	GERALD GENTLEMAN STATION - KEYSTONE 345KV CKT 1
FDNS	00NR	0	17SP	G15_094	TO->FROM	GERALD GENTLEMAN STATION - OGALLALA 230KV CKT 1	320	320	0.44197	112.452	GERALD GENTLEMAN STATION - KEYSTONE 345KV CKT 1
FDNS	09ALL	0	16WP	G15_094	TO->FROM	GERALD GENTLEMAN STATION - OGALLALA 230KV CKT 1	320	320	0.53086	111.5122	GERALD GENTLEMAN STATION - KEYSTONE 345KV CKT 1
FDNS	00NR	0	20WP	G15_094	TO->FROM	GERALD GENTLEMAN STATION - OGALLALA 230KV CKT 1	320	320	0.44928	107.125	GERALD GENTLEMAN STATION - KEYSTONE 345KV CKT 1
FDNS	09ALL	0	20WP	G15_094	TO->FROM	GERALD GENTLEMAN STATION - OGALLALA 230KV CKT 1	320	320	0.53221	104.7603	GERALD GENTLEMAN STATION - KEYSTONE 345KV CKT 1
FDNS	00NR	0	20SP	G15_094	TO->FROM	GERALD GENTLEMAN STATION - OGALLALA 230KV CKT 1	320	320	0.45291	101.6888	GERALD GENTLEMAN STATION - KEYSTONE 345KV CKT 1
FDNS	09ALL	0	25SP	G15_094	FROM->TO	GGS	1635	1635	0.61092	100.4759	BASE CASE
FDNS	00NR	0	16WP	G15_094	TO->FROM	MATHWSN7 345.00 - TATONGA7 345.00 345KV CKT 1	1195	1195	0.0312	108.6268	G14-074T 345.00 - OKLAUNION 345KV CKT 1
FDNS	00NR	0	16WP	G15_094	TO->FROM	MATHWSN7 345.00 - TATONGA7 345.00 345KV CKT 1	1195	1195	0.0312	100.5612	G14-074T 345.00 - TUCO INTERCHANGE 345KV CKT 1
FDNS	00NR	0	16WP	G15_094	TO->FROM	MATHWSN7 345.00 - TATONGA7 345.00 345KV CKT 1	1195	1195	0.02992	100.4392	CHISHOLM6 230.00 - SWEETWATER 230KV CKT 1
FDNS	00NR	0	16WP	G15_094	TO->FROM	MATHWSN7 345.00 - TATONGA7 345.00 345KV CKT 1	1195	1195	0.03001	100.2694	P12:230:AEPW:ELKCITY6:SWEETWT6
FDNS	00NR	0	17SP	G15_094	TO->FROM	SIDNEY - SIDNEY TRANSFORMER 230KV CKT 1	400	400	0.53141	120.8827	KEYSTONE - SIDNEY1-LNX3345.00 345KV CKT 1
FDNS	00NR	0	17SP	G15_094	TO->FROM	SIDNEY - SIDNEY TRANSFORMER 230KV CKT 1	400	400	0.53141	120.2355	SIDNEY - SIDNEY1-LNX3345.00 345KV CKT Z
FDNSLock	00NR	0	20SP	G15_094	TO->FROM	SIDNEY - SIDNEY TRANSFORMER 230KV CKT 1	400	400	0.5419	111.0053	KEYSTONE - SIDNEY1-LNX3345.00 345KV CKT 1
FDNS	00NR	0	20SP	G15_094	TO->FROM	SIDNEY - SIDNEY TRANSFORMER 230KV CKT 1	400	400	0.5419	109.8896	SIDNEY - SIDNEY1-LNX3345.00 345KV CKT Z
FDNS	00NR	0	25SP	G15_094	TO->FROM	SIDNEY - SIDNEY TRANSFORMER 230KV CKT 1	400	400	0.54191	109.6285	KEYSTONE - SIDNEY1-LNX3345.00 345KV CKT 1
FDNS	00NR	0	25SP	G15_094	TO->FROM	SIDNEY - SIDNEY TRANSFORMER 230KV CKT 1	400	400	0.54191	109.1934	SIDNEY - SIDNEY1-LNX3345.00 345KV CKT Z
FDNS	09ALL	0	17SP	G15_094	TO->FROM	SIDNEY - SIDNEY TRANSFORMER 230KV CKT 1	400	400	0.63535	102.4132	KEYSTONE - SIDNEY1-LNX3345.00 345KV CKT 1
FDNS	09ALL	0	17SP	G15_094	TO->FROM	SIDNEY - SIDNEY TRANSFORMER 230KV CKT 1	400	400	0.63535	101.708	SIDNEY - SIDNEY1-LNX3345.00 345KV CKT Z
FDNS	00NR	0	25SP	G15_094	FROM->TO	SIDNEY (SD KV1A) 230/115/13.8KV TRANSFORMER CKT 1	112	112	0.03238	107.5865	P12:115:TSGT:GRANTNB7-OGALALA7_2
FDNS	00NR	0	17SP	G15_094	FROM->TO	SIDNEY (SD KV1A) 230/115/13.8KV TRANSFORMER CKT 1	112	112	0.08663	105.4874	SIDNEY - SIDNEY1-LNX3345.00 345KV CKT Z
FDNS	00NR	0	25SP	G15_094	FROM->TO	SIDNEY (SD KV1A) 230/115/13.8KV TRANSFORMER CKT 1	112	112	0.03238	105.4607	P12:115:TSGT:GRANTNB7-OGALALA7_2
FDNS	00NR	0	17SP	G15_094	FROM->TO	SIDNEY (SD KV1A) 230/115/13.8KV TRANSFORMER CKT 1	112	112	0.08663	105.4092	KEYSTONE - SIDNEY1-LNX3345.00 345KV CKT 1
FDNS	00NR	0	17SP	G15_094	FROM->TO	SIDNEY (SD KV1A) 230/115/13.8KV TRANSFORMER CKT 1	112	112	0.08663	105.1384	SIDNEY - SIDNEY1-LNX3345.00 345KV CKT Z
FDNS	00NR	0	17SP	G15_094	FROM->TO	SIDNEY (SD KV1A) 230/115/13.8KV TRANSFORMER CKT 1	112	112	0.08663	105.0588	KEYSTONE - SIDNEY1-LNX3345.00 345KV CKT 1
FDNS	00NR	0	17SP	G15_094	FROM->TO	SIDNEY (SD KV1A) 230/115/13.8KV TRANSFORMER CKT 1	112	112	0.03304	104.0052	P12:115:TSGT:GRANTNB7-OGALALA7_2
FDNS	00NR	0	20SP	G15_094	FROM->TO	SIDNEY (SD KV1A) 230/115/13.8KV TRANSFORMER CKT 1	112	112	0.03237	103.4958	P12:115:TSGT:GRANTNB7-OGALALA7_2
FDNS	00NR	0	17SP	G15_094	FROM->TO	SIDNEY (SD KV1A) 230/115/13.8KV TRANSFORMER CKT 1	112	112	0.03304	101.8814	P12:115:TSGT:GRANTNB7-OGALALA7_2
FDNS	00NR	0	20SP	G15_094	FROM->TO	SIDNEY (SD KV1A) 230/115/13.8KV TRANSFORMER CKT 1	112	112	0.03237	101.7226	P12:115:TSGT:GRANTNB7-OGALALA7_2
FDNS	00NR	0	25SP	G15_094	FROM->TO	SIDNEY (SD KV1A) 230/115/13.8KV TRANSFORMER CKT 1	112	112	0.08817	101.2874	SIDNEY - SIDNEY1-LNX3345.00 345KV CKT Z
FDNS	00NR	0	25SP	G15_094	FROM->TO	SIDNEY (SD KV1A) 230/115/13.8KV TRANSFORMER CKT 1	112	112	0.08817	101.1683	SIDNEY - SIDNEY1-LNX3345.00 345KV CKT Z
FDNS	00NR	0	25SP	G15_094	FROM->TO	SIDNEY (SD KV1A) 230/115/13.8KV TRANSFORMER CKT 1	112	112	0.08817	101.1241	KEYSTONE - SIDNEY1-LNX3345.00 345KV CKT 1
FDNS	00NR	0	25SP	G15_094	FROM->TO	SIDNEY (SD KV1A) 230/115/13.8KV TRANSFORMER CKT 1	112	112	0.08817	101.0167	KEYSTONE - SIDNEY1-LNX3345.00 345KV CKT 1
FDNS	00NR	0	20SP	G15_094	FROM->TO	SIDNEY (SD KV1A) 230/115/13.8KV TRANSFORMER CKT 1	112	112	0.08816	100.1137	SIDNEY - SIDNEY1-LNX3345.00 345KV CKT Z
FDNS	00NR	0	20SP	G15_094	FROM->TO	SIDNEY (SD KV1A) 230/115/13.8KV TRANSFORMER CKT 1	112	112	0.08816	99.9	SIDNEY - SIDNEY1-LNX3345.00 345KV CKT Z
FDNSLock	00NR	0	20SP	G15_094	FROM->TO	SIDNEY (SD KV1A) 230/115/13.8KV TRANSFORMER CKT 1	112	112	0.08816	99.7	KEYSTONE - SIDNEY1-LNX3345.00 345KV CKT 1
FDNS	00NR	0	17SP	G15_094	FROM->TO	SIDNEY (SDQ KV2A) 345/230/13.8KV TRANSFORMER CKT 1	400	480	0.53141	102.6537	KEYSTONE - SIDNEY1-LNX3345.00 345KV CKT 1
FDNS	00NR	0	17SP	G15_094	FROM->TO	SIDNEY (SDQ KV2A) 345/230/13.8KV TRANSFORMER CKT 1	400	480	0.53141	102.2384	SIDNEY - SIDNEY1-LNX3345.00 345KV CKT Z
FDNS	00NR	0	17SP	G15_094	FROM->TO	SIDNEY (SDQ KV2A) 345/230/13.8KV TRANSFORMER CKT 1	400	480	0.53141	102.023	KEYSTONE - SIDNEY1-LNX3345.00 345KV CKT 1
FDNS	00NR	0	17SP	G15_094	FROM->TO	SIDNEY (SDQ KV2A) 345/230/13.8KV TRANSFORMER CKT 1	400	480	0.53141	101.9841	SIDNEY - SIDNEY1-LNX3345.00 345KV CKT Z
FDNS	09NR	0	20L	G15_094	TO->FROM	SIOUX CITY - TWIN CHURCH 230KV CKT 1	320	320	0.03235	118.8338	HOSKINS - RAUN 345KV CKT 1
FDNS	09NR	0	20L	G15_094	TO->FROM	SIOUX CITY - TWIN CHURCH 230KV CKT 1	320	320	0.03235	118.8338	HOSKINS - RAUN 345KV CKT 1
FDNS	09NR	0	17G	G15_094	TO->FROM	SIOUX CITY - TWIN CHURCH 230KV CKT 1	320	320	0.03581	107.634	HOSKINS - RAUN 345KV CKT 1
FDNS	09NR	0	20L	G15_094	TO->FROM	SIOUX CITY - TWIN CHURCH 230KV CKT 1	320	320	0.03055	103.9487	RAUN - SIOUX CITY 345KV CKT 1
FDNS	09NR	0	20L	G15_094	TO->FROM	SIOUX CITY - TWIN CHURCH 230KV CKT 1	320	320	0.03055	103.9487	RAUN - SIOUX CITY 345KV CKT 1
FDNS	00NR	0	17SP	G15_094	FROM->TO	SWISSVALE - WEST GARDNER 345KV CKT 1	717	717	0.03261	105.8268	HOYT - STRANGER CREEK 345KV CKT 1
FDNS	00NR	0	17SP	G15_094	FROM->TO	SWISSVALE - WEST GARDNER 345KV CKT 1	717	717	0.03001	104.7282	G15074_T 345.00 - HOYT 345KV CKT 1
FDNS	00NR	0	16WP	G15_094	FROM->TO	SWISSVALE - WEST GARDNER 345KV CKT 1	717	717	0.03303	101.7741	HOYT - STRANGER CREEK 345KV CKT 1
FDNS	00NR	0	16WP	G15_094	FROM->TO	SWISSVALE - WEST GARDNER 345KV CKT 1	717	717	0.03043	99.7	G15074_T 345.00 - HOYT 345KV CKT 1
FDNS	00NR	2	17SP	G15_094	TO->FROM	CHAPPEL - COLTON 7 115.00 115KV CKT 1	109	109	0.08752	102.1895	SIDNEY - SIDNEY1-LNX3345.00 345KV CKT Z
FDNS	00NR	2	17SP	G15_094	TO->FROM	CHAPPEL - COLTON 7 115.00 115KV CKT 1	109	109	0.08752	102.0173	KEYSTONE - SIDNEY1-LNX3345.00 345KV CKT 1
FDNS	00NR	2	17SP	G15_094	TO->FROM	CHAPPEL - COLTON 7 115.00 115KV CKT 1	109	109	0.03208	101.4983	P12:115:TSGT:GRANTNB7-OGALALA7_2
FDNS	00NR	2	17SP	G15_094	TO->FROM	COLTON 7 115.00 - SIDNEY 115KV CKT 1	109	109	0.08752	105.2249	SIDNEY - SIDNEY1-LNX3345.00 345KV CKT Z
FDNS	00NR	2	17SP	G15_094	TO->FROM	COLTON 7 115.00 - SIDNEY 115KV CKT 1	109	109	0.08752	105.0464	KEYSTONE - SIDNEY1-LNX3345.00 345KV CKT 1
FDNS	00NR	2	17SP	G15_094	TO->FROM	COLTON 7 115.00 - SIDNEY 115KV CKT 1	109	109	0.03208	104.7327	P12:115:TSGT:GRANTNB7-OGALALA7_2

SOLUTION	GROUP	SCENARIO	SEASON	SOURCE	DIRECTION	MONITORED ELEMENT	RATEA (MVA)	RATEB(MVA)	TDF	TC%LOADING (% MVA)	CONTINGENCY
FDNS	00NR	2	17SP	G15_094	FROM->TO	G14-059T 230.00 - OGALLALA 230KV CKT 1	320	320	0.45046	167.2434	SIDNEY - SIDNEY1-LNX3345.00 345KV CKT Z
FDNS	00NR	2	17SP	G15_094	FROM->TO	G14-059T 230.00 - OGALLALA 230KV CKT 1	320	320	0.45046	167.0441	KEYSTONE - SIDNEY1-LNX3345.00 345KV CKT 1
FDNS	09ALL	2	17G	G15_094	FROM->TO	G14-059T 230.00 - OGALLALA 230KV CKT 1	320	320	0.5422	148.8893	SIDNEY - SIDNEY1-LNX3345.00 345KV CKT Z
FDNS	09ALL	2	17G	G15_094	FROM->TO	G14-059T 230.00 - OGALLALA 230KV CKT 1	320	320	0.5422	148.6202	KEYSTONE - SIDNEY1-LNX3345.00 345KV CKT 1
FDNS	09ALL	2	17SP	G15_094	FROM->TO	G14-059T 230.00 - OGALLALA 230KV CKT 1	320	320	0.53702	148.4304	KEYSTONE - SIDNEY1-LNX3345.00 345KV CKT 1
FDNS	09ALL	2	17SP	G15_094	FROM->TO	G14-059T 230.00 - OGALLALA 230KV CKT 1	320	320	0.53702	148.3915	SIDNEY - SIDNEY1-LNX3345.00 345KV CKT Z
FDNS	09ALL	2	16WP	G15_094	FROM->TO	G14-059T 230.00 - OGALLALA 230KV CKT 1	320	320	0.54156	144.3535	SIDNEY - SIDNEY1-LNX3345.00 345KV CKT Z
FDNS	09ALL	2	16WP	G15_094	FROM->TO	G14-059T 230.00 - OGALLALA 230KV CKT 1	320	320	0.54156	144.2007	KEYSTONE - SIDNEY1-LNX3345.00 345KV CKT 1
FDNS	09ALL	2	20SP	G15_094	FROM->TO	G14-059T 230.00 - OGALLALA 230KV CKT 1	320	320	0.53588	144.139	SIDNEY - SIDNEY1-LNX3345.00 345KV CKT Z
FDNS	09ALL	2	20SP	G15_094	FROM->TO	G14-059T 230.00 - OGALLALA 230KV CKT 1	320	320	0.53588	143.9527	KEYSTONE - SIDNEY1-LNX3345.00 345KV CKT 1
FDNS	09ALL	2	25SP	G15_094	FROM->TO	G14-059T 230.00 - OGALLALA 230KV CKT 1	320	320	0.53642	143.3797	SIDNEY - SIDNEY1-LNX3345.00 345KV CKT Z
FDNS	09ALL	2	25SP	G15_094	FROM->TO	G14-059T 230.00 - OGALLALA 230KV CKT 1	320	320	0.53642	143.3759	KEYSTONE - SIDNEY1-LNX3345.00 345KV CKT 1
FDNS	09ALL	2	20WP	G15_094	FROM->TO	G14-059T 230.00 - OGALLALA 230KV CKT 1	320	320	0.53268	136.0766	SIDNEY - SIDNEY1-LNX3345.00 345KV CKT Z
FDNS	09ALL	2	20WP	G15_094	FROM->TO	G14-059T 230.00 - OGALLALA 230KV CKT 1	320	320	0.53268	135.7348	KEYSTONE - SIDNEY1-LNX3345.00 345KV CKT 1
FDNS	00NR	2	17SP	G15_094	FROM->TO	G14-059T 230.00 - OGALLALA 230KV CKT 1	320	320	0.27015	109.435	GERALD GENTLEMAN STATION - KEYSTONE 345KV CKT 1
FDNS	09ALL	2	17G	G15_094	FROM->TO	G14-059T 230.00 - OGALLALA 230KV CKT 1	320	320	0.32364	100.9239	GERALD GENTLEMAN STATION - KEYSTONE 345KV CKT 1
FDNS	00NR	2	17SP	G15_094	TO->FROM	G14-059T 230.00 - SIDNEY 230KV CKT 1	320	320	0.45046	116.2551	SIDNEY - SIDNEY1-LNX3345.00 345KV CKT Z
FDNS	00NR	2	17SP	G15_094	TO->FROM	G14-059T 230.00 - SIDNEY 230KV CKT 1	320	320	0.45046	116.042	KEYSTONE - SIDNEY1-LNX3345.00 345KV CKT 1
FDNS	09ALL	2	17G	G15_094	TO->FROM	GERALD GENTLEMAN STATION - OGALLALA 230KV CKT 1	320	320	0.53661	119.4651	GERALD GENTLEMAN STATION - KEYSTONE 345KV CKT 1
FDNS	09ALL	2	16WP	G15_094	TO->FROM	GERALD GENTLEMAN STATION - OGALLALA 230KV CKT 1	320	320	0.53612	111.354	GERALD GENTLEMAN STATION - KEYSTONE 345KV CKT 1
FDNS	00NR	2	17SP	G15_094	TO->FROM	GERALD GENTLEMAN STATION - OGALLALA 230KV CKT 1	320	320	0.44962	109.9012	GERALD GENTLEMAN STATION - KEYSTONE 345KV CKT 1
FDNS	09ALL	2	20WP	G15_094	TO->FROM	GERALD GENTLEMAN STATION - OGALLALA 230KV CKT 1	320	320	0.5322	105.0389	GERALD GENTLEMAN STATION - KEYSTONE 345KV CKT 1
FDNS	09ALL	2	25SP	G15_094	FROM->TO	GGS	1635	1635	0.61092	100.5842	BASE CASE
FDNS	00NR	2	17SP	G15_094	TO->FROM	SIDNEY - SIDNEY TRANSFORMER 230KV CKT 1	400	400	0.53798	118.7101	KEYSTONE - SIDNEY1-LNX3345.00 345KV CKT 1
FDNS	00NR	2	17SP	G15_094	TO->FROM	SIDNEY - SIDNEY TRANSFORMER 230KV CKT 1	400	400	0.53798	118.2146	SIDNEY - SIDNEY1-LNX3345.00 345KV CKT Z
FDNS	09ALL	2	17SP	G15_094	TO->FROM	SIDNEY - SIDNEY TRANSFORMER 230KV CKT 1	400	400	0.63965	102.0954	KEYSTONE - SIDNEY1-LNX3345.00 345KV CKT 1
FDNS	09ALL	2	17SP	G15_094	TO->FROM	SIDNEY - SIDNEY TRANSFORMER 230KV CKT 1	400	400	0.63965	101.3449	SIDNEY - SIDNEY1-LNX3345.00 345KV CKT Z
FDNS	00NR	2	17SP	G15_094	FROM->TO	SIDNEY (SD KV1A) 230/115/13.8KV TRANSFORMER CKT 1	112	112	0.08752	104.5037	SIDNEY - SIDNEY1-LNX3345.00 345KV CKT Z
FDNS	00NR	2	17SP	G15_094	FROM->TO	SIDNEY (SD KV1A) 230/115/13.8KV TRANSFORMER CKT 1	112	112	0.08752	104.3265	KEYSTONE - SIDNEY1-LNX3345.00 345KV CKT 1
FDNS	00NR	2	17SP	G15_094	FROM->TO	SIDNEY (SD KV1A) 230/115/13.8KV TRANSFORMER CKT 1	112	112	0.08752	104.1752	SIDNEY - SIDNEY1-LNX3345.00 345KV CKT Z
FDNS	00NR	2	17SP	G15_094	FROM->TO	SIDNEY (SD KV1A) 230/115/13.8KV TRANSFORMER CKT 1	112	112	0.08752	104.0562	KEYSTONE - SIDNEY1-LNX3345.00 345KV CKT 1
FDNS	00NR	2	17SP	G15_094	FROM->TO	SIDNEY (SD KV1A) 230/115/13.8KV TRANSFORMER CKT 1	112	112	0.03208	104.009	P12:115:TSGT:GRANTNB7-OGALALA7_2
FDNS	00NR	2	17SP	G15_094	FROM->TO	SIDNEY (SD KV1A) 230/115/13.8KV TRANSFORMER CKT 1	112	112	0.03208	101.8042	P12:115:TSGT:GRANTNB7-OGALALA7_2
FDNS	00NR	2	17SP	G15_094	FROM->TO	SIDNEY (SDQ KV2A) 345/230/13.8KV TRANSFORMER CKT 1	400	480	0.53798	100.8156	KEYSTONE - SIDNEY1-LNX3345.00 345KV CKT 1
FDNS	00NR	2	17SP	G15_094	FROM->TO	SIDNEY (SDQ KV2A) 345/230/13.8KV TRANSFORMER CKT 1	400	480	0.53798	100.5215	SIDNEY - SIDNEY1-LNX3345.00 345KV CKT Z
FDNS	00NR	2	17SP	G15_094	FROM->TO	SIDNEY (SDQ KV2A) 345/230/13.8KV TRANSFORMER CKT 1	400	480	0.53798	100.2736	SIDNEY - SIDNEY1-LNX3345.00 345KV CKT Z
FDNS	00NR	2	17SP	G15_094	FROM->TO	SIDNEY (SDQ KV2A) 345/230/13.8KV TRANSFORMER CKT 1	400	480	0.53798	100.213	KEYSTONE - SIDNEY1-LNX3345.00 345KV CKT 1
FDNS	09ALL	3	17G	G15_094	TO->FROM	GERALD GENTLEMAN STATION - OGALLALA 230KV CKT 1	320	320	0.56275	124.8715	GERALD GENTLEMAN STATION - KEYSTONE 345KV CKT 1
FDNS	09NR	3	17G	G15_094	TO->FROM	GERALD GENTLEMAN STATION - OGALLALA 230KV CKT 1	320	320	0.46169	124.6748	GERALD GENTLEMAN STATION - KEYSTONE 345KV CKT 1
FDNS	00NR	3	16WP	G15_094	TO->FROM	GERALD GENTLEMAN STATION - OGALLALA 230KV CKT 1	320	320	0.47255	119.0451	GERALD GENTLEMAN STATION - KEYSTONE 345KV CKT 1
FDNS	09ALL	3	16WP	G15_094	TO->FROM	GERALD GENTLEMAN STATION - OGALLALA 230KV CKT 1	320	320	0.56221	116.7458	GERALD GENTLEMAN STATION - KEYSTONE 345KV CKT 1
FDNS	00NR	3	17SP	G15_094	TO->FROM	GERALD GENTLEMAN STATION - OGALLALA 230KV CKT 1	320	320	0.47161	116.6787	GERALD GENTLEMAN STATION - KEYSTONE 345KV CKT 1
FDNS	00NR	3	20WP	G15_094	TO->FROM	GERALD GENTLEMAN STATION - OGALLALA 230KV CKT 1	320	320	0.4714	113.4992	GERALD GENTLEMAN STATION - KEYSTONE 345KV CKT 1
FDNS	09ALL	3	20WP	G15_094	TO->FROM	GERALD GENTLEMAN STATION - OGALLALA 230KV CKT 1	320	320	0.55835	110.3552	GERALD GENTLEMAN STATION - KEYSTONE 345KV CKT 1
FDNS	00NR	3	20SP	G15_094	TO->FROM	GERALD GENTLEMAN STATION - OGALLALA 230KV CKT 1	320	320	0.47518	107.7175	GERALD GENTLEMAN STATION - KEYSTONE 345KV CKT 1
FDNS	00NR	3	25SP	G15_094	TO->FROM	GERALD GENTLEMAN STATION - OGALLALA 230KV CKT 1	320	320	0.47522	103.1092	GERALD GENTLEMAN STATION - KEYSTONE 345KV CKT 1
FDNS	00NR	3	17SP	G15_094	TO->FROM	SIDNEY - SIDNEY TRANSFORMER 230KV CKT 1	496	496	0.5866	106.2829	KEYSTONE - SIDNEY1-LNX3345.00 345KV CKT 1
FDNS	00NR	3	17SP	G15_094	TO->FROM	SIDNEY - SIDNEY TRANSFORMER 230KV CKT 1	496	496	0.5866	105.6764	SIDNEY - SIDNEY1-LNX3345.00 345KV CKT Z
FDNS	00NR	3	17SP	G15_094	FROM->TO	SIDNEY (SDQ KV2A) 345/230/13.8KV TRANSFORMER CKT 1	400	480	0.5866	111.8609	KEYSTONE - SIDNEY1-LNX3345.00 345KV CKT 1
FDNS	00NR	3	17SP	G15_094	FROM->TO	SIDNEY (SDQ KV2A) 345/230/13.8KV TRANSFORMER CKT 1	400	480	0.5866	111.3728	SIDNEY - SIDNEY1-LNX3345.00 345KV CKT Z
FDNS	00NR	3	17SP	G15_094	FROM->TO	SIDNEY (SDQ KV2A) 345/230/13.8KV TRANSFORMER CKT 1	400	480	0.5866	111.0342	KEYSTONE - SIDNEY1-LNX3345.00 345KV CKT 1
FDNS	00NR	3	17SP	G15_094	FROM->TO	SIDNEY (SDQ KV2A) 345/230/13.8KV TRANSFORMER CKT 1	400	480	0.5866	110.968	SIDNEY - SIDNEY1-LNX3345.00 345KV CKT Z
FDNS	00NR	3	20SP	G15_094	FROM->TO	SIDNEY (SDQ KV2A) 345/230/13.8KV TRANSFORMER CKT 1	400	480	0.59107	104.1696	KEYSTONE - SIDNEY1-LNX3345.00 345KV CKT 1
FDNS	00NR	3	20SP	G15_094	FROM->TO	SIDNEY (SDQ KV2A) 345/230/13.8KV TRANSFORMER CKT 1	400	480	0.59107	103.7549	SIDNEY - SIDNEY1-LNX3345.00 345KV CKT Z
FDNS	00NR	3	20SP	G15_094	FROM->TO	SIDNEY (SDQ KV2A) 345/230/13.8KV TRANSFORMER CKT 1	400	480	0.59107	103.543	KEYSTONE - SIDNEY1-LNX3345.00 345KV CKT 1
FDNS	00NR	3	20SP	G15_094	FROM->TO	SIDNEY (SDQ KV2A) 345/230/13.8KV TRANSFORMER CKT 1	400	480	0.59107	103.5202	SIDNEY - SIDNEY1-LNX3345.00 345KV CKT Z
FDNS	00NR	3	25SP	G15_094	FROM->TO	SIDNEY (SDQ KV2A) 345/230/13.8KV TRANSFORMER CKT 1	400	480	0.59114	103.5176	KEYSTONE - SIDNEY1-LNX3345.00 345KV CKT 1
FDNS	00NR	3	25SP	G15_094	FROM->TO	SIDNEY (SDQ KV2A) 345/230/13.8KV TRANSFORMER CKT 1	400	480	0.59114	103.0728	SIDNEY - SIDNEY1-LNX3345.00 345KV CKT Z
FDNS	00NR	3	25SP	G15_094	FROM->TO	SIDNEY (SDQ KV2A) 345/230/13.8KV TRANSFORMER CKT 1	400	480	0.59114	102.9056	KEYSTONE - SIDNEY1-LNX3345.00 345KV CKT 1
FDNS	00NR	3	25SP	G15_094	FROM->TO	SIDNEY (SDQ KV2A) 345/230/13.8KV TRANSFORMER CKT 1	400	480	0.59114	102.8515	SIDNEY - SIDNEY1-LNX3345.00 345KV CKT Z
FDNS	00NR	4	17SP	G15_094	TO->FROM	SIDNEY - SIDNEY TRANSFORMER 230KV CKT 1	496	496	0.58662	106.3008	KEYSTONE - SIDNEY1-LNX3345.00 345KV CKT 1
FDNS	00NR	4	17SP	G15_094	TO->FROM	SIDNEY - SIDNEY TRANSFORMER 230KV CKT 1	496	496	0.58662	105.6956	SIDNEY - SIDNEY1-LNX3345.00 345KV CKT Z
FDNS	00NR	4	17SP	G15_094	FROM->TO	SIDNEY (SDQ KV2A) 345/230/13.8KV TRANSFORMER CKT 1	400	480	0.58662	111.8796	KEYSTONE - SIDNEY1-LNX3345.00 345KV CKT 1
FDNS	00NR	4	17SP	G15_094	FROM->TO	SIDNEY (SDQ KV2A) 345/230/13.8KV TRANSFORMER CKT 1	400	480	0.58662	111.3929	SIDNEY - SIDNEY1-LNX3345.00 345KV CKT Z
FDNS	00NR	4	17SP	G15_094	FROM->TO	SIDNEY (SDQ KV2A) 345/230/13.8KV TRANSFORMER CKT 1	400	480	0.58662	111.0525	KEYSTONE - SIDNEY1-LNX3345.00 345KV CKT 1
FDNS	00NR	4	17SP	G15_094	FROM->TO	SIDNEY (SDQ KV2A) 345/230/13.8KV TRANSFORMER CKT 1	400	480	0.58662	110.9877	SIDNEY - SIDNEY1-LNX3345.00 345KV CKT Z
FDNS	00NR	4	20SP	G15_094	FROM->TO	SIDNEY (SDQ KV2A) 345/230/13.8KV TRANSFORMER CKT 1	400	480	0.59109	104.1852	KEYSTONE - SIDNEY1-LNX3345.00 345KV CKT 1
FDNS	00NR	4	20SP	G15_094	FROM->TO	SIDNEY (SDQ KV2A) 345/230/13.8KV TRANSFORMER CKT 1	400	480	0.59109	103.7706	SIDNEY - SIDNEY1-LNX3345.00 345KV CKT Z
FDNS	00NR	4	20SP	G15_094	FROM->TO	SIDNEY (SDQ KV2A) 345/230/13.8KV TRANSFORMER CKT 1	400	480	0.59109	103.5584	KEYSTONE - SIDNEY1-LNX3345.00 345KV CKT 1
FDNS	00NR	4	20SP	G15_094	FROM->TO	SIDNEY (SDQ KV2A) 345/230/13.8KV TRANSFORMER CKT 1	400	480	0.59109	103.5357	SIDNEY - SIDNEY1-LNX3345.00 345KV CKT Z
FDNS	00NR	4	25SP	G15_094	FROM->TO	SIDNEY (SDQ KV2A) 345/230/13.8KV TRANSFORMER CKT 1	400	480	0.59115	103.5347	KEYSTONE - SIDNEY1-LNX3345.00 345KV CKT 1
FDNS	00NR	4	25SP	G15_094	FROM->TO	SIDNEY (SDQ KV2A) 345/230/13.8KV TRANSFORMER CKT 1	400	480	0.59115	103.0899	SIDNEY - SIDNEY1-LNX3345.00 345KV CKT Z
FDNS	00NR	4	25SP	G15_094	FROM->TO	SIDNEY (SDQ KV2A) 345/230/13.8KV TRANSFORMER CKT 1	400	480	0.59115	102.9223	KEYSTONE - SIDNEY1-LNX3345.00 345KV CKT 1
FDNS	00NR	4	25SP	G15_094	FROM->TO	SIDNEY (SDQ KV2A) 345/230/13.8KV TRANSFORMER CKT 1	400	480	0.59115	102.8684	SIDNEY - SIDNEY1-LNX3345.00 345KV CKT Z
FDNS	09NR	5	17G	G15_094	FROM->TO	DIXONCO 3 345.00 (DIXON1) 345/230/13.8KV TRANSFORMER CKT 1	336	420	0.03376	101.5656	HOSKINS - RAUN 345KV CKT 1
FDNS	09NR	5	17G	G15_094	FROM->TO	DIXONCO 3 345.00 (DIXON1) 345/230/13.8KV TRANSFORMER CKT 1	336	420	0.03376	101.3922	HOSKINS - RAUN 345KV CKT 1
FDNS	00NR	5	17SP	G15_094	TO->FROM	SIDNEY - SIDNEY TRANSFORMER 230KV CKT 1	496	496	0.58662	106.2973	KEYSTONE - SIDNEY1-LNX3345.00 345KV CKT 1
FDNS	00NR	5	17SP	G15_094	TO->FROM	SIDNEY - SIDNEY TRANSFORMER 230KV CKT 1	496	496	0.58662	105.6907	SIDNEY - SIDNEY1-LNX3345.00 345KV CKT Z
FDNS	00NR	5	17SP	G15_094	FROM->TO	SIDNEY (SDQ KV2A) 345/230/13.8KV TRANSFORMER CKT 1	400	480	0.58662	111.876	KEYSTONE - SIDNEY1-LNX3345.00 345KV CKT 1

SOLUTION	GROUP	SCENARIO	SEASON	SOURCE	DIRECTION	MONITORED ELEMENT	RATEA (MVA)	RATEB(MVA)	TDF	TC%LOADING (% MVA)	CONTINGENCY
FDNS	00NR	5	17SP	G15_094	FROM->TO	SIDNEY (SDQ KV2A) 345/230/13.8KV TRANSFORMER CKT 1	400	480	0.58662	111.3877	SIDNEY - SIDNEY1-LNX3345.00 345KV CKT Z
FDNS	00NR	5	17SP	G15_094	FROM->TO	SIDNEY (SDQ KV2A) 345/230/13.8KV TRANSFORMER CKT 1	400	480	0.58662	111.0489	KEYSTONE - SIDNEY1-LNX3345.00 345KV CKT 1
FDNS	00NR	5	17SP	G15_094	FROM->TO	SIDNEY (SDQ KV2A) 345/230/13.8KV TRANSFORMER CKT 1	400	480	0.58662	110.9826	SIDNEY - SIDNEY1-LNX3345.00 345KV CKT Z
FDNS	00NR	5	20SP	G15_094	FROM->TO	SIDNEY (SDQ KV2A) 345/230/13.8KV TRANSFORMER CKT 1	400	480	0.59109	104.1809	KEYSTONE - SIDNEY1-LNX3345.00 345KV CKT 1
FDNS	00NR	5	20SP	G15_094	FROM->TO	SIDNEY (SDQ KV2A) 345/230/13.8KV TRANSFORMER CKT 1	400	480	0.59109	103.7661	SIDNEY - SIDNEY1-LNX3345.00 345KV CKT Z
FDNS	00NR	5	20SP	G15_094	FROM->TO	SIDNEY (SDQ KV2A) 345/230/13.8KV TRANSFORMER CKT 1	400	480	0.59109	103.5541	KEYSTONE - SIDNEY1-LNX3345.00 345KV CKT 1
FDNS	00NR	5	20SP	G15_094	FROM->TO	SIDNEY (SDQ KV2A) 345/230/13.8KV TRANSFORMER CKT 1	400	480	0.59109	103.5311	SIDNEY - SIDNEY1-LNX3345.00 345KV CKT Z
FDNS	00NR	5	25SP	G15_094	FROM->TO	SIDNEY (SDQ KV2A) 345/230/13.8KV TRANSFORMER CKT 1	400	480	0.59116	103.5279	KEYSTONE - SIDNEY1-LNX3345.00 345KV CKT 1
FDNS	00NR	5	25SP	G15_094	FROM->TO	SIDNEY (SDQ KV2A) 345/230/13.8KV TRANSFORMER CKT 1	400	480	0.59116	103.0832	SIDNEY - SIDNEY1-LNX3345.00 345KV CKT Z
FDNS	00NR	5	25SP	G15_094	FROM->TO	SIDNEY (SDQ KV2A) 345/230/13.8KV TRANSFORMER CKT 1	400	480	0.59116	102.9157	KEYSTONE - SIDNEY1-LNX3345.00 345KV CKT 1
FDNS	00NR	5	25SP	G15_094	FROM->TO	SIDNEY (SDQ KV2A) 345/230/13.8KV TRANSFORMER CKT 1	400	480	0.59116	102.8617	SIDNEY - SIDNEY1-LNX3345.00 345KV CKT Z
FDNS	09NR	6	17G	G15_094	FROM->TO	DIXONCO 3 345.00 (DIXON1) 345/230/13.8KV TRANSFORMER CKT 1	336	420	0.03341	101.625	HOSKINS - RAUN 345KV CKT 1
FDNS	09NR	6	17G	G15_094	FROM->TO	DIXONCO 3 345.00 (DIXON1) 345/230/13.8KV TRANSFORMER CKT 1	336	420	0.03341	101.454	HOSKINS - RAUN 345KV CKT 1
FDNS	00NR	6	17SP	G15_094	TO->FROM	SIDNEY - SIDNEY TRANSFORMER 230KV CKT 1	496	496	0.59992	108.2092	KEYSTONE - SIDNEY1-LNX3345.00 345KV CKT 1
FDNS	00NR	6	17SP	G15_094	TO->FROM	SIDNEY - SIDNEY TRANSFORMER 230KV CKT 1	496	496	0.59992	107.559	SIDNEY - SIDNEY1-LNX3345.00 345KV CKT Z
FDNS	00NR	6	20SP	G15_094	TO->FROM	SIDNEY - SIDNEY TRANSFORMER 230KV CKT 1	496	496	0.60454	100.7153	KEYSTONE - SIDNEY1-LNX3345.00 345KV CKT 1
FDNS	00NR	6	20SP	G15_094	TO->FROM	SIDNEY - SIDNEY TRANSFORMER 230KV CKT 1	496	496	0.60454	100.1554	SIDNEY - SIDNEY1-LNX3345.00 345KV CKT Z
FDNS	00NR	6	25SP	G15_094	TO->FROM	SIDNEY - SIDNEY TRANSFORMER 230KV CKT 1	496	496	0.60463	100.0541	KEYSTONE - SIDNEY1-LNX3345.00 345KV CKT 1
FDNS	00NR	6	25SP	G15_094	TO->FROM	SIDNEY - SIDNEY TRANSFORMER 230KV CKT 1	496	496	0.60463	99.6	SIDNEY - SIDNEY1-LNX3345.00 345KV CKT Z
FDNSLock-Blown up	01ALL	0	16WP	G15_095		Non-Converged Contingency	1195	1195	0.06629	-	MATHWSN7 345.00 - TATONGA7 345.00 345KV CKT 1
FDNSLock-Blown up	01NR	0	17G	G15_095		Non-Converged Contingency	1195	1195	0.11792	-	MATHWSN7 345.00 - TATONGA7 345.00 345KV CKT 1
FDNSLock-Blown up	01ALL	0	20L	G15_095		Non-Converged Contingency	1195	1195	0.0737	-	MATHWSN7 345.00 - TATONGA7 345.00 345KV CKT 1
FDNSLock-Blown up	01ALL	0	20WP	G15_095		Non-Converged Contingency	1195	1195	0.06175	-	MATHWSN7 345.00 - TATONGA7 345.00 345KV CKT 1
FDNS	00NR	0	17SP	G15_095	TO->FROM	ALVA - KNOBHILL 69KV CKT 1	67	76	0.04694	103.9521	FAIRVIEW - OKEENE 69KV CKT 1
FDNS	00NR	0	16WP	G15_095	FROM->TO	CIMARRON - DRAPER LAKE 345KV CKT 1	717	717	0.07298	132.6508	G14-057T 345.00 - SUNNYSIDE 345KV CKT 1
FDNS	00NR	0	16WP	G15_095	FROM->TO	CIMARRON - DRAPER LAKE 345KV CKT 1	717	717	0.07298	122.0003	G14-057T 345.00 - LAWTON EASTSIDE 345KV CKT 1
FDNS	00NR	0	16WP	G15_095	FROM->TO	CIMARRON - DRAPER LAKE 345KV CKT 1	717	717	0.08024	116.5817	ARCADIA - SEMINOLE 345KV CKT 1
FDNS	00NR	0	16WP	G15_095	FROM->TO	CIMARRON - DRAPER LAKE 345KV CKT 1	717	717	0.06971	115.588	CLEVELAND - G15066_T 345.00 345KV CKT 1
FDNS	00NR	0	16WP	G15_095	FROM->TO	CIMARRON - DRAPER LAKE 345KV CKT 1	717	717	0.07176	115.2993	ARCADIA - NORTHWEST 345KV CKT 1
FDNS	00NR	0	16WP	G15_095	FROM->TO	CIMARRON - DRAPER LAKE 345KV CKT 1	717	717	0.06971	114.8063	G15066_T 345.00 - SOONER 345KV CKT 1
FDNS	00NR	0	16WP	G15_095	FROM->TO	CIMARRON - DRAPER LAKE 345KV CKT 1	717	717	0.06811	110.2756	CLEVELAND - TULSA NORTH 345KV CKT 1
FDNS	00NR	0	16WP	G15_095	FROM->TO	CIMARRON - DRAPER LAKE 345KV CKT 1	717	717	0.06811	110.2756	CLEVELAND - TULSA NORTH 345KV CKT 1
FDNS	00NR	0	16WP	G15_095	FROM->TO	CIMARRON - DRAPER LAKE 345KV CKT 1	717	717	0.0677	110.1142	MATHWSN7 345.00 - NORTHWEST 345KV CKT 1
FDNS	00NR	0	16WP	G15_095	FROM->TO	CIMARRON - DRAPER LAKE 345KV CKT 1	717	717	0.06729	109.2409	CIMARRON - SARA 138KV CKT 1
FDNS	00NR	0	16WP	G15_095	FROM->TO	CIMARRON - DRAPER LAKE 345KV CKT 1	717	717	0.06148	108.713	P12:138:WFEC:MSL03
FDNS	00NR	0	16WP	G15_095	FROM->TO	CIMARRON - DRAPER LAKE 345KV CKT 1	717	717	0.06516	108.0689	CIMARRON (CIMARON2) 345/138/13.8KV TRANSFORMER CKT 1
FDNS	00NR	0	16WP	G15_095	FROM->TO	CIMARRON - DRAPER LAKE 345KV CKT 1	717	717	0.06729	107.9446	SARA - STHLAKE4 138.00 138KV CKT 1
FDNS	00NR	0	16WP	G15_095	FROM->TO	CIMARRON - DRAPER LAKE 345KV CKT 1	717	717	0.06514	107.899	CIMARRON (CIMARON1) 345/138/13.8KV TRANSFORMER CKT 1
FDNS	00NR	0	16WP	G15_095	FROM->TO	CIMARRON - DRAPER LAKE 345KV CKT 1	717	717	0.06729	107.745	MCCLAIN - STHLAKE4 138.00 138KV CKT 1
FDNS	00NR	0	16WP	G15_095	FROM->TO	CIMARRON - DRAPER LAKE 345KV CKT 1	717	717	0.06494	107.4685	CIMARRON - CZECH HALL 138KV CKT 1
FDNS	00NR	0	16WP	G15_095	FROM->TO	CIMARRON - DRAPER LAKE 345KV CKT 1	717	717	0.06494	107.112	CZECH HALL - XEROX 138KV CKT 1
FDNS	00NR	0	16WP	G15_095	FROM->TO	CIMARRON - DRAPER LAKE 345KV CKT 1	717	717	0.06494	107.0924	MORGAN - XEROX 138KV CKT 1
FDNS	00NR	0	16WP	G15_095	FROM->TO	CIMARRON - DRAPER LAKE 345KV CKT 1	717	717	0.05792	106.9919	ANADARKO - POCASSETT 138KV CKT 1
FDNS	00NR	0	16WP	G15_095	FROM->TO	CIMARRON - DRAPER LAKE 345KV CKT 1	717	717	0.06494	106.9752	MORGAN - MUSTANG 138KV CKT 1
FDNS	00NR	0	16WP	G15_095	FROM->TO	CIMARRON - DRAPER LAKE 345KV CKT 1	717	717	0.05792	106.7926	POCASSETT - TUTTLE 138KV CKT 1
FDNS	00NR	0	16WP	G15_095	FROM->TO	CIMARRON - DRAPER LAKE 345KV CKT 1	717	717	0.0645	106.703	GEN515040 1-SEMINOLE 1G
FDNS	00NR	0	16WP	G15_095	FROM->TO	CIMARRON - DRAPER LAKE 345KV CKT 1	717	717	0.06507	106.6763	LACYGNE - WAVERLY7 345.00 345KV CKT 1
FDNS	00NR	0	16WP	G15_095	FROM->TO	CIMARRON - DRAPER LAKE 345KV CKT 1	717	717	0.06279	106.5853	JOHNSON COUNTY - SUNNYSIDE 345KV CKT 1
FDNS	00NR	0	16WP	G15_095	FROM->TO	CIMARRON - DRAPER LAKE 345KV CKT 1	717	717	0.06507	106.4587	WAVERLY7 345.00 - WOLF CREEK 345KV CKT 1
FDNSLock	00NR	0	16WP	G15_095	FROM->TO	CIMARRON - DRAPER LAKE 345KV CKT 1	717	717	0.0645	106.456	GEN509403 1-PIRKEY GENERATION
FDNS	00NR	0	16WP	G15_095	FROM->TO	CIMARRON - DRAPER LAKE 345KV CKT 1	717	717	0.06217	106.4058	CORN TAP - NAPLESTP 138.00 138KV CKT 1
FDNS	00NR	0	16WP	G15_095	FROM->TO	CIMARRON - DRAPER LAKE 345KV CKT 1	717	717	0.0645	106.3792	GEN509416 1-TURK GENERATION
FDNS	00NR	0	16WP	G15_095	FROM->TO	CIMARRON - DRAPER LAKE 345KV CKT 1	717	717	0.0645	106.3605	GEN501801 1-DOLET HILLS UNIT1
FDNS	00NR	0	16WP	G15_095	FROM->TO	CIMARRON - DRAPER LAKE 345KV CKT 1	717	717	0.06217	106.3121	NAPLESTP 138.00 - PAYNE 138.00 138KV CKT 1
FDNS	00NR	0	16WP	G15_095	FROM->TO	CIMARRON - DRAPER LAKE 345KV CKT 1	717	717	0.05792	106.2787	BRIDGECR 138.00 - TUTTLE 138KV CKT 1
FDNS	00NR	0	16WP	G15_095	FROM->TO	CIMARRON - DRAPER LAKE 345KV CKT 1	717	717	0.06577	106.2342	CANEYRV7 345.00 - NEOSHO 345KV CKT 1
FDNS	00NR	0	17SP	G15_095	FROM->TO	CIMARRON - DRAPER LAKE 345KV CKT 1	717	717	0.07292	106.1697	G14-057T 345.00 - SUNNYSIDE 345KV CKT 1
FDNSLock	00NR	0	16WP	G15_095	FROM->TO	CIMARRON - DRAPER LAKE 345KV CKT 1	717	717	0.0645	106.0246	GEN336821 1-GRAND GULF UNIT
FDNS	00NR	0	16WP	G15_095	FROM->TO	CIMARRON - DRAPER LAKE 345KV CKT 1	717	717	0.0645	105.9922	GEN515042 1-SEMINOLE 3G
FDNS	00NR	0	16WP	G15_095	FROM->TO	CIMARRON - DRAPER LAKE 345KV CKT 1	717	717	0.06577	105.9562	CANEYRV7 345.00 - LATHAMS7 345.00 345KV CKT 1
FDNS	00NR	0	16WP	G15_095	FROM->TO	CIMARRON - DRAPER LAKE 345KV CKT 1	717	717	0.05792	105.9048	BRIDGECR 138.00 - SUNSHINE CANYON 138KV CKT 1
FDNS	00NR	0	16WP	G15_095	FROM->TO	CIMARRON - DRAPER LAKE 345KV CKT 1	717	717	0.05792	105.894	P12:138:WFEC:MSL01
FDNS	00NR	0	16WP	G15_095	FROM->TO	CIMARRON - DRAPER LAKE 345KV CKT 1	717	717	0.0645	105.7583	GEN515041 1-SEMINOLE 2G
FDNSLock	00NR	0	16WP	G15_095	FROM->TO	CIMARRON - DRAPER LAKE 345KV CKT 1	717	717	0.0645	105.7266	GEN336153 1-WATERFORD UNIT#3
FDNS	00NR	0	16WP	G15_095	FROM->TO	CIMARRON - DRAPER LAKE 345KV CKT 1	717	717	0.05903	105.5516	CIMARRON - NORTHWEST 345KV CKT 1
FDNS	00NR	0	16WP	G15_095	FROM->TO	CIMARRON - DRAPER LAKE 345KV CKT 1	717	717	0.0645	105.5263	GEN509406 1-WELSH #3
FDNS	00NR	0	16WP	G15_095	FROM->TO	CIMARRON - DRAPER LAKE 345KV CKT 1	717	717	0.0645	105.5261	GEN509404 1-WELSH #1
FDNS	00NR	0	16WP	G15_095	FROM->TO	CIMARRON - DRAPER LAKE 345KV CKT 1	717	717	0.06577	105.5155	LATHAMS7 345.00 - ROSE HILL 345KV CKT 1
FDNSLock	00NR	0	16WP	G15_095	FROM->TO	CIMARRON - DRAPER LAKE 345KV CKT 1	717	717	0.0645	105.4219	GEN335831 1-RIVERBEND UNIT#1
FDNSLock	00NR	0	16WP	G15_095	FROM->TO	CIMARRON - DRAPER LAKE 345KV CKT 1	717	717	0.0645	105.406	GEN337911 1-ARKANSAS NUCLEAR ONE UNIT #2
FDNS	00NR	0	16WP	G15_095	FROM->TO	CIMARRON - DRAPER LAKE 345KV CKT 1	717	717	0.06697	105.1336	HUGO - SUNNYSIDE 345KV CKT 1
FDNS	00NR	0	16WP	G15_095	FROM->TO	CIMARRON - DRAPER LAKE 345KV CKT 1	717	717	0.06861	105.1183	CANADIAN RIVER - MUSKOGEE 345KV CKT 1
FDNS	00NR	0	16WP	G15_095	FROM->TO	CIMARRON - DRAPER LAKE 345KV CKT 1	717	717	0.06486	105.0337	P12:138:OKGE:3TERM14
FDNS	00NR	0	16WP	G15_095	FROM->TO	CIMARRON - DRAPER LAKE 345KV CKT 1	717	717	0.0645	105.0296	GRAND GULF 500/22.0KV TRANSFORMER CKT 1
FDNS	00NR	0	16WP	G15_095	FROM->TO	CIMARRON - DRAPER LAKE 345KV CKT 1	717	717	0.0645	105.0273	GEN337910 1-ARKANSAS NUCLEAR ONE UNIT #1
FDNS	00NR	0	16WP	G15_095	FROM->TO	CIMARRON - DRAPER LAKE 345KV CKT 1	717	717	0.06249	105.0144	JOHNSON COUNTY - PITTSBURG 345KV CKT 1
FDNS	00NR	0	16WP	G15_095	FROM->TO	CIMARRON - DRAPER LAKE 345KV CKT 1	717	717	0.06249	105.0144	JOHNSON COUNTY - PITTSBURG 345KV CKT 1
FDNS	00NR	0	16WP	G15_095	FROM->TO	CIMARRON - DRAPER LAKE 345KV CKT 1	717	717	0.066	104.9951	HORSESHOE LAKE - JONES TAP 138KV CKT 1
FDNS	00NR	0	16WP	G15_095	FROM->TO	CIMARRON - DRAPER LAKE 345KV CKT 1	717	717	0.0656	104.9687	MORISNT4 138.00 - STILLWATER 138KV CKT 1

SOLUTION	GROUP	SCENARIO	SEASON	SOURCE	DIRECTION	MONITORED ELEMENT	RATEA (MVA)	RATEB(MVA)	TDF	TC%LOADING (% MVA)	CONTINGENCY
FDNS	00NR	0	16WP	G15_095	FROM->TO	CIMARRON - DRAPER LAKE 345KV CKT 1	717	717	0.06562	104.9641	P12:138:OKGE:3TERM2
FDNS	00NR	0	16WP	G15_095	FROM->TO	CIMARRON - DRAPER LAKE 345KV CKT 1	717	717	0.06464	104.9439	REDBUD - RIVERSIDE STATION 345KV CKT 1
FDNS	00NR	0	16WP	G15_095	FROM->TO	CIMARRON - DRAPER LAKE 345KV CKT 1	717	717	0.06464	104.9439	REDBUD - RIVERSIDE STATION 345KV CKT 1
FDNS	00NR	0	16WP	G15_095	FROM->TO	CIMARRON - DRAPER LAKE 345KV CKT 1	717	717	0.0645	104.8928	GEN515226 1-MUSKOGEE 6G
FDNS	00NR	0	16WP	G15_095	FROM->TO	CIMARRON - DRAPER LAKE 345KV CKT 1	717	717	0.0645	104.879	GEN501813 1-RODEMACHER UNIT 3
FDNS	00NR	0	16WP	G15_095	FROM->TO	CIMARRON - DRAPER LAKE 345KV CKT 1	717	717	0.05814	104.8291	BAILEY4 138.00 - SUNSHINE CANYON 138KV CKT 1
FDNS	00NR	0	16WP	G15_095	FROM->TO	CIMARRON - DRAPER LAKE 345KV CKT 1	717	717	0.06476	104.7782	NORTHWEST (NORTWST2) 345/138/13.8KV TRANSFORMER CKT 1
FDNS	00NR	0	16WP	G15_095	FROM->TO	CIMARRON - DRAPER LAKE 345KV CKT 1	717	717	0.06546	104.7766	7SAREPTA% 345.00 - LONGWOOD 345KV CKT 1
FDNS	00NR	0	16WP	G15_095	FROM->TO	CIMARRON - DRAPER LAKE 345KV CKT 1	717	717	0.06546	104.7766	7SAREPTA% 345.00 - LONGWOOD 345KV CKT 1
FDNS	00NR	0	16WP	G15_095	FROM->TO	CIMARRON - DRAPER LAKE 345KV CKT 1	717	717	0.06506	104.7749	ARCADIA - KAMO MEMORIAL 138KV CKT 1
FDNS	00NR	0	16WP	G15_095	FROM->TO	CIMARRON - DRAPER LAKE 345KV CKT 1	717	717	0.06455	104.7555	P12:138:OKGE:3TERM12
FDNS	00NR	0	16WP	G15_095	FROM->TO	CIMARRON - DRAPER LAKE 345KV CKT 1	717	717	0.06493	104.7399	DOLET HILLS - SOUTHWEST SHREVEPORT 345KV CKT 1
FDNS	00NR	0	16WP	G15_095	FROM->TO	CIMARRON - DRAPER LAKE 345KV CKT 1	717	717	0.06493	104.7399	DOLET HILLS - SOUTHWEST SHREVEPORT 345KV CKT 1
FDNS	00NR	0	16WP	G15_095	FROM->TO	CIMARRON - DRAPER LAKE 345KV CKT 1	717	717	0.0645	104.6942	GEN515225 1-MUSKOGEE 5G
FDNS	00NR	0	16WP	G15_095	FROM->TO	CIMARRON - DRAPER LAKE 345KV CKT 1	717	717	0.0645	104.694	GEN515223 1-MUSKOGEE 4G
FDNS	00NR	0	16WP	G15_095	FROM->TO	CIMARRON - DRAPER LAKE 345KV CKT 1	717	717	0.0645	104.6904	GEN335206 1-NELSON UNIT 6
FDNS	00NR	0	16WP	G15_095	FROM->TO	CIMARRON - DRAPER LAKE 345KV CKT 1	717	717	0.06527	104.68	MEMORIAL - SKYLINE 138KV CKT 1
FDNS	00NR	0	16WP	G15_095	FROM->TO	CIMARRON - DRAPER LAKE 345KV CKT 1	717	717	0.07842	104.583	GRACEMONT (BANK 1) 345/138/13.8KV TRANSFORMER CKT 1
FDNS	00NR	0	16WP	G15_095	FROM->TO	CIMARRON - DRAPER LAKE 345KV CKT 1	717	717	0.06475	104.5721	QUAIL CREEK - SKYLINE 138KV CKT 1
FDNS	00NR	0	16WP	G15_095	FROM->TO	CIMARRON - DRAPER LAKE 345KV CKT 1	717	717	0.0645	104.5492	GEN509409 1-WILKES #3
FDNS	00NR	0	16WP	G15_095	FROM->TO	CIMARRON - DRAPER LAKE 345KV CKT 1	717	717	0.0645	104.5474	GEN337653 1-WHITE BLUFF UNIT #2
FDNS	00NR	0	16WP	G15_095	FROM->TO	CIMARRON - DRAPER LAKE 345KV CKT 1	717	717	0.06632	104.5355	P12:138:OKGE:3TERM18
FDNS	00NR	0	16WP	G15_095	FROM->TO	CIMARRON - DRAPER LAKE 345KV CKT 1	717	717	0.05814	104.5271	BAILEY4 138.00 - WESTMOORE 138KV CKT 1
FDNS	00NR	0	16WP	G15_095	FROM->TO	CIMARRON - DRAPER LAKE 345KV CKT 1	717	717	0.0645	104.519	GEN501812 1-RODEMACHER UNIT 2
FDNS	00NR	0	16WP	G15_095	FROM->TO	CIMARRON - DRAPER LAKE 345KV CKT 1	717	717	0.06474	104.5145	NORTHWEST (NORTWST4) 345/138/13.8KV TRANSFORMER CKT 1
FDNS	00NR	0	16WP	G15_095	FROM->TO	CIMARRON - DRAPER LAKE 345KV CKT 1	717	717	0.0645	104.4548	NEW MADRID 161/22.0KV TRANSFORMER CKT 1
FDNS	00NR	0	16WP	G15_095	FROM->TO	CIMARRON - DRAPER LAKE 345KV CKT 1	717	717	0.0663	104.4542	36 & MERIDIAN - CHEMTRON 138KV CKT 1
FDNS	00NR	0	16WP	G15_095	FROM->TO	CIMARRON - DRAPER LAKE 345KV CKT 1	717	717	0.06525	104.4515	THISTLE7 345.00 - WOODWARD DISTRICT EHV 345KV CKT 1
FDNS	00NR	0	16WP	G15_095	FROM->TO	CIMARRON - DRAPER LAKE 345KV CKT 1	717	717	0.06525	104.4515	THISTLE7 345.00 - WOODWARD DISTRICT EHV 345KV CKT 1
FDNS	00NR	0	16WP	G15_095	FROM->TO	CIMARRON - DRAPER LAKE 345KV CKT 1	717	717	0.06525	104.4515	THISTLE7 345.00 - WOODWARD DISTRICT EHV 345KV CKT 2
FDNS	00NR	0	16WP	G15_095	FROM->TO	CIMARRON - DRAPER LAKE 345KV CKT 1	717	717	0.06525	104.4515	THISTLE7 345.00 - WOODWARD DISTRICT EHV 345KV CKT 2
FDNS	00NR	0	16WP	G15_095	FROM->TO	CIMARRON - DRAPER LAKE 345KV CKT 1	717	717	0.0645	104.4411	NEW MADRID 345/22.0KV TRANSFORMER CKT 1
FDNS	00NR	0	16WP	G15_095	FROM->TO	CIMARRON - DRAPER LAKE 345KV CKT 1	717	717	0.0645	104.4225	GEN520947 1-HUGO1
FDNS	00NR	0	16WP	G15_095	FROM->TO	CIMARRON - DRAPER LAKE 345KV CKT 1	717	717	0.0645	104.4148	GEN337652 1-WHITE BLUFF UNIT #1
FDNS	00NR	0	16WP	G15_095	FROM->TO	CIMARRON - DRAPER LAKE 345KV CKT 1	717	717	0.06474	104.3894	NORTHWEST (NORTWST3) 345/138/13.8KV TRANSFORMER CKT 1
FDNS	00NR	0	16WP	G15_095	FROM->TO	CIMARRON - DRAPER LAKE 345KV CKT 1	717	717	0.06504	104.376	3TR3AR8EL7EL
FDNS	00NR	0	16WP	G15_095	FROM->TO	CIMARRON - DRAPER LAKE 345KV CKT 1	717	717	0.06504	104.376	7SAREPTA% 345.00 - ELDORADO EHV 345KV CKT 1
FDNS	00NR	0	16WP	G15_095	FROM->TO	CIMARRON - DRAPER LAKE 345KV CKT 1	717	717	0.06504	104.3682	ELDORADO EHV 500/345KV TRANSFORMER CKT 1
FDNS	00NR	0	16WP	G15_095	FROM->TO	CIMARRON - DRAPER LAKE 345KV CKT 1	717	717	0.0663	104.3672	CHEMTRON - PENNSYLVANIA 138KV CKT 1
FDNS	00NR	0	16WP	G15_095	FROM->TO	CIMARRON - DRAPER LAKE 345KV CKT 1	717	717	0.06413	104.3371	G15052_T 345.00 - ROSE HILL 345KV CKT 1
FDNS	00NR	0	16WP	G15_095	FROM->TO	CIMARRON - DRAPER LAKE 345KV CKT 1	717	717	0.0647	104.3332	G15074_T 345.00 - HOYT 345KV CKT 1
FDNS	00NR	0	16WP	G15_095	FROM->TO	CIMARRON - DRAPER LAKE 345KV CKT 1	717	717	0.06273	104.3021	BLANCHARD - CORNVILLE 138KV CKT 1
FDNS	00NR	0	16WP	G15_095	FROM->TO	CIMARRON - DRAPER LAKE 345KV CKT 1	717	717	0.06374	104.3015	COMANCHE - LOCO 138KV CKT 1
FDNS	00NR	0	16WP	G15_095	FROM->TO	CIMARRON - DRAPER LAKE 345KV CKT 1	717	717	0.06503	104.2791	P12:138:OKGE:3TERM17
FDNS	00NR	0	16WP	G15_095	FROM->TO	CIMARRON - DRAPER LAKE 345KV CKT 1	717	717	0.0645	104.2625	GEN515577 1-ARBWND11 0.6900
FDNS	00NR	0	16WP	G15_095	FROM->TO	CIMARRON - DRAPER LAKE 345KV CKT 1	717	717	0.05814	104.2438	FRANKLIN SW - WESTMOORE 138KV CKT 1
FDNS	00NR	0	16WP	G15_095	FROM->TO	CIMARRON - DRAPER LAKE 345KV CKT 1	717	717	0.06449	104.2374	P12:138:OKGE:3TERM11
FDNS	00NR	0	16WP	G15_095	FROM->TO	CIMARRON - DRAPER LAKE 345KV CKT 1	717	717	0.0645	104.2237	GEN334440 1-SABINE UNIT 4
FDNS	00NR	0	16WP	G15_095	FROM->TO	CIMARRON - DRAPER LAKE 345KV CKT 1	717	717	0.06472	104.2165	LONEOAK - NORTHWEST 138KV CKT 1
FDNS	00NR	0	16WP	G15_095	FROM->TO	CIMARRON - DRAPER LAKE 345KV CKT 1	717	717	0.06273	104.211	P12:138:AEPW-OGE:CORNVIL4:MAUD 4
FDNS	00NR	0	16WP	G15_095	FROM->TO	CIMARRON - DRAPER LAKE 345KV CKT 1	717	717	0.06423	104.2024	KETCH TAP - NORTHWEST 138KV CKT 1
FDNS	00NR	0	16WP	G15_095	FROM->TO	CIMARRON - DRAPER LAKE 345KV CKT 1	717	717	0.0645	104.2023	DELL 500 - ESSEX UNIT 2 500KV CKT Z1
FDNS	00NR	0	16WP	G15_095	FROM->TO	CIMARRON - DRAPER LAKE 345KV CKT 1	717	717	0.06465	104.1938	DIVISION AVE - LAKESIDE 138KV CKT 1
FDNS	00NR	0	16WP	G15_095	FROM->TO	CIMARRON - DRAPER LAKE 345KV CKT 1	717	717	0.06537	104.1729	HORSESHOE LAKE - KAMO MEMORIAL 138KV CKT 1
FDNS	00NR	0	16WP	G15_095	FROM->TO	CIMARRON - DRAPER LAKE 345KV CKT 1	717	717	0.06485	104.1303	NORTHWEST - PANTHER 138KV CKT 1
FDNS	00NR	0	16WP	G15_095	FROM->TO	CIMARRON - DRAPER LAKE 345KV CKT 1	717	717	0.06601	104.1253	G14-074T 345.00 - OKLAUNION 345KV CKT 1
FDNS	00NR	0	16WP	G15_095	FROM->TO	CIMARRON - DRAPER LAKE 345KV CKT 1	717	717	0.06573	104.1217	CLARKSVILLE - ONETA 345KV CKT 1
FDNS	00NR	0	16WP	G15_095	FROM->TO	CIMARRON - DRAPER LAKE 345KV CKT 1	717	717	0.06573	104.1217	CLARKSVILLE - ONETA 345KV CKT 1
FDNS	00NR	0	16WP	G15_095	FROM->TO	CIMARRON - DRAPER LAKE 345KV CKT 1	717	717	0.06642	104.1144	P12:138:OKGE:3TERM20
FDNS	00NR	0	16WP	G15_095	FROM->TO	CIMARRON - DRAPER LAKE 345KV CKT 1	717	717	0.06273	104.1089	BLANCHARD - MAUD 138KV CKT 1
FDNS	00NR	0	16WP	G15_095	FROM->TO	CIMARRON - DRAPER LAKE 345KV CKT 1	717	717	0.06431	104.1015	CIMARRON - HAYMAKER 138KV CKT 1
FDNS	00NR	0	16WP	G15_095	FROM->TO	CIMARRON - DRAPER LAKE 345KV CKT 1	717	717	0.06495	104.0977	P12:138:OKGE:3TERM47
FDNS	00NR	0	16WP	G15_095	FROM->TO	CIMARRON - DRAPER LAKE 345KV CKT 1	717	717	0.0645	104.0931	GEN336252 1-NINEMILE POINT UNIT#5
FDNS	00NR	0	16WP	G15_095	FROM->TO	CIMARRON - DRAPER LAKE 345KV CKT 1	717	717	0.06484	104.0857	FINNEY SWITCHING STATION - HOLCOMB 345KV CKT 1
FDNS	00NR	0	16WP	G15_095	FROM->TO	CIMARRON - DRAPER LAKE 345KV CKT 1	717	717	0.06484	104.0857	FINNEY SWITCHING STATION - HOLCOMB 345KV CKT 1
FDNS	00NR	0	16WP	G15_095	FROM->TO	CIMARRON - DRAPER LAKE 345KV CKT 1	717	717	0.0645	104.0808	DOLET HILLS 345/24.0KV TRANSFORMER CKT 1
FDNS	00NR	0	16WP	G15_095	FROM->TO	CIMARRON - DRAPER LAKE 345KV CKT 1	717	717	0.06485	104.08	PANTHER - SILVER LAKE 138KV CKT 1
FDNS	00NR	0	16WP	G15_095	FROM->TO	CIMARRON - DRAPER LAKE 345KV CKT 1	717	717	0.06465	104.0723	HEFNER - LAKESIDE 138KV CKT 1
FDNS	00NR	0	16WP	G15_095	FROM->TO	CIMARRON - DRAPER LAKE 345KV CKT 1	717	717	0.06493	104.041	BLACKBERRY - NEOSHO 345KV CKT 1
FDNS	00NR	0	16WP	G15_095	FROM->TO	CIMARRON - DRAPER LAKE 345KV CKT 1	717	717	0.0645	104.0356	WHITE BLUFF 500/26.0KV TRANSFORMER CKT 1
FDNS	00NR	0	16WP	G15_095	FROM->TO	CIMARRON - DRAPER LAKE 345KV CKT 1	717	717	0.06554	104.0273	KETCH - KETCH TAP 138KV CKT 1
FDNS	00NR	0	16WP	G15_095	FROM->TO	CIMARRON - DRAPER LAKE 345KV CKT 1	717	717	0.06505	104.02	EMPORIA ENERGY CENTER - G14_001T 345.00 345KV CKT 1
FDNS	00NR	0	16WP	G15_095	FROM->TO	CIMARRON - DRAPER LAKE 345KV CKT 1	717	717	0.0647	104.0189	HOYT - STRANGER CREEK 345KV CKT 1
FDNS	00NR	0	16WP	G15_095	FROM->TO	CIMARRON - DRAPER LAKE 345KV CKT 1	717	717	0.06501	104.0086	DIVISION AVE - MUSTANG 138KV CKT 1
FDNS	00NR	0	16WP	G15_095	FROM->TO	CIMARRON - DRAPER LAKE 345KV CKT 1	717	717	0.06459	104	G15088_T 345.00 - MOORE 345KV CKT 1
FDNS	00NR	0	16WP	G15_095	FROM->TO	CIMARRON - DRAPER LAKE 345KV CKT 1	717	717	0.0645	104	GEN300006 1-NEW MADRID UNIT 1
FDNS	00NR	0	16WP	G15_095	FROM->TO	CIMARRON - DRAPER LAKE 345KV CKT 1	717	717	0.0645	104	GEN300007 1-NEW MADRID UNIT 2
FDNS	00NR	0	16WP	G15_095	FROM->TO	CIMARRON - DRAPER LAKE 345KV CKT 1	717	717	0.06359	103.999	P12:138:WFEC:MSL02
FDNS	00NR	0	16WP	G15_095	FROM->TO	CIMARRON - DRAPER LAKE 345KV CKT 1	717	717	0.06431	103.998	DIVISION AVE - HAYMAKER 138KV CKT 1

SOLUTION	GROUP	SCENARIO	SEASON	SOURCE	DIRECTION	MONITORED ELEMENT	RATEA (MVA)	RATEB(MVA)	TDF	TC%LOADING (% MVA)	CONTINGENCY
FDNS	00NR	0	16WP	G15_095	FROM->TO	CIMARRON - DRAPER LAKE 345KV CKT 1	717	717	0.0645	103.9886	GEN509408 1-WILKES #2
FDNS	00NR	0	16WP	G15_095	FROM->TO	CIMARRON - DRAPER LAKE 345KV CKT 1	717	717	0.06528	103.9879	P12:138:AEPW-OGE:SHIDLER4:OSAGE 4
FDNS	00NR	0	16WP	G15_095	FROM->TO	CIMARRON - DRAPER LAKE 345KV CKT 1	717	717	0.06573	103.975	MCCLAIN - PLEASANT VALLEY 138KV CKT 1
FDNS	00NR	0	16WP	G15_095	FROM->TO	CIMARRON - DRAPER LAKE 345KV CKT 1	717	717	0.06477	103.9746	SWISSVALE - WEST GARDNER 345KV CKT 1
FDNS	00NR	0	16WP	G15_095	FROM->TO	CIMARRON - DRAPER LAKE 345KV CKT 1	717	717	0.0647	103.9659	G15074_T 345.00 - JEFFREY ENERGY CENTER 345KV CKT 1
FDNS	00NR	0	16WP	G15_095	FROM->TO	CIMARRON - DRAPER LAKE 345KV CKT 1	717	717	0.06385	103.962	ANADARKO - GEORGIA 138KV CKT 1
FDNS	00NR	0	16WP	G15_095	FROM->TO	CIMARRON - DRAPER LAKE 345KV CKT 1	717	717	0.0645	103.9525	GEN335204 1-NELSON UNIT 4
FDNS	00NR	0	16WP	G15_095	FROM->TO	CIMARRON - DRAPER LAKE 345KV CKT 1	717	717	0.0645	103.9519	GEN336831 1-BAXTER WILSON SES
FDNS	00NR	0	16WP	G15_095	FROM->TO	CIMARRON - DRAPER LAKE 345KV CKT 1	717	717	0.06529	103.9391	P12:138:AEPW:OKMULGE4:R.S.S-4
FDNS	00NR	0	16WP	G15_095	FROM->TO	CIMARRON - DRAPER LAKE 345KV CKT 1	717	717	0.0645	103.9208	GEN506754 1-LEBROCK STEAM 1
FDNS	00NR	0	16WP	G15_095	FROM->TO	CIMARRON - DRAPER LAKE 345KV CKT 1	717	717	0.0652	103.919	CLASSEN - ROBINSON 138KV CKT 1
FDNS	00NR	0	16WP	G15_095	FROM->TO	CIMARRON - DRAPER LAKE 345KV CKT 1	717	717	0.0645	103.9013	GEN334441 1-SABINE UNIT 5
FDNS	00NR	0	16WP	G15_095	FROM->TO	CIMARRON - DRAPER LAKE 345KV CKT 1	717	717	0.0645	103.8962	GEN334071 1-LEWIS CREEK 2
FDNS	00NR	0	16WP	G15_095	FROM->TO	CIMARRON - DRAPER LAKE 345KV CKT 1	717	717	0.06385	103.8953	FLETCHER - GEORGIA 138KV CKT 1
FDNS	00NR	0	16WP	G15_095	FROM->TO	CIMARRON - DRAPER LAKE 345KV CKT 1	717	717	0.06505	103.8915	G14_001T 345.00 - WICHITA 345KV CKT 1
FDNS	00NR	0	16WP	G15_095	FROM->TO	CIMARRON - DRAPER LAKE 345KV CKT 1	717	717	0.0645	103.8883	GEN334070 1-LEWIS CREEK 1
FDNS	00NR	0	16WP	G15_095	FROM->TO	CIMARRON - DRAPER LAKE 345KV CKT 1	717	717	0.06515	103.8865	BENTON - WICHITA 345KV CKT 1
FDNS	00NR	0	16WP	G15_095	FROM->TO	CIMARRON - DRAPER LAKE 345KV CKT 1	717	717	0.06484	103.8864	FINNEY SWITCHING STATION - Hitchland Interchange 345KV CKT 1
FDNS	00NR	0	16WP	G15_095	FROM->TO	CIMARRON - DRAPER LAKE 345KV CKT 1	717	717	0.0645	103.8862	GEN336251 1-NINEMILE POINT UNIT#4
FDNS	00NR	0	16WP	G15_095	FROM->TO	CIMARRON - DRAPER LAKE 345KV CKT 1	717	717	0.06477	103.8786	WEBRE - WELLS 500KV CKT 1
FDNS	00NR	0	16WP	G15_095	FROM->TO	CIMARRON - DRAPER LAKE 345KV CKT 1	717	717	0.0648	103.8775	LACYGNE - NEOSHO 345KV CKT 1
FDNSLock	00NR	0	16WP	G15_095	FROM->TO	CIMARRON - DRAPER LAKE 345KV CKT 1	717	717	0.0645	103.8742	GEN590011 2-ERCOT EQUIVALENCE
FDNS	00NR	0	16WP	G15_095	FROM->TO	CIMARRON - DRAPER LAKE 345KV CKT 1	717	717	0.06474	103.862	EMPORIA ENERGY CENTER - SWISSVALE 345KV CKT 1
FDNS	00NR	0	16WP	G15_095	FROM->TO	CIMARRON - DRAPER LAKE 345KV CKT 1	717	717	0.06368	103.8385	EMPIRE - FLETCHER 138KV CKT 1
FDNSLock	00NR	0	16WP	G15_095	FROM->TO	CIMARRON - DRAPER LAKE 345KV CKT 1	717	717	0.0645	103.8317	GEN590010 1-ERCOT EQUIVALENCE
FDNS	00NR	0	16WP	G15_095	FROM->TO	CIMARRON - DRAPER LAKE 345KV CKT 1	717	717	0.06468	103.8223	G1524G1525 345.00 - THISTLE7 345.00 345KV CKT 1
FDNS	00NR	0	16WP	G15_095	FROM->TO	CIMARRON - DRAPER LAKE 345KV CKT 1	717	717	0.06468	103.8223	G1524G1525 345.00 - THISTLE7 345.00 345KV CKT 2
FDNS	00NR	0	16WP	G15_095	FROM->TO	CIMARRON - DRAPER LAKE 345KV CKT 1	717	717	0.0645	103.8186	GEN503909 1-FULTONU1 1 16.000
FDNSLock	00NR	0	16WP	G15_095	FROM->TO	CIMARRON - DRAPER LAKE 345KV CKT 1	717	717	0.0645	103.8129	GEN338146 1-INDEPENDENCE UNIT #2
FDNS	00NR	0	16WP	G15_095	FROM->TO	CIMARRON - DRAPER LAKE 345KV CKT 1	717	717	0.06472	103.8126	LONEOAK - QUAIL CREEK 138KV CKT 1
FDNS	00NR	0	16WP	G15_095	FROM->TO	CIMARRON - DRAPER LAKE 345KV CKT 1	717	717	0.0645	103.809	GEN501811 1-RODEMACHER UNIT 1
FDNS	00NR	0	16WP	G15_095	FROM->TO	CIMARRON - DRAPER LAKE 345KV CKT 1	717	717	0.06076	103.8044	WOODRING (WOODRNG2) 345/138/13.8KV TRANSFORMER CKT 1
FDNS	00NR	0	16WP	G15_095	FROM->TO	CIMARRON - DRAPER LAKE 345KV CKT 1	717	717	0.0611	103.7918	CRINER - PAYNE 138.00 138KV CKT 1
FDNS	00NR	0	16WP	G15_095	FROM->TO	CIMARRON - DRAPER LAKE 345KV CKT 1	717	717	0.06528	103.7817	OSAGE - WEBB CITY TAP 138KV CKT 1
FDNS	00NR	0	16WP	G15_095	FROM->TO	CIMARRON - DRAPER LAKE 345KV CKT 1	717	717	0.06368	103.7768	COMANCHE - EMPIRE 138KV CKT 1
FDNS	00NR	0	16WP	G15_095	FROM->TO	CIMARRON - DRAPER LAKE 345KV CKT 1	717	717	0.0645	103.7748	FRONTIER - GRIMES 345KV CKT 1
FDNS	00NR	0	16WP	G15_095	FROM->TO	CIMARRON - DRAPER LAKE 345KV CKT 1	717	717	0.0645	103.7716	GEN334433 1-SABINE UNIT 3
FDNS	00NR	0	16WP	G15_095	FROM->TO	CIMARRON - DRAPER LAKE 345KV CKT 1	717	717	0.0645	103.7693	P12:069:OKGE:3TERM4
FDNS	00NR	0	16WP	G15_095	FROM->TO	CIMARRON - DRAPER LAKE 345KV CKT 1	717	717	0.0645	103.7671	GEN334030 1-FRONTIER UNIT 1
FDNS	00NR	0	16WP	G15_095	FROM->TO	CIMARRON - DRAPER LAKE 345KV CKT 1	717	717	0.0645	103.7661	GEN334031 1-FRONTIER UNIT 2
FDNS	00NR	0	16WP	G15_095	FROM->TO	CIMARRON - DRAPER LAKE 345KV CKT 1	717	717	0.0645	103.764	GEN303007 1-1BC2 U2
FDNS	00NR	0	16WP	G15_095	FROM->TO	CIMARRON - DRAPER LAKE 345KV CKT 1	717	717	0.06508	103.7619	SPVALLY4 138.00 - STILLWATER 138KV CKT 1
FDNS	00NR	0	16WP	G15_095	FROM->TO	CIMARRON - DRAPER LAKE 345KV CKT 1	717	717	0.0645	103.7587	GEN303006 1-1BC2 U1
FDNS	00NR	0	16WP	G15_095	FROM->TO	CIMARRON - DRAPER LAKE 345KV CKT 1	717	717	0.0645	103.7582	GEN337041 1-GERALD ANDRUS
FDNS	00NR	0	16WP	G15_095	FROM->TO	CIMARRON - DRAPER LAKE 345KV CKT 1	717	717	0.0645	103.7551	P12:161:AEPW:DYESS 5:HYLAND 5
FDNS	00NR	0	16WP	G15_095	FROM->TO	CIMARRON - DRAPER LAKE 345KV CKT 1	717	717	0.0645	103.7415	GEN336191 1-LITTLE GYPSY UNIT#3
FDNS	00NR	0	16WP	G15_095	FROM->TO	CIMARRON - DRAPER LAKE 345KV CKT 1	717	717	0.06456	103.7374	8DANIEL8 500.00 - MCKNIGHT 500KV CKT 1
FDNS	00NR	0	16WP	G15_095	FROM->TO	CIMARRON - DRAPER LAKE 345KV CKT 1	717	717	0.0645	103.7345	GEN509393 S1-ARSENAL HILL GENS #4 (STALL)
FDNS	00NR	0	16WP	G15_095	FROM->TO	CIMARRON - DRAPER LAKE 345KV CKT 1	717	717	0.06463	103.7342	CLEAVELAND - CLEVLND 4 138.00 138KV CKT Z1
FDNS	00NR	0	16WP	G15_095	FROM->TO	CIMARRON - DRAPER LAKE 345KV CKT 1	717	717	0.06463	103.7339	CLEVELAND (CLVAUTO1) 345/138/13.8KV TRANSFORMER CKT 1
FDNS	00NR	0	16WP	G15_095	FROM->TO	CIMARRON - DRAPER LAKE 345KV CKT 1	717	717	0.06463	103.7339	CLEVELAND (CLVAUTO1) 345/138/13.8KV TRANSFORMER CKT 1
FDNS	00NR	0	16WP	G15_095	FROM->TO	CIMARRON - DRAPER LAKE 345KV CKT 1	717	717	0.06508	103.7325	PAYNESB4 138.00 - SPVALLY4 138.00 138KV CKT 1
FDNS	00NR	0	16WP	G15_095	FROM->TO	CIMARRON - DRAPER LAKE 345KV CKT 1	717	717	0.06462	103.7308	P12:138:OKGE:3TERM13
FDNS	00NR	0	16WP	G15_095	FROM->TO	CIMARRON - DRAPER LAKE 345KV CKT 1	717	717	0.06421	103.7266	ARKANSAS NUCLEAR ONE - FT SMITH 500KV CKT 1
FDNS	00NR	0	16WP	G15_095	FROM->TO	CIMARRON - DRAPER LAKE 345KV CKT 1	717	717	0.06421	103.7266	ARKANSAS NUCLEAR ONE - FT SMITH 500KV CKT 1
FDNS	00NR	0	16WP	G15_095	FROM->TO	CIMARRON - DRAPER LAKE 345KV CKT 1	717	717	0.0645	103.7179	GEN509392 G2-ARSENAL HILL GENS #3 (STALL)
FDNS	00NR	0	16WP	G15_095	FROM->TO	CIMARRON - DRAPER LAKE 345KV CKT 1	717	717	0.0645	103.7178	GEN509391 G1-ARSENAL HILL GENS #2 (STALL)
FDNS	00NR	0	16WP	G15_095	FROM->TO	CIMARRON - DRAPER LAKE 345KV CKT 1	717	717	0.06508	103.7169	CUSHING - PAYNESB4 138.00 138KV CKT 1
FDNS	00NR	0	16WP	G15_095	FROM->TO	CIMARRON - DRAPER LAKE 345KV CKT 1	717	717	0.0645	103.711	GEN335614 1-WILLOW GLENN UNIT#4
FDNS	00NR	0	16WP	G15_095	FROM->TO	CIMARRON - DRAPER LAKE 345KV CKT 1	717	717	0.06494	103.7087	DAYTON - MUSTANG 138KV CKT 1
FDNS	00NR	0	16WP	G15_095	FROM->TO	CIMARRON - DRAPER LAKE 345KV CKT 1	717	717	0.06494	103.7038	DAYTON - HOBBY LOBBY 138KV CKT 1
FDNS	00NR	0	16WP	G15_095	FROM->TO	CIMARRON - DRAPER LAKE 345KV CKT 1	717	717	0.0645	103.6985	GEN303008 1-1BC2 U3
FDNS	00NR	0	16WP	G15_095	FROM->TO	CIMARRON - DRAPER LAKE 345KV CKT 1	717	717	0.06879	103.6895	CANADIAN RIVER - PITTSBURG 345KV CKT 1
FDNS	00NR	0	16WP	G15_095	FROM->TO	CIMARRON - DRAPER LAKE 345KV CKT 1	717	717	0.06879	103.6895	CANADIAN RIVER - PITTSBURG 345KV CKT 1
FDNS	00NR	0	16WP	G15_095	FROM->TO	CIMARRON - DRAPER LAKE 345KV CKT 1	717	717	0.06475	103.6882	MUSTANG - SW 5TH 138KV CKT 1
FDNS	00NR	0	16WP	G15_095	FROM->TO	CIMARRON - DRAPER LAKE 345KV CKT 1	717	717	0.0645	103.6855	GEN338143 1-INDEPENDENCE UNIT #1
FDNS	00NR	0	16WP	G15_095	FROM->TO	CIMARRON - DRAPER LAKE 345KV CKT 1	717	717	0.06464	103.6766	ELDORADO EHV - MOUNT OLIVE 500KV CKT 1
FDNS	00NR	0	16WP	G15_095	FROM->TO	CIMARRON - DRAPER LAKE 345KV CKT 1	717	717	0.0645	103.6764	GEN336170 1-GULF OXY U4
FDNS	00NR	0	16WP	G15_095	FROM->TO	CIMARRON - DRAPER LAKE 345KV CKT 1	717	717	0.0645	103.6751	GEN336464 1-MICHOUD UNIT #3
FDNS	00NR	0	16WP	G15_095	FROM->TO	CIMARRON - DRAPER LAKE 345KV CKT 1	717	717	0.0611	103.6693	COLE - CRINER 138KV CKT 1
FDNS	00NR	0	16WP	G15_095	FROM->TO	CIMARRON - DRAPER LAKE 345KV CKT 1	717	717	0.06456	103.6516	P12:069:OKGE:3TERM19
FDNS	00NR	0	16WP	G15_095	FROM->TO	CIMARRON - DRAPER LAKE 345KV CKT 1	717	717	0.0645	103.6516	ESSEX UNIT 2 500/18.0KV TRANSFORMER CKT 1
FDNS	00NR	0	16WP	G15_095	FROM->TO	CIMARRON - DRAPER LAKE 345KV CKT 1	717	717	0.06462	103.6427	7LUTESVIL 345.00 - 7ST FRANC 345.00 345KV CKT 1
FDNS	00NR	0	16WP	G15_095	FROM->TO	CIMARRON - DRAPER LAKE 345KV CKT 1	717	717	0.06494	103.6334	OUMED 4 - STONEWALL 138KV CKT 1
FDNS	00NR	0	16WP	G15_095	FROM->TO	CIMARRON - DRAPER LAKE 345KV CKT 1	717	717	0.0645	103.6302	GEN336801 1-BAXTER WILSON UNIT #1
FDNS	00NR	0	16WP	G15_095	FROM->TO	CIMARRON - DRAPER LAKE 345KV CKT 1	717	717	0.0652	103.6262	LIGHTNING CREEK - ROBINSON 138KV CKT 1
FDNS	00NR	0	16WP	G15_095	FROM->TO	CIMARRON - DRAPER LAKE 345KV CKT 1	717	717	0.06476	103.6225	ARCADIA - LGARBER4 138.00 138KV CKT 1
FDNS	00NR	0	16WP	G15_095	FROM->TO	CIMARRON - DRAPER LAKE 345KV CKT 1	717	717	0.0645	103.6136	GEN506752 1-LEBROCK GAS 1
FDNS	00NR	0	16WP	G15_095	FROM->TO	CIMARRON - DRAPER LAKE 345KV CKT 1	717	717	0.0645	103.6135	GEN506753 1-LEBROCK GAS 2

SOLUTION	GROUP	SCENARIO	SEASON	SOURCE	DIRECTION	MONITORED ELEMENT	RATEA (MVA)	RATEB(MVA)	TDF	TC%LOADING (% MVA)	CONTINGENCY
FDNS	00NR	0	16WP	G15_095	FROM->TO	CIMARRON - DRAPER LAKE 345KV CKT 1	717	717	0.06461	103.6057	7JASPER 345.00 - BLACKBERRY 345KV CKT 1
FDNS	00NR	0	16WP	G15_095	FROM->TO	CIMARRON - DRAPER LAKE 345KV CKT 1	717	717	0.06528	103.6018	FAIRFAX TAP - SHIDLER 138KV CKT 1
FDNS	00NR	0	16WP	G15_095	FROM->TO	CIMARRON - DRAPER LAKE 345KV CKT 1	717	717	0.06528	103.6017	FAIRFAX TAP - WEBB CITY TAP 138KV CKT 1
FDNS	00NR	0	16WP	G15_095	FROM->TO	CIMARRON - DRAPER LAKE 345KV CKT 1	717	717	0.06476	103.5927	CHITWOOD - LGARBER4 138.00 138KV CKT 1
FDNS	00NR	0	16WP	G15_095	FROM->TO	CIMARRON - DRAPER LAKE 345KV CKT 1	717	717	0.0645	103.5925	GEN501910 1-ACADIA UNIT ST1
FDNS	00NR	0	16WP	G15_095	FROM->TO	CIMARRON - DRAPER LAKE 345KV CKT 1	717	717	0.0645	103.5817	RODEMACHER 230/22.0KV TRANSFORMER CKT 1
FDNS	00NR	0	16WP	G15_095	FROM->TO	CIMARRON - DRAPER LAKE 345KV CKT 1	717	717	0.06476	103.5804	CHITWOOD - JONES TAP 138KV CKT 1
FDNS	00NR	0	16WP	G15_095	FROM->TO	CIMARRON - DRAPER LAKE 345KV CKT 1	717	717	0.0645	103.5784	GEN511843 1-RIVERSIDE STATION #2
FDNS	00NR	0	16WP	G15_095	FROM->TO	CIMARRON - DRAPER LAKE 345KV CKT 1	717	717	0.06463	103.5772	P12:138:AEPW-OGE:WTH_JCT4:JENSEN4
FDNS	00NR	0	16WP	G15_095	FROM->TO	CIMARRON - DRAPER LAKE 345KV CKT 1	717	717	0.06514	103.571	TULSA NORTH - WEKIWA 345KV CKT 1
FDNS	00NR	0	16WP	G15_095	FROM->TO	CIMARRON - DRAPER LAKE 345KV CKT 1	717	717	0.06514	103.571	TULSA NORTH - WEKIWA 345KV CKT 1
FDNS	00NR	0	16WP	G15_095	FROM->TO	CIMARRON - DRAPER LAKE 345KV CKT 1	717	717	0.06481	103.5684	6LAYFLD 230.00 - CARROLL 230KV CKT 1
FDNS	00NR	0	16WP	G15_095	FROM->TO	CIMARRON - DRAPER LAKE 345KV CKT 1	717	717	0.06466	103.5641	8WNEWMADRID 500.00 - DELL 500 500KV CKT 1
FDNS	00NR	0	16WP	G15_095	FROM->TO	CIMARRON - DRAPER LAKE 345KV CKT 1	717	717	0.06451	103.5615	P12:345:GRDA:CHOUTEAU-SPORTSMANACRES
FDNS	00NR	0	16WP	G15_095	FROM->TO	CIMARRON - DRAPER LAKE 345KV CKT 1	717	717	0.06472	103.5548	ELDORADO EHV - SHERIDAN EHV 500KV CKT 1
FDNS	00NR	0	16WP	G15_095	FROM->TO	CIMARRON - DRAPER LAKE 345KV CKT 1	717	717	0.0635	103.5535	CHISHOLM6 230.00 - ELK CITY 230KV 230KV CKT 1
FDNS	00NR	0	16WP	G15_095	FROM->TO	CIMARRON - DRAPER LAKE 345KV CKT 1	717	717	0.0635	103.5504	ELK CITY 230KV (ELKCTY-6) 230/138/13.8KV TRANSFORMER CKT 1
FDNS	00NR	0	16WP	G15_095	FROM->TO	CIMARRON - DRAPER LAKE 345KV CKT 1	717	717	0.0635	103.5504	ELK CITY 230KV (ELKCTY-6) 230/138/13.8KV TRANSFORMER CKT 1
FDNS	00NR	0	16WP	G15_095	FROM->TO	CIMARRON - DRAPER LAKE 345KV CKT 1	717	717	0.06478	103.5453	G13-010T 345.00 - POST ROCK 345KV CKT 1
FDNS	00NR	0	16WP	G15_095	FROM->TO	CIMARRON - DRAPER LAKE 345KV CKT 1	717	717	0.06454	103.5337	P12:138:AEPW:N.E.S.-4:CATOOSA4
FDNS	00NR	0	16WP	G15_095	FROM->TO	CIMARRON - DRAPER LAKE 345KV CKT 1	717	717	0.06494	103.5322	OUMED 4 - PARK PLACE 138KV CKT 1
FDNS	00NR	0	16WP	G15_095	FROM->TO	CIMARRON - DRAPER LAKE 345KV CKT 1	717	717	0.0649	103.5255	FULTON 115 - HOPE 115KV CKT 1
FDNS	00NR	0	16WP	G15_095	FROM->TO	CIMARRON - DRAPER LAKE 345KV CKT 1	717	717	0.0649	103.5255	FULTON 115 - HOPE 115KV CKT 1
FDNS	00NR	0	16WP	G15_095	FROM->TO	CIMARRON - DRAPER LAKE 345KV CKT 1	717	717	0.0646	103.5186	P13:138-161:WERE:NSES_TX-4OR5::
FDNS	00NR	0	16WP	G15_095	FROM->TO	CIMARRON - DRAPER LAKE 345KV CKT 1	717	717	0.0645	103.5156	8CAJUN2 500/24.0KV TRANSFORMER CKT 1
FDNS	00NR	0	16WP	G15_095	FROM->TO	CIMARRON - DRAPER LAKE 345KV CKT 1	717	717	0.06464	103.5154	MORISNT4 138.00 - SOONER 138KV CKT 1
FDNS	00NR	0	16WP	G15_095	FROM->TO	CIMARRON - DRAPER LAKE 345KV CKT 1	717	717	0.06457	103.5113	P12:138:AEPW:CATOOSA4:T.S.E.-4
FDNS	00NR	0	16WP	G15_095	FROM->TO	CIMARRON - DRAPER LAKE 345KV CKT 1	717	717	0.0645	103.5052	ST FRANCIS - ST FRANCIS 1 161KV CKT Z1
FDNS	00NR	0	16WP	G15_095	FROM->TO	CIMARRON - DRAPER LAKE 345KV CKT 1	717	717	0.06465	103.5015	7JASPER 345.00 - MORGAN 345KV CKT 1
FDNS	00NR	0	16WP	G15_095	FROM->TO	CIMARRON - DRAPER LAKE 345KV CKT 1	717	717	0.06451	103.4974	P12:069:OKGE:3TERM3
FDNS	00NR	0	16WP	G15_095	FROM->TO	CIMARRON - DRAPER LAKE 345KV CKT 1	717	717	0.06212	103.4908	HUGO - VALLIANT 345KV CKT 1
FDNS	00NR	0	16WP	G15_095	FROM->TO	CIMARRON - DRAPER LAKE 345KV CKT 1	717	717	0.06212	103.4908	HUGO - VALLIANT 345KV CKT 1
FDNS	00NR	0	16WP	G15_095	FROM->TO	CIMARRON - DRAPER LAKE 345KV CKT 1	717	717	0.0645	103.4903	GEN509394 1-FLINT CREEK
FDNS	00NR	0	16WP	G15_095	FROM->TO	CIMARRON - DRAPER LAKE 345KV CKT 1	717	717	0.0645	103.4898	GEN300015 1-1SGPDEL 18.000
FDNS	00NR	0	16WP	G15_095	FROM->TO	CIMARRON - DRAPER LAKE 345KV CKT 1	717	717	0.06478	103.4897	G13-010T 345.00 - SPEARVILLE 345KV CKT 1
FDNS	00NR	0	16WP	G15_095	FROM->TO	CIMARRON - DRAPER LAKE 345KV CKT 1	717	717	0.06541	103.4895	DALE - HORSESHOE LAKE 138KV CKT 1
FDNS	00NR	0	16WP	G15_095	FROM->TO	CIMARRON - DRAPER LAKE 345KV CKT 1	717	717	0.0652	103.4888	LIGHTNING CREEK - TROSPER 138KV CKT 1
FDNS	00NR	0	16WP	G15_095	FROM->TO	CIMARRON - DRAPER LAKE 345KV CKT 1	717	717	0.0645	103.4794	GEN337766 1-TRACTEBEL UNIT S1
FDNS	00NR	0	16WP	G15_095	FROM->TO	CIMARRON - DRAPER LAKE 345KV CKT 1	717	717	0.0645	103.4788	P12:138:AEPW:SHERID4:112GORE4
FDNS	00NR	0	16WP	G15_095	FROM->TO	CIMARRON - DRAPER LAKE 345KV CKT 1	717	717	0.0645	103.4762	GEN515564 1-ORIGIN11 0.6900
FDNS	00NR	0	16WP	G15_095	FROM->TO	CIMARRON - DRAPER LAKE 345KV CKT 1	717	717	0.0645	103.4762	GEN515565 1-ORIGIN21 0.6900
FDNS	00NR	0	16WP	G15_095	FROM->TO	CIMARRON - DRAPER LAKE 345KV CKT 1	717	717	0.06494	103.4744	36 & MERIDIAN - HOBBY LOBBY 138KV CKT 1
FDNS	00NR	0	16WP	G15_095	FROM->TO	CIMARRON - DRAPER LAKE 345KV CKT 1	717	717	0.06468	103.474	HAMMETT TAP - HAMMETT2 138KV CKT 1
FDNS	00NR	0	16WP	G15_095	FROM->TO	CIMARRON - DRAPER LAKE 345KV CKT 1	717	717	0.07109	103.4732	ANADARKO - GRACMNT4 138.00 138KV CKT 1
FDNS	00NR	0	16WP	G15_095	FROM->TO	CIMARRON - DRAPER LAKE 345KV CKT 1	717	717	0.0645	103.4731	GEN336222 1-LITTLE GYPSY UNIT#2
FDNS	00NR	0	16WP	G15_095	FROM->TO	CIMARRON - DRAPER LAKE 345KV CKT 1	717	717	0.06533	103.4701	NORTHEAST STATION - ONETA 345KV CKT 1
FDNS	00NR	0	16WP	G15_095	FROM->TO	CIMARRON - DRAPER LAKE 345KV CKT 1	717	717	0.06533	103.4701	NORTHEAST STATION - ONETA 345KV CKT 1
FDNS	00NR	0	16WP	G15_095	FROM->TO	CIMARRON - DRAPER LAKE 345KV CKT 1	717	717	0.06451	103.4701	P12:138:OKGE:3TERM28
FDNS	00NR	0	16WP	G15_095	FROM->TO	CIMARRON - DRAPER LAKE 345KV CKT 1	717	717	0.06421	103.4665	FLETCHER - MARLOW JCT 69KV CKT 1
FDNS	00NR	0	16WP	G15_095	FROM->TO	CIMARRON - DRAPER LAKE 345KV CKT 1	717	717	0.0645	103.4622	GEN501970 1-EVANGELINE UNIT 7
FDNS	00NR	0	16WP	G15_095	FROM->TO	CIMARRON - DRAPER LAKE 345KV CKT 1	717	717	0.0645	103.4621	NELSON 230/20.0KV TRANSFORMER CKT 1
FDNS	00NR	0	16WP	G15_095	FROM->TO	CIMARRON - DRAPER LAKE 345KV CKT 1	717	717	0.06467	103.4586	NW164TH4 138.00 - PIEDMONT 138KV CKT 1
FDNS	00NR	0	16WP	G15_095	FROM->TO	CIMARRON - DRAPER LAKE 345KV CKT 1	717	717	0.06451	103.458	P12:161:AEPW:EROGERS5:ECNTRTN5
FDNS	00NR	0	16WP	G15_095	FROM->TO	CIMARRON - DRAPER LAKE 345KV CKT 1	717	717	0.06442	103.4577	P12:138:OKGE-AEPW:JENSEN4:REDROCKRD4
FDNS	00NR	0	16WP	G15_095	FROM->TO	CIMARRON - DRAPER LAKE 345KV CKT 1	717	717	0.06467	103.4567	NORTHWEST - NW164TH4 138.00 138KV CKT 1
FDNS	00NR	0	16WP	G15_095	FROM->TO	CIMARRON - DRAPER LAKE 345KV CKT 1	717	717	0.0645	103.4555	ESSEX UNIT 2 500/18.0KV TRANSFORMER CKT 1
FDNS	00NR	0	16WP	G15_095	FROM->TO	CIMARRON - DRAPER LAKE 345KV CKT 1	717	717	0.0645	103.4553	P12:161:AEPW-SWPA:BEAVER5:EROGERS5
FDNS	00NR	0	16WP	G15_095	FROM->TO	CIMARRON - DRAPER LAKE 345KV CKT 1	717	717	0.06474	103.4548	COMANCHE TAP - OMPA-DUNCAN 840 138KV CKT 1
FDNS	00NR	0	16WP	G15_095	FROM->TO	CIMARRON - DRAPER LAKE 345KV CKT 1	717	717	0.06304	103.4517	CORN TAP - SEQUOYAHJ4 138.00 138KV CKT 1
FDNS	00NR	0	16WP	G15_095	FROM->TO	CIMARRON - DRAPER LAKE 345KV CKT 1	717	717	0.06414	103.4516	P12:138:AEPW:CORNVIL4:S.W.S.-4
FDNS	00NR	0	16WP	G15_095	FROM->TO	CIMARRON - DRAPER LAKE 345KV CKT 1	717	717	0.06304	103.4513	ANADARKO - SEQUOYAHJ4 138.00 138KV CKT 1
FDNS	00NR	0	16WP	G15_095	FROM->TO	CIMARRON - DRAPER LAKE 345KV CKT 1	717	717	0.06541	103.448	DALE - SQUIRL CREEK 138KV CKT 1
FDNS	00NR	0	16WP	G15_095	FROM->TO	CIMARRON - DRAPER LAKE 345KV CKT 1	717	717	0.06432	103.4464	HEALDTON - LOCO 138KV CKT 1
FDNS	00NR	0	16WP	G15_095	FROM->TO	CIMARRON - DRAPER LAKE 345KV CKT 1	717	717	0.0645	103.4463	P12:161:AEPW:DYESS5:ELMSPRNG:TONTITN5
FDNS	00NR	0	16WP	G15_095	FROM->TO	CIMARRON - DRAPER LAKE 345KV CKT 1	717	717	0.0645	103.4425	GEN336152 1-WATERFORD UNIT#2
FDNS	00NR	0	16WP	G15_095	FROM->TO	CIMARRON - DRAPER LAKE 345KV CKT 1	717	717	0.0645	103.4415	GEN336151 1-WATERFORD UNIT#1
FDNS	00NR	0	16WP	G15_095	FROM->TO	CIMARRON - DRAPER LAKE 345KV CKT 1	717	717	0.0645	103.4407	ST FRANCIS 345/161KV TRANSFORMER CKT 1
FDNS	00NR	0	16WP	G15_095	FROM->TO	CIMARRON - DRAPER LAKE 345KV CKT 1	717	717	0.06594	103.4351	CORN TAP - CORNVILLE 138KV CKT 1
FDNS	00NR	0	16WP	G15_095	FROM->TO	CIMARRON - DRAPER LAKE 345KV CKT 1	717	717	0.06557	103.4322	MARSHALL - WOODRING 138KV CKT 1
FDNS	00NR	0	16WP	G15_095	FROM->TO	CIMARRON - DRAPER LAKE 345KV CKT 1	717	717	0.0645	103.4302	GEN334392 1-EXXON MOBIL IPP 1
FDNS	00NR	0	16WP	G15_095	FROM->TO	CIMARRON - DRAPER LAKE 345KV CKT 1	717	717	0.06557	103.4299	COTTONWOOD CREEK - MARSHALL 138KV CKT 1
FDNS	00NR	0	16WP	G15_095	FROM->TO	CIMARRON - DRAPER LAKE 345KV CKT 1	717	717	0.06461	103.4289	HEFNER - TULSA 138KV CKT 1
FDNS	00NR	0	16WP	G15_095	FROM->TO	CIMARRON - DRAPER LAKE 345KV CKT 1	717	717	0.0611	103.4279	COLE - OUSW4 138KV CKT 1
FDNS	00NR	0	16WP	G15_095	FROM->TO	CIMARRON - DRAPER LAKE 345KV CKT 1	717	717	0.06465	103.426	MC NIEL 500/115KV TRANSFORMER CKT 1
FDNS	00NR	0	16WP	G15_095	FROM->TO	CIMARRON - DRAPER LAKE 345KV CKT 1	717	717	0.0645	103.424	GEN334393 1-EXXON MOBIL IPP 2
FDNS	00NR	0	16WP	G15_095	FROM->TO	CIMARRON - DRAPER LAKE 345KV CKT 1	717	717	0.0645	103.424	GEN334394 1-EXXON MOBIL IPP 3
FDNS	00NR	0	16WP	G15_095	FROM->TO	CIMARRON - DRAPER LAKE 345KV CKT 1	717	717	0.0648	103.4222	P12:138:AEPW:MOUNDRD4:SHIDLER4
FDNS	00NR	0	16WP	G15_095	FROM->TO	CIMARRON - DRAPER LAKE 345KV CKT 1	717	717	0.06481	103.4218	BISMARK - HOT SPRINGS WEST BUS 115KV CKT 1
FDNS	00NR	0	16WP	G15_095	FROM->TO	CIMARRON - DRAPER LAKE 345KV CKT 1	717	717	0.06559	103.4138	EL RENO SW - MUSTANG2 69.000 69KV CKT 1

SOLUTION	GROUP	SCENARIO	SEASON	SOURCE	DIRECTION	MONITORED ELEMENT	RATEA (MVA)	RATEB(MVA)	TDF	TC%LOADING (% MVA)	CONTINGENCY
FDNS	00NR	0	16WP	G15_095	FROM->TO	CIMARRON - DRAPER LAKE 345KV CKT 1	717	717	0.06489	103.4132	BRISTOW - SILVER CITY 138KV CKT 1
FDNS	00NR	0	16WP	G15_095	FROM->TO	CIMARRON - DRAPER LAKE 345KV CKT 1	717	717	0.06475	103.4123	KELLYAV4 138.00 - MEMORIAL 138KV CKT 1
FDNS	00NR	0	16WP	G15_095	FROM->TO	CIMARRON - DRAPER LAKE 345KV CKT 1	717	717	0.0645	103.4084	GEN501972 1-EVANGELINE UNIT 7-2
FDNS	00NR	0	16WP	G15_095	FROM->TO	CIMARRON - DRAPER LAKE 345KV CKT 1	717	717	0.0645	103.4083	GEN501971 1-EVANGELINE UNIT 7-1
FDNS	00NR	0	16WP	G15_095	FROM->TO	CIMARRON - DRAPER LAKE 345KV CKT 1	717	717	0.0648	103.4049	SHIDLER - WEST PAWHUSKA 138KV CKT 1
FDNS	00NR	0	16WP	G15_095	FROM->TO	CIMARRON - DRAPER LAKE 345KV CKT 1	717	717	0.06432	103.4047	HEALDTON - RINGLING 138KV CKT 1
FDNS	00NR	0	16WP	G15_095	FROM->TO	CIMARRON - DRAPER LAKE 345KV CKT 1	717	717	0.0645	103.3987	GEN334431 1-SABINE UNIT 1
FDNS	00NR	0	16WP	G15_095	FROM->TO	CIMARRON - DRAPER LAKE 345KV CKT 1	717	717	0.0645	103.3986	GEN334432 1-SABINE UNIT 2
FDNS	00NR	0	16WP	G15_095	FROM->TO	CIMARRON - DRAPER LAKE 345KV CKT 1	717	717	0.0645	103.3959	GEN336242 1-1NMIL ST1 18.000
FDNS	00NR	0	16WP	G15_095	FROM->TO	CIMARRON - DRAPER LAKE 345KV CKT 1	717	717	0.0645	103.3954	GEN337764 1-TRACTEBEL UNIT C1
FDNS	00NR	0	16WP	G15_095	FROM->TO	CIMARRON - DRAPER LAKE 345KV CKT 1	717	717	0.0645	103.3954	GEN337765 1-TRACTEBEL UNIT C2
FDNS	00NR	0	16WP	G15_095	FROM->TO	CIMARRON - DRAPER LAKE 345KV CKT 1	717	717	0.06455	103.3939	BROOKLINE - MORGAN 345KV CKT 1
FDNS	00NR	0	16WP	G15_095	FROM->TO	CIMARRON - DRAPER LAKE 345KV CKT 1	717	717	0.06455	103.3939	BROOKLINE - MORGAN 345KV CKT 1
FDNS	00NR	0	16WP	G15_095	FROM->TO	CIMARRON - DRAPER LAKE 345KV CKT 1	717	717	0.0645	103.3938	GEN501912 1-ACADIA UNIT CT1B
FDNS	00NR	0	16WP	G15_095	FROM->TO	CIMARRON - DRAPER LAKE 345KV CKT 1	717	717	0.0645	103.3931	GEN501911 1-ACADIA UNIT CT1A
FDNS	00NR	0	16WP	G15_095	FROM->TO	CIMARRON - DRAPER LAKE 345KV CKT 1	717	717	0.06494	103.3919	BODLE - PARK PLACE 138KV CKT 1
FDNS	00NR	0	16WP	G15_095	FROM->TO	CIMARRON - DRAPER LAKE 345KV CKT 1	717	717	0.06454	103.3911	COUNCIL - MUSTANG 138KV CKT 1
FDNS	00NR	0	16WP	G15_095	FROM->TO	CIMARRON - DRAPER LAKE 345KV CKT 1	717	717	0.06514	103.391	BRYANT - MEMORIAL 138KV CKT 1
FDNS	00NR	0	16WP	G15_095	FROM->TO	CIMARRON - DRAPER LAKE 345KV CKT 1	717	717	0.06481	103.3884	ALPINE AECC - BISMARK 115KV CKT 1
FDNS	00NR	0	16WP	G15_095	FROM->TO	CIMARRON - DRAPER LAKE 345KV CKT 1	717	717	0.0648	103.3884	PAWHUSKA TAP - WEST PAWHUSKA 138KV CKT 1
FDNS	00NR	0	16WP	G15_095	FROM->TO	CIMARRON - DRAPER LAKE 345KV CKT 1	717	717	0.06454	103.388	CYPRESS - HARTBURG 500KV CKT 1
FDNS	00NR	0	16WP	G15_095	FROM->TO	CIMARRON - DRAPER LAKE 345KV CKT 1	717	717	0.06467	103.3831	PIEDMONT - RICHRDS 138KV CKT 1
FDNS	00NR	0	16WP	G15_095	FROM->TO	CIMARRON - DRAPER LAKE 345KV CKT 1	717	717	0.0645	103.3827	P12:69:AEPW:L.E.S.-2:LAW WC2
FDNS	00NR	0	16WP	G15_095	FROM->TO	CIMARRON - DRAPER LAKE 345KV CKT 1	717	717	0.06475	103.3809	KELLYAV4 138.00 - REMNGTON PARK 138KV CKT 1
FDNS	00NR	0	16WP	G15_095	FROM->TO	CIMARRON - DRAPER LAKE 345KV CKT 1	717	717	0.06468	103.3808	HAMMETT2 - MEEKER 138KV CKT 1
FDNS	00NR	0	16WP	G15_095	FROM->TO	CIMARRON - DRAPER LAKE 345KV CKT 1	717	717	0.06466	103.375	HAMMETT TAP - HORSESHOE LAKE 138KV CKT 1
FDNS	00NR	0	16WP	G15_095	FROM->TO	CIMARRON - DRAPER LAKE 345KV CKT 1	717	717	0.06462	103.3697	LAYFLD8 500.00 - MOUNT OLIVE 500KV CKT 1
FDNS	00NR	0	16WP	G15_095	FROM->TO	CIMARRON - DRAPER LAKE 345KV CKT 1	717	717	0.06462	103.3697	LAYFLD8 500.00 - MOUNT OLIVE 500KV CKT 1
FDNS	00NR	0	16WP	G15_095	FROM->TO	CIMARRON - DRAPER LAKE 345KV CKT 1	717	717	0.06432	103.3631	RINGLING - SOUTH WILSON 138KV CKT 1
FDNS	00NR	0	16WP	G15_095	FROM->TO	CIMARRON - DRAPER LAKE 345KV CKT 1	717	717	0.06449	103.3457	CIVIT - PAOLI 138KV CKT 1
FDNS	00NR	0	16WP	G15_095	FROM->TO	CIMARRON - DRAPER LAKE 345KV CKT 1	717	717	0.06452	103.3404	LACYGNE - STILWELL 345KV CKT 1
FDNS	00NR	0	16WP	G15_095	FROM->TO	CIMARRON - DRAPER LAKE 345KV CKT 1	717	717	0.07057	103.3399	GRACEMONT - LAWTON EASTSIDE 345KV CKT 1
FDNS	00NR	0	16WP	G15_095	FROM->TO	CIMARRON - DRAPER LAKE 345KV CKT 1	717	717	0.07057	103.3399	GRACEMONT - LAWTON EASTSIDE 345KV CKT 1
FDNS	00NR	0	16WP	G15_095	FROM->TO	CIMARRON - DRAPER LAKE 345KV CKT 1	717	717	0.06454	103.3365	COUNCIL - WESTOAKS 138KV CKT 1
FDNS	00NR	0	16WP	G15_095	FROM->TO	CIMARRON - DRAPER LAKE 345KV CKT 1	717	717	0.0645	102.9113	BASE CASE
FDNS	00NR	0	16WP	G15_095	FROM->TO	CIMARRON - DRAPER LAKE 345KV CKT 1	717	717	0.06442	102.5994	GRAPEVINE INTERCHANGE - NICHOLS STATION 230KV CKT 1
FDNS	00NR	0	16WP	G15_095	FROM->TO	CIMARRON - DRAPER LAKE 345KV CKT 1	717	717	0.06442	102.5994	GRAPEVINE INTERCHANGE - NICHOLS STATION 230KV CKT 1
FDNS	00NR	0	16WP	G15_095	FROM->TO	CIMARRON - DRAPER LAKE 345KV CKT 1	717	717	0.05015	102.5967	G15063_T 345.00 - WOODRING 345KV CKT 1
FDNS	00NR	0	16WP	G15_095	FROM->TO	CIMARRON - DRAPER LAKE 345KV CKT 1	717	717	0.06456	102.5371	BURGETT4 138.00 - RNDBARN4 138.00 138KV CKT 1
FDNS	00NR	0	16WP	G15_095	FROM->TO	CIMARRON - DRAPER LAKE 345KV CKT 1	717	717	0.06456	102.5354	BURGETT4 138.00 - DANFORTH 138KV CKT 1
FDNS	00NR	0	16WP	G15_095	FROM->TO	CIMARRON - DRAPER LAKE 345KV CKT 1	717	717	0.06456	102.5245	ARCADIA - RNDBARN4 138.00 138KV CKT 1
FDNS	00NR	0	16WP	G15_095	FROM->TO	CIMARRON - DRAPER LAKE 345KV CKT 1	717	717	0.0645	102.495	GEN659125 1-COVEY
FDNS	00NR	0	16WP	G15_095	FROM->TO	CIMARRON - DRAPER LAKE 345KV CKT 1	717	717	0.0645	102.4903	GEN515550 1-MNCWND31 0.6900
FDNS	00NR	0	16WP	G15_095	FROM->TO	CIMARRON - DRAPER LAKE 345KV CKT 1	717	717	0.06439	102.482	GRAPEVINE INTERCHANGE - STATELINE INTERCHANGE 230KV CKT 1
FDNS	00NR	0	16WP	G15_095	FROM->TO	CIMARRON - DRAPER LAKE 345KV CKT 1	717	717	0.06439	102.482	GRAPEVINE INTERCHANGE - STATELINE INTERCHANGE 230KV CKT 1
FDNS	00NR	0	16WP	G15_095	FROM->TO	CIMARRON - DRAPER LAKE 345KV CKT 1	717	717	0.0645	102.477	GEN562611 1-G14_064_3 0.6900
FDNS	00NR	0	16WP	G15_095	FROM->TO	CIMARRON - DRAPER LAKE 345KV CKT 1	717	717	0.0645	102.4715	GEN511848 1-SOUTHWESTERN STATION #3
FDNS	00NR	0	16WP	G15_095	FROM->TO	CIMARRON - DRAPER LAKE 345KV CKT 1	717	717	0.0645	102.4453	GEN515601 1-KNGFSR11 0.7000
FDNS	00NR	0	16WP	G15_095	FROM->TO	CIMARRON - DRAPER LAKE 345KV CKT 1	717	717	0.0645	102.4414	GEN600071 10-RIVER SIDE
FDNS	00NR	0	16WP	G15_095	FROM->TO	CIMARRON - DRAPER LAKE 345KV CKT 1	717	717	0.0645	102.4413	GEN600070 9-RIVER SIDE
FDNS	00NR	0	16WP	G15_095	FROM->TO	CIMARRON - DRAPER LAKE 345KV CKT 1	717	717	0.0645	102.4362	GEN672303 3-BOUNDARY DAM GENERATOR 3
FDNS	00NR	0	16WP	G15_095	FROM->TO	CIMARRON - DRAPER LAKE 345KV CKT 1	717	717	0.0645	102.4362	GEN672304 4-BOUNDARY DAM GENERATOR 4
FDNS	00NR	0	16WP	G15_095	FROM->TO	CIMARRON - DRAPER LAKE 345KV CKT 1	717	717	0.0645	102.4362	GEN672305 5-BOUNDARY DAM GENERATOR 5
FDNS	00NR	0	16WP	G15_095	FROM->TO	CIMARRON - DRAPER LAKE 345KV CKT 1	717	717	0.0645	102.4353	GEN600007 7-RIVERSIDE GEN 7
FDNS	00NR	0	16WP	G15_095	FROM->TO	CIMARRON - DRAPER LAKE 345KV CKT 1	717	717	0.0645	102.4347	GEN600067 9-HIGH BRIDGE
FDNS	00NR	0	16WP	G15_095	FROM->TO	CIMARRON - DRAPER LAKE 345KV CKT 1	717	717	0.0645	102.4338	GEN563062 1-G15071_3 0.6900
FDNS	00NR	0	16WP	G15_095	FROM->TO	CIMARRON - DRAPER LAKE 345KV CKT 1	717	717	0.0645	102.4307	GEN615052 1-CAMBRIDGE GENERATING STATION
FDNS	00NR	0	16WP	G15_095	FROM->TO	CIMARRON - DRAPER LAKE 345KV CKT 1	717	717	0.0645	102.4274	GEN541151 3-SIBLEY GENERATING UNIT #3
FDNS	00NR	0	16WP	G15_095	FROM->TO	CIMARRON - DRAPER LAKE 345KV CKT 1	717	717	0.06466	102.4256	CHISNEY - CLARKSVILLE 138KV CKT 1
FDNSLock	00NR	0	16WP	G15_095	FROM->TO	CIMARRON - DRAPER LAKE 345KV CKT 1	717	717	0.0645	102.4224	GEN600014 4-BLACK DOG GEN 4
FDNS	00NR	0	16WP	G15_095	FROM->TO	CIMARRON - DRAPER LAKE 345KV CKT 1	717	717	0.0645	102.4218	GEN563282 1-G15094_3 0.6900
FDNS	00NR	0	16WP	G15_095	FROM->TO	CIMARRON - DRAPER LAKE 345KV CKT 1	717	717	0.0645	102.4212	GEN652353 2-GR PRAIRIEG 0.6900
FDNS	00NR	0	16WP	G15_095	FROM->TO	CIMARRON - DRAPER LAKE 345KV CKT 1	717	717	0.0645	102.4168	GEN629067 1-EMERY GAS TURBINE 1
FDNS	00NR	0	16WP	G15_095	FROM->TO	CIMARRON - DRAPER LAKE 345KV CKT 1	717	717	0.06474	102.4148	7MCCREDIE 345.00 - 7MONTGMRY 345.00 345KV CKT 1
FDNS	00NR	0	16WP	G15_095	FROM->TO	CIMARRON - DRAPER LAKE 345KV CKT 1	717	717	0.0645	102.4032	GEN563102 1-G15075_3 0.5500
FDNS	00NR	0	16WP	G15_095	FROM->TO	CIMARRON - DRAPER LAKE 345KV CKT 1	717	717	0.0645	102.4015	GEN515591 1-PALDRW11 0.6900
FDNS	00NR	0	16WP	G15_095	FROM->TO	CIMARRON - DRAPER LAKE 345KV CKT 1	717	717	0.0645	102.4	GEN300003 1-THOMAS HILL UNIT 3
FDNS	00NR	0	16WP	G15_095	FROM->TO	CIMARRON - DRAPER LAKE 345KV CKT 1	717	717	0.0645	102.4	GEN600011 5-BLACK DOG GEN 1
FDNS	00NR	0	16WP	G15_095	FROM->TO	CIMARRON - DRAPER LAKE 345KV CKT 1	717	717	0.0645	102.4	GEN615032 2-PLEASANT VALLEY
FDNS	00NR	0	16WP	G15_095	FROM->TO	CIMARRON - DRAPER LAKE 345KV CKT 1	717	717	0.0645	102.3966	GEN562602 1-G15_029_3 0.6900
FDNS	00NR	0	16WP	G15_095	FROM->TO	CIMARRON - DRAPER LAKE 345KV CKT 1	717	717	0.06387	102.3868	SEMINOLE - VANOSTP4 138.00 138KV CKT 1
FDNS	00NR	0	16WP	G15_095	FROM->TO	CIMARRON - DRAPER LAKE 345KV CKT 1	717	717	0.0645	102.3864	GEN600017 C-LS POWER CT
FDNS	00NR	0	16WP	G15_095	FROM->TO	CIMARRON - DRAPER LAKE 345KV CKT 1	717	717	0.0645	102.3828	GEN562812 1-G15040_3 0.3570
FDNS	00NR	0	16WP	G15_095	FROM->TO	CIMARRON - DRAPER LAKE 345KV CKT 1	717	717	0.0645	102.3765	GEN563132 1-G15078_3 0.3570
FDNS	00NR	0	16WP	G15_095	FROM->TO	CIMARRON - DRAPER LAKE 345KV CKT 1	717	717	0.06609	102.3681	FOREST HILL - MAUD 138KV CKT 1
FDNS	00NR	0	16WP	G15_095	FROM->TO	CIMARRON - DRAPER LAKE 345KV CKT 1	717	717	0.0645	102.3672	GEN524285 1-WILDORADO WIND GEN
FDNS	00NR	0	16WP	G15_095	FROM->TO	CIMARRON - DRAPER LAKE 345KV CKT 1	717	717	0.06462	102.366	P12:138:AEPW:WELETK4:EARLSBORO4
FDNS	00NR	0	16WP	G15_095	FROM->TO	CIMARRON - DRAPER LAKE 345KV CKT 1	717	717	0.06462	102.366	P12:138:OKGE:3TERM36
FDNS	00NR	0	16WP	G15_095	FROM->TO	CIMARRON - DRAPER LAKE 345KV CKT 1	717	717	0.0645	102.3624	GEN562074 1-G1149G1504 0.6900

SOLUTION	GROUP	SCENARIO	SEASON	SOURCE	DIRECTION	MONITORED ELEMENT	RATEA (MVA)	RATEB(MVA)	TDF	TC%LOADING (% MVA)	CONTINGENCY
FDNS	00NR	0	16WP	G15_095	FROM->TO	CIMARRON - DRAPER LAKE 345KV CKT 1	717	717	0.0645	102.3559	GEN672392 1-NBECGT1G 18.000
FDNS	00NR	0	16WP	G15_095	FROM->TO	CIMARRON - DRAPER LAKE 345KV CKT 1	717	717	0.06461	102.3552	EARLSBORO 4138.00 - FIXICO TAP 138KV CKT 1
FDNS	00NR	0	16WP	G15_095	FROM->TO	CIMARRON - DRAPER LAKE 345KV CKT 1	717	717	0.0645	102.3552	GEN629070 2-BEAVER CHANNEL GENERATORFOR UNIT NO 2
FDNS	00NR	0	16WP	G15_095	FROM->TO	CIMARRON - DRAPER LAKE 345KV CKT 1	717	717	0.0645	102.3445	GEN526331 1-JONES GEN #1 22 KV
FDNS	00NR	0	16WP	G15_095	FROM->TO	CIMARRON - DRAPER LAKE 345KV CKT 1	717	717	0.0645	102.3445	GEN526332 1-JONES GEN #2 21 KV
FDNS	00NR	0	16WP	G15_095	FROM->TO	CIMARRON - DRAPER LAKE 345KV CKT 1	717	717	0.06443	102.3431	CANADIAN RIVER - MCALESTER SOUTH 138KV CKT 1
FDNS	00NR	0	16WP	G15_095	FROM->TO	CIMARRON - DRAPER LAKE 345KV CKT 1	717	717	0.06443	102.3431	CANADIAN RIVER - MCALESTER SOUTH 138KV CKT 1
FDNS	00NR	0	16WP	G15_095	FROM->TO	CIMARRON - DRAPER LAKE 345KV CKT 1	717	717	0.0645	102.343	GEN562596 1-G14_059_3 0.6900
FDNS	00NR	0	16WP	G15_095	FROM->TO	CIMARRON - DRAPER LAKE 345KV CKT 1	717	717	0.06443	102.3417	CANADIAN RIVER () 345/138/13.8KV TRANSFORMER CKT 1
FDNS	00NR	0	16WP	G15_095	FROM->TO	CIMARRON - DRAPER LAKE 345KV CKT 1	717	717	0.06443	102.3417	CANADIAN RIVER () 345/138/13.8KV TRANSFORMER CKT 1
FDNS	00NR	0	16WP	G15_095	FROM->TO	CIMARRON - DRAPER LAKE 345KV CKT 1	717	717	0.0645	102.336	GEN615010 1-STANTON4
FDNS	00NR	0	16WP	G15_095	FROM->TO	CIMARRON - DRAPER LAKE 345KV CKT 1	717	717	0.0645	102.3359	GEN629071 1-BURLINGTON GENERATOR FOR UNIT NO 1 E
FDNS	00NR	0	16WP	G15_095	FROM->TO	CIMARRON - DRAPER LAKE 345KV CKT 1	717	717	0.06466	102.3342	CHISNEY - HIGHLAND 138KV CKT 1
FDNS	00NR	0	16WP	G15_095	FROM->TO	CIMARRON - DRAPER LAKE 345KV CKT 1	717	717	0.0645	102.3307	GEN515365 1-CENT 21 0.7000
FDNS	00NR	0	16WP	G15_095	FROM->TO	CIMARRON - DRAPER LAKE 345KV CKT 1	717	717	0.0645	102.3205	GEN562983 1-G15061_4 0.6900
FDNS	00NR	0	16WP	G15_095	FROM->TO	CIMARRON - DRAPER LAKE 345KV CKT 1	717	717	0.0645	102.3205	GEN562984 1-G15061_5 0.6900
FDNS	00NR	0	16WP	G15_095	FROM->TO	CIMARRON - DRAPER LAKE 345KV CKT 1	717	717	0.06409	102.3203	P12:138:WFEC:MSL07
FDNS	00NR	0	16WP	G15_095	FROM->TO	CIMARRON - DRAPER LAKE 345KV CKT 1	717	717	0.06409	102.3203	P12:138:WFEC-AEPW:HUGOPP4:ATOKA--4
FDNS	00NR	0	16WP	G15_095	FROM->TO	CIMARRON - DRAPER LAKE 345KV CKT 1	717	717	0.0645	102.3161	GEN562017 1-G11_022_3 0.6900
FDNS	00NR	0	16WP	G15_095	FROM->TO	CIMARRON - DRAPER LAKE 345KV CKT 1	717	717	0.0645	102.3138	GEN615021 1-GRE-ER 14G 16.000
FDNS	00NR	0	16WP	G15_095	FROM->TO	CIMARRON - DRAPER LAKE 345KV CKT 1	717	717	0.06454	102.3122	GRPRAR1-LNX3345.00 - HOLT.CO3 345.00 345KV CKT 1
FDNS	00NR	0	16WP	G15_095	FROM->TO	CIMARRON - DRAPER LAKE 345KV CKT 1	717	717	0.06458	102.3107	P12:138:AEPW:SHAM4WT:CHILD4WT
FDNS	00NR	0	16WP	G15_095	FROM->TO	CIMARRON - DRAPER LAKE 345KV CKT 1	717	717	0.06454	102.3086	GRPRAR1-LNX3345.00 - GRPRAR 345KV CKT Z
FDNS	00NR	0	16WP	G15_095	FROM->TO	CIMARRON - DRAPER LAKE 345KV CKT 1	717	717	0.0645	102.3034	GEN562429 1-G13-029 0.6900
FDNS	00NR	0	16WP	G15_095	FROM->TO	CIMARRON - DRAPER LAKE 345KV CKT 1	717	717	0.0645	102.3021	GEN562432 1-G13-030 0.6900
FDNS	00NR	0	16WP	G15_095	FROM->TO	CIMARRON - DRAPER LAKE 345KV CKT 1	717	717	0.0645	102.3019	GEN560105 1-G08-22 0.6900
FDNS	00NR	0	16WP	G15_095	FROM->TO	CIMARRON - DRAPER LAKE 345KV CKT 1	717	717	0.0645	102.3006	INDEPENDENCE 500/26.0KV TRANSFORMER CKT 1
FDNS	00NR	0	16WP	G15_095	FROM->TO	CIMARRON - DRAPER LAKE 345KV CKT 1	717	717	0.06459	102.2985	P12:138:AEPW-SWPA:LONEOAK4:TUPELO4
FDNS	00NR	0	16WP	G15_095	FROM->TO	CIMARRON - DRAPER LAKE 345KV CKT 1	717	717	0.0645	102.2985	GEN532663 1-LAWRENCE ENERGY CENTER UNIT 5
FDNS	00NR	0	16WP	G15_095	FROM->TO	CIMARRON - DRAPER LAKE 345KV CKT 1	717	717	0.06459	102.2984	P12:138:WFEC:MSL06
FDNS	00NR	0	16WP	G15_095	FROM->TO	CIMARRON - DRAPER LAKE 345KV CKT 1	717	717	0.06477	102.2966	OVEXFRMCCOVE
FDNS	00NR	0	16WP	G15_095	FROM->TO	CIMARRON - DRAPER LAKE 345KV CKT 1	717	717	0.06462	102.2931	DELL 500 - INDEPENDENCE 500KV CKT 1
FDNS	00NR	0	16WP	G15_095	FROM->TO	CIMARRON - DRAPER LAKE 345KV CKT 1	717	717	0.0645	102.2894	BURLINGTON NO1 + NO 2 + NO 3 161/20.0KV TRANSFORMER CKT 1
FDNS	00NR	0	16WP	G15_095	FROM->TO	CIMARRON - DRAPER LAKE 345KV CKT 1	717	717	0.06462	102.2839	P12:138:AEPW-OGE:WELETK4:MAUD 4
FDNS	00NR	0	16WP	G15_095	FROM->TO	CIMARRON - DRAPER LAKE 345KV CKT 1	717	717	0.06286	102.2797	P12:230:AEPW:ELKCITY6:SWEETWT6
FDNS	00NR	0	16WP	G15_095	FROM->TO	CIMARRON - DRAPER LAKE 345KV CKT 1	717	717	0.0645	102.2752	GEN527882 1-CUNNINGHAM GEN #2 20 KV
FDNS	00NR	0	16WP	G15_095	FROM->TO	CIMARRON - DRAPER LAKE 345KV CKT 1	717	717	0.06413	102.2741	P12:138:WFEC:MSL16
FDNS	00NR	0	16WP	G15_095	FROM->TO	CIMARRON - DRAPER LAKE 345KV CKT 1	717	717	0.06461	102.2712	EARLSBORO 4138.00 - MAUD 138KV CKT 1
FDNS	00NR	0	16WP	G15_095	FROM->TO	CIMARRON - DRAPER LAKE 345KV CKT 1	717	717	0.06461	102.2712	EARLSBORO 4138.00 - MAUD 138KV CKT 1
FDNS	00NR	0	16WP	G15_095	FROM->TO	CIMARRON - DRAPER LAKE 345KV CKT 1	717	717	0.0645	102.2674	GEN562550 1-G14_040_3 0.6900
FDNS	00NR	0	16WP	G15_095	FROM->TO	CIMARRON - DRAPER LAKE 345KV CKT 1	717	717	0.0645	102.2642	GEN524295 1-SPNSPUR_WND10.6900
FDNS	00NR	0	16WP	G15_095	FROM->TO	CIMARRON - DRAPER LAKE 345KV CKT 1	717	717	0.0645	102.2579	GEN562832 1-G15042_3 0.6900
FDNS	00NR	0	16WP	G15_095	FROM->TO	CIMARRON - DRAPER LAKE 345KV CKT 1	717	717	0.06479	102.2486	MAUD - SEMINOLE 138KV CKT 1
FDNS	00NR	0	16WP	G15_095	FROM->TO	CIMARRON - DRAPER LAKE 345KV CKT 1	717	717	0.0643	102.2397	STLN-DEMARC6 - SWEETWATER 230KV CKT 1
FDNS	00NR	0	16WP	G15_095	FROM->TO	CIMARRON - DRAPER LAKE 345KV CKT 1	717	717	0.0643	102.2392	P12:230:AEPW-SPS:SWEETWT6:WHEELER 6
FDNS	00NR	0	16WP	G15_095	FROM->TO	CIMARRON - DRAPER LAKE 345KV CKT 1	717	717	0.0643	102.2372	STATELINE INTERCHANGE - STLN-DEMARC6 230KV CKT 1
FDNS	00NR	0	16WP	G15_095	FROM->TO	CIMARRON - DRAPER LAKE 345KV CKT 1	717	717	0.0645	102.221	GEN531447 1-HOLCOMB GENERATOR
FDNS	00NR	0	16WP	G15_095	FROM->TO	CIMARRON - DRAPER LAKE 345KV CKT 1	717	717	0.0645	102.2207	P12:230:UMZB:# 112 #: NU IN SD. NU-RCDC & DRY CREEK XFMR
FDNS	00NR	0	16WP	G15_095	FROM->TO	CIMARRON - DRAPER LAKE 345KV CKT 1	717	717	0.0645	102.2195	RCDC EAST 4230.00 - RED CEDAR DC 230KV CKT 1
FDNS	00NR	0	16WP	G15_095	FROM->TO	CIMARRON - DRAPER LAKE 345KV CKT 1	717	717	0.0645	102.2165	GEN645011 1-NEBRASKA CITY 1
FDNS	00NR	0	16WP	G15_095	FROM->TO	CIMARRON - DRAPER LAKE 345KV CKT 1	717	717	0.0645	102.2156	GEN345671 2-1RUSH G2 18.000
FDNS	00NR	0	16WP	G15_095	FROM->TO	CIMARRON - DRAPER LAKE 345KV CKT 1	717	717	0.0645	102.2137	GEN345670 1-1RUSH G1 18.000
FDNS	00NR	0	16WP	G15_095	FROM->TO	CIMARRON - DRAPER LAKE 345KV CKT 1	717	717	0.0645	102.2132	GEN515606 1-CANDN11 0.6900
FDNS	00NR	0	16WP	G15_095	FROM->TO	CIMARRON - DRAPER LAKE 345KV CKT 1	717	717	0.0645	102.2132	GEN515607 1-CANDN12 0.6900
FDNS	00NR	0	16WP	G15_095	FROM->TO	CIMARRON - DRAPER LAKE 345KV CKT 1	717	717	0.06466	102.2079	HIGHLAND - PINK SW 138KV CKT 1
FDNS	00NR	0	16WP	G15_095	FROM->TO	CIMARRON - DRAPER LAKE 345KV CKT 1	717	717	0.0645	102.1858	GEN515443 1-MNCOWND1 0.7000
FDNS	00NR	0	16WP	G15_095	FROM->TO	CIMARRON - DRAPER LAKE 345KV CKT 1	717	717	0.0645	102.1851	GEN562794 1-G15038_5 0.6900
FDNS	00NR	0	16WP	G15_095	FROM->TO	CIMARRON - DRAPER LAKE 345KV CKT 1	717	717	0.0645	102.1851	GEN562795 1-G15038_6 0.6900
FDNS	00NR	0	16WP	G15_095	FROM->TO	CIMARRON - DRAPER LAKE 345KV CKT 1	717	717	0.0645	102.1817	GEN563092 1-G15074_3 0.6900
FDNS	00NR	0	16WP	G15_095	FROM->TO	CIMARRON - DRAPER LAKE 345KV CKT 1	717	717	0.06423	102.1805	FT SMITH - MUSKOGEE 345KV CKT 1
FDNS	00NR	0	16WP	G15_095	FROM->TO	CIMARRON - DRAPER LAKE 345KV CKT 1	717	717	0.0645	102.1774	GEN542951 5-HAWTHORN UNIT #5
FDNS	00NR	0	16WP	G15_095	FROM->TO	CIMARRON - DRAPER LAKE 345KV CKT 1	717	717	0.0645	102.1724	GEN645012 2-NEBRASKA CITY 2
FDNSLock	00NR	0	16WP	G15_095	FROM->TO	CIMARRON - DRAPER LAKE 345KV CKT 1	717	717	0.0645	102.1642	GEN629072 4-LANSING GENERATOR FOR UNITS NO4 EIA CODE 1
FDNS	00NR	0	16WP	G15_095	FROM->TO	CIMARRON - DRAPER LAKE 345KV CKT 1	717	717	0.0645	102.1533	GEN562512 1-G14_020_3 0.6900
FDNS	00NR	0	16WP	G15_095	FROM->TO	CIMARRON - DRAPER LAKE 345KV CKT 1	717	717	0.06468	102.1446	KEO EHV - WEST MEMPHIS 500 500KV CKT 1
FDNS	00NR	0	16WP	G15_095	FROM->TO	CIMARRON - DRAPER LAKE 345KV CKT 1	717	717	0.0643	102.1408	CHISHOLM6 230.00 - SWEETWATER 230KV CKT 1
FDNS	00NR	0	16WP	G15_095	FROM->TO	CIMARRON - DRAPER LAKE 345KV CKT 1	717	717	0.0645	102.134	GEN657749 1-YOUNG 1 GENERATOR
FDNS	00NR	0	16WP	G15_095	FROM->TO	CIMARRON - DRAPER LAKE 345KV CKT 1	717	717	0.0645	102.1262	GEN562699 1-G15_018_3 0.6900
FDNS	00NR	0	16WP	G15_095	FROM->TO	CIMARRON - DRAPER LAKE 345KV CKT 1	717	717	0.0645	102.1114	GEN640009 1-COOPER NUCLEAR STATION
FDNS	00NR	0	16WP	G15_095	FROM->TO	CIMARRON - DRAPER LAKE 345KV CKT 1	717	717	0.0645	102.1042	GEN529201 1-OMCDLEC1 13.800
FDNS	00NR	0	16WP	G15_095	FROM->TO	CIMARRON - DRAPER LAKE 345KV CKT 1	717	717	0.06356	102.1014	FRISCCO4 138.00 - LULA 138KV CKT 1
FDNS	00NR	0	16WP	G15_095	FROM->TO	CIMARRON - DRAPER LAKE 345KV CKT 1	717	717	0.0645	102.0883	GEN563122 1-G15077_3 0.3850
FDNS	00NR	0	16WP	G15_095	FROM->TO	CIMARRON - DRAPER LAKE 345KV CKT 1	717	717	0.0645	102.0793	GEN563182 1-G15083_3 0.6900
FDNSLock	00NR	0	16WP	G15_095	FROM->TO	CIMARRON - DRAPER LAKE 345KV CKT 1	717	717	0.0645	102.0662	GEN681522 3-GENOA 3
FDNS	00NR	0	16WP	G15_095	FROM->TO	CIMARRON - DRAPER LAKE 345KV CKT 1	717	717	0.0645	102.0608	GEN562685 1-G15_013_3 0.3550
FDNS	00NR	0	16WP	G15_095	FROM->TO	CIMARRON - DRAPER LAKE 345KV CKT 1	717	717	0.06696	102.0437	HOLLYWOOD - MIDWEST TAP 138KV CKT 1
FDNS	00NR	0	16WP	G15_095	FROM->TO	CIMARRON - DRAPER LAKE 345KV CKT 1	717	717	0.0645	102.0354	GEN344895 2-1LAB G2 20.000
FDNS	00NR	0	16WP	G15_095	FROM->TO	CIMARRON - DRAPER LAKE 345KV CKT 1	717	717	0.06374	102.0328	TUPELO - TUPELO TAP 138KV CKT 1
FDNS	00NR	0	16WP	G15_095	FROM->TO	CIMARRON - DRAPER LAKE 345KV CKT 1	717	717	0.0629	102.0286	CHISHOLM7 345.00 - GRACEMONT 345KV CKT 1

SOLUTION	GROUP	SCENARIO	SEASON	SOURCE	DIRECTION	MONITORED ELEMENT	RATEA (MVA)	RATEB(MVA)	TDF	TC%LOADING (% MVA)	CONTINGENCY
FDNS	00NR	0	16WP	G15_095	FROM->TO	CIMARRON - DRAPER LAKE 345KV CKT 1	717	717	0.0645	102.0223	GEN563222 1-G15088_3 0.6900
FDNS	00NR	0	16WP	G15_095	FROM->TO	CIMARRON - DRAPER LAKE 345KV CKT 1	717	717	0.0645	102.0212	4SIOUX 1 138.00 138/18.0KV TRANSFORMER CKT 1
FDNS	00NR	0	16WP	G15_095	FROM->TO	CIMARRON - DRAPER LAKE 345KV CKT 1	717	717	0.06797	102.0151	CIMARRON - TUTTLE CONOCO TAP 138KV CKT 1
FDNS	00NR	0	16WP	G15_095	FROM->TO	CIMARRON - DRAPER LAKE 345KV CKT 1	717	717	0.06356	102.0133	FRISCCO4 138.00 - HARDEN 4 138.00 138KV CKT 1
FDNS	00NR	0	16WP	G15_095	FROM->TO	CIMARRON - DRAPER LAKE 345KV CKT 1	717	717	0.0645	102.0083	GEN523461 1-BLACKHAWK GEN #1
FDNS	00NR	0	16WP	G15_095	FROM->TO	CIMARRON - DRAPER LAKE 345KV CKT 1	717	717	0.0645	102.0082	GEN523462 1-BLACKHAWK GEN #2
FDNS	00NR	0	16WP	G15_095	FROM->TO	CIMARRON - DRAPER LAKE 345KV CKT 1	717	717	0.0645	102.0073	GEN344896 3-1LAB G3 20.000
FDNS	00NR	0	16WP	G15_095	FROM->TO	CIMARRON - DRAPER LAKE 345KV CKT 1	717	717	0.0645	102.0058	GEN344894 1-1LAB G1 20.000
FDNS	00NR	0	16WP	G15_095	FROM->TO	CIMARRON - DRAPER LAKE 345KV CKT 1	717	717	0.0645	102.0047	GEN344897 4-1LAB G4 20.000
FDNS	00NR	0	16WP	G15_095	FROM->TO	CIMARRON - DRAPER LAKE 345KV CKT 1	717	717	0.0645	102.0003	GEN562587 1-G14_056_3 0.6900
FDNS	00NR	0	16WP	G15_095	FROM->TO	CIMARRON - DRAPER LAKE 345KV CKT 1	717	717	0.0645	101.9772	GEN515602 1-KNGFSR12 0.7000
FDNS	00NR	0	16WP	G15_095	FROM->TO	CIMARRON - DRAPER LAKE 345KV CKT 1	717	717	0.0645	101.9571	GEN563082 1-G15073_3 0.6900
FDNS	00NR	0	16WP	G15_095	FROM->TO	CIMARRON - DRAPER LAKE 345KV CKT 1	717	717	0.06797	101.9436	TUTTLE - TUTTLE CONOCO TAP 138KV CKT 1
FDNS	00NR	0	16WP	G15_095	FROM->TO	CIMARRON - DRAPER LAKE 345KV CKT 1	717	717	0.0629	101.9367	CHISHOLM7 345.00 (CHISHOLM) 345/230/13.2KV TRANSFORMER CKT 1
FDNS	00NR	0	16WP	G15_095	FROM->TO	CIMARRON - DRAPER LAKE 345KV CKT 1	717	717	0.0645	101.9307	GEN562704 1-G15_020_3 0.3550
FDNS	00NR	0	16WP	G15_095	FROM->TO	CIMARRON - DRAPER LAKE 345KV CKT 1	717	717	0.0645	101.9129	GEN563202 1-G15085_3 0.5500
FDNS	00NR	0	16WP	G15_095	FROM->TO	CIMARRON - DRAPER LAKE 345KV CKT 1	717	717	0.0645	101.9087	CLAY BOSWELL 230/20.9KV TRANSFORMER CKT 1
FDNS	00NR	0	16WP	G15_095	FROM->TO	CIMARRON - DRAPER LAKE 345KV CKT 1	717	717	0.0645	101.8974	GEN640010 1-GERALD GENTLEMAN STATION UNIT 1
FDNS	00NR	0	16WP	G15_095	FROM->TO	CIMARRON - DRAPER LAKE 345KV CKT 1	717	717	0.0645	101.8665	GEN672321 1-SHAND GENERATOR 1
FDNS	00NR	0	16WP	G15_095	FROM->TO	CIMARRON - DRAPER LAKE 345KV CKT 1	717	717	0.06314	101.8497	LULA - TUPELO TAP 138KV CKT 1
FDNS	00NR	0	16WP	G15_095	FROM->TO	CIMARRON - DRAPER LAKE 345KV CKT 1	717	717	0.06512	101.8468	NORTHWEST TEXARKANA - VALLIANT 345KV CKT 1
FDNS	00NR	0	16WP	G15_095	FROM->TO	CIMARRON - DRAPER LAKE 345KV CKT 1	717	717	0.06512	101.8468	NORTHWEST TEXARKANA - VALLIANT 345KV CKT 1
FDNS	00NR	0	16WP	G15_095	FROM->TO	CIMARRON - DRAPER LAKE 345KV CKT 1	717	717	0.0645	101.8436	GEN562710 1-G15_022_3 0.5500
FDNS	00NR	0	16WP	G15_095	FROM->TO	CIMARRON - DRAPER LAKE 345KV CKT 1	717	717	0.0635	101.8429	SEMINOLE (SEMINOL1) 345/138/14.4KV TRANSFORMER CKT 1
FDNS	00NR	0	16WP	G15_095	FROM->TO	CIMARRON - DRAPER LAKE 345KV CKT 1	717	717	0.0645	101.8407	GEN672310 1-POPLAR RIVER GENERATOR 1
FDNS	00NR	0	16WP	G15_095	FROM->TO	CIMARRON - DRAPER LAKE 345KV CKT 1	717	717	0.0645	101.8406	GEN672311 2-POPLAR RIVER GENERATOR 2
FDNS	00NR	0	16WP	G15_095	FROM->TO	CIMARRON - DRAPER LAKE 345KV CKT 1	717	717	0.0645	101.8304	GEN672306 6-BOUNDARY DAM GENERATOR 6
FDNS	00NR	0	16WP	G15_095	FROM->TO	CIMARRON - DRAPER LAKE 345KV CKT 1	717	717	0.0645	101.8297	GEN640011 2-GERALD GENTLEMAN STATION UNIT 2
FDNS	00NR	0	16WP	G15_095	FROM->TO	CIMARRON - DRAPER LAKE 345KV CKT 1	717	717	0.0645	101.8274	GEN542956 2-LACYGNE UNIT #2
FDNS	00NR	0	16WP	G15_095	FROM->TO	CIMARRON - DRAPER LAKE 345KV CKT 1	717	717	0.0645	101.8181	GEN659118 1-LARAMIE RIVER UNIT1
FDNS	00NR	0	16WP	G15_095	FROM->TO	CIMARRON - DRAPER LAKE 345KV CKT 1	717	717	0.06356	101.7929	ETNA - HARDEN 4 138.00 138KV CKT 1
FDNS	00NR	0	16WP	G15_095	FROM->TO	CIMARRON - DRAPER LAKE 345KV CKT 1	717	717	0.06735	101.7872	RENFROW7 345.00 - VIOLA 7 345.00 345KV CKT 1
FDNS	01NR	0	17G	G15_095	FROM->TO	CIMARRON - DRAPER LAKE 345KV CKT 1	717	717	0.11835	101.7747	G14-057T 345.00 - SUNNYSIDE 345KV CKT 1
FDNS	00NR	0	16WP	G15_095	FROM->TO	CIMARRON - DRAPER LAKE 345KV CKT 1	717	717	0.06388	101.7737	P12:138:OKGE:3TERM22
FDNS	00NR	0	16WP	G15_095	FROM->TO	CIMARRON - DRAPER LAKE 345KV CKT 1	717	717	0.06393	101.7718	DRAPER LAKE - SOONER TAP 138KV CKT 1
FDNS	00NR	0	16WP	G15_095	FROM->TO	CIMARRON - DRAPER LAKE 345KV CKT 1	717	717	0.06466	101.7634	P12:138:WFEC:MSL08
FDNS	00NR	0	16WP	G15_095	FROM->TO	CIMARRON - DRAPER LAKE 345KV CKT 1	717	717	0.06466	101.7516	FRANKLIN - PINK SW 138KV CKT 1
FDNS	00NR	0	16WP	G15_095	FROM->TO	CIMARRON - DRAPER LAKE 345KV CKT 1	717	717	0.06468	101.7502	P12:138:WFEC:MSL09
FDNS	00NR	0	16WP	G15_095	FROM->TO	CIMARRON - DRAPER LAKE 345KV CKT 1	717	717	0.06618	101.7466	OAKCREEK - WILD MARY 138KV CKT 1
FDNS	00NR	0	16WP	G15_095	FROM->TO	CIMARRON - DRAPER LAKE 345KV CKT 1	717	717	0.0645	101.7397	GEN542957 1-IATAN UNIT #1
FDNSLock	00NR	0	16WP	G15_095	FROM->TO	CIMARRON - DRAPER LAKE 345KV CKT 1	717	717	0.0645	101.7355	GEN681542 6-JP MADGETT
FDNS	00NR	0	16WP	G15_095	FROM->TO	CIMARRON - DRAPER LAKE 345KV CKT 1	717	717	0.0645	101.7124	GEN530690 1-PRWINDG1 0.6900
FDNS	00NR	0	16WP	G15_095	FROM->TO	CIMARRON - DRAPER LAKE 345KV CKT 1	717	717	0.06356	101.7075	ETNA - PARK LANE 138KV CKT 1
FDNS	00NR	0	16WP	G15_095	FROM->TO	CIMARRON - DRAPER LAKE 345KV CKT 1	717	717	0.0645	101.7	GEN645001 1-FORT CALHOUN 1
FDNS	00NR	0	16WP	G15_095	FROM->TO	CIMARRON - DRAPER LAKE 345KV CKT 1	717	717	0.05916	101.6997	HUNTERS7 345.00 - RENFROW7 345.00 345KV CKT 1
FDNS	00NR	0	16WP	G15_095	FROM->TO	CIMARRON - DRAPER LAKE 345KV CKT 1	717	717	0.0645	101.658	GEN542955 1-LACYGNE UNIT #1
FDNS	00NR	0	16WP	G15_095	FROM->TO	CIMARRON - DRAPER LAKE 345KV CKT 1	717	717	0.0645	101.6477	GEN562754 1-G15031_5 0.6900
FDNS	00NR	0	16WP	G15_095	FROM->TO	CIMARRON - DRAPER LAKE 345KV CKT 1	717	717	0.0645	101.6356	GEN562556 1-G14_046_3 0.3420
FDNS	00NR	0	16WP	G15_095	FROM->TO	CIMARRON - DRAPER LAKE 345KV CKT 1	717	717	0.0633	101.6321	SEMINOLE (SEMINOL2) 345/138/14.4KV TRANSFORMER CKT 1
FDNS	00NR	0	16WP	G15_095	FROM->TO	CIMARRON - DRAPER LAKE 345KV CKT 1	717	717	0.0645	101.6108	GEN661015 1-COYOTE
FDNS	00NR	0	16WP	G15_095	FROM->TO	CIMARRON - DRAPER LAKE 345KV CKT 1	717	717	0.0645	101.6042	GEN562756 1-G15031_7 0.6900
FDNS	00NR	0	16WP	G15_095	FROM->TO	CIMARRON - DRAPER LAKE 345KV CKT 1	717	717	0.0645	101.6013	GEN532653 1-JEFFREY ENERGY CENTER UNIT 3
FDNS	00NR	0	16WP	G15_095	FROM->TO	CIMARRON - DRAPER LAKE 345KV CKT 1	717	717	0.0645	101.6012	GEN532652 1-JEFFREY ENERGY CENTER UNIT 2
FDNS	00NR	0	16WP	G15_095	FROM->TO	CIMARRON - DRAPER LAKE 345KV CKT 1	717	717	0.0645	101.5971	GEN532651 1-JEFFREY ENERGY CENTER UNIT 1
FDNS	00NR	0	16WP	G15_095	FROM->TO	CIMARRON - DRAPER LAKE 345KV CKT 1	717	717	0.0645	101.5894	GEN562974 1-G15060_5 0.6900
FDNS	00NR	0	16WP	G15_095	FROM->TO	CIMARRON - DRAPER LAKE 345KV CKT 1	717	717	0.0645	101.5883	GEN563142 1-G15079_3 0.5500
FDNS	00NR	0	16WP	G15_095	FROM->TO	CIMARRON - DRAPER LAKE 345KV CKT 1	717	717	0.0645	101.5883	GEN563151 1-G15080_2 0.5500
FDNS	00NR	0	16WP	G15_095	FROM->TO	CIMARRON - DRAPER LAKE 345KV CKT 1	717	717	0.0645	101.5778	GEN563042 1-G15068_3 0.6900
FDNS	00NR	0	16WP	G15_095	FROM->TO	CIMARRON - DRAPER LAKE 345KV CKT 1	717	717	0.0645	101.5733	GEN562973 1-G15060_4 0.6900
FDNS	00NR	0	16WP	G15_095	FROM->TO	CIMARRON - DRAPER LAKE 345KV CKT 1	717	717	0.0645	101.5428	GEN562078 1-G11_051_3 0.6900
FDNS	00NR	0	16WP	G15_095	FROM->TO	CIMARRON - DRAPER LAKE 345KV CKT 1	717	717	0.0645	101.531	GEN562691 1-G15_015_3 0.6900
FDNS	00NR	0	16WP	G15_095	FROM->TO	CIMARRON - DRAPER LAKE 345KV CKT 1	717	717	0.06618	101.52	AIRDEPT4 138.00 - WILD MARY 138KV CKT 1
FDNS	00NR	0	16WP	G15_095	FROM->TO	CIMARRON - DRAPER LAKE 345KV CKT 1	717	717	0.06319	101.4938	PARK LANE - SEMINOLE 138KV CKT 1
FDNS	00NR	0	16WP	G15_095	FROM->TO	CIMARRON - DRAPER LAKE 345KV CKT 1	717	717	0.0645	101.4886	GEN562655 1-G14_074_3 0.6900
FDNS	00NR	0	16WP	G15_095	FROM->TO	CIMARRON - DRAPER LAKE 345KV CKT 1	717	717	0.0645	101.4881	GEN562762 1-G15033_3 0.6900
FDNS	00NR	0	16WP	G15_095	FROM->TO	CIMARRON - DRAPER LAKE 345KV CKT 1	717	717	0.0645	101.4826	GEN657748 1-YOUNG 2 GENERATOR
FDNS	00NR	0	16WP	G15_095	FROM->TO	CIMARRON - DRAPER LAKE 345KV CKT 1	717	717	0.06466	101.468	FRANKLIN - FRANKLIN SW 138KV CKT 1
FDNS	00NR	0	16WP	G15_095	FROM->TO	CIMARRON - DRAPER LAKE 345KV CKT 1	717	717	0.0645	101.4312	GEN527901 1-HOBBS PLANT #1 (CT)
FDNS	00NR	0	16WP	G15_095	FROM->TO	CIMARRON - DRAPER LAKE 345KV CKT 1	717	717	0.0645	101.4312	GEN527902 1-HOBBS PLANT #2 (CT)
FDNS	00NR	0	16WP	G15_095	FROM->TO	CIMARRON - DRAPER LAKE 345KV CKT 1	717	717	0.0645	101.405	GEN563273 2-G15093_4 0.6900
FDNS	00NR	0	16WP	G15_095	FROM->TO	CIMARRON - DRAPER LAKE 345KV CKT 1	717	717	0.0645	101.389	GEN563043 1-G15068_4 0.6900
FDNS	00NR	0	16WP	G15_095	FROM->TO	CIMARRON - DRAPER LAKE 345KV CKT 1	717	717	0.06544	101.3853	LYDIA - WELSH 345KV CKT 1
FDNS	00NR	0	16WP	G15_095	FROM->TO	CIMARRON - DRAPER LAKE 345KV CKT 1	717	717	0.06544	101.3853	LYDIA - WELSH 345KV CKT 1
FDNS	00NR	0	16WP	G15_095	FROM->TO	CIMARRON - DRAPER LAKE 345KV CKT 1	717	717	0.0645	101.3678	GEN563052 1-G15069_3 0.6900
FDNS	00NR	0	16WP	G15_095	FROM->TO	CIMARRON - DRAPER LAKE 345KV CKT 1	717	717	0.0645	101.3481	GEN525845 1-ELK_2 1 138.00
FDNS	00NR	0	16WP	G15_095	FROM->TO	CIMARRON - DRAPER LAKE 345KV CKT 1	717	717	0.0645	101.3447	GEN525844 1-ELK_1 118.000
FDNS	00NR	0	16WP	G15_095	FROM->TO	CIMARRON - DRAPER LAKE 345KV CKT 1	717	717	0.0645	101.3169	GEN563242 1-G15090_3 0.6900
FDNS	00NR	0	16WP	G15_095	FROM->TO	CIMARRON - DRAPER LAKE 345KV CKT 1	717	717	0.0645	101.298	GEN526333 1-JONES GEN #3 21 KV
FDNS	00NR	0	16WP	G15_095	FROM->TO	CIMARRON - DRAPER LAKE 345KV CKT 1	717	717	0.0645	101.298	GEN526334 1-JONES_4 116.500

SOLUTION	GROUP	SCENARIO	SEASON	SOURCE	DIRECTION	MONITORED ELEMENT	RATEA (MVA)	RATEB(MVA)	TDF	TC%LOADING (% MVA)	CONTINGENCY
FDNS	00NR	0	16WP	G15_095	FROM->TO	CIMARRON - DRAPER LAKE 345KV CKT 1	717	717	0.06797	101.2942	P12:138:AEPW-OGE:CORNVIL4:CIMARON4
FDNS	00NR	0	16WP	G15_095	FROM->TO	CIMARRON - DRAPER LAKE 345KV CKT 1	717	717	0.0645	101.2934	GEN620315 1-BIG STONE GEN
FDNS	00NR	0	16WP	G15_095	FROM->TO	CIMARRON - DRAPER LAKE 345KV CKT 1	717	717	0.06618	101.2904	AIRDEPT4 138.00 - GM 138KV CKT 1
FDNS	00NR	0	16WP	G15_095	FROM->TO	CIMARRON - DRAPER LAKE 345KV CKT 1	717	717	0.0645	101.2796	GEN562772 1-G15034_3 0.6900
FDNS	00NR	0	16WP	G15_095	FROM->TO	CIMARRON - DRAPER LAKE 345KV CKT 1	717	717	0.05916	101.2661	HUNTERS7 345.00 - WOODRING 345KV CKT 1
FDNS	00NR	0	16WP	G15_095	FROM->TO	CIMARRON - DRAPER LAKE 345KV CKT 1	717	717	0.0645	101.2635	GEN523971 1-HARRINGTON GEN #1 24 KV
FDNS	00NR	0	16WP	G15_095	FROM->TO	CIMARRON - DRAPER LAKE 345KV CKT 1	717	717	0.0645	101.2635	GEN523972 1-HARRINGTON GEN #2 24 KV
FDNS	00NR	0	16WP	G15_095	FROM->TO	CIMARRON - DRAPER LAKE 345KV CKT 1	717	717	0.0645	101.2635	GEN523973 1-HARRINGTON GEN #3 24 KV
FDNS	00NR	0	16WP	G15_095	FROM->TO	CIMARRON - DRAPER LAKE 345KV CKT 1	717	717	0.06413	101.2533	RANCHRD7 345.00 - SOONER 345KV CKT 1
FDNS	00NR	0	16WP	G15_095	FROM->TO	CIMARRON - DRAPER LAKE 345KV CKT 1	717	717	0.0645	101.2384	GEN600004 2-PRAIRIE ISLAND G2
FDNS	00NR	0	16WP	G15_095	FROM->TO	CIMARRON - DRAPER LAKE 345KV CKT 1	717	717	0.0645	101.2354	GEN600003 1-PRAIRIE ISLAND G1
FDNSLock	00NR	0	16WP	G15_095	FROM->TO	CIMARRON - DRAPER LAKE 345KV CKT 1	717	717	0.0645	101.2218	GEN600006 1-AS KING
FDNSLock	00NR	0	16WP	G15_095	FROM->TO	CIMARRON - DRAPER LAKE 345KV CKT 1	717	717	0.0645	101.201	GEN636641 1-LOUISA UNIT 1
FDNS	00NR	0	16WP	G15_095	FROM->TO	CIMARRON - DRAPER LAKE 345KV CKT 1	717	717	0.06723	101.136	MUSKOGEE - SEMINOLE 345KV CKT 1
FDNS	00NR	0	16WP	G15_095	FROM->TO	CIMARRON - DRAPER LAKE 345KV CKT 1	717	717	0.0645	101.1035	GEN563292 1-G15095_3 0.6900
FDNS	00NR	0	16WP	G15_095	FROM->TO	CIMARRON - DRAPER LAKE 345KV CKT 1	717	717	0.0645	101.1	GEN542962 2-IATAN UNIT #2
FDNS	00NR	0	16WP	G15_095	FROM->TO	CIMARRON - DRAPER LAKE 345KV CKT 1	717	717	0.0645	101.1	GEN615002 2-COAL CREEK
FDNS	00NR	0	16WP	G15_095	FROM->TO	CIMARRON - DRAPER LAKE 345KV CKT 1	717	717	0.06074	101.0885	NORTHWEST - SPRING CREEK 345KV CKT 1
FDNS	00NR	0	16WP	G15_095	FROM->TO	CIMARRON - DRAPER LAKE 345KV CKT 1	717	717	0.0645	101.0833	GEN600005 1-MONTICELLO
FDNS	00NR	0	16WP	G15_095	FROM->TO	CIMARRON - DRAPER LAKE 345KV CKT 1	717	717	0.06618	101.082	DRAPER LAKE - GM 138KV CKT 1
FDNS	00NR	0	16WP	G15_095	FROM->TO	CIMARRON - DRAPER LAKE 345KV CKT 1	717	717	0.0645	101.0628	GEN527166 1-MUSTANG_6 118.000
FDNS	00NR	0	16WP	G15_095	FROM->TO	CIMARRON - DRAPER LAKE 345KV CKT 1	717	717	0.0645	101.0553	GEN525562 1-TOLK GEN #2 24 KV
FDNS	00NR	0	16WP	G15_095	FROM->TO	CIMARRON - DRAPER LAKE 345KV CKT 1	717	717	0.06074	101.0485	SOONER - SPRING CREEK 345KV CKT 1
FDNS	00NR	0	16WP	G15_095	FROM->TO	CIMARRON - DRAPER LAKE 345KV CKT 1	717	717	0.06683	101.0368	CLARKSVILLE - MUSKOGEE 345KV CKT 1
FDNS	00NR	0	16WP	G15_095	FROM->TO	CIMARRON - DRAPER LAKE 345KV CKT 1	717	717	0.06683	101.0368	CLARKSVILLE - MUSKOGEE 345KV CKT 1
FDNS	00NR	0	16WP	G15_095	FROM->TO	CIMARRON - DRAPER LAKE 345KV CKT 1	717	717	0.0645	101.0116	GEN562952 1-G15057_3 0.6500
FDNS	00NR	0	16WP	G15_095	FROM->TO	CIMARRON - DRAPER LAKE 345KV CKT 1	717	717	0.0645	101.0001	GEN563272 1-G15093_3 0.6900
FDNS	00NR	0	16WP	G15_095	FROM->TO	CIMARRON - DRAPER LAKE 345KV CKT 1	717	717	0.0645	101	GEN629074 1-ARNOLD LOWSIDE OF GSU XFMR
FDNS	00NR	0	16WP	G15_095	FROM->TO	CIMARRON - DRAPER LAKE 345KV CKT 1	717	717	0.0645	100.9585	GEN635213 3-NEAL UNIT 3
FDNS	00NR	0	16WP	G15_095	FROM->TO	CIMARRON - DRAPER LAKE 345KV CKT 1	717	717	0.0602	100.9479	FRANKLIN SW - MIDWEST TAP 138KV CKT 1
FDNS	00NR	0	16WP	G15_095	FROM->TO	CIMARRON - DRAPER LAKE 345KV CKT 1	717	717	0.06238	100.9426	DRAPER LAKE - SEMINOLE 345KV CKT 3
FDNS	00NR	0	16WP	G15_095	FROM->TO	CIMARRON - DRAPER LAKE 345KV CKT 1	717	717	0.0645	100.9128	GEN562892 1-G15048_3 0.6900
FDNS	00NR	0	16WP	G15_095	FROM->TO	CIMARRON - DRAPER LAKE 345KV CKT 1	717	717	0.0645	100.9011	BIG STONE 230/24.0KV TRANSFORMER CKT 1
FDNS	00NR	0	16WP	G15_095	FROM->TO	CIMARRON - DRAPER LAKE 345KV CKT 1	717	717	0.0645	100.8665	GEN563173 1-G15082_3 0.6900
FDNS	00NR	0	16WP	G15_095	FROM->TO	CIMARRON - DRAPER LAKE 345KV CKT 1	717	717	0.06485	100.8575	CHAMBER SPRINGS - CLARKSVILLE 345KV CKT 1
FDNS	00NR	0	16WP	G15_095	FROM->TO	CIMARRON - DRAPER LAKE 345KV CKT 1	717	717	0.0645	100.8263	GEN562902 1-G15052_3 0.6900
FDNS	00NR	0	16WP	G15_095	FROM->TO	CIMARRON - DRAPER LAKE 345KV CKT 1	717	717	0.06575	100.8149	LYDIA - VALLIANT 345KV CKT 1
FDNS	00NR	0	16WP	G15_095	FROM->TO	CIMARRON - DRAPER LAKE 345KV CKT 1	717	717	0.06575	100.8149	LYDIA - VALLIANT 345KV CKT 1
FDNS	00NR	0	16WP	G15_095	FROM->TO	CIMARRON - DRAPER LAKE 345KV CKT 1	717	717	0.0645	100.81	GEN514805 1-SOONER UNIT 1
FDNS	00NR	0	16WP	G15_095	FROM->TO	CIMARRON - DRAPER LAKE 345KV CKT 1	717	717	0.0645	100.787	GEN527903 1-HOBBS PLANT #3 (ST)
FDNS	00NR	0	16WP	G15_095	FROM->TO	CIMARRON - DRAPER LAKE 345KV CKT 1	717	717	0.0645	100.7504	GEN525561 1-TOLK GEN #1 24 KV
FDNSLock	00NR	0	16WP	G15_095	FROM->TO	CIMARRON - DRAPER LAKE 345KV CKT 1	717	717	0.0645	100.7392	GEN600000 1-SHERBURNECNTY G1
FDNS	00NR	0	16WP	G15_095	FROM->TO	CIMARRON - DRAPER LAKE 345KV CKT 1	717	717	0.06655	100.6808	P12:138:OKGE:3TERM23
FDNS	00NR	0	16WP	G15_095	FROM->TO	CIMARRON - DRAPER LAKE 345KV CKT 1	717	717	0.0645	100.6578	GEN600001 2-SHERBURNE CNTY G2
FDNS	00NR	0	16WP	G15_095	FROM->TO	CIMARRON - DRAPER LAKE 345KV CKT 1	717	717	0.06655	100.6216	BARNES 4 138.00 - DRAPER LAKE 138KV CKT 1
FDNS	00NR	0	16WP	G15_095	FROM->TO	CIMARRON - DRAPER LAKE 345KV CKT 1	717	717	0.0645	100.6	GEN344225 1-1CAL G1 25.000
FDNS	00NR	0	16WP	G15_095	FROM->TO	CIMARRON - DRAPER LAKE 345KV CKT 1	717	717	0.0645	100.5641	GEN514806 1-SOONER UNIT 2
FDNSLock	00NR	0	16WP	G15_095	FROM->TO	CIMARRON - DRAPER LAKE 345KV CKT 1	717	717	0.0645	100.5438	GEN629075 1-OTTUMWA GENERATOR FOR OTTUMWA UNIT NO 1
FDNS	00NR	0	16WP	G15_095	FROM->TO	CIMARRON - DRAPER LAKE 345KV CKT 1	717	717	0.0645	100.5167	GEN563162 1-G15081_3 0.6900
FDNS	00NR	0	16WP	G15_095	FROM->TO	CIMARRON - DRAPER LAKE 345KV CKT 1	717	717	0.06412	100.3768	DRAPER LAKE (DRAPER2) 345/138/13.8KV TRANSFORMER CKT 1
FDNS	00NR	0	16WP	G15_095	FROM->TO	CIMARRON - DRAPER LAKE 345KV CKT 1	717	717	0.0645	100.3192	SHERBURNE CO 345/24.0KV TRANSFORMER CKT 1
FDNS	00NR	0	16WP	G15_095	FROM->TO	CIMARRON - DRAPER LAKE 345KV CKT 1	717	717	0.06025	100.2891	CIMARRON - MATHWSN7 345.00 345KV CKT 1
FDNS	00NR	0	16WP	G15_095	FROM->TO	CIMARRON - DRAPER LAKE 345KV CKT 1	717	717	0.06025	100.2891	CIMARRON - MATHWSN7 345.00 345KV CKT 2
FDNS	00NR	0	16WP	G15_095	FROM->TO	CIMARRON - DRAPER LAKE 345KV CKT 1	717	717	0.06412	100.286	DRAPER LAKE (DRAPER3) 345/138/13.8KV TRANSFORMER CKT 1
FDNS	00NR	0	16WP	G15_095	FROM->TO	CIMARRON - DRAPER LAKE 345KV CKT 1	717	717	0.06412	100.286	DRAPER LAKE (DRAPER4) 345/138/13.8KV TRANSFORMER CKT 1
FDNSLock	00NR	0	16WP	G15_095	FROM->TO	CIMARRON - DRAPER LAKE 345KV CKT 1	717	717	0.0645	100.2812	GEN635214 4-NEAL UNIT 4
FDNS	00NR	0	16WP	G15_095	FROM->TO	CIMARRON - DRAPER LAKE 345KV CKT 1	717	717	0.0645	100.2003	GEN562882 1-G15047_3 0.6900
FDNS	00NR	0	16WP	G15_095	FROM->TO	CIMARRON - DRAPER LAKE 345KV CKT 1	717	717	0.0645	100.1889	GEN600002 3-SHERBURNE CNTY G3
FDNS	00NR	0	16WP	G15_095	FROM->TO	CIMARRON - DRAPER LAKE 345KV CKT 1	717	717	0.0645	99.8	GEN635023 3-WALTER SCOTT UNIT 3
FDNS	00NR	0	16WP	G15_095	FROM->TO	CIMARRON - DRAPER LAKE 345KV CKT 1	717	717	0.0645	99.7	GEN562023 1-G11_020_3 0.6900
FDNS	00NR	0	16WP	G15_095	FROM->TO	CIMARRON - DRAPER LAKE 345KV CKT 1	717	717	0.0645	99.7	GEN562026 1-G11_019_3 0.6900
FDNS	00NR	0	16WP	G15_095	FROM->TO	CIMARRON - DRAPER LAKE 345KV CKT 1	717	717	0.0645	99.6	EASTDC - ERCOT EQUIVALENCE 345KV CKT 1
FDNS	00NR	0	16WP	G15_095	FROM->TO	CIMARRON - DRAPER LAKE 345KV CKT 1	717	717	0.06053	99.5	DRAPER LAKE - SEMINOLE 345KV CKT 1
FDNS	00NR	0	16WP	G15_095	FROM->TO	CIMARRON - DRAPER LAKE 345KV CKT 1	717	717	0.06053	99.5	DRAPER LAKE - SEMINOLE 345KV CKT 2
FDNS	01NR	0	20L	G15_095	FROM->TO	CLEO CORNER - CLEOPLT4 138.00 138KV CKT 1	191	191	0.11376	120.3357	MATHWSN7 345.00 - TATONGA7 345.00 345KV CKT 1
FDNSLock	00NR	0	16WP	G15_095	FROM->TO	CLEO CORNER - CLEOPLT4 138.00 138KV CKT 1	191	191	0.08013	118.7587	MATHWSN7 345.00 - TATONGA7 345.00 345KV CKT 1
FDNS	00NR	0	20WP	G15_095	FROM->TO	CLEO CORNER - CLEOPLT4 138.00 138KV CKT 1	191	191	0.08028	118.0033	MATHWSN7 345.00 - TATONGA7 345.00 345KV CKT 1
FDNSLock	00NR	0	16WP	G15_095	FROM->TO	CLEO CORNER - CLEOPLT4 138.00 138KV CKT 1	191	191	0.08013	114.6586	G11_051T 345.00 - TATONGA7 345.00 345KV CKT 1
FDNS	00NR	0	20WP	G15_095	FROM->TO	CLEO CORNER - CLEOPLT4 138.00 138KV CKT 1	191	191	0.08028	114.0655	G11_051T 345.00 - TATONGA7 345.00 345KV CKT 1
FDNS	01ALL	0	17SP	G15_095	FROM->TO	CLEO CORNER - CLEOPLT4 138.00 138KV CKT 1	191	191	0.10958	112.3589	BASE CASE
FDNS	01ALL	0	20WP	G15_095	FROM->TO	CLEO CORNER - CLEOPLT4 138.00 138KV CKT 1	191	191	0.10949	111.2513	BASE CASE
FDNS	01ALL	0	16WP	G15_095	FROM->TO	CLEO CORNER - CLEOPLT4 138.00 138KV CKT 1	191	191	0.10971	110.537	BASE CASE
FDNS	01NR	0	20L	G15_095	FROM->TO	CLEO CORNER - CLEOPLT4 138.00 138KV CKT 1	191	191	0.09001	110.5365	CLEO CORNER (CLEOCOR1) 138/69/13.8KV TRANSFORMER CKT 1
FDNS	00NR	0	17SP	G15_095	FROM->TO	CLEO CORNER - CLEOPLT4 138.00 138KV CKT 1	191	191	0.08007	110.1289	MATHWSN7 345.00 - TATONGA7 345.00 345KV CKT 1
FDNS	01ALL	0	20SP	G15_095	FROM->TO	CLEO CORNER - CLEOPLT4 138.00 138KV CKT 1	191	191	0.10972	109.6891	BASE CASE
FDNSLock	00NR	0	16WP	G15_095	FROM->TO	CLEO CORNER - CLEOPLT4 138.00 138KV CKT 1	191	191	0.08013	108.8545	G11_051T 345.00 - WOODWARD DISTRICT EHV 345KV CKT 1
FDNS	00NR	0	20WP	G15_095	FROM->TO	CLEO CORNER - CLEOPLT4 138.00 138KV CKT 1	191	191	0.08028	108.5453	G11_051T 345.00 - WOODWARD DISTRICT EHV 345KV CKT 1
FDNS	00NR	0	20WP	G15_095	FROM->TO	CLEO CORNER - CLEOPLT4 138.00 138KV CKT 1	191	191	0.05764	108.5379	CLEO CORNER (CLEOCOR1) 138/69/13.8KV TRANSFORMER CKT 1
FDNS	00NR	0	16WP	G15_095	FROM->TO	CLEO CORNER - CLEOPLT4 138.00 138KV CKT 1	191	191	0.05769	107.7863	CLEO CORNER (CLEOCOR1) 138/69/13.8KV TRANSFORMER CKT 1

SOLUTION	GROUP	SCENARIO	SEASON	SOURCE	DIRECTION	MONITORED ELEMENT	RATEA (MVA)	RATEB(MVA)	TDF	TC%LOADING (% MVA)	CONTINGENCY
FDNS	01NR	0	17G	G15_095	FROM->TO	CLEO CORNER - CLEOPLT4 138.00 138KV CKT 1	191	191	0.0889	107.6463	CLEO CORNER (CLEOCOR1) 138/69/13.8KV TRANSFORMER CKT 1
FDNS	01NR	0	20L	G15_095	FROM->TO	CLEO CORNER - CLEOPLT4 138.00 138KV CKT 1	191	191	0.13297	107.1442	P12:138:WFEC:MSL15
FDNS	00NR	0	17SP	G15_095	FROM->TO	CLEO CORNER - CLEOPLT4 138.00 138KV CKT 1	191	191	0.08007	106.7029	G11_051T 345.00 - TATONGA7 345.00 345KV CKT 1
FDNS	01NR	0	20L	G15_095	FROM->TO	CLEO CORNER - CLEOPLT4 138.00 138KV CKT 1	191	191	0.11376	106.302	G11_051T 345.00 - TATONGA7 345.00 345KV CKT 1
FDNS	01NR	0	20L	G15_095	FROM->TO	CLEO CORNER - CLEOPLT4 138.00 138KV CKT 1	191	191	0.12204	106.2473	MOORELAND - PIC4 138.00 138KV CKT 1
FDNS	01NR	0	20L	G15_095	FROM->TO	CLEO CORNER - CLEOPLT4 138.00 138KV CKT 1	191	191	0.12204	106.2372	P12:138:WFEC:MSL12
FDNS	01NR	0	20L	G15_095	FROM->TO	CLEO CORNER - CLEOPLT4 138.00 138KV CKT 1	191	191	0.12204	106.1501	CEDARDALE - PIC4 138.00 138KV CKT 1
FDNS	01NR	0	20L	G15_095	FROM->TO	CLEO CORNER - CLEOPLT4 138.00 138KV CKT 1	191	191	0.13297	106.076	NOEL_SW 138.00 - SALT_PLAINS 138.00 138KV CKT 1
FDNS	01NR	0	20L	G15_095	FROM->TO	CLEO CORNER - CLEOPLT4 138.00 138KV CKT 1	191	191	0.12363	106.0522	DOVER SW - OKEENE 138KV CKT 1
FDNS	01NR	0	20L	G15_095	FROM->TO	CLEO CORNER - CLEOPLT4 138.00 138KV CKT 1	191	191	0.12204	106.0416	CEDARDALE - OKEENE 138KV CKT 1
FDNS	01NR	0	20L	G15_095	FROM->TO	CLEO CORNER - CLEOPLT4 138.00 138KV CKT 1	191	191	0.1086	105.6019	CLEO CORNER - CLEO JCT 69KV CKT 1
FDNS	01NR	0	20L	G15_095	FROM->TO	CLEO CORNER - CLEOPLT4 138.00 138KV CKT 1	191	191	0.1086	105.5998	CLEO JCT - RINGWOOD 69KV CKT 1
FDNS	00NR	0	20SP	G15_095	FROM->TO	CLEO CORNER - CLEOPLT4 138.00 138KV CKT 1	191	191	0.08028	105.3449	MATHWSN7 345.00 - TATONGA7 345.00 345KV CKT 1
FDNS	01NR	0	20L	G15_095	FROM->TO	CLEO CORNER - CLEOPLT4 138.00 138KV CKT 1	191	191	0.12514	104.9017	P12:138:WFEC:MSL14
FDNS	01NR	0	20L	G15_095	FROM->TO	CLEO CORNER - CLEOPLT4 138.00 138KV CKT 1	191	191	0.12514	104.8688	BEARCAT 138.00 - MOORELAND 138KV CKT 1
FDNS	00NR	0	17SP	G15_095	FROM->TO	CLEO CORNER - CLEOPLT4 138.00 138KV CKT 1	191	191	0.05765	104.8243	CLEO CORNER (CLEOCOR1) 138/69/13.8KV TRANSFORMER CKT 1
FDNS	01NR	0	20L	G15_095	FROM->TO	CLEO CORNER - CLEOPLT4 138.00 138KV CKT 1	191	191	0.1149	104.7116	DEWEY - SOUTHARD 138KV CKT 1
FDNS	01NR	0	20L	G15_095	FROM->TO	CLEO CORNER - CLEOPLT4 138.00 138KV CKT 1	191	191	0.13297	104.4972	C_CITY_138 138.00 - SALT_PLAINS 138.00 138KV CKT 1
FDNS	01NR	0	20L	G15_095	FROM->TO	CLEO CORNER - CLEOPLT4 138.00 138KV CKT 1	191	191	0.1149	104.4554	ROMAN NOSE - SOUTHARD 138KV CKT 1
FDNS	01NR	0	20L	G15_095	FROM->TO	CLEO CORNER - CLEOPLT4 138.00 138KV CKT 1	191	191	0.12514	104.4004	BEARCAT 138.00 - NINE MILE 138KV CKT 1
FDNS	00NR	0	16WP	G15_095	FROM->TO	CLEO CORNER - CLEOPLT4 138.00 138KV CKT 1	191	191	0.08526	104.376	MOORELAND - PIC4 138.00 138KV CKT 1
FDNS	00NR	0	16WP	G15_095	FROM->TO	CLEO CORNER - CLEOPLT4 138.00 138KV CKT 1	191	191	0.08526	104.3524	P12:138:WFEC:MSL12
FDNS	01NR	0	20L	G15_095	FROM->TO	CLEO CORNER - CLEOPLT4 138.00 138KV CKT 1	191	191	0.13297	104.3502	BYRON_138 138.00 - C_CITY_138 138.00 138KV CKT 1
FDNS	00NR	0	16WP	G15_095	FROM->TO	CLEO CORNER - CLEOPLT4 138.00 138KV CKT 1	191	191	0.08526	104.2784	CEDARDALE - PIC4 138.00 138KV CKT 1
FDNS	00NR	0	16WP	G15_095	FROM->TO	CLEO CORNER - CLEOPLT4 138.00 138KV CKT 1	191	191	0.08526	104.0791	CEDARDALE - OKEENE 138KV CKT 1
FDNS	01NR	0	20L	G15_095	FROM->TO	CLEO CORNER - CLEOPLT4 138.00 138KV CKT 1	191	191	0.1086	104.0669	NSAH - RINGWOOD 69KV CKT 1
FDNS	01NR	0	20L	G15_095	FROM->TO	CLEO CORNER - CLEOPLT4 138.00 138KV CKT 1	191	191	0.11045	104.0663	THISTLE7 345.00 - WOODWARD DISTRICT EHV 345KV CKT 1
FDNS	01NR	0	20L	G15_095	FROM->TO	CLEO CORNER - CLEOPLT4 138.00 138KV CKT 1	191	191	0.11045	104.0663	THISTLE7 345.00 - WOODWARD DISTRICT EHV 345KV CKT 1
FDNS	01NR	0	20L	G15_095	FROM->TO	CLEO CORNER - CLEOPLT4 138.00 138KV CKT 1	191	191	0.11045	104.0663	THISTLE7 345.00 - WOODWARD DISTRICT EHV 345KV CKT 2
FDNS	01NR	0	20L	G15_095	FROM->TO	CLEO CORNER - CLEOPLT4 138.00 138KV CKT 1	191	191	0.11045	104.0663	THISTLE7 345.00 - WOODWARD DISTRICT EHV 345KV CKT 2
FDNS	00NR	0	20WP	G15_095	FROM->TO	CLEO CORNER - CLEOPLT4 138.00 138KV CKT 1	191	191	0.08541	104.0561	MOORELAND - PIC4 138.00 138KV CKT 1
FDNS	00NR	0	20WP	G15_095	FROM->TO	CLEO CORNER - CLEOPLT4 138.00 138KV CKT 1	191	191	0.08541	104.031	P12:138:WFEC:MSL12
FDNS	01NR	0	20L	G15_095	FROM->TO	CLEO CORNER - CLEOPLT4 138.00 138KV CKT 1	191	191	0.12535	104.0011	G15095_T 138.00 - ROSE_VALLEY 138.00 138KV CKT 1
FDNS	00NR	0	16WP	G15_095	FROM->TO	CLEO CORNER - CLEOPLT4 138.00 138KV CKT 1	191	191	0.06887	104.0002	WOODRING (WOODRNG2) 345/138/13.8KV TRANSFORMER CKT 1
FDNS	01NR	0	20L	G15_095	FROM->TO	CLEO CORNER - CLEOPLT4 138.00 138KV CKT 1	191	191	0.1172	103.9781	ELK CITY - RED HILLS WIND 138KV CKT 1
FDNS	01NR	0	20L	G15_095	FROM->TO	CLEO CORNER - CLEOPLT4 138.00 138KV CKT 1	191	191	0.1172	103.9781	ELK CITY - RED HILLS WIND 138KV CKT 1
FDNS	00NR	0	20WP	G15_095	FROM->TO	CLEO CORNER - CLEOPLT4 138.00 138KV CKT 1	191	191	0.08541	103.9586	CEDARDALE - PIC4 138.00 138KV CKT 1
FDNS	00NR	0	20WP	G15_095	FROM->TO	CLEO CORNER - CLEOPLT4 138.00 138KV CKT 1	191	191	0.06905	103.87	WOODRING (WOODRNG2) 345/138/13.8KV TRANSFORMER CKT 1
FDNS	00NR	0	17SP	G15_095	FROM->TO	CLEO CORNER - CLEOPLT4 138.00 138KV CKT 1	191	191	0.06883	103.8203	WOODRING (WOODRNG2) 345/138/13.8KV TRANSFORMER CKT 1
FDNS	00NR	0	20WP	G15_095	FROM->TO	CLEO CORNER - CLEOPLT4 138.00 138KV CKT 1	191	191	0.08541	103.7433	CEDARDALE - OKEENE 138KV CKT 1
FDNS	01NR	0	20L	G15_095	FROM->TO	CLEO CORNER - CLEOPLT4 138.00 138KV CKT 1	191	191	0.12535	103.6319	NOEL_SW 138.00 - ROSE_VALLEY 138.00 138KV CKT 1
FDNS	01NR	0	20L	G15_095	FROM->TO	CLEO CORNER - CLEOPLT4 138.00 138KV CKT 1	191	191	0.12514	103.6138	MOREWOOD SW - NINE MILE 138KV CKT 1
FDNS	00NR	0	16WP	G15_095	FROM->TO	CLEO CORNER - CLEOPLT4 138.00 138KV CKT 1	191	191	0.08645	103.1599	DOVER SW - OKEENE 138KV CKT 1
FDNS	00NR	0	16WP	G15_095	FROM->TO	CLEO CORNER - CLEOPLT4 138.00 138KV CKT 1	191	191	0.09793	103.0536	P12:138:WFEC:MSL15
FDNS	01NR	0	20L	G15_095	FROM->TO	CLEO CORNER - CLEOPLT4 138.00 138KV CKT 1	191	191	0.09416	102.9257	CLEO CORNER - CLEOTP 2 69.000 69KV CKT 1
FDNS	01NR	0	20L	G15_095	FROM->TO	CLEO CORNER - CLEOPLT4 138.00 138KV CKT 1	191	191	0.09416	102.83	ALINETP2 69.000 - CLEOTP 2 69.000 69KV CKT 1
FDNS	01NR	0	20L	G15_095	FROM->TO	CLEO CORNER - CLEOPLT4 138.00 138KV CKT 1	191	191	0.10964	102.8157	GEN514805 1-SOONER UNIT 1
FDNS	01NR	0	20L	G15_095	FROM->TO	CLEO CORNER - CLEOPLT4 138.00 138KV CKT 1	191	191	0.09416	102.782	ALINETP2 69.000 - ALVA 69KV CKT 1
FDNS	00NR	0	20WP	G15_095	FROM->TO	CLEO CORNER - CLEOPLT4 138.00 138KV CKT 1	191	191	0.098	102.7537	P12:138:WFEC:MSL15
FDNS	01NR	0	20L	G15_095	FROM->TO	CLEO CORNER - CLEOPLT4 138.00 138KV CKT 1	191	191	0.13297	102.7227	BYRON_138 138.00 - SANDY_CN_138138.00 138KV CKT 1
FDNS	01NR	0	20L	G15_095	FROM->TO	CLEO CORNER - CLEOPLT4 138.00 138KV CKT 1	191	191	0.10839	102.6136	CIMARRON - MINCO 345KV CKT 1
FDNS	01NR	0	20L	G15_095	FROM->TO	CLEO CORNER - CLEOPLT4 138.00 138KV CKT 1	191	191	0.11001	102.5673	Hitchland Interchange - WALKTAP7 345.00 345KV CKT 1
FDNS	01NR	0	20L	G15_095	FROM->TO	CLEO CORNER - CLEOPLT4 138.00 138KV CKT 1	191	191	0.11001	102.5673	Hitchland Interchange - WALKTAP7 345.00 345KV CKT 1
FDNS	01NR	0	20L	G15_095	FROM->TO	CLEO CORNER - CLEOPLT4 138.00 138KV CKT 1	191	191	0.11001	102.555	P12:345:SPS:J07.1.FINN.HITCH
FDNS	00NR	0	16WP	G15_095	FROM->TO	CLEO CORNER - CLEOPLT4 138.00 138KV CKT 1	191	191	0.08091	102.5524	DEWEY - SOUTHARD 138KV CKT 1
FDNS	00NR	0	20WP	G15_095	FROM->TO	CLEO CORNER - CLEOPLT4 138.00 138KV CKT 1	191	191	0.08664	102.5062	DOVER SW - OKEENE 138KV CKT 1
FDNS	01NR	0	20L	G15_095	FROM->TO	CLEO CORNER - CLEOPLT4 138.00 138KV CKT 1	191	191	0.1086	102.5034	NSAH - WAKITA 69KV CKT 1
FDNS	01NR	0	20L	G15_095	FROM->TO	CLEO CORNER - CLEOPLT4 138.00 138KV CKT 1	191	191	0.1086	102.5	WAKITAS4 138.00 (WAKITA_XMER) 138/69/13.8KV TRANSFORMER CKT 1
FDNS	01NR	0	17G	G15_095	FROM->TO	CLEO CORNER - CLEOPLT4 138.00 138KV CKT 1	191	191	0.1316	102.4945	P12:138:WFEC:MSL15
FDNS	01NR	0	20L	G15_095	FROM->TO	CLEO CORNER - CLEOPLT4 138.00 138KV CKT 1	191	191	0.1108	102.2678	G14-057T 345.00 - SUNNYSIDE 345KV CKT 1
FDNS	00NR	0	16WP	G15_095	FROM->TO	CLEO CORNER - CLEOPLT4 138.00 138KV CKT 1	191	191	0.07786	102.2628	G14-074T 345.00 - OKLAUNION 345KV CKT 1
FDNS	00NR	0	20WP	G15_095	FROM->TO	CLEO CORNER - CLEOPLT4 138.00 138KV CKT 1	191	191	0.07534	102.2039	CLEO CORNER - CLEO JCT 69KV CKT 1
FDNS	00NR	0	20WP	G15_095	FROM->TO	CLEO CORNER - CLEOPLT4 138.00 138KV CKT 1	191	191	0.07534	102.2015	CLEO JCT - RINGWOOD 69KV CKT 1
FDNS	00NR	0	20SP	G15_095	FROM->TO	CLEO CORNER - CLEOPLT4 138.00 138KV CKT 1	191	191	0.05764	102.1709	CLEO CORNER (CLEOCOR1) 138/69/13.8KV TRANSFORMER CKT 1
FDNS	00NR	0	16WP	G15_095	FROM->TO	CLEO CORNER - CLEOPLT4 138.00 138KV CKT 1	191	191	0.08091	102.125	ROMAN NOSE - SOUTHARD 138KV CKT 1
FDNS	00NR	0	20WP	G15_095	FROM->TO	CLEO CORNER - CLEOPLT4 138.00 138KV CKT 1	191	191	0.08108	102.0673	DEWEY - SOUTHARD 138KV CKT 1
FDNS	00NR	0	20WP	G15_095	FROM->TO	CLEO CORNER - CLEOPLT4 138.00 138KV CKT 1	191	191	0.07803	102.0025	G14-074T 345.00 - OKLAUNION 345KV CKT 1
FDNS	00NR	0	20SP	G15_095	FROM->TO	CLEO CORNER - CLEOPLT4 138.00 138KV CKT 1	191	191	0.08028	101.9636	G11_051T 345.00 - TATONGA7 345.00 345KV CKT 1
FDNS	01NR	0	20L	G15_095	FROM->TO	CLEO CORNER - CLEOPLT4 138.00 138KV CKT 1	191	191	0.11379	101.9219	WOODWARD DISTRICT EHV (WWDEHV-T2) 345/138/13.8KV TRANSFORMER CKT 2
FDNS	00NR	0	16WP	G15_095	FROM->TO	CLEO CORNER - CLEOPLT4 138.00 138KV CKT 1	191	191	0.07507	101.8999	CLEO CORNER - CLEO JCT 69KV CKT 1
FDNS	00NR	0	16WP	G15_095	FROM->TO	CLEO CORNER - CLEOPLT4 138.00 138KV CKT 1	191	191	0.07507	101.8973	CLEO JCT - RINGWOOD 69KV CKT 1
FDNS	00NR	0	16WP	G15_095	FROM->TO	CLEO CORNER - CLEOPLT4 138.00 138KV CKT 1	191	191	0.07536	101.8842	CIMARRON - MINCO 345KV CKT 1
FDNS	00NR	0	16WP	G15_095	FROM->TO	CLEO CORNER - CLEOPLT4 138.00 138KV CKT 1	191	191	0.09793	101.8377	NOEL_SW 138.00 - SALT_PLAINS 138.00 138KV CKT 1
FDNS	01NR	0	20L	G15_095	FROM->TO	CLEO CORNER - CLEOPLT4 138.00 138KV CKT 1	191	191	0.11359	101.8138	WOODWARD DISTRICT EHV (WWDEHV) 345/138/13.8KV TRANSFORMER CKT 1
FDNS	01NR	0	20L	G15_095	FROM->TO	CLEO CORNER - CLEOPLT4 138.00 138KV CKT 1	191	191	0.10993	101.794	G1524G1525 345.00 - THISTLE7 345.00 345KV CKT 1
FDNS	01NR	0	20L	G15_095	FROM->TO	CLEO CORNER - CLEOPLT4 138.00 138KV CKT 1	191	191	0.10993	101.794	G1524G1525 345.00 - THISTLE7 345.00 345KV CKT 2
FDNS	01NR	0	20L	G15_095	FROM->TO	CLEO CORNER - CLEOPLT4 138.00 138KV CKT 1	191	191	0.10663	101.7733	G15063_T 345.00 - WOODRING 345KV CKT 1
FDNS	01NR	0	20L	G15_095	FROM->TO	CLEO CORNER - CLEOPLT4 138.00 138KV CKT 1	191	191	0.1108	101.7672	G14-057T 345.00 - LAWTON EASTSIDE 345KV CKT 1
FDNS	00NR	0	17SP	G15_095	FROM->TO	CLEO CORNER - CLEOPLT4 138.00 138KV CKT 1	191	191	0.08007	101.7172	G11_051T 345.00 - WOODWARD DISTRICT EHV 345KV CKT 1

SOLUTION	GROUP	SCENARIO	SEASON	SOURCE	DIRECTION	MONITORED ELEMENT	RATEA (MVA)	RATEB(MVA)	TDF	TC%LOADING (% MVA)	CONTINGENCY
FDNS	01NR	0	20L	G15_095	FROM->TO	CLEO CORNER - CLEOPLT4 138.00 138KV CKT 1	191	191	0.10964	101.6439	GEN514806 1-SOONER UNIT 2
FDNS	01NR	0	17G	G15_095	FROM->TO	CLEO CORNER - CLEOPLT4 138.00 138KV CKT 1	191	191	0.12069	101.6419	MOORELAND - PIC4 138.00 138KV CKT 1
FDNS	00NR	0	20WP	G15_095	FROM->TO	CLEO CORNER - CLEOPLT4 138.00 138KV CKT 1	191	191	0.08108	101.6375	ROMAN NOSE - SOUTHARD 138KV CKT 1
FDNS	01NR	0	17G	G15_095	FROM->TO	CLEO CORNER - CLEOPLT4 138.00 138KV CKT 1	191	191	0.12069	101.6199	P12:138:WFEC:MSL12
FDNS	01NR	0	17G	G15_095	FROM->TO	CLEO CORNER - CLEOPLT4 138.00 138KV CKT 1	191	191	0.10709	101.6036	CLEO CORNER - CLEO JCT 69KV CKT 1
FDNS	01NR	0	17G	G15_095	FROM->TO	CLEO CORNER - CLEOPLT4 138.00 138KV CKT 1	191	191	0.10709	101.6013	CLEO JCT - RINGWOOD 69KV CKT 1
FDNS	01NR	0	17G	G15_095	FROM->TO	CLEO CORNER - CLEOPLT4 138.00 138KV CKT 1	191	191	0.12069	101.5434	CEDARDALE - PIC4 138.00 138KV CKT 1
FDNS	00NR	0	20WP	G15_095	FROM->TO	CLEO CORNER - CLEOPLT4 138.00 138KV CKT 1	191	191	0.098	101.5026	NOEL_SW 138.00 - SALT_PLAINS 138.00 138KV CKT 1
FDNS	00NR	0	20WP	G15_095	FROM->TO	CLEO CORNER - CLEOPLT4 138.00 138KV CKT 1	191	191	0.07556	101.5004	CIMARRON - MINCO 345KV CKT 1
FDNS	01NR	0	17G	G15_095	FROM->TO	CLEO CORNER - CLEOPLT4 138.00 138KV CKT 1	191	191	0.1316	101.4863	NOEL_SW 138.00 - SALT_PLAINS 138.00 138KV CKT 1
FDNS	00NR	0	16WP	G15_095	FROM->TO	CLEO CORNER - CLEOPLT4 138.00 138KV CKT 1	191	191	0.08844	101.4559	P12:138:WFEC:MSL14
FDNS	00NR	0	16WP	G15_095	FROM->TO	CLEO CORNER - CLEOPLT4 138.00 138KV CKT 1	191	191	0.08844	101.4214	BEARCAT 138.00 - MOORELAND 138KV CKT 1
FDNS	01NR	0	17G	G15_095	FROM->TO	CLEO CORNER - CLEOPLT4 138.00 138KV CKT 1	191	191	0.12069	101.3562	CEDARDALE - OKEENE 138KV CKT 1
FDNS	01NR	0	20L	G15_095	FROM->TO	CLEO CORNER - CLEOPLT4 138.00 138KV CKT 1	191	191	0.10983	101.3253	MINGO - RED WILLOW 345KV CKT 1
FDNS	01NR	0	20L	G15_095	FROM->TO	CLEO CORNER - CLEOPLT4 138.00 138KV CKT 1	191	191	0.10983	101.3253	MINGO - RED WILLOW 345KV CKT 1
FDNS	01NR	0	20L	G15_095	FROM->TO	CLEO CORNER - CLEOPLT4 138.00 138KV CKT 1	191	191	0.11144	101.2632	CHISHOLM7 345.00 - GRACEMONT 345KV CKT 1
FDNS	01NR	0	20L	G15_095	FROM->TO	CLEO CORNER - CLEOPLT4 138.00 138KV CKT 1	191	191	0.12239	101.2504	CZYCRVT2 69.000 - KNOBHILL 69KV CKT 1
FDNS	00NR	0	16WP	G15_095	FROM->TO	CLEO CORNER - CLEOPLT4 138.00 138KV CKT 1	191	191	0.06287	101.2141	CLEO CORNER - CLEOTP 2 69.000 69KV CKT 1
FDNS	01NR	0	20L	G15_095	FROM->TO	CLEO CORNER - CLEOPLT4 138.00 138KV CKT 1	191	191	0.10663	101.104	G15063_T 345.00 - MATHWSN7 345.00 345KV CKT 1
FDNS	00NR	0	16WP	G15_095	FROM->TO	CLEO CORNER - CLEOPLT4 138.00 138KV CKT 1	191	191	0.07749	101.0972	G14-057T 345.00 - SUNNYSIDE 345KV CKT 1
FDNS	00NR	0	16WP	G15_095	FROM->TO	CLEO CORNER - CLEOPLT4 138.00 138KV CKT 1	191	191	0.0917	101.0846	G15095_T 138.00 - ROSE_VALLEY 138.00 138KV CKT 1
FDNS	00NR	0	16WP	G15_095	FROM->TO	CLEO CORNER - CLEOPLT4 138.00 138KV CKT 1	191	191	0.06287	100.9964	ALINETP2 69.000 - CLEOTP 2 69.000 69KV CKT 1
FDNS	00NR	0	20WP	G15_095	FROM->TO	CLEO CORNER - CLEOPLT4 138.00 138KV CKT 1	191	191	0.06278	100.9831	CLEO CORNER - CLEOTP 2 69.000 69KV CKT 1
FDNS	01NR	0	17G	G15_095	FROM->TO	CLEO CORNER - CLEOPLT4 138.00 138KV CKT 1	191	191	0.11251	100.9643	G11_051T 345.00 - TATONGA7 345.00 345KV CKT 1
FDNS	00NR	0	16WP	G15_095	FROM->TO	CLEO CORNER - CLEOPLT4 138.00 138KV CKT 1	191	191	0.08844	100.9334	BEARCAT 138.00 - NINE MILE 138KV CKT 1
FDNS	00NR	0	16WP	G15_095	FROM->TO	CLEO CORNER - CLEOPLT4 138.00 138KV CKT 1	191	191	0.08067	100.9002	HUNTERS7 345.00 - WOODRING 345KV CKT 1
FDNS	00NR	0	16WP	G15_095	FROM->TO	CLEO CORNER - CLEOPLT4 138.00 138KV CKT 1	191	191	0.06287	100.8966	ALINETP2 69.000 - ALVA 69KV CKT 1
FDNS	00NR	0	20WP	G15_095	FROM->TO	CLEO CORNER - CLEOPLT4 138.00 138KV CKT 1	191	191	0.09165	100.8431	G15095_T 138.00 - ROSE_VALLEY 138.00 138KV CKT 1
FDNS	00NR	0	20WP	G15_095	FROM->TO	CLEO CORNER - CLEOPLT4 138.00 138KV CKT 1	191	191	0.08864	100.8109	P12:138:WFEC:MSL14
FDNS	00NR	0	20WP	G15_095	FROM->TO	CLEO CORNER - CLEOPLT4 138.00 138KV CKT 1	191	191	0.08864	100.7788	BEARCAT 138.00 - MOORELAND 138KV CKT 1
FDNS	00NR	0	20WP	G15_095	FROM->TO	CLEO CORNER - CLEOPLT4 138.00 138KV CKT 1	191	191	0.06278	100.7617	ALINETP2 69.000 - CLEOTP 2 69.000 69KV CKT 1
FDNS	00NR	0	16WP	G15_095	FROM->TO	CLEO CORNER - CLEOPLT4 138.00 138KV CKT 1	191	191	0.0917	100.751	NOEL_SW 138.00 - ROSE_VALLEY 138.00 138KV CKT 1
FDNS	00NR	0	20WP	G15_095	FROM->TO	CLEO CORNER - CLEOPLT4 138.00 138KV CKT 1	191	191	0.06278	100.6638	ALINETP2 69.000 - ALVA 69KV CKT 1
FDNS	01NR	0	17G	G15_095	FROM->TO	CLEO CORNER - CLEOPLT4 138.00 138KV CKT 1	191	191	0.12198	100.656	DOVER SW - OKEENE 138KV CKT 1
FDNS	00NR	0	20WP	G15_095	FROM->TO	CLEO CORNER - CLEOPLT4 138.00 138KV CKT 1	191	191	0.07767	100.5563	G14-057T 345.00 - SUNNYSIDE 345KV CKT 1
FDNS	00NR	0	16WP	G15_095	FROM->TO	CLEO CORNER - CLEOPLT4 138.00 138KV CKT 1	191	191	0.07763	100.5293	THISTLE7 345.00 - WOODWARD DISTRICT EHV 345KV CKT 1
FDNS	00NR	0	16WP	G15_095	FROM->TO	CLEO CORNER - CLEOPLT4 138.00 138KV CKT 1	191	191	0.07763	100.5293	THISTLE7 345.00 - WOODWARD DISTRICT EHV 345KV CKT 1
FDNS	00NR	0	16WP	G15_095	FROM->TO	CLEO CORNER - CLEOPLT4 138.00 138KV CKT 1	191	191	0.07763	100.5293	THISTLE7 345.00 - WOODWARD DISTRICT EHV 345KV CKT 2
FDNS	00NR	0	16WP	G15_095	FROM->TO	CLEO CORNER - CLEOPLT4 138.00 138KV CKT 1	191	191	0.07763	100.5293	THISTLE7 345.00 - WOODWARD DISTRICT EHV 345KV CKT 2
FDNS	00NR	0	20WP	G15_095	FROM->TO	CLEO CORNER - CLEOPLT4 138.00 138KV CKT 1	191	191	0.09165	100.4856	NOEL_SW 138.00 - ROSE_VALLEY 138.00 138KV CKT 1
FDNS	01ALL	0	20L	G15_095	FROM->TO	CLEO CORNER - CLEOPLT4 138.00 138KV CKT 1	191	191	0.11287	100.4438	BASE CASE
FDNS	00NR	0	20WP	G15_095	FROM->TO	CLEO CORNER - CLEOPLT4 138.00 138KV CKT 1	191	191	0.08864	100.2863	BEARCAT 138.00 - NINE MILE 138KV CKT 1
FDNS	00NR	0	16WP	G15_095	FROM->TO	CLEO CORNER - CLEOPLT4 138.00 138KV CKT 1	191	191	0.07848	100.2513	CHISHOLM7 345.00 - GRACEMONT 345KV CKT 1
FDNS	00NR	0	17SP	G15_095	FROM->TO	CLEO CORNER - CLEOPLT4 138.00 138KV CKT 1	191	191	0.08521	100.2502	MOORELAND - PIC4 138.00 138KV CKT 1
FDNS	00NR	0	20WP	G15_095	FROM->TO	CLEO CORNER - CLEOPLT4 138.00 138KV CKT 1	191	191	0.0778	100.24	THISTLE7 345.00 - WOODWARD DISTRICT EHV 345KV CKT 1
FDNS	00NR	0	20WP	G15_095	FROM->TO	CLEO CORNER - CLEOPLT4 138.00 138KV CKT 1	191	191	0.0778	100.24	THISTLE7 345.00 - WOODWARD DISTRICT EHV 345KV CKT 1
FDNS	00NR	0	20WP	G15_095	FROM->TO	CLEO CORNER - CLEOPLT4 138.00 138KV CKT 1	191	191	0.0778	100.24	THISTLE7 345.00 - WOODWARD DISTRICT EHV 345KV CKT 2
FDNS	00NR	0	20WP	G15_095	FROM->TO	CLEO CORNER - CLEOPLT4 138.00 138KV CKT 1	191	191	0.0778	100.24	THISTLE7 345.00 - WOODWARD DISTRICT EHV 345KV CKT 2
FDNS	00NR	0	17SP	G15_095	FROM->TO	CLEO CORNER - CLEOPLT4 138.00 138KV CKT 1	191	191	0.08521	100.2278	P12:138:WFEC:MSL12
FDNS	00NR	0	16WP	G15_095	FROM->TO	CLEO CORNER - CLEOPLT4 138.00 138KV CKT 1	191	191	0.09793	100.1954	C_CITY_138 138.00 - SALT_PLAINS 138.00 138KV CKT 1
FDNS	01NR	0	17G	G15_095	FROM->TO	CLEO CORNER - CLEOPLT4 138.00 138KV CKT 1	191	191	0.10902	100.1748	THISTLE7 345.00 - WOODWARD DISTRICT EHV 345KV CKT 1
FDNS	01NR	0	17G	G15_095	FROM->TO	CLEO CORNER - CLEOPLT4 138.00 138KV CKT 1	191	191	0.10902	100.1748	THISTLE7 345.00 - WOODWARD DISTRICT EHV 345KV CKT 1
FDNS	01NR	0	17G	G15_095	FROM->TO	CLEO CORNER - CLEOPLT4 138.00 138KV CKT 1	191	191	0.10902	100.1748	THISTLE7 345.00 - WOODWARD DISTRICT EHV 345KV CKT 2
FDNS	01NR	0	17G	G15_095	FROM->TO	CLEO CORNER - CLEOPLT4 138.00 138KV CKT 1	191	191	0.10902	100.1748	THISTLE7 345.00 - WOODWARD DISTRICT EHV 345KV CKT 2
FDNS	01NR	0	17G	G15_095	FROM->TO	CLEO CORNER - CLEOPLT4 138.00 138KV CKT 1	191	191	0.12432	100.1685	P12:138:WFEC:MSL14
FDNS	00NR	0	17SP	G15_095	FROM->TO	CLEO CORNER - CLEOPLT4 138.00 138KV CKT 1	191	191	0.08521	100.1554	CEDARDALE - PIC4 138.00 138KV CKT 1
FDNS	01NR	0	17G	G15_095	FROM->TO	CLEO CORNER - CLEOPLT4 138.00 138KV CKT 1	191	191	0.12432	100.1355	BEARCAT 138.00 - MOORELAND 138KV CKT 1
FDNS	00NR	0	16WP	G15_095	FROM->TO	CLEO CORNER - CLEOPLT4 138.00 138KV CKT 1	191	191	0.08844	100.1341	MOREWOOD SW - NINE MILE 138KV CKT 1
FDNS	01NR	0	17G	G15_095	FROM->TO	CLEO CORNER - CLEOPLT4 138.00 138KV CKT 1	191	191	0.11363	100.1238	DEWEY - SOUTHARD 138KV CKT 1
FDNS	00NR	0	17SP	G15_095	FROM->TO	CLEO CORNER - CLEOPLT4 138.00 138KV CKT 1	191	191	0.08521	100	CEDARDALE - OKEENE 138KV CKT 1
FDNS	00NR	0	16WP	G15_095	FROM->TO	CLEO CORNER - CLEOPLT4 138.00 138KV CKT 1	191	191	0.09793	99.9	BYRON_138 138.00 - C_CITY_138 138.00 138KV CKT 1
FDNS	01NR	0	17G	G15_095	FROM->TO	CLEO CORNER - CLEOPLT4 138.00 138KV CKT 1	191	191	0.1316	99.9	C_CITY_138 138.00 - SALT_PLAINS 138.00 138KV CKT 1
FDNS	00NR	0	20WP	G15_095	FROM->TO	CLEO CORNER - CLEOPLT4 138.00 138KV CKT 1	191	191	0.098	99.9	C_CITY_138 138.00 - SALT_PLAINS 138.00 138KV CKT 1
FDNS	00NR	0	20WP	G15_095	FROM->TO	CLEO CORNER - CLEOPLT4 138.00 138KV CKT 1	191	191	0.07863	99.9	CHISHOLM7 345.00 - GRACEMONT 345KV CKT 1
FDNS	00NR	0	16WP	G15_095	FROM->TO	CLEO CORNER - CLEOPLT4 138.00 138KV CKT 1	191	191	0.08067	99.8	HUNTERS7 345.00 - RENFROW7 345.00 345KV CKT 1
FDNS	00NR	0	16WP	G15_095	FROM->TO	CLEO CORNER - CLEOPLT4 138.00 138KV CKT 1	191	191	0.07536	99.8	GRACEMONT - MINCO 345KV CKT 1
FDNS	00NR	0	16WP	G15_095	FROM->TO	CLEO CORNER - CLEOPLT4 138.00 138KV CKT 1	191	191	0.07507	99.8	NSAH - RINGWOOD 69KV CKT 1
FDNS	01NR	0	17G	G15_095	FROM->TO	CLEO CORNER - CLEOPLT4 138.00 138KV CKT 1	191	191	0.1242	99.8	G15095_T 138.00 - ROSE_VALLEY 138.00 138KV CKT 1
FDNS	00NR	0	20SP	G15_095	FROM->TO	CLEO CORNER - CLEOPLT4 138.00 138KV CKT 1	191	191	0.06905	99.8	WOODRING (WOODRNG2) 345/138/13.8KV TRANSFORMER CKT 1
FDNS	01NR	0	17G	G15_095	FROM->TO	CLEO CORNER - CLEOPLT4 138.00 138KV CKT 1	191	191	0.1316	99.7	BYRON_138 138.00 - C_CITY_138 138.00 138KV CKT 1
FDNS	01NR	0	17G	G15_095	FROM->TO	CLEO CORNER - CLEOPLT4 138.00 138KV CKT 1	191	191	0.12432	99.7	BEARCAT 138.00 - NINE MILE 138KV CKT 1
FDNS	01NR	0	17G	G15_095	FROM->TO	CLEO CORNER - CLEOPLT4 138.00 138KV CKT 1	191	191	0.11363	99.7	ROMAN NOSE - SOUTHARD 138KV CKT 1
FDNS	00NR	0	16WP	G15_095	FROM->TO	CLEO CORNER - CLEOPLT4 138.00 138KV CKT 1	191	191	0.07848	99.5	CHISHOLM7 345.00 (CHISHOLM) 345/230/13.2KV TRANSFORMER CKT 1
FDNS	00NR	0	16WP	G15_095	FROM->TO	CLEO CORNER - CLEOPLT4 138.00 138KV CKT 1	191	191	0.07749	99.5	G14-057T 345.00 - LAWTON EASTSIDE 345KV CKT 1
FDNS	00NR	0	16WP	G15_095	FROM->TO	CLEO CORNER - CLEOPLT4 138.00 138KV CKT 1	191	191	0.07734	99.5	G1524G1525 345.00 - THISTLE7 345.00 345KV CKT 1
FDNS	00NR	0	16WP	G15_095	FROM->TO	CLEO CORNER - CLEOPLT4 138.00 138KV CKT 1	191	191	0.07734	99.5	G1524G1525 345.00 - THISTLE7 345.00 345KV CKT 2
FDNS	00NR	0	16WP	G15_095	FROM->TO	CLEO CORNER - CLEOPLT4 138.00 138KV CKT 1	191	191	0.0772	99.5	GEN514805 1-SOONER UNIT 1
FDNS	01NR	0	17G	G15_095	FROM->TO	CLEO CORNER - CLEOPLT4 138.00 138KV CKT 1	191	191	0.10709	99.5	NSAH - RINGWOOD 69KV CKT 1
FDNS	01NR	0	20L	G15_095	FROM->TO	CLEO CORNER - CLEOPLT4 138.00 138KV CKT 1	191	191	0.10964	99.5	BASE CASE

SOLUTION	GROUP	SCENARIO	SEASON	SOURCE	DIRECTION	MONITORED ELEMENT	RATEA (MVA)	RATEB(MVA)	TDF	TC%LOADING (% MVA)	CONTINGENCY
FDNS	00NR	0	20WP	G15_095	FROM->TO	CLEO CORNER - CLEOPLT4 138.00 138KV CKT 1	191	191	0.08864	99.5	MOREWOOD SW - NINE MILE 138KV CKT 1
FDNS	00NR	0	16WP	G15_095	FROM->TO	G14-057T 345.00 - SUNNYSIDE 345KV CKT 1	717	789	0.05213	125.8516	PITTSBURG - SEMINOLE 345KV CKT 1
FDNS	00NR	0	16WP	G15_095	FROM->TO	G14-057T 345.00 - SUNNYSIDE 345KV CKT 1	717	789	0.05213	125.8516	PITTSBURG - SEMINOLE 345KV CKT 1
FDNS	00NR	0	16WP	G15_095	FROM->TO	G14-057T 345.00 - SUNNYSIDE 345KV CKT 1	717	789	0.03615	125.7317	BASE CASE
FDNS	00NR	0	20WP	G15_095	FROM->TO	G14-057T 345.00 - SUNNYSIDE 345KV CKT 1	717	789	0.03594	123.4961	BASE CASE
FDNS	00NR	0	16WP	G15_095	FROM->TO	G14-057T 345.00 - SUNNYSIDE 345KV CKT 1	717	789	0.04214	123.2027	CIMARRON - DRAPER LAKE 345KV CKT 1
FDNS	00NR	0	20WP	G15_095	FROM->TO	G14-057T 345.00 - SUNNYSIDE 345KV CKT 1	717	789	0.05186	122.942	PITTSBURG - SEMINOLE 345KV CKT 1
FDNS	00NR	0	20WP	G15_095	FROM->TO	G14-057T 345.00 - SUNNYSIDE 345KV CKT 1	717	789	0.05186	122.942	PITTSBURG - SEMINOLE 345KV CKT 1
FDNS	00NR	0	20WP	G15_095	FROM->TO	G14-057T 345.00 - SUNNYSIDE 345KV CKT 1	717	789	0.04182	120.8155	CIMARRON - DRAPER LAKE 345KV CKT 1
FDNS	00NR	0	16WP	G15_095	FROM->TO	G14-057T 345.00 - SUNNYSIDE 345KV CKT 1	717	789	0.0428	119.7169	PITTSBURG - VALLIANT 345KV CKT 1
FDNS	00NR	0	16WP	G15_095	FROM->TO	G14-057T 345.00 - SUNNYSIDE 345KV CKT 1	717	789	0.0428	119.7169	PITTSBURG - VALLIANT 345KV CKT 1
FDNSLock	00NR	0	16WP	G15_095	FROM->TO	G14-057T 345.00 - SUNNYSIDE 345KV CKT 1	717	789	0.03615	119.4097	GEN509403 1-PIRKEY GENERATION
FDNS	00NR	0	16WP	G15_095	FROM->TO	G14-057T 345.00 - SUNNYSIDE 345KV CKT 1	717	789	0.03615	119.3291	GEN509416 1-TURK GENERATION
FDNS	00NR	0	16WP	G15_095	FROM->TO	G14-057T 345.00 - SUNNYSIDE 345KV CKT 1	717	789	0.03824	119.038	CLEVELAND - G15066_T 345.00 345KV CKT 1
FDNS	00NR	0	16WP	G15_095	FROM->TO	G14-057T 345.00 - SUNNYSIDE 345KV CKT 1	717	789	0.03824	118.7424	G15066_T 345.00 - SOONER 345KV CKT 1
FDNS	00NR	0	16WP	G15_095	FROM->TO	G14-057T 345.00 - SUNNYSIDE 345KV CKT 1	717	789	0.03615	118.4277	GEN501801 1-DOLET HILLS UNIT1
FDNS	00NR	0	16WP	G15_095	FROM->TO	G14-057T 345.00 - SUNNYSIDE 345KV CKT 1	717	789	0.03615	118.0417	GEN509404 1-WELSH #1
FDNS	00NR	0	16WP	G15_095	FROM->TO	G14-057T 345.00 - SUNNYSIDE 345KV CKT 1	717	789	0.03615	118.0417	GEN509406 1-WELSH #3
FDNS	00NR	0	16WP	G15_095	FROM->TO	G14-057T 345.00 - SUNNYSIDE 345KV CKT 1	717	789	0.03271	117.7945	BORDER 7345.00 - WOODWARD DISTRICT EHV 345KV CKT 1
FDNS	00NR	0	16WP	G15_095	FROM->TO	G14-057T 345.00 - SUNNYSIDE 345KV CKT 1	717	789	0.03803	117.3154	7SAREPTA% 345.00 - LONGWOOD 345KV CKT 1
FDNS	00NR	0	16WP	G15_095	FROM->TO	G14-057T 345.00 - SUNNYSIDE 345KV CKT 1	717	789	0.03803	117.3154	7SAREPTA% 345.00 - LONGWOOD 345KV CKT 1
FDNS	00NR	0	20WP	G15_095	FROM->TO	G14-057T 345.00 - SUNNYSIDE 345KV CKT 1	717	789	0.03594	117.2677	GEN509403 1-PIRKEY GENERATION
FDNS	00NR	0	16WP	G15_095	FROM->TO	G14-057T 345.00 - SUNNYSIDE 345KV CKT 1	717	789	0.03403	117.2341	CORN TAP - NAPLESTP 138.00 138KV CKT 1
FDNS	00NR	0	20WP	G15_095	FROM->TO	G14-057T 345.00 - SUNNYSIDE 345KV CKT 1	717	789	0.03594	117.1868	GEN509416 1-TURK GENERATION
FDNS	00NR	0	16WP	G15_095	FROM->TO	G14-057T 345.00 - SUNNYSIDE 345KV CKT 1	717	789	0.03403	117.1497	NAPLESTP 138.00 - PAYNE 138.00 138KV CKT 1
FDNS	00NR	0	16WP	G15_095	FROM->TO	G14-057T 345.00 - SUNNYSIDE 345KV CKT 1	717	789	0.03695	117.1471	DOLET HILLS - SOUTHWEST SHREVEPORT 345KV CKT 1
FDNS	00NR	0	16WP	G15_095	FROM->TO	G14-057T 345.00 - SUNNYSIDE 345KV CKT 1	717	789	0.03695	117.1471	DOLET HILLS - SOUTHWEST SHREVEPORT 345KV CKT 1
FDNS	00NR	0	16WP	G15_095	FROM->TO	G14-057T 345.00 - SUNNYSIDE 345KV CKT 1	717	789	0.03132	117.1448	ANADARKO - POCASSETT 138KV CKT 1
FDNSLock	00NR	0	16WP	G15_095	FROM->TO	G14-057T 345.00 - SUNNYSIDE 345KV CKT 1	717	789	0.03615	117.1301	GEN336821 1-GRAND GULF UNIT
FDNS	00NR	0	16WP	G15_095	FROM->TO	G14-057T 345.00 - SUNNYSIDE 345KV CKT 1	717	789	0.03765	117.0898	CLEVELAND - TULSA NORTH 345KV CKT 1
FDNS	00NR	0	16WP	G15_095	FROM->TO	G14-057T 345.00 - SUNNYSIDE 345KV CKT 1	717	789	0.03765	117.0898	CLEVELAND - TULSA NORTH 345KV CKT 1
FDNS	00NR	0	16WP	G15_095	FROM->TO	G14-057T 345.00 - SUNNYSIDE 345KV CKT 1	717	789	0.03446	117.0742	COMANCHE - LOCO 138KV CKT 1
FDNSLock	00NR	0	16WP	G15_095	FROM->TO	G14-057T 345.00 - SUNNYSIDE 345KV CKT 1	717	789	0.03615	117.0352	GEN336153 1-WATERFORD UNIT#3
FDNS	00NR	0	16WP	G15_095	FROM->TO	G14-057T 345.00 - SUNNYSIDE 345KV CKT 1	717	789	0.04191	117.0161	CANADIAN RIVER - MUSKOGEE 345KV CKT 1
FDNS	00NR	0	16WP	G15_095	FROM->TO	G14-057T 345.00 - SUNNYSIDE 345KV CKT 1	717	789	0.03132	116.9961	POCASSETT - TUTTLE 138KV CKT 1
FDNS	00NR	0	20WP	G15_095	FROM->TO	G14-057T 345.00 - SUNNYSIDE 345KV CKT 1	717	789	0.03798	116.9383	CLEVELAND - G15066_T 345.00 345KV CKT 1
FDNSLock	00NR	0	16WP	G15_095	FROM->TO	G14-057T 345.00 - SUNNYSIDE 345KV CKT 1	717	789	0.03802	116.891	MATHWSN7 345.00 - TATONGA7 345.00 345KV CKT 1
FDNS	00NR	0	16WP	G15_095	FROM->TO	G14-057T 345.00 - SUNNYSIDE 345KV CKT 1	717	789	0.03271	116.8671	BORDER 7345.00 - TUCO_2 345.00 345KV CKT 1
FDNS	00NR	0	20WP	G15_095	FROM->TO	G14-057T 345.00 - SUNNYSIDE 345KV CKT 1	717	789	0.04252	116.8606	PITTSBURG - VALLIANT 345KV CKT 1
FDNS	00NR	0	20WP	G15_095	FROM->TO	G14-057T 345.00 - SUNNYSIDE 345KV CKT 1	717	789	0.04252	116.8606	PITTSBURG - VALLIANT 345KV CKT 1
FDNS	00NR	0	16WP	G15_095	FROM->TO	G14-057T 345.00 - SUNNYSIDE 345KV CKT 1	717	789	0.03767	116.8117	ARCADIA - NORTHWEST 345KV CKT 1
FDNS	00NR	0	16WP	G15_095	FROM->TO	G14-057T 345.00 - SUNNYSIDE 345KV CKT 1	717	789	0.03615	116.7419	GRAND GULF 500/22.0KV TRANSFORMER CKT 1
FDNSLock	00NR	0	16WP	G15_095	FROM->TO	G14-057T 345.00 - SUNNYSIDE 345KV CKT 1	717	789	0.03615	116.7414	GEN335831 1-RIVERBEND UNIT#1
FDNS	00NR	0	16WP	G15_095	FROM->TO	G14-057T 345.00 - SUNNYSIDE 345KV CKT 1	717	789	0.03615	116.7065	GEN515577 1-ARBWND11 0.6900
FDNS	00NR	0	16WP	G15_095	FROM->TO	G14-057T 345.00 - SUNNYSIDE 345KV CKT 1	717	789	0.03913	116.6977	ARCADIA - SEMINOLE 345KV CKT 1
FDNS	00NR	0	16WP	G15_095	FROM->TO	G14-057T 345.00 - SUNNYSIDE 345KV CKT 1	717	789	0.03615	116.6641	GEN509409 1-WILKES #3
FDNS	00NR	0	16WP	G15_095	FROM->TO	G14-057T 345.00 - SUNNYSIDE 345KV CKT 1	717	789	0.0372	116.6569	7SAREPTA% 345.00 - ELDORADO EHV 345KV CKT 1
FDNS	00NR	0	16WP	G15_095	FROM->TO	G14-057T 345.00 - SUNNYSIDE 345KV CKT 1	717	789	0.0372	116.6567	3TR3AR8EL7EL
FDNS	00NR	0	16WP	G15_095	FROM->TO	G14-057T 345.00 - SUNNYSIDE 345KV CKT 1	717	789	0.0372	116.6476	ELDORADO EHV 500/345KV TRANSFORMER CKT 1
FDNS	00NR	0	20WP	G15_095	FROM->TO	G14-057T 345.00 - SUNNYSIDE 345KV CKT 1	717	789	0.03798	116.6463	G15066_T 345.00 - SOONER 345KV CKT 1
FDNS	00NR	0	16WP	G15_095	FROM->TO	G14-057T 345.00 - SUNNYSIDE 345KV CKT 1	717	789	0.0373	116.6347	P12:138:AEPW:DUNCAN-4:L.E.S.-4
FDNS	00NR	0	16WP	G15_095	FROM->TO	G14-057T 345.00 - SUNNYSIDE 345KV CKT 1	717	789	0.03132	116.6144	BRIDGECR 138.00 - TUTTLE 138KV CKT 1
FDNS	00NR	0	16WP	G15_095	FROM->TO	G14-057T 345.00 - SUNNYSIDE 345KV CKT 1	717	789	0.0373	116.5237	COMANCHE TAP - OMPA-DUNCAN 840 138KV CKT 1
FDNS	00NR	0	16WP	G15_095	FROM->TO	G14-057T 345.00 - SUNNYSIDE 345KV CKT 1	717	789	0.03538	116.4781	HEALDTON - LOCO 138KV CKT 1
FDNS	00NR	0	20WP	G15_095	FROM->TO	G14-057T 345.00 - SUNNYSIDE 345KV CKT 1	717	789	0.03594	116.4704	GEN501801 1-DOLET HILLS UNIT1
FDNS	00NR	0	16WP	G15_095	FROM->TO	G14-057T 345.00 - SUNNYSIDE 345KV CKT 1	717	789	0.0368	116.4505	FINNEY SWITCHING STATION - HOLCOMB 345KV CKT 1
FDNS	00NR	0	16WP	G15_095	FROM->TO	G14-057T 345.00 - SUNNYSIDE 345KV CKT 1	717	789	0.0368	116.4505	FINNEY SWITCHING STATION - HOLCOMB 345KV CKT 1
FDNS	00NR	0	16WP	G15_095	FROM->TO	G14-057T 345.00 - SUNNYSIDE 345KV CKT 1	717	789	0.03615	116.4	GEN300006 1-NEW MADRID UNIT 1
FDNS	00NR	0	16WP	G15_095	FROM->TO	G14-057T 345.00 - SUNNYSIDE 345KV CKT 1	717	789	0.03615	116.4	GEN300007 1-NEW MADRID UNIT 2
FDNS	00NR	0	16WP	G15_095	FROM->TO	G14-057T 345.00 - SUNNYSIDE 345KV CKT 1	717	789	0.0365	116.3928	LACYGNE - WAVERLY7 345.00 345KV CKT 1
FDNS	00NR	0	16WP	G15_095	FROM->TO	G14-057T 345.00 - SUNNYSIDE 345KV CKT 1	717	789	0.03615	116.369	GEN501813 1-RODEMACHER UNIT 3
FDNS	00NR	0	16WP	G15_095	FROM->TO	G14-057T 345.00 - SUNNYSIDE 345KV CKT 1	717	789	0.03132	116.3452	P12:138:WFEC:MSL01
FDNS	00NR	0	16WP	G15_095	FROM->TO	G14-057T 345.00 - SUNNYSIDE 345KV CKT 1	717	789	0.03132	116.3403	BRIDGECR 138.00 - SUNSHINE CANYON 138KV CKT 1
FDNS	00NR	0	16WP	G15_095	FROM->TO	G14-057T 345.00 - SUNNYSIDE 345KV CKT 1	717	789	0.03538	116.3386	HEALDTON - RINGLING 138KV CKT 1
FDNS	00NR	0	16WP	G15_095	FROM->TO	G14-057T 345.00 - SUNNYSIDE 345KV CKT 1	717	789	0.0365	116.2527	WAVERLY7 345.00 - WOLF CREEK 345KV CKT 1
FDNS	00NR	0	16WP	G15_095	FROM->TO	G14-057T 345.00 - SUNNYSIDE 345KV CKT 1	717	789	0.03615	116.2503	GEN520947 1-HUGO1
FDNS	00NR	0	16WP	G15_095	FROM->TO	G14-057T 345.00 - SUNNYSIDE 345KV CKT 1	717	789	0.0373	116.2417	DUNCAN - OMPA-DUNCAN 840 138KV CKT 1
FDNS	00NR	0	16WP	G15_095	FROM->TO	G14-057T 345.00 - SUNNYSIDE 345KV CKT 1	717	789	0.0373	116.2417	DUNCAN - OMPA-DUNCAN 840 138KV CKT 1
FDNS	00NR	0	20WP	G15_095	FROM->TO	G14-057T 345.00 - SUNNYSIDE 345KV CKT 1	717	789	0.0326	116.2407	BORDER 7345.00 - WOODWARD DISTRICT EHV 345KV CKT 1
FDNSLock	00NR	0	16WP	G15_095	FROM->TO	G14-057T 345.00 - SUNNYSIDE 345KV CKT 1	717	789	0.03802	116.2034	G11_051T 345.00 - TATONGA7 345.00 345KV CKT 1
FDNS	00NR	0	16WP	G15_095	FROM->TO	G14-057T 345.00 - SUNNYSIDE 345KV CKT 1	717	789	0.03538	116.1742	RINGLING - SOUTH WILSON 138KV CKT 1
FDNS	00NR	0	16WP	G15_095	FROM->TO	G14-057T 345.00 - SUNNYSIDE 345KV CKT 1	717	789	0.03615	116.1685	GEN335206 1-NELSON UNIT 6
FDNS	00NR	0	16WP	G15_095	FROM->TO	G14-057T 345.00 - SUNNYSIDE 345KV CKT 1	717	789	0.0368	116.0651	FINNEY SWITCHING STATION - Hitchland Interchange 345KV CKT 1
FDNS	00NR	0	16WP	G15_095	FROM->TO	G14-057T 345.00 - SUNNYSIDE 345KV CKT 1	717	789	0.03615	116.0517	DOLET HILLS 345/24.0KV TRANSFORMER CKT 1
FDNS	00NR	0	16WP	G15_095	FROM->TO	G14-057T 345.00 - SUNNYSIDE 345KV CKT 1	717	789	0.03615	116.0067	P12:138:AEPW:SHERID4:112GORE4
FDNS	00NR	0	16WP	G15_095	FROM->TO	G14-057T 345.00 - SUNNYSIDE 345KV CKT 1	717	789	0.0377	115.998	PARK LANE - SEMINOLE 138KV CKT 1
FDNSLock	00NR	0	16WP	G15_095	FROM->TO	G14-057T 345.00 - SUNNYSIDE 345KV CKT 1	717	789	0.03615	115.9851	GEN590011 2-ERCOT EQUIVALENCE
FDNS	00NR	0	16WP	G15_095	FROM->TO	G14-057T 345.00 - SUNNYSIDE 345KV CKT 1	717	789	0.03615	115.9826	GEN501812 1-RODEMACHER UNIT 2
FDNS	00NR	0	16WP	G15_095	FROM->TO	G14-057T 345.00 - SUNNYSIDE 345KV CKT 1	717	789	0.03699	115.9522	THISTLE7 345.00 - WOODWARD DISTRICT EHV 345KV CKT 1

SOLUTION	GROUP	SCENARIO	SEASON	SOURCE	DIRECTION	MONITORED ELEMENT	RATEA (MVA)	RATEB(MVA)	TDF	TC%LOADING (% MVA)	CONTINGENCY
FDNS	00NR	0	16WP	G15_095	FROM->TO	G14-057T 345.00 - SUNNYSIDE 345KV CKT 1	717	789	0.03699	115.9522	THISTLE7 345.00 - WOODWARD DISTRICT EHV 345KV CKT 1
FDNS	00NR	0	16WP	G15_095	FROM->TO	G14-057T 345.00 - SUNNYSIDE 345KV CKT 1	717	789	0.03699	115.9522	THISTLE7 345.00 - WOODWARD DISTRICT EHV 345KV CKT 2
FDNS	00NR	0	16WP	G15_095	FROM->TO	G14-057T 345.00 - SUNNYSIDE 345KV CKT 1	717	789	0.03699	115.9522	THISTLE7 345.00 - WOODWARD DISTRICT EHV 345KV CKT 2
FDNS	00NR	0	20WP	G15_095	FROM->TO	G14-057T 345.00 - SUNNYSIDE 345KV CKT 1	717	789	0.03594	115.9478	GEN509406 1-WELSH #3
FDNS	00NR	0	20WP	G15_095	FROM->TO	G14-057T 345.00 - SUNNYSIDE 345KV CKT 1	717	789	0.03594	115.9475	GEN509404 1-WELSH #1
FDNS	00NR	0	16WP	G15_095	FROM->TO	G14-057T 345.00 - SUNNYSIDE 345KV CKT 1	717	789	0.03686	115.9348	CANEYRV7 345.00 - NEOSHO 345KV CKT 1
FDNS	00NR	0	16WP	G15_095	FROM->TO	G14-057T 345.00 - SUNNYSIDE 345KV CKT 1	717	789	0.03615	115.9221	GEN515564 1-ORIGIN11 0.6900
FDNS	00NR	0	16WP	G15_095	FROM->TO	G14-057T 345.00 - SUNNYSIDE 345KV CKT 1	717	789	0.03615	115.9221	GEN515565 1-ORIGIN21 0.6900
FDNSLock	00NR	0	16WP	G15_095	FROM->TO	G14-057T 345.00 - SUNNYSIDE 345KV CKT 1	717	789	0.03615	115.9096	GEN590010 1-ERCOT EQUIVALENCE
FDNS	00NR	0	16WP	G15_095	FROM->TO	G14-057T 345.00 - SUNNYSIDE 345KV CKT 1	717	789	0.03538	115.8986	MARIETTA - SOUTH WILSON 138KV CKT 1
FDNS	00NR	0	16WP	G15_095	FROM->TO	G14-057T 345.00 - SUNNYSIDE 345KV CKT 1	717	789	0.03615	115.8352	GEN509408 1-WILKES #2
FDNS	00NR	0	16WP	G15_095	FROM->TO	G14-057T 345.00 - SUNNYSIDE 345KV CKT 1	717	789	0.03538	115.8012	P12:138:WFEC:MSL17
FDNS	00NR	0	16WP	G15_095	FROM->TO	G14-057T 345.00 - SUNNYSIDE 345KV CKT 1	717	789	0.03686	115.7954	CANEYRV7 345.00 - LATHAMS7 345.00 345KV CKT 1
FDNS	00NR	0	16WP	G15_095	FROM->TO	G14-057T 345.00 - SUNNYSIDE 345KV CKT 1	717	789	0.03471	115.7632	P12:138:WFEC:MSL02
FDNS	00NR	0	16WP	G15_095	FROM->TO	G14-057T 345.00 - SUNNYSIDE 345KV CKT 1	717	789	0.03615	115.7471	P12:161:AEPW:DYESS 5:HYLAND 5
FDNS	00NR	0	16WP	G15_095	FROM->TO	G14-057T 345.00 - SUNNYSIDE 345KV CKT 1	717	789	0.03615	115.7452	GEN506754 1-LEBROCK STEAM 1
FDNS	00NR	0	16WP	G15_095	FROM->TO	G14-057T 345.00 - SUNNYSIDE 345KV CKT 1	717	789	0.03615	115.7417	P12:69:AEPW:L.E.S.-2:LAW WC2
FDNS	00NR	0	16WP	G15_095	FROM->TO	G14-057T 345.00 - SUNNYSIDE 345KV CKT 1	717	789	0.03625	115.7311	REDBUD - RIVERSIDE STATION 345KV CKT 1
FDNS	00NR	0	16WP	G15_095	FROM->TO	G14-057T 345.00 - SUNNYSIDE 345KV CKT 1	717	789	0.03625	115.7311	REDBUD - RIVERSIDE STATION 345KV CKT 1
FDNS	00NR	0	16WP	G15_095	FROM->TO	G14-057T 345.00 - SUNNYSIDE 345KV CKT 1	717	789	0.03647	115.7085	ELDORADO EHV - MOUNT OLIVE 500KV CKT 1
FDNS	00NR	0	16WP	G15_095	FROM->TO	G14-057T 345.00 - SUNNYSIDE 345KV CKT 1	717	789	0.03615	115.6998	GEN334440 1-SABINE UNIT 4
FDNS	00NR	0	16WP	G15_095	FROM->TO	G14-057T 345.00 - SUNNYSIDE 345KV CKT 1	717	789	0.03611	115.6769	CIVIT - PAOLI 138KV CKT 1
FDNS	00NR	0	16WP	G15_095	FROM->TO	G14-057T 345.00 - SUNNYSIDE 345KV CKT 1	717	789	0.03514	115.675	ANADARKO - GEORGIA 138KV CKT 1
FDNS	00NR	0	16WP	G15_095	FROM->TO	G14-057T 345.00 - SUNNYSIDE 345KV CKT 1	717	789	0.03681	115.6471	MATHWSN7 345.00 - NORTHWEST 345KV CKT 1
FDNS	00NR	0	16WP	G15_095	FROM->TO	G14-057T 345.00 - SUNNYSIDE 345KV CKT 1	717	789	0.03615	115.6371	P12:138:AEPW:112GORE4:L.E.S.-4
FDNS	00NR	0	16WP	G15_095	FROM->TO	G14-057T 345.00 - SUNNYSIDE 345KV CKT 1	717	789	0.03671	115.6268	ELDORADO EHV - SHERIDAN EHV 500KV CKT 1
FDNS	00NR	0	16WP	G15_095	FROM->TO	G14-057T 345.00 - SUNNYSIDE 345KV CKT 1	717	789	0.03441	115.6192	P12:138:AEPW-OGE:CORNVIL4:MAUD 4
FDNS	00NR	0	16WP	G15_095	FROM->TO	G14-057T 345.00 - SUNNYSIDE 345KV CKT 1	717	789	0.03615	115.6004	NEW MADRID 161/22.0KV TRANSFORMER CKT 1
FDNS	00NR	0	16WP	G15_095	FROM->TO	G14-057T 345.00 - SUNNYSIDE 345KV CKT 1	717	789	0.03658	115.5963	WEBRE - WELLS 500KV CKT 1
FDNS	00NR	0	16WP	G15_095	FROM->TO	G14-057T 345.00 - SUNNYSIDE 345KV CKT 1	717	789	0.03668	115.5952	PAOLI - PAYNE 138.00 138KV CKT 1
FDNS	00NR	0	16WP	G15_095	FROM->TO	G14-057T 345.00 - SUNNYSIDE 345KV CKT 1	717	789	0.03615	115.5952	GEN503909 1-FULTONU1 1 16.000
FDNS	00NR	0	16WP	G15_095	FROM->TO	G14-057T 345.00 - SUNNYSIDE 345KV CKT 1	717	789	0.03615	115.5865	NEW MADRID 345/22.0KV TRANSFORMER CKT 1
FDNS	00NR	0	16WP	G15_095	FROM->TO	G14-057T 345.00 - SUNNYSIDE 345KV CKT 1	717	789	0.03514	115.5859	FLETCHER - GEORGIA 138KV CKT 1
FDNS	00NR	0	16WP	G15_095	FROM->TO	G14-057T 345.00 - SUNNYSIDE 345KV CKT 1	717	789	0.03686	115.5778	LATHAMS7 345.00 - ROSE HILL 345KV CKT 1
FDNS	00NR	0	16WP	G15_095	FROM->TO	G14-057T 345.00 - SUNNYSIDE 345KV CKT 1	717	789	0.03841	115.5671	LAWTON EASTSIDE (LES 5) 345/138/13.8KV TRANSFORMER CKT 2
FDNS	00NR	0	16WP	G15_095	FROM->TO	G14-057T 345.00 - SUNNYSIDE 345KV CKT 1	717	789	0.03841	115.5671	LAWTON EASTSIDE (LES 5) 345/138/13.8KV TRANSFORMER CKT 2
FDNS	00NR	0	16WP	G15_095	FROM->TO	G14-057T 345.00 - SUNNYSIDE 345KV CKT 1	717	789	0.03615	115.5633	FRONTIER - GRIMES 345KV CKT 1
FDNS	00NR	0	16WP	G15_095	FROM->TO	G14-057T 345.00 - SUNNYSIDE 345KV CKT 1	717	789	0.03484	115.5527	EMPIRE - FLETCHER 138KV CKT 1
FDNS	00NR	0	16WP	G15_095	FROM->TO	G14-057T 345.00 - SUNNYSIDE 345KV CKT 1	717	789	0.03441	115.5491	BLANCHARD - CORNVILLE 138KV CKT 1
FDNS	00NR	0	16WP	G15_095	FROM->TO	G14-057T 345.00 - SUNNYSIDE 345KV CKT 1	717	789	0.03611	115.5364	CIVIT - STRATFORD 138KV CKT 1
FDNS	00NR	0	16WP	G15_095	FROM->TO	G14-057T 345.00 - SUNNYSIDE 345KV CKT 1	717	789	0.03747	115.5229	TUPELO - TUPELO TAP 138KV CKT 1
FDNS	00NR	0	16WP	G15_095	FROM->TO	G14-057T 345.00 - SUNNYSIDE 345KV CKT 1	717	789	0.03484	115.4711	COMANCHE - EMPIRE 138KV CKT 1
FDNS	00NR	0	16WP	G15_095	FROM->TO	G14-057T 345.00 - SUNNYSIDE 345KV CKT 1	717	789	0.03641	115.4691	G1524G1525 345.00 - THISTLE7 345.00 345KV CKT 1
FDNS	00NR	0	16WP	G15_095	FROM->TO	G14-057T 345.00 - SUNNYSIDE 345KV CKT 1	717	789	0.03641	115.4691	G1524G1525 345.00 - THISTLE7 345.00 345KV CKT 2
FDNS	00NR	0	16WP	G15_095	FROM->TO	G14-057T 345.00 - SUNNYSIDE 345KV CKT 1	717	789	0.03615	115.4679	GEN509393 S1-ARSENAL HILL GENS #4 (STALL)
FDNS	00NR	0	16WP	G15_095	FROM->TO	G14-057T 345.00 - SUNNYSIDE 345KV CKT 1	717	789	0.03615	115.4437	GEN509392 G2-ARSENAL HILL GENS #3 (STALL)
FDNS	00NR	0	16WP	G15_095	FROM->TO	G14-057T 345.00 - SUNNYSIDE 345KV CKT 1	717	789	0.03615	115.4436	GEN509391 G1-ARSENAL HILL GENS #2 (STALL)
FDNS	00NR	0	16WP	G15_095	FROM->TO	G14-057T 345.00 - SUNNYSIDE 345KV CKT 1	717	789	0.03615	115.429	GEN336252 1-NINEMILE POINT UNIT#5
FDNS	00NR	0	16WP	G15_095	FROM->TO	G14-057T 345.00 - SUNNYSIDE 345KV CKT 1	717	789	0.03611	115.419	OIL CENTER - STRATFORD 138KV CKT 1
FDNS	00NR	0	16WP	G15_095	FROM->TO	G14-057T 345.00 - SUNNYSIDE 345KV CKT 1	717	789	0.03615	115.4027	DELL 500 - ESSEX UNIT 2 500KV CKT Z1
FDNS	00NR	0	16WP	G15_095	FROM->TO	G14-057T 345.00 - SUNNYSIDE 345KV CKT 1	717	789	0.03615	115.3907	GEN334071 1-LEWIS CREEK 2
FDNS	00NR	0	16WP	G15_095	FROM->TO	G14-057T 345.00 - SUNNYSIDE 345KV CKT 1	717	789	0.03615	115.3817	GEN334070 1-LEWIS CREEK 1
FDNS	00NR	0	16WP	G15_095	FROM->TO	G14-057T 345.00 - SUNNYSIDE 345KV CKT 1	717	789	0.03615	115.3782	GEN335204 1-NELSON UNIT 4
FDNS	00NR	0	20WP	G15_095	FROM->TO	G14-057T 345.00 - SUNNYSIDE 345KV CKT 1	717	789	0.03784	115.3748	7SAREPTA% 345.00 - LONGWOOD 345KV CKT 1
FDNS	00NR	0	20WP	G15_095	FROM->TO	G14-057T 345.00 - SUNNYSIDE 345KV CKT 1	717	789	0.03784	115.3748	7SAREPTA% 345.00 - LONGWOOD 345KV CKT 1
FDNS	00NR	0	20WP	G15_095	FROM->TO	G14-057T 345.00 - SUNNYSIDE 345KV CKT 1	717	789	0.03369	115.3669	CORN TAP - NAPLESTP 138.00 138KV CKT 1
FDNS	00NR	0	16WP	G15_095	FROM->TO	G14-057T 345.00 - SUNNYSIDE 345KV CKT 1	717	789	0.03665	115.3542	DUNCAN (DUNCAN) 138/69/13.8KV TRANSFORMER CKT 1
FDNS	00NR	0	16WP	G15_095	FROM->TO	G14-057T 345.00 - SUNNYSIDE 345KV CKT 1	717	789	0.03665	115.3542	DUNCAN (DUNCAN) 138/69/13.8KV TRANSFORMER CKT 1
FDNS	00NR	0	16WP	G15_095	FROM->TO	G14-057T 345.00 - SUNNYSIDE 345KV CKT 1	717	789	0.03441	115.3522	BLANCHARD - MAUD 138KV CKT 1
FDNS	00NR	0	16WP	G15_095	FROM->TO	G14-057T 345.00 - SUNNYSIDE 345KV CKT 1	717	789	0.03615	115.3434	GEN334441 1-SABINE UNIT 5
FDNS	00NR	0	16WP	G15_095	FROM->TO	G14-057T 345.00 - SUNNYSIDE 345KV CKT 1	717	789	0.03615	115.3149	GEN337653 1-WHITE BLUFF UNIT #2
FDNS	00NR	0	20WP	G15_095	FROM->TO	G14-057T 345.00 - SUNNYSIDE 345KV CKT 1	717	789	0.0326	115.3146	BORDER 7345.00 - TUCO_2 345.00 345KV CKT 1
FDNS	00NR	0	16WP	G15_095	FROM->TO	G14-057T 345.00 - SUNNYSIDE 345KV CKT 1	717	789	0.03617	115.3081	P12:138:AEPW:CATOOSA4:T.S.E.-4
FDNS	00NR	0	16WP	G15_095	FROM->TO	G14-057T 345.00 - SUNNYSIDE 345KV CKT 1	717	789	0.03615	115.3065	P12:161:AEPW-SWPA:BEAVER5:EROGERS5
FDNS	00NR	0	16WP	G15_095	FROM->TO	G14-057T 345.00 - SUNNYSIDE 345KV CKT 1	717	789	0.03615	115.3	GEN300003 1-THOMAS HILL UNIT 3
FDNS	00NR	0	16WP	G15_095	FROM->TO	G14-057T 345.00 - SUNNYSIDE 345KV CKT 1	717	789	0.03672	115.2966	6LAYFLD 230.00 - CARROLL 230KV CKT 1
FDNS	00NR	0	16WP	G15_095	FROM->TO	G14-057T 345.00 - SUNNYSIDE 345KV CKT 1	717	789	0.03615	115.2935	GEN506752 1-LEBROCK GAS 1
FDNS	00NR	0	16WP	G15_095	FROM->TO	G14-057T 345.00 - SUNNYSIDE 345KV CKT 1	717	789	0.03615	115.2933	GEN506753 1-LEBROCK GAS 2
FDNS	00NR	0	16WP	G15_095	FROM->TO	G14-057T 345.00 - SUNNYSIDE 345KV CKT 1	717	789	0.03615	115.2879	GEN334030 1-FRONTIER UNIT 1
FDNS	00NR	0	16WP	G15_095	FROM->TO	G14-057T 345.00 - SUNNYSIDE 345KV CKT 1	717	789	0.03288	115.2871	TUTTLE - TUTTLE CONOCO TAP 138KV CKT 1
FDNS	00NR	0	16WP	G15_095	FROM->TO	G14-057T 345.00 - SUNNYSIDE 345KV CKT 1	717	789	0.03615	115.2864	GEN334031 1-FRONTIER UNIT 2
FDNS	00NR	0	20WP	G15_095	FROM->TO	G14-057T 345.00 - SUNNYSIDE 345KV CKT 1	717	789	0.03369	115.2754	NAPLESTP 138.00 - PAYNE 138.00 138KV CKT 1
FDNS	00NR	0	16WP	G15_095	FROM->TO	G14-057T 345.00 - SUNNYSIDE 345KV CKT 1	717	789	0.03249	115.2707	BAILEY4 138.00 - SUNSHINE CANYON 138KV CKT 1
FDNS	00NR	0	16WP	G15_095	FROM->TO	G14-057T 345.00 - SUNNYSIDE 345KV CKT 1	717	789	0.03615	115.2699	GEN515040 1-SEMINOLE 1G
FDNS	00NR	0	16WP	G15_095	FROM->TO	G14-057T 345.00 - SUNNYSIDE 345KV CKT 1	717	789	0.03692	115.2642	FULTON 115 - HOPE 115KV CKT 1
FDNS	00NR	0	16WP	G15_095	FROM->TO	G14-057T 345.00 - SUNNYSIDE 345KV CKT 1	717	789	0.03692	115.2642	FULTON 115 - HOPE 115KV CKT 1
FDNS	00NR	0	16WP	G15_095	FROM->TO	G14-057T 345.00 - SUNNYSIDE 345KV CKT 1	717	789	0.03622	115.249	8DANIEL8 500.00 - MCKNIGHT 500KV CKT 1
FDNS	00NR	0	16WP	G15_095	FROM->TO	G14-057T 345.00 - SUNNYSIDE 345KV CKT 1	717	789	0.03611	115.2478	LATTA JCT - OIL CENTER 138KV CKT 1
FDNS	00NR	0	16WP	G15_095	FROM->TO	G14-057T 345.00 - SUNNYSIDE 345KV CKT 1	717	789	0.03615	115.2473	GEN515226 1-MUSKOGEE 6G

SOLUTION	GROUP	SCENARIO	SEASON	SOURCE	DIRECTION	MONITORED ELEMENT	RATEA (MVA)	RATEB(MVA)	TDF	TC%LOADING (% MVA)	CONTINGENCY
FDNS	00NR	0	16WP	G15_095	FROM->TO	G14-057T 345.00 - SUNNYSIDE 345KV CKT 1	717	789	0.03558	115.2426	P12:138:AEPW-OGE:WTH_JCT4:JENSEN4
FDNS	00NR	0	16WP	G15_095	FROM->TO	G14-057T 345.00 - SUNNYSIDE 345KV CKT 1	717	789	0.03615	115.2333	GEN300015 1-1SGPDEL 18.000
FDNSLock	00NR	0	16WP	G15_095	FROM->TO	G14-057T 345.00 - SUNNYSIDE 345KV CKT 1	717	789	0.03615	115.2307	GEN337911 1-ARKANSAS NUCLEAR ONE UNIT #2
FDNS	00NR	0	16WP	G15_095	FROM->TO	G14-057T 345.00 - SUNNYSIDE 345KV CKT 1	717	789	0.03615	115.2299	P12:161:AEPW:DYESS5:ELMSPRNG:TONTITN5
FDNS	00NR	0	16WP	G15_095	FROM->TO	G14-057T 345.00 - SUNNYSIDE 345KV CKT 1	717	789	0.03615	115.2278	GEN337652 1-WHITE BLUFF UNIT #1
FDNS	00NR	0	16WP	G15_095	FROM->TO	G14-057T 345.00 - SUNNYSIDE 345KV CKT 1	717	789	0.03615	115.2235	GEN336251 1-NINEMILE POINT UNIT#4
FDNS	00NR	0	16WP	G15_095	FROM->TO	G14-057T 345.00 - SUNNYSIDE 345KV CKT 1	717	789	0.03549	115.2215	P12:138:AEPW:CORNVIL4:S.W.S.-4
FDNS	00NR	0	16WP	G15_095	FROM->TO	G14-057T 345.00 - SUNNYSIDE 345KV CKT 1	717	789	0.03615	115.2199	GEN501811 1-RODEMACHER UNIT 1
FDNS	00NR	0	16WP	G15_095	FROM->TO	G14-057T 345.00 - SUNNYSIDE 345KV CKT 1	717	789	0.03615	115.2185	GEN336831 1-BAXTER WILSON SES
FDNS	00NR	0	16WP	G15_095	FROM->TO	G14-057T 345.00 - SUNNYSIDE 345KV CKT 1	717	789	0.03648	115.2077	P12:138:AEPW:CORNVIL4:DUNCAN-4
FDNS	00NR	0	16WP	G15_095	FROM->TO	G14-057T 345.00 - SUNNYSIDE 345KV CKT 1	717	789	0.0363	115.2071	G15074_T 345.00 - HOYT 345KV CKT 1
FDNS	00NR	0	16WP	G15_095	FROM->TO	G14-057T 345.00 - SUNNYSIDE 345KV CKT 1	717	789	0.03288	115.206	CIMARRON - TUTTLE CONOCO TAP 138KV CKT 1
FDNS	00NR	0	20WP	G15_095	FROM->TO	G14-057T 345.00 - SUNNYSIDE 345KV CKT 1	717	789	0.03594	115.2011	GEN336821 1-GRAND GULF UNIT
FDNS	00NR	0	16WP	G15_095	FROM->TO	G14-057T 345.00 - SUNNYSIDE 345KV CKT 1	717	789	0.03623	115.2	G15088_T 345.00 - MOORE 345KV CKT 1
FDNS	00NR	0	16WP	G15_095	FROM->TO	G14-057T 345.00 - SUNNYSIDE 345KV CKT 1	717	789	0.03615	115.1975	GEN334433 1-SABINE UNIT 3
FDNS	00NR	0	16WP	G15_095	FROM->TO	G14-057T 345.00 - SUNNYSIDE 345KV CKT 1	717	789	0.03665	115.1706	P12:69:WFEC-AEPW:COMANCH2:DUNCAN-2
FDNS	00NR	0	16WP	G15_095	FROM->TO	G14-057T 345.00 - SUNNYSIDE 345KV CKT 1	717	789	0.03612	115.1663	BUCKNER7 345.00 - SPEARVILLE 345KV CKT 1
FDNS	00NR	0	16WP	G15_095	FROM->TO	G14-057T 345.00 - SUNNYSIDE 345KV CKT 1	717	789	0.03612	115.1663	BUCKNER7 345.00 - SPEARVILLE 345KV CKT 1
FDNS	00NR	0	16WP	G15_095	FROM->TO	G14-057T 345.00 - SUNNYSIDE 345KV CKT 1	717	789	0.03615	115.164	GEN562783 1-G15036_4 0.6900
FDNS	00NR	0	16WP	G15_095	FROM->TO	G14-057T 345.00 - SUNNYSIDE 345KV CKT 1	717	789	0.03615	115.164	GEN562784 1-G15036_5 0.6900
FDNSLock	00NR	0	16WP	G15_095	FROM->TO	G14-057T 345.00 - SUNNYSIDE 345KV CKT 1	717	789	0.03615	115.1601	GEN505432 1-SIKESTON
FDNS	00NR	0	16WP	G15_095	FROM->TO	G14-057T 345.00 - SUNNYSIDE 345KV CKT 1	717	789	0.03623	115.158	CIMARRON - CZECH HALL 138KV CKT 1
FDNS	00NR	0	16WP	G15_095	FROM->TO	G14-057T 345.00 - SUNNYSIDE 345KV CKT 1	717	789	0.03615	115.1483	GEN515223 1-MUSKOGEE 4G
FDNS	00NR	0	16WP	G15_095	FROM->TO	G14-057T 345.00 - SUNNYSIDE 345KV CKT 1	717	789	0.03615	115.1483	GEN515225 1-MUSKOGEE 5G
FDNS	00NR	0	16WP	G15_095	FROM->TO	G14-057T 345.00 - SUNNYSIDE 345KV CKT 1	717	789	0.03577	115.1473	P12:138:AEPW:WTHWF4:CLINTJC4
FDNS	00NR	0	16WP	G15_095	FROM->TO	G14-057T 345.00 - SUNNYSIDE 345KV CKT 1	717	789	0.03654	115.1258	CIMARRON - SARA 138KV CKT 1
FDNS	00NR	0	16WP	G15_095	FROM->TO	G14-057T 345.00 - SUNNYSIDE 345KV CKT 1	717	789	0.03615	115.1244	P12:161:AEPW:EROGERS5:ECNTRTN5
FDNS	00NR	0	16WP	G15_095	FROM->TO	G14-057T 345.00 - SUNNYSIDE 345KV CKT 1	717	789	0.03642	115.1205	LAYFLD8 500.00 - MOUNT OLIVE 500KV CKT 1
FDNS	00NR	0	16WP	G15_095	FROM->TO	G14-057T 345.00 - SUNNYSIDE 345KV CKT 1	717	789	0.03642	115.1205	LAYFLD8 500.00 - MOUNT OLIVE 500KV CKT 1
FDNS	00NR	0	16WP	G15_095	FROM->TO	G14-057T 345.00 - SUNNYSIDE 345KV CKT 1	717	789	0.03665	115.1191	DUNCAN - TOSCO 69KV CKT 1
FDNS	00NR	0	16WP	G15_095	FROM->TO	G14-057T 345.00 - SUNNYSIDE 345KV CKT 1	717	789	0.03615	115.1185	RODEMACHER 230/22.0KV TRANSFORMER CKT 1
FDNS	00NR	0	16WP	G15_095	FROM->TO	G14-057T 345.00 - SUNNYSIDE 345KV CKT 1	717	789	0.03615	115.118	WHITE BLUFF 500/26.0KV TRANSFORMER CKT 1
FDNS	00NR	0	16WP	G15_095	FROM->TO	G14-057T 345.00 - SUNNYSIDE 345KV CKT 1	717	789	0.03577	115.1125	P12:138:AEPW:WTHWF4:WTH_SE4
FDNS	00NR	0	16WP	G15_095	FROM->TO	G14-057T 345.00 - SUNNYSIDE 345KV CKT 1	717	789	0.03643	115.1104	MC NIEL 500/115KV TRANSFORMER CKT 1
FDNS	00NR	0	16WP	G15_095	FROM->TO	G14-057T 345.00 - SUNNYSIDE 345KV CKT 1	717	789	0.04196	115.1076	CANADIAN RIVER - PITTSBURG 345KV CKT 1
FDNS	00NR	0	16WP	G15_095	FROM->TO	G14-057T 345.00 - SUNNYSIDE 345KV CKT 1	717	789	0.04196	115.1076	CANADIAN RIVER - PITTSBURG 345KV CKT 1
FDNS	00NR	0	20WP	G15_095	FROM->TO	G14-057T 345.00 - SUNNYSIDE 345KV CKT 1	717	789	0.03122	115.1068	ANADARKO - POCASSETT 138KV CKT 1
FDNS	00NR	0	16WP	G15_095	FROM->TO	G14-057T 345.00 - SUNNYSIDE 345KV CKT 1	717	789	0.03674	115.1055	BISMARK - HOT SPRINGS WEST BUS 115KV CKT 1
FDNS	00NR	0	16WP	G15_095	FROM->TO	G14-057T 345.00 - SUNNYSIDE 345KV CKT 1	717	789	0.03615	115.1045	GEN303007 1-1BC2 U2
FDNS	00NR	0	16WP	G15_095	FROM->TO	G14-057T 345.00 - SUNNYSIDE 345KV CKT 1	717	789	0.03249	115.1009	BAILEY4 138.00 - WESTMOORE 138KV CKT 1
FDNS	00NR	0	16WP	G15_095	FROM->TO	G14-057T 345.00 - SUNNYSIDE 345KV CKT 1	717	789	0.03638	115.1003	HOT SPRINGS EHV - MAGNET COVE 500KV CKT 1
FDNS	00NR	0	16WP	G15_095	FROM->TO	G14-057T 345.00 - SUNNYSIDE 345KV CKT 1	717	789	0.03615	115.0992	GEN303006 1-1BC2 U1
FDNS	00NR	0	16WP	G15_095	FROM->TO	G14-057T 345.00 - SUNNYSIDE 345KV CKT 1	717	789	0.03843	115.0967	CLEO CORNER - CLEOPLT4 138.00 138KV CKT 1
FDNS	00NR	0	16WP	G15_095	FROM->TO	G14-057T 345.00 - SUNNYSIDE 345KV CKT 1	717	789	0.03696	115.0929	ARBWIND4 138.00 - CARTER 138KV CKT 1
FDNS	00NR	0	16WP	G15_095	FROM->TO	G14-057T 345.00 - SUNNYSIDE 345KV CKT 1	717	789	0.04491	115.0928	G15095_T 138.00 - ROSE_VALLEY 138.00 138KV CKT 1
FDNS	00NR	0	16WP	G15_095	FROM->TO	G14-057T 345.00 - SUNNYSIDE 345KV CKT 1	717	789	0.03659	115.0921	P12:69:AEPW-OMPA:COMANC-2:OMWALTR2
FDNS	00NR	0	20WP	G15_095	FROM->TO	G14-057T 345.00 - SUNNYSIDE 345KV CKT 1	717	789	0.03594	115.0919	GEN336153 1-WATERFORD UNIT#3
FDNS	00NR	0	16WP	G15_095	FROM->TO	G14-057T 345.00 - SUNNYSIDE 345KV CKT 1	717	789	0.03615	115.0853	GEN337910 1-ARKANSAS NUCLEAR ONE UNIT #1
FDNS	00NR	0	16WP	G15_095	FROM->TO	G14-057T 345.00 - SUNNYSIDE 345KV CKT 1	717	789	0.03714	115.0838	SEMINOLE - VANOSTP4 138.00 138KV CKT 1
FDNS	00NR	0	16WP	G15_095	FROM->TO	G14-057T 345.00 - SUNNYSIDE 345KV CKT 1	717	789	0.03843	115.0828	CLEOPLT4 138.00 - MEN TAP 138KV CKT 1
FDNS	00NR	0	16WP	G15_095	FROM->TO	G14-057T 345.00 - SUNNYSIDE 345KV CKT 1	717	789	0.03615	115.0797	GEN300010 1-ST FRANCIS UNIT 1
FDNS	00NR	0	16WP	G15_095	FROM->TO	G14-057T 345.00 - SUNNYSIDE 345KV CKT 1	717	789	0.03615	115.0766	GEN336191 1-LITTLE GYPSY UNIT#3
FDNS	00NR	0	16WP	G15_095	FROM->TO	G14-057T 345.00 - SUNNYSIDE 345KV CKT 1	717	789	0.03843	115.0709	IMO TAP - MEN TAP 138KV CKT 1
FDNS	00NR	0	16WP	G15_095	FROM->TO	G14-057T 345.00 - SUNNYSIDE 345KV CKT 1	717	789	0.03623	115.0701	CZECH HALL - XEROX 138KV CKT 1
FDNS	00NR	0	16WP	G15_095	FROM->TO	G14-057T 345.00 - SUNNYSIDE 345KV CKT 1	717	789	0.03623	115.0657	MORGAN - XEROX 138KV CKT 1
FDNS	00NR	0	16WP	G15_095	FROM->TO	G14-057T 345.00 - SUNNYSIDE 345KV CKT 1	717	789	0.03616	115.057	P12:138:AEPW:N.E.S.-4:CATOOSA4
FDNS	00NR	0	16WP	G15_095	FROM->TO	G14-057T 345.00 - SUNNYSIDE 345KV CKT 1	717	789	0.03615	115.0559	NELSON 230/20.0KV TRANSFORMER CKT 1
FDNS	00NR	0	16WP	G15_095	FROM->TO	G14-057T 345.00 - SUNNYSIDE 345KV CKT 1	717	789	0.03674	115.0529	ALPINE AECC - BISMARK 115KV CKT 1
FDNS	00NR	0	16WP	G15_095	FROM->TO	G14-057T 345.00 - SUNNYSIDE 345KV CKT 1	717	789	0.03615	115.0513	GEN335614 1-WILLOW GLENN UNIT#4
FDNS	00NR	0	16WP	G15_095	FROM->TO	G14-057T 345.00 - SUNNYSIDE 345KV CKT 1	717	789	0.03665	115.0494	COMANCHE TAP - TOSCO 69KV CKT 1
FDNS	00NR	0	16WP	G15_095	FROM->TO	G14-057T 345.00 - SUNNYSIDE 345KV CKT 1	717	789	0.03623	115.0419	MORGAN - MUSTANG 138KV CKT 1
FDNS	00NR	0	16WP	G15_095	FROM->TO	G14-057T 345.00 - SUNNYSIDE 345KV CKT 1	717	789	0.03671	115.0417	BENTON - WICHITA 345KV CKT 1
FDNS	00NR	0	16WP	G15_095	FROM->TO	G14-057T 345.00 - SUNNYSIDE 345KV CKT 1	717	789	0.03615	115.0396	GEN303008 1-1BC2 U3
FDNS	00NR	0	16WP	G15_095	FROM->TO	G14-057T 345.00 - SUNNYSIDE 345KV CKT 1	717	789	0.03615	115.03	GEN300011 1-ST FRANCIS UNIT 2
FDNS	00NR	0	16WP	G15_095	FROM->TO	G14-057T 345.00 - SUNNYSIDE 345KV CKT 1	717	789	0.04491	115.0247	NOEL_SW 138.00 - ROSE_VALLEY 138.00 138KV CKT 1
FDNS	00NR	0	16WP	G15_095	FROM->TO	G14-057T 345.00 - SUNNYSIDE 345KV CKT 1	717	789	0.03615	115.0126	GEN336170 1-GULF OXY U4
FDNS	00NR	0	16WP	G15_095	FROM->TO	G14-057T 345.00 - SUNNYSIDE 345KV CKT 1	717	789	0.0355	115.0103	WEATHERFORD JCT. - WEATHERFORD SOUTHEAST 138KV CKT 1
FDNS	00NR	0	16WP	G15_095	FROM->TO	G14-057T 345.00 - SUNNYSIDE 345KV CKT 1	717	789	0.0355	115.0103	WEATHERFORD JCT. - WEATHERFORD SOUTHEAST 138KV CKT 1
FDNS	00NR	0	16WP	G15_095	FROM->TO	G14-057T 345.00 - SUNNYSIDE 345KV CKT 1	717	789	0.03622	115.0093	CYPRESS - HARTBURG 500KV CKT 1
FDNS	00NR	0	16WP	G15_095	FROM->TO	G14-057T 345.00 - SUNNYSIDE 345KV CKT 1	717	789	0.03674	115.0092	ALPINE AECC - AMITY SS 115KV CKT 1
FDNS	00NR	0	16WP	G15_095	FROM->TO	G14-057T 345.00 - SUNNYSIDE 345KV CKT 1	717	789	0.03615	115.0076	GEN336464 1-MICHOUD UNIT #3
FDNS	00NR	0	20WP	G15_095	FROM->TO	G14-057T 345.00 - SUNNYSIDE 345KV CKT 1	717	789	0.03739	115.0036	CLEVELAND - TULSA NORTH 345KV CKT 1
FDNS	00NR	0	20WP	G15_095	FROM->TO	G14-057T 345.00 - SUNNYSIDE 345KV CKT 1	717	789	0.03739	115.0036	CLEVELAND - TULSA NORTH 345KV CKT 1
FDNS	00NR	0	16WP	G15_095	FROM->TO	G14-057T 345.00 - SUNNYSIDE 345KV CKT 1	717	789	0.0363	114.998	HOYT - STRANGER CREEK 345KV CKT 1
FDNS	00NR	0	16WP	G15_095	FROM->TO	G14-057T 345.00 - SUNNYSIDE 345KV CKT 1	717	789	0.03484	114.9964	CHISHOLM6 230.00 - ELK CITY 230KV 230KV CKT 1
FDNS	00NR	0	20WP	G15_095	FROM->TO	G14-057T 345.00 - SUNNYSIDE 345KV CKT 1	717	789	0.03432	114.9957	COMANCHE - LOCO 138KV CKT 1
FDNS	00NR	0	16WP	G15_095	FROM->TO	G14-057T 345.00 - SUNNYSIDE 345KV CKT 1	717	789	0.03665	114.9952	COMANCHE - COMANCHE TAP 69KV CKT 1
FDNS	00NR	0	16WP	G15_095	FROM->TO	G14-057T 345.00 - SUNNYSIDE 345KV CKT 1	717	789	0.03484	114.9949	ELK CITY 230KV (ELKCTY-6) 230/138/13.8KV TRANSFORMER CKT 1
FDNS	00NR	0	16WP	G15_095	FROM->TO	G14-057T 345.00 - SUNNYSIDE 345KV CKT 1	717	789	0.03484	114.9949	ELK CITY 230KV (ELKCTY-6) 230/138/13.8KV TRANSFORMER CKT 1

SOLUTION	GROUP	SCENARIO	SEASON	SOURCE	DIRECTION	MONITORED ELEMENT	RATEA (MVA)	RATEB(MVA)	TDF	TC%LOADING (% MVA)	CONTINGENCY
FDNS	00NR	0	16WP	G15_095	FROM->TO	G14-057T 345.00 - SUNNYSIDE 345KV CKT 1	717	789	0.03615	114.9914	GEN300016 1-1G1GPDEL 18.000
FDNS	00NR	0	16WP	G15_095	FROM->TO	G14-057T 345.00 - SUNNYSIDE 345KV CKT 1	717	789	0.03615	114.9913	8CAJUN2 500/24.0KV TRANSFORMER CKT 1
FDNS	00NR	0	16WP	G15_095	FROM->TO	G14-057T 345.00 - SUNNYSIDE 345KV CKT 1	717	789	0.0368	114.9818	P12:138:OKGE-AEPW:JENSEN4:REDROCKRD4
FDNS	00NR	0	16WP	G15_095	FROM->TO	G14-057T 345.00 - SUNNYSIDE 345KV CKT 1	717	789	0.03615	114.9768	GEN337041 1-GERALD ANDRUS
FDNS	00NR	0	16WP	G15_095	FROM->TO	G14-057T 345.00 - SUNNYSIDE 345KV CKT 1	717	789	0.03741	114.9721	CANADIAN - NOBLE 138KV CKT 1
FDNS	00NR	0	16WP	G15_095	FROM->TO	G14-057T 345.00 - SUNNYSIDE 345KV CKT 1	717	789	0.03615	114.9655	GEN501910 1-ACADIA UNIT ST1
FDNS	00NR	0	16WP	G15_095	FROM->TO	G14-057T 345.00 - SUNNYSIDE 345KV CKT 1	717	789	0.03615	114.9604	P12:138:AEPW:R.S.S.-4:S.HUD.-4
FDNS	00NR	0	16WP	G15_095	FROM->TO	G14-057T 345.00 - SUNNYSIDE 345KV CKT 1	717	789	0.03611	114.9568	LASALLE - LATTA JCT 138KV CKT 1
FDNS	00NR	0	16WP	G15_095	FROM->TO	G14-057T 345.00 - SUNNYSIDE 345KV CKT 1	717	789	0.0355	114.9568	P12:138:AEPW:REDROCKRD4:WTH_JCT4
FDNS	00NR	0	16WP	G15_095	FROM->TO	G14-057T 345.00 - SUNNYSIDE 345KV CKT 1	717	789	0.03627	114.9566	7JASPER 345.00 - BLACKBERRY 345KV CKT 1
FDNS	00NR	0	16WP	G15_095	FROM->TO	G14-057T 345.00 - SUNNYSIDE 345KV CKT 1	717	789	0.03636	114.955	WALTERS - WALTERS 69KV CKT 1
FDNS	00NR	0	16WP	G15_095	FROM->TO	G14-057T 345.00 - SUNNYSIDE 345KV CKT 1	717	789	0.03725	114.9539	P12:138:OKGE:3TERM27
FDNS	00NR	0	20WP	G15_095	FROM->TO	G14-057T 345.00 - SUNNYSIDE 345KV CKT 1	717	789	0.03122	114.9532	POCASSETT - TUTTLE 138KV CKT 1
FDNS	00NR	0	16WP	G15_095	FROM->TO	G14-057T 345.00 - SUNNYSIDE 345KV CKT 1	717	789	0.0363	114.9521	G15074_T 345.00 - JEFFREY ENERGY CENTER 345KV CKT 1
FDNS	00NR	0	16WP	G15_095	FROM->TO	G14-057T 345.00 - SUNNYSIDE 345KV CKT 1	717	789	0.03644	114.9482	BLACKBERRY - NEOSHO 345KV CKT 1
FDNS	00NR	0	16WP	G15_095	FROM->TO	G14-057T 345.00 - SUNNYSIDE 345KV CKT 1	717	789	0.03634	114.9468	SWISSVALE - WEST GARDNER 345KV CKT 1
FDNS	00NR	0	16WP	G15_095	FROM->TO	G14-057T 345.00 - SUNNYSIDE 345KV CKT 1	717	789	0.03544	114.9464	NORGE ROAD - SOUTHWESTERN STATION 138KV CKT 1
FDNS	00NR	0	16WP	G15_095	FROM->TO	G14-057T 345.00 - SUNNYSIDE 345KV CKT 1	717	789	0.03544	114.9464	NORGE ROAD - SOUTHWESTERN STATION 138KV CKT 1
FDNS	00NR	0	16WP	G15_095	FROM->TO	G14-057T 345.00 - SUNNYSIDE 345KV CKT 1	717	789	0.03249	114.9431	FRANKLIN SW - WESTMOORE 138KV CKT 1
FDNS	00NR	0	16WP	G15_095	FROM->TO	G14-057T 345.00 - SUNNYSIDE 345KV CKT 1	717	789	0.03697	114.9374	DRAPER LAKE - SEMINOLE 345KV CKT 2
FDNS	00NR	0	16WP	G15_095	FROM->TO	G14-057T 345.00 - SUNNYSIDE 345KV CKT 1	717	789	0.03697	114.9373	DRAPER LAKE - SEMINOLE 345KV CKT 1
FDNS	00NR	0	20WP	G15_095	FROM->TO	G14-057T 345.00 - SUNNYSIDE 345KV CKT 1	717	789	0.03675	114.9356	DOLET HILLS - SOUTHWEST SHREVEPORT 345KV CKT 1
FDNS	00NR	0	20WP	G15_095	FROM->TO	G14-057T 345.00 - SUNNYSIDE 345KV CKT 1	717	789	0.03675	114.9356	DOLET HILLS - SOUTHWEST SHREVEPORT 345KV CKT 1
FDNS	00NR	0	16WP	G15_095	FROM->TO	G14-057T 345.00 - SUNNYSIDE 345KV CKT 1	717	789	0.03654	114.933	SARA - STHLAKE4 138.00 138KV CKT 1
FDNS	00NR	0	16WP	G15_095	FROM->TO	G14-057T 345.00 - SUNNYSIDE 345KV CKT 1	717	789	0.03506	114.9289	G14_038T 345.00 - Hitchland Interchange 345KV CKT 1
FDNS	00NR	0	16WP	G15_095	FROM->TO	G14-057T 345.00 - SUNNYSIDE 345KV CKT 1	717	789	0.03635	114.9274	ETTA (DUKE HOTSPRINGS) - MC NIEL 500KV CKT 1
FDNS	00NR	0	16WP	G15_095	FROM->TO	G14-057T 345.00 - SUNNYSIDE 345KV CKT 1	717	789	0.03615	114.9218	P12:138:AEPW:YARCH-S4:T.S.E.-4
FDNS	00NR	0	16WP	G15_095	FROM->TO	G14-057T 345.00 - SUNNYSIDE 345KV CKT 1	717	789	0.03659	114.9213	LAWTON RELIFT TAP - OMPA-WALTERS 69KV CKT 1
FDNS	00NR	0	16WP	G15_095	FROM->TO	G14-057T 345.00 - SUNNYSIDE 345KV CKT 1	717	789	0.03615	114.9181	SABINE 230/24.0KV TRANSFORMER CKT 1
FDNS	00NR	0	16WP	G15_095	FROM->TO	G14-057T 345.00 - SUNNYSIDE 345KV CKT 1	717	789	0.03615	114.9164	ESSEX UNIT 2 500/18.0KV TRANSFORMER CKT 1
FDNS	00NR	0	16WP	G15_095	FROM->TO	G14-057T 345.00 - SUNNYSIDE 345KV CKT 1	717	789	0.03615	114.9157	P12:69:AEPW:NROGERS2:ECNTRTN2
FDNS	00NR	0	16WP	G15_095	FROM->TO	G14-057T 345.00 - SUNNYSIDE 345KV CKT 1	717	789	0.03615	114.9156	P12:138:AEPW:BA_71ST4:T.S.E.-4
FDNS	00NR	0	16WP	G15_095	FROM->TO	G14-057T 345.00 - SUNNYSIDE 345KV CKT 1	717	789	0.03615	114.9151	GEN336801 1-BAXTER WILSON UNIT #1
FDNS	00NR	0	16WP	G15_095	FROM->TO	G14-057T 345.00 - SUNNYSIDE 345KV CKT 1	717	789	0.03652	114.9126	EMPORIA ENERGY CENTER - G14_001T 345.00 345KV CKT 1
FDNS	00NR	0	16WP	G15_095	FROM->TO	G14-057T 345.00 - SUNNYSIDE 345KV CKT 1	717	789	0.03627	114.9076	7LUTESVIL 345.00 - 7ST FRANC 345.00 345KV CKT 1
FDNS	00NR	0	16WP	G15_095	FROM->TO	G14-057T 345.00 - SUNNYSIDE 345KV CKT 1	717	789	0.03654	114.9039	MCCLAIN - STHLAKE4 138.00 138KV CKT 1
FDNS	00NR	0	16WP	G15_095	FROM->TO	G14-057T 345.00 - SUNNYSIDE 345KV CKT 1	717	789	0.03615	114.8963	FRONTIER 345/18.0KV TRANSFORMER CKT 1
FDNS	00NR	0	16WP	G15_095	FROM->TO	G14-057T 345.00 - SUNNYSIDE 345KV CKT 1	717	789	0.03692	114.8959	HOPE - MCNAB REC 115KV CKT 1
FDNS	00NR	0	16WP	G15_095	FROM->TO	G14-057T 345.00 - SUNNYSIDE 345KV CKT 1	717	789	0.03615	114.8947	FRONTIER 345/18.0KV TRANSFORMER CKT 1
FDNS	00NR	0	16WP	G15_095	FROM->TO	G14-057T 345.00 - SUNNYSIDE 345KV CKT 1	717	789	0.0365	114.888	P12:138:AEPW-OGE:SHIDLER4:OSAGE 4
FDNS	00NR	0	16WP	G15_095	FROM->TO	G14-057T 345.00 - SUNNYSIDE 345KV CKT 1	717	789	0.03692	114.887	P12:115:AEPW:TURK3:HOPE3
FDNS	00NR	0	16WP	G15_095	FROM->TO	G14-057T 345.00 - SUNNYSIDE 345KV CKT 1	717	789	0.03615	114.8839	P12:161:AEPW:CHAMSPR5:FARMING5
FDNS	00NR	0	16WP	G15_095	FROM->TO	G14-057T 345.00 - SUNNYSIDE 345KV CKT 1	717	789	0.03549	114.8809	SOUTHWESTERN STATION - VERDEN 138KV CKT 1
FDNS	00NR	0	16WP	G15_095	FROM->TO	G14-057T 345.00 - SUNNYSIDE 345KV CKT 1	717	789	0.03741	114.8807	NOBLE - PURCELL4 138.00 138KV CKT 1
FDNS	00NR	0	16WP	G15_095	FROM->TO	G14-057T 345.00 - SUNNYSIDE 345KV CKT 1	717	789	0.0355	114.8796	HINTON - WEATHERFORD JCT. 138KV CKT 1
FDNS	00NR	0	16WP	G15_095	FROM->TO	G14-057T 345.00 - SUNNYSIDE 345KV CKT 1	717	789	0.03723	114.8773	ENOWILT - LONE OAK 138KV CKT 1
FDNS	00NR	0	16WP	G15_095	FROM->TO	G14-057T 345.00 - SUNNYSIDE 345KV CKT 1	717	789	0.03416	114.8748	ANADARKO - SEQUOYAHJ4 138.00 138KV CKT 1
FDNS	00NR	0	16WP	G15_095	FROM->TO	G14-057T 345.00 - SUNNYSIDE 345KV CKT 1	717	789	0.03416	114.8744	CORN TAP - SEQUOYAHJ4 138.00 138KV CKT 1
FDNS	00NR	0	16WP	G15_095	FROM->TO	G14-057T 345.00 - SUNNYSIDE 345KV CKT 1	717	789	0.03749	114.8724	ARBUCKLE - VANOSTP4 138.00 138KV CKT 1
FDNS	00NR	0	16WP	G15_095	FROM->TO	G14-057T 345.00 - SUNNYSIDE 345KV CKT 1	717	789	0.03577	114.872	WEATHERFORD TAP - WEATHERFORD WIND FARM 138KV CKT 1
FDNS	00NR	0	16WP	G15_095	FROM->TO	G14-057T 345.00 - SUNNYSIDE 345KV CKT 1	717	789	0.03723	114.8684	ENOWILT - SARDIS 138KV CKT 1
FDNS	00NR	0	16WP	G15_095	FROM->TO	G14-057T 345.00 - SUNNYSIDE 345KV CKT 1	717	789	0.03631	114.8684	8WNEWMADRID 500.00 - DELL 500 500KV CKT 1
FDNS	00NR	0	16WP	G15_095	FROM->TO	G14-057T 345.00 - SUNNYSIDE 345KV CKT 1	717	789	0.03615	114.8662	GEN505616 1-BROKEN BOW
FDNS	00NR	0	16WP	G15_095	FROM->TO	G14-057T 345.00 - SUNNYSIDE 345KV CKT 1	717	789	0.03688	114.8654	CLINTON JUNCTION - ELK CITY 138KV CKT 1
FDNS	00NR	0	16WP	G15_095	FROM->TO	G14-057T 345.00 - SUNNYSIDE 345KV CKT 1	717	789	0.03688	114.8654	CLINTON JUNCTION - ELK CITY 138KV CKT 1
FDNS	00NR	0	16WP	G15_095	FROM->TO	G14-057T 345.00 - SUNNYSIDE 345KV CKT 1	717	789	0.03692	114.8645	MCNAB REC - Turk 115 115KV CKT 1
FDNS	00NR	0	16WP	G15_095	FROM->TO	G14-057T 345.00 - SUNNYSIDE 345KV CKT 1	717	789	0.03692	114.8645	TURK (TURK 1) 138/115/13.2KV TRANSFORMER CKT 1
FDNS	00NR	0	16WP	G15_095	FROM->TO	G14-057T 345.00 - SUNNYSIDE 345KV CKT 1	717	789	0.03692	114.8645	TURK (TURK 1) 138/115/13.2KV TRANSFORMER CKT 1
FDNS	00NR	0	16WP	G15_095	FROM->TO	G14-057T 345.00 - SUNNYSIDE 345KV CKT 1	717	789	0.03549	114.86	NORTH 29TH CHICKASHA - VERDEN 138KV CKT 1
FDNS	00NR	0	16WP	G15_095	FROM->TO	G14-057T 345.00 - SUNNYSIDE 345KV CKT 1	717	789	0.03652	114.8591	G14_001T 345.00 - WICHITA 345KV CKT 1
FDNS	00NR	0	16WP	G15_095	FROM->TO	G14-057T 345.00 - SUNNYSIDE 345KV CKT 1	717	789	0.03615	114.8585	LEWIS CREEK SWITCHYARD 138/22.0KV TRANSFORMER CKT 1
FDNS	00NR	0	16WP	G15_095	FROM->TO	G14-057T 345.00 - SUNNYSIDE 345KV CKT 1	717	789	0.03659	114.8545	OMPA-WALTERS - WALTERS 69KV CKT 1
FDNS	00NR	0	16WP	G15_095	FROM->TO	G14-057T 345.00 - SUNNYSIDE 345KV CKT 1	717	789	0.03659	114.8545	OMPA-WALTERS - WALTERS 69KV CKT 1
FDNS	00NR	0	16WP	G15_095	FROM->TO	G14-057T 345.00 - SUNNYSIDE 345KV CKT 1	717	789	0.03643	114.8545	G13-010T 345.00 - POST ROCK 345KV CKT 1
FDNS	00NR	0	16WP	G15_095	FROM->TO	G14-057T 345.00 - SUNNYSIDE 345KV CKT 1	717	789	0.03658	114.8539	COUCH SES - MC NIEL 115KV CKT 1
FDNS	00NR	0	16WP	G15_095	FROM->TO	G14-057T 345.00 - SUNNYSIDE 345KV CKT 1	717	789	0.03615	114.8536	LEWIS CREEK SWITCHYARD 138/22.0KV TRANSFORMER CKT 1
FDNS	00NR	0	16WP	G15_095	FROM->TO	G14-057T 345.00 - SUNNYSIDE 345KV CKT 1	717	789	0.03632	114.8433	EMPORIA ENERGY CENTER - SWISSVALE 345KV CKT 1
FDNS	00NR	0	16WP	G15_095	FROM->TO	G14-057T 345.00 - SUNNYSIDE 345KV CKT 1	717	789	0.03636	114.8397	P12:69:WFEC-AEPW:COMANCH2:WALTRS-2
FDNS	00NR	0	16WP	G15_095	FROM->TO	G14-057T 345.00 - SUNNYSIDE 345KV CKT 1	717	789	0.03615	114.8396	GEN501970 1-EVANGELINE UNIT 7
FDNS	00NR	0	16WP	G15_095	FROM->TO	G14-057T 345.00 - SUNNYSIDE 345KV CKT 1	717	789	0.03648	114.835	MORISNT4 138.00 - STILLWATER 138KV CKT 1
FDNS	00NR	0	16WP	G15_095	FROM->TO	G14-057T 345.00 - SUNNYSIDE 345KV CKT 1	717	789	0.03723	114.8336	CLAYTON - SARDIS 138KV CKT 1
FDNS	00NR	0	16WP	G15_095	FROM->TO	G14-057T 345.00 - SUNNYSIDE 345KV CKT 1	717	789	0.0365	114.8296	P12:138:OKGE:3TERM2
FDNS	00NR	0	16WP	G15_095	FROM->TO	G14-057T 345.00 - SUNNYSIDE 345KV CKT 1	717	789	0.0355	114.8285	HINTON - REDROCKRD4 138.00 138KV CKT 1
FDNS	00NR	0	16WP	G15_095	FROM->TO	G14-057T 345.00 - SUNNYSIDE 345KV CKT 1	717	789	0.03615	114.8271	GEN334392 1-EXXON MOBIL IPP 1
FDNS	00NR	0	16WP	G15_095	FROM->TO	G14-057T 345.00 - SUNNYSIDE 345KV CKT 1	717	789	0.03544	114.826	CORNVILLE - NORGE ROAD 138KV CKT 1
FDNS	00NR	0	16WP	G15_095	FROM->TO	G14-057T 345.00 - SUNNYSIDE 345KV CKT 1	717	789	0.03544	114.826	CORNVILLE - NORGE ROAD 138KV CKT 1
FDNS	00NR	0	16WP	G15_095	FROM->TO	G14-057T 345.00 - SUNNYSIDE 345KV CKT 1	717	789	0.03611	114.822	LASALLE - STONEWAL LH138.00 138KV CKT 1
FDNS	00NR	0	16WP	G15_095	FROM->TO	G14-057T 345.00 - SUNNYSIDE 345KV CKT 1	717	789	0.03615	114.8203	GEN334393 1-EXXON MOBIL IPP 2
FDNS	00NR	0	16WP	G15_095	FROM->TO	G14-057T 345.00 - SUNNYSIDE 345KV CKT 1	717	789	0.03615	114.8203	GEN334394 1-EXXON MOBIL IPP 3

SOLUTION	GROUP	SCENARIO	SEASON	SOURCE	DIRECTION	MONITORED ELEMENT	RATEA (MVA)	RATEB(MVA)	TDF	TC%LOADING (% MVA)	CONTINGENCY
FDNS	00NR	0	16WP	G15_095	FROM->TO	G14-057T 345.00 - SUNNYSIDE 345KV CKT 1	717	789	0.03612	114.8155	P12:138:OKGE:3TERM12
FDNS	00NR	0	16WP	G15_095	FROM->TO	G14-057T 345.00 - SUNNYSIDE 345KV CKT 1	717	789	0.03615	114.812	GEN336222 1-LITTLE GYPSY UNIT#2
FDNS	00NR	0	16WP	G15_095	FROM->TO	G14-057T 345.00 - SUNNYSIDE 345KV CKT 1	717	789	0.03611	114.807	STONEWAL LH138.00 - TUPELO TAP 138KV CKT 1
FDNS	00NR	0	16WP	G15_095	FROM->TO	G14-057T 345.00 - SUNNYSIDE 345KV CKT 1	717	789	0.03723	114.8059	P12:138:AEPW-SWPA:LONEOAK4:BRKNBW4
FDNS	00NR	0	16WP	G15_095	FROM->TO	G14-057T 345.00 - SUNNYSIDE 345KV CKT 1	717	789	0.03583	114.803	FLETCHER - MARLOW JCT 69KV CKT 1
FDNS	00NR	0	20WP	G15_095	FROM->TO	G14-057T 345.00 - SUNNYSIDE 345KV CKT 1	717	789	0.03594	114.7966	GEN335831 1-RIVERBEND UNIT#1
FDNS	00NR	0	16WP	G15_095	FROM->TO	G14-057T 345.00 - SUNNYSIDE 345KV CKT 1	717	789	0.0363	114.7955	7JASPER 345.00 - MORGAN 345KV CKT 1
FDNS	00NR	0	16WP	G15_095	FROM->TO	G14-057T 345.00 - SUNNYSIDE 345KV CKT 1	717	789	0.03615	114.7941	P12:138:AEPW:R.S.S-4:T.P.S.-4
FDNS	00NR	0	16WP	G15_095	FROM->TO	G14-057T 345.00 - SUNNYSIDE 345KV CKT 1	717	789	0.03615	114.7937	GEN506749 1-EASTMAN GENERATION A
FDNS	00NR	0	16WP	G15_095	FROM->TO	G14-057T 345.00 - SUNNYSIDE 345KV CKT 1	717	789	0.03723	114.792	CLAYTON - NASHOBA 138KV CKT 1
FDNS	00NR	0	16WP	G15_095	FROM->TO	G14-057T 345.00 - SUNNYSIDE 345KV CKT 1	717	789	0.03674	114.7904	CLARKSVILLE - ONETA 345KV CKT 1
FDNS	00NR	0	16WP	G15_095	FROM->TO	G14-057T 345.00 - SUNNYSIDE 345KV CKT 1	717	789	0.03674	114.7904	CLARKSVILLE - ONETA 345KV CKT 1
FDNS	00NR	0	16WP	G15_095	FROM->TO	G14-057T 345.00 - SUNNYSIDE 345KV CKT 1	717	789	0.03549	114.7904	CORNVILLE - NORTH 29TH CHICKASHA 138KV CKT 1
FDNS	00NR	0	16WP	G15_095	FROM->TO	G14-057T 345.00 - SUNNYSIDE 345KV CKT 1	717	789	0.03615	114.7901	GEN334431 1-SABINE UNIT 1
FDNS	00NR	0	16WP	G15_095	FROM->TO	G14-057T 345.00 - SUNNYSIDE 345KV CKT 1	717	789	0.03615	114.79	GEN334432 1-SABINE UNIT 2
FDNS	00NR	0	16WP	G15_095	FROM->TO	G14-057T 345.00 - SUNNYSIDE 345KV CKT 1	717	789	0.03609	114.785	FRANKLIN - FRANKLIN SW 138KV CKT 1
FDNS	00NR	0	16WP	G15_095	FROM->TO	G14-057T 345.00 - SUNNYSIDE 345KV CKT 1	717	789	0.03577	114.7845	WEATHERFORD SOUTHEAST - WEATHERFORD TAP 138KV CKT 1
FDNS	00NR	0	16WP	G15_095	FROM->TO	G14-057T 345.00 - SUNNYSIDE 345KV CKT 1	717	789	0.03615	114.7829	GEN501972 1-EVANGELINE UNIT 7-2
FDNS	00NR	0	16WP	G15_095	FROM->TO	G14-057T 345.00 - SUNNYSIDE 345KV CKT 1	717	789	0.03615	114.7828	GEN501971 1-EVANGELINE UNIT 7-1
FDNS	00NR	0	16WP	G15_095	FROM->TO	G14-057T 345.00 - SUNNYSIDE 345KV CKT 1	717	789	0.03615	114.7826	GEN336152 1-WATERFORD UNIT#2
FDNS	00NR	0	16WP	G15_095	FROM->TO	G14-057T 345.00 - SUNNYSIDE 345KV CKT 1	717	789	0.03615	114.7815	GEN336151 1-WATERFORD UNIT#1
FDNS	00NR	0	16WP	G15_095	FROM->TO	G14-057T 345.00 - SUNNYSIDE 345KV CKT 1	717	789	0.03723	114.779	BETHEL - NASHOBA 138KV CKT 1
FDNS	00NR	0	16WP	G15_095	FROM->TO	G14-057T 345.00 - SUNNYSIDE 345KV CKT 1	717	789	0.03615	114.7698	P12:138:AEPW:R.S.S.-4:R:96YALE-4
FDNS	00NR	0	20WP	G15_095	FROM->TO	G14-057T 345.00 - SUNNYSIDE 345KV CKT 1	717	789	0.03743	114.7697	ARCADIA - NORTHWEST 345KV CKT 1
FDNS	00NR	0	20WP	G15_095	FROM->TO	G14-057T 345.00 - SUNNYSIDE 345KV CKT 1	717	789	0.03594	114.7537	GRAND GULF 500/22.0KV TRANSFORMER CKT 1
FDNS	00NR	0	16WP	G15_095	FROM->TO	G14-057T 345.00 - SUNNYSIDE 345KV CKT 1	717	789	0.03538	114.7505	MARIETTA - MARIETTA4 138.00 138KV CKT 1
FDNS	00NR	0	16WP	G15_095	FROM->TO	G14-057T 345.00 - SUNNYSIDE 345KV CKT 1	717	789	0.0368	114.7347	Canadian Pump Station - REDROCKRD4 138.00 138KV CKT 1
FDNS	00NR	0	16WP	G15_095	FROM->TO	G14-057T 345.00 - SUNNYSIDE 345KV CKT 1	717	789	0.03577	114.73	CLINTON JUNCTION - CLINTON NATURAL GAS TAP 138KV CKT 1
FDNS	00NR	0	16WP	G15_095	FROM->TO	G14-057T 345.00 - SUNNYSIDE 345KV CKT 1	717	789	0.03635	114.7223	P12:138:OKGE:3TERM47
FDNS	00NR	0	16WP	G15_095	FROM->TO	G14-057T 345.00 - SUNNYSIDE 345KV CKT 1	717	789	0.03517	114.7209	CIMARRON - NORTHWEST 345KV CKT 1
FDNS	00NR	0	16WP	G15_095	FROM->TO	G14-057T 345.00 - SUNNYSIDE 345KV CKT 1	717	789	0.03628	114.7076	HAMMETT TAP - HORSESHOE LAKE 138KV CKT 1
FDNS	00NR	0	20WP	G15_095	FROM->TO	G14-057T 345.00 - SUNNYSIDE 345KV CKT 1	717	789	0.037	114.7044	7SAREPTA% 345.00 - ELDORADO EHV 345KV CKT 1
FDNS	00NR	0	20WP	G15_095	FROM->TO	G14-057T 345.00 - SUNNYSIDE 345KV CKT 1	717	789	0.037	114.7042	3TR3AR8EL7EL
FDNS	00NR	0	20WP	G15_095	FROM->TO	G14-057T 345.00 - SUNNYSIDE 345KV CKT 1	717	789	0.037	114.6934	ELDORADO EHV 500/345KV TRANSFORMER CKT 1
FDNS	00NR	0	20WP	G15_095	FROM->TO	G14-057T 345.00 - SUNNYSIDE 345KV CKT 1	717	789	0.0371	114.6786	P12:138:AEPW:DUNCAN-4:L.E.S.-4
FDNS	00NR	0	16WP	G15_095	FROM->TO	G14-057T 345.00 - SUNNYSIDE 345KV CKT 1	717	789	0.03636	114.6677	COMANCHE - WALTERS 69KV CKT 1
FDNS	00NR	0	20WP	G15_095	FROM->TO	G14-057T 345.00 - SUNNYSIDE 345KV CKT 1	717	789	0.03594	114.608	GEN515577 1-ARBWND11 0.6900
FDNS	00NR	0	20WP	G15_095	FROM->TO	G14-057T 345.00 - SUNNYSIDE 345KV CKT 1	717	789	0.03776	114.5615	MATHWSN7 345.00 - TATONGA7 345.00 345KV CKT 1
FDNS	00NR	0	20WP	G15_095	FROM->TO	G14-057T 345.00 - SUNNYSIDE 345KV CKT 1	717	789	0.0371	114.5571	COMANCHE TAP - OMPA-DUNCAN 840 138KV CKT 1
FDNS	00NR	0	20WP	G15_095	FROM->TO	G14-057T 345.00 - SUNNYSIDE 345KV CKT 1	717	789	0.03122	114.5549	BRIDGECR 138.00 - TUTTLE 138KV CKT 1
FDNS	00NR	0	20WP	G15_095	FROM->TO	G14-057T 345.00 - SUNNYSIDE 345KV CKT 1	717	789	0.04168	114.5467	CANADIAN RIVER - MUSKOGEE 345KV CKT 1
FDNS	00NR	0	20WP	G15_095	FROM->TO	G14-057T 345.00 - SUNNYSIDE 345KV CKT 1	717	789	0.03594	114.4684	GEN509409 1-WILKES #3
FDNS	00NR	0	20WP	G15_095	FROM->TO	G14-057T 345.00 - SUNNYSIDE 345KV CKT 1	717	789	0.03664	114.4388	Hitchland Interchange - WALKTAP7 345.00 345KV CKT 1
FDNS	00NR	0	20WP	G15_095	FROM->TO	G14-057T 345.00 - SUNNYSIDE 345KV CKT 1	717	789	0.03664	114.4388	Hitchland Interchange - WALKTAP7 345.00 345KV CKT 1
FDNS	00NR	0	20WP	G15_095	FROM->TO	G14-057T 345.00 - SUNNYSIDE 345KV CKT 1	717	789	0.03519	114.4317	HEALDTON - LOCO 138KV CKT 1
FDNS	00NR	0	20WP	G15_095	FROM->TO	G14-057T 345.00 - SUNNYSIDE 345KV CKT 1	717	789	0.03888	114.4268	ARCADIA - SEMINOLE 345KV CKT 1
FDNS	00NR	0	20WP	G15_095	FROM->TO	G14-057T 345.00 - SUNNYSIDE 345KV CKT 1	717	789	0.03664	114.4189	P12:345:SPS:J07.1.FINN.HITCH
FDNS	00NR	0	20WP	G15_095	FROM->TO	G14-057T 345.00 - SUNNYSIDE 345KV CKT 1	717	789	0.03594	114.4089	GEN501813 1-RODEMACHER UNIT 3
FDNS	00NR	0	20WP	G15_095	FROM->TO	G14-057T 345.00 - SUNNYSIDE 345KV CKT 1	717	789	0.03594	114.3121	GEN300006 1-NEW MADRID UNIT 1
FDNS	00NR	0	20WP	G15_095	FROM->TO	G14-057T 345.00 - SUNNYSIDE 345KV CKT 1	717	789	0.03594	114.2922	GEN300007 1-NEW MADRID UNIT 2
FDNS	00NR	0	20WP	G15_095	FROM->TO	G14-057T 345.00 - SUNNYSIDE 345KV CKT 1	717	789	0.03519	114.2876	HEALDTON - RINGLING 138KV CKT 1
FDNS	00NR	0	20WP	G15_095	FROM->TO	G14-057T 345.00 - SUNNYSIDE 345KV CKT 1	717	789	0.03631	114.2757	LACYGNE - WAVERLY7 345.00 345KV CKT 1
FDNS	00NR	0	20WP	G15_095	FROM->TO	G14-057T 345.00 - SUNNYSIDE 345KV CKT 1	717	789	0.0371	114.2686	DUNCAN - OMPA-DUNCAN 840 138KV CKT 1
FDNS	00NR	0	20WP	G15_095	FROM->TO	G14-057T 345.00 - SUNNYSIDE 345KV CKT 1	717	789	0.0371	114.2686	DUNCAN - OMPA-DUNCAN 840 138KV CKT 1
FDNS	00NR	0	20WP	G15_095	FROM->TO	G14-057T 345.00 - SUNNYSIDE 345KV CKT 1	717	789	0.03122	114.2678	P12:138:WFEC:MSL01
FDNS	00NR	0	16WP	G15_095	FROM->TO	G14-057T 345.00 - SUNNYSIDE 345KV CKT 1	717	789	0.03615	114.2581	803-OKLAUNION
FDNS	00NR	0	20WP	G15_095	FROM->TO	G14-057T 345.00 - SUNNYSIDE 345KV CKT 1	717	789	0.03122	114.2563	BRIDGECR 138.00 - SUNSHINE CANYON 138KV CKT 1
FDNS	00NR	0	20WP	G15_095	FROM->TO	G14-057T 345.00 - SUNNYSIDE 345KV CKT 1	717	789	0.03594	114.1972	GEN335206 1-NELSON UNIT 6
FDNS	00NR	0	20WP	G15_095	FROM->TO	G14-057T 345.00 - SUNNYSIDE 345KV CKT 1	717	789	0.03631	114.1543	WAVERLY7 345.00 - WOLF CREEK 345KV CKT 1
FDNS	00NR	0	20WP	G15_095	FROM->TO	G14-057T 345.00 - SUNNYSIDE 345KV CKT 1	717	789	0.03594	114.1257	GEN520947 1-HUGO1
FDNS	00NR	0	20WP	G15_095	FROM->TO	G14-057T 345.00 - SUNNYSIDE 345KV CKT 1	717	789	0.03519	114.1171	RINGLING - SOUTH WILSON 138KV CKT 1
FDNS	00NR	0	16WP	G15_095	FROM->TO	G14-057T 345.00 - SUNNYSIDE 345KV CKT 1	717	789	0.03722	114.0994	P12:138:OKGE:3TERM39
FDNS	00NR	0	20WP	G15_095	FROM->TO	G14-057T 345.00 - SUNNYSIDE 345KV CKT 1	717	789	0.03776	114.0411	G11_051T 345.00 - TATONGA7 345.00 345KV CKT 1
FDNS	00NR	0	20WP	G15_095	FROM->TO	G14-057T 345.00 - SUNNYSIDE 345KV CKT 1	717	789	0.03627	114.0258	ELDORADO EHV - MOUNT OLIVE 500KV CKT 1
FDNS	00NR	0	20WP	G15_095	FROM->TO	G14-057T 345.00 - SUNNYSIDE 345KV CKT 1	717	789	0.03594	114.0121	GEN501812 1-RODEMACHER UNIT 2
FDNS	00NR	0	20WP	G15_095	FROM->TO	G14-057T 345.00 - SUNNYSIDE 345KV CKT 1	717	789	0.03595	114.0071	P12:138:AEPW:SHERID4:112GORE4
FDNS	00NR	0	20WP	G15_095	FROM->TO	G14-057T 345.00 - SUNNYSIDE 345KV CKT 1	717	789	0.03594	114.0013	DOLET HILLS 345/24.0KV TRANSFORMER CKT 1
FDNS	00NR	0	20WP	G15_095	FROM->TO	G14-057T 345.00 - SUNNYSIDE 345KV CKT 1	717	789	0.03677	113.9961	THISTLE7 345.00 - WOODWARD DISTRICT EHV 345KV CKT 1
FDNS	00NR	0	20WP	G15_095	FROM->TO	G14-057T 345.00 - SUNNYSIDE 345KV CKT 1	717	789	0.03677	113.9961	THISTLE7 345.00 - WOODWARD DISTRICT EHV 345KV CKT 1
FDNS	00NR	0	20WP	G15_095	FROM->TO	G14-057T 345.00 - SUNNYSIDE 345KV CKT 1	717	789	0.03677	113.9961	THISTLE7 345.00 - WOODWARD DISTRICT EHV 345KV CKT 2
FDNS	00NR	0	20WP	G15_095	FROM->TO	G14-057T 345.00 - SUNNYSIDE 345KV CKT 1	717	789	0.03677	113.9961	THISTLE7 345.00 - WOODWARD DISTRICT EHV 345KV CKT 2
FDNS	00NR	0	20WP	G15_095	FROM->TO	G14-057T 345.00 - SUNNYSIDE 345KV CKT 1	717	789	0.03749	113.9283	PARK LANE - SEMINOLE 138KV CKT 1
FDNS	00NR	0	20WP	G15_095	FROM->TO	G14-057T 345.00 - SUNNYSIDE 345KV CKT 1	717	789	0.03638	113.8762	WEBRE - WELLS 500KV CKT 1
FDNS	00NR	0	20WP	G15_095	FROM->TO	G14-057T 345.00 - SUNNYSIDE 345KV CKT 1	717	789	0.03594	113.875	GEN515564 1-ORIGIN11 0.6900
FDNS	00NR	0	20WP	G15_095	FROM->TO	G14-057T 345.00 - SUNNYSIDE 345KV CKT 1	717	789	0.03594	113.875	GEN515565 1-ORIGIN21 0.6900
FDNS	00NR	0	16WP	G15_095	FROM->TO	G14-057T 345.00 - SUNNYSIDE 345KV CKT 1	717	789	0.03796	113.8718	MAYSVILLE - MAYSVLT4 138.00 138KV CKT 1
FDNS	00NR	0	16WP	G15_095	FROM->TO	G14-057T 345.00 - SUNNYSIDE 345KV CKT 1	717	789	0.03579	113.8663	DRAPER LAKE - MIDWEST TAP 138KV CKT 1
FDNS	00NR	0	16WP	G15_095	FROM->TO	G14-057T 345.00 - SUNNYSIDE 345KV CKT 1	717	789	0.03592	113.8628	GLASSES - MADILL INDUSTRIAL TAP 138KV CKT 1
FDNS	00NR	0	20WP	G15_095	FROM->TO	G14-057T 345.00 - SUNNYSIDE 345KV CKT 1	717	789	0.03594	113.8527	GEN334440 1-SABINE UNIT 4

SOLUTION	GROUP	SCENARIO	SEASON	SOURCE	DIRECTION	MONITORED ELEMENT	RATEA (MVA)	RATEB(MVA)	TDF	TC%LOADING (% MVA)	CONTINGENCY
FDNS	00NR	0	16WP	G15_095	FROM->TO	G14-057T 345.00 - SUNNYSIDE 345KV CKT 1	717	789	0.03548	113.8517	CIMARRON - MATHWSN7 345.00 345KV CKT 1
FDNS	00NR	0	16WP	G15_095	FROM->TO	G14-057T 345.00 - SUNNYSIDE 345KV CKT 1	717	789	0.03548	113.8517	CIMARRON - MATHWSN7 345.00 345KV CKT 2
FDNS	00NR	0	16WP	G15_095	FROM->TO	G14-057T 345.00 - SUNNYSIDE 345KV CKT 1	717	789	0.03615	113.8451	GEN562691 1-G15_015_3 0.6900
FDNS	00NR	0	16WP	G15_095	FROM->TO	G14-057T 345.00 - SUNNYSIDE 345KV CKT 1	717	789	0.03615	113.8449	GEN562772 1-G15034_3 0.6900
FDNS	00NR	0	16WP	G15_095	FROM->TO	G14-057T 345.00 - SUNNYSIDE 345KV CKT 1	717	789	0.03556	113.8438	P12:138:OKGE:3TERM21
FDNS	00NR	0	20WP	G15_095	FROM->TO	G14-057T 345.00 - SUNNYSIDE 345KV CKT 1	717	789	0.03665	113.8344	CANEYRV7 345.00 - NEOSHO 345KV CKT 1
FDNS	00NR	0	20WP	G15_095	FROM->TO	G14-057T 345.00 - SUNNYSIDE 345KV CKT 1	717	789	0.03519	113.8289	MARIETTA - SOUTH WILSON 138KV CKT 1
FDNS	00NR	0	20WP	G15_095	FROM->TO	G14-057T 345.00 - SUNNYSIDE 345KV CKT 1	717	789	0.03594	113.8232	GEN590011 2-ERCOT EQUIVALENCE
FDNS	00NR	0	16WP	G15_095	FROM->TO	G14-057T 345.00 - SUNNYSIDE 345KV CKT 1	717	789	0.03615	113.8171	GEN521103 1-BLUE CANYON WIND FARM
FDNS	00NR	0	16WP	G15_095	FROM->TO	G14-057T 345.00 - SUNNYSIDE 345KV CKT 1	717	789	0.03615	113.8166	GEN520812 1-ANADRK5
FDNS	00NR	0	16WP	G15_095	FROM->TO	G14-057T 345.00 - SUNNYSIDE 345KV CKT 1	717	789	0.03615	113.8165	GEN520813 1-ANADRK6
FDNS	00NR	0	16WP	G15_095	FROM->TO	G14-057T 345.00 - SUNNYSIDE 345KV CKT 1	717	789	0.03796	113.8102	MAYSVLT4 138.00 - PRAIRIE POINT 138KV CKT 1
FDNS	00NR	0	16WP	G15_095	FROM->TO	G14-057T 345.00 - SUNNYSIDE 345KV CKT 1	717	789	0.03592	113.8033	GLASSES - RUSSETT 138KV CKT 1
FDNS	00NR	0	20WP	G15_095	FROM->TO	G14-057T 345.00 - SUNNYSIDE 345KV CKT 1	717	789	0.03594	113.7939	DELL 500 - ESSEX UNIT 2 500KV CKT Z1
FDNS	00NR	0	20WP	G15_095	FROM->TO	G14-057T 345.00 - SUNNYSIDE 345KV CKT 1	717	789	0.03594	113.7926	P12:161:AEPW:DYESS 5:HYLAND 5
FDNS	00NR	0	16WP	G15_095	FROM->TO	G14-057T 345.00 - SUNNYSIDE 345KV CKT 1	717	789	0.03696	113.785	ARBUCKLE - SULPHR 4 138.00 138KV CKT 1
FDNS	00NR	0	20WP	G15_095	FROM->TO	G14-057T 345.00 - SUNNYSIDE 345KV CKT 1	717	789	0.03605	113.7845	REDBUD - RIVERSIDE STATION 345KV CKT 1
FDNS	00NR	0	20WP	G15_095	FROM->TO	G14-057T 345.00 - SUNNYSIDE 345KV CKT 1	717	789	0.03605	113.7845	REDBUD - RIVERSIDE STATION 345KV CKT 1
FDNS	00NR	0	16WP	G15_095	FROM->TO	G14-057T 345.00 - SUNNYSIDE 345KV CKT 1	717	789	0.03646	113.7802	P12:138:WFEC:MSL11
FDNS	00NR	0	16WP	G15_095	FROM->TO	G14-057T 345.00 - SUNNYSIDE 345KV CKT 1	717	789	0.03646	113.7802	P12:138:WFEC-AEPW:PHAROAH4:LONEOAK4
FDNS	00NR	0	16WP	G15_095	FROM->TO	G14-057T 345.00 - SUNNYSIDE 345KV CKT 1	717	789	0.0358	113.7755	CANEY CREEK - JOHNSON COUNTY 138KV CKT 1
FDNS	00NR	0	16WP	G15_095	FROM->TO	G14-057T 345.00 - SUNNYSIDE 345KV CKT 1	717	789	0.03615	113.7736	GEN511961 1-DEMPSEY-WTG10.7000
FDNS	00NR	0	16WP	G15_095	FROM->TO	G14-057T 345.00 - SUNNYSIDE 345KV CKT 1	717	789	0.03616	113.758	P12:069:OKGE:3TERM42
FDNS	00NR	0	20WP	G15_095	FROM->TO	G14-057T 345.00 - SUNNYSIDE 345KV CKT 1	717	789	0.03594	113.7534	GEN590010 1-ERCOT EQUIVALENCE
FDNS	00NR	0	20WP	G15_095	FROM->TO	G14-057T 345.00 - SUNNYSIDE 345KV CKT 1	717	789	0.03594	113.7453	P12:69:AEPW:L.E.S.-2:LAW WC2
FDNS	00NR	0	20WP	G15_095	FROM->TO	G14-057T 345.00 - SUNNYSIDE 345KV CKT 1	717	789	0.03819	113.7442	LAWTON EASTSIDE (LES 5) 345/138/13.8KV TRANSFORMER CKT 2
FDNS	00NR	0	20WP	G15_095	FROM->TO	G14-057T 345.00 - SUNNYSIDE 345KV CKT 1	717	789	0.03819	113.7442	LAWTON EASTSIDE (LES 5) 345/138/13.8KV TRANSFORMER CKT 2
FDNS	00NR	0	16WP	G15_095	FROM->TO	G14-057T 345.00 - SUNNYSIDE 345KV CKT 1	717	789	0.03615	113.7348	GEN629070 2-BEAVER CHANNEL GENERATORFOR UNIT NO 2
FDNS	00NR	0	16WP	G15_095	FROM->TO	G14-057T 345.00 - SUNNYSIDE 345KV CKT 1	717	789	0.03619	113.7272	GRPRAR1-LNX3345.00 - HOLT.CO3 345.00 345KV CKT 1
FDNS	00NR	0	20WP	G15_095	FROM->TO	G14-057T 345.00 - SUNNYSIDE 345KV CKT 1	717	789	0.03519	113.7272	P12:138:WFEC:MSL17
FDNS	00NR	0	16WP	G15_095	FROM->TO	G14-057T 345.00 - SUNNYSIDE 345KV CKT 1	717	789	0.03615	113.7271	GEN515443 1-MNCOWND1 0.7000
FDNS	00NR	0	16WP	G15_095	FROM->TO	G14-057T 345.00 - SUNNYSIDE 345KV CKT 1	717	789	0.03619	113.7234	GRPRAR1-LNX3345.00 - GRPRAR 345KV CKT Z
FDNS	00NR	0	20WP	G15_095	FROM->TO	G14-057T 345.00 - SUNNYSIDE 345KV CKT 1	717	789	0.03457	113.7227	P12:138:WFEC:MSL02
FDNS	00NR	0	16WP	G15_095	FROM->TO	G14-057T 345.00 - SUNNYSIDE 345KV CKT 1	717	789	0.03609	113.7218	P12:138:WFEC:MSL08
FDNS	00NR	0	16WP	G15_095	FROM->TO	G14-057T 345.00 - SUNNYSIDE 345KV CKT 1	717	789	0.03615	113.7183	GEN615021 1-GRE-ER 14G 16.000
FDNS	00NR	0	16WP	G15_095	FROM->TO	G14-057T 345.00 - SUNNYSIDE 345KV CKT 1	717	789	0.03615	113.7147	GEN562902 1-G15052_3 0.6900
FDNS	00NR	0	16WP	G15_095	FROM->TO	G14-057T 345.00 - SUNNYSIDE 345KV CKT 1	717	789	0.03796	113.7129	PRAIRIE POINT - RATLIFF 138KV CKT 1
FDNS	00NR	0	16WP	G15_095	FROM->TO	G14-057T 345.00 - SUNNYSIDE 345KV CKT 1	717	789	0.0361	113.7093	CARTER - CHICKASAW 138KV CKT 1
FDNS	00NR	0	16WP	G15_095	FROM->TO	G14-057T 345.00 - SUNNYSIDE 345KV CKT 1	717	789	0.03615	113.7078	GEN563242 1-G15090_3 0.6900
FDNS	00NR	0	16WP	G15_095	FROM->TO	G14-057T 345.00 - SUNNYSIDE 345KV CKT 1	717	789	0.03615	113.7066	GEN560183 1-REDHIL-WTG1 12.000
FDNS	00NR	0	16WP	G15_095	FROM->TO	G14-057T 345.00 - SUNNYSIDE 345KV CKT 1	717	789	0.03615	113.7049	GEN629071 1-BURLINGTON GENERATOR FOR UNIT NO 1 E
FDNS	00NR	0	16WP	G15_095	FROM->TO	G14-057T 345.00 - SUNNYSIDE 345KV CKT 1	717	789	0.03606	113.7009	CANADIAN RIVER - MCALESTER SOUTH 138KV CKT 1
FDNS	00NR	0	16WP	G15_095	FROM->TO	G14-057T 345.00 - SUNNYSIDE 345KV CKT 1	717	789	0.03606	113.7009	CANADIAN RIVER - MCALESTER SOUTH 138KV CKT 1
FDNS	00NR	0	16WP	G15_095	FROM->TO	G14-057T 345.00 - SUNNYSIDE 345KV CKT 1	717	789	0.03606	113.6996	CANADIAN RIVER () 345/138/13.8KV TRANSFORMER CKT 1
FDNS	00NR	0	16WP	G15_095	FROM->TO	G14-057T 345.00 - SUNNYSIDE 345KV CKT 1	717	789	0.03606	113.6996	CANADIAN RIVER () 345/138/13.8KV TRANSFORMER CKT 1
FDNS	00NR	0	16WP	G15_095	FROM->TO	G14-057T 345.00 - SUNNYSIDE 345KV CKT 1	717	789	0.03496	113.6995	NORTHWEST - SPRING CREEK 345KV CKT 1
FDNS	00NR	0	16WP	G15_095	FROM->TO	G14-057T 345.00 - SUNNYSIDE 345KV CKT 1	717	789	0.0362	113.6922	ROCKY POINT - SPRINGDALE 138KV CKT 1
FDNS	00NR	0	16WP	G15_095	FROM->TO	G14-057T 345.00 - SUNNYSIDE 345KV CKT 1	717	789	0.03496	113.6897	SOONER - SPRING CREEK 345KV CKT 1
FDNS	00NR	0	20WP	G15_095	FROM->TO	G14-057T 345.00 - SUNNYSIDE 345KV CKT 1	717	789	0.03665	113.687	CANEYRV7 345.00 - LATHAMS7 345.00 345KV CKT 1
FDNS	00NR	0	16WP	G15_095	FROM->TO	G14-057T 345.00 - SUNNYSIDE 345KV CKT 1	717	789	0.03615	113.679	INDEPENDENCE 500/26.0KV TRANSFORMER CKT 1
FDNS	00NR	0	16WP	G15_095	FROM->TO	G14-057T 345.00 - SUNNYSIDE 345KV CKT 1	717	789	0.03615	113.6766	BURLINGTON NO1 + NO 2 + NO 3 161/20.0KV TRANSFORMER CKT 1
FDNS	00NR	0	20WP	G15_095	FROM->TO	G14-057T 345.00 - SUNNYSIDE 345KV CKT 1	717	789	0.03594	113.676	GEN509408 1-WILKES #2
FDNS	00NR	0	16WP	G15_095	FROM->TO	G14-057T 345.00 - SUNNYSIDE 345KV CKT 1	717	789	0.03597	113.6747	ALTUS JUNCTION - RUSSELL 138KV CKT 1
FDNS	00NR	0	16WP	G15_095	FROM->TO	G14-057T 345.00 - SUNNYSIDE 345KV CKT 1	717	789	0.03597	113.6747	ALTUS JUNCTION - RUSSELL 138KV CKT 1
FDNS	00NR	0	16WP	G15_095	FROM->TO	G14-057T 345.00 - SUNNYSIDE 345KV CKT 1	717	789	0.03655	113.6724	NORTHWEST TEXARKANA - WELSH 345KV CKT 1
FDNS	00NR	0	16WP	G15_095	FROM->TO	G14-057T 345.00 - SUNNYSIDE 345KV CKT 1	717	789	0.03655	113.6724	NORTHWEST TEXARKANA - WELSH 345KV CKT 1
FDNS	00NR	0	16WP	G15_095	FROM->TO	G14-057T 345.00 - SUNNYSIDE 345KV CKT 1	717	789	0.03615	113.6705	GEN514805 1-SOONER UNIT 1
FDNS	00NR	0	16WP	G15_095	FROM->TO	G14-057T 345.00 - SUNNYSIDE 345KV CKT 1	717	789	0.03615	113.6637	GEN514806 1-SOONER UNIT 2
FDNS	00NR	0	20WP	G15_095	FROM->TO	G14-057T 345.00 - SUNNYSIDE 345KV CKT 1	717	789	0.0365	113.6598	ELDORADO EHV - SHERIDAN EHV 500KV CKT 1
FDNS	00NR	0	20WP	G15_095	FROM->TO	G14-057T 345.00 - SUNNYSIDE 345KV CKT 1	717	789	0.03645	113.6598	PAOLI - PAYNE 138.00 138KV CKT 1
FDNS	00NR	0	16WP	G15_095	FROM->TO	G14-057T 345.00 - SUNNYSIDE 345KV CKT 1	717	789	0.03631	113.6579	KEO EHV - WEST MEMPHIS 500 500KV CKT 1
FDNS	00NR	0	16WP	G15_095	FROM->TO	G14-057T 345.00 - SUNNYSIDE 345KV CKT 1	717	789	0.03626	113.6508	CHAMBER SPRINGS - CLARKSVILLE 345KV CKT 1
FDNS	00NR	0	20WP	G15_095	FROM->TO	G14-057T 345.00 - SUNNYSIDE 345KV CKT 1	717	789	0.03594	113.6501	GEN506754 1-LEBROCK STEAM 1
FDNS	00NR	0	16WP	G15_095	FROM->TO	G14-057T 345.00 - SUNNYSIDE 345KV CKT 1	717	789	0.03615	113.6474	GEN562078 1-G11_051_3 0.6900
FDNS	00NR	0	20WP	G15_095	FROM->TO	G14-057T 345.00 - SUNNYSIDE 345KV CKT 1	717	789	0.03499	113.6428	ANADARKO - GEORGIA 138KV CKT 1
FDNS	00NR	0	16WP	G15_095	FROM->TO	G14-057T 345.00 - SUNNYSIDE 345KV CKT 1	717	789	0.03615	113.6379	P12:230:UMZB:# 112 #: NU IN SD. NU-RCDC & DRY CREEK XFMR
FDNS	00NR	0	16WP	G15_095	FROM->TO	G14-057T 345.00 - SUNNYSIDE 345KV CKT 1	717	789	0.03615	113.6365	RCDC EAST 4230.00 - RED CEDAR DC 230KV CKT 1
FDNS	00NR	0	16WP	G15_095	FROM->TO	G14-057T 345.00 - SUNNYSIDE 345KV CKT 1	717	789	0.03696	113.6334	JOLLYVILLE - SULPHR 4 138.00 138KV CKT 1
FDNS	00NR	0	16WP	G15_095	FROM->TO	G14-057T 345.00 - SUNNYSIDE 345KV CKT 1	717	789	0.03615	113.6189	GEN562802 1-G15039_3 0.3570
FDNS	00NR	0	20WP	G15_095	FROM->TO	G14-057T 345.00 - SUNNYSIDE 345KV CKT 1	717	789	0.03595	113.6137	P12:138:AEPW:112GORE4:L.E.S.-4
FDNS	00NR	0	16WP	G15_095	FROM->TO	G14-057T 345.00 - SUNNYSIDE 345KV CKT 1	717	789	0.03615	113.6124	GEN524285 1-WILDORADO WIND GEN
FDNS	00NR	0	20WP	G15_095	FROM->TO	G14-057T 345.00 - SUNNYSIDE 345KV CKT 1	717	789	0.03589	113.6016	CIVIT - PAOLI 138KV CKT 1
FDNS	00NR	0	20WP	G15_095	FROM->TO	G14-057T 345.00 - SUNNYSIDE 345KV CKT 1	717	789	0.03659	113.5945	MATHWSN7 345.00 - NORTHWEST 345KV CKT 1
FDNS	00NR	0	16WP	G15_095	FROM->TO	G14-057T 345.00 - SUNNYSIDE 345KV CKT 1	717	789	0.03615	113.5926	GEN524295 1-SPNSPUR_WND10.6900
FDNS	00NR	0	16WP	G15_095	FROM->TO	G14-057T 345.00 - SUNNYSIDE 345KV CKT 1	717	789	0.03615	113.5923	GEN562587 1-G14_056_3 0.6900
FDNS	00NR	0	16WP	G15_095	FROM->TO	G14-057T 345.00 - SUNNYSIDE 345KV CKT 1	717	789	0.03615	113.5856	GEN560331 1-G10-46 13.800
FDNS	00NR	0	16WP	G15_095	FROM->TO	G14-057T 345.00 - SUNNYSIDE 345KV CKT 1	717	789	0.03642	113.5745	ARKANSAS NUCLEAR ONE - FT SMITH 500KV CKT 1
FDNS	00NR	0	16WP	G15_095	FROM->TO	G14-057T 345.00 - SUNNYSIDE 345KV CKT 1	717	789	0.03642	113.5745	ARKANSAS NUCLEAR ONE - FT SMITH 500KV CKT 1
FDNSLock	00NR	0	16WP	G15_095	FROM->TO	G14-057T 345.00 - SUNNYSIDE 345KV CKT 1	717	789	0.03615	113.5733	GEN629072 4-LANSING GENERATOR FOR UNITS NO4 EIA CODE 1

SOLUTION	GROUP	SCENARIO	SEASON	SOURCE	DIRECTION	MONITORED ELEMENT	RATEA (MVA)	RATEB(MVA)	TDF	TC%LOADING (% MVA)	CONTINGENCY
FDNS	00NR	0	20WP	G15_095	FROM->TO	G14-057T 345.00 - SUNNYSIDE 345KV CKT 1	717	789	0.03594	113.5691	GEN336252 1-NINEMILE POINT UNIT#5
FDNS	00NR	0	16WP	G15_095	FROM->TO	G14-057T 345.00 - SUNNYSIDE 345KV CKT 1	717	789	0.03696	113.5649	JOLLYVILLE - KERR MCGEE CIMARRON 138KV CKT 1
FDNS	00NR	0	16WP	G15_095	FROM->TO	G14-057T 345.00 - SUNNYSIDE 345KV CKT 1	717	789	0.03615	113.5641	GEN562882 1-G15047_3 0.6900
FDNS	00NR	0	16WP	G15_095	FROM->TO	G14-057T 345.00 - SUNNYSIDE 345KV CKT 1	717	789	0.03615	113.555	GEN562269 1-G12-020-1 0.6900
FDNS	00NR	0	16WP	G15_095	FROM->TO	G14-057T 345.00 - SUNNYSIDE 345KV CKT 1	717	789	0.03615	113.5529	GEN657749 1-YOUNG 1 GENERATOR
FDNS	00NR	0	20WP	G15_095	FROM->TO	G14-057T 345.00 - SUNNYSIDE 345KV CKT 1	717	789	0.03499	113.5467	FLETCHER - GEORGIA 138KV CKT 1
FDNS	00NR	0	20WP	G15_095	FROM->TO	G14-057T 345.00 - SUNNYSIDE 345KV CKT 1	717	789	0.03417	113.5386	P12:138:AEPW-OGE:CORNVIL4:MAUD 4
FDNS	00NR	0	20WP	G15_095	FROM->TO	G14-057T 345.00 - SUNNYSIDE 345KV CKT 1	717	789	0.03594	113.5228	FRONTIER - GRIMES 345KV CKT 1
FDNS	00NR	0	16WP	G15_095	FROM->TO	G14-057T 345.00 - SUNNYSIDE 345KV CKT 1	717	789	0.03696	113.5143	ARBWIND4 138.00 - KERR MCGEE CIMARRON 138KV CKT 1
FDNS	00NR	0	20WP	G15_095	FROM->TO	G14-057T 345.00 - SUNNYSIDE 345KV CKT 1	717	789	0.03594	113.5117	GEN335204 1-NELSON UNIT 4
FDNS	00NR	0	16WP	G15_095	FROM->TO	G14-057T 345.00 - SUNNYSIDE 345KV CKT 1	717	789	0.03615	113.51	GEN562270 1-G12-020-2 0.6900
FDNS	00NR	0	20WP	G15_095	FROM->TO	G14-057T 345.00 - SUNNYSIDE 345KV CKT 1	717	789	0.03594	113.5052	GEN503909 1-FULTONU1 1 16.000
FDNS	00NR	0	20WP	G15_095	FROM->TO	G14-057T 345.00 - SUNNYSIDE 345KV CKT 1	717	789	0.03594	113.5045	GEN334441 1-SABINE UNIT 5
FDNS	00NR	0	16WP	G15_095	FROM->TO	G14-057T 345.00 - SUNNYSIDE 345KV CKT 1	717	789	0.03615	113.5044	GEN562812 1-G15040_3 0.3570
FDNS	00NR	0	20WP	G15_095	FROM->TO	G14-057T 345.00 - SUNNYSIDE 345KV CKT 1	717	789	0.03469	113.5041	EMPIRE - FLETCHER 138KV CKT 1
FDNS	00NR	0	16WP	G15_095	FROM->TO	G14-057T 345.00 - SUNNYSIDE 345KV CKT 1	717	789	0.0362	113.503	P12:138:AEPW:112GORE4:SNYDER-4
FDNS	00NR	0	16WP	G15_095	FROM->TO	G14-057T 345.00 - SUNNYSIDE 345KV CKT 1	717	789	0.03717	113.5027	CLARKSVILLE - MUSKOGEE 345KV CKT 1
FDNS	00NR	0	16WP	G15_095	FROM->TO	G14-057T 345.00 - SUNNYSIDE 345KV CKT 1	717	789	0.03717	113.5027	CLARKSVILLE - MUSKOGEE 345KV CKT 1
FDNS	00NR	0	16WP	G15_095	FROM->TO	G14-057T 345.00 - SUNNYSIDE 345KV CKT 1	717	789	0.03615	113.5015	GEN563102 1-G15075_3 0.5500
FDNS	00NR	0	16WP	G15_095	FROM->TO	G14-057T 345.00 - SUNNYSIDE 345KV CKT 1	717	789	0.03615	113.4982	GEN562974 1-G15060_5 0.6900
FDNS	00NR	0	16WP	G15_095	FROM->TO	G14-057T 345.00 - SUNNYSIDE 345KV CKT 1	717	789	0.03615	113.4946	GEN563062 1-G15071_3 0.6900
FDNS	00NR	0	16WP	G15_095	FROM->TO	G14-057T 345.00 - SUNNYSIDE 345KV CKT 1	717	789	0.03615	113.4938	GEN563132 1-G15078_3 0.3570
FDNS	00NR	0	16WP	G15_095	FROM->TO	G14-057T 345.00 - SUNNYSIDE 345KV CKT 1	717	789	0.03615	113.4887	GEN562973 1-G15060_4 0.6900
FDNS	00NR	0	20WP	G15_095	FROM->TO	G14-057T 345.00 - SUNNYSIDE 345KV CKT 1	717	789	0.03726	113.4836	TUPELO - TUPELO TAP 138KV CKT 1
FDNSLock	00NR	0	16WP	G15_095	FROM->TO	G14-057T 345.00 - SUNNYSIDE 345KV CKT 1	717	789	0.03615	113.4834	GEN681522 3-GENOA 3
FDNS	00NR	0	20WP	G15_095	FROM->TO	G14-057T 345.00 - SUNNYSIDE 345KV CKT 1	717	789	0.03665	113.4741	LATHAMS7 345.00 - ROSE HILL 345KV CKT 1
FDNS	00NR	0	20WP	G15_095	FROM->TO	G14-057T 345.00 - SUNNYSIDE 345KV CKT 1	717	789	0.03417	113.4632	BLANCHARD - CORNVILLE 138KV CKT 1
FDNS	00NR	0	20WP	G15_095	FROM->TO	G14-057T 345.00 - SUNNYSIDE 345KV CKT 1	717	789	0.03589	113.4605	CIVIT - STRATFORD 138KV CKT 1
FDNS	00NR	0	16WP	G15_095	FROM->TO	G14-057T 345.00 - SUNNYSIDE 345KV CKT 1	717	789	0.03544	113.4561	BROWN - RUSSETT 138KV CKT 1
FDNS	00NR	0	16WP	G15_095	FROM->TO	G14-057T 345.00 - SUNNYSIDE 345KV CKT 1	717	789	0.03691	113.4351	CHICKASAW - TOTAL 138KV CKT 1
FDNS	00NR	0	16WP	G15_095	FROM->TO	G14-057T 345.00 - SUNNYSIDE 345KV CKT 1	717	789	0.03561	113.4301	RUSSETT - SPRINGDALE 138KV CKT 1
FDNS	00NR	0	16WP	G15_095	FROM->TO	G14-057T 345.00 - SUNNYSIDE 345KV CKT 1	717	789	0.03615	113.4267	GEN345671 2-1RUSH G2 18.000
FDNS	00NR	0	16WP	G15_095	FROM->TO	G14-057T 345.00 - SUNNYSIDE 345KV CKT 1	717	789	0.03615	113.4248	GEN345670 1-1RUSH G1 18.000
FDNS	00NR	0	20WP	G15_095	FROM->TO	G14-057T 345.00 - SUNNYSIDE 345KV CKT 1	717	789	0.03469	113.4227	COMANCHE - EMPIRE 138KV CKT 1
FDNS	00NR	0	20WP	G15_095	FROM->TO	G14-057T 345.00 - SUNNYSIDE 345KV CKT 1	717	789	0.03622	113.4172	LAYFLD8 500.00 - MOUNT OLIVE 500KV CKT 1
FDNS	00NR	0	20WP	G15_095	FROM->TO	G14-057T 345.00 - SUNNYSIDE 345KV CKT 1	717	789	0.03622	113.4172	LAYFLD8 500.00 - MOUNT OLIVE 500KV CKT 1
FDNS	00NR	0	16WP	G15_095	FROM->TO	G14-057T 345.00 - SUNNYSIDE 345KV CKT 1	717	789	0.03615	113.4132	GEN526331 1-JONES GEN #1 22 KV
FDNS	00NR	0	16WP	G15_095	FROM->TO	G14-057T 345.00 - SUNNYSIDE 345KV CKT 1	717	789	0.03615	113.4131	GEN526332 1-JONES GEN #2 21 KV
FDNS	00NR	0	16WP	G15_095	FROM->TO	G14-057T 345.00 - SUNNYSIDE 345KV CKT 1	717	789	0.03615	113.4028	GEN560105 1-G08-22 0.6900
FDNS	00NR	0	16WP	G15_095	FROM->TO	G14-057T 345.00 - SUNNYSIDE 345KV CKT 1	717	789	0.03615	113.3993	GEN562550 1-G14_040_3 0.6900
FDNS	00NR	0	16WP	G15_095	FROM->TO	G14-057T 345.00 - SUNNYSIDE 345KV CKT 1	717	789	0.03625	113.3982	ROCKY POINT - SUNNYSIDE 138KV CKT 1
FDNS	00NR	0	20WP	G15_095	FROM->TO	G14-057T 345.00 - SUNNYSIDE 345KV CKT 1	717	789	0.03594	113.3982	GEN336251 1-NINEMILE POINT UNIT#4
FDNS	00NR	0	20WP	G15_095	FROM->TO	G14-057T 345.00 - SUNNYSIDE 345KV CKT 1	717	789	0.03621	113.393	G1524G1525 345.00 - THISTLE7 345.00 345KV CKT 1
FDNS	00NR	0	20WP	G15_095	FROM->TO	G14-057T 345.00 - SUNNYSIDE 345KV CKT 1	717	789	0.03621	113.393	G1524G1525 345.00 - THISTLE7 345.00 345KV CKT 2
FDNS	00NR	0	20WP	G15_095	FROM->TO	G14-057T 345.00 - SUNNYSIDE 345KV CKT 1	717	789	0.03637	113.3929	FINNEY SWITCHING STATION - HOLCOMB 345KV CKT 1
FDNS	00NR	0	20WP	G15_095	FROM->TO	G14-057T 345.00 - SUNNYSIDE 345KV CKT 1	717	789	0.03637	113.3929	FINNEY SWITCHING STATION - HOLCOMB 345KV CKT 1
FDNS	00NR	0	20WP	G15_095	FROM->TO	G14-057T 345.00 - SUNNYSIDE 345KV CKT 1	717	789	0.03594	113.3927	GEN334071 1-LEWIS CREEK 2
FDNS	00NR	0	16WP	G15_095	FROM->TO	G14-057T 345.00 - SUNNYSIDE 345KV CKT 1	717	789	0.03544	113.3879	RUSSETT - RUSSETT 138KV CKT 1
FDNS	00NR	0	20WP	G15_095	FROM->TO	G14-057T 345.00 - SUNNYSIDE 345KV CKT 1	717	789	0.03594	113.3843	GEN334070 1-LEWIS CREEK 1
FDNS	00NR	0	16WP	G15_095	FROM->TO	G14-057T 345.00 - SUNNYSIDE 345KV CKT 1	717	789	0.03615	113.3775	4SIOUX 1 138.00 138/18.0KV TRANSFORMER CKT 1
FDNS	00NR	0	16WP	G15_095	FROM->TO	G14-057T 345.00 - SUNNYSIDE 345KV CKT 1	717	789	0.03838	113.3694	P12:138:WFEC:MSL07
FDNS	00NR	0	16WP	G15_095	FROM->TO	G14-057T 345.00 - SUNNYSIDE 345KV CKT 1	717	789	0.03838	113.3694	P12:138:WFEC-AEPW:HUGOPP4:ATOKA--4
FDNS	00NR	0	20WP	G15_095	FROM->TO	G14-057T 345.00 - SUNNYSIDE 345KV CKT 1	717	789	0.03594	113.3642	P12:161:AEPW-SWPA:BEAVER5:EROGERS5
FDNS	00NR	0	20WP	G15_095	FROM->TO	G14-057T 345.00 - SUNNYSIDE 345KV CKT 1	717	789	0.03594	113.3603	GEN509392 G2-ARSENAL HILL GENS #3 (STALL)
FDNS	00NR	0	20WP	G15_095	FROM->TO	G14-057T 345.00 - SUNNYSIDE 345KV CKT 1	717	789	0.03594	113.3602	GEN509391 G1-ARSENAL HILL GENS #2 (STALL)
FDNS	00NR	0	16WP	G15_095	FROM->TO	G14-057T 345.00 - SUNNYSIDE 345KV CKT 1	717	789	0.03615	113.3591	GEN511962 2-RKYRDGW2-1 0.7000
FDNS	00NR	0	20WP	G15_095	FROM->TO	G14-057T 345.00 - SUNNYSIDE 345KV CKT 1	717	789	0.03594	113.3581	GEN509393 S1-ARSENAL HILL GENS #4 (STALL)
FDNS	00NR	0	16WP	G15_095	FROM->TO	G14-057T 345.00 - SUNNYSIDE 345KV CKT 1	717	789	0.03615	113.3577	GEN521112 1-ORME3 13.800
FDNS	00NR	0	16WP	G15_095	FROM->TO	G14-057T 345.00 - SUNNYSIDE 345KV CKT 1	717	789	0.03615	113.3553	CLAY BOSWELL 230/20.9KV TRANSFORMER CKT 1
FDNS	00NR	0	16WP	G15_095	FROM->TO	G14-057T 345.00 - SUNNYSIDE 345KV CKT 1	717	789	0.03615	113.3532	GEN527882 1-CUNNINGHAM GEN #2 20 KV
FDNS	00NR	0	20WP	G15_095	FROM->TO	G14-057T 345.00 - SUNNYSIDE 345KV CKT 1	717	789	0.03594	113.3465	GEN334433 1-SABINE UNIT 3
FDNS	00NR	0	20WP	G15_095	FROM->TO	G14-057T 345.00 - SUNNYSIDE 345KV CKT 1	717	789	0.03589	113.3428	OIL CENTER - STRATFORD 138KV CKT 1
FDNS	00NR	0	16WP	G15_095	FROM->TO	G14-057T 345.00 - SUNNYSIDE 345KV CKT 1	717	789	0.03615	113.3369	GEN562892 1-G15048_3 0.6900
FDNS	00NR	0	20WP	G15_095	FROM->TO	G14-057T 345.00 - SUNNYSIDE 345KV CKT 1	717	789	0.03594	113.3339	GEN337653 1-WHITE BLUFF UNIT #2
FDNS	00NR	0	16WP	G15_095	FROM->TO	G14-057T 345.00 - SUNNYSIDE 345KV CKT 1	717	789	0.03674	113.3312	ARDMORE WEST - CARTER 138KV CKT 1
FDNS	00NR	0	16WP	G15_095	FROM->TO	G14-057T 345.00 - SUNNYSIDE 345KV CKT 1	717	789	0.03615	113.3247	GEN562512 1-G14_020_3 0.6900
FDNS	00NR	0	20WP	G15_095	FROM->TO	G14-057T 345.00 - SUNNYSIDE 345KV CKT 1	717	789	0.03594	113.323	GEN336831 1-BAXTER WILSON SES
FDNS	00NR	0	16WP	G15_095	FROM->TO	G14-057T 345.00 - SUNNYSIDE 345KV CKT 1	717	789	0.03615	113.3179	GEN672321 1-SHAND GENERATOR 1
FDNS	00NR	0	16WP	G15_095	FROM->TO	G14-057T 345.00 - SUNNYSIDE 345KV CKT 1	717	789	0.03615	113.3158	GEN563192 1-G15084_3 0.5500
FDNS	00NR	0	20WP	G15_095	FROM->TO	G14-057T 345.00 - SUNNYSIDE 345KV CKT 1	717	789	0.0421	113.3115	P12:138:AEPW:S.W.S.-4:L.E.S.-4
FDNS	00NR	0	16WP	G15_095	FROM->TO	G14-057T 345.00 - SUNNYSIDE 345KV CKT 1	717	789	0.03615	113.3067	GEN511853 1-COMANCHE #3
FDNS	00NR	0	20WP	G15_095	FROM->TO	G14-057T 345.00 - SUNNYSIDE 345KV CKT 1	717	789	0.03594	113.3019	P12:161:AEPW:DYESS5:ELMSPRNG:TONTITN5
FDNS	00NR	0	20WP	G15_095	FROM->TO	G14-057T 345.00 - SUNNYSIDE 345KV CKT 1	717	789	0.03643	113.2967	DUNCAN (DUNCAN) 138/69/13.8KV TRANSFORMER CKT 1
FDNS	00NR	0	20WP	G15_095	FROM->TO	G14-057T 345.00 - SUNNYSIDE 345KV CKT 1	717	789	0.03643	113.2967	DUNCAN (DUNCAN) 138/69/13.8KV TRANSFORMER CKT 1
FDNS	00NR	0	16WP	G15_095	FROM->TO	G14-057T 345.00 - SUNNYSIDE 345KV CKT 1	717	789	0.03615	113.2937	GEN672310 1-POPLAR RIVER GENERATOR 1
FDNS	00NR	0	16WP	G15_095	FROM->TO	G14-057T 345.00 - SUNNYSIDE 345KV CKT 1	717	789	0.03615	113.2937	GEN672311 2-POPLAR RIVER GENERATOR 2
FDNS	00NR	0	16WP	G15_095	FROM->TO	G14-057T 345.00 - SUNNYSIDE 345KV CKT 1	717	789	0.03605	113.2933	P12:138:WFEC:MSL16
FDNS	00NR	0	16WP	G15_095	FROM->TO	G14-057T 345.00 - SUNNYSIDE 345KV CKT 1	717	789	0.03711	113.2886	P12:138:WFEC-AEPW:GOLDENSW4:CRAIGJT4
FDNS	00NR	0	16WP	G15_095	FROM->TO	G14-057T 345.00 - SUNNYSIDE 345KV CKT 1	717	789	0.03686	113.2851	SUNNYSIDE (SUNNYSD5) 345/138/13.8KV TRANSFORMER CKT 1

SOLUTION	GROUP	SCENARIO	SEASON	SOURCE	DIRECTION	MONITORED ELEMENT	RATEA (MVA)	RATEB(MVA)	TDF	TC%LOADING (% MVA)	CONTINGENCY
FDNS	00NR	0	16WP	G15_095	FROM->TO	G14-057T 345.00 - SUNNYSIDE 345KV CKT 1	717	789	0.03615	113.2851	GEN672306 6-BOUNDARY DAM GENERATOR 6
FDNS	00NR	0	20WP	G15_095	FROM->TO	G14-057T 345.00 - SUNNYSIDE 345KV CKT 1	717	789	0.03594	113.2821	GEN337911 1-ARKANSAS NUCLEAR ONE UNIT #2
FDNS	00NR	0	20WP	G15_095	FROM->TO	G14-057T 345.00 - SUNNYSIDE 345KV CKT 1	717	789	0.03594	113.2788	GEN515040 1-SEMINOLE 1G
FDNS	00NR	0	20WP	G15_095	FROM->TO	G14-057T 345.00 - SUNNYSIDE 345KV CKT 1	717	789	0.03483	113.2722	G14_038T 345.00 - Hitchland Interchange 345KV CKT 1
FDNS	00NR	0	20WP	G15_095	FROM->TO	G14-057T 345.00 - SUNNYSIDE 345KV CKT 1	717	789	0.03594	113.2716	GEN334030 1-FRONTIER UNIT 1
FDNS	00NR	0	16WP	G15_095	FROM->TO	G14-057T 345.00 - SUNNYSIDE 345KV CKT 1	717	789	0.03615	113.271	GEN344895 2-1LAB G2 20.000
FDNS	00NR	0	20WP	G15_095	FROM->TO	G14-057T 345.00 - SUNNYSIDE 345KV CKT 1	717	789	0.03594	113.2693	GEN334031 1-FRONTIER UNIT 2
FDNS	00NR	0	16WP	G15_095	FROM->TO	G14-057T 345.00 - SUNNYSIDE 345KV CKT 1	717	789	0.03615	113.2581	GEN523461 1-BLACKHAWK GEN #1
FDNS	00NR	0	16WP	G15_095	FROM->TO	G14-057T 345.00 - SUNNYSIDE 345KV CKT 1	717	789	0.03615	113.258	GEN523462 1-BLACKHAWK GEN #2
FDNS	00NR	0	20WP	G15_095	FROM->TO	G14-057T 345.00 - SUNNYSIDE 345KV CKT 1	717	789	0.03266	113.2548	TUTTLE - TUTTLE CONOCO TAP 138KV CKT 1
FDNS	00NR	0	16WP	G15_095	FROM->TO	G14-057T 345.00 - SUNNYSIDE 345KV CKT 1	717	789	0.03615	113.2537	GEN511852 1-COMANCHE #2
FDNS	00NR	0	20WP	G15_095	FROM->TO	G14-057T 345.00 - SUNNYSIDE 345KV CKT 1	717	789	0.03596	113.2501	P12:138:AEPW:CATOOSA4:T.S.E.-4
FDNS	00NR	0	20WP	G15_095	FROM->TO	G14-057T 345.00 - SUNNYSIDE 345KV CKT 1	717	789	0.03417	113.2433	BLANCHARD - MAUD 138KV CKT 1
FDNS	00NR	0	16WP	G15_095	FROM->TO	G14-057T 345.00 - SUNNYSIDE 345KV CKT 1	717	789	0.03615	113.2389	GEN344896 3-1LAB G3 20.000
FDNS	00NR	0	16WP	G15_095	FROM->TO	G14-057T 345.00 - SUNNYSIDE 345KV CKT 1	717	789	0.03615	113.2375	GEN344894 1-1LAB G1 20.000
FDNS	00NR	0	16WP	G15_095	FROM->TO	G14-057T 345.00 - SUNNYSIDE 345KV CKT 1	717	789	0.03615	113.2361	GEN344897 4-1LAB G4 20.000
FDNS	00NR	0	20WP	G15_095	FROM->TO	G14-057T 345.00 - SUNNYSIDE 345KV CKT 1	717	789	0.03672	113.2345	FULTON 115 - HOPE 115KV CKT 1
FDNS	00NR	0	20WP	G15_095	FROM->TO	G14-057T 345.00 - SUNNYSIDE 345KV CKT 1	717	789	0.03672	113.2345	FULTON 115 - HOPE 115KV CKT 1
FDNS	00NR	0	20WP	G15_095	FROM->TO	G14-057T 345.00 - SUNNYSIDE 345KV CKT 1	717	789	0.03536	113.2314	P12:138:AEPW-OGE:WTH_JCT4:JENSEN4
FDNS	00NR	0	20WP	G15_095	FROM->TO	G14-057T 345.00 - SUNNYSIDE 345KV CKT 1	717	789	0.03594	113.2306	GEN337652 1-WHITE BLUFF UNIT #1
FDNS	00NR	0	20WP	G15_095	FROM->TO	G14-057T 345.00 - SUNNYSIDE 345KV CKT 1	717	789	0.03594	113.2297	GEN501811 1-RODEMACHER UNIT 1
FDNS	00NR	0	20WP	G15_095	FROM->TO	G14-057T 345.00 - SUNNYSIDE 345KV CKT 1	717	789	0.03629	113.2296	P12:138:AEPW:CORNVIL4:DUNCAN-4
FDNS	00NR	0	20WP	G15_095	FROM->TO	G14-057T 345.00 - SUNNYSIDE 345KV CKT 1	717	789	0.03594	113.2154	GEN506752 1-LEBROCK GAS 1
FDNS	00NR	0	16WP	G15_095	FROM->TO	G14-057T 345.00 - SUNNYSIDE 345KV CKT 1	717	789	0.03674	113.2152	ARDMORE WEST - UNIROYAL 138KV CKT 1
FDNS	00NR	0	20WP	G15_095	FROM->TO	G14-057T 345.00 - SUNNYSIDE 345KV CKT 1	717	789	0.03594	113.2151	GEN506753 1-LEBROCK GAS 2
FDNS	00NR	0	20WP	G15_095	FROM->TO	G14-057T 345.00 - SUNNYSIDE 345KV CKT 1	717	789	0.03594	113.212	GEN300015 1-1SGPDEL 18.000
FDNS	00NR	0	20WP	G15_095	FROM->TO	G14-057T 345.00 - SUNNYSIDE 345KV CKT 1	717	789	0.03594	113.2097	GEN515226 1-MUSKOGEE 6G
FDNS	00NR	0	20WP	G15_095	FROM->TO	G14-057T 345.00 - SUNNYSIDE 345KV CKT 1	717	789	0.03594	113.2086	GEN300003 1-THOMAS HILL UNIT 3
FDNS	00NR	0	16WP	G15_095	FROM->TO	G14-057T 345.00 - SUNNYSIDE 345KV CKT 1	717	789	0.03622	113.2023	P12:138:AEPW-SWPA:LONEOAK4:TUPELO4
FDNS	00NR	0	16WP	G15_095	FROM->TO	G14-057T 345.00 - SUNNYSIDE 345KV CKT 1	717	789	0.03622	113.2023	P12:138:WFEC:MSL06
FDNS	00NR	0	16WP	G15_095	FROM->TO	G14-057T 345.00 - SUNNYSIDE 345KV CKT 1	717	789	0.03578	113.2022	P12:138:OKGE:3TERM40
FDNS	00NR	0	20WP	G15_095	FROM->TO	G14-057T 345.00 - SUNNYSIDE 345KV CKT 1	717	789	0.03594	113.197	GEN336191 1-LITTLE GYPSY UNIT#3
FDNS	00NR	0	16WP	G15_095	FROM->TO	G14-057T 345.00 - SUNNYSIDE 345KV CKT 1	717	789	0.03615	113.1818	GEN563162 1-G15081_3 0.6900
FDNSLock	00NR	0	16WP	G15_095	FROM->TO	G14-057T 345.00 - SUNNYSIDE 345KV CKT 1	717	789	0.03615	113.1814	GEN681542 6-JP MADGETT
FDNS	00NR	0	16WP	G15_095	FROM->TO	G14-057T 345.00 - SUNNYSIDE 345KV CKT 1	717	789	0.03615	113.1784	GEN521110 1-ORME1 13.800
FDNS	00NR	0	16WP	G15_095	FROM->TO	G14-057T 345.00 - SUNNYSIDE 345KV CKT 1	717	789	0.03615	113.1784	GEN521111 1-ORME2 13.800
FDNS	00NR	0	20WP	G15_095	FROM->TO	G14-057T 345.00 - SUNNYSIDE 345KV CKT 1	717	789	0.03534	113.1781	P12:138:AEPW:CORNVIL4:S.W.S.-4
FDNS	00NR	0	20WP	G15_095	FROM->TO	G14-057T 345.00 - SUNNYSIDE 345KV CKT 1	717	789	0.03653	113.1775	6LAYFLD 230.00 - CARROLL 230KV CKT 1
FDNS	00NR	0	16WP	G15_095	FROM->TO	G14-057T 345.00 - SUNNYSIDE 345KV CKT 1	717	789	0.03615	113.1714	GEN562699 1-G15_018_3 0.6900
FDNS	00NR	0	16WP	G15_095	FROM->TO	G14-057T 345.00 - SUNNYSIDE 345KV CKT 1	717	789	0.03596	113.1706	G15085_T 138.00 - RUSSELL 138KV CKT 1
FDNS	00NR	0	16WP	G15_095	FROM->TO	G14-057T 345.00 - SUNNYSIDE 345KV CKT 1	717	789	0.03735	113.1705	CARTRCO4 138.00 - RATLIFF 138KV CKT 1
FDNS	00NR	0	20WP	G15_095	FROM->TO	G14-057T 345.00 - SUNNYSIDE 345KV CKT 1	717	789	0.03589	113.1702	LATTA JCT - OIL CENTER 138KV CKT 1
FDNS	00NR	0	20WP	G15_095	FROM->TO	G14-057T 345.00 - SUNNYSIDE 345KV CKT 1	717	789	0.03594	113.1681	GEN335614 1-WILLOW GLENN UNIT#4
FDNS	00NR	0	20WP	G15_095	FROM->TO	G14-057T 345.00 - SUNNYSIDE 345KV CKT 1	717	789	0.03266	113.162	CIMARRON - TUTTLE CONOCO TAP 138KV CKT 1
FDNS	00NR	0	16WP	G15_095	FROM->TO	G14-057T 345.00 - SUNNYSIDE 345KV CKT 1	717	789	0.03615	113.159	GEN563292 1-G15095_3 0.6900
FDNS	00NR	0	20WP	G15_095	FROM->TO	G14-057T 345.00 - SUNNYSIDE 345KV CKT 1	717	789	0.03602	113.1529	8DANIEL8 500.00 - MCKNIGHT 500KV CKT 1
FDNS	00NR	0	20WP	G15_095	FROM->TO	G14-057T 345.00 - SUNNYSIDE 345KV CKT 1	717	789	0.03237	113.1398	BAILEY4 138.00 - SUNSHINE CANYON 138KV CKT 1
FDNS	00NR	0	20WP	G15_095	FROM->TO	G14-057T 345.00 - SUNNYSIDE 345KV CKT 1	717	789	0.04472	113.1297	G15095_T 138.00 - ROSE_VALLEY 138.00 138KV CKT 1
FDNS	00NR	0	16WP	G15_095	FROM->TO	G14-057T 345.00 - SUNNYSIDE 345KV CKT 1	717	789	0.03281	113.1295	G15063_T 345.00 - MATHWSN7 345.00 345KV CKT 1
FDNS	00NR	0	20WP	G15_095	FROM->TO	G14-057T 345.00 - SUNNYSIDE 345KV CKT 1	717	789	0.03594	113.1261	GEN337910 1-ARKANSAS NUCLEAR ONE UNIT #1
FDNS	00NR	0	20WP	G15_095	FROM->TO	G14-057T 345.00 - SUNNYSIDE 345KV CKT 1	717	789	0.03594	113.1241	P12:161:AEPW:EROGERS5:ECNTRTN5
FDNS	00NR	0	20WP	G15_095	FROM->TO	G14-057T 345.00 - SUNNYSIDE 345KV CKT 1	717	789	0.03591	113.1228	BUCKNER7 345.00 - SPEARVILLE 345KV CKT 1
FDNS	00NR	0	20WP	G15_095	FROM->TO	G14-057T 345.00 - SUNNYSIDE 345KV CKT 1	717	789	0.03591	113.1228	BUCKNER7 345.00 - SPEARVILLE 345KV CKT 1
FDNS	00NR	0	20WP	G15_095	FROM->TO	G14-057T 345.00 - SUNNYSIDE 345KV CKT 1	717	789	0.03594	113.122	GEN303007 1-1BC2 U2
FDNS	00NR	0	20WP	G15_095	FROM->TO	G14-057T 345.00 - SUNNYSIDE 345KV CKT 1	717	789	0.03637	113.1199	FINNEY SWITCHING STATION - WALKTAP7 345.00 345KV CKT 1
FDNS	00NR	0	20WP	G15_095	FROM->TO	G14-057T 345.00 - SUNNYSIDE 345KV CKT 1	717	789	0.03637	113.1199	FINNEY SWITCHING STATION - WALKTAP7 345.00 345KV CKT 1
FDNS	00NR	0	16WP	G15_095	FROM->TO	G14-057T 345.00 - SUNNYSIDE 345KV CKT 1	717	789	0.0362	113.1195	CACHE - SNYDER 138KV CKT 1
FDNS	00NR	0	20WP	G15_095	FROM->TO	G14-057T 345.00 - SUNNYSIDE 345KV CKT 1	717	789	0.03594	113.1171	GEN336464 1-MICHOUD UNIT #3
FDNS	00NR	0	20WP	G15_095	FROM->TO	G14-057T 345.00 - SUNNYSIDE 345KV CKT 1	717	789	0.03594	113.116	GEN303006 1-1BC2 U1
FDNS	00NR	0	20WP	G15_095	FROM->TO	G14-057T 345.00 - SUNNYSIDE 345KV CKT 1	717	789	0.03556	113.1158	P12:138:AEPW:WTHWF4:CLINTJC4
FDNS	00NR	0	20WP	G15_095	FROM->TO	G14-057T 345.00 - SUNNYSIDE 345KV CKT 1	717	789	0.03594	113.1142	WHITE BLUFF 500/26.0KV TRANSFORMER CKT 1
FDNS	00NR	0	20WP	G15_095	FROM->TO	G14-057T 345.00 - SUNNYSIDE 345KV CKT 1	717	789	0.03643	113.1123	P12:69:WFEC-AEPW:COMANCH2:DUNCAN-2
FDNS	00NR	0	20WP	G15_095	FROM->TO	G14-057T 345.00 - SUNNYSIDE 345KV CKT 1	717	789	0.03594	113.1123	GEN515223 1-MUSKOGEE 4G
FDNS	00NR	0	20WP	G15_095	FROM->TO	G14-057T 345.00 - SUNNYSIDE 345KV CKT 1	717	789	0.03594	113.1123	GEN515225 1-MUSKOGEE 5G
FDNS	00NR	0	20WP	G15_095	FROM->TO	G14-057T 345.00 - SUNNYSIDE 345KV CKT 1	717	789	0.03594	113.1096	GEN562783 1-G15036_4 0.6900
FDNS	00NR	0	20WP	G15_095	FROM->TO	G14-057T 345.00 - SUNNYSIDE 345KV CKT 1	717	789	0.03594	113.1096	GEN562784 1-G15036_5 0.6900
FDNS	00NR	0	20WP	G15_095	FROM->TO	G14-057T 345.00 - SUNNYSIDE 345KV CKT 1	717	789	0.03602	113.1077	G15088_T 345.00 - MOORE 345KV CKT 1
FDNS	00NR	0	20WP	G15_095	FROM->TO	G14-057T 345.00 - SUNNYSIDE 345KV CKT 1	717	789	0.03639	113.1046	P12:69:AEPW-OMPA:COMANC-2:OMWALTR2
FDNS	00NR	0	20WP	G15_095	FROM->TO	G14-057T 345.00 - SUNNYSIDE 345KV CKT 1	717	789	0.03654	113.0985	BISMARK - HOT SPRINGS WEST BUS 115KV CKT 1
FDNS	00NR	0	20WP	G15_095	FROM->TO	G14-057T 345.00 - SUNNYSIDE 345KV CKT 1	717	789	0.03601	113.0959	CIMARRON - CZECH HALL 138KV CKT 1
FDNS	00NR	0	20WP	G15_095	FROM->TO	G14-057T 345.00 - SUNNYSIDE 345KV CKT 1	717	789	0.03609	113.0936	G15074_T 345.00 - HOYT 345KV CKT 1
FDNS	00NR	0	20WP	G15_095	FROM->TO	G14-057T 345.00 - SUNNYSIDE 345KV CKT 1	717	789	0.03623	113.0914	MC NIEL 500/115KV TRANSFORMER CKT 1
FDNS	00NR	0	20WP	G15_095	FROM->TO	G14-057T 345.00 - SUNNYSIDE 345KV CKT 1	717	789	0.03594	113.0857	GEN300010 1-ST FRANCIS UNIT 1
FDNS	00NR	0	20WP	G15_095	FROM->TO	G14-057T 345.00 - SUNNYSIDE 345KV CKT 1	717	789	0.03643	113.0853	DUNCAN - TOSCO 69KV CKT 1
FDNS	00NR	0	20WP	G15_095	FROM->TO	G14-057T 345.00 - SUNNYSIDE 345KV CKT 1	717	789	0.03556	113.0823	P12:138:AEPW:WTHWF4:WTH_SE4
FDNS	00NR	0	16WP	G15_095	FROM->TO	G14-057T 345.00 - SUNNYSIDE 345KV CKT 1	717	789	0.03615	113.0731	GEN563122 1-G15077_3 0.3850
FDNS	00NR	0	16WP	G15_095	FROM->TO	G14-057T 345.00 - SUNNYSIDE 345KV CKT 1	717	789	0.03615	113.0722	GEN661015 1-COYOTE
FDNS	00NR	0	20WP	G15_095	FROM->TO	G14-057T 345.00 - SUNNYSIDE 345KV CKT 1	717	789	0.03618	113.0703	HOT SPRINGS EHV - MAGNET COVE 500KV CKT 1
FDNS	00NR	0	20WP	G15_095	FROM->TO	G14-057T 345.00 - SUNNYSIDE 345KV CKT 1	717	789	0.03823	113.0696	CLEO CORNER - CLEOPLT4 138.00 138KV CKT 1

SOLUTION	GROUP	SCENARIO	SEASON	SOURCE	DIRECTION	MONITORED ELEMENT	RATEA (MVA)	RATEB(MVA)	TDF	TC%LOADING (% MVA)	CONTINGENCY
FDNS	00NR	0	20WP	G15_095	FROM->TO	G14-057T 345.00 - SUNNYSIDE 345KV CKT 1	717	789	0.03594	113.0607	GEN337041 1-GERALD ANDRUS
FDNS	00NR	0	20WP	G15_095	FROM->TO	G14-057T 345.00 - SUNNYSIDE 345KV CKT 1	717	789	0.03594	113.059	GEN505432 1-SIKESTON
FDNS	00NR	0	16WP	G15_095	FROM->TO	G14-057T 345.00 - SUNNYSIDE 345KV CKT 1	717	789	0.03615	113.0554	GEN562861 1-G15045_2 0.4800
FDNS	00NR	0	20WP	G15_095	FROM->TO	G14-057T 345.00 - SUNNYSIDE 345KV CKT 1	717	789	0.03594	113.0543	GEN303008 1-1BC2 U3
FDNS	00NR	0	20WP	G15_095	FROM->TO	G14-057T 345.00 - SUNNYSIDE 345KV CKT 1	717	789	0.03467	113.0517	CHISHOLM6 230.00 - ELK CITY 230KV 230KV CKT 1
FDNS	00NR	0	20WP	G15_095	FROM->TO	G14-057T 345.00 - SUNNYSIDE 345KV CKT 1	717	789	0.04472	113.0491	NOEL_SW 138.00 - ROSE_VALLEY 138.00 138KV CKT 1
FDNS	00NR	0	20WP	G15_095	FROM->TO	G14-057T 345.00 - SUNNYSIDE 345KV CKT 1	717	789	0.03823	113.0487	CLEOPLT4 138.00 - MEN TAP 138KV CKT 1
FDNS	00NR	0	20WP	G15_095	FROM->TO	G14-057T 345.00 - SUNNYSIDE 345KV CKT 1	717	789	0.03467	113.0487	ELK CITY 230KV (ELKCTY-6) 230/138/13.8KV TRANSFORMER CKT 1
FDNS	00NR	0	20WP	G15_095	FROM->TO	G14-057T 345.00 - SUNNYSIDE 345KV CKT 1	717	789	0.03467	113.0487	ELK CITY 230KV (ELKCTY-6) 230/138/13.8KV TRANSFORMER CKT 1
FDNS	00NR	0	20WP	G15_095	FROM->TO	G14-057T 345.00 - SUNNYSIDE 345KV CKT 1	717	789	0.03654	113.047	ALPINE AECC - BISMARK 115KV CKT 1
FDNS	00NR	0	16WP	G15_095	FROM->TO	G14-057T 345.00 - SUNNYSIDE 345KV CKT 1	717	789	0.03615	113.0454	GEN520811 1-ANADRK4
FDNS	00NR	0	20WP	G15_095	FROM->TO	G14-057T 345.00 - SUNNYSIDE 345KV CKT 1	717	789	0.03633	113.0419	CIMARRON - SARA 138KV CKT 1
FDNS	00NR	0	20WP	G15_095	FROM->TO	G14-057T 345.00 - SUNNYSIDE 345KV CKT 1	717	789	0.03823	113.0367	IMO TAP - MEN TAP 138KV CKT 1
FDNS	00NR	0	20WP	G15_095	FROM->TO	G14-057T 345.00 - SUNNYSIDE 345KV CKT 1	717	789	0.03594	113.0282	GEN300011 1-ST FRANCIS UNIT 2
FDNS	00NR	0	20WP	G15_095	FROM->TO	G14-057T 345.00 - SUNNYSIDE 345KV CKT 1	717	789	0.03594	113.0251	GEN336170 1-GULF OXY U4
FDNS	00NR	0	20WP	G15_095	FROM->TO	G14-057T 345.00 - SUNNYSIDE 345KV CKT 1	717	789	0.03596	113.0227	P12:138:AEPW:N.E.S.-4:CATOOSA4
FDNSLock	00NR	0	16WP	G15_095	FROM->TO	G14-057T 345.00 - SUNNYSIDE 345KV CKT 1	717	789	0.03615	113.0211	GEN532751 1-WOLF CREEK GENERATING STATION UNIT 1
FDNS	00NR	0	20WP	G15_095	FROM->TO	G14-057T 345.00 - SUNNYSIDE 345KV CKT 1	717	789	0.03694	113.0209	SEMINOLE - VANOSTP4 138.00 138KV CKT 1
FDNS	00NR	0	20WP	G15_095	FROM->TO	G14-057T 345.00 - SUNNYSIDE 345KV CKT 1	717	789	0.03601	113.0172	CZECH HALL - XEROX 138KV CKT 1
FDNS	00NR	0	20WP	G15_095	FROM->TO	G14-057T 345.00 - SUNNYSIDE 345KV CKT 1	717	789	0.03643	113.0167	COMANCHE TAP - TOSCO 69KV CKT 1
FDNS	00NR	0	20WP	G15_095	FROM->TO	G14-057T 345.00 - SUNNYSIDE 345KV CKT 1	717	789	0.03594	113.0167	NELSON 230/20.0KV TRANSFORMER CKT 1
FDNS	00NR	0	16WP	G15_095	FROM->TO	G14-057T 345.00 - SUNNYSIDE 345KV CKT 1	717	789	0.0419	113.0164	P12:138:WFEC:MSL15
FDNS	00NR	0	20WP	G15_095	FROM->TO	G14-057T 345.00 - SUNNYSIDE 345KV CKT 1	717	789	0.03601	113.0131	MORGAN - XEROX 138KV CKT 1
FDNS	00NR	0	20WP	G15_095	FROM->TO	G14-057T 345.00 - SUNNYSIDE 345KV CKT 1	717	789	0.03594	113.0062	GEN336801 1-BAXTER WILSON UNIT #1
FDNS	00NR	0	20WP	G15_095	FROM->TO	G14-057T 345.00 - SUNNYSIDE 345KV CKT 1	717	789	0.03654	112.9982	ALPINE AECC - AMITY SS 115KV CKT 1
FDNS	00NR	0	20WP	G15_095	FROM->TO	G14-057T 345.00 - SUNNYSIDE 345KV CKT 1	717	789	0.03676	112.9962	ARBWIND4 138.00 - CARTER 138KV CKT 1
FDNS	00NR	0	16WP	G15_095	FROM->TO	G14-057T 345.00 - SUNNYSIDE 345KV CKT 1	717	789	0.03674	112.9937	SUNNYSIDE - UNIROYAL 138KV CKT 1
FDNS	00NR	0	20WP	G15_095	FROM->TO	G14-057T 345.00 - SUNNYSIDE 345KV CKT 1	717	789	0.03601	112.9905	MORGAN - MUSTANG 138KV CKT 1
FDNS	00NR	0	20WP	G15_095	FROM->TO	G14-057T 345.00 - SUNNYSIDE 345KV CKT 1	717	789	0.03529	112.9897	WEATHERFORD JCT. - WEATHERFORD SOUTHEAST 138KV CKT 1
FDNS	00NR	0	20WP	G15_095	FROM->TO	G14-057T 345.00 - SUNNYSIDE 345KV CKT 1	717	789	0.03529	112.9897	WEATHERFORD JCT. - WEATHERFORD SOUTHEAST 138KV CKT 1
FDNS	00NR	0	20WP	G15_095	FROM->TO	G14-057T 345.00 - SUNNYSIDE 345KV CKT 1	717	789	0.03594	112.9775	8CAJUN2 500/24.0KV TRANSFORMER CKT 1
FDNS	00NR	0	20WP	G15_095	FROM->TO	G14-057T 345.00 - SUNNYSIDE 345KV CKT 1	717	789	0.03594	112.9766	GEN501910 1-ACADIA UNIT ST1
FDNS	00NR	0	16WP	G15_095	FROM->TO	G14-057T 345.00 - SUNNYSIDE 345KV CKT 1	717	789	0.03615	112.9741	GEN562992 1-G15063_3 0.6900
FDNS	00NR	0	20WP	G15_095	FROM->TO	G14-057T 345.00 - SUNNYSIDE 345KV CKT 1	717	789	0.03377	112.9676	ANADARKO - SEQUOYAHJ4 138.00 138KV CKT 1
FDNS	00NR	0	20WP	G15_095	FROM->TO	G14-057T 345.00 - SUNNYSIDE 345KV CKT 1	717	789	0.03377	112.9661	CORN TAP - SEQUOYAHJ4 138.00 138KV CKT 1
FDNS	00NR	0	20WP	G15_095	FROM->TO	G14-057T 345.00 - SUNNYSIDE 345KV CKT 1	717	789	0.03643	112.9645	COMANCHE - COMANCHE TAP 69KV CKT 1
FDNS	00NR	0	20WP	G15_095	FROM->TO	G14-057T 345.00 - SUNNYSIDE 345KV CKT 1	717	789	0.03237	112.9615	BAILEY4 138.00 - WESTMOORE 138KV CKT 1
FDNS	00NR	0	16WP	G15_095	FROM->TO	G14-057T 345.00 - SUNNYSIDE 345KV CKT 1	717	789	0.03615	112.9554	GEN657748 1-YOUNG 2 GENERATOR
FDNS	00NR	0	16WP	G15_095	FROM->TO	G14-057T 345.00 - SUNNYSIDE 345KV CKT 1	717	789	0.03577	112.9501	GRAPEVINE INTERCHANGE - STATELINE INTERCHANGE 230KV CKT 1
FDNS	00NR	0	16WP	G15_095	FROM->TO	G14-057T 345.00 - SUNNYSIDE 345KV CKT 1	717	789	0.03577	112.9501	GRAPEVINE INTERCHANGE - STATELINE INTERCHANGE 230KV CKT 1
FDNS	00NR	0	20WP	G15_095	FROM->TO	G14-057T 345.00 - SUNNYSIDE 345KV CKT 1	717	789	0.03658	112.95	P12:138:OKGE-AEPW:JENSEN4:REDROCKRD4
FDNS	00NR	0	20WP	G15_095	FROM->TO	G14-057T 345.00 - SUNNYSIDE 345KV CKT 1	717	789	0.03615	112.94	WALTERS - WALTERS 69KV CKT 1
FDNS	00NR	0	20WP	G15_095	FROM->TO	G14-057T 345.00 - SUNNYSIDE 345KV CKT 1	717	789	0.03529	112.9379	P12:138:AEPW:REDROCKRD4:WTH_JCT4
FDNS	00NR	0	20WP	G15_095	FROM->TO	G14-057T 345.00 - SUNNYSIDE 345KV CKT 1	717	789	0.03594	112.9375	SABINE 230/24.0KV TRANSFORMER CKT 1
FDNS	00NR	0	20WP	G15_095	FROM->TO	G14-057T 345.00 - SUNNYSIDE 345KV CKT 1	717	789	0.03594	112.9335	GEN300016 1-1G1GPDEL 18.000
FDNS	00NR	0	20WP	G15_095	FROM->TO	G14-057T 345.00 - SUNNYSIDE 345KV CKT 1	717	789	0.03633	112.9306	SARA - STHLAKE4 138.00 138KV CKT 1
FDNS	00NR	0	16WP	G15_095	FROM->TO	G14-057T 345.00 - SUNNYSIDE 345KV CKT 1	717	789	0.03538	112.9294	CANEY CREEK - TEXOMA JCT 138KV CKT 1
FDNS	00NR	0	20WP	G15_095	FROM->TO	G14-057T 345.00 - SUNNYSIDE 345KV CKT 1	717	789	0.03594	112.9286	P12:138:AEPW:R.S.S.-4:S.HUD.-4
FDNS	00NR	0	20WP	G15_095	FROM->TO	G14-057T 345.00 - SUNNYSIDE 345KV CKT 1	717	789	0.03615	112.9232	ETTA (DUKE HOTSPRINGS) - MC NIEL 500KV CKT 1
FDNS	00NR	0	20WP	G15_095	FROM->TO	G14-057T 345.00 - SUNNYSIDE 345KV CKT 1	717	789	0.03594	112.9218	GEN336222 1-LITTLE GYPSY UNIT#2
FDNS	00NR	0	16WP	G15_095	FROM->TO	G14-057T 345.00 - SUNNYSIDE 345KV CKT 1	717	789	0.03596	112.9113	P12:138:AEPW:SHAM4WT:CHILD4WT
FDNS	00NR	0	20WP	G15_095	FROM->TO	G14-057T 345.00 - SUNNYSIDE 345KV CKT 1	717	789	0.03639	112.9105	LAWTON RELIFT TAP - OMPA-WALTERS 69KV CKT 1
FDNS	00NR	0	20WP	G15_095	FROM->TO	G14-057T 345.00 - SUNNYSIDE 345KV CKT 1	717	789	0.03633	112.9005	MCCLAIN - STHLAKE4 138.00 138KV CKT 1
FDNS	00NR	0	20WP	G15_095	FROM->TO	G14-057T 345.00 - SUNNYSIDE 345KV CKT 1	717	789	0.03594	112.897	P12:69:AEPW:NROGERS2:ECNTRTN2
FDNS	00NR	0	20WP	G15_095	FROM->TO	G14-057T 345.00 - SUNNYSIDE 345KV CKT 1	717	789	0.03624	112.8964	G13-010T 345.00 - POST ROCK 345KV CKT 1
FDNS	00NR	0	16WP	G15_095	FROM->TO	G14-057T 345.00 - SUNNYSIDE 345KV CKT 1	717	789	0.03615	112.8952	GEN562704 1-G15_020_3 0.3550
FDNS	00NR	0	20WP	G15_095	FROM->TO	G14-057T 345.00 - SUNNYSIDE 345KV CKT 1	717	789	0.03589	112.8932	LASALLE - LATTA JCT 138KV CKT 1
FDNS	00NR	0	20WP	G15_095	FROM->TO	G14-057T 345.00 - SUNNYSIDE 345KV CKT 1	717	789	0.0353	112.8928	NORGE ROAD - SOUTHWESTERN STATION 138KV CKT 1
FDNS	00NR	0	20WP	G15_095	FROM->TO	G14-057T 345.00 - SUNNYSIDE 345KV CKT 1	717	789	0.0353	112.8928	NORGE ROAD - SOUTHWESTERN STATION 138KV CKT 1
FDNS	00NR	0	16WP	G15_095	FROM->TO	G14-057T 345.00 - SUNNYSIDE 345KV CKT 1	717	789	0.03615	112.8914	GEN562952 1-G15057_3 0.6500
FDNS	00NR	0	20WP	G15_095	FROM->TO	G14-057T 345.00 - SUNNYSIDE 345KV CKT 1	717	789	0.03594	112.8872	GEN336152 1-WATERFORD UNIT#2
FDNS	00NR	0	20WP	G15_095	FROM->TO	G14-057T 345.00 - SUNNYSIDE 345KV CKT 1	717	789	0.03594	112.8868	P12:138:AEPW:BA_71ST4:T.S.E.-4
FDNS	00NR	0	20WP	G15_095	FROM->TO	G14-057T 345.00 - SUNNYSIDE 345KV CKT 1	717	789	0.03594	112.8864	GEN336151 1-WATERFORD UNIT#1
FDNS	00NR	0	20WP	G15_095	FROM->TO	G14-057T 345.00 - SUNNYSIDE 345KV CKT 1	717	789	0.03594	112.882	P12:138:AEPW:YARCH-S4:T.S.E.-4
FDNS	00NR	0	20WP	G15_095	FROM->TO	G14-057T 345.00 - SUNNYSIDE 345KV CKT 1	717	789	0.03631	112.8781	EMPORIA ENERGY CENTER - G14_001T 345.00 345KV CKT 1
FDNS	00NR	0	20WP	G15_095	FROM->TO	G14-057T 345.00 - SUNNYSIDE 345KV CKT 1	717	789	0.0361	112.8777	HOYT - STRANGER CREEK 345KV CKT 1
FDNS	00NR	0	20WP	G15_095	FROM->TO	G14-057T 345.00 - SUNNYSIDE 345KV CKT 1	717	789	0.03629	112.8772	P12:138:AEPW-OGE:SHIDLER4:OSAGE 4
FDNS	00NR	0	20WP	G15_095	FROM->TO	G14-057T 345.00 - SUNNYSIDE 345KV CKT 1	717	789	0.03594	112.875	GEN300017 1-1G2GPDEL 18.000
FDNS	00NR	0	20WP	G15_095	FROM->TO	G14-057T 345.00 - SUNNYSIDE 345KV CKT 1	717	789	0.03594	112.8749	FRONTIER 345/18.0KV TRANSFORMER CKT 1
FDNS	00NR	0	20WP	G15_095	FROM->TO	G14-057T 345.00 - SUNNYSIDE 345KV CKT 1	717	789	0.03594	112.8727	FRONTIER 345/18.0KV TRANSFORMER CKT 1
FDNS	00NR	0	20WP	G15_095	FROM->TO	G14-057T 345.00 - SUNNYSIDE 345KV CKT 1	717	789	0.03636	112.8685	P12:138:OKGE:3TERM2
FDNS	00NR	0	20WP	G15_095	FROM->TO	G14-057T 345.00 - SUNNYSIDE 345KV CKT 1	717	789	0.03672	112.8667	HOPE - MCNAB REC 115KV CKT 1
FDNS	00NR	0	20WP	G15_095	FROM->TO	G14-057T 345.00 - SUNNYSIDE 345KV CKT 1	717	789	0.03665	112.8667	CLINTON JUNCTION - ELK CITY 138KV CKT 1
FDNS	00NR	0	20WP	G15_095	FROM->TO	G14-057T 345.00 - SUNNYSIDE 345KV CKT 1	717	789	0.03665	112.8667	CLINTON JUNCTION - ELK CITY 138KV CKT 1
FDNS	00NR	0	20WP	G15_095	FROM->TO	G14-057T 345.00 - SUNNYSIDE 345KV CKT 1	717	789	0.03634	112.8653	MORISNT4 138.00 - STILLWATER 138KV CKT 1
FDNS	00NR	0	20WP	G15_095	FROM->TO	G14-057T 345.00 - SUNNYSIDE 345KV CKT 1	717	789	0.03672	112.856	P12:115:AEPW:TURK3:HOPE3
FDNS	00NR	0	20WP	G15_095	FROM->TO	G14-057T 345.00 - SUNNYSIDE 345KV CKT 1	717	789	0.03642	112.8552	BENTON - WICHITA 345KV CKT 1
FDNS	00NR	0	20WP	G15_095	FROM->TO	G14-057T 345.00 - SUNNYSIDE 345KV CKT 1	717	789	0.03609	112.853	G15074_T 345.00 - JEFFREY ENERGY CENTER 345KV CKT 1
FDNS	00NR	0	16WP	G15_095	FROM->TO	G14-057T 345.00 - SUNNYSIDE 345KV CKT 1	717	789	0.03615	112.8518	GEN563173 1-G15082_3 0.6900

SOLUTION	GROUP	SCENARIO	SEASON	SOURCE	DIRECTION	MONITORED ELEMENT	RATEA (MVA)	RATEB(MVA)	TDF	TC%LOADING (% MVA)	CONTINGENCY
FDNS	00NR	0	20WP	G15_095	FROM->TO	G14-057T 345.00 - SUNNYSIDE 345KV CKT 1	717	789	0.03624	112.8505	G13-010T 345.00 - SPEARVILLE 345KV CKT 1
FDNS	00NR	0	20WP	G15_095	FROM->TO	G14-057T 345.00 - SUNNYSIDE 345KV CKT 1	717	789	0.03638	112.8485	COUCH SES - MC NIEL 115KV CKT 1
FDNS	00NR	0	20WP	G15_095	FROM->TO	G14-057T 345.00 - SUNNYSIDE 345KV CKT 1	717	789	0.03556	112.8447	WEATHERFORD TAP - WEATHERFORD WIND FARM 138KV CKT 1
FDNS	00NR	0	20WP	G15_095	FROM->TO	G14-057T 345.00 - SUNNYSIDE 345KV CKT 1	717	789	0.03622	112.8444	BLACKBERRY - NEOSHO 345KV CKT 1
FDNS	00NR	0	20WP	G15_095	FROM->TO	G14-057T 345.00 - SUNNYSIDE 345KV CKT 1	717	789	0.03594	112.8441	LEWIS CREEK SWITCHYARD 138/22.0KV TRANSFORMER CKT 1
FDNS	00NR	0	20WP	G15_095	FROM->TO	G14-057T 345.00 - SUNNYSIDE 345KV CKT 1	717	789	0.03529	112.8435	HINTON - WEATHERFORD JCT. 138KV CKT 1
FDNS	00NR	0	20WP	G15_095	FROM->TO	G14-057T 345.00 - SUNNYSIDE 345KV CKT 1	717	789	0.03594	112.8396	LEWIS CREEK SWITCHYARD 138/22.0KV TRANSFORMER CKT 1
FDNS	00NR	0	16WP	G15_095	FROM->TO	G14-057T 345.00 - SUNNYSIDE 345KV CKT 1	717	789	0.03572	112.8375	GRAPEVINE INTERCHANGE - NICHOLS STATION 230KV CKT 1
FDNS	00NR	0	16WP	G15_095	FROM->TO	G14-057T 345.00 - SUNNYSIDE 345KV CKT 1	717	789	0.03572	112.8375	GRAPEVINE INTERCHANGE - NICHOLS STATION 230KV CKT 1
FDNS	00NR	0	20WP	G15_095	FROM->TO	G14-057T 345.00 - SUNNYSIDE 345KV CKT 1	717	789	0.03639	112.8369	OMPA-WALTERS - WALTERS 69KV CKT 1
FDNS	00NR	0	20WP	G15_095	FROM->TO	G14-057T 345.00 - SUNNYSIDE 345KV CKT 1	717	789	0.03639	112.8369	OMPA-WALTERS - WALTERS 69KV CKT 1
FDNS	00NR	0	20WP	G15_095	FROM->TO	G14-057T 345.00 - SUNNYSIDE 345KV CKT 1	717	789	0.036	112.8359	CYPRESS - HARTBURG 500KV CKT 1
FDNS	00NR	0	20WP	G15_095	FROM->TO	G14-057T 345.00 - SUNNYSIDE 345KV CKT 1	717	789	0.03534	112.8325	SOUTHWESTERN STATION - VERDEN 138KV CKT 1
FDNS	00NR	0	20WP	G15_095	FROM->TO	G14-057T 345.00 - SUNNYSIDE 345KV CKT 1	717	789	0.03594	112.8315	GEN334432 1-SABINE UNIT 2
FDNS	00NR	0	20WP	G15_095	FROM->TO	G14-057T 345.00 - SUNNYSIDE 345KV CKT 1	717	789	0.03594	112.831	GEN334431 1-SABINE UNIT 1
FDNS	00NR	0	20WP	G15_095	FROM->TO	G14-057T 345.00 - SUNNYSIDE 345KV CKT 1	717	789	0.03672	112.8308	TURK (TURK 1) 138/115/13.2KV TRANSFORMER CKT 1
FDNS	00NR	0	20WP	G15_095	FROM->TO	G14-057T 345.00 - SUNNYSIDE 345KV CKT 1	717	789	0.03672	112.8308	TURK (TURK 1) 138/115/13.2KV TRANSFORMER CKT 1
FDNS	00NR	0	20WP	G15_095	FROM->TO	G14-057T 345.00 - SUNNYSIDE 345KV CKT 1	717	789	0.03672	112.8307	MCNAB REC - Turk 115 115KV CKT 1
FDNS	00NR	0	20WP	G15_095	FROM->TO	G14-057T 345.00 - SUNNYSIDE 345KV CKT 1	717	789	0.03606	112.8301	7JASPER 345.00 - BLACKBERRY 345KV CKT 1
FDNS	00NR	0	20WP	G15_095	FROM->TO	G14-057T 345.00 - SUNNYSIDE 345KV CKT 1	717	789	0.03594	112.8268	GEN501823 1-TECHE UNIT 3
FDNS	00NR	0	20WP	G15_095	FROM->TO	G14-057T 345.00 - SUNNYSIDE 345KV CKT 1	717	789	0.03594	112.8248	GEN501970 1-EVANGELINE UNIT 7
FDNS	00NR	0	20WP	G15_095	FROM->TO	G14-057T 345.00 - SUNNYSIDE 345KV CKT 1	717	789	0.03594	112.8197	GEN505616 1-BROKEN BOW
FDNS	00NR	0	20WP	G15_095	FROM->TO	G14-057T 345.00 - SUNNYSIDE 345KV CKT 1	717	789	0.03615	112.8185	P12:69:WFEC-AEPW:COMANCH2:WALTRS-2
FDNS	00NR	0	20WP	G15_095	FROM->TO	G14-057T 345.00 - SUNNYSIDE 345KV CKT 1	717	789	0.0372	112.8114	CANADIAN - NOBLE 138KV CKT 1
FDNS	00NR	0	20WP	G15_095	FROM->TO	G14-057T 345.00 - SUNNYSIDE 345KV CKT 1	717	789	0.03534	112.8107	NORTH 29TH CHICKASHA - VERDEN 138KV CKT 1
FDNS	00NR	0	20WP	G15_095	FROM->TO	G14-057T 345.00 - SUNNYSIDE 345KV CKT 1	717	789	0.03594	112.8098	P12:161:AEPW:CHAMSPR5:FARMING5
FDNS	00NR	0	16WP	G15_095	FROM->TO	G14-057T 345.00 - SUNNYSIDE 345KV CKT 1	717	789	0.03615	112.8084	GEN562710 1-G15_022_3 0.5500
FDNS	00NR	0	20WP	G15_095	FROM->TO	G14-057T 345.00 - SUNNYSIDE 345KV CKT 1	717	789	0.03606	112.8043	7LUTESVIL 345.00 - 7ST FRANC 345.00 345KV CKT 1
FDNS	00NR	0	20WP	G15_095	FROM->TO	G14-057T 345.00 - SUNNYSIDE 345KV CKT 1	717	789	0.03594	112.8033	GEN334392 1-EXXON MOBIL IPP 1
FDNS	00NR	0	20WP	G15_095	FROM->TO	G14-057T 345.00 - SUNNYSIDE 345KV CKT 1	717	789	0.03631	112.8	G14_001T 345.00 - WICHITA 345KV CKT 1
FDNS	00NR	0	20WP	G15_095	FROM->TO	G14-057T 345.00 - SUNNYSIDE 345KV CKT 1	717	789	0.03594	112.7969	GEN334393 1-EXXON MOBIL IPP 2
FDNS	00NR	0	20WP	G15_095	FROM->TO	G14-057T 345.00 - SUNNYSIDE 345KV CKT 1	717	789	0.03594	112.7969	GEN334394 1-EXXON MOBIL IPP 3
FDNS	00NR	0	20WP	G15_095	FROM->TO	G14-057T 345.00 - SUNNYSIDE 345KV CKT 1	717	789	0.03237	112.7939	FRANKLIN SW - WESTMOORE 138KV CKT 1
FDNS	00NR	0	20WP	G15_095	FROM->TO	G14-057T 345.00 - SUNNYSIDE 345KV CKT 1	717	789	0.03612	112.7921	LAKEOVER - MCADAMS 500KV CKT 1
FDNS	00NR	0	16WP	G15_095	FROM->TO	G14-057T 345.00 - SUNNYSIDE 345KV CKT 1	717	789	0.03615	112.7898	GEN620315 1-BIG STONE GEN
FDNS	00NR	0	20WP	G15_095	FROM->TO	G14-057T 345.00 - SUNNYSIDE 345KV CKT 1	717	789	0.03704	112.7872	P12:138:OKGE:3TERM27
FDNS	00NR	0	20WP	G15_095	FROM->TO	G14-057T 345.00 - SUNNYSIDE 345KV CKT 1	717	789	0.03611	112.7859	EMPORIA ENERGY CENTER - SWISSVALE 345KV CKT 1
FDNS	00NR	0	20WP	G15_095	FROM->TO	G14-057T 345.00 - SUNNYSIDE 345KV CKT 1	717	789	0.03594	112.7835	ST FRANCIS - ST FRANCIS 1 161KV CKT Z1
FDNS	00NR	0	20WP	G15_095	FROM->TO	G14-057T 345.00 - SUNNYSIDE 345KV CKT 1	717	789	0.03626	112.7809	MCADAMS - WOLF CREEK 500KV CKT 1
FDNS	00NR	0	20WP	G15_095	FROM->TO	G14-057T 345.00 - SUNNYSIDE 345KV CKT 1	717	789	0.03594	112.779	SABINE 230/22.0KV TRANSFORMER CKT 1
FDNS	00NR	0	20WP	G15_095	FROM->TO	G14-057T 345.00 - SUNNYSIDE 345KV CKT 1	717	789	0.03564	112.7787	FLETCHER - MARLOW JCT 69KV CKT 1
FDNS	00NR	0	20WP	G15_095	FROM->TO	G14-057T 345.00 - SUNNYSIDE 345KV CKT 1	717	789	0.03613	112.7734	SWISSVALE - WEST GARDNER 345KV CKT 1
FDNS	00NR	0	20WP	G15_095	FROM->TO	G14-057T 345.00 - SUNNYSIDE 345KV CKT 1	717	789	0.03529	112.7689	HINTON - REDROCKRD4 138.00 138KV CKT 1
FDNS	00NR	0	16WP	G15_095	FROM->TO	G14-057T 345.00 - SUNNYSIDE 345KV CKT 1	717	789	0.03615	112.7677	GEN511851 1-COMANCHE #1
FDNS	00NR	0	20WP	G15_095	FROM->TO	G14-057T 345.00 - SUNNYSIDE 345KV CKT 1	717	789	0.03594	112.7667	GEN501972 1-EVANGELINE UNIT 7-2
FDNS	00NR	0	20WP	G15_095	FROM->TO	G14-057T 345.00 - SUNNYSIDE 345KV CKT 1	717	789	0.03594	112.7666	GEN501971 1-EVANGELINE UNIT 7-1
FDNS	00NR	0	20WP	G15_095	FROM->TO	G14-057T 345.00 - SUNNYSIDE 345KV CKT 1	717	789	0.03595	112.7601	P12:138:AEPW:R.S.S-4:T.P.S.-4
FDNS	00NR	0	20WP	G15_095	FROM->TO	G14-057T 345.00 - SUNNYSIDE 345KV CKT 1	717	789	0.0353	112.7558	CORNVILLE - NORGE ROAD 138KV CKT 1
FDNS	00NR	0	20WP	G15_095	FROM->TO	G14-057T 345.00 - SUNNYSIDE 345KV CKT 1	717	789	0.0353	112.7558	CORNVILLE - NORGE ROAD 138KV CKT 1
FDNS	00NR	0	20WP	G15_095	FROM->TO	G14-057T 345.00 - SUNNYSIDE 345KV CKT 1	717	789	0.03592	112.7544	P12:138:OKGE:3TERM12
FDNS	00NR	0	20WP	G15_095	FROM->TO	G14-057T 345.00 - SUNNYSIDE 345KV CKT 1	717	789	0.03702	112.7529	ENOWILT - LONE OAK 138KV CKT 1
FDNS	00NR	0	20WP	G15_095	FROM->TO	G14-057T 345.00 - SUNNYSIDE 345KV CKT 1	717	789	0.03556	112.7506	WEATHERFORD SOUTHEAST - WEATHERFORD TAP 138KV CKT 1
FDNS	00NR	0	20WP	G15_095	FROM->TO	G14-057T 345.00 - SUNNYSIDE 345KV CKT 1	717	789	0.03702	112.7442	ENOWILT - SARDIS 138KV CKT 1
FDNS	00NR	0	20WP	G15_095	FROM->TO	G14-057T 345.00 - SUNNYSIDE 345KV CKT 1	717	789	0.03594	112.7431	GEN501912 1-ACADIA UNIT CT1B
FDNS	00NR	0	20WP	G15_095	FROM->TO	G14-057T 345.00 - SUNNYSIDE 345KV CKT 1	717	789	0.03588	112.743	FRANKLIN - FRANKLIN SW 138KV CKT 1
FDNS	00NR	0	20WP	G15_095	FROM->TO	G14-057T 345.00 - SUNNYSIDE 345KV CKT 1	717	789	0.03558	112.7424	P12:138:WFEC-AEPW:ELKCTY-4:ERICK4
FDNS	00NR	0	20WP	G15_095	FROM->TO	G14-057T 345.00 - SUNNYSIDE 345KV CKT 1	717	789	0.03594	112.7423	GEN501911 1-ACADIA UNIT CT1A
FDNS	00NR	0	20WP	G15_095	FROM->TO	G14-057T 345.00 - SUNNYSIDE 345KV CKT 1	717	789	0.03589	112.7421	LASALLE - STONEWAL LH138.00 138KV CKT 1
FDNS	00NR	0	20WP	G15_095	FROM->TO	G14-057T 345.00 - SUNNYSIDE 345KV CKT 1	717	789	0.03654	112.7364	AMITY SS - MURFREESBORO EAST (AECC) 115KV CKT 1
FDNS	00NR	0	20WP	G15_095	FROM->TO	G14-057T 345.00 - SUNNYSIDE 345KV CKT 1	717	789	0.03594	112.7343	P12:138:AEPW:R.S.S.-4:R:96YALE-4
FDNS	00NR	0	16WP	G15_095	FROM->TO	G14-057T 345.00 - SUNNYSIDE 345KV CKT 1	717	789	0.03615	112.7303	GEN600004 2-PRAIRIE ISLAND G2
FDNS	00NR	0	16WP	G15_095	FROM->TO	G14-057T 345.00 - SUNNYSIDE 345KV CKT 1	717	789	0.03615	112.7275	GEN600003 1-PRAIRIE ISLAND G1
FDNS	00NR	0	20WP	G15_095	FROM->TO	G14-057T 345.00 - SUNNYSIDE 345KV CKT 1	717	789	0.03534	112.7268	CORNVILLE - NORTH 29TH CHICKASHA 138KV CKT 1
FDNS	00NR	0	20WP	G15_095	FROM->TO	G14-057T 345.00 - SUNNYSIDE 345KV CKT 1	717	789	0.03589	112.724	STONEWAL LH138.00 - TUPELO TAP 138KV CKT 1
FDNS	00NR	0	20WP	G15_095	FROM->TO	G14-057T 345.00 - SUNNYSIDE 345KV CKT 1	717	789	0.0372	112.7182	NOBLE - PURCELL4 138.00 138KV CKT 1
FDNSLock	00NR	0	16WP	G15_095	FROM->TO	G14-057T 345.00 - SUNNYSIDE 345KV CKT 1	717	789	0.03615	112.715	GEN600006 1-AS KING
FDNS	00NR	0	20WP	G15_095	FROM->TO	G14-057T 345.00 - SUNNYSIDE 345KV CKT 1	717	789	0.03497	112.7058	CIMARRON - NORTHWEST 345KV CKT 1
FDNS	00NR	0	20WP	G15_095	FROM->TO	G14-057T 345.00 - SUNNYSIDE 345KV CKT 1	717	789	0.03556	112.7001	CLINTON JUNCTION - CLINTON NATURAL GAS TAP 138KV CKT 1
FDNS	00NR	0	20WP	G15_095	FROM->TO	G14-057T 345.00 - SUNNYSIDE 345KV CKT 1	717	789	0.03658	112.6983	Canadian Pump Station - REDROCKRD4 138.00 138KV CKT 1
FDNS	00NR	0	20WP	G15_095	FROM->TO	G14-057T 345.00 - SUNNYSIDE 345KV CKT 1	717	789	0.03434	112.6767	CRINER - PAYNE 138.00 138KV CKT 1
FDNS	00NR	0	16WP	G15_095	FROM->TO	G14-057T 345.00 - SUNNYSIDE 345KV CKT 1	717	789	0.03626	112.6686	P12:138:WFEC:MSL09
FDNS	00NR	0	16WP	G15_095	FROM->TO	G14-057T 345.00 - SUNNYSIDE 345KV CKT 1	717	789	0.03288	112.6633	P12:138:AEPW-OGE:CORNVIL4:CIMARON4
FDNS	00NR	0	20WP	G15_095	FROM->TO	G14-057T 345.00 - SUNNYSIDE 345KV CKT 1	717	789	0.03615	112.6419	COMANCHE - WALTERS 69KV CKT 1
FDNSLock	00NR	0	16WP	G15_095	FROM->TO	G14-057T 345.00 - SUNNYSIDE 345KV CKT 1	717	789	0.03615	112.6382	GEN636641 1-LOUISA UNIT 1
FDNS	00NR	0	16WP	G15_095	FROM->TO	G14-057T 345.00 - SUNNYSIDE 345KV CKT 1	717	789	0.03615	112.6	GEN615002 2-COAL CREEK
FDNS	00NR	0	16WP	G15_095	FROM->TO	G14-057T 345.00 - SUNNYSIDE 345KV CKT 1	717	789	0.03615	112.5883	GEN600005 1-MONTICELLO
FDNS	00NR	0	16WP	G15_095	FROM->TO	G14-057T 345.00 - SUNNYSIDE 345KV CKT 1	717	789	0.03318	112.5634	CHISHOLM7 345.00 (CHISHOLM) 345/230/13.2KV TRANSFORMER CKT 1
FDNS	00NR	0	16WP	G15_095	FROM->TO	G14-057T 345.00 - SUNNYSIDE 345KV CKT 1	717	789	0.03615	112.5594	GEN562754 1-G15031_5 0.6900
FDNS	00NR	0	16WP	G15_095	FROM->TO	G14-057T 345.00 - SUNNYSIDE 345KV CKT 1	717	789	0.03615	112.5259	GEN635213 3-NEAL UNIT 3

SOLUTION	GROUP	SCENARIO	SEASON	SOURCE	DIRECTION	MONITORED ELEMENT	RATEA (MVA)	RATEB(MVA)	TDF	TC%LOADING (% MVA)	CONTINGENCY
FDNS	00NR	0	16WP	G15_095	FROM->TO	G14-057T 345.00 - SUNNYSIDE 345KV CKT 1	717	789	0.03615	112.5005	GEN562756 1-G15031_7 0.6900
FDNS	00NR	0	16WP	G15_095	FROM->TO	G14-057T 345.00 - SUNNYSIDE 345KV CKT 1	717	789	0.03615	112.5	GEN629074 1-ARNOLD LOWSIDE OF GSU XFMR
FDNS	00NR	0	16WP	G15_095	FROM->TO	G14-057T 345.00 - SUNNYSIDE 345KV CKT 1	717	789	0.03615	112.4623	GEN562023 1-G11_020_3 0.6900
FDNS	00NR	0	16WP	G15_095	FROM->TO	G14-057T 345.00 - SUNNYSIDE 345KV CKT 1	717	789	0.03615	112.4623	GEN562026 1-G11_019_3 0.6900
FDNS	00NR	0	16WP	G15_095	FROM->TO	G14-057T 345.00 - SUNNYSIDE 345KV CKT 1	717	789	0.03615	112.4584	GEN562556 1-G14_046_3 0.3420
FDNS	00NR	0	16WP	G15_095	FROM->TO	G14-057T 345.00 - SUNNYSIDE 345KV CKT 1	717	789	0.03318	112.4526	CHISHOLM7 345.00 - GRACEMONT 345KV CKT 1
FDNS	00NR	0	16WP	G15_095	FROM->TO	G14-057T 345.00 - SUNNYSIDE 345KV CKT 1	717	789	0.03615	112.451	BIG STONE 230/24.0KV TRANSFORMER CKT 1
FDNS	00NR	0	16WP	G15_095	FROM->TO	G14-057T 345.00 - SUNNYSIDE 345KV CKT 1	717	789	0.03615	112.3702	GEN563142 1-G15079_3 0.5500
FDNS	00NR	0	16WP	G15_095	FROM->TO	G14-057T 345.00 - SUNNYSIDE 345KV CKT 1	717	789	0.03615	112.3702	GEN563151 1-G15080_2 0.5500
FDNS	00NR	0	16WP	G15_095	FROM->TO	G14-057T 345.00 - SUNNYSIDE 345KV CKT 1	717	789	0.03615	112.3332	GEN523971 1-HARRINGTON GEN #1 24 KV
FDNS	00NR	0	16WP	G15_095	FROM->TO	G14-057T 345.00 - SUNNYSIDE 345KV CKT 1	717	789	0.03615	112.3331	GEN523973 1-HARRINGTON GEN #3 24 KV
FDNS	00NR	0	16WP	G15_095	FROM->TO	G14-057T 345.00 - SUNNYSIDE 345KV CKT 1	717	789	0.03615	112.333	GEN523972 1-HARRINGTON GEN #2 24 KV
FDNS	00NR	0	16WP	G15_095	FROM->TO	G14-057T 345.00 - SUNNYSIDE 345KV CKT 1	717	789	0.03737	112.293	NORTHWEST TEXARKANA - VALLIANT 345KV CKT 1
FDNS	00NR	0	16WP	G15_095	FROM->TO	G14-057T 345.00 - SUNNYSIDE 345KV CKT 1	717	789	0.03737	112.293	NORTHWEST TEXARKANA - VALLIANT 345KV CKT 1
FDNS	00NR	0	16WP	G15_095	FROM->TO	G14-057T 345.00 - SUNNYSIDE 345KV CKT 1	717	789	0.03548	112.2788	P12:230:AEPW-SPS:SWEETWT6:WHEELER 6
FDNS	00NR	0	16WP	G15_095	FROM->TO	G14-057T 345.00 - SUNNYSIDE 345KV CKT 1	717	789	0.03548	112.2782	STLN-DEMARC6 - SWEETWATER 230KV CKT 1
FDNS	00NR	0	16WP	G15_095	FROM->TO	G14-057T 345.00 - SUNNYSIDE 345KV CKT 1	717	789	0.03548	112.2771	STATELINE INTERCHANGE - STLN-DEMARC6 230KV CKT 1
FDNSLock	00NR	0	16WP	G15_095	FROM->TO	G14-057T 345.00 - SUNNYSIDE 345KV CKT 1	717	789	0.03615	112.2748	GEN600000 1-SHERBURNECNTY G1
FDNS	00NR	0	16WP	G15_095	FROM->TO	G14-057T 345.00 - SUNNYSIDE 345KV CKT 1	717	789	0.03615	112.2359	GEN511848 1-SOUTHWESTERN STATION #3
FDNS	00NR	0	20WP	G15_095	FROM->TO	G14-057T 345.00 - SUNNYSIDE 345KV CKT 1	717	789	0.03594	112.2265	803-OKLAUNION
FDNS	00NR	0	16WP	G15_095	FROM->TO	G14-057T 345.00 - SUNNYSIDE 345KV CKT 1	717	789	0.03615	112.2003	GEN600001 2-SHERBURNE CNTY G2
FDNS	00NR	0	16WP	G15_095	FROM->TO	G14-057T 345.00 - SUNNYSIDE 345KV CKT 1	717	789	0.03615	112.163	GEN563042 1-G15068_3 0.6900
FDNS	00NR	0	16WP	G15_095	FROM->TO	G14-057T 345.00 - SUNNYSIDE 345KV CKT 1	717	789	0.03615	112.1422	GEN527901 1-HOBBS PLANT #1 (CT)
FDNS	00NR	0	16WP	G15_095	FROM->TO	G14-057T 345.00 - SUNNYSIDE 345KV CKT 1	717	789	0.03615	112.1422	GEN527902 1-HOBBS PLANT #2 (CT)
FDNSLock	00NR	0	16WP	G15_095	FROM->TO	G14-057T 345.00 - SUNNYSIDE 345KV CKT 1	717	789	0.03615	112.0855	GEN629075 1-OTTUMWA GENERATOR FOR OTTUMWA UNIT NO 1
FDNS	00NR	0	20WP	G15_095	FROM->TO	G14-057T 345.00 - SUNNYSIDE 345KV CKT 1	717	789	0.03702	111.9515	P12:138:OKGE:3TERM39
FDNSLock	00NR	0	16WP	G15_095	FROM->TO	G14-057T 345.00 - SUNNYSIDE 345KV CKT 1	717	789	0.03615	111.9266	GEN635214 4-NEAL UNIT 4
FDNS	00NR	0	16WP	G15_095	FROM->TO	G14-057T 345.00 - SUNNYSIDE 345KV CKT 1	717	789	0.03615	111.9233	SHERBURNE CO 345/24.0KV TRANSFORMER CKT 1
FDNS	00NR	0	20WP	G15_095	FROM->TO	G14-057T 345.00 - SUNNYSIDE 345KV CKT 1	717	789	0.03587	111.9074	RANCHRD7 345.00 - SOONER 345KV CKT 1
FDNS	00NR	0	20WP	G15_095	FROM->TO	G14-057T 345.00 - SUNNYSIDE 345KV CKT 1	717	789	0.03561	111.8943	CHILDRESS - LAKE PAULINE 138KV CKT 1
FDNS	00NR	0	20WP	G15_095	FROM->TO	G14-057T 345.00 - SUNNYSIDE 345KV CKT 1	717	789	0.03561	111.8943	CHILDRESS - LAKE PAULINE 138KV CKT 1
FDNS	00NR	0	20WP	G15_095	FROM->TO	G14-057T 345.00 - SUNNYSIDE 345KV CKT 1	717	789	0.03576	111.8901	CHILDRESS - HOLLIS TAP 138KV CKT 1
FDNS	00NR	0	20WP	G15_095	FROM->TO	G14-057T 345.00 - SUNNYSIDE 345KV CKT 1	717	789	0.03594	111.8664	GEN562084 1-G11_050_3 0.6900
FDNS	00NR	0	16WP	G15_095	FROM->TO	G14-057T 345.00 - SUNNYSIDE 345KV CKT 1	717	789	0.03615	111.861	GEN563043 1-G15068_4 0.6900
FDNS	00NR	0	16WP	G15_095	FROM->TO	G14-057T 345.00 - SUNNYSIDE 345KV CKT 1	717	789	0.03615	111.8591	GEN563273 2-G15093_4 0.6900
FDNS	00NR	0	20WP	G15_095	FROM->TO	G14-057T 345.00 - SUNNYSIDE 345KV CKT 1	717	789	0.03776	111.847	MAYSVILLE - PAOLI 138KV CKT 1
FDNS	00NR	0	20WP	G15_095	FROM->TO	G14-057T 345.00 - SUNNYSIDE 345KV CKT 1	717	789	0.03594	111.8386	GEN560187 1-WTH WIND 0.5750
FDNS	00NR	0	16WP	G15_095	FROM->TO	G14-057T 345.00 - SUNNYSIDE 345KV CKT 1	717	789	0.03615	111.8362	GEN526333 1-JONES GEN #3 21 KV
FDNS	00NR	0	16WP	G15_095	FROM->TO	G14-057T 345.00 - SUNNYSIDE 345KV CKT 1	717	789	0.03615	111.8361	GEN526334 1-JONES_4 116.500
FDNS	00NR	0	20WP	G15_095	FROM->TO	G14-057T 345.00 - SUNNYSIDE 345KV CKT 1	717	789	0.03528	111.8224	CIMARRON - MATHWSN7 345.00 345KV CKT 1
FDNS	00NR	0	20WP	G15_095	FROM->TO	G14-057T 345.00 - SUNNYSIDE 345KV CKT 1	717	789	0.03528	111.8224	CIMARRON - MATHWSN7 345.00 345KV CKT 2
FDNS	00NR	0	20WP	G15_095	FROM->TO	G14-057T 345.00 - SUNNYSIDE 345KV CKT 1	717	789	0.03594	111.8182	GEN560112 1-G08_037_3 0.6900
FDNS	00NR	0	16WP	G15_095	FROM->TO	G14-057T 345.00 - SUNNYSIDE 345KV CKT 1	717	789	0.03615	111.8	GEN344225 1-1CAL G1 25.000
FDNS	00NR	0	16WP	G15_095	FROM->TO	G14-057T 345.00 - SUNNYSIDE 345KV CKT 1	717	789	0.03325	111.7926	P12:230:AEPW:ELKCITY6:SWEETWT6
FDNS	00NR	0	16WP	G15_095	FROM->TO	G14-057T 345.00 - SUNNYSIDE 345KV CKT 1	717	789	0.03615	111.7857	GEN525844 1-ELK_1 118.000
FDNS	00NR	0	20WP	G15_095	FROM->TO	G14-057T 345.00 - SUNNYSIDE 345KV CKT 1	717	789	0.03594	111.7821	GEN521103 1-BLUE CANYON WIND FARM
FDNS	00NR	0	20WP	G15_095	FROM->TO	G14-057T 345.00 - SUNNYSIDE 345KV CKT 1	717	789	0.03594	111.7799	GEN520812 1-ANADRK5
FDNS	00NR	0	20WP	G15_095	FROM->TO	G14-057T 345.00 - SUNNYSIDE 345KV CKT 1	717	789	0.03594	111.7798	GEN520813 1-ANADRK6
FDNS	00NR	0	20WP	G15_095	FROM->TO	G14-057T 345.00 - SUNNYSIDE 345KV CKT 1	717	789	0.03559	111.7795	DRAPER LAKE - MIDWEST TAP 138KV CKT 1
FDNS	00NR	0	16WP	G15_095	FROM->TO	G14-057T 345.00 - SUNNYSIDE 345KV CKT 1	717	789	0.03615	111.779	GEN525845 1-ELK_2 1 138.00
FDNS	00NR	0	20WP	G15_095	FROM->TO	G14-057T 345.00 - SUNNYSIDE 345KV CKT 1	717	789	0.03594	111.7781	GEN563052 1-G15069_3 0.6900
FDNS	00NR	0	16WP	G15_095	FROM->TO	G14-057T 345.00 - SUNNYSIDE 345KV CKT 1	717	789	0.03615	111.7743	GEN600002 3-SHERBURNE CNTY G3
FDNS	00NR	0	20WP	G15_095	FROM->TO	G14-057T 345.00 - SUNNYSIDE 345KV CKT 1	717	789	0.03776	111.7716	MAYSVILLE - MAYSVLT4 138.00 138KV CKT 1
FDNS	00NR	0	20WP	G15_095	FROM->TO	G14-057T 345.00 - SUNNYSIDE 345KV CKT 1	717	789	0.03535	111.7619	P12:138:OKGE:3TERM21
FDNS	00NR	0	20WP	G15_095	FROM->TO	G14-057T 345.00 - SUNNYSIDE 345KV CKT 1	717	789	0.03594	111.7611	GEN562691 1-G15_015_3 0.6900
FDNS	00NR	0	20WP	G15_095	FROM->TO	G14-057T 345.00 - SUNNYSIDE 345KV CKT 1	717	789	0.03594	111.7556	GEN562772 1-G15034_3 0.6900
FDNS	00NR	0	20WP	G15_095	FROM->TO	G14-057T 345.00 - SUNNYSIDE 345KV CKT 1	717	789	0.03594	111.7408	GEN511961 1-DEMPSEY-WTG10.7000
FDNS	00NR	0	20WP	G15_095	FROM->TO	G14-057T 345.00 - SUNNYSIDE 345KV CKT 1	717	789	0.03479	111.7297	SOONER - SPRING CREEK 345KV CKT 1
FDNS	00NR	0	20WP	G15_095	FROM->TO	G14-057T 345.00 - SUNNYSIDE 345KV CKT 1	717	789	0.03595	111.7267	P12:069:OKGE:3TERM42
FDNS	00NR	0	20WP	G15_095	FROM->TO	G14-057T 345.00 - SUNNYSIDE 345KV CKT 1	717	789	0.03479	111.7265	NORTHWEST - SPRING CREEK 345KV CKT 1
FDNS	00NR	0	20WP	G15_095	FROM->TO	G14-057T 345.00 - SUNNYSIDE 345KV CKT 1	717	789	0.03676	111.7238	ARBUCKLE - SULPHR 4 138.00 138KV CKT 1
FDNS	00NR	0	20WP	G15_095	FROM->TO	G14-057T 345.00 - SUNNYSIDE 345KV CKT 1	717	789	0.03572	111.7062	GLASSES - MADILL INDUSTRIAL TAP 138KV CKT 1
FDNS	00NR	0	20WP	G15_095	FROM->TO	G14-057T 345.00 - SUNNYSIDE 345KV CKT 1	717	789	0.03776	111.7055	MAYSVLT4 138.00 - PRAIRIE POINT 138KV CKT 1
FDNS	00NR	0	20WP	G15_095	FROM->TO	G14-057T 345.00 - SUNNYSIDE 345KV CKT 1	717	789	0.03626	111.7005	P12:138:WFEC:MSL11
FDNS	00NR	0	20WP	G15_095	FROM->TO	G14-057T 345.00 - SUNNYSIDE 345KV CKT 1	717	789	0.03626	111.7005	P12:138:WFEC-AEPW:PHAROAH4:LONEOAK4
FDNS	00NR	0	20WP	G15_095	FROM->TO	G14-057T 345.00 - SUNNYSIDE 345KV CKT 1	717	789	0.0356	111.6941	CANEY CREEK - JOHNSON COUNTY 138KV CKT 1
FDNS	00NR	0	20WP	G15_095	FROM->TO	G14-057T 345.00 - SUNNYSIDE 345KV CKT 1	717	789	0.03594	111.689	GEN515443 1-MNCOWND1 0.7000
FDNS	00NR	0	20WP	G15_095	FROM->TO	G14-057T 345.00 - SUNNYSIDE 345KV CKT 1	717	789	0.03576	111.6712	ALTUS JUNCTION - RUSSELL 138KV CKT 1
FDNS	00NR	0	20WP	G15_095	FROM->TO	G14-057T 345.00 - SUNNYSIDE 345KV CKT 1	717	789	0.03576	111.6712	ALTUS JUNCTION - RUSSELL 138KV CKT 1
FDNS	00NR	0	20WP	G15_095	FROM->TO	G14-057T 345.00 - SUNNYSIDE 345KV CKT 1	717	789	0.03594	111.6708	GEN560183 1-REDHIL-WTG1 12.000
FDNS	00NR	0	20WP	G15_095	FROM->TO	G14-057T 345.00 - SUNNYSIDE 345KV CKT 1	717	789	0.03594	111.6625	INDEPENDENCE 500/26.0KV TRANSFORMER CKT 1
FDNS	00NR	0	20WP	G15_095	FROM->TO	G14-057T 345.00 - SUNNYSIDE 345KV CKT 1	717	789	0.03572	111.6578	GLASSES - RUSSETT 138KV CKT 1
FDNS	00NR	0	20WP	G15_095	FROM->TO	G14-057T 345.00 - SUNNYSIDE 345KV CKT 1	717	789	0.03594	111.654	GEN600067 9-HIGH BRIDGE
FDNS	00NR	0	20WP	G15_095	FROM->TO	G14-057T 345.00 - SUNNYSIDE 345KV CKT 1	717	789	0.03616	111.6529	OVEXFRMCCOVE
FDNS	00NR	0	20WP	G15_095	FROM->TO	G14-057T 345.00 - SUNNYSIDE 345KV CKT 1	717	789	0.03588	111.6441	P12:138:WFEC:MSL08
FDNS	00NR	0	16WP	G15_095	FROM->TO	G14-057T 345.00 - SUNNYSIDE 345KV CKT 1	717	789	0.03615	111.6433	GEN525562 1-TOLK GEN #2 24 KV
FDNS	00NR	0	20WP	G15_095	FROM->TO	G14-057T 345.00 - SUNNYSIDE 345KV CKT 1	717	789	0.03589	111.6433	CARTER - CHICKASAW 138KV CKT 1
FDNS	00NR	0	16WP	G15_095	FROM->TO	G14-057T 345.00 - SUNNYSIDE 345KV CKT 1	717	789	0.03615	111.6359	GEN563202 1-G15085_3 0.5500
FDNS	00NR	0	20WP	G15_095	FROM->TO	G14-057T 345.00 - SUNNYSIDE 345KV CKT 1	717	789	0.03586	111.6359	CANADIAN RIVER - MCALESTER SOUTH 138KV CKT 1

SOLUTION	GROUP	SCENARIO	SEASON	SOURCE	DIRECTION	MONITORED ELEMENT	RATEA (MVA)	RATEB(MVA)	TDF	TC%LOADING (% MVA)	CONTINGENCY
FDNS	00NR	0	20WP	G15_095	FROM->TO	G14-057T 345.00 - SUNNYSIDE 345KV CKT 1	717	789	0.03586	111.6359	CANADIAN RIVER - MCALESTER SOUTH 138KV CKT 1
FDNS	00NR	0	20WP	G15_095	FROM->TO	G14-057T 345.00 - SUNNYSIDE 345KV CKT 1	717	789	0.03519	111.6344	LEBANON - TEXOMA JCT 138KV CKT 1
FDNS	00NR	0	20WP	G15_095	FROM->TO	G14-057T 345.00 - SUNNYSIDE 345KV CKT 1	717	789	0.03586	111.6341	CANADIAN RIVER () 345/138/13.8KV TRANSFORMER CKT 1
FDNS	00NR	0	20WP	G15_095	FROM->TO	G14-057T 345.00 - SUNNYSIDE 345KV CKT 1	717	789	0.03586	111.6341	CANADIAN RIVER () 345/138/13.8KV TRANSFORMER CKT 1
FDNS	00NR	0	20WP	G15_095	FROM->TO	G14-057T 345.00 - SUNNYSIDE 345KV CKT 1	717	789	0.03594	111.6328	P12:230:UMZB:# 112 #: NU IN SD. NU-RCDC & DRY CREEK XFMR
FDNS	00NR	0	16WP	G15_095	FROM->TO	G14-057T 345.00 - SUNNYSIDE 345KV CKT 1	717	789	0.03795	111.6299	LYDIA - WELSH 345KV CKT 1
FDNS	00NR	0	16WP	G15_095	FROM->TO	G14-057T 345.00 - SUNNYSIDE 345KV CKT 1	717	789	0.03795	111.6299	LYDIA - WELSH 345KV CKT 1
FDNS	00NR	0	20WP	G15_095	FROM->TO	G14-057T 345.00 - SUNNYSIDE 345KV CKT 1	717	789	0.03594	111.627	RCDC EAST 4230.00 - RED CEDAR DC 230KV CKT 1
FDNS	00NR	0	20WP	G15_095	FROM->TO	G14-057T 345.00 - SUNNYSIDE 345KV CKT 1	717	789	0.036	111.6223	ROCKY POINT - SPRINGDALE 138KV CKT 1
FDNS	00NR	0	20WP	G15_095	FROM->TO	G14-057T 345.00 - SUNNYSIDE 345KV CKT 1	717	789	0.03594	111.6211	GEN562902 1-G15052_3 0.6900
FDNS	00NR	0	20WP	G15_095	FROM->TO	G14-057T 345.00 - SUNNYSIDE 345KV CKT 1	717	789	0.03594	111.6184	GEN563242 1-G15090_3 0.6900
FDNS	00NR	0	20WP	G15_095	FROM->TO	G14-057T 345.00 - SUNNYSIDE 345KV CKT 1	717	789	0.03776	111.6131	PRAIRIE POINT - RATLIFF 138KV CKT 1
FDNS	00NR	0	20WP	G15_095	FROM->TO	G14-057T 345.00 - SUNNYSIDE 345KV CKT 1	717	789	0.03605	111.6118	CHAMBER SPRINGS - CLARKSVILLE 345KV CKT 1
FDNS	00NR	0	20WP	G15_095	FROM->TO	G14-057T 345.00 - SUNNYSIDE 345KV CKT 1	717	789	0.036	111.6064	GRPRAR1-LNX3345.00 - GRPRAR 345KV CKT Z
FDNS	00NR	0	20WP	G15_095	FROM->TO	G14-057T 345.00 - SUNNYSIDE 345KV CKT 1	717	789	0.036	111.606	GRPRAR1-LNX3345.00 - HOLT.CO3 345.00 345KV CKT 1
FDNS	00NR	0	16WP	G15_095	FROM->TO	G14-057T 345.00 - SUNNYSIDE 345KV CKT 1	717	789	0.03615	111.5979	GEN527166 1-MUSTANG_6 118.000
FDNS	00NR	0	20WP	G15_095	FROM->TO	G14-057T 345.00 - SUNNYSIDE 345KV CKT 1	717	789	0.03594	111.5943	GEN629072 4-LANSING GENERATOR FOR UNITS NO4 EIA CODE 1
FDNS	00NR	0	16WP	G15_095	FROM->TO	G14-057T 345.00 - SUNNYSIDE 345KV CKT 1	717	789	0.03548	111.5888	CHISHOLM6 230.00 - SWEETWATER 230KV CKT 1
FDNS	00NR	0	20WP	G15_095	FROM->TO	G14-057T 345.00 - SUNNYSIDE 345KV CKT 1	717	789	0.03594	111.5796	GEN562078 1-G11_051_3 0.6900
FDNS	00NR	0	20WP	G15_095	FROM->TO	G14-057T 345.00 - SUNNYSIDE 345KV CKT 1	717	789	0.03605	111.5767	P12:138:AEPW:112GORE4:SNYDER-4
FDNS	00NR	0	20WP	G15_095	FROM->TO	G14-057T 345.00 - SUNNYSIDE 345KV CKT 1	717	789	0.03594	111.5711	GEN524285 1-WILDORADO WIND GEN
FDNS	00NR	0	20WP	G15_095	FROM->TO	G14-057T 345.00 - SUNNYSIDE 345KV CKT 1	717	789	0.03676	111.5694	JOLLYVILLE - SULPHR 4 138.00 138KV CKT 1
FDNS	00NR	0	20WP	G15_095	FROM->TO	G14-057T 345.00 - SUNNYSIDE 345KV CKT 1	717	789	0.03594	111.5522	GEN562587 1-G14_056_3 0.6900
FDNS	00NR	0	20WP	G15_095	FROM->TO	G14-057T 345.00 - SUNNYSIDE 345KV CKT 1	717	789	0.03594	111.5512	GEN514805 1-SOONER UNIT 1
FDNS	00NR	0	20WP	G15_095	FROM->TO	G14-057T 345.00 - SUNNYSIDE 345KV CKT 1	717	789	0.03594	111.5454	GEN524295 1-SPNSPUR_WND10.6900
FDNS	00NR	0	20WP	G15_095	FROM->TO	G14-057T 345.00 - SUNNYSIDE 345KV CKT 1	717	789	0.03594	111.5399	GEN657749 1-YOUNG 1 GENERATOR
FDNS	00NR	0	16WP	G15_095	FROM->TO	G14-057T 345.00 - SUNNYSIDE 345KV CKT 1	717	789	0.0358	111.5346	JOHNSON COUNTY (JOHNCO) 345/138/13.8KV TRANSFORMER CKT 1
FDNS	00NR	0	16WP	G15_095	FROM->TO	G14-057T 345.00 - SUNNYSIDE 345KV CKT 1	717	789	0.03615	111.5255	GEN635023 3-WALTER SCOTT UNIT 3
FDNS	00NR	0	20WP	G15_095	FROM->TO	G14-057T 345.00 - SUNNYSIDE 345KV CKT 1	717	789	0.03594	111.5198	GEN514806 1-SOONER UNIT 2
FDNS	00NR	0	20WP	G15_095	FROM->TO	G14-057T 345.00 - SUNNYSIDE 345KV CKT 1	717	789	0.03594	111.5196	GEN524023 1-NICHOLS GEN #3 22 KV
FDNS	00NR	0	16WP	G15_095	FROM->TO	G14-057T 345.00 - SUNNYSIDE 345KV CKT 1	717	789	0.03615	111.5165	GEN562590 1-G14_057_3 0.6900
FDNS	00NR	0	20WP	G15_095	FROM->TO	G14-057T 345.00 - SUNNYSIDE 345KV CKT 1	717	789	0.0364	111.5107	CROCKETT - TENASKA RUSK COUNTY 345KV CKT 1
FDNS	00NR	0	20WP	G15_095	FROM->TO	G14-057T 345.00 - SUNNYSIDE 345KV CKT 1	717	789	0.0364	111.5059	LEBROCK - TENASKA RUSK COUNTY 345KV CKT 1
FDNS	00NR	0	20WP	G15_095	FROM->TO	G14-057T 345.00 - SUNNYSIDE 345KV CKT 1	717	789	0.03676	111.4877	JOLLYVILLE - KERR MCGEE CIMARRON 138KV CKT 1
FDNS	00NR	0	20WP	G15_095	FROM->TO	G14-057T 345.00 - SUNNYSIDE 345KV CKT 1	717	789	0.03594	111.4834	GEN562812 1-G15040_3 0.3570
FDNS	00NR	0	20WP	G15_095	FROM->TO	G14-057T 345.00 - SUNNYSIDE 345KV CKT 1	717	789	0.03594	111.4785	GEN562270 1-G12-020-2 0.6900
FDNS	00NR	0	20WP	G15_095	FROM->TO	G14-057T 345.00 - SUNNYSIDE 345KV CKT 1	717	789	0.03594	111.4769	GEN562882 1-G15047_3 0.6900
FDNS	00NR	0	20WP	G15_095	FROM->TO	G14-057T 345.00 - SUNNYSIDE 345KV CKT 1	717	789	0.03594	111.4766	GEN563132 1-G15078_3 0.3570
FDNS	00NR	0	20WP	G15_095	FROM->TO	G14-057T 345.00 - SUNNYSIDE 345KV CKT 1	717	789	0.03594	111.4697	GEN563102 1-G15075_3 0.5500
FDNS	00NR	0	20WP	G15_095	FROM->TO	G14-057T 345.00 - SUNNYSIDE 345KV CKT 1	717	789	0.03594	111.4569	GEN563062 1-G15071_3 0.6900
FDNS	00NR	0	20WP	G15_095	FROM->TO	G14-057T 345.00 - SUNNYSIDE 345KV CKT 1	717	789	0.03676	111.4369	ARBWIND4 138.00 - KERR MCGEE CIMARRON 138KV CKT 1
FDNS	00NR	0	20WP	G15_095	FROM->TO	G14-057T 345.00 - SUNNYSIDE 345KV CKT 1	717	789	0.03594	111.4202	GEN562974 1-G15060_5 0.6900
FDNS	00NR	0	20WP	G15_095	FROM->TO	G14-057T 345.00 - SUNNYSIDE 345KV CKT 1	717	789	0.03594	111.4197	GEN521112 1-ORME3 13.800
FDNS	00NR	0	20WP	G15_095	FROM->TO	G14-057T 345.00 - SUNNYSIDE 345KV CKT 1	717	789	0.03523	111.4177	BROWN - RUSSETT 138KV CKT 1
FDNS	00NR	0	16WP	G15_095	FROM->TO	G14-057T 345.00 - SUNNYSIDE 345KV CKT 1	717	789	0.03615	111.4166	GEN562762 1-G15033_3 0.6900
FDNS	00NR	0	20WP	G15_095	FROM->TO	G14-057T 345.00 - SUNNYSIDE 345KV CKT 1	717	789	0.03594	111.4113	GEN345671 2-1RUSH G2 18.000
FDNS	00NR	0	20WP	G15_095	FROM->TO	G14-057T 345.00 - SUNNYSIDE 345KV CKT 1	717	789	0.03594	111.4104	GEN562973 1-G15060_4 0.6900
FDNS	00NR	0	20WP	G15_095	FROM->TO	G14-057T 345.00 - SUNNYSIDE 345KV CKT 1	717	789	0.03594	111.4094	GEN345670 1-1RUSH G1 18.000
FDNS	00NR	0	16WP	G15_095	FROM->TO	G14-057T 345.00 - SUNNYSIDE 345KV CKT 1	717	789	0.03615	111.4055	GEN562655 1-G14_074_3 0.6900
FDNS	00NR	0	20WP	G15_095	FROM->TO	G14-057T 345.00 - SUNNYSIDE 345KV CKT 1	717	789	0.03671	111.3964	CHICKASAW - TOTAL 138KV CKT 1
FDNS	00NR	0	20WP	G15_095	FROM->TO	G14-057T 345.00 - SUNNYSIDE 345KV CKT 1	717	789	0.03594	111.3839	GEN560105 1-G08-22 0.6900
FDNS	00NR	0	20WP	G15_095	FROM->TO	G14-057T 345.00 - SUNNYSIDE 345KV CKT 1	717	789	0.03594	111.3817	4SIOUX 1 138.00 138/18.0KV TRANSFORMER CKT 1
FDNS	00NR	0	20WP	G15_095	FROM->TO	G14-057T 345.00 - SUNNYSIDE 345KV CKT 1	717	789	0.03523	111.372	RUSSETT - RUSSETT 138KV CKT 1
FDNS	00NR	0	20WP	G15_095	FROM->TO	G14-057T 345.00 - SUNNYSIDE 345KV CKT 1	717	789	0.03594	111.3666	GEN562550 1-G14_040_3 0.6900
FDNS	00NR	0	20WP	G15_095	FROM->TO	G14-057T 345.00 - SUNNYSIDE 345KV CKT 1	717	789	0.03594	111.3633	GEN681522 3-GENOA 3
FDNS	00NR	0	16WP	G15_095	FROM->TO	G14-057T 345.00 - SUNNYSIDE 345KV CKT 1	717	789	0.03615	111.3403	GEN562685 1-G15_013_3 0.3550
FDNS	00NR	0	20WP	G15_095	FROM->TO	G14-057T 345.00 - SUNNYSIDE 345KV CKT 1	717	789	0.03594	111.3293	GEN511853 1-COMANCHE #3
FDNS	00NR	0	20WP	G15_095	FROM->TO	G14-057T 345.00 - SUNNYSIDE 345KV CKT 1	717	789	0.03594	111.3226	GEN527161 1-MUSTANG GEN #1
FDNS	00NR	0	20WP	G15_095	FROM->TO	G14-057T 345.00 - SUNNYSIDE 345KV CKT 1	717	789	0.03594	111.3226	GEN527162 1-MUSTANG GEN #2
FDNS	00NR	0	20WP	G15_095	FROM->TO	G14-057T 345.00 - SUNNYSIDE 345KV CKT 1	717	789	0.03605	111.3211	ROCKY POINT - SUNNYSIDE 138KV CKT 1
FDNS	00NR	0	20WP	G15_095	FROM->TO	G14-057T 345.00 - SUNNYSIDE 345KV CKT 1	717	789	0.03594	111.3161	EASTDC - ERCOT EQUIVALENCE 345KV CKT 1
FDNS	00NR	0	20WP	G15_095	FROM->TO	G14-057T 345.00 - SUNNYSIDE 345KV CKT 1	717	789	0.03594	111.3113	GEN511962 2-RKYRDGW2-1 0.7000
FDNS	00NR	0	20WP	G15_095	FROM->TO	G14-057T 345.00 - SUNNYSIDE 345KV CKT 1	717	789	0.03594	111.2988	GEN672321 1-SHAND GENERATOR 1
FDNS	00NR	0	20WP	G15_095	FROM->TO	G14-057T 345.00 - SUNNYSIDE 345KV CKT 1	717	789	0.0354	111.2978	RUSSETT - SPRINGDALE 138KV CKT 1
FDNS	00NR	0	20WP	G15_095	FROM->TO	G14-057T 345.00 - SUNNYSIDE 345KV CKT 1	717	789	0.03594	111.2896	GEN525494 1-PLANT X GEN #4 20 KV
FDNS	00NR	0	20WP	G15_095	FROM->TO	G14-057T 345.00 - SUNNYSIDE 345KV CKT 1	717	789	0.03267	111.2832	G15063_T 345.00 - MATHWSN7 345.00 345KV CKT 1
FDNS	00NR	0	20WP	G15_095	FROM->TO	G14-057T 345.00 - SUNNYSIDE 345KV CKT 1	717	789	0.03594	111.2755	GEN672310 1-POPLAR RIVER GENERATOR 1
FDNS	00NR	0	20WP	G15_095	FROM->TO	G14-057T 345.00 - SUNNYSIDE 345KV CKT 1	717	789	0.03594	111.2755	GEN672311 2-POPLAR RIVER GENERATOR 2
FDNS	00NR	0	20WP	G15_095	FROM->TO	G14-057T 345.00 - SUNNYSIDE 345KV CKT 1	717	789	0.03594	111.2739	GEN527882 1-CUNNINGHAM GEN #2 20 KV
FDNS	00NR	0	20WP	G15_095	FROM->TO	G14-057T 345.00 - SUNNYSIDE 345KV CKT 1	717	789	0.03594	111.266	GEN672306 6-BOUNDARY DAM GENERATOR 6
FDNS	00NR	0	20WP	G15_095	FROM->TO	G14-057T 345.00 - SUNNYSIDE 345KV CKT 1	717	789	0.03594	111.2655	GEN563192 1-G15084_3 0.5500
FDNS	00NR	0	20WP	G15_095	FROM->TO	G14-057T 345.00 - SUNNYSIDE 345KV CKT 1	717	789	0.03594	111.2616	GEN562512 1-G14_020_3 0.6900
FDNS	00NR	0	20WP	G15_095	FROM->TO	G14-057T 345.00 - SUNNYSIDE 345KV CKT 1	717	789	0.03594	111.2595	GEN511852 1-COMANCHE #2
FDNS	00NR	0	20WP	G15_095	FROM->TO	G14-057T 345.00 - SUNNYSIDE 345KV CKT 1	717	789	0.03594	111.2591	GEN344895 2-1LAB G2 20.000
FDNS	00NR	0	20WP	G15_095	FROM->TO	G14-057T 345.00 - SUNNYSIDE 345KV CKT 1	717	789	0.03594	111.258	GEN527163 1-MUSTANG GEN #3 22 KV
FDNS	00NR	0	20WP	G15_095	FROM->TO	G14-057T 345.00 - SUNNYSIDE 345KV CKT 1	717	789	0.0369	111.2526	P12:138:WFEC-AEPW:GOLDENSW4:CRAIGJT4
FDNS	00NR	0	20WP	G15_095	FROM->TO	G14-057T 345.00 - SUNNYSIDE 345KV CKT 1	717	789	0.03594	111.2434	GEN562892 1-G15048_3 0.6900
FDNS	00NR	0	20WP	G15_095	FROM->TO	G14-057T 345.00 - SUNNYSIDE 345KV CKT 1	717	789	0.03594	111.2366	GEN681542 6-JP MADGETT
FDNS	00NR	0	20WP	G15_095	FROM->TO	G14-057T 345.00 - SUNNYSIDE 345KV CKT 1	717	789	0.0362	111.235	ARKANSAS NUCLEAR ONE - FT SMITH 500KV CKT 1

SOLUTION	GROUP	SCENARIO	SEASON	SOURCE	DIRECTION	MONITORED ELEMENT	RATEA (MVA)	RATEB(MVA)	TDF	TC%LOADING (% MVA)	CONTINGENCY
FDNS	00NR	0	20WP	G15_095	FROM->TO	G14-057T 345.00 - SUNNYSIDE 345KV CKT 1	717	789	0.0362	111.235	ARKANSAS NUCLEAR ONE - FT SMITH 500KV CKT 1
FDNS	00NR	0	20WP	G15_095	FROM->TO	G14-057T 345.00 - SUNNYSIDE 345KV CKT 1	717	789	0.03594	111.2295	GEN344896 3-1LAB G3 20.000
FDNS	00NR	0	20WP	G15_095	FROM->TO	G14-057T 345.00 - SUNNYSIDE 345KV CKT 1	717	789	0.03594	111.2284	GEN344897 4-1LAB G4 20.000
FDNS	00NR	0	20WP	G15_095	FROM->TO	G14-057T 345.00 - SUNNYSIDE 345KV CKT 1	717	789	0.03594	111.2281	GEN344894 1-1LAB G1 20.000
FDNS	00NR	0	20WP	G15_095	FROM->TO	G14-057T 345.00 - SUNNYSIDE 345KV CKT 1	717	789	0.03586	111.2223	P12:138:WFEC:MSL16
FDNS	00NR	0	20WP	G15_095	FROM->TO	G14-057T 345.00 - SUNNYSIDE 345KV CKT 1	717	789	0.03653	111.2221	ARDMORE WEST - CARTER 138KV CKT 1
FDNS	00NR	0	16WP	G15_095	FROM->TO	G14-057T 345.00 - SUNNYSIDE 345KV CKT 1	717	789	0.03615	111.2074	GEN525561 1-TOLK GEN #1 24 KV
FDNS	00NR	0	16WP	G15_095	FROM->TO	G14-057T 345.00 - SUNNYSIDE 345KV CKT 1	717	789	0.03615	111.2074	GEN527903 1-HOBBS PLANT #3 (ST)
FDNS	00NR	0	16WP	G15_095	FROM->TO	G14-057T 345.00 - SUNNYSIDE 345KV CKT 1	717	789	0.03615	111.2054	GEN563272 1-G15093_3 0.6900
FDNS	00NR	0	20WP	G15_095	FROM->TO	G14-057T 345.00 - SUNNYSIDE 345KV CKT 1	717	789	0.03594	111.2032	GEN523461 1-BLACKHAWK GEN #1
FDNS	00NR	0	20WP	G15_095	FROM->TO	G14-057T 345.00 - SUNNYSIDE 345KV CKT 1	717	789	0.03594	111.2031	GEN523462 1-BLACKHAWK GEN #2
FDNS	00NR	0	20WP	G15_095	FROM->TO	G14-057T 345.00 - SUNNYSIDE 345KV CKT 1	717	789	0.03605	111.1791	CACHE - SNYDER 138KV CKT 1
FDNS	00NR	0	20WP	G15_095	FROM->TO	G14-057T 345.00 - SUNNYSIDE 345KV CKT 1	717	789	0.03817	111.1605	P12:138:WFEC:MSL07
FDNS	00NR	0	20WP	G15_095	FROM->TO	G14-057T 345.00 - SUNNYSIDE 345KV CKT 1	717	789	0.03817	111.1605	P12:138:WFEC-AEPW:HUGOPP4:ATOKA--4
FDNS	00NR	0	20WP	G15_095	FROM->TO	G14-057T 345.00 - SUNNYSIDE 345KV CKT 1	717	789	0.03601	111.1553	P12:138:AEPW-SWPA:LONEOAK4:TUPELO4
FDNS	00NR	0	20WP	G15_095	FROM->TO	G14-057T 345.00 - SUNNYSIDE 345KV CKT 1	717	789	0.03601	111.1553	P12:138:WFEC:MSL06
FDNS	00NR	0	20WP	G15_095	FROM->TO	G14-057T 345.00 - SUNNYSIDE 345KV CKT 1	717	789	0.03594	111.1514	GEN521111 1-ORME2 13.800
FDNS	00NR	0	20WP	G15_095	FROM->TO	G14-057T 345.00 - SUNNYSIDE 345KV CKT 1	717	789	0.03594	111.1465	GEN562699 1-G15_018_3 0.6900
FDNS	00NR	0	20WP	G15_095	FROM->TO	G14-057T 345.00 - SUNNYSIDE 345KV CKT 1	717	789	0.03666	111.1385	SUNNYSIDE (SUNNYSD5) 345/138/13.8KV TRANSFORMER CKT 1
FDNS	00NR	0	20WP	G15_095	FROM->TO	G14-057T 345.00 - SUNNYSIDE 345KV CKT 1	717	789	0.03594	111.1382	GEN521110 1-ORME1 13.800
FDNS	00NR	0	20WP	G15_095	FROM->TO	G14-057T 345.00 - SUNNYSIDE 345KV CKT 1	717	789	0.03695	111.1308	CLARKSVILLE - MUSKOGEE 345KV CKT 1
FDNS	00NR	0	20WP	G15_095	FROM->TO	G14-057T 345.00 - SUNNYSIDE 345KV CKT 1	717	789	0.03695	111.1308	CLARKSVILLE - MUSKOGEE 345KV CKT 1
FDNS	00NR	0	20WP	G15_095	FROM->TO	G14-057T 345.00 - SUNNYSIDE 345KV CKT 1	717	789	0.03576	111.1294	G15085_T 138.00 - RUSSELL 138KV CKT 1
FDNS	00NR	0	20WP	G15_095	FROM->TO	G14-057T 345.00 - SUNNYSIDE 345KV CKT 1	717	789	0.03653	111.1097	ARDMORE WEST - UNIROYAL 138KV CKT 1
FDNS	00NR	0	16WP	G15_095	FROM->TO	G14-057T 345.00 - SUNNYSIDE 345KV CKT 1	717	789	0.03615	111.1021	GEN635024 4-WALTER SCOTT UNIT 4
FDNS	00NR	0	20WP	G15_095	FROM->TO	G14-057T 345.00 - SUNNYSIDE 345KV CKT 1	717	789	0.03594	111.0967	GEN520811 1-ANADRK4
FDNS	00NR	0	20WP	G15_095	FROM->TO	G14-057T 345.00 - SUNNYSIDE 345KV CKT 1	717	789	0.03594	111.0961	GEN563162 1-G15081_3 0.6900
FDNS	00NR	0	20WP	G15_095	FROM->TO	G14-057T 345.00 - SUNNYSIDE 345KV CKT 1	717	789	0.03594	111.0703	GEN661015 1-COYOTE
FDNS	00NR	0	20WP	G15_095	FROM->TO	G14-057T 345.00 - SUNNYSIDE 345KV CKT 1	717	789	0.03594	111.0659	GEN563292 1-G15095_3 0.6900
FDNS	00NR	0	20WP	G15_095	FROM->TO	G14-057T 345.00 - SUNNYSIDE 345KV CKT 1	717	789	0.03558	111.0612	P12:138:OKGE:3TERM40
FDNS	00NR	0	20WP	G15_095	FROM->TO	G14-057T 345.00 - SUNNYSIDE 345KV CKT 1	717	789	0.03715	111.0535	CARTRCO4 138.00 - RATLIFF 138KV CKT 1
FDNS	00NR	0	20WP	G15_095	FROM->TO	G14-057T 345.00 - SUNNYSIDE 345KV CKT 1	717	789	0.03594	111.0431	GEN563122 1-G15077_3 0.3850
FDNS	00NR	0	20WP	G15_095	FROM->TO	G14-057T 345.00 - SUNNYSIDE 345KV CKT 1	717	789	0.03594	111.0154	GEN562861 1-G15045_2 0.4800
FDNS	00NR	0	20WP	G15_095	FROM->TO	G14-057T 345.00 - SUNNYSIDE 345KV CKT 1	717	789	0.03594	110.9573	GEN657748 1-YOUNG 2 GENERATOR
FDNS	00NR	0	20WP	G15_095	FROM->TO	G14-057T 345.00 - SUNNYSIDE 345KV CKT 1	717	789	0.03594	110.9312	GEN527883 1-CUNNINGHAM GEN #3 22 KV
FDNS	00NR	0	20WP	G15_095	FROM->TO	G14-057T 345.00 - SUNNYSIDE 345KV CKT 1	717	789	0.03594	110.9282	GEN527884 1-CUNNINGHAM GEN #4 22 KV
FDNS	00NR	0	20WP	G15_095	FROM->TO	G14-057T 345.00 - SUNNYSIDE 345KV CKT 1	717	789	0.04167	110.9202	P12:138:WFEC:MSL15
FDNS	00NR	0	20WP	G15_095	FROM->TO	G14-057T 345.00 - SUNNYSIDE 345KV CKT 1	717	789	0.03594	110.8807	GEN562992 1-G15063_3 0.6900
FDNS	00NR	0	20WP	G15_095	FROM->TO	G14-057T 345.00 - SUNNYSIDE 345KV CKT 1	717	789	0.03653	110.8733	SUNNYSIDE - UNIROYAL 138KV CKT 1
FDNS	00NR	0	20WP	G15_095	FROM->TO	G14-057T 345.00 - SUNNYSIDE 345KV CKT 1	717	789	0.03576	110.8647	P12:138:AEPW:SHAM4WT:CHILD4WT
FDNS	00NR	0	20WP	G15_095	FROM->TO	G14-057T 345.00 - SUNNYSIDE 345KV CKT 1	717	789	0.03594	110.8625	GEN562704 1-G15_020_3 0.3550
FDNS	00NR	0	20WP	G15_095	FROM->TO	G14-057T 345.00 - SUNNYSIDE 345KV CKT 1	717	789	0.03594	110.8623	GEN526331 1-JONES GEN #1 22 KV
FDNS	00NR	0	20WP	G15_095	FROM->TO	G14-057T 345.00 - SUNNYSIDE 345KV CKT 1	717	789	0.03594	110.8621	GEN526332 1-JONES GEN #2 21 KV
FDNS	00NR	0	20WP	G15_095	FROM->TO	G14-057T 345.00 - SUNNYSIDE 345KV CKT 1	717	789	0.03594	110.8621	GEN620315 1-BIG STONE GEN
FDNS	00NR	0	20WP	G15_095	FROM->TO	G14-057T 345.00 - SUNNYSIDE 345KV CKT 1	717	789	0.03594	110.8294	GEN562952 1-G15057_3 0.6500
FDNS	00NR	0	20WP	G15_095	FROM->TO	G14-057T 345.00 - SUNNYSIDE 345KV CKT 1	717	789	0.03594	110.7897	GEN511851 1-COMANCHE #1
FDNS	00NR	0	20WP	G15_095	FROM->TO	G14-057T 345.00 - SUNNYSIDE 345KV CKT 1	717	789	0.03594	110.7889	GEN600004 2-PRAIRIE ISLAND G2
FDNS	00NR	0	20WP	G15_095	FROM->TO	G14-057T 345.00 - SUNNYSIDE 345KV CKT 1	717	789	0.03594	110.7863	GEN600003 1-PRAIRIE ISLAND G1
FDNS	00NR	0	20WP	G15_095	FROM->TO	G14-057T 345.00 - SUNNYSIDE 345KV CKT 1	717	789	0.03594	110.7686	GEN600006 1-AS KING
FDNS	00NR	0	20WP	G15_095	FROM->TO	G14-057T 345.00 - SUNNYSIDE 345KV CKT 1	717	789	0.03594	110.7635	GEN563173 1-G15082_3 0.6900
FDNS	00NR	0	20WP	G15_095	FROM->TO	G14-057T 345.00 - SUNNYSIDE 345KV CKT 1	717	789	0.03594	110.7507	GEN562710 1-G15_022_3 0.5500
FDNS	00NR	0	20WP	G15_095	FROM->TO	G14-057T 345.00 - SUNNYSIDE 345KV CKT 1	717	789	0.03519	110.7451	CANEY CREEK - TEXOMA JCT 138KV CKT 1
FDNS	00NR	0	20WP	G15_095	FROM->TO	G14-057T 345.00 - SUNNYSIDE 345KV CKT 1	717	789	0.03557	110.7436	GRAPEVINE INTERCHANGE - STATELINE INTERCHANGE 230KV CKT 1
FDNS	00NR	0	20WP	G15_095	FROM->TO	G14-057T 345.00 - SUNNYSIDE 345KV CKT 1	717	789	0.03557	110.7436	GRAPEVINE INTERCHANGE - STATELINE INTERCHANGE 230KV CKT 1
FDNS	00NR	0	20WP	G15_095	FROM->TO	G14-057T 345.00 - SUNNYSIDE 345KV CKT 1	717	789	0.03594	110.7218	GEN532751 1-WOLF CREEK GENERATING STATION UNIT 1
FDNS	00NR	0	20WP	G15_095	FROM->TO	G14-057T 345.00 - SUNNYSIDE 345KV CKT 1	717	789	0.03266	110.6708	P12:138:AEPW-OGE:CORNVIL4:CIMARON4
FDNS	00NR	0	20WP	G15_095	FROM->TO	G14-057T 345.00 - SUNNYSIDE 345KV CKT 1	717	789	0.03552	110.6105	GRAPEVINE INTERCHANGE - NICHOLS STATION 230KV CKT 1
FDNS	00NR	0	20WP	G15_095	FROM->TO	G14-057T 345.00 - SUNNYSIDE 345KV CKT 1	717	789	0.03552	110.6105	GRAPEVINE INTERCHANGE - NICHOLS STATION 230KV CKT 1
FDNS	00NR	0	20WP	G15_095	FROM->TO	G14-057T 345.00 - SUNNYSIDE 345KV CKT 1	717	789	0.03594	110.6	GEN615002 2-COAL CREEK
FDNS	00NR	0	20WP	G15_095	FROM->TO	G14-057T 345.00 - SUNNYSIDE 345KV CKT 1	717	789	0.03594	110.5967	GEN635213 3-NEAL UNIT 3
FDNS	00NR	0	20WP	G15_095	FROM->TO	G14-057T 345.00 - SUNNYSIDE 345KV CKT 1	717	789	0.03594	110.5961	GEN629074 1-ARNOLD LOWSIDE OF GSU XFMR
FDNS	00NR	0	20WP	G15_095	FROM->TO	G14-057T 345.00 - SUNNYSIDE 345KV CKT 1	717	789	0.03718	110.531	NORTHWEST TEXARKANA - VALLIANT 345KV CKT 1
FDNS	00NR	0	20WP	G15_095	FROM->TO	G14-057T 345.00 - SUNNYSIDE 345KV CKT 1	717	789	0.03718	110.531	NORTHWEST TEXARKANA - VALLIANT 345KV CKT 1
FDNS	00NR	0	20WP	G15_095	FROM->TO	G14-057T 345.00 - SUNNYSIDE 345KV CKT 1	717	789	0.03607	110.5277	P12:138:WFEC:MSL09
FDNS	00NR	0	16WP	G15_095	FROM->TO	G14-057T 345.00 - SUNNYSIDE 345KV CKT 1	717	789	0.03859	110.5148	LYDIA - VALLIANT 345KV CKT 1
FDNS	00NR	0	16WP	G15_095	FROM->TO	G14-057T 345.00 - SUNNYSIDE 345KV CKT 1	717	789	0.03859	110.5148	LYDIA - VALLIANT 345KV CKT 1
FDNS	00NR	0	20WP	G15_095	FROM->TO	G14-057T 345.00 - SUNNYSIDE 345KV CKT 1	717	789	0.03594	110.5037	GEN636641 1-LOUISA UNIT 1
FDNS	00NR	0	20WP	G15_095	FROM->TO	G14-057T 345.00 - SUNNYSIDE 345KV CKT 1	717	789	0.03594	110.5028	GEN562754 1-G15031_5 0.6900
FDNS	00NR	0	20WP	G15_095	FROM->TO	G14-057T 345.00 - SUNNYSIDE 345KV CKT 1	717	789	0.03594	110.469	GEN600005 1-MONTICELLO
FDNS	00NR	0	20WP	G15_095	FROM->TO	G14-057T 345.00 - SUNNYSIDE 345KV CKT 1	717	789	0.03305	110.4636	CHISHOLM7 345.00 () 345/230/13.2KV TRANSFORMER CKT 1
FDNS	00NR	0	20WP	G15_095	FROM->TO	G14-057T 345.00 - SUNNYSIDE 345KV CKT 1	717	789	0.03594	110.445	GEN562556 1-G14_046_3 0.3420
FDNS	00NR	0	20WP	G15_095	FROM->TO	G14-057T 345.00 - SUNNYSIDE 345KV CKT 1	717	789	0.03594	110.444	GEN562756 1-G15031_7 0.6900
FDNS	00NR	0	20WP	G15_095	FROM->TO	G14-057T 345.00 - SUNNYSIDE 345KV CKT 1	717	789	0.03305	110.3828	CHISHOLM7 345.00 - GRACEMONT 345KV CKT 1
FDNS	00NR	0	20WP	G15_095	FROM->TO	G14-057T 345.00 - SUNNYSIDE 345KV CKT 1	717	789	0.03594	110.3618	GEN563142 1-G15079_3 0.5500
FDNS	00NR	0	20WP	G15_095	FROM->TO	G14-057T 345.00 - SUNNYSIDE 345KV CKT 1	717	789	0.03594	110.3618	GEN563151 1-G15080_2 0.5500
FDNS	00NR	0	20WP	G15_095	FROM->TO	G14-057T 345.00 - SUNNYSIDE 345KV CKT 1	717	789	0.03594	110.3553	GEN562023 1-G11_020_3 0.6900
FDNS	00NR	0	20WP	G15_095	FROM->TO	G14-057T 345.00 - SUNNYSIDE 345KV CKT 1	717	789	0.03594	110.3553	GEN562026 1-G11_019_3 0.6900
FDNS	00NR	0	20WP	G15_095	FROM->TO	G14-057T 345.00 - SUNNYSIDE 345KV CKT 1	717	789	0.03594	110.3434	GEN600000 1-SHERBURNECNTY G1
FDNS	00NR	0	20WP	G15_095	FROM->TO	G14-057T 345.00 - SUNNYSIDE 345KV CKT 1	717	789	0.03594	110.3082	GEN629075 1-OTTUMWA GENERATOR FOR OTTUMWA UNIT NO 1

SOLUTION	GROUP	SCENARIO	SEASON	SOURCE	DIRECTION	MONITORED ELEMENT	RATEA (MVA)	RATEB(MVA)	TDF	TC%LOADING (% MVA)	CONTINGENCY
FDNS	00NR	0	20WP	G15_095	FROM->TO	G14-057T 345.00 - SUNNYSIDE 345KV CKT 1	717	789	0.03594	110.2904	GEN600001 2-SHERBURNE CNTY G2
FDNS	00NR	0	20WP	G15_095	FROM->TO	G14-057T 345.00 - SUNNYSIDE 345KV CKT 1	717	789	0.03594	110.2626	GEN523971 1-HARRINGTON GEN #1 24 KV
FDNS	00NR	0	20WP	G15_095	FROM->TO	G14-057T 345.00 - SUNNYSIDE 345KV CKT 1	717	789	0.03594	110.2626	GEN523972 1-HARRINGTON GEN #2 24 KV
FDNS	00NR	0	20WP	G15_095	FROM->TO	G14-057T 345.00 - SUNNYSIDE 345KV CKT 1	717	789	0.03594	110.2626	GEN523973 1-HARRINGTON GEN #3 24 KV
FDNS	00NR	0	20WP	G15_095	FROM->TO	G14-057T 345.00 - SUNNYSIDE 345KV CKT 1	717	789	0.03594	110.2331	GEN511848 1-SOUTHWESTERN STATION #3
FDNS	00NR	0	20WP	G15_095	FROM->TO	G14-057T 345.00 - SUNNYSIDE 345KV CKT 1	717	789	0.03778	110.1764	LYDIA - WELSH 345KV CKT 1
FDNS	00NR	0	20WP	G15_095	FROM->TO	G14-057T 345.00 - SUNNYSIDE 345KV CKT 1	717	789	0.03778	110.1764	LYDIA - WELSH 345KV CKT 1
FDNS	00NR	0	20WP	G15_095	FROM->TO	G14-057T 345.00 - SUNNYSIDE 345KV CKT 1	717	789	0.03594	110.163	GEN527901 1-HOBBS PLANT #1 (CT)
FDNS	00NR	0	20WP	G15_095	FROM->TO	G14-057T 345.00 - SUNNYSIDE 345KV CKT 1	717	789	0.03594	110.163	GEN527902 1-HOBBS PLANT #2 (CT)
FDNS	00NR	0	20WP	G15_095	FROM->TO	G14-057T 345.00 - SUNNYSIDE 345KV CKT 1	717	789	0.03594	110.1255	GEN563042 1-G15068_3 0.6900
FDNS	00NR	0	20WP	G15_095	FROM->TO	G14-057T 345.00 - SUNNYSIDE 345KV CKT 1	717	789	0.03594	110.028	GEN635214 4-NEAL UNIT 4
FDNS	00NR	0	20WP	G15_095	FROM->TO	G14-057T 345.00 - SUNNYSIDE 345KV CKT 1	717	789	0.03529	109.9254	STATELINE INTERCHANGE - STLN-DEMARC6 230KV CKT 1
FDNS	00NR	0	20WP	G15_095	FROM->TO	G14-057T 345.00 - SUNNYSIDE 345KV CKT 1	717	789	0.03529	109.9227	STLN-DEMARC6 - SWEETWATER 230KV CKT 1
FDNS	00NR	0	20WP	G15_095	FROM->TO	G14-057T 345.00 - SUNNYSIDE 345KV CKT 1	717	789	0.03529	109.9175	P12:230:AEPW-SPS:SWEETWT6:WHEELER 6
FDNS	00NR	0	20WP	G15_095	FROM->TO	G14-057T 345.00 - SUNNYSIDE 345KV CKT 1	717	789	0.03594	109.8577	GEN600002 3-SHERBURNE CNTY G3
FDNS	00NR	0	20WP	G15_095	FROM->TO	G14-057T 345.00 - SUNNYSIDE 345KV CKT 1	717	789	0.03594	109.827	GEN563043 1-G15068_4 0.6900
FDNS	00NR	0	20WP	G15_095	FROM->TO	G14-057T 345.00 - SUNNYSIDE 345KV CKT 1	717	789	0.03594	109.8013	GEN526333 1-JONES GEN #3 21 KV
FDNS	00NR	0	20WP	G15_095	FROM->TO	G14-057T 345.00 - SUNNYSIDE 345KV CKT 1	717	789	0.03594	109.8012	GEN526334 1-JONES_4 116.500
FDNS	00NR	0	20WP	G15_095	FROM->TO	G14-057T 345.00 - SUNNYSIDE 345KV CKT 1	717	789	0.03594	109.7846	GEN563273 2-G15093_4 0.6900
FDNS	00NR	0	20WP	G15_095	FROM->TO	G14-057T 345.00 - SUNNYSIDE 345KV CKT 1	717	789	0.03594	109.7685	GEN344225 1-1CAL G1 25.000
FDNS	00NR	0	20WP	G15_095	FROM->TO	G14-057T 345.00 - SUNNYSIDE 345KV CKT 1	717	789	0.03594	109.7635	GEN525844 1-ELK_1 118.000
FDNS	00NR	0	20WP	G15_095	FROM->TO	G14-057T 345.00 - SUNNYSIDE 345KV CKT 1	717	789	0.03594	109.7458	GEN525845 1-ELK_2 1 18.000
FDNS	00NR	0	20WP	G15_095	FROM->TO	G14-057T 345.00 - SUNNYSIDE 345KV CKT 1	717	789	0.03594	109.6155	GEN527166 1-MUSTANG_6 118.000
FDNS	00NR	0	20WP	G15_095	FROM->TO	G14-057T 345.00 - SUNNYSIDE 345KV CKT 1	717	789	0.03594	109.5706	GEN635023 3-WALTER SCOTT UNIT 3
FDNS	00NR	0	20WP	G15_095	FROM->TO	G14-057T 345.00 - SUNNYSIDE 345KV CKT 1	717	789	0.03594	109.5526	GEN563202 1-G15085_3 0.5500
FDNS	00NR	0	20WP	G15_095	FROM->TO	G14-057T 345.00 - SUNNYSIDE 345KV CKT 1	717	789	0.03594	109.5515	GEN528501 1-G14_012 24.000
FDNS	00NR	0	20WP	G15_095	FROM->TO	G14-057T 345.00 - SUNNYSIDE 345KV CKT 1	717	789	0.03311	109.4942	P12:230:AEPW:ELKCITY6:SWEETWT6
FDNS	00NR	0	20WP	G15_095	FROM->TO	G14-057T 345.00 - SUNNYSIDE 345KV CKT 1	717	789	0.03594	109.4928	GEN562590 1-G14_057_3 0.6900
FDNS	00NR	0	16WP	G15_095	FROM->TO	G14-057T 345.00 - SUNNYSIDE 345KV CKT 1	717	789	0.03615	109.4478	EASTDC - ERCOT EQUIVALENCE 345KV CKT 1
FDNS	00NR	0	20WP	G15_095	FROM->TO	G14-057T 345.00 - SUNNYSIDE 345KV CKT 1	717	789	0.03594	109.3772	GEN562762 1-G15033_3 0.6900
FDNS	00NR	0	20WP	G15_095	FROM->TO	G14-057T 345.00 - SUNNYSIDE 345KV CKT 1	717	789	0.03594	109.3658	GEN562655 1-G14_074_3 0.6900
FDNS	00NR	0	20WP	G15_095	FROM->TO	G14-057T 345.00 - SUNNYSIDE 345KV CKT 1	717	789	0.03594	109.3638	GEN525562 1-TOLK GEN #2 24 KV
FDNS	00NR	0	20WP	G15_095	FROM->TO	G14-057T 345.00 - SUNNYSIDE 345KV CKT 1	717	789	0.0356	109.2753	JOHNSON COUNTY (JOHNCO) 345/138/13.8KV TRANSFORMER CKT 1
FDNS	00NR	0	20WP	G15_095	FROM->TO	G14-057T 345.00 - SUNNYSIDE 345KV CKT 1	717	789	0.03594	109.27	GEN562685 1-G15_013_3 0.3550
FDNS	00NR	0	20WP	G15_095	FROM->TO	G14-057T 345.00 - SUNNYSIDE 345KV CKT 1	717	789	0.03594	109.2675	GEN527903 1-HOBBS PLANT #3 (ST)
FDNS	00NR	0	20WP	G15_095	FROM->TO	G14-057T 345.00 - SUNNYSIDE 345KV CKT 1	717	789	0.03529	109.2452	CHISHOLM6 230.00 - SWEETWATER 230KV CKT 1
FDNS	00NR	0	20WP	G15_095	FROM->TO	G14-057T 345.00 - SUNNYSIDE 345KV CKT 1	717	789	0.03594	109.1665	GEN635024 4-WALTER SCOTT UNIT 4
FDNS	00NR	0	20WP	G15_095	FROM->TO	G14-057T 345.00 - SUNNYSIDE 345KV CKT 1	717	789	0.03594	109.1256	GEN563272 1-G15093_3 0.6900
FDNS	00NR	0	20WP	G15_095	FROM->TO	G14-057T 345.00 - SUNNYSIDE 345KV CKT 1	717	789	0.03842	109.1187	LYDIA - VALLIANT 345KV CKT 1
FDNS	00NR	0	20WP	G15_095	FROM->TO	G14-057T 345.00 - SUNNYSIDE 345KV CKT 1	717	789	0.03842	109.1187	LYDIA - VALLIANT 345KV CKT 1
FDNS	00NR	0	20WP	G15_095	FROM->TO	G14-057T 345.00 - SUNNYSIDE 345KV CKT 1	717	789	0.03594	108.7846	GEN525561 1-TOLK GEN #1 24 KV
FDNS	00NR	0	16WP	G15_095	FROM->TO	G14-057T 345.00 - SUNNYSIDE 345KV CKT 1	717	789	0.04269	108.4243	JOHNSON COUNTY - PITTSBURG 345KV CKT 1
FDNS	00NR	0	16WP	G15_095	FROM->TO	G14-057T 345.00 - SUNNYSIDE 345KV CKT 1	717	789	0.04269	108.4243	JOHNSON COUNTY - PITTSBURG 345KV CKT 1
FDNS	00NR	0	16WP	G15_095	FROM->TO	G14-057T 345.00 - SUNNYSIDE 345KV CKT 1	717	789	0.03615	108.057	GEN563263 1-G15092_4 0.6900
FDNS	00NR	0	16WP	G15_095	FROM->TO	G14-057T 345.00 - SUNNYSIDE 345KV CKT 1	717	789	0.0543	107.6655	HUGO - VALLIANT 345KV CKT 1
FDNS	00NR	0	16WP	G15_095	FROM->TO	G14-057T 345.00 - SUNNYSIDE 345KV CKT 1	717	789	0.0543	107.6655	HUGO - VALLIANT 345KV CKT 1
FDNS	00NR	0	20WP	G15_095	FROM->TO	G14-057T 345.00 - SUNNYSIDE 345KV CKT 1	717	789	0.04248	106.869	JOHNSON COUNTY - PITTSBURG 345KV CKT 1
FDNS	00NR	0	20WP	G15_095	FROM->TO	G14-057T 345.00 - SUNNYSIDE 345KV CKT 1	717	789	0.04248	106.869	JOHNSON COUNTY - PITTSBURG 345KV CKT 1
FDNS	00NR	0	20WP	G15_095	FROM->TO	G14-057T 345.00 - SUNNYSIDE 345KV CKT 1	717	789	0.05415	106.5939	HUGO - VALLIANT 345KV CKT 1
FDNS	00NR	0	20WP	G15_095	FROM->TO	G14-057T 345.00 - SUNNYSIDE 345KV CKT 1	717	789	0.05415	106.5939	HUGO - VALLIANT 345KV CKT 1
FDNS	00NR	0	16WP	G15_095	FROM->TO	G14-057T 345.00 - SUNNYSIDE 345KV CKT 1	717	789	0.03615	106.381	GEN563262 1-G15092_3 0.6900
FDNS	00NR	0	20WP	G15_095	FROM->TO	G14-057T 345.00 - SUNNYSIDE 345KV CKT 1	717	789	0.03594	105.9962	GEN563263 1-G15092_4 0.6900
FDNS	00NR	0	20WP	G15_095	FROM->TO	G14-057T 345.00 - SUNNYSIDE 345KV CKT 1	717	789	0.03594	104.3167	GEN563262 1-G15092_3 0.6900
FDNS	00NR	0	16WP	G15_095	FROM->TO	G14-057T 345.00 - SUNNYSIDE 345KV CKT 1	717	789	0.0425	102.6669	JOHNSON COUNTY - SUNNYSIDE 345KV CKT 1
FDNS	00NR	0	20WP	G15_095	FROM->TO	G14-057T 345.00 - SUNNYSIDE 345KV CKT 1	717	789	0.0423	100.3152	JOHNSON COUNTY - SUNNYSIDE 345KV CKT 1
FDNS	01ALL	0	20SP	G15_095	FROM->TO	G15095_T 138.00 - ROSE_VALLEY 138.00 138KV CKT 1	183	228	0.33737	120.54	BASE CASE
FDNS	01ALL	0	20WP	G15_095	FROM->TO	G15095_T 138.00 - ROSE_VALLEY 138.00 138KV CKT 1	183	228	0.33707	117.9208	BASE CASE
FDNS	01ALL	0	17SP	G15_095	FROM->TO	G15095_T 138.00 - ROSE_VALLEY 138.00 138KV CKT 1	183	228	0.33587	115.5849	BASE CASE
FDNS	01ALL	0	20SP	G15_095	FROM->TO	G15095_T 138.00 - ROSE_VALLEY 138.00 138KV CKT 1	183	228	0.33904	112.9198	MATHWSN7 345.00 - TATONGA7 345.00 345KV CKT 1
FDNS	01ALL	0	16WP	G15_095	FROM->TO	G15095_T 138.00 - ROSE_VALLEY 138.00 138KV CKT 1	183	228	0.33584	111.8131	BASE CASE
FDNS	01ALL	0	17SP	G15_095	FROM->TO	G15095_T 138.00 - ROSE_VALLEY 138.00 138KV CKT 1	183	228	0.33755	109.1438	MATHWSN7 345.00 - TATONGA7 345.00 345KV CKT 1
FDNS	01ALL	0	20SP	G15_095	FROM->TO	G15095_T 138.00 - ROSE_VALLEY 138.00 138KV CKT 1	183	228	0.30715	107.1722	RENFROW7 345.00 (BANK 1) 345/138/13.8KV TRANSFORMER CKT 1
FDNS	01ALL	0	20SP	G15_095	FROM->TO	G15095_T 138.00 - ROSE_VALLEY 138.00 138KV CKT 1	183	228	0.34947	104.8017	MOORELAND - PIC4 138.00 138KV CKT 1
FDNS	01ALL	0	20SP	G15_095	FROM->TO	G15095_T 138.00 - ROSE_VALLEY 138.00 138KV CKT 1	183	228	0.34947	104.7772	P12:138:WFEC:MSL12
FDNS	01ALL	0	20SP	G15_095	FROM->TO	G15095_T 138.00 - ROSE_VALLEY 138.00 138KV CKT 1	183	228	0.34947	104.7118	CEDARDALE - PIC4 138.00 138KV CKT 1
FDNS	01ALL	0	20SP	G15_095	FROM->TO	G15095_T 138.00 - ROSE_VALLEY 138.00 138KV CKT 1	183	228	0.34947	104.5244	CEDARDALE - OKEENE 138KV CKT 1
FDNS	01ALL	0	20SP	G15_095	FROM->TO	G15095_T 138.00 - ROSE_VALLEY 138.00 138KV CKT 1	183	228	0.35122	104.1829	P12:138:WFEC:MSL14
FDNS	01ALL	0	20SP	G15_095	FROM->TO	G15095_T 138.00 - ROSE_VALLEY 138.00 138KV CKT 1	183	228	0.35122	104.1641	BEARCAT 138.00 - MOORELAND 138KV CKT 1
FDNS	01ALL	0	20SP	G15_095	FROM->TO	G15095_T 138.00 - ROSE_VALLEY 138.00 138KV CKT 1	183	228	0.35122	103.7637	BEARCAT 138.00 - NINE MILE 138KV CKT 1
FDNS	01ALL	0	20SP	G15_095	FROM->TO	G15095_T 138.00 - ROSE_VALLEY 138.00 138KV CKT 1	183	228	0.33336	103.7626	BUFBEAR2 - BUFFALO 69KV CKT 1
FDNS	01ALL	0	20SP	G15_095	FROM->TO	G15095_T 138.00 - ROSE_VALLEY 138.00 138KV CKT 1	183	228	0.3746	103.3903	WOODWARD EHV - WWPAR4 138.00 138KV CKT 1
FDNS	01ALL	0	20SP	G15_095	FROM->TO	G15095_T 138.00 - ROSE_VALLEY 138.00 138KV CKT 1	183	228	0.3746	103.39	WOODWARD - WWPAR4 138.00 138KV CKT 1
FDNS	01ALL	0	20WP	G15_095	FROM->TO	G15095_T 138.00 - ROSE_VALLEY 138.00 138KV CKT 1	183	228	0.32869	103.2777	FAIRVIEW - OKEENE 69KV CKT 1
FDNS	01ALL	0	20SP	G15_095	FROM->TO	G15095_T 138.00 - ROSE_VALLEY 138.00 138KV CKT 1	183	228	0.32898	103.2027	EAGLE CHIEF - RINGWOOD JCT 69KV CKT 1
FDNS	01ALL	0	20SP	G15_095	FROM->TO	G15095_T 138.00 - ROSE_VALLEY 138.00 138KV CKT 1	183	228	0.32898	103.2027	FAIRVIEW - RINGWOOD JCT 69KV CKT 1
FDNS	01ALL	0	20SP	G15_095	FROM->TO	G15095_T 138.00 - ROSE_VALLEY 138.00 138KV CKT 1	183	228	0.32776	103.1172	CLEO CORNER (CLEOCOR1) 138/69/13.8KV TRANSFORMER CKT 1
FDNS	01ALL	0	20SP	G15_095	FROM->TO	G15095_T 138.00 - ROSE_VALLEY 138.00 138KV CKT 1	183	228	0.35122	103.0778	MOREWOOD SW - NINE MILE 138KV CKT 1
FDNS	01ALL	0	20WP	G15_095	FROM->TO	G15095_T 138.00 - ROSE_VALLEY 138.00 138KV CKT 1	183	228	0.34912	103.0675	MOORELAND - PIC4 138.00 138KV CKT 1
FDNS	01ALL	0	20WP	G15_095	FROM->TO	G15095_T 138.00 - ROSE_VALLEY 138.00 138KV CKT 1	183	228	0.34912	103.038	P12:138:WFEC:MSL12

SOLUTION	GROUP	SCENARIO	SEASON	SOURCE	DIRECTION	MONITORED ELEMENT	RATEA (MVA)	RATEB(MVA)	TDF	TC%LOADING (% MVA)	CONTINGENCY
FDNS	01ALL	0	20SP	G15_095	FROM->TO	G15095_T 138.00 - ROSE_VALLEY 138.00 138KV CKT 1	183	228	0.34236	102.9915	CLEO CORNER - CLEOPLT4 138.00 138KV CKT 1
FDNS	01ALL	0	20WP	G15_095	FROM->TO	G15095_T 138.00 - ROSE_VALLEY 138.00 138KV CKT 1	183	228	0.34912	102.977	CEDARDALE - PIC4 138.00 138KV CKT 1
FDNS	01ALL	0	17SP	G15_095	FROM->TO	G15095_T 138.00 - ROSE_VALLEY 138.00 138KV CKT 1	183	228	0.30537	102.9755	RENFROW7 345.00 (BANK 1) 345/138/13.8KV TRANSFORMER CKT 1
FDNS	01ALL	0	20SP	G15_095	FROM->TO	G15095_T 138.00 - ROSE_VALLEY 138.00 138KV CKT 1	183	228	0.33869	102.8866	THISTLE7 345.00 - WOODWARD DISTRICT EHV 345KV CKT 1
FDNS	01ALL	0	20SP	G15_095	FROM->TO	G15095_T 138.00 - ROSE_VALLEY 138.00 138KV CKT 1	183	228	0.33869	102.8866	THISTLE7 345.00 - WOODWARD DISTRICT EHV 345KV CKT 1
FDNS	01ALL	0	20SP	G15_095	FROM->TO	G15095_T 138.00 - ROSE_VALLEY 138.00 138KV CKT 1	183	228	0.33869	102.8866	THISTLE7 345.00 - WOODWARD DISTRICT EHV 345KV CKT 2
FDNS	01ALL	0	20SP	G15_095	FROM->TO	G15095_T 138.00 - ROSE_VALLEY 138.00 138KV CKT 1	183	228	0.33869	102.8866	THISTLE7 345.00 - WOODWARD DISTRICT EHV 345KV CKT 2
FDNS	01ALL	0	20SP	G15_095	FROM->TO	G15095_T 138.00 - ROSE_VALLEY 138.00 138KV CKT 1	183	228	0.34236	102.8081	CLEOPLT4 138.00 - MEN TAP 138KV CKT 1
FDNS	01ALL	0	20WP	G15_095	FROM->TO	G15095_T 138.00 - ROSE_VALLEY 138.00 138KV CKT 1	183	228	0.34912	102.7863	CEDARDALE - OKEENE 138KV CKT 1
FDNS	01ALL	0	20SP	G15_095	FROM->TO	G15095_T 138.00 - ROSE_VALLEY 138.00 138KV CKT 1	183	228	0.34236	102.6469	IMO TAP - MEN TAP 138KV CKT 1
FDNS	01ALL	0	20SP	G15_095	FROM->TO	G15095_T 138.00 - ROSE_VALLEY 138.00 138KV CKT 1	183	228	0.33336	102.4614	BUFFALO - WEST 69KV CKT 1
FDNS	01ALL	0	20WP	G15_095	FROM->TO	G15095_T 138.00 - ROSE_VALLEY 138.00 138KV CKT 1	183	228	0.3509	101.8832	P12:138:WFEC:MSL14
FDNS	01ALL	0	20SP	G15_095	FROM->TO	G15095_T 138.00 - ROSE_VALLEY 138.00 138KV CKT 1	183	228	0.33524	101.8697	HUNTERS7 345.00 - RENFROW7 345.00 345KV CKT 1
FDNS	01ALL	0	20WP	G15_095	FROM->TO	G15095_T 138.00 - ROSE_VALLEY 138.00 138KV CKT 1	183	228	0.3509	101.8633	BEARCAT 138.00 - MOORELAND 138KV CKT 1
FDNS	01ALL	0	20SP	G15_095	FROM->TO	G15095_T 138.00 - ROSE_VALLEY 138.00 138KV CKT 1	183	228	0.35347	101.7983	GLASS MOUNTAIN - MOORELAND 138KV CKT 1
FDNS	01ALL	0	20SP	G15_095	FROM->TO	G15095_T 138.00 - ROSE_VALLEY 138.00 138KV CKT 1	183	228	0.3415	101.5614	DEWEY - SOUTHARD 138KV CKT 1
FDNS	01ALL	0	20WP	G15_095	FROM->TO	G15095_T 138.00 - ROSE_VALLEY 138.00 138KV CKT 1	183	228	0.33305	101.5123	BUFBEAR2 - BUFFALO 69KV CKT 1
FDNS	01ALL	0	20WP	G15_095	FROM->TO	G15095_T 138.00 - ROSE_VALLEY 138.00 138KV CKT 1	183	228	0.3509	101.4606	BEARCAT 138.00 - NINE MILE 138KV CKT 1
FDNS	01ALL	0	20SP	G15_095	FROM->TO	G15095_T 138.00 - ROSE_VALLEY 138.00 138KV CKT 1	183	228	0.35347	101.3756	CLEO CORNER - GLASS MOUNTAIN 138KV CKT 1
FDNS	01ALL	0	20SP	G15_095	FROM->TO	G15095_T 138.00 - ROSE_VALLEY 138.00 138KV CKT 1	183	228	0.33336	101.2874	FREEDOM - WEST 69KV CKT 1
FDNS	01ALL	0	17SP	G15_095	FROM->TO	G15095_T 138.00 - ROSE_VALLEY 138.00 138KV CKT 1	183	228	0.32776	101.2133	FAIRVIEW - OKEENE 69KV CKT 1
FDNS	01ALL	0	20WP	G15_095	FROM->TO	G15095_T 138.00 - ROSE_VALLEY 138.00 138KV CKT 1	183	228	0.33836	101.1841	THISTLE7 345.00 - WOODWARD DISTRICT EHV 345KV CKT 1
FDNS	01ALL	0	20WP	G15_095	FROM->TO	G15095_T 138.00 - ROSE_VALLEY 138.00 138KV CKT 1	183	228	0.33836	101.1841	THISTLE7 345.00 - WOODWARD DISTRICT EHV 345KV CKT 1
FDNS	01ALL	0	20WP	G15_095	FROM->TO	G15095_T 138.00 - ROSE_VALLEY 138.00 138KV CKT 1	183	228	0.33836	101.1841	THISTLE7 345.00 - WOODWARD DISTRICT EHV 345KV CKT 2
FDNS	01ALL	0	20WP	G15_095	FROM->TO	G15095_T 138.00 - ROSE_VALLEY 138.00 138KV CKT 1	183	228	0.33836	101.1841	THISTLE7 345.00 - WOODWARD DISTRICT EHV 345KV CKT 2
FDNS	01ALL	0	20WP	G15_095	FROM->TO	G15095_T 138.00 - ROSE_VALLEY 138.00 138KV CKT 1	183	228	0.30694	101.1696	RENFROW7 345.00 (BANK 1) 345/138/13.8KV TRANSFORMER CKT 1
FDNS	01ALL	0	20SP	G15_095	FROM->TO	G15095_T 138.00 - ROSE_VALLEY 138.00 138KV CKT 1	183	228	0.3415	101.0526	ROMAN NOSE - SOUTHARD 138KV CKT 1
FDNS	01ALL	0	25SP	G15_095	FROM->TO	G15095_T 138.00 - ROSE_VALLEY 138.00 138KV CKT 1	183	228	0.33716	100.8786	BASE CASE
FDNS	01ALL	0	17SP	G15_095	FROM->TO	G15095_T 138.00 - ROSE_VALLEY 138.00 138KV CKT 1	183	228	0.34794	100.8648	MOORELAND - PIC4 138.00 138KV CKT 1
FDNS	01ALL	0	17SP	G15_095	FROM->TO	G15095_T 138.00 - ROSE_VALLEY 138.00 138KV CKT 1	183	228	0.34794	100.8427	P12:138:WFEC:MSL12
FDNS	01ALL	0	20WP	G15_095	FROM->TO	G15095_T 138.00 - ROSE_VALLEY 138.00 138KV CKT 1	183	228	0.34205	100.804	CLEO CORNER - CLEOPLT4 138.00 138KV CKT 1
FDNS	01ALL	0	17SP	G15_095	FROM->TO	G15095_T 138.00 - ROSE_VALLEY 138.00 138KV CKT 1	183	228	0.34794	100.7756	CEDARDALE - PIC4 138.00 138KV CKT 1
FDNS	01ALL	0	20WP	G15_095	FROM->TO	G15095_T 138.00 - ROSE_VALLEY 138.00 138KV CKT 1	183	228	0.3509	100.7732	MOREWOOD SW - NINE MILE 138KV CKT 1
FDNS	01ALL	0	20SP	G15_095	FROM->TO	G15095_T 138.00 - ROSE_VALLEY 138.00 138KV CKT 1	183	228	0.33524	100.7059	HUNTERS7 345.00 - WOODRING 345KV CKT 1
FDNS	01ALL	0	20WP	G15_095	FROM->TO	G15095_T 138.00 - ROSE_VALLEY 138.00 138KV CKT 1	183	228	0.34205	100.6294	CLEOPLT4 138.00 - MEN TAP 138KV CKT 1
FDNS	01ALL	0	17SP	G15_095	FROM->TO	G15095_T 138.00 - ROSE_VALLEY 138.00 138KV CKT 1	183	228	0.34794	100.6133	CEDARDALE - OKEENE 138KV CKT 1
FDNS	01ALL	0	20SP	G15_095	FROM->TO	G15095_T 138.00 - ROSE_VALLEY 138.00 138KV CKT 1	183	228	0.33602	100.5837	G15063_T 345.00 - WOODRING 345KV CKT 1
FDNS	01ALL	0	20WP	G15_095	FROM->TO	G15095_T 138.00 - ROSE_VALLEY 138.00 138KV CKT 1	183	228	0.34205	100.5267	IMO TAP - MEN TAP 138KV CKT 1
FDNS	01ALL	0	20SP	G15_095	FROM->TO	G15095_T 138.00 - ROSE_VALLEY 138.00 138KV CKT 1	183	228	0.33336	100.5055	FREEDOM - WINCH_TAP 69.000 69KV CKT 1
FDNS	01ALL	0	20WP	G15_095	FROM->TO	G15095_T 138.00 - ROSE_VALLEY 138.00 138KV CKT 1	183	228	0.33305	100.4925	BUFFALO - WEST 69KV CKT 1
FDNS	01ALL	0	17SP	G15_095	FROM->TO	G15095_T 138.00 - ROSE_VALLEY 138.00 138KV CKT 1	183	228	0.34968	100.3816	P12:138:WFEC:MSL14
FDNS	01ALL	0	17SP	G15_095	FROM->TO	G15095_T 138.00 - ROSE_VALLEY 138.00 138KV CKT 1	183	228	0.34968	100.3624	BEARCAT 138.00 - MOORELAND 138KV CKT 1
FDNS	01ALL	0	20WP	G15_095	FROM->TO	G15095_T 138.00 - ROSE_VALLEY 138.00 138KV CKT 1	183	228	0.32745	100.2276	CLEO CORNER (CLEOCOR1) 138/69/13.8KV TRANSFORMER CKT 1
FDNS	01ALL	0	17SP	G15_095	FROM->TO	G15095_T 138.00 - ROSE_VALLEY 138.00 138KV CKT 1	183	228	0.37302	100	WOODWARD - WWPAR4 138.00 138KV CKT 1
FDNS	01ALL	0	17SP	G15_095	FROM->TO	G15095_T 138.00 - ROSE_VALLEY 138.00 138KV CKT 1	183	228	0.37302	100	WOODWARD EHV - WWPAR4 138.00 138KV CKT 1
FDNS	01ALL	0	17SP	G15_095	FROM->TO	G15095_T 138.00 - ROSE_VALLEY 138.00 138KV CKT 1	183	228	0.34968	100	BEARCAT 138.00 - NINE MILE 138KV CKT 1
FDNS	01ALL	0	20SP	G15_095	FROM->TO	G15095_T 138.00 - ROSE_VALLEY 138.00 138KV CKT 1	183	228	0.33602	100	G15063_T 345.00 - MATHWSN7 345.00 345KV CKT 1
FDNS	01ALL	0	20SP	G15_095	FROM->TO	G15095_T 138.00 - ROSE_VALLEY 138.00 138KV CKT 1	183	228	0.3443	99.9	DOVER SW - OKEENE 138KV CKT 1
FDNS	01ALL	0	20WP	G15_095	FROM->TO	G15095_T 138.00 - ROSE_VALLEY 138.00 138KV CKT 1	183	228	0.34115	99.9	DEWEY - SOUTHARD 138KV CKT 1
FDNS	01ALL	0	20SP	G15_095	FROM->TO	G15095_T 138.00 - ROSE_VALLEY 138.00 138KV CKT 1	183	228	0.33336	99.8	FT SUPPLY - STOCKHOLM2 69.000 69KV CKT 1
FDNS	01ALL	0	20SP	G15_095	FROM->TO	G15095_T 138.00 - ROSE_VALLEY 138.00 138KV CKT 1	183	228	0.34412	99.7	ELK CITY - RED HILLS WIND 138KV CKT 1
FDNS	01ALL	0	20SP	G15_095	FROM->TO	G15095_T 138.00 - ROSE_VALLEY 138.00 138KV CKT 1	183	228	0.34412	99.7	ELK CITY - RED HILLS WIND 138KV CKT 1
FDNS	01ALL	0	20SP	G15_095	FROM->TO	G15095_T 138.00 - ROSE_VALLEY 138.00 138KV CKT 1	183	228	0.34138	99.7	WOODWARD DISTRICT EHV (WWDEHV-T2) 345/138/13.8KV TRANSFORMER CKT 2
FDNS	01ALL	0	20SP	G15_095	FROM->TO	G15095_T 138.00 - ROSE_VALLEY 138.00 138KV CKT 1	183	228	0.33336	99.7	BUFBEAR2 - STOCKHOLM2 69.000 69KV CKT 1
FDNS	01ALL	0	20SP	G15_095	FROM->TO	G15095_T 138.00 - ROSE_VALLEY 138.00 138KV CKT 1	183	228	0.34119	99.6	WOODWARD DISTRICT EHV (WWDEHV) 345/138/13.8KV TRANSFORMER CKT 1
FDNS	01ALL	0	20WP	G15_095	FROM->TO	G15095_T 138.00 - ROSE_VALLEY 138.00 138KV CKT 1	183	228	0.35312	99.6	GLASS MOUNTAIN - MOORELAND 138KV CKT 1
FDNS	01ALL	0	20WP	G15_095	FROM->TO	G15095_T 138.00 - ROSE_VALLEY 138.00 138KV CKT 1	183	228	0.34115	99.6	ROMAN NOSE - SOUTHARD 138KV CKT 1
FDNS	01ALL	0	20WP	G15_095	FROM->TO	G15095_T 138.00 - ROSE_VALLEY 138.00 138KV CKT 1	183	228	0.33305	99.6	FREEDOM - WEST 69KV CKT 1
FDNS	01ALL	0	17G	G15_095	FROM->TO	G15095_T 138.00 - ROSE_VALLEY 138.00 138KV CKT 1	183	228	0.33741	99.5	BASE CASE
FDNS	01ALL	0	20SP	G15_095	FROM->TO	G15095_T 138.00 - ROSE_VALLEY 138.00 138KV CKT 1	183	228	0.33824	99.5	Hitchland Interchange - WALKTAP7 345.00 345KV CKT 1
FDNS	01ALL	0	20SP	G15_095	FROM->TO	G15095_T 138.00 - ROSE_VALLEY 138.00 138KV CKT 1	183	228	0.33824	99.5	Hitchland Interchange - WALKTAP7 345.00 345KV CKT 1
FDNS	00NR	0	20WP	G15_095	TO->FROM	MATHWSN7 345.00 - TATONGA7 345.00 345KV CKT 1	1195	1195	0.09336	110.9769	G14-074T 345.00 - OKLAUNION 345KV CKT 1
FDNS	00NR	0	16WP	G15_095	TO->FROM	MATHWSN7 345.00 - TATONGA7 345.00 345KV CKT 1	1195	1195	0.09385	108.6268	G14-074T 345.00 - OKLAUNION 345KV CKT 1
FDNS	01ALL	0	20WP	G15_095	TO->FROM	MATHWSN7 345.00 - TATONGA7 345.00 345KV CKT 1	1195	1195	0.06175	107.9199	BASE CASE
FDNS	01NR	0	20L	G15_095	TO->FROM	MATHWSN7 345.00 - TATONGA7 345.00 345KV CKT 1	1195	1195	0.12609	103.4941	THISTLE7 345.00 - WOODWARD DISTRICT EHV 345KV CKT 1
FDNS	01NR	0	20L	G15_095	TO->FROM	MATHWSN7 345.00 - TATONGA7 345.00 345KV CKT 1	1195	1195	0.12609	103.4941	THISTLE7 345.00 - WOODWARD DISTRICT EHV 345KV CKT 1
FDNS	01NR	0	20L	G15_095	TO->FROM	MATHWSN7 345.00 - TATONGA7 345.00 345KV CKT 1	1195	1195	0.12609	103.4941	THISTLE7 345.00 - WOODWARD DISTRICT EHV 345KV CKT 2
FDNS	01NR	0	20L	G15_095	TO->FROM	MATHWSN7 345.00 - TATONGA7 345.00 345KV CKT 1	1195	1195	0.12609	103.4941	THISTLE7 345.00 - WOODWARD DISTRICT EHV 345KV CKT 2
FDNS	01ALL	0	16WP	G15_095	TO->FROM	MATHWSN7 345.00 - TATONGA7 345.00 345KV CKT 1	1195	1195	0.06629	103.1041	BASE CASE
FDNS	00NR	0	20WP	G15_095	TO->FROM	MATHWSN7 345.00 - TATONGA7 345.00 345KV CKT 1	1195	1195	0.08702	102.7399	THISTLE7 345.00 - WOODWARD DISTRICT EHV 345KV CKT 1
FDNS	00NR	0	20WP	G15_095	TO->FROM	MATHWSN7 345.00 - TATONGA7 345.00 345KV CKT 1	1195	1195	0.08702	102.7399	THISTLE7 345.00 - WOODWARD DISTRICT EHV 345KV CKT 1
FDNS	00NR	0	20WP	G15_095	TO->FROM	MATHWSN7 345.00 - TATONGA7 345.00 345KV CKT 1	1195	1195	0.08702	102.7399	THISTLE7 345.00 - WOODWARD DISTRICT EHV 345KV CKT 2
FDNS	00NR	0	20WP	G15_095	TO->FROM	MATHWSN7 345.00 - TATONGA7 345.00 345KV CKT 1	1195	1195	0.08702	102.7399	THISTLE7 345.00 - WOODWARD DISTRICT EHV 345KV CKT 2
FDNS	00NR	0	20WP	G15_095	TO->FROM	MATHWSN7 345.00 - TATONGA7 345.00 345KV CKT 1	1195	1195	0.08438	102.4191	CHISHOLM6 230.00 - SWEETWATER 230KV CKT 1
FDNS	00NR	0	20WP	G15_095	TO->FROM	MATHWSN7 345.00 - TATONGA7 345.00 345KV CKT 1	1195	1195	0.09336	102.4108	G14-074T 345.00 - TUCO INTERCHANGE 345KV CKT 1
FDNS	00NR	0	20WP	G15_095	TO->FROM	MATHWSN7 345.00 - TATONGA7 345.00 345KV CKT 1	1195	1195	0.08667	102.1811	P12:230:AEPW:ELKCITY6:SWEETWT6
FDNS	00NR	0	16WP	G15_095	TO->FROM	MATHWSN7 345.00 - TATONGA7 345.00 345KV CKT 1	1195	1195	0.08736	101.0086	THISTLE7 345.00 - WOODWARD DISTRICT EHV 345KV CKT 1
FDNS	00NR	0	16WP	G15_095	TO->FROM	MATHWSN7 345.00 - TATONGA7 345.00 345KV CKT 1	1195	1195	0.08736	101.0086	THISTLE7 345.00 - WOODWARD DISTRICT EHV 345KV CKT 1
FDNS	00NR	0	16WP	G15_095	TO->FROM	MATHWSN7 345.00 - TATONGA7 345.00 345KV CKT 1	1195	1195	0.08736	101.0086	THISTLE7 345.00 - WOODWARD DISTRICT EHV 345KV CKT 2

SOLUTION	GROUP	SCENARIO	SEASON	SOURCE	DIRECTION	MONITORED ELEMENT	RATEA (MVA)	RATEB(MVA)	TDF	TC%LOADING (% MVA)	CONTINGENCY
FDNS	00NR	0	16WP	G15_095	TO->FROM	MATHWSN7 345.00 - TATONGA7 345.00 345KV CKT 1	1195	1195	0.08736	101.0086	THISTLE7 345.00 - WOODWARD DISTRICT EHV 345KV CKT 2
FDNS	00NR	0	20WP	G15_095	TO->FROM	MATHWSN7 345.00 - TATONGA7 345.00 345KV CKT 1	1195	1195	0.06629	100.869	CIMARRON - MINCO 345KV CKT 1
FDNS	00NR	0	16WP	G15_095	TO->FROM	MATHWSN7 345.00 - TATONGA7 345.00 345KV CKT 1	1195	1195	0.09385	100.5612	G14-074T 345.00 - TUCO INTERCHANGE 345KV CKT 1
FDNS	00NR	0	16WP	G15_095	TO->FROM	MATHWSN7 345.00 - TATONGA7 345.00 345KV CKT 1	1195	1195	0.08474	100.4392	CHISHOLM6 230.00 - SWEETWATER 230KV CKT 1
FDNS	00NR	0	20WP	G15_095	TO->FROM	MATHWSN7 345.00 - TATONGA7 345.00 345KV CKT 1	1195	1195	0.08438	100.3181	STLN-DEMARC6 - SWEETWATER 230KV CKT 1
FDNS	00NR	0	20WP	G15_095	TO->FROM	MATHWSN7 345.00 - TATONGA7 345.00 345KV CKT 1	1195	1195	0.08438	100.2999	STATELINE INTERCHANGE - STLN-DEMARC6 230KV CKT 1
FDNS	00NR	0	16WP	G15_095	TO->FROM	MATHWSN7 345.00 - TATONGA7 345.00 345KV CKT 1	1195	1195	0.08714	100.2694	P12:230:AEPW:ELKCITY6:SWEETWT6
FDNS	00NR	0	20WP	G15_095	TO->FROM	MATHWSN7 345.00 - TATONGA7 345.00 345KV CKT 1	1195	1195	0.08438	100.26	P12:230:AEPW-SPS:SWEETWT6:WHEELER 6
FDNS	01ALL	0	20L	G15_095	TO->FROM	MATHWSN7 345.00 - TATONGA7 345.00 345KV CKT 1	1195	1195	0.0737	100.1968	BASE CASE
FDNS	00NR	0	20WP	G15_095	TO->FROM	MATHWSN7 345.00 - TATONGA7 345.00 345KV CKT 1	1195	1195	0.08329	100.09	G1524G1525 345.00 - THISTLE7 345.00 345KV CKT 1
FDNS	00NR	0	20WP	G15_095	TO->FROM	MATHWSN7 345.00 - TATONGA7 345.00 345KV CKT 1	1195	1195	0.08329	100.09	G1524G1525 345.00 - THISTLE7 345.00 345KV CKT 2
FDNS	01ALL	0	20SP	G15_095	TO->FROM	NOEL_SW 138.00 - ROSE_VALLEY 138.00 138KV CKT 1	183	228	0.33737	112.4442	BASE CASE
FDNS	01ALL	0	20WP	G15_095	TO->FROM	NOEL_SW 138.00 - ROSE_VALLEY 138.00 138KV CKT 1	183	228	0.33707	112.0572	BASE CASE
FDNS	01ALL	0	17SP	G15_095	TO->FROM	NOEL_SW 138.00 - ROSE_VALLEY 138.00 138KV CKT 1	183	228	0.33587	108.526	BASE CASE
FDNS	01ALL	0	16WP	G15_095	TO->FROM	NOEL_SW 138.00 - ROSE_VALLEY 138.00 138KV CKT 1	183	228	0.33584	106.3569	BASE CASE
FDNS	01ALL	0	20SP	G15_095	TO->FROM	NOEL_SW 138.00 - ROSE_VALLEY 138.00 138KV CKT 1	183	228	0.33904	106.1661	MATHWSN7 345.00 - TATONGA7 345.00 345KV CKT 1
FDNS	01ALL	0	17SP	G15_095	TO->FROM	NOEL_SW 138.00 - ROSE_VALLEY 138.00 138KV CKT 1	183	228	0.33755	103.2615	MATHWSN7 345.00 - TATONGA7 345.00 345KV CKT 1
FDNS	01ALL	0	20SP	G15_095	TO->FROM	NOEL_SW 138.00 - ROSE_VALLEY 138.00 138KV CKT 1	183	228	0.30715	100.3301	RENFROW7 345.00 (BANK 1) 345/138/13.8KV TRANSFORMER CKT 1
FDNS	00NR	0	16WP	G15_095	TO->FROM	PITTSBURG - SEMINOLE 345KV CKT 1	717	717	0.09499	101.4082	G14-057T 345.00 - SUNNYSIDE 345KV CKT 1
FDNS	01NR	0	20L	G15_095	TO->FROM	ROMAN NOSE - SOUTHARD 138KV CKT 1	133	153	0.07567	122.4038	MATHWSN7 345.00 - TATONGA7 345.00 345KV CKT 1
FDNS	00NR	0	17SP	G15_095	TO->FROM	ROMAN NOSE - SOUTHARD 138KV CKT 1	133	153	0.05343	105.4044	MATHWSN7 345.00 - TATONGA7 345.00 345KV CKT 1
FDNSLock	00NR	0	16WP	G15_095	TO->FROM	ROMAN NOSE - SOUTHARD 138KV CKT 1	171	185	0.05347	104.3877	MATHWSN7 345.00 - TATONGA7 345.00 345KV CKT 1
FDNS	00NR	0	20WP	G15_095	TO->FROM	ROMAN NOSE - SOUTHARD 138KV CKT 1	171	185	0.05328	103.7546	MATHWSN7 345.00 - TATONGA7 345.00 345KV CKT 1
FDNS	01ALL	0	17SP	G15_095	TO->FROM	ROMAN NOSE - SOUTHARD 138KV CKT 1	133	153	0.06148	103.6561	BASE CASE
FDNS	01ALL	0	20SP	G15_095	TO->FROM	ROMAN NOSE - SOUTHARD 138KV CKT 1	133	153	0.06146	100.0583	BASE CASE
FDNS	01NR	0	20L	G15_095	TO->FROM	TUPELO - TUPELO TAP 138KV CKT 1	143	143	0.06369	105.2422	PITTSBURG - SEMINOLE 345KV CKT 1
FDNS	01NR	0	20L	G15_095	TO->FROM	TUPELO - TUPELO TAP 138KV CKT 1	143	143	0.06369	105.2422	PITTSBURG - SEMINOLE 345KV CKT 1
FDNS	01NR	0	20L	G15_095	TO->FROM	TUPELO - TUPELO TAP 138KV CKT 1	143	143	0.06607	103.4628	PITTSBURG - VALLIANT 345KV CKT 1
FDNS	01NR	0	20L	G15_095	TO->FROM	TUPELO - TUPELO TAP 138KV CKT 1	143	143	0.06607	103.4628	PITTSBURG - VALLIANT 345KV CKT 1
FDNS	01NR	0	20L	G15_095	TO->FROM	TUPELO - TUPELO TAP 138KV CKT 1	143	143	0.0581	102.6044	G14-057T 345.00 - SUNNYSIDE 345KV CKT 1
FDNS	01ALL	0	25SP	G15_095	FROM->TO	WOODWARD DISTRICT EHV (WWDEHV) 345/138/13.8KV TRANSFORMER CKT 1	493	493	0.29867	110.7645	WOODWARD DISTRICT EHV (WWDEHV-T2) 345/138/13.8KV TRANSFORMER CKT 2
FDNS	01ALL	0	25SP	G15_095	FROM->TO	WOODWARD DISTRICT EHV (WWDEHV) 345/138/13.8KV TRANSFORMER CKT 1	493	493	0.29867	109.2561	WOODWARD DISTRICT EHV (WWDEHV-T2) 345/138/13.8KV TRANSFORMER CKT 2
FDNS	01ALL	0	25SP	G15_095	FROM->TO	WOODWARD DISTRICT EHV (WWDEHV-T2) 345/138/13.8KV TRANSFORMER CKT 2	493	493	0.3	111.2094	WOODWARD DISTRICT EHV (WWDEHV) 345/138/13.8KV TRANSFORMER CKT 1
FDNS	01ALL	0	25SP	G15_095	FROM->TO	WOODWARD DISTRICT EHV (WWDEHV-T2) 345/138/13.8KV TRANSFORMER CKT 2	493	493	0.3	109.7337	WOODWARD DISTRICT EHV (WWDEHV) 345/138/13.8KV TRANSFORMER CKT 1
FDNS	00NR	2	16WP	G15_095	FROM->TO	CIMARRON - DRAPER LAKE 345KV CKT 1	717	717	0.07206	116.4604	CLEVELAND - TULSA NORTH 345KV CKT 1
FDNS	00NR	2	16WP	G15_095	FROM->TO	CIMARRON - DRAPER LAKE 345KV CKT 1	717	717	0.06508	115.0647	P12:138:WFEC:MSL03
FDNS	00NR	2	16WP	G15_095	FROM->TO	CIMARRON - DRAPER LAKE 345KV CKT 1	717	717	0.06181	111.8969	P12:138:WFEC:MSL01
FDNS	00NR	2	16WP	G15_095	FROM->TO	CIMARRON - DRAPER LAKE 345KV CKT 1	717	717	0.06839	111.2482	GRAND GULF 500/22.0KV TRANSFORMER CKT 1
FDNS	00NR	2	16WP	G15_095	FROM->TO	CIMARRON - DRAPER LAKE 345KV CKT 1	717	717	0.06877	111.2407	P12:138:OKGE:3TERM14
FDNS	00NR	2	16WP	G15_095	FROM->TO	CIMARRON - DRAPER LAKE 345KV CKT 1	717	717	0.06864	111.1914	REDBUD - RIVERSIDE STATION 345KV CKT 1
FDNS	00NR	2	16WP	G15_095	FROM->TO	CIMARRON - DRAPER LAKE 345KV CKT 1	717	717	0.06634	111.1158	JOHNSON COUNTY - PITTSBURG 345KV CKT 1
FDNS	00NR	2	16WP	G15_095	FROM->TO	CIMARRON - DRAPER LAKE 345KV CKT 1	717	717	0.06951	111.0878	P12:138:OKGE:3TERM2
FDNS	00NR	2	16WP	G15_095	FROM->TO	CIMARRON - DRAPER LAKE 345KV CKT 1	717	717	0.06936	110.9474	7SAREPTA% 345.00 - LONGWOOD 345KV CKT 1
FDNS	00NR	2	16WP	G15_095	FROM->TO	CIMARRON - DRAPER LAKE 345KV CKT 1	717	717	0.06845	110.9352	P12:138:OKGE:3TERM12
FDNS	00NR	2	16WP	G15_095	FROM->TO	CIMARRON - DRAPER LAKE 345KV CKT 1	717	717	0.06882	110.9233	DOLET HILLS - SOUTHWEST SHREVEPORT 345KV CKT 1
FDNS	00NR	2	16WP	G15_095	FROM->TO	CIMARRON - DRAPER LAKE 345KV CKT 1	717	717	0.07025	110.7684	P12:138:OKGE:3TERM18
FDNS	00NR	2	16WP	G15_095	FROM->TO	CIMARRON - DRAPER LAKE 345KV CKT 1	717	717	0.06839	110.6806	NEW MADRID 161/22.0KV TRANSFORMER CKT 1
FDNS	00NR	2	16WP	G15_095	FROM->TO	CIMARRON - DRAPER LAKE 345KV CKT 1	717	717	0.06904	110.6721	THISTLE7 345.00 - WOODWARD DISTRICT EHV 345KV CKT 1
FDNS	00NR	2	16WP	G15_095	FROM->TO	CIMARRON - DRAPER LAKE 345KV CKT 1	717	717	0.06904	110.6721	THISTLE7 345.00 - WOODWARD DISTRICT EHV 345KV CKT 2
FDNS	00NR	2	16WP	G15_095	FROM->TO	CIMARRON - DRAPER LAKE 345KV CKT 1	717	717	0.06839	110.6721	NEW MADRID 345/22.0KV TRANSFORMER CKT 1
FDNS	00NR	2	16WP	G15_095	FROM->TO	CIMARRON - DRAPER LAKE 345KV CKT 1	717	717	0.06893	110.542	7SAREPTA% 345.00 - ELDORADO EHV 345KV CKT 1
FDNS	00NR	2	16WP	G15_095	FROM->TO	CIMARRON - DRAPER LAKE 345KV CKT 1	717	717	0.06893	110.5352	ELDORADO EHV 500/345KV TRANSFORMER CKT 1
FDNS	00NR	2	16WP	G15_095	FROM->TO	CIMARRON - DRAPER LAKE 345KV CKT 1	717	717	0.06846	110.4913	P12:138:OKGE:3TERM11
FDNS	00NR	2	16WP	G15_095	FROM->TO	CIMARRON - DRAPER LAKE 345KV CKT 1	717	717	0.06893	110.4789	P12:138:OKGE:3TERM17
FDNS	00NR	2	16WP	G15_095	FROM->TO	CIMARRON - DRAPER LAKE 345KV CKT 1	717	717	0.06839	110.4198	DELL 500 - ESSEX UNIT 2 500KV CKT Z1
FDNS	00NR	2	16WP	G15_095	FROM->TO	CIMARRON - DRAPER LAKE 345KV CKT 1	717	717	0.06657	110.3524	P12:138:AEPW-OGE:CORNVIL4:MAUD 4
FDNS	00NR	2	16WP	G15_095	FROM->TO	CIMARRON - DRAPER LAKE 345KV CKT 1	717	717	0.07034	110.3362	P12:138:OKGE:3TERM20
FDNS	00NR	2	16WP	G15_095	FROM->TO	CIMARRON - DRAPER LAKE 345KV CKT 1	717	717	0.06961	110.2891	CLARKSVILLE - ONETA 345KV CKT 1
FDNS	00NR	2	16WP	G15_095	FROM->TO	CIMARRON - DRAPER LAKE 345KV CKT 1	717	717	0.06885	110.281	P12:138:OKGE:3TERM47
FDNS	00NR	2	16WP	G15_095	FROM->TO	CIMARRON - DRAPER LAKE 345KV CKT 1	717	717	0.06865	110.2624	FINNEY SWITCHING STATION - HOLCOMB 345KV CKT 1
FDNS	00NR	2	16WP	G15_095	FROM->TO	CIMARRON - DRAPER LAKE 345KV CKT 1	717	717	0.06839	110.2574	DOLET HILLS 345/24.0KV TRANSFORMER CKT 1
FDNS	00NR	2	16WP	G15_095	FROM->TO	CIMARRON - DRAPER LAKE 345KV CKT 1	717	717	0.06839	110.2508	WHITE BLUFF 500/26.0KV TRANSFORMER CKT 1
FDNS	00NR	2	16WP	G15_095	FROM->TO	CIMARRON - DRAPER LAKE 345KV CKT 1	717	717	0.06881	110.2117	BLACKBERRY - NEOSHO 345KV CKT 1
FDNS	00NR	2	16WP	G15_095	FROM->TO	CIMARRON - DRAPER LAKE 345KV CKT 1	717	717	0.06918	110.142	P12:138:AEPW-OGE:SHIDLER4:OSAGE 4
FDNS	00NR	2	16WP	G15_095	FROM->TO	CIMARRON - DRAPER LAKE 345KV CKT 1	717	717	0.06751	110.1103	P12:138:WFEC:MSL02
FDNS	00NR	2	16WP	G15_095	FROM->TO	CIMARRON - DRAPER LAKE 345KV CKT 1	717	717	0.07486	110.1089	GRACEMONT - LAWTON EASTSIDE 345KV CKT 1
FDNS	00NR	2	16WP	G15_095	FROM->TO	CIMARRON - DRAPER LAKE 345KV CKT 1	717	717	0.06917	110.0911	P12:138:AEPW:OKMULGE4:R.S.S-4
FDNS	00NR	2	16WP	G15_095	FROM->TO	CIMARRON - DRAPER LAKE 345KV CKT 1	717	717	0.06866	110.0582	WEBRE - WELLS 500KV CKT 1
FDNS	00NR	2	16WP	G15_095	FROM->TO	CIMARRON - DRAPER LAKE 345KV CKT 1	717	717	0.06839	109.9538	FRONTIER - GRIMES 345KV CKT 1
FDNS	00NR	2	16WP	G15_095	FROM->TO	CIMARRON - DRAPER LAKE 345KV CKT 1	717	717	0.06852	109.9445	CLEAVELAND - CLEVLND 4 138.00 138KV CKT Z1
FDNS	00NR	2	16WP	G15_095	FROM->TO	CIMARRON - DRAPER LAKE 345KV CKT 1	717	717	0.06852	109.9443	CLEVELAND (CLVAUTO1) 345/138/13.8KV TRANSFORMER CKT 1
FDNS	00NR	2	16WP	G15_095	FROM->TO	CIMARRON - DRAPER LAKE 345KV CKT 1	717	717	0.0684	109.9391	P12:069:OKGE:3TERM4
FDNS	00NR	2	16WP	G15_095	FROM->TO	CIMARRON - DRAPER LAKE 345KV CKT 1	717	717	0.06806	109.9301	ARKANSAS NUCLEAR ONE - FT SMITH 500KV CKT 1
FDNS	00NR	2	16WP	G15_095	FROM->TO	CIMARRON - DRAPER LAKE 345KV CKT 1	717	717	0.06845	109.9269	8DANIEL8 500.00 - MCKNIGHT 500KV CKT 1
FDNS	00NR	2	16WP	G15_095	FROM->TO	CIMARRON - DRAPER LAKE 345KV CKT 1	717	717	0.06852	109.9207	P12:138:OKGE:3TERM13
FDNS	00NR	2	16WP	G15_095	FROM->TO	CIMARRON - DRAPER LAKE 345KV CKT 1	717	717	0.06839	109.9018	P12:161:AEPW:DYESS 5:HYLAND 5
FDNS	00NR	2	16WP	G15_095	FROM->TO	CIMARRON - DRAPER LAKE 345KV CKT 1	717	717	0.0684	109.853	P12:345:GRDA:CHOUTEAU-SPORTSMANACRES
FDNS	00NR	2	16WP	G15_095	FROM->TO	CIMARRON - DRAPER LAKE 345KV CKT 1	717	717	0.06853	109.8424	ELDORADO EHV - MOUNT OLIVE 500KV CKT 1
FDNS	00NR	2	16WP	G15_095	FROM->TO	CIMARRON - DRAPER LAKE 345KV CKT 1	717	717	0.06839	109.8363	ESSEX UNIT 2 500/18.0KV TRANSFORMER CKT 1

SOLUTION	GROUP	SCENARIO	SEASON	SOURCE	DIRECTION	MONITORED ELEMENT	RATEA (MVA)	RATEB(MVA)	TDF	TC%LOADING (% MVA)	CONTINGENCY
FDNS	00NR	2	16WP	G15_095	FROM->TO	CIMARRON - DRAPER LAKE 345KV CKT 1	717	717	0.06845	109.8338	P12:069:OKGE:3TERM19
FDNS	00NR	2	16WP	G15_095	FROM->TO	CIMARRON - DRAPER LAKE 345KV CKT 1	717	717	0.06851	109.8302	7LUTESVIL 345.00 - 7ST FRANC 345.00 345KV CKT 1
FDNS	00NR	2	16WP	G15_095	FROM->TO	CIMARRON - DRAPER LAKE 345KV CKT 1	717	717	0.06839	109.7675	RODEMACHER 230/22.0KV TRANSFORMER CKT 1
FDNS	00NR	2	16WP	G15_095	FROM->TO	CIMARRON - DRAPER LAKE 345KV CKT 1	717	717	0.06851	109.765	7JASPER 345.00 - BLACKBERRY 345KV CKT 1
FDNS	00NR	2	16WP	G15_095	FROM->TO	CIMARRON - DRAPER LAKE 345KV CKT 1	717	717	0.06859	109.7538	P12:138:AEPW-OGE:WTH_JCT4:JENSEN4
FDNS	00NR	2	16WP	G15_095	FROM->TO	CIMARRON - DRAPER LAKE 345KV CKT 1	717	717	0.07266	109.7486	CANADIAN RIVER - PITTSBURG 345KV CKT 1
FDNS	00NR	2	16WP	G15_095	FROM->TO	CIMARRON - DRAPER LAKE 345KV CKT 1	717	717	0.06855	109.7457	8WNEWMADRID 500.00 - DELL 500 500KV CKT 1
FDNS	00NR	2	16WP	G15_095	FROM->TO	CIMARRON - DRAPER LAKE 345KV CKT 1	717	717	0.0687	109.7367	6LAYFLD 230.00 - CARROLL 230KV CKT 1
FDNS	00NR	2	16WP	G15_095	FROM->TO	CIMARRON - DRAPER LAKE 345KV CKT 1	717	717	0.06736	109.7329	ELK CITY 230KV (ELKCTY-6) 230/138/13.8KV TRANSFORMER CKT 1
FDNS	00NR	2	16WP	G15_095	FROM->TO	CIMARRON - DRAPER LAKE 345KV CKT 1	717	717	0.06901	109.7216	TULSA NORTH - WEKIWA 345KV CKT 1
FDNS	00NR	2	16WP	G15_095	FROM->TO	CIMARRON - DRAPER LAKE 345KV CKT 1	717	717	0.06861	109.7203	ELDORADO EHV - SHERIDAN EHV 500KV CKT 1
FDNS	00NR	2	16WP	G15_095	FROM->TO	CIMARRON - DRAPER LAKE 345KV CKT 1	717	717	0.06843	109.7031	P12:138:AEPW:N.E.S.-4:CATOOSA4
FDNS	00NR	2	16WP	G15_095	FROM->TO	CIMARRON - DRAPER LAKE 345KV CKT 1	717	717	0.06849	109.7019	P13:138-161:WERE:NSES_TX-4OR5::
FDNS	00NR	2	16WP	G15_095	FROM->TO	CIMARRON - DRAPER LAKE 345KV CKT 1	717	717	0.06839	109.6988	ST FRANCIS 161/16.0KV TRANSFORMER CKT 1
FDNS	00NR	2	16WP	G15_095	FROM->TO	CIMARRON - DRAPER LAKE 345KV CKT 1	717	717	0.06839	109.6987	ST FRANCIS - ST FRANCIS 1 161KV CKT Z1
FDNS	00NR	2	16WP	G15_095	FROM->TO	CIMARRON - DRAPER LAKE 345KV CKT 1	717	717	0.06879	109.6925	FULTON 115 - HOPE 115KV CKT 1
FDNS	00NR	2	16WP	G15_095	FROM->TO	CIMARRON - DRAPER LAKE 345KV CKT 1	717	717	0.06839	109.6904	8CAJUN2 500/24.0KV TRANSFORMER CKT 1
FDNS	00NR	2	16WP	G15_095	FROM->TO	CIMARRON - DRAPER LAKE 345KV CKT 1	717	717	0.06606	109.6801	HUGO - VALLIANT 345KV CKT 1
FDNS	00NR	2	16WP	G15_095	FROM->TO	CIMARRON - DRAPER LAKE 345KV CKT 1	717	717	0.06854	109.6741	7JASPER 345.00 - MORGAN 345KV CKT 1
FDNS	00NR	2	16WP	G15_095	FROM->TO	CIMARRON - DRAPER LAKE 345KV CKT 1	717	717	0.06841	109.6734	P12:069:OKGE:3TERM3
FDNS	00NR	2	16WP	G15_095	FROM->TO	CIMARRON - DRAPER LAKE 345KV CKT 1	717	717	0.06837	109.6617	P12:138:OKGE-AEPW:JENSEN4:REDROCKRD4
FDNS	00NR	2	16WP	G15_095	FROM->TO	CIMARRON - DRAPER LAKE 345KV CKT 1	717	717	0.06846	109.6528	P12:138:AEPW:CATOOSA4:T.S.E.-4
FDNS	00NR	2	16WP	G15_095	FROM->TO	CIMARRON - DRAPER LAKE 345KV CKT 1	717	717	0.0684	109.6503	P12:138:OKGE:3TERM28
FDNS	00NR	2	16WP	G15_095	FROM->TO	CIMARRON - DRAPER LAKE 345KV CKT 1	717	717	0.06839	109.647	ESSEX UNIT 2 500/18.0KV TRANSFORMER CKT 1
FDNS	00NR	2	16WP	G15_095	FROM->TO	CIMARRON - DRAPER LAKE 345KV CKT 1	717	717	0.06839	109.6402	NELSON 230/20.0KV TRANSFORMER CKT 1
FDNS	00NR	2	16WP	G15_095	FROM->TO	CIMARRON - DRAPER LAKE 345KV CKT 1	717	717	0.06841	109.637	AS KING - EAU CLAIRE 345KV CKT 1
FDNS	00NR	2	16WP	G15_095	FROM->TO	CIMARRON - DRAPER LAKE 345KV CKT 1	717	717	0.06839	109.6339	ST FRANCIS 2 161/16.0KV TRANSFORMER CKT 2
FDNS	00NR	2	16WP	G15_095	FROM->TO	CIMARRON - DRAPER LAKE 345KV CKT 1	717	717	0.06839	109.6338	ST FRANCIS 345/161KV TRANSFORMER CKT 1
FDNS	00NR	2	16WP	G15_095	FROM->TO	CIMARRON - DRAPER LAKE 345KV CKT 1	717	717	0.0684	109.6287	P12:161:AEPW:EROGERS5:ECNTRTN5
FDNS	00NR	2	16WP	G15_095	FROM->TO	CIMARRON - DRAPER LAKE 345KV CKT 1	717	717	0.06839	109.6274	P12:138:AEPW:SHERID4:112GORE4
FDNS	00NR	2	16WP	G15_095	FROM->TO	CIMARRON - DRAPER LAKE 345KV CKT 1	717	717	0.06839	109.6228	P12:161:AEPW:DYESS5:ELMSPRNG:TONTITN5
FDNS	00NR	2	16WP	G15_095	FROM->TO	CIMARRON - DRAPER LAKE 345KV CKT 1	717	717	0.06805	109.6205	P12:138:AEPW:CORNVIL4:S.W.S.-4
FDNS	00NR	2	16WP	G15_095	FROM->TO	CIMARRON - DRAPER LAKE 345KV CKT 1	717	717	0.06839	109.6133	P12:161:AEPW-SWPA:BEAVER5:EROGERS5
FDNS	00NR	2	16WP	G15_095	FROM->TO	CIMARRON - DRAPER LAKE 345KV CKT 1	717	717	0.06854	109.5977	MC NIEL 500/115KV TRANSFORMER CKT 1
FDNS	00NR	2	16WP	G15_095	FROM->TO	CIMARRON - DRAPER LAKE 345KV CKT 1	717	717	0.06843	109.5932	BROOKLINE - MORGAN 345KV CKT 1
FDNS	00NR	2	16WP	G15_095	FROM->TO	CIMARRON - DRAPER LAKE 345KV CKT 1	717	717	0.0687	109.593	P12:138:AEPW:MOUNDRD4:SHIDLER4
FDNS	00NR	2	16WP	G15_095	FROM->TO	CIMARRON - DRAPER LAKE 345KV CKT 1	717	717	0.0687	109.5926	BISMARK - HOT SPRINGS WEST BUS 115KV CKT 1
FDNS	00NR	2	16WP	G15_095	FROM->TO	CIMARRON - DRAPER LAKE 345KV CKT 1	717	717	0.0692	109.5879	NORTHEAST STATION - ONETA 345KV CKT 1
FDNS	00NR	2	16WP	G15_095	FROM->TO	CIMARRON - DRAPER LAKE 345KV CKT 1	717	717	0.0691	109.5873	P12:138:WFEC:MSL15
FDNS	00NR	2	16WP	G15_095	FROM->TO	CIMARRON - DRAPER LAKE 345KV CKT 1	717	717	0.06878	109.5847	BRISTOW - SILVER CITY 138KV CKT 1
FDNS	00NR	2	16WP	G15_095	FROM->TO	CIMARRON - DRAPER LAKE 345KV CKT 1	717	717	0.06842	109.5683	ARPIN B4 345.00 - EAU CLAIRE 345KV CKT 1
FDNS	00NR	2	16WP	G15_095	FROM->TO	CIMARRON - DRAPER LAKE 345KV CKT 1	717	717	0.06843	109.565	CYPRESS - HARTBURG 500KV CKT 1
FDNS	00NR	2	16WP	G15_095	FROM->TO	CIMARRON - DRAPER LAKE 345KV CKT 1	717	717	0.0687	109.5595	ALPINE AECC - BISMARK 115KV CKT 1
FDNS	00NR	2	16WP	G15_095	FROM->TO	CIMARRON - DRAPER LAKE 345KV CKT 1	717	717	0.06839	109.5426	P12:69:AEPW:L.E.S.-2:LAW WC2
FDNS	00NR	2	16WP	G15_095	FROM->TO	CIMARRON - DRAPER LAKE 345KV CKT 1	717	717	0.06839	109.5408	SABINE 230/24.0KV TRANSFORMER CKT 1
FDNS	00NR	2	16WP	G15_095	FROM->TO	CIMARRON - DRAPER LAKE 345KV CKT 1	717	717	0.06851	109.5391	LAYFLD8 500.00 - MOUNT OLIVE 500KV CKT 1
FDNS	00NR	2	16WP	G15_095	FROM->TO	CIMARRON - DRAPER LAKE 345KV CKT 1	717	717	0.06839	109.0896	BASE CASE
FDNS	00NR	2	16WP	G15_095	FROM->TO	CIMARRON - DRAPER LAKE 345KV CKT 1	717	717	0.06855	108.6174	7MCCREDIE 345.00 - 7OVERTON 345.00 345KV CKT 1
FDNS	00NR	2	16WP	G15_095	FROM->TO	CIMARRON - DRAPER LAKE 345KV CKT 1	717	717	0.06826	108.6121	P12:138:WFEC:MSL10
FDNS	00NR	2	16WP	G15_095	FROM->TO	CIMARRON - DRAPER LAKE 345KV CKT 1	717	717	0.06881	108.5713	DELAWARE - NORTHEAST STATION 345KV CKT 1
FDNS	00NR	2	16WP	G15_095	FROM->TO	CIMARRON - DRAPER LAKE 345KV CKT 1	717	717	0.06863	108.5624	7MCCREDIE 345.00 - 7MONTGMRY 345.00 345KV CKT 1
FDNS	00NR	2	16WP	G15_095	FROM->TO	CIMARRON - DRAPER LAKE 345KV CKT 1	717	717	0.06848	108.5199	P12:138:AEPW:SHAM4WT:CHILD4WT
FDNS	00NR	2	16WP	G15_095	FROM->TO	CIMARRON - DRAPER LAKE 345KV CKT 1	717	717	0.0685	108.5167	P12:138:OKGE:3TERM36
FDNS	00NR	2	16WP	G15_095	FROM->TO	CIMARRON - DRAPER LAKE 345KV CKT 1	717	717	0.06797	108.5107	P12:138:WFEC:MSL07
FDNS	00NR	2	16WP	G15_095	FROM->TO	CIMARRON - DRAPER LAKE 345KV CKT 1	717	717	0.06797	108.5107	P12:138:WFEC-AEPW:HUGOPP4:ATOKA--4
FDNS	00NR	2	16WP	G15_095	FROM->TO	CIMARRON - DRAPER LAKE 345KV CKT 1	717	717	0.06832	108.5101	CANADIAN RIVER - MCALESTER SOUTH 138KV CKT 1
FDNS	00NR	2	16WP	G15_095	FROM->TO	CIMARRON - DRAPER LAKE 345KV CKT 1	717	717	0.06832	108.5091	CANADIAN RIVER () 345/138/13.8KV TRANSFORMER CKT 1
FDNS	00NR	2	16WP	G15_095	FROM->TO	CIMARRON - DRAPER LAKE 345KV CKT 1	717	717	0.0685	108.5058	P12:138:AEPW:WELETK4:EARLSBORO4
FDNS	00NR	2	16WP	G15_095	FROM->TO	CIMARRON - DRAPER LAKE 345KV CKT 1	717	717	0.06848	108.4969	P12:138:AEPW-SWPA:LONEOAK4:TUPELO4
FDNS	00NR	2	16WP	G15_095	FROM->TO	CIMARRON - DRAPER LAKE 345KV CKT 1	717	717	0.06848	108.4969	P12:138:WFEC:MSL06
FDNS	00NR	2	16WP	G15_095	FROM->TO	CIMARRON - DRAPER LAKE 345KV CKT 1	717	717	0.06803	108.485	P12:138:WFEC:MSL16
FDNS	00NR	2	16WP	G15_095	FROM->TO	CIMARRON - DRAPER LAKE 345KV CKT 1	717	717	0.06839	108.4672	INDEPENDENCE 500/26.0KV TRANSFORMER CKT 1
FDNS	00NR	2	16WP	G15_095	FROM->TO	CIMARRON - DRAPER LAKE 345KV CKT 1	717	717	0.06839	108.4545	BURLINGTON NO1 + NO 2 + NO 3 161/20.0KV TRANSFORMER CKT 1
FDNS	00NR	2	16WP	G15_095	FROM->TO	CIMARRON - DRAPER LAKE 345KV CKT 1	717	717	0.06867	108.436	MINGO - SETAB 345KV CKT 1
FDNS	00NR	2	16WP	G15_095	FROM->TO	CIMARRON - DRAPER LAKE 345KV CKT 1	717	717	0.06851	108.4316	DELL 500 - INDEPENDENCE 500KV CKT 1
FDNS	00NR	2	16WP	G15_095	FROM->TO	CIMARRON - DRAPER LAKE 345KV CKT 1	717	717	0.0685	108.4219	P12:138:AEPW-OGE:WELETK4:MAUD 4
FDNS	00NR	2	16WP	G15_095	FROM->TO	CIMARRON - DRAPER LAKE 345KV CKT 1	717	717	0.06849	108.4183	EARLSBORO 4138.00 - MAUD 138KV CKT 1
FDNS	00NR	2	16WP	G15_095	FROM->TO	CIMARRON - DRAPER LAKE 345KV CKT 1	717	717	0.06839	108.3752	THOMAS HILL 161/22.0KV TRANSFORMER CKT 1
FDNS	00NR	2	16WP	G15_095	FROM->TO	CIMARRON - DRAPER LAKE 345KV CKT 1	717	717	0.06839	108.3713	P12:230:UMZB:# 112 #: NU IN SD. NU-RCDC & DRY CREEK XFMR
FDNS	00NR	2	16WP	G15_095	FROM->TO	CIMARRON - DRAPER LAKE 345KV CKT 1	717	717	0.06857	108.2738	KEO EHV - WEST MEMPHIS 500 500KV CKT 1
FDNS	00NR	2	16WP	G15_095	FROM->TO	CIMARRON - DRAPER LAKE 345KV CKT 1	717	717	0.06839	108.1869	4SIOUX 1 138.00 138/18.0KV TRANSFORMER CKT 1
FDNS	00NR	2	16WP	G15_095	FROM->TO	CIMARRON - DRAPER LAKE 345KV CKT 1	717	717	0.06839	108.0523	CLAY BOSWELL 230/20.9KV TRANSFORMER CKT 1
FDNS	00NR	2	16WP	G15_095	FROM->TO	CIMARRON - DRAPER LAKE 345KV CKT 1	717	717	0.06901	107.9815	NORTHWEST TEXARKANA - VALLIANT 345KV CKT 1
FDNS	00NR	2	16WP	G15_095	FROM->TO	CIMARRON - DRAPER LAKE 345KV CKT 1	717	717	0.06857	107.9537	P12:138:WFEC:MSL09
FDNS	00NR	2	16WP	G15_095	FROM->TO	CIMARRON - DRAPER LAKE 345KV CKT 1	717	717	0.06775	107.9148	P12:138:OKGE:3TERM22
FDNS	00NR	2	16WP	G15_095	FROM->TO	CIMARRON - DRAPER LAKE 345KV CKT 1	717	717	0.06853	107.9092	P12:138:WFEC:MSL08
FDNS	00NR	2	16WP	G15_095	FROM->TO	CIMARRON - DRAPER LAKE 345KV CKT 1	717	717	0.07188	107.6099	P12:138:AEPW-OGE:CORNVIL4:CIMARON4
FDNS	00NR	2	16WP	G15_095	FROM->TO	CIMARRON - DRAPER LAKE 345KV CKT 1	717	717	0.06934	107.5056	LYDIA - WELSH 345KV CKT 1
FDNS	00NR	2	16WP	G15_095	FROM->TO	CIMARRON - DRAPER LAKE 345KV CKT 1	717	717	0.07068	107.1046	CLARKSVILLE - MUSKOGEE 345KV CKT 1

SOLUTION	GROUP	SCENARIO	SEASON	SOURCE	DIRECTION	MONITORED ELEMENT	RATEA (MVA)	RATEB(MVA)	TDF	TC%LOADING (% MVA)	CONTINGENCY
FDNS	00NR	2	16WP	G15_095	FROM->TO	CIMARRON - DRAPER LAKE 345KV CKT 1	717	717	0.06839	107.0031	BIG STONE 230/24.0KV TRANSFORMER CKT 1
FDNS	00NR	2	16WP	G15_095	FROM->TO	CIMARRON - DRAPER LAKE 345KV CKT 1	717	717	0.06965	106.9076	LYDIA - VALLIANT 345KV CKT 1
FDNS	00NR	2	16WP	G15_095	FROM->TO	CIMARRON - DRAPER LAKE 345KV CKT 1	717	717	0.07044	106.8165	P12:138:OKGE:3TERM23
FDNS	00NR	2	16WP	G15_095	FROM->TO	CIMARRON - DRAPER LAKE 345KV CKT 1	717	717	0.06839	106.4011	SHERBURNE CO 345/24.0KV TRANSFORMER CKT 1
FDNS	01ALL	2	16WP	G15_095	FROM->TO	CIMARRON - DRAPER LAKE 345KV CKT 1	717	717	0.07267	103.9899	BASE CASE
FDNS	00NR	2	16WP	G15_095	FROM->TO	CIMARRON - DRAPER LAKE 345KV CKT 1	717	717	0.06384	103.4591	P12:138:OKGE:3TERM21
FDNS	00NR	2	16WP	G15_095	FROM->TO	CIMARRON - DRAPER LAKE 345KV CKT 1	717	717	0.05873	101.6899	PITTSBURG - VALLIANT 345KV CKT 1
FDNS	01ALL	2	17SP	G15_095	FROM->TO	CLEO CORNER - CLEOPLT4 138.00 138KV CKT 1	191	191	0.10859	106.7996	BASE CASE
FDNS	01ALL	2	20WP	G15_095	FROM->TO	CLEO CORNER - CLEOPLT4 138.00 138KV CKT 1	191	191	0.10854	104.3509	BASE CASE
FDNS	01ALL	2	20SP	G15_095	FROM->TO	CLEO CORNER - CLEOPLT4 138.00 138KV CKT 1	191	191	0.10873	104.3298	BASE CASE
FDNS	01ALL	2	16WP	G15_095	FROM->TO	CLEO CORNER - CLEOPLT4 138.00 138KV CKT 1	191	191	0.10868	104.1173	BASE CASE
FDNS	00NR	2	16WP	G15_095	FROM->TO	G14-057T 345.00 - SUNNYSIDE 345KV CKT 1	717	789	0.05196	125.0762	PITTSBURG - SEMINOLE 345KV CKT 1
FDNS	00NR	2	16WP	G15_095	FROM->TO	G14-057T 345.00 - SUNNYSIDE 345KV CKT 1	717	789	0.03557	124.2437	BASE CASE
FDNS	00NR	2	16WP	G15_095	FROM->TO	G14-057T 345.00 - SUNNYSIDE 345KV CKT 1	717	789	0.04232	118.2698	PITTSBURG - VALLIANT 345KV CKT 1
FDNS	00NR	2	16WP	G15_095	FROM->TO	G14-057T 345.00 - SUNNYSIDE 345KV CKT 1	717	789	0.03743	115.9008	7SAREPTA% 345.00 - LONGWOOD 345KV CKT 1
FDNS	00NR	2	16WP	G15_095	FROM->TO	G14-057T 345.00 - SUNNYSIDE 345KV CKT 1	717	789	0.03636	115.7458	DOLET HILLS - SOUTHWEST SHREVEPORT 345KV CKT 1
FDNS	00NR	2	16WP	G15_095	FROM->TO	G14-057T 345.00 - SUNNYSIDE 345KV CKT 1	717	789	0.03713	115.7334	CLEVELAND - TULSA NORTH 345KV CKT 1
FDNS	00NR	2	16WP	G15_095	FROM->TO	G14-057T 345.00 - SUNNYSIDE 345KV CKT 1	717	789	0.03557	115.3409	GRAND GULF 500/22.0KV TRANSFORMER CKT 1
FDNS	00NR	2	16WP	G15_095	FROM->TO	G14-057T 345.00 - SUNNYSIDE 345KV CKT 1	717	789	0.03661	115.2476	7SAREPTA% 345.00 - ELDORADO EHV 345KV CKT 1
FDNS	00NR	2	16WP	G15_095	FROM->TO	G14-057T 345.00 - SUNNYSIDE 345KV CKT 1	717	789	0.03661	115.2364	ELDORADO EHV 500/345KV TRANSFORMER CKT 1
FDNS	00NR	2	16WP	G15_095	FROM->TO	G14-057T 345.00 - SUNNYSIDE 345KV CKT 1	717	789	0.03672	115.1782	P12:138:AEPW:DUNCAN-4:L.E.S.-4
FDNS	00NR	2	16WP	G15_095	FROM->TO	G14-057T 345.00 - SUNNYSIDE 345KV CKT 1	717	789	0.0308	114.8175	P12:138:WFEC:MSL01
FDNS	00NR	2	16WP	G15_095	FROM->TO	G14-057T 345.00 - SUNNYSIDE 345KV CKT 1	717	789	0.03672	114.7912	DUNCAN - OMPA-DUNCAN 840 138KV CKT 1
FDNS	00NR	2	16WP	G15_095	FROM->TO	G14-057T 345.00 - SUNNYSIDE 345KV CKT 1	717	789	0.03557	114.657	DOLET HILLS 345/24.0KV TRANSFORMER CKT 1
FDNS	00NR	2	16WP	G15_095	FROM->TO	G14-057T 345.00 - SUNNYSIDE 345KV CKT 1	717	789	0.03558	114.6276	P12:138:AEPW:SHERID4:112GORE4
FDNS	00NR	2	16WP	G15_095	FROM->TO	G14-057T 345.00 - SUNNYSIDE 345KV CKT 1	717	789	0.03598	114.6104	FINNEY SWITCHING STATION - HOLCOMB 345KV CKT 1
FDNS	00NR	2	16WP	G15_095	FROM->TO	G14-057T 345.00 - SUNNYSIDE 345KV CKT 1	717	789	0.03578	114.5304	REDBUD - RIVERSIDE STATION 345KV CKT 1
FDNS	00NR	2	16WP	G15_095	FROM->TO	G14-057T 345.00 - SUNNYSIDE 345KV CKT 1	717	789	0.03482	114.4751	P12:138:WFEC:MSL17
FDNS	00NR	2	16WP	G15_095	FROM->TO	G14-057T 345.00 - SUNNYSIDE 345KV CKT 1	717	789	0.03557	114.3715	P12:69:AEPW:L.E.S.-2:LAW WC2
FDNS	00NR	2	16WP	G15_095	FROM->TO	G14-057T 345.00 - SUNNYSIDE 345KV CKT 1	717	789	0.03557	114.3488	P12:161:AEPW:DYESS 5:HYLAND 5
FDNS	00NR	2	16WP	G15_095	FROM->TO	G14-057T 345.00 - SUNNYSIDE 345KV CKT 1	717	789	0.03589	114.3229	ELDORADO EHV - MOUNT OLIVE 500KV CKT 1
FDNS	00NR	2	16WP	G15_095	FROM->TO	G14-057T 345.00 - SUNNYSIDE 345KV CKT 1	717	789	0.03419	114.3189	P12:138:WFEC:MSL02
FDNS	00NR	2	16WP	G15_095	FROM->TO	G14-057T 345.00 - SUNNYSIDE 345KV CKT 1	717	789	0.03558	114.2825	P12:138:AEPW:112GORE4:L.E.S.-4
FDNS	00NR	2	16WP	G15_095	FROM->TO	G14-057T 345.00 - SUNNYSIDE 345KV CKT 1	717	789	0.03613	114.2476	ELDORADO EHV - SHERIDAN EHV 500KV CKT 1
FDNS	00NR	2	16WP	G15_095	FROM->TO	G14-057T 345.00 - SUNNYSIDE 345KV CKT 1	717	789	0.03557	114.2205	NEW MADRID 161/22.0KV TRANSFORMER CKT 1
FDNS	00NR	2	16WP	G15_095	FROM->TO	G14-057T 345.00 - SUNNYSIDE 345KV CKT 1	717	789	0.0338	114.2147	P12:138:AEPW-OGE:CORNVIL4:MAUD 4
FDNS	00NR	2	16WP	G15_095	FROM->TO	G14-057T 345.00 - SUNNYSIDE 345KV CKT 1	717	789	0.03557	114.2089	NEW MADRID 345/22.0KV TRANSFORMER CKT 1
FDNS	00NR	2	16WP	G15_095	FROM->TO	G14-057T 345.00 - SUNNYSIDE 345KV CKT 1	717	789	0.03599	114.2028	WEBRE - WELLS 500KV CKT 1
FDNS	00NR	2	16WP	G15_095	FROM->TO	G14-057T 345.00 - SUNNYSIDE 345KV CKT 1	717	789	0.03557	114.1815	FRONTIER - GRIMES 345KV CKT 1
FDNS	00NR	2	16WP	G15_095	FROM->TO	G14-057T 345.00 - SUNNYSIDE 345KV CKT 1	717	789	0.03781	114.1592	LAWTON EASTSIDE (LES 5) 345/138/13.8KV TRANSFORMER CKT 2
FDNS	00NR	2	16WP	G15_095	FROM->TO	G14-057T 345.00 - SUNNYSIDE 345KV CKT 1	717	789	0.03608	114.0392	THISTLE7 345.00 - WOODWARD DISTRICT EHV 345KV CKT 1
FDNS	00NR	2	16WP	G15_095	FROM->TO	G14-057T 345.00 - SUNNYSIDE 345KV CKT 1	717	789	0.03608	114.0392	THISTLE7 345.00 - WOODWARD DISTRICT EHV 345KV CKT 2
FDNS	00NR	2	16WP	G15_095	FROM->TO	G14-057T 345.00 - SUNNYSIDE 345KV CKT 1	717	789	0.03557	114.0181	DELL 500 - ESSEX UNIT 2 500KV CKT Z1
FDNS	00NR	2	16WP	G15_095	FROM->TO	G14-057T 345.00 - SUNNYSIDE 345KV CKT 1	717	789	0.03606	113.9738	DUNCAN (DUNCAN) 138/69/13.8KV TRANSFORMER CKT 1
FDNS	00NR	2	16WP	G15_095	FROM->TO	G14-057T 345.00 - SUNNYSIDE 345KV CKT 1	717	789	0.03557	113.9424	P12:161:AEPW-SWPA:BEAVER5:EROGERS5
FDNS	00NR	2	16WP	G15_095	FROM->TO	G14-057T 345.00 - SUNNYSIDE 345KV CKT 1	717	789	0.03559	113.9237	P12:138:AEPW:CATOOSA4:T.S.E.-4
FDNS	00NR	2	16WP	G15_095	FROM->TO	G14-057T 345.00 - SUNNYSIDE 345KV CKT 1	717	789	0.03614	113.9117	6LAYFLD 230.00 - CARROLL 230KV CKT 1
FDNS	00NR	2	16WP	G15_095	FROM->TO	G14-057T 345.00 - SUNNYSIDE 345KV CKT 1	717	789	0.03633	113.8781	FULTON 115 - HOPE 115KV CKT 1
FDNS	00NR	2	16WP	G15_095	FROM->TO	G14-057T 345.00 - SUNNYSIDE 345KV CKT 1	717	789	0.03565	113.8739	8DANIEL8 500.00 - MCKNIGHT 500KV CKT 1
FDNS	00NR	2	16WP	G15_095	FROM->TO	G14-057T 345.00 - SUNNYSIDE 345KV CKT 1	717	789	0.03557	113.8724	P12:161:AEPW:DYESS5:ELMSPRNG:TONTITN5
FDNS	00NR	2	16WP	G15_095	FROM->TO	G14-057T 345.00 - SUNNYSIDE 345KV CKT 1	717	789	0.03496	113.8378	P12:138:AEPW:CORNVIL4:S.W.S.-4
FDNS	00NR	2	16WP	G15_095	FROM->TO	G14-057T 345.00 - SUNNYSIDE 345KV CKT 1	717	789	0.03591	113.8049	P12:138:AEPW:CORNVIL4:DUNCAN-4
FDNS	00NR	2	16WP	G15_095	FROM->TO	G14-057T 345.00 - SUNNYSIDE 345KV CKT 1	717	789	0.03606	113.8023	P12:69:WFEC-AEPW:COMANCH2:DUNCAN-2
FDNS	00NR	2	16WP	G15_095	FROM->TO	G14-057T 345.00 - SUNNYSIDE 345KV CKT 1	717	789	0.03497	113.7798	P12:138:AEPW-OGE:WTH_JCT4:JENSEN4
FDNS	00NR	2	16WP	G15_095	FROM->TO	G14-057T 345.00 - SUNNYSIDE 345KV CKT 1	717	789	0.03558	113.7588	P12:161:AEPW:EROGERS5:ECNTRTN5
FDNS	00NR	2	16WP	G15_095	FROM->TO	G14-057T 345.00 - SUNNYSIDE 345KV CKT 1	717	789	0.03584	113.7486	LAYFLD8 500.00 - MOUNT OLIVE 500KV CKT 1
FDNS	00NR	2	16WP	G15_095	FROM->TO	G14-057T 345.00 - SUNNYSIDE 345KV CKT 1	717	789	0.03557	113.7485	RODEMACHER 230/22.0KV TRANSFORMER CKT 1
FDNS	00NR	2	16WP	G15_095	FROM->TO	G14-057T 345.00 - SUNNYSIDE 345KV CKT 1	717	789	0.03557	113.7391	WHITE BLUFF 500/26.0KV TRANSFORMER CKT 1
FDNS	00NR	2	16WP	G15_095	FROM->TO	G14-057T 345.00 - SUNNYSIDE 345KV CKT 1	717	789	0.03518	113.7384	P12:138:AEPW:WTHWF4:CLINTJC4
FDNS	00NR	2	16WP	G15_095	FROM->TO	G14-057T 345.00 - SUNNYSIDE 345KV CKT 1	717	789	0.03585	113.7358	MC NIEL 500/115KV TRANSFORMER CKT 1
FDNS	00NR	2	16WP	G15_095	FROM->TO	G14-057T 345.00 - SUNNYSIDE 345KV CKT 1	717	789	0.0358	113.7307	HOT SPRINGS EHV - MAGNET COVE 500KV CKT 1
FDNS	00NR	2	16WP	G15_095	FROM->TO	G14-057T 345.00 - SUNNYSIDE 345KV CKT 1	717	789	0.03616	113.7275	BISMARK - HOT SPRINGS WEST BUS 115KV CKT 1
FDNS	00NR	2	16WP	G15_095	FROM->TO	G14-057T 345.00 - SUNNYSIDE 345KV CKT 1	717	789	0.03602	113.7242	P12:69:AEPW-OMPA:COMANC-2:OMWALTR2
FDNS	00NR	2	16WP	G15_095	FROM->TO	G14-057T 345.00 - SUNNYSIDE 345KV CKT 1	717	789	0.03552	113.7165	BUCKNER7 345.00 - SPEARVILLE 345KV CKT 1
FDNS	00NR	2	16WP	G15_095	FROM->TO	G14-057T 345.00 - SUNNYSIDE 345KV CKT 1	717	789	0.03518	113.6923	P12:138:AEPW:WTHWF4:WTH_SE4
FDNS	00NR	2	16WP	G15_095	FROM->TO	G14-057T 345.00 - SUNNYSIDE 345KV CKT 1	717	789	0.03559	113.6922	P12:138:AEPW:N.E.S.-4:CATOOSA4
FDNS	00NR	2	16WP	G15_095	FROM->TO	G14-057T 345.00 - SUNNYSIDE 345KV CKT 1	717	789	0.03557	113.6815	NELSON 230/20.0KV TRANSFORMER CKT 1
FDNS	00NR	2	16WP	G15_095	FROM->TO	G14-057T 345.00 - SUNNYSIDE 345KV CKT 1	717	789	0.03616	113.6759	ALPINE AECC - BISMARK 115KV CKT 1
FDNS	00NR	2	16WP	G15_095	FROM->TO	G14-057T 345.00 - SUNNYSIDE 345KV CKT 1	717	789	0.03671	113.6755	P12:138:OKGE:3TERM27
FDNS	00NR	2	16WP	G15_095	FROM->TO	G14-057T 345.00 - SUNNYSIDE 345KV CKT 1	717	789	0.03564	113.64	CYPRESS - HARTBURG 500KV CKT 1
FDNS	00NR	2	16WP	G15_095	FROM->TO	G14-057T 345.00 - SUNNYSIDE 345KV CKT 1	717	789	0.03424	113.6346	ELK CITY 230KV (ELKCTY-6) 230/138/13.8KV TRANSFORMER CKT 1
FDNS	00NR	2	16WP	G15_095	FROM->TO	G14-057T 345.00 - SUNNYSIDE 345KV CKT 1	717	789	0.03616	113.6333	ALPINE AECC - AMITY SS 115KV CKT 1
FDNS	00NR	2	16WP	G15_095	FROM->TO	G14-057T 345.00 - SUNNYSIDE 345KV CKT 1	717	789	0.03557	113.6232	8CAJUN2 500/24.0KV TRANSFORMER CKT 1
FDNS	00NR	2	16WP	G15_095	FROM->TO	G14-057T 345.00 - SUNNYSIDE 345KV CKT 1	717	789	0.0413	113.6224	CANADIAN RIVER - PITTSBURG 345KV CKT 1
FDNS	00NR	2	16WP	G15_095	FROM->TO	G14-057T 345.00 - SUNNYSIDE 345KV CKT 1	717	789	0.03571	113.609	7JASPER 345.00 - BLACKBERRY 345KV CKT 1
FDNS	00NR	2	16WP	G15_095	FROM->TO	G14-057T 345.00 - SUNNYSIDE 345KV CKT 1	717	789	0.03558	113.5983	P12:138:AEPW:R.S.S.-4:S.HUD.-4
FDNS	00NR	2	16WP	G15_095	FROM->TO	G14-057T 345.00 - SUNNYSIDE 345KV CKT 1	717	789	0.03578	113.5627	ETTA (DUKE HOTSPRINGS) - MC NIEL 500KV CKT 1
FDNS	00NR	2	16WP	G15_095	FROM->TO	G14-057T 345.00 - SUNNYSIDE 345KV CKT 1	717	789	0.03557	113.5603	P12:138:AEPW:YARCH-S4:T.S.E.-4
FDNS	00NR	2	16WP	G15_095	FROM->TO	G14-057T 345.00 - SUNNYSIDE 345KV CKT 1	717	789	0.03491	113.5565	WEATHERFORD JCT. - WEATHERFORD SOUTHEAST 138KV CKT 1

SOLUTION	GROUP	SCENARIO	SEASON	SOURCE	DIRECTION	MONITORED ELEMENT	RATEA (MVA)	RATEB(MVA)	TDF	TC%LOADING (% MVA)	CONTINGENCY
FDNS	00NR	2	16WP	G15_095	FROM->TO	G14-057T 345.00 - SUNNYSIDE 345KV CKT 1	717	789	0.03557	113.5542	P12:138:AEPW:BA_71ST4:T.S.E.-4
FDNS	00NR	2	16WP	G15_095	FROM->TO	G14-057T 345.00 - SUNNYSIDE 345KV CKT 1	717	789	0.03557	113.5534	P12:69:AEPW:NROGERS2:ECNTRTN2
FDNS	00NR	2	16WP	G15_095	FROM->TO	G14-057T 345.00 - SUNNYSIDE 345KV CKT 1	717	789	0.03557	113.5458	SABINE 230/24.0KV TRANSFORMER CKT 1
FDNS	00NR	2	16WP	G15_095	FROM->TO	G14-057T 345.00 - SUNNYSIDE 345KV CKT 1	717	789	0.03584	113.5397	BLACKBERRY - NEOSHO 345KV CKT 1
FDNS	00NR	2	16WP	G15_095	FROM->TO	G14-057T 345.00 - SUNNYSIDE 345KV CKT 1	717	789	0.03569	113.5342	7LUTESVIL 345.00 - 7ST FRANC 345.00 345KV CKT 1
FDNS	00NR	2	16WP	G15_095	FROM->TO	G14-057T 345.00 - SUNNYSIDE 345KV CKT 1	717	789	0.03557	113.5301	FRONTIER 345/18.0KV TRANSFORMER CKT 1
FDNS	00NR	2	16WP	G15_095	FROM->TO	G14-057T 345.00 - SUNNYSIDE 345KV CKT 1	717	789	0.03557	113.5285	FRONTIER 345/18.0KV TRANSFORMER CKT 1
FDNS	00NR	2	16WP	G15_095	FROM->TO	G14-057T 345.00 - SUNNYSIDE 345KV CKT 1	717	789	0.03557	113.5223	P12:161:AEPW:CHAMSPR5:FARMING5
FDNS	00NR	2	16WP	G15_095	FROM->TO	G14-057T 345.00 - SUNNYSIDE 345KV CKT 1	717	789	0.03617	113.5201	P12:138:OKGE-AEPW:JENSEN4:REDROCKRD4
FDNS	00NR	2	16WP	G15_095	FROM->TO	G14-057T 345.00 - SUNNYSIDE 345KV CKT 1	717	789	0.03557	113.52	ESSEX UNIT 2 500/18.0KV TRANSFORMER CKT 1
FDNS	00NR	2	16WP	G15_095	FROM->TO	G14-057T 345.00 - SUNNYSIDE 345KV CKT 1	717	789	0.03592	113.5188	P12:138:AEPW-OGE:SHIDLER4:OSAGE 4
FDNS	00NR	2	16WP	G15_095	FROM->TO	G14-057T 345.00 - SUNNYSIDE 345KV CKT 1	717	789	0.03491	113.5131	NORGE ROAD - SOUTHWESTERN STATION 138KV CKT 1
FDNS	00NR	2	16WP	G15_095	FROM->TO	G14-057T 345.00 - SUNNYSIDE 345KV CKT 1	717	789	0.03633	113.5071	P12:115:AEPW:TURK3:HOPE3
FDNS	00NR	2	16WP	G15_095	FROM->TO	G14-057T 345.00 - SUNNYSIDE 345KV CKT 1	717	789	0.03491	113.5062	P12:138:AEPW:REDROCKRD4:WTH_JCT4
FDNS	00NR	2	16WP	G15_095	FROM->TO	G14-057T 345.00 - SUNNYSIDE 345KV CKT 1	717	789	0.03573	113.4943	8WNEWMADRID 500.00 - DELL 500 500KV CKT 1
FDNS	00NR	2	16WP	G15_095	FROM->TO	G14-057T 345.00 - SUNNYSIDE 345KV CKT 1	717	789	0.03557	113.4932	LEWIS CREEK SWITCHYARD 138/22.0KV TRANSFORMER CKT 1
FDNS	00NR	2	16WP	G15_095	FROM->TO	G14-057T 345.00 - SUNNYSIDE 345KV CKT 1	717	789	0.03557	113.4884	LEWIS CREEK SWITCHYARD 138/22.0KV TRANSFORMER CKT 1
FDNS	00NR	2	16WP	G15_095	FROM->TO	G14-057T 345.00 - SUNNYSIDE 345KV CKT 1	717	789	0.03602	113.4861	OMPA-WALTERS - WALTERS 69KV CKT 1
FDNS	00NR	2	16WP	G15_095	FROM->TO	G14-057T 345.00 - SUNNYSIDE 345KV CKT 1	717	789	0.03633	113.4852	TURK (TURK 1) 138/115/13.2KV TRANSFORMER CKT 1
FDNS	00NR	2	16WP	G15_095	FROM->TO	G14-057T 345.00 - SUNNYSIDE 345KV CKT 1	717	789	0.036	113.4831	COUCH SES - MC NIEL 115KV CKT 1
FDNS	00NR	2	16WP	G15_095	FROM->TO	G14-057T 345.00 - SUNNYSIDE 345KV CKT 1	717	789	0.03555	113.4667	P12:138:OKGE:3TERM12
FDNS	00NR	2	16WP	G15_095	FROM->TO	G14-057T 345.00 - SUNNYSIDE 345KV CKT 1	717	789	0.03579	113.4631	P12:69:WFEC-AEPW:COMANCH2:WALTRS-2
FDNS	00NR	2	16WP	G15_095	FROM->TO	G14-057T 345.00 - SUNNYSIDE 345KV CKT 1	717	789	0.03666	113.4581	P12:138:AEPW-SWPA:LONEOAK4:BRKNBW4
FDNS	00NR	2	16WP	G15_095	FROM->TO	G14-057T 345.00 - SUNNYSIDE 345KV CKT 1	717	789	0.03592	113.4484	P12:138:OKGE:3TERM2
FDNS	00NR	2	16WP	G15_095	FROM->TO	G14-057T 345.00 - SUNNYSIDE 345KV CKT 1	717	789	0.03573	113.4391	7JASPER 345.00 - MORGAN 345KV CKT 1
FDNS	00NR	2	16WP	G15_095	FROM->TO	G14-057T 345.00 - SUNNYSIDE 345KV CKT 1	717	789	0.03552	113.4377	BUCKNER7 345.00 - HOLCOMB 345KV CKT 1
FDNS	00NR	2	16WP	G15_095	FROM->TO	G14-057T 345.00 - SUNNYSIDE 345KV CKT 1	717	789	0.03558	113.434	P12:138:AEPW:R.S.S-4:T.P.S.-4
FDNS	00NR	2	16WP	G15_095	FROM->TO	G14-057T 345.00 - SUNNYSIDE 345KV CKT 1	717	789	0.03628	113.4303	CLINTON JUNCTION - ELK CITY 138KV CKT 1
FDNS	00NR	2	16WP	G15_095	FROM->TO	G14-057T 345.00 - SUNNYSIDE 345KV CKT 1	717	789	0.03616	113.4299	CLARKSVILLE - ONETA 345KV CKT 1
FDNS	00NR	2	16WP	G15_095	FROM->TO	G14-057T 345.00 - SUNNYSIDE 345KV CKT 1	717	789	0.03557	113.4106	P12:138:AEPW:R.S.S.-4:R:96YALE-4
FDNS	00NR	2	16WP	G15_095	FROM->TO	G14-057T 345.00 - SUNNYSIDE 345KV CKT 1	717	789	0.03491	113.3952	CORNVILLE - NORGE ROAD 138KV CKT 1
FDNS	00NR	2	16WP	G15_095	FROM->TO	G14-057T 345.00 - SUNNYSIDE 345KV CKT 1	717	789	0.03557	113.3951	P12:138:AEPW:MOHAWK4:T.NO--4
FDNS	00NR	2	16WP	G15_095	FROM->TO	G14-057T 345.00 - SUNNYSIDE 345KV CKT 1	717	789	0.03557	113.3891	ST FRANCIS 161/16.0KV TRANSFORMER CKT 1
FDNS	00NR	2	16WP	G15_095	FROM->TO	G14-057T 345.00 - SUNNYSIDE 345KV CKT 1	717	789	0.03557	113.389	ST FRANCIS - ST FRANCIS 1 161KV CKT Z1
FDNS	00NR	2	16WP	G15_095	FROM->TO	G14-057T 345.00 - SUNNYSIDE 345KV CKT 1	717	789	0.03593	113.3855	P12:138:AEPW:OKMULGE4:R.S.S-4
FDNS	00NR	2	16WP	G15_095	FROM->TO	G14-057T 345.00 - SUNNYSIDE 345KV CKT 1	717	789	0.03586	113.385	LAYFLD8 500.00 (LAYFLD AUTO) 500/230/13.8KV TRANSFORMER CKT 1
FDNS	00NR	2	16WP	G15_095	FROM->TO	G14-057T 345.00 - SUNNYSIDE 345KV CKT 1	717	789	0.03557	113.3786	SABINE 230/22.0KV TRANSFORMER CKT 1
FDNS	00NR	2	16WP	G15_095	FROM->TO	G14-057T 345.00 - SUNNYSIDE 345KV CKT 1	717	789	0.03616	113.3764	AMITY SS - MURFREESBORO EAST (AECC) 115KV CKT 1
FDNS	00NR	2	16WP	G15_095	FROM->TO	G14-057T 345.00 - SUNNYSIDE 345KV CKT 1	717	789	0.03521	113.3747	P12:138:WFEC-AEPW:ELKCTY-4:ERICK4
FDNS	00NR	2	16WP	G15_095	FROM->TO	G14-057T 345.00 - SUNNYSIDE 345KV CKT 1	717	789	0.03579	113.3729	P12:138:OKGE:3TERM47
FDNS	00NR	2	16WP	G15_095	FROM->TO	G14-057T 345.00 - SUNNYSIDE 345KV CKT 1	717	789	0.03557	112.9058	803-OKLAUNION
FDNS	00NR	2	16WP	G15_095	FROM->TO	G14-057T 345.00 - SUNNYSIDE 345KV CKT 1	717	789	0.03497	112.4486	P12:138:OKGE:3TERM21
FDNS	00NR	2	16WP	G15_095	FROM->TO	G14-057T 345.00 - SUNNYSIDE 345KV CKT 1	717	789	0.03589	112.4396	P12:138:WFEC:MSL11
FDNS	00NR	2	16WP	G15_095	FROM->TO	G14-057T 345.00 - SUNNYSIDE 345KV CKT 1	717	789	0.03589	112.4396	P12:138:WFEC-AEPW:PHAROAH4:LONEOAK4
FDNS	00NR	2	16WP	G15_095	FROM->TO	G14-057T 345.00 - SUNNYSIDE 345KV CKT 1	717	789	0.03558	112.4178	P12:069:OKGE:3TERM42
FDNS	00NR	2	16WP	G15_095	FROM->TO	G14-057T 345.00 - SUNNYSIDE 345KV CKT 1	717	789	0.03553	112.4163	P12:138:WFEC:MSL08
FDNS	00NR	2	16WP	G15_095	FROM->TO	G14-057T 345.00 - SUNNYSIDE 345KV CKT 1	717	789	0.03567	112.411	DELL 500 - INDEPENDENCE 500KV CKT 1
FDNS	00NR	2	16WP	G15_095	FROM->TO	G14-057T 345.00 - SUNNYSIDE 345KV CKT 1	717	789	0.03557	112.3439	BURLINGTON NO1 + NO 2 + NO 3 161/20.0KV TRANSFORMER CKT 1
FDNS	00NR	2	16WP	G15_095	FROM->TO	G14-057T 345.00 - SUNNYSIDE 345KV CKT 1	717	789	0.03557	112.3431	INDEPENDENCE 500/26.0KV TRANSFORMER CKT 1
FDNS	00NR	2	16WP	G15_095	FROM->TO	G14-057T 345.00 - SUNNYSIDE 345KV CKT 1	717	789	0.03549	112.3389	CANADIAN RIVER - MCALESTER SOUTH 138KV CKT 1
FDNS	00NR	2	16WP	G15_095	FROM->TO	G14-057T 345.00 - SUNNYSIDE 345KV CKT 1	717	789	0.03549	112.3377	CANADIAN RIVER () 345/138/13.8KV TRANSFORMER CKT 1
FDNS	00NR	2	16WP	G15_095	FROM->TO	G14-057T 345.00 - SUNNYSIDE 345KV CKT 1	717	789	0.03541	112.3253	ALTUS JUNCTION - RUSSELL 138KV CKT 1
FDNS	00NR	2	16WP	G15_095	FROM->TO	G14-057T 345.00 - SUNNYSIDE 345KV CKT 1	717	789	0.03597	112.3173	NORTHWEST TEXARKANA - WELSH 345KV CKT 1
FDNS	00NR	2	16WP	G15_095	FROM->TO	G14-057T 345.00 - SUNNYSIDE 345KV CKT 1	717	789	0.03586	112.315	MINGO - SETAB 345KV CKT 1
FDNS	00NR	2	16WP	G15_095	FROM->TO	G14-057T 345.00 - SUNNYSIDE 345KV CKT 1	717	789	0.03557	112.3074	P12:230:UMZB:# 112 #: NU IN SD. NU-RCDC & DRY CREEK XFMR
FDNS	00NR	2	16WP	G15_095	FROM->TO	G14-057T 345.00 - SUNNYSIDE 345KV CKT 1	717	789	0.03572	112.2896	KEO EHV - WEST MEMPHIS 500 500KV CKT 1
FDNS	00NR	2	16WP	G15_095	FROM->TO	G14-057T 345.00 - SUNNYSIDE 345KV CKT 1	717	789	0.03557	112.2707	THOMAS HILL 161/22.0KV TRANSFORMER CKT 1
FDNS	00NR	2	16WP	G15_095	FROM->TO	G14-057T 345.00 - SUNNYSIDE 345KV CKT 1	717	789	0.03588	112.257	ARKANSAS NUCLEAR ONE - FT SMITH 500KV CKT 1
FDNS	00NR	2	16WP	G15_095	FROM->TO	G14-057T 345.00 - SUNNYSIDE 345KV CKT 1	717	789	0.03564	112.1653	P12:138:AEPW:112GORE4:SNYDER-4
FDNS	00NR	2	16WP	G15_095	FROM->TO	G14-057T 345.00 - SUNNYSIDE 345KV CKT 1	717	789	0.03657	112.1239	CLARKSVILLE - MUSKOGEE 345KV CKT 1
FDNS	00NR	2	16WP	G15_095	FROM->TO	G14-057T 345.00 - SUNNYSIDE 345KV CKT 1	717	789	0.03557	112.0482	4SIOUX 1 138.00 138/18.0KV TRANSFORMER CKT 1
FDNS	00NR	2	16WP	G15_095	FROM->TO	G14-057T 345.00 - SUNNYSIDE 345KV CKT 1	717	789	0.03782	112.0471	P12:138:WFEC:MSL07
FDNS	00NR	2	16WP	G15_095	FROM->TO	G14-057T 345.00 - SUNNYSIDE 345KV CKT 1	717	789	0.03782	112.0471	P12:138:WFEC-AEPW:HUGOPP4:ATOKA--4
FDNS	00NR	2	16WP	G15_095	FROM->TO	G14-057T 345.00 - SUNNYSIDE 345KV CKT 1	717	789	0.03557	112.0336	CLAY BOSWELL 230/20.9KV TRANSFORMER CKT 1
FDNS	00NR	2	16WP	G15_095	FROM->TO	G14-057T 345.00 - SUNNYSIDE 345KV CKT 1	717	789	0.03549	111.997	P12:138:WFEC:MSL16
FDNS	00NR	2	16WP	G15_095	FROM->TO	G14-057T 345.00 - SUNNYSIDE 345KV CKT 1	717	789	0.03653	111.9491	P12:138:WFEC-AEPW:GOLDENSW4:CRAIGJT4
FDNS	00NR	2	16WP	G15_095	FROM->TO	G14-057T 345.00 - SUNNYSIDE 345KV CKT 1	717	789	0.03564	111.8719	P12:138:AEPW-SWPA:LONEOAK4:TUPELO4
FDNS	00NR	2	16WP	G15_095	FROM->TO	G14-057T 345.00 - SUNNYSIDE 345KV CKT 1	717	789	0.03564	111.8719	P12:138:WFEC:MSL06
FDNS	00NR	2	16WP	G15_095	FROM->TO	G14-057T 345.00 - SUNNYSIDE 345KV CKT 1	717	789	0.03521	111.8539	P12:138:OKGE:3TERM40
FDNS	00NR	2	16WP	G15_095	FROM->TO	G14-057T 345.00 - SUNNYSIDE 345KV CKT 1	717	789	0.03528	111.7803	GRAPEVINE INTERCHANGE - STATELINE INTERCHANGE 230KV CKT 1
FDNS	00NR	2	16WP	G15_095	FROM->TO	G14-057T 345.00 - SUNNYSIDE 345KV CKT 1	717	789	0.03523	111.6468	GRAPEVINE INTERCHANGE - NICHOLS STATION 230KV CKT 1
FDNS	00NR	2	16WP	G15_095	FROM->TO	G14-057T 345.00 - SUNNYSIDE 345KV CKT 1	717	789	0.0354	111.6209	P12:138:AEPW:SHAM4WT:CHILD4WT
FDNS	00NR	2	16WP	G15_095	FROM->TO	G14-057T 345.00 - SUNNYSIDE 345KV CKT 1	717	789	0.04115	111.6149	P12:138:WFEC:MSL15
FDNS	00NR	2	16WP	G15_095	FROM->TO	G14-057T 345.00 - SUNNYSIDE 345KV CKT 1	717	789	0.03569	111.3775	P12:138:WFEC:MSL09
FDNS	00NR	2	16WP	G15_095	FROM->TO	G14-057T 345.00 - SUNNYSIDE 345KV CKT 1	717	789	0.03506	111.219	P12:230:AEPW-SPS:SWEETWT6:WHEELER 6
FDNS	00NR	2	16WP	G15_095	FROM->TO	G14-057T 345.00 - SUNNYSIDE 345KV CKT 1	717	789	0.03223	111.2158	P12:138:AEPW-OGE:CORNVIL4:CIMARON4
FDNS	00NR	2	16WP	G15_095	FROM->TO	G14-057T 345.00 - SUNNYSIDE 345KV CKT 1	717	789	0.03557	111.1543	BIG STONE 230/24.0KV TRANSFORMER CKT 1
FDNS	00NR	2	16WP	G15_095	FROM->TO	G14-057T 345.00 - SUNNYSIDE 345KV CKT 1	717	789	0.03677	110.9204	NORTHWEST TEXARKANA - VALLIANT 345KV CKT 1
FDNS	00NR	2	16WP	G15_095	FROM->TO	G14-057T 345.00 - SUNNYSIDE 345KV CKT 1	717	789	0.03284	110.8617	P12:230:AEPW:ELKCITY6:SWEETWT6

SOLUTION	GROUP	SCENARIO	SEASON	SOURCE	DIRECTION	MONITORED ELEMENT	RATEA (MVA)	RATEB(MVA)	TDF	TC%LOADING (% MVA)	CONTINGENCY
FDNS	00NR	2	16WP	G15_095	FROM->TO	G14-057T 345.00 - SUNNYSIDE 345KV CKT 1	717	789	0.03557	110.6383	SHERBURNE CO 345/24.0KV TRANSFORMER CKT 1
FDNS	00NR	2	16WP	G15_095	FROM->TO	G14-057T 345.00 - SUNNYSIDE 345KV CKT 1	717	789	0.03735	110.2331	LYDIA - WELSH 345KV CKT 1
FDNS	00NR	2	16WP	G15_095	FROM->TO	G14-057T 345.00 - SUNNYSIDE 345KV CKT 1	717	789	0.03797	109.1144	LYDIA - VALLIANT 345KV CKT 1
FDNS	00NR	2	16WP	G15_095	FROM->TO	G14-057T 345.00 - SUNNYSIDE 345KV CKT 1	717	789	0.0422	107.1829	JOHNSON COUNTY - PITTSBURG 345KV CKT 1
FDNS	00NR	2	16WP	G15_095	FROM->TO	G14-057T 345.00 - SUNNYSIDE 345KV CKT 1	717	789	0.05367	106.2395	HUGO - VALLIANT 345KV CKT 1
FDNS	01ALL	2	20SP	G15_095	FROM->TO	G15095_T 138.00 - ROSE_VALLEY 138.00 138KV CKT 1	183	228	0.33664	115.9323	BASE CASE
FDNS	01ALL	2	20WP	G15_095	FROM->TO	G15095_T 138.00 - ROSE_VALLEY 138.00 138KV CKT 1	183	228	0.33637	111.965	BASE CASE
FDNS	01ALL	2	17SP	G15_095	FROM->TO	G15095_T 138.00 - ROSE_VALLEY 138.00 138KV CKT 1	183	228	0.33514	110.8058	BASE CASE
FDNS	01ALL	2	16WP	G15_095	FROM->TO	G15095_T 138.00 - ROSE_VALLEY 138.00 138KV CKT 1	183	228	0.33508	106.3095	BASE CASE
FDNS	01ALL	2	20SP	G15_095	FROM->TO	G15095_T 138.00 - ROSE_VALLEY 138.00 138KV CKT 1	183	228	0.30643	103.665	RENFROW7 345.00 (BANK 1) 345/138/13.8KV TRANSFORMER CKT 1
FDNS	01ALL	2	20SP	G15_095	FROM->TO	G15095_T 138.00 - ROSE_VALLEY 138.00 138KV CKT 1	183	228	0.37461	102.1548	WOODWARD EHV - WWPAR4 138.00 138KV CKT 1
FDNS	01ALL	2	20SP	G15_095	FROM->TO	G15095_T 138.00 - ROSE_VALLEY 138.00 138KV CKT 1	183	228	0.37461	102.1544	WOODWARD - WWPAR4 138.00 138KV CKT 1
FDNS	01ALL	2	25SP	G15_095	FROM->TO	G15095_T 138.00 - ROSE_VALLEY 138.00 138KV CKT 1	183	228	0.33716	100.8806	BASE CASE
FDNS	01ALL	2	20SP	G15_095	FROM->TO	G15095_T 138.00 - ROSE_VALLEY 138.00 138KV CKT 1	183	228	0.34847	100.3384	MOORELAND - PIC4 138.00 138KV CKT 1
FDNS	01ALL	2	20SP	G15_095	FROM->TO	G15095_T 138.00 - ROSE_VALLEY 138.00 138KV CKT 1	183	228	0.34847	100.3132	P12:138:WFEC:MSL12
FDNS	01ALL	2	20SP	G15_095	FROM->TO	G15095_T 138.00 - ROSE_VALLEY 138.00 138KV CKT 1	183	228	0.34847	100.2506	CEDARDALE - PIC4 138.00 138KV CKT 1
FDNS	01ALL	2	20SP	G15_095	FROM->TO	G15095_T 138.00 - ROSE_VALLEY 138.00 138KV CKT 1	183	228	0.34847	100.0678	CEDARDALE - OKEENE 138KV CKT 1
FDNS	01ALL	2	20SP	G15_095	FROM->TO	G15095_T 138.00 - ROSE_VALLEY 138.00 138KV CKT 1	183	228	0.21306	99.9	RENFROW4 138.00 - RENFROW4 138.00 138KV CKT 1
FDNS	01ALL	2	20SP	G15_095	FROM->TO	G15095_T 138.00 - ROSE_VALLEY 138.00 138KV CKT 1	183	228	0.33259	99.8	BUFBEAR2 - BUFFALO 69KV CKT 1
FDNS	01ALL	2	20SP	G15_095	FROM->TO	G15095_T 138.00 - ROSE_VALLEY 138.00 138KV CKT 1	183	228	0.35019	99.7	BEARCAT 138.00 - MOORELAND 138KV CKT 1
FDNS	01ALL	2	20SP	G15_095	FROM->TO	G15095_T 138.00 - ROSE_VALLEY 138.00 138KV CKT 1	183	228	0.35019	99.7	P12:138:WFEC:MSL14
FDNS	01ALL	2	20SP	G15_095	FROM->TO	G15095_T 138.00 - ROSE_VALLEY 138.00 138KV CKT 1	183	228	0.32825	99.5	EAGLE CHIEF - RINGWOOD JCT 69KV CKT 1
FDNS	01ALL	2	20SP	G15_095	FROM->TO	G15095_T 138.00 - ROSE_VALLEY 138.00 138KV CKT 1	183	228	0.32825	99.5	FAIRVIEW - RINGWOOD JCT 69KV CKT 1
FDNS	01ALL	2	20SP	G15_095	TO->FROM	NOEL_SW 138.00 - ROSE_VALLEY 138.00 138KV CKT 1	183	228	0.33664	107.8874	BASE CASE
FDNS	01ALL	2	20WP	G15_095	TO->FROM	NOEL_SW 138.00 - ROSE_VALLEY 138.00 138KV CKT 1	183	228	0.33637	106.1646	BASE CASE
FDNS	01ALL	2	17SP	G15_095	TO->FROM	NOEL_SW 138.00 - ROSE_VALLEY 138.00 138KV CKT 1	183	228	0.33514	103.7945	BASE CASE
FDNS	01ALL	2	16WP	G15_095	TO->FROM	NOEL_SW 138.00 - ROSE_VALLEY 138.00 138KV CKT 1	183	228	0.33508	100.9006	BASE CASE
FDNS	01NR	2	20L	G15_095	TO->FROM	TUPELO - TUPELO TAP 138KV CKT 1	143	143	0.06431	107.5628	PITTSBURG - SEMINOLE 345KV CKT 1
FDNS	01NR	2	20L	G15_095	TO->FROM	TUPELO - TUPELO TAP 138KV CKT 1	143	143	0.06659	105.3498	PITTSBURG - VALLIANT 345KV CKT 1
FDNS	01ALL	2	25SP	G15_095	FROM->TO	WOODWARD DISTRICT EHV (WWDEHV) 345/138/13.8KV TRANSFORMER CKT 1	493	493	0.29867	110.7659	WOODWARD DISTRICT EHV (WWDEHV-T2) 345/138/13.8KV TRANSFORMER CKT 2
FDNS	01ALL	2	25SP	G15_095	FROM->TO	WOODWARD DISTRICT EHV (WWDEHV) 345/138/13.8KV TRANSFORMER CKT 1	493	493	0.29867	109.2572	WOODWARD DISTRICT EHV (WWDEHV-T2) 345/138/13.8KV TRANSFORMER CKT 2
FDNS	01ALL	2	17SP	G15_095	FROM->TO	WOODWARD DISTRICT EHV (WWDEHV) 345/138/13.8KV TRANSFORMER CKT 1	493	493	0.29858	107.674	WOODWARD DISTRICT EHV (WWDEHV-T2) 345/138/13.8KV TRANSFORMER CKT 2
FDNS	01ALL	2	17SP	G15_095	FROM->TO	WOODWARD DISTRICT EHV (WWDEHV) 345/138/13.8KV TRANSFORMER CKT 1	493	493	0.29858	106.0733	WOODWARD DISTRICT EHV (WWDEHV-T2) 345/138/13.8KV TRANSFORMER CKT 2
FDNS	01ALL	2	16WP	G15_095	FROM->TO	WOODWARD DISTRICT EHV (WWDEHV) 345/138/13.8KV TRANSFORMER CKT 1	493	493	0.29734	105.1984	WOODWARD DISTRICT EHV (WWDEHV-T2) 345/138/13.8KV TRANSFORMER CKT 2
FDNS	01ALL	2	20SP	G15_095	FROM->TO	WOODWARD DISTRICT EHV (WWDEHV) 345/138/13.8KV TRANSFORMER CKT 1	493	493	0.29833	105.0912	WOODWARD DISTRICT EHV (WWDEHV-T2) 345/138/13.8KV TRANSFORMER CKT 2
FDNS	01ALL	2	16WP	G15_095	FROM->TO	WOODWARD DISTRICT EHV (WWDEHV) 345/138/13.8KV TRANSFORMER CKT 1	493	493	0.29734	103.8456	WOODWARD DISTRICT EHV (WWDEHV-T2) 345/138/13.8KV TRANSFORMER CKT 2
FDNS	01ALL	2	20SP	G15_095	FROM->TO	WOODWARD DISTRICT EHV (WWDEHV) 345/138/13.8KV TRANSFORMER CKT 1	493	493	0.29833	103.5376	WOODWARD DISTRICT EHV (WWDEHV-T2) 345/138/13.8KV TRANSFORMER CKT 2
FDNS	01ALL	2	20L	G15_095	FROM->TO	WOODWARD DISTRICT EHV (WWDEHV) 345/138/13.8KV TRANSFORMER CKT 1	493	493	0.3004	102.1901	WOODWARD DISTRICT EHV (WWDEHV-T2) 345/138/13.8KV TRANSFORMER CKT 2
FDNS	01ALL	2	20L	G15_095	FROM->TO	WOODWARD DISTRICT EHV (WWDEHV) 345/138/13.8KV TRANSFORMER CKT 1	493	493	0.3004	100.7683	WOODWARD DISTRICT EHV (WWDEHV-T2) 345/138/13.8KV TRANSFORMER CKT 2
FDNS	01ALL	2	25SP	G15_095	FROM->TO	WOODWARD DISTRICT EHV (WWDEHV-T2) 345/138/13.8KV TRANSFORMER CKT 2	493	493	0.3	111.2109	WOODWARD DISTRICT EHV (WWDEHV) 345/138/13.8KV TRANSFORMER CKT 1
FDNS	01ALL	2	25SP	G15_095	FROM->TO	WOODWARD DISTRICT EHV (WWDEHV-T2) 345/138/13.8KV TRANSFORMER CKT 2	493	493	0.3	109.7348	WOODWARD DISTRICT EHV (WWDEHV) 345/138/13.8KV TRANSFORMER CKT 1
FDNS	01ALL	2	17SP	G15_095	FROM->TO	WOODWARD DISTRICT EHV (WWDEHV-T2) 345/138/13.8KV TRANSFORMER CKT 2	493	493	0.2999	108.1014	WOODWARD DISTRICT EHV (WWDEHV) 345/138/13.8KV TRANSFORMER CKT 1
FDNS	01ALL	2	17SP	G15_095	FROM->TO	WOODWARD DISTRICT EHV (WWDEHV-T2) 345/138/13.8KV TRANSFORMER CKT 2	493	493	0.2999	106.5345	WOODWARD DISTRICT EHV (WWDEHV) 345/138/13.8KV TRANSFORMER CKT 1
FDNS	01ALL	2	16WP	G15_095	FROM->TO	WOODWARD DISTRICT EHV (WWDEHV-T2) 345/138/13.8KV TRANSFORMER CKT 2	493	493	0.29867	105.6189	WOODWARD DISTRICT EHV (WWDEHV) 345/138/13.8KV TRANSFORMER CKT 1
FDNS	01ALL	2	20SP	G15_095	FROM->TO	WOODWARD DISTRICT EHV (WWDEHV-T2) 345/138/13.8KV TRANSFORMER CKT 2	493	493	0.29965	105.5079	WOODWARD DISTRICT EHV (WWDEHV) 345/138/13.8KV TRANSFORMER CKT 1
FDNS	01ALL	2	16WP	G15_095	FROM->TO	WOODWARD DISTRICT EHV (WWDEHV-T2) 345/138/13.8KV TRANSFORMER CKT 2	493	493	0.29867	104.2959	WOODWARD DISTRICT EHV (WWDEHV) 345/138/13.8KV TRANSFORMER CKT 1
FDNS	01ALL	2	20SP	G15_095	FROM->TO	WOODWARD DISTRICT EHV (WWDEHV-T2) 345/138/13.8KV TRANSFORMER CKT 2	493	493	0.29965	103.9868	WOODWARD DISTRICT EHV (WWDEHV) 345/138/13.8KV TRANSFORMER CKT 1
FDNS	01ALL	2	20L	G15_095	FROM->TO	WOODWARD DISTRICT EHV (WWDEHV-T2) 345/138/13.8KV TRANSFORMER CKT 2	493	493	0.30173	102.5964	WOODWARD DISTRICT EHV (WWDEHV) 345/138/13.8KV TRANSFORMER CKT 1
FDNS	01ALL	2	20L	G15_095	FROM->TO	WOODWARD DISTRICT EHV (WWDEHV-T2) 345/138/13.8KV TRANSFORMER CKT 2	493	493	0.30173	101.206	WOODWARD DISTRICT EHV (WWDEHV) 345/138/13.8KV TRANSFORMER CKT 1
FDNS	00NR	3	16WP	G15_095	FROM->TO	G14-057T 345.00 - SUNNYSIDE 345KV CKT 1	717	789	0.05169	124.8136	PITTSBURG - SEMINOLE 345KV CKT 1
FDNS	00NR	3	16WP	G15_095	FROM->TO	G14-057T 345.00 - SUNNYSIDE 345KV CKT 1	717	789	0.05169	124.8136	PITTSBURG - SEMINOLE 345KV CKT 1
FDNS	00NR	3	16WP	G15_095	FROM->TO	G14-057T 345.00 - SUNNYSIDE 345KV CKT 1	717	789	0.03531	124.008	BASE CASE
FDNS	00NR	3	16WP	G15_095	FROM->TO	G14-057T 345.00 - SUNNYSIDE 345KV CKT 1	717	789	0.04168	122.0119	CIMARRON - DRAPER LAKE 345KV CKT 1
FDNS	00NR	3	16WP	G15_095	FROM->TO	G14-057T 345.00 - SUNNYSIDE 345KV CKT 1	717	789	0.04205	118.0416	PITTSBURG - VALLIANT 345KV CKT 1
FDNS	00NR	3	16WP	G15_095	FROM->TO	G14-057T 345.00 - SUNNYSIDE 345KV CKT 1	717	789	0.04205	118.0416	PITTSBURG - VALLIANT 345KV CKT 1
FDNS	00NR	3	16WP	G15_095	FROM->TO	G14-057T 345.00 - SUNNYSIDE 345KV CKT 1	717	789	0.03531	117.8049	GEN509403 1-PIRKEY GENERATION
FDNS	00NR	3	16WP	G15_095	FROM->TO	G14-057T 345.00 - SUNNYSIDE 345KV CKT 1	717	789	0.03531	117.7043	GEN509416 1-TURK GENERATION
FDNS	00NR	3	16WP	G15_095	FROM->TO	G14-057T 345.00 - SUNNYSIDE 345KV CKT 1	717	789	0.03747	117.4601	CLEVELAND - G15066_T 345.00 345KV CKT 1
FDNS	00NR	3	16WP	G15_095	FROM->TO	G14-057T 345.00 - SUNNYSIDE 345KV CKT 1	717	789	0.03747	117.173	G15066_T 345.00 - SOONER 345KV CKT 1
FDNS	00NR	3	16WP	G15_095	FROM->TO	G14-057T 345.00 - SUNNYSIDE 345KV CKT 1	717	789	0.03531	116.8021	GEN501801 1-DOLET HILLS UNIT1
FDNS	00NR	3	16WP	G15_095	FROM->TO	G14-057T 345.00 - SUNNYSIDE 345KV CKT 1	717	789	0.03231	116.6882	BORDER 7345.00 - WOODWARD DISTRICT EHV 345KV CKT 1
FDNS	00NR	3	16WP	G15_095	FROM->TO	G14-057T 345.00 - SUNNYSIDE 345KV CKT 1	717	789	0.03531	116.404	GEN509406 1-WELSH #3
FDNS	00NR	3	16WP	G15_095	FROM->TO	G14-057T 345.00 - SUNNYSIDE 345KV CKT 1	717	789	0.03531	116.4039	GEN509404 1-WELSH #1
FDNS	00NR	3	16WP	G15_095	FROM->TO	G14-057T 345.00 - SUNNYSIDE 345KV CKT 1	717	789	0.03301	115.7786	CORN TAP - NAPLESTP 138.00 138KV CKT 1
FDNS	00NR	3	16WP	G15_095	FROM->TO	G14-057T 345.00 - SUNNYSIDE 345KV CKT 1	717	789	0.03231	115.7529	BORDER 7345.00 - TUCO_2 345.00 345KV CKT 1
FDNS	00NR	3	16WP	G15_095	FROM->TO	G14-057T 345.00 - SUNNYSIDE 345KV CKT 1	717	789	0.03301	115.6961	NAPLESTP 138.00 - PAYNE 138.00 138KV CKT 1
FDNS	00NR	3	16WP	G15_095	FROM->TO	G14-057T 345.00 - SUNNYSIDE 345KV CKT 1	717	789	0.03717	115.6773	7SAREPTA% 345.00 - LONGWOOD 345KV CKT 1
FDNS	00NR	3	16WP	G15_095	FROM->TO	G14-057T 345.00 - SUNNYSIDE 345KV CKT 1	717	789	0.03717	115.6773	7SAREPTA% 345.00 - LONGWOOD 345KV CKT 1
FDNS	00NR	3	16WP	G15_095	FROM->TO	G14-057T 345.00 - SUNNYSIDE 345KV CKT 1	717	789	0.0361	115.5202	DOLET HILLS - SOUTHWEST SHREVEPORT 345KV CKT 1
FDNS	00NR	3	16WP	G15_095	FROM->TO	G14-057T 345.00 - SUNNYSIDE 345KV CKT 1	717	789	0.0361	115.5202	DOLET HILLS - SOUTHWEST SHREVEPORT 345KV CKT 1
FDNS	00NR	3	16WP	G15_095	FROM->TO	G14-057T 345.00 - SUNNYSIDE 345KV CKT 1	717	789	0.03687	115.5069	CLEVELAND - TULSA NORTH 345KV CKT 1
FDNS	00NR	3	16WP	G15_095	FROM->TO	G14-057T 345.00 - SUNNYSIDE 345KV CKT 1	717	789	0.03687	115.5069	CLEVELAND - TULSA NORTH 345KV CKT 1
FDNSLock	00NR	3	16WP	G15_095	FROM->TO	G14-057T 345.00 - SUNNYSIDE 345KV CKT 1	717	789	0.03531	115.4962	GEN336821 1-GRAND GULF UNIT
FDNS	00NR	3	16WP	G15_095	FROM->TO	G14-057T 345.00 - SUNNYSIDE 345KV CKT 1	717	789	0.03706	115.448	ARCADIA - NORTHWEST 345KV CKT 1
FDNSLock	00NR	3	16WP	G15_095	FROM->TO	G14-057T 345.00 - SUNNYSIDE 345KV CKT 1	717	789	0.03531	115.4165	GEN336153 1-WATERFORD UNIT#3
FDNS	00NR	3	16WP	G15_095	FROM->TO	G14-057T 345.00 - SUNNYSIDE 345KV CKT 1	717	789	0.03365	115.4159	COMANCHE - LOCO 138KV CKT 1
FDNS	00NR	3	16WP	G15_095	FROM->TO	G14-057T 345.00 - SUNNYSIDE 345KV CKT 1	717	789	0.03053	115.353	ANADARKO - POCASSETT 138KV CKT 1
FDNS	00NR	3	16WP	G15_095	FROM->TO	G14-057T 345.00 - SUNNYSIDE 345KV CKT 1	717	789	0.04101	115.3212	CANADIAN RIVER - MUSKOGEE 345KV CKT 1
FDNS	00NR	3	16WP	G15_095	FROM->TO	G14-057T 345.00 - SUNNYSIDE 345KV CKT 1	717	789	0.03837	115.2138	ARCADIA - SEMINOLE 345KV CKT 1

SOLUTION	GROUP	SCENARIO	SEASON	SOURCE	DIRECTION	MONITORED ELEMENT	RATEA (MVA)	RATEB(MVA)	TDF	TC%LOADING (% MVA)	CONTINGENCY
FDNS	00NR	3	16WP	G15_095	FROM->TO	G14-057T 345.00 - SUNNYSIDE 345KV CKT 1	717	789	0.03053	115.2125	POCASSETT - TUTTLE 138KV CKT 1
FDNSLock	00NR	3	16WP	G15_095	FROM->TO	G14-057T 345.00 - SUNNYSIDE 345KV CKT 1	717	789	0.03531	115.1249	GEN335831 1-RIVERBEND UNIT#1
FDNS	00NR	3	16WP	G15_095	FROM->TO	G14-057T 345.00 - SUNNYSIDE 345KV CKT 1	717	789	0.03531	115.1143	GRAND GULF 500/22.0KV TRANSFORMER CKT 1
FDNS	00NR	3	16WP	G15_095	FROM->TO	G14-057T 345.00 - SUNNYSIDE 345KV CKT 1	717	789	0.03531	115.0932	GEN515577 1-ARBWND11 0.6900
FDNS	00NR	3	16WP	G15_095	FROM->TO	G14-057T 345.00 - SUNNYSIDE 345KV CKT 1	717	789	0.03635	115.0342	7SAREPTA% 345.00 - ELDORADO EHV 345KV CKT 1
FDNS	00NR	3	16WP	G15_095	FROM->TO	G14-057T 345.00 - SUNNYSIDE 345KV CKT 1	717	789	0.03635	115.034	3TR3AR8EL7EL
FDNS	00NR	3	16WP	G15_095	FROM->TO	G14-057T 345.00 - SUNNYSIDE 345KV CKT 1	717	789	0.03531	115.0265	GEN509409 1-WILKES #3
FDNS	00NR	3	16WP	G15_095	FROM->TO	G14-057T 345.00 - SUNNYSIDE 345KV CKT 1	717	789	0.03635	115.0233	ELDORADO EHV 500/345KV TRANSFORMER CKT 1
FDNS	00NR	3	16WP	G15_095	FROM->TO	G14-057T 345.00 - SUNNYSIDE 345KV CKT 1	717	789	0.03646	114.9623	P12:138:AEPW:DUNCAN-4:L.E.S.-4
FDNS	00NR	3	16WP	G15_095	FROM->TO	G14-057T 345.00 - SUNNYSIDE 345KV CKT 1	717	789	0.03454	114.9274	HEALDTON - LOCO 138KV CKT 1
FDNS	00NR	3	16WP	G15_095	FROM->TO	G14-057T 345.00 - SUNNYSIDE 345KV CKT 1	717	789	0.03053	114.8486	BRIDGECR 138.00 - TUTTLE 138KV CKT 1
FDNS	00NR	3	16WP	G15_095	FROM->TO	G14-057T 345.00 - SUNNYSIDE 345KV CKT 1	717	789	0.03646	114.8474	COMANCHE TAP - OMPA-DUNCAN 840 138KV CKT 1
FDNS	00NR	3	16WP	G15_095	FROM->TO	G14-057T 345.00 - SUNNYSIDE 345KV CKT 1	717	789	0.03454	114.7868	HEALDTON - RINGLING 138KV CKT 1
FDNS	00NR	3	16WP	G15_095	FROM->TO	G14-057T 345.00 - SUNNYSIDE 345KV CKT 1	717	789	0.03531	114.7634	GEN501813 1-RODEMACHER UNIT 3
FDNSLock	00NR	3	16WP	G15_095	FROM->TO	G14-057T 345.00 - SUNNYSIDE 345KV CKT 1	717	789	0.03531	114.7487	GEN300006 1-NEW MADRID UNIT 1
FDNSLock	00NR	3	16WP	G15_095	FROM->TO	G14-057T 345.00 - SUNNYSIDE 345KV CKT 1	717	789	0.03531	114.7366	GEN300007 1-NEW MADRID UNIT 2
FDNS	00NR	3	16WP	G15_095	FROM->TO	G14-057T 345.00 - SUNNYSIDE 345KV CKT 1	717	789	0.03566	114.7109	LACYGNE - WAVERLY7 345.00 345KV CKT 1
FDNS	00NR	3	16WP	G15_095	FROM->TO	G14-057T 345.00 - SUNNYSIDE 345KV CKT 1	717	789	0.03531	114.6254	GEN520947 1-HUGO1
FDNS	00NR	3	16WP	G15_095	FROM->TO	G14-057T 345.00 - SUNNYSIDE 345KV CKT 1	717	789	0.03454	114.6225	RINGLING - SOUTH WILSON 138KV CKT 1
FDNS	00NR	3	16WP	G15_095	FROM->TO	G14-057T 345.00 - SUNNYSIDE 345KV CKT 1	717	789	0.03566	114.5992	WAVERLY7 345.00 - WOLF CREEK 345KV CKT 1
FDNS	00NR	3	16WP	G15_095	FROM->TO	G14-057T 345.00 - SUNNYSIDE 345KV CKT 1	717	789	0.03053	114.5952	P12:138:WFEC:MSL01
FDNS	00NR	3	16WP	G15_095	FROM->TO	G14-057T 345.00 - SUNNYSIDE 345KV CKT 1	717	789	0.03053	114.5868	BRIDGECR 138.00 - SUNSHINE CANYON 138KV CKT 1
FDNS	00NR	3	16WP	G15_095	FROM->TO	G14-057T 345.00 - SUNNYSIDE 345KV CKT 1	717	789	0.03646	114.5765	DUNCAN - OMPA-DUNCAN 840 138KV CKT 1
FDNS	00NR	3	16WP	G15_095	FROM->TO	G14-057T 345.00 - SUNNYSIDE 345KV CKT 1	717	789	0.03646	114.5765	DUNCAN - OMPA-DUNCAN 840 138KV CKT 1
FDNS	00NR	3	16WP	G15_095	FROM->TO	G14-057T 345.00 - SUNNYSIDE 345KV CKT 1	717	789	0.03531	114.566	GEN335206 1-NELSON UNIT 6
FDNS	00NR	3	16WP	G15_095	FROM->TO	G14-057T 345.00 - SUNNYSIDE 345KV CKT 1	717	789	0.03531	114.4229	DOLET HILLS 345/24.0KV TRANSFORMER CKT 1
FDNS	00NR	3	16WP	G15_095	FROM->TO	G14-057T 345.00 - SUNNYSIDE 345KV CKT 1	717	789	0.03532	114.4188	P12:138:AEPW:SHERID4:112GORE4
FDNS	00NR	3	16WP	G15_095	FROM->TO	G14-057T 345.00 - SUNNYSIDE 345KV CKT 1	717	789	0.03689	114.4101	PARK LANE - SEMINOLE 138KV CKT 1
FDNS	00NR	3	16WP	G15_095	FROM->TO	G14-057T 345.00 - SUNNYSIDE 345KV CKT 1	717	789	0.03531	114.3829	GEN501812 1-RODEMACHER UNIT 2
FDNS	00NR	3	16WP	G15_095	FROM->TO	G14-057T 345.00 - SUNNYSIDE 345KV CKT 1	717	789	0.03531	114.3533	GEN590011 2-ERCOT EQUIVALENCE
FDNS	00NR	3	16WP	G15_095	FROM->TO	G14-057T 345.00 - SUNNYSIDE 345KV CKT 1	717	789	0.03454	114.3473	MARIETTA - SOUTH WILSON 138KV CKT 1
FDNS	00NR	3	16WP	G15_095	FROM->TO	G14-057T 345.00 - SUNNYSIDE 345KV CKT 1	717	789	0.03531	114.3456	GEN515564 1-ORIGIN11 0.6900
FDNS	00NR	3	16WP	G15_095	FROM->TO	G14-057T 345.00 - SUNNYSIDE 345KV CKT 1	717	789	0.03531	114.3456	GEN515565 1-ORIGIN21 0.6900
FDNS	00NR	3	16WP	G15_095	FROM->TO	G14-057T 345.00 - SUNNYSIDE 345KV CKT 1	717	789	0.03551	114.3132	REDBUD - RIVERSIDE STATION 345KV CKT 1
FDNS	00NR	3	16WP	G15_095	FROM->TO	G14-057T 345.00 - SUNNYSIDE 345KV CKT 1	717	789	0.03551	114.3132	REDBUD - RIVERSIDE STATION 345KV CKT 1
FDNS	00NR	3	16WP	G15_095	FROM->TO	G14-057T 345.00 - SUNNYSIDE 345KV CKT 1	717	789	0.03574	114.2953	Hitchland Interchange - WALKTAP7 345.00 345KV CKT 1
FDNS	00NR	3	16WP	G15_095	FROM->TO	G14-057T 345.00 - SUNNYSIDE 345KV CKT 1	717	789	0.03574	114.2953	Hitchland Interchange - WALKTAP7 345.00 345KV CKT 1
FDNS	00NR	3	16WP	G15_095	FROM->TO	G14-057T 345.00 - SUNNYSIDE 345KV CKT 1	717	789	0.03616	114.2952	MATHWSN7 345.00 - NORTHWEST 345KV CKT 1
FDNS	00NR	3	16WP	G15_095	FROM->TO	G14-057T 345.00 - SUNNYSIDE 345KV CKT 1	717	789	0.03574	114.2807	P12:345:SPS:J07.1.FINN.HITCH
FDNS	00NR	3	16WP	G15_095	FROM->TO	G14-057T 345.00 - SUNNYSIDE 345KV CKT 1	717	789	0.03531	114.2786	GEN590010 1-ERCOT EQUIVALENCE
FDNS	00NR	3	16WP	G15_095	FROM->TO	G14-057T 345.00 - SUNNYSIDE 345KV CKT 1	717	789	0.03454	114.2632	P12:138:WFEC:MSL17
FDNS	00NR	3	16WP	G15_095	FROM->TO	G14-057T 345.00 - SUNNYSIDE 345KV CKT 1	717	789	0.03597	114.2419	CANEYRV7 345.00 - NEOSHO 345KV CKT 1
FDNS	00NR	3	16WP	G15_095	FROM->TO	G14-057T 345.00 - SUNNYSIDE 345KV CKT 1	717	789	0.03526	114.1859	CIVIT - PAOLI 138KV CKT 1
FDNS	00NR	3	16WP	G15_095	FROM->TO	G14-057T 345.00 - SUNNYSIDE 345KV CKT 1	717	789	0.03531	114.1631	P12:69:AEPW:L.E.S.-2:LAW WC2
FDNS	00NR	3	16WP	G15_095	FROM->TO	G14-057T 345.00 - SUNNYSIDE 345KV CKT 1	717	789	0.03531	114.1449	P12:161:AEPW:DYESS 5:HYLAND 5
FDNS	00NR	3	16WP	G15_095	FROM->TO	G14-057T 345.00 - SUNNYSIDE 345KV CKT 1	717	789	0.03531	114.1444	GEN509408 1-WILKES #2
FDNS	00NR	3	16WP	G15_095	FROM->TO	G14-057T 345.00 - SUNNYSIDE 345KV CKT 1	717	789	0.03531	114.1339	GEN506754 1-LEBROCK STEAM 1
FDNS	00NR	3	16WP	G15_095	FROM->TO	G14-057T 345.00 - SUNNYSIDE 345KV CKT 1	717	789	0.03563	114.1161	ELDORADO EHV - MOUNT OLIVE 500KV CKT 1
FDNS	00NR	3	16WP	G15_095	FROM->TO	G14-057T 345.00 - SUNNYSIDE 345KV CKT 1	717	789	0.03597	114.1082	CANEYRV7 345.00 - LATHAMS7 345.00 345KV CKT 1
FDNS	00NR	3	16WP	G15_095	FROM->TO	G14-057T 345.00 - SUNNYSIDE 345KV CKT 1	717	789	0.03392	114.1072	P12:138:WFEC:MSL02
FDNS	00NR	3	16WP	G15_095	FROM->TO	G14-057T 345.00 - SUNNYSIDE 345KV CKT 1	717	789	0.03583	114.1066	PAOLI - PAYNE 138.00 138KV CKT 1
FDNS	00NR	3	16WP	G15_095	FROM->TO	G14-057T 345.00 - SUNNYSIDE 345KV CKT 1	717	789	0.03531	114.1045	GEN334440 1-SABINE UNIT 4
FDNS	00NR	3	16WP	G15_095	FROM->TO	G14-057T 345.00 - SUNNYSIDE 345KV CKT 1	717	789	0.03532	114.0744	P12:138:AEPW:112GORE4:L.E.S.-4
FDNS	00NR	3	16WP	G15_095	FROM->TO	G14-057T 345.00 - SUNNYSIDE 345KV CKT 1	717	789	0.03526	114.0436	CIVIT - STRATFORD 138KV CKT 1
FDNS	00NR	3	16WP	G15_095	FROM->TO	G14-057T 345.00 - SUNNYSIDE 345KV CKT 1	717	789	0.03587	114.0419	ELDORADO EHV - SHERIDAN EHV 500KV CKT 1
FDNS	00NR	3	16WP	G15_095	FROM->TO	G14-057T 345.00 - SUNNYSIDE 345KV CKT 1	717	789	0.03434	114.0191	ANADARKO - GEORGIA 138KV CKT 1
FDNS	00NR	3	16WP	G15_095	FROM->TO	G14-057T 345.00 - SUNNYSIDE 345KV CKT 1	717	789	0.03665	114.0156	TUPELO - TUPELO TAP 138KV CKT 1
FDNS	00NR	3	16WP	G15_095	FROM->TO	G14-057T 345.00 - SUNNYSIDE 345KV CKT 1	717	789	0.03573	113.9972	WEBRE - WELLS 500KV CKT 1
FDNS	00NR	3	16WP	G15_095	FROM->TO	G14-057T 345.00 - SUNNYSIDE 345KV CKT 1	717	789	0.03352	113.9928	P12:138:AEPW-OGE:CORNVIL4:MAUD 4
FDNS	00NR	3	16WP	G15_095	FROM->TO	G14-057T 345.00 - SUNNYSIDE 345KV CKT 1	717	789	0.03531	113.9809	GEN503909 1-FULTONU1 1 16.000
FDNS	00NR	3	16WP	G15_095	FROM->TO	G14-057T 345.00 - SUNNYSIDE 345KV CKT 1	717	789	0.03531	113.9741	FRONTIER - GRIMES 345KV CKT 1
FDNS	00NR	3	16WP	G15_095	FROM->TO	G14-057T 345.00 - SUNNYSIDE 345KV CKT 1	717	789	0.03434	113.9406	FLETCHER - GEORGIA 138KV CKT 1
FDNS	00NR	3	16WP	G15_095	FROM->TO	G14-057T 345.00 - SUNNYSIDE 345KV CKT 1	717	789	0.03756	113.9351	LAWTON EASTSIDE (LES 5) 345/138/13.8KV TRANSFORMER CKT 2
FDNS	00NR	3	16WP	G15_095	FROM->TO	G14-057T 345.00 - SUNNYSIDE 345KV CKT 1	717	789	0.03756	113.9351	LAWTON EASTSIDE (LES 5) 345/138/13.8KV TRANSFORMER CKT 2
FDNS	00NR	3	16WP	G15_095	FROM->TO	G14-057T 345.00 - SUNNYSIDE 345KV CKT 1	717	789	0.03526	113.9244	OIL CENTER - STRATFORD 138KV CKT 1
FDNS	00NR	3	16WP	G15_095	FROM->TO	G14-057T 345.00 - SUNNYSIDE 345KV CKT 1	717	789	0.03352	113.9189	BLANCHARD - CORNVILLE 138KV CKT 1
FDNS	00NR	3	16WP	G15_095	FROM->TO	G14-057T 345.00 - SUNNYSIDE 345KV CKT 1	717	789	0.03404	113.9064	EMPIRE - FLETCHER 138KV CKT 1
FDNS	00NR	3	16WP	G15_095	FROM->TO	G14-057T 345.00 - SUNNYSIDE 345KV CKT 1	717	789	0.03597	113.8979	LATHAMS7 345.00 - ROSE HILL 345KV CKT 1
FDNS	00NR	3	16WP	G15_095	FROM->TO	G14-057T 345.00 - SUNNYSIDE 345KV CKT 1	717	789	0.03531	113.855	GEN509393 S1-ARSENAL HILL GENS #4 (STALL)
FDNS	00NR	3	16WP	G15_095	FROM->TO	G14-057T 345.00 - SUNNYSIDE 345KV CKT 1	717	789	0.03531	113.8313	GEN509392 G2-ARSENAL HILL GENS #3 (STALL)
FDNS	00NR	3	16WP	G15_095	FROM->TO	G14-057T 345.00 - SUNNYSIDE 345KV CKT 1	717	789	0.03531	113.8312	GEN509391 G1-ARSENAL HILL GENS #2 (STALL)
FDNS	00NR	3	16WP	G15_095	FROM->TO	G14-057T 345.00 - SUNNYSIDE 345KV CKT 1	717	789	0.03404	113.8286	COMANCHE - EMPIRE 138KV CKT 1
FDNS	00NR	3	16WP	G15_095	FROM->TO	G14-057T 345.00 - SUNNYSIDE 345KV CKT 1	717	789	0.03531	113.8154	GEN336252 1-NINEMILE POINT UNIT#5
FDNS	00NR	3	16WP	G15_095	FROM->TO	G14-057T 345.00 - SUNNYSIDE 345KV CKT 1	717	789	0.03531	113.7996	GEN334071 1-LEWIS CREEK 2
FDNS	00NR	3	16WP	G15_095	FROM->TO	G14-057T 345.00 - SUNNYSIDE 345KV CKT 1	717	789	0.03531	113.7967	DELL 500 - ESSEX UNIT 2 500KV CKT Z1
FDNS	00NR	3	16WP	G15_095	FROM->TO	G14-057T 345.00 - SUNNYSIDE 345KV CKT 1	717	789	0.03531	113.7907	GEN334070 1-LEWIS CREEK 1
FDNS	00NR	3	16WP	G15_095	FROM->TO	G14-057T 345.00 - SUNNYSIDE 345KV CKT 1	717	789	0.03531	113.7883	GEN335204 1-NELSON UNIT 4
FDNS	00NR	3	16WP	G15_095	FROM->TO	G14-057T 345.00 - SUNNYSIDE 345KV CKT 1	717	789	0.03582	113.7671	THISTLE7 345.00 - WOODWARD DISTRICT EHV 345KV CKT 1
FDNS	00NR	3	16WP	G15_095	FROM->TO	G14-057T 345.00 - SUNNYSIDE 345KV CKT 1	717	789	0.03582	113.7671	THISTLE7 345.00 - WOODWARD DISTRICT EHV 345KV CKT 1

SOLUTION	GROUP	SCENARIO	SEASON	SOURCE	DIRECTION	MONITORED ELEMENT	RATEA (MVA)	RATEB(MVA)	TDF	TC%LOADING (% MVA)	CONTINGENCY
FDNS	00NR	3	16WP	G15_095	FROM->TO	G14-057T 345.00 - SUNNYSIDE 345KV CKT 1	717	789	0.03582	113.7671	THISTLE7 345.00 - WOODWARD DISTRICT EHV 345KV CKT 2
FDNS	00NR	3	16WP	G15_095	FROM->TO	G14-057T 345.00 - SUNNYSIDE 345KV CKT 1	717	789	0.03582	113.7671	THISTLE7 345.00 - WOODWARD DISTRICT EHV 345KV CKT 2
FDNS	00NR	3	16WP	G15_095	FROM->TO	G14-057T 345.00 - SUNNYSIDE 345KV CKT 1	717	789	0.0358	113.7574	DUNCAN (DUNCAN) 138/69/13.8KV TRANSFORMER CKT 1
FDNS	00NR	3	16WP	G15_095	FROM->TO	G14-057T 345.00 - SUNNYSIDE 345KV CKT 1	717	789	0.0358	113.7574	DUNCAN (DUNCAN) 138/69/13.8KV TRANSFORMER CKT 1
FDNS	00NR	3	16WP	G15_095	FROM->TO	G14-057T 345.00 - SUNNYSIDE 345KV CKT 1	717	789	0.03531	113.7542	GEN334441 1-SABINE UNIT 5
FDNS	00NR	3	16WP	G15_095	FROM->TO	G14-057T 345.00 - SUNNYSIDE 345KV CKT 1	717	789	0.03526	113.7458	LATTA JCT - OIL CENTER 138KV CKT 1
FDNS	00NR	3	16WP	G15_095	FROM->TO	G14-057T 345.00 - SUNNYSIDE 345KV CKT 1	717	789	0.03531	113.7361	P12:161:AEPW-SWPA:BEAVERS:EROGERS5
FDNS	00NR	3	16WP	G15_095	FROM->TO	G14-057T 345.00 - SUNNYSIDE 345KV CKT 1	717	789	0.03352	113.7205	BLANCHARD - MAUD 138KV CKT 1
FDNS	00NR	3	16WP	G15_095	FROM->TO	G14-057T 345.00 - SUNNYSIDE 345KV CKT 1	717	789	0.03533	113.7186	P12:138:AEPW:CATOOSA4:T.S.E.-4
FDNS	00NR	3	16WP	G15_095	FROM->TO	G14-057T 345.00 - SUNNYSIDE 345KV CKT 1	717	789	0.03531	113.709	GEN337653 1-WHITE BLUFF UNIT #2
FDNS	00NR	3	16WP	G15_095	FROM->TO	G14-057T 345.00 - SUNNYSIDE 345KV CKT 1	717	789	0.03588	113.708	6LAYFLD 230.00 - CARROLL 230KV CKT 1
FDNS	00NR	3	16WP	G15_095	FROM->TO	G14-057T 345.00 - SUNNYSIDE 345KV CKT 1	717	789	0.03531	113.7044	GEN334030 1-FRONTIER UNIT 1
FDNS	00NR	3	16WP	G15_095	FROM->TO	G14-057T 345.00 - SUNNYSIDE 345KV CKT 1	717	789	0.03531	113.7028	GEN334031 1-FRONTIER UNIT 2
FDNS	00NR	3	16WP	G15_095	FROM->TO	G14-057T 345.00 - SUNNYSIDE 345KV CKT 1	717	789	0.03531	113.7	GEN300003 1-THOMAS HILL UNIT 3
FDNS	00NR	3	16WP	G15_095	FROM->TO	G14-057T 345.00 - SUNNYSIDE 345KV CKT 1	717	789	0.03531	113.6896	GEN506752 1-LEBROCK GAS 1
FDNS	00NR	3	16WP	G15_095	FROM->TO	G14-057T 345.00 - SUNNYSIDE 345KV CKT 1	717	789	0.03531	113.6894	GEN506753 1-LEBROCK GAS 2
FDNS	00NR	3	16WP	G15_095	FROM->TO	G14-057T 345.00 - SUNNYSIDE 345KV CKT 1	717	789	0.03607	113.6747	FULTON 115 - HOPE 115KV CKT 1
FDNS	00NR	3	16WP	G15_095	FROM->TO	G14-057T 345.00 - SUNNYSIDE 345KV CKT 1	717	789	0.03607	113.6747	FULTON 115 - HOPE 115KV CKT 1
FDNS	00NR	3	16WP	G15_095	FROM->TO	G14-057T 345.00 - SUNNYSIDE 345KV CKT 1	717	789	0.03539	113.6675	8DANIEL8 500.00 - MCKNIGHT 500KV CKT 1
FDNS	00NR	3	16WP	G15_095	FROM->TO	G14-057T 345.00 - SUNNYSIDE 345KV CKT 1	717	789	0.03531	113.6672	P12:161:AEPW:DYESS5:ELMSPRNG:TONTITN5
FDNS	00NR	3	16WP	G15_095	FROM->TO	G14-057T 345.00 - SUNNYSIDE 345KV CKT 1	717	789	0.03531	113.637	GEN515226 1-MUSKOGEE 6G
FDNS	00NR	3	16WP	G15_095	FROM->TO	G14-057T 345.00 - SUNNYSIDE 345KV CKT 1	717	789	0.03531	113.6367	GEN501811 1-RODEMACHER UNIT 1
FDNS	00NR	3	16WP	G15_095	FROM->TO	G14-057T 345.00 - SUNNYSIDE 345KV CKT 1	717	789	0.03531	113.6288	GEN300015 1-1SGPDEL 18.000
FDNS	00NR	3	16WP	G15_095	FROM->TO	G14-057T 345.00 - SUNNYSIDE 345KV CKT 1	717	789	0.03469	113.6265	P12:138:AEPW:CORNVIL4:S.W.S.-4
FDNS	00NR	3	16WP	G15_095	FROM->TO	G14-057T 345.00 - SUNNYSIDE 345KV CKT 1	717	789	0.03531	113.624	GEN337911 1-ARKANSAS NUCLEAR ONE UNIT #2
FDNS	00NR	3	16WP	G15_095	FROM->TO	G14-057T 345.00 - SUNNYSIDE 345KV CKT 1	717	789	0.03531	113.6187	GEN336251 1-NINEMILE POINT UNIT#4
FDNS	00NR	3	16WP	G15_095	FROM->TO	G14-057T 345.00 - SUNNYSIDE 345KV CKT 1	717	789	0.03531	113.618	GEN337652 1-WHITE BLUFF UNIT #1
FDNS	00NR	3	16WP	G15_095	FROM->TO	G14-057T 345.00 - SUNNYSIDE 345KV CKT 1	717	789	0.03531	113.6154	GEN334433 1-SABINE UNIT 3
FDNS	00NR	3	16WP	G15_095	FROM->TO	G14-057T 345.00 - SUNNYSIDE 345KV CKT 1	717	789	0.03531	113.6126	GEN336831 1-BAXTER WILSON SES
FDNS	00NR	3	16WP	G15_095	FROM->TO	G14-057T 345.00 - SUNNYSIDE 345KV CKT 1	717	789	0.03545	113.5975	G15074_T 345.00 - HOYT 345KV CKT 1
FDNS	00NR	3	16WP	G15_095	FROM->TO	G14-057T 345.00 - SUNNYSIDE 345KV CKT 1	717	789	0.03565	113.5963	P12:138:AEPW:CORNVIL4:DUNCAN-4
FDNS	00NR	3	16WP	G15_095	FROM->TO	G14-057T 345.00 - SUNNYSIDE 345KV CKT 1	717	789	0.0358	113.5953	P12:69:WFEC-AEPW:COMANCH2:DUNCAN-2
FDNS	00NR	3	16WP	G15_095	FROM->TO	G14-057T 345.00 - SUNNYSIDE 345KV CKT 1	717	789	0.03531	113.5846	GEN562783 1-G15036_4 0.6900
FDNS	00NR	3	16WP	G15_095	FROM->TO	G14-057T 345.00 - SUNNYSIDE 345KV CKT 1	717	789	0.03531	113.5846	GEN562784 1-G15036_5 0.6900
FDNS	00NR	3	16WP	G15_095	FROM->TO	G14-057T 345.00 - SUNNYSIDE 345KV CKT 1	717	789	0.03167	113.5764	BAILEY4 138.00 - SUNSHINE CANYON 138KV CKT 1
FDNS	00NR	3	16WP	G15_095	FROM->TO	G14-057T 345.00 - SUNNYSIDE 345KV CKT 1	717	789	0.03196	113.5753	TUTTLE - TUTTLE CONOCO TAP 138KV CKT 1
FDNSLock	00NR	3	16WP	G15_095	FROM->TO	G14-057T 345.00 - SUNNYSIDE 345KV CKT 1	717	789	0.03539	113.5721	G15088_T 345.00 - MOORE 345KV CKT 1
FDNS	00NR	3	16WP	G15_095	FROM->TO	G14-057T 345.00 - SUNNYSIDE 345KV CKT 1	717	789	0.0354	113.5699	CIMARRON - CZECH HALL 138KV CKT 1
FDNS	00NR	3	16WP	G15_095	FROM->TO	G14-057T 345.00 - SUNNYSIDE 345KV CKT 1	717	789	0.03545	113.565	G1524G1525 345.00 - THISTLE7 345.00 345KV CKT 1
FDNS	00NR	3	16WP	G15_095	FROM->TO	G14-057T 345.00 - SUNNYSIDE 345KV CKT 1	717	789	0.03545	113.565	G1524G1525 345.00 - THISTLE7 345.00 345KV CKT 2
FDNS	00NR	3	16WP	G15_095	FROM->TO	G14-057T 345.00 - SUNNYSIDE 345KV CKT 1	717	789	0.0347	113.5595	P12:138:AEPW-OGE:WTH_JCT4:JENSEN4
FDNS	00NR	3	16WP	G15_095	FROM->TO	G14-057T 345.00 - SUNNYSIDE 345KV CKT 1	717	789	0.03531	113.5563	GEN505432 1-SIKESTON
FDNS	00NR	3	16WP	G15_095	FROM->TO	G14-057T 345.00 - SUNNYSIDE 345KV CKT 1	717	789	0.03531	113.554	P12:161:AEPW:EROGERS5:ECNTRTN5
FDNS	00NR	3	16WP	G15_095	FROM->TO	G14-057T 345.00 - SUNNYSIDE 345KV CKT 1	717	789	0.03571	113.5536	CIMARRON - SARA 138KV CKT 1
FDNS	00NR	3	16WP	G15_095	FROM->TO	G14-057T 345.00 - SUNNYSIDE 345KV CKT 1	717	789	0.03531	113.5512	GEN515040 1-SEMINOLE 1G
FDNS	00NR	3	16WP	G15_095	FROM->TO	G14-057T 345.00 - SUNNYSIDE 345KV CKT 1	717	789	0.03558	113.545	LAYFLD8 500.00 - MOUNT OLIVE 500KV CKT 1
FDNS	00NR	3	16WP	G15_095	FROM->TO	G14-057T 345.00 - SUNNYSIDE 345KV CKT 1	717	789	0.03558	113.545	LAYFLD8 500.00 - MOUNT OLIVE 500KV CKT 1
FDNS	00NR	3	16WP	G15_095	FROM->TO	G14-057T 345.00 - SUNNYSIDE 345KV CKT 1	717	789	0.03615	113.5433	ARBWIND4 138.00 - CARTER 138KV CKT 1
FDNS	00NR	3	16WP	G15_095	FROM->TO	G14-057T 345.00 - SUNNYSIDE 345KV CKT 1	717	789	0.03531	113.5426	RODEMACHER 230/22.0KV TRANSFORMER CKT 1
FDNS	00NR	3	16WP	G15_095	FROM->TO	G14-057T 345.00 - SUNNYSIDE 345KV CKT 1	717	789	0.0358	113.5415	DUNCAN - TOSCO 69KV CKT 1
FDNS	00NR	3	16WP	G15_095	FROM->TO	G14-057T 345.00 - SUNNYSIDE 345KV CKT 1	717	789	0.03531	113.5409	GEN515223 1-MUSKOGEE 4G
FDNS	00NR	3	16WP	G15_095	FROM->TO	G14-057T 345.00 - SUNNYSIDE 345KV CKT 1	717	789	0.03531	113.5409	GEN515225 1-MUSKOGEE 5G
FDNS	00NR	3	16WP	G15_095	FROM->TO	G14-057T 345.00 - SUNNYSIDE 345KV CKT 1	717	789	0.03434	113.5371	G14_038T 345.00 - Hitchland Interchange 345KV CKT 1
FDNS	00NR	3	16WP	G15_095	FROM->TO	G14-057T 345.00 - SUNNYSIDE 345KV CKT 1	717	789	0.03492	113.5328	P12:138:AEPW:WTHWF4:CLINTJC4
FDNS	00NR	3	16WP	G15_095	FROM->TO	G14-057T 345.00 - SUNNYSIDE 345KV CKT 1	717	789	0.03559	113.5321	MC NIEL 500/115KV TRANSFORMER CKT 1
FDNS	00NR	3	16WP	G15_095	FROM->TO	G14-057T 345.00 - SUNNYSIDE 345KV CKT 1	717	789	0.03554	113.5264	HOT SPRINGS EHV - MAGNET COVE 500KV CKT 1
FDNS	00NR	3	16WP	G15_095	FROM->TO	G14-057T 345.00 - SUNNYSIDE 345KV CKT 1	717	789	0.0359	113.5229	BISMARK - HOT SPRINGS WEST BUS 115KV CKT 1
FDNS	00NR	3	16WP	G15_095	FROM->TO	G14-057T 345.00 - SUNNYSIDE 345KV CKT 1	717	789	0.03531	113.5226	GEN303007 1-1BC2 U2
FDNS	00NR	3	16WP	G15_095	FROM->TO	G14-057T 345.00 - SUNNYSIDE 345KV CKT 1	717	789	0.03531	113.5208	WHITE BLUFF 500/26.0KV TRANSFORMER CKT 1
FDNS	00NR	3	16WP	G15_095	FROM->TO	G14-057T 345.00 - SUNNYSIDE 345KV CKT 1	717	789	0.03531	113.5177	GEN303006 1-1BC2 U1
FDNS	00NR	3	16WP	G15_095	FROM->TO	G14-057T 345.00 - SUNNYSIDE 345KV CKT 1	717	789	0.03576	113.5176	P12:69:AEPW-OMPA:COMANC-2:OMWALTR2
FDNS	00NR	3	16WP	G15_095	FROM->TO	G14-057T 345.00 - SUNNYSIDE 345KV CKT 1	717	789	0.03633	113.5174	SEMINOLE - VANOSTP4 138.00 138KV CKT 1
FDNS	00NR	3	16WP	G15_095	FROM->TO	G14-057T 345.00 - SUNNYSIDE 345KV CKT 1	717	789	0.0358	113.4974	COMANCHE TAP - TOSCO 69KV CKT 1
FDNS	00NR	3	16WP	G15_095	FROM->TO	G14-057T 345.00 - SUNNYSIDE 345KV CKT 1	717	789	0.03196	113.4956	CIMARRON - TUTTLE CONOCO TAP 138KV CKT 1
FDNS	00NR	3	16WP	G15_095	FROM->TO	G14-057T 345.00 - SUNNYSIDE 345KV CKT 1	717	789	0.03531	113.4954	GEN336191 1-LITTLE GYPSY UNIT#3
FDNS	00NR	3	16WP	G15_095	FROM->TO	G14-057T 345.00 - SUNNYSIDE 345KV CKT 1	717	789	0.03661	113.4942	CANADIAN - NOBLE 138KV CKT 1
FDNS	00NR	3	16WP	G15_095	FROM->TO	G14-057T 345.00 - SUNNYSIDE 345KV CKT 1	717	789	0.0354	113.4938	CZECH HALL - XEROX 138KV CKT 1
FDNS	00NR	3	16WP	G15_095	FROM->TO	G14-057T 345.00 - SUNNYSIDE 345KV CKT 1	717	789	0.0354	113.4896	MORGAN - XEROX 138KV CKT 1
FDNS	00NR	3	16WP	G15_095	FROM->TO	G14-057T 345.00 - SUNNYSIDE 345KV CKT 1	717	789	0.03533	113.4871	P12:138:AEPW:N.E.S.-4:CATOOSA4
FDNS	00NR	3	16WP	G15_095	FROM->TO	G14-057T 345.00 - SUNNYSIDE 345KV CKT 1	717	789	0.03531	113.4833	GEN337910 1-ARKANSAS NUCLEAR ONE UNIT #1
FDNS	00NR	3	16WP	G15_095	FROM->TO	G14-057T 345.00 - SUNNYSIDE 345KV CKT 1	717	789	0.03526	113.4805	BUCKNER7 345.00 - SPEARVILLE 345KV CKT 1
FDNS	00NR	3	16WP	G15_095	FROM->TO	G14-057T 345.00 - SUNNYSIDE 345KV CKT 1	717	789	0.03526	113.4805	BUCKNER7 345.00 - SPEARVILLE 345KV CKT 1
FDNS	00NR	3	16WP	G15_095	FROM->TO	G14-057T 345.00 - SUNNYSIDE 345KV CKT 1	717	789	0.03531	113.4774	GEN300010 1-ST FRANCIS UNIT 1
FDNS	00NR	3	16WP	G15_095	FROM->TO	G14-057T 345.00 - SUNNYSIDE 345KV CKT 1	717	789	0.03492	113.4769	P12:138:AEPW:WTHWF4:WTH_SE4
FDNS	00NR	3	16WP	G15_095	FROM->TO	G14-057T 345.00 - SUNNYSIDE 345KV CKT 1	717	789	0.03526	113.473	LASALLE - LATTA JCT 138KV CKT 1
FDNS	00NR	3	16WP	G15_095	FROM->TO	G14-057T 345.00 - SUNNYSIDE 345KV CKT 1	717	789	0.03531	113.4723	NELSON 230/20.0KV TRANSFORMER CKT 1
FDNS	00NR	3	16WP	G15_095	FROM->TO	G14-057T 345.00 - SUNNYSIDE 345KV CKT 1	717	789	0.0359	113.4715	ALPINE AECC - BISMARK 115KV CKT 1
FDNS	00NR	3	16WP	G15_095	FROM->TO	G14-057T 345.00 - SUNNYSIDE 345KV CKT 1	717	789	0.03531	113.4706	GEN335614 1-WILLOW GLENN UNIT#4
FDNS	00NR	3	16WP	G15_095	FROM->TO	G14-057T 345.00 - SUNNYSIDE 345KV CKT 1	717	789	0.0354	113.4666	MORGAN - MUSTANG 138KV CKT 1

SOLUTION	GROUP	SCENARIO	SEASON	SOURCE	DIRECTION	MONITORED ELEMENT	RATEA (MVA)	RATEB(MVA)	TDF	TC%LOADING (% MVA)	CONTINGENCY
FDNS	00NR	3	16WP	G15_095	FROM->TO	G14-057T 345.00 - SUNNYSIDE 345KV CKT 1	717	789	0.03645	113.4645	P12:138:OKGE:3TERM27
FDNS	00NR	3	16WP	G15_095	FROM->TO	G14-057T 345.00 - SUNNYSIDE 345KV CKT 1	717	789	0.03531	113.4591	GEN303008 1-1BC2 U3
FDNS	00NR	3	16WP	G15_095	FROM->TO	G14-057T 345.00 - SUNNYSIDE 345KV CKT 1	717	789	0.03558	113.4492	FINNEY SWITCHING STATION - HOLCOMB 345KV CKT 1
FDNS	00NR	3	16WP	G15_095	FROM->TO	G14-057T 345.00 - SUNNYSIDE 345KV CKT 1	717	789	0.03558	113.4492	FINNEY SWITCHING STATION - HOLCOMB 345KV CKT 1
FDNS	00NR	3	16WP	G15_095	FROM->TO	G14-057T 345.00 - SUNNYSIDE 345KV CKT 1	717	789	0.0358	113.4348	COMANCHE - COMANCHE TAP 69KV CKT 1
FDNS	00NR	3	16WP	G15_095	FROM->TO	G14-057T 345.00 - SUNNYSIDE 345KV CKT 1	717	789	0.03538	113.4347	CYPRESS - HARTBURG 500KV CKT 1
FDNS	00NR	3	16WP	G15_095	FROM->TO	G14-057T 345.00 - SUNNYSIDE 345KV CKT 1	717	789	0.03531	113.4325	GEN336170 1-GULF OXY U4
FDNS	00NR	3	16WP	G15_095	FROM->TO	G14-057T 345.00 - SUNNYSIDE 345KV CKT 1	717	789	0.0359	113.4287	ALPINE AECC - AMITY SS 115KV CKT 1
FDNS	00NR	3	16WP	G15_095	FROM->TO	G14-057T 345.00 - SUNNYSIDE 345KV CKT 1	717	789	0.03531	113.4284	GEN300011 1-ST FRANCIS UNIT 2
FDNS	00NR	3	16WP	G15_095	FROM->TO	G14-057T 345.00 - SUNNYSIDE 345KV CKT 1	717	789	0.03531	113.4275	GEN336464 1-MICHOUD UNIT #3
FDNS	00NR	3	16WP	G15_095	FROM->TO	G14-057T 345.00 - SUNNYSIDE 345KV CKT 1	717	789	0.03403	113.4253	CHISHOLM6 230.00 - ELK CITY 230KV 230KV CKT 1
FDNS	00NR	3	16WP	G15_095	FROM->TO	G14-057T 345.00 - SUNNYSIDE 345KV CKT 1	717	789	0.04105	113.4235	CANADIAN RIVER - PITTSBURG 345KV CKT 1
FDNS	00NR	3	16WP	G15_095	FROM->TO	G14-057T 345.00 - SUNNYSIDE 345KV CKT 1	717	789	0.04105	113.4235	CANADIAN RIVER - PITTSBURG 345KV CKT 1
FDNS	00NR	3	16WP	G15_095	FROM->TO	G14-057T 345.00 - SUNNYSIDE 345KV CKT 1	717	789	0.03531	113.4182	8CAJUN2 500/24.0KV TRANSFORMER CKT 1
FDNS	00NR	3	16WP	G15_095	FROM->TO	G14-057T 345.00 - SUNNYSIDE 345KV CKT 1	717	789	0.03403	113.4176	ELK CITY 230KV (ELKCTY-6) 230/138/13.8KV TRANSFORMER CKT 1
FDNS	00NR	3	16WP	G15_095	FROM->TO	G14-057T 345.00 - SUNNYSIDE 345KV CKT 1	717	789	0.03403	113.4176	ELK CITY 230KV (ELKCTY-6) 230/138/13.8KV TRANSFORMER CKT 1
FDNS	00NR	3	16WP	G15_095	FROM->TO	G14-057T 345.00 - SUNNYSIDE 345KV CKT 1	717	789	0.04184	113.4121	GRACEMONT (BANK 1) 345/138/13.8KV TRANSFORMER CKT 1
FDNS	00NR	3	16WP	G15_095	FROM->TO	G14-057T 345.00 - SUNNYSIDE 345KV CKT 1	717	789	0.03167	113.4106	BAILEY4 138.00 - WESTMOORE 138KV CKT 1
FDNS	00NR	3	16WP	G15_095	FROM->TO	G14-057T 345.00 - SUNNYSIDE 345KV CKT 1	717	789	0.03619	113.4036	DRAPER LAKE - SEMINOLE 345KV CKT 1
FDNS	00NR	3	16WP	G15_095	FROM->TO	G14-057T 345.00 - SUNNYSIDE 345KV CKT 1	717	789	0.03619	113.4036	DRAPER LAKE - SEMINOLE 345KV CKT 2
FDNS	00NR	3	16WP	G15_095	FROM->TO	G14-057T 345.00 - SUNNYSIDE 345KV CKT 1	717	789	0.03661	113.4027	NOBLE - PURCELL4 138.00 138KV CKT 1
FDNS	00NR	3	16WP	G15_095	FROM->TO	G14-057T 345.00 - SUNNYSIDE 345KV CKT 1	717	789	0.03545	113.3955	HOYT - STRANGER CREEK 345KV CKT 1
FDNS	00NR	3	16WP	G15_095	FROM->TO	G14-057T 345.00 - SUNNYSIDE 345KV CKT 1	717	789	0.03544	113.3936	7JASPER 345.00 - BLACKBERRY 345KV CKT 1
FDNS	00NR	3	16WP	G15_095	FROM->TO	G14-057T 345.00 - SUNNYSIDE 345KV CKT 1	717	789	0.03531	113.393	GEN300016 1-1G1GPDEL 18.000
FDNS	00NR	3	16WP	G15_095	FROM->TO	G14-057T 345.00 - SUNNYSIDE 345KV CKT 1	717	789	0.03531	113.3926	P12:138:AEPW:R.S.S.-4:S.HUD.-4
FDNS	00NR	3	16WP	G15_095	FROM->TO	G14-057T 345.00 - SUNNYSIDE 345KV CKT 1	717	789	0.03531	113.3866	GEN501910 1-ACADIA UNIT ST1
FDNS	00NR	3	16WP	G15_095	FROM->TO	G14-057T 345.00 - SUNNYSIDE 345KV CKT 1	717	789	0.04371	113.3762	G15095_T 138.00 - ROSE_VALLEY 138.00 138KV CKT 1
FDNS	00NR	3	16WP	G15_095	FROM->TO	G14-057T 345.00 - SUNNYSIDE 345KV CKT 1	717	789	0.03531	113.3742	GEN337041 1-GERALD ANDRUS
FDNS	00NR	3	16WP	G15_095	FROM->TO	G14-057T 345.00 - SUNNYSIDE 345KV CKT 1	717	789	0.03571	113.3698	SARA - STHLAKE4 138.00 138KV CKT 1
FDNS	00NR	3	16WP	G15_095	FROM->TO	G14-057T 345.00 - SUNNYSIDE 345KV CKT 1	717	789	0.03545	113.3592	G15074_T 345.00 - JEFFREY ENERGY CENTER 345KV CKT 1
FDNS	00NR	3	16WP	G15_095	FROM->TO	G14-057T 345.00 - SUNNYSIDE 345KV CKT 1	717	789	0.03552	113.3574	ETTA (DUKE HOTSPRINGS) - MC NIEL 500KV CKT 1
FDNS	00NR	3	16WP	G15_095	FROM->TO	G14-057T 345.00 - SUNNYSIDE 345KV CKT 1	717	789	0.03531	113.3546	P12:138:AEPW:YARCH-S4:T.S.E.-4
FDNS	00NR	3	16WP	G15_095	FROM->TO	G14-057T 345.00 - SUNNYSIDE 345KV CKT 1	717	789	0.03552	113.3531	WALTERS - WALTERS 69KV CKT 1
FDNS	00NR	3	16WP	G15_095	FROM->TO	G14-057T 345.00 - SUNNYSIDE 345KV CKT 1	717	789	0.03312	113.3511	ANADARKO - SEQUOYAHJ4 138.00 138KV CKT 1
FDNS	00NR	3	16WP	G15_095	FROM->TO	G14-057T 345.00 - SUNNYSIDE 345KV CKT 1	717	789	0.03531	113.3484	P12:138:AEPW:BA_71ST4:T.S.E.-4
FDNS	00NR	3	16WP	G15_095	FROM->TO	G14-057T 345.00 - SUNNYSIDE 345KV CKT 1	717	789	0.03531	113.3477	P12:69:AEPW:NROGERS2:ECNTRTN2
FDNS	00NR	3	16WP	G15_095	FROM->TO	G14-057T 345.00 - SUNNYSIDE 345KV CKT 1	717	789	0.03312	113.3455	CORN TAP - SEQUOYAHJ4 138.00 138KV CKT 1
FDNS	00NR	3	16WP	G15_095	FROM->TO	G14-057T 345.00 - SUNNYSIDE 345KV CKT 1	717	789	0.03571	113.3421	MCCLAIN - STHLAKE4 138.00 138KV CKT 1
FDNS	00NR	3	16WP	G15_095	FROM->TO	G14-057T 345.00 - SUNNYSIDE 345KV CKT 1	717	789	0.03531	113.3405	SABINE 230/24.0KV TRANSFORMER CKT 1
FDNS	00NR	3	16WP	G15_095	FROM->TO	G14-057T 345.00 - SUNNYSIDE 345KV CKT 1	717	789	0.03531	113.3362	GEN336801 1-BAXTER WILSON UNIT #1
FDNS	00NR	3	16WP	G15_095	FROM->TO	G14-057T 345.00 - SUNNYSIDE 345KV CKT 1	717	789	0.03465	113.3355	WEATHERFORD JCT. - WEATHERFORD SOUTHEAST 138KV CKT 1
FDNS	00NR	3	16WP	G15_095	FROM->TO	G14-057T 345.00 - SUNNYSIDE 345KV CKT 1	717	789	0.03465	113.3355	WEATHERFORD JCT. - WEATHERFORD SOUTHEAST 138KV CKT 1
FDNS	00NR	3	16WP	G15_095	FROM->TO	G14-057T 345.00 - SUNNYSIDE 345KV CKT 1	717	789	0.03558	113.3323	BLACKBERRY - NEOSHO 345KV CKT 1
FDNS	00NR	3	16WP	G15_095	FROM->TO	G14-057T 345.00 - SUNNYSIDE 345KV CKT 1	717	789	0.03576	113.3317	LAWTON RELIFT TAP - OMPA-WALTERS 69KV CKT 1
FDNS	00NR	3	16WP	G15_095	FROM->TO	G14-057T 345.00 - SUNNYSIDE 345KV CKT 1	717	789	0.03543	113.3282	7LUTESVIL 345.00 - 7ST FRANC 345.00 345KV CKT 1
FDNS	00NR	3	16WP	G15_095	FROM->TO	G14-057T 345.00 - SUNNYSIDE 345KV CKT 1	717	789	0.03531	113.3247	FRONTIER 345/18.0KV TRANSFORMER CKT 1
FDNS	00NR	3	16WP	G15_095	FROM->TO	G14-057T 345.00 - SUNNYSIDE 345KV CKT 1	717	789	0.03549	113.3235	SWISSVALE - WEST GARDNER 345KV CKT 1
FDNS	00NR	3	16WP	G15_095	FROM->TO	G14-057T 345.00 - SUNNYSIDE 345KV CKT 1	717	789	0.03531	113.323	FRONTIER 345/18.0KV TRANSFORMER CKT 1
FDNS	00NR	3	16WP	G15_095	FROM->TO	G14-057T 345.00 - SUNNYSIDE 345KV CKT 1	717	789	0.0364	113.3228	ENOWILT - LONE OAK 138KV CKT 1
FDNS	00NR	3	16WP	G15_095	FROM->TO	G14-057T 345.00 - SUNNYSIDE 345KV CKT 1	717	789	0.04371	113.3201	NOEL_SW 138.00 - ROSE_VALLEY 138.00 138KV CKT 1
FDNS	00NR	3	16WP	G15_095	FROM->TO	G14-057T 345.00 - SUNNYSIDE 345KV CKT 1	717	789	0.03465	113.3193	NORGE ROAD - SOUTHWESTERN STATION 138KV CKT 1
FDNS	00NR	3	16WP	G15_095	FROM->TO	G14-057T 345.00 - SUNNYSIDE 345KV CKT 1	717	789	0.03465	113.3193	NORGE ROAD - SOUTHWESTERN STATION 138KV CKT 1
FDNS	00NR	3	16WP	G15_095	FROM->TO	G14-057T 345.00 - SUNNYSIDE 345KV CKT 1	717	789	0.03531	113.3188	GEN512688 2-GRDA1 GSU2 22
FDNS	00NR	3	16WP	G15_095	FROM->TO	G14-057T 345.00 - SUNNYSIDE 345KV CKT 1	717	789	0.03669	113.3185	ARBUCKLE - VANOSTP4 138.00 138KV CKT 1
FDNS	00NR	3	16WP	G15_095	FROM->TO	G14-057T 345.00 - SUNNYSIDE 345KV CKT 1	717	789	0.03526	113.3171	LASALLE - STONEWAL LH138.00 138KV CKT 1
FDNS	00NR	3	16WP	G15_095	FROM->TO	G14-057T 345.00 - SUNNYSIDE 345KV CKT 1	717	789	0.03531	113.3165	P12:161:AEPW:CHAMSPR5:FARMING5
FDNS	00NR	3	16WP	G15_095	FROM->TO	G14-057T 345.00 - SUNNYSIDE 345KV CKT 1	717	789	0.0364	113.3139	ENOWILT - SARDIS 138KV CKT 1
FDNS	00NR	3	16WP	G15_095	FROM->TO	G14-057T 345.00 - SUNNYSIDE 345KV CKT 1	717	789	0.03587	113.3124	P12:138:OKGE-AEPW:JENSEN4:REDROCKRD4
FDNS	00NR	3	16WP	G15_095	FROM->TO	G14-057T 345.00 - SUNNYSIDE 345KV CKT 1	717	789	0.03566	113.312	P12:138:AEPW-OGE:SHIDLER4:OSAGE 4
FDNS	00NR	3	16WP	G15_095	FROM->TO	G14-057T 345.00 - SUNNYSIDE 345KV CKT 1	717	789	0.03607	113.3118	HOPE - MCNAB REC 115KV CKT 1
FDNS	00NR	3	16WP	G15_095	FROM->TO	G14-057T 345.00 - SUNNYSIDE 345KV CKT 1	717	789	0.03566	113.3064	EMPORIA ENERGY CENTER - G14_001T 345.00 345KV CKT 1
FDNS	00NR	3	16WP	G15_095	FROM->TO	G14-057T 345.00 - SUNNYSIDE 345KV CKT 1	717	789	0.03607	113.3033	P12:115:AEPW:TURK3:HOPE3
FDNS	00NR	3	16WP	G15_095	FROM->TO	G14-057T 345.00 - SUNNYSIDE 345KV CKT 1	717	789	0.03526	113.3024	STONEWAL LH138.00 - TUPELO TAP 138KV CKT 1
FDNS	00NR	3	16WP	G15_095	FROM->TO	G14-057T 345.00 - SUNNYSIDE 345KV CKT 1	717	789	0.03578	113.2971	BENTON - WICHITA 345KV CKT 1
FDNS	00NR	3	16WP	G15_095	FROM->TO	G14-057T 345.00 - SUNNYSIDE 345KV CKT 1	717	789	0.03753	113.2951	CLEO CORNER - CLEOPLT4 138.00 138KV CKT 1
FDNS	00NR	3	16WP	G15_095	FROM->TO	G14-057T 345.00 - SUNNYSIDE 345KV CKT 1	717	789	0.03547	113.2889	8WNEWMADRID 500.00 - DELL 500 500KV CKT 1
FDNS	00NR	3	16WP	G15_095	FROM->TO	G14-057T 345.00 - SUNNYSIDE 345KV CKT 1	717	789	0.03531	113.2876	LEWIS CREEK SWITCHYARD 138/22.0KV TRANSFORMER CKT 1
FDNS	00NR	3	16WP	G15_095	FROM->TO	G14-057T 345.00 - SUNNYSIDE 345KV CKT 1	717	789	0.03531	113.2872	GEN505616 1-BROKEN BOW
FDNS	00NR	3	16WP	G15_095	FROM->TO	G14-057T 345.00 - SUNNYSIDE 345KV CKT 1	717	789	0.03465	113.2857	P12:138:AEPW:REDROCKRD4:WTH_JCT4
FDNS	00NR	3	16WP	G15_095	FROM->TO	G14-057T 345.00 - SUNNYSIDE 345KV CKT 1	717	789	0.03753	113.2836	CLEOPLT4 138.00 - MEN TAP 138KV CKT 1
FDNS	00NR	3	16WP	G15_095	FROM->TO	G14-057T 345.00 - SUNNYSIDE 345KV CKT 1	717	789	0.03531	113.2828	LEWIS CREEK SWITCHYARD 138/22.0KV TRANSFORMER CKT 1
FDNS	00NR	3	16WP	G15_095	FROM->TO	G14-057T 345.00 - SUNNYSIDE 345KV CKT 1	717	789	0.03607	113.2811	MCNAB REC - Turk 115 115KV CKT 1
FDNS	00NR	3	16WP	G15_095	FROM->TO	G14-057T 345.00 - SUNNYSIDE 345KV CKT 1	717	789	0.03607	113.2811	TURK (TURK 1) 138/115/13.2KV TRANSFORMER CKT 1
FDNS	00NR	3	16WP	G15_095	FROM->TO	G14-057T 345.00 - SUNNYSIDE 345KV CKT 1	717	789	0.03607	113.2811	TURK (TURK 1) 138/115/13.2KV TRANSFORMER CKT 1
FDNS	00NR	3	16WP	G15_095	FROM->TO	G14-057T 345.00 - SUNNYSIDE 345KV CKT 1	717	789	0.0364	113.2796	CLAYTON - SARDIS 138KV CKT 1
FDNS	00NR	3	16WP	G15_095	FROM->TO	G14-057T 345.00 - SUNNYSIDE 345KV CKT 1	717	789	0.03469	113.2795	SOUTHWESTERN STATION - VERDEN 138KV CKT 1
FDNS	00NR	3	16WP	G15_095	FROM->TO	G14-057T 345.00 - SUNNYSIDE 345KV CKT 1	717	789	0.03574	113.2784	COUCH SES - MC NIEL 115KV CKT 1
FDNS	00NR	3	16WP	G15_095	FROM->TO	G14-057T 345.00 - SUNNYSIDE 345KV CKT 1	717	789	0.03434	113.2751	G14_038T 345.00 - POTTER COUNTY INTERCHANGE 345KV CKT 1
FDNS	00NR	3	16WP	G15_095	FROM->TO	G14-057T 345.00 - SUNNYSIDE 345KV CKT 1	717	789	0.03753	113.2735	IMO TAP - MEN TAP 138KV CKT 1

SOLUTION	GROUP	SCENARIO	SEASON	SOURCE	DIRECTION	MONITORED ELEMENT	RATEA (MVA)	RATEB(MVA)	TDF	TC%LOADING (% MVA)	CONTINGENCY
FDNS	00NR	3	16WP	G15_095	FROM->TO	G14-057T 345.00 - SUNNYSIDE 345KV CKT 1	717	789	0.03576	113.2659	OMPA-WALTERS - WALTERS 69KV CKT 1
FDNS	00NR	3	16WP	G15_095	FROM->TO	G14-057T 345.00 - SUNNYSIDE 345KV CKT 1	717	789	0.03576	113.2659	OMPA-WALTERS - WALTERS 69KV CKT 1
FDNS	00NR	3	16WP	G15_095	FROM->TO	G14-057T 345.00 - SUNNYSIDE 345KV CKT 1	717	789	0.03531	113.2631	GEN501970 1-EVANGELINE UNIT 7
FDNS	00NR	3	16WP	G15_095	FROM->TO	G14-057T 345.00 - SUNNYSIDE 345KV CKT 1	717	789	0.03529	113.2597	P12:138:OKGE:3TERM12
FDNS	00NR	3	16WP	G15_095	FROM->TO	G14-057T 345.00 - SUNNYSIDE 345KV CKT 1	717	789	0.03469	113.2593	NORTH 29TH CHICKASHA - VERDEN 138KV CKT 1
FDNS	00NR	3	16WP	G15_095	FROM->TO	G14-057T 345.00 - SUNNYSIDE 345KV CKT 1	717	789	0.03167	113.2549	FRANKLIN SW - WESTMOORE 138KV CKT 1
FDNS	00NR	3	16WP	G15_095	FROM->TO	G14-057T 345.00 - SUNNYSIDE 345KV CKT 1	717	789	0.03552	113.254	P12:69:WFEC-AEPW:COMANCH2:WALTRS-2
FDNS	00NR	3	16WP	G15_095	FROM->TO	G14-057T 345.00 - SUNNYSIDE 345KV CKT 1	717	789	0.03547	113.2526	EMPORIA ENERGY CENTER - SWISSVALE 345KV CKT 1
FDNS	00NR	3	16WP	G15_095	FROM->TO	G14-057T 345.00 - SUNNYSIDE 345KV CKT 1	717	789	0.0364	113.2521	P12:138:AEPW-SWPA:LONEOAK4:BRKNBW4
FDNS	00NR	3	16WP	G15_095	FROM->TO	G14-057T 345.00 - SUNNYSIDE 345KV CKT 1	717	789	0.03531	113.2509	GEN334392 1-EXXON MOBIL IPP 1
FDNS	00NR	3	16WP	G15_095	FROM->TO	G14-057T 345.00 - SUNNYSIDE 345KV CKT 1	717	789	0.03565	113.2458	MORISNT4 138.00 - STILLWATER 138KV CKT 1
FDNS	00NR	3	16WP	G15_095	FROM->TO	G14-057T 345.00 - SUNNYSIDE 345KV CKT 1	717	789	0.03531	113.2443	GEN334393 1-EXXON MOBIL IPP 2
FDNS	00NR	3	16WP	G15_095	FROM->TO	G14-057T 345.00 - SUNNYSIDE 345KV CKT 1	717	789	0.03531	113.2443	GEN334394 1-EXXON MOBIL IPP 3
FDNS	00NR	3	16WP	G15_095	FROM->TO	G14-057T 345.00 - SUNNYSIDE 345KV CKT 1	717	789	0.03566	113.242	G14_001T 345.00 - WICHITA 345KV CKT 1
FDNS	00NR	3	16WP	G15_095	FROM->TO	G14-057T 345.00 - SUNNYSIDE 345KV CKT 1	717	789	0.03531	113.2419	GEN659125 1-COVEY
FDNS	00NR	3	16WP	G15_095	FROM->TO	G14-057T 345.00 - SUNNYSIDE 345KV CKT 1	717	789	0.03567	113.2403	P12:138:OKGE:3TERM2
FDNS	00NR	3	16WP	G15_095	FROM->TO	G14-057T 345.00 - SUNNYSIDE 345KV CKT 1	717	789	0.0364	113.2392	CLAYTON - NASHOBA 138KV CKT 1
FDNS	00NR	3	16WP	G15_095	FROM->TO	G14-057T 345.00 - SUNNYSIDE 345KV CKT 1	717	789	0.03492	113.2392	WEATHERFORD TAP - WEATHERFORD WIND FARM 138KV CKT 1
FDNS	00NR	3	16WP	G15_095	FROM->TO	G14-057T 345.00 - SUNNYSIDE 345KV CKT 1	717	789	0.03531	113.2373	GEN509394 1-FLINT CREEK
FDNS	00NR	3	16WP	G15_095	FROM->TO	G14-057T 345.00 - SUNNYSIDE 345KV CKT 1	717	789	0.03531	113.2355	GEN336222 1-LITTLE GYPSY UNIT#2
FDNS	00NR	3	16WP	G15_095	FROM->TO	G14-057T 345.00 - SUNNYSIDE 345KV CKT 1	717	789	0.03526	113.2354	FRANKLIN - FRANKLIN SW 138KV CKT 1
FDNS	00NR	3	16WP	G15_095	FROM->TO	G14-057T 345.00 - SUNNYSIDE 345KV CKT 1	717	789	0.03526	113.2312	BUCKNER7 345.00 - HOLCOMB 345KV CKT 1
FDNS	00NR	3	16WP	G15_095	FROM->TO	G14-057T 345.00 - SUNNYSIDE 345KV CKT 1	717	789	0.03526	113.2312	BUCKNER7 345.00 - HOLCOMB 345KV CKT 1
FDNS	00NR	3	16WP	G15_095	FROM->TO	G14-057T 345.00 - SUNNYSIDE 345KV CKT 1	717	789	0.03532	113.2279	P12:138:AEPW:R.S.S-4:T.P.S.-4
FDNS	00NR	3	16WP	G15_095	FROM->TO	G14-057T 345.00 - SUNNYSIDE 345KV CKT 1	717	789	0.0364	113.2263	BETHEL - NASHOBA 138KV CKT 1
FDNS	00NR	3	16WP	G15_095	FROM->TO	G14-057T 345.00 - SUNNYSIDE 345KV CKT 1	717	789	0.03454	113.2253	MARIETTA - MARIETTA4 138.00 138KV CKT 1
FDNS	00NR	3	16WP	G15_095	FROM->TO	G14-057T 345.00 - SUNNYSIDE 345KV CKT 1	717	789	0.0359	113.2238	CLARKSVILLE - ONETA 345KV CKT 1
FDNS	00NR	3	16WP	G15_095	FROM->TO	G14-057T 345.00 - SUNNYSIDE 345KV CKT 1	717	789	0.0359	113.2238	CLARKSVILLE - ONETA 345KV CKT 1
FDNS	00NR	3	16WP	G15_095	FROM->TO	G14-057T 345.00 - SUNNYSIDE 345KV CKT 1	717	789	0.03531	113.2174	GEN506749 1-EASTMAN GENERATION A
FDNS	00NR	3	16WP	G15_095	FROM->TO	G14-057T 345.00 - SUNNYSIDE 345KV CKT 1	717	789	0.03531	113.2146	GEN334432 1-SABINE UNIT 2
FDNS	00NR	3	16WP	G15_095	FROM->TO	G14-057T 345.00 - SUNNYSIDE 345KV CKT 1	717	789	0.03546	113.2145	7JASPER 345.00 - MORGAN 345KV CKT 1
FDNS	00NR	3	16WP	G15_095	FROM->TO	G14-057T 345.00 - SUNNYSIDE 345KV CKT 1	717	789	0.03531	113.2145	GEN334431 1-SABINE UNIT 1
FDNS	00NR	3	16WP	G15_095	FROM->TO	G14-057T 345.00 - SUNNYSIDE 345KV CKT 1	717	789	0.03465	113.2094	HINTON - WEATHERFORD JCT. 138KV CKT 1
FDNS	00NR	3	16WP	G15_095	FROM->TO	G14-057T 345.00 - SUNNYSIDE 345KV CKT 1	717	789	0.03531	113.2073	GEN501971 1-EVANGELINE UNIT 7-1
FDNS	00NR	3	16WP	G15_095	FROM->TO	G14-057T 345.00 - SUNNYSIDE 345KV CKT 1	717	789	0.03531	113.2073	GEN501972 1-EVANGELINE UNIT 7-2
FDNS	00NR	3	16WP	G15_095	FROM->TO	G14-057T 345.00 - SUNNYSIDE 345KV CKT 1	717	789	0.03531	113.2066	GEN336152 1-WATERFORD UNIT#2
FDNS	00NR	3	16WP	G15_095	FROM->TO	G14-057T 345.00 - SUNNYSIDE 345KV CKT 1	717	789	0.03531	113.2056	GEN336151 1-WATERFORD UNIT#1
FDNS	00NR	3	16WP	G15_095	FROM->TO	G14-057T 345.00 - SUNNYSIDE 345KV CKT 1	717	789	0.03531	113.2044	P12:138:AEPW:R.S.S.-4:R:96YALE-4
FDNS	00NR	3	16WP	G15_095	FROM->TO	G14-057T 345.00 - SUNNYSIDE 345KV CKT 1	717	789	0.036	113.2038	CLINTON JUNCTION - ELK CITY 138KV CKT 1
FDNS	00NR	3	16WP	G15_095	FROM->TO	G14-057T 345.00 - SUNNYSIDE 345KV CKT 1	717	789	0.036	113.2038	CLINTON JUNCTION - ELK CITY 138KV CKT 1
FDNS	00NR	3	16WP	G15_095	FROM->TO	G14-057T 345.00 - SUNNYSIDE 345KV CKT 1	717	789	0.03465	113.2005	CORNVILLE - NORGE ROAD 138KV CKT 1
FDNS	00NR	3	16WP	G15_095	FROM->TO	G14-057T 345.00 - SUNNYSIDE 345KV CKT 1	717	789	0.03465	113.2005	CORNVILLE - NORGE ROAD 138KV CKT 1
FDNS	00NR	3	16WP	G15_095	FROM->TO	G14-057T 345.00 - SUNNYSIDE 345KV CKT 1	717	789	0.03661	113.1938	PURCELL4 138.00 - WALNUT CREEK 138KV CKT 1
FDNS	00NR	3	16WP	G15_095	FROM->TO	G14-057T 345.00 - SUNNYSIDE 345KV CKT 1	717	789	0.03558	113.1938	FINNEY SWITCHING STATION - WALKTAP7 345.00 345KV CKT 1
FDNS	00NR	3	16WP	G15_095	FROM->TO	G14-057T 345.00 - SUNNYSIDE 345KV CKT 1	717	789	0.03558	113.1938	FINNEY SWITCHING STATION - WALKTAP7 345.00 345KV CKT 1
FDNS	00NR	3	16WP	G15_095	FROM->TO	G14-057T 345.00 - SUNNYSIDE 345KV CKT 1	717	789	0.03469	113.1935	CORNVILLE - NORTH 29TH CHICKASHA 138KV CKT 1
FDNS	00NR	3	16WP	G15_095	FROM->TO	G14-057T 345.00 - SUNNYSIDE 345KV CKT 1	717	789	0.03531	113.189	P12:138:AEPW:MOHAWK4:T.NO--4
FDNS	00NR	3	16WP	G15_095	FROM->TO	G14-057T 345.00 - SUNNYSIDE 345KV CKT 1	717	789	0.03531	113.1839	GEN501912 1-ACADIA UNIT CT1B
FDNS	00NR	3	16WP	G15_095	FROM->TO	G14-057T 345.00 - SUNNYSIDE 345KV CKT 1	717	789	0.03554	113.1837	G13-010T 345.00 - POST ROCK 345KV CKT 1
FDNS	00NR	3	16WP	G15_095	FROM->TO	G14-057T 345.00 - SUNNYSIDE 345KV CKT 1	717	789	0.03531	113.1832	GEN501911 1-ACADIA UNIT CT1A
FDNS	00NR	3	16WP	G15_095	FROM->TO	G14-057T 345.00 - SUNNYSIDE 345KV CKT 1	717	789	0.03531	113.1825	ST FRANCIS - ST FRANCIS 1 161KV CKT Z1
FDNS	00NR	3	16WP	G15_095	FROM->TO	G14-057T 345.00 - SUNNYSIDE 345KV CKT 1	717	789	0.03546	113.181	HAMMETT TAP - HORSESHOE LAKE 138KV CKT 1
FDNS	00NR	3	16WP	G15_095	FROM->TO	G14-057T 345.00 - SUNNYSIDE 345KV CKT 1	717	789	0.0356	113.1799	LAYFLD8 500.00 (LAYFLD AUTO) 500/230/13.8KV TRANSFORMER CKT 1
FDNS	00NR	3	16WP	G15_095	FROM->TO	G14-057T 345.00 - SUNNYSIDE 345KV CKT 1	717	789	0.0356	113.1799	LAYFLD8 500.00 (LAYFLD AUTO) 500/230/13.8KV TRANSFORMER CKT 1
FDNS	00NR	3	16WP	G15_095	FROM->TO	G14-057T 345.00 - SUNNYSIDE 345KV CKT 1	717	789	0.03567	113.1784	P12:138:AEPW:OKMULGE4:R.S.S-4
FDNS	00NR	3	16WP	G15_095	FROM->TO	G14-057T 345.00 - SUNNYSIDE 345KV CKT 1	717	789	0.03658	113.1736	ARBUCKLE - MILLCREEK 138KV CKT 1
FDNS	00NR	3	16WP	G15_095	FROM->TO	G14-057T 345.00 - SUNNYSIDE 345KV CKT 1	717	789	0.03531	113.1727	SABINE 230/22.0KV TRANSFORMER CKT 1
FDNS	00NR	3	16WP	G15_095	FROM->TO	G14-057T 345.00 - SUNNYSIDE 345KV CKT 1	717	789	0.0364	113.1722	BETHEL - BROKEN BOW 138KV CKT 1
FDNS	00NR	3	16WP	G15_095	FROM->TO	G14-057T 345.00 - SUNNYSIDE 345KV CKT 1	717	789	0.0359	113.1713	AMITY SS - MURFREESBORO EAST (AECC) 115KV CKT 1
FDNS	00NR	3	16WP	G15_095	FROM->TO	G14-057T 345.00 - SUNNYSIDE 345KV CKT 1	717	789	0.03501	113.1701	FLETCHER - MARLOW JCT 69KV CKT 1
FDNS	00NR	3	16WP	G15_095	FROM->TO	G14-057T 345.00 - SUNNYSIDE 345KV CKT 1	717	789	0.03553	113.1658	P12:138:OKGE:3TERM47
FDNS	00NR	3	16WP	G15_095	FROM->TO	G14-057T 345.00 - SUNNYSIDE 345KV CKT 1	717	789	0.03496	113.1648	P12:138:WFEC-AEPW:ELKCTY-4:ERICK4
FDNS	00NR	3	16WP	G15_095	FROM->TO	G14-057T 345.00 - SUNNYSIDE 345KV CKT 1	717	789	0.03531	113.1593	GEN336242 1-1NMIL ST1 18.000
FDNS	00NR	3	16WP	G15_095	FROM->TO	G14-057T 345.00 - SUNNYSIDE 345KV CKT 1	717	789	0.03465	113.1531	HINTON - REDROCKRD4 138.00 138KV CKT 1
FDNS	00NR	3	16WP	G15_095	FROM->TO	G14-057T 345.00 - SUNNYSIDE 345KV CKT 1	717	789	0.03492	113.1518	WEATHERFORD SOUTHEAST - WEATHERFORD TAP 138KV CKT 1
FDNS	00NR	3	16WP	G15_095	FROM->TO	G14-057T 345.00 - SUNNYSIDE 345KV CKT 1	717	789	0.03433	113.1417	CIMARRON - NORTHWEST 345KV CKT 1
FDNS	00NR	3	16WP	G15_095	FROM->TO	G14-057T 345.00 - SUNNYSIDE 345KV CKT 1	717	789	0.03574	113.1395	SEMINOLE (SEMINOL2) 345/138/14.4KV TRANSFORMER CKT 1
FDNS	00NR	3	16WP	G15_095	FROM->TO	G14-057T 345.00 - SUNNYSIDE 345KV CKT 1	717	789	0.03531	112.6917	803-OKLAUNION
FDNS	00NR	3	16WP	G15_095	FROM->TO	G14-057T 345.00 - SUNNYSIDE 345KV CKT 1	717	789	0.03506	112.3105	JOHNSON COUNTY - RUSSETT 138KV CKT 1
FDNS	00NR	3	16WP	G15_095	FROM->TO	G14-057T 345.00 - SUNNYSIDE 345KV CKT 1	717	789	0.03717	112.305	MAYSVLT4 138.00 - PRAIRIE POINT 138KV CKT 1
FDNS	00NR	3	16WP	G15_095	FROM->TO	G14-057T 345.00 - SUNNYSIDE 345KV CKT 1	717	789	0.03422	112.3037	NORTHWEST - SPRING CREEK 345KV CKT 1
FDNS	00NR	3	16WP	G15_095	FROM->TO	G14-057T 345.00 - SUNNYSIDE 345KV CKT 1	717	789	0.03508	112.2986	GLASSES - MADILL INDUSTRIAL TAP 138KV CKT 1
FDNS	00NR	3	16WP	G15_095	FROM->TO	G14-057T 345.00 - SUNNYSIDE 345KV CKT 1	717	789	0.03422	112.2965	SOONER - SPRING CREEK 345KV CKT 1
FDNS	00NR	3	16WP	G15_095	FROM->TO	G14-057T 345.00 - SUNNYSIDE 345KV CKT 1	717	789	0.03531	112.2764	GEN562772 1-G15034_3 0.6900
FDNS	00NR	3	16WP	G15_095	FROM->TO	G14-057T 345.00 - SUNNYSIDE 345KV CKT 1	717	789	0.03531	112.2677	GEN521103 1-BLUE CANYON WIND FARM
FDNS	00NR	3	16WP	G15_095	FROM->TO	G14-057T 345.00 - SUNNYSIDE 345KV CKT 1	717	789	0.03531	112.264	GEN562691 1-G15_015_3 0.6900
FDNS	00NR	3	16WP	G15_095	FROM->TO	G14-057T 345.00 - SUNNYSIDE 345KV CKT 1	717	789	0.03495	112.2614	DRAPER LAKE - MIDWEST TAP 138KV CKT 1
FDNS	00NR	3	16WP	G15_095	FROM->TO	G14-057T 345.00 - SUNNYSIDE 345KV CKT 1	717	789	0.03615	112.2436	ARBUCKLE - SULPHR 4 138.00 138KV CKT 1
FDNS	00NR	3	16WP	G15_095	FROM->TO	G14-057T 345.00 - SUNNYSIDE 345KV CKT 1	717	789	0.03531	112.2392	GEN520812 1-ANADRK5

SOLUTION	GROUP	SCENARIO	SEASON	SOURCE	DIRECTION	MONITORED ELEMENT	RATEA (MVA)	RATEB(MVA)	TDF	TC%LOADING (% MVA)	CONTINGENCY
FDNS	00NR	3	16WP	G15_095	FROM->TO	G14-057T 345.00 - SUNNYSIDE 345KV CKT 1	717	789	0.03531	112.2391	GEN520813 1-ANADRK6
FDNS	00NR	3	16WP	G15_095	FROM->TO	G14-057T 345.00 - SUNNYSIDE 345KV CKT 1	717	789	0.03508	112.2379	GLASSES - RUSSETT 138KV CKT 1
FDNS	00NR	3	16WP	G15_095	FROM->TO	G14-057T 345.00 - SUNNYSIDE 345KV CKT 1	717	789	0.03563	112.2346	P12:138:WFEC:MSL11
FDNS	00NR	3	16WP	G15_095	FROM->TO	G14-057T 345.00 - SUNNYSIDE 345KV CKT 1	717	789	0.03563	112.2346	P12:138:WFEC-AEPW:PHAROAH4:LONEOAK4
FDNS	00NR	3	16WP	G15_095	FROM->TO	G14-057T 345.00 - SUNNYSIDE 345KV CKT 1	717	789	0.03531	112.2289	GEN511961 1-DEMPSEY-WTG10.7000
FDNS	00NR	3	16WP	G15_095	FROM->TO	G14-057T 345.00 - SUNNYSIDE 345KV CKT 1	717	789	0.03531	112.2149	GEN600017 C-LS POWER CT
FDNS	00NR	3	16WP	G15_095	FROM->TO	G14-057T 345.00 - SUNNYSIDE 345KV CKT 1	717	789	0.03526	112.2118	P12:138:WFEC:MSL08
FDNS	00NR	3	16WP	G15_095	FROM->TO	G14-057T 345.00 - SUNNYSIDE 345KV CKT 1	717	789	0.03532	112.2113	P12:069:OKGE:3TERM42
FDNS	00NR	3	16WP	G15_095	FROM->TO	G14-057T 345.00 - SUNNYSIDE 345KV CKT 1	717	789	0.03471	112.2096	P12:138:OKGE:3TERM21
FDNS	00NR	3	16WP	G15_095	FROM->TO	G14-057T 345.00 - SUNNYSIDE 345KV CKT 1	717	789	0.03717	112.2081	PRAIRIE POINT - RATLIFF 138KV CKT 1
FDNS	00NR	3	16WP	G15_095	FROM->TO	G14-057T 345.00 - SUNNYSIDE 345KV CKT 1	717	789	0.03541	112.2038	DELL 500 - INDEPENDENCE 500KV CKT 1
FDNS	00NR	3	16WP	G15_095	FROM->TO	G14-057T 345.00 - SUNNYSIDE 345KV CKT 1	717	789	0.0346	112.1984	CIMARRON - MATHWSN7 345.00 345KV CKT 1
FDNS	00NR	3	16WP	G15_095	FROM->TO	G14-057T 345.00 - SUNNYSIDE 345KV CKT 1	717	789	0.0346	112.1984	CIMARRON - MATHWSN7 345.00 345KV CKT 2
FDNS	00NR	3	16WP	G15_095	FROM->TO	G14-057T 345.00 - SUNNYSIDE 345KV CKT 1	717	789	0.03531	112.1901	GEN672392 1-NBECGT1G 18.000
FDNS	00NR	3	16WP	G15_095	FROM->TO	G14-057T 345.00 - SUNNYSIDE 345KV CKT 1	717	789	0.03555	112.1877	OVEXFRMCCOVE
FDNS	00NR	3	16WP	G15_095	FROM->TO	G14-057T 345.00 - SUNNYSIDE 345KV CKT 1	717	789	0.03531	112.1744	GEN528361 1-MADDOX GEN #1
FDNS	00NR	3	16WP	G15_095	FROM->TO	G14-057T 345.00 - SUNNYSIDE 345KV CKT 1	717	789	0.03535	112.1735	GRPRAR1-LNX3345.00 - HOLT.CO3 345.00 345KV CKT 1
FDNS	00NR	3	16WP	G15_095	FROM->TO	G14-057T 345.00 - SUNNYSIDE 345KV CKT 1	717	789	0.03497	112.1714	CANEY CREEK - JOHNSON COUNTY 138KV CKT 1
FDNS	00NR	3	16WP	G15_095	FROM->TO	G14-057T 345.00 - SUNNYSIDE 345KV CKT 1	717	789	0.03531	112.1704	GEN615010 1-STANTON4
FDNS	00NR	3	16WP	G15_095	FROM->TO	G14-057T 345.00 - SUNNYSIDE 345KV CKT 1	717	789	0.03531	112.1645	GEN629070 2-BEAVER CHANNEL GENERATORFOR UNIT NO 2
FDNS	00NR	3	16WP	G15_095	FROM->TO	G14-057T 345.00 - SUNNYSIDE 345KV CKT 1	717	789	0.03535	112.1628	GRPRAR1-LNX3345.00 - GRPRAR 345KV CKT Z
FDNS	00NR	3	16WP	G15_095	FROM->TO	G14-057T 345.00 - SUNNYSIDE 345KV CKT 1	717	789	0.03531	112.155	GEN560183 1-REDHIL-WTG1 12.000
FDNS	00NR	3	16WP	G15_095	FROM->TO	G14-057T 345.00 - SUNNYSIDE 345KV CKT 1	717	789	0.03531	112.1545	GEN515443 1-MNCOWND1 0.7000
FDNS	00NR	3	16WP	G15_095	FROM->TO	G14-057T 345.00 - SUNNYSIDE 345KV CKT 1	717	789	0.03531	112.15	GEN629071 1-BURLINGTON GENERATOR FOR UNIT NO 1 E
FDNS	00NR	3	16WP	G15_095	FROM->TO	G14-057T 345.00 - SUNNYSIDE 345KV CKT 1	717	789	0.03531	112.1499	GEN615021 1-GRE-ER 14G 16.000
FDNS	00NR	3	16WP	G15_095	FROM->TO	G14-057T 345.00 - SUNNYSIDE 345KV CKT 1	717	789	0.03526	112.146	CARTER - CHICKASAW 138KV CKT 1
FDNS	00NR	3	16WP	G15_095	FROM->TO	G14-057T 345.00 - SUNNYSIDE 345KV CKT 1	717	789	0.03531	112.1366	INDEPENDENCE 500/26.0KV TRANSFORMER CKT 1
FDNS	00NR	3	16WP	G15_095	FROM->TO	G14-057T 345.00 - SUNNYSIDE 345KV CKT 1	717	789	0.03531	112.1349	GEN562902 1-G15052_3 0.6900
FDNS	00NR	3	16WP	G15_095	FROM->TO	G14-057T 345.00 - SUNNYSIDE 345KV CKT 1	717	789	0.03531	112.1348	GEN563242 1-G15090_3 0.6900
FDNS	00NR	3	16WP	G15_095	FROM->TO	G14-057T 345.00 - SUNNYSIDE 345KV CKT 1	717	789	0.03537	112.1346	ROCKY POINT - SPRINGDALE 138KV CKT 1
FDNS	00NR	3	16WP	G15_095	FROM->TO	G14-057T 345.00 - SUNNYSIDE 345KV CKT 1	717	789	0.03531	112.1346	BURLINGTON NO1 + NO 2 + NO 3 161/20.0KV TRANSFORMER CKT 1
FDNS	00NR	3	16WP	G15_095	FROM->TO	G14-057T 345.00 - SUNNYSIDE 345KV CKT 1	717	789	0.03523	112.131	CANADIAN RIVER - MCALESTER SOUTH 138KV CKT 1
FDNS	00NR	3	16WP	G15_095	FROM->TO	G14-057T 345.00 - SUNNYSIDE 345KV CKT 1	717	789	0.03523	112.131	CANADIAN RIVER - MCALESTER SOUTH 138KV CKT 1
FDNS	00NR	3	16WP	G15_095	FROM->TO	G14-057T 345.00 - SUNNYSIDE 345KV CKT 1	717	789	0.03523	112.1297	CANADIAN RIVER () 345/138/13.8KV TRANSFORMER CKT 1
FDNS	00NR	3	16WP	G15_095	FROM->TO	G14-057T 345.00 - SUNNYSIDE 345KV CKT 1	717	789	0.03523	112.1297	CANADIAN RIVER () 345/138/13.8KV TRANSFORMER CKT 1
FDNS	00NR	3	16WP	G15_095	FROM->TO	G14-057T 345.00 - SUNNYSIDE 345KV CKT 1	717	789	0.03515	112.1149	ALTUS JUNCTION - RUSSELL 138KV CKT 1
FDNS	00NR	3	16WP	G15_095	FROM->TO	G14-057T 345.00 - SUNNYSIDE 345KV CKT 1	717	789	0.03515	112.1149	ALTUS JUNCTION - RUSSELL 138KV CKT 1
FDNS	00NR	3	16WP	G15_095	FROM->TO	G14-057T 345.00 - SUNNYSIDE 345KV CKT 1	717	789	0.03571	112.1082	NORTHWEST TEXARKANA - WELSH 345KV CKT 1
FDNS	00NR	3	16WP	G15_095	FROM->TO	G14-057T 345.00 - SUNNYSIDE 345KV CKT 1	717	789	0.03571	112.1082	NORTHWEST TEXARKANA - WELSH 345KV CKT 1
FDNS	00NR	3	16WP	G15_095	FROM->TO	G14-057T 345.00 - SUNNYSIDE 345KV CKT 1	717	789	0.03531	112.1003	GEN562078 1-G11_051_3 0.6900
FDNS	00NR	3	16WP	G15_095	FROM->TO	G14-057T 345.00 - SUNNYSIDE 345KV CKT 1	717	789	0.0356	112.0975	MINGO - SETAB 345KV CKT 1
FDNS	00NR	3	16WP	G15_095	FROM->TO	G14-057T 345.00 - SUNNYSIDE 345KV CKT 1	717	789	0.0356	112.0975	MINGO - SETAB 345KV CKT 1
FDNS	00NR	3	16WP	G15_095	FROM->TO	G14-057T 345.00 - SUNNYSIDE 345KV CKT 1	717	789	0.03541	112.0928	CHAMBER SPRINGS - CLARKSVILLE 345KV CKT 1
FDNS	00NR	3	16WP	G15_095	FROM->TO	G14-057T 345.00 - SUNNYSIDE 345KV CKT 1	717	789	0.03615	112.0919	JOLLYVILLE - SULPHR 4 138.00 138KV CKT 1
FDNS	00NR	3	16WP	G15_095	FROM->TO	G14-057T 345.00 - SUNNYSIDE 345KV CKT 1	717	789	0.03531	112.0854	P12:230:UMZB:# 112 #: NU IN SD. NU-RCDC & DRY CREEK XFMR
FDNS	00NR	3	16WP	G15_095	FROM->TO	G14-057T 345.00 - SUNNYSIDE 345KV CKT 1	717	789	0.03531	112.0839	RCDC EAST 4230.00 - RED CEDAR DC 230KV CKT 1
FDNS	00NR	3	16WP	G15_095	FROM->TO	G14-057T 345.00 - SUNNYSIDE 345KV CKT 1	717	789	0.03546	112.0816	KEO EHV - WEST MEMPHIS 500 500KV CKT 1
FDNS	00NR	3	16WP	G15_095	FROM->TO	G14-057T 345.00 - SUNNYSIDE 345KV CKT 1	717	789	0.03531	112.076	GEN562802 1-G15039_3 0.3570
FDNS	00NR	3	16WP	G15_095	FROM->TO	G14-057T 345.00 - SUNNYSIDE 345KV CKT 1	717	789	0.03531	112.0707	GEN524285 1-WILDORADO WIND GEN
FDNS	00NR	3	16WP	G15_095	FROM->TO	G14-057T 345.00 - SUNNYSIDE 345KV CKT 1	717	789	0.03531	112.0633	GEN514805 1-SOONER UNIT 1
FDNS	00NR	3	16WP	G15_095	FROM->TO	G14-057T 345.00 - SUNNYSIDE 345KV CKT 1	717	789	0.03531	112.0546	GEN524295 1-SPNSPUR_WND10.6900
FDNS	00NR	3	16WP	G15_095	FROM->TO	G14-057T 345.00 - SUNNYSIDE 345KV CKT 1	717	789	0.03531	112.0543	GEN514806 1-SOONER UNIT 2
FDNS	00NR	3	16WP	G15_095	FROM->TO	G14-057T 345.00 - SUNNYSIDE 345KV CKT 1	717	789	0.03531	112.0426	GEN560331 1-G10-46 13.800
FDNS	00NR	3	16WP	G15_095	FROM->TO	G14-057T 345.00 - SUNNYSIDE 345KV CKT 1	717	789	0.03561	112.0377	ARKANSAS NUCLEAR ONE - FT SMITH 500KV CKT 1
FDNS	00NR	3	16WP	G15_095	FROM->TO	G14-057T 345.00 - SUNNYSIDE 345KV CKT 1	717	789	0.03561	112.0377	ARKANSAS NUCLEAR ONE - FT SMITH 500KV CKT 1
FDNS	00NR	3	16WP	G15_095	FROM->TO	G14-057T 345.00 - SUNNYSIDE 345KV CKT 1	717	789	0.03615	112.0245	JOLLYVILLE - KERR MCGEE CIMARRON 138KV CKT 1
FDNS	00NR	3	16WP	G15_095	FROM->TO	G14-057T 345.00 - SUNNYSIDE 345KV CKT 1	717	789	0.03531	112.0196	GEN562587 1-G14_056_3 0.6900
FDNS	00NR	3	16WP	G15_095	FROM->TO	G14-057T 345.00 - SUNNYSIDE 345KV CKT 1	717	789	0.03531	112.0133	GEN562269 1-G12-020-1 0.6900
FDNS	00NR	3	16WP	G15_095	FROM->TO	G14-057T 345.00 - SUNNYSIDE 345KV CKT 1	717	789	0.03531	112.008	GEN629072 4-LANSING GENERATOR FOR UNITS NO4 EIA CODE 1
FDNS	00NR	3	16WP	G15_095	FROM->TO	G14-057T 345.00 - SUNNYSIDE 345KV CKT 1	717	789	0.03531	111.9885	GEN657749 1-YOUNG 1 GENERATOR
FDNS	00NR	3	16WP	G15_095	FROM->TO	G14-057T 345.00 - SUNNYSIDE 345KV CKT 1	717	789	0.03531	111.9876	GEN562882 1-G15047_3 0.6900
FDNS	00NR	3	16WP	G15_095	FROM->TO	G14-057T 345.00 - SUNNYSIDE 345KV CKT 1	717	789	0.03615	111.9735	ARBWIND4 138.00 - KERR MCGEE CIMARRON 138KV CKT 1
FDNS	00NR	3	16WP	G15_095	FROM->TO	G14-057T 345.00 - SUNNYSIDE 345KV CKT 1	717	789	0.03531	111.9699	GEN562270 1-G12-020-2 0.6900
FDNS	00NR	3	16WP	G15_095	FROM->TO	G14-057T 345.00 - SUNNYSIDE 345KV CKT 1	717	789	0.03214	111.9688	G15063_T 345.00 - MATHWSN7 345.00 345KV CKT 1
FDNS	00NR	3	16WP	G15_095	FROM->TO	G14-057T 345.00 - SUNNYSIDE 345KV CKT 1	717	789	0.03531	111.964	GEN562812 1-G15040_3 0.3570
FDNS	00NR	3	16WP	G15_095	FROM->TO	G14-057T 345.00 - SUNNYSIDE 345KV CKT 1	717	789	0.03531	111.9615	GEN563102 1-G15075_3 0.5500
FDNS	00NR	3	16WP	G15_095	FROM->TO	G14-057T 345.00 - SUNNYSIDE 345KV CKT 1	717	789	0.03531	111.9565	GEN562974 1-G15060_5 0.6900
FDNS	00NR	3	16WP	G15_095	FROM->TO	G14-057T 345.00 - SUNNYSIDE 345KV CKT 1	717	789	0.03531	111.9538	GEN563132 1-G15078_3 0.3570
FDNS	00NR	3	16WP	G15_095	FROM->TO	G14-057T 345.00 - SUNNYSIDE 345KV CKT 1	717	789	0.03531	111.9476	GEN562973 1-G15060_4 0.6900
FDNS	00NR	3	16WP	G15_095	FROM->TO	G14-057T 345.00 - SUNNYSIDE 345KV CKT 1	717	789	0.0354	111.9451	P12:138:AEPW:112GORE4:SNYDER-4
FDNS	00NR	3	16WP	G15_095	FROM->TO	G14-057T 345.00 - SUNNYSIDE 345KV CKT 1	717	789	0.03531	111.9371	GEN563062 1-G15071_3 0.6900
FDNS	00NR	3	16WP	G15_095	FROM->TO	G14-057T 345.00 - SUNNYSIDE 345KV CKT 1	717	789	0.03631	111.9195	CLARKSVILLE - MUSKOGEE 345KV CKT 1
FDNS	00NR	3	16WP	G15_095	FROM->TO	G14-057T 345.00 - SUNNYSIDE 345KV CKT 1	717	789	0.03631	111.9195	CLARKSVILLE - MUSKOGEE 345KV CKT 1
FDNS	00NR	3	16WP	G15_095	FROM->TO	G14-057T 345.00 - SUNNYSIDE 345KV CKT 1	717	789	0.03609	111.9015	CHICKASAW - TOTAL 138KV CKT 1
FDNS	00NR	3	16WP	G15_095	FROM->TO	G14-057T 345.00 - SUNNYSIDE 345KV CKT 1	717	789	0.03531	111.9	GEN681522 3-GENOA 3
FDNS	00NR	3	16WP	G15_095	FROM->TO	G14-057T 345.00 - SUNNYSIDE 345KV CKT 1	717	789	0.0346	111.887	BROWN - RUSSETT 138KV CKT 1
FDNS	00NR	3	16WP	G15_095	FROM->TO	G14-057T 345.00 - SUNNYSIDE 345KV CKT 1	717	789	0.03531	111.876	GEN526331 1-JONES GEN #1 22 KV
FDNS	00NR	3	16WP	G15_095	FROM->TO	G14-057T 345.00 - SUNNYSIDE 345KV CKT 1	717	789	0.03531	111.8759	GEN526332 1-JONES GEN #2 21 KV
FDNS	00NR	3	16WP	G15_095	FROM->TO	G14-057T 345.00 - SUNNYSIDE 345KV CKT 1	717	789	0.03477	111.87	RUSSETT - SPRINGDALE 138KV CKT 1

SOLUTION	GROUP	SCENARIO	SEASON	SOURCE	DIRECTION	MONITORED ELEMENT	RATEA (MVA)	RATEB(MVA)	TDF	TC%LOADING (% MVA)	CONTINGENCY
FDNS	00NR	3	16WP	G15_095	FROM->TO	G14-057T 345.00 - SUNNYSIDE 345KV CKT 1	717	789	0.03531	111.8657	GEN560105 1-G08-22 0.6900
FDNS	00NR	3	16WP	G15_095	FROM->TO	G14-057T 345.00 - SUNNYSIDE 345KV CKT 1	717	789	0.03531	111.8633	GEN562550 1-G14_040_3 0.6900
FDNS	00NR	3	16WP	G15_095	FROM->TO	G14-057T 345.00 - SUNNYSIDE 345KV CKT 1	717	789	0.03531	111.8567	GEN345671 2-1RUSH G2 18.000
FDNS	00NR	3	16WP	G15_095	FROM->TO	G14-057T 345.00 - SUNNYSIDE 345KV CKT 1	717	789	0.03531	111.8549	GEN345670 1-1RUSH G1 18.000
FDNS	00NR	3	16WP	G15_095	FROM->TO	G14-057T 345.00 - SUNNYSIDE 345KV CKT 1	717	789	0.03543	111.8445	ROCKY POINT - SUNNYSIDE 138KV CKT 1
FDNS	00NR	3	16WP	G15_095	FROM->TO	G14-057T 345.00 - SUNNYSIDE 345KV CKT 1	717	789	0.03755	111.8418	P12:138:WFEC:MSL07
FDNS	00NR	3	16WP	G15_095	FROM->TO	G14-057T 345.00 - SUNNYSIDE 345KV CKT 1	717	789	0.03755	111.8418	P12:138:WFEC-AEPW:HUGOPP4:ATOKA--4
FDNS	00NR	3	16WP	G15_095	FROM->TO	G14-057T 345.00 - SUNNYSIDE 345KV CKT 1	717	789	0.03531	111.8382	4SIOUX 1 138.00 138/18.0KV TRANSFORMER CKT 1
FDNS	00NR	3	16WP	G15_095	FROM->TO	G14-057T 345.00 - SUNNYSIDE 345KV CKT 1	717	789	0.03531	111.8246	GEN511962 2-RKYRDGW2-1 0.7000
FDNS	00NR	3	16WP	G15_095	FROM->TO	G14-057T 345.00 - SUNNYSIDE 345KV CKT 1	717	789	0.0346	111.8183	RUSSETT - RUSSETT 138KV CKT 1
FDNS	00NR	3	16WP	G15_095	FROM->TO	G14-057T 345.00 - SUNNYSIDE 345KV CKT 1	717	789	0.03531	111.8177	GEN527882 1-CUNNINGHAM GEN #2 20 KV
FDNS	00NR	3	16WP	G15_095	FROM->TO	G14-057T 345.00 - SUNNYSIDE 345KV CKT 1	717	789	0.03531	111.8089	CLAY BOSWELL 230/20.9KV TRANSFORMER CKT 1
FDNS	00NR	3	16WP	G15_095	FROM->TO	G14-057T 345.00 - SUNNYSIDE 345KV CKT 1	717	789	0.03531	111.7989	GEN521112 1-ORME3 13.800
FDNS	00NR	3	16WP	G15_095	FROM->TO	G14-057T 345.00 - SUNNYSIDE 345KV CKT 1	717	789	0.03531	111.7937	GEN563192 1-G15084_3 0.5500
FDNS	00NR	3	16WP	G15_095	FROM->TO	G14-057T 345.00 - SUNNYSIDE 345KV CKT 1	717	789	0.03523	111.7906	P12:138:WFEC:MSL16
FDNS	00NR	3	16WP	G15_095	FROM->TO	G14-057T 345.00 - SUNNYSIDE 345KV CKT 1	717	789	0.03592	111.7903	ARDMORE WEST - CARTER 138KV CKT 1
FDNS	00NR	3	16WP	G15_095	FROM->TO	G14-057T 345.00 - SUNNYSIDE 345KV CKT 1	717	789	0.03531	111.7721	GEN562892 1-G15048_3 0.6900
FDNS	00NR	3	16WP	G15_095	FROM->TO	G14-057T 345.00 - SUNNYSIDE 345KV CKT 1	717	789	0.03531	111.7673	GEN520811 1-ANADRK4
FDNS	00NR	3	16WP	G15_095	FROM->TO	G14-057T 345.00 - SUNNYSIDE 345KV CKT 1	717	789	0.03531	111.7579	GEN672321 1-SHAND GENERATOR 1
FDNS	00NR	3	16WP	G15_095	FROM->TO	G14-057T 345.00 - SUNNYSIDE 345KV CKT 1	717	789	0.03605	111.7506	SUNNYSIDE (SUNNYSD5) 345/138/13.8KV TRANSFORMER CKT 1
FDNS	00NR	3	16WP	G15_095	FROM->TO	G14-057T 345.00 - SUNNYSIDE 345KV CKT 1	717	789	0.03627	111.7436	P12:138:WFEC-AEPW:GOLDENSW4:CRAIGJT4
FDNS	00NR	3	16WP	G15_095	FROM->TO	G14-057T 345.00 - SUNNYSIDE 345KV CKT 1	717	789	0.03531	111.7409	GEN562512 1-G14_020_3 0.6900
FDNS	00NR	3	16WP	G15_095	FROM->TO	G14-057T 345.00 - SUNNYSIDE 345KV CKT 1	717	789	0.03531	111.7343	GEN672310 1-POPLAR RIVER GENERATOR 1
FDNS	00NR	3	16WP	G15_095	FROM->TO	G14-057T 345.00 - SUNNYSIDE 345KV CKT 1	717	789	0.03531	111.7342	GEN672311 2-POPLAR RIVER GENERATOR 2
FDNS	00NR	3	16WP	G15_095	FROM->TO	G14-057T 345.00 - SUNNYSIDE 345KV CKT 1	717	789	0.03531	111.7315	GEN523461 1-BLACKHAWK GEN #1
FDNS	00NR	3	16WP	G15_095	FROM->TO	G14-057T 345.00 - SUNNYSIDE 345KV CKT 1	717	789	0.03531	111.7314	GEN523462 1-BLACKHAWK GEN #2
FDNS	00NR	3	16WP	G15_095	FROM->TO	G14-057T 345.00 - SUNNYSIDE 345KV CKT 1	717	789	0.03531	111.7262	GEN672306 6-BOUNDARY DAM GENERATOR 6
FDNS	00NR	3	16WP	G15_095	FROM->TO	G14-057T 345.00 - SUNNYSIDE 345KV CKT 1	717	789	0.03531	111.6964	GEN344895 2-1LAB G2 20.000
FDNS	00NR	3	16WP	G15_095	FROM->TO	G14-057T 345.00 - SUNNYSIDE 345KV CKT 1	717	789	0.03592	111.6754	ARDMORE WEST - UNIROYAL 138KV CKT 1
FDNS	00NR	3	16WP	G15_095	FROM->TO	G14-057T 345.00 - SUNNYSIDE 345KV CKT 1	717	789	0.03531	111.6717	GEN511853 1-COMANCHE #3
FDNS	00NR	3	16WP	G15_095	FROM->TO	G14-057T 345.00 - SUNNYSIDE 345KV CKT 1	717	789	0.03538	111.6662	P12:138:AEPW-SWPA:LONEOAK4:TUPELO4
FDNS	00NR	3	16WP	G15_095	FROM->TO	G14-057T 345.00 - SUNNYSIDE 345KV CKT 1	717	789	0.03538	111.6662	P12:138:WFEC:MSL06
FDNS	00NR	3	16WP	G15_095	FROM->TO	G14-057T 345.00 - SUNNYSIDE 345KV CKT 1	717	789	0.03531	111.6643	GEN344896 3-1LAB G3 20.000
FDNS	00NR	3	16WP	G15_095	FROM->TO	G14-057T 345.00 - SUNNYSIDE 345KV CKT 1	717	789	0.03531	111.663	GEN344894 1-1LAB G1 20.000
FDNS	00NR	3	16WP	G15_095	FROM->TO	G14-057T 345.00 - SUNNYSIDE 345KV CKT 1	717	789	0.03531	111.6622	GEN563162 1-G15081_3 0.6900
FDNS	00NR	3	16WP	G15_095	FROM->TO	G14-057T 345.00 - SUNNYSIDE 345KV CKT 1	717	789	0.03531	111.6615	GEN344897 4-1LAB G4 20.000
FDNS	00NR	3	16WP	G15_095	FROM->TO	G14-057T 345.00 - SUNNYSIDE 345KV CKT 1	717	789	0.03655	111.656	CARTRCO4 138.00 - RATLIFF 138KV CKT 1
FDNS	00NR	3	16WP	G15_095	FROM->TO	G14-057T 345.00 - SUNNYSIDE 345KV CKT 1	717	789	0.03495	111.6475	P12:138:OKGE:3TERM40
FDNS	00NR	3	16WP	G15_095	FROM->TO	G14-057T 345.00 - SUNNYSIDE 345KV CKT 1	717	789	0.03531	111.6412	GEN562699 1-G15_018_3 0.6900
FDNS	00NR	3	16WP	G15_095	FROM->TO	G14-057T 345.00 - SUNNYSIDE 345KV CKT 1	717	789	0.03531	111.6389	GEN511852 1-COMANCHE #2
FDNS	00NR	3	16WP	G15_095	FROM->TO	G14-057T 345.00 - SUNNYSIDE 345KV CKT 1	717	789	0.03531	111.6238	GEN521110 1-ORME1 13.800
FDNS	00NR	3	16WP	G15_095	FROM->TO	G14-057T 345.00 - SUNNYSIDE 345KV CKT 1	717	789	0.03531	111.6238	GEN521111 1-ORME2 13.800
FDNS	00NR	3	16WP	G15_095	FROM->TO	G14-057T 345.00 - SUNNYSIDE 345KV CKT 1	717	789	0.03531	111.6195	GEN563292 1-G15095_3 0.6900
FDNS	00NR	3	16WP	G15_095	FROM->TO	G14-057T 345.00 - SUNNYSIDE 345KV CKT 1	717	789	0.03514	111.6031	G15085_T 138.00 - RUSSELL 138KV CKT 1
FDNS	00NR	3	16WP	G15_095	FROM->TO	G14-057T 345.00 - SUNNYSIDE 345KV CKT 1	717	789	0.035	111.5774	GRAPEVINE INTERCHANGE - STATELINE INTERCHANGE 230KV CKT 1
FDNS	00NR	3	16WP	G15_095	FROM->TO	G14-057T 345.00 - SUNNYSIDE 345KV CKT 1	717	789	0.035	111.5774	GRAPEVINE INTERCHANGE - STATELINE INTERCHANGE 230KV CKT 1
FDNS	00NR	3	16WP	G15_095	FROM->TO	G14-057T 345.00 - SUNNYSIDE 345KV CKT 1	717	789	0.0354	111.5593	CACHE - SNYDER 138KV CKT 1
FDNS	00NR	3	16WP	G15_095	FROM->TO	G14-057T 345.00 - SUNNYSIDE 345KV CKT 1	717	789	0.03531	111.5424	GEN563122 1-G15077_3 0.3850
FDNS	00NR	3	16WP	G15_095	FROM->TO	G14-057T 345.00 - SUNNYSIDE 345KV CKT 1	717	789	0.03531	111.5346	GEN562861 1-G15045_2 0.4800
FDNS	00NR	3	16WP	G15_095	FROM->TO	G14-057T 345.00 - SUNNYSIDE 345KV CKT 1	717	789	0.03531	111.5178	GEN661015 1-COYOTE
FDNS	00NR	3	16WP	G15_095	FROM->TO	G14-057T 345.00 - SUNNYSIDE 345KV CKT 1	717	789	0.03592	111.4571	SUNNYSIDE - UNIROYAL 138KV CKT 1
FDNS	00NR	3	16WP	G15_095	FROM->TO	G14-057T 345.00 - SUNNYSIDE 345KV CKT 1	717	789	0.03495	111.44	GRAPEVINE INTERCHANGE - NICHOLS STATION 230KV CKT 1
FDNS	00NR	3	16WP	G15_095	FROM->TO	G14-057T 345.00 - SUNNYSIDE 345KV CKT 1	717	789	0.03495	111.44	GRAPEVINE INTERCHANGE - NICHOLS STATION 230KV CKT 1
FDNS	00NR	3	16WP	G15_095	FROM->TO	G14-057T 345.00 - SUNNYSIDE 345KV CKT 1	717	789	0.03514	111.4174	P12:138:AEPW:SHAM4WT:CHILD4WT
FDNS	00NR	3	16WP	G15_095	FROM->TO	G14-057T 345.00 - SUNNYSIDE 345KV CKT 1	717	789	0.04054	111.4115	P12:138:WFEC:MSL15
FDNS	00NR	3	16WP	G15_095	FROM->TO	G14-057T 345.00 - SUNNYSIDE 345KV CKT 1	717	789	0.0325	111.4067	CHISHOLM7 345.00 (CHISHOLM) 345/230/13.2KV TRANSFORMER CKT 1
FDNS	00NR	3	16WP	G15_095	FROM->TO	G14-057T 345.00 - SUNNYSIDE 345KV CKT 1	717	789	0.03531	111.4034	GEN657748 1-YOUNG 2 GENERATOR
FDNS	00NR	3	16WP	G15_095	FROM->TO	G14-057T 345.00 - SUNNYSIDE 345KV CKT 1	717	789	0.03531	111.4	GEN532751 1-WOLF CREEK GENERATING STATION UNIT 1
FDNS	00NR	3	16WP	G15_095	FROM->TO	G14-057T 345.00 - SUNNYSIDE 345KV CKT 1	717	789	0.03531	111.3811	GEN562992 1-G15063_3 0.6900
FDNS	00NR	3	16WP	G15_095	FROM->TO	G14-057T 345.00 - SUNNYSIDE 345KV CKT 1	717	789	0.03531	111.3562	GEN562704 1-G15_020_3 0.3550
FDNS	00NR	3	16WP	G15_095	FROM->TO	G14-057T 345.00 - SUNNYSIDE 345KV CKT 1	717	789	0.03531	111.3542	GEN563173 1-G15082_3 0.6900
FDNS	00NR	3	16WP	G15_095	FROM->TO	G14-057T 345.00 - SUNNYSIDE 345KV CKT 1	717	789	0.03454	111.3478	CANEY CREEK - TEXOMA JCT 138KV CKT 1
FDNS	00NR	3	16WP	G15_095	FROM->TO	G14-057T 345.00 - SUNNYSIDE 345KV CKT 1	717	789	0.03531	111.3165	GEN562952 1-G15057_3 0.6500
FDNS	00NR	3	16WP	G15_095	FROM->TO	G14-057T 345.00 - SUNNYSIDE 345KV CKT 1	717	789	0.03531	111.2724	GEN562710 1-G15_022_3 0.5500
FDNS	00NR	3	16WP	G15_095	FROM->TO	G14-057T 345.00 - SUNNYSIDE 345KV CKT 1	717	789	0.03531	111.2411	GEN620315 1-BIG STONE GEN
FDNS	00NR	3	16WP	G15_095	FROM->TO	G14-057T 345.00 - SUNNYSIDE 345KV CKT 1	717	789	0.0325	111.1801	CHISHOLM7 345.00 - GRACEMONT 345KV CKT 1
FDNSLock	00NR	3	16WP	G15_095	FROM->TO	G14-057T 345.00 - SUNNYSIDE 345KV CKT 1	717	789	0.03531	111.1763	GEN600004 2-PRAIRIE ISLAND G2
FDNSLock	00NR	3	16WP	G15_095	FROM->TO	G14-057T 345.00 - SUNNYSIDE 345KV CKT 1	717	789	0.03531	111.1736	GEN600003 1-PRAIRIE ISLAND G1
FDNS	00NR	3	16WP	G15_095	FROM->TO	G14-057T 345.00 - SUNNYSIDE 345KV CKT 1	717	789	0.03543	111.1734	P12:138:WFEC:MSL09
FDNSLock	00NR	3	16WP	G15_095	FROM->TO	G14-057T 345.00 - SUNNYSIDE 345KV CKT 1	717	789	0.03531	111.1659	GEN600006 1-AS KING
FDNS	00NR	3	16WP	G15_095	FROM->TO	G14-057T 345.00 - SUNNYSIDE 345KV CKT 1	717	789	0.03531	111.1295	GEN511851 1-COMANCHE #1
FDNS	00NR	3	16WP	G15_095	FROM->TO	G14-057T 345.00 - SUNNYSIDE 345KV CKT 1	717	789	0.03531	111.1	GEN636641 1-LOUISA UNIT 1
FDNS	00NR	3	16WP	G15_095	FROM->TO	G14-057T 345.00 - SUNNYSIDE 345KV CKT 1	717	789	0.03531	111.0396	GEN600005 1-MONTICELLO
FDNS	00NR	3	16WP	G15_095	FROM->TO	G14-057T 345.00 - SUNNYSIDE 345KV CKT 1	717	789	0.03477	111.0304	P12:230:AEPW-SPS:SWEETWT6:WHEELER 6
FDNS	00NR	3	16WP	G15_095	FROM->TO	G14-057T 345.00 - SUNNYSIDE 345KV CKT 1	717	789	0.03477	111.0294	STATELINE INTERCHANGE - STLN-DEMARC6 230KV CKT 1
FDNS	00NR	3	16WP	G15_095	FROM->TO	G14-057T 345.00 - SUNNYSIDE 345KV CKT 1	717	789	0.03477	111.0283	STLN-DEMARC6 - SWEETWATER 230KV CKT 1
FDNS	00NR	3	16WP	G15_095	FROM->TO	G14-057T 345.00 - SUNNYSIDE 345KV CKT 1	717	789	0.03531	111.0266	GEN562754 1-G15031_5 0.6900
FDNS	00NR	3	16WP	G15_095	FROM->TO	G14-057T 345.00 - SUNNYSIDE 345KV CKT 1	717	789	0.03531	111.0089	GEN615002 2-COAL CREEK
FDNS	00NR	3	16WP	G15_095	FROM->TO	G14-057T 345.00 - SUNNYSIDE 345KV CKT 1	717	789	0.03531	111	GEN629074 1-ARNOLD LOWSIDE OF GSU XFMR

SOLUTION	GROUP	SCENARIO	SEASON	SOURCE	DIRECTION	MONITORED ELEMENT	RATEA (MVA)	RATEB(MVA)	TDF	TC%LOADING (% MVA)	CONTINGENCY
FDNS	00NR	3	16WP	G15_095	FROM->TO	G14-057T 345.00 - SUNNYSIDE 345KV CKT 1	717	789	0.03196	110.9877	P12:138:AEPW-OGE:CORNVIL4:CIMARON4
FDNS	00NR	3	16WP	G15_095	FROM->TO	G14-057T 345.00 - SUNNYSIDE 345KV CKT 1	717	789	0.03531	110.9862	GEN562023 1-G11_020_3 0.6900
FDNS	00NR	3	16WP	G15_095	FROM->TO	G14-057T 345.00 - SUNNYSIDE 345KV CKT 1	717	789	0.03531	110.9862	GEN562026 1-G11_019_3 0.6900
FDNS	00NR	3	16WP	G15_095	FROM->TO	G14-057T 345.00 - SUNNYSIDE 345KV CKT 1	717	789	0.03531	110.9797	GEN635213 3-NEAL UNIT 3
FDNS	00NR	3	16WP	G15_095	FROM->TO	G14-057T 345.00 - SUNNYSIDE 345KV CKT 1	717	789	0.03531	110.9682	GEN562756 1-G15031_7 0.6900
FDNS	00NR	3	16WP	G15_095	FROM->TO	G14-057T 345.00 - SUNNYSIDE 345KV CKT 1	717	789	0.03531	110.9258	BIG STONE 230/24.0KV TRANSFORMER CKT 1
FDNS	00NR	3	16WP	G15_095	FROM->TO	G14-057T 345.00 - SUNNYSIDE 345KV CKT 1	717	789	0.03531	110.9216	GEN562556 1-G14_046_3 0.3420
FDNS	00NR	3	16WP	G15_095	FROM->TO	G14-057T 345.00 - SUNNYSIDE 345KV CKT 1	717	789	0.03531	110.8335	GEN563142 1-G15079_3 0.5500
FDNS	00NR	3	16WP	G15_095	FROM->TO	G14-057T 345.00 - SUNNYSIDE 345KV CKT 1	717	789	0.03531	110.8335	GEN563151 1-G15080_2 0.5500
FDNS	00NR	3	16WP	G15_095	FROM->TO	G14-057T 345.00 - SUNNYSIDE 345KV CKT 1	717	789	0.03531	110.8185	GEN523971 1-HARRINGTON GEN #1 24 KV
FDNS	00NR	3	16WP	G15_095	FROM->TO	G14-057T 345.00 - SUNNYSIDE 345KV CKT 1	717	789	0.03531	110.8185	GEN523973 1-HARRINGTON GEN #3 24 KV
FDNS	00NR	3	16WP	G15_095	FROM->TO	G14-057T 345.00 - SUNNYSIDE 345KV CKT 1	717	789	0.03531	110.8184	GEN523972 1-HARRINGTON GEN #2 24 KV
FDNS	00NR	3	16WP	G15_095	FROM->TO	G14-057T 345.00 - SUNNYSIDE 345KV CKT 1	717	789	0.03531	110.7304	GEN600000 1-SHERBURNECNTY G1
FDNS	00NR	3	16WP	G15_095	FROM->TO	G14-057T 345.00 - SUNNYSIDE 345KV CKT 1	717	789	0.03651	110.7146	NORTHWEST TEXARKANA - VALLIANT 345KV CKT 1
FDNS	00NR	3	16WP	G15_095	FROM->TO	G14-057T 345.00 - SUNNYSIDE 345KV CKT 1	717	789	0.03651	110.7146	NORTHWEST TEXARKANA - VALLIANT 345KV CKT 1
FDNS	00NR	3	16WP	G15_095	FROM->TO	G14-057T 345.00 - SUNNYSIDE 345KV CKT 1	717	789	0.0326	110.6535	P12:230:AEPW:ELKCITY6:SWEETWT6
FDNS	00NR	3	16WP	G15_095	FROM->TO	G14-057T 345.00 - SUNNYSIDE 345KV CKT 1	717	789	0.03531	110.6508	GEN600001 2-SHERBURNE CNTY G2
FDNS	00NR	3	16WP	G15_095	FROM->TO	G14-057T 345.00 - SUNNYSIDE 345KV CKT 1	717	789	0.03531	110.6206	GEN563042 1-G15068_3 0.6900
FDNS	00NR	3	16WP	G15_095	FROM->TO	G14-057T 345.00 - SUNNYSIDE 345KV CKT 1	717	789	0.03531	110.6069	GEN527901 1-HOBBS PLANT #1 (CT)
FDNS	00NR	3	16WP	G15_095	FROM->TO	G14-057T 345.00 - SUNNYSIDE 345KV CKT 1	717	789	0.03531	110.6069	GEN527902 1-HOBBS PLANT #2 (CT)
FDNS	00NR	3	16WP	G15_095	FROM->TO	G14-057T 345.00 - SUNNYSIDE 345KV CKT 1	717	789	0.03531	110.6027	GEN511848 1-SOUTHWESTERN STATION #3
FDNSLock	00NR	3	16WP	G15_095	FROM->TO	G14-057T 345.00 - SUNNYSIDE 345KV CKT 1	717	789	0.03531	110.5323	GEN629075 1-OTTUMWA GENERATOR FOR OTTUMWA UNIT NO 1
FDNS	00NR	3	16WP	G15_095	FROM->TO	G14-057T 345.00 - SUNNYSIDE 345KV CKT 1	717	789	0.03531	110.405	SHERBURNE CO 345/24.0KV TRANSFORMER CKT 1
FDNS	00NR	3	16WP	G15_095	FROM->TO	G14-057T 345.00 - SUNNYSIDE 345KV CKT 1	717	789	0.03531	110.4	GEN635214 4-NEAL UNIT 4
FDNS	00NR	3	16WP	G15_095	FROM->TO	G14-057T 345.00 - SUNNYSIDE 345KV CKT 1	717	789	0.03531	110.328	GEN563273 2-G15093_4 0.6900
FDNS	00NR	3	16WP	G15_095	FROM->TO	G14-057T 345.00 - SUNNYSIDE 345KV CKT 1	717	789	0.03531	110.3185	GEN563043 1-G15068_4 0.6900
FDNS	00NR	3	16WP	G15_095	FROM->TO	G14-057T 345.00 - SUNNYSIDE 345KV CKT 1	717	789	0.03477	110.3023	CHISHOLM6 230.00 - SWEETWATER 230KV CKT 1
FDNS	00NR	3	16WP	G15_095	FROM->TO	G14-057T 345.00 - SUNNYSIDE 345KV CKT 1	717	789	0.03531	110.2979	GEN526333 1-JONES GEN #3 21 KV
FDNS	00NR	3	16WP	G15_095	FROM->TO	G14-057T 345.00 - SUNNYSIDE 345KV CKT 1	717	789	0.03531	110.2979	GEN526334 1-JONES_4 116.500
FDNS	00NR	3	16WP	G15_095	FROM->TO	G14-057T 345.00 - SUNNYSIDE 345KV CKT 1	717	789	0.03531	110.2441	GEN525844 1-ELK_1 118.000
FDNS	00NR	3	16WP	G15_095	FROM->TO	G14-057T 345.00 - SUNNYSIDE 345KV CKT 1	717	789	0.03531	110.2387	GEN525845 1-ELK_2 1 138.00
FDNS	00NR	3	16WP	G15_095	FROM->TO	G14-057T 345.00 - SUNNYSIDE 345KV CKT 1	717	789	0.03531	110.2242	GEN600002 3-SHERBURNE CNTY G3
FDNS	00NR	3	16WP	G15_095	FROM->TO	G14-057T 345.00 - SUNNYSIDE 345KV CKT 1	717	789	0.03531	110.2	GEN344225 1-1CAL G1 25.000
FDNS	00NR	3	16WP	G15_095	FROM->TO	G14-057T 345.00 - SUNNYSIDE 345KV CKT 1	717	789	0.03531	110.1546	GEN563202 1-G15085_3 0.5500
FDNS	00NR	3	16WP	G15_095	FROM->TO	G14-057T 345.00 - SUNNYSIDE 345KV CKT 1	717	789	0.03531	110.1083	GEN525562 1-TOLK GEN #2 24 KV
FDNS	00NR	3	16WP	G15_095	FROM->TO	G14-057T 345.00 - SUNNYSIDE 345KV CKT 1	717	789	0.03531	110.0622	GEN527166 1-MUSTANG_6 118.000
FDNS	00NR	3	16WP	G15_095	FROM->TO	G14-057T 345.00 - SUNNYSIDE 345KV CKT 1	717	789	0.03709	110.0259	LYDIA - WELSH 345KV CKT 1
FDNS	00NR	3	16WP	G15_095	FROM->TO	G14-057T 345.00 - SUNNYSIDE 345KV CKT 1	717	789	0.03709	110.0259	LYDIA - WELSH 345KV CKT 1
FDNS	00NR	3	16WP	G15_095	FROM->TO	G14-057T 345.00 - SUNNYSIDE 345KV CKT 1	717	789	0.03498	109.9851	JOHNSON COUNTY (JOHNCO) 345/138/13.8KV TRANSFORMER CKT 1
FDNS	00NR	3	16WP	G15_095	FROM->TO	G14-057T 345.00 - SUNNYSIDE 345KV CKT 1	717	789	0.03531	109.9726	GEN635023 3-WALTER SCOTT UNIT 3
FDNS	00NR	3	16WP	G15_095	FROM->TO	G14-057T 345.00 - SUNNYSIDE 345KV CKT 1	717	789	0.03531	109.9237	GEN562590 1-G14_057_3 0.6900
FDNS	00NR	3	16WP	G15_095	FROM->TO	G14-057T 345.00 - SUNNYSIDE 345KV CKT 1	717	789	0.03531	109.8862	GEN562762 1-G15033_3 0.6900
FDNS	00NR	3	16WP	G15_095	FROM->TO	G14-057T 345.00 - SUNNYSIDE 345KV CKT 1	717	789	0.03531	109.8763	GEN562655 1-G14_074_3 0.6900
FDNS	00NR	3	16WP	G15_095	FROM->TO	G14-057T 345.00 - SUNNYSIDE 345KV CKT 1	717	789	0.03531	109.827	GEN562685 1-G15_013_3 0.3550
FDNS	00NR	3	16WP	G15_095	FROM->TO	G14-057T 345.00 - SUNNYSIDE 345KV CKT 1	717	789	0.03531	109.8155	GEN525561 1-TOLK GEN #1 24 KV
FDNS	00NR	3	16WP	G15_095	FROM->TO	G14-057T 345.00 - SUNNYSIDE 345KV CKT 1	717	789	0.03531	109.6872	GEN563272 1-G15093_3 0.6900
FDNS	00NR	3	16WP	G15_095	FROM->TO	G14-057T 345.00 - SUNNYSIDE 345KV CKT 1	717	789	0.03531	109.6728	GEN527903 1-HOBBS PLANT #3 (ST)
FDNS	00NR	3	16WP	G15_095	FROM->TO	G14-057T 345.00 - SUNNYSIDE 345KV CKT 1	717	789	0.03531	109.5478	GEN635024 4-WALTER SCOTT UNIT 4
FDNS	00NR	3	16WP	G15_095	FROM->TO	G14-057T 345.00 - SUNNYSIDE 345KV CKT 1	717	789	0.03771	108.8865	LYDIA - VALLIANT 345KV CKT 1
FDNS	00NR	3	16WP	G15_095	FROM->TO	G14-057T 345.00 - SUNNYSIDE 345KV CKT 1	717	789	0.03771	108.8865	LYDIA - VALLIANT 345KV CKT 1
FDNS	00NR	3	16WP	G15_095	FROM->TO	G14-057T 345.00 - SUNNYSIDE 345KV CKT 1	717	789	0.03531	107.8948	EASTDC - ERCOT EQUIVALENCE 345KV CKT 1
FDNS	00NR	3	16WP	G15_095	FROM->TO	G14-057T 345.00 - SUNNYSIDE 345KV CKT 1	717	789	0.04198	106.9904	JOHNSON COUNTY - PITTSBURG 345KV CKT 1
FDNS	00NR	3	16WP	G15_095	FROM->TO	G14-057T 345.00 - SUNNYSIDE 345KV CKT 1	717	789	0.04198	106.9904	JOHNSON COUNTY - PITTSBURG 345KV CKT 1
FDNS	00NR	3	16WP	G15_095	FROM->TO	G14-057T 345.00 - SUNNYSIDE 345KV CKT 1	717	789	0.03531	106.4713	GEN563263 1-G15092_4 0.6900
FDNS	00NR	3	16WP	G15_095	FROM->TO	G14-057T 345.00 - SUNNYSIDE 345KV CKT 1	717	789	0.05343	106.0336	HUGO - VALLIANT 345KV CKT 1
FDNS	00NR	3	16WP	G15_095	FROM->TO	G14-057T 345.00 - SUNNYSIDE 345KV CKT 1	717	789	0.05343	106.0336	HUGO - VALLIANT 345KV CKT 1
FDNS	00NR	3	16WP	G15_095	FROM->TO	G14-057T 345.00 - SUNNYSIDE 345KV CKT 1	717	789	0.03531	104.7958	GEN563262 1-G15092_3 0.6900
FDNS	00NR	3	16WP	G15_095	FROM->TO	G14-057T 345.00 - SUNNYSIDE 345KV CKT 1	717	789	0.04186	101.3793	JOHNSON COUNTY - SUNNYSIDE 345KV CKT 1
FDNS	00NR	3	16WP	G15_095	TO->FROM	PITTSBURG - SEMINOLE 345KV CKT 1	717	717	0.09673	104.2823	G14-057T 345.00 - SUNNYSIDE 345KV CKT 1
FDNS	01NR	3	20L	G15_095	TO->FROM	TUPELO - TUPELO TAP 138KV CKT 1	143	143	0.06423	107.4593	PITTSBURG - SEMINOLE 345KV CKT 1
FDNS	01NR	3	20L	G15_095	TO->FROM	TUPELO - TUPELO TAP 138KV CKT 1	143	143	0.06423	107.4593	PITTSBURG - SEMINOLE 345KV CKT 1
FDNS	01NR	3	20L	G15_095	TO->FROM	TUPELO - TUPELO TAP 138KV CKT 1	143	143	0.06651	105.2478	PITTSBURG - VALLIANT 345KV CKT 1
FDNS	01NR	3	20L	G15_095	TO->FROM	TUPELO - TUPELO TAP 138KV CKT 1	143	143	0.06651	105.2478	PITTSBURG - VALLIANT 345KV CKT 1
FDNS	01NR	3	20L	G15_095	TO->FROM	TUPELO - TUPELO TAP 138KV CKT 1	143	143	0.05844	103.8973	G14-057T 345.00 - SUNNYSIDE 345KV CKT 1
FDNS	01NR	3	20L	G15_095	TO->FROM	TUPELO - TUPELO TAP 138KV CKT 1	143	143	0.05844	100.1681	G14-057T 345.00 - LAWTON EASTSIDE 345KV CKT 1
FDNSLock-Blown up	16ALL_B10T_DCTIE	0	16WP	G15_096		Non-Converged Contingency	460	460	0.80643	-	BELFIELD - DAGLUM 4230.00 230KV CKT 1
FDNSLock-Blown up	16ALL	0	16WP	G15_096		Non-Converged Contingency	460	460	0.80641	-	BELFIELD - DAGLUM 4230.00 230KV CKT 1
FDNSLock-Blown up	16NR	0	17G	G15_096		Non-Converged Contingency	460	460	0.8154	-	BELFIELD - DAGLUM 4230.00 230KV CKT 1
FDNSLock-Blown up	16ALL	0	17G	G15_096		Non-Converged Contingency	460	460	0.8067	-	BELFIELD - DAGLUM 4230.00 230KV CKT 1
FDNSLock-Blown up	16ALL	0	17SP	G15_096		Non-Converged Contingency	460	460	0.80628	-	BELFIELD - DAGLUM 4230.00 230KV CKT 1
FDNSLock-Blown up	16ALL_B10T_DCTIE	0	17SP	G15_096		Non-Converged Contingency	460	460	0.80625	-	BELFIELD - DAGLUM 4230.00 230KV CKT 1
FDNSLock-Blown up	16ALL	0	17SP	G15_096		Non-Converged Contingency	717	789	0.10831	-	G09_001IST 345.00 - GROTON 345KV CKT 1
FDNSLock-Blown up	16ALL	0	17SP	G15_096		Non-Converged Contingency	717	789	0.10831	-	G09_001IST 345.00 - WATERTOWN 345KV CKT 1
FDNSLock-Blown up	16ALL_B10T_DCTIE	0	17SP	G15_096		Non-Converged Contingency	717	789	0.10828	-	G09_001IST 345.00 - GROTON 345KV CKT 1
FDNSLock-Blown up	16ALL_B10T_DCTIE	0	17SP	G15_096		Non-Converged Contingency	717	789	0.10828	-	G09_001IST 345.00 - WATERTOWN 345KV CKT 1
FDNSLock-Blown up	16NR	0	20L	G15_096		Non-Converged Contingency	460	460	0.81832	-	BELFIELD - DAGLUM 4230.00 230KV CKT 1
FDNSLock-Blown up	16ALL	0	20L	G15_096		Non-Converged Contingency	460	460	0.807	-	BELFIELD - DAGLUM 4230.00 230KV CKT 1
FDNSLock-Blown up	16ALL	0	20SP	G15_096		Non-Converged Contingency	460	460	0.80788	-	BELFIELD - DAGLUM 4230.00 230KV CKT 1
FDNSLock-Blown up	16ALL	0	20WP	G15_096		Non-Converged Contingency	460	460	0.80799	-	BELFIELD - DAGLUM 4230.00 230KV CKT 1

SOLUTION	GROUP	SCENARIO	SEASON	SOURCE	DIRECTION	MONITORED ELEMENT	RATEA (MVA)	RATEB(MVA)	TDF	TC%LOADING (% MVA)	CONTINGENCY
FDNSLock-Blown up	16ALL	0	25SP	G15_096		Non-Converged Contingency	460	460	0.80762	-	BELFIELD - DAGLUM 4230.00 230KV CKT 1
FDNSLock-Blown up	16ALL	2	17SP	G15_096		Non-Converged Contingency	717	789	0.10802	-	G09_001IST 345.00 - GROTON 345KV CKT 1
FDNSLock-Blown up	16ALL	2	17SP	G15_096		Non-Converged Contingency	717	789	0.10802	-	G09_001IST 345.00 - WATERTOWN 345KV CKT 1
FDNSLock-Blown up	00NR	2	17SP	G15_096		Non-Converged Contingency	717	789	0.0382	-	G09_001IST 345.00 - GROTON 345KV CKT 1
FDNSLock-Blown up	00NR	2	17SP	G15_096		Non-Converged Contingency	717	789	0.0382	-	G09_001IST 345.00 - WATERTOWN 345KV CKT 1
FDNS	00NR	0	16WP	G15_096	FROM->TO	BEULAH - STANTONTAP 7115.00 115KV CKT 1	120	132	0.04647	101.2468	CENTER - COYOTE 345KV CKT 1
FDNS	16NR	0	17G	G15_096	FROM->TO	BEULAH - STANTONTAP 7115.00 115KV CKT 1	120	121	0.04817	100.1671	CENTER - COYOTE 345KV CKT 1
FDNS	00NR	0	20WP	G15_096	FROM->TO	BEULAH - STANTONTAP 7115.00 115KV CKT 1	120	132	0.04544	99.7	CENTER - COYOTE 345KV CKT 1
FDNS	16ALL_B10T_DCTIE	0	17SP	G15_096	FROM->TO	BROADLAND - HURON 230KV CKT 1	400	480	0.12035	104.0318	BASE CASE
FDNS	16ALL	0	17SP	G15_096	FROM->TO	BROADLAND - HURON 230KV CKT 1	400	480	0.12034	100.6167	BASE CASE
FDNS	16ALL	0	25SP	G15_096	FROM->TO	DICKINSON (KW1A 100) 230/115/13.8KV TRANSFORMER CKT 1	100	125	0.05731	114.896	BASE CASE
FDNS	16ALL	0	25SP	G15_096	FROM->TO	DICKINSON (KW1A 100) 230/115/13.8KV TRANSFORMER CKT 1	100	125	0.05731	114.2019	BASE CASE
FDNS	00NR	0	25SP	G15_096	FROM->TO	DICKINSON (KW1A 100) 230/115/13.8KV TRANSFORMER CKT 1	100	125	0.08303	110.8897	DAGLUM 4230.00 - RHAME 4 230.00 230KV CKT 1
FDNS	00NR	0	25SP	G15_096	FROM->TO	DICKINSON (KW1A 100) 230/115/13.8KV TRANSFORMER CKT 1	100	125	0.08303	109.9517	DAGLUM 4230.00 - RHAME 4 230.00 230KV CKT 1
FDNS	00NR	0	25SP	G15_096	FROM->TO	DICKINSON (KW1A 100) 230/115/13.8KV TRANSFORMER CKT 1	100	125	0.04999	109.0547	BASE CASE
FDNS	00NR_B10T_DCTIE	0	17SP	G15_096	FROM->TO	DICKINSON (KW1A 100) 230/115/13.8KV TRANSFORMER CKT 1	100	125	0.08306	108.3164	HEBRON 4 230.00 - MANDAN 4 230.00 230KV CKT 1
FDNS	00NR	0	25SP	G15_096	FROM->TO	DICKINSON (KW1A 100) 230/115/13.8KV TRANSFORMER CKT 1	100	125	0.04999	108.0342	BASE CASE
FDNS	00NR	0	25SP	G15_096	FROM->TO	DICKINSON (KW1A 100) 230/115/13.8KV TRANSFORMER CKT 1	100	125	0.09698	107.3189	BOWMAN - RHAME 4 230.00 230KV CKT 1
FDNS	00NR_B10T_DCTIE	0	17SP	G15_096	FROM->TO	DICKINSON (KW1A 100) 230/115/13.8KV TRANSFORMER CKT 1	100	125	0.08306	107.294	HEBRON 4 230.00 - MANDAN 4 230.00 230KV CKT 1
FDNS	00NR_B10T_DCTIE	0	17SP	G15_096	FROM->TO	DICKINSON (KW1A 100) 230/115/13.8KV TRANSFORMER CKT 1	100	125	0.08376	106.7672	DAGLUM 4230.00 - RHAME 4 230.00 230KV CKT 1
FDNS	00NR	0	25SP	G15_096	FROM->TO	DICKINSON (KW1A 100) 230/115/13.8KV TRANSFORMER CKT 1	100	125	0.09698	106.2333	BOWMAN - RHAME 4 230.00 230KV CKT 1
FDNS	00NR_B10T_DCTIE	0	17SP	G15_096	FROM->TO	DICKINSON (KW1A 100) 230/115/13.8KV TRANSFORMER CKT 1	100	125	0.08376	105.8493	DAGLUM 4230.00 - RHAME 4 230.00 230KV CKT 1
FDNS	16ALL	0	20SP	G15_096	FROM->TO	DICKINSON (KW1A 100) 230/115/13.8KV TRANSFORMER CKT 1	100	125	0.05722	105.7876	BASE CASE
FDNS	00NR	0	20SP	G15_096	FROM->TO	DICKINSON (KW1A 100) 230/115/13.8KV TRANSFORMER CKT 1	100	125	0.08301	105.778	DAGLUM 4230.00 - RHAME 4 230.00 230KV CKT 1
FDNS	16ALL_B10T_DCTIE	0	17SP	G15_096	FROM->TO	DICKINSON (KW1A 100) 230/115/13.8KV TRANSFORMER CKT 1	100	125	0.05763	105.6562	BASE CASE
FDNS	00NR_B10T_DCTIE	0	17SP	G15_096	FROM->TO	DICKINSON (KW1A 100) 230/115/13.8KV TRANSFORMER CKT 1	100	125	0.05047	105.2343	BASE CASE
FDNS	00NR	0	17SP	G15_096	FROM->TO	DICKINSON (KW1A 100) 230/115/13.8KV TRANSFORMER CKT 1	100	125	0.08306	104.8658	HEBRON 4 230.00 - MANDAN 4 230.00 230KV CKT 1
FDNS	16ALL	0	20SP	G15_096	FROM->TO	DICKINSON (KW1A 100) 230/115/13.8KV TRANSFORMER CKT 1	100	125	0.05722	104.7331	BASE CASE
FDNS	16ALL_B10T_DCTIE	0	17SP	G15_096	FROM->TO	DICKINSON (KW1A 100) 230/115/13.8KV TRANSFORMER CKT 1	100	125	0.05763	104.59	BASE CASE
FDNS	00NR	0	20SP	G15_096	FROM->TO	DICKINSON (KW1A 100) 230/115/13.8KV TRANSFORMER CKT 1	100	125	0.08301	104.5143	DAGLUM 4230.00 - RHAME 4 230.00 230KV CKT 1
FDNS	00NR_B10T_DCTIE	0	17SP	G15_096	FROM->TO	DICKINSON (KW1A 100) 230/115/13.8KV TRANSFORMER CKT 1	100	125	0.05047	104.1432	BASE CASE
FDNS	00NR	0	20SP	G15_096	FROM->TO	DICKINSON (KW1A 100) 230/115/13.8KV TRANSFORMER CKT 1	100	125	0.04995	104.1151	BASE CASE
FDNS	00NR	0	20SP	G15_096	FROM->TO	DICKINSON (KW1A 100) 230/115/13.8KV TRANSFORMER CKT 1	100	125	0.09701	104.0128	BOWMAN - RHAME 4 230.00 230KV CKT 1
FDNS	00NR	0	17SP	G15_096	FROM->TO	DICKINSON (KW1A 100) 230/115/13.8KV TRANSFORMER CKT 1	100	125	0.08306	103.9007	HEBRON 4 230.00 - MANDAN 4 230.00 230KV CKT 1
FDNS	00NR_B10T_DCTIE	0	17SP	G15_096	FROM->TO	DICKINSON (KW1A 100) 230/115/13.8KV TRANSFORMER CKT 1	100	125	0.09821	103.4147	BOWMAN - RHAME 4 230.00 230KV CKT 1
FDNS	16ALL	0	20WP	G15_096	FROM->TO	DICKINSON (KW1A 100) 230/115/13.8KV TRANSFORMER CKT 1	100	125	0.05702	103.2861	BASE CASE
FDNS	16ALL	0	20WP	G15_096	FROM->TO	DICKINSON (KW1A 100) 230/115/13.8KV TRANSFORMER CKT 1	100	125	0.05702	103.0294	BASE CASE
FDNS	00NR	0	20SP	G15_096	FROM->TO	DICKINSON (KW1A 100) 230/115/13.8KV TRANSFORMER CKT 1	100	125	0.04995	102.7349	BASE CASE
FDNS	00NR	0	20SP	G15_096	FROM->TO	DICKINSON (KW1A 100) 230/115/13.8KV TRANSFORMER CKT 1	100	125	0.09701	102.5925	BOWMAN - RHAME 4 230.00 230KV CKT 1
FDNS	00NR	0	25SP	G15_096	FROM->TO	DICKINSON (KW1A 100) 230/115/13.8KV TRANSFORMER CKT 1	100	125	0.0826	102.538	HEBRON 4 230.00 - MANDAN 4 230.00 230KV CKT 1
FDNS	00NR_B10T_DCTIE	0	17SP	G15_096	FROM->TO	DICKINSON (KW1A 100) 230/115/13.8KV TRANSFORMER CKT 1	100	125	0.09821	102.4798	BOWMAN - RHAME 4 230.00 230KV CKT 1
FDNS	00NR	0	17SP	G15_096	FROM->TO	DICKINSON (KW1A 100) 230/115/13.8KV TRANSFORMER CKT 1	100	125	0.09821	102.297	BOWMAN - RHAME 4 230.00 230KV CKT 1
FDNS	00NR	0	17SP	G15_096	FROM->TO	DICKINSON (KW1A 100) 230/115/13.8KV TRANSFORMER CKT 1	100	125	0.05047	102.1911	BASE CASE
FDNS	16ALL	0	16WP	G15_096	FROM->TO	DICKINSON (KW1A 100) 230/115/13.8KV TRANSFORMER CKT 1	100	125	0.05747	102.1232	BASE CASE
FDNS	16ALL	0	17SP	G15_096	FROM->TO	DICKINSON (KW1A 100) 230/115/13.8KV TRANSFORMER CKT 1	100	125	0.05762	102.1179	BASE CASE
FDNS	00NR	0	17SP	G15_096	FROM->TO	DICKINSON (KW1A 100) 230/115/13.8KV TRANSFORMER CKT 1	100	125	0.08376	101.9716	DAGLUM 4230.00 - RHAME 4 230.00 230KV CKT 1
FDNS	00NR	0	25SP	G15_096	FROM->TO	DICKINSON (KW1A 100) 230/115/13.8KV TRANSFORMER CKT 1	100	125	0.0826	101.7574	HEBRON 4 230.00 - MANDAN 4 230.00 230KV CKT 1
FDNS	00NR	0	20SP	G15_096	FROM->TO	DICKINSON (KW1A 100) 230/115/13.8KV TRANSFORMER CKT 1	100	125	0.08254	101.4982	HEBRON 4 230.00 - MANDAN 4 230.00 230KV CKT 1
FDNS	00NR	0	17SP	G15_096	FROM->TO	DICKINSON (KW1A 100) 230/115/13.8KV TRANSFORMER CKT 1	100	125	0.09821	101.3661	BOWMAN - RHAME 4 230.00 230KV CKT 1
FDNS	16ALL	0	16WP	G15_096	FROM->TO	DICKINSON (KW1A 100) 230/115/13.8KV TRANSFORMER CKT 1	100	125	0.05747	101.1533	BASE CASE
FDNS	00NR	0	17SP	G15_096	FROM->TO	DICKINSON (KW1A 100) 230/115/13.8KV TRANSFORMER CKT 1	100	125	0.05047	101.1261	BASE CASE
FDNS	00NR	0	17SP	G15_096	FROM->TO	DICKINSON (KW1A 100) 230/115/13.8KV TRANSFORMER CKT 1	100	125	0.08376	101.1135	DAGLUM 4230.00 - RHAME 4 230.00 230KV CKT 1
FDNS	16ALL	0	17SP	G15_096	FROM->TO	DICKINSON (KW1A 100) 230/115/13.8KV TRANSFORMER CKT 1	100	125	0.05762	101.0837	BASE CASE
FDNS	00NR	0	20SP	G15_096	FROM->TO	DICKINSON (KW1A 100) 230/115/13.8KV TRANSFORMER CKT 1	100	125	0.08254	100.3184	HEBRON 4 230.00 - MANDAN 4 230.00 230KV CKT 1
FDNS	00NR	0	20WP	G15_096	FROM->TO	DICKINSON (KW1A 100) 230/115/13.8KV TRANSFORMER CKT 1	100	125	0.04905	99.6	BASE CASE
FDNS	00NR	0	20WP	G15_096	FROM->TO	DICKINSON (KW1A 100) 230/115/13.8KV TRANSFORMER CKT 1	100	125	0.04905	99.3	BASE CASE
FDNS	00NR	0	16WP	G15_096	TO->FROM	GARRISON - STANTONTAP 7115.00 115KV CKT 1	120	132	0.04647	100.9375	CENTER - COYOTE 345KV CKT 1
FDNS	16NR	0	17G	G15_096	TO->FROM	GARRISON - STANTONTAP 7115.00 115KV CKT 1	120	121	0.04817	99.8	CENTER - COYOTE 345KV CKT 1
FDNS	00NR	0	20WP	G15_096	TO->FROM	GARRISON - STANTONTAP 7115.00 115KV CKT 1	120	132	0.04544	99.4	CENTER - COYOTE 345KV CKT 1
FDNS	16NR	0	17G	G15_096	TO->FROM	GLENHAM - L3 HAWDON 230KV CKT 1	210	210	0.04647	118.9624	FT THOMPSON - FTTHOM1-LNX3345.00 345KV CKT Z
FDNS	16NR	0	17G	G15_096	TO->FROM	GLENHAM - L3 HAWDON 230KV CKT 1	210	210	0.04647	118.6238	P12:345:UMZB:# 108 #: LOS FT IN ND. LOS FT
FDNS	16NR	0	17G	G15_096	TO->FROM	GLENHAM - L3 HAWDON 230KV CKT 1	210	210	0.04647	118.6196	LELAND OLDS - LELAND2-LNX3345.00 345KV CKT Z
FDNS	16NR	0	17G	G15_096	TO->FROM	GLENHAM - L3 HAWDON 230KV CKT 1	210	210	0.04647	118.4953	FTTHOM1-LNX3345.00 - LELAND2-LNX3345.00 345KV CKT 1
FDNS	16NR	0	20L	G15_096	TO->FROM	GLENHAM - L3 HAWDON 230KV CKT 1	210	210	0.03715	113.0153	LELAND OLDS - LELAND2-LNX3345.00 345KV CKT Z
FDNS	16NR	0	20L	G15_096	TO->FROM	GLENHAM - L3 HAWDON 230KV CKT 1	210	210	0.03715	112.9734	P12:345:UMZB:# 108 #: LOS FT IN ND. LOS FT
FDNS	16NR	0	20L	G15_096	TO->FROM	GLENHAM - L3 HAWDON 230KV CKT 1	210	210	0.03715	112.9305	FT THOMPSON - FTTHOM1-LNX3345.00 345KV CKT Z
FDNS	16NR	0	20L	G15_096	TO->FROM	GLENHAM - L3 HAWDON 230KV CKT 1	210	210	0.03715	112.9032	FTTHOM1-LNX3345.00 - LELAND2-LNX3345.00 345KV CKT 1
FDNS	16NR	0	17G	G15_096	TO->FROM	GLENHAM - L3 HAWDON 230KV CKT 1	210	210	0.04387	110.9935	P12:345:UMZB:# 102 #: AVS BD IN ND. AVS BRD LR
FDNS	16NR	0	17G	G15_096	TO->FROM	GLENHAM - L3 HAWDON 230KV CKT 1	210	210	0.04387	110.993	P12:345:UMZB:# 103 #: BD IN SD. LOSS OF LINE
FDNS	16NR	0	17G	G15_096	TO->FROM	GLENHAM - L3 HAWDON 230KV CKT 1	210	210	0.04387	110.9056	ANTELOP-LNX3345.00 - ANTELOPE VALLEY 345KV CKT Z
FDNS	16NR	0	17G	G15_096	TO->FROM	GLENHAM - L3 HAWDON 230KV CKT 1	210	210	0.04387	110.6476	ANTELOP-LNX3345.00 - BRDLAND-LNX3345.00 345KV CKT 1
FDNS	16NR	0	17G	G15_096	TO->FROM	GLENHAM - L3 HAWDON 230KV CKT 1	210	210	0.04387	110.4136	BRDLAND-LNX3345.00 - HURON 345KV CKT Z
FDNS	16NR	0	17G	G15_096	TO->FROM	GLENHAM - L3 HAWDON 230KV CKT 1	210	210	0.04387	110.4134	HURON (BD KU2A) 345/230/13.8KV TRANSFORMER CKT 1
FDNS	16NR	0	17G	G15_096	TO->FROM	GLENHAM - L3 HAWDON 230KV CKT 1	210	210	0.04387	110.4134	HURON (BD KU2A) 345/230/13.8KV TRANSFORMER CKT 1
FDNS	16NR	0	17G	G15_096	TO->FROM	GLENHAM - L3 HAWDON 230KV CKT 1	210	210	0.04387	110.4114	BROADLAND - HURON 230KV CKT 1
FDNS	16NR	0	20L	G15_096	TO->FROM	GLENHAM - L3 HAWDON 230KV CKT 1	210	210	0.05137	107.6661	BISON - HETINGER 230KV CKT 1
FDNS	16NR	0	17G	G15_096	TO->FROM	GLENHAM - L3 HAWDON 230KV CKT 1	210	210	0.05974	106.4224	BISON - HETINGER 230KV CKT 1
FDNS	16NR	0	20L	G15_096	TO->FROM	GLENHAM - L3 HAWDON 230KV CKT 1	210	210	0.05137	106.3048	BISON - MAURINE 230KV CKT 1
FDNS	16NR	0	17G	G15_096	TO->FROM	GLENHAM - L3 HAWDON 230KV CKT 1	210	210	0.04114	105.9414	GROTON-LNX3 345.00 - LELAND1-LNX3345.00 345KV CKT 1

SOLUTION	GROUP	SCENARIO	SEASON	SOURCE	DIRECTION	MONITORED ELEMENT	RATEA (MVA)	RATEB(MVA)	TDF	TC%LOADING (% MVA)	CONTINGENCY
FDNS	16NR	0	17G	G15_096	TO->FROM	GLENHAM - L3 HAWDON 230KV CKT 1	210	210	0.04114	105.6238	P12:345:UMZB:# 109 #: LOS GRT IN ND. LOS GRT
FDNS	16NR	0	17G	G15_096	TO->FROM	GLENHAM - L3 HAWDON 230KV CKT 1	210	210	0.05974	105.6146	BISON - MAURINE 230KV CKT 1
FDNS	16NR	0	17G	G15_096	TO->FROM	GLENHAM - L3 HAWDON 230KV CKT 1	210	210	0.04114	105.6059	GROTON - GROTON-LNX3 345.00 345KV CKT Z
FDNS	16NR	0	17G	G15_096	TO->FROM	GLENHAM - L3 HAWDON 230KV CKT 1	210	210	0.04114	105.596	LELAND OLDS - LELAND1-LNX3345.00 345KV CKT Z
FDNS	16NR	0	20L	G15_096	TO->FROM	GLENHAM - L3 HAWDON 230KV CKT 1	210	210	0.03516	105.3126	ANTELOP-LNX3345.00 - BRDLAND-LNX3345.00 345KV CKT 1
FDNS	16NR	0	20L	G15_096	TO->FROM	GLENHAM - L3 HAWDON 230KV CKT 1	210	210	0.03516	105.1559	P12:345:UMZB:# 102 #: AVS BD IN ND. AVS BRD LR
FDNS	16NR	0	20L	G15_096	TO->FROM	GLENHAM - L3 HAWDON 230KV CKT 1	210	210	0.03516	105.1557	P12:345:UMZB:# 103 #: BD IN SD. LOSS OF LINE
FDNS	16NR	0	20L	G15_096	TO->FROM	GLENHAM - L3 HAWDON 230KV CKT 1	210	210	0.03516	105.1096	BROADLAND - HURON 230KV CKT 1
FDNS	16NR	0	20L	G15_096	TO->FROM	GLENHAM - L3 HAWDON 230KV CKT 1	210	210	0.03516	105.1094	BRDLAND-LNX3345.00 - HURON 345KV CKT Z
FDNS	16NR	0	20L	G15_096	TO->FROM	GLENHAM - L3 HAWDON 230KV CKT 1	210	210	0.03516	105.1092	HURON (BD KU2A) 345/230/13.8KV TRANSFORMER CKT 1
FDNS	16NR	0	20L	G15_096	TO->FROM	GLENHAM - L3 HAWDON 230KV CKT 1	210	210	0.03516	105.1092	HURON (BD KU2A) 345/230/13.8KV TRANSFORMER CKT 1
FDNS	16NR	0	20L	G15_096	TO->FROM	GLENHAM - L3 HAWDON 230KV CKT 1	210	210	0.03516	105.0973	ANTELOP-LNX3345.00 - ANTELOPE VALLEY 345KV CKT Z
FDNS	16NR	0	17G	G15_096	TO->FROM	GLENHAM - L3 HAWDON 230KV CKT 1	210	210	0.04083	101.9669	CENTER - JAMESTOWN 345KV CKT 1
FDNS	16NR	0	17G	G15_096	TO->FROM	GLENHAM - L3 HAWDON 230KV CKT 1	210	210	0.03984	101.1779	CHISAGO COUNTY - FORBES 500KV CKT 1
FDNS	16NR	0	17G	G15_096	TO->FROM	GLENHAM - L3 HAWDON 230KV CKT 1	210	210	0.04048	101.078	G09_001IST 345.00 - WATERTOWN 345KV CKT 1
FDNS	16NR	0	20L	G15_096	TO->FROM	GLENHAM - L3 HAWDON 230KV CKT 1	210	210	0.03305	101.0137	BUFFALO - JAMESTOWN 345KV CKT 1
FDNS	16NR	0	17G	G15_096	TO->FROM	GLENHAM - L3 HAWDON 230KV CKT 1	210	210	0.04048	100.9366	G09_001IST 345.00 - GROTON 345KV CKT 1
FDNS	16NR	0	17G	G15_096	TO->FROM	GLENHAM - L3 HAWDON 230KV CKT 1	210	210	0.03984	100.7507	CHISAGO COUNTY - CHISAGO COUNTY 500KV CKT 1
FDNS	16NR	0	20L	G15_096	TO->FROM	GLENHAM - L3 HAWDON 230KV CKT 1	210	210	0.03293	100.0929	GROTON-LNX3 345.00 - LELAND1-LNX3345.00 345KV CKT 1
FDNS	16NR	0	20L	G15_096	TO->FROM	GLENHAM - L3 HAWDON 230KV CKT 1	210	210	0.03293	99.9	GROTON - GROTON-LNX3 345.00 345KV CKT Z
FDNS	16NR	0	20L	G15_096	TO->FROM	GLENHAM - L3 HAWDON 230KV CKT 1	210	210	0.03293	99.9	LELAND OLDS - LELAND1-LNX3345.00 345KV CKT Z
FDNS	16NR	0	20L	G15_096	TO->FROM	GLENHAM - L3 HAWDON 230KV CKT 1	210	210	0.03293	99.9	P12:345:UMZB:# 109 #: LOS GRT IN ND. LOS GRT
FDNS	16NR	0	17G	G15_096	TO->FROM	GLENHAM - L3 HAWDON 230KV CKT 1	210	210	0.04027	99.6	ALEXMRES3 345.00 - BISON 3 345.00 345KV CKT 1
FDNS	16NR	0	17G	G15_096	TO->FROM	GLENHAM - L3 HAWDON 230KV CKT 1	210	210	0.04001	99.5	BISMARK - JAMES TOWN 230KV CKT 1
FDNS	16NR	0	17G	G15_096	TO->FROM	GLENHAM - L3 HAWDON 230KV CKT 1	210	210	0.04001	99.5	BISMARK - WEBER 230KV CKT 1
FDNS	16NR	0	17G	G15_096	TO->FROM	GLENHAM - L3 HAWDON 230KV CKT 1	210	210	0.04001	99.5	JAMES TOWN - WEBER 230KV CKT 1
FDNS	00NR	0	16WP	G15_096	FROM->TO	GR ISLD-LNX3345.00 - GRAND ISLAND 345KV CKT Z	720	720	0.03017	105.8059	NUNDRWD - WAYSIDE 230KV CKT 1
FDNS	00NR_B10T_DCTIE	0	16WP	G15_096	FROM->TO	GR ISLD-LNX3345.00 - GRAND ISLAND 345KV CKT Z	720	720	0.03017	103.5498	NUNDRWD - WAYSIDE 230KV CKT 1
FDNS	00NR	0	16WP	G15_096	TO->FROM	GR ISLD-LNX3345.00 - HOLT.CO3 345.00 345KV CKT 1	720	720	0.03017	105.1367	NUNDRWD - WAYSIDE 230KV CKT 1
FDNS	00NR_B10T_DCTIE	0	16WP	G15_096	TO->FROM	GR ISLD-LNX3345.00 - HOLT.CO3 345.00 345KV CKT 1	720	720	0.03017	102.8993	NUNDRWD - WAYSIDE 230KV CKT 1
FDNS	16NR	0	17G	G15_096	FROM->TO	HURON (BD KU2A) 345/230/13.8KV TRANSFORMER CKT 1	400	400	0.06628	114.1804	LELAND OLDS - LELAND2-LNX3345.00 345KV CKT Z
FDNS	16NR	0	17G	G15_096	FROM->TO	HURON (BD KU2A) 345/230/13.8KV TRANSFORMER CKT 1	400	400	0.06628	113.9679	FT THOMPSON - FTTHOM1-LNX3345.00 345KV CKT Z
FDNS	16NR	0	17G	G15_096	FROM->TO	HURON (BD KU2A) 345/230/13.8KV TRANSFORMER CKT 1	400	400	0.06628	113.6647	P12:345:UMZB:# 108 #: LOS FT IN ND. LOS FT
FDNS	16NR	0	17G	G15_096	FROM->TO	HURON (BD KU2A) 345/230/13.8KV TRANSFORMER CKT 1	400	400	0.0619	113.5579	LELAND OLDS - LELAND1-LNX3345.00 345KV CKT Z
FDNS	16NR	0	17G	G15_096	FROM->TO	HURON (BD KU2A) 345/230/13.8KV TRANSFORMER CKT 1	400	400	0.0619	113.5213	P12:345:UMZB:# 109 #: LOS GRT IN ND. LOS GRT
FDNS	16NR	0	17G	G15_096	FROM->TO	HURON (BD KU2A) 345/230/13.8KV TRANSFORMER CKT 1	400	400	0.0619	113.5163	GROTON - GROTON-LNX3 345.00 345KV CKT Z
FDNS	16NR	0	17G	G15_096	FROM->TO	HURON (BD KU2A) 345/230/13.8KV TRANSFORMER CKT 1	400	400	0.06628	113.2661	FTTHOM1-LNX3345.00 - LELAND2-LNX3345.00 345KV CKT 1
FDNS	16NR	0	17G	G15_096	FROM->TO	HURON (BD KU2A) 345/230/13.8KV TRANSFORMER CKT 1	400	400	0.0619	113.2137	GROTON-LNX3 345.00 - LELAND1-LNX3345.00 345KV CKT 1
FDNS	16NR	0	17G	G15_096	FROM->TO	HURON (BD KU2A) 345/230/13.8KV TRANSFORMER CKT 1	400	400	0.06628	109.841	LELAND OLDS - LELAND2-LNX3345.00 345KV CKT Z
FDNS	16NR	0	17G	G15_096	FROM->TO	HURON (BD KU2A) 345/230/13.8KV TRANSFORMER CKT 1	400	400	0.06628	109.684	FT THOMPSON - FTTHOM1-LNX3345.00 345KV CKT Z
FDNS	16NR	0	17G	G15_096	FROM->TO	HURON (BD KU2A) 345/230/13.8KV TRANSFORMER CKT 1	400	400	0.06628	109.393	P12:345:UMZB:# 108 #: LOS FT IN ND. LOS FT
FDNS	16NR	0	17G	G15_096	FROM->TO	HURON (BD KU2A) 345/230/13.8KV TRANSFORMER CKT 1	400	400	0.0619	109.3149	LELAND OLDS - LELAND1-LNX3345.00 345KV CKT Z
FDNS	16NR	0	17G	G15_096	FROM->TO	HURON (BD KU2A) 345/230/13.8KV TRANSFORMER CKT 1	400	400	0.0619	109.284	GROTON - GROTON-LNX3 345.00 345KV CKT Z
FDNS	16NR	0	17G	G15_096	FROM->TO	HURON (BD KU2A) 345/230/13.8KV TRANSFORMER CKT 1	400	400	0.0619	109.2831	P12:345:UMZB:# 109 #: LOS GRT IN ND. LOS GRT
FDNS	16NR	0	17G	G15_096	FROM->TO	HURON (BD KU2A) 345/230/13.8KV TRANSFORMER CKT 1	400	400	0.06628	109.0139	FTTHOM1-LNX3345.00 - LELAND2-LNX3345.00 345KV CKT 1
FDNS	16NR	0	17G	G15_096	FROM->TO	HURON (BD KU2A) 345/230/13.8KV TRANSFORMER CKT 1	400	400	0.0619	108.9684	GROTON-LNX3 345.00 - LELAND1-LNX3345.00 345KV CKT 1
FDNS	00NR_B10T_DCTIE	0	17SP	G15_096	FROM->TO	HURON (BD KU2A) 345/230/13.8KV TRANSFORMER CKT 1	400	400	0.07383	106.2248	LELAND OLDS - LELAND2-LNX3345.00 345KV CKT Z
FDNS	00NR_B10T_DCTIE	0	17SP	G15_096	FROM->TO	HURON (BD KU2A) 345/230/13.8KV TRANSFORMER CKT 1	400	400	0.07383	105.7378	P12:345:UMZB:# 108 #: LOS FT IN ND. LOS FT
FDNS	00NR_B10T_DCTIE	0	17SP	G15_096	FROM->TO	HURON (BD KU2A) 345/230/13.8KV TRANSFORMER CKT 1	400	400	0.07383	105.7264	FT THOMPSON - FTTHOM1-LNX3345.00 345KV CKT Z
FDNS	00NR_B10T_DCTIE	0	17SP	G15_096	FROM->TO	HURON (BD KU2A) 345/230/13.8KV TRANSFORMER CKT 1	400	400	0.07383	105.0881	FTTHOM1-LNX3345.00 - LELAND2-LNX3345.00 345KV CKT 1
FDNS	00NR_B10T_DCTIE	0	17SP	G15_096	FROM->TO	HURON (BD KU2A) 345/230/13.8KV TRANSFORMER CKT 1	400	400	0.06939	104.3591	LELAND OLDS - LELAND1-LNX3345.00 345KV CKT Z
FDNS	00NR_B10T_DCTIE	0	17SP	G15_096	FROM->TO	HURON (BD KU2A) 345/230/13.8KV TRANSFORMER CKT 1	400	400	0.06939	104.2434	GROTON - GROTON-LNX3 345.00 345KV CKT Z
FDNS	00NR_B10T_DCTIE	0	17SP	G15_096	FROM->TO	HURON (BD KU2A) 345/230/13.8KV TRANSFORMER CKT 1	400	400	0.06939	104.2392	P12:345:UMZB:# 109 #: LOS GRT IN ND. LOS GRT
FDNS	00NR	0	17SP	G15_096	FROM->TO	HURON (BD KU2A) 345/230/13.8KV TRANSFORMER CKT 1	400	400	0.07383	104.2379	LELAND OLDS - LELAND2-LNX3345.00 345KV CKT Z
FDNS	00NR	0	17SP	G15_096	FROM->TO	HURON (BD KU2A) 345/230/13.8KV TRANSFORMER CKT 1	400	400	0.07383	103.7749	P12:345:UMZB:# 108 #: LOS FT IN ND. LOS FT
FDNS	00NR	0	17SP	G15_096	FROM->TO	HURON (BD KU2A) 345/230/13.8KV TRANSFORMER CKT 1	400	400	0.07383	103.7693	FT THOMPSON - FTTHOM1-LNX3345.00 345KV CKT Z
FDNS	00NR_B10T_DCTIE	0	17SP	G15_096	FROM->TO	HURON (BD KU2A) 345/230/13.8KV TRANSFORMER CKT 1	400	400	0.06939	103.6769	GROTON-LNX3 345.00 - LELAND1-LNX3345.00 345KV CKT 1
FDNS	00NR	0	17SP	G15_096	FROM->TO	HURON (BD KU2A) 345/230/13.8KV TRANSFORMER CKT 1	400	400	0.07383	103.2836	FTTHOM1-LNX3345.00 - LELAND2-LNX3345.00 345KV CKT 1
FDNS	00NR_B10T_DCTIE	0	17SP	G15_096	FROM->TO	HURON (BD KU2A) 345/230/13.8KV TRANSFORMER CKT 1	400	400	0.07383	102.9326	LELAND OLDS - LELAND2-LNX3345.00 345KV CKT Z
FDNS	00NR_B10T_DCTIE	0	17SP	G15_096	FROM->TO	HURON (BD KU2A) 345/230/13.8KV TRANSFORMER CKT 1	400	400	0.07383	102.5294	FT THOMPSON - FTTHOM1-LNX3345.00 345KV CKT Z
FDNS	16NR	0	17G	G15_096	FROM->TO	HURON (BD KU2A) 345/230/13.8KV TRANSFORMER CKT 1	400	400	0.05784	102.5214	G09_001IST 345.00 - WATERTOWN 345KV CKT 1
FDNS	00NR_B10T_DCTIE	0	17SP	G15_096	FROM->TO	HURON (BD KU2A) 345/230/13.8KV TRANSFORMER CKT 1	400	400	0.07383	102.5105	P12:345:UMZB:# 108 #: LOS FT IN ND. LOS FT
FDNS	16NR	0	17G	G15_096	FROM->TO	HURON (BD KU2A) 345/230/13.8KV TRANSFORMER CKT 1	400	400	0.05784	102.506	G09_001IST 345.00 - GROTON 345KV CKT 1
FDNS	00NR	0	17SP	G15_096	FROM->TO	HURON (BD KU2A) 345/230/13.8KV TRANSFORMER CKT 1	400	400	0.06939	102.3438	GROTON-LNX3 345.00 - LELAND1-LNX3345.00 345KV CKT 1
FDNS	00NR	0	17SP	G15_096	FROM->TO	HURON (BD KU2A) 345/230/13.8KV TRANSFORMER CKT 1	400	400	0.06939	102.31	LELAND OLDS - LELAND1-LNX3345.00 345KV CKT Z
FDNS	00NR	0	17SP	G15_096	FROM->TO	HURON (BD KU2A) 345/230/13.8KV TRANSFORMER CKT 1	400	400	0.06939	102.2631	GROTON - GROTON-LNX3 345.00 345KV CKT Z
FDNS	00NR	0	17SP	G15_096	FROM->TO	HURON (BD KU2A) 345/230/13.8KV TRANSFORMER CKT 1	400	400	0.06939	102.2562	P12:345:UMZB:# 109 #: LOS GRT IN ND. LOS GRT
FDNS	00NR_B10T_DCTIE	0	17SP	G15_096	FROM->TO	HURON (BD KU2A) 345/230/13.8KV TRANSFORMER CKT 1	400	400	0.07383	101.9175	FTTHOM1-LNX3345.00 - LELAND2-LNX3345.00 345KV CKT 1
FDNS	16NR	0	17G	G15_096	FROM->TO	HURON (BD KU2A) 345/230/13.8KV TRANSFORMER CKT 1	400	400	0.05707	101.5859	CENTER - JAMESTOWN 345KV CKT 1
FDNS	16NR	0	17G	G15_096	FROM->TO	HURON (BD KU2A) 345/230/13.8KV TRANSFORMER CKT 1	400	400	0.05935	101.4238	GLENHAM - L3 HAWDON 230KV CKT 1
FDNS	00NR_B10T_DCTIE	0	17SP	G15_096	FROM->TO	HURON (BD KU2A) 345/230/13.8KV TRANSFORMER CKT 1	400	400	0.06939	101.3535	LELAND OLDS - LELAND1-LNX3345.00 345KV CKT Z
FDNS	16NR	0	17G	G15_096	FROM->TO	HURON (BD KU2A) 345/230/13.8KV TRANSFORMER CKT 1	400	400	0.07623	101.3284	BISON - HETINGER 230KV CKT 1
FDNS	00NR_B10T_DCTIE	0	17SP	G15_096	FROM->TO	HURON (BD KU2A) 345/230/13.8KV TRANSFORMER CKT 1	400	400	0.06939	101.2575	GROTON - GROTON-LNX3 345.00 345KV CKT Z
FDNS	00NR_B10T_DCTIE	0	17SP	G15_096	FROM->TO	HURON (BD KU2A) 345/230/13.8KV TRANSFORMER CKT 1	400	400	0.06939	101.2491	P12:345:UMZB:# 109 #: LOS GRT IN ND. LOS GRT
FDNS	00NR	0	17SP	G15_096	FROM->TO	HURON (BD KU2A) 345/230/13.8KV TRANSFORMER CKT 1	400	400	0.07383	101.1944	LELAND OLDS - LELAND2-LNX3345.00 345KV CKT Z
FDNS	16ALL_B10T_DCTIE	0	17SP	G15_096	FROM->TO	HURON (BD KU2A) 345/230/13.8KV TRANSFORMER CKT 1	400	400	0.12035	101.098	BASE CASE
FDNS	16NR	0	17G	G15_096	FROM->TO	HURON (BD KU2A) 345/230/13.8KV TRANSFORMER CKT 1	400	400	0.07623	100.9202	BISON - MAURINE 230KV CKT 1
FDNS	00NR	0	17SP	G15_096	FROM->TO	HURON (BD KU2A) 345/230/13.8KV TRANSFORMER CKT 1	400	400	0.07383	100.8153	FT THOMPSON - FTTHOM1-LNX3345.00 345KV CKT Z
FDNS	00NR	0	17SP	G15_096	FROM->TO	HURON (BD KU2A) 345/230/13.8KV TRANSFORMER CKT 1	400	400	0.07383	100.7927	P12:345:UMZB:# 108 #: LOS FT IN ND. LOS FT

SOLUTION	GROUP	SCENARIO	SEASON	SOURCE	DIRECTION	MONITORED ELEMENT	RATEA (MVA)	RATEB(MVA)	TDF	TC%LOADING (% MVA)	CONTINGENCY
FDNS	00NR_B10T_DCTIE	0	17SP	G15_096	FROM->TO	HURON (BD KU2A) 345/230/13.8KV TRANSFORMER CKT 1	400	400	0.06939	100.7225	GROTON-LNX3 345.00 - LELAND1-LNX3345.00 345KV CKT 1
FDNS	16NR	0	17G	G15_096	FROM->TO	HURON (BD KU2A) 345/230/13.8KV TRANSFORMER CKT 1	400	400	0.0591	100.3709	GLENHAM - WHITLOK 230KV CKT 1
FDNS	00NR	0	17SP	G15_096	FROM->TO	HURON (BD KU2A) 345/230/13.8KV TRANSFORMER CKT 1	400	400	0.07383	100.3411	FTTHOM1-LNX3345.00 - LELAND2-LNX3345.00 345KV CKT 1
FDNS	16NR	0	17G	G15_096	FROM->TO	HURON (BD KU2A) 345/230/13.8KV TRANSFORMER CKT 1	400	400	0.0591	100.2941	P12:230:UMZB:# 114 #: SB IN SD. SB-WK-GH
FDNS	16NR	0	17G	G15_096	FROM->TO	HURON (BD KU2A) 345/230/13.8KV TRANSFORMER CKT 1	400	400	0.0591	100.2941	P12:230:UMZB:# 117 #: WK IN SD. SB-WK-GH
FDNS	16NR	0	17G	G15_096	FROM->TO	HURON (BD KU2A) 345/230/13.8KV TRANSFORMER CKT 1	400	400	0.0591	100.1927	SULLYBT-LNX3230.00 - WHITLOK 230KV CKT 1
FDNS	16NR	0	17G	G15_096	FROM->TO	HURON (BD KU2A) 345/230/13.8KV TRANSFORMER CKT 1	400	400	0.0591	100.1906	SULLEY BUTTE - SULLYBT-LNX3230.00 230KV CKT Z
FDNS	16NR	0	17G	G15_096	FROM->TO	HURON (BD KU2A) 345/230/13.8KV TRANSFORMER CKT 1	400	400	0.0591	99.9	OAHE - SULLEY BUTTE 230KV CKT 1
FDNS	16NR	0	17G	G15_096	FROM->TO	HURON (BD KU2A) 345/230/13.8KV TRANSFORMER CKT 1	400	400	0.05784	99.7	G09_001IST 345.00 - GROTON 345KV CKT 1
FDNS	16NR	0	17G	G15_096	FROM->TO	HURON (BD KU2A) 345/230/13.8KV TRANSFORMER CKT 1	400	400	0.05784	99.7	G09_001IST 345.00 - WATERTOWN 345KV CKT 1
FDNS	00NR	0	17SP	G15_096	FROM->TO	HURON (BD KU2A) 345/230/13.8KV TRANSFORMER CKT 1	400	400	0.06939	99.6	GROTON-LNX3 345.00 - LELAND1-LNX3345.00 345KV CKT 1
FDNS	00NR	0	17SP	G15_096	FROM->TO	HURON (BD KU2A) 345/230/13.8KV TRANSFORMER CKT 1	400	400	0.06939	99.6	LELAND OLDS - LELAND1-LNX3345.00 345KV CKT Z
FDNS	00NR	0	17SP	G15_096	FROM->TO	HURON (BD KU2A) 345/230/13.8KV TRANSFORMER CKT 1	400	400	0.06939	99.5	GROTON - GROTON-LNX3 345.00 345KV CKT Z
FDNS	00NR	0	17SP	G15_096	FROM->TO	HURON (BD KU2A) 345/230/13.8KV TRANSFORMER CKT 1	400	400	0.06939	99.5	P12:345:UMZB:# 109 #: LOS GRT IN ND. LOS GRT
FDNS	16NR	0	17G	G15_096	FROM->TO	HURON (BD KU2A) 345/230/13.8KV TRANSFORMER CKT 1	400	400	0.05525	99.4	CHISAGO COUNTY - FORBES 500KV CKT 1
FDNS	16NR	0	17G	G15_096	FROM->TO	HURON (BD KU2A) 345/230/13.8KV TRANSFORMER CKT 1	400	400	0.05525	99.2	CHISAGO COUNTY - CHISAGO COUNTY 500KV CKT 1
FDNS	00NR_B10T_DCTIE	0	17SP	G15_096	TO->FROM	WATERTN-LNX3345.00 - WATERTOWN 345KV CKT Z	720	792	0.04993	99	BLAIR - GRANITE FALLS 230KV CKT 1
FDNS	00NR_B10T_DCTIE	0	17SP	G15_096	TO->FROM	WATERTN-LNX3345.00 - WATERTOWN 345KV CKT Z	720	792	0.04993	99	BLAIR - GRANITE FALLS 230KV CKT 1
FDNS	00NR_B10T_DCTIE	0	17SP	G15_096	FROM->TO	WATERTN-LNX3345.00 - WHITE 345KV CKT 1	720	792	0.04993	99.7	BLAIR - GRANITE FALLS 230KV CKT 1
FDNS	00NR_B10T_DCTIE	0	17SP	G15_096	FROM->TO	WATERTN-LNX3345.00 - WHITE 345KV CKT 1	720	792	0.04993	99.7	BLAIR - GRANITE FALLS 230KV CKT 1
FDNS	00NR	2	16WP	G15_096	FROM->TO	BEULAH - STANTONTAP 7115.00 115KV CKT 1	120	132	0.05146	102.683	CENTER - COYOTE 345KV CKT 1
FDNS	16NR	2	17G	G15_096	FROM->TO	BEULAH - STANTONTAP 7115.00 115KV CKT 1	120	121	0.0532	101.9013	CENTER - COYOTE 345KV CKT 1
FDNS	00NR	2	20WP	G15_096	FROM->TO	BEULAH - STANTONTAP 7115.00 115KV CKT 1	120	132	0.05039	100.637	CENTER - COYOTE 345KV CKT 1
FDNS	16ALL	2	17SP	G15_096	FROM->TO	BROADLAND - HURON 230KV CKT 1	400	480	0.11888	100.4387	BASE CASE
FDNS	00NR	2	16WP	G15_096	TO->FROM	GARRISON - STANTONTAP 7115.00 115KV CKT 1	120	132	0.05146	102.377	CENTER - COYOTE 345KV CKT 1
FDNS	16NR	2	17G	G15_096	TO->FROM	GARRISON - STANTONTAP 7115.00 115KV CKT 1	120	121	0.0532	101.5648	CENTER - COYOTE 345KV CKT 1
FDNS	00NR	2	20WP	G15_096	TO->FROM	GARRISON - STANTONTAP 7115.00 115KV CKT 1	120	132	0.05039	100.343	CENTER - COYOTE 345KV CKT 1
FDNS	16NR	2	17G	G15_096	TO->FROM	GLENHAM - L3 HAWDON 230KV CKT 1	210	210	0.04912	119.1513	LELAND OLDS - LELAND2-LNX3345.00 345KV CKT Z
FDNS	16NR	2	17G	G15_096	TO->FROM	GLENHAM - L3 HAWDON 230KV CKT 1	210	210	0.04912	119.1451	P12:345:UMZB:# 108 #: LOS FT IN ND. LOS FT
FDNS	16NR	2	17G	G15_096	TO->FROM	GLENHAM - L3 HAWDON 230KV CKT 1	210	210	0.04912	118.9495	FT THOMPSON - FTTHOM1-LNX3345.00 345KV CKT Z
FDNS	16NR	2	17G	G15_096	TO->FROM	GLENHAM - L3 HAWDON 230KV CKT 1	210	210	0.04912	118.8726	FTTHOM1-LNX3345.00 - LELAND2-LNX3345.00 345KV CKT 1
FDNS	16NR	2	20L	G15_096	TO->FROM	GLENHAM - L3 HAWDON 230KV CKT 1	210	210	0.03971	113.3551	P12:345:UMZB:# 108 #: LOS FT IN ND. LOS FT
FDNS	16NR	2	20L	G15_096	TO->FROM	GLENHAM - L3 HAWDON 230KV CKT 1	210	210	0.03971	113.3455	LELAND OLDS - LELAND2-LNX3345.00 345KV CKT Z
FDNS	16NR	2	20L	G15_096	TO->FROM	GLENHAM - L3 HAWDON 230KV CKT 1	210	210	0.03971	113.3113	FT THOMPSON - FTTHOM1-LNX3345.00 345KV CKT Z
FDNS	16NR	2	20L	G15_096	TO->FROM	GLENHAM - L3 HAWDON 230KV CKT 1	210	210	0.03971	113.2882	FTTHOM1-LNX3345.00 - LELAND2-LNX3345.00 345KV CKT 1
FDNS	16NR	2	17G	G15_096	TO->FROM	GLENHAM - L3 HAWDON 230KV CKT 1	210	210	0.04641	111.3466	ANTELOP-LNX3345.00 - ANTELOPE VALLEY 345KV CKT Z
FDNS	16NR	2	17G	G15_096	TO->FROM	GLENHAM - L3 HAWDON 230KV CKT 1	210	210	0.04641	111.077	ANTELOP-LNX3345.00 - BRDLAND-LNX3345.00 345KV CKT 1
FDNS	16NR	2	17G	G15_096	TO->FROM	GLENHAM - L3 HAWDON 230KV CKT 1	210	210	0.04641	110.9102	P12:345:UMZB:# 102 #: AVS BD IN ND. AVS BRD LR
FDNS	16NR	2	17G	G15_096	TO->FROM	GLENHAM - L3 HAWDON 230KV CKT 1	210	210	0.04641	110.91	P12:345:UMZB:# 103 #: BD IN SD. LOSS OF LINE
FDNS	16NR	2	17G	G15_096	TO->FROM	GLENHAM - L3 HAWDON 230KV CKT 1	210	210	0.04641	110.8259	BROADLAND - HURON 230KV CKT 1
FDNS	16NR	2	17G	G15_096	TO->FROM	GLENHAM - L3 HAWDON 230KV CKT 1	210	210	0.04641	110.8257	BRDLAND-LNX3345.00 - HURON 345KV CKT Z
FDNS	16NR	2	17G	G15_096	TO->FROM	GLENHAM - L3 HAWDON 230KV CKT 1	210	210	0.04641	110.8254	HURON (BD KU2A) 345/230/13.8KV TRANSFORMER CKT 1
FDNS	16NR	2	17G	G15_096	TO->FROM	GLENHAM - L3 HAWDON 230KV CKT 1	210	210	0.04641	110.8254	HURON (BD KU2A) 345/230/13.8KV TRANSFORMER CKT 1
FDNS	16NR	2	20L	G15_096	TO->FROM	GLENHAM - L3 HAWDON 230KV CKT 1	210	210	0.05268	108.0231	BISON - HETINGER 230KV CKT 1
FDNS	16NR	2	17G	G15_096	TO->FROM	GLENHAM - L3 HAWDON 230KV CKT 1	210	210	0.06113	106.7878	BISON - HETINGER 230KV CKT 1
FDNS	16NR	2	20L	G15_096	TO->FROM	GLENHAM - L3 HAWDON 230KV CKT 1	210	210	0.05268	106.6545	BISON - MAURINE 230KV CKT 1
FDNS	16NR	2	17G	G15_096	TO->FROM	GLENHAM - L3 HAWDON 230KV CKT 1	210	210	0.04374	106.653	GROTON-LNX3 345.00 - LELAND1-LNX3345.00 345KV CKT 1
FDNS	16NR	2	17G	G15_096	TO->FROM	GLENHAM - L3 HAWDON 230KV CKT 1	210	210	0.04374	106.0747	P12:345:UMZB:# 109 #: LOS GRT IN ND. LOS GRT
FDNS	16NR	2	17G	G15_096	TO->FROM	GLENHAM - L3 HAWDON 230KV CKT 1	210	210	0.04374	106.0647	GROTON - GROTON-LNX3 345.00 345KV CKT Z
FDNS	16NR	2	17G	G15_096	TO->FROM	GLENHAM - L3 HAWDON 230KV CKT 1	210	210	0.04374	106.0613	LELAND OLDS - LELAND1-LNX3345.00 345KV CKT Z
FDNS	16NR	2	17G	G15_096	TO->FROM	GLENHAM - L3 HAWDON 230KV CKT 1	210	210	0.06113	105.9745	BISON - MAURINE 230KV CKT 1
FDNS	16NR	2	20L	G15_096	TO->FROM	GLENHAM - L3 HAWDON 230KV CKT 1	210	210	0.03762	105.71	ANTELOP-LNX3345.00 - BRDLAND-LNX3345.00 345KV CKT 1
FDNS	16NR	2	20L	G15_096	TO->FROM	GLENHAM - L3 HAWDON 230KV CKT 1	210	210	0.03762	105.5481	P12:345:UMZB:# 102 #: AVS BD IN ND. AVS BRD LR
FDNS	16NR	2	20L	G15_096	TO->FROM	GLENHAM - L3 HAWDON 230KV CKT 1	210	210	0.03762	105.5479	P12:345:UMZB:# 103 #: BD IN SD. LOSS OF LINE
FDNS	16NR	2	20L	G15_096	TO->FROM	GLENHAM - L3 HAWDON 230KV CKT 1	210	210	0.03762	105.5007	BROADLAND - HURON 230KV CKT 1
FDNS	16NR	2	20L	G15_096	TO->FROM	GLENHAM - L3 HAWDON 230KV CKT 1	210	210	0.03762	105.5005	BRDLAND-LNX3345.00 - HURON 345KV CKT Z
FDNS	16NR	2	20L	G15_096	TO->FROM	GLENHAM - L3 HAWDON 230KV CKT 1	210	210	0.03762	105.5003	HURON (BD KU2A) 345/230/13.8KV TRANSFORMER CKT 1
FDNS	16NR	2	20L	G15_096	TO->FROM	GLENHAM - L3 HAWDON 230KV CKT 1	210	210	0.03762	105.5003	HURON (BD KU2A) 345/230/13.8KV TRANSFORMER CKT 1
FDNS	16NR	2	20L	G15_096	TO->FROM	GLENHAM - L3 HAWDON 230KV CKT 1	210	210	0.03762	105.4892	ANTELOP-LNX3345.00 - ANTELOPE VALLEY 345KV CKT Z
FDNS	16NR	2	17G	G15_096	TO->FROM	GLENHAM - L3 HAWDON 230KV CKT 1	210	210	0.04361	102.3742	CENTER - JAMESTOWN 345KV CKT 1
FDNS	16NR	2	17G	G15_096	TO->FROM	GLENHAM - L3 HAWDON 230KV CKT 1	210	210	0.04303	102.0144	BISON 3 345.00 - BUFFALO 345KV CKT 1
FDNS	16NR	2	17G	G15_096	TO->FROM	GLENHAM - L3 HAWDON 230KV CKT 1	210	210	0.04254	101.5864	CHISAGO COUNTY - FORBES 500KV CKT 1
FDNS	16NR	2	17G	G15_096	TO->FROM	GLENHAM - L3 HAWDON 230KV CKT 1	210	210	0.04313	101.5412	G09_001IST 345.00 - WATERTOWN 345KV CKT 1
FDNS	16NR	2	20L	G15_096	TO->FROM	GLENHAM - L3 HAWDON 230KV CKT 1	210	210	0.03574	101.3823	BUFFALO - JAMESTOWN 345KV CKT 1
FDNS	16NR	2	17G	G15_096	TO->FROM	GLENHAM - L3 HAWDON 230KV CKT 1	210	210	0.04313	101.3807	G09_001IST 345.00 - GROTON 345KV CKT 1
FDNS	16NR	2	17G	G15_096	TO->FROM	GLENHAM - L3 HAWDON 230KV CKT 1	210	210	0.04254	101.1336	CHISAGO COUNTY - CHISAGO COUNTY 500KV CKT 1
FDNS	16NR	2	20L	G15_096	TO->FROM	GLENHAM - L3 HAWDON 230KV CKT 1	210	210	0.03545	100.4951	GROTON-LNX3 345.00 - LELAND1-LNX3345.00 345KV CKT 1
FDNS	16NR	2	20L	G15_096	TO->FROM	GLENHAM - L3 HAWDON 230KV CKT 1	210	210	0.03545	100.3299	P12:345:UMZB:# 109 #: LOS GRT IN ND. LOS GRT
FDNS	16NR	2	20L	G15_096	TO->FROM	GLENHAM - L3 HAWDON 230KV CKT 1	210	210	0.03545	100.3222	LELAND OLDS - LELAND1-LNX3345.00 345KV CKT Z
FDNS	16NR	2	20L	G15_096	TO->FROM	GLENHAM - L3 HAWDON 230KV CKT 1	210	210	0.03545	100.3206	GROTON - GROTON-LNX3 345.00 345KV CKT Z
FDNS	16NR	2	17G	G15_096	TO->FROM	GLENHAM - L3 HAWDON 230KV CKT 1	210	210	0.043	100	ALEXMRES3 345.00 - BISON 3 345.00 345KV CKT 1
FDNS	16NR	2	17G	G15_096	TO->FROM	GLENHAM - L3 HAWDON 230KV CKT 1	210	210	0.04273	99.9	BISMARK - JAMES TOWN 230KV CKT 1
FDNS	16NR	2	17G	G15_096	TO->FROM	GLENHAM - L3 HAWDON 230KV CKT 1	210	210	0.04273	99.9	BISMARK - WEBER 230KV CKT 1
FDNS	16NR	2	17G	G15_096	TO->FROM	GLENHAM - L3 HAWDON 230KV CKT 1	210	210	0.04273	99.9	JAMES TOWN - WEBER 230KV CKT 1
FDNS	16NR	2	20L	G15_096	TO->FROM	GLENHAM - L3 HAWDON 230KV CKT 1	210	210	0.03477	99.4	CHISAGO COUNTY - FORBES 500KV CKT 1
FDNS	16NR	2	20L	G15_096	TO->FROM	GLENHAM - L3 HAWDON 230KV CKT 1	210	210	0.03477	99.3	CHISAGO COUNTY - CHISAGO COUNTY 500KV CKT 1
FDNS	16NR	2	17G	G15_096	TO->FROM	GLENHAM - L3 HAWDON 230KV CKT 1	210	210	0.04216	99	BIG STONE - BLAIR 230KV CKT 1
FDNS	16NR	2	17G	G15_096	TO->FROM	GLENHAM - L3 HAWDON 230KV CKT 1	210	210	0.04216	99	BIG STONE - BLAIR 230KV CKT 1
FDNS	16NR	2	17G	G15_096	FROM->TO	HURON (BD KU2A) 345/230/13.8KV TRANSFORMER CKT 1	400	400	0.06484	114.1034	LELAND OLDS - LELAND2-LNX3345.00 345KV CKT Z

SOLUTION	GROUP	SCENARIO	SEASON	SOURCE	DIRECTION	MONITORED ELEMENT	RATEA (MVA)	RATEB(MVA)	TDF	TC%LOADING (% MVA)	CONTINGENCY
FDNS	16NR	2	17G	G15_096	FROM->TO	HURON (BD KU2A) 345/230/13.8KV TRANSFORMER CKT 1	400	400	0.06484	113.6467	FT THOMPSON - FTTHOM1-LNX3345.00 345KV CKT Z
FDNS	16NR	2	17G	G15_096	FROM->TO	HURON (BD KU2A) 345/230/13.8KV TRANSFORMER CKT 1	400	400	0.06484	113.5758	P12:345:UMZB:# 108 #: LOS FT IN ND. LOS FT
FDNS	16NR	2	17G	G15_096	FROM->TO	HURON (BD KU2A) 345/230/13.8KV TRANSFORMER CKT 1	400	400	0.06026	113.4195	LELAND OLDS - LELAND1-LNX3345.00 345KV CKT Z
FDNS	16NR	2	17G	G15_096	FROM->TO	HURON (BD KU2A) 345/230/13.8KV TRANSFORMER CKT 1	400	400	0.06026	113.3774	P12:345:UMZB:# 109 #: LOS GRT IN ND. LOS GRT
FDNS	16NR	2	17G	G15_096	FROM->TO	HURON (BD KU2A) 345/230/13.8KV TRANSFORMER CKT 1	400	400	0.06026	113.3758	GROTON - GROTON-LNX3 345.00 345KV CKT Z
FDNS	16NR	2	17G	G15_096	FROM->TO	HURON (BD KU2A) 345/230/13.8KV TRANSFORMER CKT 1	400	400	0.06026	113.2252	GROTON-LNX3 345.00 - LELAND1-LNX3345.00 345KV CKT 1
FDNS	16NR	2	17G	G15_096	FROM->TO	HURON (BD KU2A) 345/230/13.8KV TRANSFORMER CKT 1	400	400	0.06484	113.1081	FTTHOM1-LNX3345.00 - LELAND2-LNX3345.00 345KV CKT 1
FDNS	16NR	2	17G	G15_096	FROM->TO	HURON (BD KU2A) 345/230/13.8KV TRANSFORMER CKT 1	400	400	0.06484	109.7794	LELAND OLDS - LELAND2-LNX3345.00 345KV CKT Z
FDNS	16NR	2	17G	G15_096	FROM->TO	HURON (BD KU2A) 345/230/13.8KV TRANSFORMER CKT 1	400	400	0.06484	109.4159	FT THOMPSON - FTTHOM1-LNX3345.00 345KV CKT Z
FDNS	16NR	2	17G	G15_096	FROM->TO	HURON (BD KU2A) 345/230/13.8KV TRANSFORMER CKT 1	400	400	0.06484	109.3213	P12:345:UMZB:# 108 #: LOS FT IN ND. LOS FT
FDNS	16NR	2	17G	G15_096	FROM->TO	HURON (BD KU2A) 345/230/13.8KV TRANSFORMER CKT 1	400	400	0.06026	109.202	LELAND OLDS - LELAND1-LNX3345.00 345KV CKT Z
FDNS	16NR	2	17G	G15_096	FROM->TO	HURON (BD KU2A) 345/230/13.8KV TRANSFORMER CKT 1	400	400	0.06026	109.1691	GROTON - GROTON-LNX3 345.00 345KV CKT Z
FDNS	16NR	2	17G	G15_096	FROM->TO	HURON (BD KU2A) 345/230/13.8KV TRANSFORMER CKT 1	400	400	0.06026	109.1654	P12:345:UMZB:# 109 #: LOS GRT IN ND. LOS GRT
FDNS	16NR	2	17G	G15_096	FROM->TO	HURON (BD KU2A) 345/230/13.8KV TRANSFORMER CKT 1	400	400	0.06026	108.9823	GROTON-LNX3 345.00 - LELAND1-LNX3345.00 345KV CKT 1
FDNS	16NR	2	17G	G15_096	FROM->TO	HURON (BD KU2A) 345/230/13.8KV TRANSFORMER CKT 1	400	400	0.06484	108.8839	FTTHOM1-LNX3345.00 - LELAND2-LNX3345.00 345KV CKT 1
FDNS	00NR	2	17SP	G15_096	FROM->TO	HURON (BD KU2A) 345/230/13.8KV TRANSFORMER CKT 1	400	400	0.0724	104.1141	LELAND OLDS - LELAND2-LNX3345.00 345KV CKT Z
FDNS	00NR	2	17SP	G15_096	FROM->TO	HURON (BD KU2A) 345/230/13.8KV TRANSFORMER CKT 1	400	400	0.0724	103.6391	P12:345:UMZB:# 108 #: LOS FT IN ND. LOS FT
FDNS	00NR	2	17SP	G15_096	FROM->TO	HURON (BD KU2A) 345/230/13.8KV TRANSFORMER CKT 1	400	400	0.0724	103.6385	FT THOMPSON - FTTHOM1-LNX3345.00 345KV CKT Z
FDNS	00NR	2	17SP	G15_096	FROM->TO	HURON (BD KU2A) 345/230/13.8KV TRANSFORMER CKT 1	400	400	0.0724	103.1306	FTTHOM1-LNX3345.00 - LELAND2-LNX3345.00 345KV CKT 1
FDNS	16NR	2	17G	G15_096	FROM->TO	HURON (BD KU2A) 345/230/13.8KV TRANSFORMER CKT 1	400	400	0.0564	102.4006	G09_001IST 345.00 - WATERTOWN 345KV CKT 1
FDNS	16NR	2	17G	G15_096	FROM->TO	HURON (BD KU2A) 345/230/13.8KV TRANSFORMER CKT 1	400	400	0.0564	102.2488	G09_001IST 345.00 - GROTON 345KV CKT 1
FDNS	00NR	2	17SP	G15_096	FROM->TO	HURON (BD KU2A) 345/230/13.8KV TRANSFORMER CKT 1	400	400	0.06776	102.0879	LELAND OLDS - LELAND1-LNX3345.00 345KV CKT Z
FDNS	00NR	2	17SP	G15_096	FROM->TO	HURON (BD KU2A) 345/230/13.8KV TRANSFORMER CKT 1	400	400	0.06776	102.0811	GROTON - GROTON-LNX3 345.00 345KV CKT Z
FDNS	00NR	2	17SP	G15_096	FROM->TO	HURON (BD KU2A) 345/230/13.8KV TRANSFORMER CKT 1	400	400	0.06776	102.0779	P12:345:UMZB:# 109 #: LOS GRT IN ND. LOS GRT
FDNS	00NR	2	17SP	G15_096	FROM->TO	HURON (BD KU2A) 345/230/13.8KV TRANSFORMER CKT 1	400	400	0.06776	101.6451	GROTON-LNX3 345.00 - LELAND1-LNX3345.00 345KV CKT 1
FDNS	16NR	2	17G	G15_096	FROM->TO	HURON (BD KU2A) 345/230/13.8KV TRANSFORMER CKT 1	400	400	0.05586	101.4818	CENTER - JAMESTOWN 345KV CKT 1
FDNS	16NR	2	17G	G15_096	FROM->TO	HURON (BD KU2A) 345/230/13.8KV TRANSFORMER CKT 1	400	400	0.05829	101.2215	GLENHAM - L3 HAWDON 230KV CKT 1
FDNS	16NR	2	17G	G15_096	FROM->TO	HURON (BD KU2A) 345/230/13.8KV TRANSFORMER CKT 1	400	400	0.0732	101.0941	BISON - HETINGER 230KV CKT 1
FDNS	00NR	2	17SP	G15_096	FROM->TO	HURON (BD KU2A) 345/230/13.8KV TRANSFORMER CKT 1	400	400	0.0724	101.0877	LELAND OLDS - LELAND2-LNX3345.00 345KV CKT Z
FDNS	16NR	2	17G	G15_096	FROM->TO	HURON (BD KU2A) 345/230/13.8KV TRANSFORMER CKT 1	400	400	0.05488	100.9521	BISON 3 345.00 - BUFFALO 345KV CKT 1
FDNS	00NR	2	17SP	G15_096	FROM->TO	HURON (BD KU2A) 345/230/13.8KV TRANSFORMER CKT 1	400	400	0.0724	100.7024	FT THOMPSON - FTTHOM1-LNX3345.00 345KV CKT Z
FDNS	16NR	2	17G	G15_096	FROM->TO	HURON (BD KU2A) 345/230/13.8KV TRANSFORMER CKT 1	400	400	0.0732	100.6872	BISON - MAURINE 230KV CKT 1
FDNS	00NR	2	17SP	G15_096	FROM->TO	HURON (BD KU2A) 345/230/13.8KV TRANSFORMER CKT 1	400	400	0.0724	100.6755	P12:345:UMZB:# 108 #: LOS FT IN ND. LOS FT
FDNS	16NR	2	17G	G15_096	FROM->TO	HURON (BD KU2A) 345/230/13.8KV TRANSFORMER CKT 1	400	400	0.05804	100.2529	GLENHAM - WHITLOK 230KV CKT 1
FDNS	00NR	2	17SP	G15_096	FROM->TO	HURON (BD KU2A) 345/230/13.8KV TRANSFORMER CKT 1	400	400	0.0724	100.2086	FTTHOM1-LNX3345.00 - LELAND2-LNX3345.00 345KV CKT 1
FDNS	16NR	2	17G	G15_096	FROM->TO	HURON (BD KU2A) 345/230/13.8KV TRANSFORMER CKT 1	400	400	0.05804	100.1761	P12:230:UMZB:# 114 #: SB IN SD. SB-WK-GH
FDNS	16NR	2	17G	G15_096	FROM->TO	HURON (BD KU2A) 345/230/13.8KV TRANSFORMER CKT 1	400	400	0.05804	100.1761	P12:230:UMZB:# 117 #: WK IN SD. SB-WK-GH
FDNS	16NR	2	17G	G15_096	FROM->TO	HURON (BD KU2A) 345/230/13.8KV TRANSFORMER CKT 1	400	400	0.05804	100.0737	SULLYBT-LNX3230.00 - WHITLOK 230KV CKT 1
FDNS	16NR	2	17G	G15_096	FROM->TO	HURON (BD KU2A) 345/230/13.8KV TRANSFORMER CKT 1	400	400	0.05804	100.0718	SULLEY BUTTE - SULLYBT-LNX3230.00 230KV CKT Z
FDNS	16NR	2	17G	G15_096	FROM->TO	HURON (BD KU2A) 345/230/13.8KV TRANSFORMER CKT 1	400	400	0.05804	99.8	OAHE - SULLEY BUTTE 230KV CKT 1
FDNS	16NR	2	17G	G15_096	FROM->TO	HURON (BD KU2A) 345/230/13.8KV TRANSFORMER CKT 1	400	400	0.0564	99.6	G09_001IST 345.00 - WATERTOWN 345KV CKT 1
FDNS	16NR	2	17G	G15_096	FROM->TO	HURON (BD KU2A) 345/230/13.8KV TRANSFORMER CKT 1	400	400	0.0564	99.5	G09_001IST 345.00 - GROTON 345KV CKT 1
FDNS	00NR	2	17SP	G15_096	FROM->TO	HURON (BD KU2A) 345/230/13.8KV TRANSFORMER CKT 1	400	400	0.06776	99.4	GROTON - GROTON-LNX3 345.00 345KV CKT Z
FDNS	00NR	2	17SP	G15_096	FROM->TO	HURON (BD KU2A) 345/230/13.8KV TRANSFORMER CKT 1	400	400	0.06776	99.4	LELAND OLDS - LELAND1-LNX3345.00 345KV CKT Z
FDNS	00NR	2	17SP	G15_096	FROM->TO	HURON (BD KU2A) 345/230/13.8KV TRANSFORMER CKT 1	400	400	0.06776	99.4	P12:345:UMZB:# 109 #: LOS GRT IN ND. LOS GRT
FDNS	16NR	2	17G	G15_096	FROM->TO	HURON (BD KU2A) 345/230/13.8KV TRANSFORMER CKT 1	400	400	0.05388	99.3	CHISAGO COUNTY - FORBES 500KV CKT 1
FDNS	16NR	2	17G	G15_096	FROM->TO	HURON (BD KU2A) 345/230/13.8KV TRANSFORMER CKT 1	400	400	0.05388	99.2	CHISAGO COUNTY - CHISAGO COUNTY 500KV CKT 1
FDNS	00NR	2	17SP	G15_096	FROM->TO	HURON (BD KU2A) 345/230/13.8KV TRANSFORMER CKT 1	400	400	0.06776	99	GROTON-LNX3 345.00 - LELAND1-LNX3345.00 345KV CKT 1
FDNSLock-Blown up	16ALL_B10T_DCTIE	0	17SP	G15_097		Non-Converged Contingency	717	789	0.45457	-	G09_001IST 345.00 - GROTON 345KV CKT 1
FDNSLock-Blown up	16ALL_B10T_DCTIE	0	17SP	G15_097		Non-Converged Contingency	717	789	0.45457	-	G09_001IST 345.00 - WATERTOWN 345KV CKT 1
FDNSLock-Blown up	16ALL	2	17SP	G15_097		Non-Converged Contingency	717	789	0.45459	-	G09_001IST 345.00 - GROTON 345KV CKT 1
FDNSLock-Blown up	16ALL	2	17SP	G15_097		Non-Converged Contingency	717	789	0.45459	-	G09_001IST 345.00 - WATERTOWN 345KV CKT 1
FDNSLock-Blown up	00NR	2	17SP	G15_097		Non-Converged Contingency	717	789	0.38446	-	G09_001IST 345.00 - GROTON 345KV CKT 1
FDNSLock-Blown up	00NR	2	17SP	G15_097		Non-Converged Contingency	717	789	0.38446	-	G09_001IST 345.00 - WATERTOWN 345KV CKT 1
FDNS	00NR	0	20SP	G15_097	TO->FROM	ABERDEEN SIEBRECHT - GROTON 115KV CKT 1	120	129	0.1965	110.7905	G09_001IST 345.00 - WATERTOWN 345KV CKT 1
FDNS	00NR	0	25SP	G15_097	TO->FROM	ABERDEEN SIEBRECHT - GROTON 115KV CKT 1	120	129	0.19654	109.9127	G09_001IST 345.00 - WATERTOWN 345KV CKT 1
FDNS	00NR	0	20SP	G15_097	TO->FROM	BRISTOL - GROTON 115KV CKT 1	111	111	0.14307	122.606	G09_001IST 345.00 - WATERTOWN 345KV CKT 1
FDNS	00NR	0	25SP	G15_097	TO->FROM	BRISTOL - GROTON 115KV CKT 1	111	111	0.14315	121.7706	G09_001IST 345.00 - WATERTOWN 345KV CKT 1
FDNS	00NR	0	20WP	G15_097	TO->FROM	BRISTOL - GROTON 115KV CKT 1	111	111	0.1427	110.4355	G09_001IST 345.00 - WATERTOWN 345KV CKT 1
FDNS	00NR	0	16WP	G15_097	TO->FROM	BRISTOL - GROTON 115KV CKT 1	111	111	0.145	103.2731	G09_001IST 345.00 - WATERTOWN 345KV CKT 1
FDNS	00NR_B10T_DCTIE	0	16WP	G15_097	TO->FROM	BRISTOL - GROTON 115KV CKT 1	111	111	0.145	100.1634	G09_001IST 345.00 - WATERTOWN 345KV CKT 1
FDNS	00NR	0	20SP	G15_097	FROM->TO	BRISTOL - SUMMIT 115KV CKT 1	111	111	0.14307	118.1672	G09_001IST 345.00 - WATERTOWN 345KV CKT 1
FDNS	00NR	0	25SP	G15_097	FROM->TO	BRISTOL - SUMMIT 115KV CKT 1	111	111	0.14315	116.9798	G09_001IST 345.00 - WATERTOWN 345KV CKT 1
FDNS	00NR	0	20WP	G15_097	FROM->TO	BRISTOL - SUMMIT 115KV CKT 1	111	111	0.1427	103.4544	G09_001IST 345.00 - WATERTOWN 345KV CKT 1
FDNS	00NR	0	20SP	G15_097	TO->FROM	G13_001IST 115.00 - SUMMIT 115KV CKT 1	120	121	0.10469	119.8846	G09_001IST 345.00 - WATERTOWN 345KV CKT 1
FDNS	00NR	0	25SP	G15_097	TO->FROM	G13_001IST 115.00 - SUMMIT 115KV CKT 1	120	121	0.1048	117.9418	G09_001IST 345.00 - WATERTOWN 345KV CKT 1
FDNS	00NR_B10T_DCTIE	0	17SP	G15_097	TO->FROM	G13_001IST 115.00 - SUMMIT 115KV CKT 1	120	121	0.05861	111.8737	FORMAN - HANKINSON 230KV CKT 1
FDNS	00NR	0	17SP	G15_097	TO->FROM	G13_001IST 115.00 - SUMMIT 115KV CKT 1	120	121	0.05861	110.5323	FORMAN - HANKINSON 230KV CKT 1
FDNS	00NR	0	16WP	G15_097	TO->FROM	G13_001IST 115.00 - SUMMIT 115KV CKT 1	120	121	0.10948	107.6007	G09_001IST 345.00 - WATERTOWN 345KV CKT 1
FDNS	00NR_B10T_DCTIE	0	16WP	G15_097	TO->FROM	G13_001IST 115.00 - SUMMIT 115KV CKT 1	120	121	0.10948	104.4669	G09_001IST 345.00 - WATERTOWN 345KV CKT 1
FDNS	00NR	0	20SP	G15_097	TO->FROM	G13_001IST 115.00 - SUMMIT 115KV CKT 1	120	121	0.10469	99.2	G09_001IST 345.00 - GROTON 345KV CKT 1
FDNS	00NR	0	20SP	G15_097	FROM->TO	G13_001IST 115.00 - WATERTOWN 115KV CKT 1	120	121	0.10469	133.9416	G09_001IST 345.00 - WATERTOWN 345KV CKT 1
FDNS	00NR	0	25SP	G15_097	FROM->TO	G13_001IST 115.00 - WATERTOWN 115KV CKT 1	120	121	0.1048	132.0127	G09_001IST 345.00 - WATERTOWN 345KV CKT 1
FDNS	00NR_B10T_DCTIE	0	17SP	G15_097	FROM->TO	G13_001IST 115.00 - WATERTOWN 115KV CKT 1	120	121	0.05861	126.1143	FORMAN - HANKINSON 230KV CKT 1
FDNS	00NR	0	17SP	G15_097	FROM->TO	G13_001IST 115.00 - WATERTOWN 115KV CKT 1	120	121	0.05861	124.7941	FORMAN - HANKINSON 230KV CKT 1
FDNS	00NR	0	16WP	G15_097	FROM->TO	G13_001IST 115.00 - WATERTOWN 115KV CKT 1	120	121	0.10948	120.8251	G09_001IST 345.00 - WATERTOWN 345KV CKT 1
FDNS	00NR_B10T_DCTIE	0	16WP	G15_097	FROM->TO	G13_001IST 115.00 - WATERTOWN 115KV CKT 1	120	121	0.10948	117.5723	G09_001IST 345.00 - WATERTOWN 345KV CKT 1
FDNS	15NR	0	17G	G15_097	FROM->TO	G13_001IST 115.00 - WATERTOWN 115KV CKT 1	120	121	0.10984	115.6708	G09_001IST 345.00 - WATERTOWN 345KV CKT 1
FDNS	00NR	0	20SP	G15_097	FROM->TO	G13_001IST 115.00 - WATERTOWN 115KV CKT 1	120	121	0.10469	112.8617	G09_001IST 345.00 - GROTON 345KV CKT 1

SOLUTION	GROUP	SCENARIO	SEASON	SOURCE	DIRECTION	MONITORED ELEMENT	RATEA (MVA)	RATEB(MVA)	TDF	TC%LOADING (% MVA)	CONTINGENCY
FDNS	00NR_B10T_DCTIE	0	17SP	G15_097	FROM->TO	G13_001IST 115.00 - WATERTOWN 115KV CKT 1	120	121	0.18723	111.3656	GROTON (GROTON KU2A) 345/115/13.8KV TRANSFORMER CKT 1
FDNS	00NR	0	17SP	G15_097	FROM->TO	G13_001IST 115.00 - WATERTOWN 115KV CKT 1	120	121	0.18723	111.1197	GROTON (GROTON KU2A) 345/115/13.8KV TRANSFORMER CKT 1
FDNS	00NR	0	25SP	G15_097	FROM->TO	G13_001IST 115.00 - WATERTOWN 115KV CKT 1	120	121	0.1048	110.614	G09_001IST 345.00 - GROTON 345KV CKT 1
FDNS	15ALL	0	17SP	G15_097	FROM->TO	G13_001IST 115.00 - WATERTOWN 115KV CKT 1	120	121	0.1966	109.6236	GROTON (GROTON KU2A) 345/115/13.8KV TRANSFORMER CKT 1
FDNS	00NR	0	20WP	G15_097	FROM->TO	G13_001IST 115.00 - WATERTOWN 115KV CKT 1	120	121	0.104	107.9674	G09_001IST 345.00 - WATERTOWN 345KV CKT 1
FDNS	00NR	0	17SP	G15_097	FROM->TO	G13_001IST 115.00 - WATERTOWN 115KV CKT 1	120	121	0.0533	105.9177	BIG STONE - BLAIR 230KV CKT 1
FDNS	00NR	0	17SP	G15_097	FROM->TO	G13_001IST 115.00 - WATERTOWN 115KV CKT 1	120	121	0.0533	105.9177	BIG STONE - BLAIR 230KV CKT 1
FDNS	15ALL	0	17G	G15_097	FROM->TO	G13_001IST 115.00 - WATERTOWN 115KV CKT 1	120	121	0.19655	105.785	GROTON (GROTON KU2A) 345/115/13.8KV TRANSFORMER CKT 1
FDNS	00NR_B10T_DCTIE	0	17SP	G15_097	FROM->TO	G13_001IST 115.00 - WATERTOWN 115KV CKT 1	120	121	0.0533	105.5962	BIG STONE - BLAIR 230KV CKT 1
FDNS	00NR_B10T_DCTIE	0	17SP	G15_097	FROM->TO	G13_001IST 115.00 - WATERTOWN 115KV CKT 1	120	121	0.0533	105.5962	BIG STONE - BLAIR 230KV CKT 1
FDNS	00NR_B10T_DCTIE	0	17SP	G15_097	FROM->TO	G13_001IST 115.00 - WATERTOWN 115KV CKT 1	120	121	0.05619	103.1741	HANKINSON - WAHPETON 230KV CKT 1
FDNS	00NR	0	17SP	G15_097	FROM->TO	G13_001IST 115.00 - WATERTOWN 115KV CKT 1	120	121	0.05619	102.2689	HANKINSON - WAHPETON 230KV CKT 1
FDNS	00NR_B10T_DCTIE	0	17SP	G15_097	FROM->TO	G13_001IST 115.00 - WATERTOWN 115KV CKT 1	120	121	0.05408	100	CHISAGO COUNTY - FORBES 500KV CKT 1
FDNS	00NR	0	17SP	G15_097	FROM->TO	G13_001IST 115.00 - WATERTOWN 115KV CKT 1	120	121	0.05408	99.5	CHISAGO COUNTY - CHISAGO COUNTY 500KV CKT 1
FDNS	00NR	0	17SP	G15_097	FROM->TO	G13_001IST 115.00 - WATERTOWN 115KV CKT 1	120	121	0.05408	99.5	CHISAGO COUNTY - FORBES 500KV CKT 1
FDNS	00NR_B10T_DCTIE	0	17SP	G15_097	FROM->TO	GRANITE FALLS - MN VALLEY TAP 230KV CKT 1	240	259	0.03192	124.985	GRANITE FALLS - MN VALLEY TAP 230KV CKT 1
FDNS	00NR	0	17SP	G15_097	FROM->TO	GRANITE FALLS - MN VALLEY TAP 230KV CKT 1	240	259	0.03192	124.5482	GRANITE FALLS - MN VALLEY TAP 230KV CKT 1
FDNS	00NR	0	17SP	G15_097	FROM->TO	GRANITE FALLS - MN VALLEY TAP 230KV CKT 1	240	259	0.03192	124.5482	GRANITE FALLS - MN VALLEY TAP 230KV CKT 1
FDNS	00NR	0	20SP	G15_097	FROM->TO	GRANITE FALLS - MN VALLEY TAP 230KV CKT 1	240	259	0.03189	120.7465	GRANITE FALLS - MN VALLEY TAP 230KV CKT 1
FDNS	00NR	0	20SP	G15_097	FROM->TO	GRANITE FALLS - MN VALLEY TAP 230KV CKT 1	240	259	0.03189	120.7465	GRANITE FALLS - MN VALLEY TAP 230KV CKT 1
FDNS	00NR	0	25SP	G15_097	FROM->TO	GRANITE FALLS - MN VALLEY TAP 230KV CKT 1	240	259	0.0319	118.2659	GRANITE FALLS - MN VALLEY TAP 230KV CKT 1
FDNS	00NR	0	25SP	G15_097	FROM->TO	GRANITE FALLS - MN VALLEY TAP 230KV CKT 1	240	259	0.0319	118.2659	GRANITE FALLS - MN VALLEY TAP 230KV CKT 1
FDNS	00NR_B10T_DCTIE	0	17SP	G15_097	FROM->TO	HANKINSON - WAHPETON 230KV CKT 1	319	351	0.03363	111.6027	BIG STONE - BLAIR 230KV CKT 1
FDNS	00NR_B10T_DCTIE	0	17SP	G15_097	FROM->TO	HANKINSON - WAHPETON 230KV CKT 1	319	351	0.03363	111.6027	BIG STONE - BLAIR 230KV CKT 1
FDNS	00NR_B10T_DCTIE	0	17SP	G15_097	FROM->TO	HANKINSON - WAHPETON 230KV CKT 1	319	351	0.03962	102.0005	SQUARE BUTTE - YNG2 4 230.00 230KV CKT 1
FDNS	00NR_B10T_DCTIE	0	16WP	G15_097	FROM->TO	HANKINSON - WAHPETON 230KV CKT 1	319	351	0.03418	99.4	BIG STONE - BLAIR 230KV CKT 1
FDNS	00NR_B10T_DCTIE	0	16WP	G15_097	FROM->TO	HANKINSON - WAHPETON 230KV CKT 1	319	351	0.03418	99.4	BIG STONE - BLAIR 230KV CKT 1
FDNS	00NR	0	20SP	G15_097	TO->FROM	SPLIT ROCK - WHITE 345KV CKT 1	717	717	0.13391	122.3088	BROOKING COUNTY - LYON COUNTY 345KV CKT 1
FDNS	00NR	0	25SP	G15_097	TO->FROM	SPLIT ROCK - WHITE 345KV CKT 1	717	717	0.13404	118.578	BROOKING COUNTY - LYON COUNTY 345KV CKT 1
FDNS	00NR	0	20SP	G15_097	TO->FROM	SPLIT ROCK - WHITE 345KV CKT 1	717	717	0.11471	102.0892	GRPRAR1-LNX3345.00 - HOLT.CO3 345.00 345KV CKT 1
FDNS	00NR	0	20SP	G15_097	TO->FROM	SPLIT ROCK - WHITE 345KV CKT 1	717	717	0.11471	102.0854	GRPRAR1-LNX3345.00 - YANKTON 345KV CKT Z
FDNS	00NR	0	20SP	G15_097	TO->FROM	SPLIT ROCK - WHITE 345KV CKT 1	717	717	0.11251	100.8963	HANLON - STORLA 230KV CKT 1
FDNS	00NR	0	20WP	G15_097	TO->FROM	SPLIT ROCK - WHITE 345KV CKT 1	717	717	0.13009	100.8106	BROOKING COUNTY - LYON COUNTY 345KV CKT 1
FDNS	00NR	0	20SP	G15_097	TO->FROM	SPLIT ROCK - WHITE 345KV CKT 1	717	717	0.11287	100.6838	P12:230:UMZB:# 116 #: ST IN SD. WSG-ST-VH
FDNS	00NR	0	20SP	G15_097	TO->FROM	SPLIT ROCK - WHITE 345KV CKT 1	717	717	0.11482	100.1	GEN635214 4-NEAL UNIT 4
FDNS	00NR_B10T_DCTIE	0	17SP	G15_097	TO->FROM	SPLIT ROCK - WHITE 345KV CKT 1	717	717	0.13253	100	BROOKING COUNTY - LYON COUNTY 345KV CKT 1
FDNS	00NR	0	20SP	G15_097	TO->FROM	SPLIT ROCK - WHITE 345KV CKT 1	717	717	0.11482	99.4	SQUARE BUTTE - YNG2 4 230.00 230KV CKT 1
FDNS	00NR	0	17SP	G15_097	TO->FROM	SPLIT ROCK - WHITE 345KV CKT 1	717	717	0.13253	99.3	BROOKING COUNTY - LYON COUNTY 345KV CKT 1
FDNS	00NR_B10T_DCTIE	0	17SP	G15_097	TO->FROM	WATERTN-LNX3345.00 - WATERTOWN 345KV CKT Z	720	792	0.24246	99	BLAIR - GRANITE FALLS 230KV CKT 1
FDNS	00NR_B10T_DCTIE	0	17SP	G15_097	TO->FROM	WATERTN-LNX3345.00 - WATERTOWN 345KV CKT Z	720	792	0.24246	99	BLAIR - GRANITE FALLS 230KV CKT 1
FDNS	00NR_B10T_DCTIE	0	17SP	G15_097	FROM->TO	WATERTN-LNX3345.00 - WHITE 345KV CKT 1	720	792	0.24246	99.7	BLAIR - GRANITE FALLS 230KV CKT 1
FDNS	00NR_B10T_DCTIE	0	17SP	G15_097	FROM->TO	WATERTN-LNX3345.00 - WHITE 345KV CKT 1	720	792	0.24246	99.7	BLAIR - GRANITE FALLS 230KV CKT 1
FDNS	00NR	2	20SP	G15_097	TO->FROM	ABERDEEN SIEBRECHT - GROTON 115KV CKT 1	120	129	0.19631	110.7047	G09_001IST 345.00 - WATERTOWN 345KV CKT 1
FDNS	00NR	2	25SP	G15_097	TO->FROM	ABERDEEN SIEBRECHT - GROTON 115KV CKT 1	120	129	0.19636	109.8271	G09_001IST 345.00 - WATERTOWN 345KV CKT 1
FDNS	00NR	2	20SP	G15_097	TO->FROM	BRISTOL - GROTON 115KV CKT 1	111	111	0.14381	123.3092	G09_001IST 345.00 - WATERTOWN 345KV CKT 1
FDNS	00NR	2	25SP	G15_097	TO->FROM	BRISTOL - GROTON 115KV CKT 1	111	111	0.1439	122.503	G09_001IST 345.00 - WATERTOWN 345KV CKT 1
FDNS	00NR	2	20WP	G15_097	TO->FROM	BRISTOL - GROTON 115KV CKT 1	111	111	0.14344	111.3128	G09_001IST 345.00 - WATERTOWN 345KV CKT 1
FDNS	00NR	2	16WP	G15_097	TO->FROM	BRISTOL - GROTON 115KV CKT 1	111	111	0.14577	104.3448	G09_001IST 345.00 - WATERTOWN 345KV CKT 1
FDNS	00NR	2	20SP	G15_097	FROM->TO	BRISTOL - SUMMIT 115KV CKT 1	111	111	0.14381	118.7989	G09_001IST 345.00 - WATERTOWN 345KV CKT 1
FDNS	00NR	2	25SP	G15_097	FROM->TO	BRISTOL - SUMMIT 115KV CKT 1	111	111	0.1439	117.6329	G09_001IST 345.00 - WATERTOWN 345KV CKT 1
FDNS	00NR	2	20WP	G15_097	FROM->TO	BRISTOL - SUMMIT 115KV CKT 1	111	111	0.14344	104.1971	G09_001IST 345.00 - WATERTOWN 345KV CKT 1
FDNS	00NR	2	20SP	G15_097	TO->FROM	G13_001IST 115.00 - SUMMIT 115KV CKT 1	120	121	0.10603	122.8866	G09_001IST 345.00 - WATERTOWN 345KV CKT 1
FDNS	00NR	2	25SP	G15_097	TO->FROM	G13_001IST 115.00 - SUMMIT 115KV CKT 1	120	121	0.10615	120.901	G09_001IST 345.00 - WATERTOWN 345KV CKT 1
FDNS	00NR	2	17SP	G15_097	TO->FROM	G13_001IST 115.00 - SUMMIT 115KV CKT 1	120	121	0.05937	113.3763	FORMAN - HANKINSON 230KV CKT 1
FDNS	00NR	2	16WP	G15_097	TO->FROM	G13_001IST 115.00 - SUMMIT 115KV CKT 1	120	121	0.11087	109.43	G09_001IST 345.00 - WATERTOWN 345KV CKT 1
FDNS	00NR	2	20SP	G15_097	TO->FROM	G13_001IST 115.00 - SUMMIT 115KV CKT 1	120	121	0.10603	101.5067	G09_001IST 345.00 - GROTON 345KV CKT 1
FDNS	00NR	2	20SP	G15_097	TO->FROM	SPLIT ROCK - WHITE 345KV CKT 1	717	717	0.13394	122.2761	BROOKING COUNTY - LYON COUNTY 345KV CKT 1
FDNS	00NR	2	25SP	G15_097	TO->FROM	SPLIT ROCK - WHITE 345KV CKT 1	717	717	0.13407	118.5897	BROOKING COUNTY - LYON COUNTY 345KV CKT 1
FDNS	16ALL	2	20SP	G15_097	TO->FROM	SPLIT ROCK - WHITE 345KV CKT 1	717	717	0.24206	104.2185	BROOKING COUNTY - LYON COUNTY 345KV CKT 1
FDNS	16ALL	2	25SP	G15_097	TO->FROM	SPLIT ROCK - WHITE 345KV CKT 1	717	717	0.24296	102.9353	BROOKING COUNTY - LYON COUNTY 345KV CKT 1
FDNS	00NR	2	20SP	G15_097	TO->FROM	SPLIT ROCK - WHITE 345KV CKT 1	717	717	0.11473	102.3193	GRPRAR1-LNX3345.00 - HOLT.CO3 345.00 345KV CKT 1
FDNS	00NR	2	20SP	G15_097	TO->FROM	SPLIT ROCK - WHITE 345KV CKT 1	717	717	0.11473	102.3161	GRPRAR1-LNX3345.00 - YANKTON 345KV CKT Z
FDNS	00NR	2	20SP	G15_097	TO->FROM	SPLIT ROCK - WHITE 345KV CKT 1	717	717	0.11253	100.8665	HANLON - STORLA 230KV CKT 1
FDNS	00NR	2	20WP	G15_097	TO->FROM	SPLIT ROCK - WHITE 345KV CKT 1	717	717	0.13012	100.825	BROOKING COUNTY - LYON COUNTY 345KV CKT 1
FDNS	00NR	2	20SP	G15_097	TO->FROM	SPLIT ROCK - WHITE 345KV CKT 1	717	717	0.11289	100.7475	P12:230:UMZB:# 116 #: ST IN SD. WSG-ST-VH
FDNS	00NR	2	20SP	G15_097	TO->FROM	SPLIT ROCK - WHITE 345KV CKT 1	717	717	0.11484	100.1	GEN635214 4-NEAL UNIT 4
FDNS	00NR	3	17SP	G15_097	TO->FROM	APPLEDORN 4 230.00 - WATERTOWN 230KV CKT 1	341.8	341.8	0.08326	100.6945	P12:345:UMZW:# 1747 #: WT2 IN SD. WT2-WHT LINE FAULT
FDNS	00NR	3	17SP	G15_097	TO->FROM	APPLEDORN 4 230.00 - WATERTOWN 230KV CKT 1	341.8	341.8	0.08326	100.6912	WATERTN-LNX3345.00 - WATERTOWN 345KV CKT Z
FDNS	00NR	3	17SP	G15_097	FROM->TO	BLAIR - GRANITE FALLS 230KV CKT 1	410	410	0.06769	103.5132	P12:345:UMZW:# 1747 #: WT2 IN SD. WT2-WHT LINE FAULT
FDNS	00NR	3	17SP	G15_097	FROM->TO	BLAIR - GRANITE FALLS 230KV CKT 1	410	410	0.06769	103.5099	WATERTN-LNX3345.00 - WATERTOWN 345KV CKT Z
FDNS	00NR	3	25SP	G15_097	FROM->TO	BLAIR - GRANITE FALLS 230KV CKT 1	410	410	0.03749	99.3	BROOKING COUNTY - LYON COUNTY 345KV CKT 1
FDNS	00NR	3	17SP	G15_097	TO->FROM	BRISTOL - GROTON 115KV CKT 1	111	111	0.14568	115.0225	G09_001IST 345.00 - GROTON 345KV CKT 1
FDNS	00NR	3	17SP	G15_097	FROM->TO	BRISTOL - SUMMIT 115KV CKT 1	111	111	0.14568	110.4796	G09_001IST 345.00 - GROTON 345KV CKT 1
FDNS	00NR	3	17SP	G15_097	TO->FROM	BROOKINGS - WATERTOWN 115KV CKT 1	120	122	0.03205	106.9524	P12:345:UMZW:# 1747 #: WT2 IN SD. WT2-WHT LINE FAULT
FDNS	00NR	3	17SP	G15_097	TO->FROM	BROOKINGS - WATERTOWN 115KV CKT 1	120	122	0.03205	106.9104	WATERTN-LNX3345.00 - WATERTOWN 345KV CKT Z
FDNS	00NR	3	17SP	G15_097	TO->FROM	G13_001IST 115.00 - SUMMIT 115KV CKT 1	120	121	0.11104	138.5931	G09_001IST 345.00 - GROTON 345KV CKT 1
FDNS	00NR	3	17SP	G15_097	TO->FROM	G13_001IST 115.00 - SUMMIT 115KV CKT 1	120	121	0.05268	102.5264	FORMAN - HANKINSON 230KV CKT 1
FDNS	00NR	3	20SP	G15_097	TO->FROM	G13_001IST 115.00 - SUMMIT 115KV CKT 1	120	121	0.10603	101.6777	G09_001IST 345.00 - GROTON 345KV CKT 1
FDNS	00NR	3	25SP	G15_097	TO->FROM	G13_001IST 115.00 - SUMMIT 115KV CKT 1	120	121	0.10615	99.3	G09_001IST 345.00 - GROTON 345KV CKT 1

SOLUTION	GROUP	SCENARIO	SEASON	SOURCE	DIRECTION	MONITORED ELEMENT	RATEA (MVA)	RATEB(MVA)	TDF	TC%LOADING (% MVA)	CONTINGENCY
FDNS	00NR	3	20SP	G15_097	TO->FROM	SPLIT ROCK - WHITE 345KV CKT 1	717	717	0.14246	123.9373	BROOKING COUNTY - LYON COUNTY 345KV CKT 1
FDNS	00NR	3	25SP	G15_097	TO->FROM	SPLIT ROCK - WHITE 345KV CKT 1	717	717	0.1426	120.0723	BROOKING COUNTY - LYON COUNTY 345KV CKT 1
FDNS	00NR	3	20SP	G15_097	TO->FROM	SPLIT ROCK - WHITE 345KV CKT 1	717	717	0.12138	103.4222	GRPRAR1-LNX3345.00 - HOLT.CO3 345.00 345KV CKT 1
FDNS	00NR	3	20SP	G15_097	TO->FROM	SPLIT ROCK - WHITE 345KV CKT 1	717	717	0.12138	103.4158	GRPRAR1-LNX3345.00 - YANKTON 345KV CKT Z
FDNS	00NR	3	20SP	G15_097	TO->FROM	SPLIT ROCK - WHITE 345KV CKT 1	717	717	0.11905	102.1619	HANLON - STORLA 230KV CKT 1
FDNS	00NR	3	20WP	G15_097	TO->FROM	SPLIT ROCK - WHITE 345KV CKT 1	717	717	0.13859	102.1411	BROOKING COUNTY - LYON COUNTY 345KV CKT 1
FDNS	00NR	3	20SP	G15_097	TO->FROM	SPLIT ROCK - WHITE 345KV CKT 1	717	717	0.11941	102.0091	P12:230:UMZB:# 116 #: ST IN SD. WSG-ST-VH
FDNS	00NR	3	17SP	G15_097	TO->FROM	SPLIT ROCK - WHITE 345KV CKT 1	717	717	0.14332	101.5488	BROOKING COUNTY - LYON COUNTY 345KV CKT 1
FDNS	00NR	3	20SP	G15_097	TO->FROM	SPLIT ROCK - WHITE 345KV CKT 1	717	717	0.12163	101.2461	GEN635214 4-NEAL UNIT 4
FDNS	00NR	3	20SP	G15_097	TO->FROM	SPLIT ROCK - WHITE 345KV CKT 1	717	717	0.12163	100.5608	SQUARE BUTTE - YNG2 4 230.00 230KV CKT 1
FDNS	00NR	3	20SP	G15_097	TO->FROM	SPLIT ROCK - WHITE 345KV CKT 1	717	717	0.12163	100.5604	YNG2 4 230.00 230/20.0KV TRANSFORMER CKT 1
FDNS	00NR	3	20SP	G15_097	TO->FROM	SPLIT ROCK - WHITE 345KV CKT 1	717	717	0.12093	100.1955	GR ISLD-LNX3345.00 - HOLT.CO3 345.00 345KV CKT 1
FDNS	00NR	3	20SP	G15_097	TO->FROM	SPLIT ROCK - WHITE 345KV CKT 1	717	717	0.12093	100.0623	GR ISLD-LNX3345.00 - GRAND ISLAND 345KV CKT Z
FDNS	00NR	3	20SP	G15_097	TO->FROM	SPLIT ROCK - WHITE 345KV CKT 1	717	717	0.12163	100	GEN635024 4-WALTER SCOTT UNIT 4
FDNS	00NR	3	20SP	G15_097	TO->FROM	SPLIT ROCK - WHITE 345KV CKT 1	717	717	0.12163	99.5	GEN635213 3-NEAL UNIT 3
FDNS	00NR	3	20SP	G15_097	TO->FROM	SPLIT ROCK - WHITE 345KV CKT 1	717	717	0.11889	99.5	STORLA - WESSINGTON 230KV CKT 1
FDNS	00NR	3	20SP	G15_097	TO->FROM	SPLIT ROCK - WHITE 345KV CKT 1	717	717	0.11809	99.5	FT THOMPSON - LETCHER 230KV CKT 1
FDNS	00NR	3	20SP	G15_097	TO->FROM	SPLIT ROCK - WHITE 345KV CKT 1	717	717	0.11809	99.5	FT THOMPSON - LETCHER 230KV CKT 1
FDNS	00NR	3	20SP	G15_097	TO->FROM	SPLIT ROCK - WHITE 345KV CKT 1	717	717	0.12163	99.4	ANSON - SPLIT ROCK 115KV CKT 1
FDNS	00NR	3	20SP	G15_097	TO->FROM	SPLIT ROCK - WHITE 345KV CKT 1	717	717	0.12163	99.4	ANSON (ANS 1) 115/13.8/13.8KV TRANSFORMER CKT 2
FDNS	00NR	3	20SP	G15_097	TO->FROM	SPLIT ROCK - WHITE 345KV CKT 1	717	717	0.12163	99.4	COYOTE 345/24.0KV TRANSFORMER CKT 1
FDNS	00NR	3	20SP	G15_097	TO->FROM	SPLIT ROCK - WHITE 345KV CKT 1	717	717	0.12163	99.2	GEN635023 3-WALTER SCOTT UNIT 3
FDNSLock	00NR	3	17SP	G15_097	TO->FROM	WATERTN-LNX3345.00 - WATERTOWN 345KV CKT Z	720	792	0.25132	102.3561	CHISAGO COUNTY - CHISAGO COUNTY 500KV CKT 1
FDNS	00NR	3	17SP	G15_097	TO->FROM	WATERTN-LNX3345.00 - WATERTOWN 345KV CKT Z	720	792	0.25975	100.0833	BLAIR - GRANITE FALLS 230KV CKT 1
FDNS	00NR	3	17SP	G15_097	TO->FROM	WATERTN-LNX3345.00 - WATERTOWN 345KV CKT Z	720	792	0.25975	100.0833	BLAIR - GRANITE FALLS 230KV CKT 1
FDNSLock	00NR	3	17SP	G15_097	FROM->TO	WATERTN-LNX3345.00 - WHITE 345KV CKT 1	720	792	0.25132	103.1764	CHISAGO COUNTY - CHISAGO COUNTY 500KV CKT 1
FDNS	00NR	3	17SP	G15_097	FROM->TO	WATERTN-LNX3345.00 - WHITE 345KV CKT 1	720	792	0.25975	100.5653	BLAIR - GRANITE FALLS 230KV CKT 1
FDNS	00NR	3	17SP	G15_097	FROM->TO	WATERTN-LNX3345.00 - WHITE 345KV CKT 1	720	792	0.25975	100.5653	BLAIR - GRANITE FALLS 230KV CKT 1
FDNS	00NR	3	17SP	G15_097	FROM->TO	WATERTOWN (WT2 KU1A) 345/230/13.8KV TRANSFORMER CKT 1	400	500	0.36442	113.6286	P12:345:UMZW:# 1747 #: WT2 IN SD. WT2-WHT LINE FAULT
FDNS	00NR	3	17SP	G15_097	FROM->TO	WATERTOWN (WT2 KU1A) 345/230/13.8KV TRANSFORMER CKT 1	400	500	0.36442	113.6	WATERTN-LNX3345.00 - WATERTOWN 345KV CKT Z
FDNS	00NR	3	17SP	G15_097	FROM->TO	WATERTOWN (WT2 KU1A) 345/230/13.8KV TRANSFORMER CKT 1	400	500	0.36442	113.2575	P12:345:UMZW:# 1747 #: WT2 IN SD. WT2-WHT LINE FAULT
FDNS	00NR	3	17SP	G15_097	FROM->TO	WATERTOWN (WT2 KU1A) 345/230/13.8KV TRANSFORMER CKT 1	400	500	0.36442	113.2351	WATERTN-LNX3345.00 - WATERTOWN 345KV CKT Z
FDNS	00NR	3	20SP	G15_097	FROM->TO	WATERTOWN (WT2 KU1A) 345/230/13.8KV TRANSFORMER CKT 1	400	500	0.36353	103.4574	WATERTN-LNX3345.00 - WHITE 345KV CKT 1
FDNS	00NR	3	20SP	G15_097	FROM->TO	WATERTOWN (WT2 KU1A) 345/230/13.8KV TRANSFORMER CKT 1	400	500	0.36353	103.1978	P12:345:UMZW:# 1747 #: WT2 IN SD. WT2-WHT LINE FAULT
FDNS	00NR	3	20SP	G15_097	FROM->TO	WATERTOWN (WT2 KU1A) 345/230/13.8KV TRANSFORMER CKT 1	400	500	0.36353	103.1701	WATERTN-LNX3345.00 - WATERTOWN 345KV CKT Z
FDNS	00NR	3	25SP	G15_097	FROM->TO	WATERTOWN (WT2 KU1A) 345/230/13.8KV TRANSFORMER CKT 1	400	500	0.36383	102.8265	WATERTN-LNX3345.00 - WHITE 345KV CKT 1
FDNS	00NR	3	25SP	G15_097	FROM->TO	WATERTOWN (WT2 KU1A) 345/230/13.8KV TRANSFORMER CKT 1	400	500	0.36383	102.6211	P12:345:UMZW:# 1747 #: WT2 IN SD. WT2-WHT LINE FAULT
FDNS	00NR	3	25SP	G15_097	FROM->TO	WATERTOWN (WT2 KU1A) 345/230/13.8KV TRANSFORMER CKT 1	400	500	0.36383	102.5973	WATERTN-LNX3345.00 - WATERTOWN 345KV CKT Z
FDNS	00NR	3	20SP	G15_097	FROM->TO	WATERTOWN (WT2 KU1A) 345/230/13.8KV TRANSFORMER CKT 1	400	500	0.36353	102.4715	P12:345:UMZW:# 1747 #: WT2 IN SD. WT2-WHT LINE FAULT
FDNS	00NR	3	20SP	G15_097	FROM->TO	WATERTOWN (WT2 KU1A) 345/230/13.8KV TRANSFORMER CKT 1	400	500	0.36353	102.4494	WATERTN-LNX3345.00 - WATERTOWN 345KV CKT Z
FDNS	00NR	3	20SP	G15_097	FROM->TO	WATERTOWN (WT2 KU1A) 345/230/13.8KV TRANSFORMER CKT 1	400	500	0.36353	102.3103	WATERTN-LNX3345.00 - WHITE 345KV CKT 1
FDNS	00NR	3	25SP	G15_097	FROM->TO	WATERTOWN (WT2 KU1A) 345/230/13.8KV TRANSFORMER CKT 1	400	500	0.36383	101.8388	P12:345:UMZW:# 1747 #: WT2 IN SD. WT2-WHT LINE FAULT
FDNS	00NR	3	25SP	G15_097	FROM->TO	WATERTOWN (WT2 KU1A) 345/230/13.8KV TRANSFORMER CKT 1	400	500	0.36383	101.8187	WATERTN-LNX3345.00 - WATERTOWN 345KV CKT Z
FDNS	00NR	3	25SP	G15_097	FROM->TO	WATERTOWN (WT2 KU1A) 345/230/13.8KV TRANSFORMER CKT 1	400	500	0.36383	101.6258	WATERTN-LNX3345.00 - WHITE 345KV CKT 1
FDNSLock-Blown up	16ALL_B10T_DCTIE	0	16WP	G15_098		Non-Converged Contingency	460	460	0.03832	-	BELFIELD - DAGLUM 4230.00 230KV CKT 1
FDNSLock-Blown up	16ALL	0	16WP	G15_098		Non-Converged Contingency	460	460	0.0383	-	BELFIELD - DAGLUM 4230.00 230KV CKT 1
FDNSLock-Blown up	16NR	0	17G	G15_098		Non-Converged Contingency	460	460	0.04728	-	BELFIELD - DAGLUM 4230.00 230KV CKT 1
FDNSLock-Blown up	16ALL	0	17G	G15_098		Non-Converged Contingency	460	460	0.03859	-	BELFIELD - DAGLUM 4230.00 230KV CKT 1
FDNSLock-Blown up	16ALL	0	17SP	G15_098		Non-Converged Contingency	717	789	0.10938	-	G09_001IST 345.00 - GROTON 345KV CKT 1
FDNSLock-Blown up	16ALL	0	17SP	G15_098		Non-Converged Contingency	717	789	0.10938	-	G09_001IST 345.00 - WATERTOWN 345KV CKT 1
FDNSLock-Blown up	16ALL_B10T_DCTIE	0	17SP	G15_098		Non-Converged Contingency	717	789	0.10935	-	G09_001IST 345.00 - GROTON 345KV CKT 1
FDNSLock-Blown up	16ALL_B10T_DCTIE	0	17SP	G15_098		Non-Converged Contingency	717	789	0.10935	-	G09_001IST 345.00 - WATERTOWN 345KV CKT 1
FDNSLock-Blown up	16ALL	0	17SP	G15_098		Non-Converged Contingency	460	460	0.03817	-	BELFIELD - DAGLUM 4230.00 230KV CKT 1
FDNSLock-Blown up	16ALL_B10T_DCTIE	0	17SP	G15_098		Non-Converged Contingency	460	460	0.03814	-	BELFIELD - DAGLUM 4230.00 230KV CKT 1
FDNSLock-Blown up	16NR	0	20L	G15_098		Non-Converged Contingency	460	460	0.05021	-	BELFIELD - DAGLUM 4230.00 230KV CKT 1
FDNSLock-Blown up	16ALL	0	20L	G15_098		Non-Converged Contingency	460	460	0.03889	-	BELFIELD - DAGLUM 4230.00 230KV CKT 1
FDNSLock-Blown up	16ALL	0	20SP	G15_098		Non-Converged Contingency	460	460	0.03977	-	BELFIELD - DAGLUM 4230.00 230KV CKT 1
FDNSLock-Blown up	16ALL	0	20WP	G15_098		Non-Converged Contingency	460	460	0.03988	-	BELFIELD - DAGLUM 4230.00 230KV CKT 1
FDNSLock-Blown up	16ALL	0	25SP	G15_098		Non-Converged Contingency	460	460	0.03953	-	BELFIELD - DAGLUM 4230.00 230KV CKT 1
FDNSLock-Blown up	16ALL	2	17SP	G15_098		Non-Converged Contingency	717	789	0.1092	-	G09_001IST 345.00 - GROTON 345KV CKT 1
FDNSLock-Blown up	16ALL	2	17SP	G15_098		Non-Converged Contingency	717	789	0.1092	-	G09_001IST 345.00 - WATERTOWN 345KV CKT 1
FDNSLock-Blown up	00NR	2	17SP	G15_098		Non-Converged Contingency	717	789	0.03938	-	G09_001IST 345.00 - GROTON 345KV CKT 1
FDNSLock-Blown up	00NR	2	17SP	G15_098		Non-Converged Contingency	717	789	0.03938	-	G09_001IST 345.00 - WATERTOWN 345KV CKT 1
FDNS	00NR	0	16WP	G15_098	FROM->TO	BEULAH - STANTONTAP 7115.00 115KV CKT 1	120	132	0.0433	101.2468	CENTER - COYOTE 345KV CKT 1
FDNS	16NR	0	17G	G15_098	FROM->TO	BEULAH - STANTONTAP 7115.00 115KV CKT 1	120	121	0.045	100.1671	CENTER - COYOTE 345KV CKT 1
FDNS	00NR	0	20WP	G15_098	FROM->TO	BEULAH - STANTONTAP 7115.00 115KV CKT 1	120	132	0.04227	99.7	CENTER - COYOTE 345KV CKT 1
FDNS	16ALL_B10T_DCTIE	0	17SP	G15_098	FROM->TO	BROADLAND - HURON 230KV CKT 1	400	480	0.12206	104.0318	BASE CASE
FDNS	16ALL	0	17SP	G15_098	FROM->TO	BROADLAND - HURON 230KV CKT 1	400	480	0.12205	100.6167	BASE CASE
FDNS	00NR	0	25SP	G15_098	FROM->TO	DAWSON CREEK - FALLON 115KV CKT 1	80	88	0.05473	102.2185	DAWSON CREEK - MILES CITY EAST 230KV CKT 1
FDNS	16ALL	0	25SP	G15_098	FROM->TO	DICKINSON (KW1A 100) 230/115/13.8KV TRANSFORMER CKT 1	100	125	0.05139	114.896	BASE CASE
FDNS	16ALL	0	25SP	G15_098	FROM->TO	DICKINSON (KW1A 100) 230/115/13.8KV TRANSFORMER CKT 1	100	125	0.05139	114.2019	BASE CASE
FDNS	00NR	0	25SP	G15_098	FROM->TO	DICKINSON (KW1A 100) 230/115/13.8KV TRANSFORMER CKT 1	100	125	0.03531	110.8897	DAGLUM 4230.00 - RHAME 4 230.00 230KV CKT 1
FDNS	00NR	0	25SP	G15_098	FROM->TO	DICKINSON (KW1A 100) 230/115/13.8KV TRANSFORMER CKT 1	100	125	0.03531	109.9517	DAGLUM 4230.00 - RHAME 4 230.00 230KV CKT 1
FDNS	00NR	0	25SP	G15_098	FROM->TO	DICKINSON (KW1A 100) 230/115/13.8KV TRANSFORMER CKT 1	100	125	0.04407	109.0547	BASE CASE
FDNS	00NR_B10T_DCTIE	0	17SP	G15_098	FROM->TO	DICKINSON (KW1A 100) 230/115/13.8KV TRANSFORMER CKT 1	100	125	0.07423	108.3164	HEBRON 4 230.00 - MANDAN 4 230.00 230KV CKT 1
FDNS	00NR	0	25SP	G15_098	FROM->TO	DICKINSON (KW1A 100) 230/115/13.8KV TRANSFORMER CKT 1	100	125	0.04407	108.0342	BASE CASE
FDNS	00NR	0	25SP	G15_098	FROM->TO	DICKINSON (KW1A 100) 230/115/13.8KV TRANSFORMER CKT 1	100	125	0.08934	107.3189	BOWMAN - RHAME 4 230.00 230KV CKT 1
FDNS	00NR_B10T_DCTIE	0	17SP	G15_098	FROM->TO	DICKINSON (KW1A 100) 230/115/13.8KV TRANSFORMER CKT 1	100	125	0.07423	107.294	HEBRON 4 230.00 - MANDAN 4 230.00 230KV CKT 1
FDNS	00NR_B10T_DCTIE	0	17SP	G15_098	FROM->TO	DICKINSON (KW1A 100) 230/115/13.8KV TRANSFORMER CKT 1	100	125	0.03593	106.7672	DAGLUM 4230.00 - RHAME 4 230.00 230KV CKT 1

SOLUTION	GROUP	SCENARIO	SEASON	SOURCE	DIRECTION	MONITORED ELEMENT	RATEA (MVA)	RATEB(MVA)	TDF	TC%LOADING (% MVA)	CONTINGENCY
FDNS	00NR	0	25SP	G15_098	FROM->TO	DICKINSON (KW1A 100) 230/115/13.8KV TRANSFORMER CKT 1	100	125	0.08934	106.2333	BOWMAN - RHAME 4 230.00 230KV CKT 1
FDNS	00NR_B10T_DCTIE	0	17SP	G15_098	FROM->TO	DICKINSON (KW1A 100) 230/115/13.8KV TRANSFORMER CKT 1	100	125	0.03593	105.8493	DAGLUM 4230.00 - RHAME 4 230.00 230KV CKT 1
FDNS	16ALL	0	20SP	G15_098	FROM->TO	DICKINSON (KW1A 100) 230/115/13.8KV TRANSFORMER CKT 1	100	125	0.0513	105.7876	BASE CASE
FDNS	00NR	0	20SP	G15_098	FROM->TO	DICKINSON (KW1A 100) 230/115/13.8KV TRANSFORMER CKT 1	100	125	0.03524	105.778	DAGLUM 4230.00 - RHAME 4 230.00 230KV CKT 1
FDNS	16ALL_B10T_DCTIE	0	17SP	G15_098	FROM->TO	DICKINSON (KW1A 100) 230/115/13.8KV TRANSFORMER CKT 1	100	125	0.05171	105.6562	BASE CASE
FDNS	00NR_B10T_DCTIE	0	17SP	G15_098	FROM->TO	DICKINSON (KW1A 100) 230/115/13.8KV TRANSFORMER CKT 1	100	125	0.04455	105.2343	BASE CASE
FDNS	00NR	0	17SP	G15_098	FROM->TO	DICKINSON (KW1A 100) 230/115/13.8KV TRANSFORMER CKT 1	100	125	0.07423	104.8658	HEBRON 4 230.00 - MANDAN 4 230.00 230KV CKT 1
FDNS	16ALL	0	20SP	G15_098	FROM->TO	DICKINSON (KW1A 100) 230/115/13.8KV TRANSFORMER CKT 1	100	125	0.0513	104.7331	BASE CASE
FDNS	16ALL_B10T_DCTIE	0	17SP	G15_098	FROM->TO	DICKINSON (KW1A 100) 230/115/13.8KV TRANSFORMER CKT 1	100	125	0.05171	104.59	BASE CASE
FDNS	00NR	0	20SP	G15_098	FROM->TO	DICKINSON (KW1A 100) 230/115/13.8KV TRANSFORMER CKT 1	100	125	0.03524	104.5143	DAGLUM 4230.00 - RHAME 4 230.00 230KV CKT 1
FDNS	00NR_B10T_DCTIE	0	17SP	G15_098	FROM->TO	DICKINSON (KW1A 100) 230/115/13.8KV TRANSFORMER CKT 1	100	125	0.04455	104.1432	BASE CASE
FDNS	00NR	0	20SP	G15_098	FROM->TO	DICKINSON (KW1A 100) 230/115/13.8KV TRANSFORMER CKT 1	100	125	0.04403	104.1151	BASE CASE
FDNS	00NR	0	20SP	G15_098	FROM->TO	DICKINSON (KW1A 100) 230/115/13.8KV TRANSFORMER CKT 1	100	125	0.08936	104.0128	BOWMAN - RHAME 4 230.00 230KV CKT 1
FDNS	00NR	0	17SP	G15_098	FROM->TO	DICKINSON (KW1A 100) 230/115/13.8KV TRANSFORMER CKT 1	100	125	0.07423	103.9007	HEBRON 4 230.00 - MANDAN 4 230.00 230KV CKT 1
FDNS	00NR_B10T_DCTIE	0	17SP	G15_098	FROM->TO	DICKINSON (KW1A 100) 230/115/13.8KV TRANSFORMER CKT 1	100	125	0.09057	103.4147	BOWMAN - RHAME 4 230.00 230KV CKT 1
FDNS	16ALL	0	20WP	G15_098	FROM->TO	DICKINSON (KW1A 100) 230/115/13.8KV TRANSFORMER CKT 1	100	125	0.0511	103.2861	BASE CASE
FDNS	16ALL	0	20WP	G15_098	FROM->TO	DICKINSON (KW1A 100) 230/115/13.8KV TRANSFORMER CKT 1	100	125	0.0511	103.0294	BASE CASE
FDNS	00NR	0	20SP	G15_098	FROM->TO	DICKINSON (KW1A 100) 230/115/13.8KV TRANSFORMER CKT 1	100	125	0.04403	102.7349	BASE CASE
FDNS	00NR	0	20SP	G15_098	FROM->TO	DICKINSON (KW1A 100) 230/115/13.8KV TRANSFORMER CKT 1	100	125	0.08936	102.5925	BOWMAN - RHAME 4 230.00 230KV CKT 1
FDNS	00NR	0	25SP	G15_098	FROM->TO	DICKINSON (KW1A 100) 230/115/13.8KV TRANSFORMER CKT 1	100	125	0.07377	102.538	HEBRON 4 230.00 - MANDAN 4 230.00 230KV CKT 1
FDNS	00NR_B10T_DCTIE	0	17SP	G15_098	FROM->TO	DICKINSON (KW1A 100) 230/115/13.8KV TRANSFORMER CKT 1	100	125	0.09057	102.4798	BOWMAN - RHAME 4 230.00 230KV CKT 1
FDNS	00NR	0	17SP	G15_098	FROM->TO	DICKINSON (KW1A 100) 230/115/13.8KV TRANSFORMER CKT 1	100	125	0.09057	102.297	BOWMAN - RHAME 4 230.00 230KV CKT 1
FDNS	00NR	0	17SP	G15_098	FROM->TO	DICKINSON (KW1A 100) 230/115/13.8KV TRANSFORMER CKT 1	100	125	0.04455	102.1911	BASE CASE
FDNS	16ALL	0	16WP	G15_098	FROM->TO	DICKINSON (KW1A 100) 230/115/13.8KV TRANSFORMER CKT 1	100	125	0.05155	102.1232	BASE CASE
FDNS	16ALL	0	17SP	G15_098	FROM->TO	DICKINSON (KW1A 100) 230/115/13.8KV TRANSFORMER CKT 1	100	125	0.05171	102.1179	BASE CASE
FDNS	00NR	0	17SP	G15_098	FROM->TO	DICKINSON (KW1A 100) 230/115/13.8KV TRANSFORMER CKT 1	100	125	0.03593	101.9716	DAGLUM 4230.00 - RHAME 4 230.00 230KV CKT 1
FDNS	00NR	0	25SP	G15_098	FROM->TO	DICKINSON (KW1A 100) 230/115/13.8KV TRANSFORMER CKT 1	100	125	0.07377	101.7574	HEBRON 4 230.00 - MANDAN 4 230.00 230KV CKT 1
FDNS	00NR	0	20SP	G15_098	FROM->TO	DICKINSON (KW1A 100) 230/115/13.8KV TRANSFORMER CKT 1	100	125	0.07371	101.4982	HEBRON 4 230.00 - MANDAN 4 230.00 230KV CKT 1
FDNS	00NR	0	17SP	G15_098	FROM->TO	DICKINSON (KW1A 100) 230/115/13.8KV TRANSFORMER CKT 1	100	125	0.09057	101.3661	BOWMAN - RHAME 4 230.00 230KV CKT 1
FDNS	16ALL	0	16WP	G15_098	FROM->TO	DICKINSON (KW1A 100) 230/115/13.8KV TRANSFORMER CKT 1	100	125	0.05155	101.1533	BASE CASE
FDNS	00NR	0	17SP	G15_098	FROM->TO	DICKINSON (KW1A 100) 230/115/13.8KV TRANSFORMER CKT 1	100	125	0.04455	101.1261	BASE CASE
FDNS	00NR	0	17SP	G15_098	FROM->TO	DICKINSON (KW1A 100) 230/115/13.8KV TRANSFORMER CKT 1	100	125	0.03593	101.1135	DAGLUM 4230.00 - RHAME 4 230.00 230KV CKT 1
FDNS	16ALL	0	17SP	G15_098	FROM->TO	DICKINSON (KW1A 100) 230/115/13.8KV TRANSFORMER CKT 1	100	125	0.05171	101.0837	BASE CASE
FDNS	00NR	0	20SP	G15_098	FROM->TO	DICKINSON (KW1A 100) 230/115/13.8KV TRANSFORMER CKT 1	100	125	0.07371	100.3184	HEBRON 4 230.00 - MANDAN 4 230.00 230KV CKT 1
FDNS	00NR	0	20WP	G15_098	FROM->TO	DICKINSON (KW1A 100) 230/115/13.8KV TRANSFORMER CKT 1	100	125	0.04313	99.6	BASE CASE
FDNS	00NR	0	20WP	G15_098	FROM->TO	DICKINSON (KW1A 100) 230/115/13.8KV TRANSFORMER CKT 1	100	125	0.04313	99.3	BASE CASE
FDNS	00NR	0	16WP	G15_098	TO->FROM	GARRISON - STANTONTAP 7115.00 115KV CKT 1	120	132	0.0433	100.9375	CENTER - COYOTE 345KV CKT 1
FDNS	16NR	0	17G	G15_098	TO->FROM	GARRISON - STANTONTAP 7115.00 115KV CKT 1	120	121	0.045	99.8	CENTER - COYOTE 345KV CKT 1
FDNS	00NR	0	20WP	G15_098	TO->FROM	GARRISON - STANTONTAP 7115.00 115KV CKT 1	120	132	0.04227	99.4	CENTER - COYOTE 345KV CKT 1
FDNS	16NR	0	17G	G15_098	TO->FROM	GLENHAM - L3 HAWDON 230KV CKT 1	210	210	0.04693	118.9624	FT THOMPSON - FTTHOM1-LNX3345.00 345KV CKT Z
FDNS	16NR	0	17G	G15_098	TO->FROM	GLENHAM - L3 HAWDON 230KV CKT 1	210	210	0.04693	118.6238	P12:345:UMZB:# 108 #: LOS FT IN ND. LOS FT
FDNS	16NR	0	17G	G15_098	TO->FROM	GLENHAM - L3 HAWDON 230KV CKT 1	210	210	0.04693	118.6196	LELAND OLDS - LELAND2-LNX3345.00 345KV CKT Z
FDNS	16NR	0	17G	G15_098	TO->FROM	GLENHAM - L3 HAWDON 230KV CKT 1	210	210	0.04693	118.4953	FTTHOM1-LNX3345.00 - LELAND2-LNX3345.00 345KV CKT 1
FDNS	16NR	0	20L	G15_098	TO->FROM	GLENHAM - L3 HAWDON 230KV CKT 1	210	210	0.03763	113.0153	LELAND OLDS - LELAND2-LNX3345.00 345KV CKT Z
FDNS	16NR	0	20L	G15_098	TO->FROM	GLENHAM - L3 HAWDON 230KV CKT 1	210	210	0.03763	112.9734	P12:345:UMZB:# 108 #: LOS FT IN ND. LOS FT
FDNS	16NR	0	20L	G15_098	TO->FROM	GLENHAM - L3 HAWDON 230KV CKT 1	210	210	0.03763	112.9305	FT THOMPSON - FTTHOM1-LNX3345.00 345KV CKT Z
FDNS	16NR	0	20L	G15_098	TO->FROM	GLENHAM - L3 HAWDON 230KV CKT 1	210	210	0.03763	112.9032	FTTHOM1-LNX3345.00 - LELAND2-LNX3345.00 345KV CKT 1
FDNS	16NR	0	17G	G15_098	TO->FROM	GLENHAM - L3 HAWDON 230KV CKT 1	210	210	0.04421	110.9935	P12:345:UMZB:# 102 #: AVS BD IN ND. AVS BRD LR
FDNS	16NR	0	17G	G15_098	TO->FROM	GLENHAM - L3 HAWDON 230KV CKT 1	210	210	0.04421	110.993	P12:345:UMZB:# 103 #: BD IN SD. LOSS OF LINE
FDNS	16NR	0	17G	G15_098	TO->FROM	GLENHAM - L3 HAWDON 230KV CKT 1	210	210	0.04421	110.9056	ANTELOP-LNX3345.00 - ANTELOPE VALLEY 345KV CKT Z
FDNS	16NR	0	17G	G15_098	TO->FROM	GLENHAM - L3 HAWDON 230KV CKT 1	210	210	0.04421	110.6476	ANTELOP-LNX3345.00 - BRDLAND-LNX3345.00 345KV CKT 1
FDNS	16NR	0	17G	G15_098	TO->FROM	GLENHAM - L3 HAWDON 230KV CKT 1	210	210	0.04421	110.4136	BRDLAND-LNX3345.00 - HURON 345KV CKT Z
FDNS	16NR	0	17G	G15_098	TO->FROM	GLENHAM - L3 HAWDON 230KV CKT 1	210	210	0.04421	110.4134	HURON (BD KU2A) 345/230/13.8KV TRANSFORMER CKT 1
FDNS	16NR	0	17G	G15_098	TO->FROM	GLENHAM - L3 HAWDON 230KV CKT 1	210	210	0.04421	110.4134	HURON (BD KU2A) 345/230/13.8KV TRANSFORMER CKT 1
FDNS	16NR	0	17G	G15_098	TO->FROM	GLENHAM - L3 HAWDON 230KV CKT 1	210	210	0.04421	110.4114	BROADLAND - HURON 230KV CKT 1
FDNS	16NR	0	20L	G15_098	TO->FROM	GLENHAM - L3 HAWDON 230KV CKT 1	210	210	0.05075	107.6661	BISON - HETINGER 230KV CKT 1
FDNS	16NR	0	17G	G15_098	TO->FROM	GLENHAM - L3 HAWDON 230KV CKT 1	210	210	0.05908	106.4224	BISON - HETINGER 230KV CKT 1
FDNS	16NR	0	20L	G15_098	TO->FROM	GLENHAM - L3 HAWDON 230KV CKT 1	210	210	0.05075	106.3048	BISON - MAURINE 230KV CKT 1
FDNS	16NR	0	17G	G15_098	TO->FROM	GLENHAM - L3 HAWDON 230KV CKT 1	210	210	0.04141	105.9414	GROTON-LNX3 345.00 - LELAND1-LNX3345.00 345KV CKT 1
FDNS	16NR	0	17G	G15_098	TO->FROM	GLENHAM - L3 HAWDON 230KV CKT 1	210	210	0.04141	105.6238	P12:345:UMZB:# 109 #: LOS GRT IN ND. LOS GRT
FDNS	16NR	0	17G	G15_098	TO->FROM	GLENHAM - L3 HAWDON 230KV CKT 1	210	210	0.05908	105.6146	BISON - MAURINE 230KV CKT 1
FDNS	16NR	0	17G	G15_098	TO->FROM	GLENHAM - L3 HAWDON 230KV CKT 1	210	210	0.04141	105.6059	GROTON - GROTON-LNX3 345.00 345KV CKT Z
FDNS	16NR	0	17G	G15_098	TO->FROM	GLENHAM - L3 HAWDON 230KV CKT 1	210	210	0.04141	105.596	LELAND OLDS - LELAND1-LNX3345.00 345KV CKT Z
FDNS	16NR	0	20L	G15_098	TO->FROM	GLENHAM - L3 HAWDON 230KV CKT 1	210	210	0.03552	105.3126	ANTELOP-LNX3345.00 - BRDLAND-LNX3345.00 345KV CKT 1
FDNS	16NR	0	20L	G15_098	TO->FROM	GLENHAM - L3 HAWDON 230KV CKT 1	210	210	0.03552	105.1559	P12:345:UMZB:# 102 #: AVS BD IN ND. AVS BRD LR
FDNS	16NR	0	20L	G15_098	TO->FROM	GLENHAM - L3 HAWDON 230KV CKT 1	210	210	0.03552	105.1557	P12:345:UMZB:# 103 #: BD IN SD. LOSS OF LINE
FDNS	16NR	0	20L	G15_098	TO->FROM	GLENHAM - L3 HAWDON 230KV CKT 1	210	210	0.03552	105.1096	BROADLAND - HURON 230KV CKT 1
FDNS	16NR	0	20L	G15_098	TO->FROM	GLENHAM - L3 HAWDON 230KV CKT 1	210	210	0.03552	105.1094	BRDLAND-LNX3345.00 - HURON 345KV CKT Z
FDNS	16NR	0	20L	G15_098	TO->FROM	GLENHAM - L3 HAWDON 230KV CKT 1	210	210	0.03552	105.1092	HURON (BD KU2A) 345/230/13.8KV TRANSFORMER CKT 1
FDNS	16NR	0	20L	G15_098	TO->FROM	GLENHAM - L3 HAWDON 230KV CKT 1	210	210	0.03552	105.1092	HURON (BD KU2A) 345/230/13.8KV TRANSFORMER CKT 1
FDNS	16NR	0	20L	G15_098	TO->FROM	GLENHAM - L3 HAWDON 230KV CKT 1	210	210	0.03552	105.0973	ANTELOP-LNX3345.00 - ANTELOPE VALLEY 345KV CKT Z
FDNS	16NR	0	17G	G15_098	TO->FROM	GLENHAM - L3 HAWDON 230KV CKT 1	210	210	0.04099	101.9669	CENTER - JAMESTOWN 345KV CKT 1
FDNS	16NR	0	17G	G15_098	TO->FROM	GLENHAM - L3 HAWDON 230KV CKT 1	210	210	0.04004	101.1779	CHISAGO COUNTY - FORBES 500KV CKT 1
FDNS	16NR	0	17G	G15_098	TO->FROM	GLENHAM - L3 HAWDON 230KV CKT 1	210	210	0.0407	101.078	G09_001IST 345.00 - WATERTOWN 345KV CKT 1
FDNS	16NR	0	20L	G15_098	TO->FROM	GLENHAM - L3 HAWDON 230KV CKT 1	210	210	0.03324	101.0137	BUFFALO - JAMESTOWN 345KV CKT 1
FDNS	16NR	0	17G	G15_098	TO->FROM	GLENHAM - L3 HAWDON 230KV CKT 1	210	210	0.0407	100.9366	G09_001IST 345.00 - GROTON 345KV CKT 1
FDNS	16NR	0	17G	G15_098	TO->FROM	GLENHAM - L3 HAWDON 230KV CKT 1	210	210	0.04004	100.7507	CHISAGO COUNTY - CHISAGO COUNTY 500KV CKT 1
FDNS	16NR	0	20L	G15_098	TO->FROM	GLENHAM - L3 HAWDON 230KV CKT 1	210	210	0.03322	100.0929	GROTON-LNX3 345.00 - LELAND1-LNX3345.00 345KV CKT 1
FDNS	16NR	0	20L	G15_098	TO->FROM	GLENHAM - L3 HAWDON 230KV CKT 1	210	210	0.03322	99.9	GROTON - GROTON-LNX3 345.00 345KV CKT Z

SOLUTION	GROUP	SCENARIO	SEASON	SOURCE	DIRECTION	MONITORED ELEMENT	RATEA (MVA)	RATEB(MVA)	TDF	TC%LOADING (% MVA)	CONTINGENCY
FDNS	16NR	0	20L	G15_098	TO->FROM	GLENHAM - L3 HAWDON 230KV CKT 1	210	210	0.03322	99.9	LELAND OLDS - LELAND1-LNX3345.00 345KV CKT Z
FDNS	16NR	0	20L	G15_098	TO->FROM	GLENHAM - L3 HAWDON 230KV CKT 1	210	210	0.03322	99.9	P12:345:UMZB:# 109 #: LOS GRT IN ND. LOS GRT
FDNS	16NR	0	17G	G15_098	TO->FROM	GLENHAM - L3 HAWDON 230KV CKT 1	210	210	0.04045	99.6	ALEXMRES3 345.00 - BISON 3 345.00 345KV CKT 1
FDNS	16NR	0	17G	G15_098	TO->FROM	GLENHAM - L3 HAWDON 230KV CKT 1	210	210	0.04016	99.5	BISMARK - JAMES TOWN 230KV CKT 1
FDNS	16NR	0	17G	G15_098	TO->FROM	GLENHAM - L3 HAWDON 230KV CKT 1	210	210	0.04016	99.5	BISMARK - WEBER 230KV CKT 1
FDNS	16NR	0	17G	G15_098	TO->FROM	GLENHAM - L3 HAWDON 230KV CKT 1	210	210	0.04016	99.5	JAMES TOWN - WEBER 230KV CKT 1
FDNS	00NR	0	16WP	G15_098	FROM->TO	GR ISLD-LNX3345.00 - GRAND ISLAND 345KV CKT Z	720	720	0.03013	105.8059	NUNDRWD - WAYSIDE 230KV CKT 1
FDNS	00NR_B10T_DCTIE	0	16WP	G15_098	FROM->TO	GR ISLD-LNX3345.00 - GRAND ISLAND 345KV CKT Z	720	720	0.03013	103.5498	NUNDRWD - WAYSIDE 230KV CKT 1
FDNS	00NR	0	16WP	G15_098	TO->FROM	GR ISLD-LNX3345.00 - HOLT.CO3 345.00 345KV CKT 1	720	720	0.03013	105.1367	NUNDRWD - WAYSIDE 230KV CKT 1
FDNS	00NR_B10T_DCTIE	0	16WP	G15_098	TO->FROM	GR ISLD-LNX3345.00 - HOLT.CO3 345.00 345KV CKT 1	720	720	0.03013	102.8993	NUNDRWD - WAYSIDE 230KV CKT 1
FDNS	16NR	0	17G	G15_098	FROM->TO	HURON (BD KU2A) 345/230/13.8KV TRANSFORMER CKT 1	400	400	0.06844	114.1804	LELAND OLDS - LELAND2-LNX3345.00 345KV CKT Z
FDNS	16NR	0	17G	G15_098	FROM->TO	HURON (BD KU2A) 345/230/13.8KV TRANSFORMER CKT 1	400	400	0.06844	113.9679	FT THOMPSON - FTTHOM1-LNX3345.00 345KV CKT Z
FDNS	16NR	0	17G	G15_098	FROM->TO	HURON (BD KU2A) 345/230/13.8KV TRANSFORMER CKT 1	400	400	0.06844	113.6647	P12:345:UMZB:# 108 #: LOS FT IN ND. LOS FT
FDNS	16NR	0	17G	G15_098	FROM->TO	HURON (BD KU2A) 345/230/13.8KV TRANSFORMER CKT 1	400	400	0.06393	113.5579	LELAND OLDS - LELAND1-LNX3345.00 345KV CKT Z
FDNS	16NR	0	17G	G15_098	FROM->TO	HURON (BD KU2A) 345/230/13.8KV TRANSFORMER CKT 1	400	400	0.06393	113.5213	P12:345:UMZB:# 109 #: LOS GRT IN ND. LOS GRT
FDNS	16NR	0	17G	G15_098	FROM->TO	HURON (BD KU2A) 345/230/13.8KV TRANSFORMER CKT 1	400	400	0.06393	113.5163	GROTON - GROTON-LNX3 345.00 345KV CKT Z
FDNS	16NR	0	17G	G15_098	FROM->TO	HURON (BD KU2A) 345/230/13.8KV TRANSFORMER CKT 1	400	400	0.06844	113.2661	FTTHOM1-LNX3345.00 - LELAND2-LNX3345.00 345KV CKT 1
FDNS	16NR	0	17G	G15_098	FROM->TO	HURON (BD KU2A) 345/230/13.8KV TRANSFORMER CKT 1	400	400	0.06393	113.2137	GROTON-LNX3 345.00 - LELAND1-LNX3345.00 345KV CKT 1
FDNS	16NR	0	17G	G15_098	FROM->TO	HURON (BD KU2A) 345/230/13.8KV TRANSFORMER CKT 1	400	400	0.06844	109.841	LELAND OLDS - LELAND2-LNX3345.00 345KV CKT Z
FDNS	16NR	0	17G	G15_098	FROM->TO	HURON (BD KU2A) 345/230/13.8KV TRANSFORMER CKT 1	400	400	0.06844	109.684	FT THOMPSON - FTTHOM1-LNX3345.00 345KV CKT Z
FDNS	16NR	0	17G	G15_098	FROM->TO	HURON (BD KU2A) 345/230/13.8KV TRANSFORMER CKT 1	400	400	0.06844	109.393	P12:345:UMZB:# 108 #: LOS FT IN ND. LOS FT
FDNS	16NR	0	17G	G15_098	FROM->TO	HURON (BD KU2A) 345/230/13.8KV TRANSFORMER CKT 1	400	400	0.06393	109.3149	LELAND OLDS - LELAND1-LNX3345.00 345KV CKT Z
FDNS	16NR	0	17G	G15_098	FROM->TO	HURON (BD KU2A) 345/230/13.8KV TRANSFORMER CKT 1	400	400	0.06393	109.284	GROTON - GROTON-LNX3 345.00 345KV CKT Z
FDNS	16NR	0	17G	G15_098	FROM->TO	HURON (BD KU2A) 345/230/13.8KV TRANSFORMER CKT 1	400	400	0.06393	109.2831	P12:345:UMZB:# 109 #: LOS GRT IN ND. LOS GRT
FDNS	16NR	0	17G	G15_098	FROM->TO	HURON (BD KU2A) 345/230/13.8KV TRANSFORMER CKT 1	400	400	0.06844	109.0139	FTTHOM1-LNX3345.00 - LELAND2-LNX3345.00 345KV CKT 1
FDNS	16NR	0	17G	G15_098	FROM->TO	HURON (BD KU2A) 345/230/13.8KV TRANSFORMER CKT 1	400	400	0.06393	108.9684	GROTON-LNX3 345.00 - LELAND1-LNX3345.00 345KV CKT 1
FDNS	00NR_B10T_DCTIE	0	17SP	G15_098	FROM->TO	HURON (BD KU2A) 345/230/13.8KV TRANSFORMER CKT 1	400	400	0.07598	106.2248	LELAND OLDS - LELAND2-LNX3345.00 345KV CKT Z
FDNS	00NR_B10T_DCTIE	0	17SP	G15_098	FROM->TO	HURON (BD KU2A) 345/230/13.8KV TRANSFORMER CKT 1	400	400	0.07598	105.7378	P12:345:UMZB:# 108 #: LOS FT IN ND. LOS FT
FDNS	00NR_B10T_DCTIE	0	17SP	G15_098	FROM->TO	HURON (BD KU2A) 345/230/13.8KV TRANSFORMER CKT 1	400	400	0.07598	105.7264	FT THOMPSON - FTTHOM1-LNX3345.00 345KV CKT Z
FDNS	00NR_B10T_DCTIE	0	17SP	G15_098	FROM->TO	HURON (BD KU2A) 345/230/13.8KV TRANSFORMER CKT 1	400	400	0.07598	105.0881	FTTHOM1-LNX3345.00 - LELAND2-LNX3345.00 345KV CKT 1
FDNS	00NR_B10T_DCTIE	0	17SP	G15_098	FROM->TO	HURON (BD KU2A) 345/230/13.8KV TRANSFORMER CKT 1	400	400	0.07143	104.3591	LELAND OLDS - LELAND1-LNX3345.00 345KV CKT Z
FDNS	00NR_B10T_DCTIE	0	17SP	G15_098	FROM->TO	HURON (BD KU2A) 345/230/13.8KV TRANSFORMER CKT 1	400	400	0.07143	104.2434	GROTON - GROTON-LNX3 345.00 345KV CKT Z
FDNS	00NR_B10T_DCTIE	0	17SP	G15_098	FROM->TO	HURON (BD KU2A) 345/230/13.8KV TRANSFORMER CKT 1	400	400	0.07143	104.2392	P12:345:UMZB:# 109 #: LOS GRT IN ND. LOS GRT
FDNS	00NR	0	17SP	G15_098	FROM->TO	HURON (BD KU2A) 345/230/13.8KV TRANSFORMER CKT 1	400	400	0.07598	104.2379	LELAND OLDS - LELAND2-LNX3345.00 345KV CKT Z
FDNS	00NR	0	17SP	G15_098	FROM->TO	HURON (BD KU2A) 345/230/13.8KV TRANSFORMER CKT 1	400	400	0.07598	103.7749	P12:345:UMZB:# 108 #: LOS FT IN ND. LOS FT
FDNS	00NR	0	17SP	G15_098	FROM->TO	HURON (BD KU2A) 345/230/13.8KV TRANSFORMER CKT 1	400	400	0.07598	103.7693	FT THOMPSON - FTTHOM1-LNX3345.00 345KV CKT Z
FDNS	00NR_B10T_DCTIE	0	17SP	G15_098	FROM->TO	HURON (BD KU2A) 345/230/13.8KV TRANSFORMER CKT 1	400	400	0.07143	103.6769	GROTON-LNX3 345.00 - LELAND1-LNX3345.00 345KV CKT 1
FDNS	00NR	0	17SP	G15_098	FROM->TO	HURON (BD KU2A) 345/230/13.8KV TRANSFORMER CKT 1	400	400	0.07598	103.2836	FTTHOM1-LNX3345.00 - LELAND2-LNX3345.00 345KV CKT 1
FDNS	00NR_B10T_DCTIE	0	17SP	G15_098	FROM->TO	HURON (BD KU2A) 345/230/13.8KV TRANSFORMER CKT 1	400	400	0.07598	102.9326	LELAND OLDS - LELAND2-LNX3345.00 345KV CKT Z
FDNS	00NR_B10T_DCTIE	0	17SP	G15_098	FROM->TO	HURON (BD KU2A) 345/230/13.8KV TRANSFORMER CKT 1	400	400	0.07598	102.5294	FT THOMPSON - FTTHOM1-LNX3345.00 345KV CKT Z
FDNS	16NR	0	17G	G15_098	FROM->TO	HURON (BD KU2A) 345/230/13.8KV TRANSFORMER CKT 1	400	400	0.05965	102.5214	G09_001IST 345.00 - WATERTOWN 345KV CKT 1
FDNS	00NR_B10T_DCTIE	0	17SP	G15_098	FROM->TO	HURON (BD KU2A) 345/230/13.8KV TRANSFORMER CKT 1	400	400	0.07598	102.5105	P12:345:UMZB:# 108 #: LOS FT IN ND. LOS FT
FDNS	16NR	0	17G	G15_098	FROM->TO	HURON (BD KU2A) 345/230/13.8KV TRANSFORMER CKT 1	400	400	0.05965	102.506	G09_001IST 345.00 - GROTON 345KV CKT 1
FDNS	00NR	0	17SP	G15_098	FROM->TO	HURON (BD KU2A) 345/230/13.8KV TRANSFORMER CKT 1	400	400	0.07143	102.3438	GROTON-LNX3 345.00 - LELAND1-LNX3345.00 345KV CKT 1
FDNS	00NR	0	17SP	G15_098	FROM->TO	HURON (BD KU2A) 345/230/13.8KV TRANSFORMER CKT 1	400	400	0.07143	102.31	LELAND OLDS - LELAND1-LNX3345.00 345KV CKT Z
FDNS	00NR	0	17SP	G15_098	FROM->TO	HURON (BD KU2A) 345/230/13.8KV TRANSFORMER CKT 1	400	400	0.07143	102.2631	GROTON - GROTON-LNX3 345.00 345KV CKT Z
FDNS	00NR	0	17SP	G15_098	FROM->TO	HURON (BD KU2A) 345/230/13.8KV TRANSFORMER CKT 1	400	400	0.07143	102.2562	P12:345:UMZB:# 109 #: LOS GRT IN ND. LOS GRT
FDNS	00NR_B10T_DCTIE	0	17SP	G15_098	FROM->TO	HURON (BD KU2A) 345/230/13.8KV TRANSFORMER CKT 1	400	400	0.07598	101.9175	FTTHOM1-LNX3345.00 - LELAND2-LNX3345.00 345KV CKT 1
FDNS	16NR	0	17G	G15_098	FROM->TO	HURON (BD KU2A) 345/230/13.8KV TRANSFORMER CKT 1	400	400	0.05875	101.5859	CENTER - JAMESTOWN 345KV CKT 1
FDNS	16NR	0	17G	G15_098	FROM->TO	HURON (BD KU2A) 345/230/13.8KV TRANSFORMER CKT 1	400	400	0.06109	101.4238	GLENHAM - L3 HAWDON 230KV CKT 1
FDNS	00NR_B10T_DCTIE	0	17SP	G15_098	FROM->TO	HURON (BD KU2A) 345/230/13.8KV TRANSFORMER CKT 1	400	400	0.07143	101.3535	LELAND OLDS - LELAND1-LNX3345.00 345KV CKT Z
FDNS	16NR	0	17G	G15_098	FROM->TO	HURON (BD KU2A) 345/230/13.8KV TRANSFORMER CKT 1	400	400	0.07705	101.3284	BISON - HETINGER 230KV CKT 1
FDNS	00NR_B10T_DCTIE	0	17SP	G15_098	FROM->TO	HURON (BD KU2A) 345/230/13.8KV TRANSFORMER CKT 1	400	400	0.07143	101.2575	GROTON - GROTON-LNX3 345.00 345KV CKT Z
FDNS	00NR_B10T_DCTIE	0	17SP	G15_098	FROM->TO	HURON (BD KU2A) 345/230/13.8KV TRANSFORMER CKT 1	400	400	0.07143	101.2491	P12:345:UMZB:# 109 #: LOS GRT IN ND. LOS GRT
FDNS	00NR	0	17SP	G15_098	FROM->TO	HURON (BD KU2A) 345/230/13.8KV TRANSFORMER CKT 1	400	400	0.07598	101.1944	LELAND OLDS - LELAND2-LNX3345.00 345KV CKT Z
FDNS	16ALL_B10T_DCTIE	0	17SP	G15_098	FROM->TO	HURON (BD KU2A) 345/230/13.8KV TRANSFORMER CKT 1	400	400	0.12206	101.098	BASE CASE
FDNS	16NR	0	17G	G15_098	FROM->TO	HURON (BD KU2A) 345/230/13.8KV TRANSFORMER CKT 1	400	400	0.07705	100.9202	BISON - MAURINE 230KV CKT 1
FDNS	00NR	0	17SP	G15_098	FROM->TO	HURON (BD KU2A) 345/230/13.8KV TRANSFORMER CKT 1	400	400	0.07598	100.8153	FT THOMPSON - FTTHOM1-LNX3345.00 345KV CKT Z
FDNS	00NR	0	17SP	G15_098	FROM->TO	HURON (BD KU2A) 345/230/13.8KV TRANSFORMER CKT 1	400	400	0.07598	100.7927	P12:345:UMZB:# 108 #: LOS FT IN ND. LOS FT
FDNS	00NR_B10T_DCTIE	0	17SP	G15_098	FROM->TO	HURON (BD KU2A) 345/230/13.8KV TRANSFORMER CKT 1	400	400	0.07143	100.7225	GROTON-LNX3 345.00 - LELAND1-LNX3345.00 345KV CKT 1
FDNS	16NR	0	17G	G15_098	FROM->TO	HURON (BD KU2A) 345/230/13.8KV TRANSFORMER CKT 1	400	400	0.06084	100.3709	GLENHAM - WHITLOK 230KV CKT 1
FDNS	00NR	0	17SP	G15_098	FROM->TO	HURON (BD KU2A) 345/230/13.8KV TRANSFORMER CKT 1	400	400	0.07598	100.3411	FTTHOM1-LNX3345.00 - LELAND2-LNX3345.00 345KV CKT 1
FDNS	16NR	0	17G	G15_098	FROM->TO	HURON (BD KU2A) 345/230/13.8KV TRANSFORMER CKT 1	400	400	0.06084	100.2941	P12:230:UMZB:# 114 #: SB IN SD. SB-WK-GH
FDNS	16NR	0	17G	G15_098	FROM->TO	HURON (BD KU2A) 345/230/13.8KV TRANSFORMER CKT 1	400	400	0.06084	100.2941	P12:230:UMZB:# 117 #: WK IN SD. SB-WK-GH
FDNS	16NR	0	17G	G15_098	FROM->TO	HURON (BD KU2A) 345/230/13.8KV TRANSFORMER CKT 1	400	400	0.06084	100.1927	SULLYBT-LNX3230.00 - WHITLOK 230KV CKT 1
FDNS	16NR	0	17G	G15_098	FROM->TO	HURON (BD KU2A) 345/230/13.8KV TRANSFORMER CKT 1	400	400	0.06084	100.1906	SULLEY BUTTE - SULLYBT-LNX3230.00 230KV CKT Z
FDNS	16NR	0	17G	G15_098	FROM->TO	HURON (BD KU2A) 345/230/13.8KV TRANSFORMER CKT 1	400	400	0.06084	99.9	OAHE - SULLEY BUTTE 230KV CKT 1
FDNS	16NR	0	17G	G15_098	FROM->TO	HURON (BD KU2A) 345/230/13.8KV TRANSFORMER CKT 1	400	400	0.05965	99.7	G09_001IST 345.00 - GROTON 345KV CKT 1
FDNS	16NR	0	17G	G15_098	FROM->TO	HURON (BD KU2A) 345/230/13.8KV TRANSFORMER CKT 1	400	400	0.05965	99.7	G09_001IST 345.00 - WATERTOWN 345KV CKT 1
FDNS	00NR	0	17SP	G15_098	FROM->TO	HURON (BD KU2A) 345/230/13.8KV TRANSFORMER CKT 1	400	400	0.07143	99.6	GROTON-LNX3 345.00 - LELAND1-LNX3345.00 345KV CKT 1
FDNS	00NR	0	17SP	G15_098	FROM->TO	HURON (BD KU2A) 345/230/13.8KV TRANSFORMER CKT 1	400	400	0.07143	99.6	LELAND OLDS - LELAND1-LNX3345.00 345KV CKT Z
FDNS	00NR	0	17SP	G15_098	FROM->TO	HURON (BD KU2A) 345/230/13.8KV TRANSFORMER CKT 1	400	400	0.07143	99.5	GROTON - GROTON-LNX3 345.00 345KV CKT Z
FDNS	00NR	0	17SP	G15_098	FROM->TO	HURON (BD KU2A) 345/230/13.8KV TRANSFORMER CKT 1	400	400	0.07143	99.5	P12:345:UMZB:# 109 #: LOS GRT IN ND. LOS GRT
FDNS	16NR	0	17G	G15_098	FROM->TO	HURON (BD KU2A) 345/230/13.8KV TRANSFORMER CKT 1	400	400	0.05698	99.4	CHISAGO COUNTY - FORBES 500KV CKT 1
FDNS	16NR	0	17G	G15_098	FROM->TO	HURON (BD KU2A) 345/230/13.8KV TRANSFORMER CKT 1	400	400	0.05698	99.2	CHISAGO COUNTY - CHISAGO COUNTY 500KV CKT 1
FDNS	00NR_B10T_DCTIE	0	17SP	G15_098	TO->FROM	WATERTN-LNX3345.00 - WATERTOWN 345KV CKT Z	720	792	0.0507	99	BLAIR - GRANITE FALLS 230KV CKT 1
FDNS	00NR_B10T_DCTIE	0	17SP	G15_098	TO->FROM	WATERTN-LNX3345.00 - WATERTOWN 345KV CKT Z	720	792	0.0507	99	BLAIR - GRANITE FALLS 230KV CKT 1
FDNS	00NR_B10T_DCTIE	0	17SP	G15_098	FROM->TO	WATERTN-LNX3345.00 - WHITE 345KV CKT 1	720	792	0.0507	99.7	BLAIR - GRANITE FALLS 230KV CKT 1
FDNS	00NR_B10T_DCTIE	0	17SP	G15_098	FROM->TO	WATERTN-LNX3345.00 - WHITE 345KV CKT 1	720	792	0.0507	99.7	BLAIR - GRANITE FALLS 230KV CKT 1

SOLUTION	GROUP	SCENARIO	SEASON	SOURCE	DIRECTION	MONITORED ELEMENT	RATEA (MVA)	RATEB(MVA)	TDF	TC%LOADING (% MVA)	CONTINGENCY
FDNS	00NR	2	16WP	G15_098	FROM->TO	BEULAH - STANTONTAP 7115.00 115KV CKT 1	120	132	0.04537	102.683	CENTER - COYOTE 345KV CKT 1
FDNS	16NR	2	17G	G15_098	FROM->TO	BEULAH - STANTONTAP 7115.00 115KV CKT 1	120	121	0.04712	101.9013	CENTER - COYOTE 345KV CKT 1
FDNS	00NR	2	20WP	G15_098	FROM->TO	BEULAH - STANTONTAP 7115.00 115KV CKT 1	120	132	0.04431	100.637	CENTER - COYOTE 345KV CKT 1
FDNS	16ALL	2	17SP	G15_098	FROM->TO	BROADLAND - HURON 230KV CKT 1	400	480	0.12149	100.4387	BASE CASE
FDNS	00NR	2	25SP	G15_098	FROM->TO	DAWSON CREEK - FALLON 115KV CKT 1	80	88	0.05539	102.6153	DAWSON CREEK - MILES CITY EAST 230KV CKT 1
FDNS	00NR	2	16WP	G15_098	TO->FROM	GARRISON - STANTONTAP 7115.00 115KV CKT 1	120	132	0.04537	102.377	CENTER - COYOTE 345KV CKT 1
FDNS	16NR	2	17G	G15_098	TO->FROM	GARRISON - STANTONTAP 7115.00 115KV CKT 1	120	121	0.04712	101.5648	CENTER - COYOTE 345KV CKT 1
FDNS	00NR	2	20WP	G15_098	TO->FROM	GARRISON - STANTONTAP 7115.00 115KV CKT 1	120	132	0.04431	100.343	CENTER - COYOTE 345KV CKT 1
FDNS	16NR	2	17G	G15_098	TO->FROM	GLENHAM - L3 HAWDON 230KV CKT 1	210	210	0.04751	119.1513	LELAND OLDS - LELAND2-LNX3345.00 345KV CKT Z
FDNS	16NR	2	17G	G15_098	TO->FROM	GLENHAM - L3 HAWDON 230KV CKT 1	210	210	0.04751	119.1451	P12:345:UMZB:# 108 #: LOS FT IN ND. LOS FT
FDNS	16NR	2	17G	G15_098	TO->FROM	GLENHAM - L3 HAWDON 230KV CKT 1	210	210	0.04751	118.9495	FT THOMPSON - FTTHOM1-LNX3345.00 345KV CKT Z
FDNS	16NR	2	17G	G15_098	TO->FROM	GLENHAM - L3 HAWDON 230KV CKT 1	210	210	0.04751	118.8726	FTTHOM1-LNX3345.00 - LELAND2-LNX3345.00 345KV CKT 1
FDNS	16NR	2	20L	G15_098	TO->FROM	GLENHAM - L3 HAWDON 230KV CKT 1	210	210	0.03819	113.3551	P12:345:UMZB:# 108 #: LOS FT IN ND. LOS FT
FDNS	16NR	2	20L	G15_098	TO->FROM	GLENHAM - L3 HAWDON 230KV CKT 1	210	210	0.03819	113.3455	LELAND OLDS - LELAND2-LNX3345.00 345KV CKT Z
FDNS	16NR	2	20L	G15_098	TO->FROM	GLENHAM - L3 HAWDON 230KV CKT 1	210	210	0.03819	113.3113	FT THOMPSON - FTTHOM1-LNX3345.00 345KV CKT Z
FDNS	16NR	2	20L	G15_098	TO->FROM	GLENHAM - L3 HAWDON 230KV CKT 1	210	210	0.03819	113.2882	FTTHOM1-LNX3345.00 - LELAND2-LNX3345.00 345KV CKT 1
FDNS	16NR	2	17G	G15_098	TO->FROM	GLENHAM - L3 HAWDON 230KV CKT 1	210	210	0.04477	111.3466	ANTELOP-LNX3345.00 - ANTELOPE VALLEY 345KV CKT Z
FDNS	16NR	2	17G	G15_098	TO->FROM	GLENHAM - L3 HAWDON 230KV CKT 1	210	210	0.04477	111.077	ANTELOP-LNX3345.00 - BRDLAND-LNX3345.00 345KV CKT 1
FDNS	16NR	2	17G	G15_098	TO->FROM	GLENHAM - L3 HAWDON 230KV CKT 1	210	210	0.04477	110.9102	P12:345:UMZB:# 102 #: AVS BD IN ND. AVS BRD LR
FDNS	16NR	2	17G	G15_098	TO->FROM	GLENHAM - L3 HAWDON 230KV CKT 1	210	210	0.04477	110.91	P12:345:UMZB:# 103 #: BD IN SD. LOSS OF LINE
FDNS	16NR	2	17G	G15_098	TO->FROM	GLENHAM - L3 HAWDON 230KV CKT 1	210	210	0.04477	110.8259	BROADLAND - HURON 230KV CKT 1
FDNS	16NR	2	17G	G15_098	TO->FROM	GLENHAM - L3 HAWDON 230KV CKT 1	210	210	0.04477	110.8257	BRDLAND-LNX3345.00 - HURON 345KV CKT Z
FDNS	16NR	2	17G	G15_098	TO->FROM	GLENHAM - L3 HAWDON 230KV CKT 1	210	210	0.04477	110.8254	HURON (BD KU2A) 345/230/13.8KV TRANSFORMER CKT 1
FDNS	16NR	2	17G	G15_098	TO->FROM	GLENHAM - L3 HAWDON 230KV CKT 1	210	210	0.04477	110.8254	HURON (BD KU2A) 345/230/13.8KV TRANSFORMER CKT 1
FDNS	16NR	2	20L	G15_098	TO->FROM	GLENHAM - L3 HAWDON 230KV CKT 1	210	210	0.05115	108.0231	BISON - HETINGER 230KV CKT 1
FDNS	16NR	2	17G	G15_098	TO->FROM	GLENHAM - L3 HAWDON 230KV CKT 1	210	210	0.05951	106.7878	BISON - HETINGER 230KV CKT 1
FDNS	16NR	2	20L	G15_098	TO->FROM	GLENHAM - L3 HAWDON 230KV CKT 1	210	210	0.05115	106.6545	BISON - MAURINE 230KV CKT 1
FDNS	16NR	2	17G	G15_098	TO->FROM	GLENHAM - L3 HAWDON 230KV CKT 1	210	210	0.042	106.653	GROTON-LNX3 345.00 - LELAND1-LNX3345.00 345KV CKT 1
FDNS	16NR	2	17G	G15_098	TO->FROM	GLENHAM - L3 HAWDON 230KV CKT 1	210	210	0.042	106.0747	P12:345:UMZB:# 109 #: LOS GRT IN ND. LOS GRT
FDNS	16NR	2	17G	G15_098	TO->FROM	GLENHAM - L3 HAWDON 230KV CKT 1	210	210	0.042	106.0647	GROTON - GROTON-LNX3 345.00 345KV CKT Z
FDNS	16NR	2	17G	G15_098	TO->FROM	GLENHAM - L3 HAWDON 230KV CKT 1	210	210	0.042	106.0613	LELAND OLDS - LELAND1-LNX3345.00 345KV CKT Z
FDNS	16NR	2	17G	G15_098	TO->FROM	GLENHAM - L3 HAWDON 230KV CKT 1	210	210	0.05951	105.9745	BISON - MAURINE 230KV CKT 1
FDNS	16NR	2	20L	G15_098	TO->FROM	GLENHAM - L3 HAWDON 230KV CKT 1	210	210	0.03607	105.71	ANTELOP-LNX3345.00 - BRDLAND-LNX3345.00 345KV CKT 1
FDNS	16NR	2	20L	G15_098	TO->FROM	GLENHAM - L3 HAWDON 230KV CKT 1	210	210	0.03607	105.5481	P12:345:UMZB:# 102 #: AVS BD IN ND. AVS BRD LR
FDNS	16NR	2	20L	G15_098	TO->FROM	GLENHAM - L3 HAWDON 230KV CKT 1	210	210	0.03607	105.5479	P12:345:UMZB:# 103 #: BD IN SD. LOSS OF LINE
FDNS	16NR	2	20L	G15_098	TO->FROM	GLENHAM - L3 HAWDON 230KV CKT 1	210	210	0.03607	105.5007	BROADLAND - HURON 230KV CKT 1
FDNS	16NR	2	20L	G15_098	TO->FROM	GLENHAM - L3 HAWDON 230KV CKT 1	210	210	0.03607	105.5005	BRDLAND-LNX3345.00 - HURON 345KV CKT Z
FDNS	16NR	2	20L	G15_098	TO->FROM	GLENHAM - L3 HAWDON 230KV CKT 1	210	210	0.03607	105.5003	HURON (BD KU2A) 345/230/13.8KV TRANSFORMER CKT 1
FDNS	16NR	2	20L	G15_098	TO->FROM	GLENHAM - L3 HAWDON 230KV CKT 1	210	210	0.03607	105.5003	HURON (BD KU2A) 345/230/13.8KV TRANSFORMER CKT 1
FDNS	16NR	2	20L	G15_098	TO->FROM	GLENHAM - L3 HAWDON 230KV CKT 1	210	210	0.03607	105.4892	ANTELOP-LNX3345.00 - ANTELOPE VALLEY 345KV CKT Z
FDNS	16NR	2	17G	G15_098	TO->FROM	GLENHAM - L3 HAWDON 230KV CKT 1	210	210	0.04163	102.3742	CENTER - JAMESTOWN 345KV CKT 1
FDNS	16NR	2	17G	G15_098	TO->FROM	GLENHAM - L3 HAWDON 230KV CKT 1	210	210	0.04108	102.0144	BISON 3 345.00 - BUFFALO 345KV CKT 1
FDNS	16NR	2	17G	G15_098	TO->FROM	GLENHAM - L3 HAWDON 230KV CKT 1	210	210	0.04065	101.5864	CHISAGO COUNTY - FORBES 500KV CKT 1
FDNS	16NR	2	17G	G15_098	TO->FROM	GLENHAM - L3 HAWDON 230KV CKT 1	210	210	0.0413	101.5412	G09_001IST 345.00 - WATERTOWN 345KV CKT 1
FDNS	16NR	2	20L	G15_098	TO->FROM	GLENHAM - L3 HAWDON 230KV CKT 1	210	210	0.03386	101.3823	BUFFALO - JAMESTOWN 345KV CKT 1
FDNS	16NR	2	17G	G15_098	TO->FROM	GLENHAM - L3 HAWDON 230KV CKT 1	210	210	0.0413	101.3807	G09_001IST 345.00 - GROTON 345KV CKT 1
FDNS	16NR	2	17G	G15_098	TO->FROM	GLENHAM - L3 HAWDON 230KV CKT 1	210	210	0.04065	101.1336	CHISAGO COUNTY - CHISAGO COUNTY 500KV CKT 1
FDNS	16NR	2	20L	G15_098	TO->FROM	GLENHAM - L3 HAWDON 230KV CKT 1	210	210	0.03379	100.4951	GROTON-LNX3 345.00 - LELAND1-LNX3345.00 345KV CKT 1
FDNS	16NR	2	20L	G15_098	TO->FROM	GLENHAM - L3 HAWDON 230KV CKT 1	210	210	0.03379	100.3299	P12:345:UMZB:# 109 #: LOS GRT IN ND. LOS GRT
FDNS	16NR	2	20L	G15_098	TO->FROM	GLENHAM - L3 HAWDON 230KV CKT 1	210	210	0.03379	100.3222	LELAND OLDS - LELAND1-LNX3345.00 345KV CKT Z
FDNS	16NR	2	20L	G15_098	TO->FROM	GLENHAM - L3 HAWDON 230KV CKT 1	210	210	0.03379	100.3206	GROTON - GROTON-LNX3 345.00 345KV CKT Z
FDNS	16NR	2	17G	G15_098	TO->FROM	GLENHAM - L3 HAWDON 230KV CKT 1	210	210	0.04107	100	ALEXMRES3 345.00 - BISON 3 345.00 345KV CKT 1
FDNS	16NR	2	17G	G15_098	TO->FROM	GLENHAM - L3 HAWDON 230KV CKT 1	210	210	0.04078	99.9	BISMARK - JAMES TOWN 230KV CKT 1
FDNS	16NR	2	17G	G15_098	TO->FROM	GLENHAM - L3 HAWDON 230KV CKT 1	210	210	0.04078	99.9	BISMARK - WEBER 230KV CKT 1
FDNS	16NR	2	17G	G15_098	TO->FROM	GLENHAM - L3 HAWDON 230KV CKT 1	210	210	0.04078	99.9	JAMES TOWN - WEBER 230KV CKT 1
FDNS	16NR	2	20L	G15_098	TO->FROM	GLENHAM - L3 HAWDON 230KV CKT 1	210	210	0.03297	99.4	CHISAGO COUNTY - FORBES 500KV CKT 1
FDNS	16NR	2	20L	G15_098	TO->FROM	GLENHAM - L3 HAWDON 230KV CKT 1	210	210	0.03297	99.3	CHISAGO COUNTY - CHISAGO COUNTY 500KV CKT 1
FDNS	16NR	2	17G	G15_098	TO->FROM	GLENHAM - L3 HAWDON 230KV CKT 1	210	210	0.04026	99	BIG STONE - BLAIR 230KV CKT 1
FDNS	16NR	2	17G	G15_098	TO->FROM	GLENHAM - L3 HAWDON 230KV CKT 1	210	210	0.04026	99	BIG STONE - BLAIR 230KV CKT 1
FDNS	00NR	2	16WP	G15_098	FROM->TO	GR ISLD-LNX3345.00 - GRAND ISLAND 345KV CKT Z	720	720	0.02988	105.7439	NUNDRWD - WAYSIDE 230KV CKT 1
FDNS	00NR	2	16WP	G15_098	TO->FROM	GR ISLD-LNX3345.00 - HOLT.CO3 345.00 345KV CKT 1	720	720	0.02988	105.0748	NUNDRWD - WAYSIDE 230KV CKT 1
FDNS	16NR	2	17G	G15_098	FROM->TO	HURON (BD KU2A) 345/230/13.8KV TRANSFORMER CKT 1	400	400	0.06789	114.1034	LELAND OLDS - LELAND2-LNX3345.00 345KV CKT Z
FDNS	16NR	2	17G	G15_098	FROM->TO	HURON (BD KU2A) 345/230/13.8KV TRANSFORMER CKT 1	400	400	0.06789	113.6467	FT THOMPSON - FTTHOM1-LNX3345.00 345KV CKT Z
FDNS	16NR	2	17G	G15_098	FROM->TO	HURON (BD KU2A) 345/230/13.8KV TRANSFORMER CKT 1	400	400	0.06789	113.5758	P12:345:UMZB:# 108 #: LOS FT IN ND. LOS FT
FDNS	16NR	2	17G	G15_098	FROM->TO	HURON (BD KU2A) 345/230/13.8KV TRANSFORMER CKT 1	400	400	0.06334	113.4195	LELAND OLDS - LELAND1-LNX3345.00 345KV CKT Z
FDNS	16NR	2	17G	G15_098	FROM->TO	HURON (BD KU2A) 345/230/13.8KV TRANSFORMER CKT 1	400	400	0.06334	113.3774	P12:345:UMZB:# 109 #: LOS GRT IN ND. LOS GRT
FDNS	16NR	2	17G	G15_098	FROM->TO	HURON (BD KU2A) 345/230/13.8KV TRANSFORMER CKT 1	400	400	0.06334	113.3758	GROTON - GROTON-LNX3 345.00 345KV CKT Z
FDNS	16NR	2	17G	G15_098	FROM->TO	HURON (BD KU2A) 345/230/13.8KV TRANSFORMER CKT 1	400	400	0.06334	113.2252	GROTON-LNX3 345.00 - LELAND1-LNX3345.00 345KV CKT 1
FDNS	16NR	2	17G	G15_098	FROM->TO	HURON (BD KU2A) 345/230/13.8KV TRANSFORMER CKT 1	400	400	0.06789	113.1081	FTTHOM1-LNX3345.00 - LELAND2-LNX3345.00 345KV CKT 1
FDNS	16NR	2	17G	G15_098	FROM->TO	HURON (BD KU2A) 345/230/13.8KV TRANSFORMER CKT 1	400	400	0.06789	109.7794	LELAND OLDS - LELAND2-LNX3345.00 345KV CKT Z
FDNS	16NR	2	17G	G15_098	FROM->TO	HURON (BD KU2A) 345/230/13.8KV TRANSFORMER CKT 1	400	400	0.06789	109.4159	FT THOMPSON - FTTHOM1-LNX3345.00 345KV CKT Z
FDNS	16NR	2	17G	G15_098	FROM->TO	HURON (BD KU2A) 345/230/13.8KV TRANSFORMER CKT 1	400	400	0.06789	109.3213	P12:345:UMZB:# 108 #: LOS FT IN ND. LOS FT
FDNS	16NR	2	17G	G15_098	FROM->TO	HURON (BD KU2A) 345/230/13.8KV TRANSFORMER CKT 1	400	400	0.06334	109.202	LELAND OLDS - LELAND1-LNX3345.00 345KV CKT Z
FDNS	16NR	2	17G	G15_098	FROM->TO	HURON (BD KU2A) 345/230/13.8KV TRANSFORMER CKT 1	400	400	0.06334	109.1691	GROTON - GROTON-LNX3 345.00 345KV CKT Z
FDNS	16NR	2	17G	G15_098	FROM->TO	HURON (BD KU2A) 345/230/13.8KV TRANSFORMER CKT 1	400	400	0.06334	109.1654	P12:345:UMZB:# 109 #: LOS GRT IN ND. LOS GRT
FDNS	16NR	2	17G	G15_098	FROM->TO	HURON (BD KU2A) 345/230/13.8KV TRANSFORMER CKT 1	400	400	0.06334	108.9823	GROTON-LNX3 345.00 - LELAND1-LNX3345.00 345KV CKT 1
FDNS	16NR	2	17G	G15_098	FROM->TO	HURON (BD KU2A) 345/230/13.8KV TRANSFORMER CKT 1	400	400	0.06789	108.8839	FTTHOM1-LNX3345.00 - LELAND2-LNX3345.00 345KV CKT 1
FDNS	00NR	2	17SP	G15_098	FROM->TO	HURON (BD KU2A) 345/230/13.8KV TRANSFORMER CKT 1	400	400	0.07544	104.1141	LELAND OLDS - LELAND2-LNX3345.00 345KV CKT Z
FDNS	00NR	2	17SP	G15_098	FROM->TO	HURON (BD KU2A) 345/230/13.8KV TRANSFORMER CKT 1	400	400	0.07544	103.6391	P12:345:UMZB:# 108 #: LOS FT IN ND. LOS FT

SOLUTION	GROUP	SCENARIO	SEASON	SOURCE	DIRECTION	MONITORED ELEMENT	RATEA (MVA)	RATEB(MVA)	TDF	TC%LOADING (% MVA)	CONTINGENCY
FDNS	00NR	2	17SP	G15_098	FROM->TO	HURON (BD KU2A) 345/230/13.8KV TRANSFORMER CKT 1	400	400	0.07544	103.6385	FT THOMPSON - FTTHOM1-LNX3345.00 345KV CKT Z
FDNS	00NR	2	17SP	G15_098	FROM->TO	HURON (BD KU2A) 345/230/13.8KV TRANSFORMER CKT 1	400	400	0.07544	103.1306	FTTHOM1-LNX3345.00 - LELAND2-LNX3345.00 345KV CKT 1
FDNS	16NR	2	17G	G15_098	FROM->TO	HURON (BD KU2A) 345/230/13.8KV TRANSFORMER CKT 1	400	400	0.05912	102.4006	G09_001IST 345.00 - WATERTOWN 345KV CKT 1
FDNS	16NR	2	17G	G15_098	FROM->TO	HURON (BD KU2A) 345/230/13.8KV TRANSFORMER CKT 1	400	400	0.05912	102.2488	G09_001IST 345.00 - GROTON 345KV CKT 1
FDNS	00NR	2	17SP	G15_098	FROM->TO	HURON (BD KU2A) 345/230/13.8KV TRANSFORMER CKT 1	400	400	0.07084	102.0879	LELAND OLDS - LELAND1-LNX3345.00 345KV CKT Z
FDNS	00NR	2	17SP	G15_098	FROM->TO	HURON (BD KU2A) 345/230/13.8KV TRANSFORMER CKT 1	400	400	0.07084	102.0811	GROTON - GROTON-LNX3 345.00 345KV CKT Z
FDNS	00NR	2	17SP	G15_098	FROM->TO	HURON (BD KU2A) 345/230/13.8KV TRANSFORMER CKT 1	400	400	0.07084	102.0779	P12:345:UMZB:# 109 #: LOS GRT IN ND. LOS GRT
FDNS	00NR	2	17SP	G15_098	FROM->TO	HURON (BD KU2A) 345/230/13.8KV TRANSFORMER CKT 1	400	400	0.07084	101.6451	GROTON-LNX3 345.00 - LELAND1-LNX3345.00 345KV CKT 1
FDNS	16NR	2	17G	G15_098	FROM->TO	HURON (BD KU2A) 345/230/13.8KV TRANSFORMER CKT 1	400	400	0.05831	101.4818	CENTER - JAMESTOWN 345KV CKT 1
FDNS	16NR	2	17G	G15_098	FROM->TO	HURON (BD KU2A) 345/230/13.8KV TRANSFORMER CKT 1	400	400	0.06066	101.2215	GLENHAM - L3 HAWDON 230KV CKT 1
FDNS	16NR	2	17G	G15_098	FROM->TO	HURON (BD KU2A) 345/230/13.8KV TRANSFORMER CKT 1	400	400	0.07607	101.0941	BISON - HETINGER 230KV CKT 1
FDNS	00NR	2	17SP	G15_098	FROM->TO	HURON (BD KU2A) 345/230/13.8KV TRANSFORMER CKT 1	400	400	0.07544	101.0877	LELAND OLDS - LELAND2-LNX3345.00 345KV CKT Z
FDNS	16NR	2	17G	G15_098	FROM->TO	HURON (BD KU2A) 345/230/13.8KV TRANSFORMER CKT 1	400	400	0.05738	100.9521	BISON 3 345.00 - BUFFALO 345KV CKT 1
FDNS	00NR	2	17SP	G15_098	FROM->TO	HURON (BD KU2A) 345/230/13.8KV TRANSFORMER CKT 1	400	400	0.07544	100.7024	FT THOMPSON - FTTHOM1-LNX3345.00 345KV CKT Z
FDNS	16NR	2	17G	G15_098	FROM->TO	HURON (BD KU2A) 345/230/13.8KV TRANSFORMER CKT 1	400	400	0.07607	100.6872	BISON - MAURINE 230KV CKT 1
FDNS	00NR	2	17SP	G15_098	FROM->TO	HURON (BD KU2A) 345/230/13.8KV TRANSFORMER CKT 1	400	400	0.07544	100.6755	P12:345:UMZB:# 108 #: LOS FT IN ND. LOS FT
FDNS	16NR	2	17G	G15_098	FROM->TO	HURON (BD KU2A) 345/230/13.8KV TRANSFORMER CKT 1	400	400	0.06041	100.2529	GLENHAM - WHITLOK 230KV CKT 1
FDNS	00NR	2	17SP	G15_098	FROM->TO	HURON (BD KU2A) 345/230/13.8KV TRANSFORMER CKT 1	400	400	0.07544	100.2086	FTTHOM1-LNX3345.00 - LELAND2-LNX3345.00 345KV CKT 1
FDNS	16NR	2	17G	G15_098	FROM->TO	HURON (BD KU2A) 345/230/13.8KV TRANSFORMER CKT 1	400	400	0.06041	100.1761	P12:230:UMZB:# 114 #: SB IN SD. SB-WK-GH
FDNS	16NR	2	17G	G15_098	FROM->TO	HURON (BD KU2A) 345/230/13.8KV TRANSFORMER CKT 1	400	400	0.06041	100.1761	P12:230:UMZB:# 117 #: WK IN SD. SB-WK-GH
FDNS	16NR	2	17G	G15_098	FROM->TO	HURON (BD KU2A) 345/230/13.8KV TRANSFORMER CKT 1	400	400	0.06041	100.0737	SULLYBT-LNX3230.00 - WHITLOK 230KV CKT 1
FDNS	16NR	2	17G	G15_098	FROM->TO	HURON (BD KU2A) 345/230/13.8KV TRANSFORMER CKT 1	400	400	0.06041	100.0718	SULLEY BUTTE - SULLYBT-LNX3230.00 230KV CKT Z
FDNS	16NR	2	17G	G15_098	FROM->TO	HURON (BD KU2A) 345/230/13.8KV TRANSFORMER CKT 1	400	400	0.06041	99.8	OAHE - SULLEY BUTTE 230KV CKT 1
FDNS	16NR	2	17G	G15_098	FROM->TO	HURON (BD KU2A) 345/230/13.8KV TRANSFORMER CKT 1	400	400	0.05912	99.6	G09_001IST 345.00 - WATERTOWN 345KV CKT 1
FDNS	16NR	2	17G	G15_098	FROM->TO	HURON (BD KU2A) 345/230/13.8KV TRANSFORMER CKT 1	400	400	0.05912	99.5	G09_001IST 345.00 - GROTON 345KV CKT 1
FDNS	00NR	2	17SP	G15_098	FROM->TO	HURON (BD KU2A) 345/230/13.8KV TRANSFORMER CKT 1	400	400	0.07084	99.4	GROTON - GROTON-LNX3 345.00 345KV CKT Z
FDNS	00NR	2	17SP	G15_098	FROM->TO	HURON (BD KU2A) 345/230/13.8KV TRANSFORMER CKT 1	400	400	0.07084	99.4	LELAND OLDS - LELAND1-LNX3345.00 345KV CKT Z
FDNS	00NR	2	17SP	G15_098	FROM->TO	HURON (BD KU2A) 345/230/13.8KV TRANSFORMER CKT 1	400	400	0.07084	99.4	P12:345:UMZB:# 109 #: LOS GRT IN ND. LOS GRT
FDNS	16NR	2	17G	G15_098	FROM->TO	HURON (BD KU2A) 345/230/13.8KV TRANSFORMER CKT 1	400	400	0.05648	99.3	CHISAGO COUNTY - FORBES 500KV CKT 1
FDNS	16NR	2	17G	G15_098	FROM->TO	HURON (BD KU2A) 345/230/13.8KV TRANSFORMER CKT 1	400	400	0.05648	99.2	CHISAGO COUNTY - CHISAGO COUNTY 500KV CKT 1
FDNS	00NR	2	17SP	G15_098	FROM->TO	HURON (BD KU2A) 345/230/13.8KV TRANSFORMER CKT 1	400	400	0.07084	99	GROTON-LNX3 345.00 - LELAND1-LNX3345.00 345KV CKT 1

11.9 G1-T: Stand Alone Thermal Power Flow Analysis (Constraints Requiring Transmission Reinforcement)

See next page.

SOLUTION	GROUP	SCENARIO	SEASON	SOURCE	DIRECTION	MONITORED ELEMENT	RATEA (MVA)	RATEB(MVA)	TDF	TC%LOADING (% MVA)	CONTINGENCY
FDNSLock-Blown up	02ALL_G14_037	0	16WP	G14_037		Non-Converged Contingency	987.16	1082.8	0.25568	-	FINNEY SWITCHING STATION - Hitchland Interchange 345KV CKT 1
FDNSLock-Blown up	02ALL_G14_037	0	16WP	G14_037		Non-Converged Contingency	956.09	1051.7	0.25568	-	FINNEY SWITCHING STATION - HOLCOMB 345KV CKT 1
FDNSLock-Blown up	02ALL_G14_037	0	20L	G14_037		Non-Converged Contingency	0	0	0.4528	-	P12:345:SPS:J07.1.FINN.HITCH
FDNSLock-Blown up	02ALL_G14_037	0	20L	G14_037		Non-Converged Contingency	956.09	1051.7	0.24173	-	Hitchland Interchange - WALKTAP7 345.00 345KV CKT 1
FDNSLock-Blown up	02ALL_G14_037	0	20L	G14_037		Non-Converged Contingency	956.09	1051.7	0.21107	-	FINNEY SWITCHING STATION - HOLCOMB 345KV CKT 1
FDNSLock-Blown up	02ALL_G14_037	0	20L	G14_037		Non-Converged Contingency	956.09	1051.7	0.21107	-	FINNEY SWITCHING STATION - HOLCOMB 345KV CKT 1
FDNSLock-Blown up	02ALL_G14_037	0	20L	G14_037		Non-Converged Contingency	1420	1775	0.1794	-	G11_051T 345.00 - WOODWARD DISTRICT EHV 345KV CKT 1
FDNSLock-Blown up	02ALL_G14_037	0	20L	G14_037		Non-Converged Contingency	1195	1195	0.1794	-	MATHWSN7 345.00 - TATONGA7 345.00 345KV CKT 1
FDNSLock-Blown up	02ALL_G14_037	0	20L	G14_037		Non-Converged Contingency	502	502	0.04506	-	GRAPEVINE INTERCHANGE - STATELINE INTERCHANGE 230KV CKT 1
FDNSLock-Blown up	02ALL_G14_037	0	20L	G14_037		Non-Converged Contingency	502	502	0.04506	-	GRAPEVINE INTERCHANGE - STATELINE INTERCHANGE 230KV CKT 1
FDNSLock-Blown up	02ALL_G14_037	0	20L	G14_037		Non-Converged Contingency	1022	1124	0.03678	-	G14-074T 345.00 - OKLAUNION 345KV CKT 1
FDNSLock-Blown up	02ALL_G14_037	0	20WP	G14_037		Non-Converged Contingency	0	0	0.48337	-	P12:345:SPS:J07.1.FINN.HITCH
FDNSLock-Blown up	02ALL_G14_037	0	20WP	G14_037		Non-Converged Contingency	987.16	1082.8	0.25769	-	Hitchland Interchange - WALKTAP7 345.00 345KV CKT 1
FDNSLock-Blown up	02ALL_G14_037	0	20WP	G14_037		Non-Converged Contingency	987.16	1082.8	0.25769	-	Hitchland Interchange - WALKTAP7 345.00 345KV CKT 1
FDNSLock-Blown up	02ALL_G14_037	2	20L	G14_037		Non-Converged Contingency	956.09	1051.7	0.23405	-	Hitchland Interchange - WALKTAP7 345.00 345KV CKT 1
FDNSLock-Blown up	02ALL_G14_037	2	20L	G14_037		Non-Converged Contingency	956.09	1051.7	0.23405	-	Hitchland Interchange - WALKTAP7 345.00 345KV CKT 1
FDNS	02ALL_G14_037	0	25SP	G14_037	TO->FROM	BUSHLAND INTERCHANGE - POTTER COUNTY INTERCHANGE 230KV CKT 1	318.7	350.57	0.03569	117.3539	BASE CASE
FDNS	02ALL_G14_037	0	25SP	G14_037	FROM->TO	POTTER COUNTY INTERCHANGE (WAUK 90343-A) 345/230/13.2KV TRANSFORMER CKT 1	560	560	0.11225	112.2699	BASE CASE
FDNS	02ALL_G14_037	0	25SP	G14_037	FROM->TO	POTTER COUNTY INTERCHANGE (WAUK 90343-A) 345/230/13.2KV TRANSFORMER CKT 1	560	560	0.11225	109.8734	BASE CASE
FDNS	02ALL_G14_037	2	25SP	G14_037	TO->FROM	BUSHLAND INTERCHANGE - POTTER COUNTY INTERCHANGE 230KV CKT 1	318.7	350.57	0.03569	117.2444	BASE CASE
FDNS	02ALL_G14_037	2	25SP	G14_037	FROM->TO	POTTER COUNTY INTERCHANGE (WAUK 90343-A) 345/230/13.2KV TRANSFORMER CKT 1	560	560	0.11229	112.3282	BASE CASE
FDNS	02ALL_G14_037	2	25SP	G14_037	FROM->TO	POTTER COUNTY INTERCHANGE (WAUK 90343-A) 345/230/13.2KV TRANSFORMER CKT 1	560	560	0.11229	109.9684	BASE CASE
FDNS	02ALL_G14_037	3	25SP	G14_037	TO->FROM	BUSHLAND INTERCHANGE - POTTER COUNTY INTERCHANGE 230KV CKT 1	318.7	350.57	0.03275	113.7212	BASE CASE
FDNSLock-Blown up	02ALL_G14_038	0	16WP	G14_038		Non-Converged Contingency	987.16	1082.8	0.25275	-	FINNEY SWITCHING STATION - Hitchland Interchange 345KV CKT 1
FDNSLock-Blown up	02ALL_G14_038	0	16WP	G14_038		Non-Converged Contingency	956.09	1051.7	0.25275	-	FINNEY SWITCHING STATION - HOLCOMB 345KV CKT 1
FDNSLock-Blown up	02ALL_G14_038	0	17G	G14_038		Non-Converged Contingency	956.09	1051.7	0.24581	-	FINNEY SWITCHING STATION - Hitchland Interchange 345KV CKT 1
FDNSLock-Blown up	02ALL_G14_038	0	17G	G14_038		Non-Converged Contingency	956.09	1051.7	0.24581	-	FINNEY SWITCHING STATION - HOLCOMB 345KV CKT 1
FDNSLock-Blown up	02ALL_G14_038	0	20L	G14_038		Non-Converged Contingency	0	0	0.4456	-	P12:345:SPS:J07.1.FINN.HITCH
FDNSLock-Blown up	02ALL_G14_038	0	20L	G14_038		Non-Converged Contingency	956.09	1051.7	0.2379	-	Hitchland Interchange - WALKTAP7 345.00 345KV CKT 1
FDNSLock-Blown up	02ALL_G14_038	0	20L	G14_038		Non-Converged Contingency	956.09	1051.7	0.2379	-	Hitchland Interchange - WALKTAP7 345.00 345KV CKT 1
FDNSLock-Blown up	02ALL_G14_038	0	20L	G14_038		Non-Converged Contingency	956.09	1051.7	0.2077	-	FINNEY SWITCHING STATION - HOLCOMB 345KV CKT 1
FDNSLock-Blown up	02ALL_G14_038	0	20L	G14_038		Non-Converged Contingency	956.09	1051.7	0.2077	-	FINNEY SWITCHING STATION - HOLCOMB 345KV CKT 1
FDNSLock-Blown up	02ALL_G14_038	0	20L	G14_038		Non-Converged Contingency	956.09	1051.7	0.2077	-	FINNEY SWITCHING STATION - WALKTAP7 345.00 345KV CKT 1
FDNSLock-Blown up	02ALL_G14_038	0	20L	G14_038		Non-Converged Contingency	956.09	1051.7	0.2077	-	FINNEY SWITCHING STATION - WALKTAP7 345.00 345KV CKT 1
FDNSLock-Blown up	02ALL_G14_038	0	20L	G14_038		Non-Converged Contingency	1420	1775	0.16899	-	G11_051T 345.00 - TATONGA7 345.00 345KV CKT 1
FDNSLock-Blown up	02ALL_G14_038	0	20L	G14_038		Non-Converged Contingency	1420	1775	0.16899	-	G11_051T 345.00 - WOODWARD DISTRICT EHV 345KV CKT 1
FDNSLock-Blown up	02ALL_G14_038	0	20L	G14_038		Non-Converged Contingency	502	502	0.05706	-	GRAPEVINE INTERCHANGE - STATELINE INTERCHANGE 230KV CKT 1
FDNSLock-Blown up	02ALL_G14_038	0	20L	G14_038		Non-Converged Contingency	502	502	0.05706	-	GRAPEVINE INTERCHANGE - STATELINE INTERCHANGE 230KV CKT 1
FDNSLock-Blown up	02ALL_G14_038	0	20L	G14_038		Non-Converged Contingency	1022	1124	0.04821	-	G14-074T 345.00 - TUCO INTERCHANGE 345KV CKT 1
FDNSLock-Blown up	02ALL_G14_038	0	20WP	G14_038		Non-Converged Contingency	0	0	0.47617	-	P12:345:SPS:J07.1.FINN.HITCH
FDNSLock-Blown up	02ALL_G14_038	0	20WP	G14_038		Non-Converged Contingency	987.16	1082.8	0.25386	-	Hitchland Interchange - WALKTAP7 345.00 345KV CKT 1
FDNSLock-Blown up	02ALL_G14_038	0	20WP	G14_038		Non-Converged Contingency	987.16	1082.8	0.25386	-	Hitchland Interchange - WALKTAP7 345.00 345KV CKT 1
FDNSLock-Blown up	02ALL_G14_038	2	20L	G14_038		Non-Converged Contingency	0	0	0.43204	-	P12:345:SPS:J07.1.FINN.HITCH
FDNSLock-Blown up	02ALL_G14_038	2	20L	G14_038		Non-Converged Contingency	956.09	1051.7	0.23067	-	Hitchland Interchange - WALKTAP7 345.00 345KV CKT 1
FDNSLock-Blown up	02ALL_G14_038	2	20L	G14_038		Non-Converged Contingency	956.09	1051.7	0.23067	-	Hitchland Interchange - WALKTAP7 345.00 345KV CKT 1
FDNS	02ALL_G14_038	0	25SP	G14_038	TO->FROM	BUSHLAND INTERCHANGE - POTTER COUNTY INTERCHANGE 230KV CKT 1	318.7	350.57	0.0454	118.1249	BASE CASE
FDNS	02ALL_G14_038	0	25SP	G14_038	FROM->TO	POTTER COUNTY INTERCHANGE (WAUK 90343-A) 345/230/13.2KV TRANSFORMER CKT 1	560	560	0.21093	135.2307	HITCHLAND INTERCHANGE - MOORE COUNTY INTERCHANGE 230KV CKT 1
FDNS	02ALL_G14_038	0	25SP	G14_038	FROM->TO	POTTER COUNTY INTERCHANGE (WAUK 90343-A) 345/230/13.2KV TRANSFORMER CKT 1	560	560	0.21093	135.2307	HITCHLAND INTERCHANGE - MOORE COUNTY INTERCHANGE 230KV CKT 1
FDNS	02ALL_G14_038	0	25SP	G14_038	FROM->TO	POTTER COUNTY INTERCHANGE (WAUK 90343-A) 345/230/13.2KV TRANSFORMER CKT 1	560	560	0.19736	132.5414	BORDER 7345.00 - TUCO_2 345.00 345KV CKT 1
FDNS	02ALL_G14_038	0	25SP	G14_038	FROM->TO	POTTER COUNTY INTERCHANGE (WAUK 90343-A) 345/230/13.2KV TRANSFORMER CKT 1	560	560	0.21093	130.8694	HITCHLAND INTERCHANGE - MOORE COUNTY INTERCHANGE 230KV CKT 1
FDNS	02ALL_G14_038	0	25SP	G14_038	FROM->TO	POTTER COUNTY INTERCHANGE (WAUK 90343-A) 345/230/13.2KV TRANSFORMER CKT 1	560	560	0.21093	130.8694	HITCHLAND INTERCHANGE - MOORE COUNTY INTERCHANGE 230KV CKT 1
FDNS	02ALL_G14_038	0	25SP	G14_038	FROM->TO	POTTER COUNTY INTERCHANGE (WAUK 90343-A) 345/230/13.2KV TRANSFORMER CKT 1	560	560	0.19736	130.5203	BORDER 7345.00 - WOODWARD DISTRICT EHV 345KV CKT 1
FDNS	02ALL_G14_038	0	25SP	G14_038	FROM->TO	POTTER COUNTY INTERCHANGE (WAUK 90343-A) 345/230/13.2KV TRANSFORMER CKT 1	560	560	0.19736	128.7318	BORDER 7345.00 - TUCO_2 345.00 345KV CKT 1
FDNS	02ALL_G14_038	0	25SP	G14_038	FROM->TO	POTTER COUNTY INTERCHANGE (WAUK 90343-A) 345/230/13.2KV TRANSFORMER CKT 1	560	560	0.20119	126.9868	GEN523971 1-HARRINGTON GEN #1 24 KV
FDNS	02ALL_G14_038	0	25SP	G14_038	FROM->TO	POTTER COUNTY INTERCHANGE (WAUK 90343-A) 345/230/13.2KV TRANSFORMER CKT 1	560	560	0.20119	126.9846	GEN523973 1-HARRINGTON GEN #3 24 KV
FDNS	02ALL_G14_038	0	25SP	G14_038	FROM->TO	POTTER COUNTY INTERCHANGE (WAUK 90343-A) 345/230/13.2KV TRANSFORMER CKT 1	560	560	0.20119	126.9697	GEN523972 1-HARRINGTON GEN #2 24 KV
FDNS	02ALL_G14_038	0	25SP	G14_038	FROM->TO	POTTER COUNTY INTERCHANGE (WAUK 90343-A) 345/230/13.2KV TRANSFORMER CKT 1	560	560	0.19736	126.8374	BORDER 7345.00 - WOODWARD DISTRICT EHV 345KV CKT 1
FDNS	02ALL_G14_038	0	25SP	G14_038	FROM->TO	POTTER COUNTY INTERCHANGE (WAUK 90343-A) 345/230/13.2KV TRANSFORMER CKT 1	560	560	0.20119	123.7566	GEN524023 1-NICHOLS GEN #3 22 KV
FDNS	02ALL_G14_038	0	25SP	G14_038	FROM->TO	POTTER COUNTY INTERCHANGE (WAUK 90343-A) 345/230/13.2KV TRANSFORMER CKT 1	560	560	0.20119	123.635	GEN523971 1-HARRINGTON GEN #1 24 KV
FDNS	02ALL_G14_038	0	25SP	G14_038	FROM->TO	POTTER COUNTY INTERCHANGE (WAUK 90343-A) 345/230/13.2KV TRANSFORMER CKT 1	560	560	0.20119	123.6335	GEN523973 1-HARRINGTON GEN #3 24 KV
FDNS	02ALL_G14_038	0	25SP	G14_038	FROM->TO	POTTER COUNTY INTERCHANGE (WAUK 90343-A) 345/230/13.2KV TRANSFORMER CKT 1	560	560	0.20119	123.6222	GEN523972 1-HARRINGTON GEN #2 24 KV
FDNS	02ALL_G14_038	0	25SP	G14_038	FROM->TO	POTTER COUNTY INTERCHANGE (WAUK 90343-A) 345/230/13.2KV TRANSFORMER CKT 1	560	560	0.22109	123.0977	G11-14T 345.00 - WOODWARD DISTRICT EHV 345KV CKT 1
FDNS	02ALL_G14_038	0	25SP	G14_038	FROM->TO	POTTER COUNTY INTERCHANGE (WAUK 90343-A) 345/230/13.2KV TRANSFORMER CKT 1	560	560	0.22109	123.0977	G11-14T 345.00 - WOODWARD DISTRICT EHV 345KV CKT 2
FDNS	02ALL_G14_038	0	25SP	G14_038	FROM->TO	POTTER COUNTY INTERCHANGE (WAUK 90343-A) 345/230/13.2KV TRANSFORMER CKT 1	560	560	0.20119	122.8748	GEN527903 1-HOBBS PLANT #3 (ST)
FDNS	02ALL_G14_038	0	25SP	G14_038	FROM->TO	POTTER COUNTY INTERCHANGE (WAUK 90343-A) 345/230/13.2KV TRANSFORMER CKT 1	560	560	0.206	122.8099	MOORE COUNTY INTERCHANGE - POTTER COUNTY INTERCHANGE 230KV CKT 1
FDNS	02ALL_G14_038	0	25SP	G14_038	FROM->TO	POTTER COUNTY INTERCHANGE (WAUK 90343-A) 345/230/13.2KV TRANSFORMER CKT 1	560	560	0.206	122.8099	MOORE COUNTY INTERCHANGE - POTTER COUNTY INTERCHANGE 230KV CKT 1
FDNS	02ALL_G14_038	0	25SP	G14_038	FROM->TO	POTTER COUNTY INTERCHANGE (WAUK 90343-A) 345/230/13.2KV TRANSFORMER CKT 1	560	560	0.20382	122.6382	Hansford County Switch Station - SPEARMAN INTERCHANGE 115KV CKT 1
FDNS	02ALL_G14_038	0	25SP	G14_038	FROM->TO	POTTER COUNTY INTERCHANGE (WAUK 90343-A) 345/230/13.2KV TRANSFORMER CKT 1	560	560	0.20382	122.6382	Hansford County Switch Station - SPEARMAN INTERCHANGE 115KV CKT 1
FDNS	02ALL_G14_038	0	25SP	G14_038	FROM->TO	POTTER COUNTY INTERCHANGE (WAUK 90343-A) 345/230/13.2KV TRANSFORMER CKT 1	560	560	0.20119	122.1299	GEN528501 1-G14_012 24.000
FDNS	02ALL_G14_038	0	25SP	G14_038	FROM->TO	POTTER COUNTY INTERCHANGE (WAUK 90343-A) 345/230/13.2KV TRANSFORMER CKT 1	560	560	0.23181	121.713	P12:345:SPS:J07.1.FINN.HITCH
FDNS	02ALL_G14_038	0	25SP	G14_038	FROM->TO	POTTER COUNTY INTERCHANGE (WAUK 90343-A) 345/230/13.2KV TRANSFORMER CKT 1	560	560	0.20301	121.6774	DWS FRISCO - SHERMAN COUNTY TAP 115KV CKT 1
FDNS	02ALL_G14_038	0	25SP	G14_038	FROM->TO	POTTER COUNTY INTERCHANGE (WAUK 90343-A) 345/230/13.2KV TRANSFORMER CKT 1	560	560	0.23181	121.6224	Hitchland Interchange - WALKTAP7 345.00 345KV CKT 1
FDNS	02ALL_G14_038	0	25SP	G14_038	FROM->TO	POTTER COUNTY INTERCHANGE (WAUK 90343-A) 345/230/13.2KV TRANSFORMER CKT 1	560	560	0.23181	121.6224	Hitchland Interchange - WALKTAP7 345.00 345KV CKT 1

SOLUTION	GROUP	SCENARIO	SEASON	SOURCE	DIRECTION	MONITORED ELEMENT	RATEA (MVA)	RATEB(MVA)	TDF	TC%LOADING (% MVA)	CONTINGENCY
FDNS	02ALL_G14_038	0	25SP	G14_038	FROM->TO	POTTER COUNTY INTERCHANGE (WAUK 90343-A) 345/230/13.2KV TRANSFORMER CKT 1	560	560	0.20119	121.4751	GEN526331 1-JONES GEN #1 22 KV
FDNS	02ALL_G14_038	0	25SP	G14_038	FROM->TO	POTTER COUNTY INTERCHANGE (WAUK 90343-A) 345/230/13.2KV TRANSFORMER CKT 1	560	560	0.20119	121.454	GEN526332 1-JONES GEN #2 21 KV
FDNS	02ALL_G14_038	0	25SP	G14_038	FROM->TO	POTTER COUNTY INTERCHANGE (WAUK 90343-A) 345/230/13.2KV TRANSFORMER CKT 1	560	560	0.20119	121.2506	GEN527166 1-MUSTANG_6 118.000
FDNS	02ALL_G14_038	0	25SP	G14_038	FROM->TO	POTTER COUNTY INTERCHANGE (WAUK 90343-A) 345/230/13.2KV TRANSFORMER CKT 1	560	560	0.20119	121.0411	GEN526333 1-JONES GEN #3 21 KV
FDNS	02ALL_G14_038	0	25SP	G14_038	FROM->TO	POTTER COUNTY INTERCHANGE (WAUK 90343-A) 345/230/13.2KV TRANSFORMER CKT 1	560	560	0.20443	121.041	Hitchland Interchange (SIEM 8743067) 345/230/13.2KV TRANSFORMER CKT 2
FDNS	02ALL_G14_038	0	25SP	G14_038	FROM->TO	POTTER COUNTY INTERCHANGE (WAUK 90343-A) 345/230/13.2KV TRANSFORMER CKT 1	560	560	0.20443	121.041	Hitchland Interchange (SIEM 8743067) 345/230/13.2KV TRANSFORMER CKT 2
FDNS	02ALL_G14_038	0	25SP	G14_038	FROM->TO	POTTER COUNTY INTERCHANGE (WAUK 90343-A) 345/230/13.2KV TRANSFORMER CKT 1	560	560	0.20119	120.9741	GEN525844 1-ELK_1 118.000
FDNS	02ALL_G14_038	0	25SP	G14_038	FROM->TO	POTTER COUNTY INTERCHANGE (WAUK 90343-A) 345/230/13.2KV TRANSFORMER CKT 1	560	560	0.20119	120.9732	GEN525845 1-ELK_2 1 18.000
FDNS	02ALL_G14_038	0	25SP	G14_038	FROM->TO	POTTER COUNTY INTERCHANGE (WAUK 90343-A) 345/230/13.2KV TRANSFORMER CKT 1	560	560	0.20119	120.9386	GEN526334 1-JONES_4 116.500
FDNS	02ALL_G14_038	0	25SP	G14_038	FROM->TO	POTTER COUNTY INTERCHANGE (WAUK 90343-A) 345/230/13.2KV TRANSFORMER CKT 1	560	560	0.20301	120.8809	P12:115:SPS:W08.1.HITCH.LASLEY
FDNS	02ALL_G14_038	0	25SP	G14_038	FROM->TO	POTTER COUNTY INTERCHANGE (WAUK 90343-A) 345/230/13.2KV TRANSFORMER CKT 1	560	560	0.20301	120.7351	DWS FRISCO - HITCHLAND INTERCHANGE 115KV CKT 1
FDNS	02ALL_G14_038	0	25SP	G14_038	FROM->TO	POTTER COUNTY INTERCHANGE (WAUK 90343-A) 345/230/13.2KV TRANSFORMER CKT 1	560	560	0.20119	120.6657	GEN524023 1-NICHOLS GEN #3 22 KV
FDNS	02ALL_G14_038	0	25SP	G14_038	FROM->TO	POTTER COUNTY INTERCHANGE (WAUK 90343-A) 345/230/13.2KV TRANSFORMER CKT 1	560	560	0.20119	120.6128	GEN527901 1-HOBBS PLANT #1 (CT)
FDNS	02ALL_G14_038	0	25SP	G14_038	FROM->TO	POTTER COUNTY INTERCHANGE (WAUK 90343-A) 345/230/13.2KV TRANSFORMER CKT 1	560	560	0.20119	120.6128	GEN527902 1-HOBBS PLANT #2 (CT)
FDNS	02ALL_G14_038	0	25SP	G14_038	FROM->TO	POTTER COUNTY INTERCHANGE (WAUK 90343-A) 345/230/13.2KV TRANSFORMER CKT 1	560	560	0.20119	120.5574	GEN525494 1-PLANT X GEN #4 20 KV
FDNS	02ALL_G14_038	0	25SP	G14_038	FROM->TO	POTTER COUNTY INTERCHANGE (WAUK 90343-A) 345/230/13.2KV TRANSFORMER CKT 1	560	560	0.20119	120.1676	GEN527163 1-MUSTANG GEN #3 22 KV
FDNS	02ALL_G14_038	0	25SP	G14_038	FROM->TO	POTTER COUNTY INTERCHANGE (WAUK 90343-A) 345/230/13.2KV TRANSFORMER CKT 1	560	560	0.21946	119.9675	FINNEY SWITCHING STATION - HOLCOMB 345KV CKT 1
FDNS	02ALL_G14_038	0	25SP	G14_038	FROM->TO	POTTER COUNTY INTERCHANGE (WAUK 90343-A) 345/230/13.2KV TRANSFORMER CKT 1	560	560	0.21946	119.9675	FINNEY SWITCHING STATION - HOLCOMB 345KV CKT 1
FDNS	02ALL_G14_038	0	25SP	G14_038	FROM->TO	POTTER COUNTY INTERCHANGE (WAUK 90343-A) 345/230/13.2KV TRANSFORMER CKT 1	560	560	0.20119	119.9615	GEN527903 1-HOBBS PLANT #3 (ST)
FDNS	02ALL_G14_038	0	25SP	G14_038	FROM->TO	POTTER COUNTY INTERCHANGE (WAUK 90343-A) 345/230/13.2KV TRANSFORMER CKT 1	560	560	0.20119	119.8915	GEN527161 1-MUSTANG GEN #1
FDNS	02ALL_G14_038	0	25SP	G14_038	FROM->TO	POTTER COUNTY INTERCHANGE (WAUK 90343-A) 345/230/13.2KV TRANSFORMER CKT 1	560	560	0.20119	119.8914	GEN527162 1-MUSTANG GEN #2
FDNS	02ALL_G14_038	0	25SP	G14_038	FROM->TO	POTTER COUNTY INTERCHANGE (WAUK 90343-A) 345/230/13.2KV TRANSFORMER CKT 1	560	560	0.2037	119.8359	Hitchland Interchange (H TB80155502) 345/230/13.2KV TRANSFORMER CKT 1
FDNS	02ALL_G14_038	0	25SP	G14_038	FROM->TO	POTTER COUNTY INTERCHANGE (WAUK 90343-A) 345/230/13.2KV TRANSFORMER CKT 1	560	560	0.2037	119.8359	Hitchland Interchange (H TB80155502) 345/230/13.2KV TRANSFORMER CKT 1
FDNS	02ALL_G14_038	0	25SP	G14_038	FROM->TO	POTTER COUNTY INTERCHANGE (WAUK 90343-A) 345/230/13.2KV TRANSFORMER CKT 1	560	560	0.22109	119.6878	G11-14T 345.00 - WOODWARD DISTRICT EHV 345KV CKT 1
FDNS	02ALL_G14_038	0	25SP	G14_038	FROM->TO	POTTER COUNTY INTERCHANGE (WAUK 90343-A) 345/230/13.2KV TRANSFORMER CKT 1	560	560	0.22109	119.6878	G11-14T 345.00 - WOODWARD DISTRICT EHV 345KV CKT 2
FDNS	02ALL_G14_038	0	25SP	G14_038	FROM->TO	POTTER COUNTY INTERCHANGE (WAUK 90343-A) 345/230/13.2KV TRANSFORMER CKT 1	560	560	0.206	119.6365	MOORE COUNTY INTERCHANGE - POTTER COUNTY INTERCHANGE 230KV CKT 1
FDNS	02ALL_G14_038	0	25SP	G14_038	FROM->TO	POTTER COUNTY INTERCHANGE (WAUK 90343-A) 345/230/13.2KV TRANSFORMER CKT 1	560	560	0.206	119.6365	MOORE COUNTY INTERCHANGE - POTTER COUNTY INTERCHANGE 230KV CKT 1
FDNS	02ALL_G14_038	0	25SP	G14_038	FROM->TO	POTTER COUNTY INTERCHANGE (WAUK 90343-A) 345/230/13.2KV TRANSFORMER CKT 1	560	560	0.20119	119.6181	GEN527164 1-MUSTANG GEN #4 22 KV
FDNS	02ALL_G14_038	0	25SP	G14_038	FROM->TO	POTTER COUNTY INTERCHANGE (WAUK 90343-A) 345/230/13.2KV TRANSFORMER CKT 1	560	560	0.20119	119.6074	GEN527165 1-Mustang Gen #5
FDNS	02ALL_G14_038	0	25SP	G14_038	FROM->TO	POTTER COUNTY INTERCHANGE (WAUK 90343-A) 345/230/13.2KV TRANSFORMER CKT 1	560	560	0.20382	119.5784	HITCHLAND INTERCHANGE - Hansford County Switch Station 115KV CKT 1
FDNS	02ALL_G14_038	0	25SP	G14_038	FROM->TO	POTTER COUNTY INTERCHANGE (WAUK 90343-A) 345/230/13.2KV TRANSFORMER CKT 1	560	560	0.20382	119.5784	HITCHLAND INTERCHANGE - Hansford County Switch Station 115KV CKT 1
FDNS	02ALL_G14_038	0	25SP	G14_038	FROM->TO	POTTER COUNTY INTERCHANGE (WAUK 90343-A) 345/230/13.2KV TRANSFORMER CKT 1	560	560	0.20382	119.5667	Hansford County Switch Station - SPEARMAN INTERCHANGE 115KV CKT 1
FDNS	02ALL_G14_038	0	25SP	G14_038	FROM->TO	POTTER COUNTY INTERCHANGE (WAUK 90343-A) 345/230/13.2KV TRANSFORMER CKT 1	560	560	0.20382	119.5667	Hansford County Switch Station - SPEARMAN INTERCHANGE 115KV CKT 1
FDNS	02ALL_G14_038	0	25SP	G14_038	FROM->TO	POTTER COUNTY INTERCHANGE (WAUK 90343-A) 345/230/13.2KV TRANSFORMER CKT 1	560	560	0.20119	119.2715	GEN528501 1-G14_012 24.000
FDNS	02ALL_G14_038	0	25SP	G14_038	FROM->TO	POTTER COUNTY INTERCHANGE (WAUK 90343-A) 345/230/13.2KV TRANSFORMER CKT 1	560	560	0.20766	118.8988	BUCKNER7 345.00 - SPEARVILLE 345KV CKT 1
FDNS	02ALL_G14_038	0	25SP	G14_038	FROM->TO	POTTER COUNTY INTERCHANGE (WAUK 90343-A) 345/230/13.2KV TRANSFORMER CKT 1	560	560	0.20766	118.8988	BUCKNER7 345.00 - SPEARVILLE 345KV CKT 1
FDNS	02ALL_G14_038	0	25SP	G14_038	FROM->TO	POTTER COUNTY INTERCHANGE (WAUK 90343-A) 345/230/13.2KV TRANSFORMER CKT 1	560	560	0.20085	118.7755	TUCO INTERCHANGE - YOAKUM_345 345.00 345KV CKT 1
FDNS	02ALL_G14_038	0	25SP	G14_038	FROM->TO	POTTER COUNTY INTERCHANGE (WAUK 90343-A) 345/230/13.2KV TRANSFORMER CKT 1	560	560	0.20301	118.721	DWS FRISCO - SHERMAN COUNTY TAP 115KV CKT 1
FDNS	02ALL_G14_038	0	25SP	G14_038	FROM->TO	POTTER COUNTY INTERCHANGE (WAUK 90343-A) 345/230/13.2KV TRANSFORMER CKT 1	560	560	0.20119	118.7108	GEN527884 1-CUNNINGHAM GEN #4 22 KV
FDNS	02ALL_G14_038	0	25SP	G14_038	FROM->TO	POTTER COUNTY INTERCHANGE (WAUK 90343-A) 345/230/13.2KV TRANSFORMER CKT 1	560	560	0.20119	118.6991	GEN527883 1-CUNNINGHAM GEN #3 22 KV
FDNS	02ALL_G14_038	0	25SP	G14_038	FROM->TO	POTTER COUNTY INTERCHANGE (WAUK 90343-A) 345/230/13.2KV TRANSFORMER CKT 1	560	560	0.20119	118.6803	GEN528361 1-MADDOX GEN #1
FDNS	02ALL_G14_038	0	25SP	G14_038	FROM->TO	POTTER COUNTY INTERCHANGE (WAUK 90343-A) 345/230/13.2KV TRANSFORMER CKT 1	560	560	0.20119	118.6627	GEN526331 1-JONES GEN #1 22 KV
FDNS	02ALL_G14_038	0	25SP	G14_038	FROM->TO	POTTER COUNTY INTERCHANGE (WAUK 90343-A) 345/230/13.2KV TRANSFORMER CKT 1	560	560	0.20119	118.6613	GEN523942 1-MAJSTC-WTG210.6900
FDNS	02ALL_G14_038	0	25SP	G14_038	FROM->TO	POTTER COUNTY INTERCHANGE (WAUK 90343-A) 345/230/13.2KV TRANSFORMER CKT 1	560	560	0.20119	118.6541	GEN523941 1-MAJSTC-WTG110.6900
FDNS	02ALL_G14_038	0	25SP	G14_038	FROM->TO	POTTER COUNTY INTERCHANGE (WAUK 90343-A) 345/230/13.2KV TRANSFORMER CKT 1	560	560	0.20119	118.6452	GEN526332 1-JONES GEN #2 21 KV
FDNS	02ALL_G14_038	0	25SP	G14_038	FROM->TO	POTTER COUNTY INTERCHANGE (WAUK 90343-A) 345/230/13.2KV TRANSFORMER CKT 1	560	560	0.20119	118.5225	GEN523462 1-BLACKHAWK GEN #2
FDNS	02ALL_G14_038	0	25SP	G14_038	FROM->TO	POTTER COUNTY INTERCHANGE (WAUK 90343-A) 345/230/13.2KV TRANSFORMER CKT 1	560	560	0.20119	118.5074	GEN523461 1-BLACKHAWK GEN #1
FDNS	02ALL_G14_038	0	25SP	G14_038	FROM->TO	POTTER COUNTY INTERCHANGE (WAUK 90343-A) 345/230/13.2KV TRANSFORMER CKT 1	560	560	0.20224	118.4624	HITCHLAND INTERCHANGE - OCHILTREE 230KV CKT 1
FDNS	02ALL_G14_038	0	25SP	G14_038	FROM->TO	POTTER COUNTY INTERCHANGE (WAUK 90343-A) 345/230/13.2KV TRANSFORMER CKT 1	560	560	0.20224	118.4624	HITCHLAND INTERCHANGE - OCHILTREE 230KV CKT 1
FDNS	02ALL_G14_038	0	25SP	G14_038	FROM->TO	POTTER COUNTY INTERCHANGE (WAUK 90343-A) 345/230/13.2KV TRANSFORMER CKT 1	560	560	0.20119	118.4536	GEN527166 1-MUSTANG_6 118.000
FDNS	02ALL_G14_038	0	25SP	G14_038	FROM->TO	POTTER COUNTY INTERCHANGE (WAUK 90343-A) 345/230/13.2KV TRANSFORMER CKT 1	560	560	0.20224	118.4461	OCHILTREE (H TP80219401) 230/115/13.2KV TRANSFORMER CKT 1
FDNS	02ALL_G14_038	0	25SP	G14_038	FROM->TO	POTTER COUNTY INTERCHANGE (WAUK 90343-A) 345/230/13.2KV TRANSFORMER CKT 1	560	560	0.20224	118.4461	OCHILTREE (H TP80219401) 230/115/13.2KV TRANSFORMER CKT 1
FDNS	02ALL_G14_038	0	25SP	G14_038	FROM->TO	POTTER COUNTY INTERCHANGE (WAUK 90343-A) 345/230/13.2KV TRANSFORMER CKT 1	560	560	0.23181	118.3423	P12:345:SPS:J07.1.FINN.HITCH
FDNS	02ALL_G14_038	0	25SP	G14_038	FROM->TO	POTTER COUNTY INTERCHANGE (WAUK 90343-A) 345/230/13.2KV TRANSFORMER CKT 1	560	560	0.23181	118.2806	Hitchland Interchange - WALKTAP7 345.00 345KV CKT 1
FDNS	02ALL_G14_038	0	25SP	G14_038	FROM->TO	POTTER COUNTY INTERCHANGE (WAUK 90343-A) 345/230/13.2KV TRANSFORMER CKT 1	560	560	0.23181	118.2806	Hitchland Interchange - WALKTAP7 345.00 345KV CKT 1
FDNS	02ALL_G14_038	0	25SP	G14_038	FROM->TO	POTTER COUNTY INTERCHANGE (WAUK 90343-A) 345/230/13.2KV TRANSFORMER CKT 1	560	560	0.20119	118.2526	GEN526333 1-JONES GEN #3 21 KV
FDNS	02ALL_G14_038	0	25SP	G14_038	FROM->TO	POTTER COUNTY INTERCHANGE (WAUK 90343-A) 345/230/13.2KV TRANSFORMER CKT 1	560	560	0.20119	118.1907	GEN525844 1-ELK_1 118.000
FDNS	02ALL_G14_038	0	25SP	G14_038	FROM->TO	POTTER COUNTY INTERCHANGE (WAUK 90343-A) 345/230/13.2KV TRANSFORMER CKT 1	560	560	0.20119	118.1898	GEN525845 1-ELK_2 1 18.000
FDNS	02ALL_G14_038	0	25SP	G14_038	FROM->TO	POTTER COUNTY INTERCHANGE (WAUK 90343-A) 345/230/13.2KV TRANSFORMER CKT 1	560	560	0.20119	118.1578	GEN526334 1-JONES_4 116.500
FDNS	02ALL_G14_038	0	25SP	G14_038	FROM->TO	POTTER COUNTY INTERCHANGE (WAUK 90343-A) 345/230/13.2KV TRANSFORMER CKT 1	560	560	0.20443	118.1397	Hitchland Interchange (SIEM 8743067) 345/230/13.2KV TRANSFORMER CKT 2
FDNS	02ALL_G14_038	0	25SP	G14_038	FROM->TO	POTTER COUNTY INTERCHANGE (WAUK 90343-A) 345/230/13.2KV TRANSFORMER CKT 1	560	560	0.20443	118.1397	Hitchland Interchange (SIEM 8743067) 345/230/13.2KV TRANSFORMER CKT 2
FDNS	02ALL_G14_038	0	25SP	G14_038	FROM->TO	POTTER COUNTY INTERCHANGE (WAUK 90343-A) 345/230/13.2KV TRANSFORMER CKT 1	560	560	0.20301	117.9887	P12:115:SPS:W08.1.HITCH.LASLEY
FDNS	02ALL_G14_038	0	25SP	G14_038	FROM->TO	POTTER COUNTY INTERCHANGE (WAUK 90343-A) 345/230/13.2KV TRANSFORMER CKT 1	560	560	0.19862	117.9418	GRACEMONT - MINCO 345KV CKT 1
FDNS	02ALL_G14_038	0	25SP	G14_038	FROM->TO	POTTER COUNTY INTERCHANGE (WAUK 90343-A) 345/230/13.2KV TRANSFORMER CKT 1	560	560	0.20301	117.8642	DWS FRISCO - HITCHLAND INTERCHANGE 115KV CKT 1
FDNS	02ALL_G14_038	0	25SP	G14_038	FROM->TO	POTTER COUNTY INTERCHANGE (WAUK 90343-A) 345/230/13.2KV TRANSFORMER CKT 1	560	560	0.20119	117.8638	GEN527901 1-HOBBS PLANT #1 (CT)
FDNS	02ALL_G14_038	0	25SP	G14_038	FROM->TO	POTTER COUNTY INTERCHANGE (WAUK 90343-A) 345/230/13.2KV TRANSFORMER CKT 1	560	560	0.20119	117.8638	GEN527902 1-HOBBS PLANT #2 (CT)
FDNS	02ALL_G14_038	0	25SP	G14_038	FROM->TO	POTTER COUNTY INTERCHANGE (WAUK 90343-A) 345/230/13.2KV TRANSFORMER CKT 1	560	560	0.20119	117.8456	GEN562550 1-G14_040_3 0.6900
FDNS	02ALL_G14_038	0	25SP	G14_038	FROM->TO	POTTER COUNTY INTERCHANGE (WAUK 90343-A) 345/230/13.2KV TRANSFORMER CKT 1	560	560	0.20119	117.8445	GEN525494 1-PLANT X GEN #4 20 KV
FDNS	02ALL_G14_038	0	25SP	G14_038	FROM->TO	POTTER COUNTY INTERCHANGE (WAUK 90343-A) 345/230/13.2KV TRANSFORMER CKT 1	560	560	0.21946	117.8092	FINNEY SWITCHING STATION - WALKTAP7 345.00 345KV CKT 1
FDNS	02ALL_G14_038	0	25SP	G14_038	FROM->TO	POTTER COUNTY INTERCHANGE (WAUK 90343-A) 345/230/13.2KV TRANSFORMER CKT 1	560	560	0.21946	117.8092	FINNEY SWITCHING STATION - WALKTAP7 345.00 345KV CKT 1
FDNS	02ALL_G14_038	0	25SP	G14_038	FROM->TO	POTTER COUNTY INTERCHANGE (WAUK 90343-A) 345/230/13.2KV TRANSFORMER CKT 1	560	560	0.20766	117.738	BUCKNER7 345.00 - HOLCOMB 345KV CKT 1
FDNS	02ALL_G14_038	0	25SP	G14_038	FROM->TO	POTTER COUNTY INTERCHANGE (WAUK 90343-A) 345/230/13.2KV TRANSFORMER CKT 1	560	560	0.20766	117.738	BUCKNER7 345.00 - HOLCOMB 345KV CKT 1
FDNS	02ALL_G14_038	0	25SP	G14_038	FROM->TO	POTTER COUNTY INTERCHANGE (WAUK 90343-A) 345/230/13.2KV TRANSFORMER CKT 1	560	560	0.20119	117.7058	GEN560105 1-G08-22 0.6900

SOLUTION	GROUP	SCENARIO	SEASON	SOURCE	DIRECTION	MONITORED ELEMENT	RATEA (MVA)	RATEB(MVA)	TDF	TC%LOADING (% MVA)	CONTINGENCY
FDNS	02ALL_G14_038	0	25SP	G14_038	FROM->TO	POTTER COUNTY INTERCHANGE (WAUK 90343-A) 345/230/13.2KV TRANSFORMER CKT 1	560	560	0.20119	117.4455	GEN527163 1-MUSTANG GEN #3 22 KV
FDNS	02ALL_G14_038	0	25SP	G14_038	FROM->TO	POTTER COUNTY INTERCHANGE (WAUK 90343-A) 345/230/13.2KV TRANSFORMER CKT 1	560	560	0.20174	117.4345	RB-ELKS 3115.00 - SHERMAN COUNTY TAP 115KV CKT 1
FDNS	02ALL_G14_038	0	25SP	G14_038	FROM->TO	POTTER COUNTY INTERCHANGE (WAUK 90343-A) 345/230/13.2KV TRANSFORMER CKT 1	560	560	0.20174	117.3633	P12:115:SPS:W24.1.MOOREE.LASLEY
FDNS	02ALL_G14_038	0	25SP	G14_038	FROM->TO	POTTER COUNTY INTERCHANGE (WAUK 90343-A) 345/230/13.2KV TRANSFORMER CKT 1	560	560	0.20696	117.2849	BVRCNTY7 345.00 - G11-14T 345.00 345KV CKT 1
FDNS	02ALL_G14_038	0	25SP	G14_038	FROM->TO	POTTER COUNTY INTERCHANGE (WAUK 90343-A) 345/230/13.2KV TRANSFORMER CKT 1	560	560	0.20696	117.2849	BVRCNTY7 345.00 - G11-14T 345.00 345KV CKT 2
FDNS	02ALL_G14_038	0	25SP	G14_038	FROM->TO	POTTER COUNTY INTERCHANGE (WAUK 90343-A) 345/230/13.2KV TRANSFORMER CKT 1	560	560	0.20174	117.2548	RB-ELKS 3115.00 - RB-SPURLOCK3115.00 115KV CKT 1
FDNS	02ALL_G14_038	0	25SP	G14_038	FROM->TO	POTTER COUNTY INTERCHANGE (WAUK 90343-A) 345/230/13.2KV TRANSFORMER CKT 1	560	560	0.20255	117.22	PRINGLE INTERCHANGE - SPEARMAN INTERCHANGE 115KV CKT 1
FDNS	02ALL_G14_038	0	25SP	G14_038	FROM->TO	POTTER COUNTY INTERCHANGE (WAUK 90343-A) 345/230/13.2KV TRANSFORMER CKT 1	560	560	0.20255	117.22	PRINGLE INTERCHANGE - SPEARMAN INTERCHANGE 115KV CKT 1
FDNS	02ALL_G14_038	0	25SP	G14_038	FROM->TO	POTTER COUNTY INTERCHANGE (WAUK 90343-A) 345/230/13.2KV TRANSFORMER CKT 1	560	560	0.20233	117.1915	P12:115:SPS:W29.1.OCLTRE.SPRMN
FDNS	02ALL_G14_038	0	25SP	G14_038	FROM->TO	POTTER COUNTY INTERCHANGE (WAUK 90343-A) 345/230/13.2KV TRANSFORMER CKT 1	560	560	0.20119	117.1906	GEN527161 1-MUSTANG GEN #1
FDNS	02ALL_G14_038	0	25SP	G14_038	FROM->TO	POTTER COUNTY INTERCHANGE (WAUK 90343-A) 345/230/13.2KV TRANSFORMER CKT 1	560	560	0.20119	117.1906	GEN527162 1-MUSTANG GEN #2
FDNS	02ALL_G14_038	0	25SP	G14_038	FROM->TO	POTTER COUNTY INTERCHANGE (WAUK 90343-A) 345/230/13.2KV TRANSFORMER CKT 1	560	560	0.20441	117.1441	MATHWSN7 345.00 - TATONGA7 345.00 345KV CKT 1
FDNS	02ALL_G14_038	0	25SP	G14_038	FROM->TO	POTTER COUNTY INTERCHANGE (WAUK 90343-A) 345/230/13.2KV TRANSFORMER CKT 1	560	560	0.20441	117.1441	MATHWSN7 345.00 - TATONGA7 345.00 345KV CKT 2
FDNS	02ALL_G14_038	0	25SP	G14_038	FROM->TO	POTTER COUNTY INTERCHANGE (WAUK 90343-A) 345/230/13.2KV TRANSFORMER CKT 1	560	560	0.20233	117.1066	OCHILTREE - TEXAS FARMS SUB 115KV CKT 1
FDNS	02ALL_G14_038	0	25SP	G14_038	FROM->TO	POTTER COUNTY INTERCHANGE (WAUK 90343-A) 345/230/13.2KV TRANSFORMER CKT 1	560	560	0.2037	117.0551	Hitchland Interchange (H TB80155502) 345/230/13.2KV TRANSFORMER CKT 1
FDNS	02ALL_G14_038	0	25SP	G14_038	FROM->TO	POTTER COUNTY INTERCHANGE (WAUK 90343-A) 345/230/13.2KV TRANSFORMER CKT 1	560	560	0.2037	117.0551	Hitchland Interchange (H TB80155502) 345/230/13.2KV TRANSFORMER CKT 1
FDNS	02ALL_G14_038	0	25SP	G14_038	FROM->TO	POTTER COUNTY INTERCHANGE (WAUK 90343-A) 345/230/13.2KV TRANSFORMER CKT 1	560	560	0.21946	117.0525	FINNEY SWITCHING STATION - HOLCOMB 345KV CKT 1
FDNS	02ALL_G14_038	0	25SP	G14_038	FROM->TO	POTTER COUNTY INTERCHANGE (WAUK 90343-A) 345/230/13.2KV TRANSFORMER CKT 1	560	560	0.21946	117.0525	FINNEY SWITCHING STATION - HOLCOMB 345KV CKT 1
FDNS	02ALL_G14_038	0	25SP	G14_038	FROM->TO	POTTER COUNTY INTERCHANGE (WAUK 90343-A) 345/230/13.2KV TRANSFORMER CKT 1	560	560	0.20119	117.0092	GEN562270 1-G12-020-2 0.6900
FDNS	02ALL_G14_038	0	25SP	G14_038	FROM->TO	POTTER COUNTY INTERCHANGE (WAUK 90343-A) 345/230/13.2KV TRANSFORMER CKT 1	560	560	0.20237	116.9937	HITCHLAND INTERCHANGE (H TP80148301) 230/115/13.2KV TRANSFORMER CKT 1
FDNS	02ALL_G14_038	0	25SP	G14_038	FROM->TO	POTTER COUNTY INTERCHANGE (WAUK 90343-A) 345/230/13.2KV TRANSFORMER CKT 1	560	560	0.20237	116.9937	HITCHLAND INTERCHANGE (H TP80148301) 230/115/13.2KV TRANSFORMER CKT 1
FDNS	02ALL_G14_038	0	25SP	G14_038	FROM->TO	POTTER COUNTY INTERCHANGE (WAUK 90343-A) 345/230/13.2KV TRANSFORMER CKT 1	560	560	0.20237	116.9937	HITCHLAND INTERCHANGE (UPDATE LATER) 230/115/13.2KV TRANSFORMER CKT 2
FDNS	02ALL_G14_038	0	25SP	G14_038	FROM->TO	POTTER COUNTY INTERCHANGE (WAUK 90343-A) 345/230/13.2KV TRANSFORMER CKT 1	560	560	0.20237	116.9937	HITCHLAND INTERCHANGE (UPDATE LATER) 230/115/13.2KV TRANSFORMER CKT 2
FDNS	02ALL_G14_038	0	25SP	G14_038	FROM->TO	POTTER COUNTY INTERCHANGE (WAUK 90343-A) 345/230/13.2KV TRANSFORMER CKT 1	560	560	0.20174	116.9797	MOORE COUNTY INTERCHANGE EAST BUS - RB-SPURLOCK3115.00 115KV CKT 1
FDNS	02ALL_G14_038	0	25SP	G14_038	FROM->TO	POTTER COUNTY INTERCHANGE (WAUK 90343-A) 345/230/13.2KV TRANSFORMER CKT 1	560	560	0.20162	116.959	DALLAM COUNTY INTERCHANGE - SHERMAN COUNTY SUB 115KV CKT 1
FDNS	02ALL_G14_038	0	25SP	G14_038	FROM->TO	POTTER COUNTY INTERCHANGE (WAUK 90343-A) 345/230/13.2KV TRANSFORMER CKT 1	560	560	0.20119	116.959	GEN524285 1-WILDORADO WIND GEN
FDNS	02ALL_G14_038	0	25SP	G14_038	FROM->TO	POTTER COUNTY INTERCHANGE (WAUK 90343-A) 345/230/13.2KV TRANSFORMER CKT 1	560	560	0.20472	116.9569	MINGO - SETAB 345KV CKT 1
FDNS	02ALL_G14_038	0	25SP	G14_038	FROM->TO	POTTER COUNTY INTERCHANGE (WAUK 90343-A) 345/230/13.2KV TRANSFORMER CKT 1	560	560	0.20472	116.9569	MINGO - SETAB 345KV CKT 1
FDNS	02ALL_G14_038	0	25SP	G14_038	FROM->TO	POTTER COUNTY INTERCHANGE (WAUK 90343-A) 345/230/13.2KV TRANSFORMER CKT 1	560	560	0.20233	116.9359	SPEARMAN SUB - TEXAS FARMS SUB 115KV CKT 1
FDNS	02ALL_G14_038	0	25SP	G14_038	FROM->TO	POTTER COUNTY INTERCHANGE (WAUK 90343-A) 345/230/13.2KV TRANSFORMER CKT 1	560	560	0.20119	116.9338	GEN336821 1-GRAND GULF UNIT
FDNS	02ALL_G14_038	0	25SP	G14_038	FROM->TO	POTTER COUNTY INTERCHANGE (WAUK 90343-A) 345/230/13.2KV TRANSFORMER CKT 1	560	560	0.20119	116.9316	GEN527164 1-MUSTANG GEN #4 22 KV
FDNS	02ALL_G14_038	0	25SP	G14_038	FROM->TO	POTTER COUNTY INTERCHANGE (WAUK 90343-A) 345/230/13.2KV TRANSFORMER CKT 1	560	560	0.20119	116.9279	GEN562269 1-G12-020-1 0.6900
FDNS	02ALL_G14_038	0	25SP	G14_038	FROM->TO	POTTER COUNTY INTERCHANGE (WAUK 90343-A) 345/230/13.2KV TRANSFORMER CKT 1	560	560	0.20119	116.9223	GEN527165 1-Mustang Gen #5
FDNS	02ALL_G14_038	0	25SP	G14_038	FROM->TO	POTTER COUNTY INTERCHANGE (WAUK 90343-A) 345/230/13.2KV TRANSFORMER CKT 1	560	560	0.20162	116.9198	P12:115:SPS:W05.1.DALLAM.LASLEY
FDNS	02ALL_G14_038	0	25SP	G14_038	FROM->TO	POTTER COUNTY INTERCHANGE (WAUK 90343-A) 345/230/13.2KV TRANSFORMER CKT 1	560	560	0.20162	116.8708	SHERMAN COUNTY SUB - SHERMAN COUNTY TAP 115KV CKT 1
FDNS	02ALL_G14_038	0	25SP	G14_038	FROM->TO	POTTER COUNTY INTERCHANGE (WAUK 90343-A) 345/230/13.2KV TRANSFORMER CKT 1	560	560	0.20382	116.8286	HITCHLAND INTERCHANGE - Hansford County Switch Station 115KV CKT 1
FDNS	02ALL_G14_038	0	25SP	G14_038	FROM->TO	POTTER COUNTY INTERCHANGE (WAUK 90343-A) 345/230/13.2KV TRANSFORMER CKT 1	560	560	0.20382	116.8286	HITCHLAND INTERCHANGE - Hansford County Switch Station 115KV CKT 1
FDNS	02ALL_G14_038	0	25SP	G14_038	FROM->TO	POTTER COUNTY INTERCHANGE (WAUK 90343-A) 345/230/13.2KV TRANSFORMER CKT 1	560	560	0.20389	116.8055	HOLCOMB - SETAB 345KV CKT 1
FDNS	02ALL_G14_038	0	25SP	G14_038	FROM->TO	POTTER COUNTY INTERCHANGE (WAUK 90343-A) 345/230/13.2KV TRANSFORMER CKT 1	560	560	0.20389	116.8055	HOLCOMB - SETAB 345KV CKT 1
FDNS	02ALL_G14_038	0	25SP	G14_038	FROM->TO	POTTER COUNTY INTERCHANGE (WAUK 90343-A) 345/230/13.2KV TRANSFORMER CKT 1	560	560	0.20119	116.7463	GEN336153 1-WATERFORD UNIT#3
FDNS	02ALL_G14_038	0	25SP	G14_038	FROM->TO	POTTER COUNTY INTERCHANGE (WAUK 90343-A) 345/230/13.2KV TRANSFORMER CKT 1	560	560	0.19862	116.6926	CIMARRON - MINCO 345KV CKT 1
FDNS	02ALL_G14_038	0	25SP	G14_038	FROM->TO	POTTER COUNTY INTERCHANGE (WAUK 90343-A) 345/230/13.2KV TRANSFORMER CKT 1	560	560	0.20119	116.6887	GEN337911 1-ARKANSAS NUCLEAR ONE UNIT #2
FDNS	02ALL_G14_038	0	25SP	G14_038	FROM->TO	POTTER COUNTY INTERCHANGE (WAUK 90343-A) 345/230/13.2KV TRANSFORMER CKT 1	560	560	0.20119	116.6785	GEN501801 1-DOLET HILLS UNIT1
FDNS	02ALL_G14_038	0	25SP	G14_038	FROM->TO	POTTER COUNTY INTERCHANGE (WAUK 90343-A) 345/230/13.2KV TRANSFORMER CKT 1	560	560	0.20119	116.6613	GEN527881 1-CUNNINGHAM GEN #1
FDNS	02ALL_G14_038	0	25SP	G14_038	FROM->TO	POTTER COUNTY INTERCHANGE (WAUK 90343-A) 345/230/13.2KV TRANSFORMER CKT 1	560	560	0.20119	116.646	GEN562688 1-G15_014_3 0.6900
FDNS	02ALL_G14_038	0	25SP	G14_038	FROM->TO	POTTER COUNTY INTERCHANGE (WAUK 90343-A) 345/230/13.2KV TRANSFORMER CKT 1	560	560	0.20236	116.6423	PRINGLE INTERCHANGE (ENRCO13617-1) 230/115/13.2KV TRANSFORMER CKT 1
FDNS	02ALL_G14_038	0	25SP	G14_038	FROM->TO	POTTER COUNTY INTERCHANGE (WAUK 90343-A) 345/230/13.2KV TRANSFORMER CKT 1	560	560	0.20236	116.6423	PRINGLE INTERCHANGE (ENRCO13617-1) 230/115/13.2KV TRANSFORMER CKT 1
FDNS	02ALL_G14_038	0	25SP	G14_038	FROM->TO	POTTER COUNTY INTERCHANGE (WAUK 90343-A) 345/230/13.2KV TRANSFORMER CKT 1	560	560	0.20233	116.6286	SPEARMAN INTERCHANGE - SPEARMAN SUB 115KV CKT 1
FDNS	02ALL_G14_038	0	25SP	G14_038	FROM->TO	POTTER COUNTY INTERCHANGE (WAUK 90343-A) 345/230/13.2KV TRANSFORMER CKT 1	560	560	0.20119	116.6194	GEN335831 1-RIVERBEND UNIT#1
FDNS	02ALL_G14_038	0	25SP	G14_038	FROM->TO	POTTER COUNTY INTERCHANGE (WAUK 90343-A) 345/230/13.2KV TRANSFORMER CKT 1	560	560	0.20119	116.604	GEN562483 1-G13_027_3 0.6900
FDNS	02ALL_G14_038	0	25SP	G14_038	FROM->TO	POTTER COUNTY INTERCHANGE (WAUK 90343-A) 345/230/13.2KV TRANSFORMER CKT 1	560	560	0.20157	116.6003	MOORE COUNTY INTERCHANGE (ENRCO 136402) 230/115/13.2KV TRANSFORMER CKT 1
FDNS	02ALL_G14_038	0	25SP	G14_038	FROM->TO	POTTER COUNTY INTERCHANGE (WAUK 90343-A) 345/230/13.2KV TRANSFORMER CKT 1	560	560	0.20157	116.6003	MOORE COUNTY INTERCHANGE (ENRCO 136402) 230/115/13.2KV TRANSFORMER CKT 1
FDNS	02ALL_G14_038	0	25SP	G14_038	FROM->TO	POTTER COUNTY INTERCHANGE (WAUK 90343-A) 345/230/13.2KV TRANSFORMER CKT 1	560	560	0.20236	116.5587	Harrington Station East Bus - PRINGLE INTERCHANGE 230KV CKT 1
FDNS	02ALL_G14_038	0	25SP	G14_038	FROM->TO	POTTER COUNTY INTERCHANGE (WAUK 90343-A) 345/230/13.2KV TRANSFORMER CKT 1	560	560	0.20236	116.5575	P12:230:SPS:K43.1.PRNGLE.HARR_E
FDNS	02ALL_G14_038	0	25SP	G14_038	FROM->TO	POTTER COUNTY INTERCHANGE (WAUK 90343-A) 345/230/13.2KV TRANSFORMER CKT 1	560	560	0.202	116.5516	PRINGLE INTERCHANGE - SPEARMAN INTERCHANGE 115KV CKT 2
FDNS	02ALL_G14_038	0	25SP	G14_038	FROM->TO	POTTER COUNTY INTERCHANGE (WAUK 90343-A) 345/230/13.2KV TRANSFORMER CKT 1	560	560	0.202	116.5516	PRINGLE INTERCHANGE - SPEARMAN INTERCHANGE 115KV CKT 2
FDNS	02ALL_G14_038	0	25SP	G14_038	FROM->TO	POTTER COUNTY INTERCHANGE (WAUK 90343-A) 345/230/13.2KV TRANSFORMER CKT 1	560	560	0.20119	116.5261	GEN522866 1-LUBBOCK POWER & LIGHT-HOLLY GEN
FDNS	02ALL_G14_038	0	25SP	G14_038	FROM->TO	POTTER COUNTY INTERCHANGE (WAUK 90343-A) 345/230/13.2KV TRANSFORMER CKT 1	560	560	0.20119	116.5177	GEN337910 1-ARKANSAS NUCLEAR ONE UNIT #1
FDNS	02ALL_G14_038	0	25SP	G14_038	FROM->TO	POTTER COUNTY INTERCHANGE (WAUK 90343-A) 345/230/13.2KV TRANSFORMER CKT 1	560	560	0.20177	116.4705	PRINGLE INTERCHANGE - RIVERVIEW INTERCHANGE 115KV CKT 1
FDNS	02ALL_G14_038	0	25SP	G14_038	FROM->TO	POTTER COUNTY INTERCHANGE (WAUK 90343-A) 345/230/13.2KV TRANSFORMER CKT 1	560	560	0.20177	116.4705	PRINGLE INTERCHANGE - RIVERVIEW INTERCHANGE 115KV CKT 1
FDNS	02ALL_G14_038	0	25SP	G14_038	FROM->TO	POTTER COUNTY INTERCHANGE (WAUK 90343-A) 345/230/13.2KV TRANSFORMER CKT 1	560	560	0.20131	116.4522	BEARCAT 138.00 - MOORELAND 138KV CKT 1
FDNS	02ALL_G14_038	0	25SP	G14_038	FROM->TO	POTTER COUNTY INTERCHANGE (WAUK 90343-A) 345/230/13.2KV TRANSFORMER CKT 1	560	560	0.20119	116.4364	GEN524890 1-SNJN-WTGA1 10.6000
FDNSLock	02ALL_G14_038	0	25SP	G14_038	FROM->TO	POTTER COUNTY INTERCHANGE (WAUK 90343-A) 345/230/13.2KV TRANSFORMER CKT 1	560	560	0.20032	116.4214	STATELINE INTERCHANGE (H TP80154301) 230/115/13.2KV TRANSFORMER CKT 1
FDNS	02ALL_G14_038	0	25SP	G14_038	FROM->TO	POTTER COUNTY INTERCHANGE (WAUK 90343-A) 345/230/13.2KV TRANSFORMER CKT 1	560	560	0.20123	116.4065	GRACEMONT - LAWTON EASTSIDE 345KV CKT 1
FDNS	02ALL_G14_038	0	25SP	G14_038	FROM->TO	POTTER COUNTY INTERCHANGE (WAUK 90343-A) 345/230/13.2KV TRANSFORMER CKT 1	560	560	0.20123	116.4065	GRACEMONT - LAWTON EASTSIDE 345KV CKT 1
FDNS	02ALL_G14_038	0	25SP	G14_038	FROM->TO	POTTER COUNTY INTERCHANGE (WAUK 90343-A) 345/230/13.2KV TRANSFORMER CKT 1	560	560	0.20115	116.3708	HOBBS - YOAKUM_345 345.00 345KV CKT 1
FDNS	02ALL_G14_038	0	25SP	G14_038	FROM->TO	POTTER COUNTY INTERCHANGE (WAUK 90343-A) 345/230/13.2KV TRANSFORMER CKT 1	560	560	0.20119	116.3468	GEN337652 1-WHITE BLUFF UNIT #1
FDNS	02ALL_G14_038	0	25SP	G14_038	FROM->TO	POTTER COUNTY INTERCHANGE (WAUK 90343-A) 345/230/13.2KV TRANSFORMER CKT 1	560	560	0.20131	116.342	BEARCAT 138.00 - NINE MILE 138KV CKT 1
FDNS	02ALL_G14_038	0	25SP	G14_038	FROM->TO	POTTER COUNTY INTERCHANGE (WAUK 90343-A) 345/230/13.2KV TRANSFORMER CKT 1	560	560	0.20131	116.3409	P12:138:WFEC:MSL14
FDNS	02ALL_G14_038	0	25SP	G14_038	FROM->TO	POTTER COUNTY INTERCHANGE (WAUK 90343-A) 345/230/13.2KV TRANSFORMER CKT 1	560	560	0.20119	116.3289	GEN562710 1-G15_022_3 0.5500
FDNS	02ALL_G14_038	0	25SP	G14_038	FROM->TO	POTTER COUNTY INTERCHANGE (WAUK 90343-A) 345/230/13.2KV TRANSFORMER CKT 1	560	560	0.2018	116.3189	MOORE COUNTY INTERCHANGE W. - RB-S&S 3115.00 115KV CKT 1
FDNS	02ALL_G14_038	0	25SP	G14_038	FROM->TO	POTTER COUNTY INTERCHANGE (WAUK 90343-A) 345/230/13.2KV TRANSFORMER CKT 1	560	560	0.20119	116.3174	GEN337653 1-WHITE BLUFF UNIT #2
FDNS	02ALL_G14_038	0	25SP	G14_038	FROM->TO	POTTER COUNTY INTERCHANGE (WAUK 90343-A) 345/230/13.2KV TRANSFORMER CKT 1	560	560	0.20119	116.3065	GEN501813 1-RODEMACHER UNIT 3

SOLUTION	GROUP	SCENARIO	SEASON	SOURCE	DIRECTION	MONITORED ELEMENT	RATEA (MVA)	RATEB(MVA)	TDF	TC%LOADING (% MVA)	CONTINGENCY
FDNS	02ALL_G14_038	0	25SP	G14_038	FROM->TO	POTTER COUNTY INTERCHANGE (WAUK 90343-A) 345/230/13.2KV TRANSFORMER CKT 1	560	560	0.20076	116.3023	JOHNSON COUNTY - PITTSBURG 345KV CKT 1
FDNS	02ALL_G14_038	0	25SP	G14_038	FROM->TO	POTTER COUNTY INTERCHANGE (WAUK 90343-A) 345/230/13.2KV TRANSFORMER CKT 1	560	560	0.20076	116.3023	JOHNSON COUNTY - PITTSBURG 345KV CKT 1
FDNS	02ALL_G14_038	0	25SP	G14_038	FROM->TO	POTTER COUNTY INTERCHANGE (WAUK 90343-A) 345/230/13.2KV TRANSFORMER CKT 1	560	560	0.20119	116.2915	GEN336252 1-NINEMILE POINT UNIT#5
FDNS	02ALL_G14_038	0	25SP	G14_038	FROM->TO	POTTER COUNTY INTERCHANGE (WAUK 90343-A) 345/230/13.2KV TRANSFORMER CKT 1	560	560	0.20032	116.2746	Graves Sub - STATELINE INTERCHANGE 115KV CKT 1
FDNS	02ALL_G14_038	0	25SP	G14_038	FROM->TO	POTTER COUNTY INTERCHANGE (WAUK 90343-A) 345/230/13.2KV TRANSFORMER CKT 1	560	560	0.20032	116.2746	Graves Sub - STATELINE INTERCHANGE 115KV CKT 1
FDNS	02ALL_G14_038	0	25SP	G14_038	FROM->TO	POTTER COUNTY INTERCHANGE (WAUK 90343-A) 345/230/13.2KV TRANSFORMER CKT 1	560	560	0.20119	116.2602	GEN336251 1-NINEMILE POINT UNIT#4
FDNS	02ALL_G14_038	0	25SP	G14_038	FROM->TO	POTTER COUNTY INTERCHANGE (WAUK 90343-A) 345/230/13.2KV TRANSFORMER CKT 1	560	560	0.2023	116.2592	G13-010T 345.00 - POST ROCK 345KV CKT 1
FDNS	02ALL_G14_038	0	25SP	G14_038	FROM->TO	POTTER COUNTY INTERCHANGE (WAUK 90343-A) 345/230/13.2KV TRANSFORMER CKT 1	560	560	0.20119	116.2507	GEN562655 1-G14_074_3 0.6900
FDNS	02ALL_G14_038	0	25SP	G14_038	FROM->TO	POTTER COUNTY INTERCHANGE (WAUK 90343-A) 345/230/13.2KV TRANSFORMER CKT 1	560	560	0.20119	116.2385	GEN334440 1-SABINE UNIT 4
FDNS	02ALL_G14_038	0	25SP	G14_038	FROM->TO	POTTER COUNTY INTERCHANGE (WAUK 90343-A) 345/230/13.2KV TRANSFORMER CKT 1	560	560	0.20119	116.2323	GEN524287 1-GS-PHWD_GEN10.6900
FDNS	02ALL_G14_038	0	25SP	G14_038	FROM->TO	POTTER COUNTY INTERCHANGE (WAUK 90343-A) 345/230/13.2KV TRANSFORMER CKT 1	560	560	0.20119	116.2303	GEN335206 1-NELSON UNIT 6
FDNS	02ALL_G14_038	0	25SP	G14_038	FROM->TO	POTTER COUNTY INTERCHANGE (WAUK 90343-A) 345/230/13.2KV TRANSFORMER CKT 1	560	560	0.20119	116.2243	GEN524485 1-CAPROCK WIND GEN
FDNS	02ALL_G14_038	0	25SP	G14_038	FROM->TO	POTTER COUNTY INTERCHANGE (WAUK 90343-A) 345/230/13.2KV TRANSFORMER CKT 1	560	560	0.20129	116.2228	MARTIN SUB - PANTEX NORTH SUB 115KV CKT 1
FDNS	02ALL_G14_038	0	25SP	G14_038	FROM->TO	POTTER COUNTY INTERCHANGE (WAUK 90343-A) 345/230/13.2KV TRANSFORMER CKT 1	560	560	0.20129	116.2228	MARTIN SUB - PANTEX NORTH SUB 115KV CKT 1
FDNS	02ALL_G14_038	0	25SP	G14_038	FROM->TO	POTTER COUNTY INTERCHANGE (WAUK 90343-A) 345/230/13.2KV TRANSFORMER CKT 1	560	560	0.20119	116.2202	GEN336831 1-BAXTER WILSON SES
FDNS	02ALL_G14_038	0	25SP	G14_038	FROM->TO	POTTER COUNTY INTERCHANGE (WAUK 90343-A) 345/230/13.2KV TRANSFORMER CKT 1	560	560	0.20129	116.2172	PANTEX NORTH SUB - PANTEX SOUTH SUB 115KV CKT 1
FDNS	02ALL_G14_038	0	25SP	G14_038	FROM->TO	POTTER COUNTY INTERCHANGE (WAUK 90343-A) 345/230/13.2KV TRANSFORMER CKT 1	560	560	0.20129	116.2172	PANTEX NORTH SUB - PANTEX SOUTH SUB 115KV CKT 1
FDNS	02ALL_G14_038	0	25SP	G14_038	FROM->TO	POTTER COUNTY INTERCHANGE (WAUK 90343-A) 345/230/13.2KV TRANSFORMER CKT 1	560	560	0.20053	116.2161	TUCO_2 345.00 (TUCO_2 XFMR) 345/230/13.2KV TRANSFORMER CKT 1
FDNS	02ALL_G14_038	0	25SP	G14_038	FROM->TO	POTTER COUNTY INTERCHANGE (WAUK 90343-A) 345/230/13.2KV TRANSFORMER CKT 1	560	560	0.2023	116.2158	G13-010T 345.00 - SPEARVILLE 345KV CKT 1
FDNS	02ALL_G14_038	0	25SP	G14_038	FROM->TO	POTTER COUNTY INTERCHANGE (WAUK 90343-A) 345/230/13.2KV TRANSFORMER CKT 1	560	560	0.20129	116.2108	HIGHLAND PARK TAP - PANTEX SOUTH SUB 115KV CKT 1
FDNS	02ALL_G14_038	0	25SP	G14_038	FROM->TO	POTTER COUNTY INTERCHANGE (WAUK 90343-A) 345/230/13.2KV TRANSFORMER CKT 1	560	560	0.20072	116.2073	TUCO INTERCHANGE (GE M1022338) 345/230/13.2KV TRANSFORMER CKT 1
FDNS	02ALL_G14_038	0	25SP	G14_038	FROM->TO	POTTER COUNTY INTERCHANGE (WAUK 90343-A) 345/230/13.2KV TRANSFORMER CKT 1	560	560	0.20072	116.2073	TUCO INTERCHANGE (GE M1022338) 345/230/13.2KV TRANSFORMER CKT 1
FDNS	02ALL_G14_038	0	25SP	G14_038	FROM->TO	POTTER COUNTY INTERCHANGE (WAUK 90343-A) 345/230/13.2KV TRANSFORMER CKT 1	560	560	0.20131	116.2054	MOREWOOD SW - NINE MILE 138KV CKT 1
FDNS	02ALL_G14_038	0	25SP	G14_038	FROM->TO	POTTER COUNTY INTERCHANGE (WAUK 90343-A) 345/230/13.2KV TRANSFORMER CKT 1	560	560	0.20119	116.2006	GEN523815 1-LLANO ESTACADO WIND GEN
FDNS	02ALL_G14_038	0	25SP	G14_038	FROM->TO	POTTER COUNTY INTERCHANGE (WAUK 90343-A) 345/230/13.2KV TRANSFORMER CKT 1	560	560	0.20085	116.1995	TUCO INTERCHANGE - YOAKUM_345 345.00 345KV CKT 1
FDNS	02ALL_G14_038	0	25SP	G14_038	FROM->TO	POTTER COUNTY INTERCHANGE (WAUK 90343-A) 345/230/13.2KV TRANSFORMER CKT 1	560	560	0.20144	116.1985	TUCO INTERCHANGE - TUCO_2 345.00 345KV CKT 1
FDNS	02ALL_G14_038	0	25SP	G14_038	FROM->TO	POTTER COUNTY INTERCHANGE (WAUK 90343-A) 345/230/13.2KV TRANSFORMER CKT 1	560	560	0.20272	116.1921	G11_051T 345.00 - TATONGA7 345.00 345KV CKT 2
FDNS	02ALL_G14_038	0	25SP	G14_038	FROM->TO	POTTER COUNTY INTERCHANGE (WAUK 90343-A) 345/230/13.2KV TRANSFORMER CKT 1	560	560	0.20272	116.1919	G11_051T 345.00 - TATONGA7 345.00 345KV CKT 1
FDNS	02ALL_G14_038	0	25SP	G14_038	FROM->TO	POTTER COUNTY INTERCHANGE (WAUK 90343-A) 345/230/13.2KV TRANSFORMER CKT 1	560	560	0.20272	116.1913	G11_051T 345.00 - WOODWARD DISTRICT EHV 345KV CKT 2
FDNS	02ALL_G14_038	0	25SP	G14_038	FROM->TO	POTTER COUNTY INTERCHANGE (WAUK 90343-A) 345/230/13.2KV TRANSFORMER CKT 1	560	560	0.20272	116.1911	G11_051T 345.00 - WOODWARD DISTRICT EHV 345KV CKT 1
FDNS	02ALL_G14_038	0	25SP	G14_038	FROM->TO	POTTER COUNTY INTERCHANGE (WAUK 90343-A) 345/230/13.2KV TRANSFORMER CKT 1	560	560	0.20119	116.1856	GEN338146 1-INDEPENDENCE UNIT #2
FDNS	02ALL_G14_038	0	25SP	G14_038	FROM->TO	POTTER COUNTY INTERCHANGE (WAUK 90343-A) 345/230/13.2KV TRANSFORMER CKT 1	560	560	0.20207	116.1786	WALKEMEYER - WALKTAP3 115.00 115KV CKT 1
FDNS	02ALL_G14_038	0	25SP	G14_038	FROM->TO	POTTER COUNTY INTERCHANGE (WAUK 90343-A) 345/230/13.2KV TRANSFORMER CKT 1	560	560	0.20207	116.1786	WALKEMEYER - WALKTAP3 115.00 115KV CKT 1
FDNS	02ALL_G14_038	0	25SP	G14_038	FROM->TO	POTTER COUNTY INTERCHANGE (WAUK 90343-A) 345/230/13.2KV TRANSFORMER CKT 1	560	560	0.20207	116.1784	WALKTAP7 345.00 (WALKE345) 345/115/13.8KV TRANSFORMER CKT 1
FDNS	02ALL_G14_038	0	25SP	G14_038	FROM->TO	POTTER COUNTY INTERCHANGE (WAUK 90343-A) 345/230/13.2KV TRANSFORMER CKT 1	560	560	0.20207	116.1784	WALKTAP7 345.00 (WALKE345) 345/115/13.8KV TRANSFORMER CKT 1
FDNS	02ALL_G14_038	0	25SP	G14_038	FROM->TO	POTTER COUNTY INTERCHANGE (WAUK 90343-A) 345/230/13.2KV TRANSFORMER CKT 1	560	560	0.20081	116.177	P12:138:AEPW:S.W.S.-4:L.E.S.-4
FDNS	02ALL_G14_038	0	25SP	G14_038	FROM->TO	POTTER COUNTY INTERCHANGE (WAUK 90343-A) 345/230/13.2KV TRANSFORMER CKT 1	560	560	0.20119	116.1703	GEN501812 1-RODEMACHER UNIT 2
FDNS	02ALL_G14_038	0	25SP	G14_038	FROM->TO	POTTER COUNTY INTERCHANGE (WAUK 90343-A) 345/230/13.2KV TRANSFORMER CKT 1	560	560	0.20766	116.1554	BUCKNER7 345.00 - SPEARVILLE 345KV CKT 1
FDNS	02ALL_G14_038	0	25SP	G14_038	FROM->TO	POTTER COUNTY INTERCHANGE (WAUK 90343-A) 345/230/13.2KV TRANSFORMER CKT 1	560	560	0.20766	116.1554	BUCKNER7 345.00 - SPEARVILLE 345KV CKT 1
FDNS	02ALL_G14_038	0	25SP	G14_038	FROM->TO	POTTER COUNTY INTERCHANGE (WAUK 90343-A) 345/230/13.2KV TRANSFORMER CKT 1	560	560	0.20119	116.1552	GEN337041 1-GERALD ANDRUS
FDNS	02ALL_G14_038	0	25SP	G14_038	FROM->TO	POTTER COUNTY INTERCHANGE (WAUK 90343-A) 345/230/13.2KV TRANSFORMER CKT 1	560	560	0.20119	116.151	GEN338143 1-INDEPENDENCE UNIT #1
FDNS	02ALL_G14_038	0	25SP	G14_038	FROM->TO	POTTER COUNTY INTERCHANGE (WAUK 90343-A) 345/230/13.2KV TRANSFORMER CKT 1	560	560	0.20174	116.1431	IODINE - WOODWARD EHV 138KV CKT 1
FDNS	02ALL_G14_038	0	25SP	G14_038	FROM->TO	POTTER COUNTY INTERCHANGE (WAUK 90343-A) 345/230/13.2KV TRANSFORMER CKT 1	560	560	0.20119	116.1431	GRAND GULF 500/22.0KV TRANSFORMER CKT 1
FDNS	02ALL_G14_038	0	25SP	G14_038	FROM->TO	POTTER COUNTY INTERCHANGE (WAUK 90343-A) 345/230/13.2KV TRANSFORMER CKT 1	560	560	0.20115	116.1402	P12:138:WFEC:MSL15
FDNS	02ALL_G14_038	0	25SP	G14_038	FROM->TO	POTTER COUNTY INTERCHANGE (WAUK 90343-A) 345/230/13.2KV TRANSFORMER CKT 1	560	560	0.20119	116.1348	GEN334441 1-SABINE UNIT 5
FDNS	02ALL_G14_038	0	25SP	G14_038	FROM->TO	POTTER COUNTY INTERCHANGE (WAUK 90343-A) 345/230/13.2KV TRANSFORMER CKT 1	560	560	0.2018	116.133	DUMAS SUB - RB-S&S 3115.00 115KV CKT 1
FDNS	02ALL_G14_038	0	25SP	G14_038	FROM->TO	POTTER COUNTY INTERCHANGE (WAUK 90343-A) 345/230/13.2KV TRANSFORMER CKT 1	560	560	0.20094	116.1323	SUNDOWN INTERCHANGE - WOLFFORTH INTERCHANGE 230KV CKT 1
FDNS	02ALL_G14_038	0	25SP	G14_038	FROM->TO	POTTER COUNTY INTERCHANGE (WAUK 90343-A) 345/230/13.2KV TRANSFORMER CKT 1	560	560	0.20094	116.1323	SUNDOWN INTERCHANGE - WOLFFORTH INTERCHANGE 230KV CKT 1
FDNS	02ALL_G14_038	0	25SP	G14_038	FROM->TO	POTTER COUNTY INTERCHANGE (WAUK 90343-A) 345/230/13.2KV TRANSFORMER CKT 1	560	560	0.2018	116.1171	P12:115:SPS:T25.1.MOOREW.DUMAS19
FDNS	02ALL_G14_038	0	25SP	G14_038	FROM->TO	POTTER COUNTY INTERCHANGE (WAUK 90343-A) 345/230/13.2KV TRANSFORMER CKT 1	560	560	0.20119	116.113	GEN335204 1-NELSON UNIT 4
FDNS	02ALL_G14_038	0	25SP	G14_038	FROM->TO	POTTER COUNTY INTERCHANGE (WAUK 90343-A) 345/230/13.2KV TRANSFORMER CKT 1	560	560	0.20119	116.1049	P12:345:GRDA:CHOUTEAU-SPORTSMANACRES
FDNS	02ALL_G14_038	0	25SP	G14_038	FROM->TO	POTTER COUNTY INTERCHANGE (WAUK 90343-A) 345/230/13.2KV TRANSFORMER CKT 1	560	560	0.20114	116.1042	CARLISLE INTERCHANGE - TUCO INTERCHANGE 230KV CKT 1
FDNS	02ALL_G14_038	0	25SP	G14_038	FROM->TO	POTTER COUNTY INTERCHANGE (WAUK 90343-A) 345/230/13.2KV TRANSFORMER CKT 1	560	560	0.20114	116.1042	CARLISLE INTERCHANGE - TUCO INTERCHANGE 230KV CKT 1
FDNS	02ALL_G14_038	0	25SP	G14_038	FROM->TO	POTTER COUNTY INTERCHANGE (WAUK 90343-A) 345/230/13.2KV TRANSFORMER CKT 1	560	560	0.20119	116.0993	GEN562007 1-G11_025_3 0.6900
FDNS	02ALL_G14_038	0	25SP	G14_038	FROM->TO	POTTER COUNTY INTERCHANGE (WAUK 90343-A) 345/230/13.2KV TRANSFORMER CKT 1	560	560	0.20119	116.0978	GEN511848 1-SOUTHWESTERN STATION #3
FDNS	02ALL_G14_038	0	25SP	G14_038	FROM->TO	POTTER COUNTY INTERCHANGE (WAUK 90343-A) 345/230/13.2KV TRANSFORMER CKT 1	560	560	0.20174	116.0949	DEWEY - IODINE 138KV CKT 1
FDNS	02ALL_G14_038	0	25SP	G14_038	FROM->TO	POTTER COUNTY INTERCHANGE (WAUK 90343-A) 345/230/13.2KV TRANSFORMER CKT 1	560	560	0.20056	116.0948	HUGO - SUNNYSIDE 345KV CKT 1
FDNS	02ALL_G14_038	0	25SP	G14_038	FROM->TO	POTTER COUNTY INTERCHANGE (WAUK 90343-A) 345/230/13.2KV TRANSFORMER CKT 1	560	560	0.20119	116.0875	GEN527884 1-CUNNINGHAM GEN #4 22 KV
FDNS	02ALL_G14_038	0	25SP	G14_038	FROM->TO	POTTER COUNTY INTERCHANGE (WAUK 90343-A) 345/230/13.2KV TRANSFORMER CKT 1	560	560	0.20083	116.0863	NORTHWEST - SPRING CREEK 345KV CKT 1
FDNS	02ALL_G14_038	0	25SP	G14_038	FROM->TO	POTTER COUNTY INTERCHANGE (WAUK 90343-A) 345/230/13.2KV TRANSFORMER CKT 1	560	560	0.20119	116.0834	GEN336191 1-LITTLE GYPSY UNIT#3
FDNS	02ALL_G14_038	0	25SP	G14_038	FROM->TO	POTTER COUNTY INTERCHANGE (WAUK 90343-A) 345/230/13.2KV TRANSFORMER CKT 1	560	560	0.20119	116.0768	GEN527883 1-CUNNINGHAM GEN #3 22 KV
FDNS	02ALL_G14_038	0	25SP	G14_038	FROM->TO	POTTER COUNTY INTERCHANGE (WAUK 90343-A) 345/230/13.2KV TRANSFORMER CKT 1	560	560	0.20119	116.0592	GEN528361 1-MADDOX GEN #1
FDNS	02ALL_G14_038	0	25SP	G14_038	FROM->TO	POTTER COUNTY INTERCHANGE (WAUK 90343-A) 345/230/13.2KV TRANSFORMER CKT 1	560	560	0.20119	115.9715	GEN523942 1-MAJSTC-WTG210.6900
FDNS	02ALL_G14_038	0	25SP	G14_038	FROM->TO	POTTER COUNTY INTERCHANGE (WAUK 90343-A) 345/230/13.2KV TRANSFORMER CKT 1	560	560	0.20119	115.9639	GEN523941 1-MAJSTC-WTG110.6900
FDNS	02ALL_G14_038	0	25SP	G14_038	FROM->TO	POTTER COUNTY INTERCHANGE (WAUK 90343-A) 345/230/13.2KV TRANSFORMER CKT 1	560	560	0.20119	115.8551	GEN523462 1-BLACKHAWK GEN #2
FDNS	02ALL_G14_038	0	25SP	G14_038	FROM->TO	POTTER COUNTY INTERCHANGE (WAUK 90343-A) 345/230/13.2KV TRANSFORMER CKT 1	560	560	0.20119	115.8421	GEN523461 1-BLACKHAWK GEN #1
FDNS	02ALL_G14_038	0	25SP	G14_038	FROM->TO	POTTER COUNTY INTERCHANGE (WAUK 90343-A) 345/230/13.2KV TRANSFORMER CKT 1	560	560	0.20224	115.7834	OCHILTREE (H TP80219401) 230/115/13.2KV TRANSFORMER CKT 1
FDNS	02ALL_G14_038	0	25SP	G14_038	FROM->TO	POTTER COUNTY INTERCHANGE (WAUK 90343-A) 345/230/13.2KV TRANSFORMER CKT 1	560	560	0.20224	115.7834	OCHILTREE (H TP80219401) 230/115/13.2KV TRANSFORMER CKT 1
FDNS	02ALL_G14_038	0	25SP	G14_038	FROM->TO	POTTER COUNTY INTERCHANGE (WAUK 90343-A) 345/230/13.2KV TRANSFORMER CKT 1	560	560	0.20224	115.764	HITCHLAND INTERCHANGE - OCHILTREE 230KV CKT 1
FDNS	02ALL_G14_038	0	25SP	G14_038	FROM->TO	POTTER COUNTY INTERCHANGE (WAUK 90343-A) 345/230/13.2KV TRANSFORMER CKT 1	560	560	0.20224	115.764	HITCHLAND INTERCHANGE - OCHILTREE 230KV CKT 1
FDNS	02ALL_G14_038	0	25SP	G14_038	FROM->TO	POTTER COUNTY INTERCHANGE (WAUK 90343-A) 345/230/13.2KV TRANSFORMER CKT 1	560	560	0.20119	115.549	2109-BUSHLAND INTERCHANGE
FDNS	02ALL_G14_038	0	25SP	G14_038	FROM->TO	POTTER COUNTY INTERCHANGE (WAUK 90343-A) 345/230/13.2KV TRANSFORMER CKT 1	560	560	0.20119	115.549	BASE CASE
FDNS	02ALL_G14_038	0	25SP	G14_038	FROM->TO	POTTER COUNTY INTERCHANGE (WAUK 90343-A) 345/230/13.2KV TRANSFORMER CKT 1	560	560	0.19862	115.3399	GRACEMONT - MINCO 345KV CKT 1

SOLUTION	GROUP	SCENARIO	SEASON	SOURCE	DIRECTION	MONITORED ELEMENT	RATEA (MVA)	RATEB(MVA)	TDF	TC%LOADING (% MVA)	CONTINGENCY
FDNS	02ALL_G14_038	0	25SP	G14_038	FROM->TO	POTTER COUNTY INTERCHANGE (WAUK 90343-A) 345/230/13.2KV TRANSFORMER CKT 1	560	560	0.20119	115.3186	GEN562550 1-G14_040_3 0.6900
FDNS	02ALL_G14_038	0	25SP	G14_038	FROM->TO	POTTER COUNTY INTERCHANGE (WAUK 90343-A) 345/230/13.2KV TRANSFORMER CKT 1	560	560	0.20119	115.1486	GEN560105 1-G08-22 0.6900
FDNS	02ALL_G14_038	0	25SP	G14_038	FROM->TO	POTTER COUNTY INTERCHANGE (WAUK 90343-A) 345/230/13.2KV TRANSFORMER CKT 1	560	560	0.20766	115.1112	BUCKNER7 345.00 - HOLCOMB 345KV CKT 1
FDNS	02ALL_G14_038	0	25SP	G14_038	FROM->TO	POTTER COUNTY INTERCHANGE (WAUK 90343-A) 345/230/13.2KV TRANSFORMER CKT 1	560	560	0.20766	115.1112	BUCKNER7 345.00 - HOLCOMB 345KV CKT 1
FDNS	02ALL_G14_038	0	25SP	G14_038	FROM->TO	POTTER COUNTY INTERCHANGE (WAUK 90343-A) 345/230/13.2KV TRANSFORMER CKT 1	560	560	0.21946	115.1003	FINNEY SWITCHING STATION - WALKTAP7 345.00 345KV CKT 1
FDNS	02ALL_G14_038	0	25SP	G14_038	FROM->TO	POTTER COUNTY INTERCHANGE (WAUK 90343-A) 345/230/13.2KV TRANSFORMER CKT 1	560	560	0.21946	115.1003	FINNEY SWITCHING STATION - WALKTAP7 345.00 345KV CKT 1
FDNS	02ALL_G14_038	0	25SP	G14_038	FROM->TO	POTTER COUNTY INTERCHANGE (WAUK 90343-A) 345/230/13.2KV TRANSFORMER CKT 1	560	560	0.201	115.0106	CANYON WEST SUB - DAWN SUB 115KV CKT 1
FDNS	02ALL_G14_038	0	25SP	G14_038	FROM->TO	POTTER COUNTY INTERCHANGE (WAUK 90343-A) 345/230/13.2KV TRANSFORMER CKT 1	560	560	0.20119	115.0097	GEN531461 4-S4 GENERATOR
FDNS	02ALL_G14_038	0	25SP	G14_038	FROM->TO	POTTER COUNTY INTERCHANGE (WAUK 90343-A) 345/230/13.2KV TRANSFORMER CKT 1	560	560	0.20119	115.0093	GEN659018 1-G14_003IS_3 0.6900
FDNS	02ALL_G14_038	0	25SP	G14_038	FROM->TO	POTTER COUNTY INTERCHANGE (WAUK 90343-A) 345/230/13.2KV TRANSFORMER CKT 1	560	560	0.20119	115.0081	GEN300021 1-1CHOTCT5 16.000
FDNS	02ALL_G14_038	0	25SP	G14_038	FROM->TO	POTTER COUNTY INTERCHANGE (WAUK 90343-A) 345/230/13.2KV TRANSFORMER CKT 1	560	560	0.20119	115.008	GEN300020 1-1CHOTCT4 16.000
FDNS	02ALL_G14_038	0	25SP	G14_038	FROM->TO	POTTER COUNTY INTERCHANGE (WAUK 90343-A) 345/230/13.2KV TRANSFORMER CKT 1	560	560	0.20119	115.008	GEN300032 1-CHOUTEAU CTG 2
FDNS	02ALL_G14_038	0	25SP	G14_038	FROM->TO	POTTER COUNTY INTERCHANGE (WAUK 90343-A) 345/230/13.2KV TRANSFORMER CKT 1	560	560	0.20119	115.008	GEN300033 1-CHOUTEAU STG 3
FDNS	02ALL_G14_038	0	25SP	G14_038	FROM->TO	POTTER COUNTY INTERCHANGE (WAUK 90343-A) 345/230/13.2KV TRANSFORMER CKT 1	560	560	0.20119	114.9887	GEN531462 5-S5 GENERATOR
FDNS	02ALL_G14_038	0	25SP	G14_038	FROM->TO	POTTER COUNTY INTERCHANGE (WAUK 90343-A) 345/230/13.2KV TRANSFORMER CKT 1	560	560	0.20119	114.9867	GEN300024 1-1CHOTST6 16.000
FDNS	02ALL_G14_038	0	25SP	G14_038	FROM->TO	POTTER COUNTY INTERCHANGE (WAUK 90343-A) 345/230/13.2KV TRANSFORMER CKT 1	560	560	0.20119	114.9867	GEN300031 1-CHOUTEAU CTG 1
FDNS	02ALL_G14_038	0	25SP	G14_038	FROM->TO	POTTER COUNTY INTERCHANGE (WAUK 90343-A) 345/230/13.2KV TRANSFORMER CKT 1	560	560	0.20119	114.9847	GEN546698 1-QN GEN2
FDNS	02ALL_G14_038	0	25SP	G14_038	FROM->TO	POTTER COUNTY INTERCHANGE (WAUK 90343-A) 345/230/13.2KV TRANSFORMER CKT 1	560	560	0.20119	114.9729	GEN659289 1-DAYCNTYWND W0.6900
FDNS	02ALL_G14_038	0	25SP	G14_038	FROM->TO	POTTER COUNTY INTERCHANGE (WAUK 90343-A) 345/230/13.2KV TRANSFORMER CKT 1	560	560	0.201	114.9718	P12:115:SPS:W40.1.WCANYON.DFSMTH
FDNS	02ALL_G14_038	0	25SP	G14_038	FROM->TO	POTTER COUNTY INTERCHANGE (WAUK 90343-A) 345/230/13.2KV TRANSFORMER CKT 1	560	560	0.20119	114.9711	GEN542967 9-HAWTHORN UNIT #9
FDNS	02ALL_G14_038	0	25SP	G14_038	FROM->TO	POTTER COUNTY INTERCHANGE (WAUK 90343-A) 345/230/13.2KV TRANSFORMER CKT 1	560	560	0.20093	114.97	G13_027T 230.00 - TOLK STATION WEST 230KV CKT 1
FDNS	02ALL_G14_038	0	25SP	G14_038	FROM->TO	POTTER COUNTY INTERCHANGE (WAUK 90343-A) 345/230/13.2KV TRANSFORMER CKT 1	560	560	0.20087	114.9679	KINGSMILL INTERCHANGE - LLANO ESTACADO WIND GEN 115KV CKT 1
FDNS	02ALL_G14_038	0	25SP	G14_038	FROM->TO	POTTER COUNTY INTERCHANGE (WAUK 90343-A) 345/230/13.2KV TRANSFORMER CKT 1	560	560	0.20119	114.9579	GEN635213 3-NEAL UNIT 3
FDNS	02ALL_G14_038	0	25SP	G14_038	FROM->TO	POTTER COUNTY INTERCHANGE (WAUK 90343-A) 345/230/13.2KV TRANSFORMER CKT 1	560	560	0.20119	114.9271	GEN600001 2-SHERBURNE CNTY G2
FDNS	02ALL_G14_038	0	25SP	G14_038	FROM->TO	POTTER COUNTY INTERCHANGE (WAUK 90343-A) 345/230/13.2KV TRANSFORMER CKT 1	560	560	0.20119	114.9205	GEN652559 1-OAHE
FDNS	02ALL_G14_038	0	25SP	G14_038	FROM->TO	POTTER COUNTY INTERCHANGE (WAUK 90343-A) 345/230/13.2KV TRANSFORMER CKT 1	560	560	0.20104	114.9162	P12:345:SPS:J15.1.XRDS.TOLK
FDNS	02ALL_G14_038	0	25SP	G14_038	FROM->TO	POTTER COUNTY INTERCHANGE (WAUK 90343-A) 345/230/13.2KV TRANSFORMER CKT 1	560	560	0.20113	114.9141	EAST PLANT INTERCHANGE (WH ALM21481) 230/115/13.2KV TRANSFORMER CKT 1
FDNS	02ALL_G14_038	0	25SP	G14_038	FROM->TO	POTTER COUNTY INTERCHANGE (WAUK 90343-A) 345/230/13.2KV TRANSFORMER CKT 1	560	560	0.20113	114.9141	EAST PLANT INTERCHANGE (WH ALM21481) 230/115/13.2KV TRANSFORMER CKT 1
FDNS	02ALL_G14_038	0	25SP	G14_038	FROM->TO	POTTER COUNTY INTERCHANGE (WAUK 90343-A) 345/230/13.2KV TRANSFORMER CKT 1	560	560	0.20119	114.9124	GEN532672 1-TECUMSEH ENERGY CENTER UNIT 8
FDNS	02ALL_G14_038	0	25SP	G14_038	FROM->TO	POTTER COUNTY INTERCHANGE (WAUK 90343-A) 345/230/13.2KV TRANSFORMER CKT 1	560	560	0.20087	114.9121	CARGILL SUB - FRIONA SUB 115KV CKT 1
FDNS	02ALL_G14_038	0	25SP	G14_038	FROM->TO	POTTER COUNTY INTERCHANGE (WAUK 90343-A) 345/230/13.2KV TRANSFORMER CKT 1	560	560	0.20119	114.9116	GEN539677 3-A. M. MULLERGREN GENERATOR
FDNS	02ALL_G14_038	0	25SP	G14_038	FROM->TO	POTTER COUNTY INTERCHANGE (WAUK 90343-A) 345/230/13.2KV TRANSFORMER CKT 1	560	560	0.20119	114.9046	BIG STONE 230/24.0KV TRANSFORMER CKT 1
FDNS	02ALL_G14_038	0	25SP	G14_038	FROM->TO	POTTER COUNTY INTERCHANGE (WAUK 90343-A) 345/230/13.2KV TRANSFORMER CKT 1	560	560	0.20119	114.9041	GEN514939 1-HORSESHOE LAKE 8G
FDNS	02ALL_G14_038	0	25SP	G14_038	FROM->TO	POTTER COUNTY INTERCHANGE (WAUK 90343-A) 345/230/13.2KV TRANSFORMER CKT 1	560	560	0.20119	114.9011	GEN600005 1-MONTICELLO
FDNS	02ALL_G14_038	0	25SP	G14_038	FROM->TO	POTTER COUNTY INTERCHANGE (WAUK 90343-A) 345/230/13.2KV TRANSFORMER CKT 1	560	560	0.19964	114.9009	P12:115:SPS:T53.1.NICHLS.KIRBY
FDNS	02ALL_G14_038	0	25SP	G14_038	FROM->TO	POTTER COUNTY INTERCHANGE (WAUK 90343-A) 345/230/13.2KV TRANSFORMER CKT 1	560	560	0.20113	114.8957	EAST PLANT INTERCHANGE - HARRINGTON STATION 230KV CKT 1
FDNS	02ALL_G14_038	0	25SP	G14_038	FROM->TO	POTTER COUNTY INTERCHANGE (WAUK 90343-A) 345/230/13.2KV TRANSFORMER CKT 1	560	560	0.20113	114.8957	EAST PLANT INTERCHANGE - HARRINGTON STATION 230KV CKT 1
FDNS	02ALL_G14_038	0	25SP	G14_038	FROM->TO	POTTER COUNTY INTERCHANGE (WAUK 90343-A) 345/230/13.2KV TRANSFORMER CKT 1	560	560	0.20119	114.8922	GEN532742 5-EMPORIA ENERGY CENTER UNIT 5
FDNS	02ALL_G14_038	0	25SP	G14_038	FROM->TO	POTTER COUNTY INTERCHANGE (WAUK 90343-A) 345/230/13.2KV TRANSFORMER CKT 1	560	560	0.20119	114.8912	GEN645024 4-NORTH OMAHA 4
FDNS	02ALL_G14_038	0	25SP	G14_038	FROM->TO	POTTER COUNTY INTERCHANGE (WAUK 90343-A) 345/230/13.2KV TRANSFORMER CKT 1	560	560	0.20119	114.889	GEN300017 1-1G2GPDEL 18.000
FDNS	02ALL_G14_038	0	25SP	G14_038	FROM->TO	POTTER COUNTY INTERCHANGE (WAUK 90343-A) 345/230/13.2KV TRANSFORMER CKT 1	560	560	0.20119	114.8805	GEN539653 1-CIMARRON RIVER PLANT GENERATOR
FDNS	02ALL_G14_038	0	25SP	G14_038	FROM->TO	POTTER COUNTY INTERCHANGE (WAUK 90343-A) 345/230/13.2KV TRANSFORMER CKT 1	560	560	0.20003	114.8796	MCCLELLAN SUB - MCLEAN RURAL SUB 115KV CKT 1
FDNS	02ALL_G14_038	0	25SP	G14_038	FROM->TO	POTTER COUNTY INTERCHANGE (WAUK 90343-A) 345/230/13.2KV TRANSFORMER CKT 1	560	560	0.20003	114.8795	KIRBY SWITCHING STATION - MCCLELLAN SUB 115KV CKT 1
FDNS	02ALL_G14_038	0	25SP	G14_038	FROM->TO	POTTER COUNTY INTERCHANGE (WAUK 90343-A) 345/230/13.2KV TRANSFORMER CKT 1	560	560	0.20087	114.8649	DEAF SMITH REC-#6 - FRIONA SUB 115KV CKT 1
FDNS	02ALL_G14_038	0	25SP	G14_038	FROM->TO	POTTER COUNTY INTERCHANGE (WAUK 90343-A) 345/230/13.2KV TRANSFORMER CKT 1	560	560	0.20119	114.8622	GEN511941 1-OEC STEAM # 2
FDNS	02ALL_G14_038	0	25SP	G14_038	FROM->TO	POTTER COUNTY INTERCHANGE (WAUK 90343-A) 345/230/13.2KV TRANSFORMER CKT 1	560	560	0.20119	114.8589	GEN549890 1-SOUTHWEST 1
FDNS	02ALL_G14_038	0	25SP	G14_038	FROM->TO	POTTER COUNTY INTERCHANGE (WAUK 90343-A) 345/230/13.2KV TRANSFORMER CKT 1	560	560	0.20119	114.8584	GEN300016 1-1G1GPDEL 18.000
FDNS	02ALL_G14_038	0	25SP	G14_038	FROM->TO	POTTER COUNTY INTERCHANGE (WAUK 90343-A) 345/230/13.2KV TRANSFORMER CKT 1	560	560	0.20119	114.8548	GEN600000 1-SHERBURNECNTY G1
FDNS	02ALL_G14_038	0	25SP	G14_038	FROM->TO	POTTER COUNTY INTERCHANGE (WAUK 90343-A) 345/230/13.2KV TRANSFORMER CKT 1	560	560	0.20119	114.853	GEN547649 1-ASBURY UNIT #1
FDNS	02ALL_G14_038	0	25SP	G14_038	FROM->TO	POTTER COUNTY INTERCHANGE (WAUK 90343-A) 345/230/13.2KV TRANSFORMER CKT 1	560	560	0.20119	114.8523	GEN511938 1-OEC STEAM # 1
FDNS	02ALL_G14_038	0	25SP	G14_038	FROM->TO	POTTER COUNTY INTERCHANGE (WAUK 90343-A) 345/230/13.2KV TRANSFORMER CKT 1	560	560	0.20093	114.8501	G13_027T 230.00 - YOAKUM COUNTY INTERCHANGE 230KV CKT 1
FDNS	02ALL_G14_038	0	25SP	G14_038	FROM->TO	POTTER COUNTY INTERCHANGE (WAUK 90343-A) 345/230/13.2KV TRANSFORMER CKT 1	560	560	0.20174	114.8477	RB-ELKS 3115.00 - SHERMAN COUNTY TAP 115KV CKT 1
FDNS	02ALL_G14_038	0	25SP	G14_038	FROM->TO	POTTER COUNTY INTERCHANGE (WAUK 90343-A) 345/230/13.2KV TRANSFORMER CKT 1	560	560	0.20119	114.8442	GEN513602 1-GRECSTG_1 17.500
FDNS	02ALL_G14_038	0	25SP	G14_038	FROM->TO	POTTER COUNTY INTERCHANGE (WAUK 90343-A) 345/230/13.2KV TRANSFORMER CKT 1	560	560	0.20119	114.8421	GEN615001 1-COAL CREEK
FDNS	02ALL_G14_038	0	25SP	G14_038	FROM->TO	POTTER COUNTY INTERCHANGE (WAUK 90343-A) 345/230/13.2KV TRANSFORMER CKT 1	560	560	0.20119	114.8358	GEN547658 1-STATE LINE COMBINED CYCLE
FDNS	02ALL_G14_038	0	25SP	G14_038	FROM->TO	POTTER COUNTY INTERCHANGE (WAUK 90343-A) 345/230/13.2KV TRANSFORMER CKT 1	560	560	0.20087	114.8332	DEAF SMITH REC-#6 - HEREFORD INTERCHANGE 115KV CKT 1
FDNS	02ALL_G14_038	0	25SP	G14_038	FROM->TO	POTTER COUNTY INTERCHANGE (WAUK 90343-A) 345/230/13.2KV TRANSFORMER CKT 1	560	560	0.19964	114.8315	CONWAY SUB - NICHOLS STATION 115KV CKT 1
FDNS	02ALL_G14_038	0	25SP	G14_038	FROM->TO	POTTER COUNTY INTERCHANGE (WAUK 90343-A) 345/230/13.2KV TRANSFORMER CKT 1	560	560	0.20119	114.8313	GEN615002 2-COAL CREEK
FDNS	02ALL_G14_038	0	25SP	G14_038	FROM->TO	POTTER COUNTY INTERCHANGE (WAUK 90343-A) 345/230/13.2KV TRANSFORMER CKT 1	560	560	0.20119	114.8312	GEN515040 1-SEMINOLE 1G
FDNS	02ALL_G14_038	0	25SP	G14_038	FROM->TO	POTTER COUNTY INTERCHANGE (WAUK 90343-A) 345/230/13.2KV TRANSFORMER CKT 1	560	560	0.20087	114.8297	P12:115:SPS:T58.1.HERFRD.CARGIL
FDNS	02ALL_G14_038	0	25SP	G14_038	FROM->TO	POTTER COUNTY INTERCHANGE (WAUK 90343-A) 345/230/13.2KV TRANSFORMER CKT 1	560	560	0.20119	114.8292	GEN640005 1-CANADAY
FDNS	02ALL_G14_038	0	25SP	G14_038	FROM->TO	POTTER COUNTY INTERCHANGE (WAUK 90343-A) 345/230/13.2KV TRANSFORMER CKT 1	560	560	0.20119	114.8243	GEN532725 1-EVANS ENERGY CENTER GAS TURBINE 3
FDNS	02ALL_G14_038	0	25SP	G14_038	FROM->TO	POTTER COUNTY INTERCHANGE (WAUK 90343-A) 345/230/13.2KV TRANSFORMER CKT 1	560	560	0.20106	114.8119	CROSSROADS 7345.00 - TOLK STATION 345KV CKT 1
FDNS	02ALL_G14_038	0	25SP	G14_038	FROM->TO	POTTER COUNTY INTERCHANGE (WAUK 90343-A) 345/230/13.2KV TRANSFORMER CKT 1	560	560	0.20106	114.8118	TOLK STATION (ABBXNL844501) 345/230/13.2KV TRANSFORMER CKT 1
FDNS	02ALL_G14_038	0	25SP	G14_038	FROM->TO	POTTER COUNTY INTERCHANGE (WAUK 90343-A) 345/230/13.2KV TRANSFORMER CKT 1	560	560	0.20106	114.8118	TOLK STATION (ABBXNL844501) 345/230/13.2KV TRANSFORMER CKT 1
FDNS	02ALL_G14_038	0	25SP	G14_038	FROM->TO	POTTER COUNTY INTERCHANGE (WAUK 90343-A) 345/230/13.2KV TRANSFORMER CKT 1	560	560	0.20119	114.8045	GEN532721 1-EVANS ENERGY CENTER UNIT 1
FDNS	02ALL_G14_038	0	25SP	G14_038	FROM->TO	POTTER COUNTY INTERCHANGE (WAUK 90343-A) 345/230/13.2KV TRANSFORMER CKT 1	560	560	0.20119	114.7948	GEN659354 1-DEERCREK STG18.000
FDNS	02ALL_G14_038	0	25SP	G14_038	FROM->TO	POTTER COUNTY INTERCHANGE (WAUK 90343-A) 345/230/13.2KV TRANSFORMER CKT 1	560	560	0.20174	114.7945	P12:115:SPS:W24.1.MOOREE.LASLEY
FDNS	02ALL_G14_038	0	25SP	G14_038	FROM->TO	POTTER COUNTY INTERCHANGE (WAUK 90343-A) 345/230/13.2KV TRANSFORMER CKT 1	560	560	0.20119	114.7945	GEN659353 1-DEERCREK CTG18.000
FDNS	02ALL_G14_038	0	25SP	G14_038	FROM->TO	POTTER COUNTY INTERCHANGE (WAUK 90343-A) 345/230/13.2KV TRANSFORMER CKT 1	560	560	0.20119	114.7933	GEN532743 6-EMPORIA ENERGY CENTER UNIT 6
FDNS	02ALL_G14_038	0	25SP	G14_038	FROM->TO	POTTER COUNTY INTERCHANGE (WAUK 90343-A) 345/230/13.2KV TRANSFORMER CKT 1	560	560	0.20119	114.7933	GEN532744 7-EMPORIA ENERGY CENTER UNIT 7
FDNS	02ALL_G14_038	0	25SP	G14_038	FROM->TO	POTTER COUNTY INTERCHANGE (WAUK 90343-A) 345/230/13.2KV TRANSFORMER CKT 1	560	560	0.201	114.7692	CANYON E_TP3115.00 - CANYON WEST SUB 115KV CKT 1
FDNS	02ALL_G14_038	0	25SP	G14_038	FROM->TO	POTTER COUNTY INTERCHANGE (WAUK 90343-A) 345/230/13.2KV TRANSFORMER CKT 1	560	560	0.20119	114.7549	GEN509409 1-WILKES #3

SOLUTION	GROUP	SCENARIO	SEASON	SOURCE	DIRECTION	MONITORED ELEMENT	RATEA (MVA)	RATEB(MVA)	TDF	TC%LOADING (% MVA)	CONTINGENCY
FDNS	02ALL_G14_038	0	25SP	G14_038	FROM->TO	POTTER COUNTY INTERCHANGE (WAUK 90343-A) 345/230/13.2KV TRANSFORMER CKT 1	560	560	0.20056	114.7547	KRESS INTERCHANGE - TULIA TAP 115KV CKT 1
FDNS	02ALL_G14_038	0	25SP	G14_038	FROM->TO	POTTER COUNTY INTERCHANGE (WAUK 90343-A) 345/230/13.2KV TRANSFORMER CKT 1	560	560	0.20119	114.7532	GEN509398 1-KNOXLEE #5
FDNS	02ALL_G14_038	0	25SP	G14_038	FROM->TO	POTTER COUNTY INTERCHANGE (WAUK 90343-A) 345/230/13.2KV TRANSFORMER CKT 1	560	560	0.20119	114.7368	GEN300001 1-THOMAS HILL UNIT 1
FDNS	02ALL_G14_038	0	25SP	G14_038	FROM->TO	POTTER COUNTY INTERCHANGE (WAUK 90343-A) 345/230/13.2KV TRANSFORMER CKT 1	560	560	0.20095	114.7338	AMARILLO SOUTH INTERCHANGE - NICHOLS STATION 230KV CKT 1
FDNS	02ALL_G14_038	0	25SP	G14_038	FROM->TO	POTTER COUNTY INTERCHANGE (WAUK 90343-A) 345/230/13.2KV TRANSFORMER CKT 1	560	560	0.20095	114.7338	AMARILLO SOUTH INTERCHANGE - NICHOLS STATION 230KV CKT 1
FDNS	02ALL_G14_038	0	25SP	G14_038	FROM->TO	POTTER COUNTY INTERCHANGE (WAUK 90343-A) 345/230/13.2KV TRANSFORMER CKT 1	560	560	0.20119	114.7316	SHERBURNE CO 345/24.0KV TRANSFORMER CKT 1
FDNS	02ALL_G14_038	0	25SP	G14_038	FROM->TO	POTTER COUNTY INTERCHANGE (WAUK 90343-A) 345/230/13.2KV TRANSFORMER CKT 1	560	560	0.20119	114.7281	GEN645041 1-CASS COUNTY 1
FDNS	02ALL_G14_038	0	25SP	G14_038	FROM->TO	POTTER COUNTY INTERCHANGE (WAUK 90343-A) 345/230/13.2KV TRANSFORMER CKT 1	560	560	0.20119	114.7254	GEN541163 1-ARIES COMBUSTION TURBINE #1
FDNS	02ALL_G14_038	0	25SP	G14_038	FROM->TO	POTTER COUNTY INTERCHANGE (WAUK 90343-A) 345/230/13.2KV TRANSFORMER CKT 1	560	560	0.20119	114.725	GEN645042 2-CASS COUNTY 2
FDNS	02ALL_G14_038	0	25SP	G14_038	FROM->TO	POTTER COUNTY INTERCHANGE (WAUK 90343-A) 345/230/13.2KV TRANSFORMER CKT 1	560	560	0.20104	114.7218	P12:345:SPS:J02.1.TOLK.EDDY
FDNS	02ALL_G14_038	0	25SP	G14_038	FROM->TO	POTTER COUNTY INTERCHANGE (WAUK 90343-A) 345/230/13.2KV TRANSFORMER CKT 1	560	560	0.20119	114.7212	GEN635214 4-NEAL UNIT 4
FDNS	02ALL_G14_038	0	25SP	G14_038	FROM->TO	POTTER COUNTY INTERCHANGE (WAUK 90343-A) 345/230/13.2KV TRANSFORMER CKT 1	560	560	0.20119	114.7189	FINNEY SWITCHING STATION - PSCO LAMAR DC TIE 345KV CKT 1
FDNS	02ALL_G14_038	0	25SP	G14_038	FROM->TO	POTTER COUNTY INTERCHANGE (WAUK 90343-A) 345/230/13.2KV TRANSFORMER CKT 1	560	560	0.20119	114.7189	FINNEY SWITCHING STATION - PSCO LAMAR DC TIE 345KV CKT 1
FDNS	02ALL_G14_038	0	25SP	G14_038	FROM->TO	POTTER COUNTY INTERCHANGE (WAUK 90343-A) 345/230/13.2KV TRANSFORMER CKT 1	560	560	0.20233	114.6874	P12:115:SPS:W29.1.OCLTRE.SPRMN
FDNS	02ALL_G14_038	0	25SP	G14_038	FROM->TO	POTTER COUNTY INTERCHANGE (WAUK 90343-A) 345/230/13.2KV TRANSFORMER CKT 1	560	560	0.20119	114.6814	GEN541162 1-ARIES STEAM TURBINE
FDNS	02ALL_G14_038	0	25SP	G14_038	FROM->TO	POTTER COUNTY INTERCHANGE (WAUK 90343-A) 345/230/13.2KV TRANSFORMER CKT 1	560	560	0.20174	114.6806	RB-ELKS 3115.00 - RB-SPURLOCK3115.00 115KV CKT 1
FDNS	02ALL_G14_038	0	25SP	G14_038	FROM->TO	POTTER COUNTY INTERCHANGE (WAUK 90343-A) 345/230/13.2KV TRANSFORMER CKT 1	560	560	0.20119	114.6743	GEN515041 1-SEMINOLE 2G
FDNS	02ALL_G14_038	0	25SP	G14_038	FROM->TO	POTTER COUNTY INTERCHANGE (WAUK 90343-A) 345/230/13.2KV TRANSFORMER CKT 1	560	560	0.20119	114.6732	GEN600002 3-SHERBURNE CNTY G3
FDNS	02ALL_G14_038	0	25SP	G14_038	FROM->TO	POTTER COUNTY INTERCHANGE (WAUK 90343-A) 345/230/13.2KV TRANSFORMER CKT 1	560	560	0.20056	114.6695	P12:115:SPS:T67.1.HAPPY.KRESS
FDNS	02ALL_G14_038	0	25SP	G14_038	FROM->TO	POTTER COUNTY INTERCHANGE (WAUK 90343-A) 345/230/13.2KV TRANSFORMER CKT 1	560	560	0.20255	114.658	PRINGLE INTERCHANGE - SPEARMAN INTERCHANGE 115KV CKT 1
FDNS	02ALL_G14_038	0	25SP	G14_038	FROM->TO	POTTER COUNTY INTERCHANGE (WAUK 90343-A) 345/230/13.2KV TRANSFORMER CKT 1	560	560	0.20255	114.658	PRINGLE INTERCHANGE - SPEARMAN INTERCHANGE 115KV CKT 1
FDNS	02ALL_G14_038	0	25SP	G14_038	FROM->TO	POTTER COUNTY INTERCHANGE (WAUK 90343-A) 345/230/13.2KV TRANSFORMER CKT 1	560	560	0.20056	114.6555	HAPPY INTERCHANGE - TULIA TAP 115KV CKT 1
FDNS	02ALL_G14_038	0	25SP	G14_038	FROM->TO	POTTER COUNTY INTERCHANGE (WAUK 90343-A) 345/230/13.2KV TRANSFORMER CKT 1	560	560	0.20119	114.6421	GEN515042 1-SEMINOLE 3G
FDNS	02ALL_G14_038	0	25SP	G14_038	FROM->TO	POTTER COUNTY INTERCHANGE (WAUK 90343-A) 345/230/13.2KV TRANSFORMER CKT 1	560	560	0.20696	114.6418	BVRCNTY7 345.00 - G11-14T 345.00 345KV CKT 1
FDNS	02ALL_G14_038	0	25SP	G14_038	FROM->TO	POTTER COUNTY INTERCHANGE (WAUK 90343-A) 345/230/13.2KV TRANSFORMER CKT 1	560	560	0.20696	114.6418	BVRCNTY7 345.00 - G11-14T 345.00 345KV CKT 2
FDNS	02ALL_G14_038	0	25SP	G14_038	FROM->TO	POTTER COUNTY INTERCHANGE (WAUK 90343-A) 345/230/13.2KV TRANSFORMER CKT 1	560	560	0.20119	114.6384	GEN635023 3-WALTER SCOTT UNIT 3
FDNS	02ALL_G14_038	0	25SP	G14_038	FROM->TO	POTTER COUNTY INTERCHANGE (WAUK 90343-A) 345/230/13.2KV TRANSFORMER CKT 1	560	560	0.20441	114.6046	MATHWSN7 345.00 - TATONGA7 345.00 345KV CKT 1
FDNS	02ALL_G14_038	0	25SP	G14_038	FROM->TO	POTTER COUNTY INTERCHANGE (WAUK 90343-A) 345/230/13.2KV TRANSFORMER CKT 1	560	560	0.20441	114.6046	MATHWSN7 345.00 - TATONGA7 345.00 345KV CKT 2
FDNS	02ALL_G14_038	0	25SP	G14_038	FROM->TO	POTTER COUNTY INTERCHANGE (WAUK 90343-A) 345/230/13.2KV TRANSFORMER CKT 1	560	560	0.20119	114.601	GEN515592 1-PALDRW21 0.6900
FDNS	02ALL_G14_038	0	25SP	G14_038	FROM->TO	POTTER COUNTY INTERCHANGE (WAUK 90343-A) 345/230/13.2KV TRANSFORMER CKT 1	560	560	0.20233	114.5956	OCHILTREE - TEXAS FARMS SUB 115KV CKT 1
FDNS	02ALL_G14_038	0	25SP	G14_038	FROM->TO	POTTER COUNTY INTERCHANGE (WAUK 90343-A) 345/230/13.2KV TRANSFORMER CKT 1	560	560	0.20119	114.5953	GEN523170 1-GOODWELL_1 10.6900
FDNS	02ALL_G14_038	0	25SP	G14_038	FROM->TO	POTTER COUNTY INTERCHANGE (WAUK 90343-A) 345/230/13.2KV TRANSFORMER CKT 1	560	560	0.20119	114.5849	GEN300010 1-ST FRANCIS UNIT 1
FDNS	02ALL_G14_038	0	25SP	G14_038	FROM->TO	POTTER COUNTY INTERCHANGE (WAUK 90343-A) 345/230/13.2KV TRANSFORMER CKT 1	560	560	0.20106	114.5783	EDDY COUNTY INTERCHANGE (ABB AEM30711) 345/230/13.2KV TRANSFORMER CKT 1
FDNS	02ALL_G14_038	0	25SP	G14_038	FROM->TO	POTTER COUNTY INTERCHANGE (WAUK 90343-A) 345/230/13.2KV TRANSFORMER CKT 1	560	560	0.20106	114.5783	EDDY COUNTY INTERCHANGE (ABB AEM30711) 345/230/13.2KV TRANSFORMER CKT 1
FDNS	02ALL_G14_038	0	25SP	G14_038	FROM->TO	POTTER COUNTY INTERCHANGE (WAUK 90343-A) 345/230/13.2KV TRANSFORMER CKT 1	560	560	0.20106	114.5783	P12:345:SPS:J14.1.EDDY.XRDS
FDNS	02ALL_G14_038	0	25SP	G14_038	FROM->TO	POTTER COUNTY INTERCHANGE (WAUK 90343-A) 345/230/13.2KV TRANSFORMER CKT 1	560	560	0.20106	114.5781	CROSSROADS 7345.00 - EDDY COUNTY INTERCHANGE 345KV CKT 1
FDNS	02ALL_G14_038	0	25SP	G14_038	FROM->TO	POTTER COUNTY INTERCHANGE (WAUK 90343-A) 345/230/13.2KV TRANSFORMER CKT 1	560	560	0.20119	114.5748	GEN300015 1-1SGPDEL 18.000
FDNS	02ALL_G14_038	0	25SP	G14_038	FROM->TO	POTTER COUNTY INTERCHANGE (WAUK 90343-A) 345/230/13.2KV TRANSFORMER CKT 1	560	560	0.20119	114.5628	GEN523171 1-GOODWELL_2 10.6900
FDNS	02ALL_G14_038	0	25SP	G14_038	FROM->TO	POTTER COUNTY INTERCHANGE (WAUK 90343-A) 345/230/13.2KV TRANSFORMER CKT 1	560	560	0.20119	114.5402	GEN505432 1-SIKESTON
FDNS	02ALL_G14_038	0	25SP	G14_038	FROM->TO	POTTER COUNTY INTERCHANGE (WAUK 90343-A) 345/230/13.2KV TRANSFORMER CKT 1	560	560	0.20119	114.5388	GEN300011 1-ST FRANCIS UNIT 2
FDNS	02ALL_G14_038	0	25SP	G14_038	FROM->TO	POTTER COUNTY INTERCHANGE (WAUK 90343-A) 345/230/13.2KV TRANSFORMER CKT 1	560	560	0.20119	114.533	GEN549893 2-SOUTHWEST 2
FDNS	02ALL_G14_038	0	25SP	G14_038	FROM->TO	POTTER COUNTY INTERCHANGE (WAUK 90343-A) 345/230/13.2KV TRANSFORMER CKT 1	560	560	0.20119	114.5269	GEN531459 2-S2 GENERATOR
FDNS	02ALL_G14_038	0	25SP	G14_038	FROM->TO	POTTER COUNTY INTERCHANGE (WAUK 90343-A) 345/230/13.2KV TRANSFORMER CKT 1	560	560	0.20119	114.4983	GEN562270 1-G12-020-2 0.6900
FDNS	02ALL_G14_038	0	25SP	G14_038	FROM->TO	POTTER COUNTY INTERCHANGE (WAUK 90343-A) 345/230/13.2KV TRANSFORMER CKT 1	560	560	0.20119	114.4977	GEN635024 4-WALTER SCOTT UNIT 4
FDNS	02ALL_G14_038	0	25SP	G14_038	FROM->TO	POTTER COUNTY INTERCHANGE (WAUK 90343-A) 345/230/13.2KV TRANSFORMER CKT 1	560	560	0.20237	114.4808	HITCHLAND INTERCHANGE (H TP80148301) 230/115/13.2KV TRANSFORMER CKT 1
FDNS	02ALL_G14_038	0	25SP	G14_038	FROM->TO	POTTER COUNTY INTERCHANGE (WAUK 90343-A) 345/230/13.2KV TRANSFORMER CKT 1	560	560	0.20237	114.4808	HITCHLAND INTERCHANGE (H TP80148301) 230/115/13.2KV TRANSFORMER CKT 1
FDNS	02ALL_G14_038	0	25SP	G14_038	FROM->TO	POTTER COUNTY INTERCHANGE (WAUK 90343-A) 345/230/13.2KV TRANSFORMER CKT 1	560	560	0.20237	114.4808	HITCHLAND INTERCHANGE (UPDATE LATER) 230/115/13.2KV TRANSFORMER CKT 2
FDNS	02ALL_G14_038	0	25SP	G14_038	FROM->TO	POTTER COUNTY INTERCHANGE (WAUK 90343-A) 345/230/13.2KV TRANSFORMER CKT 1	560	560	0.20237	114.4808	HITCHLAND INTERCHANGE (UPDATE LATER) 230/115/13.2KV TRANSFORMER CKT 2
FDNS	02ALL_G14_038	0	25SP	G14_038	FROM->TO	POTTER COUNTY INTERCHANGE (WAUK 90343-A) 345/230/13.2KV TRANSFORMER CKT 1	560	560	0.20119	114.4721	GEN645025 5-NORTH OMAHA 5
FDNS	02ALL_G14_038	0	25SP	G14_038	FROM->TO	POTTER COUNTY INTERCHANGE (WAUK 90343-A) 345/230/13.2KV TRANSFORMER CKT 1	560	560	0.19884	114.4604	CHERRY1 - HARRINGTON STATION 230KV CKT 1
FDNS	02ALL_G14_038	0	25SP	G14_038	FROM->TO	POTTER COUNTY INTERCHANGE (WAUK 90343-A) 345/230/13.2KV TRANSFORMER CKT 1	560	560	0.19884	114.4604	CHERRY1 - HARRINGTON STATION 230KV CKT 1
FDNS	02ALL_G14_038	0	25SP	G14_038	FROM->TO	POTTER COUNTY INTERCHANGE (WAUK 90343-A) 345/230/13.2KV TRANSFORMER CKT 1	560	560	0.20119	114.4526	GEN524285 1-WILDORADO WIND GEN
FDNS	02ALL_G14_038	0	25SP	G14_038	FROM->TO	POTTER COUNTY INTERCHANGE (WAUK 90343-A) 345/230/13.2KV TRANSFORMER CKT 1	560	560	0.20162	114.4507	DALLAM COUNTY INTERCHANGE - SHERMAN COUNTY SUB 115KV CKT 1
FDNS	02ALL_G14_038	0	25SP	G14_038	FROM->TO	POTTER COUNTY INTERCHANGE (WAUK 90343-A) 345/230/13.2KV TRANSFORMER CKT 1	560	560	0.20119	114.441	GEN659110 1-LELAND OLDS UNIT1
FDNS	02ALL_G14_038	0	25SP	G14_038	FROM->TO	POTTER COUNTY INTERCHANGE (WAUK 90343-A) 345/230/13.2KV TRANSFORMER CKT 1	560	560	0.20233	114.4344	SPEARMAN SUB - TEXAS FARMS SUB 115KV CKT 1
FDNS	02ALL_G14_038	0	25SP	G14_038	FROM->TO	POTTER COUNTY INTERCHANGE (WAUK 90343-A) 345/230/13.2KV TRANSFORMER CKT 1	560	560	0.20174	114.4241	MOORE COUNTY INTERCHANGE EAST BUS - RB-SPURLOCK3115.00 115KV CKT 1
FDNS	02ALL_G14_038	0	25SP	G14_038	FROM->TO	POTTER COUNTY INTERCHANGE (WAUK 90343-A) 345/230/13.2KV TRANSFORMER CKT 1	560	560	0.20119	114.4228	GEN562269 1-G12-020-1 0.6900
FDNS	02ALL_G14_038	0	25SP	G14_038	FROM->TO	POTTER COUNTY INTERCHANGE (WAUK 90343-A) 345/230/13.2KV TRANSFORMER CKT 1	560	560	0.20119	114.4201	GEN509406 1-WELSH #3
FDNS	02ALL_G14_038	0	25SP	G14_038	FROM->TO	POTTER COUNTY INTERCHANGE (WAUK 90343-A) 345/230/13.2KV TRANSFORMER CKT 1	560	560	0.20119	114.4201	GEN546702 1-NM GEN N1
FDNS	02ALL_G14_038	0	25SP	G14_038	FROM->TO	POTTER COUNTY INTERCHANGE (WAUK 90343-A) 345/230/13.2KV TRANSFORMER CKT 1	560	560	0.20119	114.4199	GEN509404 1-WELSH #1
FDNS	02ALL_G14_038	0	25SP	G14_038	FROM->TO	POTTER COUNTY INTERCHANGE (WAUK 90343-A) 345/230/13.2KV TRANSFORMER CKT 1	560	560	0.20162	114.4166	P12:115:SPS:W05.1.DALLAM.LASLEY
FDNS	02ALL_G14_038	0	25SP	G14_038	FROM->TO	POTTER COUNTY INTERCHANGE (WAUK 90343-A) 345/230/13.2KV TRANSFORMER CKT 1	560	560	0.20119	114.4119	GEN336821 1-GRAND GULF UNIT
FDNS	02ALL_G14_038	0	25SP	G14_038	FROM->TO	POTTER COUNTY INTERCHANGE (WAUK 90343-A) 345/230/13.2KV TRANSFORMER CKT 1	560	560	0.20179	114.398	CHAN/TASCOS6230.00 - POTTER COUNTY INTERCHANGE 230KV CKT 1
FDNS	02ALL_G14_038	0	25SP	G14_038	FROM->TO	POTTER COUNTY INTERCHANGE (WAUK 90343-A) 345/230/13.2KV TRANSFORMER CKT 1	560	560	0.20472	114.3896	MINGO - SETAB 345KV CKT 1
FDNS	02ALL_G14_038	0	25SP	G14_038	FROM->TO	POTTER COUNTY INTERCHANGE (WAUK 90343-A) 345/230/13.2KV TRANSFORMER CKT 1	560	560	0.20472	114.3896	MINGO - SETAB 345KV CKT 1
FDNS	02ALL_G14_038	0	25SP	G14_038	FROM->TO	POTTER COUNTY INTERCHANGE (WAUK 90343-A) 345/230/13.2KV TRANSFORMER CKT 1	560	560	0.20162	114.378	SHERMAN COUNTY SUB - SHERMAN COUNTY TAP 115KV CKT 1
FDNS	02ALL_G14_038	0	25SP	G14_038	FROM->TO	POTTER COUNTY INTERCHANGE (WAUK 90343-A) 345/230/13.2KV TRANSFORMER CKT 1	560	560	0.201	114.3767	CANYON E_TP3115.00 - RANDALL COUNTY INTERCHANGE 115KV CKT 1
FDNS	02ALL_G14_038	0	25SP	G14_038	FROM->TO	POTTER COUNTY INTERCHANGE (WAUK 90343-A) 345/230/13.2KV TRANSFORMER CKT 1	560	560	0.20119	114.352	GEN513601 1-GRECCTG_1 20.000
FDNS	02ALL_G14_038	0	25SP	G14_038	FROM->TO	POTTER COUNTY INTERCHANGE (WAUK 90343-A) 345/230/13.2KV TRANSFORMER CKT 1	560	560	0.201	114.3419	P12:115:SPS:V05.1.OSAGE.WCANYON
FDNS	02ALL_G14_038	0	25SP	G14_038	FROM->TO	POTTER COUNTY INTERCHANGE (WAUK 90343-A) 345/230/13.2KV TRANSFORMER CKT 1	560	560	0.20119	114.3225	GEN300002 1-THOMAS HILL UNIT 2
FDNS	02ALL_G14_038	0	25SP	G14_038	FROM->TO	POTTER COUNTY INTERCHANGE (WAUK 90343-A) 345/230/13.2KV TRANSFORMER CKT 1	560	560	0.20119	114.3113	GEN539670 4-JUDSON LARGE GENERATOR
FDNS	02ALL_G14_038	0	25SP	G14_038	FROM->TO	POTTER COUNTY INTERCHANGE (WAUK 90343-A) 345/230/13.2KV TRANSFORMER CKT 1	560	560	0.20055	114.3019	PLANT X STATION - SUNDOWN INTERCHANGE 230KV CKT 1
FDNS	02ALL_G14_038	0	25SP	G14_038	FROM->TO	POTTER COUNTY INTERCHANGE (WAUK 90343-A) 345/230/13.2KV TRANSFORMER CKT 1	560	560	0.20055	114.3019	PLANT X STATION - SUNDOWN INTERCHANGE 230KV CKT 1

SOLUTION	GROUP	SCENARIO	SEASON	SOURCE	DIRECTION	MONITORED ELEMENT	RATEA (MVA)	RATEB(MVA)	TDF	TC%LOADING (% MVA)	CONTINGENCY
FDNS	02ALL_G14_038	0	25SP	G14_038	FROM->TO	POTTER COUNTY INTERCHANGE (WAUK 90343-A) 345/230/13.2KV TRANSFORMER CKT 1	560	560	0.20119	114.2842	GEN509416 1-TURK GENERATION
FDNS	02ALL_G14_038	0	25SP	G14_038	FROM->TO	POTTER COUNTY INTERCHANGE (WAUK 90343-A) 345/230/13.2KV TRANSFORMER CKT 1	560	560	0.19775	114.2748	Harrington Station East Bus - POTTER COUNTY INTERCHANGE 230KV CKT 1
FDNS	02ALL_G14_038	0	25SP	G14_038	FROM->TO	POTTER COUNTY INTERCHANGE (WAUK 90343-A) 345/230/13.2KV TRANSFORMER CKT 1	560	560	0.19775	114.2748	Harrington Station East Bus - POTTER COUNTY INTERCHANGE 230KV CKT 1
FDNS	02ALL_G14_038	0	25SP	G14_038	FROM->TO	POTTER COUNTY INTERCHANGE (WAUK 90343-A) 345/230/13.2KV TRANSFORMER CKT 1	560	560	0.20119	114.273	GEN511842 1-RIVERSIDE STATION #1
FDNS	02ALL_G14_038	0	25SP	G14_038	FROM->TO	POTTER COUNTY INTERCHANGE (WAUK 90343-A) 345/230/13.2KV TRANSFORMER CKT 1	560	560	0.20119	114.2674	GEN511843 1-RIVERSIDE STATION #2
FDNS	02ALL_G14_038	0	25SP	G14_038	FROM->TO	POTTER COUNTY INTERCHANGE (WAUK 90343-A) 345/230/13.2KV TRANSFORMER CKT 1	560	560	0.20119	114.2641	GEN641089 2-ENERGY CENTER 2
FDNS	02ALL_G14_038	0	25SP	G14_038	FROM->TO	POTTER COUNTY INTERCHANGE (WAUK 90343-A) 345/230/13.2KV TRANSFORMER CKT 1	560	560	0.20389	114.2464	HOLCOMB - SETAB 345KV CKT 1
FDNS	02ALL_G14_038	0	25SP	G14_038	FROM->TO	POTTER COUNTY INTERCHANGE (WAUK 90343-A) 345/230/13.2KV TRANSFORMER CKT 1	560	560	0.20389	114.2464	HOLCOMB - SETAB 345KV CKT 1
FDNS	02ALL_G14_038	0	25SP	G14_038	FROM->TO	POTTER COUNTY INTERCHANGE (WAUK 90343-A) 345/230/13.2KV TRANSFORMER CKT 1	560	560	0.19746	114.2447	CHERRY1 - POTTER COUNTY INTERCHANGE 230KV CKT 1
FDNS	02ALL_G14_038	0	25SP	G14_038	FROM->TO	POTTER COUNTY INTERCHANGE (WAUK 90343-A) 345/230/13.2KV TRANSFORMER CKT 1	560	560	0.19746	114.2447	CHERRY1 - POTTER COUNTY INTERCHANGE 230KV CKT 1
FDNS	02ALL_G14_038	0	25SP	G14_038	FROM->TO	POTTER COUNTY INTERCHANGE (WAUK 90343-A) 345/230/13.2KV TRANSFORMER CKT 1	560	560	0.20119	114.24	GEN336153 1-WATERFORD UNIT#3
FDNS	02ALL_G14_038	0	25SP	G14_038	FROM->TO	POTTER COUNTY INTERCHANGE (WAUK 90343-A) 345/230/13.2KV TRANSFORMER CKT 1	560	560	0.20119	114.2072	GEN515223 1-MUSKOGEE 4G
FDNS	02ALL_G14_038	0	25SP	G14_038	FROM->TO	POTTER COUNTY INTERCHANGE (WAUK 90343-A) 345/230/13.2KV TRANSFORMER CKT 1	560	560	0.20119	114.1991	GEN511839 1-NORTHEASTERN STATION #2
FDNS	02ALL_G14_038	0	25SP	G14_038	FROM->TO	POTTER COUNTY INTERCHANGE (WAUK 90343-A) 345/230/13.2KV TRANSFORMER CKT 1	560	560	0.20119	114.1944	GEN515226 1-MUSKOGEE 6G
FDNS	02ALL_G14_038	0	25SP	G14_038	FROM->TO	POTTER COUNTY INTERCHANGE (WAUK 90343-A) 345/230/13.2KV TRANSFORMER CKT 1	560	560	0.20082	114.19	Harrington Station Mid Bus - RANDALL COUNTY INTERCHANGE 230KV CKT 1
FDNS	02ALL_G14_038	0	25SP	G14_038	FROM->TO	POTTER COUNTY INTERCHANGE (WAUK 90343-A) 345/230/13.2KV TRANSFORMER CKT 1	560	560	0.20082	114.19	Harrington Station Mid Bus - RANDALL COUNTY INTERCHANGE 230KV CKT 1
FDNS	02ALL_G14_038	0	25SP	G14_038	FROM->TO	POTTER COUNTY INTERCHANGE (WAUK 90343-A) 345/230/13.2KV TRANSFORMER CKT 1	560	560	0.19862	114.1876	CIMARRON - MINCO 345KV CKT 1
FDNS	02ALL_G14_038	0	25SP	G14_038	FROM->TO	POTTER COUNTY INTERCHANGE (WAUK 90343-A) 345/230/13.2KV TRANSFORMER CKT 1	560	560	0.20119	114.1863	GEN337911 1-ARKANSAS NUCLEAR ONE UNIT #2
FDNS	02ALL_G14_038	0	25SP	G14_038	FROM->TO	POTTER COUNTY INTERCHANGE (WAUK 90343-A) 345/230/13.2KV TRANSFORMER CKT 1	560	560	0.20119	114.1785	GEN501801 1-DOLET HILLS UNIT1
FDNS	02ALL_G14_038	0	25SP	G14_038	FROM->TO	POTTER COUNTY INTERCHANGE (WAUK 90343-A) 345/230/13.2KV TRANSFORMER CKT 1	560	560	0.20119	114.1773	GEN515225 1-MUSKOGEE 5G
FDNS	02ALL_G14_038	0	25SP	G14_038	FROM->TO	POTTER COUNTY INTERCHANGE (WAUK 90343-A) 345/230/13.2KV TRANSFORMER CKT 1	560	560	0.20119	114.1758	GEN527881 1-CUNNINGHAM GEN #1
FDNS	02ALL_G14_038	0	25SP	G14_038	FROM->TO	POTTER COUNTY INTERCHANGE (WAUK 90343-A) 345/230/13.2KV TRANSFORMER CKT 1	560	560	0.20119	114.1627	GEN562688 1-G15_014_3 0.6900
FDNS	02ALL_G14_038	0	25SP	G14_038	FROM->TO	POTTER COUNTY INTERCHANGE (WAUK 90343-A) 345/230/13.2KV TRANSFORMER CKT 1	560	560	0.20056	114.1559	HAPPY INTERCHANGE - PALO DURO SUB 115KV CKT 1
FDNS	02ALL_G14_038	0	25SP	G14_038	FROM->TO	POTTER COUNTY INTERCHANGE (WAUK 90343-A) 345/230/13.2KV TRANSFORMER CKT 1	560	560	0.20233	114.1505	SPEARMAN INTERCHANGE - SPEARMAN SUB 115KV CKT 1
FDNS	02ALL_G14_038	0	25SP	G14_038	FROM->TO	POTTER COUNTY INTERCHANGE (WAUK 90343-A) 345/230/13.2KV TRANSFORMER CKT 1	560	560	0.20236	114.1465	PRINGLE INTERCHANGE (ENRCO13617-1) 230/115/13.2KV TRANSFORMER CKT 1
FDNS	02ALL_G14_038	0	25SP	G14_038	FROM->TO	POTTER COUNTY INTERCHANGE (WAUK 90343-A) 345/230/13.2KV TRANSFORMER CKT 1	560	560	0.20236	114.1465	PRINGLE INTERCHANGE (ENRCO13617-1) 230/115/13.2KV TRANSFORMER CKT 1
FDNS	02ALL_G14_038	0	25SP	G14_038	FROM->TO	POTTER COUNTY INTERCHANGE (WAUK 90343-A) 345/230/13.2KV TRANSFORMER CKT 1	560	560	0.20157	114.1457	MOORE COUNTY INTERCHANGE (ENRCO 136402) 230/115/13.2KV TRANSFORMER CKT 1
FDNS	02ALL_G14_038	0	25SP	G14_038	FROM->TO	POTTER COUNTY INTERCHANGE (WAUK 90343-A) 345/230/13.2KV TRANSFORMER CKT 1	560	560	0.20157	114.1457	MOORE COUNTY INTERCHANGE (ENRCO 136402) 230/115/13.2KV TRANSFORMER CKT 1
FDNS	02ALL_G14_038	0	25SP	G14_038	FROM->TO	POTTER COUNTY INTERCHANGE (WAUK 90343-A) 345/230/13.2KV TRANSFORMER CKT 1	560	560	0.19944	114.1399	CHISHOLM6 230.00 - ELK CITY 230KV 230KV CKT 1
FDNS	02ALL_G14_038	0	25SP	G14_038	FROM->TO	POTTER COUNTY INTERCHANGE (WAUK 90343-A) 345/230/13.2KV TRANSFORMER CKT 1	560	560	0.19944	114.1395	ELK CITY 230KV (ELKCTY-6) 230/138/13.8KV TRANSFORMER CKT 1
FDNS	02ALL_G14_038	0	25SP	G14_038	FROM->TO	POTTER COUNTY INTERCHANGE (WAUK 90343-A) 345/230/13.2KV TRANSFORMER CKT 1	560	560	0.19944	114.1395	ELK CITY 230KV (ELKCTY-6) 230/138/13.8KV TRANSFORMER CKT 1
FDNS	02ALL_G14_038	0	25SP	G14_038	FROM->TO	POTTER COUNTY INTERCHANGE (WAUK 90343-A) 345/230/13.2KV TRANSFORMER CKT 1	560	560	0.20119	114.1235	GEN335831 1-RIVERBEND UNIT#1
FDNS	02ALL_G14_038	0	25SP	G14_038	FROM->TO	POTTER COUNTY INTERCHANGE (WAUK 90343-A) 345/230/13.2KV TRANSFORMER CKT 1	560	560	0.20119	114.1219	GEN562483 1-G13_027_3 0.6900
FDNS	02ALL_G14_038	0	25SP	G14_038	FROM->TO	POTTER COUNTY INTERCHANGE (WAUK 90343-A) 345/230/13.2KV TRANSFORMER CKT 1	560	560	0.20056	114.0969	P12:115:SPS:T66.1.RNDALL.HAPPY
FDNS	02ALL_G14_038	0	25SP	G14_038	FROM->TO	POTTER COUNTY INTERCHANGE (WAUK 90343-A) 345/230/13.2KV TRANSFORMER CKT 1	560	560	0.20119	114.0938	GEN511840 1-NORTHEASTERN STATION #3
FDNS	02ALL_G14_038	0	25SP	G14_038	FROM->TO	POTTER COUNTY INTERCHANGE (WAUK 90343-A) 345/230/13.2KV TRANSFORMER CKT 1	560	560	0.20236	114.0829	Harrington Station East Bus - PRINGLE INTERCHANGE 230KV CKT 1
FDNS	02ALL_G14_038	0	25SP	G14_038	FROM->TO	POTTER COUNTY INTERCHANGE (WAUK 90343-A) 345/230/13.2KV TRANSFORMER CKT 1	560	560	0.20236	114.0818	P12:230:SPS:K43.1.PRNGLE.HARR_E
FDNS	02ALL_G14_038	0	25SP	G14_038	FROM->TO	POTTER COUNTY INTERCHANGE (WAUK 90343-A) 345/230/13.2KV TRANSFORMER CKT 1	560	560	0.20056	114.0608	PALO DURO SUB - RANDALL COUNTY INTERCHANGE 115KV CKT 1
FDNS	02ALL_G14_038	0	25SP	G14_038	FROM->TO	POTTER COUNTY INTERCHANGE (WAUK 90343-A) 345/230/13.2KV TRANSFORMER CKT 1	560	560	0.202	114.0587	PRINGLE INTERCHANGE - SPEARMAN INTERCHANGE 115KV CKT 2
FDNS	02ALL_G14_038	0	25SP	G14_038	FROM->TO	POTTER COUNTY INTERCHANGE (WAUK 90343-A) 345/230/13.2KV TRANSFORMER CKT 1	560	560	0.202	114.0587	PRINGLE INTERCHANGE - SPEARMAN INTERCHANGE 115KV CKT 2
FDNS	02ALL_G14_038	0	25SP	G14_038	FROM->TO	POTTER COUNTY INTERCHANGE (WAUK 90343-A) 345/230/13.2KV TRANSFORMER CKT 1	560	560	0.20119	114.0499	GEN522866 1-LUBBOCK POWER & LIGHT-HOLLY GEN
FDNS	02ALL_G14_038	0	25SP	G14_038	FROM->TO	POTTER COUNTY INTERCHANGE (WAUK 90343-A) 345/230/13.2KV TRANSFORMER CKT 1	560	560	0.20119	114.0293	GEN337910 1-ARKANSAS NUCLEAR ONE UNIT #1
FDNS	02ALL_G14_038	0	25SP	G14_038	FROM->TO	POTTER COUNTY INTERCHANGE (WAUK 90343-A) 345/230/13.2KV TRANSFORMER CKT 1	560	560	0.20119	113.9948	GEN509403 1-PIRKEY GENERATION
FDNS	02ALL_G14_038	0	25SP	G14_038	FROM->TO	POTTER COUNTY INTERCHANGE (WAUK 90343-A) 345/230/13.2KV TRANSFORMER CKT 1	560	560	0.20177	113.9726	PRINGLE INTERCHANGE - RIVERVIEW INTERCHANGE 115KV CKT 1
FDNS	02ALL_G14_038	0	25SP	G14_038	FROM->TO	POTTER COUNTY INTERCHANGE (WAUK 90343-A) 345/230/13.2KV TRANSFORMER CKT 1	560	560	0.20177	113.9726	PRINGLE INTERCHANGE - RIVERVIEW INTERCHANGE 115KV CKT 1
FDNS	02ALL_G14_038	0	25SP	G14_038	FROM->TO	POTTER COUNTY INTERCHANGE (WAUK 90343-A) 345/230/13.2KV TRANSFORMER CKT 1	560	560	0.20131	113.9681	BEARCAT 138.00 - MOORELAND 138KV CKT 1
FDNS	02ALL_G14_038	0	25SP	G14_038	FROM->TO	POTTER COUNTY INTERCHANGE (WAUK 90343-A) 345/230/13.2KV TRANSFORMER CKT 1	560	560	0.20119	113.9658	GEN524890 1-SNJN-WTGA1 10.6000
FDNS	02ALL_G14_038	0	25SP	G14_038	FROM->TO	POTTER COUNTY INTERCHANGE (WAUK 90343-A) 345/230/13.2KV TRANSFORMER CKT 1	560	560	0.20123	113.9443	GRACEMONT - LAWTON EASTSIDE 345KV CKT 1
FDNS	02ALL_G14_038	0	25SP	G14_038	FROM->TO	POTTER COUNTY INTERCHANGE (WAUK 90343-A) 345/230/13.2KV TRANSFORMER CKT 1	560	560	0.20123	113.9443	GRACEMONT - LAWTON EASTSIDE 345KV CKT 1
FDNSLock	02ALL_G14_038	0	25SP	G14_038	FROM->TO	POTTER COUNTY INTERCHANGE (WAUK 90343-A) 345/230/13.2KV TRANSFORMER CKT 1	560	560	0.20032	113.9387	STATELINE INTERCHANGE (H TP80154301) 230/115/13.2KV TRANSFORMER CKT 1
FDNS	02ALL_G14_038	0	25SP	G14_038	FROM->TO	POTTER COUNTY INTERCHANGE (WAUK 90343-A) 345/230/13.2KV TRANSFORMER CKT 1	560	560	0.20115	113.9135	HOBBS - YOAKUM_345 345.00 345KV CKT 1
FDNS	02ALL_G14_038	0	25SP	G14_038	FROM->TO	POTTER COUNTY INTERCHANGE (WAUK 90343-A) 345/230/13.2KV TRANSFORMER CKT 1	560	560	0.20119	113.8726	GEN337652 1-WHITE BLUFF UNIT #1
FDNS	02ALL_G14_038	0	25SP	G14_038	FROM->TO	POTTER COUNTY INTERCHANGE (WAUK 90343-A) 345/230/13.2KV TRANSFORMER CKT 1	560	560	0.20119	113.8706	GEN562710 1-G15_022_3 0.5500
FDNS	02ALL_G14_038	0	25SP	G14_038	FROM->TO	POTTER COUNTY INTERCHANGE (WAUK 90343-A) 345/230/13.2KV TRANSFORMER CKT 1	560	560	0.2018	113.8701	MOORE COUNTY INTERCHANGE W. - RB-S&S 3115.00 115KV CKT 1
FDNS	02ALL_G14_038	0	25SP	G14_038	FROM->TO	POTTER COUNTY INTERCHANGE (WAUK 90343-A) 345/230/13.2KV TRANSFORMER CKT 1	560	560	0.20131	113.867	BEARCAT 138.00 - NINE MILE 138KV CKT 1
FDNS	02ALL_G14_038	0	25SP	G14_038	FROM->TO	POTTER COUNTY INTERCHANGE (WAUK 90343-A) 345/230/13.2KV TRANSFORMER CKT 1	560	560	0.20131	113.8659	P12:138:WFEC:MSL14
FDNS	02ALL_G14_038	0	25SP	G14_038	FROM->TO	POTTER COUNTY INTERCHANGE (WAUK 90343-A) 345/230/13.2KV TRANSFORMER CKT 1	560	560	0.20119	113.854	GEN514805 1-SOONER UNIT 1
FDNS	02ALL_G14_038	0	25SP	G14_038	FROM->TO	POTTER COUNTY INTERCHANGE (WAUK 90343-A) 345/230/13.2KV TRANSFORMER CKT 1	560	560	0.20119	113.8538	GEN541151 3-SIBLEY GENERATING UNIT #3
FDNS	02ALL_G14_038	0	25SP	G14_038	FROM->TO	POTTER COUNTY INTERCHANGE (WAUK 90343-A) 345/230/13.2KV TRANSFORMER CKT 1	560	560	0.20026	113.8514	NEWHART 230 - PLANT X STATION 230KV CKT 1
FDNS	02ALL_G14_038	0	25SP	G14_038	FROM->TO	POTTER COUNTY INTERCHANGE (WAUK 90343-A) 345/230/13.2KV TRANSFORMER CKT 1	560	560	0.20119	113.8456	GEN337653 1-WHITE BLUFF UNIT #2
FDNS	02ALL_G14_038	0	25SP	G14_038	FROM->TO	POTTER COUNTY INTERCHANGE (WAUK 90343-A) 345/230/13.2KV TRANSFORMER CKT 1	560	560	0.20119	113.8373	GEN532663 1-LAWRENCE ENERGY CENTER UNIT 5
FDNS	02ALL_G14_038	0	25SP	G14_038	FROM->TO	POTTER COUNTY INTERCHANGE (WAUK 90343-A) 345/230/13.2KV TRANSFORMER CKT 1	560	560	0.20119	113.8361	GEN501813 1-RODEMACHER UNIT 3
FDNS	02ALL_G14_038	0	25SP	G14_038	FROM->TO	POTTER COUNTY INTERCHANGE (WAUK 90343-A) 345/230/13.2KV TRANSFORMER CKT 1	560	560	0.20076	113.8354	JOHNSON COUNTY - PITTSBURG 345KV CKT 1
FDNS	02ALL_G14_038	0	25SP	G14_038	FROM->TO	POTTER COUNTY INTERCHANGE (WAUK 90343-A) 345/230/13.2KV TRANSFORMER CKT 1	560	560	0.20076	113.8354	JOHNSON COUNTY - PITTSBURG 345KV CKT 1
FDNS	02ALL_G14_038	0	25SP	G14_038	FROM->TO	POTTER COUNTY INTERCHANGE (WAUK 90343-A) 345/230/13.2KV TRANSFORMER CKT 1	560	560	0.20119	113.8345	GEN514806 1-SOONER UNIT 2
FDNS	02ALL_G14_038	0	25SP	G14_038	FROM->TO	POTTER COUNTY INTERCHANGE (WAUK 90343-A) 345/230/13.2KV TRANSFORMER CKT 1	560	560	0.20119	113.8263	GEN509394 1-FLINT CREEK
FDNS	02ALL_G14_038	0	25SP	G14_038	FROM->TO	POTTER COUNTY INTERCHANGE (WAUK 90343-A) 345/230/13.2KV TRANSFORMER CKT 1	560	560	0.20119	113.8221	GEN336252 1-NINEMILE POINT UNIT#5
FDNS	02ALL_G14_038	0	25SP	G14_038	FROM->TO	POTTER COUNTY INTERCHANGE (WAUK 90343-A) 345/230/13.2KV TRANSFORMER CKT 1	560	560	0.20032	113.8089	Graves Sub - STATELINE INTERCHANGE 115KV CKT 1
FDNS	02ALL_G14_038	0	25SP	G14_038	FROM->TO	POTTER COUNTY INTERCHANGE (WAUK 90343-A) 345/230/13.2KV TRANSFORMER CKT 1	560	560	0.20032	113.8089	Graves Sub - STATELINE INTERCHANGE 115KV CKT 1
FDNS	02ALL_G14_038	0	25SP	G14_038	FROM->TO	POTTER COUNTY INTERCHANGE (WAUK 90343-A) 345/230/13.2KV TRANSFORMER CKT 1	560	560	0.20119	113.7933	GEN336251 1-NINEMILE POINT UNIT#4
FDNS	02ALL_G14_038	0	25SP	G14_038	FROM->TO	POTTER COUNTY INTERCHANGE (WAUK 90343-A) 345/230/13.2KV TRANSFORMER CKT 1	560	560	0.20119	113.7911	GEN562655 1-G14_074_3 0.6900
FDNS	02ALL_G14_038	0	25SP	G14_038	FROM->TO	POTTER COUNTY INTERCHANGE (WAUK 90343-A) 345/230/13.2KV TRANSFORMER CKT 1	560	560	0.2023	113.786	G13-010T 345.00 - POST ROCK 345KV CKT 1
FDNS	02ALL_G14_038	0	25SP	G14_038	FROM->TO	POTTER COUNTY INTERCHANGE (WAUK 90343-A) 345/230/13.2KV TRANSFORMER CKT 1	560	560	0.20119	113.7759	GEN524287 1-GS-PHWD_GEN10.6900

SOLUTION	GROUP	SCENARIO	SEASON	SOURCE	DIRECTION	MONITORED ELEMENT	RATEA (MVA)	RATEB(MVA)	TDF	TC%LOADING (% MVA)	CONTINGENCY
FDNS	02ALL_G14_038	0	25SP	G14_038	FROM->TO	POTTER COUNTY INTERCHANGE (WAUK 90343-A) 345/230/13.2KV TRANSFORMER CKT 1	560	560	0.20119	113.7735	GEN334440 1-SABINE UNIT 4
FDNS	02ALL_G14_038	0	25SP	G14_038	FROM->TO	POTTER COUNTY INTERCHANGE (WAUK 90343-A) 345/230/13.2KV TRANSFORMER CKT 1	560	560	0.20129	113.7716	MARTIN SUB - PANTEX NORTH SUB 115KV CKT 1
FDNS	02ALL_G14_038	0	25SP	G14_038	FROM->TO	POTTER COUNTY INTERCHANGE (WAUK 90343-A) 345/230/13.2KV TRANSFORMER CKT 1	560	560	0.20129	113.7716	MARTIN SUB - PANTEX NORTH SUB 115KV CKT 1
FDNS	02ALL_G14_038	0	25SP	G14_038	FROM->TO	POTTER COUNTY INTERCHANGE (WAUK 90343-A) 345/230/13.2KV TRANSFORMER CKT 1	560	560	0.20119	113.7687	GEN524485 1-CAPROCK WIND GEN
FDNS	02ALL_G14_038	0	25SP	G14_038	FROM->TO	POTTER COUNTY INTERCHANGE (WAUK 90343-A) 345/230/13.2KV TRANSFORMER CKT 1	560	560	0.20119	113.7662	GEN523122 1-NBLWND-WTG210.6900
FDNS	02ALL_G14_038	0	25SP	G14_038	FROM->TO	POTTER COUNTY INTERCHANGE (WAUK 90343-A) 345/230/13.2KV TRANSFORMER CKT 1	560	560	0.20129	113.7661	PANTEX NORTH SUB - PANTEX SOUTH SUB 115KV CKT 1
FDNS	02ALL_G14_038	0	25SP	G14_038	FROM->TO	POTTER COUNTY INTERCHANGE (WAUK 90343-A) 345/230/13.2KV TRANSFORMER CKT 1	560	560	0.20129	113.7661	PANTEX NORTH SUB - PANTEX SOUTH SUB 115KV CKT 1
FDNS	02ALL_G14_038	0	25SP	G14_038	FROM->TO	POTTER COUNTY INTERCHANGE (WAUK 90343-A) 345/230/13.2KV TRANSFORMER CKT 1	560	560	0.20119	113.766	GEN335206 1-NELSON UNIT 6
FDNS	02ALL_G14_038	0	25SP	G14_038	FROM->TO	POTTER COUNTY INTERCHANGE (WAUK 90343-A) 345/230/13.2KV TRANSFORMER CKT 1	560	560	0.20129	113.7609	HIGHLAND PARK TAP - PANTEX SOUTH SUB 115KV CKT 1
FDNS	02ALL_G14_038	0	25SP	G14_038	FROM->TO	POTTER COUNTY INTERCHANGE (WAUK 90343-A) 345/230/13.2KV TRANSFORMER CKT 1	560	560	0.20053	113.7589	TUCO_2 345.00 (TUCO_2 XFMR) 345/230/13.2KV TRANSFORMER CKT 1
FDNS	02ALL_G14_038	0	25SP	G14_038	FROM->TO	POTTER COUNTY INTERCHANGE (WAUK 90343-A) 345/230/13.2KV TRANSFORMER CKT 1	560	560	0.20119	113.7565	GEN336831 1-BAXTER WILSON SES
FDNS	02ALL_G14_038	0	25SP	G14_038	FROM->TO	POTTER COUNTY INTERCHANGE (WAUK 90343-A) 345/230/13.2KV TRANSFORMER CKT 1	560	560	0.20072	113.7531	TUCO INTERCHANGE (GE M1022338) 345/230/13.2KV TRANSFORMER CKT 1
FDNS	02ALL_G14_038	0	25SP	G14_038	FROM->TO	POTTER COUNTY INTERCHANGE (WAUK 90343-A) 345/230/13.2KV TRANSFORMER CKT 1	560	560	0.20072	113.7531	TUCO INTERCHANGE (GE M1022338) 345/230/13.2KV TRANSFORMER CKT 1
FDNS	02ALL_G14_038	0	25SP	G14_038	FROM->TO	POTTER COUNTY INTERCHANGE (WAUK 90343-A) 345/230/13.2KV TRANSFORMER CKT 1	560	560	0.20119	113.7512	GEN523121 1-NBLWND-WTG110.6900
FDNS	02ALL_G14_038	0	25SP	G14_038	FROM->TO	POTTER COUNTY INTERCHANGE (WAUK 90343-A) 345/230/13.2KV TRANSFORMER CKT 1	560	560	0.20144	113.7475	TUCO INTERCHANGE - TUCO_2 345.00 345KV CKT 1
FDNS	02ALL_G14_038	0	25SP	G14_038	FROM->TO	POTTER COUNTY INTERCHANGE (WAUK 90343-A) 345/230/13.2KV TRANSFORMER CKT 1	560	560	0.2023	113.7442	G13-010T 345.00 - SPEARVILLE 345KV CKT 1
FDNS	02ALL_G14_038	0	25SP	G14_038	FROM->TO	POTTER COUNTY INTERCHANGE (WAUK 90343-A) 345/230/13.2KV TRANSFORMER CKT 1	560	560	0.20131	113.7415	MOREWOOD SW - NINE MILE 138KV CKT 1
FDNS	02ALL_G14_038	0	25SP	G14_038	FROM->TO	POTTER COUNTY INTERCHANGE (WAUK 90343-A) 345/230/13.2KV TRANSFORMER CKT 1	560	560	0.20119	113.7347	GEN523815 1-LLANO ESTACADO WIND GEN
FDNS	02ALL_G14_038	0	25SP	G14_038	FROM->TO	POTTER COUNTY INTERCHANGE (WAUK 90343-A) 345/230/13.2KV TRANSFORMER CKT 1	560	560	0.20119	113.7243	GEN338146 1-INDEPENDENCE UNIT #2
FDNS	02ALL_G14_038	0	25SP	G14_038	FROM->TO	POTTER COUNTY INTERCHANGE (WAUK 90343-A) 345/230/13.2KV TRANSFORMER CKT 1	560	560	0.20272	113.7211	G11_051T 345.00 - TATONGA7 345.00 345KV CKT 2
FDNS	02ALL_G14_038	0	25SP	G14_038	FROM->TO	POTTER COUNTY INTERCHANGE (WAUK 90343-A) 345/230/13.2KV TRANSFORMER CKT 1	560	560	0.20272	113.7209	G11_051T 345.00 - TATONGA7 345.00 345KV CKT 1
FDNS	02ALL_G14_038	0	25SP	G14_038	FROM->TO	POTTER COUNTY INTERCHANGE (WAUK 90343-A) 345/230/13.2KV TRANSFORMER CKT 1	560	560	0.20119	113.7204	GEN560584 1-G06-44-2 4.1600
FDNS	02ALL_G14_038	0	25SP	G14_038	FROM->TO	POTTER COUNTY INTERCHANGE (WAUK 90343-A) 345/230/13.2KV TRANSFORMER CKT 1	560	560	0.20081	113.7188	P12:138:AEPW:S.W.S.-4:L.E.S.-4
FDNS	02ALL_G14_038	0	25SP	G14_038	FROM->TO	POTTER COUNTY INTERCHANGE (WAUK 90343-A) 345/230/13.2KV TRANSFORMER CKT 1	560	560	0.20272	113.7164	G11_051T 345.00 - WOODWARD DISTRICT EHV 345KV CKT 2
FDNS	02ALL_G14_038	0	25SP	G14_038	FROM->TO	POTTER COUNTY INTERCHANGE (WAUK 90343-A) 345/230/13.2KV TRANSFORMER CKT 1	560	560	0.20272	113.7162	G11_051T 345.00 - WOODWARD DISTRICT EHV 345KV CKT 1
FDNS	02ALL_G14_038	0	25SP	G14_038	FROM->TO	POTTER COUNTY INTERCHANGE (WAUK 90343-A) 345/230/13.2KV TRANSFORMER CKT 1	560	560	0.20119	113.7132	GEN523107 1-NOVUS_WND 14.1600
FDNS	02ALL_G14_038	0	25SP	G14_038	FROM->TO	POTTER COUNTY INTERCHANGE (WAUK 90343-A) 345/230/13.2KV TRANSFORMER CKT 1	560	560	0.20119	113.7108	GEN501812 1-RODEMACHER UNIT 2
FDNS	02ALL_G14_038	0	25SP	G14_038	FROM->TO	POTTER COUNTY INTERCHANGE (WAUK 90343-A) 345/230/13.2KV TRANSFORMER CKT 1	560	560	0.20207	113.7014	WALKEMEYER - WALKTAP3 115.00 115KV CKT 1
FDNS	02ALL_G14_038	0	25SP	G14_038	FROM->TO	POTTER COUNTY INTERCHANGE (WAUK 90343-A) 345/230/13.2KV TRANSFORMER CKT 1	560	560	0.20207	113.7014	WALKEMEYER - WALKTAP3 115.00 115KV CKT 1
FDNS	02ALL_G14_038	0	25SP	G14_038	FROM->TO	POTTER COUNTY INTERCHANGE (WAUK 90343-A) 345/230/13.2KV TRANSFORMER CKT 1	560	560	0.20207	113.7012	WALKTAP7 345.00 (WALKE345) 345/115/13.8KV TRANSFORMER CKT 1
FDNS	02ALL_G14_038	0	25SP	G14_038	FROM->TO	POTTER COUNTY INTERCHANGE (WAUK 90343-A) 345/230/13.2KV TRANSFORMER CKT 1	560	560	0.20207	113.7012	WALKTAP7 345.00 (WALKE345) 345/115/13.8KV TRANSFORMER CKT 1
FDNS	02ALL_G14_038	0	25SP	G14_038	FROM->TO	POTTER COUNTY INTERCHANGE (WAUK 90343-A) 345/230/13.2KV TRANSFORMER CKT 1	560	560	0.20119	113.7002	GEN532722 1-EVANS ENERGY CENTER UNIT 2
FDNS	02ALL_G14_038	0	25SP	G14_038	FROM->TO	POTTER COUNTY INTERCHANGE (WAUK 90343-A) 345/230/13.2KV TRANSFORMER CKT 1	560	560	0.20094	113.6972	SUNDOWN INTERCHANGE - WOLFFORTH INTERCHANGE 230KV CKT 1
FDNS	02ALL_G14_038	0	25SP	G14_038	FROM->TO	POTTER COUNTY INTERCHANGE (WAUK 90343-A) 345/230/13.2KV TRANSFORMER CKT 1	560	560	0.20094	113.6972	SUNDOWN INTERCHANGE - WOLFFORTH INTERCHANGE 230KV CKT 1
FDNS	02ALL_G14_038	0	25SP	G14_038	FROM->TO	POTTER COUNTY INTERCHANGE (WAUK 90343-A) 345/230/13.2KV TRANSFORMER CKT 1	560	560	0.20119	113.6966	GEN337041 1-GERALD ANDRUS
FDNS	02ALL_G14_038	0	25SP	G14_038	FROM->TO	POTTER COUNTY INTERCHANGE (WAUK 90343-A) 345/230/13.2KV TRANSFORMER CKT 1	560	560	0.2018	113.6946	P12:115:SPS:T25.1.MOOREW.DUMAS19
FDNS	02ALL_G14_038	0	25SP	G14_038	FROM->TO	POTTER COUNTY INTERCHANGE (WAUK 90343-A) 345/230/13.2KV TRANSFORMER CKT 1	560	560	0.20119	113.6924	GEN338143 1-INDEPENDENCE UNIT #1
FDNS	02ALL_G14_038	0	25SP	G14_038	FROM->TO	POTTER COUNTY INTERCHANGE (WAUK 90343-A) 345/230/13.2KV TRANSFORMER CKT 1	560	560	0.2018	113.6868	DUMAS SUB - RB-S&S 3115.00 115KV CKT 1
FDNS	02ALL_G14_038	0	25SP	G14_038	FROM->TO	POTTER COUNTY INTERCHANGE (WAUK 90343-A) 345/230/13.2KV TRANSFORMER CKT 1	560	560	0.20119	113.6857	GRAND GULF 500/22.0KV TRANSFORMER CKT 1
FDNS	02ALL_G14_038	0	25SP	G14_038	FROM->TO	POTTER COUNTY INTERCHANGE (WAUK 90343-A) 345/230/13.2KV TRANSFORMER CKT 1	560	560	0.20115	113.6852	P12:138:WFEC:MSL15
FDNS	02ALL_G14_038	0	25SP	G14_038	FROM->TO	POTTER COUNTY INTERCHANGE (WAUK 90343-A) 345/230/13.2KV TRANSFORMER CKT 1	560	560	0.19899	113.6805	Harrington Station East Bus - Harrington Station Mid Bus 230KV CKT @1
FDNS	02ALL_G14_038	0	25SP	G14_038	FROM->TO	POTTER COUNTY INTERCHANGE (WAUK 90343-A) 345/230/13.2KV TRANSFORMER CKT 1	560	560	0.20174	113.6801	IODINE - WOODWARD EHV 138KV CKT 1
FDNS	02ALL_G14_038	0	25SP	G14_038	FROM->TO	POTTER COUNTY INTERCHANGE (WAUK 90343-A) 345/230/13.2KV TRANSFORMER CKT 1	560	560	0.20119	113.6781	GEN334441 1-SABINE UNIT 5
FDNS	02ALL_G14_038	0	25SP	G14_038	FROM->TO	POTTER COUNTY INTERCHANGE (WAUK 90343-A) 345/230/13.2KV TRANSFORMER CKT 1	560	560	0.20119	113.6623	GEN523123 1-NBLWND-WTG310.6900
FDNS	02ALL_G14_038	0	25SP	G14_038	FROM->TO	POTTER COUNTY INTERCHANGE (WAUK 90343-A) 345/230/13.2KV TRANSFORMER CKT 1	560	560	0.20119	113.6322	GEN512688 2-GRDA1 GSU2 22
FDNS	02ALL_G14_038	0	25SP	G14_038	FROM->TO	POTTER COUNTY INTERCHANGE (WAUK 90343-A) 345/230/13.2KV TRANSFORMER CKT 1	560	560	0.20119	113.3037	GEN590010 1-ERCOT EQUIVALENCE
FDNS	02ALL_G14_038	0	25SP	G14_038	FROM->TO	POTTER COUNTY INTERCHANGE (WAUK 90343-A) 345/230/13.2KV TRANSFORMER CKT 1	560	560	0.20119	113.2913	GEN659111 2-LELAND OLDS UNIT2
FDNS	02ALL_G14_038	0	25SP	G14_038	FROM->TO	POTTER COUNTY INTERCHANGE (WAUK 90343-A) 345/230/13.2KV TRANSFORMER CKT 1	560	560	0.20119	113.2572	GEN560586 1-G06-44-4 4.1600
FDNS	02ALL_G14_038	0	25SP	G14_038	FROM->TO	POTTER COUNTY INTERCHANGE (WAUK 90343-A) 345/230/13.2KV TRANSFORMER CKT 1	560	560	0.19621	113.2438	SWISHER COUNTY INTERCHANGE - TUCO_2 230.00 230KV CKT 1
FDNS	02ALL_G14_038	0	25SP	G14_038	FROM->TO	POTTER COUNTY INTERCHANGE (WAUK 90343-A) 345/230/13.2KV TRANSFORMER CKT 1	560	560	0.20119	113.2366	GEN590011 2-ERCOT EQUIVALENCE
FDNS	02ALL_G14_038	0	25SP	G14_038	FROM->TO	POTTER COUNTY INTERCHANGE (WAUK 90343-A) 345/230/13.2KV TRANSFORMER CKT 1	560	560	0.20119	113.1454	GEN300006 1-NEW MADRID UNIT 1
FDNS	02ALL_G14_038	0	25SP	G14_038	FROM->TO	POTTER COUNTY INTERCHANGE (WAUK 90343-A) 345/230/13.2KV TRANSFORMER CKT 1	560	560	0.20119	113.1425	GEN300007 1-NEW MADRID UNIT 2
FDNS	02ALL_G14_038	0	25SP	G14_038	FROM->TO	POTTER COUNTY INTERCHANGE (WAUK 90343-A) 345/230/13.2KV TRANSFORMER CKT 1	560	560	0.20119	113.1386	2109-BUSHLAND INTERCHANGE
FDNS	02ALL_G14_038	0	25SP	G14_038	FROM->TO	POTTER COUNTY INTERCHANGE (WAUK 90343-A) 345/230/13.2KV TRANSFORMER CKT 1	560	560	0.20119	113.1386	BASE CASE
FDNS	02ALL_G14_038	0	25SP	G14_038	FROM->TO	POTTER COUNTY INTERCHANGE (WAUK 90343-A) 345/230/13.2KV TRANSFORMER CKT 1	560	560	0.20119	113.0909	GEN659103 1-ANTELOPE VALLEY UNIT1
FDNS	02ALL_G14_038	0	25SP	G14_038	FROM->TO	POTTER COUNTY INTERCHANGE (WAUK 90343-A) 345/230/13.2KV TRANSFORMER CKT 1	560	560	0.20119	113.0909	GEN659107 2-ANTELOPE VALLEY UNIT2
FDNS	02ALL_G14_038	0	25SP	G14_038	FROM->TO	POTTER COUNTY INTERCHANGE (WAUK 90343-A) 345/230/13.2KV TRANSFORMER CKT 1	560	560	0.20119	113.025	GEN560585 1-G06-44-3 4.1600
FDNS	02ALL_G14_038	0	25SP	G14_038	FROM->TO	POTTER COUNTY INTERCHANGE (WAUK 90343-A) 345/230/13.2KV TRANSFORMER CKT 1	560	560	0.20119	112.8002	GEN542951 5-HAWTHORN UNIT #5
FDNS	02ALL_G14_038	0	25SP	G14_038	FROM->TO	POTTER COUNTY INTERCHANGE (WAUK 90343-A) 345/230/13.2KV TRANSFORMER CKT 1	560	560	0.20093	112.5994	G13_027T 230.00 - TOLK STATION WEST 230KV CKT 1
FDNS	02ALL_G14_038	0	25SP	G14_038	FROM->TO	POTTER COUNTY INTERCHANGE (WAUK 90343-A) 345/230/13.2KV TRANSFORMER CKT 1	560	560	0.20113	112.5958	EAST PLANT INTERCHANGE (WH ALM21481) 230/115/13.2KV TRANSFORMER CKT 1
FDNS	02ALL_G14_038	0	25SP	G14_038	FROM->TO	POTTER COUNTY INTERCHANGE (WAUK 90343-A) 345/230/13.2KV TRANSFORMER CKT 1	560	560	0.20113	112.5958	EAST PLANT INTERCHANGE (WH ALM21481) 230/115/13.2KV TRANSFORMER CKT 1
FDNS	02ALL_G14_038	0	25SP	G14_038	FROM->TO	POTTER COUNTY INTERCHANGE (WAUK 90343-A) 345/230/13.2KV TRANSFORMER CKT 1	560	560	0.20119	112.5874	GEN560286 1-G10-01-1WTG 0.6900
FDNS	02ALL_G14_038	0	25SP	G14_038	FROM->TO	POTTER COUNTY INTERCHANGE (WAUK 90343-A) 345/230/13.2KV TRANSFORMER CKT 1	560	560	0.20119	112.5874	GEN560287 1-G10-01-2WTG 0.6900
FDNS	02ALL_G14_038	0	25SP	G14_038	FROM->TO	POTTER COUNTY INTERCHANGE (WAUK 90343-A) 345/230/13.2KV TRANSFORMER CKT 1	560	560	0.20113	112.5808	EAST PLANT INTERCHANGE - HARRINGTON STATION 230KV CKT 1
FDNS	02ALL_G14_038	0	25SP	G14_038	FROM->TO	POTTER COUNTY INTERCHANGE (WAUK 90343-A) 345/230/13.2KV TRANSFORMER CKT 1	560	560	0.20113	112.5808	EAST PLANT INTERCHANGE - HARRINGTON STATION 230KV CKT 1
FDNS	02ALL_G14_038	0	25SP	G14_038	FROM->TO	POTTER COUNTY INTERCHANGE (WAUK 90343-A) 345/230/13.2KV TRANSFORMER CKT 1	560	560	0.20119	112.5693	GEN542956 2-LACYGNE UNIT #2
FDNS	02ALL_G14_038	0	25SP	G14_038	FROM->TO	POTTER COUNTY INTERCHANGE (WAUK 90343-A) 345/230/13.2KV TRANSFORMER CKT 1	560	560	0.20119	112.5645	GEN600001 2-SHERBURNE CNTY G2
FDNS	02ALL_G14_038	0	25SP	G14_038	FROM->TO	POTTER COUNTY INTERCHANGE (WAUK 90343-A) 345/230/13.2KV TRANSFORMER CKT 1	560	560	0.20087	112.5591	CARGILL SUB - FRIONA SUB 115KV CKT 1
FDNS	02ALL_G14_038	0	25SP	G14_038	FROM->TO	POTTER COUNTY INTERCHANGE (WAUK 90343-A) 345/230/13.2KV TRANSFORMER CKT 1	560	560	0.20119	112.5569	GEN652559 1-OAHE
FDNS	02ALL_G14_038	0	25SP	G14_038	FROM->TO	POTTER COUNTY INTERCHANGE (WAUK 90343-A) 345/230/13.2KV TRANSFORMER CKT 1	560	560	0.20104	112.5554	P12:345:SPS:J15.1.XRDS.TOLK
FDNS	02ALL_G14_038	0	25SP	G14_038	FROM->TO	POTTER COUNTY INTERCHANGE (WAUK 90343-A) 345/230/13.2KV TRANSFORMER CKT 1	560	560	0.19964	112.5544	P12:115:SPS:T53.1.NICHLS.KIRBY
FDNS	02ALL_G14_038	0	25SP	G14_038	FROM->TO	POTTER COUNTY INTERCHANGE (WAUK 90343-A) 345/230/13.2KV TRANSFORMER CKT 1	560	560	0.20119	112.5503	GEN539677 3-A. M. MULLERGREN GENERATOR
FDNS	02ALL_G14_038	0	25SP	G14_038	FROM->TO	POTTER COUNTY INTERCHANGE (WAUK 90343-A) 345/230/13.2KV TRANSFORMER CKT 1	560	560	0.20119	112.5498	GEN532672 1-TECUMSEH ENERGY CENTER UNIT 8

SOLUTION	GROUP	SCENARIO	SEASON	SOURCE	DIRECTION	MONITORED ELEMENT	RATEA (MVA)	RATEB(MVA)	TDF	TC%LOADING (% MVA)	CONTINGENCY
FDNS	02ALL_G14_038	0	25SP	G14_038	FROM->TO	POTTER COUNTY INTERCHANGE (WAUK 90343-A) 345/230/13.2KV TRANSFORMER CKT 1	560	560	0.20119	112.5441	BIG STONE 230/24.0KV TRANSFORMER CKT 1
FDNS	02ALL_G14_038	0	25SP	G14_038	FROM->TO	POTTER COUNTY INTERCHANGE (WAUK 90343-A) 345/230/13.2KV TRANSFORMER CKT 1	560	560	0.20119	112.5406	GEN600005 1-MONTICELLO
FDNS	02ALL_G14_038	0	25SP	G14_038	FROM->TO	POTTER COUNTY INTERCHANGE (WAUK 90343-A) 345/230/13.2KV TRANSFORMER CKT 1	560	560	0.20119	112.5347	GEN514939 1-HORSESHOE LAKE 8G
FDNS	02ALL_G14_038	0	25SP	G14_038	FROM->TO	POTTER COUNTY INTERCHANGE (WAUK 90343-A) 345/230/13.2KV TRANSFORMER CKT 1	560	560	0.20119	112.5307	GEN532742 5-EMPORIA ENERGY CENTER UNIT 5
FDNS	02ALL_G14_038	0	25SP	G14_038	FROM->TO	POTTER COUNTY INTERCHANGE (WAUK 90343-A) 345/230/13.2KV TRANSFORMER CKT 1	560	560	0.20119	112.5299	GEN645024 4-NORTH OMAHA 4
FDNS	02ALL_G14_038	0	25SP	G14_038	FROM->TO	POTTER COUNTY INTERCHANGE (WAUK 90343-A) 345/230/13.2KV TRANSFORMER CKT 1	560	560	0.20119	112.5266	GEN300017 1-1G2GPDEL 18.000
FDNS	02ALL_G14_038	0	25SP	G14_038	FROM->TO	POTTER COUNTY INTERCHANGE (WAUK 90343-A) 345/230/13.2KV TRANSFORMER CKT 1	560	560	0.20003	112.526	MCCLELLAN SUB - MCLEAN RURAL SUB 115KV CKT 1
FDNS	02ALL_G14_038	0	25SP	G14_038	FROM->TO	POTTER COUNTY INTERCHANGE (WAUK 90343-A) 345/230/13.2KV TRANSFORMER CKT 1	560	560	0.20003	112.5257	KIRBY SWITCHING STATION - MCCLELLAN SUB 115KV CKT 1
FDNS	02ALL_G14_038	0	25SP	G14_038	FROM->TO	POTTER COUNTY INTERCHANGE (WAUK 90343-A) 345/230/13.2KV TRANSFORMER CKT 1	560	560	0.20119	112.5208	GEN539653 1-CIMARRON RIVER PLANT GENERATOR
FDNS	02ALL_G14_038	0	25SP	G14_038	FROM->TO	POTTER COUNTY INTERCHANGE (WAUK 90343-A) 345/230/13.2KV TRANSFORMER CKT 1	560	560	0.20087	112.5127	DEAF SMITH REC-#6 - FRIONA SUB 115KV CKT 1
FDNS	02ALL_G14_038	0	25SP	G14_038	FROM->TO	POTTER COUNTY INTERCHANGE (WAUK 90343-A) 345/230/13.2KV TRANSFORMER CKT 1	560	560	0.20119	112.5005	GEN511941 1-OEC STEAM # 2
FDNS	02ALL_G14_038	0	25SP	G14_038	FROM->TO	POTTER COUNTY INTERCHANGE (WAUK 90343-A) 345/230/13.2KV TRANSFORMER CKT 1	560	560	0.20119	112.4986	GEN549890 1-SOUTHWEST 1
FDNS	02ALL_G14_038	0	25SP	G14_038	FROM->TO	POTTER COUNTY INTERCHANGE (WAUK 90343-A) 345/230/13.2KV TRANSFORMER CKT 1	560	560	0.20119	112.4982	GEN300016 1-1G1GPDEL 18.000
FDNS	02ALL_G14_038	0	25SP	G14_038	FROM->TO	POTTER COUNTY INTERCHANGE (WAUK 90343-A) 345/230/13.2KV TRANSFORMER CKT 1	560	560	0.20119	112.4977	GEN600000 1-SHERBURNECNTY G1
FDNS	02ALL_G14_038	0	25SP	G14_038	FROM->TO	POTTER COUNTY INTERCHANGE (WAUK 90343-A) 345/230/13.2KV TRANSFORMER CKT 1	560	560	0.20119	112.4931	GEN547649 1-ASBURY UNIT #1
FDNS	02ALL_G14_038	0	25SP	G14_038	FROM->TO	POTTER COUNTY INTERCHANGE (WAUK 90343-A) 345/230/13.2KV TRANSFORMER CKT 1	560	560	0.20119	112.4913	GEN511938 1-OEC STEAM # 1
FDNS	02ALL_G14_038	0	25SP	G14_038	FROM->TO	POTTER COUNTY INTERCHANGE (WAUK 90343-A) 345/230/13.2KV TRANSFORMER CKT 1	560	560	0.20093	112.4887	G13_027T 230.00 - YOAKUM COUNTY INTERCHANGE 230KV CKT 1
FDNS	02ALL_G14_038	0	25SP	G14_038	FROM->TO	POTTER COUNTY INTERCHANGE (WAUK 90343-A) 345/230/13.2KV TRANSFORMER CKT 1	560	560	0.19964	112.487	CONWAY SUB - NICHOLS STATION 115KV CKT 1
FDNS	02ALL_G14_038	0	25SP	G14_038	FROM->TO	POTTER COUNTY INTERCHANGE (WAUK 90343-A) 345/230/13.2KV TRANSFORMER CKT 1	560	560	0.20119	112.4861	GEN615001 1-COAL CREEK
FDNS	02ALL_G14_038	0	25SP	G14_038	FROM->TO	POTTER COUNTY INTERCHANGE (WAUK 90343-A) 345/230/13.2KV TRANSFORMER CKT 1	560	560	0.20119	112.4843	GEN513602 1-GRECSTG_1 17.500
FDNS	02ALL_G14_038	0	25SP	G14_038	FROM->TO	POTTER COUNTY INTERCHANGE (WAUK 90343-A) 345/230/13.2KV TRANSFORMER CKT 1	560	560	0.20087	112.4789	DEAF SMITH REC-#6 - HEREFORD INTERCHANGE 115KV CKT 1
FDNS	02ALL_G14_038	0	25SP	G14_038	FROM->TO	POTTER COUNTY INTERCHANGE (WAUK 90343-A) 345/230/13.2KV TRANSFORMER CKT 1	560	560	0.20119	112.477	GEN547658 1-STATE LINE COMBINED CYCLE
FDNS	02ALL_G14_038	0	25SP	G14_038	FROM->TO	POTTER COUNTY INTERCHANGE (WAUK 90343-A) 345/230/13.2KV TRANSFORMER CKT 1	560	560	0.20119	112.4762	GEN615002 2-COAL CREEK
FDNS	02ALL_G14_038	0	25SP	G14_038	FROM->TO	POTTER COUNTY INTERCHANGE (WAUK 90343-A) 345/230/13.2KV TRANSFORMER CKT 1	560	560	0.20087	112.4746	P12:115:SPS:T58.1.HERFRD.CARGIL
FDNS	02ALL_G14_038	0	25SP	G14_038	FROM->TO	POTTER COUNTY INTERCHANGE (WAUK 90343-A) 345/230/13.2KV TRANSFORMER CKT 1	560	560	0.20119	112.4727	GEN640005 1-CANADAY
FDNS	02ALL_G14_038	0	25SP	G14_038	FROM->TO	POTTER COUNTY INTERCHANGE (WAUK 90343-A) 345/230/13.2KV TRANSFORMER CKT 1	560	560	0.20119	112.4674	GEN515040 1-SEMINOLE 1G
FDNS	02ALL_G14_038	0	25SP	G14_038	FROM->TO	POTTER COUNTY INTERCHANGE (WAUK 90343-A) 345/230/13.2KV TRANSFORMER CKT 1	560	560	0.20119	112.4669	GEN532725 1-EVANS ENERGY CENTER GAS TURBINE 3
FDNS	02ALL_G14_038	0	25SP	G14_038	FROM->TO	POTTER COUNTY INTERCHANGE (WAUK 90343-A) 345/230/13.2KV TRANSFORMER CKT 1	560	560	0.201	112.463	CANYON E_TP3115.00 - CANYON WEST SUB 115KV CKT 1
FDNS	02ALL_G14_038	0	25SP	G14_038	FROM->TO	POTTER COUNTY INTERCHANGE (WAUK 90343-A) 345/230/13.2KV TRANSFORMER CKT 1	560	560	0.1982	112.4555	DEAF SMITH COUNTY INTERCHANGE - PLANT X STATION 230KV CKT 1
FDNS	02ALL_G14_038	0	25SP	G14_038	FROM->TO	POTTER COUNTY INTERCHANGE (WAUK 90343-A) 345/230/13.2KV TRANSFORMER CKT 1	560	560	0.1982	112.4555	DEAF SMITH COUNTY INTERCHANGE - PLANT X STATION 230KV CKT 1
FDNS	02ALL_G14_038	0	25SP	G14_038	FROM->TO	POTTER COUNTY INTERCHANGE (WAUK 90343-A) 345/230/13.2KV TRANSFORMER CKT 1	560	560	0.20106	112.4549	CROSSROADS 7345.00 - TOLK STATION 345KV CKT 1
FDNS	02ALL_G14_038	0	25SP	G14_038	FROM->TO	POTTER COUNTY INTERCHANGE (WAUK 90343-A) 345/230/13.2KV TRANSFORMER CKT 1	560	560	0.20106	112.4548	TOLK STATION (ABBXNL844501) 345/230/13.2KV TRANSFORMER CKT 1
FDNS	02ALL_G14_038	0	25SP	G14_038	FROM->TO	POTTER COUNTY INTERCHANGE (WAUK 90343-A) 345/230/13.2KV TRANSFORMER CKT 1	560	560	0.20106	112.4548	TOLK STATION (ABBXNL844501) 345/230/13.2KV TRANSFORMER CKT 1
FDNS	02ALL_G14_038	0	25SP	G14_038	FROM->TO	POTTER COUNTY INTERCHANGE (WAUK 90343-A) 345/230/13.2KV TRANSFORMER CKT 1	560	560	0.20119	112.4486	GEN532721 1-EVANS ENERGY CENTER UNIT 1
FDNS	02ALL_G14_038	0	25SP	G14_038	FROM->TO	POTTER COUNTY INTERCHANGE (WAUK 90343-A) 345/230/13.2KV TRANSFORMER CKT 1	560	560	0.20119	112.4412	GEN659354 1-DEERCREK STG18.000
FDNS	02ALL_G14_038	0	25SP	G14_038	FROM->TO	POTTER COUNTY INTERCHANGE (WAUK 90343-A) 345/230/13.2KV TRANSFORMER CKT 1	560	560	0.20119	112.4409	GEN659353 1-DEERCREK CTG18.000
FDNS	02ALL_G14_038	0	25SP	G14_038	FROM->TO	POTTER COUNTY INTERCHANGE (WAUK 90343-A) 345/230/13.2KV TRANSFORMER CKT 1	560	560	0.20119	112.4396	GEN532743 6-EMPORIA ENERGY CENTER UNIT 6
FDNS	02ALL_G14_038	0	25SP	G14_038	FROM->TO	POTTER COUNTY INTERCHANGE (WAUK 90343-A) 345/230/13.2KV TRANSFORMER CKT 1	560	560	0.20119	112.4396	GEN532744 7-EMPORIA ENERGY CENTER UNIT 7
FDNS	02ALL_G14_038	0	25SP	G14_038	FROM->TO	POTTER COUNTY INTERCHANGE (WAUK 90343-A) 345/230/13.2KV TRANSFORMER CKT 1	560	560	0.20095	112.4305	AMARILLO SOUTH INTERCHANGE - NICHOLS STATION 230KV CKT 1
FDNS	02ALL_G14_038	0	25SP	G14_038	FROM->TO	POTTER COUNTY INTERCHANGE (WAUK 90343-A) 345/230/13.2KV TRANSFORMER CKT 1	560	560	0.20095	112.4305	AMARILLO SOUTH INTERCHANGE - NICHOLS STATION 230KV CKT 1
FDNS	02ALL_G14_038	0	25SP	G14_038	FROM->TO	POTTER COUNTY INTERCHANGE (WAUK 90343-A) 345/230/13.2KV TRANSFORMER CKT 1	560	560	0.20056	112.4284	KRESS INTERCHANGE - TULIA TAP 115KV CKT 1
FDNS	02ALL_G14_038	0	25SP	G14_038	FROM->TO	POTTER COUNTY INTERCHANGE (WAUK 90343-A) 345/230/13.2KV TRANSFORMER CKT 1	560	560	0.19884	112.4125	CHERRY1 - HARRINGTON STATION 230KV CKT 1
FDNS	02ALL_G14_038	0	25SP	G14_038	FROM->TO	POTTER COUNTY INTERCHANGE (WAUK 90343-A) 345/230/13.2KV TRANSFORMER CKT 1	560	560	0.19884	112.4125	CHERRY1 - HARRINGTON STATION 230KV CKT 1
FDNS	02ALL_G14_038	0	25SP	G14_038	FROM->TO	POTTER COUNTY INTERCHANGE (WAUK 90343-A) 345/230/13.2KV TRANSFORMER CKT 1	560	560	0.20119	112.4005	GEN509409 1-WILKES #3
FDNS	02ALL_G14_038	0	25SP	G14_038	FROM->TO	POTTER COUNTY INTERCHANGE (WAUK 90343-A) 345/230/13.2KV TRANSFORMER CKT 1	560	560	0.20119	112.399	GEN509398 1-KNOXLEE #5
FDNS	02ALL_G14_038	0	25SP	G14_038	FROM->TO	POTTER COUNTY INTERCHANGE (WAUK 90343-A) 345/230/13.2KV TRANSFORMER CKT 1	560	560	0.20119	112.386	GEN300001 1-THOMAS HILL UNIT 1
FDNS	02ALL_G14_038	0	25SP	G14_038	FROM->TO	POTTER COUNTY INTERCHANGE (WAUK 90343-A) 345/230/13.2KV TRANSFORMER CKT 1	560	560	0.20119	112.3843	SHERBURNE CO 345/24.0KV TRANSFORMER CKT 1
FDNS	02ALL_G14_038	0	25SP	G14_038	FROM->TO	POTTER COUNTY INTERCHANGE (WAUK 90343-A) 345/230/13.2KV TRANSFORMER CKT 1	560	560	0.20119	112.3797	FINNEY SWITCHING STATION - PSCO LAMAR DC TIE 345KV CKT 1
FDNS	02ALL_G14_038	0	25SP	G14_038	FROM->TO	POTTER COUNTY INTERCHANGE (WAUK 90343-A) 345/230/13.2KV TRANSFORMER CKT 1	560	560	0.20119	112.3797	FINNEY SWITCHING STATION - PSCO LAMAR DC TIE 345KV CKT 1
FDNS	02ALL_G14_038	0	25SP	G14_038	FROM->TO	POTTER COUNTY INTERCHANGE (WAUK 90343-A) 345/230/13.2KV TRANSFORMER CKT 1	560	560	0.20119	112.3794	GEN645041 1-CASS COUNTY 1
FDNS	02ALL_G14_038	0	25SP	G14_038	FROM->TO	POTTER COUNTY INTERCHANGE (WAUK 90343-A) 345/230/13.2KV TRANSFORMER CKT 1	560	560	0.20119	112.3766	GEN645042 2-CASS COUNTY 2
FDNS	02ALL_G14_038	0	25SP	G14_038	FROM->TO	POTTER COUNTY INTERCHANGE (WAUK 90343-A) 345/230/13.2KV TRANSFORMER CKT 1	560	560	0.20104	112.3766	P12:345:SPS:J02.1.TOLK.EDDY
FDNS	02ALL_G14_038	0	25SP	G14_038	FROM->TO	POTTER COUNTY INTERCHANGE (WAUK 90343-A) 345/230/13.2KV TRANSFORMER CKT 1	560	560	0.20119	112.3756	GEN541163 1-ARIES COMBUSTION TURBINE #1
FDNS	02ALL_G14_038	0	25SP	G14_038	FROM->TO	POTTER COUNTY INTERCHANGE (WAUK 90343-A) 345/230/13.2KV TRANSFORMER CKT 1	560	560	0.20119	112.3741	GEN635214 4-NEAL UNIT 4
FDNS	02ALL_G14_038	0	25SP	G14_038	FROM->TO	POTTER COUNTY INTERCHANGE (WAUK 90343-A) 345/230/13.2KV TRANSFORMER CKT 1	560	560	0.20056	112.3478	P12:115:SPS:T67.1.HAPPY.KRESS
FDNS	02ALL_G14_038	0	25SP	G14_038	FROM->TO	POTTER COUNTY INTERCHANGE (WAUK 90343-A) 345/230/13.2KV TRANSFORMER CKT 1	560	560	0.20056	112.3396	HAPPY INTERCHANGE - TULIA TAP 115KV CKT 1
FDNS	02ALL_G14_038	0	25SP	G14_038	FROM->TO	POTTER COUNTY INTERCHANGE (WAUK 90343-A) 345/230/13.2KV TRANSFORMER CKT 1	560	560	0.20119	112.3348	GEN541162 1-ARIES STEAM TURBINE
FDNS	02ALL_G14_038	0	25SP	G14_038	FROM->TO	POTTER COUNTY INTERCHANGE (WAUK 90343-A) 345/230/13.2KV TRANSFORMER CKT 1	560	560	0.20119	112.3298	GEN600002 3-SHERBURNE CNTY G3
FDNS	02ALL_G14_038	0	25SP	G14_038	FROM->TO	POTTER COUNTY INTERCHANGE (WAUK 90343-A) 345/230/13.2KV TRANSFORMER CKT 1	560	560	0.20119	112.3215	GEN515041 1-SEMINOLE 2G
FDNS	02ALL_G14_038	0	25SP	G14_038	FROM->TO	POTTER COUNTY INTERCHANGE (WAUK 90343-A) 345/230/13.2KV TRANSFORMER CKT 1	560	560	0.20119	112.2974	GEN635023 3-WALTER SCOTT UNIT 3
FDNS	02ALL_G14_038	0	25SP	G14_038	FROM->TO	POTTER COUNTY INTERCHANGE (WAUK 90343-A) 345/230/13.2KV TRANSFORMER CKT 1	560	560	0.20119	112.2913	GEN515042 1-SEMINOLE 3G
FDNS	02ALL_G14_038	0	25SP	G14_038	FROM->TO	POTTER COUNTY INTERCHANGE (WAUK 90343-A) 345/230/13.2KV TRANSFORMER CKT 1	560	560	0.20119	112.2728	GEN523170 1-GOODWELL_1 10.6900
FDNS	02ALL_G14_038	0	25SP	G14_038	FROM->TO	POTTER COUNTY INTERCHANGE (WAUK 90343-A) 345/230/13.2KV TRANSFORMER CKT 1	560	560	0.20119	112.2611	GEN515592 1-PALDRW21 0.6900
FDNS	02ALL_G14_038	0	25SP	G14_038	FROM->TO	POTTER COUNTY INTERCHANGE (WAUK 90343-A) 345/230/13.2KV TRANSFORMER CKT 1	560	560	0.20119	112.2445	GEN300010 1-ST FRANCIS UNIT 1
FDNS	02ALL_G14_038	0	25SP	G14_038	FROM->TO	POTTER COUNTY INTERCHANGE (WAUK 90343-A) 345/230/13.2KV TRANSFORMER CKT 1	560	560	0.20119	112.2432	GEN523171 1-GOODWELL_2 10.6900
FDNS	02ALL_G14_038	0	25SP	G14_038	FROM->TO	POTTER COUNTY INTERCHANGE (WAUK 90343-A) 345/230/13.2KV TRANSFORMER CKT 1	560	560	0.20106	112.2383	EDDY COUNTY INTERCHANGE (ABB AEM30711) 345/230/13.2KV TRANSFORMER CKT 1
FDNS	02ALL_G14_038	0	25SP	G14_038	FROM->TO	POTTER COUNTY INTERCHANGE (WAUK 90343-A) 345/230/13.2KV TRANSFORMER CKT 1	560	560	0.20106	112.2383	EDDY COUNTY INTERCHANGE (ABB AEM30711) 345/230/13.2KV TRANSFORMER CKT 1
FDNS	02ALL_G14_038	0	25SP	G14_038	FROM->TO	POTTER COUNTY INTERCHANGE (WAUK 90343-A) 345/230/13.2KV TRANSFORMER CKT 1	560	560	0.20106	112.2383	P12:345:SPS:J14.1.EDDY.XRDS
FDNS	02ALL_G14_038	0	25SP	G14_038	FROM->TO	POTTER COUNTY INTERCHANGE (WAUK 90343-A) 345/230/13.2KV TRANSFORMER CKT 1	560	560	0.20106	112.2381	CROSSROADS 7345.00 - EDDY COUNTY INTERCHANGE 345KV CKT 1
FDNS	02ALL_G14_038	0	25SP	G14_038	FROM->TO	POTTER COUNTY INTERCHANGE (WAUK 90343-A) 345/230/13.2KV TRANSFORMER CKT 1	560	560	0.20119	112.235	GEN300015 1-1SGPDEL 18.000
FDNS	02ALL_G14_038	0	25SP	G14_038	FROM->TO	POTTER COUNTY INTERCHANGE (WAUK 90343-A) 345/230/13.2KV TRANSFORMER CKT 1	560	560	0.20119	112.2215	GEN645011 1-NEBRASKA CITY 1
FDNS	02ALL_G14_038	0	25SP	G14_038	FROM->TO	POTTER COUNTY INTERCHANGE (WAUK 90343-A) 345/230/13.2KV TRANSFORMER CKT 1	560	560	0.20119	112.2031	GEN505432 1-SIKESTON
FDNS	02ALL_G14_038	0	25SP	G14_038	FROM->TO	POTTER COUNTY INTERCHANGE (WAUK 90343-A) 345/230/13.2KV TRANSFORMER CKT 1	560	560	0.20119	112.2018	GEN300011 1-ST FRANCIS UNIT 2

SOLUTION	GROUP	SCENARIO	SEASON	SOURCE	DIRECTION	MONITORED ELEMENT	RATEA (MVA)	RATEB(MVA)	TDF	TC%LOADING (% MVA)	CONTINGENCY
FDNS	02ALL_G14_038	0	25SP	G14_038	FROM->TO	POTTER COUNTY INTERCHANGE (WAUK 90343-A) 345/230/13.2KV TRANSFORMER CKT 1	560	560	0.20119	112.197	GEN531459 2-S2 GENERATOR
FDNS	02ALL_G14_038	0	25SP	G14_038	FROM->TO	POTTER COUNTY INTERCHANGE (WAUK 90343-A) 345/230/13.2KV TRANSFORMER CKT 1	560	560	0.20119	112.1961	GEN549893 2-SOUTHWEST 2
FDNS	02ALL_G14_038	0	25SP	G14_038	FROM->TO	POTTER COUNTY INTERCHANGE (WAUK 90343-A) 345/230/13.2KV TRANSFORMER CKT 1	560	560	0.19775	112.1954	Harrington Station East Bus - POTTER COUNTY INTERCHANGE 230KV CKT 1
FDNS	02ALL_G14_038	0	25SP	G14_038	FROM->TO	POTTER COUNTY INTERCHANGE (WAUK 90343-A) 345/230/13.2KV TRANSFORMER CKT 1	560	560	0.19775	112.1954	Harrington Station East Bus - POTTER COUNTY INTERCHANGE 230KV CKT 1
FDNS	02ALL_G14_038	0	25SP	G14_038	FROM->TO	POTTER COUNTY INTERCHANGE (WAUK 90343-A) 345/230/13.2KV TRANSFORMER CKT 1	560	560	0.20119	112.191	GEN645001 1-FORT CALHOUN 1
FDNS	02ALL_G14_038	0	25SP	G14_038	FROM->TO	POTTER COUNTY INTERCHANGE (WAUK 90343-A) 345/230/13.2KV TRANSFORMER CKT 1	560	560	0.20119	112.1672	GEN635024 4-WALTER SCOTT UNIT 4
FDNS	02ALL_G14_038	0	25SP	G14_038	FROM->TO	POTTER COUNTY INTERCHANGE (WAUK 90343-A) 345/230/13.2KV TRANSFORMER CKT 1	560	560	0.20119	112.1428	GEN542955 1-LACYGNE UNIT #1
FDNS	02ALL_G14_038	0	25SP	G14_038	FROM->TO	POTTER COUNTY INTERCHANGE (WAUK 90343-A) 345/230/13.2KV TRANSFORMER CKT 1	560	560	0.20119	112.1416	GEN645025 5-NORTH OMAHA 5
FDNS	02ALL_G14_038	0	25SP	G14_038	FROM->TO	POTTER COUNTY INTERCHANGE (WAUK 90343-A) 345/230/13.2KV TRANSFORMER CKT 1	560	560	0.201	112.1336	CANYON E_TP3115.00 - RANDALL COUNTY INTERCHANGE 115KV CKT 1
FDNS	02ALL_G14_038	0	25SP	G14_038	FROM->TO	POTTER COUNTY INTERCHANGE (WAUK 90343-A) 345/230/13.2KV TRANSFORMER CKT 1	560	560	0.20119	112.1125	GEN659110 1-LELAND OLDS UNIT1
FDNS	02ALL_G14_038	0	25SP	G14_038	FROM->TO	POTTER COUNTY INTERCHANGE (WAUK 90343-A) 345/230/13.2KV TRANSFORMER CKT 1	560	560	0.20119	112.1014	GEN562042 1-G11_014_3 0.6900
FDNS	02ALL_G14_038	0	25SP	G14_038	FROM->TO	POTTER COUNTY INTERCHANGE (WAUK 90343-A) 345/230/13.2KV TRANSFORMER CKT 1	560	560	0.19746	112.093	CHERRY1 - POTTER COUNTY INTERCHANGE 230KV CKT 1
FDNS	02ALL_G14_038	0	25SP	G14_038	FROM->TO	POTTER COUNTY INTERCHANGE (WAUK 90343-A) 345/230/13.2KV TRANSFORMER CKT 1	560	560	0.19746	112.093	CHERRY1 - POTTER COUNTY INTERCHANGE 230KV CKT 1
FDNS	02ALL_G14_038	0	25SP	G14_038	FROM->TO	POTTER COUNTY INTERCHANGE (WAUK 90343-A) 345/230/13.2KV TRANSFORMER CKT 1	560	560	0.20119	112.0926	GEN546702 1-NM GEN N1
FDNS	02ALL_G14_038	0	25SP	G14_038	FROM->TO	POTTER COUNTY INTERCHANGE (WAUK 90343-A) 345/230/13.2KV TRANSFORMER CKT 1	560	560	0.20119	112.0885	GEN509406 1-WELSH #3
FDNS	02ALL_G14_038	0	25SP	G14_038	FROM->TO	POTTER COUNTY INTERCHANGE (WAUK 90343-A) 345/230/13.2KV TRANSFORMER CKT 1	560	560	0.20119	112.0883	GEN509404 1-WELSH #1
FDNS	02ALL_G14_038	0	25SP	G14_038	FROM->TO	POTTER COUNTY INTERCHANGE (WAUK 90343-A) 345/230/13.2KV TRANSFORMER CKT 1	560	560	0.201	112.0834	P12:115:SPS:V05.1.OSAGE.WCANYON
FDNS	02ALL_G14_038	0	25SP	G14_038	FROM->TO	POTTER COUNTY INTERCHANGE (WAUK 90343-A) 345/230/13.2KV TRANSFORMER CKT 1	560	560	0.20179	112.0653	CHAN/TASCOS6230.00 - POTTER COUNTY INTERCHANGE 230KV CKT 1
FDNS	02ALL_G14_038	0	25SP	G14_038	FROM->TO	POTTER COUNTY INTERCHANGE (WAUK 90343-A) 345/230/13.2KV TRANSFORMER CKT 1	560	560	0.20119	112.0421	GEN542957 1-IATAN UNIT #1
FDNS	02ALL_G14_038	0	25SP	G14_038	FROM->TO	POTTER COUNTY INTERCHANGE (WAUK 90343-A) 345/230/13.2KV TRANSFORMER CKT 1	560	560	0.20119	112.0269	GEN513601 1-GRECCTG_1 20.000
FDNS	02ALL_G14_038	0	25SP	G14_038	FROM->TO	POTTER COUNTY INTERCHANGE (WAUK 90343-A) 345/230/13.2KV TRANSFORMER CKT 1	560	560	0.20119	112.0205	GEN645012 2-NEBRASKA CITY 2
FDNS	02ALL_G14_038	0	25SP	G14_038	FROM->TO	POTTER COUNTY INTERCHANGE (WAUK 90343-A) 345/230/13.2KV TRANSFORMER CKT 1	560	560	0.20119	112.0017	GEN300002 1-THOMAS HILL UNIT 2
FDNS	02ALL_G14_038	0	25SP	G14_038	FROM->TO	POTTER COUNTY INTERCHANGE (WAUK 90343-A) 345/230/13.2KV TRANSFORMER CKT 1	560	560	0.20119	112.0015	GEN300003 1-THOMAS HILL UNIT 3
FDNS	02ALL_G14_038	0	25SP	G14_038	FROM->TO	POTTER COUNTY INTERCHANGE (WAUK 90343-A) 345/230/13.2KV TRANSFORMER CKT 1	560	560	0.20119	111.9963	GEN539670 4-JUDSON LARGE GENERATOR
FDNS	02ALL_G14_038	0	25SP	G14_038	FROM->TO	POTTER COUNTY INTERCHANGE (WAUK 90343-A) 345/230/13.2KV TRANSFORMER CKT 1	560	560	0.20119	111.9613	GEN509416 1-TURK GENERATION
FDNS	02ALL_G14_038	0	25SP	G14_038	FROM->TO	POTTER COUNTY INTERCHANGE (WAUK 90343-A) 345/230/13.2KV TRANSFORMER CKT 1	560	560	0.20055	111.958	PLANT X STATION - SUNDOWN INTERCHANGE 230KV CKT 1
FDNS	02ALL_G14_038	0	25SP	G14_038	FROM->TO	POTTER COUNTY INTERCHANGE (WAUK 90343-A) 345/230/13.2KV TRANSFORMER CKT 1	560	560	0.20055	111.958	PLANT X STATION - SUNDOWN INTERCHANGE 230KV CKT 1
FDNS	02ALL_G14_038	0	25SP	G14_038	FROM->TO	POTTER COUNTY INTERCHANGE (WAUK 90343-A) 345/230/13.2KV TRANSFORMER CKT 1	560	560	0.20082	111.9562	Harrington Station Mid Bus - RANDALL COUNTY INTERCHANGE 230KV CKT 1
FDNS	02ALL_G14_038	0	25SP	G14_038	FROM->TO	POTTER COUNTY INTERCHANGE (WAUK 90343-A) 345/230/13.2KV TRANSFORMER CKT 1	560	560	0.20082	111.9562	Harrington Station Mid Bus - RANDALL COUNTY INTERCHANGE 230KV CKT 1
FDNS	02ALL_G14_038	0	25SP	G14_038	FROM->TO	POTTER COUNTY INTERCHANGE (WAUK 90343-A) 345/230/13.2KV TRANSFORMER CKT 1	560	560	0.20119	111.9521	GEN511842 1-RIVERSIDE STATION #1
FDNS	02ALL_G14_038	0	25SP	G14_038	FROM->TO	POTTER COUNTY INTERCHANGE (WAUK 90343-A) 345/230/13.2KV TRANSFORMER CKT 1	560	560	0.20119	111.9487	GEN641089 2-ENERGY CENTER 2
FDNS	02ALL_G14_038	0	25SP	G14_038	FROM->TO	POTTER COUNTY INTERCHANGE (WAUK 90343-A) 345/230/13.2KV TRANSFORMER CKT 1	560	560	0.20119	111.9469	GEN511843 1-RIVERSIDE STATION #2
FDNS	02ALL_G14_038	0	25SP	G14_038	FROM->TO	POTTER COUNTY INTERCHANGE (WAUK 90343-A) 345/230/13.2KV TRANSFORMER CKT 1	560	560	0.20119	111.8905	GEN515223 1-MUSKOGEE 4G
FDNS	02ALL_G14_038	0	25SP	G14_038	FROM->TO	POTTER COUNTY INTERCHANGE (WAUK 90343-A) 345/230/13.2KV TRANSFORMER CKT 1	560	560	0.20056	111.8881	HAPPY INTERCHANGE - PALO DURO SUB 115KV CKT 1
FDNS	02ALL_G14_038	0	25SP	G14_038	FROM->TO	POTTER COUNTY INTERCHANGE (WAUK 90343-A) 345/230/13.2KV TRANSFORMER CKT 1	560	560	0.20119	111.8844	GEN511839 1-NORTHEASTERN STATION #2
FDNS	02ALL_G14_038	0	25SP	G14_038	FROM->TO	POTTER COUNTY INTERCHANGE (WAUK 90343-A) 345/230/13.2KV TRANSFORMER CKT 1	560	560	0.20119	111.8786	GEN515226 1-MUSKOGEE 6G
FDNS	02ALL_G14_038	0	25SP	G14_038	FROM->TO	POTTER COUNTY INTERCHANGE (WAUK 90343-A) 345/230/13.2KV TRANSFORMER CKT 1	560	560	0.20119	111.8627	GEN515225 1-MUSKOGEE 5G
FDNS	02ALL_G14_038	0	25SP	G14_038	FROM->TO	POTTER COUNTY INTERCHANGE (WAUK 90343-A) 345/230/13.2KV TRANSFORMER CKT 1	560	560	0.19944	111.84	CHISHOLM6 230.00 - ELK CITY 230KV 230KV CKT 1
FDNS	02ALL_G14_038	0	25SP	G14_038	FROM->TO	POTTER COUNTY INTERCHANGE (WAUK 90343-A) 345/230/13.2KV TRANSFORMER CKT 1	560	560	0.19944	111.8394	ELK CITY 230KV (ELKCTY-6) 230/138/13.8KV TRANSFORMER CKT 1
FDNS	02ALL_G14_038	0	25SP	G14_038	FROM->TO	POTTER COUNTY INTERCHANGE (WAUK 90343-A) 345/230/13.2KV TRANSFORMER CKT 1	560	560	0.19944	111.8394	ELK CITY 230KV (ELKCTY-6) 230/138/13.8KV TRANSFORMER CKT 1
FDNS	02ALL_G14_038	0	25SP	G14_038	FROM->TO	POTTER COUNTY INTERCHANGE (WAUK 90343-A) 345/230/13.2KV TRANSFORMER CKT 1	560	560	0.20056	111.8331	P12:115:SPS:T66.1.RNDALL.HAPPY
FDNS	02ALL_G14_038	0	25SP	G14_038	FROM->TO	POTTER COUNTY INTERCHANGE (WAUK 90343-A) 345/230/13.2KV TRANSFORMER CKT 1	560	560	0.20119	111.8174	GEN532653 1-JEFFREY ENERGY CENTER UNIT 3
FDNS	02ALL_G14_038	0	25SP	G14_038	FROM->TO	POTTER COUNTY INTERCHANGE (WAUK 90343-A) 345/230/13.2KV TRANSFORMER CKT 1	560	560	0.20119	111.8172	GEN532652 1-JEFFREY ENERGY CENTER UNIT 2
FDNS	02ALL_G14_038	0	25SP	G14_038	FROM->TO	POTTER COUNTY INTERCHANGE (WAUK 90343-A) 345/230/13.2KV TRANSFORMER CKT 1	560	560	0.20119	111.8114	GEN532651 1-JEFFREY ENERGY CENTER UNIT 1
FDNS	02ALL_G14_038	0	25SP	G14_038	FROM->TO	POTTER COUNTY INTERCHANGE (WAUK 90343-A) 345/230/13.2KV TRANSFORMER CKT 1	560	560	0.20056	111.803	PALO DURO SUB - RANDALL COUNTY INTERCHANGE 115KV CKT 1
FDNS	02ALL_G14_038	0	25SP	G14_038	FROM->TO	POTTER COUNTY INTERCHANGE (WAUK 90343-A) 345/230/13.2KV TRANSFORMER CKT 1	560	560	0.20119	111.7865	GEN511840 1-NORTHEASTERN STATION #3
FDNS	02ALL_G14_038	0	25SP	G14_038	FROM->TO	POTTER COUNTY INTERCHANGE (WAUK 90343-A) 345/230/13.2KV TRANSFORMER CKT 1	560	560	0.20119	111.6941	GEN640009 1-COOPER NUCLEAR STATION
FDNS	02ALL_G14_038	0	25SP	G14_038	FROM->TO	POTTER COUNTY INTERCHANGE (WAUK 90343-A) 345/230/13.2KV TRANSFORMER CKT 1	560	560	0.20119	111.6931	GEN509403 1-PIRKEY GENERATION
FDNS	02ALL_G14_038	0	25SP	G14_038	FROM->TO	POTTER COUNTY INTERCHANGE (WAUK 90343-A) 345/230/13.2KV TRANSFORMER CKT 1	560	560	0.20026	111.6774	NEWHART 230 - PLANT X STATION 230KV CKT 1
FDNS	02ALL_G14_038	0	25SP	G14_038	FROM->TO	POTTER COUNTY INTERCHANGE (WAUK 90343-A) 345/230/13.2KV TRANSFORMER CKT 1	560	560	0.20119	111.5933	GEN531447 1-HOLCOMB GENERATOR
FDNS	02ALL_G14_038	0	25SP	G14_038	FROM->TO	POTTER COUNTY INTERCHANGE (WAUK 90343-A) 345/230/13.2KV TRANSFORMER CKT 1	560	560	0.20119	111.5669	GEN541151 3-SIBLEY GENERATING UNIT #3
FDNS	02ALL_G14_038	0	25SP	G14_038	FROM->TO	POTTER COUNTY INTERCHANGE (WAUK 90343-A) 345/230/13.2KV TRANSFORMER CKT 1	560	560	0.20119	111.562	GEN514805 1-SOONER UNIT 1
FDNS	02ALL_G14_038	0	25SP	G14_038	FROM->TO	POTTER COUNTY INTERCHANGE (WAUK 90343-A) 345/230/13.2KV TRANSFORMER CKT 1	560	560	0.20119	111.5517	GEN532663 1-LAWRENCE ENERGY CENTER UNIT 5
FDNS	02ALL_G14_038	0	25SP	G14_038	FROM->TO	POTTER COUNTY INTERCHANGE (WAUK 90343-A) 345/230/13.2KV TRANSFORMER CKT 1	560	560	0.20119	111.5482	GEN523122 1-NBLWND-WTG210.6900
FDNS	02ALL_G14_038	0	25SP	G14_038	FROM->TO	POTTER COUNTY INTERCHANGE (WAUK 90343-A) 345/230/13.2KV TRANSFORMER CKT 1	560	560	0.20119	111.5446	GEN514806 1-SOONER UNIT 2
FDNS	02ALL_G14_038	0	25SP	G14_038	FROM->TO	POTTER COUNTY INTERCHANGE (WAUK 90343-A) 345/230/13.2KV TRANSFORMER CKT 1	560	560	0.20119	111.5401	GEN659118 1-LARAMIE RIVER UNIT1
FDNS	02ALL_G14_038	0	25SP	G14_038	FROM->TO	POTTER COUNTY INTERCHANGE (WAUK 90343-A) 345/230/13.2KV TRANSFORMER CKT 1	560	560	0.20119	111.538	GEN509394 1-FLINT CREEK
FDNS	02ALL_G14_038	0	25SP	G14_038	FROM->TO	POTTER COUNTY INTERCHANGE (WAUK 90343-A) 345/230/13.2KV TRANSFORMER CKT 1	560	560	0.20119	111.533	GEN560256 1-G10-14-1 0.6900
FDNS	02ALL_G14_038	0	25SP	G14_038	FROM->TO	POTTER COUNTY INTERCHANGE (WAUK 90343-A) 345/230/13.2KV TRANSFORMER CKT 1	560	560	0.20119	111.5291	GEN523121 1-NBLWND-WTG110.6900
FDNS	02ALL_G14_038	0	25SP	G14_038	FROM->TO	POTTER COUNTY INTERCHANGE (WAUK 90343-A) 345/230/13.2KV TRANSFORMER CKT 1	560	560	0.20119	111.493	GEN560584 1-G06-44-2 4.1600
FDNS	02ALL_G14_038	0	25SP	G14_038	FROM->TO	POTTER COUNTY INTERCHANGE (WAUK 90343-A) 345/230/13.2KV TRANSFORMER CKT 1	560	560	0.20119	111.4918	GEN523107 1-NOVUS_WND 14.1600
FDNS	02ALL_G14_038	0	25SP	G14_038	FROM->TO	POTTER COUNTY INTERCHANGE (WAUK 90343-A) 345/230/13.2KV TRANSFORMER CKT 1	560	560	0.20119	111.4567	GEN523123 1-NBLWND-WTG310.6900
FDNS	02ALL_G14_038	0	25SP	G14_038	FROM->TO	POTTER COUNTY INTERCHANGE (WAUK 90343-A) 345/230/13.2KV TRANSFORMER CKT 1	560	560	0.19899	111.4398	Harrington Station East Bus - Harrington Station Mid Bus 230KV CKT @1
FDNS	02ALL_G14_038	0	25SP	G14_038	FROM->TO	POTTER COUNTY INTERCHANGE (WAUK 90343-A) 345/230/13.2KV TRANSFORMER CKT 1	560	560	0.20119	111.4291	GEN560257 1-G10-14-2 0.6900
FDNS	02ALL_G14_038	0	25SP	G14_038	FROM->TO	POTTER COUNTY INTERCHANGE (WAUK 90343-A) 345/230/13.2KV TRANSFORMER CKT 1	560	560	0.20119	111.4232	GEN532722 1-EVANS ENERGY CENTER UNIT 2
FDNS	02ALL_G14_038	0	25SP	G14_038	FROM->TO	POTTER COUNTY INTERCHANGE (WAUK 90343-A) 345/230/13.2KV TRANSFORMER CKT 1	560	560	0.20119	111.3572	GEN512688 2-GRDA1 GSU2 22
FDNS	02ALL_G14_038	0	25SP	G14_038	FROM->TO	POTTER COUNTY INTERCHANGE (WAUK 90343-A) 345/230/13.2KV TRANSFORMER CKT 1	560	560	0.20119	111.3442	GEN542962 2-IATAN UNIT #2
FDNS	02ALL_G14_038	0	25SP	G14_038	FROM->TO	POTTER COUNTY INTERCHANGE (WAUK 90343-A) 345/230/13.2KV TRANSFORMER CKT 1	560	560	0.20119	111.1723	GEN640010 1-GERALD GENTLEMAN STATION UNIT 1
FDNS	02ALL_G14_038	0	25SP	G14_038	FROM->TO	POTTER COUNTY INTERCHANGE (WAUK 90343-A) 345/230/13.2KV TRANSFORMER CKT 1	560	560	0.19621	111.0839	SWISHER COUNTY INTERCHANGE - TUCO_2 230.00 230KV CKT 1
FDNS	02ALL_G14_038	0	25SP	G14_038	FROM->TO	POTTER COUNTY INTERCHANGE (WAUK 90343-A) 345/230/13.2KV TRANSFORMER CKT 1	560	560	0.20119	111.0837	GEN560586 1-G06-44-4 4.1600
FDNS	02ALL_G14_038	0	25SP	G14_038	FROM->TO	POTTER COUNTY INTERCHANGE (WAUK 90343-A) 345/230/13.2KV TRANSFORMER CKT 1	560	560	0.20119	111.0541	GEN590010 1-ERCOT EQUIVALENCE
FDNS	02ALL_G14_038	0	25SP	G14_038	FROM->TO	POTTER COUNTY INTERCHANGE (WAUK 90343-A) 345/230/13.2KV TRANSFORMER CKT 1	560	560	0.20119	111.0453	GEN659111 2-LELAND OLDS UNIT2
FDNS	02ALL_G14_038	0	25SP	G14_038	FROM->TO	POTTER COUNTY INTERCHANGE (WAUK 90343-A) 345/230/13.2KV TRANSFORMER CKT 1	560	560	0.20119	110.9916	GEN590011 2-ERCOT EQUIVALENCE

SOLUTION	GROUP	SCENARIO	SEASON	SOURCE	DIRECTION	MONITORED ELEMENT	RATEA (MVA)	RATEB(MVA)	TDF	TC%LOADING (% MVA)	CONTINGENCY
FDNS	02ALL_G14_038	0	25SP	G14_038	FROM->TO	POTTER COUNTY INTERCHANGE (WAUK 90343-A) 345/230/13.2KV TRANSFORMER CKT 1	560	560	0.20119	110.9134	GEN640011 2-GERALD GENTLEMAN STATION UNIT 2
FDNS	02ALL_G14_038	0	25SP	G14_038	FROM->TO	POTTER COUNTY INTERCHANGE (WAUK 90343-A) 345/230/13.2KV TRANSFORMER CKT 1	560	560	0.20119	110.9068	GEN300006 1-NEW MADRID UNIT 1
FDNS	02ALL_G14_038	0	25SP	G14_038	FROM->TO	POTTER COUNTY INTERCHANGE (WAUK 90343-A) 345/230/13.2KV TRANSFORMER CKT 1	560	560	0.20119	110.9041	GEN300007 1-NEW MADRID UNIT 2
FDNS	02ALL_G14_038	0	25SP	G14_038	FROM->TO	POTTER COUNTY INTERCHANGE (WAUK 90343-A) 345/230/13.2KV TRANSFORMER CKT 1	560	560	0.20119	110.8721	GEN560585 1-G06-44-3 4.1600
FDNS	02ALL_G14_038	0	25SP	G14_038	FROM->TO	POTTER COUNTY INTERCHANGE (WAUK 90343-A) 345/230/13.2KV TRANSFORMER CKT 1	560	560	0.20119	110.859	GEN659103 1-ANTELOPE VALLEY UNIT1
FDNS	02ALL_G14_038	0	25SP	G14_038	FROM->TO	POTTER COUNTY INTERCHANGE (WAUK 90343-A) 345/230/13.2KV TRANSFORMER CKT 1	560	560	0.20119	110.859	GEN659107 2-ANTELOPE VALLEY UNIT2
FDNS	02ALL_G14_038	0	25SP	G14_038	FROM->TO	POTTER COUNTY INTERCHANGE (WAUK 90343-A) 345/230/13.2KV TRANSFORMER CKT 1	560	560	0.19815	110.8413	AMARILLO SOUTH INTERCHANGE - SWISHER COUNTY INTERCHANGE 230KV CKT 1
FDNS	02ALL_G14_038	0	25SP	G14_038	FROM->TO	POTTER COUNTY INTERCHANGE (WAUK 90343-A) 345/230/13.2KV TRANSFORMER CKT 1	560	560	0.19815	110.8413	AMARILLO SOUTH INTERCHANGE - SWISHER COUNTY INTERCHANGE 230KV CKT 1
FDNS	02ALL_G14_038	0	25SP	G14_038	FROM->TO	POTTER COUNTY INTERCHANGE (WAUK 90343-A) 345/230/13.2KV TRANSFORMER CKT 1	560	560	0.20119	110.8005	GEN515591 1-PALDRW11 0.6900
FDNS	02ALL_G14_038	0	25SP	G14_038	FROM->TO	POTTER COUNTY INTERCHANGE (WAUK 90343-A) 345/230/13.2KV TRANSFORMER CKT 1	560	560	0.20119	110.5877	GEN542951 5-HAWTHORN UNIT #5
FDNS	02ALL_G14_038	0	25SP	G14_038	FROM->TO	POTTER COUNTY INTERCHANGE (WAUK 90343-A) 345/230/13.2KV TRANSFORMER CKT 1	560	560	0.20119	110.472	GEN560286 1-G10-01-1WTG 0.6900
FDNS	02ALL_G14_038	0	25SP	G14_038	FROM->TO	POTTER COUNTY INTERCHANGE (WAUK 90343-A) 345/230/13.2KV TRANSFORMER CKT 1	560	560	0.20119	110.472	GEN560287 1-G10-01-2WTG 0.6900
FDNS	02ALL_G14_038	0	25SP	G14_038	FROM->TO	POTTER COUNTY INTERCHANGE (WAUK 90343-A) 345/230/13.2KV TRANSFORMER CKT 1	560	560	0.1982	110.4167	DEAF SMITH COUNTY INTERCHANGE - PLANT X STATION 230KV CKT 1
FDNS	02ALL_G14_038	0	25SP	G14_038	FROM->TO	POTTER COUNTY INTERCHANGE (WAUK 90343-A) 345/230/13.2KV TRANSFORMER CKT 1	560	560	0.1982	110.4167	DEAF SMITH COUNTY INTERCHANGE - PLANT X STATION 230KV CKT 1
FDNS	02ALL_G14_038	0	25SP	G14_038	FROM->TO	POTTER COUNTY INTERCHANGE (WAUK 90343-A) 345/230/13.2KV TRANSFORMER CKT 1	560	560	0.20119	110.3722	GEN542956 2-LACYGNE UNIT #2
FDNS	02ALL_G14_038	0	25SP	G14_038	FROM->TO	POTTER COUNTY INTERCHANGE (WAUK 90343-A) 345/230/13.2KV TRANSFORMER CKT 1	560	560	0.20119	110.065	GEN532751 1-WOLF CREEK GENERATING STATION UNIT 1
FDNS	02ALL_G14_038	0	25SP	G14_038	FROM->TO	POTTER COUNTY INTERCHANGE (WAUK 90343-A) 345/230/13.2KV TRANSFORMER CKT 1	560	560	0.20119	110.0496	GEN645011 1-NEBRASKA CITY 1
FDNS	02ALL_G14_038	0	25SP	G14_038	FROM->TO	POTTER COUNTY INTERCHANGE (WAUK 90343-A) 345/230/13.2KV TRANSFORMER CKT 1	560	560	0.20119	110.0213	GEN645001 1-FORT CALHOUN 1
FDNS	02ALL_G14_038	0	25SP	G14_038	FROM->TO	POTTER COUNTY INTERCHANGE (WAUK 90343-A) 345/230/13.2KV TRANSFORMER CKT 1	560	560	0.20119	110.003	GEN562042 1-G11_014_3 0.6900
FDNS	02ALL_G14_038	0	25SP	G14_038	FROM->TO	POTTER COUNTY INTERCHANGE (WAUK 90343-A) 345/230/13.2KV TRANSFORMER CKT 1	560	560	0.20119	109.975	GEN542955 1-LACYGNE UNIT #1
FDNS	02ALL_G14_038	0	25SP	G14_038	FROM->TO	POTTER COUNTY INTERCHANGE (WAUK 90343-A) 345/230/13.2KV TRANSFORMER CKT 1	560	560	0.20119	109.8821	GEN542957 1-IATAN UNIT #1
FDNS	02ALL_G14_038	0	25SP	G14_038	FROM->TO	POTTER COUNTY INTERCHANGE (WAUK 90343-A) 345/230/13.2KV TRANSFORMER CKT 1	560	560	0.20119	109.8624	GEN645012 2-NEBRASKA CITY 2
FDNS	02ALL_G14_038	0	25SP	G14_038	FROM->TO	POTTER COUNTY INTERCHANGE (WAUK 90343-A) 345/230/13.2KV TRANSFORMER CKT 1	560	560	0.20119	109.8432	GEN300003 1-THOMAS HILL UNIT 3
FDNS	02ALL_G14_038	0	25SP	G14_038	FROM->TO	POTTER COUNTY INTERCHANGE (WAUK 90343-A) 345/230/13.2KV TRANSFORMER CKT 1	560	560	0.20119	109.7471	GEN562432 1-G13-030 0.6900
FDNS	02ALL_G14_038	0	25SP	G14_038	FROM->TO	POTTER COUNTY INTERCHANGE (WAUK 90343-A) 345/230/13.2KV TRANSFORMER CKT 1	560	560	0.20119	109.673	GEN532653 1-JEFFREY ENERGY CENTER UNIT 3
FDNS	02ALL_G14_038	0	25SP	G14_038	FROM->TO	POTTER COUNTY INTERCHANGE (WAUK 90343-A) 345/230/13.2KV TRANSFORMER CKT 1	560	560	0.20119	109.6729	GEN532652 1-JEFFREY ENERGY CENTER UNIT 2
FDNS	02ALL_G14_038	0	25SP	G14_038	FROM->TO	POTTER COUNTY INTERCHANGE (WAUK 90343-A) 345/230/13.2KV TRANSFORMER CKT 1	560	560	0.20119	109.6674	GEN532651 1-JEFFREY ENERGY CENTER UNIT 1
FDNS	02ALL_G14_038	0	25SP	G14_038	FROM->TO	POTTER COUNTY INTERCHANGE (WAUK 90343-A) 345/230/13.2KV TRANSFORMER CKT 1	560	560	0.20119	109.5582	GEN640009 1-COOPER NUCLEAR STATION
FDNS	02ALL_G14_038	0	25SP	G14_038	FROM->TO	POTTER COUNTY INTERCHANGE (WAUK 90343-A) 345/230/13.2KV TRANSFORMER CKT 1	560	560	0.20119	109.5398	GEN524295 1-SPNSPUR_WND10.6900
FDNS	02ALL_G14_038	0	25SP	G14_038	FROM->TO	POTTER COUNTY INTERCHANGE (WAUK 90343-A) 345/230/13.2KV TRANSFORMER CKT 1	560	560	0.20119	109.5236	GEN560256 1-G10-14-1 0.6900
FDNS	02ALL_G14_038	0	25SP	G14_038	FROM->TO	POTTER COUNTY INTERCHANGE (WAUK 90343-A) 345/230/13.2KV TRANSFORMER CKT 1	560	560	0.20119	109.4832	GEN531447 1-HOLCOMB GENERATOR
FDNS	02ALL_G14_038	0	25SP	G14_038	FROM->TO	POTTER COUNTY INTERCHANGE (WAUK 90343-A) 345/230/13.2KV TRANSFORMER CKT 1	560	560	0.20119	109.4304	GEN560257 1-G10-14-2 0.6900
FDNS	02ALL_G14_038	0	25SP	G14_038	FROM->TO	POTTER COUNTY INTERCHANGE (WAUK 90343-A) 345/230/13.2KV TRANSFORMER CKT 1	560	560	0.19725	109.4189	BUSHLAND INTERCHANGE - POTTER COUNTY INTERCHANGE 230KV CKT 1
FDNS	02ALL_G14_038	0	25SP	G14_038	FROM->TO	POTTER COUNTY INTERCHANGE (WAUK 90343-A) 345/230/13.2KV TRANSFORMER CKT 1	560	560	0.19725	109.4189	BUSHLAND INTERCHANGE - POTTER COUNTY INTERCHANGE 230KV CKT 1
FDNS	02ALL_G14_038	0	25SP	G14_038	FROM->TO	POTTER COUNTY INTERCHANGE (WAUK 90343-A) 345/230/13.2KV TRANSFORMER CKT 1	560	560	0.20119	109.4163	GEN659118 1-LARAMIE RIVER UNIT1
FDNS	02ALL_G14_038	0	25SP	G14_038	FROM->TO	POTTER COUNTY INTERCHANGE (WAUK 90343-A) 345/230/13.2KV TRANSFORMER CKT 1	560	560	0.20119	109.2314	GEN542962 2-IATAN UNIT #2
FDNS	02ALL_G14_038	0	25SP	G14_038	FROM->TO	POTTER COUNTY INTERCHANGE (WAUK 90343-A) 345/230/13.2KV TRANSFORMER CKT 1	560	560	0.20119	109.0712	GEN640010 1-GERALD GENTLEMAN STATION UNIT 1
FDNS	02ALL_G14_038	0	25SP	G14_038	FROM->TO	POTTER COUNTY INTERCHANGE (WAUK 90343-A) 345/230/13.2KV TRANSFORMER CKT 1	560	560	0.19815	108.9285	AMARILLO SOUTH INTERCHANGE - SWISHER COUNTY INTERCHANGE 230KV CKT 1
FDNS	02ALL_G14_038	0	25SP	G14_038	FROM->TO	POTTER COUNTY INTERCHANGE (WAUK 90343-A) 345/230/13.2KV TRANSFORMER CKT 1	560	560	0.19815	108.9285	AMARILLO SOUTH INTERCHANGE - SWISHER COUNTY INTERCHANGE 230KV CKT 1
FDNS	02ALL_G14_038	0	25SP	G14_038	FROM->TO	POTTER COUNTY INTERCHANGE (WAUK 90343-A) 345/230/13.2KV TRANSFORMER CKT 1	560	560	0.20119	108.8719	GEN562017 1-G11_022_3 0.6900
FDNS	02ALL_G14_038	0	25SP	G14_038	FROM->TO	POTTER COUNTY INTERCHANGE (WAUK 90343-A) 345/230/13.2KV TRANSFORMER CKT 1	560	560	0.20119	108.8297	GEN640011 2-GERALD GENTLEMAN STATION UNIT 2
FDNS	02ALL_G14_038	0	25SP	G14_038	FROM->TO	POTTER COUNTY INTERCHANGE (WAUK 90343-A) 345/230/13.2KV TRANSFORMER CKT 1	560	560	0.20119	108.7598	GEN515591 1-PALDRW11 0.6900
FDNS	02ALL_G14_038	0	25SP	G14_038	FROM->TO	POTTER COUNTY INTERCHANGE (WAUK 90343-A) 345/230/13.2KV TRANSFORMER CKT 1	560	560	0.19568	108.4038	NEWHART 230 - POTTER COUNTY INTERCHANGE 230KV CKT 1
FDNS	02ALL_G14_038	0	25SP	G14_038	FROM->TO	POTTER COUNTY INTERCHANGE (WAUK 90343-A) 345/230/13.2KV TRANSFORMER CKT 1	560	560	0.20119	108.1267	GEN562544 1-G14_038_3 0.6900
FDNS	02ALL_G14_038	0	25SP	G14_038	FROM->TO	POTTER COUNTY INTERCHANGE (WAUK 90343-A) 345/230/13.2KV TRANSFORMER CKT 1	560	560	0.20119	108.0358	GEN532751 1-WOLF CREEK GENERATING STATION UNIT 1
FDNS	02ALL_G14_038	0	25SP	G14_038	FROM->TO	POTTER COUNTY INTERCHANGE (WAUK 90343-A) 345/230/13.2KV TRANSFORMER CKT 1	560	560	0.20119	107.8695	GEN562432 1-G13-030 0.6900
FDNS	02ALL_G14_038	0	25SP	G14_038	FROM->TO	POTTER COUNTY INTERCHANGE (WAUK 90343-A) 345/230/13.2KV TRANSFORMER CKT 1	560	560	0.19645	107.8221	BUSHLAND INTERCHANGE - DEAF SMITH COUNTY INTERCHANGE 230KV CKT 1
FDNS	02ALL_G14_038	0	25SP	G14_038	FROM->TO	POTTER COUNTY INTERCHANGE (WAUK 90343-A) 345/230/13.2KV TRANSFORMER CKT 1	560	560	0.19645	107.8221	BUSHLAND INTERCHANGE - DEAF SMITH COUNTY INTERCHANGE 230KV CKT 1
FDNS	02ALL_G14_038	0	25SP	G14_038	FROM->TO	POTTER COUNTY INTERCHANGE (WAUK 90343-A) 345/230/13.2KV TRANSFORMER CKT 1	560	560	0.19725	107.5901	BUSHLAND INTERCHANGE - POTTER COUNTY INTERCHANGE 230KV CKT 1
FDNS	02ALL_G14_038	0	25SP	G14_038	FROM->TO	POTTER COUNTY INTERCHANGE (WAUK 90343-A) 345/230/13.2KV TRANSFORMER CKT 1	560	560	0.19725	107.5901	BUSHLAND INTERCHANGE - POTTER COUNTY INTERCHANGE 230KV CKT 1
FDNS	02ALL_G14_038	0	25SP	G14_038	FROM->TO	POTTER COUNTY INTERCHANGE (WAUK 90343-A) 345/230/13.2KV TRANSFORMER CKT 1	560	560	0.20119	106.9918	GEN562017 1-G11_022_3 0.6900
FDNS	02ALL_G14_038	0	25SP	G14_038	FROM->TO	POTTER COUNTY INTERCHANGE (WAUK 90343-A) 345/230/13.2KV TRANSFORMER CKT 1	560	560	0.20119	106.8085	GEN524295 1-SPNSPUR_WND10.6900
FDNS	02ALL_G14_038	0	25SP	G14_038	FROM->TO	POTTER COUNTY INTERCHANGE (WAUK 90343-A) 345/230/13.2KV TRANSFORMER CKT 1	560	560	0.19568	106.594	NEWHART 230 - POTTER COUNTY INTERCHANGE 230KV CKT 1
FDNS	02ALL_G14_038	0	25SP	G14_038	FROM->TO	POTTER COUNTY INTERCHANGE (WAUK 90343-A) 345/230/13.2KV TRANSFORMER CKT 1	560	560	0.20119	106.1051	GEN562544 1-G14_038_3 0.6900
FDNS	02ALL_G14_038	0	25SP	G14_038	FROM->TO	POTTER COUNTY INTERCHANGE (WAUK 90343-A) 345/230/13.2KV TRANSFORMER CKT 1	560	560	0.19645	105.9925	BUSHLAND INTERCHANGE - DEAF SMITH COUNTY INTERCHANGE 230KV CKT 1
FDNS	02ALL_G14_038	0	25SP	G14_038	FROM->TO	POTTER COUNTY INTERCHANGE (WAUK 90343-A) 345/230/13.2KV TRANSFORMER CKT 1	560	560	0.19645	105.9925	BUSHLAND INTERCHANGE - DEAF SMITH COUNTY INTERCHANGE 230KV CKT 1
FDNS	02ALL_G14_038	2	25SP	G14_038	TO->FROM	BUSHLAND INTERCHANGE - POTTER COUNTY INTERCHANGE 230KV CKT 1	318.7	350.57	0.04541	118.0122	BASE CASE
FDNS	02ALL_G14_038	2	25SP	G14_038	FROM->TO	POTTER COUNTY INTERCHANGE (WAUK 90343-A) 345/230/13.2KV TRANSFORMER CKT 1	560	560	0.21097	135.2773	HITCHLAND INTERCHANGE - MOORE COUNTY INTERCHANGE 230KV CKT 1
FDNS	02ALL_G14_038	2	25SP	G14_038	FROM->TO	POTTER COUNTY INTERCHANGE (WAUK 90343-A) 345/230/13.2KV TRANSFORMER CKT 1	560	560	0.21097	135.2773	HITCHLAND INTERCHANGE - MOORE COUNTY INTERCHANGE 230KV CKT 1
FDNS	02ALL_G14_038	2	25SP	G14_038	FROM->TO	POTTER COUNTY INTERCHANGE (WAUK 90343-A) 345/230/13.2KV TRANSFORMER CKT 1	560	560	0.19741	132.7388	BORDER 7345.00 - TUCO_2 345.00 345KV CKT 1
FDNS	02ALL_G14_038	2	25SP	G14_038	FROM->TO	POTTER COUNTY INTERCHANGE (WAUK 90343-A) 345/230/13.2KV TRANSFORMER CKT 1	560	560	0.21097	130.9688	HITCHLAND INTERCHANGE - MOORE COUNTY INTERCHANGE 230KV CKT 1
FDNS	02ALL_G14_038	2	25SP	G14_038	FROM->TO	POTTER COUNTY INTERCHANGE (WAUK 90343-A) 345/230/13.2KV TRANSFORMER CKT 1	560	560	0.21097	130.9688	HITCHLAND INTERCHANGE - MOORE COUNTY INTERCHANGE 230KV CKT 1
FDNS	02ALL_G14_038	2	25SP	G14_038	FROM->TO	POTTER COUNTY INTERCHANGE (WAUK 90343-A) 345/230/13.2KV TRANSFORMER CKT 1	560	560	0.19741	130.7236	BORDER 7345.00 - WOODWARD DISTRICT EHV 345KV CKT 1
FDNS	02ALL_G14_038	2	25SP	G14_038	FROM->TO	POTTER COUNTY INTERCHANGE (WAUK 90343-A) 345/230/13.2KV TRANSFORMER CKT 1	560	560	0.19741	128.9614	BORDER 7345.00 - TUCO_2 345.00 345KV CKT 1
FDNS	02ALL_G14_038	2	25SP	G14_038	FROM->TO	POTTER COUNTY INTERCHANGE (WAUK 90343-A) 345/230/13.2KV TRANSFORMER CKT 1	560	560	0.19741	127.0761	BORDER 7345.00 - WOODWARD DISTRICT EHV 345KV CKT 1
FDNS	02ALL_G14_038	2	25SP	G14_038	FROM->TO	POTTER COUNTY INTERCHANGE (WAUK 90343-A) 345/230/13.2KV TRANSFORMER CKT 1	560	560	0.20122	127.0512	GEN523971 1-HARRINGTON GEN #1 24 KV
FDNS	02ALL_G14_038	2	25SP	G14_038	FROM->TO	POTTER COUNTY INTERCHANGE (WAUK 90343-A) 345/230/13.2KV TRANSFORMER CKT 1	560	560	0.20122	127.0491	GEN523973 1-HARRINGTON GEN #3 24 KV
FDNS	02ALL_G14_038	2	25SP	G14_038	FROM->TO	POTTER COUNTY INTERCHANGE (WAUK 90343-A) 345/230/13.2KV TRANSFORMER CKT 1	560	560	0.20122	127.0249	GEN523972 1-HARRINGTON GEN #2 24 KV
FDNS	02ALL_G14_038	2	25SP	G14_038	FROM->TO	POTTER COUNTY INTERCHANGE (WAUK 90343-A) 345/230/13.2KV TRANSFORMER CKT 1	560	560	0.20122	123.808	GEN524023 1-NICHOLS GEN #3 22 KV
FDNS	02ALL_G14_038	2	25SP	G14_038	FROM->TO	POTTER COUNTY INTERCHANGE (WAUK 90343-A) 345/230/13.2KV TRANSFORMER CKT 1	560	560	0.20122	123.7422	GEN523971 1-HARRINGTON GEN #1 24 KV
FDNS	02ALL_G14_038	2	25SP	G14_038	FROM->TO	POTTER COUNTY INTERCHANGE (WAUK 90343-A) 345/230/13.2KV TRANSFORMER CKT 1	560	560	0.20122	123.7408	GEN523973 1-HARRINGTON GEN #3 24 KV
FDNS	02ALL_G14_038	2	25SP	G14_038	FROM->TO	POTTER COUNTY INTERCHANGE (WAUK 90343-A) 345/230/13.2KV TRANSFORMER CKT 1	560	560	0.20122	123.7232	GEN523972 1-HARRINGTON GEN #2 24 KV
FDNS	02ALL_G14_038	2	25SP	G14_038	FROM->TO	POTTER COUNTY INTERCHANGE (WAUK 90343-A) 345/230/13.2KV TRANSFORMER CKT 1	560	560	0.22111	123.0794	G11-14T 345.00 - WOODWARD DISTRICT EHV 345KV CKT 1

SOLUTION	GROUP	SCENARIO	SEASON	SOURCE	DIRECTION	MONITORED ELEMENT	RATEA (MVA)	RATEB(MVA)	TDF	TC%LOADING (% MVA)	CONTINGENCY
FDNS	02ALL_G14_038	2	25SP	G14_038	FROM->TO	POTTER COUNTY INTERCHANGE (WAUK 90343-A) 345/230/13.2KV TRANSFORMER CKT 1	560	560	0.22111	123.0794	G11-14T 345.00 - WOODWARD DISTRICT EHV 345KV CKT 2
FDNS	02ALL_G14_038	2	25SP	G14_038	FROM->TO	POTTER COUNTY INTERCHANGE (WAUK 90343-A) 345/230/13.2KV TRANSFORMER CKT 1	560	560	0.20122	122.9692	GEN527903 1-HOBBS PLANT #3 (ST)
FDNS	02ALL_G14_038	2	25SP	G14_038	FROM->TO	POTTER COUNTY INTERCHANGE (WAUK 90343-A) 345/230/13.2KV TRANSFORMER CKT 1	560	560	0.20604	122.8641	MOORE COUNTY INTERCHANGE - POTTER COUNTY INTERCHANGE 230KV CKT 1
FDNS	02ALL_G14_038	2	25SP	G14_038	FROM->TO	POTTER COUNTY INTERCHANGE (WAUK 90343-A) 345/230/13.2KV TRANSFORMER CKT 1	560	560	0.20604	122.8641	MOORE COUNTY INTERCHANGE - POTTER COUNTY INTERCHANGE 230KV CKT 1
FDNS	02ALL_G14_038	2	25SP	G14_038	FROM->TO	POTTER COUNTY INTERCHANGE (WAUK 90343-A) 345/230/13.2KV TRANSFORMER CKT 1	560	560	0.20385	122.6877	Hansford County Switch Station - SPEARMAN INTERCHANGE 115KV CKT 1
FDNS	02ALL_G14_038	2	25SP	G14_038	FROM->TO	POTTER COUNTY INTERCHANGE (WAUK 90343-A) 345/230/13.2KV TRANSFORMER CKT 1	560	560	0.20385	122.6877	Hansford County Switch Station - SPEARMAN INTERCHANGE 115KV CKT 1
FDNS	02ALL_G14_038	2	25SP	G14_038	FROM->TO	POTTER COUNTY INTERCHANGE (WAUK 90343-A) 345/230/13.2KV TRANSFORMER CKT 1	560	560	0.20122	122.1816	GEN528501 1-G14_012 24.000
FDNS	02ALL_G14_038	2	25SP	G14_038	FROM->TO	POTTER COUNTY INTERCHANGE (WAUK 90343-A) 345/230/13.2KV TRANSFORMER CKT 1	560	560	0.23186	121.8028	P12:345:SPS:J07.1.FINN.HITCH
FDNS	02ALL_G14_038	2	25SP	G14_038	FROM->TO	POTTER COUNTY INTERCHANGE (WAUK 90343-A) 345/230/13.2KV TRANSFORMER CKT 1	560	560	0.23186	121.7303	Hitchland Interchange - WALKTAP7 345.00 345KV CKT 1
FDNS	02ALL_G14_038	2	25SP	G14_038	FROM->TO	POTTER COUNTY INTERCHANGE (WAUK 90343-A) 345/230/13.2KV TRANSFORMER CKT 1	560	560	0.23186	121.7303	Hitchland Interchange - WALKTAP7 345.00 345KV CKT 1
FDNS	02ALL_G14_038	2	25SP	G14_038	FROM->TO	POTTER COUNTY INTERCHANGE (WAUK 90343-A) 345/230/13.2KV TRANSFORMER CKT 1	560	560	0.20304	121.7268	DWS FRISCO - SHERMAN COUNTY TAP 115KV CKT 1
FDNS	02ALL_G14_038	2	25SP	G14_038	FROM->TO	POTTER COUNTY INTERCHANGE (WAUK 90343-A) 345/230/13.2KV TRANSFORMER CKT 1	560	560	0.20122	121.5258	GEN526331 1-JONES GEN #1 22 KV
FDNS	02ALL_G14_038	2	25SP	G14_038	FROM->TO	POTTER COUNTY INTERCHANGE (WAUK 90343-A) 345/230/13.2KV TRANSFORMER CKT 1	560	560	0.20122	121.5194	GEN526332 1-JONES GEN #2 21 KV
FDNS	02ALL_G14_038	2	25SP	G14_038	FROM->TO	POTTER COUNTY INTERCHANGE (WAUK 90343-A) 345/230/13.2KV TRANSFORMER CKT 1	560	560	0.20122	121.2929	GEN527166 1-MUSTANG_6 118.000
FDNS	02ALL_G14_038	2	25SP	G14_038	FROM->TO	POTTER COUNTY INTERCHANGE (WAUK 90343-A) 345/230/13.2KV TRANSFORMER CKT 1	560	560	0.20448	121.1547	Hitchland Interchange (SIEM 8743067) 345/230/13.2KV TRANSFORMER CKT 2
FDNS	02ALL_G14_038	2	25SP	G14_038	FROM->TO	POTTER COUNTY INTERCHANGE (WAUK 90343-A) 345/230/13.2KV TRANSFORMER CKT 1	560	560	0.20448	121.1547	Hitchland Interchange (SIEM 8743067) 345/230/13.2KV TRANSFORMER CKT 2
FDNS	02ALL_G14_038	2	25SP	G14_038	FROM->TO	POTTER COUNTY INTERCHANGE (WAUK 90343-A) 345/230/13.2KV TRANSFORMER CKT 1	560	560	0.20122	121.0751	GEN526333 1-JONES GEN #3 21 KV
FDNS	02ALL_G14_038	2	25SP	G14_038	FROM->TO	POTTER COUNTY INTERCHANGE (WAUK 90343-A) 345/230/13.2KV TRANSFORMER CKT 1	560	560	0.20122	121.0173	GEN525844 1-ELK_1 118.000
FDNS	02ALL_G14_038	2	25SP	G14_038	FROM->TO	POTTER COUNTY INTERCHANGE (WAUK 90343-A) 345/230/13.2KV TRANSFORMER CKT 1	560	560	0.20122	121.0164	GEN525845 1-ELK_2 1 18.000
FDNS	02ALL_G14_038	2	25SP	G14_038	FROM->TO	POTTER COUNTY INTERCHANGE (WAUK 90343-A) 345/230/13.2KV TRANSFORMER CKT 1	560	560	0.20122	120.9806	GEN526334 1-JONES_4 116.500
FDNS	02ALL_G14_038	2	25SP	G14_038	FROM->TO	POTTER COUNTY INTERCHANGE (WAUK 90343-A) 345/230/13.2KV TRANSFORMER CKT 1	560	560	0.20304	120.9358	P12:115:SPS:W08.1.HITCH.LASLEY
FDNS	02ALL_G14_038	2	25SP	G14_038	FROM->TO	POTTER COUNTY INTERCHANGE (WAUK 90343-A) 345/230/13.2KV TRANSFORMER CKT 1	560	560	0.20304	120.7898	DWS FRISCO - HITCHLAND INTERCHANGE 115KV CKT 1
FDNS	02ALL_G14_038	2	25SP	G14_038	FROM->TO	POTTER COUNTY INTERCHANGE (WAUK 90343-A) 345/230/13.2KV TRANSFORMER CKT 1	560	560	0.20122	120.7561	GEN524023 1-NICHOLS GEN #3 22 KV
FDNS	02ALL_G14_038	2	25SP	G14_038	FROM->TO	POTTER COUNTY INTERCHANGE (WAUK 90343-A) 345/230/13.2KV TRANSFORMER CKT 1	560	560	0.20122	120.6619	GEN527901 1-HOBBS PLANT #1 (CT)
FDNS	02ALL_G14_038	2	25SP	G14_038	FROM->TO	POTTER COUNTY INTERCHANGE (WAUK 90343-A) 345/230/13.2KV TRANSFORMER CKT 1	560	560	0.20122	120.6618	GEN527902 1-HOBBS PLANT #2 (CT)
FDNS	02ALL_G14_038	2	25SP	G14_038	FROM->TO	POTTER COUNTY INTERCHANGE (WAUK 90343-A) 345/230/13.2KV TRANSFORMER CKT 1	560	560	0.20122	120.6021	GEN525494 1-PLANT X GEN #4 20 KV
FDNS	02ALL_G14_038	2	25SP	G14_038	FROM->TO	POTTER COUNTY INTERCHANGE (WAUK 90343-A) 345/230/13.2KV TRANSFORMER CKT 1	560	560	0.20122	120.209	GEN527163 1-MUSTANG GEN #3 22 KV
FDNS	02ALL_G14_038	2	25SP	G14_038	FROM->TO	POTTER COUNTY INTERCHANGE (WAUK 90343-A) 345/230/13.2KV TRANSFORMER CKT 1	560	560	0.20122	120.0904	GEN527903 1-HOBBS PLANT #3 (ST)
FDNS	02ALL_G14_038	2	25SP	G14_038	FROM->TO	POTTER COUNTY INTERCHANGE (WAUK 90343-A) 345/230/13.2KV TRANSFORMER CKT 1	560	560	0.21951	120.064	FINNEY SWITCHING STATION - HOLCOMB 345KV CKT 1
FDNS	02ALL_G14_038	2	25SP	G14_038	FROM->TO	POTTER COUNTY INTERCHANGE (WAUK 90343-A) 345/230/13.2KV TRANSFORMER CKT 1	560	560	0.21951	120.064	FINNEY SWITCHING STATION - HOLCOMB 345KV CKT 1
FDNS	02ALL_G14_038	2	25SP	G14_038	FROM->TO	POTTER COUNTY INTERCHANGE (WAUK 90343-A) 345/230/13.2KV TRANSFORMER CKT 1	560	560	0.20122	119.9331	GEN527161 1-MUSTANG GEN #1
FDNS	02ALL_G14_038	2	25SP	G14_038	FROM->TO	POTTER COUNTY INTERCHANGE (WAUK 90343-A) 345/230/13.2KV TRANSFORMER CKT 1	560	560	0.20122	119.9331	GEN527162 1-MUSTANG GEN #2
FDNS	02ALL_G14_038	2	25SP	G14_038	FROM->TO	POTTER COUNTY INTERCHANGE (WAUK 90343-A) 345/230/13.2KV TRANSFORMER CKT 1	560	560	0.20374	119.917	Hitchland Interchange (H TB80155502) 345/230/13.2KV TRANSFORMER CKT 1
FDNS	02ALL_G14_038	2	25SP	G14_038	FROM->TO	POTTER COUNTY INTERCHANGE (WAUK 90343-A) 345/230/13.2KV TRANSFORMER CKT 1	560	560	0.20374	119.917	Hitchland Interchange (H TB80155502) 345/230/13.2KV TRANSFORMER CKT 1
FDNS	02ALL_G14_038	2	25SP	G14_038	FROM->TO	POTTER COUNTY INTERCHANGE (WAUK 90343-A) 345/230/13.2KV TRANSFORMER CKT 1	560	560	0.20604	119.7294	MOORE COUNTY INTERCHANGE - POTTER COUNTY INTERCHANGE 230KV CKT 1
FDNS	02ALL_G14_038	2	25SP	G14_038	FROM->TO	POTTER COUNTY INTERCHANGE (WAUK 90343-A) 345/230/13.2KV TRANSFORMER CKT 1	560	560	0.20604	119.7294	MOORE COUNTY INTERCHANGE - POTTER COUNTY INTERCHANGE 230KV CKT 1
FDNS	02ALL_G14_038	2	25SP	G14_038	FROM->TO	POTTER COUNTY INTERCHANGE (WAUK 90343-A) 345/230/13.2KV TRANSFORMER CKT 1	560	560	0.22111	119.7158	G11-14T 345.00 - WOODWARD DISTRICT EHV 345KV CKT 1
FDNS	02ALL_G14_038	2	25SP	G14_038	FROM->TO	POTTER COUNTY INTERCHANGE (WAUK 90343-A) 345/230/13.2KV TRANSFORMER CKT 1	560	560	0.22111	119.7158	G11-14T 345.00 - WOODWARD DISTRICT EHV 345KV CKT 2
FDNS	02ALL_G14_038	2	25SP	G14_038	FROM->TO	POTTER COUNTY INTERCHANGE (WAUK 90343-A) 345/230/13.2KV TRANSFORMER CKT 1	560	560	0.20122	119.659	GEN527164 1-MUSTANG GEN #4 22 KV
FDNS	02ALL_G14_038	2	25SP	G14_038	FROM->TO	POTTER COUNTY INTERCHANGE (WAUK 90343-A) 345/230/13.2KV TRANSFORMER CKT 1	560	560	0.20385	119.6539	Hansford County Switch Station - SPEARMAN INTERCHANGE 115KV CKT 1
FDNS	02ALL_G14_038	2	25SP	G14_038	FROM->TO	POTTER COUNTY INTERCHANGE (WAUK 90343-A) 345/230/13.2KV TRANSFORMER CKT 1	560	560	0.20385	119.6539	Hansford County Switch Station - SPEARMAN INTERCHANGE 115KV CKT 1
FDNS	02ALL_G14_038	2	25SP	G14_038	FROM->TO	POTTER COUNTY INTERCHANGE (WAUK 90343-A) 345/230/13.2KV TRANSFORMER CKT 1	560	560	0.20122	119.6483	GEN527165 1-Mustang Gen #5
FDNS	02ALL_G14_038	2	25SP	G14_038	FROM->TO	POTTER COUNTY INTERCHANGE (WAUK 90343-A) 345/230/13.2KV TRANSFORMER CKT 1	560	560	0.20385	119.639	HITCHLAND INTERCHANGE - Hansford County Switch Station 115KV CKT 1
FDNS	02ALL_G14_038	2	25SP	G14_038	FROM->TO	POTTER COUNTY INTERCHANGE (WAUK 90343-A) 345/230/13.2KV TRANSFORMER CKT 1	560	560	0.20385	119.639	HITCHLAND INTERCHANGE - Hansford County Switch Station 115KV CKT 1
FDNS	02ALL_G14_038	2	25SP	G14_038	FROM->TO	POTTER COUNTY INTERCHANGE (WAUK 90343-A) 345/230/13.2KV TRANSFORMER CKT 1	560	560	0.20122	119.3605	GEN528501 1-G14_012 24.000
FDNS	02ALL_G14_038	2	25SP	G14_038	FROM->TO	POTTER COUNTY INTERCHANGE (WAUK 90343-A) 345/230/13.2KV TRANSFORMER CKT 1	560	560	0.2077	119.0026	BUCKNER7 345.00 - SPEARVILLE 345KV CKT 1
FDNS	02ALL_G14_038	2	25SP	G14_038	FROM->TO	POTTER COUNTY INTERCHANGE (WAUK 90343-A) 345/230/13.2KV TRANSFORMER CKT 1	560	560	0.2077	119.0026	BUCKNER7 345.00 - SPEARVILLE 345KV CKT 1
FDNS	02ALL_G14_038	2	25SP	G14_038	FROM->TO	POTTER COUNTY INTERCHANGE (WAUK 90343-A) 345/230/13.2KV TRANSFORMER CKT 1	560	560	0.20089	118.8507	TUCO INTERCHANGE - YOAKUM_345 345.00 345KV CKT 1
FDNS	02ALL_G14_038	2	25SP	G14_038	FROM->TO	POTTER COUNTY INTERCHANGE (WAUK 90343-A) 345/230/13.2KV TRANSFORMER CKT 1	560	560	0.20304	118.8091	DWS FRISCO - SHERMAN COUNTY TAP 115KV CKT 1
FDNS	02ALL_G14_038	2	25SP	G14_038	FROM->TO	POTTER COUNTY INTERCHANGE (WAUK 90343-A) 345/230/13.2KV TRANSFORMER CKT 1	560	560	0.20122	118.753	GEN527884 1-CUNNINGHAM GEN #4 22 KV
FDNS	02ALL_G14_038	2	25SP	G14_038	FROM->TO	POTTER COUNTY INTERCHANGE (WAUK 90343-A) 345/230/13.2KV TRANSFORMER CKT 1	560	560	0.20122	118.751	GEN526331 1-JONES GEN #1 22 KV
FDNS	02ALL_G14_038	2	25SP	G14_038	FROM->TO	POTTER COUNTY INTERCHANGE (WAUK 90343-A) 345/230/13.2KV TRANSFORMER CKT 1	560	560	0.20122	118.7444	GEN526332 1-JONES GEN #2 21 KV
FDNS	02ALL_G14_038	2	25SP	G14_038	FROM->TO	POTTER COUNTY INTERCHANGE (WAUK 90343-A) 345/230/13.2KV TRANSFORMER CKT 1	560	560	0.20122	118.7413	GEN527883 1-CUNNINGHAM GEN #3 22 KV
FDNS	02ALL_G14_038	2	25SP	G14_038	FROM->TO	POTTER COUNTY INTERCHANGE (WAUK 90343-A) 345/230/13.2KV TRANSFORMER CKT 1	560	560	0.20122	118.7259	GEN528361 1-MADDOX GEN #1
FDNS	02ALL_G14_038	2	25SP	G14_038	FROM->TO	POTTER COUNTY INTERCHANGE (WAUK 90343-A) 345/230/13.2KV TRANSFORMER CKT 1	560	560	0.20122	118.7162	GEN523942 1-MAJSTC-WTG210.6900
FDNS	02ALL_G14_038	2	25SP	G14_038	FROM->TO	POTTER COUNTY INTERCHANGE (WAUK 90343-A) 345/230/13.2KV TRANSFORMER CKT 1	560	560	0.20122	118.7089	GEN523941 1-MAJSTC-WTG110.6900
FDNS	02ALL_G14_038	2	25SP	G14_038	FROM->TO	POTTER COUNTY INTERCHANGE (WAUK 90343-A) 345/230/13.2KV TRANSFORMER CKT 1	560	560	0.20122	118.5704	GEN523462 1-BLACKHAWK GEN #2
FDNS	02ALL_G14_038	2	25SP	G14_038	FROM->TO	POTTER COUNTY INTERCHANGE (WAUK 90343-A) 345/230/13.2KV TRANSFORMER CKT 1	560	560	0.20122	118.5697	GEN523461 1-BLACKHAWK GEN #1
FDNS	02ALL_G14_038	2	25SP	G14_038	FROM->TO	POTTER COUNTY INTERCHANGE (WAUK 90343-A) 345/230/13.2KV TRANSFORMER CKT 1	560	560	0.20122	118.5352	GEN527166 1-MUSTANG_6 118.000
FDNS	02ALL_G14_038	2	25SP	G14_038	FROM->TO	POTTER COUNTY INTERCHANGE (WAUK 90343-A) 345/230/13.2KV TRANSFORMER CKT 1	560	560	0.20227	118.5195	OCHILTREE (H TP80219401) 230/115/13.2KV TRANSFORMER CKT 1
FDNS	02ALL_G14_038	2	25SP	G14_038	FROM->TO	POTTER COUNTY INTERCHANGE (WAUK 90343-A) 345/230/13.2KV TRANSFORMER CKT 1	560	560	0.20227	118.5195	OCHILTREE (H TP80219401) 230/115/13.2KV TRANSFORMER CKT 1
FDNS	02ALL_G14_038	2	25SP	G14_038	FROM->TO	POTTER COUNTY INTERCHANGE (WAUK 90343-A) 345/230/13.2KV TRANSFORMER CKT 1	560	560	0.20227	118.5184	HITCHLAND INTERCHANGE - OCHILTREE 230KV CKT 1
FDNS	02ALL_G14_038	2	25SP	G14_038	FROM->TO	POTTER COUNTY INTERCHANGE (WAUK 90343-A) 345/230/13.2KV TRANSFORMER CKT 1	560	560	0.20227	118.5184	HITCHLAND INTERCHANGE - OCHILTREE 230KV CKT 1
FDNS	02ALL_G14_038	2	25SP	G14_038	FROM->TO	POTTER COUNTY INTERCHANGE (WAUK 90343-A) 345/230/13.2KV TRANSFORMER CKT 1	560	560	0.23186	118.4523	P12:345:SPS:J07.1.FINN.HITCH
FDNS	02ALL_G14_038	2	25SP	G14_038	FROM->TO	POTTER COUNTY INTERCHANGE (WAUK 90343-A) 345/230/13.2KV TRANSFORMER CKT 1	560	560	0.23186	118.4054	Hitchland Interchange - WALKTAP7 345.00 345KV CKT 1
FDNS	02ALL_G14_038	2	25SP	G14_038	FROM->TO	POTTER COUNTY INTERCHANGE (WAUK 90343-A) 345/230/13.2KV TRANSFORMER CKT 1	560	560	0.23186	118.4054	Hitchland Interchange - WALKTAP7 345.00 345KV CKT 1
FDNS	02ALL_G14_038	2	25SP	G14_038	FROM->TO	POTTER COUNTY INTERCHANGE (WAUK 90343-A) 345/230/13.2KV TRANSFORMER CKT 1	560	560	0.20122	118.3271	GEN526333 1-JONES GEN #3 21 KV
FDNS	02ALL_G14_038	2	25SP	G14_038	FROM->TO	POTTER COUNTY INTERCHANGE (WAUK 90343-A) 345/230/13.2KV TRANSFORMER CKT 1	560	560	0.20448	118.2964	Hitchland Interchange (SIEM 8743067) 345/230/13.2KV TRANSFORMER CKT 2
FDNS	02ALL_G14_038	2	25SP	G14_038	FROM->TO	POTTER COUNTY INTERCHANGE (WAUK 90343-A) 345/230/13.2KV TRANSFORMER CKT 1	560	560	0.20448	118.2964	Hitchland Interchange (SIEM 8743067) 345/230/13.2KV TRANSFORMER CKT 2
FDNS	02ALL_G14_038	2	25SP	G14_038	FROM->TO	POTTER COUNTY INTERCHANGE (WAUK 90343-A) 345/230/13.2KV TRANSFORMER CKT 1	560	560	0.20122	118.2729	GEN525844 1-ELK_1 118.000
FDNS	02ALL_G14_038	2	25SP	G14_038	FROM->TO	POTTER COUNTY INTERCHANGE (WAUK 90343-A) 345/230/13.2KV TRANSFORMER CKT 1	560	560	0.20122	118.272	GEN525845 1-ELK_2 1 18.000
FDNS	02ALL_G14_038	2	25SP	G14_038	FROM->TO	POTTER COUNTY INTERCHANGE (WAUK 90343-A) 345/230/13.2KV TRANSFORMER CKT 1	560	560	0.20122	118.2384	GEN526334 1-JONES_4 116.500
FDNS	02ALL_G14_038	2	25SP	G14_038	FROM->TO	POTTER COUNTY INTERCHANGE (WAUK 90343-A) 345/230/13.2KV TRANSFORMER CKT 1	560	560	0.20304	118.0816	P12:115:SPS:W08.1.HITCH.LASLEY

SOLUTION	GROUP	SCENARIO	SEASON	SOURCE	DIRECTION	MONITORED ELEMENT	RATEA (MVA)	RATEB(MVA)	TDF	TC%LOADING (% MVA)	CONTINGENCY
FDNS	02ALL_G14_038	2	25SP	G14_038	FROM->TO	POTTER COUNTY INTERCHANGE (WAUK 90343-A) 345/230/13.2KV TRANSFORMER CKT 1	560	560	0.19866	118.0366	GRACEMONT - MINCO 345KV CKT 1
FDNS	02ALL_G14_038	2	25SP	G14_038	FROM->TO	POTTER COUNTY INTERCHANGE (WAUK 90343-A) 345/230/13.2KV TRANSFORMER CKT 1	560	560	0.20304	117.9569	DWS FRISCO - HITCHLAND INTERCHANGE 115KV CKT 1
FDNS	02ALL_G14_038	2	25SP	G14_038	FROM->TO	POTTER COUNTY INTERCHANGE (WAUK 90343-A) 345/230/13.2KV TRANSFORMER CKT 1	560	560	0.20122	117.95	GEN527901 1-HOBBS PLANT #1 (CT)
FDNS	02ALL_G14_038	2	25SP	G14_038	FROM->TO	POTTER COUNTY INTERCHANGE (WAUK 90343-A) 345/230/13.2KV TRANSFORMER CKT 1	560	560	0.20122	117.95	GEN527902 1-HOBBS PLANT #2 (CT)
FDNS	02ALL_G14_038	2	25SP	G14_038	FROM->TO	POTTER COUNTY INTERCHANGE (WAUK 90343-A) 345/230/13.2KV TRANSFORMER CKT 1	560	560	0.20122	117.9279	GEN525494 1-PLANT X GEN #4 20 KV
FDNS	02ALL_G14_038	2	25SP	G14_038	FROM->TO	POTTER COUNTY INTERCHANGE (WAUK 90343-A) 345/230/13.2KV TRANSFORMER CKT 1	560	560	0.21951	117.891	FINNEY SWITCHING STATION - WALKTAP7 345.00 345KV CKT 1
FDNS	02ALL_G14_038	2	25SP	G14_038	FROM->TO	POTTER COUNTY INTERCHANGE (WAUK 90343-A) 345/230/13.2KV TRANSFORMER CKT 1	560	560	0.21951	117.891	FINNEY SWITCHING STATION - WALKTAP7 345.00 345KV CKT 1
FDNS	02ALL_G14_038	2	25SP	G14_038	FROM->TO	POTTER COUNTY INTERCHANGE (WAUK 90343-A) 345/230/13.2KV TRANSFORMER CKT 1	560	560	0.20122	117.8879	GEN562550 1-G14_040_3 0.6900
FDNS	02ALL_G14_038	2	25SP	G14_038	FROM->TO	POTTER COUNTY INTERCHANGE (WAUK 90343-A) 345/230/13.2KV TRANSFORMER CKT 1	560	560	0.2077	117.8482	BUCKNER7 345.00 - HOLCOMB 345KV CKT 1
FDNS	02ALL_G14_038	2	25SP	G14_038	FROM->TO	POTTER COUNTY INTERCHANGE (WAUK 90343-A) 345/230/13.2KV TRANSFORMER CKT 1	560	560	0.2077	117.8482	BUCKNER7 345.00 - HOLCOMB 345KV CKT 1
FDNS	02ALL_G14_038	2	25SP	G14_038	FROM->TO	POTTER COUNTY INTERCHANGE (WAUK 90343-A) 345/230/13.2KV TRANSFORMER CKT 1	560	560	0.20122	117.7505	GEN560105 1-G08-22 0.6900
FDNS	02ALL_G14_038	2	25SP	G14_038	FROM->TO	POTTER COUNTY INTERCHANGE (WAUK 90343-A) 345/230/13.2KV TRANSFORMER CKT 1	560	560	0.20122	117.5258	GEN527163 1-MUSTANG GEN #3 22 KV
FDNS	02ALL_G14_038	2	25SP	G14_038	FROM->TO	POTTER COUNTY INTERCHANGE (WAUK 90343-A) 345/230/13.2KV TRANSFORMER CKT 1	560	560	0.20178	117.4841	RB-ELKS 3115.00 - SHERMAN COUNTY TAP 115KV CKT 1
FDNS	02ALL_G14_038	2	25SP	G14_038	FROM->TO	POTTER COUNTY INTERCHANGE (WAUK 90343-A) 345/230/13.2KV TRANSFORMER CKT 1	560	560	0.20178	117.4292	P12:115:SPS:W24.1.MOOREE.LASLEY
FDNS	02ALL_G14_038	2	25SP	G14_038	FROM->TO	POTTER COUNTY INTERCHANGE (WAUK 90343-A) 345/230/13.2KV TRANSFORMER CKT 1	560	560	0.207	117.3366	BVRCNTY7 345.00 - G11-14T 345.00 345KV CKT 1
FDNS	02ALL_G14_038	2	25SP	G14_038	FROM->TO	POTTER COUNTY INTERCHANGE (WAUK 90343-A) 345/230/13.2KV TRANSFORMER CKT 1	560	560	0.207	117.3366	BVRCNTY7 345.00 - G11-14T 345.00 345KV CKT 2
FDNS	02ALL_G14_038	2	25SP	G14_038	FROM->TO	POTTER COUNTY INTERCHANGE (WAUK 90343-A) 345/230/13.2KV TRANSFORMER CKT 1	560	560	0.20178	117.3212	RB-ELKS 3115.00 - RB-SPURLOCK3115.00 115KV CKT 1
FDNS	02ALL_G14_038	2	25SP	G14_038	FROM->TO	POTTER COUNTY INTERCHANGE (WAUK 90343-A) 345/230/13.2KV TRANSFORMER CKT 1	560	560	0.20259	117.2836	PRINGLE INTERCHANGE - SPEARMAN INTERCHANGE 115KV CKT 1
FDNS	02ALL_G14_038	2	25SP	G14_038	FROM->TO	POTTER COUNTY INTERCHANGE (WAUK 90343-A) 345/230/13.2KV TRANSFORMER CKT 1	560	560	0.20259	117.2836	PRINGLE INTERCHANGE - SPEARMAN INTERCHANGE 115KV CKT 1
FDNS	02ALL_G14_038	2	25SP	G14_038	FROM->TO	POTTER COUNTY INTERCHANGE (WAUK 90343-A) 345/230/13.2KV TRANSFORMER CKT 1	560	560	0.20122	117.2708	GEN527161 1-MUSTANG GEN #1
FDNS	02ALL_G14_038	2	25SP	G14_038	FROM->TO	POTTER COUNTY INTERCHANGE (WAUK 90343-A) 345/230/13.2KV TRANSFORMER CKT 1	560	560	0.20122	117.2708	GEN527162 1-MUSTANG GEN #2
FDNS	02ALL_G14_038	2	25SP	G14_038	FROM->TO	POTTER COUNTY INTERCHANGE (WAUK 90343-A) 345/230/13.2KV TRANSFORMER CKT 1	560	560	0.20237	117.2518	P12:115:SPS:W29.1.OCLTRE.SPRMN
FDNS	02ALL_G14_038	2	25SP	G14_038	FROM->TO	POTTER COUNTY INTERCHANGE (WAUK 90343-A) 345/230/13.2KV TRANSFORMER CKT 1	560	560	0.20446	117.2313	MATHWSN7 345.00 - TATONGA7 345.00 345KV CKT 1
FDNS	02ALL_G14_038	2	25SP	G14_038	FROM->TO	POTTER COUNTY INTERCHANGE (WAUK 90343-A) 345/230/13.2KV TRANSFORMER CKT 1	560	560	0.20446	117.2313	MATHWSN7 345.00 - TATONGA7 345.00 345KV CKT 2
FDNS	02ALL_G14_038	2	25SP	G14_038	FROM->TO	POTTER COUNTY INTERCHANGE (WAUK 90343-A) 345/230/13.2KV TRANSFORMER CKT 1	560	560	0.20374	117.1714	Hitchland Interchange (H TB80155502) 345/230/13.2KV TRANSFORMER CKT 1
FDNS	02ALL_G14_038	2	25SP	G14_038	FROM->TO	POTTER COUNTY INTERCHANGE (WAUK 90343-A) 345/230/13.2KV TRANSFORMER CKT 1	560	560	0.20374	117.1714	Hitchland Interchange (H TB80155502) 345/230/13.2KV TRANSFORMER CKT 1
FDNS	02ALL_G14_038	2	25SP	G14_038	FROM->TO	POTTER COUNTY INTERCHANGE (WAUK 90343-A) 345/230/13.2KV TRANSFORMER CKT 1	560	560	0.21951	117.1641	FINNEY SWITCHING STATION - HOLCOMB 345KV CKT 1
FDNS	02ALL_G14_038	2	25SP	G14_038	FROM->TO	POTTER COUNTY INTERCHANGE (WAUK 90343-A) 345/230/13.2KV TRANSFORMER CKT 1	560	560	0.21951	117.1641	FINNEY SWITCHING STATION - HOLCOMB 345KV CKT 1
FDNS	02ALL_G14_038	2	25SP	G14_038	FROM->TO	POTTER COUNTY INTERCHANGE (WAUK 90343-A) 345/230/13.2KV TRANSFORMER CKT 1	560	560	0.20237	117.1542	OCHILTREE - TEXAS FARMS SUB 115KV CKT 1
FDNS	02ALL_G14_038	2	25SP	G14_038	FROM->TO	POTTER COUNTY INTERCHANGE (WAUK 90343-A) 345/230/13.2KV TRANSFORMER CKT 1	560	560	0.20241	117.0753	HITCHLAND INTERCHANGE (H TP80148301) 230/115/13.2KV TRANSFORMER CKT 1
FDNS	02ALL_G14_038	2	25SP	G14_038	FROM->TO	POTTER COUNTY INTERCHANGE (WAUK 90343-A) 345/230/13.2KV TRANSFORMER CKT 1	560	560	0.20241	117.0753	HITCHLAND INTERCHANGE (H TP80148301) 230/115/13.2KV TRANSFORMER CKT 1
FDNS	02ALL_G14_038	2	25SP	G14_038	FROM->TO	POTTER COUNTY INTERCHANGE (WAUK 90343-A) 345/230/13.2KV TRANSFORMER CKT 1	560	560	0.20241	117.0753	HITCHLAND INTERCHANGE (UPDATE LATER) 230/115/13.2KV TRANSFORMER CKT 2
FDNS	02ALL_G14_038	2	25SP	G14_038	FROM->TO	POTTER COUNTY INTERCHANGE (WAUK 90343-A) 345/230/13.2KV TRANSFORMER CKT 1	560	560	0.20241	117.0753	HITCHLAND INTERCHANGE (UPDATE LATER) 230/115/13.2KV TRANSFORMER CKT 2
FDNS	02ALL_G14_038	2	25SP	G14_038	FROM->TO	POTTER COUNTY INTERCHANGE (WAUK 90343-A) 345/230/13.2KV TRANSFORMER CKT 1	560	560	0.20122	117.0488	GEN562270 1-G12-020-2 0.6900
FDNS	02ALL_G14_038	2	25SP	G14_038	FROM->TO	POTTER COUNTY INTERCHANGE (WAUK 90343-A) 345/230/13.2KV TRANSFORMER CKT 1	560	560	0.20178	117.0445	MOORE COUNTY INTERCHANGE EAST BUS - RB-SPURLOCK3115.00 115KV CKT 1
FDNS	02ALL_G14_038	2	25SP	G14_038	FROM->TO	POTTER COUNTY INTERCHANGE (WAUK 90343-A) 345/230/13.2KV TRANSFORMER CKT 1	560	560	0.20166	117.0248	DALLAM COUNTY INTERCHANGE - SHERMAN COUNTY SUB 115KV CKT 1
FDNS	02ALL_G14_038	2	25SP	G14_038	FROM->TO	POTTER COUNTY INTERCHANGE (WAUK 90343-A) 345/230/13.2KV TRANSFORMER CKT 1	560	560	0.20122	117.0126	GEN524285 1-WILDORADO WIND GEN
FDNS	02ALL_G14_038	2	25SP	G14_038	FROM->TO	POTTER COUNTY INTERCHANGE (WAUK 90343-A) 345/230/13.2KV TRANSFORMER CKT 1	560	560	0.20476	117.0118	MINGO - SETAB 345KV CKT 1
FDNS	02ALL_G14_038	2	25SP	G14_038	FROM->TO	POTTER COUNTY INTERCHANGE (WAUK 90343-A) 345/230/13.2KV TRANSFORMER CKT 1	560	560	0.20476	117.0118	MINGO - SETAB 345KV CKT 1
FDNS	02ALL_G14_038	2	25SP	G14_038	FROM->TO	POTTER COUNTY INTERCHANGE (WAUK 90343-A) 345/230/13.2KV TRANSFORMER CKT 1	560	560	0.20122	117.0112	GEN527164 1-MUSTANG GEN #4 22 KV
FDNS	02ALL_G14_038	2	25SP	G14_038	FROM->TO	POTTER COUNTY INTERCHANGE (WAUK 90343-A) 345/230/13.2KV TRANSFORMER CKT 1	560	560	0.20122	117.0018	GEN527165 1-Mustang Gen #5
FDNS	02ALL_G14_038	2	25SP	G14_038	FROM->TO	POTTER COUNTY INTERCHANGE (WAUK 90343-A) 345/230/13.2KV TRANSFORMER CKT 1	560	560	0.20122	116.9879	GEN336821 1-GRAND GULF UNIT
FDNS	02ALL_G14_038	2	25SP	G14_038	FROM->TO	POTTER COUNTY INTERCHANGE (WAUK 90343-A) 345/230/13.2KV TRANSFORMER CKT 1	560	560	0.20237	116.9851	SPEARMAN SUB - TEXAS FARMS SUB 115KV CKT 1
FDNS	02ALL_G14_038	2	25SP	G14_038	FROM->TO	POTTER COUNTY INTERCHANGE (WAUK 90343-A) 345/230/13.2KV TRANSFORMER CKT 1	560	560	0.20122	116.9671	GEN562269 1-G12-020-1 0.6900
FDNS	02ALL_G14_038	2	25SP	G14_038	FROM->TO	POTTER COUNTY INTERCHANGE (WAUK 90343-A) 345/230/13.2KV TRANSFORMER CKT 1	560	560	0.20166	116.9661	P12:115:SPS:W05.1.DALLAM.LASLEY
FDNS	02ALL_G14_038	2	25SP	G14_038	FROM->TO	POTTER COUNTY INTERCHANGE (WAUK 90343-A) 345/230/13.2KV TRANSFORMER CKT 1	560	560	0.20166	116.9308	SHERMAN COUNTY SUB - SHERMAN COUNTY TAP 115KV CKT 1
FDNS	02ALL_G14_038	2	25SP	G14_038	FROM->TO	POTTER COUNTY INTERCHANGE (WAUK 90343-A) 345/230/13.2KV TRANSFORMER CKT 1	560	560	0.20385	116.9248	HITCHLAND INTERCHANGE - Hansford County Switch Station 115KV CKT 1
FDNS	02ALL_G14_038	2	25SP	G14_038	FROM->TO	POTTER COUNTY INTERCHANGE (WAUK 90343-A) 345/230/13.2KV TRANSFORMER CKT 1	560	560	0.20385	116.9248	HITCHLAND INTERCHANGE - Hansford County Switch Station 115KV CKT 1
FDNS	02ALL_G14_038	2	25SP	G14_038	FROM->TO	POTTER COUNTY INTERCHANGE (WAUK 90343-A) 345/230/13.2KV TRANSFORMER CKT 1	560	560	0.20393	116.8656	HOLCOMB - SETAB 345KV CKT 1
FDNS	02ALL_G14_038	2	25SP	G14_038	FROM->TO	POTTER COUNTY INTERCHANGE (WAUK 90343-A) 345/230/13.2KV TRANSFORMER CKT 1	560	560	0.20393	116.8656	HOLCOMB - SETAB 345KV CKT 1
FDNS	02ALL_G14_038	2	25SP	G14_038	FROM->TO	POTTER COUNTY INTERCHANGE (WAUK 90343-A) 345/230/13.2KV TRANSFORMER CKT 1	560	560	0.20122	116.8005	GEN336153 1-WATERFORD UNIT#3
FDNS	02ALL_G14_038	2	25SP	G14_038	FROM->TO	POTTER COUNTY INTERCHANGE (WAUK 90343-A) 345/230/13.2KV TRANSFORMER CKT 1	560	560	0.19866	116.797	CIMARRON - MINCO 345KV CKT 1
FDNS	02ALL_G14_038	2	25SP	G14_038	FROM->TO	POTTER COUNTY INTERCHANGE (WAUK 90343-A) 345/230/13.2KV TRANSFORMER CKT 1	560	560	0.20122	116.7429	GEN337911 1-ARKANSAS NUCLEAR ONE UNIT #2
FDNS	02ALL_G14_038	2	25SP	G14_038	FROM->TO	POTTER COUNTY INTERCHANGE (WAUK 90343-A) 345/230/13.2KV TRANSFORMER CKT 1	560	560	0.20122	116.7331	GEN501801 1-DOLET HILLS UNIT1
FDNS	02ALL_G14_038	2	25SP	G14_038	FROM->TO	POTTER COUNTY INTERCHANGE (WAUK 90343-A) 345/230/13.2KV TRANSFORMER CKT 1	560	560	0.20122	116.709	GEN527881 1-CUNNINGHAM GEN #1
FDNS	02ALL_G14_038	2	25SP	G14_038	FROM->TO	POTTER COUNTY INTERCHANGE (WAUK 90343-A) 345/230/13.2KV TRANSFORMER CKT 1	560	560	0.20122	116.6938	GEN562688 1-G15_014_3 0.6900
FDNS	02ALL_G14_038	2	25SP	G14_038	FROM->TO	POTTER COUNTY INTERCHANGE (WAUK 90343-A) 345/230/13.2KV TRANSFORMER CKT 1	560	560	0.2024	116.691	PRINGLE INTERCHANGE (ENRCO13617-1) 230/115/13.2KV TRANSFORMER CKT 1
FDNS	02ALL_G14_038	2	25SP	G14_038	FROM->TO	POTTER COUNTY INTERCHANGE (WAUK 90343-A) 345/230/13.2KV TRANSFORMER CKT 1	560	560	0.2024	116.691	PRINGLE INTERCHANGE (ENRCO13617-1) 230/115/13.2KV TRANSFORMER CKT 1
FDNS	02ALL_G14_038	2	25SP	G14_038	FROM->TO	POTTER COUNTY INTERCHANGE (WAUK 90343-A) 345/230/13.2KV TRANSFORMER CKT 1	560	560	0.20237	116.6892	SPEARMAN INTERCHANGE - SPEARMAN SUB 115KV CKT 1
FDNS	02ALL_G14_038	2	25SP	G14_038	FROM->TO	POTTER COUNTY INTERCHANGE (WAUK 90343-A) 345/230/13.2KV TRANSFORMER CKT 1	560	560	0.20122	116.6736	GEN335831 1-RIVERBEND UNIT#1
FDNS	02ALL_G14_038	2	25SP	G14_038	FROM->TO	POTTER COUNTY INTERCHANGE (WAUK 90343-A) 345/230/13.2KV TRANSFORMER CKT 1	560	560	0.20161	116.6675	MOORE COUNTY INTERCHANGE (ENRCO 136402) 230/115/13.2KV TRANSFORMER CKT 1
FDNS	02ALL_G14_038	2	25SP	G14_038	FROM->TO	POTTER COUNTY INTERCHANGE (WAUK 90343-A) 345/230/13.2KV TRANSFORMER CKT 1	560	560	0.20161	116.6675	MOORE COUNTY INTERCHANGE (ENRCO 136402) 230/115/13.2KV TRANSFORMER CKT 1
FDNS	02ALL_G14_038	2	25SP	G14_038	FROM->TO	POTTER COUNTY INTERCHANGE (WAUK 90343-A) 345/230/13.2KV TRANSFORMER CKT 1	560	560	0.20122	116.6552	GEN562483 1-G13_027_3 0.6900
FDNS	02ALL_G14_038	2	25SP	G14_038	FROM->TO	POTTER COUNTY INTERCHANGE (WAUK 90343-A) 345/230/13.2KV TRANSFORMER CKT 1	560	560	0.20204	116.6151	PRINGLE INTERCHANGE - SPEARMAN INTERCHANGE 115KV CKT 2
FDNS	02ALL_G14_038	2	25SP	G14_038	FROM->TO	POTTER COUNTY INTERCHANGE (WAUK 90343-A) 345/230/13.2KV TRANSFORMER CKT 1	560	560	0.20204	116.6151	PRINGLE INTERCHANGE - SPEARMAN INTERCHANGE 115KV CKT 2
FDNS	02ALL_G14_038	2	25SP	G14_038	FROM->TO	POTTER COUNTY INTERCHANGE (WAUK 90343-A) 345/230/13.2KV TRANSFORMER CKT 1	560	560	0.2024	116.6078	Harrington Station East Bus - PRINGLE INTERCHANGE 230KV CKT 1
FDNS	02ALL_G14_038	2	25SP	G14_038	FROM->TO	POTTER COUNTY INTERCHANGE (WAUK 90343-A) 345/230/13.2KV TRANSFORMER CKT 1	560	560	0.2024	116.6066	P12:230:SPS:K43.1.PRNGLE.HARR_E
FDNS	02ALL_G14_038	2	25SP	G14_038	FROM->TO	POTTER COUNTY INTERCHANGE (WAUK 90343-A) 345/230/13.2KV TRANSFORMER CKT 1	560	560	0.20122	116.5746	GEN522866 1-LUBBOCK POWER & LIGHT-HOLLY GEN
FDNS	02ALL_G14_038	2	25SP	G14_038	FROM->TO	POTTER COUNTY INTERCHANGE (WAUK 90343-A) 345/230/13.2KV TRANSFORMER CKT 1	560	560	0.20122	116.5717	GEN337910 1-ARKANSAS NUCLEAR ONE UNIT #1
FDNS	02ALL_G14_038	2	25SP	G14_038	FROM->TO	POTTER COUNTY INTERCHANGE (WAUK 90343-A) 345/230/13.2KV TRANSFORMER CKT 1	560	560	0.20181	116.5369	PRINGLE INTERCHANGE - RIVERVIEW INTERCHANGE 115KV CKT 1
FDNS	02ALL_G14_038	2	25SP	G14_038	FROM->TO	POTTER COUNTY INTERCHANGE (WAUK 90343-A) 345/230/13.2KV TRANSFORMER CKT 1	560	560	0.20181	116.5369	PRINGLE INTERCHANGE - RIVERVIEW INTERCHANGE 115KV CKT 1
FDNS	02ALL_G14_038	2	25SP	G14_038	FROM->TO	POTTER COUNTY INTERCHANGE (WAUK 90343-A) 345/230/13.2KV TRANSFORMER CKT 1	560	560	0.20122	116.489	GEN524890 1-SNJN-WTGA1 10.6000
FDNSLock	02ALL_G14_038	2	25SP	G14_038	FROM->TO	POTTER COUNTY INTERCHANGE (WAUK 90343-A) 345/230/13.2KV TRANSFORMER CKT 1	560	560	0.20036	116.4854	STATELINE INTERCHANGE (H TP80154301) 230/115/13.2KV TRANSFORMER CKT 1

SOLUTION	GROUP	SCENARIO	SEASON	SOURCE	DIRECTION	MONITORED ELEMENT	RATEA (MVA)	RATEB(MVA)	TDF	TC%LOADING (% MVA)	CONTINGENCY
FDNS	02ALL_G14_038	2	25SP	G14_038	FROM->TO	POTTER COUNTY INTERCHANGE (WAUK 90343-A) 345/230/13.2KV TRANSFORMER CKT 1	560	560	0.20127	116.4637	GRACEMONT - LAWTON EASTSIDE 345KV CKT 1
FDNS	02ALL_G14_038	2	25SP	G14_038	FROM->TO	POTTER COUNTY INTERCHANGE (WAUK 90343-A) 345/230/13.2KV TRANSFORMER CKT 1	560	560	0.20127	116.4637	GRACEMONT - LAWTON EASTSIDE 345KV CKT 1
FDNS	02ALL_G14_038	2	25SP	G14_038	FROM->TO	POTTER COUNTY INTERCHANGE (WAUK 90343-A) 345/230/13.2KV TRANSFORMER CKT 1	560	560	0.20119	116.4381	HOBBS - YOAKUM_345 345.00 345KV CKT 1
FDNS	02ALL_G14_038	2	25SP	G14_038	FROM->TO	POTTER COUNTY INTERCHANGE (WAUK 90343-A) 345/230/13.2KV TRANSFORMER CKT 1	560	560	0.20122	116.4008	GEN337652 1-WHITE BLUFF UNIT #1
FDNS	02ALL_G14_038	2	25SP	G14_038	FROM->TO	POTTER COUNTY INTERCHANGE (WAUK 90343-A) 345/230/13.2KV TRANSFORMER CKT 1	560	560	0.20133	116.3901	BEARCAT 138.00 - MOORELAND 138KV CKT 1
FDNS	02ALL_G14_038	2	25SP	G14_038	FROM->TO	POTTER COUNTY INTERCHANGE (WAUK 90343-A) 345/230/13.2KV TRANSFORMER CKT 1	560	560	0.20183	116.3881	MOORE COUNTY INTERCHANGE W. - RB-S&S 3115.00 115KV CKT 1
FDNS	02ALL_G14_038	2	25SP	G14_038	FROM->TO	POTTER COUNTY INTERCHANGE (WAUK 90343-A) 345/230/13.2KV TRANSFORMER CKT 1	560	560	0.20122	116.3821	GEN562710 1-G15_022_3 0.5500
FDNS	02ALL_G14_038	2	25SP	G14_038	FROM->TO	POTTER COUNTY INTERCHANGE (WAUK 90343-A) 345/230/13.2KV TRANSFORMER CKT 1	560	560	0.20122	116.3714	GEN337653 1-WHITE BLUFF UNIT #2
FDNS	02ALL_G14_038	2	25SP	G14_038	FROM->TO	POTTER COUNTY INTERCHANGE (WAUK 90343-A) 345/230/13.2KV TRANSFORMER CKT 1	560	560	0.2008	116.3712	JOHNSON COUNTY - PITTSBURG 345KV CKT 1
FDNS	02ALL_G14_038	2	25SP	G14_038	FROM->TO	POTTER COUNTY INTERCHANGE (WAUK 90343-A) 345/230/13.2KV TRANSFORMER CKT 1	560	560	0.2008	116.3712	JOHNSON COUNTY - PITTSBURG 345KV CKT 1
FDNS	02ALL_G14_038	2	25SP	G14_038	FROM->TO	POTTER COUNTY INTERCHANGE (WAUK 90343-A) 345/230/13.2KV TRANSFORMER CKT 1	560	560	0.20122	116.3608	GEN501813 1-RODEMACHER UNIT 3
FDNS	02ALL_G14_038	2	25SP	G14_038	FROM->TO	POTTER COUNTY INTERCHANGE (WAUK 90343-A) 345/230/13.2KV TRANSFORMER CKT 1	560	560	0.20122	116.3455	GEN336252 1-NINEMILE POINT UNIT#5
FDNS	02ALL_G14_038	2	25SP	G14_038	FROM->TO	POTTER COUNTY INTERCHANGE (WAUK 90343-A) 345/230/13.2KV TRANSFORMER CKT 1	560	560	0.20036	116.3387	Graves Sub - STATELINE INTERCHANGE 115KV CKT 1
FDNS	02ALL_G14_038	2	25SP	G14_038	FROM->TO	POTTER COUNTY INTERCHANGE (WAUK 90343-A) 345/230/13.2KV TRANSFORMER CKT 1	560	560	0.20036	116.3387	Graves Sub - STATELINE INTERCHANGE 115KV CKT 1
FDNS	02ALL_G14_038	2	25SP	G14_038	FROM->TO	POTTER COUNTY INTERCHANGE (WAUK 90343-A) 345/230/13.2KV TRANSFORMER CKT 1	560	560	0.20133	116.3229	BEARCAT 138.00 - NINE MILE 138KV CKT 1
FDNS	02ALL_G14_038	2	25SP	G14_038	FROM->TO	POTTER COUNTY INTERCHANGE (WAUK 90343-A) 345/230/13.2KV TRANSFORMER CKT 1	560	560	0.20234	116.3217	G13-010T 345.00 - POST ROCK 345KV CKT 1
FDNS	02ALL_G14_038	2	25SP	G14_038	FROM->TO	POTTER COUNTY INTERCHANGE (WAUK 90343-A) 345/230/13.2KV TRANSFORMER CKT 1	560	560	0.20122	116.3143	GEN336251 1-NINEMILE POINT UNIT#4
FDNS	02ALL_G14_038	2	25SP	G14_038	FROM->TO	POTTER COUNTY INTERCHANGE (WAUK 90343-A) 345/230/13.2KV TRANSFORMER CKT 1	560	560	0.20089	116.3094	TUCO INTERCHANGE - YOAKUM_345 345.00 345KV CKT 1
FDNS	02ALL_G14_038	2	25SP	G14_038	FROM->TO	POTTER COUNTY INTERCHANGE (WAUK 90343-A) 345/230/13.2KV TRANSFORMER CKT 1	560	560	0.20122	116.3039	GEN562655 1-G14_074_3 0.6900
FDNS	02ALL_G14_038	2	25SP	G14_038	FROM->TO	POTTER COUNTY INTERCHANGE (WAUK 90343-A) 345/230/13.2KV TRANSFORMER CKT 1	560	560	0.20133	116.2946	P12:138:WFEC:MSL14
FDNS	02ALL_G14_038	2	25SP	G14_038	FROM->TO	POTTER COUNTY INTERCHANGE (WAUK 90343-A) 345/230/13.2KV TRANSFORMER CKT 1	560	560	0.20122	116.2927	GEN334440 1-SABINE UNIT 4
FDNS	02ALL_G14_038	2	25SP	G14_038	FROM->TO	POTTER COUNTY INTERCHANGE (WAUK 90343-A) 345/230/13.2KV TRANSFORMER CKT 1	560	560	0.20234	116.2861	G13-010T 345.00 - SPEARVILLE 345KV CKT 1
FDNS	02ALL_G14_038	2	25SP	G14_038	FROM->TO	POTTER COUNTY INTERCHANGE (WAUK 90343-A) 345/230/13.2KV TRANSFORMER CKT 1	560	560	0.2018	116.286	IODINE - WOODWARD EHV 138KV CKT 1
FDNS	02ALL_G14_038	2	25SP	G14_038	FROM->TO	POTTER COUNTY INTERCHANGE (WAUK 90343-A) 345/230/13.2KV TRANSFORMER CKT 1	560	560	0.20122	116.2849	GEN524287 1-GS-PHWD_GEN10.6900
FDNS	02ALL_G14_038	2	25SP	G14_038	FROM->TO	POTTER COUNTY INTERCHANGE (WAUK 90343-A) 345/230/13.2KV TRANSFORMER CKT 1	560	560	0.20122	116.2845	GEN335206 1-NELSON UNIT 6
FDNS	02ALL_G14_038	2	25SP	G14_038	FROM->TO	POTTER COUNTY INTERCHANGE (WAUK 90343-A) 345/230/13.2KV TRANSFORMER CKT 1	560	560	0.2077	116.2798	BUCKNER7 345.00 - SPEARVILLE 345KV CKT 1
FDNS	02ALL_G14_038	2	25SP	G14_038	FROM->TO	POTTER COUNTY INTERCHANGE (WAUK 90343-A) 345/230/13.2KV TRANSFORMER CKT 1	560	560	0.2077	116.2798	BUCKNER7 345.00 - SPEARVILLE 345KV CKT 1
FDNS	02ALL_G14_038	2	25SP	G14_038	FROM->TO	POTTER COUNTY INTERCHANGE (WAUK 90343-A) 345/230/13.2KV TRANSFORMER CKT 1	560	560	0.20122	116.2777	GEN524485 1-CAPROCK WIND GEN
FDNS	02ALL_G14_038	2	25SP	G14_038	FROM->TO	POTTER COUNTY INTERCHANGE (WAUK 90343-A) 345/230/13.2KV TRANSFORMER CKT 1	560	560	0.20132	116.2758	MARTIN SUB - PANTEX NORTH SUB 115KV CKT 1
FDNS	02ALL_G14_038	2	25SP	G14_038	FROM->TO	POTTER COUNTY INTERCHANGE (WAUK 90343-A) 345/230/13.2KV TRANSFORMER CKT 1	560	560	0.20132	116.2758	MARTIN SUB - PANTEX NORTH SUB 115KV CKT 1
FDNS	02ALL_G14_038	2	25SP	G14_038	FROM->TO	POTTER COUNTY INTERCHANGE (WAUK 90343-A) 345/230/13.2KV TRANSFORMER CKT 1	560	560	0.20076	116.2758	TUCO INTERCHANGE (GE M1022338) 345/230/13.2KV TRANSFORMER CKT 1
FDNS	02ALL_G14_038	2	25SP	G14_038	FROM->TO	POTTER COUNTY INTERCHANGE (WAUK 90343-A) 345/230/13.2KV TRANSFORMER CKT 1	560	560	0.20076	116.2758	TUCO INTERCHANGE (GE M1022338) 345/230/13.2KV TRANSFORMER CKT 1
FDNS	02ALL_G14_038	2	25SP	G14_038	FROM->TO	POTTER COUNTY INTERCHANGE (WAUK 90343-A) 345/230/13.2KV TRANSFORMER CKT 1	560	560	0.20122	116.2743	GEN336831 1-BAXTER WILSON SES
FDNS	02ALL_G14_038	2	25SP	G14_038	FROM->TO	POTTER COUNTY INTERCHANGE (WAUK 90343-A) 345/230/13.2KV TRANSFORMER CKT 1	560	560	0.20132	116.2702	PANTEX NORTH SUB - PANTEX SOUTH SUB 115KV CKT 1
FDNS	02ALL_G14_038	2	25SP	G14_038	FROM->TO	POTTER COUNTY INTERCHANGE (WAUK 90343-A) 345/230/13.2KV TRANSFORMER CKT 1	560	560	0.20132	116.2702	PANTEX NORTH SUB - PANTEX SOUTH SUB 115KV CKT 1
FDNS	02ALL_G14_038	2	25SP	G14_038	FROM->TO	POTTER COUNTY INTERCHANGE (WAUK 90343-A) 345/230/13.2KV TRANSFORMER CKT 1	560	560	0.20276	116.2675	G11_051T 345.00 - TATONGA7 345.00 345KV CKT 2
FDNS	02ALL_G14_038	2	25SP	G14_038	FROM->TO	POTTER COUNTY INTERCHANGE (WAUK 90343-A) 345/230/13.2KV TRANSFORMER CKT 1	560	560	0.20276	116.2674	G11_051T 345.00 - TATONGA7 345.00 345KV CKT 1
FDNS	02ALL_G14_038	2	25SP	G14_038	FROM->TO	POTTER COUNTY INTERCHANGE (WAUK 90343-A) 345/230/13.2KV TRANSFORMER CKT 1	560	560	0.20148	116.2674	TUCO INTERCHANGE - TUCO_2 345.00 345KV CKT 1
FDNS	02ALL_G14_038	2	25SP	G14_038	FROM->TO	POTTER COUNTY INTERCHANGE (WAUK 90343-A) 345/230/13.2KV TRANSFORMER CKT 1	560	560	0.20132	116.2638	HIGHLAND PARK TAP - PANTEX SOUTH SUB 115KV CKT 1
FDNS	02ALL_G14_038	2	25SP	G14_038	FROM->TO	POTTER COUNTY INTERCHANGE (WAUK 90343-A) 345/230/13.2KV TRANSFORMER CKT 1	560	560	0.20276	116.261	G11_051T 345.00 - WOODWARD DISTRICT EHV 345KV CKT 2
FDNS	02ALL_G14_038	2	25SP	G14_038	FROM->TO	POTTER COUNTY INTERCHANGE (WAUK 90343-A) 345/230/13.2KV TRANSFORMER CKT 1	560	560	0.20276	116.2609	G11_051T 345.00 - WOODWARD DISTRICT EHV 345KV CKT 1
FDNS	02ALL_G14_038	2	25SP	G14_038	FROM->TO	POTTER COUNTY INTERCHANGE (WAUK 90343-A) 345/230/13.2KV TRANSFORMER CKT 1	560	560	0.20056	116.2588	TUCO_2 345.00 (TUCO_2 XFMR) 345/230/13.2KV TRANSFORMER CKT 1
FDNS	02ALL_G14_038	2	25SP	G14_038	FROM->TO	POTTER COUNTY INTERCHANGE (WAUK 90343-A) 345/230/13.2KV TRANSFORMER CKT 1	560	560	0.20211	116.2532	WALKEMEYER - WALKTAP3 115.00 115KV CKT 1
FDNS	02ALL_G14_038	2	25SP	G14_038	FROM->TO	POTTER COUNTY INTERCHANGE (WAUK 90343-A) 345/230/13.2KV TRANSFORMER CKT 1	560	560	0.20211	116.2532	WALKEMEYER - WALKTAP3 115.00 115KV CKT 1
FDNS	02ALL_G14_038	2	25SP	G14_038	FROM->TO	POTTER COUNTY INTERCHANGE (WAUK 90343-A) 345/230/13.2KV TRANSFORMER CKT 1	560	560	0.20211	116.2531	WALKTAP7 345.00 (WALKE345) 345/115/13.8KV TRANSFORMER CKT 1
FDNS	02ALL_G14_038	2	25SP	G14_038	FROM->TO	POTTER COUNTY INTERCHANGE (WAUK 90343-A) 345/230/13.2KV TRANSFORMER CKT 1	560	560	0.20211	116.2531	WALKTAP7 345.00 (WALKE345) 345/115/13.8KV TRANSFORMER CKT 1
FDNS	02ALL_G14_038	2	25SP	G14_038	FROM->TO	POTTER COUNTY INTERCHANGE (WAUK 90343-A) 345/230/13.2KV TRANSFORMER CKT 1	560	560	0.20122	116.2527	GEN523815 1-LLANO ESTACADO WIND GEN
FDNS	02ALL_G14_038	2	25SP	G14_038	FROM->TO	POTTER COUNTY INTERCHANGE (WAUK 90343-A) 345/230/13.2KV TRANSFORMER CKT 1	560	560	0.20084	116.2486	P12:138:AEPW:S.W.S.-4:L.E.S.-4
FDNS	02ALL_G14_038	2	25SP	G14_038	FROM->TO	POTTER COUNTY INTERCHANGE (WAUK 90343-A) 345/230/13.2KV TRANSFORMER CKT 1	560	560	0.20122	116.2394	GEN338146 1-INDEPENDENCE UNIT #2
FDNS	02ALL_G14_038	2	25SP	G14_038	FROM->TO	POTTER COUNTY INTERCHANGE (WAUK 90343-A) 345/230/13.2KV TRANSFORMER CKT 1	560	560	0.2018	116.2324	DEWEY - IODINE 138KV CKT 1
FDNS	02ALL_G14_038	2	25SP	G14_038	FROM->TO	POTTER COUNTY INTERCHANGE (WAUK 90343-A) 345/230/13.2KV TRANSFORMER CKT 1	560	560	0.20122	116.2246	GEN501812 1-RODEMACHER UNIT 2
FDNS	02ALL_G14_038	2	25SP	G14_038	FROM->TO	POTTER COUNTY INTERCHANGE (WAUK 90343-A) 345/230/13.2KV TRANSFORMER CKT 1	560	560	0.20118	116.213	P12:138:WFEC:MSL15
FDNS	02ALL_G14_038	2	25SP	G14_038	FROM->TO	POTTER COUNTY INTERCHANGE (WAUK 90343-A) 345/230/13.2KV TRANSFORMER CKT 1	560	560	0.20122	116.2114	GRAND GULF 500/22.0KV TRANSFORMER CKT 1
FDNS	02ALL_G14_038	2	25SP	G14_038	FROM->TO	POTTER COUNTY INTERCHANGE (WAUK 90343-A) 345/230/13.2KV TRANSFORMER CKT 1	560	560	0.20122	116.2092	GEN337041 1-GERALD ANDRUS
FDNS	02ALL_G14_038	2	25SP	G14_038	FROM->TO	POTTER COUNTY INTERCHANGE (WAUK 90343-A) 345/230/13.2KV TRANSFORMER CKT 1	560	560	0.20122	116.2048	GEN338143 1-INDEPENDENCE UNIT #1
FDNS	02ALL_G14_038	2	25SP	G14_038	FROM->TO	POTTER COUNTY INTERCHANGE (WAUK 90343-A) 345/230/13.2KV TRANSFORMER CKT 1	560	560	0.20098	116.1994	SUNDOWN INTERCHANGE - WOLFFORTH INTERCHANGE 230KV CKT 1
FDNS	02ALL_G14_038	2	25SP	G14_038	FROM->TO	POTTER COUNTY INTERCHANGE (WAUK 90343-A) 345/230/13.2KV TRANSFORMER CKT 1	560	560	0.20098	116.1994	SUNDOWN INTERCHANGE - WOLFFORTH INTERCHANGE 230KV CKT 1
FDNS	02ALL_G14_038	2	25SP	G14_038	FROM->TO	POTTER COUNTY INTERCHANGE (WAUK 90343-A) 345/230/13.2KV TRANSFORMER CKT 1	560	560	0.20122	116.189	GEN334441 1-SABINE UNIT 5
FDNS	02ALL_G14_038	2	25SP	G14_038	FROM->TO	POTTER COUNTY INTERCHANGE (WAUK 90343-A) 345/230/13.2KV TRANSFORMER CKT 1	560	560	0.20183	116.187	P12:115:SPS:T25.1.MOOREW.DUMAS19
FDNS	02ALL_G14_038	2	25SP	G14_038	FROM->TO	POTTER COUNTY INTERCHANGE (WAUK 90343-A) 345/230/13.2KV TRANSFORMER CKT 1	560	560	0.20183	116.185	DUMAS SUB - RB-S&S 3115.00 115KV CKT 1
FDNS	02ALL_G14_038	2	25SP	G14_038	FROM->TO	POTTER COUNTY INTERCHANGE (WAUK 90343-A) 345/230/13.2KV TRANSFORMER CKT 1	560	560	0.20122	116.1732	P12:345:GRDA:CHOUTEAU-SPORTSMANACRES
FDNS	02ALL_G14_038	2	25SP	G14_038	FROM->TO	POTTER COUNTY INTERCHANGE (WAUK 90343-A) 345/230/13.2KV TRANSFORMER CKT 1	560	560	0.20118	116.1704	CARLISLE INTERCHANGE - TUCO INTERCHANGE 230KV CKT 1
FDNS	02ALL_G14_038	2	25SP	G14_038	FROM->TO	POTTER COUNTY INTERCHANGE (WAUK 90343-A) 345/230/13.2KV TRANSFORMER CKT 1	560	560	0.20118	116.1704	CARLISLE INTERCHANGE - TUCO INTERCHANGE 230KV CKT 1
FDNS	02ALL_G14_038	2	25SP	G14_038	FROM->TO	POTTER COUNTY INTERCHANGE (WAUK 90343-A) 345/230/13.2KV TRANSFORMER CKT 1	560	560	0.20122	116.1673	GEN527884 1-CUNNINGHAM GEN #4 22 KV
FDNS	02ALL_G14_038	2	25SP	G14_038	FROM->TO	POTTER COUNTY INTERCHANGE (WAUK 90343-A) 345/230/13.2KV TRANSFORMER CKT 1	560	560	0.20122	116.1672	GEN335204 1-NELSON UNIT 4
FDNS	02ALL_G14_038	2	25SP	G14_038	FROM->TO	POTTER COUNTY INTERCHANGE (WAUK 90343-A) 345/230/13.2KV TRANSFORMER CKT 1	560	560	0.2006	116.1635	HUGO - SUNNYSIDE 345KV CKT 1
FDNS	02ALL_G14_038	2	25SP	G14_038	FROM->TO	POTTER COUNTY INTERCHANGE (WAUK 90343-A) 345/230/13.2KV TRANSFORMER CKT 1	560	560	0.20133	116.1594	MOREWOOD SW - NINE MILE 138KV CKT 1
FDNS	02ALL_G14_038	2	25SP	G14_038	FROM->TO	POTTER COUNTY INTERCHANGE (WAUK 90343-A) 345/230/13.2KV TRANSFORMER CKT 1	560	560	0.20122	116.1565	GEN527883 1-CUNNINGHAM GEN #3 22 KV
FDNS	02ALL_G14_038	2	25SP	G14_038	FROM->TO	POTTER COUNTY INTERCHANGE (WAUK 90343-A) 345/230/13.2KV TRANSFORMER CKT 1	560	560	0.20086	116.155	NORTHWEST - SPRING CREEK 345KV CKT 1
FDNS	02ALL_G14_038	2	25SP	G14_038	FROM->TO	POTTER COUNTY INTERCHANGE (WAUK 90343-A) 345/230/13.2KV TRANSFORMER CKT 1	560	560	0.20122	116.1533	P12:230:SPS:CL.1.BSHLND.WLDRDO
FDNS	02ALL_G14_038	2	25SP	G14_038	FROM->TO	POTTER COUNTY INTERCHANGE (WAUK 90343-A) 345/230/13.2KV TRANSFORMER CKT 1	560	560	0.20122	116.153	GEN511848 1-SOUTHWESTERN STATION #3
FDNS	02ALL_G14_038	2	25SP	G14_038	FROM->TO	POTTER COUNTY INTERCHANGE (WAUK 90343-A) 345/230/13.2KV TRANSFORMER CKT 1	560	560	0.20122	116.1518	GEN562007 1-G11_025_3 0.6900
FDNS	02ALL_G14_038	2	25SP	G14_038	FROM->TO	POTTER COUNTY INTERCHANGE (WAUK 90343-A) 345/230/13.2KV TRANSFORMER CKT 1	560	560	0.20084	116.1515	TUCO INTERCHANGE (SIEM 8743066) 345/230/13.2KV TRANSFORMER CKT 2

SOLUTION	GROUP	SCENARIO	SEASON	SOURCE	DIRECTION	MONITORED ELEMENT	RATEA (MVA)	RATEB(MVA)	TDF	TC%LOADING (% MVA)	CONTINGENCY
FDNS	02ALL_G14_038	2	25SP	G14_038	FROM->TO	POTTER COUNTY INTERCHANGE (WAUK 90343-A) 345/230/13.2KV TRANSFORMER CKT 1	560	560	0.20084	116.1515	TUCO INTERCHANGE (SIEM 8743066) 345/230/13.2KV TRANSFORMER CKT 2
FDNS	02ALL_G14_038	2	25SP	G14_038	FROM->TO	POTTER COUNTY INTERCHANGE (WAUK 90343-A) 345/230/13.2KV TRANSFORMER CKT 1	560	560	0.19911	116.1475	CHILDRESS - LAKE PAULINE 138KV CKT 1
FDNS	02ALL_G14_038	2	25SP	G14_038	FROM->TO	POTTER COUNTY INTERCHANGE (WAUK 90343-A) 345/230/13.2KV TRANSFORMER CKT 1	560	560	0.19911	116.1475	CHILDRESS - LAKE PAULINE 138KV CKT 1
FDNS	02ALL_G14_038	2	25SP	G14_038	FROM->TO	POTTER COUNTY INTERCHANGE (WAUK 90343-A) 345/230/13.2KV TRANSFORMER CKT 1	560	560	0.20119	116.1461	P12:115:SPS:T01.1.TXSCO.COLE
FDNS	02ALL_G14_038	2	25SP	G14_038	FROM->TO	POTTER COUNTY INTERCHANGE (WAUK 90343-A) 345/230/13.2KV TRANSFORMER CKT 1	560	560	0.20122	116.1423	GEN528361 1-MADDOX GEN #1
FDNS	02ALL_G14_038	2	25SP	G14_038	FROM->TO	POTTER COUNTY INTERCHANGE (WAUK 90343-A) 345/230/13.2KV TRANSFORMER CKT 1	560	560	0.20122	116.1375	GEN336191 1-LITTLE GYPSY UNIT#3
FDNS	02ALL_G14_038	2	25SP	G14_038	FROM->TO	POTTER COUNTY INTERCHANGE (WAUK 90343-A) 345/230/13.2KV TRANSFORMER CKT 1	560	560	0.20122	116.0629	GEN523942 1-MAJSTC-WTG210.6900
FDNS	02ALL_G14_038	2	25SP	G14_038	FROM->TO	POTTER COUNTY INTERCHANGE (WAUK 90343-A) 345/230/13.2KV TRANSFORMER CKT 1	560	560	0.20122	116.0552	GEN523941 1-MAJSTC-WTG110.6900
FDNS	02ALL_G14_038	2	25SP	G14_038	FROM->TO	POTTER COUNTY INTERCHANGE (WAUK 90343-A) 345/230/13.2KV TRANSFORMER CKT 1	560	560	0.20122	115.9402	GEN523462 1-BLACKHAWK GEN #2
FDNS	02ALL_G14_038	2	25SP	G14_038	FROM->TO	POTTER COUNTY INTERCHANGE (WAUK 90343-A) 345/230/13.2KV TRANSFORMER CKT 1	560	560	0.20122	115.9396	GEN523461 1-BLACKHAWK GEN #1
FDNS	02ALL_G14_038	2	25SP	G14_038	FROM->TO	POTTER COUNTY INTERCHANGE (WAUK 90343-A) 345/230/13.2KV TRANSFORMER CKT 1	560	560	0.20227	115.8917	OCHILTREE (H TP80219401) 230/115/13.2KV TRANSFORMER CKT 1
FDNS	02ALL_G14_038	2	25SP	G14_038	FROM->TO	POTTER COUNTY INTERCHANGE (WAUK 90343-A) 345/230/13.2KV TRANSFORMER CKT 1	560	560	0.20227	115.8917	OCHILTREE (H TP80219401) 230/115/13.2KV TRANSFORMER CKT 1
FDNS	02ALL_G14_038	2	25SP	G14_038	FROM->TO	POTTER COUNTY INTERCHANGE (WAUK 90343-A) 345/230/13.2KV TRANSFORMER CKT 1	560	560	0.20227	115.8567	HITCHLAND INTERCHANGE - OCHILTREE 230KV CKT 1
FDNS	02ALL_G14_038	2	25SP	G14_038	FROM->TO	POTTER COUNTY INTERCHANGE (WAUK 90343-A) 345/230/13.2KV TRANSFORMER CKT 1	560	560	0.20227	115.8567	HITCHLAND INTERCHANGE - OCHILTREE 230KV CKT 1
FDNS	02ALL_G14_038	2	25SP	G14_038	FROM->TO	POTTER COUNTY INTERCHANGE (WAUK 90343-A) 345/230/13.2KV TRANSFORMER CKT 1	560	560	0.20122	115.601	2109-BUSHLAND INTERCHANGE
FDNS	02ALL_G14_038	2	25SP	G14_038	FROM->TO	POTTER COUNTY INTERCHANGE (WAUK 90343-A) 345/230/13.2KV TRANSFORMER CKT 1	560	560	0.20122	115.601	BASE CASE
FDNS	02ALL_G14_038	2	25SP	G14_038	FROM->TO	POTTER COUNTY INTERCHANGE (WAUK 90343-A) 345/230/13.2KV TRANSFORMER CKT 1	560	560	0.19866	115.4681	GRACEMONT - MINCO 345KV CKT 1
FDNS	02ALL_G14_038	2	25SP	G14_038	FROM->TO	POTTER COUNTY INTERCHANGE (WAUK 90343-A) 345/230/13.2KV TRANSFORMER CKT 1	560	560	0.20122	115.3989	GEN562550 1-G14_040_3 0.6900
FDNS	02ALL_G14_038	2	25SP	G14_038	FROM->TO	POTTER COUNTY INTERCHANGE (WAUK 90343-A) 345/230/13.2KV TRANSFORMER CKT 1	560	560	0.2077	115.2328	BUCKNER7 345.00 - HOLCOMB 345KV CKT 1
FDNS	02ALL_G14_038	2	25SP	G14_038	FROM->TO	POTTER COUNTY INTERCHANGE (WAUK 90343-A) 345/230/13.2KV TRANSFORMER CKT 1	560	560	0.2077	115.2328	BUCKNER7 345.00 - HOLCOMB 345KV CKT 1
FDNS	02ALL_G14_038	2	25SP	G14_038	FROM->TO	POTTER COUNTY INTERCHANGE (WAUK 90343-A) 345/230/13.2KV TRANSFORMER CKT 1	560	560	0.20122	115.2298	GEN560105 1-G08-22 0.6900
FDNS	02ALL_G14_038	2	25SP	G14_038	FROM->TO	POTTER COUNTY INTERCHANGE (WAUK 90343-A) 345/230/13.2KV TRANSFORMER CKT 1	560	560	0.21951	115.1999	FINNEY SWITCHING STATION - WALKTAP7 345.00 345KV CKT 1
FDNS	02ALL_G14_038	2	25SP	G14_038	FROM->TO	POTTER COUNTY INTERCHANGE (WAUK 90343-A) 345/230/13.2KV TRANSFORMER CKT 1	560	560	0.21951	115.1999	FINNEY SWITCHING STATION - WALKTAP7 345.00 345KV CKT 1
FDNS	02ALL_G14_038	2	25SP	G14_038	FROM->TO	POTTER COUNTY INTERCHANGE (WAUK 90343-A) 345/230/13.2KV TRANSFORMER CKT 1	560	560	0.20122	115.0642	GEN659018 1-G14_003IS_3 0.6900
FDNS	02ALL_G14_038	2	25SP	G14_038	FROM->TO	POTTER COUNTY INTERCHANGE (WAUK 90343-A) 345/230/13.2KV TRANSFORMER CKT 1	560	560	0.20122	115.063	GEN531461 4-S4 GENERATOR
FDNS	02ALL_G14_038	2	25SP	G14_038	FROM->TO	POTTER COUNTY INTERCHANGE (WAUK 90343-A) 345/230/13.2KV TRANSFORMER CKT 1	560	560	0.20122	115.0621	GEN300020 1-1CHOTCT4 16.000
FDNS	02ALL_G14_038	2	25SP	G14_038	FROM->TO	POTTER COUNTY INTERCHANGE (WAUK 90343-A) 345/230/13.2KV TRANSFORMER CKT 1	560	560	0.20122	115.062	GEN300021 1-1CHOTCT5 16.000
FDNS	02ALL_G14_038	2	25SP	G14_038	FROM->TO	POTTER COUNTY INTERCHANGE (WAUK 90343-A) 345/230/13.2KV TRANSFORMER CKT 1	560	560	0.20122	115.062	GEN300032 1-CHOUTEAU CTG 2
FDNS	02ALL_G14_038	2	25SP	G14_038	FROM->TO	POTTER COUNTY INTERCHANGE (WAUK 90343-A) 345/230/13.2KV TRANSFORMER CKT 1	560	560	0.20122	115.062	GEN300033 1-CHOUTEAU STG 3
FDNS	02ALL_G14_038	2	25SP	G14_038	FROM->TO	POTTER COUNTY INTERCHANGE (WAUK 90343-A) 345/230/13.2KV TRANSFORMER CKT 1	560	560	0.20122	115.0445	GEN531462 5-S5 GENERATOR
FDNS	02ALL_G14_038	2	25SP	G14_038	FROM->TO	POTTER COUNTY INTERCHANGE (WAUK 90343-A) 345/230/13.2KV TRANSFORMER CKT 1	560	560	0.20104	115.0437	P12:115:SPS:W40.1.WCANYON.DFSMTH
FDNS	02ALL_G14_038	2	25SP	G14_038	FROM->TO	POTTER COUNTY INTERCHANGE (WAUK 90343-A) 345/230/13.2KV TRANSFORMER CKT 1	560	560	0.20122	115.0407	GEN300024 1-1CHOTST6 16.000
FDNS	02ALL_G14_038	2	25SP	G14_038	FROM->TO	POTTER COUNTY INTERCHANGE (WAUK 90343-A) 345/230/13.2KV TRANSFORMER CKT 1	560	560	0.20097	115.0407	G13_027T 230.00 - TOLK STATION WEST 230KV CKT 1
FDNS	02ALL_G14_038	2	25SP	G14_038	FROM->TO	POTTER COUNTY INTERCHANGE (WAUK 90343-A) 345/230/13.2KV TRANSFORMER CKT 1	560	560	0.20122	115.0406	GEN300031 1-CHOUTEAU CTG 1
FDNS	02ALL_G14_038	2	25SP	G14_038	FROM->TO	POTTER COUNTY INTERCHANGE (WAUK 90343-A) 345/230/13.2KV TRANSFORMER CKT 1	560	560	0.20122	115.0346	GEN546698 1-QN GEN2
FDNS	02ALL_G14_038	2	25SP	G14_038	FROM->TO	POTTER COUNTY INTERCHANGE (WAUK 90343-A) 345/230/13.2KV TRANSFORMER CKT 1	560	560	0.20091	115.034	KINGSMILL INTERCHANGE - LLANO ESTACADO WIND GEN 115KV CKT 1
FDNS	02ALL_G14_038	2	25SP	G14_038	FROM->TO	POTTER COUNTY INTERCHANGE (WAUK 90343-A) 345/230/13.2KV TRANSFORMER CKT 1	560	560	0.20122	115.0277	GEN659289 1-DAYCNTYWND W0.6900
FDNS	02ALL_G14_038	2	25SP	G14_038	FROM->TO	POTTER COUNTY INTERCHANGE (WAUK 90343-A) 345/230/13.2KV TRANSFORMER CKT 1	560	560	0.20122	115.0211	GEN542967 9-HAWTHORN UNIT #9
FDNS	02ALL_G14_038	2	25SP	G14_038	FROM->TO	POTTER COUNTY INTERCHANGE (WAUK 90343-A) 345/230/13.2KV TRANSFORMER CKT 1	560	560	0.20122	115.0161	GEN635213 3-NEAL UNIT 3
FDNS	02ALL_G14_038	2	25SP	G14_038	FROM->TO	POTTER COUNTY INTERCHANGE (WAUK 90343-A) 345/230/13.2KV TRANSFORMER CKT 1	560	560	0.20091	115.0156	CARGILL SUB - FRIONA SUB 115KV CKT 1
FDNS	02ALL_G14_038	2	25SP	G14_038	FROM->TO	POTTER COUNTY INTERCHANGE (WAUK 90343-A) 345/230/13.2KV TRANSFORMER CKT 1	560	560	0.20122	114.9854	GEN600001 2-SHERBURNE CNTY G2
FDNS	02ALL_G14_038	2	25SP	G14_038	FROM->TO	POTTER COUNTY INTERCHANGE (WAUK 90343-A) 345/230/13.2KV TRANSFORMER CKT 1	560	560	0.20117	114.9796	EAST PLANT INTERCHANGE (WH ALM21481) 230/115/13.2KV TRANSFORMER CKT 1
FDNS	02ALL_G14_038	2	25SP	G14_038	FROM->TO	POTTER COUNTY INTERCHANGE (WAUK 90343-A) 345/230/13.2KV TRANSFORMER CKT 1	560	560	0.20117	114.9796	EAST PLANT INTERCHANGE (WH ALM21481) 230/115/13.2KV TRANSFORMER CKT 1
FDNS	02ALL_G14_038	2	25SP	G14_038	FROM->TO	POTTER COUNTY INTERCHANGE (WAUK 90343-A) 345/230/13.2KV TRANSFORMER CKT 1	560	560	0.20122	114.9767	BIG STONE 230/24.0KV TRANSFORMER CKT 1
FDNS	02ALL_G14_038	2	25SP	G14_038	FROM->TO	POTTER COUNTY INTERCHANGE (WAUK 90343-A) 345/230/13.2KV TRANSFORMER CKT 1	560	560	0.20122	114.9755	GEN652559 1-OAHE
FDNS	02ALL_G14_038	2	25SP	G14_038	FROM->TO	POTTER COUNTY INTERCHANGE (WAUK 90343-A) 345/230/13.2KV TRANSFORMER CKT 1	560	560	0.20108	114.9755	P12:345:SPS:J15.1.XRDS.TOLK
FDNS	02ALL_G14_038	2	25SP	G14_038	FROM->TO	POTTER COUNTY INTERCHANGE (WAUK 90343-A) 345/230/13.2KV TRANSFORMER CKT 1	560	560	0.20117	114.9652	EAST PLANT INTERCHANGE - HARRINGTON STATION 230KV CKT 1
FDNS	02ALL_G14_038	2	25SP	G14_038	FROM->TO	POTTER COUNTY INTERCHANGE (WAUK 90343-A) 345/230/13.2KV TRANSFORMER CKT 1	560	560	0.20117	114.9652	EAST PLANT INTERCHANGE - HARRINGTON STATION 230KV CKT 1
FDNS	02ALL_G14_038	2	25SP	G14_038	FROM->TO	POTTER COUNTY INTERCHANGE (WAUK 90343-A) 345/230/13.2KV TRANSFORMER CKT 1	560	560	0.20122	114.9639	GEN539677 3-A. M. MULLERGREN GENERATOR
FDNS	02ALL_G14_038	2	25SP	G14_038	FROM->TO	POTTER COUNTY INTERCHANGE (WAUK 90343-A) 345/230/13.2KV TRANSFORMER CKT 1	560	560	0.20122	114.9637	GEN532672 1-TECUMSEH ENERGY CENTER UNIT 8
FDNS	02ALL_G14_038	2	25SP	G14_038	FROM->TO	POTTER COUNTY INTERCHANGE (WAUK 90343-A) 345/230/13.2KV TRANSFORMER CKT 1	560	560	0.19967	114.9611	P12:115:SPS:T53.1.NICHLS.KIRBY
FDNS	02ALL_G14_038	2	25SP	G14_038	FROM->TO	POTTER COUNTY INTERCHANGE (WAUK 90343-A) 345/230/13.2KV TRANSFORMER CKT 1	560	560	0.20091	114.9607	DEAF SMITH REC-#6 - FRIONA SUB 115KV CKT 1
FDNS	02ALL_G14_038	2	25SP	G14_038	FROM->TO	POTTER COUNTY INTERCHANGE (WAUK 90343-A) 345/230/13.2KV TRANSFORMER CKT 1	560	560	0.20122	114.9597	GEN600005 1-MONTICELLO
FDNS	02ALL_G14_038	2	25SP	G14_038	FROM->TO	POTTER COUNTY INTERCHANGE (WAUK 90343-A) 345/230/13.2KV TRANSFORMER CKT 1	560	560	0.20122	114.9586	GEN514939 1-HORSESHOE LAKE 8G
FDNS	02ALL_G14_038	2	25SP	G14_038	FROM->TO	POTTER COUNTY INTERCHANGE (WAUK 90343-A) 345/230/13.2KV TRANSFORMER CKT 1	560	560	0.20122	114.9447	GEN532742 5-EMPORIA ENERGY CENTER UNIT 5
FDNS	02ALL_G14_038	2	25SP	G14_038	FROM->TO	POTTER COUNTY INTERCHANGE (WAUK 90343-A) 345/230/13.2KV TRANSFORMER CKT 1	560	560	0.20007	114.9442	MCCLELLAN SUB - MCLEAN RURAL SUB 115KV CKT 1
FDNS	02ALL_G14_038	2	25SP	G14_038	FROM->TO	POTTER COUNTY INTERCHANGE (WAUK 90343-A) 345/230/13.2KV TRANSFORMER CKT 1	560	560	0.20007	114.9441	KIRBY SWITCHING STATION - MCCLELLAN SUB 115KV CKT 1
FDNS	02ALL_G14_038	2	25SP	G14_038	FROM->TO	POTTER COUNTY INTERCHANGE (WAUK 90343-A) 345/230/13.2KV TRANSFORMER CKT 1	560	560	0.20122	114.9432	GEN300017 1-1G2GPDEL 18.000
FDNS	02ALL_G14_038	2	25SP	G14_038	FROM->TO	POTTER COUNTY INTERCHANGE (WAUK 90343-A) 345/230/13.2KV TRANSFORMER CKT 1	560	560	0.20122	114.9432	GEN645024 4-NORTH OMAHA 4
FDNS	02ALL_G14_038	2	25SP	G14_038	FROM->TO	POTTER COUNTY INTERCHANGE (WAUK 90343-A) 345/230/13.2KV TRANSFORMER CKT 1	560	560	0.20122	114.939	GEN539653 1-CIMARRON RIVER PLANT GENERATOR
FDNS	02ALL_G14_038	2	25SP	G14_038	FROM->TO	POTTER COUNTY INTERCHANGE (WAUK 90343-A) 345/230/13.2KV TRANSFORMER CKT 1	560	560	0.20178	114.9338	RB-ELKS 3115.00 - SHERMAN COUNTY TAP 115KV CKT 1
FDNS	02ALL_G14_038	2	25SP	G14_038	FROM->TO	POTTER COUNTY INTERCHANGE (WAUK 90343-A) 345/230/13.2KV TRANSFORMER CKT 1	560	560	0.20097	114.9234	G13_027T 230.00 - YOAKUM COUNTY INTERCHANGE 230KV CKT 1
FDNS	02ALL_G14_038	2	25SP	G14_038	FROM->TO	POTTER COUNTY INTERCHANGE (WAUK 90343-A) 345/230/13.2KV TRANSFORMER CKT 1	560	560	0.20122	114.9161	GEN511941 1-OEC STEAM # 2
FDNS	02ALL_G14_038	2	25SP	G14_038	FROM->TO	POTTER COUNTY INTERCHANGE (WAUK 90343-A) 345/230/13.2KV TRANSFORMER CKT 1	560	560	0.20122	114.9137	GEN600000 1-SHERBURNECNTY G1
FDNS	02ALL_G14_038	2	25SP	G14_038	FROM->TO	POTTER COUNTY INTERCHANGE (WAUK 90343-A) 345/230/13.2KV TRANSFORMER CKT 1	560	560	0.20122	114.9129	GEN549890 1-SOUTHWEST 1
FDNS	02ALL_G14_038	2	25SP	G14_038	FROM->TO	POTTER COUNTY INTERCHANGE (WAUK 90343-A) 345/230/13.2KV TRANSFORMER CKT 1	560	560	0.20122	114.9125	GEN300016 1-1G1GPDEL 18.000
FDNS	02ALL_G14_038	2	25SP	G14_038	FROM->TO	POTTER COUNTY INTERCHANGE (WAUK 90343-A) 345/230/13.2KV TRANSFORMER CKT 1	560	560	0.20122	114.907	GEN547649 1-ASBURY UNIT #1
FDNS	02ALL_G14_038	2	25SP	G14_038	FROM->TO	POTTER COUNTY INTERCHANGE (WAUK 90343-A) 345/230/13.2KV TRANSFORMER CKT 1	560	560	0.20122	114.9062	GEN511938 1-OEC STEAM # 1
FDNS	02ALL_G14_038	2	25SP	G14_038	FROM->TO	POTTER COUNTY INTERCHANGE (WAUK 90343-A) 345/230/13.2KV TRANSFORMER CKT 1	560	560	0.20122	114.9015	GEN615001 1-COAL CREEK
FDNS	02ALL_G14_038	2	25SP	G14_038	FROM->TO	POTTER COUNTY INTERCHANGE (WAUK 90343-A) 345/230/13.2KV TRANSFORMER CKT 1	560	560	0.20091	114.9	DEAF SMITH REC-#6 - HEREFORD INTERCHANGE 115KV CKT 1
FDNS	02ALL_G14_038	2	25SP	G14_038	FROM->TO	POTTER COUNTY INTERCHANGE (WAUK 90343-A) 345/230/13.2KV TRANSFORMER CKT 1	560	560	0.20122	114.898	GEN513602 1-GRECSTG_1 17.500
FDNS	02ALL_G14_038	2	25SP	G14_038	FROM->TO	POTTER COUNTY INTERCHANGE (WAUK 90343-A) 345/230/13.2KV TRANSFORMER CKT 1	560	560	0.20178	114.8966	P12:115:SPS:W24.1.MOOREE.LASLEY
FDNS	02ALL_G14_038	2	25SP	G14_038	FROM->TO	POTTER COUNTY INTERCHANGE (WAUK 90343-A) 345/230/13.2KV TRANSFORMER CKT 1	560	560	0.20091	114.895	P12:115:SPS:T58.1.HERFRD.CARGIL

SOLUTION	GROUP	SCENARIO	SEASON	SOURCE	DIRECTION	MONITORED ELEMENT	RATEA (MVA)	RATEB(MVA)	TDF	TC%LOADING (% MVA)	CONTINGENCY
FDNS	02ALL_G14_038	2	25SP	G14_038	FROM->TO	POTTER COUNTY INTERCHANGE (WAUK 90343-A) 345/230/13.2KV TRANSFORMER CKT 1	560	560	0.20122	114.8908	GEN615002 2-COAL CREEK
FDNS	02ALL_G14_038	2	25SP	G14_038	FROM->TO	POTTER COUNTY INTERCHANGE (WAUK 90343-A) 345/230/13.2KV TRANSFORMER CKT 1	560	560	0.20122	114.8897	GEN547658 1-STATE LINE COMBINED CYCLE
FDNS	02ALL_G14_038	2	25SP	G14_038	FROM->TO	POTTER COUNTY INTERCHANGE (WAUK 90343-A) 345/230/13.2KV TRANSFORMER CKT 1	560	560	0.20122	114.8827	GEN640005 1-CANADAY
FDNS	02ALL_G14_038	2	25SP	G14_038	FROM->TO	POTTER COUNTY INTERCHANGE (WAUK 90343-A) 345/230/13.2KV TRANSFORMER CKT 1	560	560	0.20122	114.8815	GEN515040 1-SEMINOLE 1G
FDNS	02ALL_G14_038	2	25SP	G14_038	FROM->TO	POTTER COUNTY INTERCHANGE (WAUK 90343-A) 345/230/13.2KV TRANSFORMER CKT 1	560	560	0.19967	114.8772	CONWAY SUB - NICHOLS STATION 115KV CKT 1
FDNS	02ALL_G14_038	2	25SP	G14_038	FROM->TO	POTTER COUNTY INTERCHANGE (WAUK 90343-A) 345/230/13.2KV TRANSFORMER CKT 1	560	560	0.20109	114.8751	TOLK STATION (ABBXNL844501) 345/230/13.2KV TRANSFORMER CKT 1
FDNS	02ALL_G14_038	2	25SP	G14_038	FROM->TO	POTTER COUNTY INTERCHANGE (WAUK 90343-A) 345/230/13.2KV TRANSFORMER CKT 1	560	560	0.20109	114.8751	TOLK STATION (ABBXNL844501) 345/230/13.2KV TRANSFORMER CKT 1
FDNS	02ALL_G14_038	2	25SP	G14_038	FROM->TO	POTTER COUNTY INTERCHANGE (WAUK 90343-A) 345/230/13.2KV TRANSFORMER CKT 1	560	560	0.20109	114.8726	CROSSROADS 7345.00 - TOLK STATION 345KV CKT 1
FDNS	02ALL_G14_038	2	25SP	G14_038	FROM->TO	POTTER COUNTY INTERCHANGE (WAUK 90343-A) 345/230/13.2KV TRANSFORMER CKT 1	560	560	0.20122	114.871	GEN532725 1-EVANS ENERGY CENTER GAS TURBINE 3
FDNS	02ALL_G14_038	2	25SP	G14_038	FROM->TO	POTTER COUNTY INTERCHANGE (WAUK 90343-A) 345/230/13.2KV TRANSFORMER CKT 1	560	560	0.20122	114.8585	GEN532721 1-EVANS ENERGY CENTER UNIT 1
FDNS	02ALL_G14_038	2	25SP	G14_038	FROM->TO	POTTER COUNTY INTERCHANGE (WAUK 90343-A) 345/230/13.2KV TRANSFORMER CKT 1	560	560	0.20122	114.8499	GEN532743 6-EMPORIA ENERGY CENTER UNIT 6
FDNS	02ALL_G14_038	2	25SP	G14_038	FROM->TO	POTTER COUNTY INTERCHANGE (WAUK 90343-A) 345/230/13.2KV TRANSFORMER CKT 1	560	560	0.20122	114.8499	GEN532744 7-EMPORIA ENERGY CENTER UNIT 7
FDNS	02ALL_G14_038	2	25SP	G14_038	FROM->TO	POTTER COUNTY INTERCHANGE (WAUK 90343-A) 345/230/13.2KV TRANSFORMER CKT 1	560	560	0.20122	114.8469	GEN659354 1-DEERCREK STG18.000
FDNS	02ALL_G14_038	2	25SP	G14_038	FROM->TO	POTTER COUNTY INTERCHANGE (WAUK 90343-A) 345/230/13.2KV TRANSFORMER CKT 1	560	560	0.20122	114.8465	GEN659353 1-DEERCREK CTG18.000
FDNS	02ALL_G14_038	2	25SP	G14_038	FROM->TO	POTTER COUNTY INTERCHANGE (WAUK 90343-A) 345/230/13.2KV TRANSFORMER CKT 1	560	560	0.20104	114.827	CANYON E_TP3115.00 - CANYON WEST SUB 115KV CKT 1
FDNS	02ALL_G14_038	2	25SP	G14_038	FROM->TO	POTTER COUNTY INTERCHANGE (WAUK 90343-A) 345/230/13.2KV TRANSFORMER CKT 1	560	560	0.20122	114.8089	GEN509409 1-WILKES #3
FDNS	02ALL_G14_038	2	25SP	G14_038	FROM->TO	POTTER COUNTY INTERCHANGE (WAUK 90343-A) 345/230/13.2KV TRANSFORMER CKT 1	560	560	0.2006	114.8083	KRESS INTERCHANGE - TULIA TAP 115KV CKT 1
FDNS	02ALL_G14_038	2	25SP	G14_038	FROM->TO	POTTER COUNTY INTERCHANGE (WAUK 90343-A) 345/230/13.2KV TRANSFORMER CKT 1	560	560	0.20122	114.8073	GEN509398 1-KNOXLEE #5
FDNS	02ALL_G14_038	2	25SP	G14_038	FROM->TO	POTTER COUNTY INTERCHANGE (WAUK 90343-A) 345/230/13.2KV TRANSFORMER CKT 1	560	560	0.20098	114.805	AMARILLO SOUTH INTERCHANGE - NICHOLS STATION 230KV CKT 1
FDNS	02ALL_G14_038	2	25SP	G14_038	FROM->TO	POTTER COUNTY INTERCHANGE (WAUK 90343-A) 345/230/13.2KV TRANSFORMER CKT 1	560	560	0.20098	114.805	AMARILLO SOUTH INTERCHANGE - NICHOLS STATION 230KV CKT 1
FDNS	02ALL_G14_038	2	25SP	G14_038	FROM->TO	POTTER COUNTY INTERCHANGE (WAUK 90343-A) 345/230/13.2KV TRANSFORMER CKT 1	560	560	0.20122	114.8046	SHERBURNE CO 345/24.0KV TRANSFORMER CKT 1
FDNS	02ALL_G14_038	2	25SP	G14_038	FROM->TO	POTTER COUNTY INTERCHANGE (WAUK 90343-A) 345/230/13.2KV TRANSFORMER CKT 1	560	560	0.20122	114.7919	FINNEY SWITCHING STATION - PSCO LAMAR DC TIE 345KV CKT 1
FDNS	02ALL_G14_038	2	25SP	G14_038	FROM->TO	POTTER COUNTY INTERCHANGE (WAUK 90343-A) 345/230/13.2KV TRANSFORMER CKT 1	560	560	0.20122	114.7919	FINNEY SWITCHING STATION - PSCO LAMAR DC TIE 345KV CKT 1
FDNS	02ALL_G14_038	2	25SP	G14_038	FROM->TO	POTTER COUNTY INTERCHANGE (WAUK 90343-A) 345/230/13.2KV TRANSFORMER CKT 1	560	560	0.20122	114.7907	GEN300001 1-THOMAS HILL UNIT 1
FDNS	02ALL_G14_038	2	25SP	G14_038	FROM->TO	POTTER COUNTY INTERCHANGE (WAUK 90343-A) 345/230/13.2KV TRANSFORMER CKT 1	560	560	0.20237	114.7843	P12:115:SPS:W29.1.OCLTRE.SPRMN
FDNS	02ALL_G14_038	2	25SP	G14_038	FROM->TO	POTTER COUNTY INTERCHANGE (WAUK 90343-A) 345/230/13.2KV TRANSFORMER CKT 1	560	560	0.20178	114.7822	RB-ELKS 3115.00 - RB-SPURLOCK3115.00 115KV CKT 1
FDNS	02ALL_G14_038	2	25SP	G14_038	FROM->TO	POTTER COUNTY INTERCHANGE (WAUK 90343-A) 345/230/13.2KV TRANSFORMER CKT 1	560	560	0.20122	114.781	GEN635214 4-NEAL UNIT 4
FDNS	02ALL_G14_038	2	25SP	G14_038	FROM->TO	POTTER COUNTY INTERCHANGE (WAUK 90343-A) 345/230/13.2KV TRANSFORMER CKT 1	560	560	0.20122	114.7802	GEN645041 1-CASS COUNTY 1
FDNS	02ALL_G14_038	2	25SP	G14_038	FROM->TO	POTTER COUNTY INTERCHANGE (WAUK 90343-A) 345/230/13.2KV TRANSFORMER CKT 1	560	560	0.20122	114.7792	GEN541163 1-ARIES COMBUSTION TURBINE #1
FDNS	02ALL_G14_038	2	25SP	G14_038	FROM->TO	POTTER COUNTY INTERCHANGE (WAUK 90343-A) 345/230/13.2KV TRANSFORMER CKT 1	560	560	0.20122	114.7772	GEN645042 2-CASS COUNTY 2
FDNS	02ALL_G14_038	2	25SP	G14_038	FROM->TO	POTTER COUNTY INTERCHANGE (WAUK 90343-A) 345/230/13.2KV TRANSFORMER CKT 1	560	560	0.20108	114.7736	P12:345:SPS:J02.1.TOLK.EDDY
FDNS	02ALL_G14_038	2	25SP	G14_038	FROM->TO	POTTER COUNTY INTERCHANGE (WAUK 90343-A) 345/230/13.2KV TRANSFORMER CKT 1	560	560	0.20259	114.7572	PRINGLE INTERCHANGE - SPEARMAN INTERCHANGE 115KV CKT 1
FDNS	02ALL_G14_038	2	25SP	G14_038	FROM->TO	POTTER COUNTY INTERCHANGE (WAUK 90343-A) 345/230/13.2KV TRANSFORMER CKT 1	560	560	0.20259	114.7572	PRINGLE INTERCHANGE - SPEARMAN INTERCHANGE 115KV CKT 1
FDNS	02ALL_G14_038	2	25SP	G14_038	FROM->TO	POTTER COUNTY INTERCHANGE (WAUK 90343-A) 345/230/13.2KV TRANSFORMER CKT 1	560	560	0.2006	114.7513	HAPPY INTERCHANGE - TULIA TAP 115KV CKT 1
FDNS	02ALL_G14_038	2	25SP	G14_038	FROM->TO	POTTER COUNTY INTERCHANGE (WAUK 90343-A) 345/230/13.2KV TRANSFORMER CKT 1	560	560	0.20122	114.7352	GEN541162 1-ARIES STEAM TURBINE
FDNS	02ALL_G14_038	2	25SP	G14_038	FROM->TO	POTTER COUNTY INTERCHANGE (WAUK 90343-A) 345/230/13.2KV TRANSFORMER CKT 1	560	560	0.2006	114.7351	P12:115:SPS:T67.1.HAPPY.KRESS
FDNS	02ALL_G14_038	2	25SP	G14_038	FROM->TO	POTTER COUNTY INTERCHANGE (WAUK 90343-A) 345/230/13.2KV TRANSFORMER CKT 1	560	560	0.20122	114.7332	GEN600002 3-SHERBURNE CNTY G3
FDNS	02ALL_G14_038	2	25SP	G14_038	FROM->TO	POTTER COUNTY INTERCHANGE (WAUK 90343-A) 345/230/13.2KV TRANSFORMER CKT 1	560	560	0.20122	114.7283	GEN515041 1-SEMINOLE 2G
FDNS	02ALL_G14_038	2	25SP	G14_038	FROM->TO	POTTER COUNTY INTERCHANGE (WAUK 90343-A) 345/230/13.2KV TRANSFORMER CKT 1	560	560	0.207	114.7277	BVRCNTY7 345.00 - G11-14T 345.00 345KV CKT 1
FDNS	02ALL_G14_038	2	25SP	G14_038	FROM->TO	POTTER COUNTY INTERCHANGE (WAUK 90343-A) 345/230/13.2KV TRANSFORMER CKT 1	560	560	0.207	114.7277	BVRCNTY7 345.00 - G11-14T 345.00 345KV CKT 2
FDNS	02ALL_G14_038	2	25SP	G14_038	FROM->TO	POTTER COUNTY INTERCHANGE (WAUK 90343-A) 345/230/13.2KV TRANSFORMER CKT 1	560	560	0.20446	114.7254	MATHWSN7 345.00 - TATONGA7 345.00 345KV CKT 1
FDNS	02ALL_G14_038	2	25SP	G14_038	FROM->TO	POTTER COUNTY INTERCHANGE (WAUK 90343-A) 345/230/13.2KV TRANSFORMER CKT 1	560	560	0.20446	114.7254	MATHWSN7 345.00 - TATONGA7 345.00 345KV CKT 2
FDNS	02ALL_G14_038	2	25SP	G14_038	FROM->TO	POTTER COUNTY INTERCHANGE (WAUK 90343-A) 345/230/13.2KV TRANSFORMER CKT 1	560	560	0.20122	114.6983	GEN635023 3-WALTER SCOTT UNIT 3
FDNS	02ALL_G14_038	2	25SP	G14_038	FROM->TO	POTTER COUNTY INTERCHANGE (WAUK 90343-A) 345/230/13.2KV TRANSFORMER CKT 1	560	560	0.20122	114.696	GEN515042 1-SEMINOLE 3G
FDNS	02ALL_G14_038	2	25SP	G14_038	FROM->TO	POTTER COUNTY INTERCHANGE (WAUK 90343-A) 345/230/13.2KV TRANSFORMER CKT 1	560	560	0.20237	114.6805	OCHILTREE - TEXAS FARMS SUB 115KV CKT 1
FDNS	02ALL_G14_038	2	25SP	G14_038	FROM->TO	POTTER COUNTY INTERCHANGE (WAUK 90343-A) 345/230/13.2KV TRANSFORMER CKT 1	560	560	0.20122	114.6607	GEN523170 1-GOODWELL_1 10.6900
FDNS	02ALL_G14_038	2	25SP	G14_038	FROM->TO	POTTER COUNTY INTERCHANGE (WAUK 90343-A) 345/230/13.2KV TRANSFORMER CKT 1	560	560	0.20122	114.6564	GEN515592 1-PALDRW21 0.6900
FDNS	02ALL_G14_038	2	25SP	G14_038	FROM->TO	POTTER COUNTY INTERCHANGE (WAUK 90343-A) 345/230/13.2KV TRANSFORMER CKT 1	560	560	0.20122	114.6388	GEN300010 1-ST FRANCIS UNIT 1
FDNS	02ALL_G14_038	2	25SP	G14_038	FROM->TO	POTTER COUNTY INTERCHANGE (WAUK 90343-A) 345/230/13.2KV TRANSFORMER CKT 1	560	560	0.20109	114.631	EDDY COUNTY INTERCHANGE (ABB AEM30711) 345/230/13.2KV TRANSFORMER CKT 1
FDNS	02ALL_G14_038	2	25SP	G14_038	FROM->TO	POTTER COUNTY INTERCHANGE (WAUK 90343-A) 345/230/13.2KV TRANSFORMER CKT 1	560	560	0.20109	114.631	EDDY COUNTY INTERCHANGE (ABB AEM30711) 345/230/13.2KV TRANSFORMER CKT 1
FDNS	02ALL_G14_038	2	25SP	G14_038	FROM->TO	POTTER COUNTY INTERCHANGE (WAUK 90343-A) 345/230/13.2KV TRANSFORMER CKT 1	560	560	0.20109	114.631	P12:345:SPS:J14.1.EDDY.XRDS
FDNS	02ALL_G14_038	2	25SP	G14_038	FROM->TO	POTTER COUNTY INTERCHANGE (WAUK 90343-A) 345/230/13.2KV TRANSFORMER CKT 1	560	560	0.20109	114.6308	CROSSROADS 7345.00 - EDDY COUNTY INTERCHANGE 345KV CKT 1
FDNS	02ALL_G14_038	2	25SP	G14_038	FROM->TO	POTTER COUNTY INTERCHANGE (WAUK 90343-A) 345/230/13.2KV TRANSFORMER CKT 1	560	560	0.20122	114.6287	GEN300015 1-15GPDEL 18.000
FDNS	02ALL_G14_038	2	25SP	G14_038	FROM->TO	POTTER COUNTY INTERCHANGE (WAUK 90343-A) 345/230/13.2KV TRANSFORMER CKT 1	560	560	0.20122	114.6241	GEN523171 1-GOODWELL_2 10.6900
FDNS	02ALL_G14_038	2	25SP	G14_038	FROM->TO	POTTER COUNTY INTERCHANGE (WAUK 90343-A) 345/230/13.2KV TRANSFORMER CKT 1	560	560	0.19887	114.6018	CHERRY1 - HARRINGTON STATION 230KV CKT 1
FDNS	02ALL_G14_038	2	25SP	G14_038	FROM->TO	POTTER COUNTY INTERCHANGE (WAUK 90343-A) 345/230/13.2KV TRANSFORMER CKT 1	560	560	0.19887	114.6018	CHERRY1 - HARRINGTON STATION 230KV CKT 1
FDNS	02ALL_G14_038	2	25SP	G14_038	FROM->TO	POTTER COUNTY INTERCHANGE (WAUK 90343-A) 345/230/13.2KV TRANSFORMER CKT 1	560	560	0.20241	114.5965	HITCHLAND INTERCHANGE (H TP80148301) 230/115/13.2KV TRANSFORMER CKT 1
FDNS	02ALL_G14_038	2	25SP	G14_038	FROM->TO	POTTER COUNTY INTERCHANGE (WAUK 90343-A) 345/230/13.2KV TRANSFORMER CKT 1	560	560	0.20241	114.5965	HITCHLAND INTERCHANGE (H TP80148301) 230/115/13.2KV TRANSFORMER CKT 1
FDNS	02ALL_G14_038	2	25SP	G14_038	FROM->TO	POTTER COUNTY INTERCHANGE (WAUK 90343-A) 345/230/13.2KV TRANSFORMER CKT 1	560	560	0.20241	114.5965	HITCHLAND INTERCHANGE (UPDATE LATER) 230/115/13.2KV TRANSFORMER CKT 2
FDNS	02ALL_G14_038	2	25SP	G14_038	FROM->TO	POTTER COUNTY INTERCHANGE (WAUK 90343-A) 345/230/13.2KV TRANSFORMER CKT 1	560	560	0.20241	114.5965	HITCHLAND INTERCHANGE (UPDATE LATER) 230/115/13.2KV TRANSFORMER CKT 2
FDNS	02ALL_G14_038	2	25SP	G14_038	FROM->TO	POTTER COUNTY INTERCHANGE (WAUK 90343-A) 345/230/13.2KV TRANSFORMER CKT 1	560	560	0.20122	114.5941	GEN505432 1-SIKESTON
FDNS	02ALL_G14_038	2	25SP	G14_038	FROM->TO	POTTER COUNTY INTERCHANGE (WAUK 90343-A) 345/230/13.2KV TRANSFORMER CKT 1	560	560	0.20122	114.5927	GEN300011 1-ST FRANCIS UNIT 2
FDNS	02ALL_G14_038	2	25SP	G14_038	FROM->TO	POTTER COUNTY INTERCHANGE (WAUK 90343-A) 345/230/13.2KV TRANSFORMER CKT 1	560	560	0.20122	114.587	GEN549893 2-SOUTHWEST 2
FDNS	02ALL_G14_038	2	25SP	G14_038	FROM->TO	POTTER COUNTY INTERCHANGE (WAUK 90343-A) 345/230/13.2KV TRANSFORMER CKT 1	560	560	0.20122	114.5816	GEN531459 2-S2 GENERATOR
FDNS	02ALL_G14_038	2	25SP	G14_038	FROM->TO	POTTER COUNTY INTERCHANGE (WAUK 90343-A) 345/230/13.2KV TRANSFORMER CKT 1	560	560	0.20122	114.5757	GEN562270 1-G12-020-2 0.6900
FDNS	02ALL_G14_038	2	25SP	G14_038	FROM->TO	POTTER COUNTY INTERCHANGE (WAUK 90343-A) 345/230/13.2KV TRANSFORMER CKT 1	560	560	0.20122	114.5585	GEN635024 4-WALTER SCOTT UNIT 4
FDNS	02ALL_G14_038	2	25SP	G14_038	FROM->TO	POTTER COUNTY INTERCHANGE (WAUK 90343-A) 345/230/13.2KV TRANSFORMER CKT 1	560	560	0.20166	114.5519	DALLAM COUNTY INTERCHANGE - SHERMAN COUNTY SUB 115KV CKT 1
FDNS	02ALL_G14_038	2	25SP	G14_038	FROM->TO	POTTER COUNTY INTERCHANGE (WAUK 90343-A) 345/230/13.2KV TRANSFORMER CKT 1	560	560	0.20122	114.5424	GEN524285 1-WILDORADO WIND GEN
FDNS	02ALL_G14_038	2	25SP	G14_038	FROM->TO	POTTER COUNTY INTERCHANGE (WAUK 90343-A) 345/230/13.2KV TRANSFORMER CKT 1	560	560	0.20122	114.5246	GEN645025 5-NORTH OMAHA 5
FDNS	02ALL_G14_038	2	25SP	G14_038	FROM->TO	POTTER COUNTY INTERCHANGE (WAUK 90343-A) 345/230/13.2KV TRANSFORMER CKT 1	560	560	0.20178	114.5241	MOORE COUNTY INTERCHANGE EAST BUS - RB-SPURLOCK3115.00 115KV CKT 1
FDNS	02ALL_G14_038	2	25SP	G14_038	FROM->TO	POTTER COUNTY INTERCHANGE (WAUK 90343-A) 345/230/13.2KV TRANSFORMER CKT 1	560	560	0.20237	114.5209	SPEARMAN SUB - TEXAS FARMS SUB 115KV CKT 1
FDNS	02ALL_G14_038	2	25SP	G14_038	FROM->TO	POTTER COUNTY INTERCHANGE (WAUK 90343-A) 345/230/13.2KV TRANSFORMER CKT 1	560	560	0.20166	114.5046	P12:115:SPS:W05.1.DALLAM.LASLEY
FDNS	02ALL_G14_038	2	25SP	G14_038	FROM->TO	POTTER COUNTY INTERCHANGE (WAUK 90343-A) 345/230/13.2KV TRANSFORMER CKT 1	560	560	0.20122	114.5029	GEN336821 1-GRAND GULF UNIT

SOLUTION	GROUP	SCENARIO	SEASON	SOURCE	DIRECTION	MONITORED ELEMENT	RATEA (MVA)	RATEB(MVA)	TDF	TC%LOADING (% MVA)	CONTINGENCY
FDNS	02ALL_G14_038	2	25SP	G14_038	FROM->TO	POTTER COUNTY INTERCHANGE (WAUK 90343-A) 345/230/13.2KV TRANSFORMER CKT 1	560	560	0.20122	114.4999	GEN562269 1-G12-020-1 0.6900
FDNS	02ALL_G14_038	2	25SP	G14_038	FROM->TO	POTTER COUNTY INTERCHANGE (WAUK 90343-A) 345/230/13.2KV TRANSFORMER CKT 1	560	560	0.20122	114.4965	GEN659110 1-LELAND OLDS UNIT1
FDNS	02ALL_G14_038	2	25SP	G14_038	FROM->TO	POTTER COUNTY INTERCHANGE (WAUK 90343-A) 345/230/13.2KV TRANSFORMER CKT 1	560	560	0.20476	114.4802	MINGO - SETAB 345KV CKT 1
FDNS	02ALL_G14_038	2	25SP	G14_038	FROM->TO	POTTER COUNTY INTERCHANGE (WAUK 90343-A) 345/230/13.2KV TRANSFORMER CKT 1	560	560	0.20476	114.4802	MINGO - SETAB 345KV CKT 1
FDNS	02ALL_G14_038	2	25SP	G14_038	FROM->TO	POTTER COUNTY INTERCHANGE (WAUK 90343-A) 345/230/13.2KV TRANSFORMER CKT 1	560	560	0.20166	114.4754	SHERMAN COUNTY SUB - SHERMAN COUNTY TAP 115KV CKT 1
FDNS	02ALL_G14_038	2	25SP	G14_038	FROM->TO	POTTER COUNTY INTERCHANGE (WAUK 90343-A) 345/230/13.2KV TRANSFORMER CKT 1	560	560	0.20122	114.4739	GEN509406 1-WELSH #3
FDNS	02ALL_G14_038	2	25SP	G14_038	FROM->TO	POTTER COUNTY INTERCHANGE (WAUK 90343-A) 345/230/13.2KV TRANSFORMER CKT 1	560	560	0.20122	114.4739	GEN546702 1-NM GEN N1
FDNS	02ALL_G14_038	2	25SP	G14_038	FROM->TO	POTTER COUNTY INTERCHANGE (WAUK 90343-A) 345/230/13.2KV TRANSFORMER CKT 1	560	560	0.20122	114.4737	GEN509404 1-WELSH #1
FDNS	02ALL_G14_038	2	25SP	G14_038	FROM->TO	POTTER COUNTY INTERCHANGE (WAUK 90343-A) 345/230/13.2KV TRANSFORMER CKT 1	560	560	0.20183	114.4631	CHAN/TASCOS6230.00 - POTTER COUNTY INTERCHANGE 230KV CKT 1
FDNS	02ALL_G14_038	2	25SP	G14_038	FROM->TO	POTTER COUNTY INTERCHANGE (WAUK 90343-A) 345/230/13.2KV TRANSFORMER CKT 1	560	560	0.20104	114.4614	CANYON E_TP3115.00 - RANDALL COUNTY INTERCHANGE 115KV CKT 1
FDNS	02ALL_G14_038	2	25SP	G14_038	FROM->TO	POTTER COUNTY INTERCHANGE (WAUK 90343-A) 345/230/13.2KV TRANSFORMER CKT 1	560	560	0.20122	114.4053	GEN513601 1-GRECCTG_1 20.000
FDNS	02ALL_G14_038	2	25SP	G14_038	FROM->TO	POTTER COUNTY INTERCHANGE (WAUK 90343-A) 345/230/13.2KV TRANSFORMER CKT 1	560	560	0.20104	114.3991	P12:115:SPS:V05.1.OSAGE.WCANYON
FDNS	02ALL_G14_038	2	25SP	G14_038	FROM->TO	POTTER COUNTY INTERCHANGE (WAUK 90343-A) 345/230/13.2KV TRANSFORMER CKT 1	560	560	0.20122	114.376	GEN300002 1-THOMAS HILL UNIT 2
FDNS	02ALL_G14_038	2	25SP	G14_038	FROM->TO	POTTER COUNTY INTERCHANGE (WAUK 90343-A) 345/230/13.2KV TRANSFORMER CKT 1	560	560	0.20122	114.3626	GEN539670 4-JUDSON LARGE GENERATOR
FDNS	02ALL_G14_038	2	25SP	G14_038	FROM->TO	POTTER COUNTY INTERCHANGE (WAUK 90343-A) 345/230/13.2KV TRANSFORMER CKT 1	560	560	0.19779	114.3569	Harrington Station East Bus - POTTER COUNTY INTERCHANGE 230KV CKT 1
FDNS	02ALL_G14_038	2	25SP	G14_038	FROM->TO	POTTER COUNTY INTERCHANGE (WAUK 90343-A) 345/230/13.2KV TRANSFORMER CKT 1	560	560	0.19779	114.3569	Harrington Station East Bus - POTTER COUNTY INTERCHANGE 230KV CKT 1
FDNS	02ALL_G14_038	2	25SP	G14_038	FROM->TO	POTTER COUNTY INTERCHANGE (WAUK 90343-A) 345/230/13.2KV TRANSFORMER CKT 1	560	560	0.20059	114.3567	PLANT X STATION - SUNDOWN INTERCHANGE 230KV CKT 1
FDNS	02ALL_G14_038	2	25SP	G14_038	FROM->TO	POTTER COUNTY INTERCHANGE (WAUK 90343-A) 345/230/13.2KV TRANSFORMER CKT 1	560	560	0.20059	114.3567	PLANT X STATION - SUNDOWN INTERCHANGE 230KV CKT 1
FDNS	02ALL_G14_038	2	25SP	G14_038	FROM->TO	POTTER COUNTY INTERCHANGE (WAUK 90343-A) 345/230/13.2KV TRANSFORMER CKT 1	560	560	0.20393	114.3422	HOLCOMB - SETAB 345KV CKT 1
FDNS	02ALL_G14_038	2	25SP	G14_038	FROM->TO	POTTER COUNTY INTERCHANGE (WAUK 90343-A) 345/230/13.2KV TRANSFORMER CKT 1	560	560	0.20393	114.3422	HOLCOMB - SETAB 345KV CKT 1
FDNS	02ALL_G14_038	2	25SP	G14_038	FROM->TO	POTTER COUNTY INTERCHANGE (WAUK 90343-A) 345/230/13.2KV TRANSFORMER CKT 1	560	560	0.19749	114.3419	CHERRY1 - POTTER COUNTY INTERCHANGE 230KV CKT 1
FDNS	02ALL_G14_038	2	25SP	G14_038	FROM->TO	POTTER COUNTY INTERCHANGE (WAUK 90343-A) 345/230/13.2KV TRANSFORMER CKT 1	560	560	0.19749	114.3419	CHERRY1 - POTTER COUNTY INTERCHANGE 230KV CKT 1
FDNS	02ALL_G14_038	2	25SP	G14_038	FROM->TO	POTTER COUNTY INTERCHANGE (WAUK 90343-A) 345/230/13.2KV TRANSFORMER CKT 1	560	560	0.20122	114.3381	GEN509416 1-TURK GENERATION
FDNS	02ALL_G14_038	2	25SP	G14_038	FROM->TO	POTTER COUNTY INTERCHANGE (WAUK 90343-A) 345/230/13.2KV TRANSFORMER CKT 1	560	560	0.20122	114.3309	GEN336153 1-WATERFORD UNIT#3
FDNS	02ALL_G14_038	2	25SP	G14_038	FROM->TO	POTTER COUNTY INTERCHANGE (WAUK 90343-A) 345/230/13.2KV TRANSFORMER CKT 1	560	560	0.20122	114.3264	GEN511842 1-RIVERSIDE STATION #1
FDNS	02ALL_G14_038	2	25SP	G14_038	FROM->TO	POTTER COUNTY INTERCHANGE (WAUK 90343-A) 345/230/13.2KV TRANSFORMER CKT 1	560	560	0.19866	114.3239	CIMARRON - MINCO 345KV CKT 1
FDNS	02ALL_G14_038	2	25SP	G14_038	FROM->TO	POTTER COUNTY INTERCHANGE (WAUK 90343-A) 345/230/13.2KV TRANSFORMER CKT 1	560	560	0.20122	114.3214	GEN641089 2-ENERGY CENTER 2
FDNS	02ALL_G14_038	2	25SP	G14_038	FROM->TO	POTTER COUNTY INTERCHANGE (WAUK 90343-A) 345/230/13.2KV TRANSFORMER CKT 1	560	560	0.20122	114.3208	GEN511843 1-RIVERSIDE STATION #2
FDNS	02ALL_G14_038	2	25SP	G14_038	FROM->TO	POTTER COUNTY INTERCHANGE (WAUK 90343-A) 345/230/13.2KV TRANSFORMER CKT 1	560	560	0.20122	114.2772	GEN337911 1-ARKANSAS NUCLEAR ONE UNIT #2
FDNS	02ALL_G14_038	2	25SP	G14_038	FROM->TO	POTTER COUNTY INTERCHANGE (WAUK 90343-A) 345/230/13.2KV TRANSFORMER CKT 1	560	560	0.20086	114.2742	Harrington Station Mid Bus - RANDALL COUNTY INTERCHANGE 230KV CKT 1
FDNS	02ALL_G14_038	2	25SP	G14_038	FROM->TO	POTTER COUNTY INTERCHANGE (WAUK 90343-A) 345/230/13.2KV TRANSFORMER CKT 1	560	560	0.20086	114.2742	Harrington Station Mid Bus - RANDALL COUNTY INTERCHANGE 230KV CKT 1
FDNS	02ALL_G14_038	2	25SP	G14_038	FROM->TO	POTTER COUNTY INTERCHANGE (WAUK 90343-A) 345/230/13.2KV TRANSFORMER CKT 1	560	560	0.20122	114.2697	GEN501801 1-DOLET HILLS UNIT1
FDNS	02ALL_G14_038	2	25SP	G14_038	FROM->TO	POTTER COUNTY INTERCHANGE (WAUK 90343-A) 345/230/13.2KV TRANSFORMER CKT 1	560	560	0.20122	114.2606	GEN515223 1-MUSKOGEE 4G
FDNS	02ALL_G14_038	2	25SP	G14_038	FROM->TO	POTTER COUNTY INTERCHANGE (WAUK 90343-A) 345/230/13.2KV TRANSFORMER CKT 1	560	560	0.20122	114.2603	GEN527881 1-CUNNINGHAM GEN #1
FDNS	02ALL_G14_038	2	25SP	G14_038	FROM->TO	POTTER COUNTY INTERCHANGE (WAUK 90343-A) 345/230/13.2KV TRANSFORMER CKT 1	560	560	0.20122	114.2524	GEN511839 1-NORTHEASTERN STATION #2
FDNS	02ALL_G14_038	2	25SP	G14_038	FROM->TO	POTTER COUNTY INTERCHANGE (WAUK 90343-A) 345/230/13.2KV TRANSFORMER CKT 1	560	560	0.20161	114.2478	MOORE COUNTY INTERCHANGE (ENRCO 136402) 230/115/13.2KV TRANSFORMER CKT 1
FDNS	02ALL_G14_038	2	25SP	G14_038	FROM->TO	POTTER COUNTY INTERCHANGE (WAUK 90343-A) 345/230/13.2KV TRANSFORMER CKT 1	560	560	0.20161	114.2478	MOORE COUNTY INTERCHANGE (ENRCO 136402) 230/115/13.2KV TRANSFORMER CKT 1
FDNS	02ALL_G14_038	2	25SP	G14_038	FROM->TO	POTTER COUNTY INTERCHANGE (WAUK 90343-A) 345/230/13.2KV TRANSFORMER CKT 1	560	560	0.20122	114.2478	GEN515226 1-MUSKOGEE 6G
FDNS	02ALL_G14_038	2	25SP	G14_038	FROM->TO	POTTER COUNTY INTERCHANGE (WAUK 90343-A) 345/230/13.2KV TRANSFORMER CKT 1	560	560	0.20122	114.2473	GEN562688 1-G15_014_3 0.6900
FDNS	02ALL_G14_038	2	25SP	G14_038	FROM->TO	POTTER COUNTY INTERCHANGE (WAUK 90343-A) 345/230/13.2KV TRANSFORMER CKT 1	560	560	0.20237	114.2446	SPEARMAN INTERCHANGE - SPEARMAN SUB 115KV CKT 1
FDNS	02ALL_G14_038	2	25SP	G14_038	FROM->TO	POTTER COUNTY INTERCHANGE (WAUK 90343-A) 345/230/13.2KV TRANSFORMER CKT 1	560	560	0.2024	114.2322	PRINGLE INTERCHANGE (ENRCO13617-1) 230/115/13.2KV TRANSFORMER CKT 1
FDNS	02ALL_G14_038	2	25SP	G14_038	FROM->TO	POTTER COUNTY INTERCHANGE (WAUK 90343-A) 345/230/13.2KV TRANSFORMER CKT 1	560	560	0.2024	114.2322	PRINGLE INTERCHANGE (ENRCO13617-1) 230/115/13.2KV TRANSFORMER CKT 1
FDNS	02ALL_G14_038	2	25SP	G14_038	FROM->TO	POTTER COUNTY INTERCHANGE (WAUK 90343-A) 345/230/13.2KV TRANSFORMER CKT 1	560	560	0.20122	114.2307	GEN515225 1-MUSKOGEE 5G
FDNS	02ALL_G14_038	2	25SP	G14_038	FROM->TO	POTTER COUNTY INTERCHANGE (WAUK 90343-A) 345/230/13.2KV TRANSFORMER CKT 1	560	560	0.2006	114.2248	HAPPY INTERCHANGE - PALO DURO SUB 115KV CKT 1
FDNS	02ALL_G14_038	2	25SP	G14_038	FROM->TO	POTTER COUNTY INTERCHANGE (WAUK 90343-A) 345/230/13.2KV TRANSFORMER CKT 1	560	560	0.20122	114.2143	GEN335831 1-RIVERBEND UNIT#1
FDNS	02ALL_G14_038	2	25SP	G14_038	FROM->TO	POTTER COUNTY INTERCHANGE (WAUK 90343-A) 345/230/13.2KV TRANSFORMER CKT 1	560	560	0.20122	114.2095	GEN562483 1-G13_027_3 0.6900
FDNS	02ALL_G14_038	2	25SP	G14_038	FROM->TO	POTTER COUNTY INTERCHANGE (WAUK 90343-A) 345/230/13.2KV TRANSFORMER CKT 1	560	560	0.2024	114.1685	Harrington Station East Bus - PRINGLE INTERCHANGE 230KV CKT 1
FDNS	02ALL_G14_038	2	25SP	G14_038	FROM->TO	POTTER COUNTY INTERCHANGE (WAUK 90343-A) 345/230/13.2KV TRANSFORMER CKT 1	560	560	0.2024	114.1674	P12:230:SPS:K43.1.PRNGLE.HARR_E
FDNS	02ALL_G14_038	2	25SP	G14_038	FROM->TO	POTTER COUNTY INTERCHANGE (WAUK 90343-A) 345/230/13.2KV TRANSFORMER CKT 1	560	560	0.2006	114.1647	P12:115:SPS:T66.1.RNDALL.HAPPY
FDNS	02ALL_G14_038	2	25SP	G14_038	FROM->TO	POTTER COUNTY INTERCHANGE (WAUK 90343-A) 345/230/13.2KV TRANSFORMER CKT 1	560	560	0.20204	114.1578	PRINGLE INTERCHANGE - SPEARMAN INTERCHANGE 115KV CKT 2
FDNS	02ALL_G14_038	2	25SP	G14_038	FROM->TO	POTTER COUNTY INTERCHANGE (WAUK 90343-A) 345/230/13.2KV TRANSFORMER CKT 1	560	560	0.20204	114.1578	PRINGLE INTERCHANGE - SPEARMAN INTERCHANGE 115KV CKT 2
FDNS	02ALL_G14_038	2	25SP	G14_038	FROM->TO	POTTER COUNTY INTERCHANGE (WAUK 90343-A) 345/230/13.2KV TRANSFORMER CKT 1	560	560	0.20122	114.1468	GEN511840 1-NORTHEASTERN STATION #3
FDNS	02ALL_G14_038	2	25SP	G14_038	FROM->TO	POTTER COUNTY INTERCHANGE (WAUK 90343-A) 345/230/13.2KV TRANSFORMER CKT 1	560	560	0.19947	114.1368	CHISHOLM6 230.00 - ELK CITY 230KV 230KV CKT 1
FDNS	02ALL_G14_038	2	25SP	G14_038	FROM->TO	POTTER COUNTY INTERCHANGE (WAUK 90343-A) 345/230/13.2KV TRANSFORMER CKT 1	560	560	0.19947	114.1365	ELK CITY 230KV (ELKCTY-6) 230/138/13.8KV TRANSFORMER CKT 1
FDNS	02ALL_G14_038	2	25SP	G14_038	FROM->TO	POTTER COUNTY INTERCHANGE (WAUK 90343-A) 345/230/13.2KV TRANSFORMER CKT 1	560	560	0.19947	114.1365	ELK CITY 230KV (ELKCTY-6) 230/138/13.8KV TRANSFORMER CKT 1
FDNS	02ALL_G14_038	2	25SP	G14_038	FROM->TO	POTTER COUNTY INTERCHANGE (WAUK 90343-A) 345/230/13.2KV TRANSFORMER CKT 1	560	560	0.20122	114.135	GEN522866 1-LUBBOCK POWER & LIGHT-HOLLY GEN
FDNS	02ALL_G14_038	2	25SP	G14_038	FROM->TO	POTTER COUNTY INTERCHANGE (WAUK 90343-A) 345/230/13.2KV TRANSFORMER CKT 1	560	560	0.20122	114.12	GEN337910 1-ARKANSAS NUCLEAR ONE UNIT #1
FDNS	02ALL_G14_038	2	25SP	G14_038	FROM->TO	POTTER COUNTY INTERCHANGE (WAUK 90343-A) 345/230/13.2KV TRANSFORMER CKT 1	560	560	0.2006	114.1157	PALO DURO SUB - RANDALL COUNTY INTERCHANGE 115KV CKT 1
FDNS	02ALL_G14_038	2	25SP	G14_038	FROM->TO	POTTER COUNTY INTERCHANGE (WAUK 90343-A) 345/230/13.2KV TRANSFORMER CKT 1	560	560	0.20181	114.074	PRINGLE INTERCHANGE - RIVERVIEW INTERCHANGE 115KV CKT 1
FDNS	02ALL_G14_038	2	25SP	G14_038	FROM->TO	POTTER COUNTY INTERCHANGE (WAUK 90343-A) 345/230/13.2KV TRANSFORMER CKT 1	560	560	0.20181	114.074	PRINGLE INTERCHANGE - RIVERVIEW INTERCHANGE 115KV CKT 1
FDNS	02ALL_G14_038	2	25SP	G14_038	FROM->TO	POTTER COUNTY INTERCHANGE (WAUK 90343-A) 345/230/13.2KV TRANSFORMER CKT 1	560	560	0.20122	114.0545	GEN524890 1-SNJN-WTGA1 10.6000
FDNS	02ALL_G14_038	2	25SP	G14_038	FROM->TO	POTTER COUNTY INTERCHANGE (WAUK 90343-A) 345/230/13.2KV TRANSFORMER CKT 1	560	560	0.20122	114.0484	GEN509403 1-PIRKEY GENERATION
FDNSLock	02ALL_G14_038	2	25SP	G14_038	FROM->TO	POTTER COUNTY INTERCHANGE (WAUK 90343-A) 345/230/13.2KV TRANSFORMER CKT 1	560	560	0.20036	114.0378	STATELINE INTERCHANGE (H TP80154301) 230/115/13.2KV TRANSFORMER CKT 1
FDNS	02ALL_G14_038	2	25SP	G14_038	FROM->TO	POTTER COUNTY INTERCHANGE (WAUK 90343-A) 345/230/13.2KV TRANSFORMER CKT 1	560	560	0.20127	114.0372	GRACEMONT - LAWTON EASTSIDE 345KV CKT 1
FDNS	02ALL_G14_038	2	25SP	G14_038	FROM->TO	POTTER COUNTY INTERCHANGE (WAUK 90343-A) 345/230/13.2KV TRANSFORMER CKT 1	560	560	0.20127	114.0372	GRACEMONT - LAWTON EASTSIDE 345KV CKT 1
FDNS	02ALL_G14_038	2	25SP	G14_038	FROM->TO	POTTER COUNTY INTERCHANGE (WAUK 90343-A) 345/230/13.2KV TRANSFORMER CKT 1	560	560	0.20119	114.0158	HOBBS - YOAKUM_345 345.00 345KV CKT 1
FDNS	02ALL_G14_038	2	25SP	G14_038	FROM->TO	POTTER COUNTY INTERCHANGE (WAUK 90343-A) 345/230/13.2KV TRANSFORMER CKT 1	560	560	0.20183	113.9732	MOORE COUNTY INTERCHANGE W. - RB-S&S 3115.00 115KV CKT 1
FDNS	02ALL_G14_038	2	25SP	G14_038	FROM->TO	POTTER COUNTY INTERCHANGE (WAUK 90343-A) 345/230/13.2KV TRANSFORMER CKT 1	560	560	0.20122	113.9631	GEN337652 1-WHITE BLUFF UNIT #1
FDNS	02ALL_G14_038	2	25SP	G14_038	FROM->TO	POTTER COUNTY INTERCHANGE (WAUK 90343-A) 345/230/13.2KV TRANSFORMER CKT 1	560	560	0.20122	113.9598	GEN562710 1-G15_022_3 0.5500
FDNS	02ALL_G14_038	2	25SP	G14_038	FROM->TO	POTTER COUNTY INTERCHANGE (WAUK 90343-A) 345/230/13.2KV TRANSFORMER CKT 1	560	560	0.20133	113.9518	BEARCAT 138.00 - MOORELAND 138KV CKT 1
FDNS	02ALL_G14_038	2	25SP	G14_038	FROM->TO	POTTER COUNTY INTERCHANGE (WAUK 90343-A) 345/230/13.2KV TRANSFORMER CKT 1	560	560	0.2008	113.9391	JOHNSON COUNTY - PITTSBURG 345KV CKT 1
FDNS	02ALL_G14_038	2	25SP	G14_038	FROM->TO	POTTER COUNTY INTERCHANGE (WAUK 90343-A) 345/230/13.2KV TRANSFORMER CKT 1	560	560	0.2008	113.9391	JOHNSON COUNTY - PITTSBURG 345KV CKT 1
FDNS	02ALL_G14_038	2	25SP	G14_038	FROM->TO	POTTER COUNTY INTERCHANGE (WAUK 90343-A) 345/230/13.2KV TRANSFORMER CKT 1	560	560	0.20122	113.9361	GEN337653 1-WHITE BLUFF UNIT #2

SOLUTION	GROUP	SCENARIO	SEASON	SOURCE	DIRECTION	MONITORED ELEMENT	RATEA (MVA)	RATEB(MVA)	TDF	TC%LOADING (% MVA)	CONTINGENCY
FDNS	02ALL_G14_038	2	25SP	G14_038	FROM->TO	POTTER COUNTY INTERCHANGE (WAUK 90343-A) 345/230/13.2KV TRANSFORMER CKT 1	560	560	0.20122	113.9267	GEN501813 1-RODEMACHER UNIT 3
FDNS	02ALL_G14_038	2	25SP	G14_038	FROM->TO	POTTER COUNTY INTERCHANGE (WAUK 90343-A) 345/230/13.2KV TRANSFORMER CKT 1	560	560	0.20122	113.9126	GEN336252 1-NINEMILE POINT UNIT#5
FDNS	02ALL_G14_038	2	25SP	G14_038	FROM->TO	POTTER COUNTY INTERCHANGE (WAUK 90343-A) 345/230/13.2KV TRANSFORMER CKT 1	560	560	0.2003	113.9112	NEWHART 230 - PLANT X STATION 230KV CKT 1
FDNS	02ALL_G14_038	2	25SP	G14_038	FROM->TO	POTTER COUNTY INTERCHANGE (WAUK 90343-A) 345/230/13.2KV TRANSFORMER CKT 1	560	560	0.20122	113.9086	GEN514805 1-SOONER UNIT 1
FDNS	02ALL_G14_038	2	25SP	G14_038	FROM->TO	POTTER COUNTY INTERCHANGE (WAUK 90343-A) 345/230/13.2KV TRANSFORMER CKT 1	560	560	0.20036	113.908	Graves Sub - STATELINE INTERCHANGE 115KV CKT 1
FDNS	02ALL_G14_038	2	25SP	G14_038	FROM->TO	POTTER COUNTY INTERCHANGE (WAUK 90343-A) 345/230/13.2KV TRANSFORMER CKT 1	560	560	0.20036	113.908	Graves Sub - STATELINE INTERCHANGE 115KV CKT 1
FDNS	02ALL_G14_038	2	25SP	G14_038	FROM->TO	POTTER COUNTY INTERCHANGE (WAUK 90343-A) 345/230/13.2KV TRANSFORMER CKT 1	560	560	0.20122	113.9074	GEN541151 3-SIBLEY GENERATING UNIT #3
FDNS	02ALL_G14_038	2	25SP	G14_038	FROM->TO	POTTER COUNTY INTERCHANGE (WAUK 90343-A) 345/230/13.2KV TRANSFORMER CKT 1	560	560	0.20122	113.8903	GEN532663 1-LAWRENCE ENERGY CENTER UNIT 5
FDNS	02ALL_G14_038	2	25SP	G14_038	FROM->TO	POTTER COUNTY INTERCHANGE (WAUK 90343-A) 345/230/13.2KV TRANSFORMER CKT 1	560	560	0.20133	113.8896	BEARCAT 138.00 - NINE MILE 138KV CKT 1
FDNS	02ALL_G14_038	2	25SP	G14_038	FROM->TO	POTTER COUNTY INTERCHANGE (WAUK 90343-A) 345/230/13.2KV TRANSFORMER CKT 1	560	560	0.20122	113.8864	GEN514806 1-SOONER UNIT 2
FDNS	02ALL_G14_038	2	25SP	G14_038	FROM->TO	POTTER COUNTY INTERCHANGE (WAUK 90343-A) 345/230/13.2KV TRANSFORMER CKT 1	560	560	0.20234	113.886	G13-010T 345.00 - POST ROCK 345KV CKT 1
FDNS	02ALL_G14_038	2	25SP	G14_038	FROM->TO	POTTER COUNTY INTERCHANGE (WAUK 90343-A) 345/230/13.2KV TRANSFORMER CKT 1	560	560	0.20122	113.8838	GEN336251 1-NINEMILE POINT UNIT#4
FDNS	02ALL_G14_038	2	25SP	G14_038	FROM->TO	POTTER COUNTY INTERCHANGE (WAUK 90343-A) 345/230/13.2KV TRANSFORMER CKT 1	560	560	0.20122	113.8815	GEN562655 1-G14_074_3 0.6900
FDNS	02ALL_G14_038	2	25SP	G14_038	FROM->TO	POTTER COUNTY INTERCHANGE (WAUK 90343-A) 345/230/13.2KV TRANSFORMER CKT 1	560	560	0.20122	113.8794	GEN509394 1-FLINT CREEK
FDNS	02ALL_G14_038	2	25SP	G14_038	FROM->TO	POTTER COUNTY INTERCHANGE (WAUK 90343-A) 345/230/13.2KV TRANSFORMER CKT 1	560	560	0.20122	113.8647	GEN524287 1-GS-PHWD_GEN10.6900
FDNS	02ALL_G14_038	2	25SP	G14_038	FROM->TO	POTTER COUNTY INTERCHANGE (WAUK 90343-A) 345/230/13.2KV TRANSFORMER CKT 1	560	560	0.20122	113.8641	GEN334440 1-SABINE UNIT 4
FDNS	02ALL_G14_038	2	25SP	G14_038	FROM->TO	POTTER COUNTY INTERCHANGE (WAUK 90343-A) 345/230/13.2KV TRANSFORMER CKT 1	560	560	0.20133	113.8639	P12:138:WFEC:MSL14
FDNS	02ALL_G14_038	2	25SP	G14_038	FROM->TO	POTTER COUNTY INTERCHANGE (WAUK 90343-A) 345/230/13.2KV TRANSFORMER CKT 1	560	560	0.20132	113.8606	MARTIN SUB - PANTEX NORTH SUB 115KV CKT 1
FDNS	02ALL_G14_038	2	25SP	G14_038	FROM->TO	POTTER COUNTY INTERCHANGE (WAUK 90343-A) 345/230/13.2KV TRANSFORMER CKT 1	560	560	0.20132	113.8606	MARTIN SUB - PANTEX NORTH SUB 115KV CKT 1
FDNS	02ALL_G14_038	2	25SP	G14_038	FROM->TO	POTTER COUNTY INTERCHANGE (WAUK 90343-A) 345/230/13.2KV TRANSFORMER CKT 1	560	560	0.20122	113.8585	GEN524485 1-CAPROCK WIND GEN
FDNS	02ALL_G14_038	2	25SP	G14_038	FROM->TO	POTTER COUNTY INTERCHANGE (WAUK 90343-A) 345/230/13.2KV TRANSFORMER CKT 1	560	560	0.20122	113.8566	GEN335206 1-NELSON UNIT 6
FDNS	02ALL_G14_038	2	25SP	G14_038	FROM->TO	POTTER COUNTY INTERCHANGE (WAUK 90343-A) 345/230/13.2KV TRANSFORMER CKT 1	560	560	0.20076	113.8566	TUCO INTERCHANGE (GE M1022338) 345/230/13.2KV TRANSFORMER CKT 1
FDNS	02ALL_G14_038	2	25SP	G14_038	FROM->TO	POTTER COUNTY INTERCHANGE (WAUK 90343-A) 345/230/13.2KV TRANSFORMER CKT 1	560	560	0.20076	113.8566	TUCO INTERCHANGE (GE M1022338) 345/230/13.2KV TRANSFORMER CKT 1
FDNS	02ALL_G14_038	2	25SP	G14_038	FROM->TO	POTTER COUNTY INTERCHANGE (WAUK 90343-A) 345/230/13.2KV TRANSFORMER CKT 1	560	560	0.20132	113.8551	PANTEX NORTH SUB - PANTEX SOUTH SUB 115KV CKT 1
FDNS	02ALL_G14_038	2	25SP	G14_038	FROM->TO	POTTER COUNTY INTERCHANGE (WAUK 90343-A) 345/230/13.2KV TRANSFORMER CKT 1	560	560	0.20132	113.8551	PANTEX NORTH SUB - PANTEX SOUTH SUB 115KV CKT 1
FDNS	02ALL_G14_038	2	25SP	G14_038	FROM->TO	POTTER COUNTY INTERCHANGE (WAUK 90343-A) 345/230/13.2KV TRANSFORMER CKT 1	560	560	0.2018	113.8515	IODINE - WOODWARD EHV 138KV CKT 1
FDNS	02ALL_G14_038	2	25SP	G14_038	FROM->TO	POTTER COUNTY INTERCHANGE (WAUK 90343-A) 345/230/13.2KV TRANSFORMER CKT 1	560	560	0.20148	113.8512	TUCO INTERCHANGE - TUCO_2 345.00 345KV CKT 1
FDNS	02ALL_G14_038	2	25SP	G14_038	FROM->TO	POTTER COUNTY INTERCHANGE (WAUK 90343-A) 345/230/13.2KV TRANSFORMER CKT 1	560	560	0.20132	113.8499	HIGHLAND PARK TAP - PANTEX SOUTH SUB 115KV CKT 1
FDNS	02ALL_G14_038	2	25SP	G14_038	FROM->TO	POTTER COUNTY INTERCHANGE (WAUK 90343-A) 345/230/13.2KV TRANSFORMER CKT 1	560	560	0.20122	113.8469	GEN336831 1-BAXTER WILSON SES
FDNS	02ALL_G14_038	2	25SP	G14_038	FROM->TO	POTTER COUNTY INTERCHANGE (WAUK 90343-A) 345/230/13.2KV TRANSFORMER CKT 1	560	560	0.20234	113.8437	G13-010T 345.00 - SPEARVILLE 345KV CKT 1
FDNS	02ALL_G14_038	2	25SP	G14_038	FROM->TO	POTTER COUNTY INTERCHANGE (WAUK 90343-A) 345/230/13.2KV TRANSFORMER CKT 1	560	560	0.20056	113.8393	TUCO_2 345.00 (TUCO_2 XFMR) 345/230/13.2KV TRANSFORMER CKT 1
FDNS	02ALL_G14_038	2	25SP	G14_038	FROM->TO	POTTER COUNTY INTERCHANGE (WAUK 90343-A) 345/230/13.2KV TRANSFORMER CKT 1	560	560	0.20276	113.8311	G11_051T 345.00 - TATONGA7 345.00 345KV CKT 2
FDNS	02ALL_G14_038	2	25SP	G14_038	FROM->TO	POTTER COUNTY INTERCHANGE (WAUK 90343-A) 345/230/13.2KV TRANSFORMER CKT 1	560	560	0.20276	113.831	G11_051T 345.00 - TATONGA7 345.00 345KV CKT 1
FDNS	02ALL_G14_038	2	25SP	G14_038	FROM->TO	POTTER COUNTY INTERCHANGE (WAUK 90343-A) 345/230/13.2KV TRANSFORMER CKT 1	560	560	0.20122	113.8297	GEN523122 1-NBLWND-WTG210.6900
FDNS	02ALL_G14_038	2	25SP	G14_038	FROM->TO	POTTER COUNTY INTERCHANGE (WAUK 90343-A) 345/230/13.2KV TRANSFORMER CKT 1	560	560	0.20084	113.8251	P12:138:AEPW:S.W.S.-4:L.E.S.-4
FDNS	02ALL_G14_038	2	25SP	G14_038	FROM->TO	POTTER COUNTY INTERCHANGE (WAUK 90343-A) 345/230/13.2KV TRANSFORMER CKT 1	560	560	0.20122	113.8229	GEN523815 1-LLANO ESTACADO WIND GEN
FDNS	02ALL_G14_038	2	25SP	G14_038	FROM->TO	POTTER COUNTY INTERCHANGE (WAUK 90343-A) 345/230/13.2KV TRANSFORMER CKT 1	560	560	0.20276	113.8212	G11_051T 345.00 - WOODWARD DISTRICT EHV 345KV CKT 2
FDNS	02ALL_G14_038	2	25SP	G14_038	FROM->TO	POTTER COUNTY INTERCHANGE (WAUK 90343-A) 345/230/13.2KV TRANSFORMER CKT 1	560	560	0.20276	113.8211	G11_051T 345.00 - WOODWARD DISTRICT EHV 345KV CKT 1
FDNS	02ALL_G14_038	2	25SP	G14_038	FROM->TO	POTTER COUNTY INTERCHANGE (WAUK 90343-A) 345/230/13.2KV TRANSFORMER CKT 1	560	560	0.20122	113.8145	GEN338146 1-INDEPENDENCE UNIT #2
FDNS	02ALL_G14_038	2	25SP	G14_038	FROM->TO	POTTER COUNTY INTERCHANGE (WAUK 90343-A) 345/230/13.2KV TRANSFORMER CKT 1	560	560	0.20122	113.8116	GEN523121 1-NBLWND-WTG110.6900
FDNS	02ALL_G14_038	2	25SP	G14_038	FROM->TO	POTTER COUNTY INTERCHANGE (WAUK 90343-A) 345/230/13.2KV TRANSFORMER CKT 1	560	560	0.20211	113.8097	WALKEMEYER - WALKTAP3 115.00 115KV CKT 1
FDNS	02ALL_G14_038	2	25SP	G14_038	FROM->TO	POTTER COUNTY INTERCHANGE (WAUK 90343-A) 345/230/13.2KV TRANSFORMER CKT 1	560	560	0.20211	113.8097	WALKEMEYER - WALKTAP3 115.00 115KV CKT 1
FDNS	02ALL_G14_038	2	25SP	G14_038	FROM->TO	POTTER COUNTY INTERCHANGE (WAUK 90343-A) 345/230/13.2KV TRANSFORMER CKT 1	560	560	0.20211	113.8096	WALKTAP7 345.00 (WALKE345) 345/115/13.8KV TRANSFORMER CKT 1
FDNS	02ALL_G14_038	2	25SP	G14_038	FROM->TO	POTTER COUNTY INTERCHANGE (WAUK 90343-A) 345/230/13.2KV TRANSFORMER CKT 1	560	560	0.20211	113.8096	WALKTAP7 345.00 (WALKE345) 345/115/13.8KV TRANSFORMER CKT 1
FDNS	02ALL_G14_038	2	25SP	G14_038	FROM->TO	POTTER COUNTY INTERCHANGE (WAUK 90343-A) 345/230/13.2KV TRANSFORMER CKT 1	560	560	0.2018	113.8015	DEWEY - IODINE 138KV CKT 1
FDNS	02ALL_G14_038	2	25SP	G14_038	FROM->TO	POTTER COUNTY INTERCHANGE (WAUK 90343-A) 345/230/13.2KV TRANSFORMER CKT 1	560	560	0.20122	113.8014	GEN501812 1-RODEMACHER UNIT 2
FDNS	02ALL_G14_038	2	25SP	G14_038	FROM->TO	POTTER COUNTY INTERCHANGE (WAUK 90343-A) 345/230/13.2KV TRANSFORMER CKT 1	560	560	0.20098	113.7993	SUNDOWN INTERCHANGE - WOLFFORTH INTERCHANGE 230KV CKT 1
FDNS	02ALL_G14_038	2	25SP	G14_038	FROM->TO	POTTER COUNTY INTERCHANGE (WAUK 90343-A) 345/230/13.2KV TRANSFORMER CKT 1	560	560	0.20098	113.7993	SUNDOWN INTERCHANGE - WOLFFORTH INTERCHANGE 230KV CKT 1
FDNS	02ALL_G14_038	2	25SP	G14_038	FROM->TO	POTTER COUNTY INTERCHANGE (WAUK 90343-A) 345/230/13.2KV TRANSFORMER CKT 1	560	560	0.20183	113.7991	P12:115:SPS:T25.1.MOOREW.DUMAS19
FDNS	02ALL_G14_038	2	25SP	G14_038	FROM->TO	POTTER COUNTY INTERCHANGE (WAUK 90343-A) 345/230/13.2KV TRANSFORMER CKT 1	560	560	0.20118	113.7928	P12:138:WFEC:MSL15
FDNS	02ALL_G14_038	2	25SP	G14_038	FROM->TO	POTTER COUNTY INTERCHANGE (WAUK 90343-A) 345/230/13.2KV TRANSFORMER CKT 1	560	560	0.20122	113.7892	GRAND GULF 500/22.0KV TRANSFORMER CKT 1
FDNS	02ALL_G14_038	2	25SP	G14_038	FROM->TO	POTTER COUNTY INTERCHANGE (WAUK 90343-A) 345/230/13.2KV TRANSFORMER CKT 1	560	560	0.20122	113.787	GEN337041 1-GERALD ANDRUS
FDNS	02ALL_G14_038	2	25SP	G14_038	FROM->TO	POTTER COUNTY INTERCHANGE (WAUK 90343-A) 345/230/13.2KV TRANSFORMER CKT 1	560	560	0.20122	113.7826	GEN338143 1-INDEPENDENCE UNIT #1
FDNS	02ALL_G14_038	2	25SP	G14_038	FROM->TO	POTTER COUNTY INTERCHANGE (WAUK 90343-A) 345/230/13.2KV TRANSFORMER CKT 1	560	560	0.20122	113.7801	GEN560584 1-G06-44-2 4.1600
FDNS	02ALL_G14_038	2	25SP	G14_038	FROM->TO	POTTER COUNTY INTERCHANGE (WAUK 90343-A) 345/230/13.2KV TRANSFORMER CKT 1	560	560	0.20183	113.7751	DUMAS SUB - RB-S&S 3115.00 115KV CKT 1
FDNS	02ALL_G14_038	2	25SP	G14_038	FROM->TO	POTTER COUNTY INTERCHANGE (WAUK 90343-A) 345/230/13.2KV TRANSFORMER CKT 1	560	560	0.20122	113.7734	GEN523107 1-NOVUS_WND 14.1600
FDNS	02ALL_G14_038	2	25SP	G14_038	FROM->TO	POTTER COUNTY INTERCHANGE (WAUK 90343-A) 345/230/13.2KV TRANSFORMER CKT 1	560	560	0.20122	113.7687	GEN334441 1-SABINE UNIT 5
FDNS	02ALL_G14_038	2	25SP	G14_038	FROM->TO	POTTER COUNTY INTERCHANGE (WAUK 90343-A) 345/230/13.2KV TRANSFORMER CKT 1	560	560	0.20118	113.7641	CARLISLE INTERCHANGE - TUCO INTERCHANGE 230KV CKT 1
FDNS	02ALL_G14_038	2	25SP	G14_038	FROM->TO	POTTER COUNTY INTERCHANGE (WAUK 90343-A) 345/230/13.2KV TRANSFORMER CKT 1	560	560	0.20118	113.7641	CARLISLE INTERCHANGE - TUCO INTERCHANGE 230KV CKT 1
FDNS	02ALL_G14_038	2	25SP	G14_038	FROM->TO	POTTER COUNTY INTERCHANGE (WAUK 90343-A) 345/230/13.2KV TRANSFORMER CKT 1	560	560	0.20122	113.7534	GEN532722 1-EVANS ENERGY CENTER UNIT 2
FDNS	02ALL_G14_038	2	25SP	G14_038	FROM->TO	POTTER COUNTY INTERCHANGE (WAUK 90343-A) 345/230/13.2KV TRANSFORMER CKT 1	560	560	0.19903	113.7449	Harrington Station East Bus - Harrington Station Mid Bus 230KV CKT @1
FDNS	02ALL_G14_038	2	25SP	G14_038	FROM->TO	POTTER COUNTY INTERCHANGE (WAUK 90343-A) 345/230/13.2KV TRANSFORMER CKT 1	560	560	0.20122	113.7234	GEN523123 1-NBLWND-WTG310.6900
FDNS	02ALL_G14_038	2	25SP	G14_038	FROM->TO	POTTER COUNTY INTERCHANGE (WAUK 90343-A) 345/230/13.2KV TRANSFORMER CKT 1	560	560	0.20122	113.6852	GEN512688 2-GRDA1 GSU2 22
FDNS	02ALL_G14_038	2	25SP	G14_038	FROM->TO	POTTER COUNTY INTERCHANGE (WAUK 90343-A) 345/230/13.2KV TRANSFORMER CKT 1	560	560	0.20122	113.357	GEN590010 1-ERCOT EQUIVALENCE
FDNS	02ALL_G14_038	2	25SP	G14_038	FROM->TO	POTTER COUNTY INTERCHANGE (WAUK 90343-A) 345/230/13.2KV TRANSFORMER CKT 1	560	560	0.20122	113.3479	GEN659111 2-LELAND OLDS UNIT2
FDNS	02ALL_G14_038	2	25SP	G14_038	FROM->TO	POTTER COUNTY INTERCHANGE (WAUK 90343-A) 345/230/13.2KV TRANSFORMER CKT 1	560	560	0.19625	113.3363	SWISHER COUNTY INTERCHANGE - TUCO_2 230.00 230KV CKT 1
FDNS	02ALL_G14_038	2	25SP	G14_038	FROM->TO	POTTER COUNTY INTERCHANGE (WAUK 90343-A) 345/230/13.2KV TRANSFORMER CKT 1	560	560	0.20122	113.32	GEN560586 1-G06-44-4 4.1600
FDNS	02ALL_G14_038	2	25SP	G14_038	FROM->TO	POTTER COUNTY INTERCHANGE (WAUK 90343-A) 345/230/13.2KV TRANSFORMER CKT 1	560	560	0.20122	113.2899	GEN590011 2-ERCOT EQUIVALENCE
FDNS	02ALL_G14_038	2	25SP	G14_038	FROM->TO	POTTER COUNTY INTERCHANGE (WAUK 90343-A) 345/230/13.2KV TRANSFORMER CKT 1	560	560	0.20122	113.2265	2109-BUSHLAND INTERCHANGE
FDNS	02ALL_G14_038	2	25SP	G14_038	FROM->TO	POTTER COUNTY INTERCHANGE (WAUK 90343-A) 345/230/13.2KV TRANSFORMER CKT 1	560	560	0.20122	113.2265	BASE CASE
FDNS	02ALL_G14_038	2	25SP	G14_038	FROM->TO	POTTER COUNTY INTERCHANGE (WAUK 90343-A) 345/230/13.2KV TRANSFORMER CKT 1	560	560	0.20122	113.1986	GEN300006 1-NEW MADRID UNIT 1
FDNS	02ALL_G14_038	2	25SP	G14_038	FROM->TO	POTTER COUNTY INTERCHANGE (WAUK 90343-A) 345/230/13.2KV TRANSFORMER CKT 1	560	560	0.20122	113.1956	GEN300007 1-NEW MADRID UNIT 2
FDNS	02ALL_G14_038	2	25SP	G14_038	FROM->TO	POTTER COUNTY INTERCHANGE (WAUK 90343-A) 345/230/13.2KV TRANSFORMER CKT 1	560	560	0.20122	113.1477	GEN659103 1-ANTELOPE VALLEY UNIT1

SOLUTION	GROUP	SCENARIO	SEASON	SOURCE	DIRECTION	MONITORED ELEMENT	RATEA (MVA)	RATEB(MVA)	TDF	TC%LOADING (% MVA)	CONTINGENCY
FDNS	02ALL_G14_038	2	25SP	G14_038	FROM->TO	POTTER COUNTY INTERCHANGE (WAUK 90343-A) 345/230/13.2KV TRANSFORMER CKT 1	560	560	0.20122	113.1477	GEN659107 2-ANTELOPE VALLEY UNIT2
FDNS	02ALL_G14_038	2	25SP	G14_038	FROM->TO	POTTER COUNTY INTERCHANGE (WAUK 90343-A) 345/230/13.2KV TRANSFORMER CKT 1	560	560	0.20122	113.0936	GEN560585 1-G06-44-3 4.1600
FDNS	02ALL_G14_038	2	25SP	G14_038	FROM->TO	POTTER COUNTY INTERCHANGE (WAUK 90343-A) 345/230/13.2KV TRANSFORMER CKT 1	560	560	0.20122	112.8533	GEN542951 5-HAWTHORN UNIT #5
FDNS	02ALL_G14_038	2	25SP	G14_038	FROM->TO	POTTER COUNTY INTERCHANGE (WAUK 90343-A) 345/230/13.2KV TRANSFORMER CKT 1	560	560	0.20122	112.6894	GEN542967 9-HAWTHORN UNIT #9
FDNS	02ALL_G14_038	2	25SP	G14_038	FROM->TO	POTTER COUNTY INTERCHANGE (WAUK 90343-A) 345/230/13.2KV TRANSFORMER CKT 1	560	560	0.20117	112.6848	EAST PLANT INTERCHANGE - HARRINGTON STATION 230KV CKT 1
FDNS	02ALL_G14_038	2	25SP	G14_038	FROM->TO	POTTER COUNTY INTERCHANGE (WAUK 90343-A) 345/230/13.2KV TRANSFORMER CKT 1	560	560	0.20117	112.6848	EAST PLANT INTERCHANGE - HARRINGTON STATION 230KV CKT 1
FDNS	02ALL_G14_038	2	25SP	G14_038	FROM->TO	POTTER COUNTY INTERCHANGE (WAUK 90343-A) 345/230/13.2KV TRANSFORMER CKT 1	560	560	0.20122	112.659	GEN560286 1-G10-01-1WTG 0.6900
FDNS	02ALL_G14_038	2	25SP	G14_038	FROM->TO	POTTER COUNTY INTERCHANGE (WAUK 90343-A) 345/230/13.2KV TRANSFORMER CKT 1	560	560	0.20122	112.659	GEN560287 1-G10-01-2WTG 0.6900
FDNS	02ALL_G14_038	2	25SP	G14_038	FROM->TO	POTTER COUNTY INTERCHANGE (WAUK 90343-A) 345/230/13.2KV TRANSFORMER CKT 1	560	560	0.20122	112.6573	GEN600001 2-SHERBURNE CNTY G2
FDNS	02ALL_G14_038	2	25SP	G14_038	FROM->TO	POTTER COUNTY INTERCHANGE (WAUK 90343-A) 345/230/13.2KV TRANSFORMER CKT 1	560	560	0.20108	112.6503	P12:345:SPS:J15.1.XRDS.TOLK
FDNS	02ALL_G14_038	2	25SP	G14_038	FROM->TO	POTTER COUNTY INTERCHANGE (WAUK 90343-A) 345/230/13.2KV TRANSFORMER CKT 1	560	560	0.19967	112.6498	P12:115:SPS:T53.1.NICHLS.KIRBY
FDNS	02ALL_G14_038	2	25SP	G14_038	FROM->TO	POTTER COUNTY INTERCHANGE (WAUK 90343-A) 345/230/13.2KV TRANSFORMER CKT 1	560	560	0.20122	112.6496	BIG STONE 230/24.0KV TRANSFORMER CKT 1
FDNS	02ALL_G14_038	2	25SP	G14_038	FROM->TO	POTTER COUNTY INTERCHANGE (WAUK 90343-A) 345/230/13.2KV TRANSFORMER CKT 1	560	560	0.20122	112.6472	GEN652559 1-OAHE
FDNS	02ALL_G14_038	2	25SP	G14_038	FROM->TO	POTTER COUNTY INTERCHANGE (WAUK 90343-A) 345/230/13.2KV TRANSFORMER CKT 1	560	560	0.20091	112.6402	DEAF SMITH REC-#6 - FRIONA SUB 115KV CKT 1
FDNS	02ALL_G14_038	2	25SP	G14_038	FROM->TO	POTTER COUNTY INTERCHANGE (WAUK 90343-A) 345/230/13.2KV TRANSFORMER CKT 1	560	560	0.20122	112.6377	GEN539677 3-A. M. MULLERGREN GENERATOR
FDNS	02ALL_G14_038	2	25SP	G14_038	FROM->TO	POTTER COUNTY INTERCHANGE (WAUK 90343-A) 345/230/13.2KV TRANSFORMER CKT 1	560	560	0.20122	112.6367	GEN532672 1-TECUMSEH ENERGY CENTER UNIT 8
FDNS	02ALL_G14_038	2	25SP	G14_038	FROM->TO	POTTER COUNTY INTERCHANGE (WAUK 90343-A) 345/230/13.2KV TRANSFORMER CKT 1	560	560	0.20122	112.6334	GEN600005 1-MONTICELLO
FDNS	02ALL_G14_038	2	25SP	G14_038	FROM->TO	POTTER COUNTY INTERCHANGE (WAUK 90343-A) 345/230/13.2KV TRANSFORMER CKT 1	560	560	0.20007	112.6252	MCCLELLAN SUB - MCLEAN RURAL SUB 115KV CKT 1
FDNS	02ALL_G14_038	2	25SP	G14_038	FROM->TO	POTTER COUNTY INTERCHANGE (WAUK 90343-A) 345/230/13.2KV TRANSFORMER CKT 1	560	560	0.20122	112.625	GEN514939 1-HORSESHOE LAKE 8G
FDNS	02ALL_G14_038	2	25SP	G14_038	FROM->TO	POTTER COUNTY INTERCHANGE (WAUK 90343-A) 345/230/13.2KV TRANSFORMER CKT 1	560	560	0.20007	112.625	KIRBY SWITCHING STATION - MCCLELLAN SUB 115KV CKT 1
FDNS	02ALL_G14_038	2	25SP	G14_038	FROM->TO	POTTER COUNTY INTERCHANGE (WAUK 90343-A) 345/230/13.2KV TRANSFORMER CKT 1	560	560	0.20122	112.6202	GEN542956 2-LACYGNE UNIT #2
FDNS	02ALL_G14_038	2	25SP	G14_038	FROM->TO	POTTER COUNTY INTERCHANGE (WAUK 90343-A) 345/230/13.2KV TRANSFORMER CKT 1	560	560	0.20122	112.6192	GEN532742 5-EMPORIA ENERGY CENTER UNIT 5
FDNS	02ALL_G14_038	2	25SP	G14_038	FROM->TO	POTTER COUNTY INTERCHANGE (WAUK 90343-A) 345/230/13.2KV TRANSFORMER CKT 1	560	560	0.20122	112.6174	GEN645024 4-NORTH OMAHA 4
FDNS	02ALL_G14_038	2	25SP	G14_038	FROM->TO	POTTER COUNTY INTERCHANGE (WAUK 90343-A) 345/230/13.2KV TRANSFORMER CKT 1	560	560	0.20122	112.6163	GEN300017 1-1G2GPDEL 18.000
FDNS	02ALL_G14_038	2	25SP	G14_038	FROM->TO	POTTER COUNTY INTERCHANGE (WAUK 90343-A) 345/230/13.2KV TRANSFORMER CKT 1	560	560	0.20122	112.6144	GEN539653 1-CIMARRON RIVER PLANT GENERATOR
FDNS	02ALL_G14_038	2	25SP	G14_038	FROM->TO	POTTER COUNTY INTERCHANGE (WAUK 90343-A) 345/230/13.2KV TRANSFORMER CKT 1	560	560	0.20097	112.5932	G13_027T 230.00 - YOAKUM COUNTY INTERCHANGE 230KV CKT 1
FDNS	02ALL_G14_038	2	25SP	G14_038	FROM->TO	POTTER COUNTY INTERCHANGE (WAUK 90343-A) 345/230/13.2KV TRANSFORMER CKT 1	560	560	0.20122	112.5909	GEN600000 1-SHERBURNECNTY G1
FDNS	02ALL_G14_038	2	25SP	G14_038	FROM->TO	POTTER COUNTY INTERCHANGE (WAUK 90343-A) 345/230/13.2KV TRANSFORMER CKT 1	560	560	0.20122	112.59	GEN511941 1-OEC STEAM # 2
FDNS	02ALL_G14_038	2	25SP	G14_038	FROM->TO	POTTER COUNTY INTERCHANGE (WAUK 90343-A) 345/230/13.2KV TRANSFORMER CKT 1	560	560	0.20122	112.5881	GEN549890 1-SOUTHWEST 1
FDNS	02ALL_G14_038	2	25SP	G14_038	FROM->TO	POTTER COUNTY INTERCHANGE (WAUK 90343-A) 345/230/13.2KV TRANSFORMER CKT 1	560	560	0.20122	112.5878	GEN300016 1-1G1GPDEL 18.000
FDNS	02ALL_G14_038	2	25SP	G14_038	FROM->TO	POTTER COUNTY INTERCHANGE (WAUK 90343-A) 345/230/13.2KV TRANSFORMER CKT 1	560	560	0.20122	112.5825	GEN547649 1-ASBURY UNIT #1
FDNS	02ALL_G14_038	2	25SP	G14_038	FROM->TO	POTTER COUNTY INTERCHANGE (WAUK 90343-A) 345/230/13.2KV TRANSFORMER CKT 1	560	560	0.20122	112.5808	GEN511938 1-OEC STEAM # 1
FDNS	02ALL_G14_038	2	25SP	G14_038	FROM->TO	POTTER COUNTY INTERCHANGE (WAUK 90343-A) 345/230/13.2KV TRANSFORMER CKT 1	560	560	0.20091	112.5802	DEAF SMITH REC-#6 - HEREFORD INTERCHANGE 115KV CKT 1
FDNS	02ALL_G14_038	2	25SP	G14_038	FROM->TO	POTTER COUNTY INTERCHANGE (WAUK 90343-A) 345/230/13.2KV TRANSFORMER CKT 1	560	560	0.20122	112.5797	GEN615001 1-COAL CREEK
FDNS	02ALL_G14_038	2	25SP	G14_038	FROM->TO	POTTER COUNTY INTERCHANGE (WAUK 90343-A) 345/230/13.2KV TRANSFORMER CKT 1	560	560	0.20091	112.5747	P12:115:SPS:T58.1.HERFRD.CARGIL
FDNS	02ALL_G14_038	2	25SP	G14_038	FROM->TO	POTTER COUNTY INTERCHANGE (WAUK 90343-A) 345/230/13.2KV TRANSFORMER CKT 1	560	560	0.20122	112.5737	GEN513602 1-GRECSTG_1 17.500
FDNS	02ALL_G14_038	2	25SP	G14_038	FROM->TO	POTTER COUNTY INTERCHANGE (WAUK 90343-A) 345/230/13.2KV TRANSFORMER CKT 1	560	560	0.20122	112.5698	GEN615002 2-COAL CREEK
FDNS	02ALL_G14_038	2	25SP	G14_038	FROM->TO	POTTER COUNTY INTERCHANGE (WAUK 90343-A) 345/230/13.2KV TRANSFORMER CKT 1	560	560	0.19887	112.5695	CHERRY1 - HARRINGTON STATION 230KV CKT 1
FDNS	02ALL_G14_038	2	25SP	G14_038	FROM->TO	POTTER COUNTY INTERCHANGE (WAUK 90343-A) 345/230/13.2KV TRANSFORMER CKT 1	560	560	0.19887	112.5695	CHERRY1 - HARRINGTON STATION 230KV CKT 1
FDNS	02ALL_G14_038	2	25SP	G14_038	FROM->TO	POTTER COUNTY INTERCHANGE (WAUK 90343-A) 345/230/13.2KV TRANSFORMER CKT 1	560	560	0.19967	112.5688	CONWAY SUB - NICHOLS STATION 115KV CKT 1
FDNS	02ALL_G14_038	2	25SP	G14_038	FROM->TO	POTTER COUNTY INTERCHANGE (WAUK 90343-A) 345/230/13.2KV TRANSFORMER CKT 1	560	560	0.20122	112.5664	GEN547658 1-STATE LINE COMBINED CYCLE
FDNS	02ALL_G14_038	2	25SP	G14_038	FROM->TO	POTTER COUNTY INTERCHANGE (WAUK 90343-A) 345/230/13.2KV TRANSFORMER CKT 1	560	560	0.20122	112.5613	GEN640005 1-CANADAY
FDNS	02ALL_G14_038	2	25SP	G14_038	FROM->TO	POTTER COUNTY INTERCHANGE (WAUK 90343-A) 345/230/13.2KV TRANSFORMER CKT 1	560	560	0.20104	112.5562	CANYON E_TP3115.00 - CANYON WEST SUB 115KV CKT 1
FDNS	02ALL_G14_038	2	25SP	G14_038	FROM->TO	POTTER COUNTY INTERCHANGE (WAUK 90343-A) 345/230/13.2KV TRANSFORMER CKT 1	560	560	0.20122	112.5537	GEN515040 1-SEMINOLE 1G
FDNS	02ALL_G14_038	2	25SP	G14_038	FROM->TO	POTTER COUNTY INTERCHANGE (WAUK 90343-A) 345/230/13.2KV TRANSFORMER CKT 1	560	560	0.20109	112.5533	TOLK STATION (ABBXNL844501) 345/230/13.2KV TRANSFORMER CKT 1
FDNS	02ALL_G14_038	2	25SP	G14_038	FROM->TO	POTTER COUNTY INTERCHANGE (WAUK 90343-A) 345/230/13.2KV TRANSFORMER CKT 1	560	560	0.20109	112.5533	TOLK STATION (ABBXNL844501) 345/230/13.2KV TRANSFORMER CKT 1
FDNS	02ALL_G14_038	2	25SP	G14_038	FROM->TO	POTTER COUNTY INTERCHANGE (WAUK 90343-A) 345/230/13.2KV TRANSFORMER CKT 1	560	560	0.20109	112.5511	CROSSROADS 7345.00 - TOLK STATION 345KV CKT 1
FDNS	02ALL_G14_038	2	25SP	G14_038	FROM->TO	POTTER COUNTY INTERCHANGE (WAUK 90343-A) 345/230/13.2KV TRANSFORMER CKT 1	560	560	0.20122	112.5504	GEN532725 1-EVANS ENERGY CENTER GAS TURBINE 3
FDNS	02ALL_G14_038	2	25SP	G14_038	FROM->TO	POTTER COUNTY INTERCHANGE (WAUK 90343-A) 345/230/13.2KV TRANSFORMER CKT 1	560	560	0.20122	112.538	GEN532721 1-EVANS ENERGY CENTER UNIT 1
FDNS	02ALL_G14_038	2	25SP	G14_038	FROM->TO	POTTER COUNTY INTERCHANGE (WAUK 90343-A) 345/230/13.2KV TRANSFORMER CKT 1	560	560	0.20098	112.5358	AMARILLO SOUTH INTERCHANGE - NICHOLS STATION 230KV CKT 1
FDNS	02ALL_G14_038	2	25SP	G14_038	FROM->TO	POTTER COUNTY INTERCHANGE (WAUK 90343-A) 345/230/13.2KV TRANSFORMER CKT 1	560	560	0.20098	112.5358	AMARILLO SOUTH INTERCHANGE - NICHOLS STATION 230KV CKT 1
FDNS	02ALL_G14_038	2	25SP	G14_038	FROM->TO	POTTER COUNTY INTERCHANGE (WAUK 90343-A) 345/230/13.2KV TRANSFORMER CKT 1	560	560	0.20122	112.5305	GEN532743 6-EMPORIA ENERGY CENTER UNIT 6
FDNS	02ALL_G14_038	2	25SP	G14_038	FROM->TO	POTTER COUNTY INTERCHANGE (WAUK 90343-A) 345/230/13.2KV TRANSFORMER CKT 1	560	560	0.20122	112.5305	GEN532744 7-EMPORIA ENERGY CENTER UNIT 7
FDNS	02ALL_G14_038	2	25SP	G14_038	FROM->TO	POTTER COUNTY INTERCHANGE (WAUK 90343-A) 345/230/13.2KV TRANSFORMER CKT 1	560	560	0.20122	112.5286	GEN659354 1-DEERCREK STG18.000
FDNS	02ALL_G14_038	2	25SP	G14_038	FROM->TO	POTTER COUNTY INTERCHANGE (WAUK 90343-A) 345/230/13.2KV TRANSFORMER CKT 1	560	560	0.20122	112.5284	GEN659353 1-DEERCREK CTG18.000
FDNS	02ALL_G14_038	2	25SP	G14_038	FROM->TO	POTTER COUNTY INTERCHANGE (WAUK 90343-A) 345/230/13.2KV TRANSFORMER CKT 1	560	560	0.19823	112.52	DEAF SMITH COUNTY INTERCHANGE - PLANT X STATION 230KV CKT 1
FDNS	02ALL_G14_038	2	25SP	G14_038	FROM->TO	POTTER COUNTY INTERCHANGE (WAUK 90343-A) 345/230/13.2KV TRANSFORMER CKT 1	560	560	0.19823	112.52	DEAF SMITH COUNTY INTERCHANGE - PLANT X STATION 230KV CKT 1
FDNS	02ALL_G14_038	2	25SP	G14_038	FROM->TO	POTTER COUNTY INTERCHANGE (WAUK 90343-A) 345/230/13.2KV TRANSFORMER CKT 1	560	560	0.2006	112.5174	KRESS INTERCHANGE - TULIA TAP 115KV CKT 1
FDNS	02ALL_G14_038	2	25SP	G14_038	FROM->TO	POTTER COUNTY INTERCHANGE (WAUK 90343-A) 345/230/13.2KV TRANSFORMER CKT 1	560	560	0.20122	112.4904	SHERBURNE CO 345/24.0KV TRANSFORMER CKT 1
FDNS	02ALL_G14_038	2	25SP	G14_038	FROM->TO	POTTER COUNTY INTERCHANGE (WAUK 90343-A) 345/230/13.2KV TRANSFORMER CKT 1	560	560	0.20122	112.4901	GEN509409 1-WILKES #3
FDNS	02ALL_G14_038	2	25SP	G14_038	FROM->TO	POTTER COUNTY INTERCHANGE (WAUK 90343-A) 345/230/13.2KV TRANSFORMER CKT 1	560	560	0.20122	112.4886	GEN509398 1-KNOXLEE #5
FDNS	02ALL_G14_038	2	25SP	G14_038	FROM->TO	POTTER COUNTY INTERCHANGE (WAUK 90343-A) 345/230/13.2KV TRANSFORMER CKT 1	560	560	0.20122	112.4877	FINNEY SWITCHING STATION - PSCO LAMAR DC TIE 345KV CKT 1
FDNS	02ALL_G14_038	2	25SP	G14_038	FROM->TO	POTTER COUNTY INTERCHANGE (WAUK 90343-A) 345/230/13.2KV TRANSFORMER CKT 1	560	560	0.20122	112.4877	FINNEY SWITCHING STATION - PSCO LAMAR DC TIE 345KV CKT 1
FDNS	02ALL_G14_038	2	25SP	G14_038	FROM->TO	POTTER COUNTY INTERCHANGE (WAUK 90343-A) 345/230/13.2KV TRANSFORMER CKT 1	560	560	0.20122	112.4753	GEN300001 1-THOMAS HILL UNIT 1
FDNS	02ALL_G14_038	2	25SP	G14_038	FROM->TO	POTTER COUNTY INTERCHANGE (WAUK 90343-A) 345/230/13.2KV TRANSFORMER CKT 1	560	560	0.20122	112.4678	GEN635214 4-NEAL UNIT 4
FDNS	02ALL_G14_038	2	25SP	G14_038	FROM->TO	POTTER COUNTY INTERCHANGE (WAUK 90343-A) 345/230/13.2KV TRANSFORMER CKT 1	560	560	0.20122	112.4669	GEN645041 1-CASS COUNTY 1
FDNS	02ALL_G14_038	2	25SP	G14_038	FROM->TO	POTTER COUNTY INTERCHANGE (WAUK 90343-A) 345/230/13.2KV TRANSFORMER CKT 1	560	560	0.20122	112.4648	GEN541163 1-ARIES COMBUSTION TURBINE #1
FDNS	02ALL_G14_038	2	25SP	G14_038	FROM->TO	POTTER COUNTY INTERCHANGE (WAUK 90343-A) 345/230/13.2KV TRANSFORMER CKT 1	560	560	0.20108	112.4644	P12:345:SPS:J02.1.TOLK.EDDY
FDNS	02ALL_G14_038	2	25SP	G14_038	FROM->TO	POTTER COUNTY INTERCHANGE (WAUK 90343-A) 345/230/13.2KV TRANSFORMER CKT 1	560	560	0.2006	112.4644	HAPPY INTERCHANGE - TULIA TAP 115KV CKT 1
FDNS	02ALL_G14_038	2	25SP	G14_038	FROM->TO	POTTER COUNTY INTERCHANGE (WAUK 90343-A) 345/230/13.2KV TRANSFORMER CKT 1	560	560	0.20122	112.464	GEN645042 2-CASS COUNTY 2
FDNS	02ALL_G14_038	2	25SP	G14_038	FROM->TO	POTTER COUNTY INTERCHANGE (WAUK 90343-A) 345/230/13.2KV TRANSFORMER CKT 1	560	560	0.2006	112.4481	P12:115:SPS:T67.1.HAPPY.KRESS
FDNS	02ALL_G14_038	2	25SP	G14_038	FROM->TO	POTTER COUNTY INTERCHANGE (WAUK 90343-A) 345/230/13.2KV TRANSFORMER CKT 1	560	560	0.20122	112.4239	GEN541162 1-ARIES STEAM TURBINE
FDNS	02ALL_G14_038	2	25SP	G14_038	FROM->TO	POTTER COUNTY INTERCHANGE (WAUK 90343-A) 345/230/13.2KV TRANSFORMER CKT 1	560	560	0.20122	112.4237	GEN600002 3-SHERBURNE CNTY G3

SOLUTION	GROUP	SCENARIO	SEASON	SOURCE	DIRECTION	MONITORED ELEMENT	RATEA (MVA)	RATEB(MVA)	TDF	TC%LOADING (% MVA)	CONTINGENCY
FDNS	02ALL_G14_038	2	25SP	G14_038	FROM->TO	POTTER COUNTY INTERCHANGE (WAUK 90343-A) 345/230/13.2KV TRANSFORMER CKT 1	560	560	0.20122	112.4113	GEN515041 1-SEMINOLE 2G
FDNS	02ALL_G14_038	2	25SP	G14_038	FROM->TO	POTTER COUNTY INTERCHANGE (WAUK 90343-A) 345/230/13.2KV TRANSFORMER CKT 1	560	560	0.20122	112.3911	GEN635023 3-WALTER SCOTT UNIT 3
FDNS	02ALL_G14_038	2	25SP	G14_038	FROM->TO	POTTER COUNTY INTERCHANGE (WAUK 90343-A) 345/230/13.2KV TRANSFORMER CKT 1	560	560	0.20122	112.3811	GEN515042 1-SEMINOLE 3G
FDNS	02ALL_G14_038	2	25SP	G14_038	FROM->TO	POTTER COUNTY INTERCHANGE (WAUK 90343-A) 345/230/13.2KV TRANSFORMER CKT 1	560	560	0.20122	112.3727	GEN523170 1-GOODWELL_1 10.6900
FDNS	02ALL_G14_038	2	25SP	G14_038	FROM->TO	POTTER COUNTY INTERCHANGE (WAUK 90343-A) 345/230/13.2KV TRANSFORMER CKT 1	560	560	0.20122	112.3512	GEN515592 1-PALDRW21 0.6900
FDNS	02ALL_G14_038	2	25SP	G14_038	FROM->TO	POTTER COUNTY INTERCHANGE (WAUK 90343-A) 345/230/13.2KV TRANSFORMER CKT 1	560	560	0.20122	112.3392	GEN523171 1-GOODWELL_2 10.6900
FDNS	02ALL_G14_038	2	25SP	G14_038	FROM->TO	POTTER COUNTY INTERCHANGE (WAUK 90343-A) 345/230/13.2KV TRANSFORMER CKT 1	560	560	0.20122	112.3338	GEN300010 1-ST FRANCIS UNIT 1
FDNS	02ALL_G14_038	2	25SP	G14_038	FROM->TO	POTTER COUNTY INTERCHANGE (WAUK 90343-A) 345/230/13.2KV TRANSFORMER CKT 1	560	560	0.20109	112.3271	EDDY COUNTY INTERCHANGE (ABB AEM30711) 345/230/13.2KV TRANSFORMER CKT 1
FDNS	02ALL_G14_038	2	25SP	G14_038	FROM->TO	POTTER COUNTY INTERCHANGE (WAUK 90343-A) 345/230/13.2KV TRANSFORMER CKT 1	560	560	0.20109	112.3271	EDDY COUNTY INTERCHANGE (ABB AEM30711) 345/230/13.2KV TRANSFORMER CKT 1
FDNS	02ALL_G14_038	2	25SP	G14_038	FROM->TO	POTTER COUNTY INTERCHANGE (WAUK 90343-A) 345/230/13.2KV TRANSFORMER CKT 1	560	560	0.20109	112.3271	P12:345:SPS:J14.1.EDDY.XRDS
FDNS	02ALL_G14_038	2	25SP	G14_038	FROM->TO	POTTER COUNTY INTERCHANGE (WAUK 90343-A) 345/230/13.2KV TRANSFORMER CKT 1	560	560	0.20109	112.327	CROSSROADS 7345.00 - EDDY COUNTY INTERCHANGE 345KV CKT 1
FDNS	02ALL_G14_038	2	25SP	G14_038	FROM->TO	POTTER COUNTY INTERCHANGE (WAUK 90343-A) 345/230/13.2KV TRANSFORMER CKT 1	560	560	0.20122	112.3243	GEN300015 1-1SGPDEL 18.000
FDNS	02ALL_G14_038	2	25SP	G14_038	FROM->TO	POTTER COUNTY INTERCHANGE (WAUK 90343-A) 345/230/13.2KV TRANSFORMER CKT 1	560	560	0.19779	112.307	Harrington Station East Bus - POTTER COUNTY INTERCHANGE 230KV CKT 1
FDNS	02ALL_G14_038	2	25SP	G14_038	FROM->TO	POTTER COUNTY INTERCHANGE (WAUK 90343-A) 345/230/13.2KV TRANSFORMER CKT 1	560	560	0.19779	112.307	Harrington Station East Bus - POTTER COUNTY INTERCHANGE 230KV CKT 1
FDNS	02ALL_G14_038	2	25SP	G14_038	FROM->TO	POTTER COUNTY INTERCHANGE (WAUK 90343-A) 345/230/13.2KV TRANSFORMER CKT 1	560	560	0.20122	112.2924	GEN505432 1-SIKESTON
FDNS	02ALL_G14_038	2	25SP	G14_038	FROM->TO	POTTER COUNTY INTERCHANGE (WAUK 90343-A) 345/230/13.2KV TRANSFORMER CKT 1	560	560	0.20122	112.291	GEN300011 1-ST FRANCIS UNIT 2
FDNS	02ALL_G14_038	2	25SP	G14_038	FROM->TO	POTTER COUNTY INTERCHANGE (WAUK 90343-A) 345/230/13.2KV TRANSFORMER CKT 1	560	560	0.20122	112.2868	GEN531459 2-S2 GENERATOR
FDNS	02ALL_G14_038	2	25SP	G14_038	FROM->TO	POTTER COUNTY INTERCHANGE (WAUK 90343-A) 345/230/13.2KV TRANSFORMER CKT 1	560	560	0.20122	112.2854	GEN549893 2-SOUTHWEST 2
FDNS	02ALL_G14_038	2	25SP	G14_038	FROM->TO	POTTER COUNTY INTERCHANGE (WAUK 90343-A) 345/230/13.2KV TRANSFORMER CKT 1	560	560	0.20122	112.2781	GEN645011 1-NEBRASKA CITY 1
FDNS	02ALL_G14_038	2	25SP	G14_038	FROM->TO	POTTER COUNTY INTERCHANGE (WAUK 90343-A) 345/230/13.2KV TRANSFORMER CKT 1	560	560	0.20122	112.2615	GEN635024 4-WALTER SCOTT UNIT 4
FDNS	02ALL_G14_038	2	25SP	G14_038	FROM->TO	POTTER COUNTY INTERCHANGE (WAUK 90343-A) 345/230/13.2KV TRANSFORMER CKT 1	560	560	0.20104	112.2516	CANYON E_TP3115.00 - RANDALL COUNTY INTERCHANGE 115KV CKT 1
FDNS	02ALL_G14_038	2	25SP	G14_038	FROM->TO	POTTER COUNTY INTERCHANGE (WAUK 90343-A) 345/230/13.2KV TRANSFORMER CKT 1	560	560	0.20122	112.2482	GEN645001 1-FORT CALHOUN 1
FDNS	02ALL_G14_038	2	25SP	G14_038	FROM->TO	POTTER COUNTY INTERCHANGE (WAUK 90343-A) 345/230/13.2KV TRANSFORMER CKT 1	560	560	0.20122	112.2292	GEN645025 5-NORTH OMAHA 5
FDNS	02ALL_G14_038	2	25SP	G14_038	FROM->TO	POTTER COUNTY INTERCHANGE (WAUK 90343-A) 345/230/13.2KV TRANSFORMER CKT 1	560	560	0.19749	112.2178	CHERRY1 - POTTER COUNTY INTERCHANGE 230KV CKT 1
FDNS	02ALL_G14_038	2	25SP	G14_038	FROM->TO	POTTER COUNTY INTERCHANGE (WAUK 90343-A) 345/230/13.2KV TRANSFORMER CKT 1	560	560	0.19749	112.2178	CHERRY1 - POTTER COUNTY INTERCHANGE 230KV CKT 1
FDNS	02ALL_G14_038	2	25SP	G14_038	FROM->TO	POTTER COUNTY INTERCHANGE (WAUK 90343-A) 345/230/13.2KV TRANSFORMER CKT 1	560	560	0.20122	112.2028	GEN659110 1-LELAND OLDS UNIT1
FDNS	02ALL_G14_038	2	25SP	G14_038	FROM->TO	POTTER COUNTY INTERCHANGE (WAUK 90343-A) 345/230/13.2KV TRANSFORMER CKT 1	560	560	0.20122	112.1931	GEN542955 1-LACYGNE UNIT #1
FDNS	02ALL_G14_038	2	25SP	G14_038	FROM->TO	POTTER COUNTY INTERCHANGE (WAUK 90343-A) 345/230/13.2KV TRANSFORMER CKT 1	560	560	0.20122	112.1816	GEN546702 1-NM GEN N1
FDNS	02ALL_G14_038	2	25SP	G14_038	FROM->TO	POTTER COUNTY INTERCHANGE (WAUK 90343-A) 345/230/13.2KV TRANSFORMER CKT 1	560	560	0.20122	112.1779	GEN509406 1-WELSH #3
FDNS	02ALL_G14_038	2	25SP	G14_038	FROM->TO	POTTER COUNTY INTERCHANGE (WAUK 90343-A) 345/230/13.2KV TRANSFORMER CKT 1	560	560	0.20122	112.1777	GEN509404 1-WELSH #1
FDNS	02ALL_G14_038	2	25SP	G14_038	FROM->TO	POTTER COUNTY INTERCHANGE (WAUK 90343-A) 345/230/13.2KV TRANSFORMER CKT 1	560	560	0.20104	112.1757	P12:115:SPS:V05.1.OSAGE.WCANYON
FDNS	02ALL_G14_038	2	25SP	G14_038	FROM->TO	POTTER COUNTY INTERCHANGE (WAUK 90343-A) 345/230/13.2KV TRANSFORMER CKT 1	560	560	0.20122	112.1699	GEN562042 1-G11_014_3 0.6900
FDNS	02ALL_G14_038	2	25SP	G14_038	FROM->TO	POTTER COUNTY INTERCHANGE (WAUK 90343-A) 345/230/13.2KV TRANSFORMER CKT 1	560	560	0.20183	112.1649	CHAN/TASCOS6230.00 - POTTER COUNTY INTERCHANGE 230KV CKT 1
FDNS	02ALL_G14_038	2	25SP	G14_038	FROM->TO	POTTER COUNTY INTERCHANGE (WAUK 90343-A) 345/230/13.2KV TRANSFORMER CKT 1	560	560	0.20122	112.1158	GEN513601 1-GRECCTG_1 20.000
FDNS	02ALL_G14_038	2	25SP	G14_038	FROM->TO	POTTER COUNTY INTERCHANGE (WAUK 90343-A) 345/230/13.2KV TRANSFORMER CKT 1	560	560	0.20122	112.0951	GEN542957 1-IATAN UNIT #1
FDNS	02ALL_G14_038	2	25SP	G14_038	FROM->TO	POTTER COUNTY INTERCHANGE (WAUK 90343-A) 345/230/13.2KV TRANSFORMER CKT 1	560	560	0.20122	112.0904	GEN300002 1-THOMAS HILL UNIT 2
FDNS	02ALL_G14_038	2	25SP	G14_038	FROM->TO	POTTER COUNTY INTERCHANGE (WAUK 90343-A) 345/230/13.2KV TRANSFORMER CKT 1	560	560	0.20122	112.0844	GEN539670 4-JUDSON LARGE GENERATOR
FDNS	02ALL_G14_038	2	25SP	G14_038	FROM->TO	POTTER COUNTY INTERCHANGE (WAUK 90343-A) 345/230/13.2KV TRANSFORMER CKT 1	560	560	0.20122	112.0773	GEN645012 2-NEBRASKA CITY 2
FDNS	02ALL_G14_038	2	25SP	G14_038	FROM->TO	POTTER COUNTY INTERCHANGE (WAUK 90343-A) 345/230/13.2KV TRANSFORMER CKT 1	560	560	0.20086	112.0728	Harrington Station Mid Bus - RANDALL COUNTY INTERCHANGE 230KV CKT 1
FDNS	02ALL_G14_038	2	25SP	G14_038	FROM->TO	POTTER COUNTY INTERCHANGE (WAUK 90343-A) 345/230/13.2KV TRANSFORMER CKT 1	560	560	0.20086	112.0728	Harrington Station Mid Bus - RANDALL COUNTY INTERCHANGE 230KV CKT 1
FDNS	02ALL_G14_038	2	25SP	G14_038	FROM->TO	POTTER COUNTY INTERCHANGE (WAUK 90343-A) 345/230/13.2KV TRANSFORMER CKT 1	560	560	0.20122	112.0533	GEN300003 1-THOMAS HILL UNIT 3
FDNS	02ALL_G14_038	2	25SP	G14_038	FROM->TO	POTTER COUNTY INTERCHANGE (WAUK 90343-A) 345/230/13.2KV TRANSFORMER CKT 1	560	560	0.20122	112.0507	GEN509416 1-TURK GENERATION
FDNS	02ALL_G14_038	2	25SP	G14_038	FROM->TO	POTTER COUNTY INTERCHANGE (WAUK 90343-A) 345/230/13.2KV TRANSFORMER CKT 1	560	560	0.20059	112.0486	PLANT X STATION - SUNDOWN INTERCHANGE 230KV CKT 1
FDNS	02ALL_G14_038	2	25SP	G14_038	FROM->TO	POTTER COUNTY INTERCHANGE (WAUK 90343-A) 345/230/13.2KV TRANSFORMER CKT 1	560	560	0.20059	112.0486	PLANT X STATION - SUNDOWN INTERCHANGE 230KV CKT 1
FDNS	02ALL_G14_038	2	25SP	G14_038	FROM->TO	POTTER COUNTY INTERCHANGE (WAUK 90343-A) 345/230/13.2KV TRANSFORMER CKT 1	560	560	0.20122	112.0415	GEN641089 2-ENERGY CENTER 2
FDNS	02ALL_G14_038	2	25SP	G14_038	FROM->TO	POTTER COUNTY INTERCHANGE (WAUK 90343-A) 345/230/13.2KV TRANSFORMER CKT 1	560	560	0.20122	112.0411	GEN511842 1-RIVERSIDE STATION #1
FDNS	02ALL_G14_038	2	25SP	G14_038	FROM->TO	POTTER COUNTY INTERCHANGE (WAUK 90343-A) 345/230/13.2KV TRANSFORMER CKT 1	560	560	0.20122	112.0359	GEN511843 1-RIVERSIDE STATION #2
FDNS	02ALL_G14_038	2	25SP	G14_038	FROM->TO	POTTER COUNTY INTERCHANGE (WAUK 90343-A) 345/230/13.2KV TRANSFORMER CKT 1	560	560	0.2006	111.9899	HAPPY INTERCHANGE - PALO DURO SUB 115KV CKT 1
FDNS	02ALL_G14_038	2	25SP	G14_038	FROM->TO	POTTER COUNTY INTERCHANGE (WAUK 90343-A) 345/230/13.2KV TRANSFORMER CKT 1	560	560	0.20122	111.9795	GEN515223 1-MUSKOGEE 4G
FDNS	02ALL_G14_038	2	25SP	G14_038	FROM->TO	POTTER COUNTY INTERCHANGE (WAUK 90343-A) 345/230/13.2KV TRANSFORMER CKT 1	560	560	0.20122	111.9732	GEN511839 1-NORTHEASTERN STATION #2
FDNS	02ALL_G14_038	2	25SP	G14_038	FROM->TO	POTTER COUNTY INTERCHANGE (WAUK 90343-A) 345/230/13.2KV TRANSFORMER CKT 1	560	560	0.20122	111.9676	GEN515226 1-MUSKOGEE 6G
FDNS	02ALL_G14_038	2	25SP	G14_038	FROM->TO	POTTER COUNTY INTERCHANGE (WAUK 90343-A) 345/230/13.2KV TRANSFORMER CKT 1	560	560	0.20122	111.9516	GEN515225 1-MUSKOGEE 5G
FDNS	02ALL_G14_038	2	25SP	G14_038	FROM->TO	POTTER COUNTY INTERCHANGE (WAUK 90343-A) 345/230/13.2KV TRANSFORMER CKT 1	560	560	0.2006	111.934	P12:115:SPS:T66.1.RNDALL.HAPPY
FDNS	02ALL_G14_038	2	25SP	G14_038	FROM->TO	POTTER COUNTY INTERCHANGE (WAUK 90343-A) 345/230/13.2KV TRANSFORMER CKT 1	560	560	0.2006	111.8929	PALO DURO SUB - RANDALL COUNTY INTERCHANGE 115KV CKT 1
FDNS	02ALL_G14_038	2	25SP	G14_038	FROM->TO	POTTER COUNTY INTERCHANGE (WAUK 90343-A) 345/230/13.2KV TRANSFORMER CKT 1	560	560	0.19947	111.8768	CHISHOLM6 230.00 - ELK CITY 230KV 230KV CKT 1
FDNS	02ALL_G14_038	2	25SP	G14_038	FROM->TO	POTTER COUNTY INTERCHANGE (WAUK 90343-A) 345/230/13.2KV TRANSFORMER CKT 1	560	560	0.19947	111.8762	ELK CITY 230KV (ELKCTY-6) 230/138/13.8KV TRANSFORMER CKT 1
FDNS	02ALL_G14_038	2	25SP	G14_038	FROM->TO	POTTER COUNTY INTERCHANGE (WAUK 90343-A) 345/230/13.2KV TRANSFORMER CKT 1	560	560	0.19947	111.8762	ELK CITY 230KV (ELKCTY-6) 230/138/13.8KV TRANSFORMER CKT 1
FDNS	02ALL_G14_038	2	25SP	G14_038	FROM->TO	POTTER COUNTY INTERCHANGE (WAUK 90343-A) 345/230/13.2KV TRANSFORMER CKT 1	560	560	0.20122	111.875	GEN511840 1-NORTHEASTERN STATION #3
FDNS	02ALL_G14_038	2	25SP	G14_038	FROM->TO	POTTER COUNTY INTERCHANGE (WAUK 90343-A) 345/230/13.2KV TRANSFORMER CKT 1	560	560	0.20122	111.8703	GEN532653 1-JEFFREY ENERGY CENTER UNIT 3
FDNS	02ALL_G14_038	2	25SP	G14_038	FROM->TO	POTTER COUNTY INTERCHANGE (WAUK 90343-A) 345/230/13.2KV TRANSFORMER CKT 1	560	560	0.20122	111.8702	GEN532652 1-JEFFREY ENERGY CENTER UNIT 2
FDNS	02ALL_G14_038	2	25SP	G14_038	FROM->TO	POTTER COUNTY INTERCHANGE (WAUK 90343-A) 345/230/13.2KV TRANSFORMER CKT 1	560	560	0.20122	111.8643	GEN532651 1-JEFFREY ENERGY CENTER UNIT 1
FDNS	02ALL_G14_038	2	25SP	G14_038	FROM->TO	POTTER COUNTY INTERCHANGE (WAUK 90343-A) 345/230/13.2KV TRANSFORMER CKT 1	560	560	0.20122	111.7822	GEN509403 1-PIRKEY GENERATION
FDNS	02ALL_G14_038	2	25SP	G14_038	FROM->TO	POTTER COUNTY INTERCHANGE (WAUK 90343-A) 345/230/13.2KV TRANSFORMER CKT 1	560	560	0.2003	111.7721	NEWHART 230 - PLANT X STATION 230KV CKT 1
FDNS	02ALL_G14_038	2	25SP	G14_038	FROM->TO	POTTER COUNTY INTERCHANGE (WAUK 90343-A) 345/230/13.2KV TRANSFORMER CKT 1	560	560	0.20122	111.7507	GEN640009 1-COOPER NUCLEAR STATION
FDNS	02ALL_G14_038	2	25SP	G14_038	FROM->TO	POTTER COUNTY INTERCHANGE (WAUK 90343-A) 345/230/13.2KV TRANSFORMER CKT 1	560	560	0.20122	111.6798	GEN531447 1-HOLCOMB GENERATOR
FDNS	02ALL_G14_038	2	25SP	G14_038	FROM->TO	POTTER COUNTY INTERCHANGE (WAUK 90343-A) 345/230/13.2KV TRANSFORMER CKT 1	560	560	0.20122	111.6555	GEN541151 3-SIBLEY GENERATING UNIT #3
FDNS	02ALL_G14_038	2	25SP	G14_038	FROM->TO	POTTER COUNTY INTERCHANGE (WAUK 90343-A) 345/230/13.2KV TRANSFORMER CKT 1	560	560	0.20122	111.6519	GEN514805 1-SOONER UNIT 1
FDNS	02ALL_G14_038	2	25SP	G14_038	FROM->TO	POTTER COUNTY INTERCHANGE (WAUK 90343-A) 345/230/13.2KV TRANSFORMER CKT 1	560	560	0.20122	111.6462	GEN523122 1-NBLWND-WTG210.6900
FDNS	02ALL_G14_038	2	25SP	G14_038	FROM->TO	POTTER COUNTY INTERCHANGE (WAUK 90343-A) 345/230/13.2KV TRANSFORMER CKT 1	560	560	0.20122	111.6397	GEN532663 1-LAWRENCE ENERGY CENTER UNIT 5
FDNS	02ALL_G14_038	2	25SP	G14_038	FROM->TO	POTTER COUNTY INTERCHANGE (WAUK 90343-A) 345/230/13.2KV TRANSFORMER CKT 1	560	560	0.20122	111.6322	GEN514806 1-SOONER UNIT 2
FDNS	02ALL_G14_038	2	25SP	G14_038	FROM->TO	POTTER COUNTY INTERCHANGE (WAUK 90343-A) 345/230/13.2KV TRANSFORMER CKT 1	560	560	0.20122	111.6265	GEN509394 1-FLINT CREEK
FDNS	02ALL_G14_038	2	25SP	G14_038	FROM->TO	POTTER COUNTY INTERCHANGE (WAUK 90343-A) 345/230/13.2KV TRANSFORMER CKT 1	560	560	0.20122	111.623	GEN523121 1-NBLWND-WTG110.6900
FDNS	02ALL_G14_038	2	25SP	G14_038	FROM->TO	POTTER COUNTY INTERCHANGE (WAUK 90343-A) 345/230/13.2KV TRANSFORMER CKT 1	560	560	0.20122	111.6067	GEN659118 1-LARAMIE RIVER UNIT1

SOLUTION	GROUP	SCENARIO	SEASON	SOURCE	DIRECTION	MONITORED ELEMENT	RATEA (MVA)	RATEB(MVA)	TDF	TC%LOADING (% MVA)	CONTINGENCY
FDNS	02ALL_G14_038	2	25SP	G14_038	FROM->TO	POTTER COUNTY INTERCHANGE (WAUK 90343-A) 345/230/13.2KV TRANSFORMER CKT 1	560	560	0.20122	111.6054	GEN560256 1-G10-14-1 0.6900
FDNS	02ALL_G14_038	2	25SP	G14_038	FROM->TO	POTTER COUNTY INTERCHANGE (WAUK 90343-A) 345/230/13.2KV TRANSFORMER CKT 1	560	560	0.20122	111.5868	GEN560584 1-G06-44-2 4.1600
FDNS	02ALL_G14_038	2	25SP	G14_038	FROM->TO	POTTER COUNTY INTERCHANGE (WAUK 90343-A) 345/230/13.2KV TRANSFORMER CKT 1	560	560	0.20122	111.5856	GEN523107 1-NOVUS_WND 14.1600
FDNS	02ALL_G14_038	2	25SP	G14_038	FROM->TO	POTTER COUNTY INTERCHANGE (WAUK 90343-A) 345/230/13.2KV TRANSFORMER CKT 1	560	560	0.20122	111.5511	GEN523123 1-NBLWND-WTG310.6900
FDNS	02ALL_G14_038	2	25SP	G14_038	FROM->TO	POTTER COUNTY INTERCHANGE (WAUK 90343-A) 345/230/13.2KV TRANSFORMER CKT 1	560	560	0.19903	111.5383	Harrington Station East Bus - Harrington Station Mid Bus 230KV CKT @1
FDNS	02ALL_G14_038	2	25SP	G14_038	FROM->TO	POTTER COUNTY INTERCHANGE (WAUK 90343-A) 345/230/13.2KV TRANSFORMER CKT 1	560	560	0.20122	111.5112	GEN532722 1-EVANS ENERGY CENTER UNIT 2
FDNS	02ALL_G14_038	2	25SP	G14_038	FROM->TO	POTTER COUNTY INTERCHANGE (WAUK 90343-A) 345/230/13.2KV TRANSFORMER CKT 1	560	560	0.20122	111.5017	GEN560257 1-G10-14-2 0.6900
FDNS	02ALL_G14_038	2	25SP	G14_038	FROM->TO	POTTER COUNTY INTERCHANGE (WAUK 90343-A) 345/230/13.2KV TRANSFORMER CKT 1	560	560	0.20122	111.4455	GEN512688 2-GRDA1 GSU2 22
FDNS	02ALL_G14_038	2	25SP	G14_038	FROM->TO	POTTER COUNTY INTERCHANGE (WAUK 90343-A) 345/230/13.2KV TRANSFORMER CKT 1	560	560	0.20122	111.397	GEN542962 2-IATAN UNIT #2
FDNS	02ALL_G14_038	2	25SP	G14_038	FROM->TO	POTTER COUNTY INTERCHANGE (WAUK 90343-A) 345/230/13.2KV TRANSFORMER CKT 1	560	560	0.20122	111.2412	GEN640010 1-GERALD GENTLEMAN STATION UNIT 1
FDNS	02ALL_G14_038	2	25SP	G14_038	FROM->TO	POTTER COUNTY INTERCHANGE (WAUK 90343-A) 345/230/13.2KV TRANSFORMER CKT 1	560	560	0.19625	111.2059	SWISHER COUNTY INTERCHANGE - TUCO_2 230.00 230KV CKT 1
FDNS	02ALL_G14_038	2	25SP	G14_038	FROM->TO	POTTER COUNTY INTERCHANGE (WAUK 90343-A) 345/230/13.2KV TRANSFORMER CKT 1	560	560	0.20122	111.1795	GEN560586 1-G06-44-4 4.1600
FDNS	02ALL_G14_038	2	25SP	G14_038	FROM->TO	POTTER COUNTY INTERCHANGE (WAUK 90343-A) 345/230/13.2KV TRANSFORMER CKT 1	560	560	0.20122	111.1423	GEN590010 1-ERCOT EQUIVALENCE
FDNS	02ALL_G14_038	2	25SP	G14_038	FROM->TO	POTTER COUNTY INTERCHANGE (WAUK 90343-A) 345/230/13.2KV TRANSFORMER CKT 1	560	560	0.20122	111.136	GEN659111 2-LELAND OLDS UNIT2
FDNS	02ALL_G14_038	2	25SP	G14_038	FROM->TO	POTTER COUNTY INTERCHANGE (WAUK 90343-A) 345/230/13.2KV TRANSFORMER CKT 1	560	560	0.20122	111.0798	GEN590011 2-ERCOT EQUIVALENCE
FDNS	02ALL_G14_038	2	25SP	G14_038	FROM->TO	POTTER COUNTY INTERCHANGE (WAUK 90343-A) 345/230/13.2KV TRANSFORMER CKT 1	560	560	0.20122	110.9948	GEN300006 1-NEW MADRID UNIT 1
FDNS	02ALL_G14_038	2	25SP	G14_038	FROM->TO	POTTER COUNTY INTERCHANGE (WAUK 90343-A) 345/230/13.2KV TRANSFORMER CKT 1	560	560	0.20122	110.9921	GEN300007 1-NEW MADRID UNIT 2
FDNS	02ALL_G14_038	2	25SP	G14_038	FROM->TO	POTTER COUNTY INTERCHANGE (WAUK 90343-A) 345/230/13.2KV TRANSFORMER CKT 1	560	560	0.20122	110.9824	GEN640011 2-GERALD GENTLEMAN STATION UNIT 2
FDNS	02ALL_G14_038	2	25SP	G14_038	FROM->TO	POTTER COUNTY INTERCHANGE (WAUK 90343-A) 345/230/13.2KV TRANSFORMER CKT 1	560	560	0.20122	110.9746	GEN560585 1-G06-44-3 4.1600
FDNS	02ALL_G14_038	2	25SP	G14_038	FROM->TO	POTTER COUNTY INTERCHANGE (WAUK 90343-A) 345/230/13.2KV TRANSFORMER CKT 1	560	560	0.20122	110.9498	GEN659103 1-ANTELOPE VALLEY UNIT1
FDNS	02ALL_G14_038	2	25SP	G14_038	FROM->TO	POTTER COUNTY INTERCHANGE (WAUK 90343-A) 345/230/13.2KV TRANSFORMER CKT 1	560	560	0.20122	110.9498	GEN659107 2-ANTELOPE VALLEY UNIT2
FDNS	02ALL_G14_038	2	25SP	G14_038	FROM->TO	POTTER COUNTY INTERCHANGE (WAUK 90343-A) 345/230/13.2KV TRANSFORMER CKT 1	560	560	0.19819	110.9045	AMARILLO SOUTH INTERCHANGE - SWISHER COUNTY INTERCHANGE 230KV CKT 1
FDNS	02ALL_G14_038	2	25SP	G14_038	FROM->TO	POTTER COUNTY INTERCHANGE (WAUK 90343-A) 345/230/13.2KV TRANSFORMER CKT 1	560	560	0.19819	110.9045	AMARILLO SOUTH INTERCHANGE - SWISHER COUNTY INTERCHANGE 230KV CKT 1
FDNS	02ALL_G14_038	2	25SP	G14_038	FROM->TO	POTTER COUNTY INTERCHANGE (WAUK 90343-A) 345/230/13.2KV TRANSFORMER CKT 1	560	560	0.20122	110.8765	GEN515591 1-PALDRW11 0.6900
FDNS	02ALL_G14_038	2	25SP	G14_038	FROM->TO	POTTER COUNTY INTERCHANGE (WAUK 90343-A) 345/230/13.2KV TRANSFORMER CKT 1	560	560	0.20122	110.6752	GEN542951 5-HAWTHORN UNIT #5
FDNS	02ALL_G14_038	2	25SP	G14_038	FROM->TO	POTTER COUNTY INTERCHANGE (WAUK 90343-A) 345/230/13.2KV TRANSFORMER CKT 1	560	560	0.20122	110.5782	GEN560286 1-G10-01-1WTG 0.6900
FDNS	02ALL_G14_038	2	25SP	G14_038	FROM->TO	POTTER COUNTY INTERCHANGE (WAUK 90343-A) 345/230/13.2KV TRANSFORMER CKT 1	560	560	0.20122	110.5782	GEN560287 1-G10-01-2WTG 0.6900
FDNS	02ALL_G14_038	2	25SP	G14_038	FROM->TO	POTTER COUNTY INTERCHANGE (WAUK 90343-A) 345/230/13.2KV TRANSFORMER CKT 1	560	560	0.19823	110.5147	DEAF SMITH COUNTY INTERCHANGE - PLANT X STATION 230KV CKT 1
FDNS	02ALL_G14_038	2	25SP	G14_038	FROM->TO	POTTER COUNTY INTERCHANGE (WAUK 90343-A) 345/230/13.2KV TRANSFORMER CKT 1	560	560	0.19823	110.5147	DEAF SMITH COUNTY INTERCHANGE - PLANT X STATION 230KV CKT 1
FDNS	02ALL_G14_038	2	25SP	G14_038	FROM->TO	POTTER COUNTY INTERCHANGE (WAUK 90343-A) 345/230/13.2KV TRANSFORMER CKT 1	560	560	0.20122	110.4579	GEN542956 2-LACYGNE UNIT #2
FDNS	02ALL_G14_038	2	25SP	G14_038	FROM->TO	POTTER COUNTY INTERCHANGE (WAUK 90343-A) 345/230/13.2KV TRANSFORMER CKT 1	560	560	0.20122	110.1396	GEN645011 1-NEBRASKA CITY 1
FDNS	02ALL_G14_038	2	25SP	G14_038	FROM->TO	POTTER COUNTY INTERCHANGE (WAUK 90343-A) 345/230/13.2KV TRANSFORMER CKT 1	560	560	0.20122	110.1117	GEN645001 1-FORT CALHOUN 1
FDNS	02ALL_G14_038	2	25SP	G14_038	FROM->TO	POTTER COUNTY INTERCHANGE (WAUK 90343-A) 345/230/13.2KV TRANSFORMER CKT 1	560	560	0.20122	110.1079	GEN562042 1-G11_014_3 0.6900
FDNS	02ALL_G14_038	2	25SP	G14_038	FROM->TO	POTTER COUNTY INTERCHANGE (WAUK 90343-A) 345/230/13.2KV TRANSFORMER CKT 1	560	560	0.20122	110.1075	GEN532751 1-WOLF CREEK GENERATING STATION UNIT 1
FDNS	02ALL_G14_038	2	25SP	G14_038	FROM->TO	POTTER COUNTY INTERCHANGE (WAUK 90343-A) 345/230/13.2KV TRANSFORMER CKT 1	560	560	0.20122	110.06	GEN542955 1-LACYGNE UNIT #1
FDNS	02ALL_G14_038	2	25SP	G14_038	FROM->TO	POTTER COUNTY INTERCHANGE (WAUK 90343-A) 345/230/13.2KV TRANSFORMER CKT 1	560	560	0.20122	109.9692	GEN542957 1-IATAN UNIT #1
FDNS	02ALL_G14_038	2	25SP	G14_038	FROM->TO	POTTER COUNTY INTERCHANGE (WAUK 90343-A) 345/230/13.2KV TRANSFORMER CKT 1	560	560	0.20122	109.9525	GEN645012 2-NEBRASKA CITY 2
FDNS	02ALL_G14_038	2	25SP	G14_038	FROM->TO	POTTER COUNTY INTERCHANGE (WAUK 90343-A) 345/230/13.2KV TRANSFORMER CKT 1	560	560	0.20122	109.9294	GEN300003 1-THOMAS HILL UNIT 3
FDNS	02ALL_G14_038	2	25SP	G14_038	FROM->TO	POTTER COUNTY INTERCHANGE (WAUK 90343-A) 345/230/13.2KV TRANSFORMER CKT 1	560	560	0.20122	109.82	GEN562432 1-G13-030 0.6900
FDNS	02ALL_G14_038	2	25SP	G14_038	FROM->TO	POTTER COUNTY INTERCHANGE (WAUK 90343-A) 345/230/13.2KV TRANSFORMER CKT 1	560	560	0.20122	109.7598	GEN532653 1-JEFFREY ENERGY CENTER UNIT 3
FDNS	02ALL_G14_038	2	25SP	G14_038	FROM->TO	POTTER COUNTY INTERCHANGE (WAUK 90343-A) 345/230/13.2KV TRANSFORMER CKT 1	560	560	0.20122	109.7597	GEN532652 1-JEFFREY ENERGY CENTER UNIT 2
FDNS	02ALL_G14_038	2	25SP	G14_038	FROM->TO	POTTER COUNTY INTERCHANGE (WAUK 90343-A) 345/230/13.2KV TRANSFORMER CKT 1	560	560	0.20122	109.7542	GEN532651 1-JEFFREY ENERGY CENTER UNIT 1
FDNS	02ALL_G14_038	2	25SP	G14_038	FROM->TO	POTTER COUNTY INTERCHANGE (WAUK 90343-A) 345/230/13.2KV TRANSFORMER CKT 1	560	560	0.20122	109.6479	GEN640009 1-COOPER NUCLEAR STATION
FDNS	02ALL_G14_038	2	25SP	G14_038	FROM->TO	POTTER COUNTY INTERCHANGE (WAUK 90343-A) 345/230/13.2KV TRANSFORMER CKT 1	560	560	0.20122	109.6314	GEN560256 1-G10-14-1 0.6900
FDNS	02ALL_G14_038	2	25SP	G14_038	FROM->TO	POTTER COUNTY INTERCHANGE (WAUK 90343-A) 345/230/13.2KV TRANSFORMER CKT 1	560	560	0.20122	109.5988	GEN531447 1-HOLCOMB GENERATOR
FDNS	02ALL_G14_038	2	25SP	G14_038	FROM->TO	POTTER COUNTY INTERCHANGE (WAUK 90343-A) 345/230/13.2KV TRANSFORMER CKT 1	560	560	0.20122	109.5916	GEN524295 1-SPNSPUR_WND10.6900
FDNS	02ALL_G14_038	2	25SP	G14_038	FROM->TO	POTTER COUNTY INTERCHANGE (WAUK 90343-A) 345/230/13.2KV TRANSFORMER CKT 1	560	560	0.20122	109.5384	GEN560257 1-G10-14-2 0.6900
FDNS	02ALL_G14_038	2	25SP	G14_038	FROM->TO	POTTER COUNTY INTERCHANGE (WAUK 90343-A) 345/230/13.2KV TRANSFORMER CKT 1	560	560	0.20122	109.5146	GEN659118 1-LARAMIE RIVER UNIT1
FDNS	02ALL_G14_038	2	25SP	G14_038	FROM->TO	POTTER COUNTY INTERCHANGE (WAUK 90343-A) 345/230/13.2KV TRANSFORMER CKT 1	560	560	0.19728	109.476	BUSHLAND INTERCHANGE - POTTER COUNTY INTERCHANGE 230KV CKT 1
FDNS	02ALL_G14_038	2	25SP	G14_038	FROM->TO	POTTER COUNTY INTERCHANGE (WAUK 90343-A) 345/230/13.2KV TRANSFORMER CKT 1	560	560	0.19728	109.476	BUSHLAND INTERCHANGE - POTTER COUNTY INTERCHANGE 230KV CKT 1
FDNS	02ALL_G14_038	2	25SP	G14_038	FROM->TO	POTTER COUNTY INTERCHANGE (WAUK 90343-A) 345/230/13.2KV TRANSFORMER CKT 1	560	560	0.20122	109.3179	GEN542962 2-IATAN UNIT #2
FDNS	02ALL_G14_038	2	25SP	G14_038	FROM->TO	POTTER COUNTY INTERCHANGE (WAUK 90343-A) 345/230/13.2KV TRANSFORMER CKT 1	560	560	0.20122	109.1709	GEN640010 1-GERALD GENTLEMAN STATION UNIT 1
FDNS	02ALL_G14_038	2	25SP	G14_038	FROM->TO	POTTER COUNTY INTERCHANGE (WAUK 90343-A) 345/230/13.2KV TRANSFORMER CKT 1	560	560	0.19819	109.0252	AMARILLO SOUTH INTERCHANGE - SWISHER COUNTY INTERCHANGE 230KV CKT 1
FDNS	02ALL_G14_038	2	25SP	G14_038	FROM->TO	POTTER COUNTY INTERCHANGE (WAUK 90343-A) 345/230/13.2KV TRANSFORMER CKT 1	560	560	0.19819	109.0252	AMARILLO SOUTH INTERCHANGE - SWISHER COUNTY INTERCHANGE 230KV CKT 1
FDNS	02ALL_G14_038	2	25SP	G14_038	FROM->TO	POTTER COUNTY INTERCHANGE (WAUK 90343-A) 345/230/13.2KV TRANSFORMER CKT 1	560	560	0.20122	108.9466	GEN562017 1-G11_022_3 0.6900
FDNS	02ALL_G14_038	2	25SP	G14_038	FROM->TO	POTTER COUNTY INTERCHANGE (WAUK 90343-A) 345/230/13.2KV TRANSFORMER CKT 1	560	560	0.20122	108.9293	GEN640011 2-GERALD GENTLEMAN STATION UNIT 2
FDNS	02ALL_G14_038	2	25SP	G14_038	FROM->TO	POTTER COUNTY INTERCHANGE (WAUK 90343-A) 345/230/13.2KV TRANSFORMER CKT 1	560	560	0.20122	108.8688	GEN515591 1-PALDRW11 0.6900
FDNS	02ALL_G14_038	2	25SP	G14_038	FROM->TO	POTTER COUNTY INTERCHANGE (WAUK 90343-A) 345/230/13.2KV TRANSFORMER CKT 1	560	560	0.19572	108.4626	NEWHART 230 - POTTER COUNTY INTERCHANGE 230KV CKT 1
FDNS	02ALL_G14_038	2	25SP	G14_038	FROM->TO	POTTER COUNTY INTERCHANGE (WAUK 90343-A) 345/230/13.2KV TRANSFORMER CKT 1	560	560	0.20122	108.2056	GEN562544 1-G14_038_3 0.6900
FDNS	02ALL_G14_038	2	25SP	G14_038	FROM->TO	POTTER COUNTY INTERCHANGE (WAUK 90343-A) 345/230/13.2KV TRANSFORMER CKT 1	560	560	0.20122	108.1131	GEN532751 1-WOLF CREEK GENERATING STATION UNIT 1
FDNS	02ALL_G14_038	2	25SP	G14_038	FROM->TO	POTTER COUNTY INTERCHANGE (WAUK 90343-A) 345/230/13.2KV TRANSFORMER CKT 1	560	560	0.20122	107.9799	GEN562432 1-G13-030 0.6900
FDNS	02ALL_G14_038	2	25SP	G14_038	FROM->TO	POTTER COUNTY INTERCHANGE (WAUK 90343-A) 345/230/13.2KV TRANSFORMER CKT 1	560	560	0.19648	107.8982	BUSHLAND INTERCHANGE - DEAF SMITH COUNTY INTERCHANGE 230KV CKT 1
FDNS	02ALL_G14_038	2	25SP	G14_038	FROM->TO	POTTER COUNTY INTERCHANGE (WAUK 90343-A) 345/230/13.2KV TRANSFORMER CKT 1	560	560	0.19648	107.8982	BUSHLAND INTERCHANGE - DEAF SMITH COUNTY INTERCHANGE 230KV CKT 1
FDNS	02ALL_G14_038	2	25SP	G14_038	FROM->TO	POTTER COUNTY INTERCHANGE (WAUK 90343-A) 345/230/13.2KV TRANSFORMER CKT 1	560	560	0.19728	107.6809	BUSHLAND INTERCHANGE - POTTER COUNTY INTERCHANGE 230KV CKT 1
FDNS	02ALL_G14_038	2	25SP	G14_038	FROM->TO	POTTER COUNTY INTERCHANGE (WAUK 90343-A) 345/230/13.2KV TRANSFORMER CKT 1	560	560	0.19728	107.6809	BUSHLAND INTERCHANGE - POTTER COUNTY INTERCHANGE 230KV CKT 1
FDNS	02ALL_G14_038	2	25SP	G14_038	FROM->TO	POTTER COUNTY INTERCHANGE (WAUK 90343-A) 345/230/13.2KV TRANSFORMER CKT 1	560	560	0.20122	107.1043	GEN562017 1-G11_022_3 0.6900
FDNS	02ALL_G14_038	2	25SP	G14_038	FROM->TO	POTTER COUNTY INTERCHANGE (WAUK 90343-A) 345/230/13.2KV TRANSFORMER CKT 1	560	560	0.20122	106.894	GEN524295 1-SPNSPUR_WND10.6900
FDNS	02ALL_G14_038	2	25SP	G14_038	FROM->TO	POTTER COUNTY INTERCHANGE (WAUK 90343-A) 345/230/13.2KV TRANSFORMER CKT 1	560	560	0.19572	106.6894	NEWHART 230 - POTTER COUNTY INTERCHANGE 230KV CKT 1
FDNS	02ALL_G14_038	2	25SP	G14_038	FROM->TO	POTTER COUNTY INTERCHANGE (WAUK 90343-A) 345/230/13.2KV TRANSFORMER CKT 1	560	560	0.20122	106.2211	GEN562544 1-G14_038_3 0.6900
FDNS	02ALL_G14_038	2	25SP	G14_038	FROM->TO	POTTER COUNTY INTERCHANGE (WAUK 90343-A) 345/230/13.2KV TRANSFORMER CKT 1	560	560	0.19648	106.0995	BUSHLAND INTERCHANGE - DEAF SMITH COUNTY INTERCHANGE 230KV CKT 1
FDNS	02ALL_G14_038	2	25SP	G14_038	FROM->TO	POTTER COUNTY INTERCHANGE (WAUK 90343-A) 345/230/13.2KV TRANSFORMER CKT 1	560	560	0.19648	106.0995	BUSHLAND INTERCHANGE - DEAF SMITH COUNTY INTERCHANGE 230KV CKT 1
FDNS	02ALL_G14_038	3	25SP	G14_038	TO->FROM	BUSHLAND INTERCHANGE - POTTER COUNTY INTERCHANGE 230KV CKT 1	318.7	350.57	0.04442	114.6225	BASE CASE
FDNSLock-Blown up	06ALL_G14_046	0	20WP	G14_046		Non-Converged Contingency	1022	1124	0.25919	-	G14-074T 345.00 - OKLAUNION 345KV CKT 1

SOLUTION	GROUP	SCENARIO	SEASON	SOURCE	DIRECTION	MONITORED ELEMENT	RATEA (MVA)	RATEB(MVA)	TDF	TC%LOADING (% MVA)	CONTINGENCY
FDNS	00NR_G14_046	0	17SP	G14_046	FROM->TO	CHAVES COUNTY INTERCHANGE - SAMSON SUB 115KV CKT 1	120	154	0.16841	99.5	CHAVES COUNTY INTERCHANGE - URTON SUB 115KV CKT 1
FDNS	00NR_G14_046	0	25SP	G14_046	TO->FROM	JONES STATION - TUCO INTERCHANGE 230KV CKT 1	343.79	343.79	0.05534	115.5757	CARLISLE INTERCHANGE - TUCO INTERCHANGE 230KV CKT 1
FDNS	00NR_G14_046	0	25SP	G14_046	TO->FROM	JONES STATION - TUCO INTERCHANGE 230KV CKT 1	343.79	343.79	0.05534	115.5757	CARLISLE INTERCHANGE - TUCO INTERCHANGE 230KV CKT 1
FDNS	00NR_G14_046	0	25SP	G14_046	TO->FROM	JONES STATION - TUCO INTERCHANGE 230KV CKT 1	343.79	343.79	0.03647	103.0869	TUCO INTERCHANGE - YOAKUM_345 345.00 345KV CKT 1
FDNS	00NR_G14_046	2	25SP	G14_046	TO->FROM	JONES STATION - TUCO INTERCHANGE 230KV CKT 1	343.79	343.79	0.05534	115.5757	CARLISLE INTERCHANGE - TUCO INTERCHANGE 230KV CKT 1
FDNS	00NR_G14_046	2	25SP	G14_046	TO->FROM	JONES STATION - TUCO INTERCHANGE 230KV CKT 1	343.79	343.79	0.05534	115.5757	CARLISLE INTERCHANGE - TUCO INTERCHANGE 230KV CKT 1
FDNS	00NR_G14_046	2	25SP	G14_046	TO->FROM	JONES STATION - TUCO INTERCHANGE 230KV CKT 1	343.79	343.79	0.03647	103.0869	TUCO INTERCHANGE - YOAKUM_345 345.00 345KV CKT 1
FDNS	00NR_G14_059	0	25SP	G14_059	TO->FROM	CHAPPEL - COLTON 7 115.00 115KV CKT 1	109	109	0.03034	105.7119	P12:115:TSGT:GRANTNB7-OGALALA7_2
FDNS	00NR_G14_059	0	17SP	G14_059	TO->FROM	CHAPPEL - COLTON 7 115.00 115KV CKT 1	109	109	0.03073	101.9338	P12:115:TSGT:GRANTNB7-OGALALA7_2
FDNS	00NR_G14_059	0	20SP	G14_059	TO->FROM	CHAPPEL - COLTON 7 115.00 115KV CKT 1	109	109	0.0303	101.4626	P12:115:TSGT:GRANTNB7-OGALALA7_2
FDNS	00NR_G14_059	0	25SP	G14_059	TO->FROM	COLTON 7 115.00 - SIDNEY 115KV CKT 1	109	109	0.03034	108.8694	P12:115:TSGT:GRANTNB7-OGALALA7_2
FDNS	00NR_G14_059	0	17SP	G14_059	TO->FROM	COLTON 7 115.00 - SIDNEY 115KV CKT 1	109	109	0.03073	105.1621	P12:115:TSGT:GRANTNB7-OGALALA7_2
FDNS	00NR_G14_059	0	20SP	G14_059	TO->FROM	COLTON 7 115.00 - SIDNEY 115KV CKT 1	109	109	0.0303	104.6298	P12:115:TSGT:GRANTNB7-OGALALA7_2
FDNS	00NR_G14_059	0	17SP	G14_059	FROM->TO	G14-059T 230.00 - OGALLALA 230KV CKT 1	320	320	0.83795	152.758	KEYSTONE - SIDNEY1-LNX3345.00 345KV CKT 1
FDNS	00NR_G14_059	0	17SP	G14_059	FROM->TO	G14-059T 230.00 - OGALLALA 230KV CKT 1	320	320	0.83795	152.6754	SIDNEY - SIDNEY1-LNX3345.00 345KV CKT Z
FDNS	00NR_G14_059	0	20SP	G14_059	FROM->TO	G14-059T 230.00 - OGALLALA 230KV CKT 1	320	320	0.84049	142.2234	KEYSTONE - SIDNEY1-LNX3345.00 345KV CKT 1
FDNS	00NR_G14_059	0	20SP	G14_059	FROM->TO	G14-059T 230.00 - OGALLALA 230KV CKT 1	320	320	0.84049	142.2139	SIDNEY - SIDNEY1-LNX3345.00 345KV CKT Z
FDNS	00NR_G14_059	0	25SP	G14_059	FROM->TO	G14-059T 230.00 - OGALLALA 230KV CKT 1	320	320	0.84014	141.2785	KEYSTONE - SIDNEY1-LNX3345.00 345KV CKT 1
FDNS	00NR_G14_059	0	25SP	G14_059	FROM->TO	G14-059T 230.00 - OGALLALA 230KV CKT 1	320	320	0.84014	141.1437	SIDNEY - SIDNEY1-LNX3345.00 345KV CKT Z
FDNS	00NR_G14_059	0	16WP	G14_059	FROM->TO	G14-059T 230.00 - OGALLALA 230KV CKT 1	320	320	0.84014	137.3507	SIDNEY - SIDNEY1-LNX3345.00 345KV CKT Z
FDNS	00NR_G14_059	0	16WP	G14_059	FROM->TO	G14-059T 230.00 - OGALLALA 230KV CKT 1	320	320	0.84014	137.3012	KEYSTONE - SIDNEY1-LNX3345.00 345KV CKT 1
FDNSLock	09ALL_G14_059	0	17G	G14_059	FROM->TO	G14-059T 230.00 - OGALLALA 230KV CKT 1	320	320	0.80743	131.5582	KEYSTONE - SIDNEY1-LNX3345.00 345KV CKT 1
FDNSLock	09ALL_G14_059	0	17G	G14_059	FROM->TO	G14-059T 230.00 - OGALLALA 230KV CKT 1	320	320	0.80743	131.4951	SIDNEY - SIDNEY1-LNX3345.00 345KV CKT Z
FDNSLock	09NR_G14_059	0	17G	G14_059	FROM->TO	G14-059T 230.00 - OGALLALA 230KV CKT 1	320	320	0.8405	130.3398	SIDNEY - SIDNEY1-LNX3345.00 345KV CKT Z
FDNS	09NR_G14_059	0	17G	G14_059	FROM->TO	G14-059T 230.00 - OGALLALA 230KV CKT 1	320	320	0.8405	130.0557	KEYSTONE - SIDNEY1-LNX3345.00 345KV CKT 1
FDNS	00NR_G14_059	0	20WP	G14_059	FROM->TO	G14-059T 230.00 - OGALLALA 230KV CKT 1	320	320	0.84021	129.3655	KEYSTONE - SIDNEY1-LNX3345.00 345KV CKT 1
FDNS	00NR_G14_059	0	20WP	G14_059	FROM->TO	G14-059T 230.00 - OGALLALA 230KV CKT 1	320	320	0.84021	129.365	SIDNEY - SIDNEY1-LNX3345.00 345KV CKT Z
FDNS	09ALL_G14_059	0	17SP	G14_059	FROM->TO	G14-059T 230.00 - OGALLALA 230KV CKT 1	320	320	0.8079	128.0969	SIDNEY - SIDNEY1-LNX3345.00 345KV CKT Z
FDNS	09ALL_G14_059	0	17SP	G14_059	FROM->TO	G14-059T 230.00 - OGALLALA 230KV CKT 1	320	320	0.8079	127.9104	KEYSTONE - SIDNEY1-LNX3345.00 345KV CKT 1
FDNSLock	09ALL_G14_059	0	16WP	G14_059	FROM->TO	G14-059T 230.00 - OGALLALA 230KV CKT 1	320	320	0.80746	124.2214	KEYSTONE - SIDNEY1-LNX3345.00 345KV CKT 1
FDNSLock	09ALL_G14_059	0	16WP	G14_059	FROM->TO	G14-059T 230.00 - OGALLALA 230KV CKT 1	320	320	0.80746	124.1486	SIDNEY - SIDNEY1-LNX3345.00 345KV CKT Z
FDNS	09ALL_G14_059	0	25SP	G14_059	FROM->TO	G14-059T 230.00 - OGALLALA 230KV CKT 1	320	320	0.81328	123.2821	KEYSTONE - SIDNEY1-LNX3345.00 345KV CKT 1
FDNS	09ALL_G14_059	0	25SP	G14_059	FROM->TO	G14-059T 230.00 - OGALLALA 230KV CKT 1	320	320	0.81328	123.2006	SIDNEY - SIDNEY1-LNX3345.00 345KV CKT Z
FDNS	09ALL_G14_059	0	20SP	G14_059	FROM->TO	G14-059T 230.00 - OGALLALA 230KV CKT 1	320	320	0.8129	121.6863	SIDNEY - SIDNEY1-LNX3345.00 345KV CKT Z
FDNS	09ALL_G14_059	0	20SP	G14_059	FROM->TO	G14-059T 230.00 - OGALLALA 230KV CKT 1	320	320	0.8129	121.5103	KEYSTONE - SIDNEY1-LNX3345.00 345KV CKT 1
FDNS	09ALL_G14_059	0	20WP	G14_059	FROM->TO	G14-059T 230.00 - OGALLALA 230KV CKT 1	320	320	0.80994	115.9539	KEYSTONE - SIDNEY1-LNX3345.00 345KV CKT 1
FDNS	09ALL_G14_059	0	20WP	G14_059	FROM->TO	G14-059T 230.00 - OGALLALA 230KV CKT 1	320	320	0.80994	115.9062	SIDNEY - SIDNEY1-LNX3345.00 345KV CKT Z
FDNS	00NR_G14_059	0	17SP	G14_059	FROM->TO	G14-059T 230.00 - OGALLALA 230KV CKT 1	320	320	0.79871	100.2906	GERALD GENTLEMAN STATION - KEYSTONE 345KV CKT 1
FDNS	00NR_G14_059	0	16WP	G14_059	TO->FROM	GERALD GENTLEMAN STATION - OGALLALA 230KV CKT 1	320	320	0.69912	106.2492	GERALD GENTLEMAN STATION - KEYSTONE 345KV CKT 1
FDNS	09ALL_G14_059	0	17G	G14_059	TO->FROM	GERALD GENTLEMAN STATION - OGALLALA 230KV CKT 1	320	320	0.65218	102.48	GERALD GENTLEMAN STATION - KEYSTONE 345KV CKT 1
FDNS	09NR_G14_059	0	17G	G14_059	TO->FROM	GERALD GENTLEMAN STATION - OGALLALA 230KV CKT 1	320	320	0.69994	101.773	GERALD GENTLEMAN STATION - KEYSTONE 345KV CKT 1
FDNS	00NR_G14_059	0	25SP	G14_059	FROM->TO	GGS	1635	1635	0.32311	104.4474	BASE CASE
FDNS	00NR_G14_059	0	20SP	G14_059	FROM->TO	GR ISLD-LNX3345.00 - GRAND ISLAND 345KV CKT Z	720	720	0.05448	115.6513	GERALD GENTLEMAN STATION - SWEETWATER 345KV CKT 1
FDNS	00NR_G14_059	0	25SP	G14_059	FROM->TO	GR ISLD-LNX3345.00 - GRAND ISLAND 345KV CKT Z	720	720	0.05694	115.5348	GERALD GENTLEMAN STATION - SWEETWATER 345KV CKT 1
FDNS	00NR_G14_059	0	20SP	G14_059	FROM->TO	GR ISLD-LNX3345.00 - GRAND ISLAND 345KV CKT Z	720	720	0.04155	115.0001	KELLY - MEADOWGROVE4230.00 230KV CKT 1
FDNS	00NR_G14_059	0	25SP	G14_059	FROM->TO	GR ISLD-LNX3345.00 - GRAND ISLAND 345KV CKT Z	720	720	0.04371	114.6206	KELLY - MEADOWGROVE4230.00 230KV CKT 1
FDNS	00NR_G14_059	0	20SP	G14_059	FROM->TO	GR ISLD-LNX3345.00 - GRAND ISLAND 345KV CKT Z	720	720	0.06283	114.3497	GRAND ISLAND - SWEETWATER 345KV CKT 1
FDNS	00NR_G14_059	0	20SP	G14_059	FROM->TO	GR ISLD-LNX3345.00 - GRAND ISLAND 345KV CKT Z	720	720	0.05101	113.8649	GERALD GENTLEMAN STATION - SWEETWATER 345KV CKT 2
FDNS	00NR_G14_059	0	20SP	G14_059	FROM->TO	GR ISLD-LNX3345.00 - GRAND ISLAND 345KV CKT Z	720	720	0.04152	113.6989	P12:230:UMZB:# 116 #: ST IN SD. WSG-ST-VH
FDNS	00NR_G14_059	0	25SP	G14_059	FROM->TO	GR ISLD-LNX3345.00 - GRAND ISLAND 345KV CKT Z	720	720	0.05339	113.6806	GERALD GENTLEMAN STATION - SWEETWATER 345KV CKT 2
FDNS	00NR_G14_059	0	25SP	G14_059	FROM->TO	GR ISLD-LNX3345.00 - GRAND ISLAND 345KV CKT Z	720	720	0.04364	113.3725	P12:230:UMZB:# 116 #: ST IN SD. WSG-ST-VH
FDNS	00NR_G14_059	0	25SP	G14_059	FROM->TO	GR ISLD-LNX3345.00 - GRAND ISLAND 345KV CKT Z	720	720	0.06574	113.3588	GRAND ISLAND - SWEETWATER 345KV CKT 1
FDNS	00NR_G14_059	0	25SP	G14_059	FROM->TO	GR ISLD-LNX3345.00 - GRAND ISLAND 345KV CKT Z	720	720	0.04806	113.1106	MINGO - RED WILLOW 345KV CKT 1
FDNS	00NR_G14_059	0	25SP	G14_059	FROM->TO	GR ISLD-LNX3345.00 - GRAND ISLAND 345KV CKT Z	720	720	0.04806	113.1106	MINGO - RED WILLOW 345KV CKT 1
FDNS	00NR_G14_059	0	20SP	G14_059	FROM->TO	GR ISLD-LNX3345.00 - GRAND ISLAND 345KV CKT Z	720	720	0.04138	113.0934	STORLA - WESSINGTON 230KV CKT 1
FDNS	00NR_G14_059	0	25SP	G14_059	FROM->TO	GR ISLD-LNX3345.00 - GRAND ISLAND 345KV CKT Z	720	720	0.0435	112.7946	STORLA - WESSINGTON 230KV CKT 1
FDNS	00NR_G14_059	0	25SP	G14_059	FROM->TO	GR ISLD-LNX3345.00 - GRAND ISLAND 345KV CKT Z	720	720	0.0455	112.4146	GERALD GENTLEMAN STATION - RED WILLOW 345KV CKT 1
FDNS	00NR_G14_059	0	20SP	G14_059	FROM->TO	GR ISLD-LNX3345.00 - GRAND ISLAND 345KV CKT Z	720	720	0.04133	112.3827	HANLON - STORLA 230KV CKT 1
FDNS	00NR_G14_059	0	25SP	G14_059	FROM->TO	GR ISLD-LNX3345.00 - GRAND ISLAND 345KV CKT Z	720	720	0.04345	112.0351	HANLON - STORLA 230KV CKT 1
FDNS	00NR_G14_059	0	20SP	G14_059	FROM->TO	GR ISLD-LNX3345.00 - GRAND ISLAND 345KV CKT Z	720	720	0.04589	112.0234	MINGO - RED WILLOW 345KV CKT 1
FDNS	00NR_G14_059	0	20SP	G14_059	FROM->TO	GR ISLD-LNX3345.00 - GRAND ISLAND 345KV CKT Z	720	720	0.04589	112.0234	MINGO - RED WILLOW 345KV CKT 1
FDNS	00NR_G14_059	0	20SP	G14_059	FROM->TO	GR ISLD-LNX3345.00 - GRAND ISLAND 345KV CKT Z	720	720	0.04721	112.0223	CROOKED CREEK - NORTH PLATTE 230KV CKT 1
FDNS	00NR_G14_059	0	20SP	G14_059	FROM->TO	GR ISLD-LNX3345.00 - GRAND ISLAND 345KV CKT Z	720	720	0.04153	111.9762	FT THOMPSON - LETCHER 230KV CKT 1
FDNS	00NR_G14_059	0	20SP	G14_059	FROM->TO	GR ISLD-LNX3345.00 - GRAND ISLAND 345KV CKT Z	720	720	0.04153	111.9762	FT THOMPSON - LETCHER 230KV CKT 1
FDNS	00NR_G14_059	0	20SP	G14_059	FROM->TO	GR ISLD-LNX3345.00 - GRAND ISLAND 345KV CKT Z	720	720	0.04052	111.877	GEN635024 4-WALTER SCOTT UNIT 4
FDNS	00NR_G14_059	0	20SP	G14_059	FROM->TO	GR ISLD-LNX3345.00 - GRAND ISLAND 345KV CKT Z	720	720	0.04333	111.8682	GERALD GENTLEMAN STATION - RED WILLOW 345KV CKT 1
FDNS	00NR_G14_059	0	25SP	G14_059	FROM->TO	GR ISLD-LNX3345.00 - GRAND ISLAND 345KV CKT Z	720	720	0.04951	111.8202	CROOKED CREEK - NORTH PLATTE 230KV CKT 1
FDNS	00NR_G14_059	0	25SP	G14_059	FROM->TO	GR ISLD-LNX3345.00 - GRAND ISLAND 345KV CKT Z	720	720	0.04366	111.6399	FT THOMPSON - LETCHER 230KV CKT 1
FDNS	00NR_G14_059	0	25SP	G14_059	FROM->TO	GR ISLD-LNX3345.00 - GRAND ISLAND 345KV CKT Z	720	720	0.04366	111.6399	FT THOMPSON - LETCHER 230KV CKT 1
FDNS	00NR_G14_059	0	20SP	G14_059	FROM->TO	GR ISLD-LNX3345.00 - GRAND ISLAND 345KV CKT Z	720	720	0.04155	111.4711	FT RANDAL - MEADOWGROVE4230.00 230KV CKT 1
FDNS	00NR_G14_059	0	25SP	G14_059	FROM->TO	GR ISLD-LNX3345.00 - GRAND ISLAND 345KV CKT Z	720	720	0.0428	111.4686	BUFFALO - JAMESTOWN 345KV CKT 1
FDNS	00NR_G14_059	0	20SP	G14_059	FROM->TO	GR ISLD-LNX3345.00 - GRAND ISLAND 345KV CKT Z	720	720	0.04068	111.4202	BUFFALO - JAMESTOWN 345KV CKT 1
FDNS	00NR_G14_059	0	20SP	G14_059	FROM->TO	GR ISLD-LNX3345.00 - GRAND ISLAND 345KV CKT Z	720	720	0.04052	111.4018	GEN635023 3-WALTER SCOTT UNIT 3

SOLUTION	GROUP	SCENARIO	SEASON	SOURCE	DIRECTION	MONITORED ELEMENT	RATEA (MVA)	RATEB(MVA)	TDF	TC%LOADING (% MVA)	CONTINGENCY
FDNS	00NR_G14_059	0	25SP	G14_059	FROM->TO	GR ISLD-LNX3345.00 - GRAND ISLAND 345KV CKT Z	720	720	0.04264	111.2644	GEN635024 4-WALTER SCOTT UNIT 4
FDNS	00NR_G14_059	0	20SP	G14_059	FROM->TO	GR ISLD-LNX3345.00 - GRAND ISLAND 345KV CKT Z	720	720	0.04144	111.2006	FT RANDAL - G12_009IST 230.00 230KV CKT 1
FDNS	00NR_G14_059	0	20SP	G14_059	FROM->TO	GR ISLD-LNX3345.00 - GRAND ISLAND 345KV CKT Z	720	720	0.04146	111.1892	FT RANDAL - FT THOMPSON 230KV CKT 1
FDNS	00NR_G14_059	0	20SP	G14_059	FROM->TO	GR ISLD-LNX3345.00 - GRAND ISLAND 345KV CKT Z	720	720	0.04146	111.1892	FT RANDAL - FT THOMPSON 230KV CKT 1
FDNS	00NR_G14_059	0	20SP	G14_059	FROM->TO	GR ISLD-LNX3345.00 - GRAND ISLAND 345KV CKT Z	720	720	0.04144	111.1414	FT THOMPSON - LAKE PLATT 230KV CKT 1
FDNS	00NR_G14_059	0	20SP	G14_059	FROM->TO	GR ISLD-LNX3345.00 - GRAND ISLAND 345KV CKT Z	720	720	0.04144	111.1414	FT THOMPSON - LAKE PLATT 230KV CKT 1
FDNS	00NR_G14_059	0	20SP	G14_059	FROM->TO	GR ISLD-LNX3345.00 - GRAND ISLAND 345KV CKT Z	720	720	0.04071	111.0695	G09_001IST 345.00 - WATERTOWN 345KV CKT 1
FDNS	00NR_G14_059	0	25SP	G14_059	FROM->TO	GR ISLD-LNX3345.00 - GRAND ISLAND 345KV CKT Z	720	720	0.04371	110.9411	FT RANDAL - MEADOWGROVE4230.00 230KV CKT 1
FDNS	00NR_G14_059	0	20SP	G14_059	FROM->TO	GR ISLD-LNX3345.00 - GRAND ISLAND 345KV CKT Z	720	720	0.04144	110.9179	G12_009IST 230.00 - LAKE PLATT 230KV CKT 1
FDNS	00NR_G14_059	0	20SP	G14_059	FROM->TO	GR ISLD-LNX3345.00 - GRAND ISLAND 345KV CKT Z	720	720	0.04052	110.9069	GEN336821 1-GRAND GULF UNIT
FDNS	00NR_G14_059	0	25SP	G14_059	FROM->TO	GR ISLD-LNX3345.00 - GRAND ISLAND 345KV CKT Z	720	720	0.04264	110.8129	GEN635023 3-WALTER SCOTT UNIT 3
FDNS	00NR_G14_059	0	20SP	G14_059	FROM->TO	GR ISLD-LNX3345.00 - GRAND ISLAND 345KV CKT Z	720	720	0.04052	110.7553	GEN344225 1-1CAL G1 25.000
FDNS	00NR_G14_059	0	25SP	G14_059	FROM->TO	GR ISLD-LNX3345.00 - GRAND ISLAND 345KV CKT Z	720	720	0.04356	110.7342	FT RANDAL - G12_009IST 230.00 230KV CKT 1
FDNS	00NR_G14_059	0	25SP	G14_059	FROM->TO	GR ISLD-LNX3345.00 - GRAND ISLAND 345KV CKT Z	720	720	0.04359	110.7335	FT RANDAL - FT THOMPSON 230KV CKT 1
FDNS	00NR_G14_059	0	25SP	G14_059	FROM->TO	GR ISLD-LNX3345.00 - GRAND ISLAND 345KV CKT Z	720	720	0.04359	110.7335	FT RANDAL - FT THOMPSON 230KV CKT 1
FDNS	00NR_G14_059	0	25SP	G14_059	FROM->TO	GR ISLD-LNX3345.00 - GRAND ISLAND 345KV CKT Z	720	720	0.04356	110.6871	FT THOMPSON - LAKE PLATT 230KV CKT 1
FDNS	00NR_G14_059	0	25SP	G14_059	FROM->TO	GR ISLD-LNX3345.00 - GRAND ISLAND 345KV CKT Z	720	720	0.04356	110.6871	FT THOMPSON - LAKE PLATT 230KV CKT 1
FDNS	00NR_G14_059	0	25SP	G14_059	FROM->TO	GR ISLD-LNX3345.00 - GRAND ISLAND 345KV CKT Z	720	720	0.04284	110.6722	G09_001IST 345.00 - WATERTOWN 345KV CKT 1
FDNS	00NR_G14_059	0	20SP	G14_059	FROM->TO	GR ISLD-LNX3345.00 - GRAND ISLAND 345KV CKT Z	720	720	0.04096	110.6619	WATERTN-LNX3345.00 - WHITE 345KV CKT 1
FDNS	00NR_G14_059	0	20SP	G14_059	FROM->TO	GR ISLD-LNX3345.00 - GRAND ISLAND 345KV CKT Z	720	720	0.04052	110.6582	GEN640009 1-COOPER NUCLEAR STATION
FDNS	00NR_G14_059	0	20SP	G14_059	FROM->TO	GR ISLD-LNX3345.00 - GRAND ISLAND 345KV CKT Z	720	720	0.04083	110.6124	SPLIT ROCK - WHITE 345KV CKT 1
FDNS	00NR_G14_059	0	20SP	G14_059	FROM->TO	GR ISLD-LNX3345.00 - GRAND ISLAND 345KV CKT Z	720	720	0.04083	110.6124	SPLIT ROCK - WHITE 345KV CKT 1
FDNS	00NR_G14_059	0	20SP	G14_059	FROM->TO	GR ISLD-LNX3345.00 - GRAND ISLAND 345KV CKT Z	720	720	0.04118	110.6009	LETCHER - SIOUX FALLS 230KV CKT 1
FDNS	00NR_G14_059	0	20SP	G14_059	FROM->TO	GR ISLD-LNX3345.00 - GRAND ISLAND 345KV CKT Z	720	720	0.04096	110.5931	WATERTN-LNX3345.00 - WATERTOWN 345KV CKT Z
FDNS	00NR_G14_059	0	20SP	G14_059	FROM->TO	GR ISLD-LNX3345.00 - GRAND ISLAND 345KV CKT Z	720	720	0.04096	110.5926	P12:345:UMZW:# 1747 #: WT2 IN SD. WT2-WHT LINE FAULT
FDNS	00NR_G14_059	0	20SP	G14_059	FROM->TO	GR ISLD-LNX3345.00 - GRAND ISLAND 345KV CKT Z	720	720	0.04052	110.4603	GEN336153 1-WATERFORD UNIT#3
FDNS	00NR_G14_059	0	20SP	G14_059	FROM->TO	GR ISLD-LNX3345.00 - GRAND ISLAND 345KV CKT Z	720	720	0.04052	110.4575	GEN337911 1-ARKANSAS NUCLEAR ONE UNIT #2
FDNS	00NR_G14_059	0	25SP	G14_059	FROM->TO	GR ISLD-LNX3345.00 - GRAND ISLAND 345KV CKT Z	720	720	0.04356	110.445	G12_009IST 230.00 - LAKE PLATT 230KV CKT 1
FDNS	00NR_G14_059	0	20SP	G14_059	FROM->TO	GR ISLD-LNX3345.00 - GRAND ISLAND 345KV CKT Z	720	720	0.04068	110.4438	CENTER - JAMESTOWN 345KV CKT 1
FDNS	00NR_G14_059	0	25SP	G14_059	FROM->TO	GR ISLD-LNX3345.00 - GRAND ISLAND 345KV CKT Z	720	720	0.04264	110.3464	GEN336821 1-GRAND GULF UNIT
FDNSLock	00NR_G14_059	0	20SP	G14_059	FROM->TO	GR ISLD-LNX3345.00 - GRAND ISLAND 345KV CKT Z	720	720	0.04057	110.3161	FORBES - ROSEAU 500KV CKT 1
FDNS	00NR_G14_059	0	20SP	G14_059	FROM->TO	GR ISLD-LNX3345.00 - GRAND ISLAND 345KV CKT Z	720	720	0.04175	110.3139	RAUN - SUB 3451 FT CAL 345KV CKT 1
FDNS	00NR_G14_059	0	20SP	G14_059	FROM->TO	GR ISLD-LNX3345.00 - GRAND ISLAND 345KV CKT Z	720	720	0.04175	110.3139	RAUN - SUB 3451 FT CAL 345KV CKT 1
FDNS	00NR_G14_059	0	25SP	G14_059	FROM->TO	GR ISLD-LNX3345.00 - GRAND ISLAND 345KV CKT Z	720	720	0.0428	110.2906	CENTER - JAMESTOWN 345KV CKT 1
FDNS	00NR_G14_059	0	20SP	G14_059	FROM->TO	GR ISLD-LNX3345.00 - GRAND ISLAND 345KV CKT Z	720	720	0.04105	110.2681	FT RANDAL - SIOUX CITY 230KV CKT 1
FDNS	00NR_G14_059	0	20SP	G14_059	FROM->TO	GR ISLD-LNX3345.00 - GRAND ISLAND 345KV CKT Z	720	720	0.04063	110.2439	BISON 3 345.00 - BUFFALO 345KV CKT 1
FDNS	00NR_G14_059	0	20SP	G14_059	FROM->TO	GR ISLD-LNX3345.00 - GRAND ISLAND 345KV CKT Z	720	720	0.04116	110.2433	THEDFRD3 345.00 (THEDFORDT2) 345/115/13.8KV TRANSFORMER CKT 1
FDNS	00NR_G14_059	0	20SP	G14_059	FROM->TO	GR ISLD-LNX3345.00 - GRAND ISLAND 345KV CKT Z	720	720	0.04052	110.2134	GEN335831 1-RIVERBEND UNIT#1
FDNS	00NR_G14_059	0	20SP	G14_059	FROM->TO	GR ISLD-LNX3345.00 - GRAND ISLAND 345KV CKT Z	720	720	0.04052	110.2073	GEN641089 2-ENERGY CENTER 2
FDNS	00NR_G14_059	0	25SP	G14_059	FROM->TO	GR ISLD-LNX3345.00 - GRAND ISLAND 345KV CKT Z	720	720	0.04264	110.1938	GEN344225 1-1CAL G1 25.000
FDNS	00NR_G14_059	0	25SP	G14_059	FROM->TO	GR ISLD-LNX3345.00 - GRAND ISLAND 345KV CKT Z	720	720	0.04264	110.1809	GEN640009 1-COOPER NUCLEAR STATION
FDNS	00NR_G14_059	0	20SP	G14_059	FROM->TO	GR ISLD-LNX3345.00 - GRAND ISLAND 345KV CKT Z	720	720	0.04109	110.1527	SIOUXCY-LNX3345.00 - SPLIT ROCK 345KV CKT 1
FDNS	00NR_G14_059	0	20SP	G14_059	FROM->TO	GR ISLD-LNX3345.00 - GRAND ISLAND 345KV CKT Z	720	720	0.04109	110.1527	SIOUXCY-LNX3345.00 - SPLIT ROCK 345KV CKT 1
FDNS	00NR_G14_059	0	25SP	G14_059	FROM->TO	GR ISLD-LNX3345.00 - GRAND ISLAND 345KV CKT Z	720	720	0.0433	110.1521	LETCHER - SIOUX FALLS 230KV CKT 1
FDNS	00NR_G14_059	0	20SP	G14_059	FROM->TO	GR ISLD-LNX3345.00 - GRAND ISLAND 345KV CKT Z	720	720	0.04052	110.1285	GEN337910 1-ARKANSAS NUCLEAR ONE UNIT #1
FDNS	00NR_G14_059	0	20SP	G14_059	FROM->TO	GR ISLD-LNX3345.00 - GRAND ISLAND 345KV CKT Z	720	720	0.04062	110.1273	CHISAGO COUNTY - CHISAGO COUNTY 500KV CKT 1
FDNS	00NR_G14_059	0	20SP	G14_059	FROM->TO	GR ISLD-LNX3345.00 - GRAND ISLAND 345KV CKT Z	720	720	0.04109	110.1244	P12:345:UMZW:# 907 #: SC2-SR IN IA. SC2-SR 345 KV LINE
FDNS	00NR_G14_059	0	20SP	G14_059	FROM->TO	GR ISLD-LNX3345.00 - GRAND ISLAND 345KV CKT Z	720	720	0.04109	110.1083	SIOUX CITY - SIOUXCY-LNX3345.00 345KV CKT Z
FDNS	00NR_G14_059	0	25SP	G14_059	FROM->TO	GR ISLD-LNX3345.00 - GRAND ISLAND 345KV CKT Z	720	720	0.04308	110.0985	WATERTN-LNX3345.00 - WHITE 345KV CKT 1
FDNS	00NR_G14_059	0	20SP	G14_059	FROM->TO	GR ISLD-LNX3345.00 - GRAND ISLAND 345KV CKT Z	720	720	0.04062	110.0828	CHISAGO COUNTY - FORBES 500KV CKT 1
FDNS	00NR_G14_059	0	20SP	G14_059	FROM->TO	GR ISLD-LNX3345.00 - GRAND ISLAND 345KV CKT Z	720	720	0.04057	110.0637	ROSEAU - ROSEAUM 2 500.00 500KV CKT 1
FDNS	00NR_G14_059	0	20SP	G14_059	FROM->TO	GR ISLD-LNX3345.00 - GRAND ISLAND 345KV CKT Z	720	720	0.04057	110.0636	RIEL - ROSEAU 500KV CKT 1
FDNS	00NR_G14_059	0	20SP	G14_059	FROM->TO	GR ISLD-LNX3345.00 - GRAND ISLAND 345KV CKT Z	720	720	0.04057	110.0598	ROSEAU - ROSEAUM 2 500.00 500KV CKT 1
FDNS	00NR_G14_059	0	25SP	G14_059	FROM->TO	GR ISLD-LNX3345.00 - GRAND ISLAND 345KV CKT Z	720	720	0.04295	110.0578	SPLIT ROCK - WHITE 345KV CKT 1
FDNS	00NR_G14_059	0	25SP	G14_059	FROM->TO	GR ISLD-LNX3345.00 - GRAND ISLAND 345KV CKT Z	720	720	0.04295	110.0578	SPLIT ROCK - WHITE 345KV CKT 1
FDNS	00NR_G14_059	0	20SP	G14_059	FROM->TO	GR ISLD-LNX3345.00 - GRAND ISLAND 345KV CKT Z	720	720	0.04052	110.0463	GEN645012 2-NEBRASKA CITY 2
FDNS	00NR_G14_059	0	25SP	G14_059	FROM->TO	GR ISLD-LNX3345.00 - GRAND ISLAND 345KV CKT Z	720	720	0.04308	110.0286	WATERTN-LNX3345.00 - WATERTOWN 345KV CKT Z
FDNS	00NR_G14_059	0	25SP	G14_059	FROM->TO	GR ISLD-LNX3345.00 - GRAND ISLAND 345KV CKT Z	720	720	0.04308	110.0208	P12:345:UMZW:# 1747 #: WT2 IN SD. WT2-WHT LINE FAULT
FDNS	00NR_G14_059	0	25SP	G14_059	FROM->TO	GR ISLD-LNX3345.00 - GRAND ISLAND 345KV CKT Z	720	720	0.04276	109.9656	BISON 3 345.00 - BUFFALO 345KV CKT 1
FDNS	00NR_G14_059	0	20SP	G14_059	FROM->TO	GR ISLD-LNX3345.00 - GRAND ISLAND 345KV CKT Z	720	720	0.04052	109.9359	GEN645011 1-NEBRASKA CITY 1
FDNS	00NR_G14_059	0	25SP	G14_059	FROM->TO	GR ISLD-LNX3345.00 - GRAND ISLAND 345KV CKT Z	720	720	0.04264	109.9337	GEN337911 1-ARKANSAS NUCLEAR ONE UNIT #2
FDNS	00NR_G14_059	0	20SP	G14_059	FROM->TO	GR ISLD-LNX3345.00 - GRAND ISLAND 345KV CKT Z	720	720	0.04224	109.9116	CALLAWAY - MAXWELL 115KV CKT 1
FDNS	00NR_G14_059	0	20SP	G14_059	FROM->TO	GR ISLD-LNX3345.00 - GRAND ISLAND 345KV CKT Z	720	720	0.04158	109.9081	P12:115:NPPD:1167A:AINSWRT7:ONEILL 7:BTB
FDNS	00NR_G14_059	0	20SP	G14_059	FROM->TO	GR ISLD-LNX3345.00 - GRAND ISLAND 345KV CKT Z	720	720	0.04098	109.9073	HANLON - SIOUX FALLS 230KV CKT 1
FDNS	00NR_G14_059	0	25SP	G14_059	FROM->TO	GR ISLD-LNX3345.00 - GRAND ISLAND 345KV CKT Z	720	720	0.04264	109.9011	GEN336153 1-WATERFORD UNIT#3
FDNS	00NR_G14_059	0	20SP	G14_059	FROM->TO	GR ISLD-LNX3345.00 - GRAND ISLAND 345KV CKT Z	720	720	0.0406	109.8862	ARROWHEAD - ARROWHEAD 230 230KV CKT 1
FDNS	00NR_G14_059	0	25SP	G14_059	FROM->TO	GR ISLD-LNX3345.00 - GRAND ISLAND 345KV CKT Z	720	720	0.0433	109.878	THEDFRD3 345.00 (THEDFORDT2) 345/115/13.8KV TRANSFORMER CKT 1
FDNS	00NR_G14_059	0	20SP	G14_059	FROM->TO	GR ISLD-LNX3345.00 - GRAND ISLAND 345KV CKT Z	720	720	0.04088	109.8429	FT RANDAL - UTICA JCT 230KV CKT 1
FDNS	00NR_G14_059	0	20SP	G14_059	FROM->TO	GR ISLD-LNX3345.00 - GRAND ISLAND 345KV CKT Z	720	720	0.04071	109.8207	G09_001IST 345.00 - GROTON 345KV CKT 1
FDNS	00NR_G14_059	0	25SP	G14_059	FROM->TO	GR ISLD-LNX3345.00 - GRAND ISLAND 345KV CKT Z	720	720	0.04386	109.817	RAUN - SUB 3451 FT CAL 345KV CKT 1
FDNS	00NR_G14_059	0	25SP	G14_059	FROM->TO	GR ISLD-LNX3345.00 - GRAND ISLAND 345KV CKT Z	720	720	0.04386	109.817	RAUN - SUB 3451 FT CAL 345KV CKT 1
FDNS	00NR_G14_059	0	20SP	G14_059	FROM->TO	GR ISLD-LNX3345.00 - GRAND ISLAND 345KV CKT Z	720	720	0.0407	109.8164	GROTON-LNX3 345.00 - LELAND1-LNX3345.00 345KV CKT 1
FDNS	00NR_G14_059	0	20SP	G14_059	FROM->TO	GR ISLD-LNX3345.00 - GRAND ISLAND 345KV CKT Z	720	720	0.04052	109.7993	GEN337653 1-WHITE BLUFF UNIT #2

SOLUTION	GROUP	SCENARIO	SEASON	SOURCE	DIRECTION	MONITORED ELEMENT	RATEA (MVA)	RATEB(MVA)	TDF	TC%LOADING (% MVA)	CONTINGENCY
FDNS	00NR_G14_059	0	20SP	G14_059	FROM->TO	GR ISLD-LNX3345.00 - GRAND ISLAND 345KV CKT Z	720	720	0.04085	109.793	PAHOJA - SIOUX FALLS 230KV CKT 1
FDNS	00NR_G14_059	0	20SP	G14_059	FROM->TO	GR ISLD-LNX3345.00 - GRAND ISLAND 345KV CKT Z	720	720	0.0407	109.7859	P12:345:UMZB:# 109 #: LOS GRT IN ND. LOS GRT
FDNS	00NR_G14_059	0	20SP	G14_059	FROM->TO	GR ISLD-LNX3345.00 - GRAND ISLAND 345KV CKT Z	720	720	0.0407	109.7836	GROTON - GROTON-LNX3 345.00 345KV CKT Z
FDNS	00NR_G14_059	0	25SP	G14_059	FROM->TO	GR ISLD-LNX3345.00 - GRAND ISLAND 345KV CKT Z	720	720	0.04317	109.7795	FT RANDAL - SIOUX CITY 230KV CKT 1
FDNS	00NR_G14_059	0	20SP	G14_059	FROM->TO	GR ISLD-LNX3345.00 - GRAND ISLAND 345KV CKT Z	720	720	0.0407	109.7789	LELAND OLDS - LELAND1-LNX3345.00 345KV CKT Z
FDNS	00NR_G14_059	0	20SP	G14_059	FROM->TO	GR ISLD-LNX3345.00 - GRAND ISLAND 345KV CKT Z	720	720	0.04076	109.77	LAKEFIELD 3 - NOBLES 345KV CKT 1
FDNS	00NR_G14_059	0	20SP	G14_059	FROM->TO	GR ISLD-LNX3345.00 - GRAND ISLAND 345KV CKT Z	720	720	0.04052	109.7655	GEN337652 1-WHITE BLUFF UNIT #1
FDNS	00NR_G14_059	0	25SP	G14_059	FROM->TO	GR ISLD-LNX3345.00 - GRAND ISLAND 345KV CKT Z	720	720	0.04264	109.7636	GEN641089 2-ENERGY CENTER 2
FDNS	00NR_G14_059	0	20SP	G14_059	FROM->TO	GR ISLD-LNX3345.00 - GRAND ISLAND 345KV CKT Z	720	720	0.04052	109.757	GEN338143 1-INDEPENDENCE UNIT #1
FDNS	00NR_G14_059	0	20SP	G14_059	FROM->TO	GR ISLD-LNX3345.00 - GRAND ISLAND 345KV CKT Z	720	720	0.04052	109.7513	GEN338146 1-INDEPENDENCE UNIT #2
FDNS	00NR_G14_059	0	25SP	G14_059	FROM->TO	GR ISLD-LNX3345.00 - GRAND ISLAND 345KV CKT Z	720	720	0.04274	109.7427	CHISAGO COUNTY - CHISAGO COUNTY 500KV CKT 1
FDNS	00NR_G14_059	0	20SP	G14_059	FROM->TO	GR ISLD-LNX3345.00 - GRAND ISLAND 345KV CKT Z	720	720	0.04491	109.7115	CROOKED CREEK - RIVERDALE 230KV CKT 1
FDNS	00NR_G14_059	0	25SP	G14_059	FROM->TO	GR ISLD-LNX3345.00 - GRAND ISLAND 345KV CKT Z	720	720	0.04264	109.6931	GEN335831 1-RIVERBEND UNIT#1
FDNS	00NR_G14_059	0	25SP	G14_059	FROM->TO	GR ISLD-LNX3345.00 - GRAND ISLAND 345KV CKT Z	720	720	0.04541	109.691	MINGO - SETAB 345KV CKT 1
FDNS	00NR_G14_059	0	25SP	G14_059	FROM->TO	GR ISLD-LNX3345.00 - GRAND ISLAND 345KV CKT Z	720	720	0.04541	109.691	MINGO - SETAB 345KV CKT 1
FDNS	00NR_G14_059	0	20SP	G14_059	FROM->TO	GR ISLD-LNX3345.00 - GRAND ISLAND 345KV CKT Z	720	720	0.04052	109.658	GEN501801 1-DOLET HILLS UNIT1
FDNS	00NR_G14_059	0	25SP	G14_059	FROM->TO	GR ISLD-LNX3345.00 - GRAND ISLAND 345KV CKT Z	720	720	0.04264	109.6325	GEN337910 1-ARKANSAS NUCLEAR ONE UNIT #1
FDNS	00NR_G14_059	0	20SP	G14_059	FROM->TO	GR ISLD-LNX3345.00 - GRAND ISLAND 345KV CKT Z	720	720	0.04052	109.6183	GEN336252 1-NINEMILE POINT UNIT#5
FDNS	00NR_G14_059	0	20SP	G14_059	FROM->TO	GR ISLD-LNX3345.00 - GRAND ISLAND 345KV CKT Z	720	720	0.04061	109.6106	BROOKING COUNTY - LYON COUNTY 345KV CKT 1
FDNS	00NR_G14_059	0	20SP	G14_059	FROM->TO	GR ISLD-LNX3345.00 - GRAND ISLAND 345KV CKT Z	720	720	0.04058	109.6074	AS KING - EAU CLAIRE 345KV CKT 1
FDNS	00NR_G14_059	0	20SP	G14_059	FROM->TO	GR ISLD-LNX3345.00 - GRAND ISLAND 345KV CKT Z	720	720	0.04088	109.6073	CARPENTER - HURON 230KV CKT 1
FDNS	00NR_G14_059	0	25SP	G14_059	FROM->TO	GR ISLD-LNX3345.00 - GRAND ISLAND 345KV CKT Z	720	720	0.04322	109.5885	SIOUXCY-LNX3345.00 - SPLIT ROCK 345KV CKT 1
FDNS	00NR_G14_059	0	25SP	G14_059	FROM->TO	GR ISLD-LNX3345.00 - GRAND ISLAND 345KV CKT Z	720	720	0.04322	109.5885	SIOUXCY-LNX3345.00 - SPLIT ROCK 345KV CKT 1
FDNS	00NR_G14_059	0	20SP	G14_059	FROM->TO	GR ISLD-LNX3345.00 - GRAND ISLAND 345KV CKT Z	720	720	0.04138	109.5822	FT THOMPSON - WESSINGTON 230KV CKT 1
FDNS	00NR_G14_059	0	20SP	G14_059	FROM->TO	GR ISLD-LNX3345.00 - GRAND ISLAND 345KV CKT Z	720	720	0.04138	109.5822	FT THOMPSON - WESSINGTON 230KV CKT 1
FDNS	00NR_G14_059	0	25SP	G14_059	FROM->TO	GR ISLD-LNX3345.00 - GRAND ISLAND 345KV CKT Z	720	720	0.04269	109.5804	RIEL - ROSEAU 500KV CKT 1
FDNS	00NR_G14_059	0	20SP	G14_059	FROM->TO	GR ISLD-LNX3345.00 - GRAND ISLAND 345KV CKT Z	720	720	0.04052	109.5782	GEN542962 2-IATAN UNIT #2
FDNS	00NR_G14_059	0	25SP	G14_059	FROM->TO	GR ISLD-LNX3345.00 - GRAND ISLAND 345KV CKT Z	720	720	0.04269	109.5708	ROSEAU - ROSEAUM 2 500.00 500KV CKT 1
FDNS	00NR_G14_059	0	25SP	G14_059	FROM->TO	GR ISLD-LNX3345.00 - GRAND ISLAND 345KV CKT Z	720	720	0.04269	109.5708	ROSEAU - ROSEAUM 2 500.00 500KV CKT 1
FDNS	00NR_G14_059	0	25SP	G14_059	FROM->TO	GR ISLD-LNX3345.00 - GRAND ISLAND 345KV CKT Z	720	720	0.04322	109.5626	P12:345:UMZW:# 907 #: SC2-SR IN IA. SC2-SR 345 KV LINE
FDNS	00NR_G14_059	0	20SP	G14_059	FROM->TO	GR ISLD-LNX3345.00 - GRAND ISLAND 345KV CKT Z	720	720	0.04052	109.5621	GEN336251 1-NINEMILE POINT UNIT#4
FDNS	00NR_G14_059	0	20SP	G14_059	FROM->TO	GR ISLD-LNX3345.00 - GRAND ISLAND 345KV CKT Z	720	720	0.04052	109.5522	GEN336831 1-BAXTER WILSON SES
FDNS	00NR_G14_059	0	20SP	G14_059	FROM->TO	GR ISLD-LNX3345.00 - GRAND ISLAND 345KV CKT Z	720	720	0.04052	109.5425	GEN532751 1-WOLF CREEK GENERATING STATION UNIT 1
FDNS	00NR_G14_059	0	20SP	G14_059	FROM->TO	GR ISLD-LNX3345.00 - GRAND ISLAND 345KV CKT Z	720	720	0.04085	109.542	EAGLE 4 230.00 - PAHOJA 230KV CKT 1
FDNS	00NR_G14_059	0	25SP	G14_059	FROM->TO	GR ISLD-LNX3345.00 - GRAND ISLAND 345KV CKT Z	720	720	0.04322	109.5408	SIOUX CITY - SIOUXCY-LNX3345.00 345KV CKT Z
FDNS	00NR_G14_059	0	20SP	G14_059	FROM->TO	GR ISLD-LNX3345.00 - GRAND ISLAND 345KV CKT Z	720	720	0.04088	109.5376	HURON - WATERTOWN 230KV CKT 2
FDNS	00NR_G14_059	0	20SP	G14_059	FROM->TO	GR ISLD-LNX3345.00 - GRAND ISLAND 345KV CKT Z	720	720	0.04088	109.5376	HURON - WATERTOWN 230KV CKT 2
FDNS	00NR_G14_059	0	25SP	G14_059	FROM->TO	GR ISLD-LNX3345.00 - GRAND ISLAND 345KV CKT Z	720	720	0.04442	109.5286	CALLAWAY - MAXWELL 115KV CKT 1
FDNS	00NR_G14_059	0	20SP	G14_059	FROM->TO	GR ISLD-LNX3345.00 - GRAND ISLAND 345KV CKT Z	720	720	0.04052	109.5207	GEN337041 1-GERALD ANDRUS
FDNS	00NR_G14_059	0	20SP	G14_059	FROM->TO	GR ISLD-LNX3345.00 - GRAND ISLAND 345KV CKT Z	720	720	0.03956	109.5198	STAPLETON - THEDFORD 115KV CKT 1
FDNS	00NR_G14_059	0	20SP	G14_059	FROM->TO	GR ISLD-LNX3345.00 - GRAND ISLAND 345KV CKT Z	720	720	0.04088	109.5184	RASMUSN - UTICA JCT 230KV CKT 1
FDNS	00NR_G14_059	0	20SP	G14_059	FROM->TO	GR ISLD-LNX3345.00 - GRAND ISLAND 345KV CKT Z	720	720	0.04088	109.5092	CARPENTER - WATERTOWN 230KV CKT 1
FDNS	00NR_G14_059	0	20SP	G14_059	FROM->TO	GR ISLD-LNX3345.00 - GRAND ISLAND 345KV CKT Z	720	720	0.04088	109.5092	CARPENTER - WATERTOWN 230KV CKT 1
FDNS	00NR_G14_059	0	25SP	G14_059	FROM->TO	GR ISLD-LNX3345.00 - GRAND ISLAND 345KV CKT Z	720	720	0.04264	109.5058	GEN645012 2-NEBRASKA CITY 2
FDNS	00NR_G14_059	0	20SP	G14_059	FROM->TO	GR ISLD-LNX3345.00 - GRAND ISLAND 345KV CKT Z	720	720	0.04052	109.4771	GEN501813 1-RODEMACHER UNIT 3
FDNS	00NR_G14_059	0	20SP	G14_059	FROM->TO	GR ISLD-LNX3345.00 - GRAND ISLAND 345KV CKT Z	720	720	0.04067	109.468	ALEXMRES3 345.00 - BISON 3 345.00 345KV CKT 1
FDNS	00NR_G14_059	0	20SP	G14_059	FROM->TO	GR ISLD-LNX3345.00 - GRAND ISLAND 345KV CKT Z	720	720	0.04069	109.4678	HAZLETON - MITCHLCO3 345.00 345KV CKT 1
FDNS	00NR_G14_059	0	20SP	G14_059	FROM->TO	GR ISLD-LNX3345.00 - GRAND ISLAND 345KV CKT Z	720	720	0.04052	109.4516	GEN344897 4-1LAB G4 20.000
FDNS	00NR_G14_059	0	20SP	G14_059	FROM->TO	GR ISLD-LNX3345.00 - GRAND ISLAND 345KV CKT Z	720	720	0.04052	109.4504	GEN344894 1-1LAB G1 20.000
FDNS	00NR_G14_059	0	20SP	G14_059	FROM->TO	GR ISLD-LNX3345.00 - GRAND ISLAND 345KV CKT Z	720	720	0.04052	109.4504	GEN344895 2-1LAB G2 20.000
FDNS	00NR_G14_059	0	20SP	G14_059	FROM->TO	GR ISLD-LNX3345.00 - GRAND ISLAND 345KV CKT Z	720	720	0.04052	109.4503	GEN344896 3-1LAB G3 20.000
FDNS	00NR_G14_059	0	25SP	G14_059	FROM->TO	GR ISLD-LNX3345.00 - GRAND ISLAND 345KV CKT Z	720	720	0.04371	109.4439	P12:115:NPPD:1167A:AINSWRT7:ONEILL 7:BTB
FDNS	00NR_G14_059	0	20SP	G14_059	FROM->TO	GR ISLD-LNX3345.00 - GRAND ISLAND 345KV CKT Z	720	720	0.04052	109.4391	GEN542957 1-IATAN UNIT #1
FDNS	00NR_G14_059	0	20SP	G14_059	FROM->TO	GR ISLD-LNX3345.00 - GRAND ISLAND 345KV CKT Z	720	720	0.04126	109.4214	P12:115:NPPD:1164:ONEILL 7:JEFFREY9:BTB
FDNS	00NR_G14_059	0	25SP	G14_059	FROM->TO	GR ISLD-LNX3345.00 - GRAND ISLAND 345KV CKT Z	720	720	0.0431	109.4203	HANLON - SIOUX FALLS 230KV CKT 1
FDNS	00NR_G14_059	0	20SP	G14_059	FROM->TO	GR ISLD-LNX3345.00 - GRAND ISLAND 345KV CKT Z	720	720	0.04052	109.4198	GEN629075 1-OTTUMWA GENERATOR FOR OTTUMWA UNIT NO 1
FDNSLock	00NR_G14_059	0	20SP	G14_059	FROM->TO	GR ISLD-LNX3345.00 - GRAND ISLAND 345KV CKT Z	720	720	0.04057	109.4166	CENTER - CNTSHNT3 345.00 345KV CKT Z1
FDNS	00NR_G14_059	0	25SP	G14_059	FROM->TO	GR ISLD-LNX3345.00 - GRAND ISLAND 345KV CKT Z	720	720	0.04264	109.4058	GEN645011 1-NEBRASKA CITY 1
FDNS	00NR_G14_059	0	25SP	G14_059	FROM->TO	GR ISLD-LNX3345.00 - GRAND ISLAND 345KV CKT Z	720	720	0.043	109.4023	FT RANDAL - UTICA JCT 230KV CKT 1
FDNS	00NR_G14_059	0	20SP	G14_059	FROM->TO	GR ISLD-LNX3345.00 - GRAND ISLAND 345KV CKT Z	720	720	0.04052	109.3988	GEN345671 2-1RUSH G2 18.000
FDNS	00NR_G14_059	0	20SP	G14_059	FROM->TO	GR ISLD-LNX3345.00 - GRAND ISLAND 345KV CKT Z	720	720	0.04052	109.3956	GEN345670 1-1RUSH G1 18.000
FDNS	00NR_G14_059	0	20SP	G14_059	FROM->TO	GR ISLD-LNX3345.00 - GRAND ISLAND 345KV CKT Z	720	720	0.04158	109.39	BASSETT 7115.00 - STUART 115KV CKT 1
FDNS	00NR_G14_059	0	20SP	G14_059	FROM->TO	GR ISLD-LNX3345.00 - GRAND ISLAND 345KV CKT Z	720	720	0.04088	109.3857	RASMUSN - SIOUX CITY 230KV CKT 1
FDNS	00NR_G14_059	0	20SP	G14_059	FROM->TO	GR ISLD-LNX3345.00 - GRAND ISLAND 345KV CKT Z	720	720	0.04097	109.3819	GRIMES - LEHIGH 345KV CKT 1
FDNS	00NR_G14_059	0	20SP	G14_059	FROM->TO	GR ISLD-LNX3345.00 - GRAND ISLAND 345KV CKT Z	720	720	0.04052	109.3801	GEN645001 1-FORT CALHOUN 1
FDNS	00NR_G14_059	0	20SP	G14_059	FROM->TO	GR ISLD-LNX3345.00 - GRAND ISLAND 345KV CKT Z	720	720	0.04326	109.3738	MINGO - SETAB 345KV CKT 1
FDNS	00NR_G14_059	0	20SP	G14_059	FROM->TO	GR ISLD-LNX3345.00 - GRAND ISLAND 345KV CKT Z	720	720	0.04326	109.3738	MINGO - SETAB 345KV CKT 1
FDNS	00NR_G14_059	0	20SP	G14_059	FROM->TO	GR ISLD-LNX3345.00 - GRAND ISLAND 345KV CKT Z	720	720	0.04158	109.3628	AINSWORTH - BASSETT 7115.00 115KV CKT 1
FDNS	00NR_G14_059	0	20SP	G14_059	FROM->TO	GR ISLD-LNX3345.00 - GRAND ISLAND 345KV CKT Z	720	720	0.04126	109.3607	CLEARWATER - ONEILL 115KV CKT 1
FDNS	00NR_G14_059	0	20SP	G14_059	FROM->TO	GR ISLD-LNX3345.00 - GRAND ISLAND 345KV CKT Z	720	720	0.04052	109.3597	GEN335206 1-NELSON UNIT 6
FDNS	00NR_G14_059	0	25SP	G14_059	FROM->TO	GR ISLD-LNX3345.00 - GRAND ISLAND 345KV CKT Z	720	720	0.04288	109.359	LAKEFIELD 3 - NOBLES 345KV CKT 1
FDNS	00NR_G14_059	0	25SP	G14_059	FROM->TO	GR ISLD-LNX3345.00 - GRAND ISLAND 345KV CKT Z	720	720	0.04264	109.3551	GEN337652 1-WHITE BLUFF UNIT #1
FDNS	00NR_G14_059	0	25SP	G14_059	FROM->TO	GR ISLD-LNX3345.00 - GRAND ISLAND 345KV CKT Z	720	720	0.04272	109.3438	ARROWHEAD - ARROWHEAD 230 230KV CKT 1

SOLUTION	GROUP	SCENARIO	SEASON	SOURCE	DIRECTION	MONITORED ELEMENT	RATEA (MVA)	RATEB(MVA)	TDF	TC%LOADING (% MVA)	CONTINGENCY
FDNS	00NR_G14_059	0	20SP	G14_059	FROM->TO	GR ISLD-LNX3345.00 - GRAND ISLAND 345KV CKT Z	720	720	0.04125	109.3417	BUCKNER7 345.00 - SPEARVILLE 345KV CKT 1
FDNS	00NR_G14_059	0	20SP	G14_059	FROM->TO	GR ISLD-LNX3345.00 - GRAND ISLAND 345KV CKT Z	720	720	0.04125	109.3417	BUCKNER7 345.00 - SPEARVILLE 345KV CKT 1
FDNS	00NR_G14_059	0	20SP	G14_059	FROM->TO	GR ISLD-LNX3345.00 - GRAND ISLAND 345KV CKT Z	720	720	0.04052	109.3334	GEN532652 1-JEFFREY ENERGY CENTER UNIT 2
FDNS	00NR_G14_059	0	20SP	G14_059	FROM->TO	GR ISLD-LNX3345.00 - GRAND ISLAND 345KV CKT Z	720	720	0.04052	109.3333	GEN532653 1-JEFFREY ENERGY CENTER UNIT 3
FDNS	00NR_G14_059	0	25SP	G14_059	FROM->TO	GR ISLD-LNX3345.00 - GRAND ISLAND 345KV CKT Z	720	720	0.04264	109.3323	GEN338143 1-INDEPENDENCE UNIT #1
FDNS	00NR_G14_059	0	20SP	G14_059	FROM->TO	GR ISLD-LNX3345.00 - GRAND ISLAND 345KV CKT Z	720	720	0.04052	109.3321	GEN532651 1-JEFFREY ENERGY CENTER UNIT 1
FDNS	00NR_G14_059	0	25SP	G14_059	FROM->TO	GR ISLD-LNX3345.00 - GRAND ISLAND 345KV CKT Z	720	720	0.04264	109.3306	GEN338146 1-INDEPENDENCE UNIT #2
FDNS	00NR_G14_059	0	20SP	G14_059	FROM->TO	GR ISLD-LNX3345.00 - GRAND ISLAND 345KV CKT Z	720	720	0.04057	109.3303	CNTSHNT3 345.00 - PRAIRIE3 345.00 345KV CKT 1
FDNS	00NR_G14_059	0	20SP	G14_059	FROM->TO	GR ISLD-LNX3345.00 - GRAND ISLAND 345KV CKT Z	720	720	0.04052	109.3265	GEN334440 1-SABINE UNIT 4
FDNS	00NR_G14_059	0	25SP	G14_059	FROM->TO	GR ISLD-LNX3345.00 - GRAND ISLAND 345KV CKT Z	720	720	0.04283	109.3256	GROTON-LNX3 345.00 - LELAND1-LNX3345.00 345KV CKT 1
FDNS	00NR_G14_059	0	20SP	G14_059	FROM->TO	GR ISLD-LNX3345.00 - GRAND ISLAND 345KV CKT Z	720	720	0.04052	109.3244	GEN642067 1-PLATTE
FDNS	00NR_G14_059	0	20SP	G14_059	FROM->TO	GR ISLD-LNX3345.00 - GRAND ISLAND 345KV CKT Z	720	720	0.04056	109.3232	P12:115:NPPD:WAPA4:SIDNEY 7:B.SPRGS7:BTB
FDNS	00NR_G14_059	0	20SP	G14_059	FROM->TO	GR ISLD-LNX3345.00 - GRAND ISLAND 345KV CKT Z	720	720	0.04056	109.3232	P12:115:UMZB:# 119 #: IN NE.
FDNS	00NR_G14_059	0	20SP	G14_059	FROM->TO	GR ISLD-LNX3345.00 - GRAND ISLAND 345KV CKT Z	720	720	0.04244	109.3086	JEFFREY - NORTH PLATTE 115KV CKT 1
FDNS	00NR_G14_059	0	20SP	G14_059	FROM->TO	GR ISLD-LNX3345.00 - GRAND ISLAND 345KV CKT Z	720	720	0.04052	109.3049	GEN501812 1-RODEMACHER UNIT 2
FDNS	00NR_G14_059	0	25SP	G14_059	FROM->TO	GR ISLD-LNX3345.00 - GRAND ISLAND 345KV CKT Z	720	720	0.04284	109.297	G09_001IST 345.00 - GROTON 345KV CKT 1
FDNS	00NR_G14_059	0	25SP	G14_059	FROM->TO	GR ISLD-LNX3345.00 - GRAND ISLAND 345KV CKT Z	720	720	0.04264	109.2924	GEN337653 1-WHITE BLUFF UNIT #2
FDNS	00NR_G14_059	0	20SP	G14_059	FROM->TO	GR ISLD-LNX3345.00 - GRAND ISLAND 345KV CKT Z	720	720	0.04058	109.2884	ARPIN B4 345.00 - EAU CLAIRE 345KV CKT 1
FDNS	00NR_G14_059	0	25SP	G14_059	FROM->TO	GR ISLD-LNX3345.00 - GRAND ISLAND 345KV CKT Z	720	720	0.04283	109.287	P12:345:UMZB:# 109 #: LOS GRT IN ND. LOS GRT
FDNS	00NR_G14_059	0	25SP	G14_059	FROM->TO	GR ISLD-LNX3345.00 - GRAND ISLAND 345KV CKT Z	720	720	0.04283	109.2848	GROTON - GROTON-LNX3 345.00 345KV CKT Z
FDNS	00NR_G14_059	0	25SP	G14_059	FROM->TO	GR ISLD-LNX3345.00 - GRAND ISLAND 345KV CKT Z	720	720	0.04283	109.2806	LELAND OLDS - LELAND1-LNX3345.00 345KV CKT Z
FDNS	00NR_G14_059	0	25SP	G14_059	FROM->TO	GR ISLD-LNX3345.00 - GRAND ISLAND 345KV CKT Z	720	720	0.04298	109.2752	PAHOJA - SIOUX FALLS 230KV CKT 1
FDNS	00NR_G14_059	0	20SP	G14_059	FROM->TO	GR ISLD-LNX3345.00 - GRAND ISLAND 345KV CKT Z	720	720	0.04052	109.2664	GEN338388 1-1PLUM PT U1 23.000
FDNS	00NR_G14_059	0	20SP	G14_059	FROM->TO	GR ISLD-LNX3345.00 - GRAND ISLAND 345KV CKT Z	720	720	0.04052	109.2565	GEN336191 1-LITTLE GYPSY UNIT#3
FDNS	00NR_G14_059	0	20SP	G14_059	FROM->TO	GR ISLD-LNX3345.00 - GRAND ISLAND 345KV CKT Z	720	720	0.04158	109.2506	ATKINSON - STUART 115KV CKT 1
FDNS	00NR_G14_059	0	20SP	G14_059	FROM->TO	GR ISLD-LNX3345.00 - GRAND ISLAND 345KV CKT Z	720	720	0.04438	109.2389	KEYSTONE - SIDNEY1-LNX3345.00 345KV CKT 1
FDNS	00NR_G14_059	0	20SP	G14_059	FROM->TO	GR ISLD-LNX3345.00 - GRAND ISLAND 345KV CKT Z	720	720	0.04052	109.2188	GEN335204 1-NELSON UNIT 4
FDNS	00NR_G14_059	0	20SP	G14_059	FROM->TO	GR ISLD-LNX3345.00 - GRAND ISLAND 345KV CKT Z	720	720	0.04052	109.2101	GEN334441 1-SABINE UNIT 5
FDNS	00NR_G14_059	0	20SP	G14_059	FROM->TO	GR ISLD-LNX3345.00 - GRAND ISLAND 345KV CKT Z	720	720	0.04052	109.2095	GEN335614 1-WILLOW GLENN UNIT#4
FDNS	00NR_G14_059	0	20SP	G14_059	FROM->TO	GR ISLD-LNX3345.00 - GRAND ISLAND 345KV CKT Z	720	720	0.04052	109.2066	GEN336801 1-BAXTER WILSON UNIT #1
FDNS	00NR_G14_059	0	20SP	G14_059	FROM->TO	GR ISLD-LNX3345.00 - GRAND ISLAND 345KV CKT Z	720	720	0.04018	109.2032	P12:115:NPPD:WAPA2:HEMINGF7:SNAKECK7:BTB
FDNS	00NR_G14_059	0	20SP	G14_059	FROM->TO	GR ISLD-LNX3345.00 - GRAND ISLAND 345KV CKT Z	720	720	0.04052	109.2006	GEN336464 1-MICHOUD UNIT #3
FDNS	00NR_G14_059	0	20SP	G14_059	FROM->TO	GR ISLD-LNX3345.00 - GRAND ISLAND 345KV CKT Z	720	720	0.04052	109.1981	GEN542951 5-HAWTHORN UNIT #5
FDNS	00NR_G14_059	0	20SP	G14_059	FROM->TO	GR ISLD-LNX3345.00 - GRAND ISLAND 345KV CKT Z	720	720	0.04056	109.1919	NORTH LA CROSSE - NORTH ROCHESTER 345KV CKT 1
FDNS	00NR_G14_059	0	20SP	G14_059	FROM->TO	GR ISLD-LNX3345.00 - GRAND ISLAND 345KV CKT Z	720	720	0.04052	109.1897	GEN542955 1-LACYGNE UNIT #1
FDNS	00NR_G14_059	0	20SP	G14_059	FROM->TO	GR ISLD-LNX3345.00 - GRAND ISLAND 345KV CKT Z	720	720	0.04052	109.1873	P12:115:UMZW:# 162 #: NEL IN ND. FAULT ON ML-NEL-MX-GA 115 KV
FDNS	00NR_G14_059	0	25SP	G14_059	FROM->TO	GR ISLD-LNX3345.00 - GRAND ISLAND 345KV CKT Z	720	720	0.04301	109.1863	CARPENTER - HURON 230KV CKT 1
FDNS	00NR_G14_059	0	25SP	G14_059	FROM->TO	GR ISLD-LNX3345.00 - GRAND ISLAND 345KV CKT Z	720	720	0.04273	109.1846	BROOKING COUNTY - LYON COUNTY 345KV CKT 1
FDNS	00NR_G14_059	0	25SP	G14_059	FROM->TO	GR ISLD-LNX3345.00 - GRAND ISLAND 345KV CKT Z	720	720	0.0472	109.1837	CROOKED CREEK - RIVERDALE 230KV CKT 1
FDNS	00NR_G14_059	0	20SP	G14_059	FROM->TO	GR ISLD-LNX3345.00 - GRAND ISLAND 345KV CKT Z	720	720	0.04224	109.1759	BROKEN BOW - CALLAWAY 115KV CKT 1
FDNS	00NR_G14_059	0	20SP	G14_059	FROM->TO	GR ISLD-LNX3345.00 - GRAND ISLAND 345KV CKT Z	720	720	0.04076	109.1709	KOSSUTH 3 345.00 - WEBSTER 345KV CKT 1
FDNS	00NR_G14_059	0	25SP	G14_059	FROM->TO	GR ISLD-LNX3345.00 - GRAND ISLAND 345KV CKT Z	720	720	0.04264	109.1685	GEN501801 1-DOLET HILLS UNIT1
FDNS	00NR_G14_059	0	20SP	G14_059	FROM->TO	GR ISLD-LNX3345.00 - GRAND ISLAND 345KV CKT Z	720	720	0.04438	109.1645	SIDNEY - SIDNEY1-LNX3345.00 345KV CKT Z
FDNS	00NR_G14_059	0	20SP	G14_059	FROM->TO	GR ISLD-LNX3345.00 - GRAND ISLAND 345KV CKT Z	720	720	0.04102	109.1632	FT THOMPSON - HURON 230KV CKT 1
FDNS	00NR_G14_059	0	20SP	G14_059	FROM->TO	GR ISLD-LNX3345.00 - GRAND ISLAND 345KV CKT Z	720	720	0.04102	109.1632	FT THOMPSON - HURON 230KV CKT 1
FDNS	00NR_G14_059	0	20SP	G14_059	FROM->TO	GR ISLD-LNX3345.00 - GRAND ISLAND 345KV CKT Z	720	720	0.04102	109.1632	FT THOMPSON - HURON 230KV CKT 2
FDNS	00NR_G14_059	0	20SP	G14_059	FROM->TO	GR ISLD-LNX3345.00 - GRAND ISLAND 345KV CKT Z	720	720	0.04102	109.1632	FT THOMPSON - HURON 230KV CKT 2
FDNS	00NR_G14_059	0	20SP	G14_059	FROM->TO	GR ISLD-LNX3345.00 - GRAND ISLAND 345KV CKT Z	720	720	0.04063	109.1469	GLENBORO SOUTH - RUGBY 230KV CKT 1
FDNS	00NR_G14_059	0	20SP	G14_059	FROM->TO	GR ISLD-LNX3345.00 - GRAND ISLAND 345KV CKT Z	720	720	0.04052	109.1186	GEN334433 1-SABINE UNIT 3
FDNS	00NR_G14_059	0	25SP	G14_059	FROM->TO	GR ISLD-LNX3345.00 - GRAND ISLAND 345KV CKT Z	720	720	0.04264	109.1181	GEN336252 1-NINEMILE POINT UNIT#5
FDNS	00NR_G14_059	0	25SP	G14_059	FROM->TO	GR ISLD-LNX3345.00 - GRAND ISLAND 345KV CKT Z	720	720	0.04301	109.1133	HURON - WATERTOWN 230KV CKT 2
FDNS	00NR_G14_059	0	25SP	G14_059	FROM->TO	GR ISLD-LNX3345.00 - GRAND ISLAND 345KV CKT Z	720	720	0.04301	109.1133	HURON - WATERTOWN 230KV CKT 2
FDNS	00NR_G14_059	0	20SP	G14_059	FROM->TO	GR ISLD-LNX3345.00 - GRAND ISLAND 345KV CKT Z	720	720	0.04158	109.1045	ATKINSON - EMMET 115KV CKT 1
FDNS	00NR_G14_059	0	20SP	G14_059	FROM->TO	GR ISLD-LNX3345.00 - GRAND ISLAND 345KV CKT Z	720	720	0.04065	109.1003	GAVINS POINT - HARTINGTON 115KV CKT 1
FDNS	00NR_G14_059	0	25SP	G14_059	FROM->TO	GR ISLD-LNX3345.00 - GRAND ISLAND 345KV CKT Z	720	720	0.04264	109.0924	GEN532751 1-WOLF CREEK GENERATING STATION UNIT 1
FDNS	00NR_G14_059	0	25SP	G14_059	FROM->TO	GR ISLD-LNX3345.00 - GRAND ISLAND 345KV CKT Z	720	720	0.04264	109.088	GEN542962 2-IATAN UNIT #2
FDNS	00NR_G14_059	0	25SP	G14_059	FROM->TO	GR ISLD-LNX3345.00 - GRAND ISLAND 345KV CKT Z	720	720	0.04301	109.0861	CARPENTER - WATERTOWN 230KV CKT 1
FDNS	00NR_G14_059	0	25SP	G14_059	FROM->TO	GR ISLD-LNX3345.00 - GRAND ISLAND 345KV CKT Z	720	720	0.04301	109.0861	CARPENTER - WATERTOWN 230KV CKT 1
FDNS	00NR_G14_059	0	25SP	G14_059	FROM->TO	GR ISLD-LNX3345.00 - GRAND ISLAND 345KV CKT Z	720	720	0.0427	109.081	AS KING - EAU CLAIRE 345KV CKT 1
FDNS	00NR_G14_059	0	20SP	G14_059	FROM->TO	GR ISLD-LNX3345.00 - GRAND ISLAND 345KV CKT Z	720	720	0.04052	109.0809	GEN336222 1-LITTLE GYPSY UNIT#2
FDNS	00NR_G14_059	0	25SP	G14_059	FROM->TO	GR ISLD-LNX3345.00 - GRAND ISLAND 345KV CKT Z	720	720	0.0435	109.078	FT THOMPSON - WESSINGTON 230KV CKT 1
FDNS	00NR_G14_059	0	25SP	G14_059	FROM->TO	GR ISLD-LNX3345.00 - GRAND ISLAND 345KV CKT Z	720	720	0.0435	109.078	FT THOMPSON - WESSINGTON 230KV CKT 1
FDNS	00NR_G14_059	0	20SP	G14_059	FROM->TO	GR ISLD-LNX3345.00 - GRAND ISLAND 345KV CKT Z	720	720	0.04126	109.0716	CLEARWATER - NELIGH 115KV CKT 1
FDNS	00NR_G14_059	0	20SP	G14_059	FROM->TO	GR ISLD-LNX3345.00 - GRAND ISLAND 345KV CKT Z	720	720	0.03972	109.0673	SIDNEY - STEGALL 345KV CKT 1
FDNS	00NR_G14_059	0	25SP	G14_059	FROM->TO	GR ISLD-LNX3345.00 - GRAND ISLAND 345KV CKT Z	720	720	0.04264	109.0628	GEN336251 1-NINEMILE POINT UNIT#4
FDNS	00NR_G14_059	0	20SP	G14_059	FROM->TO	GR ISLD-LNX3345.00 - GRAND ISLAND 345KV CKT Z	720	720	0.04045	109.06	P12:115:NPPD:WAPA6:FTRANDL7:ONEILL 7:BTB
FDNS	00NR_G14_059	0	20SP	G14_059	FROM->TO	GR ISLD-LNX3345.00 - GRAND ISLAND 345KV CKT Z	720	720	0.04045	109.06	P12:115:UMZB:# 115 #: SE IN NE. FR-SE-ON
FDNS	00NR_G14_059	0	25SP	G14_059	FROM->TO	GR ISLD-LNX3345.00 - GRAND ISLAND 345KV CKT Z	720	720	0.0428	109.0594	HAZLETON - MITCHLCO3 345.00 345KV CKT 1
FDNS	00NR_G14_059	0	20SP	G14_059	FROM->TO	GR ISLD-LNX3345.00 - GRAND ISLAND 345KV CKT Z	720	720	0.04057	109.055	NMA B3 345 345.00 - NORTH LA CROSSE 345KV CKT 1
FDNS	00NR_G14_059	0	20SP	G14_059	FROM->TO	GR ISLD-LNX3345.00 - GRAND ISLAND 345KV CKT Z	720	720	0.0408	109.0477	WINNER - WITTEN 115KV CKT 1
FDNS	00NR_G14_059	0	20SP	G14_059	FROM->TO	GR ISLD-LNX3345.00 - GRAND ISLAND 345KV CKT Z	720	720	0.04052	109.0465	GEN336152 1-WATERFORD UNIT#2
FDNS	00NR_G14_059	0	20SP	G14_059	FROM->TO	GR ISLD-LNX3345.00 - GRAND ISLAND 345KV CKT Z	720	720	0.04052	109.0464	GEN336151 1-WATERFORD UNIT#1
FDNS	00NR_G14_059	0	20SP	G14_059	FROM->TO	GR ISLD-LNX3345.00 - GRAND ISLAND 345KV CKT Z	720	720	0.03627	109.0447	NUNDRWD - WAYSIDE 230KV CKT 1

SOLUTION	GROUP	SCENARIO	SEASON	SOURCE	DIRECTION	MONITORED ELEMENT	RATEA (MVA)	RATEB(MVA)	TDF	TC%LOADING (% MVA)	CONTINGENCY
FDNS	00NR_G14_059	0	25SP	G14_059	FROM->TO	GR ISLD-LNX3345.00 - GRAND ISLAND 345KV CKT Z	720	720	0.04264	109.0389	GEN336831 1-BAXTER WILSON SES
FDNS	00NR_G14_059	0	20SP	G14_059	FROM->TO	GR ISLD-LNX3345.00 - GRAND ISLAND 345KV CKT Z	720	720	0.04056	109.0326	CENTER - COYOTE 345KV CKT 1
FDNS	00NR_G14_059	0	25SP	G14_059	FROM->TO	GR ISLD-LNX3345.00 - GRAND ISLAND 345KV CKT Z	720	720	0.04269	109.0315	CNTSHNT3 345.00 - PRAIRIE3 345.00 345KV CKT 1
FDNS	00NR_G14_059	0	20SP	G14_059	FROM->TO	GR ISLD-LNX3345.00 - GRAND ISLAND 345KV CKT Z	720	720	0.04152	109.0291	AINSWORTH - AINSWORTH 115KV CKT 1
FDNS	00NR_G14_059	0	20SP	G14_059	FROM->TO	GR ISLD-LNX3345.00 - GRAND ISLAND 345KV CKT Z	720	720	0.04052	109.0216	P13:230-345:NPPD:NUCOR-1
FDNS	00NR_G14_059	0	25SP	G14_059	FROM->TO	GR ISLD-LNX3345.00 - GRAND ISLAND 345KV CKT Z	720	720	0.04168	109.0192	STAPLETON - THEDFORD 115KV CKT 1
FDNS	00NR_G14_059	0	20SP	G14_059	FROM->TO	GR ISLD-LNX3345.00 - GRAND ISLAND 345KV CKT Z	720	720	0.04052	109.0188	P13:115-230:NPPD:NUCOR-3
FDNS	00NR_G14_059	0	25SP	G14_059	FROM->TO	GR ISLD-LNX3345.00 - GRAND ISLAND 345KV CKT Z	720	720	0.04279	109.017	ALEXMRES3 345.00 - BISON 3 345.00 345KV CKT 1
FDNS	00NR_G14_059	0	20SP	G14_059	FROM->TO	GR ISLD-LNX3345.00 - GRAND ISLAND 345KV CKT Z	720	720	0.04058	109.0121	MENNO JCT - TRIPP JCT 115KV CKT 1
FDNS	00NR_G14_059	0	20SP	G14_059	FROM->TO	GR ISLD-LNX3345.00 - GRAND ISLAND 345KV CKT Z	720	720	0.04069	109.0009	ADAMS - MITCHLCO3 345.00 345KV CKT 1
FDNS	00NR_G14_059	0	25SP	G14_059	FROM->TO	GR ISLD-LNX3345.00 - GRAND ISLAND 345KV CKT Z	720	720	0.04264	109.0007	GEN337041 1-GERALD ANDRUS
FDNS	00NR_G14_059	0	25SP	G14_059	FROM->TO	GR ISLD-LNX3345.00 - GRAND ISLAND 345KV CKT Z	720	720	0.04298	108.9995	EAGLE 4 230.00 - PAHOJA 230KV CKT 1
FDNS	00NR_G14_059	0	20SP	G14_059	FROM->TO	GR ISLD-LNX3345.00 - GRAND ISLAND 345KV CKT Z	720	720	0.04052	108.9975	GEN303007 1-1BC2 U2
FDNS	00NR_G14_059	0	20SP	G14_059	FROM->TO	GR ISLD-LNX3345.00 - GRAND ISLAND 345KV CKT Z	720	720	0.04052	108.995	GEN303006 1-1BC2 U1
FDNS	00NR_G14_059	0	20SP	G14_059	FROM->TO	GR ISLD-LNX3345.00 - GRAND ISLAND 345KV CKT Z	720	720	0.04052	108.9817	GEN562547 1-G14_039_3 0.6900
FDNS	00NR_G14_059	0	20SP	G14_059	FROM->TO	GR ISLD-LNX3345.00 - GRAND ISLAND 345KV CKT Z	720	720	0.04056	108.9749	GARRISON - JAMES TOWN 230KV CKT 1
FDNS	00NR_G14_059	0	20SP	G14_059	FROM->TO	GR ISLD-LNX3345.00 - GRAND ISLAND 345KV CKT Z	720	720	0.04057	108.9678	BROOKING COUNTY - BSSOUTH3 345.00 345KV CKT 1
FDNS	00NR_G14_059	0	20SP	G14_059	FROM->TO	GR ISLD-LNX3345.00 - GRAND ISLAND 345KV CKT Z	720	720	0.04058	108.9665	MENNO JCT - UTICA 115KV CKT 1
FDNS	00NR_G14_059	0	25SP	G14_059	FROM->TO	GR ISLD-LNX3345.00 - GRAND ISLAND 345KV CKT Z	720	720	0.043	108.9651	RASMUSN - UTICA JCT 230KV CKT 1
FDNS	00NR_G14_059	0	25SP	G14_059	FROM->TO	GR ISLD-LNX3345.00 - GRAND ISLAND 345KV CKT Z	720	720	0.04264	108.9641	GEN501813 1-RODEMACHER UNIT 3
FDNS	00NR_G14_059	0	20SP	G14_059	FROM->TO	GR ISLD-LNX3345.00 - GRAND ISLAND 345KV CKT Z	720	720	0.04066	108.9508	ADAMS - PLEASANT VALLEY 345KV CKT 1
FDNS	00NR_G14_059	0	20SP	G14_059	FROM->TO	GR ISLD-LNX3345.00 - GRAND ISLAND 345KV CKT Z	720	720	0.04052	108.9494	GEN303008 1-1BC2 U3
FDNS	00NR_G14_059	0	20SP	G14_059	FROM->TO	GR ISLD-LNX3345.00 - GRAND ISLAND 345KV CKT Z	720	720	0.04052	108.9466	GEN336170 1-GULF OXY U4
FDNS	00NR_G14_059	0	25SP	G14_059	FROM->TO	GR ISLD-LNX3345.00 - GRAND ISLAND 345KV CKT Z	720	720	0.04269	108.9235	P12:115:NPPD:WAPA4:SIDNEY 7:B.SPRGS7:BTB
FDNS	00NR_G14_059	0	25SP	G14_059	FROM->TO	GR ISLD-LNX3345.00 - GRAND ISLAND 345KV CKT Z	720	720	0.04269	108.9235	P12:115:UMZB:# 119 #: IN NE.
FDNS	00NR_G14_059	0	25SP	G14_059	FROM->TO	GR ISLD-LNX3345.00 - GRAND ISLAND 345KV CKT Z	720	720	0.04309	108.9205	GRIMES - LEHIGH 345KV CKT 1
FDNS	00NR_G14_059	0	25SP	G14_059	FROM->TO	GR ISLD-LNX3345.00 - GRAND ISLAND 345KV CKT Z	720	720	0.04264	108.9164	GEN344897 4-1LAB G4 20.000
FDNS	00NR_G14_059	0	25SP	G14_059	FROM->TO	GR ISLD-LNX3345.00 - GRAND ISLAND 345KV CKT Z	720	720	0.04264	108.9154	GEN344894 1-1LAB G1 20.000
FDNS	00NR_G14_059	0	25SP	G14_059	FROM->TO	GR ISLD-LNX3345.00 - GRAND ISLAND 345KV CKT Z	720	720	0.04264	108.9153	GEN344895 2-1LAB G2 20.000
FDNS	00NR_G14_059	0	25SP	G14_059	FROM->TO	GR ISLD-LNX3345.00 - GRAND ISLAND 345KV CKT Z	720	720	0.04264	108.9152	GEN344896 3-1LAB G3 20.000
FDNS	00NR_G14_059	0	20SP	G14_059	FROM->TO	GR ISLD-LNX3345.00 - GRAND ISLAND 345KV CKT Z	720	720	0.04052	108.8969	GEN636641 1-LOUISA UNIT 1
FDNS	00NR_G14_059	0	25SP	G14_059	FROM->TO	GR ISLD-LNX3345.00 - GRAND ISLAND 345KV CKT Z	720	720	0.04459	108.8961	JEFFREY - NORTH PLATTE 115KV CKT 1
FDNS	00NR_G14_059	0	25SP	G14_059	FROM->TO	GR ISLD-LNX3345.00 - GRAND ISLAND 345KV CKT Z	720	720	0.04264	108.8911	GEN542957 1-IATAN UNIT #1
FDNS	00NR_G14_059	0	25SP	G14_059	FROM->TO	GR ISLD-LNX3345.00 - GRAND ISLAND 345KV CKT Z	720	720	0.04371	108.8856	BASSETT 7115.00 - STUART 115KV CKT 1
FDNS	00NR_G14_059	0	25SP	G14_059	FROM->TO	GR ISLD-LNX3345.00 - GRAND ISLAND 345KV CKT Z	720	720	0.04652	108.8769	KEYSTONE - SIDNEY1-LNX3345.00 345KV CKT 1
FDNS	00NR_G14_059	0	20SP	G14_059	FROM->TO	GR ISLD-LNX3345.00 - GRAND ISLAND 345KV CKT Z	720	720	0.03956	108.8736	MAXWELL - STAPLETON 115KV CKT 1
FDNS	00NR_G14_059	0	25SP	G14_059	FROM->TO	GR ISLD-LNX3345.00 - GRAND ISLAND 345KV CKT Z	720	720	0.04264	108.8662	GEN345671 2-1RUSH G2 18.000
FDNS	00NR_G14_059	0	25SP	G14_059	FROM->TO	GR ISLD-LNX3345.00 - GRAND ISLAND 345KV CKT Z	720	720	0.04264	108.8633	GEN345670 1-1RUSH G1 18.000
FDNS	00NR_G14_059	0	25SP	G14_059	FROM->TO	GR ISLD-LNX3345.00 - GRAND ISLAND 345KV CKT Z	720	720	0.04371	108.8462	AINSWORTH - BASSETT 7115.00 115KV CKT 1
FDNS	00NR_G14_059	0	25SP	G14_059	FROM->TO	GR ISLD-LNX3345.00 - GRAND ISLAND 345KV CKT Z	720	720	0.04264	108.8441	GEN335206 1-NELSON UNIT 6
FDNS	00NR_G14_059	0	25SP	G14_059	FROM->TO	GR ISLD-LNX3345.00 - GRAND ISLAND 345KV CKT Z	720	720	0.04264	108.8419	GEN532652 1-JEFFREY ENERGY CENTER UNIT 2
FDNS	00NR_G14_059	0	25SP	G14_059	FROM->TO	GR ISLD-LNX3345.00 - GRAND ISLAND 345KV CKT Z	720	720	0.04264	108.8417	GEN532653 1-JEFFREY ENERGY CENTER UNIT 3
FDNS	00NR_G14_059	0	25SP	G14_059	FROM->TO	GR ISLD-LNX3345.00 - GRAND ISLAND 345KV CKT Z	720	720	0.04264	108.8412	GEN532651 1-JEFFREY ENERGY CENTER UNIT 1
FDNS	00NR_G14_059	0	25SP	G14_059	FROM->TO	GR ISLD-LNX3345.00 - GRAND ISLAND 345KV CKT Z	720	720	0.04264	108.8263	GEN629075 1-OTTUMWA GENERATOR FOR OTTUMWA UNIT NO 1
FDNS	00NR_G14_059	0	25SP	G14_059	FROM->TO	GR ISLD-LNX3345.00 - GRAND ISLAND 345KV CKT Z	720	720	0.04264	108.8244	GEN334440 1-SABINE UNIT 4
FDNS	00NR_G14_059	0	25SP	G14_059	FROM->TO	GR ISLD-LNX3345.00 - GRAND ISLAND 345KV CKT Z	720	720	0.04339	108.82	P12:115:NPPD:1164:ONEILL 7:JEFFREY9:BTB
FDNS	00NR_G14_059	0	25SP	G14_059	FROM->TO	GR ISLD-LNX3345.00 - GRAND ISLAND 345KV CKT Z	720	720	0.043	108.8134	RASMUSN - SIOUX CITY 230KV CKT 1
FDNS	00NR_G14_059	0	25SP	G14_059	FROM->TO	GR ISLD-LNX3345.00 - GRAND ISLAND 345KV CKT Z	720	720	0.04264	108.8085	GEN645001 1-FORT CALHOUN 1
FDNS	00NR_G14_059	0	25SP	G14_059	FROM->TO	GR ISLD-LNX3345.00 - GRAND ISLAND 345KV CKT Z	720	720	0.04264	108.8058	GEN338388 1-1PLUM PT U1 23.000
FDNS	00NR_G14_059	0	25SP	G14_059	FROM->TO	GR ISLD-LNX3345.00 - GRAND ISLAND 345KV CKT Z	720	720	0.04276	108.8052	GLENBORO SOUTH - RUGBY 230KV CKT 1
FDNS	00NR_G14_059	0	25SP	G14_059	FROM->TO	GR ISLD-LNX3345.00 - GRAND ISLAND 345KV CKT Z	720	720	0.04264	108.792	GEN642067 1-PLATTE
FDNS	00NR_G14_059	0	25SP	G14_059	FROM->TO	GR ISLD-LNX3345.00 - GRAND ISLAND 345KV CKT Z	720	720	0.0427	108.7871	ARPIN B4 345.00 - EAU CLAIRE 345KV CKT 1
FDNS	00NR_G14_059	0	25SP	G14_059	FROM->TO	GR ISLD-LNX3345.00 - GRAND ISLAND 345KV CKT Z	720	720	0.04438	108.7853	HOLCOMB - SETAB 345KV CKT 1
FDNS	00NR_G14_059	0	25SP	G14_059	FROM->TO	GR ISLD-LNX3345.00 - GRAND ISLAND 345KV CKT Z	720	720	0.04438	108.7853	HOLCOMB - SETAB 345KV CKT 1
FDNS	00NR_G14_059	0	20SP	G14_059	FROM->TO	GR ISLD-LNX3345.00 - GRAND ISLAND 345KV CKT Z	720	720	0.0406	108.7798	AXTELL - SWEETWATER 345KV CKT 1
FDNS	00NR_G14_059	0	25SP	G14_059	FROM->TO	GR ISLD-LNX3345.00 - GRAND ISLAND 345KV CKT Z	720	720	0.04339	108.7664	CLEARWATER - ONEILL 115KV CKT 1
FDNS	00NR_G14_059	0	25SP	G14_059	FROM->TO	GR ISLD-LNX3345.00 - GRAND ISLAND 345KV CKT Z	720	720	0.04371	108.7531	ATKINSON - STUART 115KV CKT 1
FDNS	00NR_G14_059	0	25SP	G14_059	FROM->TO	GR ISLD-LNX3345.00 - GRAND ISLAND 345KV CKT Z	720	720	0.04264	108.7524	GEN501812 1-RODEMACHER UNIT 2
FDNS	00NR_G14_059	0	25SP	G14_059	FROM->TO	GR ISLD-LNX3345.00 - GRAND ISLAND 345KV CKT Z	720	720	0.04264	108.7471	GEN336191 1-LITTLE GYPSY UNIT#3
FDNS	00NR_G14_059	0	25SP	G14_059	FROM->TO	GR ISLD-LNX3345.00 - GRAND ISLAND 345KV CKT Z	720	720	0.04288	108.742	KOSSUTH 3 345.00 - WEBSTER 345KV CKT 1
FDNS	00NR_G14_059	0	25SP	G14_059	FROM->TO	GR ISLD-LNX3345.00 - GRAND ISLAND 345KV CKT Z	720	720	0.0423	108.7401	P12:115:NPPD:WAPA2:HEMINGF7:SNAKECK7:BTB
FDNS	00NR_G14_059	0	25SP	G14_059	FROM->TO	GR ISLD-LNX3345.00 - GRAND ISLAND 345KV CKT Z	720	720	0.04264	108.7194	P12:115:UMZW:# 162 #: NEL IN ND. FAULT ON ML-NEL-MX-GA 115 KV
FDNS	00NR_G14_059	0	25SP	G14_059	FROM->TO	GR ISLD-LNX3345.00 - GRAND ISLAND 345KV CKT Z	720	720	0.04652	108.7131	SIDNEY - SIDNEY1-LNX3345.00 345KV CKT Z
FDNS	00NR_G14_059	0	25SP	G14_059	FROM->TO	GR ISLD-LNX3345.00 - GRAND ISLAND 345KV CKT Z	720	720	0.04264	108.6922	GEN335614 1-WILLOW GLENN UNIT#4
FDNS	00NR_G14_059	0	25SP	G14_059	FROM->TO	GR ISLD-LNX3345.00 - GRAND ISLAND 345KV CKT Z	720	720	0.04264	108.6921	GEN336801 1-BAXTER WILSON UNIT #1
FDNS	00NR_G14_059	0	25SP	G14_059	FROM->TO	GR ISLD-LNX3345.00 - GRAND ISLAND 345KV CKT Z	720	720	0.04264	108.6873	GEN542955 1-LACYGNE UNIT #1
FDNS	00NR_G14_059	0	25SP	G14_059	FROM->TO	GR ISLD-LNX3345.00 - GRAND ISLAND 345KV CKT Z	720	720	0.04264	108.683	GEN336464 1-MICHOUD UNIT #3
FDNS	00NR_G14_059	0	25SP	G14_059	FROM->TO	GR ISLD-LNX3345.00 - GRAND ISLAND 345KV CKT Z	720	720	0.04264	108.6803	GEN542951 5-HAWTHORN UNIT #5
FDNS	00NR_G14_059	0	25SP	G14_059	FROM->TO	GR ISLD-LNX3345.00 - GRAND ISLAND 345KV CKT Z	720	720	0.04264	108.6723	GEN334441 1-SABINE UNIT 5
FDNS	00NR_G14_059	0	25SP	G14_059	FROM->TO	GR ISLD-LNX3345.00 - GRAND ISLAND 345KV CKT Z	720	720	0.04264	108.6663	GEN335204 1-NELSON UNIT 4
FDNS	00NR_G14_059	0	25SP	G14_059	FROM->TO	GR ISLD-LNX3345.00 - GRAND ISLAND 345KV CKT Z	720	720	0.04314	108.6574	FT THOMPSON - HURON 230KV CKT 1
FDNS	00NR_G14_059	0	25SP	G14_059	FROM->TO	GR ISLD-LNX3345.00 - GRAND ISLAND 345KV CKT Z	720	720	0.04314	108.6574	FT THOMPSON - HURON 230KV CKT 1
FDNS	00NR_G14_059	0	25SP	G14_059	FROM->TO	GR ISLD-LNX3345.00 - GRAND ISLAND 345KV CKT Z	720	720	0.04314	108.6574	FT THOMPSON - HURON 230KV CKT 2

SOLUTION	GROUP	SCENARIO	SEASON	SOURCE	DIRECTION	MONITORED ELEMENT	RATEA (MVA)	RATEB(MVA)	TDF	TC%LOADING (% MVA)	CONTINGENCY
FDNS	00NR_G14_059	0	25SP	G14_059	FROM->TO	GR ISLD-LNX3345.00 - GRAND ISLAND 345KV CKT Z	720	720	0.04314	108.6574	FT THOMPSON - HURON 230KV CKT 2
FDNS	00NR_G14_059	0	25SP	G14_059	FROM->TO	GR ISLD-LNX3345.00 - GRAND ISLAND 345KV CKT Z	720	720	0.04442	108.633	BROKEN BOW - CALLAWAY 115KV CKT 1
FDNS	00NR_G14_059	0	25SP	G14_059	FROM->TO	GR ISLD-LNX3345.00 - GRAND ISLAND 345KV CKT Z	720	720	0.04365	108.6125	AINSWORTH - AINSWORTH 115KV CKT 1
FDNS	00NR_G14_059	0	25SP	G14_059	FROM->TO	GR ISLD-LNX3345.00 - GRAND ISLAND 345KV CKT Z	720	720	0.04268	108.6092	NORTH LA CROSSE - NORTH ROCHESTER 345KV CKT 1
FDNS	00NR_G14_059	0	25SP	G14_059	FROM->TO	GR ISLD-LNX3345.00 - GRAND ISLAND 345KV CKT Z	720	720	0.04273	108.6078	AXTELL - SWEETWATER 345KV CKT 1
FDNS	00NR_G14_059	0	25SP	G14_059	FROM->TO	GR ISLD-LNX3345.00 - GRAND ISLAND 345KV CKT Z	720	720	0.04264	108.5765	GEN334433 1-SABINE UNIT 3
FDNS	00NR_G14_059	0	25SP	G14_059	FROM->TO	GR ISLD-LNX3345.00 - GRAND ISLAND 345KV CKT Z	720	720	0.04278	108.568	GAVINS POINT - HARTINGTON 115KV CKT 1
FDNS	00NR_G14_059	0	25SP	G14_059	FROM->TO	GR ISLD-LNX3345.00 - GRAND ISLAND 345KV CKT Z	720	720	0.0428	108.5678	ADAMS - MITCHLCO3 345.00 345KV CKT 1
FDNS	00NR_G14_059	0	25SP	G14_059	FROM->TO	GR ISLD-LNX3345.00 - GRAND ISLAND 345KV CKT Z	720	720	0.04258	108.5675	P12:115:NPPD:WAPA6:FTRANDL7:ONEILL 7:BTB
FDNS	00NR_G14_059	0	25SP	G14_059	FROM->TO	GR ISLD-LNX3345.00 - GRAND ISLAND 345KV CKT Z	720	720	0.04258	108.5675	P12:115:UMZB:# 115 #: SE IN NE. FR-SE-ON
FDNS	00NR_G14_059	0	25SP	G14_059	FROM->TO	GR ISLD-LNX3345.00 - GRAND ISLAND 345KV CKT Z	720	720	0.04264	108.5421	GEN336222 1-LITTLE GYPSY UNIT#2
FDNS	00NR_G14_059	0	25SP	G14_059	FROM->TO	GR ISLD-LNX3345.00 - GRAND ISLAND 345KV CKT Z	720	720	0.04268	108.5415	CENTER - COYOTE 345KV CKT 1
FDNS	00NR_G14_059	0	25SP	G14_059	FROM->TO	GR ISLD-LNX3345.00 - GRAND ISLAND 345KV CKT Z	720	720	0.04371	108.5353	ATKINSON - EMMET 115KV CKT 1
FDNS	00NR_G14_059	0	25SP	G14_059	FROM->TO	GR ISLD-LNX3345.00 - GRAND ISLAND 345KV CKT Z	720	720	0.04292	108.5223	WINNER - WITTEN 115KV CKT 1
FDNS	00NR_G14_059	0	25SP	G14_059	FROM->TO	GR ISLD-LNX3345.00 - GRAND ISLAND 345KV CKT Z	720	720	0.04184	108.5189	SIDNEY - STEGALL 345KV CKT 1
FDNS	00NR_G14_059	0	25SP	G14_059	FROM->TO	GR ISLD-LNX3345.00 - GRAND ISLAND 345KV CKT Z	720	720	0.04264	108.5036	GEN336152 1-WATERFORD UNIT#2
FDNS	00NR_G14_059	0	25SP	G14_059	FROM->TO	GR ISLD-LNX3345.00 - GRAND ISLAND 345KV CKT Z	720	720	0.04264	108.5035	GEN336151 1-WATERFORD UNIT#1
FDNS	00NR_G14_059	0	25SP	G14_059	FROM->TO	GR ISLD-LNX3345.00 - GRAND ISLAND 345KV CKT Z	720	720	0.03836	108.4994	NUNDRWD - WAYSIDE 230KV CKT 1
FDNS	00NR_G14_059	0	25SP	G14_059	FROM->TO	GR ISLD-LNX3345.00 - GRAND ISLAND 345KV CKT Z	720	720	0.04264	108.496	P13:115-230:NPPD:NUCOR-3
FDNS	00NR_G14_059	0	25SP	G14_059	FROM->TO	GR ISLD-LNX3345.00 - GRAND ISLAND 345KV CKT Z	720	720	0.04264	108.4843	P13:230-345:NPPD:NUCOR-1
FDNS	00NR_G14_059	0	25SP	G14_059	FROM->TO	GR ISLD-LNX3345.00 - GRAND ISLAND 345KV CKT Z	720	720	0.0427	108.4725	MENNO JCT - TRIPP JCT 115KV CKT 1
FDNS	00NR_G14_059	0	20SP	G14_059	FROM->TO	GR ISLD-LNX3345.00 - GRAND ISLAND 345KV CKT Z	720	720	0.04052	108.4022	KEARNEY 115KV SWITCHED SHUNT
FDNS	00NR_G14_059	0	25SP	G14_059	FROM->TO	GR ISLD-LNX3345.00 - GRAND ISLAND 345KV CKT Z	720	720	0.04264	108.3831	P13:115-345:NPPD:NUCOR-2
FDNSLock	00NR_G14_059	0	20SP	G14_059	FROM->TO	GR ISLD-LNX3345.00 - GRAND ISLAND 345KV CKT Z	720	720	0.04052	108.383	KEARNEY 115KV SWITCHED SHUNT
FDNS	00NR_G14_059	0	25SP	G14_059	FROM->TO	GR ISLD-LNX3345.00 - GRAND ISLAND 345KV CKT Z	720	720	0.0427	108.3691	P12:115:UMZZ:# 237 #: MEN IN SD. MENNO JUNCTION IS A TAP (UJ-MEN-TP).
FDNS	00NR_G14_059	0	20SP	G14_059	FROM->TO	GR ISLD-LNX3345.00 - GRAND ISLAND 345KV CKT Z	720	720	0.04052	108.3574	1303-KEARNEY
FDNS	00NR_G14_059	0	20SP	G14_059	FROM->TO	GR ISLD-LNX3345.00 - GRAND ISLAND 345KV CKT Z	720	720	0.04052	108.3574	BASE CASE
FDNS	00NR_G14_059	0	25SP	G14_059	FROM->TO	GR ISLD-LNX3345.00 - GRAND ISLAND 345KV CKT Z	720	720	0.04168	108.3522	MAXWELL - STAPLETON 115KV CKT 1
FDNS	00NR_G14_059	0	20SP	G14_059	FROM->TO	GR ISLD-LNX3345.00 - GRAND ISLAND 345KV CKT Z	720	720	0.03967	108.1869	MOORE - PAULINE 345KV CKT 1
FDNS	00NR_G14_059	0	20SP	G14_059	FROM->TO	GR ISLD-LNX3345.00 - GRAND ISLAND 345KV CKT Z	720	720	0.04021	108.1607	KELLY - SHELL CREEK 230KV CKT 1
FDNS	00NR_G14_059	0	20SP	G14_059	FROM->TO	GR ISLD-LNX3345.00 - GRAND ISLAND 345KV CKT Z	720	720	0.04021	108.1345	SHELL CREEK (SHELLCREEKT1) 345/230/13.8KV TRANSFORMER CKT 1
FDNS	00NR_G14_059	0	20SP	G14_059	FROM->TO	GR ISLD-LNX3345.00 - GRAND ISLAND 345KV CKT Z	720	720	0.04021	108.1345	SHELL CREEK (SHELLCREEKT1) 345/230/13.8KV TRANSFORMER CKT 1
FDNS	00NR_G14_059	0	20SP	G14_059	FROM->TO	GR ISLD-LNX3345.00 - GRAND ISLAND 345KV CKT Z	720	720	0.03749	108.1028	COOPER - MOORE 345KV CKT 1
FDNS	00NR_G14_059	0	20SP	G14_059	FROM->TO	GR ISLD-LNX3345.00 - GRAND ISLAND 345KV CKT Z	720	720	0.04068	108.0513	SUB 3455 - SUB 3740 345KV CKT 1
FDNS	00NR_G14_059	0	20SP	G14_059	FROM->TO	GR ISLD-LNX3345.00 - GRAND ISLAND 345KV CKT Z	720	720	0.04068	108.0513	SUB 3455 - SUB 3740 345KV CKT 1
FDNS	00NR_G14_059	0	20SP	G14_059	FROM->TO	GR ISLD-LNX3345.00 - GRAND ISLAND 345KV CKT Z	720	720	0.04051	108.0092	ANTELOP-LNX3345.00 - BRDLAND-LNX3345.00 345KV CKT 1
FDNS	00NR_G14_059	0	20SP	G14_059	FROM->TO	GR ISLD-LNX3345.00 - GRAND ISLAND 345KV CKT Z	720	720	0.03951	107.991	103RD & ROKEBY - MOORE 345KV CKT 1
FDNS	00NR_G14_059	0	20SP	G14_059	FROM->TO	GR ISLD-LNX3345.00 - GRAND ISLAND 345KV CKT Z	720	720	0.03951	107.991	103RD & ROKEBY - MOORE 345KV CKT 1
FDNS	00NR_G14_059	0	20SP	G14_059	FROM->TO	GR ISLD-LNX3345.00 - GRAND ISLAND 345KV CKT Z	720	720	0.0403	107.9854	AURORA - GRAND ISLAND 115KV CKT 1
FDNS	00NR_G14_059	0	20SP	G14_059	FROM->TO	GR ISLD-LNX3345.00 - GRAND ISLAND 345KV CKT Z	720	720	0.03685	107.9826	COLUMWEST - KELLY 230KV CKT 1
FDNS	00NR_G14_059	0	20SP	G14_059	FROM->TO	GR ISLD-LNX3345.00 - GRAND ISLAND 345KV CKT Z	720	720	0.04038	107.9815	MOORE - NW68TH & HOLDREGE 345KV CKT 1
FDNS	00NR_G14_059	0	20SP	G14_059	FROM->TO	GR ISLD-LNX3345.00 - GRAND ISLAND 345KV CKT Z	720	720	0.04038	107.9815	MOORE - NW68TH & HOLDREGE 345KV CKT 1
FDNS	00NR_G14_059	0	20SP	G14_059	FROM->TO	GR ISLD-LNX3345.00 - GRAND ISLAND 345KV CKT Z	720	720	0.04033	107.9789	MISSION - WITTEN 115KV CKT 1
FDNS	00NR_G14_059	0	20SP	G14_059	FROM->TO	GR ISLD-LNX3345.00 - GRAND ISLAND 345KV CKT Z	720	720	0.04126	107.9701	LOUP CITY - ST LIBORY 115KV CKT 1
FDNS	00NR_G14_059	0	20SP	G14_059	FROM->TO	GR ISLD-LNX3345.00 - GRAND ISLAND 345KV CKT Z	720	720	0.03996	107.9368	CENTRAL CITY - CLARKS 115KV CKT 1
FDNS	00NR_G14_059	0	25SP	G14_059	FROM->TO	GR ISLD-LNX3345.00 - GRAND ISLAND 345KV CKT Z	720	720	0.04264	107.899	KEARNEY 115KV SWITCHED SHUNT
FDNS	00NR_G14_059	0	20SP	G14_059	FROM->TO	GR ISLD-LNX3345.00 - GRAND ISLAND 345KV CKT Z	720	720	0.04051	107.8848	HURON (BD KU2A) 345/230/13.8KV TRANSFORMER CKT 1
FDNS	00NR_G14_059	0	20SP	G14_059	FROM->TO	GR ISLD-LNX3345.00 - GRAND ISLAND 345KV CKT Z	720	720	0.04051	107.8848	HURON (BD KU2A) 345/230/13.8KV TRANSFORMER CKT 1
FDNS	00NR_G14_059	0	20SP	G14_059	FROM->TO	GR ISLD-LNX3345.00 - GRAND ISLAND 345KV CKT Z	720	720	0.04051	107.8821	BRDLAND-LNX3345.00 - HURON 345KV CKT Z
FDNS	00NR_G14_059	0	20SP	G14_059	FROM->TO	GR ISLD-LNX3345.00 - GRAND ISLAND 345KV CKT Z	720	720	0.04051	107.8817	BROADLAND - HURON 230KV CKT 1
FDNS	00NR_G14_059	0	20SP	G14_059	FROM->TO	GR ISLD-LNX3345.00 - GRAND ISLAND 345KV CKT Z	720	720	0.04051	107.8816	P12:345:UMZB:# 102 #: AVS BD IN ND. AVS BRD LR
FDNS	00NR_G14_059	0	20SP	G14_059	FROM->TO	GR ISLD-LNX3345.00 - GRAND ISLAND 345KV CKT Z	720	720	0.04051	107.8814	P12:345:UMZB:# 103 #: BD IN SD. LOSS OF LINE
FDNSLock	00NR_G14_059	0	25SP	G14_059	FROM->TO	GR ISLD-LNX3345.00 - GRAND ISLAND 345KV CKT Z	720	720	0.04264	107.8633	KEARNEY 115KV SWITCHED SHUNT
FDNS	00NR_G14_059	0	20SP	G14_059	FROM->TO	GR ISLD-LNX3345.00 - GRAND ISLAND 345KV CKT Z	720	720	0.04052	107.862	G830_SUB 115.00 - GRE-MCHENRY7115.00 115KV CKT 1
FDNS	00NR_G14_059	0	20SP	G14_059	FROM->TO	GR ISLD-LNX3345.00 - GRAND ISLAND 345KV CKT Z	720	720	0.04052	107.8592	G830_SUB 115.00 115/34.5KV TRANSFORMER CKT 1
FDNS	00NR_G14_059	0	20SP	G14_059	FROM->TO	GR ISLD-LNX3345.00 - GRAND ISLAND 345KV CKT Z	720	720	0.04052	107.8584	GEN620324 3-HOOT LAKE 3 GEN
FDNS	00NR_G14_059	0	20SP	G14_059	FROM->TO	GR ISLD-LNX3345.00 - GRAND ISLAND 345KV CKT Z	720	720	0.04052	107.8542	GEN652414 4-FT PECK
FDNS	00NR_G14_059	0	20SP	G14_059	FROM->TO	GR ISLD-LNX3345.00 - GRAND ISLAND 345KV CKT Z	720	720	0.04052	107.8542	GEN652415 5-FT PECK
FDNS	00NR_G14_059	0	20SP	G14_059	FROM->TO	GR ISLD-LNX3345.00 - GRAND ISLAND 345KV CKT Z	720	720	0.0409	107.8537	P12:230:UMZB:# 114 #: SB IN SD. SB-WK-GH
FDNS	00NR_G14_059	0	20SP	G14_059	FROM->TO	GR ISLD-LNX3345.00 - GRAND ISLAND 345KV CKT Z	720	720	0.0409	107.8537	P12:230:UMZB:# 117 #: WK IN SD. SB-WK-GH
FDNS	00NR_G14_059	0	20SP	G14_059	FROM->TO	GR ISLD-LNX3345.00 - GRAND ISLAND 345KV CKT Z	720	720	0.04052	107.8493	GEN600050 1-FEP
FDNS	00NR_G14_059	0	20SP	G14_059	FROM->TO	GR ISLD-LNX3345.00 - GRAND ISLAND 345KV CKT Z	720	720	0.04052	107.8439	GEN 11104 1-J262_GEN 0.6000
FDNS	00NR_G14_059	0	20SP	G14_059	FROM->TO	GR ISLD-LNX3345.00 - GRAND ISLAND 345KV CKT Z	720	720	0.04052	107.8439	GEN 11108 1-J263_GEN 0.6000
FDNS	00NR_G14_059	0	20SP	G14_059	FROM->TO	GR ISLD-LNX3345.00 - GRAND ISLAND 345KV CKT Z	720	720	0.0406	107.8417	FALLOW 3 345.00 - GRIMES 345KV CKT 1
FDNS	00NR_G14_059	0	20SP	G14_059	FROM->TO	GR ISLD-LNX3345.00 - GRAND ISLAND 345KV CKT Z	720	720	0.04052	107.8414	GEN600047 1-MECCT1
FDNS	00NR_G14_059	0	25SP	G14_059	FROM->TO	GR ISLD-LNX3345.00 - GRAND ISLAND 345KV CKT Z	720	720	0.04182	107.8301	MOORE - PAULINE 345KV CKT 1
FDNS	00NR_G14_059	0	20SP	G14_059	FROM->TO	GR ISLD-LNX3345.00 - GRAND ISLAND 345KV CKT Z	720	720	0.0409	107.8222	GLENHAM - WHITLOK 230KV CKT 1
FDNS	00NR_G14_059	0	25SP	G14_059	FROM->TO	GR ISLD-LNX3345.00 - GRAND ISLAND 345KV CKT Z	720	720	0.04264	107.8215	1303-KEARNEY
FDNS	00NR_G14_059	0	25SP	G14_059	FROM->TO	GR ISLD-LNX3345.00 - GRAND ISLAND 345KV CKT Z	720	720	0.04264	107.8215	BASE CASE
FDNS	00NR_G14_059	0	20SP	G14_059	FROM->TO	GR ISLD-LNX3345.00 - GRAND ISLAND 345KV CKT Z	720	720	0.0409	107.8153	COOPER - FAIRPORT 345KV CKT 1
FDNS	00NR_G14_059	0	20SP	G14_059	FROM->TO	GR ISLD-LNX3345.00 - GRAND ISLAND 345KV CKT Z	720	720	0.0409	107.8153	COOPER - FAIRPORT 345KV CKT 1
FDNS	00NR_G14_059	0	20SP	G14_059	FROM->TO	GR ISLD-LNX3345.00 - GRAND ISLAND 345KV CKT Z	720	720	0.04052	107.8115	GEN660001 2-ABERDEEN SIEBRECHT
FDNS	00NR_G14_059	0	20SP	G14_059	FROM->TO	GR ISLD-LNX3345.00 - GRAND ISLAND 345KV CKT Z	720	720	0.04052	107.809	GEN660003 3-HURON WEST PARK

SOLUTION	GROUP	SCENARIO	SEASON	SOURCE	DIRECTION	MONITORED ELEMENT	RATEA (MVA)	RATEB(MVA)	TDF	TC%LOADING (% MVA)	CONTINGENCY
FDNS	00NR_G14_059	0	20SP	G14_059	FROM->TO	GR ISLD-LNX3345.00 - GRAND ISLAND 345KV CKT Z	720	720	0.04027	107.8036	POST ROCK (POSTROCK T1) 345/230/13.8KV TRANSFORMER CKT 1
FDNS	00NR_G14_059	0	20SP	G14_059	FROM->TO	GR ISLD-LNX3345.00 - GRAND ISLAND 345KV CKT Z	720	720	0.04052	107.7953	GEN600063 1-COLVILLE GEN 1
FDNS	00NR_G14_059	0	20SP	G14_059	FROM->TO	GR ISLD-LNX3345.00 - GRAND ISLAND 345KV CKT Z	720	720	0.04052	107.7953	GEN600064 2-COLVILLE GEN 2
FDNS	00NR_G14_059	0	25SP	G14_059	FROM->TO	GR ISLD-LNX3345.00 - GRAND ISLAND 345KV CKT Z	720	720	0.0397	107.7951	COOPER - MOORE 345KV CKT 1
FDNS	00NR_G14_059	0	20SP	G14_059	FROM->TO	GR ISLD-LNX3345.00 - GRAND ISLAND 345KV CKT Z	720	720	0.0393	107.7926	MAXWELL - NORTH PLATTE 115KV CKT 1
FDNS	00NR_G14_059	0	20SP	G14_059	FROM->TO	GR ISLD-LNX3345.00 - GRAND ISLAND 345KV CKT Z	720	720	0.04051	107.7895	ANTELOP-LNX3345.00 - ANTELOPE VALLEY 345KV CKT Z
FDNS	00NR_G14_059	0	20SP	G14_059	FROM->TO	GR ISLD-LNX3345.00 - GRAND ISLAND 345KV CKT Z	720	720	0.04052	107.7877	GEN681522 3-GENOA 3
FDNS	00NR_G14_059	0	20SP	G14_059	FROM->TO	GR ISLD-LNX3345.00 - GRAND ISLAND 345KV CKT Z	720	720	0.04052	107.7849	GEN659273 2-GROTON SYNC COND
FDNS	00NR_G14_059	0	20SP	G14_059	FROM->TO	GR ISLD-LNX3345.00 - GRAND ISLAND 345KV CKT Z	720	720	0.04052	107.7849	GEN659294 1-WILTONCOL9
FDNS	00NR_G14_059	0	20SP	G14_059	FROM->TO	GR ISLD-LNX3345.00 - GRAND ISLAND 345KV CKT Z	720	720	0.04052	107.776	GEN600043 7-BLUE LAKE5
FDNS	00NR_G14_059	0	20SP	G14_059	FROM->TO	GR ISLD-LNX3345.00 - GRAND ISLAND 345KV CKT Z	720	720	0.04052	107.776	GEN600044 8-BLUE LAKE6
FDNS	00NR_G14_059	0	20SP	G14_059	FROM->TO	GR ISLD-LNX3345.00 - GRAND ISLAND 345KV CKT Z	720	720	0.04154	107.7713	ATCHSNT3 345.00 - BOONEVILLE 345KV CKT 1
FDNS	00NR_G14_059	0	20SP	G14_059	FROM->TO	GR ISLD-LNX3345.00 - GRAND ISLAND 345KV CKT Z	720	720	0.04003	107.7615	GRAND ISLAND (GRAND.ISD T5) 230/115/13.8KV TRANSFORMER CKT 2
FDNS	00NR_G14_059	0	20SP	G14_059	FROM->TO	GR ISLD-LNX3345.00 - GRAND ISLAND 345KV CKT Z	720	720	0.04003	107.7615	GRAND ISLAND (GRAND.ISD T5) 230/115/13.8KV TRANSFORMER CKT 2
FDNS	00NR_G14_059	0	20SP	G14_059	FROM->TO	GR ISLD-LNX3345.00 - GRAND ISLAND 345KV CKT Z	720	720	0.04003	107.7582	GRAND ISLAND (GRAND.ISD T2) 230/115/13.8KV TRANSFORMER CKT 1
FDNS	00NR_G14_059	0	20SP	G14_059	FROM->TO	GR ISLD-LNX3345.00 - GRAND ISLAND 345KV CKT Z	720	720	0.04003	107.7582	GRAND ISLAND (GRAND.ISD T2) 230/115/13.8KV TRANSFORMER CKT 1
FDNS	00NR_G14_059	0	20SP	G14_059	FROM->TO	GR ISLD-LNX3345.00 - GRAND ISLAND 345KV CKT Z	720	720	0.04052	107.7563	GEN600014 4-BLACK DOG GEN 4
FDNS	00NR_G14_059	0	20SP	G14_059	FROM->TO	GR ISLD-LNX3345.00 - GRAND ISLAND 345KV CKT Z	720	720	0.04052	107.756	GEN600065 7-HIGH BRIDGE
FDNS	00NR_G14_059	0	20SP	G14_059	FROM->TO	GR ISLD-LNX3345.00 - GRAND ISLAND 345KV CKT Z	720	720	0.04052	107.756	GEN600066 8-HIGH BRIDGE
FDNS	00NR_G14_059	0	20SP	G14_059	FROM->TO	GR ISLD-LNX3345.00 - GRAND ISLAND 345KV CKT Z	720	720	0.04052	107.7521	GEN600011 5-BLACK DOG GEN 1
FDNS	00NR_G14_059	0	20SP	G14_059	FROM->TO	GR ISLD-LNX3345.00 - GRAND ISLAND 345KV CKT Z	720	720	0.04052	107.7499	LANSING WEST 161/22.0KV TRANSFORMER CKT 1
FDNS	00NR_G14_059	0	20SP	G14_059	FROM->TO	GR ISLD-LNX3345.00 - GRAND ISLAND 345KV CKT Z	720	720	0.04052	107.7466	GEN600071 10-RIVER SIDE
FDNS	00NR_G14_059	0	20SP	G14_059	FROM->TO	GR ISLD-LNX3345.00 - GRAND ISLAND 345KV CKT Z	720	720	0.04052	107.7464	GEN600070 9-RIVER SIDE
FDNS	00NR_G14_059	0	20SP	G14_059	FROM->TO	GR ISLD-LNX3345.00 - GRAND ISLAND 345KV CKT Z	720	720	0.04052	107.739	GEN659031 1-G12_014IS_4 0.6900
FDNS	00NR_G14_059	0	20SP	G14_059	FROM->TO	GR ISLD-LNX3345.00 - GRAND ISLAND 345KV CKT Z	720	720	0.04052	107.7382	GEN600007 7-RIVERSIDE GEN 7
FDNS	00NR_G14_059	0	25SP	G14_059	FROM->TO	GR ISLD-LNX3345.00 - GRAND ISLAND 345KV CKT Z	720	720	0.0392	107.7374	COLUMWEST - KELLY 230KV CKT 1
FDNS	00NR_G14_059	0	20SP	G14_059	FROM->TO	GR ISLD-LNX3345.00 - GRAND ISLAND 345KV CKT Z	720	720	0.04052	107.7267	GEN600017 C-LS POWER CT
FDNS	00NR_G14_059	0	20SP	G14_059	FROM->TO	GR ISLD-LNX3345.00 - GRAND ISLAND 345KV CKT Z	720	720	0.04052	107.7248	GEN659192 6-LYNN
FDNS	00NR_G14_059	0	20SP	G14_059	FROM->TO	GR ISLD-LNX3345.00 - GRAND ISLAND 345KV CKT Z	720	720	0.04052	107.724	GEN659162 4-RED WLCK
FDNS	00NR_G14_059	0	20SP	G14_059	FROM->TO	GR ISLD-LNX3345.00 - GRAND ISLAND 345KV CKT Z	720	720	0.04052	107.724	GEN659163 5-BLACK WDCK
FDNS	00NR_G14_059	0	20SP	G14_059	FROM->TO	GR ISLD-LNX3345.00 - GRAND ISLAND 345KV CKT Z	720	720	0.04052	107.7141	GEN600045 4-ANSON
FDNS	00NR_G14_059	0	20SP	G14_059	FROM->TO	GR ISLD-LNX3345.00 - GRAND ISLAND 345KV CKT Z	720	720	0.04052	107.7098	GEN 10648 1-G830_GEN 0.6900
FDNS	00NR_G14_059	0	25SP	G14_059	FROM->TO	GR ISLD-LNX3345.00 - GRAND ISLAND 345KV CKT Z	720	720	0.04236	107.6938	SHELL CREEK (SHELLCREEKT1) 345/230/13.8KV TRANSFORMER CKT 1
FDNS	00NR_G14_059	0	25SP	G14_059	FROM->TO	GR ISLD-LNX3345.00 - GRAND ISLAND 345KV CKT Z	720	720	0.04236	107.6938	SHELL CREEK (SHELLCREEKT1) 345/230/13.8KV TRANSFORMER CKT 1
FDNS	00NR_G14_059	0	25SP	G14_059	FROM->TO	GR ISLD-LNX3345.00 - GRAND ISLAND 345KV CKT Z	720	720	0.04236	107.6934	KELLY - SHELL CREEK 230KV CKT 1
FDNS	00NR_G14_059	0	20SP	G14_059	FROM->TO	GR ISLD-LNX3345.00 - GRAND ISLAND 345KV CKT Z	720	720	0.04052	107.6832	GEN615052 1-CAMBRIDGE GENERATING STATION
FDNS	00NR_G14_059	0	20SP	G14_059	FROM->TO	GR ISLD-LNX3345.00 - GRAND ISLAND 345KV CKT Z	720	720	0.04052	107.6775	GEN615015 1-GRE-SPRITWDG13.200
FDNS	00NR_G14_059	0	20SP	G14_059	FROM->TO	GR ISLD-LNX3345.00 - GRAND ISLAND 345KV CKT Z	720	720	0.04052	107.669	GEN615021 1-GRE-ER 14G 16.000
FDNSLock	00NR_G14_059	0	20SP	G14_059	FROM->TO	GR ISLD-LNX3345.00 - GRAND ISLAND 345KV CKT Z	720	720	0.04095	107.664	COPSTJCPFRSJ
FDNSLock	00NR_G14_059	0	20SP	G14_059	FROM->TO	GR ISLD-LNX3345.00 - GRAND ISLAND 345KV CKT Z	720	720	0.04095	107.664	P12:345:NPPD:3517:COOPER 3:ST JOE 3:BTB
FDNSLock	00NR_G14_059	0	20SP	G14_059	FROM->TO	GR ISLD-LNX3345.00 - GRAND ISLAND 345KV CKT Z	720	720	0.04095	107.664	STMDSJFAFACO
FDNS	00NR_G14_059	0	20SP	G14_059	FROM->TO	GR ISLD-LNX3345.00 - GRAND ISLAND 345KV CKT Z	720	720	0.04011	107.6637	GRAND ISLAND (GI KU1B) 345/230/13.8KV TRANSFORMER CKT 2
FDNS	00NR_G14_059	0	20SP	G14_059	FROM->TO	GR ISLD-LNX3345.00 - GRAND ISLAND 345KV CKT Z	720	720	0.04011	107.6637	GRAND ISLAND (GI KU1B) 345/230/13.8KV TRANSFORMER CKT 2
FDNS	00NR_G14_059	0	20SP	G14_059	FROM->TO	GR ISLD-LNX3345.00 - GRAND ISLAND 345KV CKT Z	720	720	0.04011	107.6622	GRAND ISLAND (GI KU1A) 345/230/13.8KV TRANSFORMER CKT 1
FDNS	00NR_G14_059	0	20SP	G14_059	FROM->TO	GR ISLD-LNX3345.00 - GRAND ISLAND 345KV CKT Z	720	720	0.04011	107.6622	GRAND ISLAND (GI KU1A) 345/230/13.8KV TRANSFORMER CKT 1
FDNS	00NR_G14_059	0	20SP	G14_059	FROM->TO	GR ISLD-LNX3345.00 - GRAND ISLAND 345KV CKT Z	720	720	0.04052	107.661	BISONMP4 230.00 - SQUARE BUTTE 230KV CKT 1
FDNS	00NR_G14_059	0	20SP	G14_059	FROM->TO	GR ISLD-LNX3345.00 - GRAND ISLAND 345KV CKT Z	720	720	0.04052	107.6495	GEN660016 1-B_H WIND 0.7000
FDNS	00NR_G14_059	0	20SP	G14_059	FROM->TO	GR ISLD-LNX3345.00 - GRAND ISLAND 345KV CKT Z	720	720	0.04019	107.62	FT THOMPSON - LOWERBRULE 4230.00 230KV CKT 1
FDNS	00NR_G14_059	0	20SP	G14_059	FROM->TO	GR ISLD-LNX3345.00 - GRAND ISLAND 345KV CKT Z	720	720	0.04019	107.62	FT THOMPSON - LOWERBRULE 4230.00 230KV CKT 1
FDNS	00NR_G14_059	0	20SP	G14_059	FROM->TO	GR ISLD-LNX3345.00 - GRAND ISLAND 345KV CKT Z	720	720	0.04028	107.6119	MCCOOL (MCCOOL T2) 345/115/13.8KV TRANSFORMER CKT 1
FDNS	00NR_G14_059	0	20SP	G14_059	FROM->TO	GR ISLD-LNX3345.00 - GRAND ISLAND 345KV CKT Z	720	720	0.04028	107.6119	MCCOOL (MCCOOL T2) 345/115/13.8KV TRANSFORMER CKT 1
FDNS	00NR_G14_059	0	20SP	G14_059	FROM->TO	GR ISLD-LNX3345.00 - GRAND ISLAND 345KV CKT Z	720	720	0.04052	107.5884	GEN672303 3-BOUNDARY DAM GENERATOR 3
FDNS	00NR_G14_059	0	20SP	G14_059	FROM->TO	GR ISLD-LNX3345.00 - GRAND ISLAND 345KV CKT Z	720	720	0.04052	107.5884	GEN672304 4-BOUNDARY DAM GENERATOR 4
FDNS	00NR_G14_059	0	20SP	G14_059	FROM->TO	GR ISLD-LNX3345.00 - GRAND ISLAND 345KV CKT Z	720	720	0.04052	107.5884	GEN672305 5-BOUNDARY DAM GENERATOR 5
FDNS	00NR_G14_059	0	25SP	G14_059	FROM->TO	GR ISLD-LNX3345.00 - GRAND ISLAND 345KV CKT Z	720	720	0.04682	107.564	GRAND ISLAND - RIVERDALE 230KV CKT 1
FDNS	00NR_G14_059	0	25SP	G14_059	FROM->TO	GR ISLD-LNX3345.00 - GRAND ISLAND 345KV CKT Z	720	720	0.04168	107.5584	103RD & ROKEBY - MOORE 345KV CKT 1
FDNS	00NR_G14_059	0	25SP	G14_059	FROM->TO	GR ISLD-LNX3345.00 - GRAND ISLAND 345KV CKT Z	720	720	0.04168	107.5584	103RD & ROKEBY - MOORE 345KV CKT 1
FDNS	00NR_G14_059	0	20SP	G14_059	FROM->TO	GR ISLD-LNX3345.00 - GRAND ISLAND 345KV CKT Z	720	720	0.04113	107.5555	COOPER - ST JOE 345KV CKT 1
FDNS	00NR_G14_059	0	20SP	G14_059	FROM->TO	GR ISLD-LNX3345.00 - GRAND ISLAND 345KV CKT Z	720	720	0.04052	107.5525	GEN672392 1-NBECGT1G 18.000
FDNS	00NR_G14_059	0	25SP	G14_059	FROM->TO	GR ISLD-LNX3345.00 - GRAND ISLAND 345KV CKT Z	720	720	0.04328	107.552	ALDA - SUB A 115KV CKT 1
FDNS	00NR_G14_059	0	20SP	G14_059	FROM->TO	GR ISLD-LNX3345.00 - GRAND ISLAND 345KV CKT Z	720	720	0.04052	107.541	GEN662101 1-WESSINGTON190.5750
FDNS	00NR_G14_059	0	20SP	G14_059	FROM->TO	GR ISLD-LNX3345.00 - GRAND ISLAND 345KV CKT Z	720	720	0.04052	107.5213	GEN600067 9-HIGH BRIDGE
FDNS	00NR_G14_059	0	20SP	G14_059	FROM->TO	GR ISLD-LNX3345.00 - GRAND ISLAND 345KV CKT Z	720	720	0.04052	107.5212	CENTER 230/22.0KV TRANSFORMER CKT 1
FDNS	00NR_G14_059	0	25SP	G14_059	FROM->TO	GR ISLD-LNX3345.00 - GRAND ISLAND 345KV CKT Z	720	720	0.0428	107.5206	SUB 3455 - SUB 3740 345KV CKT 1
FDNS	00NR_G14_059	0	25SP	G14_059	FROM->TO	GR ISLD-LNX3345.00 - GRAND ISLAND 345KV CKT Z	720	720	0.0428	107.5206	SUB 3455 - SUB 3740 345KV CKT 1
FDNS	00NR_G14_059	0	20SP	G14_059	FROM->TO	GR ISLD-LNX3345.00 - GRAND ISLAND 345KV CKT Z	720	720	0.0407	107.5075	G14-021T 345.00 - MULLNCR7 345.00 345KV CKT 1
FDNS	00NR_G14_059	0	20SP	G14_059	FROM->TO	GR ISLD-LNX3345.00 - GRAND ISLAND 345KV CKT Z	720	720	0.0407	107.5058	G15-005T 345.00 - MULLNCR7 345.00 345KV CKT 1
FDNS	00NR_G14_059	0	25SP	G14_059	FROM->TO	GR ISLD-LNX3345.00 - GRAND ISLAND 345KV CKT Z	720	720	0.04247	107.4834	AURORA - GRAND ISLAND 115KV CKT 1
FDNS	00NR_G14_059	0	20SP	G14_059	FROM->TO	GR ISLD-LNX3345.00 - GRAND ISLAND 345KV CKT Z	720	720	0.04052	107.4521	GEN659353 1-DEERCREK CTG18.000
FDNS	00NR_G14_059	0	20SP	G14_059	FROM->TO	GR ISLD-LNX3345.00 - GRAND ISLAND 345KV CKT Z	720	720	0.04052	107.4519	GEN659354 1-DEERCREK STG18.000
FDNS	00NR_G14_059	0	25SP	G14_059	FROM->TO	GR ISLD-LNX3345.00 - GRAND ISLAND 345KV CKT Z	720	720	0.04216	107.4377	CENTRAL CITY - CLARKS 115KV CKT 1
FDNS	00NR_G14_059	0	20SP	G14_059	FROM->TO	GR ISLD-LNX3345.00 - GRAND ISLAND 345KV CKT Z	720	720	0.04052	107.4281	GEN910006 1-G12_012IS_3 0.6900
FDNS	00NR_G14_059	0	20SP	G14_059	FROM->TO	GR ISLD-LNX3345.00 - GRAND ISLAND 345KV CKT Z	720	720	0.0407	107.4231	G15-005T 345.00 - SIBLEY 345KV CKT 1

SOLUTION	GROUP	SCENARIO	SEASON	SOURCE	DIRECTION	MONITORED ELEMENT	RATEA (MVA)	RATEB(MVA)	TDF	TC%LOADING (% MVA)	CONTINGENCY
FDNSLock	00NR_G14_059	0	20SP	G14_059	FROM->TO	GR ISLD-LNX3345.00 - GRAND ISLAND 345KV CKT Z	720	720	0.03996	107.4156	CENTRAL CITY - GRAND ISLAND 115KV CKT 1
FDNS	00NR_G14_059	0	25SP	G14_059	FROM->TO	GR ISLD-LNX3345.00 - GRAND ISLAND 345KV CKT Z	720	720	0.04349	107.4072	LOUP CITY - ST LIBORY 115KV CKT 1
FDNS	00NR_G14_059	0	20SP	G14_059	FROM->TO	GR ISLD-LNX3345.00 - GRAND ISLAND 345KV CKT Z	720	720	0.0409	107.3934	GLENHAM - L3 HAWDON 230KV CKT 1
FDNS	00NR_G14_059	0	20SP	G14_059	FROM->TO	GR ISLD-LNX3345.00 - GRAND ISLAND 345KV CKT Z	720	720	0.04052	107.3916	GEN681542 6-JP MADGETT
FDNS	00NR_G14_059	0	25SP	G14_059	FROM->TO	GR ISLD-LNX3345.00 - GRAND ISLAND 345KV CKT Z	720	720	0.04263	107.339	BRDLAND-LNX3345.00 - HURON 345KV CKT Z
FDNS	00NR_G14_059	0	25SP	G14_059	FROM->TO	GR ISLD-LNX3345.00 - GRAND ISLAND 345KV CKT Z	720	720	0.04263	107.339	P12:345:UMZB:# 102 #: AVS BD IN ND. AVS BRD LR
FDNS	00NR_G14_059	0	25SP	G14_059	FROM->TO	GR ISLD-LNX3345.00 - GRAND ISLAND 345KV CKT Z	720	720	0.04263	107.3384	BROADLAND - HURON 230KV CKT 1
FDNS	00NR_G14_059	0	25SP	G14_059	FROM->TO	GR ISLD-LNX3345.00 - GRAND ISLAND 345KV CKT Z	720	720	0.04263	107.3384	HURON (BD KU2A) 345/230/13.8KV TRANSFORMER CKT 1
FDNS	00NR_G14_059	0	25SP	G14_059	FROM->TO	GR ISLD-LNX3345.00 - GRAND ISLAND 345KV CKT Z	720	720	0.04263	107.3384	HURON (BD KU2A) 345/230/13.8KV TRANSFORMER CKT 1
FDNS	00NR_G14_059	0	25SP	G14_059	FROM->TO	GR ISLD-LNX3345.00 - GRAND ISLAND 345KV CKT Z	720	720	0.04263	107.3379	P12:345:UMZB:# 103 #: BD IN SD. LOSS OF LINE
FDNS	00NR_G14_059	0	20SP	G14_059	FROM->TO	GR ISLD-LNX3345.00 - GRAND ISLAND 345KV CKT Z	720	720	0.04052	107.3365	GEN659289 1-DAYCNTYWND W0.6900
FDNS	00NR_G14_059	0	25SP	G14_059	FROM->TO	GR ISLD-LNX3345.00 - GRAND ISLAND 345KV CKT Z	720	720	0.04264	107.331	EMERY 161/18.0KV TRANSFORMER CKT 1
FDNS	00NR_G14_059	0	25SP	G14_059	FROM->TO	GR ISLD-LNX3345.00 - GRAND ISLAND 345KV CKT Z	720	720	0.04264	107.3215	G830_SUB 115.00 - GRE-MCHENRY7115.00 115KV CKT 1
FDNS	00NR_G14_059	0	25SP	G14_059	FROM->TO	GR ISLD-LNX3345.00 - GRAND ISLAND 345KV CKT Z	720	720	0.04264	107.3214	G830_SUB 115.00 115/34.5KV TRANSFORMER CKT 1
FDNS	00NR_G14_059	0	25SP	G14_059	FROM->TO	GR ISLD-LNX3345.00 - GRAND ISLAND 345KV CKT Z	720	720	0.04302	107.3162	COOPER - FAIRPORT 345KV CKT 1
FDNS	00NR_G14_059	0	25SP	G14_059	FROM->TO	GR ISLD-LNX3345.00 - GRAND ISLAND 345KV CKT Z	720	720	0.04302	107.3162	COOPER - FAIRPORT 345KV CKT 1
FDNS	00NR_G14_059	0	20SP	G14_059	FROM->TO	GR ISLD-LNX3345.00 - GRAND ISLAND 345KV CKT Z	720	720	0.03991	107.3144	GRAND ISLAND (GI KU3A) 345/230/13.8KV TRANSFORMER CKT 3
FDNS	00NR_G14_059	0	20SP	G14_059	FROM->TO	GR ISLD-LNX3345.00 - GRAND ISLAND 345KV CKT Z	720	720	0.03991	107.3144	GRAND ISLAND (GI KU3A) 345/230/13.8KV TRANSFORMER CKT 3
FDNS	00NR_G14_059	0	25SP	G14_059	FROM->TO	GR ISLD-LNX3345.00 - GRAND ISLAND 345KV CKT Z	720	720	0.04264	107.3041	GEN652414 4-FT PECK
FDNS	00NR_G14_059	0	25SP	G14_059	FROM->TO	GR ISLD-LNX3345.00 - GRAND ISLAND 345KV CKT Z	720	720	0.04264	107.3041	GEN652415 5-FT PECK
FDNS	00NR_G14_059	0	25SP	G14_059	FROM->TO	GR ISLD-LNX3345.00 - GRAND ISLAND 345KV CKT Z	720	720	0.04264	107.2985	GEN620324 3-HOOT LAKE 3 GEN
FDNS	00NR_G14_059	0	25SP	G14_059	FROM->TO	GR ISLD-LNX3345.00 - GRAND ISLAND 345KV CKT Z	720	720	0.04264	107.2949	GEN 11104 1-J262_GEN 0.6000
FDNS	00NR_G14_059	0	25SP	G14_059	FROM->TO	GR ISLD-LNX3345.00 - GRAND ISLAND 345KV CKT Z	720	720	0.04264	107.2949	GEN 11108 1-J263_GEN 0.6000
FDNS	00NR_G14_059	0	25SP	G14_059	FROM->TO	GR ISLD-LNX3345.00 - GRAND ISLAND 345KV CKT Z	720	720	0.04264	107.2906	GEN600046 1-MECST
FDNS	00NR_G14_059	0	25SP	G14_059	FROM->TO	GR ISLD-LNX3345.00 - GRAND ISLAND 345KV CKT Z	720	720	0.0414	107.2805	MAXWELL - NORTH PLATTE 115KV CKT 1
FDNS	00NR_G14_059	0	25SP	G14_059	FROM->TO	GR ISLD-LNX3345.00 - GRAND ISLAND 345KV CKT Z	720	720	0.04272	107.272	FALLOW 3 345.00 - GRIMES 345KV CKT 1
FDNS	00NR_G14_059	0	25SP	G14_059	FROM->TO	GR ISLD-LNX3345.00 - GRAND ISLAND 345KV CKT Z	720	720	0.04264	107.2718	GEN600047 1-MECCT1
FDNS	00NR_G14_059	0	25SP	G14_059	FROM->TO	GR ISLD-LNX3345.00 - GRAND ISLAND 345KV CKT Z	720	720	0.04264	107.2637	GEN660003 3-HURON WEST PARK
FDNS	00NR_G14_059	0	25SP	G14_059	FROM->TO	GR ISLD-LNX3345.00 - GRAND ISLAND 345KV CKT Z	720	720	0.04264	107.263	GEN600063 1-COLVILLE GEN 1
FDNS	00NR_G14_059	0	25SP	G14_059	FROM->TO	GR ISLD-LNX3345.00 - GRAND ISLAND 345KV CKT Z	720	720	0.04264	107.263	GEN600064 2-COLVILLE GEN 2
FDNS	00NR_G14_059	0	25SP	G14_059	FROM->TO	GR ISLD-LNX3345.00 - GRAND ISLAND 345KV CKT Z	720	720	0.04264	107.2599	GEN660001 2-ABERDEEN SIEBRECHT
FDNS	00NR_G14_059	0	25SP	G14_059	FROM->TO	GR ISLD-LNX3345.00 - GRAND ISLAND 345KV CKT Z	720	720	0.04365	107.2588	ATCHSNT3 345.00 - COOPER 345KV CKT 1
FDNS	00NR_G14_059	0	25SP	G14_059	FROM->TO	GR ISLD-LNX3345.00 - GRAND ISLAND 345KV CKT Z	720	720	0.04365	107.2588	ATCHSNT3 345.00 - COOPER 345KV CKT 1
FDNS	00NR_G14_059	0	20SP	G14_059	FROM->TO	GR ISLD-LNX3345.00 - GRAND ISLAND 345KV CKT Z	720	720	0.04052	107.2514	COYOTE 345/24.0KV TRANSFORMER CKT 1
FDNS	00NR_G14_059	0	25SP	G14_059	FROM->TO	GR ISLD-LNX3345.00 - GRAND ISLAND 345KV CKT Z	720	720	0.04264	107.2492	GEN600043 7-BLUE LAKE5
FDNS	00NR_G14_059	0	25SP	G14_059	FROM->TO	GR ISLD-LNX3345.00 - GRAND ISLAND 345KV CKT Z	720	720	0.04264	107.2492	GEN600044 8-BLUE LAKE6
FDNS	00NR_G14_059	0	25SP	G14_059	FROM->TO	GR ISLD-LNX3345.00 - GRAND ISLAND 345KV CKT Z	720	720	0.04263	107.2488	ANTELOP-LNX3345.00 - ANTELOPE VALLEY 345KV CKT Z
FDNS	00NR_G14_059	0	20SP	G14_059	FROM->TO	GR ISLD-LNX3345.00 - GRAND ISLAND 345KV CKT Z	720	720	0.04052	107.246	GEN659018 1-G14_003IS_3 0.6900
FDNS	00NR_G14_059	0	25SP	G14_059	FROM->TO	GR ISLD-LNX3345.00 - GRAND ISLAND 345KV CKT Z	720	720	0.04264	107.2387	GEN659273 2-GROTON SYNC COND
FDNS	00NR_G14_059	0	25SP	G14_059	FROM->TO	GR ISLD-LNX3345.00 - GRAND ISLAND 345KV CKT Z	720	720	0.04264	107.2387	GEN659294 1-WILTONCOL9
FDNS	00NR_G14_059	0	25SP	G14_059	FROM->TO	GR ISLD-LNX3345.00 - GRAND ISLAND 345KV CKT Z	720	720	0.04264	107.2304	GEN681522 3-GENOA 3
FDNS	00NR_G14_059	0	25SP	G14_059	FROM->TO	GR ISLD-LNX3345.00 - GRAND ISLAND 345KV CKT Z	720	720	0.04264	107.2274	GEN600065 7-HIGH BRIDGE
FDNS	00NR_G14_059	0	25SP	G14_059	FROM->TO	GR ISLD-LNX3345.00 - GRAND ISLAND 345KV CKT Z	720	720	0.04264	107.2274	GEN600066 8-HIGH BRIDGE
FDNS	00NR_G14_059	0	25SP	G14_059	FROM->TO	GR ISLD-LNX3345.00 - GRAND ISLAND 345KV CKT Z	720	720	0.04264	107.2267	GEN600014 4-BLACK DOG GEN 4
FDNS	00NR_G14_059	0	25SP	G14_059	FROM->TO	GR ISLD-LNX3345.00 - GRAND ISLAND 345KV CKT Z	720	720	0.04204	107.2267	GRAND ISLAND (GRAND.ISD T5) 230/115/13.8KV TRANSFORMER CKT 2
FDNS	00NR_G14_059	0	25SP	G14_059	FROM->TO	GR ISLD-LNX3345.00 - GRAND ISLAND 345KV CKT Z	720	720	0.04204	107.2267	GRAND ISLAND (GRAND.ISD T5) 230/115/13.8KV TRANSFORMER CKT 2
FDNS	00NR_G14_059	0	25SP	G14_059	FROM->TO	GR ISLD-LNX3345.00 - GRAND ISLAND 345KV CKT Z	720	720	0.04203	107.2234	GRAND ISLAND (GRAND.ISD T2) 230/115/13.8KV TRANSFORMER CKT 1
FDNS	00NR_G14_059	0	25SP	G14_059	FROM->TO	GR ISLD-LNX3345.00 - GRAND ISLAND 345KV CKT Z	720	720	0.04203	107.2234	GRAND ISLAND (GRAND.ISD T2) 230/115/13.8KV TRANSFORMER CKT 1
FDNS	00NR_G14_059	0	25SP	G14_059	FROM->TO	GR ISLD-LNX3345.00 - GRAND ISLAND 345KV CKT Z	720	720	0.04264	107.2229	GEN600011 5-BLACK DOG GEN 1
FDNS	00NR_G14_059	0	25SP	G14_059	FROM->TO	GR ISLD-LNX3345.00 - GRAND ISLAND 345KV CKT Z	720	720	0.04264	107.2179	GEN600070 9-RIVER SIDE
FDNS	00NR_G14_059	0	25SP	G14_059	FROM->TO	GR ISLD-LNX3345.00 - GRAND ISLAND 345KV CKT Z	720	720	0.04264	107.2179	GEN600071 10-RIVER SIDE
FDNS	00NR_G14_059	0	25SP	G14_059	FROM->TO	GR ISLD-LNX3345.00 - GRAND ISLAND 345KV CKT Z	720	720	0.04264	107.2111	LANSING WEST 161/22.0KV TRANSFORMER CKT 1
FDNS	00NR_G14_059	0	20SP	G14_059	FROM->TO	GR ISLD-LNX3345.00 - GRAND ISLAND 345KV CKT Z	720	720	0.04052	107.2094	GEN562596 1-G14_059_3 0.6900
FDNS	00NR_G14_059	0	25SP	G14_059	FROM->TO	GR ISLD-LNX3345.00 - GRAND ISLAND 345KV CKT Z	720	720	0.04264	107.2094	GEN600007 7-RIVERSIDE GEN 7
FDNS	00NR_G14_059	0	20SP	G14_059	FROM->TO	GR ISLD-LNX3345.00 - GRAND ISLAND 345KV CKT Z	720	720	0.04052	107.2033	GEN659010 4-G07_027IS_2 0.6900
FDNS	00NR_G14_059	0	20SP	G14_059	FROM->TO	GR ISLD-LNX3345.00 - GRAND ISLAND 345KV CKT Z	720	720	0.04052	107.1965	GEN659194 1-NDPRAIRWND1W0.6900
FDNS	00NR_G14_059	0	25SP	G14_059	FROM->TO	GR ISLD-LNX3345.00 - GRAND ISLAND 345KV CKT Z	720	720	0.04264	107.1954	GEN600017 C-LS POWER CT
FDNS	00NR_G14_059	0	20SP	G14_059	FROM->TO	GR ISLD-LNX3345.00 - GRAND ISLAND 345KV CKT Z	720	720	0.04052	107.1953	GEN652460 4-GARRISON
FDNS	00NR_G14_059	0	20SP	G14_059	FROM->TO	GR ISLD-LNX3345.00 - GRAND ISLAND 345KV CKT Z	720	720	0.04052	107.1953	GEN652461 5-GARRISON
FDNS	00NR_G14_059	0	25SP	G14_059	FROM->TO	GR ISLD-LNX3345.00 - GRAND ISLAND 345KV CKT Z	720	720	0.04264	107.1927	GEN659031 1-G12_014IS_4 0.6900
FDNS	00NR_G14_059	0	25SP	G14_059	FROM->TO	GR ISLD-LNX3345.00 - GRAND ISLAND 345KV CKT Z	720	720	0.04306	107.1677	COPSTJCPFRSJ
FDNS	00NR_G14_059	0	25SP	G14_059	FROM->TO	GR ISLD-LNX3345.00 - GRAND ISLAND 345KV CKT Z	720	720	0.04306	107.1677	P12:345:NPPD:3517:COOPER 3:ST JOE 3:BTB
FDNS	00NR_G14_059	0	25SP	G14_059	FROM->TO	GR ISLD-LNX3345.00 - GRAND ISLAND 345KV CKT Z	720	720	0.04306	107.1677	STMDSJFAFACO
FDNS	00NR_G14_059	0	20SP	G14_059	FROM->TO	GR ISLD-LNX3345.00 - GRAND ISLAND 345KV CKT Z	720	720	0.04052	107.1658	CLAY BOSWELL 230/20.9KV TRANSFORMER CKT 1
FDNS	00NR_G14_059	0	25SP	G14_059	FROM->TO	GR ISLD-LNX3345.00 - GRAND ISLAND 345KV CKT Z	720	720	0.04264	107.1655	GEN659192 6-LYNN
FDNS	00NR_G14_059	0	25SP	G14_059	FROM->TO	GR ISLD-LNX3345.00 - GRAND ISLAND 345KV CKT Z	720	720	0.04264	107.1644	GEN659162 4-RED WLCK
FDNS	00NR_G14_059	0	25SP	G14_059	FROM->TO	GR ISLD-LNX3345.00 - GRAND ISLAND 345KV CKT Z	720	720	0.04264	107.1644	GEN659163 5-BLACK WDCK
FDNS	00NR_G14_059	0	25SP	G14_059	FROM->TO	GR ISLD-LNX3345.00 - GRAND ISLAND 345KV CKT Z	720	720	0.04264	107.1615	GEN 10648 1-G830_GEN 0.6900
FDNS	00NR_G14_059	0	20SP	G14_059	FROM->TO	GR ISLD-LNX3345.00 - GRAND ISLAND 345KV CKT Z	720	720	0.04052	107.1606	GEN652545 7-BIG BEND
FDNS	00NR_G14_059	0	25SP	G14_059	FROM->TO	GR ISLD-LNX3345.00 - GRAND ISLAND 345KV CKT Z	720	720	0.04264	107.1566	GEN600045 4-ANSON
FDNS	00NR_G14_059	0	20SP	G14_059	FROM->TO	GR ISLD-LNX3345.00 - GRAND ISLAND 345KV CKT Z	720	720	0.04052	107.1564	GEN652457 1-GARRISON
FDNS	00NR_G14_059	0	20SP	G14_059	FROM->TO	GR ISLD-LNX3345.00 - GRAND ISLAND 345KV CKT Z	720	720	0.04052	107.1564	GEN652458 2-GARRISON
FDNS	00NR_G14_059	0	20SP	G14_059	FROM->TO	GR ISLD-LNX3345.00 - GRAND ISLAND 345KV CKT Z	720	720	0.04052	107.1564	GEN652459 3-GARRISON

SOLUTION	GROUP	SCENARIO	SEASON	SOURCE	DIRECTION	MONITORED ELEMENT	RATEA (MVA)	RATEB(MVA)	TDF	TC%LOADING (% MVA)	CONTINGENCY
FDNS	00NR_G14_059	0	25SP	G14_059	FROM->TO	GR ISLD-LNX3345.00 - GRAND ISLAND 345KV CKT Z	720	720	0.04264	107.1508	GEN615052 1-CAMBRIDGE GENERATING STATION
FDNS	00NR_G14_059	0	20SP	G14_059	FROM->TO	GR ISLD-LNX3345.00 - GRAND ISLAND 345KV CKT Z	720	720	0.04052	107.1481	GEN652544 5-BIG BEND
FDNS	00NR_G14_059	0	25SP	G14_059	FROM->TO	GR ISLD-LNX3345.00 - GRAND ISLAND 345KV CKT Z	720	720	0.04264	107.1434	BISONMP4 230.00 - SQUARE BUTTE 230KV CKT 1
FDNS	00NR_G14_059	0	25SP	G14_059	FROM->TO	GR ISLD-LNX3345.00 - GRAND ISLAND 345KV CKT Z	720	720	0.04365	107.1364	ATCHSNT3 345.00 - BOONEVILLE 345KV CKT 1
FDNS	00NR_G14_059	0	20SP	G14_059	FROM->TO	GR ISLD-LNX3345.00 - GRAND ISLAND 345KV CKT Z	720	720	0.04052	107.1354	GEN652543 3-BIG BEND
FDNS	00NR_G14_059	0	20SP	G14_059	FROM->TO	GR ISLD-LNX3345.00 - GRAND ISLAND 345KV CKT Z	720	720	0.04052	107.1353	GEN652542 1-BIG BEND
FDNS	00NR_G14_059	0	25SP	G14_059	FROM->TO	GR ISLD-LNX3345.00 - GRAND ISLAND 345KV CKT Z	720	720	0.04215	107.1176	GRAND ISLAND (GI KU1B) 345/230/13.8KV TRANSFORMER CKT 2
FDNS	00NR_G14_059	0	25SP	G14_059	FROM->TO	GR ISLD-LNX3345.00 - GRAND ISLAND 345KV CKT Z	720	720	0.04215	107.1176	GRAND ISLAND (GI KU1B) 345/230/13.8KV TRANSFORMER CKT 2
FDNS	00NR_G14_059	0	25SP	G14_059	FROM->TO	GR ISLD-LNX3345.00 - GRAND ISLAND 345KV CKT Z	720	720	0.04215	107.1161	GRAND ISLAND (GI KU1A) 345/230/13.8KV TRANSFORMER CKT 1
FDNS	00NR_G14_059	0	25SP	G14_059	FROM->TO	GR ISLD-LNX3345.00 - GRAND ISLAND 345KV CKT Z	720	720	0.04215	107.1161	GRAND ISLAND (GI KU1A) 345/230/13.8KV TRANSFORMER CKT 1
FDNS	00NR_G14_059	0	25SP	G14_059	FROM->TO	GR ISLD-LNX3345.00 - GRAND ISLAND 345KV CKT Z	720	720	0.04324	107.1133	COOPER - ST JOE 345KV CKT 1
FDNS	00NR_G14_059	0	25SP	G14_059	FROM->TO	GR ISLD-LNX3345.00 - GRAND ISLAND 345KV CKT Z	720	720	0.04264	107.1084	GEN615015 1-GRE-SPRITWDG13.200
FDNS	00NR_G14_059	0	25SP	G14_059	FROM->TO	GR ISLD-LNX3345.00 - GRAND ISLAND 345KV CKT Z	720	720	0.04264	107.0983	GEN615021 1-GRE-ER 14G 16.000
FDNS	00NR_G14_059	0	25SP	G14_059	FROM->TO	GR ISLD-LNX3345.00 - GRAND ISLAND 345KV CKT Z	720	720	0.04264	107.0977	GEN660016 1-B_H WIND 0.7000
FDNS	00NR_G14_059	0	25SP	G14_059	FROM->TO	GR ISLD-LNX3345.00 - GRAND ISLAND 345KV CKT Z	720	720	0.04264	107.0883	GEN657705 X-DRAYTON
FDNS	00NR_G14_059	0	20SP	G14_059	FROM->TO	GR ISLD-LNX3345.00 - GRAND ISLAND 345KV CKT Z	720	720	0.04052	107.0866	GEN659403 1-NDSUNFLWR W0.6900
FDNS	00NR_G14_059	0	20SP	G14_059	FROM->TO	GR ISLD-LNX3345.00 - GRAND ISLAND 345KV CKT Z	720	720	0.04052	107.06	SQUARE BUTTE - YNG2 4 230.00 230KV CKT 1
FDNS	00NR_G14_059	0	20SP	G14_059	FROM->TO	GR ISLD-LNX3345.00 - GRAND ISLAND 345KV CKT Z	720	720	0.04052	107.0598	YNG2 4 230.00 230/20.0KV TRANSFORMER CKT 1
FDNSLock	00NR_G14_059	0	25SP	G14_059	FROM->TO	GR ISLD-LNX3345.00 - GRAND ISLAND 345KV CKT Z	720	720	0.04239	107.0596	MCCOOL (MCCOOL T2) 345/115/13.8KV TRANSFORMER CKT 1
FDNSLock	00NR_G14_059	0	25SP	G14_059	FROM->TO	GR ISLD-LNX3345.00 - GRAND ISLAND 345KV CKT Z	720	720	0.04239	107.0596	MCCOOL (MCCOOL T2) 345/115/13.8KV TRANSFORMER CKT 1
FDNS	00NR_G14_059	0	20SP	G14_059	FROM->TO	GR ISLD-LNX3345.00 - GRAND ISLAND 345KV CKT Z	720	720	0.04052	107.0492	STANTON 230/18.0KV TRANSFORMER CKT 1
FDNS	00NR_G14_059	0	20SP	G14_059	FROM->TO	GR ISLD-LNX3345.00 - GRAND ISLAND 345KV CKT Z	720	720	0.03685	107.0449	COLUMWEST - GRAND ISLAND 230KV CKT 1
FDNS	00NR_G14_059	0	25SP	G14_059	FROM->TO	GR ISLD-LNX3345.00 - GRAND ISLAND 345KV CKT Z	720	720	0.04283	107.041	G14-021T 345.00 - MULLNCR7 345.00 345KV CKT 1
FDNS	00NR_G14_059	0	25SP	G14_059	FROM->TO	GR ISLD-LNX3345.00 - GRAND ISLAND 345KV CKT Z	720	720	0.04283	107.0384	G15-005T 345.00 - MULLNCR7 345.00 345KV CKT 1
FDNS	00NR_G14_059	0	25SP	G14_059	FROM->TO	GR ISLD-LNX3345.00 - GRAND ISLAND 345KV CKT Z	720	720	0.04264	107.0209	GEN672305 5-BOUNDARY DAM GENERATOR 5
FDNS	00NR_G14_059	0	25SP	G14_059	FROM->TO	GR ISLD-LNX3345.00 - GRAND ISLAND 345KV CKT Z	720	720	0.04264	107.0208	GEN672303 3-BOUNDARY DAM GENERATOR 3
FDNS	00NR_G14_059	0	25SP	G14_059	FROM->TO	GR ISLD-LNX3345.00 - GRAND ISLAND 345KV CKT Z	720	720	0.04264	107.0208	GEN672304 4-BOUNDARY DAM GENERATOR 4
FDNS	00NR_G14_059	0	25SP	G14_059	FROM->TO	GR ISLD-LNX3345.00 - GRAND ISLAND 345KV CKT Z	720	720	0.04279	107.0122	HIGHLND 3 345.00 - OBRIEN 3 345.00 345KV CKT 1
FDNS	00NR_G14_059	0	25SP	G14_059	FROM->TO	GR ISLD-LNX3345.00 - GRAND ISLAND 345KV CKT Z	720	720	0.04264	107.0039	GEN662101 1-WESSINGTON190.5750
FDNS	00NR_G14_059	0	25SP	G14_059	FROM->TO	GR ISLD-LNX3345.00 - GRAND ISLAND 345KV CKT Z	720	720	0.04264	107.0018	GEN672356 1-FUT-WL1X 18.000
FDNS	00NR_G14_059	0	25SP	G14_059	FROM->TO	GR ISLD-LNX3345.00 - GRAND ISLAND 345KV CKT Z	720	720	0.04232	106.9935	FT THOMPSON - LOWERBRULE 4230.00 230KV CKT 1
FDNS	00NR_G14_059	0	25SP	G14_059	FROM->TO	GR ISLD-LNX3345.00 - GRAND ISLAND 345KV CKT Z	720	720	0.04232	106.9935	FT THOMPSON - LOWERBRULE 4230.00 230KV CKT 1
FDNS	00NR_G14_059	0	25SP	G14_059	FROM->TO	GR ISLD-LNX3345.00 - GRAND ISLAND 345KV CKT Z	720	720	0.04264	106.9818	GEN600067 9-HIGH BRIDGE
FDNS	00NR_G14_059	0	25SP	G14_059	FROM->TO	GR ISLD-LNX3345.00 - GRAND ISLAND 345KV CKT Z	720	720	0.04264	106.9803	GEN672389 1-FUT-SW1X 18.000
FDNS	00NR_G14_059	0	25SP	G14_059	FROM->TO	GR ISLD-LNX3345.00 - GRAND ISLAND 345KV CKT Z	720	720	0.04264	106.9793	CENTER 230/22.0KV TRANSFORMER CKT 1
FDNS	00NR_G14_059	0	25SP	G14_059	FROM->TO	GR ISLD-LNX3345.00 - GRAND ISLAND 345KV CKT Z	720	720	0.04264	106.9741	GEN672392 1-NBECGT1G 18.000
FDNS	00NR_G14_059	0	25SP	G14_059	FROM->TO	GR ISLD-LNX3345.00 - GRAND ISLAND 345KV CKT Z	720	720	0.04283	106.9593	G15-005T 345.00 - SIBLEY 345KV CKT 1
FDNSLock	00NR_G14_059	0	25SP	G14_059	FROM->TO	GR ISLD-LNX3345.00 - GRAND ISLAND 345KV CKT Z	720	720	0.04216	106.914	CENTRAL CITY - GRAND ISLAND 115KV CKT 1
FDNS	00NR_G14_059	0	20SP	G14_059	FROM->TO	GR ISLD-LNX3345.00 - GRAND ISLAND 345KV CKT Z	720	720	0.04052	106.9027	ALMA 161 161/24.0KV TRANSFORMER CKT 1
FDNS	00NR_G14_059	0	20SP	G14_059	FROM->TO	GR ISLD-LNX3345.00 - GRAND ISLAND 345KV CKT Z	720	720	0.04052	106.8929	GEN652906 1-G09_006IS_3 0.6900
FDNS	00NR_G14_059	0	25SP	G14_059	FROM->TO	GR ISLD-LNX3345.00 - GRAND ISLAND 345KV CKT Z	720	720	0.04264	106.8885	GEN659353 1-DEERCREK CTG18.000
FDNS	00NR_G14_059	0	25SP	G14_059	FROM->TO	GR ISLD-LNX3345.00 - GRAND ISLAND 345KV CKT Z	720	720	0.04264	106.8885	GEN659354 1-DEERCREK STG18.000
FDNS	00NR_G14_059	0	25SP	G14_059	FROM->TO	GR ISLD-LNX3345.00 - GRAND ISLAND 345KV CKT Z	720	720	0.04303	106.8771	GLENHAM - L3 HAWDON 230KV CKT 1
FDNS	00NR_G14_059	0	25SP	G14_059	FROM->TO	GR ISLD-LNX3345.00 - GRAND ISLAND 345KV CKT Z	720	720	0.04264	106.8688	GEN910006 1-G12_012IS_3 0.6900
FDNS	00NR_G14_059	0	20SP	G14_059	FROM->TO	GR ISLD-LNX3345.00 - GRAND ISLAND 345KV CKT Z	720	720	0.04052	106.866	GEN659411 1-CAMPBLCNTY W0.6900
FDNS	00NR_G14_059	0	25SP	G14_059	FROM->TO	GR ISLD-LNX3345.00 - GRAND ISLAND 345KV CKT Z	720	720	0.04264	106.8453	GEN681542 6-JP MADGETT
FDNS	00NR_G14_059	0	20SP	G14_059	FROM->TO	GR ISLD-LNX3345.00 - GRAND ISLAND 345KV CKT Z	720	720	0.03924	106.8394	AXTELL - POST ROCK 345KV CKT 1
FDNSLock	00NR_G14_059	0	20SP	G14_059	FROM->TO	GR ISLD-LNX3345.00 - GRAND ISLAND 345KV CKT Z	720	720	0.04052	106.8082	GR ISLD-LNX3345.00 345KV SWITCHED SHUNT
FDNS	00NR_G14_059	0	20SP	G14_059	FROM->TO	GR ISLD-LNX3345.00 - GRAND ISLAND 345KV CKT Z	720	720	0.04052	106.8059	GR ISLD-LNX3345.00 345KV SWITCHED SHUNT
FDNS	00NR_G14_059	0	25SP	G14_059	FROM->TO	GR ISLD-LNX3345.00 - GRAND ISLAND 345KV CKT Z	720	720	0.04264	106.7856	GEN659289 1-DAYCNTYWND W0.6900
FDNS	00NR_G14_059	0	25SP	G14_059	FROM->TO	GR ISLD-LNX3345.00 - GRAND ISLAND 345KV CKT Z	720	720	0.04191	106.7689	GRAND ISLAND (GI KU3A) 345/230/13.8KV TRANSFORMER CKT 3
FDNS	00NR_G14_059	0	25SP	G14_059	FROM->TO	GR ISLD-LNX3345.00 - GRAND ISLAND 345KV CKT Z	720	720	0.04191	106.7689	GRAND ISLAND (GI KU3A) 345/230/13.8KV TRANSFORMER CKT 3
FDNS	00NR_G14_059	0	20SP	G14_059	FROM->TO	GR ISLD-LNX3345.00 - GRAND ISLAND 345KV CKT Z	720	720	0.04052	106.7347	GEN659296 2-SDPRAIRWND1W0.6900
FDNS	00NR_G14_059	0	20SP	G14_059	FROM->TO	GR ISLD-LNX3345.00 - GRAND ISLAND 345KV CKT Z	720	720	0.04052	106.7243	GEN652907 1-G09_007IS_3 0.6900
FDNS	00NR_G14_059	0	25SP	G14_059	FROM->TO	GR ISLD-LNX3345.00 - GRAND ISLAND 345KV CKT Z	720	720	0.04264	106.688	GEN659018 1-G14_003IS_3 0.6900
FDNS	00NR_G14_059	0	25SP	G14_059	FROM->TO	GR ISLD-LNX3345.00 - GRAND ISLAND 345KV CKT Z	720	720	0.0392	106.6877	COLUMWEST - GRAND ISLAND 230KV CKT 1
FDNS	00NR_G14_059	0	20SP	G14_059	FROM->TO	GR ISLD-LNX3345.00 - GRAND ISLAND 345KV CKT Z	720	720	0.04052	106.6636	GEN672321 1-SHAND GENERATOR 1
FDNS	00NR_G14_059	0	25SP	G14_059	FROM->TO	GR ISLD-LNX3345.00 - GRAND ISLAND 345KV CKT Z	720	720	0.04264	106.651	GEN659010 4-G07_027IS_2 0.6900
FDNS	00NR_G14_059	0	25SP	G14_059	FROM->TO	GR ISLD-LNX3345.00 - GRAND ISLAND 345KV CKT Z	720	720	0.04264	106.6497	COYOTE 345/24.0KV TRANSFORMER CKT 1
FDNS	00NR_G14_059	0	25SP	G14_059	FROM->TO	GR ISLD-LNX3345.00 - GRAND ISLAND 345KV CKT Z	720	720	0.04264	106.6407	GEN652460 4-GARRISON
FDNS	00NR_G14_059	0	25SP	G14_059	FROM->TO	GR ISLD-LNX3345.00 - GRAND ISLAND 345KV CKT Z	720	720	0.04264	106.6407	GEN652461 5-GARRISON
FDNS	00NR_G14_059	0	25SP	G14_059	FROM->TO	GR ISLD-LNX3345.00 - GRAND ISLAND 345KV CKT Z	720	720	0.04264	106.6388	GEN659194 1-NDPRAIRWND1W0.6900
FDNS	00NR_G14_059	0	20SP	G14_059	FROM->TO	GR ISLD-LNX3345.00 - GRAND ISLAND 345KV CKT Z	720	720	0.04052	106.629	GEN652559 1-OAHE
FDNS	00NR_G14_059	0	25SP	G14_059	FROM->TO	GR ISLD-LNX3345.00 - GRAND ISLAND 345KV CKT Z	720	720	0.04264	106.6265	GEN652545 7-BIG BEND
FDNS	00NR_G14_059	0	20SP	G14_059	FROM->TO	GR ISLD-LNX3345.00 - GRAND ISLAND 345KV CKT Z	720	720	0.04052	106.6215	GEN672310 1-POPLAR RIVER GENERATOR 1
FDNS	00NR_G14_059	0	20SP	G14_059	FROM->TO	GR ISLD-LNX3345.00 - GRAND ISLAND 345KV CKT Z	720	720	0.04052	106.6215	GEN672311 2-POPLAR RIVER GENERATOR 2
FDNS	00NR_G14_059	0	25SP	G14_059	FROM->TO	GR ISLD-LNX3345.00 - GRAND ISLAND 345KV CKT Z	720	720	0.04264	106.6157	GEN562596 1-G14_059_3 0.6900
FDNS	00NR_G14_059	0	20SP	G14_059	FROM->TO	GR ISLD-LNX3345.00 - GRAND ISLAND 345KV CKT Z	720	720	0.04052	106.6092	GEN672306 6-BOUNDARY DAM GENERATOR 6
FDNS	00NR_G14_059	0	25SP	G14_059	FROM->TO	GR ISLD-LNX3345.00 - GRAND ISLAND 345KV CKT Z	720	720	0.04264	106.6022	GEN652457 1-GARRISON
FDNS	00NR_G14_059	0	25SP	G14_059	FROM->TO	GR ISLD-LNX3345.00 - GRAND ISLAND 345KV CKT Z	720	720	0.04264	106.6021	GEN652458 2-GARRISON
FDNS	00NR_G14_059	0	25SP	G14_059	FROM->TO	GR ISLD-LNX3345.00 - GRAND ISLAND 345KV CKT Z	720	720	0.04264	106.6021	GEN652459 3-GARRISON
FDNS	00NR_G14_059	0	25SP	G14_059	FROM->TO	GR ISLD-LNX3345.00 - GRAND ISLAND 345KV CKT Z	720	720	0.04264	106.6001	GEN652544 5-BIG BEND
FDNS	00NR_G14_059	0	20SP	G14_059	FROM->TO	GR ISLD-LNX3345.00 - GRAND ISLAND 345KV CKT Z	720	720	0.04052	106.5959	GEN600004 2-PRAIRIE ISLAND G2

SOLUTION	GROUP	SCENARIO	SEASON	SOURCE	DIRECTION	MONITORED ELEMENT	RATEA (MVA)	RATEB(MVA)	TDF	TC%LOADING (% MVA)	CONTINGENCY
FDNS	00NR_G14_059	0	20SP	G14_059	FROM->TO	GR ISLD-LNX3345.00 - GRAND ISLAND 345KV CKT Z	720	720	0.04052	106.5929	GEN600003 1-PRAIRIE ISLAND G1
FDNS	00NR_G14_059	0	25SP	G14_059	FROM->TO	GR ISLD-LNX3345.00 - GRAND ISLAND 345KV CKT Z	720	720	0.04264	106.5886	GEN652543 3-BIG BEND
FDNS	00NR_G14_059	0	25SP	G14_059	FROM->TO	GR ISLD-LNX3345.00 - GRAND ISLAND 345KV CKT Z	720	720	0.04264	106.5885	GEN652542 1-BIG BEND
FDNS	00NR_G14_059	0	20SP	G14_059	FROM->TO	GR ISLD-LNX3345.00 - GRAND ISLAND 345KV CKT Z	720	720	0.04052	106.5443	GEN615010 1-STANTON4
FDNS	00NR_G14_059	0	25SP	G14_059	FROM->TO	GR ISLD-LNX3345.00 - GRAND ISLAND 345KV CKT Z	720	720	0.04264	106.5297	GEN659403 1-NDSUNFLWR W0.6900
FDNS	00NR_G14_059	0	25SP	G14_059	FROM->TO	GR ISLD-LNX3345.00 - GRAND ISLAND 345KV CKT Z	720	720	0.04264	106.5133	STANTON 230/18.0KV TRANSFORMER CKT 1
FDNS	00NR_G14_059	0	20SP	G14_059	FROM->TO	GR ISLD-LNX3345.00 - GRAND ISLAND 345KV CKT Z	720	720	0.04052	106.5073	GEN652556 2-OAHE
FDNS	00NR_G14_059	0	20SP	G14_059	FROM->TO	GR ISLD-LNX3345.00 - GRAND ISLAND 345KV CKT Z	720	720	0.04052	106.5073	GEN652557 4-OAHE
FDNS	00NR_G14_059	0	20SP	G14_059	FROM->TO	GR ISLD-LNX3345.00 - GRAND ISLAND 345KV CKT Z	720	720	0.04052	106.5073	GEN652558 6-OAHE
FDNS	00NR_G14_059	0	20SP	G14_059	FROM->TO	GR ISLD-LNX3345.00 - GRAND ISLAND 345KV CKT Z	720	720	0.04052	106.4736	GEN659453 1-GI1414GEN W0.6900
FDNS	00NR_G14_059	0	25SP	G14_059	FROM->TO	GR ISLD-LNX3345.00 - GRAND ISLAND 345KV CKT Z	720	720	0.04264	106.4443	ALMA 161 161/24.0KV TRANSFORMER CKT 1
FDNS	00NR_G14_059	0	20SP	G14_059	FROM->TO	GR ISLD-LNX3345.00 - GRAND ISLAND 345KV CKT Z	720	720	0.04052	106.4301	GEN659141 1-K10215A
FDNS	00NR_G14_059	0	20SP	G14_059	FROM->TO	GR ISLD-LNX3345.00 - GRAND ISLAND 345KV CKT Z	720	720	0.04052	106.3774	GEN652173 1-G09_001IS_2 0.6900
FDNS	00NR_G14_059	0	20SP	G14_059	FROM->TO	GR ISLD-LNX3345.00 - GRAND ISLAND 345KV CKT Z	720	720	0.04052	106.3501	GEN600006 1-AS KING
FDNS	00NR_G14_059	0	25SP	G14_059	FROM->TO	GR ISLD-LNX3345.00 - GRAND ISLAND 345KV CKT Z	720	720	0.04264	106.3347	GEN652906 1-G09_006IS_3 0.6900
FDNSLock	00NR_G14_059	0	25SP	G14_059	FROM->TO	GR ISLD-LNX3345.00 - GRAND ISLAND 345KV CKT Z	720	720	0.04264	106.3218	GR ISLD-LNX3345.00 345KV SWITCHED SHUNT
FDNS	00NR_G14_059	0	25SP	G14_059	FROM->TO	GR ISLD-LNX3345.00 - GRAND ISLAND 345KV CKT Z	720	720	0.04264	106.3205	GR ISLD-LNX3345.00 345KV SWITCHED SHUNT
FDNS	00NR_G14_059	0	25SP	G14_059	FROM->TO	GR ISLD-LNX3345.00 - GRAND ISLAND 345KV CKT Z	720	720	0.04264	106.3131	GEN659411 1-CAMPBLCNTY W0.6900
FDNS	00NR_G14_059	0	25SP	G14_059	FROM->TO	GR ISLD-LNX3345.00 - GRAND ISLAND 345KV CKT Z	720	720	0.04264	106.3069	SQUARE BUTTE - YNG2 4 230.00 230KV CKT 1
FDNS	00NR_G14_059	0	25SP	G14_059	FROM->TO	GR ISLD-LNX3345.00 - GRAND ISLAND 345KV CKT Z	720	720	0.04264	106.3067	YNG2 4 230.00 230/20.0KV TRANSFORMER CKT 1
FDNS	00NR_G14_059	0	20SP	G14_059	FROM->TO	GR ISLD-LNX3345.00 - GRAND ISLAND 345KV CKT Z	720	720	0.04052	106.2377	P12:230:UMZB:# 112 #: NU IN SD. NU-RCDC & DRY CREEK XFMR
FDNS	00NR_G14_059	0	20SP	G14_059	FROM->TO	GR ISLD-LNX3345.00 - GRAND ISLAND 345KV CKT Z	720	720	0.04052	106.2324	RCDC EAST 4230.00 - RED CEDAR DC 230KV CKT 1
FDNS	00NR_G14_059	0	25SP	G14_059	FROM->TO	GR ISLD-LNX3345.00 - GRAND ISLAND 345KV CKT Z	720	720	0.04264	106.1824	GEN659296 2-SDPRAIRWND1W0.6900
FDNS	00NR_G14_059	0	20SP	G14_059	FROM->TO	GR ISLD-LNX3345.00 - GRAND ISLAND 345KV CKT Z	720	720	0.04052	106.166	GEN659407 1-ANTELPHILLSW0.6900
FDNS	00NR_G14_059	0	25SP	G14_059	FROM->TO	GR ISLD-LNX3345.00 - GRAND ISLAND 345KV CKT Z	720	720	0.04264	106.1631	GEN652907 1-G09_007IS_3 0.6900
FDNS	00NR_G14_059	0	20SP	G14_059	FROM->TO	GR ISLD-LNX3345.00 - GRAND ISLAND 345KV CKT Z	720	720	0.04052	106.1231	GEN657749 1-YOUNG 1 GENERATOR
FDNS	00NR_G14_059	0	20SP	G14_059	FROM->TO	GR ISLD-LNX3345.00 - GRAND ISLAND 345KV CKT Z	720	720	0.04052	106.1162	GEN659110 1-LELAND OLDS UNIT1
FDNS	00NR_G14_059	0	25SP	G14_059	FROM->TO	GR ISLD-LNX3345.00 - GRAND ISLAND 345KV CKT Z	720	720	0.04264	106.0629	GEN672310 1-POPLAR RIVER GENERATOR 1
FDNS	00NR_G14_059	0	25SP	G14_059	FROM->TO	GR ISLD-LNX3345.00 - GRAND ISLAND 345KV CKT Z	720	720	0.04264	106.0629	GEN672311 2-POPLAR RIVER GENERATOR 2
FDNS	00NR_G14_059	0	25SP	G14_059	FROM->TO	GR ISLD-LNX3345.00 - GRAND ISLAND 345KV CKT Z	720	720	0.04264	106.052	GEN672321 1-SHAND GENERATOR 1
FDNS	00NR_G14_059	0	25SP	G14_059	FROM->TO	GR ISLD-LNX3345.00 - GRAND ISLAND 345KV CKT Z	720	720	0.04264	106.0125	GEN652559 1-OAHE
FDNS	00NR_G14_059	0	25SP	G14_059	FROM->TO	GR ISLD-LNX3345.00 - GRAND ISLAND 345KV CKT Z	720	720	0.04264	105.9957	GEN672306 6-BOUNDARY DAM GENERATOR 6
FDNS	00NR_G14_059	0	25SP	G14_059	FROM->TO	GR ISLD-LNX3345.00 - GRAND ISLAND 345KV CKT Z	720	720	0.04264	105.9773	GEN615010 1-STANTON4
FDNS	00NR_G14_059	0	25SP	G14_059	FROM->TO	GR ISLD-LNX3345.00 - GRAND ISLAND 345KV CKT Z	720	720	0.04264	105.9628	GEN600004 2-PRAIRIE ISLAND G2
FDNS	00NR_G14_059	0	25SP	G14_059	FROM->TO	GR ISLD-LNX3345.00 - GRAND ISLAND 345KV CKT Z	720	720	0.04264	105.9598	GEN600003 1-PRAIRIE ISLAND G1
FDNS	00NR_G14_059	0	25SP	G14_059	FROM->TO	GR ISLD-LNX3345.00 - GRAND ISLAND 345KV CKT Z	720	720	0.04264	105.9536	GEN652556 2-OAHE
FDNS	00NR_G14_059	0	25SP	G14_059	FROM->TO	GR ISLD-LNX3345.00 - GRAND ISLAND 345KV CKT Z	720	720	0.04264	105.9536	GEN652557 4-OAHE
FDNS	00NR_G14_059	0	25SP	G14_059	FROM->TO	GR ISLD-LNX3345.00 - GRAND ISLAND 345KV CKT Z	720	720	0.04264	105.9536	GEN652558 6-OAHE
FDNS	00NR_G14_059	0	25SP	G14_059	FROM->TO	GR ISLD-LNX3345.00 - GRAND ISLAND 345KV CKT Z	720	720	0.04264	105.899	GEN659453 1-GI1414GEN W0.6900
FDNS	00NR_G14_059	0	25SP	G14_059	FROM->TO	GR ISLD-LNX3345.00 - GRAND ISLAND 345KV CKT Z	720	720	0.04264	105.8729	GEN659141 1-K10215A
FDNS	00NR_G14_059	0	25SP	G14_059	FROM->TO	GR ISLD-LNX3345.00 - GRAND ISLAND 345KV CKT Z	720	720	0.0414	105.8542	AXTELL - POST ROCK 345KV CKT 1
FDNS	00NR_G14_059	0	25SP	G14_059	FROM->TO	GR ISLD-LNX3345.00 - GRAND ISLAND 345KV CKT Z	720	720	0.04264	105.8113	GEN652173 1-G09_001IS_2 0.6900
FDNS	00NR_G14_059	0	20SP	G14_059	FROM->TO	GR ISLD-LNX3345.00 - GRAND ISLAND 345KV CKT Z	720	720	0.04052	105.7154	GEN600005 1-MONTICELLO
FDNS	00NR_G14_059	0	25SP	G14_059	FROM->TO	GR ISLD-LNX3345.00 - GRAND ISLAND 345KV CKT Z	720	720	0.04264	105.6978	GEN600006 1-AS KING
FDNS	00NR_G14_059	0	25SP	G14_059	FROM->TO	GR ISLD-LNX3345.00 - GRAND ISLAND 345KV CKT Z	720	720	0.04264	105.6669	P12:230:UMZB:# 112 #: NU IN SD. NU-RCDC & DRY CREEK XFMR
FDNS	00NR_G14_059	0	25SP	G14_059	FROM->TO	GR ISLD-LNX3345.00 - GRAND ISLAND 345KV CKT Z	720	720	0.04264	105.6613	RCDC EAST 4230.00 - RED CEDAR DC 230KV CKT 1
FDNS	00NR_G14_059	0	25SP	G14_059	FROM->TO	GR ISLD-LNX3345.00 - GRAND ISLAND 345KV CKT Z	720	720	0.04264	105.6184	GEN659407 1-ANTELPHILLSW0.6900
FDNS	00NR_G14_059	0	20SP	G14_059	FROM->TO	GR ISLD-LNX3345.00 - GRAND ISLAND 345KV CKT Z	720	720	0.04052	105.6003	GEN600001 2-SHERBURNE CNTY G2
FDNS	00NR_G14_059	0	25SP	G14_059	FROM->TO	GR ISLD-LNX3345.00 - GRAND ISLAND 345KV CKT Z	720	720	0.04264	105.5533	GEN659110 1-LELAND OLDS UNIT1
FDNS	00NR_G14_059	0	20SP	G14_059	FROM->TO	GR ISLD-LNX3345.00 - GRAND ISLAND 345KV CKT Z	720	720	0.04052	105.5515	GEN600000 1-SHERBURNECNTY G1
FDNS	00NR_G14_059	0	25SP	G14_059	FROM->TO	GR ISLD-LNX3345.00 - GRAND ISLAND 345KV CKT Z	720	720	0.04264	105.5174	GEN657749 1-YOUNG 1 GENERATOR
FDNS	00NR_G14_059	0	20SP	G14_059	FROM->TO	GR ISLD-LNX3345.00 - GRAND ISLAND 345KV CKT Z	720	720	0.04052	105.3846	GEN661015 1-COYOTE
FDNS	00NR_G14_059	0	25SP	G14_059	FROM->TO	GR ISLD-LNX3345.00 - GRAND ISLAND 345KV CKT Z	720	720	0.04264	105.3543	CLAY BOSWELL 230/20.9KV TRANSFORMER CKT 1
FDNS	00NR_G14_059	0	20SP	G14_059	FROM->TO	GR ISLD-LNX3345.00 - GRAND ISLAND 345KV CKT Z	720	720	0.04052	105.2766	GEN620315 1-BIG STONE GEN
FDNS	00NR_G14_059	0	25SP	G14_059	FROM->TO	GR ISLD-LNX3345.00 - GRAND ISLAND 345KV CKT Z	720	720	0.04264	105.0117	GEN600005 1-MONTICELLO
FDNS	00NR_G14_059	0	25SP	G14_059	FROM->TO	GR ISLD-LNX3345.00 - GRAND ISLAND 345KV CKT Z	720	720	0.04264	104.9039	GEN600001 2-SHERBURNE CNTY G2
FDNS	00NR_G14_059	0	25SP	G14_059	FROM->TO	GR ISLD-LNX3345.00 - GRAND ISLAND 345KV CKT Z	720	720	0.04264	104.8394	GEN600000 1-SHERBURNECNTY G1
FDNS	00NR_G14_059	0	20SP	G14_059	FROM->TO	GR ISLD-LNX3345.00 - GRAND ISLAND 345KV CKT Z	720	720	0.04052	104.7952	GEN600002 3-SHERBURNE CNTY G3
FDNS	00NR_G14_059	0	20SP	G14_059	FROM->TO	GR ISLD-LNX3345.00 - GRAND ISLAND 345KV CKT Z	720	720	0.04052	104.7838	GEN640010 1-GERALD GENTLEMAN STATION UNIT 1
FDNS	00NR_G14_059	0	20SP	G14_059	FROM->TO	GR ISLD-LNX3345.00 - GRAND ISLAND 345KV CKT Z	720	720	0.04052	104.76	GEN657748 1-YOUNG 2 GENERATOR
FDNS	00NR_G14_059	0	20SP	G14_059	FROM->TO	GR ISLD-LNX3345.00 - GRAND ISLAND 345KV CKT Z	720	720	0.04052	104.7361	GEN640011 2-GERALD GENTLEMAN STATION UNIT 2
FDNS	00NR_G14_059	0	20SP	G14_059	FROM->TO	GR ISLD-LNX3345.00 - GRAND ISLAND 345KV CKT Z	720	720	0.04052	104.6693	SHERBURNE CO 345/24.0KV TRANSFORMER CKT 1
FDNS	00NR_G14_059	0	25SP	G14_059	FROM->TO	GR ISLD-LNX3345.00 - GRAND ISLAND 345KV CKT Z	720	720	0.04264	104.6447	GEN620315 1-BIG STONE GEN
FDNS	00NR_G14_059	0	25SP	G14_059	FROM->TO	GR ISLD-LNX3345.00 - GRAND ISLAND 345KV CKT Z	720	720	0.04264	104.6006	GEN661015 1-COYOTE
FDNS	00NR_G14_059	0	20SP	G14_059	FROM->TO	GR ISLD-LNX3345.00 - GRAND ISLAND 345KV CKT Z	720	720	0.04131	104.4703	FTTHOM1-LNX3345.00 - LELAND2-LNX3345.00 345KV CKT 1
FDNS	00NR_G14_059	0	20SP	G14_059	FROM->TO	GR ISLD-LNX3345.00 - GRAND ISLAND 345KV CKT Z	720	720	0.04131	104.4029	P12:345:UMZB:# 108 #: LOS FT IN ND. LOS FT
FDNS	00NR_G14_059	0	20SP	G14_059	FROM->TO	GR ISLD-LNX3345.00 - GRAND ISLAND 345KV CKT Z	720	720	0.04131	104.3991	FT THOMPSON - FTTHOM1-LNX3345.00 345KV CKT Z
FDNS	00NR_G14_059	0	20SP	G14_059	FROM->TO	GR ISLD-LNX3345.00 - GRAND ISLAND 345KV CKT Z	720	720	0.04131	104.3863	LELAND OLDS - LELAND2-LNX3345.00 345KV CKT Z
FDNS	00NR_G14_059	0	20SP	G14_059	FROM->TO	GR ISLD-LNX3345.00 - GRAND ISLAND 345KV CKT Z	720	720	0.04052	104.3825	BIG STONE 230/24.0KV TRANSFORMER CKT 1
FDNS	00NR_G14_059	0	25SP	G14_059	FROM->TO	GR ISLD-LNX3345.00 - GRAND ISLAND 345KV CKT Z	720	720	0.04264	104.0977	SHERBURNE CO 345/24.0KV TRANSFORMER CKT 1
FDNS	00NR_G14_059	0	25SP	G14_059	FROM->TO	GR ISLD-LNX3345.00 - GRAND ISLAND 345KV CKT Z	720	720	0.04264	104.0922	GEN600002 3-SHERBURNE CNTY G3
FDNS	00NR_G14_059	0	20SP	G14_059	FROM->TO	GR ISLD-LNX3345.00 - GRAND ISLAND 345KV CKT Z	720	720	0.04052	104.0652	GEN659118 1-LARAMIE RIVER UNIT1
FDNS	00NR_G14_059	0	25SP	G14_059	FROM->TO	GR ISLD-LNX3345.00 - GRAND ISLAND 345KV CKT Z	720	720	0.04343	104.0187	FTTHOM1-LNX3345.00 - LELAND2-LNX3345.00 345KV CKT 1

SOLUTION	GROUP	SCENARIO	SEASON	SOURCE	DIRECTION	MONITORED ELEMENT	RATEA (MVA)	RATEB(MVA)	TDF	TC%LOADING (% MVA)	CONTINGENCY
FDNS	00NR_G14_059	0	25SP	G14_059	FROM->TO	GR ISLD-LNX3345.00 - GRAND ISLAND 345KV CKT Z	720	720	0.04343	103.9516	P12:345:UMZB:# 108 #: LOS FT IN ND. LOS FT
FDNS	00NR_G14_059	0	25SP	G14_059	FROM->TO	GR ISLD-LNX3345.00 - GRAND ISLAND 345KV CKT Z	720	720	0.04343	103.9502	FT THOMPSON - FTTHOM1-LNX3345.00 345KV CKT Z
FDNS	00NR_G14_059	0	25SP	G14_059	FROM->TO	GR ISLD-LNX3345.00 - GRAND ISLAND 345KV CKT Z	720	720	0.04343	103.9324	LELAND OLDS - LELAND2-LNX3345.00 345KV CKT Z
FDNS	00NR_G14_059	0	25SP	G14_059	FROM->TO	GR ISLD-LNX3345.00 - GRAND ISLAND 345KV CKT Z	720	720	0.04264	103.8932	GEN640010 1-GERALD GENTLEMAN STATION UNIT 1
FDNS	00NR_G14_059	0	20SP	G14_059	FROM->TO	GR ISLD-LNX3345.00 - GRAND ISLAND 345KV CKT Z	720	720	0.04052	103.6761	GEN659111 2-LELAND OLDS UNIT2
FDNS	00NR_G14_059	0	25SP	G14_059	FROM->TO	GR ISLD-LNX3345.00 - GRAND ISLAND 345KV CKT Z	720	720	0.04264	103.5969	GEN657748 1-YOUNG 2 GENERATOR
FDNS	00NR_G14_059	0	20SP	G14_059	FROM->TO	GR ISLD-LNX3345.00 - GRAND ISLAND 345KV CKT Z	720	720	0.04052	103.4359	GEN659125 1-COVEY
FDNS	00NR_G14_059	0	25SP	G14_059	FROM->TO	GR ISLD-LNX3345.00 - GRAND ISLAND 345KV CKT Z	720	720	0.04264	103.3542	GEN659118 1-LARAMIE RIVER UNIT1
FDNS	00NR_G14_059	0	25SP	G14_059	FROM->TO	GR ISLD-LNX3345.00 - GRAND ISLAND 345KV CKT Z	720	720	0.04264	103.3433	GEN640011 2-GERALD GENTLEMAN STATION UNIT 2
FDNS	00NR_G14_059	0	20SP	G14_059	FROM->TO	GR ISLD-LNX3345.00 - GRAND ISLAND 345KV CKT Z	720	720	0.04052	103.2991	GEN659103 1-ANTELOPE VALLEY UNIT1
FDNS	00NR_G14_059	0	20SP	G14_059	FROM->TO	GR ISLD-LNX3345.00 - GRAND ISLAND 345KV CKT Z	720	720	0.04052	103.2991	GEN659107 2-ANTELOPE VALLEY UNIT2
FDNS	00NR_G14_059	0	25SP	G14_059	FROM->TO	GR ISLD-LNX3345.00 - GRAND ISLAND 345KV CKT Z	720	720	0.04264	103.0509	GEN659111 2-LELAND OLDS UNIT2
FDNS	00NR_G14_059	0	25SP	G14_059	FROM->TO	GR ISLD-LNX3345.00 - GRAND ISLAND 345KV CKT Z	720	720	0.02967	102.8995	MCCOOL - MOORE 345KV CKT 1
FDNS	00NR_G14_059	0	25SP	G14_059	FROM->TO	GR ISLD-LNX3345.00 - GRAND ISLAND 345KV CKT Z	720	720	0.04264	102.8381	GEN659125 1-COVEY
FDNS	00NR_G14_059	0	20SP	G14_059	FROM->TO	GR ISLD-LNX3345.00 - GRAND ISLAND 345KV CKT Z	720	720	0.04052	102.8006	GEN615001 1-COAL CREEK
FDNS	00NR_G14_059	0	20SP	G14_059	FROM->TO	GR ISLD-LNX3345.00 - GRAND ISLAND 345KV CKT Z	720	720	0.04052	102.7177	GEN615002 2-COAL CREEK
FDNS	00NR_G14_059	0	25SP	G14_059	FROM->TO	GR ISLD-LNX3345.00 - GRAND ISLAND 345KV CKT Z	720	720	0.04264	102.6697	GEN659103 1-ANTELOPE VALLEY UNIT1
FDNS	00NR_G14_059	0	25SP	G14_059	FROM->TO	GR ISLD-LNX3345.00 - GRAND ISLAND 345KV CKT Z	720	720	0.04264	102.6697	GEN659107 2-ANTELOPE VALLEY UNIT2
FDNS	00NR_G14_059	0	25SP	G14_059	FROM->TO	GR ISLD-LNX3345.00 - GRAND ISLAND 345KV CKT Z	720	720	0.04264	102.1504	GEN615001 1-COAL CREEK
FDNS	00NR_G14_059	0	25SP	G14_059	FROM->TO	GR ISLD-LNX3345.00 - GRAND ISLAND 345KV CKT Z	720	720	0.04264	102.0742	GEN615002 2-COAL CREEK
FDNS	00NR_G14_059	0	20SP	G14_059	TO->FROM	GR ISLD-LNX3345.00 - HOLT.CO3 345.00 345KV CKT 1	720	720	0.05448	114.6959	GERALD GENTLEMAN STATION - SWEETWATER 345KV CKT 1
FDNS	00NR_G14_059	0	25SP	G14_059	TO->FROM	GR ISLD-LNX3345.00 - HOLT.CO3 345.00 345KV CKT 1	720	720	0.05694	114.5657	GERALD GENTLEMAN STATION - SWEETWATER 345KV CKT 1
FDNS	00NR_G14_059	0	20SP	G14_059	TO->FROM	GR ISLD-LNX3345.00 - HOLT.CO3 345.00 345KV CKT 1	720	720	0.04155	114.1045	KELLY - MEADOWGROVE4230.00 230KV CKT 1
FDNS	00NR_G14_059	0	25SP	G14_059	TO->FROM	GR ISLD-LNX3345.00 - HOLT.CO3 345.00 345KV CKT 1	720	720	0.04371	113.7121	KELLY - MEADOWGROVE4230.00 230KV CKT 1
FDNS	00NR_G14_059	0	20SP	G14_059	TO->FROM	GR ISLD-LNX3345.00 - HOLT.CO3 345.00 345KV CKT 1	720	720	0.06283	113.3523	GRAND ISLAND - SWEETWATER 345KV CKT 1
FDNS	00NR_G14_059	0	20SP	G14_059	TO->FROM	GR ISLD-LNX3345.00 - HOLT.CO3 345.00 345KV CKT 1	720	720	0.05101	112.9469	GERALD GENTLEMAN STATION - SWEETWATER 345KV CKT 2
FDNS	00NR_G14_059	0	20SP	G14_059	TO->FROM	GR ISLD-LNX3345.00 - HOLT.CO3 345.00 345KV CKT 1	720	720	0.04152	112.8171	P12:230:UMZB:# 116 #: ST IN SD. WSG-ST-VH
FDNS	00NR_G14_059	0	25SP	G14_059	TO->FROM	GR ISLD-LNX3345.00 - HOLT.CO3 345.00 345KV CKT 1	720	720	0.05339	112.7471	GERALD GENTLEMAN STATION - SWEETWATER 345KV CKT 2
FDNS	00NR_G14_059	0	25SP	G14_059	TO->FROM	GR ISLD-LNX3345.00 - HOLT.CO3 345.00 345KV CKT 1	720	720	0.04364	112.48	P12:230:UMZB:# 116 #: ST IN SD. WSG-ST-VH
FDNS	00NR_G14_059	0	25SP	G14_059	TO->FROM	GR ISLD-LNX3345.00 - HOLT.CO3 345.00 345KV CKT 1	720	720	0.06574	112.3662	GRAND ISLAND - SWEETWATER 345KV CKT 1
FDNS	00NR_G14_059	0	20SP	G14_059	TO->FROM	GR ISLD-LNX3345.00 - HOLT.CO3 345.00 345KV CKT 1	720	720	0.04138	112.2138	STORLA - WESSINGTON 230KV CKT 1
FDNS	00NR_G14_059	0	25SP	G14_059	TO->FROM	GR ISLD-LNX3345.00 - HOLT.CO3 345.00 345KV CKT 1	720	720	0.04806	112.1018	MINGO - RED WILLOW 345KV CKT 1
FDNS	00NR_G14_059	0	25SP	G14_059	TO->FROM	GR ISLD-LNX3345.00 - HOLT.CO3 345.00 345KV CKT 1	720	720	0.04806	112.1018	MINGO - RED WILLOW 345KV CKT 1
FDNS	00NR_G14_059	0	25SP	G14_059	TO->FROM	GR ISLD-LNX3345.00 - HOLT.CO3 345.00 345KV CKT 1	720	720	0.0435	111.9062	STORLA - WESSINGTON 230KV CKT 1
FDNS	00NR_G14_059	0	20SP	G14_059	TO->FROM	GR ISLD-LNX3345.00 - HOLT.CO3 345.00 345KV CKT 1	720	720	0.04133	111.5003	HANLON - STORLA 230KV CKT 1
FDNS	00NR_G14_059	0	25SP	G14_059	TO->FROM	GR ISLD-LNX3345.00 - HOLT.CO3 345.00 345KV CKT 1	720	720	0.0455	111.4321	GERALD GENTLEMAN STATION - RED WILLOW 345KV CKT 1
FDNS	00NR_G14_059	0	25SP	G14_059	TO->FROM	GR ISLD-LNX3345.00 - HOLT.CO3 345.00 345KV CKT 1	720	720	0.04345	111.1428	HANLON - STORLA 230KV CKT 1
FDNS	00NR_G14_059	0	20SP	G14_059	TO->FROM	GR ISLD-LNX3345.00 - HOLT.CO3 345.00 345KV CKT 1	720	720	0.04153	111.1009	FT THOMPSON - LETCHER 230KV CKT 1
FDNS	00NR_G14_059	0	20SP	G14_059	TO->FROM	GR ISLD-LNX3345.00 - HOLT.CO3 345.00 345KV CKT 1	720	720	0.04153	111.1009	FT THOMPSON - LETCHER 230KV CKT 1
FDNS	00NR_G14_059	0	20SP	G14_059	TO->FROM	GR ISLD-LNX3345.00 - HOLT.CO3 345.00 345KV CKT 1	720	720	0.04721	111.0957	CROOKED CREEK - NORTH PLATTE 230KV CKT 1
FDNS	00NR_G14_059	0	20SP	G14_059	TO->FROM	GR ISLD-LNX3345.00 - HOLT.CO3 345.00 345KV CKT 1	720	720	0.04589	111.0573	MINGO - RED WILLOW 345KV CKT 1
FDNS	00NR_G14_059	0	20SP	G14_059	TO->FROM	GR ISLD-LNX3345.00 - HOLT.CO3 345.00 345KV CKT 1	720	720	0.04589	111.0573	MINGO - RED WILLOW 345KV CKT 1
FDNS	00NR_G14_059	0	20SP	G14_059	TO->FROM	GR ISLD-LNX3345.00 - HOLT.CO3 345.00 345KV CKT 1	720	720	0.04052	110.9863	GEN635024 4-WALTER SCOTT UNIT 4
FDNS	00NR_G14_059	0	20SP	G14_059	TO->FROM	GR ISLD-LNX3345.00 - HOLT.CO3 345.00 345KV CKT 1	720	720	0.04333	110.9264	GERALD GENTLEMAN STATION - RED WILLOW 345KV CKT 1
FDNS	00NR_G14_059	0	25SP	G14_059	TO->FROM	GR ISLD-LNX3345.00 - HOLT.CO3 345.00 345KV CKT 1	720	720	0.04951	110.8773	CROOKED CREEK - NORTH PLATTE 230KV CKT 1
FDNS	00NR_G14_059	0	25SP	G14_059	TO->FROM	GR ISLD-LNX3345.00 - HOLT.CO3 345.00 345KV CKT 1	720	720	0.04366	110.7417	FT THOMPSON - LETCHER 230KV CKT 1
FDNS	00NR_G14_059	0	25SP	G14_059	TO->FROM	GR ISLD-LNX3345.00 - HOLT.CO3 345.00 345KV CKT 1	720	720	0.04366	110.7417	FT THOMPSON - LETCHER 230KV CKT 1
FDNS	00NR_G14_059	0	20SP	G14_059	TO->FROM	GR ISLD-LNX3345.00 - HOLT.CO3 345.00 345KV CKT 1	720	720	0.04155	110.6087	FT RANDAL - MEADOWGROVE4230.00 230KV CKT 1
FDNS	00NR_G14_059	0	25SP	G14_059	TO->FROM	GR ISLD-LNX3345.00 - HOLT.CO3 345.00 345KV CKT 1	720	720	0.0428	110.5918	BUFFALO - JAMESTOWN 345KV CKT 1
FDNS	00NR_G14_059	0	20SP	G14_059	TO->FROM	GR ISLD-LNX3345.00 - HOLT.CO3 345.00 345KV CKT 1	720	720	0.04068	110.5572	BUFFALO - JAMESTOWN 345KV CKT 1
FDNS	00NR_G14_059	0	20SP	G14_059	TO->FROM	GR ISLD-LNX3345.00 - HOLT.CO3 345.00 345KV CKT 1	720	720	0.04052	110.5167	GEN635023 3-WALTER SCOTT UNIT 3
FDNS	00NR_G14_059	0	25SP	G14_059	TO->FROM	GR ISLD-LNX3345.00 - HOLT.CO3 345.00 345KV CKT 1	720	720	0.04264	110.3625	GEN635024 4-WALTER SCOTT UNIT 4
FDNS	00NR_G14_059	0	20SP	G14_059	TO->FROM	GR ISLD-LNX3345.00 - HOLT.CO3 345.00 345KV CKT 1	720	720	0.04144	110.3395	FT RANDAL - G12_009IST 230.00 230KV CKT 1
FDNS	00NR_G14_059	0	20SP	G14_059	TO->FROM	GR ISLD-LNX3345.00 - HOLT.CO3 345.00 345KV CKT 1	720	720	0.04146	110.3273	FT RANDAL - FT THOMPSON 230KV CKT 1
FDNS	00NR_G14_059	0	20SP	G14_059	TO->FROM	GR ISLD-LNX3345.00 - HOLT.CO3 345.00 345KV CKT 1	720	720	0.04146	110.3273	FT RANDAL - FT THOMPSON 230KV CKT 1
FDNS	00NR_G14_059	0	20SP	G14_059	TO->FROM	GR ISLD-LNX3345.00 - HOLT.CO3 345.00 345KV CKT 1	720	720	0.04144	110.2824	FT THOMPSON - LAKE PLATT 230KV CKT 1
FDNS	00NR_G14_059	0	20SP	G14_059	TO->FROM	GR ISLD-LNX3345.00 - HOLT.CO3 345.00 345KV CKT 1	720	720	0.04144	110.2824	FT THOMPSON - LAKE PLATT 230KV CKT 1
FDNS	00NR_G14_059	0	20SP	G14_059	TO->FROM	GR ISLD-LNX3345.00 - HOLT.CO3 345.00 345KV CKT 1	720	720	0.04071	110.2133	G09_001IST 345.00 - WATERTOWN 345KV CKT 1
FDNS	00NR_G14_059	0	25SP	G14_059	TO->FROM	GR ISLD-LNX3345.00 - HOLT.CO3 345.00 345KV CKT 1	720	720	0.04371	110.0611	FT RANDAL - MEADOWGROVE4230.00 230KV CKT 1
FDNS	00NR_G14_059	0	20SP	G14_059	TO->FROM	GR ISLD-LNX3345.00 - HOLT.CO3 345.00 345KV CKT 1	720	720	0.04144	110.0595	G12_009IST 230.00 - LAKE PLATT 230KV CKT 1
FDNS	00NR_G14_059	0	20SP	G14_059	TO->FROM	GR ISLD-LNX3345.00 - HOLT.CO3 345.00 345KV CKT 1	720	720	0.04052	110.0476	GEN336821 1-GRAND GULF UNIT
FDNS	00NR_G14_059	0	25SP	G14_059	TO->FROM	GR ISLD-LNX3345.00 - HOLT.CO3 345.00 345KV CKT 1	720	720	0.04264	109.9151	GEN635023 3-WALTER SCOTT UNIT 3
FDNS	00NR_G14_059	0	20SP	G14_059	TO->FROM	GR ISLD-LNX3345.00 - HOLT.CO3 345.00 345KV CKT 1	720	720	0.04052	109.892	GEN344225 1-1CAL G1 25.000
FDNS	00NR_G14_059	0	25SP	G14_059	TO->FROM	GR ISLD-LNX3345.00 - HOLT.CO3 345.00 345KV CKT 1	720	720	0.04359	109.8575	FT RANDAL - FT THOMPSON 230KV CKT 1
FDNS	00NR_G14_059	0	25SP	G14_059	TO->FROM	GR ISLD-LNX3345.00 - HOLT.CO3 345.00 345KV CKT 1	720	720	0.04359	109.8575	FT RANDAL - FT THOMPSON 230KV CKT 1
FDNS	00NR_G14_059	0	25SP	G14_059	TO->FROM	GR ISLD-LNX3345.00 - HOLT.CO3 345.00 345KV CKT 1	720	720	0.04356	109.8572	FT RANDAL - G12_009IST 230.00 230KV CKT 1
FDNS	00NR_G14_059	0	25SP	G14_059	TO->FROM	GR ISLD-LNX3345.00 - HOLT.CO3 345.00 345KV CKT 1	720	720	0.04356	109.8123	FT THOMPSON - LAKE PLATT 230KV CKT 1
FDNS	00NR_G14_059	0	25SP	G14_059	TO->FROM	GR ISLD-LNX3345.00 - HOLT.CO3 345.00 345KV CKT 1	720	720	0.04356	109.8123	FT THOMPSON - LAKE PLATT 230KV CKT 1
FDNS	00NR_G14_059	0	20SP	G14_059	TO->FROM	GR ISLD-LNX3345.00 - HOLT.CO3 345.00 345KV CKT 1	720	720	0.04096	109.8002	WATERTN-LNX3345.00 - WHITE 345KV CKT 1
FDNS	00NR_G14_059	0	25SP	G14_059	TO->FROM	GR ISLD-LNX3345.00 - HOLT.CO3 345.00 345KV CKT 1	720	720	0.04284	109.797	G09_001IST 345.00 - WATERTOWN 345KV CKT 1
FDNS	00NR_G14_059	0	20SP	G14_059	TO->FROM	GR ISLD-LNX3345.00 - HOLT.CO3 345.00 345KV CKT 1	720	720	0.04052	109.762	GEN640009 1-COOPER NUCLEAR STATION
FDNS	00NR_G14_059	0	20SP	G14_059	TO->FROM	GR ISLD-LNX3345.00 - HOLT.CO3 345.00 345KV CKT 1	720	720	0.04083	109.7536	SPLIT ROCK - WHITE 345KV CKT 1
FDNS	00NR_G14_059	0	20SP	G14_059	TO->FROM	GR ISLD-LNX3345.00 - HOLT.CO3 345.00 345KV CKT 1	720	720	0.04083	109.7536	SPLIT ROCK - WHITE 345KV CKT 1

SOLUTION	GROUP	SCENARIO	SEASON	SOURCE	DIRECTION	MONITORED ELEMENT	RATEA (MVA)	RATEB(MVA)	TDF	TC%LOADING (% MVA)	CONTINGENCY
FDNS	00NR_G14_059	0	20SP	G14_059	TO->FROM	GR ISLD-LNX3345.00 - HOLT.CO3 345.00 345KV CKT 1	720	720	0.04118	109.7358	LETCHER - SIOUX FALLS 230KV CKT 1
FDNS	00NR_G14_059	0	20SP	G14_059	TO->FROM	GR ISLD-LNX3345.00 - HOLT.CO3 345.00 345KV CKT 1	720	720	0.04096	109.7312	WATERTN-LNX3345.00 - WATERTOWN 345KV CKT Z
FDNS	00NR_G14_059	0	20SP	G14_059	TO->FROM	GR ISLD-LNX3345.00 - HOLT.CO3 345.00 345KV CKT 1	720	720	0.04096	109.7307	P12:345:UMZW:# 1747 #: WT2 IN SD. WT2-WHT LINE FAULT
FDNS	00NR_G14_059	0	20SP	G14_059	TO->FROM	GR ISLD-LNX3345.00 - HOLT.CO3 345.00 345KV CKT 1	720	720	0.04052	109.603	GEN336153 1-WATERFORD UNIT#3
FDNS	00NR_G14_059	0	20SP	G14_059	TO->FROM	GR ISLD-LNX3345.00 - HOLT.CO3 345.00 345KV CKT 1	720	720	0.04052	109.6006	GEN337911 1-ARKANSAS NUCLEAR ONE UNIT #2
FDNS	00NR_G14_059	0	20SP	G14_059	TO->FROM	GR ISLD-LNX3345.00 - HOLT.CO3 345.00 345KV CKT 1	720	720	0.04068	109.5863	CENTER - JAMESTOWN 345KV CKT 1
FDNS	00NR_G14_059	0	25SP	G14_059	TO->FROM	GR ISLD-LNX3345.00 - HOLT.CO3 345.00 345KV CKT 1	720	720	0.04356	109.5701	G12_009IST 230.00 - LAKE PLATT 230KV CKT 1
FDNS	00NR_G14_059	0	25SP	G14_059	TO->FROM	GR ISLD-LNX3345.00 - HOLT.CO3 345.00 345KV CKT 1	720	720	0.04264	109.4684	GEN336821 1-GRAND GULF UNIT
FDNSLock	00NR_G14_059	0	20SP	G14_059	TO->FROM	GR ISLD-LNX3345.00 - HOLT.CO3 345.00 345KV CKT 1	720	720	0.04057	109.4658	FORBES - ROSEAU 500KV CKT 1
FDNS	00NR_G14_059	0	20SP	G14_059	TO->FROM	GR ISLD-LNX3345.00 - HOLT.CO3 345.00 345KV CKT 1	720	720	0.04175	109.4494	RAUN - SUB 3451 FT CAL 345KV CKT 1
FDNS	00NR_G14_059	0	20SP	G14_059	TO->FROM	GR ISLD-LNX3345.00 - HOLT.CO3 345.00 345KV CKT 1	720	720	0.04175	109.4494	RAUN - SUB 3451 FT CAL 345KV CKT 1
FDNS	00NR_G14_059	0	25SP	G14_059	TO->FROM	GR ISLD-LNX3345.00 - HOLT.CO3 345.00 345KV CKT 1	720	720	0.0428	109.414	CENTER - JAMESTOWN 345KV CKT 1
FDNS	00NR_G14_059	0	20SP	G14_059	TO->FROM	GR ISLD-LNX3345.00 - HOLT.CO3 345.00 345KV CKT 1	720	720	0.04105	109.4032	FT RANDAL - SIOUX CITY 230KV CKT 1
FDNS	00NR_G14_059	0	20SP	G14_059	TO->FROM	GR ISLD-LNX3345.00 - HOLT.CO3 345.00 345KV CKT 1	720	720	0.04063	109.3871	BISON 3 345.00 - BUFFALO 345KV CKT 1
FDNS	00NR_G14_059	0	20SP	G14_059	TO->FROM	GR ISLD-LNX3345.00 - HOLT.CO3 345.00 345KV CKT 1	720	720	0.04116	109.3752	THEDFRD3 345.00 (THEDFORDT2) 345/115/13.8KV TRANSFORMER CKT 1
FDNS	00NR_G14_059	0	20SP	G14_059	TO->FROM	GR ISLD-LNX3345.00 - HOLT.CO3 345.00 345KV CKT 1	720	720	0.04052	109.3579	GEN335831 1-RIVERBEND UNIT#1
FDNS	00NR_G14_059	0	20SP	G14_059	TO->FROM	GR ISLD-LNX3345.00 - HOLT.CO3 345.00 345KV CKT 1	720	720	0.04052	109.3392	GEN641089 2-ENERGY CENTER 2
FDNS	00NR_G14_059	0	25SP	G14_059	TO->FROM	GR ISLD-LNX3345.00 - HOLT.CO3 345.00 345KV CKT 1	720	720	0.04264	109.3128	GEN344225 1-1CAL G1 25.000
FDNS	00NR_G14_059	0	20SP	G14_059	TO->FROM	GR ISLD-LNX3345.00 - HOLT.CO3 345.00 345KV CKT 1	720	720	0.04109	109.2927	SIOUXCY-LNX3345.00 - SPLIT ROCK 345KV CKT 1
FDNS	00NR_G14_059	0	20SP	G14_059	TO->FROM	GR ISLD-LNX3345.00 - HOLT.CO3 345.00 345KV CKT 1	720	720	0.04109	109.2927	SIOUXCY-LNX3345.00 - SPLIT ROCK 345KV CKT 1
FDNS	00NR_G14_059	0	20SP	G14_059	TO->FROM	GR ISLD-LNX3345.00 - HOLT.CO3 345.00 345KV CKT 1	720	720	0.04052	109.2738	GEN337910 1-ARKANSAS NUCLEAR ONE UNIT #1
FDNS	00NR_G14_059	0	25SP	G14_059	TO->FROM	GR ISLD-LNX3345.00 - HOLT.CO3 345.00 345KV CKT 1	720	720	0.04264	109.2733	GEN640009 1-COOPER NUCLEAR STATION
FDNS	00NR_G14_059	0	20SP	G14_059	TO->FROM	GR ISLD-LNX3345.00 - HOLT.CO3 345.00 345KV CKT 1	720	720	0.04062	109.2713	CHISAGO COUNTY - CHISAGO COUNTY 500KV CKT 1
FDNS	00NR_G14_059	0	25SP	G14_059	TO->FROM	GR ISLD-LNX3345.00 - HOLT.CO3 345.00 345KV CKT 1	720	720	0.0433	109.2711	LETCHER - SIOUX FALLS 230KV CKT 1
FDNS	00NR_G14_059	0	20SP	G14_059	TO->FROM	GR ISLD-LNX3345.00 - HOLT.CO3 345.00 345KV CKT 1	720	720	0.04109	109.2648	P12:345:UMZW:# 907 #: SC2-SR IN IA. SC2-SR 345 KV LINE
FDNS	00NR_G14_059	0	20SP	G14_059	TO->FROM	GR ISLD-LNX3345.00 - HOLT.CO3 345.00 345KV CKT 1	720	720	0.04109	109.2486	SIOUX CITY - SIOUXCY-LNX3345.00 345KV CKT Z
FDNS	00NR_G14_059	0	20SP	G14_059	TO->FROM	GR ISLD-LNX3345.00 - HOLT.CO3 345.00 345KV CKT 1	720	720	0.04062	109.2267	CHISAGO COUNTY - FORBES 500KV CKT 1
FDNS	00NR_G14_059	0	25SP	G14_059	TO->FROM	GR ISLD-LNX3345.00 - HOLT.CO3 345.00 345KV CKT 1	720	720	0.04308	109.2232	WATERTN-LNX3345.00 - WHITE 345KV CKT 1
FDNS	00NR_G14_059	0	20SP	G14_059	TO->FROM	GR ISLD-LNX3345.00 - HOLT.CO3 345.00 345KV CKT 1	720	720	0.04057	109.2104	ROSEAU - ROSEAUM 2 500.00 500KV CKT 1
FDNS	00NR_G14_059	0	20SP	G14_059	TO->FROM	GR ISLD-LNX3345.00 - HOLT.CO3 345.00 345KV CKT 1	720	720	0.04057	109.2103	RIEL - ROSEAU 500KV CKT 1
FDNS	00NR_G14_059	0	20SP	G14_059	TO->FROM	GR ISLD-LNX3345.00 - HOLT.CO3 345.00 345KV CKT 1	720	720	0.04057	109.2066	ROSEAU - ROSEAUM 2 500.00 500KV CKT 1
FDNS	00NR_G14_059	0	25SP	G14_059	TO->FROM	GR ISLD-LNX3345.00 - HOLT.CO3 345.00 345KV CKT 1	720	720	0.04295	109.185	SPLIT ROCK - WHITE 345KV CKT 1
FDNS	00NR_G14_059	0	25SP	G14_059	TO->FROM	GR ISLD-LNX3345.00 - HOLT.CO3 345.00 345KV CKT 1	720	720	0.04295	109.185	SPLIT ROCK - WHITE 345KV CKT 1
FDNS	00NR_G14_059	0	20SP	G14_059	TO->FROM	GR ISLD-LNX3345.00 - HOLT.CO3 345.00 345KV CKT 1	720	720	0.04052	109.1623	GEN645012 2-NEBRASKA CITY 2
FDNS	00NR_G14_059	0	25SP	G14_059	TO->FROM	GR ISLD-LNX3345.00 - HOLT.CO3 345.00 345KV CKT 1	720	720	0.04308	109.1526	WATERTN-LNX3345.00 - WATERTOWN 345KV CKT Z
FDNS	00NR_G14_059	0	25SP	G14_059	TO->FROM	GR ISLD-LNX3345.00 - HOLT.CO3 345.00 345KV CKT 1	720	720	0.04308	109.1447	P12:345:UMZW:# 1747 #: WT2 IN SD. WT2-WHT LINE FAULT
FDNS	00NR_G14_059	0	25SP	G14_059	TO->FROM	GR ISLD-LNX3345.00 - HOLT.CO3 345.00 345KV CKT 1	720	720	0.04276	109.0922	BISON 3 345.00 - BUFFALO 345KV CKT 1
FDNS	00NR_G14_059	0	20SP	G14_059	TO->FROM	GR ISLD-LNX3345.00 - HOLT.CO3 345.00 345KV CKT 1	720	720	0.04052	109.0624	GEN645011 1-NEBRASKA CITY 1
FDNS	00NR_G14_059	0	25SP	G14_059	TO->FROM	GR ISLD-LNX3345.00 - HOLT.CO3 345.00 345KV CKT 1	720	720	0.04264	109.0573	GEN337911 1-ARKANSAS NUCLEAR ONE UNIT #2
FDNS	00NR_G14_059	0	20SP	G14_059	TO->FROM	GR ISLD-LNX3345.00 - HOLT.CO3 345.00 345KV CKT 1	720	720	0.04098	109.0525	HANLON - SIOUX FALLS 230KV CKT 1
FDNS	00NR_G14_059	0	20SP	G14_059	TO->FROM	GR ISLD-LNX3345.00 - HOLT.CO3 345.00 345KV CKT 1	720	720	0.04158	109.0437	P12:115:NPPD:1167A:AINSWRT7:ONEILL 7:BTB
FDNS	00NR_G14_059	0	20SP	G14_059	TO->FROM	GR ISLD-LNX3345.00 - HOLT.CO3 345.00 345KV CKT 1	720	720	0.04224	109.0389	CALLAWAY - MAXWELL 115KV CKT 1
FDNS	00NR_G14_059	0	20SP	G14_059	TO->FROM	GR ISLD-LNX3345.00 - HOLT.CO3 345.00 345KV CKT 1	720	720	0.0406	109.0339	ARROWHEAD - ARROWHEAD 230 230KV CKT 1
FDNS	00NR_G14_059	0	25SP	G14_059	TO->FROM	GR ISLD-LNX3345.00 - HOLT.CO3 345.00 345KV CKT 1	720	720	0.04264	109.025	GEN336153 1-WATERFORD UNIT#3
FDNS	00NR_G14_059	0	25SP	G14_059	TO->FROM	GR ISLD-LNX3345.00 - HOLT.CO3 345.00 345KV CKT 1	720	720	0.0433	108.9849	THEDFRD3 345.00 (THEDFORDT2) 345/115/13.8KV TRANSFORMER CKT 1
FDNS	00NR_G14_059	0	20SP	G14_059	TO->FROM	GR ISLD-LNX3345.00 - HOLT.CO3 345.00 345KV CKT 1	720	720	0.04088	108.9817	FT RANDAL - UTICA JCT 230KV CKT 1
FDNS	00NR_G14_059	0	20SP	G14_059	TO->FROM	GR ISLD-LNX3345.00 - HOLT.CO3 345.00 345KV CKT 1	720	720	0.04071	108.971	G09_001IST 345.00 - GROTON 345KV CKT 1
FDNS	00NR_G14_059	0	20SP	G14_059	TO->FROM	GR ISLD-LNX3345.00 - HOLT.CO3 345.00 345KV CKT 1	720	720	0.0407	108.9697	GROTON-LNX3 345.00 - LELAND1-LNX3345.00 345KV CKT 1
FDNS	00NR_G14_059	0	20SP	G14_059	TO->FROM	GR ISLD-LNX3345.00 - HOLT.CO3 345.00 345KV CKT 1	720	720	0.04052	108.9492	GEN337653 1-WHITE BLUFF UNIT #2
FDNS	00NR_G14_059	0	20SP	G14_059	TO->FROM	GR ISLD-LNX3345.00 - HOLT.CO3 345.00 345KV CKT 1	720	720	0.0407	108.9386	P12:345:UMZB:# 109 #: LOS GRT IN ND. LOS GRT
FDNS	00NR_G14_059	0	20SP	G14_059	TO->FROM	GR ISLD-LNX3345.00 - HOLT.CO3 345.00 345KV CKT 1	720	720	0.04085	108.9385	PAHOJA - SIOUX FALLS 230KV CKT 1
FDNS	00NR_G14_059	0	20SP	G14_059	TO->FROM	GR ISLD-LNX3345.00 - HOLT.CO3 345.00 345KV CKT 1	720	720	0.0407	108.9363	GROTON - GROTON-LNX3 345.00 345KV CKT Z
FDNS	00NR_G14_059	0	25SP	G14_059	TO->FROM	GR ISLD-LNX3345.00 - HOLT.CO3 345.00 345KV CKT 1	720	720	0.04386	108.9356	RAUN - SUB 3451 FT CAL 345KV CKT 1
FDNS	00NR_G14_059	0	25SP	G14_059	TO->FROM	GR ISLD-LNX3345.00 - HOLT.CO3 345.00 345KV CKT 1	720	720	0.04386	108.9356	RAUN - SUB 3451 FT CAL 345KV CKT 1
FDNS	00NR_G14_059	0	25SP	G14_059	TO->FROM	GR ISLD-LNX3345.00 - HOLT.CO3 345.00 345KV CKT 1	720	720	0.0407	108.9316	LELAND OLDS - LELAND1-LNX3345.00 345KV CKT Z
FDNS	00NR_G14_059	0	20SP	G14_059	TO->FROM	GR ISLD-LNX3345.00 - HOLT.CO3 345.00 345KV CKT 1	720	720	0.04076	108.916	LAKEFIELD 3 - NOBLES 345KV CKT 1
FDNS	00NR_G14_059	0	20SP	G14_059	TO->FROM	GR ISLD-LNX3345.00 - HOLT.CO3 345.00 345KV CKT 1	720	720	0.04052	108.9156	GEN337652 1-WHITE BLUFF UNIT #1
FDNS	00NR_G14_059	0	20SP	G14_059	TO->FROM	GR ISLD-LNX3345.00 - HOLT.CO3 345.00 345KV CKT 1	720	720	0.04052	108.9067	GEN338143 1-INDEPENDENCE UNIT #1
FDNS	00NR_G14_059	0	20SP	G14_059	TO->FROM	GR ISLD-LNX3345.00 - HOLT.CO3 345.00 345KV CKT 1	720	720	0.04052	108.9012	GEN338146 1-INDEPENDENCE UNIT #2
FDNS	00NR_G14_059	0	25SP	G14_059	TO->FROM	GR ISLD-LNX3345.00 - HOLT.CO3 345.00 345KV CKT 1	720	720	0.04317	108.8993	FT RANDAL - SIOUX CITY 230KV CKT 1
FDNS	00NR_G14_059	0	25SP	G14_059	TO->FROM	GR ISLD-LNX3345.00 - HOLT.CO3 345.00 345KV CKT 1	720	720	0.04264	108.8787	GEN641089 2-ENERGY CENTER 2
FDNS	00NR_G14_059	0	25SP	G14_059	TO->FROM	GR ISLD-LNX3345.00 - HOLT.CO3 345.00 345KV CKT 1	720	720	0.04274	108.871	CHISAGO COUNTY - CHISAGO COUNTY 500KV CKT 1
FDNS	00NR_G14_059	0	20SP	G14_059	TO->FROM	GR ISLD-LNX3345.00 - HOLT.CO3 345.00 345KV CKT 1	720	720	0.04491	108.8205	CROOKED CREEK - RIVERDALE 230KV CKT 1
FDNS	00NR_G14_059	0	25SP	G14_059	TO->FROM	GR ISLD-LNX3345.00 - HOLT.CO3 345.00 345KV CKT 1	720	720	0.04264	108.8197	GEN335831 1-RIVERBEND UNIT#1
FDNS	00NR_G14_059	0	20SP	G14_059	TO->FROM	GR ISLD-LNX3345.00 - HOLT.CO3 345.00 345KV CKT 1	720	720	0.04052	108.8102	GEN501801 1-DOLET HILLS UNIT1
FDNS	00NR_G14_059	0	25SP	G14_059	TO->FROM	GR ISLD-LNX3345.00 - HOLT.CO3 345.00 345KV CKT 1	720	720	0.04541	108.7714	MINGO - SETAB 345KV CKT 1
FDNS	00NR_G14_059	0	25SP	G14_059	TO->FROM	GR ISLD-LNX3345.00 - HOLT.CO3 345.00 345KV CKT 1	720	720	0.04541	108.7714	MINGO - SETAB 345KV CKT 1
FDNS	00NR_G14_059	0	20SP	G14_059	TO->FROM	GR ISLD-LNX3345.00 - HOLT.CO3 345.00 345KV CKT 1	720	720	0.04052	108.77	GEN336252 1-NINEMILE POINT UNIT#5
FDNS	00NR_G14_059	0	20SP	G14_059	TO->FROM	GR ISLD-LNX3345.00 - HOLT.CO3 345.00 345KV CKT 1	720	720	0.04061	108.7596	BROOKING COUNTY - LYON COUNTY 345KV CKT 1
FDNS	00NR_G14_059	0	25SP	G14_059	TO->FROM	GR ISLD-LNX3345.00 - HOLT.CO3 345.00 345KV CKT 1	720	720	0.04264	108.7595	GEN337910 1-ARKANSAS NUCLEAR ONE UNIT #1
FDNS	00NR_G14_059	0	20SP	G14_059	TO->FROM	GR ISLD-LNX3345.00 - HOLT.CO3 345.00 345KV CKT 1	720	720	0.04058	108.7574	AS KING - EAU CLAIRE 345KV CKT 1
FDNS	00NR_G14_059	0	20SP	G14_059	TO->FROM	GR ISLD-LNX3345.00 - HOLT.CO3 345.00 345KV CKT 1	720	720	0.04088	108.7565	CARPENTER - HURON 230KV CKT 1
FDNS	00NR_G14_059	0	20SP	G14_059	TO->FROM	GR ISLD-LNX3345.00 - HOLT.CO3 345.00 345KV CKT 1	720	720	0.04138	108.7321	FT THOMPSON - WESSINGTON 230KV CKT 1

SOLUTION	GROUP	SCENARIO	SEASON	SOURCE	DIRECTION	MONITORED ELEMENT	RATEA (MVA)	RATEB(MVA)	TDF	TC%LOADING (% MVA)	CONTINGENCY
FDNS	00NR_G14_059	0	20SP	G14_059	TO->FROM	GR ISLD-LNX3345.00 - HOLT.CO3 345.00 345KV CKT 1	720	720	0.04138	108.7321	FT THOMPSON - WESSINGTON 230KV CKT 1
FDNS	00NR_G14_059	0	20SP	G14_059	TO->FROM	GR ISLD-LNX3345.00 - HOLT.CO3 345.00 345KV CKT 1	720	720	0.04052	108.7142	GEN336251 1-NINEMILE POINT UNIT#4
FDNS	00NR_G14_059	0	20SP	G14_059	TO->FROM	GR ISLD-LNX3345.00 - HOLT.CO3 345.00 345KV CKT 1	720	720	0.04052	108.7132	GEN542962 2-IATAN UNIT #2
FDNS	00NR_G14_059	0	25SP	G14_059	TO->FROM	GR ISLD-LNX3345.00 - HOLT.CO3 345.00 345KV CKT 1	720	720	0.04322	108.7128	SIOUXCY-LNX3345.00 - SPLIT ROCK 345KV CKT 1
FDNS	00NR_G14_059	0	25SP	G14_059	TO->FROM	GR ISLD-LNX3345.00 - HOLT.CO3 345.00 345KV CKT 1	720	720	0.04322	108.7128	SIOUXCY-LNX3345.00 - SPLIT ROCK 345KV CKT 1
FDNS	00NR_G14_059	0	25SP	G14_059	TO->FROM	GR ISLD-LNX3345.00 - HOLT.CO3 345.00 345KV CKT 1	720	720	0.04269	108.7092	RIEL - ROSEAU 500KV CKT 1
FDNS	00NR_G14_059	0	20SP	G14_059	TO->FROM	GR ISLD-LNX3345.00 - HOLT.CO3 345.00 345KV CKT 1	720	720	0.04052	108.7043	GEN336831 1-BAXTER WILSON SES
FDNS	00NR_G14_059	0	25SP	G14_059	TO->FROM	GR ISLD-LNX3345.00 - HOLT.CO3 345.00 345KV CKT 1	720	720	0.04269	108.6997	ROSEAU - ROSEAUM 2 500.00 500KV CKT 1
FDNS	00NR_G14_059	0	25SP	G14_059	TO->FROM	GR ISLD-LNX3345.00 - HOLT.CO3 345.00 345KV CKT 1	720	720	0.04269	108.6997	ROSEAU - ROSEAUM 2 500.00 500KV CKT 1
FDNS	00NR_G14_059	0	20SP	G14_059	TO->FROM	GR ISLD-LNX3345.00 - HOLT.CO3 345.00 345KV CKT 1	720	720	0.04085	108.6907	EAGLE 4 230.00 - PAHOJA 230KV CKT 1
FDNS	00NR_G14_059	0	20SP	G14_059	TO->FROM	GR ISLD-LNX3345.00 - HOLT.CO3 345.00 345KV CKT 1	720	720	0.04088	108.688	HURON - WATERTOWN 230KV CKT 2
FDNS	00NR_G14_059	0	20SP	G14_059	TO->FROM	GR ISLD-LNX3345.00 - HOLT.CO3 345.00 345KV CKT 1	720	720	0.04088	108.688	HURON - WATERTOWN 230KV CKT 2
FDNS	00NR_G14_059	0	25SP	G14_059	TO->FROM	GR ISLD-LNX3345.00 - HOLT.CO3 345.00 345KV CKT 1	720	720	0.04322	108.6874	P12:345:UMZW:# 907 #: SC2-SR IN IA. SC2-SR 345 KV LINE
FDNS	00NR_G14_059	0	20SP	G14_059	TO->FROM	GR ISLD-LNX3345.00 - HOLT.CO3 345.00 345KV CKT 1	720	720	0.04052	108.6821	GEN532751 1-WOLF CREEK GENERATING STATION UNIT 1
FDNS	00NR_G14_059	0	20SP	G14_059	TO->FROM	GR ISLD-LNX3345.00 - HOLT.CO3 345.00 345KV CKT 1	720	720	0.04052	108.673	GEN337041 1-GERALD ANDRUS
FDNS	00NR_G14_059	0	20SP	G14_059	TO->FROM	GR ISLD-LNX3345.00 - HOLT.CO3 345.00 345KV CKT 1	720	720	0.04088	108.6659	RASMUSN - UTICA JCT 230KV CKT 1
FDNS	00NR_G14_059	0	20SP	G14_059	TO->FROM	GR ISLD-LNX3345.00 - HOLT.CO3 345.00 345KV CKT 1	720	720	0.03956	108.6659	STAPLETON - THEDFORD 115KV CKT 1
FDNS	00NR_G14_059	0	25SP	G14_059	TO->FROM	GR ISLD-LNX3345.00 - HOLT.CO3 345.00 345KV CKT 1	720	720	0.04322	108.6655	SIOUX CITY - SIOUXCY-LNX3345.00 345KV CKT Z
FDNS	00NR_G14_059	0	20SP	G14_059	TO->FROM	GR ISLD-LNX3345.00 - HOLT.CO3 345.00 345KV CKT 1	720	720	0.04088	108.6596	CARPENTER - WATERTOWN 230KV CKT 1
FDNS	00NR_G14_059	0	20SP	G14_059	TO->FROM	GR ISLD-LNX3345.00 - HOLT.CO3 345.00 345KV CKT 1	720	720	0.04088	108.6596	CARPENTER - WATERTOWN 230KV CKT 1
FDNS	00NR_G14_059	0	25SP	G14_059	TO->FROM	GR ISLD-LNX3345.00 - HOLT.CO3 345.00 345KV CKT 1	720	720	0.04442	108.6325	CALLAWAY - MAXWELL 115KV CKT 1
FDNS	00NR_G14_059	0	20SP	G14_059	TO->FROM	GR ISLD-LNX3345.00 - HOLT.CO3 345.00 345KV CKT 1	720	720	0.04052	108.6301	GEN501813 1-RODEMACHER UNIT 3
FDNS	00NR_G14_059	0	20SP	G14_059	TO->FROM	GR ISLD-LNX3345.00 - HOLT.CO3 345.00 345KV CKT 1	720	720	0.04067	108.6198	ALEXMRES3 345.00 - BISON 3 345.00 345KV CKT 1
FDNS	00NR_G14_059	0	20SP	G14_059	TO->FROM	GR ISLD-LNX3345.00 - HOLT.CO3 345.00 345KV CKT 1	720	720	0.04069	108.6185	HAZLETON - MITCHLCO3 345.00 345KV CKT 1
FDNS	00NR_G14_059	0	25SP	G14_059	TO->FROM	GR ISLD-LNX3345.00 - HOLT.CO3 345.00 345KV CKT 1	720	720	0.04264	108.6138	GEN645012 2-NEBRASKA CITY 2
FDNS	00NR_G14_059	0	20SP	G14_059	TO->FROM	GR ISLD-LNX3345.00 - HOLT.CO3 345.00 345KV CKT 1	720	720	0.04052	108.6028	GEN344897 4-1LAB G4 20.000
FDNS	00NR_G14_059	0	20SP	G14_059	TO->FROM	GR ISLD-LNX3345.00 - HOLT.CO3 345.00 345KV CKT 1	720	720	0.04052	108.6016	GEN344894 1-1LAB G1 20.000
FDNS	00NR_G14_059	0	20SP	G14_059	TO->FROM	GR ISLD-LNX3345.00 - HOLT.CO3 345.00 345KV CKT 1	720	720	0.04052	108.6016	GEN344895 2-1LAB G2 20.000
FDNS	00NR_G14_059	0	20SP	G14_059	TO->FROM	GR ISLD-LNX3345.00 - HOLT.CO3 345.00 345KV CKT 1	720	720	0.04052	108.6016	GEN344896 3-1LAB G3 20.000
FDNS	00NR_G14_059	0	20SP	G14_059	TO->FROM	GR ISLD-LNX3345.00 - HOLT.CO3 345.00 345KV CKT 1	720	720	0.04052	108.5779	GEN542957 1-IATAN UNIT #1
FDNSLock	00NR_G14_059	0	20SP	G14_059	TO->FROM	GR ISLD-LNX3345.00 - HOLT.CO3 345.00 345KV CKT 1	720	720	0.04057	108.5731	CENTER - CNTSHNT3 345.00 345KV CKT Z1
FDNS	00NR_G14_059	0	20SP	G14_059	TO->FROM	GR ISLD-LNX3345.00 - HOLT.CO3 345.00 345KV CKT 1	720	720	0.04126	108.5695	P12:115:NPPD:1164:ONEILL 7:JEFFREY9:BTB
FDNS	00NR_G14_059	0	20SP	G14_059	TO->FROM	GR ISLD-LNX3345.00 - HOLT.CO3 345.00 345KV CKT 1	720	720	0.04052	108.5685	GEN629075 1-OTTUMWA GENERATOR FOR OTTUMWA UNIT NO 1
FDNS	00NR_G14_059	0	25SP	G14_059	TO->FROM	GR ISLD-LNX3345.00 - HOLT.CO3 345.00 345KV CKT 1	720	720	0.04371	108.5613	P12:115:NPPD:1167A:AINSWRT7:ONEILL 7:BTB
FDNS	00NR_G14_059	0	20SP	G14_059	TO->FROM	GR ISLD-LNX3345.00 - HOLT.CO3 345.00 345KV CKT 1	720	720	0.04052	108.5507	GEN345671 2-1RUSH G2 18.000
FDNS	00NR_G14_059	0	20SP	G14_059	TO->FROM	GR ISLD-LNX3345.00 - HOLT.CO3 345.00 345KV CKT 1	720	720	0.04052	108.5475	GEN345670 1-1RUSH G1 18.000
FDNS	00NR_G14_059	0	25SP	G14_059	TO->FROM	GR ISLD-LNX3345.00 - HOLT.CO3 345.00 345KV CKT 1	720	720	0.0431	108.5463	HANLON - SIOUX FALLS 230KV CKT 1
FDNS	00NR_G14_059	0	20SP	G14_059	TO->FROM	GR ISLD-LNX3345.00 - HOLT.CO3 345.00 345KV CKT 1	720	720	0.04088	108.5344	RASMUSN - SIOUX CITY 230KV CKT 1
FDNS	00NR_G14_059	0	20SP	G14_059	TO->FROM	GR ISLD-LNX3345.00 - HOLT.CO3 345.00 345KV CKT 1	720	720	0.04158	108.5339	BASSETT 7115.00 - STUART 115KV CKT 1
FDNS	00NR_G14_059	0	20SP	G14_059	TO->FROM	GR ISLD-LNX3345.00 - HOLT.CO3 345.00 345KV CKT 1	720	720	0.04097	108.5319	GRIMES - LEHIGH 345KV CKT 1
FDNS	00NR_G14_059	0	25SP	G14_059	TO->FROM	GR ISLD-LNX3345.00 - HOLT.CO3 345.00 345KV CKT 1	720	720	0.043	108.5246	FT RANDAL - UTICA JCT 230KV CKT 1
FDNS	00NR_G14_059	0	20SP	G14_059	TO->FROM	GR ISLD-LNX3345.00 - HOLT.CO3 345.00 345KV CKT 1	720	720	0.04039	108.5213	HOSKINS - RAUN 345KV CKT 1
FDNS	00NR_G14_059	0	20SP	G14_059	TO->FROM	GR ISLD-LNX3345.00 - HOLT.CO3 345.00 345KV CKT 1	720	720	0.04039	108.5213	HOSKINS - RAUN 345KV CKT 1
FDNS	00NR_G14_059	0	25SP	G14_059	TO->FROM	GR ISLD-LNX3345.00 - HOLT.CO3 345.00 345KV CKT 1	720	720	0.04264	108.5179	GEN645011 1-NEBRASKA CITY 1
FDNS	00NR_G14_059	0	20SP	G14_059	TO->FROM	GR ISLD-LNX3345.00 - HOLT.CO3 345.00 345KV CKT 1	720	720	0.04052	108.5134	GEN335206 1-NELSON UNIT 6
FDNS	00NR_G14_059	0	20SP	G14_059	TO->FROM	GR ISLD-LNX3345.00 - HOLT.CO3 345.00 345KV CKT 1	720	720	0.04126	108.5093	CLEARWATER - ONEILL 115KV CKT 1
FDNS	00NR_G14_059	0	20SP	G14_059	TO->FROM	GR ISLD-LNX3345.00 - HOLT.CO3 345.00 345KV CKT 1	720	720	0.04158	108.508	AINSWORTH - BASSETT 7115.00 115KV CKT 1
FDNS	00NR_G14_059	0	20SP	G14_059	TO->FROM	GR ISLD-LNX3345.00 - HOLT.CO3 345.00 345KV CKT 1	720	720	0.04052	108.5076	GEN645001 1-FORT CALHOUN 1
FDNS	00NR_G14_059	0	20SP	G14_059	TO->FROM	GR ISLD-LNX3345.00 - HOLT.CO3 345.00 345KV CKT 1	720	720	0.04326	108.5015	MINGO - SETAB 345KV CKT 1
FDNS	00NR_G14_059	0	20SP	G14_059	TO->FROM	GR ISLD-LNX3345.00 - HOLT.CO3 345.00 345KV CKT 1	720	720	0.04326	108.5015	MINGO - SETAB 345KV CKT 1
FDNS	00NR_G14_059	0	25SP	G14_059	TO->FROM	GR ISLD-LNX3345.00 - HOLT.CO3 345.00 345KV CKT 1	720	720	0.04264	108.485	GEN337652 1-WHITE BLUFF UNIT #1
FDNS	00NR_G14_059	0	25SP	G14_059	TO->FROM	GR ISLD-LNX3345.00 - HOLT.CO3 345.00 345KV CKT 1	720	720	0.04288	108.4844	LAKEFIELD 3 - NOBLES 345KV CKT 1
FDNS	00NR_G14_059	0	20SP	G14_059	TO->FROM	GR ISLD-LNX3345.00 - HOLT.CO3 345.00 345KV CKT 1	720	720	0.04057	108.4833	CNTSHNT3 345.00 - PRAIRIE3 345.00 345KV CKT 1
FDNS	00NR_G14_059	0	20SP	G14_059	TO->FROM	GR ISLD-LNX3345.00 - HOLT.CO3 345.00 345KV CKT 1	720	720	0.04052	108.4805	GEN334440 1-SABINE UNIT 4
FDNS	00NR_G14_059	0	20SP	G14_059	TO->FROM	GR ISLD-LNX3345.00 - HOLT.CO3 345.00 345KV CKT 1	720	720	0.04052	108.4762	GEN532652 1-JEFFREY ENERGY CENTER UNIT 2
FDNS	00NR_G14_059	0	20SP	G14_059	TO->FROM	GR ISLD-LNX3345.00 - HOLT.CO3 345.00 345KV CKT 1	720	720	0.04052	108.4761	GEN532653 1-JEFFREY ENERGY CENTER UNIT 3
FDNS	00NR_G14_059	0	20SP	G14_059	TO->FROM	GR ISLD-LNX3345.00 - HOLT.CO3 345.00 345KV CKT 1	720	720	0.04052	108.475	GEN532651 1-JEFFREY ENERGY CENTER UNIT 1
FDNS	00NR_G14_059	0	20SP	G14_059	TO->FROM	GR ISLD-LNX3345.00 - HOLT.CO3 345.00 345KV CKT 1	720	720	0.04125	108.4745	BUCKNER7 345.00 - SPEARVILLE 345KV CKT 1
FDNS	00NR_G14_059	0	20SP	G14_059	TO->FROM	GR ISLD-LNX3345.00 - HOLT.CO3 345.00 345KV CKT 1	720	720	0.04125	108.4745	BUCKNER7 345.00 - SPEARVILLE 345KV CKT 1
FDNS	00NR_G14_059	0	25SP	G14_059	TO->FROM	GR ISLD-LNX3345.00 - HOLT.CO3 345.00 345KV CKT 1	720	720	0.04272	108.4719	ARROWHEAD - ARROWHEAD 230 230KV CKT 1
FDNS	00NR_G14_059	0	20SP	G14_059	TO->FROM	GR ISLD-LNX3345.00 - HOLT.CO3 345.00 345KV CKT 1	720	720	0.04052	108.4623	GEN642067 1-PLATTE
FDNS	00NR_G14_059	0	25SP	G14_059	TO->FROM	GR ISLD-LNX3345.00 - HOLT.CO3 345.00 345KV CKT 1	720	720	0.04264	108.4619	GEN338143 1-INDEPENDENCE UNIT #1
FDNS	00NR_G14_059	0	25SP	G14_059	TO->FROM	GR ISLD-LNX3345.00 - HOLT.CO3 345.00 345KV CKT 1	720	720	0.04283	108.461	GROTON-LNX3 345.00 - LELAND1-LNX3345.00 345KV CKT 1
FDNS	00NR_G14_059	0	25SP	G14_059	TO->FROM	GR ISLD-LNX3345.00 - HOLT.CO3 345.00 345KV CKT 1	720	720	0.04264	108.4602	GEN338146 1-INDEPENDENCE UNIT #2
FDNS	00NR_G14_059	0	20SP	G14_059	TO->FROM	GR ISLD-LNX3345.00 - HOLT.CO3 345.00 345KV CKT 1	720	720	0.04056	108.459	P12:115:NPPD:WAPA4:SIDNEY 7:B.SPRGS7:BTB
FDNS	00NR_G14_059	0	20SP	G14_059	TO->FROM	GR ISLD-LNX3345.00 - HOLT.CO3 345.00 345KV CKT 1	720	720	0.04056	108.459	P12:115:UMZB:# 119 #: IN NE.
FDNS	00NR_G14_059	0	20SP	G14_059	TO->FROM	GR ISLD-LNX3345.00 - HOLT.CO3 345.00 345KV CKT 1	720	720	0.04052	108.459	GEN501812 1-RODEMACHER UNIT 2
FDNS	00NR_G14_059	0	20SP	G14_059	TO->FROM	GR ISLD-LNX3345.00 - HOLT.CO3 345.00 345KV CKT 1	720	720	0.04244	108.4557	JEFFREY - NORTH PLATTE 115KV CKT 1
FDNS	00NR_G14_059	0	20SP	G14_059	TO->FROM	GR ISLD-LNX3345.00 - HOLT.CO3 345.00 345KV CKT 1	720	720	0.04058	108.4411	ARPIN B4 345.00 - EAU CLAIRE 345KV CKT 1
FDNS	00NR_G14_059	0	25SP	G14_059	TO->FROM	GR ISLD-LNX3345.00 - HOLT.CO3 345.00 345KV CKT 1	720	720	0.04284	108.4285	G09_001IST 345.00 - GROTON 345KV CKT 1
FDNS	00NR_G14_059	0	25SP	G14_059	TO->FROM	GR ISLD-LNX3345.00 - HOLT.CO3 345.00 345KV CKT 1	720	720	0.04264	108.4225	GEN337653 1-WHITE BLUFF UNIT #2
FDNS	00NR_G14_059	0	25SP	G14_059	TO->FROM	GR ISLD-LNX3345.00 - HOLT.CO3 345.00 345KV CKT 1	720	720	0.04283	108.4212	P12:345:UMZB:# 109 #: LOS GRT IN ND. LOS GRT
FDNS	00NR_G14_059	0	20SP	G14_059	TO->FROM	GR ISLD-LNX3345.00 - HOLT.CO3 345.00 345KV CKT 1	720	720	0.04052	108.4202	GEN338388 1-1PLUM PT U1 23.000

SOLUTION	GROUP	SCENARIO	SEASON	SOURCE	DIRECTION	MONITORED ELEMENT	RATEA (MVA)	RATEB(MVA)	TDF	TC%LOADING (% MVA)	CONTINGENCY
FDNS	00NR_G14_059	0	25SP	G14_059	TO->FROM	GR ISLD-LNX3345.00 - HOLT.CO3 345.00 345KV CKT 1	720	720	0.04283	108.419	GROTON - GROTON-LNX3 345.00 345KV CKT Z
FDNS	00NR_G14_059	0	25SP	G14_059	TO->FROM	GR ISLD-LNX3345.00 - HOLT.CO3 345.00 345KV CKT 1	720	720	0.04283	108.4149	LELAND OLDS - LELAND1-LNX3345.00 345KV CKT Z
FDNS	00NR_G14_059	0	20SP	G14_059	TO->FROM	GR ISLD-LNX3345.00 - HOLT.CO3 345.00 345KV CKT 1	720	720	0.04438	108.4127	KEYSTONE - SIDNEY1-LNX3345.00 345KV CKT 1
FDNS	00NR_G14_059	0	20SP	G14_059	TO->FROM	GR ISLD-LNX3345.00 - HOLT.CO3 345.00 345KV CKT 1	720	720	0.04052	108.4108	GEN336191 1-LITTLE GYPSY UNIT#3
FDNS	00NR_G14_059	0	25SP	G14_059	TO->FROM	GR ISLD-LNX3345.00 - HOLT.CO3 345.00 345KV CKT 1	720	720	0.04298	108.4001	PAHOJA - SIOUX FALLS 230KV CKT 1
FDNS	00NR_G14_059	0	20SP	G14_059	TO->FROM	GR ISLD-LNX3345.00 - HOLT.CO3 345.00 345KV CKT 1	720	720	0.04158	108.3959	ATKINSON - STUART 115KV CKT 1
FDNS	00NR_G14_059	0	20SP	G14_059	TO->FROM	GR ISLD-LNX3345.00 - HOLT.CO3 345.00 345KV CKT 1	720	720	0.04052	108.3736	GEN335204 1-NELSON UNIT 4
FDNS	00NR_G14_059	0	20SP	G14_059	TO->FROM	GR ISLD-LNX3345.00 - HOLT.CO3 345.00 345KV CKT 1	720	720	0.04052	108.365	GEN334441 1-SABINE UNIT 5
FDNS	00NR_G14_059	0	20SP	G14_059	TO->FROM	GR ISLD-LNX3345.00 - HOLT.CO3 345.00 345KV CKT 1	720	720	0.04052	108.3642	GEN335614 1-WILLOW GLENN UNIT#4
FDNS	00NR_G14_059	0	20SP	G14_059	TO->FROM	GR ISLD-LNX3345.00 - HOLT.CO3 345.00 345KV CKT 1	720	720	0.04052	108.3612	GEN336801 1-BAXTER WILSON UNIT #1
FDNS	00NR_G14_059	0	20SP	G14_059	TO->FROM	GR ISLD-LNX3345.00 - HOLT.CO3 345.00 345KV CKT 1	720	720	0.04052	108.3553	GEN336464 1-MICHOUD UNIT #3
FDNS	00NR_G14_059	0	20SP	G14_059	TO->FROM	GR ISLD-LNX3345.00 - HOLT.CO3 345.00 345KV CKT 1	720	720	0.04018	108.3465	P12:115:NPPD:WAPA2:HEMINGF7:SNAKECK7:BTB
FDNS	00NR_G14_059	0	20SP	G14_059	TO->FROM	GR ISLD-LNX3345.00 - HOLT.CO3 345.00 345KV CKT 1	720	720	0.04438	108.3453	SIDNEY - SIDNEY1-LNX3345.00 345KV CKT Z
FDNS	00NR_G14_059	0	20SP	G14_059	TO->FROM	GR ISLD-LNX3345.00 - HOLT.CO3 345.00 345KV CKT 1	720	720	0.04056	108.3453	NORTH LA CROSSE - NORTH ROCHESTER 345KV CKT 1
FDNS	00NR_G14_059	0	20SP	G14_059	TO->FROM	GR ISLD-LNX3345.00 - HOLT.CO3 345.00 345KV CKT 1	720	720	0.04052	108.3402	GEN542951 5-HAWTHORN UNIT #5
FDNS	00NR_G14_059	0	20SP	G14_059	TO->FROM	GR ISLD-LNX3345.00 - HOLT.CO3 345.00 345KV CKT 1	720	720	0.04052	108.3389	P12:115:UMZW:# 162 #: NEL IN ND. FAULT ON ML-NEL-MX-GA 115 KV
FDNS	00NR_G14_059	0	20SP	G14_059	TO->FROM	GR ISLD-LNX3345.00 - HOLT.CO3 345.00 345KV CKT 1	720	720	0.04052	108.3333	GEN542955 1-LACYGNE UNIT #1
FDNS	00NR_G14_059	0	20SP	G14_059	TO->FROM	GR ISLD-LNX3345.00 - HOLT.CO3 345.00 345KV CKT 1	720	720	0.04076	108.3235	KOSSUTH 3 345.00 - WEBSTER 345KV CKT 1
FDNS	00NR_G14_059	0	20SP	G14_059	TO->FROM	GR ISLD-LNX3345.00 - HOLT.CO3 345.00 345KV CKT 1	720	720	0.04224	108.3216	BROKEN BOW - CALLAWAY 115KV CKT 1
FDNS	00NR_G14_059	0	20SP	G14_059	TO->FROM	GR ISLD-LNX3345.00 - HOLT.CO3 345.00 345KV CKT 1	720	720	0.04102	108.3173	FT THOMPSON - HURON 230KV CKT 1
FDNS	00NR_G14_059	0	20SP	G14_059	TO->FROM	GR ISLD-LNX3345.00 - HOLT.CO3 345.00 345KV CKT 1	720	720	0.04102	108.3173	FT THOMPSON - HURON 230KV CKT 1
FDNS	00NR_G14_059	0	20SP	G14_059	TO->FROM	GR ISLD-LNX3345.00 - HOLT.CO3 345.00 345KV CKT 1	720	720	0.04102	108.3173	FT THOMPSON - HURON 230KV CKT 2
FDNS	00NR_G14_059	0	20SP	G14_059	TO->FROM	GR ISLD-LNX3345.00 - HOLT.CO3 345.00 345KV CKT 1	720	720	0.04102	108.3173	FT THOMPSON - HURON 230KV CKT 2
FDNS	00NR_G14_059	0	25SP	G14_059	TO->FROM	GR ISLD-LNX3345.00 - HOLT.CO3 345.00 345KV CKT 1	720	720	0.04301	108.3147	CARPENTER - HURON 230KV CKT 1
FDNS	00NR_G14_059	0	25SP	G14_059	TO->FROM	GR ISLD-LNX3345.00 - HOLT.CO3 345.00 345KV CKT 1	720	720	0.04273	108.3119	BROOKING COUNTY - LYON COUNTY 345KV CKT 1
FDNS	00NR_G14_059	0	20SP	G14_059	TO->FROM	GR ISLD-LNX3345.00 - HOLT.CO3 345.00 345KV CKT 1	720	720	0.04063	108.3015	GLENBORO SOUTH - RUGBY 230KV CKT 1
FDNS	00NR_G14_059	0	25SP	G14_059	TO->FROM	GR ISLD-LNX3345.00 - HOLT.CO3 345.00 345KV CKT 1	720	720	0.04264	108.2997	GEN501801 1-DOLET HILLS UNIT1
FDNS	00NR_G14_059	0	25SP	G14_059	TO->FROM	GR ISLD-LNX3345.00 - HOLT.CO3 345.00 345KV CKT 1	720	720	0.0472	108.279	CROOKED CREEK - RIVERDALE 230KV CKT 1
FDNS	00NR_G14_059	0	20SP	G14_059	TO->FROM	GR ISLD-LNX3345.00 - HOLT.CO3 345.00 345KV CKT 1	720	720	0.04052	108.2741	GEN334433 1-SABINE UNIT 3
FDNS	00NR_G14_059	0	20SP	G14_059	TO->FROM	GR ISLD-LNX3345.00 - HOLT.CO3 345.00 345KV CKT 1	720	720	0.04158	108.2526	ATKINSON - EMMET 115KV CKT 1
FDNS	00NR_G14_059	0	20SP	G14_059	TO->FROM	GR ISLD-LNX3345.00 - HOLT.CO3 345.00 345KV CKT 1	720	720	0.04065	108.2525	GAVINS POINT - HARTINGTON 115KV CKT 1
FDNS	00NR_G14_059	0	25SP	G14_059	TO->FROM	GR ISLD-LNX3345.00 - HOLT.CO3 345.00 345KV CKT 1	720	720	0.04264	108.249	GEN336252 1-NINEMILE POINT UNIT#5
FDNS	00NR_G14_059	0	25SP	G14_059	TO->FROM	GR ISLD-LNX3345.00 - HOLT.CO3 345.00 345KV CKT 1	720	720	0.04301	108.2425	HURON - WATERTOWN 230KV CKT 2
FDNS	00NR_G14_059	0	25SP	G14_059	TO->FROM	GR ISLD-LNX3345.00 - HOLT.CO3 345.00 345KV CKT 1	720	720	0.04301	108.2425	HURON - WATERTOWN 230KV CKT 2
FDNS	00NR_G14_059	0	20SP	G14_059	TO->FROM	GR ISLD-LNX3345.00 - HOLT.CO3 345.00 345KV CKT 1	720	720	0.03972	108.2371	SIDNEY - STEGALL 345KV CKT 1
FDNS	00NR_G14_059	0	20SP	G14_059	TO->FROM	GR ISLD-LNX3345.00 - HOLT.CO3 345.00 345KV CKT 1	720	720	0.04052	108.2365	GEN336222 1-LITTLE GYPSY UNIT#2
FDNS	00NR_G14_059	0	20SP	G14_059	TO->FROM	GR ISLD-LNX3345.00 - HOLT.CO3 345.00 345KV CKT 1	720	720	0.04052	108.2304	GEN542956 2-LACYGNE UNIT #2
FDNS	00NR_G14_059	0	20SP	G14_059	TO->FROM	GR ISLD-LNX3345.00 - HOLT.CO3 345.00 345KV CKT 1	720	720	0.04126	108.2241	CLEARWATER - NELIGH 115KV CKT 1
FDNS	00NR_G14_059	0	20SP	G14_059	TO->FROM	GR ISLD-LNX3345.00 - HOLT.CO3 345.00 345KV CKT 1	720	720	0.04045	108.2187	P12:115:NPPD:WAPA6:FTRANDL7:ONEILL 7:BTB
FDNS	00NR_G14_059	0	20SP	G14_059	TO->FROM	GR ISLD-LNX3345.00 - HOLT.CO3 345.00 345KV CKT 1	720	720	0.04045	108.2187	P12:115:UMZB:# 115 #: SE IN NE. FR-SE-ON
FDNS	00NR_G14_059	0	25SP	G14_059	TO->FROM	GR ISLD-LNX3345.00 - HOLT.CO3 345.00 345KV CKT 1	720	720	0.04301	108.215	CARPENTER - WATERTOWN 230KV CKT 1
FDNS	00NR_G14_059	0	25SP	G14_059	TO->FROM	GR ISLD-LNX3345.00 - HOLT.CO3 345.00 345KV CKT 1	720	720	0.04301	108.215	CARPENTER - WATERTOWN 230KV CKT 1
FDNS	00NR_G14_059	0	20SP	G14_059	TO->FROM	GR ISLD-LNX3345.00 - HOLT.CO3 345.00 345KV CKT 1	720	720	0.03627	108.2138	NUNDRWD - WAYSIDE 230KV CKT 1
FDNS	00NR_G14_059	0	25SP	G14_059	TO->FROM	GR ISLD-LNX3345.00 - HOLT.CO3 345.00 345KV CKT 1	720	720	0.04264	108.2113	GEN532751 1-WOLF CREEK GENERATING STATION UNIT 1
FDNS	00NR_G14_059	0	25SP	G14_059	TO->FROM	GR ISLD-LNX3345.00 - HOLT.CO3 345.00 345KV CKT 1	720	720	0.0427	108.2106	AS KING - EAU CLAIRE 345KV CKT 1
FDNS	00NR_G14_059	0	20SP	G14_059	TO->FROM	GR ISLD-LNX3345.00 - HOLT.CO3 345.00 345KV CKT 1	720	720	0.04057	108.2098	NMA B3 345 345.00 - NORTH LA CROSSE 345KV CKT 1
FDNS	00NR_G14_059	0	25SP	G14_059	TO->FROM	GR ISLD-LNX3345.00 - HOLT.CO3 345.00 345KV CKT 1	720	720	0.0435	108.2069	FT THOMPSON - WESSINGTON 230KV CKT 1
FDNS	00NR_G14_059	0	25SP	G14_059	TO->FROM	GR ISLD-LNX3345.00 - HOLT.CO3 345.00 345KV CKT 1	720	720	0.0435	108.2069	FT THOMPSON - WESSINGTON 230KV CKT 1
FDNS	00NR_G14_059	0	25SP	G14_059	TO->FROM	GR ISLD-LNX3345.00 - HOLT.CO3 345.00 345KV CKT 1	720	720	0.04264	108.2057	GEN542962 2-IATAN UNIT #2
FDNS	00NR_G14_059	0	20SP	G14_059	TO->FROM	GR ISLD-LNX3345.00 - HOLT.CO3 345.00 345KV CKT 1	720	720	0.0408	108.203	WINNER - WITTEN 115KV CKT 1
FDNS	00NR_G14_059	0	20SP	G14_059	TO->FROM	GR ISLD-LNX3345.00 - HOLT.CO3 345.00 345KV CKT 1	720	720	0.04052	108.2023	GEN336152 1-WATERFORD UNIT#2
FDNS	00NR_G14_059	0	20SP	G14_059	TO->FROM	GR ISLD-LNX3345.00 - HOLT.CO3 345.00 345KV CKT 1	720	720	0.04052	108.2022	GEN336151 1-WATERFORD UNIT#1
FDNS	00NR_G14_059	0	20SP	G14_059	TO->FROM	GR ISLD-LNX3345.00 - HOLT.CO3 345.00 345KV CKT 1	720	720	0.04052	108.1996	P12:115:TSGT:BLKWDCK7-ELSIETP7
FDNS	00NR_G14_059	0	25SP	G14_059	TO->FROM	GR ISLD-LNX3345.00 - HOLT.CO3 345.00 345KV CKT 1	720	720	0.04264	108.1939	GEN336251 1-NINEMILE POINT UNIT#4
FDNS	00NR_G14_059	0	25SP	G14_059	TO->FROM	GR ISLD-LNX3345.00 - HOLT.CO3 345.00 345KV CKT 1	720	720	0.0428	108.1885	HAZLETON - MITCHLCO3 345.00 345KV CKT 1
FDNS	00NR_G14_059	0	20SP	G14_059	TO->FROM	GR ISLD-LNX3345.00 - HOLT.CO3 345.00 345KV CKT 1	720	720	0.04056	108.1869	CENTER - COYOTE 345KV CKT 1
FDNS	00NR_G14_059	0	25SP	G14_059	TO->FROM	GR ISLD-LNX3345.00 - HOLT.CO3 345.00 345KV CKT 1	720	720	0.04253	108.1859	HOSKINS - RAUN 345KV CKT 1
FDNS	00NR_G14_059	0	25SP	G14_059	TO->FROM	GR ISLD-LNX3345.00 - HOLT.CO3 345.00 345KV CKT 1	720	720	0.04253	108.1859	HOSKINS - RAUN 345KV CKT 1
FDNS	00NR_G14_059	0	20SP	G14_059	TO->FROM	GR ISLD-LNX3345.00 - HOLT.CO3 345.00 345KV CKT 1	720	720	0.04052	108.1748	P13:230-345:NPPD:NUCOR-1
FDNS	00NR_G14_059	0	20SP	G14_059	TO->FROM	GR ISLD-LNX3345.00 - HOLT.CO3 345.00 345KV CKT 1	720	720	0.04152	108.1743	AINSWORTH - AINSWORTH 115KV CKT 1
FDNS	00NR_G14_059	0	20SP	G14_059	TO->FROM	GR ISLD-LNX3345.00 - HOLT.CO3 345.00 345KV CKT 1	720	720	0.04052	108.171	P13:115-230:NPPD:NUCOR-3
FDNS	00NR_G14_059	0	25SP	G14_059	TO->FROM	GR ISLD-LNX3345.00 - HOLT.CO3 345.00 345KV CKT 1	720	720	0.04264	108.1701	GEN336831 1-BAXTER WILSON SES
FDNS	00NR_G14_059	0	20SP	G14_059	TO->FROM	GR ISLD-LNX3345.00 - HOLT.CO3 345.00 345KV CKT 1	720	720	0.04058	108.167	MENNO JCT - TRIPP JCT 115KV CKT 1
FDNS	00NR_G14_059	0	25SP	G14_059	TO->FROM	GR ISLD-LNX3345.00 - HOLT.CO3 345.00 345KV CKT 1	720	720	0.04269	108.1628	CNTSHNT3 345.00 - PRAIRIE3 345.00 345KV CKT 1
FDNS	00NR_G14_059	0	20SP	G14_059	TO->FROM	GR ISLD-LNX3345.00 - HOLT.CO3 345.00 345KV CKT 1	720	720	0.04069	108.155	ADAMS - MITCHLCO3 345.00 345KV CKT 1
FDNS	00NR_G14_059	0	20SP	G14_059	TO->FROM	GR ISLD-LNX3345.00 - HOLT.CO3 345.00 345KV CKT 1	720	720	0.04052	108.1538	GEN303007 1-1BC2 U2
FDNS	00NR_G14_059	0	20SP	G14_059	TO->FROM	GR ISLD-LNX3345.00 - HOLT.CO3 345.00 345KV CKT 1	720	720	0.04052	108.1513	GEN303006 1-1BC2 U1
FDNS	00NR_G14_059	0	25SP	G14_059	TO->FROM	GR ISLD-LNX3345.00 - HOLT.CO3 345.00 345KV CKT 1	720	720	0.04168	108.1488	STAPLETON - THEDFORD 115KV CKT 1
FDNS	00NR_G14_059	0	25SP	G14_059	TO->FROM	GR ISLD-LNX3345.00 - HOLT.CO3 345.00 345KV CKT 1	720	720	0.04279	108.1482	ALEXMRES3 345.00 - BISON 3 345.00 345KV CKT 1
FDNS	00NR_G14_059	0	20SP	G14_059	TO->FROM	GR ISLD-LNX3345.00 - HOLT.CO3 345.00 345KV CKT 1	720	720	0.04052	108.1338	GEN562547 1-G14_039_3 0.6900
FDNS	00NR_G14_059	0	25SP	G14_059	TO->FROM	GR ISLD-LNX3345.00 - HOLT.CO3 345.00 345KV CKT 1	720	720	0.04264	108.1319	GEN337041 1-GERALD ANDRUS
FDNS	00NR_G14_059	0	20SP	G14_059	TO->FROM	GR ISLD-LNX3345.00 - HOLT.CO3 345.00 345KV CKT 1	720	720	0.04056	108.1307	GARRISON - JAMES TOWN 230KV CKT 1
FDNS	00NR_G14_059	0	25SP	G14_059	TO->FROM	GR ISLD-LNX3345.00 - HOLT.CO3 345.00 345KV CKT 1	720	720	0.04298	108.1273	EAGLE 4 230.00 - PAHOJA 230KV CKT 1

SOLUTION	GROUP	SCENARIO	SEASON	SOURCE	DIRECTION	MONITORED ELEMENT	RATEA (MVA)	RATEB(MVA)	TDF	TC%LOADING (% MVA)	CONTINGENCY
FDNS	00NR_G14_059	0	20SP	G14_059	TO->FROM	GR ISLD-LNX3345.00 - HOLT.CO3 345.00 345KV CKT 1	720	720	0.04057	108.1229	BROOKING COUNTY - BSSOUTH3 345.00 345KV CKT 1
FDNS	00NR_G14_059	0	20SP	G14_059	TO->FROM	GR ISLD-LNX3345.00 - HOLT.CO3 345.00 345KV CKT 1	720	720	0.04058	108.122	MENNO JCT - UTICA 115KV CKT 1
FDNS	00NR_G14_059	0	20SP	G14_059	TO->FROM	GR ISLD-LNX3345.00 - HOLT.CO3 345.00 345KV CKT 1	720	720	0.04117	108.1178	RAUN - SIOUX CITY 345KV CKT 1
FDNS	00NR_G14_059	0	20SP	G14_059	TO->FROM	GR ISLD-LNX3345.00 - HOLT.CO3 345.00 345KV CKT 1	720	720	0.04117	108.1178	RAUN - SIOUX CITY 345KV CKT 1
FDNS	00NR_G14_059	0	20SP	G14_059	TO->FROM	GR ISLD-LNX3345.00 - HOLT.CO3 345.00 345KV CKT 1	720	720	0.04052	108.1059	GEN303008 1-1BC2 U3
FDNS	00NR_G14_059	0	20SP	G14_059	TO->FROM	GR ISLD-LNX3345.00 - HOLT.CO3 345.00 345KV CKT 1	720	720	0.04066	108.1052	ADAMS - PLEASANT VALLEY 345KV CKT 1
FDNS	00NR_G14_059	0	20SP	G14_059	TO->FROM	GR ISLD-LNX3345.00 - HOLT.CO3 345.00 345KV CKT 1	720	720	0.04052	108.1032	GEN336170 1-GULF OXY U4
FDNS	00NR_G14_059	0	25SP	G14_059	TO->FROM	GR ISLD-LNX3345.00 - HOLT.CO3 345.00 345KV CKT 1	720	720	0.04264	108.0957	GEN501813 1-RODEMACHER UNIT 3
FDNS	00NR_G14_059	0	25SP	G14_059	TO->FROM	GR ISLD-LNX3345.00 - HOLT.CO3 345.00 345KV CKT 1	720	720	0.04301	108.092	RASMUSN - UTICA JCT 230KV CKT 1
FDNS	00NR_G14_059	0	20SP	G14_059	TO->FROM	GR ISLD-LNX3345.00 - HOLT.CO3 345.00 345KV CKT 1	720	720	0.04125	108.0827	BUCKNER7 345.00 - HOLCOMB 345KV CKT 1
FDNS	00NR_G14_059	0	20SP	G14_059	TO->FROM	GR ISLD-LNX3345.00 - HOLT.CO3 345.00 345KV CKT 1	720	720	0.04125	108.0827	BUCKNER7 345.00 - HOLCOMB 345KV CKT 1
FDNS	00NR_G14_059	0	20SP	G14_059	TO->FROM	GR ISLD-LNX3345.00 - HOLT.CO3 345.00 345KV CKT 1	720	720	0.0408	108.0816	P12:115:UMZW:# 172 #: WI IN SD.
FDNS	00NR_G14_059	0	20SP	G14_059	TO->FROM	GR ISLD-LNX3345.00 - HOLT.CO3 345.00 345KV CKT 1	720	720	0.04052	108.0724	P13:115-345:NPPD:NUCOR-2
FDNS	00NR_G14_059	0	20SP	G14_059	TO->FROM	GR ISLD-LNX3345.00 - HOLT.CO3 345.00 345KV CKT 1	720	720	0.04058	108.0695	P12:115:UMZZ:# 237 #: MEN IN SD. MENNO JUNCTION IS A TAP (UJ-MEN-TP).
FDNS	00NR_G14_059	0	20SP	G14_059	TO->FROM	GR ISLD-LNX3345.00 - HOLT.CO3 345.00 345KV CKT 1	720	720	0.04064	108.0626	DENISON - SIOUX CITY 230KV CKT 1
FDNS	00NR_G14_059	0	20SP	G14_059	TO->FROM	GR ISLD-LNX3345.00 - HOLT.CO3 345.00 345KV CKT 1	720	720	0.04052	108.0618	P13:230:UMZW:# 2218 #: FP IN MT. LOSS OF TRANSFORMER (AT2).
FDNS	00NR_G14_059	0	20SP	G14_059	TO->FROM	GR ISLD-LNX3345.00 - HOLT.CO3 345.00 345KV CKT 1	720	720	0.04106	108.0536	COLUMEAST - SHELL CREEK 345KV CKT 1
FDNS	00NR_G14_059	0	20SP	G14_059	TO->FROM	GR ISLD-LNX3345.00 - HOLT.CO3 345.00 345KV CKT 1	720	720	0.04052	108.0507	GEN636641 1-LOUISA UNIT 1
FDNS	00NR_G14_059	0	25SP	G14_059	TO->FROM	GR ISLD-LNX3345.00 - HOLT.CO3 345.00 345KV CKT 1	720	720	0.04309	108.0489	GRIMES - LEHIGH 345KV CKT 1
FDNS	00NR_G14_059	0	25SP	G14_059	TO->FROM	GR ISLD-LNX3345.00 - HOLT.CO3 345.00 345KV CKT 1	720	720	0.04264	108.0471	GEN344897 4-1LAB G4 20.000
FDNS	00NR_G14_059	0	25SP	G14_059	TO->FROM	GR ISLD-LNX3345.00 - HOLT.CO3 345.00 345KV CKT 1	720	720	0.04264	108.0461	GEN344894 1-1LAB G1 20.000
FDNS	00NR_G14_059	0	25SP	G14_059	TO->FROM	GR ISLD-LNX3345.00 - HOLT.CO3 345.00 345KV CKT 1	720	720	0.04264	108.046	GEN344895 2-1LAB G2 20.000
FDNS	00NR_G14_059	0	25SP	G14_059	TO->FROM	GR ISLD-LNX3345.00 - HOLT.CO3 345.00 345KV CKT 1	720	720	0.04264	108.0459	GEN344896 3-1LAB G3 20.000
FDNS	00NR_G14_059	0	25SP	G14_059	TO->FROM	GR ISLD-LNX3345.00 - HOLT.CO3 345.00 345KV CKT 1	720	720	0.04269	108.0367	P12:115:NPPD:WAPA4:SIDNEY 7:B.SPRGS7:BTB
FDNS	00NR_G14_059	0	25SP	G14_059	TO->FROM	GR ISLD-LNX3345.00 - HOLT.CO3 345.00 345KV CKT 1	720	720	0.04269	108.0367	P12:115:UMZB:# 119 #: IN NE.
FDNS	00NR_G14_059	0	25SP	G14_059	TO->FROM	GR ISLD-LNX3345.00 - HOLT.CO3 345.00 345KV CKT 1	720	720	0.04652	108.0339	KEYSTONE - SIDNEY1-LNX3345.00 345KV CKT 1
FDNS	00NR_G14_059	0	20SP	G14_059	TO->FROM	GR ISLD-LNX3345.00 - HOLT.CO3 345.00 345KV CKT 1	720	720	0.03956	108.033	MAXWELL - STAPLETON 115KV CKT 1
FDNS	00NR_G14_059	0	25SP	G14_059	TO->FROM	GR ISLD-LNX3345.00 - HOLT.CO3 345.00 345KV CKT 1	720	720	0.04459	108.0191	JEFFREY - NORTH PLATTE 115KV CKT 1
FDNS	00NR_G14_059	0	25SP	G14_059	TO->FROM	GR ISLD-LNX3345.00 - HOLT.CO3 345.00 345KV CKT 1	720	720	0.04264	108.013	GEN542957 1-IATAN UNIT #1
FDNS	00NR_G14_059	0	25SP	G14_059	TO->FROM	GR ISLD-LNX3345.00 - HOLT.CO3 345.00 345KV CKT 1	720	720	0.04371	108.0068	BASSETT 7115.00 - STUART 115KV CKT 1
FDNS	00NR_G14_059	0	25SP	G14_059	TO->FROM	GR ISLD-LNX3345.00 - HOLT.CO3 345.00 345KV CKT 1	720	720	0.04264	107.9971	GEN345671 2-1RUSH G2 18.000
FDNS	00NR_G14_059	0	25SP	G14_059	TO->FROM	GR ISLD-LNX3345.00 - HOLT.CO3 345.00 345KV CKT 1	720	720	0.04264	107.9941	GEN345670 1-1RUSH G1 18.000
FDNS	00NR_G14_059	0	25SP	G14_059	TO->FROM	GR ISLD-LNX3345.00 - HOLT.CO3 345.00 345KV CKT 1	720	720	0.04264	107.9765	GEN335206 1-NELSON UNIT 6
FDNS	00NR_G14_059	0	25SP	G14_059	TO->FROM	GR ISLD-LNX3345.00 - HOLT.CO3 345.00 345KV CKT 1	720	720	0.04371	107.9689	AINSWORTH - BASSETT 7115.00 115KV CKT 1
FDNS	00NR_G14_059	0	25SP	G14_059	TO->FROM	GR ISLD-LNX3345.00 - HOLT.CO3 345.00 345KV CKT 1	720	720	0.04264	107.9674	GEN532652 1-JEFFREY ENERGY CENTER UNIT 2
FDNS	00NR_G14_059	0	25SP	G14_059	TO->FROM	GR ISLD-LNX3345.00 - HOLT.CO3 345.00 345KV CKT 1	720	720	0.04264	107.9673	GEN532653 1-JEFFREY ENERGY CENTER UNIT 3
FDNS	00NR_G14_059	0	25SP	G14_059	TO->FROM	GR ISLD-LNX3345.00 - HOLT.CO3 345.00 345KV CKT 1	720	720	0.04264	107.9668	GEN532651 1-JEFFREY ENERGY CENTER UNIT 1
FDNS	00NR_G14_059	0	25SP	G14_059	TO->FROM	GR ISLD-LNX3345.00 - HOLT.CO3 345.00 345KV CKT 1	720	720	0.04264	107.9569	GEN334440 1-SABINE UNIT 4
FDNS	00NR_G14_059	0	25SP	G14_059	TO->FROM	GR ISLD-LNX3345.00 - HOLT.CO3 345.00 345KV CKT 1	720	720	0.04264	107.9551	GEN629075 1-OTTUMWA GENERATOR FOR OTTUMWA UNIT NO 1
FDNS	00NR_G14_059	0	25SP	G14_059	TO->FROM	GR ISLD-LNX3345.00 - HOLT.CO3 345.00 345KV CKT 1	720	720	0.04339	107.948	P12:115:NPPD:1164:ONEILL 7:JEFFREY9:BTB
FDNS	00NR_G14_059	0	25SP	G14_059	TO->FROM	GR ISLD-LNX3345.00 - HOLT.CO3 345.00 345KV CKT 1	720	720	0.04301	107.9414	RASMUSN - SIOUX CITY 230KV CKT 1
FDNS	00NR_G14_059	0	25SP	G14_059	TO->FROM	GR ISLD-LNX3345.00 - HOLT.CO3 345.00 345KV CKT 1	720	720	0.04264	107.938	GEN338388 1-1PLUM PT U1 23.000
FDNS	00NR_G14_059	0	25SP	G14_059	TO->FROM	GR ISLD-LNX3345.00 - HOLT.CO3 345.00 345KV CKT 1	720	720	0.04276	107.9375	GLENBORO SOUTH - RUGBY 230KV CKT 1
FDNS	00NR_G14_059	0	25SP	G14_059	TO->FROM	GR ISLD-LNX3345.00 - HOLT.CO3 345.00 345KV CKT 1	720	720	0.04264	107.9214	GEN645001 1-FORT CALHOUN 1
FDNS	00NR_G14_059	0	25SP	G14_059	TO->FROM	GR ISLD-LNX3345.00 - HOLT.CO3 345.00 345KV CKT 1	720	720	0.0427	107.9182	ARPIN B4 345.00 - EAU CLAIRE 345KV CKT 1
FDNS	00NR_G14_059	0	25SP	G14_059	TO->FROM	GR ISLD-LNX3345.00 - HOLT.CO3 345.00 345KV CKT 1	720	720	0.04264	107.9162	GEN642067 1-PLATTE
FDNS	00NR_G14_059	0	25SP	G14_059	TO->FROM	GR ISLD-LNX3345.00 - HOLT.CO3 345.00 345KV CKT 1	720	720	0.04339	107.894	CLEARWATER - ONEILL 115KV CKT 1
FDNS	00NR_G14_059	0	25SP	G14_059	TO->FROM	GR ISLD-LNX3345.00 - HOLT.CO3 345.00 345KV CKT 1	720	720	0.04438	107.8918	HOLCOMB - SETAB 345KV CKT 1
FDNS	00NR_G14_059	0	25SP	G14_059	TO->FROM	GR ISLD-LNX3345.00 - HOLT.CO3 345.00 345KV CKT 1	720	720	0.04438	107.8918	HOLCOMB - SETAB 345KV CKT 1
FDNS	00NR_G14_059	0	25SP	G14_059	TO->FROM	GR ISLD-LNX3345.00 - HOLT.CO3 345.00 345KV CKT 1	720	720	0.04264	107.8852	GEN501812 1-RODEMACHER UNIT 2
FDNS	00NR_G14_059	0	25SP	G14_059	TO->FROM	GR ISLD-LNX3345.00 - HOLT.CO3 345.00 345KV CKT 1	720	720	0.04264	107.8799	GEN336191 1-LITTLE GYPSY UNIT#3
FDNS	00NR_G14_059	0	25SP	G14_059	TO->FROM	GR ISLD-LNX3345.00 - HOLT.CO3 345.00 345KV CKT 1	720	720	0.04371	107.8759	ATKINSON - STUART 115KV CKT 1
FDNS	00NR_G14_059	0	25SP	G14_059	TO->FROM	GR ISLD-LNX3345.00 - HOLT.CO3 345.00 345KV CKT 1	720	720	0.04652	107.8753	SIDNEY - SIDNEY1-LNX3345.00 345KV CKT Z
FDNS	00NR_G14_059	0	25SP	G14_059	TO->FROM	GR ISLD-LNX3345.00 - HOLT.CO3 345.00 345KV CKT 1	720	720	0.04288	107.8731	KOSSUTH 3 345.00 - WEBSTER 345KV CKT 1
FDNS	00NR_G14_059	0	25SP	G14_059	TO->FROM	GR ISLD-LNX3345.00 - HOLT.CO3 345.00 345KV CKT 1	720	720	0.0423	107.8644	P12:115:NPPD:WAPA2:HEMINGF7:SNAKECK7:BTB
FDNS	00NR_G14_059	0	25SP	G14_059	TO->FROM	GR ISLD-LNX3345.00 - HOLT.CO3 345.00 345KV CKT 1	720	720	0.04264	107.8506	P12:115:UMZW:# 162 #: NEL IN ND. FAULT ON ML-NEL-MX-GA 115 KV
FDNS	00NR_G14_059	0	20SP	G14_059	TO->FROM	GR ISLD-LNX3345.00 - HOLT.CO3 345.00 345KV CKT 1	720	720	0.0406	107.8332	AXTELL - SWEETWATER 345KV CKT 1
FDNS	00NR_G14_059	0	25SP	G14_059	TO->FROM	GR ISLD-LNX3345.00 - HOLT.CO3 345.00 345KV CKT 1	720	720	0.04264	107.8252	GEN335614 1-WILLOW GLENN UNIT#4
FDNS	00NR_G14_059	0	25SP	G14_059	TO->FROM	GR ISLD-LNX3345.00 - HOLT.CO3 345.00 345KV CKT 1	720	720	0.04264	107.8251	GEN336801 1-BAXTER WILSON UNIT #1
FDNS	00NR_G14_059	0	25SP	G14_059	TO->FROM	GR ISLD-LNX3345.00 - HOLT.CO3 345.00 345KV CKT 1	720	720	0.04264	107.8161	GEN336464 1-MICHOUD UNIT #3
FDNS	00NR_G14_059	0	25SP	G14_059	TO->FROM	GR ISLD-LNX3345.00 - HOLT.CO3 345.00 345KV CKT 1	720	720	0.04264	107.8134	GEN542955 1-LACYGNE UNIT #1
FDNS	00NR_G14_059	0	25SP	G14_059	TO->FROM	GR ISLD-LNX3345.00 - HOLT.CO3 345.00 345KV CKT 1	720	720	0.04264	107.8055	GEN334441 1-SABINE UNIT 5
FDNS	00NR_G14_059	0	25SP	G14_059	TO->FROM	GR ISLD-LNX3345.00 - HOLT.CO3 345.00 345KV CKT 1	720	720	0.04264	107.8051	GEN542951 5-HAWTHORN UNIT #5
FDNS	00NR_G14_059	0	25SP	G14_059	TO->FROM	GR ISLD-LNX3345.00 - HOLT.CO3 345.00 345KV CKT 1	720	720	0.04264	107.7993	GEN335204 1-NELSON UNIT 4
FDNS	00NR_G14_059	0	25SP	G14_059	TO->FROM	GR ISLD-LNX3345.00 - HOLT.CO3 345.00 345KV CKT 1	720	720	0.04314	107.7897	FT THOMPSON - HURON 230KV CKT 1
FDNS	00NR_G14_059	0	25SP	G14_059	TO->FROM	GR ISLD-LNX3345.00 - HOLT.CO3 345.00 345KV CKT 1	720	720	0.04314	107.7897	FT THOMPSON - HURON 230KV CKT 1
FDNS	00NR_G14_059	0	25SP	G14_059	TO->FROM	GR ISLD-LNX3345.00 - HOLT.CO3 345.00 345KV CKT 1	720	720	0.04314	107.7897	FT THOMPSON - HURON 230KV CKT 2
FDNS	00NR_G14_059	0	25SP	G14_059	TO->FROM	GR ISLD-LNX3345.00 - HOLT.CO3 345.00 345KV CKT 1	720	720	0.04314	107.7897	FT THOMPSON - HURON 230KV CKT 2
FDNS	00NR_G14_059	0	25SP	G14_059	TO->FROM	GR ISLD-LNX3345.00 - HOLT.CO3 345.00 345KV CKT 1	720	720	0.04442	107.7579	BROKEN BOW - CALLAWAY 115KV CKT 1
FDNS	00NR_G14_059	0	25SP	G14_059	TO->FROM	GR ISLD-LNX3345.00 - HOLT.CO3 345.00 345KV CKT 1	720	720	0.04268	107.7415	NORTH LA CROSSE - NORTH ROCHESTER 345KV CKT 1
FDNS	00NR_G14_059	0	25SP	G14_059	TO->FROM	GR ISLD-LNX3345.00 - HOLT.CO3 345.00 345KV CKT 1	720	720	0.04365	107.7318	AINSWORTH - AINSWORTH 115KV CKT 1
FDNS	00NR_G14_059	0	25SP	G14_059	TO->FROM	GR ISLD-LNX3345.00 - HOLT.CO3 345.00 345KV CKT 1	720	720	0.04264	107.7101	GEN334433 1-SABINE UNIT 3
FDNS	00NR_G14_059	0	25SP	G14_059	TO->FROM	GR ISLD-LNX3345.00 - HOLT.CO3 345.00 345KV CKT 1	720	720	0.04264	107.7086	P12:115:TSGT:BLKWDCK7-ELSIETP7

SOLUTION	GROUP	SCENARIO	SEASON	SOURCE	DIRECTION	MONITORED ELEMENT	RATEA (MVA)	RATEB(MVA)	TDF	TC%LOADING (% MVA)	CONTINGENCY
FDNS	00NR_G14_059	0	25SP	G14_059	TO->FROM	GR ISLD-LNX3345.00 - HOLT.CO3 345.00 345KV CKT 1	720	720	0.04264	107.7038	GEN542956 2-LACYGNE UNIT #2
FDNS	00NR_G14_059	0	25SP	G14_059	TO->FROM	GR ISLD-LNX3345.00 - HOLT.CO3 345.00 345KV CKT 1	720	720	0.0428	107.7007	ADAMS - MITCHLCO3 345.00 345KV CKT 1
FDNS	00NR_G14_059	0	25SP	G14_059	TO->FROM	GR ISLD-LNX3345.00 - HOLT.CO3 345.00 345KV CKT 1	720	720	0.04278	107.6979	GAVINS POINT - HARTINGTON 115KV CKT 1
FDNS	00NR_G14_059	0	25SP	G14_059	TO->FROM	GR ISLD-LNX3345.00 - HOLT.CO3 345.00 345KV CKT 1	720	720	0.04264	107.6757	GEN336222 1-LITTLE GYPSY UNIT#2
FDNS	00NR_G14_059	0	25SP	G14_059	TO->FROM	GR ISLD-LNX3345.00 - HOLT.CO3 345.00 345KV CKT 1	720	720	0.04268	107.675	CENTER - COYOTE 345KV CKT 1
FDNS	00NR_G14_059	0	25SP	G14_059	TO->FROM	GR ISLD-LNX3345.00 - HOLT.CO3 345.00 345KV CKT 1	720	720	0.04184	107.6693	SIDNEY - STEGALL 345KV CKT 1
FDNS	00NR_G14_059	0	25SP	G14_059	TO->FROM	GR ISLD-LNX3345.00 - HOLT.CO3 345.00 345KV CKT 1	720	720	0.04371	107.6589	ATKINSON - EMMET 115KV CKT 1
FDNS	00NR_G14_059	0	25SP	G14_059	TO->FROM	GR ISLD-LNX3345.00 - HOLT.CO3 345.00 345KV CKT 1	720	720	0.04292	107.6563	WINNER - WITTEN 115KV CKT 1
FDNS	00NR_G14_059	0	25SP	G14_059	TO->FROM	GR ISLD-LNX3345.00 - HOLT.CO3 345.00 345KV CKT 1	720	720	0.03836	107.6484	NUNDRWD - WAYSIDE 230KV CKT 1
FDNS	00NR_G14_059	0	25SP	G14_059	TO->FROM	GR ISLD-LNX3345.00 - HOLT.CO3 345.00 345KV CKT 1	720	720	0.04273	107.6414	AXTELL - SWEETWATER 345KV CKT 1
FDNS	00NR_G14_059	0	25SP	G14_059	TO->FROM	GR ISLD-LNX3345.00 - HOLT.CO3 345.00 345KV CKT 1	720	720	0.04264	107.6374	GEN336152 1-WATERFORD UNIT#2
FDNS	00NR_G14_059	0	25SP	G14_059	TO->FROM	GR ISLD-LNX3345.00 - HOLT.CO3 345.00 345KV CKT 1	720	720	0.04264	107.6373	GEN336151 1-WATERFORD UNIT#1
FDNS	00NR_G14_059	0	25SP	G14_059	TO->FROM	GR ISLD-LNX3345.00 - HOLT.CO3 345.00 345KV CKT 1	720	720	0.04268	107.6285	GARRISON - JAMES TOWN 230KV CKT 1
FDNS	00NR_G14_059	0	25SP	G14_059	TO->FROM	GR ISLD-LNX3345.00 - HOLT.CO3 345.00 345KV CKT 1	720	720	0.04264	107.6276	P13:115-230:NPPD:NUCOR-3
FDNS	00NR_G14_059	0	25SP	G14_059	TO->FROM	GR ISLD-LNX3345.00 - HOLT.CO3 345.00 345KV CKT 1	720	720	0.04264	107.6236	P13:230-345:NPPD:NUCOR-1
FDNS	00NR_G14_059	0	25SP	G14_059	TO->FROM	GR ISLD-LNX3345.00 - HOLT.CO3 345.00 345KV CKT 1	720	720	0.04272	107.6071	APPLEDORN 4 230.00 - WATERTOWN 230KV CKT 1
FDNS	00NR_G14_059	0	25SP	G14_059	TO->FROM	GR ISLD-LNX3345.00 - HOLT.CO3 345.00 345KV CKT 1	720	720	0.04272	107.6071	APPLEDORN 4 230.00 - WATERTOWN 230KV CKT 1
FDNS	00NR_G14_059	0	25SP	G14_059	TO->FROM	GR ISLD-LNX3345.00 - HOLT.CO3 345.00 345KV CKT 1	720	720	0.0427	107.6066	MENNO JCT - TRIPP JCT 115KV CKT 1
FDNS	00NR_G14_059	0	25SP	G14_059	TO->FROM	GR ISLD-LNX3345.00 - HOLT.CO3 345.00 345KV CKT 1	720	720	0.04277	107.5916	ADAMS - PLEASANT VALLEY 345KV CKT 1
FDNS	00NR_G14_059	0	25SP	G14_059	TO->FROM	GR ISLD-LNX3345.00 - HOLT.CO3 345.00 345KV CKT 1	720	720	0.04339	107.5861	CLEARWATER - NELIGH 115KV CKT 1
FDNS	00NR_G14_059	0	25SP	G14_059	TO->FROM	GR ISLD-LNX3345.00 - HOLT.CO3 345.00 345KV CKT 1	720	720	0.04264	107.5828	GEN303007 1-1BC2 U2
FDNS	00NR_G14_059	0	25SP	G14_059	TO->FROM	GR ISLD-LNX3345.00 - HOLT.CO3 345.00 345KV CKT 1	720	720	0.04264	107.5817	GEN562547 1-G14_039_3 0.6900
FDNS	00NR_G14_059	0	25SP	G14_059	TO->FROM	GR ISLD-LNX3345.00 - HOLT.CO3 345.00 345KV CKT 1	720	720	0.04264	107.5805	GEN303006 1-1BC2 U1
FDNS	00NR_G14_059	0	25SP	G14_059	TO->FROM	GR ISLD-LNX3345.00 - HOLT.CO3 345.00 345KV CKT 1	720	720	0.0427	107.5486	MENNO JCT - UTICA 115KV CKT 1
FDNS	00NR_G14_059	0	25SP	G14_059	TO->FROM	GR ISLD-LNX3345.00 - HOLT.CO3 345.00 345KV CKT 1	720	720	0.04286	107.5358	P12:345:SPS:J07.1.FINN.HITCH
FDNS	00NR_G14_059	0	25SP	G14_059	TO->FROM	GR ISLD-LNX3345.00 - HOLT.CO3 345.00 345KV CKT 1	720	720	0.04264	107.5225	P13:115-345:NPPD:NUCOR-2
FDNS	00NR_G14_059	0	20SP	G14_059	TO->FROM	GR ISLD-LNX3345.00 - HOLT.CO3 345.00 345KV CKT 1	720	720	0.04052	107.5222	BASE CASE
FDNS	00NR_G14_059	0	25SP	G14_059	TO->FROM	GR ISLD-LNX3345.00 - HOLT.CO3 345.00 345KV CKT 1	720	720	0.0427	107.5106	P12:115:UMZZ:# 237 #: MEN IN SD. MENNO JUNCTION IS A TAP (UJ-MEN-TP).
FDNS	00NR_G14_059	0	25SP	G14_059	TO->FROM	GR ISLD-LNX3345.00 - HOLT.CO3 345.00 345KV CKT 1	720	720	0.04286	107.5008	Hitchland Interchange - WALKTAP7 345.00 345KV CKT 1
FDNS	00NR_G14_059	0	25SP	G14_059	TO->FROM	GR ISLD-LNX3345.00 - HOLT.CO3 345.00 345KV CKT 1	720	720	0.04286	107.5008	Hitchland Interchange - WALKTAP7 345.00 345KV CKT 1
FDNS	00NR_G14_059	0	25SP	G14_059	TO->FROM	GR ISLD-LNX3345.00 - HOLT.CO3 345.00 345KV CKT 1	720	720	0.04168	107.4915	MAXWELL - STAPLETON 115KV CKT 1
FDNS	00NR_G14_059	0	20SP	G14_059	TO->FROM	GR ISLD-LNX3345.00 - HOLT.CO3 345.00 345KV CKT 1	720	720	0.04052	107.3667	GRPRAR2-LNX3345.00 345KV SWITCHED SHUNT
FDNSLock	00NR_G14_059	0	20SP	G14_059	TO->FROM	GR ISLD-LNX3345.00 - HOLT.CO3 345.00 345KV CKT 1	720	720	0.04052	107.3667	GRPRAR2-LNX3345.00 345KV SWITCHED SHUNT
FDNS	00NR_G14_059	0	20SP	G14_059	TO->FROM	GR ISLD-LNX3345.00 - HOLT.CO3 345.00 345KV CKT 1	720	720	0.03967	107.3145	MOORE - PAULINE 345KV CKT 1
FDNS	00NR_G14_059	0	20SP	G14_059	TO->FROM	GR ISLD-LNX3345.00 - HOLT.CO3 345.00 345KV CKT 1	720	720	0.03749	107.2423	COOPER - MOORE 345KV CKT 1
FDNS	00NR_G14_059	0	20SP	G14_059	TO->FROM	GR ISLD-LNX3345.00 - HOLT.CO3 345.00 345KV CKT 1	720	720	0.04051	107.1858	ANTELOP-LNX3345.00 - BRDLAND-LNX3345.00 345KV CKT 1
FDNS	00NR_G14_059	0	20SP	G14_059	TO->FROM	GR ISLD-LNX3345.00 - HOLT.CO3 345.00 345KV CKT 1	720	720	0.03951	107.1383	103RD & ROKEBY - MOORE 345KV CKT 1
FDNS	00NR_G14_059	0	20SP	G14_059	TO->FROM	GR ISLD-LNX3345.00 - HOLT.CO3 345.00 345KV CKT 1	720	720	0.03951	107.1383	103RD & ROKEBY - MOORE 345KV CKT 1
FDNS	00NR_G14_059	0	20SP	G14_059	TO->FROM	GR ISLD-LNX3345.00 - HOLT.CO3 345.00 345KV CKT 1	720	720	0.03685	107.1026	COLUMWEST - KELLY 230KV CKT 1
FDNS	00NR_G14_059	0	20SP	G14_059	TO->FROM	GR ISLD-LNX3345.00 - HOLT.CO3 345.00 345KV CKT 1	720	720	0.04051	107.0585	HURON (BD KU2A) 345/230/13.8KV TRANSFORMER CKT 1
FDNS	00NR_G14_059	0	20SP	G14_059	TO->FROM	GR ISLD-LNX3345.00 - HOLT.CO3 345.00 345KV CKT 1	720	720	0.04051	107.0585	HURON (BD KU2A) 345/230/13.8KV TRANSFORMER CKT 1
FDNS	00NR_G14_059	0	20SP	G14_059	TO->FROM	GR ISLD-LNX3345.00 - HOLT.CO3 345.00 345KV CKT 1	720	720	0.04051	107.0558	BRDLAND-LNX3345.00 - HURON 345KV CKT Z
FDNS	00NR_G14_059	0	20SP	G14_059	TO->FROM	GR ISLD-LNX3345.00 - HOLT.CO3 345.00 345KV CKT 1	720	720	0.04051	107.0556	P12:345:UMZB:# 102 #: AVS BD IN ND. AVS BRD LR
FDNS	00NR_G14_059	0	20SP	G14_059	TO->FROM	GR ISLD-LNX3345.00 - HOLT.CO3 345.00 345KV CKT 1	720	720	0.04051	107.0555	BROADLAND - HURON 230KV CKT 1
FDNS	00NR_G14_059	0	20SP	G14_059	TO->FROM	GR ISLD-LNX3345.00 - HOLT.CO3 345.00 345KV CKT 1	720	720	0.04051	107.0554	P12:345:UMZB:# 103 #: BD IN SD. LOSS OF LINE
FDNS	00NR_G14_059	0	20SP	G14_059	TO->FROM	GR ISLD-LNX3345.00 - HOLT.CO3 345.00 345KV CKT 1	720	720	0.0406	107.0123	FALLOW 3 345.00 - GRIMES 345KV CKT 1
FDNS	00NR_G14_059	0	20SP	G14_059	TO->FROM	GR ISLD-LNX3345.00 - HOLT.CO3 345.00 345KV CKT 1	720	720	0.0409	106.9919	GLENHAM - WHITLOK 230KV CKT 1
FDNS	00NR_G14_059	0	20SP	G14_059	TO->FROM	GR ISLD-LNX3345.00 - HOLT.CO3 345.00 345KV CKT 1	720	720	0.0409	106.9874	COOPER - FAIRPORT 345KV CKT 1
FDNS	00NR_G14_059	0	20SP	G14_059	TO->FROM	GR ISLD-LNX3345.00 - HOLT.CO3 345.00 345KV CKT 1	720	720	0.0409	106.9874	COOPER - FAIRPORT 345KV CKT 1
FDNS	00NR_G14_059	0	20SP	G14_059	TO->FROM	GR ISLD-LNX3345.00 - HOLT.CO3 345.00 345KV CKT 1	720	720	0.04052	106.9807	GEN660001 2-ABERDEEN SIEBRECHT
FDNS	00NR_G14_059	0	20SP	G14_059	TO->FROM	GR ISLD-LNX3345.00 - HOLT.CO3 345.00 345KV CKT 1	720	720	0.04052	106.9784	GEN660003 3-HURON WEST PARK
FDNS	00NR_G14_059	0	20SP	G14_059	TO->FROM	GR ISLD-LNX3345.00 - HOLT.CO3 345.00 345KV CKT 1	720	720	0.04027	106.9748	POST ROCK (POSTROCK T1) 345/230/13.8KV TRANSFORMER CKT 1
FDNS	00NR_G14_059	0	25SP	G14_059	TO->FROM	GR ISLD-LNX3345.00 - HOLT.CO3 345.00 345KV CKT 1	720	720	0.04264	106.9669	BASE CASE
FDNS	00NR_G14_059	0	20SP	G14_059	TO->FROM	GR ISLD-LNX3345.00 - HOLT.CO3 345.00 345KV CKT 1	720	720	0.04052	106.965	GEN600063 1-COLVILLE GEN 1
FDNS	00NR_G14_059	0	20SP	G14_059	TO->FROM	GR ISLD-LNX3345.00 - HOLT.CO3 345.00 345KV CKT 1	720	720	0.04052	106.965	GEN600064 2-COLVILLE GEN 2
FDNS	00NR_G14_059	0	20SP	G14_059	TO->FROM	GR ISLD-LNX3345.00 - HOLT.CO3 345.00 345KV CKT 1	720	720	0.04051	106.9621	ANTELOP-LNX3345.00 - ANTELOPE VALLEY 345KV CKT Z
FDNS	00NR_G14_059	0	20SP	G14_059	TO->FROM	GR ISLD-LNX3345.00 - HOLT.CO3 345.00 345KV CKT 1	720	720	0.0393	106.9586	MAXWELL - NORTH PLATTE 115KV CKT 1
FDNS	00NR_G14_059	0	20SP	G14_059	TO->FROM	GR ISLD-LNX3345.00 - HOLT.CO3 345.00 345KV CKT 1	720	720	0.04052	106.9572	GEN681522 3-GENOA 3
FDNS	00NR_G14_059	0	20SP	G14_059	TO->FROM	GR ISLD-LNX3345.00 - HOLT.CO3 345.00 345KV CKT 1	720	720	0.04052	106.9537	GEN659273 2-GROTON SYNC COND
FDNS	00NR_G14_059	0	20SP	G14_059	TO->FROM	GR ISLD-LNX3345.00 - HOLT.CO3 345.00 345KV CKT 1	720	720	0.04052	106.9537	GEN659294 1-WILTONCOL9
FDNS	00NR_G14_059	0	20SP	G14_059	TO->FROM	GR ISLD-LNX3345.00 - HOLT.CO3 345.00 345KV CKT 1	720	720	0.04052	106.9459	GEN600043 7-BLUE LAKE5
FDNS	00NR_G14_059	0	20SP	G14_059	TO->FROM	GR ISLD-LNX3345.00 - HOLT.CO3 345.00 345KV CKT 1	720	720	0.04052	106.9459	GEN600044 8-BLUE LAKE6
FDNS	00NR_G14_059	0	20SP	G14_059	TO->FROM	GR ISLD-LNX3345.00 - HOLT.CO3 345.00 345KV CKT 1	720	720	0.04154	106.9415	ATCHSNT3 345.00 - BOONEVILLE 345KV CKT 1
FDNS	00NR_G14_059	0	20SP	G14_059	TO->FROM	GR ISLD-LNX3345.00 - HOLT.CO3 345.00 345KV CKT 1	720	720	0.04052	106.9263	GEN600014 4-BLACK DOG GEN 4
FDNS	00NR_G14_059	0	20SP	G14_059	TO->FROM	GR ISLD-LNX3345.00 - HOLT.CO3 345.00 345KV CKT 1	720	720	0.04052	106.926	GEN600065 7-HIGH BRIDGE
FDNS	00NR_G14_059	0	20SP	G14_059	TO->FROM	GR ISLD-LNX3345.00 - HOLT.CO3 345.00 345KV CKT 1	720	720	0.04052	106.926	GEN600066 8-HIGH BRIDGE
FDNS	00NR_G14_059	0	20SP	G14_059	TO->FROM	GR ISLD-LNX3345.00 - HOLT.CO3 345.00 345KV CKT 1	720	720	0.04052	106.9222	GEN600011 5-BLACK DOG GEN 1
FDNS	00NR_G14_059	0	20SP	G14_059	TO->FROM	GR ISLD-LNX3345.00 - HOLT.CO3 345.00 345KV CKT 1	720	720	0.04052	106.9203	LANSING WEST 161/22.0KV TRANSFORMER CKT 1
FDNS	00NR_G14_059	0	20SP	G14_059	TO->FROM	GR ISLD-LNX3345.00 - HOLT.CO3 345.00 345KV CKT 1	720	720	0.04003	106.9181	GRAND ISLAND (GRAND.ISD T5) 230/115/13.8KV TRANSFORMER CKT 2
FDNS	00NR_G14_059	0	20SP	G14_059	TO->FROM	GR ISLD-LNX3345.00 - HOLT.CO3 345.00 345KV CKT 1	720	720	0.04003	106.9181	GRAND ISLAND (GRAND.ISD T5) 230/115/13.8KV TRANSFORMER CKT 2
FDNS	00NR_G14_059	0	20SP	G14_059	TO->FROM	GR ISLD-LNX3345.00 - HOLT.CO3 345.00 345KV CKT 1	720	720	0.04052	106.9167	GEN600071 10-RIVER SIDE
FDNS	00NR_G14_059	0	20SP	G14_059	TO->FROM	GR ISLD-LNX3345.00 - HOLT.CO3 345.00 345KV CKT 1	720	720	0.04052	106.9165	GEN600070 9-RIVER SIDE
FDNS	00NR_G14_059	0	20SP	G14_059	TO->FROM	GR ISLD-LNX3345.00 - HOLT.CO3 345.00 345KV CKT 1	720	720	0.04003	106.9147	GRAND ISLAND (GRAND.ISD T2) 230/115/13.8KV TRANSFORMER CKT 1

SOLUTION	GROUP	SCENARIO	SEASON	SOURCE	DIRECTION	MONITORED ELEMENT	RATEA (MVA)	RATEB(MVA)	TDF	TC%LOADING (% MVA)	CONTINGENCY
FDNS	00NR_G14_059	0	20SP	G14_059	TO->FROM	GR ISLD-LNX3345.00 - HOLT.CO3 345.00 345KV CKT 1	720	720	0.04003	106.9147	GRAND ISLAND (GRAND.ISD T2) 230/115/13.8KV TRANSFORMER CKT 1
FDNS	00NR_G14_059	0	20SP	G14_059	TO->FROM	GR ISLD-LNX3345.00 - HOLT.CO3 345.00 345KV CKT 1	720	720	0.04052	106.9084	GEN600007 7-RIVERSIDE GEN 7
FDNS	00NR_G14_059	0	20SP	G14_059	TO->FROM	GR ISLD-LNX3345.00 - HOLT.CO3 345.00 345KV CKT 1	720	720	0.04052	106.9084	GEN659031 1-G12_014IS_4 0.6900
FDNS	00NR_G14_059	0	20SP	G14_059	TO->FROM	GR ISLD-LNX3345.00 - HOLT.CO3 345.00 345KV CKT 1	720	720	0.04052	106.8969	GEN600017 C-LS POWER CT
FDNS	00NR_G14_059	0	20SP	G14_059	TO->FROM	GR ISLD-LNX3345.00 - HOLT.CO3 345.00 345KV CKT 1	720	720	0.04052	106.8942	GEN659192 6-LYNN
FDNS	00NR_G14_059	0	20SP	G14_059	TO->FROM	GR ISLD-LNX3345.00 - HOLT.CO3 345.00 345KV CKT 1	720	720	0.04052	106.8935	GEN659162 4-RED WLCK
FDNS	00NR_G14_059	0	20SP	G14_059	TO->FROM	GR ISLD-LNX3345.00 - HOLT.CO3 345.00 345KV CKT 1	720	720	0.04052	106.8935	GEN659163 5-BLACK WDCK
FDNS	00NR_G14_059	0	20SP	G14_059	TO->FROM	GR ISLD-LNX3345.00 - HOLT.CO3 345.00 345KV CKT 1	720	720	0.04052	106.8858	GEN600045 4-ANSON
FDNS	00NR_G14_059	0	20SP	G14_059	TO->FROM	GR ISLD-LNX3345.00 - HOLT.CO3 345.00 345KV CKT 1	720	720	0.04052	106.8798	GEN 10648 1-G830_GEN 0.6900
FDNS	00NR_G14_059	0	20SP	G14_059	TO->FROM	GR ISLD-LNX3345.00 - HOLT.CO3 345.00 345KV CKT 1	720	720	0.04052	106.8538	GEN615052 1-CAMBRIDGE GENERATING STATION
FDNS	00NR_G14_059	0	20SP	G14_059	TO->FROM	GR ISLD-LNX3345.00 - HOLT.CO3 345.00 345KV CKT 1	720	720	0.04052	106.848	GEN615015 1-GRE-SPRITWDG13.200
FDNS	00NR_G14_059	0	20SP	G14_059	TO->FROM	GR ISLD-LNX3345.00 - HOLT.CO3 345.00 345KV CKT 1	720	720	0.04052	106.8398	GEN615021 1-GRE-ER 14G 16.000
FDNSLock	00NR_G14_059	0	20SP	G14_059	TO->FROM	GR ISLD-LNX3345.00 - HOLT.CO3 345.00 345KV CKT 1	720	720	0.04095	106.8374	COPSTJCPFRSJ
FDNSLock	00NR_G14_059	0	20SP	G14_059	TO->FROM	GR ISLD-LNX3345.00 - HOLT.CO3 345.00 345KV CKT 1	720	720	0.04095	106.8374	P12:345:NPPD:3517:COOPER 3:ST JOE 3:BTB
FDNSLock	00NR_G14_059	0	20SP	G14_059	TO->FROM	GR ISLD-LNX3345.00 - HOLT.CO3 345.00 345KV CKT 1	720	720	0.04095	106.8374	STMDSJFAFACO
FDNS	00NR_G14_059	0	25SP	G14_059	TO->FROM	GR ISLD-LNX3345.00 - HOLT.CO3 345.00 345KV CKT 1	720	720	0.0392	106.8352	COLUMWEST - KELLY 230KV CKT 1
FDNSLock	00NR_G14_059	0	25SP	G14_059	TO->FROM	GR ISLD-LNX3345.00 - HOLT.CO3 345.00 345KV CKT 1	720	720	0.04264	106.8336	GRPRAR2-LNX3345.00 345KV SWITCHED SHUNT
FDNS	00NR_G14_059	0	25SP	G14_059	TO->FROM	GR ISLD-LNX3345.00 - HOLT.CO3 345.00 345KV CKT 1	720	720	0.04264	106.8329	GRPRAR2-LNX3345.00 345KV SWITCHED SHUNT
FDNS	00NR_G14_059	0	20SP	G14_059	TO->FROM	GR ISLD-LNX3345.00 - HOLT.CO3 345.00 345KV CKT 1	720	720	0.04052	106.8314	BISONMP4 230.00 - SQUARE BUTTE 230KV CKT 1
FDNS	00NR_G14_059	0	20SP	G14_059	TO->FROM	GR ISLD-LNX3345.00 - HOLT.CO3 345.00 345KV CKT 1	720	720	0.04011	106.827	GRAND ISLAND (GI KU1B) 345/230/13.8KV TRANSFORMER CKT 2
FDNS	00NR_G14_059	0	20SP	G14_059	TO->FROM	GR ISLD-LNX3345.00 - HOLT.CO3 345.00 345KV CKT 1	720	720	0.04011	106.827	GRAND ISLAND (GI KU1B) 345/230/13.8KV TRANSFORMER CKT 2
FDNS	00NR_G14_059	0	20SP	G14_059	TO->FROM	GR ISLD-LNX3345.00 - HOLT.CO3 345.00 345KV CKT 1	720	720	0.04011	106.8256	GRAND ISLAND (GI KU1A) 345/230/13.8KV TRANSFORMER CKT 1
FDNS	00NR_G14_059	0	20SP	G14_059	TO->FROM	GR ISLD-LNX3345.00 - HOLT.CO3 345.00 345KV CKT 1	720	720	0.04011	106.8256	GRAND ISLAND (GI KU1A) 345/230/13.8KV TRANSFORMER CKT 1
FDNS	00NR_G14_059	0	20SP	G14_059	TO->FROM	GR ISLD-LNX3345.00 - HOLT.CO3 345.00 345KV CKT 1	720	720	0.04052	106.8206	GEN660016 1-B_H WIND 0.7000
FDNS	00NR_G14_059	0	25SP	G14_059	TO->FROM	GR ISLD-LNX3345.00 - HOLT.CO3 345.00 345KV CKT 1	720	720	0.04236	106.8131	KELLY - SHELL CREEK 230KV CKT 1
FDNS	00NR_G14_059	0	20SP	G14_059	TO->FROM	GR ISLD-LNX3345.00 - HOLT.CO3 345.00 345KV CKT 1	720	720	0.04019	106.7908	FT THOMPSON - LOWERBRULE 4230.00 230KV CKT 1
FDNS	00NR_G14_059	0	20SP	G14_059	TO->FROM	GR ISLD-LNX3345.00 - HOLT.CO3 345.00 345KV CKT 1	720	720	0.04019	106.7908	FT THOMPSON - LOWERBRULE 4230.00 230KV CKT 1
FDNS	00NR_G14_059	0	20SP	G14_059	TO->FROM	GR ISLD-LNX3345.00 - HOLT.CO3 345.00 345KV CKT 1	720	720	0.04028	106.7654	MCCOOL (MCCOOL T2) 345/115/13.8KV TRANSFORMER CKT 1
FDNS	00NR_G14_059	0	20SP	G14_059	TO->FROM	GR ISLD-LNX3345.00 - HOLT.CO3 345.00 345KV CKT 1	720	720	0.04028	106.7654	MCCOOL (MCCOOL T2) 345/115/13.8KV TRANSFORMER CKT 1
FDNS	00NR_G14_059	0	20SP	G14_059	TO->FROM	GR ISLD-LNX3345.00 - HOLT.CO3 345.00 345KV CKT 1	720	720	0.04052	106.7597	GEN672303 3-BOUNDARY DAM GENERATOR 3
FDNS	00NR_G14_059	0	20SP	G14_059	TO->FROM	GR ISLD-LNX3345.00 - HOLT.CO3 345.00 345KV CKT 1	720	720	0.04052	106.7597	GEN672305 5-BOUNDARY DAM GENERATOR 5
FDNS	00NR_G14_059	0	20SP	G14_059	TO->FROM	GR ISLD-LNX3345.00 - HOLT.CO3 345.00 345KV CKT 1	720	720	0.04052	106.7596	GEN672304 4-BOUNDARY DAM GENERATOR 4
FDNS	00NR_G14_059	0	20SP	G14_059	TO->FROM	GR ISLD-LNX3345.00 - HOLT.CO3 345.00 345KV CKT 1	720	720	0.04113	106.732	COOPER - ST JOE 345KV CKT 1
FDNS	00NR_G14_059	0	20SP	G14_059	TO->FROM	GR ISLD-LNX3345.00 - HOLT.CO3 345.00 345KV CKT 1	720	720	0.04052	106.7241	GEN672392 1-NBECGT1G 18.000
FDNS	00NR_G14_059	0	20SP	G14_059	TO->FROM	GR ISLD-LNX3345.00 - HOLT.CO3 345.00 345KV CKT 1	720	720	0.04052	106.7134	GEN662101 1-WESSINGTON190.5750
FDNS	00NR_G14_059	0	20SP	G14_059	TO->FROM	GR ISLD-LNX3345.00 - HOLT.CO3 345.00 345KV CKT 1	720	720	0.04052	106.6934	GEN600067 9-HIGH BRIDGE
FDNS	00NR_G14_059	0	20SP	G14_059	TO->FROM	GR ISLD-LNX3345.00 - HOLT.CO3 345.00 345KV CKT 1	720	720	0.04052	106.6918	CENTER 230/22.0KV TRANSFORMER CKT 1
FDNS	00NR_G14_059	0	20SP	G14_059	TO->FROM	GR ISLD-LNX3345.00 - HOLT.CO3 345.00 345KV CKT 1	720	720	0.0407	106.684	G14-021T 345.00 - MULLNCR7 345.00 345KV CKT 1
FDNS	00NR_G14_059	0	25SP	G14_059	TO->FROM	GR ISLD-LNX3345.00 - HOLT.CO3 345.00 345KV CKT 1	720	720	0.04168	106.6834	103RD & ROKEBY - MOORE 345KV CKT 1
FDNS	00NR_G14_059	0	25SP	G14_059	TO->FROM	GR ISLD-LNX3345.00 - HOLT.CO3 345.00 345KV CKT 1	720	720	0.04168	106.6834	103RD & ROKEBY - MOORE 345KV CKT 1
FDNS	00NR_G14_059	0	20SP	G14_059	TO->FROM	GR ISLD-LNX3345.00 - HOLT.CO3 345.00 345KV CKT 1	720	720	0.0407	106.6816	G15-005T 345.00 - MULLNCR7 345.00 345KV CKT 1
FDNS	00NR_G14_059	0	25SP	G14_059	TO->FROM	GR ISLD-LNX3345.00 - HOLT.CO3 345.00 345KV CKT 1	720	720	0.04263	106.6397	ANTELOP-LNX3345.00 - BRDLAND-LNX3345.00 345KV CKT 1
FDNS	00NR_G14_059	0	20SP	G14_059	TO->FROM	GR ISLD-LNX3345.00 - HOLT.CO3 345.00 345KV CKT 1	720	720	0.04052	106.6238	GEN659353 1-DEERCREK CTG18.000
FDNS	00NR_G14_059	0	20SP	G14_059	TO->FROM	GR ISLD-LNX3345.00 - HOLT.CO3 345.00 345KV CKT 1	720	720	0.04052	106.6237	GEN659354 1-DEERCREK STG18.000
FDNS	00NR_G14_059	0	20SP	G14_059	TO->FROM	GR ISLD-LNX3345.00 - HOLT.CO3 345.00 345KV CKT 1	720	720	0.0407	106.6002	G15-005T 345.00 - SIBLEY 345KV CKT 1
FDNS	00NR_G14_059	0	20SP	G14_059	TO->FROM	GR ISLD-LNX3345.00 - HOLT.CO3 345.00 345KV CKT 1	720	720	0.04052	106.5998	GEN910006 1-G12_012IS_3 0.6900
FDNSLock	00NR_G14_059	0	20SP	G14_059	TO->FROM	GR ISLD-LNX3345.00 - HOLT.CO3 345.00 345KV CKT 1	720	720	0.03996	106.5854	CENTRAL CITY - GRAND ISLAND 115KV CKT 1
FDNS	00NR_G14_059	0	20SP	G14_059	TO->FROM	GR ISLD-LNX3345.00 - HOLT.CO3 345.00 345KV CKT 1	720	720	0.0409	106.5673	GLENHAM - L3 HAWDON 230KV CKT 1
FDNS	00NR_G14_059	0	20SP	G14_059	TO->FROM	GR ISLD-LNX3345.00 - HOLT.CO3 345.00 345KV CKT 1	720	720	0.04052	106.5646	GEN681542 6-JP MADGETT
FDNS	00NR_G14_059	0	25SP	G14_059	TO->FROM	GR ISLD-LNX3345.00 - HOLT.CO3 345.00 345KV CKT 1	720	720	0.04349	106.5462	LOUP CITY - ST LIBORY 115KV CKT 1
FDNS	00NR_G14_059	0	20SP	G14_059	TO->FROM	GR ISLD-LNX3345.00 - HOLT.CO3 345.00 345KV CKT 1	720	720	0.04052	106.509	GEN659289 1-DAYCNTYWND W0.6900
FDNS	00NR_G14_059	0	25SP	G14_059	TO->FROM	GR ISLD-LNX3345.00 - HOLT.CO3 345.00 345KV CKT 1	720	720	0.04263	106.4934	P12:345:UMZB:# 102 #: AVS BD IN ND. AVS BRD LR
FDNS	00NR_G14_059	0	25SP	G14_059	TO->FROM	GR ISLD-LNX3345.00 - HOLT.CO3 345.00 345KV CKT 1	720	720	0.04263	106.4931	BRDLAND-LNX3345.00 - HURON 345KV CKT Z
FDNS	00NR_G14_059	0	25SP	G14_059	TO->FROM	GR ISLD-LNX3345.00 - HOLT.CO3 345.00 345KV CKT 1	720	720	0.04263	106.4925	BROADLAND - HURON 230KV CKT 1
FDNS	00NR_G14_059	0	25SP	G14_059	TO->FROM	GR ISLD-LNX3345.00 - HOLT.CO3 345.00 345KV CKT 1	720	720	0.04263	106.4925	HURON (BD KU2A) 345/230/13.8KV TRANSFORMER CKT 1
FDNS	00NR_G14_059	0	25SP	G14_059	TO->FROM	GR ISLD-LNX3345.00 - HOLT.CO3 345.00 345KV CKT 1	720	720	0.04263	106.4925	HURON (BD KU2A) 345/230/13.8KV TRANSFORMER CKT 1
FDNS	00NR_G14_059	0	25SP	G14_059	TO->FROM	GR ISLD-LNX3345.00 - HOLT.CO3 345.00 345KV CKT 1	720	720	0.04263	106.4923	P12:345:UMZB:# 103 #: BD IN SD. LOSS OF LINE
FDNS	00NR_G14_059	0	20SP	G14_059	TO->FROM	GR ISLD-LNX3345.00 - HOLT.CO3 345.00 345KV CKT 1	720	720	0.03991	106.4802	GRAND ISLAND (GI KU3A) 345/230/13.8KV TRANSFORMER CKT 3
FDNS	00NR_G14_059	0	20SP	G14_059	TO->FROM	GR ISLD-LNX3345.00 - HOLT.CO3 345.00 345KV CKT 1	720	720	0.03991	106.4802	GRAND ISLAND (GI KU3A) 345/230/13.8KV TRANSFORMER CKT 3
FDNS	00NR_G14_059	0	25SP	G14_059	TO->FROM	GR ISLD-LNX3345.00 - HOLT.CO3 345.00 345KV CKT 1	720	720	0.04302	106.467	COOPER - FAIRPORT 345KV CKT 1
FDNS	00NR_G14_059	0	25SP	G14_059	TO->FROM	GR ISLD-LNX3345.00 - HOLT.CO3 345.00 345KV CKT 1	720	720	0.04302	106.467	COOPER - FAIRPORT 345KV CKT 1
FDNS	00NR_G14_059	0	25SP	G14_059	TO->FROM	GR ISLD-LNX3345.00 - HOLT.CO3 345.00 345KV CKT 1	720	720	0.04264	106.4482	GEN620324 3-HOOT LAKE 3 GEN
FDNS	00NR_G14_059	0	25SP	G14_059	TO->FROM	GR ISLD-LNX3345.00 - HOLT.CO3 345.00 345KV CKT 1	720	720	0.04264	106.4445	GEN 11104 1-J262_GEN 0.6000
FDNS	00NR_G14_059	0	25SP	G14_059	TO->FROM	GR ISLD-LNX3345.00 - HOLT.CO3 345.00 345KV CKT 1	720	720	0.04264	106.4445	GEN 11108 1-J263_GEN 0.6000
FDNS	00NR_G14_059	0	25SP	G14_059	TO->FROM	GR ISLD-LNX3345.00 - HOLT.CO3 345.00 345KV CKT 1	720	720	0.04264	106.4407	GEN600046 1-MECST
FDNS	00NR_G14_059	0	25SP	G14_059	TO->FROM	GR ISLD-LNX3345.00 - HOLT.CO3 345.00 345KV CKT 1	720	720	0.0414	106.4266	MAXWELL - NORTH PLATTE 115KV CKT 1
FDNS	00NR_G14_059	0	20SP	G14_059	TO->FROM	GR ISLD-LNX3345.00 - HOLT.CO3 345.00 345KV CKT 1	720	720	0.04052	106.4241	COYOTE 345/24.0KV TRANSFORMER CKT 1
FDNS	00NR_G14_059	0	25SP	G14_059	TO->FROM	GR ISLD-LNX3345.00 - HOLT.CO3 345.00 345KV CKT 1	720	720	0.04272	106.4231	FALLOW 3 345.00 - GRIMES 345KV CKT 1
FDNS	00NR_G14_059	0	25SP	G14_059	TO->FROM	GR ISLD-LNX3345.00 - HOLT.CO3 345.00 345KV CKT 1	720	720	0.04264	106.4221	GEN600047 1-MECCT1
FDNS	00NR_G14_059	0	20SP	G14_059	TO->FROM	GR ISLD-LNX3345.00 - HOLT.CO3 345.00 345KV CKT 1	720	720	0.04052	106.4188	GEN659018 1-G14_003IS_3 0.6900
FDNS	00NR_G14_059	0	25SP	G14_059	TO->FROM	GR ISLD-LNX3345.00 - HOLT.CO3 345.00 345KV CKT 1	720	720	0.04264	106.4138	GEN660003 3-HURON WEST PARK
FDNS	00NR_G14_059	0	25SP	G14_059	TO->FROM	GR ISLD-LNX3345.00 - HOLT.CO3 345.00 345KV CKT 1	720	720	0.04264	106.4132	GEN600063 1-COLVILLE GEN 1
FDNS	00NR_G14_059	0	25SP	G14_059	TO->FROM	GR ISLD-LNX3345.00 - HOLT.CO3 345.00 345KV CKT 1	720	720	0.04264	106.4132	GEN600064 2-COLVILLE GEN 2

SOLUTION	GROUP	SCENARIO	SEASON	SOURCE	DIRECTION	MONITORED ELEMENT	RATEA (MVA)	RATEB(MVA)	TDF	TC%LOADING (% MVA)	CONTINGENCY
FDNS	00NR_G14_059	0	25SP	G14_059	TO->FROM	GR ISLD-LNX3345.00 - HOLT.CO3 345.00 345KV CKT 1	720	720	0.04365	106.4106	ATCHSNT3 345.00 - COOPER 345KV CKT 1
FDNS	00NR_G14_059	0	25SP	G14_059	TO->FROM	GR ISLD-LNX3345.00 - HOLT.CO3 345.00 345KV CKT 1	720	720	0.04365	106.4106	ATCHSNT3 345.00 - COOPER 345KV CKT 1
FDNS	00NR_G14_059	0	25SP	G14_059	TO->FROM	GR ISLD-LNX3345.00 - HOLT.CO3 345.00 345KV CKT 1	720	720	0.04264	106.4098	GEN660001 2-ABERDEEN SIEBRECHT
FDNS	00NR_G14_059	0	20SP	G14_059	TO->FROM	GR ISLD-LNX3345.00 - HOLT.CO3 345.00 345KV CKT 1	720	720	0.04052	106.4087	GEN562596 1-G14_059_3 0.6900
FDNS	00NR_G14_059	0	25SP	G14_059	TO->FROM	GR ISLD-LNX3345.00 - HOLT.CO3 345.00 345KV CKT 1	720	720	0.04263	106.4017	ANTELOP-LNX3345.00 - ANTELOPE VALLEY 345KV CKT Z
FDNS	00NR_G14_059	0	25SP	G14_059	TO->FROM	GR ISLD-LNX3345.00 - HOLT.CO3 345.00 345KV CKT 1	720	720	0.04264	106.3996	GEN600043 7-BLUE LAKE5
FDNS	00NR_G14_059	0	25SP	G14_059	TO->FROM	GR ISLD-LNX3345.00 - HOLT.CO3 345.00 345KV CKT 1	720	720	0.04264	106.3996	GEN600044 8-BLUE LAKE6
FDNS	00NR_G14_059	0	25SP	G14_059	TO->FROM	GR ISLD-LNX3345.00 - HOLT.CO3 345.00 345KV CKT 1	720	720	0.04264	106.3882	GEN659273 2-GROTON SYNC COND
FDNS	00NR_G14_059	0	25SP	G14_059	TO->FROM	GR ISLD-LNX3345.00 - HOLT.CO3 345.00 345KV CKT 1	720	720	0.04264	106.3882	GEN659294 1-WILTONCOL9
FDNS	00NR_G14_059	0	25SP	G14_059	TO->FROM	GR ISLD-LNX3345.00 - HOLT.CO3 345.00 345KV CKT 1	720	720	0.04264	106.3807	GEN681522 3-GENOA 3
FDNS	00NR_G14_059	0	25SP	G14_059	TO->FROM	GR ISLD-LNX3345.00 - HOLT.CO3 345.00 345KV CKT 1	720	720	0.04264	106.378	GEN600065 7-HIGH BRIDGE
FDNS	00NR_G14_059	0	25SP	G14_059	TO->FROM	GR ISLD-LNX3345.00 - HOLT.CO3 345.00 345KV CKT 1	720	720	0.04264	106.378	GEN600066 8-HIGH BRIDGE
FDNS	00NR_G14_059	0	25SP	G14_059	TO->FROM	GR ISLD-LNX3345.00 - HOLT.CO3 345.00 345KV CKT 1	720	720	0.04264	106.3772	GEN600014 4-BLACK DOG GEN 4
FDNS	00NR_G14_059	0	20SP	G14_059	TO->FROM	GR ISLD-LNX3345.00 - HOLT.CO3 345.00 345KV CKT 1	720	720	0.04052	106.3762	GEN659010 4-G07_027IS_2 0.6900
FDNS	00NR_G14_059	0	25SP	G14_059	TO->FROM	GR ISLD-LNX3345.00 - HOLT.CO3 345.00 345KV CKT 1	720	720	0.04264	106.3735	GEN600011 5-BLACK DOG GEN 1
FDNS	00NR_G14_059	0	20SP	G14_059	TO->FROM	GR ISLD-LNX3345.00 - HOLT.CO3 345.00 345KV CKT 1	720	720	0.04052	106.3695	GEN659194 1-NDPRAIRWND1W0.6900
FDNS	00NR_G14_059	0	25SP	G14_059	TO->FROM	GR ISLD-LNX3345.00 - HOLT.CO3 345.00 345KV CKT 1	720	720	0.04264	106.3685	GEN600070 9-RIVER SIDE
FDNS	00NR_G14_059	0	25SP	G14_059	TO->FROM	GR ISLD-LNX3345.00 - HOLT.CO3 345.00 345KV CKT 1	720	720	0.04264	106.3685	GEN600071 10-RIVER SIDE
FDNS	00NR_G14_059	0	20SP	G14_059	TO->FROM	GR ISLD-LNX3345.00 - HOLT.CO3 345.00 345KV CKT 1	720	720	0.04052	106.3682	GEN652460 4-GARRISON
FDNS	00NR_G14_059	0	20SP	G14_059	TO->FROM	GR ISLD-LNX3345.00 - HOLT.CO3 345.00 345KV CKT 1	720	720	0.04052	106.3682	GEN652461 5-GARRISON
FDNS	00NR_G14_059	0	25SP	G14_059	TO->FROM	GR ISLD-LNX3345.00 - HOLT.CO3 345.00 345KV CKT 1	720	720	0.04264	106.3618	LANSING WEST 161/22.0KV TRANSFORMER CKT 1
FDNS	00NR_G14_059	0	25SP	G14_059	TO->FROM	GR ISLD-LNX3345.00 - HOLT.CO3 345.00 345KV CKT 1	720	720	0.04204	106.3606	GRAND ISLAND (GRAND.ISD T5) 230/115/13.8KV TRANSFORMER CKT 2
FDNS	00NR_G14_059	0	25SP	G14_059	TO->FROM	GR ISLD-LNX3345.00 - HOLT.CO3 345.00 345KV CKT 1	720	720	0.04204	106.3606	GRAND ISLAND (GRAND.ISD T5) 230/115/13.8KV TRANSFORMER CKT 2
FDNS	00NR_G14_059	0	25SP	G14_059	TO->FROM	GR ISLD-LNX3345.00 - HOLT.CO3 345.00 345KV CKT 1	720	720	0.04264	106.36	GEN600007 7-RIVERSIDE GEN 7
FDNS	00NR_G14_059	0	25SP	G14_059	TO->FROM	GR ISLD-LNX3345.00 - HOLT.CO3 345.00 345KV CKT 1	720	720	0.04203	106.3572	GRAND ISLAND (GRAND.ISD T2) 230/115/13.8KV TRANSFORMER CKT 1
FDNS	00NR_G14_059	0	25SP	G14_059	TO->FROM	GR ISLD-LNX3345.00 - HOLT.CO3 345.00 345KV CKT 1	720	720	0.04203	106.3572	GRAND ISLAND (GRAND.ISD T2) 230/115/13.8KV TRANSFORMER CKT 1
FDNS	00NR_G14_059	0	25SP	G14_059	TO->FROM	GR ISLD-LNX3345.00 - HOLT.CO3 345.00 345KV CKT 1	720	720	0.04264	106.3463	GEN600017 C-LS POWER CT
FDNS	00NR_G14_059	0	25SP	G14_059	TO->FROM	GR ISLD-LNX3345.00 - HOLT.CO3 345.00 345KV CKT 1	720	720	0.04264	106.3429	GEN659031 1-G12_014IS_4 0.6900
FDNS	00NR_G14_059	0	20SP	G14_059	TO->FROM	GR ISLD-LNX3345.00 - HOLT.CO3 345.00 345KV CKT 1	720	720	0.04052	106.3405	CLAY BOSWELL 230/20.9KV TRANSFORMER CKT 1
FDNS	00NR_G14_059	0	20SP	G14_059	TO->FROM	GR ISLD-LNX3345.00 - HOLT.CO3 345.00 345KV CKT 1	720	720	0.04052	106.3382	GEN652545 7-BIG BEND
FDNS	00NR_G14_059	0	20SP	G14_059	TO->FROM	GR ISLD-LNX3345.00 - HOLT.CO3 345.00 345KV CKT 1	720	720	0.04052	106.3297	GEN652458 2-GARRISON
FDNS	00NR_G14_059	0	20SP	G14_059	TO->FROM	GR ISLD-LNX3345.00 - HOLT.CO3 345.00 345KV CKT 1	720	720	0.04052	106.3297	GEN652459 3-GARRISON
FDNS	00NR_G14_059	0	20SP	G14_059	TO->FROM	GR ISLD-LNX3345.00 - HOLT.CO3 345.00 345KV CKT 1	720	720	0.04052	106.3296	GEN652457 1-GARRISON
FDNS	00NR_G14_059	0	20SP	G14_059	TO->FROM	GR ISLD-LNX3345.00 - HOLT.CO3 345.00 345KV CKT 1	720	720	0.04052	106.3244	GEN652544 5-BIG BEND
FDNS	00NR_G14_059	0	25SP	G14_059	TO->FROM	GR ISLD-LNX3345.00 - HOLT.CO3 345.00 345KV CKT 1	720	720	0.04306	106.3202	COPSTJCPFRSJ
FDNS	00NR_G14_059	0	25SP	G14_059	TO->FROM	GR ISLD-LNX3345.00 - HOLT.CO3 345.00 345KV CKT 1	720	720	0.04306	106.3202	P12:345:NPPD:3517:COOPER 3:ST JOE 3:BTB
FDNS	00NR_G14_059	0	25SP	G14_059	TO->FROM	GR ISLD-LNX3345.00 - HOLT.CO3 345.00 345KV CKT 1	720	720	0.04306	106.3202	STMDSJFAFACO
FDNS	00NR_G14_059	0	25SP	G14_059	TO->FROM	GR ISLD-LNX3345.00 - HOLT.CO3 345.00 345KV CKT 1	720	720	0.04264	106.3156	GEN659192 6-LYNN
FDNS	00NR_G14_059	0	25SP	G14_059	TO->FROM	GR ISLD-LNX3345.00 - HOLT.CO3 345.00 345KV CKT 1	720	720	0.04264	106.3146	GEN659162 4-RED WLCK
FDNS	00NR_G14_059	0	25SP	G14_059	TO->FROM	GR ISLD-LNX3345.00 - HOLT.CO3 345.00 345KV CKT 1	720	720	0.04264	106.3146	GEN659163 5-BLACK WDCK
FDNS	00NR_G14_059	0	25SP	G14_059	TO->FROM	GR ISLD-LNX3345.00 - HOLT.CO3 345.00 345KV CKT 1	720	720	0.04264	106.312	GEN 10648 1-G830_GEN 0.6900
FDNS	00NR_G14_059	0	20SP	G14_059	TO->FROM	GR ISLD-LNX3345.00 - HOLT.CO3 345.00 345KV CKT 1	720	720	0.04052	106.3117	GEN652543 3-BIG BEND
FDNS	00NR_G14_059	0	20SP	G14_059	TO->FROM	GR ISLD-LNX3345.00 - HOLT.CO3 345.00 345KV CKT 1	720	720	0.04052	106.3116	GEN652542 1-BIG BEND
FDNS	00NR_G14_059	0	25SP	G14_059	TO->FROM	GR ISLD-LNX3345.00 - HOLT.CO3 345.00 345KV CKT 1	720	720	0.04264	106.309	GEN600045 4-ANSON
FDNS	00NR_G14_059	0	25SP	G14_059	TO->FROM	GR ISLD-LNX3345.00 - HOLT.CO3 345.00 345KV CKT 1	720	720	0.04264	106.3019	GEN615052 1-CAMBRIDGE GENERATING STATION
FDNS	00NR_G14_059	0	25SP	G14_059	TO->FROM	GR ISLD-LNX3345.00 - HOLT.CO3 345.00 345KV CKT 1	720	720	0.04264	106.294	BISONMP4 230.00 - SQUARE BUTTE 230KV CKT 1
FDNS	00NR_G14_059	0	25SP	G14_059	TO->FROM	GR ISLD-LNX3345.00 - HOLT.CO3 345.00 345KV CKT 1	720	720	0.04365	106.2878	ATCHSNT3 345.00 - BOONEVILLE 345KV CKT 1
FDNS	00NR_G14_059	0	25SP	G14_059	TO->FROM	GR ISLD-LNX3345.00 - HOLT.CO3 345.00 345KV CKT 1	720	720	0.04324	106.267	COOPER - ST JOE 345KV CKT 1
FDNS	00NR_G14_059	0	20SP	G14_059	TO->FROM	GR ISLD-LNX3345.00 - HOLT.CO3 345.00 345KV CKT 1	720	720	0.04052	106.2607	GEN659403 1-NDSUNFLWR W0.6900
FDNS	00NR_G14_059	0	25SP	G14_059	TO->FROM	GR ISLD-LNX3345.00 - HOLT.CO3 345.00 345KV CKT 1	720	720	0.04215	106.2597	GRAND ISLAND (GI KU1B) 345/230/13.8KV TRANSFORMER CKT 2
FDNS	00NR_G14_059	0	25SP	G14_059	TO->FROM	GR ISLD-LNX3345.00 - HOLT.CO3 345.00 345KV CKT 1	720	720	0.04215	106.2597	GRAND ISLAND (GI KU1B) 345/230/13.8KV TRANSFORMER CKT 2
FDNS	00NR_G14_059	0	25SP	G14_059	TO->FROM	GR ISLD-LNX3345.00 - HOLT.CO3 345.00 345KV CKT 1	720	720	0.04264	106.2595	GEN615015 1-GRE-SPRITWDG13.200
FDNS	00NR_G14_059	0	25SP	G14_059	TO->FROM	GR ISLD-LNX3345.00 - HOLT.CO3 345.00 345KV CKT 1	720	720	0.04215	106.2582	GRAND ISLAND (GI KU1A) 345/230/13.8KV TRANSFORMER CKT 1
FDNS	00NR_G14_059	0	25SP	G14_059	TO->FROM	GR ISLD-LNX3345.00 - HOLT.CO3 345.00 345KV CKT 1	720	720	0.04215	106.2582	GRAND ISLAND (GI KU1A) 345/230/13.8KV TRANSFORMER CKT 1
FDNS	00NR_G14_059	0	25SP	G14_059	TO->FROM	GR ISLD-LNX3345.00 - HOLT.CO3 345.00 345KV CKT 1	720	720	0.04264	106.2499	GEN615021 1-GRE-ER 14G 16.000
FDNS	00NR_G14_059	0	25SP	G14_059	TO->FROM	GR ISLD-LNX3345.00 - HOLT.CO3 345.00 345KV CKT 1	720	720	0.04264	106.2496	GEN660016 1-B_H WIND 0.7000
FDNS	00NR_G14_059	0	25SP	G14_059	TO->FROM	GR ISLD-LNX3345.00 - HOLT.CO3 345.00 345KV CKT 1	720	720	0.04264	106.2397	GEN657705 X-DRAYTON
FDNS	00NR_G14_059	0	20SP	G14_059	TO->FROM	GR ISLD-LNX3345.00 - HOLT.CO3 345.00 345KV CKT 1	720	720	0.04052	106.2342	SQUARE BUTTE - YNG2 4 230.00 230KV CKT 1
FDNS	00NR_G14_059	0	20SP	G14_059	TO->FROM	GR ISLD-LNX3345.00 - HOLT.CO3 345.00 345KV CKT 1	720	720	0.04052	106.234	YNG2 4 230.00 230/20.0KV TRANSFORMER CKT 1
FDNS	00NR_G14_059	0	20SP	G14_059	TO->FROM	GR ISLD-LNX3345.00 - HOLT.CO3 345.00 345KV CKT 1	720	720	0.04052	106.2244	STANTON 230/18.0KV TRANSFORMER CKT 1
FDNSLock	00NR_G14_059	0	25SP	G14_059	TO->FROM	GR ISLD-LNX3345.00 - HOLT.CO3 345.00 345KV CKT 1	720	720	0.04239	106.217	MCCOOL (MCCOOL T2) 345/115/13.8KV TRANSFORMER CKT 1
FDNSLock	00NR_G14_059	0	25SP	G14_059	TO->FROM	GR ISLD-LNX3345.00 - HOLT.CO3 345.00 345KV CKT 1	720	720	0.04239	106.217	MCCOOL (MCCOOL T2) 345/115/13.8KV TRANSFORMER CKT 1
FDNS	00NR_G14_059	0	25SP	G14_059	TO->FROM	GR ISLD-LNX3345.00 - HOLT.CO3 345.00 345KV CKT 1	720	720	0.04283	106.195	G14-021T 345.00 - MULLNCR7 345.00 345KV CKT 1
FDNS	00NR_G14_059	0	25SP	G14_059	TO->FROM	GR ISLD-LNX3345.00 - HOLT.CO3 345.00 345KV CKT 1	720	720	0.04283	106.1918	G15-005T 345.00 - MULLNCR7 345.00 345KV CKT 1
FDNS	00NR_G14_059	0	20SP	G14_059	TO->FROM	GR ISLD-LNX3345.00 - HOLT.CO3 345.00 345KV CKT 1	720	720	0.03685	106.1844	COLUMWEST - GRAND ISLAND 230KV CKT 1
FDNS	00NR_G14_059	0	25SP	G14_059	TO->FROM	GR ISLD-LNX3345.00 - HOLT.CO3 345.00 345KV CKT 1	720	720	0.04264	106.1728	GEN672303 3-BOUNDARY DAM GENERATOR 3
FDNS	00NR_G14_059	0	25SP	G14_059	TO->FROM	GR ISLD-LNX3345.00 - HOLT.CO3 345.00 345KV CKT 1	720	720	0.04264	106.1728	GEN672304 4-BOUNDARY DAM GENERATOR 4
FDNS	00NR_G14_059	0	25SP	G14_059	TO->FROM	GR ISLD-LNX3345.00 - HOLT.CO3 345.00 345KV CKT 1	720	720	0.04264	106.1728	GEN672305 5-BOUNDARY DAM GENERATOR 5
FDNS	00NR_G14_059	0	25SP	G14_059	TO->FROM	GR ISLD-LNX3345.00 - HOLT.CO3 345.00 345KV CKT 1	720	720	0.04279	106.1648	HIGHLND 3 345.00 - OBRIEN 3 345.00 345KV CKT 1
FDNS	00NR_G14_059	0	25SP	G14_059	TO->FROM	GR ISLD-LNX3345.00 - HOLT.CO3 345.00 345KV CKT 1	720	720	0.04264	106.157	GEN662101 1-WESSINGTON190.5750
FDNS	00NR_G14_059	0	25SP	G14_059	TO->FROM	GR ISLD-LNX3345.00 - HOLT.CO3 345.00 345KV CKT 1	720	720	0.04264	106.1538	GEN672356 1-FUT-WL1X 18.000
FDNS	00NR_G14_059	0	25SP	G14_059	TO->FROM	GR ISLD-LNX3345.00 - HOLT.CO3 345.00 345KV CKT 1	720	720	0.04232	106.1496	FT THOMPSON - LOWERBRULE 4230.00 230KV CKT 1
FDNS	00NR_G14_059	0	25SP	G14_059	TO->FROM	GR ISLD-LNX3345.00 - HOLT.CO3 345.00 345KV CKT 1	720	720	0.04232	106.1496	FT THOMPSON - LOWERBRULE 4230.00 230KV CKT 1

SOLUTION	GROUP	SCENARIO	SEASON	SOURCE	DIRECTION	MONITORED ELEMENT	RATEA (MVA)	RATEB(MVA)	TDF	TC%LOADING (% MVA)	CONTINGENCY
FDNS	00NR_G14_059	0	25SP	G14_059	TO->FROM	GR ISLD-LNX3345.00 - HOLT.CO3 345.00 345KV CKT 1	720	720	0.04264	106.1344	GEN600067 9-HIGH BRIDGE
FDNS	00NR_G14_059	0	25SP	G14_059	TO->FROM	GR ISLD-LNX3345.00 - HOLT.CO3 345.00 345KV CKT 1	720	720	0.04264	106.1326	GEN672389 1-FUT-SW1X 18.000
FDNS	00NR_G14_059	0	25SP	G14_059	TO->FROM	GR ISLD-LNX3345.00 - HOLT.CO3 345.00 345KV CKT 1	720	720	0.04264	106.13	CENTER 230/22.0KV TRANSFORMER CKT 1
FDNS	00NR_G14_059	0	25SP	G14_059	TO->FROM	GR ISLD-LNX3345.00 - HOLT.CO3 345.00 345KV CKT 1	720	720	0.04264	106.1264	GEN672392 1-NBECGT1G 18.000
FDNS	00NR_G14_059	0	25SP	G14_059	TO->FROM	GR ISLD-LNX3345.00 - HOLT.CO3 345.00 345KV CKT 1	720	720	0.04283	106.1137	G15-005T 345.00 - SIBLEY 345KV CKT 1
FDNS	00NR_G14_059	0	20SP	G14_059	TO->FROM	GR ISLD-LNX3345.00 - HOLT.CO3 345.00 345KV CKT 1	720	720	0.04052	106.0797	ALMA 161 161/24.0KV TRANSFORMER CKT 1
FDNS	00NR_G14_059	0	20SP	G14_059	TO->FROM	GR ISLD-LNX3345.00 - HOLT.CO3 345.00 345KV CKT 1	720	720	0.04052	106.0722	GEN652906 1-G09_006IS_3 0.6900
FDNSLock	00NR_G14_059	0	25SP	G14_059	TO->FROM	GR ISLD-LNX3345.00 - HOLT.CO3 345.00 345KV CKT 1	720	720	0.04216	106.0647	CENTRAL CITY - GRAND ISLAND 115KV CKT 1
FDNS	00NR_G14_059	0	20SP	G14_059	TO->FROM	GR ISLD-LNX3345.00 - HOLT.CO3 345.00 345KV CKT 1	720	720	0.04052	106.0422	GEN659411 1-CAMPBLCNTY W0.6900
FDNS	00NR_G14_059	0	25SP	G14_059	TO->FROM	GR ISLD-LNX3345.00 - HOLT.CO3 345.00 345KV CKT 1	720	720	0.04264	106.0412	GEN659354 1-DEERCREK STG18.000
FDNS	00NR_G14_059	0	25SP	G14_059	TO->FROM	GR ISLD-LNX3345.00 - HOLT.CO3 345.00 345KV CKT 1	720	720	0.04264	106.0411	GEN659353 1-DEERCREK CTG18.000
FDNS	00NR_G14_059	0	25SP	G14_059	TO->FROM	GR ISLD-LNX3345.00 - HOLT.CO3 345.00 345KV CKT 1	720	720	0.04303	106.031	GLENHAM - L3 HAWDON 230KV CKT 1
FDNS	00NR_G14_059	0	25SP	G14_059	TO->FROM	GR ISLD-LNX3345.00 - HOLT.CO3 345.00 345KV CKT 1	720	720	0.04264	106.0212	GEN910006 1-G12_012IS_3 0.6900
FDNS	00NR_G14_059	0	20SP	G14_059	TO->FROM	GR ISLD-LNX3345.00 - HOLT.CO3 345.00 345KV CKT 1	720	720	0.03924	106.0025	AXTELL - POST ROCK 345KV CKT 1
FDNS	00NR_G14_059	0	25SP	G14_059	TO->FROM	GR ISLD-LNX3345.00 - HOLT.CO3 345.00 345KV CKT 1	720	720	0.04264	105.9989	GEN681542 6-JP MADGETT
FDNS	00NR_G14_059	0	25SP	G14_059	TO->FROM	GR ISLD-LNX3345.00 - HOLT.CO3 345.00 345KV CKT 1	720	720	0.04264	105.9389	GEN659289 1-DAYCNTYWND W0.6900
FDNS	00NR_G14_059	0	20SP	G14_059	TO->FROM	GR ISLD-LNX3345.00 - HOLT.CO3 345.00 345KV CKT 1	720	720	0.04052	105.9139	GEN659296 2-SDPRAIRWND1W0.6900
FDNS	00NR_G14_059	0	25SP	G14_059	TO->FROM	GR ISLD-LNX3345.00 - HOLT.CO3 345.00 345KV CKT 1	720	720	0.04191	105.9134	GRAND ISLAND (GI KU3A) 345/230/13.8KV TRANSFORMER CKT 3
FDNS	00NR_G14_059	0	25SP	G14_059	TO->FROM	GR ISLD-LNX3345.00 - HOLT.CO3 345.00 345KV CKT 1	720	720	0.04191	105.9134	GRAND ISLAND (GI KU3A) 345/230/13.8KV TRANSFORMER CKT 3
FDNS	00NR_G14_059	0	20SP	G14_059	TO->FROM	GR ISLD-LNX3345.00 - HOLT.CO3 345.00 345KV CKT 1	720	720	0.04052	105.9053	GEN652907 1-G09_007IS_3 0.6900
FDNS	00NR_G14_059	0	20SP	G14_059	TO->FROM	GR ISLD-LNX3345.00 - HOLT.CO3 345.00 345KV CKT 1	720	720	0.04052	105.8425	GEN672321 1-SHAND GENERATOR 1
FDNS	00NR_G14_059	0	25SP	G14_059	TO->FROM	GR ISLD-LNX3345.00 - HOLT.CO3 345.00 345KV CKT 1	720	720	0.04264	105.8416	GEN659018 1-G14_003IS_3 0.6900
FDNS	00NR_G14_059	0	20SP	G14_059	TO->FROM	GR ISLD-LNX3345.00 - HOLT.CO3 345.00 345KV CKT 1	720	720	0.04052	105.8083	GEN652559 1-OAHE
FDNS	00NR_G14_059	0	25SP	G14_059	TO->FROM	GR ISLD-LNX3345.00 - HOLT.CO3 345.00 345KV CKT 1	720	720	0.0392	105.8055	COLUMWEST - GRAND ISLAND 230KV CKT 1
FDNS	00NR_G14_059	0	25SP	G14_059	TO->FROM	GR ISLD-LNX3345.00 - HOLT.CO3 345.00 345KV CKT 1	720	720	0.04264	105.8047	GEN659010 4-G07_027IS_2 0.6900
FDNS	00NR_G14_059	0	25SP	G14_059	TO->FROM	GR ISLD-LNX3345.00 - HOLT.CO3 345.00 345KV CKT 1	720	720	0.04264	105.8026	COYOTE 345/24.0KV TRANSFORMER CKT 1
FDNS	00NR_G14_059	0	20SP	G14_059	TO->FROM	GR ISLD-LNX3345.00 - HOLT.CO3 345.00 345KV CKT 1	720	720	0.04052	105.8009	GEN672310 1-POPLAR RIVER GENERATOR 1
FDNS	00NR_G14_059	0	20SP	G14_059	TO->FROM	GR ISLD-LNX3345.00 - HOLT.CO3 345.00 345KV CKT 1	720	720	0.04052	105.8008	GEN672311 2-POPLAR RIVER GENERATOR 2
FDNS	00NR_G14_059	0	25SP	G14_059	TO->FROM	GR ISLD-LNX3345.00 - HOLT.CO3 345.00 345KV CKT 1	720	720	0.04264	105.7948	GEN562596 1-G14_059_3 0.6900
FDNS	00NR_G14_059	0	25SP	G14_059	TO->FROM	GR ISLD-LNX3345.00 - HOLT.CO3 345.00 345KV CKT 1	720	720	0.04264	105.7945	GEN652460 4-GARRISON
FDNS	00NR_G14_059	0	25SP	G14_059	TO->FROM	GR ISLD-LNX3345.00 - HOLT.CO3 345.00 345KV CKT 1	720	720	0.04264	105.7945	GEN652461 5-GARRISON
FDNS	00NR_G14_059	0	25SP	G14_059	TO->FROM	GR ISLD-LNX3345.00 - HOLT.CO3 345.00 345KV CKT 1	720	720	0.04264	105.7926	GEN659194 1-NDPRAIRWND1W0.6900
FDNS	00NR_G14_059	0	20SP	G14_059	TO->FROM	GR ISLD-LNX3345.00 - HOLT.CO3 345.00 345KV CKT 1	720	720	0.04052	105.7886	GEN672306 6-BOUNDARY DAM GENERATOR 6
FDNS	00NR_G14_059	0	25SP	G14_059	TO->FROM	GR ISLD-LNX3345.00 - HOLT.CO3 345.00 345KV CKT 1	720	720	0.04264	105.7847	GEN652545 7-BIG BEND
FDNS	00NR_G14_059	0	20SP	G14_059	TO->FROM	GR ISLD-LNX3345.00 - HOLT.CO3 345.00 345KV CKT 1	720	720	0.04052	105.776	GEN600004 2-PRAIRIE ISLAND G2
FDNS	00NR_G14_059	0	20SP	G14_059	TO->FROM	GR ISLD-LNX3345.00 - HOLT.CO3 345.00 345KV CKT 1	720	720	0.04052	105.773	GEN600003 1-PRAIRIE ISLAND G1
FDNS	00NR_G14_059	0	25SP	G14_059	TO->FROM	GR ISLD-LNX3345.00 - HOLT.CO3 345.00 345KV CKT 1	720	720	0.04264	105.7567	GEN652544 5-BIG BEND
FDNS	00NR_G14_059	0	25SP	G14_059	TO->FROM	GR ISLD-LNX3345.00 - HOLT.CO3 345.00 345KV CKT 1	720	720	0.04264	105.7561	GEN652457 1-GARRISON
FDNS	00NR_G14_059	0	25SP	G14_059	TO->FROM	GR ISLD-LNX3345.00 - HOLT.CO3 345.00 345KV CKT 1	720	720	0.04264	105.7561	GEN652458 2-GARRISON
FDNS	00NR_G14_059	0	25SP	G14_059	TO->FROM	GR ISLD-LNX3345.00 - HOLT.CO3 345.00 345KV CKT 1	720	720	0.04264	105.7561	GEN652459 3-GARRISON
FDNS	00NR_G14_059	0	25SP	G14_059	TO->FROM	GR ISLD-LNX3345.00 - HOLT.CO3 345.00 345KV CKT 1	720	720	0.04264	105.7454	GEN652543 3-BIG BEND
FDNS	00NR_G14_059	0	25SP	G14_059	TO->FROM	GR ISLD-LNX3345.00 - HOLT.CO3 345.00 345KV CKT 1	720	720	0.04264	105.7453	GEN652542 1-BIG BEND
FDNS	00NR_G14_059	0	20SP	G14_059	TO->FROM	GR ISLD-LNX3345.00 - HOLT.CO3 345.00 345KV CKT 1	720	720	0.04052	105.7239	GEN615010 1-STANTON4
FDNS	00NR_G14_059	0	20SP	G14_059	TO->FROM	GR ISLD-LNX3345.00 - HOLT.CO3 345.00 345KV CKT 1	720	720	0.04052	105.6871	GEN652556 2-OAHE
FDNS	00NR_G14_059	0	20SP	G14_059	TO->FROM	GR ISLD-LNX3345.00 - HOLT.CO3 345.00 345KV CKT 1	720	720	0.04052	105.6871	GEN652557 4-OAHE
FDNS	00NR_G14_059	0	20SP	G14_059	TO->FROM	GR ISLD-LNX3345.00 - HOLT.CO3 345.00 345KV CKT 1	720	720	0.04052	105.6871	GEN652558 6-OAHE
FDNS	00NR_G14_059	0	25SP	G14_059	TO->FROM	GR ISLD-LNX3345.00 - HOLT.CO3 345.00 345KV CKT 1	720	720	0.04264	105.6845	GEN659403 1-NDSUNFLWR W0.6900
FDNS	00NR_G14_059	0	25SP	G14_059	TO->FROM	GR ISLD-LNX3345.00 - HOLT.CO3 345.00 345KV CKT 1	720	720	0.04264	105.6684	STANTON 230/18.0KV TRANSFORMER CKT 1
FDNS	00NR_G14_059	0	20SP	G14_059	TO->FROM	GR ISLD-LNX3345.00 - HOLT.CO3 345.00 345KV CKT 1	720	720	0.04052	105.6524	GEN659453 1-GI1414GEN W0.6900
FDNS	00NR_G14_059	0	20SP	G14_059	TO->FROM	GR ISLD-LNX3345.00 - HOLT.CO3 345.00 345KV CKT 1	720	720	0.04052	105.6089	GEN659141 1-K10215A
FDNS	00NR_G14_059	0	25SP	G14_059	TO->FROM	GR ISLD-LNX3345.00 - HOLT.CO3 345.00 345KV CKT 1	720	720	0.04264	105.601	ALMA 161 161/24.0KV TRANSFORMER CKT 1
FDNS	00NR_G14_059	0	20SP	G14_059	TO->FROM	GR ISLD-LNX3345.00 - HOLT.CO3 345.00 345KV CKT 1	720	720	0.04052	105.5573	GEN652173 1-G09_001IS_2 0.6900
FDNS	00NR_G14_059	0	20SP	G14_059	TO->FROM	GR ISLD-LNX3345.00 - HOLT.CO3 345.00 345KV CKT 1	720	720	0.04052	105.5322	GEN600006 1-AS KING
FDNS	00NR_G14_059	0	25SP	G14_059	TO->FROM	GR ISLD-LNX3345.00 - HOLT.CO3 345.00 345KV CKT 1	720	720	0.04264	105.4944	GEN652906 1-G09_006IS_3 0.6900
FDNS	00NR_G14_059	0	25SP	G14_059	TO->FROM	GR ISLD-LNX3345.00 - HOLT.CO3 345.00 345KV CKT 1	720	720	0.04264	105.4698	GEN659411 1-CAMPBLCNTY W0.6900
FDNS	00NR_G14_059	0	25SP	G14_059	TO->FROM	GR ISLD-LNX3345.00 - HOLT.CO3 345.00 345KV CKT 1	720	720	0.04264	105.4625	SQUARE BUTTE - YNG2 4 230.00 230KV CKT 1
FDNS	00NR_G14_059	0	25SP	G14_059	TO->FROM	GR ISLD-LNX3345.00 - HOLT.CO3 345.00 345KV CKT 1	720	720	0.04264	105.4622	YNG2 4 230.00 230/20.0KV TRANSFORMER CKT 1
FDNS	00NR_G14_059	0	20SP	G14_059	TO->FROM	GR ISLD-LNX3345.00 - HOLT.CO3 345.00 345KV CKT 1	720	720	0.04052	105.4263	P12:230:UMZB:# 112 #: NU IN SD. NU-RCDC & DRY CREEK XFMR
FDNS	00NR_G14_059	0	20SP	G14_059	TO->FROM	GR ISLD-LNX3345.00 - HOLT.CO3 345.00 345KV CKT 1	720	720	0.04052	105.4211	RCDC EAST 4230.00 - RED CEDAR DC 230KV CKT 1
FDNS	00NR_G14_059	0	20SP	G14_059	TO->FROM	GR ISLD-LNX3345.00 - HOLT.CO3 345.00 345KV CKT 1	720	720	0.04052	105.3462	GEN659407 1-ANTELPHILLSW0.6900
FDNS	00NR_G14_059	0	25SP	G14_059	TO->FROM	GR ISLD-LNX3345.00 - HOLT.CO3 345.00 345KV CKT 1	720	720	0.04264	105.3421	GEN659296 2-SDPRAIRWND1W0.6900
FDNS	00NR_G14_059	0	25SP	G14_059	TO->FROM	GR ISLD-LNX3345.00 - HOLT.CO3 345.00 345KV CKT 1	720	720	0.04264	105.3246	GEN652907 1-G09_007IS_3 0.6900
FDNS	00NR_G14_059	0	20SP	G14_059	TO->FROM	GR ISLD-LNX3345.00 - HOLT.CO3 345.00 345KV CKT 1	720	720	0.04052	105.3064	GEN657749 1-YOUNG 1 GENERATOR
FDNS	00NR_G14_059	0	20SP	G14_059	TO->FROM	GR ISLD-LNX3345.00 - HOLT.CO3 345.00 345KV CKT 1	720	720	0.04052	105.2971	GEN659110 1-LELAND OLDS UNIT1
FDNS	00NR_G14_059	0	25SP	G14_059	TO->FROM	GR ISLD-LNX3345.00 - HOLT.CO3 345.00 345KV CKT 1	720	720	0.04264	105.2226	GEN672310 1-POPLAR RIVER GENERATOR 1
FDNS	00NR_G14_059	0	25SP	G14_059	TO->FROM	GR ISLD-LNX3345.00 - HOLT.CO3 345.00 345KV CKT 1	720	720	0.04264	105.2226	GEN672311 2-POPLAR RIVER GENERATOR 2
FDNS	00NR_G14_059	0	25SP	G14_059	TO->FROM	GR ISLD-LNX3345.00 - HOLT.CO3 345.00 345KV CKT 1	720	720	0.04264	105.2118	GEN672321 1-SHAND GENERATOR 1
FDNS	00NR_G14_059	0	25SP	G14_059	TO->FROM	GR ISLD-LNX3345.00 - HOLT.CO3 345.00 345KV CKT 1	720	720	0.04264	105.1724	GEN652559 1-OAHE
FDNS	00NR_G14_059	0	25SP	G14_059	TO->FROM	GR ISLD-LNX3345.00 - HOLT.CO3 345.00 345KV CKT 1	720	720	0.04264	105.1559	GEN672306 6-BOUNDARY DAM GENERATOR 6
FDNS	00NR_G14_059	0	25SP	G14_059	TO->FROM	GR ISLD-LNX3345.00 - HOLT.CO3 345.00 345KV CKT 1	720	720	0.04264	105.1371	GEN615010 1-STANTON4
FDNS	00NR_G14_059	0	25SP	G14_059	TO->FROM	GR ISLD-LNX3345.00 - HOLT.CO3 345.00 345KV CKT 1	720	720	0.04264	105.1241	GEN600004 2-PRAIRIE ISLAND G2
FDNS	00NR_G14_059	0	25SP	G14_059	TO->FROM	GR ISLD-LNX3345.00 - HOLT.CO3 345.00 345KV CKT 1	720	720	0.04264	105.1212	GEN600003 1-PRAIRIE ISLAND G1
FDNS	00NR_G14_059	0	25SP	G14_059	TO->FROM	GR ISLD-LNX3345.00 - HOLT.CO3 345.00 345KV CKT 1	720	720	0.04264	105.1138	GEN652556 2-OAHE

SOLUTION	GROUP	SCENARIO	SEASON	SOURCE	DIRECTION	MONITORED ELEMENT	RATEA (MVA)	RATEB(MVA)	TDF	TC%LOADING (% MVA)	CONTINGENCY
FDNS	00NR_G14_059	0	25SP	G14_059	TO->FROM	GR ISLD-LNX3345.00 - HOLT.CO3 345.00 345KV CKT 1	720	720	0.04264	105.1138	GEN652557 4-OAHE
FDNS	00NR_G14_059	0	25SP	G14_059	TO->FROM	GR ISLD-LNX3345.00 - HOLT.CO3 345.00 345KV CKT 1	720	720	0.04264	105.1138	GEN652558 6-OAHE
FDNS	00NR_G14_059	0	25SP	G14_059	TO->FROM	GR ISLD-LNX3345.00 - HOLT.CO3 345.00 345KV CKT 1	720	720	0.04264	105.0585	GEN659453 1-GI1414GEN W0.6900
FDNS	00NR_G14_059	0	25SP	G14_059	TO->FROM	GR ISLD-LNX3345.00 - HOLT.CO3 345.00 345KV CKT 1	720	720	0.04264	105.0322	GEN659141 1-K10215A
FDNS	00NR_G14_059	0	25SP	G14_059	TO->FROM	GR ISLD-LNX3345.00 - HOLT.CO3 345.00 345KV CKT 1	720	720	0.0414	105.002	AXTELL - POST ROCK 345KV CKT 1
FDNS	00NR_G14_059	0	25SP	G14_059	TO->FROM	GR ISLD-LNX3345.00 - HOLT.CO3 345.00 345KV CKT 1	720	720	0.04264	104.9722	GEN652173 1-G09_001IS_2 0.6900
FDNS	00NR_G14_059	0	20SP	G14_059	TO->FROM	GR ISLD-LNX3345.00 - HOLT.CO3 345.00 345KV CKT 1	720	720	0.04052	104.9032	GEN600005 1-MONTICELLO
FDNS	00NR_G14_059	0	25SP	G14_059	TO->FROM	GR ISLD-LNX3345.00 - HOLT.CO3 345.00 345KV CKT 1	720	720	0.04264	104.8613	GEN600006 1-AS KING
FDNS	00NR_G14_059	0	25SP	G14_059	TO->FROM	GR ISLD-LNX3345.00 - HOLT.CO3 345.00 345KV CKT 1	720	720	0.04264	104.8355	P12:230:UMZB:# 112 #: NU IN SD. NU-RCDC & DRY CREEK XFMR
FDNS	00NR_G14_059	0	25SP	G14_059	TO->FROM	GR ISLD-LNX3345.00 - HOLT.CO3 345.00 345KV CKT 1	720	720	0.04264	104.8298	RCDC EAST 4230.00 - RED CEDAR DC 230KV CKT 1
FDNS	00NR_G14_059	0	20SP	G14_059	TO->FROM	GR ISLD-LNX3345.00 - HOLT.CO3 345.00 345KV CKT 1	720	720	0.04052	104.789	GEN600001 2-SHERBURNE CNTY G2
FDNS	00NR_G14_059	0	25SP	G14_059	TO->FROM	GR ISLD-LNX3345.00 - HOLT.CO3 345.00 345KV CKT 1	720	720	0.04264	104.7792	GEN659407 1-ANTELPHILLSW0.6900
FDNS	00NR_G14_059	0	20SP	G14_059	TO->FROM	GR ISLD-LNX3345.00 - HOLT.CO3 345.00 345KV CKT 1	720	720	0.04052	104.7407	GEN600000 1-SHERBURNECNTY G1
FDNS	00NR_G14_059	0	25SP	G14_059	TO->FROM	GR ISLD-LNX3345.00 - HOLT.CO3 345.00 345KV CKT 1	720	720	0.04264	104.7148	GEN659110 1-LELAND OLDS UNIT1
FDNS	00NR_G14_059	0	25SP	G14_059	TO->FROM	GR ISLD-LNX3345.00 - HOLT.CO3 345.00 345KV CKT 1	720	720	0.04264	104.6811	GEN657749 1-YOUNG 1 GENERATOR
FDNS	00NR_G14_059	0	20SP	G14_059	TO->FROM	GR ISLD-LNX3345.00 - HOLT.CO3 345.00 345KV CKT 1	720	720	0.04052	104.5743	GEN661015 1-COYOTE
FDNS	00NR_G14_059	0	25SP	G14_059	TO->FROM	GR ISLD-LNX3345.00 - HOLT.CO3 345.00 345KV CKT 1	720	720	0.04264	104.5198	CLAY BOSWELL 230/20.9KV TRANSFORMER CKT 1
FDNS	00NR_G14_059	0	20SP	G14_059	TO->FROM	GR ISLD-LNX3345.00 - HOLT.CO3 345.00 345KV CKT 1	720	720	0.04052	104.4694	GEN620315 1-BIG STONE GEN
FDNS	00NR_G14_059	0	25SP	G14_059	TO->FROM	GR ISLD-LNX3345.00 - HOLT.CO3 345.00 345KV CKT 1	720	720	0.04264	104.181	GEN600005 1-MONTICELLO
FDNS	00NR_G14_059	0	25SP	G14_059	TO->FROM	GR ISLD-LNX3345.00 - HOLT.CO3 345.00 345KV CKT 1	720	720	0.04264	104.0742	GEN600001 2-SHERBURNE CNTY G2
FDNS	00NR_G14_059	0	20SP	G14_059	TO->FROM	GR ISLD-LNX3345.00 - HOLT.CO3 345.00 345KV CKT 1	720	720	0.04052	104.0639	GEN640010 1-GERALD GENTLEMAN STATION UNIT 1
FDNS	00NR_G14_059	0	20SP	G14_059	TO->FROM	GR ISLD-LNX3345.00 - HOLT.CO3 345.00 345KV CKT 1	720	720	0.04052	104.0122	GEN640011 2-GERALD GENTLEMAN STATION UNIT 2
FDNS	00NR_G14_059	0	25SP	G14_059	TO->FROM	GR ISLD-LNX3345.00 - HOLT.CO3 345.00 345KV CKT 1	720	720	0.04264	104.0103	GEN600000 1-SHERBURNECNTY G1
FDNS	00NR_G14_059	0	20SP	G14_059	TO->FROM	GR ISLD-LNX3345.00 - HOLT.CO3 345.00 345KV CKT 1	720	720	0.04052	103.9909	GEN600002 3-SHERBURNE CNTY G3
FDNS	00NR_G14_059	0	20SP	G14_059	TO->FROM	GR ISLD-LNX3345.00 - HOLT.CO3 345.00 345KV CKT 1	720	720	0.04052	103.9551	GEN657748 1-YOUNG 2 GENERATOR
FDNS	00NR_G14_059	0	20SP	G14_059	TO->FROM	GR ISLD-LNX3345.00 - HOLT.CO3 345.00 345KV CKT 1	720	720	0.04052	103.8649	SHERBURNE CO 345/24.0KV TRANSFORMER CKT 1
FDNS	00NR_G14_059	0	25SP	G14_059	TO->FROM	GR ISLD-LNX3345.00 - HOLT.CO3 345.00 345KV CKT 1	720	720	0.04264	103.8182	GEN620315 1-BIG STONE GEN
FDNS	00NR_G14_059	0	25SP	G14_059	TO->FROM	GR ISLD-LNX3345.00 - HOLT.CO3 345.00 345KV CKT 1	720	720	0.04264	103.772	GEN661015 1-COYOTE
FDNS	00NR_G14_059	0	20SP	G14_059	TO->FROM	GR ISLD-LNX3345.00 - HOLT.CO3 345.00 345KV CKT 1	720	720	0.04131	103.6797	FTTHOM1-LNX3345.00 - LELAND2-LNX3345.00 345KV CKT 1
FDNS	00NR_G14_059	0	20SP	G14_059	TO->FROM	GR ISLD-LNX3345.00 - HOLT.CO3 345.00 345KV CKT 1	720	720	0.04131	103.5981	P12:345:UMZB:# 108 #: LOS FT IN ND. LOS FT
FDNS	00NR_G14_059	0	20SP	G14_059	TO->FROM	GR ISLD-LNX3345.00 - HOLT.CO3 345.00 345KV CKT 1	720	720	0.04131	103.5944	FT THOMPSON - FTTHOM1-LNX3345.00 345KV CKT Z
FDNS	00NR_G14_059	0	20SP	G14_059	TO->FROM	GR ISLD-LNX3345.00 - HOLT.CO3 345.00 345KV CKT 1	720	720	0.04052	103.5822	BIG STONE 230/24.0KV TRANSFORMER CKT 1
FDNS	00NR_G14_059	0	20SP	G14_059	TO->FROM	GR ISLD-LNX3345.00 - HOLT.CO3 345.00 345KV CKT 1	720	720	0.04131	103.5722	LELAND OLDS - LELAND2-LNX3345.00 345KV CKT Z
FDNS	00NR_G14_059	0	20SP	G14_059	TO->FROM	GR ISLD-LNX3345.00 - HOLT.CO3 345.00 345KV CKT 1	720	720	0.04052	103.3277	GEN659118 1-LARAMIE RIVER UNIT1
FDNS	00NR_G14_059	0	25SP	G14_059	TO->FROM	GR ISLD-LNX3345.00 - HOLT.CO3 345.00 345KV CKT 1	720	720	0.04264	103.2739	SHERBURNE CO 345/24.0KV TRANSFORMER CKT 1
FDNS	00NR_G14_059	0	25SP	G14_059	TO->FROM	GR ISLD-LNX3345.00 - HOLT.CO3 345.00 345KV CKT 1	720	720	0.04264	103.2693	GEN600002 3-SHERBURNE CNTY G3
FDNS	00NR_G14_059	0	25SP	G14_059	TO->FROM	GR ISLD-LNX3345.00 - HOLT.CO3 345.00 345KV CKT 1	720	720	0.04343	103.2072	FTTHOM1-LNX3345.00 - LELAND2-LNX3345.00 345KV CKT 1
FDNS	00NR_G14_059	0	25SP	G14_059	TO->FROM	GR ISLD-LNX3345.00 - HOLT.CO3 345.00 345KV CKT 1	720	720	0.04264	103.1594	GEN640010 1-GERALD GENTLEMAN STATION UNIT 1
FDNS	00NR_G14_059	0	25SP	G14_059	TO->FROM	GR ISLD-LNX3345.00 - HOLT.CO3 345.00 345KV CKT 1	720	720	0.04343	103.1255	P12:345:UMZB:# 108 #: LOS FT IN ND. LOS FT
FDNS	00NR_G14_059	0	25SP	G14_059	TO->FROM	GR ISLD-LNX3345.00 - HOLT.CO3 345.00 345KV CKT 1	720	720	0.04343	103.1241	FT THOMPSON - FTTHOM1-LNX3345.00 345KV CKT Z
FDNS	00NR_G14_059	0	25SP	G14_059	TO->FROM	GR ISLD-LNX3345.00 - HOLT.CO3 345.00 345KV CKT 1	720	720	0.04343	103.097	LELAND OLDS - LELAND2-LNX3345.00 345KV CKT Z
FDNS	00NR_G14_059	0	20SP	G14_059	TO->FROM	GR ISLD-LNX3345.00 - HOLT.CO3 345.00 345KV CKT 1	720	720	0.04052	102.8752	GEN659111 2-LELAND OLDS UNIT2
FDNS	00NR_G14_059	0	25SP	G14_059	TO->FROM	GR ISLD-LNX3345.00 - HOLT.CO3 345.00 345KV CKT 1	720	720	0.04264	102.7761	GEN657748 1-YOUNG 2 GENERATOR
FDNS	00NR_G14_059	0	20SP	G14_059	TO->FROM	GR ISLD-LNX3345.00 - HOLT.CO3 345.00 345KV CKT 1	720	720	0.04052	102.6376	GEN659125 1-COVEY
FDNS	00NR_G14_059	0	25SP	G14_059	TO->FROM	GR ISLD-LNX3345.00 - HOLT.CO3 345.00 345KV CKT 1	720	720	0.04264	102.6204	GEN640011 2-GERALD GENTLEMAN STATION UNIT 2
FDNS	00NR_G14_059	0	25SP	G14_059	TO->FROM	GR ISLD-LNX3345.00 - HOLT.CO3 345.00 345KV CKT 1	720	720	0.04264	102.5971	GEN659118 1-LARAMIE RIVER UNIT1
FDNS	00NR_G14_059	0	20SP	G14_059	TO->FROM	GR ISLD-LNX3345.00 - HOLT.CO3 345.00 345KV CKT 1	720	720	0.04052	102.5013	GEN659103 1-ANTELOPE VALLEY UNIT1
FDNS	00NR_G14_059	0	20SP	G14_059	TO->FROM	GR ISLD-LNX3345.00 - HOLT.CO3 345.00 345KV CKT 1	720	720	0.04052	102.5013	GEN659107 2-ANTELOPE VALLEY UNIT2
FDNS	00NR_G14_059	0	25SP	G14_059	TO->FROM	GR ISLD-LNX3345.00 - HOLT.CO3 345.00 345KV CKT 1	720	720	0.04264	102.2305	GEN659111 2-LELAND OLDS UNIT2
FDNS	00NR_G14_059	0	25SP	G14_059	TO->FROM	GR ISLD-LNX3345.00 - HOLT.CO3 345.00 345KV CKT 1	720	720	0.04264	102.0198	GEN659125 1-COVEY
FDNS	00NR_G14_059	0	20SP	G14_059	TO->FROM	GR ISLD-LNX3345.00 - HOLT.CO3 345.00 345KV CKT 1	720	720	0.04052	102.0125	GEN615001 1-COAL CREEK
FDNS	00NR_G14_059	0	20SP	G14_059	TO->FROM	GR ISLD-LNX3345.00 - HOLT.CO3 345.00 345KV CKT 1	720	720	0.04052	101.9303	GEN615002 2-COAL CREEK
FDNS	00NR_G14_059	0	25SP	G14_059	TO->FROM	GR ISLD-LNX3345.00 - HOLT.CO3 345.00 345KV CKT 1	720	720	0.02967	101.9221	MCCOOL - MOORE 345KV CKT 1
FDNS	00NR_G14_059	0	25SP	G14_059	TO->FROM	GR ISLD-LNX3345.00 - HOLT.CO3 345.00 345KV CKT 1	720	720	0.04264	101.8521	GEN659103 1-ANTELOPE VALLEY UNIT1
FDNS	00NR_G14_059	0	25SP	G14_059	TO->FROM	GR ISLD-LNX3345.00 - HOLT.CO3 345.00 345KV CKT 1	720	720	0.04264	101.8521	GEN659107 2-ANTELOPE VALLEY UNIT2
FDNS	00NR_G14_059	0	25SP	G14_059	TO->FROM	GR ISLD-LNX3345.00 - HOLT.CO3 345.00 345KV CKT 1	720	720	0.04264	101.3408	GEN615001 1-COAL CREEK
FDNS	00NR_G14_059	0	25SP	G14_059	TO->FROM	GR ISLD-LNX3345.00 - HOLT.CO3 345.00 345KV CKT 1	720	720	0.04264	101.2652	GEN615002 2-COAL CREEK
FDNS	00NR_G14_059	0	25SP	G14_059	TO->FROM	GRANTNB7 115.00 - OGALALANPPD7115.00 115KV CKT 2	147	147	0.04362	103.1005	OGALALA7 115.00 - OGALALANPPD7115.00 115KV CKT Z
FDNS	00NR_G14_059	0	25SP	G14_059	FROM->TO	SIDNEY (SD KV1A) 230/115/13.8KV TRANSFORMER CKT 1	112	112	0.03034	108.1207	P12:115:TSGT:GRANTNB7-OGALALA7_2
FDNS	00NR_G14_059	0	25SP	G14_059	FROM->TO	SIDNEY (SD KV1A) 230/115/13.8KV TRANSFORMER CKT 1	112	112	0.03034	105.8906	P12:115:TSGT:GRANTNB7-OGALALA7_2
FDNS	00NR_G14_059	0	17SP	G14_059	FROM->TO	SIDNEY (SD KV1A) 230/115/13.8KV TRANSFORMER CKT 1	112	112	0.03073	104.4374	P12:115:TSGT:GRANTNB7-OGALALA7_2
FDNS	00NR_G14_059	0	20SP	G14_059	FROM->TO	SIDNEY (SD KV1A) 230/115/13.8KV TRANSFORMER CKT 1	112	112	0.0303	103.9168	P12:115:TSGT:GRANTNB7-OGALALA7_2
FDNS	00NR_G14_059	0	17SP	G14_059	FROM->TO	SIDNEY (SD KV1A) 230/115/13.8KV TRANSFORMER CKT 1	112	112	0.03073	102.2459	P12:115:TSGT:GRANTNB7-OGALALA7_2
FDNS	00NR_G14_059	0	20SP	G14_059	FROM->TO	SIDNEY (SD KV1A) 230/115/13.8KV TRANSFORMER CKT 1	112	112	0.0303	102.0585	P12:115:TSGT:GRANTNB7-OGALALA7_2
FDNS	00NR_G14_059	2	25SP	G14_059	FROM->TO	GGS	1635	1635	0.68813	104.5291	BASE CASE
FDNS	00NR_G14_059	2	20SP	G14_059	FROM->TO	GR ISLD-LNX3345.00 - GRAND ISLAND 345KV CKT Z	720	720	0.07243	115.6364	GERALD GENTLEMAN STATION - SWEETWATER 345KV CKT 1
FDNS	00NR_G14_059	2	25SP	G14_059	FROM->TO	GR ISLD-LNX3345.00 - GRAND ISLAND 345KV CKT Z	720	720	0.07246	115.4785	GERALD GENTLEMAN STATION - SWEETWATER 345KV CKT 1
FDNS	00NR_G14_059	2	20SP	G14_059	FROM->TO	GR ISLD-LNX3345.00 - GRAND ISLAND 345KV CKT Z	720	720	0.04601	114.9554	KELLY - MEADOWGROVE4230.00 230KV CKT 1
FDNS	00NR_G14_059	2	25SP	G14_059	FROM->TO	GR ISLD-LNX3345.00 - GRAND ISLAND 345KV CKT Z	720	720	0.04613	114.5268	KELLY - MEADOWGROVE4230.00 230KV CKT 1
FDNS	00NR_G14_059	2	20SP	G14_059	FROM->TO	GR ISLD-LNX3345.00 - GRAND ISLAND 345KV CKT Z	720	720	0.07862	114.3191	GRAND ISLAND - SWEETWATER 345KV CKT 1
FDNS	00NR_G14_059	2	20SP	G14_059	FROM->TO	GR ISLD-LNX3345.00 - GRAND ISLAND 345KV CKT Z	720	720	0.06592	113.8349	GERALD GENTLEMAN STATION - SWEETWATER 345KV CKT 2
FDNS	00NR_G14_059	2	20SP	G14_059	FROM->TO	GR ISLD-LNX3345.00 - GRAND ISLAND 345KV CKT Z	720	720	0.04803	113.6404	P12:230:UMZB:# 116 #: ST IN SD. WSG-ST-VH
FDNS	00NR_G14_059	2	25SP	G14_059	FROM->TO	GR ISLD-LNX3345.00 - GRAND ISLAND 345KV CKT Z	720	720	0.06597	113.6256	GERALD GENTLEMAN STATION - SWEETWATER 345KV CKT 2

SOLUTION	GROUP	SCENARIO	SEASON	SOURCE	DIRECTION	MONITORED ELEMENT	RATEA (MVA)	RATEB(MVA)	TDF	TC%LOADING (% MVA)	CONTINGENCY
FDNS	00NR_G14_059	2	25SP	G14_059	FROM->TO	GR ISLD-LNX3345.00 - GRAND ISLAND 345KV CKT Z	720	720	0.07841	113.3284	GRAND ISLAND - SWEETWATER 345KV CKT 1
FDNS	00NR_G14_059	2	25SP	G14_059	FROM->TO	GR ISLD-LNX3345.00 - GRAND ISLAND 345KV CKT Z	720	720	0.04812	113.2549	P12:230:UMZB:# 116 #: ST IN SD. WSG-ST-VH
FDNS	00NR_G14_059	2	20SP	G14_059	FROM->TO	GR ISLD-LNX3345.00 - GRAND ISLAND 345KV CKT Z	720	720	0.04777	113.0434	STORLA - WESSINGTON 230KV CKT 1
FDNS	00NR_G14_059	2	25SP	G14_059	FROM->TO	GR ISLD-LNX3345.00 - GRAND ISLAND 345KV CKT Z	720	720	0.06322	113.0348	MINGO - RED WILLOW 345KV CKT 1
FDNS	00NR_G14_059	2	25SP	G14_059	FROM->TO	GR ISLD-LNX3345.00 - GRAND ISLAND 345KV CKT Z	720	720	0.06322	113.0348	MINGO - RED WILLOW 345KV CKT 1
FDNS	00NR_G14_059	2	25SP	G14_059	FROM->TO	GR ISLD-LNX3345.00 - GRAND ISLAND 345KV CKT Z	720	720	0.04786	112.7063	STORLA - WESSINGTON 230KV CKT 1
FDNS	00NR_G14_059	2	25SP	G14_059	FROM->TO	GR ISLD-LNX3345.00 - GRAND ISLAND 345KV CKT Z	720	720	0.05706	112.3482	GERALD GENTLEMAN STATION - RED WILLOW 345KV CKT 1
FDNS	00NR_G14_059	2	20SP	G14_059	FROM->TO	GR ISLD-LNX3345.00 - GRAND ISLAND 345KV CKT Z	720	720	0.04769	112.3361	HANLON - STORLA 230KV CKT 1
FDNS	00NR_G14_059	2	20SP	G14_059	FROM->TO	GR ISLD-LNX3345.00 - GRAND ISLAND 345KV CKT Z	720	720	0.05735	112.021	CROOKED CREEK - NORTH PLATTE 230KV CKT 1
FDNS	00NR_G14_059	2	20SP	G14_059	FROM->TO	GR ISLD-LNX3345.00 - GRAND ISLAND 345KV CKT Z	720	720	0.06299	111.977	MINGO - RED WILLOW 345KV CKT 1
FDNS	00NR_G14_059	2	20SP	G14_059	FROM->TO	GR ISLD-LNX3345.00 - GRAND ISLAND 345KV CKT Z	720	720	0.06299	111.977	MINGO - RED WILLOW 345KV CKT 1
FDNS	00NR_G14_059	2	25SP	G14_059	FROM->TO	GR ISLD-LNX3345.00 - GRAND ISLAND 345KV CKT Z	720	720	0.04778	111.9595	HANLON - STORLA 230KV CKT 1
FDNS	00NR_G14_059	2	20SP	G14_059	FROM->TO	GR ISLD-LNX3345.00 - GRAND ISLAND 345KV CKT Z	720	720	0.04806	111.93	FT THOMPSON - LETCHER 230KV CKT 1
FDNS	00NR_G14_059	2	20SP	G14_059	FROM->TO	GR ISLD-LNX3345.00 - GRAND ISLAND 345KV CKT Z	720	720	0.04806	111.93	FT THOMPSON - LETCHER 230KV CKT 1
FDNS	00NR_G14_059	2	20SP	G14_059	FROM->TO	GR ISLD-LNX3345.00 - GRAND ISLAND 345KV CKT Z	720	720	0.04625	111.8294	GEN635024 4-WALTER SCOTT UNIT 4
FDNS	00NR_G14_059	2	20SP	G14_059	FROM->TO	GR ISLD-LNX3345.00 - GRAND ISLAND 345KV CKT Z	720	720	0.05686	111.8159	GERALD GENTLEMAN STATION - RED WILLOW 345KV CKT 1
FDNS	00NR_G14_059	2	25SP	G14_059	FROM->TO	GR ISLD-LNX3345.00 - GRAND ISLAND 345KV CKT Z	720	720	0.05742	111.7704	CROOKED CREEK - NORTH PLATTE 230KV CKT 1
FDNS	00NR_G14_059	2	25SP	G14_059	FROM->TO	GR ISLD-LNX3345.00 - GRAND ISLAND 345KV CKT Z	720	720	0.04815	111.5671	FT THOMPSON - LETCHER 230KV CKT 1
FDNS	00NR_G14_059	2	25SP	G14_059	FROM->TO	GR ISLD-LNX3345.00 - GRAND ISLAND 345KV CKT Z	720	720	0.04815	111.5671	FT THOMPSON - LETCHER 230KV CKT 1
FDNS	00NR_G14_059	2	20SP	G14_059	FROM->TO	GR ISLD-LNX3345.00 - GRAND ISLAND 345KV CKT Z	720	720	0.04601	111.428	FT RANDAL - MEADOWGROVE4230.00 230KV CKT 1
FDNS	00NR_G14_059	2	25SP	G14_059	FROM->TO	GR ISLD-LNX3345.00 - GRAND ISLAND 345KV CKT Z	720	720	0.04669	111.3995	BUFFALO - JAMESTOWN 345KV CKT 1
FDNS	00NR_G14_059	2	20SP	G14_059	FROM->TO	GR ISLD-LNX3345.00 - GRAND ISLAND 345KV CKT Z	720	720	0.0466	111.3768	BUFFALO - JAMESTOWN 345KV CKT 1
FDNS	00NR_G14_059	2	20SP	G14_059	FROM->TO	GR ISLD-LNX3345.00 - GRAND ISLAND 345KV CKT Z	720	720	0.04625	111.3553	GEN635023 3-WALTER SCOTT UNIT 3
FDNS	00NR_G14_059	2	25SP	G14_059	FROM->TO	GR ISLD-LNX3345.00 - GRAND ISLAND 345KV CKT Z	720	720	0.04635	111.2146	GEN635024 4-WALTER SCOTT UNIT 4
FDNS	00NR_G14_059	2	20SP	G14_059	FROM->TO	GR ISLD-LNX3345.00 - GRAND ISLAND 345KV CKT Z	720	720	0.04734	111.1575	FT RANDAL - G12_009IST 230.00 230KV CKT 1
FDNS	00NR_G14_059	2	20SP	G14_059	FROM->TO	GR ISLD-LNX3345.00 - GRAND ISLAND 345KV CKT Z	720	720	0.04737	111.1446	FT RANDAL - FT THOMPSON 230KV CKT 1
FDNS	00NR_G14_059	2	20SP	G14_059	FROM->TO	GR ISLD-LNX3345.00 - GRAND ISLAND 345KV CKT Z	720	720	0.04737	111.1446	FT RANDAL - FT THOMPSON 230KV CKT 1
FDNS	00NR_G14_059	2	20SP	G14_059	FROM->TO	GR ISLD-LNX3345.00 - GRAND ISLAND 345KV CKT Z	720	720	0.04734	111.0966	FT THOMPSON - LAKE PLATT 230KV CKT 1
FDNS	00NR_G14_059	2	20SP	G14_059	FROM->TO	GR ISLD-LNX3345.00 - GRAND ISLAND 345KV CKT Z	720	720	0.04734	111.0966	FT THOMPSON - LAKE PLATT 230KV CKT 1
FDNS	00NR_G14_059	2	20SP	G14_059	FROM->TO	GR ISLD-LNX3345.00 - GRAND ISLAND 345KV CKT Z	720	720	0.04658	111.0297	G09_001IST 345.00 - WATERTOWN 345KV CKT 1
FDNS	00NR_G14_059	2	25SP	G14_059	FROM->TO	GR ISLD-LNX3345.00 - GRAND ISLAND 345KV CKT Z	720	720	0.04613	110.8919	FT RANDAL - MEADOWGROVE4230.00 230KV CKT 1
FDNS	00NR_G14_059	2	20SP	G14_059	FROM->TO	GR ISLD-LNX3345.00 - GRAND ISLAND 345KV CKT Z	720	720	0.04734	110.8749	G12_009IST 230.00 - LAKE PLATT 230KV CKT 1
FDNS	00NR_G14_059	2	20SP	G14_059	FROM->TO	GR ISLD-LNX3345.00 - GRAND ISLAND 345KV CKT Z	720	720	0.04625	110.8635	GEN336821 1-GRAND GULF UNIT
FDNS	00NR_G14_059	2	25SP	G14_059	FROM->TO	GR ISLD-LNX3345.00 - GRAND ISLAND 345KV CKT Z	720	720	0.04635	110.7572	GEN635023 3-WALTER SCOTT UNIT 3
FDNS	00NR_G14_059	2	20SP	G14_059	FROM->TO	GR ISLD-LNX3345.00 - GRAND ISLAND 345KV CKT Z	720	720	0.04625	110.7122	GEN344225 1-1CAL G1 25.000
FDNS	00NR_G14_059	2	25SP	G14_059	FROM->TO	GR ISLD-LNX3345.00 - GRAND ISLAND 345KV CKT Z	720	720	0.04744	110.6831	FT RANDAL - G12_009IST 230.00 230KV CKT 1
FDNS	00NR_G14_059	2	25SP	G14_059	FROM->TO	GR ISLD-LNX3345.00 - GRAND ISLAND 345KV CKT Z	720	720	0.04747	110.6816	FT RANDAL - FT THOMPSON 230KV CKT 1
FDNS	00NR_G14_059	2	25SP	G14_059	FROM->TO	GR ISLD-LNX3345.00 - GRAND ISLAND 345KV CKT Z	720	720	0.04747	110.6816	FT RANDAL - FT THOMPSON 230KV CKT 1
FDNS	00NR_G14_059	2	25SP	G14_059	FROM->TO	GR ISLD-LNX3345.00 - GRAND ISLAND 345KV CKT Z	720	720	0.04744	110.6356	FT THOMPSON - LAKE PLATT 230KV CKT 1
FDNS	00NR_G14_059	2	25SP	G14_059	FROM->TO	GR ISLD-LNX3345.00 - GRAND ISLAND 345KV CKT Z	720	720	0.04744	110.6356	FT THOMPSON - LAKE PLATT 230KV CKT 1
FDNS	00NR_G14_059	2	20SP	G14_059	FROM->TO	GR ISLD-LNX3345.00 - GRAND ISLAND 345KV CKT Z	720	720	0.04702	110.6185	WATERTN-LNX3345.00 - WHITE 345KV CKT 1
FDNS	00NR_G14_059	2	20SP	G14_059	FROM->TO	GR ISLD-LNX3345.00 - GRAND ISLAND 345KV CKT Z	720	720	0.04625	110.6124	GEN640009 1-COOPER NUCLEAR STATION
FDNS	00NR_G14_059	2	25SP	G14_059	FROM->TO	GR ISLD-LNX3345.00 - GRAND ISLAND 345KV CKT Z	720	720	0.04667	110.6019	G09_001IST 345.00 - WATERTOWN 345KV CKT 1
FDNS	00NR_G14_059	2	20SP	G14_059	FROM->TO	GR ISLD-LNX3345.00 - GRAND ISLAND 345KV CKT Z	720	720	0.04628	110.5669	SPLIT ROCK - WHITE 345KV CKT 1
FDNS	00NR_G14_059	2	20SP	G14_059	FROM->TO	GR ISLD-LNX3345.00 - GRAND ISLAND 345KV CKT Z	720	720	0.04628	110.5669	SPLIT ROCK - WHITE 345KV CKT 1
FDNS	00NR_G14_059	2	20SP	G14_059	FROM->TO	GR ISLD-LNX3345.00 - GRAND ISLAND 345KV CKT Z	720	720	0.04743	110.5579	LETCHER - SIOUX FALLS 230KV CKT 1
FDNS	00NR_G14_059	2	20SP	G14_059	FROM->TO	GR ISLD-LNX3345.00 - GRAND ISLAND 345KV CKT Z	720	720	0.04702	110.5568	WATERTN-LNX3345.00 - WATERTOWN 345KV CKT Z
FDNS	00NR_G14_059	2	20SP	G14_059	FROM->TO	GR ISLD-LNX3345.00 - GRAND ISLAND 345KV CKT Z	720	720	0.04702	110.5455	P12:345:UMZW:# 1747 #: WT2 IN SD. WT2-WHT LINE FAULT
FDNS	00NR_G14_059	2	20SP	G14_059	FROM->TO	GR ISLD-LNX3345.00 - GRAND ISLAND 345KV CKT Z	720	720	0.04625	110.4171	GEN336153 1-WATERFORD UNIT#3
FDNS	00NR_G14_059	2	20SP	G14_059	FROM->TO	GR ISLD-LNX3345.00 - GRAND ISLAND 345KV CKT Z	720	720	0.04625	110.4136	GEN337911 1-ARKANSAS NUCLEAR ONE UNIT #2
FDNS	00NR_G14_059	2	20SP	G14_059	FROM->TO	GR ISLD-LNX3345.00 - GRAND ISLAND 345KV CKT Z	720	720	0.0466	110.3986	CENTER - JAMESTOWN 345KV CKT 1
FDNS	00NR_G14_059	2	25SP	G14_059	FROM->TO	GR ISLD-LNX3345.00 - GRAND ISLAND 345KV CKT Z	720	720	0.04744	110.3959	G12_009IST 230.00 - LAKE PLATT 230KV CKT 1
FDNS	00NR_G14_059	2	25SP	G14_059	FROM->TO	GR ISLD-LNX3345.00 - GRAND ISLAND 345KV CKT Z	720	720	0.04635	110.2981	GEN336821 1-GRAND GULF UNIT
FDNS	00NR_G14_059	2	20SP	G14_059	FROM->TO	GR ISLD-LNX3345.00 - GRAND ISLAND 345KV CKT Z	720	720	0.04693	110.2724	RAUN - SUB 3451 FT CAL 345KV CKT 1
FDNS	00NR_G14_059	2	20SP	G14_059	FROM->TO	GR ISLD-LNX3345.00 - GRAND ISLAND 345KV CKT Z	720	720	0.04693	110.2724	RAUN - SUB 3451 FT CAL 345KV CKT 1
FDNS	00NR_G14_059	2	20SP	G14_059	FROM->TO	GR ISLD-LNX3345.00 - GRAND ISLAND 345KV CKT Z	720	720	0.04723	110.2268	FT RANDAL - SIOUX CITY 230KV CKT 1
FDNS	00NR_G14_059	2	25SP	G14_059	FROM->TO	GR ISLD-LNX3345.00 - GRAND ISLAND 345KV CKT Z	720	720	0.04669	110.223	CENTER - JAMESTOWN 345KV CKT 1
FDNS	00NR_G14_059	2	20SP	G14_059	FROM->TO	GR ISLD-LNX3345.00 - GRAND ISLAND 345KV CKT Z	720	720	0.0465	110.2013	BISON 3 345.00 - BUFFALO 345KV CKT 1
FDNS	00NR_G14_059	2	20SP	G14_059	FROM->TO	GR ISLD-LNX3345.00 - GRAND ISLAND 345KV CKT Z	720	720	0.0477	110.2011	THEDFRD3 345.00 (THEDFORDT2) 345/115/13.8KV TRANSFORMER CKT 1
FDNS	00NR_G14_059	2	20SP	G14_059	FROM->TO	GR ISLD-LNX3345.00 - GRAND ISLAND 345KV CKT Z	720	720	0.04625	110.1715	GEN335831 1-RIVERBEND UNIT#1
FDNS	00NR_G14_059	2	20SP	G14_059	FROM->TO	GR ISLD-LNX3345.00 - GRAND ISLAND 345KV CKT Z	720	720	0.04625	110.1638	GEN641089 2-ENERGY CENTER 2
FDNS	00NR_G14_059	2	25SP	G14_059	FROM->TO	GR ISLD-LNX3345.00 - GRAND ISLAND 345KV CKT Z	720	720	0.04635	110.1284	GEN640009 1-COOPER NUCLEAR STATION
FDNS	00NR_G14_059	2	25SP	G14_059	FROM->TO	GR ISLD-LNX3345.00 - GRAND ISLAND 345KV CKT Z	720	720	0.04635	110.1224	GEN344225 1-1CAL G1 25.000
FDNS	00NR_G14_059	2	20SP	G14_059	FROM->TO	GR ISLD-LNX3345.00 - GRAND ISLAND 345KV CKT Z	720	720	0.04635	110.1102	SIOUXCY-LNX3345.00 - SPLIT ROCK 345KV CKT 1
FDNS	00NR_G14_059	2	20SP	G14_059	FROM->TO	GR ISLD-LNX3345.00 - GRAND ISLAND 345KV CKT Z	720	720	0.04635	110.1102	SIOUXCY-LNX3345.00 - SPLIT ROCK 345KV CKT 1
FDNS	00NR_G14_059	2	25SP	G14_059	FROM->TO	GR ISLD-LNX3345.00 - GRAND ISLAND 345KV CKT Z	720	720	0.04752	110.103	LETCHER - SIOUX FALLS 230KV CKT 1
FDNS	00NR_G14_059	2	20SP	G14_059	FROM->TO	GR ISLD-LNX3345.00 - GRAND ISLAND 345KV CKT Z	720	720	0.04635	110.0953	P12:345:UMZW:# 907 #: SC2-SR IN IA. SC2-SR 345 KV LINE
FDNS	00NR_G14_059	2	20SP	G14_059	FROM->TO	GR ISLD-LNX3345.00 - GRAND ISLAND 345KV CKT Z	720	720	0.04625	110.0866	GEN337910 1-ARKANSAS NUCLEAR ONE UNIT #1
FDNS	00NR_G14_059	2	20SP	G14_059	FROM->TO	GR ISLD-LNX3345.00 - GRAND ISLAND 345KV CKT Z	720	720	0.04646	110.0851	CHISAGO COUNTY - CHISAGO COUNTY 500KV CKT 1
FDNS	00NR_G14_059	2	20SP	G14_059	FROM->TO	GR ISLD-LNX3345.00 - GRAND ISLAND 345KV CKT Z	720	720	0.04635	110.0809	SIOUX CITY - SIOUXCY-LNX3345.00 345KV CKT Z
FDNS	00NR_G14_059	2	20SP	G14_059	FROM->TO	GR ISLD-LNX3345.00 - GRAND ISLAND 345KV CKT Z	720	720	0.04646	110.0436	CHISAGO COUNTY - FORBES 500KV CKT 1
FDNS	00NR_G14_059	2	25SP	G14_059	FROM->TO	GR ISLD-LNX3345.00 - GRAND ISLAND 345KV CKT Z	720	720	0.04711	110.0431	WATERTN-LNX3345.00 - WHITE 345KV CKT 1
FDNS	00NR_G14_059	2	20SP	G14_059	FROM->TO	GR ISLD-LNX3345.00 - GRAND ISLAND 345KV CKT Z	720	720	0.04637	110.0191	ROSEAU - ROSEAUM 2 500.00 500KV CKT 1

SOLUTION	GROUP	SCENARIO	SEASON	SOURCE	DIRECTION	MONITORED ELEMENT	RATEA (MVA)	RATEB(MVA)	TDF	TC%LOADING (% MVA)	CONTINGENCY
FDNS	00NR_G14_059	2	20SP	G14_059	FROM->TO	GR ISLD-LNX3345.00 - GRAND ISLAND 345KV CKT Z	720	720	0.04637	110.0191	ROSEAU - ROSEAUM 2 500.00 500KV CKT 1
FDNS	00NR_G14_059	2	20SP	G14_059	FROM->TO	GR ISLD-LNX3345.00 - GRAND ISLAND 345KV CKT Z	720	720	0.04637	110.019	RIEL - ROSEAU 500KV CKT 1
FDNS	00NR_G14_059	2	25SP	G14_059	FROM->TO	GR ISLD-LNX3345.00 - GRAND ISLAND 345KV CKT Z	720	720	0.04638	110.0048	SPLIT ROCK - WHITE 345KV CKT 1
FDNS	00NR_G14_059	2	25SP	G14_059	FROM->TO	GR ISLD-LNX3345.00 - GRAND ISLAND 345KV CKT Z	720	720	0.04638	110.0048	SPLIT ROCK - WHITE 345KV CKT 1
FDNS	00NR_G14_059	2	20SP	G14_059	FROM->TO	GR ISLD-LNX3345.00 - GRAND ISLAND 345KV CKT Z	720	720	0.04625	109.9982	GEN645012 2-NEBRASKA CITY 2
FDNS	00NR_G14_059	2	25SP	G14_059	FROM->TO	GR ISLD-LNX3345.00 - GRAND ISLAND 345KV CKT Z	720	720	0.04711	109.9723	WATERTN-LNX3345.00 - WATERTOWN 345KV CKT Z
FDNS	00NR_G14_059	2	25SP	G14_059	FROM->TO	GR ISLD-LNX3345.00 - GRAND ISLAND 345KV CKT Z	720	720	0.04711	109.9663	P12:345:UMZW:# 1747 #: WT2 IN SD. WT2-WHT LINE FAULT
FDNS	00NR_G14_059	2	25SP	G14_059	FROM->TO	GR ISLD-LNX3345.00 - GRAND ISLAND 345KV CKT Z	720	720	0.0466	109.9074	BISON 3 345.00 - BUFFALO 345KV CKT 1
FDNS	00NR_G14_059	2	20SP	G14_059	FROM->TO	GR ISLD-LNX3345.00 - GRAND ISLAND 345KV CKT Z	720	720	0.04625	109.8979	GEN645011 1-NEBRASKA CITY 1
FDNS	00NR_G14_059	2	25SP	G14_059	FROM->TO	GR ISLD-LNX3345.00 - GRAND ISLAND 345KV CKT Z	720	720	0.04635	109.8928	GEN337911 1-ARKANSAS NUCLEAR ONE UNIT #2
FDNS	00NR_G14_059	2	20SP	G14_059	FROM->TO	GR ISLD-LNX3345.00 - GRAND ISLAND 345KV CKT Z	720	720	0.04709	109.8777	HANLON - SIOUX FALLS 230KV CKT 1
FDNS	00NR_G14_059	2	20SP	G14_059	FROM->TO	GR ISLD-LNX3345.00 - GRAND ISLAND 345KV CKT Z	720	720	0.04884	109.8707	CALLAWAY - MAXWELL 115KV CKT 1
FDNS	00NR_G14_059	2	20SP	G14_059	FROM->TO	GR ISLD-LNX3345.00 - GRAND ISLAND 345KV CKT Z	720	720	0.04814	109.8677	P12:115:NPPD:1167A:AINSWRT7:ONEILL 7:BTB
FDNS	00NR_G14_059	2	20SP	G14_059	FROM->TO	GR ISLD-LNX3345.00 - GRAND ISLAND 345KV CKT Z	720	720	0.04665	109.8585	ARROWHEAD - ARROWHEAD 230 230KV CKT 1
FDNS	00NR_G14_059	2	25SP	G14_059	FROM->TO	GR ISLD-LNX3345.00 - GRAND ISLAND 345KV CKT Z	720	720	0.04635	109.8392	GEN336153 1-WATERFORD UNIT#3
FDNS	00NR_G14_059	2	25SP	G14_059	FROM->TO	GR ISLD-LNX3345.00 - GRAND ISLAND 345KV CKT Z	720	720	0.04778	109.8321	THEDFRD3 345.00 (THEDFORDT2) 345/115/13.8KV TRANSFORMER CKT 1
FDNS	00NR_G14_059	2	20SP	G14_059	FROM->TO	GR ISLD-LNX3345.00 - GRAND ISLAND 345KV CKT Z	720	720	0.04701	109.8018	FT RANDAL - UTICA JCT 230KV CKT 1
FDNS	00NR_G14_059	2	20SP	G14_059	FROM->TO	GR ISLD-LNX3345.00 - GRAND ISLAND 345KV CKT Z	720	720	0.04658	109.792	G09_001IST 345.00 - GROTON 345KV CKT 1
FDNS	00NR_G14_059	2	20SP	G14_059	FROM->TO	GR ISLD-LNX3345.00 - GRAND ISLAND 345KV CKT Z	720	720	0.04655	109.7867	GROTON-LNX3 345.00 - LELAND1-LNX3345.00 345KV CKT 1
FDNS	00NR_G14_059	2	25SP	G14_059	FROM->TO	GR ISLD-LNX3345.00 - GRAND ISLAND 345KV CKT Z	720	720	0.04704	109.7701	RAUN - SUB 3451 FT CAL 345KV CKT 1
FDNS	00NR_G14_059	2	25SP	G14_059	FROM->TO	GR ISLD-LNX3345.00 - GRAND ISLAND 345KV CKT Z	720	720	0.04704	109.7701	RAUN - SUB 3451 FT CAL 345KV CKT 1
FDNS	00NR_G14_059	2	20SP	G14_059	FROM->TO	GR ISLD-LNX3345.00 - GRAND ISLAND 345KV CKT Z	720	720	0.0466	109.765	PAHOJA - SIOUX FALLS 230KV CKT 1
FDNS	00NR_G14_059	2	20SP	G14_059	FROM->TO	GR ISLD-LNX3345.00 - GRAND ISLAND 345KV CKT Z	720	720	0.04625	109.7588	GEN337653 1-WHITE BLUFF UNIT #2
FDNS	00NR_G14_059	2	20SP	G14_059	FROM->TO	GR ISLD-LNX3345.00 - GRAND ISLAND 345KV CKT Z	720	720	0.04655	109.7553	GROTON - GROTON-LNX3 345.00 345KV CKT Z
FDNS	00NR_G14_059	2	20SP	G14_059	FROM->TO	GR ISLD-LNX3345.00 - GRAND ISLAND 345KV CKT Z	720	720	0.04655	109.7549	P12:345:UMZB:# 109 #: LOS GRT IN ND. LOS GRT
FDNS	00NR_G14_059	2	20SP	G14_059	FROM->TO	GR ISLD-LNX3345.00 - GRAND ISLAND 345KV CKT Z	720	720	0.04655	109.7506	LELAND OLDS - LELAND1-LNX3345.00 345KV CKT Z
FDNS	00NR_G14_059	2	20SP	G14_059	FROM->TO	GR ISLD-LNX3345.00 - GRAND ISLAND 345KV CKT Z	720	720	0.04694	109.7411	LAKEFIELD 3 - NOBLES 345KV CKT 1
FDNS	00NR_G14_059	2	25SP	G14_059	FROM->TO	GR ISLD-LNX3345.00 - GRAND ISLAND 345KV CKT Z	720	720	0.04732	109.7324	FT RANDAL - SIOUX CITY 230KV CKT 1
FDNS	00NR_G14_059	2	20SP	G14_059	FROM->TO	GR ISLD-LNX3345.00 - GRAND ISLAND 345KV CKT Z	720	720	0.04625	109.7252	GEN337652 1-WHITE BLUFF UNIT #1
FDNS	00NR_G14_059	2	25SP	G14_059	FROM->TO	GR ISLD-LNX3345.00 - GRAND ISLAND 345KV CKT Z	720	720	0.04635	109.717	GEN641089 2-ENERGY CENTER 2
FDNS	00NR_G14_059	2	20SP	G14_059	FROM->TO	GR ISLD-LNX3345.00 - GRAND ISLAND 345KV CKT Z	720	720	0.04625	109.7116	GEN338143 1-INDEPENDENCE UNIT #1
FDNS	00NR_G14_059	2	20SP	G14_059	FROM->TO	GR ISLD-LNX3345.00 - GRAND ISLAND 345KV CKT Z	720	720	0.04625	109.7108	GEN338146 1-INDEPENDENCE UNIT #2
FDNS	00NR_G14_059	2	20SP	G14_059	FROM->TO	GR ISLD-LNX3345.00 - GRAND ISLAND 345KV CKT Z	720	720	0.05417	109.7	CROOKED CREEK - RIVERDALE 230KV CKT 1
FDNS	00NR_G14_059	2	25SP	G14_059	FROM->TO	GR ISLD-LNX3345.00 - GRAND ISLAND 345KV CKT Z	720	720	0.04656	109.6896	CHISAGO COUNTY - CHISAGO COUNTY 500KV CKT 1
FDNS	00NR_G14_059	2	25SP	G14_059	FROM->TO	GR ISLD-LNX3345.00 - GRAND ISLAND 345KV CKT Z	720	720	0.05532	109.6541	MINGO - SETAB 345KV CKT 1
FDNS	00NR_G14_059	2	25SP	G14_059	FROM->TO	GR ISLD-LNX3345.00 - GRAND ISLAND 345KV CKT Z	720	720	0.05532	109.6541	MINGO - SETAB 345KV CKT 1
FDNS	00NR_G14_059	2	25SP	G14_059	FROM->TO	GR ISLD-LNX3345.00 - GRAND ISLAND 345KV CKT Z	720	720	0.04635	109.6256	GEN335831 1-RIVERBEND UNIT#1
FDNS	00NR_G14_059	2	20SP	G14_059	FROM->TO	GR ISLD-LNX3345.00 - GRAND ISLAND 345KV CKT Z	720	720	0.04625	109.6187	GEN501801 1-DOLET HILLS UNIT1
FDNS	00NR_G14_059	2	20SP	G14_059	FROM->TO	GR ISLD-LNX3345.00 - GRAND ISLAND 345KV CKT Z	720	720	0.04661	109.5833	BROOKING COUNTY - LYON COUNTY 345KV CKT 1
FDNS	00NR_G14_059	2	20SP	G14_059	FROM->TO	GR ISLD-LNX3345.00 - GRAND ISLAND 345KV CKT Z	720	720	0.04663	109.5798	AS KING - EAU CLAIRE 345KV CKT 1
FDNS	00NR_G14_059	2	20SP	G14_059	FROM->TO	GR ISLD-LNX3345.00 - GRAND ISLAND 345KV CKT Z	720	720	0.04709	109.5793	CARPENTER - HURON 230KV CKT 1
FDNS	00NR_G14_059	2	20SP	G14_059	FROM->TO	GR ISLD-LNX3345.00 - GRAND ISLAND 345KV CKT Z	720	720	0.04625	109.5741	GEN336252 1-NINEMILE POINT UNIT#5
FDNS	00NR_G14_059	2	25SP	G14_059	FROM->TO	GR ISLD-LNX3345.00 - GRAND ISLAND 345KV CKT Z	720	720	0.04635	109.5645	GEN337910 1-ARKANSAS NUCLEAR ONE UNIT #1
FDNS	00NR_G14_059	2	20SP	G14_059	FROM->TO	GR ISLD-LNX3345.00 - GRAND ISLAND 345KV CKT Z	720	720	0.04777	109.5532	FT THOMPSON - WESSINGTON 230KV CKT 1
FDNS	00NR_G14_059	2	20SP	G14_059	FROM->TO	GR ISLD-LNX3345.00 - GRAND ISLAND 345KV CKT Z	720	720	0.04777	109.5532	FT THOMPSON - WESSINGTON 230KV CKT 1
FDNS	00NR_G14_059	2	20SP	G14_059	FROM->TO	GR ISLD-LNX3345.00 - GRAND ISLAND 345KV CKT Z	720	720	0.04625	109.5523	GEN542962 2-IATAN UNIT #2
FDNS	00NR_G14_059	2	25SP	G14_059	FROM->TO	GR ISLD-LNX3345.00 - GRAND ISLAND 345KV CKT Z	720	720	0.04646	109.5404	SIOUXCY-LNX3345.00 - SPLIT ROCK 345KV CKT 1
FDNS	00NR_G14_059	2	25SP	G14_059	FROM->TO	GR ISLD-LNX3345.00 - GRAND ISLAND 345KV CKT Z	720	720	0.04646	109.5404	SIOUXCY-LNX3345.00 - SPLIT ROCK 345KV CKT 1
FDNS	00NR_G14_059	2	25SP	G14_059	FROM->TO	GR ISLD-LNX3345.00 - GRAND ISLAND 345KV CKT Z	720	720	0.04647	109.5274	RIEL - ROSEAU 500KV CKT 1
FDNS	00NR_G14_059	2	25SP	G14_059	FROM->TO	GR ISLD-LNX3345.00 - GRAND ISLAND 345KV CKT Z	720	720	0.04647	109.5238	ROSEAU - ROSEAUM 2 500.00 500KV CKT 1
FDNS	00NR_G14_059	2	25SP	G14_059	FROM->TO	GR ISLD-LNX3345.00 - GRAND ISLAND 345KV CKT Z	720	720	0.04647	109.5238	ROSEAU - ROSEAUM 2 500.00 500KV CKT 1
FDNS	00NR_G14_059	2	20SP	G14_059	FROM->TO	GR ISLD-LNX3345.00 - GRAND ISLAND 345KV CKT Z	720	720	0.04625	109.5184	GEN336251 1-NINEMILE POINT UNIT#4
FDNS	00NR_G14_059	2	20SP	G14_059	FROM->TO	GR ISLD-LNX3345.00 - GRAND ISLAND 345KV CKT Z	720	720	0.0466	109.5169	EAGLE 4 230.00 - PAHOJA 230KV CKT 1
FDNS	00NR_G14_059	2	25SP	G14_059	FROM->TO	GR ISLD-LNX3345.00 - GRAND ISLAND 345KV CKT Z	720	720	0.04646	109.5114	P12:345:UMZW:# 907 #: SC2-SR IN IA. SC2-SR 345 KV LINE
FDNS	00NR_G14_059	2	25SP	G14_059	FROM->TO	GR ISLD-LNX3345.00 - GRAND ISLAND 345KV CKT Z	720	720	0.04709	109.5093	HURON - WATERTOWN 230KV CKT 2
FDNS	00NR_G14_059	2	20SP	G14_059	FROM->TO	GR ISLD-LNX3345.00 - GRAND ISLAND 345KV CKT Z	720	720	0.04709	109.5093	HURON - WATERTOWN 230KV CKT 2
FDNS	00NR_G14_059	2	20SP	G14_059	FROM->TO	GR ISLD-LNX3345.00 - GRAND ISLAND 345KV CKT Z	720	720	0.04625	109.5081	GEN336831 1-BAXTER WILSON SES
FDNS	00NR_G14_059	2	20SP	G14_059	FROM->TO	GR ISLD-LNX3345.00 - GRAND ISLAND 345KV CKT Z	720	720	0.04625	109.5001	GEN532751 1-WOLF CREEK GENERATING STATION UNIT 1
FDNS	00NR_G14_059	2	20SP	G14_059	FROM->TO	GR ISLD-LNX3345.00 - GRAND ISLAND 345KV CKT Z	720	720	0.04685	109.4903	RASMUSN - UTICA JCT 230KV CKT 1
FDNS	00NR_G14_059	2	25SP	G14_059	FROM->TO	GR ISLD-LNX3345.00 - GRAND ISLAND 345KV CKT Z	720	720	0.04646	109.4902	SIOUX CITY - SIOUXCY-LNX3345.00 345KV CKT Z
FDNS	00NR_G14_059	2	20SP	G14_059	FROM->TO	GR ISLD-LNX3345.00 - GRAND ISLAND 345KV CKT Z	720	720	0.04625	109.4899	GEN337041 1-GERALD ANDRUS
FDNS	00NR_G14_059	2	20SP	G14_059	FROM->TO	GR ISLD-LNX3345.00 - GRAND ISLAND 345KV CKT Z	720	720	0.04709	109.4809	CARPENTER - WATERTOWN 230KV CKT 1
FDNS	00NR_G14_059	2	20SP	G14_059	FROM->TO	GR ISLD-LNX3345.00 - GRAND ISLAND 345KV CKT Z	720	720	0.04709	109.4809	CARPENTER - WATERTOWN 230KV CKT 1
FDNS	00NR_G14_059	2	20SP	G14_059	FROM->TO	GR ISLD-LNX3345.00 - GRAND ISLAND 345KV CKT Z	720	720	0.04419	109.4752	STAPLETON - THEDFORD 115KV CKT 1
FDNS	00NR_G14_059	2	25SP	G14_059	FROM->TO	GR ISLD-LNX3345.00 - GRAND ISLAND 345KV CKT Z	720	720	0.04892	109.4629	CALLAWAY - MAXWELL 115KV CKT 1
FDNS	00NR_G14_059	2	25SP	G14_059	FROM->TO	GR ISLD-LNX3345.00 - GRAND ISLAND 345KV CKT Z	720	720	0.04635	109.46	GEN645012 2-NEBRASKA CITY 2
FDNS	00NR_G14_059	2	20SP	G14_059	FROM->TO	GR ISLD-LNX3345.00 - GRAND ISLAND 345KV CKT Z	720	720	0.04661	109.4399	ALEXMRES3 345.00 - BISON 3 345.00 345KV CKT 1
FDNS	00NR_G14_059	2	20SP	G14_059	FROM->TO	GR ISLD-LNX3345.00 - GRAND ISLAND 345KV CKT Z	720	720	0.04689	109.4354	HAZLETON - MITCHLCO3 345.00 345KV CKT 1
FDNS	00NR_G14_059	2	20SP	G14_059	FROM->TO	GR ISLD-LNX3345.00 - GRAND ISLAND 345KV CKT Z	720	720	0.04625	109.4331	GEN501813 1-RODEMACHER UNIT 3
FDNS	00NR_G14_059	2	20SP	G14_059	FROM->TO	GR ISLD-LNX3345.00 - GRAND ISLAND 345KV CKT Z	720	720	0.04625	109.4209	GEN344897 4-1LAB G4 20.000
FDNS	00NR_G14_059	2	20SP	G14_059	FROM->TO	GR ISLD-LNX3345.00 - GRAND ISLAND 345KV CKT Z	720	720	0.04625	109.4197	GEN344894 1-1LAB G1 20.000
FDNS	00NR_G14_059	2	20SP	G14_059	FROM->TO	GR ISLD-LNX3345.00 - GRAND ISLAND 345KV CKT Z	720	720	0.04625	109.4197	GEN344895 2-1LAB G2 20.000
FDNS	00NR_G14_059	2	20SP	G14_059	FROM->TO	GR ISLD-LNX3345.00 - GRAND ISLAND 345KV CKT Z	720	720	0.04625	109.4196	GEN344896 3-1LAB G3 20.000

SOLUTION	GROUP	SCENARIO	SEASON	SOURCE	DIRECTION	MONITORED ELEMENT	RATEA (MVA)	RATEB(MVA)	TDF	TC%LOADING (% MVA)	CONTINGENCY
FDNS	00NR_G14_059	2	20SP	G14_059	FROM->TO	GR ISLD-LNX3345.00 - GRAND ISLAND 345KV CKT Z	720	720	0.04625	109.4092	GEN629075 1-OTTUMWA GENERATOR FOR OTTUMWA UNIT NO 1
FDNS	00NR_G14_059	2	20SP	G14_059	FROM->TO	GR ISLD-LNX3345.00 - GRAND ISLAND 345KV CKT Z	720	720	0.04625	109.4001	GEN542957 1-IATAN UNIT #1
FDNS	00NR_G14_059	2	20SP	G14_059	FROM->TO	GR ISLD-LNX3345.00 - GRAND ISLAND 345KV CKT Z	720	720	0.04723	109.3933	P12:115:NPPD:1164:ONEILL 7:JEFFREY9:BTB
FDNS	00NR_G14_059	2	25SP	G14_059	FROM->TO	GR ISLD-LNX3345.00 - GRAND ISLAND 345KV CKT Z	720	720	0.04822	109.3922	P12:115:NPPD:1167A:AINSWRT7:ONEILL 7:BTB
FDNS	00NR_G14_059	2	25SP	G14_059	FROM->TO	GR ISLD-LNX3345.00 - GRAND ISLAND 345KV CKT Z	720	720	0.04718	109.3724	HANLON - SIOUX FALLS 230KV CKT 1
FDNS	00NR_G14_059	2	20SP	G14_059	FROM->TO	GR ISLD-LNX3345.00 - GRAND ISLAND 345KV CKT Z	720	720	0.04625	109.3681	GEN345671 2-1RUSH G2 18.000
FDNS	00NR_G14_059	2	20SP	G14_059	FROM->TO	GR ISLD-LNX3345.00 - GRAND ISLAND 345KV CKT Z	720	720	0.04625	109.365	GEN345670 1-1RUSH G1 18.000
FDNS	00NR_G14_059	2	25SP	G14_059	FROM->TO	GR ISLD-LNX3345.00 - GRAND ISLAND 345KV CKT Z	720	720	0.04635	109.3608	GEN645011 1-NEBRASKA CITY 1
FDNS	00NR_G14_059	2	20SP	G14_059	FROM->TO	GR ISLD-LNX3345.00 - GRAND ISLAND 345KV CKT Z	720	720	0.04685	109.3576	RASMUSN - SIOUX CITY 230KV CKT 1
FDNS	00NR_G14_059	2	25SP	G14_059	FROM->TO	GR ISLD-LNX3345.00 - GRAND ISLAND 345KV CKT Z	720	720	0.0471	109.3566	FT RANDAL - UTICA JCT 230KV CKT 1
FDNS	00NR_G14_059	2	20SP	G14_059	FROM->TO	GR ISLD-LNX3345.00 - GRAND ISLAND 345KV CKT Z	720	720	0.04691	109.3539	GRIMES - LEHIGH 345KV CKT 1
FDNS	00NR_G14_059	2	20SP	G14_059	FROM->TO	GR ISLD-LNX3345.00 - GRAND ISLAND 345KV CKT Z	720	720	0.04625	109.3363	GEN645001 1-FORT CALHOUN 1
FDNS	00NR_G14_059	2	20SP	G14_059	FROM->TO	GR ISLD-LNX3345.00 - GRAND ISLAND 345KV CKT Z	720	720	0.04814	109.3344	BASSETT 7115.00 - STUART 115KV CKT 1
FDNS	00NR_G14_059	2	20SP	G14_059	FROM->TO	GR ISLD-LNX3345.00 - GRAND ISLAND 345KV CKT Z	720	720	0.04625	109.3333	GEN334440 1-SABINE UNIT 4
FDNS	00NR_G14_059	2	20SP	G14_059	FROM->TO	GR ISLD-LNX3345.00 - GRAND ISLAND 345KV CKT Z	720	720	0.05513	109.3309	MINGO - SETAB 345KV CKT 1
FDNS	00NR_G14_059	2	20SP	G14_059	FROM->TO	GR ISLD-LNX3345.00 - GRAND ISLAND 345KV CKT Z	720	720	0.05513	109.3309	MINGO - SETAB 345KV CKT 1
FDNS	00NR_G14_059	2	20SP	G14_059	FROM->TO	GR ISLD-LNX3345.00 - GRAND ISLAND 345KV CKT Z	720	720	0.04723	109.3305	CLEARWATER - ONEILL 115KV CKT 1
FDNS	00NR_G14_059	2	20SP	G14_059	FROM->TO	GR ISLD-LNX3345.00 - GRAND ISLAND 345KV CKT Z	720	720	0.04625	109.3288	GEN335206 1-NELSON UNIT 6
FDNS	00NR_G14_059	2	25SP	G14_059	FROM->TO	GR ISLD-LNX3345.00 - GRAND ISLAND 345KV CKT Z	720	720	0.04703	109.3118	LAKEFIELD 3 - NOBLES 345KV CKT 1
FDNS	00NR_G14_059	2	20SP	G14_059	FROM->TO	GR ISLD-LNX3345.00 - GRAND ISLAND 345KV CKT Z	720	720	0.04814	109.3089	AINSWORTH - BASSETT 7115.00 115KV CKT 1
FDNS	00NR_G14_059	2	20SP	G14_059	FROM->TO	GR ISLD-LNX3345.00 - GRAND ISLAND 345KV CKT Z	720	720	0.04782	109.3035	BUCKNER7 345.00 - SPEARVILLE 345KV CKT 1
FDNS	00NR_G14_059	2	20SP	G14_059	FROM->TO	GR ISLD-LNX3345.00 - GRAND ISLAND 345KV CKT Z	720	720	0.04782	109.3035	BUCKNER7 345.00 - SPEARVILLE 345KV CKT 1
FDNS	00NR_G14_059	2	20SP	G14_059	FROM->TO	GR ISLD-LNX3345.00 - GRAND ISLAND 345KV CKT Z	720	720	0.04637	109.3023	CNTSHNT3 345.00 - PRAIRIE3 345.00 345KV CKT 1
FDNS	00NR_G14_059	2	20SP	G14_059	FROM->TO	GR ISLD-LNX3345.00 - GRAND ISLAND 345KV CKT Z	720	720	0.04625	109.293	GEN532652 1-JEFFREY ENERGY CENTER UNIT 2
FDNS	00NR_G14_059	2	20SP	G14_059	FROM->TO	GR ISLD-LNX3345.00 - GRAND ISLAND 345KV CKT Z	720	720	0.04625	109.2929	GEN532653 1-JEFFREY ENERGY CENTER UNIT 3
FDNS	00NR_G14_059	2	20SP	G14_059	FROM->TO	GR ISLD-LNX3345.00 - GRAND ISLAND 345KV CKT Z	720	720	0.04873	109.2927	JEFFREY - NORTH PLATTE 115KV CKT 1
FDNS	00NR_G14_059	2	20SP	G14_059	FROM->TO	GR ISLD-LNX3345.00 - GRAND ISLAND 345KV CKT Z	720	720	0.04625	109.2917	GEN532651 1-JEFFREY ENERGY CENTER UNIT 1
FDNS	00NR_G14_059	2	25SP	G14_059	FROM->TO	GR ISLD-LNX3345.00 - GRAND ISLAND 345KV CKT Z	720	720	0.04635	109.2896	GEN337652 1-WHITE BLUFF UNIT #1
FDNS	00NR_G14_059	2	25SP	G14_059	FROM->TO	GR ISLD-LNX3345.00 - GRAND ISLAND 345KV CKT Z	720	720	0.04674	109.2887	ARROWHEAD - ARROWHEAD 230 230KV CKT 1
FDNS	00NR_G14_059	2	20SP	G14_059	FROM->TO	GR ISLD-LNX3345.00 - GRAND ISLAND 345KV CKT Z	720	720	0.04627	109.2789	P12:115:NPPD:WAPA4:SIDNEY 7:B.SPRGS7:BTB
FDNS	00NR_G14_059	2	20SP	G14_059	FROM->TO	GR ISLD-LNX3345.00 - GRAND ISLAND 345KV CKT Z	720	720	0.04627	109.2789	P12:115:UMZB:# 119 #: IN NE.
FDNS	00NR_G14_059	2	25SP	G14_059	FROM->TO	GR ISLD-LNX3345.00 - GRAND ISLAND 345KV CKT Z	720	720	0.04664	109.2768	GROTON-LNX3 345.00 - LELAND1-LNX3345.00 345KV CKT 1
FDNS	00NR_G14_059	2	20SP	G14_059	FROM->TO	GR ISLD-LNX3345.00 - GRAND ISLAND 345KV CKT Z	720	720	0.04625	109.274	GEN501812 1-RODEMACHER UNIT 2
FDNS	00NR_G14_059	2	25SP	G14_059	FROM->TO	GR ISLD-LNX3345.00 - GRAND ISLAND 345KV CKT Z	720	720	0.04635	109.2679	GEN338143 1-INDEPENDENCE UNIT #1
FDNS	00NR_G14_059	2	20SP	G14_059	FROM->TO	GR ISLD-LNX3345.00 - GRAND ISLAND 345KV CKT Z	720	720	0.04625	109.2672	GEN642067 1-PLATTE
FDNS	00NR_G14_059	2	25SP	G14_059	FROM->TO	GR ISLD-LNX3345.00 - GRAND ISLAND 345KV CKT Z	720	720	0.04635	109.2662	GEN338146 1-INDEPENDENCE UNIT #2
FDNS	00NR_G14_059	2	20SP	G14_059	FROM->TO	GR ISLD-LNX3345.00 - GRAND ISLAND 345KV CKT Z	720	720	0.0467	109.2598	ARPIN B4 345.00 - EAU CLAIRE 345KV CKT 1
FDNS	00NR_G14_059	2	25SP	G14_059	FROM->TO	GR ISLD-LNX3345.00 - GRAND ISLAND 345KV CKT Z	720	720	0.04667	109.2437	G09_001IST 345.00 - GROTON 345KV CKT 1
FDNS	00NR_G14_059	2	25SP	G14_059	FROM->TO	GR ISLD-LNX3345.00 - GRAND ISLAND 345KV CKT Z	720	720	0.04664	109.2413	GROTON - GROTON-LNX3 345.00 345KV CKT Z
FDNS	00NR_G14_059	2	25SP	G14_059	FROM->TO	GR ISLD-LNX3345.00 - GRAND ISLAND 345KV CKT Z	720	720	0.04664	109.2375	P12:345:UMZB:# 109 #: LOS GRT IN ND. LOS GRT
FDNS	00NR_G14_059	2	20SP	G14_059	FROM->TO	GR ISLD-LNX3345.00 - GRAND ISLAND 345KV CKT Z	720	720	0.04625	109.2357	GEN338388 1-1PLUM PT U1 23.000
FDNS	00NR_G14_059	2	25SP	G14_059	FROM->TO	GR ISLD-LNX3345.00 - GRAND ISLAND 345KV CKT Z	720	720	0.04664	109.233	LELAND OLDS - LELAND1-LNX3345.00 345KV CKT Z
FDNS	00NR_G14_059	2	25SP	G14_059	FROM->TO	GR ISLD-LNX3345.00 - GRAND ISLAND 345KV CKT Z	720	720	0.04635	109.2265	GEN337653 1-WHITE BLUFF UNIT #2
FDNS	00NR_G14_059	2	20SP	G14_059	FROM->TO	GR ISLD-LNX3345.00 - GRAND ISLAND 345KV CKT Z	720	720	0.04625	109.2259	GEN336191 1-LITTLE GYPSY UNIT#3
FDNS	00NR_G14_059	2	25SP	G14_059	FROM->TO	GR ISLD-LNX3345.00 - GRAND ISLAND 345KV CKT Z	720	720	0.0467	109.2238	PAHOJA - SIOUX FALLS 230KV CKT 1
FDNS	00NR_G14_059	2	20SP	G14_059	FROM->TO	GR ISLD-LNX3345.00 - GRAND ISLAND 345KV CKT Z	720	720	0.04814	109.2102	ATKINSON - STUART 115KV CKT 1
FDNS	00NR_G14_059	2	20SP	G14_059	FROM->TO	GR ISLD-LNX3345.00 - GRAND ISLAND 345KV CKT Z	720	720	0.04625	109.188	GEN335204 1-NELSON UNIT 4
FDNS	00NR_G14_059	2	20SP	G14_059	FROM->TO	GR ISLD-LNX3345.00 - GRAND ISLAND 345KV CKT Z	720	720	0.04625	109.1809	GEN335614 1-WILLOW GLENN UNIT#4
FDNS	00NR_G14_059	2	20SP	G14_059	FROM->TO	GR ISLD-LNX3345.00 - GRAND ISLAND 345KV CKT Z	720	720	0.04579	109.1796	P12:115:NPPD:WAPA2:HEMINGF7:SNAKECK7:BTB
FDNS	00NR_G14_059	2	20SP	G14_059	FROM->TO	GR ISLD-LNX3345.00 - GRAND ISLAND 345KV CKT Z	720	720	0.04625	109.1793	GEN334441 1-SABINE UNIT 5
FDNS	00NR_G14_059	2	20SP	G14_059	FROM->TO	GR ISLD-LNX3345.00 - GRAND ISLAND 345KV CKT Z	720	720	0.04625	109.1758	GEN336801 1-BAXTER WILSON UNIT #1
FDNS	00NR_G14_059	2	20SP	G14_059	FROM->TO	GR ISLD-LNX3345.00 - GRAND ISLAND 345KV CKT Z	720	720	0.04625	109.1719	GEN336464 1-MICHOUD UNIT #3
FDNS	00NR_G14_059	2	20SP	G14_059	FROM->TO	GR ISLD-LNX3345.00 - GRAND ISLAND 345KV CKT Z	720	720	0.04656	109.1642	NORTH LA CROSSE - NORTH ROCHESTER 345KV CKT 1
FDNS	00NR_G14_059	2	20SP	G14_059	FROM->TO	GR ISLD-LNX3345.00 - GRAND ISLAND 345KV CKT Z	720	720	0.04625	109.1592	GEN542951 5-HAWTHORN UNIT #5
FDNS	00NR_G14_059	2	25SP	G14_059	FROM->TO	GR ISLD-LNX3345.00 - GRAND ISLAND 345KV CKT Z	720	720	0.05423	109.1553	CROOKED CREEK - RIVERDALE 230KV CKT 1
FDNS	00NR_G14_059	2	20SP	G14_059	FROM->TO	GR ISLD-LNX3345.00 - GRAND ISLAND 345KV CKT Z	720	720	0.04625	109.1545	P12:115:UMZW:# 162 #: NEL IN ND. FAULT ON ML-NEL-MX-GA 115 KV
FDNS	00NR_G14_059	2	20SP	G14_059	FROM->TO	GR ISLD-LNX3345.00 - GRAND ISLAND 345KV CKT Z	720	720	0.04625	109.1493	GEN542955 1-LACYGNE UNIT #1
FDNS	00NR_G14_059	2	20SP	G14_059	FROM->TO	GR ISLD-LNX3345.00 - GRAND ISLAND 345KV CKT Z	720	720	0.04639	109.149	KOSSUTH 3 345.00 - WEBSTER 345KV CKT 1
FDNS	00NR_G14_059	2	25SP	G14_059	FROM->TO	GR ISLD-LNX3345.00 - GRAND ISLAND 345KV CKT Z	720	720	0.04718	109.1391	CARPENTER - HURON 230KV CKT 1
FDNS	00NR_G14_059	2	20SP	G14_059	FROM->TO	GR ISLD-LNX3345.00 - GRAND ISLAND 345KV CKT Z	720	720	0.04884	109.1374	BROKEN BOW - CALLAWAY 115KV CKT 1
FDNS	00NR_G14_059	2	20SP	G14_059	FROM->TO	GR ISLD-LNX3345.00 - GRAND ISLAND 345KV CKT Z	720	720	0.04742	109.1356	FT THOMPSON - HURON 230KV CKT 1
FDNS	00NR_G14_059	2	20SP	G14_059	FROM->TO	GR ISLD-LNX3345.00 - GRAND ISLAND 345KV CKT Z	720	720	0.04742	109.1356	FT THOMPSON - HURON 230KV CKT 1
FDNS	00NR_G14_059	2	20SP	G14_059	FROM->TO	GR ISLD-LNX3345.00 - GRAND ISLAND 345KV CKT Z	720	720	0.04742	109.1356	FT THOMPSON - HURON 230KV CKT 2
FDNS	00NR_G14_059	2	20SP	G14_059	FROM->TO	GR ISLD-LNX3345.00 - GRAND ISLAND 345KV CKT Z	720	720	0.04742	109.1356	FT THOMPSON - HURON 230KV CKT 2
FDNS	00NR_G14_059	2	25SP	G14_059	FROM->TO	GR ISLD-LNX3345.00 - GRAND ISLAND 345KV CKT Z	720	720	0.04671	109.1254	BROOKING COUNTY - LYON COUNTY 345KV CKT 1
FDNS	00NR_G14_059	2	20SP	G14_059	FROM->TO	GR ISLD-LNX3345.00 - GRAND ISLAND 345KV CKT Z	720	720	0.04654	109.1188	GLENBORO SOUTH - RUGBY 230KV CKT 1
FDNS	00NR_G14_059	2	20SP	G14_059	FROM->TO	GR ISLD-LNX3345.00 - GRAND ISLAND 345KV CKT Z	720	720	0.04894	109.1055	KEYSTONE - SIDNEY1-LNX3345.00 345KV CKT 1
FDNS	00NR_G14_059	2	25SP	G14_059	FROM->TO	GR ISLD-LNX3345.00 - GRAND ISLAND 345KV CKT Z	720	720	0.04635	109.1027	GEN501801 1-DOLET HILLS UNIT1
FDNS	00NR_G14_059	2	20SP	G14_059	FROM->TO	GR ISLD-LNX3345.00 - GRAND ISLAND 345KV CKT Z	720	720	0.04625	109.0879	GEN334433 1-SABINE UNIT 3
FDNS	00NR_G14_059	2	20SP	G14_059	FROM->TO	GR ISLD-LNX3345.00 - GRAND ISLAND 345KV CKT Z	720	720	0.04814	109.0788	ATKINSON - EMMET 115KV CKT 1
FDNS	00NR_G14_059	2	20SP	G14_059	FROM->TO	GR ISLD-LNX3345.00 - GRAND ISLAND 345KV CKT Z	720	720	0.04636	109.0775	GAVINS POINT - HARTINGTON 115KV CKT 1
FDNS	00NR_G14_059	2	25SP	G14_059	FROM->TO	GR ISLD-LNX3345.00 - GRAND ISLAND 345KV CKT Z	720	720	0.04718	109.0707	HURON - WATERTOWN 230KV CKT 2
FDNS	00NR_G14_059	2	25SP	G14_059	FROM->TO	GR ISLD-LNX3345.00 - GRAND ISLAND 345KV CKT Z	720	720	0.04718	109.0707	HURON - WATERTOWN 230KV CKT 2

SOLUTION	GROUP	SCENARIO	SEASON	SOURCE	DIRECTION	MONITORED ELEMENT	RATEA (MVA)	RATEB(MVA)	TDF	TC%LOADING (% MVA)	CONTINGENCY
FDNS	00NR_G14_059	2	20SP	G14_059	FROM->TO	GR ISLD-LNX3345.00 - GRAND ISLAND 345KV CKT Z	720	720	0.04723	109.0663	CLEARWATER - NELIGH 115KV CKT 1
FDNS	00NR_G14_059	2	25SP	G14_059	FROM->TO	GR ISLD-LNX3345.00 - GRAND ISLAND 345KV CKT Z	720	720	0.04635	109.0572	GEN336252 1-NINEMILE POINT UNIT#5
FDNS	00NR_G14_059	2	25SP	G14_059	FROM->TO	GR ISLD-LNX3345.00 - GRAND ISLAND 345KV CKT Z	720	720	0.04786	109.0551	FT THOMPSON - WESSINGTON 230KV CKT 1
FDNS	00NR_G14_059	2	25SP	G14_059	FROM->TO	GR ISLD-LNX3345.00 - GRAND ISLAND 345KV CKT Z	720	720	0.04786	109.0551	FT THOMPSON - WESSINGTON 230KV CKT 1
FDNS	00NR_G14_059	2	20SP	G14_059	FROM->TO	GR ISLD-LNX3345.00 - GRAND ISLAND 345KV CKT Z	720	720	0.04625	109.0501	GEN336222 1-LITTLE GYPSY UNIT#2
FDNS	00NR_G14_059	2	20SP	G14_059	FROM->TO	GR ISLD-LNX3345.00 - GRAND ISLAND 345KV CKT Z	720	720	0.04894	109.0498	SIDNEY - SIDNEY1-LNX3345.00 345KV CKT Z
FDNS	00NR_G14_059	2	20SP	G14_059	FROM->TO	GR ISLD-LNX3345.00 - GRAND ISLAND 345KV CKT Z	720	720	0.04625	109.0486	GEN542956 2-LACYGNE UNIT #2
FDNS	00NR_G14_059	2	25SP	G14_059	FROM->TO	GR ISLD-LNX3345.00 - GRAND ISLAND 345KV CKT Z	720	720	0.04635	109.0386	GEN542962 2-IATAN UNIT #2
FDNS	00NR_G14_059	2	25SP	G14_059	FROM->TO	GR ISLD-LNX3345.00 - GRAND ISLAND 345KV CKT Z	720	720	0.04718	109.0384	CARPENTER - WATERTOWN 230KV CKT 1
FDNS	00NR_G14_059	2	25SP	G14_059	FROM->TO	GR ISLD-LNX3345.00 - GRAND ISLAND 345KV CKT Z	720	720	0.04718	109.0384	CARPENTER - WATERTOWN 230KV CKT 1
FDNS	00NR_G14_059	2	25SP	G14_059	FROM->TO	GR ISLD-LNX3345.00 - GRAND ISLAND 345KV CKT Z	720	720	0.04672	109.0373	AS KING - EAU CLAIRE 345KV CKT 1
FDNS	00NR_G14_059	2	20SP	G14_059	FROM->TO	GR ISLD-LNX3345.00 - GRAND ISLAND 345KV CKT Z	720	720	0.04521	109.0357	SIDNEY - STEGALL 345KV CKT 1
FDNS	00NR_G14_059	2	20SP	G14_059	FROM->TO	GR ISLD-LNX3345.00 - GRAND ISLAND 345KV CKT Z	720	720	0.0467	109.0275	NMA B3 345 345.00 - NORTH LA CROSSE 345KV CKT 1
FDNS	00NR_G14_059	2	25SP	G14_059	FROM->TO	GR ISLD-LNX3345.00 - GRAND ISLAND 345KV CKT Z	720	720	0.04635	109.0254	GEN532751 1-WOLF CREEK GENERATING STATION UNIT 1
FDNS	00NR_G14_059	2	20SP	G14_059	FROM->TO	GR ISLD-LNX3345.00 - GRAND ISLAND 345KV CKT Z	720	720	0.04053	109.0223	NUNDRWD - WAYSIDE 230KV CKT 1
FDNS	00NR_G14_059	2	20SP	G14_059	FROM->TO	GR ISLD-LNX3345.00 - GRAND ISLAND 345KV CKT Z	720	720	0.04603	109.0193	P12:115:NPPD:WAPA6:FTRANDL7:ONEILL 7:BTB
FDNS	00NR_G14_059	2	20SP	G14_059	FROM->TO	GR ISLD-LNX3345.00 - GRAND ISLAND 345KV CKT Z	720	720	0.04603	109.0193	P12:115:UMZB:# 115 #: SE IN NE. FR-SE-ON
FDNS	00NR_G14_059	2	20SP	G14_059	FROM->TO	GR ISLD-LNX3345.00 - GRAND ISLAND 345KV CKT Z	720	720	0.04664	109.0188	WINNER - WITTEN 115KV CKT 1
FDNS	00NR_G14_059	2	20SP	G14_059	FROM->TO	GR ISLD-LNX3345.00 - GRAND ISLAND 345KV CKT Z	720	720	0.04625	109.0158	GEN336151 1-WATERFORD UNIT#1
FDNS	00NR_G14_059	2	20SP	G14_059	FROM->TO	GR ISLD-LNX3345.00 - GRAND ISLAND 345KV CKT Z	720	720	0.04625	109.0158	GEN336152 1-WATERFORD UNIT#2
FDNS	00NR_G14_059	2	25SP	G14_059	FROM->TO	GR ISLD-LNX3345.00 - GRAND ISLAND 345KV CKT Z	720	720	0.04698	109.0119	HAZLETON - MITCHLCO3 345.00 345KV CKT 1
FDNS	00NR_G14_059	2	25SP	G14_059	FROM->TO	GR ISLD-LNX3345.00 - GRAND ISLAND 345KV CKT Z	720	720	0.04635	109.0036	GEN336251 1-NINEMILE POINT UNIT#4
FDNS	00NR_G14_059	2	20SP	G14_059	FROM->TO	GR ISLD-LNX3345.00 - GRAND ISLAND 345KV CKT Z	720	720	0.04633	108.9997	CENTER - COYOTE 345KV CKT 1
FDNS	00NR_G14_059	2	25SP	G14_059	FROM->TO	GR ISLD-LNX3345.00 - GRAND ISLAND 345KV CKT Z	720	720	0.0443	108.9967	STAPLETON - THEDFORD 115KV CKT 1
FDNS	00NR_G14_059	2	20SP	G14_059	FROM->TO	GR ISLD-LNX3345.00 - GRAND ISLAND 345KV CKT Z	720	720	0.04625	108.9939	P13:230-345:NPPD:NUCOR-1
FDNS	00NR_G14_059	2	20SP	G14_059	FROM->TO	GR ISLD-LNX3345.00 - GRAND ISLAND 345KV CKT Z	720	720	0.04842	108.9918	AINSWORTH - AINSWORTH 115KV CKT 1
FDNS	00NR_G14_059	2	20SP	G14_059	FROM->TO	GR ISLD-LNX3345.00 - GRAND ISLAND 345KV CKT Z	720	720	0.04625	108.9913	P13:115-230:NPPD:NUCOR-3
FDNS	00NR_G14_059	2	20SP	G14_059	FROM->TO	GR ISLD-LNX3345.00 - GRAND ISLAND 345KV CKT Z	720	720	0.04628	108.9845	MENNO JCT - TRIPP JCT 115KV CKT 1
FDNS	00NR_G14_059	2	25SP	G14_059	FROM->TO	GR ISLD-LNX3345.00 - GRAND ISLAND 345KV CKT Z	720	720	0.04647	108.9837	CNTSHNT3 345.00 - PRAIRIE3 345.00 345KV CKT 1
FDNS	00NR_G14_059	2	25SP	G14_059	FROM->TO	GR ISLD-LNX3345.00 - GRAND ISLAND 345KV CKT Z	720	720	0.04635	108.9803	GEN336831 1-BAXTER WILSON SES
FDNS	00NR_G14_059	2	20SP	G14_059	FROM->TO	GR ISLD-LNX3345.00 - GRAND ISLAND 345KV CKT Z	720	720	0.04689	108.9731	ADAMS - MITCHLCO3 345.00 345KV CKT 1
FDNS	00NR_G14_059	2	20SP	G14_059	FROM->TO	GR ISLD-LNX3345.00 - GRAND ISLAND 345KV CKT Z	720	720	0.04625	108.9669	GEN303007 1-1BC2 U2
FDNS	00NR_G14_059	2	25SP	G14_059	FROM->TO	GR ISLD-LNX3345.00 - GRAND ISLAND 345KV CKT Z	720	720	0.04671	108.9654	ALEXMRES3 345.00 - BISON 3 345.00 345KV CKT 1
FDNS	00NR_G14_059	2	20SP	G14_059	FROM->TO	GR ISLD-LNX3345.00 - GRAND ISLAND 345KV CKT Z	720	720	0.04682	108.9646	RAUN - SIOUX CITY 345KV CKT 1
FDNS	00NR_G14_059	2	20SP	G14_059	FROM->TO	GR ISLD-LNX3345.00 - GRAND ISLAND 345KV CKT Z	720	720	0.04682	108.9646	RAUN - SIOUX CITY 345KV CKT 1
FDNS	00NR_G14_059	2	20SP	G14_059	FROM->TO	GR ISLD-LNX3345.00 - GRAND ISLAND 345KV CKT Z	720	720	0.04625	108.9644	GEN303006 1-1BC2 U1
FDNS	00NR_G14_059	2	20SP	G14_059	FROM->TO	GR ISLD-LNX3345.00 - GRAND ISLAND 345KV CKT Z	720	720	0.04625	108.9515	GEN562547 1-G14_039_3 0.6900
FDNS	00NR_G14_059	2	25SP	G14_059	FROM->TO	GR ISLD-LNX3345.00 - GRAND ISLAND 345KV CKT Z	720	720	0.0467	108.9507	EAGLE 4 230.00 - PAHOJA 230KV CKT 1
FDNS	00NR_G14_059	2	20SP	G14_059	FROM->TO	GR ISLD-LNX3345.00 - GRAND ISLAND 345KV CKT Z	720	720	0.04603	108.9469	FT RANDAL - SPENCER 115KV CKT 1
FDNS	00NR_G14_059	2	25SP	G14_059	FROM->TO	GR ISLD-LNX3345.00 - GRAND ISLAND 345KV CKT Z	720	720	0.04635	108.9404	GEN337041 1-GERALD ANDRUS
FDNS	00NR_G14_059	2	20SP	G14_059	FROM->TO	GR ISLD-LNX3345.00 - GRAND ISLAND 345KV CKT Z	720	720	0.04628	108.935	MENNO JCT - UTICA 115KV CKT 1
FDNS	00NR_G14_059	2	20SP	G14_059	FROM->TO	GR ISLD-LNX3345.00 - GRAND ISLAND 345KV CKT Z	720	720	0.04634	108.9316	GARRISON - JAMES TOWN 230KV CKT 1
FDNS	00NR_G14_059	2	20SP	G14_059	FROM->TO	GR ISLD-LNX3345.00 - GRAND ISLAND 345KV CKT Z	720	720	0.04668	108.923	ADAMS - PLEASANT VALLEY 345KV CKT 1
FDNS	00NR_G14_059	2	20SP	G14_059	FROM->TO	GR ISLD-LNX3345.00 - GRAND ISLAND 345KV CKT Z	720	720	0.04629	108.9228	BROOKING COUNTY - BSSOUTH3 345.00 345KV CKT 1
FDNS	00NR_G14_059	2	20SP	G14_059	FROM->TO	GR ISLD-LNX3345.00 - GRAND ISLAND 345KV CKT Z	720	720	0.04625	108.9185	GEN303008 1-1BC2 U3
FDNS	00NR_G14_059	2	25SP	G14_059	FROM->TO	GR ISLD-LNX3345.00 - GRAND ISLAND 345KV CKT Z	720	720	0.04695	108.9178	RASMUSN - UTICA JCT 230KV CKT 1
FDNS	00NR_G14_059	2	20SP	G14_059	FROM->TO	GR ISLD-LNX3345.00 - GRAND ISLAND 345KV CKT Z	720	720	0.04625	108.9154	GEN336170 1-GULF OXY U4
FDNS	00NR_G14_059	2	25SP	G14_059	FROM->TO	GR ISLD-LNX3345.00 - GRAND ISLAND 345KV CKT Z	720	720	0.04635	108.9029	GEN501813 1-RODEMACHER UNIT 3
FDNS	00NR_G14_059	2	25SP	G14_059	FROM->TO	GR ISLD-LNX3345.00 - GRAND ISLAND 345KV CKT Z	720	720	0.04635	108.8743	GEN542957 1-IATAN UNIT #1
FDNS	00NR_G14_059	2	25SP	G14_059	FROM->TO	GR ISLD-LNX3345.00 - GRAND ISLAND 345KV CKT Z	720	720	0.047	108.8738	GRIMES - LEHIGH 345KV CKT 1
FDNS	00NR_G14_059	2	25SP	G14_059	FROM->TO	GR ISLD-LNX3345.00 - GRAND ISLAND 345KV CKT Z	720	720	0.04635	108.866	GEN344897 4-1LAB G4 20.000
FDNS	00NR_G14_059	2	20SP	G14_059	FROM->TO	GR ISLD-LNX3345.00 - GRAND ISLAND 345KV CKT Z	720	720	0.04625	108.8655	GEN636641 1-LOUISA UNIT 1
FDNS	00NR_G14_059	2	25SP	G14_059	FROM->TO	GR ISLD-LNX3345.00 - GRAND ISLAND 345KV CKT Z	720	720	0.04635	108.8651	GEN344894 1-1LAB G1 20.000
FDNS	00NR_G14_059	2	25SP	G14_059	FROM->TO	GR ISLD-LNX3345.00 - GRAND ISLAND 345KV CKT Z	720	720	0.04635	108.865	GEN344895 2-1LAB G2 20.000
FDNS	00NR_G14_059	2	25SP	G14_059	FROM->TO	GR ISLD-LNX3345.00 - GRAND ISLAND 345KV CKT Z	720	720	0.04635	108.8649	GEN344896 3-1LAB G3 20.000
FDNS	00NR_G14_059	2	25SP	G14_059	FROM->TO	GR ISLD-LNX3345.00 - GRAND ISLAND 345KV CKT Z	720	720	0.04636	108.8542	P12:115:NPPD:WAPA4:SIDNEY 7:B.SPRGS7:BTB
FDNS	00NR_G14_059	2	25SP	G14_059	FROM->TO	GR ISLD-LNX3345.00 - GRAND ISLAND 345KV CKT Z	720	720	0.04636	108.8542	P12:115:UMZB:# 119 #: IN NE.
FDNS	00NR_G14_059	2	20SP	G14_059	FROM->TO	GR ISLD-LNX3345.00 - GRAND ISLAND 345KV CKT Z	720	720	0.04419	108.8512	MAXWELL - STAPLETON 115KV CKT 1
FDNS	00NR_G14_059	2	25SP	G14_059	FROM->TO	GR ISLD-LNX3345.00 - GRAND ISLAND 345KV CKT Z	720	720	0.04882	108.8445	JEFFREY - NORTH PLATTE 115KV CKT 1
FDNS	00NR_G14_059	2	25SP	G14_059	FROM->TO	GR ISLD-LNX3345.00 - GRAND ISLAND 345KV CKT Z	720	720	0.04822	108.8429	BASSETT 7115.00 - STUART 115KV CKT 1
FDNS	00NR_G14_059	2	25SP	G14_059	FROM->TO	GR ISLD-LNX3345.00 - GRAND ISLAND 345KV CKT Z	720	720	0.04635	108.8127	GEN345671 2-1RUSH G2 18.000
FDNS	00NR_G14_059	2	25SP	G14_059	FROM->TO	GR ISLD-LNX3345.00 - GRAND ISLAND 345KV CKT Z	720	720	0.04635	108.8098	GEN345670 1-1RUSH G1 18.000
FDNS	00NR_G14_059	2	25SP	G14_059	FROM->TO	GR ISLD-LNX3345.00 - GRAND ISLAND 345KV CKT Z	720	720	0.04635	108.7895	GEN335206 1-NELSON UNIT 6
FDNS	00NR_G14_059	2	25SP	G14_059	FROM->TO	GR ISLD-LNX3345.00 - GRAND ISLAND 345KV CKT Z	720	720	0.04635	108.7859	GEN532652 1-JEFFREY ENERGY CENTER UNIT 2
FDNS	00NR_G14_059	2	25SP	G14_059	FROM->TO	GR ISLD-LNX3345.00 - GRAND ISLAND 345KV CKT Z	720	720	0.04635	108.7858	GEN532653 1-JEFFREY ENERGY CENTER UNIT 3
FDNS	00NR_G14_059	2	25SP	G14_059	FROM->TO	GR ISLD-LNX3345.00 - GRAND ISLAND 345KV CKT Z	720	720	0.04635	108.7849	GEN532651 1-JEFFREY ENERGY CENTER UNIT 1
FDNS	00NR_G14_059	2	25SP	G14_059	FROM->TO	GR ISLD-LNX3345.00 - GRAND ISLAND 345KV CKT Z	720	720	0.04822	108.7846	AINSWORTH - BASSETT 7115.00 115KV CKT 1
FDNS	00NR_G14_059	2	25SP	G14_059	FROM->TO	GR ISLD-LNX3345.00 - GRAND ISLAND 345KV CKT Z	720	720	0.04635	108.7827	GEN629075 1-OTTUMWA GENERATOR FOR OTTUMWA UNIT NO 1
FDNS	00NR_G14_059	2	25SP	G14_059	FROM->TO	GR ISLD-LNX3345.00 - GRAND ISLAND 345KV CKT Z	720	720	0.04732	108.7811	P12:115:NPPD:1164:ONEILL 7:JEFFREY9:BTB
FDNS	00NR_G14_059	2	25SP	G14_059	FROM->TO	GR ISLD-LNX3345.00 - GRAND ISLAND 345KV CKT Z	720	720	0.04635	108.7702	GEN334440 1-SABINE UNIT 4
FDNS	00NR_G14_059	2	25SP	G14_059	FROM->TO	GR ISLD-LNX3345.00 - GRAND ISLAND 345KV CKT Z	720	720	0.04695	108.7653	RASMUSN - SIOUX CITY 230KV CKT 1
FDNS	00NR_G14_059	2	25SP	G14_059	FROM->TO	GR ISLD-LNX3345.00 - GRAND ISLAND 345KV CKT Z	720	720	0.04635	108.7585	GEN645001 1-FORT CALHOUN 1
FDNS	00NR_G14_059	2	25SP	G14_059	FROM->TO	GR ISLD-LNX3345.00 - GRAND ISLAND 345KV CKT Z	720	720	0.04663	108.7567	GLENBORO SOUTH - RUGBY 230KV CKT 1

SOLUTION	GROUP	SCENARIO	SEASON	SOURCE	DIRECTION	MONITORED ELEMENT	RATEA (MVA)	RATEB(MVA)	TDF	TC%LOADING (% MVA)	CONTINGENCY
FDNS	00NR_G14_059	2	25SP	G14_059	FROM->TO	GR ISLD-LNX3345.00 - GRAND ISLAND 345KV CKT Z	720	720	0.04635	108.7552	GEN338388 1-1PLUM PT U1 23.000
FDNS	00NR_G14_059	2	25SP	G14_059	FROM->TO	GR ISLD-LNX3345.00 - GRAND ISLAND 345KV CKT Z	720	720	0.04635	108.7461	GEN642067 1-PLATTE
FDNS	00NR_G14_059	2	25SP	G14_059	FROM->TO	GR ISLD-LNX3345.00 - GRAND ISLAND 345KV CKT Z	720	720	0.04678	108.7392	ARPIN B4 345.00 - EAU CLAIRE 345KV CKT 1
FDNS	00NR_G14_059	2	20SP	G14_059	FROM->TO	GR ISLD-LNX3345.00 - GRAND ISLAND 345KV CKT Z	720	720	0.04644	108.7376	AXTELL - SWEETWATER 345KV CKT 1
FDNS	00NR_G14_059	2	25SP	G14_059	FROM->TO	GR ISLD-LNX3345.00 - GRAND ISLAND 345KV CKT Z	720	720	0.05207	108.7338	HOLCOMB - SETAB 345KV CKT 1
FDNS	00NR_G14_059	2	25SP	G14_059	FROM->TO	GR ISLD-LNX3345.00 - GRAND ISLAND 345KV CKT Z	720	720	0.05207	108.7338	HOLCOMB - SETAB 345KV CKT 1
FDNS	00NR_G14_059	2	25SP	G14_059	FROM->TO	GR ISLD-LNX3345.00 - GRAND ISLAND 345KV CKT Z	720	720	0.04732	108.7074	CLEARWATER - ONEILL 115KV CKT 1
FDNS	00NR_G14_059	2	25SP	G14_059	FROM->TO	GR ISLD-LNX3345.00 - GRAND ISLAND 345KV CKT Z	720	720	0.04822	108.703	ATKINSON - STUART 115KV CKT 1
FDNS	00NR_G14_059	2	25SP	G14_059	FROM->TO	GR ISLD-LNX3345.00 - GRAND ISLAND 345KV CKT Z	720	720	0.04635	108.7003	GEN501812 1-RODEMACHER UNIT 2
FDNS	00NR_G14_059	2	25SP	G14_059	FROM->TO	GR ISLD-LNX3345.00 - GRAND ISLAND 345KV CKT Z	720	720	0.04649	108.6989	KOSSUTH 3 345.00 - WEBSTER 345KV CKT 1
FDNS	00NR_G14_059	2	25SP	G14_059	FROM->TO	GR ISLD-LNX3345.00 - GRAND ISLAND 345KV CKT Z	720	720	0.04635	108.6962	GEN336191 1-LITTLE GYPSY UNIT#3
FDNS	00NR_G14_059	2	25SP	G14_059	FROM->TO	GR ISLD-LNX3345.00 - GRAND ISLAND 345KV CKT Z	720	720	0.04905	108.6916	KEYSTONE - SIDNEY1-LNX3345.00 345KV CKT 1
FDNS	00NR_G14_059	2	25SP	G14_059	FROM->TO	GR ISLD-LNX3345.00 - GRAND ISLAND 345KV CKT Z	720	720	0.04588	108.6766	P12:115:NPPD:WAPA2:HEMINGF7:SNAKECK7:BTB
FDNS	00NR_G14_059	2	25SP	G14_059	FROM->TO	GR ISLD-LNX3345.00 - GRAND ISLAND 345KV CKT Z	720	720	0.04635	108.67	P12:115:UMZW:# 162 #: NEL IN ND. FAULT ON ML-NEL-MX-GA 115 KV
FDNS	00NR_G14_059	2	25SP	G14_059	FROM->TO	GR ISLD-LNX3345.00 - GRAND ISLAND 345KV CKT Z	720	720	0.04635	108.642	GEN335614 1-WILLOW GLENN UNIT#4
FDNS	00NR_G14_059	2	25SP	G14_059	FROM->TO	GR ISLD-LNX3345.00 - GRAND ISLAND 345KV CKT Z	720	720	0.04635	108.64	GEN336801 1-BAXTER WILSON UNIT #1
FDNS	00NR_G14_059	2	25SP	G14_059	FROM->TO	GR ISLD-LNX3345.00 - GRAND ISLAND 345KV CKT Z	720	720	0.04635	108.6356	GEN542951 5-HAWTHORN UNIT #5
FDNS	00NR_G14_059	2	25SP	G14_059	FROM->TO	GR ISLD-LNX3345.00 - GRAND ISLAND 345KV CKT Z	720	720	0.04635	108.6355	GEN542955 1-LACYGNE UNIT #1
FDNS	00NR_G14_059	2	25SP	G14_059	FROM->TO	GR ISLD-LNX3345.00 - GRAND ISLAND 345KV CKT Z	720	720	0.04635	108.6326	GEN336464 1-MICHOUD UNIT #3
FDNS	00NR_G14_059	2	25SP	G14_059	FROM->TO	GR ISLD-LNX3345.00 - GRAND ISLAND 345KV CKT Z	720	720	0.04635	108.6218	GEN334441 1-SABINE UNIT 5
FDNS	00NR_G14_059	2	25SP	G14_059	FROM->TO	GR ISLD-LNX3345.00 - GRAND ISLAND 345KV CKT Z	720	720	0.04635	108.6158	GEN335204 1-NELSON UNIT 4
FDNS	00NR_G14_059	2	25SP	G14_059	FROM->TO	GR ISLD-LNX3345.00 - GRAND ISLAND 345KV CKT Z	720	720	0.04751	108.6151	FT THOMPSON - HURON 230KV CKT 1
FDNS	00NR_G14_059	2	25SP	G14_059	FROM->TO	GR ISLD-LNX3345.00 - GRAND ISLAND 345KV CKT Z	720	720	0.04751	108.6151	FT THOMPSON - HURON 230KV CKT 1
FDNS	00NR_G14_059	2	25SP	G14_059	FROM->TO	GR ISLD-LNX3345.00 - GRAND ISLAND 345KV CKT Z	720	720	0.04751	108.6151	FT THOMPSON - HURON 230KV CKT 2
FDNS	00NR_G14_059	2	25SP	G14_059	FROM->TO	GR ISLD-LNX3345.00 - GRAND ISLAND 345KV CKT Z	720	720	0.04751	108.6151	FT THOMPSON - HURON 230KV CKT 2
FDNS	00NR_G14_059	2	25SP	G14_059	FROM->TO	GR ISLD-LNX3345.00 - GRAND ISLAND 345KV CKT Z	720	720	0.04892	108.5894	BROKEN BOW - CALLAWAY 115KV CKT 1
FDNS	00NR_G14_059	2	25SP	G14_059	FROM->TO	GR ISLD-LNX3345.00 - GRAND ISLAND 345KV CKT Z	720	720	0.04905	108.5884	SIDNEY - SIDNEY1-LNX3345.00 345KV CKT Z
FDNS	00NR_G14_059	2	25SP	G14_059	FROM->TO	GR ISLD-LNX3345.00 - GRAND ISLAND 345KV CKT Z	720	720	0.04851	108.572	AINSWORTH - AINSWORTH 115KV CKT 1
FDNS	00NR_G14_059	2	25SP	G14_059	FROM->TO	GR ISLD-LNX3345.00 - GRAND ISLAND 345KV CKT Z	720	720	0.04663	108.5627	NORTH LA CROSSE - NORTH ROCHESTER 345KV CKT 1
FDNS	00NR_G14_059	2	25SP	G14_059	FROM->TO	GR ISLD-LNX3345.00 - GRAND ISLAND 345KV CKT Z	720	720	0.04654	108.5562	AXTELL - SWEETWATER 345KV CKT 1
FDNS	00NR_G14_059	2	25SP	G14_059	FROM->TO	GR ISLD-LNX3345.00 - GRAND ISLAND 345KV CKT Z	720	720	0.04635	108.5253	GEN334433 1-SABINE UNIT 3
FDNS	00NR_G14_059	2	25SP	G14_059	FROM->TO	GR ISLD-LNX3345.00 - GRAND ISLAND 345KV CKT Z	720	720	0.04645	108.5249	GAVINS POINT - HARTINGTON 115KV CKT 1
FDNS	00NR_G14_059	2	25SP	G14_059	FROM->TO	GR ISLD-LNX3345.00 - GRAND ISLAND 345KV CKT Z	720	720	0.04613	108.5204	P12:115:NPPD:WAPA6:FTRANDL7:ONEILL 7:BTB
FDNS	00NR_G14_059	2	25SP	G14_059	FROM->TO	GR ISLD-LNX3345.00 - GRAND ISLAND 345KV CKT Z	720	720	0.04613	108.5204	P12:115:UMZB:# 115 #: SE IN NE. FR-SE-ON
FDNS	00NR_G14_059	2	25SP	G14_059	FROM->TO	GR ISLD-LNX3345.00 - GRAND ISLAND 345KV CKT Z	720	720	0.04698	108.5194	ADAMS - MITCHLCO3 345.00 345KV CKT 1
FDNS	00NR_G14_059	2	25SP	G14_059	FROM->TO	GR ISLD-LNX3345.00 - GRAND ISLAND 345KV CKT Z	720	720	0.04822	108.5017	ATKINSON - EMMET 115KV CKT 1
FDNS	00NR_G14_059	2	25SP	G14_059	FROM->TO	GR ISLD-LNX3345.00 - GRAND ISLAND 345KV CKT Z	720	720	0.04673	108.4977	WINNER - WITTEN 115KV CKT 1
FDNS	00NR_G14_059	2	25SP	G14_059	FROM->TO	GR ISLD-LNX3345.00 - GRAND ISLAND 345KV CKT Z	720	720	0.04635	108.4909	GEN336222 1-LITTLE GYPSY UNIT#2
FDNS	00NR_G14_059	2	25SP	G14_059	FROM->TO	GR ISLD-LNX3345.00 - GRAND ISLAND 345KV CKT Z	720	720	0.04642	108.4898	CENTER - COYOTE 345KV CKT 1
FDNS	00NR_G14_059	2	25SP	G14_059	FROM->TO	GR ISLD-LNX3345.00 - GRAND ISLAND 345KV CKT Z	720	720	0.04531	108.4815	SIDNEY - STEGALL 345KV CKT 1
FDNS	00NR_G14_059	2	25SP	G14_059	FROM->TO	GR ISLD-LNX3345.00 - GRAND ISLAND 345KV CKT Z	720	720	0.04063	108.4801	NUNDRWD - WAYSIDE 230KV CKT 1
FDNS	00NR_G14_059	2	25SP	G14_059	FROM->TO	GR ISLD-LNX3345.00 - GRAND ISLAND 345KV CKT Z	720	720	0.04635	108.4521	GEN336151 1-WATERFORD UNIT#1
FDNS	00NR_G14_059	2	25SP	G14_059	FROM->TO	GR ISLD-LNX3345.00 - GRAND ISLAND 345KV CKT Z	720	720	0.04635	108.4521	GEN336152 1-WATERFORD UNIT#2
FDNS	00NR_G14_059	2	25SP	G14_059	FROM->TO	GR ISLD-LNX3345.00 - GRAND ISLAND 345KV CKT Z	720	720	0.04635	108.4473	P13:115-230:NPPD:NUCOR-3
FDNS	00NR_G14_059	2	25SP	G14_059	FROM->TO	GR ISLD-LNX3345.00 - GRAND ISLAND 345KV CKT Z	720	720	0.04635	108.441	P13:230-345:NPPD:NUCOR-1
FDNS	00NR_G14_059	2	25SP	G14_059	FROM->TO	GR ISLD-LNX3345.00 - GRAND ISLAND 345KV CKT Z	720	720	0.04638	108.4216	MENNO JCT - TRIPP JCT 115KV CKT 1
FDNS	00NR_G14_059	2	25SP	G14_059	FROM->TO	GR ISLD-LNX3345.00 - GRAND ISLAND 345KV CKT Z	720	720	0.04678	108.4175	ADAMS - PLEASANT VALLEY 345KV CKT 1
FDNS	00NR_G14_059	2	25SP	G14_059	FROM->TO	GR ISLD-LNX3345.00 - GRAND ISLAND 345KV CKT Z	720	720	0.04635	108.3945	GEN562547 1-G14_039_3 0.6900
FDNS	00NR_G14_059	2	25SP	G14_059	FROM->TO	GR ISLD-LNX3345.00 - GRAND ISLAND 345KV CKT Z	720	720	0.04656	108.3859	APPLEDORN 4 230.00 - GRANITE FALLS 230KV CKT 1
FDNS	00NR_G14_059	2	25SP	G14_059	FROM->TO	GR ISLD-LNX3345.00 - GRAND ISLAND 345KV CKT Z	720	720	0.04656	108.3859	APPLEDORN 4 230.00 - GRANITE FALLS 230KV CKT 1
FDNS	00NR_G14_059	2	25SP	G14_059	FROM->TO	GR ISLD-LNX3345.00 - GRAND ISLAND 345KV CKT Z	720	720	0.04675	108.3843	NMA B3 345 345.00 - NORTH LA CROSSE 345KV CKT 1
FDNS	00NR_G14_059	2	25SP	G14_059	FROM->TO	GR ISLD-LNX3345.00 - GRAND ISLAND 345KV CKT Z	720	720	0.04732	108.383	CLEARWATER - NELIGH 115KV CKT 1
FDNS	00NR_G14_059	2	25SP	G14_059	FROM->TO	GR ISLD-LNX3345.00 - GRAND ISLAND 345KV CKT Z	720	720	0.04638	108.3604	MENNO JCT - UTICA 115KV CKT 1
FDNS	00NR_G14_059	2	25SP	G14_059	FROM->TO	GR ISLD-LNX3345.00 - GRAND ISLAND 345KV CKT Z	720	720	0.04635	108.3481	GEN336170 1-GULF OXY U4
FDNS	00NR_G14_059	2	25SP	G14_059	FROM->TO	GR ISLD-LNX3345.00 - GRAND ISLAND 345KV CKT Z	720	720	0.04673	108.3448	GREGORY - WINNER 115KV CKT 1
FDNS	00NR_G14_059	2	25SP	G14_059	FROM->TO	GR ISLD-LNX3345.00 - GRAND ISLAND 345KV CKT Z	720	720	0.04635	108.34	P13:115-345:NPPD:NUCOR-2
FDNS	00NR_G14_059	2	25SP	G14_059	FROM->TO	GR ISLD-LNX3345.00 - GRAND ISLAND 345KV CKT Z	720	720	0.04673	108.3382	P12:115:UMZW:# 172 #: WI IN SD.
FDNS	00NR_G14_059	2	25SP	G14_059	FROM->TO	GR ISLD-LNX3345.00 - GRAND ISLAND 345KV CKT Z	720	720	0.04638	108.325	P12:115:UMZZ:# 237 #: MEN IN SD. MENNO JUNCTION IS A TAP (UJ-MEN-TP).
FDNS	00NR_G14_059	2	25SP	G14_059	FROM->TO	GR ISLD-LNX3345.00 - GRAND ISLAND 345KV CKT Z	720	720	0.0443	108.3172	MAXWELL - STAPLETON 115KV CKT 1
FDNS	00NR_G14_059	2	25SP	G14_059	FROM->TO	GR ISLD-LNX3345.00 - GRAND ISLAND 345KV CKT Z	720	720	0.04664	108.3141	HUNTLEY3 345.00 - LEDYARD3 345.00 345KV CKT 1
FDNS	00NR_G14_059	2	20SP	G14_059	FROM->TO	GR ISLD-LNX3345.00 - GRAND ISLAND 345KV CKT Z	720	720	0.04625	108.314	1303-KEARNEY
FDNS	00NR_G14_059	2	20SP	G14_059	FROM->TO	GR ISLD-LNX3345.00 - GRAND ISLAND 345KV CKT Z	720	720	0.04625	108.314	BASE CASE
FDNS	00NR_G14_059	2	25SP	G14_059	FROM->TO	GR ISLD-LNX3345.00 - GRAND ISLAND 345KV CKT Z	720	720	0.04661	108.311	DENISON - SIOUX CITY 230KV CKT 1
FDNS	00NR_G14_059	2	25SP	G14_059	FROM->TO	GR ISLD-LNX3345.00 - GRAND ISLAND 345KV CKT Z	720	720	0.04635	108.2812	GEN501811 1-RODEMACHER UNIT 1
FDNS	00NR_G14_059	2	25SP	G14_059	FROM->TO	GR ISLD-LNX3345.00 - GRAND ISLAND 345KV CKT Z	720	720	0.04645	108.2749	BISMARK - JAMES TOWN 230KV CKT 1
FDNS	00NR_G14_059	2	25SP	G14_059	FROM->TO	GR ISLD-LNX3345.00 - GRAND ISLAND 345KV CKT Z	720	720	0.04635	108.2445	GEN334070 1-LEWIS CREEK 1
FDNS	00NR_G14_059	2	25SP	G14_059	FROM->TO	GR ISLD-LNX3345.00 - GRAND ISLAND 345KV CKT Z	720	720	0.04635	108.2445	GEN334071 1-LEWIS CREEK 2
FDNS	00NR_G14_059	2	20SP	G14_059	FROM->TO	GR ISLD-LNX3345.00 - GRAND ISLAND 345KV CKT Z	720	720	0.045	108.1526	MOORE - PAULINE 345KV CKT 1
FDNS	00NR_G14_059	2	20SP	G14_059	FROM->TO	GR ISLD-LNX3345.00 - GRAND ISLAND 345KV CKT Z	720	720	0.04536	108.1158	KELLY - SHELL CREEK 230KV CKT 1
FDNS	00NR_G14_059	2	20SP	G14_059	FROM->TO	GR ISLD-LNX3345.00 - GRAND ISLAND 345KV CKT Z	720	720	0.04536	108.107	SHELL CREEK (SHELLCREEKT1) 345/230/13.8KV TRANSFORMER CKT 1
FDNS	00NR_G14_059	2	20SP	G14_059	FROM->TO	GR ISLD-LNX3345.00 - GRAND ISLAND 345KV CKT Z	720	720	0.04536	108.107	SHELL CREEK (SHELLCREEKT1) 345/230/13.8KV TRANSFORMER CKT 1
FDNS	00NR_G14_059	2	20SP	G14_059	FROM->TO	GR ISLD-LNX3345.00 - GRAND ISLAND 345KV CKT Z	720	720	0.04203	108.0732	COOPER - MOORE 345KV CKT 1
FDNS	00NR_G14_059	2	20SP	G14_059	FROM->TO	GR ISLD-LNX3345.00 - GRAND ISLAND 345KV CKT Z	720	720	0.04639	108.021	SUB 3455 - SUB 3740 345KV CKT 1

SOLUTION	GROUP	SCENARIO	SEASON	SOURCE	DIRECTION	MONITORED ELEMENT	RATEA (MVA)	RATEB(MVA)	TDF	TC%LOADING (% MVA)	CONTINGENCY
FDNS	00NR_G14_059	2	20SP	G14_059	FROM->TO	GR ISLD-LNX3345.00 - GRAND ISLAND 345KV CKT Z	720	720	0.04639	108.021	SUB 3455 - SUB 3740 345KV CKT 1
FDNS	00NR_G14_059	2	20SP	G14_059	FROM->TO	GR ISLD-LNX3345.00 - GRAND ISLAND 345KV CKT Z	720	720	0.04364	107.9653	103RD & ROKEBY - MOORE 345KV CKT 1
FDNS	00NR_G14_059	2	20SP	G14_059	FROM->TO	GR ISLD-LNX3345.00 - GRAND ISLAND 345KV CKT Z	720	720	0.04364	107.9653	103RD & ROKEBY - MOORE 345KV CKT 1
FDNS	00NR_G14_059	2	20SP	G14_059	FROM->TO	GR ISLD-LNX3345.00 - GRAND ISLAND 345KV CKT Z	720	720	0.04568	107.9589	AURORA - GRAND ISLAND 115KV CKT 1
FDNS	00NR_G14_059	2	20SP	G14_059	FROM->TO	GR ISLD-LNX3345.00 - GRAND ISLAND 345KV CKT Z	720	720	0.04578	107.9558	MOORE - NW68TH & HOLDREGE 345KV CKT 1
FDNS	00NR_G14_059	2	20SP	G14_059	FROM->TO	GR ISLD-LNX3345.00 - GRAND ISLAND 345KV CKT Z	720	720	0.04578	107.9558	MOORE - NW68TH & HOLDREGE 345KV CKT 1
FDNS	00NR_G14_059	2	20SP	G14_059	FROM->TO	GR ISLD-LNX3345.00 - GRAND ISLAND 345KV CKT Z	720	720	0.04727	107.9484	LOUP CITY - ST LIBORY 115KV CKT 1
FDNS	00NR_G14_059	2	20SP	G14_059	FROM->TO	GR ISLD-LNX3345.00 - GRAND ISLAND 345KV CKT Z	720	720	0.04596	107.9409	MISSION - WITTEN 115KV CKT 1
FDNS	00NR_G14_059	2	20SP	G14_059	FROM->TO	GR ISLD-LNX3345.00 - GRAND ISLAND 345KV CKT Z	720	720	0.03891	107.9258	COLUMWEST - KELLY 230KV CKT 1
FDNS	00NR_G14_059	2	20SP	G14_059	FROM->TO	GR ISLD-LNX3345.00 - GRAND ISLAND 345KV CKT Z	720	720	0.04507	107.8964	CENTRAL CITY - CLARKS 115KV CKT 1
FDNS	00NR_G14_059	2	20SP	G14_059	FROM->TO	GR ISLD-LNX3345.00 - GRAND ISLAND 345KV CKT Z	720	720	0.04627	107.844	P12:345:UMZB:# 103 #: BD IN SD. LOSS OF LINE
FDNS	00NR_G14_059	2	20SP	G14_059	FROM->TO	GR ISLD-LNX3345.00 - GRAND ISLAND 345KV CKT Z	720	720	0.04627	107.8417	BRDLAND-LNX3345.00 - HURON 345KV CKT Z
FDNS	00NR_G14_059	2	20SP	G14_059	FROM->TO	GR ISLD-LNX3345.00 - GRAND ISLAND 345KV CKT Z	720	720	0.04627	107.8414	HURON (BD KU2A) 345/230/13.8KV TRANSFORMER CKT 1
FDNS	00NR_G14_059	2	20SP	G14_059	FROM->TO	GR ISLD-LNX3345.00 - GRAND ISLAND 345KV CKT Z	720	720	0.04627	107.8414	HURON (BD KU2A) 345/230/13.8KV TRANSFORMER CKT 1
FDNS	00NR_G14_059	2	20SP	G14_059	FROM->TO	GR ISLD-LNX3345.00 - GRAND ISLAND 345KV CKT Z	720	720	0.04627	107.8413	BROADLAND - HURON 230KV CKT 1
FDNS	00NR_G14_059	2	20SP	G14_059	FROM->TO	GR ISLD-LNX3345.00 - GRAND ISLAND 345KV CKT Z	720	720	0.04627	107.8412	P12:345:UMZB:# 102 #: AVS BD IN ND. AVS BRD LR
FDNS	00NR_G14_059	2	20SP	G14_059	FROM->TO	GR ISLD-LNX3345.00 - GRAND ISLAND 345KV CKT Z	720	720	0.04625	107.8219	G830_SUB 115.00 - GRE-MCHENRY7115.00 115KV CKT 1
FDNS	00NR_G14_059	2	20SP	G14_059	FROM->TO	GR ISLD-LNX3345.00 - GRAND ISLAND 345KV CKT Z	720	720	0.04625	107.8189	G830_SUB 115.00 115/34.5KV TRANSFORMER CKT 1
FDNS	00NR_G14_059	2	20SP	G14_059	FROM->TO	GR ISLD-LNX3345.00 - GRAND ISLAND 345KV CKT Z	720	720	0.04625	107.8152	GEN620324 3-HOOT LAKE 3 GEN
FDNS	00NR_G14_059	2	20SP	G14_059	FROM->TO	GR ISLD-LNX3345.00 - GRAND ISLAND 345KV CKT Z	720	720	0.04709	107.8125	P12:230:UMZB:# 114 #: SB IN SD. SB-WK-GH
FDNS	00NR_G14_059	2	20SP	G14_059	FROM->TO	GR ISLD-LNX3345.00 - GRAND ISLAND 345KV CKT Z	720	720	0.04709	107.8125	P12:230:UMZB:# 117 #: WK IN SD. SB-WK-GH
FDNS	00NR_G14_059	2	20SP	G14_059	FROM->TO	GR ISLD-LNX3345.00 - GRAND ISLAND 345KV CKT Z	720	720	0.04625	107.8106	GEN652414 4-FT PECK
FDNS	00NR_G14_059	2	20SP	G14_059	FROM->TO	GR ISLD-LNX3345.00 - GRAND ISLAND 345KV CKT Z	720	720	0.04625	107.8106	GEN652415 5-FT PECK
FDNS	00NR_G14_059	2	20SP	G14_059	FROM->TO	GR ISLD-LNX3345.00 - GRAND ISLAND 345KV CKT Z	720	720	0.04625	107.8058	GEN600050 1-FEP
FDNS	00NR_G14_059	2	20SP	G14_059	FROM->TO	GR ISLD-LNX3345.00 - GRAND ISLAND 345KV CKT Z	720	720	0.04581	107.8009	FALLOW 3 345.00 - GRIMES 345KV CKT 1
FDNS	00NR_G14_059	2	20SP	G14_059	FROM->TO	GR ISLD-LNX3345.00 - GRAND ISLAND 345KV CKT Z	720	720	0.04625	107.8003	GEN 11104 1-J262_GEN 0.6000
FDNS	00NR_G14_059	2	20SP	G14_059	FROM->TO	GR ISLD-LNX3345.00 - GRAND ISLAND 345KV CKT Z	720	720	0.04625	107.8003	GEN 11108 1-J263_GEN 0.6000
FDNS	00NR_G14_059	2	20SP	G14_059	FROM->TO	GR ISLD-LNX3345.00 - GRAND ISLAND 345KV CKT Z	720	720	0.04625	107.7977	GEN600047 1-MECCT1
FDNS	00NR_G14_059	2	20SP	G14_059	FROM->TO	GR ISLD-LNX3345.00 - GRAND ISLAND 345KV CKT Z	720	720	0.04709	107.7811	GLENHAM - WHITLOK 230KV CKT 1
FDNS	00NR_G14_059	2	25SP	G14_059	FROM->TO	GR ISLD-LNX3345.00 - GRAND ISLAND 345KV CKT Z	720	720	0.04635	107.7753	BASE CASE
FDNS	00NR_G14_059	2	20SP	G14_059	FROM->TO	GR ISLD-LNX3345.00 - GRAND ISLAND 345KV CKT Z	720	720	0.04548	107.7703	COOPER - FAIRPORT 345KV CKT 1
FDNS	00NR_G14_059	2	20SP	G14_059	FROM->TO	GR ISLD-LNX3345.00 - GRAND ISLAND 345KV CKT Z	720	720	0.04625	107.7679	GEN660001 2-ABERDEEN SIEBRECHT
FDNS	00NR_G14_059	2	20SP	G14_059	FROM->TO	GR ISLD-LNX3345.00 - GRAND ISLAND 345KV CKT Z	720	720	0.04625	107.7654	GEN660003 3-HURON WEST PARK
FDNS	00NR_G14_059	2	20SP	G14_059	FROM->TO	GR ISLD-LNX3345.00 - GRAND ISLAND 345KV CKT Z	720	720	0.04522	107.7631	POST ROCK (POSTROCK T1) 345/230/13.8KV TRANSFORMER CKT 1
FDNS	00NR_G14_059	2	25SP	G14_059	FROM->TO	GR ISLD-LNX3345.00 - GRAND ISLAND 345KV CKT Z	720	720	0.04511	107.7612	MOORE - PAULINE 345KV CKT 1
FDNS	00NR_G14_059	2	25SP	G14_059	FROM->TO	GR ISLD-LNX3345.00 - GRAND ISLAND 345KV CKT Z	720	720	0.04217	107.7582	COOPER - MOORE 345KV CKT 1
FDNS	00NR_G14_059	2	20SP	G14_059	FROM->TO	GR ISLD-LNX3345.00 - GRAND ISLAND 345KV CKT Z	720	720	0.04625	107.7518	GEN600063 1-COLVILLE GEN 1
FDNS	00NR_G14_059	2	20SP	G14_059	FROM->TO	GR ISLD-LNX3345.00 - GRAND ISLAND 345KV CKT Z	720	720	0.04625	107.7518	GEN600064 2-COLVILLE GEN 2
FDNS	00NR_G14_059	2	20SP	G14_059	FROM->TO	GR ISLD-LNX3345.00 - GRAND ISLAND 345KV CKT Z	720	720	0.04423	107.7502	MAXWELL - NORTH PLATTE 115KV CKT 1
FDNS	00NR_G14_059	2	20SP	G14_059	FROM->TO	GR ISLD-LNX3345.00 - GRAND ISLAND 345KV CKT Z	720	720	0.04627	107.7492	ANTELOP-LNX3345.00 - ANTELOPE VALLEY 345KV CKT Z
FDNS	00NR_G14_059	2	20SP	G14_059	FROM->TO	GR ISLD-LNX3345.00 - GRAND ISLAND 345KV CKT Z	720	720	0.04625	107.7443	GEN681522 3-GENOA 3
FDNS	00NR_G14_059	2	20SP	G14_059	FROM->TO	GR ISLD-LNX3345.00 - GRAND ISLAND 345KV CKT Z	720	720	0.04625	107.7413	GEN659273 2-GROTON SYNC COND
FDNS	00NR_G14_059	2	20SP	G14_059	FROM->TO	GR ISLD-LNX3345.00 - GRAND ISLAND 345KV CKT Z	720	720	0.04625	107.7413	GEN659294 1-WILTONCOL9
FDNS	00NR_G14_059	2	20SP	G14_059	FROM->TO	GR ISLD-LNX3345.00 - GRAND ISLAND 345KV CKT Z	720	720	0.04612	107.7345	GRAND ISLAND (GRAND.ISD T5) 230/115/13.8KV TRANSFORMER CKT 2
FDNS	00NR_G14_059	2	20SP	G14_059	FROM->TO	GR ISLD-LNX3345.00 - GRAND ISLAND 345KV CKT Z	720	720	0.04612	107.7345	GRAND ISLAND (GRAND.ISD T5) 230/115/13.8KV TRANSFORMER CKT 2
FDNS	00NR_G14_059	2	20SP	G14_059	FROM->TO	GR ISLD-LNX3345.00 - GRAND ISLAND 345KV CKT Z	720	720	0.04625	107.7325	GEN600043 7-BLUE LAKE5
FDNS	00NR_G14_059	2	20SP	G14_059	FROM->TO	GR ISLD-LNX3345.00 - GRAND ISLAND 345KV CKT Z	720	720	0.04625	107.7325	GEN600044 8-BLUE LAKE6
FDNS	00NR_G14_059	2	20SP	G14_059	FROM->TO	GR ISLD-LNX3345.00 - GRAND ISLAND 345KV CKT Z	720	720	0.04612	107.7313	GRAND ISLAND (GRAND.ISD T2) 230/115/13.8KV TRANSFORMER CKT 1
FDNS	00NR_G14_059	2	20SP	G14_059	FROM->TO	GR ISLD-LNX3345.00 - GRAND ISLAND 345KV CKT Z	720	720	0.04612	107.7313	GRAND ISLAND (GRAND.ISD T2) 230/115/13.8KV TRANSFORMER CKT 1
FDNS	00NR_G14_059	2	20SP	G14_059	FROM->TO	GR ISLD-LNX3345.00 - GRAND ISLAND 345KV CKT Z	720	720	0.04612	107.7257	ATCHSNT3 345.00 - BOONEVILLE 345KV CKT 1
FDNS	00NR_G14_059	2	20SP	G14_059	FROM->TO	GR ISLD-LNX3345.00 - GRAND ISLAND 345KV CKT Z	720	720	0.04625	107.7128	GEN600014 4-BLACK DOG GEN 4
FDNS	00NR_G14_059	2	20SP	G14_059	FROM->TO	GR ISLD-LNX3345.00 - GRAND ISLAND 345KV CKT Z	720	720	0.04625	107.7125	GEN600065 7-HIGH BRIDGE
FDNS	00NR_G14_059	2	20SP	G14_059	FROM->TO	GR ISLD-LNX3345.00 - GRAND ISLAND 345KV CKT Z	720	720	0.04625	107.7125	GEN600066 8-HIGH BRIDGE
FDNS	00NR_G14_059	2	20SP	G14_059	FROM->TO	GR ISLD-LNX3345.00 - GRAND ISLAND 345KV CKT Z	720	720	0.04625	107.7094	LANSING WEST 161/22.0KV TRANSFORMER CKT 1
FDNS	00NR_G14_059	2	20SP	G14_059	FROM->TO	GR ISLD-LNX3345.00 - GRAND ISLAND 345KV CKT Z	720	720	0.04625	107.7086	GEN600011 5-BLACK DOG GEN 1
FDNS	00NR_G14_059	2	20SP	G14_059	FROM->TO	GR ISLD-LNX3345.00 - GRAND ISLAND 345KV CKT Z	720	720	0.04625	107.703	GEN600071 10-RIVER SIDE
FDNS	00NR_G14_059	2	20SP	G14_059	FROM->TO	GR ISLD-LNX3345.00 - GRAND ISLAND 345KV CKT Z	720	720	0.04625	107.7029	GEN600070 9-RIVER SIDE
FDNS	00NR_G14_059	2	20SP	G14_059	FROM->TO	GR ISLD-LNX3345.00 - GRAND ISLAND 345KV CKT Z	720	720	0.04625	107.6954	GEN659031 1-G12_014IS_4 0.6900
FDNS	00NR_G14_059	2	20SP	G14_059	FROM->TO	GR ISLD-LNX3345.00 - GRAND ISLAND 345KV CKT Z	720	720	0.04625	107.6948	GEN600007 7-RIVERSIDE GEN 7
FDNS	00NR_G14_059	2	20SP	G14_059	FROM->TO	GR ISLD-LNX3345.00 - GRAND ISLAND 345KV CKT Z	720	720	0.04625	107.6831	GEN600017 C-LS POWER CT
FDNS	00NR_G14_059	2	20SP	G14_059	FROM->TO	GR ISLD-LNX3345.00 - GRAND ISLAND 345KV CKT Z	720	720	0.04625	107.6812	GEN659192 6-LYNN
FDNS	00NR_G14_059	2	20SP	G14_059	FROM->TO	GR ISLD-LNX3345.00 - GRAND ISLAND 345KV CKT Z	720	720	0.04625	107.6805	GEN659162 4-RED WLCK
FDNS	00NR_G14_059	2	20SP	G14_059	FROM->TO	GR ISLD-LNX3345.00 - GRAND ISLAND 345KV CKT Z	720	720	0.04625	107.6805	GEN659163 5-BLACK WDCK
FDNS	00NR_G14_059	2	20SP	G14_059	FROM->TO	GR ISLD-LNX3345.00 - GRAND ISLAND 345KV CKT Z	720	720	0.04625	107.6705	GEN600045 4-ANSON
FDNS	00NR_G14_059	2	20SP	G14_059	FROM->TO	GR ISLD-LNX3345.00 - GRAND ISLAND 345KV CKT Z	720	720	0.04625	107.6663	GEN 10648 1-G830_GEN 0.6900
FDNS	00NR_G14_059	2	25SP	G14_059	FROM->TO	GR ISLD-LNX3345.00 - GRAND ISLAND 345KV CKT Z	720	720	0.04547	107.6507	KELLY - SHELL CREEK 230KV CKT 1
FDNS	00NR_G14_059	2	20SP	G14_059	FROM->TO	GR ISLD-LNX3345.00 - GRAND ISLAND 345KV CKT Z	720	720	0.04625	107.6396	GEN615052 1-CAMBRIDGE GENERATING STATION
FDNS	00NR_G14_059	2	25SP	G14_059	FROM->TO	GR ISLD-LNX3345.00 - GRAND ISLAND 345KV CKT Z	720	720	0.03907	107.6391	COLUMWEST - KELLY 230KV CKT 1
FDNS	00NR_G14_059	2	20SP	G14_059	FROM->TO	GR ISLD-LNX3345.00 - GRAND ISLAND 345KV CKT Z	720	720	0.04625	107.6341	GEN615015 1-GRE-SPRITWDG13.200
FDNS	00NR_G14_059	2	20SP	G14_059	FROM->TO	GR ISLD-LNX3345.00 - GRAND ISLAND 345KV CKT Z	720	720	0.0461	107.6283	GRAND ISLAND (GI KU1B) 345/230/13.8KV TRANSFORMER CKT 2
FDNS	00NR_G14_059	2	20SP	G14_059	FROM->TO	GR ISLD-LNX3345.00 - GRAND ISLAND 345KV CKT Z	720	720	0.0461	107.6283	GRAND ISLAND (GI KU1B) 345/230/13.8KV TRANSFORMER CKT 2
FDNS	00NR_G14_059	2	20SP	G14_059	FROM->TO	GR ISLD-LNX3345.00 - GRAND ISLAND 345KV CKT Z	720	720	0.0461	107.6268	GRAND ISLAND (GI KU1A) 345/230/13.8KV TRANSFORMER CKT 1
FDNS	00NR_G14_059	2	20SP	G14_059	FROM->TO	GR ISLD-LNX3345.00 - GRAND ISLAND 345KV CKT Z	720	720	0.0461	107.6268	GRAND ISLAND (GI KU1A) 345/230/13.8KV TRANSFORMER CKT 1

SOLUTION	GROUP	SCENARIO	SEASON	SOURCE	DIRECTION	MONITORED ELEMENT	RATEA (MVA)	RATEB(MVA)	TDF	TC%LOADING (% MVA)	CONTINGENCY
FDNS	00NR_G14_059	2	20SP	G14_059	FROM->TO	GR ISLD-LNX3345.00 - GRAND ISLAND 345KV CKT Z	720	720	0.04625	107.6255	GEN615021 1-GRE-ER 14G 16.000
FDNSLock	00NR_G14_059	2	20SP	G14_059	FROM->TO	GR ISLD-LNX3345.00 - GRAND ISLAND 345KV CKT Z	720	720	0.04546	107.6235	COPSTJCPFRSJ
FDNSLock	00NR_G14_059	2	20SP	G14_059	FROM->TO	GR ISLD-LNX3345.00 - GRAND ISLAND 345KV CKT Z	720	720	0.04546	107.6235	STMDSJFAFACO
FDNS	00NR_G14_059	2	25SP	G14_059	FROM->TO	GR ISLD-LNX3345.00 - GRAND ISLAND 345KV CKT Z	720	720	0.04547	107.623	SHELL CREEK (SHELLCREEKT1) 345/230/13.8KV TRANSFORMER CKT 1
FDNS	00NR_G14_059	2	25SP	G14_059	FROM->TO	GR ISLD-LNX3345.00 - GRAND ISLAND 345KV CKT Z	720	720	0.04547	107.623	SHELL CREEK (SHELLCREEKT1) 345/230/13.8KV TRANSFORMER CKT 1
FDNS	00NR_G14_059	2	20SP	G14_059	FROM->TO	GR ISLD-LNX3345.00 - GRAND ISLAND 345KV CKT Z	720	720	0.04625	107.6209	BISONMP4 230.00 - SQUARE BUTTE 230KV CKT 1
FDNS	00NR_G14_059	2	20SP	G14_059	FROM->TO	GR ISLD-LNX3345.00 - GRAND ISLAND 345KV CKT Z	720	720	0.04625	107.6065	GEN660016 1-B_H WIND 0.7000
FDNS	00NR_G14_059	2	20SP	G14_059	FROM->TO	GR ISLD-LNX3345.00 - GRAND ISLAND 345KV CKT Z	720	720	0.0457	107.5935	FT THOMPSON - LOWERBRULE 4230.00 230KV CKT 1
FDNS	00NR_G14_059	2	20SP	G14_059	FROM->TO	GR ISLD-LNX3345.00 - GRAND ISLAND 345KV CKT Z	720	720	0.0457	107.5935	FT THOMPSON - LOWERBRULE 4230.00 230KV CKT 1
FDNS	00NR_G14_059	2	20SP	G14_059	FROM->TO	GR ISLD-LNX3345.00 - GRAND ISLAND 345KV CKT Z	720	720	0.04602	107.5723	MCCOOL (MCCOOL T2) 345/115/13.8KV TRANSFORMER CKT 1
FDNS	00NR_G14_059	2	20SP	G14_059	FROM->TO	GR ISLD-LNX3345.00 - GRAND ISLAND 345KV CKT Z	720	720	0.04602	107.5723	MCCOOL (MCCOOL T2) 345/115/13.8KV TRANSFORMER CKT 1
FDNS	00NR_G14_059	2	20SP	G14_059	FROM->TO	GR ISLD-LNX3345.00 - GRAND ISLAND 345KV CKT Z	720	720	0.04625	107.5449	GEN672303 3-BOUNDARY DAM GENERATOR 3
FDNS	00NR_G14_059	2	20SP	G14_059	FROM->TO	GR ISLD-LNX3345.00 - GRAND ISLAND 345KV CKT Z	720	720	0.04625	107.5449	GEN672304 4-BOUNDARY DAM GENERATOR 4
FDNS	00NR_G14_059	2	20SP	G14_059	FROM->TO	GR ISLD-LNX3345.00 - GRAND ISLAND 345KV CKT Z	720	720	0.04625	107.5449	GEN672305 5-BOUNDARY DAM GENERATOR 5
FDNS	00NR_G14_059	2	25SP	G14_059	FROM->TO	GR ISLD-LNX3345.00 - GRAND ISLAND 345KV CKT Z	720	720	0.0534	107.5303	GRAND ISLAND - RIVERDALE 230KV CKT 1
FDNS	00NR_G14_059	2	20SP	G14_059	FROM->TO	GR ISLD-LNX3345.00 - GRAND ISLAND 345KV CKT Z	720	720	0.04495	107.5297	COOPER - ST JOE 345KV CKT 1
FDNS	00NR_G14_059	2	25SP	G14_059	FROM->TO	GR ISLD-LNX3345.00 - GRAND ISLAND 345KV CKT Z	720	720	0.04377	107.5281	103RD & ROKEBY - MOORE 345KV CKT 1
FDNS	00NR_G14_059	2	25SP	G14_059	FROM->TO	GR ISLD-LNX3345.00 - GRAND ISLAND 345KV CKT Z	720	720	0.04377	107.5281	103RD & ROKEBY - MOORE 345KV CKT 1
FDNS	00NR_G14_059	2	25SP	G14_059	FROM->TO	GR ISLD-LNX3345.00 - GRAND ISLAND 345KV CKT Z	720	720	0.04697	107.5146	ALDA - SUB A 115KV CKT 1
FDNS	00NR_G14_059	2	20SP	G14_059	FROM->TO	GR ISLD-LNX3345.00 - GRAND ISLAND 345KV CKT Z	720	720	0.04625	107.509	GEN672392 1-NBECGT1G 18.000
FDNS	00NR_G14_059	2	20SP	G14_059	FROM->TO	GR ISLD-LNX3345.00 - GRAND ISLAND 345KV CKT Z	720	720	0.04625	107.4973	GEN662101 1-WESSINGTON190.5750
FDNS	00NR_G14_059	2	20SP	G14_059	FROM->TO	GR ISLD-LNX3345.00 - GRAND ISLAND 345KV CKT Z	720	720	0.04625	107.4816	CENTER 230/22.0KV TRANSFORMER CKT 1
FDNS	00NR_G14_059	2	20SP	G14_059	FROM->TO	GR ISLD-LNX3345.00 - GRAND ISLAND 345KV CKT Z	720	720	0.04513	107.4799	G14-021T 345.00 - MULLNCR7 345.00 345KV CKT 1
FDNS	00NR_G14_059	2	20SP	G14_059	FROM->TO	GR ISLD-LNX3345.00 - GRAND ISLAND 345KV CKT Z	720	720	0.04513	107.4783	G15-005T 345.00 - MULLNCR7 345.00 345KV CKT 1
FDNS	00NR_G14_059	2	20SP	G14_059	FROM->TO	GR ISLD-LNX3345.00 - GRAND ISLAND 345KV CKT Z	720	720	0.04625	107.4779	GEN600067 9-HIGH BRIDGE
FDNS	00NR_G14_059	2	25SP	G14_059	FROM->TO	GR ISLD-LNX3345.00 - GRAND ISLAND 345KV CKT Z	720	720	0.04649	107.4703	SUB 3455 - SUB 3740 345KV CKT 1
FDNS	00NR_G14_059	2	25SP	G14_059	FROM->TO	GR ISLD-LNX3345.00 - GRAND ISLAND 345KV CKT Z	720	720	0.04649	107.4703	SUB 3455 - SUB 3740 345KV CKT 1
FDNS	00NR_G14_059	2	25SP	G14_059	FROM->TO	GR ISLD-LNX3345.00 - GRAND ISLAND 345KV CKT Z	720	720	0.04578	107.4356	AURORA - GRAND ISLAND 115KV CKT 1
FDNS	00NR_G14_059	2	20SP	G14_059	FROM->TO	GR ISLD-LNX3345.00 - GRAND ISLAND 345KV CKT Z	720	720	0.04625	107.4089	GEN659353 1-DEERCREK CTG18.000
FDNS	00NR_G14_059	2	20SP	G14_059	FROM->TO	GR ISLD-LNX3345.00 - GRAND ISLAND 345KV CKT Z	720	720	0.04625	107.4088	GEN659354 1-DEERCREK STG18.000
FDNS	00NR_G14_059	2	20SP	G14_059	FROM->TO	GR ISLD-LNX3345.00 - GRAND ISLAND 345KV CKT Z	720	720	0.04513	107.3955	G15-005T 345.00 - SIBLEY 345KV CKT 1
FDNS	00NR_G14_059	2	25SP	G14_059	FROM->TO	GR ISLD-LNX3345.00 - GRAND ISLAND 345KV CKT Z	720	720	0.04518	107.3942	CENTRAL CITY - CLARKS 115KV CKT 1
FDNS	00NR_G14_059	2	20SP	G14_059	FROM->TO	GR ISLD-LNX3345.00 - GRAND ISLAND 345KV CKT Z	720	720	0.04625	107.3846	GEN910006 1-G12_012IS_3 0.6900
FDNSLock	00NR_G14_059	2	20SP	G14_059	FROM->TO	GR ISLD-LNX3345.00 - GRAND ISLAND 345KV CKT Z	720	720	0.04507	107.3755	CENTRAL CITY - GRAND ISLAND 115KV CKT 1
FDNS	00NR_G14_059	2	25SP	G14_059	FROM->TO	GR ISLD-LNX3345.00 - GRAND ISLAND 345KV CKT Z	720	720	0.04736	107.3678	LOUP CITY - ST LIBORY 115KV CKT 1
FDNS	00NR_G14_059	2	20SP	G14_059	FROM->TO	GR ISLD-LNX3345.00 - GRAND ISLAND 345KV CKT Z	720	720	0.04709	107.3526	GLENHAM - L3 HAWDON 230KV CKT 1
FDNS	00NR_G14_059	2	20SP	G14_059	FROM->TO	GR ISLD-LNX3345.00 - GRAND ISLAND 345KV CKT Z	720	720	0.04625	107.3482	GEN681542 6-JP MADGETT
FDNS	00NR_G14_059	2	20SP	G14_059	FROM->TO	GR ISLD-LNX3345.00 - GRAND ISLAND 345KV CKT Z	720	720	0.04603	107.2995	GRAND ISLAND (GI KU3A) 345/230/13.8KV TRANSFORMER CKT 3
FDNS	00NR_G14_059	2	20SP	G14_059	FROM->TO	GR ISLD-LNX3345.00 - GRAND ISLAND 345KV CKT Z	720	720	0.04603	107.2995	GRAND ISLAND (GI KU3A) 345/230/13.8KV TRANSFORMER CKT 3
FDNS	00NR_G14_059	2	25SP	G14_059	FROM->TO	GR ISLD-LNX3345.00 - GRAND ISLAND 345KV CKT Z	720	720	0.04637	107.2986	HURON (BD KU2A) 345/230/13.8KV TRANSFORMER CKT 1
FDNS	00NR_G14_059	2	25SP	G14_059	FROM->TO	GR ISLD-LNX3345.00 - GRAND ISLAND 345KV CKT Z	720	720	0.04637	107.2986	HURON (BD KU2A) 345/230/13.8KV TRANSFORMER CKT 1
FDNS	00NR_G14_059	2	25SP	G14_059	FROM->TO	GR ISLD-LNX3345.00 - GRAND ISLAND 345KV CKT Z	720	720	0.04637	107.2985	P12:345:UMZB:# 103 #: BD IN SD. LOSS OF LINE
FDNS	00NR_G14_059	2	25SP	G14_059	FROM->TO	GR ISLD-LNX3345.00 - GRAND ISLAND 345KV CKT Z	720	720	0.04637	107.296	BRDLAND-LNX3345.00 - HURON 345KV CKT Z
FDNS	00NR_G14_059	2	25SP	G14_059	FROM->TO	GR ISLD-LNX3345.00 - GRAND ISLAND 345KV CKT Z	720	720	0.04637	107.296	P12:345:UMZB:# 102 #: AVS BD IN ND. AVS BRD LR
FDNS	00NR_G14_059	2	25SP	G14_059	FROM->TO	GR ISLD-LNX3345.00 - GRAND ISLAND 345KV CKT Z	720	720	0.04637	107.2954	BROADLAND - HURON 230KV CKT 1
FDNS	00NR_G14_059	2	20SP	G14_059	FROM->TO	GR ISLD-LNX3345.00 - GRAND ISLAND 345KV CKT Z	720	720	0.04625	107.2931	GEN659289 1-DAYCNTYWND W0.6900
FDNS	00NR_G14_059	2	25SP	G14_059	FROM->TO	GR ISLD-LNX3345.00 - GRAND ISLAND 345KV CKT Z	720	720	0.04635	107.2767	G830_SUB 115.00 - GRE-MCHENRY7115.00 115KV CKT 1
FDNS	00NR_G14_059	2	25SP	G14_059	FROM->TO	GR ISLD-LNX3345.00 - GRAND ISLAND 345KV CKT Z	720	720	0.04635	107.2763	G830_SUB 115.00 115/34.5KV TRANSFORMER CKT 1
FDNS	00NR_G14_059	2	25SP	G14_059	FROM->TO	GR ISLD-LNX3345.00 - GRAND ISLAND 345KV CKT Z	720	720	0.04558	107.2732	COOPER - FAIRPORT 345KV CKT 1
FDNS	00NR_G14_059	2	25SP	G14_059	FROM->TO	GR ISLD-LNX3345.00 - GRAND ISLAND 345KV CKT Z	720	720	0.04558	107.2732	COOPER - FAIRPORT 345KV CKT 1
FDNS	00NR_G14_059	2	25SP	G14_059	FROM->TO	GR ISLD-LNX3345.00 - GRAND ISLAND 345KV CKT Z	720	720	0.04635	107.2591	GEN652414 4-FT PECK
FDNS	00NR_G14_059	2	25SP	G14_059	FROM->TO	GR ISLD-LNX3345.00 - GRAND ISLAND 345KV CKT Z	720	720	0.04635	107.2591	GEN652415 5-FT PECK
FDNS	00NR_G14_059	2	25SP	G14_059	FROM->TO	GR ISLD-LNX3345.00 - GRAND ISLAND 345KV CKT Z	720	720	0.04635	107.2538	GEN620324 3-HOOT LAKE 3 GEN
FDNS	00NR_G14_059	2	25SP	G14_059	FROM->TO	GR ISLD-LNX3345.00 - GRAND ISLAND 345KV CKT Z	720	720	0.04635	107.2498	GEN 11104 1-J262_GEN 0.6000
FDNS	00NR_G14_059	2	25SP	G14_059	FROM->TO	GR ISLD-LNX3345.00 - GRAND ISLAND 345KV CKT Z	720	720	0.04635	107.2498	GEN 11108 1-J263_GEN 0.6000
FDNS	00NR_G14_059	2	25SP	G14_059	FROM->TO	GR ISLD-LNX3345.00 - GRAND ISLAND 345KV CKT Z	720	720	0.04635	107.2456	GEN600046 1-MECST
FDNS	00NR_G14_059	2	25SP	G14_059	FROM->TO	GR ISLD-LNX3345.00 - GRAND ISLAND 345KV CKT Z	720	720	0.04591	107.2301	FALLOW 3 345.00 - GRIMES 345KV CKT 1
FDNS	00NR_G14_059	2	25SP	G14_059	FROM->TO	GR ISLD-LNX3345.00 - GRAND ISLAND 345KV CKT Z	720	720	0.04635	107.2268	GEN600047 1-MECCT1
FDNS	00NR_G14_059	2	25SP	G14_059	FROM->TO	GR ISLD-LNX3345.00 - GRAND ISLAND 345KV CKT Z	720	720	0.04433	107.2205	MAXWELL - NORTH PLATTE 115KV CKT 1
FDNS	00NR_G14_059	2	25SP	G14_059	FROM->TO	GR ISLD-LNX3345.00 - GRAND ISLAND 345KV CKT Z	720	720	0.04635	107.2186	GEN660003 3-HURON WEST PARK
FDNS	00NR_G14_059	2	25SP	G14_059	FROM->TO	GR ISLD-LNX3345.00 - GRAND ISLAND 345KV CKT Z	720	720	0.04635	107.2178	GEN600063 1-COLVILLE GEN 1
FDNS	00NR_G14_059	2	25SP	G14_059	FROM->TO	GR ISLD-LNX3345.00 - GRAND ISLAND 345KV CKT Z	720	720	0.04635	107.2178	GEN600064 2-COLVILLE GEN 2
FDNS	00NR_G14_059	2	25SP	G14_059	FROM->TO	GR ISLD-LNX3345.00 - GRAND ISLAND 345KV CKT Z	720	720	0.04623	107.2155	ATCHSNT3 345.00 - COOPER 345KV CKT 1
FDNS	00NR_G14_059	2	25SP	G14_059	FROM->TO	GR ISLD-LNX3345.00 - GRAND ISLAND 345KV CKT Z	720	720	0.04623	107.2155	ATCHSNT3 345.00 - COOPER 345KV CKT 1
FDNS	00NR_G14_059	2	25SP	G14_059	FROM->TO	GR ISLD-LNX3345.00 - GRAND ISLAND 345KV CKT Z	720	720	0.04635	107.2148	GEN660001 2-ABERDEEN SIEBRECHT
FDNS	00NR_G14_059	2	20SP	G14_059	FROM->TO	GR ISLD-LNX3345.00 - GRAND ISLAND 345KV CKT Z	720	720	0.04625	107.2118	COYOTE 345/24.0KV TRANSFORMER CKT 1
FDNS	00NR_G14_059	2	25SP	G14_059	FROM->TO	GR ISLD-LNX3345.00 - GRAND ISLAND 345KV CKT Z	720	720	0.04637	107.2059	ANTELOP-LNX3345.00 - ANTELOPE VALLEY 345KV CKT Z
FDNS	00NR_G14_059	2	25SP	G14_059	FROM->TO	GR ISLD-LNX3345.00 - GRAND ISLAND 345KV CKT Z	720	720	0.04635	107.2042	GEN600043 7-BLUE LAKE5
FDNS	00NR_G14_059	2	25SP	G14_059	FROM->TO	GR ISLD-LNX3345.00 - GRAND ISLAND 345KV CKT Z	720	720	0.04635	107.2042	GEN600044 8-BLUE LAKE6
FDNS	00NR_G14_059	2	20SP	G14_059	FROM->TO	GR ISLD-LNX3345.00 - GRAND ISLAND 345KV CKT Z	720	720	0.04625	107.2026	GEN659018 1-G14_003IS_3 0.6900
FDNS	00NR_G14_059	2	25SP	G14_059	FROM->TO	GR ISLD-LNX3345.00 - GRAND ISLAND 345KV CKT Z	720	720	0.04635	107.1937	GEN659273 2-GROTON SYNC COND
FDNS	00NR_G14_059	2	25SP	G14_059	FROM->TO	GR ISLD-LNX3345.00 - GRAND ISLAND 345KV CKT Z	720	720	0.04635	107.1937	GEN659294 1-WILTONCOL9
FDNS	00NR_G14_059	2	25SP	G14_059	FROM->TO	GR ISLD-LNX3345.00 - GRAND ISLAND 345KV CKT Z	720	720	0.04622	107.1909	GRAND ISLAND (GRAND.ISD T5) 230/115/13.8KV TRANSFORMER CKT 2

SOLUTION	GROUP	SCENARIO	SEASON	SOURCE	DIRECTION	MONITORED ELEMENT	RATEA (MVA)	RATEB(MVA)	TDF	TC%LOADING (% MVA)	CONTINGENCY
FDNS	00NR_G14_059	2	25SP	G14_059	FROM->TO	GR ISLD-LNX3345.00 - GRAND ISLAND 345KV CKT Z	720	720	0.04622	107.1909	GRAND ISLAND (GRAND.ISD T5) 230/115/13.8KV TRANSFORMER CKT 2
FDNS	00NR_G14_059	2	25SP	G14_059	FROM->TO	GR ISLD-LNX3345.00 - GRAND ISLAND 345KV CKT Z	720	720	0.04622	107.1875	GRAND ISLAND (GRAND.ISD T2) 230/115/13.8KV TRANSFORMER CKT 1
FDNS	00NR_G14_059	2	25SP	G14_059	FROM->TO	GR ISLD-LNX3345.00 - GRAND ISLAND 345KV CKT Z	720	720	0.04622	107.1875	GRAND ISLAND (GRAND.ISD T2) 230/115/13.8KV TRANSFORMER CKT 1
FDNS	00NR_G14_059	2	25SP	G14_059	FROM->TO	GR ISLD-LNX3345.00 - GRAND ISLAND 345KV CKT Z	720	720	0.04635	107.1848	GEN681522 3-GENOA 3
FDNS	00NR_G14_059	2	20SP	G14_059	FROM->TO	GR ISLD-LNX3345.00 - GRAND ISLAND 345KV CKT Z	720	720	0.04625	107.1834	GEN562596 1-G14_059_3 0.6900
FDNS	00NR_G14_059	2	25SP	G14_059	FROM->TO	GR ISLD-LNX3345.00 - GRAND ISLAND 345KV CKT Z	720	720	0.04635	107.1824	GEN600065 7-HIGH BRIDGE
FDNS	00NR_G14_059	2	25SP	G14_059	FROM->TO	GR ISLD-LNX3345.00 - GRAND ISLAND 345KV CKT Z	720	720	0.04635	107.1824	GEN600066 8-HIGH BRIDGE
FDNS	00NR_G14_059	2	25SP	G14_059	FROM->TO	GR ISLD-LNX3345.00 - GRAND ISLAND 345KV CKT Z	720	720	0.04635	107.1816	GEN600014 4-BLACK DOG GEN 4
FDNS	00NR_G14_059	2	25SP	G14_059	FROM->TO	GR ISLD-LNX3345.00 - GRAND ISLAND 345KV CKT Z	720	720	0.04635	107.178	GEN600011 5-BLACK DOG GEN 1
FDNS	00NR_G14_059	2	25SP	G14_059	FROM->TO	GR ISLD-LNX3345.00 - GRAND ISLAND 345KV CKT Z	720	720	0.04635	107.174	LANSING WEST 161/22.0KV TRANSFORMER CKT 1
FDNS	00NR_G14_059	2	25SP	G14_059	FROM->TO	GR ISLD-LNX3345.00 - GRAND ISLAND 345KV CKT Z	720	720	0.04635	107.1729	GEN600070 9-RIVER SIDE
FDNS	00NR_G14_059	2	25SP	G14_059	FROM->TO	GR ISLD-LNX3345.00 - GRAND ISLAND 345KV CKT Z	720	720	0.04635	107.1729	GEN600071 10-RIVER SIDE
FDNS	00NR_G14_059	2	25SP	G14_059	FROM->TO	GR ISLD-LNX3345.00 - GRAND ISLAND 345KV CKT Z	720	720	0.04635	107.1644	GEN600007 7-RIVERSIDE GEN 7
FDNS	00NR_G14_059	2	20SP	G14_059	FROM->TO	GR ISLD-LNX3345.00 - GRAND ISLAND 345KV CKT Z	720	720	0.04625	107.1599	GEN659010 4-G07_027IS_2 0.6900
FDNS	00NR_G14_059	2	20SP	G14_059	FROM->TO	GR ISLD-LNX3345.00 - GRAND ISLAND 345KV CKT Z	720	720	0.04625	107.1531	GEN659194 1-NDPRAIRWND1W0.6900
FDNS	00NR_G14_059	2	20SP	G14_059	FROM->TO	GR ISLD-LNX3345.00 - GRAND ISLAND 345KV CKT Z	720	720	0.04625	107.1519	GEN652460 4-GARRISON
FDNS	00NR_G14_059	2	20SP	G14_059	FROM->TO	GR ISLD-LNX3345.00 - GRAND ISLAND 345KV CKT Z	720	720	0.04625	107.1519	GEN652461 5-GARRISON
FDNS	00NR_G14_059	2	25SP	G14_059	FROM->TO	GR ISLD-LNX3345.00 - GRAND ISLAND 345KV CKT Z	720	720	0.04635	107.1505	GEN600017 C-LS POWER CT
FDNS	00NR_G14_059	2	25SP	G14_059	FROM->TO	GR ISLD-LNX3345.00 - GRAND ISLAND 345KV CKT Z	720	720	0.04635	107.1477	GEN659031 1-G12_014IS_4 0.6900
FDNS	00NR_G14_059	2	20SP	G14_059	FROM->TO	GR ISLD-LNX3345.00 - GRAND ISLAND 345KV CKT Z	720	720	0.04625	107.1258	CLAY BOSWELL 230/20.9KV TRANSFORMER CKT 1
FDNS	00NR_G14_059	2	25SP	G14_059	FROM->TO	GR ISLD-LNX3345.00 - GRAND ISLAND 345KV CKT Z	720	720	0.04557	107.1247	COPSTJCPFRSJ
FDNS	00NR_G14_059	2	25SP	G14_059	FROM->TO	GR ISLD-LNX3345.00 - GRAND ISLAND 345KV CKT Z	720	720	0.04557	107.1247	P12:345:NPPD:3517:COOPER 3:ST JOE 3:BTB
FDNS	00NR_G14_059	2	25SP	G14_059	FROM->TO	GR ISLD-LNX3345.00 - GRAND ISLAND 345KV CKT Z	720	720	0.04557	107.1247	STMDSJFAFACO
FDNS	00NR_G14_059	2	25SP	G14_059	FROM->TO	GR ISLD-LNX3345.00 - GRAND ISLAND 345KV CKT Z	720	720	0.04635	107.1205	GEN659192 6-LYNN
FDNS	00NR_G14_059	2	25SP	G14_059	FROM->TO	GR ISLD-LNX3345.00 - GRAND ISLAND 345KV CKT Z	720	720	0.04635	107.1194	GEN659162 4-RED WLCK
FDNS	00NR_G14_059	2	25SP	G14_059	FROM->TO	GR ISLD-LNX3345.00 - GRAND ISLAND 345KV CKT Z	720	720	0.04635	107.1194	GEN659163 5-BLACK WDCK
FDNS	00NR_G14_059	2	20SP	G14_059	FROM->TO	GR ISLD-LNX3345.00 - GRAND ISLAND 345KV CKT Z	720	720	0.04625	107.1172	GEN652545 7-BIG BEND
FDNS	00NR_G14_059	2	25SP	G14_059	FROM->TO	GR ISLD-LNX3345.00 - GRAND ISLAND 345KV CKT Z	720	720	0.04635	107.1166	GEN 10648 1-G830_GEN 0.6900
FDNS	00NR_G14_059	2	20SP	G14_059	FROM->TO	GR ISLD-LNX3345.00 - GRAND ISLAND 345KV CKT Z	720	720	0.04625	107.1131	GEN652457 1-GARRISON
FDNS	00NR_G14_059	2	20SP	G14_059	FROM->TO	GR ISLD-LNX3345.00 - GRAND ISLAND 345KV CKT Z	720	720	0.04625	107.1131	GEN652458 2-GARRISON
FDNS	00NR_G14_059	2	20SP	G14_059	FROM->TO	GR ISLD-LNX3345.00 - GRAND ISLAND 345KV CKT Z	720	720	0.04625	107.1131	GEN652459 3-GARRISON
FDNS	00NR_G14_059	2	25SP	G14_059	FROM->TO	GR ISLD-LNX3345.00 - GRAND ISLAND 345KV CKT Z	720	720	0.04635	107.1108	GEN600045 4-ANSON
FDNS	00NR_G14_059	2	25SP	G14_059	FROM->TO	GR ISLD-LNX3345.00 - GRAND ISLAND 345KV CKT Z	720	720	0.04635	107.1059	GEN615052 1-CAMBRIDGE GENERATING STATION
FDNS	00NR_G14_059	2	20SP	G14_059	FROM->TO	GR ISLD-LNX3345.00 - GRAND ISLAND 345KV CKT Z	720	720	0.04625	107.1047	GEN652544 5-BIG BEND
FDNS	00NR_G14_059	2	25SP	G14_059	FROM->TO	GR ISLD-LNX3345.00 - GRAND ISLAND 345KV CKT Z	720	720	0.04635	107.1013	BISONMP4 230.00 - SQUARE BUTTE 230KV CKT 1
FDNS	00NR_G14_059	2	25SP	G14_059	FROM->TO	GR ISLD-LNX3345.00 - GRAND ISLAND 345KV CKT Z	720	720	0.04623	107.0927	ATCHSNT3 345.00 - BOONEVILLE 345KV CKT 1
FDNS	00NR_G14_059	2	20SP	G14_059	FROM->TO	GR ISLD-LNX3345.00 - GRAND ISLAND 345KV CKT Z	720	720	0.04625	107.092	GEN652543 3-BIG BEND
FDNS	00NR_G14_059	2	20SP	G14_059	FROM->TO	GR ISLD-LNX3345.00 - GRAND ISLAND 345KV CKT Z	720	720	0.04625	107.0919	GEN652542 1-BIG BEND
FDNS	00NR_G14_059	2	25SP	G14_059	FROM->TO	GR ISLD-LNX3345.00 - GRAND ISLAND 345KV CKT Z	720	720	0.04506	107.0704	COOPER - ST JOE 345KV CKT 1
FDNS	00NR_G14_059	2	25SP	G14_059	FROM->TO	GR ISLD-LNX3345.00 - GRAND ISLAND 345KV CKT Z	720	720	0.0462	107.0685	GRAND ISLAND (GI KU1B) 345/230/13.8KV TRANSFORMER CKT 2
FDNS	00NR_G14_059	2	25SP	G14_059	FROM->TO	GR ISLD-LNX3345.00 - GRAND ISLAND 345KV CKT Z	720	720	0.0462	107.0685	GRAND ISLAND (GI KU1B) 345/230/13.8KV TRANSFORMER CKT 2
FDNS	00NR_G14_059	2	25SP	G14_059	FROM->TO	GR ISLD-LNX3345.00 - GRAND ISLAND 345KV CKT Z	720	720	0.0462	107.067	GRAND ISLAND (GI KU1A) 345/230/13.8KV TRANSFORMER CKT 1
FDNS	00NR_G14_059	2	25SP	G14_059	FROM->TO	GR ISLD-LNX3345.00 - GRAND ISLAND 345KV CKT Z	720	720	0.0462	107.067	GRAND ISLAND (GI KU1A) 345/230/13.8KV TRANSFORMER CKT 1
FDNS	00NR_G14_059	2	25SP	G14_059	FROM->TO	GR ISLD-LNX3345.00 - GRAND ISLAND 345KV CKT Z	720	720	0.04635	107.0646	GEN615015 1-GRE-SPRITWDG13.200
FDNS	00NR_G14_059	2	25SP	G14_059	FROM->TO	GR ISLD-LNX3345.00 - GRAND ISLAND 345KV CKT Z	720	720	0.04635	107.0536	GEN615021 1-GRE-ER 14G 16.000
FDNS	00NR_G14_059	2	25SP	G14_059	FROM->TO	GR ISLD-LNX3345.00 - GRAND ISLAND 345KV CKT Z	720	720	0.04635	107.0528	GEN660016 1-B_H WIND 0.7000
FDNS	00NR_G14_059	2	25SP	G14_059	FROM->TO	GR ISLD-LNX3345.00 - GRAND ISLAND 345KV CKT Z	720	720	0.04635	107.0446	GEN657705 X-DRAYTON
FDNS	00NR_G14_059	2	20SP	G14_059	FROM->TO	GR ISLD-LNX3345.00 - GRAND ISLAND 345KV CKT Z	720	720	0.04625	107.0433	GEN659403 1-NDSUNFLWR W0.6900
FDNS	00NR_G14_059	2	20SP	G14_059	FROM->TO	GR ISLD-LNX3345.00 - GRAND ISLAND 345KV CKT Z	720	720	0.04625	107.0206	SQUARE BUTTE - YNG2 4 230.00 230KV CKT 1
FDNS	00NR_G14_059	2	20SP	G14_059	FROM->TO	GR ISLD-LNX3345.00 - GRAND ISLAND 345KV CKT Z	720	720	0.04625	107.0203	YNG2 4 230.00 230/20.0KV TRANSFORMER CKT 1
FDNSLock	00NR_G14_059	2	25SP	G14_059	FROM->TO	GR ISLD-LNX3345.00 - GRAND ISLAND 345KV CKT Z	720	720	0.04611	107.0184	MCCOOL (MCCOOL T2) 345/115/13.8KV TRANSFORMER CKT 1
FDNS	00NR_G14_059	2	20SP	G14_059	FROM->TO	GR ISLD-LNX3345.00 - GRAND ISLAND 345KV CKT Z	720	720	0.04625	107.0098	STANTON 230/18.0KV TRANSFORMER CKT 1
FDNS	00NR_G14_059	2	20SP	G14_059	FROM->TO	GR ISLD-LNX3345.00 - GRAND ISLAND 345KV CKT Z	720	720	0.03891	107.0019	COLUMWEST - GRAND ISLAND 230KV CKT 1
FDNS	00NR_G14_059	2	25SP	G14_059	FROM->TO	GR ISLD-LNX3345.00 - GRAND ISLAND 345KV CKT Z	720	720	0.04524	106.9978	G14-021T 345.00 - MULLNCR7 345.00 345KV CKT 1
FDNS	00NR_G14_059	2	25SP	G14_059	FROM->TO	GR ISLD-LNX3345.00 - GRAND ISLAND 345KV CKT Z	720	720	0.04524	106.9955	G15-005T 345.00 - MULLNCR7 345.00 345KV CKT 1
FDNS	00NR_G14_059	2	25SP	G14_059	FROM->TO	GR ISLD-LNX3345.00 - GRAND ISLAND 345KV CKT Z	720	720	0.04635	106.9771	GEN672303 3-BOUNDARY DAM GENERATOR 3
FDNS	00NR_G14_059	2	25SP	G14_059	FROM->TO	GR ISLD-LNX3345.00 - GRAND ISLAND 345KV CKT Z	720	720	0.04635	106.9771	GEN672304 4-BOUNDARY DAM GENERATOR 4
FDNS	00NR_G14_059	2	25SP	G14_059	FROM->TO	GR ISLD-LNX3345.00 - GRAND ISLAND 345KV CKT Z	720	720	0.04635	106.9771	GEN672305 5-BOUNDARY DAM GENERATOR 5
FDNS	00NR_G14_059	2	25SP	G14_059	FROM->TO	GR ISLD-LNX3345.00 - GRAND ISLAND 345KV CKT Z	720	720	0.04587	106.9695	HIGHLND 3 345.00 - OBRIEN 3 345.00 345KV CKT 1
FDNS	00NR_G14_059	2	25SP	G14_059	FROM->TO	GR ISLD-LNX3345.00 - GRAND ISLAND 345KV CKT Z	720	720	0.04635	106.9562	GEN672356 1-FUT-WL1X 18.000
FDNS	00NR_G14_059	2	25SP	G14_059	FROM->TO	GR ISLD-LNX3345.00 - GRAND ISLAND 345KV CKT Z	720	720	0.04635	106.9526	GEN662101 1-WESSINGTON190.5750
FDNS	00NR_G14_059	2	25SP	G14_059	FROM->TO	GR ISLD-LNX3345.00 - GRAND ISLAND 345KV CKT Z	720	720	0.04581	106.9494	FT THOMPSON - LOWERBRULE 4230.00 230KV CKT 1
FDNS	00NR_G14_059	2	25SP	G14_059	FROM->TO	GR ISLD-LNX3345.00 - GRAND ISLAND 345KV CKT Z	720	720	0.04581	106.9494	FT THOMPSON - LOWERBRULE 4230.00 230KV CKT 1
FDNS	00NR_G14_059	2	25SP	G14_059	FROM->TO	GR ISLD-LNX3345.00 - GRAND ISLAND 345KV CKT Z	720	720	0.04635	106.937	CENTER 230/22.0KV TRANSFORMER CKT 1
FDNS	00NR_G14_059	2	25SP	G14_059	FROM->TO	GR ISLD-LNX3345.00 - GRAND ISLAND 345KV CKT Z	720	720	0.04635	106.9369	GEN600067 9-HIGH BRIDGE
FDNS	00NR_G14_059	2	25SP	G14_059	FROM->TO	GR ISLD-LNX3345.00 - GRAND ISLAND 345KV CKT Z	720	720	0.04635	106.9348	GEN672389 1-FUT-SW1X 18.000
FDNS	00NR_G14_059	2	25SP	G14_059	FROM->TO	GR ISLD-LNX3345.00 - GRAND ISLAND 345KV CKT Z	720	720	0.04635	106.9285	GEN672392 1-NBECGT1G 18.000
FDNS	00NR_G14_059	2	25SP	G14_059	FROM->TO	GR ISLD-LNX3345.00 - GRAND ISLAND 345KV CKT Z	720	720	0.04524	106.916	G15-005T 345.00 - SIBLEY 345KV CKT 1
FDNSLock	00NR_G14_059	2	25SP	G14_059	FROM->TO	GR ISLD-LNX3345.00 - GRAND ISLAND 345KV CKT Z	720	720	0.04518	106.8707	CENTRAL CITY - GRAND ISLAND 115KV CKT 1
FDNS	00NR_G14_059	2	20SP	G14_059	FROM->TO	GR ISLD-LNX3345.00 - GRAND ISLAND 345KV CKT Z	720	720	0.04625	106.8499	GEN652906 1-G09_006IS_3 0.6900
FDNS	00NR_G14_059	2	25SP	G14_059	FROM->TO	GR ISLD-LNX3345.00 - GRAND ISLAND 345KV CKT Z	720	720	0.04719	106.8488	GLENHAM - L3 HAWDON 230KV CKT 1
FDNS	00NR_G14_059	2	25SP	G14_059	FROM->TO	GR ISLD-LNX3345.00 - GRAND ISLAND 345KV CKT Z	720	720	0.04635	106.8442	GEN659354 1-DEERCREK STG18.000
FDNS	00NR_G14_059	2	25SP	G14_059	FROM->TO	GR ISLD-LNX3345.00 - GRAND ISLAND 345KV CKT Z	720	720	0.04635	106.8441	GEN659353 1-DEERCREK CTG18.000

SOLUTION	GROUP	SCENARIO	SEASON	SOURCE	DIRECTION	MONITORED ELEMENT	RATEA (MVA)	RATEB(MVA)	TDF	TC%LOADING (% MVA)	CONTINGENCY
FDNS	00NR_G14_059	2	25SP	G14_059	FROM->TO	GR ISLD-LNX3345.00 - GRAND ISLAND 345KV CKT Z	720	720	0.04635	106.8233	GEN910006 1-G12_012IS_3 0.6900
FDNS	00NR_G14_059	2	20SP	G14_059	FROM->TO	GR ISLD-LNX3345.00 - GRAND ISLAND 345KV CKT Z	720	720	0.04625	106.8232	GEN659411 1-CAMPBLCNTY W0.6900
FDNS	00NR_G14_059	2	20SP	G14_059	FROM->TO	GR ISLD-LNX3345.00 - GRAND ISLAND 345KV CKT Z	720	720	0.03723	106.8097	AXTELL - POST ROCK 345KV CKT 1
FDNS	00NR_G14_059	2	25SP	G14_059	FROM->TO	GR ISLD-LNX3345.00 - GRAND ISLAND 345KV CKT Z	720	720	0.04635	106.801	GEN681542 6-JP MADGETT
FDNS	00NR_G14_059	2	25SP	G14_059	FROM->TO	GR ISLD-LNX3345.00 - GRAND ISLAND 345KV CKT Z	720	720	0.04635	106.7398	GEN659289 1-DAYCNTYWND W0.6900
FDNS	00NR_G14_059	2	25SP	G14_059	FROM->TO	GR ISLD-LNX3345.00 - GRAND ISLAND 345KV CKT Z	720	720	0.04613	106.7264	GRAND ISLAND (GI KU3A) 345/230/13.8KV TRANSFORMER CKT 3
FDNS	00NR_G14_059	2	25SP	G14_059	FROM->TO	GR ISLD-LNX3345.00 - GRAND ISLAND 345KV CKT Z	720	720	0.04613	106.7264	GRAND ISLAND (GI KU3A) 345/230/13.8KV TRANSFORMER CKT 3
FDNS	00NR_G14_059	2	20SP	G14_059	FROM->TO	GR ISLD-LNX3345.00 - GRAND ISLAND 345KV CKT Z	720	720	0.04625	106.6915	GEN659296 2-SDPRAIRWND1W0.6900
FDNS	00NR_G14_059	2	20SP	G14_059	FROM->TO	GR ISLD-LNX3345.00 - GRAND ISLAND 345KV CKT Z	720	720	0.04625	106.6814	GEN652907 1-G09_007IS_3 0.6900
FDNS	00NR_G14_059	2	25SP	G14_059	FROM->TO	GR ISLD-LNX3345.00 - GRAND ISLAND 345KV CKT Z	720	720	0.04635	106.6424	GEN659018 1-G14_003IS_3 0.6900
FDNS	00NR_G14_059	2	25SP	G14_059	FROM->TO	GR ISLD-LNX3345.00 - GRAND ISLAND 345KV CKT Z	720	720	0.03907	106.6335	COLUMWEST - GRAND ISLAND 230KV CKT 1
FDNS	00NR_G14_059	2	20SP	G14_059	FROM->TO	GR ISLD-LNX3345.00 - GRAND ISLAND 345KV CKT Z	720	720	0.04625	106.6205	GEN672321 1-SHAND GENERATOR 1
FDNS	00NR_G14_059	2	25SP	G14_059	FROM->TO	GR ISLD-LNX3345.00 - GRAND ISLAND 345KV CKT Z	720	720	0.04635	106.6054	GEN659010 4-G07_027IS_2 0.6900
FDNS	00NR_G14_059	2	25SP	G14_059	FROM->TO	GR ISLD-LNX3345.00 - GRAND ISLAND 345KV CKT Z	720	720	0.04635	106.6045	COYOTE 345/24.0KV TRANSFORMER CKT 1
FDNS	00NR_G14_059	2	25SP	G14_059	FROM->TO	GR ISLD-LNX3345.00 - GRAND ISLAND 345KV CKT Z	720	720	0.04635	106.5952	GEN652460 4-GARRISON
FDNS	00NR_G14_059	2	25SP	G14_059	FROM->TO	GR ISLD-LNX3345.00 - GRAND ISLAND 345KV CKT Z	720	720	0.04635	106.5952	GEN652461 5-GARRISON
FDNS	00NR_G14_059	2	25SP	G14_059	FROM->TO	GR ISLD-LNX3345.00 - GRAND ISLAND 345KV CKT Z	720	720	0.04635	106.5933	GEN659194 1-NDPRAIRWND1W0.6900
FDNS	00NR_G14_059	2	25SP	G14_059	FROM->TO	GR ISLD-LNX3345.00 - GRAND ISLAND 345KV CKT Z	720	720	0.04635	106.588	GEN562596 1-G14_059_3 0.6900
FDNS	00NR_G14_059	2	20SP	G14_059	FROM->TO	GR ISLD-LNX3345.00 - GRAND ISLAND 345KV CKT Z	720	720	0.04625	106.5864	GEN652559 1-OAHE
FDNS	00NR_G14_059	2	25SP	G14_059	FROM->TO	GR ISLD-LNX3345.00 - GRAND ISLAND 345KV CKT Z	720	720	0.04635	106.5812	GEN652545 7-BIG BEND
FDNS	00NR_G14_059	2	20SP	G14_059	FROM->TO	GR ISLD-LNX3345.00 - GRAND ISLAND 345KV CKT Z	720	720	0.04625	106.5784	GEN672310 1-POPLAR RIVER GENERATOR 1
FDNS	00NR_G14_059	2	20SP	G14_059	FROM->TO	GR ISLD-LNX3345.00 - GRAND ISLAND 345KV CKT Z	720	720	0.04625	106.5784	GEN672311 2-POPLAR RIVER GENERATOR 2
FDNS	00NR_G14_059	2	20SP	G14_059	FROM->TO	GR ISLD-LNX3345.00 - GRAND ISLAND 345KV CKT Z	720	720	0.04625	106.5661	GEN672306 6-BOUNDARY DAM GENERATOR 6
FDNS	00NR_G14_059	2	25SP	G14_059	FROM->TO	GR ISLD-LNX3345.00 - GRAND ISLAND 345KV CKT Z	720	720	0.04635	106.5566	GEN652457 1-GARRISON
FDNS	00NR_G14_059	2	25SP	G14_059	FROM->TO	GR ISLD-LNX3345.00 - GRAND ISLAND 345KV CKT Z	720	720	0.04635	106.5566	GEN652458 2-GARRISON
FDNS	00NR_G14_059	2	25SP	G14_059	FROM->TO	GR ISLD-LNX3345.00 - GRAND ISLAND 345KV CKT Z	720	720	0.04635	106.5566	GEN652459 3-GARRISON
FDNS	00NR_G14_059	2	25SP	G14_059	FROM->TO	GR ISLD-LNX3345.00 - GRAND ISLAND 345KV CKT Z	720	720	0.04635	106.5558	GEN652544 5-BIG BEND
FDNS	00NR_G14_059	2	20SP	G14_059	FROM->TO	GR ISLD-LNX3345.00 - GRAND ISLAND 345KV CKT Z	720	720	0.04625	106.5528	GEN600004 2-PRAIRIE ISLAND G2
FDNS	00NR_G14_059	2	20SP	G14_059	FROM->TO	GR ISLD-LNX3345.00 - GRAND ISLAND 345KV CKT Z	720	720	0.04625	106.5498	GEN600003 1-PRAIRIE ISLAND G1
FDNS	00NR_G14_059	2	25SP	G14_059	FROM->TO	GR ISLD-LNX3345.00 - GRAND ISLAND 345KV CKT Z	720	720	0.04635	106.5442	GEN652542 1-BIG BEND
FDNS	00NR_G14_059	2	25SP	G14_059	FROM->TO	GR ISLD-LNX3345.00 - GRAND ISLAND 345KV CKT Z	720	720	0.04635	106.5442	GEN652543 3-BIG BEND
FDNS	00NR_G14_059	2	20SP	G14_059	FROM->TO	GR ISLD-LNX3345.00 - GRAND ISLAND 345KV CKT Z	720	720	0.04625	106.5017	GEN615010 1-STANTON4
FDNS	00NR_G14_059	2	25SP	G14_059	FROM->TO	GR ISLD-LNX3345.00 - GRAND ISLAND 345KV CKT Z	720	720	0.04635	106.4844	GEN659403 1-NDSUNFLWR W0.6900
FDNS	00NR_G14_059	2	25SP	G14_059	FROM->TO	GR ISLD-LNX3345.00 - GRAND ISLAND 345KV CKT Z	720	720	0.04635	106.4711	STANTON 230/18.0KV TRANSFORMER CKT 1
FDNS	00NR_G14_059	2	20SP	G14_059	FROM->TO	GR ISLD-LNX3345.00 - GRAND ISLAND 345KV CKT Z	720	720	0.04625	106.4645	GEN652556 2-OAHE
FDNS	00NR_G14_059	2	20SP	G14_059	FROM->TO	GR ISLD-LNX3345.00 - GRAND ISLAND 345KV CKT Z	720	720	0.04625	106.4645	GEN652557 4-OAHE
FDNS	00NR_G14_059	2	20SP	G14_059	FROM->TO	GR ISLD-LNX3345.00 - GRAND ISLAND 345KV CKT Z	720	720	0.04625	106.4645	GEN652558 6-OAHE
FDNS	00NR_G14_059	2	20SP	G14_059	FROM->TO	GR ISLD-LNX3345.00 - GRAND ISLAND 345KV CKT Z	720	720	0.04625	106.431	GEN659453 1-GI1414GEN W0.6900
FDNS	00NR_G14_059	2	25SP	G14_059	FROM->TO	GR ISLD-LNX3345.00 - GRAND ISLAND 345KV CKT Z	720	720	0.04635	106.402	ALMA 161 161/24.0KV TRANSFORMER CKT 1
FDNS	00NR_G14_059	2	20SP	G14_059	FROM->TO	GR ISLD-LNX3345.00 - GRAND ISLAND 345KV CKT Z	720	720	0.04625	106.3875	GEN659141 1-K10215A
FDNS	00NR_G14_059	2	20SP	G14_059	FROM->TO	GR ISLD-LNX3345.00 - GRAND ISLAND 345KV CKT Z	720	720	0.04625	106.3343	GEN652173 1-G09_001IS_2 0.6900
FDNS	00NR_G14_059	2	20SP	G14_059	FROM->TO	GR ISLD-LNX3345.00 - GRAND ISLAND 345KV CKT Z	720	720	0.04625	106.3075	GEN600006 1-AS KING
FDNS	00NR_G14_059	2	25SP	G14_059	FROM->TO	GR ISLD-LNX3345.00 - GRAND ISLAND 345KV CKT Z	720	720	0.04635	106.2894	GEN652906 1-G09_006IS_3 0.6900
FDNS	00NR_G14_059	2	25SP	G14_059	FROM->TO	GR ISLD-LNX3345.00 - GRAND ISLAND 345KV CKT Z	720	720	0.04635	106.2824	GR ISLD-LNX3345.00 345KV SWITCHED SHUNT
FDNS	00NR_G14_059	2	25SP	G14_059	FROM->TO	GR ISLD-LNX3345.00 - GRAND ISLAND 345KV CKT Z	720	720	0.04635	106.2707	SQUARE BUTTE - YNG2 4 230.00 230KV CKT 1
FDNS	00NR_G14_059	2	25SP	G14_059	FROM->TO	GR ISLD-LNX3345.00 - GRAND ISLAND 345KV CKT Z	720	720	0.04635	106.2704	YNG2 4 230.00 230/20.0KV TRANSFORMER CKT 1
FDNS	00NR_G14_059	2	25SP	G14_059	FROM->TO	GR ISLD-LNX3345.00 - GRAND ISLAND 345KV CKT Z	720	720	0.04635	106.2674	GEN659411 1-CAMPBLCNTY W0.6900
FDNS	00NR_G14_059	2	20SP	G14_059	FROM->TO	GR ISLD-LNX3345.00 - GRAND ISLAND 345KV CKT Z	720	720	0.04625	106.1995	P12:230:UMZB:# 112 #: NU IN SD. NU-RCDC & DRY CREEK XFMR
FDNS	00NR_G14_059	2	20SP	G14_059	FROM->TO	GR ISLD-LNX3345.00 - GRAND ISLAND 345KV CKT Z	720	720	0.04625	106.1956	RCDC EAST 4230.00 - RED CEDAR DC 230KV CKT 1
FDNS	00NR_G14_059	2	25SP	G14_059	FROM->TO	GR ISLD-LNX3345.00 - GRAND ISLAND 345KV CKT Z	720	720	0.04635	106.1366	GEN659296 2-SDPRAIRWND1W0.6900
FDNS	00NR_G14_059	2	20SP	G14_059	FROM->TO	GR ISLD-LNX3345.00 - GRAND ISLAND 345KV CKT Z	720	720	0.04625	106.1232	GEN659407 1-ANTELPHILLSW0.6900
FDNS	00NR_G14_059	2	25SP	G14_059	FROM->TO	GR ISLD-LNX3345.00 - GRAND ISLAND 345KV CKT Z	720	720	0.04635	106.1179	GEN652907 1-G09_007IS_3 0.6900
FDNS	00NR_G14_059	2	20SP	G14_059	FROM->TO	GR ISLD-LNX3345.00 - GRAND ISLAND 345KV CKT Z	720	720	0.04625	106.0806	GEN657749 1-YOUNG 1 GENERATOR
FDNS	00NR_G14_059	2	20SP	G14_059	FROM->TO	GR ISLD-LNX3345.00 - GRAND ISLAND 345KV CKT Z	720	720	0.04625	106.0735	GEN659110 1-LELAND OLDS UNIT1
FDNS	00NR_G14_059	2	25SP	G14_059	FROM->TO	GR ISLD-LNX3345.00 - GRAND ISLAND 345KV CKT Z	720	720	0.04635	106.0176	GEN672310 1-POPLAR RIVER GENERATOR 1
FDNS	00NR_G14_059	2	25SP	G14_059	FROM->TO	GR ISLD-LNX3345.00 - GRAND ISLAND 345KV CKT Z	720	720	0.04635	106.0176	GEN672311 2-POPLAR RIVER GENERATOR 2
FDNS	00NR_G14_059	2	25SP	G14_059	FROM->TO	GR ISLD-LNX3345.00 - GRAND ISLAND 345KV CKT Z	720	720	0.04635	106.0068	GEN672321 1-SHAND GENERATOR 1
FDNS	00NR_G14_059	2	25SP	G14_059	FROM->TO	GR ISLD-LNX3345.00 - GRAND ISLAND 345KV CKT Z	720	720	0.04635	105.9674	GEN652559 1-OAHE
FDNS	00NR_G14_059	2	25SP	G14_059	FROM->TO	GR ISLD-LNX3345.00 - GRAND ISLAND 345KV CKT Z	720	720	0.04635	105.9502	GEN672306 6-BOUNDARY DAM GENERATOR 6
FDNS	00NR_G14_059	2	25SP	G14_059	FROM->TO	GR ISLD-LNX3345.00 - GRAND ISLAND 345KV CKT Z	720	720	0.04635	105.9305	GEN615010 1-STANTON4
FDNS	00NR_G14_059	2	25SP	G14_059	FROM->TO	GR ISLD-LNX3345.00 - GRAND ISLAND 345KV CKT Z	720	720	0.04635	105.9174	GEN600004 2-PRAIRIE ISLAND G2
FDNS	00NR_G14_059	2	25SP	G14_059	FROM->TO	GR ISLD-LNX3345.00 - GRAND ISLAND 345KV CKT Z	720	720	0.04635	105.9142	GEN600003 1-PRAIRIE ISLAND G1
FDNS	00NR_G14_059	2	25SP	G14_059	FROM->TO	GR ISLD-LNX3345.00 - GRAND ISLAND 345KV CKT Z	720	720	0.04635	105.9084	GEN652556 2-OAHE
FDNS	00NR_G14_059	2	25SP	G14_059	FROM->TO	GR ISLD-LNX3345.00 - GRAND ISLAND 345KV CKT Z	720	720	0.04635	105.9084	GEN652557 4-OAHE
FDNS	00NR_G14_059	2	25SP	G14_059	FROM->TO	GR ISLD-LNX3345.00 - GRAND ISLAND 345KV CKT Z	720	720	0.04635	105.9084	GEN652558 6-OAHE
FDNS	00NR_G14_059	2	25SP	G14_059	FROM->TO	GR ISLD-LNX3345.00 - GRAND ISLAND 345KV CKT Z	720	720	0.04635	105.854	GEN659453 1-GI1414GEN W0.6900
FDNS	00NR_G14_059	2	25SP	G14_059	FROM->TO	GR ISLD-LNX3345.00 - GRAND ISLAND 345KV CKT Z	720	720	0.04635	105.8277	GEN659141 1-K10215A
FDNS	00NR_G14_059	2	25SP	G14_059	FROM->TO	GR ISLD-LNX3345.00 - GRAND ISLAND 345KV CKT Z	720	720	0.03723	105.8024	AXTELL - POST ROCK 345KV CKT 1
FDNS	00NR_G14_059	2	25SP	G14_059	FROM->TO	GR ISLD-LNX3345.00 - GRAND ISLAND 345KV CKT Z	720	720	0.04635	105.7655	GEN652173 1-G09_001IS_2 0.6900
FDNS	00NR_G14_059	2	20SP	G14_059	FROM->TO	GR ISLD-LNX3345.00 - GRAND ISLAND 345KV CKT Z	720	720	0.04625	105.673	GEN600005 1-MONTICELLO
FDNS	00NR_G14_059	2	25SP	G14_059	FROM->TO	GR ISLD-LNX3345.00 - GRAND ISLAND 345KV CKT Z	720	720	0.04635	105.6528	GEN600006 1-AS KING
FDNS	00NR_G14_059	2	25SP	G14_059	FROM->TO	GR ISLD-LNX3345.00 - GRAND ISLAND 345KV CKT Z	720	720	0.04635	105.6288	RCDC EAST 4230.00 - RED CEDAR DC 230KV CKT 1
FDNS	00NR_G14_059	2	25SP	G14_059	FROM->TO	GR ISLD-LNX3345.00 - GRAND ISLAND 345KV CKT Z	720	720	0.04635	105.6277	P12:230:UMZB:# 112 #: NU IN SD. NU-RCDC & DRY CREEK XFMR

SOLUTION	GROUP	SCENARIO	SEASON	SOURCE	DIRECTION	MONITORED ELEMENT	RATEA (MVA)	RATEB(MVA)	TDF	TC%LOADING (% MVA)	CONTINGENCY
FDNS	00NR_G14_059	2	25SP	G14_059	FROM->TO	GR ISLD-LNX3345.00 - GRAND ISLAND 345KV CKT Z	720	720	0.04635	105.5732	GEN659407 1-ANTELPHILLSW0.6900
FDNS	00NR_G14_059	2	20SP	G14_059	FROM->TO	GR ISLD-LNX3345.00 - GRAND ISLAND 345KV CKT Z	720	720	0.04625	105.5578	GEN600001 2-SHERBURNE CNTY G2
FDNS	00NR_G14_059	2	20SP	G14_059	FROM->TO	GR ISLD-LNX3345.00 - GRAND ISLAND 345KV CKT Z	720	720	0.04625	105.5088	GEN600000 1-SHERBURNECNTY G1
FDNS	00NR_G14_059	2	25SP	G14_059	FROM->TO	GR ISLD-LNX3345.00 - GRAND ISLAND 345KV CKT Z	720	720	0.04635	105.5085	GEN659110 1-LELAND OLDS UNIT1
FDNS	00NR_G14_059	2	25SP	G14_059	FROM->TO	GR ISLD-LNX3345.00 - GRAND ISLAND 345KV CKT Z	720	720	0.04635	105.4711	GEN657749 1-YOUNG 1 GENERATOR
FDNS	00NR_G14_059	2	20SP	G14_059	FROM->TO	GR ISLD-LNX3345.00 - GRAND ISLAND 345KV CKT Z	720	720	0.04625	105.3424	GEN661015 1-COYOTE
FDNS	00NR_G14_059	2	25SP	G14_059	FROM->TO	GR ISLD-LNX3345.00 - GRAND ISLAND 345KV CKT Z	720	720	0.04635	105.312	CLAY BOSWELL 230/20.9KV TRANSFORMER CKT 1
FDNS	00NR_G14_059	2	20SP	G14_059	FROM->TO	GR ISLD-LNX3345.00 - GRAND ISLAND 345KV CKT Z	720	720	0.04625	105.234	GEN620315 1-BIG STONE GEN
FDNS	00NR_G14_059	2	25SP	G14_059	FROM->TO	GR ISLD-LNX3345.00 - GRAND ISLAND 345KV CKT Z	720	720	0.04635	104.9763	GEN600005 1-MONTICELLO
FDNS	00NR_G14_059	2	25SP	G14_059	FROM->TO	GR ISLD-LNX3345.00 - GRAND ISLAND 345KV CKT Z	720	720	0.04635	104.8586	GEN600001 2-SHERBURNE CNTY G2
FDNS	00NR_G14_059	2	25SP	G14_059	FROM->TO	GR ISLD-LNX3345.00 - GRAND ISLAND 345KV CKT Z	720	720	0.04635	104.7942	GEN600000 1-SHERBURNECNTY G1
FDNS	00NR_G14_059	2	20SP	G14_059	FROM->TO	GR ISLD-LNX3345.00 - GRAND ISLAND 345KV CKT Z	720	720	0.04625	104.7528	GEN600002 3-SHERBURNE CNTY G3
FDNS	00NR_G14_059	2	20SP	G14_059	FROM->TO	GR ISLD-LNX3345.00 - GRAND ISLAND 345KV CKT Z	720	720	0.04625	104.7258	GEN640010 1-GERALD GENTLEMAN STATION UNIT 1
FDNS	00NR_G14_059	2	20SP	G14_059	FROM->TO	GR ISLD-LNX3345.00 - GRAND ISLAND 345KV CKT Z	720	720	0.04625	104.718	GEN657748 1-YOUNG 2 GENERATOR
FDNS	00NR_G14_059	2	20SP	G14_059	FROM->TO	GR ISLD-LNX3345.00 - GRAND ISLAND 345KV CKT Z	720	720	0.04625	104.6801	GEN640011 2-GERALD GENTLEMAN STATION UNIT 2
FDNS	00NR_G14_059	2	20SP	G14_059	FROM->TO	GR ISLD-LNX3345.00 - GRAND ISLAND 345KV CKT Z	720	720	0.04625	104.6272	SHERBURNE CO 345/24.0KV TRANSFORMER CKT 1
FDNS	00NR_G14_059	2	25SP	G14_059	FROM->TO	GR ISLD-LNX3345.00 - GRAND ISLAND 345KV CKT Z	720	720	0.04635	104.5997	GEN620315 1-BIG STONE GEN
FDNS	00NR_G14_059	2	25SP	G14_059	FROM->TO	GR ISLD-LNX3345.00 - GRAND ISLAND 345KV CKT Z	720	720	0.04635	104.5543	GEN661015 1-COYOTE
FDNS	00NR_G14_059	2	20SP	G14_059	FROM->TO	GR ISLD-LNX3345.00 - GRAND ISLAND 345KV CKT Z	720	720	0.04878	104.4309	FTTHOM1-LNX3345.00 - LELAND2-LNX3345.00 345KV CKT 1
FDNS	00NR_G14_059	2	20SP	G14_059	FROM->TO	GR ISLD-LNX3345.00 - GRAND ISLAND 345KV CKT Z	720	720	0.04878	104.3642	P12:345:UMZB:# 108 #: LOS FT IN ND. LOS FT
FDNS	00NR_G14_059	2	20SP	G14_059	FROM->TO	GR ISLD-LNX3345.00 - GRAND ISLAND 345KV CKT Z	720	720	0.04878	104.3631	FT THOMPSON - FTTHOM1-LNX3345.00 345KV CKT Z
FDNS	00NR_G14_059	2	20SP	G14_059	FROM->TO	GR ISLD-LNX3345.00 - GRAND ISLAND 345KV CKT Z	720	720	0.04878	104.3472	LELAND OLDS - LELAND2-LNX3345.00 345KV CKT Z
FDNS	00NR_G14_059	2	20SP	G14_059	FROM->TO	GR ISLD-LNX3345.00 - GRAND ISLAND 345KV CKT Z	720	720	0.04625	104.3441	BIG STONE 230/24.0KV TRANSFORMER CKT 1
FDNS	00NR_G14_059	2	25SP	G14_059	FROM->TO	GR ISLD-LNX3345.00 - GRAND ISLAND 345KV CKT Z	720	720	0.04635	104.0561	SHERBURNE CO 345/24.0KV TRANSFORMER CKT 1
FDNS	00NR_G14_059	2	25SP	G14_059	FROM->TO	GR ISLD-LNX3345.00 - GRAND ISLAND 345KV CKT Z	720	720	0.04635	104.0473	GEN600002 3-SHERBURNE CNTY G3
FDNS	00NR_G14_059	2	20SP	G14_059	FROM->TO	GR ISLD-LNX3345.00 - GRAND ISLAND 345KV CKT Z	720	720	0.04625	104.0384	GEN659118 1-LARAMIE RIVER UNIT1
FDNS	00NR_G14_059	2	25SP	G14_059	FROM->TO	GR ISLD-LNX3345.00 - GRAND ISLAND 345KV CKT Z	720	720	0.04886	103.9771	FTTHOM1-LNX3345.00 - LELAND2-LNX3345.00 345KV CKT 1
FDNS	00NR_G14_059	2	25SP	G14_059	FROM->TO	GR ISLD-LNX3345.00 - GRAND ISLAND 345KV CKT Z	720	720	0.04886	103.9127	P12:345:UMZB:# 108 #: LOS FT IN ND. LOS FT
FDNS	00NR_G14_059	2	25SP	G14_059	FROM->TO	GR ISLD-LNX3345.00 - GRAND ISLAND 345KV CKT Z	720	720	0.04886	103.909	FT THOMPSON - FTTHOM1-LNX3345.00 345KV CKT Z
FDNS	00NR_G14_059	2	25SP	G14_059	FROM->TO	GR ISLD-LNX3345.00 - GRAND ISLAND 345KV CKT Z	720	720	0.04886	103.8906	LELAND OLDS - LELAND2-LNX3345.00 345KV CKT Z
FDNS	00NR_G14_059	2	25SP	G14_059	FROM->TO	GR ISLD-LNX3345.00 - GRAND ISLAND 345KV CKT Z	720	720	0.04635	103.8293	GEN640010 1-GERALD GENTLEMAN STATION UNIT 1
FDNS	00NR_G14_059	2	20SP	G14_059	FROM->TO	GR ISLD-LNX3345.00 - GRAND ISLAND 345KV CKT Z	720	720	0.04625	103.6341	GEN659111 2-LELAND OLDS UNIT2
FDNS	00NR_G14_059	2	25SP	G14_059	FROM->TO	GR ISLD-LNX3345.00 - GRAND ISLAND 345KV CKT Z	720	720	0.04635	103.5641	GEN657748 1-YOUNG 2 GENERATOR
FDNS	00NR_G14_059	2	20SP	G14_059	FROM->TO	GR ISLD-LNX3345.00 - GRAND ISLAND 345KV CKT Z	720	720	0.04625	103.3948	GEN659125 1-COVEY
FDNS	00NR_G14_059	2	25SP	G14_059	FROM->TO	GR ISLD-LNX3345.00 - GRAND ISLAND 345KV CKT Z	720	720	0.04635	103.3123	GEN659118 1-LARAMIE RIVER UNIT1
FDNS	00NR_G14_059	2	25SP	G14_059	FROM->TO	GR ISLD-LNX3345.00 - GRAND ISLAND 345KV CKT Z	720	720	0.04635	103.2824	GEN640011 2-GERALD GENTLEMAN STATION UNIT 2
FDNS	00NR_G14_059	2	20SP	G14_059	FROM->TO	GR ISLD-LNX3345.00 - GRAND ISLAND 345KV CKT Z	720	720	0.04625	103.258	GEN659103 1-ANTELOPE VALLEY UNIT1
FDNS	00NR_G14_059	2	20SP	G14_059	FROM->TO	GR ISLD-LNX3345.00 - GRAND ISLAND 345KV CKT Z	720	720	0.04625	103.258	GEN659107 2-ANTELOPE VALLEY UNIT2
FDNS	00NR_G14_059	2	25SP	G14_059	FROM->TO	GR ISLD-LNX3345.00 - GRAND ISLAND 345KV CKT Z	720	720	0.04635	103.0101	GEN659111 2-LELAND OLDS UNIT2
FDNS	00NR_G14_059	2	25SP	G14_059	FROM->TO	GR ISLD-LNX3345.00 - GRAND ISLAND 345KV CKT Z	720	720	0.04635	102.7926	GEN659125 1-COVEY
FDNS	00NR_G14_059	2	20SP	G14_059	FROM->TO	GR ISLD-LNX3345.00 - GRAND ISLAND 345KV CKT Z	720	720	0.04625	102.7593	GEN615001 1-COAL CREEK
FDNS	00NR_G14_059	2	20SP	G14_059	FROM->TO	GR ISLD-LNX3345.00 - GRAND ISLAND 345KV CKT Z	720	720	0.04625	102.6765	GEN615002 2-COAL CREEK
FDNS	00NR_G14_059	2	25SP	G14_059	FROM->TO	GR ISLD-LNX3345.00 - GRAND ISLAND 345KV CKT Z	720	720	0.04635	102.6241	GEN659103 1-ANTELOPE VALLEY UNIT1
FDNS	00NR_G14_059	2	25SP	G14_059	FROM->TO	GR ISLD-LNX3345.00 - GRAND ISLAND 345KV CKT Z	720	720	0.04635	102.6241	GEN659107 2-ANTELOPE VALLEY UNIT2
FDNS	00NR_G14_059	2	25SP	G14_059	FROM->TO	GR ISLD-LNX3345.00 - GRAND ISLAND 345KV CKT Z	720	720	0.04635	102.1071	GEN615001 1-COAL CREEK
FDNS	00NR_G14_059	2	25SP	G14_059	FROM->TO	GR ISLD-LNX3345.00 - GRAND ISLAND 345KV CKT Z	720	720	0.04635	102.0309	GEN615002 2-COAL CREEK
FDNS	00NR_G14_059	2	20SP	G14_059	TO->FROM	GR ISLD-LNX3345.00 - HOLT.CO3 345.00 345KV CKT 1	720	720	0.07243	114.6807	GERALD GENTLEMAN STATION - SWEETWATER 345KV CKT 1
FDNS	00NR_G14_059	2	25SP	G14_059	TO->FROM	GR ISLD-LNX3345.00 - HOLT.CO3 345.00 345KV CKT 1	720	720	0.07246	114.5065	GERALD GENTLEMAN STATION - SWEETWATER 345KV CKT 1
FDNS	00NR_G14_059	2	20SP	G14_059	TO->FROM	GR ISLD-LNX3345.00 - HOLT.CO3 345.00 345KV CKT 1	720	720	0.04601	114.0573	KELLY - MEADOWGROVE4230.00 230KV CKT 1
FDNS	00NR_G14_059	2	25SP	G14_059	TO->FROM	GR ISLD-LNX3345.00 - HOLT.CO3 345.00 345KV CKT 1	720	720	0.04613	113.6216	KELLY - MEADOWGROVE4230.00 230KV CKT 1
FDNS	00NR_G14_059	2	20SP	G14_059	TO->FROM	GR ISLD-LNX3345.00 - HOLT.CO3 345.00 345KV CKT 1	720	720	0.07862	113.3193	GRAND ISLAND - SWEETWATER 345KV CKT 1
FDNS	00NR_G14_059	2	20SP	G14_059	TO->FROM	GR ISLD-LNX3345.00 - HOLT.CO3 345.00 345KV CKT 1	720	720	0.06592	112.9165	GERALD GENTLEMAN STATION - SWEETWATER 345KV CKT 2
FDNS	00NR_G14_059	2	20SP	G14_059	TO->FROM	GR ISLD-LNX3345.00 - HOLT.CO3 345.00 345KV CKT 1	720	720	0.04803	112.759	P12:230:UMZB:# 116 #: ST IN SD. WSG-ST-VH
FDNS	00NR_G14_059	2	25SP	G14_059	TO->FROM	GR ISLD-LNX3345.00 - HOLT.CO3 345.00 345KV CKT 1	720	720	0.06597	112.6917	GERALD GENTLEMAN STATION - SWEETWATER 345KV CKT 2
FDNS	00NR_G14_059	2	25SP	G14_059	TO->FROM	GR ISLD-LNX3345.00 - HOLT.CO3 345.00 345KV CKT 1	720	720	0.04812	112.3666	P12:230:UMZB:# 116 #: ST IN SD. WSG-ST-VH
FDNS	00NR_G14_059	2	25SP	G14_059	TO->FROM	GR ISLD-LNX3345.00 - HOLT.CO3 345.00 345KV CKT 1	720	720	0.07841	112.3358	GRAND ISLAND - SWEETWATER 345KV CKT 1
FDNS	00NR_G14_059	2	20SP	G14_059	TO->FROM	GR ISLD-LNX3345.00 - HOLT.CO3 345.00 345KV CKT 1	720	720	0.04777	112.1632	STORLA - WESSINGTON 230KV CKT 1
FDNS	00NR_G14_059	2	25SP	G14_059	TO->FROM	GR ISLD-LNX3345.00 - HOLT.CO3 345.00 345KV CKT 1	720	720	0.06322	112.0237	MINGO - RED WILLOW 345KV CKT 1
FDNS	00NR_G14_059	2	25SP	G14_059	TO->FROM	GR ISLD-LNX3345.00 - HOLT.CO3 345.00 345KV CKT 1	720	720	0.06322	112.0237	MINGO - RED WILLOW 345KV CKT 1
FDNS	00NR_G14_059	2	25SP	G14_059	TO->FROM	GR ISLD-LNX3345.00 - HOLT.CO3 345.00 345KV CKT 1	720	720	0.04786	111.8186	STORLA - WESSINGTON 230KV CKT 1
FDNS	00NR_G14_059	2	20SP	G14_059	TO->FROM	GR ISLD-LNX3345.00 - HOLT.CO3 345.00 345KV CKT 1	720	720	0.04769	111.4541	HANLON - STORLA 230KV CKT 1
FDNS	00NR_G14_059	2	25SP	G14_059	TO->FROM	GR ISLD-LNX3345.00 - HOLT.CO3 345.00 345KV CKT 1	720	720	0.05706	111.3645	GERALD GENTLEMAN STATION - RED WILLOW 345KV CKT 1
FDNS	00NR_G14_059	2	20SP	G14_059	TO->FROM	GR ISLD-LNX3345.00 - HOLT.CO3 345.00 345KV CKT 1	720	720	0.05735	111.0921	CROOKED CREEK - NORTH PLATTE 230KV CKT 1
FDNS	00NR_G14_059	2	25SP	G14_059	TO->FROM	GR ISLD-LNX3345.00 - HOLT.CO3 345.00 345KV CKT 1	720	720	0.04778	111.066	HANLON - STORLA 230KV CKT 1
FDNS	00NR_G14_059	2	20SP	G14_059	TO->FROM	GR ISLD-LNX3345.00 - HOLT.CO3 345.00 345KV CKT 1	720	720	0.04806	111.0545	FT THOMPSON - LETCHER 230KV CKT 1
FDNS	00NR_G14_059	2	20SP	G14_059	TO->FROM	GR ISLD-LNX3345.00 - HOLT.CO3 345.00 345KV CKT 1	720	720	0.04806	111.0545	FT THOMPSON - LETCHER 230KV CKT 1
FDNS	00NR_G14_059	2	20SP	G14_059	TO->FROM	GR ISLD-LNX3345.00 - HOLT.CO3 345.00 345KV CKT 1	720	720	0.06299	111.0107	MINGO - RED WILLOW 345KV CKT 1
FDNS	00NR_G14_059	2	20SP	G14_059	TO->FROM	GR ISLD-LNX3345.00 - HOLT.CO3 345.00 345KV CKT 1	720	720	0.06299	111.0107	MINGO - RED WILLOW 345KV CKT 1
FDNS	00NR_G14_059	2	20SP	G14_059	TO->FROM	GR ISLD-LNX3345.00 - HOLT.CO3 345.00 345KV CKT 1	720	720	0.04625	110.9391	GEN635024 4-WALTER SCOTT UNIT 4
FDNS	00NR_G14_059	2	20SP	G14_059	TO->FROM	GR ISLD-LNX3345.00 - HOLT.CO3 345.00 345KV CKT 1	720	720	0.05686	110.8742	GERALD GENTLEMAN STATION - RED WILLOW 345KV CKT 1
FDNS	00NR_G14_059	2	25SP	G14_059	TO->FROM	GR ISLD-LNX3345.00 - HOLT.CO3 345.00 345KV CKT 1	720	720	0.05742	110.8236	CROOKED CREEK - NORTH PLATTE 230KV CKT 1
FDNS	00NR_G14_059	2	25SP	G14_059	TO->FROM	GR ISLD-LNX3345.00 - HOLT.CO3 345.00 345KV CKT 1	720	720	0.04815	110.669	FT THOMPSON - LETCHER 230KV CKT 1
FDNS	00NR_G14_059	2	25SP	G14_059	TO->FROM	GR ISLD-LNX3345.00 - HOLT.CO3 345.00 345KV CKT 1	720	720	0.04815	110.669	FT THOMPSON - LETCHER 230KV CKT 1

SOLUTION	GROUP	SCENARIO	SEASON	SOURCE	DIRECTION	MONITORED ELEMENT	RATEA (MVA)	RATEB(MVA)	TDF	TC%LOADING (% MVA)	CONTINGENCY
FDNS	00NR_G14_059	2	20SP	G14_059	TO->FROM	GR ISLD-LNX3345.00 - HOLT.CO3 345.00 345KV CKT 1	720	720	0.04601	110.5659	FT RANDAL - MEADOWGROVE4230.00 230KV CKT 1
FDNS	00NR_G14_059	2	25SP	G14_059	TO->FROM	GR ISLD-LNX3345.00 - HOLT.CO3 345.00 345KV CKT 1	720	720	0.04669	110.5217	BUFFALO - JAMESTOWN 345KV CKT 1
FDNS	00NR_G14_059	2	20SP	G14_059	TO->FROM	GR ISLD-LNX3345.00 - HOLT.CO3 345.00 345KV CKT 1	720	720	0.0466	110.5137	BUFFALO - JAMESTOWN 345KV CKT 1
FDNS	00NR_G14_059	2	20SP	G14_059	TO->FROM	GR ISLD-LNX3345.00 - HOLT.CO3 345.00 345KV CKT 1	720	720	0.04625	110.47	GEN635023 3-WALTER SCOTT UNIT 3
FDNS	00NR_G14_059	2	25SP	G14_059	TO->FROM	GR ISLD-LNX3345.00 - HOLT.CO3 345.00 345KV CKT 1	720	720	0.04635	110.3126	GEN635024 4-WALTER SCOTT UNIT 4
FDNS	00NR_G14_059	2	20SP	G14_059	TO->FROM	GR ISLD-LNX3345.00 - HOLT.CO3 345.00 345KV CKT 1	720	720	0.04734	110.2973	FT RANDAL - G12_009IST 230.00 230KV CKT 1
FDNS	00NR_G14_059	2	20SP	G14_059	TO->FROM	GR ISLD-LNX3345.00 - HOLT.CO3 345.00 345KV CKT 1	720	720	0.04737	110.2846	FT RANDAL - FT THOMPSON 230KV CKT 1
FDNS	00NR_G14_059	2	20SP	G14_059	TO->FROM	GR ISLD-LNX3345.00 - HOLT.CO3 345.00 345KV CKT 1	720	720	0.04737	110.2846	FT RANDAL - FT THOMPSON 230KV CKT 1
FDNS	00NR_G14_059	2	20SP	G14_059	TO->FROM	GR ISLD-LNX3345.00 - HOLT.CO3 345.00 345KV CKT 1	720	720	0.04734	110.2382	FT THOMPSON - LAKE PLATT 230KV CKT 1
FDNS	00NR_G14_059	2	20SP	G14_059	TO->FROM	GR ISLD-LNX3345.00 - HOLT.CO3 345.00 345KV CKT 1	720	720	0.04734	110.2382	FT THOMPSON - LAKE PLATT 230KV CKT 1
FDNS	00NR_G14_059	2	20SP	G14_059	TO->FROM	GR ISLD-LNX3345.00 - HOLT.CO3 345.00 345KV CKT 1	720	720	0.04658	110.1727	G09_001IST 345.00 - WATERTOWN 345KV CKT 1
FDNS	00NR_G14_059	2	20SP	G14_059	TO->FROM	GR ISLD-LNX3345.00 - HOLT.CO3 345.00 345KV CKT 1	720	720	0.04734	110.0173	G12_009IST 230.00 - LAKE PLATT 230KV CKT 1
FDNS	00NR_G14_059	2	25SP	G14_059	TO->FROM	GR ISLD-LNX3345.00 - HOLT.CO3 345.00 345KV CKT 1	720	720	0.04613	110.012	FT RANDAL - MEADOWGROVE4230.00 230KV CKT 1
FDNS	00NR_G14_059	2	20SP	G14_059	TO->FROM	GR ISLD-LNX3345.00 - HOLT.CO3 345.00 345KV CKT 1	720	720	0.04625	110.0037	GEN336821 1-GRAND GULF UNIT
FDNS	00NR_G14_059	2	25SP	G14_059	TO->FROM	GR ISLD-LNX3345.00 - HOLT.CO3 345.00 345KV CKT 1	720	720	0.04635	109.8598	GEN635023 3-WALTER SCOTT UNIT 3
FDNS	00NR_G14_059	2	20SP	G14_059	TO->FROM	GR ISLD-LNX3345.00 - HOLT.CO3 345.00 345KV CKT 1	720	720	0.04625	109.8488	GEN344225 1-1CAL G1 25.000
FDNS	00NR_G14_059	2	25SP	G14_059	TO->FROM	GR ISLD-LNX3345.00 - HOLT.CO3 345.00 345KV CKT 1	720	720	0.04744	109.8062	FT RANDAL - G12_009IST 230.00 230KV CKT 1
FDNS	00NR_G14_059	2	25SP	G14_059	TO->FROM	GR ISLD-LNX3345.00 - HOLT.CO3 345.00 345KV CKT 1	720	720	0.04747	109.8059	FT RANDAL - FT THOMPSON 230KV CKT 1
FDNS	00NR_G14_059	2	25SP	G14_059	TO->FROM	GR ISLD-LNX3345.00 - HOLT.CO3 345.00 345KV CKT 1	720	720	0.04747	109.8059	FT RANDAL - FT THOMPSON 230KV CKT 1
FDNS	00NR_G14_059	2	25SP	G14_059	TO->FROM	GR ISLD-LNX3345.00 - HOLT.CO3 345.00 345KV CKT 1	720	720	0.04744	109.7608	FT THOMPSON - LAKE PLATT 230KV CKT 1
FDNS	00NR_G14_059	2	25SP	G14_059	TO->FROM	GR ISLD-LNX3345.00 - HOLT.CO3 345.00 345KV CKT 1	720	720	0.04744	109.7608	FT THOMPSON - LAKE PLATT 230KV CKT 1
FDNS	00NR_G14_059	2	20SP	G14_059	TO->FROM	GR ISLD-LNX3345.00 - HOLT.CO3 345.00 345KV CKT 1	720	720	0.04702	109.7568	WATERTN-LNX3345.00 - WHITE 345KV CKT 1
FDNS	00NR_G14_059	2	25SP	G14_059	TO->FROM	GR ISLD-LNX3345.00 - HOLT.CO3 345.00 345KV CKT 1	720	720	0.04667	109.726	G09_001IST 345.00 - WATERTOWN 345KV CKT 1
FDNS	00NR_G14_059	2	20SP	G14_059	TO->FROM	GR ISLD-LNX3345.00 - HOLT.CO3 345.00 345KV CKT 1	720	720	0.04625	109.7161	GEN640009 1-COOPER NUCLEAR STATION
FDNS	00NR_G14_059	2	20SP	G14_059	TO->FROM	GR ISLD-LNX3345.00 - HOLT.CO3 345.00 345KV CKT 1	720	720	0.04628	109.7079	SPLIT ROCK - WHITE 345KV CKT 1
FDNS	00NR_G14_059	2	20SP	G14_059	TO->FROM	GR ISLD-LNX3345.00 - HOLT.CO3 345.00 345KV CKT 1	720	720	0.04628	109.7079	SPLIT ROCK - WHITE 345KV CKT 1
FDNS	00NR_G14_059	2	20SP	G14_059	TO->FROM	GR ISLD-LNX3345.00 - HOLT.CO3 345.00 345KV CKT 1	720	720	0.04702	109.6952	WATERTN-LNX3345.00 - WATERTOWN 345KV CKT Z
FDNS	00NR_G14_059	2	20SP	G14_059	TO->FROM	GR ISLD-LNX3345.00 - HOLT.CO3 345.00 345KV CKT 1	720	720	0.04743	109.693	LETCHER - SIOUX FALLS 230KV CKT 1
FDNS	00NR_G14_059	2	20SP	G14_059	TO->FROM	GR ISLD-LNX3345.00 - HOLT.CO3 345.00 345KV CKT 1	720	720	0.04702	109.6839	P12:345:UMZW:# 1747 #: WT2 IN SD. WT2-WHT LINE FAULT
FDNS	00NR_G14_059	2	20SP	G14_059	TO->FROM	GR ISLD-LNX3345.00 - HOLT.CO3 345.00 345KV CKT 1	720	720	0.04625	109.5598	GEN336153 1-WATERFORD UNIT#3
FDNS	00NR_G14_059	2	20SP	G14_059	TO->FROM	GR ISLD-LNX3345.00 - HOLT.CO3 345.00 345KV CKT 1	720	720	0.04625	109.5566	GEN337911 1-ARKANSAS NUCLEAR ONE UNIT #2
FDNS	00NR_G14_059	2	20SP	G14_059	TO->FROM	GR ISLD-LNX3345.00 - HOLT.CO3 345.00 345KV CKT 1	720	720	0.0466	109.541	CENTER - JAMESTOWN 345KV CKT 1
FDNS	00NR_G14_059	2	25SP	G14_059	TO->FROM	GR ISLD-LNX3345.00 - HOLT.CO3 345.00 345KV CKT 1	720	720	0.04744	109.5211	G12_009IST 230.00 - LAKE PLATT 230KV CKT 1
FDNS	00NR_G14_059	2	25SP	G14_059	TO->FROM	GR ISLD-LNX3345.00 - HOLT.CO3 345.00 345KV CKT 1	720	720	0.04635	109.4191	GEN336821 1-GRAND GULF UNIT
FDNS	00NR_G14_059	2	20SP	G14_059	TO->FROM	GR ISLD-LNX3345.00 - HOLT.CO3 345.00 345KV CKT 1	720	720	0.04693	109.4081	RAUN - SUB 3451 FT CAL 345KV CKT 1
FDNS	00NR_G14_059	2	20SP	G14_059	TO->FROM	GR ISLD-LNX3345.00 - HOLT.CO3 345.00 345KV CKT 1	720	720	0.04693	109.4081	RAUN - SUB 3451 FT CAL 345KV CKT 1
FDNS	00NR_G14_059	2	20SP	G14_059	TO->FROM	GR ISLD-LNX3345.00 - HOLT.CO3 345.00 345KV CKT 1	720	720	0.04723	109.3621	FT RANDAL - SIOUX CITY 230KV CKT 1
FDNS	00NR_G14_059	2	25SP	G14_059	TO->FROM	GR ISLD-LNX3345.00 - HOLT.CO3 345.00 345KV CKT 1	720	720	0.04669	109.3469	CENTER - JAMESTOWN 345KV CKT 1
FDNS	00NR_G14_059	2	20SP	G14_059	TO->FROM	GR ISLD-LNX3345.00 - HOLT.CO3 345.00 345KV CKT 1	720	720	0.0465	109.3448	BISON 3 345.00 - BUFFALO 345KV CKT 1
FDNS	00NR_G14_059	2	20SP	G14_059	TO->FROM	GR ISLD-LNX3345.00 - HOLT.CO3 345.00 345KV CKT 1	720	720	0.0477	109.3332	THEDFRD3 345.00 (THEDFORDT2) 345/115/13.8KV TRANSFORMER CKT 1
FDNS	00NR_G14_059	2	20SP	G14_059	TO->FROM	GR ISLD-LNX3345.00 - HOLT.CO3 345.00 345KV CKT 1	720	720	0.04625	109.3161	GEN335831 1-RIVERBEND UNIT#1
FDNS	00NR_G14_059	2	20SP	G14_059	TO->FROM	GR ISLD-LNX3345.00 - HOLT.CO3 345.00 345KV CKT 1	720	720	0.04625	109.296	GEN641089 2-ENERGY CENTER 2
FDNS	00NR_G14_059	2	20SP	G14_059	TO->FROM	GR ISLD-LNX3345.00 - HOLT.CO3 345.00 345KV CKT 1	720	720	0.04635	109.2504	SIOUXCY-LNX3345.00 - SPLIT ROCK 345KV CKT 1
FDNS	00NR_G14_059	2	20SP	G14_059	TO->FROM	GR ISLD-LNX3345.00 - HOLT.CO3 345.00 345KV CKT 1	720	720	0.04635	109.2504	SIOUXCY-LNX3345.00 - SPLIT ROCK 345KV CKT 1
FDNS	00NR_G14_059	2	25SP	G14_059	TO->FROM	GR ISLD-LNX3345.00 - HOLT.CO3 345.00 345KV CKT 1	720	720	0.04635	109.2419	GEN344225 1-1CAL G1 25.000
FDNS	00NR_G14_059	2	20SP	G14_059	TO->FROM	GR ISLD-LNX3345.00 - HOLT.CO3 345.00 345KV CKT 1	720	720	0.04635	109.2358	P12:345:UMZW:# 907 #: SC2-SR IN IA. SC2-SR 345 KV LINE
FDNS	00NR_G14_059	2	20SP	G14_059	TO->FROM	GR ISLD-LNX3345.00 - HOLT.CO3 345.00 345KV CKT 1	720	720	0.04625	109.2321	GEN337910 1-ARKANSAS NUCLEAR ONE UNIT #1
FDNS	00NR_G14_059	2	20SP	G14_059	TO->FROM	GR ISLD-LNX3345.00 - HOLT.CO3 345.00 345KV CKT 1	720	720	0.04646	109.2293	CHISAGO COUNTY - CHISAGO COUNTY 500KV CKT 1
FDNS	00NR_G14_059	2	20SP	G14_059	TO->FROM	GR ISLD-LNX3345.00 - HOLT.CO3 345.00 345KV CKT 1	720	720	0.04635	109.2236	SIOUX CITY - SIOUXCY-LNX3345.00 345KV CKT Z
FDNS	00NR_G14_059	2	25SP	G14_059	TO->FROM	GR ISLD-LNX3345.00 - HOLT.CO3 345.00 345KV CKT 1	720	720	0.04752	109.2222	LETCHER - SIOUX FALLS 230KV CKT 1
FDNS	00NR_G14_059	2	25SP	G14_059	TO->FROM	GR ISLD-LNX3345.00 - HOLT.CO3 345.00 345KV CKT 1	720	720	0.04635	109.2209	GEN640009 1-COOPER NUCLEAR STATION
FDNS	00NR_G14_059	2	20SP	G14_059	TO->FROM	GR ISLD-LNX3345.00 - HOLT.CO3 345.00 345KV CKT 1	720	720	0.04646	109.188	CHISAGO COUNTY - FORBES 500KV CKT 1
FDNS	00NR_G14_059	2	25SP	G14_059	TO->FROM	GR ISLD-LNX3345.00 - HOLT.CO3 345.00 345KV CKT 1	720	720	0.04711	109.1675	WATERTN-LNX3345.00 - WHITE 345KV CKT 1
FDNS	00NR_G14_059	2	20SP	G14_059	TO->FROM	GR ISLD-LNX3345.00 - HOLT.CO3 345.00 345KV CKT 1	720	720	0.04637	109.1661	ROSEAU - ROSEAUM 2 500.00 500KV CKT 1
FDNS	00NR_G14_059	2	20SP	G14_059	TO->FROM	GR ISLD-LNX3345.00 - HOLT.CO3 345.00 345KV CKT 1	720	720	0.04637	109.1661	ROSEAU - ROSEAUM 2 500.00 500KV CKT 1
FDNS	00NR_G14_059	2	20SP	G14_059	TO->FROM	GR ISLD-LNX3345.00 - HOLT.CO3 345.00 345KV CKT 1	720	720	0.04637	109.166	RIEL - ROSEAU 500KV CKT 1
FDNS	00NR_G14_059	2	25SP	G14_059	TO->FROM	GR ISLD-LNX3345.00 - HOLT.CO3 345.00 345KV CKT 1	720	720	0.04638	109.1323	SPLIT ROCK - WHITE 345KV CKT 1
FDNS	00NR_G14_059	2	25SP	G14_059	TO->FROM	GR ISLD-LNX3345.00 - HOLT.CO3 345.00 345KV CKT 1	720	720	0.04638	109.1323	SPLIT ROCK - WHITE 345KV CKT 1
FDNS	00NR_G14_059	2	20SP	G14_059	TO->FROM	GR ISLD-LNX3345.00 - HOLT.CO3 345.00 345KV CKT 1	720	720	0.04625	109.115	GEN645012 2-NEBRASKA CITY 2
FDNS	00NR_G14_059	2	25SP	G14_059	TO->FROM	GR ISLD-LNX3345.00 - HOLT.CO3 345.00 345KV CKT 1	720	720	0.04711	109.0963	WATERTN-LNX3345.00 - WATERTOWN 345KV CKT Z
FDNS	00NR_G14_059	2	25SP	G14_059	TO->FROM	GR ISLD-LNX3345.00 - HOLT.CO3 345.00 345KV CKT 1	720	720	0.04711	109.0904	P12:345:UMZW:# 1747 #: WT2 IN SD. WT2-WHT LINE FAULT
FDNS	00NR_G14_059	2	25SP	G14_059	TO->FROM	GR ISLD-LNX3345.00 - HOLT.CO3 345.00 345KV CKT 1	720	720	0.0466	109.0342	BISON 3 345.00 - BUFFALO 345KV CKT 1
FDNS	00NR_G14_059	2	20SP	G14_059	TO->FROM	GR ISLD-LNX3345.00 - HOLT.CO3 345.00 345KV CKT 1	720	720	0.04625	109.0238	GEN645011 1-NEBRASKA CITY 1
FDNS	00NR_G14_059	2	20SP	G14_059	TO->FROM	GR ISLD-LNX3345.00 - HOLT.CO3 345.00 345KV CKT 1	720	720	0.04709	109.0236	HANLON - SIOUX FALLS 230KV CKT 1
FDNS	00NR_G14_059	2	25SP	G14_059	TO->FROM	GR ISLD-LNX3345.00 - HOLT.CO3 345.00 345KV CKT 1	720	720	0.04635	109.0185	GEN337911 1-ARKANSAS NUCLEAR ONE UNIT #2
FDNS	00NR_G14_059	2	20SP	G14_059	TO->FROM	GR ISLD-LNX3345.00 - HOLT.CO3 345.00 345KV CKT 1	720	720	0.04665	109.0063	ARROWHEAD - ARROWHEAD 230 230KV CKT 1
FDNS	00NR_G14_059	2	20SP	G14_059	TO->FROM	GR ISLD-LNX3345.00 - HOLT.CO3 345.00 345KV CKT 1	720	720	0.04814	109.0036	P12:115:NPPD:1167A:AINSWRT7:ONEILL 7:BTB
FDNS	00NR_G14_059	2	20SP	G14_059	TO->FROM	GR ISLD-LNX3345.00 - HOLT.CO3 345.00 345KV CKT 1	720	720	0.04884	108.9989	CALLAWAY - MAXWELL 115KV CKT 1
FDNS	00NR_G14_059	2	25SP	G14_059	TO->FROM	GR ISLD-LNX3345.00 - HOLT.CO3 345.00 345KV CKT 1	720	720	0.04635	108.9632	GEN336153 1-WATERFORD UNIT#3
FDNS	00NR_G14_059	2	20SP	G14_059	TO->FROM	GR ISLD-LNX3345.00 - HOLT.CO3 345.00 345KV CKT 1	720	720	0.04658	108.9423	G09_001IST 345.00 - GROTON 345KV CKT 1
FDNS	00NR_G14_059	2	20SP	G14_059	TO->FROM	GR ISLD-LNX3345.00 - HOLT.CO3 345.00 345KV CKT 1	720	720	0.04701	108.9409	FT RANDAL - UTICA JCT 230KV CKT 1
FDNS	00NR_G14_059	2	20SP	G14_059	TO->FROM	GR ISLD-LNX3345.00 - HOLT.CO3 345.00 345KV CKT 1	720	720	0.04655	108.9401	GROTON-LNX3 345.00 - LELAND1-LNX3345.00 345KV CKT 1
FDNS	00NR_G14_059	2	25SP	G14_059	TO->FROM	GR ISLD-LNX3345.00 - HOLT.CO3 345.00 345KV CKT 1	720	720	0.04778	108.9395	THEDFRD3 345.00 (THEDFORDT2) 345/115/13.8KV TRANSFORMER CKT 1

SOLUTION	GROUP	SCENARIO	SEASON	SOURCE	DIRECTION	MONITORED ELEMENT	RATEA (MVA)	RATEB(MVA)	TDF	TC%LOADING (% MVA)	CONTINGENCY
FDNS	00NR_G14_059	2	20SP	G14_059	TO->FROM	GR ISLD-LNX3345.00 - HOLT.CO3 345.00 345KV CKT 1	720	720	0.0466	108.9106	PAHOJA - SIOUX FALLS 230KV CKT 1
FDNS	00NR_G14_059	2	20SP	G14_059	TO->FROM	GR ISLD-LNX3345.00 - HOLT.CO3 345.00 345KV CKT 1	720	720	0.04625	108.9094	GEN337653 1-WHITE BLUFF UNIT #2
FDNS	00NR_G14_059	2	20SP	G14_059	TO->FROM	GR ISLD-LNX3345.00 - HOLT.CO3 345.00 345KV CKT 1	720	720	0.04655	108.9081	GROTON - GROTON-LNX3 345.00 345KV CKT Z
FDNS	00NR_G14_059	2	20SP	G14_059	TO->FROM	GR ISLD-LNX3345.00 - HOLT.CO3 345.00 345KV CKT 1	720	720	0.04655	108.9077	P12:345:UMZB:# 109 #: LOS GRT IN ND. LOS GRT
FDNS	00NR_G14_059	2	20SP	G14_059	TO->FROM	GR ISLD-LNX3345.00 - HOLT.CO3 345.00 345KV CKT 1	720	720	0.04655	108.9034	LELAND OLDS - LELAND1-LNX3345.00 345KV CKT Z
FDNS	00NR_G14_059	2	25SP	G14_059	TO->FROM	GR ISLD-LNX3345.00 - HOLT.CO3 345.00 345KV CKT 1	720	720	0.04704	108.8885	RAUN - SUB 3451 FT CAL 345KV CKT 1
FDNS	00NR_G14_059	2	25SP	G14_059	TO->FROM	GR ISLD-LNX3345.00 - HOLT.CO3 345.00 345KV CKT 1	720	720	0.04704	108.8885	RAUN - SUB 3451 FT CAL 345KV CKT 1
FDNS	00NR_G14_059	2	20SP	G14_059	TO->FROM	GR ISLD-LNX3345.00 - HOLT.CO3 345.00 345KV CKT 1	720	720	0.04694	108.8872	LAKEFIELD 3 - NOBLES 345KV CKT 1
FDNS	00NR_G14_059	2	20SP	G14_059	TO->FROM	GR ISLD-LNX3345.00 - HOLT.CO3 345.00 345KV CKT 1	720	720	0.04625	108.876	GEN337652 1-WHITE BLUFF UNIT #1
FDNS	00NR_G14_059	2	20SP	G14_059	TO->FROM	GR ISLD-LNX3345.00 - HOLT.CO3 345.00 345KV CKT 1	720	720	0.04625	108.8621	GEN338143 1-INDEPENDENCE UNIT #1
FDNS	00NR_G14_059	2	20SP	G14_059	TO->FROM	GR ISLD-LNX3345.00 - HOLT.CO3 345.00 345KV CKT 1	720	720	0.04625	108.8614	GEN338146 1-INDEPENDENCE UNIT #2
FDNS	00NR_G14_059	2	25SP	G14_059	TO->FROM	GR ISLD-LNX3345.00 - HOLT.CO3 345.00 345KV CKT 1	720	720	0.04732	108.852	FT RANDAL - SIOUX CITY 230KV CKT 1
FDNS	00NR_G14_059	2	25SP	G14_059	TO->FROM	GR ISLD-LNX3345.00 - HOLT.CO3 345.00 345KV CKT 1	720	720	0.04635	108.8317	GEN641089 2-ENERGY CENTER 2
FDNS	00NR_G14_059	2	25SP	G14_059	TO->FROM	GR ISLD-LNX3345.00 - HOLT.CO3 345.00 345KV CKT 1	720	720	0.04656	108.8179	CHISAGO COUNTY - CHISAGO COUNTY 500KV CKT 1
FDNS	00NR_G14_059	2	20SP	G14_059	TO->FROM	GR ISLD-LNX3345.00 - HOLT.CO3 345.00 345KV CKT 1	720	720	0.05417	108.8101	CROOKED CREEK - RIVERDALE 230KV CKT 1
FDNS	00NR_G14_059	2	20SP	G14_059	TO->FROM	GR ISLD-LNX3345.00 - HOLT.CO3 345.00 345KV CKT 1	720	720	0.04625	108.771	GEN501801 1-DOLET HILLS UNIT1
FDNS	00NR_G14_059	2	25SP	G14_059	TO->FROM	GR ISLD-LNX3345.00 - HOLT.CO3 345.00 345KV CKT 1	720	720	0.04635	108.7544	GEN335831 1-RIVERBEND UNIT#1
FDNS	00NR_G14_059	2	25SP	G14_059	TO->FROM	GR ISLD-LNX3345.00 - HOLT.CO3 345.00 345KV CKT 1	720	720	0.05532	108.733	MINGO - SETAB 345KV CKT 1
FDNS	00NR_G14_059	2	25SP	G14_059	TO->FROM	GR ISLD-LNX3345.00 - HOLT.CO3 345.00 345KV CKT 1	720	720	0.05532	108.733	MINGO - SETAB 345KV CKT 1
FDNS	00NR_G14_059	2	20SP	G14_059	TO->FROM	GR ISLD-LNX3345.00 - HOLT.CO3 345.00 345KV CKT 1	720	720	0.04661	108.7322	BROOKING COUNTY - LYON COUNTY 345KV CKT 1
FDNS	00NR_G14_059	2	20SP	G14_059	TO->FROM	GR ISLD-LNX3345.00 - HOLT.CO3 345.00 345KV CKT 1	720	720	0.04663	108.7299	AS KING - EAU CLAIRE 345KV CKT 1
FDNS	00NR_G14_059	2	20SP	G14_059	TO->FROM	GR ISLD-LNX3345.00 - HOLT.CO3 345.00 345KV CKT 1	720	720	0.04709	108.7287	CARPENTER - HURON 230KV CKT 1
FDNS	00NR_G14_059	2	20SP	G14_059	TO->FROM	GR ISLD-LNX3345.00 - HOLT.CO3 345.00 345KV CKT 1	720	720	0.04625	108.726	GEN336252 1-NINEMILE POINT UNIT#5
FDNS	00NR_G14_059	2	20SP	G14_059	TO->FROM	GR ISLD-LNX3345.00 - HOLT.CO3 345.00 345KV CKT 1	720	720	0.04777	108.7033	FT THOMPSON - WESSINGTON 230KV CKT 1
FDNS	00NR_G14_059	2	20SP	G14_059	TO->FROM	GR ISLD-LNX3345.00 - HOLT.CO3 345.00 345KV CKT 1	720	720	0.04777	108.7033	FT THOMPSON - WESSINGTON 230KV CKT 1
FDNS	00NR_G14_059	2	25SP	G14_059	TO->FROM	GR ISLD-LNX3345.00 - HOLT.CO3 345.00 345KV CKT 1	720	720	0.04635	108.6936	GEN337910 1-ARKANSAS NUCLEAR ONE UNIT #1
FDNS	00NR_G14_059	2	20SP	G14_059	TO->FROM	GR ISLD-LNX3345.00 - HOLT.CO3 345.00 345KV CKT 1	720	720	0.04625	108.6878	GEN542962 2-IATAN UNIT #2
FDNS	00NR_G14_059	2	20SP	G14_059	TO->FROM	GR ISLD-LNX3345.00 - HOLT.CO3 345.00 345KV CKT 1	720	720	0.04625	108.6707	GEN336251 1-NINEMILE POINT UNIT#4
FDNS	00NR_G14_059	2	20SP	G14_059	TO->FROM	GR ISLD-LNX3345.00 - HOLT.CO3 345.00 345KV CKT 1	720	720	0.0466	108.6655	EAGLE 4 230.00 - PAHOJA 230KV CKT 1
FDNS	00NR_G14_059	2	25SP	G14_059	TO->FROM	GR ISLD-LNX3345.00 - HOLT.CO3 345.00 345KV CKT 1	720	720	0.04646	108.6647	SIOUXCY-LNX3345.00 - SPLIT ROCK 345KV CKT 1
FDNS	00NR_G14_059	2	25SP	G14_059	TO->FROM	GR ISLD-LNX3345.00 - HOLT.CO3 345.00 345KV CKT 1	720	720	0.04646	108.6647	SIOUXCY-LNX3345.00 - SPLIT ROCK 345KV CKT 1
FDNS	00NR_G14_059	2	20SP	G14_059	TO->FROM	GR ISLD-LNX3345.00 - HOLT.CO3 345.00 345KV CKT 1	720	720	0.04625	108.6605	GEN336831 1-BAXTER WILSON SES
FDNS	00NR_G14_059	2	20SP	G14_059	TO->FROM	GR ISLD-LNX3345.00 - HOLT.CO3 345.00 345KV CKT 1	720	720	0.04709	108.6598	HURON - WATERTOWN 230KV CKT 2
FDNS	00NR_G14_059	2	20SP	G14_059	TO->FROM	GR ISLD-LNX3345.00 - HOLT.CO3 345.00 345KV CKT 1	720	720	0.04709	108.6598	HURON - WATERTOWN 230KV CKT 2
FDNS	00NR_G14_059	2	25SP	G14_059	TO->FROM	GR ISLD-LNX3345.00 - HOLT.CO3 345.00 345KV CKT 1	720	720	0.04647	108.6562	RIEL - ROSEAU 500KV CKT 1
FDNS	00NR_G14_059	2	25SP	G14_059	TO->FROM	GR ISLD-LNX3345.00 - HOLT.CO3 345.00 345KV CKT 1	720	720	0.04647	108.6525	ROSEAU - ROSEAUM 2 500.00 500KV CKT 1
FDNS	00NR_G14_059	2	25SP	G14_059	TO->FROM	GR ISLD-LNX3345.00 - HOLT.CO3 345.00 345KV CKT 1	720	720	0.04647	108.6525	ROSEAU - ROSEAUM 2 500.00 500KV CKT 1
FDNS	00NR_G14_059	2	20SP	G14_059	TO->FROM	GR ISLD-LNX3345.00 - HOLT.CO3 345.00 345KV CKT 1	720	720	0.04625	108.6423	GEN337041 1-GERALD ANDRUS
FDNS	00NR_G14_059	2	20SP	G14_059	TO->FROM	GR ISLD-LNX3345.00 - HOLT.CO3 345.00 345KV CKT 1	720	720	0.04625	108.6398	GEN532751 1-WOLF CREEK GENERATING STATION UNIT 1
FDNS	00NR_G14_059	2	20SP	G14_059	TO->FROM	GR ISLD-LNX3345.00 - HOLT.CO3 345.00 345KV CKT 1	720	720	0.04685	108.638	RASMUSN - UTICA JCT 230KV CKT 1
FDNS	00NR_G14_059	2	25SP	G14_059	TO->FROM	GR ISLD-LNX3345.00 - HOLT.CO3 345.00 345KV CKT 1	720	720	0.04646	108.6362	P12:345:UMZW:# 907 #: SC2-SR IN IA. SC2-SR 345 KV LINE
FDNS	00NR_G14_059	2	20SP	G14_059	TO->FROM	GR ISLD-LNX3345.00 - HOLT.CO3 345.00 345KV CKT 1	720	720	0.04709	108.6314	CARPENTER - WATERTOWN 230KV CKT 1
FDNS	00NR_G14_059	2	20SP	G14_059	TO->FROM	GR ISLD-LNX3345.00 - HOLT.CO3 345.00 345KV CKT 1	720	720	0.04709	108.6314	CARPENTER - WATERTOWN 230KV CKT 1
FDNS	00NR_G14_059	2	20SP	G14_059	TO->FROM	GR ISLD-LNX3345.00 - HOLT.CO3 345.00 345KV CKT 1	720	720	0.04419	108.6213	STAPLETON - THEDFORD 115KV CKT 1
FDNS	00NR_G14_059	2	25SP	G14_059	TO->FROM	GR ISLD-LNX3345.00 - HOLT.CO3 345.00 345KV CKT 1	720	720	0.04646	108.6149	SIOUX CITY - SIOUXCY-LNX3345.00 345KV CKT Z
FDNS	00NR_G14_059	2	20SP	G14_059	TO->FROM	GR ISLD-LNX3345.00 - HOLT.CO3 345.00 345KV CKT 1	720	720	0.04661	108.5918	ALEXMRES3 345.00 - BISON 3 345.00 345KV CKT 1
FDNS	00NR_G14_059	2	20SP	G14_059	TO->FROM	GR ISLD-LNX3345.00 - HOLT.CO3 345.00 345KV CKT 1	720	720	0.04689	108.5863	HAZLETON - MITCHLCO3 345.00 345KV CKT 1
FDNS	00NR_G14_059	2	20SP	G14_059	TO->FROM	GR ISLD-LNX3345.00 - HOLT.CO3 345.00 345KV CKT 1	720	720	0.04625	108.5863	GEN501813 1-RODEMACHER UNIT 3
FDNS	00NR_G14_059	2	20SP	G14_059	TO->FROM	GR ISLD-LNX3345.00 - HOLT.CO3 345.00 345KV CKT 1	720	720	0.04625	108.5722	GEN344897 4-1LAB G4 20.000
FDNS	00NR_G14_059	2	20SP	G14_059	TO->FROM	GR ISLD-LNX3345.00 - HOLT.CO3 345.00 345KV CKT 1	720	720	0.04625	108.5711	GEN344894 1-1LAB G1 20.000
FDNS	00NR_G14_059	2	20SP	G14_059	TO->FROM	GR ISLD-LNX3345.00 - HOLT.CO3 345.00 345KV CKT 1	720	720	0.04625	108.571	GEN344895 2-1LAB G2 20.000
FDNS	00NR_G14_059	2	20SP	G14_059	TO->FROM	GR ISLD-LNX3345.00 - HOLT.CO3 345.00 345KV CKT 1	720	720	0.04625	108.5709	GEN344896 3-1LAB G3 20.000
FDNS	00NR_G14_059	2	25SP	G14_059	TO->FROM	GR ISLD-LNX3345.00 - HOLT.CO3 345.00 345KV CKT 1	720	720	0.04635	108.5688	GEN645012 2-NEBRASKA CITY 2
FDNS	00NR_G14_059	2	25SP	G14_059	TO->FROM	GR ISLD-LNX3345.00 - HOLT.CO3 345.00 345KV CKT 1	720	720	0.04892	108.5669	CALLAWAY - MAXWELL 115KV CKT 1
FDNS	00NR_G14_059	2	20SP	G14_059	TO->FROM	GR ISLD-LNX3345.00 - HOLT.CO3 345.00 345KV CKT 1	720	720	0.04625	108.5582	GEN629075 1-OTTUMWA GENERATOR FOR OTTUMWA UNIT NO 1
FDNS	00NR_G14_059	2	20SP	G14_059	TO->FROM	GR ISLD-LNX3345.00 - HOLT.CO3 345.00 345KV CKT 1	720	720	0.04723	108.5415	P12:115:NPPD:1164:ONEILL 7:JEFFREY9:BTB
FDNS	00NR_G14_059	2	20SP	G14_059	TO->FROM	GR ISLD-LNX3345.00 - HOLT.CO3 345.00 345KV CKT 1	720	720	0.04625	108.5383	GEN542957 1-IATAN UNIT #1
FDNS	00NR_G14_059	2	20SP	G14_059	TO->FROM	GR ISLD-LNX3345.00 - HOLT.CO3 345.00 345KV CKT 1	720	720	0.04625	108.5201	GEN345671 2-1RUSH G2 18.000
FDNS	00NR_G14_059	2	20SP	G14_059	TO->FROM	GR ISLD-LNX3345.00 - HOLT.CO3 345.00 345KV CKT 1	720	720	0.04625	108.517	GEN345670 1-1RUSH G1 18.000
FDNS	00NR_G14_059	2	25SP	G14_059	TO->FROM	GR ISLD-LNX3345.00 - HOLT.CO3 345.00 345KV CKT 1	720	720	0.04822	108.5096	P12:115:NPPD:1167A:AINSWRT7:ONEILL 7:BTB
FDNS	00NR_G14_059	2	20SP	G14_059	TO->FROM	GR ISLD-LNX3345.00 - HOLT.CO3 345.00 345KV CKT 1	720	720	0.04685	108.5065	RASMUSN - SIOUX CITY 230KV CKT 1
FDNS	00NR_G14_059	2	20SP	G14_059	TO->FROM	GR ISLD-LNX3345.00 - HOLT.CO3 345.00 345KV CKT 1	720	720	0.04691	108.504	GRIMES - LEHIGH 345KV CKT 1
FDNS	00NR_G14_059	2	25SP	G14_059	TO->FROM	GR ISLD-LNX3345.00 - HOLT.CO3 345.00 345KV CKT 1	720	720	0.04718	108.4984	HANLON - SIOUX FALLS 230KV CKT 1
FDNS	00NR_G14_059	2	20SP	G14_059	TO->FROM	GR ISLD-LNX3345.00 - HOLT.CO3 345.00 345KV CKT 1	720	720	0.04625	108.4872	GEN334440 1-SABINE UNIT 4
FDNS	00NR_G14_059	2	20SP	G14_059	TO->FROM	GR ISLD-LNX3345.00 - HOLT.CO3 345.00 345KV CKT 1	720	720	0.04472	108.4839	HOSKINS - RAUN 345KV CKT 1
FDNS	00NR_G14_059	2	20SP	G14_059	TO->FROM	GR ISLD-LNX3345.00 - HOLT.CO3 345.00 345KV CKT 1	720	720	0.04472	108.4839	HOSKINS - RAUN 345KV CKT 1
FDNS	00NR_G14_059	2	20SP	G14_059	TO->FROM	GR ISLD-LNX3345.00 - HOLT.CO3 345.00 345KV CKT 1	720	720	0.04625	108.4827	GEN335206 1-NELSON UNIT 6
FDNS	00NR_G14_059	2	20SP	G14_059	TO->FROM	GR ISLD-LNX3345.00 - HOLT.CO3 345.00 345KV CKT 1	720	720	0.04723	108.4794	CLEARWATER - ONEILL 115KV CKT 1
FDNS	00NR_G14_059	2	25SP	G14_059	TO->FROM	GR ISLD-LNX3345.00 - HOLT.CO3 345.00 345KV CKT 1	720	720	0.0471	108.479	FT RANDAL - UTICA JCT 230KV CKT 1
FDNS	00NR_G14_059	2	20SP	G14_059	TO->FROM	GR ISLD-LNX3345.00 - HOLT.CO3 345.00 345KV CKT 1	720	720	0.04814	108.4785	BASSETT 7115.00 - STUART 115KV CKT 1
FDNS	00NR_G14_059	2	25SP	G14_059	TO->FROM	GR ISLD-LNX3345.00 - HOLT.CO3 345.00 345KV CKT 1	720	720	0.04635	108.4716	GEN645011 1-NEBRASKA CITY 1
FDNS	00NR_G14_059	2	20SP	G14_059	TO->FROM	GR ISLD-LNX3345.00 - HOLT.CO3 345.00 345KV CKT 1	720	720	0.04625	108.4641	GEN645001 1-FORT CALHOUN 1
FDNS	00NR_G14_059	2	20SP	G14_059	TO->FROM	GR ISLD-LNX3345.00 - HOLT.CO3 345.00 345KV CKT 1	720	720	0.05513	108.4594	MINGO - SETAB 345KV CKT 1

SOLUTION	GROUP	SCENARIO	SEASON	SOURCE	DIRECTION	MONITORED ELEMENT	RATEA (MVA)	RATEB(MVA)	TDF	TC%LOADING (% MVA)	CONTINGENCY
FDNS	00NR_G14_059	2	20SP	G14_059	TO->FROM	GR ISLD-LNX3345.00 - HOLT.CO3 345.00 345KV CKT 1	720	720	0.05513	108.4594	MINGO - SETAB 345KV CKT 1
FDNS	00NR_G14_059	2	20SP	G14_059	TO->FROM	GR ISLD-LNX3345.00 - HOLT.CO3 345.00 345KV CKT 1	720	720	0.04637	108.4553	CNTSHNT3 345.00 - PRAIRIE3 345.00 345KV CKT 1
FDNS	00NR_G14_059	2	20SP	G14_059	TO->FROM	GR ISLD-LNX3345.00 - HOLT.CO3 345.00 345KV CKT 1	720	720	0.04814	108.4538	AINSWORTH - BASSETT 7115.00 115KV CKT 1
FDNS	00NR_G14_059	2	20SP	G14_059	TO->FROM	GR ISLD-LNX3345.00 - HOLT.CO3 345.00 345KV CKT 1	720	720	0.04873	108.4385	JEFFREY - NORTH PLATTE 115KV CKT 1
FDNS	00NR_G14_059	2	20SP	G14_059	TO->FROM	GR ISLD-LNX3345.00 - HOLT.CO3 345.00 345KV CKT 1	720	720	0.04782	108.4371	BUCKNER7 345.00 - SPEARVILLE 345KV CKT 1
FDNS	00NR_G14_059	2	20SP	G14_059	TO->FROM	GR ISLD-LNX3345.00 - HOLT.CO3 345.00 345KV CKT 1	720	720	0.04782	108.4371	BUCKNER7 345.00 - SPEARVILLE 345KV CKT 1
FDNS	00NR_G14_059	2	25SP	G14_059	TO->FROM	GR ISLD-LNX3345.00 - HOLT.CO3 345.00 345KV CKT 1	720	720	0.04703	108.4371	LAKEFIELD 3 - NOBLES 345KV CKT 1
FDNS	00NR_G14_059	2	20SP	G14_059	TO->FROM	GR ISLD-LNX3345.00 - HOLT.CO3 345.00 345KV CKT 1	720	720	0.04625	108.436	GEN532652 1-JEFFREY ENERGY CENTER UNIT 2
FDNS	00NR_G14_059	2	20SP	G14_059	TO->FROM	GR ISLD-LNX3345.00 - HOLT.CO3 345.00 345KV CKT 1	720	720	0.04625	108.4358	GEN532653 1-JEFFREY ENERGY CENTER UNIT 3
FDNS	00NR_G14_059	2	20SP	G14_059	TO->FROM	GR ISLD-LNX3345.00 - HOLT.CO3 345.00 345KV CKT 1	720	720	0.04625	108.4347	GEN532651 1-JEFFREY ENERGY CENTER UNIT 1
FDNS	00NR_G14_059	2	20SP	G14_059	TO->FROM	GR ISLD-LNX3345.00 - HOLT.CO3 345.00 345KV CKT 1	720	720	0.04625	108.4283	GEN501812 1-RODEMACHER UNIT 2
FDNS	00NR_G14_059	2	25SP	G14_059	TO->FROM	GR ISLD-LNX3345.00 - HOLT.CO3 345.00 345KV CKT 1	720	720	0.04635	108.4195	GEN337652 1-WHITE BLUFF UNIT #1
FDNS	00NR_G14_059	2	25SP	G14_059	TO->FROM	GR ISLD-LNX3345.00 - HOLT.CO3 345.00 345KV CKT 1	720	720	0.04674	108.4171	ARROWHEAD - ARROWHEAD 230 230KV CKT 1
FDNS	00NR_G14_059	2	20SP	G14_059	TO->FROM	GR ISLD-LNX3345.00 - HOLT.CO3 345.00 345KV CKT 1	720	720	0.04627	108.4147	P12:115:NPPD:WAPA4:SIDNEY 7:B.SPRGS7:BTB
FDNS	00NR_G14_059	2	20SP	G14_059	TO->FROM	GR ISLD-LNX3345.00 - HOLT.CO3 345.00 345KV CKT 1	720	720	0.04627	108.4147	P12:115:UMZB:# 119 #: IN NE.
FDNS	00NR_G14_059	2	20SP	G14_059	TO->FROM	GR ISLD-LNX3345.00 - HOLT.CO3 345.00 345KV CKT 1	720	720	0.0467	108.4127	ARPIN B4 345.00 - EAU CLAIRE 345KV CKT 1
FDNS	00NR_G14_059	2	25SP	G14_059	TO->FROM	GR ISLD-LNX3345.00 - HOLT.CO3 345.00 345KV CKT 1	720	720	0.04664	108.4121	GROTON-LNX3 345.00 - LELAND1-LNX3345.00 345KV CKT 1
FDNS	00NR_G14_059	2	20SP	G14_059	TO->FROM	GR ISLD-LNX3345.00 - HOLT.CO3 345.00 345KV CKT 1	720	720	0.04625	108.4089	GEN642067 1-PLATTE
FDNS	00NR_G14_059	2	25SP	G14_059	TO->FROM	GR ISLD-LNX3345.00 - HOLT.CO3 345.00 345KV CKT 1	720	720	0.04635	108.3975	GEN338143 1-INDEPENDENCE UNIT #1
FDNS	00NR_G14_059	2	25SP	G14_059	TO->FROM	GR ISLD-LNX3345.00 - HOLT.CO3 345.00 345KV CKT 1	720	720	0.04635	108.3959	GEN338146 1-INDEPENDENCE UNIT #2
FDNS	00NR_G14_059	2	20SP	G14_059	TO->FROM	GR ISLD-LNX3345.00 - HOLT.CO3 345.00 345KV CKT 1	720	720	0.04625	108.3896	GEN338388 1-1PLUM PT U1 23.000
FDNS	00NR_G14_059	2	20SP	G14_059	TO->FROM	GR ISLD-LNX3345.00 - HOLT.CO3 345.00 345KV CKT 1	720	720	0.04625	108.3803	GEN336191 1-LITTLE GYPSY UNIT#3
FDNS	00NR_G14_059	2	25SP	G14_059	TO->FROM	GR ISLD-LNX3345.00 - HOLT.CO3 345.00 345KV CKT 1	720	720	0.04664	108.3756	GROTON - GROTON-LNX3 345.00 345KV CKT Z
FDNS	00NR_G14_059	2	25SP	G14_059	TO->FROM	GR ISLD-LNX3345.00 - HOLT.CO3 345.00 345KV CKT 1	720	720	0.04667	108.3749	G09_001IST 345.00 - GROTON 345KV CKT 1
FDNS	00NR_G14_059	2	25SP	G14_059	TO->FROM	GR ISLD-LNX3345.00 - HOLT.CO3 345.00 345KV CKT 1	720	720	0.04664	108.3718	P12:345:UMZB:# 109 #: LOS GRT IN ND. LOS GRT
FDNS	00NR_G14_059	2	25SP	G14_059	TO->FROM	GR ISLD-LNX3345.00 - HOLT.CO3 345.00 345KV CKT 1	720	720	0.04664	108.3673	LELAND OLDS - LELAND1-LNX3345.00 345KV CKT Z
FDNS	00NR_G14_059	2	25SP	G14_059	TO->FROM	GR ISLD-LNX3345.00 - HOLT.CO3 345.00 345KV CKT 1	720	720	0.04635	108.3567	GEN337653 1-WHITE BLUFF UNIT #2
FDNS	00NR_G14_059	2	20SP	G14_059	TO->FROM	GR ISLD-LNX3345.00 - HOLT.CO3 345.00 345KV CKT 1	720	720	0.04814	108.3558	ATKINSON - STUART 115KV CKT 1
FDNS	00NR_G14_059	2	25SP	G14_059	TO->FROM	GR ISLD-LNX3345.00 - HOLT.CO3 345.00 345KV CKT 1	720	720	0.0467	108.3489	PAHOJA - SIOUX FALLS 230KV CKT 1
FDNS	00NR_G14_059	2	20SP	G14_059	TO->FROM	GR ISLD-LNX3345.00 - HOLT.CO3 345.00 345KV CKT 1	720	720	0.04625	108.3429	GEN335204 1-NELSON UNIT 4
FDNS	00NR_G14_059	2	20SP	G14_059	TO->FROM	GR ISLD-LNX3345.00 - HOLT.CO3 345.00 345KV CKT 1	720	720	0.04625	108.3357	GEN335614 1-WILLOW GLENN UNIT#4
FDNS	00NR_G14_059	2	20SP	G14_059	TO->FROM	GR ISLD-LNX3345.00 - HOLT.CO3 345.00 345KV CKT 1	720	720	0.04625	108.3343	GEN334441 1-SABINE UNIT 5
FDNS	00NR_G14_059	2	20SP	G14_059	TO->FROM	GR ISLD-LNX3345.00 - HOLT.CO3 345.00 345KV CKT 1	720	720	0.04625	108.3305	GEN336801 1-BAXTER WILSON UNIT #1
FDNS	00NR_G14_059	2	20SP	G14_059	TO->FROM	GR ISLD-LNX3345.00 - HOLT.CO3 345.00 345KV CKT 1	720	720	0.04625	108.3267	GEN336464 1-MICHOUD UNIT #3
FDNS	00NR_G14_059	2	20SP	G14_059	TO->FROM	GR ISLD-LNX3345.00 - HOLT.CO3 345.00 345KV CKT 1	720	720	0.04579	108.3233	P12:115:NPPD:WAPA2:HEMINGF7:SNAKECK7:BTB
FDNS	00NR_G14_059	2	20SP	G14_059	TO->FROM	GR ISLD-LNX3345.00 - HOLT.CO3 345.00 345KV CKT 1	720	720	0.04656	108.3177	NORTH LA CROSSE - NORTH ROCHESTER 345KV CKT 1
FDNS	00NR_G14_059	2	20SP	G14_059	TO->FROM	GR ISLD-LNX3345.00 - HOLT.CO3 345.00 345KV CKT 1	720	720	0.04625	108.3071	P12:115:UMZW:# 162 #: NEL IN ND. FAULT ON ML-NEL-MX-GA 115 KV
FDNS	00NR_G14_059	2	20SP	G14_059	TO->FROM	GR ISLD-LNX3345.00 - HOLT.CO3 345.00 345KV CKT 1	720	720	0.04639	108.3008	KOSSUTH 3 345.00 - WEBSTER 345KV CKT 1
FDNS	00NR_G14_059	2	20SP	G14_059	TO->FROM	GR ISLD-LNX3345.00 - HOLT.CO3 345.00 345KV CKT 1	720	720	0.04625	108.3006	GEN542951 5-HAWTHORN UNIT #5
FDNS	00NR_G14_059	2	20SP	G14_059	TO->FROM	GR ISLD-LNX3345.00 - HOLT.CO3 345.00 345KV CKT 1	720	720	0.04625	108.2931	GEN542955 1-LACYGNE UNIT #1
FDNS	00NR_G14_059	2	20SP	G14_059	TO->FROM	GR ISLD-LNX3345.00 - HOLT.CO3 345.00 345KV CKT 1	720	720	0.04742	108.2899	FT THOMPSON - HURON 230KV CKT 1
FDNS	00NR_G14_059	2	20SP	G14_059	TO->FROM	GR ISLD-LNX3345.00 - HOLT.CO3 345.00 345KV CKT 1	720	720	0.04742	108.2899	FT THOMPSON - HURON 230KV CKT 1
FDNS	00NR_G14_059	2	20SP	G14_059	TO->FROM	GR ISLD-LNX3345.00 - HOLT.CO3 345.00 345KV CKT 1	720	720	0.04742	108.2899	FT THOMPSON - HURON 230KV CKT 2
FDNS	00NR_G14_059	2	20SP	G14_059	TO->FROM	GR ISLD-LNX3345.00 - HOLT.CO3 345.00 345KV CKT 1	720	720	0.04742	108.2899	FT THOMPSON - HURON 230KV CKT 2
FDNS	00NR_G14_059	2	20SP	G14_059	TO->FROM	GR ISLD-LNX3345.00 - HOLT.CO3 345.00 345KV CKT 1	720	720	0.04884	108.2833	BROKEN BOW - CALLAWAY 115KV CKT 1
FDNS	00NR_G14_059	2	20SP	G14_059	TO->FROM	GR ISLD-LNX3345.00 - HOLT.CO3 345.00 345KV CKT 1	720	720	0.04894	108.2784	KEYSTONE - SIDNEY1-LNX3345.00 345KV CKT 1
FDNS	00NR_G14_059	2	20SP	G14_059	TO->FROM	GR ISLD-LNX3345.00 - HOLT.CO3 345.00 345KV CKT 1	720	720	0.04654	108.2734	GLENBORO SOUTH - RUGBY 230KV CKT 1
FDNS	00NR_G14_059	2	25SP	G14_059	TO->FROM	GR ISLD-LNX3345.00 - HOLT.CO3 345.00 345KV CKT 1	720	720	0.04718	108.2673	CARPENTER - HURON 230KV CKT 1
FDNS	00NR_G14_059	2	25SP	G14_059	TO->FROM	GR ISLD-LNX3345.00 - HOLT.CO3 345.00 345KV CKT 1	720	720	0.04671	108.2532	BROOKING COUNTY - LYON COUNTY 345KV CKT 1
FDNS	00NR_G14_059	2	25SP	G14_059	TO->FROM	GR ISLD-LNX3345.00 - HOLT.CO3 345.00 345KV CKT 1	720	720	0.05423	108.2501	CROOKED CREEK - RIVERDALE 230KV CKT 1
FDNS	00NR_G14_059	2	25SP	G14_059	TO->FROM	GR ISLD-LNX3345.00 - HOLT.CO3 345.00 345KV CKT 1	720	720	0.04625	108.2435	GEN334433 1-SABINE UNIT 3
FDNS	00NR_G14_059	2	25SP	G14_059	TO->FROM	GR ISLD-LNX3345.00 - HOLT.CO3 345.00 345KV CKT 1	720	720	0.04635	108.234	GEN501801 1-DOLET HILLS UNIT1
FDNS	00NR_G14_059	2	20SP	G14_059	TO->FROM	GR ISLD-LNX3345.00 - HOLT.CO3 345.00 345KV CKT 1	720	720	0.04894	108.229	SIDNEY - SIDNEY1-LNX3345.00 345KV CKT Z
FDNS	00NR_G14_059	2	20SP	G14_059	TO->FROM	GR ISLD-LNX3345.00 - HOLT.CO3 345.00 345KV CKT 1	720	720	0.04636	108.2289	GAVINS POINT - HARTINGTON 115KV CKT 1
FDNS	00NR_G14_059	2	20SP	G14_059	TO->FROM	GR ISLD-LNX3345.00 - HOLT.CO3 345.00 345KV CKT 1	720	720	0.04814	108.227	ATKINSON - EMMET 115KV CKT 1
FDNS	00NR_G14_059	2	20SP	G14_059	TO->FROM	GR ISLD-LNX3345.00 - HOLT.CO3 345.00 345KV CKT 1	720	720	0.04723	108.2192	CLEARWATER - NELIGH 115KV CKT 1
FDNS	00NR_G14_059	2	20SP	G14_059	TO->FROM	GR ISLD-LNX3345.00 - HOLT.CO3 345.00 345KV CKT 1	720	720	0.04625	108.2059	GEN336222 1-LITTLE GYPSY UNIT#2
FDNS	00NR_G14_059	2	20SP	G14_059	TO->FROM	GR ISLD-LNX3345.00 - HOLT.CO3 345.00 345KV CKT 1	720	720	0.04521	108.2056	SIDNEY - STEGALL 345KV CKT 1
FDNS	00NR_G14_059	2	25SP	G14_059	TO->FROM	GR ISLD-LNX3345.00 - HOLT.CO3 345.00 345KV CKT 1	720	720	0.04718	108.1995	HURON - WATERTOWN 230KV CKT 2
FDNS	00NR_G14_059	2	25SP	G14_059	TO->FROM	GR ISLD-LNX3345.00 - HOLT.CO3 345.00 345KV CKT 1	720	720	0.04718	108.1995	HURON - WATERTOWN 230KV CKT 2
FDNS	00NR_G14_059	2	20SP	G14_059	TO->FROM	GR ISLD-LNX3345.00 - HOLT.CO3 345.00 345KV CKT 1	720	720	0.04625	108.1958	GEN542956 2-LACYGNE UNIT #2
FDNS	00NR_G14_059	2	20SP	G14_059	TO->FROM	GR ISLD-LNX3345.00 - HOLT.CO3 345.00 345KV CKT 1	720	720	0.04053	108.1917	NUNDRWD - WAYSIDE 230KV CKT 1
FDNS	00NR_G14_059	2	25SP	G14_059	TO->FROM	GR ISLD-LNX3345.00 - HOLT.CO3 345.00 345KV CKT 1	720	720	0.04635	108.1881	GEN336252 1-NINEMILE POINT UNIT#5
FDNS	00NR_G14_059	2	25SP	G14_059	TO->FROM	GR ISLD-LNX3345.00 - HOLT.CO3 345.00 345KV CKT 1	720	720	0.04786	108.1848	FT THOMPSON - WESSINGTON 230KV CKT 1
FDNS	00NR_G14_059	2	25SP	G14_059	TO->FROM	GR ISLD-LNX3345.00 - HOLT.CO3 345.00 345KV CKT 1	720	720	0.04786	108.1848	FT THOMPSON - WESSINGTON 230KV CKT 1
FDNS	00NR_G14_059	2	20SP	G14_059	TO->FROM	GR ISLD-LNX3345.00 - HOLT.CO3 345.00 345KV CKT 1	720	720	0.0467	108.1823	NMA B3 345 345.00 - NORTH LA CROSSE 345KV CKT 1
FDNS	00NR_G14_059	2	20SP	G14_059	TO->FROM	GR ISLD-LNX3345.00 - HOLT.CO3 345.00 345KV CKT 1	720	720	0.04603	108.1782	P12:115:NPPD:WAPA6:FTRANDL7:ONEILL 7:BTB
FDNS	00NR_G14_059	2	20SP	G14_059	TO->FROM	GR ISLD-LNX3345.00 - HOLT.CO3 345.00 345KV CKT 1	720	720	0.04603	108.1782	P12:115:UMZB:# 115 #: SE IN NE. FR-SE-ON
FDNS	00NR_G14_059	2	20SP	G14_059	TO->FROM	GR ISLD-LNX3345.00 - HOLT.CO3 345.00 345KV CKT 1	720	720	0.04664	108.1743	WINNER - WITTEN 115KV CKT 1
FDNS	00NR_G14_059	2	20SP	G14_059	TO->FROM	GR ISLD-LNX3345.00 - HOLT.CO3 345.00 345KV CKT 1	720	720	0.04625	108.1717	GEN336151 1-WATERFORD UNIT#1
FDNS	00NR_G14_059	2	20SP	G14_059	TO->FROM	GR ISLD-LNX3345.00 - HOLT.CO3 345.00 345KV CKT 1	720	720	0.04625	108.1717	GEN336152 1-WATERFORD UNIT#2
FDNS	00NR_G14_059	2	25SP	G14_059	TO->FROM	GR ISLD-LNX3345.00 - HOLT.CO3 345.00 345KV CKT 1	720	720	0.04718	108.1672	CARPENTER - WATERTOWN 230KV CKT 1
FDNS	00NR_G14_059	2	25SP	G14_059	TO->FROM	GR ISLD-LNX3345.00 - HOLT.CO3 345.00 345KV CKT 1	720	720	0.04718	108.1672	CARPENTER - WATERTOWN 230KV CKT 1

SOLUTION	GROUP	SCENARIO	SEASON	SOURCE	DIRECTION	MONITORED ELEMENT	RATEA (MVA)	RATEB(MVA)	TDF	TC%LOADING (% MVA)	CONTINGENCY
FDNS	00NR_G14_059	2	25SP	G14_059	TO->FROM	GR ISLD-LNX3345.00 - HOLT.CO3 345.00 345KV CKT 1	720	720	0.04672	108.1667	AS KING - EAU CLAIRE 345KV CKT 1
FDNS	00NR_G14_059	2	20SP	G14_059	TO->FROM	GR ISLD-LNX3345.00 - HOLT.CO3 345.00 345KV CKT 1	720	720	0.04625	108.1601	P12:115:TSGT:BLKWDCK7-ELSIETP7
FDNS	00NR_G14_059	2	25SP	G14_059	TO->FROM	GR ISLD-LNX3345.00 - HOLT.CO3 345.00 345KV CKT 1	720	720	0.04635	108.1563	GEN542962 2-IATAN UNIT #2
FDNS	00NR_G14_059	2	20SP	G14_059	TO->FROM	GR ISLD-LNX3345.00 - HOLT.CO3 345.00 345KV CKT 1	720	720	0.04633	108.155	CENTER - COYOTE 345KV CKT 1
FDNS	00NR_G14_059	2	20SP	G14_059	TO->FROM	GR ISLD-LNX3345.00 - HOLT.CO3 345.00 345KV CKT 1	720	720	0.04625	108.1473	P13:230-345:NPPD:NUCOR-1
FDNS	00NR_G14_059	2	25SP	G14_059	TO->FROM	GR ISLD-LNX3345.00 - HOLT.CO3 345.00 345KV CKT 1	720	720	0.04635	108.1449	GEN532751 1-WOLF CREEK GENERATING STATION UNIT 1
FDNS	00NR_G14_059	2	20SP	G14_059	TO->FROM	GR ISLD-LNX3345.00 - HOLT.CO3 345.00 345KV CKT 1	720	720	0.04625	108.1436	P13:115-230:NPPD:NUCOR-3
FDNS	00NR_G14_059	2	25SP	G14_059	TO->FROM	GR ISLD-LNX3345.00 - HOLT.CO3 345.00 345KV CKT 1	720	720	0.04698	108.1409	HAZLETON - MITCHLCO3 345.00 345KV CKT 1
FDNS	00NR_G14_059	2	20SP	G14_059	TO->FROM	GR ISLD-LNX3345.00 - HOLT.CO3 345.00 345KV CKT 1	720	720	0.04628	108.1395	MENNO JCT - TRIPP JCT 115KV CKT 1
FDNS	00NR_G14_059	2	20SP	G14_059	TO->FROM	GR ISLD-LNX3345.00 - HOLT.CO3 345.00 345KV CKT 1	720	720	0.04842	108.1365	AINSWORTH - AINSWORTH 115KV CKT 1
FDNS	00NR_G14_059	2	25SP	G14_059	TO->FROM	GR ISLD-LNX3345.00 - HOLT.CO3 345.00 345KV CKT 1	720	720	0.04635	108.1347	GEN336251 1-NINEMILE POINT UNIT#4
FDNS	00NR_G14_059	2	25SP	G14_059	TO->FROM	GR ISLD-LNX3345.00 - HOLT.CO3 345.00 345KV CKT 1	720	720	0.04484	108.1306	HOSKINS - RAUN 345KV CKT 1
FDNS	00NR_G14_059	2	25SP	G14_059	TO->FROM	GR ISLD-LNX3345.00 - HOLT.CO3 345.00 345KV CKT 1	720	720	0.04484	108.1306	HOSKINS - RAUN 345KV CKT 1
FDNS	00NR_G14_059	2	20SP	G14_059	TO->FROM	GR ISLD-LNX3345.00 - HOLT.CO3 345.00 345KV CKT 1	720	720	0.04689	108.1272	ADAMS - MITCHLCO3 345.00 345KV CKT 1
FDNS	00NR_G14_059	2	25SP	G14_059	TO->FROM	GR ISLD-LNX3345.00 - HOLT.CO3 345.00 345KV CKT 1	720	720	0.0443	108.1267	STAPLETON - THEDFORD 115KV CKT 1
FDNS	00NR_G14_059	2	20SP	G14_059	TO->FROM	GR ISLD-LNX3345.00 - HOLT.CO3 345.00 345KV CKT 1	720	720	0.04625	108.1233	GEN303007 1-1BC2 U2
FDNS	00NR_G14_059	2	20SP	G14_059	TO->FROM	GR ISLD-LNX3345.00 - HOLT.CO3 345.00 345KV CKT 1	720	720	0.04625	108.1208	GEN303006 1-1BC2 U1
FDNS	00NR_G14_059	2	20SP	G14_059	TO->FROM	GR ISLD-LNX3345.00 - HOLT.CO3 345.00 345KV CKT 1	720	720	0.04682	108.1189	RAUN - SIOUX CITY 345KV CKT 1
FDNS	00NR_G14_059	2	20SP	G14_059	TO->FROM	GR ISLD-LNX3345.00 - HOLT.CO3 345.00 345KV CKT 1	720	720	0.04682	108.1189	RAUN - SIOUX CITY 345KV CKT 1
FDNS	00NR_G14_059	2	25SP	G14_059	TO->FROM	GR ISLD-LNX3345.00 - HOLT.CO3 345.00 345KV CKT 1	720	720	0.04647	108.1149	CNTSHNT3 345.00 - PRAIRIE3 345.00 345KV CKT 1
FDNS	00NR_G14_059	2	25SP	G14_059	TO->FROM	GR ISLD-LNX3345.00 - HOLT.CO3 345.00 345KV CKT 1	720	720	0.04635	108.1115	GEN336831 1-BAXTER WILSON SES
FDNS	00NR_G14_059	2	20SP	G14_059	TO->FROM	GR ISLD-LNX3345.00 - HOLT.CO3 345.00 345KV CKT 1	720	720	0.04625	108.1037	GEN562547 1-G14_039_3 0.6900
FDNS	00NR_G14_059	2	25SP	G14_059	TO->FROM	GR ISLD-LNX3345.00 - HOLT.CO3 345.00 345KV CKT 1	720	720	0.04671	108.0969	ALEXMRES3 345.00 - BISON 3 345.00 345KV CKT 1
FDNS	00NR_G14_059	2	20SP	G14_059	TO->FROM	GR ISLD-LNX3345.00 - HOLT.CO3 345.00 345KV CKT 1	720	720	0.04628	108.0907	MENNO JCT - UTICA 115KV CKT 1
FDNS	00NR_G14_059	2	20SP	G14_059	TO->FROM	GR ISLD-LNX3345.00 - HOLT.CO3 345.00 345KV CKT 1	720	720	0.04634	108.0878	GARRISON - JAMES TOWN 230KV CKT 1
FDNS	00NR_G14_059	2	25SP	G14_059	TO->FROM	GR ISLD-LNX3345.00 - HOLT.CO3 345.00 345KV CKT 1	720	720	0.0467	108.0789	EAGLE 4 230.00 - PAHOJA 230KV CKT 1
FDNS	00NR_G14_059	2	20SP	G14_059	TO->FROM	GR ISLD-LNX3345.00 - HOLT.CO3 345.00 345KV CKT 1	720	720	0.04629	108.0782	BROOKING COUNTY - BSSOUTH3 345.00 345KV CKT 1
FDNS	00NR_G14_059	2	20SP	G14_059	TO->FROM	GR ISLD-LNX3345.00 - HOLT.CO3 345.00 345KV CKT 1	720	720	0.04668	108.0775	ADAMS - PLEASANT VALLEY 345KV CKT 1
FDNS	00NR_G14_059	2	20SP	G14_059	TO->FROM	GR ISLD-LNX3345.00 - HOLT.CO3 345.00 345KV CKT 1	720	720	0.04625	108.0752	GEN303008 1-1BC2 U3
FDNS	00NR_G14_059	2	25SP	G14_059	TO->FROM	GR ISLD-LNX3345.00 - HOLT.CO3 345.00 345KV CKT 1	720	720	0.04635	108.072	GEN337041 1-GERALD ANDRUS
FDNS	00NR_G14_059	2	20SP	G14_059	TO->FROM	GR ISLD-LNX3345.00 - HOLT.CO3 345.00 345KV CKT 1	720	720	0.04625	108.0717	GEN336170 1-GULF OXY U4
FDNS	00NR_G14_059	2	20SP	G14_059	TO->FROM	GR ISLD-LNX3345.00 - HOLT.CO3 345.00 345KV CKT 1	720	720	0.04664	108.0564	GREGORY - WINNER 115KV CKT 1
FDNS	00NR_G14_059	2	20SP	G14_059	TO->FROM	GR ISLD-LNX3345.00 - HOLT.CO3 345.00 345KV CKT 1	720	720	0.04646	108.0547	NORTH ROCHESTER - PRAIRIE ISLAND 345KV CKT 1
FDNS	00NR_G14_059	2	20SP	G14_059	TO->FROM	GR ISLD-LNX3345.00 - HOLT.CO3 345.00 345KV CKT 1	720	720	0.04664	108.0539	P12:115:UMZW:# 172 #: WI IN SD.
FDNS	00NR_G14_059	2	20SP	G14_059	TO->FROM	GR ISLD-LNX3345.00 - HOLT.CO3 345.00 345KV CKT 1	720	720	0.04782	108.0509	BUCKNER7 345.00 - HOLCOMB 345KV CKT 1
FDNS	00NR_G14_059	2	20SP	G14_059	TO->FROM	GR ISLD-LNX3345.00 - HOLT.CO3 345.00 345KV CKT 1	720	720	0.04782	108.0509	BUCKNER7 345.00 - HOLCOMB 345KV CKT 1
FDNS	00NR_G14_059	2	20SP	G14_059	TO->FROM	GR ISLD-LNX3345.00 - HOLT.CO3 345.00 345KV CKT 1	720	720	0.04625	108.0449	P13:115-345:NPPD:NUCOR-2
FDNS	00NR_G14_059	2	25SP	G14_059	TO->FROM	GR ISLD-LNX3345.00 - HOLT.CO3 345.00 345KV CKT 1	720	720	0.04695	108.0446	RASMUSN - UTICA JCT 230KV CKT 1
FDNS	00NR_G14_059	2	20SP	G14_059	TO->FROM	GR ISLD-LNX3345.00 - HOLT.CO3 345.00 345KV CKT 1	720	720	0.04628	108.0418	P12:115:UMZZ:# 237 #: MEN IN SD. MENNO JUNCTION IS A TAP (UJ-MEN-TP).
FDNS	00NR_G14_059	2	20SP	G14_059	TO->FROM	GR ISLD-LNX3345.00 - HOLT.CO3 345.00 345KV CKT 1	720	720	0.04646	108.0382	APPLEDORN 4 230.00 - WATERTOWN 230KV CKT 1
FDNS	00NR_G14_059	2	20SP	G14_059	TO->FROM	GR ISLD-LNX3345.00 - HOLT.CO3 345.00 345KV CKT 1	720	720	0.04646	108.0382	APPLEDORN 4 230.00 - WATERTOWN 230KV CKT 1
FDNS	00NR_G14_059	2	20SP	G14_059	TO->FROM	GR ISLD-LNX3345.00 - HOLT.CO3 345.00 345KV CKT 1	720	720	0.04652	108.0351	DENISON - SIOUX CITY 230KV CKT 1
FDNS	00NR_G14_059	2	25SP	G14_059	TO->FROM	GR ISLD-LNX3345.00 - HOLT.CO3 345.00 345KV CKT 1	720	720	0.04635	108.035	GEN501813 1-RODEMACHER UNIT 3
FDNS	00NR_G14_059	2	20SP	G14_059	TO->FROM	GR ISLD-LNX3345.00 - HOLT.CO3 345.00 345KV CKT 1	720	720	0.04625	108.0342	P13:230:UMZW:# 2218 #: FP IN MT. LOSS OF TRANSFORMER (AT2).
FDNS	00NR_G14_059	2	20SP	G14_059	TO->FROM	GR ISLD-LNX3345.00 - HOLT.CO3 345.00 345KV CKT 1	720	720	0.04637	108.0265	COLUMEAST - SHELL CREEK 345KV CKT 1
FDNS	00NR_G14_059	2	20SP	G14_059	TO->FROM	GR ISLD-LNX3345.00 - HOLT.CO3 345.00 345KV CKT 1	720	720	0.04625	108.0195	GEN636641 1-LOUISA UNIT 1
FDNS	00NR_G14_059	2	20SP	G14_059	TO->FROM	GR ISLD-LNX3345.00 - HOLT.CO3 345.00 345KV CKT 1	720	720	0.04625	108.0129	GEN501811 1-RODEMACHER UNIT 1
FDNS	00NR_G14_059	2	20SP	G14_059	TO->FROM	GR ISLD-LNX3345.00 - HOLT.CO3 345.00 345KV CKT 1	720	720	0.04419	108.0092	MAXWELL - STAPLETON 115KV CKT 1
FDNS	00NR_G14_059	2	25SP	G14_059	TO->FROM	GR ISLD-LNX3345.00 - HOLT.CO3 345.00 345KV CKT 1	720	720	0.047	108.0025	GRIMES - LEHIGH 345KV CKT 1
FDNS	00NR_G14_059	2	25SP	G14_059	TO->FROM	GR ISLD-LNX3345.00 - HOLT.CO3 345.00 345KV CKT 1	720	720	0.04635	107.9967	GEN344897 4-1LAB G4 20.000
FDNS	00NR_G14_059	2	25SP	G14_059	TO->FROM	GR ISLD-LNX3345.00 - HOLT.CO3 345.00 345KV CKT 1	720	720	0.04635	107.9965	GEN542957 1-IATAN UNIT #1
FDNS	00NR_G14_059	2	25SP	G14_059	TO->FROM	GR ISLD-LNX3345.00 - HOLT.CO3 345.00 345KV CKT 1	720	720	0.04635	107.9957	GEN344894 1-1LAB G1 20.000
FDNS	00NR_G14_059	2	25SP	G14_059	TO->FROM	GR ISLD-LNX3345.00 - HOLT.CO3 345.00 345KV CKT 1	720	720	0.04635	107.9956	GEN344895 2-1LAB G2 20.000
FDNS	00NR_G14_059	2	25SP	G14_059	TO->FROM	GR ISLD-LNX3345.00 - HOLT.CO3 345.00 345KV CKT 1	720	720	0.04635	107.9955	GEN344896 3-1LAB G3 20.000
FDNS	00NR_G14_059	2	25SP	G14_059	TO->FROM	GR ISLD-LNX3345.00 - HOLT.CO3 345.00 345KV CKT 1	720	720	0.04636	107.9676	P12:115:NPPD:WAPA4:SIDNEY 7:B.SPRGS7:BTB
FDNS	00NR_G14_059	2	25SP	G14_059	TO->FROM	GR ISLD-LNX3345.00 - HOLT.CO3 345.00 345KV CKT 1	720	720	0.04636	107.9676	P12:115:UMZB:# 119 #: IN NE.
FDNS	00NR_G14_059	2	25SP	G14_059	TO->FROM	GR ISLD-LNX3345.00 - HOLT.CO3 345.00 345KV CKT 1	720	720	0.04882	107.9674	JEFFREY - NORTH PLATTE 115KV CKT 1
FDNS	00NR_G14_059	2	25SP	G14_059	TO->FROM	GR ISLD-LNX3345.00 - HOLT.CO3 345.00 345KV CKT 1	720	720	0.04822	107.9637	BASSETT 7115.00 - STUART 115KV CKT 1
FDNS	00NR_G14_059	2	25SP	G14_059	TO->FROM	GR ISLD-LNX3345.00 - HOLT.CO3 345.00 345KV CKT 1	720	720	0.04635	107.9437	GEN345671 2-1RUSH G2 18.000
FDNS	00NR_G14_059	2	25SP	G14_059	TO->FROM	GR ISLD-LNX3345.00 - HOLT.CO3 345.00 345KV CKT 1	720	720	0.04635	107.9409	GEN345670 1-1RUSH G1 18.000
FDNS	00NR_G14_059	2	25SP	G14_059	TO->FROM	GR ISLD-LNX3345.00 - HOLT.CO3 345.00 345KV CKT 1	720	720	0.04635	107.922	GEN335206 1-NELSON UNIT 6
FDNS	00NR_G14_059	2	25SP	G14_059	TO->FROM	GR ISLD-LNX3345.00 - HOLT.CO3 345.00 345KV CKT 1	720	720	0.04635	107.9115	GEN532652 1-JEFFREY ENERGY CENTER UNIT 2
FDNS	00NR_G14_059	2	25SP	G14_059	TO->FROM	GR ISLD-LNX3345.00 - HOLT.CO3 345.00 345KV CKT 1	720	720	0.04635	107.9113	GEN532653 1-JEFFREY ENERGY CENTER UNIT 3
FDNS	00NR_G14_059	2	25SP	G14_059	TO->FROM	GR ISLD-LNX3345.00 - HOLT.CO3 345.00 345KV CKT 1	720	720	0.04635	107.9106	GEN532651 1-JEFFREY ENERGY CENTER UNIT 1
FDNS	00NR_G14_059	2	25SP	G14_059	TO->FROM	GR ISLD-LNX3345.00 - HOLT.CO3 345.00 345KV CKT 1	720	720	0.04635	107.9102	GEN629075 1-OTTUMWA GENERATOR FOR OTTUMWA UNIT NO 1
FDNS	00NR_G14_059	2	25SP	G14_059	TO->FROM	GR ISLD-LNX3345.00 - HOLT.CO3 345.00 345KV CKT 1	720	720	0.04732	107.909	P12:115:NPPD:1164:ONEILL 7:JEFFREY9:BTB
FDNS	00NR_G14_059	2	25SP	G14_059	TO->FROM	GR ISLD-LNX3345.00 - HOLT.CO3 345.00 345KV CKT 1	720	720	0.04822	107.9066	AINSWORTH - BASSETT 7115.00 115KV CKT 1
FDNS	00NR_G14_059	2	25SP	G14_059	TO->FROM	GR ISLD-LNX3345.00 - HOLT.CO3 345.00 345KV CKT 1	720	720	0.04635	107.9028	GEN334440 1-SABINE UNIT 4
FDNS	00NR_G14_059	2	25SP	G14_059	TO->FROM	GR ISLD-LNX3345.00 - HOLT.CO3 345.00 345KV CKT 1	720	720	0.04695	107.8938	RASMUSN - SIOUX CITY 230KV CKT 1
FDNS	00NR_G14_059	2	25SP	G14_059	TO->FROM	GR ISLD-LNX3345.00 - HOLT.CO3 345.00 345KV CKT 1	720	720	0.04663	107.8893	GLENBORO SOUTH - RUGBY 230KV CKT 1
FDNS	00NR_G14_059	2	25SP	G14_059	TO->FROM	GR ISLD-LNX3345.00 - HOLT.CO3 345.00 345KV CKT 1	720	720	0.04635	107.8873	GEN338388 1-1PLUM PT U1 23.000
FDNS	00NR_G14_059	2	25SP	G14_059	TO->FROM	GR ISLD-LNX3345.00 - HOLT.CO3 345.00 345KV CKT 1	720	720	0.04635	107.8713	GEN645001 1-FORT CALHOUN 1
FDNS	00NR_G14_059	2	25SP	G14_059	TO->FROM	GR ISLD-LNX3345.00 - HOLT.CO3 345.00 345KV CKT 1	720	720	0.04678	107.8708	ARPIN B4 345.00 - EAU CLAIRE 345KV CKT 1

SOLUTION	GROUP	SCENARIO	SEASON	SOURCE	DIRECTION	MONITORED ELEMENT	RATEA (MVA)	RATEB(MVA)	TDF	TC%LOADING (% MVA)	CONTINGENCY
FDNS	00NR_G14_059	2	25SP	G14_059	TO->FROM	GR ISLD-LNX3345.00 - HOLT.CO3 345.00 345KV CKT 1	720	720	0.04635	107.8687	GEN642067 1-PLATTE
FDNS	00NR_G14_059	2	25SP	G14_059	TO->FROM	GR ISLD-LNX3345.00 - HOLT.CO3 345.00 345KV CKT 1	720	720	0.04905	107.8465	KEYSTONE - SIDNEY1-LNX3345.00 345KV CKT 1
FDNS	00NR_G14_059	2	25SP	G14_059	TO->FROM	GR ISLD-LNX3345.00 - HOLT.CO3 345.00 345KV CKT 1	720	720	0.05207	107.8421	HOLCOMB - SETAB 345KV CKT 1
FDNS	00NR_G14_059	2	25SP	G14_059	TO->FROM	GR ISLD-LNX3345.00 - HOLT.CO3 345.00 345KV CKT 1	720	720	0.05207	107.8421	HOLCOMB - SETAB 345KV CKT 1
FDNS	00NR_G14_059	2	25SP	G14_059	TO->FROM	GR ISLD-LNX3345.00 - HOLT.CO3 345.00 345KV CKT 1	720	720	0.04732	107.8358	CLEARWATER - ONEILL 115KV CKT 1
FDNS	00NR_G14_059	2	25SP	G14_059	TO->FROM	GR ISLD-LNX3345.00 - HOLT.CO3 345.00 345KV CKT 1	720	720	0.04635	107.8332	GEN501812 1-RODEMACHER UNIT 2
FDNS	00NR_G14_059	2	25SP	G14_059	TO->FROM	GR ISLD-LNX3345.00 - HOLT.CO3 345.00 345KV CKT 1	720	720	0.04649	107.8296	KOSSUTH 3 345.00 - WEBSTER 345KV CKT 1
FDNS	00NR_G14_059	2	25SP	G14_059	TO->FROM	GR ISLD-LNX3345.00 - HOLT.CO3 345.00 345KV CKT 1	720	720	0.04635	107.829	GEN336191 1-LITTLE GYPSY UNIT#3
FDNS	00NR_G14_059	2	25SP	G14_059	TO->FROM	GR ISLD-LNX3345.00 - HOLT.CO3 345.00 345KV CKT 1	720	720	0.04822	107.8262	ATKINSON - STUART 115KV CKT 1
FDNS	00NR_G14_059	2	25SP	G14_059	TO->FROM	GR ISLD-LNX3345.00 - HOLT.CO3 345.00 345KV CKT 1	720	720	0.04635	107.8014	P12:115:UMZW:# 162 #: NEL IN ND. FAULT ON ML-NEL-MX-GA 115 KV
FDNS	00NR_G14_059	2	25SP	G14_059	TO->FROM	GR ISLD-LNX3345.00 - HOLT.CO3 345.00 345KV CKT 1	720	720	0.04588	107.8011	P12:115:NPPD:WAPA2:HEMINGF7:SNAKECK7:BTB
FDNS	00NR_G14_059	2	20SP	G14_059	TO->FROM	GR ISLD-LNX3345.00 - HOLT.CO3 345.00 345KV CKT 1	720	720	0.04644	107.7903	AXTELL - SWEETWATER 345KV CKT 1
FDNS	00NR_G14_059	2	25SP	G14_059	TO->FROM	GR ISLD-LNX3345.00 - HOLT.CO3 345.00 345KV CKT 1	720	720	0.04635	107.775	GEN335614 1-WILLOW GLENN UNIT#4
FDNS	00NR_G14_059	2	25SP	G14_059	TO->FROM	GR ISLD-LNX3345.00 - HOLT.CO3 345.00 345KV CKT 1	720	720	0.04635	107.7734	GEN336801 1-BAXTER WILSON UNIT #1
FDNS	00NR_G14_059	2	25SP	G14_059	TO->FROM	GR ISLD-LNX3345.00 - HOLT.CO3 345.00 345KV CKT 1	720	720	0.04635	107.7656	GEN336464 1-MICHOUD UNIT #3
FDNS	00NR_G14_059	2	25SP	G14_059	TO->FROM	GR ISLD-LNX3345.00 - HOLT.CO3 345.00 345KV CKT 1	720	720	0.04635	107.7616	GEN542955 1-LACYGNE UNIT #1
FDNS	00NR_G14_059	2	25SP	G14_059	TO->FROM	GR ISLD-LNX3345.00 - HOLT.CO3 345.00 345KV CKT 1	720	720	0.04635	107.7592	GEN542951 5-HAWTHORN UNIT #5
FDNS	00NR_G14_059	2	25SP	G14_059	TO->FROM	GR ISLD-LNX3345.00 - HOLT.CO3 345.00 345KV CKT 1	720	720	0.04635	107.755	GEN334441 1-SABINE UNIT 5
FDNS	00NR_G14_059	2	25SP	G14_059	TO->FROM	GR ISLD-LNX3345.00 - HOLT.CO3 345.00 345KV CKT 1	720	720	0.04635	107.7488	GEN335204 1-NELSON UNIT 4
FDNS	00NR_G14_059	2	25SP	G14_059	TO->FROM	GR ISLD-LNX3345.00 - HOLT.CO3 345.00 345KV CKT 1	720	720	0.04905	107.7483	SIDNEY - SIDNEY1-LNX3345.00 345KV CKT Z
FDNS	00NR_G14_059	2	25SP	G14_059	TO->FROM	GR ISLD-LNX3345.00 - HOLT.CO3 345.00 345KV CKT 1	720	720	0.04751	107.7461	FT THOMPSON - HURON 230KV CKT 1
FDNS	00NR_G14_059	2	25SP	G14_059	TO->FROM	GR ISLD-LNX3345.00 - HOLT.CO3 345.00 345KV CKT 1	720	720	0.04751	107.7461	FT THOMPSON - HURON 230KV CKT 1
FDNS	00NR_G14_059	2	25SP	G14_059	TO->FROM	GR ISLD-LNX3345.00 - HOLT.CO3 345.00 345KV CKT 1	720	720	0.04751	107.7461	FT THOMPSON - HURON 230KV CKT 2
FDNS	00NR_G14_059	2	25SP	G14_059	TO->FROM	GR ISLD-LNX3345.00 - HOLT.CO3 345.00 345KV CKT 1	720	720	0.04751	107.7461	FT THOMPSON - HURON 230KV CKT 2
FDNS	00NR_G14_059	2	25SP	G14_059	TO->FROM	GR ISLD-LNX3345.00 - HOLT.CO3 345.00 345KV CKT 1	720	720	0.04892	107.7143	BROKEN BOW - CALLAWAY 115KV CKT 1
FDNS	00NR_G14_059	2	25SP	G14_059	TO->FROM	GR ISLD-LNX3345.00 - HOLT.CO3 345.00 345KV CKT 1	720	720	0.04663	107.6945	NORTH LA CROSSE - NORTH ROCHESTER 345KV CKT 1
FDNS	00NR_G14_059	2	25SP	G14_059	TO->FROM	GR ISLD-LNX3345.00 - HOLT.CO3 345.00 345KV CKT 1	720	720	0.04851	107.6913	AINSWORTH - AINSWORTH 115KV CKT 1
FDNS	00NR_G14_059	2	25SP	G14_059	TO->FROM	GR ISLD-LNX3345.00 - HOLT.CO3 345.00 345KV CKT 1	720	720	0.04635	107.6594	GEN334433 1-SABINE UNIT 3
FDNS	00NR_G14_059	2	25SP	G14_059	TO->FROM	GR ISLD-LNX3345.00 - HOLT.CO3 345.00 345KV CKT 1	720	720	0.04645	107.654	GAVINS POINT - HARTINGTON 115KV CKT 1
FDNS	00NR_G14_059	2	25SP	G14_059	TO->FROM	GR ISLD-LNX3345.00 - HOLT.CO3 345.00 345KV CKT 1	720	720	0.04635	107.653	GEN542956 2-LACYGNE UNIT #2
FDNS	00NR_G14_059	2	25SP	G14_059	TO->FROM	GR ISLD-LNX3345.00 - HOLT.CO3 345.00 345KV CKT 1	720	720	0.04635	107.6523	P12:115:TSGT:BLKWDCK7-ELSIETP7
FDNS	00NR_G14_059	2	25SP	G14_059	TO->FROM	GR ISLD-LNX3345.00 - HOLT.CO3 345.00 345KV CKT 1	720	720	0.04698	107.6515	ADAMS - MITCHLCO3 345.00 345KV CKT 1
FDNS	00NR_G14_059	2	25SP	G14_059	TO->FROM	GR ISLD-LNX3345.00 - HOLT.CO3 345.00 345KV CKT 1	720	720	0.04531	107.6319	SIDNEY - STEGALL 345KV CKT 1
FDNS	00NR_G14_059	2	25SP	G14_059	TO->FROM	GR ISLD-LNX3345.00 - HOLT.CO3 345.00 345KV CKT 1	720	720	0.04673	107.6316	WINNER - WITTEN 115KV CKT 1
FDNS	00NR_G14_059	2	25SP	G14_059	TO->FROM	GR ISLD-LNX3345.00 - HOLT.CO3 345.00 345KV CKT 1	720	720	0.04063	107.6295	NUNDRWD - WAYSIDE 230KV CKT 1
FDNS	00NR_G14_059	2	25SP	G14_059	TO->FROM	GR ISLD-LNX3345.00 - HOLT.CO3 345.00 345KV CKT 1	720	720	0.04822	107.6285	ATKINSON - EMMET 115KV CKT 1
FDNS	00NR_G14_059	2	25SP	G14_059	TO->FROM	GR ISLD-LNX3345.00 - HOLT.CO3 345.00 345KV CKT 1	720	720	0.04635	107.625	GEN336222 1-LITTLE GYPSY UNIT#2
FDNS	00NR_G14_059	2	25SP	G14_059	TO->FROM	GR ISLD-LNX3345.00 - HOLT.CO3 345.00 345KV CKT 1	720	720	0.04642	107.6236	CENTER - COYOTE 345KV CKT 1
FDNS	00NR_G14_059	2	25SP	G14_059	TO->FROM	GR ISLD-LNX3345.00 - HOLT.CO3 345.00 345KV CKT 1	720	720	0.04654	107.5878	AXTELL - SWEETWATER 345KV CKT 1
FDNS	00NR_G14_059	2	25SP	G14_059	TO->FROM	GR ISLD-LNX3345.00 - HOLT.CO3 345.00 345KV CKT 1	720	720	0.04635	107.5864	GEN336151 1-WATERFORD UNIT#1
FDNS	00NR_G14_059	2	25SP	G14_059	TO->FROM	GR ISLD-LNX3345.00 - HOLT.CO3 345.00 345KV CKT 1	720	720	0.04635	107.5864	GEN336152 1-WATERFORD UNIT#2
FDNS	00NR_G14_059	2	25SP	G14_059	TO->FROM	GR ISLD-LNX3345.00 - HOLT.CO3 345.00 345KV CKT 1	720	720	0.04635	107.5857	P13:115-230:NPPD:NUCOR-3
FDNS	00NR_G14_059	2	25SP	G14_059	TO->FROM	GR ISLD-LNX3345.00 - HOLT.CO3 345.00 345KV CKT 1	720	720	0.04644	107.5828	GARRISON - JAMES TOWN 230KV CKT 1
FDNS	00NR_G14_059	2	25SP	G14_059	TO->FROM	GR ISLD-LNX3345.00 - HOLT.CO3 345.00 345KV CKT 1	720	720	0.04635	107.5806	P13:230-345:NPPD:NUCOR-1
FDNS	00NR_G14_059	2	25SP	G14_059	TO->FROM	GR ISLD-LNX3345.00 - HOLT.CO3 345.00 345KV CKT 1	720	720	0.04656	107.5636	APPLEDORN 4 230.00 - WATERTOWN 230KV CKT 1
FDNS	00NR_G14_059	2	25SP	G14_059	TO->FROM	GR ISLD-LNX3345.00 - HOLT.CO3 345.00 345KV CKT 1	720	720	0.04656	107.5636	APPLEDORN 4 230.00 - WATERTOWN 230KV CKT 1
FDNS	00NR_G14_059	2	25SP	G14_059	TO->FROM	GR ISLD-LNX3345.00 - HOLT.CO3 345.00 345KV CKT 1	720	720	0.04638	107.5624	MENNO JCT - TRIPP JCT 115KV CKT 1
FDNS	00NR_G14_059	2	25SP	G14_059	TO->FROM	GR ISLD-LNX3345.00 - HOLT.CO3 345.00 345KV CKT 1	720	720	0.04678	107.5521	ADAMS - PLEASANT VALLEY 345KV CKT 1
FDNS	00NR_G14_059	2	25SP	G14_059	TO->FROM	GR ISLD-LNX3345.00 - HOLT.CO3 345.00 345KV CKT 1	720	720	0.04635	107.5328	GEN562547 1-G14_039_3 0.6900
FDNS	00NR_G14_059	2	25SP	G14_059	TO->FROM	GR ISLD-LNX3345.00 - HOLT.CO3 345.00 345KV CKT 1	720	720	0.04635	107.5324	GEN303007 1-1BC2 U2
FDNS	00NR_G14_059	2	25SP	G14_059	TO->FROM	GR ISLD-LNX3345.00 - HOLT.CO3 345.00 345KV CKT 1	720	720	0.04635	107.53	GEN303006 1-1BC2 U1
FDNS	00NR_G14_059	2	25SP	G14_059	TO->FROM	GR ISLD-LNX3345.00 - HOLT.CO3 345.00 345KV CKT 1	720	720	0.04732	107.5234	CLEARWATER - NELIGH 115KV CKT 1
FDNS	00NR_G14_059	2	25SP	G14_059	TO->FROM	GR ISLD-LNX3345.00 - HOLT.CO3 345.00 345KV CKT 1	720	720	0.04656	107.5204	APPLEDORN 4 230.00 - GRANITE FALLS 230KV CKT 1
FDNS	00NR_G14_059	2	25SP	G14_059	TO->FROM	GR ISLD-LNX3345.00 - HOLT.CO3 345.00 345KV CKT 1	720	720	0.04656	107.5204	APPLEDORN 4 230.00 - GRANITE FALLS 230KV CKT 1
FDNS	00NR_G14_059	2	25SP	G14_059	TO->FROM	GR ISLD-LNX3345.00 - HOLT.CO3 345.00 345KV CKT 1	720	720	0.04675	107.5196	NMA B3 345 345.00 - NORTH LA CROSSE 345KV CKT 1
FDNS	00NR_G14_059	2	25SP	G14_059	TO->FROM	GR ISLD-LNX3345.00 - HOLT.CO3 345.00 345KV CKT 1	720	720	0.04639	107.5167	BROOKING COUNTY - BSSOUTH3 345.00 345KV CKT 1
FDNS	00NR_G14_059	2	25SP	G14_059	TO->FROM	GR ISLD-LNX3345.00 - HOLT.CO3 345.00 345KV CKT 1	720	720	0.04648	107.5162	BLAIR - GRANITE FALLS 230KV CKT 1
FDNS	00NR_G14_059	2	25SP	G14_059	TO->FROM	GR ISLD-LNX3345.00 - HOLT.CO3 345.00 345KV CKT 1	720	720	0.04648	107.5162	BLAIR - GRANITE FALLS 230KV CKT 1
FDNS	00NR_G14_059	2	25SP	G14_059	TO->FROM	GR ISLD-LNX3345.00 - HOLT.CO3 345.00 345KV CKT 1	720	720	0.04635	107.5128	P13:230:UMZW:# 2218 #: FP IN MT. LOSS OF TRANSFORMER (AT2).
FDNS	00NR_G14_059	2	25SP	G14_059	TO->FROM	GR ISLD-LNX3345.00 - HOLT.CO3 345.00 345KV CKT 1	720	720	0.04638	107.502	MENNO JCT - UTICA 115KV CKT 1
FDNS	00NR_G14_059	2	25SP	G14_059	TO->FROM	GR ISLD-LNX3345.00 - HOLT.CO3 345.00 345KV CKT 1	720	720	0.0474	107.4935	P12:345:SPS:J07.1.FINN.HITCH
FDNS	00NR_G14_059	2	25SP	G14_059	TO->FROM	GR ISLD-LNX3345.00 - HOLT.CO3 345.00 345KV CKT 1	720	720	0.04673	107.4873	GREGORY - WINNER 115KV CKT 1
FDNS	00NR_G14_059	2	25SP	G14_059	TO->FROM	GR ISLD-LNX3345.00 - HOLT.CO3 345.00 345KV CKT 1	720	720	0.04635	107.4827	GEN336170 1-GULF OXY U4
FDNS	00NR_G14_059	2	25SP	G14_059	TO->FROM	GR ISLD-LNX3345.00 - HOLT.CO3 345.00 345KV CKT 1	720	720	0.04673	107.4802	P12:115:UMZW:# 172 #: WI IN SD.
FDNS	00NR_G14_059	2	25SP	G14_059	TO->FROM	GR ISLD-LNX3345.00 - HOLT.CO3 345.00 345KV CKT 1	720	720	0.04635	107.4796	P13:115-345:NPPD:NUCOR-2
FDNS	00NR_G14_059	2	20SP	G14_059	TO->FROM	GR ISLD-LNX3345.00 - HOLT.CO3 345.00 345KV CKT 1	720	720	0.04625	107.4791	BASE CASE
FDNS	00NR_G14_059	2	25SP	G14_059	TO->FROM	GR ISLD-LNX3345.00 - HOLT.CO3 345.00 345KV CKT 1	720	720	0.04661	107.473	HUNTLEY3 345.00 - LAKEFIELD 3 345KV CKT 1
FDNS	00NR_G14_059	2	25SP	G14_059	TO->FROM	GR ISLD-LNX3345.00 - HOLT.CO3 345.00 345KV CKT 1	720	720	0.04638	107.4667	P12:115:UMZZ:# 237 #: MEN IN SD. MENNO JUNCTION IS A TAP (UJ-MEN-TP).
FDNS	00NR_G14_059	2	25SP	G14_059	TO->FROM	GR ISLD-LNX3345.00 - HOLT.CO3 345.00 345KV CKT 1	720	720	0.04739	107.4582	Hitchland Interchange - WALKTAP7 345.00 345KV CKT 1
FDNS	00NR_G14_059	2	25SP	G14_059	TO->FROM	GR ISLD-LNX3345.00 - HOLT.CO3 345.00 345KV CKT 1	720	720	0.04739	107.4582	Hitchland Interchange - WALKTAP7 345.00 345KV CKT 1
FDNS	00NR_G14_059	2	25SP	G14_059	TO->FROM	GR ISLD-LNX3345.00 - HOLT.CO3 345.00 345KV CKT 1	720	720	0.0443	107.4571	MAXWELL - STAPLETON 115KV CKT 1
FDNS	00NR_G14_059	2	25SP	G14_059	TO->FROM	GR ISLD-LNX3345.00 - HOLT.CO3 345.00 345KV CKT 1	720	720	0.04664	107.4549	HUNTLEY3 345.00 - LEDYARD3 345.00 345KV CKT 1
FDNS	00NR_G14_059	2	25SP	G14_059	TO->FROM	GR ISLD-LNX3345.00 - HOLT.CO3 345.00 345KV CKT 1	720	720	0.04661	107.4506	DENISON - SIOUX CITY 230KV CKT 1

SOLUTION	GROUP	SCENARIO	SEASON	SOURCE	DIRECTION	MONITORED ELEMENT	RATEA (MVA)	RATEB(MVA)	TDF	TC%LOADING (% MVA)	CONTINGENCY
FDNS	00NR_G14_059	2	25SP	G14_059	TO->FROM	GR ISLD-LNX3345.00 - HOLT.CO3 345.00 345KV CKT 1	720	720	0.04635	107.4232	GEN501811 1-RODEMACHER UNIT 1
FDNS	00NR_G14_059	2	25SP	G14_059	TO->FROM	GR ISLD-LNX3345.00 - HOLT.CO3 345.00 345KV CKT 1	720	720	0.04851	107.339	P12:115:NPPD:1090:AINSWND7:THEDFRD7:BTB
FDNS	00NR_G14_059	2	20SP	G14_059	TO->FROM	GR ISLD-LNX3345.00 - HOLT.CO3 345.00 345KV CKT 1	720	720	0.04203	107.2151	COOPER - MOORE 345KV CKT 1
FDNS	00NR_G14_059	2	20SP	G14_059	TO->FROM	GR ISLD-LNX3345.00 - HOLT.CO3 345.00 345KV CKT 1	720	720	0.04627	107.1584	ANTELOP-LNX3345.00 - BRDLAND-LNX3345.00 345KV CKT 1
FDNS	00NR_G14_059	2	20SP	G14_059	TO->FROM	GR ISLD-LNX3345.00 - HOLT.CO3 345.00 345KV CKT 1	720	720	0.04364	107.1126	103RD & ROKEBY - MOORE 345KV CKT 1
FDNS	00NR_G14_059	2	20SP	G14_059	TO->FROM	GR ISLD-LNX3345.00 - HOLT.CO3 345.00 345KV CKT 1	720	720	0.04364	107.1126	103RD & ROKEBY - MOORE 345KV CKT 1
FDNS	00NR_G14_059	2	20SP	G14_059	TO->FROM	GR ISLD-LNX3345.00 - HOLT.CO3 345.00 345KV CKT 1	720	720	0.03891	107.0519	COLUMWEST - KELLY 230KV CKT 1
FDNS	00NR_G14_059	2	20SP	G14_059	TO->FROM	GR ISLD-LNX3345.00 - HOLT.CO3 345.00 345KV CKT 1	720	720	0.04627	107.0181	P12:345:UMZB:# 103 #: BD IN SD. LOSS OF LINE
FDNS	00NR_G14_059	2	20SP	G14_059	TO->FROM	GR ISLD-LNX3345.00 - HOLT.CO3 345.00 345KV CKT 1	720	720	0.04627	107.0157	BRDLAND-LNX3345.00 - HURON 345KV CKT Z
FDNS	00NR_G14_059	2	20SP	G14_059	TO->FROM	GR ISLD-LNX3345.00 - HOLT.CO3 345.00 345KV CKT 1	720	720	0.04627	107.0154	HURON (BD KU2A) 345/230/13.8KV TRANSFORMER CKT 1
FDNS	00NR_G14_059	2	20SP	G14_059	TO->FROM	GR ISLD-LNX3345.00 - HOLT.CO3 345.00 345KV CKT 1	720	720	0.04627	107.0154	HURON (BD KU2A) 345/230/13.8KV TRANSFORMER CKT 1
FDNS	00NR_G14_059	2	20SP	G14_059	TO->FROM	GR ISLD-LNX3345.00 - HOLT.CO3 345.00 345KV CKT 1	720	720	0.04627	107.0154	P12:345:UMZB:# 102 #: AVS BD IN ND. AVS BRD LR
FDNS	00NR_G14_059	2	20SP	G14_059	TO->FROM	GR ISLD-LNX3345.00 - HOLT.CO3 345.00 345KV CKT 1	720	720	0.04627	107.0153	BROADLAND - HURON 230KV CKT 1
FDNS	00NR_G14_059	2	20SP	G14_059	TO->FROM	GR ISLD-LNX3345.00 - HOLT.CO3 345.00 345KV CKT 1	720	720	0.04581	106.9718	FALLOW 3 345.00 - GRIMES 345KV CKT 1
FDNS	00NR_G14_059	2	20SP	G14_059	TO->FROM	GR ISLD-LNX3345.00 - HOLT.CO3 345.00 345KV CKT 1	720	720	0.04709	106.951	GLENHAM - WHITLOK 230KV CKT 1
FDNS	00NR_G14_059	2	20SP	G14_059	TO->FROM	GR ISLD-LNX3345.00 - HOLT.CO3 345.00 345KV CKT 1	720	720	0.04548	106.9428	COOPER - FAIRPORT 345KV CKT 1
FDNS	00NR_G14_059	2	20SP	G14_059	TO->FROM	GR ISLD-LNX3345.00 - HOLT.CO3 345.00 345KV CKT 1	720	720	0.04625	106.9374	GEN660001 2-ABERDEEN SIEBRECHT
FDNS	00NR_G14_059	2	20SP	G14_059	TO->FROM	GR ISLD-LNX3345.00 - HOLT.CO3 345.00 345KV CKT 1	720	720	0.04625	106.9351	GEN660003 3-HURON WEST PARK
FDNS	00NR_G14_059	2	20SP	G14_059	TO->FROM	GR ISLD-LNX3345.00 - HOLT.CO3 345.00 345KV CKT 1	720	720	0.04522	106.9346	POST ROCK (POSTROCK T1) 345/230/13.8KV TRANSFORMER CKT 1
FDNS	00NR_G14_059	2	20SP	G14_059	TO->FROM	GR ISLD-LNX3345.00 - HOLT.CO3 345.00 345KV CKT 1	720	720	0.04627	106.9221	ANTELOP-LNX3345.00 - ANTELOPE VALLEY 345KV CKT Z
FDNS	00NR_G14_059	2	20SP	G14_059	TO->FROM	GR ISLD-LNX3345.00 - HOLT.CO3 345.00 345KV CKT 1	720	720	0.04625	106.9218	GEN600063 1-COLVILLE GEN 1
FDNS	00NR_G14_059	2	20SP	G14_059	TO->FROM	GR ISLD-LNX3345.00 - HOLT.CO3 345.00 345KV CKT 1	720	720	0.04625	106.9218	GEN600064 2-COLVILLE GEN 2
FDNS	00NR_G14_059	2	25SP	G14_059	TO->FROM	GR ISLD-LNX3345.00 - HOLT.CO3 345.00 345KV CKT 1	720	720	0.04635	106.921	BASE CASE
FDNS	00NR_G14_059	2	20SP	G14_059	TO->FROM	GR ISLD-LNX3345.00 - HOLT.CO3 345.00 345KV CKT 1	720	720	0.04423	106.9171	MAXWELL - NORTH PLATTE 115KV CKT 1
FDNS	00NR_G14_059	2	20SP	G14_059	TO->FROM	GR ISLD-LNX3345.00 - HOLT.CO3 345.00 345KV CKT 1	720	720	0.04625	106.914	GEN681522 3-GENOA 3
FDNS	00NR_G14_059	2	20SP	G14_059	TO->FROM	GR ISLD-LNX3345.00 - HOLT.CO3 345.00 345KV CKT 1	720	720	0.04625	106.9104	GEN659273 2-GROTON SYNC COND
FDNS	00NR_G14_059	2	20SP	G14_059	TO->FROM	GR ISLD-LNX3345.00 - HOLT.CO3 345.00 345KV CKT 1	720	720	0.04625	106.9104	GEN659294 1-WILTONCOL9
FDNS	00NR_G14_059	2	20SP	G14_059	TO->FROM	GR ISLD-LNX3345.00 - HOLT.CO3 345.00 345KV CKT 1	720	720	0.04625	106.9027	GEN600043 7-BLUE LAKE5
FDNS	00NR_G14_059	2	20SP	G14_059	TO->FROM	GR ISLD-LNX3345.00 - HOLT.CO3 345.00 345KV CKT 1	720	720	0.04625	106.9027	GEN600044 8-BLUE LAKE6
FDNS	00NR_G14_059	2	20SP	G14_059	TO->FROM	GR ISLD-LNX3345.00 - HOLT.CO3 345.00 345KV CKT 1	720	720	0.04612	106.8963	ATCHSNT3 345.00 - BOONEVILLE 345KV CKT 1
FDNS	00NR_G14_059	2	20SP	G14_059	TO->FROM	GR ISLD-LNX3345.00 - HOLT.CO3 345.00 345KV CKT 1	720	720	0.04612	106.8911	GRAND ISLAND (GRAND.ISD T5) 230/115/13.8KV TRANSFORMER CKT 2
FDNS	00NR_G14_059	2	20SP	G14_059	TO->FROM	GR ISLD-LNX3345.00 - HOLT.CO3 345.00 345KV CKT 1	720	720	0.04612	106.8911	GRAND ISLAND (GRAND.ISD T5) 230/115/13.8KV TRANSFORMER CKT 2
FDNS	00NR_G14_059	2	20SP	G14_059	TO->FROM	GR ISLD-LNX3345.00 - HOLT.CO3 345.00 345KV CKT 1	720	720	0.04612	106.8879	GRAND ISLAND (GRAND.ISD T2) 230/115/13.8KV TRANSFORMER CKT 1
FDNS	00NR_G14_059	2	20SP	G14_059	TO->FROM	GR ISLD-LNX3345.00 - HOLT.CO3 345.00 345KV CKT 1	720	720	0.04612	106.8879	GRAND ISLAND (GRAND.ISD T2) 230/115/13.8KV TRANSFORMER CKT 1
FDNS	00NR_G14_059	2	20SP	G14_059	TO->FROM	GR ISLD-LNX3345.00 - HOLT.CO3 345.00 345KV CKT 1	720	720	0.04625	106.8831	GEN600014 4-BLACK DOG GEN 4
FDNS	00NR_G14_059	2	20SP	G14_059	TO->FROM	GR ISLD-LNX3345.00 - HOLT.CO3 345.00 345KV CKT 1	720	720	0.04625	106.8829	GEN600065 7-HIGH BRIDGE
FDNS	00NR_G14_059	2	20SP	G14_059	TO->FROM	GR ISLD-LNX3345.00 - HOLT.CO3 345.00 345KV CKT 1	720	720	0.04625	106.8829	GEN600066 8-HIGH BRIDGE
FDNS	00NR_G14_059	2	20SP	G14_059	TO->FROM	GR ISLD-LNX3345.00 - HOLT.CO3 345.00 345KV CKT 1	720	720	0.04625	106.88	LANSING WEST 161/22.0KV TRANSFORMER CKT 1
FDNS	00NR_G14_059	2	20SP	G14_059	TO->FROM	GR ISLD-LNX3345.00 - HOLT.CO3 345.00 345KV CKT 1	720	720	0.04625	106.8789	GEN600011 5-BLACK DOG GEN 1
FDNS	00NR_G14_059	2	20SP	G14_059	TO->FROM	GR ISLD-LNX3345.00 - HOLT.CO3 345.00 345KV CKT 1	720	720	0.04625	106.8734	GEN600071 10-RIVER SIDE
FDNS	00NR_G14_059	2	20SP	G14_059	TO->FROM	GR ISLD-LNX3345.00 - HOLT.CO3 345.00 345KV CKT 1	720	720	0.04625	106.8733	GEN600070 9-RIVER SIDE
FDNS	00NR_G14_059	2	20SP	G14_059	TO->FROM	GR ISLD-LNX3345.00 - HOLT.CO3 345.00 345KV CKT 1	720	720	0.04625	106.8652	GEN600007 7-RIVERSIDE GEN 7
FDNS	00NR_G14_059	2	20SP	G14_059	TO->FROM	GR ISLD-LNX3345.00 - HOLT.CO3 345.00 345KV CKT 1	720	720	0.04625	106.8652	GEN659031 1-G12_014IS_4 0.6900
FDNS	00NR_G14_059	2	20SP	G14_059	TO->FROM	GR ISLD-LNX3345.00 - HOLT.CO3 345.00 345KV CKT 1	720	720	0.04625	106.8537	GEN600017 C-LS POWER CT
FDNS	00NR_G14_059	2	20SP	G14_059	TO->FROM	GR ISLD-LNX3345.00 - HOLT.CO3 345.00 345KV CKT 1	720	720	0.04625	106.8509	GEN659192 6-LYNN
FDNS	00NR_G14_059	2	20SP	G14_059	TO->FROM	GR ISLD-LNX3345.00 - HOLT.CO3 345.00 345KV CKT 1	720	720	0.04625	106.8502	GEN659162 4-RED WLCK
FDNS	00NR_G14_059	2	20SP	G14_059	TO->FROM	GR ISLD-LNX3345.00 - HOLT.CO3 345.00 345KV CKT 1	720	720	0.04625	106.8502	GEN659163 5-BLACK WDCK
FDNS	00NR_G14_059	2	20SP	G14_059	TO->FROM	GR ISLD-LNX3345.00 - HOLT.CO3 345.00 345KV CKT 1	720	720	0.04625	106.8425	GEN600045 4-ANSON
FDNS	00NR_G14_059	2	20SP	G14_059	TO->FROM	GR ISLD-LNX3345.00 - HOLT.CO3 345.00 345KV CKT 1	720	720	0.04625	106.8366	GEN 10648 1-G830_GEN 0.6900
FDNS	00NR_G14_059	2	20SP	G14_059	TO->FROM	GR ISLD-LNX3345.00 - HOLT.CO3 345.00 345KV CKT 1	720	720	0.04625	106.8105	GEN615052 1-CAMBRIDGE GENERATING STATION
FDNS	00NR_G14_059	2	20SP	G14_059	TO->FROM	GR ISLD-LNX3345.00 - HOLT.CO3 345.00 345KV CKT 1	720	720	0.04625	106.8048	GEN615015 1-GRE-SPRITWDG13.200
FDNSLock	00NR_G14_059	2	20SP	G14_059	TO->FROM	GR ISLD-LNX3345.00 - HOLT.CO3 345.00 345KV CKT 1	720	720	0.04546	106.7972	COPSTJCPFRSJ
FDNSLock	00NR_G14_059	2	20SP	G14_059	TO->FROM	GR ISLD-LNX3345.00 - HOLT.CO3 345.00 345KV CKT 1	720	720	0.04546	106.7972	STMDSJFAFACO
FDNS	00NR_G14_059	2	20SP	G14_059	TO->FROM	GR ISLD-LNX3345.00 - HOLT.CO3 345.00 345KV CKT 1	720	720	0.04625	106.7966	GEN615021 1-GRE-ER 14G 16.000
FDNS	00NR_G14_059	2	20SP	G14_059	TO->FROM	GR ISLD-LNX3345.00 - HOLT.CO3 345.00 345KV CKT 1	720	720	0.0461	106.7918	GRAND ISLAND (GI KU1B) 345/230/13.8KV TRANSFORMER CKT 2
FDNS	00NR_G14_059	2	20SP	G14_059	TO->FROM	GR ISLD-LNX3345.00 - HOLT.CO3 345.00 345KV CKT 1	720	720	0.0461	106.7918	GRAND ISLAND (GI KU1B) 345/230/13.8KV TRANSFORMER CKT 2
FDNS	00NR_G14_059	2	20SP	G14_059	TO->FROM	GR ISLD-LNX3345.00 - HOLT.CO3 345.00 345KV CKT 1	720	720	0.04625	106.7914	BISONMP4 230.00 - SQUARE BUTTE 230KV CKT 1
FDNS	00NR_G14_059	2	20SP	G14_059	TO->FROM	GR ISLD-LNX3345.00 - HOLT.CO3 345.00 345KV CKT 1	720	720	0.0461	106.7904	GRAND ISLAND (GI KU1A) 345/230/13.8KV TRANSFORMER CKT 1
FDNS	00NR_G14_059	2	20SP	G14_059	TO->FROM	GR ISLD-LNX3345.00 - HOLT.CO3 345.00 345KV CKT 1	720	720	0.0461	106.7904	GRAND ISLAND (GI KU1A) 345/230/13.8KV TRANSFORMER CKT 1
FDNS	00NR_G14_059	2	20SP	G14_059	TO->FROM	GR ISLD-LNX3345.00 - HOLT.CO3 345.00 345KV CKT 1	720	720	0.04625	106.7778	GEN660016 1-B_H WIND 0.7000
FDNS	00NR_G14_059	2	20SP	G14_059	TO->FROM	GR ISLD-LNX3345.00 - HOLT.CO3 345.00 345KV CKT 1	720	720	0.0457	106.7643	FT THOMPSON - LOWERBRULE 4230.00 230KV CKT 1
FDNS	00NR_G14_059	2	20SP	G14_059	TO->FROM	GR ISLD-LNX3345.00 - HOLT.CO3 345.00 345KV CKT 1	720	720	0.0457	106.7643	FT THOMPSON - LOWERBRULE 4230.00 230KV CKT 1
FDNS	00NR_G14_059	2	25SP	G14_059	TO->FROM	GR ISLD-LNX3345.00 - HOLT.CO3 345.00 345KV CKT 1	720	720	0.03907	106.7427	COLUMWEST - KELLY 230KV CKT 1
FDNS	00NR_G14_059	2	20SP	G14_059	TO->FROM	GR ISLD-LNX3345.00 - HOLT.CO3 345.00 345KV CKT 1	720	720	0.04602	106.726	MCCOOL (MCCOOL T2) 345/115/13.8KV TRANSFORMER CKT 1
FDNS	00NR_G14_059	2	20SP	G14_059	TO->FROM	GR ISLD-LNX3345.00 - HOLT.CO3 345.00 345KV CKT 1	720	720	0.04602	106.726	MCCOOL (MCCOOL T2) 345/115/13.8KV TRANSFORMER CKT 1
FDNS	00NR_G14_059	2	20SP	G14_059	TO->FROM	GR ISLD-LNX3345.00 - HOLT.CO3 345.00 345KV CKT 1	720	720	0.04625	106.7165	GEN672303 3-BOUNDARY DAM GENERATOR 3
FDNS	00NR_G14_059	2	20SP	G14_059	TO->FROM	GR ISLD-LNX3345.00 - HOLT.CO3 345.00 345KV CKT 1	720	720	0.04625	106.7165	GEN672305 5-BOUNDARY DAM GENERATOR 5
FDNS	00NR_G14_059	2	20SP	G14_059	TO->FROM	GR ISLD-LNX3345.00 - HOLT.CO3 345.00 345KV CKT 1	720	720	0.04625	106.7164	GEN672304 4-BOUNDARY DAM GENERATOR 4
FDNS	00NR_G14_059	2	20SP	G14_059	TO->FROM	GR ISLD-LNX3345.00 - HOLT.CO3 345.00 345KV CKT 1	720	720	0.04495	106.7061	COOPER - ST JOE 345KV CKT 1
FDNS	00NR_G14_059	2	20SP	G14_059	TO->FROM	GR ISLD-LNX3345.00 - HOLT.CO3 345.00 345KV CKT 1	720	720	0.04625	106.6809	GEN672392 1-NBECGT1G 18.000
FDNS	00NR_G14_059	2	20SP	G14_059	TO->FROM	GR ISLD-LNX3345.00 - HOLT.CO3 345.00 345KV CKT 1	720	720	0.04625	106.6701	GEN662101 1-WESSINGTON190.5750
FDNS	00NR_G14_059	2	20SP	G14_059	TO->FROM	GR ISLD-LNX3345.00 - HOLT.CO3 345.00 345KV CKT 1	720	720	0.04513	106.6565	G14-021T 345.00 - MULLNCR7 345.00 345KV CKT 1
FDNS	00NR_G14_059	2	20SP	G14_059	TO->FROM	GR ISLD-LNX3345.00 - HOLT.CO3 345.00 345KV CKT 1	720	720	0.04513	106.6541	G15-005T 345.00 - MULLNCR7 345.00 345KV CKT 1

SOLUTION	GROUP	SCENARIO	SEASON	SOURCE	DIRECTION	MONITORED ELEMENT	RATEA (MVA)	RATEB(MVA)	TDF	TC%LOADING (% MVA)	CONTINGENCY
FDNS	00NR_G14_059	2	20SP	G14_059	TO->FROM	GR ISLD-LNX3345.00 - HOLT.CO3 345.00 345KV CKT 1	720	720	0.04625	106.6524	CENTER 230/22.0KV TRANSFORMER CKT 1
FDNS	00NR_G14_059	2	20SP	G14_059	TO->FROM	GR ISLD-LNX3345.00 - HOLT.CO3 345.00 345KV CKT 1	720	720	0.04625	106.6502	GEN600067 9-HIGH BRIDGE
FDNS	00NR_G14_059	2	25SP	G14_059	TO->FROM	GR ISLD-LNX3345.00 - HOLT.CO3 345.00 345KV CKT 1	720	720	0.04637	106.597	ANTELOP-LNX3345.00 - BRDLAND-LNX3345.00 345KV CKT 1
FDNS	00NR_G14_059	2	20SP	G14_059	TO->FROM	GR ISLD-LNX3345.00 - HOLT.CO3 345.00 345KV CKT 1	720	720	0.04625	106.5809	GEN659353 1-DEERCREK CTG18.000
FDNS	00NR_G14_059	2	20SP	G14_059	TO->FROM	GR ISLD-LNX3345.00 - HOLT.CO3 345.00 345KV CKT 1	720	720	0.04625	106.5808	GEN659354 1-DEERCREK STG18.000
FDNS	00NR_G14_059	2	20SP	G14_059	TO->FROM	GR ISLD-LNX3345.00 - HOLT.CO3 345.00 345KV CKT 1	720	720	0.04513	106.5727	G15-005T 345.00 - SIBLEY 345KV CKT 1
FDNS	00NR_G14_059	2	20SP	G14_059	TO->FROM	GR ISLD-LNX3345.00 - HOLT.CO3 345.00 345KV CKT 1	720	720	0.04625	106.5567	GEN910006 1-G12_012IS_3 0.6900
FDNSLock	00NR_G14_059	2	20SP	G14_059	TO->FROM	GR ISLD-LNX3345.00 - HOLT.CO3 345.00 345KV CKT 1	720	720	0.04507	106.5455	CENTRAL CITY - GRAND ISLAND 115KV CKT 1
FDNS	00NR_G14_059	2	20SP	G14_059	TO->FROM	GR ISLD-LNX3345.00 - HOLT.CO3 345.00 345KV CKT 1	720	720	0.04709	106.5267	GLENHAM - L3 HAWDON 230KV CKT 1
FDNS	00NR_G14_059	2	20SP	G14_059	TO->FROM	GR ISLD-LNX3345.00 - HOLT.CO3 345.00 345KV CKT 1	720	720	0.04625	106.5216	GEN681542 6-JP MADGETT
FDNS	00NR_G14_059	2	25SP	G14_059	TO->FROM	GR ISLD-LNX3345.00 - HOLT.CO3 345.00 345KV CKT 1	720	720	0.04736	106.5072	LOUP CITY - ST LIBORY 115KV CKT 1
FDNS	00NR_G14_059	2	20SP	G14_059	TO->FROM	GR ISLD-LNX3345.00 - HOLT.CO3 345.00 345KV CKT 1	720	720	0.04625	106.4659	GEN659289 1-DAYCNTYWND W0.6900
FDNS	00NR_G14_059	2	20SP	G14_059	TO->FROM	GR ISLD-LNX3345.00 - HOLT.CO3 345.00 345KV CKT 1	720	720	0.04603	106.4652	GRAND ISLAND (GI KU3A) 345/230/13.8KV TRANSFORMER CKT 3
FDNS	00NR_G14_059	2	20SP	G14_059	TO->FROM	GR ISLD-LNX3345.00 - HOLT.CO3 345.00 345KV CKT 1	720	720	0.04603	106.4652	GRAND ISLAND (GI KU3A) 345/230/13.8KV TRANSFORMER CKT 3
FDNS	00NR_G14_059	2	25SP	G14_059	TO->FROM	GR ISLD-LNX3345.00 - HOLT.CO3 345.00 345KV CKT 1	720	720	0.04637	106.4531	P12:345:UMZB:# 103 #: BD IN SD. LOSS OF LINE
FDNS	00NR_G14_059	2	25SP	G14_059	TO->FROM	GR ISLD-LNX3345.00 - HOLT.CO3 345.00 345KV CKT 1	720	720	0.04637	106.4529	HURON (BD KU2A) 345/230/13.8KV TRANSFORMER CKT 1
FDNS	00NR_G14_059	2	25SP	G14_059	TO->FROM	GR ISLD-LNX3345.00 - HOLT.CO3 345.00 345KV CKT 1	720	720	0.04637	106.4529	HURON (BD KU2A) 345/230/13.8KV TRANSFORMER CKT 1
FDNS	00NR_G14_059	2	25SP	G14_059	TO->FROM	GR ISLD-LNX3345.00 - HOLT.CO3 345.00 345KV CKT 1	720	720	0.04637	106.4507	P12:345:UMZB:# 102 #: AVS BD IN ND. AVS BRD LR
FDNS	00NR_G14_059	2	25SP	G14_059	TO->FROM	GR ISLD-LNX3345.00 - HOLT.CO3 345.00 345KV CKT 1	720	720	0.04637	106.4504	BRDLAND-LNX3345.00 - HURON 345KV CKT Z
FDNS	00NR_G14_059	2	25SP	G14_059	TO->FROM	GR ISLD-LNX3345.00 - HOLT.CO3 345.00 345KV CKT 1	720	720	0.04637	106.4499	BROADLAND - HURON 230KV CKT 1
FDNS	00NR_G14_059	2	25SP	G14_059	TO->FROM	GR ISLD-LNX3345.00 - HOLT.CO3 345.00 345KV CKT 1	720	720	0.04558	106.4243	COOPER - FAIRPORT 345KV CKT 1
FDNS	00NR_G14_059	2	25SP	G14_059	TO->FROM	GR ISLD-LNX3345.00 - HOLT.CO3 345.00 345KV CKT 1	720	720	0.04558	106.4243	COOPER - FAIRPORT 345KV CKT 1
FDNS	00NR_G14_059	2	25SP	G14_059	TO->FROM	GR ISLD-LNX3345.00 - HOLT.CO3 345.00 345KV CKT 1	720	720	0.04635	106.4039	GEN620324 3-HOOT LAKE 3 GEN
FDNS	00NR_G14_059	2	25SP	G14_059	TO->FROM	GR ISLD-LNX3345.00 - HOLT.CO3 345.00 345KV CKT 1	720	720	0.04635	106.3997	GEN 11104 1-J262_GEN 0.6000
FDNS	00NR_G14_059	2	25SP	G14_059	TO->FROM	GR ISLD-LNX3345.00 - HOLT.CO3 345.00 345KV CKT 1	720	720	0.04635	106.3997	GEN 11108 1-J263_GEN 0.6000
FDNS	00NR_G14_059	2	25SP	G14_059	TO->FROM	GR ISLD-LNX3345.00 - HOLT.CO3 345.00 345KV CKT 1	720	720	0.04635	106.396	GEN600046 1-MECST
FDNS	00NR_G14_059	2	20SP	G14_059	TO->FROM	GR ISLD-LNX3345.00 - HOLT.CO3 345.00 345KV CKT 1	720	720	0.04625	106.3848	COYOTE 345/24.0KV TRANSFORMER CKT 1
FDNS	00NR_G14_059	2	20SP	G14_059	TO->FROM	GR ISLD-LNX3345.00 - HOLT.CO3 345.00 345KV CKT 1	720	720	0.04625	106.383	GEN562596 1-G14_059_3 0.6900
FDNS	00NR_G14_059	2	25SP	G14_059	TO->FROM	GR ISLD-LNX3345.00 - HOLT.CO3 345.00 345KV CKT 1	720	720	0.04591	106.3815	FALLOW 3 345.00 - GRIMES 345KV CKT 1
FDNS	00NR_G14_059	2	25SP	G14_059	TO->FROM	GR ISLD-LNX3345.00 - HOLT.CO3 345.00 345KV CKT 1	720	720	0.04635	106.3773	GEN600047 1-MECCT1
FDNS	00NR_G14_059	2	20SP	G14_059	TO->FROM	GR ISLD-LNX3345.00 - HOLT.CO3 345.00 345KV CKT 1	720	720	0.04625	106.3757	GEN659018 1-G14_003IS_3 0.6900
FDNS	00NR_G14_059	2	25SP	G14_059	TO->FROM	GR ISLD-LNX3345.00 - HOLT.CO3 345.00 345KV CKT 1	720	720	0.04635	106.3689	GEN660003 3-HURON WEST PARK
FDNS	00NR_G14_059	2	25SP	G14_059	TO->FROM	GR ISLD-LNX3345.00 - HOLT.CO3 345.00 345KV CKT 1	720	720	0.04635	106.3684	GEN600064 2-COLVILLE GEN 2
FDNS	00NR_G14_059	2	25SP	G14_059	TO->FROM	GR ISLD-LNX3345.00 - HOLT.CO3 345.00 345KV CKT 1	720	720	0.04635	106.3683	GEN600063 1-COLVILLE GEN 1
FDNS	00NR_G14_059	2	25SP	G14_059	TO->FROM	GR ISLD-LNX3345.00 - HOLT.CO3 345.00 345KV CKT 1	720	720	0.04623	106.3675	ATCHSNT3 345.00 - COOPER 345KV CKT 1
FDNS	00NR_G14_059	2	25SP	G14_059	TO->FROM	GR ISLD-LNX3345.00 - HOLT.CO3 345.00 345KV CKT 1	720	720	0.04623	106.3675	ATCHSNT3 345.00 - COOPER 345KV CKT 1
FDNS	00NR_G14_059	2	25SP	G14_059	TO->FROM	GR ISLD-LNX3345.00 - HOLT.CO3 345.00 345KV CKT 1	720	720	0.04433	106.3656	MAXWELL - NORTH PLATTE 115KV CKT 1
FDNS	00NR_G14_059	2	25SP	G14_059	TO->FROM	GR ISLD-LNX3345.00 - HOLT.CO3 345.00 345KV CKT 1	720	720	0.04635	106.3649	GEN660001 2-ABERDEEN SIEBRECHT
FDNS	00NR_G14_059	2	25SP	G14_059	TO->FROM	GR ISLD-LNX3345.00 - HOLT.CO3 345.00 345KV CKT 1	720	720	0.04637	106.359	ANTELOP-LNX3345.00 - ANTELOPE VALLEY 345KV CKT Z
FDNS	00NR_G14_059	2	25SP	G14_059	TO->FROM	GR ISLD-LNX3345.00 - HOLT.CO3 345.00 345KV CKT 1	720	720	0.04635	106.3549	GEN600043 7-BLUE LAKE5
FDNS	00NR_G14_059	2	25SP	G14_059	TO->FROM	GR ISLD-LNX3345.00 - HOLT.CO3 345.00 345KV CKT 1	720	720	0.04635	106.3549	GEN600044 8-BLUE LAKE6
FDNS	00NR_G14_059	2	25SP	G14_059	TO->FROM	GR ISLD-LNX3345.00 - HOLT.CO3 345.00 345KV CKT 1	720	720	0.04635	106.3435	GEN659273 2-GROTON SYNC COND
FDNS	00NR_G14_059	2	25SP	G14_059	TO->FROM	GR ISLD-LNX3345.00 - HOLT.CO3 345.00 345KV CKT 1	720	720	0.04635	106.3435	GEN659294 1-WILTONCOL9
FDNS	00NR_G14_059	2	25SP	G14_059	TO->FROM	GR ISLD-LNX3345.00 - HOLT.CO3 345.00 345KV CKT 1	720	720	0.04635	106.3354	GEN681522 3-GENOA 3
FDNS	00NR_G14_059	2	25SP	G14_059	TO->FROM	GR ISLD-LNX3345.00 - HOLT.CO3 345.00 345KV CKT 1	720	720	0.04635	106.3333	GEN600065 7-HIGH BRIDGE
FDNS	00NR_G14_059	2	25SP	G14_059	TO->FROM	GR ISLD-LNX3345.00 - HOLT.CO3 345.00 345KV CKT 1	720	720	0.04635	106.3333	GEN600066 8-HIGH BRIDGE
FDNS	00NR_G14_059	2	20SP	G14_059	TO->FROM	GR ISLD-LNX3345.00 - HOLT.CO3 345.00 345KV CKT 1	720	720	0.04625	106.3331	GEN659010 4-G07_027IS_2 0.6900
FDNS	00NR_G14_059	2	25SP	G14_059	TO->FROM	GR ISLD-LNX3345.00 - HOLT.CO3 345.00 345KV CKT 1	720	720	0.04635	106.3325	GEN600014 4-BLACK DOG GEN 4
FDNS	00NR_G14_059	2	25SP	G14_059	TO->FROM	GR ISLD-LNX3345.00 - HOLT.CO3 345.00 345KV CKT 1	720	720	0.04635	106.3289	GEN600011 5-BLACK DOG GEN 1
FDNS	00NR_G14_059	2	20SP	G14_059	TO->FROM	GR ISLD-LNX3345.00 - HOLT.CO3 345.00 345KV CKT 1	720	720	0.04625	106.3264	GEN659194 1-NDPRAIRWND1W0.6900
FDNS	00NR_G14_059	2	20SP	G14_059	TO->FROM	GR ISLD-LNX3345.00 - HOLT.CO3 345.00 345KV CKT 1	720	720	0.04625	106.3252	GEN652460 4-GARRISON
FDNS	00NR_G14_059	2	20SP	G14_059	TO->FROM	GR ISLD-LNX3345.00 - HOLT.CO3 345.00 345KV CKT 1	720	720	0.04625	106.3251	GEN652461 5-GARRISON
FDNS	00NR_G14_059	2	25SP	G14_059	TO->FROM	GR ISLD-LNX3345.00 - HOLT.CO3 345.00 345KV CKT 1	720	720	0.04635	106.325	LANSING WEST 161/22.0KV TRANSFORMER CKT 1
FDNS	00NR_G14_059	2	25SP	G14_059	TO->FROM	GR ISLD-LNX3345.00 - HOLT.CO3 345.00 345KV CKT 1	720	720	0.04622	106.3241	GRAND ISLAND (GRAND.ISD T5) 230/115/13.8KV TRANSFORMER CKT 2
FDNS	00NR_G14_059	2	25SP	G14_059	TO->FROM	GR ISLD-LNX3345.00 - HOLT.CO3 345.00 345KV CKT 1	720	720	0.04622	106.3241	GRAND ISLAND (GRAND.ISD T5) 230/115/13.8KV TRANSFORMER CKT 2
FDNS	00NR_G14_059	2	25SP	G14_059	TO->FROM	GR ISLD-LNX3345.00 - HOLT.CO3 345.00 345KV CKT 1	720	720	0.04635	106.3238	GEN600070 9-RIVER SIDE
FDNS	00NR_G14_059	2	25SP	G14_059	TO->FROM	GR ISLD-LNX3345.00 - HOLT.CO3 345.00 345KV CKT 1	720	720	0.04635	106.3238	GEN600071 10-RIVER SIDE
FDNS	00NR_G14_059	2	25SP	G14_059	TO->FROM	GR ISLD-LNX3345.00 - HOLT.CO3 345.00 345KV CKT 1	720	720	0.04622	106.3207	GRAND ISLAND (GRAND.ISD T2) 230/115/13.8KV TRANSFORMER CKT 1
FDNS	00NR_G14_059	2	25SP	G14_059	TO->FROM	GR ISLD-LNX3345.00 - HOLT.CO3 345.00 345KV CKT 1	720	720	0.04622	106.3207	GRAND ISLAND (GRAND.ISD T2) 230/115/13.8KV TRANSFORMER CKT 1
FDNS	00NR_G14_059	2	25SP	G14_059	TO->FROM	GR ISLD-LNX3345.00 - HOLT.CO3 345.00 345KV CKT 1	720	720	0.04635	106.3153	GEN600007 7-RIVERSIDE GEN 7
FDNS	00NR_G14_059	2	25SP	G14_059	TO->FROM	GR ISLD-LNX3345.00 - HOLT.CO3 345.00 345KV CKT 1	720	720	0.04635	106.3016	GEN600017 C-LS POWER CT
FDNS	00NR_G14_059	2	20SP	G14_059	TO->FROM	GR ISLD-LNX3345.00 - HOLT.CO3 345.00 345KV CKT 1	720	720	0.04625	106.3007	CLAY BOSWELL 230/20.9KV TRANSFORMER CKT 1
FDNS	00NR_G14_059	2	25SP	G14_059	TO->FROM	GR ISLD-LNX3345.00 - HOLT.CO3 345.00 345KV CKT 1	720	720	0.04635	106.2982	GEN659031 1-G12_014IS_4 0.6900
FDNS	00NR_G14_059	2	20SP	G14_059	TO->FROM	GR ISLD-LNX3345.00 - HOLT.CO3 345.00 345KV CKT 1	720	720	0.04625	106.2951	GEN652545 7-BIG BEND
FDNS	00NR_G14_059	2	20SP	G14_059	TO->FROM	GR ISLD-LNX3345.00 - HOLT.CO3 345.00 345KV CKT 1	720	720	0.04625	106.2867	GEN652458 2-GARRISON
FDNS	00NR_G14_059	2	20SP	G14_059	TO->FROM	GR ISLD-LNX3345.00 - HOLT.CO3 345.00 345KV CKT 1	720	720	0.04625	106.2866	GEN652457 1-GARRISON
FDNS	00NR_G14_059	2	20SP	G14_059	TO->FROM	GR ISLD-LNX3345.00 - HOLT.CO3 345.00 345KV CKT 1	720	720	0.04625	106.2866	GEN652459 3-GARRISON
FDNS	00NR_G14_059	2	20SP	G14_059	TO->FROM	GR ISLD-LNX3345.00 - HOLT.CO3 345.00 345KV CKT 1	720	720	0.04625	106.2813	GEN652544 5-BIG BEND
FDNS	00NR_G14_059	2	25SP	G14_059	TO->FROM	GR ISLD-LNX3345.00 - HOLT.CO3 345.00 345KV CKT 1	720	720	0.04557	106.2775	COPSTJCPFRSJ
FDNS	00NR_G14_059	2	25SP	G14_059	TO->FROM	GR ISLD-LNX3345.00 - HOLT.CO3 345.00 345KV CKT 1	720	720	0.04557	106.2775	P12:345:NPPD:3517:COOPER 3:ST JOE 3:BTB
FDNS	00NR_G14_059	2	25SP	G14_059	TO->FROM	GR ISLD-LNX3345.00 - HOLT.CO3 345.00 345KV CKT 1	720	720	0.04557	106.2775	STMDSJFAFACO
FDNS	00NR_G14_059	2	25SP	G14_059	TO->FROM	GR ISLD-LNX3345.00 - HOLT.CO3 345.00 345KV CKT 1	720	720	0.04635	106.2709	GEN659192 6-LYNN
FDNS	00NR_G14_059	2	25SP	G14_059	TO->FROM	GR ISLD-LNX3345.00 - HOLT.CO3 345.00 345KV CKT 1	720	720	0.04635	106.2698	GEN659162 4-RED WLCK

SOLUTION	GROUP	SCENARIO	SEASON	SOURCE	DIRECTION	MONITORED ELEMENT	RATEA (MVA)	RATEB(MVA)	TDF	TC%LOADING (% MVA)	CONTINGENCY
FDNS	00NR_G14_059	2	25SP	G14_059	TO->FROM	GR ISLD-LNX3345.00 - HOLT.CO3 345.00 345KV CKT 1	720	720	0.04635	106.2698	GEN659163 5-BLACK WDCK
FDNS	00NR_G14_059	2	20SP	G14_059	TO->FROM	GR ISLD-LNX3345.00 - HOLT.CO3 345.00 345KV CKT 1	720	720	0.04625	106.2686	GEN652543 3-BIG BEND
FDNS	00NR_G14_059	2	20SP	G14_059	TO->FROM	GR ISLD-LNX3345.00 - HOLT.CO3 345.00 345KV CKT 1	720	720	0.04625	106.2685	GEN652542 1-BIG BEND
FDNS	00NR_G14_059	2	25SP	G14_059	TO->FROM	GR ISLD-LNX3345.00 - HOLT.CO3 345.00 345KV CKT 1	720	720	0.04635	106.2674	GEN 10648 1-G830_GEN 0.6900
FDNS	00NR_G14_059	2	25SP	G14_059	TO->FROM	GR ISLD-LNX3345.00 - HOLT.CO3 345.00 345KV CKT 1	720	720	0.04635	106.2634	GEN600045 4-ANSON
FDNS	00NR_G14_059	2	25SP	G14_059	TO->FROM	GR ISLD-LNX3345.00 - HOLT.CO3 345.00 345KV CKT 1	720	720	0.04635	106.2573	GEN615052 1-CAMBRIDGE GENERATING STATION
FDNS	00NR_G14_059	2	25SP	G14_059	TO->FROM	GR ISLD-LNX3345.00 - HOLT.CO3 345.00 345KV CKT 1	720	720	0.04635	106.2521	BISONMP4 230.00 - SQUARE BUTTE 230KV CKT 1
FDNS	00NR_G14_059	2	25SP	G14_059	TO->FROM	GR ISLD-LNX3345.00 - HOLT.CO3 345.00 345KV CKT 1	720	720	0.04623	106.2444	ATCHSNT3 345.00 - BOONEVILLE 345KV CKT 1
FDNS	00NR_G14_059	2	25SP	G14_059	TO->FROM	GR ISLD-LNX3345.00 - HOLT.CO3 345.00 345KV CKT 1	720	720	0.04506	106.2244	COOPER - ST JOE 345KV CKT 1
FDNS	00NR_G14_059	2	20SP	G14_059	TO->FROM	GR ISLD-LNX3345.00 - HOLT.CO3 345.00 345KV CKT 1	720	720	0.04625	106.2177	GEN659403 1-NDSUNFLWR W0.6900
FDNS	00NR_G14_059	2	25SP	G14_059	TO->FROM	GR ISLD-LNX3345.00 - HOLT.CO3 345.00 345KV CKT 1	720	720	0.04635	106.216	GEN615015 1-GRE-SPRITWDG13.200
FDNS	00NR_G14_059	2	25SP	G14_059	TO->FROM	GR ISLD-LNX3345.00 - HOLT.CO3 345.00 345KV CKT 1	720	720	0.0462	106.2105	GRAND ISLAND (GI KU1B) 345/230/13.8KV TRANSFORMER CKT 2
FDNS	00NR_G14_059	2	25SP	G14_059	TO->FROM	GR ISLD-LNX3345.00 - HOLT.CO3 345.00 345KV CKT 1	720	720	0.0462	106.2105	GRAND ISLAND (GI KU1B) 345/230/13.8KV TRANSFORMER CKT 2
FDNS	00NR_G14_059	2	25SP	G14_059	TO->FROM	GR ISLD-LNX3345.00 - HOLT.CO3 345.00 345KV CKT 1	720	720	0.0462	106.2091	GRAND ISLAND (GI KU1A) 345/230/13.8KV TRANSFORMER CKT 1
FDNS	00NR_G14_059	2	25SP	G14_059	TO->FROM	GR ISLD-LNX3345.00 - HOLT.CO3 345.00 345KV CKT 1	720	720	0.0462	106.2091	GRAND ISLAND (GI KU1A) 345/230/13.8KV TRANSFORMER CKT 1
FDNS	00NR_G14_059	2	25SP	G14_059	TO->FROM	GR ISLD-LNX3345.00 - HOLT.CO3 345.00 345KV CKT 1	720	720	0.04635	106.2054	GEN615021 1-GRE-ER 14G 16.000
FDNS	00NR_G14_059	2	25SP	G14_059	TO->FROM	GR ISLD-LNX3345.00 - HOLT.CO3 345.00 345KV CKT 1	720	720	0.04635	106.205	GEN660016 1-B_H WIND 0.7000
FDNS	00NR_G14_059	2	25SP	G14_059	TO->FROM	GR ISLD-LNX3345.00 - HOLT.CO3 345.00 345KV CKT 1	720	720	0.04635	106.1962	GEN657705 X-DRAYTON
FDNS	00NR_G14_059	2	20SP	G14_059	TO->FROM	GR ISLD-LNX3345.00 - HOLT.CO3 345.00 345KV CKT 1	720	720	0.04625	106.195	SQUARE BUTTE - YNG2 4 230.00 230KV CKT 1
FDNS	00NR_G14_059	2	20SP	G14_059	TO->FROM	GR ISLD-LNX3345.00 - HOLT.CO3 345.00 345KV CKT 1	720	720	0.04625	106.1947	YNG2 4 230.00 230/20.0KV TRANSFORMER CKT 1
FDNS	00NR_G14_059	2	20SP	G14_059	TO->FROM	GR ISLD-LNX3345.00 - HOLT.CO3 345.00 345KV CKT 1	720	720	0.04625	106.1852	STANTON 230/18.0KV TRANSFORMER CKT 1
FDNSLock	00NR_G14_059	2	25SP	G14_059	TO->FROM	GR ISLD-LNX3345.00 - HOLT.CO3 345.00 345KV CKT 1	720	720	0.04611	106.176	MCCOOL (MCCOOL T2) 345/115/13.8KV TRANSFORMER CKT 1
FDNS	00NR_G14_059	2	25SP	G14_059	TO->FROM	GR ISLD-LNX3345.00 - HOLT.CO3 345.00 345KV CKT 1	720	720	0.04524	106.1521	G14-021T 345.00 - MULLNCR7 345.00 345KV CKT 1
FDNS	00NR_G14_059	2	25SP	G14_059	TO->FROM	GR ISLD-LNX3345.00 - HOLT.CO3 345.00 345KV CKT 1	720	720	0.04524	106.1492	G15-005T 345.00 - MULLNCR7 345.00 345KV CKT 1
FDNS	00NR_G14_059	2	20SP	G14_059	TO->FROM	GR ISLD-LNX3345.00 - HOLT.CO3 345.00 345KV CKT 1	720	720	0.03891	106.1416	COLUMWEST - GRAND ISLAND 230KV CKT 1
FDNS	00NR_G14_059	2	25SP	G14_059	TO->FROM	GR ISLD-LNX3345.00 - HOLT.CO3 345.00 345KV CKT 1	720	720	0.04635	106.1293	GEN672303 3-BOUNDARY DAM GENERATOR 3
FDNS	00NR_G14_059	2	25SP	G14_059	TO->FROM	GR ISLD-LNX3345.00 - HOLT.CO3 345.00 345KV CKT 1	720	720	0.04635	106.1293	GEN672304 4-BOUNDARY DAM GENERATOR 4
FDNS	00NR_G14_059	2	25SP	G14_059	TO->FROM	GR ISLD-LNX3345.00 - HOLT.CO3 345.00 345KV CKT 1	720	720	0.04635	106.1293	GEN672305 5-BOUNDARY DAM GENERATOR 5
FDNS	00NR_G14_059	2	25SP	G14_059	TO->FROM	GR ISLD-LNX3345.00 - HOLT.CO3 345.00 345KV CKT 1	720	720	0.04587	106.1223	HIGHLND 3 345.00 - OBRIEN 3 345.00 345KV CKT 1
FDNS	00NR_G14_059	2	25SP	G14_059	TO->FROM	GR ISLD-LNX3345.00 - HOLT.CO3 345.00 345KV CKT 1	720	720	0.04635	106.1086	GEN672356 1-FUT-WL1X 18.000
FDNS	00NR_G14_059	2	25SP	G14_059	TO->FROM	GR ISLD-LNX3345.00 - HOLT.CO3 345.00 345KV CKT 1	720	720	0.04635	106.1059	GEN662101 1-WESSINGTON190.5750
FDNS	00NR_G14_059	2	25SP	G14_059	TO->FROM	GR ISLD-LNX3345.00 - HOLT.CO3 345.00 345KV CKT 1	720	720	0.04581	106.1058	FT THOMPSON - LOWERBRULE 4230.00 230KV CKT 1
FDNS	00NR_G14_059	2	25SP	G14_059	TO->FROM	GR ISLD-LNX3345.00 - HOLT.CO3 345.00 345KV CKT 1	720	720	0.04581	106.1058	FT THOMPSON - LOWERBRULE 4230.00 230KV CKT 1
FDNS	00NR_G14_059	2	25SP	G14_059	TO->FROM	GR ISLD-LNX3345.00 - HOLT.CO3 345.00 345KV CKT 1	720	720	0.04635	106.0898	GEN600067 9-HIGH BRIDGE
FDNS	00NR_G14_059	2	25SP	G14_059	TO->FROM	GR ISLD-LNX3345.00 - HOLT.CO3 345.00 345KV CKT 1	720	720	0.04635	106.0881	CENTER 230/22.0KV TRANSFORMER CKT 1
FDNS	00NR_G14_059	2	25SP	G14_059	TO->FROM	GR ISLD-LNX3345.00 - HOLT.CO3 345.00 345KV CKT 1	720	720	0.04635	106.0873	GEN672389 1-FUT-SW1X 18.000
FDNS	00NR_G14_059	2	25SP	G14_059	TO->FROM	GR ISLD-LNX3345.00 - HOLT.CO3 345.00 345KV CKT 1	720	720	0.04635	106.0811	GEN672392 1-NBECGT1G 18.000
FDNS	00NR_G14_059	2	25SP	G14_059	TO->FROM	GR ISLD-LNX3345.00 - HOLT.CO3 345.00 345KV CKT 1	720	720	0.04524	106.0708	G15-005T 345.00 - SIBLEY 345KV CKT 1
FDNS	00NR_G14_059	2	20SP	G14_059	TO->FROM	GR ISLD-LNX3345.00 - HOLT.CO3 345.00 345KV CKT 1	720	720	0.04625	106.0295	GEN652906 1-G09_006IS_3 0.6900
FDNSLock	00NR_G14_059	2	25SP	G14_059	TO->FROM	GR ISLD-LNX3345.00 - HOLT.CO3 345.00 345KV CKT 1	720	720	0.04518	106.0217	CENTRAL CITY - GRAND ISLAND 115KV CKT 1
FDNS	00NR_G14_059	2	25SP	G14_059	TO->FROM	GR ISLD-LNX3345.00 - HOLT.CO3 345.00 345KV CKT 1	720	720	0.04719	106.0028	GLENHAM - L3 HAWDON 230KV CKT 1
FDNS	00NR_G14_059	2	20SP	G14_059	TO->FROM	GR ISLD-LNX3345.00 - HOLT.CO3 345.00 345KV CKT 1	720	720	0.04625	105.9997	GEN659411 1-CAMPBLCNTY W0.6900
FDNS	00NR_G14_059	2	25SP	G14_059	TO->FROM	GR ISLD-LNX3345.00 - HOLT.CO3 345.00 345KV CKT 1	720	720	0.04635	105.9971	GEN659353 1-DEERCREK CTG18.000
FDNS	00NR_G14_059	2	25SP	G14_059	TO->FROM	GR ISLD-LNX3345.00 - HOLT.CO3 345.00 345KV CKT 1	720	720	0.04635	105.9971	GEN659354 1-DEERCREK STG18.000
FDNS	00NR_G14_059	2	25SP	G14_059	TO->FROM	GR ISLD-LNX3345.00 - HOLT.CO3 345.00 345KV CKT 1	720	720	0.04635	105.9761	GEN910006 1-G12_012IS_3 0.6900
FDNS	00NR_G14_059	2	20SP	G14_059	TO->FROM	GR ISLD-LNX3345.00 - HOLT.CO3 345.00 345KV CKT 1	720	720	0.03723	105.9729	AXTELL - POST ROCK 345KV CKT 1
FDNS	00NR_G14_059	2	25SP	G14_059	TO->FROM	GR ISLD-LNX3345.00 - HOLT.CO3 345.00 345KV CKT 1	720	720	0.04635	105.9549	GEN681542 6-JP MADGETT
FDNS	00NR_G14_059	2	25SP	G14_059	TO->FROM	GR ISLD-LNX3345.00 - HOLT.CO3 345.00 345KV CKT 1	720	720	0.04635	105.8934	GEN659289 1-DAYCNTYWND W0.6900
FDNS	00NR_G14_059	2	20SP	G14_059	TO->FROM	GR ISLD-LNX3345.00 - HOLT.CO3 345.00 345KV CKT 1	720	720	0.04625	105.871	GEN659296 2-SDPRAIRWND1W0.6900
FDNS	00NR_G14_059	2	25SP	G14_059	TO->FROM	GR ISLD-LNX3345.00 - HOLT.CO3 345.00 345KV CKT 1	720	720	0.04613	105.8704	GRAND ISLAND (GI KU3A) 345/230/13.8KV TRANSFORMER CKT 3
FDNS	00NR_G14_059	2	25SP	G14_059	TO->FROM	GR ISLD-LNX3345.00 - HOLT.CO3 345.00 345KV CKT 1	720	720	0.04613	105.8704	GRAND ISLAND (GI KU3A) 345/230/13.8KV TRANSFORMER CKT 3
FDNS	00NR_G14_059	2	20SP	G14_059	TO->FROM	GR ISLD-LNX3345.00 - HOLT.CO3 345.00 345KV CKT 1	720	720	0.04625	105.8627	GEN652907 1-G09_007IS_3 0.6900
FDNS	00NR_G14_059	2	20SP	G14_059	TO->FROM	GR ISLD-LNX3345.00 - HOLT.CO3 345.00 345KV CKT 1	720	720	0.04625	105.7998	GEN672321 1-SHAND GENERATOR 1
FDNS	00NR_G14_059	2	25SP	G14_059	TO->FROM	GR ISLD-LNX3345.00 - HOLT.CO3 345.00 345KV CKT 1	720	720	0.04635	105.7962	GEN659018 1-G14_003IS_3 0.6900
FDNS	00NR_G14_059	2	25SP	G14_059	TO->FROM	GR ISLD-LNX3345.00 - HOLT.CO3 345.00 345KV CKT 1	720	720	0.04635	105.7673	GEN562596 1-G14_059_3 0.6900
FDNS	00NR_G14_059	2	20SP	G14_059	TO->FROM	GR ISLD-LNX3345.00 - HOLT.CO3 345.00 345KV CKT 1	720	720	0.04625	105.766	GEN652559 1-OAHE
FDNS	00NR_G14_059	2	25SP	G14_059	TO->FROM	GR ISLD-LNX3345.00 - HOLT.CO3 345.00 345KV CKT 1	720	720	0.04635	105.7595	GEN659010 4-G07_027IS_2 0.6900
FDNS	00NR_G14_059	2	20SP	G14_059	TO->FROM	GR ISLD-LNX3345.00 - HOLT.CO3 345.00 345KV CKT 1	720	720	0.04625	105.7581	GEN672310 1-POPLAR RIVER GENERATOR 1
FDNS	00NR_G14_059	2	20SP	G14_059	TO->FROM	GR ISLD-LNX3345.00 - HOLT.CO3 345.00 345KV CKT 1	720	720	0.04625	105.7581	GEN672311 2-POPLAR RIVER GENERATOR 2
FDNS	00NR_G14_059	2	25SP	G14_059	TO->FROM	GR ISLD-LNX3345.00 - HOLT.CO3 345.00 345KV CKT 1	720	720	0.04635	105.7579	COYOTE 345/24.0KV TRANSFORMER CKT 1
FDNS	00NR_G14_059	2	25SP	G14_059	TO->FROM	GR ISLD-LNX3345.00 - HOLT.CO3 345.00 345KV CKT 1	720	720	0.03907	105.751	COLUMWEST - GRAND ISLAND 230KV CKT 1
FDNS	00NR_G14_059	2	25SP	G14_059	TO->FROM	GR ISLD-LNX3345.00 - HOLT.CO3 345.00 345KV CKT 1	720	720	0.04635	105.7493	GEN652461 5-GARRISON
FDNS	00NR_G14_059	2	25SP	G14_059	TO->FROM	GR ISLD-LNX3345.00 - HOLT.CO3 345.00 345KV CKT 1	720	720	0.04635	105.7492	GEN652460 4-GARRISON
FDNS	00NR_G14_059	2	25SP	G14_059	TO->FROM	GR ISLD-LNX3345.00 - HOLT.CO3 345.00 345KV CKT 1	720	720	0.04635	105.7474	GEN659194 1-NDPRAIRWND1W0.6900
FDNS	00NR_G14_059	2	20SP	G14_059	TO->FROM	GR ISLD-LNX3345.00 - HOLT.CO3 345.00 345KV CKT 1	720	720	0.04625	105.7458	GEN672306 6-BOUNDARY DAM GENERATOR 6
FDNS	00NR_G14_059	2	25SP	G14_059	TO->FROM	GR ISLD-LNX3345.00 - HOLT.CO3 345.00 345KV CKT 1	720	720	0.04635	105.7397	GEN652545 7-BIG BEND
FDNS	00NR_G14_059	2	20SP	G14_059	TO->FROM	GR ISLD-LNX3345.00 - HOLT.CO3 345.00 345KV CKT 1	720	720	0.04625	105.7332	GEN600004 2-PRAIRIE ISLAND G2
FDNS	00NR_G14_059	2	20SP	G14_059	TO->FROM	GR ISLD-LNX3345.00 - HOLT.CO3 345.00 345KV CKT 1	720	720	0.04625	105.7302	GEN600003 1-PRAIRIE ISLAND G1
FDNS	00NR_G14_059	2	25SP	G14_059	TO->FROM	GR ISLD-LNX3345.00 - HOLT.CO3 345.00 345KV CKT 1	720	720	0.04635	105.7127	GEN652544 5-BIG BEND
FDNS	00NR_G14_059	2	25SP	G14_059	TO->FROM	GR ISLD-LNX3345.00 - HOLT.CO3 345.00 345KV CKT 1	720	720	0.04635	105.7109	GEN652457 1-GARRISON
FDNS	00NR_G14_059	2	25SP	G14_059	TO->FROM	GR ISLD-LNX3345.00 - HOLT.CO3 345.00 345KV CKT 1	720	720	0.04635	105.7109	GEN652458 2-GARRISON
FDNS	00NR_G14_059	2	25SP	G14_059	TO->FROM	GR ISLD-LNX3345.00 - HOLT.CO3 345.00 345KV CKT 1	720	720	0.04635	105.7109	GEN652459 3-GARRISON
FDNS	00NR_G14_059	2	25SP	G14_059	TO->FROM	GR ISLD-LNX3345.00 - HOLT.CO3 345.00 345KV CKT 1	720	720	0.04635	105.7013	GEN652542 1-BIG BEND

SOLUTION	GROUP	SCENARIO	SEASON	SOURCE	DIRECTION	MONITORED ELEMENT	RATEA (MVA)	RATEB(MVA)	TDF	TC%LOADING (% MVA)	CONTINGENCY
FDNS	00NR_G14_059	2	25SP	G14_059	TO->FROM	GR ISLD-LNX3345.00 - HOLT.CO3 345.00 345KV CKT 1	720	720	0.04635	105.7013	GEN652543 3-BIG BEND
FDNS	00NR_G14_059	2	20SP	G14_059	TO->FROM	GR ISLD-LNX3345.00 - HOLT.CO3 345.00 345KV CKT 1	720	720	0.04625	105.6816	GEN615010 1-STANTON4
FDNS	00NR_G14_059	2	20SP	G14_059	TO->FROM	GR ISLD-LNX3345.00 - HOLT.CO3 345.00 345KV CKT 1	720	720	0.04625	105.6447	GEN652556 2-OAHE
FDNS	00NR_G14_059	2	20SP	G14_059	TO->FROM	GR ISLD-LNX3345.00 - HOLT.CO3 345.00 345KV CKT 1	720	720	0.04625	105.6447	GEN652557 4-OAHE
FDNS	00NR_G14_059	2	20SP	G14_059	TO->FROM	GR ISLD-LNX3345.00 - HOLT.CO3 345.00 345KV CKT 1	720	720	0.04625	105.6447	GEN652558 6-OAHE
FDNS	00NR_G14_059	2	25SP	G14_059	TO->FROM	GR ISLD-LNX3345.00 - HOLT.CO3 345.00 345KV CKT 1	720	720	0.04635	105.6395	GEN659403 1-NDSUNFLWR W0.6900
FDNS	00NR_G14_059	2	25SP	G14_059	TO->FROM	GR ISLD-LNX3345.00 - HOLT.CO3 345.00 345KV CKT 1	720	720	0.04635	105.6266	STANTON 230/18.0KV TRANSFORMER CKT 1
FDNS	00NR_G14_059	2	20SP	G14_059	TO->FROM	GR ISLD-LNX3345.00 - HOLT.CO3 345.00 345KV CKT 1	720	720	0.04625	105.6101	GEN659453 1-GI1414GEN W0.6900
FDNS	00NR_G14_059	2	20SP	G14_059	TO->FROM	GR ISLD-LNX3345.00 - HOLT.CO3 345.00 345KV CKT 1	720	720	0.04625	105.5666	GEN659141 1-K10215A
FDNS	00NR_G14_059	2	25SP	G14_059	TO->FROM	GR ISLD-LNX3345.00 - HOLT.CO3 345.00 345KV CKT 1	720	720	0.04635	105.5589	ALMA 161 161/24.0KV TRANSFORMER CKT 1
FDNS	00NR_G14_059	2	20SP	G14_059	TO->FROM	GR ISLD-LNX3345.00 - HOLT.CO3 345.00 345KV CKT 1	720	720	0.04625	105.5144	GEN652173 1-G09_001IS_2 0.6900
FDNS	00NR_G14_059	2	20SP	G14_059	TO->FROM	GR ISLD-LNX3345.00 - HOLT.CO3 345.00 345KV CKT 1	720	720	0.04625	105.4899	GEN600006 1-AS KING
FDNS	00NR_G14_059	2	25SP	G14_059	TO->FROM	GR ISLD-LNX3345.00 - HOLT.CO3 345.00 345KV CKT 1	720	720	0.04635	105.4494	GEN652906 1-G09_006IS_3 0.6900
FDNS	00NR_G14_059	2	25SP	G14_059	TO->FROM	GR ISLD-LNX3345.00 - HOLT.CO3 345.00 345KV CKT 1	720	720	0.04635	105.4265	SQUARE BUTTE - YNG2 4 230.00 230KV CKT 1
FDNS	00NR_G14_059	2	25SP	G14_059	TO->FROM	GR ISLD-LNX3345.00 - HOLT.CO3 345.00 345KV CKT 1	720	720	0.04635	105.4262	YNG2 4 230.00 230/20.0KV TRANSFORMER CKT 1
FDNS	00NR_G14_059	2	25SP	G14_059	TO->FROM	GR ISLD-LNX3345.00 - HOLT.CO3 345.00 345KV CKT 1	720	720	0.04635	105.4244	GEN659411 1-CAMPBLCNTY W0.6900
FDNS	00NR_G14_059	2	20SP	G14_059	TO->FROM	GR ISLD-LNX3345.00 - HOLT.CO3 345.00 345KV CKT 1	720	720	0.04625	105.3884	P12:230:UMZB:# 112 #: NU IN SD. NU-RCDC & DRY CREEK XFMR
FDNS	00NR_G14_059	2	20SP	G14_059	TO->FROM	GR ISLD-LNX3345.00 - HOLT.CO3 345.00 345KV CKT 1	720	720	0.04625	105.3846	RCDC EAST 4230.00 - RED CEDAR DC 230KV CKT 1
FDNS	00NR_G14_059	2	20SP	G14_059	TO->FROM	GR ISLD-LNX3345.00 - HOLT.CO3 345.00 345KV CKT 1	720	720	0.04625	105.3038	GEN659407 1-ANTELPHILLSW0.6900
FDNS	00NR_G14_059	2	25SP	G14_059	TO->FROM	GR ISLD-LNX3345.00 - HOLT.CO3 345.00 345KV CKT 1	720	720	0.04635	105.2966	GEN659296 2-SDPRAIRWND1W0.6900
FDNS	00NR_G14_059	2	25SP	G14_059	TO->FROM	GR ISLD-LNX3345.00 - HOLT.CO3 345.00 345KV CKT 1	720	720	0.04635	105.2797	GEN652907 1-G09_007IS_3 0.6900
FDNS	00NR_G14_059	2	20SP	G14_059	TO->FROM	GR ISLD-LNX3345.00 - HOLT.CO3 345.00 345KV CKT 1	720	720	0.04625	105.2642	GEN657749 1-YOUNG 1 GENERATOR
FDNS	00NR_G14_059	2	20SP	G14_059	TO->FROM	GR ISLD-LNX3345.00 - HOLT.CO3 345.00 345KV CKT 1	720	720	0.04625	105.2546	GEN659110 1-LELAND OLDS UNIT1
FDNS	00NR_G14_059	2	25SP	G14_059	TO->FROM	GR ISLD-LNX3345.00 - HOLT.CO3 345.00 345KV CKT 1	720	720	0.04635	105.1777	GEN672310 1-POPLAR RIVER GENERATOR 1
FDNS	00NR_G14_059	2	25SP	G14_059	TO->FROM	GR ISLD-LNX3345.00 - HOLT.CO3 345.00 345KV CKT 1	720	720	0.04635	105.1776	GEN672311 2-POPLAR RIVER GENERATOR 2
FDNS	00NR_G14_059	2	25SP	G14_059	TO->FROM	GR ISLD-LNX3345.00 - HOLT.CO3 345.00 345KV CKT 1	720	720	0.04635	105.1669	GEN672321 1-SHAND GENERATOR 1
FDNS	00NR_G14_059	2	25SP	G14_059	TO->FROM	GR ISLD-LNX3345.00 - HOLT.CO3 345.00 345KV CKT 1	720	720	0.04635	105.1277	GEN652559 1-OAHE
FDNS	00NR_G14_059	2	25SP	G14_059	TO->FROM	GR ISLD-LNX3345.00 - HOLT.CO3 345.00 345KV CKT 1	720	720	0.04635	105.1108	GEN672306 6-BOUNDARY DAM GENERATOR 6
FDNS	00NR_G14_059	2	25SP	G14_059	TO->FROM	GR ISLD-LNX3345.00 - HOLT.CO3 345.00 345KV CKT 1	720	720	0.04635	105.0906	GEN615010 1-STANTON4
FDNS	00NR_G14_059	2	25SP	G14_059	TO->FROM	GR ISLD-LNX3345.00 - HOLT.CO3 345.00 345KV CKT 1	720	720	0.04635	105.079	GEN600004 2-PRAIRIE ISLAND G2
FDNS	00NR_G14_059	2	25SP	G14_059	TO->FROM	GR ISLD-LNX3345.00 - HOLT.CO3 345.00 345KV CKT 1	720	720	0.04635	105.0759	GEN600003 1-PRAIRIE ISLAND G1
FDNS	00NR_G14_059	2	25SP	G14_059	TO->FROM	GR ISLD-LNX3345.00 - HOLT.CO3 345.00 345KV CKT 1	720	720	0.04635	105.069	GEN652556 2-OAHE
FDNS	00NR_G14_059	2	25SP	G14_059	TO->FROM	GR ISLD-LNX3345.00 - HOLT.CO3 345.00 345KV CKT 1	720	720	0.04635	105.069	GEN652557 4-OAHE
FDNS	00NR_G14_059	2	25SP	G14_059	TO->FROM	GR ISLD-LNX3345.00 - HOLT.CO3 345.00 345KV CKT 1	720	720	0.04635	105.069	GEN652558 6-OAHE
FDNS	00NR_G14_059	2	25SP	G14_059	TO->FROM	GR ISLD-LNX3345.00 - HOLT.CO3 345.00 345KV CKT 1	720	720	0.04635	105.0139	GEN659453 1-GI1414GEN W0.6900
FDNS	00NR_G14_059	2	25SP	G14_059	TO->FROM	GR ISLD-LNX3345.00 - HOLT.CO3 345.00 345KV CKT 1	720	720	0.04635	104.9874	GEN659141 1-K10215A
FDNS	00NR_G14_059	2	25SP	G14_059	TO->FROM	GR ISLD-LNX3345.00 - HOLT.CO3 345.00 345KV CKT 1	720	720	0.03723	104.95	AXTELL - POST ROCK 345KV CKT 1
FDNS	00NR_G14_059	2	25SP	G14_059	TO->FROM	GR ISLD-LNX3345.00 - HOLT.CO3 345.00 345KV CKT 1	720	720	0.04635	104.9268	GEN652173 1-G09_001IS_2 0.6900
FDNS	00NR_G14_059	2	20SP	G14_059	TO->FROM	GR ISLD-LNX3345.00 - HOLT.CO3 345.00 345KV CKT 1	720	720	0.04625	104.861	GEN600005 1-MONTICELLO
FDNS	00NR_G14_059	2	25SP	G14_059	TO->FROM	GR ISLD-LNX3345.00 - HOLT.CO3 345.00 345KV CKT 1	720	720	0.04635	104.8166	GEN600006 1-AS KING
FDNS	00NR_G14_059	2	25SP	G14_059	TO->FROM	GR ISLD-LNX3345.00 - HOLT.CO3 345.00 345KV CKT 1	720	720	0.04635	104.7976	RCDC EAST 4230.00 - RED CEDAR DC 230KV CKT 1
FDNS	00NR_G14_059	2	25SP	G14_059	TO->FROM	GR ISLD-LNX3345.00 - HOLT.CO3 345.00 345KV CKT 1	720	720	0.04635	104.7965	P12:230:UMZB:# 112 #: NU IN SD. NU-RCDC & DRY CREEK XFMR
FDNS	00NR_G14_059	2	20SP	G14_059	TO->FROM	GR ISLD-LNX3345.00 - HOLT.CO3 345.00 345KV CKT 1	720	720	0.04625	104.7468	GEN600001 2-SHERBURNE CNTY G2
FDNS	00NR_G14_059	2	25SP	G14_059	TO->FROM	GR ISLD-LNX3345.00 - HOLT.CO3 345.00 345KV CKT 1	720	720	0.04635	104.7343	GEN659407 1-ANTELPHILLSW0.6900
FDNS	00NR_G14_059	2	20SP	G14_059	TO->FROM	GR ISLD-LNX3345.00 - HOLT.CO3 345.00 345KV CKT 1	720	720	0.04625	104.6982	GEN600000 1-SHERBURNECNTY G1
FDNS	00NR_G14_059	2	25SP	G14_059	TO->FROM	GR ISLD-LNX3345.00 - HOLT.CO3 345.00 345KV CKT 1	720	720	0.04635	104.6703	GEN659110 1-LELAND OLDS UNIT1
FDNS	00NR_G14_059	2	25SP	G14_059	TO->FROM	GR ISLD-LNX3345.00 - HOLT.CO3 345.00 345KV CKT 1	720	720	0.04635	104.6352	GEN657749 1-YOUNG 1 GENERATOR
FDNS	00NR_G14_059	2	20SP	G14_059	TO->FROM	GR ISLD-LNX3345.00 - HOLT.CO3 345.00 345KV CKT 1	720	720	0.04625	104.5324	GEN661015 1-COYOTE
FDNS	00NR_G14_059	2	25SP	G14_059	TO->FROM	GR ISLD-LNX3345.00 - HOLT.CO3 345.00 345KV CKT 1	720	720	0.04635	104.4778	CLAY BOSWELL 230/20.9KV TRANSFORMER CKT 1
FDNS	00NR_G14_059	2	20SP	G14_059	TO->FROM	GR ISLD-LNX3345.00 - HOLT.CO3 345.00 345KV CKT 1	720	720	0.04625	104.4271	GEN620315 1-BIG STONE GEN
FDNS	00NR_G14_059	2	25SP	G14_059	TO->FROM	GR ISLD-LNX3345.00 - HOLT.CO3 345.00 345KV CKT 1	720	720	0.04635	104.1459	GEN600005 1-MONTICELLO
FDNS	00NR_G14_059	2	25SP	G14_059	TO->FROM	GR ISLD-LNX3345.00 - HOLT.CO3 345.00 345KV CKT 1	720	720	0.04635	104.0292	GEN600001 2-SHERBURNE CNTY G2
FDNS	00NR_G14_059	2	20SP	G14_059	TO->FROM	GR ISLD-LNX3345.00 - HOLT.CO3 345.00 345KV CKT 1	720	720	0.04625	104.0066	GEN640010 1-GERALD GENTLEMAN STATION UNIT 1
FDNS	00NR_G14_059	2	25SP	G14_059	TO->FROM	GR ISLD-LNX3345.00 - HOLT.CO3 345.00 345KV CKT 1	720	720	0.04635	103.9653	GEN600000 1-SHERBURNECNTY G1
FDNS	00NR_G14_059	2	20SP	G14_059	TO->FROM	GR ISLD-LNX3345.00 - HOLT.CO3 345.00 345KV CKT 1	720	720	0.04625	103.9566	GEN640011 2-GERALD GENTLEMAN STATION UNIT 2
FDNS	00NR_G14_059	2	20SP	G14_059	TO->FROM	GR ISLD-LNX3345.00 - HOLT.CO3 345.00 345KV CKT 1	720	720	0.04625	103.9488	GEN600002 3-SHERBURNE CNTY G3
FDNS	00NR_G14_059	2	20SP	G14_059	TO->FROM	GR ISLD-LNX3345.00 - HOLT.CO3 345.00 345KV CKT 1	720	720	0.04625	103.9134	GEN657748 1-YOUNG 2 GENERATOR
FDNS	00NR_G14_059	2	20SP	G14_059	TO->FROM	GR ISLD-LNX3345.00 - HOLT.CO3 345.00 345KV CKT 1	720	720	0.04625	103.8231	SHERBURNE CO 345/24.0KV TRANSFORMER CKT 1
FDNS	00NR_G14_059	2	25SP	G14_059	TO->FROM	GR ISLD-LNX3345.00 - HOLT.CO3 345.00 345KV CKT 1	720	720	0.04635	103.7735	GEN620315 1-BIG STONE GEN
FDNS	00NR_G14_059	2	25SP	G14_059	TO->FROM	GR ISLD-LNX3345.00 - HOLT.CO3 345.00 345KV CKT 1	720	720	0.04635	103.726	GEN661015 1-COYOTE
FDNS	00NR_G14_059	2	20SP	G14_059	TO->FROM	GR ISLD-LNX3345.00 - HOLT.CO3 345.00 345KV CKT 1	720	720	0.04878	103.6406	FTTHOM1-LNX3345.00 - LELAND2-LNX3345.00 345KV CKT 1
FDNS	00NR_G14_059	2	20SP	G14_059	TO->FROM	GR ISLD-LNX3345.00 - HOLT.CO3 345.00 345KV CKT 1	720	720	0.04878	103.5597	P12:345:UMZB:# 108 #: LOS FT IN ND. LOS FT
FDNS	00NR_G14_059	2	20SP	G14_059	TO->FROM	GR ISLD-LNX3345.00 - HOLT.CO3 345.00 345KV CKT 1	720	720	0.04878	103.5585	FT THOMPSON - FTTHOM1-LNX3345.00 345KV CKT Z
FDNS	00NR_G14_059	2	20SP	G14_059	TO->FROM	GR ISLD-LNX3345.00 - HOLT.CO3 345.00 345KV CKT 1	720	720	0.04625	103.544	BIG STONE 230/24.0KV TRANSFORMER CKT 1
FDNS	00NR_G14_059	2	20SP	G14_059	TO->FROM	GR ISLD-LNX3345.00 - HOLT.CO3 345.00 345KV CKT 1	720	720	0.04878	103.5334	LELAND OLDS - LELAND2-LNX3345.00 345KV CKT Z
FDNS	00NR_G14_059	2	20SP	G14_059	TO->FROM	GR ISLD-LNX3345.00 - HOLT.CO3 345.00 345KV CKT 1	720	720	0.04625	103.3011	GEN659118 1-LARAMIE RIVER UNIT1
FDNS	00NR_G14_059	2	25SP	G14_059	TO->FROM	GR ISLD-LNX3345.00 - HOLT.CO3 345.00 345KV CKT 1	720	720	0.04635	103.2325	SHERBURNE CO 345/24.0KV TRANSFORMER CKT 1
FDNS	00NR_G14_059	2	25SP	G14_059	TO->FROM	GR ISLD-LNX3345.00 - HOLT.CO3 345.00 345KV CKT 1	720	720	0.04635	103.2246	GEN600002 3-SHERBURNE CNTY G3
FDNS	00NR_G14_059	2	25SP	G14_059	TO->FROM	GR ISLD-LNX3345.00 - HOLT.CO3 345.00 345KV CKT 1	720	720	0.04886	103.1658	FTTHOM1-LNX3345.00 - LELAND2-LNX3345.00 345KV CKT 1
FDNS	00NR_G14_059	2	25SP	G14_059	TO->FROM	GR ISLD-LNX3345.00 - HOLT.CO3 345.00 345KV CKT 1	720	720	0.04635	103.0961	GEN640010 1-GERALD GENTLEMAN STATION UNIT 1
FDNS	00NR_G14_059	2	25SP	G14_059	TO->FROM	GR ISLD-LNX3345.00 - HOLT.CO3 345.00 345KV CKT 1	720	720	0.04886	103.0869	P12:345:UMZB:# 108 #: LOS FT IN ND. LOS FT
FDNS	00NR_G14_059	2	25SP	G14_059	TO->FROM	GR ISLD-LNX3345.00 - HOLT.CO3 345.00 345KV CKT 1	720	720	0.04886	103.0831	FT THOMPSON - FTTHOM1-LNX3345.00 345KV CKT Z
FDNS	00NR_G14_059	2	25SP	G14_059	TO->FROM	GR ISLD-LNX3345.00 - HOLT.CO3 345.00 345KV CKT 1	720	720	0.04886	103.0553	LELAND OLDS - LELAND2-LNX3345.00 345KV CKT Z

SOLUTION	GROUP	SCENARIO	SEASON	SOURCE	DIRECTION	MONITORED ELEMENT	RATEA (MVA)	RATEB(MVA)	TDF	TC%LOADING (% MVA)	CONTINGENCY
FDNS	00NR_G14_059	2	20SP	G14_059	TO->FROM	GR ISLD-LNX3345.00 - HOLT.CO3 345.00 345KV CKT 1	720	720	0.04625	102.8335	GEN659111 2-LELAND OLDS UNIT2
FDNS	00NR_G14_059	2	25SP	G14_059	TO->FROM	GR ISLD-LNX3345.00 - HOLT.CO3 345.00 345KV CKT 1	720	720	0.04635	102.7435	GEN657748 1-YOUNG 2 GENERATOR
FDNS	00NR_G14_059	2	20SP	G14_059	TO->FROM	GR ISLD-LNX3345.00 - HOLT.CO3 345.00 345KV CKT 1	720	720	0.04625	102.5968	GEN659125 1-COVEY
FDNS	00NR_G14_059	2	25SP	G14_059	TO->FROM	GR ISLD-LNX3345.00 - HOLT.CO3 345.00 345KV CKT 1	720	720	0.04635	102.5594	GEN640011 2-GERALD GENTLEMAN STATION UNIT 2
FDNS	00NR_G14_059	2	25SP	G14_059	TO->FROM	GR ISLD-LNX3345.00 - HOLT.CO3 345.00 345KV CKT 1	720	720	0.04635	102.5563	GEN659118 1-LARAMIE RIVER UNIT1
FDNS	00NR_G14_059	2	20SP	G14_059	TO->FROM	GR ISLD-LNX3345.00 - HOLT.CO3 345.00 345KV CKT 1	720	720	0.04625	102.4604	GEN659103 1-ANTELOPE VALLEY UNIT1
FDNS	00NR_G14_059	2	20SP	G14_059	TO->FROM	GR ISLD-LNX3345.00 - HOLT.CO3 345.00 345KV CKT 1	720	720	0.04625	102.4604	GEN659107 2-ANTELOPE VALLEY UNIT2
FDNS	00NR_G14_059	2	25SP	G14_059	TO->FROM	GR ISLD-LNX3345.00 - HOLT.CO3 345.00 345KV CKT 1	720	720	0.04635	102.1899	GEN659111 2-LELAND OLDS UNIT2
FDNS	00NR_G14_059	2	25SP	G14_059	TO->FROM	GR ISLD-LNX3345.00 - HOLT.CO3 345.00 345KV CKT 1	720	720	0.04635	101.9746	GEN659125 1-COVEY
FDNS	00NR_G14_059	2	20SP	G14_059	TO->FROM	GR ISLD-LNX3345.00 - HOLT.CO3 345.00 345KV CKT 1	720	720	0.04625	101.9714	GEN615001 1-COAL CREEK
FDNS	00NR_G14_059	2	20SP	G14_059	TO->FROM	GR ISLD-LNX3345.00 - HOLT.CO3 345.00 345KV CKT 1	720	720	0.04625	101.8893	GEN615002 2-COAL CREEK
FDNS	00NR_G14_059	2	25SP	G14_059	TO->FROM	GR ISLD-LNX3345.00 - HOLT.CO3 345.00 345KV CKT 1	720	720	0.04635	101.8066	GEN659103 1-ANTELOPE VALLEY UNIT1
FDNS	00NR_G14_059	2	25SP	G14_059	TO->FROM	GR ISLD-LNX3345.00 - HOLT.CO3 345.00 345KV CKT 1	720	720	0.04635	101.8066	GEN659107 2-ANTELOPE VALLEY UNIT2
FDNS	00NR_G14_059	2	25SP	G14_059	TO->FROM	GR ISLD-LNX3345.00 - HOLT.CO3 345.00 345KV CKT 1	720	720	0.04635	101.2977	GEN615001 1-COAL CREEK
FDNS	00NR_G14_059	2	25SP	G14_059	TO->FROM	GR ISLD-LNX3345.00 - HOLT.CO3 345.00 345KV CKT 1	720	720	0.04635	101.2222	GEN615002 2-COAL CREEK
FDNS	00NR_G14_059	2	25SP	G14_059	TO->FROM	GRANTNB7 115.00 - OGALALANPPD7115.00 115KV CKT 2	147	147	0.05709	103.8869	OGALALA7 115.00 - OGALALANPPD7115.00 115KV CKT Z
FDNS	00NR_G14_059	3	25SP	G14_059	FROM->TO	GGS	1635	1635	0.68813	104.5291	BASE CASE
FDNS	00NR_G14_059	3	17SP	G14_059	FROM->TO	GR ISLD-LNX3345.00 - GRAND ISLAND 345KV CKT Z	844	844	0.07346	103.0113	GERALD GENTLEMAN STATION - SWEETWATER 345KV CKT 1
FDNS	00NR_G14_059	3	17SP	G14_059	FROM->TO	GR ISLD-LNX3345.00 - GRAND ISLAND 345KV CKT Z	844	844	0.04694	102.7253	KELLY - MEADOWGROVE4230.00 230KV CKT 1
FDNS	00NR_G14_059	3	17SP	G14_059	FROM->TO	GR ISLD-LNX3345.00 - GRAND ISLAND 345KV CKT Z	844	844	0.04882	101.9946	P12:230:UMZB:# 116 #: ST IN SD. WSG-ST-VH
FDNS	00NR_G14_059	3	17SP	G14_059	FROM->TO	GR ISLD-LNX3345.00 - GRAND ISLAND 345KV CKT Z	844	844	0.0669	101.4386	GERALD GENTLEMAN STATION - SWEETWATER 345KV CKT 2
FDNS	00NR_G14_059	3	17SP	G14_059	FROM->TO	GR ISLD-LNX3345.00 - GRAND ISLAND 345KV CKT Z	844	844	0.04856	101.4087	STORLA - WESSINGTON 230KV CKT 1
FDNS	00NR_G14_059	3	17SP	G14_059	FROM->TO	GR ISLD-LNX3345.00 - GRAND ISLAND 345KV CKT Z	844	844	0.07946	101.3709	GRAND ISLAND - SWEETWATER 345KV CKT 1
FDNS	00NR_G14_059	3	17SP	G14_059	FROM->TO	GR ISLD-LNX3345.00 - GRAND ISLAND 345KV CKT Z	844	844	0.04806	100.862	WATERTN-LNX3345.00 - WHITE 345KV CKT 1
FDNS	00NR_G14_059	3	17SP	G14_059	FROM->TO	GR ISLD-LNX3345.00 - GRAND ISLAND 345KV CKT Z	844	844	0.04849	100.7342	HANLON - STORLA 230KV CKT 1
FDNS	00NR_G14_059	3	17SP	G14_059	FROM->TO	GR ISLD-LNX3345.00 - GRAND ISLAND 345KV CKT Z	844	844	0.04806	100.7341	P12:345:UMZW:# 1747 #: WT2 IN SD. WT2-WHT LINE FAULT
FDNS	00NR_G14_059	3	17SP	G14_059	FROM->TO	GR ISLD-LNX3345.00 - GRAND ISLAND 345KV CKT Z	844	844	0.04806	100.6758	WATERTN-LNX3345.00 - WATERTOWN 345KV CKT Z
FDNS	00NR_G14_059	3	17SP	G14_059	FROM->TO	GR ISLD-LNX3345.00 - GRAND ISLAND 345KV CKT Z	844	844	0.06424	100.4942	MINGO - RED WILLOW 345KV CKT 1
FDNS	00NR_G14_059	3	17SP	G14_059	FROM->TO	GR ISLD-LNX3345.00 - GRAND ISLAND 345KV CKT Z	844	844	0.06424	100.4942	MINGO - RED WILLOW 345KV CKT 1
FDNS	00NR_G14_059	3	17SP	G14_059	FROM->TO	GR ISLD-LNX3345.00 - GRAND ISLAND 345KV CKT Z	844	844	0.04885	100.4617	FT THOMPSON - LETCHER 230KV CKT 1
FDNS	00NR_G14_059	3	17SP	G14_059	FROM->TO	GR ISLD-LNX3345.00 - GRAND ISLAND 345KV CKT Z	844	844	0.04885	100.4617	FT THOMPSON - LETCHER 230KV CKT 1
FDNS	00NR_G14_059	3	17SP	G14_059	FROM->TO	GR ISLD-LNX3345.00 - GRAND ISLAND 345KV CKT Z	844	844	0.04746	100.4616	G09_001IST 345.00 - WATERTOWN 345KV CKT 1
FDNS	00NR_G14_059	3	17SP	G14_059	FROM->TO	GR ISLD-LNX3345.00 - GRAND ISLAND 345KV CKT Z	844	844	0.05786	100.1018	GERALD GENTLEMAN STATION - RED WILLOW 345KV CKT 1
FDNS	00NR_G14_059	3	17SP	G14_059	FROM->TO	GR ISLD-LNX3345.00 - GRAND ISLAND 345KV CKT Z	844	844	0.04743	100	BUFFALO - JAMESTOWN 345KV CKT 1
FDNS	00NR_G14_059	3	17SP	G14_059	FROM->TO	GR ISLD-LNX3345.00 - GRAND ISLAND 345KV CKT Z	844	844	0.05806	99.8	CROOKED CREEK - NORTH PLATTE 230KV CKT 1
FDNS	00NR_G14_059	3	17SP	G14_059	FROM->TO	GR ISLD-LNX3345.00 - GRAND ISLAND 345KV CKT Z	844	844	0.04813	99.7	FT RANDAL - FT THOMPSON 230KV CKT 1
FDNS	00NR_G14_059	3	17SP	G14_059	FROM->TO	GR ISLD-LNX3345.00 - GRAND ISLAND 345KV CKT Z	844	844	0.04813	99.7	FT RANDAL - FT THOMPSON 230KV CKT 1
FDNS	00NR_G14_059	3	17SP	G14_059	FROM->TO	GR ISLD-LNX3345.00 - GRAND ISLAND 345KV CKT Z	844	844	0.0481	99.7	FT RANDAL - G12_009IST 230.00 230KV CKT 1
FDNS	00NR_G14_059	3	17SP	G14_059	FROM->TO	GR ISLD-LNX3345.00 - GRAND ISLAND 345KV CKT Z	844	844	0.04707	99.7	GEN635024 4-WALTER SCOTT UNIT 4
FDNS	00NR_G14_059	3	17SP	G14_059	FROM->TO	GR ISLD-LNX3345.00 - GRAND ISLAND 345KV CKT Z	844	844	0.0481	99.6	FT THOMPSON - LAKE PLATT 230KV CKT 1
FDNS	00NR_G14_059	3	17SP	G14_059	FROM->TO	GR ISLD-LNX3345.00 - GRAND ISLAND 345KV CKT Z	844	844	0.0481	99.6	FT THOMPSON - LAKE PLATT 230KV CKT 1
FDNS	00NR_G14_059	3	17SP	G14_059	FROM->TO	GR ISLD-LNX3345.00 - GRAND ISLAND 345KV CKT Z	844	844	0.04694	99.6	FT RANDAL - MEADOWGROVE4230.00 230KV CKT 1
FDNS	00NR_G14_059	3	17SP	G14_059	TO->FROM	GR ISLD-LNX3345.00 - HOLT.CO3 345.00 345KV CKT 1	844	844	0.07346	102.1082	GERALD GENTLEMAN STATION - SWEETWATER 345KV CKT 1
FDNS	00NR_G14_059	3	17SP	G14_059	TO->FROM	GR ISLD-LNX3345.00 - HOLT.CO3 345.00 345KV CKT 1	844	844	0.04694	101.8753	KELLY - MEADOWGROVE4230.00 230KV CKT 1
FDNS	00NR_G14_059	3	17SP	G14_059	TO->FROM	GR ISLD-LNX3345.00 - HOLT.CO3 345.00 345KV CKT 1	844	844	0.04882	101.1557	P12:230:UMZB:# 116 #: ST IN SD. WSG-ST-VH
FDNS	00NR_G14_059	3	17SP	G14_059	TO->FROM	GR ISLD-LNX3345.00 - HOLT.CO3 345.00 345KV CKT 1	844	844	0.04856	100.5724	STORLA - WESSINGTON 230KV CKT 1
FDNS	00NR_G14_059	3	17SP	G14_059	TO->FROM	GR ISLD-LNX3345.00 - HOLT.CO3 345.00 345KV CKT 1	844	844	0.0669	100.5681	GERALD GENTLEMAN STATION - SWEETWATER 345KV CKT 2
FDNS	00NR_G14_059	3	17SP	G14_059	TO->FROM	GR ISLD-LNX3345.00 - HOLT.CO3 345.00 345KV CKT 1	844	844	0.07946	100.4412	GRAND ISLAND - SWEETWATER 345KV CKT 1
FDNS	00NR_G14_059	3	17SP	G14_059	TO->FROM	GR ISLD-LNX3345.00 - HOLT.CO3 345.00 345KV CKT 1	844	844	0.04806	100	WATERTN-LNX3345.00 - WHITE 345KV CKT 1
FDNS	00NR_G14_059	3	17SP	G14_059	TO->FROM	GR ISLD-LNX3345.00 - HOLT.CO3 345.00 345KV CKT 1	844	844	0.04849	99.9	HANLON - STORLA 230KV CKT 1
FDNS	00NR_G14_059	3	17SP	G14_059	TO->FROM	GR ISLD-LNX3345.00 - HOLT.CO3 345.00 345KV CKT 1	844	844	0.04806	99.9	P12:345:UMZW:# 1747 #: WT2 IN SD. WT2-WHT LINE FAULT
FDNS	00NR_G14_059	3	17SP	G14_059	TO->FROM	GR ISLD-LNX3345.00 - HOLT.CO3 345.00 345KV CKT 1	844	844	0.04806	99.8	WATERTN-LNX3345.00 - WATERTOWN 345KV CKT Z
FDNS	00NR_G14_059	3	17SP	G14_059	TO->FROM	GR ISLD-LNX3345.00 - HOLT.CO3 345.00 345KV CKT 1	844	844	0.06424	99.6	MINGO - RED WILLOW 345KV CKT 1
FDNS	00NR_G14_059	3	17SP	G14_059	TO->FROM	GR ISLD-LNX3345.00 - HOLT.CO3 345.00 345KV CKT 1	844	844	0.06424	99.6	MINGO - RED WILLOW 345KV CKT 1
FDNS	00NR_G14_059	3	17SP	G14_059	TO->FROM	GR ISLD-LNX3345.00 - HOLT.CO3 345.00 345KV CKT 1	844	844	0.04885	99.6	FT THOMPSON - LETCHER 230KV CKT 1
FDNS	00NR_G14_059	3	17SP	G14_059	TO->FROM	GR ISLD-LNX3345.00 - HOLT.CO3 345.00 345KV CKT 1	844	844	0.04885	99.6	FT THOMPSON - LETCHER 230KV CKT 1
FDNS	00NR_G14_059	3	17SP	G14_059	TO->FROM	GR ISLD-LNX3345.00 - HOLT.CO3 345.00 345KV CKT 1	844	844	0.04746	99.6	G09_001IST 345.00 - WATERTOWN 345KV CKT 1
FDNS	00NR_G14_059	3	25SP	G14_059	TO->FROM	GRANTNB7 115.00 - OGALALANPPD7115.00 115KV CKT 2	147	147	0.05709	103.8869	OGALALA7 115.00 - OGALALANPPD7115.00 115KV CKT Z
FDNS	00NR_G15_018	0	25SP	G15_018	TO->FROM	AMOCO SWITCHING STATION - SUNDOWN INTERCHANGE 230KV CKT 1	437	437	0.06124	100.1646	TUCO INTERCHANGE - YOAKUM_345 345.00 345KV CKT 1
FDNS	00NR_G15_018	0	25SP	G15_018	TO->FROM	HOCKLEY COUNTY INTERCHANGE - LAMB COUNTY INTERCHANGE 115KV CKT 1	141.02	141.02	0.04913	100	SUNDOWN INTERCHANGE (WH XDS70381) 230/115/13.8KV TRANSFORMER CKT 1
FDNS	00NR_G15_018	0	25SP	G15_018	TO->FROM	HOCKLEY COUNTY INTERCHANGE - LAMB COUNTY INTERCHANGE 115KV CKT 1	141.02	141.02	0.04913	100	SUNDOWN INTERCHANGE (WH XDS70381) 230/115/13.8KV TRANSFORMER CKT 1
FDNS	00NR_G15_018	0	25SP	G15_018	TO->FROM	JONES STATION - TUCO INTERCHANGE 230KV CKT 1	343.79	343.79	0.06494	116.9838	CARLISLE INTERCHANGE - TUCO INTERCHANGE 230KV CKT 1
FDNS	00NR_G15_018	0	25SP	G15_018	TO->FROM	JONES STATION - TUCO INTERCHANGE 230KV CKT 1	343.79	343.79	0.06494	116.9838	CARLISLE INTERCHANGE - TUCO INTERCHANGE 230KV CKT 1
FDNS	00NR_G15_018	0	25SP	G15_018	TO->FROM	JONES STATION - TUCO INTERCHANGE 230KV CKT 1	343.79	343.79	0.06221	105.3193	TUCO INTERCHANGE - YOAKUM_345 345.00 345KV CKT 1
FDNS	00NR_G15_018	0	25SP	G15_018	TO->FROM	JONES STATION - TUCO INTERCHANGE 230KV CKT 1	343.79	343.79	0.0568	99.7	GEN526333 1-JONES GEN #3 21 KV
FDNS	00NR_G15_020	0	25SP	G15_020	TO->FROM	AMOCO SWITCHING STATION - SUNDOWN INTERCHANGE 230KV CKT 1	437	437	0.04552	99.6	TUCO INTERCHANGE - YOAKUM_345 345.00 345KV CKT 1
FDNS	00NR_G15_020	0	25SP	G15_020	TO->FROM	JONES STATION - TUCO INTERCHANGE 230KV CKT 1	343.79	343.79	0.06653	116.646	CARLISLE INTERCHANGE - TUCO INTERCHANGE 230KV CKT 1
FDNS	00NR_G15_020	0	25SP	G15_020	TO->FROM	JONES STATION - TUCO INTERCHANGE 230KV CKT 1	343.79	343.79	0.06653	116.646	CARLISLE INTERCHANGE - TUCO INTERCHANGE 230KV CKT 1
FDNS	00NR_G15_020	0	25SP	G15_020	TO->FROM	JONES STATION - TUCO INTERCHANGE 230KV CKT 1	343.79	343.79	0.06131	104.8848	TUCO INTERCHANGE - YOAKUM_345 345.00 345KV CKT 1
FDNSLock-Blown up	06ALL_G15_031	0	17G	G15_031		Non-Converged Contingency	1022	1124	0.23132	-	G14-074T 345.00 - OKLAUNION 345KV CKT 1
FDNSLock-Blown up	06ALL_G15_031	0	20L	G15_031		Non-Converged Contingency	1022	1124	0.18786	-	G14-074T 345.00 - OKLAUNION 345KV CKT 1
FDNSLock-Blown up	06ALL_G15_031	0	20L	G15_031		Non-Converged Contingency	1022	1124	0.18786	-	G14-074T 345.00 - TUCO INTERCHANGE 345KV CKT 1
FDNSLock-Blown up	06ALL_G15_031	0	20L	G15_031		Non-Converged Contingency	1792	1792	0.14035	-	BORDER 7345.00 - WOODWARD DISTRICT EHV 345KV CKT 1

SOLUTION	GROUP	SCENARIO	SEASON	SOURCE	DIRECTION	MONITORED ELEMENT	RATEA (MVA)	RATEB(MVA)	TDF	TC%LOADING (% MVA)	CONTINGENCY
FDNSLock-Blown up	06ALL_G15_031	0	20L	G15_031		Non-Converged Contingency	0	0	0.03171	-	P12:69:AEPW:NWMEMPH2:CHLDR2WT
FDNSLock-Blown up	06ALL_G15_031	0	20WP	G15_031		Non-Converged Contingency	1022	1124	0.21764	-	G14-074T 345.00 - OKLAUNION 345KV CKT 1
FDNS	06ALL_G15_031	0	17SP	G15_031	TO->FROM	AMARILLO SOUTH INTERCHANGE - G15031_T 230.00 230KV CKT 1	318.7	350.57	0.33523	111.4658	G14-074T 345.00 - OKLAUNION 345KV CKT 1
FDNS	06ALL_G15_031	0	16WP	G15_031	TO->FROM	AMARILLO SOUTH INTERCHANGE - G15031_T 230.00 230KV CKT 1	329.05	360.92	0.33512	102.8482	G14-074T 345.00 - OKLAUNION 345KV CKT 1
FDNS	00NR_G15_031	0	25SP	G15_031	TO->FROM	AMOCO SWITCHING STATION - SUNDOWN INTERCHANGE 230KV CKT 1	437	437	0.11032	101.7188	TUCO INTERCHANGE - YOAKUM_345 345.00 345KV CKT 1
FDNS	00NR_G15_031	0	16WP	G15_031	FROM->TO	CARLISLE INTERCHANGE - LP-DOUD_TP 3115.00 115KV CKT 1	165	177	0.06837	109.8744	LUBBOCK SOUTH INTERCHANGE - WOLFFORTH INTERCHANGE 230KV CKT 1
FDNS	00NR_G15_031	0	16WP	G15_031	FROM->TO	CARLISLE INTERCHANGE - LP-DOUD_TP 3115.00 115KV CKT 1	165	177	0.06837	109.8744	LUBBOCK SOUTH INTERCHANGE - WOLFFORTH INTERCHANGE 230KV CKT 1
FDNS	00NR_G15_031	0	25SP	G15_031	FROM->TO	CARLISLE INTERCHANGE - LP-DOUD_TP 3115.00 115KV CKT 1	159	160	0.03448	101.1331	TUCO INTERCHANGE - YOAKUM_345 345.00 345KV CKT 1
FDNS	06ALL_G15_031	0	20L	G15_031	TO->FROM	CHISHOLM6 230.00 - SWEETWATER 230KV CKT 1	421	439	0.10524	102.5831	BASE CASE
FDNS	00NR_G15_031	0	25SP	G15_031	TO->FROM	JONES STATION - TUCO INTERCHANGE 230KV CKT 1	343.79	343.79	0.11873	117.9045	CARLISLE INTERCHANGE - TUCO INTERCHANGE 230KV CKT 1
FDNS	00NR_G15_031	0	25SP	G15_031	TO->FROM	JONES STATION - TUCO INTERCHANGE 230KV CKT 1	343.79	343.79	0.11873	117.9045	CARLISLE INTERCHANGE - TUCO INTERCHANGE 230KV CKT 1
FDNS	00NR_G15_031	0	25SP	G15_031	TO->FROM	JONES STATION - TUCO INTERCHANGE 230KV CKT 1	343.79	343.79	0.11488	105.8851	TUCO INTERCHANGE - YOAKUM_345 345.00 345KV CKT 1
FDNS	00NR_G15_031	0	25SP	G15_031	TO->FROM	JONES STATION - TUCO INTERCHANGE 230KV CKT 1	343.79	343.79	0.09251	100.1999	GEN526333 1-JONES GEN #3 21 KV
FDNS	00NR_G15_031	0	25SP	G15_031	TO->FROM	JONES STATION - TUCO INTERCHANGE 230KV CKT 1	343.79	343.79	0.09251	99.8	GEN526334 1-JONES_4 116.500
FDNS	00NR_G15_031	0	25SP	G15_031	TO->FROM	KRESS INTERCHANGE - SWISHER COUNTY INTERCHANGE 115KV CKT 1	218	239	0.22142	118.6319	NEWHART 230 - SWISHER COUNTY INTERCHANGE 230KV CKT 1
FDNS	00NR_G15_031	0	25SP	G15_031	TO->FROM	KRESS INTERCHANGE - SWISHER COUNTY INTERCHANGE 115KV CKT 1	218	239	0.11342	111.1857	PALO DURO SUB - RANDALL COUNTY INTERCHANGE 115KV CKT 1
FDNS	00NR_G15_031	0	25SP	G15_031	TO->FROM	KRESS INTERCHANGE - SWISHER COUNTY INTERCHANGE 115KV CKT 1	218	239	0.11342	109.8583	P12:115:SPS:T66.1.RNDALL.HAPPY
FDNS	00NR_G15_031	0	25SP	G15_031	TO->FROM	KRESS INTERCHANGE - SWISHER COUNTY INTERCHANGE 115KV CKT 1	218	239	0.11342	109.7292	HAPPY INTERCHANGE - PALO DURO SUB 115KV CKT 1
FDNS	00NR_G15_031	0	25SP	G15_031	TO->FROM	KRESS INTERCHANGE - SWISHER COUNTY INTERCHANGE 115KV CKT 1	218	239	0.12328	107.7927	BASE CASE
FDNS	00NR_G15_031	0	25SP	G15_031	TO->FROM	KRESS INTERCHANGE - SWISHER COUNTY INTERCHANGE 115KV CKT 1	218	239	0.20124	106.6658	SWISHER COUNTY INTERCHANGE - TUCO_2 230.00 230KV CKT 1
FDNS	00NR_G15_031	0	17SP	G15_031	TO->FROM	KRESS INTERCHANGE - SWISHER COUNTY INTERCHANGE 115KV CKT 1	218	239	0.23153	105.0719	NEWHART 230 - SWISHER COUNTY INTERCHANGE 230KV CKT 1
FDNS	00NR_G15_031	0	25SP	G15_031	TO->FROM	KRESS INTERCHANGE - SWISHER COUNTY INTERCHANGE 115KV CKT 1	218	239	0.13507	103.6793	TUCO INTERCHANGE - TUCO_2 230.00 230KV CKT 1
FDNS	00NR_G15_031	0	25SP	G15_031	TO->FROM	KRESS INTERCHANGE - SWISHER COUNTY INTERCHANGE 115KV CKT 1	218	239	0.12623	103.654	NEWHART 230 (UPDATE LATER) 230/115/13.2KV TRANSFORMER CKT 2
FDNS	00NR_G15_031	0	25SP	G15_031	TO->FROM	KRESS INTERCHANGE - SWISHER COUNTY INTERCHANGE 115KV CKT 1	218	239	0.12623	103.654	NEWHART 230 (UPDATE LATER) 230/115/13.2KV TRANSFORMER CKT 2
FDNS	00NR_G15_031	0	25SP	G15_031	TO->FROM	KRESS INTERCHANGE - SWISHER COUNTY INTERCHANGE 115KV CKT 1	218	239	0.12623	103.654	NEWHART 230 (WAUK WT01105) 230/115/13.2KV TRANSFORMER CKT 1
FDNS	00NR_G15_031	0	25SP	G15_031	TO->FROM	KRESS INTERCHANGE - SWISHER COUNTY INTERCHANGE 115KV CKT 1	218	239	0.12623	103.654	NEWHART 230 (WAUK WT01105) 230/115/13.2KV TRANSFORMER CKT 1
FDNS	00NR_G15_031	0	25SP	G15_031	TO->FROM	KRESS INTERCHANGE - SWISHER COUNTY INTERCHANGE 115KV CKT 1	218	239	0.12046	103.4301	PLANT X STATION (WH ALM20171) 230/115/13.2KV TRANSFORMER CKT 1
FDNS	00NR_G15_031	0	25SP	G15_031	TO->FROM	KRESS INTERCHANGE - SWISHER COUNTY INTERCHANGE 115KV CKT 1	218	239	0.12046	103.4301	PLANT X STATION (WH ALM20171) 230/115/13.2KV TRANSFORMER CKT 1
FDNS	00NR_G15_031	0	25SP	G15_031	TO->FROM	KRESS INTERCHANGE - SWISHER COUNTY INTERCHANGE 115KV CKT 1	218	239	0.12181	103.4196	FLOYD COUNTY INTERCHANGE - TUCO INTERCHANGE 115KV CKT 1
FDNS	00NR_G15_031	0	25SP	G15_031	TO->FROM	KRESS INTERCHANGE - SWISHER COUNTY INTERCHANGE 115KV CKT 1	218	239	0.12181	103.4196	FLOYD COUNTY INTERCHANGE - TUCO INTERCHANGE 115KV CKT 1
FDNS	00NR_G15_031	0	25SP	G15_031	TO->FROM	KRESS INTERCHANGE - SWISHER COUNTY INTERCHANGE 115KV CKT 1	218	239	0.12589	103.3817	TUCO INTERCHANGE - YOAKUM_345 345.00 345KV CKT 1
FDNS	00NR_G15_031	0	25SP	G15_031	TO->FROM	KRESS INTERCHANGE - SWISHER COUNTY INTERCHANGE 115KV CKT 1	218	239	0.12336	102.9132	TUCO INTERCHANGE (ENRCO 136401) 230/115/13.2KV TRANSFORMER CKT 1
FDNS	00NR_G15_031	0	25SP	G15_031	TO->FROM	KRESS INTERCHANGE - SWISHER COUNTY INTERCHANGE 115KV CKT 1	218	239	0.12336	102.9132	TUCO INTERCHANGE (ENRCO 136401) 230/115/13.2KV TRANSFORMER CKT 1
FDNS	00NR_G15_031	0	25SP	G15_031	TO->FROM	KRESS INTERCHANGE - SWISHER COUNTY INTERCHANGE 115KV CKT 1	218	239	0.12336	102.9132	TUCO INTERCHANGE (ENRCO 136401) 230/115/13.2KV TRANSFORMER CKT 2
FDNS	00NR_G15_031	0	25SP	G15_031	TO->FROM	KRESS INTERCHANGE - SWISHER COUNTY INTERCHANGE 115KV CKT 1	218	239	0.12336	102.9132	TUCO INTERCHANGE (ENRCO 136401) 230/115/13.2KV TRANSFORMER CKT 2
FDNS	00NR_G15_031	0	25SP	G15_031	TO->FROM	KRESS INTERCHANGE - SWISHER COUNTY INTERCHANGE 115KV CKT 1	218	239	0.13472	102.5801	NEWHART 230 - PLANT X STATION 230KV CKT 1
FDNS	00NR_G15_031	0	25SP	G15_031	TO->FROM	KRESS INTERCHANGE - SWISHER COUNTY INTERCHANGE 115KV CKT 1	218	239	0.12413	102.5005	BUSHLAND INTERCHANGE - DEAF SMITH COUNTY INTERCHANGE 230KV CKT 1
FDNS	00NR_G15_031	0	25SP	G15_031	TO->FROM	KRESS INTERCHANGE - SWISHER COUNTY INTERCHANGE 115KV CKT 1	218	239	0.12413	102.5005	BUSHLAND INTERCHANGE - DEAF SMITH COUNTY INTERCHANGE 230KV CKT 1
FDNS	00NR_G15_031	0	25SP	G15_031	TO->FROM	KRESS INTERCHANGE - SWISHER COUNTY INTERCHANGE 115KV CKT 1	218	239	0.11342	102.0002	HAPPY INTERCHANGE - TULIA TAP 115KV CKT 1
FDNS	00NR_G15_031	0	25SP	G15_031	TO->FROM	KRESS INTERCHANGE - SWISHER COUNTY INTERCHANGE 115KV CKT 1	218	239	0.11563	101.9541	HALE CO INTERCHANGE - TUCO INTERCHANGE 115KV CKT 1
FDNS	00NR_G15_031	0	25SP	G15_031	TO->FROM	KRESS INTERCHANGE - SWISHER COUNTY INTERCHANGE 115KV CKT 1	218	239	0.11563	101.9541	HALE CO INTERCHANGE - TUCO INTERCHANGE 115KV CKT 1
FDNS	00NR_G15_031	0	25SP	G15_031	TO->FROM	KRESS INTERCHANGE - SWISHER COUNTY INTERCHANGE 115KV CKT 1	218	239	0.12328	101.8133	GEN525562 1-TOLK GEN #2 24 KV
FDNS	00NR_G15_031	0	25SP	G15_031	TO->FROM	KRESS INTERCHANGE - SWISHER COUNTY INTERCHANGE 115KV CKT 1	218	239	0.12328	101.7775	GEN525561 1-TOLK GEN #1 24 KV
FDNS	00NR_G15_031	0	20SP	G15_031	TO->FROM	KRESS INTERCHANGE - SWISHER COUNTY INTERCHANGE 115KV CKT 1	218	239	0.22212	101.595	NEWHART 230 - SWISHER COUNTY INTERCHANGE 230KV CKT 1
FDNS	00NR_G15_031	0	25SP	G15_031	TO->FROM	KRESS INTERCHANGE - SWISHER COUNTY INTERCHANGE 115KV CKT 1	218	239	0.12296	101.2993	LAMB COUNTY INTERCHANGE - TOLK STATION WEST 230KV CKT 1
FDNS	00NR_G15_031	0	25SP	G15_031	TO->FROM	KRESS INTERCHANGE - SWISHER COUNTY INTERCHANGE 115KV CKT 1	218	239	0.12296	101.2927	LAMB COUNTY INTERCHANGE (WH ALM20172) 230/115/13.2KV TRANSFORMER CKT 1
FDNS	00NR_G15_031	0	25SP	G15_031	TO->FROM	KRESS INTERCHANGE - SWISHER COUNTY INTERCHANGE 115KV CKT 1	218	239	0.12296	101.2927	LAMB COUNTY INTERCHANGE (WH ALM20172) 230/115/13.2KV TRANSFORMER CKT 1
FDNS	00NR_G15_031	0	25SP	G15_031	TO->FROM	KRESS INTERCHANGE - SWISHER COUNTY INTERCHANGE 115KV CKT 1	218	239	0.12296	101.2927	P12:230:SPS:K37.1.TOLK.LAMB
FDNS	00NR_G15_031	0	25SP	G15_031	TO->FROM	KRESS INTERCHANGE - SWISHER COUNTY INTERCHANGE 115KV CKT 1	218	239	0.12556	101.1893	JONES STATION - TUCO INTERCHANGE 230KV CKT 1
FDNS	00NR_G15_031	0	25SP	G15_031	TO->FROM	KRESS INTERCHANGE - SWISHER COUNTY INTERCHANGE 115KV CKT 1	218	239	0.12556	101.1893	JONES STATION - TUCO INTERCHANGE 230KV CKT 1
FDNS	00NR_G15_031	0	25SP	G15_031	TO->FROM	KRESS INTERCHANGE - SWISHER COUNTY INTERCHANGE 115KV CKT 1	218	239	0.11259	100.9714	KRESS INTERCHANGE - NEWHART 115KV CKT 1
FDNS	00NR_G15_031	0	25SP	G15_031	TO->FROM	KRESS INTERCHANGE - SWISHER COUNTY INTERCHANGE 115KV CKT 1	218	239	0.11259	100.9714	KRESS INTERCHANGE - NEWHART 115KV CKT 1
FDNS	00NR_G15_031	0	25SP	G15_031	TO->FROM	KRESS INTERCHANGE - SWISHER COUNTY INTERCHANGE 115KV CKT 1	218	239	0.12453	100.9147	CARLISLE INTERCHANGE - TUCO INTERCHANGE 230KV CKT 1
FDNS	00NR_G15_031	0	25SP	G15_031	TO->FROM	KRESS INTERCHANGE - SWISHER COUNTY INTERCHANGE 115KV CKT 1	218	239	0.12453	100.9147	CARLISLE INTERCHANGE - TUCO INTERCHANGE 230KV CKT 1
FDNS	00NR_G15_031	0	25SP	G15_031	TO->FROM	KRESS INTERCHANGE - SWISHER COUNTY INTERCHANGE 115KV CKT 1	218	239	0.12496	100.8041	HART INDUSTRIAL - NEWHART 115KV CKT 1
FDNS	00NR_G15_031	0	25SP	G15_031	TO->FROM	KRESS INTERCHANGE - SWISHER COUNTY INTERCHANGE 115KV CKT 1	218	239	0.11342	100.703	P12:115:SPS:T67.1.HAPPY.KRESS
FDNS	00NR_G15_031	0	25SP	G15_031	TO->FROM	KRESS INTERCHANGE - SWISHER COUNTY INTERCHANGE 115KV CKT 1	218	239	0.12366	100.6734	BUSHLAND INTERCHANGE - POTTER COUNTY INTERCHANGE 230KV CKT 1
FDNS	00NR_G15_031	0	25SP	G15_031	TO->FROM	KRESS INTERCHANGE - SWISHER COUNTY INTERCHANGE 115KV CKT 1	218	239	0.12366	100.6734	BUSHLAND INTERCHANGE - POTTER COUNTY INTERCHANGE 230KV CKT 1
FDNS	00NR_G15_031	0	25SP	G15_031	TO->FROM	KRESS INTERCHANGE - SWISHER COUNTY INTERCHANGE 115KV CKT 1	218	239	0.12145	100.6719	CROSBY COUNTY INTERCHANGE - LUBBOCK EAST INTERCHANGE 115KV CKT 1
FDNS	00NR_G15_031	0	25SP	G15_031	TO->FROM	KRESS INTERCHANGE - SWISHER COUNTY INTERCHANGE 115KV CKT 1	218	239	0.12145	100.6719	CROSBY COUNTY INTERCHANGE - LUBBOCK EAST INTERCHANGE 115KV CKT 1
FDNS	00NR_G15_031	0	25SP	G15_031	TO->FROM	KRESS INTERCHANGE - SWISHER COUNTY INTERCHANGE 115KV CKT 1	218	239	0.11342	100.5538	KRESS INTERCHANGE - TULIA TAP 115KV CKT 1
FDNS	00NR_G15_031	0	25SP	G15_031	TO->FROM	KRESS INTERCHANGE - SWISHER COUNTY INTERCHANGE 115KV CKT 1	218	239	0.12496	100.4322	HART INDUSTRIAL - LAMTON INTERCHANGE 115KV CKT 1
FDNS	00NR_G15_031	0	25SP	G15_031	TO->FROM	KRESS INTERCHANGE - SWISHER COUNTY INTERCHANGE 115KV CKT 1	218	239	0.12328	100.1751	GEN562550 1-G14_040_3 0.6900
FDNS	00NR_G15_031	0	25SP	G15_031	TO->FROM	KRESS INTERCHANGE - SWISHER COUNTY INTERCHANGE 115KV CKT 1	218	239	0.12325	99.9	JONES STATION - LUBBOCK EAST INTERCHANGE 230KV CKT 1
FDNS	00NR_G15_031	0	25SP	G15_031	TO->FROM	KRESS INTERCHANGE - SWISHER COUNTY INTERCHANGE 115KV CKT 1	218	239	0.12325	99.9	JONES STATION - LUBBOCK EAST INTERCHANGE 230KV CKT 1
FDNS	00NR_G15_031	0	16WP	G15_031	FROM->TO	LP-DOUD_TP 3115.00 - SP-WOLF_TP 3115.00 115KV CKT 1	165	180	0.06837	102.3592	LUBBOCK SOUTH INTERCHANGE - WOLFFORTH INTERCHANGE 230KV CKT 1
FDNS	00NR_G15_031	0	16WP	G15_031	FROM->TO	LP-DOUD_TP 3115.00 - SP-WOLF_TP 3115.00 115KV CKT 1	165	180	0.06837	102.3592	LUBBOCK SOUTH INTERCHANGE - WOLFFORTH INTERCHANGE 230KV CKT 1
FDNS	06ALL_G15_031	0	20L	G15_031	FROM->TO	STATELINE INTERCHANGE - STLN-DEMARC6 230KV CKT 1	348.58	381.24	0.10524	108.4168	BASE CASE
FDNS	06ALL_G15_031	0	20L	G15_031	FROM->TO	STLN-DEMARC6 - SWEETWATER 230KV CKT 1	353	353	0.10524	106.6812	BASE CASE
FDNS	00NR_G15_031	0	25SP	G15_031	TO->FROM	SUNDOWN INTERCHANGE - WOLFFORTH INTERCHANGE 230KV CKT 1	318.7	350.57	0.07764	101.992	TUCO INTERCHANGE - YOAKUM_345 345.00 345KV CKT 1
FDNS	00NR_G15_031	0	17SP	G15_031	FROM->TO	SUNDOWN INTERCHANGE (WH XDS70381) 230/115/13.8KV TRANSFORMER CKT 1	187	187	0.05632	109.3907	AMOCO SWITCHING STATION - SUNDOWN INTERCHANGE 230KV CKT 1
FDNS	00NR_G15_031	0	17SP	G15_031	FROM->TO	SUNDOWN INTERCHANGE (WH XDS70381) 230/115/13.8KV TRANSFORMER CKT 1	187	187	0.05632	109.3907	AMOCO SWITCHING STATION - SUNDOWN INTERCHANGE 230KV CKT 1
FDNS	00NR_G15_031	0	17SP	G15_031	FROM->TO	SUNDOWN INTERCHANGE (WH XDS70381) 230/115/13.8KV TRANSFORMER CKT 1	187	187	0.05632	106.7155	AMOCO SWITCHING STATION - SUNDOWN INTERCHANGE 230KV CKT 1

SOLUTION	GROUP	SCENARIO	SEASON	SOURCE	DIRECTION	MONITORED ELEMENT	RATEA (MVA)	RATEB(MVA)	TDF	TC%LOADING (% MVA)	CONTINGENCY
FDNS	00NR_G15_031	0	17SP	G15_031	FROM->TO	SUNDOWN INTERCHANGE (WH XDS70381) 230/115/13.8KV TRANSFORMER CKT 1	187	187	0.05632	106.7155	AMOCO SWITCHING STATION - SUNDOWN INTERCHANGE 230KV CKT 1
FDNS	00NR_G15_031	0	25SP	G15_031	TO->FROM	TERRY COUNTY INTERCHANGE - WOLFFORTH INTERCHANGE 115KV CKT 1	119.51	153.97	0.04566	112.7259	TUCO INTERCHANGE - YOAKUM_345 345.00 345KV CKT 1
FDNS	00NR_G15_031	0	25SP	G15_031	TO->FROM	TUCO INTERCHANGE - TUCO_2 230.00 230KV CKT 1	318.7	350.57	0.31943	139.9303	TUCO INTERCHANGE - TUCO_2 345.00 345KV CKT 1
FDNS	00NR_G15_031	0	25SP	G15_031	TO->FROM	TUCO INTERCHANGE - TUCO_2 230.00 230KV CKT 1	318.7	350.57	0.23781	124.1072	TUCO INTERCHANGE (GE M1022338) 345/230/13.2KV TRANSFORMER CKT 1
FDNS	00NR_G15_031	0	25SP	G15_031	TO->FROM	TUCO INTERCHANGE - TUCO_2 230.00 230KV CKT 1	318.7	350.57	0.23781	124.1072	TUCO INTERCHANGE (GE M1022338) 345/230/13.2KV TRANSFORMER CKT 1
FDNS	00NR_G15_031	0	25SP	G15_031	TO->FROM	TUCO INTERCHANGE - TUCO_2 230.00 230KV CKT 1	318.7	350.57	0.23936	117.5826	TUCO INTERCHANGE (SIEM 8743066) 345/230/13.2KV TRANSFORMER CKT 2
FDNS	00NR_G15_031	0	25SP	G15_031	TO->FROM	TUCO INTERCHANGE - TUCO_2 230.00 230KV CKT 1	318.7	350.57	0.23936	117.5826	TUCO INTERCHANGE (SIEM 8743066) 345/230/13.2KV TRANSFORMER CKT 2
FDNS	00NR_G15_031	0	25SP	G15_031	TO->FROM	TUCO INTERCHANGE - TUCO_2 230.00 230KV CKT 1	318.7	350.57	0.26437	109.7246	TUCO INTERCHANGE - YOAKUM_345 345.00 345KV CKT 1
FDNS	00NR_G15_031	0	25SP	G15_031	TO->FROM	TUCO INTERCHANGE - TUCO_2 230.00 230KV CKT 1	318.7	350.57	0.27798	106.8556	KRESS INTERCHANGE - SWISHER COUNTY INTERCHANGE 115KV CKT 1
FDNS	00NR_G15_031	0	25SP	G15_031	TO->FROM	TUCO INTERCHANGE - TUCO_2 230.00 230KV CKT 1	318.7	350.57	0.27798	106.8556	KRESS INTERCHANGE - SWISHER COUNTY INTERCHANGE 115KV CKT 1
FDNS	00NR_G15_031	0	25SP	G15_031	TO->FROM	TUCO INTERCHANGE - TUCO_2 230.00 230KV CKT 1	318.7	350.57	0.24618	103.7894	GEN525561 1-TOLK GEN #1 24 KV
FDNS	00NR_G15_031	0	25SP	G15_031	TO->FROM	TUCO INTERCHANGE - TUCO_2 230.00 230KV CKT 1	318.7	350.57	0.24618	103.7502	GEN525562 1-TOLK GEN #2 24 KV
FDNS	00NR_G15_031	0	25SP	G15_031	TO->FROM	TUCO INTERCHANGE - TUCO_2 230.00 230KV CKT 1	318.7	350.57	0.24618	103.4829	GEN526333 1-JONES GEN #3 21 KV
FDNS	00NR_G15_031	0	25SP	G15_031	TO->FROM	TUCO INTERCHANGE - TUCO_2 230.00 230KV CKT 1	318.7	350.57	0.24618	103.229	GEN526334 1-JONES_4 116.500
FDNS	00NR_G15_031	0	25SP	G15_031	TO->FROM	TUCO INTERCHANGE - TUCO_2 230.00 230KV CKT 1	318.7	350.57	0.34207	103.0042	NEWHART 230 - SWISHER COUNTY INTERCHANGE 230KV CKT 1
FDNS	00NR_G15_031	0	25SP	G15_031	TO->FROM	TUCO INTERCHANGE - TUCO_2 230.00 230KV CKT 1	318.7	350.57	0.298	102.0627	NEWHART 230 - PLANT X STATION 230KV CKT 1
FDNS	00NR_G15_031	0	25SP	G15_031	TO->FROM	TUCO INTERCHANGE - TUCO_2 230.00 230KV CKT 1	318.7	350.57	0.24618	101.7163	GEN526332 1-JONES GEN #2 21 KV
FDNS	00NR_G15_031	0	25SP	G15_031	TO->FROM	TUCO INTERCHANGE - TUCO_2 230.00 230KV CKT 1	318.7	350.57	0.24618	101.697	GEN526331 1-JONES GEN #1 22 KV
FDNS	00NR_G15_031	0	25SP	G15_031	TO->FROM	TUCO INTERCHANGE - TUCO_2 230.00 230KV CKT 1	318.7	350.57	0.24705	101.1822	G14-074T 345.00 - TUCO INTERCHANGE 345KV CKT 1
FDNS	00NR_G15_031	0	25SP	G15_031	TO->FROM	TUCO INTERCHANGE - TUCO_2 230.00 230KV CKT 1	318.7	350.57	0.24952	100.2896	BUSHLAND INTERCHANGE - DEAF SMITH COUNTY INTERCHANGE 230KV CKT 1
FDNS	00NR_G15_031	0	25SP	G15_031	TO->FROM	TUCO INTERCHANGE - TUCO_2 230.00 230KV CKT 1	318.7	350.57	0.24952	100.2896	BUSHLAND INTERCHANGE - DEAF SMITH COUNTY INTERCHANGE 230KV CKT 1
FDNS	00NR_G15_031	0	17SP	G15_031	FROM->TO	WOLFFORTH INTERCHANGE (WH 7001668) 230/115/13.2KV TRANSFORMER CKT 1	120	154	0.03851	109.7902	CARLISLE INTERCHANGE - LP-DOUD_TP 3115.00 115KV CKT 1
FDNS	00NR_G15_031	0	17SP	G15_031	FROM->TO	WOLFFORTH INTERCHANGE (WH 7001668) 230/115/13.2KV TRANSFORMER CKT 1	120	154	0.03851	106.3374	CARLISLE INTERCHANGE - LP-DOUD_TP 3115.00 115KV CKT 1
FDNS	00NR_G15_031	2	25SP	G15_031	TO->FROM	AMOCO SWITCHING STATION - SUNDOWN INTERCHANGE 230KV CKT 1	437	437	0.11036	102.294	TUCO INTERCHANGE - YOAKUM_345 345.00 345KV CKT 1
FDNS	00NR_G15_031	2	16WP	G15_031	FROM->TO	CARLISLE INTERCHANGE - LP-DOUD_TP 3115.00 115KV CKT 1	165	177	0.06812	105.9068	LUBBOCK SOUTH INTERCHANGE - WOLFFORTH INTERCHANGE 230KV CKT 1
FDNS	00NR_G15_031	2	16WP	G15_031	FROM->TO	CARLISLE INTERCHANGE - LP-DOUD_TP 3115.00 115KV CKT 1	165	177	0.06812	105.9068	LUBBOCK SOUTH INTERCHANGE - WOLFFORTH INTERCHANGE 230KV CKT 1
FDNS	00NR_G15_031	2	25SP	G15_031	FROM->TO	CARLISLE INTERCHANGE - LP-DOUD_TP 3115.00 115KV CKT 1	159	160	0.03452	102.7921	TUCO INTERCHANGE - YOAKUM_345 345.00 345KV CKT 1
FDNS	00NR_G15_031	2	25SP	G15_031	TO->FROM	JONES STATION - TUCO INTERCHANGE 230KV CKT 1	343.79	343.79	0.11906	119.112	CARLISLE INTERCHANGE - TUCO INTERCHANGE 230KV CKT 1
FDNS	00NR_G15_031	2	25SP	G15_031	TO->FROM	JONES STATION - TUCO INTERCHANGE 230KV CKT 1	343.79	343.79	0.11906	119.112	CARLISLE INTERCHANGE - TUCO INTERCHANGE 230KV CKT 1
FDNS	00NR_G15_031	2	25SP	G15_031	TO->FROM	JONES STATION - TUCO INTERCHANGE 230KV CKT 1	343.79	343.79	0.115	106.6821	TUCO INTERCHANGE - YOAKUM_345 345.00 345KV CKT 1
FDNS	00NR_G15_031	2	25SP	G15_031	TO->FROM	JONES STATION - TUCO INTERCHANGE 230KV CKT 1	343.79	343.79	0.09277	100.8223	GEN526333 1-JONES GEN #3 21 KV
FDNS	00NR_G15_031	2	25SP	G15_031	TO->FROM	JONES STATION - TUCO INTERCHANGE 230KV CKT 1	343.79	343.79	0.09277	100.4163	GEN526334 1-JONES_4 116.500
FDNS	00NR_G15_031	2	25SP	G15_031	TO->FROM	KRESS INTERCHANGE - SWISHER COUNTY INTERCHANGE 115KV CKT 1	218	239	0.22146	119.3391	NEWHART 230 - SWISHER COUNTY INTERCHANGE 230KV CKT 1
FDNS	00NR_G15_031	2	25SP	G15_031	TO->FROM	KRESS INTERCHANGE - SWISHER COUNTY INTERCHANGE 115KV CKT 1	218	239	0.11328	109.7591	PALO DURO SUB - RANDALL COUNTY INTERCHANGE 115KV CKT 1
FDNS	00NR_G15_031	2	25SP	G15_031	TO->FROM	KRESS INTERCHANGE - SWISHER COUNTY INTERCHANGE 115KV CKT 1	218	239	0.11328	108.448	P12:115:SPS:T66.1.RNDALL.HAPPY
FDNS	00NR_G15_031	2	25SP	G15_031	TO->FROM	KRESS INTERCHANGE - SWISHER COUNTY INTERCHANGE 115KV CKT 1	218	239	0.11328	108.316	HAPPY INTERCHANGE - PALO DURO SUB 115KV CKT 1
FDNS	00NR_G15_031	2	25SP	G15_031	TO->FROM	KRESS INTERCHANGE - SWISHER COUNTY INTERCHANGE 115KV CKT 1	218	239	0.12328	107.4859	BASE CASE
FDNS	00NR_G15_031	2	17SP	G15_031	TO->FROM	KRESS INTERCHANGE - SWISHER COUNTY INTERCHANGE 115KV CKT 1	218	239	0.23141	104.5903	NEWHART 230 - SWISHER COUNTY INTERCHANGE 230KV CKT 1
FDNS	00NR_G15_031	2	25SP	G15_031	TO->FROM	KRESS INTERCHANGE - SWISHER COUNTY INTERCHANGE 115KV CKT 1	218	239	0.19948	103.5077	SWISHER COUNTY INTERCHANGE - TUCO_2 230.00 230KV CKT 1
FDNS	00NR_G15_031	2	25SP	G15_031	TO->FROM	KRESS INTERCHANGE - SWISHER COUNTY INTERCHANGE 115KV CKT 1	218	239	0.13506	103.3611	TUCO INTERCHANGE - TUCO_2 230.00 230KV CKT 1
FDNS	00NR_G15_031	2	25SP	G15_031	TO->FROM	KRESS INTERCHANGE - SWISHER COUNTY INTERCHANGE 115KV CKT 1	218	239	0.12183	103.3445	FLOYD COUNTY INTERCHANGE - TUCO INTERCHANGE 115KV CKT 1
FDNS	00NR_G15_031	2	25SP	G15_031	TO->FROM	KRESS INTERCHANGE - SWISHER COUNTY INTERCHANGE 115KV CKT 1	218	239	0.12183	103.3445	FLOYD COUNTY INTERCHANGE - TUCO INTERCHANGE 115KV CKT 1
FDNS	00NR_G15_031	2	25SP	G15_031	TO->FROM	KRESS INTERCHANGE - SWISHER COUNTY INTERCHANGE 115KV CKT 1	218	239	0.12622	103.2819	NEWHART 230 (UPDATE LATER) 230/115/13.2KV TRANSFORMER CKT 2
FDNS	00NR_G15_031	2	25SP	G15_031	TO->FROM	KRESS INTERCHANGE - SWISHER COUNTY INTERCHANGE 115KV CKT 1	218	239	0.12622	103.2819	NEWHART 230 (UPDATE LATER) 230/115/13.2KV TRANSFORMER CKT 2
FDNS	00NR_G15_031	2	25SP	G15_031	TO->FROM	KRESS INTERCHANGE - SWISHER COUNTY INTERCHANGE 115KV CKT 1	218	239	0.12622	103.2819	NEWHART 230 (WAUK WT01105) 230/115/13.2KV TRANSFORMER CKT 1
FDNS	00NR_G15_031	2	25SP	G15_031	TO->FROM	KRESS INTERCHANGE - SWISHER COUNTY INTERCHANGE 115KV CKT 1	218	239	0.12622	103.2819	NEWHART 230 (WAUK WT01105) 230/115/13.2KV TRANSFORMER CKT 1
FDNS	00NR_G15_031	2	25SP	G15_031	TO->FROM	KRESS INTERCHANGE - SWISHER COUNTY INTERCHANGE 115KV CKT 1	218	239	0.12589	103.2503	TUCO INTERCHANGE - YOAKUM_345 345.00 345KV CKT 1
FDNS	00NR_G15_031	2	25SP	G15_031	TO->FROM	KRESS INTERCHANGE - SWISHER COUNTY INTERCHANGE 115KV CKT 1	218	239	0.12046	103.1759	PLANT X STATION (WH ALM20171) 230/115/13.2KV TRANSFORMER CKT 1
FDNS	00NR_G15_031	2	25SP	G15_031	TO->FROM	KRESS INTERCHANGE - SWISHER COUNTY INTERCHANGE 115KV CKT 1	218	239	0.12046	103.1759	PLANT X STATION (WH ALM20171) 230/115/13.2KV TRANSFORMER CKT 1
FDNS	00NR_G15_031	2	25SP	G15_031	TO->FROM	KRESS INTERCHANGE - SWISHER COUNTY INTERCHANGE 115KV CKT 1	218	239	0.12337	102.8642	TUCO INTERCHANGE (ENRCO 136401) 230/115/13.2KV TRANSFORMER CKT 1
FDNS	00NR_G15_031	2	25SP	G15_031	TO->FROM	KRESS INTERCHANGE - SWISHER COUNTY INTERCHANGE 115KV CKT 1	218	239	0.12337	102.8642	TUCO INTERCHANGE (ENRCO 136401) 230/115/13.2KV TRANSFORMER CKT 1
FDNS	00NR_G15_031	2	25SP	G15_031	TO->FROM	KRESS INTERCHANGE - SWISHER COUNTY INTERCHANGE 115KV CKT 1	218	239	0.12337	102.8642	TUCO INTERCHANGE (ENRCO 136401) 230/115/13.2KV TRANSFORMER CKT 2
FDNS	00NR_G15_031	2	25SP	G15_031	TO->FROM	KRESS INTERCHANGE - SWISHER COUNTY INTERCHANGE 115KV CKT 1	218	239	0.12337	102.8642	TUCO INTERCHANGE (ENRCO 136401) 230/115/13.2KV TRANSFORMER CKT 2
FDNS	00NR_G15_031	2	25SP	G15_031	TO->FROM	KRESS INTERCHANGE - SWISHER COUNTY INTERCHANGE 115KV CKT 1	218	239	0.11572	102.3725	HALE CO INTERCHANGE - TUCO INTERCHANGE 115KV CKT 1
FDNS	00NR_G15_031	2	25SP	G15_031	TO->FROM	KRESS INTERCHANGE - SWISHER COUNTY INTERCHANGE 115KV CKT 1	218	239	0.11572	102.3725	HALE CO INTERCHANGE - TUCO INTERCHANGE 115KV CKT 1
FDNS	00NR_G15_031	2	25SP	G15_031	TO->FROM	KRESS INTERCHANGE - SWISHER COUNTY INTERCHANGE 115KV CKT 1	218	239	0.13466	102.1144	NEWHART 230 - PLANT X STATION 230KV CKT 1
FDNS	00NR_G15_031	2	25SP	G15_031	TO->FROM	KRESS INTERCHANGE - SWISHER COUNTY INTERCHANGE 115KV CKT 1	218	239	0.12409	101.9395	BUSHLAND INTERCHANGE - DEAF SMITH COUNTY INTERCHANGE 230KV CKT 1
FDNS	00NR_G15_031	2	25SP	G15_031	TO->FROM	KRESS INTERCHANGE - SWISHER COUNTY INTERCHANGE 115KV CKT 1	218	239	0.12409	101.9395	BUSHLAND INTERCHANGE - DEAF SMITH COUNTY INTERCHANGE 230KV CKT 1
FDNS	00NR_G15_031	2	20SP	G15_031	TO->FROM	KRESS INTERCHANGE - SWISHER COUNTY INTERCHANGE 115KV CKT 1	218	239	0.22214	101.281	NEWHART 230 - SWISHER COUNTY INTERCHANGE 230KV CKT 1
FDNS	00NR_G15_031	2	25SP	G15_031	TO->FROM	KRESS INTERCHANGE - SWISHER COUNTY INTERCHANGE 115KV CKT 1	218	239	0.12328	101.2507	GEN525562 1-TOLK GEN #2 24 KV
FDNS	00NR_G15_031	2	25SP	G15_031	TO->FROM	KRESS INTERCHANGE - SWISHER COUNTY INTERCHANGE 115KV CKT 1	218	239	0.12328	101.1088	GEN525561 1-TOLK GEN #1 24 KV
FDNS	00NR_G15_031	2	25SP	G15_031	TO->FROM	KRESS INTERCHANGE - SWISHER COUNTY INTERCHANGE 115KV CKT 1	218	239	0.12296	101.0555	LAMB COUNTY INTERCHANGE - TOLK STATION WEST 230KV CKT 1
FDNS	00NR_G15_031	2	25SP	G15_031	TO->FROM	KRESS INTERCHANGE - SWISHER COUNTY INTERCHANGE 115KV CKT 1	218	239	0.12296	101.0497	LAMB COUNTY INTERCHANGE (WH ALM20172) 230/115/13.2KV TRANSFORMER CKT 1
FDNS	00NR_G15_031	2	25SP	G15_031	TO->FROM	KRESS INTERCHANGE - SWISHER COUNTY INTERCHANGE 115KV CKT 1	218	239	0.12296	101.0497	LAMB COUNTY INTERCHANGE (WH ALM20172) 230/115/13.2KV TRANSFORMER CKT 1
FDNS	00NR_G15_031	2	25SP	G15_031	TO->FROM	KRESS INTERCHANGE - SWISHER COUNTY INTERCHANGE 115KV CKT 1	218	239	0.12296	101.0497	P12:230:SPS:K37.1.TOLK.LAMB
FDNS	00NR_G15_031	2	25SP	G15_031	TO->FROM	KRESS INTERCHANGE - SWISHER COUNTY INTERCHANGE 115KV CKT 1	218	239	0.12557	100.9331	JONES STATION - TUCO INTERCHANGE 230KV CKT 1
FDNS	00NR_G15_031	2	25SP	G15_031	TO->FROM	KRESS INTERCHANGE - SWISHER COUNTY INTERCHANGE 115KV CKT 1	218	239	0.12557	100.9331	JONES STATION - TUCO INTERCHANGE 230KV CKT 1
FDNS	00NR_G15_031	2	25SP	G15_031	TO->FROM	KRESS INTERCHANGE - SWISHER COUNTY INTERCHANGE 115KV CKT 1	218	239	0.12454	100.714	CARLISLE INTERCHANGE - TUCO INTERCHANGE 230KV CKT 1
FDNS	00NR_G15_031	2	25SP	G15_031	TO->FROM	KRESS INTERCHANGE - SWISHER COUNTY INTERCHANGE 115KV CKT 1	218	239	0.12454	100.714	CARLISLE INTERCHANGE - TUCO INTERCHANGE 230KV CKT 1
FDNS	00NR_G15_031	2	25SP	G15_031	TO->FROM	KRESS INTERCHANGE - SWISHER COUNTY INTERCHANGE 115KV CKT 1	218	239	0.12495	100.7011	HART INDUSTRIAL - NEWHART 115KV CKT 1
FDNS	00NR_G15_031	2	25SP	G15_031	TO->FROM	KRESS INTERCHANGE - SWISHER COUNTY INTERCHANGE 115KV CKT 1	218	239	0.11328	100.6885	HAPPY INTERCHANGE - TULIA TAP 115KV CKT 1
FDNS	00NR_G15_031	2	25SP	G15_031	TO->FROM	KRESS INTERCHANGE - SWISHER COUNTY INTERCHANGE 115KV CKT 1	218	239	0.11256	100.4883	KRESS INTERCHANGE - NEWHART 115KV CKT 1
FDNS	00NR_G15_031	2	25SP	G15_031	TO->FROM	KRESS INTERCHANGE - SWISHER COUNTY INTERCHANGE 115KV CKT 1	218	239	0.11256	100.4883	KRESS INTERCHANGE - NEWHART 115KV CKT 1

SOLUTION	GROUP	SCENARIO	SEASON	SOURCE	DIRECTION	MONITORED ELEMENT	RATEA (MVA)	RATEB(MVA)	TDF	TC%LOADING (% MVA)	CONTINGENCY
FDNS	00NR_G15_031	2	25SP	G15_031	TO->FROM	KRESS INTERCHANGE - SWISHER COUNTY INTERCHANGE 115KV CKT 1	218	239	0.12145	100.3949	CROSBY COUNTY INTERCHANGE - LUBBOCK EAST INTERCHANGE 115KV CKT 1
FDNS	00NR_G15_031	2	25SP	G15_031	TO->FROM	KRESS INTERCHANGE - SWISHER COUNTY INTERCHANGE 115KV CKT 1	218	239	0.12145	100.3949	CROSBY COUNTY INTERCHANGE - LUBBOCK EAST INTERCHANGE 115KV CKT 1
FDNS	00NR_G15_031	2	25SP	G15_031	TO->FROM	KRESS INTERCHANGE - SWISHER COUNTY INTERCHANGE 115KV CKT 1	218	239	0.12495	100.314	HART INDUSTRIAL - LAMTON INTERCHANGE 115KV CKT 1
FDNS	00NR_G15_031	2	25SP	G15_031	TO->FROM	KRESS INTERCHANGE - SWISHER COUNTY INTERCHANGE 115KV CKT 1	218	239	0.12363	100.2739	BUSHLAND INTERCHANGE - POTTER COUNTY INTERCHANGE 230KV CKT 1
FDNS	00NR_G15_031	2	25SP	G15_031	TO->FROM	KRESS INTERCHANGE - SWISHER COUNTY INTERCHANGE 115KV CKT 1	218	239	0.12363	100.2739	BUSHLAND INTERCHANGE - POTTER COUNTY INTERCHANGE 230KV CKT 1
FDNS	00NR_G15_031	2	25SP	G15_031	TO->FROM	KRESS INTERCHANGE - SWISHER COUNTY INTERCHANGE 115KV CKT 1	218	239	0.12328	100	GEN562550 1-G14_040_3 0.6900
FDNS	00NR_G15_031	2	25SP	G15_031	TO->FROM	KRESS INTERCHANGE - SWISHER COUNTY INTERCHANGE 115KV CKT 1	218	239	0.12325	99.9	JONES STATION - LUBBOCK EAST INTERCHANGE 230KV CKT 1
FDNS	00NR_G15_031	2	25SP	G15_031	TO->FROM	KRESS INTERCHANGE - SWISHER COUNTY INTERCHANGE 115KV CKT 1	218	239	0.12325	99.9	JONES STATION - LUBBOCK EAST INTERCHANGE 230KV CKT 1
FDNS	00NR_G15_031	2	25SP	G15_031	TO->FROM	SUNDOWN INTERCHANGE - WOLFFORTH INTERCHANGE 230KV CKT 1	318.7	350.57	0.07785	105.2692	TUCO INTERCHANGE - YOAKUM_345 345.00 345KV CKT 1
FDNS	00NR_G15_031	2	17SP	G15_031	FROM->TO	SUNDOWN INTERCHANGE (WH XDS70381) 230/115/13.8KV TRANSFORMER CKT 1	187	187	0.05631	109.0532	AMOCO SWITCHING STATION - SUNDOWN INTERCHANGE 230KV CKT 1
FDNS	00NR_G15_031	2	17SP	G15_031	FROM->TO	SUNDOWN INTERCHANGE (WH XDS70381) 230/115/13.8KV TRANSFORMER CKT 1	187	187	0.05631	109.0532	AMOCO SWITCHING STATION - SUNDOWN INTERCHANGE 230KV CKT 1
FDNS	00NR_G15_031	2	17SP	G15_031	FROM->TO	SUNDOWN INTERCHANGE (WH XDS70381) 230/115/13.8KV TRANSFORMER CKT 1	187	187	0.05631	106.3566	AMOCO SWITCHING STATION - SUNDOWN INTERCHANGE 230KV CKT 1
FDNS	00NR_G15_031	2	17SP	G15_031	FROM->TO	SUNDOWN INTERCHANGE (WH XDS70381) 230/115/13.8KV TRANSFORMER CKT 1	187	187	0.05631	106.3566	AMOCO SWITCHING STATION - SUNDOWN INTERCHANGE 230KV CKT 1
FDNS	00NR_G15_031	2	25SP	G15_031	TO->FROM	TERRY COUNTY INTERCHANGE - WOLFFORTH INTERCHANGE 115KV CKT 1	119.51	153.97	0.04571	114.6492	TUCO INTERCHANGE - YOAKUM_345 345.00 345KV CKT 1
FDNS	00NR_G15_031	2	25SP	G15_031	TO->FROM	TUCO INTERCHANGE - TUCO_2 230.00 230KV CKT 1	318.7	350.57	0.32001	154.0182	TUCO INTERCHANGE - TUCO_2 345.00 345KV CKT 1
FDNS	00NR_G15_031	2	25SP	G15_031	TO->FROM	TUCO INTERCHANGE - TUCO_2 230.00 230KV CKT 1	318.7	350.57	0.23807	124.1266	TUCO INTERCHANGE (GE M1022338) 345/230/13.2KV TRANSFORMER CKT 1
FDNS	00NR_G15_031	2	25SP	G15_031	TO->FROM	TUCO INTERCHANGE - TUCO_2 230.00 230KV CKT 1	318.7	350.57	0.23807	124.1266	TUCO INTERCHANGE (GE M1022338) 345/230/13.2KV TRANSFORMER CKT 1
FDNS	00NR_G15_031	2	25SP	G15_031	TO->FROM	TUCO INTERCHANGE - TUCO_2 230.00 230KV CKT 1	318.7	350.57	0.23953	117.225	TUCO INTERCHANGE (SIEM 8743066) 345/230/13.2KV TRANSFORMER CKT 2
FDNS	00NR_G15_031	2	25SP	G15_031	TO->FROM	TUCO INTERCHANGE - TUCO_2 230.00 230KV CKT 1	318.7	350.57	0.23953	117.225	TUCO INTERCHANGE (SIEM 8743066) 345/230/13.2KV TRANSFORMER CKT 2
FDNS	00NR_G15_031	2	25SP	G15_031	TO->FROM	TUCO INTERCHANGE - TUCO_2 230.00 230KV CKT 1	318.7	350.57	0.26433	108.4537	TUCO INTERCHANGE - YOAKUM_345 345.00 345KV CKT 1
FDNS	00NR_G15_031	2	25SP	G15_031	TO->FROM	TUCO INTERCHANGE - TUCO_2 230.00 230KV CKT 1	318.7	350.57	0.27779	104.8094	KRESS INTERCHANGE - SWISHER COUNTY INTERCHANGE 115KV CKT 1
FDNS	00NR_G15_031	2	25SP	G15_031	TO->FROM	TUCO INTERCHANGE - TUCO_2 230.00 230KV CKT 1	318.7	350.57	0.27779	104.8094	KRESS INTERCHANGE - SWISHER COUNTY INTERCHANGE 115KV CKT 1
FDNS	00NR_G15_031	2	25SP	G15_031	TO->FROM	TUCO INTERCHANGE - TUCO_2 230.00 230KV CKT 1	318.7	350.57	0.34204	101.7131	NEWHART 230 - SWISHER COUNTY INTERCHANGE 230KV CKT 1
FDNS	00NR_G15_031	2	25SP	G15_031	TO->FROM	TUCO INTERCHANGE - TUCO_2 230.00 230KV CKT 1	318.7	350.57	0.24599	100.8841	GEN526333 1-JONES GEN #3 21 KV
FDNS	00NR_G15_031	2	25SP	G15_031	TO->FROM	TUCO INTERCHANGE - TUCO_2 230.00 230KV CKT 1	318.7	350.57	0.24599	100.6383	GEN526334 1-JONES_4 116.500
FDNS	00NR_G15_031	2	25SP	G15_031	TO->FROM	TUCO INTERCHANGE - TUCO_2 230.00 230KV CKT 1	318.7	350.57	0.24599	100.1278	GEN525562 1-TOLK GEN #2 24 KV
FDNS	06ALL_G15_031	2	20WP	G15_031	FROM->TO	TUCO_2 345.00 (TUCO_2 XFMR) 345/230/13.2KV TRANSFORMER CKT 1	560	560	0.24526	116.658	TUCO INTERCHANGE - TUCO_2 345.00 345KV CKT 1
FDNS	06ALL_G15_031	2	20WP	G15_031	FROM->TO	TUCO_2 345.00 (TUCO_2 XFMR) 345/230/13.2KV TRANSFORMER CKT 1	560	560	0.24526	115.685	TUCO INTERCHANGE - TUCO_2 345.00 345KV CKT 1
FDNS	06ALL_G15_031	2	20L	G15_031	FROM->TO	TUCO_2 345.00 (TUCO_2 XFMR) 345/230/13.2KV TRANSFORMER CKT 1	560	560	0.21526	110.3622	TUCO INTERCHANGE - TUCO_2 345.00 345KV CKT 1
FDNS	06ALL_G15_031	2	20L	G15_031	FROM->TO	TUCO_2 345.00 (TUCO_2 XFMR) 345/230/13.2KV TRANSFORMER CKT 1	560	560	0.21526	109.6371	TUCO INTERCHANGE - TUCO_2 345.00 345KV CKT 1
FDNS	06ALL_G15_031	2	17G	G15_031	FROM->TO	TUCO_2 345.00 (TUCO_2 XFMR) 345/230/13.2KV TRANSFORMER CKT 1	560	560	0.24758	108.0095	TUCO INTERCHANGE - TUCO_2 345.00 345KV CKT 1
FDNS	06ALL_G15_031	2	17G	G15_031	FROM->TO	TUCO_2 345.00 (TUCO_2 XFMR) 345/230/13.2KV TRANSFORMER CKT 1	560	560	0.24758	107.4382	TUCO INTERCHANGE - TUCO_2 345.00 345KV CKT 1
FDNS	06ALL_G15_031	2	17SP	G15_031	FROM->TO	TUCO_2 345.00 (TUCO_2 XFMR) 345/230/13.2KV TRANSFORMER CKT 1	560	560	0.25392	106.9386	TUCO INTERCHANGE - TUCO_2 345.00 345KV CKT 1
FDNS	06ALL_G15_031	2	17SP	G15_031	FROM->TO	TUCO_2 345.00 (TUCO_2 XFMR) 345/230/13.2KV TRANSFORMER CKT 1	560	560	0.25392	106.5494	TUCO INTERCHANGE - TUCO_2 345.00 345KV CKT 1
FDNS	06ALL_G15_031	2	16WP	G15_031	FROM->TO	TUCO_2 345.00 (TUCO_2 XFMR) 345/230/13.2KV TRANSFORMER CKT 1	560	560	0.2541	106.3224	TUCO INTERCHANGE - TUCO_2 345.00 345KV CKT 1
FDNS	06ALL_G15_031	2	16WP	G15_031	FROM->TO	TUCO_2 345.00 (TUCO_2 XFMR) 345/230/13.2KV TRANSFORMER CKT 1	560	560	0.2541	105.9988	TUCO INTERCHANGE - TUCO_2 345.00 345KV CKT 1
FDNS	06ALL_G15_031	2	20SP	G15_031	FROM->TO	TUCO_2 345.00 (TUCO_2 XFMR) 345/230/13.2KV TRANSFORMER CKT 1	560	560	0.25337	105.7317	TUCO INTERCHANGE - TUCO_2 345.00 345KV CKT 1
FDNS	06ALL_G15_031	2	20SP	G15_031	FROM->TO	TUCO_2 345.00 (TUCO_2 XFMR) 345/230/13.2KV TRANSFORMER CKT 1	560	560	0.25337	105.2901	TUCO INTERCHANGE - TUCO_2 345.00 345KV CKT 1
FDNS	00NR_G15_031	2	17SP	G15_031	FROM->TO	WOLFFORTH INTERCHANGE (WH 7001668) 230/115/13.2KV TRANSFORMER CKT 1	120	154	0.0385	109.225	CARLISLE INTERCHANGE - LP-DOUD_TP 3115.00 115KV CKT 1
FDNS	00NR_G15_031	2	17SP	G15_031	FROM->TO	WOLFFORTH INTERCHANGE (WH 7001668) 230/115/13.2KV TRANSFORMER CKT 1	120	154	0.0385	105.7697	CARLISLE INTERCHANGE - LP-DOUD_TP 3115.00 115KV CKT 1
FDNS	00NR_G15_031	3	25SP	G15_031	TO->FROM	AMOCO SWITCHING STATION - SUNDOWN INTERCHANGE 230KV CKT 1	437	437	0.11081	103.8136	TUCO INTERCHANGE - YOAKUM_345 345.00 345KV CKT 1
FDNS	00NR_G15_031	3	25SP	G15_031	TO->FROM	KRESS INTERCHANGE - SWISHER COUNTY INTERCHANGE 115KV CKT 1	218	239	0.22147	119.5185	NEWHART 230 - SWISHER COUNTY INTERCHANGE 230KV CKT 1
FDNS	00NR_G15_031	3	25SP	G15_031	TO->FROM	KRESS INTERCHANGE - SWISHER COUNTY INTERCHANGE 115KV CKT 1	218	239	0.1133	109.9672	PALO DURO SUB - RANDALL COUNTY INTERCHANGE 115KV CKT 1
FDNS	00NR_G15_031	3	25SP	G15_031	TO->FROM	KRESS INTERCHANGE - SWISHER COUNTY INTERCHANGE 115KV CKT 1	218	239	0.1133	108.653	P12:115:SPS:T66.1.RNDALL.HAPPY
FDNS	00NR_G15_031	3	25SP	G15_031	TO->FROM	KRESS INTERCHANGE - SWISHER COUNTY INTERCHANGE 115KV CKT 1	218	239	0.1133	108.5206	HAPPY INTERCHANGE - PALO DURO SUB 115KV CKT 1
FDNS	00NR_G15_031	3	25SP	G15_031	TO->FROM	KRESS INTERCHANGE - SWISHER COUNTY INTERCHANGE 115KV CKT 1	218	239	0.12329	107.6745	BASE CASE
FDNS	00NR_G15_031	3	17SP	G15_031	TO->FROM	KRESS INTERCHANGE - SWISHER COUNTY INTERCHANGE 115KV CKT 1	218	239	0.23141	104.6866	NEWHART 230 - SWISHER COUNTY INTERCHANGE 230KV CKT 1
FDNS	00NR_G15_031	3	25SP	G15_031	TO->FROM	KRESS INTERCHANGE - SWISHER COUNTY INTERCHANGE 115KV CKT 1	218	239	0.19949	103.6351	SWISHER COUNTY INTERCHANGE - TUCO_2 230.00 230KV CKT 1
FDNS	00NR_G15_031	3	25SP	G15_031	TO->FROM	KRESS INTERCHANGE - SWISHER COUNTY INTERCHANGE 115KV CKT 1	218	239	0.13507	103.5253	TUCO INTERCHANGE - TUCO_2 230.00 230KV CKT 1
FDNS	00NR_G15_031	3	25SP	G15_031	TO->FROM	KRESS INTERCHANGE - SWISHER COUNTY INTERCHANGE 115KV CKT 1	218	239	0.12184	103.5199	FLOYD COUNTY INTERCHANGE - TUCO INTERCHANGE 115KV CKT 1
FDNS	00NR_G15_031	3	25SP	G15_031	TO->FROM	KRESS INTERCHANGE - SWISHER COUNTY INTERCHANGE 115KV CKT 1	218	239	0.12184	103.5199	FLOYD COUNTY INTERCHANGE - TUCO INTERCHANGE 115KV CKT 1
FDNS	00NR_G15_031	3	25SP	G15_031	TO->FROM	KRESS INTERCHANGE - SWISHER COUNTY INTERCHANGE 115KV CKT 1	218	239	0.12048	103.5111	PLANT X STATION (WH ALM20171) 230/115/13.2KV TRANSFORMER CKT 1
FDNS	00NR_G15_031	3	25SP	G15_031	TO->FROM	KRESS INTERCHANGE - SWISHER COUNTY INTERCHANGE 115KV CKT 1	218	239	0.12048	103.5111	PLANT X STATION (WH ALM20171) 230/115/13.2KV TRANSFORMER CKT 1
FDNS	00NR_G15_031	3	25SP	G15_031	TO->FROM	KRESS INTERCHANGE - SWISHER COUNTY INTERCHANGE 115KV CKT 1	218	239	0.12591	103.4843	TUCO INTERCHANGE - YOAKUM_345 345.00 345KV CKT 1
FDNS	00NR_G15_031	3	25SP	G15_031	TO->FROM	KRESS INTERCHANGE - SWISHER COUNTY INTERCHANGE 115KV CKT 1	218	239	0.12623	103.4792	NEWHART 230 (UPDATE LATER) 230/115/13.2KV TRANSFORMER CKT 2
FDNS	00NR_G15_031	3	25SP	G15_031	TO->FROM	KRESS INTERCHANGE - SWISHER COUNTY INTERCHANGE 115KV CKT 1	218	239	0.12623	103.4792	NEWHART 230 (UPDATE LATER) 230/115/13.2KV TRANSFORMER CKT 2
FDNS	00NR_G15_031	3	25SP	G15_031	TO->FROM	KRESS INTERCHANGE - SWISHER COUNTY INTERCHANGE 115KV CKT 1	218	239	0.12623	103.4792	NEWHART 230 (WAUK WT01105) 230/115/13.2KV TRANSFORMER CKT 1
FDNS	00NR_G15_031	3	25SP	G15_031	TO->FROM	KRESS INTERCHANGE - SWISHER COUNTY INTERCHANGE 115KV CKT 1	218	239	0.12623	103.4792	NEWHART 230 (WAUK WT01105) 230/115/13.2KV TRANSFORMER CKT 1
FDNS	00NR_G15_031	3	25SP	G15_031	TO->FROM	KRESS INTERCHANGE - SWISHER COUNTY INTERCHANGE 115KV CKT 1	218	239	0.12338	102.9891	TUCO INTERCHANGE (ENRCO 136401) 230/115/13.2KV TRANSFORMER CKT 1
FDNS	00NR_G15_031	3	25SP	G15_031	TO->FROM	KRESS INTERCHANGE - SWISHER COUNTY INTERCHANGE 115KV CKT 1	218	239	0.12338	102.9891	TUCO INTERCHANGE (ENRCO 136401) 230/115/13.2KV TRANSFORMER CKT 1
FDNS	00NR_G15_031	3	25SP	G15_031	TO->FROM	KRESS INTERCHANGE - SWISHER COUNTY INTERCHANGE 115KV CKT 1	218	239	0.12338	102.9891	TUCO INTERCHANGE (ENRCO 136401) 230/115/13.2KV TRANSFORMER CKT 2
FDNS	00NR_G15_031	3	25SP	G15_031	TO->FROM	KRESS INTERCHANGE - SWISHER COUNTY INTERCHANGE 115KV CKT 1	218	239	0.12338	102.9891	TUCO INTERCHANGE (ENRCO 136401) 230/115/13.2KV TRANSFORMER CKT 2
FDNS	00NR_G15_031	3	25SP	G15_031	TO->FROM	KRESS INTERCHANGE - SWISHER COUNTY INTERCHANGE 115KV CKT 1	218	239	0.11573	102.5686	HALE CO INTERCHANGE - TUCO INTERCHANGE 115KV CKT 1
FDNS	00NR_G15_031	3	25SP	G15_031	TO->FROM	KRESS INTERCHANGE - SWISHER COUNTY INTERCHANGE 115KV CKT 1	218	239	0.11573	102.5686	HALE CO INTERCHANGE - TUCO INTERCHANGE 115KV CKT 1
FDNS	00NR_G15_031	3	25SP	G15_031	TO->FROM	KRESS INTERCHANGE - SWISHER COUNTY INTERCHANGE 115KV CKT 1	218	239	0.13467	102.3139	NEWHART 230 - PLANT X STATION 230KV CKT 1
FDNS	00NR_G15_031	3	25SP	G15_031	TO->FROM	KRESS INTERCHANGE - SWISHER COUNTY INTERCHANGE 115KV CKT 1	218	239	0.1241	102.1101	BUSHLAND INTERCHANGE - DEAF SMITH COUNTY INTERCHANGE 230KV CKT 1
FDNS	00NR_G15_031	3	25SP	G15_031	TO->FROM	KRESS INTERCHANGE - SWISHER COUNTY INTERCHANGE 115KV CKT 1	218	239	0.1241	102.1101	BUSHLAND INTERCHANGE - DEAF SMITH COUNTY INTERCHANGE 230KV CKT 1
FDNS	00NR_G15_031	3	25SP	G15_031	TO->FROM	KRESS INTERCHANGE - SWISHER COUNTY INTERCHANGE 115KV CKT 1	218	239	0.12329	101.4757	GEN525562 1-TOLK GEN #2 24 KV
FDNS	00NR_G15_031	3	25SP	G15_031	TO->FROM	KRESS INTERCHANGE - SWISHER COUNTY INTERCHANGE 115KV CKT 1	218	239	0.12297	101.3978	LAMB COUNTY INTERCHANGE - TOLK STATION WEST 230KV CKT 1
FDNS	00NR_G15_031	3	25SP	G15_031	TO->FROM	KRESS INTERCHANGE - SWISHER COUNTY INTERCHANGE 115KV CKT 1	218	239	0.12297	101.3919	LAMB COUNTY INTERCHANGE (WH ALM20172) 230/115/13.2KV TRANSFORMER CKT 1
FDNS	00NR_G15_031	3	25SP	G15_031	TO->FROM	KRESS INTERCHANGE - SWISHER COUNTY INTERCHANGE 115KV CKT 1	218	239	0.12297	101.3919	LAMB COUNTY INTERCHANGE (WH ALM20172) 230/115/13.2KV TRANSFORMER CKT 1
FDNS	00NR_G15_031	3	25SP	G15_031	TO->FROM	KRESS INTERCHANGE - SWISHER COUNTY INTERCHANGE 115KV CKT 1	218	239	0.12297	101.3919	P12:230:SPS:K37.1.TOLK.LAMB
FDNS	00NR_G15_031	3	20SP	G15_031	TO->FROM	KRESS INTERCHANGE - SWISHER COUNTY INTERCHANGE 115KV CKT 1	218	239	0.22215	101.3857	NEWHART 230 - SWISHER COUNTY INTERCHANGE 230KV CKT 1

SOLUTION	GROUP	SCENARIO	SEASON	SOURCE	DIRECTION	MONITORED ELEMENT	RATEA (MVA)	RATEB(MVA)	TDF	TC%LOADING (% MVA)	CONTINGENCY
FDNS	00NR_G15_031	3	25SP	G15_031	TO->FROM	KRESS INTERCHANGE - SWISHER COUNTY INTERCHANGE 115KV CKT 1	218	239	0.12329	101.2867	GEN525561 1-TOLK GEN #1 24 KV
FDNS	00NR_G15_031	3	25SP	G15_031	TO->FROM	KRESS INTERCHANGE - SWISHER COUNTY INTERCHANGE 115KV CKT 1	218	239	0.12558	101.1178	JONES STATION - TUCO INTERCHANGE 230KV CKT 1
FDNS	00NR_G15_031	3	25SP	G15_031	TO->FROM	KRESS INTERCHANGE - SWISHER COUNTY INTERCHANGE 115KV CKT 1	218	239	0.12558	101.1178	JONES STATION - TUCO INTERCHANGE 230KV CKT 1
FDNS	00NR_G15_031	3	25SP	G15_031	TO->FROM	KRESS INTERCHANGE - SWISHER COUNTY INTERCHANGE 115KV CKT 1	218	239	0.12455	100.9074	CARLISLE INTERCHANGE - TUCO INTERCHANGE 230KV CKT 1
FDNS	00NR_G15_031	3	25SP	G15_031	TO->FROM	KRESS INTERCHANGE - SWISHER COUNTY INTERCHANGE 115KV CKT 1	218	239	0.12455	100.9074	CARLISLE INTERCHANGE - TUCO INTERCHANGE 230KV CKT 1
FDNS	00NR_G15_031	3	25SP	G15_031	TO->FROM	KRESS INTERCHANGE - SWISHER COUNTY INTERCHANGE 115KV CKT 1	218	239	0.12496	100.8857	HART INDUSTRIAL - NEWHART 115KV CKT 1
FDNS	00NR_G15_031	3	25SP	G15_031	TO->FROM	KRESS INTERCHANGE - SWISHER COUNTY INTERCHANGE 115KV CKT 1	218	239	0.1133	100.8696	HAPPY INTERCHANGE - TULIA TAP 115KV CKT 1
FDNS	00NR_G15_031	3	25SP	G15_031	TO->FROM	KRESS INTERCHANGE - SWISHER COUNTY INTERCHANGE 115KV CKT 1	218	239	0.11257	100.6821	KRESS INTERCHANGE - NEWHART 115KV CKT 1
FDNS	00NR_G15_031	3	25SP	G15_031	TO->FROM	KRESS INTERCHANGE - SWISHER COUNTY INTERCHANGE 115KV CKT 1	218	239	0.11257	100.6821	KRESS INTERCHANGE - NEWHART 115KV CKT 1
FDNS	00NR_G15_031	3	25SP	G15_031	TO->FROM	KRESS INTERCHANGE - SWISHER COUNTY INTERCHANGE 115KV CKT 1	218	239	0.12146	100.6025	CROSBY COUNTY INTERCHANGE - LUBBOCK EAST INTERCHANGE 115KV CKT 1
FDNS	00NR_G15_031	3	25SP	G15_031	TO->FROM	KRESS INTERCHANGE - SWISHER COUNTY INTERCHANGE 115KV CKT 1	218	239	0.12146	100.6025	CROSBY COUNTY INTERCHANGE - LUBBOCK EAST INTERCHANGE 115KV CKT 1
FDNS	00NR_G15_031	3	25SP	G15_031	TO->FROM	KRESS INTERCHANGE - SWISHER COUNTY INTERCHANGE 115KV CKT 1	218	239	0.12496	100.4962	HART INDUSTRIAL - LAMTON INTERCHANGE 115KV CKT 1
FDNS	00NR_G15_031	3	25SP	G15_031	TO->FROM	KRESS INTERCHANGE - SWISHER COUNTY INTERCHANGE 115KV CKT 1	218	239	0.12365	100.4303	BUSHLAND INTERCHANGE - POTTER COUNTY INTERCHANGE 230KV CKT 1
FDNS	00NR_G15_031	3	25SP	G15_031	TO->FROM	KRESS INTERCHANGE - SWISHER COUNTY INTERCHANGE 115KV CKT 1	218	239	0.12365	100.4303	BUSHLAND INTERCHANGE - POTTER COUNTY INTERCHANGE 230KV CKT 1
FDNS	00NR_G15_031	3	25SP	G15_031	TO->FROM	KRESS INTERCHANGE - SWISHER COUNTY INTERCHANGE 115KV CKT 1	218	239	0.12329	100.1244	GEN562550 1-G14_040_3 0.6900
FDNS	00NR_G15_031	3	25SP	G15_031	TO->FROM	KRESS INTERCHANGE - SWISHER COUNTY INTERCHANGE 115KV CKT 1	218	239	0.12326	100.0702	JONES STATION - LUBBOCK EAST INTERCHANGE 230KV CKT 1
FDNS	00NR_G15_031	3	25SP	G15_031	TO->FROM	KRESS INTERCHANGE - SWISHER COUNTY INTERCHANGE 115KV CKT 1	218	239	0.12326	100.0702	JONES STATION - LUBBOCK EAST INTERCHANGE 230KV CKT 1
FDNS	00NR_G15_031	3	25SP	G15_031	TO->FROM	KRESS INTERCHANGE - SWISHER COUNTY INTERCHANGE 115KV CKT 1	218	239	0.1133	99.6	P12:115:SPS:T67.1.HAPPY.KRESS
FDNS	00NR_G15_031	3	25SP	G15_031	TO->FROM	SUNDOWN INTERCHANGE - WOLFFORTH INTERCHANGE 230KV CKT 1	318.7	350.57	0.07738	104.5332	TUCO INTERCHANGE - YOAKUM_345 345.00 345KV CKT 1
FDNS	00NR_G15_031	3	25SP	G15_031	TO->FROM	TUCO INTERCHANGE - TUCO_2 230.00 230KV CKT 1	318.7	350.57	0.32003	153.9133	TUCO INTERCHANGE - TUCO_2 345.00 345KV CKT 1
FDNS	00NR_G15_031	3	25SP	G15_031	TO->FROM	TUCO INTERCHANGE - TUCO_2 230.00 230KV CKT 1	318.7	350.57	0.23811	123.8181	TUCO INTERCHANGE (GE M1022338) 345/230/13.2KV TRANSFORMER CKT 1
FDNS	00NR_G15_031	3	25SP	G15_031	TO->FROM	TUCO INTERCHANGE - TUCO_2 230.00 230KV CKT 1	318.7	350.57	0.23811	123.8181	TUCO INTERCHANGE (GE M1022338) 345/230/13.2KV TRANSFORMER CKT 1
FDNS	00NR_G15_031	3	25SP	G15_031	TO->FROM	TUCO INTERCHANGE - TUCO_2 230.00 230KV CKT 1	318.7	350.57	0.23957	116.9294	TUCO INTERCHANGE (SIEM 8743066) 345/230/13.2KV TRANSFORMER CKT 2
FDNS	00NR_G15_031	3	25SP	G15_031	TO->FROM	TUCO INTERCHANGE - TUCO_2 230.00 230KV CKT 1	318.7	350.57	0.23957	116.9294	TUCO INTERCHANGE (SIEM 8743066) 345/230/13.2KV TRANSFORMER CKT 2
FDNS	00NR_G15_031	3	25SP	G15_031	TO->FROM	TUCO INTERCHANGE - TUCO_2 230.00 230KV CKT 1	318.7	350.57	0.26437	108.2987	TUCO INTERCHANGE - YOAKUM_345 345.00 345KV CKT 1
FDNS	00NR_G15_031	3	25SP	G15_031	TO->FROM	TUCO INTERCHANGE - TUCO_2 230.00 230KV CKT 1	318.7	350.57	0.27782	104.6017	KRESS INTERCHANGE - SWISHER COUNTY INTERCHANGE 115KV CKT 1
FDNS	00NR_G15_031	3	25SP	G15_031	TO->FROM	TUCO INTERCHANGE - TUCO_2 230.00 230KV CKT 1	318.7	350.57	0.27782	104.6017	KRESS INTERCHANGE - SWISHER COUNTY INTERCHANGE 115KV CKT 1
FDNS	00NR_G15_031	3	25SP	G15_031	TO->FROM	TUCO INTERCHANGE - TUCO_2 230.00 230KV CKT 1	318.7	350.57	0.34207	101.5067	NEWHART 230 - SWISHER COUNTY INTERCHANGE 230KV CKT 1
FDNS	00NR_G15_031	3	25SP	G15_031	TO->FROM	TUCO INTERCHANGE - TUCO_2 230.00 230KV CKT 1	318.7	350.57	0.24602	100.6323	GEN526333 1-JONES GEN #3 21 KV
FDNS	00NR_G15_031	3	25SP	G15_031	TO->FROM	TUCO INTERCHANGE - TUCO_2 230.00 230KV CKT 1	318.7	350.57	0.24602	100.3878	GEN526334 1-JONES_4 116.500
FDNS	00NR_G15_031	3	25SP	G15_031	TO->FROM	TUCO INTERCHANGE - TUCO_2 230.00 230KV CKT 1	318.7	350.57	0.24602	99.6	GEN525562 1-TOLK GEN #2 24 KV
FDNSLock-Blown up	06ALL_G15_033	0	20L	G15_033		Non-Converged Contingency	1022	1124	0.38514	-	G14-074T 345.00 - OKLAUNION 345KV CKT 1
FDNSLock-Blown up	06ALL_G15_033	0	20L	G15_033		Non-Converged Contingency	1792	1792	0.18016	-	BORDER 7345.00 - WOODWARD DISTRICT EHV 345KV CKT 1
FDNSLock-Blown up	06ALL_G15_033	0	20WP	G15_033		Non-Converged Contingency	1022	1124	0.41519	-	G14-074T 345.00 - OKLAUNION 345KV CKT 1
FDNSLock-Blown up	00NR_G15_033	0	25SP	G15_033		Non-Converged Contingency	956	1042	0.81275	-	G14-074T 345.00 - TUCO INTERCHANGE 345KV CKT 1
FDNS	00NR_G15_033	0	25SP	G15_033	TO->FROM	AMOCO SWITCHING STATION - SUNDOWN INTERCHANGE 230KV CKT 1	437	437	0.12484	101.9152	TUCO INTERCHANGE - YOAKUM_345 345.00 345KV CKT 1
FDNS	00NR_G15_033	0	25SP	G15_033	FROM->TO	CARLISLE INTERCHANGE - LP-DOUD_TP 3115.00 115KV CKT 1	159	160	0.03222	119.9872	WOLFFORTH INTERCHANGE (WH 7001668) 230/115/13.2KV TRANSFORMER CKT 1
FDNS	00NR_G15_033	0	25SP	G15_033	FROM->TO	CARLISLE INTERCHANGE - LP-DOUD_TP 3115.00 115KV CKT 1	159	160	0.03222	119.9872	WOLFFORTH INTERCHANGE (WH 7001668) 230/115/13.2KV TRANSFORMER CKT 1
FDNS	00NR_G15_033	0	16WP	G15_033	FROM->TO	CARLISLE INTERCHANGE - LP-DOUD_TP 3115.00 115KV CKT 1	165	177	0.11885	115.2403	LUBBOCK SOUTH INTERCHANGE - WOLFFORTH INTERCHANGE 230KV CKT 1
FDNS	00NR_G15_033	0	16WP	G15_033	FROM->TO	CARLISLE INTERCHANGE - LP-DOUD_TP 3115.00 115KV CKT 1	165	177	0.11885	115.2403	LUBBOCK SOUTH INTERCHANGE - WOLFFORTH INTERCHANGE 230KV CKT 1
FDNS	00NR_G15_033	0	25SP	G15_033	FROM->TO	CARLISLE INTERCHANGE - LP-DOUD_TP 3115.00 115KV CKT 1	159	160	0.04806	102.2265	TUCO INTERCHANGE - YOAKUM_345 345.00 345KV CKT 1
FDNS	00NR_G15_033	0	17SP	G15_033	FROM->TO	CARLISLE INTERCHANGE - LP-DOUD_TP 3115.00 115KV CKT 1	159	160	0.06159	99.7	WOLFFORTH INTERCHANGE (WH 7001668) 230/115/13.2KV TRANSFORMER CKT 1
FDNS	00NR_G15_033	0	17SP	G15_033	FROM->TO	CARLISLE INTERCHANGE - LP-DOUD_TP 3115.00 115KV CKT 1	159	160	0.06159	99.7	WOLFFORTH INTERCHANGE (WH 7001668) 230/115/13.2KV TRANSFORMER CKT 1
FDNS	00NR_G15_033	0	25SP	G15_033	FROM->TO	CARLISLE INTERCHANGE (WH XHS70711) 230/115/13.2KV TRANSFORMER CKT 1	168	168	0.03738	104.108	CARLISLE INTERCHANGE - WOLFFORTH INTERCHANGE 230KV CKT 1
FDNS	00NR_G15_033	0	25SP	G15_033	FROM->TO	CARLISLE INTERCHANGE (WH XHS70711) 230/115/13.2KV TRANSFORMER CKT 1	168	168	0.03738	103.2862	CARLISLE INTERCHANGE - WOLFFORTH INTERCHANGE 230KV CKT 1
FDNS	00NR_G15_033	0	25SP	G15_033	TO->FROM	JONES STATION - TUCO INTERCHANGE 230KV CKT 1	343.79	343.79	0.16779	120.6903	CARLISLE INTERCHANGE - TUCO INTERCHANGE 230KV CKT 1
FDNS	00NR_G15_033	0	25SP	G15_033	TO->FROM	JONES STATION - TUCO INTERCHANGE 230KV CKT 1	343.79	343.79	0.16779	120.6903	CARLISLE INTERCHANGE - TUCO INTERCHANGE 230KV CKT 1
FDNS	00NR_G15_033	0	25SP	G15_033	TO->FROM	JONES STATION - TUCO INTERCHANGE 230KV CKT 1	343.79	343.79	0.16515	109.0729	TUCO INTERCHANGE - YOAKUM_345 345.00 345KV CKT 1
FDNS	00NR_G15_033	0	25SP	G15_033	TO->FROM	JONES STATION - TUCO INTERCHANGE 230KV CKT 1	343.79	343.79	0.12726	102.1641	GEN526333 1-JONES GEN #3 21 KV
FDNS	00NR_G15_033	0	25SP	G15_033	TO->FROM	JONES STATION - TUCO INTERCHANGE 230KV CKT 1	343.79	343.79	0.12726	101.7604	GEN526334 1-JONES_4 116.500
FDNS	00NR_G15_033	0	16WP	G15_033	FROM->TO	LP-DOUD_TP 3115.00 - SP-WOLF_TP 3115.00 115KV CKT 1	165	180	0.11885	107.63	LUBBOCK SOUTH INTERCHANGE - WOLFFORTH INTERCHANGE 230KV CKT 1
FDNS	00NR_G15_033	0	16WP	G15_033	FROM->TO	LP-DOUD_TP 3115.00 - SP-WOLF_TP 3115.00 115KV CKT 1	165	180	0.11885	107.63	LUBBOCK SOUTH INTERCHANGE - WOLFFORTH INTERCHANGE 230KV CKT 1
FDNS	00NR_G15_033	0	16WP	G15_033	FROM->TO	SP-WOLF_TP 3115.00 - YUMA INTERCHANGE 115KV CKT 1	165	180	0.11885	101.3212	LUBBOCK SOUTH INTERCHANGE - WOLFFORTH INTERCHANGE 230KV CKT 1
FDNS	00NR_G15_033	0	16WP	G15_033	FROM->TO	SP-WOLF_TP 3115.00 - YUMA INTERCHANGE 115KV CKT 1	165	180	0.11885	101.3212	LUBBOCK SOUTH INTERCHANGE - WOLFFORTH INTERCHANGE 230KV CKT 1
FDNS	00NR_G15_033	0	25SP	G15_033	TO->FROM	SUNDOWN INTERCHANGE - WOLFFORTH INTERCHANGE 230KV CKT 1	318.7	350.57	0.15441	105.1886	TUCO INTERCHANGE - YOAKUM_345 345.00 345KV CKT 1
FDNS	00NR_G15_033	0	17SP	G15_033	FROM->TO	SUNDOWN INTERCHANGE (WH XDS70381) 230/115/13.8KV TRANSFORMER CKT 1	187	187	0.06755	110.0755	AMOCO SWITCHING STATION - SUNDOWN INTERCHANGE 230KV CKT 1
FDNS	00NR_G15_033	0	17SP	G15_033	FROM->TO	SUNDOWN INTERCHANGE (WH XDS70381) 230/115/13.8KV TRANSFORMER CKT 1	187	187	0.06755	110.0755	AMOCO SWITCHING STATION - SUNDOWN INTERCHANGE 230KV CKT 1
FDNS	00NR_G15_033	0	17SP	G15_033	FROM->TO	SUNDOWN INTERCHANGE (WH XDS70381) 230/115/13.8KV TRANSFORMER CKT 1	187	187	0.06755	107.4012	AMOCO SWITCHING STATION - SUNDOWN INTERCHANGE 230KV CKT 1
FDNS	00NR_G15_033	0	17SP	G15_033	FROM->TO	SUNDOWN INTERCHANGE (WH XDS70381) 230/115/13.8KV TRANSFORMER CKT 1	187	187	0.06755	107.4012	AMOCO SWITCHING STATION - SUNDOWN INTERCHANGE 230KV CKT 1
FDNS	00NR_G15_033	0	25SP	G15_033	TO->FROM	TERRY COUNTY INTERCHANGE - WOLFFORTH INTERCHANGE 115KV CKT 1	119.51	153.97	0.06444	114.2227	TUCO INTERCHANGE - YOAKUM_345 345.00 345KV CKT 1
FDNS	00NR_G15_033	0	25SP	G15_033	TO->FROM	TUCO INTERCHANGE - TUCO_2 230.00 230KV CKT 1	318.7	350.57	0.15449	117.1134	TUCO INTERCHANGE (GE M1022338) 345/230/13.2KV TRANSFORMER CKT 1
FDNS	00NR_G15_033	0	25SP	G15_033	TO->FROM	TUCO INTERCHANGE - TUCO_2 230.00 230KV CKT 1	318.7	350.57	0.15449	117.1134	TUCO INTERCHANGE (GE M1022338) 345/230/13.2KV TRANSFORMER CKT 1
FDNS	00NR_G15_033	0	25SP	G15_033	TO->FROM	TUCO INTERCHANGE - TUCO_2 230.00 230KV CKT 1	318.7	350.57	0.13811	109.3934	TUCO INTERCHANGE (SIEM 8743066) 345/230/13.2KV TRANSFORMER CKT 2
FDNS	00NR_G15_033	0	25SP	G15_033	TO->FROM	TUCO INTERCHANGE - TUCO_2 230.00 230KV CKT 1	318.7	350.57	0.13811	109.3934	TUCO INTERCHANGE (SIEM 8743066) 345/230/13.2KV TRANSFORMER CKT 2
FDNS	00NR_G15_033	0	25SP	G15_033	FROM->TO	TUCO INTERCHANGE (ENRCO 136401) 230/115/13.2KV TRANSFORMER CKT 1	250	288	0.0647	120.625	TUCO INTERCHANGE (ENRCO 136401) 230/115/13.2KV TRANSFORMER CKT 2
FDNS	00NR_G15_033	0	25SP	G15_033	FROM->TO	TUCO INTERCHANGE (ENRCO 136401) 230/115/13.2KV TRANSFORMER CKT 1	250	288	0.0647	120.625	TUCO INTERCHANGE (ENRCO 136401) 230/115/13.2KV TRANSFORMER CKT 2
FDNS	00NR_G15_033	0	25SP	G15_033	FROM->TO	TUCO INTERCHANGE (ENRCO 136401) 230/115/13.2KV TRANSFORMER CKT 1	250	288	0.0647	113.3487	TUCO INTERCHANGE (ENRCO 136401) 230/115/13.2KV TRANSFORMER CKT 2
FDNS	00NR_G15_033	0	25SP	G15_033	FROM->TO	TUCO INTERCHANGE (ENRCO 136401) 230/115/13.2KV TRANSFORMER CKT 1	250	288	0.0647	113.3487	TUCO INTERCHANGE (ENRCO 136401) 230/115/13.2KV TRANSFORMER CKT 2
FDNS	00NR_G15_033	0	25SP	G15_033	FROM->TO	TUCO INTERCHANGE (ENRCO 136401) 230/115/13.2KV TRANSFORMER CKT 2	250	288	0.0647	120.625	TUCO INTERCHANGE (ENRCO 136401) 230/115/13.2KV TRANSFORMER CKT 1
FDNS	00NR_G15_033	0	25SP	G15_033	FROM->TO	TUCO INTERCHANGE (ENRCO 136401) 230/115/13.2KV TRANSFORMER CKT 2	250	288	0.0647	120.625	TUCO INTERCHANGE (ENRCO 136401) 230/115/13.2KV TRANSFORMER CKT 1
FDNS	00NR_G15_033	0	25SP	G15_033	FROM->TO	TUCO INTERCHANGE (ENRCO 136401) 230/115/13.2KV TRANSFORMER CKT 2	250	288	0.0647	113.3487	TUCO INTERCHANGE (ENRCO 136401) 230/115/13.2KV TRANSFORMER CKT 1
FDNS	00NR_G15_033	0	25SP	G15_033	FROM->TO	TUCO INTERCHANGE (ENRCO 136401) 230/115/13.2KV TRANSFORMER CKT 2	250	288	0.0647	113.3487	TUCO INTERCHANGE (ENRCO 136401) 230/115/13.2KV TRANSFORMER CKT 1
FDNS	00NR_G15_033	0	17SP	G15_033	FROM->TO	TUCO INTERCHANGE (GE M102345) 230/115/13.2KV TRANSFORMER CKT 1	242	252	0.0901	106.5437	TUCO INTERCHANGE (ENRCO 136401) 230/115/13.2KV TRANSFORMER CKT 2

SOLUTION	GROUP	SCENARIO	SEASON	SOURCE	DIRECTION	MONITORED ELEMENT	RATEA (MVA)	RATEB(MVA)	TDF	TC%LOADING (% MVA)	CONTINGENCY
FDNS	00NR_G15_033	0	17SP	G15_033	FROM->TO	TUCO INTERCHANGE (GE M102345) 230/115/13.2KV TRANSFORMER CKT 1	242	252	0.0901	106.5437	TUCO INTERCHANGE (ENRCO 136401) 230/115/13.2KV TRANSFORMER CKT 2
FDNS	00NR_G15_033	0	17SP	G15_033	FROM->TO	TUCO INTERCHANGE (GE M102345) 230/115/13.2KV TRANSFORMER CKT 1	242	252	0.0901	105.9604	TUCO INTERCHANGE (ENRCO 136401) 230/115/13.2KV TRANSFORMER CKT 2
FDNS	00NR_G15_033	0	17SP	G15_033	FROM->TO	TUCO INTERCHANGE (GE M102345) 230/115/13.2KV TRANSFORMER CKT 1	242	252	0.0901	105.9604	TUCO INTERCHANGE (ENRCO 136401) 230/115/13.2KV TRANSFORMER CKT 2
FDNS	00NR_G15_033	0	17SP	G15_033	FROM->TO	WOLFFORTH INTERCHANGE (WH 7001668) 230/115/13.2KV TRANSFORMER CKT 1	120	154	0.05366	111.2705	CARLISLE INTERCHANGE - LP-DOUD_TP 3115.00 115KV CKT 1
FDNS	00NR_G15_033	0	17SP	G15_033	FROM->TO	WOLFFORTH INTERCHANGE (WH 7001668) 230/115/13.2KV TRANSFORMER CKT 1	120	154	0.05366	107.7904	CARLISLE INTERCHANGE - LP-DOUD_TP 3115.00 115KV CKT 1
FDNS	00NR_G15_033	0	17SP	G15_033	FROM->TO	WOLFFORTH INTERCHANGE (WH 7001668) 230/115/13.2KV TRANSFORMER CKT 1	120	154	0.05366	101.0879	LP-DOUD_TP 3115.00 - SP-WOLF_TP 3115.00 115KV CKT 1
FDNS	00NR_G15_033	2	25SP	G15_033	TO->FROM	AMOCO SWITCHING STATION - SUNDOWN INTERCHANGE 230KV CKT 1	437	437	0.12484	101.9064	TUCO INTERCHANGE - YOAKUM_345 345.00 345KV CKT 1
FDNS	00NR_G15_033	2	25SP	G15_033	FROM->TO	CARLISLE INTERCHANGE - LP-DOUD_TP 3115.00 115KV CKT 1	159	160	0.03222	120.0289	WOLFFORTH INTERCHANGE (WH 7001668) 230/115/13.2KV TRANSFORMER CKT 1
FDNS	00NR_G15_033	2	25SP	G15_033	FROM->TO	CARLISLE INTERCHANGE - LP-DOUD_TP 3115.00 115KV CKT 1	159	160	0.03222	120.0289	WOLFFORTH INTERCHANGE (WH 7001668) 230/115/13.2KV TRANSFORMER CKT 1
FDNS	00NR_G15_033	2	16WP	G15_033	FROM->TO	CARLISLE INTERCHANGE - LP-DOUD_TP 3115.00 115KV CKT 1	165	177	0.11885	115.0224	LUBBOCK SOUTH INTERCHANGE - WOLFFORTH INTERCHANGE 230KV CKT 1
FDNS	00NR_G15_033	2	16WP	G15_033	FROM->TO	CARLISLE INTERCHANGE - LP-DOUD_TP 3115.00 115KV CKT 1	165	177	0.11885	115.0224	LUBBOCK SOUTH INTERCHANGE - WOLFFORTH INTERCHANGE 230KV CKT 1
FDNS	00NR_G15_033	2	25SP	G15_033	FROM->TO	CARLISLE INTERCHANGE - LP-DOUD_TP 3115.00 115KV CKT 1	159	160	0.04806	102.4121	TUCO INTERCHANGE - YOAKUM_345 345.00 345KV CKT 1
FDNS	00NR_G15_033	2	17SP	G15_033	FROM->TO	CARLISLE INTERCHANGE - LP-DOUD_TP 3115.00 115KV CKT 1	159	160	0.06159	99.7	WOLFFORTH INTERCHANGE (WH 7001668) 230/115/13.2KV TRANSFORMER CKT 1
FDNS	00NR_G15_033	2	17SP	G15_033	FROM->TO	CARLISLE INTERCHANGE - LP-DOUD_TP 3115.00 115KV CKT 1	159	160	0.06159	99.7	WOLFFORTH INTERCHANGE (WH 7001668) 230/115/13.2KV TRANSFORMER CKT 1
FDNS	00NR_G15_033	2	25SP	G15_033	FROM->TO	CARLISLE INTERCHANGE (WH XHS70711) 230/115/13.2KV TRANSFORMER CKT 1	168	168	0.03738	104.3072	CARLISLE INTERCHANGE - WOLFFORTH INTERCHANGE 230KV CKT 1
FDNS	00NR_G15_033	2	25SP	G15_033	FROM->TO	CARLISLE INTERCHANGE (WH XHS70711) 230/115/13.2KV TRANSFORMER CKT 1	168	168	0.03738	103.4155	CARLISLE INTERCHANGE - WOLFFORTH INTERCHANGE 230KV CKT 1
FDNS	00NR_G15_033	2	25SP	G15_033	TO->FROM	JONES STATION - TUCO INTERCHANGE 230KV CKT 1	343.79	343.79	0.16779	120.4281	CARLISLE INTERCHANGE - TUCO INTERCHANGE 230KV CKT 1
FDNS	00NR_G15_033	2	25SP	G15_033	TO->FROM	JONES STATION - TUCO INTERCHANGE 230KV CKT 1	343.79	343.79	0.16779	120.4281	CARLISLE INTERCHANGE - TUCO INTERCHANGE 230KV CKT 1
FDNS	00NR_G15_033	2	25SP	G15_033	TO->FROM	JONES STATION - TUCO INTERCHANGE 230KV CKT 1	343.79	343.79	0.16515	108.878	TUCO INTERCHANGE - YOAKUM_345 345.00 345KV CKT 1
FDNS	00NR_G15_033	2	25SP	G15_033	TO->FROM	JONES STATION - TUCO INTERCHANGE 230KV CKT 1	343.79	343.79	0.12726	101.9755	GEN526333 1-JONES GEN #3 21 KV
FDNS	00NR_G15_033	2	25SP	G15_033	TO->FROM	JONES STATION - TUCO INTERCHANGE 230KV CKT 1	343.79	343.79	0.12726	101.5419	GEN526334 1-JONES_4 116.500
FDNS	00NR_G15_033	2	16WP	G15_033	FROM->TO	LP-DOUD_TP 3115.00 - SP-WOLF_TP 3115.00 115KV CKT 1	165	180	0.11885	107.4171	LUBBOCK SOUTH INTERCHANGE - WOLFFORTH INTERCHANGE 230KV CKT 1
FDNS	00NR_G15_033	2	16WP	G15_033	FROM->TO	LP-DOUD_TP 3115.00 - SP-WOLF_TP 3115.00 115KV CKT 1	165	180	0.11885	107.4171	LUBBOCK SOUTH INTERCHANGE - WOLFFORTH INTERCHANGE 230KV CKT 1
FDNS	00NR_G15_033	2	16WP	G15_033	FROM->TO	SP-WOLF_TP 3115.00 - YUMA INTERCHANGE 115KV CKT 1	165	180	0.11885	101.1078	LUBBOCK SOUTH INTERCHANGE - WOLFFORTH INTERCHANGE 230KV CKT 1
FDNS	00NR_G15_033	2	16WP	G15_033	FROM->TO	SP-WOLF_TP 3115.00 - YUMA INTERCHANGE 115KV CKT 1	165	180	0.11885	101.1078	LUBBOCK SOUTH INTERCHANGE - WOLFFORTH INTERCHANGE 230KV CKT 1
FDNS	00NR_G15_033	2	25SP	G15_033	TO->FROM	SUNDOWN INTERCHANGE - WOLFFORTH INTERCHANGE 230KV CKT 1	318.7	350.57	0.15441	105.4792	TUCO INTERCHANGE - YOAKUM_345 345.00 345KV CKT 1
FDNS	00NR_G15_033	2	17SP	G15_033	FROM->TO	SUNDOWN INTERCHANGE (WH XDS70381) 230/115/13.8KV TRANSFORMER CKT 1	187	187	0.06755	110.0755	AMOCO SWITCHING STATION - SUNDOWN INTERCHANGE 230KV CKT 1
FDNS	00NR_G15_033	2	17SP	G15_033	FROM->TO	SUNDOWN INTERCHANGE (WH XDS70381) 230/115/13.8KV TRANSFORMER CKT 1	187	187	0.06755	110.0755	AMOCO SWITCHING STATION - SUNDOWN INTERCHANGE 230KV CKT 1
FDNS	00NR_G15_033	2	17SP	G15_033	FROM->TO	SUNDOWN INTERCHANGE (WH XDS70381) 230/115/13.8KV TRANSFORMER CKT 1	187	187	0.06755	107.4012	AMOCO SWITCHING STATION - SUNDOWN INTERCHANGE 230KV CKT 1
FDNS	00NR_G15_033	2	17SP	G15_033	FROM->TO	SUNDOWN INTERCHANGE (WH XDS70381) 230/115/13.8KV TRANSFORMER CKT 1	187	187	0.06755	107.4012	AMOCO SWITCHING STATION - SUNDOWN INTERCHANGE 230KV CKT 1
FDNS	00NR_G15_033	2	25SP	G15_033	TO->FROM	TERRY COUNTY INTERCHANGE - WOLFFORTH INTERCHANGE 115KV CKT 1	119.51	153.97	0.06444	114.4002	TUCO INTERCHANGE - YOAKUM_345 345.00 345KV CKT 1
FDNS	00NR_G15_033	2	25SP	G15_033	TO->FROM	TUCO INTERCHANGE - TUCO_2 230.00 230KV CKT 1	318.7	350.57	0.15449	116.4766	TUCO INTERCHANGE (GE M1022338) 345/230/13.2KV TRANSFORMER CKT 1
FDNS	00NR_G15_033	2	25SP	G15_033	TO->FROM	TUCO INTERCHANGE - TUCO_2 230.00 230KV CKT 1	318.7	350.57	0.15449	116.4766	TUCO INTERCHANGE (GE M1022338) 345/230/13.2KV TRANSFORMER CKT 1
FDNS	00NR_G15_033	2	25SP	G15_033	TO->FROM	TUCO INTERCHANGE - TUCO_2 230.00 230KV CKT 1	318.7	350.57	0.13811	108.7598	TUCO INTERCHANGE (SIEM 8743066) 345/230/13.2KV TRANSFORMER CKT 2
FDNS	00NR_G15_033	2	25SP	G15_033	TO->FROM	TUCO INTERCHANGE - TUCO_2 230.00 230KV CKT 1	318.7	350.57	0.13811	108.7598	TUCO INTERCHANGE (SIEM 8743066) 345/230/13.2KV TRANSFORMER CKT 2
FDNS	00NR_G15_033	2	25SP	G15_033	FROM->TO	TUCO INTERCHANGE (ENRCO 136401) 230/115/13.2KV TRANSFORMER CKT 1	250	288	0.0647	121.146	TUCO INTERCHANGE (ENRCO 136401) 230/115/13.2KV TRANSFORMER CKT 2
FDNS	00NR_G15_033	2	25SP	G15_033	FROM->TO	TUCO INTERCHANGE (ENRCO 136401) 230/115/13.2KV TRANSFORMER CKT 1	250	288	0.0647	121.146	TUCO INTERCHANGE (ENRCO 136401) 230/115/13.2KV TRANSFORMER CKT 2
FDNS	00NR_G15_033	2	25SP	G15_033	FROM->TO	TUCO INTERCHANGE (ENRCO 136401) 230/115/13.2KV TRANSFORMER CKT 1	250	288	0.0647	113.7113	TUCO INTERCHANGE (ENRCO 136401) 230/115/13.2KV TRANSFORMER CKT 2
FDNS	00NR_G15_033	2	25SP	G15_033	FROM->TO	TUCO INTERCHANGE (ENRCO 136401) 230/115/13.2KV TRANSFORMER CKT 1	250	288	0.0647	113.7113	TUCO INTERCHANGE (ENRCO 136401) 230/115/13.2KV TRANSFORMER CKT 2
FDNS	00NR_G15_033	2	25SP	G15_033	FROM->TO	TUCO INTERCHANGE (ENRCO 136401) 230/115/13.2KV TRANSFORMER CKT 2	250	288	0.0647	121.146	TUCO INTERCHANGE (ENRCO 136401) 230/115/13.2KV TRANSFORMER CKT 1
FDNS	00NR_G15_033	2	25SP	G15_033	FROM->TO	TUCO INTERCHANGE (ENRCO 136401) 230/115/13.2KV TRANSFORMER CKT 2	250	288	0.0647	121.146	TUCO INTERCHANGE (ENRCO 136401) 230/115/13.2KV TRANSFORMER CKT 1
FDNS	00NR_G15_033	2	25SP	G15_033	FROM->TO	TUCO INTERCHANGE (ENRCO 136401) 230/115/13.2KV TRANSFORMER CKT 2	250	288	0.0647	113.7113	TUCO INTERCHANGE (ENRCO 136401) 230/115/13.2KV TRANSFORMER CKT 1
FDNS	00NR_G15_033	2	25SP	G15_033	FROM->TO	TUCO INTERCHANGE (ENRCO 136401) 230/115/13.2KV TRANSFORMER CKT 2	250	288	0.0647	113.7113	TUCO INTERCHANGE (ENRCO 136401) 230/115/13.2KV TRANSFORMER CKT 1
FDNS	00NR_G15_033	2	17SP	G15_033	FROM->TO	TUCO INTERCHANGE (GE M102345) 230/115/13.2KV TRANSFORMER CKT 1	242	252	0.0901	106.5437	TUCO INTERCHANGE (ENRCO 136401) 230/115/13.2KV TRANSFORMER CKT 2
FDNS	00NR_G15_033	2	17SP	G15_033	FROM->TO	TUCO INTERCHANGE (GE M102345) 230/115/13.2KV TRANSFORMER CKT 1	242	252	0.0901	106.5437	TUCO INTERCHANGE (ENRCO 136401) 230/115/13.2KV TRANSFORMER CKT 2
FDNS	00NR_G15_033	2	17SP	G15_033	FROM->TO	TUCO INTERCHANGE (GE M102345) 230/115/13.2KV TRANSFORMER CKT 1	242	252	0.0901	105.9604	TUCO INTERCHANGE (ENRCO 136401) 230/115/13.2KV TRANSFORMER CKT 2
FDNS	00NR_G15_033	2	17SP	G15_033	FROM->TO	TUCO INTERCHANGE (GE M102345) 230/115/13.2KV TRANSFORMER CKT 1	242	252	0.0901	105.9604	TUCO INTERCHANGE (ENRCO 136401) 230/115/13.2KV TRANSFORMER CKT 2
FDNS	00NR_G15_033	2	17SP	G15_033	FROM->TO	WOLFFORTH INTERCHANGE (WH 7001668) 230/115/13.2KV TRANSFORMER CKT 1	120	154	0.05366	111.2705	CARLISLE INTERCHANGE - LP-DOUD_TP 3115.00 115KV CKT 1
FDNS	00NR_G15_033	2	17SP	G15_033	FROM->TO	WOLFFORTH INTERCHANGE (WH 7001668) 230/115/13.2KV TRANSFORMER CKT 1	120	154	0.05366	107.7904	CARLISLE INTERCHANGE - LP-DOUD_TP 3115.00 115KV CKT 1
FDNS	00NR_G15_033	2	17SP	G15_033	FROM->TO	WOLFFORTH INTERCHANGE (WH 7001668) 230/115/13.2KV TRANSFORMER CKT 1	120	154	0.05366	101.0879	LP-DOUD_TP 3115.00 - SP-WOLF_TP 3115.00 115KV CKT 1
FDNS	00NR_G15_033	3	25SP	G15_033	TO->FROM	AMOCO SWITCHING STATION - SUNDOWN INTERCHANGE 230KV CKT 1	437	437	0.12545	103.6706	TUCO INTERCHANGE - YOAKUM_345 345.00 345KV CKT 1
FDNS	00NR_G15_033	3	25SP	G15_033	TO->FROM	SUNDOWN INTERCHANGE - WOLFFORTH INTERCHANGE 230KV CKT 1	318.7	350.57	0.15378	105.5213	TUCO INTERCHANGE - YOAKUM_345 345.00 345KV CKT 1
FDNS	00NR_G15_033	3	25SP	G15_033	TO->FROM	TUCO INTERCHANGE - TUCO_2 230.00 230KV CKT 1	318.7	350.57	0.15453	116.1551	TUCO INTERCHANGE (GE M1022338) 345/230/13.2KV TRANSFORMER CKT 1
FDNS	00NR_G15_033	3	25SP	G15_033	TO->FROM	TUCO INTERCHANGE - TUCO_2 230.00 230KV CKT 1	318.7	350.57	0.15453	116.1551	TUCO INTERCHANGE (GE M1022338) 345/230/13.2KV TRANSFORMER CKT 1
FDNS	00NR_G15_033	3	25SP	G15_033	TO->FROM	TUCO INTERCHANGE - TUCO_2 230.00 230KV CKT 1	318.7	350.57	0.13815	108.4552	TUCO INTERCHANGE (SIEM 8743066) 345/230/13.2KV TRANSFORMER CKT 2
FDNS	00NR_G15_033	3	25SP	G15_033	TO->FROM	TUCO INTERCHANGE - TUCO_2 230.00 230KV CKT 1	318.7	350.57	0.13815	108.4552	TUCO INTERCHANGE (SIEM 8743066) 345/230/13.2KV TRANSFORMER CKT 2
FDNS	00NR_G15_033	3	25SP	G15_033	FROM->TO	TUCO INTERCHANGE (ENRCO 136401) 230/115/13.2KV TRANSFORMER CKT 1	250	288	0.06487	122.4978	TUCO INTERCHANGE (ENRCO 136401) 230/115/13.2KV TRANSFORMER CKT 2
FDNS	00NR_G15_033	3	25SP	G15_033	FROM->TO	TUCO INTERCHANGE (ENRCO 136401) 230/115/13.2KV TRANSFORMER CKT 1	250	288	0.06487	122.4978	TUCO INTERCHANGE (ENRCO 136401) 230/115/13.2KV TRANSFORMER CKT 2
FDNS	00NR_G15_033	3	25SP	G15_033	FROM->TO	TUCO INTERCHANGE (ENRCO 136401) 230/115/13.2KV TRANSFORMER CKT 1	250	288	0.06487	114.1761	TUCO INTERCHANGE (ENRCO 136401) 230/115/13.2KV TRANSFORMER CKT 2
FDNS	00NR_G15_033	3	25SP	G15_033	FROM->TO	TUCO INTERCHANGE (ENRCO 136401) 230/115/13.2KV TRANSFORMER CKT 1	250	288	0.06487	114.1761	TUCO INTERCHANGE (ENRCO 136401) 230/115/13.2KV TRANSFORMER CKT 2
FDNS	00NR_G15_033	3	25SP	G15_033	FROM->TO	TUCO INTERCHANGE (ENRCO 136401) 230/115/13.2KV TRANSFORMER CKT 2	250	288	0.06487	122.4977	TUCO INTERCHANGE (ENRCO 136401) 230/115/13.2KV TRANSFORMER CKT 1
FDNS	00NR_G15_033	3	25SP	G15_033	FROM->TO	TUCO INTERCHANGE (ENRCO 136401) 230/115/13.2KV TRANSFORMER CKT 2	250	288	0.06487	122.4977	TUCO INTERCHANGE (ENRCO 136401) 230/115/13.2KV TRANSFORMER CKT 1
FDNS	00NR_G15_033	3	25SP	G15_033	FROM->TO	TUCO INTERCHANGE (ENRCO 136401) 230/115/13.2KV TRANSFORMER CKT 2	250	288	0.06487	114.1763	TUCO INTERCHANGE (ENRCO 136401) 230/115/13.2KV TRANSFORMER CKT 1
FDNS	00NR_G15_033	3	25SP	G15_033	FROM->TO	TUCO INTERCHANGE (ENRCO 136401) 230/115/13.2KV TRANSFORMER CKT 2	250	288	0.06487	114.1763	TUCO INTERCHANGE (ENRCO 136401) 230/115/13.2KV TRANSFORMER CKT 1
FDNS	00NR_G15_039	0	25SP	G15_039	TO->FROM	AMOCO SWITCHING STATION - SUNDOWN INTERCHANGE 230KV CKT 1	437	437	0.09466	100.9056	TUCO INTERCHANGE - YOAKUM_345 345.00 345KV CKT 1
FDNS	06ALL_G15_039	0	20SP	G15_039	TO->FROM	DEAF SMITH COUNTY INTERCHANGE - G15039_T 230.00 230KV CKT 1	318.7	350.57	0.65248	125.8356	LAWTON EASTSIDE - OKLAUNION 345KV CKT 1
FDNS	06ALL_G15_039	0	20SP	G15_039	TO->FROM	DEAF SMITH COUNTY INTERCHANGE - G15039_T 230.00 230KV CKT 1	318.7	350.57	0.65248	125.8356	LAWTON EASTSIDE - OKLAUNION 345KV CKT 1
FDNS	06ALL_G15_039	0	20SP	G15_039	TO->FROM	DEAF SMITH COUNTY INTERCHANGE - G15039_T 230.00 230KV CKT 1	318.7	350.57	0.65248	106.8476	G14-074T 345.00 - OKLAUNION 345KV CKT 1
FDNS	06ALL_G15_039	0	17SP	G15_039	TO->FROM	DEAF SMITH COUNTY INTERCHANGE - G15039_T 230.00 230KV CKT 1	318.7	350.57	0.65237	105.1997	G14-074T 345.00 - OKLAUNION 345KV CKT 1
FDNS	00NR_G15_039	0	25SP	G15_039	TO->FROM	JONES STATION - TUCO INTERCHANGE 230KV CKT 1	343.79	343.79	0.08333	117.8971	CARLISLE INTERCHANGE - TUCO INTERCHANGE 230KV CKT 1
FDNS	00NR_G15_039	0	25SP	G15_039	TO->FROM	JONES STATION - TUCO INTERCHANGE 230KV CKT 1	343.79	343.79	0.08333	117.8971	CARLISLE INTERCHANGE - TUCO INTERCHANGE 230KV CKT 1
FDNS	00NR_G15_039	0	25SP	G15_039	TO->FROM	JONES STATION - TUCO INTERCHANGE 230KV CKT 1	343.79	343.79	0.08273	106.3192	TUCO INTERCHANGE - YOAKUM_345 345.00 345KV CKT 1
FDNS	00NR_G15_039	0	25SP	G15_039	TO->FROM	JONES STATION - TUCO INTERCHANGE 230KV CKT 1	343.79	343.79	0.06907	100.2426	GEN526333 1-JONES GEN #3 21 KV

SOLUTION	GROUP	SCENARIO	SEASON	SOURCE	DIRECTION	MONITORED ELEMENT	RATEA (MVA)	RATEB(MVA)	TDF	TC%LOADING (% MVA)	CONTINGENCY
FDNS	00NR_G15_039	0	25SP	G15_039	TO->FROM	JONES STATION - TUCO INTERCHANGE 230KV CKT 1	343.79	343.79	0.06907	99.8	GEN526334 1-JONES_4 116.500
FDNS	00NR_G15_039	0	17SP	G15_039	FROM->TO	SUNDOWN INTERCHANGE (WH XDS70381) 230/115/13.8KV TRANSFORMER CKT 1	187	187	0.04719	108.9354	AMOCO SWITCHING STATION - SUNDOWN INTERCHANGE 230KV CKT 1
FDNS	00NR_G15_039	0	17SP	G15_039	FROM->TO	SUNDOWN INTERCHANGE (WH XDS70381) 230/115/13.8KV TRANSFORMER CKT 1	187	187	0.04719	108.9354	AMOCO SWITCHING STATION - SUNDOWN INTERCHANGE 230KV CKT 1
FDNS	00NR_G15_039	0	17SP	G15_039	FROM->TO	SUNDOWN INTERCHANGE (WH XDS70381) 230/115/13.8KV TRANSFORMER CKT 1	187	187	0.04719	106.2737	AMOCO SWITCHING STATION - SUNDOWN INTERCHANGE 230KV CKT 1
FDNS	00NR_G15_039	0	17SP	G15_039	FROM->TO	SUNDOWN INTERCHANGE (WH XDS70381) 230/115/13.8KV TRANSFORMER CKT 1	187	187	0.04719	106.2737	AMOCO SWITCHING STATION - SUNDOWN INTERCHANGE 230KV CKT 1
FDNS	00NR_G15_039	0	25SP	G15_039	TO->FROM	TUCO INTERCHANGE - TUCO_2 230.00 230KV CKT 1	318.7	350.57	0.10524	129.369	TUCO INTERCHANGE - TUCO_2 345.00 345KV CKT 1
FDNS	00NR_G15_039	0	25SP	G15_039	TO->FROM	TUCO INTERCHANGE - TUCO_2 230.00 230KV CKT 1	318.7	350.57	0.06476	115.136	TUCO INTERCHANGE (GE M1022338) 345/230/13.2KV TRANSFORMER CKT 1
FDNS	00NR_G15_039	0	25SP	G15_039	TO->FROM	TUCO INTERCHANGE - TUCO_2 230.00 230KV CKT 1	318.7	350.57	0.06476	115.136	TUCO INTERCHANGE (GE M1022338) 345/230/13.2KV TRANSFORMER CKT 1
FDNS	00NR_G15_039	0	25SP	G15_039	TO->FROM	TUCO INTERCHANGE - TUCO_2 230.00 230KV CKT 1	318.7	350.57	0.06489	107.9397	TUCO INTERCHANGE (SIEM 8743066) 345/230/13.2KV TRANSFORMER CKT 2
FDNS	00NR_G15_039	0	25SP	G15_039	TO->FROM	TUCO INTERCHANGE - TUCO_2 230.00 230KV CKT 1	318.7	350.57	0.06489	107.9397	TUCO INTERCHANGE (SIEM 8743066) 345/230/13.2KV TRANSFORMER CKT 2
FDNS	00NR_G15_040	0	25SP	G15_040	TO->FROM	GAINES COUNTY INTERCHANGE - SEMINOLE 115KV CKT 1	159.95	159.95	0.04576	100.2559	DOSS INTERCHANGE - SEMINOLE 115KV CKT 1
FDNS	00NR_G15_040	0	25SP	G15_040	TO->FROM	GAINES COUNTY INTERCHANGE - SEMINOLE 115KV CKT 1	159.95	159.95	0.04576	100.2559	DOSS INTERCHANGE - SEMINOLE 115KV CKT 1
FDNS	00NR_G15_040	0	25SP	G15_040	FROM->TO	MUSTANG STATION (ENRCO 136161) 230/115/13.2KV TRANSFORMER CKT 1	250	288	0.18273	102.0105	MUSTANG STATION - SEMINOLE 230KV CKT 1
FDNS	00NR_G15_040	0	25SP	G15_040	FROM->TO	MUSTANG STATION (ENRCO 136161) 230/115/13.2KV TRANSFORMER CKT 1	250	288	0.18273	102.0105	MUSTANG STATION - SEMINOLE 230KV CKT 1
FDNS	00NR_G15_040	0	25SP	G15_040	FROM->TO	MUSTANG STATION (ENRCO 136161) 230/115/13.2KV TRANSFORMER CKT 1	250	288	0.18273	101.6351	MUSTANG STATION - SEMINOLE 230KV CKT 1
FDNS	00NR_G15_040	0	25SP	G15_040	FROM->TO	MUSTANG STATION (ENRCO 136161) 230/115/13.2KV TRANSFORMER CKT 1	250	288	0.18273	101.6351	MUSTANG STATION - SEMINOLE 230KV CKT 1
FDNS	00NR_G15_040	0	25SP	G15_040	FROM->TO	SEMINOLE (GE M101687) 230/115/13.2KV TRANSFORMER CKT 1	150	150	0.06514	132.3276	SEMINOLE (GE M101898) 230/115/13.2KV TRANSFORMER CKT 2
FDNS	00NR_G15_040	0	25SP	G15_040	FROM->TO	SEMINOLE (GE M101687) 230/115/13.2KV TRANSFORMER CKT 1	150	150	0.06514	132.3276	SEMINOLE (GE M101898) 230/115/13.2KV TRANSFORMER CKT 2
FDNS	00NR_G15_040	0	25SP	G15_040	FROM->TO	SEMINOLE (GE M101687) 230/115/13.2KV TRANSFORMER CKT 1	150	150	0.06514	123.101	SEMINOLE (GE M101898) 230/115/13.2KV TRANSFORMER CKT 2
FDNS	00NR_G15_040	0	25SP	G15_040	FROM->TO	SEMINOLE (GE M101687) 230/115/13.2KV TRANSFORMER CKT 1	150	150	0.06514	123.101	SEMINOLE (GE M101898) 230/115/13.2KV TRANSFORMER CKT 2
FDNS	00NR_G15_040	0	17SP	G15_040	FROM->TO	SEMINOLE (GE M101687) 230/115/13.2KV TRANSFORMER CKT 1	150	150	0.07717	116.2852	SEMINOLE (GE M101898) 230/115/13.2KV TRANSFORMER CKT 2
FDNS	00NR_G15_040	0	17SP	G15_040	FROM->TO	SEMINOLE (GE M101687) 230/115/13.2KV TRANSFORMER CKT 1	150	150	0.07717	116.2852	SEMINOLE (GE M101898) 230/115/13.2KV TRANSFORMER CKT 2
FDNS	00NR_G15_040	0	20SP	G15_040	FROM->TO	SEMINOLE (GE M101687) 230/115/13.2KV TRANSFORMER CKT 1	150	150	0.06604	111.2723	SEMINOLE (GE M101898) 230/115/13.2KV TRANSFORMER CKT 2
FDNS	00NR_G15_040	0	20SP	G15_040	FROM->TO	SEMINOLE (GE M101687) 230/115/13.2KV TRANSFORMER CKT 1	150	150	0.06604	111.2723	SEMINOLE (GE M101898) 230/115/13.2KV TRANSFORMER CKT 2
FDNS	00NR_G15_040	0	17SP	G15_040	FROM->TO	SEMINOLE (GE M101687) 230/115/13.2KV TRANSFORMER CKT 1	150	150	0.07717	109.3968	SEMINOLE (GE M101898) 230/115/13.2KV TRANSFORMER CKT 2
FDNS	00NR_G15_040	0	17SP	G15_040	FROM->TO	SEMINOLE (GE M101687) 230/115/13.2KV TRANSFORMER CKT 1	150	150	0.07717	109.3968	SEMINOLE (GE M101898) 230/115/13.2KV TRANSFORMER CKT 2
FDNS	00NR_G15_040	0	20SP	G15_040	FROM->TO	SEMINOLE (GE M101687) 230/115/13.2KV TRANSFORMER CKT 1	150	150	0.06604	105.3035	SEMINOLE (GE M101898) 230/115/13.2KV TRANSFORMER CKT 2
FDNS	00NR_G15_040	0	20SP	G15_040	FROM->TO	SEMINOLE (GE M101687) 230/115/13.2KV TRANSFORMER CKT 1	150	150	0.06604	105.3035	SEMINOLE (GE M101898) 230/115/13.2KV TRANSFORMER CKT 2
FDNS	00NR_G15_040	0	25SP	G15_040	FROM->TO	SEMINOLE (GE M101898) 230/115/13.2KV TRANSFORMER CKT 2	150	150	0.06583	133.6901	SEMINOLE (GE M101687) 230/115/13.2KV TRANSFORMER CKT 1
FDNS	00NR_G15_040	0	25SP	G15_040	FROM->TO	SEMINOLE (GE M101898) 230/115/13.2KV TRANSFORMER CKT 2	150	150	0.06583	133.6901	SEMINOLE (GE M101687) 230/115/13.2KV TRANSFORMER CKT 1
FDNS	00NR_G15_040	0	25SP	G15_040	FROM->TO	SEMINOLE (GE M101898) 230/115/13.2KV TRANSFORMER CKT 2	150	150	0.06583	124.617	SEMINOLE (GE M101687) 230/115/13.2KV TRANSFORMER CKT 1
FDNS	00NR_G15_040	0	25SP	G15_040	FROM->TO	SEMINOLE (GE M101898) 230/115/13.2KV TRANSFORMER CKT 2	150	150	0.06583	124.617	SEMINOLE (GE M101687) 230/115/13.2KV TRANSFORMER CKT 1
FDNS	00NR_G15_040	0	17SP	G15_040	FROM->TO	SEMINOLE (GE M101898) 230/115/13.2KV TRANSFORMER CKT 2	150	150	0.07798	117.4728	SEMINOLE (GE M101687) 230/115/13.2KV TRANSFORMER CKT 1
FDNS	00NR_G15_040	0	17SP	G15_040	FROM->TO	SEMINOLE (GE M101898) 230/115/13.2KV TRANSFORMER CKT 2	150	150	0.07798	117.4728	SEMINOLE (GE M101687) 230/115/13.2KV TRANSFORMER CKT 1
FDNS	00NR_G15_040	0	20SP	G15_040	FROM->TO	SEMINOLE (GE M101898) 230/115/13.2KV TRANSFORMER CKT 2	150	150	0.06674	111.6691	SEMINOLE (GE M101687) 230/115/13.2KV TRANSFORMER CKT 1
FDNS	00NR_G15_040	0	20SP	G15_040	FROM->TO	SEMINOLE (GE M101898) 230/115/13.2KV TRANSFORMER CKT 2	150	150	0.06674	111.6691	SEMINOLE (GE M101687) 230/115/13.2KV TRANSFORMER CKT 1
FDNS	00NR_G15_040	0	17SP	G15_040	FROM->TO	SEMINOLE (GE M101898) 230/115/13.2KV TRANSFORMER CKT 2	150	150	0.07798	110.6965	SEMINOLE (GE M101687) 230/115/13.2KV TRANSFORMER CKT 1
FDNS	00NR_G15_040	0	17SP	G15_040	FROM->TO	SEMINOLE (GE M101898) 230/115/13.2KV TRANSFORMER CKT 2	150	150	0.07798	110.6965	SEMINOLE (GE M101687) 230/115/13.2KV TRANSFORMER CKT 1
FDNS	00NR_G15_040	0	20SP	G15_040	FROM->TO	SEMINOLE (GE M101898) 230/115/13.2KV TRANSFORMER CKT 2	150	150	0.06674	106.2327	SEMINOLE (GE M101687) 230/115/13.2KV TRANSFORMER CKT 1
FDNS	00NR_G15_040	0	20SP	G15_040	FROM->TO	SEMINOLE (GE M101898) 230/115/13.2KV TRANSFORMER CKT 2	150	150	0.06674	106.2327	SEMINOLE (GE M101687) 230/115/13.2KV TRANSFORMER CKT 1
FDNS	00NR_G15_041	0	25SP	G15_041	TO->FROM	AMOCO SWITCHING STATION - SUNDOWN INTERCHANGE 230KV CKT 1	437	437	0.12686	100.983	TUCO INTERCHANGE - YOAKUM_345 345.00 345KV CKT 1
FDNS	00NR_G15_041	0	25SP	G15_041	FROM->TO	CARLISLE INTERCHANGE - LP-DOUD_TP 3115.00 115KV CKT 1	159	160	0.03329	119.1236	WOLFFORTH INTERCHANGE (WH 7001668) 230/115/13.2KV TRANSFORMER CKT 1
FDNS	00NR_G15_041	0	25SP	G15_041	FROM->TO	CARLISLE INTERCHANGE - LP-DOUD_TP 3115.00 115KV CKT 1	159	160	0.03329	119.1236	WOLFFORTH INTERCHANGE (WH 7001668) 230/115/13.2KV TRANSFORMER CKT 1
FDNS	00NR_G15_041	0	16WP	G15_041	FROM->TO	CARLISLE INTERCHANGE - LP-DOUD_TP 3115.00 115KV CKT 1	165	177	0.12526	112.1504	LUBBOCK SOUTH INTERCHANGE - WOLFFORTH INTERCHANGE 230KV CKT 1
FDNS	00NR_G15_041	0	16WP	G15_041	FROM->TO	CARLISLE INTERCHANGE - LP-DOUD_TP 3115.00 115KV CKT 1	165	177	0.12526	112.1504	LUBBOCK SOUTH INTERCHANGE - WOLFFORTH INTERCHANGE 230KV CKT 1
FDNS	00NR_G15_041	0	25SP	G15_041	FROM->TO	CARLISLE INTERCHANGE - LP-DOUD_TP 3115.00 115KV CKT 1	159	160	0.05	100.9023	TUCO INTERCHANGE - YOAKUM_345 345.00 345KV CKT 1
FDNS	00NR_G15_041	0	25SP	G15_041	FROM->TO	CARLISLE INTERCHANGE (WH XHS70711) 230/115/13.2KV TRANSFORMER CKT 1	168	168	0.03932	103.2328	CARLISLE INTERCHANGE - WOLFFORTH INTERCHANGE 230KV CKT 1
FDNS	00NR_G15_041	0	25SP	G15_041	FROM->TO	CARLISLE INTERCHANGE (WH XHS70711) 230/115/13.2KV TRANSFORMER CKT 1	168	168	0.03932	102.0258	CARLISLE INTERCHANGE - WOLFFORTH INTERCHANGE 230KV CKT 1
FDNS	00NR_G15_041	0	25SP	G15_041	TO->FROM	JONES STATION - TUCO INTERCHANGE 230KV CKT 1	343.79	343.79	0.17401	118.8413	CARLISLE INTERCHANGE - TUCO INTERCHANGE 230KV CKT 1
FDNS	00NR_G15_041	0	25SP	G15_041	TO->FROM	JONES STATION - TUCO INTERCHANGE 230KV CKT 1	343.79	343.79	0.17401	118.8413	CARLISLE INTERCHANGE - TUCO INTERCHANGE 230KV CKT 1
FDNS	00NR_G15_041	0	25SP	G15_041	TO->FROM	JONES STATION - TUCO INTERCHANGE 230KV CKT 1	343.79	343.79	0.17131	107.0908	TUCO INTERCHANGE - YOAKUM_345 345.00 345KV CKT 1
FDNS	00NR_G15_041	0	25SP	G15_041	TO->FROM	JONES STATION - TUCO INTERCHANGE 230KV CKT 1	343.79	343.79	0.1316	100.7671	GEN526333 1-JONES GEN #3 21 KV
FDNS	00NR_G15_041	0	25SP	G15_041	TO->FROM	JONES STATION - TUCO INTERCHANGE 230KV CKT 1	343.79	343.79	0.1316	100.3595	GEN526334 1-JONES_4 116.500
FDNS	00NR_G15_041	0	16WP	G15_041	FROM->TO	LP-DOUD_TP 3115.00 - SP-WOLF_TP 3115.00 115KV CKT 1	165	180	0.12526	104.5965	LUBBOCK SOUTH INTERCHANGE - WOLFFORTH INTERCHANGE 230KV CKT 1
FDNS	00NR_G15_041	0	16WP	G15_041	FROM->TO	LP-DOUD_TP 3115.00 - SP-WOLF_TP 3115.00 115KV CKT 1	165	180	0.12526	104.5965	LUBBOCK SOUTH INTERCHANGE - WOLFFORTH INTERCHANGE 230KV CKT 1
FDNS	00NR_G15_041	0	25SP	G15_041	TO->FROM	SUNDOWN INTERCHANGE - WOLFFORTH INTERCHANGE 230KV CKT 1	318.7	350.57	0.16477	102.3216	TUCO INTERCHANGE - YOAKUM_345 345.00 345KV CKT 1
FDNS	00NR_G15_041	0	17SP	G15_041	FROM->TO	SUNDOWN INTERCHANGE (WH XDS70381) 230/115/13.8KV TRANSFORMER CKT 1	187	187	0.06892	109.1499	AMOCO SWITCHING STATION - SUNDOWN INTERCHANGE 230KV CKT 1
FDNS	00NR_G15_041	0	17SP	G15_041	FROM->TO	SUNDOWN INTERCHANGE (WH XDS70381) 230/115/13.8KV TRANSFORMER CKT 1	187	187	0.06892	109.1499	AMOCO SWITCHING STATION - SUNDOWN INTERCHANGE 230KV CKT 1
FDNS	00NR_G15_041	0	17SP	G15_041	FROM->TO	SUNDOWN INTERCHANGE (WH XDS70381) 230/115/13.8KV TRANSFORMER CKT 1	187	187	0.06892	106.4863	AMOCO SWITCHING STATION - SUNDOWN INTERCHANGE 230KV CKT 1
FDNS	00NR_G15_041	0	17SP	G15_041	FROM->TO	SUNDOWN INTERCHANGE (WH XDS70381) 230/115/13.8KV TRANSFORMER CKT 1	187	187	0.06892	106.4863	AMOCO SWITCHING STATION - SUNDOWN INTERCHANGE 230KV CKT 1
FDNS	00NR_G15_041	0	25SP	G15_041	TO->FROM	TERRY COUNTY INTERCHANGE - WOLFFORTH INTERCHANGE 115KV CKT 1	119.51	153.97	0.06701	112.3203	TUCO INTERCHANGE - YOAKUM_345 345.00 345KV CKT 1
FDNS	00NR_G15_041	0	25SP	G15_041	TO->FROM	TUCO INTERCHANGE - TUCO_2 230.00 230KV CKT 1	318.7	350.57	0.15517	116.5195	TUCO INTERCHANGE (GE M1022338) 345/230/13.2KV TRANSFORMER CKT 1
FDNS	00NR_G15_041	0	25SP	G15_041	TO->FROM	TUCO INTERCHANGE - TUCO_2 230.00 230KV CKT 1	318.7	350.57	0.15517	116.5195	TUCO INTERCHANGE (GE M1022338) 345/230/13.2KV TRANSFORMER CKT 1
FDNS	00NR_G15_041	0	25SP	G15_041	TO->FROM	TUCO INTERCHANGE - TUCO_2 230.00 230KV CKT 1	318.7	350.57	0.13719	109.1859	TUCO INTERCHANGE (SIEM 8743066) 345/230/13.2KV TRANSFORMER CKT 2
FDNS	00NR_G15_041	0	25SP	G15_041	TO->FROM	TUCO INTERCHANGE - TUCO_2 230.00 230KV CKT 1	318.7	350.57	0.13719	109.1859	TUCO INTERCHANGE (SIEM 8743066) 345/230/13.2KV TRANSFORMER CKT 2
FDNS	00NR_G15_041	0	25SP	G15_041	FROM->TO	TUCO INTERCHANGE (ENRCO 136401) 230/115/13.2KV TRANSFORMER CKT 1	250	288	0.07112	118.7828	TUCO INTERCHANGE (ENRCO 136401) 230/115/13.2KV TRANSFORMER CKT 2
FDNS	00NR_G15_041	0	25SP	G15_041	FROM->TO	TUCO INTERCHANGE (ENRCO 136401) 230/115/13.2KV TRANSFORMER CKT 1	250	288	0.07112	118.7828	TUCO INTERCHANGE (ENRCO 136401) 230/115/13.2KV TRANSFORMER CKT 2
FDNS	00NR_G15_041	0	25SP	G15_041	FROM->TO	TUCO INTERCHANGE (ENRCO 136401) 230/115/13.2KV TRANSFORMER CKT 1	250	288	0.07112	111.6037	TUCO INTERCHANGE (ENRCO 136401) 230/115/13.2KV TRANSFORMER CKT 2
FDNS	00NR_G15_041	0	25SP	G15_041	FROM->TO	TUCO INTERCHANGE (ENRCO 136401) 230/115/13.2KV TRANSFORMER CKT 1	250	288	0.07112	111.6037	TUCO INTERCHANGE (ENRCO 136401) 230/115/13.2KV TRANSFORMER CKT 2
FDNS	00NR_G15_041	0	25SP	G15_041	FROM->TO	TUCO INTERCHANGE (ENRCO 136401) 230/115/13.2KV TRANSFORMER CKT 2	250	288	0.07112	118.7828	TUCO INTERCHANGE (ENRCO 136401) 230/115/13.2KV TRANSFORMER CKT 1
FDNS	00NR_G15_041	0	25SP	G15_041	FROM->TO	TUCO INTERCHANGE (ENRCO 136401) 230/115/13.2KV TRANSFORMER CKT 2	250	288	0.07112	118.7828	TUCO INTERCHANGE (ENRCO 136401) 230/115/13.2KV TRANSFORMER CKT 1
FDNS	00NR_G15_041	0	25SP	G15_041	FROM->TO	TUCO INTERCHANGE (ENRCO 136401) 230/115/13.2KV TRANSFORMER CKT 2	250	288	0.07112	111.6037	TUCO INTERCHANGE (ENRCO 136401) 230/115/13.2KV TRANSFORMER CKT 1
FDNS	00NR_G15_041	0	25SP	G15_041	FROM->TO	TUCO INTERCHANGE (ENRCO 136401) 230/115/13.2KV TRANSFORMER CKT 2	250	288	0.07112	111.6037	TUCO INTERCHANGE (ENRCO 136401) 230/115/13.2KV TRANSFORMER CKT 1

SOLUTION	GROUP	SCENARIO	SEASON	SOURCE	DIRECTION	MONITORED ELEMENT	RATEA (MVA)	RATEB(MVA)	TDF	TC%LOADING (% MVA)	CONTINGENCY
FDNS	00NR_G15_041	0	17SP	G15_041	FROM->TO	TUCO INTERCHANGE (GE M102345) 230/115/13.2KV TRANSFORMER CKT 1	242	252	0.09743	104.1881	TUCO INTERCHANGE (ENRCO 136401) 230/115/13.2KV TRANSFORMER CKT 2
FDNS	00NR_G15_041	0	17SP	G15_041	FROM->TO	TUCO INTERCHANGE (GE M102345) 230/115/13.2KV TRANSFORMER CKT 1	242	252	0.09743	104.1881	TUCO INTERCHANGE (ENRCO 136401) 230/115/13.2KV TRANSFORMER CKT 2
FDNS	00NR_G15_041	0	17SP	G15_041	FROM->TO	TUCO INTERCHANGE (GE M102345) 230/115/13.2KV TRANSFORMER CKT 1	242	252	0.09743	103.5879	TUCO INTERCHANGE (ENRCO 136401) 230/115/13.2KV TRANSFORMER CKT 2
FDNS	00NR_G15_041	0	17SP	G15_041	FROM->TO	TUCO INTERCHANGE (GE M102345) 230/115/13.2KV TRANSFORMER CKT 1	242	252	0.09743	103.5879	TUCO INTERCHANGE (ENRCO 136401) 230/115/13.2KV TRANSFORMER CKT 2
FDNS	00NR_G15_041	0	17SP	G15_041	FROM->TO	WOLFFORTH INTERCHANGE (WH 7001668) 230/115/13.2KV TRANSFORMER CKT 1	120	154	0.05558	110.0512	CARLISLE INTERCHANGE - LP-DOUD_TP 3115.00 115KV CKT 1
FDNS	00NR_G15_041	0	17SP	G15_041	FROM->TO	WOLFFORTH INTERCHANGE (WH 7001668) 230/115/13.2KV TRANSFORMER CKT 1	120	154	0.05558	106.5974	CARLISLE INTERCHANGE - LP-DOUD_TP 3115.00 115KV CKT 1
FDNS	00NR_G15_041	2	25SP	G15_041	TO->FROM	TUCO INTERCHANGE - TUCO_2 230.00 230KV CKT 1	318.7	350.57	0.15521	116.164	TUCO INTERCHANGE (GE M1022338) 345/230/13.2KV TRANSFORMER CKT 1
FDNS	00NR_G15_041	2	25SP	G15_041	TO->FROM	TUCO INTERCHANGE - TUCO_2 230.00 230KV CKT 1	318.7	350.57	0.13724	108.875	TUCO INTERCHANGE (SIEM 8743066) 345/230/13.2KV TRANSFORMER CKT 2
FDNS	00NR_G15_041	2	25SP	G15_041	FROM->TO	TUCO INTERCHANGE (ENRCO 136401) 230/115/13.2KV TRANSFORMER CKT 1	250	288	0.07129	120.1737	TUCO INTERCHANGE (ENRCO 136401) 230/115/13.2KV TRANSFORMER CKT 2
FDNS	00NR_G15_041	2	25SP	G15_041	FROM->TO	TUCO INTERCHANGE (ENRCO 136401) 230/115/13.2KV TRANSFORMER CKT 1	250	288	0.07129	112.0859	TUCO INTERCHANGE (ENRCO 136401) 230/115/13.2KV TRANSFORMER CKT 2
FDNS	00NR_G15_041	2	25SP	G15_041	FROM->TO	TUCO INTERCHANGE (ENRCO 136401) 230/115/13.2KV TRANSFORMER CKT 2	250	288	0.07129	120.1735	TUCO INTERCHANGE (ENRCO 136401) 230/115/13.2KV TRANSFORMER CKT 1
FDNS	00NR_G15_041	2	25SP	G15_041	FROM->TO	TUCO INTERCHANGE (ENRCO 136401) 230/115/13.2KV TRANSFORMER CKT 2	250	288	0.07129	112.0862	TUCO INTERCHANGE (ENRCO 136401) 230/115/13.2KV TRANSFORMER CKT 1
FDNSLock-Blown up	00NR_G15_042	0	16WP	G15_042		Non-Converged Contingency	720	720	0.06323	-	GR ISLD-LNX3345.00 - GRAND ISLAND 345KV CKT Z
FDNSLock-Blown up	00NR_G15_042	0	16WP	G15_042		Non-Converged Contingency	720	720	0.06323	-	GR ISLD-LNX3345.00 - HOLT.CO3 345.00 345KV CKT 1
FDNSLock-Blown up	09NR_G15_042	0	17G	G15_042		Non-Converged Contingency	720	720	0.063	-	GR ISLD-LNX3345.00 - GRAND ISLAND 345KV CKT Z
FDNSLock-Blown up	09NR_G15_042	0	17G	G15_042		Non-Converged Contingency	720	720	0.063	-	GR ISLD-LNX3345.00 - HOLT.CO3 345.00 345KV CKT 1
FDNSLock-Blown up	00NR_G15_042	0	17SP	G15_042		Non-Converged Contingency	720	720	0.06467	-	GR ISLD-LNX3345.00 - GRAND ISLAND 345KV CKT Z
FDNSLock-Blown up	00NR_G15_042	0	17SP	G15_042		Non-Converged Contingency	720	720	0.06467	-	GR ISLD-LNX3345.00 - HOLT.CO3 345.00 345KV CKT 1
FDNSLock-Blown up	00NR_G15_042	2	16WP	G15_042		Non-Converged Contingency	720	720	0.04036	-	GR ISLD-LNX3345.00 - GRAND ISLAND 345KV CKT Z
FDNSLock-Blown up	00NR_G15_042	2	16WP	G15_042		Non-Converged Contingency	720	720	0.04036	-	GR ISLD-LNX3345.00 - HOLT.CO3 345.00 345KV CKT 1
FDNSLock-Blown up	09NR_G15_042	2	17G	G15_042		Non-Converged Contingency	720	720	0.04066	-	GR ISLD-LNX3345.00 - GRAND ISLAND 345KV CKT Z
FDNSLock-Blown up	09NR_G15_042	2	17G	G15_042		Non-Converged Contingency	720	720	0.04066	-	GR ISLD-LNX3345.00 - HOLT.CO3 345.00 345KV CKT 1
FDNSLock-Blown up	00NR_G15_042	2	17SP	G15_042		Non-Converged Contingency	720	720	0.04112	-	GR ISLD-LNX3345.00 - GRAND ISLAND 345KV CKT Z
FDNSLock-Blown up	00NR_G15_042	2	17SP	G15_042		Non-Converged Contingency	720	720	0.04112	-	GR ISLD-LNX3345.00 - HOLT.CO3 345.00 345KV CKT 1
FDNS	09ALL_G15_042	0	20L	G15_042	FROM->TO	DIXONCO 230.00 - HOSKINS 230KV CKT 1	320	320	1	205.2047	DIXONCO 230.00 - TWIN CHURCH 230KV CKT 1
FDNS	09ALL_G15_042	0	17G	G15_042	FROM->TO	DIXONCO 230.00 - HOSKINS 230KV CKT 1	320	320	1	204.2354	DIXONCO 230.00 - TWIN CHURCH 230KV CKT 1
FDNS	09ALL_G15_042	0	17SP	G15_042	FROM->TO	DIXONCO 230.00 - HOSKINS 230KV CKT 1	320	320	1	203.5645	DIXONCO 230.00 - TWIN CHURCH 230KV CKT 1
FDNS	09ALL_G15_042	0	25SP	G15_042	FROM->TO	DIXONCO 230.00 - HOSKINS 230KV CKT 1	320	320	1	203.3779	DIXONCO 230.00 - TWIN CHURCH 230KV CKT 1
FDNS	09ALL_G15_042	0	20WP	G15_042	FROM->TO	DIXONCO 230.00 - HOSKINS 230KV CKT 1	320	320	1	203.2688	DIXONCO 230.00 - TWIN CHURCH 230KV CKT 1
FDNS	09ALL_G15_042	0	16WP	G15_042	FROM->TO	DIXONCO 230.00 - HOSKINS 230KV CKT 1	320	320	1	203.2282	DIXONCO 230.00 - TWIN CHURCH 230KV CKT 1
FDNS	09ALL_G15_042	0	20SP	G15_042	FROM->TO	DIXONCO 230.00 - HOSKINS 230KV CKT 1	320	320	1	203.1695	DIXONCO 230.00 - TWIN CHURCH 230KV CKT 1
FDNS	09NR_G15_042	0	20L	G15_042	FROM->TO	DIXONCO 230.00 - HOSKINS 230KV CKT 1	320	320	1	190.2391	DIXONCO 230.00 - TWIN CHURCH 230KV CKT 1
FDNS	09NR_G15_042	0	17G	G15_042	FROM->TO	DIXONCO 230.00 - HOSKINS 230KV CKT 1	320	320	1	189.5301	DIXONCO 230.00 - TWIN CHURCH 230KV CKT 1
FDNS	00NR_G15_042	0	17SP	G15_042	FROM->TO	DIXONCO 230.00 - HOSKINS 230KV CKT 1	320	320	1	150.4433	DIXONCO 230.00 - TWIN CHURCH 230KV CKT 1
FDNS	00NR_G15_042	0	25SP	G15_042	FROM->TO	DIXONCO 230.00 - HOSKINS 230KV CKT 1	320	320	1	150.2105	DIXONCO 230.00 - TWIN CHURCH 230KV CKT 1
FDNS	00NR_G15_042	0	20SP	G15_042	FROM->TO	DIXONCO 230.00 - HOSKINS 230KV CKT 1	320	320	1	149.8457	DIXONCO 230.00 - TWIN CHURCH 230KV CKT 1
FDNS	00NR_G15_042	0	20WP	G15_042	FROM->TO	DIXONCO 230.00 - HOSKINS 230KV CKT 1	320	320	1	149.4904	DIXONCO 230.00 - TWIN CHURCH 230KV CKT 1
FDNS	00NR_G15_042	0	16WP	G15_042	FROM->TO	DIXONCO 230.00 - HOSKINS 230KV CKT 1	320	320	1	149.4789	DIXONCO 230.00 - TWIN CHURCH 230KV CKT 1
FDNS	09ALL_G15_042	0	20L	G15_042	FROM->TO	DIXONCO 230.00 - HOSKINS 230KV CKT 1	320	320	0.78121	142.3892	SIOUX CITY - TWIN CHURCH 230KV CKT 1
FDNS	09ALL_G15_042	0	17G	G15_042	FROM->TO	DIXONCO 230.00 - HOSKINS 230KV CKT 1	320	320	0.78245	133.9125	SIOUX CITY - TWIN CHURCH 230KV CKT 1
FDNS	09NR_G15_042	0	20L	G15_042	FROM->TO	DIXONCO 230.00 - HOSKINS 230KV CKT 1	320	320	0.78318	132.2868	SIOUX CITY - TWIN CHURCH 230KV CKT 1
FDNS	09ALL_G15_042	0	20SP	G15_042	FROM->TO	DIXONCO 230.00 - HOSKINS 230KV CKT 1	320	320	0.78161	130.3497	SIOUX CITY - TWIN CHURCH 230KV CKT 1
FDNS	09ALL_G15_042	0	25SP	G15_042	FROM->TO	DIXONCO 230.00 - HOSKINS 230KV CKT 1	320	320	0.78164	129.7032	SIOUX CITY - TWIN CHURCH 230KV CKT 1
FDNS	09ALL_G15_042	0	20WP	G15_042	FROM->TO	DIXONCO 230.00 - HOSKINS 230KV CKT 1	320	320	0.78157	129.6809	SIOUX CITY - TWIN CHURCH 230KV CKT 1
FDNS	09ALL_G15_042	0	17SP	G15_042	FROM->TO	DIXONCO 230.00 - HOSKINS 230KV CKT 1	320	320	0.78253	129.0233	SIOUX CITY - TWIN CHURCH 230KV CKT 1
FDNS	09ALL_G15_042	0	16WP	G15_042	FROM->TO	DIXONCO 230.00 - HOSKINS 230KV CKT 1	320	320	0.78237	128.9437	SIOUX CITY - TWIN CHURCH 230KV CKT 1
FDNS	09NR_G15_042	0	17G	G15_042	FROM->TO	DIXONCO 230.00 - HOSKINS 230KV CKT 1	320	320	0.78402	124.0666	SIOUX CITY - TWIN CHURCH 230KV CKT 1
FDNS	00NR_G15_042	0	17SP	G15_042	FROM->TO	DIXONCO 230.00 - HOSKINS 230KV CKT 1	320	320	0.49877	106.3507	HOSKINS - RAUN 345KV CKT 1
FDNS	00NR_G15_042	0	17SP	G15_042	FROM->TO	DIXONCO 230.00 - HOSKINS 230KV CKT 1	320	320	0.49877	106.3507	HOSKINS - RAUN 345KV CKT 1
FDNS	00NR_G15_042	0	25SP	G15_042	FROM->TO	DIXONCO 230.00 - HOSKINS 230KV CKT 1	320	320	0.49853	105.7352	HOSKINS - RAUN 345KV CKT 1
FDNS	00NR_G15_042	0	25SP	G15_042	FROM->TO	DIXONCO 230.00 - HOSKINS 230KV CKT 1	320	320	0.49853	105.7352	HOSKINS - RAUN 345KV CKT 1
FDNS	00NR_G15_042	0	20SP	G15_042	FROM->TO	DIXONCO 230.00 - HOSKINS 230KV CKT 1	320	320	0.49829	103.6146	HOSKINS - RAUN 345KV CKT 1
FDNS	00NR_G15_042	0	20SP	G15_042	FROM->TO	DIXONCO 230.00 - HOSKINS 230KV CKT 1	320	320	0.49829	103.6146	HOSKINS - RAUN 345KV CKT 1
FDNS	09ALL_G15_042	0	25SP	G15_042	FROM->TO	DIXONCO 230.00 - HOSKINS 230KV CKT 1	320	320	0.519	102.2011	KELLY - MEADOWGROVE4230.00 230KV CKT 1
FDNS	09ALL_G15_042	0	17SP	G15_042	FROM->TO	DIXONCO 230.00 - HOSKINS 230KV CKT 1	320	320	0.5196	101.7701	KELLY - MEADOWGROVE4230.00 230KV CKT 1
FDNS	09ALL_G15_042	0	20SP	G15_042	FROM->TO	DIXONCO 230.00 - HOSKINS 230KV CKT 1	320	320	0.51886	101.7017	KELLY - MEADOWGROVE4230.00 230KV CKT 1
FDNS	09ALL_G15_042	0	25SP	G15_042	FROM->TO	DIXONCO 230.00 - HOSKINS 230KV CKT 1	320	320	0.53131	99.9	EMERSON - TWIN CHURCH 115KV CKT 1
FDNS	09ALL_G15_042	0	25SP	G15_042	FROM->TO	DIXONCO 230.00 - HOSKINS 230KV CKT 1	320	320	0.51934	99.7	GEN562438 1-G13-032 0.6900
FDNS	09ALL_G15_042	0	25SP	G15_042	FROM->TO	DIXONCO 230.00 - HOSKINS 230KV CKT 1	320	320	0.51934	99.6	GEN562673 1-G15_007_3 0.6900
FDNS	09ALL_G15_042	0	25SP	G15_042	FROM->TO	DIXONCO 230.00 - TWIN CHURCH 230KV CKT 1	320	320	1	203.5414	DIXONCO 230.00 - HOSKINS 230KV CKT 1
FDNS	09ALL_G15_042	0	17SP	G15_042	FROM->TO	DIXONCO 230.00 - TWIN CHURCH 230KV CKT 1	320	320	1	203.4416	DIXONCO 230.00 - HOSKINS 230KV CKT 1
FDNS	09ALL_G15_042	0	20SP	G15_042	FROM->TO	DIXONCO 230.00 - TWIN CHURCH 230KV CKT 1	320	320	1	203.2591	DIXONCO 230.00 - HOSKINS 230KV CKT 1
FDNS	09ALL_G15_042	0	20L	G15_042	FROM->TO	DIXONCO 230.00 - TWIN CHURCH 230KV CKT 1	320	320	1	202.6431	DIXONCO 230.00 - HOSKINS 230KV CKT 1
FDNS	09ALL_G15_042	0	16WP	G15_042	FROM->TO	DIXONCO 230.00 - TWIN CHURCH 230KV CKT 1	320	320	1	202.3857	DIXONCO 230.00 - HOSKINS 230KV CKT 1
FDNS	09ALL_G15_042	0	20WP	G15_042	FROM->TO	DIXONCO 230.00 - TWIN CHURCH 230KV CKT 1	320	320	1	202.2537	DIXONCO 230.00 - HOSKINS 230KV CKT 1
FDNS	09ALL_G15_042	0	17G	G15_042	FROM->TO	DIXONCO 230.00 - TWIN CHURCH 230KV CKT 1	320	320	1	202.1879	DIXONCO 230.00 - HOSKINS 230KV CKT 1
FDNS	09NR_G15_042	0	20L	G15_042	FROM->TO	DIXONCO 230.00 - TWIN CHURCH 230KV CKT 1	320	320	1	188.6868	DIXONCO 230.00 - HOSKINS 230KV CKT 1
FDNS	09NR_G15_042	0	17G	G15_042	FROM->TO	DIXONCO 230.00 - TWIN CHURCH 230KV CKT 1	320	320	1	188.2096	DIXONCO 230.00 - HOSKINS 230KV CKT 1
FDNS	00NR_G15_042	0	17SP	G15_042	FROM->TO	DIXONCO 230.00 - TWIN CHURCH 230KV CKT 1	320	320	1	150.4184	DIXONCO 230.00 - HOSKINS 230KV CKT 1
FDNS	00NR_G15_042	0	25SP	G15_042	FROM->TO	DIXONCO 230.00 - TWIN CHURCH 230KV CKT 1	320	320	1	150.201	DIXONCO 230.00 - HOSKINS 230KV CKT 1
FDNS	00NR_G15_042	0	20SP	G15_042	FROM->TO	DIXONCO 230.00 - TWIN CHURCH 230KV CKT 1	320	320	1	150.1082	DIXONCO 230.00 - HOSKINS 230KV CKT 1
FDNS	00NR_G15_042	0	16WP	G15_042	FROM->TO	DIXONCO 230.00 - TWIN CHURCH 230KV CKT 1	320	320	1	149.2802	DIXONCO 230.00 - HOSKINS 230KV CKT 1
FDNS	00NR_G15_042	0	20WP	G15_042	FROM->TO	DIXONCO 230.00 - TWIN CHURCH 230KV CKT 1	320	320	1	149.1312	DIXONCO 230.00 - HOSKINS 230KV CKT 1

SOLUTION	GROUP	SCENARIO	SEASON	SOURCE	DIRECTION	MONITORED ELEMENT	RATEA (MVA)	RATEB(MVA)	TDF	TC%LOADING (% MVA)	CONTINGENCY
FDNS	09ALL_G15_042	0	20L	G15_042	FROM->TO	DIXONCO 230.00 - TWIN CHURCH 230KV CKT 1	320	320	0.48164	137.8126	P13:230-345:NPPD:NUCOR-1
FDNS	09ALL_G15_042	0	16WP	G15_042	FROM->TO	DIXONCO 230.00 - TWIN CHURCH 230KV CKT 1	320	320	0.48084	135.7262	P13:230-345:NPPD:NUCOR-1
FDNS	09ALL_G15_042	0	20WP	G15_042	FROM->TO	DIXONCO 230.00 - TWIN CHURCH 230KV CKT 1	320	320	0.48136	135.158	P13:230-345:NPPD:NUCOR-1
FDNS	09ALL_G15_042	0	20L	G15_042	FROM->TO	DIXONCO 230.00 - TWIN CHURCH 230KV CKT 1	320	320	0.52153	132.1228	HOSKINS - RAUN 345KV CKT 1
FDNS	09ALL_G15_042	0	20L	G15_042	FROM->TO	DIXONCO 230.00 - TWIN CHURCH 230KV CKT 1	320	320	0.52153	132.1228	HOSKINS - RAUN 345KV CKT 1
FDNS	09ALL_G15_042	0	20L	G15_042	FROM->TO	DIXONCO 230.00 - TWIN CHURCH 230KV CKT 1	320	320	0.62483	129.2678	HOSKINS (HOSKINS T2) 345/230/13.8KV TRANSFORMER CKT 1
FDNS	09ALL_G15_042	0	20L	G15_042	FROM->TO	DIXONCO 230.00 - TWIN CHURCH 230KV CKT 1	320	320	0.62483	129.2678	HOSKINS (HOSKINS T2) 345/230/13.8KV TRANSFORMER CKT 1
FDNS	09ALL_G15_042	0	17SP	G15_042	FROM->TO	DIXONCO 230.00 - TWIN CHURCH 230KV CKT 1	320	320	0.48012	128.3377	P13:230-345:NPPD:NUCOR-1
FDNS	09ALL_G15_042	0	20SP	G15_042	FROM->TO	DIXONCO 230.00 - TWIN CHURCH 230KV CKT 1	320	320	0.48077	128.2864	P13:230-345:NPPD:NUCOR-1
FDNS	09ALL_G15_042	0	25SP	G15_042	FROM->TO	DIXONCO 230.00 - TWIN CHURCH 230KV CKT 1	320	320	0.48066	127.783	P13:230-345:NPPD:NUCOR-1
FDNS	09NR_G15_042	0	20L	G15_042	FROM->TO	DIXONCO 230.00 - TWIN CHURCH 230KV CKT 1	320	320	0.47127	127.1505	P13:230-345:NPPD:NUCOR-1
FDNS	09ALL_G15_042	0	16WP	G15_042	FROM->TO	DIXONCO 230.00 - TWIN CHURCH 230KV CKT 1	320	320	0.52119	126.97	HOSKINS - RAUN 345KV CKT 1
FDNS	09ALL_G15_042	0	16WP	G15_042	FROM->TO	DIXONCO 230.00 - TWIN CHURCH 230KV CKT 1	320	320	0.52119	126.97	HOSKINS - RAUN 345KV CKT 1
FDNS	09ALL_G15_042	0	16WP	G15_042	FROM->TO	DIXONCO 230.00 - TWIN CHURCH 230KV CKT 1	320	320	0.48084	126.5182	P13:115-230:NPPD:NUCOR-3
FDNS	09NR_G15_042	0	17G	G15_042	FROM->TO	DIXONCO 230.00 - TWIN CHURCH 230KV CKT 1	320	320	0.47053	126.0232	P13:230-345:NPPD:NUCOR-1
FDNS	09ALL_G15_042	0	20WP	G15_042	FROM->TO	DIXONCO 230.00 - TWIN CHURCH 230KV CKT 1	320	320	0.48136	125.8124	P13:115-230:NPPD:NUCOR-3
FDNS	09ALL_G15_042	0	20WP	G15_042	FROM->TO	DIXONCO 230.00 - TWIN CHURCH 230KV CKT 1	320	320	0.52176	125.4204	HOSKINS - RAUN 345KV CKT 1
FDNS	09ALL_G15_042	0	20WP	G15_042	FROM->TO	DIXONCO 230.00 - TWIN CHURCH 230KV CKT 1	320	320	0.52176	125.4204	HOSKINS - RAUN 345KV CKT 1
FDNS	09ALL_G15_042	0	20L	G15_042	FROM->TO	DIXONCO 230.00 - TWIN CHURCH 230KV CKT 1	320	320	0.48164	124.1613	P13:115-230:NPPD:NUCOR-3
FDNS	09ALL_G15_042	0	16WP	G15_042	FROM->TO	DIXONCO 230.00 - TWIN CHURCH 230KV CKT 1	320	320	0.6245	121.5059	HOSKINS (HOSKINS T2) 345/230/13.8KV TRANSFORMER CKT 1
FDNS	09ALL_G15_042	0	16WP	G15_042	FROM->TO	DIXONCO 230.00 - TWIN CHURCH 230KV CKT 1	320	320	0.6245	121.5059	HOSKINS (HOSKINS T2) 345/230/13.8KV TRANSFORMER CKT 1
FDNS	09ALL_G15_042	0	20L	G15_042	FROM->TO	DIXONCO 230.00 - TWIN CHURCH 230KV CKT 1	320	320	0.51235	120.997	HOSKINS - SHELL CREEK 345KV CKT 1
FDNS	09ALL_G15_042	0	20WP	G15_042	FROM->TO	DIXONCO 230.00 - TWIN CHURCH 230KV CKT 1	320	320	0.62479	120.9944	HOSKINS (HOSKINS T2) 345/230/13.8KV TRANSFORMER CKT 1
FDNS	09ALL_G15_042	0	20WP	G15_042	FROM->TO	DIXONCO 230.00 - TWIN CHURCH 230KV CKT 1	320	320	0.62479	120.9944	HOSKINS (HOSKINS T2) 345/230/13.8KV TRANSFORMER CKT 1
FDNS	09ALL_G15_042	0	17G	G15_042	FROM->TO	DIXONCO 230.00 - TWIN CHURCH 230KV CKT 1	320	320	0.51194	120.8847	HOSKINS - SHELL CREEK 345KV CKT 1
FDNS	09ALL_G15_042	0	17G	G15_042	FROM->TO	DIXONCO 230.00 - TWIN CHURCH 230KV CKT 1	320	320	0.49367	120.446	COLUMEAST - NW68TH & HOLDREGE 345KV CKT 1
FDNS	09ALL_G15_042	0	20L	G15_042	FROM->TO	DIXONCO 230.00 - TWIN CHURCH 230KV CKT 1	320	320	0.49383	119.9898	COLUMEAST - NW68TH & HOLDREGE 345KV CKT 1
FDNS	09ALL_G15_042	0	20L	G15_042	FROM->TO	DIXONCO 230.00 - TWIN CHURCH 230KV CKT 1	320	320	0.49383	119.9898	COLUMEAST - NW68TH & HOLDREGE 345KV CKT 1
FDNS	09ALL_G15_042	0	17G	G15_042	FROM->TO	DIXONCO 230.00 - TWIN CHURCH 230KV CKT 1	320	320	0.4926	119.8881	COLUMEAST - SHELL CREEK 345KV CKT 1
FDNS	09ALL_G15_042	0	20L	G15_042	FROM->TO	DIXONCO 230.00 - TWIN CHURCH 230KV CKT 1	320	320	0.47406	119.7297	RAUN - SIOUX CITY 345KV CKT 1
FDNS	09ALL_G15_042	0	20L	G15_042	FROM->TO	DIXONCO 230.00 - TWIN CHURCH 230KV CKT 1	320	320	0.47406	119.7297	RAUN - SIOUX CITY 345KV CKT 1
FDNS	09ALL_G15_042	0	20L	G15_042	FROM->TO	DIXONCO 230.00 - TWIN CHURCH 230KV CKT 1	320	320	0.49318	119.5462	COLUMEAST - SHELL CREEK 345KV CKT 1
FDNS	09ALL_G15_042	0	16WP	G15_042	FROM->TO	DIXONCO 230.00 - TWIN CHURCH 230KV CKT 1	320	320	0.48084	119.3505	P13:115-345:NPPD:NUCOR-2
FDNS	09ALL_G15_042	0	20L	G15_042	FROM->TO	DIXONCO 230.00 - TWIN CHURCH 230KV CKT 1	320	320	0.50693	119.2698	HOSKINS (HOSKINS T1) 230/115/13.8KV TRANSFORMER CKT 1
FDNS	09ALL_G15_042	0	20L	G15_042	FROM->TO	DIXONCO 230.00 - TWIN CHURCH 230KV CKT 1	320	320	0.50693	119.2698	HOSKINS (HOSKINS T1) 230/115/13.8KV TRANSFORMER CKT 1
FDNS	09ALL_G15_042	0	16WP	G15_042	FROM->TO	DIXONCO 230.00 - TWIN CHURCH 230KV CKT 1	320	320	0.47253	118.9949	RAUN - SIOUX CITY 345KV CKT 1
FDNS	09ALL_G15_042	0	16WP	G15_042	FROM->TO	DIXONCO 230.00 - TWIN CHURCH 230KV CKT 1	320	320	0.47253	118.9949	RAUN - SIOUX CITY 345KV CKT 1
FDNS	09NR_G15_042	0	20L	G15_042	FROM->TO	DIXONCO 230.00 - TWIN CHURCH 230KV CKT 1	320	320	0.50325	118.9618	HOSKINS - RAUN 345KV CKT 1
FDNS	09NR_G15_042	0	20L	G15_042	FROM->TO	DIXONCO 230.00 - TWIN CHURCH 230KV CKT 1	320	320	0.50325	118.9618	HOSKINS - RAUN 345KV CKT 1
FDNS	09NR_G15_042	0	20L	G15_042	FROM->TO	DIXONCO 230.00 - TWIN CHURCH 230KV CKT 1	320	320	0.61737	118.6835	HOSKINS (HOSKINS T2) 345/230/13.8KV TRANSFORMER CKT 1
FDNS	09NR_G15_042	0	20L	G15_042	FROM->TO	DIXONCO 230.00 - TWIN CHURCH 230KV CKT 1	320	320	0.61737	118.6835	HOSKINS (HOSKINS T2) 345/230/13.8KV TRANSFORMER CKT 1
FDNS	09ALL_G15_042	0	20WP	G15_042	FROM->TO	DIXONCO 230.00 - TWIN CHURCH 230KV CKT 1	320	320	0.48136	118.6207	P13:115-345:NPPD:NUCOR-2
FDNS	09ALL_G15_042	0	20L	G15_042	FROM->TO	DIXONCO 230.00 - TWIN CHURCH 230KV CKT 1	320	320	0.48164	118.5415	P13:115-345:NPPD:NUCOR-2
FDNS	09ALL_G15_042	0	17SP	G15_042	FROM->TO	DIXONCO 230.00 - TWIN CHURCH 230KV CKT 1	320	320	0.48012	118.4541	P13:115-230:NPPD:NUCOR-3
FDNS	09NR_G15_042	0	17G	G15_042	FROM->TO	DIXONCO 230.00 - TWIN CHURCH 230KV CKT 1	320	320	0.5025	118.3763	HOSKINS - RAUN 345KV CKT 1
FDNS	09NR_G15_042	0	17G	G15_042	FROM->TO	DIXONCO 230.00 - TWIN CHURCH 230KV CKT 1	320	320	0.5025	118.3763	HOSKINS - RAUN 345KV CKT 1
FDNS	09ALL_G15_042	0	16WP	G15_042	FROM->TO	DIXONCO 230.00 - TWIN CHURCH 230KV CKT 1	320	320	0.50604	118.3431	HOSKINS (HOSKINS T1) 230/115/13.8KV TRANSFORMER CKT 1
FDNS	09ALL_G15_042	0	16WP	G15_042	FROM->TO	DIXONCO 230.00 - TWIN CHURCH 230KV CKT 1	320	320	0.50604	118.3431	HOSKINS (HOSKINS T1) 230/115/13.8KV TRANSFORMER CKT 1
FDNS	09ALL_G15_042	0	20L	G15_042	FROM->TO	DIXONCO 230.00 - TWIN CHURCH 230KV CKT 1	320	320	0.48256	118.1453	BLOOMFIELD - GAVINS POINT 115KV CKT 1
FDNS	09ALL_G15_042	0	20WP	G15_042	FROM->TO	DIXONCO 230.00 - TWIN CHURCH 230KV CKT 1	320	320	0.47336	117.9681	RAUN - SIOUX CITY 345KV CKT 1
FDNS	09ALL_G15_042	0	20WP	G15_042	FROM->TO	DIXONCO 230.00 - TWIN CHURCH 230KV CKT 1	320	320	0.47336	117.9681	RAUN - SIOUX CITY 345KV CKT 1
FDNS	09ALL_G15_042	0	20SP	G15_042	FROM->TO	DIXONCO 230.00 - TWIN CHURCH 230KV CKT 1	320	320	0.48077	117.9612	P13:115-230:NPPD:NUCOR-3
FDNS	09ALL_G15_042	0	17G	G15_042	FROM->TO	DIXONCO 230.00 - TWIN CHURCH 230KV CKT 1	320	320	0.48114	117.9085	BLOOMFIELD - GAVINS POINT 115KV CKT 1
FDNS	09ALL_G15_042	0	25SP	G15_042	FROM->TO	DIXONCO 230.00 - TWIN CHURCH 230KV CKT 1	320	320	0.48066	117.8664	P13:115-230:NPPD:NUCOR-3
FDNS	09ALL_G15_042	0	20L	G15_042	FROM->TO	DIXONCO 230.00 - TWIN CHURCH 230KV CKT 1	320	320	0.48107	117.6394	FTTHOM2-LNX3345.00 - GRPRAR2-LNX3345.00 345KV CKT 1
FDNS	09ALL_G15_042	0	20L	G15_042	FROM->TO	DIXONCO 230.00 - TWIN CHURCH 230KV CKT 1	320	320	0.48107	117.638	FT THOMPSON - FTTHOM2-LNX3345.00 345KV CKT Z
FDNS	09ALL_G15_042	0	20L	G15_042	FROM->TO	DIXONCO 230.00 - TWIN CHURCH 230KV CKT 1	320	320	0.48107	117.6328	GRPRAR2-LNX3345.00 - YANKTON 345KV CKT Z
FDNS	09ALL_G15_042	0	20WP	G15_042	FROM->TO	DIXONCO 230.00 - TWIN CHURCH 230KV CKT 1	320	320	0.50659	117.6306	HOSKINS (HOSKINS T1) 230/115/13.8KV TRANSFORMER CKT 1
FDNS	09ALL_G15_042	0	20WP	G15_042	FROM->TO	DIXONCO 230.00 - TWIN CHURCH 230KV CKT 1	320	320	0.50659	117.6306	HOSKINS (HOSKINS T1) 230/115/13.8KV TRANSFORMER CKT 1
FDNS	09NR_G15_042	0	17G	G15_042	FROM->TO	DIXONCO 230.00 - TWIN CHURCH 230KV CKT 1	320	320	0.61703	117.6085	HOSKINS (HOSKINS T2) 345/230/13.8KV TRANSFORMER CKT 1
FDNS	09NR_G15_042	0	17G	G15_042	FROM->TO	DIXONCO 230.00 - TWIN CHURCH 230KV CKT 1	320	320	0.61703	117.6085	HOSKINS (HOSKINS T2) 345/230/13.8KV TRANSFORMER CKT 1
FDNS	09ALL_G15_042	0	17G	G15_042	FROM->TO	DIXONCO 230.00 - TWIN CHURCH 230KV CKT 1	320	320	0.47969	117.3323	FT THOMPSON - FTTHOM2-LNX3345.00 345KV CKT Z
FDNS	09ALL_G15_042	0	17G	G15_042	FROM->TO	DIXONCO 230.00 - TWIN CHURCH 230KV CKT 1	320	320	0.47969	117.3217	FTTHOM2-LNX3345.00 - GRPRAR2-LNX3345.00 345KV CKT 1
FDNS	09ALL_G15_042	0	17G	G15_042	FROM->TO	DIXONCO 230.00 - TWIN CHURCH 230KV CKT 1	320	320	0.47969	117.2924	GRPRAR2-LNX3345.00 - YANKTON 345KV CKT Z
FDNS	09ALL_G15_042	0	17G	G15_042	FROM->TO	DIXONCO 230.00 - TWIN CHURCH 230KV CKT 1	320	320	0.47864	117.2271	FT RANDAL - SIOUX CITY 230KV CKT 1
FDNS	09ALL_G15_042	0	16WP	G15_042	FROM->TO	DIXONCO 230.00 - TWIN CHURCH 230KV CKT 1	320	320	0.51228	117.049	HOSKINS - SHELL CREEK 345KV CKT 1
FDNS	09ALL_G15_042	0	17G	G15_042	FROM->TO	DIXONCO 230.00 - TWIN CHURCH 230KV CKT 1	320	320	0.48316	117.0433	HOSKINS - STANTON NORTH 115KV CKT 1
FDNS	09ALL_G15_042	0	16WP	G15_042	FROM->TO	DIXONCO 230.00 - TWIN CHURCH 230KV CKT 1	320	320	0.49291	117.0426	COLUMEAST - SHELL CREEK 345KV CKT 1
FDNS	09ALL_G15_042	0	20L	G15_042	FROM->TO	DIXONCO 230.00 - TWIN CHURCH 230KV CKT 1	320	320	0.48248	116.873	FT RANDAL - MEADOWGROVE4230.00 230KV CKT 1
FDNS	09ALL_G15_042	0	16WP	G15_042	FROM->TO	DIXONCO 230.00 - TWIN CHURCH 230KV CKT 1	320	320	0.49392	116.7768	COLUMEAST - NW68TH & HOLDREGE 345KV CKT 1
FDNS	09ALL_G15_042	0	16WP	G15_042	FROM->TO	DIXONCO 230.00 - TWIN CHURCH 230KV CKT 1	320	320	0.49392	116.7768	COLUMEAST - NW68TH & HOLDREGE 345KV CKT 1
FDNS	09ALL_G15_042	0	17G	G15_042	FROM->TO	DIXONCO 230.00 - TWIN CHURCH 230KV CKT 1	320	320	0.48316	116.7432	STANTON - STANTON NORTH 115KV CKT 1
FDNS	09ALL_G15_042	0	20L	G15_042	FROM->TO	DIXONCO 230.00 - TWIN CHURCH 230KV CKT 1	320	320	0.48164	116.7425	GEN600002 3-SHERBURNE CNTY G3

SOLUTION	GROUP	SCENARIO	SEASON	SOURCE	DIRECTION	MONITORED ELEMENT	RATEA (MVA)	RATEB(MVA)	TDF	TC%LOADING (% MVA)	CONTINGENCY
FDNS	09ALL_G15_042	0	20L	G15_042	FROM->TO	DIXONCO 230.00 - TWIN CHURCH 230KV CKT 1	320	320	0.48164	116.7095	SHERBURNE CO 345/24.0KV TRANSFORMER CKT 1
FDNS	09ALL_G15_042	0	17G	G15_042	FROM->TO	DIXONCO 230.00 - TWIN CHURCH 230KV CKT 1	320	320	0.48316	116.632	BEEMER - STANTON 115KV CKT 1
FDNS	09ALL_G15_042	0	20L	G15_042	FROM->TO	DIXONCO 230.00 - TWIN CHURCH 230KV CKT 1	320	320	0.48164	116.5174	BIG STONE 230/24.0KV TRANSFORMER CKT 1
FDNS	09ALL_G15_042	0	20WP	G15_042	FROM->TO	DIXONCO 230.00 - TWIN CHURCH 230KV CKT 1	320	320	0.51223	116.473	HOSKINS - SHELL CREEK 345KV CKT 1
FDNS	09ALL_G15_042	0	20L	G15_042	FROM->TO	DIXONCO 230.00 - TWIN CHURCH 230KV CKT 1	320	320	0.48164	116.4476	GEN600005 1-MONTICELLO
FDNS	09ALL_G15_042	0	20L	G15_042	FROM->TO	DIXONCO 230.00 - TWIN CHURCH 230KV CKT 1	320	320	0.48164	116.4343	GEN600001 2-SHERBURNE CNTY G2
FDNS	09ALL_G15_042	0	17G	G15_042	FROM->TO	DIXONCO 230.00 - TWIN CHURCH 230KV CKT 1	320	320	0.47975	116.4157	FT RANDAL - UTICA JCT 230KV CKT 1
FDNS	09ALL_G15_042	0	20L	G15_042	FROM->TO	DIXONCO 230.00 - TWIN CHURCH 230KV CKT 1	320	320	0.48436	116.4072	HOSKINS - STANTON NORTH 115KV CKT 1
FDNS	09ALL_G15_042	0	20L	G15_042	FROM->TO	DIXONCO 230.00 - TWIN CHURCH 230KV CKT 1	320	320	0.48164	116.3973	GEN615002 2-COAL CREEK
FDNS	09ALL_G15_042	0	20L	G15_042	FROM->TO	DIXONCO 230.00 - TWIN CHURCH 230KV CKT 1	320	320	0.48164	116.3322	GEN600000 1-SHERBURNECNTY G1
FDNS	09ALL_G15_042	0	20L	G15_042	FROM->TO	DIXONCO 230.00 - TWIN CHURCH 230KV CKT 1	320	320	0.47946	116.3267	FT RANDAL - SIOUX CITY 230KV CKT 1
FDNS	09ALL_G15_042	0	20WP	G15_042	FROM->TO	DIXONCO 230.00 - TWIN CHURCH 230KV CKT 1	320	320	0.49315	116.3258	COLUMEAST - SHELL CREEK 345KV CKT 1
FDNS	09ALL_G15_042	0	20L	G15_042	FROM->TO	DIXONCO 230.00 - TWIN CHURCH 230KV CKT 1	320	320	0.46345	116.3254	P13:345:UMZW:# 260 #: SC2 IN IA. LOSS OF TRANSFORMER (KU1A
FDNS	09ALL_G15_042	0	20L	G15_042	FROM->TO	DIXONCO 230.00 - TWIN CHURCH 230KV CKT 1	320	320	0.48164	116.3179	GEN620315 1-BIG STONE GEN
FDNS	09ALL_G15_042	0	17G	G15_042	FROM->TO	DIXONCO 230.00 - TWIN CHURCH 230KV CKT 1	320	320	0.47875	116.2799	RASMUSN - UTICA JCT 230KV CKT 1
FDNS	09ALL_G15_042	0	16WP	G15_042	FROM->TO	DIXONCO 230.00 - TWIN CHURCH 230KV CKT 1	320	320	0.48159	116.2425	BLOOMFIELD - GAVINS POINT 115KV CKT 1
FDNS	09ALL_G15_042	0	17G	G15_042	FROM->TO	DIXONCO 230.00 - TWIN CHURCH 230KV CKT 1	320	320	0.48316	116.2315	BEEMER - WEST POINT 115KV CKT 1
FDNS	09ALL_G15_042	0	20L	G15_042	FROM->TO	DIXONCO 230.00 - TWIN CHURCH 230KV CKT 1	320	320	0.48164	116.1798	GEN659103 1-ANTELOPE VALLEY UNIT1
FDNS	09ALL_G15_042	0	20L	G15_042	FROM->TO	DIXONCO 230.00 - TWIN CHURCH 230KV CKT 1	320	320	0.48164	116.1798	GEN659107 2-ANTELOPE VALLEY UNIT2
FDNS	09ALL_G15_042	0	20L	G15_042	FROM->TO	DIXONCO 230.00 - TWIN CHURCH 230KV CKT 1	320	320	0.48436	116.1615	STANTON - STANTON NORTH 115KV CKT 1
FDNS	09ALL_G15_042	0	20L	G15_042	FROM->TO	DIXONCO 230.00 - TWIN CHURCH 230KV CKT 1	320	320	0.48436	116.1284	P12:115:NPPD:1166:STNTN.N7:BEEMER 7:BTB
FDNS	09ALL_G15_042	0	20L	G15_042	FROM->TO	DIXONCO 230.00 - TWIN CHURCH 230KV CKT 1	320	320	0.48436	116.0822	BEEMER - STANTON 115KV CKT 1
FDNS	09ALL_G15_042	0	20WP	G15_042	FROM->TO	DIXONCO 230.00 - TWIN CHURCH 230KV CKT 1	320	320	0.49396	116.0769	COLUMEAST - NW68TH & HOLDREGE 345KV CKT 1
FDNS	09ALL_G15_042	0	20WP	G15_042	FROM->TO	DIXONCO 230.00 - TWIN CHURCH 230KV CKT 1	320	320	0.49396	116.0769	COLUMEAST - NW68TH & HOLDREGE 345KV CKT 1
FDNS	09ALL_G15_042	0	20L	G15_042	FROM->TO	DIXONCO 230.00 - TWIN CHURCH 230KV CKT 1	320	320	0.48164	116.0563	GEN600003 1-PRAIRIE ISLAND G1
FDNS	09ALL_G15_042	0	17G	G15_042	FROM->TO	DIXONCO 230.00 - TWIN CHURCH 230KV CKT 1	320	320	0.48118	116.0545	PETERSBRG.N7115.00 - PETERSBURG 115KV CKT Z1
FDNS	09ALL_G15_042	0	20L	G15_042	FROM->TO	DIXONCO 230.00 - TWIN CHURCH 230KV CKT 1	320	320	0.48164	116.0542	GEN600004 2-PRAIRIE ISLAND G2
FDNS	09ALL_G15_042	0	17G	G15_042	FROM->TO	DIXONCO 230.00 - TWIN CHURCH 230KV CKT 1	320	320	0.48118	116.041	ALBION - PETERSBURG 115KV CKT 1
FDNS	09ALL_G15_042	0	17G	G15_042	FROM->TO	DIXONCO 230.00 - TWIN CHURCH 230KV CKT 1	320	320	0.47875	116.029	RASMUSN - SIOUX CITY 230KV CKT 1
FDNS	09ALL_G15_042	0	17G	G15_042	FROM->TO	DIXONCO 230.00 - TWIN CHURCH 230KV CKT 1	320	320	0.48076	115.9972	FT RANDAL - MEADOWGROVE4230.00 230KV CKT 1
FDNS	09ALL_G15_042	0	17G	G15_042	FROM->TO	DIXONCO 230.00 - TWIN CHURCH 230KV CKT 1	320	320	0.48014	115.9605	COLUMBUS - SCHUYLER 115KV CKT 1
FDNS	09ALL_G15_042	0	20L	G15_042	FROM->TO	DIXONCO 230.00 - TWIN CHURCH 230KV CKT 1	320	320	0.48257	115.8871	COOPER - MOORE 345KV CKT 1
FDNS	09ALL_G15_042	0	20L	G15_042	FROM->TO	DIXONCO 230.00 - TWIN CHURCH 230KV CKT 1	320	320	0.48436	115.8634	BEEMER - WEST POINT 115KV CKT 1
FDNS	09ALL_G15_042	0	16WP	G15_042	FROM->TO	DIXONCO 230.00 - TWIN CHURCH 230KV CKT 1	320	320	0.47897	115.8347	FT RANDAL - SIOUX CITY 230KV CKT 1
FDNS	09ALL_G15_042	0	17G	G15_042	FROM->TO	DIXONCO 230.00 - TWIN CHURCH 230KV CKT 1	320	320	0.48313	115.8096	OAKLAND - WEST POINT 115KV CKT 1
FDNS	09ALL_G15_042	0	20L	G15_042	FROM->TO	DIXONCO 230.00 - TWIN CHURCH 230KV CKT 1	320	320	0.48077	115.8082	FT RANDAL - UTICA JCT 230KV CKT 1
FDNS	09ALL_G15_042	0	16WP	G15_042	FROM->TO	DIXONCO 230.00 - TWIN CHURCH 230KV CKT 1	320	320	0.48084	115.8054	GEN600002 3-SHERBURNE CNTY G3
FDNS	09ALL_G15_042	0	17G	G15_042	FROM->TO	DIXONCO 230.00 - TWIN CHURCH 230KV CKT 1	320	320	0.48009	115.7979	SUB 3454 - WAGENER 345KV CKT 1
FDNS	09ALL_G15_042	0	17G	G15_042	FROM->TO	DIXONCO 230.00 - TWIN CHURCH 230KV CKT 1	320	320	0.48107	115.7897	MINGO - RED WILLOW 345KV CKT 1
FDNS	09ALL_G15_042	0	20L	G15_042	FROM->TO	DIXONCO 230.00 - TWIN CHURCH 230KV CKT 1	320	320	0.48164	115.7883	GEN600006 1-AS KING
FDNS	09ALL_G15_042	0	20L	G15_042	FROM->TO	DIXONCO 230.00 - TWIN CHURCH 230KV CKT 1	320	320	0.48243	115.7793	P12:115:NPPD:1168B:ALBION 7:PETERSBRG.N7:BTB
FDNS	09ALL_G15_042	0	17G	G15_042	FROM->TO	DIXONCO 230.00 - TWIN CHURCH 230KV CKT 1	320	320	0.47067	115.7648	BELDEN - TWIN CHURCH 115KV CKT 1
FDNS	09ALL_G15_042	0	16WP	G15_042	FROM->TO	DIXONCO 230.00 - TWIN CHURCH 230KV CKT 1	320	320	0.46226	115.7434	P13:345:UMZW:# 260 #: SC2 IN IA. LOSS OF TRANSFORMER (KU1A
FDNS	09ALL_G15_042	0	20L	G15_042	FROM->TO	DIXONCO 230.00 - TWIN CHURCH 230KV CKT 1	320	320	0.48176	115.7132	FALLOW 3 345.00 - GRIMES 345KV CKT 1
FDNS	09ALL_G15_042	0	20L	G15_042	FROM->TO	DIXONCO 230.00 - TWIN CHURCH 230KV CKT 1	320	320	0.48432	115.7118	P12:115:NPPD:1161:OAKLAND7:BEEMER 7:BTB
FDNS	09ALL_G15_042	0	16WP	G15_042	FROM->TO	DIXONCO 230.00 - TWIN CHURCH 230KV CKT 1	320	320	0.48356	115.7043	HOSKINS - STANTON NORTH 115KV CKT 1
FDNS	09ALL_G15_042	0	16WP	G15_042	FROM->TO	DIXONCO 230.00 - TWIN CHURCH 230KV CKT 1	320	320	0.4803	115.643	FT THOMPSON - FTTHOM2-LNX3345.00 345KV CKT Z
FDNS	09ALL_G15_042	0	16WP	G15_042	FROM->TO	DIXONCO 230.00 - TWIN CHURCH 230KV CKT 1	320	320	0.4803	115.6314	GRPRAR2-LNX3345.00 - YANKTON 345KV CKT Z
FDNS	09ALL_G15_042	0	16WP	G15_042	FROM->TO	DIXONCO 230.00 - TWIN CHURCH 230KV CKT 1	320	320	0.4803	115.6305	FTTHOM2-LNX3345.00 - GRPRAR2-LNX3345.00 345KV CKT 1
FDNS	09ALL_G15_042	0	16WP	G15_042	FROM->TO	DIXONCO 230.00 - TWIN CHURCH 230KV CKT 1	320	320	0.48084	115.5887	SHERBURNE CO 345/24.0KV TRANSFORMER CKT 1
FDNS	09ALL_G15_042	0	20WP	G15_042	FROM->TO	DIXONCO 230.00 - TWIN CHURCH 230KV CKT 1	320	320	0.48211	115.472	BLOOMFIELD - GAVINS POINT 115KV CKT 1
FDNS	09ALL_G15_042	0	16WP	G15_042	FROM->TO	DIXONCO 230.00 - TWIN CHURCH 230KV CKT 1	320	320	0.48356	115.2965	STANTON - STANTON NORTH 115KV CKT 1
FDNS	09ALL_G15_042	0	16WP	G15_042	FROM->TO	DIXONCO 230.00 - TWIN CHURCH 230KV CKT 1	320	320	0.48084	115.2613	GEN600000 1-SHERBURNECNTY G1
FDNS	09ALL_G15_042	0	16WP	G15_042	FROM->TO	DIXONCO 230.00 - TWIN CHURCH 230KV CKT 1	320	320	0.48356	115.2089	P12:115:NPPD:1166:STNTN.N7:BEEMER 7:BTB
FDNS	09ALL_G15_042	0	20WP	G15_042	FROM->TO	DIXONCO 230.00 - TWIN CHURCH 230KV CKT 1	320	320	0.46269	115.193	P13:345:UMZW:# 260 #: SC2 IN IA. LOSS OF TRANSFORMER (KU1A
FDNS	09NR_G15_042	0	17G	G15_042	FROM->TO	DIXONCO 230.00 - TWIN CHURCH 230KV CKT 1	320	320	0.47053	115.1765	P13:115-230:NPPD:NUCOR-3
FDNS	09ALL_G15_042	0	16WP	G15_042	FROM->TO	DIXONCO 230.00 - TWIN CHURCH 230KV CKT 1	320	320	0.48084	115.1626	GEN600001 2-SHERBURNE CNTY G2
FDNS	09ALL_G15_042	0	16WP	G15_042	FROM->TO	DIXONCO 230.00 - TWIN CHURCH 230KV CKT 1	320	320	0.48084	115.1052	BIG STONE 230/24.0KV TRANSFORMER CKT 1
FDNS	09ALL_G15_042	0	16WP	G15_042	FROM->TO	DIXONCO 230.00 - TWIN CHURCH 230KV CKT 1	320	320	0.48084	115.1004	GEN659103 1-ANTELOPE VALLEY UNIT1
FDNS	09ALL_G15_042	0	16WP	G15_042	FROM->TO	DIXONCO 230.00 - TWIN CHURCH 230KV CKT 1	320	320	0.48084	115.1004	GEN659107 2-ANTELOPE VALLEY UNIT2
FDNS	09ALL_G15_042	0	16WP	G15_042	FROM->TO	DIXONCO 230.00 - TWIN CHURCH 230KV CKT 1	320	320	0.48356	115.0559	BEEMER - STANTON 115KV CKT 1
FDNS	09ALL_G15_042	0	16WP	G15_042	FROM->TO	DIXONCO 230.00 - TWIN CHURCH 230KV CKT 1	320	320	0.48013	115.0532	FT RANDAL - UTICA JCT 230KV CKT 1
FDNS	09ALL_G15_042	0	16WP	G15_042	FROM->TO	DIXONCO 230.00 - TWIN CHURCH 230KV CKT 1	320	320	0.48084	114.9388	GEN659111 2-LELAND OLDS UNIT2
FDNS	09ALL_G15_042	0	16WP	G15_042	FROM->TO	DIXONCO 230.00 - TWIN CHURCH 230KV CKT 1	320	320	0.48084	114.9344	GEN600005 1-MONTICELLO
FDNS	09ALL_G15_042	0	16WP	G15_042	FROM->TO	DIXONCO 230.00 - TWIN CHURCH 230KV CKT 1	320	320	0.48084	114.9229	GEN615002 2-COAL CREEK
FDNS	09ALL_G15_042	0	20WP	G15_042	FROM->TO	DIXONCO 230.00 - TWIN CHURCH 230KV CKT 1	320	320	0.47947	114.9209	FT RANDAL - SIOUX CITY 230KV CKT 1
FDNS	09ALL_G15_042	0	16WP	G15_042	FROM->TO	DIXONCO 230.00 - TWIN CHURCH 230KV CKT 1	320	320	0.48084	114.8956	GEN615001 1-COAL CREEK
FDNS	09ALL_G15_042	0	20WP	G15_042	FROM->TO	DIXONCO 230.00 - TWIN CHURCH 230KV CKT 1	320	320	0.48415	114.8012	HOSKINS - STANTON NORTH 115KV CKT 1
FDNS	09ALL_G15_042	0	16WP	G15_042	FROM->TO	DIXONCO 230.00 - TWIN CHURCH 230KV CKT 1	320	320	0.48084	114.7895	GEN620315 1-BIG STONE GEN
FDNS	09ALL_G15_042	0	20WP	G15_042	FROM->TO	DIXONCO 230.00 - TWIN CHURCH 230KV CKT 1	320	320	0.48072	114.7796	FTTHOM2-LNX3345.00 - GRPRAR2-LNX3345.00 345KV CKT 1
FDNS	09ALL_G15_042	0	20WP	G15_042	FROM->TO	DIXONCO 230.00 - TWIN CHURCH 230KV CKT 1	320	320	0.48072	114.7682	FT THOMPSON - FTTHOM2-LNX3345.00 345KV CKT Z
FDNS	09ALL_G15_042	0	20WP	G15_042	FROM->TO	DIXONCO 230.00 - TWIN CHURCH 230KV CKT 1	320	320	0.48072	114.7653	GRPRAR2-LNX3345.00 - YANKTON 345KV CKT Z
FDNS	09ALL_G15_042	0	16WP	G15_042	FROM->TO	DIXONCO 230.00 - TWIN CHURCH 230KV CKT 1	320	320	0.48084	114.7395	GEN600006 1-AS KING

SOLUTION	GROUP	SCENARIO	SEASON	SOURCE	DIRECTION	MONITORED ELEMENT	RATEA (MVA)	RATEB(MVA)	TDF	TC%LOADING (% MVA)	CONTINGENCY
FDNS	09ALL_G15_042	0	17G	G15_042	FROM->TO	DIXONCO 230.00 - TWIN CHURCH 230KV CKT 1	320	320	0.48043	114.7346	BASE CASE
FDNS	09ALL_G15_042	0	20WP	G15_042	FROM->TO	DIXONCO 230.00 - TWIN CHURCH 230KV CKT 1	320	320	0.48136	114.7279	GEN600002 3-SHERBURNE CNTY G3
FDNS	09ALL_G15_042	0	16WP	G15_042	FROM->TO	DIXONCO 230.00 - TWIN CHURCH 230KV CKT 1	320	320	0.48084	114.727	GEN600003 1-PRAIRIE ISLAND G1
FDNS	09ALL_G15_042	0	16WP	G15_042	FROM->TO	DIXONCO 230.00 - TWIN CHURCH 230KV CKT 1	320	320	0.48084	114.7244	GEN600004 2-PRAIRIE ISLAND G2
FDNS	09NR_G15_042	0	20L	G15_042	FROM->TO	DIXONCO 230.00 - TWIN CHURCH 230KV CKT 1	320	320	0.47127	114.6947	P13:115-230:NPPD:NUCOR-3
FDNS	09ALL_G15_042	0	16WP	G15_042	FROM->TO	DIXONCO 230.00 - TWIN CHURCH 230KV CKT 1	320	320	0.48055	114.6744	COLUMBUS - SCHUYLER 115KV CKT 1
FDNS	09ALL_G15_042	0	16WP	G15_042	FROM->TO	DIXONCO 230.00 - TWIN CHURCH 230KV CKT 1	320	320	0.47907	114.6647	RASMUSN - UTICA JCT 230KV CKT 1
FDNS	09ALL_G15_042	0	20L	G15_042	FROM->TO	DIXONCO 230.00 - TWIN CHURCH 230KV CKT 1	320	320	0.48164	114.6481	BASE CASE
FDNS	09ALL_G15_042	0	20WP	G15_042	FROM->TO	DIXONCO 230.00 - TWIN CHURCH 230KV CKT 1	320	320	0.48136	114.5475	SHERBURNE CO 345/24.0KV TRANSFORMER CKT 1
FDNS	09ALL_G15_042	0	16WP	G15_042	FROM->TO	DIXONCO 230.00 - TWIN CHURCH 230KV CKT 1	320	320	0.48084	114.508	GEN657748 1-YOUNG 2 GENERATOR
FDNS	09ALL_G15_042	0	16WP	G15_042	FROM->TO	DIXONCO 230.00 - TWIN CHURCH 230KV CKT 1	320	320	0.48032	114.4915	ATCHSNT3 345.00 - BOONEVILLE 345KV CKT 1
FDNS	09ALL_G15_042	0	20WP	G15_042	FROM->TO	DIXONCO 230.00 - TWIN CHURCH 230KV CKT 1	320	320	0.48415	114.4223	STANTON - STANTON NORTH 115KV CKT 1
FDNS	09ALL_G15_042	0	16WP	G15_042	FROM->TO	DIXONCO 230.00 - TWIN CHURCH 230KV CKT 1	320	320	0.48159	114.4222	P12:115:NPPD:1168B:ALBION 7:PETERSBRG.N7:BTB
FDNS	09ALL_G15_042	0	16WP	G15_042	FROM->TO	DIXONCO 230.00 - TWIN CHURCH 230KV CKT 1	320	320	0.48159	114.4082	PETERSBRG.N7115.00 - PETERSBURG 115KV CKT Z1
FDNS	09ALL_G15_042	0	16WP	G15_042	FROM->TO	DIXONCO 230.00 - TWIN CHURCH 230KV CKT 1	320	320	0.48356	114.3928	BEEMER - WEST POINT 115KV CKT 1
FDNS	09ALL_G15_042	0	16WP	G15_042	FROM->TO	DIXONCO 230.00 - TWIN CHURCH 230KV CKT 1	320	320	0.48084	114.3846	GEN661015 1-COYOTE
FDNS	09ALL_G15_042	0	16WP	G15_042	FROM->TO	DIXONCO 230.00 - TWIN CHURCH 230KV CKT 1	320	320	0.48159	114.3812	ALBION - PETERSBURG 115KV CKT 1
FDNS	09ALL_G15_042	0	20WP	G15_042	FROM->TO	DIXONCO 230.00 - TWIN CHURCH 230KV CKT 1	320	320	0.48136	114.3596	BIG STONE 230/24.0KV TRANSFORMER CKT 1
FDNS	09ALL_G15_042	0	16WP	G15_042	FROM->TO	DIXONCO 230.00 - TWIN CHURCH 230KV CKT 1	320	320	0.47907	114.3528	RASMUSN - SIOUX CITY 230KV CKT 1
FDNS	09ALL_G15_042	0	20WP	G15_042	FROM->TO	DIXONCO 230.00 - TWIN CHURCH 230KV CKT 1	320	320	0.48415	114.3328	P12:115:NPPD:1166:STNTN.N7:BEEMER 7:BTB
FDNS	09ALL_G15_042	0	16WP	G15_042	FROM->TO	DIXONCO 230.00 - TWIN CHURCH 230KV CKT 1	320	320	0.48084	114.3191	ALMA 161 161/24.0KV TRANSFORMER CKT 1
FDNS	09ALL_G15_042	0	20WP	G15_042	FROM->TO	DIXONCO 230.00 - TWIN CHURCH 230KV CKT 1	320	320	0.48136	114.2951	GEN659103 1-ANTELOPE VALLEY UNIT1
FDNS	09ALL_G15_042	0	20WP	G15_042	FROM->TO	DIXONCO 230.00 - TWIN CHURCH 230KV CKT 1	320	320	0.48136	114.2951	GEN659107 2-ANTELOPE VALLEY UNIT2
FDNS	09ALL_G15_042	0	16WP	G15_042	FROM->TO	DIXONCO 230.00 - TWIN CHURCH 230KV CKT 1	320	320	0.48032	114.2705	ATCHSNT3 345.00 - COOPER 345KV CKT 1
FDNS	09ALL_G15_042	0	16WP	G15_042	FROM->TO	DIXONCO 230.00 - TWIN CHURCH 230KV CKT 1	320	320	0.48032	114.2705	ATCHSNT3 345.00 - COOPER 345KV CKT 1
FDNS	09ALL_G15_042	0	20WP	G15_042	FROM->TO	DIXONCO 230.00 - TWIN CHURCH 230KV CKT 1	320	320	0.48136	114.2554	GEN600000 1-SHERBURNECNTY G1
FDNS	09ALL_G15_042	0	16WP	G15_042	FROM->TO	DIXONCO 230.00 - TWIN CHURCH 230KV CKT 1	320	320	0.4813	114.2507	FT RANDAL - MEADOWGROVE4230.00 230KV CKT 1
FDNS	09ALL_G15_042	0	16WP	G15_042	FROM->TO	DIXONCO 230.00 - TWIN CHURCH 230KV CKT 1	320	320	0.48053	114.2412	P12:230:UMZB:# 116 #: ST IN SD. WSG-ST-VH
FDNS	09ALL_G15_042	0	16WP	G15_042	FROM->TO	DIXONCO 230.00 - TWIN CHURCH 230KV CKT 1	320	320	0.48051	114.2349	SUB 3454 - WAGENER 345KV CKT 1
FDNS	09ALL_G15_042	0	16WP	G15_042	FROM->TO	DIXONCO 230.00 - TWIN CHURCH 230KV CKT 1	320	320	0.48051	114.2349	SUB 3454 - WAGENER 345KV CKT 1
FDNS	09ALL_G15_042	0	20WP	G15_042	FROM->TO	DIXONCO 230.00 - TWIN CHURCH 230KV CKT 1	320	320	0.48066	114.2329	FT RANDAL - UTICA JCT 230KV CKT 1
FDNS	09ALL_G15_042	0	16WP	G15_042	FROM->TO	DIXONCO 230.00 - TWIN CHURCH 230KV CKT 1	320	320	0.47906	114.2161	PAHOJA - SIOUX FALLS 230KV CKT 1
FDNS	09ALL_G15_042	0	16WP	G15_042	FROM->TO	DIXONCO 230.00 - TWIN CHURCH 230KV CKT 1	320	320	0.48084	114.1965	GEN635214 4-NEAL UNIT 4
FDNS	09ALL_G15_042	0	16WP	G15_042	FROM->TO	DIXONCO 230.00 - TWIN CHURCH 230KV CKT 1	320	320	0.48053	114.1916	HANLON - STORLA 230KV CKT 1
FDNS	09ALL_G15_042	0	20WP	G15_042	FROM->TO	DIXONCO 230.00 - TWIN CHURCH 230KV CKT 1	320	320	0.48415	114.1865	BEEMER - STANTON 115KV CKT 1
FDNS	09ALL_G15_042	0	16WP	G15_042	FROM->TO	DIXONCO 230.00 - TWIN CHURCH 230KV CKT 1	320	320	0.48084	114.1752	GEN672306 6-BOUNDARY DAM GENERATOR 6
FDNS	09ALL_G15_042	0	16WP	G15_042	FROM->TO	DIXONCO 230.00 - TWIN CHURCH 230KV CKT 1	320	320	0.48084	114.1648	GEN672310 1-POPLAR RIVER GENERATOR 1
FDNS	09ALL_G15_042	0	16WP	G15_042	FROM->TO	DIXONCO 230.00 - TWIN CHURCH 230KV CKT 1	320	320	0.48084	114.1648	GEN672311 2-POPLAR RIVER GENERATOR 2
FDNS	09ALL_G15_042	0	20WP	G15_042	FROM->TO	DIXONCO 230.00 - TWIN CHURCH 230KV CKT 1	320	320	0.48136	114.1434	GEN600005 1-MONTICELLO
FDNS	09ALL_G15_042	0	16WP	G15_042	FROM->TO	DIXONCO 230.00 - TWIN CHURCH 230KV CKT 1	320	320	0.48084	114.1418	GEN672321 1-SHAND GENERATOR 1
FDNS	09ALL_G15_042	0	20WP	G15_042	FROM->TO	DIXONCO 230.00 - TWIN CHURCH 230KV CKT 1	320	320	0.48136	114.1375	GEN659111 2-LELAND OLDS UNIT2
FDNS	09ALL_G15_042	0	20WP	G15_042	FROM->TO	DIXONCO 230.00 - TWIN CHURCH 230KV CKT 1	320	320	0.48136	114.1367	GEN600001 2-SHERBURNE CNTY G2
FDNS	09ALL_G15_042	0	16WP	G15_042	FROM->TO	DIXONCO 230.00 - TWIN CHURCH 230KV CKT 1	320	320	0.48353	114.1303	P12:115:NPPD:1161:OAKLAND7:BEEMER 7:BTB
FDNS	09ALL_G15_042	0	16WP	G15_042	FROM->TO	DIXONCO 230.00 - TWIN CHURCH 230KV CKT 1	320	320	0.48093	114.1129	FALLOW 3 345.00 - GRIMES 345KV CKT 1
FDNS	09ALL_G15_042	0	16WP	G15_042	FROM->TO	DIXONCO 230.00 - TWIN CHURCH 230KV CKT 1	320	320	0.48084	114.1078	CLAY BOSWELL 230/20.9KV TRANSFORMER CKT 1
FDNS	09ALL_G15_042	0	17SP	G15_042	FROM->TO	DIXONCO 230.00 - TWIN CHURCH 230KV CKT 1	320	320	0.62405	114.0666	HOSKINS (HOSKINS T2) 345/230/13.8KV TRANSFORMER CKT 1
FDNS	09ALL_G15_042	0	17SP	G15_042	FROM->TO	DIXONCO 230.00 - TWIN CHURCH 230KV CKT 1	320	320	0.62405	114.0666	HOSKINS (HOSKINS T2) 345/230/13.8KV TRANSFORMER CKT 1
FDNS	09ALL_G15_042	0	20SP	G15_042	FROM->TO	DIXONCO 230.00 - TWIN CHURCH 230KV CKT 1	320	320	0.62439	114.0586	HOSKINS (HOSKINS T2) 345/230/13.8KV TRANSFORMER CKT 1
FDNS	09ALL_G15_042	0	20SP	G15_042	FROM->TO	DIXONCO 230.00 - TWIN CHURCH 230KV CKT 1	320	320	0.62439	114.0586	HOSKINS (HOSKINS T2) 345/230/13.8KV TRANSFORMER CKT 1
FDNS	09ALL_G15_042	0	20WP	G15_042	FROM->TO	DIXONCO 230.00 - TWIN CHURCH 230KV CKT 1	320	320	0.48136	114.0565	GEN620315 1-BIG STONE GEN
FDNS	09ALL_G15_042	0	20WP	G15_042	FROM->TO	DIXONCO 230.00 - TWIN CHURCH 230KV CKT 1	320	320	0.48136	114.0495	GEN615002 2-COAL CREEK
FDNS	09ALL_G15_042	0	20WP	G15_042	FROM->TO	DIXONCO 230.00 - TWIN CHURCH 230KV CKT 1	320	320	0.48136	114.0259	GEN615001 1-COAL CREEK
FDNS	09ALL_G15_042	0	20WP	G15_042	FROM->TO	DIXONCO 230.00 - TWIN CHURCH 230KV CKT 1	320	320	0.48136	113.8003	GEN600006 1-AS KING
FDNS	09ALL_G15_042	0	17G	G15_042	FROM->TO	DIXONCO 230.00 - TWIN CHURCH 230KV CKT 1	320	320	0.48114	113.7972	BLOOMFIELD - CREIGHTON 115KV CKT 1
FDNS	09ALL_G15_042	0	20WP	G15_042	FROM->TO	DIXONCO 230.00 - TWIN CHURCH 230KV CKT 1	320	320	0.47956	113.7739	RASMUSN - UTICA JCT 230KV CKT 1
FDNS	09ALL_G15_042	0	20WP	G15_042	FROM->TO	DIXONCO 230.00 - TWIN CHURCH 230KV CKT 1	320	320	0.48136	113.7674	GEN600003 1-PRAIRIE ISLAND G1
FDNS	09ALL_G15_042	0	20WP	G15_042	FROM->TO	DIXONCO 230.00 - TWIN CHURCH 230KV CKT 1	320	320	0.48136	113.7654	GEN600004 2-PRAIRIE ISLAND G2
FDNS	09ALL_G15_042	0	20WP	G15_042	FROM->TO	DIXONCO 230.00 - TWIN CHURCH 230KV CKT 1	320	320	0.48092	113.7653	ATCHSNT3 345.00 - BOONEVILLE 345KV CKT 1
FDNS	09ALL_G15_042	0	20WP	G15_042	FROM->TO	DIXONCO 230.00 - TWIN CHURCH 230KV CKT 1	320	320	0.48128	113.6746	COLUMBUS - SCHUYLER 115KV CKT 1
FDNS	09ALL_G15_042	0	20WP	G15_042	FROM->TO	DIXONCO 230.00 - TWIN CHURCH 230KV CKT 1	320	320	0.48136	113.6642	GEN657748 1-YOUNG 2 GENERATOR
FDNS	09ALL_G15_042	0	17G	G15_042	FROM->TO	DIXONCO 230.00 - TWIN CHURCH 230KV CKT 1	320	320	0.47913	113.643	ANITA TAP POINT TO CRESTON AND DENISON - EXIRA 161KV CKT 1
FDNS	09ALL_G15_042	0	20L	G15_042	FROM->TO	DIXONCO 230.00 - TWIN CHURCH 230KV CKT 1	320	320	0.4802	113.6387	SIOUX CITY (SC KV1A) 230/161/13.8KV TRANSFORMER CKT 1
FDNS	09ALL_G15_042	0	20L	G15_042	FROM->TO	DIXONCO 230.00 - TWIN CHURCH 230KV CKT 1	320	320	0.48019	113.6316	SIOUX CITY (SC KV5A) 230/161/13.8KV TRANSFORMER CKT 1
FDNS	09ALL_G15_042	0	20WP	G15_042	FROM->TO	DIXONCO 230.00 - TWIN CHURCH 230KV CKT 1	320	320	0.4819	113.6257	FT RANDAL - MEADOWGROVE4230.00 230KV CKT 1
FDNS	09ALL_G15_042	0	20L	G15_042	FROM->TO	DIXONCO 230.00 - TWIN CHURCH 230KV CKT 1	320	320	0.47975	113.6234	SIOUXCY-LNX3345.00 - SPLIT ROCK 345KV CKT 1
FDNS	09ALL_G15_042	0	20L	G15_042	FROM->TO	DIXONCO 230.00 - TWIN CHURCH 230KV CKT 1	320	320	0.47975	113.6234	SIOUXCY-LNX3345.00 - SPLIT ROCK 345KV CKT 1
FDNS	09ALL_G15_042	0	20L	G15_042	FROM->TO	DIXONCO 230.00 - TWIN CHURCH 230KV CKT 1	320	320	0.48164	113.6182	GEN335831 1-RIVERBEND UNIT#1
FDNS	09ALL_G15_042	0	17G	G15_042	FROM->TO	DIXONCO 230.00 - TWIN CHURCH 230KV CKT 1	320	320	0.47913	113.6139	DENISON - EXIRA 161KV CKT 1
FDNS	09ALL_G15_042	0	20L	G15_042	FROM->TO	DIXONCO 230.00 - TWIN CHURCH 230KV CKT 1	320	320	0.48397	113.5856	KELLY - SHELL CREEK 230KV CKT 1
FDNS	09ALL_G15_042	0	20L	G15_042	FROM->TO	DIXONCO 230.00 - TWIN CHURCH 230KV CKT 1	320	320	0.48164	113.5848	GEN337910 1-ARKANSAS NUCLEAR ONE UNIT #1
FDNS	09ALL_G15_042	0	20L	G15_042	FROM->TO	DIXONCO 230.00 - TWIN CHURCH 230KV CKT 1	320	320	0.48397	113.5827	SHELL CREEK (SHELLCREEKT1) 345/230/13.8KV TRANSFORMER CKT 1
FDNS	09ALL_G15_042	0	20L	G15_042	FROM->TO	DIXONCO 230.00 - TWIN CHURCH 230KV CKT 1	320	320	0.48397	113.5827	SHELL CREEK (SHELLCREEKT1) 345/230/13.8KV TRANSFORMER CKT 1
FDNS	09ALL_G15_042	0	20L	G15_042	FROM->TO	DIXONCO 230.00 - TWIN CHURCH 230KV CKT 1	320	320	0.48044	113.5667	ANITA TAP POINT TO CRESTON AND DENISON - EXIRA 161KV CKT 1

SOLUTION	GROUP	SCENARIO	SEASON	SOURCE	DIRECTION	MONITORED ELEMENT	RATEA (MVA)	RATEB(MVA)	TDF	TC%LOADING (% MVA)	CONTINGENCY
FDNS	09ALL_G15_042	0	20WP	G15_042	FROM->TO	DIXONCO 230.00 - TWIN CHURCH 230KV CKT 1	320	320	0.48136	113.5514	GEN661015 1-COYOTE
FDNS	09ALL_G15_042	0	20WP	G15_042	FROM->TO	DIXONCO 230.00 - TWIN CHURCH 230KV CKT 1	320	320	0.48415	113.5435	BEEMER - WEST POINT 115KV CKT 1
FDNS	09ALL_G15_042	0	20L	G15_042	FROM->TO	DIXONCO 230.00 - TWIN CHURCH 230KV CKT 1	320	320	0.48044	113.5386	DENISON - EXIRA 161KV CKT 1
FDNS	09ALL_G15_042	0	20L	G15_042	FROM->TO	DIXONCO 230.00 - TWIN CHURCH 230KV CKT 1	320	320	0.48044	113.5384	DENISON (DN KV1A) 230/161/13.8KV TRANSFORMER CKT 1
FDNS	09ALL_G15_042	0	20WP	G15_042	FROM->TO	DIXONCO 230.00 - TWIN CHURCH 230KV CKT 1	320	320	0.48092	113.5361	ATCHSNT3 345.00 - COOPER 345KV CKT 1
FDNS	09ALL_G15_042	0	20WP	G15_042	FROM->TO	DIXONCO 230.00 - TWIN CHURCH 230KV CKT 1	320	320	0.48092	113.5361	ATCHSNT3 345.00 - COOPER 345KV CKT 1
FDNS	09ALL_G15_042	0	20WP	G15_042	FROM->TO	DIXONCO 230.00 - TWIN CHURCH 230KV CKT 1	320	320	0.48216	113.5311	P12:115:NPPD:1168B:ALBION 7:PETERSBRG.N7:BTB
FDNS	09ALL_G15_042	0	20L	G15_042	FROM->TO	DIXONCO 230.00 - TWIN CHURCH 230KV CKT 1	320	320	0.48164	113.5206	GEN344225 1-1CAL G1 25.000
FDNS	09ALL_G15_042	0	20WP	G15_042	FROM->TO	DIXONCO 230.00 - TWIN CHURCH 230KV CKT 1	320	320	0.48216	113.5183	PETERSBRG.N7115.00 - PETERSBURG 115KV CKT Z1
FDNS	09ALL_G15_042	0	25SP	G15_042	FROM->TO	DIXONCO 230.00 - TWIN CHURCH 230KV CKT 1	320	320	0.62432	113.4981	HOSKINS (HOSKINS T2) 345/230/13.8KV TRANSFORMER CKT 1
FDNS	09ALL_G15_042	0	25SP	G15_042	FROM->TO	DIXONCO 230.00 - TWIN CHURCH 230KV CKT 1	320	320	0.62432	113.4981	HOSKINS (HOSKINS T2) 345/230/13.8KV TRANSFORMER CKT 1
FDNS	09ALL_G15_042	0	20WP	G15_042	FROM->TO	DIXONCO 230.00 - TWIN CHURCH 230KV CKT 1	320	320	0.48216	113.4925	ALBION - PETERSBURG 115KV CKT 1
FDNS	09ALL_G15_042	0	20L	G15_042	FROM->TO	DIXONCO 230.00 - TWIN CHURCH 230KV CKT 1	320	320	0.48164	113.4881	GEN336153 1-WATERFORD UNIT#3
FDNS	09ALL_G15_042	0	17G	G15_042	FROM->TO	DIXONCO 230.00 - TWIN CHURCH 230KV CKT 1	320	320	0.48262	113.4754	KELLY - SHELL CREEK 230KV CKT 1
FDNS	09ALL_G15_042	0	20WP	G15_042	FROM->TO	DIXONCO 230.00 - TWIN CHURCH 230KV CKT 1	320	320	0.47956	113.4739	RASMUSN - SIOUX CITY 230KV CKT 1
FDNS	09ALL_G15_042	0	20L	G15_042	FROM->TO	DIXONCO 230.00 - TWIN CHURCH 230KV CKT 1	320	320	0.46991	113.4691	BANCROFT - OAKLAND 115KV CKT 1
FDNS	09ALL_G15_042	0	20WP	G15_042	FROM->TO	DIXONCO 230.00 - TWIN CHURCH 230KV CKT 1	320	320	0.48136	113.4405	CLAY BOSWELL 230/20.9KV TRANSFORMER CKT 1
FDNS	09ALL_G15_042	0	20WP	G15_042	FROM->TO	DIXONCO 230.00 - TWIN CHURCH 230KV CKT 1	320	320	0.48136	113.423	ALMA 161 161/24.0KV TRANSFORMER CKT 1
FDNS	09ALL_G15_042	0	20WP	G15_042	FROM->TO	DIXONCO 230.00 - TWIN CHURCH 230KV CKT 1	320	320	0.48104	113.4091	P12:230:UMZB:# 116 #: ST IN SD. WSG-ST-VH
FDNS	09ALL_G15_042	0	20WP	G15_042	FROM->TO	DIXONCO 230.00 - TWIN CHURCH 230KV CKT 1	320	320	0.47952	113.4077	PAHOJA - SIOUX FALLS 230KV CKT 1
FDNS	09ALL_G15_042	0	20WP	G15_042	FROM->TO	DIXONCO 230.00 - TWIN CHURCH 230KV CKT 1	320	320	0.48147	113.4017	FALLOW 3 345.00 - GRIMES 345KV CKT 1
FDNS	09ALL_G15_042	0	20L	G15_042	FROM->TO	DIXONCO 230.00 - TWIN CHURCH 230KV CKT 1	320	320	0.48164	113.3952	GEN337911 1-ARKANSAS NUCLEAR ONE UNIT #2
FDNS	09ALL_G15_042	0	20WP	G15_042	FROM->TO	DIXONCO 230.00 - TWIN CHURCH 230KV CKT 1	320	320	0.48136	113.386	GEN672306 6-BOUNDARY DAM GENERATOR 6
FDNS	09ALL_G15_042	0	20WP	G15_042	FROM->TO	DIXONCO 230.00 - TWIN CHURCH 230KV CKT 1	320	320	0.48106	113.3743	SUB 3454 - WAGENER 345KV CKT 1
FDNS	09ALL_G15_042	0	20WP	G15_042	FROM->TO	DIXONCO 230.00 - TWIN CHURCH 230KV CKT 1	320	320	0.48106	113.3743	SUB 3454 - WAGENER 345KV CKT 1
FDNS	09ALL_G15_042	0	20WP	G15_042	FROM->TO	DIXONCO 230.00 - TWIN CHURCH 230KV CKT 1	320	320	0.48136	113.3741	GEN672311 2-POPLAR RIVER GENERATOR 2
FDNS	09ALL_G15_042	0	20WP	G15_042	FROM->TO	DIXONCO 230.00 - TWIN CHURCH 230KV CKT 1	320	320	0.48136	113.374	GEN672310 1-POPLAR RIVER GENERATOR 1
FDNS	09ALL_G15_042	0	20L	G15_042	FROM->TO	DIXONCO 230.00 - TWIN CHURCH 230KV CKT 1	320	320	0.48164	113.2651	GEN640431 1-LAREDO.GEN1W0.6900
FDNS	09ALL_G15_042	0	20L	G15_042	FROM->TO	DIXONCO 230.00 - TWIN CHURCH 230KV CKT 1	320	320	0.48164	113.2626	GEN336821 1-GRAND GULF UNIT
FDNS	09ALL_G15_042	0	20L	G15_042	FROM->TO	DIXONCO 230.00 - TWIN CHURCH 230KV CKT 1	320	320	0.47758	113.2393	TWIN CHURCH (TWNCHURCH T4) 230/115/13.8KV TRANSFORMER CKT 1
FDNS	09ALL_G15_042	0	20L	G15_042	FROM->TO	DIXONCO 230.00 - TWIN CHURCH 230KV CKT 1	320	320	0.47758	113.2393	TWIN CHURCH (TWNCHURCH T4) 230/115/13.8KV TRANSFORMER CKT 1
FDNS	09ALL_G15_042	0	20L	G15_042	FROM->TO	DIXONCO 230.00 - TWIN CHURCH 230KV CKT 1	320	320	0.48164	113.2367	GEN635023 3-WALTER SCOTT UNIT 3
FDNS	09ALL_G15_042	0	17G	G15_042	FROM->TO	DIXONCO 230.00 - TWIN CHURCH 230KV CKT 1	320	320	0.47838	113.2026	EAGLE 4 230.00 - SIOUX CITY 230KV CKT 1
FDNS	09ALL_G15_042	0	16WP	G15_042	FROM->TO	DIXONCO 230.00 - TWIN CHURCH 230KV CKT 1	320	320	0.48084	113.1607	BASE CASE
FDNS	09ALL_G15_042	0	17G	G15_042	FROM->TO	DIXONCO 230.00 - TWIN CHURCH 230KV CKT 1	320	320	0.46854	113.1366	BANCROFT - OAKLAND 115KV CKT 1
FDNS	09ALL_G15_042	0	20L	G15_042	FROM->TO	DIXONCO 230.00 - TWIN CHURCH 230KV CKT 1	320	320	0.48107	113.0852	GRPRAR1-LNX3345.00 - YANKTON 345KV CKT Z
FDNS	09ALL_G15_042	0	20L	G15_042	FROM->TO	DIXONCO 230.00 - TWIN CHURCH 230KV CKT 1	320	320	0.48107	113.0835	GRPRAR1-LNX3345.00 - HOLT.CO3 345.00 345KV CKT 1
FDNS	09ALL_G15_042	0	20L	G15_042	FROM->TO	DIXONCO 230.00 - TWIN CHURCH 230KV CKT 1	320	320	0.46991	113.0649	P12:115:NPPD:1193:OAKLAND7:EMERSON7:BTB
FDNS	09ALL_G15_042	0	20L	G15_042	FROM->TO	DIXONCO 230.00 - TWIN CHURCH 230KV CKT 1	320	320	0.46991	113.043	BANCROFT - EMERSON 115KV CKT 1
FDNS	09ALL_G15_042	0	20L	G15_042	FROM->TO	DIXONCO 230.00 - TWIN CHURCH 230KV CKT 1	320	320	0.48164	113.0254	GEN635024 4-WALTER SCOTT UNIT 4
FDNS	09ALL_G15_042	0	20L	G15_042	FROM->TO	DIXONCO 230.00 - TWIN CHURCH 230KV CKT 1	320	320	0.47943	112.9718	EAGLE 4 230.00 - SIOUX CITY 230KV CKT 1
FDNS	09ALL_G15_042	0	20L	G15_042	FROM->TO	DIXONCO 230.00 - TWIN CHURCH 230KV CKT 1	320	320	0.47806	112.6913	PLYMOUTH - SIOUX CITY 161KV CKT 1
FDNS	09ALL_G15_042	0	20L	G15_042	FROM->TO	DIXONCO 230.00 - TWIN CHURCH 230KV CKT 1	320	320	0.47806	112.6913	PLYMOUTH - SIOUX CITY 161KV CKT 1
FDNS	09ALL_G15_042	0	17G	G15_042	FROM->TO	DIXONCO 230.00 - TWIN CHURCH 230KV CKT 1	320	320	0.46854	112.4453	BANCROFT - EMERSON 115KV CKT 1
FDNS	09ALL_G15_042	0	20L	G15_042	FROM->TO	DIXONCO 230.00 - TWIN CHURCH 230KV CKT 1	320	320	0.48298	112.4228	ANTELOPE 3345.00 - HOSKINS 345KV CKT 1
FDNS	09ALL_G15_042	0	20WP	G15_042	FROM->TO	DIXONCO 230.00 - TWIN CHURCH 230KV CKT 1	320	320	0.48136	112.4223	BASE CASE
FDNS	09ALL_G15_042	0	17G	G15_042	FROM->TO	DIXONCO 230.00 - TWIN CHURCH 230KV CKT 1	320	320	0.47969	112.401	GRPRAR1-LNX3345.00 - YANKTON 345KV CKT Z
FDNS	09ALL_G15_042	0	17G	G15_042	FROM->TO	DIXONCO 230.00 - TWIN CHURCH 230KV CKT 1	320	320	0.47969	112.4001	GRPRAR1-LNX3345.00 - HOLT.CO3 345.00 345KV CKT 1
FDNS	09ALL_G15_042	0	20L	G15_042	FROM->TO	DIXONCO 230.00 - TWIN CHURCH 230KV CKT 1	320	320	0.48176	112.3883	GR ISLD-LNX3345.00 - HOLT.CO3 345.00 345KV CKT 1
FDNS	09ALL_G15_042	0	17G	G15_042	FROM->TO	DIXONCO 230.00 - TWIN CHURCH 230KV CKT 1	320	320	0.48155	112.3431	ANTELOPE 3345.00 - HOSKINS 345KV CKT 1
FDNS	09ALL_G15_042	0	20L	G15_042	FROM->TO	DIXONCO 230.00 - TWIN CHURCH 230KV CKT 1	320	320	0.48176	112.3044	GR ISLD-LNX3345.00 - GRAND ISLAND 345KV CKT Z
FDNS	09ALL_G15_042	0	16WP	G15_042	FROM->TO	DIXONCO 230.00 - TWIN CHURCH 230KV CKT 1	320	320	0.48084	112.2472	GEN338143 1-INDEPENDENCE UNIT #1
FDNS	09ALL_G15_042	0	16WP	G15_042	FROM->TO	DIXONCO 230.00 - TWIN CHURCH 230KV CKT 1	320	320	0.48084	112.2444	GEN338146 1-INDEPENDENCE UNIT #2
FDNS	09ALL_G15_042	0	16WP	G15_042	FROM->TO	DIXONCO 230.00 - TWIN CHURCH 230KV CKT 1	320	320	0.48084	112.2025	GEN337652 1-WHITE BLUFF UNIT #1
FDNS	09ALL_G15_042	0	16WP	G15_042	FROM->TO	DIXONCO 230.00 - TWIN CHURCH 230KV CKT 1	320	320	0.469	112.1961	BANCROFT - OAKLAND 115KV CKT 1
FDNS	09ALL_G15_042	0	16WP	G15_042	FROM->TO	DIXONCO 230.00 - TWIN CHURCH 230KV CKT 1	320	320	0.48084	112.1513	GEN501801 1-DOLET HILLS UNIT1
FDNS	09ALL_G15_042	0	16WP	G15_042	FROM->TO	DIXONCO 230.00 - TWIN CHURCH 230KV CKT 1	320	320	0.48084	112.1246	GEN337653 1-WHITE BLUFF UNIT #2
FDNS	09ALL_G15_042	0	20L	G15_042	FROM->TO	DIXONCO 230.00 - TWIN CHURCH 230KV CKT 1	320	320	0.48298	112.1041	ANTELOPE 3345.00 (ANTELOPE T1) 345/115/13.8KV TRANSFORMER CKT 1
FDNS	09ALL_G15_042	0	16WP	G15_042	FROM->TO	DIXONCO 230.00 - TWIN CHURCH 230KV CKT 1	320	320	0.47935	112.0558	SIOUX CITY (SC KV1A) 230/161/13.8KV TRANSFORMER CKT 1
FDNS	09ALL_G15_042	0	16WP	G15_042	FROM->TO	DIXONCO 230.00 - TWIN CHURCH 230KV CKT 1	320	320	0.47934	112.0481	SIOUX CITY (SC KV5A) 230/161/13.8KV TRANSFORMER CKT 1
FDNS	09ALL_G15_042	0	20L	G15_042	FROM->TO	DIXONCO 230.00 - TWIN CHURCH 230KV CKT 1	320	320	0.47919	112.0448	DENISON - SIOUX CITY 230KV CKT 1
FDNS	09ALL_G15_042	0	16WP	G15_042	FROM->TO	DIXONCO 230.00 - TWIN CHURCH 230KV CKT 1	320	320	0.48084	112.0251	GEN640011 2-GERALD GENTLEMAN STATION UNIT 2
FDNS	09ALL_G15_042	0	16WP	G15_042	FROM->TO	DIXONCO 230.00 - TWIN CHURCH 230KV CKT 1	320	320	0.47889	111.9684	TWIN CHURCH (TWNCHURCH T6) 230/115/13.8KV TRANSFORMER CKT 2
FDNS	09ALL_G15_042	0	16WP	G15_042	FROM->TO	DIXONCO 230.00 - TWIN CHURCH 230KV CKT 1	320	320	0.47889	111.9684	TWIN CHURCH (TWNCHURCH T6) 230/115/13.8KV TRANSFORMER CKT 2
FDNS	09ALL_G15_042	0	16WP	G15_042	FROM->TO	DIXONCO 230.00 - TWIN CHURCH 230KV CKT 1	320	320	0.48308	111.9444	KELLY - SHELL CREEK 230KV CKT 1
FDNS	09ALL_G15_042	0	16WP	G15_042	FROM->TO	DIXONCO 230.00 - TWIN CHURCH 230KV CKT 1	320	320	0.48308	111.942	SHELL CREEK (SHELLCREEKT1) 345/230/13.8KV TRANSFORMER CKT 1
FDNS	09ALL_G15_042	0	16WP	G15_042	FROM->TO	DIXONCO 230.00 - TWIN CHURCH 230KV CKT 1	320	320	0.48308	111.942	SHELL CREEK (SHELLCREEKT1) 345/230/13.8KV TRANSFORMER CKT 1
FDNS	09ALL_G15_042	0	16WP	G15_042	FROM->TO	DIXONCO 230.00 - TWIN CHURCH 230KV CKT 1	320	320	0.48084	111.9184	GEN640010 1-GERALD GENTLEMAN STATION UNIT 1
FDNS	09ALL_G15_042	0	17G	G15_042	FROM->TO	DIXONCO 230.00 - TWIN CHURCH 230KV CKT 1	320	320	0.47779	111.8828	DENISON - SIOUX CITY 230KV CKT 1
FDNS	09ALL_G15_042	0	16WP	G15_042	FROM->TO	DIXONCO 230.00 - TWIN CHURCH 230KV CKT 1	320	320	0.48084	111.8796	GEN337910 1-ARKANSAS NUCLEAR ONE UNIT #1
FDNS	09ALL_G15_042	0	16WP	G15_042	FROM->TO	DIXONCO 230.00 - TWIN CHURCH 230KV CKT 1	320	320	0.48084	111.8776	GEN335831 1-RIVERBEND UNIT#1
FDNS	09ALL_G15_042	0	16WP	G15_042	FROM->TO	DIXONCO 230.00 - TWIN CHURCH 230KV CKT 1	320	320	0.47956	111.8232	ANITA TAP POINT TO CRESTON AND DENISON - EXIRA 161KV CKT 1
FDNS	09ALL_G15_042	0	16WP	G15_042	FROM->TO	DIXONCO 230.00 - TWIN CHURCH 230KV CKT 1	320	320	0.48084	111.7656	GEN640431 1-LAREDO.GEN1W0.6900

SOLUTION	GROUP	SCENARIO	SEASON	SOURCE	DIRECTION	MONITORED ELEMENT	RATEA (MVA)	RATEB(MVA)	TDF	TC%LOADING (% MVA)	CONTINGENCY
FDNS	09ALL_G15_042	0	16WP	G15_042	FROM->TO	DIXONCO 230.00 - TWIN CHURCH 230KV CKT 1	320	320	0.48084	111.7166	GEN336153 1-WATERFORD UNIT#3
FDNS	09ALL_G15_042	0	16WP	G15_042	FROM->TO	DIXONCO 230.00 - TWIN CHURCH 230KV CKT 1	320	320	0.48084	111.6551	GEN337911 1-ARKANSAS NUCLEAR ONE UNIT #2
FDNS	09ALL_G15_042	0	16WP	G15_042	FROM->TO	DIXONCO 230.00 - TWIN CHURCH 230KV CKT 1	320	320	0.48084	111.6419	GEN344225 1-1CAL G1 25.000
FDNS	09ALL_G15_042	0	16WP	G15_042	FROM->TO	DIXONCO 230.00 - TWIN CHURCH 230KV CKT 1	320	320	0.48084	111.6346	GEN635023 3-WALTER SCOTT UNIT 3
FDNS	09ALL_G15_042	0	20WP	G15_042	FROM->TO	DIXONCO 230.00 - TWIN CHURCH 230KV CKT 1	320	320	0.47949	111.5165	SIOUXCY-LNX3345.00 - SPLIT ROCK 345KV CKT 1
FDNS	09ALL_G15_042	0	20WP	G15_042	FROM->TO	DIXONCO 230.00 - TWIN CHURCH 230KV CKT 1	320	320	0.47949	111.5165	SIOUXCY-LNX3345.00 - SPLIT ROCK 345KV CKT 1
FDNS	09ALL_G15_042	0	16WP	G15_042	FROM->TO	DIXONCO 230.00 - TWIN CHURCH 230KV CKT 1	320	320	0.469	111.5082	P12:115:NPPD:1193:OAKLAND7:EMERSON7:BTB
FDNS	09ALL_G15_042	0	20WP	G15_042	FROM->TO	DIXONCO 230.00 - TWIN CHURCH 230KV CKT 1	320	320	0.48136	111.4998	GEN337652 1-WHITE BLUFF UNIT #1
FDNS	09ALL_G15_042	0	16WP	G15_042	FROM->TO	DIXONCO 230.00 - TWIN CHURCH 230KV CKT 1	320	320	0.469	111.4578	BANCROFT - EMERSON 115KV CKT 1
FDNS	09ALL_G15_042	0	20WP	G15_042	FROM->TO	DIXONCO 230.00 - TWIN CHURCH 230KV CKT 1	320	320	0.48136	111.4305	GEN501801 1-DOLET HILLS UNIT1
FDNS	09ALL_G15_042	0	16WP	G15_042	FROM->TO	DIXONCO 230.00 - TWIN CHURCH 230KV CKT 1	320	320	0.47871	111.4283	EAGLE 4 230.00 - SIOUX CITY 230KV CKT 1
FDNS	09ALL_G15_042	0	16WP	G15_042	FROM->TO	DIXONCO 230.00 - TWIN CHURCH 230KV CKT 1	320	320	0.48084	111.4243	GEN336821 1-GRAND GULF UNIT
FDNS	09ALL_G15_042	0	20L	G15_042	FROM->TO	DIXONCO 230.00 - TWIN CHURCH 230KV CKT 1	320	320	0.46991	111.4135	EMERSON - TWIN CHURCH 115KV CKT 1
FDNS	09ALL_G15_042	0	16WP	G15_042	FROM->TO	DIXONCO 230.00 - TWIN CHURCH 230KV CKT 1	320	320	0.48084	111.4094	GEN635024 4-WALTER SCOTT UNIT 4
FDNS	09ALL_G15_042	0	20WP	G15_042	FROM->TO	DIXONCO 230.00 - TWIN CHURCH 230KV CKT 1	320	320	0.48136	111.409	GEN337653 1-WHITE BLUFF UNIT #2
FDNS	09ALL_G15_042	0	20WP	G15_042	FROM->TO	DIXONCO 230.00 - TWIN CHURCH 230KV CKT 1	320	320	0.47988	111.3741	SIOUX CITY (SC KV1A) 230/161/13.8KV TRANSFORMER CKT 1
FDNS	09ALL_G15_042	0	20WP	G15_042	FROM->TO	DIXONCO 230.00 - TWIN CHURCH 230KV CKT 1	320	320	0.47987	111.3668	SIOUX CITY (SC KV5A) 230/161/13.8KV TRANSFORMER CKT 1
FDNS	09ALL_G15_042	0	20WP	G15_042	FROM->TO	DIXONCO 230.00 - TWIN CHURCH 230KV CKT 1	320	320	0.4794	111.2586	TWIN CHURCH (TWNCHURCH T6) 230/115/13.8KV TRANSFORMER CKT 2
FDNS	09ALL_G15_042	0	20WP	G15_042	FROM->TO	DIXONCO 230.00 - TWIN CHURCH 230KV CKT 1	320	320	0.4794	111.2586	TWIN CHURCH (TWNCHURCH T6) 230/115/13.8KV TRANSFORMER CKT 2
FDNS	09ALL_G15_042	0	20WP	G15_042	FROM->TO	DIXONCO 230.00 - TWIN CHURCH 230KV CKT 1	320	320	0.4836	111.2577	KELLY - SHELL CREEK 230KV CKT 1
FDNS	09ALL_G15_042	0	20WP	G15_042	FROM->TO	DIXONCO 230.00 - TWIN CHURCH 230KV CKT 1	320	320	0.48136	111.2509	GEN640011 2-GERALD GENTLEMAN STATION UNIT 2
FDNS	09ALL_G15_042	0	20WP	G15_042	FROM->TO	DIXONCO 230.00 - TWIN CHURCH 230KV CKT 1	320	320	0.4836	111.2466	SHELL CREEK (SHELLCREEKT1) 345/230/13.8KV TRANSFORMER CKT 1
FDNS	09ALL_G15_042	0	20WP	G15_042	FROM->TO	DIXONCO 230.00 - TWIN CHURCH 230KV CKT 1	320	320	0.4836	111.2466	SHELL CREEK (SHELLCREEKT1) 345/230/13.8KV TRANSFORMER CKT 1
FDNS	09ALL_G15_042	0	20WP	G15_042	FROM->TO	DIXONCO 230.00 - TWIN CHURCH 230KV CKT 1	320	320	0.48136	111.1673	GEN335831 1-RIVERBEND UNIT#1
FDNS	09ALL_G15_042	0	20WP	G15_042	FROM->TO	DIXONCO 230.00 - TWIN CHURCH 230KV CKT 1	320	320	0.48136	111.1637	GEN337910 1-ARKANSAS NUCLEAR ONE UNIT #1
FDNS	09ALL_G15_042	0	20WP	G15_042	FROM->TO	DIXONCO 230.00 - TWIN CHURCH 230KV CKT 1	320	320	0.48136	111.1215	GEN640010 1-GERALD GENTLEMAN STATION UNIT 1
FDNS	09ALL_G15_042	0	16WP	G15_042	FROM->TO	DIXONCO 230.00 - TWIN CHURCH 230KV CKT 1	320	320	0.482	111.1089	ANTELOPE 3345.00 - HOSKINS 345KV CKT 1
FDNS	09ALL_G15_042	0	16WP	G15_042	FROM->TO	DIXONCO 230.00 - TWIN CHURCH 230KV CKT 1	320	320	0.4771	111.0619	PLYMOUTH - SIOUX CITY 161KV CKT 1
FDNS	09ALL_G15_042	0	16WP	G15_042	FROM->TO	DIXONCO 230.00 - TWIN CHURCH 230KV CKT 1	320	320	0.4771	111.0619	PLYMOUTH - SIOUX CITY 161KV CKT 1
FDNS	09ALL_G15_042	0	20WP	G15_042	FROM->TO	DIXONCO 230.00 - TWIN CHURCH 230KV CKT 1	320	320	0.48136	111.0523	GEN640431 1-LAREDO.GEN1W0.6900
FDNS	09ALL_G15_042	0	20WP	G15_042	FROM->TO	DIXONCO 230.00 - TWIN CHURCH 230KV CKT 1	320	320	0.48136	111.0085	GEN336153 1-WATERFORD UNIT#3
FDNS	09ALL_G15_042	0	20WP	G15_042	FROM->TO	DIXONCO 230.00 - TWIN CHURCH 230KV CKT 1	320	320	0.48136	110.9504	GEN344225 1-1CAL G1 25.000
FDNS	09ALL_G15_042	0	20WP	G15_042	FROM->TO	DIXONCO 230.00 - TWIN CHURCH 230KV CKT 1	320	320	0.48136	110.9394	GEN337911 1-ARKANSAS NUCLEAR ONE UNIT #2
FDNS	09ALL_G15_042	0	20WP	G15_042	FROM->TO	DIXONCO 230.00 - TWIN CHURCH 230KV CKT 1	320	320	0.4695	110.8991	P12:115:NPPD:1193:OAKLAND7:EMERSON7:BTB
FDNS	09ALL_G15_042	0	17G	G15_042	FROM->TO	DIXONCO 230.00 - TWIN CHURCH 230KV CKT 1	320	320	0.46854	110.8939	EMERSON - TWIN CHURCH 115KV CKT 1
FDNS	09ALL_G15_042	0	20WP	G15_042	FROM->TO	DIXONCO 230.00 - TWIN CHURCH 230KV CKT 1	320	320	0.4695	110.8629	BANCROFT - EMERSON 115KV CKT 1
FDNS	09ALL_G15_042	0	20WP	G15_042	FROM->TO	DIXONCO 230.00 - TWIN CHURCH 230KV CKT 1	320	320	0.48012	110.8379	ANITA TAP POINT TO CRESTON AND DENISON - EXIRA 161KV CKT 1
FDNS	09ALL_G15_042	0	16WP	G15_042	FROM->TO	DIXONCO 230.00 - TWIN CHURCH 230KV CKT 1	320	320	0.482	110.823	ANTELOPE 3345.00 (ANTELOPE T1) 345/115/13.8KV TRANSFORMER CKT 1
FDNS	09ALL_G15_042	0	20WP	G15_042	FROM->TO	DIXONCO 230.00 - TWIN CHURCH 230KV CKT 1	320	320	0.48136	110.7545	GEN635023 3-WALTER SCOTT UNIT 3
FDNS	09ALL_G15_042	0	20WP	G15_042	FROM->TO	DIXONCO 230.00 - TWIN CHURCH 230KV CKT 1	320	320	0.48136	110.7192	GEN336821 1-GRAND GULF UNIT
FDNS	09ALL_G15_042	0	16WP	G15_042	FROM->TO	DIXONCO 230.00 - TWIN CHURCH 230KV CKT 1	320	320	0.47682	110.6963	TWIN CHURCH (TWNCHURCH T4) 230/115/13.8KV TRANSFORMER CKT 1
FDNS	09ALL_G15_042	0	16WP	G15_042	FROM->TO	DIXONCO 230.00 - TWIN CHURCH 230KV CKT 1	320	320	0.47682	110.6963	TWIN CHURCH (TWNCHURCH T4) 230/115/13.8KV TRANSFORMER CKT 1
FDNS	09ALL_G15_042	0	16WP	G15_042	FROM->TO	DIXONCO 230.00 - TWIN CHURCH 230KV CKT 1	320	320	0.4803	110.6803	GRPRAR1-LNX3345.00 - HOLT.CO3 345.00 345KV CKT 1
FDNS	09ALL_G15_042	0	16WP	G15_042	FROM->TO	DIXONCO 230.00 - TWIN CHURCH 230KV CKT 1	320	320	0.4803	110.6801	GRPRAR1-LNX3345.00 - YANKTON 345KV CKT Z
FDNS	09ALL_G15_042	0	20WP	G15_042	FROM->TO	DIXONCO 230.00 - TWIN CHURCH 230KV CKT 1	320	320	0.47919	110.6226	EAGLE 4 230.00 - SIOUX CITY 230KV CKT 1
FDNS	09ALL_G15_042	0	17SP	G15_042	FROM->TO	DIXONCO 230.00 - TWIN CHURCH 230KV CKT 1	320	320	0.52045	110.6002	HOSKINS - RAUN 345KV CKT 1
FDNS	09ALL_G15_042	0	17SP	G15_042	FROM->TO	DIXONCO 230.00 - TWIN CHURCH 230KV CKT 1	320	320	0.52045	110.6002	HOSKINS - RAUN 345KV CKT 1
FDNS	09NR_G15_042	0	20L	G15_042	FROM->TO	DIXONCO 230.00 - TWIN CHURCH 230KV CKT 1	320	320	0.50746	110.5157	HOSKINS - SHELL CREEK 345KV CKT 1
FDNS	09ALL_G15_042	0	20WP	G15_042	FROM->TO	DIXONCO 230.00 - TWIN CHURCH 230KV CKT 1	320	320	0.48136	110.5092	GEN635024 4-WALTER SCOTT UNIT 4
FDNS	09NR_G15_042	0	20L	G15_042	FROM->TO	DIXONCO 230.00 - TWIN CHURCH 230KV CKT 1	320	320	0.46161	110.48	RAUN - SIOUX CITY 345KV CKT 1
FDNS	09NR_G15_042	0	20L	G15_042	FROM->TO	DIXONCO 230.00 - TWIN CHURCH 230KV CKT 1	320	320	0.46161	110.48	RAUN - SIOUX CITY 345KV CKT 1
FDNS	09NR_G15_042	0	17G	G15_042	FROM->TO	DIXONCO 230.00 - TWIN CHURCH 230KV CKT 1	320	320	0.5074	110.461	HOSKINS - SHELL CREEK 345KV CKT 1
FDNS	09ALL_G15_042	0	20WP	G15_042	FROM->TO	DIXONCO 230.00 - TWIN CHURCH 230KV CKT 1	320	320	0.4826	110.4492	ANTELOPE 3345.00 - HOSKINS 345KV CKT 1
FDNS	09ALL_G15_042	0	16WP	G15_042	FROM->TO	DIXONCO 230.00 - TWIN CHURCH 230KV CKT 1	320	320	0.47824	110.447	DENISON - SIOUX CITY 230KV CKT 1
FDNS	09NR_G15_042	0	17G	G15_042	FROM->TO	DIXONCO 230.00 - TWIN CHURCH 230KV CKT 1	320	320	0.49626	110.3426	HOSKINS (HOSKINS T1) 230/115/13.8KV TRANSFORMER CKT 1
FDNS	09NR_G15_042	0	17G	G15_042	FROM->TO	DIXONCO 230.00 - TWIN CHURCH 230KV CKT 1	320	320	0.49626	110.3426	HOSKINS (HOSKINS T1) 230/115/13.8KV TRANSFORMER CKT 1
FDNS	09ALL_G15_042	0	20L	G15_042	FROM->TO	DIXONCO 230.00 - TWIN CHURCH 230KV CKT 1	320	320	0.48164	110.3206	GEN562673 1-G15_007_3 0.6900
FDNS	09ALL_G15_042	0	20WP	G15_042	FROM->TO	DIXONCO 230.00 - TWIN CHURCH 230KV CKT 1	320	320	0.47766	110.2999	PLYMOUTH - SIOUX CITY 161KV CKT 1
FDNS	09ALL_G15_042	0	20WP	G15_042	FROM->TO	DIXONCO 230.00 - TWIN CHURCH 230KV CKT 1	320	320	0.47766	110.2999	PLYMOUTH - SIOUX CITY 161KV CKT 1
FDNS	09ALL_G15_042	0	20WP	G15_042	FROM->TO	DIXONCO 230.00 - TWIN CHURCH 230KV CKT 1	320	320	0.48072	110.283	GRPRAR1-LNX3345.00 - HOLT.CO3 345.00 345KV CKT 1
FDNS	09ALL_G15_042	0	20WP	G15_042	FROM->TO	DIXONCO 230.00 - TWIN CHURCH 230KV CKT 1	320	320	0.48072	110.2828	GRPRAR1-LNX3345.00 - YANKTON 345KV CKT Z
FDNS	09ALL_G15_042	0	17SP	G15_042	FROM->TO	DIXONCO 230.00 - TWIN CHURCH 230KV CKT 1	320	320	0.50531	110.2454	HOSKINS (HOSKINS T1) 230/115/13.8KV TRANSFORMER CKT 1
FDNS	09ALL_G15_042	0	17SP	G15_042	FROM->TO	DIXONCO 230.00 - TWIN CHURCH 230KV CKT 1	320	320	0.50531	110.2454	HOSKINS (HOSKINS T1) 230/115/13.8KV TRANSFORMER CKT 1
FDNS	09ALL_G15_042	0	17SP	G15_042	FROM->TO	DIXONCO 230.00 - TWIN CHURCH 230KV CKT 1	320	320	0.48012	110.2243	P13:115-345:NPPD:NUCOR-2
FDNS	09NR_G15_042	0	17G	G15_042	FROM->TO	DIXONCO 230.00 - TWIN CHURCH 230KV CKT 1	320	320	0.48402	110.1686	COLUMEAST - NW68TH & HOLDREGE 345KV CKT 1
FDNS	09NR_G15_042	0	17G	G15_042	FROM->TO	DIXONCO 230.00 - TWIN CHURCH 230KV CKT 1	320	320	0.48402	110.1686	COLUMEAST - NW68TH & HOLDREGE 345KV CKT 1
FDNS	09ALL_G15_042	0	20WP	G15_042	FROM->TO	DIXONCO 230.00 - TWIN CHURCH 230KV CKT 1	320	320	0.4826	110.1619	ANTELOPE 3345.00 (ANTELOPE T1) 345/115/13.8KV TRANSFORMER CKT 1
FDNS	09ALL_G15_042	0	20WP	G15_042	FROM->TO	DIXONCO 230.00 - TWIN CHURCH 230KV CKT 1	320	320	0.47733	110.0112	TWIN CHURCH (TWNCHURCH T4) 230/115/13.8KV TRANSFORMER CKT 1
FDNS	09ALL_G15_042	0	20WP	G15_042	FROM->TO	DIXONCO 230.00 - TWIN CHURCH 230KV CKT 1	320	320	0.47733	110.0112	TWIN CHURCH (TWNCHURCH T4) 230/115/13.8KV TRANSFORMER CKT 1
FDNS	09ALL_G15_042	0	20SP	G15_042	FROM->TO	DIXONCO 230.00 - TWIN CHURCH 230KV CKT 1	320	320	0.52101	109.962	HOSKINS - RAUN 345KV CKT 1
FDNS	09ALL_G15_042	0	20SP	G15_042	FROM->TO	DIXONCO 230.00 - TWIN CHURCH 230KV CKT 1	320	320	0.52101	109.962	HOSKINS - RAUN 345KV CKT 1
FDNS	09ALL_G15_042	0	20L	G15_042	FROM->TO	DIXONCO 230.00 - TWIN CHURCH 230KV CKT 1	320	320	0.48164	109.9327	GEN562438 1-G13-032 0.6900
FDNS	09ALL_G15_042	0	20SP	G15_042	FROM->TO	DIXONCO 230.00 - TWIN CHURCH 230KV CKT 1	320	320	0.48077	109.9074	P13:115-345:NPPD:NUCOR-2

SOLUTION	GROUP	SCENARIO	SEASON	SOURCE	DIRECTION	MONITORED ELEMENT	RATEA (MVA)	RATEB(MVA)	TDF	TC%LOADING (% MVA)	CONTINGENCY
FDNS	09NR_G15_042	0	20L	G15_042	FROM->TO	DIXONCO 230.00 - TWIN CHURCH 230KV CKT 1	320	320	0.49704	109.846	HOSKINS (HOSKINS T1) 230/115/13.8KV TRANSFORMER CKT 1
FDNS	09NR_G15_042	0	20L	G15_042	FROM->TO	DIXONCO 230.00 - TWIN CHURCH 230KV CKT 1	320	320	0.49704	109.846	HOSKINS (HOSKINS T1) 230/115/13.8KV TRANSFORMER CKT 1
FDNS	09NR_G15_042	0	17G	G15_042	FROM->TO	DIXONCO 230.00 - TWIN CHURCH 230KV CKT 1	320	320	0.48413	109.7959	COLUMEAST - SHELL CREEK 345KV CKT 1
FDNS	09ALL_G15_042	0	20WP	G15_042	FROM->TO	DIXONCO 230.00 - TWIN CHURCH 230KV CKT 1	320	320	0.47884	109.7754	DENISON - SIOUX CITY 230KV CKT 1
FDNS	09ALL_G15_042	0	20SP	G15_042	FROM->TO	DIXONCO 230.00 - TWIN CHURCH 230KV CKT 1	320	320	0.50601	109.772	HOSKINS (HOSKINS T1) 230/115/13.8KV TRANSFORMER CKT 1
FDNS	09ALL_G15_042	0	20SP	G15_042	FROM->TO	DIXONCO 230.00 - TWIN CHURCH 230KV CKT 1	320	320	0.50601	109.772	HOSKINS (HOSKINS T1) 230/115/13.8KV TRANSFORMER CKT 1
FDNS	09NR_G15_042	0	20L	G15_042	FROM->TO	DIXONCO 230.00 - TWIN CHURCH 230KV CKT 1	320	320	0.48403	109.7535	COLUMEAST - NW68TH & HOLDREGE 345KV CKT 1
FDNS	09NR_G15_042	0	20L	G15_042	FROM->TO	DIXONCO 230.00 - TWIN CHURCH 230KV CKT 1	320	320	0.48403	109.7535	COLUMEAST - NW68TH & HOLDREGE 345KV CKT 1
FDNS	09ALL_G15_042	0	25SP	G15_042	FROM->TO	DIXONCO 230.00 - TWIN CHURCH 230KV CKT 1	320	320	0.5059	109.6382	HOSKINS (HOSKINS T1) 230/115/13.8KV TRANSFORMER CKT 1
FDNS	09ALL_G15_042	0	25SP	G15_042	FROM->TO	DIXONCO 230.00 - TWIN CHURCH 230KV CKT 1	320	320	0.5059	109.6382	HOSKINS (HOSKINS T1) 230/115/13.8KV TRANSFORMER CKT 1
FDNS	09ALL_G15_042	0	25SP	G15_042	FROM->TO	DIXONCO 230.00 - TWIN CHURCH 230KV CKT 1	320	320	0.48066	109.575	P13:115-345:NPPD:NUCOR-2
FDNS	09ALL_G15_042	0	20L	G15_042	FROM->TO	DIXONCO 230.00 - TWIN CHURCH 230KV CKT 1	320	320	0.48248	109.5325	KELLY - MEADOWGROVE4230.00 230KV CKT 1
FDNS	09NR_G15_042	0	20L	G15_042	FROM->TO	DIXONCO 230.00 - TWIN CHURCH 230KV CKT 1	320	320	0.48447	109.5194	COLUMEAST - SHELL CREEK 345KV CKT 1
FDNS	09NR_G15_042	0	17G	G15_042	FROM->TO	DIXONCO 230.00 - TWIN CHURCH 230KV CKT 1	320	320	0.46058	109.4456	RAUN - SIOUX CITY 345KV CKT 1
FDNS	09NR_G15_042	0	17G	G15_042	FROM->TO	DIXONCO 230.00 - TWIN CHURCH 230KV CKT 1	320	320	0.46058	109.4456	RAUN - SIOUX CITY 345KV CKT 1
FDNS	09ALL_G15_042	0	20WP	G15_042	FROM->TO	DIXONCO 230.00 - TWIN CHURCH 230KV CKT 1	320	320	0.48143	109.4178	GR ISLD-LNX3345.00 - HOLT.CO3 345.00 345KV CKT 1
FDNS	09ALL_G15_042	0	20WP	G15_042	FROM->TO	DIXONCO 230.00 - TWIN CHURCH 230KV CKT 1	320	320	0.48143	109.3752	GR ISLD-LNX3345.00 - GRAND ISLAND 345KV CKT Z
FDNS	09NR_G15_042	0	17G	G15_042	FROM->TO	DIXONCO 230.00 - TWIN CHURCH 230KV CKT 1	320	320	0.47053	109.1915	P13:115-345:NPPD:NUCOR-2
FDNS	09NR_G15_042	0	20L	G15_042	FROM->TO	DIXONCO 230.00 - TWIN CHURCH 230KV CKT 1	320	320	0.47127	109.1406	P13:115-345:NPPD:NUCOR-2
FDNS	09ALL_G15_042	0	20SP	G15_042	FROM->TO	DIXONCO 230.00 - TWIN CHURCH 230KV CKT 1	320	320	0.5119	108.7683	HOSKINS - SHELL CREEK 345KV CKT 1
FDNS	09ALL_G15_042	0	16WP	G15_042	FROM->TO	DIXONCO 230.00 - TWIN CHURCH 230KV CKT 1	320	320	0.48084	108.7421	GEN562673 1-G15_007_3 0.6900
FDNS	09ALL_G15_042	0	17G	G15_042	FROM->TO	DIXONCO 230.00 - TWIN CHURCH 230KV CKT 1	320	320	0.48076	108.6815	KELLY - MEADOWGROVE4230.00 230KV CKT 1
FDNS	09ALL_G15_042	0	17SP	G15_042	FROM->TO	DIXONCO 230.00 - TWIN CHURCH 230KV CKT 1	320	320	0.51175	108.676	HOSKINS - SHELL CREEK 345KV CKT 1
FDNS	09ALL_G15_042	0	16WP	G15_042	FROM->TO	DIXONCO 230.00 - TWIN CHURCH 230KV CKT 1	320	320	0.469	108.6509	EMERSON - TWIN CHURCH 115KV CKT 1
FDNS	09ALL_G15_042	0	25SP	G15_042	FROM->TO	DIXONCO 230.00 - TWIN CHURCH 230KV CKT 1	320	320	0.51184	108.5961	HOSKINS - SHELL CREEK 345KV CKT 1
FDNS	09ALL_G15_042	0	16WP	G15_042	FROM->TO	DIXONCO 230.00 - TWIN CHURCH 230KV CKT 1	320	320	0.48084	108.4883	GEN562438 1-G13-032 0.6900
FDNS	09NR_G15_042	0	20L	G15_042	FROM->TO	DIXONCO 230.00 - TWIN CHURCH 230KV CKT 1	320	320	0.46815	108.3001	FTTHOM2-LNX3345.00 - GRPRAR2-LNX3345.00 345KV CKT 1
FDNS	09NR_G15_042	0	20L	G15_042	FROM->TO	DIXONCO 230.00 - TWIN CHURCH 230KV CKT 1	320	320	0.46815	108.2876	FT THOMPSON - FTTHOM2-LNX3345.00 345KV CKT Z
FDNS	09NR_G15_042	0	20L	G15_042	FROM->TO	DIXONCO 230.00 - TWIN CHURCH 230KV CKT 1	320	320	0.46815	108.284	GRPRAR2-LNX3345.00 - YANKTON 345KV CKT Z
FDNS	09ALL_G15_042	0	17SP	G15_042	FROM->TO	DIXONCO 230.00 - TWIN CHURCH 230KV CKT 1	320	320	0.49233	108.2506	COLUMEAST - SHELL CREEK 345KV CKT 1
FDNS	09ALL_G15_042	0	20WP	G15_042	FROM->TO	DIXONCO 230.00 - TWIN CHURCH 230KV CKT 1	320	320	0.4695	108.112	EMERSON - TWIN CHURCH 115KV CKT 1
FDNS	09NR_G15_042	0	20L	G15_042	FROM->TO	DIXONCO 230.00 - TWIN CHURCH 230KV CKT 1	320	320	0.47152	108.0162	BLOOMFIELD - GAVINS POINT 115KV CKT 1
FDNS	09ALL_G15_042	0	20WP	G15_042	FROM->TO	DIXONCO 230.00 - TWIN CHURCH 230KV CKT 1	320	320	0.48136	107.9915	GEN562673 1-G15_007_3 0.6900
FDNS	09ALL_G15_042	0	25SP	G15_042	FROM->TO	DIXONCO 230.00 - TWIN CHURCH 230KV CKT 1	320	320	0.52088	107.9784	HOSKINS - RAUN 345KV CKT 1
FDNS	09ALL_G15_042	0	25SP	G15_042	FROM->TO	DIXONCO 230.00 - TWIN CHURCH 230KV CKT 1	320	320	0.52088	107.9784	HOSKINS - RAUN 345KV CKT 1
FDNS	09NR_G15_042	0	17G	G15_042	FROM->TO	DIXONCO 230.00 - TWIN CHURCH 230KV CKT 1	320	320	0.46801	107.9736	FT THOMPSON - FTTHOM2-LNX3345.00 345KV CKT Z
FDNS	09NR_G15_042	0	17G	G15_042	FROM->TO	DIXONCO 230.00 - TWIN CHURCH 230KV CKT 1	320	320	0.46801	107.9685	GRPRAR2-LNX3345.00 - YANKTON 345KV CKT Z
FDNS	09NR_G15_042	0	17G	G15_042	FROM->TO	DIXONCO 230.00 - TWIN CHURCH 230KV CKT 1	320	320	0.46801	107.9607	FTTHOM2-LNX3345.00 - GRPRAR2-LNX3345.00 345KV CKT 1
FDNS	09NR_G15_042	0	17G	G15_042	FROM->TO	DIXONCO 230.00 - TWIN CHURCH 230KV CKT 1	320	320	0.47053	107.9117	GEN600002 3-SHERBURNE CNTY G3
FDNS	09ALL_G15_042	0	20SP	G15_042	FROM->TO	DIXONCO 230.00 - TWIN CHURCH 230KV CKT 1	320	320	0.49273	107.8405	COLUMEAST - SHELL CREEK 345KV CKT 1
FDNS	09ALL_G15_042	0	20WP	G15_042	FROM->TO	DIXONCO 230.00 - TWIN CHURCH 230KV CKT 1	320	320	0.48136	107.755	GEN562438 1-G13-032 0.6900
FDNS	09NR_G15_042	0	17G	G15_042	FROM->TO	DIXONCO 230.00 - TWIN CHURCH 230KV CKT 1	320	320	0.46873	107.7452	FT RANDAL - SIOUX CITY 230KV CKT 1
FDNS	09NR_G15_042	0	17G	G15_042	FROM->TO	DIXONCO 230.00 - TWIN CHURCH 230KV CKT 1	320	320	0.47053	107.7341	SHERBURNE CO 345/24.0KV TRANSFORMER CKT 1
FDNS	09ALL_G15_042	0	25SP	G15_042	FROM->TO	DIXONCO 230.00 - TWIN CHURCH 230KV CKT 1	320	320	0.46184	107.71	P13:345:UMZW:# 260 #: SC2 IN IA. LOSS OF TRANSFORMER (KU1A
FDNS	09NR_G15_042	0	17G	G15_042	FROM->TO	DIXONCO 230.00 - TWIN CHURCH 230KV CKT 1	320	320	0.47075	107.7046	BLOOMFIELD - GAVINS POINT 115KV CKT 1
FDNS	09ALL_G15_042	0	17SP	G15_042	FROM->TO	DIXONCO 230.00 - TWIN CHURCH 230KV CKT 1	320	320	0.4934	107.6507	COLUMEAST - NW68TH & HOLDREGE 345KV CKT 1
FDNS	09ALL_G15_042	0	17SP	G15_042	FROM->TO	DIXONCO 230.00 - TWIN CHURCH 230KV CKT 1	320	320	0.4934	107.6507	COLUMEAST - NW68TH & HOLDREGE 345KV CKT 1
FDNS	09ALL_G15_042	0	17SP	G15_042	FROM->TO	DIXONCO 230.00 - TWIN CHURCH 230KV CKT 1	320	320	0.46137	107.6314	P13:345:UMZW:# 260 #: SC2 IN IA. LOSS OF TRANSFORMER (KU1A
FDNS	09NR_G15_042	0	20L	G15_042	FROM->TO	DIXONCO 230.00 - TWIN CHURCH 230KV CKT 1	320	320	0.45294	107.5478	P13:345:UMZW:# 260 #: SC2 IN IA. LOSS OF TRANSFORMER (KU1A
FDNS	09NR_G15_042	0	17G	G15_042	FROM->TO	DIXONCO 230.00 - TWIN CHURCH 230KV CKT 1	320	320	0.47315	107.4853	HOSKINS - STANTON NORTH 115KV CKT 1
FDNS	09NR_G15_042	0	20L	G15_042	FROM->TO	DIXONCO 230.00 - TWIN CHURCH 230KV CKT 1	320	320	0.47127	107.4397	GEN600002 3-SHERBURNE CNTY G3
FDNS	09ALL_G15_042	0	25SP	G15_042	FROM->TO	DIXONCO 230.00 - TWIN CHURCH 230KV CKT 1	320	320	0.49266	107.4275	COLUMEAST - SHELL CREEK 345KV CKT 1
FDNS	09NR_G15_042	0	20L	G15_042	FROM->TO	DIXONCO 230.00 - TWIN CHURCH 230KV CKT 1	320	320	0.47127	107.408	SHERBURNE CO 345/24.0KV TRANSFORMER CKT 1
FDNS	09NR_G15_042	0	17G	G15_042	FROM->TO	DIXONCO 230.00 - TWIN CHURCH 230KV CKT 1	320	320	0.47053	107.3893	GEN600000 1-SHERBURNECNTY G1
FDNS	09ALL_G15_042	0	20SP	G15_042	FROM->TO	DIXONCO 230.00 - TWIN CHURCH 230KV CKT 1	320	320	0.46197	107.384	P13:345:UMZW:# 260 #: SC2 IN IA. LOSS OF TRANSFORMER (KU1A
FDNS	09NR_G15_042	0	17G	G15_042	FROM->TO	DIXONCO 230.00 - TWIN CHURCH 230KV CKT 1	320	320	0.47053	107.3206	GEN600001 2-SHERBURNE CNTY G2
FDNS	09NR_G15_042	0	17G	G15_042	FROM->TO	DIXONCO 230.00 - TWIN CHURCH 230KV CKT 1	320	320	0.47053	107.2972	GEN659103 1-ANTELOPE VALLEY UNIT1
FDNS	09NR_G15_042	0	17G	G15_042	FROM->TO	DIXONCO 230.00 - TWIN CHURCH 230KV CKT 1	320	320	0.47053	107.2972	GEN659107 2-ANTELOPE VALLEY UNIT2
FDNS	09NR_G15_042	0	17G	G15_042	FROM->TO	DIXONCO 230.00 - TWIN CHURCH 230KV CKT 1	320	320	0.47053	107.2201	BIG STONE 230/24.0KV TRANSFORMER CKT 1
FDNS	09NR_G15_042	0	20L	G15_042	FROM->TO	DIXONCO 230.00 - TWIN CHURCH 230KV CKT 1	320	320	0.47127	107.2157	BIG STONE 230/24.0KV TRANSFORMER CKT 1
FDNS	09NR_G15_042	0	17G	G15_042	FROM->TO	DIXONCO 230.00 - TWIN CHURCH 230KV CKT 1	320	320	0.47315	107.1859	STANTON - STANTON NORTH 115KV CKT 1
FDNS	09NR_G15_042	0	20L	G15_042	FROM->TO	DIXONCO 230.00 - TWIN CHURCH 230KV CKT 1	320	320	0.47127	107.141	GEN600005 1-MONTICELLO
FDNS	09NR_G15_042	0	17G	G15_042	FROM->TO	DIXONCO 230.00 - TWIN CHURCH 230KV CKT 1	320	320	0.47315	107.1406	P12:115:NPPD:1166:STNTN.N7:BEEMER 7:BTB
FDNS	09NR_G15_042	0	17G	G15_042	FROM->TO	DIXONCO 230.00 - TWIN CHURCH 230KV CKT 1	320	320	0.47053	107.1383	GEN659111 2-LELAND OLDS UNIT2
FDNS	09NR_G15_042	0	20L	G15_042	FROM->TO	DIXONCO 230.00 - TWIN CHURCH 230KV CKT 1	320	320	0.47127	107.129	GEN600001 2-SHERBURNE CNTY G2
FDNS	09ALL_G15_042	0	20SP	G15_042	FROM->TO	DIXONCO 230.00 - TWIN CHURCH 230KV CKT 1	320	320	0.4936	107.1265	COLUMEAST - NW68TH & HOLDREGE 345KV CKT 1
FDNS	09ALL_G15_042	0	20SP	G15_042	FROM->TO	DIXONCO 230.00 - TWIN CHURCH 230KV CKT 1	320	320	0.4936	107.1265	COLUMEAST - NW68TH & HOLDREGE 345KV CKT 1
FDNS	09NR_G15_042	0	17G	G15_042	FROM->TO	DIXONCO 230.00 - TWIN CHURCH 230KV CKT 1	320	320	0.47053	107.1047	GEN600005 1-MONTICELLO
FDNS	09NR_G15_042	0	20L	G15_042	FROM->TO	DIXONCO 230.00 - TWIN CHURCH 230KV CKT 1	320	320	0.47127	107.0934	GEN615002 2-COAL CREEK
FDNS	09NR_G15_042	0	17G	G15_042	FROM->TO	DIXONCO 230.00 - TWIN CHURCH 230KV CKT 1	320	320	0.47315	107.0753	BEEMER - STANTON 115KV CKT 1
FDNS	09NR_G15_042	0	17G	G15_042	FROM->TO	DIXONCO 230.00 - TWIN CHURCH 230KV CKT 1	320	320	0.47053	107.0571	GEN615001 1-COAL CREEK
FDNS	09ALL_G15_042	0	17SP	G15_042	FROM->TO	DIXONCO 230.00 - TWIN CHURCH 230KV CKT 1	320	320	0.47835	107.0507	FT RANDAL - SIOUX CITY 230KV CKT 1
FDNS	09NR_G15_042	0	20L	G15_042	FROM->TO	DIXONCO 230.00 - TWIN CHURCH 230KV CKT 1	320	320	0.47062	107.0437	FT RANDAL - MEADOWGROVE4230.00 230KV CKT 1

SOLUTION	GROUP	SCENARIO	SEASON	SOURCE	DIRECTION	MONITORED ELEMENT	RATEA (MVA)	RATEB(MVA)	TDF	TC%LOADING (% MVA)	CONTINGENCY
FDNS	09NR_G15_042	0	20L	G15_042	FROM->TO	DIXONCO 230.00 - TWIN CHURCH 230KV CKT 1	320	320	0.47127	107.0249	GEN600000 1-SHERBURNECNTY G1
FDNS	09NR_G15_042	0	20L	G15_042	FROM->TO	DIXONCO 230.00 - TWIN CHURCH 230KV CKT 1	320	320	0.47127	107.018	GEN620315 1-BIG STONE GEN
FDNS	09NR_G15_042	0	17G	G15_042	FROM->TO	DIXONCO 230.00 - TWIN CHURCH 230KV CKT 1	320	320	0.46978	106.9918	FT RANDAL - UTICA JCT 230KV CKT 1
FDNS	09ALL_G15_042	0	16WP	G15_042	FROM->TO	DIXONCO 230.00 - TWIN CHURCH 230KV CKT 1	320	320	0.4813	106.9589	KELLY - MEADOWGROVE4230.00 230KV CKT 1
FDNS	09ALL_G15_042	0	25SP	G15_042	FROM->TO	DIXONCO 230.00 - TWIN CHURCH 230KV CKT 1	320	320	0.47217	106.9433	RAUN - SIOUX CITY 345KV CKT 1
FDNS	09ALL_G15_042	0	25SP	G15_042	FROM->TO	DIXONCO 230.00 - TWIN CHURCH 230KV CKT 1	320	320	0.47217	106.9433	RAUN - SIOUX CITY 345KV CKT 1
FDNS	09NR_G15_042	0	17G	G15_042	FROM->TO	DIXONCO 230.00 - TWIN CHURCH 230KV CKT 1	320	320	0.47053	106.9291	GEN620315 1-BIG STONE GEN
FDNS	09NR_G15_042	0	20L	G15_042	FROM->TO	DIXONCO 230.00 - TWIN CHURCH 230KV CKT 1	320	320	0.46936	106.9113	FT RANDAL - SIOUX CITY 230KV CKT 1
FDNS	09NR_G15_042	0	17G	G15_042	FROM->TO	DIXONCO 230.00 - TWIN CHURCH 230KV CKT 1	320	320	0.47053	106.9011	GEN600003 1-PRAIRIE ISLAND G1
FDNS	09NR_G15_042	0	17G	G15_042	FROM->TO	DIXONCO 230.00 - TWIN CHURCH 230KV CKT 1	320	320	0.47053	106.8984	GEN600004 2-PRAIRIE ISLAND G2
FDNS	09NR_G15_042	0	17G	G15_042	FROM->TO	DIXONCO 230.00 - TWIN CHURCH 230KV CKT 1	320	320	0.47053	106.8889	GEN600006 1-AS KING
FDNS	09NR_G15_042	0	20L	G15_042	FROM->TO	DIXONCO 230.00 - TWIN CHURCH 230KV CKT 1	320	320	0.47394	106.8731	HOSKINS - STANTON NORTH 115KV CKT 1
FDNS	09NR_G15_042	0	20L	G15_042	FROM->TO	DIXONCO 230.00 - TWIN CHURCH 230KV CKT 1	320	320	0.47127	106.8468	GEN659103 1-ANTELOPE VALLEY UNIT1
FDNS	09NR_G15_042	0	20L	G15_042	FROM->TO	DIXONCO 230.00 - TWIN CHURCH 230KV CKT 1	320	320	0.47127	106.8468	GEN659107 2-ANTELOPE VALLEY UNIT2
FDNS	09NR_G15_042	0	17G	G15_042	FROM->TO	DIXONCO 230.00 - TWIN CHURCH 230KV CKT 1	320	320	0.46892	106.8176	RASMUSN - UTICA JCT 230KV CKT 1
FDNS	09ALL_G15_042	0	17SP	G15_042	FROM->TO	DIXONCO 230.00 - TWIN CHURCH 230KV CKT 1	320	320	0.48286	106.7836	HOSKINS - STANTON NORTH 115KV CKT 1
FDNS	09ALL_G15_042	0	17SP	G15_042	FROM->TO	DIXONCO 230.00 - TWIN CHURCH 230KV CKT 1	320	320	0.4713	106.7761	RAUN - SIOUX CITY 345KV CKT 1
FDNS	09ALL_G15_042	0	17SP	G15_042	FROM->TO	DIXONCO 230.00 - TWIN CHURCH 230KV CKT 1	320	320	0.4713	106.7761	RAUN - SIOUX CITY 345KV CKT 1
FDNS	09NR_G15_042	0	20L	G15_042	FROM->TO	DIXONCO 230.00 - TWIN CHURCH 230KV CKT 1	320	320	0.47127	106.7457	GEN600003 1-PRAIRIE ISLAND G1
FDNS	09NR_G15_042	0	20L	G15_042	FROM->TO	DIXONCO 230.00 - TWIN CHURCH 230KV CKT 1	320	320	0.47127	106.7436	GEN600004 2-PRAIRIE ISLAND G2
FDNS	09NR_G15_042	0	17G	G15_042	FROM->TO	DIXONCO 230.00 - TWIN CHURCH 230KV CKT 1	320	320	0.45258	106.6966	P13:345:UMZW:# 260 #: SC2 IN IA. LOSS OF TRANSFORMER (KU1A
FDNS	09NR_G15_042	0	17G	G15_042	FROM->TO	DIXONCO 230.00 - TWIN CHURCH 230KV CKT 1	320	320	0.47315	106.6767	BEEMER - WEST POINT 115KV CKT 1
FDNS	09NR_G15_042	0	20L	G15_042	FROM->TO	DIXONCO 230.00 - TWIN CHURCH 230KV CKT 1	320	320	0.47394	106.6212	STANTON - STANTON NORTH 115KV CKT 1
FDNS	09ALL_G15_042	0	20SP	G15_042	FROM->TO	DIXONCO 230.00 - TWIN CHURCH 230KV CKT 1	320	320	0.47237	106.6105	RAUN - SIOUX CITY 345KV CKT 1
FDNS	09ALL_G15_042	0	20SP	G15_042	FROM->TO	DIXONCO 230.00 - TWIN CHURCH 230KV CKT 1	320	320	0.47237	106.6105	RAUN - SIOUX CITY 345KV CKT 1
FDNS	09NR_G15_042	0	20L	G15_042	FROM->TO	DIXONCO 230.00 - TWIN CHURCH 230KV CKT 1	320	320	0.47394	106.5875	P12:115:NPPD:1166:STNTN.N7:BEEMER 7:BTB
FDNS	09NR_G15_042	0	17G	G15_042	FROM->TO	DIXONCO 230.00 - TWIN CHURCH 230KV CKT 1	320	320	0.46892	106.5672	RASMUSN - SIOUX CITY 230KV CKT 1
FDNS	09NR_G15_042	0	17G	G15_042	FROM->TO	DIXONCO 230.00 - TWIN CHURCH 230KV CKT 1	320	320	0.47053	106.5662	GEN657748 1-YOUNG 2 GENERATOR
FDNS	09NR_G15_042	0	17G	G15_042	FROM->TO	DIXONCO 230.00 - TWIN CHURCH 230KV CKT 1	320	320	0.46987	106.5564	COLUMBUS - SCHUYLER 115KV CKT 1
FDNS	09NR_G15_042	0	17G	G15_042	FROM->TO	DIXONCO 230.00 - TWIN CHURCH 230KV CKT 1	320	320	0.47053	106.554	GEN635214 4-NEAL UNIT 4
FDNS	09NR_G15_042	0	20L	G15_042	FROM->TO	DIXONCO 230.00 - TWIN CHURCH 230KV CKT 1	320	320	0.47394	106.5471	BEEMER - STANTON 115KV CKT 1
FDNS	09ALL_G15_042	0	25SP	G15_042	FROM->TO	DIXONCO 230.00 - TWIN CHURCH 230KV CKT 1	320	320	0.49354	106.5439	COLUMEAST - NW68TH & HOLDREGE 345KV CKT 1
FDNS	09ALL_G15_042	0	25SP	G15_042	FROM->TO	DIXONCO 230.00 - TWIN CHURCH 230KV CKT 1	320	320	0.49354	106.5439	COLUMEAST - NW68TH & HOLDREGE 345KV CKT 1
FDNS	09NR_G15_042	0	20L	G15_042	FROM->TO	DIXONCO 230.00 - TWIN CHURCH 230KV CKT 1	320	320	0.47216	106.4896	COOPER - MOORE 345KV CKT 1
FDNS	09NR_G15_042	0	17G	G15_042	FROM->TO	DIXONCO 230.00 - TWIN CHURCH 230KV CKT 1	320	320	0.47292	106.4866	P12:115:NPPD:1161:OAKLAND7:BEEMER 7:BTB
FDNS	09NR_G15_042	0	20L	G15_042	FROM->TO	DIXONCO 230.00 - TWIN CHURCH 230KV CKT 1	320	320	0.47049	106.4795	FT RANDAL - UTICA JCT 230KV CKT 1
FDNS	09NR_G15_042	0	17G	G15_042	FROM->TO	DIXONCO 230.00 - TWIN CHURCH 230KV CKT 1	320	320	0.4694	106.478	ATCHSNT3 345.00 - BOONEVILLE 345KV CKT 1
FDNS	09NR_G15_042	0	20L	G15_042	FROM->TO	DIXONCO 230.00 - TWIN CHURCH 230KV CKT 1	320	320	0.47127	106.476	GEN600006 1-AS KING
FDNS	09NR_G15_042	0	17G	G15_042	FROM->TO	DIXONCO 230.00 - TWIN CHURCH 230KV CKT 1	320	320	0.47053	106.4756	GEN661015 1-COYOTE
FDNS	09ALL_G15_042	0	17SP	G15_042	FROM->TO	DIXONCO 230.00 - TWIN CHURCH 230KV CKT 1	320	320	0.48012	106.4709	SHERBURNE CO 345/24.0KV TRANSFORMER CKT 1
FDNS	09NR_G15_042	0	17G	G15_042	FROM->TO	DIXONCO 230.00 - TWIN CHURCH 230KV CKT 1	320	320	0.47053	106.4587	ALMA 161 161/24.0KV TRANSFORMER CKT 1
FDNS	09ALL_G15_042	0	20SP	G15_042	FROM->TO	DIXONCO 230.00 - TWIN CHURCH 230KV CKT 1	320	320	0.48358	106.4397	HOSKINS - STANTON NORTH 115KV CKT 1
FDNS	09ALL_G15_042	0	20SP	G15_042	FROM->TO	DIXONCO 230.00 - TWIN CHURCH 230KV CKT 1	320	320	0.47899	106.422	FT RANDAL - SIOUX CITY 230KV CKT 1
FDNS	09NR_G15_042	0	20L	G15_042	FROM->TO	DIXONCO 230.00 - TWIN CHURCH 230KV CKT 1	320	320	0.47117	106.3791	FALLOW 3 345.00 - GRIMES 345KV CKT 1
FDNS	09NR_G15_042	0	17G	G15_042	FROM->TO	DIXONCO 230.00 - TWIN CHURCH 230KV CKT 1	320	320	0.46905	106.3777	SUB 3454 - WAGENER 345KV CKT 1
FDNS	09NR_G15_042	0	17G	G15_042	FROM->TO	DIXONCO 230.00 - TWIN CHURCH 230KV CKT 1	320	320	0.46905	106.3777	SUB 3454 - WAGENER 345KV CKT 1
FDNS	09ALL_G15_042	0	20WP	G15_042	FROM->TO	DIXONCO 230.00 - TWIN CHURCH 230KV CKT 1	320	320	0.4819	106.3688	KELLY - MEADOWGROVE4230.00 230KV CKT 1
FDNS	09NR_G15_042	0	20L	G15_042	FROM->TO	DIXONCO 230.00 - TWIN CHURCH 230KV CKT 1	320	320	0.47394	106.3286	BEEMER - WEST POINT 115KV CKT 1
FDNS	09ALL_G15_042	0	17SP	G15_042	FROM->TO	DIXONCO 230.00 - TWIN CHURCH 230KV CKT 1	320	320	0.48012	106.2932	GEN600002 3-SHERBURNE CNTY G3
FDNS	09ALL_G15_042	0	17SP	G15_042	FROM->TO	DIXONCO 230.00 - TWIN CHURCH 230KV CKT 1	320	320	0.48286	106.1652	STANTON - STANTON NORTH 115KV CKT 1
FDNS	09ALL_G15_042	0	17SP	G15_042	FROM->TO	DIXONCO 230.00 - TWIN CHURCH 230KV CKT 1	320	320	0.47945	106.0532	FT RANDAL - UTICA JCT 230KV CKT 1
FDNS	09ALL_G15_042	0	17SP	G15_042	FROM->TO	DIXONCO 230.00 - TWIN CHURCH 230KV CKT 1	320	320	0.48012	106.0108	GEN659103 1-ANTELOPE VALLEY UNIT1
FDNS	09ALL_G15_042	0	17SP	G15_042	FROM->TO	DIXONCO 230.00 - TWIN CHURCH 230KV CKT 1	320	320	0.48012	106.0108	GEN659107 2-ANTELOPE VALLEY UNIT2
FDNS	09ALL_G15_042	0	25SP	G15_042	FROM->TO	DIXONCO 230.00 - TWIN CHURCH 230KV CKT 1	320	320	0.4789	106.0066	FT RANDAL - SIOUX CITY 230KV CKT 1
FDNS	09ALL_G15_042	0	25SP	G15_042	FROM->TO	DIXONCO 230.00 - TWIN CHURCH 230KV CKT 1	320	320	0.48348	105.9763	HOSKINS - STANTON NORTH 115KV CKT 1
FDNS	09ALL_G15_042	0	17SP	G15_042	FROM->TO	DIXONCO 230.00 - TWIN CHURCH 230KV CKT 1	320	320	0.48286	105.9418	P12:115:NPPD:1166:STNTN.N7:BEEMER 7:BTB
FDNS	09ALL_G15_042	0	17SP	G15_042	FROM->TO	DIXONCO 230.00 - TWIN CHURCH 230KV CKT 1	320	320	0.48012	105.9245	BIG STONE 230/24.0KV TRANSFORMER CKT 1
FDNS	09ALL_G15_042	0	17SP	G15_042	FROM->TO	DIXONCO 230.00 - TWIN CHURCH 230KV CKT 1	320	320	0.47844	105.8948	RASMUSN - UTICA JCT 230KV CKT 1
FDNS	09ALL_G15_042	0	20SP	G15_042	FROM->TO	DIXONCO 230.00 - TWIN CHURCH 230KV CKT 1	320	320	0.48358	105.8579	STANTON - STANTON NORTH 115KV CKT 1
FDNS	09ALL_G15_042	0	17SP	G15_042	FROM->TO	DIXONCO 230.00 - TWIN CHURCH 230KV CKT 1	320	320	0.48012	105.8513	GEN659111 2-LELAND OLDS UNIT2
FDNS	09ALL_G15_042	0	17SP	G15_042	FROM->TO	DIXONCO 230.00 - TWIN CHURCH 230KV CKT 1	320	320	0.48012	105.8312	GEN600000 1-SHERBURNECNTY G1
FDNS	09ALL_G15_042	0	20SP	G15_042	FROM->TO	DIXONCO 230.00 - TWIN CHURCH 230KV CKT 1	320	320	0.48077	105.8237	SHERBURNE CO 345/24.0KV TRANSFORMER CKT 1
FDNS	09ALL_G15_042	0	17SP	G15_042	FROM->TO	DIXONCO 230.00 - TWIN CHURCH 230KV CKT 1	320	320	0.48079	105.7713	BLOOMFIELD - GAVINS POINT 115KV CKT 1
FDNS	09ALL_G15_042	0	17SP	G15_042	FROM->TO	DIXONCO 230.00 - TWIN CHURCH 230KV CKT 1	320	320	0.48012	105.7596	GEN600001 2-SHERBURNE CNTY G2
FDNS	09ALL_G15_042	0	17SP	G15_042	FROM->TO	DIXONCO 230.00 - TWIN CHURCH 230KV CKT 1	320	320	0.48088	105.7521	P12:115:NPPD:1168B:ALBION 7:PETERSBRG.N7:BTB
FDNS	09ALL_G15_042	0	17SP	G15_042	FROM->TO	DIXONCO 230.00 - TWIN CHURCH 230KV CKT 1	320	320	0.47841	105.7414	PAHOJA - SIOUX FALLS 230KV CKT 1
FDNS	09ALL_G15_042	0	17SP	G15_042	FROM->TO	DIXONCO 230.00 - TWIN CHURCH 230KV CKT 1	320	320	0.48088	105.7308	PETERSBRG.N7115.00 - PETERSBURG 115KV CKT Z1
FDNS	09ALL_G15_042	0	20SP	G15_042	FROM->TO	DIXONCO 230.00 - TWIN CHURCH 230KV CKT 1	320	320	0.48077	105.7118	GEN600002 3-SHERBURNE CNTY G3
FDNS	09ALL_G15_042	0	20SP	G15_042	FROM->TO	DIXONCO 230.00 - TWIN CHURCH 230KV CKT 1	320	320	0.48077	105.6572	GEN659103 1-ANTELOPE VALLEY UNIT1
FDNS	09ALL_G15_042	0	20SP	G15_042	FROM->TO	DIXONCO 230.00 - TWIN CHURCH 230KV CKT 1	320	320	0.48077	105.6572	GEN659107 2-ANTELOPE VALLEY UNIT2
FDNS	09ALL_G15_042	0	20SP	G15_042	FROM->TO	DIXONCO 230.00 - TWIN CHURCH 230KV CKT 1	320	320	0.48358	105.635	P12:115:NPPD:1166:STNTN.N7:BEEMER 7:BTB
FDNS	09ALL_G15_042	0	17SP	G15_042	FROM->TO	DIXONCO 230.00 - TWIN CHURCH 230KV CKT 1	320	320	0.48088	105.631	ALBION - PETERSBURG 115KV CKT 1
FDNS	09ALL_G15_042	0	20SP	G15_042	FROM->TO	DIXONCO 230.00 - TWIN CHURCH 230KV CKT 1	320	320	0.48077	105.6179	BIG STONE 230/24.0KV TRANSFORMER CKT 1

SOLUTION	GROUP	SCENARIO	SEASON	SOURCE	DIRECTION	MONITORED ELEMENT	RATEA (MVA)	RATEB(MVA)	TDF	TC%LOADING (% MVA)	CONTINGENCY
FDNS	09ALL_G15_042	0	17SP	G15_042	FROM->TO	DIXONCO 230.00 - TWIN CHURCH 230KV CKT 1	320	320	0.48286	105.6011	BEEMER - STANTON 115KV CKT 1
FDNS	09ALL_G15_042	0	17SP	G15_042	FROM->TO	DIXONCO 230.00 - TWIN CHURCH 230KV CKT 1	320	320	0.47844	105.5697	RASMUSN - SIOUX CITY 230KV CKT 1
FDNS	09ALL_G15_042	0	17SP	G15_042	FROM->TO	DIXONCO 230.00 - TWIN CHURCH 230KV CKT 1	320	320	0.48012	105.5544	GEN600005 1-MONTICELLO
FDNS	09ALL_G15_042	0	20SP	G15_042	FROM->TO	DIXONCO 230.00 - TWIN CHURCH 230KV CKT 1	320	320	0.48077	105.5002	GEN659111 2-LELAND OLDS UNIT2
FDNS	09ALL_G15_042	0	20SP	G15_042	FROM->TO	DIXONCO 230.00 - TWIN CHURCH 230KV CKT 1	320	320	0.48012	105.4847	FT RANDAL - UTICA JCT 230KV CKT 1
FDNS	09ALL_G15_042	0	25SP	G15_042	FROM->TO	DIXONCO 230.00 - TWIN CHURCH 230KV CKT 1	320	320	0.48066	105.4824	SHERBURNE CO 345/24.0KV TRANSFORMER CKT 1
FDNS	09ALL_G15_042	0	17SP	G15_042	FROM->TO	DIXONCO 230.00 - TWIN CHURCH 230KV CKT 1	320	320	0.48012	105.4563	GEN615002 2-COAL CREEK
FDNS	09ALL_G15_042	0	17SP	G15_042	FROM->TO	DIXONCO 230.00 - TWIN CHURCH 230KV CKT 1	320	320	0.48012	105.4352	GEN615001 1-COAL CREEK
FDNS	09ALL_G15_042	0	25SP	G15_042	FROM->TO	DIXONCO 230.00 - TWIN CHURCH 230KV CKT 1	320	320	0.48066	105.4273	GEN600002 3-SHERBURNE CNTY G3
FDNS	09ALL_G15_042	0	17SP	G15_042	FROM->TO	DIXONCO 230.00 - TWIN CHURCH 230KV CKT 1	320	320	0.48012	105.4219	GEN620315 1-BIG STONE GEN
FDNS	09ALL_G15_042	0	20SP	G15_042	FROM->TO	DIXONCO 230.00 - TWIN CHURCH 230KV CKT 1	320	320	0.47906	105.4174	RASMUSN - UTICA JCT 230KV CKT 1
FDNS	09ALL_G15_042	0	25SP	G15_042	FROM->TO	DIXONCO 230.00 - TWIN CHURCH 230KV CKT 1	320	320	0.48348	105.401	STANTON - STANTON NORTH 115KV CKT 1
FDNS	09NR_G15_042	0	17G	G15_042	FROM->TO	DIXONCO 230.00 - TWIN CHURCH 230KV CKT 1	320	320	0.47053	105.3863	BASE CASE
FDNS	09ALL_G15_042	0	17SP	G15_042	FROM->TO	DIXONCO 230.00 - TWIN CHURCH 230KV CKT 1	320	320	0.48012	105.3774	GEN600006 1-AS KING
FDNS	09ALL_G15_042	0	17SP	G15_042	FROM->TO	DIXONCO 230.00 - TWIN CHURCH 230KV CKT 1	320	320	0.48012	105.359	GEN600003 1-PRAIRIE ISLAND G1
FDNS	09ALL_G15_042	0	17SP	G15_042	FROM->TO	DIXONCO 230.00 - TWIN CHURCH 230KV CKT 1	320	320	0.48012	105.3568	GEN600004 2-PRAIRIE ISLAND G2
FDNS	09ALL_G15_042	0	20SP	G15_042	FROM->TO	DIXONCO 230.00 - TWIN CHURCH 230KV CKT 1	320	320	0.47899	105.3324	PAHOJA - SIOUX FALLS 230KV CKT 1
FDNS	09ALL_G15_042	0	25SP	G15_042	FROM->TO	DIXONCO 230.00 - TWIN CHURCH 230KV CKT 1	320	320	0.48066	105.3271	GEN659103 1-ANTELOPE VALLEY UNIT1
FDNS	09ALL_G15_042	0	25SP	G15_042	FROM->TO	DIXONCO 230.00 - TWIN CHURCH 230KV CKT 1	320	320	0.48066	105.3271	GEN659107 2-ANTELOPE VALLEY UNIT2
FDNS	09NR_G15_042	0	20L	G15_042	FROM->TO	DIXONCO 230.00 - TWIN CHURCH 230KV CKT 1	320	320	0.47127	105.3243	BASE CASE
FDNS	09ALL_G15_042	0	20SP	G15_042	FROM->TO	DIXONCO 230.00 - TWIN CHURCH 230KV CKT 1	320	320	0.48077	105.3052	GEN600000 1-SHERBURNECNTY G1
FDNS	09ALL_G15_042	0	20SP	G15_042	FROM->TO	DIXONCO 230.00 - TWIN CHURCH 230KV CKT 1	320	320	0.48358	105.2994	BEEMER - STANTON 115KV CKT 1
FDNSLock	09ALL_G15_042	0	17SP	G15_042	FROM->TO	DIXONCO 230.00 - TWIN CHURCH 230KV CKT 1	320	320	0.47983	105.2699	COLUMBUS - SCHUYLER 115KV CKT 1
FDNS	09ALL_G15_042	0	25SP	G15_042	FROM->TO	DIXONCO 230.00 - TWIN CHURCH 230KV CKT 1	320	320	0.48066	105.263	BIG STONE 230/24.0KV TRANSFORMER CKT 1
FDNS	09ALL_G15_042	0	17SP	G15_042	FROM->TO	DIXONCO 230.00 - TWIN CHURCH 230KV CKT 1	320	320	0.47982	105.2318	P12:230:UMZB:# 116 #: ST IN SD. WSG-ST-VH
FDNS	09ALL_G15_042	0	17SP	G15_042	FROM->TO	DIXONCO 230.00 - TWIN CHURCH 230KV CKT 1	320	320	0.47841	105.227	EAGLE 4 230.00 - PAHOJA 230KV CKT 1
FDNS	09ALL_G15_042	0	17SP	G15_042	FROM->TO	DIXONCO 230.00 - TWIN CHURCH 230KV CKT 1	320	320	0.48012	105.2193	ALMA 161 161/24.0KV TRANSFORMER CKT 1
FDNS	09ALL_G15_042	0	20SP	G15_042	FROM->TO	DIXONCO 230.00 - TWIN CHURCH 230KV CKT 1	320	320	0.48077	105.2041	GEN600005 1-MONTICELLO
FDNS	09ALL_G15_042	0	20SP	G15_042	FROM->TO	DIXONCO 230.00 - TWIN CHURCH 230KV CKT 1	320	320	0.48158	105.1971	P12:115:NPPD:1168B:ALBION 7:PETERSBRG.N7:BTB
FDNS	09ALL_G15_042	0	17SP	G15_042	FROM->TO	DIXONCO 230.00 - TWIN CHURCH 230KV CKT 1	320	320	0.47983	105.1819	HANLON - STORLA 230KV CKT 1
FDNS	09ALL_G15_042	0	20SP	G15_042	FROM->TO	DIXONCO 230.00 - TWIN CHURCH 230KV CKT 1	320	320	0.48077	105.1707	GEN600001 2-SHERBURNE CNTY G2
FDNS	09ALL_G15_042	0	25SP	G15_042	FROM->TO	DIXONCO 230.00 - TWIN CHURCH 230KV CKT 1	320	320	0.48066	105.1698	GEN659111 2-LELAND OLDS UNIT2
FDNS	09ALL_G15_042	0	20SP	G15_042	FROM->TO	DIXONCO 230.00 - TWIN CHURCH 230KV CKT 1	320	320	0.48158	105.1679	PETERSBRG.N7115.00 - PETERSBURG 115KV CKT Z1
FDNS	09ALL_G15_042	0	25SP	G15_042	FROM->TO	DIXONCO 230.00 - TWIN CHURCH 230KV CKT 1	320	320	0.48348	105.1668	P12:115:NPPD:1166:STNTN.N7:BEEMER 7:BTB
FDNS	09ALL_G15_042	0	25SP	G15_042	FROM->TO	DIXONCO 230.00 - TWIN CHURCH 230KV CKT 1	320	320	0.48002	105.1453	FT RANDAL - UTICA JCT 230KV CKT 1
FDNS	09ALL_G15_042	0	20SP	G15_042	FROM->TO	DIXONCO 230.00 - TWIN CHURCH 230KV CKT 1	320	320	0.48077	105.1323	GEN620315 1-BIG STONE GEN
FDNS	09ALL_G15_042	0	20SP	G15_042	FROM->TO	DIXONCO 230.00 - TWIN CHURCH 230KV CKT 1	320	320	0.47906	105.1154	RASMUSN - SIOUX CITY 230KV CKT 1
FDNS	09ALL_G15_042	0	20SP	G15_042	FROM->TO	DIXONCO 230.00 - TWIN CHURCH 230KV CKT 1	320	320	0.48158	105.0792	ALBION - PETERSBURG 115KV CKT 1
FDNS	09ALL_G15_042	0	17SP	G15_042	FROM->TO	DIXONCO 230.00 - TWIN CHURCH 230KV CKT 1	320	320	0.47985	105.0276	FT THOMPSON - LETCHER 230KV CKT 1
FDNS	09ALL_G15_042	0	17SP	G15_042	FROM->TO	DIXONCO 230.00 - TWIN CHURCH 230KV CKT 1	320	320	0.47985	105.0276	FT THOMPSON - LETCHER 230KV CKT 1
FDNS	09ALL_G15_042	0	20SP	G15_042	FROM->TO	DIXONCO 230.00 - TWIN CHURCH 230KV CKT 1	320	320	0.48148	105.0168	BLOOMFIELD - GAVINS POINT 115KV CKT 1
FDNS	09ALL_G15_042	0	20SP	G15_042	FROM->TO	DIXONCO 230.00 - TWIN CHURCH 230KV CKT 1	320	320	0.48077	105.0105	GEN615002 2-COAL CREEK
FDNS	09ALL_G15_042	0	25SP	G15_042	FROM->TO	DIXONCO 230.00 - TWIN CHURCH 230KV CKT 1	320	320	0.48066	105.0075	GEN600000 1-SHERBURNECNTY G1
FDNS	09ALL_G15_042	0	20SP	G15_042	FROM->TO	DIXONCO 230.00 - TWIN CHURCH 230KV CKT 1	320	320	0.48077	104.9913	GEN615001 1-COAL CREEK
FDNS	09ALL_G15_042	0	25SP	G15_042	FROM->TO	DIXONCO 230.00 - TWIN CHURCH 230KV CKT 1	320	320	0.4789	104.9688	PAHOJA - SIOUX FALLS 230KV CKT 1
FDNS	09ALL_G15_042	0	25SP	G15_042	FROM->TO	DIXONCO 230.00 - TWIN CHURCH 230KV CKT 1	320	320	0.48148	104.9378	P12:115:NPPD:1168B:ALBION 7:PETERSBRG.N7:BTB
FDNS	09ALL_G15_042	0	25SP	G15_042	FROM->TO	DIXONCO 230.00 - TWIN CHURCH 230KV CKT 1	320	320	0.47896	104.9349	RASMUSN - UTICA JCT 230KV CKT 1
FDNS	09ALL_G15_042	0	25SP	G15_042	FROM->TO	DIXONCO 230.00 - TWIN CHURCH 230KV CKT 1	320	320	0.48148	104.9084	PETERSBRG.N7115.00 - PETERSBURG 115KV CKT Z1
FDNS	09ALL_G15_042	0	25SP	G15_042	FROM->TO	DIXONCO 230.00 - TWIN CHURCH 230KV CKT 1	320	320	0.48066	104.9023	GEN600005 1-MONTICELLO
FDNS	09ALL_G15_042	0	20SP	G15_042	FROM->TO	DIXONCO 230.00 - TWIN CHURCH 230KV CKT 1	320	320	0.48077	104.8975	GEN600006 1-AS KING
FDNSLock	09ALL_G15_042	0	20SP	G15_042	FROM->TO	DIXONCO 230.00 - TWIN CHURCH 230KV CKT 1	320	320	0.4807	104.8909	COLUMBUS - SCHUYLER 115KV CKT 1
FDNS	09ALL_G15_042	0	25SP	G15_042	FROM->TO	DIXONCO 230.00 - TWIN CHURCH 230KV CKT 1	320	320	0.48066	104.8746	GEN600001 2-SHERBURNE CNTY G2
FDNS	09ALL_G15_042	0	20SP	G15_042	FROM->TO	DIXONCO 230.00 - TWIN CHURCH 230KV CKT 1	320	320	0.48077	104.8601	GEN600003 1-PRAIRIE ISLAND G1
FDNS	09ALL_G15_042	0	20SP	G15_042	FROM->TO	DIXONCO 230.00 - TWIN CHURCH 230KV CKT 1	320	320	0.48077	104.8581	GEN600004 2-PRAIRIE ISLAND G2
FDNS	09ALL_G15_042	0	25SP	G15_042	FROM->TO	DIXONCO 230.00 - TWIN CHURCH 230KV CKT 1	320	320	0.48348	104.8201	BEEMER - STANTON 115KV CKT 1
FDNS	09ALL_G15_042	0	25SP	G15_042	FROM->TO	DIXONCO 230.00 - TWIN CHURCH 230KV CKT 1	320	320	0.48148	104.8149	ALBION - PETERSBURG 115KV CKT 1
FDNS	09ALL_G15_042	0	25SP	G15_042	FROM->TO	DIXONCO 230.00 - TWIN CHURCH 230KV CKT 1	320	320	0.48066	104.8072	GEN620315 1-BIG STONE GEN
FDNS	09ALL_G15_042	0	20SP	G15_042	FROM->TO	DIXONCO 230.00 - TWIN CHURCH 230KV CKT 1	320	320	0.47899	104.773	EAGLE 4 230.00 - PAHOJA 230KV CKT 1
FDNS	09ALL_G15_042	0	20SP	G15_042	FROM->TO	DIXONCO 230.00 - TWIN CHURCH 230KV CKT 1	320	320	0.48048	104.7608	P12:230:UMZB:# 116 #: ST IN SD. WSG-ST-VH
FDNS	09ALL_G15_042	0	20SP	G15_042	FROM->TO	DIXONCO 230.00 - TWIN CHURCH 230KV CKT 1	320	320	0.48077	104.7313	ALMA 161 161/24.0KV TRANSFORMER CKT 1
FDNS	09ALL_G15_042	0	25SP	G15_042	FROM->TO	DIXONCO 230.00 - TWIN CHURCH 230KV CKT 1	320	320	0.48066	104.6795	GEN615002 2-COAL CREEK
FDNS	09ALL_G15_042	0	25SP	G15_042	FROM->TO	DIXONCO 230.00 - TWIN CHURCH 230KV CKT 1	320	320	0.48066	104.661	GEN615001 1-COAL CREEK
FDNS	09ALL_G15_042	0	25SP	G15_042	FROM->TO	DIXONCO 230.00 - TWIN CHURCH 230KV CKT 1	320	320	0.47896	104.6319	RASMUSN - SIOUX CITY 230KV CKT 1
FDNS	09ALL_G15_042	0	25SP	G15_042	FROM->TO	DIXONCO 230.00 - TWIN CHURCH 230KV CKT 1	320	320	0.48066	104.5855	GEN600006 1-AS KING
FDNS	09ALL_G15_042	0	25SP	G15_042	FROM->TO	DIXONCO 230.00 - TWIN CHURCH 230KV CKT 1	320	320	0.48135	104.5839	BLOOMFIELD - GAVINS POINT 115KV CKT 1
FDNS	09ALL_G15_042	0	25SP	G15_042	FROM->TO	DIXONCO 230.00 - TWIN CHURCH 230KV CKT 1	320	320	0.48066	104.5683	CLAY BOSWELL 230/20.9KV TRANSFORMER CKT 1
FDNS	09ALL_G15_042	0	25SP	G15_042	FROM->TO	DIXONCO 230.00 - TWIN CHURCH 230KV CKT 1	320	320	0.48066	104.5468	GEN600003 1-PRAIRIE ISLAND G1
FDNS	09ALL_G15_042	0	25SP	G15_042	FROM->TO	DIXONCO 230.00 - TWIN CHURCH 230KV CKT 1	320	320	0.48124	104.5467	MINGO - RED WILLOW 345KV CKT 1
FDNS	09ALL_G15_042	0	25SP	G15_042	FROM->TO	DIXONCO 230.00 - TWIN CHURCH 230KV CKT 1	320	320	0.48124	104.5467	MINGO - RED WILLOW 345KV CKT 1
FDNS	09ALL_G15_042	0	25SP	G15_042	FROM->TO	DIXONCO 230.00 - TWIN CHURCH 230KV CKT 1	320	320	0.48066	104.5448	GEN600004 2-PRAIRIE ISLAND G2
FDNS	09NR_G15_042	0	17G	G15_042	FROM->TO	DIXONCO 230.00 - TWIN CHURCH 230KV CKT 1	320	320	0.47053	104.4836	GEN338143 1-INDEPENDENCE UNIT #1
FDNS	09NR_G15_042	0	17G	G15_042	FROM->TO	DIXONCO 230.00 - TWIN CHURCH 230KV CKT 1	320	320	0.47053	104.4801	GEN338146 1-INDEPENDENCE UNIT #2
FDNS	09NR_G15_042	0	20L	G15_042	FROM->TO	DIXONCO 230.00 - TWIN CHURCH 230KV CKT 1	320	320	0.47127	104.4573	GEN337652 1-WHITE BLUFF UNIT #1

SOLUTION	GROUP	SCENARIO	SEASON	SOURCE	DIRECTION	MONITORED ELEMENT	RATEA (MVA)	RATEB(MVA)	TDF	TC%LOADING (% MVA)	CONTINGENCY
FDNS	09NR_G15_042	0	17G	G15_042	FROM->TO	DIXONCO 230.00 - TWIN CHURCH 230KV CKT 1	320	320	0.47053	104.4382	GEN337652 1-WHITE BLUFF UNIT #1
FDNS	09NR_G15_042	0	17G	G15_042	FROM->TO	DIXONCO 230.00 - TWIN CHURCH 230KV CKT 1	320	320	0.4685	104.4362	TWIN CHURCH (TWNCHURCH T6) 230/115/13.8KV TRANSFORMER CKT 2
FDNS	09NR_G15_042	0	17G	G15_042	FROM->TO	DIXONCO 230.00 - TWIN CHURCH 230KV CKT 1	320	320	0.4685	104.4362	TWIN CHURCH (TWNCHURCH T6) 230/115/13.8KV TRANSFORMER CKT 2
FDNS	09NR_G15_042	0	17G	G15_042	FROM->TO	DIXONCO 230.00 - TWIN CHURCH 230KV CKT 1	320	320	0.47053	104.4343	GEN501801 1-DOLET HILLS UNIT1
FDNS	09ALL_G15_042	0	25SP	G15_042	FROM->TO	DIXONCO 230.00 - TWIN CHURCH 230KV CKT 1	320	320	0.48038	104.4342	P12:230:UMZB:# 116 #: ST IN SD. WSG-ST-VH
FDNS	09ALL_G15_042	0	25SP	G15_042	FROM->TO	DIXONCO 230.00 - TWIN CHURCH 230KV CKT 1	320	320	0.48164	104.4324	AXTELL - POST ROCK 345KV CKT 1
FDNS	09ALL_G15_042	0	25SP	G15_042	FROM->TO	DIXONCO 230.00 - TWIN CHURCH 230KV CKT 1	320	320	0.48059	104.4212	COLUMBUS - SCHUYLER 115KV CKT 1
FDNS	09NR_G15_042	0	17G	G15_042	FROM->TO	DIXONCO 230.00 - TWIN CHURCH 230KV CKT 1	320	320	0.46898	104.4127	SIOUX CITY (SC KV1A) 230/161/13.8KV TRANSFORMER CKT 1
FDNS	09NR_G15_042	0	17G	G15_042	FROM->TO	DIXONCO 230.00 - TWIN CHURCH 230KV CKT 1	320	320	0.46897	104.4059	SIOUX CITY (SC KV5A) 230/161/13.8KV TRANSFORMER CKT 1
FDNS	09NR_G15_042	0	20L	G15_042	FROM->TO	DIXONCO 230.00 - TWIN CHURCH 230KV CKT 1	320	320	0.46987	104.393	SIOUXCY-LNX3345.00 - SPLIT ROCK 345KV CKT 1
FDNS	09NR_G15_042	0	20L	G15_042	FROM->TO	DIXONCO 230.00 - TWIN CHURCH 230KV CKT 1	320	320	0.46987	104.393	SIOUXCY-LNX3345.00 - SPLIT ROCK 345KV CKT 1
FDNS	09NR_G15_042	0	17G	G15_042	FROM->TO	DIXONCO 230.00 - TWIN CHURCH 230KV CKT 1	320	320	0.47053	104.3848	GEN337653 1-WHITE BLUFF UNIT #2
FDNS	09ALL_G15_042	0	25SP	G15_042	FROM->TO	DIXONCO 230.00 - TWIN CHURCH 230KV CKT 1	320	320	0.48038	104.3741	HANLON - STORLA 230KV CKT 1
FDNS	09ALL_G15_042	0	25SP	G15_042	FROM->TO	DIXONCO 230.00 - TWIN CHURCH 230KV CKT 1	320	320	0.4789	104.3674	EAGLE 4 230.00 - PAHOJA 230KV CKT 1
FDNS	09ALL_G15_042	0	25SP	G15_042	FROM->TO	DIXONCO 230.00 - TWIN CHURCH 230KV CKT 1	320	320	0.48066	104.3648	ALMA 161 161/24.0KV TRANSFORMER CKT 1
FDNS	09NR_G15_042	0	20L	G15_042	FROM->TO	DIXONCO 230.00 - TWIN CHURCH 230KV CKT 1	320	320	0.46981	104.3565	SIOUX CITY (SC KV1A) 230/161/13.8KV TRANSFORMER CKT 1
FDNS	09ALL_G15_042	0	25SP	G15_042	FROM->TO	DIXONCO 230.00 - TWIN CHURCH 230KV CKT 1	320	320	0.48126	104.3539	HIGHLND 3 345.00 - OBRIEN 3 345.00 345KV CKT 1
FDNS	09NR_G15_042	0	20L	G15_042	FROM->TO	DIXONCO 230.00 - TWIN CHURCH 230KV CKT 1	320	320	0.4698	104.3497	SIOUX CITY (SC KV5A) 230/161/13.8KV TRANSFORMER CKT 1
FDNS	09NR_G15_042	0	20L	G15_042	FROM->TO	DIXONCO 230.00 - TWIN CHURCH 230KV CKT 1	320	320	0.45881	104.3471	BANCROFT - OAKLAND 115KV CKT 1
FDNS	09NR_G15_042	0	17G	G15_042	FROM->TO	DIXONCO 230.00 - TWIN CHURCH 230KV CKT 1	320	320	0.46938	104.3426	ANITA TAP POINT TO CRESTON AND DENISON - EXIRA 161KV CKT 1
FDNS	09ALL_G15_042	0	25SP	G15_042	FROM->TO	DIXONCO 230.00 - TWIN CHURCH 230KV CKT 1	320	320	0.48066	104.3419	GEN657748 1-YOUNG 2 GENERATOR
FDNS	09NR_G15_042	0	17G	G15_042	FROM->TO	DIXONCO 230.00 - TWIN CHURCH 230KV CKT 1	320	320	0.46957	104.3319	GRIMES - LEHIGH 345KV CKT 1
FDNS	09NR_G15_042	0	17G	G15_042	FROM->TO	DIXONCO 230.00 - TWIN CHURCH 230KV CKT 1	320	320	0.46938	104.3158	DENISON - EXIRA 161KV CKT 1
FDNS	09NR_G15_042	0	17G	G15_042	FROM->TO	DIXONCO 230.00 - TWIN CHURCH 230KV CKT 1	320	320	0.46938	104.3152	DENISON (DN KV1A) 230/161/13.8KV TRANSFORMER CKT 1
FDNS	09NR_G15_042	0	20L	G15_042	FROM->TO	DIXONCO 230.00 - TWIN CHURCH 230KV CKT 1	320	320	0.47015	104.2924	ANITA TAP POINT TO CRESTON AND DENISON - EXIRA 161KV CKT 1
FDNS	09NR_G15_042	0	20L	G15_042	FROM->TO	DIXONCO 230.00 - TWIN CHURCH 230KV CKT 1	320	320	0.47127	104.2882	GEN335831 1-RIVERBEND UNIT#1
FDNS	09NR_G15_042	0	17G	G15_042	FROM->TO	DIXONCO 230.00 - TWIN CHURCH 230KV CKT 1	320	320	0.47053	104.2671	GEN640431 1-LAREDO.GEN1W0.6900
FDNS	09NR_G15_042	0	20L	G15_042	FROM->TO	DIXONCO 230.00 - TWIN CHURCH 230KV CKT 1	320	320	0.47015	104.2643	DENISON (DN KV1A) 230/161/13.8KV TRANSFORMER CKT 1
FDNS	09NR_G15_042	0	20L	G15_042	FROM->TO	DIXONCO 230.00 - TWIN CHURCH 230KV CKT 1	320	320	0.47015	104.2639	DENISON - EXIRA 161KV CKT 1
FDNS	09NR_G15_042	0	20L	G15_042	FROM->TO	DIXONCO 230.00 - TWIN CHURCH 230KV CKT 1	320	320	0.47127	104.2549	GEN337910 1-ARKANSAS NUCLEAR ONE UNIT #1
FDNS	09NR_G15_042	0	20L	G15_042	FROM->TO	DIXONCO 230.00 - TWIN CHURCH 230KV CKT 1	320	320	0.47127	104.2202	GEN640431 1-LAREDO.GEN1W0.6900
FDNS	09NR_G15_042	0	17G	G15_042	FROM->TO	DIXONCO 230.00 - TWIN CHURCH 230KV CKT 1	320	320	0.47347	104.2024	SHELL CREEK (SHELLCREEKT1) 345/230/13.8KV TRANSFORMER CKT 1
FDNS	09NR_G15_042	0	17G	G15_042	FROM->TO	DIXONCO 230.00 - TWIN CHURCH 230KV CKT 1	320	320	0.47347	104.2024	SHELL CREEK (SHELLCREEKT1) 345/230/13.8KV TRANSFORMER CKT 1
FDNS	09NR_G15_042	0	17G	G15_042	FROM->TO	DIXONCO 230.00 - TWIN CHURCH 230KV CKT 1	320	320	0.47347	104.1914	KELLY - SHELL CREEK 230KV CKT 1
FDNS	09NR_G15_042	0	20L	G15_042	FROM->TO	DIXONCO 230.00 - TWIN CHURCH 230KV CKT 1	320	320	0.47127	104.1884	GEN344225 1-1CAL G1 25.000
FDNS	09NR_G15_042	0	20L	G15_042	FROM->TO	DIXONCO 230.00 - TWIN CHURCH 230KV CKT 1	320	320	0.47127	104.1571	GEN336153 1-WATERFORD UNIT#3
FDNS	09NR_G15_042	0	17G	G15_042	FROM->TO	DIXONCO 230.00 - TWIN CHURCH 230KV CKT 1	320	320	0.47053	104.145	GEN337910 1-ARKANSAS NUCLEAR ONE UNIT #1
FDNS	09NR_G15_042	0	17G	G15_042	FROM->TO	DIXONCO 230.00 - TWIN CHURCH 230KV CKT 1	320	320	0.47053	104.14	GEN335831 1-RIVERBEND UNIT#1
FDNS	09NR_G15_042	0	20L	G15_042	FROM->TO	DIXONCO 230.00 - TWIN CHURCH 230KV CKT 1	320	320	0.47127	104.0643	GEN337911 1-ARKANSAS NUCLEAR ONE UNIT #2
FDNS	09ALL_G15_042	0	17SP	G15_042	FROM->TO	DIXONCO 230.00 - TWIN CHURCH 230KV CKT 1	320	320	0.48012	104.0557	BASE CASE
FDNS	09NR_G15_042	0	17G	G15_042	FROM->TO	DIXONCO 230.00 - TWIN CHURCH 230KV CKT 1	320	320	0.46685	104.01	RAUN - SUB 3451 FT CAL 345KV CKT 1
FDNS	09NR_G15_042	0	17G	G15_042	FROM->TO	DIXONCO 230.00 - TWIN CHURCH 230KV CKT 1	320	320	0.46685	104.01	RAUN - SUB 3451 FT CAL 345KV CKT 1
FDNS	09NR_G15_042	0	17G	G15_042	FROM->TO	DIXONCO 230.00 - TWIN CHURCH 230KV CKT 1	320	320	0.47053	103.982	GEN336153 1-WATERFORD UNIT#3
FDNS	09NR_G15_042	0	17G	G15_042	FROM->TO	DIXONCO 230.00 - TWIN CHURCH 230KV CKT 1	320	320	0.47053	103.9738	GEN635023 3-WALTER SCOTT UNIT 3
FDNS	09NR_G15_042	0	17G	G15_042	FROM->TO	DIXONCO 230.00 - TWIN CHURCH 230KV CKT 1	320	320	0.45805	103.9732	BANCROFT - OAKLAND 115KV CKT 1
FDNS	09NR_G15_042	0	20L	G15_042	FROM->TO	DIXONCO 230.00 - TWIN CHURCH 230KV CKT 1	320	320	0.45881	103.9412	P12:115:NPPD:1193:OAKLAND7:EMERSON7:BTB
FDNS	09NR_G15_042	0	20L	G15_042	FROM->TO	DIXONCO 230.00 - TWIN CHURCH 230KV CKT 1	320	320	0.47127	103.9303	GEN336821 1-GRAND GULF UNIT
FDNS	09NR_G15_042	0	17G	G15_042	FROM->TO	DIXONCO 230.00 - TWIN CHURCH 230KV CKT 1	320	320	0.47053	103.9254	GEN337911 1-ARKANSAS NUCLEAR ONE UNIT #2
FDNS	09NR_G15_042	0	20L	G15_042	FROM->TO	DIXONCO 230.00 - TWIN CHURCH 230KV CKT 1	320	320	0.45881	103.9214	BANCROFT - EMERSON 115KV CKT 1
FDNS	09NR_G15_042	0	20L	G15_042	FROM->TO	DIXONCO 230.00 - TWIN CHURCH 230KV CKT 1	320	320	0.46707	103.9205	TWIN CHURCH (TWNCHURCH T4) 230/115/13.8KV TRANSFORMER CKT 1
FDNS	09NR_G15_042	0	20L	G15_042	FROM->TO	DIXONCO 230.00 - TWIN CHURCH 230KV CKT 1	320	320	0.46707	103.9205	TWIN CHURCH (TWNCHURCH T4) 230/115/13.8KV TRANSFORMER CKT 1
FDNS	09NR_G15_042	0	17G	G15_042	FROM->TO	DIXONCO 230.00 - TWIN CHURCH 230KV CKT 1	320	320	0.46872	103.9025	EAGLE 4 230.00 - SIOUX CITY 230KV CKT 1
FDNS	09NR_G15_042	0	20L	G15_042	FROM->TO	DIXONCO 230.00 - TWIN CHURCH 230KV CKT 1	320	320	0.47127	103.8582	GEN635023 3-WALTER SCOTT UNIT 3
FDNS	09NR_G15_042	0	17G	G15_042	FROM->TO	DIXONCO 230.00 - TWIN CHURCH 230KV CKT 1	320	320	0.47053	103.7918	GEN635024 4-WALTER SCOTT UNIT 4
FDNS	09NR_G15_042	0	20L	G15_042	FROM->TO	DIXONCO 230.00 - TWIN CHURCH 230KV CKT 1	320	320	0.46815	103.762	GRPRAR1-LNX3345.00 - HOLT.CO3 345.00 345KV CKT 1
FDNS	09NR_G15_042	0	20L	G15_042	FROM->TO	DIXONCO 230.00 - TWIN CHURCH 230KV CKT 1	320	320	0.46815	103.7615	GRPRAR1-LNX3345.00 - YANKTON 345KV CKT Z
FDNS	09ALL_G15_042	0	20SP	G15_042	FROM->TO	DIXONCO 230.00 - TWIN CHURCH 230KV CKT 1	320	320	0.48077	103.7295	BASE CASE
FDNS	09NR_G15_042	0	20L	G15_042	FROM->TO	DIXONCO 230.00 - TWIN CHURCH 230KV CKT 1	320	320	0.46935	103.7094	EAGLE 4 230.00 - SIOUX CITY 230KV CKT 1
FDNS	09NR_G15_042	0	17G	G15_042	FROM->TO	DIXONCO 230.00 - TWIN CHURCH 230KV CKT 1	320	320	0.47053	103.6967	GEN336821 1-GRAND GULF UNIT
FDNS	09NR_G15_042	0	20L	G15_042	FROM->TO	DIXONCO 230.00 - TWIN CHURCH 230KV CKT 1	320	320	0.47271	103.6713	ANTELOPE 3345.00 - HOSKINS 345KV CKT 1
FDNS	09NR_G15_042	0	20L	G15_042	FROM->TO	DIXONCO 230.00 - TWIN CHURCH 230KV CKT 1	320	320	0.47127	103.6392	GEN635024 4-WALTER SCOTT UNIT 4
FDNS	09NR_G15_042	0	17G	G15_042	FROM->TO	DIXONCO 230.00 - TWIN CHURCH 230KV CKT 1	320	320	0.47183	103.5694	ANTELOPE 3345.00 - HOSKINS 345KV CKT 1
FDNS	09NR_G15_042	0	17G	G15_042	FROM->TO	DIXONCO 230.00 - TWIN CHURCH 230KV CKT 1	320	320	0.46645	103.4877	PLYMOUTH - SIOUX CITY 161KV CKT 1
FDNS	09NR_G15_042	0	17G	G15_042	FROM->TO	DIXONCO 230.00 - TWIN CHURCH 230KV CKT 1	320	320	0.46645	103.4877	PLYMOUTH - SIOUX CITY 161KV CKT 1
FDNS	09NR_G15_042	0	20L	G15_042	FROM->TO	DIXONCO 230.00 - TWIN CHURCH 230KV CKT 1	320	320	0.46744	103.455	PLYMOUTH - SIOUX CITY 161KV CKT 1
FDNS	09NR_G15_042	0	20L	G15_042	FROM->TO	DIXONCO 230.00 - TWIN CHURCH 230KV CKT 1	320	320	0.46744	103.455	PLYMOUTH - SIOUX CITY 161KV CKT 1
FDNS	09NR_G15_042	0	17G	G15_042	FROM->TO	DIXONCO 230.00 - TWIN CHURCH 230KV CKT 1	320	320	0.46634	103.4168	TWIN CHURCH (TWNCHURCH T4) 230/115/13.8KV TRANSFORMER CKT 1
FDNS	09NR_G15_042	0	17G	G15_042	FROM->TO	DIXONCO 230.00 - TWIN CHURCH 230KV CKT 1	320	320	0.46634	103.4168	TWIN CHURCH (TWNCHURCH T4) 230/115/13.8KV TRANSFORMER CKT 1
FDNS	09ALL_G15_042	0	25SP	G15_042	FROM->TO	DIXONCO 230.00 - TWIN CHURCH 230KV CKT 1	320	320	0.48066	103.3807	BASE CASE
FDNS	09NR_G15_042	0	20L	G15_042	FROM->TO	DIXONCO 230.00 - TWIN CHURCH 230KV CKT 1	320	320	0.47271	103.3746	ANTELOPE 3345.00 (ANTELOPE T1) 345/115/13.8KV TRANSFORMER CKT 1
FDNS	09NR_G15_042	0	17G	G15_042	FROM->TO	DIXONCO 230.00 - TWIN CHURCH 230KV CKT 1	320	320	0.45805	103.323	P12:115:NPPD:1193:OAKLAND7:EMERSON7:BTB
FDNS	09NR_G15_042	0	17G	G15_042	FROM->TO	DIXONCO 230.00 - TWIN CHURCH 230KV CKT 1	320	320	0.45805	103.2875	BANCROFT - EMERSON 115KV CKT 1
FDNS	09NR_G15_042	0	17G	G15_042	FROM->TO	DIXONCO 230.00 - TWIN CHURCH 230KV CKT 1	320	320	0.47183	103.2676	ANTELOPE 3345.00 (ANTELOPE T1) 345/115/13.8KV TRANSFORMER CKT 1

SOLUTION	GROUP	SCENARIO	SEASON	SOURCE	DIRECTION	MONITORED ELEMENT	RATEA (MVA)	RATEB(MVA)	TDF	TC%LOADING (% MVA)	CONTINGENCY
FDNS	09ALL_G15_042	0	17SP	G15_042	FROM->TO	DIXONCO 230.00 - TWIN CHURCH 230KV CKT 1	320	320	0.48012	103.1588	GEN345671 2-1RUSH G2 18.000
FDNS	09ALL_G15_042	0	17SP	G15_042	FROM->TO	DIXONCO 230.00 - TWIN CHURCH 230KV CKT 1	320	320	0.48012	103.1587	GEN345670 1-1RUSH G1 18.000
FDNS	09ALL_G15_042	0	17SP	G15_042	FROM->TO	DIXONCO 230.00 - TWIN CHURCH 230KV CKT 1	320	320	0.48012	103.1525	GEN344895 2-1LAB G2 20.000
FDNS	09ALL_G15_042	0	17SP	G15_042	FROM->TO	DIXONCO 230.00 - TWIN CHURCH 230KV CKT 1	320	320	0.48012	103.1233	GEN344894 1-1LAB G1 20.000
FDNS	09ALL_G15_042	0	17SP	G15_042	FROM->TO	DIXONCO 230.00 - TWIN CHURCH 230KV CKT 1	320	320	0.48012	103.1233	GEN344896 3-1LAB G3 20.000
FDNS	09ALL_G15_042	0	17SP	G15_042	FROM->TO	DIXONCO 230.00 - TWIN CHURCH 230KV CKT 1	320	320	0.48012	103.1215	GEN344897 4-1LAB G4 20.000
FDNS	09ALL_G15_042	0	17SP	G15_042	FROM->TO	DIXONCO 230.00 - TWIN CHURCH 230KV CKT 1	320	320	0.48012	103.1199	GEN335206 1-NELSON UNIT 6
FDNS	09ALL_G15_042	0	17SP	G15_042	FROM->TO	DIXONCO 230.00 - TWIN CHURCH 230KV CKT 1	320	320	0.48012	103.0995	GEN337041 1-GERALD ANDRUS
FDNS	09ALL_G15_042	0	17SP	G15_042	FROM->TO	DIXONCO 230.00 - TWIN CHURCH 230KV CKT 1	320	320	0.48012	103.0613	GEN336251 1-NINEMILE POINT UNIT#4
FDNS	09ALL_G15_042	0	17SP	G15_042	FROM->TO	DIXONCO 230.00 - TWIN CHURCH 230KV CKT 1	320	320	0.48012	103.0539	GEN336831 1-BAXTER WILSON SES
FDNS	09NR_G15_042	0	17G	G15_042	FROM->TO	DIXONCO 230.00 - TWIN CHURCH 230KV CKT 1	320	320	0.46801	103.0427	GRPRAR1-LNX3345.00 - YANKTON 345KV CKT Z
FDNS	09NR_G15_042	0	17G	G15_042	FROM->TO	DIXONCO 230.00 - TWIN CHURCH 230KV CKT 1	320	320	0.46801	103.0421	GRPRAR1-LNX3345.00 - HOLT.CO3 345.00 345KV CKT 1
FDNS	09ALL_G15_042	0	17SP	G15_042	FROM->TO	DIXONCO 230.00 - TWIN CHURCH 230KV CKT 1	320	320	0.48012	103.015	GEN501813 1-RODEMACHER UNIT 3
FDNS	09ALL_G15_042	0	17SP	G15_042	FROM->TO	DIXONCO 230.00 - TWIN CHURCH 230KV CKT 1	320	320	0.48012	102.9816	GEN336252 1-NINEMILE POINT UNIT#5
FDNS	09NR_G15_042	0	20L	G15_042	FROM->TO	DIXONCO 230.00 - TWIN CHURCH 230KV CKT 1	320	320	0.47127	102.9715	GR ISLD-LNX3345.00 - HOLT.CO3 345.00 345KV CKT 1
FDNS	09ALL_G15_042	0	17SP	G15_042	FROM->TO	DIXONCO 230.00 - TWIN CHURCH 230KV CKT 1	320	320	0.48124	102.9648	ANTELOPE 3345.00 (ANTELOPE T1) 345/115/13.8KV TRANSFORMER CKT 1
FDNS	09NR_G15_042	0	20L	G15_042	FROM->TO	DIXONCO 230.00 - TWIN CHURCH 230KV CKT 1	320	320	0.47127	102.9127	GR ISLD-LNX3345.00 - GRAND ISLAND 345KV CKT Z
FDNS	09ALL_G15_042	0	17SP	G15_042	FROM->TO	DIXONCO 230.00 - TWIN CHURCH 230KV CKT 1	320	320	0.47806	102.9092	EAGLE 4 230.00 - SIOUX CITY 230KV CKT 1
FDNS	09ALL_G15_042	0	17SP	G15_042	FROM->TO	DIXONCO 230.00 - TWIN CHURCH 230KV CKT 1	320	320	0.48233	102.8974	KELLY - SHELL CREEK 230KV CKT 1
FDNS	09ALL_G15_042	0	17SP	G15_042	FROM->TO	DIXONCO 230.00 - TWIN CHURCH 230KV CKT 1	320	320	0.48233	102.8742	SHELL CREEK (SHELLCREEKT1) 345/230/13.8KV TRANSFORMER CKT 1
FDNS	09ALL_G15_042	0	17SP	G15_042	FROM->TO	DIXONCO 230.00 - TWIN CHURCH 230KV CKT 1	320	320	0.48233	102.8742	SHELL CREEK (SHELLCREEKT1) 345/230/13.8KV TRANSFORMER CKT 1
FDNS	09ALL_G15_042	0	17SP	G15_042	FROM->TO	DIXONCO 230.00 - TWIN CHURCH 230KV CKT 1	320	320	0.47882	102.8404	ANITA TAP POINT TO CRESTON AND DENISON - EXIRA 161KV CKT 1
FDNS	09ALL_G15_042	0	17SP	G15_042	FROM->TO	DIXONCO 230.00 - TWIN CHURCH 230KV CKT 1	320	320	0.48012	102.8201	GEN501801 1-DOLET HILLS UNIT1
FDNS	09NR_G15_042	0	20L	G15_042	FROM->TO	DIXONCO 230.00 - TWIN CHURCH 230KV CKT 1	320	320	0.46885	102.8072	DENISON - SIOUX CITY 230KV CKT 1
FDNS	09ALL_G15_042	0	20SP	G15_042	FROM->TO	DIXONCO 230.00 - TWIN CHURCH 230KV CKT 1	320	320	0.48077	102.8072	GEN335206 1-NELSON UNIT 6
FDNS	09ALL_G15_042	0	17SP	G15_042	FROM->TO	DIXONCO 230.00 - TWIN CHURCH 230KV CKT 1	320	320	0.46818	102.7794	BANCROFT - OAKLAND 115KV CKT 1
FDNS	09ALL_G15_042	0	17SP	G15_042	FROM->TO	DIXONCO 230.00 - TWIN CHURCH 230KV CKT 1	320	320	0.4786	102.7785	SIOUX CITY (SC KV1A) 230/161/13.8KV TRANSFORMER CKT 1
FDNS	09ALL_G15_042	0	17SP	G15_042	FROM->TO	DIXONCO 230.00 - TWIN CHURCH 230KV CKT 1	320	320	0.48012	102.7778	GEN338143 1-INDEPENDENCE UNIT #1
FDNS	09ALL_G15_042	0	17SP	G15_042	FROM->TO	DIXONCO 230.00 - TWIN CHURCH 230KV CKT 1	320	320	0.48012	102.7737	GEN338146 1-INDEPENDENCE UNIT #2
FDNS	09ALL_G15_042	0	17SP	G15_042	FROM->TO	DIXONCO 230.00 - TWIN CHURCH 230KV CKT 1	320	320	0.47859	102.7696	SIOUX CITY (SC KV5A) 230/161/13.8KV TRANSFORMER CKT 1
FDNS	09ALL_G15_042	0	17SP	G15_042	FROM->TO	DIXONCO 230.00 - TWIN CHURCH 230KV CKT 1	320	320	0.48012	102.7408	GEN337652 1-WHITE BLUFF UNIT #1
FDNS	09ALL_G15_042	0	17SP	G15_042	FROM->TO	DIXONCO 230.00 - TWIN CHURCH 230KV CKT 1	320	320	0.47691	102.7385	RAUN - SUB 3451 FT CAL 345KV CKT 1
FDNS	09ALL_G15_042	0	17SP	G15_042	FROM->TO	DIXONCO 230.00 - TWIN CHURCH 230KV CKT 1	320	320	0.47691	102.7385	RAUN - SUB 3451 FT CAL 345KV CKT 1
FDNS	09ALL_G15_042	0	17SP	G15_042	FROM->TO	DIXONCO 230.00 - TWIN CHURCH 230KV CKT 1	320	320	0.48012	102.7315	GEN337653 1-WHITE BLUFF UNIT #2
FDNS	09ALL_G15_042	0	17SP	G15_042	FROM->TO	DIXONCO 230.00 - TWIN CHURCH 230KV CKT 1	320	320	0.47816	102.7119	TWIN CHURCH (TWNCHURCH T6) 230/115/13.8KV TRANSFORMER CKT 2
FDNS	09ALL_G15_042	0	17SP	G15_042	FROM->TO	DIXONCO 230.00 - TWIN CHURCH 230KV CKT 1	320	320	0.47816	102.7119	TWIN CHURCH (TWNCHURCH T6) 230/115/13.8KV TRANSFORMER CKT 2
FDNS	09ALL_G15_042	0	20SP	G15_042	FROM->TO	DIXONCO 230.00 - TWIN CHURCH 230KV CKT 1	320	320	0.48077	102.7054	GEN501813 1-RODEMACHER UNIT 3
FDNS	09ALL_G15_042	0	20SP	G15_042	FROM->TO	DIXONCO 230.00 - TWIN CHURCH 230KV CKT 1	320	320	0.48039	102.7005	LAKEFIELD 3 - NOBLES 345KV CKT 1
FDNS	09ALL_G15_042	0	20SP	G15_042	FROM->TO	DIXONCO 230.00 - TWIN CHURCH 230KV CKT 1	320	320	0.48077	102.6811	GEN337041 1-GERALD ANDRUS
FDNS	09ALL_G15_042	0	20SP	G15_042	FROM->TO	DIXONCO 230.00 - TWIN CHURCH 230KV CKT 1	320	320	0.48198	102.662	ANTELOPE 3345.00 (ANTELOPE T1) 345/115/13.8KV TRANSFORMER CKT 1
FDNS	09ALL_G15_042	0	20SP	G15_042	FROM->TO	DIXONCO 230.00 - TWIN CHURCH 230KV CKT 1	320	320	0.48077	102.648	GEN336831 1-BAXTER WILSON SES
FDNS	09ALL_G15_042	0	17SP	G15_042	FROM->TO	DIXONCO 230.00 - TWIN CHURCH 230KV CKT 1	320	320	0.48012	102.6426	GEN640431 1-LAREDO.GEN1W0.6900
FDNS	09ALL_G15_042	0	20SP	G15_042	FROM->TO	DIXONCO 230.00 - TWIN CHURCH 230KV CKT 1	320	320	0.48077	102.6376	GEN336251 1-NINEMILE POINT UNIT#4
FDNS	09NR_G15_042	0	17G	G15_042	FROM->TO	DIXONCO 230.00 - TWIN CHURCH 230KV CKT 1	320	320	0.46805	102.6327	DENISON - SIOUX CITY 230KV CKT 1
FDNS	09ALL_G15_042	0	17SP	G15_042	FROM->TO	DIXONCO 230.00 - TWIN CHURCH 230KV CKT 1	320	320	0.48059	102.6241	ONEILL - SPENCER 115KV CKT 1
FDNS	09ALL_G15_042	0	20SP	G15_042	FROM->TO	DIXONCO 230.00 - TWIN CHURCH 230KV CKT 1	320	320	0.48077	102.5888	GEN336252 1-NINEMILE POINT UNIT#5
FDNS	09ALL_G15_042	0	17SP	G15_042	FROM->TO	DIXONCO 230.00 - TWIN CHURCH 230KV CKT 1	320	320	0.48059	102.5704	P12:115:NPPD:WAPA6:FTRANDL7:ONEILL 7:BTB
FDNS	09ALL_G15_042	0	17SP	G15_042	FROM->TO	DIXONCO 230.00 - TWIN CHURCH 230KV CKT 1	320	320	0.48059	102.5704	P12:115:UMZB:# 115 #: SE IN NE. FR-SE-ON
FDNS	09ALL_G15_042	0	17SP	G15_042	FROM->TO	DIXONCO 230.00 - TWIN CHURCH 230KV CKT 1	320	320	0.48012	102.5169	GEN640010 1-GERALD GENTLEMAN STATION UNIT 1
FDNS	09ALL_G15_042	0	20SP	G15_042	FROM->TO	DIXONCO 230.00 - TWIN CHURCH 230KV CKT 1	320	320	0.47865	102.5094	EAGLE 4 230.00 - SIOUX CITY 230KV CKT 1
FDNS	09ALL_G15_042	0	20SP	G15_042	FROM->TO	DIXONCO 230.00 - TWIN CHURCH 230KV CKT 1	320	320	0.48077	102.5087	GEN501801 1-DOLET HILLS UNIT1
FDNS	09ALL_G15_042	0	20SP	G15_042	FROM->TO	DIXONCO 230.00 - TWIN CHURCH 230KV CKT 1	320	320	0.47784	102.5043	RAUN - SUB 3451 FT CAL 345KV CKT 1
FDNS	09ALL_G15_042	0	20SP	G15_042	FROM->TO	DIXONCO 230.00 - TWIN CHURCH 230KV CKT 1	320	320	0.47784	102.5043	RAUN - SUB 3451 FT CAL 345KV CKT 1
FDNS	09ALL_G15_042	0	20SP	G15_042	FROM->TO	DIXONCO 230.00 - TWIN CHURCH 230KV CKT 1	320	320	0.48077	102.4976	GEN338146 1-INDEPENDENCE UNIT #2
FDNS	09ALL_G15_042	0	20SP	G15_042	FROM->TO	DIXONCO 230.00 - TWIN CHURCH 230KV CKT 1	320	320	0.48077	102.4975	GEN338143 1-INDEPENDENCE UNIT #1
FDNS	09ALL_G15_042	0	17SP	G15_042	FROM->TO	DIXONCO 230.00 - TWIN CHURCH 230KV CKT 1	320	320	0.48059	102.4903	FT RANDAL - SPENCER 115KV CKT 1
FDNS	09ALL_G15_042	0	20SP	G15_042	FROM->TO	DIXONCO 230.00 - TWIN CHURCH 230KV CKT 1	320	320	0.47927	102.4875	SIOUX CITY (SC KV1A) 230/161/13.8KV TRANSFORMER CKT 1
FDNS	09ALL_G15_042	0	20SP	G15_042	FROM->TO	DIXONCO 230.00 - TWIN CHURCH 230KV CKT 1	320	320	0.47926	102.4788	SIOUX CITY (SC KV5A) 230/161/13.8KV TRANSFORMER CKT 1
FDNS	09ALL_G15_042	0	20SP	G15_042	FROM->TO	DIXONCO 230.00 - TWIN CHURCH 230KV CKT 1	320	320	0.48077	102.4617	GEN337652 1-WHITE BLUFF UNIT #1
FDNS	09ALL_G15_042	0	17SP	G15_042	FROM->TO	DIXONCO 230.00 - TWIN CHURCH 230KV CKT 1	320	320	0.48012	102.4609	GEN640011 2-GERALD GENTLEMAN STATION UNIT 2
FDNS	09ALL_G15_042	0	17SP	G15_042	FROM->TO	DIXONCO 230.00 - TWIN CHURCH 230KV CKT 1	320	320	0.48012	102.431	GEN337910 1-ARKANSAS NUCLEAR ONE UNIT #1
FDNS	09ALL_G15_042	0	20SP	G15_042	FROM->TO	DIXONCO 230.00 - TWIN CHURCH 230KV CKT 1	320	320	0.48077	102.4281	GEN337653 1-WHITE BLUFF UNIT #2
FDNS	09ALL_G15_042	0	20SP	G15_042	FROM->TO	DIXONCO 230.00 - TWIN CHURCH 230KV CKT 1	320	320	0.4788	102.4078	TWIN CHURCH (TWNCHURCH T6) 230/115/13.8KV TRANSFORMER CKT 2
FDNS	09ALL_G15_042	0	20SP	G15_042	FROM->TO	DIXONCO 230.00 - TWIN CHURCH 230KV CKT 1	320	320	0.4788	102.4078	TWIN CHURCH (TWNCHURCH T6) 230/115/13.8KV TRANSFORMER CKT 2
FDNS	09ALL_G15_042	0	25SP	G15_042	FROM->TO	DIXONCO 230.00 - TWIN CHURCH 230KV CKT 1	320	320	0.48066	102.3974	GEN501813 1-RODEMACHER UNIT 3
FDNS	09ALL_G15_042	0	17SP	G15_042	FROM->TO	DIXONCO 230.00 - TWIN CHURCH 230KV CKT 1	320	320	0.48012	102.3804	GEN335831 1-RIVERBEND UNIT#1
FDNS	09ALL_G15_042	0	25SP	G15_042	FROM->TO	DIXONCO 230.00 - TWIN CHURCH 230KV CKT 1	320	320	0.48066	102.3769	GEN337041 1-GERALD ANDRUS
FDNS	09ALL_G15_042	0	25SP	G15_042	FROM->TO	DIXONCO 230.00 - TWIN CHURCH 230KV CKT 1	320	320	0.48066	102.3405	GEN336831 1-BAXTER WILSON SES
FDNS	09ALL_G15_042	0	20SP	G15_042	FROM->TO	DIXONCO 230.00 - TWIN CHURCH 230KV CKT 1	320	320	0.48077	102.3284	GEN640431 1-LAREDO.GEN1W0.6900
FDNS	09ALL_G15_042	0	20SP	G15_042	FROM->TO	DIXONCO 230.00 - TWIN CHURCH 230KV CKT 1	320	320	0.46882	102.326	BANCROFT - OAKLAND 115KV CKT 1
FDNS	09ALL_G15_042	0	20SP	G15_042	FROM->TO	DIXONCO 230.00 - TWIN CHURCH 230KV CKT 1	320	320	0.48118	102.3211	ONEILL - SPENCER 115KV CKT 1
FDNS	09ALL_G15_042	0	25SP	G15_042	FROM->TO	DIXONCO 230.00 - TWIN CHURCH 230KV CKT 1	320	320	0.48066	102.3191	GEN336251 1-NINEMILE POINT UNIT#4
FDNS	09ALL_G15_042	0	25SP	G15_042	FROM->TO	DIXONCO 230.00 - TWIN CHURCH 230KV CKT 1	320	320	0.48028	102.3094	LAKEFIELD 3 - NOBLES 345KV CKT 1

SOLUTION	GROUP	SCENARIO	SEASON	SOURCE	DIRECTION	MONITORED ELEMENT	RATEA (MVA)	RATEB(MVA)	TDF	TC%LOADING (% MVA)	CONTINGENCY
FDNS	09NR_G15_042	0	20L	G15_042	FROM->TO	DIXONCO 230.00 - TWIN CHURCH 230KV CKT 1	320	320	0.45881	102.299	EMERSON - TWIN CHURCH 115KV CKT 1
FDNS	09ALL_G15_042	0	20SP	G15_042	FROM->TO	DIXONCO 230.00 - TWIN CHURCH 230KV CKT 1	320	320	0.47951	102.2951	ANITA TAP POINT TO CRESTON AND DENISON - EXIRA 161KV CKT 1
FDNS	09ALL_G15_042	0	17SP	G15_042	FROM->TO	DIXONCO 230.00 - TWIN CHURCH 230KV CKT 1	320	320	0.48012	102.2826	GEN635023 3-WALTER SCOTT UNIT 3
FDNS	09ALL_G15_042	0	20SP	G15_042	FROM->TO	DIXONCO 230.00 - TWIN CHURCH 230KV CKT 1	320	320	0.48077	102.2778	GEN640010 1-GERALD GENTLEMAN STATION UNIT 1
FDNS	09ALL_G15_042	0	25SP	G15_042	FROM->TO	DIXONCO 230.00 - TWIN CHURCH 230KV CKT 1	320	320	0.48066	102.2725	GEN336252 1-NINEMILE POINT UNIT#5
FDNS	09ALL_G15_042	0	17SP	G15_042	FROM->TO	DIXONCO 230.00 - TWIN CHURCH 230KV CKT 1	320	320	0.48079	102.2721	BLOOMFIELD - CREIGHTON 115KV CKT 1
FDNS	09ALL_G15_042	0	20SP	G15_042	FROM->TO	DIXONCO 230.00 - TWIN CHURCH 230KV CKT 1	320	320	0.48118	102.2637	P12:115:NPPD:WAPA6:FTRANDL7:ONEILL 7:BTB
FDNS	09ALL_G15_042	0	20SP	G15_042	FROM->TO	DIXONCO 230.00 - TWIN CHURCH 230KV CKT 1	320	320	0.48118	102.2637	P12:115:UMZB:# 115 #: SE IN NE. FR-SE-ON
FDNS	09ALL_G15_042	0	20SP	G15_042	FROM->TO	DIXONCO 230.00 - TWIN CHURCH 230KV CKT 1	320	320	0.48077	102.2382	GEN640011 2-GERALD GENTLEMAN STATION UNIT 2
FDNS	09ALL_G15_042	0	25SP	G15_042	FROM->TO	DIXONCO 230.00 - TWIN CHURCH 230KV CKT 1	320	320	0.48066	102.2024	GEN501801 1-DOLET HILLS UNIT1
FDNS	09ALL_G15_042	0	20SP	G15_042	FROM->TO	DIXONCO 230.00 - TWIN CHURCH 230KV CKT 1	320	320	0.48118	102.1887	FT RANDAL - SPENCER 115KV CKT 1
FDNS	09ALL_G15_042	0	25SP	G15_042	FROM->TO	DIXONCO 230.00 - TWIN CHURCH 230KV CKT 1	320	320	0.46869	102.1824	BANCROFT - OAKLAND 115KV CKT 1
FDNS	09ALL_G15_042	0	17SP	G15_042	FROM->TO	DIXONCO 230.00 - TWIN CHURCH 230KV CKT 1	320	320	0.48012	102.1793	GEN336153 1-WATERFORD UNIT#3
FDNS	09ALL_G15_042	0	17SP	G15_042	FROM->TO	DIXONCO 230.00 - TWIN CHURCH 230KV CKT 1	320	320	0.48012	102.1552	GEN337911 1-ARKANSAS NUCLEAR ONE UNIT #2
FDNS	09ALL_G15_042	0	25SP	G15_042	FROM->TO	DIXONCO 230.00 - TWIN CHURCH 230KV CKT 1	320	320	0.47915	102.142	SIOUX CITY (SC KV1A) 230/161/13.8KV TRANSFORMER CKT 1
FDNS	09ALL_G15_042	0	25SP	G15_042	FROM->TO	DIXONCO 230.00 - TWIN CHURCH 230KV CKT 1	320	320	0.47914	102.1333	SIOUX CITY (SC KV5A) 230/161/13.8KV TRANSFORMER CKT 1
FDNS	09ALL_G15_042	0	25SP	G15_042	FROM->TO	DIXONCO 230.00 - TWIN CHURCH 230KV CKT 1	320	320	0.48066	102.1283	GEN337653 1-WHITE BLUFF UNIT #2
FDNS	09ALL_G15_042	0	20SP	G15_042	FROM->TO	DIXONCO 230.00 - TWIN CHURCH 230KV CKT 1	320	320	0.48077	102.1278	GEN337910 1-ARKANSAS NUCLEAR ONE UNIT #1
FDNS	09ALL_G15_042	0	25SP	G15_042	FROM->TO	DIXONCO 230.00 - TWIN CHURCH 230KV CKT 1	320	320	0.48066	102.1218	GEN338146 1-INDEPENDENCE UNIT #2
FDNS	09ALL_G15_042	0	25SP	G15_042	FROM->TO	DIXONCO 230.00 - TWIN CHURCH 230KV CKT 1	320	320	0.48066	102.1212	GEN338143 1-INDEPENDENCE UNIT #1
FDNS	09ALL_G15_042	0	25SP	G15_042	FROM->TO	DIXONCO 230.00 - TWIN CHURCH 230KV CKT 1	320	320	0.4777	102.1176	RAUN - SUB 3451 FT CAL 345KV CKT 1
FDNS	09ALL_G15_042	0	25SP	G15_042	FROM->TO	DIXONCO 230.00 - TWIN CHURCH 230KV CKT 1	320	320	0.4777	102.1176	RAUN - SUB 3451 FT CAL 345KV CKT 1
FDNS	09ALL_G15_042	0	20SP	G15_042	FROM->TO	DIXONCO 230.00 - TWIN CHURCH 230KV CKT 1	320	320	0.48077	102.0886	GEN335831 1-RIVERBEND UNIT#1
FDNS	09ALL_G15_042	0	25SP	G15_042	FROM->TO	DIXONCO 230.00 - TWIN CHURCH 230KV CKT 1	320	320	0.48066	102.0795	GEN337652 1-WHITE BLUFF UNIT #1
FDNS	09ALL_G15_042	0	17SP	G15_042	FROM->TO	DIXONCO 230.00 - TWIN CHURCH 230KV CKT 1	320	320	0.48012	102.0704	GEN344225 1-1CAL G1 25.000
FDNS	09ALL_G15_042	0	25SP	G15_042	FROM->TO	DIXONCO 230.00 - TWIN CHURCH 230KV CKT 1	320	320	0.47855	102.0402	EAGLE 4 230.00 - SIOUX CITY 230KV CKT 1
FDNS	09ALL_G15_042	0	17SP	G15_042	FROM->TO	DIXONCO 230.00 - TWIN CHURCH 230KV CKT 1	320	320	0.48012	102.0142	GEN635024 4-WALTER SCOTT UNIT 4
FDNS	09ALL_G15_042	0	25SP	G15_042	FROM->TO	DIXONCO 230.00 - TWIN CHURCH 230KV CKT 1	320	320	0.48066	102.0139	GEN640431 1-LAREDO.GEN1W0.6900
FDNS	09ALL_G15_042	0	25SP	G15_042	FROM->TO	DIXONCO 230.00 - TWIN CHURCH 230KV CKT 1	320	320	0.47869	101.9869	TWIN CHURCH (TWNCHURCH T6) 230/115/13.8KV TRANSFORMER CKT 2
FDNS	09ALL_G15_042	0	25SP	G15_042	FROM->TO	DIXONCO 230.00 - TWIN CHURCH 230KV CKT 1	320	320	0.47869	101.9869	TWIN CHURCH (TWNCHURCH T6) 230/115/13.8KV TRANSFORMER CKT 2
FDNS	09ALL_G15_042	0	17SP	G15_042	FROM->TO	DIXONCO 230.00 - TWIN CHURCH 230KV CKT 1	320	320	0.46818	101.9563	P12:115:NPPD:1193:OAKLAND7:EMERSON7:BTB
FDNS	09ALL_G15_042	0	17SP	G15_042	FROM->TO	DIXONCO 230.00 - TWIN CHURCH 230KV CKT 1	320	320	0.46818	101.9114	BANCROFT - EMERSON 115KV CKT 1
FDNS	09ALL_G15_042	0	25SP	G15_042	FROM->TO	DIXONCO 230.00 - TWIN CHURCH 230KV CKT 1	320	320	0.48106	101.9023	ONEILL - SPENCER 115KV CKT 1
FDNS	09ALL_G15_042	0	25SP	G15_042	FROM->TO	DIXONCO 230.00 - TWIN CHURCH 230KV CKT 1	320	320	0.48066	101.8994	GEN640010 1-GERALD GENTLEMAN STATION UNIT 1
FDNS	09NR_G15_042	0	17G	G15_042	FROM->TO	DIXONCO 230.00 - TWIN CHURCH 230KV CKT 1	320	320	0.47053	101.8911	GEN562673 1-G15_007_3 0.6900
FDNS	09ALL_G15_042	0	25SP	G15_042	FROM->TO	DIXONCO 230.00 - TWIN CHURCH 230KV CKT 1	320	320	0.48066	101.8878	GEN640011 2-GERALD GENTLEMAN STATION UNIT 2
FDNS	09ALL_G15_042	0	20SP	G15_042	FROM->TO	DIXONCO 230.00 - TWIN CHURCH 230KV CKT 1	320	320	0.48077	101.882	GEN336153 1-WATERFORD UNIT#3
FDNS	09ALL_G15_042	0	25SP	G15_042	FROM->TO	DIXONCO 230.00 - TWIN CHURCH 230KV CKT 1	320	320	0.48106	101.8472	P12:115:NPPD:WAPA6:FTRANDL7:ONEILL 7:BTB
FDNS	09ALL_G15_042	0	25SP	G15_042	FROM->TO	DIXONCO 230.00 - TWIN CHURCH 230KV CKT 1	320	320	0.48106	101.8472	P12:115:UMZB:# 115 #: SE IN NE. FR-SE-ON
FDNS	09ALL_G15_042	0	20SP	G15_042	FROM->TO	DIXONCO 230.00 - TWIN CHURCH 230KV CKT 1	320	320	0.48077	101.8433	GEN337911 1-ARKANSAS NUCLEAR ONE UNIT #2
FDNS	09NR_G15_042	0	20L	G15_042	FROM->TO	DIXONCO 230.00 - TWIN CHURCH 230KV CKT 1	320	320	0.47127	101.8389	GEN562673 1-G15_007_3 0.6900
FDNS	09ALL_G15_042	0	20SP	G15_042	FROM->TO	DIXONCO 230.00 - TWIN CHURCH 230KV CKT 1	320	320	0.48077	101.8326	GEN344225 1-1CAL G1 25.000
FDNS	09ALL_G15_042	0	25SP	G15_042	FROM->TO	DIXONCO 230.00 - TWIN CHURCH 230KV CKT 1	320	320	0.48066	101.8326	GEN337910 1-ARKANSAS NUCLEAR ONE UNIT #1
FDNS	09ALL_G15_042	0	17SP	G15_042	FROM->TO	DIXONCO 230.00 - TWIN CHURCH 230KV CKT 1	320	320	0.48012	101.813	GEN336821 1-GRAND GULF UNIT
FDNS	09ALL_G15_042	0	25SP	G15_042	FROM->TO	DIXONCO 230.00 - TWIN CHURCH 230KV CKT 1	320	320	0.48066	101.8074	GEN335831 1-RIVERBEND UNIT#1
FDNS	09ALL_G15_042	0	25SP	G15_042	FROM->TO	DIXONCO 230.00 - TWIN CHURCH 230KV CKT 1	320	320	0.47939	101.7776	ANITA TAP POINT TO CRESTON AND DENISON - EXIRA 161KV CKT 1
FDNS	09ALL_G15_042	0	20SP	G15_042	FROM->TO	DIXONCO 230.00 - TWIN CHURCH 230KV CKT 1	320	320	0.48077	101.7738	GEN635023 3-WALTER SCOTT UNIT 3
FDNS	09ALL_G15_042	0	25SP	G15_042	FROM->TO	DIXONCO 230.00 - TWIN CHURCH 230KV CKT 1	320	320	0.48106	101.7727	FT RANDAL - SPENCER 115KV CKT 1
FDNS	09NR_G15_042	0	17G	G15_042	FROM->TO	DIXONCO 230.00 - TWIN CHURCH 230KV CKT 1	320	320	0.45805	101.7509	EMERSON - TWIN CHURCH 115KV CKT 1
FDNS	09NR_G15_042	0	17G	G15_042	FROM->TO	DIXONCO 230.00 - TWIN CHURCH 230KV CKT 1	320	320	0.47053	101.6405	GEN562438 1-G13-032 0.6900
FDNS	09ALL_G15_042	0	25SP	G15_042	FROM->TO	DIXONCO 230.00 - TWIN CHURCH 230KV CKT 1	320	320	0.48066	101.6089	GEN336153 1-WATERFORD UNIT#3
FDNS	09ALL_G15_042	0	20SP	G15_042	FROM->TO	DIXONCO 230.00 - TWIN CHURCH 230KV CKT 1	320	320	0.48148	101.5751	BLOOMFIELD - CREIGHTON 115KV CKT 1
FDNS	09NR_G15_042	0	20L	G15_042	FROM->TO	DIXONCO 230.00 - TWIN CHURCH 230KV CKT 1	320	320	0.47127	101.5674	GEN562438 1-G13-032 0.6900
FDNS	09ALL_G15_042	0	25SP	G15_042	FROM->TO	DIXONCO 230.00 - TWIN CHURCH 230KV CKT 1	320	320	0.48066	101.5583	GEN344225 1-1CAL G1 25.000
FDNS	09ALL_G15_042	0	25SP	G15_042	FROM->TO	DIXONCO 230.00 - TWIN CHURCH 230KV CKT 1	320	320	0.48066	101.5582	GEN337911 1-ARKANSAS NUCLEAR ONE UNIT #2
FDNS	09ALL_G15_042	0	20SP	G15_042	FROM->TO	DIXONCO 230.00 - TWIN CHURCH 230KV CKT 1	320	320	0.46882	101.5252	P12:115:NPPD:1193:OAKLAND7:EMERSON7:BTB
FDNS	09ALL_G15_042	0	20SP	G15_042	FROM->TO	DIXONCO 230.00 - TWIN CHURCH 230KV CKT 1	320	320	0.48077	101.4915	GEN336821 1-GRAND GULF UNIT
FDNS	09ALL_G15_042	0	20SP	G15_042	FROM->TO	DIXONCO 230.00 - TWIN CHURCH 230KV CKT 1	320	320	0.48077	101.4811	GEN635024 4-WALTER SCOTT UNIT 4
FDNS	09ALL_G15_042	0	20SP	G15_042	FROM->TO	DIXONCO 230.00 - TWIN CHURCH 230KV CKT 1	320	320	0.46882	101.4795	BANCROFT - EMERSON 115KV CKT 1
FDNS	09ALL_G15_042	0	25SP	G15_042	FROM->TO	DIXONCO 230.00 - TWIN CHURCH 230KV CKT 1	320	320	0.48066	101.4659	GEN635023 3-WALTER SCOTT UNIT 3
FDNS	09ALL_G15_042	0	25SP	G15_042	FROM->TO	DIXONCO 230.00 - TWIN CHURCH 230KV CKT 1	320	320	0.46869	101.3753	P12:115:NPPD:1193:OAKLAND7:EMERSON7:BTB
FDNS	09ALL_G15_042	0	25SP	G15_042	FROM->TO	DIXONCO 230.00 - TWIN CHURCH 230KV CKT 1	320	320	0.46869	101.3357	BANCROFT - EMERSON 115KV CKT 1
FDNS	09ALL_G15_042	0	17SP	G15_042	FROM->TO	DIXONCO 230.00 - TWIN CHURCH 230KV CKT 1	320	320	0.47628	101.276	PLYMOUTH - SIOUX CITY 161KV CKT 1
FDNS	09ALL_G15_042	0	17SP	G15_042	FROM->TO	DIXONCO 230.00 - TWIN CHURCH 230KV CKT 1	320	320	0.47628	101.276	PLYMOUTH - SIOUX CITY 161KV CKT 1
FDNS	09ALL_G15_042	0	17SP	G15_042	FROM->TO	DIXONCO 230.00 - TWIN CHURCH 230KV CKT 1	320	320	0.47609	101.2392	TWIN CHURCH (TWNCHURCH T4) 230/115/13.8KV TRANSFORMER CKT 1
FDNS	09ALL_G15_042	0	17SP	G15_042	FROM->TO	DIXONCO 230.00 - TWIN CHURCH 230KV CKT 1	320	320	0.47609	101.2392	TWIN CHURCH (TWNCHURCH T4) 230/115/13.8KV TRANSFORMER CKT 1
FDNS	09ALL_G15_042	0	25SP	G15_042	FROM->TO	DIXONCO 230.00 - TWIN CHURCH 230KV CKT 1	320	320	0.48066	101.2354	GEN336821 1-GRAND GULF UNIT
FDNS	09ALL_G15_042	0	25SP	G15_042	FROM->TO	DIXONCO 230.00 - TWIN CHURCH 230KV CKT 1	320	320	0.48135	101.2114	BLOOMFIELD - CREIGHTON 115KV CKT 1
FDNS	09ALL_G15_042	0	25SP	G15_042	FROM->TO	DIXONCO 230.00 - TWIN CHURCH 230KV CKT 1	320	320	0.48066	101.2087	GEN635024 4-WALTER SCOTT UNIT 4
FDNS	09ALL_G15_042	0	17SP	G15_042	FROM->TO	DIXONCO 230.00 - TWIN CHURCH 230KV CKT 1	320	320	0.47747	101.0888	DENISON - SIOUX CITY 230KV CKT 1
FDNS	09ALL_G15_042	0	20SP	G15_042	FROM->TO	DIXONCO 230.00 - TWIN CHURCH 230KV CKT 1	320	320	0.47672	101.0316	TWIN CHURCH (TWNCHURCH T4) 230/115/13.8KV TRANSFORMER CKT 1
FDNS	09ALL_G15_042	0	20SP	G15_042	FROM->TO	DIXONCO 230.00 - TWIN CHURCH 230KV CKT 1	320	320	0.47672	101.0316	TWIN CHURCH (TWNCHURCH T4) 230/115/13.8KV TRANSFORMER CKT 1
FDNS	09ALL_G15_042	0	20SP	G15_042	FROM->TO	DIXONCO 230.00 - TWIN CHURCH 230KV CKT 1	320	320	0.47819	100.9193	DENISON - SIOUX CITY 230KV CKT 1

SOLUTION	GROUP	SCENARIO	SEASON	SOURCE	DIRECTION	MONITORED ELEMENT	RATEA (MVA)	RATEB(MVA)	TDF	TC%LOADING (% MVA)	CONTINGENCY
FDNS	09ALL_G15_042	0	20SP	G15_042	FROM->TO	DIXONCO 230.00 - TWIN CHURCH 230KV CKT 1	320	320	0.477	100.9151	PLYMOUTH - SIOUX CITY 161KV CKT 1
FDNS	09ALL_G15_042	0	20SP	G15_042	FROM->TO	DIXONCO 230.00 - TWIN CHURCH 230KV CKT 1	320	320	0.477	100.9151	PLYMOUTH - SIOUX CITY 161KV CKT 1
FDNS	09ALL_G15_042	0	25SP	G15_042	FROM->TO	DIXONCO 230.00 - TWIN CHURCH 230KV CKT 1	320	320	0.47807	100.7105	DENISON - SIOUX CITY 230KV CKT 1
FDNS	09NR_G15_042	0	20L	G15_042	FROM->TO	DIXONCO 230.00 - TWIN CHURCH 230KV CKT 1	320	320	0.47062	100.6406	KELLY - MEADOWGROVE4230.00 230KV CKT 1
FDNS	09ALL_G15_042	0	25SP	G15_042	FROM->TO	DIXONCO 230.00 - TWIN CHURCH 230KV CKT 1	320	320	0.47687	100.579	PLYMOUTH - SIOUX CITY 161KV CKT 1
FDNS	09ALL_G15_042	0	25SP	G15_042	FROM->TO	DIXONCO 230.00 - TWIN CHURCH 230KV CKT 1	320	320	0.47687	100.579	PLYMOUTH - SIOUX CITY 161KV CKT 1
FDNS	09ALL_G15_042	0	25SP	G15_042	FROM->TO	DIXONCO 230.00 - TWIN CHURCH 230KV CKT 1	320	320	0.47661	100.5214	TWIN CHURCH (TWNCHURCH T4) 230/115/13.8KV TRANSFORMER CKT 1
FDNS	09ALL_G15_042	0	25SP	G15_042	FROM->TO	DIXONCO 230.00 - TWIN CHURCH 230KV CKT 1	320	320	0.47661	100.5214	TWIN CHURCH (TWNCHURCH T4) 230/115/13.8KV TRANSFORMER CKT 1
FDNS	09ALL_G15_042	0	20SP	G15_042	FROM->TO	DIXONCO 230.00 - TWIN CHURCH 230KV CKT 1	320	320	0.48076	100.2756	GR ISLD-LNX3345.00 - HOLT.CO3 345.00 345KV CKT 1
FDNS	09ALL_G15_042	0	20SP	G15_042	FROM->TO	DIXONCO 230.00 - TWIN CHURCH 230KV CKT 1	320	320	0.48076	100.2118	GR ISLD-LNX3345.00 - GRAND ISLAND 345KV CKT Z
FDNS	09ALL_G15_042	0	20SP	G15_042	FROM->TO	DIXONCO 230.00 - TWIN CHURCH 230KV CKT 1	320	320	0.47992	100.2009	GRPRAR1-LNX3345.00 - HOLT.CO3 345.00 345KV CKT 1
FDNS	09ALL_G15_042	0	20SP	G15_042	FROM->TO	DIXONCO 230.00 - TWIN CHURCH 230KV CKT 1	320	320	0.47992	100.1996	GRPRAR1-LNX3345.00 - YANKTON 345KV CKT Z
FDNS	09ALL_G15_042	0	17SP	G15_042	FROM->TO	DIXONCO 230.00 - TWIN CHURCH 230KV CKT 1	320	320	0.47937	100.1224	GRPRAR1-LNX3345.00 - YANKTON 345KV CKT Z
FDNS	09ALL_G15_042	0	17SP	G15_042	FROM->TO	DIXONCO 230.00 - TWIN CHURCH 230KV CKT 1	320	320	0.47937	100.122	GRPRAR1-LNX3345.00 - HOLT.CO3 345.00 345KV CKT 1
FDNS	09ALL_G15_042	0	25SP	G15_042	FROM->TO	DIXONCO 230.00 - TWIN CHURCH 230KV CKT 1	320	320	0.48063	100	GR ISLD-LNX3345.00 - HOLT.CO3 345.00 345KV CKT 1
FDNS	09ALL_G15_042	0	25SP	G15_042	FROM->TO	DIXONCO 230.00 - TWIN CHURCH 230KV CKT 1	320	320	0.48063	99.9	GR ISLD-LNX3345.00 - GRAND ISLAND 345KV CKT Z
FDNS	09NR_G15_042	0	17G	G15_042	FROM->TO	DIXONCO 230.00 - TWIN CHURCH 230KV CKT 1	320	320	0.4697	99.8	KELLY - MEADOWGROVE4230.00 230KV CKT 1
FDNS	09ALL_G15_042	0	17SP	G15_042	FROM->TO	DIXONCO 230.00 - TWIN CHURCH 230KV CKT 1	320	320	0.48012	99.7	GEN562673 1-G15_007_3 0.6900
FDNS	09ALL_G15_042	0	25SP	G15_042	FROM->TO	DIXONCO 230.00 - TWIN CHURCH 230KV CKT 1	320	320	0.47978	99.7	GRPRAR1-LNX3345.00 - HOLT.CO3 345.00 345KV CKT 1
FDNS	09ALL_G15_042	0	25SP	G15_042	FROM->TO	DIXONCO 230.00 - TWIN CHURCH 230KV CKT 1	320	320	0.47978	99.7	GRPRAR1-LNX3345.00 - YANKTON 345KV CKT Z
FDNS	00NR_G15_042	0	17SP	G15_042	FROM->TO	GR ISLD-LNX3345.00 - GRAND ISLAND 345KV CKT Z	720	720	0.06646	138.6684	KELLY - MEADOWGROVE4230.00 230KV CKT 1
FDNS	00NR_G15_042	0	17SP	G15_042	FROM->TO	GR ISLD-LNX3345.00 - GRAND ISLAND 345KV CKT Z	720	720	0.06243	138.4647	P12:230:UMZB:# 116 #: ST IN SD. WSG-ST-VH
FDNS	00NR_G15_042	0	17SP	G15_042	FROM->TO	GR ISLD-LNX3345.00 - GRAND ISLAND 345KV CKT Z	720	720	0.06277	137.5429	STORLA - WESSINGTON 230KV CKT 1
FDNS	00NR_G15_042	0	17SP	G15_042	FROM->TO	GR ISLD-LNX3345.00 - GRAND ISLAND 345KV CKT Z	720	720	0.06349	136.5121	WATERTN-LNX3345.00 - WHITE 345KV CKT 1
FDNS	00NR_G15_042	0	17SP	G15_042	FROM->TO	GR ISLD-LNX3345.00 - GRAND ISLAND 345KV CKT Z	720	720	0.06349	136.2338	WATERTN-LNX3345.00 - WATERTOWN 345KV CKT Z
FDNS	00NR_G15_042	0	17SP	G15_042	FROM->TO	GR ISLD-LNX3345.00 - GRAND ISLAND 345KV CKT Z	720	720	0.06349	136.211	P12:345:UMZW:# 1747 #: WT2 IN SD. WT2-WHT LINE FAULT
FDNS	00NR_G15_042	0	17SP	G15_042	FROM->TO	GR ISLD-LNX3345.00 - GRAND ISLAND 345KV CKT Z	720	720	0.06429	136.1793	G09_001IST 345.00 - WATERTOWN 345KV CKT 1
FDNS	00NR_G15_042	0	17SP	G15_042	FROM->TO	GR ISLD-LNX3345.00 - GRAND ISLAND 345KV CKT Z	720	720	0.06283	136.1421	HANLON - STORLA 230KV CKT 1
FDNS	00NR_G15_042	0	17SP	G15_042	FROM->TO	GR ISLD-LNX3345.00 - GRAND ISLAND 345KV CKT Z	720	720	0.06238	135.7108	FT THOMPSON - LETCHER 230KV CKT 1
FDNS	00NR_G15_042	0	17SP	G15_042	FROM->TO	GR ISLD-LNX3345.00 - GRAND ISLAND 345KV CKT Z	720	720	0.06238	135.7108	FT THOMPSON - LETCHER 230KV CKT 1
FDNS	00NR_G15_042	0	17SP	G15_042	FROM->TO	GR ISLD-LNX3345.00 - GRAND ISLAND 345KV CKT Z	720	720	0.06459	134.8425	BUFFALO - JAMESTOWN 345KV CKT 1
FDNS	00NR_G15_042	0	17SP	G15_042	FROM->TO	GR ISLD-LNX3345.00 - GRAND ISLAND 345KV CKT Z	720	720	0.06214	134.4964	FT RANDAL - FT THOMPSON 230KV CKT 1
FDNS	00NR_G15_042	0	17SP	G15_042	FROM->TO	GR ISLD-LNX3345.00 - GRAND ISLAND 345KV CKT Z	720	720	0.06214	134.4964	FT RANDAL - FT THOMPSON 230KV CKT 1
FDNS	00NR_G15_042	0	17SP	G15_042	FROM->TO	GR ISLD-LNX3345.00 - GRAND ISLAND 345KV CKT Z	720	720	0.0622	134.3934	FT RANDAL - G12_009IST 230.00 230KV CKT 1
FDNS	00NR_G15_042	0	17SP	G15_042	FROM->TO	GR ISLD-LNX3345.00 - GRAND ISLAND 345KV CKT Z	720	720	0.0622	134.299	FT THOMPSON - LAKE PLATT 230KV CKT 1
FDNS	00NR_G15_042	0	17SP	G15_042	FROM->TO	GR ISLD-LNX3345.00 - GRAND ISLAND 345KV CKT Z	720	720	0.0622	134.299	FT THOMPSON - LAKE PLATT 230KV CKT 1
FDNS	00NR_G15_042	0	17SP	G15_042	FROM->TO	GR ISLD-LNX3345.00 - GRAND ISLAND 345KV CKT Z	720	720	0.0734	134.2161	NUNDRWD - WAYSIDE 230KV CKT 1
FDNS	00NR_G15_042	0	17SP	G15_042	FROM->TO	GR ISLD-LNX3345.00 - GRAND ISLAND 345KV CKT Z	720	720	0.0622	133.9365	G12_009IST 230.00 - LAKE PLATT 230KV CKT 1
FDNS	00NR_G15_042	0	17SP	G15_042	FROM->TO	GR ISLD-LNX3345.00 - GRAND ISLAND 345KV CKT Z	720	720	0.06467	133.9161	GEN336821 1-GRAND GULF UNIT
FDNS	00NR_G15_042	0	17SP	G15_042	FROM->TO	GR ISLD-LNX3345.00 - GRAND ISLAND 345KV CKT Z	720	720	0.0646	133.7573	CHISAGO COUNTY - FORBES 500KV CKT 1
FDNSLock	00NR_G15_042	0	17SP	G15_042	FROM->TO	GR ISLD-LNX3345.00 - GRAND ISLAND 345KV CKT Z	720	720	0.0646	133.7538	CHISAGO COUNTY - CHISAGO COUNTY 500KV CKT 1
FDNS	00NR_G15_042	0	17SP	G15_042	FROM->TO	GR ISLD-LNX3345.00 - GRAND ISLAND 345KV CKT Z	720	720	0.06646	133.6834	FT RANDAL - MEADOWGROVE4230.00 230KV CKT 1
FDNS	00NR_G15_042	0	17SP	G15_042	FROM->TO	GR ISLD-LNX3345.00 - GRAND ISLAND 345KV CKT Z	720	720	0.06458	133.5894	CENTER - JAMESTOWN 345KV CKT 1
FDNS	00NR_G15_042	0	17SP	G15_042	FROM->TO	GR ISLD-LNX3345.00 - GRAND ISLAND 345KV CKT Z	720	720	0.06467	133.3727	GEN344225 1-1CAL G1 25.000
FDNS	00NR_G15_042	0	17SP	G15_042	FROM->TO	GR ISLD-LNX3345.00 - GRAND ISLAND 345KV CKT Z	720	720	0.06467	133.3682	GEN640010 1-GERALD GENTLEMAN STATION UNIT 1
FDNS	00NR_G15_042	0	17SP	G15_042	FROM->TO	GR ISLD-LNX3345.00 - GRAND ISLAND 345KV CKT Z	720	720	0.06643	133.2387	KEYSTONE - SIDNEY1-LNX3345.00 345KV CKT 1
FDNS	00NR_G15_042	0	17SP	G15_042	FROM->TO	GR ISLD-LNX3345.00 - GRAND ISLAND 345KV CKT Z	720	720	0.06322	133.2037	LETCHER - SIOUX FALLS 230KV CKT 1
FDNS	00NR_G15_042	0	17SP	G15_042	FROM->TO	GR ISLD-LNX3345.00 - GRAND ISLAND 345KV CKT Z	720	720	0.06429	133.199	G09_001IST 345.00 - GROTON 345KV CKT 1
FDNS	00NR_G15_042	0	17SP	G15_042	FROM->TO	GR ISLD-LNX3345.00 - GRAND ISLAND 345KV CKT Z	720	720	0.06643	133.1941	SIDNEY - SIDNEY1-LNX3345.00 345KV CKT Z
FDNS	00NR_G15_042	0	17SP	G15_042	FROM->TO	GR ISLD-LNX3345.00 - GRAND ISLAND 345KV CKT Z	720	720	0.06467	133.1723	GEN635024 4-WALTER SCOTT UNIT 4
FDNS	00NR_G15_042	0	17SP	G15_042	FROM->TO	GR ISLD-LNX3345.00 - GRAND ISLAND 345KV CKT Z	720	720	0.06461	133.1329	BISON 3 345.00 - BUFFALO 345KV CKT 1
FDNS	00NR_G15_042	0	17SP	G15_042	FROM->TO	GR ISLD-LNX3345.00 - GRAND ISLAND 345KV CKT Z	720	720	0.06467	133.1182	GEN336153 1-WATERFORD UNIT#3
FDNS	00NR_G15_042	0	17SP	G15_042	FROM->TO	GR ISLD-LNX3345.00 - GRAND ISLAND 345KV CKT Z	720	720	0.06467	133.0935	GEN337911 1-ARKANSAS NUCLEAR ONE UNIT #2
FDNS	00NR_G15_042	0	17SP	G15_042	FROM->TO	GR ISLD-LNX3345.00 - GRAND ISLAND 345KV CKT Z	720	720	0.06467	132.9685	GEN640011 2-GERALD GENTLEMAN STATION UNIT 2
FDNS	00NR_G15_042	0	17SP	G15_042	FROM->TO	GR ISLD-LNX3345.00 - GRAND ISLAND 345KV CKT Z	720	720	0.0739	132.7994	RAUN - SUB 3451 FT CAL 345KV CKT 1
FDNS	00NR_G15_042	0	17SP	G15_042	FROM->TO	GR ISLD-LNX3345.00 - GRAND ISLAND 345KV CKT Z	720	720	0.0739	132.7994	RAUN - SUB 3451 FT CAL 345KV CKT 1
FDNS	00NR_G15_042	0	17SP	G15_042	FROM->TO	GR ISLD-LNX3345.00 - GRAND ISLAND 345KV CKT Z	720	720	0.06467	132.6711	GEN635023 3-WALTER SCOTT UNIT 3
FDNS	00NR_G15_042	0	17SP	G15_042	FROM->TO	GR ISLD-LNX3345.00 - GRAND ISLAND 345KV CKT Z	720	720	0.06334	132.6662	SPLIT ROCK - WHITE 345KV CKT 1
FDNS	00NR_G15_042	0	17SP	G15_042	FROM->TO	GR ISLD-LNX3345.00 - GRAND ISLAND 345KV CKT Z	720	720	0.06334	132.6662	SPLIT ROCK - WHITE 345KV CKT 1
FDNS	00NR_G15_042	0	17SP	G15_042	FROM->TO	GR ISLD-LNX3345.00 - GRAND ISLAND 345KV CKT Z	720	720	0.06467	132.6351	GEN335831 1-RIVERBEND UNIT#1
FDNS	00NR_G15_042	0	17SP	G15_042	FROM->TO	GR ISLD-LNX3345.00 - GRAND ISLAND 345KV CKT Z	720	720	0.06467	132.5405	GEN337910 1-ARKANSAS NUCLEAR ONE UNIT #1
FDNS	00NR_G15_042	0	17SP	G15_042	FROM->TO	GR ISLD-LNX3345.00 - GRAND ISLAND 345KV CKT Z	720	720	0.06436	132.5196	GROTON-LNX3 345.00 - LELAND1-LNX3345.00 345KV CKT 1
FDNS	00NR_G15_042	0	17SP	G15_042	FROM->TO	GR ISLD-LNX3345.00 - GRAND ISLAND 345KV CKT Z	720	720	0.06436	132.3694	P12:345:UMZB:# 109 #: LOS GRT IN ND. LOS GRT
FDNS	00NR_G15_042	0	17SP	G15_042	FROM->TO	GR ISLD-LNX3345.00 - GRAND ISLAND 345KV CKT Z	720	720	0.06436	132.3541	GROTON - GROTON-LNX3 345.00 345KV CKT Z
FDNS	00NR_G15_042	0	17SP	G15_042	FROM->TO	GR ISLD-LNX3345.00 - GRAND ISLAND 345KV CKT Z	720	720	0.06436	132.3443	LELAND OLDS - LELAND1-LNX3345.00 345KV CKT Z
FDNS	00NR_G15_042	0	17SP	G15_042	FROM->TO	GR ISLD-LNX3345.00 - GRAND ISLAND 345KV CKT Z	720	720	0.06492	132.2086	ARROWHEAD - ARROWHEAD 230 230KV CKT 1
FDNS	00NR_G15_042	0	17SP	G15_042	FROM->TO	GR ISLD-LNX3345.00 - GRAND ISLAND 345KV CKT Z	720	720	0.06262	132.1542	FT RANDAL - SIOUX CITY 230KV CKT 1
FDNS	00NR_G15_042	0	17SP	G15_042	FROM->TO	GR ISLD-LNX3345.00 - GRAND ISLAND 345KV CKT Z	720	720	0.06371	132.0389	HANLON - SIOUX FALLS 230KV CKT 1
FDNS	00NR_G15_042	0	17SP	G15_042	FROM->TO	GR ISLD-LNX3345.00 - GRAND ISLAND 345KV CKT Z	720	720	0.06467	131.9275	GEN337653 1-WHITE BLUFF UNIT #2
FDNS	00NR_G15_042	0	17SP	G15_042	FROM->TO	GR ISLD-LNX3345.00 - GRAND ISLAND 345KV CKT Z	720	720	0.06467	131.9132	GEN337652 1-WHITE BLUFF UNIT #1
FDNS	00NR_G15_042	0	17SP	G15_042	FROM->TO	GR ISLD-LNX3345.00 - GRAND ISLAND 345KV CKT Z	720	720	0.06486	131.8986	P12:115:NPPD:1091:VALENTN7:MISSION7:BTB
FDNS	00NR_G15_042	0	17SP	G15_042	FROM->TO	GR ISLD-LNX3345.00 - GRAND ISLAND 345KV CKT Z	720	720	0.06542	131.8912	HAZLETON - MITCHLCO3 345.00 345KV CKT 1
FDNS	00NR_G15_042	0	17SP	G15_042	FROM->TO	GR ISLD-LNX3345.00 - GRAND ISLAND 345KV CKT Z	720	720	0.05087	131.8225	GRAND ISLAND - SWEETWATER 345KV CKT 1

SOLUTION	GROUP	SCENARIO	SEASON	SOURCE	DIRECTION	MONITORED ELEMENT	RATEA (MVA)	RATEB(MVA)	TDF	TC%LOADING (% MVA)	CONTINGENCY
FDNS	00NR_G15_042	0	17SP	G15_042	FROM->TO	GR ISLD-LNX3345.00 - GRAND ISLAND 345KV CKT Z	720	720	0.06467	131.8182	GEN338146 1-INDEPENDENCE UNIT #2
FDNS	00NR_G15_042	0	17SP	G15_042	FROM->TO	GR ISLD-LNX3345.00 - GRAND ISLAND 345KV CKT Z	720	720	0.06467	131.8091	GEN338143 1-INDEPENDENCE UNIT #1
FDNS	00NR_G15_042	0	17SP	G15_042	FROM->TO	GR ISLD-LNX3345.00 - GRAND ISLAND 345KV CKT Z	720	720	0.06486	131.8089	MISSION - ST FRANCIS 115KV CKT 1
FDNS	00NR_G15_042	0	17SP	G15_042	FROM->TO	GR ISLD-LNX3345.00 - GRAND ISLAND 345KV CKT Z	720	720	0.06618	131.7722	SIDNEY - STEGALL 345KV CKT 1
FDNS	00NR_G15_042	0	17SP	G15_042	FROM->TO	GR ISLD-LNX3345.00 - GRAND ISLAND 345KV CKT Z	720	720	0.06499	131.7637	AS KING - EAU CLAIRE 345KV CKT 1
FDNS	00NR_G15_042	0	17SP	G15_042	FROM->TO	GR ISLD-LNX3345.00 - GRAND ISLAND 345KV CKT Z	720	720	0.06467	131.7527	GEN501801 1-DOLET HILLS UNIT1
FDNS	00NR_G15_042	0	17SP	G15_042	FROM->TO	GR ISLD-LNX3345.00 - GRAND ISLAND 345KV CKT Z	720	720	0.0619	131.7125	SIOUXCY-LNX3345.00 - SPLIT ROCK 345KV CKT 1
FDNS	00NR_G15_042	0	17SP	G15_042	FROM->TO	GR ISLD-LNX3345.00 - GRAND ISLAND 345KV CKT Z	720	720	0.0619	131.7125	SIOUXCY-LNX3345.00 - SPLIT ROCK 345KV CKT 1
FDNS	00NR_G15_042	0	17SP	G15_042	FROM->TO	GR ISLD-LNX3345.00 - GRAND ISLAND 345KV CKT Z	720	720	0.06464	131.6915	ELLENDALE - OAKES 230KV CKT 1
FDNS	00NR_G15_042	0	17SP	G15_042	FROM->TO	GR ISLD-LNX3345.00 - GRAND ISLAND 345KV CKT Z	720	720	0.06464	131.6915	ELLENDALE - OAKES 230KV CKT 1
FDNS	00NR_G15_042	0	17SP	G15_042	FROM->TO	GR ISLD-LNX3345.00 - GRAND ISLAND 345KV CKT Z	720	720	0.06486	131.6619	HARMONY - ST FRANCIS 115KV CKT 1
FDNS	00NR_G15_042	0	17SP	G15_042	FROM->TO	GR ISLD-LNX3345.00 - GRAND ISLAND 345KV CKT Z	720	720	0.0619	131.6519	P12:345:UMZW:# 907 #: SC2-SR IN IA. SC2-SR 345 KV LINE
FDNS	00NR_G15_042	0	17SP	G15_042	FROM->TO	GR ISLD-LNX3345.00 - GRAND ISLAND 345KV CKT Z	720	720	0.06344	131.6231	FT RANDAL - UTICA JCT 230KV CKT 1
FDNS	00NR_G15_042	0	17SP	G15_042	FROM->TO	GR ISLD-LNX3345.00 - GRAND ISLAND 345KV CKT Z	720	720	0.0619	131.6067	SIOUX CITY - SIOUXCY-LNX3345.00 345KV CKT Z
FDNS	00NR_G15_042	0	17SP	G15_042	FROM->TO	GR ISLD-LNX3345.00 - GRAND ISLAND 345KV CKT Z	720	720	0.06464	131.6026	FORMAN - OAKES 230KV CKT 1
FDNS	00NR_G15_042	0	17SP	G15_042	FROM->TO	GR ISLD-LNX3345.00 - GRAND ISLAND 345KV CKT Z	720	720	0.06462	131.5978	ALEXMRES3 345.00 - BISON 3 345.00 345KV CKT 1
FDNS	00NR_G15_042	0	17SP	G15_042	FROM->TO	GR ISLD-LNX3345.00 - GRAND ISLAND 345KV CKT Z	720	720	0.06433	131.5935	CARPENTER - HURON 230KV CKT 1
FDNS	00NR_G15_042	0	17SP	G15_042	FROM->TO	GR ISLD-LNX3345.00 - GRAND ISLAND 345KV CKT Z	720	720	0.06277	131.5654	FT THOMPSON - WESSINGTON 230KV CKT 1
FDNS	00NR_G15_042	0	17SP	G15_042	FROM->TO	GR ISLD-LNX3345.00 - GRAND ISLAND 345KV CKT Z	720	720	0.06277	131.5654	FT THOMPSON - WESSINGTON 230KV CKT 1
FDNS	00NR_G15_042	0	17SP	G15_042	FROM->TO	GR ISLD-LNX3345.00 - GRAND ISLAND 345KV CKT Z	720	720	0.06513	131.556	ARPIN B4 345.00 - EAU CLAIRE 345KV CKT 1
FDNS	00NR_G15_042	0	17SP	G15_042	FROM->TO	GR ISLD-LNX3345.00 - GRAND ISLAND 345KV CKT Z	720	720	0.0647	131.4816	P12:115:NPPD:WAPA6:FTRANDL7:ONEILL 7:BTB
FDNS	00NR_G15_042	0	17SP	G15_042	FROM->TO	GR ISLD-LNX3345.00 - GRAND ISLAND 345KV CKT Z	720	720	0.0647	131.4816	P12:115:UMZB:# 115 #: SE IN NE. FR-SE-ON
FDNS	00NR_G15_042	0	17SP	G15_042	FROM->TO	GR ISLD-LNX3345.00 - GRAND ISLAND 345KV CKT Z	720	720	0.06433	131.4772	HURON - WATERTOWN 230KV CKT 2
FDNS	00NR_G15_042	0	17SP	G15_042	FROM->TO	GR ISLD-LNX3345.00 - GRAND ISLAND 345KV CKT Z	720	720	0.06433	131.4772	HURON - WATERTOWN 230KV CKT 2
FDNS	00NR_G15_042	0	17SP	G15_042	FROM->TO	GR ISLD-LNX3345.00 - GRAND ISLAND 345KV CKT Z	720	720	0.06486	131.4535	HARMONY - VALENTINE 115KV CKT 1
FDNS	00NR_G15_042	0	17SP	G15_042	FROM->TO	GR ISLD-LNX3345.00 - GRAND ISLAND 345KV CKT Z	720	720	0.0647	131.4495	FT RANDAL - SPENCER 115KV CKT 1
FDNS	00NR_G15_042	0	17SP	G15_042	FROM->TO	GR ISLD-LNX3345.00 - GRAND ISLAND 345KV CKT Z	720	720	0.06433	131.4369	CARPENTER - WATERTOWN 230KV CKT 1
FDNS	00NR_G15_042	0	17SP	G15_042	FROM->TO	GR ISLD-LNX3345.00 - GRAND ISLAND 345KV CKT Z	720	720	0.06433	131.4369	CARPENTER - WATERTOWN 230KV CKT 1
FDNS	00NR_G15_042	0	17SP	G15_042	FROM->TO	GR ISLD-LNX3345.00 - GRAND ISLAND 345KV CKT Z	720	720	0.06467	131.3954	GEN336252 1-NINEMILE POINT UNIT#5
FDNS	00NR_G15_042	0	17SP	G15_042	FROM->TO	GR ISLD-LNX3345.00 - GRAND ISLAND 345KV CKT Z	720	720	0.06467	131.353	GEN501813 1-RODEMACHER UNIT 3
FDNS	00NR_G15_042	0	17SP	G15_042	FROM->TO	GR ISLD-LNX3345.00 - GRAND ISLAND 345KV CKT Z	720	720	0.0647	131.3376	ONEILL - SPENCER 115KV CKT 1
FDNS	00NR_G15_042	0	17SP	G15_042	FROM->TO	GR ISLD-LNX3345.00 - GRAND ISLAND 345KV CKT Z	720	720	0.06291	131.3113	PAHOJA - SIOUX FALLS 230KV CKT 1
FDNS	00NR_G15_042	0	17SP	G15_042	FROM->TO	GR ISLD-LNX3345.00 - GRAND ISLAND 345KV CKT Z	720	720	0.06467	131.2516	GEN336831 1-BAXTER WILSON SES
FDNS	00NR_G15_042	0	17SP	G15_042	FROM->TO	GR ISLD-LNX3345.00 - GRAND ISLAND 345KV CKT Z	720	720	0.06467	131.2384	GEN336251 1-NINEMILE POINT UNIT#4
FDNS	00NR_G15_042	0	17SP	G15_042	FROM->TO	GR ISLD-LNX3345.00 - GRAND ISLAND 345KV CKT Z	720	720	0.0655	131.2058	GERALD GENTLEMAN STATION - KEYSTONE 345KV CKT 1
FDNS	00NR_G15_042	0	17SP	G15_042	FROM->TO	GR ISLD-LNX3345.00 - GRAND ISLAND 345KV CKT Z	720	720	0.06467	131.1934	GEN641089 2-ENERGY CENTER 2
FDNS	00NR_G15_042	0	17SP	G15_042	FROM->TO	GR ISLD-LNX3345.00 - GRAND ISLAND 345KV CKT Z	720	720	0.06466	131.1733	CNTSHNT3 345.00 - PRAIRIE3 345.00 345KV CKT 1
FDNS	00NR_G15_042	0	17SP	G15_042	FROM->TO	GR ISLD-LNX3345.00 - GRAND ISLAND 345KV CKT Z	720	720	0.06467	131.1607	GEN337041 1-GERALD ANDRUS
FDNS	00NR_G15_042	0	17SP	G15_042	FROM->TO	GR ISLD-LNX3345.00 - GRAND ISLAND 345KV CKT Z	720	720	0.06467	131.1444	GEN335206 1-NELSON UNIT 6
FDNS	00NR_G15_042	0	17SP	G15_042	FROM->TO	GR ISLD-LNX3345.00 - GRAND ISLAND 345KV CKT Z	720	720	0.06467	131.1149	GEN344897 4-1LAB G4 20.000
FDNS	00NR_G15_042	0	17SP	G15_042	FROM->TO	GR ISLD-LNX3345.00 - GRAND ISLAND 345KV CKT Z	720	720	0.06467	131.1117	GEN344894 1-1LAB G1 20.000
FDNS	00NR_G15_042	0	17SP	G15_042	FROM->TO	GR ISLD-LNX3345.00 - GRAND ISLAND 345KV CKT Z	720	720	0.06467	131.1115	GEN344896 3-1LAB G3 20.000
FDNS	00NR_G15_042	0	17SP	G15_042	FROM->TO	GR ISLD-LNX3345.00 - GRAND ISLAND 345KV CKT Z	720	720	0.06465	131.0731	FORMAN - HANKINSON 230KV CKT 1
FDNS	00NR_G15_042	0	17SP	G15_042	FROM->TO	GR ISLD-LNX3345.00 - GRAND ISLAND 345KV CKT Z	720	720	0.06486	131.0592	AINSWORTH - VALENTINE 115KV CKT 1
FDNS	00NR_G15_042	0	17SP	G15_042	FROM->TO	GR ISLD-LNX3345.00 - GRAND ISLAND 345KV CKT Z	720	720	0.06467	131.0547	GEN344895 2-1LAB G2 20.000
FDNS	00NR_G15_042	0	17SP	G15_042	FROM->TO	GR ISLD-LNX3345.00 - GRAND ISLAND 345KV CKT Z	720	720	0.06467	131.0396	GEN345670 1-1RUSH G1 18.000
FDNS	00NR_G15_042	0	17SP	G15_042	FROM->TO	GR ISLD-LNX3345.00 - GRAND ISLAND 345KV CKT Z	720	720	0.06467	131.0395	GEN345671 2-1RUSH G2 18.000
FDNS	00NR_G15_042	0	17SP	G15_042	FROM->TO	GR ISLD-LNX3345.00 - GRAND ISLAND 345KV CKT Z	720	720	0.06542	131.0225	ADAMS - MITCHLCO3 345.00 345KV CKT 1
FDNS	00NR_G15_042	0	17SP	G15_042	FROM->TO	GR ISLD-LNX3345.00 - GRAND ISLAND 345KV CKT Z	720	720	0.06467	130.9861	GEN501812 1-RODEMACHER UNIT 2
FDNS	00NR_G15_042	0	17SP	G15_042	FROM->TO	GR ISLD-LNX3345.00 - GRAND ISLAND 345KV CKT Z	720	720	0.06291	130.9646	EAGLE 4 230.00 - PAHOJA 230KV CKT 1
FDNS	00NR_G15_042	0	17SP	G15_042	FROM->TO	GR ISLD-LNX3345.00 - GRAND ISLAND 345KV CKT Z	720	720	0.06467	130.9639	GEN334440 1-SABINE UNIT 4
FDNS	00NR_G15_042	0	17SP	G15_042	FROM->TO	GR ISLD-LNX3345.00 - GRAND ISLAND 345KV CKT Z	720	720	0.06315	130.9105	RASMUSN - UTICA JCT 230KV CKT 1
FDNS	00NR_G15_042	0	17SP	G15_042	FROM->TO	GR ISLD-LNX3345.00 - GRAND ISLAND 345KV CKT Z	720	720	0.06516	130.8645	ADAMS - PLEASANT VALLEY 345KV CKT 1
FDNS	00NR_G15_042	0	17SP	G15_042	FROM->TO	GR ISLD-LNX3345.00 - GRAND ISLAND 345KV CKT Z	720	720	0.08171	130.8309	DIXONCO 230.00 - HOSKINS 230KV CKT 1
FDNS	00NR_G15_042	0	17SP	G15_042	FROM->TO	GR ISLD-LNX3345.00 - GRAND ISLAND 345KV CKT Z	720	720	0.06706	130.8146	GRIMES - LEHIGH 345KV CKT 1
FDNS	00NR_G15_042	0	17SP	G15_042	FROM->TO	GR ISLD-LNX3345.00 - GRAND ISLAND 345KV CKT Z	720	720	0.06467	130.809	GEN336191 1-LITTLE GYPSY UNIT#3
FDNSLock	00NR_G15_042	0	17SP	G15_042	FROM->TO	GR ISLD-LNX3345.00 - GRAND ISLAND 345KV CKT Z	720	720	0.06466	130.7526	CENTER - CNTSHNT3 345.00 345KV CKT Z1
FDNS	00NR_G15_042	0	17SP	G15_042	FROM->TO	GR ISLD-LNX3345.00 - GRAND ISLAND 345KV CKT Z	720	720	0.06467	130.7405	GEN338388 1-1PLUM PT U1 23.000
FDNS	00NR_G15_042	0	17SP	G15_042	FROM->TO	GR ISLD-LNX3345.00 - GRAND ISLAND 345KV CKT Z	720	720	0.06315	130.7188	RASMUSN - SIOUX CITY 230KV CKT 1
FDNS	00NR_G15_042	0	17SP	G15_042	FROM->TO	GR ISLD-LNX3345.00 - GRAND ISLAND 345KV CKT Z	720	720	0.06467	130.7111	GEN336801 1-BAXTER WILSON UNIT #1
FDNS	00NR_G15_042	0	17SP	G15_042	FROM->TO	GR ISLD-LNX3345.00 - GRAND ISLAND 345KV CKT Z	720	720	0.06467	130.7011	GEN335614 1-WILLOW GLENN UNIT#4
FDNS	00NR_G15_042	0	17SP	G15_042	FROM->TO	GR ISLD-LNX3345.00 - GRAND ISLAND 345KV CKT Z	720	720	0.06467	130.6936	GEN334441 1-SABINE UNIT 5
FDNS	00NR_G15_042	0	17SP	G15_042	FROM->TO	GR ISLD-LNX3345.00 - GRAND ISLAND 345KV CKT Z	720	720	0.06467	130.6846	GEN336464 1-MICHOUD UNIT #3
FDNS	00NR_G15_042	0	17SP	G15_042	FROM->TO	GR ISLD-LNX3345.00 - GRAND ISLAND 345KV CKT Z	720	720	0.06467	130.6717	GEN335204 1-NELSON UNIT 4
FDNS	00NR_G15_042	0	17SP	G15_042	FROM->TO	GR ISLD-LNX3345.00 - GRAND ISLAND 345KV CKT Z	720	720	0.06523	130.6699	LAKEFIELD 3 - NOBLES 345KV CKT 1
FDNS	00NR_G15_042	0	17SP	G15_042	FROM->TO	GR ISLD-LNX3345.00 - GRAND ISLAND 345KV CKT Z	720	720	0.06535	130.5914	KOSSUTH 3 345.00 - OBRIEN 3 345.00 345KV CKT 1
FDNS	00NR_G15_042	0	17SP	G15_042	FROM->TO	GR ISLD-LNX3345.00 - GRAND ISLAND 345KV CKT Z	720	720	0.06535	130.589	KOSSUTH 3 345.00 - WEBSTER 345KV CKT 1
FDNS	00NR_G15_042	0	17SP	G15_042	FROM->TO	GR ISLD-LNX3345.00 - GRAND ISLAND 345KV CKT Z	720	720	0.06498	130.5838	BROOKING COUNTY - LYON COUNTY 345KV CKT 1
FDNS	00NR_G15_042	0	17SP	G15_042	FROM->TO	GR ISLD-LNX3345.00 - GRAND ISLAND 345KV CKT Z	720	720	0.06413	130.559	FT THOMPSON - HURON 230KV CKT 1
FDNS	00NR_G15_042	0	17SP	G15_042	FROM->TO	GR ISLD-LNX3345.00 - GRAND ISLAND 345KV CKT Z	720	720	0.06413	130.559	FT THOMPSON - HURON 230KV CKT 1
FDNS	00NR_G15_042	0	17SP	G15_042	FROM->TO	GR ISLD-LNX3345.00 - GRAND ISLAND 345KV CKT Z	720	720	0.06413	130.559	FT THOMPSON - HURON 230KV CKT 2
FDNS	00NR_G15_042	0	17SP	G15_042	FROM->TO	GR ISLD-LNX3345.00 - GRAND ISLAND 345KV CKT Z	720	720	0.06413	130.559	FT THOMPSON - HURON 230KV CKT 2
FDNS	00NR_G15_042	0	17SP	G15_042	FROM->TO	GR ISLD-LNX3345.00 - GRAND ISLAND 345KV CKT Z	720	720	0.0677	130.5578	STEGALL - STEGALL TRANSFORMER 230KV CKT 1

SOLUTION	GROUP	SCENARIO	SEASON	SOURCE	DIRECTION	MONITORED ELEMENT	RATEA (MVA)	RATEB(MVA)	TDF	TC%LOADING (% MVA)	CONTINGENCY
FDNS	00NR_G15_042	0	17SP	G15_042	FROM->TO	GR ISLD-LNX3345.00 - GRAND ISLAND 345KV CKT Z	720	720	0.06496	130.5569	LARAMIE RIVER - SIDNEY2-LNX3345.00 345KV CKT 1
FDNS	00NR_G15_042	0	17SP	G15_042	FROM->TO	GR ISLD-LNX3345.00 - GRAND ISLAND 345KV CKT Z	720	720	0.0677	130.534	P13:230-345:NPPD:STEGALL3:KV3A
FDNS	00NR_G15_042	0	17SP	G15_042	FROM->TO	GR ISLD-LNX3345.00 - GRAND ISLAND 345KV CKT Z	720	720	0.0677	130.5327	STEGALL (SGQ KV3A) 345/230/13.8KV TRANSFORMER CKT 1
FDNS	00NR_G15_042	0	17SP	G15_042	FROM->TO	GR ISLD-LNX3345.00 - GRAND ISLAND 345KV CKT Z	720	720	0.06496	130.5283	SIDNEY - SIDNEY2-LNX3345.00 345KV CKT Z
FDNS	00NR_G15_042	0	17SP	G15_042	FROM->TO	GR ISLD-LNX3345.00 - GRAND ISLAND 345KV CKT Z	720	720	0.06467	130.5273	BLAIR - GRANITE FALLS 230KV CKT 1
FDNS	00NR_G15_042	0	17SP	G15_042	FROM->TO	GR ISLD-LNX3345.00 - GRAND ISLAND 345KV CKT Z	720	720	0.06467	130.5273	BLAIR - GRANITE FALLS 230KV CKT 1
FDNS	00NR_G15_042	0	17SP	G15_042	FROM->TO	GR ISLD-LNX3345.00 - GRAND ISLAND 345KV CKT Z	720	720	0.06467	130.5229	GEN334433 1-SABINE UNIT 3
FDNS	00NR_G15_042	0	17SP	G15_042	FROM->TO	GR ISLD-LNX3345.00 - GRAND ISLAND 345KV CKT Z	720	720	0.06334	130.4955	CROOKED CREEK - NORTH PLATTE 230KV CKT 1
FDNS	00NR_G15_042	0	17SP	G15_042	FROM->TO	GR ISLD-LNX3345.00 - GRAND ISLAND 345KV CKT Z	720	720	0.06465	130.4946	ALEXMRES3 345.00 - WAITE PARK 345KV CKT 1
FDNS	00NR_G15_042	0	17SP	G15_042	FROM->TO	GR ISLD-LNX3345.00 - GRAND ISLAND 345KV CKT Z	720	720	0.06968	130.4939	STEGALL-LNX3230.00 - WAYSIDE 230KV CKT 1
FDNS	00NR_G15_042	0	17SP	G15_042	FROM->TO	GR ISLD-LNX3345.00 - GRAND ISLAND 345KV CKT Z	720	720	0.06465	130.4894	CENTER - COYOTE 345KV CKT 1
FDNS	00NR_G15_042	0	17SP	G15_042	FROM->TO	GR ISLD-LNX3345.00 - GRAND ISLAND 345KV CKT Z	720	720	0.06432	130.4859	MENNO JCT - TRIPP JCT 115KV CKT 1
FDNS	00NR_G15_042	0	17SP	G15_042	FROM->TO	GR ISLD-LNX3345.00 - GRAND ISLAND 345KV CKT Z	720	720	0.06968	130.4827	STEGALL - STEGALL-LNX3230.00 230KV CKT Z
FDNS	00NR_G15_042	0	17SP	G15_042	FROM->TO	GR ISLD-LNX3345.00 - GRAND ISLAND 345KV CKT Z	720	720	0.06876	130.4778	RAUN - SIOUX CITY 345KV CKT 1
FDNS	00NR_G15_042	0	17SP	G15_042	FROM->TO	GR ISLD-LNX3345.00 - GRAND ISLAND 345KV CKT Z	720	720	0.06876	130.4778	RAUN - SIOUX CITY 345KV CKT 1
FDNS	00NR_G15_042	0	17SP	G15_042	FROM->TO	GR ISLD-LNX3345.00 - GRAND ISLAND 345KV CKT Z	720	720	0.06467	130.4718	P12:115:UMZW:# 162 #: NEL IN ND. FAULT ON ML-NEL-MX-GA 115 KV
FDNS	00NR_G15_042	0	17SP	G15_042	FROM->TO	GR ISLD-LNX3345.00 - GRAND ISLAND 345KV CKT Z	720	720	0.06467	130.4698	GEN531447 1-HOLCOMB GENERATOR
FDNS	00NR_G15_042	0	17SP	G15_042	FROM->TO	GR ISLD-LNX3345.00 - GRAND ISLAND 345KV CKT Z	720	720	0.06467	130.4465	GEN336222 1-LITTLE GYPSY UNIT#2
FDNS	00NR_G15_042	0	17SP	G15_042	FROM->TO	GR ISLD-LNX3345.00 - GRAND ISLAND 345KV CKT Z	720	720	0.06467	130.4394	GEN629075 1-OTTUMWA GENERATOR FOR OTTUMWA UNIT NO 1
FDNS	00NR_G15_042	0	17SP	G15_042	FROM->TO	GR ISLD-LNX3345.00 - GRAND ISLAND 345KV CKT Z	720	720	0.06467	130.4319	GEN303007 1-1BC2 U2
FDNS	00NR_G15_042	0	17SP	G15_042	FROM->TO	GR ISLD-LNX3345.00 - GRAND ISLAND 345KV CKT Z	720	720	0.06467	130.4275	GEN303006 1-1BC2 U1
FDNS	00NR_G15_042	0	17SP	G15_042	FROM->TO	GR ISLD-LNX3345.00 - GRAND ISLAND 345KV CKT Z	720	720	0.07133	130.4202	COLUMEAST - SHELL CREEK 345KV CKT 1
FDNS	00NR_G15_042	0	17SP	G15_042	FROM->TO	GR ISLD-LNX3345.00 - GRAND ISLAND 345KV CKT Z	720	720	0.06319	130.3979	GAVINS POINT - YANKON JCT 115KV CKT 1
FDNS	00NR_G15_042	0	17SP	G15_042	FROM->TO	GR ISLD-LNX3345.00 - GRAND ISLAND 345KV CKT Z	720	720	0.06319	130.3979	GAVINS POINT - YANKON JCT 115KV CKT 1
FDNS	00NR_G15_042	0	17SP	G15_042	FROM->TO	GR ISLD-LNX3345.00 - GRAND ISLAND 345KV CKT Z	720	720	0.06465	130.3795	GLENBORO SOUTH - RUGBY 230KV CKT 1
FDNS	00NR_G15_042	0	17SP	G15_042	FROM->TO	GR ISLD-LNX3345.00 - GRAND ISLAND 345KV CKT Z	720	720	0.06467	130.3782	GEN336152 1-WATERFORD UNIT#2
FDNS	00NR_G15_042	0	17SP	G15_042	FROM->TO	GR ISLD-LNX3345.00 - GRAND ISLAND 345KV CKT Z	720	720	0.06467	130.3779	GEN336151 1-WATERFORD UNIT#1
FDNS	00NR_G15_042	0	17SP	G15_042	FROM->TO	GR ISLD-LNX3345.00 - GRAND ISLAND 345KV CKT Z	720	720	0.06467	130.3668	P13:230-345:NPPD:NUCOR-1
FDNS	00NR_G15_042	0	17SP	G15_042	FROM->TO	GR ISLD-LNX3345.00 - GRAND ISLAND 345KV CKT Z	720	720	0.06467	130.3538	GEN303008 1-1BC2 U3
FDNS	00NR_G15_042	0	17SP	G15_042	FROM->TO	GR ISLD-LNX3345.00 - GRAND ISLAND 345KV CKT Z	720	720	0.06465	130.3497	GARRISON - JAMES TOWN 230KV CKT 1
FDNS	00NR_G15_042	0	17SP	G15_042	FROM->TO	GR ISLD-LNX3345.00 - GRAND ISLAND 345KV CKT Z	720	720	0.06467	130.3484	GEN336170 1-GULF OXY U4
FDNS	00NR_G15_042	0	17SP	G15_042	FROM->TO	GR ISLD-LNX3345.00 - GRAND ISLAND 345KV CKT Z	720	720	0.06471	130.3438	HANKINSON - WAHPETON 230KV CKT 1
FDNS	00NR_G15_042	0	17SP	G15_042	FROM->TO	GR ISLD-LNX3345.00 - GRAND ISLAND 345KV CKT Z	720	720	0.06483	130.3377	ARKANSAS NUCLEAR ONE - FT SMITH 500KV CKT 1
FDNS	00NR_G15_042	0	17SP	G15_042	FROM->TO	GR ISLD-LNX3345.00 - GRAND ISLAND 345KV CKT Z	720	720	0.06483	130.3377	ARKANSAS NUCLEAR ONE - FT SMITH 500KV CKT 1
FDNS	00NR_G15_042	0	17SP	G15_042	FROM->TO	GR ISLD-LNX3345.00 - GRAND ISLAND 345KV CKT Z	720	720	0.065	130.333	BYRON - NORTH ROCHESTER 345KV CKT 1
FDNS	00NR_G15_042	0	17SP	G15_042	FROM->TO	GR ISLD-LNX3345.00 - GRAND ISLAND 345KV CKT Z	720	720	0.06432	130.2847	MENNO JCT - UTICA 115KV CKT 1
FDNS	00NR_G15_042	0	17SP	G15_042	FROM->TO	GR ISLD-LNX3345.00 - GRAND ISLAND 345KV CKT Z	720	720	0.06467	130.2419	P13:115-230:NPPD:NUCOR-3
FDNS	00NR_G15_042	0	17SP	G15_042	FROM->TO	GR ISLD-LNX3345.00 - GRAND ISLAND 345KV CKT Z	720	720	0.06467	130.2417	P13:230:UMZW:# 2218 #: FP IN MT. LOSS OF TRANSFORMER (AT2).
FDNS	00NR_G15_042	0	17SP	G15_042	FROM->TO	GR ISLD-LNX3345.00 - GRAND ISLAND 345KV CKT Z	720	720	0.06432	130.2415	P12:115:UMZZ:# 237 #: MEN IN SD. MENNO JUNCTION IS A TAP (UJ-MEN-TP).
FDNS	00NR_G15_042	0	17SP	G15_042	FROM->TO	GR ISLD-LNX3345.00 - GRAND ISLAND 345KV CKT Z	720	720	0.06467	130.2072	GEN501811 1-RODEMACHER UNIT 1
FDNS	00NR_G15_042	0	17SP	G15_042	FROM->TO	GR ISLD-LNX3345.00 - GRAND ISLAND 345KV CKT Z	720	720	0.06465	130.1868	FARGO - JAMES TOWN 230KV CKT 1
FDNS	00NR_G15_042	0	17SP	G15_042	FROM->TO	GR ISLD-LNX3345.00 - GRAND ISLAND 345KV CKT Z	720	720	0.0647	130.1683	APPLEDORN 4 230.00 - WATERTOWN 230KV CKT 1
FDNS	00NR_G15_042	0	17SP	G15_042	FROM->TO	GR ISLD-LNX3345.00 - GRAND ISLAND 345KV CKT Z	720	720	0.0647	130.1683	APPLEDORN 4 230.00 - WATERTOWN 230KV CKT 1
FDNS	00NR_G15_042	0	17SP	G15_042	FROM->TO	GR ISLD-LNX3345.00 - GRAND ISLAND 345KV CKT Z	720	720	0.06352	130.1646	P12:115:NPPD:1164:ONEILL 7:JEFFREY9:BTB
FDNS	00NR_G15_042	0	17SP	G15_042	FROM->TO	GR ISLD-LNX3345.00 - GRAND ISLAND 345KV CKT Z	720	720	0.06465	130.1645	FARGO - JAMES TOWN 230KV CKT 2
FDNS	00NR_G15_042	0	17SP	G15_042	FROM->TO	GR ISLD-LNX3345.00 - GRAND ISLAND 345KV CKT Z	720	720	0.0648	130.1621	NORTH ROCHESTER - PRAIRIE ISLAND 345KV CKT 1
FDNS	00NR_G15_042	0	17SP	G15_042	FROM->TO	GR ISLD-LNX3345.00 - GRAND ISLAND 345KV CKT Z	720	720	0.06588	130.1216	DENISON - SIOUX CITY 230KV CKT 1
FDNS	00NR_G15_042	0	17SP	G15_042	FROM->TO	GR ISLD-LNX3345.00 - GRAND ISLAND 345KV CKT Z	720	720	0.06467	130.1093	GEN334071 1-LEWIS CREEK 2
FDNS	00NR_G15_042	0	17SP	G15_042	FROM->TO	GR ISLD-LNX3345.00 - GRAND ISLAND 345KV CKT Z	720	720	0.06467	130.1049	GEN337766 1-TRACTEBEL UNIT S1
FDNS	00NR_G15_042	0	17SP	G15_042	FROM->TO	GR ISLD-LNX3345.00 - GRAND ISLAND 345KV CKT Z	720	720	0.06467	130.1033	GEN334070 1-LEWIS CREEK 1
FDNS	00NR_G15_042	0	17SP	G15_042	FROM->TO	GR ISLD-LNX3345.00 - GRAND ISLAND 345KV CKT Z	720	720	0.06352	130.0948	CLEARWATER - ONEILL 115KV CKT 1
FDNS	00NR_G15_042	0	17SP	G15_042	FROM->TO	GR ISLD-LNX3345.00 - GRAND ISLAND 345KV CKT Z	720	720	0.0647	130.0799	APPLEDORN 4 230.00 - GRANITE FALLS 230KV CKT 1
FDNS	00NR_G15_042	0	17SP	G15_042	FROM->TO	GR ISLD-LNX3345.00 - GRAND ISLAND 345KV CKT Z	720	720	0.0647	130.0799	APPLEDORN 4 230.00 - GRANITE FALLS 230KV CKT 1
FDNS	00NR_G15_042	0	17SP	G15_042	FROM->TO	GR ISLD-LNX3345.00 - GRAND ISLAND 345KV CKT Z	720	720	0.06469	130.0737	FERGSFL4 230.00 - WAHPETON 230KV CKT 1
FDNS	00NR_G15_042	0	17SP	G15_042	FROM->TO	GR ISLD-LNX3345.00 - GRAND ISLAND 345KV CKT Z	720	720	0.06409	130.0715	P12:115:UMZW:# 1910 #: YJ IN SD. YJ-UJ LINE FAULT
FDNS	00NR_G15_042	0	17SP	G15_042	FROM->TO	GR ISLD-LNX3345.00 - GRAND ISLAND 345KV CKT Z	720	720	0.06409	130.0673	NAPA JCT7 115.00 - YANKON JCT 115KV CKT 1
FDNS	00NR_G15_042	0	17SP	G15_042	FROM->TO	GR ISLD-LNX3345.00 - GRAND ISLAND 345KV CKT Z	720	720	0.06409	130.0673	NAPA JCT7 115.00 - YANKON JCT 115KV CKT 1
FDNS	00NR_G15_042	0	17SP	G15_042	FROM->TO	GR ISLD-LNX3345.00 - GRAND ISLAND 345KV CKT Z	720	720	0.06409	130.0646	NAPA JCT7 115.00 - UTICA 115KV CKT 1
FDNS	00NR_G15_042	0	17SP	G15_042	FROM->TO	GR ISLD-LNX3345.00 - GRAND ISLAND 345KV CKT Z	720	720	0.06409	130.0646	NAPA JCT7 115.00 - UTICA 115KV CKT 1
FDNS	00NR_G15_042	0	17SP	G15_042	FROM->TO	GR ISLD-LNX3345.00 - GRAND ISLAND 345KV CKT Z	720	720	0.06465	130.0499	BISMARK - JAMES TOWN 230KV CKT 1
FDNS	00NR_G15_042	0	17SP	G15_042	FROM->TO	GR ISLD-LNX3345.00 - GRAND ISLAND 345KV CKT Z	720	720	0.06395	130.0473	LAKEFIELD 3 - LKFLDXL3 345KV CKT 1
FDNS	00NR_G15_042	0	17SP	G15_042	FROM->TO	GR ISLD-LNX3345.00 - GRAND ISLAND 345KV CKT Z	720	720	0.06467	130.0417	GEN501910 1-ACADIA UNIT ST1
FDNS	00NR_G15_042	0	17SP	G15_042	FROM->TO	GR ISLD-LNX3345.00 - GRAND ISLAND 345KV CKT Z	720	720	0.06465	130.041	BISMARK - WEBER 230KV CKT 1
FDNS	00NR_G15_042	0	17SP	G15_042	FROM->TO	GR ISLD-LNX3345.00 - GRAND ISLAND 345KV CKT Z	720	720	0.06305	130.0262	CROOKED CREEK - RIVERDALE 230KV CKT 1
FDNS	00NR_G15_042	0	17SP	G15_042	FROM->TO	GR ISLD-LNX3345.00 - GRAND ISLAND 345KV CKT Z	720	720	0.06501	130.0099	BYRON - PLEASANT VALLEY 345KV CKT 1
FDNS	00NR_G15_042	0	17SP	G15_042	FROM->TO	GR ISLD-LNX3345.00 - GRAND ISLAND 345KV CKT Z	720	720	0.06503	130.0038	P13:115-230:TSGT:SIDNEY-KV1A
FDNS	00NR_G15_042	0	17SP	G15_042	FROM->TO	GR ISLD-LNX3345.00 - GRAND ISLAND 345KV CKT Z	720	720	0.06465	130.0035	JAMES TOWN - WEBER 230KV CKT 1
FDNS	00NR_G15_042	0	17SP	G15_042	FROM->TO	GR ISLD-LNX3345.00 - GRAND ISLAND 345KV CKT Z	720	720	0.06501	129.9983	P13:230-345:NPPD:SIDNEY 3:KV2A
FDNS	00NR_G15_042	0	17SP	G15_042	FROM->TO	GR ISLD-LNX3345.00 - GRAND ISLAND 345KV CKT Z	720	720	0.06501	129.998	SIDNEY (SDQ KV2A) 345/230/13.8KV TRANSFORMER CKT 1
FDNS	00NR_G15_042	0	17SP	G15_042	FROM->TO	GR ISLD-LNX3345.00 - GRAND ISLAND 345KV CKT Z	720	720	0.06467	129.9953	P13:115-345:NPPD:NUCOR-2
FDNS	00NR_G15_042	0	17SP	G15_042	FROM->TO	GR ISLD-LNX3345.00 - GRAND ISLAND 345KV CKT Z	720	720	0.06467	129.9869	GEN525561 1-TOLK GEN #1 24 KV
FDNS	00NR_G15_042	0	17SP	G15_042	FROM->TO	GR ISLD-LNX3345.00 - GRAND ISLAND 345KV CKT Z	720	720	0.06501	129.9854	SIDNEY - SIDNEY TRANSFORMER 230KV CKT 1
FDNS	00NR_G15_042	0	17SP	G15_042	FROM->TO	GR ISLD-LNX3345.00 - GRAND ISLAND 345KV CKT Z	720	720	0.06452	129.9769	MT VERN - STORLA 115KV CKT 1

SOLUTION	GROUP	SCENARIO	SEASON	SOURCE	DIRECTION	MONITORED ELEMENT	RATEA (MVA)	RATEB(MVA)	TDF	TC%LOADING (% MVA)	CONTINGENCY
FDNS	00NR_G15_042	0	17SP	G15_042	FROM->TO	GR ISLD-LNX3345.00 - GRAND ISLAND 345KV CKT Z	720	720	0.06467	129.976	GEN525562 1-TOLK GEN #2 24 KV
FDNS	00NR_G15_042	0	17SP	G15_042	FROM->TO	GR ISLD-LNX3345.00 - GRAND ISLAND 345KV CKT Z	720	720	0.06467	129.9716	GEN345765 H-1SIOUX 2 18.000
FDNS	00NR_G15_042	0	17SP	G15_042	FROM->TO	GR ISLD-LNX3345.00 - GRAND ISLAND 345KV CKT Z	720	720	0.06319	129.9698	GAVINS POINT - HARTINGTON 115KV CKT 1
FDNS	00NR_G15_042	0	17SP	G15_042	FROM->TO	GR ISLD-LNX3345.00 - GRAND ISLAND 345KV CKT Z	720	720	0.06467	129.9694	PRAIRIE ISLAND 345/20.0KV TRANSFORMER CKT 2
FDNS	00NR_G15_042	0	17SP	G15_042	FROM->TO	GR ISLD-LNX3345.00 - GRAND ISLAND 345KV CKT Z	720	720	0.06524	129.9684	P12:115:NPPD:WAPA1:CHADRON7:BOXBUTE7:BTB
FDNS	00NR_G15_042	0	17SP	G15_042	FROM->TO	GR ISLD-LNX3345.00 - GRAND ISLAND 345KV CKT Z	720	720	0.06467	129.9681	PRAIRIE ISLAND 345/20.0KV TRANSFORMER CKT 1
FDNS	00NR_G15_042	0	17SP	G15_042	FROM->TO	GR ISLD-LNX3345.00 - GRAND ISLAND 345KV CKT Z	720	720	0.06494	129.9656	ARPIN B3 345.00 - ROCKY RN B8 345.00 345KV CKT 1
FDNS	00NR_G15_042	0	17SP	G15_042	FROM->TO	GR ISLD-LNX3345.00 - GRAND ISLAND 345KV CKT Z	720	720	0.06467	129.9654	GEN337765 1-TRACTEBEL UNIT C2
FDNS	00NR_G15_042	0	17SP	G15_042	FROM->TO	GR ISLD-LNX3345.00 - GRAND ISLAND 345KV CKT Z	720	720	0.06467	129.9653	GEN337764 1-TRACTEBEL UNIT C1
FDNS	00NR_G15_042	0	17SP	G15_042	FROM->TO	GR ISLD-LNX3345.00 - GRAND ISLAND 345KV CKT Z	720	720	0.06467	129.952	BALTA - RAMSEY 230KV CKT 1
FDNS	00NR_G15_042	0	17SP	G15_042	FROM->TO	GR ISLD-LNX3345.00 - GRAND ISLAND 345KV CKT Z	720	720	0.06467	129.9407	GRAND GULF 500/22.0KV TRANSFORMER CKT 1
FDNS	00NR_G15_042	0	17SP	G15_042	FROM->TO	GR ISLD-LNX3345.00 - GRAND ISLAND 345KV CKT Z	720	720	0.06496	129.9394	CHADRON - WAYSIDE 115KV CKT 1
FDNS	00NR_G15_042	0	17SP	G15_042	FROM->TO	GR ISLD-LNX3345.00 - GRAND ISLAND 345KV CKT Z	720	720	0.06496	129.9393	P13:115-230:NPPD:WAYSIDE4:T1
FDNS	00NR_G15_042	0	17SP	G15_042	FROM->TO	GR ISLD-LNX3345.00 - GRAND ISLAND 345KV CKT Z	720	720	0.06475	129.9371	P13:230:UMZW:# 253 #: FR IN SD. LOSS OF TRANSFORMER (E
FDNS	00NR_G15_042	0	17SP	G15_042	FROM->TO	GR ISLD-LNX3345.00 - GRAND ISLAND 345KV CKT Z	720	720	0.06481	129.9369	FRANKS - HUBEN 345KV CKT 1
FDNS	00NR_G15_042	0	17SP	G15_042	FROM->TO	GR ISLD-LNX3345.00 - GRAND ISLAND 345KV CKT Z	720	720	0.06466	129.9333	ELM CREEK - MONTICELLO 345KV CKT 1
FDNS	00NR_G15_042	0	17SP	G15_042	FROM->TO	GR ISLD-LNX3345.00 - GRAND ISLAND 345KV CKT Z	720	720	0.06467	129.9321	GEN345756 H-1SIOUX 1 18.000
FDNS	00NR_G15_042	0	17SP	G15_042	FROM->TO	GR ISLD-LNX3345.00 - GRAND ISLAND 345KV CKT Z	720	720	0.06467	129.9263	GEN336221 1-LITTLE GYPSY UNIT#1
FDNS	00NR_G15_042	0	17SP	G15_042	FROM->TO	GR ISLD-LNX3345.00 - GRAND ISLAND 345KV CKT Z	720	720	0.06469	129.9261	FERGSFL4 230.00 - GRE-SILVRLK4230.00 230KV CKT 1
FDNS	00NR_G15_042	0	17SP	G15_042	FROM->TO	GR ISLD-LNX3345.00 - GRAND ISLAND 345KV CKT Z	720	720	0.06352	129.9237	CLEARWATER - NELIGH 115KV CKT 1
FDNS	00NR_G15_042	0	17SP	G15_042	FROM->TO	GR ISLD-LNX3345.00 - GRAND ISLAND 345KV CKT Z	720	720	0.06496	129.9184	WAYSIDE (WAYSIDE T1) 230/115/13.8KV TRANSFORMER CKT 1
FDNS	00NR_G15_042	0	17SP	G15_042	FROM->TO	GR ISLD-LNX3345.00 - GRAND ISLAND 345KV CKT Z	720	720	0.06467	129.9164	GEN336242 1-1NMIL ST1 18.000
FDNS	00NR_G15_042	0	17SP	G15_042	FROM->TO	GR ISLD-LNX3345.00 - GRAND ISLAND 345KV CKT Z	720	720	0.06457	129.9164	DKSN_CO5 161.00 - TRIBOJI NO1 + NO2 161KV CKT 1
FDNS	00NR_G15_042	0	17SP	G15_042	FROM->TO	GR ISLD-LNX3345.00 - GRAND ISLAND 345KV CKT Z	720	720	0.06467	129.9133	AUDUBON - SHEYNNE 230KV CKT 1
FDNS	00NR_G15_042	0	17SP	G15_042	FROM->TO	GR ISLD-LNX3345.00 - GRAND ISLAND 345KV CKT Z	720	720	0.06467	129.9105	GEN337757 1-DUKE HOTSPRINGS STG1
FDNS	00NR_G15_042	0	17SP	G15_042	FROM->TO	GR ISLD-LNX3345.00 - GRAND ISLAND 345KV CKT Z	720	720	0.06519	129.9071	NOBLES - SPLIT ROCK 345KV CKT 1
FDNS	00NR_G15_042	0	17SP	G15_042	FROM->TO	GR ISLD-LNX3345.00 - GRAND ISLAND 345KV CKT Z	720	720	0.06467	129.9057	GEN334431 1-SABINE UNIT 1
FDNS	00NR_G15_042	0	17SP	G15_042	FROM->TO	GR ISLD-LNX3345.00 - GRAND ISLAND 345KV CKT Z	720	720	0.06467	129.9057	GEN334432 1-SABINE UNIT 2
FDNS	00NR_G15_042	0	17SP	G15_042	FROM->TO	GR ISLD-LNX3345.00 - GRAND ISLAND 345KV CKT Z	720	720	0.06517	129.9013	PALXFRASBTHI
FDNS	00NR_G15_042	0	17SP	G15_042	FROM->TO	GR ISLD-LNX3345.00 - GRAND ISLAND 345KV CKT Z	720	720	0.06524	129.8838	CHADRON - DUNLAP 115KV CKT 1
FDNS	00NR_G15_042	0	17SP	G15_042	FROM->TO	GR ISLD-LNX3345.00 - GRAND ISLAND 345KV CKT Z	720	720	0.06467	129.8838	GEN659118 1-LARAMIE RIVER UNIT1
FDNS	00NR_G15_042	0	17SP	G15_042	FROM->TO	GR ISLD-LNX3345.00 - GRAND ISLAND 345KV CKT Z	720	720	0.06467	129.8833	GEN336446 1-MICHOUD UNIT #2
FDNS	00NR_G15_042	0	17SP	G15_042	FROM->TO	GR ISLD-LNX3345.00 - GRAND ISLAND 345KV CKT Z	720	720	0.06509	129.8742	EAGLE - PHILIP 115KV CKT 1
FDNS	00NR_G15_042	0	17SP	G15_042	FROM->TO	GR ISLD-LNX3345.00 - GRAND ISLAND 345KV CKT Z	720	720	0.06467	129.8694	GEN345832 1-1TS G1 13.800
FDNS	00NR_G15_042	0	17SP	G15_042	FROM->TO	GR ISLD-LNX3345.00 - GRAND ISLAND 345KV CKT Z	720	720	0.06467	129.8691	GEN345841 2-1TS G2 13.800
FDNS	00NR_G15_042	0	17SP	G15_042	FROM->TO	GR ISLD-LNX3345.00 - GRAND ISLAND 345KV CKT Z	720	720	0.06517	129.8646	7PALM TAP 345.00 - SUB T 345KV CKT 1
FDNS	00NR_G15_042	0	17SP	G15_042	FROM->TO	GR ISLD-LNX3345.00 - GRAND ISLAND 345KV CKT Z	720	720	0.06467	129.8629	GEN501970 1-EVANGELINE UNIT 7
FDNS	00NR_G15_042	0	17SP	G15_042	FROM->TO	GR ISLD-LNX3345.00 - GRAND ISLAND 345KV CKT Z	720	720	0.06467	129.8473	GEN334030 1-FRONTIER UNIT 1
FDNS	00NR_G15_042	0	17SP	G15_042	FROM->TO	GR ISLD-LNX3345.00 - GRAND ISLAND 345KV CKT Z	720	720	0.06467	129.8469	GEN334031 1-FRONTIER UNIT 2
FDNS	00NR_G15_042	0	17SP	G15_042	FROM->TO	GR ISLD-LNX3345.00 - GRAND ISLAND 345KV CKT Z	720	720	0.06748	129.8324	OAHE - PHILIP TAP 230KV CKT 1
FDNS	00NR_G15_042	0	17SP	G15_042	FROM->TO	GR ISLD-LNX3345.00 - GRAND ISLAND 345KV CKT Z	720	720	0.06509	129.8135	EAGLE - MARTIN 115KV CKT 1
FDNS	00NR_G15_042	0	17SP	G15_042	FROM->TO	GR ISLD-LNX3345.00 - GRAND ISLAND 345KV CKT Z	720	720	0.06556	129.794	MARTIN - SHANNON 115KV CKT 1
FDNS	00NR_G15_042	0	17SP	G15_042	FROM->TO	GR ISLD-LNX3345.00 - GRAND ISLAND 345KV CKT Z	720	720	0.06467	129.7892	FINNEY SWITCHING STATION - PSCO LAMAR DC TIE 345KV CKT 1
FDNS	00NR_G15_042	0	17SP	G15_042	FROM->TO	GR ISLD-LNX3345.00 - GRAND ISLAND 345KV CKT Z	720	720	0.06467	129.7892	FINNEY SWITCHING STATION - PSCO LAMAR DC TIE 345KV CKT 1
FDNS	00NR_G15_042	0	17SP	G15_042	FROM->TO	GR ISLD-LNX3345.00 - GRAND ISLAND 345KV CKT Z	720	720	0.0767	129.656	COLUMWEST - KELLY 230KV CKT 1
FDNS	00NR_G15_042	0	17SP	G15_042	FROM->TO	GR ISLD-LNX3345.00 - GRAND ISLAND 345KV CKT Z	720	720	0.06626	129.4843	KELLY - SHELL CREEK 230KV CKT 1
FDNS	00NR_G15_042	0	17SP	G15_042	FROM->TO	GR ISLD-LNX3345.00 - GRAND ISLAND 345KV CKT Z	720	720	0.06467	129.4016	KEARNEY 115KV SWITCHED SHUNT
FDNS	00NR_G15_042	0	17SP	G15_042	FROM->TO	GR ISLD-LNX3345.00 - GRAND ISLAND 345KV CKT Z	720	720	0.06626	129.4011	SHELL CREEK (SHELLCREEKT1) 345/230/13.8KV TRANSFORMER CKT 1
FDNS	00NR_G15_042	0	17SP	G15_042	FROM->TO	GR ISLD-LNX3345.00 - GRAND ISLAND 345KV CKT Z	720	720	0.06626	129.4011	SHELL CREEK (SHELLCREEKT1) 345/230/13.8KV TRANSFORMER CKT 1
FDNSLock	00NR_G15_042	0	17SP	G15_042	FROM->TO	GR ISLD-LNX3345.00 - GRAND ISLAND 345KV CKT Z	720	720	0.06467	129.3189	KEARNEY 115KV SWITCHED SHUNT
FDNS	00NR_G15_042	0	17SP	G15_042	FROM->TO	GR ISLD-LNX3345.00 - GRAND ISLAND 345KV CKT Z	720	720	0.06467	129.2601	P12:115:TSGT:BLKWDCK7-ELSIETP7
FDNS	00NR_G15_042	0	17SP	G15_042	FROM->TO	GR ISLD-LNX3345.00 - GRAND ISLAND 345KV CKT Z	720	720	0.06474	129.2496	ANTELOP-LNX3345.00 - BRDLAND-LNX3345.00 345KV CKT 1
FDNS	00NR_G15_042	0	17SP	G15_042	FROM->TO	GR ISLD-LNX3345.00 - GRAND ISLAND 345KV CKT Z	720	720	0.06467	129.2301	1303-KEARNEY
FDNS	00NR_G15_042	0	17SP	G15_042	FROM->TO	GR ISLD-LNX3345.00 - GRAND ISLAND 345KV CKT Z	720	720	0.06467	129.2301	BASE CASE
FDNS	00NR_G15_042	0	17SP	G15_042	FROM->TO	GR ISLD-LNX3345.00 - GRAND ISLAND 345KV CKT Z	720	720	0.06487	129.2278	BUCKNER7 345.00 - SPEARVILLE 345KV CKT 1
FDNS	00NR_G15_042	0	17SP	G15_042	FROM->TO	GR ISLD-LNX3345.00 - GRAND ISLAND 345KV CKT Z	720	720	0.06487	129.2278	BUCKNER7 345.00 - SPEARVILLE 345KV CKT 1
FDNS	00NR_G15_042	0	17SP	G15_042	FROM->TO	GR ISLD-LNX3345.00 - GRAND ISLAND 345KV CKT Z	720	720	0.06242	129.1476	GRAND ISLAND - RIVERDALE 230KV CKT 1
FDNS	00NR_G15_042	0	17SP	G15_042	FROM->TO	GR ISLD-LNX3345.00 - GRAND ISLAND 345KV CKT Z	720	720	0.06476	129.109	P12:115:TSGT:GRANTNB7-OGALALA7_2
FDNS	00NR_G15_042	0	17SP	G15_042	FROM->TO	GR ISLD-LNX3345.00 - GRAND ISLAND 345KV CKT Z	720	720	0.06628	129.0997	AXTELL - PAULINE 345KV CKT 1
FDNS	00NR_G15_042	0	17SP	G15_042	FROM->TO	GR ISLD-LNX3345.00 - GRAND ISLAND 345KV CKT Z	720	720	0.06317	129.0811	COOPER - MOORE 345KV CKT 1
FDNS	00NR_G15_042	0	17SP	G15_042	FROM->TO	GR ISLD-LNX3345.00 - GRAND ISLAND 345KV CKT Z	720	720	0.06483	129.0762	MINGO (MINGO) 345/115/13.8KV TRANSFORMER CKT 1
FDNS	00NR_G15_042	0	17SP	G15_042	FROM->TO	GR ISLD-LNX3345.00 - GRAND ISLAND 345KV CKT Z	720	720	0.06483	129.0762	MINGO (MINGO) 345/115/13.8KV TRANSFORMER CKT 1
FDNS	00NR_G15_042	0	17SP	G15_042	FROM->TO	GR ISLD-LNX3345.00 - GRAND ISLAND 345KV CKT Z	720	720	0.06467	129.0753	GEN645001 1-FORT CALHOUN 1
FDNS	00NR_G15_042	0	17SP	G15_042	FROM->TO	GR ISLD-LNX3345.00 - GRAND ISLAND 345KV CKT Z	720	720	0.06678	129.0412	103RD & ROKEBY - MOORE 345KV CKT 1
FDNS	00NR_G15_042	0	17SP	G15_042	FROM->TO	GR ISLD-LNX3345.00 - GRAND ISLAND 345KV CKT Z	720	720	0.06678	129.0412	103RD & ROKEBY - MOORE 345KV CKT 1
FDNS	00NR_G15_042	0	17SP	G15_042	FROM->TO	GR ISLD-LNX3345.00 - GRAND ISLAND 345KV CKT Z	720	720	0.06606	128.9962	HOLCOMB - SETAB 345KV CKT 1
FDNS	00NR_G15_042	0	17SP	G15_042	FROM->TO	GR ISLD-LNX3345.00 - GRAND ISLAND 345KV CKT Z	720	720	0.06606	128.9962	HOLCOMB - SETAB 345KV CKT 1
FDNS	00NR_G15_042	0	17SP	G15_042	FROM->TO	GR ISLD-LNX3345.00 - GRAND ISLAND 345KV CKT Z	720	720	0.06492	128.991	LOUP CITY - ST LIBORY 115KV CKT 1
FDNS	00NR_G15_042	0	17SP	G15_042	FROM->TO	GR ISLD-LNX3345.00 - GRAND ISLAND 345KV CKT Z	720	720	0.06447	128.9356	GRAND ISLAND (GRAND.ISD T5) 230/115/13.8KV TRANSFORMER CKT 2
FDNS	00NR_G15_042	0	17SP	G15_042	FROM->TO	GR ISLD-LNX3345.00 - GRAND ISLAND 345KV CKT Z	720	720	0.06447	128.9356	GRAND ISLAND (GRAND.ISD T5) 230/115/13.8KV TRANSFORMER CKT 2
FDNS	00NR_G15_042	0	17SP	G15_042	FROM->TO	GR ISLD-LNX3345.00 - GRAND ISLAND 345KV CKT Z	720	720	0.06446	128.933	GRAND ISLAND (GRAND.ISD T2) 230/115/13.8KV TRANSFORMER CKT 1
FDNS	00NR_G15_042	0	17SP	G15_042	FROM->TO	GR ISLD-LNX3345.00 - GRAND ISLAND 345KV CKT Z	720	720	0.06446	128.933	GRAND ISLAND (GRAND.ISD T2) 230/115/13.8KV TRANSFORMER CKT 1
FDNS	00NR_G15_042	0	17SP	G15_042	FROM->TO	GR ISLD-LNX3345.00 - GRAND ISLAND 345KV CKT Z	720	720	0.06484	128.9198	FT THOMPSON - OAHE 230KV CKT 3

SOLUTION	GROUP	SCENARIO	SEASON	SOURCE	DIRECTION	MONITORED ELEMENT	RATEA (MVA)	RATEB(MVA)	TDF	TC%LOADING (% MVA)	CONTINGENCY
FDNS	00NR_G15_042	0	17SP	G15_042	FROM->TO	GR ISLD-LNX3345.00 - GRAND ISLAND 345KV CKT Z	720	720	0.06484	128.9198	FT THOMPSON - OAHE 230KV CKT 3
FDNS	00NR_G15_042	0	17SP	G15_042	FROM->TO	GR ISLD-LNX3345.00 - GRAND ISLAND 345KV CKT Z	720	720	0.06484	128.9198	FT THOMPSON - OAHE 230KV CKT 4
FDNS	00NR_G15_042	0	17SP	G15_042	FROM->TO	GR ISLD-LNX3345.00 - GRAND ISLAND 345KV CKT Z	720	720	0.06484	128.9198	FT THOMPSON - OAHE 230KV CKT 4
FDNS	00NR_G15_042	0	17SP	G15_042	FROM->TO	GR ISLD-LNX3345.00 - GRAND ISLAND 345KV CKT Z	720	720	0.06508	128.8614	AURORA - GRAND ISLAND 115KV CKT 1
FDNS	00NR_G15_042	0	17SP	G15_042	FROM->TO	GR ISLD-LNX3345.00 - GRAND ISLAND 345KV CKT Z	720	720	0.06578	128.8519	MAXWELL - NORTH PLATTE 115KV CKT 1
FDNS	00NR_G15_042	0	17SP	G15_042	FROM->TO	GR ISLD-LNX3345.00 - GRAND ISLAND 345KV CKT Z	720	720	0.06527	128.85	SUB 3455 - SUB 3740 345KV CKT 1
FDNS	00NR_G15_042	0	17SP	G15_042	FROM->TO	GR ISLD-LNX3345.00 - GRAND ISLAND 345KV CKT Z	720	720	0.06527	128.85	SUB 3455 - SUB 3740 345KV CKT 1
FDNS	00NR_G15_042	0	17SP	G15_042	FROM->TO	GR ISLD-LNX3345.00 - GRAND ISLAND 345KV CKT Z	720	720	0.06463	128.8134	MCCOOL (MCCOOL T2) 345/115/13.8KV TRANSFORMER CKT 1
FDNS	00NR_G15_042	0	17SP	G15_042	FROM->TO	GR ISLD-LNX3345.00 - GRAND ISLAND 345KV CKT Z	720	720	0.06463	128.8134	MCCOOL (MCCOOL T2) 345/115/13.8KV TRANSFORMER CKT 1
FDNS	00NR_G15_042	0	17SP	G15_042	FROM->TO	GR ISLD-LNX3345.00 - GRAND ISLAND 345KV CKT Z	720	720	0.06709	128.8041	MAXWELL - STAPLETON 115KV CKT 1
FDNS	00NR_G15_042	0	17SP	G15_042	FROM->TO	GR ISLD-LNX3345.00 - GRAND ISLAND 345KV CKT Z	720	720	0.06465	128.7578	GRAND ISLAND (GI KU1B) 345/230/13.8KV TRANSFORMER CKT 2
FDNS	00NR_G15_042	0	17SP	G15_042	FROM->TO	GR ISLD-LNX3345.00 - GRAND ISLAND 345KV CKT Z	720	720	0.06465	128.7578	GRAND ISLAND (GI KU1B) 345/230/13.8KV TRANSFORMER CKT 2
FDNS	00NR_G15_042	0	17SP	G15_042	FROM->TO	GR ISLD-LNX3345.00 - GRAND ISLAND 345KV CKT Z	720	720	0.06465	128.7568	GRAND ISLAND (GI KU1A) 345/230/13.8KV TRANSFORMER CKT 1
FDNS	00NR_G15_042	0	17SP	G15_042	FROM->TO	GR ISLD-LNX3345.00 - GRAND ISLAND 345KV CKT Z	720	720	0.06465	128.7568	GRAND ISLAND (GI KU1A) 345/230/13.8KV TRANSFORMER CKT 1
FDNS	00NR_G15_042	0	17SP	G15_042	FROM->TO	GR ISLD-LNX3345.00 - GRAND ISLAND 345KV CKT Z	720	720	0.06486	128.7341	G11_051T 345.00 - WOODWARD DISTRICT EHV 345KV CKT 1
FDNS	00NR_G15_042	0	17SP	G15_042	FROM->TO	GR ISLD-LNX3345.00 - GRAND ISLAND 345KV CKT Z	720	720	0.06514	128.7241	FINNEY SWITCHING STATION - WALKTAP7 345.00 345KV CKT 1
FDNS	00NR_G15_042	0	17SP	G15_042	FROM->TO	GR ISLD-LNX3345.00 - GRAND ISLAND 345KV CKT Z	720	720	0.06514	128.7241	FINNEY SWITCHING STATION - WALKTAP7 345.00 345KV CKT 1
FDNS	00NR_G15_042	0	17SP	G15_042	FROM->TO	GR ISLD-LNX3345.00 - GRAND ISLAND 345KV CKT Z	720	720	0.06537	128.7067	Hitchland Interchange - WALKTAP7 345.00 345KV CKT 1
FDNS	00NR_G15_042	0	17SP	G15_042	FROM->TO	GR ISLD-LNX3345.00 - GRAND ISLAND 345KV CKT Z	720	720	0.06537	128.7067	Hitchland Interchange - WALKTAP7 345.00 345KV CKT 1
FDNS	00NR_G15_042	0	17SP	G15_042	FROM->TO	GR ISLD-LNX3345.00 - GRAND ISLAND 345KV CKT Z	720	720	0.06537	128.7004	P12:345:SPS:J07.1.FINN.HITCH
FDNS	00NR_G15_042	0	17SP	G15_042	FROM->TO	GR ISLD-LNX3345.00 - GRAND ISLAND 345KV CKT Z	720	720	0.06467	128.6891	GEN562003 1-G11_027_3 0.6900
FDNS	00NR_G15_042	0	17SP	G15_042	FROM->TO	GR ISLD-LNX3345.00 - GRAND ISLAND 345KV CKT Z	720	720	0.06467	128.6783	GEN652546 1-FT RANDAL
FDNS	00NR_G15_042	0	17SP	G15_042	FROM->TO	GR ISLD-LNX3345.00 - GRAND ISLAND 345KV CKT Z	720	720	0.06881	128.677	MOORE - PAULINE 345KV CKT 1
FDNS	00NR_G15_042	0	17SP	G15_042	FROM->TO	GR ISLD-LNX3345.00 - GRAND ISLAND 345KV CKT Z	720	720	0.06496	128.6715	P12:115:UMZW:# 172 #: WI IN SD.
FDNS	00NR_G15_042	0	17SP	G15_042	FROM->TO	GR ISLD-LNX3345.00 - GRAND ISLAND 345KV CKT Z	720	720	0.06496	128.6703	LARAMIE RIVER - STEGALL 345KV CKT 1
FDNS	00NR_G15_042	0	17SP	G15_042	FROM->TO	GR ISLD-LNX3345.00 - GRAND ISLAND 345KV CKT Z	720	720	0.06467	128.6663	GEN600125 2-FEP ST G 13.800
FDNS	00NR_G15_042	0	17SP	G15_042	FROM->TO	GR ISLD-LNX3345.00 - GRAND ISLAND 345KV CKT Z	720	720	0.06493	128.6555	FALLOW 3 345.00 - GRIMES 345KV CKT 1
FDNS	00NR_G15_042	0	17SP	G15_042	FROM->TO	GR ISLD-LNX3345.00 - GRAND ISLAND 345KV CKT Z	720	720	0.06467	128.6526	GEN672367 1-MERIDIAN GENERATOR 1 GT1
FDNS	00NR_G15_042	0	17SP	G15_042	FROM->TO	GR ISLD-LNX3345.00 - GRAND ISLAND 345KV CKT Z	720	720	0.06467	128.6526	GEN672368 2-MERIDIAN GENERATOR 2 GT2
FDNS	00NR_G15_042	0	17SP	G15_042	FROM->TO	GR ISLD-LNX3345.00 - GRAND ISLAND 345KV CKT Z	720	720	0.06467	128.6515	GEN615031 1-PLEASANT VALLEY
FDNS	00NR_G15_042	0	17SP	G15_042	FROM->TO	GR ISLD-LNX3345.00 - GRAND ISLAND 345KV CKT Z	720	720	0.0669	128.6482	MINGO - SETAB 345KV CKT 1
FDNS	00NR_G15_042	0	17SP	G15_042	FROM->TO	GR ISLD-LNX3345.00 - GRAND ISLAND 345KV CKT Z	720	720	0.0669	128.6482	MINGO - SETAB 345KV CKT 1
FDNS	00NR_G15_042	0	17SP	G15_042	FROM->TO	GR ISLD-LNX3345.00 - GRAND ISLAND 345KV CKT Z	720	720	0.06467	128.6465	GEN615032 2-PLEASANT VALLEY
FDNS	00NR_G15_042	0	17SP	G15_042	FROM->TO	GR ISLD-LNX3345.00 - GRAND ISLAND 345KV CKT Z	720	720	0.06467	128.642	GEN672350 1-NIPAWIN GENERATOR 1
FDNS	00NR_G15_042	0	17SP	G15_042	FROM->TO	GR ISLD-LNX3345.00 - GRAND ISLAND 345KV CKT Z	720	720	0.06467	128.642	GEN672351 2-NIPAWIN GENERATOR 2
FDNS	00NR_G15_042	0	17SP	G15_042	FROM->TO	GR ISLD-LNX3345.00 - GRAND ISLAND 345KV CKT Z	720	720	0.06467	128.6419	GEN672352 3-NIPAWIN GENERATOR 3
FDNS	00NR_G15_042	0	17SP	G15_042	FROM->TO	GR ISLD-LNX3345.00 - GRAND ISLAND 345KV CKT Z	720	720	0.06467	128.6383	GEN600018 S-LS POWER STEAM
FDNS	00NR_G15_042	0	17SP	G15_042	FROM->TO	GR ISLD-LNX3345.00 - GRAND ISLAND 345KV CKT Z	720	720	0.06467	128.6375	GEN657964 1-ASH2GEN9 0.5750
FDNS	00NR_G15_042	0	17SP	G15_042	FROM->TO	GR ISLD-LNX3345.00 - GRAND ISLAND 345KV CKT Z	720	720	0.06714	128.6366	ATCHSNT3 345.00 - BOONEVILLE 345KV CKT 1
FDNS	00NR_G15_042	0	17SP	G15_042	FROM->TO	GR ISLD-LNX3345.00 - GRAND ISLAND 345KV CKT Z	720	720	0.06467	128.63	MITCHLCO3 345.00 345/34.5KV TRANSFORMER CKT 1
FDNS	00NR_G15_042	0	17SP	G15_042	FROM->TO	GR ISLD-LNX3345.00 - GRAND ISLAND 345KV CKT Z	720	720	0.06467	128.6272	GEN672349 3-CORY COGEN GENERATOR 3 ST
FDNS	00NR_G15_042	0	17SP	G15_042	FROM->TO	GR ISLD-LNX3345.00 - GRAND ISLAND 345KV CKT Z	720	720	0.06467	128.6193	GEN652548 5-FT RANDAL
FDNS	00NR_G15_042	0	17SP	G15_042	FROM->TO	GR ISLD-LNX3345.00 - GRAND ISLAND 345KV CKT Z	720	720	0.06467	128.6193	GEN652549 7-FT RANDAL
FDNS	00NR_G15_042	0	17SP	G15_042	FROM->TO	GR ISLD-LNX3345.00 - GRAND ISLAND 345KV CKT Z	720	720	0.06467	128.608	GEN652547 3-FT RANDAL
FDNS	00NR_G15_042	0	17SP	G15_042	FROM->TO	GR ISLD-LNX3345.00 - GRAND ISLAND 345KV CKT Z	720	720	0.06474	128.6048	P12:345:UMZB:# 103 #: BD IN SD. LOSS OF LINE
FDNS	00NR_G15_042	0	17SP	G15_042	FROM->TO	GR ISLD-LNX3345.00 - GRAND ISLAND 345KV CKT Z	720	720	0.06474	128.6047	BRDLAND-LNX3345.00 - HURON 345KV CKT Z
FDNS	00NR_G15_042	0	17SP	G15_042	FROM->TO	GR ISLD-LNX3345.00 - GRAND ISLAND 345KV CKT Z	720	720	0.06474	128.6031	P12:345:UMZB:# 102 #: AVS BD IN ND. AVS BRD LR
FDNS	00NR_G15_042	0	17SP	G15_042	FROM->TO	GR ISLD-LNX3345.00 - GRAND ISLAND 345KV CKT Z	720	720	0.06474	128.6006	HURON (BD KU2A) 345/230/13.8KV TRANSFORMER CKT 1
FDNS	00NR_G15_042	0	17SP	G15_042	FROM->TO	GR ISLD-LNX3345.00 - GRAND ISLAND 345KV CKT Z	720	720	0.06474	128.6006	HURON (BD KU2A) 345/230/13.8KV TRANSFORMER CKT 1
FDNS	00NR_G15_042	0	17SP	G15_042	FROM->TO	GR ISLD-LNX3345.00 - GRAND ISLAND 345KV CKT Z	720	720	0.06474	128.6004	BROADLAND - HURON 230KV CKT 1
FDNS	00NR_G15_042	0	17SP	G15_042	FROM->TO	GR ISLD-LNX3345.00 - GRAND ISLAND 345KV CKT Z	720	720	0.06467	128.5993	GEN620324 3-HOOT LAKE 3 GEN
FDNS	00NR_G15_042	0	17SP	G15_042	FROM->TO	GR ISLD-LNX3345.00 - GRAND ISLAND 345KV CKT Z	720	720	0.06486	128.5904	G11_051T 345.00 - TATONGA7 345.00 345KV CKT 1
FDNS	00NR_G15_042	0	17SP	G15_042	FROM->TO	GR ISLD-LNX3345.00 - GRAND ISLAND 345KV CKT Z	720	720	0.06467	128.5799	GEN600020 2-ANGUS ANSON1
FDNS	00NR_G15_042	0	17SP	G15_042	FROM->TO	GR ISLD-LNX3345.00 - GRAND ISLAND 345KV CKT Z	720	720	0.06467	128.5799	GEN600021 3-ANGUS ANSON2
FDNS	00NR_G15_042	0	17SP	G15_042	FROM->TO	GR ISLD-LNX3345.00 - GRAND ISLAND 345KV CKT Z	720	720	0.06464	128.5744	GRAND ISLAND (GI KU3A) 345/230/13.8KV TRANSFORMER CKT 3
FDNS	00NR_G15_042	0	17SP	G15_042	FROM->TO	GR ISLD-LNX3345.00 - GRAND ISLAND 345KV CKT Z	720	720	0.06464	128.5744	GRAND ISLAND (GI KU3A) 345/230/13.8KV TRANSFORMER CKT 3
FDNS	00NR_G15_042	0	17SP	G15_042	FROM->TO	GR ISLD-LNX3345.00 - GRAND ISLAND 345KV CKT Z	720	720	0.0767	128.5582	COLUMWEST - GRAND ISLAND 230KV CKT 1
FDNS	00NR_G15_042	0	17SP	G15_042	FROM->TO	GR ISLD-LNX3345.00 - GRAND ISLAND 345KV CKT Z	720	720	0.06467	128.5552	GEN659158 2-PIONEER G213.800
FDNS	00NR_G15_042	0	17SP	G15_042	FROM->TO	GR ISLD-LNX3345.00 - GRAND ISLAND 345KV CKT Z	720	720	0.06467	128.5552	GEN659159 3-PIONEER G313.800
FDNS	00NR_G15_042	0	17SP	G15_042	FROM->TO	GR ISLD-LNX3345.00 - GRAND ISLAND 345KV CKT Z	720	720	0.06467	128.5533	GEN659156 2-LONESMCRK 2G13.800
FDNS	00NR_G15_042	0	17SP	G15_042	FROM->TO	GR ISLD-LNX3345.00 - GRAND ISLAND 345KV CKT Z	720	720	0.06467	128.5533	GEN659157 3-LONESMCRK 3G13.800
FDNS	00NR_G15_042	0	17SP	G15_042	FROM->TO	GR ISLD-LNX3345.00 - GRAND ISLAND 345KV CKT Z	720	720	0.06467	128.551	GEN659290 1-EDGECOL
FDNS	00NR_G15_042	0	17SP	G15_042	FROM->TO	GR ISLD-LNX3345.00 - GRAND ISLAND 345KV CKT Z	720	720	0.06467	128.5479	GEN672339 16-QE 16G 13.800
FDNS	00NR_G15_042	0	17SP	G15_042	FROM->TO	GR ISLD-LNX3345.00 - GRAND ISLAND 345KV CKT Z	720	720	0.06467	128.5479	GEN672342 3-QUEEN ELIZABETH GENERATOR 3
FDNS	00NR_G15_042	0	17SP	G15_042	FROM->TO	GR ISLD-LNX3345.00 - GRAND ISLAND 345KV CKT Z	720	720	0.06673	128.5415	LOUP CITY - NORTH LOUP 115KV CKT 1
FDNS	00NR_G15_042	0	17SP	G15_042	FROM->TO	GR ISLD-LNX3345.00 - GRAND ISLAND 345KV CKT Z	720	720	0.06467	128.534	GEN672393 2-NBECST2G 13.800
FDNS	00NR_G15_042	0	17SP	G15_042	FROM->TO	GR ISLD-LNX3345.00 - GRAND ISLAND 345KV CKT Z	720	720	0.06467	128.5334	LADISH 115/13.2KV TRANSFORMER CKT 1
FDNS	00NR_G15_042	0	17SP	G15_042	FROM->TO	GR ISLD-LNX3345.00 - GRAND ISLAND 345KV CKT Z	720	720	0.06467	128.5329	GEN600012 2-BLACK DOG GEN 2
FDNS	00NR_G15_042	0	17SP	G15_042	FROM->TO	GR ISLD-LNX3345.00 - GRAND ISLAND 345KV CKT Z	720	720	0.06467	128.5294	GEN590010 1-ERCOT EQUIVALENCE
FDNS	00NR_G15_042	0	17SP	G15_042	FROM->TO	GR ISLD-LNX3345.00 - GRAND ISLAND 345KV CKT Z	720	720	0.06467	128.5236	GEN652410 3-FT PECK
FDNS	00NR_G15_042	0	17SP	G15_042	FROM->TO	GR ISLD-LNX3345.00 - GRAND ISLAND 345KV CKT Z	720	720	0.06467	128.5086	GEN300003 1-THOMAS HILL UNIT 3
FDNS	00NR_G15_042	0	17SP	G15_042	FROM->TO	GR ISLD-LNX3345.00 - GRAND ISLAND 345KV CKT Z	720	720	0.06467	128.4967	GEN590011 2-ERCOT EQUIVALENCE
FDNS	00NR_G15_042	0	17SP	G15_042	FROM->TO	GR ISLD-LNX3345.00 - GRAND ISLAND 345KV CKT Z	720	720	0.06467	128.4923	EASTDC - ERCOT EQUIVALENCE 345KV CKT 1

SOLUTION	GROUP	SCENARIO	SEASON	SOURCE	DIRECTION	MONITORED ELEMENT	RATEA (MVA)	RATEB(MVA)	TDF	TC%LOADING (% MVA)	CONTINGENCY
FDNS	00NR_G15_042	0	17SP	G15_042	FROM->TO	GR ISLD-LNX3345.00 - GRAND ISLAND 345KV CKT Z	720	720	0.06467	128.4872	GEN629072 4-LANSING GENERATOR FOR UNITS NO4 EIA CODE 1
FDNS	00NR_G15_042	0	17SP	G15_042	FROM->TO	GR ISLD-LNX3345.00 - GRAND ISLAND 345KV CKT Z	720	720	0.06467	128.4783	DRAYTON - LETELLIER 230KV CKT 1
FDNS	00NR_G15_042	0	17SP	G15_042	FROM->TO	GR ISLD-LNX3345.00 - GRAND ISLAND 345KV CKT Z	720	720	0.06467	128.4632	G830_SUB 115.00 - GRE-MCHENRY7115.00 115KV CKT 1
FDNS	00NR_G15_042	0	17SP	G15_042	FROM->TO	GR ISLD-LNX3345.00 - GRAND ISLAND 345KV CKT Z	720	720	0.06467	128.4569	GEN652414 4-FT PECK
FDNS	00NR_G15_042	0	17SP	G15_042	FROM->TO	GR ISLD-LNX3345.00 - GRAND ISLAND 345KV CKT Z	720	720	0.06467	128.4569	GEN652415 5-FT PECK
FDNS	00NR_G15_042	0	17SP	G15_042	FROM->TO	GR ISLD-LNX3345.00 - GRAND ISLAND 345KV CKT Z	720	720	0.06447	128.4569	OAHE - SULLEY BUTTE 230KV CKT 1
FDNS	00NR_G15_042	0	17SP	G15_042	FROM->TO	GR ISLD-LNX3345.00 - GRAND ISLAND 345KV CKT Z	720	720	0.06467	128.454	G830_SUB 115.00 115/34.5KV TRANSFORMER CKT 1
FDNS	00NR_G15_042	0	17SP	G15_042	FROM->TO	GR ISLD-LNX3345.00 - GRAND ISLAND 345KV CKT Z	720	720	0.04958	128.4434	DIXONCO 230.00 - TWIN CHURCH 230KV CKT 1
FDNS	00NR_G15_042	0	17SP	G15_042	FROM->TO	GR ISLD-LNX3345.00 - GRAND ISLAND 345KV CKT Z	720	720	0.06467	128.4383	GEN660003 3-HURON WEST PARK
FDNSLock	00NR_G15_042	0	17SP	G15_042	FROM->TO	GR ISLD-LNX3345.00 - GRAND ISLAND 345KV CKT Z	720	720	0.06668	128.4328	CENTRAL CITY - GRAND ISLAND 115KV CKT 1
FDNS	00NR_G15_042	0	17SP	G15_042	FROM->TO	GR ISLD-LNX3345.00 - GRAND ISLAND 345KV CKT Z	720	720	0.06467	128.42	GEN652345 W-G07_023IS_2 0.6900
FDNS	00NR_G15_042	0	17SP	G15_042	FROM->TO	GR ISLD-LNX3345.00 - GRAND ISLAND 345KV CKT Z	720	720	0.06467	128.4194	EMERY 161/18.0KV TRANSFORMER CKT 1
FDNS	00NR_G15_042	0	17SP	G15_042	FROM->TO	GR ISLD-LNX3345.00 - GRAND ISLAND 345KV CKT Z	720	720	0.06467	128.4142	GEN 11104 1-J262_GEN 0.6000
FDNS	00NR_G15_042	0	17SP	G15_042	FROM->TO	GR ISLD-LNX3345.00 - GRAND ISLAND 345KV CKT Z	720	720	0.06467	128.4142	GEN 11108 1-J263_GEN 0.6000
FDNS	00NR_G15_042	0	17SP	G15_042	FROM->TO	GR ISLD-LNX3345.00 - GRAND ISLAND 345KV CKT Z	720	720	0.06661	128.3958	GERALD GENTLEMAN STATION - RED WILLOW 345KV CKT 1
FDNS	00NR_G15_042	0	17SP	G15_042	FROM->TO	GR ISLD-LNX3345.00 - GRAND ISLAND 345KV CKT Z	720	720	0.06467	128.388	GEN600050 1-FEP
FDNS	00NR_G15_042	0	17SP	G15_042	FROM->TO	GR ISLD-LNX3345.00 - GRAND ISLAND 345KV CKT Z	720	720	0.06501	128.3628	POST ROCK (POSTROCK T1) 345/230/13.8KV TRANSFORMER CKT 1
FDNS	00NR_G15_042	0	17SP	G15_042	FROM->TO	GR ISLD-LNX3345.00 - GRAND ISLAND 345KV CKT Z	720	720	0.06467	128.3593	GEN652545 7-BIG BEND
FDNS	00NR_G15_042	0	17SP	G15_042	FROM->TO	GR ISLD-LNX3345.00 - GRAND ISLAND 345KV CKT Z	720	720	0.06474	128.3584	ANTELOP-LNX3345.00 - ANTELOPE VALLEY 345KV CKT Z
FDNS	00NR_G15_042	0	17SP	G15_042	FROM->TO	GR ISLD-LNX3345.00 - GRAND ISLAND 345KV CKT Z	720	720	0.06467	128.3539	GEN300007 1-NEW MADRID UNIT 2
FDNS	00NR_G15_042	0	17SP	G15_042	FROM->TO	GR ISLD-LNX3345.00 - GRAND ISLAND 345KV CKT Z	720	720	0.06467	128.3471	GEN300006 1-NEW MADRID UNIT 1
FDNS	00NR_G15_042	0	17SP	G15_042	FROM->TO	GR ISLD-LNX3345.00 - GRAND ISLAND 345KV CKT Z	720	720	0.06467	128.3354	GEN600046 1-MECST
FDNS	00NR_G15_042	0	17SP	G15_042	FROM->TO	GR ISLD-LNX3345.00 - GRAND ISLAND 345KV CKT Z	720	720	0.06486	128.3212	MATHWSN7 345.00 - TATONGA7 345.00 345KV CKT 1
FDNS	00NR_G15_042	0	17SP	G15_042	FROM->TO	GR ISLD-LNX3345.00 - GRAND ISLAND 345KV CKT Z	720	720	0.06447	128.3203	SULLEY BUTTE - SULLYBT-LNX3230.00 230KV CKT Z
FDNS	00NR_G15_042	0	17SP	G15_042	FROM->TO	GR ISLD-LNX3345.00 - GRAND ISLAND 345KV CKT Z	720	720	0.06447	128.3199	SULLYBT-LNX3230.00 - WHITLOK 230KV CKT 1
FDNS	00NR_G15_042	0	17SP	G15_042	FROM->TO	GR ISLD-LNX3345.00 - GRAND ISLAND 345KV CKT Z	720	720	0.06467	128.3083	GEN600063 1-COLVILLE GEN 1
FDNS	00NR_G15_042	0	17SP	G15_042	FROM->TO	GR ISLD-LNX3345.00 - GRAND ISLAND 345KV CKT Z	720	720	0.06467	128.3083	GEN600064 2-COLVILLE GEN 2
FDNS	00NR_G15_042	0	17SP	G15_042	FROM->TO	GR ISLD-LNX3345.00 - GRAND ISLAND 345KV CKT Z	720	720	0.06467	128.3077	GEN600047 1-MECCT1
FDNS	00NR_G15_042	0	17SP	G15_042	FROM->TO	GR ISLD-LNX3345.00 - GRAND ISLAND 345KV CKT Z	720	720	0.06467	128.3042	GEN660001 2-ABERDEEN SIEBRECHT
FDNS	00NR_G15_042	0	17SP	G15_042	FROM->TO	GR ISLD-LNX3345.00 - GRAND ISLAND 345KV CKT Z	720	720	0.06467	128.3038	GEN600043 7-BLUE LAKE5
FDNS	00NR_G15_042	0	17SP	G15_042	FROM->TO	GR ISLD-LNX3345.00 - GRAND ISLAND 345KV CKT Z	720	720	0.06467	128.3038	GEN600044 8-BLUE LAKE6
FDNS	00NR_G15_042	0	17SP	G15_042	FROM->TO	GR ISLD-LNX3345.00 - GRAND ISLAND 345KV CKT Z	720	720	0.06467	128.2919	CENTER 230/22.0KV TRANSFORMER CKT 1
FDNS	00NR_G15_042	0	17SP	G15_042	FROM->TO	GR ISLD-LNX3345.00 - GRAND ISLAND 345KV CKT Z	720	720	0.06467	128.2837	GEN659273 2-GROTON SYNC COND
FDNS	00NR_G15_042	0	17SP	G15_042	FROM->TO	GR ISLD-LNX3345.00 - GRAND ISLAND 345KV CKT Z	720	720	0.06467	128.2837	GEN659294 1-WILTONCOL9
FDNS	00NR_G15_042	0	17SP	G15_042	FROM->TO	GR ISLD-LNX3345.00 - GRAND ISLAND 345KV CKT Z	720	720	0.06447	128.2794	P12:230:UMZB:# 114 #: SB IN SD. SB-WK-GH
FDNS	00NR_G15_042	0	17SP	G15_042	FROM->TO	GR ISLD-LNX3345.00 - GRAND ISLAND 345KV CKT Z	720	720	0.06447	128.2794	P12:230:UMZB:# 117 #: WK IN SD. SB-WK-GH
FDNS	00NR_G15_042	0	17SP	G15_042	FROM->TO	GR ISLD-LNX3345.00 - GRAND ISLAND 345KV CKT Z	720	720	0.06467	128.2682	GEN600065 7-HIGH BRIDGE
FDNS	00NR_G15_042	0	17SP	G15_042	FROM->TO	GR ISLD-LNX3345.00 - GRAND ISLAND 345KV CKT Z	720	720	0.06467	128.2682	GEN600066 8-HIGH BRIDGE
FDNS	00NR_G15_042	0	17SP	G15_042	FROM->TO	GR ISLD-LNX3345.00 - GRAND ISLAND 345KV CKT Z	720	720	0.06467	128.2626	GEN600014 4-BLACK DOG GEN 4
FDNS	00NR_G15_042	0	17SP	G15_042	FROM->TO	GR ISLD-LNX3345.00 - GRAND ISLAND 345KV CKT Z	720	720	0.06467	128.2578	GEN600011 5-BLACK DOG GEN 1
FDNS	00NR_G15_042	0	17SP	G15_042	FROM->TO	GR ISLD-LNX3345.00 - GRAND ISLAND 345KV CKT Z	720	720	0.06467	128.2524	GEN600070 9-RIVER SIDE
FDNS	00NR_G15_042	0	17SP	G15_042	FROM->TO	GR ISLD-LNX3345.00 - GRAND ISLAND 345KV CKT Z	720	720	0.06467	128.2523	GEN600071 10-RIVER SIDE
FDNS	00NR_G15_042	0	17SP	G15_042	FROM->TO	GR ISLD-LNX3345.00 - GRAND ISLAND 345KV CKT Z	720	720	0.06467	128.2435	GEN 10648 1-G830_GEN 0.6900
FDNS	00NR_G15_042	0	17SP	G15_042	FROM->TO	GR ISLD-LNX3345.00 - GRAND ISLAND 345KV CKT Z	720	720	0.06467	128.2391	GEN600007 7-RIVERSIDE GEN 7
FDNS	00NR_G15_042	0	17SP	G15_042	FROM->TO	GR ISLD-LNX3345.00 - GRAND ISLAND 345KV CKT Z	720	720	0.06447	128.2348	GLENHAM - WHITLOK 230KV CKT 1
FDNS	00NR_G15_042	0	17SP	G15_042	FROM->TO	GR ISLD-LNX3345.00 - GRAND ISLAND 345KV CKT Z	720	720	0.06467	128.2327	GEN659192 6-LYNN
FDNS	00NR_G15_042	0	17SP	G15_042	FROM->TO	GR ISLD-LNX3345.00 - GRAND ISLAND 345KV CKT Z	720	720	0.06467	128.232	GEN659162 4-RED WLCK
FDNS	00NR_G15_042	0	17SP	G15_042	FROM->TO	GR ISLD-LNX3345.00 - GRAND ISLAND 345KV CKT Z	720	720	0.06467	128.232	GEN659163 5-BLACK WDCK
FDNS	00NR_G15_042	0	17SP	G15_042	FROM->TO	GR ISLD-LNX3345.00 - GRAND ISLAND 345KV CKT Z	720	720	0.06467	128.2236	GEN600045 4-ANSON
FDNS	00NR_G15_042	0	17SP	G15_042	FROM->TO	GR ISLD-LNX3345.00 - GRAND ISLAND 345KV CKT Z	720	720	0.06467	128.2095	GEN600017 C-LS POWER CT
FDNS	00NR_G15_042	0	17SP	G15_042	FROM->TO	GR ISLD-LNX3345.00 - GRAND ISLAND 345KV CKT Z	720	720	0.06467	128.1859	GEN659031 1-G12_014IS_4 0.6900
FDNS	00NR_G15_042	0	17SP	G15_042	FROM->TO	GR ISLD-LNX3345.00 - GRAND ISLAND 345KV CKT Z	720	720	0.06467	128.1719	LANSING WEST 161/22.0KV TRANSFORMER CKT 1
FDNS	00NR_G15_042	0	17SP	G15_042	FROM->TO	GR ISLD-LNX3345.00 - GRAND ISLAND 345KV CKT Z	720	720	0.06467	128.1633	GEN615021 1-GRE-ER 14G 16.000
FDNS	00NR_G15_042	0	17SP	G15_042	FROM->TO	GR ISLD-LNX3345.00 - GRAND ISLAND 345KV CKT Z	720	720	0.06467	128.156	GEN615052 1-CAMBRIDGE GENERATING STATION
FDNS	00NR_G15_042	0	17SP	G15_042	FROM->TO	GR ISLD-LNX3345.00 - GRAND ISLAND 345KV CKT Z	720	720	0.06467	128.1536	GEN615015 1-GRE-SPRITWDG13.200
FDNS	00NR_G15_042	0	17SP	G15_042	FROM->TO	GR ISLD-LNX3345.00 - GRAND ISLAND 345KV CKT Z	720	720	0.06467	128.0831	GEN681522 3-GENOA 3
FDNS	00NR_G15_042	0	17SP	G15_042	FROM->TO	GR ISLD-LNX3345.00 - GRAND ISLAND 345KV CKT Z	720	720	0.06467	128.0362	BISONMP4 230.00 - SQUARE BUTTE 230KV CKT 1
FDNS	00NR_G15_042	0	17SP	G15_042	FROM->TO	GR ISLD-LNX3345.00 - GRAND ISLAND 345KV CKT Z	720	720	0.06467	128.0197	GEN660016 1-B_H WIND 0.7000
FDNS	00NR_G15_042	0	17SP	G15_042	FROM->TO	GR ISLD-LNX3345.00 - GRAND ISLAND 345KV CKT Z	720	720	0.06467	127.9743	GEN652906 1-G09_006IS_3 0.6900
FDNS	00NR_G15_042	0	17SP	G15_042	FROM->TO	GR ISLD-LNX3345.00 - GRAND ISLAND 345KV CKT Z	720	720	0.06467	127.9738	GEN672303 3-BOUNDARY DAM GENERATOR 3
FDNS	00NR_G15_042	0	17SP	G15_042	FROM->TO	GR ISLD-LNX3345.00 - GRAND ISLAND 345KV CKT Z	720	720	0.06467	127.9738	GEN672305 5-BOUNDARY DAM GENERATOR 5
FDNS	00NR_G15_042	0	17SP	G15_042	FROM->TO	GR ISLD-LNX3345.00 - GRAND ISLAND 345KV CKT Z	720	720	0.06467	127.9723	GEN662101 1-WESSINGTON190.5750
FDNS	00NR_G15_042	0	17SP	G15_042	FROM->TO	GR ISLD-LNX3345.00 - GRAND ISLAND 345KV CKT Z	720	720	0.06467	127.95	GEN672392 1-NBECGT1G 18.000
FDNS	00NR_G15_042	0	17SP	G15_042	FROM->TO	GR ISLD-LNX3345.00 - GRAND ISLAND 345KV CKT Z	720	720	0.06467	127.8766	GEN600067 9-HIGH BRIDGE
FDNS	00NR_G15_042	0	17SP	G15_042	FROM->TO	GR ISLD-LNX3345.00 - GRAND ISLAND 345KV CKT Z	720	720	0.06467	127.8718	GEN562832 1-G15042_3 0.6900
FDNS	00NR_G15_042	0	17SP	G15_042	FROM->TO	GR ISLD-LNX3345.00 - GRAND ISLAND 345KV CKT Z	720	720	0.06467	127.8373	GEN910006 1-G12_012IS_3 0.6900
FDNS	00NR_G15_042	0	17SP	G15_042	FROM->TO	GR ISLD-LNX3345.00 - GRAND ISLAND 345KV CKT Z	720	720	0.06467	127.8357	COYOTE 345/24.0KV TRANSFORMER CKT 1
FDNS	00NR_G15_042	0	17SP	G15_042	FROM->TO	GR ISLD-LNX3345.00 - GRAND ISLAND 345KV CKT Z	720	720	0.06467	127.8305	GEN652907 1-G09_007IS_3 0.6900
FDNS	00NR_G15_042	0	17SP	G15_042	FROM->TO	GR ISLD-LNX3345.00 - GRAND ISLAND 345KV CKT Z	720	720	0.06467	127.813	SQUARE BUTTE - YNG2 4 230.00 230KV CKT 1
FDNS	00NR_G15_042	0	17SP	G15_042	FROM->TO	GR ISLD-LNX3345.00 - GRAND ISLAND 345KV CKT Z	720	720	0.06467	127.8126	YNG2 4 230.00 230/20.0KV TRANSFORMER CKT 1
FDNS	00NR_G15_042	0	17SP	G15_042	FROM->TO	GR ISLD-LNX3345.00 - GRAND ISLAND 345KV CKT Z	720	720	0.06854	127.7154	MINGO - RED WILLOW 345KV CKT 1
FDNS	00NR_G15_042	0	17SP	G15_042	FROM->TO	GR ISLD-LNX3345.00 - GRAND ISLAND 345KV CKT Z	720	720	0.06854	127.7154	MINGO - RED WILLOW 345KV CKT 1
FDNS	00NR_G15_042	0	17SP	G15_042	FROM->TO	GR ISLD-LNX3345.00 - GRAND ISLAND 345KV CKT Z	720	720	0.06467	127.6845	GEN659353 1-DEERCREK CTG18.000

SOLUTION	GROUP	SCENARIO	SEASON	SOURCE	DIRECTION	MONITORED ELEMENT	RATEA (MVA)	RATEB(MVA)	TDF	TC%LOADING (% MVA)	CONTINGENCY
FDNS	00NR_G15_042	0	17SP	G15_042	FROM->TO	GR ISLD-LNX3345.00 - GRAND ISLAND 345KV CKT Z	720	720	0.06467	127.684	GEN659354 1-DEERCREK STG18.000
FDNS	00NR_G15_042	0	17SP	G15_042	FROM->TO	GR ISLD-LNX3345.00 - GRAND ISLAND 345KV CKT Z	720	720	0.06447	127.6829	GLENHAM - L3 HAWDON 230KV CKT 1
FDNS	00NR_G15_042	0	17SP	G15_042	FROM->TO	GR ISLD-LNX3345.00 - GRAND ISLAND 345KV CKT Z	720	720	0.06467	127.5203	GEN659289 1-DAYCNTYWND W0.6900
FDNS	00NR_G15_042	0	17SP	G15_042	FROM->TO	GR ISLD-LNX3345.00 - GRAND ISLAND 345KV CKT Z	720	720	0.06467	127.4879	GEN659018 1-G14_003IS_3 0.6900
FDNS	00NR_G15_042	0	17SP	G15_042	FROM->TO	GR ISLD-LNX3345.00 - GRAND ISLAND 345KV CKT Z	720	720	0.06467	127.4369	GEN681542 6-JP MADGETT
FDNS	00NR_G15_042	0	17SP	G15_042	FROM->TO	GR ISLD-LNX3345.00 - GRAND ISLAND 345KV CKT Z	720	720	0.06467	127.3503	GEN659194 1-NDPRAIRWND1W0.6900
FDNS	00NR_G15_042	0	17SP	G15_042	FROM->TO	GR ISLD-LNX3345.00 - GRAND ISLAND 345KV CKT Z	720	720	0.06467	127.3485	GEN659010 4-G07_027IS_2 0.6900
FDNS	00NR_G15_042	0	17SP	G15_042	FROM->TO	GR ISLD-LNX3345.00 - GRAND ISLAND 345KV CKT Z	720	720	0.06467	127.3364	GEN652461 5-GARRISON
FDNS	00NR_G15_042	0	17SP	G15_042	FROM->TO	GR ISLD-LNX3345.00 - GRAND ISLAND 345KV CKT Z	720	720	0.06467	127.3363	GEN652460 4-GARRISON
FDNS	00NR_G15_042	0	17SP	G15_042	FROM->TO	GR ISLD-LNX3345.00 - GRAND ISLAND 345KV CKT Z	720	720	0.06467	127.3325	GEN652542 1-BIG BEND
FDNS	00NR_G15_042	0	17SP	G15_042	FROM->TO	GR ISLD-LNX3345.00 - GRAND ISLAND 345KV CKT Z	720	720	0.06467	127.3324	GEN652544 5-BIG BEND
FDNS	00NR_G15_042	0	17SP	G15_042	FROM->TO	GR ISLD-LNX3345.00 - GRAND ISLAND 345KV CKT Z	720	720	0.06467	127.332	GEN652543 3-BIG BEND
FDNS	00NR_G15_042	0	17SP	G15_042	FROM->TO	GR ISLD-LNX3345.00 - GRAND ISLAND 345KV CKT Z	720	720	0.06467	127.2793	GEN652457 1-GARRISON
FDNS	00NR_G15_042	0	17SP	G15_042	FROM->TO	GR ISLD-LNX3345.00 - GRAND ISLAND 345KV CKT Z	720	720	0.06467	127.2793	GEN652458 2-GARRISON
FDNS	00NR_G15_042	0	17SP	G15_042	FROM->TO	GR ISLD-LNX3345.00 - GRAND ISLAND 345KV CKT Z	720	720	0.06467	127.2793	GEN652459 3-GARRISON
FDNS	00NR_G15_042	0	17SP	G15_042	FROM->TO	GR ISLD-LNX3345.00 - GRAND ISLAND 345KV CKT Z	720	720	0.06467	127.2708	STANTON 230/18.0KV TRANSFORMER CKT 1
FDNS	00NR_G15_042	0	17SP	G15_042	FROM->TO	GR ISLD-LNX3345.00 - GRAND ISLAND 345KV CKT Z	720	720	0.06467	127.2007	GEN659403 1-NDSUNFLWR W0.6900
FDNS	00NR_G15_042	0	17SP	G15_042	FROM->TO	GR ISLD-LNX3345.00 - GRAND ISLAND 345KV CKT Z	720	720	0.06467	127.1352	GR ISLD-LNX3345.00 345KV SWITCHED SHUNT
FDNSLock	00NR_G15_042	0	17SP	G15_042	FROM->TO	GR ISLD-LNX3345.00 - GRAND ISLAND 345KV CKT Z	720	720	0.06467	127.1351	GR ISLD-LNX3345.00 345KV SWITCHED SHUNT
FDNS	00NR_G15_042	0	17SP	G15_042	FROM->TO	GR ISLD-LNX3345.00 - GRAND ISLAND 345KV CKT Z	720	720	0.06846	127.1149	AXTELL - SWEETWATER 345KV CKT 1
FDNS	00NR_G15_042	0	17SP	G15_042	FROM->TO	GR ISLD-LNX3345.00 - GRAND ISLAND 345KV CKT Z	720	720	0.06622	127.07	AXTELL - POST ROCK 345KV CKT 1
FDNS	00NR_G15_042	0	17SP	G15_042	FROM->TO	GR ISLD-LNX3345.00 - GRAND ISLAND 345KV CKT Z	720	720	0.06467	127.0125	CLAY BOSWELL 230/20.9KV TRANSFORMER CKT 1
FDNS	00NR_G15_042	0	17SP	G15_042	FROM->TO	GR ISLD-LNX3345.00 - GRAND ISLAND 345KV CKT Z	720	720	0.06467	126.8825	GEN659411 1-CAMPBLCNTY W0.6900
FDNS	00NR_G15_042	0	17SP	G15_042	FROM->TO	GR ISLD-LNX3345.00 - GRAND ISLAND 345KV CKT Z	720	720	0.06467	126.6684	GEN659296 2-SDPRAIRWND1W0.6900
FDNS	00NR_G15_042	0	17SP	G15_042	FROM->TO	GR ISLD-LNX3345.00 - GRAND ISLAND 345KV CKT Z	720	720	0.06467	126.6555	ALMA 161 161/24.0KV TRANSFORMER CKT 1
FDNS	00NR_G15_042	0	17SP	G15_042	FROM->TO	GR ISLD-LNX3345.00 - GRAND ISLAND 345KV CKT Z	720	720	0.06467	126.6306	RCDC EAST 4230.00 - RED CEDAR DC 230KV CKT 1
FDNS	00NR_G15_042	0	17SP	G15_042	FROM->TO	GR ISLD-LNX3345.00 - GRAND ISLAND 345KV CKT Z	720	720	0.06468	126.6071	P12:230:UMZB:# 112 #: NU IN SD. NU-RCDC & DRY CREEK XFMR
FDNS	00NR_G15_042	0	17SP	G15_042	FROM->TO	GR ISLD-LNX3345.00 - GRAND ISLAND 345KV CKT Z	720	720	0.06467	126.5514	GEN652559 1-OAHE
FDNS	00NR_G15_042	0	17SP	G15_042	FROM->TO	GR ISLD-LNX3345.00 - GRAND ISLAND 345KV CKT Z	720	720	0.06467	126.5318	GEN672321 1-SHAND GENERATOR 1
FDNS	00NR_G15_042	0	17SP	G15_042	FROM->TO	GR ISLD-LNX3345.00 - GRAND ISLAND 345KV CKT Z	720	720	0.06467	126.5258	GEN615010 1-STANTON4
FDNS	00NR_G15_042	0	17SP	G15_042	FROM->TO	GR ISLD-LNX3345.00 - GRAND ISLAND 345KV CKT Z	720	720	0.06467	126.5218	GEN672310 1-POPLAR RIVER GENERATOR 1
FDNS	00NR_G15_042	0	17SP	G15_042	FROM->TO	GR ISLD-LNX3345.00 - GRAND ISLAND 345KV CKT Z	720	720	0.06467	126.5218	GEN672311 2-POPLAR RIVER GENERATOR 2
FDNS	00NR_G15_042	0	17SP	G15_042	FROM->TO	GR ISLD-LNX3345.00 - GRAND ISLAND 345KV CKT Z	720	720	0.06467	126.447	GEN672306 6-BOUNDARY DAM GENERATOR 6
FDNS	00NR_G15_042	0	17SP	G15_042	FROM->TO	GR ISLD-LNX3345.00 - GRAND ISLAND 345KV CKT Z	720	720	0.06467	126.3764	GEN652556 2-OAHE
FDNS	00NR_G15_042	0	17SP	G15_042	FROM->TO	GR ISLD-LNX3345.00 - GRAND ISLAND 345KV CKT Z	720	720	0.06467	126.3764	GEN652557 4-OAHE
FDNS	00NR_G15_042	0	17SP	G15_042	FROM->TO	GR ISLD-LNX3345.00 - GRAND ISLAND 345KV CKT Z	720	720	0.06467	126.3764	GEN652558 6-OAHE
FDNS	00NR_G15_042	0	17SP	G15_042	FROM->TO	GR ISLD-LNX3345.00 - GRAND ISLAND 345KV CKT Z	720	720	0.06467	126.2893	GEN659453 1-GI1414GEN W0.6900
FDNS	00NR_G15_042	0	17SP	G15_042	FROM->TO	GR ISLD-LNX3345.00 - GRAND ISLAND 345KV CKT Z	720	720	0.06467	126.2574	GEN657749 1-YOUNG 1 GENERATOR
FDNS	00NR_G15_042	0	17SP	G15_042	FROM->TO	GR ISLD-LNX3345.00 - GRAND ISLAND 345KV CKT Z	720	720	0.06467	126.2438	GEN600004 2-PRAIRIE ISLAND G2
FDNS	00NR_G15_042	0	17SP	G15_042	FROM->TO	GR ISLD-LNX3345.00 - GRAND ISLAND 345KV CKT Z	720	720	0.06467	126.2381	GEN600003 1-PRAIRIE ISLAND G1
FDNS	00NR_G15_042	0	17SP	G15_042	FROM->TO	GR ISLD-LNX3345.00 - GRAND ISLAND 345KV CKT Z	720	720	0.06467	126.199	GEN659141 1-K10215A
FDNS	00NR_G15_042	0	17SP	G15_042	FROM->TO	GR ISLD-LNX3345.00 - GRAND ISLAND 345KV CKT Z	720	720	0.06467	125.9593	GEN652173 1-G09_001IS_2 0.6900
FDNS	00NR_G15_042	0	17SP	G15_042	FROM->TO	GR ISLD-LNX3345.00 - GRAND ISLAND 345KV CKT Z	720	720	0.06467	125.9292	GEN600006 1-AS KING
FDNS	00NR_G15_042	0	17SP	G15_042	FROM->TO	GR ISLD-LNX3345.00 - GRAND ISLAND 345KV CKT Z	720	720	0.06467	125.7335	GEN659407 1-ANTELPHILLSW0.6900
FDNS	00NR_G15_042	0	17SP	G15_042	FROM->TO	GR ISLD-LNX3345.00 - GRAND ISLAND 345KV CKT Z	720	720	0.06467	125.6559	GEN659110 1-LELAND OLDS UNIT1
FDNS	00NR_G15_042	0	17SP	G15_042	FROM->TO	GR ISLD-LNX3345.00 - GRAND ISLAND 345KV CKT Z	720	720	0.06467	125.3526	GEN600005 1-MONTICELLO
FDNS	00NR_G15_042	0	17SP	G15_042	FROM->TO	GR ISLD-LNX3345.00 - GRAND ISLAND 345KV CKT Z	720	720	0.0748	124.9373	MCCOOL - MOORE 345KV CKT 1
FDNS	00NR_G15_042	0	17SP	G15_042	FROM->TO	GR ISLD-LNX3345.00 - GRAND ISLAND 345KV CKT Z	720	720	0.06467	124.6592	GEN600000 1-SHERBURNECNTY G1
FDNS	00NR_G15_042	0	17SP	G15_042	FROM->TO	GR ISLD-LNX3345.00 - GRAND ISLAND 345KV CKT Z	720	720	0.06467	124.4254	GEN600001 2-SHERBURNE CNTY G2
FDNS	00NR_G15_042	0	17SP	G15_042	FROM->TO	GR ISLD-LNX3345.00 - GRAND ISLAND 345KV CKT Z	720	720	0.06467	124.1762	GEN661015 1-COYOTE
FDNS	00NR_G15_042	0	17SP	G15_042	FROM->TO	GR ISLD-LNX3345.00 - GRAND ISLAND 345KV CKT Z	720	720	0.06467	124.162	GEN620315 1-BIG STONE GEN
FDNS	00NR_G15_042	0	17SP	G15_042	FROM->TO	GR ISLD-LNX3345.00 - GRAND ISLAND 345KV CKT Z	720	720	0.06467	123.7312	GEN657748 1-YOUNG 2 GENERATOR
FDNS	00NR_G15_042	0	17SP	G15_042	FROM->TO	GR ISLD-LNX3345.00 - GRAND ISLAND 345KV CKT Z	720	720	0.06467	123.4684	GEN600002 3-SHERBURNE CNTY G3
FDNS	00NR_G15_042	0	17SP	G15_042	FROM->TO	GR ISLD-LNX3345.00 - GRAND ISLAND 345KV CKT Z	720	720	0.06467	122.7925	SHERBURNE CO 345/24.0KV TRANSFORMER CKT 1
FDNS	00NR_G15_042	0	20SP	G15_042	FROM->TO	GR ISLD-LNX3345.00 - GRAND ISLAND 345KV CKT Z	720	720	0.06095	122.7084	HOLT.CO3 345.00 - THEDFRD3 345.00 345KV CKT 1
FDNS	00NR_G15_042	0	17SP	G15_042	FROM->TO	GR ISLD-LNX3345.00 - GRAND ISLAND 345KV CKT Z	720	720	0.06371	122.6849	FTTHOM1-LNX3345.00 - LELAND2-LNX3345.00 345KV CKT 1
FDNS	00NR_G15_042	0	17SP	G15_042	FROM->TO	GR ISLD-LNX3345.00 - GRAND ISLAND 345KV CKT Z	720	720	0.06467	122.6049	BIG STONE 230/24.0KV TRANSFORMER CKT 1
FDNS	00NR_G15_042	0	17SP	G15_042	FROM->TO	GR ISLD-LNX3345.00 - GRAND ISLAND 345KV CKT Z	720	720	0.06371	122.4407	P12:345:UMZB:# 108 #: LOS FT IN ND. LOS FT
FDNS	00NR_G15_042	0	17SP	G15_042	FROM->TO	GR ISLD-LNX3345.00 - GRAND ISLAND 345KV CKT Z	720	720	0.06371	122.4339	FT THOMPSON - FTTHOM1-LNX3345.00 345KV CKT Z
FDNS	00NR_G15_042	0	17SP	G15_042	FROM->TO	GR ISLD-LNX3345.00 - GRAND ISLAND 345KV CKT Z	720	720	0.06371	122.2821	LELAND OLDS - LELAND2-LNX3345.00 345KV CKT Z
FDNS	00NR_G15_042	0	17SP	G15_042	FROM->TO	GR ISLD-LNX3345.00 - GRAND ISLAND 345KV CKT Z	720	720	0.06467	121.8836	GEN659111 2-LELAND OLDS UNIT2
FDNS	00NR_G15_042	0	25SP	G15_042	FROM->TO	GR ISLD-LNX3345.00 - GRAND ISLAND 345KV CKT Z	720	720	0.06184	121.6147	HOLT.CO3 345.00 - THEDFRD3 345.00 345KV CKT 1
FDNS	00NR_G15_042	0	17SP	G15_042	FROM->TO	GR ISLD-LNX3345.00 - GRAND ISLAND 345KV CKT Z	720	720	0.06467	121.5534	GEN659125 1-COVEY
FDNS	00NR_G15_042	0	17SP	G15_042	FROM->TO	GR ISLD-LNX3345.00 - GRAND ISLAND 345KV CKT Z	720	720	0.06467	121.3183	GEN659103 1-ANTELOPE VALLEY UNIT1
FDNS	00NR_G15_042	0	17SP	G15_042	FROM->TO	GR ISLD-LNX3345.00 - GRAND ISLAND 345KV CKT Z	720	720	0.06467	121.3183	GEN659107 2-ANTELOPE VALLEY UNIT2
FDNS	00NR_G15_042	0	17SP	G15_042	FROM->TO	GR ISLD-LNX3345.00 - GRAND ISLAND 345KV CKT Z	720	720	0.07553	121.2631	GRAND ISLAND - MCCOOL 345KV CKT 1
FDNS	00NR_G15_042	0	17SP	G15_042	FROM->TO	GR ISLD-LNX3345.00 - GRAND ISLAND 345KV CKT Z	720	720	0.06467	121.0647	GEN615001 1-COAL CREEK
FDNS	00NR_G15_042	0	17SP	G15_042	FROM->TO	GR ISLD-LNX3345.00 - GRAND ISLAND 345KV CKT Z	720	720	0.06467	120.9438	GEN615002 2-COAL CREEK
FDNS	00NR_G15_042	0	17SP	G15_042	FROM->TO	GR ISLD-LNX3345.00 - GRAND ISLAND 345KV CKT Z	720	720	0.06467	114.1424	GEN562714 1-G15_023_4 0.6900
FDNS	00NR_G15_042	0	17SP	G15_042	FROM->TO	GR ISLD-LNX3345.00 - GRAND ISLAND 345KV CKT Z	720	720	0.06467	114.1424	GEN562715 1-G15_023_5 0.6900
FDNS	00NR_G15_042	0	20SP	G15_042	FROM->TO	GR ISLD-LNX3345.00 - GRAND ISLAND 345KV CKT Z	720	720	0.05505	112.2779	GERALD GENTLEMAN STATION - THEDFRD3 345.00 345KV CKT 1
FDNS	00NR_G15_042	0	25SP	G15_042	FROM->TO	GR ISLD-LNX3345.00 - GRAND ISLAND 345KV CKT Z	720	720	0.0562	111.5683	GERALD GENTLEMAN STATION - THEDFRD3 345.00 345KV CKT 1
FDNS	00NR_G15_042	0	16WP	G15_042	FROM->TO	GR ISLD-LNX3345.00 - GRAND ISLAND 345KV CKT Z	720	720	0.06501	108.6666	KELLY - MEADOWGROVE4230.00 230KV CKT 1

SOLUTION	GROUP	SCENARIO	SEASON	SOURCE	DIRECTION	MONITORED ELEMENT	RATEA (MVA)	RATEB(MVA)	TDF	TC%LOADING (% MVA)	CONTINGENCY
FDNS	00NR_G15_042	0	17SP	G15_042	FROM->TO	GR ISLD-LNX3345.00 - GRAND ISLAND 345KV CKT Z	720	720	0.06467	108.6175	GEN652353 2-GR PRAIRIEG 0.6900
FDNS	00NR_G15_042	0	16WP	G15_042	FROM->TO	GR ISLD-LNX3345.00 - GRAND ISLAND 345KV CKT Z	720	720	0.06103	108.0894	P12:230:UMZB:# 116 #: ST IN SD. WSG-ST-VH
FDNS	00NR_G15_042	0	16WP	G15_042	FROM->TO	GR ISLD-LNX3345.00 - GRAND ISLAND 345KV CKT Z	720	720	0.06136	107.6465	STORLA - WESSINGTON 230KV CKT 1
FDNS	00NR_G15_042	0	16WP	G15_042	FROM->TO	GR ISLD-LNX3345.00 - GRAND ISLAND 345KV CKT Z	720	720	0.06322	106.7177	RIEL - ROSEAU 500KV CKT 1
FDNS	00NR_G15_042	0	16WP	G15_042	FROM->TO	GR ISLD-LNX3345.00 - GRAND ISLAND 345KV CKT Z	720	720	0.06142	106.4665	HANLON - STORLA 230KV CKT 1
FDNS	00NR_G15_042	0	16WP	G15_042	FROM->TO	GR ISLD-LNX3345.00 - GRAND ISLAND 345KV CKT Z	720	720	0.06098	106.0955	FT THOMPSON - LETCHER 230KV CKT 1
FDNS	00NR_G15_042	0	16WP	G15_042	FROM->TO	GR ISLD-LNX3345.00 - GRAND ISLAND 345KV CKT Z	720	720	0.06098	106.0955	FT THOMPSON - LETCHER 230KV CKT 1
FDNSLock	00NR_G15_042	0	16WP	G15_042	FROM->TO	GR ISLD-LNX3345.00 - GRAND ISLAND 345KV CKT Z	720	720	0.06208	105.8194	WATERTN-LNX3345.00 - WATERTOWN 345KV CKT Z
FDNS	00NR_G15_042	0	16WP	G15_042	FROM->TO	GR ISLD-LNX3345.00 - GRAND ISLAND 345KV CKT Z	720	720	0.06208	105.6829	P12:345:UMZW:# 1747 #: WT2 IN SD. WT2-WHT LINE FAULT
FDNS	00NR_G15_042	0	16WP	G15_042	FROM->TO	GR ISLD-LNX3345.00 - GRAND ISLAND 345KV CKT Z	720	720	0.06208	105.4006	WATERTN-LNX3345.00 - WHITE 345KV CKT 1
FDNS	00NR_G15_042	0	16WP	G15_042	FROM->TO	GR ISLD-LNX3345.00 - GRAND ISLAND 345KV CKT Z	720	720	0.06315	105.2281	BUFFALO - JAMESTOWN 345KV CKT 1
FDNS	00NR_G15_042	0	16WP	G15_042	FROM->TO	GR ISLD-LNX3345.00 - GRAND ISLAND 345KV CKT Z	720	720	0.06493	104.9522	KEYSTONE - SIDNEY1-LNX3345.00 345KV CKT 1
FDNS	00NR_G15_042	0	16WP	G15_042	FROM->TO	GR ISLD-LNX3345.00 - GRAND ISLAND 345KV CKT Z	720	720	0.06493	104.9408	SIDNEY - SIDNEY1-LNX3345.00 345KV CKT Z
FDNS	00NR_G15_042	0	16WP	G15_042	FROM->TO	GR ISLD-LNX3345.00 - GRAND ISLAND 345KV CKT Z	720	720	0.06323	104.8561	GEN336821 1-GRAND GULF UNIT
FDNS	00NR_G15_042	0	16WP	G15_042	FROM->TO	GR ISLD-LNX3345.00 - GRAND ISLAND 345KV CKT Z	720	720	0.06077	104.8404	FT RANDAL - G12_009IST 230.00 230KV CKT 1
FDNS	00NR_G15_042	0	16WP	G15_042	FROM->TO	GR ISLD-LNX3345.00 - GRAND ISLAND 345KV CKT Z	720	720	0.06077	104.744	FT THOMPSON - LAKE PLATT 230KV CKT 1
FDNS	00NR_G15_042	0	16WP	G15_042	FROM->TO	GR ISLD-LNX3345.00 - GRAND ISLAND 345KV CKT Z	720	720	0.06077	104.744	FT THOMPSON - LAKE PLATT 230KV CKT 1
FDNS	00NR_G15_042	0	16WP	G15_042	FROM->TO	GR ISLD-LNX3345.00 - GRAND ISLAND 345KV CKT Z	720	720	0.0607	104.7422	FT RANDAL - FT THOMPSON 230KV CKT 1
FDNS	00NR_G15_042	0	16WP	G15_042	FROM->TO	GR ISLD-LNX3345.00 - GRAND ISLAND 345KV CKT Z	720	720	0.0607	104.7422	FT RANDAL - FT THOMPSON 230KV CKT 1
FDNS	00NR_G15_042	0	16WP	G15_042	FROM->TO	GR ISLD-LNX3345.00 - GRAND ISLAND 345KV CKT Z	720	720	0.06181	104.6872	LETCHER - SIOUX FALLS 230KV CKT 1
FDNS	00NR_G15_042	0	16WP	G15_042	FROM->TO	GR ISLD-LNX3345.00 - GRAND ISLAND 345KV CKT Z	720	720	0.06286	104.6384	G09_001IST 345.00 - WATERTOWN 345KV CKT 1
FDNS	00NR_G15_042	0	16WP	G15_042	FROM->TO	GR ISLD-LNX3345.00 - GRAND ISLAND 345KV CKT Z	720	720	0.06323	104.5414	GEN635024 4-WALTER SCOTT UNIT 4
FDNS	00NR_G15_042	0	16WP	G15_042	FROM->TO	GR ISLD-LNX3345.00 - GRAND ISLAND 345KV CKT Z	720	720	0.06323	104.508	GEN640010 1-GERALD GENTLEMAN STATION UNIT 1
FDNS	00NR_G15_042	0	16WP	G15_042	FROM->TO	GR ISLD-LNX3345.00 - GRAND ISLAND 345KV CKT Z	720	720	0.06323	104.4937	GEN337911 1-ARKANSAS NUCLEAR ONE UNIT #2
FDNS	00NR_G15_042	0	16WP	G15_042	FROM->TO	GR ISLD-LNX3345.00 - GRAND ISLAND 345KV CKT Z	720	720	0.06077	104.4751	G12_009IST 230.00 - LAKE PLATT 230KV CKT 1
FDNS	00NR_G15_042	0	16WP	G15_042	FROM->TO	GR ISLD-LNX3345.00 - GRAND ISLAND 345KV CKT Z	720	720	0.06315	104.4105	CENTER - JAMESTOWN 345KV CKT 1
FDNS	00NR_G15_042	0	16WP	G15_042	FROM->TO	GR ISLD-LNX3345.00 - GRAND ISLAND 345KV CKT Z	720	720	0.06323	104.4033	GEN344225 1-1CAL G1 25.000
FDNS	00NR_G15_042	0	16WP	G15_042	FROM->TO	GR ISLD-LNX3345.00 - GRAND ISLAND 345KV CKT Z	720	720	0.06323	104.3988	GEN640011 2-GERALD GENTLEMAN STATION UNIT 2
FDNS	00NR_G15_042	0	16WP	G15_042	FROM->TO	GR ISLD-LNX3345.00 - GRAND ISLAND 345KV CKT Z	720	720	0.06501	104.3939	FT RANDAL - MEADOWGROVE4230.00 230KV CKT 1
FDNS	00NR_G15_042	0	16WP	G15_042	FROM->TO	GR ISLD-LNX3345.00 - GRAND ISLAND 345KV CKT Z	720	720	0.06323	104.3678	GEN336153 1-WATERFORD UNIT#3
FDNS	00NR_G15_042	0	16WP	G15_042	FROM->TO	GR ISLD-LNX3345.00 - GRAND ISLAND 345KV CKT Z	720	720	0.06401	104.3114	HAZLETON - MITCHLCO3 345.00 345KV CKT 1
FDNS	00NR_G15_042	0	16WP	G15_042	FROM->TO	GR ISLD-LNX3345.00 - GRAND ISLAND 345KV CKT Z	720	720	0.07241	104.278	RAUN - SUB 3451 FT CAL 345KV CKT 1
FDNS	00NR_G15_042	0	16WP	G15_042	FROM->TO	GR ISLD-LNX3345.00 - GRAND ISLAND 345KV CKT Z	720	720	0.07241	104.278	RAUN - SUB 3451 FT CAL 345KV CKT 1
FDNS	00NR_G15_042	0	16WP	G15_042	FROM->TO	GR ISLD-LNX3345.00 - GRAND ISLAND 345KV CKT Z	720	720	0.06318	104.2611	BISON 3 345.00 - BUFFALO 345KV CKT 1
FDNS	00NR_G15_042	0	16WP	G15_042	FROM->TO	GR ISLD-LNX3345.00 - GRAND ISLAND 345KV CKT Z	720	720	0.06323	104.2055	GEN635023 3-WALTER SCOTT UNIT 3
FDNS	00NR_G15_042	0	16WP	G15_042	FROM->TO	GR ISLD-LNX3345.00 - GRAND ISLAND 345KV CKT Z	720	720	0.06355	104.1775	AS KING - EAU CLAIRE 345KV CKT 1
FDNS	00NR_G15_042	0	16WP	G15_042	FROM->TO	GR ISLD-LNX3345.00 - GRAND ISLAND 345KV CKT Z	720	720	0.06323	104.1173	GEN337910 1-ARKANSAS NUCLEAR ONE UNIT #1
FDNS	00NR_G15_042	0	16WP	G15_042	FROM->TO	GR ISLD-LNX3345.00 - GRAND ISLAND 345KV CKT Z	720	720	0.06323	104.1	GEN335831 1-RIVERBEND UNIT#1
FDNS	00NR_G15_042	0	16WP	G15_042	FROM->TO	GR ISLD-LNX3345.00 - GRAND ISLAND 345KV CKT Z	720	720	0.06117	104.0247	FT RANDAL - SIOUX CITY 230KV CKT 1
FDNS	00NR_G15_042	0	16WP	G15_042	FROM->TO	GR ISLD-LNX3345.00 - GRAND ISLAND 345KV CKT Z	720	720	0.06349	104.0056	ARROWHEAD - ARROWHEAD 230 230KV CKT 1
FDNS	00NR_G15_042	0	16WP	G15_042	FROM->TO	GR ISLD-LNX3345.00 - GRAND ISLAND 345KV CKT Z	720	720	0.06229	103.8494	HANLON - SIOUX FALLS 230KV CKT 1
FDNS	00NR_G15_042	0	16WP	G15_042	FROM->TO	GR ISLD-LNX3345.00 - GRAND ISLAND 345KV CKT Z	720	720	0.06292	103.8483	GROTON-LNX3 345.00 - LELAND1-LNX3345.00 345KV CKT 1
FDNS	00NR_G15_042	0	16WP	G15_042	FROM->TO	GR ISLD-LNX3345.00 - GRAND ISLAND 345KV CKT Z	720	720	0.06439	103.7944	GERALD GENTLEMAN STATION - KEYSTONE 345KV CKT 1
FDNS	00NR_G15_042	0	16WP	G15_042	FROM->TO	GR ISLD-LNX3345.00 - GRAND ISLAND 345KV CKT Z	720	720	0.06292	103.7904	P12:345:UMZB:# 109 #: LOS GRT IN ND. LOS GRT
FDNS	00NR_G15_042	0	16WP	G15_042	FROM->TO	GR ISLD-LNX3345.00 - GRAND ISLAND 345KV CKT Z	720	720	0.06292	103.7903	GROTON - GROTON-LNX3 345.00 345KV CKT Z
FDNS	00NR_G15_042	0	16WP	G15_042	FROM->TO	GR ISLD-LNX3345.00 - GRAND ISLAND 345KV CKT Z	720	720	0.06465	103.7896	SIDNEY - STEGALL 345KV CKT 1
FDNS	00NR_G15_042	0	16WP	G15_042	FROM->TO	GR ISLD-LNX3345.00 - GRAND ISLAND 345KV CKT Z	720	720	0.06292	103.7842	LELAND OLDS - LELAND1-LNX3345.00 345KV CKT Z
FDNS	00NR_G15_042	0	16WP	G15_042	FROM->TO	GR ISLD-LNX3345.00 - GRAND ISLAND 345KV CKT Z	720	720	0.06201	103.7174	FT RANDAL - UTICA JCT 230KV CKT 1
FDNS	00NR_G15_042	0	16WP	G15_042	FROM->TO	GR ISLD-LNX3345.00 - GRAND ISLAND 345KV CKT Z	720	720	0.06323	103.7008	GEN337653 1-WHITE BLUFF UNIT #2
FDNS	00NR_G15_042	0	16WP	G15_042	FROM->TO	GR ISLD-LNX3345.00 - GRAND ISLAND 345KV CKT Z	720	720	0.06323	103.6471	GEN501801 1-DOLET HILLS UNIT1
FDNS	00NR_G15_042	0	16WP	G15_042	FROM->TO	GR ISLD-LNX3345.00 - GRAND ISLAND 345KV CKT Z	720	720	0.07173	103.6328	NUNDRWD - WAYSIDE 230KV CKT 1
FDNS	00NR_G15_042	0	16WP	G15_042	FROM->TO	GR ISLD-LNX3345.00 - GRAND ISLAND 345KV CKT Z	720	720	0.06291	103.6266	CARPENTER - HURON 230KV CKT 1
FDNS	00NR_G15_042	0	16WP	G15_042	FROM->TO	GR ISLD-LNX3345.00 - GRAND ISLAND 345KV CKT Z	720	720	0.06401	103.5813	ADAMS - MITCHLCO3 345.00 345KV CKT 1
FDNS	00NR_G15_042	0	16WP	G15_042	FROM->TO	GR ISLD-LNX3345.00 - GRAND ISLAND 345KV CKT Z	720	720	0.06323	103.5691	GEN337652 1-WHITE BLUFF UNIT #1
FDNS	00NR_G15_042	0	16WP	G15_042	FROM->TO	GR ISLD-LNX3345.00 - GRAND ISLAND 345KV CKT Z	720	720	0.0632	103.5418	ELLENDALE - OAKES 230KV CKT 1
FDNS	00NR_G15_042	0	16WP	G15_042	FROM->TO	GR ISLD-LNX3345.00 - GRAND ISLAND 345KV CKT Z	720	720	0.0632	103.5418	ELLENDALE - OAKES 230KV CKT 1
FDNS	00NR_G15_042	0	16WP	G15_042	FROM->TO	GR ISLD-LNX3345.00 - GRAND ISLAND 345KV CKT Z	720	720	0.0637	103.54	ARPIN B4 345.00 - EAU CLAIRE 345KV CKT 1
FDNS	00NR_G15_042	0	16WP	G15_042	FROM->TO	GR ISLD-LNX3345.00 - GRAND ISLAND 345KV CKT Z	720	720	0.06323	103.5266	GEN641089 2-ENERGY CENTER 2
FDNS	00NR_G15_042	0	16WP	G15_042	FROM->TO	GR ISLD-LNX3345.00 - GRAND ISLAND 345KV CKT Z	720	720	0.06286	103.5054	G09_001IST 345.00 - GROTON 345KV CKT 1
FDNS	00NR_G15_042	0	16WP	G15_042	FROM->TO	GR ISLD-LNX3345.00 - GRAND ISLAND 345KV CKT Z	720	720	0.06291	103.5029	HURON - WATERTOWN 230KV CKT 2
FDNS	00NR_G15_042	0	16WP	G15_042	FROM->TO	GR ISLD-LNX3345.00 - GRAND ISLAND 345KV CKT Z	720	720	0.06291	103.5029	HURON - WATERTOWN 230KV CKT 2
FDNS	00NR_G15_042	0	16WP	G15_042	FROM->TO	GR ISLD-LNX3345.00 - GRAND ISLAND 345KV CKT Z	720	720	0.0632	103.4962	FORMAN - OAKES 230KV CKT 1
FDNS	00NR_G15_042	0	16WP	G15_042	FROM->TO	GR ISLD-LNX3345.00 - GRAND ISLAND 345KV CKT Z	720	720	0.06558	103.4942	GRIMES - LEHIGH 345KV CKT 1
FDNS	00NR_G15_042	0	16WP	G15_042	FROM->TO	GR ISLD-LNX3345.00 - GRAND ISLAND 345KV CKT Z	720	720	0.06323	103.4878	GEN338146 1-INDEPENDENCE UNIT #2
FDNS	00NR_G15_042	0	16WP	G15_042	FROM->TO	GR ISLD-LNX3345.00 - GRAND ISLAND 345KV CKT Z	720	720	0.06323	103.4824	GEN338143 1-INDEPENDENCE UNIT #1
FDNS	00NR_G15_042	0	16WP	G15_042	FROM->TO	GR ISLD-LNX3345.00 - GRAND ISLAND 345KV CKT Z	720	720	0.06291	103.4532	CARPENTER - WATERTOWN 230KV CKT 1
FDNS	00NR_G15_042	0	16WP	G15_042	FROM->TO	GR ISLD-LNX3345.00 - GRAND ISLAND 345KV CKT Z	720	720	0.06291	103.4532	CARPENTER - WATERTOWN 230KV CKT 1
FDNS	00NR_G15_042	0	16WP	G15_042	FROM->TO	GR ISLD-LNX3345.00 - GRAND ISLAND 345KV CKT Z	720	720	0.06189	103.4233	SPLIT ROCK - WHITE 345KV CKT 1
FDNS	00NR_G15_042	0	16WP	G15_042	FROM->TO	GR ISLD-LNX3345.00 - GRAND ISLAND 345KV CKT Z	720	720	0.06189	103.4233	SPLIT ROCK - WHITE 345KV CKT 1
FDNS	00NR_G15_042	0	16WP	G15_042	FROM->TO	GR ISLD-LNX3345.00 - GRAND ISLAND 345KV CKT Z	720	720	0.06322	103.4213	CNTSHNT3 345.00 - PRAIRIE3 345.00 345KV CKT 1
FDNSLock	00NR_G15_042	0	16WP	G15_042	FROM->TO	GR ISLD-LNX3345.00 - GRAND ISLAND 345KV CKT Z	720	720	0.06322	103.4208	CENTER - CNTSHNT3 345.00 345KV CKT Z1
FDNS	00NR_G15_042	0	16WP	G15_042	FROM->TO	GR ISLD-LNX3345.00 - GRAND ISLAND 345KV CKT Z	720	720	0.06142	103.3819	PAHOJA - SIOUX FALLS 230KV CKT 1
FDNS	00NR_G15_042	0	16WP	G15_042	FROM->TO	GR ISLD-LNX3345.00 - GRAND ISLAND 345KV CKT Z	720	720	0.06374	103.3643	ADAMS - PLEASANT VALLEY 345KV CKT 1

SOLUTION	GROUP	SCENARIO	SEASON	SOURCE	DIRECTION	MONITORED ELEMENT	RATEA (MVA)	RATEB(MVA)	TDF	TC%LOADING (% MVA)	CONTINGENCY
FDNS	00NR_G15_042	0	16WP	G15_042	FROM->TO	GR ISLD-LNX3345.00 - GRAND ISLAND 345KV CKT Z	720	720	0.06136	103.3293	FT THOMPSON - WESSINGTON 230KV CKT 1
FDNS	00NR_G15_042	0	16WP	G15_042	FROM->TO	GR ISLD-LNX3345.00 - GRAND ISLAND 345KV CKT Z	720	720	0.06136	103.3293	FT THOMPSON - WESSINGTON 230KV CKT 1
FDNS	00NR_G15_042	0	16WP	G15_042	FROM->TO	GR ISLD-LNX3345.00 - GRAND ISLAND 345KV CKT Z	720	720	0.06323	103.3002	GEN501813 1-RODEMACHER UNIT 3
FDNS	00NR_G15_042	0	16WP	G15_042	FROM->TO	GR ISLD-LNX3345.00 - GRAND ISLAND 345KV CKT Z	720	720	0.06342	103.2996	P12:115:NPPD:1091:VALENTN7:MISSION7:BTB
FDNS	00NR_G15_042	0	16WP	G15_042	FROM->TO	GR ISLD-LNX3345.00 - GRAND ISLAND 345KV CKT Z	720	720	0.06169	103.2817	RASMUSN - UTICA JCT 230KV CKT 1
FDNS	00NR_G15_042	0	16WP	G15_042	FROM->TO	GR ISLD-LNX3345.00 - GRAND ISLAND 345KV CKT Z	720	720	0.05936	103.2505	GERALD GENTLEMAN STATION - SWEETWATER 345KV CKT 1
FDNS	00NR_G15_042	0	16WP	G15_042	FROM->TO	GR ISLD-LNX3345.00 - GRAND ISLAND 345KV CKT Z	720	720	0.06342	103.2436	MISSION - ST FRANCIS 115KV CKT 1
FDNS	00NR_G15_042	0	16WP	G15_042	FROM->TO	GR ISLD-LNX3345.00 - GRAND ISLAND 345KV CKT Z	720	720	0.06272	103.2219	FT THOMPSON - HURON 230KV CKT 1
FDNS	00NR_G15_042	0	16WP	G15_042	FROM->TO	GR ISLD-LNX3345.00 - GRAND ISLAND 345KV CKT Z	720	720	0.06272	103.2219	FT THOMPSON - HURON 230KV CKT 1
FDNS	00NR_G15_042	0	16WP	G15_042	FROM->TO	GR ISLD-LNX3345.00 - GRAND ISLAND 345KV CKT Z	720	720	0.06272	103.2219	FT THOMPSON - HURON 230KV CKT 2
FDNS	00NR_G15_042	0	16WP	G15_042	FROM->TO	GR ISLD-LNX3345.00 - GRAND ISLAND 345KV CKT Z	720	720	0.06272	103.2219	FT THOMPSON - HURON 230KV CKT 2
FDNS	00NR_G15_042	0	16WP	G15_042	FROM->TO	GR ISLD-LNX3345.00 - GRAND ISLAND 345KV CKT Z	720	720	0.06323	103.1713	GEN335206 1-NELSON UNIT 6
FDNS	00NR_G15_042	0	16WP	G15_042	FROM->TO	GR ISLD-LNX3345.00 - GRAND ISLAND 345KV CKT Z	720	720	0.06342	103.17	HARMONY - ST FRANCIS 115KV CKT 1
FDNSLock	00NR_G15_042	0	16WP	G15_042	FROM->TO	GR ISLD-LNX3345.00 - GRAND ISLAND 345KV CKT Z	720	720	0.06316	103.1529	CHISAGO COUNTY - FORBES 500KV CKT 1
FDNS	00NR_G15_042	0	16WP	G15_042	FROM->TO	GR ISLD-LNX3345.00 - GRAND ISLAND 345KV CKT Z	720	720	0.06169	103.1227	RASMUSN - SIOUX CITY 230KV CKT 1
FDNS	00NR_G15_042	0	16WP	G15_042	FROM->TO	GR ISLD-LNX3345.00 - GRAND ISLAND 345KV CKT Z	720	720	0.06342	103.1089	HARMONY - VALENTINE 115KV CKT 1
FDNS	00NR_G15_042	0	16WP	G15_042	FROM->TO	GR ISLD-LNX3345.00 - GRAND ISLAND 345KV CKT Z	720	720	0.0638	103.0929	LAKEFIELD 3 - NOBLES 345KV CKT 1
FDNS	00NR_G15_042	0	16WP	G15_042	FROM->TO	GR ISLD-LNX3345.00 - GRAND ISLAND 345KV CKT Z	720	720	0.06321	103.0845	FORMAN - HANKINSON 230KV CKT 1
FDNS	00NR_G15_042	0	16WP	G15_042	FROM->TO	GR ISLD-LNX3345.00 - GRAND ISLAND 345KV CKT Z	720	720	0.08039	103.0833	DIXONCO 230.00 - HOSKINS 230KV CKT 1
FDNS	00NR_G15_042	0	16WP	G15_042	FROM->TO	GR ISLD-LNX3345.00 - GRAND ISLAND 345KV CKT Z	720	720	0.06323	103.0782	GEN532751 1-WOLF CREEK GENERATING STATION UNIT 1
FDNS	00NR_G15_042	0	16WP	G15_042	FROM->TO	GR ISLD-LNX3345.00 - GRAND ISLAND 345KV CKT Z	720	720	0.06319	103.0731	ALEXMRES3 345.00 - BISON 3 345.00 345KV CKT 1
FDNS	00NR_G15_042	0	16WP	G15_042	FROM->TO	GR ISLD-LNX3345.00 - GRAND ISLAND 345KV CKT Z	720	720	0.06316	103.0729	CHISAGO COUNTY - CHISAGO COUNTY 500KV CKT 1
FDNS	00NR_G15_042	0	16WP	G15_042	FROM->TO	GR ISLD-LNX3345.00 - GRAND ISLAND 345KV CKT Z	720	720	0.06323	103.0646	GEN501812 1-RODEMACHER UNIT 2
FDNS	00NR_G15_042	0	16WP	G15_042	FROM->TO	GR ISLD-LNX3345.00 - GRAND ISLAND 345KV CKT Z	720	720	0.06142	103.0641	EAGLE 4 230.00 - PAHOJA 230KV CKT 1
FDNS	00NR_G15_042	0	16WP	G15_042	FROM->TO	GR ISLD-LNX3345.00 - GRAND ISLAND 345KV CKT Z	720	720	0.06323	103.0436	GEN344897 4-1LAB G4 20.000
FDNS	00NR_G15_042	0	16WP	G15_042	FROM->TO	GR ISLD-LNX3345.00 - GRAND ISLAND 345KV CKT Z	720	720	0.06323	103.0416	GEN344894 1-1LAB G1 20.000
FDNS	00NR_G15_042	0	16WP	G15_042	FROM->TO	GR ISLD-LNX3345.00 - GRAND ISLAND 345KV CKT Z	720	720	0.06323	103.0414	GEN344896 3-1LAB G3 20.000
FDNS	00NR_G15_042	0	16WP	G15_042	FROM->TO	GR ISLD-LNX3345.00 - GRAND ISLAND 345KV CKT Z	720	720	0.06322	103.0283	GLENBORO SOUTH - RUGBY 230KV CKT 1
FDNS	00NR_G15_042	0	16WP	G15_042	FROM->TO	GR ISLD-LNX3345.00 - GRAND ISLAND 345KV CKT Z	720	720	0.06323	103.0182	GEN345670 1-1RUSH G1 18.000
FDNS	00NR_G15_042	0	16WP	G15_042	FROM->TO	GR ISLD-LNX3345.00 - GRAND ISLAND 345KV CKT Z	720	720	0.06323	103.018	GEN345671 2-1RUSH G2 18.000
FDNS	00NR_G15_042	0	16WP	G15_042	FROM->TO	GR ISLD-LNX3345.00 - GRAND ISLAND 345KV CKT Z	720	720	0.06323	103.0082	GEN344895 2-1LAB G2 20.000
FDNS	00NR_G15_042	0	16WP	G15_042	FROM->TO	GR ISLD-LNX3345.00 - GRAND ISLAND 345KV CKT Z	720	720	0.06321	103.003	CENTER - COYOTE 345KV CKT 1
FDNS	00NR_G15_042	0	16WP	G15_042	FROM->TO	GR ISLD-LNX3345.00 - GRAND ISLAND 345KV CKT Z	720	720	0.06323	102.9566	GEN336252 1-NINEMILE POINT UNIT#5
FDNS	00NR_G15_042	0	16WP	G15_042	FROM->TO	GR ISLD-LNX3345.00 - GRAND ISLAND 345KV CKT Z	720	720	0.06323	102.9546	P13:230-345:NPPD:NUCOR-1
FDNS	00NR_G15_042	0	16WP	G15_042	FROM->TO	GR ISLD-LNX3345.00 - GRAND ISLAND 345KV CKT Z	720	720	0.06325	102.9478	P12:115:NPPD:WAPA6:FTRANDL7:ONEILL 7:BTB
FDNS	00NR_G15_042	0	16WP	G15_042	FROM->TO	GR ISLD-LNX3345.00 - GRAND ISLAND 345KV CKT Z	720	720	0.06325	102.9478	P12:115:UMZB:# 115 #: SE IN NE. FR-SE-ON
FDNS	00NR_G15_042	0	16WP	G15_042	FROM->TO	GR ISLD-LNX3345.00 - GRAND ISLAND 345KV CKT Z	720	720	0.06323	102.9294	GEN659118 1-LARAMIE RIVER UNIT1
FDNS	00NR_G15_042	0	16WP	G15_042	FROM->TO	GR ISLD-LNX3345.00 - GRAND ISLAND 345KV CKT Z	720	720	0.06014	102.9191	FT THOMPSON (FT2 KU1B) 345/230/13.8KV TRANSFORMER CKT 1
FDNS	00NR_G15_042	0	16WP	G15_042	FROM->TO	GR ISLD-LNX3345.00 - GRAND ISLAND 345KV CKT Z	720	720	0.06036	102.9173	GERALD GENTLEMAN STATION - SWEETWATER 345KV CKT 2
FDNS	00NR_G15_042	0	16WP	G15_042	FROM->TO	GR ISLD-LNX3345.00 - GRAND ISLAND 345KV CKT Z	720	720	0.06323	102.9172	GEN336831 1-BAXTER WILSON SES
FDNS	00NR_G15_042	0	16WP	G15_042	FROM->TO	GR ISLD-LNX3345.00 - GRAND ISLAND 345KV CKT Z	720	720	0.06014	102.9169	FT THOMPSON (FT2 KU1A) 345/230/13.8KV TRANSFORMER CKT 1
FDNS	00NR_G15_042	0	16WP	G15_042	FROM->TO	GR ISLD-LNX3345.00 - GRAND ISLAND 345KV CKT Z	720	720	0.0635	102.9132	LARAMIE RIVER - SIDNEY2-LNX3345.00 345KV CKT 1
FDNS	00NR_G15_042	0	16WP	G15_042	FROM->TO	GR ISLD-LNX3345.00 - GRAND ISLAND 345KV CKT Z	720	720	0.06021	102.9108	P12:345:UMZW:# 907 #: SC2-SR IN IA. SC2-SR 345 KV LINE
FDNS	00NR_G15_042	0	16WP	G15_042	FROM->TO	GR ISLD-LNX3345.00 - GRAND ISLAND 345KV CKT Z	720	720	0.06021	102.9105	SIOUXCY-LNX3345.00 - SPLIT ROCK 345KV CKT 1
FDNS	00NR_G15_042	0	16WP	G15_042	FROM->TO	GR ISLD-LNX3345.00 - GRAND ISLAND 345KV CKT Z	720	720	0.06021	102.9105	SIOUXCY-LNX3345.00 - SPLIT ROCK 345KV CKT 1
FDNS	00NR_G15_042	0	16WP	G15_042	FROM->TO	GR ISLD-LNX3345.00 - GRAND ISLAND 345KV CKT Z	720	720	0.06325	102.9072	FT RANDAL - SPENCER 115KV CKT 1
FDNS	00NR_G15_042	0	16WP	G15_042	FROM->TO	GR ISLD-LNX3345.00 - GRAND ISLAND 345KV CKT Z	720	720	0.0635	102.9006	SIDNEY - SIDNEY2-LNX3345.00 345KV CKT Z
FDNS	00NR_G15_042	0	16WP	G15_042	FROM->TO	GR ISLD-LNX3345.00 - GRAND ISLAND 345KV CKT Z	720	720	0.06323	102.8932	P12:115:UMZW:# 162 #: NEL IN ND. FAULT ON ML-NEL-MX-GA 115 KV
FDNS	00NR_G15_042	0	16WP	G15_042	FROM->TO	GR ISLD-LNX3345.00 - GRAND ISLAND 345KV CKT Z	720	720	0.06021	102.8846	SIOUX CITY - SIOUXCY-LNX3345.00 345KV CKT Z
FDNSLock	00NR_G15_042	0	16WP	G15_042	FROM->TO	GR ISLD-LNX3345.00 - GRAND ISLAND 345KV CKT Z	720	720	0.07128	102.8802	P13:230-345:NPPD:STEGALL3:KV3A
FDNSLock	00NR_G15_042	0	16WP	G15_042	FROM->TO	GR ISLD-LNX3345.00 - GRAND ISLAND 345KV CKT Z	720	720	0.07128	102.8773	STEGALL (SGQ KV3A) 345/230/13.8KV TRANSFORMER CKT 1
FDNS	00NR_G15_042	0	16WP	G15_042	FROM->TO	GR ISLD-LNX3345.00 - GRAND ISLAND 345KV CKT Z	720	720	0.06342	102.8678	AINSWORTH - VALENTINE 115KV CKT 1
FDNSLock	00NR_G15_042	0	16WP	G15_042	FROM->TO	GR ISLD-LNX3345.00 - GRAND ISLAND 345KV CKT Z	720	720	0.06353	102.8665	BROOKING COUNTY - LYON COUNTY 345KV CKT 1
FDNS	00NR_G15_042	0	16WP	G15_042	FROM->TO	GR ISLD-LNX3345.00 - GRAND ISLAND 345KV CKT Z	720	720	0.06988	102.8627	COLUMEAST - SHELL CREEK 345KV CKT 1
FDNS	00NR_G15_042	0	16WP	G15_042	FROM->TO	GR ISLD-LNX3345.00 - GRAND ISLAND 345KV CKT Z	720	720	0.06323	102.8568	GEN337041 1-GERALD ANDRUS
FDNS	00NR_G15_042	0	16WP	G15_042	FROM->TO	GR ISLD-LNX3345.00 - GRAND ISLAND 345KV CKT Z	720	720	0.06357	102.8433	BYRON - NORTH ROCHESTER 345KV CKT 1
FDNS	00NR_G15_042	0	16WP	G15_042	FROM->TO	GR ISLD-LNX3345.00 - GRAND ISLAND 345KV CKT Z	720	720	0.06323	102.815	GEN334440 1-SABINE UNIT 4
FDNS	00NR_G15_042	0	16WP	G15_042	FROM->TO	GR ISLD-LNX3345.00 - GRAND ISLAND 345KV CKT Z	720	720	0.06388	102.809	KOSSUTH 3 345.00 - OBRIEN 3 345.00 345KV CKT 1
FDNS	00NR_G15_042	0	16WP	G15_042	FROM->TO	GR ISLD-LNX3345.00 - GRAND ISLAND 345KV CKT Z	720	720	0.06388	102.8083	KOSSUTH 3 345.00 - WEBSTER 345KV CKT 1
FDNS	00NR_G15_042	0	16WP	G15_042	FROM->TO	GR ISLD-LNX3345.00 - GRAND ISLAND 345KV CKT Z	720	720	0.06323	102.7895	P13:115-230:NPPD:NUCOR-3
FDNS	00NR_G15_042	0	16WP	G15_042	FROM->TO	GR ISLD-LNX3345.00 - GRAND ISLAND 345KV CKT Z	720	720	0.06323	102.788	GEN336251 1-NINEMILE POINT UNIT#4
FDNS	00NR_G15_042	0	16WP	G15_042	FROM->TO	GR ISLD-LNX3345.00 - GRAND ISLAND 345KV CKT Z	720	720	0.06323	102.781	BLAIR - GRANITE FALLS 230KV CKT 1
FDNS	00NR_G15_042	0	16WP	G15_042	FROM->TO	GR ISLD-LNX3345.00 - GRAND ISLAND 345KV CKT Z	720	720	0.06323	102.781	BLAIR - GRANITE FALLS 230KV CKT 1
FDNS	00NR_G15_042	0	16WP	G15_042	FROM->TO	GR ISLD-LNX3345.00 - GRAND ISLAND 345KV CKT Z	720	720	0.06444	102.7708	DENISON - SIOUX CITY 230KV CKT 1
FDNS	00NR_G15_042	0	16WP	G15_042	FROM->TO	GR ISLD-LNX3345.00 - GRAND ISLAND 345KV CKT Z	720	720	0.06939	102.7678	COLUMEAST - NW68TH & HOLDREGE 345KV CKT 1
FDNS	00NR_G15_042	0	16WP	G15_042	FROM->TO	GR ISLD-LNX3345.00 - GRAND ISLAND 345KV CKT Z	720	720	0.06939	102.7678	COLUMEAST - NW68TH & HOLDREGE 345KV CKT 1
FDNS	00NR_G15_042	0	16WP	G15_042	FROM->TO	GR ISLD-LNX3345.00 - GRAND ISLAND 345KV CKT Z	720	720	0.06325	102.7654	ONEILL - SPENCER 115KV CKT 1
FDNS	00NR_G15_042	0	16WP	G15_042	FROM->TO	GR ISLD-LNX3345.00 - GRAND ISLAND 345KV CKT Z	720	720	0.06172	102.7648	GAVINS POINT - HARTINGTON 115KV CKT 1
FDNS	00NR_G15_042	0	16WP	G15_042	FROM->TO	GR ISLD-LNX3345.00 - GRAND ISLAND 345KV CKT Z	720	720	0.06288	102.7608	MENNO JCT - TRIPP JCT 115KV CKT 1
FDNS	00NR_G15_042	0	16WP	G15_042	FROM->TO	GR ISLD-LNX3345.00 - GRAND ISLAND 345KV CKT Z	720	720	0.06323	102.7422	GEN525561 1-TOLK GEN #1 24 KV
FDNS	00NR_G15_042	0	16WP	G15_042	FROM->TO	GR ISLD-LNX3345.00 - GRAND ISLAND 345KV CKT Z	720	720	0.06321	102.7371	GARRISON - JAMES TOWN 230KV CKT 1
FDNS	00NR_G15_042	0	16WP	G15_042	FROM->TO	GR ISLD-LNX3345.00 - GRAND ISLAND 345KV CKT Z	720	720	0.08168	102.7232	HOSKINS - SHELL CREEK 345KV CKT 1
FDNS	00NR_G15_042	0	16WP	G15_042	FROM->TO	GR ISLD-LNX3345.00 - GRAND ISLAND 345KV CKT Z	720	720	0.06323	102.7221	P13:230:UMZW:# 2218 #: FP IN MT. LOSS OF TRANSFORMER (AT2).

SOLUTION	GROUP	SCENARIO	SEASON	SOURCE	DIRECTION	MONITORED ELEMENT	RATEA (MVA)	RATEB(MVA)	TDF	TC%LOADING (% MVA)	CONTINGENCY
FDNS	00NR_G15_042	0	16WP	G15_042	FROM->TO	GR ISLD-LNX3345.00 - GRAND ISLAND 345KV CKT Z	720	720	0.06336	102.7144	NORTH ROCHESTER - PRAIRIE ISLAND 345KV CKT 1
FDNS	00NR_G15_042	0	16WP	G15_042	FROM->TO	GR ISLD-LNX3345.00 - GRAND ISLAND 345KV CKT Z	720	720	0.06327	102.7123	HANKINSON - WAHPETON 230KV CKT 1
FDNS	00NR_G15_042	0	16WP	G15_042	FROM->TO	GR ISLD-LNX3345.00 - GRAND ISLAND 345KV CKT Z	720	720	0.06208	102.6904	P12:115:NPPD:1164:ONEILL 7:JEFFREY9:BTB
FDNS	00NR_G15_042	0	16WP	G15_042	FROM->TO	GR ISLD-LNX3345.00 - GRAND ISLAND 345KV CKT Z	720	720	0.06323	102.6849	GEN303007 1-1BC2 U2
FDNS	00NR_G15_042	0	16WP	G15_042	FROM->TO	GR ISLD-LNX3345.00 - GRAND ISLAND 345KV CKT Z	720	720	0.06323	102.6835	P13:115-345:NPPD:NUCOR-2
FDNS	00NR_G15_042	0	16WP	G15_042	FROM->TO	GR ISLD-LNX3345.00 - GRAND ISLAND 345KV CKT Z	720	720	0.06323	102.682	GEN335204 1-NELSON UNIT 4
FDNS	00NR_G15_042	0	16WP	G15_042	FROM->TO	GR ISLD-LNX3345.00 - GRAND ISLAND 345KV CKT Z	720	720	0.06323	102.6817	GEN303006 1-1BC2 U1
FDNS	00NR_G15_042	0	16WP	G15_042	FROM->TO	GR ISLD-LNX3345.00 - GRAND ISLAND 345KV CKT Z	720	720	0.06323	102.6799	GEN336191 1-LITTLE GYPSY UNIT#3
FDNS	00NR_G15_042	0	16WP	G15_042	FROM->TO	GR ISLD-LNX3345.00 - GRAND ISLAND 345KV CKT Z	720	720	0.06288	102.6781	MENNO JCT - UTICA 115KV CKT 1
FDNS	00NR_G15_042	0	16WP	G15_042	FROM->TO	GR ISLD-LNX3345.00 - GRAND ISLAND 345KV CKT Z	720	720	0.06208	102.6776	CLEARWATER - ONEILL 115KV CKT 1
FDNS	00NR_G15_042	0	16WP	G15_042	FROM->TO	GR ISLD-LNX3345.00 - GRAND ISLAND 345KV CKT Z	720	720	0.06323	102.6741	GEN642067 1-PLATTE
FDNS	00NR_G15_042	0	16WP	G15_042	FROM->TO	GR ISLD-LNX3345.00 - GRAND ISLAND 345KV CKT Z	720	720	0.06358	102.6614	BYRON - PLEASANT VALLEY 345KV CKT 1
FDNS	00NR_G15_042	0	16WP	G15_042	FROM->TO	GR ISLD-LNX3345.00 - GRAND ISLAND 345KV CKT Z	720	720	0.06288	102.6504	P12:115:UMZZ:# 237 #: MEN IN SD. MENNO JUNCTION IS A TAP (UJ-MEN-TP).
FDNS	00NR_G15_042	0	16WP	G15_042	FROM->TO	GR ISLD-LNX3345.00 - GRAND ISLAND 345KV CKT Z	720	720	0.06323	102.6502	GEN531447 1-HOLCOMB GENERATOR
FDNS	00NR_G15_042	0	16WP	G15_042	FROM->TO	GR ISLD-LNX3345.00 - GRAND ISLAND 345KV CKT Z	720	720	0.06323	102.6479	GEN336801 1-BAXTER WILSON UNIT #1
FDNS	00NR_G15_042	0	16WP	G15_042	FROM->TO	GR ISLD-LNX3345.00 - GRAND ISLAND 345KV CKT Z	720	720	0.06208	102.6455	CLEARWATER - NELIGH 115KV CKT 1
FDNS	00NR_G15_042	0	16WP	G15_042	FROM->TO	GR ISLD-LNX3345.00 - GRAND ISLAND 345KV CKT Z	720	720	0.06323	102.6435	GEN335614 1-WILLOW GLENN UNIT#4
FDNS	00NR_G15_042	0	16WP	G15_042	FROM->TO	GR ISLD-LNX3345.00 - GRAND ISLAND 345KV CKT Z	720	720	0.06323	102.633	GEN336464 1-MICHOUD UNIT #3
FDNS	00NR_G15_042	0	16WP	G15_042	FROM->TO	GR ISLD-LNX3345.00 - GRAND ISLAND 345KV CKT Z	720	720	0.06323	102.6326	GEN303008 1-1BC2 U3
FDNS	00NR_G15_042	0	16WP	G15_042	FROM->TO	GR ISLD-LNX3345.00 - GRAND ISLAND 345KV CKT Z	720	720	0.06323	102.6277	GEN336170 1-GULF OXY U4
FDNS	00NR_G15_042	0	16WP	G15_042	FROM->TO	GR ISLD-LNX3345.00 - GRAND ISLAND 345KV CKT Z	720	720	0.06323	102.618	GEN334441 1-SABINE UNIT 5
FDNS	00NR_G15_042	0	16WP	G15_042	FROM->TO	GR ISLD-LNX3345.00 - GRAND ISLAND 345KV CKT Z	720	720	0.06321	102.6088	BISMARK - JAMES TOWN 230KV CKT 1
FDNS	00NR_G15_042	0	16WP	G15_042	FROM->TO	GR ISLD-LNX3345.00 - GRAND ISLAND 345KV CKT Z	720	720	0.06321	102.5954	JAMES TOWN - WEBER 230KV CKT 1
FDNS	00NR_G15_042	0	16WP	G15_042	FROM->TO	GR ISLD-LNX3345.00 - GRAND ISLAND 345KV CKT Z	720	720	0.06321	102.5939	BISMARK - WEBER 230KV CKT 1
FDNS	00NR_G15_042	0	16WP	G15_042	FROM->TO	GR ISLD-LNX3345.00 - GRAND ISLAND 345KV CKT Z	720	720	0.06323	102.5929	GRAND GULF 500/22.0KV TRANSFORMER CKT 1
FDNS	00NR_G15_042	0	16WP	G15_042	FROM->TO	GR ISLD-LNX3345.00 - GRAND ISLAND 345KV CKT Z	720	720	0.06326	102.592	APPLEDORN 4 230.00 - WATERTOWN 230KV CKT 1
FDNS	00NR_G15_042	0	16WP	G15_042	FROM->TO	GR ISLD-LNX3345.00 - GRAND ISLAND 345KV CKT Z	720	720	0.06326	102.592	APPLEDORN 4 230.00 - WATERTOWN 230KV CKT 1
FDNS	00NR_G15_042	0	16WP	G15_042	FROM->TO	GR ISLD-LNX3345.00 - GRAND ISLAND 345KV CKT Z	720	720	0.06323	102.5916	GEN501811 1-RODEMACHER UNIT 1
FDNS	00NR_G15_042	0	16WP	G15_042	FROM->TO	GR ISLD-LNX3345.00 - GRAND ISLAND 345KV CKT Z	720	720	0.06323	102.5532	PRAIRIE ISLAND 345/20.0KV TRANSFORMER CKT 1
FDNS	00NR_G15_042	0	16WP	G15_042	FROM->TO	GR ISLD-LNX3345.00 - GRAND ISLAND 345KV CKT Z	720	720	0.06323	102.5507	PRAIRIE ISLAND 345/20.0KV TRANSFORMER CKT 2
FDNS	00NR_G15_042	0	16WP	G15_042	FROM->TO	GR ISLD-LNX3345.00 - GRAND ISLAND 345KV CKT Z	720	720	0.06323	102.5428	GEN334433 1-SABINE UNIT 3
FDNS	00NR_G15_042	0	16WP	G15_042	FROM->TO	GR ISLD-LNX3345.00 - GRAND ISLAND 345KV CKT Z	720	720	0.06323	102.5351	GEN334071 1-LEWIS CREEK 2
FDNS	00NR_G15_042	0	16WP	G15_042	FROM->TO	GR ISLD-LNX3345.00 - GRAND ISLAND 345KV CKT Z	720	720	0.06326	102.5331	APPLEDORN 4 230.00 - GRANITE FALLS 230KV CKT 1
FDNS	00NR_G15_042	0	16WP	G15_042	FROM->TO	GR ISLD-LNX3345.00 - GRAND ISLAND 345KV CKT Z	720	720	0.06326	102.5331	APPLEDORN 4 230.00 - GRANITE FALLS 230KV CKT 1
FDNS	00NR_G15_042	0	16WP	G15_042	FROM->TO	GR ISLD-LNX3345.00 - GRAND ISLAND 345KV CKT Z	720	720	0.06321	102.5311	FARGO - JAMES TOWN 230KV CKT 1
FDNS	00NR_G15_042	0	16WP	G15_042	FROM->TO	GR ISLD-LNX3345.00 - GRAND ISLAND 345KV CKT Z	720	720	0.06323	102.5308	GEN334070 1-LEWIS CREEK 1
FDNS	00NR_G15_042	0	16WP	G15_042	FROM->TO	GR ISLD-LNX3345.00 - GRAND ISLAND 345KV CKT Z	720	720	0.06323	102.5246	GEN338388 1-1PLUM PT U1 23.000
FDNS	00NR_G15_042	0	16WP	G15_042	FROM->TO	GR ISLD-LNX3345.00 - GRAND ISLAND 345KV CKT Z	720	720	0.06323	102.5199	GEN337766 1-TRACTEBEL UNIT S1
FDNS	00NR_G15_042	0	16WP	G15_042	FROM->TO	GR ISLD-LNX3345.00 - GRAND ISLAND 345KV CKT Z	720	720	0.06323	102.5176	GEN525562 1-TOLK GEN #2 24 KV
FDNS	00NR_G15_042	0	16WP	G15_042	FROM->TO	GR ISLD-LNX3345.00 - GRAND ISLAND 345KV CKT Z	720	720	0.06321	102.5138	FARGO - JAMES TOWN 230KV CKT 2
FDNS	00NR_G15_042	0	16WP	G15_042	FROM->TO	GR ISLD-LNX3345.00 - GRAND ISLAND 345KV CKT Z	720	720	0.06325	102.511	FERGSFL4 230.00 - WAHPETON 230KV CKT 1
FDNS	00NR_G15_042	0	16WP	G15_042	FROM->TO	GR ISLD-LNX3345.00 - GRAND ISLAND 345KV CKT Z	720	720	0.06338	102.5105	ARKANSAS NUCLEAR ONE - FT SMITH 500KV CKT 1
FDNS	00NR_G15_042	0	16WP	G15_042	FROM->TO	GR ISLD-LNX3345.00 - GRAND ISLAND 345KV CKT Z	720	720	0.06338	102.5105	ARKANSAS NUCLEAR ONE - FT SMITH 500KV CKT 1
FDNS	00NR_G15_042	0	16WP	G15_042	FROM->TO	GR ISLD-LNX3345.00 - GRAND ISLAND 345KV CKT Z	720	720	0.06323	102.5028	BALTA - RAMSEY 230KV CKT 1
FDNS	00NR_G15_042	0	16WP	G15_042	FROM->TO	GR ISLD-LNX3345.00 - GRAND ISLAND 345KV CKT Z	720	720	0.06323	102.5	AUDUBON - SHEYNNE 230KV CKT 1
FDNS	00NR_G15_042	0	16WP	G15_042	FROM->TO	GR ISLD-LNX3345.00 - GRAND ISLAND 345KV CKT Z	720	720	0.06346	102.4878	OVEXFRMCCOVE
FDNS	00NR_G15_042	0	16WP	G15_042	FROM->TO	GR ISLD-LNX3345.00 - GRAND ISLAND 345KV CKT Z	720	720	0.06323	102.4873	GEN501910 1-ACADIA UNIT ST1
FDNS	00NR_G15_042	0	16WP	G15_042	FROM->TO	GR ISLD-LNX3345.00 - GRAND ISLAND 345KV CKT Z	720	720	0.0635	102.4854	ARPIN B3 345.00 - ROCKY RN B8 345.00 345KV CKT 1
FDNS	00NR_G15_042	0	16WP	G15_042	FROM->TO	GR ISLD-LNX3345.00 - GRAND ISLAND 345KV CKT Z	720	720	0.0633	102.4769	NORTH LA CROSSE - NORTH ROCHESTER 345KV CKT 1
FDNS	00NR_G15_042	0	16WP	G15_042	FROM->TO	GR ISLD-LNX3345.00 - GRAND ISLAND 345KV CKT Z	720	720	0.06323	102.4715	P12:345:GRDA:CHOUTEAU-SPORTSMANACRES
FDNS	00NR_G15_042	0	16WP	G15_042	FROM->TO	GR ISLD-LNX3345.00 - GRAND ISLAND 345KV CKT Z	720	720	0.06323	102.4705	WHITE BLUFF 500/26.0KV TRANSFORMER CKT 1
FDNS	00NR_G15_042	0	16WP	G15_042	FROM->TO	GR ISLD-LNX3345.00 - GRAND ISLAND 345KV CKT Z	720	720	0.06322	102.4699	ELM CREEK - MONTICELLO 345KV CKT 1
FDNS	00NR_G15_042	0	16WP	G15_042	FROM->TO	GR ISLD-LNX3345.00 - GRAND ISLAND 345KV CKT Z	720	720	0.06333	102.4666	GENOA 161 - SENECA 161 161KV CKT 1
FDNS	00NR_G15_042	0	16WP	G15_042	FROM->TO	GR ISLD-LNX3345.00 - GRAND ISLAND 345KV CKT Z	720	720	0.06323	102.4602	GEN562547 1-G14_039_3 0.6900
FDNS	00NR_G15_042	0	16WP	G15_042	FROM->TO	GR ISLD-LNX3345.00 - GRAND ISLAND 345KV CKT Z	720	720	0.06323	102.459	P12:161:GRDA:KERR-SALINA-CKT1
FDNS	00NR_G15_042	0	16WP	G15_042	FROM->TO	GR ISLD-LNX3345.00 - GRAND ISLAND 345KV CKT Z	720	720	0.06323	102.459	P12:161:GRDA:KERR-SALINA-CKT2
FDNS	00NR_G15_042	0	16WP	G15_042	FROM->TO	GR ISLD-LNX3345.00 - GRAND ISLAND 345KV CKT Z	720	720	0.06323	102.4585	GEN336222 1-LITTLE GYPSY UNIT#2
FDNS	00NR_G15_042	0	16WP	G15_042	FROM->TO	GR ISLD-LNX3345.00 - GRAND ISLAND 345KV CKT Z	720	720	0.06337	102.454	FRANKS - HUBEN 345KV CKT 1
FDNS	00NR_G15_042	0	16WP	G15_042	FROM->TO	GR ISLD-LNX3345.00 - GRAND ISLAND 345KV CKT Z	720	720	0.0633	102.4518	NORTH LA CROSSE (10008630_001) 345/161/34.5KV TRANSFORMER CKT 9
FDNS	00NR_G15_042	0	16WP	G15_042	FROM->TO	GR ISLD-LNX3345.00 - GRAND ISLAND 345KV CKT Z	720	720	0.06496	102.4513	PETERSBRG.N7115.00 - PETERSBURG 115KV CKT Z1
FDNS	00NR_G15_042	0	16WP	G15_042	FROM->TO	GR ISLD-LNX3345.00 - GRAND ISLAND 345KV CKT Z	720	720	0.06496	102.4503	P12:115:NPPD:1168B:ALBION 7:PETERSBRG.N7:BTB
FDNS	00NR_G15_042	0	16WP	G15_042	FROM->TO	GR ISLD-LNX3345.00 - GRAND ISLAND 345KV CKT Z	720	720	0.06323	102.4467	GEN562023 1-G11_020_3 0.6900
FDNS	00NR_G15_042	0	16WP	G15_042	FROM->TO	GR ISLD-LNX3345.00 - GRAND ISLAND 345KV CKT Z	720	720	0.06323	102.4467	GEN562026 1-G11_019_3 0.6900
FDNS	00NR_G15_042	0	16WP	G15_042	FROM->TO	GR ISLD-LNX3345.00 - GRAND ISLAND 345KV CKT Z	720	720	0.06172	102.4436	BELDEN - HARTINGTON 115KV CKT 1
FDNS	00NR_G15_042	0	16WP	G15_042	FROM->TO	GR ISLD-LNX3345.00 - GRAND ISLAND 345KV CKT Z	720	720	0.06323	102.4422	GEN337764 1-TRACTEBEL UNIT C1
FDNS	00NR_G15_042	0	16WP	G15_042	FROM->TO	GR ISLD-LNX3345.00 - GRAND ISLAND 345KV CKT Z	720	720	0.06323	102.4422	GEN337765 1-TRACTEBEL UNIT C2
FDNS	00NR_G15_042	0	16WP	G15_042	FROM->TO	GR ISLD-LNX3345.00 - GRAND ISLAND 345KV CKT Z	720	720	0.06312	102.4411	BLOOMFIELD - CREIGHTON 115KV CKT 1
FDNS	00NR_G15_042	0	16WP	G15_042	FROM->TO	GR ISLD-LNX3345.00 - GRAND ISLAND 345KV CKT Z	720	720	0.06356	102.4365	P13:115-230:TSGT:SIDNEY-KV1A
FDNS	00NR_G15_042	0	16WP	G15_042	FROM->TO	GR ISLD-LNX3345.00 - GRAND ISLAND 345KV CKT Z	720	720	0.06323	102.4321	GEN336152 1-WATERFORD UNIT#2
FDNS	00NR_G15_042	0	16WP	G15_042	FROM->TO	GR ISLD-LNX3345.00 - GRAND ISLAND 345KV CKT Z	720	720	0.06323	102.4312	GEN336151 1-WATERFORD UNIT#1
FDNS	00NR_G15_042	0	16WP	G15_042	FROM->TO	GR ISLD-LNX3345.00 - GRAND ISLAND 345KV CKT Z	720	720	0.06496	102.4298	ALBION - PETERSBURG 115KV CKT 1
FDNS	00NR_G15_042	0	16WP	G15_042	FROM->TO	GR ISLD-LNX3345.00 - GRAND ISLAND 345KV CKT Z	720	720	0.06097	102.0264	GRAND ISLAND - RIVERDALE 230KV CKT 1
FDNS	00NR_G15_042	0	16WP	G15_042	FROM->TO	GR ISLD-LNX3345.00 - GRAND ISLAND 345KV CKT Z	720	720	0.06323	101.9933	BASE CASE

SOLUTION	GROUP	SCENARIO	SEASON	SOURCE	DIRECTION	MONITORED ELEMENT	RATEA (MVA)	RATEB(MVA)	TDF	TC%LOADING (% MVA)	CONTINGENCY
FDNS	00NR_G15_042	0	16WP	G15_042	FROM->TO	GR ISLD-LNX3345.00 - GRAND ISLAND 345KV CKT Z	720	720	0.06323	101.7121	GEN645001 1-FORT CALHOUN 1
FDNS	00NR_G15_042	0	16WP	G15_042	FROM->TO	GR ISLD-LNX3345.00 - GRAND ISLAND 345KV CKT Z	720	720	0.06359	101.6517	AURORA - GRAND ISLAND 115KV CKT 1
FDNS	00NR_G15_042	0	16WP	G15_042	FROM->TO	GR ISLD-LNX3345.00 - GRAND ISLAND 345KV CKT Z	720	720	0.06347	101.6102	CRETE - FRIEND 115KV CKT 1
FDNS	00NR_G15_042	0	16WP	G15_042	FROM->TO	GR ISLD-LNX3345.00 - GRAND ISLAND 345KV CKT Z	720	720	0.07492	101.5959	COLUMWEST - KELLY 230KV CKT 1
FDNS	00NR_G15_042	0	16WP	G15_042	FROM->TO	GR ISLD-LNX3345.00 - GRAND ISLAND 345KV CKT Z	720	720	0.06543	101.5838	MINGO - SETAB 345KV CKT 1
FDNS	00NR_G15_042	0	16WP	G15_042	FROM->TO	GR ISLD-LNX3345.00 - GRAND ISLAND 345KV CKT Z	720	720	0.06543	101.5838	MINGO - SETAB 345KV CKT 1
FDNS	00NR_G15_042	0	16WP	G15_042	FROM->TO	GR ISLD-LNX3345.00 - GRAND ISLAND 345KV CKT Z	720	720	0.06504	101.579	LOUP CITY - NORTH LOUP 115KV CKT 1
FDNS	00NR_G15_042	0	16WP	G15_042	FROM->TO	GR ISLD-LNX3345.00 - GRAND ISLAND 345KV CKT Z	720	720	0.0633	101.5532	G14-074T 345.00 - OKLAUNION 345KV CKT 1
FDNS	00NR_G15_042	0	16WP	G15_042	FROM->TO	GR ISLD-LNX3345.00 - GRAND ISLAND 345KV CKT Z	720	720	0.0633	101.5392	ANTELOP-LNX3345.00 - BRDLAND-LNX3345.00 345KV CKT 1
FDNS	00NR_G15_042	0	16WP	G15_042	FROM->TO	GR ISLD-LNX3345.00 - GRAND ISLAND 345KV CKT Z	720	720	0.06328	101.5337	GRAND ISLAND (GI KU3A) 345/230/13.8KV TRANSFORMER CKT 3
FDNS	00NR_G15_042	0	16WP	G15_042	FROM->TO	GR ISLD-LNX3345.00 - GRAND ISLAND 345KV CKT Z	720	720	0.06328	101.5337	GRAND ISLAND (GI KU3A) 345/230/13.8KV TRANSFORMER CKT 3
FDNS	00NR_G15_042	0	16WP	G15_042	FROM->TO	GR ISLD-LNX3345.00 - GRAND ISLAND 345KV CKT Z	720	720	0.06323	101.5291	GEN659116 1-SPIRIT MOUND UNIT1
FDNS	00NR_G15_042	0	16WP	G15_042	FROM->TO	GR ISLD-LNX3345.00 - GRAND ISLAND 345KV CKT Z	720	720	0.06323	101.5291	GEN659117 2-SPIRIT MOUND UNIT2
FDNSLock	00NR_G15_042	0	16WP	G15_042	FROM->TO	GR ISLD-LNX3345.00 - GRAND ISLAND 345KV CKT Z	720	720	0.06365	101.5275	STEGALL - VICTORY HILL 230KV CKT 1
FDNS	00NR_G15_042	0	16WP	G15_042	FROM->TO	GR ISLD-LNX3345.00 - GRAND ISLAND 345KV CKT Z	720	720	0.06365	101.5235	VICTORY HILL (VICTORYHL T1) 230/115/13.8KV TRANSFORMER CKT 1
FDNS	00NR_G15_042	0	16WP	G15_042	FROM->TO	GR ISLD-LNX3345.00 - GRAND ISLAND 345KV CKT Z	720	720	0.06365	101.5235	VICTORY HILL (VICTORYHL T1) 230/115/13.8KV TRANSFORMER CKT 1
FDNS	00NR_G15_042	0	16WP	G15_042	FROM->TO	GR ISLD-LNX3345.00 - GRAND ISLAND 345KV CKT Z	720	720	0.06323	101.5212	CLKREACT5 161.00 - CRYSTLK5 161.00 161KV CKT 1
FDNS	00NR_G15_042	0	16WP	G15_042	FROM->TO	GR ISLD-LNX3345.00 - GRAND ISLAND 345KV CKT Z	720	720	0.06323	101.5173	GEN562003 1-G11_027_3 0.6900
FDNS	00NR_G15_042	0	16WP	G15_042	FROM->TO	GR ISLD-LNX3345.00 - GRAND ISLAND 345KV CKT Z	720	720	0.06323	101.5111	GEN620115 1-HRDLKGEN 0.6000
FDNS	00NR_G15_042	0	16WP	G15_042	FROM->TO	GR ISLD-LNX3345.00 - GRAND ISLAND 345KV CKT Z	720	720	0.0635	101.5044	LARAMIE RIVER - STEGALL 345KV CKT 1
FDNS	00NR_G15_042	0	16WP	G15_042	FROM->TO	GR ISLD-LNX3345.00 - GRAND ISLAND 345KV CKT Z	720	720	0.06323	101.4819	GEN672340 1-QUEEN ELIZABETH GENERATOR 1
FDNS	00NR_G15_042	0	16WP	G15_042	FROM->TO	GR ISLD-LNX3345.00 - GRAND ISLAND 345KV CKT Z	720	720	0.06323	101.4813	GEN600013 3-BLACK DOG GEN 3
FDNS	00NR_G15_042	0	16WP	G15_042	FROM->TO	GR ISLD-LNX3345.00 - GRAND ISLAND 345KV CKT Z	720	720	0.0633	101.4792	ANTELOP-LNX3345.00 - ANTELOPE VALLEY 345KV CKT Z
FDNS	00NR_G15_042	0	16WP	G15_042	FROM->TO	GR ISLD-LNX3345.00 - GRAND ISLAND 345KV CKT Z	720	720	0.06323	101.4768	MITCHLCO3 345.00 345/34.5KV TRANSFORMER CKT 1
FDNS	00NR_G15_042	0	16WP	G15_042	FROM->TO	GR ISLD-LNX3345.00 - GRAND ISLAND 345KV CKT Z	720	720	0.0635	101.4667	P12:115:UMZW:# 172 #: WI IN SD.
FDNS	00NR_G15_042	0	16WP	G15_042	FROM->TO	GR ISLD-LNX3345.00 - GRAND ISLAND 345KV CKT Z	720	720	0.06323	101.4644	GEN659018 1-G14_003IS_3 0.6900
FDNS	00NR_G15_042	0	16WP	G15_042	FROM->TO	GR ISLD-LNX3345.00 - GRAND ISLAND 345KV CKT Z	720	720	0.06481	101.4572	AXTELL - PAULINE 345KV CKT 1
FDNS	00NR_G15_042	0	16WP	G15_042	FROM->TO	GR ISLD-LNX3345.00 - GRAND ISLAND 345KV CKT Z	720	720	0.06323	101.4568	GEN672384 1-CENTENNIAL WINDFARM
FDNS	00NR_G15_042	0	16WP	G15_042	FROM->TO	GR ISLD-LNX3345.00 - GRAND ISLAND 345KV CKT Z	720	720	0.06323	101.4545	GEN600125 2-FEP ST G 13.800
FDNS	00NR_G15_042	0	16WP	G15_042	FROM->TO	GR ISLD-LNX3345.00 - GRAND ISLAND 345KV CKT Z	720	720	0.06323	101.4492	LADISH 115/13.2KV TRANSFORMER CKT 1
FDNS	00NR_G15_042	0	16WP	G15_042	FROM->TO	GR ISLD-LNX3345.00 - GRAND ISLAND 345KV CKT Z	720	720	0.06323	101.4436	GEN620323 2-HOOT LAKE 2 GEN
FDNS	00NR_G15_042	0	16WP	G15_042	FROM->TO	GR ISLD-LNX3345.00 - GRAND ISLAND 345KV CKT Z	720	720	0.06514	101.4432	CENTRAL CITY - GRAND ISLAND 115KV CKT 1
FDNS	00NR_G15_042	0	16WP	G15_042	FROM->TO	GR ISLD-LNX3345.00 - GRAND ISLAND 345KV CKT Z	720	720	0.06323	101.4374	GEN659354 1-DEERCREK STG18.000
FDNS	00NR_G15_042	0	16WP	G15_042	FROM->TO	GR ISLD-LNX3345.00 - GRAND ISLAND 345KV CKT Z	720	720	0.06323	101.427	GEN657964 1-ASH2GEN9 0.5750
FDNS	00NR_G15_042	0	16WP	G15_042	FROM->TO	GR ISLD-LNX3345.00 - GRAND ISLAND 345KV CKT Z	720	720	0.06348	101.4265	SMOKYHL6 230.00 - SUMMIT 230KV CKT 1
FDNS	00NR_G15_042	0	16WP	G15_042	FROM->TO	GR ISLD-LNX3345.00 - GRAND ISLAND 345KV CKT Z	720	720	0.06357	101.4182	7MAYWOOD 345.00 - 7SPENCER 345.00 345KV CKT 1
FDNS	00NR_G15_042	0	16WP	G15_042	FROM->TO	GR ISLD-LNX3345.00 - GRAND ISLAND 345KV CKT Z	720	720	0.06323	101.4164	GEN652546 1-FT RANDAL
FDNS	00NR_G15_042	0	16WP	G15_042	FROM->TO	GR ISLD-LNX3345.00 - GRAND ISLAND 345KV CKT Z	720	720	0.06357	101.4144	7MONTGMRY 345.00 - 7SPENCER 345.00 345KV CKT 1
FDNS	00NR_G15_042	0	16WP	G15_042	FROM->TO	GR ISLD-LNX3345.00 - GRAND ISLAND 345KV CKT Z	720	720	0.06348	101.3947	FALLOW 3 345.00 - POTTCO 3 345.00 345KV CKT 1
FDNS	00NR_G15_042	0	16WP	G15_042	FROM->TO	GR ISLD-LNX3345.00 - GRAND ISLAND 345KV CKT Z	720	720	0.06323	101.3902	GEN600018 S-LS POWER STEAM
FDNS	00NR_G15_042	0	16WP	G15_042	FROM->TO	GR ISLD-LNX3345.00 - GRAND ISLAND 345KV CKT Z	720	720	0.06323	101.3882	GEN659290 1-EDGECOL
FDNS	00NR_G15_042	0	16WP	G15_042	FROM->TO	GR ISLD-LNX3345.00 - GRAND ISLAND 345KV CKT Z	720	720	0.06323	101.3864	GEN635213 3-NEAL UNIT 3
FDNS	00NR_G15_042	0	16WP	G15_042	FROM->TO	GR ISLD-LNX3345.00 - GRAND ISLAND 345KV CKT Z	720	720	0.06323	101.3841	GEN590010 1-ERCOT EQUIVALENCE
FDNS	00NR_G15_042	0	16WP	G15_042	FROM->TO	GR ISLD-LNX3345.00 - GRAND ISLAND 345KV CKT Z	720	720	0.06323	101.3825	G830_SUB 115.00 - GRE-MCHENRY7115.00 115KV CKT 1
FDNS	00NR_G15_042	0	16WP	G15_042	FROM->TO	GR ISLD-LNX3345.00 - GRAND ISLAND 345KV CKT Z	720	720	0.06323	101.3801	GEN652548 5-FT RANDAL
FDNS	00NR_G15_042	0	16WP	G15_042	FROM->TO	GR ISLD-LNX3345.00 - GRAND ISLAND 345KV CKT Z	720	720	0.06323	101.3801	GEN652549 7-FT RANDAL
FDNS	00NR_G15_042	0	16WP	G15_042	FROM->TO	GR ISLD-LNX3345.00 - GRAND ISLAND 345KV CKT Z	720	720	0.06323	101.38	GEN652547 3-FT RANDAL
FDNS	00NR_G15_042	0	16WP	G15_042	FROM->TO	GR ISLD-LNX3345.00 - GRAND ISLAND 345KV CKT Z	720	720	0.06323	101.3714	G830_SUB 115.00 115/34.5KV TRANSFORMER CKT 1
FDNS	00NR_G15_042	0	16WP	G15_042	FROM->TO	GR ISLD-LNX3345.00 - GRAND ISLAND 345KV CKT Z	720	720	0.06323	101.3706	GEN300003 1-THOMAS HILL UNIT 3
FDNS	00NR_G15_042	0	16WP	G15_042	FROM->TO	GR ISLD-LNX3345.00 - GRAND ISLAND 345KV CKT Z	720	720	0.06323	101.3645	GEN652410 3-FT PECK
FDNS	00NR_G15_042	0	16WP	G15_042	FROM->TO	GR ISLD-LNX3345.00 - GRAND ISLAND 345KV CKT Z	720	720	0.0658	101.3626	SUB 3454 - WAGENER 345KV CKT 1
FDNS	00NR_G15_042	0	16WP	G15_042	FROM->TO	GR ISLD-LNX3345.00 - GRAND ISLAND 345KV CKT Z	720	720	0.0658	101.3626	SUB 3454 - WAGENER 345KV CKT 1
FDNS	00NR_G15_042	0	16WP	G15_042	FROM->TO	GR ISLD-LNX3345.00 - GRAND ISLAND 345KV CKT Z	720	720	0.06323	101.3553	GEN590011 2-ERCOT EQUIVALENCE
FDNS	00NR_G15_042	0	16WP	G15_042	FROM->TO	GR ISLD-LNX3345.00 - GRAND ISLAND 345KV CKT Z	720	720	0.06355	101.3393	POST ROCK (POSTROCK T1) 345/230/13.8KV TRANSFORMER CKT 1
FDNS	00NR_G15_042	0	16WP	G15_042	FROM->TO	GR ISLD-LNX3345.00 - GRAND ISLAND 345KV CKT Z	720	720	0.06323	101.3373	EASTDC - ERCOT EQUIVALENCE 345KV CKT 1
FDNS	00NR_G15_042	0	16WP	G15_042	FROM->TO	GR ISLD-LNX3345.00 - GRAND ISLAND 345KV CKT Z	720	720	0.06323	101.3288	GEN672347 1-CORY COGEN GENERATOR 1 GT1
FDNS	00NR_G15_042	0	16WP	G15_042	FROM->TO	GR ISLD-LNX3345.00 - GRAND ISLAND 345KV CKT Z	720	720	0.06323	101.3288	GEN672348 2-CORY COGEN GENERATOR 2 GT2
FDNS	00NR_G15_042	0	16WP	G15_042	FROM->TO	GR ISLD-LNX3345.00 - GRAND ISLAND 345KV CKT Z	720	720	0.06323	101.3239	GEN672350 1-NIPAWIN GENERATOR 1
FDNS	00NR_G15_042	0	16WP	G15_042	FROM->TO	GR ISLD-LNX3345.00 - GRAND ISLAND 345KV CKT Z	720	720	0.06323	101.3239	GEN672351 2-NIPAWIN GENERATOR 2
FDNS	00NR_G15_042	0	16WP	G15_042	FROM->TO	GR ISLD-LNX3345.00 - GRAND ISLAND 345KV CKT Z	720	720	0.06323	101.3238	GEN672352 3-NIPAWIN GENERATOR 3
FDNS	00NR_G15_042	0	16WP	G15_042	FROM->TO	GR ISLD-LNX3345.00 - GRAND ISLAND 345KV CKT Z	720	720	0.06323	101.3047	GEN652414 4-FT PECK
FDNS	00NR_G15_042	0	16WP	G15_042	FROM->TO	GR ISLD-LNX3345.00 - GRAND ISLAND 345KV CKT Z	720	720	0.06323	101.3047	GEN652415 5-FT PECK
FDNS	00NR_G15_042	0	16WP	G15_042	FROM->TO	GR ISLD-LNX3345.00 - GRAND ISLAND 345KV CKT Z	720	720	0.06323	101.3042	GEN657600 1-L1GEN3 9 0.5750
FDNS	00NR_G15_042	0	16WP	G15_042	FROM->TO	GR ISLD-LNX3345.00 - GRAND ISLAND 345KV CKT Z	720	720	0.06341	101.2851	G11_051T 345.00 - WOODWARD DISTRICT EHV 345KV CKT 1
FDNS	00NR_G15_042	0	16WP	G15_042	FROM->TO	GR ISLD-LNX3345.00 - GRAND ISLAND 345KV CKT Z	720	720	0.06323	101.2847	GEN600012 2-BLACK DOG GEN 2
FDNS	00NR_G15_042	0	16WP	G15_042	FROM->TO	GR ISLD-LNX3345.00 - GRAND ISLAND 345KV CKT Z	720	720	0.06323	101.283	GEN660001 2-ABERDEEN SIEBRECHT
FDNS	00NR_G15_042	0	16WP	G15_042	FROM->TO	GR ISLD-LNX3345.00 - GRAND ISLAND 345KV CKT Z	720	720	0.06335	101.2765	MADISON COUNTY - RLHILLS3 345.00 345KV CKT 1
FDNS	00NR_G15_042	0	16WP	G15_042	FROM->TO	GR ISLD-LNX3345.00 - GRAND ISLAND 345KV CKT Z	720	720	0.06323	101.2723	GEN652345 W-G07_023IS_2 0.6900
FDNS	00NR_G15_042	0	16WP	G15_042	FROM->TO	GR ISLD-LNX3345.00 - GRAND ISLAND 345KV CKT Z	720	720	0.06323	101.2665	GEN629074 1-ARNOLD LOWSIDE OF GSU XFMR
FDNS	00NR_G15_042	0	16WP	G15_042	FROM->TO	GR ISLD-LNX3345.00 - GRAND ISLAND 345KV CKT Z	720	720	0.06323	101.2575	GEN615032 2-PLEASANT VALLEY
FDNS	00NR_G15_042	0	16WP	G15_042	FROM->TO	GR ISLD-LNX3345.00 - GRAND ISLAND 345KV CKT Z	720	720	0.06323	101.2479	GEN672367 1-MERIDIAN GENERATOR 1 GT1
FDNS	00NR_G15_042	0	16WP	G15_042	FROM->TO	GR ISLD-LNX3345.00 - GRAND ISLAND 345KV CKT Z	720	720	0.06323	101.2479	GEN672368 2-MERIDIAN GENERATOR 2 GT2
FDNS	00NR_G15_042	0	16WP	G15_042	FROM->TO	GR ISLD-LNX3345.00 - GRAND ISLAND 345KV CKT Z	720	720	0.06323	101.2476	GEN672349 3-CORY COGEN GENERATOR 3 ST

SOLUTION	GROUP	SCENARIO	SEASON	SOURCE	DIRECTION	MONITORED ELEMENT	RATEA (MVA)	RATEB(MVA)	TDF	TC%LOADING (% MVA)	CONTINGENCY
FDNS	00NR_G15_042	0	16WP	G15_042	FROM->TO	GR ISLD-LNX3345.00 - GRAND ISLAND 345KV CKT Z	720	720	0.06323	101.2458	GEN300007 1-NEW MADRID UNIT 2
FDNS	00NR_G15_042	0	16WP	G15_042	FROM->TO	GR ISLD-LNX3345.00 - GRAND ISLAND 345KV CKT Z	720	720	0.06323	101.2405	GEN300006 1-NEW MADRID UNIT 1
FDNS	00NR_G15_042	0	16WP	G15_042	FROM->TO	GR ISLD-LNX3345.00 - GRAND ISLAND 345KV CKT Z	720	720	0.06323	101.2369	GEN672339 16-QE 16G 13.800
FDNS	00NR_G15_042	0	16WP	G15_042	FROM->TO	GR ISLD-LNX3345.00 - GRAND ISLAND 345KV CKT Z	720	720	0.06323	101.2369	GEN672342 3-QUEEN ELIZABETH GENERATOR 3
FDNS	00NR_G15_042	0	16WP	G15_042	FROM->TO	GR ISLD-LNX3345.00 - GRAND ISLAND 345KV CKT Z	720	720	0.06323	101.2269	GEN620324 3-HOOT LAKE 3 GEN
FDNS	00NR_G15_042	0	16WP	G15_042	FROM->TO	GR ISLD-LNX3345.00 - GRAND ISLAND 345KV CKT Z	720	720	0.06527	101.2079	103RD & ROKEBY - MOORE 345KV CKT 1
FDNS	00NR_G15_042	0	16WP	G15_042	FROM->TO	GR ISLD-LNX3345.00 - GRAND ISLAND 345KV CKT Z	720	720	0.06527	101.2079	103RD & ROKEBY - MOORE 345KV CKT 1
FDNS	00NR_G15_042	0	16WP	G15_042	FROM->TO	GR ISLD-LNX3345.00 - GRAND ISLAND 345KV CKT Z	720	720	0.06323	101.2076	GEN 11104 1-J262_GEN 0.6000
FDNS	00NR_G15_042	0	16WP	G15_042	FROM->TO	GR ISLD-LNX3345.00 - GRAND ISLAND 345KV CKT Z	720	720	0.06323	101.2076	GEN 11108 1-J263_GEN 0.6000
FDNS	00NR_G15_042	0	16WP	G15_042	FROM->TO	GR ISLD-LNX3345.00 - GRAND ISLAND 345KV CKT Z	720	720	0.06573	101.206	ATCHSNT3 345.00 - COOPER 345KV CKT 1
FDNS	00NR_G15_042	0	16WP	G15_042	FROM->TO	GR ISLD-LNX3345.00 - GRAND ISLAND 345KV CKT Z	720	720	0.06573	101.206	ATCHSNT3 345.00 - COOPER 345KV CKT 1
FDNS	00NR_G15_042	0	16WP	G15_042	FROM->TO	GR ISLD-LNX3345.00 - GRAND ISLAND 345KV CKT Z	720	720	0.06304	101.2048	GLENHAM - L3 HAWDON 230KV CKT 1
FDNS	00NR_G15_042	0	16WP	G15_042	FROM->TO	GR ISLD-LNX3345.00 - GRAND ISLAND 345KV CKT Z	720	720	0.06203	101.1842	HIGHLND 3 345.00 - OBRIEN 3 345.00 345KV CKT 1
FDNS	00NR_G15_042	0	16WP	G15_042	FROM->TO	GR ISLD-LNX3345.00 - GRAND ISLAND 345KV CKT Z	720	720	0.06518	101.1787	GERALD GENTLEMAN STATION - RED WILLOW 345KV CKT 1
FDNS	00NR_G15_042	0	16WP	G15_042	FROM->TO	GR ISLD-LNX3345.00 - GRAND ISLAND 345KV CKT Z	720	720	0.06323	101.166	GEN635214 4-NEAL UNIT 4
FDNS	00NR_G15_042	0	16WP	G15_042	FROM->TO	GR ISLD-LNX3345.00 - GRAND ISLAND 345KV CKT Z	720	720	0.06323	101.1635	GEN600050 1-FEP
FDNS	00NR_G15_042	0	16WP	G15_042	FROM->TO	GR ISLD-LNX3345.00 - GRAND ISLAND 345KV CKT Z	720	720	0.06323	101.155	CENTER 230/22.0KV TRANSFORMER CKT 1
FDNS	00NR_G15_042	0	16WP	G15_042	FROM->TO	GR ISLD-LNX3345.00 - GRAND ISLAND 345KV CKT Z	720	720	0.06323	101.1547	GEN659273 2-GROTON SYNC COND
FDNS	00NR_G15_042	0	16WP	G15_042	FROM->TO	GR ISLD-LNX3345.00 - GRAND ISLAND 345KV CKT Z	720	720	0.06323	101.1547	GEN659294 1-WILTONCOL9
FDNS	00NR_G15_042	0	16WP	G15_042	FROM->TO	GR ISLD-LNX3345.00 - GRAND ISLAND 345KV CKT Z	720	720	0.06348	101.1432	FALLOW 3 345.00 - GRIMES 345KV CKT 1
FDNS	00NR_G15_042	0	16WP	G15_042	FROM->TO	GR ISLD-LNX3345.00 - GRAND ISLAND 345KV CKT Z	720	720	0.06341	101.1374	G11_051T 345.00 - TATONGA7 345.00 345KV CKT 1
FDNS	00NR_G15_042	0	16WP	G15_042	FROM->TO	GR ISLD-LNX3345.00 - GRAND ISLAND 345KV CKT Z	720	720	0.06323	101.119	GEN672393 2-NBECST2G 13.800
FDNS	00NR_G15_042	0	16WP	G15_042	FROM->TO	GR ISLD-LNX3345.00 - GRAND ISLAND 345KV CKT Z	720	720	0.06323	101.1168	GEN629072 4-LANSING GENERATOR FOR UNITS NO4 EIA CODE 1
FDNS	00NR_G15_042	0	16WP	G15_042	FROM->TO	GR ISLD-LNX3345.00 - GRAND ISLAND 345KV CKT Z	720	720	0.06323	101.0817	GEN600065 7-HIGH BRIDGE
FDNS	00NR_G15_042	0	16WP	G15_042	FROM->TO	GR ISLD-LNX3345.00 - GRAND ISLAND 345KV CKT Z	720	720	0.06323	101.0817	GEN600066 8-HIGH BRIDGE
FDNS	00NR_G15_042	0	16WP	G15_042	FROM->TO	GR ISLD-LNX3345.00 - GRAND ISLAND 345KV CKT Z	720	720	0.06323	101.0755	GEN659192 6-LYNN
FDNS	00NR_G15_042	0	16WP	G15_042	FROM->TO	GR ISLD-LNX3345.00 - GRAND ISLAND 345KV CKT Z	720	720	0.06157	101.0755	COOPER - MOORE 345KV CKT 1
FDNS	00NR_G15_042	0	16WP	G15_042	FROM->TO	GR ISLD-LNX3345.00 - GRAND ISLAND 345KV CKT Z	720	720	0.06323	101.0743	GEN659162 4-RED WLCK
FDNS	00NR_G15_042	0	16WP	G15_042	FROM->TO	GR ISLD-LNX3345.00 - GRAND ISLAND 345KV CKT Z	720	720	0.06323	101.0743	GEN659163 5-BLACK WDCK
FDNS	00NR_G15_042	0	16WP	G15_042	FROM->TO	GR ISLD-LNX3345.00 - GRAND ISLAND 345KV CKT Z	720	720	0.06323	101.0608	GEN657985 1-ASH1GEN9 0.5750
FDNS	00NR_G15_042	0	16WP	G15_042	FROM->TO	GR ISLD-LNX3345.00 - GRAND ISLAND 345KV CKT Z	720	720	0.06323	101.0602	LANSING WEST 161/22.0KV TRANSFORMER CKT 1
FDNS	00NR_G15_042	0	16WP	G15_042	FROM->TO	GR ISLD-LNX3345.00 - GRAND ISLAND 345KV CKT Z	720	720	0.06323	101.0457	GEN652906 1-G09_006IS_3 0.6900
FDNS	00NR_G15_042	0	16WP	G15_042	FROM->TO	GR ISLD-LNX3345.00 - GRAND ISLAND 345KV CKT Z	720	720	0.06323	101.0195	GEN 10648 1-G830_GEN 0.6900
FDNS	00NR_G15_042	0	16WP	G15_042	FROM->TO	GR ISLD-LNX3345.00 - GRAND ISLAND 345KV CKT Z	720	720	0.04802	100.9983	DIXONCO 230.00 - TWIN CHURCH 230KV CKT 1
FDNS	00NR_G15_042	0	16WP	G15_042	FROM->TO	GR ISLD-LNX3345.00 - GRAND ISLAND 345KV CKT Z	720	720	0.06323	100.9976	GEN600067 9-HIGH BRIDGE
FDNS	00NR_G15_042	0	16WP	G15_042	FROM->TO	GR ISLD-LNX3345.00 - GRAND ISLAND 345KV CKT Z	720	720	0.06323	100.9952	GEN600014 4-BLACK DOG GEN 4
FDNS	00NR_G15_042	0	16WP	G15_042	FROM->TO	GR ISLD-LNX3345.00 - GRAND ISLAND 345KV CKT Z	720	720	0.06323	100.9949	GEN600070 9-RIVER SIDE
FDNS	00NR_G15_042	0	16WP	G15_042	FROM->TO	GR ISLD-LNX3345.00 - GRAND ISLAND 345KV CKT Z	720	720	0.06323	100.9949	GEN600071 10-RIVER SIDE
FDNS	00NR_G15_042	0	16WP	G15_042	FROM->TO	GR ISLD-LNX3345.00 - GRAND ISLAND 345KV CKT Z	720	720	0.06573	100.9916	ATCHSNT3 345.00 - BOONEVILLE 345KV CKT 1
FDNS	00NR_G15_042	0	16WP	G15_042	FROM->TO	GR ISLD-LNX3345.00 - GRAND ISLAND 345KV CKT Z	720	720	0.06323	100.9916	GEN600011 5-BLACK DOG GEN 1
FDNS	00NR_G15_042	0	16WP	G15_042	FROM->TO	GR ISLD-LNX3345.00 - GRAND ISLAND 345KV CKT Z	720	720	0.06323	100.9812	GEN600007 7-RIVERSIDE GEN 7
FDNS	00NR_G15_042	0	16WP	G15_042	FROM->TO	GR ISLD-LNX3345.00 - GRAND ISLAND 345KV CKT Z	720	720	0.06323	100.9614	GEN615015 1-GRE-SPRITWDG13.200
FDNS	00NR_G15_042	0	16WP	G15_042	FROM->TO	GR ISLD-LNX3345.00 - GRAND ISLAND 345KV CKT Z	720	720	0.06323	100.9357	GEN660016 1-B_H WIND 0.7000
FDNS	00NR_G15_042	0	16WP	G15_042	FROM->TO	GR ISLD-LNX3345.00 - GRAND ISLAND 345KV CKT Z	720	720	0.06323	100.932	GEN652907 1-G09_007IS_3 0.6900
FDNS	00NR_G15_042	0	16WP	G15_042	FROM->TO	GR ISLD-LNX3345.00 - GRAND ISLAND 345KV CKT Z	720	720	0.06323	100.9288	GEN600017 C-LS POWER CT
FDNS	00NR_G15_042	0	16WP	G15_042	FROM->TO	GR ISLD-LNX3345.00 - GRAND ISLAND 345KV CKT Z	720	720	0.06323	100.9281	GEN615052 1-CAMBRIDGE GENERATING STATION
FDNS	00NR_G15_042	0	16WP	G15_042	FROM->TO	GR ISLD-LNX3345.00 - GRAND ISLAND 345KV CKT Z	720	720	0.06323	100.8869	GEN681522 3-GENOA 3
FDNS	00NR_G15_042	0	16WP	G15_042	FROM->TO	GR ISLD-LNX3345.00 - GRAND ISLAND 345KV CKT Z	720	720	0.06341	100.8677	MATHWSN7 345.00 - TATONGA7 345.00 345KV CKT 1
FDNS	00NR_G15_042	0	16WP	G15_042	FROM->TO	GR ISLD-LNX3345.00 - GRAND ISLAND 345KV CKT Z	720	720	0.06323	100.8568	GEN662101 1-WESSINGTON190.5750
FDNS	00NR_G15_042	0	16WP	G15_042	FROM->TO	GR ISLD-LNX3345.00 - GRAND ISLAND 345KV CKT Z	720	720	0.0647	100.8386	AXTELL - POST ROCK 345KV CKT 1
FDNS	00NR_G15_042	0	16WP	G15_042	FROM->TO	GR ISLD-LNX3345.00 - GRAND ISLAND 345KV CKT Z	720	720	0.06323	100.7341	GEN562832 1-G15042_3 0.6900
FDNS	00NR_G15_042	0	16WP	G15_042	FROM->TO	GR ISLD-LNX3345.00 - GRAND ISLAND 345KV CKT Z	720	720	0.06323	100.7215	GEN659353 1-DEERCREK CTG18.000
FDNS	00NR_G15_042	0	16WP	G15_042	FROM->TO	GR ISLD-LNX3345.00 - GRAND ISLAND 345KV CKT Z	720	720	0.06323	100.7127	GEN910006 1-G12_012IS_3 0.6900
FDNS	00NR_G15_042	0	16WP	G15_042	FROM->TO	GR ISLD-LNX3345.00 - GRAND ISLAND 345KV CKT Z	720	720	0.06705	100.6567	MINGO - RED WILLOW 345KV CKT 1
FDNS	00NR_G15_042	0	16WP	G15_042	FROM->TO	GR ISLD-LNX3345.00 - GRAND ISLAND 345KV CKT Z	720	720	0.06705	100.6567	MINGO - RED WILLOW 345KV CKT 1
FDNS	00NR_G15_042	0	16WP	G15_042	FROM->TO	GR ISLD-LNX3345.00 - GRAND ISLAND 345KV CKT Z	720	720	0.06323	100.6538	GEN615021 1-GRE-ER 14G 16.000
FDNS	00NR_G15_042	0	16WP	G15_042	FROM->TO	GR ISLD-LNX3345.00 - GRAND ISLAND 345KV CKT Z	720	720	0.06323	100.5991	GEN672303 3-BOUNDARY DAM GENERATOR 3
FDNS	00NR_G15_042	0	16WP	G15_042	FROM->TO	GR ISLD-LNX3345.00 - GRAND ISLAND 345KV CKT Z	720	720	0.06323	100.5991	GEN672304 4-BOUNDARY DAM GENERATOR 4
FDNS	00NR_G15_042	0	16WP	G15_042	FROM->TO	GR ISLD-LNX3345.00 - GRAND ISLAND 345KV CKT Z	720	720	0.06323	100.5991	GEN672305 5-BOUNDARY DAM GENERATOR 5
FDNS	00NR_G15_042	0	16WP	G15_042	FROM->TO	GR ISLD-LNX3345.00 - GRAND ISLAND 345KV CKT Z	720	720	0.06724	100.5623	MOORE - PAULINE 345KV CKT 1
FDNS	00NR_G15_042	0	16WP	G15_042	FROM->TO	GR ISLD-LNX3345.00 - GRAND ISLAND 345KV CKT Z	720	720	0.06323	100.5021	BISONMP4 230.00 - SQUARE BUTTE 230KV CKT 1
FDNS	00NR_G15_042	0	16WP	G15_042	FROM->TO	GR ISLD-LNX3345.00 - GRAND ISLAND 345KV CKT Z	720	720	0.07492	100.433	COLUMWEST - GRAND ISLAND 230KV CKT 1
FDNS	00NR_G15_042	0	16WP	G15_042	FROM->TO	GR ISLD-LNX3345.00 - GRAND ISLAND 345KV CKT Z	720	720	0.06323	100.3926	GEN652460 4-GARRISON
FDNS	00NR_G15_042	0	16WP	G15_042	FROM->TO	GR ISLD-LNX3345.00 - GRAND ISLAND 345KV CKT Z	720	720	0.06323	100.3926	GEN652461 5-GARRISON
FDNS	00NR_G15_042	0	16WP	G15_042	FROM->TO	GR ISLD-LNX3345.00 - GRAND ISLAND 345KV CKT Z	720	720	0.06323	100.3732	GEN672392 1-NBECGT1G 18.000
FDNS	00NR_G15_042	0	16WP	G15_042	FROM->TO	GR ISLD-LNX3345.00 - GRAND ISLAND 345KV CKT Z	720	720	0.06323	100.3456	GEN652457 1-GARRISON
FDNS	00NR_G15_042	0	16WP	G15_042	FROM->TO	GR ISLD-LNX3345.00 - GRAND ISLAND 345KV CKT Z	720	720	0.06323	100.3456	GEN652459 3-GARRISON
FDNS	00NR_G15_042	0	16WP	G15_042	FROM->TO	GR ISLD-LNX3345.00 - GRAND ISLAND 345KV CKT Z	720	720	0.06323	100.3455	GEN652458 2-GARRISON
FDNS	00NR_G15_042	0	16WP	G15_042	FROM->TO	GR ISLD-LNX3345.00 - GRAND ISLAND 345KV CKT Z	720	720	0.06323	100.334	GEN652542 1-BIG BEND
FDNS	00NR_G15_042	0	16WP	G15_042	FROM->TO	GR ISLD-LNX3345.00 - GRAND ISLAND 345KV CKT Z	720	720	0.06323	100.3086	COYOTE 345/24.0KV TRANSFORMER CKT 1
FDNS	00NR_G15_042	0	16WP	G15_042	FROM->TO	GR ISLD-LNX3345.00 - GRAND ISLAND 345KV CKT Z	720	720	0.06323	100.2989	GEN659010 4-G07_027IS_2 0.6900
FDNS	00NR_G15_042	0	16WP	G15_042	FROM->TO	GR ISLD-LNX3345.00 - GRAND ISLAND 345KV CKT Z	720	720	0.06323	100.2599	GEN659194 1-NDPRAIRWND1W0.6900
FDNS	00NR_G15_042	0	16WP	G15_042	FROM->TO	GR ISLD-LNX3345.00 - GRAND ISLAND 345KV CKT Z	720	720	0.06323	100.1707	GR ISLD-LNX3345.00 345KV SWITCHED SHUNT

SOLUTION	GROUP	SCENARIO	SEASON	SOURCE	DIRECTION	MONITORED ELEMENT	RATEA (MVA)	RATEB(MVA)	TDF	TC%LOADING (% MVA)	CONTINGENCY
FDNSLock	00NR_G15_042	0	16WP	G15_042	FROM->TO	GR ISLD-LNX3345.00 - GRAND ISLAND 345KV CKT Z	720	720	0.06323	100.1707	GR ISLD-LNX3345.00 345KV SWITCHED SHUNT
FDNS	00NR_G15_042	0	16WP	G15_042	FROM->TO	GR ISLD-LNX3345.00 - GRAND ISLAND 345KV CKT Z	720	720	0.06323	100.1566	GEN659403 1-NDSUNFLWR W0.6900
FDNS	00NR_G15_042	0	16WP	G15_042	FROM->TO	GR ISLD-LNX3345.00 - GRAND ISLAND 345KV CKT Z	720	720	0.06323	100.0562	GEN681542 6-JP MADGETT
FDNS	00NR_G15_042	0	16WP	G15_042	FROM->TO	GR ISLD-LNX3345.00 - GRAND ISLAND 345KV CKT Z	720	720	0.06697	99.9	AXTELL - SWEETWATER 345KV CKT 1
FDNS	00NR_G15_042	0	16WP	G15_042	FROM->TO	GR ISLD-LNX3345.00 - GRAND ISLAND 345KV CKT Z	720	720	0.06324	99.9	P12:230:UMZB:# 112 #: NU IN SD. NU-RCDC & DRY CREEK XFMR
FDNS	00NR_G15_042	0	16WP	G15_042	FROM->TO	GR ISLD-LNX3345.00 - GRAND ISLAND 345KV CKT Z	720	720	0.06323	99.9	GEN659411 1-CAMPBLCNTY W0.6900
FDNS	00NR_G15_042	0	16WP	G15_042	FROM->TO	GR ISLD-LNX3345.00 - GRAND ISLAND 345KV CKT Z	720	720	0.06323	99.9	RCDC EAST 4230.00 - RED CEDAR DC 230KV CKT 1
FDNS	00NR_G15_042	0	20WP	G15_042	FROM->TO	GR ISLD-LNX3345.00 - GRAND ISLAND 345KV CKT Z	720	720	0.05933	99.8	HOLT.CO3 345.00 - THEDFRD3 345.00 345KV CKT 1
FDNS	00NR_G15_042	0	16WP	G15_042	FROM->TO	GR ISLD-LNX3345.00 - GRAND ISLAND 345KV CKT Z	720	720	0.06323	99.7	ALMA 161 161/24.0KV TRANSFORMER CKT 1
FDNS	00NR_G15_042	0	16WP	G15_042	FROM->TO	GR ISLD-LNX3345.00 - GRAND ISLAND 345KV CKT Z	720	720	0.06323	99.7	GEN659296 2-SDPRAIRWND1W0.6900
FDNS	00NR_G15_042	0	16WP	G15_042	FROM->TO	GR ISLD-LNX3345.00 - GRAND ISLAND 345KV CKT Z	720	720	0.06323	99.6	GEN652556 2-OAHE
FDNS	00NR_G15_042	0	16WP	G15_042	FROM->TO	GR ISLD-LNX3345.00 - GRAND ISLAND 345KV CKT Z	720	720	0.06323	99.6	GEN652558 6-OAHE
FDNS	00NR_G15_042	0	16WP	G15_042	FROM->TO	GR ISLD-LNX3345.00 - GRAND ISLAND 345KV CKT Z	720	720	0.06323	99.6	GEN652559 1-OAHE
FDNS	00NR_G15_042	0	16WP	G15_042	FROM->TO	GR ISLD-LNX3345.00 - GRAND ISLAND 345KV CKT Z	720	720	0.06323	99.5	CLAY BOSWELL 230/20.9KV TRANSFORMER CKT 1
FDNS	00NR_G15_042	0	16WP	G15_042	FROM->TO	GR ISLD-LNX3345.00 - GRAND ISLAND 345KV CKT Z	720	720	0.06323	99.5	GEN652557 5-OAHE
FDNS	00NR_G15_042	0	17SP	G15_042	TO->FROM	GR ISLD-LNX3345.00 - HOLT.CO3 345.00 345KV CKT 1	720	720	0.06646	137.6433	KELLY - MEADOWGROVE4230.00 230KV CKT 1
FDNS	00NR_G15_042	0	17SP	G15_042	TO->FROM	GR ISLD-LNX3345.00 - HOLT.CO3 345.00 345KV CKT 1	720	720	0.06243	137.4505	P12:230:UMZB:# 116 #: ST IN SD. WSG-ST-VH
FDNS	00NR_G15_042	0	17SP	G15_042	TO->FROM	GR ISLD-LNX3345.00 - HOLT.CO3 345.00 345KV CKT 1	720	720	0.06277	136.5312	STORLA - WESSINGTON 230KV CKT 1
FDNS	00NR_G15_042	0	17SP	G15_042	TO->FROM	GR ISLD-LNX3345.00 - HOLT.CO3 345.00 345KV CKT 1	720	720	0.06349	135.5089	WATERTN-LNX3345.00 - WHITE 345KV CKT 1
FDNS	00NR_G15_042	0	17SP	G15_042	TO->FROM	GR ISLD-LNX3345.00 - HOLT.CO3 345.00 345KV CKT 1	720	720	0.06349	135.2254	WATERTN-LNX3345.00 - WATERTOWN 345KV CKT Z
FDNS	00NR_G15_042	0	17SP	G15_042	TO->FROM	GR ISLD-LNX3345.00 - HOLT.CO3 345.00 345KV CKT 1	720	720	0.06429	135.2047	G09_001IST 345.00 - WATERTOWN 345KV CKT 1
FDNS	00NR_G15_042	0	17SP	G15_042	TO->FROM	GR ISLD-LNX3345.00 - HOLT.CO3 345.00 345KV CKT 1	720	720	0.06349	135.2023	P12:345:UMZW:# 1747 #: WT2 IN SD. WT2-WHT LINE FAULT
FDNS	00NR_G15_042	0	17SP	G15_042	TO->FROM	GR ISLD-LNX3345.00 - HOLT.CO3 345.00 345KV CKT 1	720	720	0.06283	135.123	HANLON - STORLA 230KV CKT 1
FDNS	00NR_G15_042	0	17SP	G15_042	TO->FROM	GR ISLD-LNX3345.00 - HOLT.CO3 345.00 345KV CKT 1	720	720	0.06238	134.6889	FT THOMPSON - LETCHER 230KV CKT 1
FDNS	00NR_G15_042	0	17SP	G15_042	TO->FROM	GR ISLD-LNX3345.00 - HOLT.CO3 345.00 345KV CKT 1	720	720	0.06238	134.6889	FT THOMPSON - LETCHER 230KV CKT 1
FDNS	00NR_G15_042	0	17SP	G15_042	TO->FROM	GR ISLD-LNX3345.00 - HOLT.CO3 345.00 345KV CKT 1	720	720	0.06459	133.8477	BUFFALO - JAMESTOWN 345KV CKT 1
FDNS	00NR_G15_042	0	17SP	G15_042	TO->FROM	GR ISLD-LNX3345.00 - HOLT.CO3 345.00 345KV CKT 1	720	720	0.06214	133.4834	FT RANDAL - FT THOMPSON 230KV CKT 1
FDNS	00NR_G15_042	0	17SP	G15_042	TO->FROM	GR ISLD-LNX3345.00 - HOLT.CO3 345.00 345KV CKT 1	720	720	0.06214	133.4834	FT RANDAL - FT THOMPSON 230KV CKT 1
FDNS	00NR_G15_042	0	17SP	G15_042	TO->FROM	GR ISLD-LNX3345.00 - HOLT.CO3 345.00 345KV CKT 1	720	720	0.0622	133.3804	FT RANDAL - G12_009IST 230.00 230KV CKT 1
FDNS	00NR_G15_042	0	17SP	G15_042	TO->FROM	GR ISLD-LNX3345.00 - HOLT.CO3 345.00 345KV CKT 1	720	720	0.0622	133.2876	FT THOMPSON - LAKE PLATT 230KV CKT 1
FDNS	00NR_G15_042	0	17SP	G15_042	TO->FROM	GR ISLD-LNX3345.00 - HOLT.CO3 345.00 345KV CKT 1	720	720	0.0622	133.2876	FT THOMPSON - LAKE PLATT 230KV CKT 1
FDNS	00NR_G15_042	0	17SP	G15_042	TO->FROM	GR ISLD-LNX3345.00 - HOLT.CO3 345.00 345KV CKT 1	720	720	0.0734	133.2161	NUNDRWD - WAYSIDE 230KV CKT 1
FDNS	00NR_G15_042	0	17SP	G15_042	TO->FROM	GR ISLD-LNX3345.00 - HOLT.CO3 345.00 345KV CKT 1	720	720	0.0622	132.9232	G12_009IST 230.00 - LAKE PLATT 230KV CKT 1
FDNS	00NR_G15_042	0	17SP	G15_042	TO->FROM	GR ISLD-LNX3345.00 - HOLT.CO3 345.00 345KV CKT 1	720	720	0.06467	132.9003	GEN336821 1-GRAND GULF UNIT
FDNSLock	00NR_G15_042	0	17SP	G15_042	TO->FROM	GR ISLD-LNX3345.00 - HOLT.CO3 345.00 345KV CKT 1	720	720	0.0646	132.7657	CHISAGO COUNTY - CHISAGO COUNTY 500KV CKT 1
FDNS	00NR_G15_042	0	17SP	G15_042	TO->FROM	GR ISLD-LNX3345.00 - HOLT.CO3 345.00 345KV CKT 1	720	720	0.0646	132.7598	CHISAGO COUNTY - FORBES 500KV CKT 1
FDNS	00NR_G15_042	0	17SP	G15_042	TO->FROM	GR ISLD-LNX3345.00 - HOLT.CO3 345.00 345KV CKT 1	720	720	0.06646	132.6678	FT RANDAL - MEADOWGROVE4230.00 230KV CKT 1
FDNS	00NR_G15_042	0	17SP	G15_042	TO->FROM	GR ISLD-LNX3345.00 - HOLT.CO3 345.00 345KV CKT 1	720	720	0.06458	132.6006	CENTER - JAMESTOWN 345KV CKT 1
FDNS	00NR_G15_042	0	17SP	G15_042	TO->FROM	GR ISLD-LNX3345.00 - HOLT.CO3 345.00 345KV CKT 1	720	720	0.06467	132.3698	GEN640010 1-GERALD GENTLEMAN STATION UNIT 1
FDNS	00NR_G15_042	0	17SP	G15_042	TO->FROM	GR ISLD-LNX3345.00 - HOLT.CO3 345.00 345KV CKT 1	720	720	0.06467	132.353	GEN344225 1-1CAL G1 25.000
FDNS	00NR_G15_042	0	17SP	G15_042	TO->FROM	GR ISLD-LNX3345.00 - HOLT.CO3 345.00 345KV CKT 1	720	720	0.06643	132.2333	KEYSTONE - SIDNEY1-LNX3345.00 345KV CKT 1
FDNS	00NR_G15_042	0	17SP	G15_042	TO->FROM	GR ISLD-LNX3345.00 - HOLT.CO3 345.00 345KV CKT 1	720	720	0.06429	132.2089	G09_001IST 345.00 - GROTON 345KV CKT 1
FDNS	00NR_G15_042	0	17SP	G15_042	TO->FROM	GR ISLD-LNX3345.00 - HOLT.CO3 345.00 345KV CKT 1	720	720	0.06643	132.1882	SIDNEY - SIDNEY1-LNX3345.00 345KV CKT Z
FDNS	00NR_G15_042	0	17SP	G15_042	TO->FROM	GR ISLD-LNX3345.00 - HOLT.CO3 345.00 345KV CKT 1	720	720	0.06322	132.1795	LETCHER - SIOUX FALLS 230KV CKT 1
FDNS	00NR_G15_042	0	17SP	G15_042	TO->FROM	GR ISLD-LNX3345.00 - HOLT.CO3 345.00 345KV CKT 1	720	720	0.06467	132.1577	GEN635024 4-WALTER SCOTT UNIT 4
FDNS	00NR_G15_042	0	17SP	G15_042	TO->FROM	GR ISLD-LNX3345.00 - HOLT.CO3 345.00 345KV CKT 1	720	720	0.06461	132.1335	BISON 3 345.00 - BUFFALO 345KV CKT 1
FDNS	00NR_G15_042	0	17SP	G15_042	TO->FROM	GR ISLD-LNX3345.00 - HOLT.CO3 345.00 345KV CKT 1	720	720	0.06467	132.1023	GEN336153 1-WATERFORD UNIT#3
FDNS	00NR_G15_042	0	17SP	G15_042	TO->FROM	GR ISLD-LNX3345.00 - HOLT.CO3 345.00 345KV CKT 1	720	720	0.06467	132.0808	GEN337911 1-ARKANSAS NUCLEAR ONE UNIT #2
FDNS	00NR_G15_042	0	17SP	G15_042	TO->FROM	GR ISLD-LNX3345.00 - HOLT.CO3 345.00 345KV CKT 1	720	720	0.06467	131.9686	GEN640011 2-GERALD GENTLEMAN STATION UNIT 2
FDNS	00NR_G15_042	0	17SP	G15_042	TO->FROM	GR ISLD-LNX3345.00 - HOLT.CO3 345.00 345KV CKT 1	720	720	0.0739	131.7779	RAUN - SUB 3451 FT CAL 345KV CKT 1
FDNS	00NR_G15_042	0	17SP	G15_042	TO->FROM	GR ISLD-LNX3345.00 - HOLT.CO3 345.00 345KV CKT 1	720	720	0.0739	131.7779	RAUN - SUB 3451 FT CAL 345KV CKT 1
FDNS	00NR_G15_042	0	17SP	G15_042	TO->FROM	GR ISLD-LNX3345.00 - HOLT.CO3 345.00 345KV CKT 1	720	720	0.06334	131.6607	SPLIT ROCK - WHITE 345KV CKT 1
FDNS	00NR_G15_042	0	17SP	G15_042	TO->FROM	GR ISLD-LNX3345.00 - HOLT.CO3 345.00 345KV CKT 1	720	720	0.06334	131.6607	SPLIT ROCK - WHITE 345KV CKT 1
FDNS	00NR_G15_042	0	17SP	G15_042	TO->FROM	GR ISLD-LNX3345.00 - HOLT.CO3 345.00 345KV CKT 1	720	720	0.06467	131.6567	GEN635023 3-WALTER SCOTT UNIT 3
FDNS	00NR_G15_042	0	17SP	G15_042	TO->FROM	GR ISLD-LNX3345.00 - HOLT.CO3 345.00 345KV CKT 1	720	720	0.06467	131.6219	GEN335831 1-RIVERBEND UNIT#1
FDNS	00NR_G15_042	0	17SP	G15_042	TO->FROM	GR ISLD-LNX3345.00 - HOLT.CO3 345.00 345KV CKT 1	720	720	0.06436	131.5347	GROTON-LNX3 345.00 - LELAND1-LNX3345.00 345KV CKT 1
FDNS	00NR_G15_042	0	17SP	G15_042	TO->FROM	GR ISLD-LNX3345.00 - HOLT.CO3 345.00 345KV CKT 1	720	720	0.06467	131.527	GEN337910 1-ARKANSAS NUCLEAR ONE UNIT #1
FDNS	00NR_G15_042	0	17SP	G15_042	TO->FROM	GR ISLD-LNX3345.00 - HOLT.CO3 345.00 345KV CKT 1	720	720	0.06436	131.379	P12:345:UMZB:# 109 #: LOS GRT IN ND. LOS GRT
FDNS	00NR_G15_042	0	17SP	G15_042	TO->FROM	GR ISLD-LNX3345.00 - HOLT.CO3 345.00 345KV CKT 1	720	720	0.06436	131.3643	GROTON - GROTON-LNX3 345.00 345KV CKT Z
FDNS	00NR_G15_042	0	17SP	G15_042	TO->FROM	GR ISLD-LNX3345.00 - HOLT.CO3 345.00 345KV CKT 1	720	720	0.06436	131.3531	LELAND OLDS - LELAND1-LNX3345.00 345KV CKT Z
FDNS	00NR_G15_042	0	17SP	G15_042	TO->FROM	GR ISLD-LNX3345.00 - HOLT.CO3 345.00 345KV CKT 1	720	720	0.06492	131.1981	ARROWHEAD - ARROWHEAD 230 230KV CKT 1
FDNS	00NR_G15_042	0	17SP	G15_042	TO->FROM	GR ISLD-LNX3345.00 - HOLT.CO3 345.00 345KV CKT 1	720	720	0.06262	131.1344	FT RANDAL - SIOUX CITY 230KV CKT 1
FDNS	00NR_G15_042	0	17SP	G15_042	TO->FROM	GR ISLD-LNX3345.00 - HOLT.CO3 345.00 345KV CKT 1	720	720	0.06371	131.0214	HANLON - SIOUX FALLS 230KV CKT 1
FDNS	00NR_G15_042	0	17SP	G15_042	TO->FROM	GR ISLD-LNX3345.00 - HOLT.CO3 345.00 345KV CKT 1	720	720	0.06467	130.9132	GEN337653 1-WHITE BLUFF UNIT #2
FDNS	00NR_G15_042	0	17SP	G15_042	TO->FROM	GR ISLD-LNX3345.00 - HOLT.CO3 345.00 345KV CKT 1	720	720	0.06467	130.8995	GEN337652 1-WHITE BLUFF UNIT #1
FDNS	00NR_G15_042	0	17SP	G15_042	TO->FROM	GR ISLD-LNX3345.00 - HOLT.CO3 345.00 345KV CKT 1	720	720	0.06486	130.8885	P12:115:NPPD:1091:VALENTN7:MISSION7:BTB
FDNS	00NR_G15_042	0	17SP	G15_042	TO->FROM	GR ISLD-LNX3345.00 - HOLT.CO3 345.00 345KV CKT 1	720	720	0.06542	130.8778	HAZLETON - MITCHLCO3 345.00 345KV CKT 1
FDNS	00NR_G15_042	0	17SP	G15_042	TO->FROM	GR ISLD-LNX3345.00 - HOLT.CO3 345.00 345KV CKT 1	720	720	0.06467	130.8056	GEN338146 1-INDEPENDENCE UNIT #2
FDNS	00NR_G15_042	0	17SP	G15_042	TO->FROM	GR ISLD-LNX3345.00 - HOLT.CO3 345.00 345KV CKT 1	720	720	0.06486	130.8022	MISSION - ST FRANCIS 115KV CKT 1
FDNS	00NR_G15_042	0	17SP	G15_042	TO->FROM	GR ISLD-LNX3345.00 - HOLT.CO3 345.00 345KV CKT 1	720	720	0.06467	130.7966	GEN338143 1-INDEPENDENCE UNIT #1
FDNS	00NR_G15_042	0	17SP	G15_042	TO->FROM	GR ISLD-LNX3345.00 - HOLT.CO3 345.00 345KV CKT 1	720	720	0.06618	130.768	SIDNEY - STEGALL 345KV CKT 1
FDNS	00NR_G15_042	0	17SP	G15_042	TO->FROM	GR ISLD-LNX3345.00 - HOLT.CO3 345.00 345KV CKT 1	720	720	0.05087	130.7546	GRAND ISLAND - SWEETWATER 345KV CKT 1
FDNS	00NR_G15_042	0	17SP	G15_042	TO->FROM	GR ISLD-LNX3345.00 - HOLT.CO3 345.00 345KV CKT 1	720	720	0.06499	130.7518	AS KING - EAU CLAIRE 345KV CKT 1

SOLUTION	GROUP	SCENARIO	SEASON	SOURCE	DIRECTION	MONITORED ELEMENT	RATEA (MVA)	RATEB(MVA)	TDF	TC%LOADING (% MVA)	CONTINGENCY
FDNS	00NR_G15_042	0	17SP	G15_042	TO->FROM	GR ISLD-LNX3345.00 - HOLT.CO3 345.00 345KV CKT 1	720	720	0.06467	130.74	GEN501801 1-DOLET HILLS UNIT1
FDNS	00NR_G15_042	0	17SP	G15_042	TO->FROM	GR ISLD-LNX3345.00 - HOLT.CO3 345.00 345KV CKT 1	720	720	0.0619	130.6985	SIOUXCY-LNX3345.00 - SPLIT ROCK 345KV CKT 1
FDNS	00NR_G15_042	0	17SP	G15_042	TO->FROM	GR ISLD-LNX3345.00 - HOLT.CO3 345.00 345KV CKT 1	720	720	0.0619	130.6985	SIOUXCY-LNX3345.00 - SPLIT ROCK 345KV CKT 1
FDNS	00NR_G15_042	0	17SP	G15_042	TO->FROM	GR ISLD-LNX3345.00 - HOLT.CO3 345.00 345KV CKT 1	720	720	0.06464	130.6903	ELLENDALE - OAKES 230KV CKT 1
FDNS	00NR_G15_042	0	17SP	G15_042	TO->FROM	GR ISLD-LNX3345.00 - HOLT.CO3 345.00 345KV CKT 1	720	720	0.06464	130.6903	ELLENDALE - OAKES 230KV CKT 1
FDNS	00NR_G15_042	0	17SP	G15_042	TO->FROM	GR ISLD-LNX3345.00 - HOLT.CO3 345.00 345KV CKT 1	720	720	0.06486	130.6553	HARMONY - ST FRANCIS 115KV CKT 1
FDNS	00NR_G15_042	0	17SP	G15_042	TO->FROM	GR ISLD-LNX3345.00 - HOLT.CO3 345.00 345KV CKT 1	720	720	0.0619	130.638	P12:345:UMZW:# 907 #: SC2-SR IN IA. SC2-SR 345 KV LINE
FDNS	00NR_G15_042	0	17SP	G15_042	TO->FROM	GR ISLD-LNX3345.00 - HOLT.CO3 345.00 345KV CKT 1	720	720	0.06344	130.6067	FT RANDAL - UTICA JCT 230KV CKT 1
FDNS	00NR_G15_042	0	17SP	G15_042	TO->FROM	GR ISLD-LNX3345.00 - HOLT.CO3 345.00 345KV CKT 1	720	720	0.06464	130.6009	FORMAN - OAKES 230KV CKT 1
FDNS	00NR_G15_042	0	17SP	G15_042	TO->FROM	GR ISLD-LNX3345.00 - HOLT.CO3 345.00 345KV CKT 1	720	720	0.06462	130.5929	ALEXMRES3 345.00 - BISON 3 345.00 345KV CKT 1
FDNS	00NR_G15_042	0	17SP	G15_042	TO->FROM	GR ISLD-LNX3345.00 - HOLT.CO3 345.00 345KV CKT 1	720	720	0.0619	130.5927	SIOUX CITY - SIOUXCY-LNX3345.00 345KV CKT Z
FDNS	00NR_G15_042	0	17SP	G15_042	TO->FROM	GR ISLD-LNX3345.00 - HOLT.CO3 345.00 345KV CKT 1	720	720	0.06433	130.5826	CARPENTER - HURON 230KV CKT 1
FDNS	00NR_G15_042	0	17SP	G15_042	TO->FROM	GR ISLD-LNX3345.00 - HOLT.CO3 345.00 345KV CKT 1	720	720	0.06277	130.5527	FT THOMPSON - WESSINGTON 230KV CKT 1
FDNS	00NR_G15_042	0	17SP	G15_042	TO->FROM	GR ISLD-LNX3345.00 - HOLT.CO3 345.00 345KV CKT 1	720	720	0.06277	130.5527	FT THOMPSON - WESSINGTON 230KV CKT 1
FDNS	00NR_G15_042	0	17SP	G15_042	TO->FROM	GR ISLD-LNX3345.00 - HOLT.CO3 345.00 345KV CKT 1	720	720	0.06513	130.5432	ARPIN B4 345.00 - EAU CLAIRE 345KV CKT 1
FDNS	00NR_G15_042	0	17SP	G15_042	TO->FROM	GR ISLD-LNX3345.00 - HOLT.CO3 345.00 345KV CKT 1	720	720	0.0647	130.4643	P12:115:NPPD:WAPA6:FTRANDL7:ONEILL 7:BTB
FDNS	00NR_G15_042	0	17SP	G15_042	TO->FROM	GR ISLD-LNX3345.00 - HOLT.CO3 345.00 345KV CKT 1	720	720	0.0647	130.4643	P12:115:UMZB:# 115 #: SE IN NE. FR-SE-ON
FDNS	00NR_G15_042	0	17SP	G15_042	TO->FROM	GR ISLD-LNX3345.00 - HOLT.CO3 345.00 345KV CKT 1	720	720	0.06433	130.4624	HURON - WATERTOWN 230KV CKT 2
FDNS	00NR_G15_042	0	17SP	G15_042	TO->FROM	GR ISLD-LNX3345.00 - HOLT.CO3 345.00 345KV CKT 1	720	720	0.06433	130.4624	HURON - WATERTOWN 230KV CKT 2
FDNS	00NR_G15_042	0	17SP	G15_042	TO->FROM	GR ISLD-LNX3345.00 - HOLT.CO3 345.00 345KV CKT 1	720	720	0.06486	130.4458	HARMONY - VALENTINE 115KV CKT 1
FDNS	00NR_G15_042	0	17SP	G15_042	TO->FROM	GR ISLD-LNX3345.00 - HOLT.CO3 345.00 345KV CKT 1	720	720	0.0647	130.4326	FT RANDAL - SPENCER 115KV CKT 1
FDNS	00NR_G15_042	0	17SP	G15_042	TO->FROM	GR ISLD-LNX3345.00 - HOLT.CO3 345.00 345KV CKT 1	720	720	0.06433	130.4201	CARPENTER - WATERTOWN 230KV CKT 1
FDNS	00NR_G15_042	0	17SP	G15_042	TO->FROM	GR ISLD-LNX3345.00 - HOLT.CO3 345.00 345KV CKT 1	720	720	0.06433	130.4201	CARPENTER - WATERTOWN 230KV CKT 1
FDNS	00NR_G15_042	0	17SP	G15_042	TO->FROM	GR ISLD-LNX3345.00 - HOLT.CO3 345.00 345KV CKT 1	720	720	0.06467	130.3829	GEN336252 1-NINEMILE POINT UNIT#5
FDNS	00NR_G15_042	0	17SP	G15_042	TO->FROM	GR ISLD-LNX3345.00 - HOLT.CO3 345.00 345KV CKT 1	720	720	0.06467	130.3405	GEN501813 1-RODEMACHER UNIT 3
FDNS	00NR_G15_042	0	17SP	G15_042	TO->FROM	GR ISLD-LNX3345.00 - HOLT.CO3 345.00 345KV CKT 1	720	720	0.0647	130.3206	ONEILL - SPENCER 115KV CKT 1
FDNS	00NR_G15_042	0	17SP	G15_042	TO->FROM	GR ISLD-LNX3345.00 - HOLT.CO3 345.00 345KV CKT 1	720	720	0.06291	130.2895	PAHOJA - SIOUX FALLS 230KV CKT 1
FDNS	00NR_G15_042	0	17SP	G15_042	TO->FROM	GR ISLD-LNX3345.00 - HOLT.CO3 345.00 345KV CKT 1	720	720	0.06467	130.2388	GEN336831 1-BAXTER WILSON SES
FDNS	00NR_G15_042	0	17SP	G15_042	TO->FROM	GR ISLD-LNX3345.00 - HOLT.CO3 345.00 345KV CKT 1	720	720	0.06467	130.2256	GEN336251 1-NINEMILE POINT UNIT#4
FDNS	00NR_G15_042	0	17SP	G15_042	TO->FROM	GR ISLD-LNX3345.00 - HOLT.CO3 345.00 345KV CKT 1	720	720	0.0655	130.2017	GERALD GENTLEMAN STATION - KEYSTONE 345KV CKT 1
FDNS	00NR_G15_042	0	17SP	G15_042	TO->FROM	GR ISLD-LNX3345.00 - HOLT.CO3 345.00 345KV CKT 1	720	720	0.06467	130.1749	GEN641089 2-ENERGY CENTER 2
FDNS	00NR_G15_042	0	17SP	G15_042	TO->FROM	GR ISLD-LNX3345.00 - HOLT.CO3 345.00 345KV CKT 1	720	720	0.06466	130.1692	CNTSHNT3 345.00 - PRAIRIE3 345.00 345KV CKT 1
FDNS	00NR_G15_042	0	17SP	G15_042	TO->FROM	GR ISLD-LNX3345.00 - HOLT.CO3 345.00 345KV CKT 1	720	720	0.06467	130.1479	GEN337041 1-GERALD ANDRUS
FDNS	00NR_G15_042	0	17SP	G15_042	TO->FROM	GR ISLD-LNX3345.00 - HOLT.CO3 345.00 345KV CKT 1	720	720	0.06467	130.1319	GEN335206 1-NELSON UNIT 6
FDNS	00NR_G15_042	0	17SP	G15_042	TO->FROM	GR ISLD-LNX3345.00 - HOLT.CO3 345.00 345KV CKT 1	720	720	0.06467	130.1029	GEN344897 4-1LAB G4 20.000
FDNS	00NR_G15_042	0	17SP	G15_042	TO->FROM	GR ISLD-LNX3345.00 - HOLT.CO3 345.00 345KV CKT 1	720	720	0.06467	130.0997	GEN344894 1-1LAB G1 20.000
FDNS	00NR_G15_042	0	17SP	G15_042	TO->FROM	GR ISLD-LNX3345.00 - HOLT.CO3 345.00 345KV CKT 1	720	720	0.06467	130.0995	GEN344896 3-1LAB G3 20.000
FDNS	00NR_G15_042	0	17SP	G15_042	TO->FROM	GR ISLD-LNX3345.00 - HOLT.CO3 345.00 345KV CKT 1	720	720	0.06465	130.0679	FORMAN - HANKINSON 230KV CKT 1
FDNS	00NR_G15_042	0	17SP	G15_042	TO->FROM	GR ISLD-LNX3345.00 - HOLT.CO3 345.00 345KV CKT 1	720	720	0.06486	130.0497	AINSWORTH - VALENTINE 115KV CKT 1
FDNS	00NR_G15_042	0	17SP	G15_042	TO->FROM	GR ISLD-LNX3345.00 - HOLT.CO3 345.00 345KV CKT 1	720	720	0.06467	130.0425	GEN344895 2-1LAB G2 20.000
FDNS	00NR_G15_042	0	17SP	G15_042	TO->FROM	GR ISLD-LNX3345.00 - HOLT.CO3 345.00 345KV CKT 1	720	720	0.06467	130.0272	GEN345670 1-1RUSH G1 18.000
FDNS	00NR_G15_042	0	17SP	G15_042	TO->FROM	GR ISLD-LNX3345.00 - HOLT.CO3 345.00 345KV CKT 1	720	720	0.06467	130.027	GEN345671 2-1RUSH G2 18.000
FDNS	00NR_G15_042	0	17SP	G15_042	TO->FROM	GR ISLD-LNX3345.00 - HOLT.CO3 345.00 345KV CKT 1	720	720	0.06542	130.009	ADAMS - MITCHLCO3 345.00 345KV CKT 1
FDNS	00NR_G15_042	0	17SP	G15_042	TO->FROM	GR ISLD-LNX3345.00 - HOLT.CO3 345.00 345KV CKT 1	720	720	0.06467	129.9733	GEN501812 1-RODEMACHER UNIT 2
FDNS	00NR_G15_042	0	17SP	G15_042	TO->FROM	GR ISLD-LNX3345.00 - HOLT.CO3 345.00 345KV CKT 1	720	720	0.06467	129.951	GEN334440 1-SABINE UNIT 4
FDNS	00NR_G15_042	0	17SP	G15_042	TO->FROM	GR ISLD-LNX3345.00 - HOLT.CO3 345.00 345KV CKT 1	720	720	0.06291	129.9467	EAGLE 4 230.00 - PAHOJA 230KV CKT 1
FDNS	00NR_G15_042	0	17SP	G15_042	TO->FROM	GR ISLD-LNX3345.00 - HOLT.CO3 345.00 345KV CKT 1	720	720	0.06315	129.8888	RASMUSN - UTICA JCT 230KV CKT 1
FDNS	00NR_G15_042	0	17SP	G15_042	TO->FROM	GR ISLD-LNX3345.00 - HOLT.CO3 345.00 345KV CKT 1	720	720	0.06516	129.8526	ADAMS - PLEASANT VALLEY 345KV CKT 1
FDNS	00NR_G15_042	0	17SP	G15_042	TO->FROM	GR ISLD-LNX3345.00 - HOLT.CO3 345.00 345KV CKT 1	720	720	0.08171	129.8156	DIXONCO 230.00 - HOSKINS 230KV CKT 1
FDNS	00NR_G15_042	0	17SP	G15_042	TO->FROM	GR ISLD-LNX3345.00 - HOLT.CO3 345.00 345KV CKT 1	720	720	0.06706	129.7992	GRIMES - LEHIGH 345KV CKT 1
FDNS	00NR_G15_042	0	17SP	G15_042	TO->FROM	GR ISLD-LNX3345.00 - HOLT.CO3 345.00 345KV CKT 1	720	720	0.06467	129.796	GEN336191 1-LITTLE GYPSY UNIT#3
FDNSLock	00NR_G15_042	0	17SP	G15_042	TO->FROM	GR ISLD-LNX3345.00 - HOLT.CO3 345.00 345KV CKT 1	720	720	0.06466	129.7501	CENTER - CNTSHNT3 345.00 345KV CKT Z1
FDNS	00NR_G15_042	0	17SP	G15_042	TO->FROM	GR ISLD-LNX3345.00 - HOLT.CO3 345.00 345KV CKT 1	720	720	0.06467	129.7276	GEN338388 1-1PLUM PT U1 23.000
FDNS	00NR_G15_042	0	17SP	G15_042	TO->FROM	GR ISLD-LNX3345.00 - HOLT.CO3 345.00 345KV CKT 1	720	720	0.06315	129.6982	RASMUSN - SIOUX CITY 230KV CKT 1
FDNS	00NR_G15_042	0	17SP	G15_042	TO->FROM	GR ISLD-LNX3345.00 - HOLT.CO3 345.00 345KV CKT 1	720	720	0.06467	129.6981	GEN336801 1-BAXTER WILSON UNIT #1
FDNS	00NR_G15_042	0	17SP	G15_042	TO->FROM	GR ISLD-LNX3345.00 - HOLT.CO3 345.00 345KV CKT 1	720	720	0.06467	129.6881	GEN335614 1-WILLOW GLENN UNIT#4
FDNS	00NR_G15_042	0	17SP	G15_042	TO->FROM	GR ISLD-LNX3345.00 - HOLT.CO3 345.00 345KV CKT 1	720	720	0.06467	129.6806	GEN334441 1-SABINE UNIT 5
FDNS	00NR_G15_042	0	17SP	G15_042	TO->FROM	GR ISLD-LNX3345.00 - HOLT.CO3 345.00 345KV CKT 1	720	720	0.06467	129.6715	GEN336464 1-MICHOUD UNIT #3
FDNS	00NR_G15_042	0	17SP	G15_042	TO->FROM	GR ISLD-LNX3345.00 - HOLT.CO3 345.00 345KV CKT 1	720	720	0.06467	129.6585	GEN335204 1-NELSON UNIT 4
FDNS	00NR_G15_042	0	17SP	G15_042	TO->FROM	GR ISLD-LNX3345.00 - HOLT.CO3 345.00 345KV CKT 1	720	720	0.06523	129.6542	LAKEFIELD 3 - NOBLES 345KV CKT 1
FDNS	00NR_G15_042	0	17SP	G15_042	TO->FROM	GR ISLD-LNX3345.00 - HOLT.CO3 345.00 345KV CKT 1	720	720	0.06535	129.5776	KOSSUTH 3 345.00 - OBRIEN 3 345.00 345KV CKT 1
FDNS	00NR_G15_042	0	17SP	G15_042	TO->FROM	GR ISLD-LNX3345.00 - HOLT.CO3 345.00 345KV CKT 1	720	720	0.06535	129.5752	KOSSUTH 3 345.00 - WEBSTER 345KV CKT 1
FDNS	00NR_G15_042	0	17SP	G15_042	TO->FROM	GR ISLD-LNX3345.00 - HOLT.CO3 345.00 345KV CKT 1	720	720	0.06498	129.5676	BROOKING COUNTY - LYON COUNTY 345KV CKT 1
FDNS	00NR_G15_042	0	17SP	G15_042	TO->FROM	GR ISLD-LNX3345.00 - HOLT.CO3 345.00 345KV CKT 1	720	720	0.0677	129.5516	STEGALL - STEGALL TRANSFORMER 230KV CKT 1
FDNS	00NR_G15_042	0	17SP	G15_042	TO->FROM	GR ISLD-LNX3345.00 - HOLT.CO3 345.00 345KV CKT 1	720	720	0.06496	129.55	LARAMIE RIVER - SIDNEY2-LNX3345.00 345KV CKT 1
FDNS	00NR_G15_042	0	17SP	G15_042	TO->FROM	GR ISLD-LNX3345.00 - HOLT.CO3 345.00 345KV CKT 1	720	720	0.06413	129.5484	FT THOMPSON - HURON 230KV CKT 1
FDNS	00NR_G15_042	0	17SP	G15_042	TO->FROM	GR ISLD-LNX3345.00 - HOLT.CO3 345.00 345KV CKT 1	720	720	0.06413	129.5484	FT THOMPSON - HURON 230KV CKT 1
FDNS	00NR_G15_042	0	17SP	G15_042	TO->FROM	GR ISLD-LNX3345.00 - HOLT.CO3 345.00 345KV CKT 1	720	720	0.06413	129.5484	FT THOMPSON - HURON 230KV CKT 2
FDNS	00NR_G15_042	0	17SP	G15_042	TO->FROM	GR ISLD-LNX3345.00 - HOLT.CO3 345.00 345KV CKT 1	720	720	0.06413	129.5484	FT THOMPSON - HURON 230KV CKT 2
FDNS	00NR_G15_042	0	17SP	G15_042	TO->FROM	GR ISLD-LNX3345.00 - HOLT.CO3 345.00 345KV CKT 1	720	720	0.0677	129.5295	P13:230-345:NPPD:STEGALL3:KV3A
FDNS	00NR_G15_042	0	17SP	G15_042	TO->FROM	GR ISLD-LNX3345.00 - HOLT.CO3 345.00 345KV CKT 1	720	720	0.0677	129.5271	STEGALL (SGQ KV3A) 345/230/13.8KV TRANSFORMER CKT 1
FDNS	00NR_G15_042	0	17SP	G15_042	TO->FROM	GR ISLD-LNX3345.00 - HOLT.CO3 345.00 345KV CKT 1	720	720	0.06496	129.5214	SIDNEY - SIDNEY2-LNX3345.00 345KV CKT Z
FDNS	00NR_G15_042	0	17SP	G15_042	TO->FROM	GR ISLD-LNX3345.00 - HOLT.CO3 345.00 345KV CKT 1	720	720	0.06467	129.5169	BLAIR - GRANITE FALLS 230KV CKT 1

SOLUTION	GROUP	SCENARIO	SEASON	SOURCE	DIRECTION	MONITORED ELEMENT	RATEA (MVA)	RATEB(MVA)	TDF	TC%LOADING (% MVA)	CONTINGENCY
FDNS	00NR_G15_042	0	17SP	G15_042	TO->FROM	GR ISLD-LNX3345.00 - HOLT.CO3 345.00 345KV CKT 1	720	720	0.06467	129.5169	BLAIR - GRANITE FALLS 230KV CKT 1
FDNS	00NR_G15_042	0	17SP	G15_042	TO->FROM	GR ISLD-LNX3345.00 - HOLT.CO3 345.00 345KV CKT 1	720	720	0.06467	129.5102	GEN334433 1-SABINE UNIT 3
FDNS	00NR_G15_042	0	17SP	G15_042	TO->FROM	GR ISLD-LNX3345.00 - HOLT.CO3 345.00 345KV CKT 1	720	720	0.06968	129.4863	STEGALL-LNX3230.00 - WAYSIDE 230KV CKT 1
FDNS	00NR_G15_042	0	17SP	G15_042	TO->FROM	GR ISLD-LNX3345.00 - HOLT.CO3 345.00 345KV CKT 1	720	720	0.06968	129.4762	STEGALL - STEGALL-LNX3230.00 230KV CKT Z
FDNS	00NR_G15_042	0	17SP	G15_042	TO->FROM	GR ISLD-LNX3345.00 - HOLT.CO3 345.00 345KV CKT 1	720	720	0.06432	129.4757	MENNO JCT - TRIPP JCT 115KV CKT 1
FDNS	00NR_G15_042	0	17SP	G15_042	TO->FROM	GR ISLD-LNX3345.00 - HOLT.CO3 345.00 345KV CKT 1	720	720	0.06876	129.4652	RAUN - SIOUX CITY 345KV CKT 1
FDNS	00NR_G15_042	0	17SP	G15_042	TO->FROM	GR ISLD-LNX3345.00 - HOLT.CO3 345.00 345KV CKT 1	720	720	0.06876	129.4652	RAUN - SIOUX CITY 345KV CKT 1
FDNS	00NR_G15_042	0	17SP	G15_042	TO->FROM	GR ISLD-LNX3345.00 - HOLT.CO3 345.00 345KV CKT 1	720	720	0.06334	129.4647	CROOKED CREEK - NORTH PLATTE 230KV CKT 1
FDNS	00NR_G15_042	0	17SP	G15_042	TO->FROM	GR ISLD-LNX3345.00 - HOLT.CO3 345.00 345KV CKT 1	720	720	0.06467	129.4611	GEN531447 1-HOLCOMB GENERATOR
FDNS	00NR_G15_042	0	17SP	G15_042	TO->FROM	GR ISLD-LNX3345.00 - HOLT.CO3 345.00 345KV CKT 1	720	720	0.06467	129.4327	GEN336222 1-LITTLE GYPSY UNIT#2
FDNS	00NR_G15_042	0	17SP	G15_042	TO->FROM	GR ISLD-LNX3345.00 - HOLT.CO3 345.00 345KV CKT 1	720	720	0.06467	129.4181	GEN303007 1-1BC2 U2
FDNS	00NR_G15_042	0	17SP	G15_042	TO->FROM	GR ISLD-LNX3345.00 - HOLT.CO3 345.00 345KV CKT 1	720	720	0.06467	129.4138	GEN303006 1-1BC2 U1
FDNS	00NR_G15_042	0	17SP	G15_042	TO->FROM	GR ISLD-LNX3345.00 - HOLT.CO3 345.00 345KV CKT 1	720	720	0.07133	129.4063	COLUMEAST - SHELL CREEK 345KV CKT 1
FDNS	00NR_G15_042	0	17SP	G15_042	TO->FROM	GR ISLD-LNX3345.00 - HOLT.CO3 345.00 345KV CKT 1	720	720	0.06467	129.3657	GEN336152 1-WATERFORD UNIT#2
FDNS	00NR_G15_042	0	17SP	G15_042	TO->FROM	GR ISLD-LNX3345.00 - HOLT.CO3 345.00 345KV CKT 1	720	720	0.06467	129.3654	GEN336151 1-WATERFORD UNIT#1
FDNS	00NR_G15_042	0	17SP	G15_042	TO->FROM	GR ISLD-LNX3345.00 - HOLT.CO3 345.00 345KV CKT 1	720	720	0.06467	129.3537	P13:230-345:NPPD:NUCOR-1
FDNS	00NR_G15_042	0	17SP	G15_042	TO->FROM	GR ISLD-LNX3345.00 - HOLT.CO3 345.00 345KV CKT 1	720	720	0.06467	129.341	GEN303008 1-1BC2 U3
FDNS	00NR_G15_042	0	17SP	G15_042	TO->FROM	GR ISLD-LNX3345.00 - HOLT.CO3 345.00 345KV CKT 1	720	720	0.06483	129.3268	ARKANSAS NUCLEAR ONE - FT SMITH 500KV CKT 1
FDNS	00NR_G15_042	0	17SP	G15_042	TO->FROM	GR ISLD-LNX3345.00 - HOLT.CO3 345.00 345KV CKT 1	720	720	0.06483	129.3268	ARKANSAS NUCLEAR ONE - FT SMITH 500KV CKT 1
FDNS	00NR_G15_042	0	17SP	G15_042	TO->FROM	GR ISLD-LNX3345.00 - HOLT.CO3 345.00 345KV CKT 1	720	720	0.06432	129.2771	MENNO JCT - UTICA 115KV CKT 1
FDNS	00NR_G15_042	0	17SP	G15_042	TO->FROM	GR ISLD-LNX3345.00 - HOLT.CO3 345.00 345KV CKT 1	720	720	0.06432	129.2336	P12:115:UMZZ:# 237 #: MEN IN SD. MENNO JUNCTION IS A TAP (UJ-MEN-TP).
FDNS	00NR_G15_042	0	17SP	G15_042	TO->FROM	GR ISLD-LNX3345.00 - HOLT.CO3 345.00 345KV CKT 1	720	720	0.06467	129.1963	GEN501811 1-RODEMACHER UNIT 1
FDNS	00NR_G15_042	0	17SP	G15_042	TO->FROM	GR ISLD-LNX3345.00 - HOLT.CO3 345.00 345KV CKT 1	720	720	0.06352	129.1543	P12:115:NPPD:1164:ONEILL 7:JEFFREY9:BTB
FDNS	00NR_G15_042	0	17SP	G15_042	TO->FROM	GR ISLD-LNX3345.00 - HOLT.CO3 345.00 345KV CKT 1	720	720	0.06588	129.1078	DENISON - SIOUX CITY 230KV CKT 1
FDNS	00NR_G15_042	0	17SP	G15_042	TO->FROM	GR ISLD-LNX3345.00 - HOLT.CO3 345.00 345KV CKT 1	720	720	0.06467	129.0985	GEN334071 1-LEWIS CREEK 2
FDNS	00NR_G15_042	0	17SP	G15_042	TO->FROM	GR ISLD-LNX3345.00 - HOLT.CO3 345.00 345KV CKT 1	720	720	0.06467	129.0924	GEN334070 1-LEWIS CREEK 1
FDNS	00NR_G15_042	0	17SP	G15_042	TO->FROM	GR ISLD-LNX3345.00 - HOLT.CO3 345.00 345KV CKT 1	720	720	0.06305	128.9977	CROOKED CREEK - RIVERDALE 230KV CKT 1
FDNS	00NR_G15_042	0	17SP	G15_042	TO->FROM	GR ISLD-LNX3345.00 - HOLT.CO3 345.00 345KV CKT 1	720	720	0.06152	128.926	FT THOMPSON (FT2 KU1B) 345/230/13.8KV TRANSFORMER CKT 1
FDNS	00NR_G15_042	0	17SP	G15_042	TO->FROM	GR ISLD-LNX3345.00 - HOLT.CO3 345.00 345KV CKT 1	720	720	0.06153	128.9249	FT THOMPSON (FT2 KU1A) 345/230/13.8KV TRANSFORMER CKT 1
FDNS	00NR_G15_042	0	17SP	G15_042	TO->FROM	GR ISLD-LNX3345.00 - HOLT.CO3 345.00 345KV CKT 1	720	720	0.06467	128.8899	GEN659118 1-LARAMIE RIVER UNIT1
FDNS	00NR_G15_042	0	17SP	G15_042	TO->FROM	GR ISLD-LNX3345.00 - HOLT.CO3 345.00 345KV CKT 1	720	720	0.0767	128.6302	COLUMWEST - KELLY 230KV CKT 1
FDNS	00NR_G15_042	0	17SP	G15_042	TO->FROM	GR ISLD-LNX3345.00 - HOLT.CO3 345.00 345KV CKT 1	720	720	0.06626	128.4644	KELLY - SHELL CREEK 230KV CKT 1
FDNS	00NR_G15_042	0	17SP	G15_042	TO->FROM	GR ISLD-LNX3345.00 - HOLT.CO3 345.00 345KV CKT 1	720	720	0.06626	128.3815	SHELL CREEK (SHELLCREEKT1) 345/230/13.8KV TRANSFORMER CKT 1
FDNS	00NR_G15_042	0	17SP	G15_042	TO->FROM	GR ISLD-LNX3345.00 - HOLT.CO3 345.00 345KV CKT 1	720	720	0.06626	128.3815	SHELL CREEK (SHELLCREEKT1) 345/230/13.8KV TRANSFORMER CKT 1
FDNS	00NR_G15_042	0	17SP	G15_042	TO->FROM	GR ISLD-LNX3345.00 - HOLT.CO3 345.00 345KV CKT 1	720	720	0.06467	128.3811	KEARNEY 115KV SWITCHED SHUNT
FDNSLock	00NR_G15_042	0	17SP	G15_042	TO->FROM	GR ISLD-LNX3345.00 - HOLT.CO3 345.00 345KV CKT 1	720	720	0.06467	128.3051	KEARNEY 115KV SWITCHED SHUNT
FDNS	00NR_G15_042	0	17SP	G15_042	TO->FROM	GR ISLD-LNX3345.00 - HOLT.CO3 345.00 345KV CKT 1	720	720	0.06474	128.276	ANTELOP-LNX3345.00 - BRDLAND-LNX3345.00 345KV CKT 1
FDNS	00NR_G15_042	0	17SP	G15_042	TO->FROM	GR ISLD-LNX3345.00 - HOLT.CO3 345.00 345KV CKT 1	720	720	0.06467	128.2212	1303-KEARNEY
FDNS	00NR_G15_042	0	17SP	G15_042	TO->FROM	GR ISLD-LNX3345.00 - HOLT.CO3 345.00 345KV CKT 1	720	720	0.06467	128.2212	BASE CASE
FDNS	00NR_G15_042	0	17SP	G15_042	TO->FROM	GR ISLD-LNX3345.00 - HOLT.CO3 345.00 345KV CKT 1	720	720	0.06242	128.1316	GRAND ISLAND - RIVERDALE 230KV CKT 1
FDNS	00NR_G15_042	0	17SP	G15_042	TO->FROM	GR ISLD-LNX3345.00 - HOLT.CO3 345.00 345KV CKT 1	720	720	0.06628	128.0817	AXTELL - PAULINE 345KV CKT 1
FDNS	00NR_G15_042	0	17SP	G15_042	TO->FROM	GR ISLD-LNX3345.00 - HOLT.CO3 345.00 345KV CKT 1	720	720	0.06467	128.0631	GEN645001 1-FORT CALHOUN 1
FDNS	00NR_G15_042	0	17SP	G15_042	TO->FROM	GR ISLD-LNX3345.00 - HOLT.CO3 345.00 345KV CKT 1	720	720	0.06317	128.0618	COOPER - MOORE 345KV CKT 1
FDNSLock	00NR_G15_042	0	17SP	G15_042	TO->FROM	GR ISLD-LNX3345.00 - HOLT.CO3 345.00 345KV CKT 1	720	720	0.06467	128.0548	GR ISLD-LNX3345.00 345KV SWITCHED SHUNT
FDNS	00NR_G15_042	0	17SP	G15_042	TO->FROM	GR ISLD-LNX3345.00 - HOLT.CO3 345.00 345KV CKT 1	720	720	0.06467	128.0546	GR ISLD-LNX3345.00 345KV SWITCHED SHUNT
FDNSLock	00NR_G15_042	0	17SP	G15_042	TO->FROM	GR ISLD-LNX3345.00 - HOLT.CO3 345.00 345KV CKT 1	720	720	0.06467	128.0273	FTTHOM1-LNX3345.00 345KV SWITCHED SHUNT
FDNS	00NR_G15_042	0	17SP	G15_042	TO->FROM	GR ISLD-LNX3345.00 - HOLT.CO3 345.00 345KV CKT 1	720	720	0.06467	128.0272	FTTHOM1-LNX3345.00 345KV SWITCHED SHUNT
FDNS	00NR_G15_042	0	17SP	G15_042	TO->FROM	GR ISLD-LNX3345.00 - HOLT.CO3 345.00 345KV CKT 1	720	720	0.06678	128.0264	103RD & ROKEBY - MOORE 345KV CKT 1
FDNS	00NR_G15_042	0	17SP	G15_042	TO->FROM	GR ISLD-LNX3345.00 - HOLT.CO3 345.00 345KV CKT 1	720	720	0.06678	128.0264	103RD & ROKEBY - MOORE 345KV CKT 1
FDNS	00NR_G15_042	0	17SP	G15_042	TO->FROM	GR ISLD-LNX3345.00 - HOLT.CO3 345.00 345KV CKT 1	720	720	0.06467	127.992	GEN635214 4-NEAL UNIT 4
FDNS	00NR_G15_042	0	17SP	G15_042	TO->FROM	GR ISLD-LNX3345.00 - HOLT.CO3 345.00 345KV CKT 1	720	720	0.06467	127.9873	FTTHOM2-LNX3345.00 345KV SWITCHED SHUNT
FDNSLock	00NR_G15_042	0	17SP	G15_042	TO->FROM	GR ISLD-LNX3345.00 - HOLT.CO3 345.00 345KV CKT 1	720	720	0.06467	127.9869	FTTHOM2-LNX3345.00 345KV SWITCHED SHUNT
FDNS	00NR_G15_042	0	17SP	G15_042	TO->FROM	GR ISLD-LNX3345.00 - HOLT.CO3 345.00 345KV CKT 1	720	720	0.06492	127.9759	LOUP CITY - ST LIBORY 115KV CKT 1
FDNS	00NR_G15_042	0	17SP	G15_042	TO->FROM	GR ISLD-LNX3345.00 - HOLT.CO3 345.00 345KV CKT 1	720	720	0.06483	127.9712	FT THOMPSON - OAHE 230KV CKT 1
FDNS	00NR_G15_042	0	17SP	G15_042	TO->FROM	GR ISLD-LNX3345.00 - HOLT.CO3 345.00 345KV CKT 1	720	720	0.06483	127.9712	FT THOMPSON - OAHE 230KV CKT 1
FDNS	00NR_G15_042	0	17SP	G15_042	TO->FROM	GR ISLD-LNX3345.00 - HOLT.CO3 345.00 345KV CKT 1	720	720	0.06483	127.9712	FT THOMPSON - OAHE 230KV CKT 2
FDNS	00NR_G15_042	0	17SP	G15_042	TO->FROM	GR ISLD-LNX3345.00 - HOLT.CO3 345.00 345KV CKT 1	720	720	0.06483	127.9712	FT THOMPSON - OAHE 230KV CKT 2
FDNS	00NR_G15_042	0	17SP	G15_042	TO->FROM	GR ISLD-LNX3345.00 - HOLT.CO3 345.00 345KV CKT 1	720	720	0.06484	127.9208	FT THOMPSON - OAHE 230KV CKT 3
FDNS	00NR_G15_042	0	17SP	G15_042	TO->FROM	GR ISLD-LNX3345.00 - HOLT.CO3 345.00 345KV CKT 1	720	720	0.06484	127.9208	FT THOMPSON - OAHE 230KV CKT 3
FDNS	00NR_G15_042	0	17SP	G15_042	TO->FROM	GR ISLD-LNX3345.00 - HOLT.CO3 345.00 345KV CKT 1	720	720	0.06484	127.9208	FT THOMPSON - OAHE 230KV CKT 4
FDNS	00NR_G15_042	0	17SP	G15_042	TO->FROM	GR ISLD-LNX3345.00 - HOLT.CO3 345.00 345KV CKT 1	720	720	0.06484	127.9208	FT THOMPSON - OAHE 230KV CKT 4
FDNS	00NR_G15_042	0	17SP	G15_042	TO->FROM	GR ISLD-LNX3345.00 - HOLT.CO3 345.00 345KV CKT 1	720	720	0.06447	127.9205	GRAND ISLAND (GRAND.ISD T5) 230/115/13.8KV TRANSFORMER CKT 2
FDNS	00NR_G15_042	0	17SP	G15_042	TO->FROM	GR ISLD-LNX3345.00 - HOLT.CO3 345.00 345KV CKT 1	720	720	0.06447	127.9205	GRAND ISLAND (GRAND.ISD T5) 230/115/13.8KV TRANSFORMER CKT 2
FDNS	00NR_G15_042	0	17SP	G15_042	TO->FROM	GR ISLD-LNX3345.00 - HOLT.CO3 345.00 345KV CKT 1	720	720	0.06446	127.918	GRAND ISLAND (GRAND.ISD T2) 230/115/13.8KV TRANSFORMER CKT 1
FDNS	00NR_G15_042	0	17SP	G15_042	TO->FROM	GR ISLD-LNX3345.00 - HOLT.CO3 345.00 345KV CKT 1	720	720	0.06446	127.918	GRAND ISLAND (GRAND.ISD T2) 230/115/13.8KV TRANSFORMER CKT 1
FDNS	00NR_G15_042	0	17SP	G15_042	TO->FROM	GR ISLD-LNX3345.00 - HOLT.CO3 345.00 345KV CKT 1	720	720	0.06578	127.8394	MAXWELL - NORTH PLATTE 115KV CKT 1
FDNS	00NR_G15_042	0	17SP	G15_042	TO->FROM	GR ISLD-LNX3345.00 - HOLT.CO3 345.00 345KV CKT 1	720	720	0.06463	127.8016	MCCOOL (MCCOOL T2) 345/115/13.8KV TRANSFORMER CKT 1
FDNS	00NR_G15_042	0	17SP	G15_042	TO->FROM	GR ISLD-LNX3345.00 - HOLT.CO3 345.00 345KV CKT 1	720	720	0.06463	127.8016	MCCOOL (MCCOOL T2) 345/115/13.8KV TRANSFORMER CKT 1
FDNS	00NR_G15_042	0	17SP	G15_042	TO->FROM	GR ISLD-LNX3345.00 - HOLT.CO3 345.00 345KV CKT 1	720	720	0.06465	127.7449	GRAND ISLAND (GI KU1B) 345/230/13.8KV TRANSFORMER CKT 2
FDNS	00NR_G15_042	0	17SP	G15_042	TO->FROM	GR ISLD-LNX3345.00 - HOLT.CO3 345.00 345KV CKT 1	720	720	0.06465	127.7449	GRAND ISLAND (GI KU1B) 345/230/13.8KV TRANSFORMER CKT 2
FDNS	00NR_G15_042	0	17SP	G15_042	TO->FROM	GR ISLD-LNX3345.00 - HOLT.CO3 345.00 345KV CKT 1	720	720	0.06465	127.7439	GRAND ISLAND (GI KU1A) 345/230/13.8KV TRANSFORMER CKT 1
FDNS	00NR_G15_042	0	17SP	G15_042	TO->FROM	GR ISLD-LNX3345.00 - HOLT.CO3 345.00 345KV CKT 1	720	720	0.06465	127.7439	GRAND ISLAND (GI KU1A) 345/230/13.8KV TRANSFORMER CKT 1
FDNS	00NR_G15_042	0	17SP	G15_042	TO->FROM	GR ISLD-LNX3345.00 - HOLT.CO3 345.00 345KV CKT 1	720	720	0.06514	127.7135	FINNEY SWITCHING STATION - WALKTAP7 345.00 345KV CKT 1

SOLUTION	GROUP	SCENARIO	SEASON	SOURCE	DIRECTION	MONITORED ELEMENT	RATEA (MVA)	RATEB(MVA)	TDF	TC%LOADING (% MVA)	CONTINGENCY
FDNS	00NR_G15_042	0	17SP	G15_042	TO->FROM	GR ISLD-LNX3345.00 - HOLT.CO3 345.00 345KV CKT 1	720	720	0.06514	127.7135	FINNEY SWITCHING STATION - WALKTAP7 345.00 345KV CKT 1
FDNS	00NR_G15_042	0	17SP	G15_042	TO->FROM	GR ISLD-LNX3345.00 - HOLT.CO3 345.00 345KV CKT 1	720	720	0.06537	127.6956	Hitchland Interchange - WALKTAP7 345.00 345KV CKT 1
FDNS	00NR_G15_042	0	17SP	G15_042	TO->FROM	GR ISLD-LNX3345.00 - HOLT.CO3 345.00 345KV CKT 1	720	720	0.06537	127.6956	Hitchland Interchange - WALKTAP7 345.00 345KV CKT 1
FDNS	00NR_G15_042	0	17SP	G15_042	TO->FROM	GR ISLD-LNX3345.00 - HOLT.CO3 345.00 345KV CKT 1	720	720	0.06537	127.6895	P12:345:SPS:J07.1.FINN.HITCH
FDNS	00NR_G15_042	0	17SP	G15_042	TO->FROM	GR ISLD-LNX3345.00 - HOLT.CO3 345.00 345KV CKT 1	720	720	0.06881	127.6591	MOORE - PAULINE 345KV CKT 1
FDNS	00NR_G15_042	0	17SP	G15_042	TO->FROM	GR ISLD-LNX3345.00 - HOLT.CO3 345.00 345KV CKT 1	720	720	0.0669	127.6293	MINGO - SETAB 345KV CKT 1
FDNS	00NR_G15_042	0	17SP	G15_042	TO->FROM	GR ISLD-LNX3345.00 - HOLT.CO3 345.00 345KV CKT 1	720	720	0.0669	127.6293	MINGO - SETAB 345KV CKT 1
FDNS	00NR_G15_042	0	17SP	G15_042	TO->FROM	GR ISLD-LNX3345.00 - HOLT.CO3 345.00 345KV CKT 1	720	720	0.06474	127.6169	P12:345:UMZB:# 103 #: BD IN SD. LOSS OF LINE
FDNS	00NR_G15_042	0	17SP	G15_042	TO->FROM	GR ISLD-LNX3345.00 - HOLT.CO3 345.00 345KV CKT 1	720	720	0.06474	127.616	BRDLAND-LNX3345.00 - HURON 345KV CKT Z
FDNS	00NR_G15_042	0	17SP	G15_042	TO->FROM	GR ISLD-LNX3345.00 - HOLT.CO3 345.00 345KV CKT 1	720	720	0.06474	127.6153	P12:345:UMZB:# 102 #: AVS BD IN ND. AVS BRD LR
FDNS	00NR_G15_042	0	17SP	G15_042	TO->FROM	GR ISLD-LNX3345.00 - HOLT.CO3 345.00 345KV CKT 1	720	720	0.06474	127.6118	HURON (BD KU2A) 345/230/13.8KV TRANSFORMER CKT 1
FDNS	00NR_G15_042	0	17SP	G15_042	TO->FROM	GR ISLD-LNX3345.00 - HOLT.CO3 345.00 345KV CKT 1	720	720	0.06474	127.6118	HURON (BD KU2A) 345/230/13.8KV TRANSFORMER CKT 1
FDNS	00NR_G15_042	0	17SP	G15_042	TO->FROM	GR ISLD-LNX3345.00 - HOLT.CO3 345.00 345KV CKT 1	720	720	0.06474	127.6117	BROADLAND - HURON 230KV CKT 1
FDNS	00NR_G15_042	0	17SP	G15_042	TO->FROM	GR ISLD-LNX3345.00 - HOLT.CO3 345.00 345KV CKT 1	720	720	0.06486	127.5814	G11_051T 345.00 - TATONGA7 345.00 345KV CKT 1
FDNS	00NR_G15_042	0	17SP	G15_042	TO->FROM	GR ISLD-LNX3345.00 - HOLT.CO3 345.00 345KV CKT 1	720	720	0.06464	127.56	GRAND ISLAND (GI KU3A) 345/230/13.8KV TRANSFORMER CKT 3
FDNS	00NR_G15_042	0	17SP	G15_042	TO->FROM	GR ISLD-LNX3345.00 - HOLT.CO3 345.00 345KV CKT 1	720	720	0.06464	127.56	GRAND ISLAND (GI KU3A) 345/230/13.8KV TRANSFORMER CKT 3
FDNS	00NR_G15_042	0	17SP	G15_042	TO->FROM	GR ISLD-LNX3345.00 - HOLT.CO3 345.00 345KV CKT 1	720	720	0.0767	127.5335	COLUMWEST - GRAND ISLAND 230KV CKT 1
FDNS	00NR_G15_042	0	17SP	G15_042	TO->FROM	GR ISLD-LNX3345.00 - HOLT.CO3 345.00 345KV CKT 1	720	720	0.06673	127.5328	LOUP CITY - NORTH LOUP 115KV CKT 1
FDNS	00NR_G15_042	0	17SP	G15_042	TO->FROM	GR ISLD-LNX3345.00 - HOLT.CO3 345.00 345KV CKT 1	720	720	0.06467	127.5212	GEN590010 1-ERCOT EQUIVALENCE
FDNS	00NR_G15_042	0	17SP	G15_042	TO->FROM	GR ISLD-LNX3345.00 - HOLT.CO3 345.00 345KV CKT 1	720	720	0.06467	127.4995	GEN300003 1-THOMAS HILL UNIT 3
FDNS	00NR_G15_042	0	17SP	G15_042	TO->FROM	GR ISLD-LNX3345.00 - HOLT.CO3 345.00 345KV CKT 1	720	720	0.06467	127.4885	GEN590011 2-ERCOT EQUIVALENCE
FDNS	00NR_G15_042	0	17SP	G15_042	TO->FROM	GR ISLD-LNX3345.00 - HOLT.CO3 345.00 345KV CKT 1	720	720	0.06467	127.4846	EASTDC - ERCOT EQUIVALENCE 345KV CKT 1
FDNS	00NR_G15_042	0	17SP	G15_042	TO->FROM	GR ISLD-LNX3345.00 - HOLT.CO3 345.00 345KV CKT 1	720	720	0.06467	127.4801	GEN629072 4-LANSING GENERATOR FOR UNITS NO4 EIA CODE 1
FDNS	00NR_G15_042	0	17SP	G15_042	TO->FROM	GR ISLD-LNX3345.00 - HOLT.CO3 345.00 345KV CKT 1	720	720	0.06447	127.4495	OAHE - SULLEY BUTTE 230KV CKT 1
FDNS	00NR_G15_042	0	17SP	G15_042	TO->FROM	GR ISLD-LNX3345.00 - HOLT.CO3 345.00 345KV CKT 1	720	720	0.06467	127.4485	GEN652414 4-FT PECK
FDNS	00NR_G15_042	0	17SP	G15_042	TO->FROM	GR ISLD-LNX3345.00 - HOLT.CO3 345.00 345KV CKT 1	720	720	0.06467	127.4485	GEN652415 5-FT PECK
FDNS	00NR_G15_042	0	17SP	G15_042	TO->FROM	GR ISLD-LNX3345.00 - HOLT.CO3 345.00 345KV CKT 1	720	720	0.06467	127.445	G830_SUB 115.00 115/34.5KV TRANSFORMER CKT 1
FDNS	00NR_G15_042	0	17SP	G15_042	TO->FROM	GR ISLD-LNX3345.00 - HOLT.CO3 345.00 345KV CKT 1	720	720	0.06467	127.4362	GEN660003 3-HURON WEST PARK
FDNS	00NR_G15_042	0	17SP	G15_042	TO->FROM	GR ISLD-LNX3345.00 - HOLT.CO3 345.00 345KV CKT 1	720	720	0.04958	127.4358	DIXONCO 230.00 - TWIN CHURCH 230KV CKT 1
FDNSLock	00NR_G15_042	0	17SP	G15_042	TO->FROM	GR ISLD-LNX3345.00 - HOLT.CO3 345.00 345KV CKT 1	720	720	0.06668	127.4259	CENTRAL CITY - GRAND ISLAND 115KV CKT 1
FDNS	00NR_G15_042	0	17SP	G15_042	TO->FROM	GR ISLD-LNX3345.00 - HOLT.CO3 345.00 345KV CKT 1	720	720	0.06467	127.4146	GEN652345 W-G07_023IS_2 0.6900
FDNS	00NR_G15_042	0	17SP	G15_042	TO->FROM	GR ISLD-LNX3345.00 - HOLT.CO3 345.00 345KV CKT 1	720	720	0.06467	127.4127	EMERY 161/18.0KV TRANSFORMER CKT 1
FDNS	00NR_G15_042	0	17SP	G15_042	TO->FROM	GR ISLD-LNX3345.00 - HOLT.CO3 345.00 345KV CKT 1	720	720	0.06467	127.4061	GEN 11104 1-J262_GEN 0.6000
FDNS	00NR_G15_042	0	17SP	G15_042	TO->FROM	GR ISLD-LNX3345.00 - HOLT.CO3 345.00 345KV CKT 1	720	720	0.06467	127.4061	GEN 11108 1-J263_GEN 0.6000
FDNS	00NR_G15_042	0	17SP	G15_042	TO->FROM	GR ISLD-LNX3345.00 - HOLT.CO3 345.00 345KV CKT 1	720	720	0.06467	127.3813	GEN600050 1-FEP
FDNS	00NR_G15_042	0	17SP	G15_042	TO->FROM	GR ISLD-LNX3345.00 - HOLT.CO3 345.00 345KV CKT 1	720	720	0.06474	127.3637	ANTELOP-LNX3345.00 - ANTELOPE VALLEY 345KV CKT Z
FDNS	00NR_G15_042	0	17SP	G15_042	TO->FROM	GR ISLD-LNX3345.00 - HOLT.CO3 345.00 345KV CKT 1	720	720	0.06661	127.3632	GERALD GENTLEMAN STATION - RED WILLOW 345KV CKT 1
FDNS	00NR_G15_042	0	17SP	G15_042	TO->FROM	GR ISLD-LNX3345.00 - HOLT.CO3 345.00 345KV CKT 1	720	720	0.06467	127.3616	GEN652545 7-BIG BEND
FDNS	00NR_G15_042	0	17SP	G15_042	TO->FROM	GR ISLD-LNX3345.00 - HOLT.CO3 345.00 345KV CKT 1	720	720	0.06501	127.3584	POST ROCK (POSTROCK T1) 345/230/13.8KV TRANSFORMER CKT 1
FDNS	00NR_G15_042	0	17SP	G15_042	TO->FROM	GR ISLD-LNX3345.00 - HOLT.CO3 345.00 345KV CKT 1	720	720	0.06467	127.3444	GEN300007 1-NEW MADRID UNIT 2
FDNS	00NR_G15_042	0	17SP	G15_042	TO->FROM	GR ISLD-LNX3345.00 - HOLT.CO3 345.00 345KV CKT 1	720	720	0.06467	127.3376	GEN300006 1-NEW MADRID UNIT 1
FDNS	00NR_G15_042	0	17SP	G15_042	TO->FROM	GR ISLD-LNX3345.00 - HOLT.CO3 345.00 345KV CKT 1	720	720	0.06467	127.3295	GEN600046 1-MECST
FDNS	00NR_G15_042	0	17SP	G15_042	TO->FROM	GR ISLD-LNX3345.00 - HOLT.CO3 345.00 345KV CKT 1	720	720	0.06447	127.3136	SULLEY BUTTE - SULLYBT-LNX3230.00 230KV CKT Z
FDNS	00NR_G15_042	0	17SP	G15_042	TO->FROM	GR ISLD-LNX3345.00 - HOLT.CO3 345.00 345KV CKT 1	720	720	0.06447	127.3133	SULLYBT-LNX3230.00 - WHITLOK 230KV CKT 1
FDNS	00NR_G15_042	0	17SP	G15_042	TO->FROM	GR ISLD-LNX3345.00 - HOLT.CO3 345.00 345KV CKT 1	720	720	0.06486	127.3126	MATHWSN7 345.00 - TATONGA7 345.00 345KV CKT 1
FDNS	00NR_G15_042	0	17SP	G15_042	TO->FROM	GR ISLD-LNX3345.00 - HOLT.CO3 345.00 345KV CKT 1	720	720	0.06467	127.302	GEN600047 1-MECCT1
FDNS	00NR_G15_042	0	17SP	G15_042	TO->FROM	GR ISLD-LNX3345.00 - HOLT.CO3 345.00 345KV CKT 1	720	720	0.06467	127.302	GEN600063 1-COLVILLE GEN 1
FDNS	00NR_G15_042	0	17SP	G15_042	TO->FROM	GR ISLD-LNX3345.00 - HOLT.CO3 345.00 345KV CKT 1	720	720	0.06467	127.302	GEN600064 2-COLVILLE GEN 2
FDNS	00NR_G15_042	0	17SP	G15_042	TO->FROM	GR ISLD-LNX3345.00 - HOLT.CO3 345.00 345KV CKT 1	720	720	0.06467	127.2975	GEN600043 7-BLUE LAKE5
FDNS	00NR_G15_042	0	17SP	G15_042	TO->FROM	GR ISLD-LNX3345.00 - HOLT.CO3 345.00 345KV CKT 1	720	720	0.06467	127.2975	GEN600044 8-BLUE LAKE6
FDNS	00NR_G15_042	0	17SP	G15_042	TO->FROM	GR ISLD-LNX3345.00 - HOLT.CO3 345.00 345KV CKT 1	720	720	0.06467	127.2975	GEN660001 2-ABERDEEN SIEBRECHT
FDNS	00NR_G15_042	0	17SP	G15_042	TO->FROM	GR ISLD-LNX3345.00 - HOLT.CO3 345.00 345KV CKT 1	720	720	0.06467	127.2817	CENTER 230/22.0KV TRANSFORMER CKT 1
FDNS	00NR_G15_042	0	17SP	G15_042	TO->FROM	GR ISLD-LNX3345.00 - HOLT.CO3 345.00 345KV CKT 1	720	720	0.06467	127.2759	GEN659273 2-GROTON SYNC COND
FDNS	00NR_G15_042	0	17SP	G15_042	TO->FROM	GR ISLD-LNX3345.00 - HOLT.CO3 345.00 345KV CKT 1	720	720	0.06467	127.2759	GEN659294 1-WILTONCOL9
FDNS	00NR_G15_042	0	17SP	G15_042	TO->FROM	GR ISLD-LNX3345.00 - HOLT.CO3 345.00 345KV CKT 1	720	720	0.06447	127.2725	P12:230:UMZB:# 114 #: SB IN SD. SB-WK-GH
FDNS	00NR_G15_042	0	17SP	G15_042	TO->FROM	GR ISLD-LNX3345.00 - HOLT.CO3 345.00 345KV CKT 1	720	720	0.06447	127.2725	P12:230:UMZB:# 117 #: WK IN SD. SB-WK-GH
FDNS	00NR_G15_042	0	17SP	G15_042	TO->FROM	GR ISLD-LNX3345.00 - HOLT.CO3 345.00 345KV CKT 1	720	720	0.06467	127.262	GEN600065 7-HIGH BRIDGE
FDNS	00NR_G15_042	0	17SP	G15_042	TO->FROM	GR ISLD-LNX3345.00 - HOLT.CO3 345.00 345KV CKT 1	720	720	0.06467	127.262	GEN600066 8-HIGH BRIDGE
FDNS	00NR_G15_042	0	17SP	G15_042	TO->FROM	GR ISLD-LNX3345.00 - HOLT.CO3 345.00 345KV CKT 1	720	720	0.06467	127.2565	GEN600014 4-BLACK DOG GEN 4
FDNS	00NR_G15_042	0	17SP	G15_042	TO->FROM	GR ISLD-LNX3345.00 - HOLT.CO3 345.00 345KV CKT 1	720	720	0.06467	127.2517	GEN600011 5-BLACK DOG GEN 1
FDNS	00NR_G15_042	0	17SP	G15_042	TO->FROM	GR ISLD-LNX3345.00 - HOLT.CO3 345.00 345KV CKT 1	720	720	0.06467	127.2463	GEN600070 9-RIVER SIDE
FDNS	00NR_G15_042	0	17SP	G15_042	TO->FROM	GR ISLD-LNX3345.00 - HOLT.CO3 345.00 345KV CKT 1	720	720	0.06467	127.2462	GEN600071 10-RIVER SIDE
FDNS	00NR_G15_042	0	17SP	G15_042	TO->FROM	GR ISLD-LNX3345.00 - HOLT.CO3 345.00 345KV CKT 1	720	720	0.06467	127.2357	GEN 10648 1-G830_GEN 0.6900
FDNS	00NR_G15_042	0	17SP	G15_042	TO->FROM	GR ISLD-LNX3345.00 - HOLT.CO3 345.00 345KV CKT 1	720	720	0.06467	127.233	GEN600007 7-RIVERSIDE GEN 7
FDNS	00NR_G15_042	0	17SP	G15_042	TO->FROM	GR ISLD-LNX3345.00 - HOLT.CO3 345.00 345KV CKT 1	720	720	0.06447	127.2287	GLENHAM - WHITLOK 230KV CKT 1
FDNS	00NR_G15_042	0	17SP	G15_042	TO->FROM	GR ISLD-LNX3345.00 - HOLT.CO3 345.00 345KV CKT 1	720	720	0.06467	127.225	GEN659192 6-LYNN
FDNS	00NR_G15_042	0	17SP	G15_042	TO->FROM	GR ISLD-LNX3345.00 - HOLT.CO3 345.00 345KV CKT 1	720	720	0.06467	127.2243	GEN659162 4-RED WLCK
FDNS	00NR_G15_042	0	17SP	G15_042	TO->FROM	GR ISLD-LNX3345.00 - HOLT.CO3 345.00 345KV CKT 1	720	720	0.06467	127.2243	GEN659163 5-BLACK WDCK
FDNS	00NR_G15_042	0	17SP	G15_042	TO->FROM	GR ISLD-LNX3345.00 - HOLT.CO3 345.00 345KV CKT 1	720	720	0.06467	127.2203	GEN600045 4-ANSON
FDNS	00NR_G15_042	0	17SP	G15_042	TO->FROM	GR ISLD-LNX3345.00 - HOLT.CO3 345.00 345KV CKT 1	720	720	0.06467	127.2038	GEN600017 C-LS POWER CT
FDNS	00NR_G15_042	0	17SP	G15_042	TO->FROM	GR ISLD-LNX3345.00 - HOLT.CO3 345.00 345KV CKT 1	720	720	0.06467	127.1795	GEN659031 1-G12_014IS_4 0.6900
FDNS	00NR_G15_042	0	17SP	G15_042	TO->FROM	GR ISLD-LNX3345.00 - HOLT.CO3 345.00 345KV CKT 1	720	720	0.06467	127.1664	LANSING WEST 161/22.0KV TRANSFORMER CKT 1
FDNS	00NR_G15_042	0	17SP	G15_042	TO->FROM	GR ISLD-LNX3345.00 - HOLT.CO3 345.00 345KV CKT 1	720	720	0.06467	127.1576	GEN615021 1-GRE-ER 14G 16.000

SOLUTION	GROUP	SCENARIO	SEASON	SOURCE	DIRECTION	MONITORED ELEMENT	RATEA (MVA)	RATEB(MVA)	TDF	TC%LOADING (% MVA)	CONTINGENCY
FDNS	00NR_G15_042	0	17SP	G15_042	TO->FROM	GR ISLD-LNX3345.00 - HOLT.CO3 345.00 345KV CKT 1	720	720	0.06467	127.1503	GEN615052 1-CAMBRIDGE GENERATING STATION
FDNS	00NR_G15_042	0	17SP	G15_042	TO->FROM	GR ISLD-LNX3345.00 - HOLT.CO3 345.00 345KV CKT 1	720	720	0.06467	127.1466	GEN615015 1-GRE-SPRITWDG13.200
FDNS	00NR_G15_042	0	17SP	G15_042	TO->FROM	GR ISLD-LNX3345.00 - HOLT.CO3 345.00 345KV CKT 1	720	720	0.06467	127.0784	GEN681522 3-GENOA 3
FDNS	00NR_G15_042	0	17SP	G15_042	TO->FROM	GR ISLD-LNX3345.00 - HOLT.CO3 345.00 345KV CKT 1	720	720	0.06467	127.0286	BISONMP4 230.00 - SQUARE BUTTE 230KV CKT 1
FDNS	00NR_G15_042	0	17SP	G15_042	TO->FROM	GR ISLD-LNX3345.00 - HOLT.CO3 345.00 345KV CKT 1	720	720	0.06467	127.0161	GEN660016 1-B_H WIND 0.7000
FDNS	00NR_G15_042	0	17SP	G15_042	TO->FROM	GR ISLD-LNX3345.00 - HOLT.CO3 345.00 345KV CKT 1	720	720	0.06467	126.9719	GEN662101 1-WESSINGTON190.5750
FDNS	00NR_G15_042	0	17SP	G15_042	TO->FROM	GR ISLD-LNX3345.00 - HOLT.CO3 345.00 345KV CKT 1	720	720	0.06467	126.9707	GEN652906 1-G09_006IS_3 0.6900
FDNS	00NR_G15_042	0	17SP	G15_042	TO->FROM	GR ISLD-LNX3345.00 - HOLT.CO3 345.00 345KV CKT 1	720	720	0.06467	126.968	GEN672303 3-BOUNDARY DAM GENERATOR 3
FDNS	00NR_G15_042	0	17SP	G15_042	TO->FROM	GR ISLD-LNX3345.00 - HOLT.CO3 345.00 345KV CKT 1	720	720	0.06467	126.968	GEN672305 5-BOUNDARY DAM GENERATOR 5
FDNS	00NR_G15_042	0	17SP	G15_042	TO->FROM	GR ISLD-LNX3345.00 - HOLT.CO3 345.00 345KV CKT 1	720	720	0.06467	126.9443	GEN672392 1-NBECGT1G 18.000
FDNS	00NR_G15_042	0	17SP	G15_042	TO->FROM	GR ISLD-LNX3345.00 - HOLT.CO3 345.00 345KV CKT 1	720	720	0.06467	126.8727	GEN600067 9-HIGH BRIDGE
FDNS	00NR_G15_042	0	17SP	G15_042	TO->FROM	GR ISLD-LNX3345.00 - HOLT.CO3 345.00 345KV CKT 1	720	720	0.06467	126.8696	GEN562832 1-G15042_3 0.6900
FDNS	00NR_G15_042	0	17SP	G15_042	TO->FROM	GR ISLD-LNX3345.00 - HOLT.CO3 345.00 345KV CKT 1	720	720	0.06467	126.8314	GEN910006 1-G12_012IS_3 0.6900
FDNS	00NR_G15_042	0	17SP	G15_042	TO->FROM	GR ISLD-LNX3345.00 - HOLT.CO3 345.00 345KV CKT 1	720	720	0.06467	126.8278	GEN652907 1-G09_007IS_3 0.6900
FDNS	00NR_G15_042	0	17SP	G15_042	TO->FROM	GR ISLD-LNX3345.00 - HOLT.CO3 345.00 345KV CKT 1	720	720	0.06467	126.8263	COYOTE 345/24.0KV TRANSFORMER CKT 1
FDNS	00NR_G15_042	0	17SP	G15_042	TO->FROM	GR ISLD-LNX3345.00 - HOLT.CO3 345.00 345KV CKT 1	720	720	0.06467	126.8037	SQUARE BUTTE - YNG2 4 230.00 230KV CKT 1
FDNS	00NR_G15_042	0	17SP	G15_042	TO->FROM	GR ISLD-LNX3345.00 - HOLT.CO3 345.00 345KV CKT 1	720	720	0.06467	126.8034	YNG2 4 230.00 230/20.0KV TRANSFORMER CKT 1
FDNS	00NR_G15_042	0	17SP	G15_042	TO->FROM	GR ISLD-LNX3345.00 - HOLT.CO3 345.00 345KV CKT 1	720	720	0.06467	126.6823	GEN659353 1-DEERCREK CTG18.000
FDNS	00NR_G15_042	0	17SP	G15_042	TO->FROM	GR ISLD-LNX3345.00 - HOLT.CO3 345.00 345KV CKT 1	720	720	0.06467	126.6817	GEN659354 1-DEERCREK STG18.000
FDNS	00NR_G15_042	0	17SP	G15_042	TO->FROM	GR ISLD-LNX3345.00 - HOLT.CO3 345.00 345KV CKT 1	720	720	0.06854	126.6803	MINGO - RED WILLOW 345KV CKT 1
FDNS	00NR_G15_042	0	17SP	G15_042	TO->FROM	GR ISLD-LNX3345.00 - HOLT.CO3 345.00 345KV CKT 1	720	720	0.06854	126.6803	MINGO - RED WILLOW 345KV CKT 1
FDNS	00NR_G15_042	0	17SP	G15_042	TO->FROM	GR ISLD-LNX3345.00 - HOLT.CO3 345.00 345KV CKT 1	720	720	0.06447	126.6801	GLENHAM - L3 HAWDON 230KV CKT 1
FDNS	00NR_G15_042	0	17SP	G15_042	TO->FROM	GR ISLD-LNX3345.00 - HOLT.CO3 345.00 345KV CKT 1	720	720	0.06467	126.5173	GEN659289 1-DAYCNTYWND W0.6900
FDNS	00NR_G15_042	0	17SP	G15_042	TO->FROM	GR ISLD-LNX3345.00 - HOLT.CO3 345.00 345KV CKT 1	720	720	0.06467	126.4833	GEN659018 1-G14_003IS_3 0.6900
FDNS	00NR_G15_042	0	17SP	G15_042	TO->FROM	GR ISLD-LNX3345.00 - HOLT.CO3 345.00 345KV CKT 1	720	720	0.06467	126.4359	GEN681542 6-JP MADGETT
FDNS	00NR_G15_042	0	17SP	G15_042	TO->FROM	GR ISLD-LNX3345.00 - HOLT.CO3 345.00 345KV CKT 1	720	720	0.06467	126.3464	GEN659194 1-NDPRAIRWND1W0.6900
FDNS	00NR_G15_042	0	17SP	G15_042	TO->FROM	GR ISLD-LNX3345.00 - HOLT.CO3 345.00 345KV CKT 1	720	720	0.06467	126.3447	GEN659010 4-G07_027IS_2 0.6900
FDNS	00NR_G15_042	0	17SP	G15_042	TO->FROM	GR ISLD-LNX3345.00 - HOLT.CO3 345.00 345KV CKT 1	720	720	0.06467	126.3335	GEN652544 5-BIG BEND
FDNS	00NR_G15_042	0	17SP	G15_042	TO->FROM	GR ISLD-LNX3345.00 - HOLT.CO3 345.00 345KV CKT 1	720	720	0.06467	126.3333	GEN652542 1-BIG BEND
FDNS	00NR_G15_042	0	17SP	G15_042	TO->FROM	GR ISLD-LNX3345.00 - HOLT.CO3 345.00 345KV CKT 1	720	720	0.06467	126.3325	GEN652460 4-GARRISON
FDNS	00NR_G15_042	0	17SP	G15_042	TO->FROM	GR ISLD-LNX3345.00 - HOLT.CO3 345.00 345KV CKT 1	720	720	0.06467	126.3325	GEN652461 5-GARRISON
FDNS	00NR_G15_042	0	17SP	G15_042	TO->FROM	GR ISLD-LNX3345.00 - HOLT.CO3 345.00 345KV CKT 1	720	720	0.06467	126.3325	GEN652543 3-BIG BEND
FDNS	00NR_G15_042	0	17SP	G15_042	TO->FROM	GR ISLD-LNX3345.00 - HOLT.CO3 345.00 345KV CKT 1	720	720	0.06467	126.2756	GEN652457 1-GARRISON
FDNS	00NR_G15_042	0	17SP	G15_042	TO->FROM	GR ISLD-LNX3345.00 - HOLT.CO3 345.00 345KV CKT 1	720	720	0.06467	126.2756	GEN652458 2-GARRISON
FDNS	00NR_G15_042	0	17SP	G15_042	TO->FROM	GR ISLD-LNX3345.00 - HOLT.CO3 345.00 345KV CKT 1	720	720	0.06467	126.2756	GEN652459 3-GARRISON
FDNS	00NR_G15_042	0	17SP	G15_042	TO->FROM	GR ISLD-LNX3345.00 - HOLT.CO3 345.00 345KV CKT 1	720	720	0.06467	126.2657	STANTON 230/18.0KV TRANSFORMER CKT 1
FDNS	00NR_G15_042	0	17SP	G15_042	TO->FROM	GR ISLD-LNX3345.00 - HOLT.CO3 345.00 345KV CKT 1	720	720	0.06467	126.1975	GEN659403 1-NDSUNFLWR W0.6900
FDNS	00NR_G15_042	0	17SP	G15_042	TO->FROM	GR ISLD-LNX3345.00 - HOLT.CO3 345.00 345KV CKT 1	720	720	0.06846	126.0755	AXTELL - SWEETWATER 345KV CKT 1
FDNS	00NR_G15_042	0	17SP	G15_042	TO->FROM	GR ISLD-LNX3345.00 - HOLT.CO3 345.00 345KV CKT 1	720	720	0.06622	126.0669	AXTELL - POST ROCK 345KV CKT 1
FDNS	00NR_G15_042	0	17SP	G15_042	TO->FROM	GR ISLD-LNX3345.00 - HOLT.CO3 345.00 345KV CKT 1	720	720	0.06467	126.0122	CLAY BOSWELL 230/20.9KV TRANSFORMER CKT 1
FDNS	00NR_G15_042	0	17SP	G15_042	TO->FROM	GR ISLD-LNX3345.00 - HOLT.CO3 345.00 345KV CKT 1	720	720	0.06467	125.8813	GEN659411 1-CAMPBLCNTY W0.6900
FDNS	00NR_G15_042	0	17SP	G15_042	TO->FROM	GR ISLD-LNX3345.00 - HOLT.CO3 345.00 345KV CKT 1	720	720	0.06467	125.6724	GEN659296 2-SDPRAIRWND1W0.6900
FDNS	00NR_G15_042	0	17SP	G15_042	TO->FROM	GR ISLD-LNX3345.00 - HOLT.CO3 345.00 345KV CKT 1	720	720	0.06467	125.6584	ALMA 161 161/24.0KV TRANSFORMER CKT 1
FDNS	00NR_G15_042	0	17SP	G15_042	TO->FROM	GR ISLD-LNX3345.00 - HOLT.CO3 345.00 345KV CKT 1	720	720	0.06467	125.6352	RCDC EAST 4230.00 - RED CEDAR DC 230KV CKT 1
FDNS	00NR_G15_042	0	17SP	G15_042	TO->FROM	GR ISLD-LNX3345.00 - HOLT.CO3 345.00 345KV CKT 1	720	720	0.06468	125.609	P12:230:UMZB:# 112 #: NU IN SD. NU-RCDC & DRY CREEK XFMR
FDNS	00NR_G15_042	0	17SP	G15_042	TO->FROM	GR ISLD-LNX3345.00 - HOLT.CO3 345.00 345KV CKT 1	720	720	0.06467	125.5525	GEN652559 1-OAHE
FDNS	00NR_G15_042	0	17SP	G15_042	TO->FROM	GR ISLD-LNX3345.00 - HOLT.CO3 345.00 345KV CKT 1	720	720	0.06467	125.5329	GEN672321 1-SHAND GENERATOR 1
FDNS	00NR_G15_042	0	17SP	G15_042	TO->FROM	GR ISLD-LNX3345.00 - HOLT.CO3 345.00 345KV CKT 1	720	720	0.06467	125.525	GEN615010 1-STANTON4
FDNS	00NR_G15_042	0	17SP	G15_042	TO->FROM	GR ISLD-LNX3345.00 - HOLT.CO3 345.00 345KV CKT 1	720	720	0.06467	125.5229	GEN672310 1-POPLAR RIVER GENERATOR 1
FDNS	00NR_G15_042	0	17SP	G15_042	TO->FROM	GR ISLD-LNX3345.00 - HOLT.CO3 345.00 345KV CKT 1	720	720	0.06467	125.5229	GEN672311 2-POPLAR RIVER GENERATOR 2
FDNS	00NR_G15_042	0	17SP	G15_042	TO->FROM	GR ISLD-LNX3345.00 - HOLT.CO3 345.00 345KV CKT 1	720	720	0.06467	125.4486	GEN672306 6-BOUNDARY DAM GENERATOR 6
FDNS	00NR_G15_042	0	17SP	G15_042	TO->FROM	GR ISLD-LNX3345.00 - HOLT.CO3 345.00 345KV CKT 1	720	720	0.06467	125.3781	GEN652556 2-OAHE
FDNS	00NR_G15_042	0	17SP	G15_042	TO->FROM	GR ISLD-LNX3345.00 - HOLT.CO3 345.00 345KV CKT 1	720	720	0.06467	125.3781	GEN652557 4-OAHE
FDNS	00NR_G15_042	0	17SP	G15_042	TO->FROM	GR ISLD-LNX3345.00 - HOLT.CO3 345.00 345KV CKT 1	720	720	0.06467	125.3781	GEN652558 6-OAHE
FDNS	00NR_G15_042	0	17SP	G15_042	TO->FROM	GR ISLD-LNX3345.00 - HOLT.CO3 345.00 345KV CKT 1	720	720	0.06467	125.2897	GEN659453 1-GI1414GEN W0.6900
FDNS	00NR_G15_042	0	17SP	G15_042	TO->FROM	GR ISLD-LNX3345.00 - HOLT.CO3 345.00 345KV CKT 1	720	720	0.06467	125.2582	GEN657749 1-YOUNG 1 GENERATOR
FDNS	00NR_G15_042	0	17SP	G15_042	TO->FROM	GR ISLD-LNX3345.00 - HOLT.CO3 345.00 345KV CKT 1	720	720	0.06467	125.2497	GEN600004 2-PRAIRIE ISLAND G2
FDNS	00NR_G15_042	0	17SP	G15_042	TO->FROM	GR ISLD-LNX3345.00 - HOLT.CO3 345.00 345KV CKT 1	720	720	0.06467	125.244	GEN600003 1-PRAIRIE ISLAND G1
FDNS	00NR_G15_042	0	17SP	G15_042	TO->FROM	GR ISLD-LNX3345.00 - HOLT.CO3 345.00 345KV CKT 1	720	720	0.06467	125.1996	GEN659141 1-K10215A
FDNS	00NR_G15_042	0	17SP	G15_042	TO->FROM	GR ISLD-LNX3345.00 - HOLT.CO3 345.00 345KV CKT 1	720	720	0.06467	124.965	GEN652173 1-G09_001IS_2 0.6900
FDNS	00NR_G15_042	0	17SP	G15_042	TO->FROM	GR ISLD-LNX3345.00 - HOLT.CO3 345.00 345KV CKT 1	720	720	0.06467	124.9364	GEN600006 1-AS KING
FDNS	00NR_G15_042	0	17SP	G15_042	TO->FROM	GR ISLD-LNX3345.00 - HOLT.CO3 345.00 345KV CKT 1	720	720	0.06467	124.7354	GEN659407 1-ANTELPHILLSW0.6900
FDNS	00NR_G15_042	0	17SP	G15_042	TO->FROM	GR ISLD-LNX3345.00 - HOLT.CO3 345.00 345KV CKT 1	720	720	0.06467	124.6586	GEN659110 1-LELAND OLDS UNIT1
FDNS	00NR_G15_042	0	17SP	G15_042	TO->FROM	GR ISLD-LNX3345.00 - HOLT.CO3 345.00 345KV CKT 1	720	720	0.06467	124.3626	GEN600005 1-MONTICELLO
FDNS	00NR_G15_042	0	17SP	G15_042	TO->FROM	GR ISLD-LNX3345.00 - HOLT.CO3 345.00 345KV CKT 1	720	720	0.0748	123.8597	MCCOOL - MOORE 345KV CKT 1
FDNS	00NR_G15_042	0	17SP	G15_042	TO->FROM	GR ISLD-LNX3345.00 - HOLT.CO3 345.00 345KV CKT 1	720	720	0.06467	123.6727	GEN600000 1-SHERBURNECNTY G1
FDNS	00NR_G15_042	0	17SP	G15_042	TO->FROM	GR ISLD-LNX3345.00 - HOLT.CO3 345.00 345KV CKT 1	720	720	0.06467	123.4401	GEN600001 2-SHERBURNE CNTY G2
FDNS	00NR_G15_042	0	17SP	G15_042	TO->FROM	GR ISLD-LNX3345.00 - HOLT.CO3 345.00 345KV CKT 1	720	720	0.06467	123.1843	GEN661015 1-COYOTE
FDNS	00NR_G15_042	0	17SP	G15_042	TO->FROM	GR ISLD-LNX3345.00 - HOLT.CO3 345.00 345KV CKT 1	720	720	0.06467	123.1787	GEN620315 1-BIG STONE GEN
FDNS	00NR_G15_042	0	17SP	G15_042	TO->FROM	GR ISLD-LNX3345.00 - HOLT.CO3 345.00 345KV CKT 1	720	720	0.06467	122.741	GEN657748 1-YOUNG 2 GENERATOR
FDNS	00NR_G15_042	0	17SP	G15_042	TO->FROM	GR ISLD-LNX3345.00 - HOLT.CO3 345.00 345KV CKT 1	720	720	0.06467	122.4878	GEN600002 3-SHERBURNE CNTY G3
FDNS	00NR_G15_042	0	20SP	G15_042	TO->FROM	GR ISLD-LNX3345.00 - HOLT.CO3 345.00 345KV CKT 1	720	720	0.06095	121.8333	HOLT.CO3 345.00 - THEDFRD3 345.00 345KV CKT 1
FDNS	00NR_G15_042	0	17SP	G15_042	TO->FROM	GR ISLD-LNX3345.00 - HOLT.CO3 345.00 345KV CKT 1	720	720	0.06467	121.8148	SHERBURNE CO 345/24.0KV TRANSFORMER CKT 1

SOLUTION	GROUP	SCENARIO	SEASON	SOURCE	DIRECTION	MONITORED ELEMENT	RATEA (MVA)	RATEB(MVA)	TDF	TC%LOADING (% MVA)	CONTINGENCY
FDNS	00NR_G15_042	0	17SP	G15_042	TO->FROM	GR ISLD-LNX3345.00 - HOLT.CO3 345.00 345KV CKT 1	720	720	0.06371	121.7228	FTTHOM1-LNX3345.00 - LELAND2-LNX3345.00 345KV CKT 1
FDNS	00NR_G15_042	0	17SP	G15_042	TO->FROM	GR ISLD-LNX3345.00 - HOLT.CO3 345.00 345KV CKT 1	720	720	0.06467	121.6289	BIG STONE 230/24.0KV TRANSFORMER CKT 1
FDNS	00NR_G15_042	0	17SP	G15_042	TO->FROM	GR ISLD-LNX3345.00 - HOLT.CO3 345.00 345KV CKT 1	720	720	0.06371	121.4557	P12:345:UMZB:# 108 #: LOS FT IN ND. LOS FT
FDNS	00NR_G15_042	0	17SP	G15_042	TO->FROM	GR ISLD-LNX3345.00 - HOLT.CO3 345.00 345KV CKT 1	720	720	0.06371	121.4489	FT THOMPSON - FTTHOM1-LNX3345.00 345KV CKT Z
FDNS	00NR_G15_042	0	17SP	G15_042	TO->FROM	GR ISLD-LNX3345.00 - HOLT.CO3 345.00 345KV CKT 1	720	720	0.06371	121.2802	LELAND OLDS - LELAND2-LNX3345.00 345KV CKT Z
FDNS	00NR_G15_042	0	17SP	G15_042	TO->FROM	GR ISLD-LNX3345.00 - HOLT.CO3 345.00 345KV CKT 1	720	720	0.06467	120.9	GEN659111 2-LELAND OLDS UNIT2
FDNS	00NR_G15_042	0	25SP	G15_042	TO->FROM	GR ISLD-LNX3345.00 - HOLT.CO3 345.00 345KV CKT 1	720	720	0.06184	120.6153	HOLT.CO3 345.00 - THEDFRD3 345.00 345KV CKT 1
FDNS	00NR_G15_042	0	17SP	G15_042	TO->FROM	GR ISLD-LNX3345.00 - HOLT.CO3 345.00 345KV CKT 1	720	720	0.06467	120.5707	GEN659125 1-COVEY
FDNS	00NR_G15_042	0	17SP	G15_042	TO->FROM	GR ISLD-LNX3345.00 - HOLT.CO3 345.00 345KV CKT 1	720	720	0.06467	120.336	GEN659103 1-ANTELOPE VALLEY UNIT1
FDNS	00NR_G15_042	0	17SP	G15_042	TO->FROM	GR ISLD-LNX3345.00 - HOLT.CO3 345.00 345KV CKT 1	720	720	0.06467	120.336	GEN659107 2-ANTELOPE VALLEY UNIT2
FDNS	00NR_G15_042	0	17SP	G15_042	TO->FROM	GR ISLD-LNX3345.00 - HOLT.CO3 345.00 345KV CKT 1	720	720	0.07553	120.1895	GRAND ISLAND - MCCOOL 345KV CKT 1
FDNS	00NR_G15_042	0	17SP	G15_042	TO->FROM	GR ISLD-LNX3345.00 - HOLT.CO3 345.00 345KV CKT 1	720	720	0.06467	120.0849	GEN615001 1-COAL CREEK
FDNS	00NR_G15_042	0	17SP	G15_042	TO->FROM	GR ISLD-LNX3345.00 - HOLT.CO3 345.00 345KV CKT 1	720	720	0.06467	119.9646	GEN615002 2-COAL CREEK
FDNS	00NR_G15_042	0	17SP	G15_042	TO->FROM	GR ISLD-LNX3345.00 - HOLT.CO3 345.00 345KV CKT 1	720	720	0.06467	113.3401	GEN562714 1-G15_023_4 0.6900
FDNS	00NR_G15_042	0	17SP	G15_042	TO->FROM	GR ISLD-LNX3345.00 - HOLT.CO3 345.00 345KV CKT 1	720	720	0.06467	113.3401	GEN562715 1-G15_023_5 0.6900
FDNS	00NR_G15_042	0	20SP	G15_042	TO->FROM	GR ISLD-LNX3345.00 - HOLT.CO3 345.00 345KV CKT 1	720	720	0.05505	111.4733	GERALD GENTLEMAN STATION - THEDFRD3 345.00 345KV CKT 1
FDNS	00NR_G15_042	0	25SP	G15_042	TO->FROM	GR ISLD-LNX3345.00 - HOLT.CO3 345.00 345KV CKT 1	720	720	0.0562	110.7483	GERALD GENTLEMAN STATION - THEDFRD3 345.00 345KV CKT 1
FDNS	00NR_G15_042	0	16WP	G15_042	TO->FROM	GR ISLD-LNX3345.00 - HOLT.CO3 345.00 345KV CKT 1	720	720	0.06501	107.9752	KELLY - MEADOWGROVE4230.00 230KV CKT 1
FDNS	00NR_G15_042	0	17SP	G15_042	TO->FROM	GR ISLD-LNX3345.00 - HOLT.CO3 345.00 345KV CKT 1	720	720	0.06467	107.7496	GEN652353 2-GR PRAIRIEG 0.6900
FDNS	00NR_G15_042	0	16WP	G15_042	TO->FROM	GR ISLD-LNX3345.00 - HOLT.CO3 345.00 345KV CKT 1	720	720	0.06103	107.4056	P12:230:UMZB:# 116 #: ST IN SD. WSG-ST-VH
FDNS	00NR_G15_042	0	16WP	G15_042	TO->FROM	GR ISLD-LNX3345.00 - HOLT.CO3 345.00 345KV CKT 1	720	720	0.06136	106.9683	STORLA - WESSINGTON 230KV CKT 1
FDNS	00NR_G15_042	0	16WP	G15_042	TO->FROM	GR ISLD-LNX3345.00 - HOLT.CO3 345.00 345KV CKT 1	720	720	0.06322	106.0485	RIEL - ROSEAU 500KV CKT 1
FDNS	00NR_G15_042	0	16WP	G15_042	TO->FROM	GR ISLD-LNX3345.00 - HOLT.CO3 345.00 345KV CKT 1	720	720	0.06142	105.797	HANLON - STORLA 230KV CKT 1
FDNS	00NR_G15_042	0	16WP	G15_042	TO->FROM	GR ISLD-LNX3345.00 - HOLT.CO3 345.00 345KV CKT 1	720	720	0.06098	105.4282	FT THOMPSON - LETCHER 230KV CKT 1
FDNS	00NR_G15_042	0	16WP	G15_042	TO->FROM	GR ISLD-LNX3345.00 - HOLT.CO3 345.00 345KV CKT 1	720	720	0.06098	105.4282	FT THOMPSON - LETCHER 230KV CKT 1
FDNSLock	00NR_G15_042	0	16WP	G15_042	TO->FROM	GR ISLD-LNX3345.00 - HOLT.CO3 345.00 345KV CKT 1	720	720	0.06208	105.1589	WATERTN-LNX3345.00 - WATERTOWN 345KV CKT Z
FDNS	00NR_G15_042	0	16WP	G15_042	TO->FROM	GR ISLD-LNX3345.00 - HOLT.CO3 345.00 345KV CKT 1	720	720	0.06208	105.0237	P12:345:UMZW:# 1747 #: WT2 IN SD. WT2-WHT LINE FAULT
FDNS	00NR_G15_042	0	16WP	G15_042	TO->FROM	GR ISLD-LNX3345.00 - HOLT.CO3 345.00 345KV CKT 1	720	720	0.06208	104.7421	WATERTN-LNX3345.00 - WHITE 345KV CKT 1
FDNS	00NR_G15_042	0	16WP	G15_042	TO->FROM	GR ISLD-LNX3345.00 - HOLT.CO3 345.00 345KV CKT 1	720	720	0.06315	104.5745	BUFFALO - JAMESTOWN 345KV CKT 1
FDNS	00NR_G15_042	0	16WP	G15_042	TO->FROM	GR ISLD-LNX3345.00 - HOLT.CO3 345.00 345KV CKT 1	720	720	0.06493	104.3103	KEYSTONE - SIDNEY1-LNX3345.00 345KV CKT 1
FDNS	00NR_G15_042	0	16WP	G15_042	TO->FROM	GR ISLD-LNX3345.00 - HOLT.CO3 345.00 345KV CKT 1	720	720	0.06493	104.3019	SIDNEY - SIDNEY1-LNX3345.00 345KV CKT Z
FDNS	00NR_G15_042	0	16WP	G15_042	TO->FROM	GR ISLD-LNX3345.00 - HOLT.CO3 345.00 345KV CKT 1	720	720	0.06323	104.2067	GEN336821 1-GRAND GULF UNIT
FDNS	00NR_G15_042	0	16WP	G15_042	TO->FROM	GR ISLD-LNX3345.00 - HOLT.CO3 345.00 345KV CKT 1	720	720	0.06077	104.1933	FT RANDAL - G12_009IST 230.00 230KV CKT 1
FDNS	00NR_G15_042	0	16WP	G15_042	TO->FROM	GR ISLD-LNX3345.00 - HOLT.CO3 345.00 345KV CKT 1	720	720	0.06077	104.0994	FT THOMPSON - LAKE PLATT 230KV CKT 1
FDNS	00NR_G15_042	0	16WP	G15_042	TO->FROM	GR ISLD-LNX3345.00 - HOLT.CO3 345.00 345KV CKT 1	720	720	0.06077	104.0994	FT THOMPSON - LAKE PLATT 230KV CKT 1
FDNS	00NR_G15_042	0	16WP	G15_042	TO->FROM	GR ISLD-LNX3345.00 - HOLT.CO3 345.00 345KV CKT 1	720	720	0.0607	104.0974	FT RANDAL - FT THOMPSON 230KV CKT 1
FDNS	00NR_G15_042	0	16WP	G15_042	TO->FROM	GR ISLD-LNX3345.00 - HOLT.CO3 345.00 345KV CKT 1	720	720	0.0607	104.0974	FT RANDAL - FT THOMPSON 230KV CKT 1
FDNS	00NR_G15_042	0	16WP	G15_042	TO->FROM	GR ISLD-LNX3345.00 - HOLT.CO3 345.00 345KV CKT 1	720	720	0.06181	104.035	LETCHER - SIOUX FALLS 230KV CKT 1
FDNS	00NR_G15_042	0	16WP	G15_042	TO->FROM	GR ISLD-LNX3345.00 - HOLT.CO3 345.00 345KV CKT 1	720	720	0.06286	103.9925	G09_001IST 345.00 - WATERTOWN 345KV CKT 1
FDNS	00NR_G15_042	0	16WP	G15_042	TO->FROM	GR ISLD-LNX3345.00 - HOLT.CO3 345.00 345KV CKT 1	720	720	0.06323	103.8994	GEN640010 1-GERALD GENTLEMAN STATION UNIT 1
FDNS	00NR_G15_042	0	16WP	G15_042	TO->FROM	GR ISLD-LNX3345.00 - HOLT.CO3 345.00 345KV CKT 1	720	720	0.06323	103.8827	GEN635024 4-WALTER SCOTT UNIT 4
FDNS	00NR_G15_042	0	16WP	G15_042	TO->FROM	GR ISLD-LNX3345.00 - HOLT.CO3 345.00 345KV CKT 1	720	720	0.06323	103.8484	GEN337911 1-ARKANSAS NUCLEAR ONE UNIT #2
FDNS	00NR_G15_042	0	16WP	G15_042	TO->FROM	GR ISLD-LNX3345.00 - HOLT.CO3 345.00 345KV CKT 1	720	720	0.06077	103.8325	G12_009IST 230.00 - LAKE PLATT 230KV CKT 1
FDNS	00NR_G15_042	0	16WP	G15_042	TO->FROM	GR ISLD-LNX3345.00 - HOLT.CO3 345.00 345KV CKT 1	720	720	0.06323	103.7872	GEN640011 2-GERALD GENTLEMAN STATION UNIT 2
FDNS	00NR_G15_042	0	16WP	G15_042	TO->FROM	GR ISLD-LNX3345.00 - HOLT.CO3 345.00 345KV CKT 1	720	720	0.06315	103.7671	CENTER - JAMESTOWN 345KV CKT 1
FDNS	00NR_G15_042	0	16WP	G15_042	TO->FROM	GR ISLD-LNX3345.00 - HOLT.CO3 345.00 345KV CKT 1	720	720	0.06323	103.7554	GEN344225 1-1CAL G1 25.000
FDNS	00NR_G15_042	0	16WP	G15_042	TO->FROM	GR ISLD-LNX3345.00 - HOLT.CO3 345.00 345KV CKT 1	720	720	0.06501	103.7512	FT RANDAL - MEADOWGROVE4230.00 230KV CKT 1
FDNS	00NR_G15_042	0	16WP	G15_042	TO->FROM	GR ISLD-LNX3345.00 - HOLT.CO3 345.00 345KV CKT 1	720	720	0.06323	103.7237	GEN336153 1-WATERFORD UNIT#3
FDNS	00NR_G15_042	0	16WP	G15_042	TO->FROM	GR ISLD-LNX3345.00 - HOLT.CO3 345.00 345KV CKT 1	720	720	0.06401	103.6652	HAZLETON - MITCHLCO3 345.00 345KV CKT 1
FDNS	00NR_G15_042	0	16WP	G15_042	TO->FROM	GR ISLD-LNX3345.00 - HOLT.CO3 345.00 345KV CKT 1	720	720	0.07241	103.6272	RAUN - SUB 3451 FT CAL 345KV CKT 1
FDNS	00NR_G15_042	0	16WP	G15_042	TO->FROM	GR ISLD-LNX3345.00 - HOLT.CO3 345.00 345KV CKT 1	720	720	0.07241	103.6272	RAUN - SUB 3451 FT CAL 345KV CKT 1
FDNS	00NR_G15_042	0	16WP	G15_042	TO->FROM	GR ISLD-LNX3345.00 - HOLT.CO3 345.00 345KV CKT 1	720	720	0.06318	103.6191	BISON 3 345.00 - BUFFALO 345KV CKT 1
FDNS	00NR_G15_042	0	16WP	G15_042	TO->FROM	GR ISLD-LNX3345.00 - HOLT.CO3 345.00 345KV CKT 1	720	720	0.06323	103.5521	GEN635023 3-WALTER SCOTT UNIT 3
FDNS	00NR_G15_042	0	16WP	G15_042	TO->FROM	GR ISLD-LNX3345.00 - HOLT.CO3 345.00 345KV CKT 1	720	720	0.06355	103.5334	AS KING - EAU CLAIRE 345KV CKT 1
FDNS	00NR_G15_042	0	16WP	G15_042	TO->FROM	GR ISLD-LNX3345.00 - HOLT.CO3 345.00 345KV CKT 1	720	720	0.06323	103.4759	GEN337910 1-ARKANSAS NUCLEAR ONE UNIT #1
FDNS	00NR_G15_042	0	16WP	G15_042	TO->FROM	GR ISLD-LNX3345.00 - HOLT.CO3 345.00 345KV CKT 1	720	720	0.06323	103.4586	GEN335831 1-RIVERBEND UNIT#1
FDNS	00NR_G15_042	0	16WP	G15_042	TO->FROM	GR ISLD-LNX3345.00 - HOLT.CO3 345.00 345KV CKT 1	720	720	0.06117	103.3779	FT RANDAL - SIOUX CITY 230KV CKT 1
FDNS	00NR_G15_042	0	16WP	G15_042	TO->FROM	GR ISLD-LNX3345.00 - HOLT.CO3 345.00 345KV CKT 1	720	720	0.06349	103.3639	ARROWHEAD - ARROWHEAD 230 230KV CKT 1
FDNS	00NR_G15_042	0	16WP	G15_042	TO->FROM	GR ISLD-LNX3345.00 - HOLT.CO3 345.00 345KV CKT 1	720	720	0.06292	103.2142	GROTON-LNX3 345.00 - LELAND1-LNX3345.00 345KV CKT 1
FDNS	00NR_G15_042	0	16WP	G15_042	TO->FROM	GR ISLD-LNX3345.00 - HOLT.CO3 345.00 345KV CKT 1	720	720	0.06229	103.2084	HANLON - SIOUX FALLS 230KV CKT 1
FDNS	00NR_G15_042	0	16WP	G15_042	TO->FROM	GR ISLD-LNX3345.00 - HOLT.CO3 345.00 345KV CKT 1	720	720	0.06439	103.1653	GERALD GENTLEMAN STATION - KEYSTONE 345KV CKT 1
FDNS	00NR_G15_042	0	16WP	G15_042	TO->FROM	GR ISLD-LNX3345.00 - HOLT.CO3 345.00 345KV CKT 1	720	720	0.06465	103.1572	SIDNEY - STEGALL 345KV CKT 1
FDNS	00NR_G15_042	0	16WP	G15_042	TO->FROM	GR ISLD-LNX3345.00 - HOLT.CO3 345.00 345KV CKT 1	720	720	0.06292	103.1558	P12:345:UMZB:# 109 #: LOS GRT IN ND. LOS GRT
FDNS	00NR_G15_042	0	16WP	G15_042	TO->FROM	GR ISLD-LNX3345.00 - HOLT.CO3 345.00 345KV CKT 1	720	720	0.06292	103.1556	GROTON - GROTON-LNX3 345.00 345KV CKT Z
FDNS	00NR_G15_042	0	16WP	G15_042	TO->FROM	GR ISLD-LNX3345.00 - HOLT.CO3 345.00 345KV CKT 1	720	720	0.06292	103.1497	LELAND OLDS - LELAND1-LNX3345.00 345KV CKT Z
FDNS	00NR_G15_042	0	16WP	G15_042	TO->FROM	GR ISLD-LNX3345.00 - HOLT.CO3 345.00 345KV CKT 1	720	720	0.06201	103.0746	FT RANDAL - UTICA JCT 230KV CKT 1
FDNS	00NR_G15_042	0	16WP	G15_042	TO->FROM	GR ISLD-LNX3345.00 - HOLT.CO3 345.00 345KV CKT 1	720	720	0.06323	103.0635	GEN337653 1-WHITE BLUFF UNIT #2
FDNS	00NR_G15_042	0	16WP	G15_042	TO->FROM	GR ISLD-LNX3345.00 - HOLT.CO3 345.00 345KV CKT 1	720	720	0.06323	103.0109	GEN501801 1-DOLET HILLS UNIT1
FDNS	00NR_G15_042	0	16WP	G15_042	TO->FROM	GR ISLD-LNX3345.00 - HOLT.CO3 345.00 345KV CKT 1	720	720	0.07173	103.0027	NUNDRWD - WAYSIDE 230KV CKT 1
FDNS	00NR_G15_042	0	16WP	G15_042	TO->FROM	GR ISLD-LNX3345.00 - HOLT.CO3 345.00 345KV CKT 1	720	720	0.06291	102.9884	CARPENTER - HURON 230KV CKT 1
FDNS	00NR_G15_042	0	16WP	G15_042	TO->FROM	GR ISLD-LNX3345.00 - HOLT.CO3 345.00 345KV CKT 1	720	720	0.04926	102.946	GRAND ISLAND - SWEETWATER 345KV CKT 1
FDNS	00NR_G15_042	0	16WP	G15_042	TO->FROM	GR ISLD-LNX3345.00 - HOLT.CO3 345.00 345KV CKT 1	720	720	0.06401	102.9433	ADAMS - MITCHLCO3 345.00 345KV CKT 1
FDNS	00NR_G15_042	0	16WP	G15_042	TO->FROM	GR ISLD-LNX3345.00 - HOLT.CO3 345.00 345KV CKT 1	720	720	0.06323	102.9331	GEN337652 1-WHITE BLUFF UNIT #1

SOLUTION	GROUP	SCENARIO	SEASON	SOURCE	DIRECTION	MONITORED ELEMENT	RATEA (MVA)	RATEB(MVA)	TDF	TC%LOADING (% MVA)	CONTINGENCY
FDNS	00NR_G15_042	0	16WP	G15_042	TO->FROM	GR ISLD-LNX3345.00 - HOLT.CO3 345.00 345KV CKT 1	720	720	0.0632	102.907	ELLENDALE - OAKES 230KV CKT 1
FDNS	00NR_G15_042	0	16WP	G15_042	TO->FROM	GR ISLD-LNX3345.00 - HOLT.CO3 345.00 345KV CKT 1	720	720	0.0632	102.907	ELLENDALE - OAKES 230KV CKT 1
FDNS	00NR_G15_042	0	16WP	G15_042	TO->FROM	GR ISLD-LNX3345.00 - HOLT.CO3 345.00 345KV CKT 1	720	720	0.0637	102.9029	ARPIN B4 345.00 - EAU CLAIRE 345KV CKT 1
FDNS	00NR_G15_042	0	16WP	G15_042	TO->FROM	GR ISLD-LNX3345.00 - HOLT.CO3 345.00 345KV CKT 1	720	720	0.06323	102.8947	GEN641089 2-ENERGY CENTER 2
FDNS	00NR_G15_042	0	16WP	G15_042	TO->FROM	GR ISLD-LNX3345.00 - HOLT.CO3 345.00 345KV CKT 1	720	720	0.06286	102.8714	G09_001IST 345.00 - GROTON 345KV CKT 1
FDNS	00NR_G15_042	0	16WP	G15_042	TO->FROM	GR ISLD-LNX3345.00 - HOLT.CO3 345.00 345KV CKT 1	720	720	0.06291	102.8664	HURON - WATERTOWN 230KV CKT 2
FDNS	00NR_G15_042	0	16WP	G15_042	TO->FROM	GR ISLD-LNX3345.00 - HOLT.CO3 345.00 345KV CKT 1	720	720	0.06291	102.8664	HURON - WATERTOWN 230KV CKT 2
FDNS	00NR_G15_042	0	16WP	G15_042	TO->FROM	GR ISLD-LNX3345.00 - HOLT.CO3 345.00 345KV CKT 1	720	720	0.0632	102.8619	FORMAN - OAKES 230KV CKT 1
FDNS	00NR_G15_042	0	16WP	G15_042	TO->FROM	GR ISLD-LNX3345.00 - HOLT.CO3 345.00 345KV CKT 1	720	720	0.06558	102.8548	GRIMES - LEHIGH 345KV CKT 1
FDNS	00NR_G15_042	0	16WP	G15_042	TO->FROM	GR ISLD-LNX3345.00 - HOLT.CO3 345.00 345KV CKT 1	720	720	0.06323	102.8524	GEN338146 1-INDEPENDENCE UNIT #2
FDNS	00NR_G15_042	0	16WP	G15_042	TO->FROM	GR ISLD-LNX3345.00 - HOLT.CO3 345.00 345KV CKT 1	720	720	0.06323	102.8471	GEN338143 1-INDEPENDENCE UNIT #1
FDNS	00NR_G15_042	0	16WP	G15_042	TO->FROM	GR ISLD-LNX3345.00 - HOLT.CO3 345.00 345KV CKT 1	720	720	0.06291	102.8169	CARPENTER - WATERTOWN 230KV CKT 1
FDNS	00NR_G15_042	0	16WP	G15_042	TO->FROM	GR ISLD-LNX3345.00 - HOLT.CO3 345.00 345KV CKT 1	720	720	0.06291	102.8169	CARPENTER - WATERTOWN 230KV CKT 1
FDNS	00NR_G15_042	0	16WP	G15_042	TO->FROM	GR ISLD-LNX3345.00 - HOLT.CO3 345.00 345KV CKT 1	720	720	0.06189	102.7887	SPLIT ROCK - WHITE 345KV CKT 1
FDNS	00NR_G15_042	0	16WP	G15_042	TO->FROM	GR ISLD-LNX3345.00 - HOLT.CO3 345.00 345KV CKT 1	720	720	0.06189	102.7887	SPLIT ROCK - WHITE 345KV CKT 1
FDNS	00NR_G15_042	0	16WP	G15_042	TO->FROM	GR ISLD-LNX3345.00 - HOLT.CO3 345.00 345KV CKT 1	720	720	0.06322	102.7873	CNTSHNT3 345.00 - PRAIRIE3 345.00 345KV CKT 1
FDNSLock	00NR_G15_042	0	16WP	G15_042	TO->FROM	GR ISLD-LNX3345.00 - HOLT.CO3 345.00 345KV CKT 1	720	720	0.06322	102.7868	CENTER - CNTSHNT3 345.00 345KV CKT Z1
FDNS	00NR_G15_042	0	16WP	G15_042	TO->FROM	GR ISLD-LNX3345.00 - HOLT.CO3 345.00 345KV CKT 1	720	720	0.06142	102.7455	PAHOJA - SIOUX FALLS 230KV CKT 1
FDNS	00NR_G15_042	0	16WP	G15_042	TO->FROM	GR ISLD-LNX3345.00 - HOLT.CO3 345.00 345KV CKT 1	720	720	0.06374	102.7289	ADAMS - PLEASANT VALLEY 345KV CKT 1
FDNS	00NR_G15_042	0	16WP	G15_042	TO->FROM	GR ISLD-LNX3345.00 - HOLT.CO3 345.00 345KV CKT 1	720	720	0.06136	102.6958	FT THOMPSON - WESSINGTON 230KV CKT 1
FDNS	00NR_G15_042	0	16WP	G15_042	TO->FROM	GR ISLD-LNX3345.00 - HOLT.CO3 345.00 345KV CKT 1	720	720	0.06136	102.6958	FT THOMPSON - WESSINGTON 230KV CKT 1
FDNS	00NR_G15_042	0	16WP	G15_042	TO->FROM	GR ISLD-LNX3345.00 - HOLT.CO3 345.00 345KV CKT 1	720	720	0.06342	102.668	P12:115:NPPD:1091:VALENTN7:MISSION7:BTB
FDNS	00NR_G15_042	0	16WP	G15_042	TO->FROM	GR ISLD-LNX3345.00 - HOLT.CO3 345.00 345KV CKT 1	720	720	0.06323	102.6673	GEN501813 1-RODEMACHER UNIT 3
FDNS	00NR_G15_042	0	16WP	G15_042	TO->FROM	GR ISLD-LNX3345.00 - HOLT.CO3 345.00 345KV CKT 1	720	720	0.06169	102.6456	RASMUSN - UTICA JCT 230KV CKT 1
FDNS	00NR_G15_042	0	16WP	G15_042	TO->FROM	GR ISLD-LNX3345.00 - HOLT.CO3 345.00 345KV CKT 1	720	720	0.06342	102.6131	MISSION - ST FRANCIS 115KV CKT 1
FDNS	00NR_G15_042	0	16WP	G15_042	TO->FROM	GR ISLD-LNX3345.00 - HOLT.CO3 345.00 345KV CKT 1	720	720	0.06272	102.5888	FT THOMPSON - HURON 230KV CKT 1
FDNS	00NR_G15_042	0	16WP	G15_042	TO->FROM	GR ISLD-LNX3345.00 - HOLT.CO3 345.00 345KV CKT 1	720	720	0.06272	102.5888	FT THOMPSON - HURON 230KV CKT 1
FDNS	00NR_G15_042	0	16WP	G15_042	TO->FROM	GR ISLD-LNX3345.00 - HOLT.CO3 345.00 345KV CKT 1	720	720	0.06272	102.5888	FT THOMPSON - HURON 230KV CKT 2
FDNS	00NR_G15_042	0	16WP	G15_042	TO->FROM	GR ISLD-LNX3345.00 - HOLT.CO3 345.00 345KV CKT 1	720	720	0.06272	102.5888	FT THOMPSON - HURON 230KV CKT 2
FDNS	00NR_G15_042	0	16WP	G15_042	TO->FROM	GR ISLD-LNX3345.00 - HOLT.CO3 345.00 345KV CKT 1	720	720	0.05936	102.587	GERALD GENTLEMAN STATION - SWEETWATER 345KV CKT 1
FDNS	00NR_G15_042	0	16WP	G15_042	TO->FROM	GR ISLD-LNX3345.00 - HOLT.CO3 345.00 345KV CKT 1	720	720	0.06342	102.5402	HARMONY - ST FRANCIS 115KV CKT 1
FDNS	00NR_G15_042	0	16WP	G15_042	TO->FROM	GR ISLD-LNX3345.00 - HOLT.CO3 345.00 345KV CKT 1	720	720	0.06323	102.5397	GEN335206 1-NELSON UNIT 6
FDNSLock	00NR_G15_042	0	16WP	G15_042	TO->FROM	GR ISLD-LNX3345.00 - HOLT.CO3 345.00 345KV CKT 1	720	720	0.06316	102.5216	CHISAGO COUNTY - FORBES 500KV CKT 1
FDNS	00NR_G15_042	0	16WP	G15_042	TO->FROM	GR ISLD-LNX3345.00 - HOLT.CO3 345.00 345KV CKT 1	720	720	0.06169	102.4886	RASMUSN - SIOUX CITY 230KV CKT 1
FDNS	00NR_G15_042	0	16WP	G15_042	TO->FROM	GR ISLD-LNX3345.00 - HOLT.CO3 345.00 345KV CKT 1	720	720	0.06342	102.4796	HARMONY - VALENTINE 115KV CKT 1
FDNS	00NR_G15_042	0	16WP	G15_042	TO->FROM	GR ISLD-LNX3345.00 - HOLT.CO3 345.00 345KV CKT 1	720	720	0.0638	102.4592	LAKEFIELD 3 - NOBLES 345KV CKT 1
FDNS	00NR_G15_042	0	16WP	G15_042	TO->FROM	GR ISLD-LNX3345.00 - HOLT.CO3 345.00 345KV CKT 1	720	720	0.06321	102.4539	FORMAN - HANKINSON 230KV CKT 1
FDNS	00NR_G15_042	0	16WP	G15_042	TO->FROM	GR ISLD-LNX3345.00 - HOLT.CO3 345.00 345KV CKT 1	720	720	0.08039	102.4508	DIXONCO 230.00 - HOSKINS 230KV CKT 1
FDNS	00NR_G15_042	0	16WP	G15_042	TO->FROM	GR ISLD-LNX3345.00 - HOLT.CO3 345.00 345KV CKT 1	720	720	0.06319	102.4424	ALEXMRES3 345.00 - BISON 3 345.00 345KV CKT 1
FDNS	00NR_G15_042	0	16WP	G15_042	TO->FROM	GR ISLD-LNX3345.00 - HOLT.CO3 345.00 345KV CKT 1	720	720	0.06316	102.4424	CHISAGO COUNTY - CHISAGO COUNTY 500KV CKT 1
FDNS	00NR_G15_042	0	16WP	G15_042	TO->FROM	GR ISLD-LNX3345.00 - HOLT.CO3 345.00 345KV CKT 1	720	720	0.06323	102.4348	GEN532751 1-WOLF CREEK GENERATING STATION UNIT 1
FDNS	00NR_G15_042	0	16WP	G15_042	TO->FROM	GR ISLD-LNX3345.00 - HOLT.CO3 345.00 345KV CKT 1	720	720	0.06323	102.434	GEN501812 1-RODEMACHER UNIT 2
FDNS	00NR_G15_042	0	16WP	G15_042	TO->FROM	GR ISLD-LNX3345.00 - HOLT.CO3 345.00 345KV CKT 1	720	720	0.06142	102.4315	EAGLE 4 230.00 - PAHOJA 230KV CKT 1
FDNS	00NR_G15_042	0	16WP	G15_042	TO->FROM	GR ISLD-LNX3345.00 - HOLT.CO3 345.00 345KV CKT 1	720	720	0.06323	102.4117	GEN344897 4-1LAB G4 20.000
FDNS	00NR_G15_042	0	16WP	G15_042	TO->FROM	GR ISLD-LNX3345.00 - HOLT.CO3 345.00 345KV CKT 1	720	720	0.06323	102.4097	GEN344894 1-1LAB G1 20.000
FDNS	00NR_G15_042	0	16WP	G15_042	TO->FROM	GR ISLD-LNX3345.00 - HOLT.CO3 345.00 345KV CKT 1	720	720	0.06323	102.4095	GEN344896 3-1LAB G3 20.000
FDNS	00NR_G15_042	0	16WP	G15_042	TO->FROM	GR ISLD-LNX3345.00 - HOLT.CO3 345.00 345KV CKT 1	720	720	0.06322	102.3983	GLENBORO SOUTH - RUGBY 230KV CKT 1
FDNS	00NR_G15_042	0	16WP	G15_042	TO->FROM	GR ISLD-LNX3345.00 - HOLT.CO3 345.00 345KV CKT 1	720	720	0.06323	102.3868	GEN345670 1-1RUSH G1 18.000
FDNS	00NR_G15_042	0	16WP	G15_042	TO->FROM	GR ISLD-LNX3345.00 - HOLT.CO3 345.00 345KV CKT 1	720	720	0.06323	102.3867	GEN345671 2-1RUSH G2 18.000
FDNS	00NR_G15_042	0	16WP	G15_042	TO->FROM	GR ISLD-LNX3345.00 - HOLT.CO3 345.00 345KV CKT 1	720	720	0.06323	102.3767	GEN344895 2-1LAB G2 20.000
FDNS	00NR_G15_042	0	16WP	G15_042	TO->FROM	GR ISLD-LNX3345.00 - HOLT.CO3 345.00 345KV CKT 1	720	720	0.06321	102.3731	CENTER - COYOTE 345KV CKT 1
FDNS	00NR_G15_042	0	16WP	G15_042	TO->FROM	GR ISLD-LNX3345.00 - HOLT.CO3 345.00 345KV CKT 1	720	720	0.06323	102.3394	GEN659118 1-LARAMIE RIVER UNIT1
FDNS	00NR_G15_042	0	16WP	G15_042	TO->FROM	GR ISLD-LNX3345.00 - HOLT.CO3 345.00 345KV CKT 1	720	720	0.06323	102.3271	GEN336252 1-NINEMILE POINT UNIT#5
FDNS	00NR_G15_042	0	16WP	G15_042	TO->FROM	GR ISLD-LNX3345.00 - HOLT.CO3 345.00 345KV CKT 1	720	720	0.06323	102.3243	P13:230-345:NPPD:NUCOR-1
FDNS	00NR_G15_042	0	16WP	G15_042	TO->FROM	GR ISLD-LNX3345.00 - HOLT.CO3 345.00 345KV CKT 1	720	720	0.06325	102.3184	P12:115:NPPD:WAPA6:FTRANDL7:ONEILL 7:BTB
FDNS	00NR_G15_042	0	16WP	G15_042	TO->FROM	GR ISLD-LNX3345.00 - HOLT.CO3 345.00 345KV CKT 1	720	720	0.06325	102.3184	P12:115:UMZB:# 115 #: SE IN NE. FR-SE-ON
FDNS	00NR_G15_042	0	16WP	G15_042	TO->FROM	GR ISLD-LNX3345.00 - HOLT.CO3 345.00 345KV CKT 1	720	720	0.06014	102.2966	FT THOMPSON (FT2 KU1B) 345/230/13.8KV TRANSFORMER CKT 1
FDNS	00NR_G15_042	0	16WP	G15_042	TO->FROM	GR ISLD-LNX3345.00 - HOLT.CO3 345.00 345KV CKT 1	720	720	0.06014	102.2943	FT THOMPSON (FT2 KU1A) 345/230/13.8KV TRANSFORMER CKT 1
FDNS	00NR_G15_042	0	16WP	G15_042	TO->FROM	GR ISLD-LNX3345.00 - HOLT.CO3 345.00 345KV CKT 1	720	720	0.06323	102.288	GEN336831 1-BAXTER WILSON SES
FDNS	00NR_G15_042	0	16WP	G15_042	TO->FROM	GR ISLD-LNX3345.00 - HOLT.CO3 345.00 345KV CKT 1	720	720	0.0635	102.2861	LARAMIE RIVER - SIDNEY2-LNX3345.00 345KV CKT 1
FDNS	00NR_G15_042	0	16WP	G15_042	TO->FROM	GR ISLD-LNX3345.00 - HOLT.CO3 345.00 345KV CKT 1	720	720	0.06021	102.2804	P12:345:UMZW:# 907 #: SC2-SR IN IA. SC2-SR 345 KV LINE
FDNS	00NR_G15_042	0	16WP	G15_042	TO->FROM	GR ISLD-LNX3345.00 - HOLT.CO3 345.00 345KV CKT 1	720	720	0.06021	102.2802	SIOUXCY-LNX3345.00 - SPLIT ROCK 345KV CKT 1
FDNS	00NR_G15_042	0	16WP	G15_042	TO->FROM	GR ISLD-LNX3345.00 - HOLT.CO3 345.00 345KV CKT 1	720	720	0.06021	102.2802	SIOUXCY-LNX3345.00 - SPLIT ROCK 345KV CKT 1
FDNS	00NR_G15_042	0	16WP	G15_042	TO->FROM	GR ISLD-LNX3345.00 - HOLT.CO3 345.00 345KV CKT 1	720	720	0.06325	102.2785	FT RANDAL - SPENCER 115KV CKT 1
FDNS	00NR_G15_042	0	16WP	G15_042	TO->FROM	GR ISLD-LNX3345.00 - HOLT.CO3 345.00 345KV CKT 1	720	720	0.06036	102.278	GERALD GENTLEMAN STATION - SWEETWATER 345KV CKT 2
FDNS	00NR_G15_042	0	16WP	G15_042	TO->FROM	GR ISLD-LNX3345.00 - HOLT.CO3 345.00 345KV CKT 1	720	720	0.0635	102.2742	SIDNEY - SIDNEY2-LNX3345.00 345KV CKT Z
FDNS	00NR_G15_042	0	16WP	G15_042	TO->FROM	GR ISLD-LNX3345.00 - HOLT.CO3 345.00 345KV CKT 1	720	720	0.06323	102.2636	P12:115:UMZW:# 162 #: NEL IN ND. FAULT ON ML-NEL-MX-GA 115 KV
FDNSLock	00NR_G15_042	0	16WP	G15_042	TO->FROM	GR ISLD-LNX3345.00 - HOLT.CO3 345.00 345KV CKT 1	720	720	0.07128	102.2556	P13:230-345:NPPD:STEGALL3:KV3A
FDNS	00NR_G15_042	0	16WP	G15_042	TO->FROM	GR ISLD-LNX3345.00 - HOLT.CO3 345.00 345KV CKT 1	720	720	0.06021	102.2543	SIOUX CITY - SIOUXCY-LNX3345.00 345KV CKT Z
FDNSLock	00NR_G15_042	0	16WP	G15_042	TO->FROM	GR ISLD-LNX3345.00 - HOLT.CO3 345.00 345KV CKT 1	720	720	0.07128	102.2528	STEGALL (SGQ KV3A) 345/230/13.8KV TRANSFORMER CKT 1
FDNS	00NR_G15_042	0	16WP	G15_042	TO->FROM	GR ISLD-LNX3345.00 - HOLT.CO3 345.00 345KV CKT 1	720	720	0.06342	102.2405	AINSWORTH - VALENTINE 115KV CKT 1
FDNSLock	00NR_G15_042	0	16WP	G15_042	TO->FROM	GR ISLD-LNX3345.00 - HOLT.CO3 345.00 345KV CKT 1	720	720	0.06353	102.2363	BROOKING COUNTY - LYON COUNTY 345KV CKT 1
FDNS	00NR_G15_042	0	16WP	G15_042	TO->FROM	GR ISLD-LNX3345.00 - HOLT.CO3 345.00 345KV CKT 1	720	720	0.06988	102.2318	COLUMEAST - SHELL CREEK 345KV CKT 1

SOLUTION	GROUP	SCENARIO	SEASON	SOURCE	DIRECTION	MONITORED ELEMENT	RATEA (MVA)	RATEB(MVA)	TDF	TC%LOADING (% MVA)	CONTINGENCY
FDNS	00NR_G15_042	0	16WP	G15_042	TO->FROM	GR ISLD-LNX3345.00 - HOLT.CO3 345.00 345KV CKT 1	720	720	0.06323	102.2282	GEN337041 1-GERALD ANDRUS
FDNS	00NR_G15_042	0	16WP	G15_042	TO->FROM	GR ISLD-LNX3345.00 - HOLT.CO3 345.00 345KV CKT 1	720	720	0.06357	102.214	BYRON - NORTH ROCHESTER 345KV CKT 1
FDNS	00NR_G15_042	0	16WP	G15_042	TO->FROM	GR ISLD-LNX3345.00 - HOLT.CO3 345.00 345KV CKT 1	720	720	0.06323	102.1871	GEN334440 1-SABINE UNIT 4
FDNS	00NR_G15_042	0	16WP	G15_042	TO->FROM	GR ISLD-LNX3345.00 - HOLT.CO3 345.00 345KV CKT 1	720	720	0.06388	102.1791	KOSSUTH 3 345.00 - OBRIEN 3 345.00 345KV CKT 1
FDNS	00NR_G15_042	0	16WP	G15_042	TO->FROM	GR ISLD-LNX3345.00 - HOLT.CO3 345.00 345KV CKT 1	720	720	0.06388	102.1784	KOSSUTH 3 345.00 - WEBSTER 345KV CKT 1
FDNS	00NR_G15_042	0	16WP	G15_042	TO->FROM	GR ISLD-LNX3345.00 - HOLT.CO3 345.00 345KV CKT 1	720	720	0.06323	102.1602	GEN336251 1-NINEMILE POINT UNIT#4
FDNS	00NR_G15_042	0	16WP	G15_042	TO->FROM	GR ISLD-LNX3345.00 - HOLT.CO3 345.00 345KV CKT 1	720	720	0.06323	102.1595	P13:115-230:NPPD:NUCOR-3
FDNS	00NR_G15_042	0	16WP	G15_042	TO->FROM	GR ISLD-LNX3345.00 - HOLT.CO3 345.00 345KV CKT 1	720	720	0.06323	102.1526	BLAIR - GRANITE FALLS 230KV CKT 1
FDNS	00NR_G15_042	0	16WP	G15_042	TO->FROM	GR ISLD-LNX3345.00 - HOLT.CO3 345.00 345KV CKT 1	720	720	0.06323	102.1526	BLAIR - GRANITE FALLS 230KV CKT 1
FDNS	00NR_G15_042	0	16WP	G15_042	TO->FROM	GR ISLD-LNX3345.00 - HOLT.CO3 345.00 345KV CKT 1	720	720	0.06444	102.1408	DENISON - SIOUX CITY 230KV CKT 1
FDNS	00NR_G15_042	0	16WP	G15_042	TO->FROM	GR ISLD-LNX3345.00 - HOLT.CO3 345.00 345KV CKT 1	720	720	0.06325	102.1382	ONEILL - SPENCER 115KV CKT 1
FDNS	00NR_G15_042	0	16WP	G15_042	TO->FROM	GR ISLD-LNX3345.00 - HOLT.CO3 345.00 345KV CKT 1	720	720	0.06172	102.1358	GAVINS POINT - HARTINGTON 115KV CKT 1
FDNS	00NR_G15_042	0	16WP	G15_042	TO->FROM	GR ISLD-LNX3345.00 - HOLT.CO3 345.00 345KV CKT 1	720	720	0.06288	102.1337	MENNO JCT - TRIPP JCT 115KV CKT 1
FDNS	00NR_G15_042	0	16WP	G15_042	TO->FROM	GR ISLD-LNX3345.00 - HOLT.CO3 345.00 345KV CKT 1	720	720	0.06939	102.131	COLUMEAST - NW68TH & HOLDREGE 345KV CKT 1
FDNS	00NR_G15_042	0	16WP	G15_042	TO->FROM	GR ISLD-LNX3345.00 - HOLT.CO3 345.00 345KV CKT 1	720	720	0.06939	102.131	COLUMEAST - NW68TH & HOLDREGE 345KV CKT 1
FDNS	00NR_G15_042	0	16WP	G15_042	TO->FROM	GR ISLD-LNX3345.00 - HOLT.CO3 345.00 345KV CKT 1	720	720	0.06323	102.1153	GEN525561 1-TOLK GEN #1 24 KV
FDNS	00NR_G15_042	0	16WP	G15_042	TO->FROM	GR ISLD-LNX3345.00 - HOLT.CO3 345.00 345KV CKT 1	720	720	0.06321	102.1106	GARRISON - JAMES TOWN 230KV CKT 1
FDNS	00NR_G15_042	0	16WP	G15_042	TO->FROM	GR ISLD-LNX3345.00 - HOLT.CO3 345.00 345KV CKT 1	720	720	0.06323	102.0945	P13:230:UMZW:# 2218 #: FP IN MT. LOSS OF TRANSFORMER (AT2).
FDNS	00NR_G15_042	0	16WP	G15_042	TO->FROM	GR ISLD-LNX3345.00 - HOLT.CO3 345.00 345KV CKT 1	720	720	0.06336	102.0866	NORTH ROCHESTER - PRAIRIE ISLAND 345KV CKT 1
FDNS	00NR_G15_042	0	16WP	G15_042	TO->FROM	GR ISLD-LNX3345.00 - HOLT.CO3 345.00 345KV CKT 1	720	720	0.08168	102.0851	HOSKINS - SHELL CREEK 345KV CKT 1
FDNS	00NR_G15_042	0	16WP	G15_042	TO->FROM	GR ISLD-LNX3345.00 - HOLT.CO3 345.00 345KV CKT 1	720	720	0.06327	102.0844	HANKINSON - WAHPETON 230KV CKT 1
FDNS	00NR_G15_042	0	16WP	G15_042	TO->FROM	GR ISLD-LNX3345.00 - HOLT.CO3 345.00 345KV CKT 1	720	720	0.06208	102.0618	P12:115:NPPD:1164:ONEILL 7:JEFFREY9:BTB
FDNS	00NR_G15_042	0	16WP	G15_042	TO->FROM	GR ISLD-LNX3345.00 - HOLT.CO3 345.00 345KV CKT 1	720	720	0.06323	102.0581	GEN303007 1-1BC2 U2
FDNS	00NR_G15_042	0	16WP	G15_042	TO->FROM	GR ISLD-LNX3345.00 - HOLT.CO3 345.00 345KV CKT 1	720	720	0.06323	102.0554	GEN335204 1-NELSON UNIT 4
FDNS	00NR_G15_042	0	16WP	G15_042	TO->FROM	GR ISLD-LNX3345.00 - HOLT.CO3 345.00 345KV CKT 1	720	720	0.06323	102.0552	P13:115-345:NPPD:NUCOR-2
FDNS	00NR_G15_042	0	16WP	G15_042	TO->FROM	GR ISLD-LNX3345.00 - HOLT.CO3 345.00 345KV CKT 1	720	720	0.06323	102.055	GEN303006 1-1BC2 U1
FDNS	00NR_G15_042	0	16WP	G15_042	TO->FROM	GR ISLD-LNX3345.00 - HOLT.CO3 345.00 345KV CKT 1	720	720	0.06323	102.0532	GEN336191 1-LITTLE GYPSY UNIT#3
FDNS	00NR_G15_042	0	16WP	G15_042	TO->FROM	GR ISLD-LNX3345.00 - HOLT.CO3 345.00 345KV CKT 1	720	720	0.06288	102.052	MENNO JCT - UTICA 115KV CKT 1
FDNS	00NR_G15_042	0	16WP	G15_042	TO->FROM	GR ISLD-LNX3345.00 - HOLT.CO3 345.00 345KV CKT 1	720	720	0.06208	102.0492	CLEARWATER - ONEILL 115KV CKT 1
FDNS	00NR_G15_042	0	16WP	G15_042	TO->FROM	GR ISLD-LNX3345.00 - HOLT.CO3 345.00 345KV CKT 1	720	720	0.06323	102.0456	GEN642067 1-PLATTE
FDNS	00NR_G15_042	0	16WP	G15_042	TO->FROM	GR ISLD-LNX3345.00 - HOLT.CO3 345.00 345KV CKT 1	720	720	0.06358	102.0339	BYRON - PLEASANT VALLEY 345KV CKT 1
FDNS	00NR_G15_042	0	16WP	G15_042	TO->FROM	GR ISLD-LNX3345.00 - HOLT.CO3 345.00 345KV CKT 1	720	720	0.06323	102.0277	GEN531447 1-HOLCOMB GENERATOR
FDNS	00NR_G15_042	0	16WP	G15_042	TO->FROM	GR ISLD-LNX3345.00 - HOLT.CO3 345.00 345KV CKT 1	720	720	0.06288	102.0244	P12:115:UMZZ:# 237 #: MEN IN SD. MENNO JUNCTION IS A TAP (UJ-MEN-TP).
FDNS	00NR_G15_042	0	16WP	G15_042	TO->FROM	GR ISLD-LNX3345.00 - HOLT.CO3 345.00 345KV CKT 1	720	720	0.06323	102.0215	GEN336801 1-BAXTER WILSON UNIT #1
FDNS	00NR_G15_042	0	16WP	G15_042	TO->FROM	GR ISLD-LNX3345.00 - HOLT.CO3 345.00 345KV CKT 1	720	720	0.06208	102.0176	CLEARWATER - NELIGH 115KV CKT 1
FDNS	00NR_G15_042	0	16WP	G15_042	TO->FROM	GR ISLD-LNX3345.00 - HOLT.CO3 345.00 345KV CKT 1	720	720	0.06323	102.0172	GEN335614 1-WILLOW GLENN UNIT#4
FDNS	00NR_G15_042	0	16WP	G15_042	TO->FROM	GR ISLD-LNX3345.00 - HOLT.CO3 345.00 345KV CKT 1	720	720	0.06323	102.0068	GEN336464 1-MICHOUD UNIT #3
FDNS	00NR_G15_042	0	16WP	G15_042	TO->FROM	GR ISLD-LNX3345.00 - HOLT.CO3 345.00 345KV CKT 1	720	720	0.06323	102.0064	GEN303008 1-1BC2 U3
FDNS	00NR_G15_042	0	16WP	G15_042	TO->FROM	GR ISLD-LNX3345.00 - HOLT.CO3 345.00 345KV CKT 1	720	720	0.06323	102.0015	GEN336170 1-GULF OXY U4
FDNS	00NR_G15_042	0	16WP	G15_042	TO->FROM	GR ISLD-LNX3345.00 - HOLT.CO3 345.00 345KV CKT 1	720	720	0.06323	101.992	GEN334441 1-SABINE UNIT 5
FDNS	00NR_G15_042	0	16WP	G15_042	TO->FROM	GR ISLD-LNX3345.00 - HOLT.CO3 345.00 345KV CKT 1	720	720	0.06321	101.9831	BISMARK - JAMES TOWN 230KV CKT 1
FDNS	00NR_G15_042	0	16WP	G15_042	TO->FROM	GR ISLD-LNX3345.00 - HOLT.CO3 345.00 345KV CKT 1	720	720	0.06321	101.9698	JAMES TOWN - WEBER 230KV CKT 1
FDNS	00NR_G15_042	0	16WP	G15_042	TO->FROM	GR ISLD-LNX3345.00 - HOLT.CO3 345.00 345KV CKT 1	720	720	0.06321	101.9684	BISMARK - WEBER 230KV CKT 1
FDNS	00NR_G15_042	0	16WP	G15_042	TO->FROM	GR ISLD-LNX3345.00 - HOLT.CO3 345.00 345KV CKT 1	720	720	0.06323	101.968	GRAND GULF 500/22.0KV TRANSFORMER CKT 1
FDNS	00NR_G15_042	0	16WP	G15_042	TO->FROM	GR ISLD-LNX3345.00 - HOLT.CO3 345.00 345KV CKT 1	720	720	0.06323	101.9658	GEN501811 1-RODEMACHER UNIT 1
FDNS	00NR_G15_042	0	16WP	G15_042	TO->FROM	GR ISLD-LNX3345.00 - HOLT.CO3 345.00 345KV CKT 1	720	720	0.06326	101.9655	APPLEDORN 4 230.00 - WATERTOWN 230KV CKT 1
FDNS	00NR_G15_042	0	16WP	G15_042	TO->FROM	GR ISLD-LNX3345.00 - HOLT.CO3 345.00 345KV CKT 1	720	720	0.06326	101.9655	APPLEDORN 4 230.00 - WATERTOWN 230KV CKT 1
FDNS	00NR_G15_042	0	16WP	G15_042	TO->FROM	GR ISLD-LNX3345.00 - HOLT.CO3 345.00 345KV CKT 1	720	720	0.06323	101.9276	PRAIRIE ISLAND 345/20.0KV TRANSFORMER CKT 1
FDNS	00NR_G15_042	0	16WP	G15_042	TO->FROM	GR ISLD-LNX3345.00 - HOLT.CO3 345.00 345KV CKT 1	720	720	0.06323	101.9251	PRAIRIE ISLAND 345/20.0KV TRANSFORMER CKT 2
FDNS	00NR_G15_042	0	16WP	G15_042	TO->FROM	GR ISLD-LNX3345.00 - HOLT.CO3 345.00 345KV CKT 1	720	720	0.06323	101.9234	GEN532651 1-JEFFREY ENERGY CENTER UNIT 1
FDNS	00NR_G15_042	0	16WP	G15_042	TO->FROM	GR ISLD-LNX3345.00 - HOLT.CO3 345.00 345KV CKT 1	720	720	0.06323	101.9176	GEN334433 1-SABINE UNIT 3
FDNS	00NR_G15_042	0	16WP	G15_042	TO->FROM	GR ISLD-LNX3345.00 - HOLT.CO3 345.00 345KV CKT 1	720	720	0.06323	101.9101	GEN334071 1-LEWIS CREEK 2
FDNS	00NR_G15_042	0	16WP	G15_042	TO->FROM	GR ISLD-LNX3345.00 - HOLT.CO3 345.00 345KV CKT 1	720	720	0.06326	101.9072	APPLEDORN 4 230.00 - GRANITE FALLS 230KV CKT 1
FDNS	00NR_G15_042	0	16WP	G15_042	TO->FROM	GR ISLD-LNX3345.00 - HOLT.CO3 345.00 345KV CKT 1	720	720	0.06326	101.9072	APPLEDORN 4 230.00 - GRANITE FALLS 230KV CKT 1
FDNS	00NR_G15_042	0	16WP	G15_042	TO->FROM	GR ISLD-LNX3345.00 - HOLT.CO3 345.00 345KV CKT 1	720	720	0.06321	101.9062	FARGO - JAMES TOWN 230KV CKT 1
FDNS	00NR_G15_042	0	16WP	G15_042	TO->FROM	GR ISLD-LNX3345.00 - HOLT.CO3 345.00 345KV CKT 1	720	720	0.06323	101.9058	GEN334070 1-LEWIS CREEK 1
FDNS	00NR_G15_042	0	16WP	G15_042	TO->FROM	GR ISLD-LNX3345.00 - HOLT.CO3 345.00 345KV CKT 1	720	720	0.06323	101.8993	GEN338388 1-1PLUM PT U1 23.000
FDNS	00NR_G15_042	0	16WP	G15_042	TO->FROM	GR ISLD-LNX3345.00 - HOLT.CO3 345.00 345KV CKT 1	720	720	0.06323	101.8949	GEN337766 1-TRACTEBEL UNIT S1
FDNS	00NR_G15_042	0	16WP	G15_042	TO->FROM	GR ISLD-LNX3345.00 - HOLT.CO3 345.00 345KV CKT 1	720	720	0.06323	101.8929	GEN525562 1-TOLK GEN #2 24 KV
FDNS	00NR_G15_042	0	16WP	G15_042	TO->FROM	GR ISLD-LNX3345.00 - HOLT.CO3 345.00 345KV CKT 1	720	720	0.06321	101.8891	FARGO - JAMES TOWN 230KV CKT 2
FDNS	00NR_G15_042	0	16WP	G15_042	TO->FROM	GR ISLD-LNX3345.00 - HOLT.CO3 345.00 345KV CKT 1	720	720	0.06338	101.8861	ARKANSAS NUCLEAR ONE - FT SMITH 500KV CKT 1
FDNS	00NR_G15_042	0	16WP	G15_042	TO->FROM	GR ISLD-LNX3345.00 - HOLT.CO3 345.00 345KV CKT 1	720	720	0.06338	101.8861	ARKANSAS NUCLEAR ONE - FT SMITH 500KV CKT 1
FDNS	00NR_G15_042	0	16WP	G15_042	TO->FROM	GR ISLD-LNX3345.00 - HOLT.CO3 345.00 345KV CKT 1	720	720	0.06325	101.8859	FERGSFL4 230.00 - WAHPETON 230KV CKT 1
FDNS	00NR_G15_042	0	16WP	G15_042	TO->FROM	GR ISLD-LNX3345.00 - HOLT.CO3 345.00 345KV CKT 1	720	720	0.06323	101.8781	BALTA - RAMSEY 230KV CKT 1
FDNS	00NR_G15_042	0	16WP	G15_042	TO->FROM	GR ISLD-LNX3345.00 - HOLT.CO3 345.00 345KV CKT 1	720	720	0.06323	101.8752	AUDUBON - SHEYNNE 230KV CKT 1
FDNS	00NR_G15_042	0	16WP	G15_042	TO->FROM	GR ISLD-LNX3345.00 - HOLT.CO3 345.00 345KV CKT 1	720	720	0.06323	101.8626	GEN501910 1-ACADIA UNIT ST1
FDNS	00NR_G15_042	0	16WP	G15_042	TO->FROM	GR ISLD-LNX3345.00 - HOLT.CO3 345.00 345KV CKT 1	720	720	0.06346	101.8617	OVEXFRMCCOVE
FDNS	00NR_G15_042	0	16WP	G15_042	TO->FROM	GR ISLD-LNX3345.00 - HOLT.CO3 345.00 345KV CKT 1	720	720	0.0635	101.8603	ARPIN B3 345.00 - ROCKY RN B8 345.00 345KV CKT 1
FDNS	00NR_G15_042	0	16WP	G15_042	TO->FROM	GR ISLD-LNX3345.00 - HOLT.CO3 345.00 345KV CKT 1	720	720	0.0633	101.8518	NORTH LA CROSSE - NORTH ROCHESTER 345KV CKT 1
FDNS	00NR_G15_042	0	16WP	G15_042	TO->FROM	GR ISLD-LNX3345.00 - HOLT.CO3 345.00 345KV CKT 1	720	720	0.06323	101.8491	P12:345:GRDA:CHOUTEAU-SPORTSMANACRES
FDNS	00NR_G15_042	0	16WP	G15_042	TO->FROM	GR ISLD-LNX3345.00 - HOLT.CO3 345.00 345KV CKT 1	720	720	0.06323	101.8465	WHITE BLUFF 500/26.0KV TRANSFORMER CKT 1
FDNS	00NR_G15_042	0	16WP	G15_042	TO->FROM	GR ISLD-LNX3345.00 - HOLT.CO3 345.00 345KV CKT 1	720	720	0.06323	101.835	P12:161:GRDA:KERR-SALINA-CKT1
FDNS	00NR_G15_042	0	16WP	G15_042	TO->FROM	GR ISLD-LNX3345.00 - HOLT.CO3 345.00 345KV CKT 1	720	720	0.06323	101.835	P12:161:GRDA:KERR-SALINA-CKT2

SOLUTION	GROUP	SCENARIO	SEASON	SOURCE	DIRECTION	MONITORED ELEMENT	RATEA (MVA)	RATEB(MVA)	TDF	TC%LOADING (% MVA)	CONTINGENCY
FDNS	00NR_G15_042	0	16WP	G15_042	TO->FROM	GR ISLD-LNX3345.00 - HOLT.CO3 345.00 345KV CKT 1	720	720	0.06323	101.8341	GEN336222 1-LITTLE GYPSY UNIT#2
FDNS	00NR_G15_042	0	16WP	G15_042	TO->FROM	GR ISLD-LNX3345.00 - HOLT.CO3 345.00 345KV CKT 1	720	720	0.06337	101.8302	FRANKS - HUBEN 345KV CKT 1
FDNS	00NR_G15_042	0	16WP	G15_042	TO->FROM	GR ISLD-LNX3345.00 - HOLT.CO3 345.00 345KV CKT 1	720	720	0.06496	101.8287	PETERSBRG.N7115.00 - PETERSBURG 115KV CKT Z1
FDNS	00NR_G15_042	0	16WP	G15_042	TO->FROM	GR ISLD-LNX3345.00 - HOLT.CO3 345.00 345KV CKT 1	720	720	0.06496	101.8276	P12:115:NPPD:1168B:ALBION 7:PETERSBRG.N7:BTB
FDNS	00NR_G15_042	0	16WP	G15_042	TO->FROM	GR ISLD-LNX3345.00 - HOLT.CO3 345.00 345KV CKT 1	720	720	0.06323	101.8179	GEN337764 1-TRACTEBEL UNIT C1
FDNS	00NR_G15_042	0	16WP	G15_042	TO->FROM	GR ISLD-LNX3345.00 - HOLT.CO3 345.00 345KV CKT 1	720	720	0.06323	101.8179	GEN337765 1-TRACTEBEL UNIT C2
FDNS	00NR_G15_042	0	16WP	G15_042	TO->FROM	GR ISLD-LNX3345.00 - HOLT.CO3 345.00 345KV CKT 1	720	720	0.06323	101.3737	BASE CASE
FDNS	00NR_G15_042	0	16WP	G15_042	TO->FROM	GR ISLD-LNX3345.00 - HOLT.CO3 345.00 345KV CKT 1	720	720	0.06323	101.0782	GEN645001 1-FORT CALHOUN 1
FDNS	00NR_G15_042	0	16WP	G15_042	TO->FROM	GR ISLD-LNX3345.00 - HOLT.CO3 345.00 345KV CKT 1	720	720	0.0633	100.9973	BRDLAND-LNX3345.00 - HURON 345KV CKT Z
FDNS	00NR_G15_042	0	16WP	G15_042	TO->FROM	GR ISLD-LNX3345.00 - HOLT.CO3 345.00 345KV CKT 1	720	720	0.0633	100.9969	HURON (BD KU2A) 345/230/13.8KV TRANSFORMER CKT 1
FDNS	00NR_G15_042	0	16WP	G15_042	TO->FROM	GR ISLD-LNX3345.00 - HOLT.CO3 345.00 345KV CKT 1	720	720	0.0633	100.9969	HURON (BD KU2A) 345/230/13.8KV TRANSFORMER CKT 1
FDNS	00NR_G15_042	0	16WP	G15_042	TO->FROM	GR ISLD-LNX3345.00 - HOLT.CO3 345.00 345KV CKT 1	720	720	0.0633	100.9968	BROADLAND - HURON 230KV CKT 1
FDNS	00NR_G15_042	0	16WP	G15_042	TO->FROM	GR ISLD-LNX3345.00 - HOLT.CO3 345.00 345KV CKT 1	720	720	0.0633	100.9939	P12:345:UMZB:# 103 #: BD IN SD. LOSS OF LINE
FDNS	00NR_G15_042	0	16WP	G15_042	TO->FROM	GR ISLD-LNX3345.00 - HOLT.CO3 345.00 345KV CKT 1	720	720	0.0633	100.992	P12:345:UMZB:# 102 #: AVS BD IN ND. AVS BRD LR
FDNS	00NR_G15_042	0	16WP	G15_042	TO->FROM	GR ISLD-LNX3345.00 - HOLT.CO3 345.00 345KV CKT 1	720	720	0.06339	100.9734	FT THOMPSON - OAHE 230KV CKT 3
FDNS	00NR_G15_042	0	16WP	G15_042	TO->FROM	GR ISLD-LNX3345.00 - HOLT.CO3 345.00 345KV CKT 1	720	720	0.06339	100.9734	FT THOMPSON - OAHE 230KV CKT 3
FDNS	00NR_G15_042	0	16WP	G15_042	TO->FROM	GR ISLD-LNX3345.00 - HOLT.CO3 345.00 345KV CKT 1	720	720	0.06339	100.9734	FT THOMPSON - OAHE 230KV CKT 4
FDNS	00NR_G15_042	0	16WP	G15_042	TO->FROM	GR ISLD-LNX3345.00 - HOLT.CO3 345.00 345KV CKT 1	720	720	0.06339	100.9734	FT THOMPSON - OAHE 230KV CKT 4
FDNS	00NR_G15_042	0	16WP	G15_042	TO->FROM	GR ISLD-LNX3345.00 - HOLT.CO3 345.00 345KV CKT 1	720	720	0.07492	100.9714	COLUMWEST - KELLY 230KV CKT 1
FDNS	00NR_G15_042	0	16WP	G15_042	TO->FROM	GR ISLD-LNX3345.00 - HOLT.CO3 345.00 345KV CKT 1	720	720	0.06543	100.961	MINGO - SETAB 345KV CKT 1
FDNS	00NR_G15_042	0	16WP	G15_042	TO->FROM	GR ISLD-LNX3345.00 - HOLT.CO3 345.00 345KV CKT 1	720	720	0.06543	100.961	MINGO - SETAB 345KV CKT 1
FDNS	00NR_G15_042	0	16WP	G15_042	TO->FROM	GR ISLD-LNX3345.00 - HOLT.CO3 345.00 345KV CKT 1	720	720	0.0633	100.9343	G14-074T 345.00 - OKLAUNION 345KV CKT 1
FDNS	00NR_G15_042	0	16WP	G15_042	TO->FROM	GR ISLD-LNX3345.00 - HOLT.CO3 345.00 345KV CKT 1	720	720	0.0633	100.9328	ANTELOP-LNX3345.00 - BRDLAND-LNX3345.00 345KV CKT 1
FDNS	00NR_G15_042	0	16WP	G15_042	TO->FROM	GR ISLD-LNX3345.00 - HOLT.CO3 345.00 345KV CKT 1	720	720	0.06328	100.9126	GRAND ISLAND (GI KU3A) 345/230/13.8KV TRANSFORMER CKT 3
FDNS	00NR_G15_042	0	16WP	G15_042	TO->FROM	GR ISLD-LNX3345.00 - HOLT.CO3 345.00 345KV CKT 1	720	720	0.06328	100.9126	GRAND ISLAND (GI KU3A) 345/230/13.8KV TRANSFORMER CKT 3
FDNSLock	00NR_G15_042	0	16WP	G15_042	TO->FROM	GR ISLD-LNX3345.00 - HOLT.CO3 345.00 345KV CKT 1	720	720	0.06365	100.9107	STEGALL - VICTORY HILL 230KV CKT 1
FDNS	00NR_G15_042	0	16WP	G15_042	TO->FROM	GR ISLD-LNX3345.00 - HOLT.CO3 345.00 345KV CKT 1	720	720	0.06323	100.9071	CLKREACT5 161.00 - CRYSTLK5 161.00 161KV CKT 1
FDNS	00NR_G15_042	0	16WP	G15_042	TO->FROM	GR ISLD-LNX3345.00 - HOLT.CO3 345.00 345KV CKT 1	720	720	0.06365	100.9068	VICTORY HILL (VICTORYHL T1) 230/115/13.8KV TRANSFORMER CKT 1
FDNS	00NR_G15_042	0	16WP	G15_042	TO->FROM	GR ISLD-LNX3345.00 - HOLT.CO3 345.00 345KV CKT 1	720	720	0.06365	100.9068	VICTORY HILL (VICTORYHL T1) 230/115/13.8KV TRANSFORMER CKT 1
FDNS	00NR_G15_042	0	16WP	G15_042	TO->FROM	GR ISLD-LNX3345.00 - HOLT.CO3 345.00 345KV CKT 1	720	720	0.06323	100.9025	GEN562003 1-G11_027_3 0.6900
FDNS	00NR_G15_042	0	16WP	G15_042	TO->FROM	GR ISLD-LNX3345.00 - HOLT.CO3 345.00 345KV CKT 1	720	720	0.0635	100.8869	LARAMIE RIVER - STEGALL 345KV CKT 1
FDNS	00NR_G15_042	0	16WP	G15_042	TO->FROM	GR ISLD-LNX3345.00 - HOLT.CO3 345.00 345KV CKT 1	720	720	0.0633	100.8681	ANTELOP-LNX3345.00 - ANTELOPE VALLEY 345KV CKT Z
FDNS	00NR_G15_042	0	16WP	G15_042	TO->FROM	GR ISLD-LNX3345.00 - HOLT.CO3 345.00 345KV CKT 1	720	720	0.06323	100.8679	GEN672340 1-QUEEN ELIZABETH GENERATOR 1
FDNS	00NR_G15_042	0	16WP	G15_042	TO->FROM	GR ISLD-LNX3345.00 - HOLT.CO3 345.00 345KV CKT 1	720	720	0.06323	100.8675	GEN600013 3-BLACK DOG GEN 3
FDNS	00NR_G15_042	0	16WP	G15_042	TO->FROM	GR ISLD-LNX3345.00 - HOLT.CO3 345.00 345KV CKT 1	720	720	0.06323	100.8633	MITCHLCO3 345.00 345/34.5KV TRANSFORMER CKT 1
FDNS	00NR_G15_042	0	16WP	G15_042	TO->FROM	GR ISLD-LNX3345.00 - HOLT.CO3 345.00 345KV CKT 1	720	720	0.0635	100.8513	P12:115:UMZW:# 172 #: WI IN SD.
FDNS	00NR_G15_042	0	16WP	G15_042	TO->FROM	GR ISLD-LNX3345.00 - HOLT.CO3 345.00 345KV CKT 1	720	720	0.06323	100.8501	GEN659018 1-G14_003IS_3 0.6900
FDNS	00NR_G15_042	0	16WP	G15_042	TO->FROM	GR ISLD-LNX3345.00 - HOLT.CO3 345.00 345KV CKT 1	720	720	0.06323	100.843	GEN672384 1-CENTENNIAL WINDFARM
FDNS	00NR_G15_042	0	16WP	G15_042	TO->FROM	GR ISLD-LNX3345.00 - HOLT.CO3 345.00 345KV CKT 1	720	720	0.06323	100.841	GEN600125 2-FEP ST G 13.800
FDNS	00NR_G15_042	0	16WP	G15_042	TO->FROM	GR ISLD-LNX3345.00 - HOLT.CO3 345.00 345KV CKT 1	720	720	0.06323	100.8352	LADISH 115/13.2KV TRANSFORMER CKT 1
FDNS	00NR_G15_042	0	16WP	G15_042	TO->FROM	GR ISLD-LNX3345.00 - HOLT.CO3 345.00 345KV CKT 1	720	720	0.06323	100.83	GEN620323 2-HOOT LAKE 2 GEN
FDNS	00NR_G15_042	0	16WP	G15_042	TO->FROM	GR ISLD-LNX3345.00 - HOLT.CO3 345.00 345KV CKT 1	720	720	0.06514	100.8262	CENTRAL CITY - GRAND ISLAND 115KV CKT 1
FDNS	00NR_G15_042	0	16WP	G15_042	TO->FROM	GR ISLD-LNX3345.00 - HOLT.CO3 345.00 345KV CKT 1	720	720	0.06481	100.8259	AXTELL - PAULINE 345KV CKT 1
FDNS	00NR_G15_042	0	16WP	G15_042	TO->FROM	GR ISLD-LNX3345.00 - HOLT.CO3 345.00 345KV CKT 1	720	720	0.06323	100.8236	GEN659354 1-DEERCREK STG18.000
FDNS	00NR_G15_042	0	16WP	G15_042	TO->FROM	GR ISLD-LNX3345.00 - HOLT.CO3 345.00 345KV CKT 1	720	720	0.06323	100.8135	GEN657964 1-ASH2GEN9 0.5750
FDNS	00NR_G15_042	0	16WP	G15_042	TO->FROM	GR ISLD-LNX3345.00 - HOLT.CO3 345.00 345KV CKT 1	720	720	0.06348	100.809	SMOKYHL6 230.00 - SUMMIT 230KV CKT 1
FDNS	00NR_G15_042	0	16WP	G15_042	TO->FROM	GR ISLD-LNX3345.00 - HOLT.CO3 345.00 345KV CKT 1	720	720	0.06357	100.8047	7MAYWOOD 345.00 - 7SPENCER 345.00 345KV CKT 1
FDNS	00NR_G15_042	0	16WP	G15_042	TO->FROM	GR ISLD-LNX3345.00 - HOLT.CO3 345.00 345KV CKT 1	720	720	0.06323	100.8036	GEN652546 1-FT RANDAL
FDNS	00NR_G15_042	0	16WP	G15_042	TO->FROM	GR ISLD-LNX3345.00 - HOLT.CO3 345.00 345KV CKT 1	720	720	0.06357	100.8008	7MONTGMRY 345.00 - 7SPENCER 345.00 345KV CKT 1
FDNS	00NR_G15_042	0	16WP	G15_042	TO->FROM	GR ISLD-LNX3345.00 - HOLT.CO3 345.00 345KV CKT 1	720	720	0.06348	100.7832	FALLOW 3 345.00 - POTTCO 3 345.00 345KV CKT 1
FDNS	00NR_G15_042	0	16WP	G15_042	TO->FROM	GR ISLD-LNX3345.00 - HOLT.CO3 345.00 345KV CKT 1	720	720	0.06323	100.7774	GEN600018 S-LS POWER STEAM
FDNS	00NR_G15_042	0	16WP	G15_042	TO->FROM	GR ISLD-LNX3345.00 - HOLT.CO3 345.00 345KV CKT 1	720	720	0.06323	100.7746	GEN659290 1-EDGECOL
FDNS	00NR_G15_042	0	16WP	G15_042	TO->FROM	GR ISLD-LNX3345.00 - HOLT.CO3 345.00 345KV CKT 1	720	720	0.06323	100.7729	GEN635213 3-NEAL UNIT 3
FDNS	00NR_G15_042	0	16WP	G15_042	TO->FROM	GR ISLD-LNX3345.00 - HOLT.CO3 345.00 345KV CKT 1	720	720	0.06323	100.7691	G830_SUB 115.00 - GRE-MCHENRY7115.00 115KV CKT 1
FDNS	00NR_G15_042	0	16WP	G15_042	TO->FROM	GR ISLD-LNX3345.00 - HOLT.CO3 345.00 345KV CKT 1	720	720	0.06323	100.7677	GEN652547 3-FT RANDAL
FDNS	00NR_G15_042	0	16WP	G15_042	TO->FROM	GR ISLD-LNX3345.00 - HOLT.CO3 345.00 345KV CKT 1	720	720	0.06323	100.7677	GEN652548 5-FT RANDAL
FDNS	00NR_G15_042	0	16WP	G15_042	TO->FROM	GR ISLD-LNX3345.00 - HOLT.CO3 345.00 345KV CKT 1	720	720	0.06323	100.7677	GEN652549 7-FT RANDAL
FDNS	00NR_G15_042	0	16WP	G15_042	TO->FROM	GR ISLD-LNX3345.00 - HOLT.CO3 345.00 345KV CKT 1	720	720	0.06323	100.7667	GEN590010 1-ERCOT EQUIVALENCE
FDNS	00NR_G15_042	0	16WP	G15_042	TO->FROM	GR ISLD-LNX3345.00 - HOLT.CO3 345.00 345KV CKT 1	720	720	0.06323	100.7581	G830_SUB 115.00 115/34.5KV TRANSFORMER CKT 1
FDNS	00NR_G15_042	0	16WP	G15_042	TO->FROM	GR ISLD-LNX3345.00 - HOLT.CO3 345.00 345KV CKT 1	720	720	0.06323	100.7512	GEN652410 3-FT PECK
FDNS	00NR_G15_042	0	16WP	G15_042	TO->FROM	GR ISLD-LNX3345.00 - HOLT.CO3 345.00 345KV CKT 1	720	720	0.0658	100.7491	SUB 3454 - WAGENER 345KV CKT 1
FDNS	00NR_G15_042	0	16WP	G15_042	TO->FROM	GR ISLD-LNX3345.00 - HOLT.CO3 345.00 345KV CKT 1	720	720	0.0658	100.7491	SUB 3454 - WAGENER 345KV CKT 1
FDNS	00NR_G15_042	0	16WP	G15_042	TO->FROM	GR ISLD-LNX3345.00 - HOLT.CO3 345.00 345KV CKT 1	720	720	0.06323	100.7467	GEN300003 1-THOMAS HILL UNIT 3
FDNS	00NR_G15_042	0	16WP	G15_042	TO->FROM	GR ISLD-LNX3345.00 - HOLT.CO3 345.00 345KV CKT 1	720	720	0.06323	100.738	GEN590011 2-ERCOT EQUIVALENCE
FDNS	00NR_G15_042	0	16WP	G15_042	TO->FROM	GR ISLD-LNX3345.00 - HOLT.CO3 345.00 345KV CKT 1	720	720	0.06355	100.7258	POST ROCK (POSTROCK T1) 345/230/13.8KV TRANSFORMER CKT 1
FDNS	00NR_G15_042	0	16WP	G15_042	TO->FROM	GR ISLD-LNX3345.00 - HOLT.CO3 345.00 345KV CKT 1	720	720	0.06323	100.7232	EASTDC - ERCOT EQUIVALENCE 345KV CKT 1
FDNS	00NR_G15_042	0	16WP	G15_042	TO->FROM	GR ISLD-LNX3345.00 - HOLT.CO3 345.00 345KV CKT 1	720	720	0.06323	100.7164	GEN672347 1-CORY COGEN GENERATOR 1 GT1
FDNS	00NR_G15_042	0	16WP	G15_042	TO->FROM	GR ISLD-LNX3345.00 - HOLT.CO3 345.00 345KV CKT 1	720	720	0.06323	100.7164	GEN672348 2-CORY COGEN GENERATOR 2 GT2
FDNS	00NR_G15_042	0	16WP	G15_042	TO->FROM	GR ISLD-LNX3345.00 - HOLT.CO3 345.00 345KV CKT 1	720	720	0.06323	100.7116	GEN672350 1-NIPAWIN GENERATOR 1
FDNS	00NR_G15_042	0	16WP	G15_042	TO->FROM	GR ISLD-LNX3345.00 - HOLT.CO3 345.00 345KV CKT 1	720	720	0.06323	100.7116	GEN672351 2-NIPAWIN GENERATOR 2
FDNS	00NR_G15_042	0	16WP	G15_042	TO->FROM	GR ISLD-LNX3345.00 - HOLT.CO3 345.00 345KV CKT 1	720	720	0.06323	100.7115	GEN672352 3-NIPAWIN GENERATOR 3
FDNS	00NR_G15_042	0	16WP	G15_042	TO->FROM	GR ISLD-LNX3345.00 - HOLT.CO3 345.00 345KV CKT 1	720	720	0.06323	100.6921	GEN652414 4-FT PECK
FDNS	00NR_G15_042	0	16WP	G15_042	TO->FROM	GR ISLD-LNX3345.00 - HOLT.CO3 345.00 345KV CKT 1	720	720	0.06323	100.6921	GEN652415 5-FT PECK

SOLUTION	GROUP	SCENARIO	SEASON	SOURCE	DIRECTION	MONITORED ELEMENT	RATEA (MVA)	RATEB(MVA)	TDF	TC%LOADING (% MVA)	CONTINGENCY
FDNS	00NR_G15_042	0	16WP	G15_042	TO->FROM	GR ISLD-LNX3345.00 - HOLT.CO3 345.00 345KV CKT 1	720	720	0.06323	100.692	GEN657600 1-L1GEN3 9 0.5750
FDNS	00NR_G15_042	0	16WP	G15_042	TO->FROM	GR ISLD-LNX3345.00 - HOLT.CO3 345.00 345KV CKT 1	720	720	0.06323	100.6731	GEN600012 2-BLACK DOG GEN 2
FDNS	00NR_G15_042	0	16WP	G15_042	TO->FROM	GR ISLD-LNX3345.00 - HOLT.CO3 345.00 345KV CKT 1	720	720	0.06323	100.6711	GEN660001 2-ABERDEEN SIEBRECHT
FDNS	00NR_G15_042	0	16WP	G15_042	TO->FROM	GR ISLD-LNX3345.00 - HOLT.CO3 345.00 345KV CKT 1	720	720	0.06341	100.6669	G11_051T 345.00 - WOODWARD DISTRICT EHV 345KV CKT 1
FDNS	00NR_G15_042	0	16WP	G15_042	TO->FROM	GR ISLD-LNX3345.00 - HOLT.CO3 345.00 345KV CKT 1	720	720	0.06335	100.6667	MADISON COUNTY - RLHILLS3 345.00 345KV CKT 1
FDNS	00NR_G15_042	0	16WP	G15_042	TO->FROM	GR ISLD-LNX3345.00 - HOLT.CO3 345.00 345KV CKT 1	720	720	0.06323	100.6602	GEN652345 W-G07_023IS_2 0.6900
FDNS	00NR_G15_042	0	16WP	G15_042	TO->FROM	GR ISLD-LNX3345.00 - HOLT.CO3 345.00 345KV CKT 1	720	720	0.06323	100.6531	GEN629074 1-ARNOLD LOWSIDE OF GSU XFMR
FDNS	00NR_G15_042	0	16WP	G15_042	TO->FROM	GR ISLD-LNX3345.00 - HOLT.CO3 345.00 345KV CKT 1	720	720	0.06323	100.6461	GEN615032 2-PLEASANT VALLEY
FDNS	00NR_G15_042	0	16WP	G15_042	TO->FROM	GR ISLD-LNX3345.00 - HOLT.CO3 345.00 345KV CKT 1	720	720	0.06323	100.6365	GEN672367 1-MERIDIAN GENERATOR 1 GT1
FDNS	00NR_G15_042	0	16WP	G15_042	TO->FROM	GR ISLD-LNX3345.00 - HOLT.CO3 345.00 345KV CKT 1	720	720	0.06323	100.6365	GEN672368 2-MERIDIAN GENERATOR 2 GT2
FDNS	00NR_G15_042	0	16WP	G15_042	TO->FROM	GR ISLD-LNX3345.00 - HOLT.CO3 345.00 345KV CKT 1	720	720	0.06323	100.6362	GEN672349 3-CORY COGEN GENERATOR 3 ST
FDNS	00NR_G15_042	0	16WP	G15_042	TO->FROM	GR ISLD-LNX3345.00 - HOLT.CO3 345.00 345KV CKT 1	720	720	0.06323	100.6274	GEN300007 1-NEW MADRID UNIT 2
FDNS	00NR_G15_042	0	16WP	G15_042	TO->FROM	GR ISLD-LNX3345.00 - HOLT.CO3 345.00 345KV CKT 1	720	720	0.06323	100.6256	GEN672342 3-QUEEN ELIZABETH GENERATOR 3
FDNS	00NR_G15_042	0	16WP	G15_042	TO->FROM	GR ISLD-LNX3345.00 - HOLT.CO3 345.00 345KV CKT 1	720	720	0.06323	100.6255	GEN672339 16-QE 16G 13.800
FDNS	00NR_G15_042	0	16WP	G15_042	TO->FROM	GR ISLD-LNX3345.00 - HOLT.CO3 345.00 345KV CKT 1	720	720	0.06323	100.6222	GEN300006 1-NEW MADRID UNIT 1
FDNS	00NR_G15_042	0	16WP	G15_042	TO->FROM	GR ISLD-LNX3345.00 - HOLT.CO3 345.00 345KV CKT 1	720	720	0.06323	100.6158	GEN620324 3-HOOT LAKE 3 GEN
FDNS	00NR_G15_042	0	16WP	G15_042	TO->FROM	GR ISLD-LNX3345.00 - HOLT.CO3 345.00 345KV CKT 1	720	720	0.06573	100.598	ATCHSNT3 345.00 - COOPER 345KV CKT 1
FDNS	00NR_G15_042	0	16WP	G15_042	TO->FROM	GR ISLD-LNX3345.00 - HOLT.CO3 345.00 345KV CKT 1	720	720	0.06573	100.598	ATCHSNT3 345.00 - COOPER 345KV CKT 1
FDNS	00NR_G15_042	0	16WP	G15_042	TO->FROM	GR ISLD-LNX3345.00 - HOLT.CO3 345.00 345KV CKT 1	720	720	0.06323	100.5964	GEN 11104 1-J262_GEN 0.6000
FDNS	00NR_G15_042	0	16WP	G15_042	TO->FROM	GR ISLD-LNX3345.00 - HOLT.CO3 345.00 345KV CKT 1	720	720	0.06323	100.5964	GEN 11108 1-J263_GEN 0.6000
FDNS	00NR_G15_042	0	16WP	G15_042	TO->FROM	GR ISLD-LNX3345.00 - HOLT.CO3 345.00 345KV CKT 1	720	720	0.06304	100.594	GLENHAM - L3 HAWDON 230KV CKT 1
FDNS	00NR_G15_042	0	16WP	G15_042	TO->FROM	GR ISLD-LNX3345.00 - HOLT.CO3 345.00 345KV CKT 1	720	720	0.06527	100.5862	103RD & ROKEBY - MOORE 345KV CKT 1
FDNS	00NR_G15_042	0	16WP	G15_042	TO->FROM	GR ISLD-LNX3345.00 - HOLT.CO3 345.00 345KV CKT 1	720	720	0.06527	100.5862	103RD & ROKEBY - MOORE 345KV CKT 1
FDNS	00NR_G15_042	0	16WP	G15_042	TO->FROM	GR ISLD-LNX3345.00 - HOLT.CO3 345.00 345KV CKT 1	720	720	0.06203	100.574	HIGHLND 3 345.00 - OBRIEN 3 345.00 345KV CKT 1
FDNS	00NR_G15_042	0	16WP	G15_042	TO->FROM	GR ISLD-LNX3345.00 - HOLT.CO3 345.00 345KV CKT 1	720	720	0.06323	100.5545	GEN635214 4-NEAL UNIT 4
FDNS	00NR_G15_042	0	16WP	G15_042	TO->FROM	GR ISLD-LNX3345.00 - HOLT.CO3 345.00 345KV CKT 1	720	720	0.06323	100.5533	GEN600050 1-FEP
FDNS	00NR_G15_042	0	16WP	G15_042	TO->FROM	GR ISLD-LNX3345.00 - HOLT.CO3 345.00 345KV CKT 1	720	720	0.06323	100.5433	GEN659273 2-GROTON SYNC COND
FDNS	00NR_G15_042	0	16WP	G15_042	TO->FROM	GR ISLD-LNX3345.00 - HOLT.CO3 345.00 345KV CKT 1	720	720	0.06323	100.5433	GEN659294 1-WILTONCOL9
FDNS	00NR_G15_042	0	16WP	G15_042	TO->FROM	GR ISLD-LNX3345.00 - HOLT.CO3 345.00 345KV CKT 1	720	720	0.06323	100.5432	CENTER 230/22.0KV TRANSFORMER CKT 1
FDNS	00NR_G15_042	0	16WP	G15_042	TO->FROM	GR ISLD-LNX3345.00 - HOLT.CO3 345.00 345KV CKT 1	720	720	0.06518	100.5422	GERALD GENTLEMAN STATION - RED WILLOW 345KV CKT 1
FDNS	00NR_G15_042	0	16WP	G15_042	TO->FROM	GR ISLD-LNX3345.00 - HOLT.CO3 345.00 345KV CKT 1	720	720	0.06348	100.5352	FALLOW 3 345.00 - GRIMES 345KV CKT 1
FDNS	00NR_G15_042	0	16WP	G15_042	TO->FROM	GR ISLD-LNX3345.00 - HOLT.CO3 345.00 345KV CKT 1	720	720	0.06341	100.5193	G11_051T 345.00 - TATONGA7 345.00 345KV CKT 1
FDNS	00NR_G15_042	0	16WP	G15_042	TO->FROM	GR ISLD-LNX3345.00 - HOLT.CO3 345.00 345KV CKT 1	720	720	0.06323	100.509	GEN672393 2-NBECST2G 13.800
FDNS	00NR_G15_042	0	16WP	G15_042	TO->FROM	GR ISLD-LNX3345.00 - HOLT.CO3 345.00 345KV CKT 1	720	720	0.06323	100.5067	GEN629072 4-LANSING GENERATOR FOR UNITS NO4 EIA CODE 1
FDNS	00NR_G15_042	0	16WP	G15_042	TO->FROM	GR ISLD-LNX3345.00 - HOLT.CO3 345.00 345KV CKT 1	720	720	0.06323	100.4724	GEN600065 7-HIGH BRIDGE
FDNS	00NR_G15_042	0	16WP	G15_042	TO->FROM	GR ISLD-LNX3345.00 - HOLT.CO3 345.00 345KV CKT 1	720	720	0.06323	100.4724	GEN600066 8-HIGH BRIDGE
FDNS	00NR_G15_042	0	16WP	G15_042	TO->FROM	GR ISLD-LNX3345.00 - HOLT.CO3 345.00 345KV CKT 1	720	720	0.06323	100.465	GEN659192 6-LYNN
FDNS	00NR_G15_042	0	16WP	G15_042	TO->FROM	GR ISLD-LNX3345.00 - HOLT.CO3 345.00 345KV CKT 1	720	720	0.06323	100.4639	GEN659162 4-RED WLCK
FDNS	00NR_G15_042	0	16WP	G15_042	TO->FROM	GR ISLD-LNX3345.00 - HOLT.CO3 345.00 345KV CKT 1	720	720	0.06323	100.4639	GEN659163 5-BLACK WDCK
FDNS	00NR_G15_042	0	16WP	G15_042	TO->FROM	GR ISLD-LNX3345.00 - HOLT.CO3 345.00 345KV CKT 1	720	720	0.06157	100.4546	COOPER - MOORE 345KV CKT 1
FDNS	00NR_G15_042	0	16WP	G15_042	TO->FROM	GR ISLD-LNX3345.00 - HOLT.CO3 345.00 345KV CKT 1	720	720	0.06323	100.4514	GEN657985 1-ASH1GEN9 0.5750
FDNS	00NR_G15_042	0	16WP	G15_042	TO->FROM	GR ISLD-LNX3345.00 - HOLT.CO3 345.00 345KV CKT 1	720	720	0.06323	100.4514	LANSING WEST 161/22.0KV TRANSFORMER CKT 1
FDNS	00NR_G15_042	0	16WP	G15_042	TO->FROM	GR ISLD-LNX3345.00 - HOLT.CO3 345.00 345KV CKT 1	720	720	0.06323	100.439	GEN652906 1-G09_006IS_3 0.6900
FDNS	00NR_G15_042	0	16WP	G15_042	TO->FROM	GR ISLD-LNX3345.00 - HOLT.CO3 345.00 345KV CKT 1	720	720	0.06323	100.4102	GEN 10648 1-G830_GEN 0.6900
FDNS	00NR_G15_042	0	16WP	G15_042	TO->FROM	GR ISLD-LNX3345.00 - HOLT.CO3 345.00 345KV CKT 1	720	720	0.06323	100.3892	GEN600067 9-HIGH BRIDGE
FDNS	00NR_G15_042	0	16WP	G15_042	TO->FROM	GR ISLD-LNX3345.00 - HOLT.CO3 345.00 345KV CKT 1	720	720	0.06323	100.3869	GEN600014 4-BLACK DOG GEN 4
FDNS	00NR_G15_042	0	16WP	G15_042	TO->FROM	GR ISLD-LNX3345.00 - HOLT.CO3 345.00 345KV CKT 1	720	720	0.04802	100.3869	DIXONCO 230.00 - TWIN CHURCH 230KV CKT 1
FDNS	00NR_G15_042	0	16WP	G15_042	TO->FROM	GR ISLD-LNX3345.00 - HOLT.CO3 345.00 345KV CKT 1	720	720	0.06323	100.3866	GEN600071 10-RIVER SIDE
FDNS	00NR_G15_042	0	16WP	G15_042	TO->FROM	GR ISLD-LNX3345.00 - HOLT.CO3 345.00 345KV CKT 1	720	720	0.06323	100.3865	GEN600070 9-RIVER SIDE
FDNS	00NR_G15_042	0	16WP	G15_042	TO->FROM	GR ISLD-LNX3345.00 - HOLT.CO3 345.00 345KV CKT 1	720	720	0.06573	100.3846	ATCHSNT3 345.00 - BOONEVILLE 345KV CKT 1
FDNS	00NR_G15_042	0	16WP	G15_042	TO->FROM	GR ISLD-LNX3345.00 - HOLT.CO3 345.00 345KV CKT 1	720	720	0.06323	100.3833	GEN600011 5-BLACK DOG GEN 1
FDNS	00NR_G15_042	0	16WP	G15_042	TO->FROM	GR ISLD-LNX3345.00 - HOLT.CO3 345.00 345KV CKT 1	720	720	0.06323	100.373	GEN600007 7-RIVERSIDE GEN 7
FDNS	00NR_G15_042	0	16WP	G15_042	TO->FROM	GR ISLD-LNX3345.00 - HOLT.CO3 345.00 345KV CKT 1	720	720	0.06323	100.3529	GEN615015 1-GRE-SPRITWDG13.200
FDNS	00NR_G15_042	0	16WP	G15_042	TO->FROM	GR ISLD-LNX3345.00 - HOLT.CO3 345.00 345KV CKT 1	720	720	0.06323	100.3278	GEN660016 1-B_H WIND 0.7000
FDNS	00NR_G15_042	0	16WP	G15_042	TO->FROM	GR ISLD-LNX3345.00 - HOLT.CO3 345.00 345KV CKT 1	720	720	0.06323	100.3268	GEN652907 1-G09_007IS_3 0.6900
FDNS	00NR_G15_042	0	16WP	G15_042	TO->FROM	GR ISLD-LNX3345.00 - HOLT.CO3 345.00 345KV CKT 1	720	720	0.06323	100.3212	GEN600017 C-LS POWER CT
FDNS	00NR_G15_042	0	16WP	G15_042	TO->FROM	GR ISLD-LNX3345.00 - HOLT.CO3 345.00 345KV CKT 1	720	720	0.06323	100.3203	GEN615052 1-CAMBRIDGE GENERATING STATION
FDNS	00NR_G15_042	0	16WP	G15_042	TO->FROM	GR ISLD-LNX3345.00 - HOLT.CO3 345.00 345KV CKT 1	720	720	0.06323	100.2794	GEN681522 3-GENOA 3
FDNS	00NR_G15_042	0	16WP	G15_042	TO->FROM	GR ISLD-LNX3345.00 - HOLT.CO3 345.00 345KV CKT 1	720	720	0.06323	100.2503	GEN662101 1-WESSINGTON190.5750
FDNS	00NR_G15_042	0	16WP	G15_042	TO->FROM	GR ISLD-LNX3345.00 - HOLT.CO3 345.00 345KV CKT 1	720	720	0.06341	100.2501	MATHWSN7 345.00 - TATONGA7 345.00 345KV CKT 1
FDNS	00NR_G15_042	0	16WP	G15_042	TO->FROM	GR ISLD-LNX3345.00 - HOLT.CO3 345.00 345KV CKT 1	720	720	0.0647	100.2238	AXTELL - POST ROCK 345KV CKT 1
FDNS	00NR_G15_042	0	16WP	G15_042	TO->FROM	GR ISLD-LNX3345.00 - HOLT.CO3 345.00 345KV CKT 1	720	720	0.06323	100.125	GEN562832 1-G15042_3 0.6900
FDNS	00NR_G15_042	0	16WP	G15_042	TO->FROM	GR ISLD-LNX3345.00 - HOLT.CO3 345.00 345KV CKT 1	720	720	0.06323	100.1152	GEN659353 1-DEERCREK CTG18.000
FDNS	00NR_G15_042	0	16WP	G15_042	TO->FROM	GR ISLD-LNX3345.00 - HOLT.CO3 345.00 345KV CKT 1	720	720	0.06323	100.106	GEN910006 1-G12_012IS_3 0.6900
FDNS	00NR_G15_042	0	16WP	G15_042	TO->FROM	GR ISLD-LNX3345.00 - HOLT.CO3 345.00 345KV CKT 1	720	720	0.06323	100.0492	GEN615021 1-GRE-ER 14G 16.000
FDNS	00NR_G15_042	0	16WP	G15_042	TO->FROM	GR ISLD-LNX3345.00 - HOLT.CO3 345.00 345KV CKT 1	720	720	0.06705	100	MINGO - RED WILLOW 345KV CKT 1
FDNS	00NR_G15_042	0	16WP	G15_042	TO->FROM	GR ISLD-LNX3345.00 - HOLT.CO3 345.00 345KV CKT 1	720	720	0.06705	100	MINGO - RED WILLOW 345KV CKT 1
FDNS	00NR_G15_042	0	16WP	G15_042	TO->FROM	GR ISLD-LNX3345.00 - HOLT.CO3 345.00 345KV CKT 1	720	720	0.06323	100	GEN672303 3-BOUNDARY DAM GENERATOR 3
FDNS	00NR_G15_042	0	16WP	G15_042	TO->FROM	GR ISLD-LNX3345.00 - HOLT.CO3 345.00 345KV CKT 1	720	720	0.06323	100	GEN672304 4-BOUNDARY DAM GENERATOR 4
FDNS	00NR_G15_042	0	16WP	G15_042	TO->FROM	GR ISLD-LNX3345.00 - HOLT.CO3 345.00 345KV CKT 1	720	720	0.06323	100	GEN672305 5-BOUNDARY DAM GENERATOR 5
FDNS	00NR_G15_042	0	16WP	G15_042	TO->FROM	GR ISLD-LNX3345.00 - HOLT.CO3 345.00 345KV CKT 1	720	720	0.06724	99.9	MOORE - PAULINE 345KV CKT 1
FDNS	00NR_G15_042	0	16WP	G15_042	TO->FROM	GR ISLD-LNX3345.00 - HOLT.CO3 345.00 345KV CKT 1	720	720	0.06323	99.9	BISONMP4 230.00 - SQUARE BUTTE 230KV CKT 1
FDNS	00NR_G15_042	0	16WP	G15_042	TO->FROM	GR ISLD-LNX3345.00 - HOLT.CO3 345.00 345KV CKT 1	720	720	0.07492	99.8	COLUMWEST - GRAND ISLAND 230KV CKT 1

SOLUTION	GROUP	SCENARIO	SEASON	SOURCE	DIRECTION	MONITORED ELEMENT	RATEA (MVA)	RATEB(MVA)	TDF	TC%LOADING (% MVA)	CONTINGENCY
FDNS	00NR_G15_042	0	16WP	G15_042	TO->FROM	GR ISLD-LNX3345.00 - HOLT.CO3 345.00 345KV CKT 1	720	720	0.06323	99.8	GEN652460 4-GARRISON
FDNS	00NR_G15_042	0	16WP	G15_042	TO->FROM	GR ISLD-LNX3345.00 - HOLT.CO3 345.00 345KV CKT 1	720	720	0.06323	99.8	GEN652461 5-GARRISON
FDNS	00NR_G15_042	0	16WP	G15_042	TO->FROM	GR ISLD-LNX3345.00 - HOLT.CO3 345.00 345KV CKT 1	720	720	0.06323	99.8	GEN672392 1-NBECGT1G 18.000
FDNS	00NR_G15_042	0	16WP	G15_042	TO->FROM	GR ISLD-LNX3345.00 - HOLT.CO3 345.00 345KV CKT 1	720	720	0.06323	99.7	COYOTE 345/24.0KV TRANSFORMER CKT 1
FDNS	00NR_G15_042	0	16WP	G15_042	TO->FROM	GR ISLD-LNX3345.00 - HOLT.CO3 345.00 345KV CKT 1	720	720	0.06323	99.7	GEN652457 1-GARRISON
FDNS	00NR_G15_042	0	16WP	G15_042	TO->FROM	GR ISLD-LNX3345.00 - HOLT.CO3 345.00 345KV CKT 1	720	720	0.06323	99.7	GEN652458 2-GARRISON
FDNS	00NR_G15_042	0	16WP	G15_042	TO->FROM	GR ISLD-LNX3345.00 - HOLT.CO3 345.00 345KV CKT 1	720	720	0.06323	99.7	GEN652459 3-GARRISON
FDNS	00NR_G15_042	0	16WP	G15_042	TO->FROM	GR ISLD-LNX3345.00 - HOLT.CO3 345.00 345KV CKT 1	720	720	0.06323	99.7	GEN652542 1-BIG BEND
FDNS	00NR_G15_042	0	16WP	G15_042	TO->FROM	GR ISLD-LNX3345.00 - HOLT.CO3 345.00 345KV CKT 1	720	720	0.06323	99.7	GEN659010 4-G07_027IS_2 0.6900
FDNS	00NR_G15_042	0	16WP	G15_042	TO->FROM	GR ISLD-LNX3345.00 - HOLT.CO3 345.00 345KV CKT 1	720	720	0.06323	99.7	GEN659194 1-NDPRAIRWND1W0.6900
FDNS	00NR_G15_042	0	16WP	G15_042	TO->FROM	GR ISLD-LNX3345.00 - HOLT.CO3 345.00 345KV CKT 1	720	720	0.06323	99.6	GEN659403 1-NDSUNFLWR W0.6900
FDNS	00NR_G15_042	0	16WP	G15_042	TO->FROM	GR ISLD-LNX3345.00 - HOLT.CO3 345.00 345KV CKT 1	720	720	0.06323	99.5	GEN681542 6-JP MADGETT
FDNS	00NR_G15_042	0	17SP	G15_042	FROM->TO	HOSKINS (HOSKINS T1) 230/115/13.8KV TRANSFORMER CKT 1	187	187	0.13488	116.8086	P13:230-345:NPPD:NUCOR-1
FDNS	00NR_G15_042	0	25SP	G15_042	FROM->TO	HOSKINS (HOSKINS T1) 230/115/13.8KV TRANSFORMER CKT 1	187	187	0.1351	116.6045	P13:230-345:NPPD:NUCOR-1
FDNS	00NR_G15_042	0	20SP	G15_042	FROM->TO	HOSKINS (HOSKINS T1) 230/115/13.8KV TRANSFORMER CKT 1	187	187	0.13507	116.2752	P13:230-345:NPPD:NUCOR-1
FDNS	00NR_G15_042	0	17SP	G15_042	FROM->TO	HOSKINS (HOSKINS T1) 230/115/13.8KV TRANSFORMER CKT 1	187	187	0.13488	115.6761	P13:230-345:NPPD:NUCOR-1
FDNS	00NR_G15_042	0	25SP	G15_042	FROM->TO	HOSKINS (HOSKINS T1) 230/115/13.8KV TRANSFORMER CKT 1	187	187	0.1351	115.3244	P13:230-345:NPPD:NUCOR-1
FDNS	00NR_G15_042	0	20SP	G15_042	FROM->TO	HOSKINS (HOSKINS T1) 230/115/13.8KV TRANSFORMER CKT 1	187	187	0.13507	114.9357	P13:230-345:NPPD:NUCOR-1
FDNS	09ALL_G15_042	0	25SP	G15_042	FROM->TO	HOSKINS (HOSKINS T1) 230/115/13.8KV TRANSFORMER CKT 1	187	187	0.26959	107.2625	DIXONCO 230.00 - TWIN CHURCH 230KV CKT 1
FDNS	09ALL_G15_042	0	17SP	G15_042	FROM->TO	HOSKINS (HOSKINS T1) 230/115/13.8KV TRANSFORMER CKT 1	187	187	0.2692	107.0179	DIXONCO 230.00 - TWIN CHURCH 230KV CKT 1
FDNS	09ALL_G15_042	0	20SP	G15_042	FROM->TO	HOSKINS (HOSKINS T1) 230/115/13.8KV TRANSFORMER CKT 1	187	187	0.26962	105.8651	DIXONCO 230.00 - TWIN CHURCH 230KV CKT 1
FDNS	09ALL_G15_042	0	25SP	G15_042	FROM->TO	HOSKINS (HOSKINS T1) 230/115/13.8KV TRANSFORMER CKT 1	187	187	0.26959	105.0231	DIXONCO 230.00 - TWIN CHURCH 230KV CKT 1
FDNS	09ALL_G15_042	0	17SP	G15_042	FROM->TO	HOSKINS (HOSKINS T1) 230/115/13.8KV TRANSFORMER CKT 1	187	187	0.2692	104.7549	DIXONCO 230.00 - TWIN CHURCH 230KV CKT 1
FDNS	09ALL_G15_042	0	20SP	G15_042	FROM->TO	HOSKINS (HOSKINS T1) 230/115/13.8KV TRANSFORMER CKT 1	187	187	0.26962	103.6549	DIXONCO 230.00 - TWIN CHURCH 230KV CKT 1
FDNS	09ALL_G15_042	0	16WP	G15_042	FROM->TO	HOSKINS (HOSKINS T1) 230/115/13.8KV TRANSFORMER CKT 1	187	187	0.26941	103.2426	DIXONCO 230.00 - TWIN CHURCH 230KV CKT 1
FDNS	09ALL_G15_042	0	20WP	G15_042	FROM->TO	HOSKINS (HOSKINS T1) 230/115/13.8KV TRANSFORMER CKT 1	187	187	0.26972	103.1653	DIXONCO 230.00 - TWIN CHURCH 230KV CKT 1
FDNS	09NR_G15_042	0	17G	G15_042	FROM->TO	HOSKINS (HOSKINS T1) 230/115/13.8KV TRANSFORMER CKT 1	187	187	0.13456	102.5769	P13:230-345:NPPD:NUCOR-1
FDNS	09NR_G15_042	0	17G	G15_042	FROM->TO	HOSKINS (HOSKINS T1) 230/115/13.8KV TRANSFORMER CKT 1	187	187	0.13456	101.6355	P13:230-345:NPPD:NUCOR-1
FDNS	09ALL_G15_042	0	17G	G15_042	FROM->TO	HOSKINS (HOSKINS T1) 230/115/13.8KV TRANSFORMER CKT 1	187	187	0.26925	101.4649	DIXONCO 230.00 - TWIN CHURCH 230KV CKT 1
FDNS	09ALL_G15_042	0	16WP	G15_042	FROM->TO	HOSKINS (HOSKINS T1) 230/115/13.8KV TRANSFORMER CKT 1	187	187	0.26941	100.9896	DIXONCO 230.00 - TWIN CHURCH 230KV CKT 1
FDNS	00NR_G15_042	0	20WP	G15_042	FROM->TO	HOSKINS (HOSKINS T1) 230/115/13.8KV TRANSFORMER CKT 1	187	187	0.13504	100.9013	P13:230-345:NPPD:NUCOR-1
FDNS	09ALL_G15_042	0	20WP	G15_042	FROM->TO	HOSKINS (HOSKINS T1) 230/115/13.8KV TRANSFORMER CKT 1	187	187	0.26972	100.8812	DIXONCO 230.00 - TWIN CHURCH 230KV CKT 1
FDNS	09NR_G15_042	0	20L	G15_042	FROM->TO	HOSKINS (HOSKINS T1) 230/115/13.8KV TRANSFORMER CKT 1	187	187	0.13477	100.7522	P13:230-345:NPPD:NUCOR-1
FDNS	09NR_G15_042	0	20L	G15_042	FROM->TO	HOSKINS (HOSKINS T1) 230/115/13.8KV TRANSFORMER CKT 1	187	187	0.13477	100.2643	P13:230-345:NPPD:NUCOR-1
FDNS	09ALL_G15_042	0	17G	G15_042	FROM->TO	HOSKINS (HOSKINS T1) 230/115/13.8KV TRANSFORMER CKT 1	187	187	0.26925	99.9	DIXONCO 230.00 - TWIN CHURCH 230KV CKT 1
FDNS	00NR_G15_042	0	20WP	G15_042	FROM->TO	HOSKINS (HOSKINS T1) 230/115/13.8KV TRANSFORMER CKT 1	187	187	0.13504	99.7	P13:230-345:NPPD:NUCOR-1
FDNS	00NR_G15_042	0	16WP	G15_042	FROM->TO	HOSKINS (HOSKINS T1) 230/115/13.8KV TRANSFORMER CKT 1	187	187	0.13487	99.6	P13:230-345:NPPD:NUCOR-1
FDNS	09ALL_G15_042	0	20L	G15_042	FROM->TO	HOSKINS (HOSKINS T2) 345/230/13.8KV TRANSFORMER CKT 1	336	336	0.72984	117.8831	DIXONCO 230.00 - TWIN CHURCH 230KV CKT 1
FDNS	09ALL_G15_042	0	17G	G15_042	FROM->TO	HOSKINS (HOSKINS T2) 345/230/13.8KV TRANSFORMER CKT 1	336	336	0.73075	115.2955	DIXONCO 230.00 - TWIN CHURCH 230KV CKT 1
FDNS	09ALL_G15_042	0	20L	G15_042	FROM->TO	HOSKINS (HOSKINS T2) 345/230/13.8KV TRANSFORMER CKT 1	336	336	0.72984	113.7055	DIXONCO 230.00 - TWIN CHURCH 230KV CKT 1
FDNS	09ALL_G15_042	0	17G	G15_042	FROM->TO	HOSKINS (HOSKINS T2) 345/230/13.8KV TRANSFORMER CKT 1	336	336	0.73075	111.3484	DIXONCO 230.00 - TWIN CHURCH 230KV CKT 1
FDNS	09NR_G15_042	0	20L	G15_042	FROM->TO	HOSKINS (HOSKINS T2) 345/230/13.8KV TRANSFORMER CKT 1	336	336	0.73029	108.7346	DIXONCO 230.00 - TWIN CHURCH 230KV CKT 1
FDNS	09NR_G15_042	0	17G	G15_042	FROM->TO	HOSKINS (HOSKINS T2) 345/230/13.8KV TRANSFORMER CKT 1	336	336	0.73078	106.305	DIXONCO 230.00 - TWIN CHURCH 230KV CKT 1
FDNS	09NR_G15_042	0	20L	G15_042	FROM->TO	HOSKINS (HOSKINS T2) 345/230/13.8KV TRANSFORMER CKT 1	336	336	0.73029	105.2774	DIXONCO 230.00 - TWIN CHURCH 230KV CKT 1
FDNS	09NR_G15_042	0	17G	G15_042	FROM->TO	HOSKINS (HOSKINS T2) 345/230/13.8KV TRANSFORMER CKT 1	336	336	0.73078	103.0145	DIXONCO 230.00 - TWIN CHURCH 230KV CKT 1
FDNS	09ALL_G15_042	0	16WP	G15_042	FROM->TO	HOSKINS (HOSKINS T2) 345/230/13.8KV TRANSFORMER CKT 1	336	336	0.73059	102.7724	DIXONCO 230.00 - TWIN CHURCH 230KV CKT 1
FDNS	09ALL_G15_042	0	20WP	G15_042	FROM->TO	HOSKINS (HOSKINS T2) 345/230/13.8KV TRANSFORMER CKT 1	336	336	0.73028	102.7064	DIXONCO 230.00 - TWIN CHURCH 230KV CKT 1
FDNS	09ALL_G15_042	0	20SP	G15_042	FROM->TO	HOSKINS (HOSKINS T2) 345/230/13.8KV TRANSFORMER CKT 1	336	336	0.73038	101.6127	DIXONCO 230.00 - TWIN CHURCH 230KV CKT 1
FDNS	09ALL_G15_042	0	25SP	G15_042	FROM->TO	HOSKINS (HOSKINS T2) 345/230/13.8KV TRANSFORMER CKT 1	336	336	0.73041	100.6119	DIXONCO 230.00 - TWIN CHURCH 230KV CKT 1
FDNS	09ALL_G15_042	0	17SP	G15_042	FROM->TO	HOSKINS (HOSKINS T2) 345/230/13.8KV TRANSFORMER CKT 1	336	336	0.7308	100.4741	DIXONCO 230.00 - TWIN CHURCH 230KV CKT 1
FDNS	00NR_G15_042	0	17SP	G15_042	TO->FROM	OGALLALA - SIDNEY 230KV CKT 1	320	320	0.03314	111.9399	SIDNEY - SIDNEY1-LNX3345.00 345KV CKT Z
FDNS	00NR_G15_042	0	17SP	G15_042	TO->FROM	OGALLALA - SIDNEY 230KV CKT 1	320	320	0.03314	111.8899	KEYSTONE - SIDNEY1-LNX3345.00 345KV CKT 1
FDNS	00NR_G15_042	0	17SP	G15_042	TO->FROM	SIDNEY - SIDNEY TRANSFORMER 230KV CKT 1	400	400	0.03768	111.469	KEYSTONE - SIDNEY1-LNX3345.00 345KV CKT 1
FDNS	00NR_G15_042	0	17SP	G15_042	TO->FROM	SIDNEY - SIDNEY TRANSFORMER 230KV CKT 1	400	400	0.03768	110.8334	SIDNEY - SIDNEY1-LNX3345.00 345KV CKT Z
FDNS	00NR_G15_042	0	20SP	G15_042	TO->FROM	SIDNEY - SIDNEY TRANSFORMER 230KV CKT 1	400	400	0.03249	101.1465	KEYSTONE - SIDNEY1-LNX3345.00 345KV CKT 1
FDNS	00NR_G15_042	0	20SP	G15_042	TO->FROM	SIDNEY - SIDNEY TRANSFORMER 230KV CKT 1	400	400	0.03249	100.6653	SIDNEY - SIDNEY1-LNX3345.00 345KV CKT Z
FDNS	00NR_G15_042	0	25SP	G15_042	TO->FROM	SIDNEY - SIDNEY TRANSFORMER 230KV CKT 1	400	400	0.03227	100	KEYSTONE - SIDNEY1-LNX3345.00 345KV CKT 1
FDNS	00NR_G15_042	0	25SP	G15_042	TO->FROM	SIDNEY - SIDNEY TRANSFORMER 230KV CKT 1	400	400	0.03227	99.5	SIDNEY - SIDNEY1-LNX3345.00 345KV CKT Z
FDNS	09ALL_G15_042	0	20L	G15_042	TO->FROM	SIOUX CITY - TWIN CHURCH 230KV CKT 1	320	320	0.80819	157.6335	DIXONCO 230.00 - HOSKINS 230KV CKT 1
FDNS	09NR_G15_042	0	20L	G15_042	TO->FROM	SIOUX CITY - TWIN CHURCH 230KV CKT 1	320	320	0.80324	144.5188	DIXONCO 230.00 - HOSKINS 230KV CKT 1
FDNS	09ALL_G15_042	0	17G	G15_042	TO->FROM	SIOUX CITY - TWIN CHURCH 230KV CKT 1	320	320	0.80859	144.4092	DIXONCO 230.00 - HOSKINS 230KV CKT 1
FDNS	09ALL_G15_042	0	20WP	G15_042	TO->FROM	SIOUX CITY - TWIN CHURCH 230KV CKT 1	320	320	0.80854	137.2504	DIXONCO 230.00 - HOSKINS 230KV CKT 1
FDNS	09ALL_G15_042	0	16WP	G15_042	TO->FROM	SIOUX CITY - TWIN CHURCH 230KV CKT 1	320	320	0.80863	136.7169	DIXONCO 230.00 - HOSKINS 230KV CKT 1
FDNS	09ALL_G15_042	0	20SP	G15_042	TO->FROM	SIOUX CITY - TWIN CHURCH 230KV CKT 1	320	320	0.80815	132.6806	DIXONCO 230.00 - HOSKINS 230KV CKT 1
FDNS	09NR_G15_042	0	17G	G15_042	TO->FROM	SIOUX CITY - TWIN CHURCH 230KV CKT 1	320	320	0.80339	131.615	DIXONCO 230.00 - HOSKINS 230KV CKT 1
FDNS	09ALL_G15_042	0	25SP	G15_042	TO->FROM	SIOUX CITY - TWIN CHURCH 230KV CKT 1	320	320	0.8081	131.4535	DIXONCO 230.00 - HOSKINS 230KV CKT 1
FDNS	09ALL_G15_042	0	17SP	G15_042	TO->FROM	SIOUX CITY - TWIN CHURCH 230KV CKT 1	320	320	0.80832	130.833	DIXONCO 230.00 - HOSKINS 230KV CKT 1
FDNS	09ALL_G15_042	0	20L	G15_042	TO->FROM	SIOUX CITY - TWIN CHURCH 230KV CKT 1	320	320	0.40654	109.615	P13:230-345:NPPD:NUCOR-1
FDNS	09ALL_G15_042	0	20L	G15_042	TO->FROM	SIOUX CITY - TWIN CHURCH 230KV CKT 1	320	320	0.45171	109.0791	HOSKINS - RAUN 345KV CKT 1
FDNS	09ALL_G15_042	0	20L	G15_042	TO->FROM	SIOUX CITY - TWIN CHURCH 230KV CKT 1	320	320	0.45171	109.0791	HOSKINS - RAUN 345KV CKT 1
FDNS	09ALL_G15_042	0	20L	G15_042	TO->FROM	SIOUX CITY - TWIN CHURCH 230KV CKT 1	320	320	0.52919	102.2053	HOSKINS (HOSKINS T2) 345/230/13.8KV TRANSFORMER CKT 1
FDNS	09ALL_G15_042	0	20L	G15_042	TO->FROM	SIOUX CITY - TWIN CHURCH 230KV CKT 1	320	320	0.52919	102.2053	HOSKINS (HOSKINS T2) 345/230/13.8KV TRANSFORMER CKT 1
FDNS	09ALL_G15_042	2	17SP	G15_042	FROM->TO	DIXONCO 230.00 - HOSKINS 230KV CKT 1	320	320	0.58576	123.3159	DIXONCO 230.00 - TWIN CHURCH 230KV CKT 1

SOLUTION	GROUP	SCENARIO	SEASON	SOURCE	DIRECTION	MONITORED ELEMENT	RATEA (MVA)	RATEB(MVA)	TDF	TC%LOADING (% MVA)	CONTINGENCY
FDNS	09ALL_G15_042	2	25SP	G15_042	FROM->TO	DIXONCO 230.00 - HOSKINS 230KV CKT 1	320	320	0.58525	122.7669	DIXONCO 230.00 - TWIN CHURCH 230KV CKT 1
FDNS	09ALL_G15_042	2	20SP	G15_042	FROM->TO	DIXONCO 230.00 - HOSKINS 230KV CKT 1	320	320	0.58508	122.4173	DIXONCO 230.00 - TWIN CHURCH 230KV CKT 1
FDNS	00NR_G15_042	2	17SP	G15_042	FROM->TO	DIXONCO 230.00 - HOSKINS 230KV CKT 1	320	320	0.58781	120.5944	DIXONCO 230.00 - TWIN CHURCH 230KV CKT 1
FDNS	00NR_G15_042	2	20SP	G15_042	FROM->TO	DIXONCO 230.00 - HOSKINS 230KV CKT 1	320	320	0.58703	118.6179	DIXONCO 230.00 - TWIN CHURCH 230KV CKT 1
FDNS	00NR_G15_042	2	25SP	G15_042	FROM->TO	DIXONCO 230.00 - HOSKINS 230KV CKT 1	320	320	0.58709	118.3242	DIXONCO 230.00 - TWIN CHURCH 230KV CKT 1
FDNS	09ALL_G15_042	2	16WP	G15_042	FROM->TO	DIXONCO 230.00 - HOSKINS 230KV CKT 1	320	320	0.58473	112.6417	DIXONCO 230.00 - TWIN CHURCH 230KV CKT 1
FDNS	09ALL_G15_042	2	20WP	G15_042	FROM->TO	DIXONCO 230.00 - HOSKINS 230KV CKT 1	320	320	0.58418	112.514	DIXONCO 230.00 - TWIN CHURCH 230KV CKT 1
FDNS	09ALL_G15_042	2	17G	G15_042	FROM->TO	DIXONCO 230.00 - HOSKINS 230KV CKT 1	320	320	0.58547	110.1115	DIXONCO 230.00 - TWIN CHURCH 230KV CKT 1
FDNS	00NR_G15_042	2	17SP	G15_042	FROM->TO	DIXONCO 230.00 - HOSKINS 230KV CKT 1	320	320	0.36779	107.6391	HOSKINS - RAUN 345KV CKT 1
FDNS	00NR_G15_042	2	16WP	G15_042	FROM->TO	DIXONCO 230.00 - HOSKINS 230KV CKT 1	320	320	0.58756	106.3431	DIXONCO 230.00 - TWIN CHURCH 230KV CKT 1
FDNS	00NR_G15_042	2	25SP	G15_042	FROM->TO	DIXONCO 230.00 - HOSKINS 230KV CKT 1	320	320	0.36664	106.2207	HOSKINS - RAUN 345KV CKT 1
FDNS	00NR_G15_042	2	25SP	G15_042	FROM->TO	DIXONCO 230.00 - HOSKINS 230KV CKT 1	320	320	0.36664	106.2207	HOSKINS - RAUN 345KV CKT 1
FDNS	09ALL_G15_042	2	20L	G15_042	FROM->TO	DIXONCO 230.00 - HOSKINS 230KV CKT 1	320	320	0.58322	106.0084	DIXONCO 230.00 - TWIN CHURCH 230KV CKT 1
FDNS	00NR_G15_042	2	20WP	G15_042	FROM->TO	DIXONCO 230.00 - HOSKINS 230KV CKT 1	320	320	0.58696	105.9702	DIXONCO 230.00 - TWIN CHURCH 230KV CKT 1
FDNS	09NR_G15_042	2	17G	G15_042	FROM->TO	DIXONCO 230.00 - HOSKINS 230KV CKT 1	320	320	0.58762	104.9601	DIXONCO 230.00 - TWIN CHURCH 230KV CKT 1
FDNS	00NR_G15_042	2	20SP	G15_042	FROM->TO	DIXONCO 230.00 - HOSKINS 230KV CKT 1	320	320	0.36647	104.0206	HOSKINS - RAUN 345KV CKT 1
FDNS	00NR_G15_042	2	20SP	G15_042	FROM->TO	DIXONCO 230.00 - HOSKINS 230KV CKT 1	320	320	0.36647	104.0206	HOSKINS - RAUN 345KV CKT 1
FDNS	00NR_G15_042	2	17SP	G15_042	FROM->TO	DIXONCO 230.00 - HOSKINS 230KV CKT 1	320	320	0.40326	101.8453	KELLY - MEADOWGROVE4230.00 230KV CKT 1
FDNS	00NR_G15_042	2	17SP	G15_042	FROM->TO	DIXONCO 230.00 - HOSKINS 230KV CKT 1	320	320	0.43694	101.0436	RASMUSN - SIOUX CITY 230KV CKT 1
FDNS	00NR_G15_042	2	17SP	G15_042	FROM->TO	DIXONCO 230.00 - HOSKINS 230KV CKT 1	320	320	0.40416	100.9038	GRPRAR1-LNX3345.00 - HOLT.CO3 345.00 345KV CKT 1
FDNS	00NR_G15_042	2	17SP	G15_042	FROM->TO	DIXONCO 230.00 - HOSKINS 230KV CKT 1	320	320	0.40416	100.9032	GRPRAR1-LNX3345.00 - YANKTON 345KV CKT Z
FDNS	09NR_G15_042	2	20L	G15_042	FROM->TO	DIXONCO 230.00 - HOSKINS 230KV CKT 1	320	320	0.58708	100.8771	DIXONCO 230.00 - TWIN CHURCH 230KV CKT 1
FDNS	00NR_G15_042	2	20SP	G15_042	FROM->TO	DIXONCO 230.00 - HOSKINS 230KV CKT 1	320	320	0.40202	99.5	KELLY - MEADOWGROVE4230.00 230KV CKT 1
FDNS	09ALL_G15_042	2	17SP	G15_042	FROM->TO	DIXONCO 230.00 - TWIN CHURCH 230KV CKT 1	320	320	0.57343	129.0797	DIXONCO 230.00 - HOSKINS 230KV CKT 1
FDNS	09ALL_G15_042	2	20SP	G15_042	FROM->TO	DIXONCO 230.00 - TWIN CHURCH 230KV CKT 1	320	320	0.57327	128.0024	DIXONCO 230.00 - HOSKINS 230KV CKT 1
FDNS	09ALL_G15_042	2	25SP	G15_042	FROM->TO	DIXONCO 230.00 - TWIN CHURCH 230KV CKT 1	320	320	0.57335	127.8482	DIXONCO 230.00 - HOSKINS 230KV CKT 1
FDNS	09ALL_G15_042	2	16WP	G15_042	FROM->TO	DIXONCO 230.00 - TWIN CHURCH 230KV CKT 1	320	320	0.573	125.9564	DIXONCO 230.00 - HOSKINS 230KV CKT 1
FDNS	09ALL_G15_042	2	20WP	G15_042	FROM->TO	DIXONCO 230.00 - TWIN CHURCH 230KV CKT 1	320	320	0.57284	125.1325	DIXONCO 230.00 - HOSKINS 230KV CKT 1
FDNS	09ALL_G15_042	2	17G	G15_042	FROM->TO	DIXONCO 230.00 - TWIN CHURCH 230KV CKT 1	320	320	0.57337	124.3993	DIXONCO 230.00 - HOSKINS 230KV CKT 1
FDNS	09ALL_G15_042	2	20L	G15_042	FROM->TO	DIXONCO 230.00 - TWIN CHURCH 230KV CKT 1	320	320	0.57206	119.6852	DIXONCO 230.00 - HOSKINS 230KV CKT 1
FDNS	09NR_G15_042	2	17G	G15_042	FROM->TO	DIXONCO 230.00 - TWIN CHURCH 230KV CKT 1	320	320	0.5747	116.892	DIXONCO 230.00 - HOSKINS 230KV CKT 1
FDNS	09ALL_G15_042	2	17G	G15_042	FROM->TO	DIXONCO 230.00 - TWIN CHURCH 230KV CKT 1	320	320	0.48043	114.7225	DIXONCO 230.00 - RASMUSN 230KV CKT 1
FDNS	09ALL_G15_042	2	20L	G15_042	FROM->TO	DIXONCO 230.00 - TWIN CHURCH 230KV CKT 1	320	320	0.48164	114.6432	DIXONCO 230.00 - RASMUSN 230KV CKT 1
FDNS	09ALL_G15_042	2	16WP	G15_042	FROM->TO	DIXONCO 230.00 - TWIN CHURCH 230KV CKT 1	320	320	0.48084	113.1484	DIXONCO 230.00 - RASMUSN 230KV CKT 1
FDNS	09ALL_G15_042	2	20WP	G15_042	FROM->TO	DIXONCO 230.00 - TWIN CHURCH 230KV CKT 1	320	320	0.48136	112.4111	DIXONCO 230.00 - RASMUSN 230KV CKT 1
FDNS	09NR_G15_042	2	20L	G15_042	FROM->TO	DIXONCO 230.00 - TWIN CHURCH 230KV CKT 1	320	320	0.57454	112.3136	DIXONCO 230.00 - HOSKINS 230KV CKT 1
FDNS	00NR_G15_042	2	17SP	G15_042	FROM->TO	DIXONCO 230.00 - TWIN CHURCH 230KV CKT 1	320	320	0.5747	108.1504	DIXONCO 230.00 - HOSKINS 230KV CKT 1
FDNS	09ALL_G15_042	2	17G	G15_042	FROM->TO	DIXONCO 230.00 - TWIN CHURCH 230KV CKT 1	320	320	0.39335	107.3143	RASMUSN - SIOUX CITY 230KV CKT 1
FDNS	00NR_G15_042	2	20SP	G15_042	FROM->TO	DIXONCO 230.00 - TWIN CHURCH 230KV CKT 1	320	320	0.57453	106.4689	DIXONCO 230.00 - HOSKINS 230KV CKT 1
FDNS	09ALL_G15_042	2	16WP	G15_042	FROM->TO	DIXONCO 230.00 - TWIN CHURCH 230KV CKT 1	320	320	0.39305	106.1441	RASMUSN - SIOUX CITY 230KV CKT 1
FDNS	00NR_G15_042	2	25SP	G15_042	FROM->TO	DIXONCO 230.00 - TWIN CHURCH 230KV CKT 1	320	320	0.57453	106.1053	DIXONCO 230.00 - HOSKINS 230KV CKT 1
FDNS	09NR_G15_042	2	17G	G15_042	FROM->TO	DIXONCO 230.00 - TWIN CHURCH 230KV CKT 1	320	320	0.47936	105.3817	DIXONCO 230.00 - RASMUSN 230KV CKT 1
FDNS	09NR_G15_042	2	20L	G15_042	FROM->TO	DIXONCO 230.00 - TWIN CHURCH 230KV CKT 1	320	320	0.47982	105.3242	DIXONCO 230.00 - RASMUSN 230KV CKT 1
FDNS	09ALL_G15_042	2	20WP	G15_042	FROM->TO	DIXONCO 230.00 - TWIN CHURCH 230KV CKT 1	320	320	0.39331	104.4091	RASMUSN - SIOUX CITY 230KV CKT 1
FDNS	09ALL_G15_042	2	17SP	G15_042	FROM->TO	DIXONCO 230.00 - TWIN CHURCH 230KV CKT 1	320	320	0.48012	104.0566	DIXONCO 230.00 - RASMUSN 230KV CKT 1
FDNS	00NR_G15_042	2	16WP	G15_042	FROM->TO	DIXONCO 230.00 - TWIN CHURCH 230KV CKT 1	320	320	0.57466	104.0018	DIXONCO 230.00 - HOSKINS 230KV CKT 1
FDNS	09ALL_G15_042	2	20SP	G15_042	FROM->TO	DIXONCO 230.00 - TWIN CHURCH 230KV CKT 1	320	320	0.48077	103.7249	DIXONCO 230.00 - RASMUSN 230KV CKT 1
FDNS	09ALL_G15_042	2	25SP	G15_042	FROM->TO	DIXONCO 230.00 - TWIN CHURCH 230KV CKT 1	320	320	0.48066	103.3338	DIXONCO 230.00 - RASMUSN 230KV CKT 1
FDNS	00NR_G15_042	2	20WP	G15_042	FROM->TO	DIXONCO 230.00 - TWIN CHURCH 230KV CKT 1	320	320	0.57454	102.913	DIXONCO 230.00 - HOSKINS 230KV CKT 1
FDNS	09ALL_G15_042	2	20L	G15_042	FROM->TO	DIXONCO 230.00 - TWIN CHURCH 230KV CKT 1	320	320	0.39212	102.4718	RASMUSN - SIOUX CITY 230KV CKT 1
FDNS	09ALL_G15_042	2	17SP	G15_042	FROM->TO	DIXONCO 230.00 - TWIN CHURCH 230KV CKT 1	320	320	0.39316	101.3118	RASMUSN - SIOUX CITY 230KV CKT 1
FDNS	09ALL_G15_042	2	20SP	G15_042	FROM->TO	DIXONCO 230.00 - TWIN CHURCH 230KV CKT 1	320	320	0.39345	99.9	RASMUSN - SIOUX CITY 230KV CKT 1
FDNS	09ALL_G15_042	2	16WP	G15_042	FROM->TO	DIXONCO 230.00 - TWIN CHURCH 230KV CKT 1	320	320	0.34131	99.6	P13:230-345:NPPD:NUCOR-1
FDNS	00NR_G15_042	2	17SP	G15_042	FROM->TO	GR ISLD-LNX3345.00 - GRAND ISLAND 345KV CKT Z	720	720	0.04321	138.4955	KELLY - MEADOWGROVE4230.00 230KV CKT 1
FDNS	00NR_G15_042	2	17SP	G15_042	FROM->TO	GR ISLD-LNX3345.00 - GRAND ISLAND 345KV CKT Z	720	720	0.03938	138.4781	P12:230:UMZB:# 116 #: ST IN SD. WSG-ST-VH
FDNS	00NR_G15_042	2	17SP	G15_042	FROM->TO	GR ISLD-LNX3345.00 - GRAND ISLAND 345KV CKT Z	720	720	0.03966	137.5623	STORLA - WESSINGTON 230KV CKT 1
FDNS	00NR_G15_042	2	17SP	G15_042	FROM->TO	GR ISLD-LNX3345.00 - GRAND ISLAND 345KV CKT Z	720	720	0.04034	136.4967	WATERTN-LNX3345.00 - WHITE 345KV CKT 1
FDNS	00NR_G15_042	2	17SP	G15_042	FROM->TO	GR ISLD-LNX3345.00 - GRAND ISLAND 345KV CKT Z	720	720	0.04034	136.2371	WATERTN-LNX3345.00 - WATERTOWN 345KV CKT Z
FDNS	00NR_G15_042	2	17SP	G15_042	FROM->TO	GR ISLD-LNX3345.00 - GRAND ISLAND 345KV CKT Z	720	720	0.04034	136.2025	P12:345:UMZW:# 1747 #: WT2 IN SD. WT2-WHT LINE FAULT
FDNS	00NR_G15_042	2	17SP	G15_042	FROM->TO	GR ISLD-LNX3345.00 - GRAND ISLAND 345KV CKT Z	720	720	0.04091	136.1523	G09_001IST 345.00 - WATERTOWN 345KV CKT 1
FDNS	00NR_G15_042	2	17SP	G15_042	FROM->TO	GR ISLD-LNX3345.00 - GRAND ISLAND 345KV CKT Z	720	720	0.03966	136.1411	HANLON - STORLA 230KV CKT 1
FDNS	00NR_G15_042	2	17SP	G15_042	FROM->TO	GR ISLD-LNX3345.00 - GRAND ISLAND 345KV CKT Z	720	720	0.03936	135.7372	FT THOMPSON - LETCHER 230KV CKT 1
FDNS	00NR_G15_042	2	17SP	G15_042	FROM->TO	GR ISLD-LNX3345.00 - GRAND ISLAND 345KV CKT Z	720	720	0.03936	135.7372	FT THOMPSON - LETCHER 230KV CKT 1
FDNS	00NR_G15_042	2	17SP	G15_042	FROM->TO	GR ISLD-LNX3345.00 - GRAND ISLAND 345KV CKT Z	720	720	0.04129	134.8417	BUFFALO - JAMESTOWN 345KV CKT 1
FDNS	00NR_G15_042	2	17SP	G15_042	FROM->TO	GR ISLD-LNX3345.00 - GRAND ISLAND 345KV CKT Z	720	720	0.03804	134.5437	FT RANDAL - FT THOMPSON 230KV CKT 1
FDNS	00NR_G15_042	2	17SP	G15_042	FROM->TO	GR ISLD-LNX3345.00 - GRAND ISLAND 345KV CKT Z	720	720	0.03804	134.5437	FT RANDAL - FT THOMPSON 230KV CKT 1
FDNS	00NR_G15_042	2	17SP	G15_042	FROM->TO	GR ISLD-LNX3345.00 - GRAND ISLAND 345KV CKT Z	720	720	0.03811	134.436	FT RANDAL - G12_009IST 230.00 230KV CKT 1
FDNS	00NR_G15_042	2	17SP	G15_042	FROM->TO	GR ISLD-LNX3345.00 - GRAND ISLAND 345KV CKT Z	720	720	0.03811	134.3256	FT THOMPSON - LAKE PLATT 230KV CKT 1
FDNS	00NR_G15_042	2	17SP	G15_042	FROM->TO	GR ISLD-LNX3345.00 - GRAND ISLAND 345KV CKT Z	720	720	0.03811	134.3256	FT THOMPSON - LAKE PLATT 230KV CKT 1
FDNS	00NR_G15_042	2	17SP	G15_042	FROM->TO	GR ISLD-LNX3345.00 - GRAND ISLAND 345KV CKT Z	720	720	0.04479	134.2041	NUNDRWD - WAYSIDE 230KV CKT 1
FDNS	00NR_G15_042	2	17SP	G15_042	FROM->TO	GR ISLD-LNX3345.00 - GRAND ISLAND 345KV CKT Z	720	720	0.03811	133.979	G12_009IST 230.00 - LAKE PLATT 230KV CKT 1
FDNS	00NR_G15_042	2	17SP	G15_042	FROM->TO	GR ISLD-LNX3345.00 - GRAND ISLAND 345KV CKT Z	720	720	0.04112	133.9083	GEN336821 1-GRAND GULF UNIT
FDNS	00NR_G15_042	2	17SP	G15_042	FROM->TO	GR ISLD-LNX3345.00 - GRAND ISLAND 345KV CKT Z	720	720	0.0412	133.7542	CHISAGO COUNTY - FORBES 500KV CKT 1

SOLUTION	GROUP	SCENARIO	SEASON	SOURCE	DIRECTION	MONITORED ELEMENT	RATEA (MVA)	RATEB(MVA)	TDF	TC%LOADING (% MVA)	CONTINGENCY
FDNS	00NR_G15_042	2	17SP	G15_042	FROM->TO	GR ISLD-LNX3345.00 - GRAND ISLAND 345KV CKT Z	720	720	0.04321	133.6285	FT RANDAL - MEADOWGROVE4230.00 230KV CKT 1
FDNS	00NR_G15_042	2	17SP	G15_042	FROM->TO	GR ISLD-LNX3345.00 - GRAND ISLAND 345KV CKT Z	720	720	0.04128	133.5856	CENTER - JAMESTOWN 345KV CKT 1
FDNS	00NR_G15_042	2	17SP	G15_042	FROM->TO	GR ISLD-LNX3345.00 - GRAND ISLAND 345KV CKT Z	720	720	0.04112	133.3818	GEN640010 1-GERALD GENTLEMAN STATION UNIT 1
FDNS	00NR_G15_042	2	17SP	G15_042	FROM->TO	GR ISLD-LNX3345.00 - GRAND ISLAND 345KV CKT Z	720	720	0.04112	133.366	GEN344225 1-1CAL G1 25.000
FDNS	00NR_G15_042	2	17SP	G15_042	FROM->TO	GR ISLD-LNX3345.00 - GRAND ISLAND 345KV CKT Z	720	720	0.04007	133.2596	LETCHER - SIOUX FALLS 230KV CKT 1
FDNS	00NR_G15_042	2	17SP	G15_042	FROM->TO	GR ISLD-LNX3345.00 - GRAND ISLAND 345KV CKT Z	720	720	0.04202	133.2472	KEYSTONE - SIDNEY1-LNX3345.00 345KV CKT 1
FDNS	00NR_G15_042	2	17SP	G15_042	FROM->TO	GR ISLD-LNX3345.00 - GRAND ISLAND 345KV CKT Z	720	720	0.04091	133.2238	G09_001IST 345.00 - GROTON 345KV CKT 1
FDNS	00NR_G15_042	2	17SP	G15_042	FROM->TO	GR ISLD-LNX3345.00 - GRAND ISLAND 345KV CKT Z	720	720	0.04202	133.2071	SIDNEY - SIDNEY1-LNX3345.00 345KV CKT Z
FDNS	00NR_G15_042	2	17SP	G15_042	FROM->TO	GR ISLD-LNX3345.00 - GRAND ISLAND 345KV CKT Z	720	720	0.04112	133.1727	GEN337911 1-ARKANSAS NUCLEAR ONE UNIT #2
FDNS	00NR_G15_042	2	17SP	G15_042	FROM->TO	GR ISLD-LNX3345.00 - GRAND ISLAND 345KV CKT Z	720	720	0.04112	133.1541	GEN635024 4-WALTER SCOTT UNIT 4
FDNS	00NR_G15_042	2	17SP	G15_042	FROM->TO	GR ISLD-LNX3345.00 - GRAND ISLAND 345KV CKT Z	720	720	0.04124	133.1371	BISON 3 345.00 - BUFFALO 345KV CKT 1
FDNS	00NR_G15_042	2	17SP	G15_042	FROM->TO	GR ISLD-LNX3345.00 - GRAND ISLAND 345KV CKT Z	720	720	0.04112	133.1157	GEN336153 1-WATERFORD UNIT#3
FDNS	00NR_G15_042	2	17SP	G15_042	FROM->TO	GR ISLD-LNX3345.00 - GRAND ISLAND 345KV CKT Z	720	720	0.04112	132.9829	GEN640011 2-GERALD GENTLEMAN STATION UNIT 2
FDNS	00NR_G15_042	2	17SP	G15_042	FROM->TO	GR ISLD-LNX3345.00 - GRAND ISLAND 345KV CKT Z	720	720	0.0501	132.8025	RAUN - SUB 3451 FT CAL 345KV CKT 1
FDNS	00NR_G15_042	2	17SP	G15_042	FROM->TO	GR ISLD-LNX3345.00 - GRAND ISLAND 345KV CKT Z	720	720	0.0501	132.8025	RAUN - SUB 3451 FT CAL 345KV CKT 1
FDNS	00NR_G15_042	2	17SP	G15_042	FROM->TO	GR ISLD-LNX3345.00 - GRAND ISLAND 345KV CKT Z	720	720	0.04112	132.6603	GEN635023 3-WALTER SCOTT UNIT 3
FDNS	00NR_G15_042	2	17SP	G15_042	FROM->TO	GR ISLD-LNX3345.00 - GRAND ISLAND 345KV CKT Z	720	720	0.04112	132.6346	GEN335831 1-RIVERBEND UNIT#1
FDNS	00NR_G15_042	2	17SP	G15_042	FROM->TO	GR ISLD-LNX3345.00 - GRAND ISLAND 345KV CKT Z	720	720	0.03933	132.5964	SPLIT ROCK - WHITE 345KV CKT 1
FDNS	00NR_G15_042	2	17SP	G15_042	FROM->TO	GR ISLD-LNX3345.00 - GRAND ISLAND 345KV CKT Z	720	720	0.03933	132.5964	SPLIT ROCK - WHITE 345KV CKT 1
FDNS	00NR_G15_042	2	17SP	G15_042	FROM->TO	GR ISLD-LNX3345.00 - GRAND ISLAND 345KV CKT Z	720	720	0.04112	132.5408	GEN337910 1-ARKANSAS NUCLEAR ONE UNIT #1
FDNS	00NR_G15_042	2	17SP	G15_042	FROM->TO	GR ISLD-LNX3345.00 - GRAND ISLAND 345KV CKT Z	720	720	0.04093	132.5111	GROTON-LNX3 345.00 - LELAND1-LNX3345.00 345KV CKT 1
FDNS	00NR_G15_042	2	17SP	G15_042	FROM->TO	GR ISLD-LNX3345.00 - GRAND ISLAND 345KV CKT Z	720	720	0.04093	132.3858	P12:345:UMZB:# 109 #: LOS GRT IN ND. LOS GRT
FDNS	00NR_G15_042	2	17SP	G15_042	FROM->TO	GR ISLD-LNX3345.00 - GRAND ISLAND 345KV CKT Z	720	720	0.04093	132.3718	GROTON - GROTON-LNX3 345.00 345KV CKT Z
FDNS	00NR_G15_042	2	17SP	G15_042	FROM->TO	GR ISLD-LNX3345.00 - GRAND ISLAND 345KV CKT Z	720	720	0.04093	132.359	LELAND OLDS - LELAND1-LNX3345.00 345KV CKT Z
FDNS	00NR_G15_042	2	17SP	G15_042	FROM->TO	GR ISLD-LNX3345.00 - GRAND ISLAND 345KV CKT Z	720	720	0.04189	132.2138	ARROWHEAD - ARROWHEAD 230 230KV CKT 1
FDNS	00NR_G15_042	2	17SP	G15_042	FROM->TO	GR ISLD-LNX3345.00 - GRAND ISLAND 345KV CKT Z	720	720	0.03971	132.1559	FT RANDAL - SIOUX CITY 230KV CKT 1
FDNS	00NR_G15_042	2	17SP	G15_042	FROM->TO	GR ISLD-LNX3345.00 - GRAND ISLAND 345KV CKT Z	720	720	0.04056	132.0595	HANLON - SIOUX FALLS 230KV CKT 1
FDNS	00NR_G15_042	2	17SP	G15_042	FROM->TO	GR ISLD-LNX3345.00 - GRAND ISLAND 345KV CKT Z	720	720	0.04112	131.9074	GEN337653 1-WHITE BLUFF UNIT #2
FDNS	00NR_G15_042	2	17SP	G15_042	FROM->TO	GR ISLD-LNX3345.00 - GRAND ISLAND 345KV CKT Z	720	720	0.04112	131.8951	GEN337652 1-WHITE BLUFF UNIT #1
FDNS	00NR_G15_042	2	17SP	G15_042	FROM->TO	GR ISLD-LNX3345.00 - GRAND ISLAND 345KV CKT Z	720	720	0.04117	131.8633	P12:115:NPPD:1091:VALENTN7:MISSION7:BTB
FDNS	00NR_G15_042	2	17SP	G15_042	FROM->TO	GR ISLD-LNX3345.00 - GRAND ISLAND 345KV CKT Z	720	720	0.04278	131.8588	HAZLETON - MITCHLCO3 345.00 345KV CKT 1
FDNS	00NR_G15_042	2	17SP	G15_042	FROM->TO	GR ISLD-LNX3345.00 - GRAND ISLAND 345KV CKT Z	720	720	0.04112	131.823	GEN338146 1-INDEPENDENCE UNIT #2
FDNS	00NR_G15_042	2	17SP	G15_042	FROM->TO	GR ISLD-LNX3345.00 - GRAND ISLAND 345KV CKT Z	720	720	0.04117	131.8172	MISSION - ST FRANCIS 115KV CKT 1
FDNS	00NR_G15_042	2	17SP	G15_042	FROM->TO	GR ISLD-LNX3345.00 - GRAND ISLAND 345KV CKT Z	720	720	0.03361	131.8158	GRAND ISLAND - SWEETWATER 345KV CKT 1
FDNS	00NR_G15_042	2	17SP	G15_042	FROM->TO	GR ISLD-LNX3345.00 - GRAND ISLAND 345KV CKT Z	720	720	0.04112	131.8136	GEN338143 1-INDEPENDENCE UNIT #1
FDNS	00NR_G15_042	2	17SP	G15_042	FROM->TO	GR ISLD-LNX3345.00 - GRAND ISLAND 345KV CKT Z	720	720	0.04178	131.7847	SIDNEY - STEGALL 345KV CKT 1
FDNS	00NR_G15_042	2	17SP	G15_042	FROM->TO	GR ISLD-LNX3345.00 - GRAND ISLAND 345KV CKT Z	720	720	0.03875	131.7688	FT RANDAL - UTICA JCT 230KV CKT 1
FDNS	00NR_G15_042	2	17SP	G15_042	FROM->TO	GR ISLD-LNX3345.00 - GRAND ISLAND 345KV CKT Z	720	720	0.04112	131.7577	GEN501801 1-DOLET HILLS UNIT1
FDNS	00NR_G15_042	2	17SP	G15_042	FROM->TO	GR ISLD-LNX3345.00 - GRAND ISLAND 345KV CKT Z	720	720	0.042	131.7522	AS KING - EAU CLAIRE 345KV CKT 1
FDNS	00NR_G15_042	2	17SP	G15_042	FROM->TO	GR ISLD-LNX3345.00 - GRAND ISLAND 345KV CKT Z	720	720	0.03805	131.7101	SIOUXCY-LNX3345.00 - SPLIT ROCK 345KV CKT 1
FDNS	00NR_G15_042	2	17SP	G15_042	FROM->TO	GR ISLD-LNX3345.00 - GRAND ISLAND 345KV CKT Z	720	720	0.03805	131.7101	SIOUXCY-LNX3345.00 - SPLIT ROCK 345KV CKT 1
FDNS	00NR_G15_042	2	17SP	G15_042	FROM->TO	GR ISLD-LNX3345.00 - GRAND ISLAND 345KV CKT Z	720	720	0.04117	131.7041	ELLENDALE - OAKES 230KV CKT 1
FDNS	00NR_G15_042	2	17SP	G15_042	FROM->TO	GR ISLD-LNX3345.00 - GRAND ISLAND 345KV CKT Z	720	720	0.04117	131.7041	ELLENDALE - OAKES 230KV CKT 1
FDNS	00NR_G15_042	2	17SP	G15_042	FROM->TO	GR ISLD-LNX3345.00 - GRAND ISLAND 345KV CKT Z	720	720	0.03805	131.6559	P12:345:UMZW:# 907 #: SC2-SR IN IA. SC2-SR 345 KV LINE
FDNS	00NR_G15_042	2	17SP	G15_042	FROM->TO	GR ISLD-LNX3345.00 - GRAND ISLAND 345KV CKT Z	720	720	0.04117	131.652	HARMONY - ST FRANCIS 115KV CKT 1
FDNS	00NR_G15_042	2	17SP	G15_042	FROM->TO	GR ISLD-LNX3345.00 - GRAND ISLAND 345KV CKT Z	720	720	0.03805	131.6164	SIOUX CITY - SIOUXCY-LNX3345.00 345KV CKT Z
FDNS	00NR_G15_042	2	17SP	G15_042	FROM->TO	GR ISLD-LNX3345.00 - GRAND ISLAND 345KV CKT Z	720	720	0.04117	131.6019	FORMAN - OAKES 230KV CKT 1
FDNS	00NR_G15_042	2	17SP	G15_042	FROM->TO	GR ISLD-LNX3345.00 - GRAND ISLAND 345KV CKT Z	720	720	0.04137	131.6004	CARPENTER - HURON 230KV CKT 1
FDNS	00NR_G15_042	2	17SP	G15_042	FROM->TO	GR ISLD-LNX3345.00 - GRAND ISLAND 345KV CKT Z	720	720	0.04137	131.5999	ALEXMRES3 345.00 - BISON 3 345.00 345KV CKT 1
FDNS	00NR_G15_042	2	17SP	G15_042	FROM->TO	GR ISLD-LNX3345.00 - GRAND ISLAND 345KV CKT Z	720	720	0.03966	131.5915	FT THOMPSON - WESSINGTON 230KV CKT 1
FDNS	00NR_G15_042	2	17SP	G15_042	FROM->TO	GR ISLD-LNX3345.00 - GRAND ISLAND 345KV CKT Z	720	720	0.03966	131.5915	FT THOMPSON - WESSINGTON 230KV CKT 1
FDNS	00NR_G15_042	2	17SP	G15_042	FROM->TO	GR ISLD-LNX3345.00 - GRAND ISLAND 345KV CKT Z	720	720	0.04242	131.5641	ARPIN B4 345.00 - EAU CLAIRE 345KV CKT 1
FDNS	00NR_G15_042	2	17SP	G15_042	FROM->TO	GR ISLD-LNX3345.00 - GRAND ISLAND 345KV CKT Z	720	720	0.04137	131.4933	HURON - WATERTOWN 230KV CKT 2
FDNS	00NR_G15_042	2	17SP	G15_042	FROM->TO	GR ISLD-LNX3345.00 - GRAND ISLAND 345KV CKT Z	720	720	0.04137	131.4933	HURON - WATERTOWN 230KV CKT 2
FDNS	00NR_G15_042	2	17SP	G15_042	FROM->TO	GR ISLD-LNX3345.00 - GRAND ISLAND 345KV CKT Z	720	720	0.04117	131.459	HARMONY - VALENTINE 115KV CKT 1
FDNS	00NR_G15_042	2	17SP	G15_042	FROM->TO	GR ISLD-LNX3345.00 - GRAND ISLAND 345KV CKT Z	720	720	0.04117	131.4573	P12:115:NPPD:WAPA6:FTRANDL7:ONEILL 7:BTB
FDNS	00NR_G15_042	2	17SP	G15_042	FROM->TO	GR ISLD-LNX3345.00 - GRAND ISLAND 345KV CKT Z	720	720	0.04117	131.4573	P12:115:UMZB:# 115 #: SE IN NE. FR-SE-ON
FDNS	00NR_G15_042	2	17SP	G15_042	FROM->TO	GR ISLD-LNX3345.00 - GRAND ISLAND 345KV CKT Z	720	720	0.04137	131.4376	CARPENTER - WATERTOWN 230KV CKT 1
FDNS	00NR_G15_042	2	17SP	G15_042	FROM->TO	GR ISLD-LNX3345.00 - GRAND ISLAND 345KV CKT Z	720	720	0.04137	131.4376	CARPENTER - WATERTOWN 230KV CKT 1
FDNS	00NR_G15_042	2	17SP	G15_042	FROM->TO	GR ISLD-LNX3345.00 - GRAND ISLAND 345KV CKT Z	720	720	0.04117	131.4106	FT RANDAL - SPENCER 115KV CKT 1
FDNS	00NR_G15_042	2	17SP	G15_042	FROM->TO	GR ISLD-LNX3345.00 - GRAND ISLAND 345KV CKT Z	720	720	0.04112	131.4026	GEN336252 1-NINEMILE POINT UNIT#5
FDNS	00NR_G15_042	2	17SP	G15_042	FROM->TO	GR ISLD-LNX3345.00 - GRAND ISLAND 345KV CKT Z	720	720	0.04112	131.36	GEN501813 1-RODEMACHER UNIT 3
FDNS	00NR_G15_042	2	17SP	G15_042	FROM->TO	GR ISLD-LNX3345.00 - GRAND ISLAND 345KV CKT Z	720	720	0.03951	131.3267	PAHOJA - SIOUX FALLS 230KV CKT 1
FDNS	00NR_G15_042	2	17SP	G15_042	FROM->TO	GR ISLD-LNX3345.00 - GRAND ISLAND 345KV CKT Z	720	720	0.04117	131.3228	ONEILL - SPENCER 115KV CKT 1
FDNS	00NR_G15_042	2	17SP	G15_042	FROM->TO	GR ISLD-LNX3345.00 - GRAND ISLAND 345KV CKT Z	720	720	0.04112	131.2604	GEN336831 1-BAXTER WILSON SES
FDNS	00NR_G15_042	2	17SP	G15_042	FROM->TO	GR ISLD-LNX3345.00 - GRAND ISLAND 345KV CKT Z	720	720	0.04112	131.2469	GEN336251 1-NINEMILE POINT UNIT#4
FDNS	00NR_G15_042	2	17SP	G15_042	FROM->TO	GR ISLD-LNX3345.00 - GRAND ISLAND 345KV CKT Z	720	720	0.05682	131.2232	DIXONCO 230.00 - HOSKINS 230KV CKT 1
FDNS	00NR_G15_042	2	17SP	G15_042	FROM->TO	GR ISLD-LNX3345.00 - GRAND ISLAND 345KV CKT Z	720	720	0.04179	131.2213	GERALD GENTLEMAN STATION - KEYSTONE 345KV CKT 1
FDNS	00NR_G15_042	2	17SP	G15_042	FROM->TO	GR ISLD-LNX3345.00 - GRAND ISLAND 345KV CKT Z	720	720	0.04112	131.2117	GEN641089 2-ENERGY CENTER 2
FDNS	00NR_G15_042	2	17SP	G15_042	FROM->TO	GR ISLD-LNX3345.00 - GRAND ISLAND 345KV CKT Z	720	720	0.0412	131.1946	CNTSHNT3 345.00 - PRAIRIE3 345.00 345KV CKT 1
FDNS	00NR_G15_042	2	17SP	G15_042	FROM->TO	GR ISLD-LNX3345.00 - GRAND ISLAND 345KV CKT Z	720	720	0.04112	131.1697	GEN337041 1-GERALD ANDRUS
FDNS	00NR_G15_042	2	17SP	G15_042	FROM->TO	GR ISLD-LNX3345.00 - GRAND ISLAND 345KV CKT Z	720	720	0.04112	131.1536	GEN335206 1-NELSON UNIT 6
FDNS	00NR_G15_042	2	17SP	G15_042	FROM->TO	GR ISLD-LNX3345.00 - GRAND ISLAND 345KV CKT Z	720	720	0.04112	131.1236	GEN344897 4-1LAB G4 20.000

SOLUTION	GROUP	SCENARIO	SEASON	SOURCE	DIRECTION	MONITORED ELEMENT	RATEA (MVA)	RATEB(MVA)	TDF	TC%LOADING (% MVA)	CONTINGENCY
FDNS	00NR_G15_042	2	17SP	G15_042	FROM->TO	GR ISLD-LNX3345.00 - GRAND ISLAND 345KV CKT Z	720	720	0.04112	131.1202	GEN344894 1-1LAB G1 20.000
FDNS	00NR_G15_042	2	17SP	G15_042	FROM->TO	GR ISLD-LNX3345.00 - GRAND ISLAND 345KV CKT Z	720	720	0.04112	131.12	GEN344896 3-1LAB G3 20.000
FDNSLock	00NR_G15_042	2	17SP	G15_042	FROM->TO	GR ISLD-LNX3345.00 - GRAND ISLAND 345KV CKT Z	720	720	0.04117	131.0811	AINSWORTH - VALENTINE 115KV CKT 1
FDNS	00NR_G15_042	2	17SP	G15_042	FROM->TO	GR ISLD-LNX3345.00 - GRAND ISLAND 345KV CKT Z	720	720	0.04121	131.0806	FORMAN - HANKINSON 230KV CKT 1
FDNS	00NR_G15_042	2	17SP	G15_042	FROM->TO	GR ISLD-LNX3345.00 - GRAND ISLAND 345KV CKT Z	720	720	0.04112	131.0637	GEN344895 2-1LAB G2 20.000
FDNS	00NR_G15_042	2	17SP	G15_042	FROM->TO	GR ISLD-LNX3345.00 - GRAND ISLAND 345KV CKT Z	720	720	0.03541	131.0546	RASMUSN - UTICA JCT 230KV CKT 1
FDNS	00NR_G15_042	2	17SP	G15_042	FROM->TO	GR ISLD-LNX3345.00 - GRAND ISLAND 345KV CKT Z	720	720	0.04112	131.0484	GEN345670 1-1RUSH G1 18.000
FDNS	00NR_G15_042	2	17SP	G15_042	FROM->TO	GR ISLD-LNX3345.00 - GRAND ISLAND 345KV CKT Z	720	720	0.04112	131.0483	GEN345671 2-1RUSH G2 18.000
FDNS	00NR_G15_042	2	17SP	G15_042	FROM->TO	GR ISLD-LNX3345.00 - GRAND ISLAND 345KV CKT Z	720	720	0.04278	131.0265	ADAMS - MITCHLCO3 345.00 345KV CKT 1
FDNS	00NR_G15_042	2	17SP	G15_042	FROM->TO	GR ISLD-LNX3345.00 - GRAND ISLAND 345KV CKT Z	720	720	0.04112	130.9968	GEN501812 1-RODEMACHER UNIT 2
FDNS	00NR_G15_042	2	17SP	G15_042	FROM->TO	GR ISLD-LNX3345.00 - GRAND ISLAND 345KV CKT Z	720	720	0.04112	130.9747	GEN334440 1-SABINE UNIT 4
FDNS	00NR_G15_042	2	17SP	G15_042	FROM->TO	GR ISLD-LNX3345.00 - GRAND ISLAND 345KV CKT Z	720	720	0.03951	130.9737	EAGLE 4 230.00 - PAHOJA 230KV CKT 1
FDNS	00NR_G15_042	2	17SP	G15_042	FROM->TO	GR ISLD-LNX3345.00 - GRAND ISLAND 345KV CKT Z	720	720	0.04223	130.885	ADAMS - PLEASANT VALLEY 345KV CKT 1
FDNS	00NR_G15_042	2	17SP	G15_042	FROM->TO	GR ISLD-LNX3345.00 - GRAND ISLAND 345KV CKT Z	720	720	0.04391	130.8284	GRIMES - LEHIGH 345KV CKT 1
FDNS	00NR_G15_042	2	17SP	G15_042	FROM->TO	GR ISLD-LNX3345.00 - GRAND ISLAND 345KV CKT Z	720	720	0.04112	130.8208	GEN336191 1-LITTLE GYPSY UNIT#3
FDNS	00NR_G15_042	2	17SP	G15_042	FROM->TO	GR ISLD-LNX3345.00 - GRAND ISLAND 345KV CKT Z	720	720	0.04112	130.7522	GEN338388 1-1PLUM PT U1 23.000
FDNS	00NR_G15_042	2	17SP	G15_042	FROM->TO	GR ISLD-LNX3345.00 - GRAND ISLAND 345KV CKT Z	720	720	0.04112	130.7228	GEN336801 1-BAXTER WILSON UNIT #1
FDNS	00NR_G15_042	2	17SP	G15_042	FROM->TO	GR ISLD-LNX3345.00 - GRAND ISLAND 345KV CKT Z	720	720	0.04112	130.7122	GEN335614 1-WILLOW GLENN UNIT#4
FDNS	00NR_G15_042	2	17SP	G15_042	FROM->TO	GR ISLD-LNX3345.00 - GRAND ISLAND 345KV CKT Z	720	720	0.04112	130.7048	GEN334441 1-SABINE UNIT 5
FDNS	00NR_G15_042	2	17SP	G15_042	FROM->TO	GR ISLD-LNX3345.00 - GRAND ISLAND 345KV CKT Z	720	720	0.04112	130.698	GEN336464 1-MICHOUD UNIT #3
FDNS	00NR_G15_042	2	17SP	G15_042	FROM->TO	GR ISLD-LNX3345.00 - GRAND ISLAND 345KV CKT Z	720	720	0.04112	130.6853	GEN335204 1-NELSON UNIT 4
FDNS	00NR_G15_042	2	17SP	G15_042	FROM->TO	GR ISLD-LNX3345.00 - GRAND ISLAND 345KV CKT Z	720	720	0.04229	130.6689	LAKEFIELD 3 - NOBLES 345KV CKT 1
FDNS	00NR_G15_042	2	17SP	G15_042	FROM->TO	GR ISLD-LNX3345.00 - GRAND ISLAND 345KV CKT Z	720	720	0.04202	130.6046	KOSSUTH 3 345.00 - OBRIEN 3 345.00 345KV CKT 1
FDNS	00NR_G15_042	2	17SP	G15_042	FROM->TO	GR ISLD-LNX3345.00 - GRAND ISLAND 345KV CKT Z	720	720	0.04178	130.6039	BROOKING COUNTY - LYON COUNTY 345KV CKT 1
FDNS	00NR_G15_042	2	17SP	G15_042	FROM->TO	GR ISLD-LNX3345.00 - GRAND ISLAND 345KV CKT Z	720	720	0.04202	130.6023	KOSSUTH 3 345.00 - WEBSTER 345KV CKT 1
FDNS	00NR_G15_042	2	17SP	G15_042	FROM->TO	GR ISLD-LNX3345.00 - GRAND ISLAND 345KV CKT Z	720	720	0.04112	130.6012	P13:230-345:NPPD:NUCOR-1
FDNS	00NR_G15_042	2	17SP	G15_042	FROM->TO	GR ISLD-LNX3345.00 - GRAND ISLAND 345KV CKT Z	720	720	0.04125	130.5915	LARAMIE RIVER - SIDNEY2-LNX3345.00 345KV CKT 1
FDNS	00NR_G15_042	2	17SP	G15_042	FROM->TO	GR ISLD-LNX3345.00 - GRAND ISLAND 345KV CKT Z	720	720	0.04244	130.5757	STEGALL - STEGALL TRANSFORMER 230KV CKT 1
FDNS	00NR_G15_042	2	17SP	G15_042	FROM->TO	GR ISLD-LNX3345.00 - GRAND ISLAND 345KV CKT Z	720	720	0.04137	130.5727	FT THOMPSON - HURON 230KV CKT 1
FDNS	00NR_G15_042	2	17SP	G15_042	FROM->TO	GR ISLD-LNX3345.00 - GRAND ISLAND 345KV CKT Z	720	720	0.04137	130.5727	FT THOMPSON - HURON 230KV CKT 1
FDNS	00NR_G15_042	2	17SP	G15_042	FROM->TO	GR ISLD-LNX3345.00 - GRAND ISLAND 345KV CKT Z	720	720	0.04137	130.5727	FT THOMPSON - HURON 230KV CKT 2
FDNS	00NR_G15_042	2	17SP	G15_042	FROM->TO	GR ISLD-LNX3345.00 - GRAND ISLAND 345KV CKT Z	720	720	0.04137	130.5727	FT THOMPSON - HURON 230KV CKT 2
FDNS	00NR_G15_042	2	17SP	G15_042	FROM->TO	GR ISLD-LNX3345.00 - GRAND ISLAND 345KV CKT Z	720	720	0.04244	130.556	P13:230-345:NPPD:STEGALL3:KV3A
FDNS	00NR_G15_042	2	17SP	G15_042	FROM->TO	GR ISLD-LNX3345.00 - GRAND ISLAND 345KV CKT Z	720	720	0.04244	130.553	STEGALL (SGQ KV3A) 345/230/13.8KV TRANSFORMER CKT 1
FDNS	00NR_G15_042	2	17SP	G15_042	FROM->TO	GR ISLD-LNX3345.00 - GRAND ISLAND 345KV CKT Z	720	720	0.04125	130.5454	SIDNEY - SIDNEY2-LNX3345.00 345KV CKT Z
FDNS	00NR_G15_042	2	17SP	G15_042	FROM->TO	GR ISLD-LNX3345.00 - GRAND ISLAND 345KV CKT Z	720	720	0.04125	130.539	BLAIR - GRANITE FALLS 230KV CKT 1
FDNS	00NR_G15_042	2	17SP	G15_042	FROM->TO	GR ISLD-LNX3345.00 - GRAND ISLAND 345KV CKT Z	720	720	0.04125	130.539	BLAIR - GRANITE FALLS 230KV CKT 1
FDNS	00NR_G15_042	2	17SP	G15_042	FROM->TO	GR ISLD-LNX3345.00 - GRAND ISLAND 345KV CKT Z	720	720	0.04112	130.5309	GEN334433 1-SABINE UNIT 3
FDNS	00NR_G15_042	2	17SP	G15_042	FROM->TO	GR ISLD-LNX3345.00 - GRAND ISLAND 345KV CKT Z	720	720	0.04083	130.5188	CROOKED CREEK - NORTH PLATTE 230KV CKT 1
FDNS	00NR_G15_042	2	17SP	G15_042	FROM->TO	GR ISLD-LNX3345.00 - GRAND ISLAND 345KV CKT Z	720	720	0.04143	130.5129	ALEXMRES3 345.00 - WAITE PARK 345KV CKT 1
FDNS	00NR_G15_042	2	17SP	G15_042	FROM->TO	GR ISLD-LNX3345.00 - GRAND ISLAND 345KV CKT Z	720	720	0.04328	130.512	STEGALL-LNX3230.00 - WAYSIDE 230KV CKT 1
FDNS	00NR_G15_042	2	17SP	G15_042	FROM->TO	GR ISLD-LNX3345.00 - GRAND ISLAND 345KV CKT Z	720	720	0.04113	130.5105	P12:115:UMZW:# 162 #: NEL IN ND. FAULT ON ML-NEL-MX-GA 115 KV
FDNS	00NR_G15_042	2	17SP	G15_042	FROM->TO	GR ISLD-LNX3345.00 - GRAND ISLAND 345KV CKT Z	720	720	0.04115	130.5092	CENTER - COYOTE 345KV CKT 1
FDNS	00NR_G15_042	2	17SP	G15_042	FROM->TO	GR ISLD-LNX3345.00 - GRAND ISLAND 345KV CKT Z	720	720	0.04328	130.501	STEGALL - STEGALL-LNX3230.00 230KV CKT Z
FDNS	00NR_G15_042	2	17SP	G15_042	FROM->TO	GR ISLD-LNX3345.00 - GRAND ISLAND 345KV CKT Z	720	720	0.04677	130.4774	COLUMEAST - SHELL CREEK 345KV CKT 1
FDNS	00NR_G15_042	2	17SP	G15_042	FROM->TO	GR ISLD-LNX3345.00 - GRAND ISLAND 345KV CKT Z	720	720	0.04112	130.4651	GEN336222 1-LITTLE GYPSY UNIT#2
FDNS	00NR_G15_042	2	17SP	G15_042	FROM->TO	GR ISLD-LNX3345.00 - GRAND ISLAND 345KV CKT Z	720	720	0.04112	130.4648	GEN531447 1-HOLCOMB GENERATOR
FDNS	00NR_G15_042	2	17SP	G15_042	FROM->TO	GR ISLD-LNX3345.00 - GRAND ISLAND 345KV CKT Z	720	720	0.04056	130.4535	MENNO JCT - TRIPP JCT 115KV CKT 1
FDNS	00NR_G15_042	2	17SP	G15_042	FROM->TO	GR ISLD-LNX3345.00 - GRAND ISLAND 345KV CKT Z	720	720	0.04112	130.4505	GEN303007 1-1BC2 U2
FDNS	00NR_G15_042	2	17SP	G15_042	FROM->TO	GR ISLD-LNX3345.00 - GRAND ISLAND 345KV CKT Z	720	720	0.04112	130.4496	GEN629075 1-OTTUMWA GENERATOR FOR OTTUMWA UNIT NO 1
FDNS	00NR_G15_042	2	17SP	G15_042	FROM->TO	GR ISLD-LNX3345.00 - GRAND ISLAND 345KV CKT Z	720	720	0.04112	130.4462	GEN303006 1-1BC2 U1
FDNS	00NR_G15_042	2	17SP	G15_042	FROM->TO	GR ISLD-LNX3345.00 - GRAND ISLAND 345KV CKT Z	720	720	0.04636	130.4443	RAUN - SIOUX CITY 345KV CKT 1
FDNS	00NR_G15_042	2	17SP	G15_042	FROM->TO	GR ISLD-LNX3345.00 - GRAND ISLAND 345KV CKT Z	720	720	0.04132	130.3942	GLENBORO SOUTH - RUGBY 230KV CKT 1
FDNS	00NR_G15_042	2	17SP	G15_042	FROM->TO	GR ISLD-LNX3345.00 - GRAND ISLAND 345KV CKT Z	720	720	0.04112	130.3917	GEN336152 1-WATERFORD UNIT#2
FDNS	00NR_G15_042	2	17SP	G15_042	FROM->TO	GR ISLD-LNX3345.00 - GRAND ISLAND 345KV CKT Z	720	720	0.04112	130.3913	GEN336151 1-WATERFORD UNIT#1
FDNS	00NR_G15_042	2	17SP	G15_042	FROM->TO	GR ISLD-LNX3345.00 - GRAND ISLAND 345KV CKT Z	720	720	0.04116	130.3674	GARRISON - JAMES TOWN 230KV CKT 1
FDNS	00NR_G15_042	2	17SP	G15_042	FROM->TO	GR ISLD-LNX3345.00 - GRAND ISLAND 345KV CKT Z	720	720	0.04125	130.361	HANKINSON - WAHPETON 230KV CKT 1
FDNS	00NR_G15_042	2	17SP	G15_042	FROM->TO	GR ISLD-LNX3345.00 - GRAND ISLAND 345KV CKT Z	720	720	0.0419	130.36	BYRON - NORTH ROCHESTER 345KV CKT 1
FDNS	00NR_G15_042	2	17SP	G15_042	FROM->TO	GR ISLD-LNX3345.00 - GRAND ISLAND 345KV CKT Z	720	720	0.04112	130.3556	P13:115-230:NPPD:NUCOR-3
FDNS	00NR_G15_042	2	17SP	G15_042	FROM->TO	GR ISLD-LNX3345.00 - GRAND ISLAND 345KV CKT Z	720	720	0.04222	130.3523	ARKANSAS NUCLEAR ONE - FT SMITH 500KV CKT 1
FDNS	00NR_G15_042	2	17SP	G15_042	FROM->TO	GR ISLD-LNX3345.00 - GRAND ISLAND 345KV CKT Z	720	720	0.04222	130.3523	ARKANSAS NUCLEAR ONE - FT SMITH 500KV CKT 1
FDNS	00NR_G15_042	2	17SP	G15_042	FROM->TO	GR ISLD-LNX3345.00 - GRAND ISLAND 345KV CKT Z	720	720	0.04066	130.3461	GAVINS POINT - YANKON JCT 115KV CKT 1
FDNS	00NR_G15_042	2	17SP	G15_042	FROM->TO	GR ISLD-LNX3345.00 - GRAND ISLAND 345KV CKT Z	720	720	0.04066	130.3461	GAVINS POINT - YANKON JCT 115KV CKT 1
FDNS	00NR_G15_042	2	17SP	G15_042	FROM->TO	GR ISLD-LNX3345.00 - GRAND ISLAND 345KV CKT Z	720	720	0.04056	130.3244	MENNO JCT - UTICA 115KV CKT 1
FDNS	00NR_G15_042	2	17SP	G15_042	FROM->TO	GR ISLD-LNX3345.00 - GRAND ISLAND 345KV CKT Z	720	720	0.04112	130.321	GEN303008 1-1BC2 U3
FDNS	00NR_G15_042	2	17SP	G15_042	FROM->TO	GR ISLD-LNX3345.00 - GRAND ISLAND 345KV CKT Z	720	720	0.04112	130.3159	GEN336170 1-GULF OXY U4
FDNS	00NR_G15_042	2	17SP	G15_042	FROM->TO	GR ISLD-LNX3345.00 - GRAND ISLAND 345KV CKT Z	720	720	0.04056	130.2811	P12:115:UMZZ:# 237 #: MEN IN SD. MENNO JUNCTION IS A TAP (UJ-MEN-TP).
FDNS	00NR_G15_042	2	17SP	G15_042	FROM->TO	GR ISLD-LNX3345.00 - GRAND ISLAND 345KV CKT Z	720	720	0.04112	130.2013	GEN501811 1-RODEMACHER UNIT 1
FDNS	00NR_G15_042	2	17SP	G15_042	FROM->TO	GR ISLD-LNX3345.00 - GRAND ISLAND 345KV CKT Z	720	720	0.04112	130.191	P13:230:UMZW:# 2218 #: FP IN MT. LOSS OF TRANSFORMER (AT2).
FDNS	00NR_G15_042	2	17SP	G15_042	FROM->TO	GR ISLD-LNX3345.00 - GRAND ISLAND 345KV CKT Z	720	720	0.04143	130.1784	NORTH ROCHESTER - PRAIRIE ISLAND 345KV CKT 1
FDNS	00NR_G15_042	2	17SP	G15_042	FROM->TO	GR ISLD-LNX3345.00 - GRAND ISLAND 345KV CKT Z	720	720	0.04133	130.1676	APPLEDORN 4 230.00 - WATERTOWN 230KV CKT 1
FDNS	00NR_G15_042	2	17SP	G15_042	FROM->TO	GR ISLD-LNX3345.00 - GRAND ISLAND 345KV CKT Z	720	720	0.04133	130.1676	APPLEDORN 4 230.00 - WATERTOWN 230KV CKT 1
FDNS	00NR_G15_042	2	17SP	G15_042	FROM->TO	GR ISLD-LNX3345.00 - GRAND ISLAND 345KV CKT Z	720	720	0.04053	130.1664	P12:115:NPPD:1164:ONEILL 7:JEFFREY9:BTB

SOLUTION	GROUP	SCENARIO	SEASON	SOURCE	DIRECTION	MONITORED ELEMENT	RATEA (MVA)	RATEB(MVA)	TDF	TC%LOADING (% MVA)	CONTINGENCY
FDNS	00NR_G15_042	2	17SP	G15_042	FROM->TO	GR ISLD-LNX3345.00 - GRAND ISLAND 345KV CKT Z	720	720	0.04133	130.164	APPLEDORN 4 230.00 - GRANITE FALLS 230KV CKT 1
FDNS	00NR_G15_042	2	17SP	G15_042	FROM->TO	GR ISLD-LNX3345.00 - GRAND ISLAND 345KV CKT Z	720	720	0.04133	130.164	APPLEDORN 4 230.00 - GRANITE FALLS 230KV CKT 1
FDNS	00NR_G15_042	2	17SP	G15_042	FROM->TO	GR ISLD-LNX3345.00 - GRAND ISLAND 345KV CKT Z	720	720	0.04117	130.1284	FARGO - JAMES TOWN 230KV CKT 1
FDNS	00NR_G15_042	2	17SP	G15_042	FROM->TO	GR ISLD-LNX3345.00 - GRAND ISLAND 345KV CKT Z	720	720	0.04261	130.1222	DENISON - SIOUX CITY 230KV CKT 1
FDNS	00NR_G15_042	2	17SP	G15_042	FROM->TO	GR ISLD-LNX3345.00 - GRAND ISLAND 345KV CKT Z	720	720	0.04112	130.104	GEN334071 1-LEWIS CREEK 2
FDNS	00NR_G15_042	2	17SP	G15_042	FROM->TO	GR ISLD-LNX3345.00 - GRAND ISLAND 345KV CKT Z	720	720	0.04112	130.0996	GEN337766 1-TRACTEBEL UNIT S1
FDNS	00NR_G15_042	2	17SP	G15_042	FROM->TO	GR ISLD-LNX3345.00 - GRAND ISLAND 345KV CKT Z	720	720	0.04112	130.0981	GEN334070 1-LEWIS CREEK 1
FDNS	00NR_G15_042	2	17SP	G15_042	FROM->TO	GR ISLD-LNX3345.00 - GRAND ISLAND 345KV CKT Z	720	720	0.04053	130.0972	CLEARWATER - ONEILL 115KV CKT 1
FDNS	00NR_G15_042	2	17SP	G15_042	FROM->TO	GR ISLD-LNX3345.00 - GRAND ISLAND 345KV CKT Z	720	720	0.04117	130.086	FARGO - JAMES TOWN 230KV CKT 2
FDNS	00NR_G15_042	2	17SP	G15_042	FROM->TO	GR ISLD-LNX3345.00 - GRAND ISLAND 345KV CKT Z	720	720	0.04123	130.0812	FERGSFL4 230.00 - WAHPETON 230KV CKT 1
FDNS	00NR_G15_042	2	17SP	G15_042	FROM->TO	GR ISLD-LNX3345.00 - GRAND ISLAND 345KV CKT Z	720	720	0.04112	130.07	P13:115-345:NPPD:NUCOR-2
FDNS	00NR_G15_042	2	17SP	G15_042	FROM->TO	GR ISLD-LNX3345.00 - GRAND ISLAND 345KV CKT Z	720	720	0.03992	130.0679	LAKEFIELD 3 - LKFLDXL3 345KV CKT 1
FDNS	00NR_G15_042	2	17SP	G15_042	FROM->TO	GR ISLD-LNX3345.00 - GRAND ISLAND 345KV CKT Z	720	720	0.04112	130.0547	GEN501910 1-ACADIA UNIT ST1
FDNS	00NR_G15_042	2	17SP	G15_042	FROM->TO	GR ISLD-LNX3345.00 - GRAND ISLAND 345KV CKT Z	720	720	0.04117	130.0462	BISMARK - JAMES TOWN 230KV CKT 1
FDNS	00NR_G15_042	2	17SP	G15_042	FROM->TO	GR ISLD-LNX3345.00 - GRAND ISLAND 345KV CKT Z	720	720	0.04069	130.04	CROOKED CREEK - RIVERDALE 230KV CKT 1
FDNS	00NR_G15_042	2	17SP	G15_042	FROM->TO	GR ISLD-LNX3345.00 - GRAND ISLAND 345KV CKT Z	720	720	0.04117	130.0366	BISMARK - WEBER 230KV CKT 1
FDNS	00NR_G15_042	2	17SP	G15_042	FROM->TO	GR ISLD-LNX3345.00 - GRAND ISLAND 345KV CKT Z	720	720	0.0419	130.0279	BYRON - PLEASANT VALLEY 345KV CKT 1
FDNS	00NR_G15_042	2	17SP	G15_042	FROM->TO	GR ISLD-LNX3345.00 - GRAND ISLAND 345KV CKT Z	720	720	0.04123	130.0269	P13:115-230:TSGT:SIDNEY-KV1A
FDNS	00NR_G15_042	2	17SP	G15_042	FROM->TO	GR ISLD-LNX3345.00 - GRAND ISLAND 345KV CKT Z	720	720	0.04117	130.0193	JAMES TOWN - WEBER 230KV CKT 1
FDNS	00NR_G15_042	2	17SP	G15_042	FROM->TO	GR ISLD-LNX3345.00 - GRAND ISLAND 345KV CKT Z	720	720	0.04122	130.0175	SIDNEY - SIDNEY TRANSFORMER 230KV CKT 1
FDNS	00NR_G15_042	2	17SP	G15_042	FROM->TO	GR ISLD-LNX3345.00 - GRAND ISLAND 345KV CKT Z	720	720	0.04111	130.0171	P12:115:UMZW:# 1910 #: YJ IN SD. YJ-UJ LINE FAULT
FDNS	00NR_G15_042	2	17SP	G15_042	FROM->TO	GR ISLD-LNX3345.00 - GRAND ISLAND 345KV CKT Z	720	720	0.04122	130.0157	P13:230-345:NPPD:SIDNEY 3:KV2A
FDNS	00NR_G15_042	2	17SP	G15_042	FROM->TO	GR ISLD-LNX3345.00 - GRAND ISLAND 345KV CKT Z	720	720	0.04122	130.0155	SIDNEY (SDQ KV2A) 345/230/13.8KV TRANSFORMER CKT 1
FDNS	00NR_G15_042	2	17SP	G15_042	FROM->TO	GR ISLD-LNX3345.00 - GRAND ISLAND 345KV CKT Z	720	720	0.04111	130.0131	NAPA JCT7 115.00 - YANKON JCT 115KV CKT 1
FDNS	00NR_G15_042	2	17SP	G15_042	FROM->TO	GR ISLD-LNX3345.00 - GRAND ISLAND 345KV CKT Z	720	720	0.04111	130.0131	NAPA JCT7 115.00 - YANKON JCT 115KV CKT 1
FDNS	00NR_G15_042	2	17SP	G15_042	FROM->TO	GR ISLD-LNX3345.00 - GRAND ISLAND 345KV CKT Z	720	720	0.04111	130.0123	NAPA JCT7 115.00 - UTICA 115KV CKT 1
FDNS	00NR_G15_042	2	17SP	G15_042	FROM->TO	GR ISLD-LNX3345.00 - GRAND ISLAND 345KV CKT Z	720	720	0.04111	130.0123	NAPA JCT7 115.00 - UTICA 115KV CKT 1
FDNS	00NR_G15_042	2	17SP	G15_042	FROM->TO	GR ISLD-LNX3345.00 - GRAND ISLAND 345KV CKT Z	720	720	0.04112	130.0065	GEN525561 1-TOLK GEN #1 24 KV
FDNS	00NR_G15_042	2	17SP	G15_042	FROM->TO	GR ISLD-LNX3345.00 - GRAND ISLAND 345KV CKT Z	720	720	0.04084	130.0026	MT VERN - STORLA 115KV CKT 1
FDNS	00NR_G15_042	2	17SP	G15_042	FROM->TO	GR ISLD-LNX3345.00 - GRAND ISLAND 345KV CKT Z	720	720	0.04112	129.9959	GEN525562 1-TOLK GEN #2 24 KV
FDNS	00NR_G15_042	2	17SP	G15_042	FROM->TO	GR ISLD-LNX3345.00 - GRAND ISLAND 345KV CKT Z	720	720	0.04112	129.987	GEN345765 H-1SIOUX 2 18.000
FDNS	00NR_G15_042	2	17SP	G15_042	FROM->TO	GR ISLD-LNX3345.00 - GRAND ISLAND 345KV CKT Z	720	720	0.04138	129.9833	P12:115:NPPD:WAPA1:CHADRON7:BOXBUTE7:BTB
FDNS	00NR_G15_042	2	17SP	G15_042	FROM->TO	GR ISLD-LNX3345.00 - GRAND ISLAND 345KV CKT Z	720	720	0.04112	129.9795	PRAIRIE ISLAND 345/20.0KV TRANSFORMER CKT 1
FDNS	00NR_G15_042	2	17SP	G15_042	FROM->TO	GR ISLD-LNX3345.00 - GRAND ISLAND 345KV CKT Z	720	720	0.04112	129.9787	GEN337764 1-TRACTEBEL UNIT C1
FDNS	00NR_G15_042	2	17SP	G15_042	FROM->TO	GR ISLD-LNX3345.00 - GRAND ISLAND 345KV CKT Z	720	720	0.04112	129.9787	GEN337765 1-TRACTEBEL UNIT C2
FDNS	00NR_G15_042	2	17SP	G15_042	FROM->TO	GR ISLD-LNX3345.00 - GRAND ISLAND 345KV CKT Z	720	720	0.04112	129.9778	PRAIRIE ISLAND 345/20.0KV TRANSFORMER CKT 2
FDNS	00NR_G15_042	2	17SP	G15_042	FROM->TO	GR ISLD-LNX3345.00 - GRAND ISLAND 345KV CKT Z	720	720	0.04112	129.9641	ELM CREEK - MONTICELLO 345KV CKT 1
FDNS	00NR_G15_042	2	17SP	G15_042	FROM->TO	GR ISLD-LNX3345.00 - GRAND ISLAND 345KV CKT Z	720	720	0.04123	129.9611	CHADRON - WAYSIDE 115KV CKT 1
FDNS	00NR_G15_042	2	17SP	G15_042	FROM->TO	GR ISLD-LNX3345.00 - GRAND ISLAND 345KV CKT Z	720	720	0.04114	129.961	BALTA - RAMSEY 230KV CKT 1
FDNS	00NR_G15_042	2	17SP	G15_042	FROM->TO	GR ISLD-LNX3345.00 - GRAND ISLAND 345KV CKT Z	720	720	0.04123	129.9609	P13:115-230:NPPD:WAYSIDE4:T1
FDNS	00NR_G15_042	2	17SP	G15_042	FROM->TO	GR ISLD-LNX3345.00 - GRAND ISLAND 345KV CKT Z	720	720	0.04112	129.9551	GRAND GULF 500/22.0KV TRANSFORMER CKT 1
FDNS	00NR_G15_042	2	17SP	G15_042	FROM->TO	GR ISLD-LNX3345.00 - GRAND ISLAND 345KV CKT Z	720	720	0.04175	129.9501	FRANKS - HUBEN 345KV CKT 1
FDNS	00NR_G15_042	2	17SP	G15_042	FROM->TO	GR ISLD-LNX3345.00 - GRAND ISLAND 345KV CKT Z	720	720	0.04112	129.9477	GEN345756 H-1SIOUX 1 18.000
FDNS	00NR_G15_042	2	17SP	G15_042	FROM->TO	GR ISLD-LNX3345.00 - GRAND ISLAND 345KV CKT Z	720	720	0.04124	129.9434	P13:230:UMZW:# 253 #: FR IN SD. LOSS OF TRANSFORMER (E
FDNS	00NR_G15_042	2	17SP	G15_042	FROM->TO	GR ISLD-LNX3345.00 - GRAND ISLAND 345KV CKT Z	720	720	0.04121	129.9423	FERGSFL4 230.00 - GRE-SILVRLK4230.00 230KV CKT 1
FDNS	00NR_G15_042	2	17SP	G15_042	FROM->TO	GR ISLD-LNX3345.00 - GRAND ISLAND 345KV CKT Z	720	720	0.04053	129.9402	CLEARWATER - NELIGH 115KV CKT 1
FDNS	00NR_G15_042	2	17SP	G15_042	FROM->TO	GR ISLD-LNX3345.00 - GRAND ISLAND 345KV CKT Z	720	720	0.04112	129.94	GEN336221 1-LITTLE GYPSY UNIT#1
FDNS	00NR_G15_042	2	17SP	G15_042	FROM->TO	GR ISLD-LNX3345.00 - GRAND ISLAND 345KV CKT Z	720	720	0.04123	129.9393	WAYSIDE (WAYSIDE T1) 230/115/13.8KV TRANSFORMER CKT 1
FDNS	00NR_G15_042	2	17SP	G15_042	FROM->TO	GR ISLD-LNX3345.00 - GRAND ISLAND 345KV CKT Z	720	720	0.0403	129.9309	GAVINS POINT - HARTINGTON 115KV CKT 1
FDNS	00NR_G15_042	2	17SP	G15_042	FROM->TO	GR ISLD-LNX3345.00 - GRAND ISLAND 345KV CKT Z	720	720	0.04119	129.9306	AUDUBON - SHEYNNE 230KV CKT 1
FDNS	00NR_G15_042	2	17SP	G15_042	FROM->TO	GR ISLD-LNX3345.00 - GRAND ISLAND 345KV CKT Z	720	720	0.04112	129.9302	GEN336242 1-1NMIL ST1 18.000
FDNS	00NR_G15_042	2	17SP	G15_042	FROM->TO	GR ISLD-LNX3345.00 - GRAND ISLAND 345KV CKT Z	720	720	0.04101	129.9285	DKSN_CO5 161.00 - TRIBOJI NO1 + NO2 161KV CKT 1
FDNS	00NR_G15_042	2	17SP	G15_042	FROM->TO	GR ISLD-LNX3345.00 - GRAND ISLAND 345KV CKT Z	720	720	0.04112	129.9244	GEN337757 1-DUKE HOTSPRINGS STG1
FDNS	00NR_G15_042	2	17SP	G15_042	FROM->TO	GR ISLD-LNX3345.00 - GRAND ISLAND 345KV CKT Z	720	720	0.04112	129.9198	GEN334431 1-SABINE UNIT 1
FDNS	00NR_G15_042	2	17SP	G15_042	FROM->TO	GR ISLD-LNX3345.00 - GRAND ISLAND 345KV CKT Z	720	720	0.04112	129.9198	GEN334432 1-SABINE UNIT 2
FDNS	00NR_G15_042	2	17SP	G15_042	FROM->TO	GR ISLD-LNX3345.00 - GRAND ISLAND 345KV CKT Z	720	720	0.04262	129.9176	PALXFRASBTHI
FDNS	00NR_G15_042	2	17SP	G15_042	FROM->TO	GR ISLD-LNX3345.00 - GRAND ISLAND 345KV CKT Z	720	720	0.04212	129.9162	NOBLES - SPLIT ROCK 345KV CKT 1
FDNS	00NR_G15_042	2	17SP	G15_042	FROM->TO	GR ISLD-LNX3345.00 - GRAND ISLAND 345KV CKT Z	720	720	0.04262	129.9099	7PALM TAP 345.00 - SUB T 345KV CKT 1
FDNS	00NR_G15_042	2	17SP	G15_042	FROM->TO	GR ISLD-LNX3345.00 - GRAND ISLAND 345KV CKT Z	720	720	0.04112	129.9084	GEN659118 1-LARAMIE RIVER UNIT1
FDNS	00NR_G15_042	2	17SP	G15_042	FROM->TO	GR ISLD-LNX3345.00 - GRAND ISLAND 345KV CKT Z	720	720	0.04121	129.9011	GRE-SILVRLK4230.00 - HENNING 230KV CKT 1
FDNS	00NR_G15_042	2	17SP	G15_042	FROM->TO	GR ISLD-LNX3345.00 - GRAND ISLAND 345KV CKT Z	720	720	0.04138	129.8987	CHADRON - DUNLAP 115KV CKT 1
FDNS	00NR_G15_042	2	17SP	G15_042	FROM->TO	GR ISLD-LNX3345.00 - GRAND ISLAND 345KV CKT Z	720	720	0.04112	129.8974	GEN336446 1-MICHOUD UNIT #2
FDNS	00NR_G15_042	2	17SP	G15_042	FROM->TO	GR ISLD-LNX3345.00 - GRAND ISLAND 345KV CKT Z	720	720	0.04118	129.8961	EAGLE - PHILIP 115KV CKT 1
FDNS	00NR_G15_042	2	17SP	G15_042	FROM->TO	GR ISLD-LNX3345.00 - GRAND ISLAND 345KV CKT Z	720	720	0.04136	129.8868	GENOA 161 - SENECA 161 161KV CKT 1
FDNS	00NR_G15_042	2	17SP	G15_042	FROM->TO	GR ISLD-LNX3345.00 - GRAND ISLAND 345KV CKT Z	720	720	0.04112	129.8834	GEN345832 1-1TS G1 13.800
FDNS	00NR_G15_042	2	17SP	G15_042	FROM->TO	GR ISLD-LNX3345.00 - GRAND ISLAND 345KV CKT Z	720	720	0.04112	129.8829	GEN345841 2-1TS G2 13.800
FDNS	00NR_G15_042	2	17SP	G15_042	FROM->TO	GR ISLD-LNX3345.00 - GRAND ISLAND 345KV CKT Z	720	720	0.04112	129.8778	GEN501970 1-EVANGELINE UNIT 7
FDNS	00NR_G15_042	2	17SP	G15_042	FROM->TO	GR ISLD-LNX3345.00 - GRAND ISLAND 345KV CKT Z	720	720	0.04112	129.8613	GEN334030 1-FRONTIER UNIT 1
FDNS	00NR_G15_042	2	17SP	G15_042	FROM->TO	GR ISLD-LNX3345.00 - GRAND ISLAND 345KV CKT Z	720	720	0.04112	129.861	GEN334031 1-FRONTIER UNIT 2
FDNS	00NR_G15_042	2	17SP	G15_042	FROM->TO	GR ISLD-LNX3345.00 - GRAND ISLAND 345KV CKT Z	720	720	0.04112	129.8579	GEN337430 1-PERYVILLE UNIT #3
FDNS	00NR_G15_042	2	17SP	G15_042	FROM->TO	GR ISLD-LNX3345.00 - GRAND ISLAND 345KV CKT Z	720	720	0.04112	129.8577	GEN337428 1-PERYVILLE UNIT #1
FDNS	00NR_G15_042	2	17SP	G15_042	FROM->TO	GR ISLD-LNX3345.00 - GRAND ISLAND 345KV CKT Z	720	720	0.04246	129.8538	OAHE - PHILIP TAP 230KV CKT 1
FDNS	00NR_G15_042	2	17SP	G15_042	FROM->TO	GR ISLD-LNX3345.00 - GRAND ISLAND 345KV CKT Z	720	720	0.04118	129.8356	EAGLE - MARTIN 115KV CKT 1

SOLUTION	GROUP	SCENARIO	SEASON	SOURCE	DIRECTION	MONITORED ELEMENT	RATEA (MVA)	RATEB(MVA)	TDF	TC%LOADING (% MVA)	CONTINGENCY
FDNS	00NR_G15_042	2	17SP	G15_042	FROM->TO	GR ISLD-LNX3345.00 - GRAND ISLAND 345KV CKT Z	720	720	0.04158	129.813	MARTIN - SHANNON 115KV CKT 1
FDNS	00NR_G15_042	2	17SP	G15_042	FROM->TO	GR ISLD-LNX3345.00 - GRAND ISLAND 345KV CKT Z	720	720	0.04112	129.8103	FINNEY SWITCHING STATION - PSCO LAMAR DC TIE 345KV CKT 1
FDNS	00NR_G15_042	2	17SP	G15_042	FROM->TO	GR ISLD-LNX3345.00 - GRAND ISLAND 345KV CKT Z	720	720	0.04112	129.8103	FINNEY SWITCHING STATION - PSCO LAMAR DC TIE 345KV CKT 1
FDNS	00NR_G15_042	2	17SP	G15_042	FROM->TO	GR ISLD-LNX3345.00 - GRAND ISLAND 345KV CKT Z	720	720	0.04138	129.7681	BOXBUTE7 115.00 - DUNLAP 115KV CKT 1
FDNS	00NR_G15_042	2	17SP	G15_042	FROM->TO	GR ISLD-LNX3345.00 - GRAND ISLAND 345KV CKT Z	720	720	0.04898	129.6775	COLUMWEST - KELLY 230KV CKT 1
FDNS	00NR_G15_042	2	17SP	G15_042	FROM->TO	GR ISLD-LNX3345.00 - GRAND ISLAND 345KV CKT Z	720	720	0.04203	129.4248	KELLY - SHELL CREEK 230KV CKT 1
FDNS	00NR_G15_042	2	17SP	G15_042	FROM->TO	GR ISLD-LNX3345.00 - GRAND ISLAND 345KV CKT Z	720	720	0.04203	129.4048	SHELL CREEK (SHELLCREEKT1) 345/230/13.8KV TRANSFORMER CKT 1
FDNS	00NR_G15_042	2	17SP	G15_042	FROM->TO	GR ISLD-LNX3345.00 - GRAND ISLAND 345KV CKT Z	720	720	0.04203	129.4048	SHELL CREEK (SHELLCREEKT1) 345/230/13.8KV TRANSFORMER CKT 1
FDNS	00NR_G15_042	2	17SP	G15_042	FROM->TO	GR ISLD-LNX3345.00 - GRAND ISLAND 345KV CKT Z	720	720	0.04112	129.2816	P12:115:TSGT:BLKWDCK7-ELSIETP7
FDNS	00NR_G15_042	2	17SP	G15_042	FROM->TO	GR ISLD-LNX3345.00 - GRAND ISLAND 345KV CKT Z	720	720	0.04124	129.2754	ANTELOP-LNX3345.00 - BRDLAND-LNX3345.00 345KV CKT 1
FDNS	00NR_G15_042	2	17SP	G15_042	FROM->TO	GR ISLD-LNX3345.00 - GRAND ISLAND 345KV CKT Z	720	720	0.04107	129.2618	BUCKNER7 345.00 - SPEARVILLE 345KV CKT 1
FDNS	00NR_G15_042	2	17SP	G15_042	FROM->TO	GR ISLD-LNX3345.00 - GRAND ISLAND 345KV CKT Z	720	720	0.04107	129.2618	BUCKNER7 345.00 - SPEARVILLE 345KV CKT 1
FDNS	00NR_G15_042	2	17SP	G15_042	FROM->TO	GR ISLD-LNX3345.00 - GRAND ISLAND 345KV CKT Z	720	720	0.04112	129.2501	1303-KEARNEY
FDNS	00NR_G15_042	2	17SP	G15_042	FROM->TO	GR ISLD-LNX3345.00 - GRAND ISLAND 345KV CKT Z	720	720	0.04112	129.2501	BASE CASE
FDNS	00NR_G15_042	2	17SP	G15_042	FROM->TO	GR ISLD-LNX3345.00 - GRAND ISLAND 345KV CKT Z	720	720	0.0402	129.1671	GRAND ISLAND - RIVERDALE 230KV CKT 1
FDNS	00NR_G15_042	2	17SP	G15_042	FROM->TO	GR ISLD-LNX3345.00 - GRAND ISLAND 345KV CKT Z	720	720	0.04112	129.1308	P12:115:TSGT:GRANTNB7-OGALALA7_2
FDNS	00NR_G15_042	2	17SP	G15_042	FROM->TO	GR ISLD-LNX3345.00 - GRAND ISLAND 345KV CKT Z	720	720	0.04241	129.116	AXTELL - PAULINE 345KV CKT 1
FDNS	00NR_G15_042	2	17SP	G15_042	FROM->TO	GR ISLD-LNX3345.00 - GRAND ISLAND 345KV CKT Z	720	720	0.0386	129.1068	COOPER - MOORE 345KV CKT 1
FDNS	00NR_G15_042	2	17SP	G15_042	FROM->TO	GR ISLD-LNX3345.00 - GRAND ISLAND 345KV CKT Z	720	720	0.04102	129.0966	MINGO (MINGO) 345/115/13.8KV TRANSFORMER CKT 1
FDNS	00NR_G15_042	2	17SP	G15_042	FROM->TO	GR ISLD-LNX3345.00 - GRAND ISLAND 345KV CKT Z	720	720	0.04102	129.0966	MINGO (MINGO) 345/115/13.8KV TRANSFORMER CKT 1
FDNS	00NR_G15_042	2	17SP	G15_042	FROM->TO	GR ISLD-LNX3345.00 - GRAND ISLAND 345KV CKT Z	720	720	0.04112	129.0874	GEN645001 1-FORT CALHOUN 1
FDNS	00NR_G15_042	2	17SP	G15_042	FROM->TO	GR ISLD-LNX3345.00 - GRAND ISLAND 345KV CKT Z	720	720	0.04163	129.064	103RD & ROKEBY - MOORE 345KV CKT 1
FDNS	00NR_G15_042	2	17SP	G15_042	FROM->TO	GR ISLD-LNX3345.00 - GRAND ISLAND 345KV CKT Z	720	720	0.04163	129.064	103RD & ROKEBY - MOORE 345KV CKT 1
FDNS	00NR_G15_042	2	17SP	G15_042	FROM->TO	GR ISLD-LNX3345.00 - GRAND ISLAND 345KV CKT Z	720	720	0.04145	128.9945	LOUP CITY - ST LIBORY 115KV CKT 1
FDNS	00NR_G15_042	2	17SP	G15_042	FROM->TO	GR ISLD-LNX3345.00 - GRAND ISLAND 345KV CKT Z	720	720	0.04117	128.9548	GRAND ISLAND (GRAND.ISD T5) 230/115/13.8KV TRANSFORMER CKT 2
FDNS	00NR_G15_042	2	17SP	G15_042	FROM->TO	GR ISLD-LNX3345.00 - GRAND ISLAND 345KV CKT Z	720	720	0.04117	128.9548	GRAND ISLAND (GRAND.ISD T5) 230/115/13.8KV TRANSFORMER CKT 2
FDNS	00NR_G15_042	2	17SP	G15_042	FROM->TO	GR ISLD-LNX3345.00 - GRAND ISLAND 345KV CKT Z	720	720	0.04117	128.9521	GRAND ISLAND (GRAND.ISD T2) 230/115/13.8KV TRANSFORMER CKT 1
FDNS	00NR_G15_042	2	17SP	G15_042	FROM->TO	GR ISLD-LNX3345.00 - GRAND ISLAND 345KV CKT Z	720	720	0.04117	128.9521	GRAND ISLAND (GRAND.ISD T2) 230/115/13.8KV TRANSFORMER CKT 1
FDNS	00NR_G15_042	2	17SP	G15_042	FROM->TO	GR ISLD-LNX3345.00 - GRAND ISLAND 345KV CKT Z	720	720	0.04124	128.9375	FT THOMPSON - OAHE 230KV CKT 3
FDNS	00NR_G15_042	2	17SP	G15_042	FROM->TO	GR ISLD-LNX3345.00 - GRAND ISLAND 345KV CKT Z	720	720	0.04124	128.9375	FT THOMPSON - OAHE 230KV CKT 3
FDNS	00NR_G15_042	2	17SP	G15_042	FROM->TO	GR ISLD-LNX3345.00 - GRAND ISLAND 345KV CKT Z	720	720	0.04124	128.9375	FT THOMPSON - OAHE 230KV CKT 4
FDNS	00NR_G15_042	2	17SP	G15_042	FROM->TO	GR ISLD-LNX3345.00 - GRAND ISLAND 345KV CKT Z	720	720	0.04124	128.9375	FT THOMPSON - OAHE 230KV CKT 4
FDNS	00NR_G15_042	2	17SP	G15_042	FROM->TO	GR ISLD-LNX3345.00 - GRAND ISLAND 345KV CKT Z	720	720	0.04164	128.8952	MAXWELL - NORTH PLATTE 115KV CKT 1
FDNS	00NR_G15_042	2	17SP	G15_042	FROM->TO	GR ISLD-LNX3345.00 - GRAND ISLAND 345KV CKT Z	720	720	0.04117	128.8812	AURORA - GRAND ISLAND 115KV CKT 1
FDNS	00NR_G15_042	2	17SP	G15_042	FROM->TO	GR ISLD-LNX3345.00 - GRAND ISLAND 345KV CKT Z	720	720	0.04172	128.8652	SUB 3455 - SUB 3740 345KV CKT 1
FDNS	00NR_G15_042	2	17SP	G15_042	FROM->TO	GR ISLD-LNX3345.00 - GRAND ISLAND 345KV CKT Z	720	720	0.04172	128.8652	SUB 3455 - SUB 3740 345KV CKT 1
FDNS	00NR_G15_042	2	17SP	G15_042	FROM->TO	GR ISLD-LNX3345.00 - GRAND ISLAND 345KV CKT Z	720	720	0.04112	128.8346	MCCOOL (MCCOOL T2) 345/115/13.8KV TRANSFORMER CKT 1
FDNS	00NR_G15_042	2	17SP	G15_042	FROM->TO	GR ISLD-LNX3345.00 - GRAND ISLAND 345KV CKT Z	720	720	0.04112	128.8346	MCCOOL (MCCOOL T2) 345/115/13.8KV TRANSFORMER CKT 1
FDNS	00NR_G15_042	2	17SP	G15_042	FROM->TO	GR ISLD-LNX3345.00 - GRAND ISLAND 345KV CKT Z	720	720	0.04134	128.7795	GRAND ISLAND (GI KU1B) 345/230/13.8KV TRANSFORMER CKT 2
FDNS	00NR_G15_042	2	17SP	G15_042	FROM->TO	GR ISLD-LNX3345.00 - GRAND ISLAND 345KV CKT Z	720	720	0.04134	128.7795	GRAND ISLAND (GI KU1B) 345/230/13.8KV TRANSFORMER CKT 2
FDNS	00NR_G15_042	2	17SP	G15_042	FROM->TO	GR ISLD-LNX3345.00 - GRAND ISLAND 345KV CKT Z	720	720	0.04134	128.7784	GRAND ISLAND (GI KU1A) 345/230/13.8KV TRANSFORMER CKT 1
FDNS	00NR_G15_042	2	17SP	G15_042	FROM->TO	GR ISLD-LNX3345.00 - GRAND ISLAND 345KV CKT Z	720	720	0.04134	128.7784	GRAND ISLAND (GI KU1A) 345/230/13.8KV TRANSFORMER CKT 1
FDNS	00NR_G15_042	2	17SP	G15_042	FROM->TO	GR ISLD-LNX3345.00 - GRAND ISLAND 345KV CKT Z	720	720	0.04011	128.7588	G11_051T 345.00 - WOODWARD DISTRICT EHV 345KV CKT 1
FDNS	00NR_G15_042	2	17SP	G15_042	FROM->TO	GR ISLD-LNX3345.00 - GRAND ISLAND 345KV CKT Z	720	720	0.04001	128.7489	FINNEY SWITCHING STATION - WALKTAP7 345.00 345KV CKT 1
FDNS	00NR_G15_042	2	17SP	G15_042	FROM->TO	GR ISLD-LNX3345.00 - GRAND ISLAND 345KV CKT Z	720	720	0.04001	128.7489	FINNEY SWITCHING STATION - WALKTAP7 345.00 345KV CKT 1
FDNS	00NR_G15_042	2	17SP	G15_042	FROM->TO	GR ISLD-LNX3345.00 - GRAND ISLAND 345KV CKT Z	720	720	0.03942	128.7259	Hitchland Interchange - WALKTAP7 345.00 345KV CKT 1
FDNS	00NR_G15_042	2	17SP	G15_042	FROM->TO	GR ISLD-LNX3345.00 - GRAND ISLAND 345KV CKT Z	720	720	0.03942	128.7259	Hitchland Interchange - WALKTAP7 345.00 345KV CKT 1
FDNS	00NR_G15_042	2	17SP	G15_042	FROM->TO	GR ISLD-LNX3345.00 - GRAND ISLAND 345KV CKT Z	720	720	0.03942	128.7203	P12:345:SPS:J07.1.FINN.HITCH
FDNS	00NR_G15_042	2	17SP	G15_042	FROM->TO	GR ISLD-LNX3345.00 - GRAND ISLAND 345KV CKT Z	720	720	0.04112	128.7049	GEN652546 1-FT RANDAL
FDNS	00NR_G15_042	2	17SP	G15_042	FROM->TO	GR ISLD-LNX3345.00 - GRAND ISLAND 345KV CKT Z	720	720	0.04328	128.7008	MOORE - PAULINE 345KV CKT 1
FDNS	00NR_G15_042	2	17SP	G15_042	FROM->TO	GR ISLD-LNX3345.00 - GRAND ISLAND 345KV CKT Z	720	720	0.0413	128.7008	P12:115:UMZW:# 172 #: WI IN SD.
FDNS	00NR_G15_042	2	17SP	G15_042	FROM->TO	GR ISLD-LNX3345.00 - GRAND ISLAND 345KV CKT Z	720	720	0.04125	128.6965	LARAMIE RIVER - STEGALL 345KV CKT 1
FDNS	00NR_G15_042	2	17SP	G15_042	FROM->TO	GR ISLD-LNX3345.00 - GRAND ISLAND 345KV CKT Z	720	720	0.04112	128.6915	GEN600125 2-FEP ST G 13.800
FDNS	00NR_G15_042	2	17SP	G15_042	FROM->TO	GR ISLD-LNX3345.00 - GRAND ISLAND 345KV CKT Z	720	720	0.04095	128.6862	FALLOW 3 345.00 - GRIMES 345KV CKT 1
FDNS	00NR_G15_042	2	17SP	G15_042	FROM->TO	GR ISLD-LNX3345.00 - GRAND ISLAND 345KV CKT Z	720	720	0.04112	128.6772	GEN672367 1-MERIDIAN GENERATOR 1 GT1
FDNS	00NR_G15_042	2	17SP	G15_042	FROM->TO	GR ISLD-LNX3345.00 - GRAND ISLAND 345KV CKT Z	720	720	0.04112	128.6772	GEN672368 2-MERIDIAN GENERATOR 2 GT2
FDNS	00NR_G15_042	2	17SP	G15_042	FROM->TO	GR ISLD-LNX3345.00 - GRAND ISLAND 345KV CKT Z	720	720	0.04112	128.6768	GEN615031 1-PLEASANT VALLEY
FDNS	00NR_G15_042	2	17SP	G15_042	FROM->TO	GR ISLD-LNX3345.00 - GRAND ISLAND 345KV CKT Z	720	720	0.03836	128.6741	MINGO - SETAB 345KV CKT 1
FDNS	00NR_G15_042	2	17SP	G15_042	FROM->TO	GR ISLD-LNX3345.00 - GRAND ISLAND 345KV CKT Z	720	720	0.03836	128.6741	MINGO - SETAB 345KV CKT 1
FDNS	00NR_G15_042	2	17SP	G15_042	FROM->TO	GR ISLD-LNX3345.00 - GRAND ISLAND 345KV CKT Z	720	720	0.04112	128.6718	GEN615032 2-PLEASANT VALLEY
FDNS	00NR_G15_042	2	17SP	G15_042	FROM->TO	GR ISLD-LNX3345.00 - GRAND ISLAND 345KV CKT Z	720	720	0.04112	128.6665	GEN672350 1-NIPAWIN GENERATOR 1
FDNS	00NR_G15_042	2	17SP	G15_042	FROM->TO	GR ISLD-LNX3345.00 - GRAND ISLAND 345KV CKT Z	720	720	0.04112	128.6665	GEN672351 2-NIPAWIN GENERATOR 2
FDNS	00NR_G15_042	2	17SP	G15_042	FROM->TO	GR ISLD-LNX3345.00 - GRAND ISLAND 345KV CKT Z	720	720	0.04112	128.6665	GEN672352 3-NIPAWIN GENERATOR 3
FDNS	00NR_G15_042	2	17SP	G15_042	FROM->TO	GR ISLD-LNX3345.00 - GRAND ISLAND 345KV CKT Z	720	720	0.04112	128.6636	GEN600018 S-LS POWER STEAM
FDNS	00NR_G15_042	2	17SP	G15_042	FROM->TO	GR ISLD-LNX3345.00 - GRAND ISLAND 345KV CKT Z	720	720	0.04247	128.6629	ATCHSNT3 345.00 - BOONEVILLE 345KV CKT 1
FDNS	00NR_G15_042	2	17SP	G15_042	FROM->TO	GR ISLD-LNX3345.00 - GRAND ISLAND 345KV CKT Z	720	720	0.04112	128.6601	GEN657964 1-ASH2GEN9 0.5750
FDNS	00NR_G15_042	2	17SP	G15_042	FROM->TO	GR ISLD-LNX3345.00 - GRAND ISLAND 345KV CKT Z	720	720	0.04112	128.6584	MITCHLCO3 345.00 345/34.5KV TRANSFORMER CKT 1
FDNS	00NR_G15_042	2	17SP	G15_042	FROM->TO	GR ISLD-LNX3345.00 - GRAND ISLAND 345KV CKT Z	720	720	0.04112	128.652	GEN672349 3-CORY COGEN GENERATOR 3 ST
FDNS	00NR_G15_042	2	17SP	G15_042	FROM->TO	GR ISLD-LNX3345.00 - GRAND ISLAND 345KV CKT Z	720	720	0.04112	128.6471	GEN652548 5-FT RANDAL
FDNS	00NR_G15_042	2	17SP	G15_042	FROM->TO	GR ISLD-LNX3345.00 - GRAND ISLAND 345KV CKT Z	720	720	0.04112	128.6471	GEN652549 7-FT RANDAL
FDNS	00NR_G15_042	2	17SP	G15_042	FROM->TO	GR ISLD-LNX3345.00 - GRAND ISLAND 345KV CKT Z	720	720	0.04124	128.6404	P12:345:UMZB:# 103 #: BD IN SD. LOSS OF LINE
FDNS	00NR_G15_042	2	17SP	G15_042	FROM->TO	GR ISLD-LNX3345.00 - GRAND ISLAND 345KV CKT Z	720	720	0.04112	128.6361	GEN652547 3-FT RANDAL
FDNS	00NR_G15_042	2	17SP	G15_042	FROM->TO	GR ISLD-LNX3345.00 - GRAND ISLAND 345KV CKT Z	720	720	0.04124	128.6354	P12:345:UMZB:# 102 #: AVS BD IN ND. AVS BRD LR

SOLUTION	GROUP	SCENARIO	SEASON	SOURCE	DIRECTION	MONITORED ELEMENT	RATEA (MVA)	RATEB(MVA)	TDF	TC%LOADING (% MVA)	CONTINGENCY
FDNS	00NR_G15_042	2	17SP	G15_042	FROM->TO	GR ISLD-LNX3345.00 - GRAND ISLAND 345KV CKT Z	720	720	0.04112	128.6242	GEN620324 3-HOOT LAKE 3 GEN
FDNS	00NR_G15_042	2	17SP	G15_042	FROM->TO	GR ISLD-LNX3345.00 - GRAND ISLAND 345KV CKT Z	720	720	0.04124	128.6224	BRDLAND-LNX3345.00 - HURON 345KV CKT Z
FDNS	00NR_G15_042	2	17SP	G15_042	FROM->TO	GR ISLD-LNX3345.00 - GRAND ISLAND 345KV CKT Z	720	720	0.04124	128.6211	HURON (BD KU2A) 345/230/13.8KV TRANSFORMER CKT 1
FDNS	00NR_G15_042	2	17SP	G15_042	FROM->TO	GR ISLD-LNX3345.00 - GRAND ISLAND 345KV CKT Z	720	720	0.04124	128.6211	HURON (BD KU2A) 345/230/13.8KV TRANSFORMER CKT 1
FDNS	00NR_G15_042	2	17SP	G15_042	FROM->TO	GR ISLD-LNX3345.00 - GRAND ISLAND 345KV CKT Z	720	720	0.04124	128.6196	BROADLAND - HURON 230KV CKT 1
FDNS	00NR_G15_042	2	17SP	G15_042	FROM->TO	GR ISLD-LNX3345.00 - GRAND ISLAND 345KV CKT Z	720	720	0.04011	128.616	G11_051T 345.00 - TATONGA7 345.00 345KV CKT 1
FDNS	00NR_G15_042	2	17SP	G15_042	FROM->TO	GR ISLD-LNX3345.00 - GRAND ISLAND 345KV CKT Z	720	720	0.04112	128.6096	GEN600021 3-ANGUS ANSON2
FDNS	00NR_G15_042	2	17SP	G15_042	FROM->TO	GR ISLD-LNX3345.00 - GRAND ISLAND 345KV CKT Z	720	720	0.04112	128.6093	GEN600020 2-ANGUS ANSON1
FDNS	00NR_G15_042	2	17SP	G15_042	FROM->TO	GR ISLD-LNX3345.00 - GRAND ISLAND 345KV CKT Z	720	720	0.04144	128.5871	GRAND ISLAND (GI KU3A) 345/230/13.8KV TRANSFORMER CKT 3
FDNS	00NR_G15_042	2	17SP	G15_042	FROM->TO	GR ISLD-LNX3345.00 - GRAND ISLAND 345KV CKT Z	720	720	0.04144	128.5871	GRAND ISLAND (GI KU3A) 345/230/13.8KV TRANSFORMER CKT 3
FDNS	00NR_G15_042	2	17SP	G15_042	FROM->TO	GR ISLD-LNX3345.00 - GRAND ISLAND 345KV CKT Z	720	720	0.04898	128.5831	COLUMWEST - GRAND ISLAND 230KV CKT 1
FDNS	00NR_G15_042	2	17SP	G15_042	FROM->TO	GR ISLD-LNX3345.00 - GRAND ISLAND 345KV CKT Z	720	720	0.04112	128.5796	GEN659158 2-PIONEER G213.800
FDNS	00NR_G15_042	2	17SP	G15_042	FROM->TO	GR ISLD-LNX3345.00 - GRAND ISLAND 345KV CKT Z	720	720	0.04112	128.5796	GEN659159 3-PIONEER G313.800
FDNS	00NR_G15_042	2	17SP	G15_042	FROM->TO	GR ISLD-LNX3345.00 - GRAND ISLAND 345KV CKT Z	720	720	0.04112	128.5778	GEN659156 2-LONESMCRK 2G13.800
FDNS	00NR_G15_042	2	17SP	G15_042	FROM->TO	GR ISLD-LNX3345.00 - GRAND ISLAND 345KV CKT Z	720	720	0.04112	128.5778	GEN659157 3-LONESMCRK 3G13.800
FDNS	00NR_G15_042	2	17SP	G15_042	FROM->TO	GR ISLD-LNX3345.00 - GRAND ISLAND 345KV CKT Z	720	720	0.04112	128.5752	GEN659290 1-EDGECOL
FDNS	00NR_G15_042	2	17SP	G15_042	FROM->TO	GR ISLD-LNX3345.00 - GRAND ISLAND 345KV CKT Z	720	720	0.04112	128.5729	GEN672339 16-QE 16G 13.800
FDNS	00NR_G15_042	2	17SP	G15_042	FROM->TO	GR ISLD-LNX3345.00 - GRAND ISLAND 345KV CKT Z	720	720	0.04112	128.5729	GEN672342 3-QUEEN ELIZABETH GENERATOR 3
FDNS	00NR_G15_042	2	17SP	G15_042	FROM->TO	GR ISLD-LNX3345.00 - GRAND ISLAND 345KV CKT Z	720	720	0.04112	128.5603	LADISH 115/13.2KV TRANSFORMER CKT 1
FDNS	00NR_G15_042	2	17SP	G15_042	FROM->TO	GR ISLD-LNX3345.00 - GRAND ISLAND 345KV CKT Z	720	720	0.04112	128.559	GEN600012 2-BLACK DOG GEN 2
FDNS	00NR_G15_042	2	17SP	G15_042	FROM->TO	GR ISLD-LNX3345.00 - GRAND ISLAND 345KV CKT Z	720	720	0.04112	128.5589	GEN672393 2-NBECST2G 13.800
FDNS	00NR_G15_042	2	17SP	G15_042	FROM->TO	GR ISLD-LNX3345.00 - GRAND ISLAND 345KV CKT Z	720	720	0.04112	128.5564	GEN562003 1-G11_027_3 0.6900
FDNS	00NR_G15_042	2	17SP	G15_042	FROM->TO	GR ISLD-LNX3345.00 - GRAND ISLAND 345KV CKT Z	720	720	0.04112	128.5535	GEN590010 1-ERCOT EQUIVALENCE
FDNS	00NR_G15_042	2	17SP	G15_042	FROM->TO	GR ISLD-LNX3345.00 - GRAND ISLAND 345KV CKT Z	720	720	0.04235	128.5497	LOUP CITY - NORTH LOUP 115KV CKT 1
FDNS	00NR_G15_042	2	17SP	G15_042	FROM->TO	GR ISLD-LNX3345.00 - GRAND ISLAND 345KV CKT Z	720	720	0.04112	128.5483	GEN652410 3-FT PECK
FDNS	00NR_G15_042	2	17SP	G15_042	FROM->TO	GR ISLD-LNX3345.00 - GRAND ISLAND 345KV CKT Z	720	720	0.04112	128.5291	GEN300003 1-THOMAS HILL UNIT 3
FDNS	00NR_G15_042	2	17SP	G15_042	FROM->TO	GR ISLD-LNX3345.00 - GRAND ISLAND 345KV CKT Z	720	720	0.04112	128.5211	GEN590011 2-ERCOT EQUIVALENCE
FDNS	00NR_G15_042	2	17SP	G15_042	FROM->TO	GR ISLD-LNX3345.00 - GRAND ISLAND 345KV CKT Z	720	720	0.04112	128.5205	EASTDC - ERCOT EQUIVALENCE 345KV CKT 1
FDNS	00NR_G15_042	2	17SP	G15_042	FROM->TO	GR ISLD-LNX3345.00 - GRAND ISLAND 345KV CKT Z	720	720	0.04112	128.5134	GEN629072 4-LANSING GENERATOR FOR UNITS NO4 EIA CODE 1
FDNS	00NR_G15_042	2	17SP	G15_042	FROM->TO	GR ISLD-LNX3345.00 - GRAND ISLAND 345KV CKT Z	720	720	0.04112	128.4901	G830_SUB 115.00 - GRE-MCHENRY7115.00 115KV CKT 1
FDNS	00NR_G15_042	2	17SP	G15_042	FROM->TO	GR ISLD-LNX3345.00 - GRAND ISLAND 345KV CKT Z	720	720	0.04148	128.4836	OAHE - SULLEY BUTTE 230KV CKT 1
FDNS	00NR_G15_042	2	17SP	G15_042	FROM->TO	GR ISLD-LNX3345.00 - GRAND ISLAND 345KV CKT Z	720	720	0.04112	128.4819	GEN652414 4-FT PECK
FDNS	00NR_G15_042	2	17SP	G15_042	FROM->TO	GR ISLD-LNX3345.00 - GRAND ISLAND 345KV CKT Z	720	720	0.04112	128.4819	GEN652415 5-FT PECK
FDNS	00NR_G15_042	2	17SP	G15_042	FROM->TO	GR ISLD-LNX3345.00 - GRAND ISLAND 345KV CKT Z	720	720	0.04112	128.4812	G830_SUB 115.00 115/34.5KV TRANSFORMER CKT 1
FDNS	00NR_G15_042	2	17SP	G15_042	FROM->TO	GR ISLD-LNX3345.00 - GRAND ISLAND 345KV CKT Z	720	720	0.04112	128.4621	GEN660003 3-HURON WEST PARK
FDNSLock	00NR_G15_042	2	17SP	G15_042	FROM->TO	GR ISLD-LNX3345.00 - GRAND ISLAND 345KV CKT Z	720	720	0.04239	128.4521	CENTRAL CITY - GRAND ISLAND 115KV CKT 1
FDNS	00NR_G15_042	2	17SP	G15_042	FROM->TO	GR ISLD-LNX3345.00 - GRAND ISLAND 345KV CKT Z	720	720	0.04112	128.4508	EMERY 161/18.0KV TRANSFORMER CKT 1
FDNS	00NR_G15_042	2	17SP	G15_042	FROM->TO	GR ISLD-LNX3345.00 - GRAND ISLAND 345KV CKT Z	720	720	0.04112	128.4454	GEN652345 W-G07_023IS_2 0.6900
FDNS	00NR_G15_042	2	17SP	G15_042	FROM->TO	GR ISLD-LNX3345.00 - GRAND ISLAND 345KV CKT Z	720	720	0.04112	128.4395	GEN 11104 1-J262_GEN 0.6000
FDNS	00NR_G15_042	2	17SP	G15_042	FROM->TO	GR ISLD-LNX3345.00 - GRAND ISLAND 345KV CKT Z	720	720	0.04112	128.4395	GEN 11108 1-J263_GEN 0.6000
FDNS	00NR_G15_042	2	17SP	G15_042	FROM->TO	GR ISLD-LNX3345.00 - GRAND ISLAND 345KV CKT Z	720	720	0.04112	128.4154	GEN600050 1-FEP
FDNS	00NR_G15_042	2	17SP	G15_042	FROM->TO	GR ISLD-LNX3345.00 - GRAND ISLAND 345KV CKT Z	720	720	0.03922	128.3978	GERALD GENTLEMAN STATION - RED WILLOW 345KV CKT 1
FDNS	00NR_G15_042	2	17SP	G15_042	FROM->TO	GR ISLD-LNX3345.00 - GRAND ISLAND 345KV CKT Z	720	720	0.04124	128.3849	ANTELOP-LNX3345.00 - ANTELOPE VALLEY 345KV CKT Z
FDNS	00NR_G15_042	2	17SP	G15_042	FROM->TO	GR ISLD-LNX3345.00 - GRAND ISLAND 345KV CKT Z	720	720	0.04035	128.3844	POST ROCK (POSTROCK T1) 345/230/13.8KV TRANSFORMER CKT 1
FDNS	00NR_G15_042	2	17SP	G15_042	FROM->TO	GR ISLD-LNX3345.00 - GRAND ISLAND 345KV CKT Z	720	720	0.04112	128.3835	GEN652545 7-BIG BEND
FDNS	00NR_G15_042	2	17SP	G15_042	FROM->TO	GR ISLD-LNX3345.00 - GRAND ISLAND 345KV CKT Z	720	720	0.04112	128.3634	GEN600046 1-MECST
FDNS	00NR_G15_042	2	17SP	G15_042	FROM->TO	GR ISLD-LNX3345.00 - GRAND ISLAND 345KV CKT Z	720	720	0.04112	128.3606	GEN300007 1-NEW MADRID UNIT 2
FDNS	00NR_G15_042	2	17SP	G15_042	FROM->TO	GR ISLD-LNX3345.00 - GRAND ISLAND 345KV CKT Z	720	720	0.04112	128.3538	GEN300006 1-NEW MADRID UNIT 1
FDNS	00NR_G15_042	2	17SP	G15_042	FROM->TO	GR ISLD-LNX3345.00 - GRAND ISLAND 345KV CKT Z	720	720	0.04011	128.3484	MATHWSN7 345.00 - TATONGA7 345.00 345KV CKT 1
FDNS	00NR_G15_042	2	17SP	G15_042	FROM->TO	GR ISLD-LNX3345.00 - GRAND ISLAND 345KV CKT Z	720	720	0.04148	128.3455	SULLYBT-LNX3230.00 - WHITLOK 230KV CKT 1
FDNS	00NR_G15_042	2	17SP	G15_042	FROM->TO	GR ISLD-LNX3345.00 - GRAND ISLAND 345KV CKT Z	720	720	0.04148	128.3408	SULLEY BUTTE - SULLYBT-LNX3230.00 230KV CKT Z
FDNS	00NR_G15_042	2	17SP	G15_042	FROM->TO	GR ISLD-LNX3345.00 - GRAND ISLAND 345KV CKT Z	720	720	0.04112	128.3359	GEN600047 1-MECCT1
FDNS	00NR_G15_042	2	17SP	G15_042	FROM->TO	GR ISLD-LNX3345.00 - GRAND ISLAND 345KV CKT Z	720	720	0.04112	128.3356	GEN600063 1-COLVILLE GEN 1
FDNS	00NR_G15_042	2	17SP	G15_042	FROM->TO	GR ISLD-LNX3345.00 - GRAND ISLAND 345KV CKT Z	720	720	0.04112	128.3356	GEN600064 2-COLVILLE GEN 2
FDNS	00NR_G15_042	2	17SP	G15_042	FROM->TO	GR ISLD-LNX3345.00 - GRAND ISLAND 345KV CKT Z	720	720	0.04112	128.3311	GEN600043 7-BLUE LAKE5
FDNS	00NR_G15_042	2	17SP	G15_042	FROM->TO	GR ISLD-LNX3345.00 - GRAND ISLAND 345KV CKT Z	720	720	0.04112	128.3311	GEN600044 8-BLUE LAKE6
FDNS	00NR_G15_042	2	17SP	G15_042	FROM->TO	GR ISLD-LNX3345.00 - GRAND ISLAND 345KV CKT Z	720	720	0.04112	128.3305	GEN660001 2-ABERDEEN SIEBRECHT
FDNS	00NR_G15_042	2	17SP	G15_042	FROM->TO	GR ISLD-LNX3345.00 - GRAND ISLAND 345KV CKT Z	720	720	0.04112	128.3093	GEN659273 2-GROTON SYNC COND
FDNS	00NR_G15_042	2	17SP	G15_042	FROM->TO	GR ISLD-LNX3345.00 - GRAND ISLAND 345KV CKT Z	720	720	0.04112	128.3093	GEN659294 1-WILTONCOL9
FDNS	00NR_G15_042	2	17SP	G15_042	FROM->TO	GR ISLD-LNX3345.00 - GRAND ISLAND 345KV CKT Z	720	720	0.04148	128.3085	P12:230:UMZB:# 114 #: SB IN SD. SB-WK-GH
FDNS	00NR_G15_042	2	17SP	G15_042	FROM->TO	GR ISLD-LNX3345.00 - GRAND ISLAND 345KV CKT Z	720	720	0.04148	128.3085	P12:230:UMZB:# 117 #: WK IN SD. SB-WK-GH
FDNS	00NR_G15_042	2	17SP	G15_042	FROM->TO	GR ISLD-LNX3345.00 - GRAND ISLAND 345KV CKT Z	720	720	0.04112	128.2957	GEN600065 7-HIGH BRIDGE
FDNS	00NR_G15_042	2	17SP	G15_042	FROM->TO	GR ISLD-LNX3345.00 - GRAND ISLAND 345KV CKT Z	720	720	0.04112	128.2957	GEN600066 8-HIGH BRIDGE
FDNS	00NR_G15_042	2	17SP	G15_042	FROM->TO	GR ISLD-LNX3345.00 - GRAND ISLAND 345KV CKT Z	720	720	0.04112	128.2904	GEN600014 4-BLACK DOG GEN 4
FDNS	00NR_G15_042	2	17SP	G15_042	FROM->TO	GR ISLD-LNX3345.00 - GRAND ISLAND 345KV CKT Z	720	720	0.04112	128.2856	GEN600011 5-BLACK DOG GEN 1
FDNS	00NR_G15_042	2	17SP	G15_042	FROM->TO	GR ISLD-LNX3345.00 - GRAND ISLAND 345KV CKT Z	720	720	0.04112	128.28	GEN600071 10-RIVER SIDE
FDNS	00NR_G15_042	2	17SP	G15_042	FROM->TO	GR ISLD-LNX3345.00 - GRAND ISLAND 345KV CKT Z	720	720	0.04112	128.2799	GEN600070 9-RIVER SIDE
FDNS	00NR_G15_042	2	17SP	G15_042	FROM->TO	GR ISLD-LNX3345.00 - GRAND ISLAND 345KV CKT Z	720	720	0.04112	128.2691	GEN 10648 1-G830_GEN 0.6900
FDNS	00NR_G15_042	2	17SP	G15_042	FROM->TO	GR ISLD-LNX3345.00 - GRAND ISLAND 345KV CKT Z	720	720	0.04112	128.2667	GEN600007 7-RIVERSIDE GEN 7
FDNS	00NR_G15_042	2	17SP	G15_042	FROM->TO	GR ISLD-LNX3345.00 - GRAND ISLAND 345KV CKT Z	720	720	0.04148	128.2623	GLENHAM - WHITLOK 230KV CKT 1
FDNS	00NR_G15_042	2	17SP	G15_042	FROM->TO	GR ISLD-LNX3345.00 - GRAND ISLAND 345KV CKT Z	720	720	0.04112	128.2587	GEN600045 4-ANSON
FDNS	00NR_G15_042	2	17SP	G15_042	FROM->TO	GR ISLD-LNX3345.00 - GRAND ISLAND 345KV CKT Z	720	720	0.04112	128.2585	GEN659192 6-LYNN
FDNS	00NR_G15_042	2	17SP	G15_042	FROM->TO	GR ISLD-LNX3345.00 - GRAND ISLAND 345KV CKT Z	720	720	0.04112	128.2578	GEN659162 4-RED WLCK

SOLUTION	GROUP	SCENARIO	SEASON	SOURCE	DIRECTION	MONITORED ELEMENT	RATEA (MVA)	RATEB(MVA)	TDF	TC%LOADING (% MVA)	CONTINGENCY
FDNS	00NR_G15_042	2	17SP	G15_042	FROM->TO	GR ISLD-LNX3345.00 - GRAND ISLAND 345KV CKT Z	720	720	0.04112	128.2578	GEN659163 5-BLACK WDCK
FDNS	00NR_G15_042	2	17SP	G15_042	FROM->TO	GR ISLD-LNX3345.00 - GRAND ISLAND 345KV CKT Z	720	720	0.04112	128.2374	GEN600017 C-LS POWER CT
FDNS	00NR_G15_042	2	17SP	G15_042	FROM->TO	GR ISLD-LNX3345.00 - GRAND ISLAND 345KV CKT Z	720	720	0.04112	128.2131	GEN659031 1-G12_014IS_4 0.6900
FDNS	00NR_G15_042	2	17SP	G15_042	FROM->TO	GR ISLD-LNX3345.00 - GRAND ISLAND 345KV CKT Z	720	720	0.04112	128.2017	LANSING WEST 161/22.0KV TRANSFORMER CKT 1
FDNS	00NR_G15_042	2	17SP	G15_042	FROM->TO	GR ISLD-LNX3345.00 - GRAND ISLAND 345KV CKT Z	720	720	0.04112	128.1913	GEN615021 1-GRE-ER 14G 16.000
FDNS	00NR_G15_042	2	17SP	G15_042	FROM->TO	GR ISLD-LNX3345.00 - GRAND ISLAND 345KV CKT Z	720	720	0.04112	128.1842	GEN615052 1-CAMBRIDGE GENERATING STATION
FDNS	00NR_G15_042	2	17SP	G15_042	FROM->TO	GR ISLD-LNX3345.00 - GRAND ISLAND 345KV CKT Z	720	720	0.04112	128.1799	GEN615015 1-GRE-SPRITWDG13.200
FDNS	00NR_G15_042	2	17SP	G15_042	FROM->TO	GR ISLD-LNX3345.00 - GRAND ISLAND 345KV CKT Z	720	720	0.04112	128.1122	GEN681522 3-GENOA 3
FDNS	00NR_G15_042	2	17SP	G15_042	FROM->TO	GR ISLD-LNX3345.00 - GRAND ISLAND 345KV CKT Z	720	720	0.04112	128.065	BISONMP4 230.00 - SQUARE BUTTE 230KV CKT 1
FDNS	00NR_G15_042	2	17SP	G15_042	FROM->TO	GR ISLD-LNX3345.00 - GRAND ISLAND 345KV CKT Z	720	720	0.04112	128.0608	GEN660016 1-B_H WIND 0.7000
FDNS	00NR_G15_042	2	17SP	G15_042	FROM->TO	GR ISLD-LNX3345.00 - GRAND ISLAND 345KV CKT Z	720	720	0.04112	128.0021	GEN672303 3-BOUNDARY DAM GENERATOR 3
FDNS	00NR_G15_042	2	17SP	G15_042	FROM->TO	GR ISLD-LNX3345.00 - GRAND ISLAND 345KV CKT Z	720	720	0.04112	128.0021	GEN672305 5-BOUNDARY DAM GENERATOR 5
FDNS	00NR_G15_042	2	17SP	G15_042	FROM->TO	GR ISLD-LNX3345.00 - GRAND ISLAND 345KV CKT Z	720	720	0.04112	128.0012	GEN662101 1-WESSINGTON190.5750
FDNS	00NR_G15_042	2	17SP	G15_042	FROM->TO	GR ISLD-LNX3345.00 - GRAND ISLAND 345KV CKT Z	720	720	0.04112	128.0005	GEN652906 1-G09_006IS_3 0.6900
FDNS	00NR_G15_042	2	17SP	G15_042	FROM->TO	GR ISLD-LNX3345.00 - GRAND ISLAND 345KV CKT Z	720	720	0.04112	127.9784	GEN672392 1-NBECGT1G 18.000
FDNS	00NR_G15_042	2	17SP	G15_042	FROM->TO	GR ISLD-LNX3345.00 - GRAND ISLAND 345KV CKT Z	720	720	0.04112	127.9069	GEN600067 9-HIGH BRIDGE
FDNS	00NR_G15_042	2	17SP	G15_042	FROM->TO	GR ISLD-LNX3345.00 - GRAND ISLAND 345KV CKT Z	720	720	0.04112	127.8683	GEN910006 1-G12_012IS_3 0.6900
FDNS	00NR_G15_042	2	17SP	G15_042	FROM->TO	GR ISLD-LNX3345.00 - GRAND ISLAND 345KV CKT Z	720	720	0.04112	127.8581	GEN652907 1-G09_007IS_3 0.6900
FDNS	00NR_G15_042	2	17SP	G15_042	FROM->TO	GR ISLD-LNX3345.00 - GRAND ISLAND 345KV CKT Z	720	720	0.04112	127.8386	SQUARE BUTTE - YNG2 4 230.00 230KV CKT 1
FDNS	00NR_G15_042	2	17SP	G15_042	FROM->TO	GR ISLD-LNX3345.00 - GRAND ISLAND 345KV CKT Z	720	720	0.03671	127.7282	MINGO - RED WILLOW 345KV CKT 1
FDNS	00NR_G15_042	2	17SP	G15_042	FROM->TO	GR ISLD-LNX3345.00 - GRAND ISLAND 345KV CKT Z	720	720	0.03671	127.7282	MINGO - RED WILLOW 345KV CKT 1
FDNS	00NR_G15_042	2	17SP	G15_042	FROM->TO	GR ISLD-LNX3345.00 - GRAND ISLAND 345KV CKT Z	720	720	0.04112	127.7165	GEN659353 1-DEERCREK CTG18.000
FDNS	00NR_G15_042	2	17SP	G15_042	FROM->TO	GR ISLD-LNX3345.00 - GRAND ISLAND 345KV CKT Z	720	720	0.04112	127.716	GEN659354 1-DEERCREK STG18.000
FDNS	00NR_G15_042	2	17SP	G15_042	FROM->TO	GR ISLD-LNX3345.00 - GRAND ISLAND 345KV CKT Z	720	720	0.04148	127.7094	GLENHAM - L3 HAWDON 230KV CKT 1
FDNS	00NR_G15_042	2	17SP	G15_042	FROM->TO	GR ISLD-LNX3345.00 - GRAND ISLAND 345KV CKT Z	720	720	0.04112	127.5508	GEN659289 1-DAYCNTYWND W0.6900
FDNS	00NR_G15_042	2	17SP	G15_042	FROM->TO	GR ISLD-LNX3345.00 - GRAND ISLAND 345KV CKT Z	720	720	0.04112	127.5162	GEN659018 1-G14_003IS_3 0.6900
FDNS	00NR_G15_042	2	17SP	G15_042	FROM->TO	GR ISLD-LNX3345.00 - GRAND ISLAND 345KV CKT Z	720	720	0.04112	127.514	GEN562832 1-G15042_3 0.6900
FDNS	00NR_G15_042	2	17SP	G15_042	FROM->TO	GR ISLD-LNX3345.00 - GRAND ISLAND 345KV CKT Z	720	720	0.04112	127.4709	GEN681542 6-JP MADGETT
FDNS	00NR_G15_042	2	17SP	G15_042	FROM->TO	GR ISLD-LNX3345.00 - GRAND ISLAND 345KV CKT Z	720	720	0.04112	127.3788	GEN659194 1-NDPRAIRWND1W0.6900
FDNS	00NR_G15_042	2	17SP	G15_042	FROM->TO	GR ISLD-LNX3345.00 - GRAND ISLAND 345KV CKT Z	720	720	0.04112	127.3769	GEN659010 4-G07_027IS_2 0.6900
FDNS	00NR_G15_042	2	17SP	G15_042	FROM->TO	GR ISLD-LNX3345.00 - GRAND ISLAND 345KV CKT Z	720	720	0.04112	127.3648	GEN652460 4-GARRISON
FDNS	00NR_G15_042	2	17SP	G15_042	FROM->TO	GR ISLD-LNX3345.00 - GRAND ISLAND 345KV CKT Z	720	720	0.04112	127.3648	GEN652461 5-GARRISON
FDNS	00NR_G15_042	2	17SP	G15_042	FROM->TO	GR ISLD-LNX3345.00 - GRAND ISLAND 345KV CKT Z	720	720	0.04112	127.3615	GEN652544 5-BIG BEND
FDNS	00NR_G15_042	2	17SP	G15_042	FROM->TO	GR ISLD-LNX3345.00 - GRAND ISLAND 345KV CKT Z	720	720	0.04112	127.3611	GEN652542 1-BIG BEND
FDNS	00NR_G15_042	2	17SP	G15_042	FROM->TO	GR ISLD-LNX3345.00 - GRAND ISLAND 345KV CKT Z	720	720	0.04112	127.3605	GEN652543 3-BIG BEND
FDNS	00NR_G15_042	2	17SP	G15_042	FROM->TO	GR ISLD-LNX3345.00 - GRAND ISLAND 345KV CKT Z	720	720	0.04112	127.3073	GEN652457 1-GARRISON
FDNS	00NR_G15_042	2	17SP	G15_042	FROM->TO	GR ISLD-LNX3345.00 - GRAND ISLAND 345KV CKT Z	720	720	0.04112	127.3073	GEN652458 2-GARRISON
FDNS	00NR_G15_042	2	17SP	G15_042	FROM->TO	GR ISLD-LNX3345.00 - GRAND ISLAND 345KV CKT Z	720	720	0.04112	127.3073	GEN652459 3-GARRISON
FDNS	00NR_G15_042	2	17SP	G15_042	FROM->TO	GR ISLD-LNX3345.00 - GRAND ISLAND 345KV CKT Z	720	720	0.04112	127.2995	STANTON 230/18.0KV TRANSFORMER CKT 1
FDNS	00NR_G15_042	2	17SP	G15_042	FROM->TO	GR ISLD-LNX3345.00 - GRAND ISLAND 345KV CKT Z	720	720	0.04112	127.2282	GEN659403 1-NDSUNFLWR W0.6900
FDNS	00NR_G15_042	2	17SP	G15_042	FROM->TO	GR ISLD-LNX3345.00 - GRAND ISLAND 345KV CKT Z	720	720	0.03937	127.1331	AXTELL - SWEETWATER 345KV CKT 1
FDNS	00NR_G15_042	2	17SP	G15_042	FROM->TO	GR ISLD-LNX3345.00 - GRAND ISLAND 345KV CKT Z	720	720	0.03402	127.1032	AXTELL - POST ROCK 345KV CKT 1
FDNS	00NR_G15_042	2	17SP	G15_042	FROM->TO	GR ISLD-LNX3345.00 - GRAND ISLAND 345KV CKT Z	720	720	0.04112	127.0489	CLAY BOSWELL 230/20.9KV TRANSFORMER CKT 1
FDNS	00NR_G15_042	2	17SP	G15_042	FROM->TO	GR ISLD-LNX3345.00 - GRAND ISLAND 345KV CKT Z	720	720	0.04112	126.9107	GEN659411 1-CAMPBLCNTY W0.6900
FDNS	00NR_G15_042	2	17SP	G15_042	FROM->TO	GR ISLD-LNX3345.00 - GRAND ISLAND 345KV CKT Z	720	720	0.04112	126.7014	GEN659296 2-SDPRAIRWND1W0.6900
FDNS	00NR_G15_042	2	17SP	G15_042	FROM->TO	GR ISLD-LNX3345.00 - GRAND ISLAND 345KV CKT Z	720	720	0.04112	126.6653	RCDC EAST 4230.00 - RED CEDAR DC 230KV CKT 1
FDNS	00NR_G15_042	2	17SP	G15_042	FROM->TO	GR ISLD-LNX3345.00 - GRAND ISLAND 345KV CKT Z	720	720	0.04113	126.6419	P12:230:UMZB:# 112 #: NU IN SD. NU-RCDC & DRY CREEK XFMR
FDNS	00NR_G15_042	2	17SP	G15_042	FROM->TO	GR ISLD-LNX3345.00 - GRAND ISLAND 345KV CKT Z	720	720	0.04112	126.5841	GEN652559 1-OAHE
FDNS	00NR_G15_042	2	17SP	G15_042	FROM->TO	GR ISLD-LNX3345.00 - GRAND ISLAND 345KV CKT Z	720	720	0.04112	126.5639	GEN672321 1-SHAND GENERATOR 1
FDNS	00NR_G15_042	2	17SP	G15_042	FROM->TO	GR ISLD-LNX3345.00 - GRAND ISLAND 345KV CKT Z	720	720	0.04112	126.5568	GEN615010 1-STANTON4
FDNS	00NR_G15_042	2	17SP	G15_042	FROM->TO	GR ISLD-LNX3345.00 - GRAND ISLAND 345KV CKT Z	720	720	0.04112	126.5539	GEN672310 1-POPLAR RIVER GENERATOR 1
FDNS	00NR_G15_042	2	17SP	G15_042	FROM->TO	GR ISLD-LNX3345.00 - GRAND ISLAND 345KV CKT Z	720	720	0.04112	126.5539	GEN672311 2-POPLAR RIVER GENERATOR 2
FDNS	00NR_G15_042	2	17SP	G15_042	FROM->TO	GR ISLD-LNX3345.00 - GRAND ISLAND 345KV CKT Z	720	720	0.04112	126.4797	GEN672306 6-BOUNDARY DAM GENERATOR 6
FDNS	00NR_G15_042	2	17SP	G15_042	FROM->TO	GR ISLD-LNX3345.00 - GRAND ISLAND 345KV CKT Z	720	720	0.04112	126.4072	GEN652556 2-OAHE
FDNS	00NR_G15_042	2	17SP	G15_042	FROM->TO	GR ISLD-LNX3345.00 - GRAND ISLAND 345KV CKT Z	720	720	0.04112	126.4072	GEN652557 4-OAHE
FDNS	00NR_G15_042	2	17SP	G15_042	FROM->TO	GR ISLD-LNX3345.00 - GRAND ISLAND 345KV CKT Z	720	720	0.04112	126.4072	GEN652558 6-OAHE
FDNS	00NR_G15_042	2	17SP	G15_042	FROM->TO	GR ISLD-LNX3345.00 - GRAND ISLAND 345KV CKT Z	720	720	0.04112	126.3213	GEN659453 1-GI1414GEN W0.6900
FDNS	00NR_G15_042	2	17SP	G15_042	FROM->TO	GR ISLD-LNX3345.00 - GRAND ISLAND 345KV CKT Z	720	720	0.04112	126.2894	GEN657749 1-YOUNG 1 GENERATOR
FDNS	00NR_G15_042	2	17SP	G15_042	FROM->TO	GR ISLD-LNX3345.00 - GRAND ISLAND 345KV CKT Z	720	720	0.04112	126.281	GEN600004 2-PRAIRIE ISLAND G2
FDNS	00NR_G15_042	2	17SP	G15_042	FROM->TO	GR ISLD-LNX3345.00 - GRAND ISLAND 345KV CKT Z	720	720	0.04112	126.2764	GEN600003 1-PRAIRIE ISLAND G1
FDNS	00NR_G15_042	2	17SP	G15_042	FROM->TO	GR ISLD-LNX3345.00 - GRAND ISLAND 345KV CKT Z	720	720	0.04112	126.2316	GEN659141 1-K10215A
FDNS	00NR_G15_042	2	17SP	G15_042	FROM->TO	GR ISLD-LNX3345.00 - GRAND ISLAND 345KV CKT Z	720	720	0.04112	125.9966	GEN652173 1-G09_001IS_2 0.6900
FDNS	00NR_G15_042	2	17SP	G15_042	FROM->TO	GR ISLD-LNX3345.00 - GRAND ISLAND 345KV CKT Z	720	720	0.04112	125.9678	GEN600006 1-AS KING
FDNS	00NR_G15_042	2	17SP	G15_042	FROM->TO	GR ISLD-LNX3345.00 - GRAND ISLAND 345KV CKT Z	720	720	0.04112	125.7682	GEN659407 1-ANTELPHILLSW0.6900
FDNS	00NR_G15_042	2	17SP	G15_042	FROM->TO	GR ISLD-LNX3345.00 - GRAND ISLAND 345KV CKT Z	720	720	0.04112	125.6908	GEN659110 1-LELAND OLDS UNIT1
FDNS	00NR_G15_042	2	17SP	G15_042	FROM->TO	GR ISLD-LNX3345.00 - GRAND ISLAND 345KV CKT Z	720	720	0.04112	125.395	GEN600005 1-MONTICELLO
FDNS	00NR_G15_042	2	17SP	G15_042	FROM->TO	GR ISLD-LNX3345.00 - GRAND ISLAND 345KV CKT Z	720	720	0.04143	124.9388	MCCOOL - MOORE 345KV CKT 1
FDNS	00NR_G15_042	2	17SP	G15_042	FROM->TO	GR ISLD-LNX3345.00 - GRAND ISLAND 345KV CKT Z	720	720	0.04112	124.7075	GEN600000 1-SHERBURNECNTY G1
FDNS	00NR_G15_042	2	17SP	G15_042	FROM->TO	GR ISLD-LNX3345.00 - GRAND ISLAND 345KV CKT Z	720	720	0.04112	124.4745	GEN600001 2-SHERBURNE CNTY G2
FDNS	00NR_G15_042	2	17SP	G15_042	FROM->TO	GR ISLD-LNX3345.00 - GRAND ISLAND 345KV CKT Z	720	720	0.04112	124.2207	GEN661015 1-COYOTE
FDNS	00NR_G15_042	2	17SP	G15_042	FROM->TO	GR ISLD-LNX3345.00 - GRAND ISLAND 345KV CKT Z	720	720	0.04112	124.214	GEN620315 1-BIG STONE GEN
FDNS	00NR_G15_042	2	17SP	G15_042	FROM->TO	GR ISLD-LNX3345.00 - GRAND ISLAND 345KV CKT Z	720	720	0.04112	123.7781	GEN657748 1-YOUNG 2 GENERATOR
FDNS	00NR_G15_042	2	17SP	G15_042	FROM->TO	GR ISLD-LNX3345.00 - GRAND ISLAND 345KV CKT Z	720	720	0.04112	123.5261	GEN600002 3-SHERBURNE CNTY G3

SOLUTION	GROUP	SCENARIO	SEASON	SOURCE	DIRECTION	MONITORED ELEMENT	RATEA (MVA)	RATEB(MVA)	TDF	TC%LOADING (% MVA)	CONTINGENCY
FDNS	00NR_G15_042	2	17SP	G15_042	FROM->TO	GR ISLD-LNX3345.00 - GRAND ISLAND 345KV CKT Z	720	720	0.04112	122.8547	SHERBURNE CO 345/24.0KV TRANSFORMER CKT 1
FDNS	00NR_G15_042	2	20SP	G15_042	FROM->TO	GR ISLD-LNX3345.00 - GRAND ISLAND 345KV CKT Z	720	720	0.0381	122.7601	HOLT.CO3 345.00 - THEDFRD3 345.00 345KV CKT 1
FDNS	00NR_G15_042	2	17SP	G15_042	FROM->TO	GR ISLD-LNX3345.00 - GRAND ISLAND 345KV CKT Z	720	720	0.04208	122.7141	FTTHOM1-LNX3345.00 - LELAND2-LNX3345.00 345KV CKT 1
FDNS	00NR_G15_042	2	17SP	G15_042	FROM->TO	GR ISLD-LNX3345.00 - GRAND ISLAND 345KV CKT Z	720	720	0.04112	122.6721	BIG STONE 230/24.0KV TRANSFORMER CKT 1
FDNS	00NR_G15_042	2	17SP	G15_042	FROM->TO	GR ISLD-LNX3345.00 - GRAND ISLAND 345KV CKT Z	720	720	0.04208	122.4719	P12:345:UMZB:# 108 #: LOS FT IN ND. LOS FT
FDNS	00NR_G15_042	2	17SP	G15_042	FROM->TO	GR ISLD-LNX3345.00 - GRAND ISLAND 345KV CKT Z	720	720	0.04208	122.4652	FT THOMPSON - FTTHOM1-LNX3345.00 345KV CKT Z
FDNS	00NR_G15_042	2	17SP	G15_042	FROM->TO	GR ISLD-LNX3345.00 - GRAND ISLAND 345KV CKT Z	720	720	0.04208	122.3142	LELAND OLDS - LELAND2-LNX3345.00 345KV CKT Z
FDNS	00NR_G15_042	2	17SP	G15_042	FROM->TO	GR ISLD-LNX3345.00 - GRAND ISLAND 345KV CKT Z	720	720	0.04112	121.9398	GEN659111 2-LELAND OLDS UNIT2
FDNS	00NR_G15_042	2	25SP	G15_042	FROM->TO	GR ISLD-LNX3345.00 - GRAND ISLAND 345KV CKT Z	720	720	0.03846	121.6777	HOLT.CO3 345.00 - THEDFRD3 345.00 345KV CKT 1
FDNS	00NR_G15_042	2	17SP	G15_042	FROM->TO	GR ISLD-LNX3345.00 - GRAND ISLAND 345KV CKT Z	720	720	0.04112	121.6152	GEN659125 1-COVEY
FDNS	00NR_G15_042	2	17SP	G15_042	FROM->TO	GR ISLD-LNX3345.00 - GRAND ISLAND 345KV CKT Z	720	720	0.04112	121.3807	GEN659103 1-ANTELOPE VALLEY UNIT1
FDNS	00NR_G15_042	2	17SP	G15_042	FROM->TO	GR ISLD-LNX3345.00 - GRAND ISLAND 345KV CKT Z	720	720	0.04112	121.3807	GEN659107 2-ANTELOPE VALLEY UNIT2
FDNS	00NR_G15_042	2	17SP	G15_042	FROM->TO	GR ISLD-LNX3345.00 - GRAND ISLAND 345KV CKT Z	720	720	0.04145	121.2781	GRAND ISLAND - MCCOOL 345KV CKT 1
FDNS	00NR_G15_042	2	17SP	G15_042	FROM->TO	GR ISLD-LNX3345.00 - GRAND ISLAND 345KV CKT Z	720	720	0.04112	121.1277	GEN615001 1-COAL CREEK
FDNS	00NR_G15_042	2	17SP	G15_042	FROM->TO	GR ISLD-LNX3345.00 - GRAND ISLAND 345KV CKT Z	720	720	0.04112	121.0072	GEN615002 2-COAL CREEK
FDNS	00NR_G15_042	2	17SP	G15_042	FROM->TO	GR ISLD-LNX3345.00 - GRAND ISLAND 345KV CKT Z	720	720	0.04112	114.1669	GEN562714 1-G15_023_4 0.6900
FDNS	00NR_G15_042	2	17SP	G15_042	FROM->TO	GR ISLD-LNX3345.00 - GRAND ISLAND 345KV CKT Z	720	720	0.04112	114.1669	GEN562715 1-G15_023_5 0.6900
FDNS	00NR_G15_042	2	20SP	G15_042	FROM->TO	GR ISLD-LNX3345.00 - GRAND ISLAND 345KV CKT Z	720	720	0.0386	112.3336	GERALD GENTLEMAN STATION - THEDFRD3 345.00 345KV CKT 1
FDNS	00NR_G15_042	2	25SP	G15_042	FROM->TO	GR ISLD-LNX3345.00 - GRAND ISLAND 345KV CKT Z	720	720	0.03892	111.6323	GERALD GENTLEMAN STATION - THEDFRD3 345.00 345KV CKT 1
FDNS	00NR_G15_042	2	16WP	G15_042	FROM->TO	GR ISLD-LNX3345.00 - GRAND ISLAND 345KV CKT Z	720	720	0.04241	108.7623	KELLY - MEADOWGROVE4230.00 230KV CKT 1
FDNS	00NR_G15_042	2	17SP	G15_042	FROM->TO	GR ISLD-LNX3345.00 - GRAND ISLAND 345KV CKT Z	720	720	0.04112	108.6505	GEN652353 2-GR PRAIRIEG 0.6900
FDNS	00NR_G15_042	2	20SP	G15_042	FROM->TO	GR ISLD-LNX3345.00 - GRAND ISLAND 345KV CKT Z	720	720	0.03256	108.5322	DIXONCO 230.00 - HOSKINS 230KV CKT 1
FDNS	00NR_G15_042	2	16WP	G15_042	FROM->TO	GR ISLD-LNX3345.00 - GRAND ISLAND 345KV CKT Z	720	720	0.03863	108.2984	P12:230:UMZB:# 116 #: ST IN SD. WSG-ST-VH
FDNS	00NR_G15_042	2	20SP	G15_042	FROM->TO	GR ISLD-LNX3345.00 - GRAND ISLAND 345KV CKT Z	720	720	0.03237	108.2129	HOSKINS - SHELL CREEK 345KV CKT 1
FDNS	00NR_G15_042	2	25SP	G15_042	FROM->TO	GR ISLD-LNX3345.00 - GRAND ISLAND 345KV CKT Z	720	720	0.03261	108.1675	DIXONCO 230.00 - HOSKINS 230KV CKT 1
FDNS	00NR_G15_042	2	25SP	G15_042	FROM->TO	GR ISLD-LNX3345.00 - GRAND ISLAND 345KV CKT Z	720	720	0.03244	107.8641	HOSKINS - SHELL CREEK 345KV CKT 1
FDNS	00NR_G15_042	2	16WP	G15_042	FROM->TO	GR ISLD-LNX3345.00 - GRAND ISLAND 345KV CKT Z	720	720	0.0389	107.8497	STORLA - WESSINGTON 230KV CKT 1
FDNS	00NR_G15_042	2	16WP	G15_042	FROM->TO	GR ISLD-LNX3345.00 - GRAND ISLAND 345KV CKT Z	720	720	0.04071	106.9031	RIEL - ROSEAU 500KV CKT 1
FDNS	00NR_G15_042	2	16WP	G15_042	FROM->TO	GR ISLD-LNX3345.00 - GRAND ISLAND 345KV CKT Z	720	720	0.03891	106.7959	HANLON - STORLA 230KV CKT 1
FDNS	00NR_G15_042	2	16WP	G15_042	FROM->TO	GR ISLD-LNX3345.00 - GRAND ISLAND 345KV CKT Z	720	720	0.03861	106.2965	FT THOMPSON - LETCHER 230KV CKT 1
FDNS	00NR_G15_042	2	16WP	G15_042	FROM->TO	GR ISLD-LNX3345.00 - GRAND ISLAND 345KV CKT Z	720	720	0.03861	106.2965	FT THOMPSON - LETCHER 230KV CKT 1
FDNSLock	00NR_G15_042	2	16WP	G15_042	FROM->TO	GR ISLD-LNX3345.00 - GRAND ISLAND 345KV CKT Z	720	720	0.0396	106.0063	WATERTN-LNX3345.00 - WATERTOWN 345KV CKT Z
FDNS	00NR_G15_042	2	16WP	G15_042	FROM->TO	GR ISLD-LNX3345.00 - GRAND ISLAND 345KV CKT Z	720	720	0.0396	105.8731	P12:345:UMZW:# 1747 #: WT2 IN SD. WT2-WHT LINE FAULT
FDNS	00NR_G15_042	2	16WP	G15_042	FROM->TO	GR ISLD-LNX3345.00 - GRAND ISLAND 345KV CKT Z	720	720	0.0396	105.5981	WATERTN-LNX3345.00 - WHITE 345KV CKT 1
FDNS	00NR_G15_042	2	16WP	G15_042	FROM->TO	GR ISLD-LNX3345.00 - GRAND ISLAND 345KV CKT Z	720	720	0.04052	105.3817	BUFFALO - JAMESTOWN 345KV CKT 1
FDNS	00NR_G15_042	2	16WP	G15_042	FROM->TO	GR ISLD-LNX3345.00 - GRAND ISLAND 345KV CKT Z	720	720	0.0412	105.1445	KEYSTONE - SIDNEY1-LNX3345.00 345KV CKT 1
FDNS	00NR_G15_042	2	16WP	G15_042	FROM->TO	GR ISLD-LNX3345.00 - GRAND ISLAND 345KV CKT Z	720	720	0.0412	105.1299	SIDNEY - SIDNEY1-LNX3345.00 345KV CKT Z
FDNS	00NR_G15_042	2	16WP	G15_042	FROM->TO	GR ISLD-LNX3345.00 - GRAND ISLAND 345KV CKT Z	720	720	0.03732	105.0409	FT RANDAL - G12_009IST 230.00 230KV CKT 1
FDNS	00NR_G15_042	2	16WP	G15_042	FROM->TO	GR ISLD-LNX3345.00 - GRAND ISLAND 345KV CKT Z	720	720	0.04036	105.0374	GEN336821 1-GRAND GULF UNIT
FDNS	00NR_G15_042	2	16WP	G15_042	FROM->TO	GR ISLD-LNX3345.00 - GRAND ISLAND 345KV CKT Z	720	720	0.03732	104.9457	FT THOMPSON - LAKE PLATT 230KV CKT 1
FDNS	00NR_G15_042	2	16WP	G15_042	FROM->TO	GR ISLD-LNX3345.00 - GRAND ISLAND 345KV CKT Z	720	720	0.03732	104.9457	FT THOMPSON - LAKE PLATT 230KV CKT 1
FDNS	00NR_G15_042	2	16WP	G15_042	FROM->TO	GR ISLD-LNX3345.00 - GRAND ISLAND 345KV CKT Z	720	720	0.03724	104.9414	FT RANDAL - FT THOMPSON 230KV CKT 1
FDNS	00NR_G15_042	2	16WP	G15_042	FROM->TO	GR ISLD-LNX3345.00 - GRAND ISLAND 345KV CKT Z	720	720	0.03724	104.9414	FT RANDAL - FT THOMPSON 230KV CKT 1
FDNS	00NR_G15_042	2	16WP	G15_042	FROM->TO	GR ISLD-LNX3345.00 - GRAND ISLAND 345KV CKT Z	720	720	0.03932	104.889	LETCHER - SIOUX FALLS 230KV CKT 1
FDNS	00NR_G15_042	2	16WP	G15_042	FROM->TO	GR ISLD-LNX3345.00 - GRAND ISLAND 345KV CKT Z	720	720	0.04014	104.836	G09_001IST 345.00 - WATERTOWN 345KV CKT 1
FDNS	00NR_G15_042	2	16WP	G15_042	FROM->TO	GR ISLD-LNX3345.00 - GRAND ISLAND 345KV CKT Z	720	720	0.04036	104.7132	GEN635024 4-WALTER SCOTT UNIT 4
FDNS	00NR_G15_042	2	16WP	G15_042	FROM->TO	GR ISLD-LNX3345.00 - GRAND ISLAND 345KV CKT Z	720	720	0.04036	104.7027	GEN640010 1-GERALD GENTLEMAN STATION UNIT 1
FDNS	00NR_G15_042	2	16WP	G15_042	FROM->TO	GR ISLD-LNX3345.00 - GRAND ISLAND 345KV CKT Z	720	720	0.04036	104.6777	GEN337911 1-ARKANSAS NUCLEAR ONE UNIT #2
FDNS	00NR_G15_042	2	16WP	G15_042	FROM->TO	GR ISLD-LNX3345.00 - GRAND ISLAND 345KV CKT Z	720	720	0.03732	104.6732	G12_009IST 230.00 - LAKE PLATT 230KV CKT 1
FDNS	00NR_G15_042	2	16WP	G15_042	FROM->TO	GR ISLD-LNX3345.00 - GRAND ISLAND 345KV CKT Z	720	720	0.04052	104.6035	CENTER - JAMESTOWN 345KV CKT 1
FDNS	00NR_G15_042	2	16WP	G15_042	FROM->TO	GR ISLD-LNX3345.00 - GRAND ISLAND 345KV CKT Z	720	720	0.04036	104.5938	GEN640011 2-GERALD GENTLEMAN STATION UNIT 2
FDNS	00NR_G15_042	2	16WP	G15_042	FROM->TO	GR ISLD-LNX3345.00 - GRAND ISLAND 345KV CKT Z	720	720	0.04241	104.5896	FT RANDAL - MEADOWGROVE4230.00 230KV CKT 1
FDNS	00NR_G15_042	2	16WP	G15_042	FROM->TO	GR ISLD-LNX3345.00 - GRAND ISLAND 345KV CKT Z	720	720	0.04036	104.5845	GEN344225 1-1CAL G1 25.000
FDNS	00NR_G15_042	2	16WP	G15_042	FROM->TO	GR ISLD-LNX3345.00 - GRAND ISLAND 345KV CKT Z	720	720	0.04036	104.5524	GEN336153 1-WATERFORD UNIT#3
FDNS	00NR_G15_042	2	16WP	G15_042	FROM->TO	GR ISLD-LNX3345.00 - GRAND ISLAND 345KV CKT Z	720	720	0.04209	104.5208	HAZLETON - MITCHLCO3 345.00 345KV CKT 1
FDNS	00NR_G15_042	2	16WP	G15_042	FROM->TO	GR ISLD-LNX3345.00 - GRAND ISLAND 345KV CKT Z	720	720	0.04923	104.4662	RAUN - SUB 3451 FT CAL 345KV CKT 1
FDNS	00NR_G15_042	2	16WP	G15_042	FROM->TO	GR ISLD-LNX3345.00 - GRAND ISLAND 345KV CKT Z	720	720	0.04923	104.4662	RAUN - SUB 3451 FT CAL 345KV CKT 1
FDNS	00NR_G15_042	2	16WP	G15_042	FROM->TO	GR ISLD-LNX3345.00 - GRAND ISLAND 345KV CKT Z	720	720	0.04048	104.4543	BISON 3 345.00 - BUFFALO 345KV CKT 1
FDNS	00NR_G15_042	2	16WP	G15_042	FROM->TO	GR ISLD-LNX3345.00 - GRAND ISLAND 345KV CKT Z	720	720	0.04036	104.3814	GEN635023 3-WALTER SCOTT UNIT 3
FDNS	00NR_G15_042	2	16WP	G15_042	FROM->TO	GR ISLD-LNX3345.00 - GRAND ISLAND 345KV CKT Z	720	720	0.04124	104.3624	AS KING - EAU CLAIRE 345KV CKT 1
FDNS	00NR_G15_042	2	16WP	G15_042	FROM->TO	GR ISLD-LNX3345.00 - GRAND ISLAND 345KV CKT Z	720	720	0.04036	104.3036	GEN337910 1-ARKANSAS NUCLEAR ONE UNIT #1
FDNS	00NR_G15_042	2	16WP	G15_042	FROM->TO	GR ISLD-LNX3345.00 - GRAND ISLAND 345KV CKT Z	720	720	0.04036	104.2864	GEN335831 1-RIVERBEND UNIT#1
FDNS	00NR_G15_042	2	16WP	G15_042	FROM->TO	GR ISLD-LNX3345.00 - GRAND ISLAND 345KV CKT Z	720	720	0.03893	104.2164	FT RANDAL - SIOUX CITY 230KV CKT 1
FDNS	00NR_G15_042	2	16WP	G15_042	FROM->TO	GR ISLD-LNX3345.00 - GRAND ISLAND 345KV CKT Z	720	720	0.04113	104.1906	ARROWHEAD - ARROWHEAD 230 230KV CKT 1
FDNS	00NR_G15_042	2	16WP	G15_042	FROM->TO	GR ISLD-LNX3345.00 - GRAND ISLAND 345KV CKT Z	720	720	0.03981	104.0474	HANLON - SIOUX FALLS 230KV CKT 1
FDNS	00NR_G15_042	2	16WP	G15_042	FROM->TO	GR ISLD-LNX3345.00 - GRAND ISLAND 345KV CKT Z	720	720	0.04016	104.047	GROTON-LNX3 345.00 - LELAND1-LNX3345.00 345KV CKT 1
FDNS	00NR_G15_042	2	16WP	G15_042	FROM->TO	GR ISLD-LNX3345.00 - GRAND ISLAND 345KV CKT Z	720	720	0.04016	103.9894	P12:345:UMZB:# 109 #: LOS GRT IN ND. LOS GRT
FDNS	00NR_G15_042	2	16WP	G15_042	FROM->TO	GR ISLD-LNX3345.00 - GRAND ISLAND 345KV CKT Z	720	720	0.04016	103.9893	GROTON - GROTON-LNX3 345.00 345KV CKT Z
FDNS	00NR_G15_042	2	16WP	G15_042	FROM->TO	GR ISLD-LNX3345.00 - GRAND ISLAND 345KV CKT Z	720	720	0.04099	103.9876	GERALD GENTLEMAN STATION - KEYSTONE 345KV CKT 1
FDNS	00NR_G15_042	2	16WP	G15_042	FROM->TO	GR ISLD-LNX3345.00 - GRAND ISLAND 345KV CKT Z	720	720	0.04016	103.9833	LELAND OLDS - LELAND1-LNX3345.00 345KV CKT Z
FDNS	00NR_G15_042	2	16WP	G15_042	FROM->TO	GR ISLD-LNX3345.00 - GRAND ISLAND 345KV CKT Z	720	720	0.04097	103.9796	SIDNEY - STEGALL 345KV CKT 1
FDNS	00NR_G15_042	2	16WP	G15_042	FROM->TO	GR ISLD-LNX3345.00 - GRAND ISLAND 345KV CKT Z	720	720	0.03798	103.9783	FT RANDAL - UTICA JCT 230KV CKT 1
FDNS	00NR_G15_042	2	16WP	G15_042	FROM->TO	GR ISLD-LNX3345.00 - GRAND ISLAND 345KV CKT Z	720	720	0.04036	103.8896	GEN337653 1-WHITE BLUFF UNIT #2

SOLUTION	GROUP	SCENARIO	SEASON	SOURCE	DIRECTION	MONITORED ELEMENT	RATEA (MVA)	RATEB(MVA)	TDF	TC%LOADING (% MVA)	CONTINGENCY
FDNS	00NR_G15_042	2	16WP	G15_042	FROM->TO	GR ISLD-LNX3345.00 - GRAND ISLAND 345KV CKT Z	720	720	0.0439	103.8367	NUNDRWD - WAYSIDE 230KV CKT 1
FDNS	00NR_G15_042	2	16WP	G15_042	FROM->TO	GR ISLD-LNX3345.00 - GRAND ISLAND 345KV CKT Z	720	720	0.04036	103.8354	GEN501801 1-DOLET HILLS UNIT1
FDNS	00NR_G15_042	2	16WP	G15_042	FROM->TO	GR ISLD-LNX3345.00 - GRAND ISLAND 345KV CKT Z	720	720	0.04062	103.8247	CARPENTER - HURON 230KV CKT 1
FDNS	00NR_G15_042	2	16WP	G15_042	FROM->TO	GR ISLD-LNX3345.00 - GRAND ISLAND 345KV CKT Z	720	720	0.04209	103.7701	ADAMS - MITCHLCO3 345.00 345KV CKT 1
FDNS	00NR_G15_042	2	16WP	G15_042	FROM->TO	GR ISLD-LNX3345.00 - GRAND ISLAND 345KV CKT Z	720	720	0.04036	103.7588	GEN337652 1-WHITE BLUFF UNIT #1
FDNS	00NR_G15_042	2	16WP	G15_042	FROM->TO	GR ISLD-LNX3345.00 - GRAND ISLAND 345KV CKT Z	720	720	0.04041	103.7369	ELLENDALE - OAKES 230KV CKT 1
FDNS	00NR_G15_042	2	16WP	G15_042	FROM->TO	GR ISLD-LNX3345.00 - GRAND ISLAND 345KV CKT Z	720	720	0.04041	103.7369	ELLENDALE - OAKES 230KV CKT 1
FDNS	00NR_G15_042	2	16WP	G15_042	FROM->TO	GR ISLD-LNX3345.00 - GRAND ISLAND 345KV CKT Z	720	720	0.04308	103.7315	GRIMES - LEHIGH 345KV CKT 1
FDNS	00NR_G15_042	2	16WP	G15_042	FROM->TO	GR ISLD-LNX3345.00 - GRAND ISLAND 345KV CKT Z	720	720	0.04166	103.7282	ARPIN B4 345.00 - EAU CLAIRE 345KV CKT 1
FDNS	00NR_G15_042	2	16WP	G15_042	FROM->TO	GR ISLD-LNX3345.00 - GRAND ISLAND 345KV CKT Z	720	720	0.04036	103.7203	GEN641089 2-ENERGY CENTER 2
FDNS	00NR_G15_042	2	16WP	G15_042	FROM->TO	GR ISLD-LNX3345.00 - GRAND ISLAND 345KV CKT Z	720	720	0.04014	103.703	G09_001IST 345.00 - GROTON 345KV CKT 1
FDNS	00NR_G15_042	2	16WP	G15_042	FROM->TO	GR ISLD-LNX3345.00 - GRAND ISLAND 345KV CKT Z	720	720	0.04062	103.7013	HURON - WATERTOWN 230KV CKT 2
FDNS	00NR_G15_042	2	16WP	G15_042	FROM->TO	GR ISLD-LNX3345.00 - GRAND ISLAND 345KV CKT Z	720	720	0.04062	103.7013	HURON - WATERTOWN 230KV CKT 2
FDNS	00NR_G15_042	2	16WP	G15_042	FROM->TO	GR ISLD-LNX3345.00 - GRAND ISLAND 345KV CKT Z	720	720	0.0404	103.6913	FORMAN - OAKES 230KV CKT 1
FDNS	00NR_G15_042	2	16WP	G15_042	FROM->TO	GR ISLD-LNX3345.00 - GRAND ISLAND 345KV CKT Z	720	720	0.04036	103.6777	GEN338146 1-INDEPENDENCE UNIT #2
FDNS	00NR_G15_042	2	16WP	G15_042	FROM->TO	GR ISLD-LNX3345.00 - GRAND ISLAND 345KV CKT Z	720	720	0.04036	103.6725	GEN338143 1-INDEPENDENCE UNIT #1
FDNS	00NR_G15_042	2	16WP	G15_042	FROM->TO	GR ISLD-LNX3345.00 - GRAND ISLAND 345KV CKT Z	720	720	0.03853	103.6609	SPLIT ROCK - WHITE 345KV CKT 1
FDNS	00NR_G15_042	2	16WP	G15_042	FROM->TO	GR ISLD-LNX3345.00 - GRAND ISLAND 345KV CKT Z	720	720	0.03853	103.6609	SPLIT ROCK - WHITE 345KV CKT 1
FDNS	00NR_G15_042	2	16WP	G15_042	FROM->TO	GR ISLD-LNX3345.00 - GRAND ISLAND 345KV CKT Z	720	720	0.04062	103.6493	CARPENTER - WATERTOWN 230KV CKT 1
FDNS	00NR_G15_042	2	16WP	G15_042	FROM->TO	GR ISLD-LNX3345.00 - GRAND ISLAND 345KV CKT Z	720	720	0.04062	103.6493	CARPENTER - WATERTOWN 230KV CKT 1
FDNS	00NR_G15_042	2	16WP	G15_042	FROM->TO	GR ISLD-LNX3345.00 - GRAND ISLAND 345KV CKT Z	720	720	0.04043	103.616	CNTSHNT3 345.00 - PRAIRIE3 345.00 345KV CKT 1
FDNS	00NR_G15_042	2	16WP	G15_042	FROM->TO	GR ISLD-LNX3345.00 - GRAND ISLAND 345KV CKT Z	720	720	0.03867	103.579	PAHOJA - SIOUX FALLS 230KV CKT 1
FDNS	00NR_G15_042	2	16WP	G15_042	FROM->TO	GR ISLD-LNX3345.00 - GRAND ISLAND 345KV CKT Z	720	720	0.04152	103.5549	ADAMS - PLEASANT VALLEY 345KV CKT 1
FDNS	00NR_G15_042	2	16WP	G15_042	FROM->TO	GR ISLD-LNX3345.00 - GRAND ISLAND 345KV CKT Z	720	720	0.0389	103.5287	FT THOMPSON - WESSINGTON 230KV CKT 1
FDNS	00NR_G15_042	2	16WP	G15_042	FROM->TO	GR ISLD-LNX3345.00 - GRAND ISLAND 345KV CKT Z	720	720	0.0389	103.5287	FT THOMPSON - WESSINGTON 230KV CKT 1
FDNS	00NR_G15_042	2	16WP	G15_042	FROM->TO	GR ISLD-LNX3345.00 - GRAND ISLAND 345KV CKT Z	720	720	0.03455	103.4974	RASMUSN - UTICA JCT 230KV CKT 1
FDNS	00NR_G15_042	2	16WP	G15_042	FROM->TO	GR ISLD-LNX3345.00 - GRAND ISLAND 345KV CKT Z	720	720	0.04036	103.4905	GEN501813 1-RODEMACHER UNIT 3
FDNS	00NR_G15_042	2	16WP	G15_042	FROM->TO	GR ISLD-LNX3345.00 - GRAND ISLAND 345KV CKT Z	720	720	0.0404	103.4855	P12:115:NPPD:1091:VALENTN7:MISSION7:BTB
FDNS	00NR_G15_042	2	16WP	G15_042	FROM->TO	GR ISLD-LNX3345.00 - GRAND ISLAND 345KV CKT Z	720	720	0.05617	103.4775	DIXONCO 230.00 - HOSKINS 230KV CKT 1
FDNS	00NR_G15_042	2	16WP	G15_042	FROM->TO	GR ISLD-LNX3345.00 - GRAND ISLAND 345KV CKT Z	720	720	0.03976	103.444	GERALD GENTLEMAN STATION - SWEETWATER 345KV CKT 1
FDNS	00NR_G15_042	2	16WP	G15_042	FROM->TO	GR ISLD-LNX3345.00 - GRAND ISLAND 345KV CKT Z	720	720	0.0404	103.4344	MISSION - ST FRANCIS 115KV CKT 1
FDNS	00NR_G15_042	2	16WP	G15_042	FROM->TO	GR ISLD-LNX3345.00 - GRAND ISLAND 345KV CKT Z	720	720	0.04062	103.4183	FT THOMPSON - HURON 230KV CKT 1
FDNS	00NR_G15_042	2	16WP	G15_042	FROM->TO	GR ISLD-LNX3345.00 - GRAND ISLAND 345KV CKT Z	720	720	0.04062	103.4183	FT THOMPSON - HURON 230KV CKT 1
FDNS	00NR_G15_042	2	16WP	G15_042	FROM->TO	GR ISLD-LNX3345.00 - GRAND ISLAND 345KV CKT Z	720	720	0.04062	103.4183	FT THOMPSON - HURON 230KV CKT 2
FDNS	00NR_G15_042	2	16WP	G15_042	FROM->TO	GR ISLD-LNX3345.00 - GRAND ISLAND 345KV CKT Z	720	720	0.04062	103.4183	FT THOMPSON - HURON 230KV CKT 2
FDNS	00NR_G15_042	2	16WP	G15_042	FROM->TO	GR ISLD-LNX3345.00 - GRAND ISLAND 345KV CKT Z	720	720	0.04036	103.3624	GEN335206 1-NELSON UNIT 6
FDNS	00NR_G15_042	2	16WP	G15_042	FROM->TO	GR ISLD-LNX3345.00 - GRAND ISLAND 345KV CKT Z	720	720	0.0404	103.3614	HARMONY - ST FRANCIS 115KV CKT 1
FDNS	00NR_G15_042	2	16WP	G15_042	FROM->TO	GR ISLD-LNX3345.00 - GRAND ISLAND 345KV CKT Z	720	720	0.0404	103.3168	HARMONY - VALENTINE 115KV CKT 1
FDNS	00NR_G15_042	2	16WP	G15_042	FROM->TO	GR ISLD-LNX3345.00 - GRAND ISLAND 345KV CKT Z	720	720	0.04036	103.2884	P13:230-345:NPPD:NUCOR-1
FDNS	00NR_G15_042	2	16WP	G15_042	FROM->TO	GR ISLD-LNX3345.00 - GRAND ISLAND 345KV CKT Z	720	720	0.04044	103.2804	FORMAN - HANKINSON 230KV CKT 1
FDNS	00NR_G15_042	2	16WP	G15_042	FROM->TO	GR ISLD-LNX3345.00 - GRAND ISLAND 345KV CKT Z	720	720	0.0415	103.2779	LAKEFIELD 3 - NOBLES 345KV CKT 1
FDNS	00NR_G15_042	2	16WP	G15_042	FROM->TO	GR ISLD-LNX3345.00 - GRAND ISLAND 345KV CKT Z	720	720	0.04036	103.2702	GEN532751 1-WOLF CREEK GENERATING STATION UNIT 1
FDNS	00NR_G15_042	2	16WP	G15_042	FROM->TO	GR ISLD-LNX3345.00 - GRAND ISLAND 345KV CKT Z	720	720	0.0406	103.2687	ALEXMRES3 345.00 - BISON 3 345.00 345KV CKT 1
FDNS	00NR_G15_042	2	16WP	G15_042	FROM->TO	GR ISLD-LNX3345.00 - GRAND ISLAND 345KV CKT Z	720	720	0.04043	103.2641	CHISAGO COUNTY - CHISAGO COUNTY 500KV CKT 1
FDNS	00NR_G15_042	2	16WP	G15_042	FROM->TO	GR ISLD-LNX3345.00 - GRAND ISLAND 345KV CKT Z	720	720	0.03867	103.2592	EAGLE 4 230.00 - PAHOJA 230KV CKT 1
FDNS	00NR_G15_042	2	16WP	G15_042	FROM->TO	GR ISLD-LNX3345.00 - GRAND ISLAND 345KV CKT Z	720	720	0.04036	103.2563	GEN501812 1-RODEMACHER UNIT 2
FDNS	00NR_G15_042	2	16WP	G15_042	FROM->TO	GR ISLD-LNX3345.00 - GRAND ISLAND 345KV CKT Z	720	720	0.04036	103.2346	GEN344897 4-1LAB G4 20.000
FDNS	00NR_G15_042	2	16WP	G15_042	FROM->TO	GR ISLD-LNX3345.00 - GRAND ISLAND 345KV CKT Z	720	720	0.04036	103.2326	GEN344894 1-1LAB G1 20.000
FDNS	00NR_G15_042	2	16WP	G15_042	FROM->TO	GR ISLD-LNX3345.00 - GRAND ISLAND 345KV CKT Z	720	720	0.04036	103.2324	GEN344896 3-1LAB G3 20.000
FDNS	00NR_G15_042	2	16WP	G15_042	FROM->TO	GR ISLD-LNX3345.00 - GRAND ISLAND 345KV CKT Z	720	720	0.04055	103.2271	GLENBORO SOUTH - RUGBY 230KV CKT 1
FDNS	00NR_G15_042	2	16WP	G15_042	FROM->TO	GR ISLD-LNX3345.00 - GRAND ISLAND 345KV CKT Z	720	720	0.04036	103.2104	GEN345670 1-1RUSH G1 18.000
FDNS	00NR_G15_042	2	16WP	G15_042	FROM->TO	GR ISLD-LNX3345.00 - GRAND ISLAND 345KV CKT Z	720	720	0.04036	103.2103	GEN345671 2-1RUSH G2 18.000
FDNS	00NR_G15_042	2	16WP	G15_042	FROM->TO	GR ISLD-LNX3345.00 - GRAND ISLAND 345KV CKT Z	720	720	0.04036	103.1994	GEN344895 2-1LAB G2 20.000
FDNS	00NR_G15_042	2	16WP	G15_042	FROM->TO	GR ISLD-LNX3345.00 - GRAND ISLAND 345KV CKT Z	720	720	0.04038	103.1989	CENTER - COYOTE 345KV CKT 1
FDNS	00NR_G15_042	2	16WP	G15_042	FROM->TO	GR ISLD-LNX3345.00 - GRAND ISLAND 345KV CKT Z	720	720	0.04036	103.149	GEN336252 1-NINEMILE POINT UNIT#5
FDNS	00NR_G15_042	2	16WP	G15_042	FROM->TO	GR ISLD-LNX3345.00 - GRAND ISLAND 345KV CKT Z	720	720	0.04039	103.1355	P12:115:NPPD:WAPA6:FTRANDL7:ONEILL 7:BTB
FDNS	00NR_G15_042	2	16WP	G15_042	FROM->TO	GR ISLD-LNX3345.00 - GRAND ISLAND 345KV CKT Z	720	720	0.04039	103.1355	P12:115:UMZB:# 115 #: SE IN NE. FR-SE-ON
FDNS	00NR_G15_042	2	16WP	G15_042	FROM->TO	GR ISLD-LNX3345.00 - GRAND ISLAND 345KV CKT Z	720	720	0.04036	103.1313	GEN659118 1-LARAMIE RIVER UNIT1
FDNS	00NR_G15_042	2	16WP	G15_042	FROM->TO	GR ISLD-LNX3345.00 - GRAND ISLAND 345KV CKT Z	720	720	0.03695	103.1302	SIOUXCY-LNX3345.00 - SPLIT ROCK 345KV CKT 1
FDNS	00NR_G15_042	2	16WP	G15_042	FROM->TO	GR ISLD-LNX3345.00 - GRAND ISLAND 345KV CKT Z	720	720	0.03695	103.1302	SIOUXCY-LNX3345.00 - SPLIT ROCK 345KV CKT 1
FDNS	00NR_G15_042	2	16WP	G15_042	FROM->TO	GR ISLD-LNX3345.00 - GRAND ISLAND 345KV CKT Z	720	720	0.03992	103.1272	GERALD GENTLEMAN STATION - SWEETWATER 345KV CKT 2
FDNS	00NR_G15_042	2	16WP	G15_042	FROM->TO	GR ISLD-LNX3345.00 - GRAND ISLAND 345KV CKT Z	720	720	0.04036	103.1098	GEN336831 1-BAXTER WILSON SES
FDNS	00NR_G15_042	2	16WP	G15_042	FROM->TO	GR ISLD-LNX3345.00 - GRAND ISLAND 345KV CKT Z	720	720	0.04047	103.1083	LARAMIE RIVER - SIDNEY2-LNX3345.00 345KV CKT 1
FDNS	00NR_G15_042	2	16WP	G15_042	FROM->TO	GR ISLD-LNX3345.00 - GRAND ISLAND 345KV CKT Z	720	720	0.03789	103.1078	FT THOMPSON (FT2 KU1B) 345/230/13.8KV TRANSFORMER CKT 1
FDNS	00NR_G15_042	2	16WP	G15_042	FROM->TO	GR ISLD-LNX3345.00 - GRAND ISLAND 345KV CKT Z	720	720	0.03695	103.1074	P12:345:UMZW:# 907 #: SC2-SR IN IA. SC2-SR 345 KV LINE
FDNS	00NR_G15_042	2	16WP	G15_042	FROM->TO	GR ISLD-LNX3345.00 - GRAND ISLAND 345KV CKT Z	720	720	0.03789	103.1056	FT THOMPSON (FT2 KU1A) 345/230/13.8KV TRANSFORMER CKT 1
FDNS	00NR_G15_042	2	16WP	G15_042	FROM->TO	GR ISLD-LNX3345.00 - GRAND ISLAND 345KV CKT Z	720	720	0.04039	103.0947	FT RANDAL - SPENCER 115KV CKT 1
FDNS	00NR_G15_042	2	16WP	G15_042	FROM->TO	GR ISLD-LNX3345.00 - GRAND ISLAND 345KV CKT Z	720	720	0.04047	103.0912	SIDNEY - SIDNEY2-LNX3345.00 345KV CKT Z
FDNS	00NR_G15_042	2	16WP	G15_042	FROM->TO	GR ISLD-LNX3345.00 - GRAND ISLAND 345KV CKT Z	720	720	0.04036	103.0889	P12:115:UMZW:# 162 #: NEL IN ND. FAULT ON ML-NEL-MX-GA 115 KV
FDNS	00NR_G15_042	2	16WP	G15_042	FROM->TO	GR ISLD-LNX3345.00 - GRAND ISLAND 345KV CKT Z	720	720	0.04036	103.086	P13:115-230:NPPD:NUCOR-3
FDNSLock	00NR_G15_042	2	16WP	G15_042	FROM->TO	GR ISLD-LNX3345.00 - GRAND ISLAND 345KV CKT Z	720	720	0.04385	103.0813	STEGALL (SGQ KV3A) 345/230/13.8KV TRANSFORMER CKT 1
FDNS	00NR_G15_042	2	16WP	G15_042	FROM->TO	GR ISLD-LNX3345.00 - GRAND ISLAND 345KV CKT Z	720	720	0.03695	103.0808	SIOUX CITY - SIOUXCY-LNX3345.00 345KV CKT Z
FDNS	00NR_G15_042	2	16WP	G15_042	FROM->TO	GR ISLD-LNX3345.00 - GRAND ISLAND 345KV CKT Z	720	720	0.0404	103.0618	AINSWORTH - VALENTINE 115KV CKT 1

SOLUTION	GROUP	SCENARIO	SEASON	SOURCE	DIRECTION	MONITORED ELEMENT	RATEA (MVA)	RATEB(MVA)	TDF	TC%LOADING (% MVA)	CONTINGENCY
FDNS	00NR_G15_042	2	16WP	G15_042	FROM->TO	GR ISLD-LNX3345.00 - GRAND ISLAND 345KV CKT Z	720	720	0.04597	103.058	COLUMEAST - SHELL CREEK 345KV CKT 1
FDNS	00NR_G15_042	2	16WP	G15_042	FROM->TO	GR ISLD-LNX3345.00 - GRAND ISLAND 345KV CKT Z	720	720	0.04036	103.0497	GEN337041 1-GERALD ANDRUS
FDNS	00NR_G15_042	2	16WP	G15_042	FROM->TO	GR ISLD-LNX3345.00 - GRAND ISLAND 345KV CKT Z	720	720	0.04116	103.0372	BYRON - NORTH ROCHESTER 345KV CKT 1
FDNS	00NR_G15_042	2	16WP	G15_042	FROM->TO	GR ISLD-LNX3345.00 - GRAND ISLAND 345KV CKT Z	720	720	0.04036	103.0084	GEN334440 1-SABINE UNIT 4
FDNS	00NR_G15_042	2	16WP	G15_042	FROM->TO	GR ISLD-LNX3345.00 - GRAND ISLAND 345KV CKT Z	720	720	0.04039	103.0046	ONEILL - SPENCER 115KV CKT 1
FDNS	00NR_G15_042	2	16WP	G15_042	FROM->TO	GR ISLD-LNX3345.00 - GRAND ISLAND 345KV CKT Z	720	720	0.04632	103.0016	COLUMEAST - NW68TH & HOLDREGE 345KV CKT 1
FDNS	00NR_G15_042	2	16WP	G15_042	FROM->TO	GR ISLD-LNX3345.00 - GRAND ISLAND 345KV CKT Z	720	720	0.04632	103.0016	COLUMEAST - NW68TH & HOLDREGE 345KV CKT 1
FDNS	00NR_G15_042	2	16WP	G15_042	FROM->TO	GR ISLD-LNX3345.00 - GRAND ISLAND 345KV CKT Z	720	720	0.0412	103.0005	KOSSUTH 3 345.00 - OBRIEN 3 345.00 345KV CKT 1
FDNS	00NR_G15_042	2	16WP	G15_042	FROM->TO	GR ISLD-LNX3345.00 - GRAND ISLAND 345KV CKT Z	720	720	0.0412	102.9996	KOSSUTH 3 345.00 - WEBSTER 345KV CKT 1
FDNS	00NR_G15_042	2	16WP	G15_042	FROM->TO	GR ISLD-LNX3345.00 - GRAND ISLAND 345KV CKT Z	720	720	0.04036	102.9815	GEN336251 1-NINEMILE POINT UNIT#4
FDNS	00NR_G15_042	2	16WP	G15_042	FROM->TO	GR ISLD-LNX3345.00 - GRAND ISLAND 345KV CKT Z	720	720	0.04048	102.981	BLAIR - GRANITE FALLS 230KV CKT 1
FDNS	00NR_G15_042	2	16WP	G15_042	FROM->TO	GR ISLD-LNX3345.00 - GRAND ISLAND 345KV CKT Z	720	720	0.04048	102.981	BLAIR - GRANITE FALLS 230KV CKT 1
FDNS	00NR_G15_042	2	16WP	G15_042	FROM->TO	GR ISLD-LNX3345.00 - GRAND ISLAND 345KV CKT Z	720	720	0.03978	102.9713	MENNO JCT - TRIPP JCT 115KV CKT 1
FDNS	00NR_G15_042	2	16WP	G15_042	FROM->TO	GR ISLD-LNX3345.00 - GRAND ISLAND 345KV CKT Z	720	720	0.04185	102.9481	DENISON - SIOUX CITY 230KV CKT 1
FDNS	00NR_G15_042	2	16WP	G15_042	FROM->TO	GR ISLD-LNX3345.00 - GRAND ISLAND 345KV CKT Z	720	720	0.04036	102.9391	GEN525561 1-TOLK GEN #1 24 KV
FDNS	00NR_G15_042	2	16WP	G15_042	FROM->TO	GR ISLD-LNX3345.00 - GRAND ISLAND 345KV CKT Z	720	720	0.0404	102.9341	GARRISON - JAMES TOWN 230KV CKT 1
FDNS	00NR_G15_042	2	16WP	G15_042	FROM->TO	GR ISLD-LNX3345.00 - GRAND ISLAND 345KV CKT Z	720	720	0.04036	102.9284	P13:115-345:NPPD:NUCOR-2
FDNS	00NR_G15_042	2	16WP	G15_042	FROM->TO	GR ISLD-LNX3345.00 - GRAND ISLAND 345KV CKT Z	720	720	0.04036	102.9182	P13:230:UMZW:# 2218 #: FP IN MT. LOSS OF TRANSFORMER (AT2).
FDNS	00NR_G15_042	2	16WP	G15_042	FROM->TO	GR ISLD-LNX3345.00 - GRAND ISLAND 345KV CKT Z	720	720	0.03951	102.9145	GAVINS POINT - HARTINGTON 115KV CKT 1
FDNS	00NR_G15_042	2	16WP	G15_042	FROM->TO	GR ISLD-LNX3345.00 - GRAND ISLAND 345KV CKT Z	720	720	0.04067	102.9084	NORTH ROCHESTER - PRAIRIE ISLAND 345KV CKT 1
FDNS	00NR_G15_042	2	16WP	G15_042	FROM->TO	GR ISLD-LNX3345.00 - GRAND ISLAND 345KV CKT Z	720	720	0.04048	102.907	HANKINSON - WAHPETON 230KV CKT 1
FDNS	00NR_G15_042	2	16WP	G15_042	FROM->TO	GR ISLD-LNX3345.00 - GRAND ISLAND 345KV CKT Z	720	720	0.03978	102.893	MENNO JCT - UTICA 115KV CKT 1
FDNS	00NR_G15_042	2	16WP	G15_042	FROM->TO	GR ISLD-LNX3345.00 - GRAND ISLAND 345KV CKT Z	720	720	0.05446	102.8913	HOSKINS - SHELL CREEK 345KV CKT 1
FDNS	00NR_G15_042	2	16WP	G15_042	FROM->TO	GR ISLD-LNX3345.00 - GRAND ISLAND 345KV CKT Z	720	720	0.04036	102.8789	GEN303007 1-1BC2 U2
FDNS	00NR_G15_042	2	16WP	G15_042	FROM->TO	GR ISLD-LNX3345.00 - GRAND ISLAND 345KV CKT Z	720	720	0.04036	102.8761	GEN335204 1-NELSON UNIT 4
FDNS	00NR_G15_042	2	16WP	G15_042	FROM->TO	GR ISLD-LNX3345.00 - GRAND ISLAND 345KV CKT Z	720	720	0.03975	102.876	P12:115:NPPD:1164:ONEILL 7:JEFFREY9:BTB
FDNS	00NR_G15_042	2	16WP	G15_042	FROM->TO	GR ISLD-LNX3345.00 - GRAND ISLAND 345KV CKT Z	720	720	0.04036	102.8758	GEN303006 1-1BC2 U1
FDNS	00NR_G15_042	2	16WP	G15_042	FROM->TO	GR ISLD-LNX3345.00 - GRAND ISLAND 345KV CKT Z	720	720	0.04036	102.874	GEN336191 1-LITTLE GYPSY UNIT#3
FDNS	00NR_G15_042	2	16WP	G15_042	FROM->TO	GR ISLD-LNX3345.00 - GRAND ISLAND 345KV CKT Z	720	720	0.04036	102.8705	GEN642067 1-PLATTE
FDNS	00NR_G15_042	2	16WP	G15_042	FROM->TO	GR ISLD-LNX3345.00 - GRAND ISLAND 345KV CKT Z	720	720	0.03975	102.8656	CLEARWATER - ONEILL 115KV CKT 1
FDNS	00NR_G15_042	2	16WP	G15_042	FROM->TO	GR ISLD-LNX3345.00 - GRAND ISLAND 345KV CKT Z	720	720	0.04117	102.8599	BYRON - PLEASANT VALLEY 345KV CKT 1
FDNS	00NR_G15_042	2	16WP	G15_042	FROM->TO	GR ISLD-LNX3345.00 - GRAND ISLAND 345KV CKT Z	720	720	0.03978	102.8588	P12:115:UMZZ:# 237 #: MEN IN SD. MENNO JUNCTION IS A TAP (UJ-MEN-TP).
FDNS	00NR_G15_042	2	16WP	G15_042	FROM->TO	GR ISLD-LNX3345.00 - GRAND ISLAND 345KV CKT Z	720	720	0.04036	102.8468	GEN531447 1-HOLCOMB GENERATOR
FDNS	00NR_G15_042	2	16WP	G15_042	FROM->TO	GR ISLD-LNX3345.00 - GRAND ISLAND 345KV CKT Z	720	720	0.04036	102.8422	GEN336801 1-BAXTER WILSON UNIT #1
FDNS	00NR_G15_042	2	16WP	G15_042	FROM->TO	GR ISLD-LNX3345.00 - GRAND ISLAND 345KV CKT Z	720	720	0.04036	102.8378	GEN335614 1-WILLOW GLENN UNIT#4
FDNS	00NR_G15_042	2	16WP	G15_042	FROM->TO	GR ISLD-LNX3345.00 - GRAND ISLAND 345KV CKT Z	720	720	0.03975	102.8323	CLEARWATER - NELIGH 115KV CKT 1
FDNS	00NR_G15_042	2	16WP	G15_042	FROM->TO	GR ISLD-LNX3345.00 - GRAND ISLAND 345KV CKT Z	720	720	0.04036	102.8274	GEN336464 1-MICHOUD UNIT #3
FDNS	00NR_G15_042	2	16WP	G15_042	FROM->TO	GR ISLD-LNX3345.00 - GRAND ISLAND 345KV CKT Z	720	720	0.04036	102.827	GEN303008 1-1BC2 U3
FDNS	00NR_G15_042	2	16WP	G15_042	FROM->TO	GR ISLD-LNX3345.00 - GRAND ISLAND 345KV CKT Z	720	720	0.04036	102.8221	GEN336170 1-GULF OXY U4
FDNS	00NR_G15_042	2	16WP	G15_042	FROM->TO	GR ISLD-LNX3345.00 - GRAND ISLAND 345KV CKT Z	720	720	0.04036	102.8125	GEN334441 1-SABINE UNIT 5
FDNS	00NR_G15_042	2	16WP	G15_042	FROM->TO	GR ISLD-LNX3345.00 - GRAND ISLAND 345KV CKT Z	720	720	0.0404	102.8073	BISMARK - JAMES TOWN 230KV CKT 1
FDNS	00NR_G15_042	2	16WP	G15_042	FROM->TO	GR ISLD-LNX3345.00 - GRAND ISLAND 345KV CKT Z	720	720	0.0404	102.793	JAMES TOWN - WEBER 230KV CKT 1
FDNS	00NR_G15_042	2	16WP	G15_042	FROM->TO	GR ISLD-LNX3345.00 - GRAND ISLAND 345KV CKT Z	720	720	0.04036	102.7914	GRAND GULF 500/22.0KV TRANSFORMER CKT 1
FDNS	00NR_G15_042	2	16WP	G15_042	FROM->TO	GR ISLD-LNX3345.00 - GRAND ISLAND 345KV CKT Z	720	720	0.0404	102.7908	BISMARK - WEBER 230KV CKT 1
FDNS	00NR_G15_042	2	16WP	G15_042	FROM->TO	GR ISLD-LNX3345.00 - GRAND ISLAND 345KV CKT Z	720	720	0.04057	102.788	APPLEDORN 4 230.00 - WATERTOWN 230KV CKT 1
FDNS	00NR_G15_042	2	16WP	G15_042	FROM->TO	GR ISLD-LNX3345.00 - GRAND ISLAND 345KV CKT Z	720	720	0.04057	102.788	APPLEDORN 4 230.00 - WATERTOWN 230KV CKT 1
FDNS	00NR_G15_042	2	16WP	G15_042	FROM->TO	GR ISLD-LNX3345.00 - GRAND ISLAND 345KV CKT Z	720	720	0.04036	102.7863	GEN501811 1-RODEMACHER UNIT 1
FDNS	00NR_G15_042	2	16WP	G15_042	FROM->TO	GR ISLD-LNX3345.00 - GRAND ISLAND 345KV CKT Z	720	720	0.04036	102.7489	PRAIRIE ISLAND 345/20.0KV TRANSFORMER CKT 1
FDNS	00NR_G15_042	2	16WP	G15_042	FROM->TO	GR ISLD-LNX3345.00 - GRAND ISLAND 345KV CKT Z	720	720	0.04036	102.7463	PRAIRIE ISLAND 345/20.0KV TRANSFORMER CKT 2
FDNS	00NR_G15_042	2	16WP	G15_042	FROM->TO	GR ISLD-LNX3345.00 - GRAND ISLAND 345KV CKT Z	720	720	0.04036	102.7378	GEN334433 1-SABINE UNIT 3
FDNS	00NR_G15_042	2	16WP	G15_042	FROM->TO	GR ISLD-LNX3345.00 - GRAND ISLAND 345KV CKT Z	720	720	0.04057	102.7304	APPLEDORN 4 230.00 - GRANITE FALLS 230KV CKT 1
FDNS	00NR_G15_042	2	16WP	G15_042	FROM->TO	GR ISLD-LNX3345.00 - GRAND ISLAND 345KV CKT Z	720	720	0.04057	102.7304	APPLEDORN 4 230.00 - GRANITE FALLS 230KV CKT 1
FDNS	00NR_G15_042	2	16WP	G15_042	FROM->TO	GR ISLD-LNX3345.00 - GRAND ISLAND 345KV CKT Z	720	720	0.04036	102.7302	GEN334071 1-LEWIS CREEK 2
FDNS	00NR_G15_042	2	16WP	G15_042	FROM->TO	GR ISLD-LNX3345.00 - GRAND ISLAND 345KV CKT Z	720	720	0.0404	102.7259	FARGO - JAMES TOWN 230KV CKT 1
FDNS	00NR_G15_042	2	16WP	G15_042	FROM->TO	GR ISLD-LNX3345.00 - GRAND ISLAND 345KV CKT Z	720	720	0.04036	102.7259	GEN334070 1-LEWIS CREEK 1
FDNS	00NR_G15_042	2	16WP	G15_042	FROM->TO	GR ISLD-LNX3345.00 - GRAND ISLAND 345KV CKT Z	720	720	0.04036	102.7196	GEN338388 1-1PLUM PT U1 23.000
FDNS	00NR_G15_042	2	16WP	G15_042	FROM->TO	GR ISLD-LNX3345.00 - GRAND ISLAND 345KV CKT Z	720	720	0.04036	102.7154	GEN525562 1-TOLK GEN #2 24 KV
FDNS	00NR_G15_042	2	16WP	G15_042	FROM->TO	GR ISLD-LNX3345.00 - GRAND ISLAND 345KV CKT Z	720	720	0.04036	102.7151	GEN337766 1-TRACTEBEL UNIT S1
FDNS	00NR_G15_042	2	16WP	G15_042	FROM->TO	GR ISLD-LNX3345.00 - GRAND ISLAND 345KV CKT Z	720	720	0.0404	102.7108	FARGO - JAMES TOWN 230KV CKT 2
FDNS	00NR_G15_042	2	16WP	G15_042	FROM->TO	GR ISLD-LNX3345.00 - GRAND ISLAND 345KV CKT Z	720	720	0.04046	102.7078	FERGSFL4 230.00 - WAHPETON 230KV CKT 1
FDNS	00NR_G15_042	2	16WP	G15_042	FROM->TO	GR ISLD-LNX3345.00 - GRAND ISLAND 345KV CKT Z	720	720	0.04153	102.706	ARKANSAS NUCLEAR ONE - FT SMITH 500KV CKT 1
FDNS	00NR_G15_042	2	16WP	G15_042	FROM->TO	GR ISLD-LNX3345.00 - GRAND ISLAND 345KV CKT Z	720	720	0.04153	102.706	ARKANSAS NUCLEAR ONE - FT SMITH 500KV CKT 1
FDNS	00NR_G15_042	2	16WP	G15_042	FROM->TO	GR ISLD-LNX3345.00 - GRAND ISLAND 345KV CKT Z	720	720	0.04037	102.6999	BALTA - RAMSEY 230KV CKT 1
FDNS	00NR_G15_042	2	16WP	G15_042	FROM->TO	GR ISLD-LNX3345.00 - GRAND ISLAND 345KV CKT Z	720	720	0.04042	102.696	AUDUBON - SHEYNNE 230KV CKT 1
FDNS	00NR_G15_042	2	16WP	G15_042	FROM->TO	GR ISLD-LNX3345.00 - GRAND ISLAND 345KV CKT Z	720	720	0.04036	102.6826	GEN501910 1-ACADIA UNIT ST1
FDNS	00NR_G15_042	2	16WP	G15_042	FROM->TO	GR ISLD-LNX3345.00 - GRAND ISLAND 345KV CKT Z	720	720	0.04017	102.6826	OVEXFRMCCOVE
FDNS	00NR_G15_042	2	16WP	G15_042	FROM->TO	GR ISLD-LNX3345.00 - GRAND ISLAND 345KV CKT Z	720	720	0.04054	102.6713	NORTH LA CROSSE - NORTH ROCHESTER 345KV CKT 1
FDNS	00NR_G15_042	2	16WP	G15_042	FROM->TO	GR ISLD-LNX3345.00 - GRAND ISLAND 345KV CKT Z	720	720	0.04035	102.6698	ELM CREEK - MONTICELLO 345KV CKT 1
FDNS	00NR_G15_042	2	16WP	G15_042	FROM->TO	GR ISLD-LNX3345.00 - GRAND ISLAND 345KV CKT Z	720	720	0.04036	102.668	P12:345:GRDA:CHOUTEAU-SPORTSMANACRES
FDNS	00NR_G15_042	2	16WP	G15_042	FROM->TO	GR ISLD-LNX3345.00 - GRAND ISLAND 345KV CKT Z	720	720	0.04036	102.6659	WHITE BLUFF 500/26.0KV TRANSFORMER CKT 1
FDNS	00NR_G15_042	2	16WP	G15_042	FROM->TO	GR ISLD-LNX3345.00 - GRAND ISLAND 345KV CKT Z	720	720	0.0406	102.6615	GENOA 161 - SENECA 161 161KV CKT 1
FDNS	00NR_G15_042	2	16WP	G15_042	FROM->TO	GR ISLD-LNX3345.00 - GRAND ISLAND 345KV CKT Z	720	720	0.04036	102.6561	GEN562547 1-G14_039_3 0.6900
FDNS	00NR_G15_042	2	16WP	G15_042	FROM->TO	GR ISLD-LNX3345.00 - GRAND ISLAND 345KV CKT Z	720	720	0.04045	102.6546	P13:115-230:TSGT:SIDNEY-KV1A

SOLUTION	GROUP	SCENARIO	SEASON	SOURCE	DIRECTION	MONITORED ELEMENT	RATEA (MVA)	RATEB(MVA)	TDF	TC%LOADING (% MVA)	CONTINGENCY
FDNS	00NR_G15_042	2	16WP	G15_042	FROM->TO	GR ISLD-LNX3345.00 - GRAND ISLAND 345KV CKT Z	720	720	0.04036	102.6543	P12:161:GRDA:KERR-SALINA-CKT1
FDNS	00NR_G15_042	2	16WP	G15_042	FROM->TO	GR ISLD-LNX3345.00 - GRAND ISLAND 345KV CKT Z	720	720	0.04036	102.6543	P12:161:GRDA:KERR-SALINA-CKT2
FDNS	00NR_G15_042	2	16WP	G15_042	FROM->TO	GR ISLD-LNX3345.00 - GRAND ISLAND 345KV CKT Z	720	720	0.04036	102.654	GEN336222 1-LITTLE GYPSY UNIT#2
FDNS	00NR_G15_042	2	16WP	G15_042	FROM->TO	GR ISLD-LNX3345.00 - GRAND ISLAND 345KV CKT Z	720	720	0.041	102.6492	FRANKS - HUBEN 345KV CKT 1
FDNS	00NR_G15_042	2	16WP	G15_042	FROM->TO	GR ISLD-LNX3345.00 - GRAND ISLAND 345KV CKT Z	720	720	0.04146	102.6488	PETERSBRG.N7115.00 - PETERSBURG 115KV CKT Z1
FDNS	00NR_G15_042	2	16WP	G15_042	FROM->TO	GR ISLD-LNX3345.00 - GRAND ISLAND 345KV CKT Z	720	720	0.04054	102.6467	NORTH LA CROSSE (10008630_001) 345/161/34.5KV TRANSFORMER CKT 9
FDNS	00NR_G15_042	2	16WP	G15_042	FROM->TO	GR ISLD-LNX3345.00 - GRAND ISLAND 345KV CKT Z	720	720	0.04036	102.6448	GEN562023 1-G11_020_3 0.6900
FDNS	00NR_G15_042	2	16WP	G15_042	FROM->TO	GR ISLD-LNX3345.00 - GRAND ISLAND 345KV CKT Z	720	720	0.04036	102.6448	GEN562026 1-G11_019_3 0.6900
FDNS	00NR_G15_042	2	16WP	G15_042	FROM->TO	GR ISLD-LNX3345.00 - GRAND ISLAND 345KV CKT Z	720	720	0.04146	102.6389	P12:115:NPPD:1168B:ALBION 7:PETERSBRG.N7:BTB
FDNS	00NR_G15_042	2	16WP	G15_042	FROM->TO	GR ISLD-LNX3345.00 - GRAND ISLAND 345KV CKT Z	720	720	0.04036	102.6378	GEN337764 1-TRACTEBEL UNIT C1
FDNS	00NR_G15_042	2	16WP	G15_042	FROM->TO	GR ISLD-LNX3345.00 - GRAND ISLAND 345KV CKT Z	720	720	0.04036	102.6378	GEN337765 1-TRACTEBEL UNIT C2
FDNS	00NR_G15_042	2	16WP	G15_042	FROM->TO	GR ISLD-LNX3345.00 - GRAND ISLAND 345KV CKT Z	720	720	0.04146	102.6304	ALBION - PETERSBURG 115KV CKT 1
FDNS	00NR_G15_042	2	16WP	G15_042	FROM->TO	GR ISLD-LNX3345.00 - GRAND ISLAND 345KV CKT Z	720	720	0.04036	102.6278	GEN336152 1-WATERFORD UNIT#2
FDNS	00NR_G15_042	2	16WP	G15_042	FROM->TO	GR ISLD-LNX3345.00 - GRAND ISLAND 345KV CKT Z	720	720	0.04036	102.6269	GEN336151 1-WATERFORD UNIT#1
FDNS	00NR_G15_042	2	16WP	G15_042	FROM->TO	GR ISLD-LNX3345.00 - GRAND ISLAND 345KV CKT Z	720	720	0.03945	102.2251	GRAND ISLAND - RIVERDALE 230KV CKT 1
FDNS	00NR_G15_042	2	16WP	G15_042	FROM->TO	GR ISLD-LNX3345.00 - GRAND ISLAND 345KV CKT Z	720	720	0.04036	102.1918	BASE CASE
FDNS	00NR_G15_042	2	16WP	G15_042	FROM->TO	GR ISLD-LNX3345.00 - GRAND ISLAND 345KV CKT Z	720	720	0.04125	101.946	SHELL CREEK (SHELLCREEKT1) 345/230/13.8KV TRANSFORMER CKT 1
FDNS	00NR_G15_042	2	16WP	G15_042	FROM->TO	GR ISLD-LNX3345.00 - GRAND ISLAND 345KV CKT Z	720	720	0.04125	101.946	SHELL CREEK (SHELLCREEKT1) 345/230/13.8KV TRANSFORMER CKT 1
FDNS	00NR_G15_042	2	16WP	G15_042	FROM->TO	GR ISLD-LNX3345.00 - GRAND ISLAND 345KV CKT Z	720	720	0.04125	101.9449	KELLY - SHELL CREEK 230KV CKT 1
FDNS	00NR_G15_042	2	16WP	G15_042	FROM->TO	GR ISLD-LNX3345.00 - GRAND ISLAND 345KV CKT Z	720	720	0.04036	101.9048	GEN645001 1-FORT CALHOUN 1
FDNS	00NR_G15_042	2	16WP	G15_042	FROM->TO	GR ISLD-LNX3345.00 - GRAND ISLAND 345KV CKT Z	720	720	0.0404	101.8513	AURORA - GRAND ISLAND 115KV CKT 1
FDNS	00NR_G15_042	2	16WP	G15_042	FROM->TO	GR ISLD-LNX3345.00 - GRAND ISLAND 345KV CKT Z	720	720	0.04041	101.8063	CRETE - FRIEND 115KV CKT 1
FDNS	00NR_G15_042	2	16WP	G15_042	FROM->TO	GR ISLD-LNX3345.00 - GRAND ISLAND 345KV CKT Z	720	720	0.03764	101.7829	MINGO - SETAB 345KV CKT 1
FDNS	00NR_G15_042	2	16WP	G15_042	FROM->TO	GR ISLD-LNX3345.00 - GRAND ISLAND 345KV CKT Z	720	720	0.03764	101.7829	MINGO - SETAB 345KV CKT 1
FDNS	00NR_G15_042	2	16WP	G15_042	FROM->TO	GR ISLD-LNX3345.00 - GRAND ISLAND 345KV CKT Z	720	720	0.04815	101.7768	COLUMWEST - KELLY 230KV CKT 1
FDNS	00NR_G15_042	2	16WP	G15_042	FROM->TO	GR ISLD-LNX3345.00 - GRAND ISLAND 345KV CKT Z	720	720	0.04158	101.7683	LOUP CITY - NORTH LOUP 115KV CKT 1
FDNS	00NR_G15_042	2	16WP	G15_042	FROM->TO	GR ISLD-LNX3345.00 - GRAND ISLAND 345KV CKT Z	720	720	0.04009	101.7511	G14-074T 345.00 - OKLAUNION 345KV CKT 1
FDNS	00NR_G15_042	2	16WP	G15_042	FROM->TO	GR ISLD-LNX3345.00 - GRAND ISLAND 345KV CKT Z	720	720	0.04047	101.75	ANTELOP-LNX3345.00 - BRDLAND-LNX3345.00 345KV CKT 1
FDNS	00NR_G15_042	2	16WP	G15_042	FROM->TO	GR ISLD-LNX3345.00 - GRAND ISLAND 345KV CKT Z	720	720	0.04036	101.7327	GEN659116 1-SPIRIT MOUND UNIT1
FDNS	00NR_G15_042	2	16WP	G15_042	FROM->TO	GR ISLD-LNX3345.00 - GRAND ISLAND 345KV CKT Z	720	720	0.04036	101.7327	GEN659117 2-SPIRIT MOUND UNIT2
FDNS	00NR_G15_042	2	16WP	G15_042	FROM->TO	GR ISLD-LNX3345.00 - GRAND ISLAND 345KV CKT Z	720	720	0.04067	101.7275	GRAND ISLAND (GI KU3A) 345/230/13.8KV TRANSFORMER CKT 3
FDNS	00NR_G15_042	2	16WP	G15_042	FROM->TO	GR ISLD-LNX3345.00 - GRAND ISLAND 345KV CKT Z	720	720	0.04067	101.7275	GRAND ISLAND (GI KU3A) 345/230/13.8KV TRANSFORMER CKT 3
FDNSLock	00NR_G15_042	2	16WP	G15_042	FROM->TO	GR ISLD-LNX3345.00 - GRAND ISLAND 345KV CKT Z	720	720	0.04054	101.727	STEGALL - VICTORY HILL 230KV CKT 1
FDNS	00NR_G15_042	2	16WP	G15_042	FROM->TO	GR ISLD-LNX3345.00 - GRAND ISLAND 345KV CKT Z	720	720	0.04054	101.7229	VICTORY HILL (VICTORYHL T1) 230/115/13.8KV TRANSFORMER CKT 1
FDNS	00NR_G15_042	2	16WP	G15_042	FROM->TO	GR ISLD-LNX3345.00 - GRAND ISLAND 345KV CKT Z	720	720	0.04054	101.7229	VICTORY HILL (VICTORYHL T1) 230/115/13.8KV TRANSFORMER CKT 1
FDNS	00NR_G15_042	2	16WP	G15_042	FROM->TO	GR ISLD-LNX3345.00 - GRAND ISLAND 345KV CKT Z	720	720	0.04036	101.722	CLKREACT5 161.00 - CRYSTLK5 161.00 161KV CKT 1
FDNS	00NR_G15_042	2	16WP	G15_042	FROM->TO	GR ISLD-LNX3345.00 - GRAND ISLAND 345KV CKT Z	720	720	0.04036	101.7118	GEN620115 1-HRDLKGEN 0.6000
FDNS	00NR_G15_042	2	16WP	G15_042	FROM->TO	GR ISLD-LNX3345.00 - GRAND ISLAND 345KV CKT Z	720	720	0.04047	101.7048	LARAMIE RIVER - STEGALL 345KV CKT 1
FDNS	00NR_G15_042	2	16WP	G15_042	FROM->TO	GR ISLD-LNX3345.00 - GRAND ISLAND 345KV CKT Z	720	720	0.04036	101.6846	GEN600013 3-BLACK DOG GEN 3
FDNS	00NR_G15_042	2	16WP	G15_042	FROM->TO	GR ISLD-LNX3345.00 - GRAND ISLAND 345KV CKT Z	720	720	0.04036	101.6844	GEN672340 1-QUEEN ELIZABETH GENERATOR 1
FDNS	00NR_G15_042	2	16WP	G15_042	FROM->TO	GR ISLD-LNX3345.00 - GRAND ISLAND 345KV CKT Z	720	720	0.04047	101.6833	ANTELOP-LNX3345.00 - ANTELOPE VALLEY 345KV CKT Z
FDNS	00NR_G15_042	2	16WP	G15_042	FROM->TO	GR ISLD-LNX3345.00 - GRAND ISLAND 345KV CKT Z	720	720	0.04052	101.6824	P12:115:UMZW:# 172 #: WI IN SD.
FDNS	00NR_G15_042	2	16WP	G15_042	FROM->TO	GR ISLD-LNX3345.00 - GRAND ISLAND 345KV CKT Z	720	720	0.04036	101.679	MITCHLCO3 345.00 345/34.5KV TRANSFORMER CKT 1
FDNS	00NR_G15_042	2	16WP	G15_042	FROM->TO	GR ISLD-LNX3345.00 - GRAND ISLAND 345KV CKT Z	720	720	0.04036	101.6666	GEN659018 1-G14_003IS_3 0.6900
FDNS	00NR_G15_042	2	16WP	G15_042	FROM->TO	GR ISLD-LNX3345.00 - GRAND ISLAND 345KV CKT Z	720	720	0.04036	101.6594	GEN672384 1-CENTENNIAL WINDFARM
FDNS	00NR_G15_042	2	16WP	G15_042	FROM->TO	GR ISLD-LNX3345.00 - GRAND ISLAND 345KV CKT Z	720	720	0.04036	101.6581	GEN600125 2-FEP ST G 13.800
FDNS	00NR_G15_042	2	16WP	G15_042	FROM->TO	GR ISLD-LNX3345.00 - GRAND ISLAND 345KV CKT Z	720	720	0.04161	101.6499	AXTELL - PAULINE 345KV CKT 1
FDNS	00NR_G15_042	2	16WP	G15_042	FROM->TO	GR ISLD-LNX3345.00 - GRAND ISLAND 345KV CKT Z	720	720	0.04036	101.6489	LADISH 115/13.2KV TRANSFORMER CKT 1
FDNS	00NR_G15_042	2	16WP	G15_042	FROM->TO	GR ISLD-LNX3345.00 - GRAND ISLAND 345KV CKT Z	720	720	0.04036	101.6453	GEN620323 2-HOOT LAKE 2 GEN
FDNS	00NR_G15_042	2	16WP	G15_042	FROM->TO	GR ISLD-LNX3345.00 - GRAND ISLAND 345KV CKT Z	720	720	0.04036	101.6402	GEN659354 1-DEERCREK STG18.000
FDNS	00NR_G15_042	2	16WP	G15_042	FROM->TO	GR ISLD-LNX3345.00 - GRAND ISLAND 345KV CKT Z	720	720	0.04036	101.631	GEN657964 1-ASH2GEN9 0.5750
FDNS	00NR_G15_042	2	16WP	G15_042	FROM->TO	GR ISLD-LNX3345.00 - GRAND ISLAND 345KV CKT Z	720	720	0.04161	101.6302	CENTRAL CITY - GRAND ISLAND 115KV CKT 1
FDNS	00NR_G15_042	2	16WP	G15_042	FROM->TO	GR ISLD-LNX3345.00 - GRAND ISLAND 345KV CKT Z	720	720	0.04006	101.6264	SMOKYHL6 230.00 - SUMMIT 230KV CKT 1
FDNS	00NR_G15_042	2	16WP	G15_042	FROM->TO	GR ISLD-LNX3345.00 - GRAND ISLAND 345KV CKT Z	720	720	0.04036	101.6216	GEN652546 1-FT RANDAL
FDNS	00NR_G15_042	2	16WP	G15_042	FROM->TO	GR ISLD-LNX3345.00 - GRAND ISLAND 345KV CKT Z	720	720	0.04136	101.621	7MAYWOOD 345.00 - 7SPENCER 345.00 345KV CKT 1
FDNS	00NR_G15_042	2	16WP	G15_042	FROM->TO	GR ISLD-LNX3345.00 - GRAND ISLAND 345KV CKT Z	720	720	0.04136	101.6171	7MONTGMRY 345.00 - 7SPENCER 345.00 345KV CKT 1
FDNS	00NR_G15_042	2	16WP	G15_042	FROM->TO	GR ISLD-LNX3345.00 - GRAND ISLAND 345KV CKT Z	720	720	0.04017	101.6023	FALLOW 3 345.00 - POTTCO 3 345.00 345KV CKT 1
FDNS	00NR_G15_042	2	16WP	G15_042	FROM->TO	GR ISLD-LNX3345.00 - GRAND ISLAND 345KV CKT Z	720	720	0.04036	101.5942	GEN600018 S-LS POWER STEAM
FDNS	00NR_G15_042	2	16WP	G15_042	FROM->TO	GR ISLD-LNX3345.00 - GRAND ISLAND 345KV CKT Z	720	720	0.04036	101.5899	GEN659290 1-EDGECOL
FDNS	00NR_G15_042	2	16WP	G15_042	FROM->TO	GR ISLD-LNX3345.00 - GRAND ISLAND 345KV CKT Z	720	720	0.04036	101.5873	GEN590010 1-ERCOT EQUIVALENCE
FDNS	00NR_G15_042	2	16WP	G15_042	FROM->TO	GR ISLD-LNX3345.00 - GRAND ISLAND 345KV CKT Z	720	720	0.04036	101.5864	GEN652548 5-FT RANDAL
FDNS	00NR_G15_042	2	16WP	G15_042	FROM->TO	GR ISLD-LNX3345.00 - GRAND ISLAND 345KV CKT Z	720	720	0.04036	101.5864	GEN652549 7-FT RANDAL
FDNS	00NR_G15_042	2	16WP	G15_042	FROM->TO	GR ISLD-LNX3345.00 - GRAND ISLAND 345KV CKT Z	720	720	0.04036	101.5863	GEN652547 3-FT RANDAL
FDNS	00NR_G15_042	2	16WP	G15_042	FROM->TO	GR ISLD-LNX3345.00 - GRAND ISLAND 345KV CKT Z	720	720	0.04036	101.5825	G830_SUB 115.00 - GRE-MCHENRY7115.00 115KV CKT 1
FDNS	00NR_G15_042	2	16WP	G15_042	FROM->TO	GR ISLD-LNX3345.00 - GRAND ISLAND 345KV CKT Z	720	720	0.04036	101.5817	GEN635213 3-NEAL UNIT 3
FDNS	00NR_G15_042	2	16WP	G15_042	FROM->TO	GR ISLD-LNX3345.00 - GRAND ISLAND 345KV CKT Z	720	720	0.04036	101.5741	GEN562003 1-G11_027_3 0.6900
FDNS	00NR_G15_042	2	16WP	G15_042	FROM->TO	GR ISLD-LNX3345.00 - GRAND ISLAND 345KV CKT Z	720	720	0.04036	101.5727	G830_SUB 115.00 115/34.5KV TRANSFORMER CKT 1
FDNS	00NR_G15_042	2	16WP	G15_042	FROM->TO	GR ISLD-LNX3345.00 - GRAND ISLAND 345KV CKT Z	720	720	0.04036	101.5721	GEN300003 1-THOMAS HILL UNIT 3
FDNS	00NR_G15_042	2	16WP	G15_042	FROM->TO	GR ISLD-LNX3345.00 - GRAND ISLAND 345KV CKT Z	720	720	0.04117	101.5706	SUB 3454 - WAGENER 345KV CKT 1
FDNS	00NR_G15_042	2	16WP	G15_042	FROM->TO	GR ISLD-LNX3345.00 - GRAND ISLAND 345KV CKT Z	720	720	0.04117	101.5706	SUB 3454 - WAGENER 345KV CKT 1
FDNS	00NR_G15_042	2	16WP	G15_042	FROM->TO	GR ISLD-LNX3345.00 - GRAND ISLAND 345KV CKT Z	720	720	0.04036	101.567	GEN652410 3-FT PECK
FDNS	00NR_G15_042	2	16WP	G15_042	FROM->TO	GR ISLD-LNX3345.00 - GRAND ISLAND 345KV CKT Z	720	720	0.04036	101.5583	GEN590011 2-ERCOT EQUIVALENCE
FDNS	00NR_G15_042	2	16WP	G15_042	FROM->TO	GR ISLD-LNX3345.00 - GRAND ISLAND 345KV CKT Z	720	720	0.04036	101.5441	EASTDC - ERCOT EQUIVALENCE 345KV CKT 1

SOLUTION	GROUP	SCENARIO	SEASON	SOURCE	DIRECTION	MONITORED ELEMENT	RATEA (MVA)	RATEB(MVA)	TDF	TC%LOADING (% MVA)	CONTINGENCY
FDNS	00NR_G15_042	2	16WP	G15_042	FROM->TO	GR ISLD-LNX3345.00 - GRAND ISLAND 345KV CKT Z	720	720	0.03957	101.5391	POST ROCK (POSTROCK T1) 345/230/13.8KV TRANSFORMER CKT 1
FDNS	00NR_G15_042	2	16WP	G15_042	FROM->TO	GR ISLD-LNX3345.00 - GRAND ISLAND 345KV CKT Z	720	720	0.04036	101.5321	GEN672347 1-CORY COGEN GENERATOR 1 GT1
FDNS	00NR_G15_042	2	16WP	G15_042	FROM->TO	GR ISLD-LNX3345.00 - GRAND ISLAND 345KV CKT Z	720	720	0.04036	101.5321	GEN672348 2-CORY COGEN GENERATOR 2 GT2
FDNS	00NR_G15_042	2	16WP	G15_042	FROM->TO	GR ISLD-LNX3345.00 - GRAND ISLAND 345KV CKT Z	720	720	0.04036	101.5273	GEN672350 1-NIPAWIN GENERATOR 1
FDNS	00NR_G15_042	2	16WP	G15_042	FROM->TO	GR ISLD-LNX3345.00 - GRAND ISLAND 345KV CKT Z	720	720	0.04036	101.5273	GEN672351 2-NIPAWIN GENERATOR 2
FDNS	00NR_G15_042	2	16WP	G15_042	FROM->TO	GR ISLD-LNX3345.00 - GRAND ISLAND 345KV CKT Z	720	720	0.04036	101.5273	GEN672352 3-NIPAWIN GENERATOR 3
FDNS	00NR_G15_042	2	16WP	G15_042	FROM->TO	GR ISLD-LNX3345.00 - GRAND ISLAND 345KV CKT Z	720	720	0.04036	101.5075	GEN652414 4-FT PECK
FDNS	00NR_G15_042	2	16WP	G15_042	FROM->TO	GR ISLD-LNX3345.00 - GRAND ISLAND 345KV CKT Z	720	720	0.04036	101.5075	GEN652415 5-FT PECK
FDNS	00NR_G15_042	2	16WP	G15_042	FROM->TO	GR ISLD-LNX3345.00 - GRAND ISLAND 345KV CKT Z	720	720	0.04036	101.5073	GEN657600 1-L1GEN3 9 0.5750
FDNS	00NR_G15_042	2	16WP	G15_042	FROM->TO	GR ISLD-LNX3345.00 - GRAND ISLAND 345KV CKT Z	720	720	0.04036	101.4894	GEN600012 2-BLACK DOG GEN 2
FDNS	00NR_G15_042	2	16WP	G15_042	FROM->TO	GR ISLD-LNX3345.00 - GRAND ISLAND 345KV CKT Z	720	720	0.04036	101.4867	GEN660001 2-ABERDEEN SIEBRECHT
FDNS	00NR_G15_042	2	16WP	G15_042	FROM->TO	GR ISLD-LNX3345.00 - GRAND ISLAND 345KV CKT Z	720	720	0.04014	101.4864	MADISON COUNTY - RLHILLS3 345.00 345KV CKT 1
FDNS	00NR_G15_042	2	16WP	G15_042	FROM->TO	GR ISLD-LNX3345.00 - GRAND ISLAND 345KV CKT Z	720	720	0.0394	101.4855	G11_051T 345.00 - WOODWARD DISTRICT EHV 345KV CKT 1
FDNS	00NR_G15_042	2	16WP	G15_042	FROM->TO	GR ISLD-LNX3345.00 - GRAND ISLAND 345KV CKT Z	720	720	0.04036	101.4752	GEN652345 W-G07_023IS_2 0.6900
FDNS	00NR_G15_042	2	16WP	G15_042	FROM->TO	GR ISLD-LNX3345.00 - GRAND ISLAND 345KV CKT Z	720	720	0.04036	101.4711	GEN629074 1-ARNOLD LOWSIDE OF GSU XFMR
FDNS	00NR_G15_042	2	16WP	G15_042	FROM->TO	GR ISLD-LNX3345.00 - GRAND ISLAND 345KV CKT Z	720	720	0.04036	101.4625	GEN615032 2-PLEASANT VALLEY
FDNS	00NR_G15_042	2	16WP	G15_042	FROM->TO	GR ISLD-LNX3345.00 - GRAND ISLAND 345KV CKT Z	720	720	0.04036	101.4519	GEN672367 1-MERIDIAN GENERATOR 1 GT1
FDNS	00NR_G15_042	2	16WP	G15_042	FROM->TO	GR ISLD-LNX3345.00 - GRAND ISLAND 345KV CKT Z	720	720	0.04036	101.4519	GEN672368 2-MERIDIAN GENERATOR 2 GT2
FDNS	00NR_G15_042	2	16WP	G15_042	FROM->TO	GR ISLD-LNX3345.00 - GRAND ISLAND 345KV CKT Z	720	720	0.04036	101.4516	GEN672349 3-CORY COGEN GENERATOR 3 ST
FDNS	00NR_G15_042	2	16WP	G15_042	FROM->TO	GR ISLD-LNX3345.00 - GRAND ISLAND 345KV CKT Z	720	720	0.04036	101.4498	GEN300007 1-NEW MADRID UNIT 2
FDNS	00NR_G15_042	2	16WP	G15_042	FROM->TO	GR ISLD-LNX3345.00 - GRAND ISLAND 345KV CKT Z	720	720	0.04036	101.4445	GEN300006 1-NEW MADRID UNIT 1
FDNS	00NR_G15_042	2	16WP	G15_042	FROM->TO	GR ISLD-LNX3345.00 - GRAND ISLAND 345KV CKT Z	720	720	0.04036	101.4409	GEN672339 16-QE 16G 13.800
FDNS	00NR_G15_042	2	16WP	G15_042	FROM->TO	GR ISLD-LNX3345.00 - GRAND ISLAND 345KV CKT Z	720	720	0.04036	101.4409	GEN672342 3-QUEEN ELIZABETH GENERATOR 3
FDNS	00NR_G15_042	2	16WP	G15_042	FROM->TO	GR ISLD-LNX3345.00 - GRAND ISLAND 345KV CKT Z	720	720	0.04036	101.43	GEN620324 3-HOOT LAKE 3 GEN
FDNS	00NR_G15_042	2	16WP	G15_042	FROM->TO	GR ISLD-LNX3345.00 - GRAND ISLAND 345KV CKT Z	720	720	0.04036	101.411	GEN 11104 1-J262_GEN 0.6000
FDNS	00NR_G15_042	2	16WP	G15_042	FROM->TO	GR ISLD-LNX3345.00 - GRAND ISLAND 345KV CKT Z	720	720	0.04036	101.411	GEN 11108 1-J263_GEN 0.6000
FDNS	00NR_G15_042	2	16WP	G15_042	FROM->TO	GR ISLD-LNX3345.00 - GRAND ISLAND 345KV CKT Z	720	720	0.04166	101.4106	ATCHSNT3 345.00 - COOPER 345KV CKT 1
FDNS	00NR_G15_042	2	16WP	G15_042	FROM->TO	GR ISLD-LNX3345.00 - GRAND ISLAND 345KV CKT Z	720	720	0.04166	101.4106	ATCHSNT3 345.00 - COOPER 345KV CKT 1
FDNS	00NR_G15_042	2	16WP	G15_042	FROM->TO	GR ISLD-LNX3345.00 - GRAND ISLAND 345KV CKT Z	720	720	0.04084	101.4094	103RD & ROKEBY - MOORE 345KV CKT 1
FDNS	00NR_G15_042	2	16WP	G15_042	FROM->TO	GR ISLD-LNX3345.00 - GRAND ISLAND 345KV CKT Z	720	720	0.04084	101.4094	103RD & ROKEBY - MOORE 345KV CKT 1
FDNS	00NR_G15_042	2	16WP	G15_042	FROM->TO	GR ISLD-LNX3345.00 - GRAND ISLAND 345KV CKT Z	720	720	0.04072	101.4063	GLENHAM - L3 HAWDON 230KV CKT 1
FDNS	00NR_G15_042	2	16WP	G15_042	FROM->TO	GR ISLD-LNX3345.00 - GRAND ISLAND 345KV CKT Z	720	720	0.03871	101.4013	HIGHLND 3 345.00 - OBRIEN 3 345.00 345KV CKT 1
FDNS	00NR_G15_042	2	16WP	G15_042	FROM->TO	GR ISLD-LNX3345.00 - GRAND ISLAND 345KV CKT Z	720	720	0.03849	101.378	GERALD GENTLEMAN STATION - RED WILLOW 345KV CKT 1
FDNS	00NR_G15_042	2	16WP	G15_042	FROM->TO	GR ISLD-LNX3345.00 - GRAND ISLAND 345KV CKT Z	720	720	0.04036	101.3694	GEN600050 1-FEP
FDNS	00NR_G15_042	2	16WP	G15_042	FROM->TO	GR ISLD-LNX3345.00 - GRAND ISLAND 345KV CKT Z	720	720	0.04036	101.3614	GEN635214 4-NEAL UNIT 4
FDNS	00NR_G15_042	2	16WP	G15_042	FROM->TO	GR ISLD-LNX3345.00 - GRAND ISLAND 345KV CKT Z	720	720	0.04036	101.3582	GEN659273 2-GROTON SYNC COND
FDNS	00NR_G15_042	2	16WP	G15_042	FROM->TO	GR ISLD-LNX3345.00 - GRAND ISLAND 345KV CKT Z	720	720	0.04036	101.3582	GEN659294 1-WILTONCOL9
FDNS	00NR_G15_042	2	16WP	G15_042	FROM->TO	GR ISLD-LNX3345.00 - GRAND ISLAND 345KV CKT Z	720	720	0.04017	101.3545	FALLOW 3 345.00 - GRIMES 345KV CKT 1
FDNS	00NR_G15_042	2	16WP	G15_042	FROM->TO	GR ISLD-LNX3345.00 - GRAND ISLAND 345KV CKT Z	720	720	0.04036	101.3487	CENTER 230/22.0KV TRANSFORMER CKT 1
FDNS	00NR_G15_042	2	16WP	G15_042	FROM->TO	GR ISLD-LNX3345.00 - GRAND ISLAND 345KV CKT Z	720	720	0.0394	101.3376	G11_051T 345.00 - TATONGA7 345.00 345KV CKT 1
FDNS	00NR_G15_042	2	16WP	G15_042	FROM->TO	GR ISLD-LNX3345.00 - GRAND ISLAND 345KV CKT Z	720	720	0.04036	101.3237	GEN672393 2-NBECST2G 13.800
FDNS	00NR_G15_042	2	16WP	G15_042	FROM->TO	GR ISLD-LNX3345.00 - GRAND ISLAND 345KV CKT Z	720	720	0.04036	101.3228	GEN629072 4-LANSING GENERATOR FOR UNITS NO4 EIA CODE 1
FDNS	00NR_G15_042	2	16WP	G15_042	FROM->TO	GR ISLD-LNX3345.00 - GRAND ISLAND 345KV CKT Z	720	720	0.04036	101.2877	GEN600065 7-HIGH BRIDGE
FDNS	00NR_G15_042	2	16WP	G15_042	FROM->TO	GR ISLD-LNX3345.00 - GRAND ISLAND 345KV CKT Z	720	720	0.04036	101.2877	GEN600066 8-HIGH BRIDGE
FDNS	00NR_G15_042	2	16WP	G15_042	FROM->TO	GR ISLD-LNX3345.00 - GRAND ISLAND 345KV CKT Z	720	720	0.03781	101.2839	COOPER - MOORE 345KV CKT 1
FDNS	00NR_G15_042	2	16WP	G15_042	FROM->TO	GR ISLD-LNX3345.00 - GRAND ISLAND 345KV CKT Z	720	720	0.04036	101.2792	GEN659192 6-LYNN
FDNS	00NR_G15_042	2	16WP	G15_042	FROM->TO	GR ISLD-LNX3345.00 - GRAND ISLAND 345KV CKT Z	720	720	0.04036	101.2781	GEN659162 4-RED WLCK
FDNS	00NR_G15_042	2	16WP	G15_042	FROM->TO	GR ISLD-LNX3345.00 - GRAND ISLAND 345KV CKT Z	720	720	0.04036	101.2781	GEN659163 5-BLACK WDCK
FDNS	00NR_G15_042	2	16WP	G15_042	FROM->TO	GR ISLD-LNX3345.00 - GRAND ISLAND 345KV CKT Z	720	720	0.04036	101.2661	LANSING WEST 161/22.0KV TRANSFORMER CKT 1
FDNS	00NR_G15_042	2	16WP	G15_042	FROM->TO	GR ISLD-LNX3345.00 - GRAND ISLAND 345KV CKT Z	720	720	0.04036	101.2654	GEN657985 1-ASH1GEN9 0.5750
FDNS	00NR_G15_042	2	16WP	G15_042	FROM->TO	GR ISLD-LNX3345.00 - GRAND ISLAND 345KV CKT Z	720	720	0.04036	101.2519	GEN652906 1-G09_006IS_3 0.6900
FDNS	00NR_G15_042	2	16WP	G15_042	FROM->TO	GR ISLD-LNX3345.00 - GRAND ISLAND 345KV CKT Z	720	720	0.04036	101.2234	GEN 10648 1-G830_GEN 0.6900
FDNS	00NR_G15_042	2	16WP	G15_042	FROM->TO	GR ISLD-LNX3345.00 - GRAND ISLAND 345KV CKT Z	720	720	0.04036	101.2041	GEN600067 9-HIGH BRIDGE
FDNS	00NR_G15_042	2	16WP	G15_042	FROM->TO	GR ISLD-LNX3345.00 - GRAND ISLAND 345KV CKT Z	720	720	0.04036	101.2021	GEN600014 4-BLACK DOG GEN 4
FDNS	00NR_G15_042	2	16WP	G15_042	FROM->TO	GR ISLD-LNX3345.00 - GRAND ISLAND 345KV CKT Z	720	720	0.04036	101.2016	GEN600071 10-RIVER SIDE
FDNS	00NR_G15_042	2	16WP	G15_042	FROM->TO	GR ISLD-LNX3345.00 - GRAND ISLAND 345KV CKT Z	720	720	0.04036	101.2015	GEN600070 9-RIVER SIDE
FDNS	00NR_G15_042	2	16WP	G15_042	FROM->TO	GR ISLD-LNX3345.00 - GRAND ISLAND 345KV CKT Z	720	720	0.04166	101.2014	ATCHSNT3 345.00 - BOONEVILLE 345KV CKT 1
FDNS	00NR_G15_042	2	16WP	G15_042	FROM->TO	GR ISLD-LNX3345.00 - GRAND ISLAND 345KV CKT Z	720	720	0.04036	101.1984	GEN600011 5-BLACK DOG GEN 1
FDNS	00NR_G15_042	2	16WP	G15_042	FROM->TO	GR ISLD-LNX3345.00 - GRAND ISLAND 345KV CKT Z	720	720	0.04036	101.1879	GEN600007 7-RIVERSIDE GEN 7
FDNS	00NR_G15_042	2	16WP	G15_042	FROM->TO	GR ISLD-LNX3345.00 - GRAND ISLAND 345KV CKT Z	720	720	0.04036	101.1661	GEN615015 1-GRE-SPRITWDG13.200
FDNS	00NR_G15_042	2	16WP	G15_042	FROM->TO	GR ISLD-LNX3345.00 - GRAND ISLAND 345KV CKT Z	720	720	0.04036	101.1556	GEN660016 1-B_H WIND 0.7000
FDNS	00NR_G15_042	2	16WP	G15_042	FROM->TO	GR ISLD-LNX3345.00 - GRAND ISLAND 345KV CKT Z	720	720	0.04036	101.139	GEN652907 1-G09_007IS_3 0.6900
FDNS	00NR_G15_042	2	16WP	G15_042	FROM->TO	GR ISLD-LNX3345.00 - GRAND ISLAND 345KV CKT Z	720	720	0.04036	101.1359	GEN600017 C-LS POWER CT
FDNS	00NR_G15_042	2	16WP	G15_042	FROM->TO	GR ISLD-LNX3345.00 - GRAND ISLAND 345KV CKT Z	720	720	0.04036	101.135	GEN615052 1-CAMBRIDGE GENERATING STATION
FDNS	00NR_G15_042	2	16WP	G15_042	FROM->TO	GR ISLD-LNX3345.00 - GRAND ISLAND 345KV CKT Z	720	720	0.04036	101.0945	GEN681522 3-GENOA 3
FDNS	00NR_G15_042	2	16WP	G15_042	FROM->TO	GR ISLD-LNX3345.00 - GRAND ISLAND 345KV CKT Z	720	720	0.0394	101.0701	MATHWSN7 345.00 - TATONGA7 345.00 345KV CKT 1
FDNS	00NR_G15_042	2	16WP	G15_042	FROM->TO	GR ISLD-LNX3345.00 - GRAND ISLAND 345KV CKT Z	720	720	0.04036	101.063	GEN662101 1-WESSINGTON190.5750
FDNS	00NR_G15_042	2	16WP	G15_042	FROM->TO	GR ISLD-LNX3345.00 - GRAND ISLAND 345KV CKT Z	720	720	0.03333	101.0415	AXTELL - POST ROCK 345KV CKT 1
FDNS	00NR_G15_042	2	16WP	G15_042	FROM->TO	GR ISLD-LNX3345.00 - GRAND ISLAND 345KV CKT Z	720	720	0.04036	100.93	GEN659353 1-DEERCREK CTG18.000
FDNS	00NR_G15_042	2	16WP	G15_042	FROM->TO	GR ISLD-LNX3345.00 - GRAND ISLAND 345KV CKT Z	720	720	0.04036	100.9182	GEN910006 1-G12_012IS_3 0.6900
FDNS	00NR_G15_042	2	16WP	G15_042	FROM->TO	GR ISLD-LNX3345.00 - GRAND ISLAND 345KV CKT Z	720	720	0.04036	100.8625	GEN615021 1-GRE-ER 14G 16.000
FDNS	00NR_G15_042	2	16WP	G15_042	FROM->TO	GR ISLD-LNX3345.00 - GRAND ISLAND 345KV CKT Z	720	720	0.03602	100.8612	MINGO - RED WILLOW 345KV CKT 1
FDNS	00NR_G15_042	2	16WP	G15_042	FROM->TO	GR ISLD-LNX3345.00 - GRAND ISLAND 345KV CKT Z	720	720	0.03602	100.8612	MINGO - RED WILLOW 345KV CKT 1

SOLUTION	GROUP	SCENARIO	SEASON	SOURCE	DIRECTION	MONITORED ELEMENT	RATEA (MVA)	RATEB(MVA)	TDF	TC%LOADING (% MVA)	CONTINGENCY
FDNS	00NR_G15_042	2	16WP	G15_042	FROM->TO	GR ISLD-LNX3345.00 - GRAND ISLAND 345KV CKT Z	720	720	0.04036	100.8067	GEN672303 3-BOUNDARY DAM GENERATOR 3
FDNS	00NR_G15_042	2	16WP	G15_042	FROM->TO	GR ISLD-LNX3345.00 - GRAND ISLAND 345KV CKT Z	720	720	0.04036	100.8067	GEN672304 4-BOUNDARY DAM GENERATOR 4
FDNS	00NR_G15_042	2	16WP	G15_042	FROM->TO	GR ISLD-LNX3345.00 - GRAND ISLAND 345KV CKT Z	720	720	0.04036	100.8067	GEN672305 5-BOUNDARY DAM GENERATOR 5
FDNS	00NR_G15_042	2	16WP	G15_042	FROM->TO	GR ISLD-LNX3345.00 - GRAND ISLAND 345KV CKT Z	720	720	0.04246	100.7543	MOORE - PAULINE 345KV CKT 1
FDNS	00NR_G15_042	2	16WP	G15_042	FROM->TO	GR ISLD-LNX3345.00 - GRAND ISLAND 345KV CKT Z	720	720	0.04036	100.7049	BISONMP4 230.00 - SQUARE BUTTE 230KV CKT 1
FDNS	00NR_G15_042	2	16WP	G15_042	FROM->TO	GR ISLD-LNX3345.00 - GRAND ISLAND 345KV CKT Z	720	720	0.04815	100.605	COLUMWEST - GRAND ISLAND 230KV CKT 1
FDNS	00NR_G15_042	2	16WP	G15_042	FROM->TO	GR ISLD-LNX3345.00 - GRAND ISLAND 345KV CKT Z	720	720	0.04036	100.5998	GEN652460 4-GARRISON
FDNS	00NR_G15_042	2	16WP	G15_042	FROM->TO	GR ISLD-LNX3345.00 - GRAND ISLAND 345KV CKT Z	720	720	0.04036	100.5998	GEN652461 5-GARRISON
FDNS	00NR_G15_042	2	16WP	G15_042	FROM->TO	GR ISLD-LNX3345.00 - GRAND ISLAND 345KV CKT Z	720	720	0.04036	100.582	GEN672392 1-NBECGT1G 18.000
FDNS	00NR_G15_042	2	16WP	G15_042	FROM->TO	GR ISLD-LNX3345.00 - GRAND ISLAND 345KV CKT Z	720	720	0.04036	100.561	GEN562832 1-G15042_3 0.6900
FDNS	00NR_G15_042	2	16WP	G15_042	FROM->TO	GR ISLD-LNX3345.00 - GRAND ISLAND 345KV CKT Z	720	720	0.04036	100.5496	GEN652457 1-GARRISON
FDNS	00NR_G15_042	2	16WP	G15_042	FROM->TO	GR ISLD-LNX3345.00 - GRAND ISLAND 345KV CKT Z	720	720	0.04036	100.5496	GEN652458 2-GARRISON
FDNS	00NR_G15_042	2	16WP	G15_042	FROM->TO	GR ISLD-LNX3345.00 - GRAND ISLAND 345KV CKT Z	720	720	0.04036	100.5496	GEN652459 3-GARRISON
FDNS	00NR_G15_042	2	16WP	G15_042	FROM->TO	GR ISLD-LNX3345.00 - GRAND ISLAND 345KV CKT Z	720	720	0.04036	100.5405	GEN652542 1-BIG BEND
FDNS	00NR_G15_042	2	16WP	G15_042	FROM->TO	GR ISLD-LNX3345.00 - GRAND ISLAND 345KV CKT Z	720	720	0.04036	100.5076	COYOTE 345/24.0KV TRANSFORMER CKT 1
FDNS	00NR_G15_042	2	16WP	G15_042	FROM->TO	GR ISLD-LNX3345.00 - GRAND ISLAND 345KV CKT Z	720	720	0.04036	100.5064	GEN659010 4-G07_027IS_2 0.6900
FDNS	00NR_G15_042	2	16WP	G15_042	FROM->TO	GR ISLD-LNX3345.00 - GRAND ISLAND 345KV CKT Z	720	720	0.04036	100.4676	GEN659194 1-NDPRAIRWND1W0.6900
FDNS	00NR_G15_042	2	16WP	G15_042	FROM->TO	GR ISLD-LNX3345.00 - GRAND ISLAND 345KV CKT Z	720	720	0.04036	100.3648	GEN659403 1-NDSUNFLWR W0.6900
FDNS	00NR_G15_042	2	16WP	G15_042	FROM->TO	GR ISLD-LNX3345.00 - GRAND ISLAND 345KV CKT Z	720	720	0.04036	100.2658	GEN681542 6-JP MADGETT
FDNS	00NR_G15_042	2	16WP	G15_042	FROM->TO	GR ISLD-LNX3345.00 - GRAND ISLAND 345KV CKT Z	720	720	0.04036	100.1221	GEN659411 1-CAMPBLCNTY W0.6900
FDNS	00NR_G15_042	2	16WP	G15_042	FROM->TO	GR ISLD-LNX3345.00 - GRAND ISLAND 345KV CKT Z	720	720	0.04036	100.0816	RCDC EAST 4230.00 - RED CEDAR DC 230KV CKT 1
FDNS	00NR_G15_042	2	16WP	G15_042	FROM->TO	GR ISLD-LNX3345.00 - GRAND ISLAND 345KV CKT Z	720	720	0.03862	100.0743	AXTELL - SWEETWATER 345KV CKT 1
FDNS	00NR_G15_042	2	16WP	G15_042	FROM->TO	GR ISLD-LNX3345.00 - GRAND ISLAND 345KV CKT Z	720	720	0.04036	100.0578	P12:230:UMZB:# 112 #: NU IN SD. NU-RCDC & DRY CREEK XFMR
FDNS	00NR_G15_042	2	20WP	G15_042	FROM->TO	GR ISLD-LNX3345.00 - GRAND ISLAND 345KV CKT Z	720	720	0.03779	100.0507	HOLT.CO3 345.00 - THEDFRD3 345.00 345KV CKT 1
FDNS	00NR_G15_042	2	16WP	G15_042	FROM->TO	GR ISLD-LNX3345.00 - GRAND ISLAND 345KV CKT Z	720	720	0.04036	100	GEN659296 2-SDPRAIRWND1W0.6900
FDNS	00NR_G15_042	2	16WP	G15_042	FROM->TO	GR ISLD-LNX3345.00 - GRAND ISLAND 345KV CKT Z	720	720	0.04036	99.8	CLAY BOSWELL 230/20.9KV TRANSFORMER CKT 1
FDNS	00NR_G15_042	2	16WP	G15_042	FROM->TO	GR ISLD-LNX3345.00 - GRAND ISLAND 345KV CKT Z	720	720	0.04036	99.8	GEN652556 2-OAHE
FDNS	00NR_G15_042	2	16WP	G15_042	FROM->TO	GR ISLD-LNX3345.00 - GRAND ISLAND 345KV CKT Z	720	720	0.04036	99.8	GEN652558 6-OAHE
FDNS	00NR_G15_042	2	16WP	G15_042	FROM->TO	GR ISLD-LNX3345.00 - GRAND ISLAND 345KV CKT Z	720	720	0.04036	99.8	GEN652559 1-OAHE
FDNS	00NR_G15_042	2	16WP	G15_042	FROM->TO	GR ISLD-LNX3345.00 - GRAND ISLAND 345KV CKT Z	720	720	0.04036	99.7	GEN652557 5-OAHE
FDNS	00NR_G15_042	2	16WP	G15_042	FROM->TO	GR ISLD-LNX3345.00 - GRAND ISLAND 345KV CKT Z	720	720	0.04036	99.6	GEN615010 1-STANTON4
FDNS	00NR_G15_042	2	16WP	G15_042	FROM->TO	GR ISLD-LNX3345.00 - GRAND ISLAND 345KV CKT Z	720	720	0.04036	99.5	GEN659453 1-GI1414GEN W0.6900
FDNS	00NR_G15_042	2	17SP	G15_042	TO->FROM	GR ISLD-LNX3345.00 - HOLT.CO3 345.00 345KV CKT 1	720	720	0.04321	137.4679	KELLY - MEADOWGROVE4230.00 230KV CKT 1
FDNS	00NR_G15_042	2	17SP	G15_042	TO->FROM	GR ISLD-LNX3345.00 - HOLT.CO3 345.00 345KV CKT 1	720	720	0.03938	137.4665	P12:230:UMZB:# 116 #: ST IN SD. WSG-ST-VH
FDNS	00NR_G15_042	2	17SP	G15_042	TO->FROM	GR ISLD-LNX3345.00 - HOLT.CO3 345.00 345KV CKT 1	720	720	0.03966	136.5519	STORLA - WESSINGTON 230KV CKT 1
FDNS	00NR_G15_042	2	17SP	G15_042	TO->FROM	GR ISLD-LNX3345.00 - HOLT.CO3 345.00 345KV CKT 1	720	720	0.04034	135.4918	WATERTN-LNX3345.00 - WHITE 345KV CKT 1
FDNS	00NR_G15_042	2	17SP	G15_042	TO->FROM	GR ISLD-LNX3345.00 - HOLT.CO3 345.00 345KV CKT 1	720	720	0.04034	135.2333	WATERTN-LNX3345.00 - WATERTOWN 345KV CKT Z
FDNS	00NR_G15_042	2	17SP	G15_042	TO->FROM	GR ISLD-LNX3345.00 - HOLT.CO3 345.00 345KV CKT 1	720	720	0.04034	135.1949	P12:345:UMZW:# 1747 #: WT2 IN SD. WT2-WHT LINE FAULT
FDNS	00NR_G15_042	2	17SP	G15_042	TO->FROM	GR ISLD-LNX3345.00 - HOLT.CO3 345.00 345KV CKT 1	720	720	0.04091	135.1798	G09_001IST 345.00 - WATERTOWN 345KV CKT 1
FDNS	00NR_G15_042	2	17SP	G15_042	TO->FROM	GR ISLD-LNX3345.00 - HOLT.CO3 345.00 345KV CKT 1	720	720	0.03966	135.1198	HANLON - STORLA 230KV CKT 1
FDNS	00NR_G15_042	2	17SP	G15_042	TO->FROM	GR ISLD-LNX3345.00 - HOLT.CO3 345.00 345KV CKT 1	720	720	0.03936	134.715	FT THOMPSON - LETCHER 230KV CKT 1
FDNS	00NR_G15_042	2	17SP	G15_042	TO->FROM	GR ISLD-LNX3345.00 - HOLT.CO3 345.00 345KV CKT 1	720	720	0.03936	134.715	FT THOMPSON - LETCHER 230KV CKT 1
FDNS	00NR_G15_042	2	17SP	G15_042	TO->FROM	GR ISLD-LNX3345.00 - HOLT.CO3 345.00 345KV CKT 1	720	720	0.04129	133.8452	BUFFALO - JAMESTOWN 345KV CKT 1
FDNS	00NR_G15_042	2	17SP	G15_042	TO->FROM	GR ISLD-LNX3345.00 - HOLT.CO3 345.00 345KV CKT 1	720	720	0.03804	133.5305	FT RANDAL - FT THOMPSON 230KV CKT 1
FDNS	00NR_G15_042	2	17SP	G15_042	TO->FROM	GR ISLD-LNX3345.00 - HOLT.CO3 345.00 345KV CKT 1	720	720	0.03804	133.5305	FT RANDAL - FT THOMPSON 230KV CKT 1
FDNS	00NR_G15_042	2	17SP	G15_042	TO->FROM	GR ISLD-LNX3345.00 - HOLT.CO3 345.00 345KV CKT 1	720	720	0.03811	133.4228	FT RANDAL - G12_009IST 230.00 230KV CKT 1
FDNS	00NR_G15_042	2	17SP	G15_042	TO->FROM	GR ISLD-LNX3345.00 - HOLT.CO3 345.00 345KV CKT 1	720	720	0.03811	133.3168	FT THOMPSON - LAKE PLATT 230KV CKT 1
FDNS	00NR_G15_042	2	17SP	G15_042	TO->FROM	GR ISLD-LNX3345.00 - HOLT.CO3 345.00 345KV CKT 1	720	720	0.03811	133.3168	FT THOMPSON - LAKE PLATT 230KV CKT 1
FDNS	00NR_G15_042	2	17SP	G15_042	TO->FROM	GR ISLD-LNX3345.00 - HOLT.CO3 345.00 345KV CKT 1	720	720	0.04479	133.2023	NUNDRWD - WAYSIDE 230KV CKT 1
FDNS	00NR_G15_042	2	17SP	G15_042	TO->FROM	GR ISLD-LNX3345.00 - HOLT.CO3 345.00 345KV CKT 1	720	720	0.03811	132.9655	G12_009IST 230.00 - LAKE PLATT 230KV CKT 1
FDNS	00NR_G15_042	2	17SP	G15_042	TO->FROM	GR ISLD-LNX3345.00 - HOLT.CO3 345.00 345KV CKT 1	720	720	0.04112	132.8923	GEN336821 1-GRAND GULF UNIT
FDNS	00NR_G15_042	2	17SP	G15_042	TO->FROM	GR ISLD-LNX3345.00 - HOLT.CO3 345.00 345KV CKT 1	720	720	0.0412	132.7564	CHISAGO COUNTY - FORBES 500KV CKT 1
FDNS	00NR_G15_042	2	17SP	G15_042	TO->FROM	GR ISLD-LNX3345.00 - HOLT.CO3 345.00 345KV CKT 1	720	720	0.04321	132.6124	FT RANDAL - MEADOWGROVE4230.00 230KV CKT 1
FDNS	00NR_G15_042	2	17SP	G15_042	TO->FROM	GR ISLD-LNX3345.00 - HOLT.CO3 345.00 345KV CKT 1	720	720	0.04128	132.5998	CENTER - JAMESTOWN 345KV CKT 1
FDNS	00NR_G15_042	2	17SP	G15_042	TO->FROM	GR ISLD-LNX3345.00 - HOLT.CO3 345.00 345KV CKT 1	720	720	0.04112	132.3833	GEN640010 1-GERALD GENTLEMAN STATION UNIT 1
FDNS	00NR_G15_042	2	17SP	G15_042	TO->FROM	GR ISLD-LNX3345.00 - HOLT.CO3 345.00 345KV CKT 1	720	720	0.04112	132.3462	GEN344225 1-1CAL G1 25.000
FDNS	00NR_G15_042	2	17SP	G15_042	TO->FROM	GR ISLD-LNX3345.00 - HOLT.CO3 345.00 345KV CKT 1	720	720	0.04202	132.2416	KEYSTONE - SIDNEY1-LNX3345.00 345KV CKT 1
FDNS	00NR_G15_042	2	17SP	G15_042	TO->FROM	GR ISLD-LNX3345.00 - HOLT.CO3 345.00 345KV CKT 1	720	720	0.04007	132.237	LETCHER - SIOUX FALLS 230KV CKT 1
FDNS	00NR_G15_042	2	17SP	G15_042	TO->FROM	GR ISLD-LNX3345.00 - HOLT.CO3 345.00 345KV CKT 1	720	720	0.04091	132.2327	G09_001IST 345.00 - GROTON 345KV CKT 1
FDNS	00NR_G15_042	2	17SP	G15_042	TO->FROM	GR ISLD-LNX3345.00 - HOLT.CO3 345.00 345KV CKT 1	720	720	0.04202	132.204	SIDNEY - SIDNEY1-LNX3345.00 345KV CKT Z
FDNS	00NR_G15_042	2	17SP	G15_042	TO->FROM	GR ISLD-LNX3345.00 - HOLT.CO3 345.00 345KV CKT 1	720	720	0.04112	132.1564	GEN337911 1-ARKANSAS NUCLEAR ONE UNIT #2
FDNS	00NR_G15_042	2	17SP	G15_042	TO->FROM	GR ISLD-LNX3345.00 - HOLT.CO3 345.00 345KV CKT 1	720	720	0.04112	132.1386	GEN635024 4-WALTER SCOTT UNIT 4
FDNS	00NR_G15_042	2	17SP	G15_042	TO->FROM	GR ISLD-LNX3345.00 - HOLT.CO3 345.00 345KV CKT 1	720	720	0.04124	132.1373	BISON 3 345.00 - BUFFALO 345KV CKT 1
FDNS	00NR_G15_042	2	17SP	G15_042	TO->FROM	GR ISLD-LNX3345.00 - HOLT.CO3 345.00 345KV CKT 1	720	720	0.04112	132.0996	GEN336153 1-WATERFORD UNIT#3
FDNS	00NR_G15_042	2	17SP	G15_042	TO->FROM	GR ISLD-LNX3345.00 - HOLT.CO3 345.00 345KV CKT 1	720	720	0.04112	131.9829	GEN640011 2-GERALD GENTLEMAN STATION UNIT 2
FDNS	00NR_G15_042	2	17SP	G15_042	TO->FROM	GR ISLD-LNX3345.00 - HOLT.CO3 345.00 345KV CKT 1	720	720	0.0501	131.781	RAUN - SUB 3451 FT CAL 345KV CKT 1
FDNS	00NR_G15_042	2	17SP	G15_042	TO->FROM	GR ISLD-LNX3345.00 - HOLT.CO3 345.00 345KV CKT 1	720	720	0.0501	131.781	RAUN - SUB 3451 FT CAL 345KV CKT 1
FDNS	00NR_G15_042	2	17SP	G15_042	TO->FROM	GR ISLD-LNX3345.00 - HOLT.CO3 345.00 345KV CKT 1	720	720	0.04112	131.6477	GEN635023 3-WALTER SCOTT UNIT 3
FDNS	00NR_G15_042	2	17SP	G15_042	TO->FROM	GR ISLD-LNX3345.00 - HOLT.CO3 345.00 345KV CKT 1	720	720	0.04112	131.6211	GEN335831 1-RIVERBEND UNIT#1
FDNS	00NR_G15_042	2	17SP	G15_042	TO->FROM	GR ISLD-LNX3345.00 - HOLT.CO3 345.00 345KV CKT 1	720	720	0.03933	131.5948	SPLIT ROCK - WHITE 345KV CKT 1
FDNS	00NR_G15_042	2	17SP	G15_042	TO->FROM	GR ISLD-LNX3345.00 - HOLT.CO3 345.00 345KV CKT 1	720	720	0.03933	131.5948	SPLIT ROCK - WHITE 345KV CKT 1
FDNS	00NR_G15_042	2	17SP	G15_042	TO->FROM	GR ISLD-LNX3345.00 - HOLT.CO3 345.00 345KV CKT 1	720	720	0.04112	131.527	GEN337910 1-ARKANSAS NUCLEAR ONE UNIT #1
FDNS	00NR_G15_042	2	17SP	G15_042	TO->FROM	GR ISLD-LNX3345.00 - HOLT.CO3 345.00 345KV CKT 1	720	720	0.04093	131.5218	GROTON-LNX3 345.00 - LELAND1-LNX3345.00 345KV CKT 1

SOLUTION	GROUP	SCENARIO	SEASON	SOURCE	DIRECTION	MONITORED ELEMENT	RATEA (MVA)	RATEB(MVA)	TDF	TC%LOADING (% MVA)	CONTINGENCY
FDNS	00NR_G15_042	2	17SP	G15_042	TO->FROM	GR ISLD-LNX3345.00 - HOLT.CO3 345.00 345KV CKT 1	720	720	0.04093	131.3957	P12:345:UMZB:# 109 #: LOS GRT IN ND. LOS GRT
FDNS	00NR_G15_042	2	17SP	G15_042	TO->FROM	GR ISLD-LNX3345.00 - HOLT.CO3 345.00 345KV CKT 1	720	720	0.04093	131.3803	GROTON - GROTON-LNX3 345.00 345KV CKT Z
FDNS	00NR_G15_042	2	17SP	G15_042	TO->FROM	GR ISLD-LNX3345.00 - HOLT.CO3 345.00 345KV CKT 1	720	720	0.04093	131.3678	LELAND OLDS - LELAND1-LNX3345.00 345KV CKT Z
FDNS	00NR_G15_042	2	17SP	G15_042	TO->FROM	GR ISLD-LNX3345.00 - HOLT.CO3 345.00 345KV CKT 1	720	720	0.04189	131.2041	ARROWHEAD - ARROWHEAD 230 230KV CKT 1
FDNS	00NR_G15_042	2	17SP	G15_042	TO->FROM	GR ISLD-LNX3345.00 - HOLT.CO3 345.00 345KV CKT 1	720	720	0.03971	131.1366	FT RANDAL - SIOUX CITY 230KV CKT 1
FDNS	00NR_G15_042	2	17SP	G15_042	TO->FROM	GR ISLD-LNX3345.00 - HOLT.CO3 345.00 345KV CKT 1	720	720	0.04056	131.0418	HANLON - SIOUX FALLS 230KV CKT 1
FDNS	00NR_G15_042	2	17SP	G15_042	TO->FROM	GR ISLD-LNX3345.00 - HOLT.CO3 345.00 345KV CKT 1	720	720	0.04112	130.8947	GEN337653 1-WHITE BLUFF UNIT #2
FDNS	00NR_G15_042	2	17SP	G15_042	TO->FROM	GR ISLD-LNX3345.00 - HOLT.CO3 345.00 345KV CKT 1	720	720	0.04112	130.8824	GEN337652 1-WHITE BLUFF UNIT #1
FDNS	00NR_G15_042	2	17SP	G15_042	TO->FROM	GR ISLD-LNX3345.00 - HOLT.CO3 345.00 345KV CKT 1	720	720	0.04117	130.8558	P12:115:NPPD:1091:VALENTN7:MISSION7:BTB
FDNS	00NR_G15_042	2	17SP	G15_042	TO->FROM	GR ISLD-LNX3345.00 - HOLT.CO3 345.00 345KV CKT 1	720	720	0.04278	130.8468	HAZLETON - MITCHLCO3 345.00 345KV CKT 1
FDNS	00NR_G15_042	2	17SP	G15_042	TO->FROM	GR ISLD-LNX3345.00 - HOLT.CO3 345.00 345KV CKT 1	720	720	0.04117	130.8104	MISSION - ST FRANCIS 115KV CKT 1
FDNS	00NR_G15_042	2	17SP	G15_042	TO->FROM	GR ISLD-LNX3345.00 - HOLT.CO3 345.00 345KV CKT 1	720	720	0.04112	130.8103	GEN338146 1-INDEPENDENCE UNIT #2
FDNS	00NR_G15_042	2	17SP	G15_042	TO->FROM	GR ISLD-LNX3345.00 - HOLT.CO3 345.00 345KV CKT 1	720	720	0.04112	130.8009	GEN338143 1-INDEPENDENCE UNIT #1
FDNS	00NR_G15_042	2	17SP	G15_042	TO->FROM	GR ISLD-LNX3345.00 - HOLT.CO3 345.00 345KV CKT 1	720	720	0.04178	130.7803	SIDNEY - STEGALL 345KV CKT 1
FDNS	00NR_G15_042	2	17SP	G15_042	TO->FROM	GR ISLD-LNX3345.00 - HOLT.CO3 345.00 345KV CKT 1	720	720	0.03875	130.7522	FT RANDAL - UTICA JCT 230KV CKT 1
FDNS	00NR_G15_042	2	17SP	G15_042	TO->FROM	GR ISLD-LNX3345.00 - HOLT.CO3 345.00 345KV CKT 1	720	720	0.03361	130.7484	GRAND ISLAND - SWEETWATER 345KV CKT 1
FDNS	00NR_G15_042	2	17SP	G15_042	TO->FROM	GR ISLD-LNX3345.00 - HOLT.CO3 345.00 345KV CKT 1	720	720	0.04112	130.7444	GEN501801 1-DOLET HILLS UNIT1
FDNS	00NR_G15_042	2	17SP	G15_042	TO->FROM	GR ISLD-LNX3345.00 - HOLT.CO3 345.00 345KV CKT 1	720	720	0.042	130.7408	AS KING - EAU CLAIRE 345KV CKT 1
FDNS	00NR_G15_042	2	17SP	G15_042	TO->FROM	GR ISLD-LNX3345.00 - HOLT.CO3 345.00 345KV CKT 1	720	720	0.04117	130.7022	ELLENDALE - OAKES 230KV CKT 1
FDNS	00NR_G15_042	2	17SP	G15_042	TO->FROM	GR ISLD-LNX3345.00 - HOLT.CO3 345.00 345KV CKT 1	720	720	0.04117	130.7022	ELLENDALE - OAKES 230KV CKT 1
FDNS	00NR_G15_042	2	17SP	G15_042	TO->FROM	GR ISLD-LNX3345.00 - HOLT.CO3 345.00 345KV CKT 1	720	720	0.03805	130.6953	SIOUXCY-LNX3345.00 - SPLIT ROCK 345KV CKT 1
FDNS	00NR_G15_042	2	17SP	G15_042	TO->FROM	GR ISLD-LNX3345.00 - HOLT.CO3 345.00 345KV CKT 1	720	720	0.03805	130.6953	SIOUXCY-LNX3345.00 - SPLIT ROCK 345KV CKT 1
FDNS	00NR_G15_042	2	17SP	G15_042	TO->FROM	GR ISLD-LNX3345.00 - HOLT.CO3 345.00 345KV CKT 1	720	720	0.04117	130.6462	HARMONY - ST FRANCIS 115KV CKT 1
FDNS	00NR_G15_042	2	17SP	G15_042	TO->FROM	GR ISLD-LNX3345.00 - HOLT.CO3 345.00 345KV CKT 1	720	720	0.03805	130.6421	P12:345:UMZW:# 907 #: SC2-SR IN IA. SC2-SR 345 KV LINE
FDNS	00NR_G15_042	2	17SP	G15_042	TO->FROM	GR ISLD-LNX3345.00 - HOLT.CO3 345.00 345KV CKT 1	720	720	0.03805	130.602	SIOUX CITY - SIOUXCY-LNX3345.00 345KV CKT Z
FDNS	00NR_G15_042	2	17SP	G15_042	TO->FROM	GR ISLD-LNX3345.00 - HOLT.CO3 345.00 345KV CKT 1	720	720	0.04117	130.5998	FORMAN - OAKES 230KV CKT 1
FDNS	00NR_G15_042	2	17SP	G15_042	TO->FROM	GR ISLD-LNX3345.00 - HOLT.CO3 345.00 345KV CKT 1	720	720	0.04137	130.5948	ALEXMRES3 345.00 - BISON 3 345.00 345KV CKT 1
FDNS	00NR_G15_042	2	17SP	G15_042	TO->FROM	GR ISLD-LNX3345.00 - HOLT.CO3 345.00 345KV CKT 1	720	720	0.04137	130.5896	CARPENTER - HURON 230KV CKT 1
FDNS	00NR_G15_042	2	17SP	G15_042	TO->FROM	GR ISLD-LNX3345.00 - HOLT.CO3 345.00 345KV CKT 1	720	720	0.03966	130.5788	FT THOMPSON - WESSINGTON 230KV CKT 1
FDNS	00NR_G15_042	2	17SP	G15_042	TO->FROM	GR ISLD-LNX3345.00 - HOLT.CO3 345.00 345KV CKT 1	720	720	0.03966	130.5788	FT THOMPSON - WESSINGTON 230KV CKT 1
FDNS	00NR_G15_042	2	17SP	G15_042	TO->FROM	GR ISLD-LNX3345.00 - HOLT.CO3 345.00 345KV CKT 1	720	720	0.04242	130.551	ARPIN B4 345.00 - EAU CLAIRE 345KV CKT 1
FDNS	00NR_G15_042	2	17SP	G15_042	TO->FROM	GR ISLD-LNX3345.00 - HOLT.CO3 345.00 345KV CKT 1	720	720	0.04137	130.4781	HURON - WATERTOWN 230KV CKT 2
FDNS	00NR_G15_042	2	17SP	G15_042	TO->FROM	GR ISLD-LNX3345.00 - HOLT.CO3 345.00 345KV CKT 1	720	720	0.04137	130.4781	HURON - WATERTOWN 230KV CKT 2
FDNS	00NR_G15_042	2	17SP	G15_042	TO->FROM	GR ISLD-LNX3345.00 - HOLT.CO3 345.00 345KV CKT 1	720	720	0.04117	130.451	HARMONY - VALENTINE 115KV CKT 1
FDNS	00NR_G15_042	2	17SP	G15_042	TO->FROM	GR ISLD-LNX3345.00 - HOLT.CO3 345.00 345KV CKT 1	720	720	0.04117	130.4398	P12:115:NPPD:WAPA6:FTRANDL7:ONEILL 7:BTB
FDNS	00NR_G15_042	2	17SP	G15_042	TO->FROM	GR ISLD-LNX3345.00 - HOLT.CO3 345.00 345KV CKT 1	720	720	0.04117	130.4398	P12:115:UMZB:# 115 #: SE IN NE. FR-SE-ON
FDNS	00NR_G15_042	2	17SP	G15_042	TO->FROM	GR ISLD-LNX3345.00 - HOLT.CO3 345.00 345KV CKT 1	720	720	0.04137	130.4225	CARPENTER - WATERTOWN 230KV CKT 1
FDNS	00NR_G15_042	2	17SP	G15_042	TO->FROM	GR ISLD-LNX3345.00 - HOLT.CO3 345.00 345KV CKT 1	720	720	0.04137	130.4225	CARPENTER - WATERTOWN 230KV CKT 1
FDNS	00NR_G15_042	2	17SP	G15_042	TO->FROM	GR ISLD-LNX3345.00 - HOLT.CO3 345.00 345KV CKT 1	720	720	0.04117	130.3942	FT RANDAL - SPENCER 115KV CKT 1
FDNS	00NR_G15_042	2	17SP	G15_042	TO->FROM	GR ISLD-LNX3345.00 - HOLT.CO3 345.00 345KV CKT 1	720	720	0.04112	130.39	GEN336252 1-NINEMILE POINT UNIT#5
FDNS	00NR_G15_042	2	17SP	G15_042	TO->FROM	GR ISLD-LNX3345.00 - HOLT.CO3 345.00 345KV CKT 1	720	720	0.04112	130.3469	GEN501813 1-RODEMACHER UNIT 3
FDNS	00NR_G15_042	2	17SP	G15_042	TO->FROM	GR ISLD-LNX3345.00 - HOLT.CO3 345.00 345KV CKT 1	720	720	0.04117	130.3051	ONEILL - SPENCER 115KV CKT 1
FDNS	00NR_G15_042	2	17SP	G15_042	TO->FROM	GR ISLD-LNX3345.00 - HOLT.CO3 345.00 345KV CKT 1	720	720	0.03951	130.3045	PAHOJA - SIOUX FALLS 230KV CKT 1
FDNS	00NR_G15_042	2	17SP	G15_042	TO->FROM	GR ISLD-LNX3345.00 - HOLT.CO3 345.00 345KV CKT 1	720	720	0.04112	130.2474	GEN336831 1-BAXTER WILSON SES
FDNS	00NR_G15_042	2	17SP	G15_042	TO->FROM	GR ISLD-LNX3345.00 - HOLT.CO3 345.00 345KV CKT 1	720	720	0.04112	130.2339	GEN336251 1-NINEMILE POINT UNIT#4
FDNS	00NR_G15_042	2	17SP	G15_042	TO->FROM	GR ISLD-LNX3345.00 - HOLT.CO3 345.00 345KV CKT 1	720	720	0.04179	130.2171	GERALD GENTLEMAN STATION - KEYSTONE 345KV CKT 1
FDNS	00NR_G15_042	2	17SP	G15_042	TO->FROM	GR ISLD-LNX3345.00 - HOLT.CO3 345.00 345KV CKT 1	720	720	0.05682	130.2062	DIXONCO 230.00 - HOSKINS 230KV CKT 1
FDNS	00NR_G15_042	2	17SP	G15_042	TO->FROM	GR ISLD-LNX3345.00 - HOLT.CO3 345.00 345KV CKT 1	720	720	0.04112	130.1949	GEN641089 2-ENERGY CENTER 2
FDNS	00NR_G15_042	2	17SP	G15_042	TO->FROM	GR ISLD-LNX3345.00 - HOLT.CO3 345.00 345KV CKT 1	720	720	0.0412	130.1896	CNTSHNT3 345.00 - PRAIRIE3 345.00 345KV CKT 1
FDNS	00NR_G15_042	2	17SP	G15_042	TO->FROM	GR ISLD-LNX3345.00 - HOLT.CO3 345.00 345KV CKT 1	720	720	0.04112	130.1567	GEN337041 1-GERALD ANDRUS
FDNS	00NR_G15_042	2	17SP	G15_042	TO->FROM	GR ISLD-LNX3345.00 - HOLT.CO3 345.00 345KV CKT 1	720	720	0.04112	130.1409	GEN335206 1-NELSON UNIT 6
FDNS	00NR_G15_042	2	17SP	G15_042	TO->FROM	GR ISLD-LNX3345.00 - HOLT.CO3 345.00 345KV CKT 1	720	720	0.04112	130.1111	GEN344897 4-1LAB G4 20.000
FDNS	00NR_G15_042	2	17SP	G15_042	TO->FROM	GR ISLD-LNX3345.00 - HOLT.CO3 345.00 345KV CKT 1	720	720	0.04112	130.1077	GEN344894 1-1LAB G1 20.000
FDNS	00NR_G15_042	2	17SP	G15_042	TO->FROM	GR ISLD-LNX3345.00 - HOLT.CO3 345.00 345KV CKT 1	720	720	0.04112	130.1076	GEN344896 3-1LAB G3 20.000
FDNSLock	00NR_G15_042	2	17SP	G15_042	TO->FROM	GR ISLD-LNX3345.00 - HOLT.CO3 345.00 345KV CKT 1	720	720	0.04117	130.0765	AINSWORTH - VALENTINE 115KV CKT 1
FDNS	00NR_G15_042	2	17SP	G15_042	TO->FROM	GR ISLD-LNX3345.00 - HOLT.CO3 345.00 345KV CKT 1	720	720	0.04121	130.0751	FORMAN - HANKINSON 230KV CKT 1
FDNS	00NR_G15_042	2	17SP	G15_042	TO->FROM	GR ISLD-LNX3345.00 - HOLT.CO3 345.00 345KV CKT 1	720	720	0.04112	130.0512	GEN344895 2-1LAB G2 20.000
FDNS	00NR_G15_042	2	17SP	G15_042	TO->FROM	GR ISLD-LNX3345.00 - HOLT.CO3 345.00 345KV CKT 1	720	720	0.04112	130.0357	GEN345670 1-1RUSH G1 18.000
FDNS	00NR_G15_042	2	17SP	G15_042	TO->FROM	GR ISLD-LNX3345.00 - HOLT.CO3 345.00 345KV CKT 1	720	720	0.04112	130.0356	GEN345671 2-1RUSH G2 18.000
FDNS	00NR_G15_042	2	17SP	G15_042	TO->FROM	GR ISLD-LNX3345.00 - HOLT.CO3 345.00 345KV CKT 1	720	720	0.03541	130.0333	RASMUSN - UTICA JCT 230KV CKT 1
FDNS	00NR_G15_042	2	17SP	G15_042	TO->FROM	GR ISLD-LNX3345.00 - HOLT.CO3 345.00 345KV CKT 1	720	720	0.04278	130.0119	ADAMS - MITCHLCO3 345.00 345KV CKT 1
FDNS	00NR_G15_042	2	17SP	G15_042	TO->FROM	GR ISLD-LNX3345.00 - HOLT.CO3 345.00 345KV CKT 1	720	720	0.04112	129.9837	GEN501812 1-RODEMACHER UNIT 2
FDNS	00NR_G15_042	2	17SP	G15_042	TO->FROM	GR ISLD-LNX3345.00 - HOLT.CO3 345.00 345KV CKT 1	720	720	0.04112	129.9617	GEN334440 1-SABINE UNIT 4
FDNS	00NR_G15_042	2	17SP	G15_042	TO->FROM	GR ISLD-LNX3345.00 - HOLT.CO3 345.00 345KV CKT 1	720	720	0.03951	129.9556	EAGLE 4 230.00 - PAHOJA 230KV CKT 1
FDNS	00NR_G15_042	2	17SP	G15_042	TO->FROM	GR ISLD-LNX3345.00 - HOLT.CO3 345.00 345KV CKT 1	720	720	0.04223	129.8732	ADAMS - PLEASANT VALLEY 345KV CKT 1
FDNS	00NR_G15_042	2	17SP	G15_042	TO->FROM	GR ISLD-LNX3345.00 - HOLT.CO3 345.00 345KV CKT 1	720	720	0.04391	129.8129	GRIMES - LEHIGH 345KV CKT 1
FDNS	00NR_G15_042	2	17SP	G15_042	TO->FROM	GR ISLD-LNX3345.00 - HOLT.CO3 345.00 345KV CKT 1	720	720	0.04112	129.8077	GEN336191 1-LITTLE GYPSY UNIT#3
FDNS	00NR_G15_042	2	17SP	G15_042	TO->FROM	GR ISLD-LNX3345.00 - HOLT.CO3 345.00 345KV CKT 1	720	720	0.04112	129.7391	GEN338388 1-1PLUM PT U1 23.000
FDNS	00NR_G15_042	2	17SP	G15_042	TO->FROM	GR ISLD-LNX3345.00 - HOLT.CO3 345.00 345KV CKT 1	720	720	0.04112	129.7094	GEN336801 1-BAXTER WILSON UNIT #1
FDNS	00NR_G15_042	2	17SP	G15_042	TO->FROM	GR ISLD-LNX3345.00 - HOLT.CO3 345.00 345KV CKT 1	720	720	0.04112	129.699	GEN335614 1-WILLOW GLENN UNIT#4
FDNS	00NR_G15_042	2	17SP	G15_042	TO->FROM	GR ISLD-LNX3345.00 - HOLT.CO3 345.00 345KV CKT 1	720	720	0.04112	129.6914	GEN334441 1-SABINE UNIT 5
FDNS	00NR_G15_042	2	17SP	G15_042	TO->FROM	GR ISLD-LNX3345.00 - HOLT.CO3 345.00 345KV CKT 1	720	720	0.04112	129.6854	GEN336464 1-MICHOUD UNIT #3
FDNS	00NR_G15_042	2	17SP	G15_042	TO->FROM	GR ISLD-LNX3345.00 - HOLT.CO3 345.00 345KV CKT 1	720	720	0.04112	129.6726	GEN335204 1-NELSON UNIT 4

SOLUTION	GROUP	SCENARIO	SEASON	SOURCE	DIRECTION	MONITORED ELEMENT	RATEA (MVA)	RATEB(MVA)	TDF	TC%LOADING (% MVA)	CONTINGENCY
FDNS	00NR_G15_042	2	17SP	G15_042	TO->FROM	GR ISLD-LNX3345.00 - HOLT.CO3 345.00 345KV CKT 1	720	720	0.04229	129.653	LAKEFIELD 3 - NOBLES 345KV CKT 1
FDNS	00NR_G15_042	2	17SP	G15_042	TO->FROM	GR ISLD-LNX3345.00 - HOLT.CO3 345.00 345KV CKT 1	720	720	0.04202	129.5906	KOSSUTH 3 345.00 - OBRIEN 3 345.00 345KV CKT 1
FDNS	00NR_G15_042	2	17SP	G15_042	TO->FROM	GR ISLD-LNX3345.00 - HOLT.CO3 345.00 345KV CKT 1	720	720	0.04178	129.5885	BROOKING COUNTY - LYON COUNTY 345KV CKT 1
FDNS	00NR_G15_042	2	17SP	G15_042	TO->FROM	GR ISLD-LNX3345.00 - HOLT.CO3 345.00 345KV CKT 1	720	720	0.04202	129.5882	KOSSUTH 3 345.00 - WEBSTER 345KV CKT 1
FDNS	00NR_G15_042	2	17SP	G15_042	TO->FROM	GR ISLD-LNX3345.00 - HOLT.CO3 345.00 345KV CKT 1	720	720	0.04112	129.5878	P13:230-345:NPPD:NUCOR-1
FDNS	00NR_G15_042	2	17SP	G15_042	TO->FROM	GR ISLD-LNX3345.00 - HOLT.CO3 345.00 345KV CKT 1	720	720	0.04125	129.5841	LARAMIE RIVER - SIDNEY2-LNX3345.00 345KV CKT 1
FDNS	00NR_G15_042	2	17SP	G15_042	TO->FROM	GR ISLD-LNX3345.00 - HOLT.CO3 345.00 345KV CKT 1	720	720	0.04244	129.5691	STEGALL - STEGALL TRANSFORMER 230KV CKT 1
FDNS	00NR_G15_042	2	17SP	G15_042	TO->FROM	GR ISLD-LNX3345.00 - HOLT.CO3 345.00 345KV CKT 1	720	720	0.04137	129.5593	FT THOMPSON - HURON 230KV CKT 1
FDNS	00NR_G15_042	2	17SP	G15_042	TO->FROM	GR ISLD-LNX3345.00 - HOLT.CO3 345.00 345KV CKT 1	720	720	0.04137	129.5593	FT THOMPSON - HURON 230KV CKT 1
FDNS	00NR_G15_042	2	17SP	G15_042	TO->FROM	GR ISLD-LNX3345.00 - HOLT.CO3 345.00 345KV CKT 1	720	720	0.04137	129.5593	FT THOMPSON - HURON 230KV CKT 2
FDNS	00NR_G15_042	2	17SP	G15_042	TO->FROM	GR ISLD-LNX3345.00 - HOLT.CO3 345.00 345KV CKT 1	720	720	0.04137	129.5593	FT THOMPSON - HURON 230KV CKT 2
FDNS	00NR_G15_042	2	17SP	G15_042	TO->FROM	GR ISLD-LNX3345.00 - HOLT.CO3 345.00 345KV CKT 1	720	720	0.04244	129.5496	P13:230-345:NPPD:STEGALL3:KV3A
FDNS	00NR_G15_042	2	17SP	G15_042	TO->FROM	GR ISLD-LNX3345.00 - HOLT.CO3 345.00 345KV CKT 1	720	720	0.04244	129.5466	STEGALL (SGQ KV3A) 345/230/13.8KV TRANSFORMER CKT 1
FDNS	00NR_G15_042	2	17SP	G15_042	TO->FROM	GR ISLD-LNX3345.00 - HOLT.CO3 345.00 345KV CKT 1	720	720	0.04125	129.5385	SIDNEY - SIDNEY2-LNX3345.00 345KV CKT Z
FDNS	00NR_G15_042	2	17SP	G15_042	TO->FROM	GR ISLD-LNX3345.00 - HOLT.CO3 345.00 345KV CKT 1	720	720	0.04125	129.5251	BLAIR - GRANITE FALLS 230KV CKT 1
FDNS	00NR_G15_042	2	17SP	G15_042	TO->FROM	GR ISLD-LNX3345.00 - HOLT.CO3 345.00 345KV CKT 1	720	720	0.04125	129.5251	BLAIR - GRANITE FALLS 230KV CKT 1
FDNS	00NR_G15_042	2	17SP	G15_042	TO->FROM	GR ISLD-LNX3345.00 - HOLT.CO3 345.00 345KV CKT 1	720	720	0.04112	129.5172	GEN334433 1-SABINE UNIT 3
FDNS	00NR_G15_042	2	17SP	G15_042	TO->FROM	GR ISLD-LNX3345.00 - HOLT.CO3 345.00 345KV CKT 1	720	720	0.04328	129.5052	STEGALL-LNX3230.00 - WAYSIDE 230KV CKT 1
FDNS	00NR_G15_042	2	17SP	G15_042	TO->FROM	GR ISLD-LNX3345.00 - HOLT.CO3 345.00 345KV CKT 1	720	720	0.04328	129.494	STEGALL - STEGALL-LNX3230.00 230KV CKT Z
FDNS	00NR_G15_042	2	17SP	G15_042	TO->FROM	GR ISLD-LNX3345.00 - HOLT.CO3 345.00 345KV CKT 1	720	720	0.04083	129.4877	CROOKED CREEK - NORTH PLATTE 230KV CKT 1
FDNS	00NR_G15_042	2	17SP	G15_042	TO->FROM	GR ISLD-LNX3345.00 - HOLT.CO3 345.00 345KV CKT 1	720	720	0.04677	129.4622	COLUMEAST - SHELL CREEK 345KV CKT 1
FDNS	00NR_G15_042	2	17SP	G15_042	TO->FROM	GR ISLD-LNX3345.00 - HOLT.CO3 345.00 345KV CKT 1	720	720	0.04112	129.4548	GEN531447 1-HOLCOMB GENERATOR
FDNS	00NR_G15_042	2	17SP	G15_042	TO->FROM	GR ISLD-LNX3345.00 - HOLT.CO3 345.00 345KV CKT 1	720	720	0.04112	129.4521	GEN336222 1-LITTLE GYPSY UNIT#2
FDNS	00NR_G15_042	2	17SP	G15_042	TO->FROM	GR ISLD-LNX3345.00 - HOLT.CO3 345.00 345KV CKT 1	720	720	0.04056	129.446	MENNO JCT - TRIPP JCT 115KV CKT 1
FDNS	00NR_G15_042	2	17SP	G15_042	TO->FROM	GR ISLD-LNX3345.00 - HOLT.CO3 345.00 345KV CKT 1	720	720	0.04112	129.4375	GEN303007 1-1BC2 U2
FDNS	00NR_G15_042	2	17SP	G15_042	TO->FROM	GR ISLD-LNX3345.00 - HOLT.CO3 345.00 345KV CKT 1	720	720	0.04112	129.4333	GEN303006 1-1BC2 U1
FDNS	00NR_G15_042	2	17SP	G15_042	TO->FROM	GR ISLD-LNX3345.00 - HOLT.CO3 345.00 345KV CKT 1	720	720	0.04112	129.3789	GEN336152 1-WATERFORD UNIT#2
FDNS	00NR_G15_042	2	17SP	G15_042	TO->FROM	GR ISLD-LNX3345.00 - HOLT.CO3 345.00 345KV CKT 1	720	720	0.04112	129.3784	GEN336151 1-WATERFORD UNIT#1
FDNS	00NR_G15_042	2	17SP	G15_042	TO->FROM	GR ISLD-LNX3345.00 - HOLT.CO3 345.00 345KV CKT 1	720	720	0.04222	129.3415	ARKANSAS NUCLEAR ONE - FT SMITH 500KV CKT 1
FDNS	00NR_G15_042	2	17SP	G15_042	TO->FROM	GR ISLD-LNX3345.00 - HOLT.CO3 345.00 345KV CKT 1	720	720	0.04222	129.3415	ARKANSAS NUCLEAR ONE - FT SMITH 500KV CKT 1
FDNS	00NR_G15_042	2	17SP	G15_042	TO->FROM	GR ISLD-LNX3345.00 - HOLT.CO3 345.00 345KV CKT 1	720	720	0.04056	129.3165	MENNO JCT - UTICA 115KV CKT 1
FDNS	00NR_G15_042	2	17SP	G15_042	TO->FROM	GR ISLD-LNX3345.00 - HOLT.CO3 345.00 345KV CKT 1	720	720	0.04056	129.2729	P12:115:UMZZ:# 237 #: MEN IN SD. MENNO JUNCTION IS A TAP (UJ-MEN-TP).
FDNS	00NR_G15_042	2	17SP	G15_042	TO->FROM	GR ISLD-LNX3345.00 - HOLT.CO3 345.00 345KV CKT 1	720	720	0.04112	129.1913	GEN501811 1-RODEMACHER UNIT 1
FDNS	00NR_G15_042	2	17SP	G15_042	TO->FROM	GR ISLD-LNX3345.00 - HOLT.CO3 345.00 345KV CKT 1	720	720	0.04112	129.1809	P13:230:UMZW:# 2218 #: FP IN MT. LOSS OF TRANSFORMER (AT2).
FDNS	00NR_G15_042	2	17SP	G15_042	TO->FROM	GR ISLD-LNX3345.00 - HOLT.CO3 345.00 345KV CKT 1	720	720	0.04133	129.157	APPLEDORN 4 230.00 - WATERTOWN 230KV CKT 1
FDNS	00NR_G15_042	2	17SP	G15_042	TO->FROM	GR ISLD-LNX3345.00 - HOLT.CO3 345.00 345KV CKT 1	720	720	0.04133	129.157	APPLEDORN 4 230.00 - WATERTOWN 230KV CKT 1
FDNS	00NR_G15_042	2	17SP	G15_042	TO->FROM	GR ISLD-LNX3345.00 - HOLT.CO3 345.00 345KV CKT 1	720	720	0.04053	129.1561	P12:115:NPPD:1164:ONEILL 7:JEFFREY9:BTB
FDNS	00NR_G15_042	2	17SP	G15_042	TO->FROM	GR ISLD-LNX3345.00 - HOLT.CO3 345.00 345KV CKT 1	720	720	0.04112	129.0896	GEN337766 1-TRACTEBEL UNIT S1
FDNS	00NR_G15_042	2	17SP	G15_042	TO->FROM	GR ISLD-LNX3345.00 - HOLT.CO3 345.00 345KV CKT 1	720	720	0.04069	129.0114	CROOKED CREEK - RIVERDALE 230KV CKT 1
FDNS	00NR_G15_042	2	17SP	G15_042	TO->FROM	GR ISLD-LNX3345.00 - HOLT.CO3 345.00 345KV CKT 1	720	720	0.03863	128.9456	FT THOMPSON (FT2 KU1B) 345/230/13.8KV TRANSFORMER CKT 1
FDNS	00NR_G15_042	2	17SP	G15_042	TO->FROM	GR ISLD-LNX3345.00 - HOLT.CO3 345.00 345KV CKT 1	720	720	0.03864	128.9445	FT THOMPSON (FT2 KU1A) 345/230/13.8KV TRANSFORMER CKT 1
FDNS	00NR_G15_042	2	17SP	G15_042	TO->FROM	GR ISLD-LNX3345.00 - HOLT.CO3 345.00 345KV CKT 1	720	720	0.04112	128.9145	GEN659118 1-LARAMIE RIVER UNIT1
FDNS	00NR_G15_042	2	17SP	G15_042	TO->FROM	GR ISLD-LNX3345.00 - HOLT.CO3 345.00 345KV CKT 1	720	720	0.04898	128.6512	COLUMWEST - KELLY 230KV CKT 1
FDNS	00NR_G15_042	2	17SP	G15_042	TO->FROM	GR ISLD-LNX3345.00 - HOLT.CO3 345.00 345KV CKT 1	720	720	0.04203	128.4058	KELLY - SHELL CREEK 230KV CKT 1
FDNS	00NR_G15_042	2	17SP	G15_042	TO->FROM	GR ISLD-LNX3345.00 - HOLT.CO3 345.00 345KV CKT 1	720	720	0.04203	128.3849	SHELL CREEK (SHELLCREEKT1) 345/230/13.8KV TRANSFORMER CKT 1
FDNS	00NR_G15_042	2	17SP	G15_042	TO->FROM	GR ISLD-LNX3345.00 - HOLT.CO3 345.00 345KV CKT 1	720	720	0.04203	128.3849	SHELL CREEK (SHELLCREEKT1) 345/230/13.8KV TRANSFORMER CKT 1
FDNS	00NR_G15_042	2	17SP	G15_042	TO->FROM	GR ISLD-LNX3345.00 - HOLT.CO3 345.00 345KV CKT 1	720	720	0.04124	128.3016	ANTELOP-LNX3345.00 - BRDLAND-LNX3345.00 345KV CKT 1
FDNS	00NR_G15_042	2	17SP	G15_042	TO->FROM	GR ISLD-LNX3345.00 - HOLT.CO3 345.00 345KV CKT 1	720	720	0.04112	128.2409	BASE CASE
FDNS	00NR_G15_042	2	17SP	G15_042	TO->FROM	GR ISLD-LNX3345.00 - HOLT.CO3 345.00 345KV CKT 1	720	720	0.0402	128.151	GRAND ISLAND - RIVERDALE 230KV CKT 1
FDNS	00NR_G15_042	2	17SP	G15_042	TO->FROM	GR ISLD-LNX3345.00 - HOLT.CO3 345.00 345KV CKT 1	720	720	0.04241	128.0983	AXTELL - PAULINE 345KV CKT 1
FDNS	00NR_G15_042	2	17SP	G15_042	TO->FROM	GR ISLD-LNX3345.00 - HOLT.CO3 345.00 345KV CKT 1	720	720	0.0386	128.0874	COOPER - MOORE 345KV CKT 1
FDNS	00NR_G15_042	2	17SP	G15_042	TO->FROM	GR ISLD-LNX3345.00 - HOLT.CO3 345.00 345KV CKT 1	720	720	0.04112	128.075	GEN645001 1-FORT CALHOUN 1
FDNS	00NR_G15_042	2	17SP	G15_042	TO->FROM	GR ISLD-LNX3345.00 - HOLT.CO3 345.00 345KV CKT 1	720	720	0.04163	128.049	103RD & ROKEBY - MOORE 345KV CKT 1
FDNS	00NR_G15_042	2	17SP	G15_042	TO->FROM	GR ISLD-LNX3345.00 - HOLT.CO3 345.00 345KV CKT 1	720	720	0.04163	128.049	103RD & ROKEBY - MOORE 345KV CKT 1
FDNS	00NR_G15_042	2	17SP	G15_042	TO->FROM	GR ISLD-LNX3345.00 - HOLT.CO3 345.00 345KV CKT 1	720	720	0.04123	127.9973	FT THOMPSON - OAHE 230KV CKT 1
FDNS	00NR_G15_042	2	17SP	G15_042	TO->FROM	GR ISLD-LNX3345.00 - HOLT.CO3 345.00 345KV CKT 1	720	720	0.04123	127.9973	FT THOMPSON - OAHE 230KV CKT 1
FDNS	00NR_G15_042	2	17SP	G15_042	TO->FROM	GR ISLD-LNX3345.00 - HOLT.CO3 345.00 345KV CKT 1	720	720	0.04123	127.9973	FT THOMPSON - OAHE 230KV CKT 2
FDNS	00NR_G15_042	2	17SP	G15_042	TO->FROM	GR ISLD-LNX3345.00 - HOLT.CO3 345.00 345KV CKT 1	720	720	0.04123	127.9973	FT THOMPSON - OAHE 230KV CKT 2
FDNS	00NR_G15_042	2	17SP	G15_042	TO->FROM	GR ISLD-LNX3345.00 - HOLT.CO3 345.00 345KV CKT 1	720	720	0.04112	127.9865	GEN635214 4-NEAL UNIT 4
FDNS	00NR_G15_042	2	17SP	G15_042	TO->FROM	GR ISLD-LNX3345.00 - HOLT.CO3 345.00 345KV CKT 1	720	720	0.04117	127.9396	GRAND ISLAND (GRAND.ISD T5) 230/115/13.8KV TRANSFORMER CKT 2
FDNS	00NR_G15_042	2	17SP	G15_042	TO->FROM	GR ISLD-LNX3345.00 - HOLT.CO3 345.00 345KV CKT 1	720	720	0.04117	127.9396	GRAND ISLAND (GRAND.ISD T5) 230/115/13.8KV TRANSFORMER CKT 2
FDNS	00NR_G15_042	2	17SP	G15_042	TO->FROM	GR ISLD-LNX3345.00 - HOLT.CO3 345.00 345KV CKT 1	720	720	0.04124	127.9385	FT THOMPSON - OAHE 230KV CKT 3
FDNS	00NR_G15_042	2	17SP	G15_042	TO->FROM	GR ISLD-LNX3345.00 - HOLT.CO3 345.00 345KV CKT 1	720	720	0.04124	127.9385	FT THOMPSON - OAHE 230KV CKT 3
FDNS	00NR_G15_042	2	17SP	G15_042	TO->FROM	GR ISLD-LNX3345.00 - HOLT.CO3 345.00 345KV CKT 1	720	720	0.04124	127.9385	FT THOMPSON - OAHE 230KV CKT 4
FDNS	00NR_G15_042	2	17SP	G15_042	TO->FROM	GR ISLD-LNX3345.00 - HOLT.CO3 345.00 345KV CKT 1	720	720	0.04124	127.9385	FT THOMPSON - OAHE 230KV CKT 4
FDNS	00NR_G15_042	2	17SP	G15_042	TO->FROM	GR ISLD-LNX3345.00 - HOLT.CO3 345.00 345KV CKT 1	720	720	0.04117	127.937	GRAND ISLAND (GRAND.ISD T2) 230/115/13.8KV TRANSFORMER CKT 1
FDNS	00NR_G15_042	2	17SP	G15_042	TO->FROM	GR ISLD-LNX3345.00 - HOLT.CO3 345.00 345KV CKT 1	720	720	0.04117	127.937	GRAND ISLAND (GRAND.ISD T2) 230/115/13.8KV TRANSFORMER CKT 1
FDNS	00NR_G15_042	2	17SP	G15_042	TO->FROM	GR ISLD-LNX3345.00 - HOLT.CO3 345.00 345KV CKT 1	720	720	0.04164	127.8803	MAXWELL - NORTH PLATTE 115KV CKT 1
FDNS	00NR_G15_042	2	17SP	G15_042	TO->FROM	GR ISLD-LNX3345.00 - HOLT.CO3 345.00 345KV CKT 1	720	720	0.04112	127.8226	MCCOOL (MCCOOL T2) 345/115/13.8KV TRANSFORMER CKT 1
FDNS	00NR_G15_042	2	17SP	G15_042	TO->FROM	GR ISLD-LNX3345.00 - HOLT.CO3 345.00 345KV CKT 1	720	720	0.04112	127.8226	MCCOOL (MCCOOL T2) 345/115/13.8KV TRANSFORMER CKT 1
FDNS	00NR_G15_042	2	17SP	G15_042	TO->FROM	GR ISLD-LNX3345.00 - HOLT.CO3 345.00 345KV CKT 1	720	720	0.04134	127.7668	GRAND ISLAND (GI KU1B) 345/230/13.8KV TRANSFORMER CKT 2
FDNS	00NR_G15_042	2	17SP	G15_042	TO->FROM	GR ISLD-LNX3345.00 - HOLT.CO3 345.00 345KV CKT 1	720	720	0.04134	127.7668	GRAND ISLAND (GI KU1B) 345/230/13.8KV TRANSFORMER CKT 2
FDNS	00NR_G15_042	2	17SP	G15_042	TO->FROM	GR ISLD-LNX3345.00 - HOLT.CO3 345.00 345KV CKT 1	720	720	0.04134	127.7657	GRAND ISLAND (GI KU1A) 345/230/13.8KV TRANSFORMER CKT 1

SOLUTION	GROUP	SCENARIO	SEASON	SOURCE	DIRECTION	MONITORED ELEMENT	RATEA (MVA)	RATEB(MVA)	TDF	TC%LOADING (% MVA)	CONTINGENCY
FDNS	00NR_G15_042	2	17SP	G15_042	TO->FROM	GR ISLD-LNX3345.00 - HOLT.CO3 345.00 345KV CKT 1	720	720	0.04134	127.7657	GRAND ISLAND (GI KU1A) 345/230/13.8KV TRANSFORMER CKT 1
FDNS	00NR_G15_042	2	17SP	G15_042	TO->FROM	GR ISLD-LNX3345.00 - HOLT.CO3 345.00 345KV CKT 1	720	720	0.04001	127.7378	FINNEY SWITCHING STATION - WALKTAP7 345.00 345KV CKT 1
FDNS	00NR_G15_042	2	17SP	G15_042	TO->FROM	GR ISLD-LNX3345.00 - HOLT.CO3 345.00 345KV CKT 1	720	720	0.04001	127.7378	FINNEY SWITCHING STATION - WALKTAP7 345.00 345KV CKT 1
FDNS	00NR_G15_042	2	17SP	G15_042	TO->FROM	GR ISLD-LNX3345.00 - HOLT.CO3 345.00 345KV CKT 1	720	720	0.03942	127.7149	Hitchland Interchange - WALKTAP7 345.00 345KV CKT 1
FDNS	00NR_G15_042	2	17SP	G15_042	TO->FROM	GR ISLD-LNX3345.00 - HOLT.CO3 345.00 345KV CKT 1	720	720	0.03942	127.7149	Hitchland Interchange - WALKTAP7 345.00 345KV CKT 1
FDNS	00NR_G15_042	2	17SP	G15_042	TO->FROM	GR ISLD-LNX3345.00 - HOLT.CO3 345.00 345KV CKT 1	720	720	0.03942	127.7089	P12:345:SPS:J07.1.FINN.HITCH
FDNS	00NR_G15_042	2	17SP	G15_042	TO->FROM	GR ISLD-LNX3345.00 - HOLT.CO3 345.00 345KV CKT 1	720	720	0.04328	127.6826	MOORE - PAULINE 345KV CKT 1
FDNS	00NR_G15_042	2	17SP	G15_042	TO->FROM	GR ISLD-LNX3345.00 - HOLT.CO3 345.00 345KV CKT 1	720	720	0.03836	127.6548	MINGO - SETAB 345KV CKT 1
FDNS	00NR_G15_042	2	17SP	G15_042	TO->FROM	GR ISLD-LNX3345.00 - HOLT.CO3 345.00 345KV CKT 1	720	720	0.03836	127.6548	MINGO - SETAB 345KV CKT 1
FDNS	00NR_G15_042	2	17SP	G15_042	TO->FROM	GR ISLD-LNX3345.00 - HOLT.CO3 345.00 345KV CKT 1	720	720	0.04124	127.6522	P12:345:UMZB:# 103 #: BD IN SD. LOSS OF LINE
FDNS	00NR_G15_042	2	17SP	G15_042	TO->FROM	GR ISLD-LNX3345.00 - HOLT.CO3 345.00 345KV CKT 1	720	720	0.04124	127.6474	P12:345:UMZB:# 102 #: AVS BD IN ND. AVS BRD LR
FDNS	00NR_G15_042	2	17SP	G15_042	TO->FROM	GR ISLD-LNX3345.00 - HOLT.CO3 345.00 345KV CKT 1	720	720	0.04124	127.6338	BRDLAND-LNX3345.00 - HURON 345KV CKT Z
FDNS	00NR_G15_042	2	17SP	G15_042	TO->FROM	GR ISLD-LNX3345.00 - HOLT.CO3 345.00 345KV CKT 1	720	720	0.04124	127.6326	HURON (BD KU2A) 345/230/13.8KV TRANSFORMER CKT 1
FDNS	00NR_G15_042	2	17SP	G15_042	TO->FROM	GR ISLD-LNX3345.00 - HOLT.CO3 345.00 345KV CKT 1	720	720	0.04124	127.6326	HURON (BD KU2A) 345/230/13.8KV TRANSFORMER CKT 1
FDNS	00NR_G15_042	2	17SP	G15_042	TO->FROM	GR ISLD-LNX3345.00 - HOLT.CO3 345.00 345KV CKT 1	720	720	0.04124	127.6313	BROADLAND - HURON 230KV CKT 1
FDNS	00NR_G15_042	2	17SP	G15_042	TO->FROM	GR ISLD-LNX3345.00 - HOLT.CO3 345.00 345KV CKT 1	720	720	0.04011	127.6069	G11_051T 345.00 - TATONGA7 345.00 345KV CKT 1
FDNS	00NR_G15_042	2	17SP	G15_042	TO->FROM	GR ISLD-LNX3345.00 - HOLT.CO3 345.00 345KV CKT 1	720	720	0.04144	127.5722	GRAND ISLAND (GI KU3A) 345/230/13.8KV TRANSFORMER CKT 3
FDNS	00NR_G15_042	2	17SP	G15_042	TO->FROM	GR ISLD-LNX3345.00 - HOLT.CO3 345.00 345KV CKT 1	720	720	0.04144	127.5722	GRAND ISLAND (GI KU3A) 345/230/13.8KV TRANSFORMER CKT 3
FDNS	00NR_G15_042	2	17SP	G15_042	TO->FROM	GR ISLD-LNX3345.00 - HOLT.CO3 345.00 345KV CKT 1	720	720	0.04898	127.5639	COLUMWEST - GRAND ISLAND 230KV CKT 1
FDNS	00NR_G15_042	2	17SP	G15_042	TO->FROM	GR ISLD-LNX3345.00 - HOLT.CO3 345.00 345KV CKT 1	720	720	0.04112	127.5511	GEN562003 1-G11_027_3 0.6900
FDNS	00NR_G15_042	2	17SP	G15_042	TO->FROM	GR ISLD-LNX3345.00 - HOLT.CO3 345.00 345KV CKT 1	720	720	0.04112	127.545	GEN590010 1-ERCOT EQUIVALENCE
FDNS	00NR_G15_042	2	17SP	G15_042	TO->FROM	GR ISLD-LNX3345.00 - HOLT.CO3 345.00 345KV CKT 1	720	720	0.04235	127.5408	LOUP CITY - NORTH LOUP 115KV CKT 1
FDNS	00NR_G15_042	2	17SP	G15_042	TO->FROM	GR ISLD-LNX3345.00 - HOLT.CO3 345.00 345KV CKT 1	720	720	0.04112	127.5198	GEN300003 1-THOMAS HILL UNIT 3
FDNS	00NR_G15_042	2	17SP	G15_042	TO->FROM	GR ISLD-LNX3345.00 - HOLT.CO3 345.00 345KV CKT 1	720	720	0.04112	127.5126	EASTDC - ERCOT EQUIVALENCE 345KV CKT 1
FDNS	00NR_G15_042	2	17SP	G15_042	TO->FROM	GR ISLD-LNX3345.00 - HOLT.CO3 345.00 345KV CKT 1	720	720	0.04112	127.5126	GEN590011 2-ERCOT EQUIVALENCE
FDNS	00NR_G15_042	2	17SP	G15_042	TO->FROM	GR ISLD-LNX3345.00 - HOLT.CO3 345.00 345KV CKT 1	720	720	0.04112	127.5062	GEN629072 4-LANSING GENERATOR FOR UNITS NO4 EIA CODE 1
FDNS	00NR_G15_042	2	17SP	G15_042	TO->FROM	GR ISLD-LNX3345.00 - HOLT.CO3 345.00 345KV CKT 1	720	720	0.04148	127.4759	OAHE - SULLEY BUTTE 230KV CKT 1
FDNS	00NR_G15_042	2	17SP	G15_042	TO->FROM	GR ISLD-LNX3345.00 - HOLT.CO3 345.00 345KV CKT 1	720	720	0.04112	127.4733	GEN652414 4-FT PECK
FDNS	00NR_G15_042	2	17SP	G15_042	TO->FROM	GR ISLD-LNX3345.00 - HOLT.CO3 345.00 345KV CKT 1	720	720	0.04112	127.4733	GEN652415 5-FT PECK
FDNS	00NR_G15_042	2	17SP	G15_042	TO->FROM	GR ISLD-LNX3345.00 - HOLT.CO3 345.00 345KV CKT 1	720	720	0.04112	127.4598	GEN660003 3-HURON WEST PARK
FDNSLock	00NR_G15_042	2	17SP	G15_042	TO->FROM	GR ISLD-LNX3345.00 - HOLT.CO3 345.00 345KV CKT 1	720	720	0.04239	127.445	CENTRAL CITY - GRAND ISLAND 115KV CKT 1
FDNS	00NR_G15_042	2	17SP	G15_042	TO->FROM	GR ISLD-LNX3345.00 - HOLT.CO3 345.00 345KV CKT 1	720	720	0.04112	127.4439	EMERY 161/18.0KV TRANSFORMER CKT 1
FDNS	00NR_G15_042	2	17SP	G15_042	TO->FROM	GR ISLD-LNX3345.00 - HOLT.CO3 345.00 345KV CKT 1	720	720	0.04112	127.4399	GEN652345 W-G07_023IS_2 0.6900
FDNS	00NR_G15_042	2	17SP	G15_042	TO->FROM	GR ISLD-LNX3345.00 - HOLT.CO3 345.00 345KV CKT 1	720	720	0.04112	127.4312	GEN 11104 1-J262_GEN 0.6000
FDNS	00NR_G15_042	2	17SP	G15_042	TO->FROM	GR ISLD-LNX3345.00 - HOLT.CO3 345.00 345KV CKT 1	720	720	0.04112	127.4312	GEN 11108 1-J263_GEN 0.6000
FDNS	00NR_G15_042	2	17SP	G15_042	TO->FROM	GR ISLD-LNX3345.00 - HOLT.CO3 345.00 345KV CKT 1	720	720	0.04112	127.4086	GEN600050 1-FEP
FDNS	00NR_G15_042	2	17SP	G15_042	TO->FROM	GR ISLD-LNX3345.00 - HOLT.CO3 345.00 345KV CKT 1	720	720	0.04124	127.3903	ANTELOP-LNX3345.00 - ANTELOPE VALLEY 345KV CKT Z
FDNS	00NR_G15_042	2	17SP	G15_042	TO->FROM	GR ISLD-LNX3345.00 - HOLT.CO3 345.00 345KV CKT 1	720	720	0.04112	127.3856	GEN652545 7-BIG BEND
FDNS	00NR_G15_042	2	17SP	G15_042	TO->FROM	GR ISLD-LNX3345.00 - HOLT.CO3 345.00 345KV CKT 1	720	720	0.04035	127.38	POST ROCK (POSTROCK T1) 345/230/13.8KV TRANSFORMER CKT 1
FDNS	00NR_G15_042	2	17SP	G15_042	TO->FROM	GR ISLD-LNX3345.00 - HOLT.CO3 345.00 345KV CKT 1	720	720	0.03922	127.3658	GERALD GENTLEMAN STATION - RED WILLOW 345KV CKT 1
FDNS	00NR_G15_042	2	17SP	G15_042	TO->FROM	GR ISLD-LNX3345.00 - HOLT.CO3 345.00 345KV CKT 1	720	720	0.04112	127.3573	GEN600046 1-MECST
FDNS	00NR_G15_042	2	17SP	G15_042	TO->FROM	GR ISLD-LNX3345.00 - HOLT.CO3 345.00 345KV CKT 1	720	720	0.04112	127.352	GEN300007 1-NEW MADRID UNIT 2
FDNS	00NR_G15_042	2	17SP	G15_042	TO->FROM	GR ISLD-LNX3345.00 - HOLT.CO3 345.00 345KV CKT 1	720	720	0.04112	127.3452	GEN300006 1-NEW MADRID UNIT 1
FDNS	00NR_G15_042	2	17SP	G15_042	TO->FROM	GR ISLD-LNX3345.00 - HOLT.CO3 345.00 345KV CKT 1	720	720	0.04011	127.3396	MATHWSN7 345.00 - TATONGA7 345.00 345KV CKT 1
FDNS	00NR_G15_042	2	17SP	G15_042	TO->FROM	GR ISLD-LNX3345.00 - HOLT.CO3 345.00 345KV CKT 1	720	720	0.04148	127.3392	SULLYBT-LNX3230.00 - WHITLOK 230KV CKT 1
FDNS	00NR_G15_042	2	17SP	G15_042	TO->FROM	GR ISLD-LNX3345.00 - HOLT.CO3 345.00 345KV CKT 1	720	720	0.04148	127.3341	SULLEY BUTTE - SULLYBT-LNX3230.00 230KV CKT Z
FDNS	00NR_G15_042	2	17SP	G15_042	TO->FROM	GR ISLD-LNX3345.00 - HOLT.CO3 345.00 345KV CKT 1	720	720	0.04112	127.33	GEN600047 1-MECCT1
FDNS	00NR_G15_042	2	17SP	G15_042	TO->FROM	GR ISLD-LNX3345.00 - HOLT.CO3 345.00 345KV CKT 1	720	720	0.04112	127.3292	GEN600063 1-COLVILLE GEN 1
FDNS	00NR_G15_042	2	17SP	G15_042	TO->FROM	GR ISLD-LNX3345.00 - HOLT.CO3 345.00 345KV CKT 1	720	720	0.04112	127.3292	GEN600064 2-COLVILLE GEN 2
FDNS	00NR_G15_042	2	17SP	G15_042	TO->FROM	GR ISLD-LNX3345.00 - HOLT.CO3 345.00 345KV CKT 1	720	720	0.04112	127.3247	GEN600043 7-BLUE LAKE5
FDNS	00NR_G15_042	2	17SP	G15_042	TO->FROM	GR ISLD-LNX3345.00 - HOLT.CO3 345.00 345KV CKT 1	720	720	0.04112	127.3247	GEN600044 8-BLUE LAKE6
FDNS	00NR_G15_042	2	17SP	G15_042	TO->FROM	GR ISLD-LNX3345.00 - HOLT.CO3 345.00 345KV CKT 1	720	720	0.04112	127.3237	GEN660001 2-ABERDEEN SIEBRECHT
FDNS	00NR_G15_042	2	17SP	G15_042	TO->FROM	GR ISLD-LNX3345.00 - HOLT.CO3 345.00 345KV CKT 1	720	720	0.04148	127.3021	P12:230:UMZB:# 114 #: SB IN SD. SB-WK-GH
FDNS	00NR_G15_042	2	17SP	G15_042	TO->FROM	GR ISLD-LNX3345.00 - HOLT.CO3 345.00 345KV CKT 1	720	720	0.04148	127.3021	P12:230:UMZB:# 117 #: WK IN SD. SB-WK-GH
FDNS	00NR_G15_042	2	17SP	G15_042	TO->FROM	GR ISLD-LNX3345.00 - HOLT.CO3 345.00 345KV CKT 1	720	720	0.04112	127.3014	GEN659273 2-GROTON SYNC COND
FDNS	00NR_G15_042	2	17SP	G15_042	TO->FROM	GR ISLD-LNX3345.00 - HOLT.CO3 345.00 345KV CKT 1	720	720	0.04112	127.3014	GEN659294 1-WILTONCOL9
FDNS	00NR_G15_042	2	17SP	G15_042	TO->FROM	GR ISLD-LNX3345.00 - HOLT.CO3 345.00 345KV CKT 1	720	720	0.04112	127.2894	GEN600065 7-HIGH BRIDGE
FDNS	00NR_G15_042	2	17SP	G15_042	TO->FROM	GR ISLD-LNX3345.00 - HOLT.CO3 345.00 345KV CKT 1	720	720	0.04112	127.2894	GEN600066 8-HIGH BRIDGE
FDNS	00NR_G15_042	2	17SP	G15_042	TO->FROM	GR ISLD-LNX3345.00 - HOLT.CO3 345.00 345KV CKT 1	720	720	0.04112	127.2842	GEN600014 4-BLACK DOG GEN 4
FDNS	00NR_G15_042	2	17SP	G15_042	TO->FROM	GR ISLD-LNX3345.00 - HOLT.CO3 345.00 345KV CKT 1	720	720	0.04112	127.2794	GEN600011 5-BLACK DOG GEN 1
FDNS	00NR_G15_042	2	17SP	G15_042	TO->FROM	GR ISLD-LNX3345.00 - HOLT.CO3 345.00 345KV CKT 1	720	720	0.04112	127.2737	GEN600070 9-RIVER SIDE
FDNS	00NR_G15_042	2	17SP	G15_042	TO->FROM	GR ISLD-LNX3345.00 - HOLT.CO3 345.00 345KV CKT 1	720	720	0.04112	127.2737	GEN600071 10-RIVER SIDE
FDNS	00NR_G15_042	2	17SP	G15_042	TO->FROM	GR ISLD-LNX3345.00 - HOLT.CO3 345.00 345KV CKT 1	720	720	0.04112	127.2612	GEN 10648 1-G830_GEN 0.6900
FDNS	00NR_G15_042	2	17SP	G15_042	TO->FROM	GR ISLD-LNX3345.00 - HOLT.CO3 345.00 345KV CKT 1	720	720	0.04112	127.2606	GEN600007 7-RIVERSIDE GEN 7
FDNS	00NR_G15_042	2	17SP	G15_042	TO->FROM	GR ISLD-LNX3345.00 - HOLT.CO3 345.00 345KV CKT 1	720	720	0.04148	127.2561	GLENHAM - WHITLOK 230KV CKT 1
FDNS	00NR_G15_042	2	17SP	G15_042	TO->FROM	GR ISLD-LNX3345.00 - HOLT.CO3 345.00 345KV CKT 1	720	720	0.04112	127.2552	GEN600045 4-ANSON
FDNS	00NR_G15_042	2	17SP	G15_042	TO->FROM	GR ISLD-LNX3345.00 - HOLT.CO3 345.00 345KV CKT 1	720	720	0.04112	127.2507	GEN659192 6-LYNN
FDNS	00NR_G15_042	2	17SP	G15_042	TO->FROM	GR ISLD-LNX3345.00 - HOLT.CO3 345.00 345KV CKT 1	720	720	0.04112	127.25	GEN659162 4-RED WLCK
FDNS	00NR_G15_042	2	17SP	G15_042	TO->FROM	GR ISLD-LNX3345.00 - HOLT.CO3 345.00 345KV CKT 1	720	720	0.04112	127.25	GEN659163 5-BLACK WDCK
FDNS	00NR_G15_042	2	17SP	G15_042	TO->FROM	GR ISLD-LNX3345.00 - HOLT.CO3 345.00 345KV CKT 1	720	720	0.04112	127.2315	GEN600017 C-LS POWER CT
FDNS	00NR_G15_042	2	17SP	G15_042	TO->FROM	GR ISLD-LNX3345.00 - HOLT.CO3 345.00 345KV CKT 1	720	720	0.04112	127.2064	GEN659031 1-G12_014IS_4 0.6900
FDNS	00NR_G15_042	2	17SP	G15_042	TO->FROM	GR ISLD-LNX3345.00 - HOLT.CO3 345.00 345KV CKT 1	720	720	0.04112	127.1966	LANSING WEST 161/22.0KV TRANSFORMER CKT 1
FDNS	00NR_G15_042	2	17SP	G15_042	TO->FROM	GR ISLD-LNX3345.00 - HOLT.CO3 345.00 345KV CKT 1	720	720	0.04112	127.1854	GEN615021 1-GRE-ER 14G 16.000

SOLUTION	GROUP	SCENARIO	SEASON	SOURCE	DIRECTION	MONITORED ELEMENT	RATEA (MVA)	RATEB(MVA)	TDF	TC%LOADING (% MVA)	CONTINGENCY
FDNS	00NR_G15_042	2	17SP	G15_042	TO->FROM	GR ISLD-LNX3345.00 - HOLT.CO3 345.00 345KV CKT 1	720	720	0.04112	127.1783	GEN615052 1-CAMBRIDGE GENERATING STATION
FDNS	00NR_G15_042	2	17SP	G15_042	TO->FROM	GR ISLD-LNX3345.00 - HOLT.CO3 345.00 345KV CKT 1	720	720	0.04112	127.1728	GEN615015 1-GRE-SPRITWDG13.200
FDNS	00NR_G15_042	2	17SP	G15_042	TO->FROM	GR ISLD-LNX3345.00 - HOLT.CO3 345.00 345KV CKT 1	720	720	0.04112	127.1073	GEN681522 3-GENOA 3
FDNS	00NR_G15_042	2	17SP	G15_042	TO->FROM	GR ISLD-LNX3345.00 - HOLT.CO3 345.00 345KV CKT 1	720	720	0.04112	127.0573	BISONMP4 230.00 - SQUARE BUTTE 230KV CKT 1
FDNS	00NR_G15_042	2	17SP	G15_042	TO->FROM	GR ISLD-LNX3345.00 - HOLT.CO3 345.00 345KV CKT 1	720	720	0.04112	127.0569	GEN660016 1-B_H WIND 0.7000
FDNS	00NR_G15_042	2	17SP	G15_042	TO->FROM	GR ISLD-LNX3345.00 - HOLT.CO3 345.00 345KV CKT 1	720	720	0.04112	127.0005	GEN662101 1-WESSINGTON190.5750
FDNS	00NR_G15_042	2	17SP	G15_042	TO->FROM	GR ISLD-LNX3345.00 - HOLT.CO3 345.00 345KV CKT 1	720	720	0.04112	126.9968	GEN652906 1-G09_006IS_3 0.6900
FDNS	00NR_G15_042	2	17SP	G15_042	TO->FROM	GR ISLD-LNX3345.00 - HOLT.CO3 345.00 345KV CKT 1	720	720	0.04112	126.9962	GEN672303 3-BOUNDARY DAM GENERATOR 3
FDNS	00NR_G15_042	2	17SP	G15_042	TO->FROM	GR ISLD-LNX3345.00 - HOLT.CO3 345.00 345KV CKT 1	720	720	0.04112	126.9962	GEN672305 5-BOUNDARY DAM GENERATOR 5
FDNS	00NR_G15_042	2	17SP	G15_042	TO->FROM	GR ISLD-LNX3345.00 - HOLT.CO3 345.00 345KV CKT 1	720	720	0.04112	126.9726	GEN672392 1-NBECGT1G 18.000
FDNS	00NR_G15_042	2	17SP	G15_042	TO->FROM	GR ISLD-LNX3345.00 - HOLT.CO3 345.00 345KV CKT 1	720	720	0.04112	126.9028	GEN600067 9-HIGH BRIDGE
FDNS	00NR_G15_042	2	17SP	G15_042	TO->FROM	GR ISLD-LNX3345.00 - HOLT.CO3 345.00 345KV CKT 1	720	720	0.04112	126.8629	GEN910006 1-G12_012IS_3 0.6900
FDNS	00NR_G15_042	2	17SP	G15_042	TO->FROM	GR ISLD-LNX3345.00 - HOLT.CO3 345.00 345KV CKT 1	720	720	0.04112	126.8552	GEN652907 1-G09_007IS_3 0.6900
FDNS	00NR_G15_042	2	17SP	G15_042	TO->FROM	GR ISLD-LNX3345.00 - HOLT.CO3 345.00 345KV CKT 1	720	720	0.04112	126.8292	SQUARE BUTTE - YNG2 4 230.00 230KV CKT 1
FDNS	00NR_G15_042	2	17SP	G15_042	TO->FROM	GR ISLD-LNX3345.00 - HOLT.CO3 345.00 345KV CKT 1	720	720	0.04112	126.7159	GEN659353 1-DEERCREK CTG18.000
FDNS	00NR_G15_042	2	17SP	G15_042	TO->FROM	GR ISLD-LNX3345.00 - HOLT.CO3 345.00 345KV CKT 1	720	720	0.04112	126.7153	GEN659354 1-DEERCREK STG18.000
FDNS	00NR_G15_042	2	17SP	G15_042	TO->FROM	GR ISLD-LNX3345.00 - HOLT.CO3 345.00 345KV CKT 1	720	720	0.04148	126.7064	GLENHAM - L3 HAWDON 230KV CKT 1
FDNS	00NR_G15_042	2	17SP	G15_042	TO->FROM	GR ISLD-LNX3345.00 - HOLT.CO3 345.00 345KV CKT 1	720	720	0.03671	126.6909	MINGO - RED WILLOW 345KV CKT 1
FDNS	00NR_G15_042	2	17SP	G15_042	TO->FROM	GR ISLD-LNX3345.00 - HOLT.CO3 345.00 345KV CKT 1	720	720	0.03671	126.6909	MINGO - RED WILLOW 345KV CKT 1
FDNS	00NR_G15_042	2	17SP	G15_042	TO->FROM	GR ISLD-LNX3345.00 - HOLT.CO3 345.00 345KV CKT 1	720	720	0.04112	126.5478	GEN659289 1-DAYCNTYWND W0.6900
FDNS	00NR_G15_042	2	17SP	G15_042	TO->FROM	GR ISLD-LNX3345.00 - HOLT.CO3 345.00 345KV CKT 1	720	720	0.04112	126.5144	GEN562832 1-G15042_3 0.6900
FDNS	00NR_G15_042	2	17SP	G15_042	TO->FROM	GR ISLD-LNX3345.00 - HOLT.CO3 345.00 345KV CKT 1	720	720	0.04112	126.5115	GEN659018 1-G14_003IS_3 0.6900
FDNS	00NR_G15_042	2	17SP	G15_042	TO->FROM	GR ISLD-LNX3345.00 - HOLT.CO3 345.00 345KV CKT 1	720	720	0.04112	126.4697	GEN681542 6-JP MADGETT
FDNS	00NR_G15_042	2	17SP	G15_042	TO->FROM	GR ISLD-LNX3345.00 - HOLT.CO3 345.00 345KV CKT 1	720	720	0.04112	126.3748	GEN659194 1-NDPRAIRWND1W0.6900
FDNS	00NR_G15_042	2	17SP	G15_042	TO->FROM	GR ISLD-LNX3345.00 - HOLT.CO3 345.00 345KV CKT 1	720	720	0.04112	126.373	GEN659010 4-G07_027IS_2 0.6900
FDNS	00NR_G15_042	2	17SP	G15_042	TO->FROM	GR ISLD-LNX3345.00 - HOLT.CO3 345.00 345KV CKT 1	720	720	0.04112	126.3624	GEN652544 5-BIG BEND
FDNS	00NR_G15_042	2	17SP	G15_042	TO->FROM	GR ISLD-LNX3345.00 - HOLT.CO3 345.00 345KV CKT 1	720	720	0.04112	126.3617	GEN652542 1-BIG BEND
FDNS	00NR_G15_042	2	17SP	G15_042	TO->FROM	GR ISLD-LNX3345.00 - HOLT.CO3 345.00 345KV CKT 1	720	720	0.04112	126.3609	GEN652543 3-BIG BEND
FDNS	00NR_G15_042	2	17SP	G15_042	TO->FROM	GR ISLD-LNX3345.00 - HOLT.CO3 345.00 345KV CKT 1	720	720	0.04112	126.3608	GEN652460 4-GARRISON
FDNS	00NR_G15_042	2	17SP	G15_042	TO->FROM	GR ISLD-LNX3345.00 - HOLT.CO3 345.00 345KV CKT 1	720	720	0.04112	126.3608	GEN652461 5-GARRISON
FDNS	00NR_G15_042	2	17SP	G15_042	TO->FROM	GR ISLD-LNX3345.00 - HOLT.CO3 345.00 345KV CKT 1	720	720	0.04112	126.3034	GEN652457 1-GARRISON
FDNS	00NR_G15_042	2	17SP	G15_042	TO->FROM	GR ISLD-LNX3345.00 - HOLT.CO3 345.00 345KV CKT 1	720	720	0.04112	126.3034	GEN652458 2-GARRISON
FDNS	00NR_G15_042	2	17SP	G15_042	TO->FROM	GR ISLD-LNX3345.00 - HOLT.CO3 345.00 345KV CKT 1	720	720	0.04112	126.3034	GEN652459 3-GARRISON
FDNS	00NR_G15_042	2	17SP	G15_042	TO->FROM	GR ISLD-LNX3345.00 - HOLT.CO3 345.00 345KV CKT 1	720	720	0.04112	126.2943	STANTON 230/18.0KV TRANSFORMER CKT 1
FDNS	00NR_G15_042	2	17SP	G15_042	TO->FROM	GR ISLD-LNX3345.00 - HOLT.CO3 345.00 345KV CKT 1	720	720	0.04112	126.2248	GEN659403 1-NDSUNFLWR W0.6900
FDNS	00NR_G15_042	2	17SP	G15_042	TO->FROM	GR ISLD-LNX3345.00 - HOLT.CO3 345.00 345KV CKT 1	720	720	0.03402	126.0999	AXTELL - POST ROCK 345KV CKT 1
FDNS	00NR_G15_042	2	17SP	G15_042	TO->FROM	GR ISLD-LNX3345.00 - HOLT.CO3 345.00 345KV CKT 1	720	720	0.03937	126.0942	AXTELL - SWEETWATER 345KV CKT 1
FDNS	00NR_G15_042	2	17SP	G15_042	TO->FROM	GR ISLD-LNX3345.00 - HOLT.CO3 345.00 345KV CKT 1	720	720	0.04112	126.0485	CLAY BOSWELL 230/20.9KV TRANSFORMER CKT 1
FDNS	00NR_G15_042	2	17SP	G15_042	TO->FROM	GR ISLD-LNX3345.00 - HOLT.CO3 345.00 345KV CKT 1	720	720	0.04112	125.9093	GEN659411 1-CAMPBLCNTY W0.6900
FDNS	00NR_G15_042	2	17SP	G15_042	TO->FROM	GR ISLD-LNX3345.00 - HOLT.CO3 345.00 345KV CKT 1	720	720	0.04112	125.7052	GEN659296 2-SDPRAIRWND1W0.6900
FDNS	00NR_G15_042	2	17SP	G15_042	TO->FROM	GR ISLD-LNX3345.00 - HOLT.CO3 345.00 345KV CKT 1	720	720	0.04112	125.6697	RCDC EAST 4230.00 - RED CEDAR DC 230KV CKT 1
FDNS	00NR_G15_042	2	17SP	G15_042	TO->FROM	GR ISLD-LNX3345.00 - HOLT.CO3 345.00 345KV CKT 1	720	720	0.04113	125.6437	P12:230:UMZB:# 112 #: NU IN SD. NU-RCDC & DRY CREEK XFMR
FDNS	00NR_G15_042	2	17SP	G15_042	TO->FROM	GR ISLD-LNX3345.00 - HOLT.CO3 345.00 345KV CKT 1	720	720	0.04112	125.5851	GEN652559 1-OAHE
FDNS	00NR_G15_042	2	17SP	G15_042	TO->FROM	GR ISLD-LNX3345.00 - HOLT.CO3 345.00 345KV CKT 1	720	720	0.04112	125.5648	GEN672321 1-SHAND GENERATOR 1
FDNS	00NR_G15_042	2	17SP	G15_042	TO->FROM	GR ISLD-LNX3345.00 - HOLT.CO3 345.00 345KV CKT 1	720	720	0.04112	125.5559	GEN615010 1-STANTON4
FDNS	00NR_G15_042	2	17SP	G15_042	TO->FROM	GR ISLD-LNX3345.00 - HOLT.CO3 345.00 345KV CKT 1	720	720	0.04112	125.5549	GEN672310 1-POPLAR RIVER GENERATOR 1
FDNS	00NR_G15_042	2	17SP	G15_042	TO->FROM	GR ISLD-LNX3345.00 - HOLT.CO3 345.00 345KV CKT 1	720	720	0.04112	125.5549	GEN672311 2-POPLAR RIVER GENERATOR 2
FDNS	00NR_G15_042	2	17SP	G15_042	TO->FROM	GR ISLD-LNX3345.00 - HOLT.CO3 345.00 345KV CKT 1	720	720	0.04112	125.481	GEN672306 6-BOUNDARY DAM GENERATOR 6
FDNS	00NR_G15_042	2	17SP	G15_042	TO->FROM	GR ISLD-LNX3345.00 - HOLT.CO3 345.00 345KV CKT 1	720	720	0.04112	125.4088	GEN652556 2-OAHE
FDNS	00NR_G15_042	2	17SP	G15_042	TO->FROM	GR ISLD-LNX3345.00 - HOLT.CO3 345.00 345KV CKT 1	720	720	0.04112	125.4088	GEN652557 4-OAHE
FDNS	00NR_G15_042	2	17SP	G15_042	TO->FROM	GR ISLD-LNX3345.00 - HOLT.CO3 345.00 345KV CKT 1	720	720	0.04112	125.4088	GEN652558 6-OAHE
FDNS	00NR_G15_042	2	17SP	G15_042	TO->FROM	GR ISLD-LNX3345.00 - HOLT.CO3 345.00 345KV CKT 1	720	720	0.04112	125.3215	GEN659453 1-GI1414GEN W0.6900
FDNS	00NR_G15_042	2	17SP	G15_042	TO->FROM	GR ISLD-LNX3345.00 - HOLT.CO3 345.00 345KV CKT 1	720	720	0.04112	125.29	GEN657749 1-YOUNG 1 GENERATOR
FDNS	00NR_G15_042	2	17SP	G15_042	TO->FROM	GR ISLD-LNX3345.00 - HOLT.CO3 345.00 345KV CKT 1	720	720	0.04112	125.2867	GEN600004 2-PRAIRIE ISLAND G2
FDNS	00NR_G15_042	2	17SP	G15_042	TO->FROM	GR ISLD-LNX3345.00 - HOLT.CO3 345.00 345KV CKT 1	720	720	0.04112	125.2821	GEN600003 1-PRAIRIE ISLAND G1
FDNS	00NR_G15_042	2	17SP	G15_042	TO->FROM	GR ISLD-LNX3345.00 - HOLT.CO3 345.00 345KV CKT 1	720	720	0.04112	125.232	GEN659141 1-K10215A
FDNS	00NR_G15_042	2	17SP	G15_042	TO->FROM	GR ISLD-LNX3345.00 - HOLT.CO3 345.00 345KV CKT 1	720	720	0.04112	125.0021	GEN652173 1-G09_001IS_2 0.6900
FDNS	00NR_G15_042	2	17SP	G15_042	TO->FROM	GR ISLD-LNX3345.00 - HOLT.CO3 345.00 345KV CKT 1	720	720	0.04112	124.9747	GEN600006 1-AS KING
FDNS	00NR_G15_042	2	17SP	G15_042	TO->FROM	GR ISLD-LNX3345.00 - HOLT.CO3 345.00 345KV CKT 1	720	720	0.04112	124.7699	GEN659407 1-ANTELPHILLSW0.6900
FDNS	00NR_G15_042	2	17SP	G15_042	TO->FROM	GR ISLD-LNX3345.00 - HOLT.CO3 345.00 345KV CKT 1	720	720	0.04112	124.6933	GEN659110 1-LELAND OLDS UNIT1
FDNS	00NR_G15_042	2	17SP	G15_042	TO->FROM	GR ISLD-LNX3345.00 - HOLT.CO3 345.00 345KV CKT 1	720	720	0.04112	124.4047	GEN600005 1-MONTICELLO
FDNS	00NR_G15_042	2	17SP	G15_042	TO->FROM	GR ISLD-LNX3345.00 - HOLT.CO3 345.00 345KV CKT 1	720	720	0.04143	123.8588	MCCOOL - MOORE 345KV CKT 1
FDNS	00NR_G15_042	2	17SP	G15_042	TO->FROM	GR ISLD-LNX3345.00 - HOLT.CO3 345.00 345KV CKT 1	720	720	0.04112	123.7208	GEN600000 1-SHERBURNECNTY G1
FDNS	00NR_G15_042	2	17SP	G15_042	TO->FROM	GR ISLD-LNX3345.00 - HOLT.CO3 345.00 345KV CKT 1	720	720	0.04112	123.489	GEN600001 2-SHERBURNE CNTY G2
FDNS	00NR_G15_042	2	17SP	G15_042	TO->FROM	GR ISLD-LNX3345.00 - HOLT.CO3 345.00 345KV CKT 1	720	720	0.04112	123.2305	GEN620315 1-BIG STONE GEN
FDNS	00NR_G15_042	2	17SP	G15_042	TO->FROM	GR ISLD-LNX3345.00 - HOLT.CO3 345.00 345KV CKT 1	720	720	0.04112	123.2285	GEN661015 1-COYOTE
FDNS	00NR_G15_042	2	17SP	G15_042	TO->FROM	GR ISLD-LNX3345.00 - HOLT.CO3 345.00 345KV CKT 1	720	720	0.04112	122.7877	GEN657748 1-YOUNG 2 GENERATOR
FDNS	00NR_G15_042	2	17SP	G15_042	TO->FROM	GR ISLD-LNX3345.00 - HOLT.CO3 345.00 345KV CKT 1	720	720	0.04112	122.5452	GEN600002 3-SHERBURNE CNTY G3
FDNS	00NR_G15_042	2	20SP	G15_042	TO->FROM	GR ISLD-LNX3345.00 - HOLT.CO3 345.00 345KV CKT 1	720	720	0.0381	121.8851	HOLT.CO3 345.00 - THEDFRD3 345.00 345KV CKT 1
FDNS	00NR_G15_042	2	17SP	G15_042	TO->FROM	GR ISLD-LNX3345.00 - HOLT.CO3 345.00 345KV CKT 1	720	720	0.04112	121.8766	SHERBURNE CO 345/24.0KV TRANSFORMER CKT 1
FDNS	00NR_G15_042	2	17SP	G15_042	TO->FROM	GR ISLD-LNX3345.00 - HOLT.CO3 345.00 345KV CKT 1	720	720	0.04208	121.7519	FTTHOM1-LNX3345.00 - LELAND2-LNX3345.00 345KV CKT 1
FDNS	00NR_G15_042	2	17SP	G15_042	TO->FROM	GR ISLD-LNX3345.00 - HOLT.CO3 345.00 345KV CKT 1	720	720	0.04112	121.6956	BIG STONE 230/24.0KV TRANSFORMER CKT 1
FDNS	00NR_G15_042	2	17SP	G15_042	TO->FROM	GR ISLD-LNX3345.00 - HOLT.CO3 345.00 345KV CKT 1	720	720	0.04208	121.4868	P12:345:UMZB:# 108 #: LOS FT IN ND. LOS FT

SOLUTION	GROUP	SCENARIO	SEASON	SOURCE	DIRECTION	MONITORED ELEMENT	RATEA (MVA)	RATEB(MVA)	TDF	TC%LOADING (% MVA)	CONTINGENCY
FDNS	00NR_G15_042	2	17SP	G15_042	TO->FROM	GR ISLD-LNX3345.00 - HOLT.CO3 345.00 345KV CKT 1	720	720	0.04208	121.48	FT THOMPSON - FTTHOM1-LNX3345.00 345KV CKT Z
FDNS	00NR_G15_042	2	17SP	G15_042	TO->FROM	GR ISLD-LNX3345.00 - HOLT.CO3 345.00 345KV CKT 1	720	720	0.04208	121.3122	LELAND OLDS - LELAND2-LNX3345.00 345KV CKT Z
FDNS	00NR_G15_042	2	17SP	G15_042	TO->FROM	GR ISLD-LNX3345.00 - HOLT.CO3 345.00 345KV CKT 1	720	720	0.04112	120.9555	GEN659111 2-LELAND OLDS UNIT2
FDNS	00NR_G15_042	2	25SP	G15_042	TO->FROM	GR ISLD-LNX3345.00 - HOLT.CO3 345.00 345KV CKT 1	720	720	0.03846	120.678	HOLT.CO3 345.00 - THEDFRD3 345.00 345KV CKT 1
FDNS	00NR_G15_042	2	17SP	G15_042	TO->FROM	GR ISLD-LNX3345.00 - HOLT.CO3 345.00 345KV CKT 1	720	720	0.04112	120.6322	GEN659125 1-COVEY
FDNS	00NR_G15_042	2	17SP	G15_042	TO->FROM	GR ISLD-LNX3345.00 - HOLT.CO3 345.00 345KV CKT 1	720	720	0.04112	120.3981	GEN659103 1-ANTELOPE VALLEY UNIT1
FDNS	00NR_G15_042	2	17SP	G15_042	TO->FROM	GR ISLD-LNX3345.00 - HOLT.CO3 345.00 345KV CKT 1	720	720	0.04112	120.3981	GEN659107 2-ANTELOPE VALLEY UNIT2
FDNS	00NR_G15_042	2	17SP	G15_042	TO->FROM	GR ISLD-LNX3345.00 - HOLT.CO3 345.00 345KV CKT 1	720	720	0.04145	120.2041	GRAND ISLAND - MCCOOL 345KV CKT 1
FDNS	00NR_G15_042	2	17SP	G15_042	TO->FROM	GR ISLD-LNX3345.00 - HOLT.CO3 345.00 345KV CKT 1	720	720	0.04112	120.1476	GEN615001 1-COAL CREEK
FDNS	00NR_G15_042	2	17SP	G15_042	TO->FROM	GR ISLD-LNX3345.00 - HOLT.CO3 345.00 345KV CKT 1	720	720	0.04112	120.0276	GEN615002 2-COAL CREEK
FDNS	00NR_G15_042	2	17SP	G15_042	TO->FROM	GR ISLD-LNX3345.00 - HOLT.CO3 345.00 345KV CKT 1	720	720	0.04112	113.3644	GEN562714 1-G15_023_4 0.6900
FDNS	00NR_G15_042	2	17SP	G15_042	TO->FROM	GR ISLD-LNX3345.00 - HOLT.CO3 345.00 345KV CKT 1	720	720	0.04112	113.3644	GEN562715 1-G15_023_5 0.6900
FDNS	00NR_G15_042	2	20SP	G15_042	TO->FROM	GR ISLD-LNX3345.00 - HOLT.CO3 345.00 345KV CKT 1	720	720	0.0386	111.5297	GERALD GENTLEMAN STATION - THEDFRD3 345.00 345KV CKT 1
FDNS	00NR_G15_042	2	25SP	G15_042	TO->FROM	GR ISLD-LNX3345.00 - HOLT.CO3 345.00 345KV CKT 1	720	720	0.03892	110.812	GERALD GENTLEMAN STATION - THEDFRD3 345.00 345KV CKT 1
FDNS	00NR_G15_042	2	16WP	G15_042	TO->FROM	GR ISLD-LNX3345.00 - HOLT.CO3 345.00 345KV CKT 1	720	720	0.04241	108.07	KELLY - MEADOWGROVE4230.00 230KV CKT 1
FDNS	00NR_G15_042	2	17SP	G15_042	TO->FROM	GR ISLD-LNX3345.00 - HOLT.CO3 345.00 345KV CKT 1	720	720	0.04112	107.7825	GEN652353 2-GR PRAIRIEG 0.6900
FDNS	00NR_G15_042	2	20SP	G15_042	TO->FROM	GR ISLD-LNX3345.00 - HOLT.CO3 345.00 345KV CKT 1	720	720	0.03256	107.7262	DIXONCO 230.00 - HOSKINS 230KV CKT 1
FDNS	00NR_G15_042	2	16WP	G15_042	TO->FROM	GR ISLD-LNX3345.00 - HOLT.CO3 345.00 345KV CKT 1	720	720	0.03863	107.6124	P12:230:UMZB:# 116 #: ST IN SD. WSG-ST-VH
FDNS	00NR_G15_042	2	20SP	G15_042	TO->FROM	GR ISLD-LNX3345.00 - HOLT.CO3 345.00 345KV CKT 1	720	720	0.03237	107.3979	HOSKINS - SHELL CREEK 345KV CKT 1
FDNS	00NR_G15_042	2	25SP	G15_042	TO->FROM	GR ISLD-LNX3345.00 - HOLT.CO3 345.00 345KV CKT 1	720	720	0.03261	107.3353	DIXONCO 230.00 - HOSKINS 230KV CKT 1
FDNS	00NR_G15_042	2	16WP	G15_042	TO->FROM	GR ISLD-LNX3345.00 - HOLT.CO3 345.00 345KV CKT 1	720	720	0.0389	107.1694	STORLA - WESSINGTON 230KV CKT 1
FDNS	00NR_G15_042	2	25SP	G15_042	TO->FROM	GR ISLD-LNX3345.00 - HOLT.CO3 345.00 345KV CKT 1	720	720	0.03244	107.0229	HOSKINS - SHELL CREEK 345KV CKT 1
FDNS	00NR_G15_042	2	16WP	G15_042	TO->FROM	GR ISLD-LNX3345.00 - HOLT.CO3 345.00 345KV CKT 1	720	720	0.04071	106.2319	RIEL - ROSEAU 500KV CKT 1
FDNS	00NR_G15_042	2	16WP	G15_042	TO->FROM	GR ISLD-LNX3345.00 - HOLT.CO3 345.00 345KV CKT 1	720	720	0.03891	106.1232	HANLON - STORLA 230KV CKT 1
FDNS	00NR_G15_042	2	16WP	G15_042	TO->FROM	GR ISLD-LNX3345.00 - HOLT.CO3 345.00 345KV CKT 1	720	720	0.03861	105.6272	FT THOMPSON - LETCHER 230KV CKT 1
FDNS	00NR_G15_042	2	16WP	G15_042	TO->FROM	GR ISLD-LNX3345.00 - HOLT.CO3 345.00 345KV CKT 1	720	720	0.03861	105.6272	FT THOMPSON - LETCHER 230KV CKT 1
FDNSLock	00NR_G15_042	2	16WP	G15_042	TO->FROM	GR ISLD-LNX3345.00 - HOLT.CO3 345.00 345KV CKT 1	720	720	0.0396	105.3439	WATERTN-LNX3345.00 - WATERTOWN 345KV CKT Z
FDNS	00NR_G15_042	2	16WP	G15_042	TO->FROM	GR ISLD-LNX3345.00 - HOLT.CO3 345.00 345KV CKT 1	720	720	0.0396	105.2118	P12:345:UMZW:# 1747 #: WT2 IN SD. WT2-WHT LINE FAULT
FDNS	00NR_G15_042	2	16WP	G15_042	TO->FROM	GR ISLD-LNX3345.00 - HOLT.CO3 345.00 345KV CKT 1	720	720	0.0396	104.9375	WATERTN-LNX3345.00 - WHITE 345KV CKT 1
FDNS	00NR_G15_042	2	16WP	G15_042	TO->FROM	GR ISLD-LNX3345.00 - HOLT.CO3 345.00 345KV CKT 1	720	720	0.04052	104.7264	BUFFALO - JAMESTOWN 345KV CKT 1
FDNS	00NR_G15_042	2	16WP	G15_042	TO->FROM	GR ISLD-LNX3345.00 - HOLT.CO3 345.00 345KV CKT 1	720	720	0.0412	104.5007	KEYSTONE - SIDNEY1-LNX3345.00 345KV CKT 1
FDNS	00NR_G15_042	2	16WP	G15_042	TO->FROM	GR ISLD-LNX3345.00 - HOLT.CO3 345.00 345KV CKT 1	720	720	0.0412	104.489	SIDNEY - SIDNEY1-LNX3345.00 345KV CKT Z
FDNS	00NR_G15_042	2	16WP	G15_042	TO->FROM	GR ISLD-LNX3345.00 - HOLT.CO3 345.00 345KV CKT 1	720	720	0.03732	104.3918	FT RANDAL - G12_009IST 230.00 230KV CKT 1
FDNS	00NR_G15_042	2	16WP	G15_042	TO->FROM	GR ISLD-LNX3345.00 - HOLT.CO3 345.00 345KV CKT 1	720	720	0.04036	104.3862	GEN336821 1-GRAND GULF UNIT
FDNS	00NR_G15_042	2	16WP	G15_042	TO->FROM	GR ISLD-LNX3345.00 - HOLT.CO3 345.00 345KV CKT 1	720	720	0.03732	104.2992	FT THOMPSON - LAKE PLATT 230KV CKT 1
FDNS	00NR_G15_042	2	16WP	G15_042	TO->FROM	GR ISLD-LNX3345.00 - HOLT.CO3 345.00 345KV CKT 1	720	720	0.03732	104.2992	FT THOMPSON - LAKE PLATT 230KV CKT 1
FDNS	00NR_G15_042	2	16WP	G15_042	TO->FROM	GR ISLD-LNX3345.00 - HOLT.CO3 345.00 345KV CKT 1	720	720	0.03724	104.2947	FT RANDAL - FT THOMPSON 230KV CKT 1
FDNS	00NR_G15_042	2	16WP	G15_042	TO->FROM	GR ISLD-LNX3345.00 - HOLT.CO3 345.00 345KV CKT 1	720	720	0.03724	104.2947	FT RANDAL - FT THOMPSON 230KV CKT 1
FDNS	00NR_G15_042	2	16WP	G15_042	TO->FROM	GR ISLD-LNX3345.00 - HOLT.CO3 345.00 345KV CKT 1	720	720	0.03932	104.2348	LETCHER - SIOUX FALLS 230KV CKT 1
FDNS	00NR_G15_042	2	16WP	G15_042	TO->FROM	GR ISLD-LNX3345.00 - HOLT.CO3 345.00 345KV CKT 1	720	720	0.04014	104.1882	G09_001IST 345.00 - WATERTOWN 345KV CKT 1
FDNS	00NR_G15_042	2	16WP	G15_042	TO->FROM	GR ISLD-LNX3345.00 - HOLT.CO3 345.00 345KV CKT 1	720	720	0.04036	104.0921	GEN640010 1-GERALD GENTLEMAN STATION UNIT 1
FDNS	00NR_G15_042	2	16WP	G15_042	TO->FROM	GR ISLD-LNX3345.00 - HOLT.CO3 345.00 345KV CKT 1	720	720	0.04036	104.0527	GEN635024 4-WALTER SCOTT UNIT 4
FDNS	00NR_G15_042	2	16WP	G15_042	TO->FROM	GR ISLD-LNX3345.00 - HOLT.CO3 345.00 345KV CKT 1	720	720	0.04036	104.0306	GEN337911 1-ARKANSAS NUCLEAR ONE UNIT #2
FDNS	00NR_G15_042	2	16WP	G15_042	TO->FROM	GR ISLD-LNX3345.00 - HOLT.CO3 345.00 345KV CKT 1	720	720	0.03732	104.0286	G12_009IST 230.00 - LAKE PLATT 230KV CKT 1
FDNS	00NR_G15_042	2	16WP	G15_042	TO->FROM	GR ISLD-LNX3345.00 - HOLT.CO3 345.00 345KV CKT 1	720	720	0.04036	103.9803	GEN640011 2-GERALD GENTLEMAN STATION UNIT 2
FDNS	00NR_G15_042	2	16WP	G15_042	TO->FROM	GR ISLD-LNX3345.00 - HOLT.CO3 345.00 345KV CKT 1	720	720	0.04052	103.9582	CENTER - JAMESTOWN 345KV CKT 1
FDNS	00NR_G15_042	2	16WP	G15_042	TO->FROM	GR ISLD-LNX3345.00 - HOLT.CO3 345.00 345KV CKT 1	720	720	0.04241	103.945	FT RANDAL - MEADOWGROVE4230.00 230KV CKT 1
FDNS	00NR_G15_042	2	16WP	G15_042	TO->FROM	GR ISLD-LNX3345.00 - HOLT.CO3 345.00 345KV CKT 1	720	720	0.04036	103.9348	GEN344225 1-1CAL G1 25.000
FDNS	00NR_G15_042	2	16WP	G15_042	TO->FROM	GR ISLD-LNX3345.00 - HOLT.CO3 345.00 345KV CKT 1	720	720	0.04036	103.9065	GEN336153 1-WATERFORD UNIT#3
FDNS	00NR_G15_042	2	16WP	G15_042	TO->FROM	GR ISLD-LNX3345.00 - HOLT.CO3 345.00 345KV CKT 1	720	720	0.04209	103.8723	HAZLETON - MITCHLCO3 345.00 345KV CKT 1
FDNS	00NR_G15_042	2	16WP	G15_042	TO->FROM	GR ISLD-LNX3345.00 - HOLT.CO3 345.00 345KV CKT 1	720	720	0.04923	103.8136	RAUN - SUB 3451 FT CAL 345KV CKT 1
FDNS	00NR_G15_042	2	16WP	G15_042	TO->FROM	GR ISLD-LNX3345.00 - HOLT.CO3 345.00 345KV CKT 1	720	720	0.04923	103.8136	RAUN - SUB 3451 FT CAL 345KV CKT 1
FDNS	00NR_G15_042	2	16WP	G15_042	TO->FROM	GR ISLD-LNX3345.00 - HOLT.CO3 345.00 345KV CKT 1	720	720	0.04048	103.8103	BISON 3 345.00 - BUFFALO 345KV CKT 1
FDNS	00NR_G15_042	2	16WP	G15_042	TO->FROM	GR ISLD-LNX3345.00 - HOLT.CO3 345.00 345KV CKT 1	720	720	0.04036	103.7261	GEN635023 3-WALTER SCOTT UNIT 3
FDNS	00NR_G15_042	2	16WP	G15_042	TO->FROM	GR ISLD-LNX3345.00 - HOLT.CO3 345.00 345KV CKT 1	720	720	0.04124	103.7164	AS KING - EAU CLAIRE 345KV CKT 1
FDNS	00NR_G15_042	2	16WP	G15_042	TO->FROM	GR ISLD-LNX3345.00 - HOLT.CO3 345.00 345KV CKT 1	720	720	0.04036	103.6604	GEN337910 1-ARKANSAS NUCLEAR ONE UNIT #1
FDNS	00NR_G15_042	2	16WP	G15_042	TO->FROM	GR ISLD-LNX3345.00 - HOLT.CO3 345.00 345KV CKT 1	720	720	0.04036	103.6432	GEN335831 1-RIVERBEND UNIT#1
FDNS	00NR_G15_042	2	16WP	G15_042	TO->FROM	GR ISLD-LNX3345.00 - HOLT.CO3 345.00 345KV CKT 1	720	720	0.03893	103.5675	FT RANDAL - SIOUX CITY 230KV CKT 1
FDNS	00NR_G15_042	2	16WP	G15_042	TO->FROM	GR ISLD-LNX3345.00 - HOLT.CO3 345.00 345KV CKT 1	720	720	0.04113	103.547	ARROWHEAD - ARROWHEAD 230 230KV CKT 1
FDNS	00NR_G15_042	2	16WP	G15_042	TO->FROM	GR ISLD-LNX3345.00 - HOLT.CO3 345.00 345KV CKT 1	720	720	0.04016	103.4109	GROTON-LNX3 345.00 - LELAND1-LNX3345.00 345KV CKT 1
FDNS	00NR_G15_042	2	16WP	G15_042	TO->FROM	GR ISLD-LNX3345.00 - HOLT.CO3 345.00 345KV CKT 1	720	720	0.03981	103.4045	HANLON - SIOUX FALLS 230KV CKT 1
FDNS	00NR_G15_042	2	16WP	G15_042	TO->FROM	GR ISLD-LNX3345.00 - HOLT.CO3 345.00 345KV CKT 1	720	720	0.04099	103.3565	GERALD GENTLEMAN STATION - KEYSTONE 345KV CKT 1
FDNS	00NR_G15_042	2	16WP	G15_042	TO->FROM	GR ISLD-LNX3345.00 - HOLT.CO3 345.00 345KV CKT 1	720	720	0.04016	103.3527	P12:345:UMZB:# 109 #: LOS GRT IN ND. LOS GRT
FDNS	00NR_G15_042	2	16WP	G15_042	TO->FROM	GR ISLD-LNX3345.00 - HOLT.CO3 345.00 345KV CKT 1	720	720	0.04016	103.3525	GROTON - GROTON-LNX3 345.00 345KV CKT Z
FDNS	00NR_G15_042	2	16WP	G15_042	TO->FROM	GR ISLD-LNX3345.00 - HOLT.CO3 345.00 345KV CKT 1	720	720	0.04016	103.3466	LELAND OLDS - LELAND1-LNX3345.00 345KV CKT Z
FDNS	00NR_G15_042	2	16WP	G15_042	TO->FROM	GR ISLD-LNX3345.00 - HOLT.CO3 345.00 345KV CKT 1	720	720	0.04097	103.3453	SIDNEY - STEGALL 345KV CKT 1
FDNS	00NR_G15_042	2	16WP	G15_042	TO->FROM	GR ISLD-LNX3345.00 - HOLT.CO3 345.00 345KV CKT 1	720	720	0.03798	103.3328	FT RANDAL - UTICA JCT 230KV CKT 1
FDNS	00NR_G15_042	2	16WP	G15_042	TO->FROM	GR ISLD-LNX3345.00 - HOLT.CO3 345.00 345KV CKT 1	720	720	0.04036	103.2504	GEN337653 1-WHITE BLUFF UNIT #2
FDNS	00NR_G15_042	2	16WP	G15_042	TO->FROM	GR ISLD-LNX3345.00 - HOLT.CO3 345.00 345KV CKT 1	720	720	0.0439	103.2045	NUNDRWD - WAYSIDE 230KV CKT 1
FDNS	00NR_G15_042	2	16WP	G15_042	TO->FROM	GR ISLD-LNX3345.00 - HOLT.CO3 345.00 345KV CKT 1	720	720	0.04036	103.1974	GEN501801 1-DOLET HILLS UNIT1
FDNS	00NR_G15_042	2	16WP	G15_042	TO->FROM	GR ISLD-LNX3345.00 - HOLT.CO3 345.00 345KV CKT 1	720	720	0.04062	103.1843	CARPENTER - HURON 230KV CKT 1
FDNS	00NR_G15_042	2	16WP	G15_042	TO->FROM	GR ISLD-LNX3345.00 - HOLT.CO3 345.00 345KV CKT 1	720	720	0.03297	103.1418	GRAND ISLAND - SWEETWATER 345KV CKT 1
FDNS	00NR_G15_042	2	16WP	G15_042	TO->FROM	GR ISLD-LNX3345.00 - HOLT.CO3 345.00 345KV CKT 1	720	720	0.04209	103.1302	ADAMS - MITCHLCO3 345.00 345KV CKT 1

SOLUTION	GROUP	SCENARIO	SEASON	SOURCE	DIRECTION	MONITORED ELEMENT	RATEA (MVA)	RATEB(MVA)	TDF	TC%LOADING (% MVA)	CONTINGENCY
FDNS	00NR_G15_042	2	16WP	G15_042	TO->FROM	GR ISLD-LNX3345.00 - HOLT.CO3 345.00 345KV CKT 1	720	720	0.04036	103.1209	GEN337652 1-WHITE BLUFF UNIT #1
FDNS	00NR_G15_042	2	16WP	G15_042	TO->FROM	GR ISLD-LNX3345.00 - HOLT.CO3 345.00 345KV CKT 1	720	720	0.04041	103.1	ELLENDALE - OAKES 230KV CKT 1
FDNS	00NR_G15_042	2	16WP	G15_042	TO->FROM	GR ISLD-LNX3345.00 - HOLT.CO3 345.00 345KV CKT 1	720	720	0.04041	103.1	ELLENDALE - OAKES 230KV CKT 1
FDNS	00NR_G15_042	2	16WP	G15_042	TO->FROM	GR ISLD-LNX3345.00 - HOLT.CO3 345.00 345KV CKT 1	720	720	0.04308	103.0898	GRIMES - LEHIGH 345KV CKT 1
FDNS	00NR_G15_042	2	16WP	G15_042	TO->FROM	GR ISLD-LNX3345.00 - HOLT.CO3 345.00 345KV CKT 1	720	720	0.04166	103.0892	ARPIN B4 345.00 - EAU CLAIRE 345KV CKT 1
FDNS	00NR_G15_042	2	16WP	G15_042	TO->FROM	GR ISLD-LNX3345.00 - HOLT.CO3 345.00 345KV CKT 1	720	720	0.04036	103.0864	GEN641089 2-ENERGY CENTER 2
FDNS	00NR_G15_042	2	16WP	G15_042	TO->FROM	GR ISLD-LNX3345.00 - HOLT.CO3 345.00 345KV CKT 1	720	720	0.04014	103.0669	G09_001IST 345.00 - GROTON 345KV CKT 1
FDNS	00NR_G15_042	2	16WP	G15_042	TO->FROM	GR ISLD-LNX3345.00 - HOLT.CO3 345.00 345KV CKT 1	720	720	0.04062	103.0626	HURON - WATERTOWN 230KV CKT 2
FDNS	00NR_G15_042	2	16WP	G15_042	TO->FROM	GR ISLD-LNX3345.00 - HOLT.CO3 345.00 345KV CKT 1	720	720	0.04062	103.0626	HURON - WATERTOWN 230KV CKT 2
FDNS	00NR_G15_042	2	16WP	G15_042	TO->FROM	GR ISLD-LNX3345.00 - HOLT.CO3 345.00 345KV CKT 1	720	720	0.0404	103.0549	FORMAN - OAKES 230KV CKT 1
FDNS	00NR_G15_042	2	16WP	G15_042	TO->FROM	GR ISLD-LNX3345.00 - HOLT.CO3 345.00 345KV CKT 1	720	720	0.04036	103.0404	GEN338146 1-INDEPENDENCE UNIT #2
FDNS	00NR_G15_042	2	16WP	G15_042	TO->FROM	GR ISLD-LNX3345.00 - HOLT.CO3 345.00 345KV CKT 1	720	720	0.04036	103.0352	GEN338143 1-INDEPENDENCE UNIT #1
FDNS	00NR_G15_042	2	16WP	G15_042	TO->FROM	GR ISLD-LNX3345.00 - HOLT.CO3 345.00 345KV CKT 1	720	720	0.03853	103.0238	SPLIT ROCK - WHITE 345KV CKT 1
FDNS	00NR_G15_042	2	16WP	G15_042	TO->FROM	GR ISLD-LNX3345.00 - HOLT.CO3 345.00 345KV CKT 1	720	720	0.03853	103.0238	SPLIT ROCK - WHITE 345KV CKT 1
FDNS	00NR_G15_042	2	16WP	G15_042	TO->FROM	GR ISLD-LNX3345.00 - HOLT.CO3 345.00 345KV CKT 1	720	720	0.04062	103.011	CARPENTER - WATERTOWN 230KV CKT 1
FDNS	00NR_G15_042	2	16WP	G15_042	TO->FROM	GR ISLD-LNX3345.00 - HOLT.CO3 345.00 345KV CKT 1	720	720	0.04062	103.011	CARPENTER - WATERTOWN 230KV CKT 1
FDNS	00NR_G15_042	2	16WP	G15_042	TO->FROM	GR ISLD-LNX3345.00 - HOLT.CO3 345.00 345KV CKT 1	720	720	0.04043	102.98	CNTSHNT3 345.00 - PRAIRIE3 345.00 345KV CKT 1
FDNS	00NR_G15_042	2	16WP	G15_042	TO->FROM	GR ISLD-LNX3345.00 - HOLT.CO3 345.00 345KV CKT 1	720	720	0.03867	102.9404	PAHOJA - SIOUX FALLS 230KV CKT 1
FDNS	00NR_G15_042	2	16WP	G15_042	TO->FROM	GR ISLD-LNX3345.00 - HOLT.CO3 345.00 345KV CKT 1	720	720	0.04152	102.9177	ADAMS - PLEASANT VALLEY 345KV CKT 1
FDNS	00NR_G15_042	2	16WP	G15_042	TO->FROM	GR ISLD-LNX3345.00 - HOLT.CO3 345.00 345KV CKT 1	720	720	0.0389	102.8932	FT THOMPSON - WESSINGTON 230KV CKT 1
FDNS	00NR_G15_042	2	16WP	G15_042	TO->FROM	GR ISLD-LNX3345.00 - HOLT.CO3 345.00 345KV CKT 1	720	720	0.0389	102.8932	FT THOMPSON - WESSINGTON 230KV CKT 1
FDNS	00NR_G15_042	2	16WP	G15_042	TO->FROM	GR ISLD-LNX3345.00 - HOLT.CO3 345.00 345KV CKT 1	720	720	0.03455	102.8593	RASMUSN - UTICA JCT 230KV CKT 1
FDNS	00NR_G15_042	2	16WP	G15_042	TO->FROM	GR ISLD-LNX3345.00 - HOLT.CO3 345.00 345KV CKT 1	720	720	0.04036	102.8556	GEN501813 1-RODEMACHER UNIT 3
FDNS	00NR_G15_042	2	16WP	G15_042	TO->FROM	GR ISLD-LNX3345.00 - HOLT.CO3 345.00 345KV CKT 1	720	720	0.0404	102.852	P12:115:NPPD:1091:VALENTN7:MISSION7:BTB
FDNS	00NR_G15_042	2	16WP	G15_042	TO->FROM	GR ISLD-LNX3345.00 - HOLT.CO3 345.00 345KV CKT 1	720	720	0.05617	102.8401	DIXONCO 230.00 - HOSKINS 230KV CKT 1
FDNS	00NR_G15_042	2	16WP	G15_042	TO->FROM	GR ISLD-LNX3345.00 - HOLT.CO3 345.00 345KV CKT 1	720	720	0.0404	102.802	MISSION - ST FRANCIS 115KV CKT 1
FDNS	00NR_G15_042	2	16WP	G15_042	TO->FROM	GR ISLD-LNX3345.00 - HOLT.CO3 345.00 345KV CKT 1	720	720	0.04062	102.7832	FT THOMPSON - HURON 230KV CKT 1
FDNS	00NR_G15_042	2	16WP	G15_042	TO->FROM	GR ISLD-LNX3345.00 - HOLT.CO3 345.00 345KV CKT 1	720	720	0.04062	102.7832	FT THOMPSON - HURON 230KV CKT 1
FDNS	00NR_G15_042	2	16WP	G15_042	TO->FROM	GR ISLD-LNX3345.00 - HOLT.CO3 345.00 345KV CKT 1	720	720	0.04062	102.7832	FT THOMPSON - HURON 230KV CKT 2
FDNS	00NR_G15_042	2	16WP	G15_042	TO->FROM	GR ISLD-LNX3345.00 - HOLT.CO3 345.00 345KV CKT 1	720	720	0.04062	102.7832	FT THOMPSON - HURON 230KV CKT 2
FDNS	00NR_G15_042	2	16WP	G15_042	TO->FROM	GR ISLD-LNX3345.00 - HOLT.CO3 345.00 345KV CKT 1	720	720	0.03976	102.7785	GERALD GENTLEMAN STATION - SWEETWATER 345KV CKT 1
FDNS	00NR_G15_042	2	16WP	G15_042	TO->FROM	GR ISLD-LNX3345.00 - HOLT.CO3 345.00 345KV CKT 1	720	720	0.0404	102.7296	HARMONY - ST FRANCIS 115KV CKT 1
FDNS	00NR_G15_042	2	16WP	G15_042	TO->FROM	GR ISLD-LNX3345.00 - HOLT.CO3 345.00 345KV CKT 1	720	720	0.04036	102.7289	GEN335206 1-NELSON UNIT 6
FDNS	00NR_G15_042	2	16WP	G15_042	TO->FROM	GR ISLD-LNX3345.00 - HOLT.CO3 345.00 345KV CKT 1	720	720	0.0404	102.6854	HARMONY - VALENTINE 115KV CKT 1
FDNS	00NR_G15_042	2	16WP	G15_042	TO->FROM	GR ISLD-LNX3345.00 - HOLT.CO3 345.00 345KV CKT 1	720	720	0.04036	102.6543	P13:230-345:NPPD:NUCOR-1
FDNS	00NR_G15_042	2	16WP	G15_042	TO->FROM	GR ISLD-LNX3345.00 - HOLT.CO3 345.00 345KV CKT 1	720	720	0.04044	102.6479	FORMAN - HANKINSON 230KV CKT 1
FDNS	00NR_G15_042	2	16WP	G15_042	TO->FROM	GR ISLD-LNX3345.00 - HOLT.CO3 345.00 345KV CKT 1	720	720	0.0415	102.6424	LAKEFIELD 3 - NOBLES 345KV CKT 1
FDNS	00NR_G15_042	2	16WP	G15_042	TO->FROM	GR ISLD-LNX3345.00 - HOLT.CO3 345.00 345KV CKT 1	720	720	0.0406	102.6359	ALEXMRES3 345.00 - BISON 3 345.00 345KV CKT 1
FDNS	00NR_G15_042	2	16WP	G15_042	TO->FROM	GR ISLD-LNX3345.00 - HOLT.CO3 345.00 345KV CKT 1	720	720	0.04043	102.6317	CHISAGO COUNTY - CHISAGO COUNTY 500KV CKT 1
FDNS	00NR_G15_042	2	16WP	G15_042	TO->FROM	GR ISLD-LNX3345.00 - HOLT.CO3 345.00 345KV CKT 1	720	720	0.04036	102.625	GEN532751 1-WOLF CREEK GENERATING STATION UNIT 1
FDNS	00NR_G15_042	2	16WP	G15_042	TO->FROM	GR ISLD-LNX3345.00 - HOLT.CO3 345.00 345KV CKT 1	720	720	0.03867	102.6246	EAGLE 4 230.00 - PAHOJA 230KV CKT 1
FDNS	00NR_G15_042	2	16WP	G15_042	TO->FROM	GR ISLD-LNX3345.00 - HOLT.CO3 345.00 345KV CKT 1	720	720	0.04036	102.6238	GEN501812 1-RODEMACHER UNIT 2
FDNS	00NR_G15_042	2	16WP	G15_042	TO->FROM	GR ISLD-LNX3345.00 - HOLT.CO3 345.00 345KV CKT 1	720	720	0.04036	102.6008	GEN344897 4-1LAB G4 20.000
FDNS	00NR_G15_042	2	16WP	G15_042	TO->FROM	GR ISLD-LNX3345.00 - HOLT.CO3 345.00 345KV CKT 1	720	720	0.04036	102.5988	GEN344894 1-1LAB G1 20.000
FDNS	00NR_G15_042	2	16WP	G15_042	TO->FROM	GR ISLD-LNX3345.00 - HOLT.CO3 345.00 345KV CKT 1	720	720	0.04036	102.5986	GEN344896 3-1LAB G3 20.000
FDNS	00NR_G15_042	2	16WP	G15_042	TO->FROM	GR ISLD-LNX3345.00 - HOLT.CO3 345.00 345KV CKT 1	720	720	0.04055	102.5951	GLENBORO SOUTH - RUGBY 230KV CKT 1
FDNS	00NR_G15_042	2	16WP	G15_042	TO->FROM	GR ISLD-LNX3345.00 - HOLT.CO3 345.00 345KV CKT 1	720	720	0.04036	102.577	GEN345670 1-1RUSH G1 18.000
FDNS	00NR_G15_042	2	16WP	G15_042	TO->FROM	GR ISLD-LNX3345.00 - HOLT.CO3 345.00 345KV CKT 1	720	720	0.04036	102.577	GEN345671 2-1RUSH G2 18.000
FDNS	00NR_G15_042	2	16WP	G15_042	TO->FROM	GR ISLD-LNX3345.00 - HOLT.CO3 345.00 345KV CKT 1	720	720	0.04038	102.5671	CENTER - COYOTE 345KV CKT 1
FDNS	00NR_G15_042	2	16WP	G15_042	TO->FROM	GR ISLD-LNX3345.00 - HOLT.CO3 345.00 345KV CKT 1	720	720	0.04036	102.566	GEN344895 2-1LAB G2 20.000
FDNS	00NR_G15_042	2	16WP	G15_042	TO->FROM	GR ISLD-LNX3345.00 - HOLT.CO3 345.00 345KV CKT 1	720	720	0.04036	102.5393	GEN659118 1-LARAMIE RIVER UNIT1
FDNS	00NR_G15_042	2	16WP	G15_042	TO->FROM	GR ISLD-LNX3345.00 - HOLT.CO3 345.00 345KV CKT 1	720	720	0.04036	102.5175	GEN336252 1-NINEMILE POINT UNIT#5
FDNS	00NR_G15_042	2	16WP	G15_042	TO->FROM	GR ISLD-LNX3345.00 - HOLT.CO3 345.00 345KV CKT 1	720	720	0.04039	102.5042	P12:115:NPPD:WAPA6:FTRANDL7:ONEILL 7:BTB
FDNS	00NR_G15_042	2	16WP	G15_042	TO->FROM	GR ISLD-LNX3345.00 - HOLT.CO3 345.00 345KV CKT 1	720	720	0.04039	102.5042	P12:115:UMZB:# 115 #: SE IN NE. FR-SE-ON
FDNS	00NR_G15_042	2	16WP	G15_042	TO->FROM	GR ISLD-LNX3345.00 - HOLT.CO3 345.00 345KV CKT 1	720	720	0.03695	102.4974	SIOUXCY-LNX3345.00 - SPLIT ROCK 345KV CKT 1
FDNS	00NR_G15_042	2	16WP	G15_042	TO->FROM	GR ISLD-LNX3345.00 - HOLT.CO3 345.00 345KV CKT 1	720	720	0.03695	102.4974	SIOUXCY-LNX3345.00 - SPLIT ROCK 345KV CKT 1
FDNS	00NR_G15_042	2	16WP	G15_042	TO->FROM	GR ISLD-LNX3345.00 - HOLT.CO3 345.00 345KV CKT 1	720	720	0.03992	102.4858	GERALD GENTLEMAN STATION - SWEETWATER 345KV CKT 2
FDNS	00NR_G15_042	2	16WP	G15_042	TO->FROM	GR ISLD-LNX3345.00 - HOLT.CO3 345.00 345KV CKT 1	720	720	0.03789	102.4833	FT THOMPSON (FT2 KU1B) 345/230/13.8KV TRANSFORMER CKT 1
FDNS	00NR_G15_042	2	16WP	G15_042	TO->FROM	GR ISLD-LNX3345.00 - HOLT.CO3 345.00 345KV CKT 1	720	720	0.03789	102.4811	FT THOMPSON (FT2 KU1A) 345/230/13.8KV TRANSFORMER CKT 1
FDNS	00NR_G15_042	2	16WP	G15_042	TO->FROM	GR ISLD-LNX3345.00 - HOLT.CO3 345.00 345KV CKT 1	720	720	0.04047	102.4792	LARAMIE RIVER - SIDNEY2-LNX3345.00 345KV CKT 1
FDNS	00NR_G15_042	2	16WP	G15_042	TO->FROM	GR ISLD-LNX3345.00 - HOLT.CO3 345.00 345KV CKT 1	720	720	0.04036	102.4786	GEN336831 1-BAXTER WILSON SES
FDNS	00NR_G15_042	2	16WP	G15_042	TO->FROM	GR ISLD-LNX3345.00 - HOLT.CO3 345.00 345KV CKT 1	720	720	0.03695	102.475	P12:345:UMZW:# 907 #: SC2-SR IN IA. SC2-SR 345 KV LINE
FDNS	00NR_G15_042	2	16WP	G15_042	TO->FROM	GR ISLD-LNX3345.00 - HOLT.CO3 345.00 345KV CKT 1	720	720	0.04039	102.4639	FT RANDAL - SPENCER 115KV CKT 1
FDNS	00NR_G15_042	2	16WP	G15_042	TO->FROM	GR ISLD-LNX3345.00 - HOLT.CO3 345.00 345KV CKT 1	720	720	0.04047	102.4629	SIDNEY - SIDNEY2-LNX3345.00 345KV CKT Z
FDNS	00NR_G15_042	2	16WP	G15_042	TO->FROM	GR ISLD-LNX3345.00 - HOLT.CO3 345.00 345KV CKT 1	720	720	0.04036	102.4574	P12:115:UMZW:# 162 #: NEL IN ND. FAULT ON ML-NEL-MX-GA 115 KV
FDNSLock	00NR_G15_042	2	16WP	G15_042	TO->FROM	GR ISLD-LNX3345.00 - HOLT.CO3 345.00 345KV CKT 1	720	720	0.04385	102.4548	STEGALL (SGQ KV3A) 345/230/13.8KV TRANSFORMER CKT 1
FDNS	00NR_G15_042	2	16WP	G15_042	TO->FROM	GR ISLD-LNX3345.00 - HOLT.CO3 345.00 345KV CKT 1	720	720	0.04036	102.453	P13:115-230:NPPD:NUCOR-3
FDNS	00NR_G15_042	2	16WP	G15_042	TO->FROM	GR ISLD-LNX3345.00 - HOLT.CO3 345.00 345KV CKT 1	720	720	0.03695	102.4485	SIOUX CITY - SIOUXCY-LNX3345.00 345KV CKT Z
FDNS	00NR_G15_042	2	16WP	G15_042	TO->FROM	GR ISLD-LNX3345.00 - HOLT.CO3 345.00 345KV CKT 1	720	720	0.0404	102.4324	AINSWORTH - VALENTINE 115KV CKT 1
FDNS	00NR_G15_042	2	16WP	G15_042	TO->FROM	GR ISLD-LNX3345.00 - HOLT.CO3 345.00 345KV CKT 1	720	720	0.04597	102.4249	COLUMEAST - SHELL CREEK 345KV CKT 1
FDNS	00NR_G15_042	2	16WP	G15_042	TO->FROM	GR ISLD-LNX3345.00 - HOLT.CO3 345.00 345KV CKT 1	720	720	0.04036	102.4192	GEN337041 1-GERALD ANDRUS
FDNS	00NR_G15_042	2	16WP	G15_042	TO->FROM	GR ISLD-LNX3345.00 - HOLT.CO3 345.00 345KV CKT 1	720	720	0.04116	102.4059	BYRON - NORTH ROCHESTER 345KV CKT 1
FDNS	00NR_G15_042	2	16WP	G15_042	TO->FROM	GR ISLD-LNX3345.00 - HOLT.CO3 345.00 345KV CKT 1	720	720	0.04036	102.3785	GEN334440 1-SABINE UNIT 4

SOLUTION	GROUP	SCENARIO	SEASON	SOURCE	DIRECTION	MONITORED ELEMENT	RATEA (MVA)	RATEB(MVA)	TDF	TC%LOADING (% MVA)	CONTINGENCY
FDNS	00NR_G15_042	2	16WP	G15_042	TO->FROM	GR ISLD-LNX3345.00 - HOLT.CO3 345.00 345KV CKT 1	720	720	0.04039	102.3748	ONEILL - SPENCER 115KV CKT 1
FDNS	00NR_G15_042	2	16WP	G15_042	TO->FROM	GR ISLD-LNX3345.00 - HOLT.CO3 345.00 345KV CKT 1	720	720	0.0412	102.3686	KOSSUTH 3 345.00 - OBRIEN 3 345.00 345KV CKT 1
FDNS	00NR_G15_042	2	16WP	G15_042	TO->FROM	GR ISLD-LNX3345.00 - HOLT.CO3 345.00 345KV CKT 1	720	720	0.0412	102.3678	KOSSUTH 3 345.00 - WEBSTER 345KV CKT 1
FDNS	00NR_G15_042	2	16WP	G15_042	TO->FROM	GR ISLD-LNX3345.00 - HOLT.CO3 345.00 345KV CKT 1	720	720	0.04632	102.3624	COLUMEAST - NW68TH & HOLDREGE 345KV CKT 1
FDNS	00NR_G15_042	2	16WP	G15_042	TO->FROM	GR ISLD-LNX3345.00 - HOLT.CO3 345.00 345KV CKT 1	720	720	0.04632	102.3624	COLUMEAST - NW68TH & HOLDREGE 345KV CKT 1
FDNS	00NR_G15_042	2	16WP	G15_042	TO->FROM	GR ISLD-LNX3345.00 - HOLT.CO3 345.00 345KV CKT 1	720	720	0.04036	102.3517	GEN336251 1-NINEMILE POINT UNIT#4
FDNS	00NR_G15_042	2	16WP	G15_042	TO->FROM	GR ISLD-LNX3345.00 - HOLT.CO3 345.00 345KV CKT 1	720	720	0.04048	102.3506	BLAIR - GRANITE FALLS 230KV CKT 1
FDNS	00NR_G15_042	2	16WP	G15_042	TO->FROM	GR ISLD-LNX3345.00 - HOLT.CO3 345.00 345KV CKT 1	720	720	0.04048	102.3506	BLAIR - GRANITE FALLS 230KV CKT 1
FDNS	00NR_G15_042	2	16WP	G15_042	TO->FROM	GR ISLD-LNX3345.00 - HOLT.CO3 345.00 345KV CKT 1	720	720	0.03978	102.342	MENNO JCT - TRIPP JCT 115KV CKT 1
FDNS	00NR_G15_042	2	16WP	G15_042	TO->FROM	GR ISLD-LNX3345.00 - HOLT.CO3 345.00 345KV CKT 1	720	720	0.04185	102.3163	DENISON - SIOUX CITY 230KV CKT 1
FDNS	00NR_G15_042	2	16WP	G15_042	TO->FROM	GR ISLD-LNX3345.00 - HOLT.CO3 345.00 345KV CKT 1	720	720	0.04036	102.3102	GEN525561 1-TOLK GEN #1 24 KV
FDNS	00NR_G15_042	2	16WP	G15_042	TO->FROM	GR ISLD-LNX3345.00 - HOLT.CO3 345.00 345KV CKT 1	720	720	0.0404	102.3056	GARRISON - JAMES TOWN 230KV CKT 1
FDNS	00NR_G15_042	2	16WP	G15_042	TO->FROM	GR ISLD-LNX3345.00 - HOLT.CO3 345.00 345KV CKT 1	720	720	0.04036	102.2976	P13:115-345:NPPD:NUCOR-2
FDNS	00NR_G15_042	2	16WP	G15_042	TO->FROM	GR ISLD-LNX3345.00 - HOLT.CO3 345.00 345KV CKT 1	720	720	0.04036	102.2886	P13:230:UMZW:# 2218 #: FP IN MT. LOSS OF TRANSFORMER (AT2).
FDNS	00NR_G15_042	2	16WP	G15_042	TO->FROM	GR ISLD-LNX3345.00 - HOLT.CO3 345.00 345KV CKT 1	720	720	0.03951	102.284	GAVINS POINT - HARTINGTON 115KV CKT 1
FDNS	00NR_G15_042	2	16WP	G15_042	TO->FROM	GR ISLD-LNX3345.00 - HOLT.CO3 345.00 345KV CKT 1	720	720	0.04067	102.2787	NORTH ROCHESTER - PRAIRIE ISLAND 345KV CKT 1
FDNS	00NR_G15_042	2	16WP	G15_042	TO->FROM	GR ISLD-LNX3345.00 - HOLT.CO3 345.00 345KV CKT 1	720	720	0.04048	102.2771	HANKINSON - WAHPETON 230KV CKT 1
FDNS	00NR_G15_042	2	16WP	G15_042	TO->FROM	GR ISLD-LNX3345.00 - HOLT.CO3 345.00 345KV CKT 1	720	720	0.03978	102.2646	MENNO JCT - UTICA 115KV CKT 1
FDNS	00NR_G15_042	2	16WP	G15_042	TO->FROM	GR ISLD-LNX3345.00 - HOLT.CO3 345.00 345KV CKT 1	720	720	0.05446	102.2512	HOSKINS - SHELL CREEK 345KV CKT 1
FDNS	00NR_G15_042	2	16WP	G15_042	TO->FROM	GR ISLD-LNX3345.00 - HOLT.CO3 345.00 345KV CKT 1	720	720	0.04036	102.2502	GEN303007 1-1BC2 U2
FDNS	00NR_G15_042	2	16WP	G15_042	TO->FROM	GR ISLD-LNX3345.00 - HOLT.CO3 345.00 345KV CKT 1	720	720	0.04036	102.2475	GEN335204 1-NELSON UNIT 4
FDNS	00NR_G15_042	2	16WP	G15_042	TO->FROM	GR ISLD-LNX3345.00 - HOLT.CO3 345.00 345KV CKT 1	720	720	0.04036	102.2471	GEN303006 1-1BC2 U1
FDNS	00NR_G15_042	2	16WP	G15_042	TO->FROM	GR ISLD-LNX3345.00 - HOLT.CO3 345.00 345KV CKT 1	720	720	0.04036	102.2454	GEN336191 1-LITTLE GYPSY UNIT#3
FDNS	00NR_G15_042	2	16WP	G15_042	TO->FROM	GR ISLD-LNX3345.00 - HOLT.CO3 345.00 345KV CKT 1	720	720	0.03975	102.2453	P12:115:NPPD:1164:ONEILL 7:JEFFREY9:BTB
FDNS	00NR_G15_042	2	16WP	G15_042	TO->FROM	GR ISLD-LNX3345.00 - HOLT.CO3 345.00 345KV CKT 1	720	720	0.04036	102.2399	GEN642067 1-PLATTE
FDNS	00NR_G15_042	2	16WP	G15_042	TO->FROM	GR ISLD-LNX3345.00 - HOLT.CO3 345.00 345KV CKT 1	720	720	0.03975	102.2353	CLEARWATER - ONEILL 115KV CKT 1
FDNS	00NR_G15_042	2	16WP	G15_042	TO->FROM	GR ISLD-LNX3345.00 - HOLT.CO3 345.00 345KV CKT 1	720	720	0.03978	102.2307	P12:115:UMZZ:# 237 #: MEN IN SD. MENNO JUNCTION IS A TAP (UJ-MEN-TP).
FDNS	00NR_G15_042	2	16WP	G15_042	TO->FROM	GR ISLD-LNX3345.00 - HOLT.CO3 345.00 345KV CKT 1	720	720	0.04117	102.2306	BYRON - PLEASANT VALLEY 345KV CKT 1
FDNS	00NR_G15_042	2	16WP	G15_042	TO->FROM	GR ISLD-LNX3345.00 - HOLT.CO3 345.00 345KV CKT 1	720	720	0.04036	102.2222	GEN531447 1-HOLCOMB GENERATOR
FDNS	00NR_G15_042	2	16WP	G15_042	TO->FROM	GR ISLD-LNX3345.00 - HOLT.CO3 345.00 345KV CKT 1	720	720	0.04036	102.2138	GEN336801 1-BAXTER WILSON UNIT #1
FDNS	00NR_G15_042	2	16WP	G15_042	TO->FROM	GR ISLD-LNX3345.00 - HOLT.CO3 345.00 345KV CKT 1	720	720	0.04036	102.2095	GEN335614 1-WILLOW GLENN UNIT#4
FDNS	00NR_G15_042	2	16WP	G15_042	TO->FROM	GR ISLD-LNX3345.00 - HOLT.CO3 345.00 345KV CKT 1	720	720	0.03975	102.2025	CLEARWATER - NELIGH 115KV CKT 1
FDNS	00NR_G15_042	2	16WP	G15_042	TO->FROM	GR ISLD-LNX3345.00 - HOLT.CO3 345.00 345KV CKT 1	720	720	0.04036	102.1992	GEN336464 1-MICHOUD UNIT #3
FDNS	00NR_G15_042	2	16WP	G15_042	TO->FROM	GR ISLD-LNX3345.00 - HOLT.CO3 345.00 345KV CKT 1	720	720	0.04036	102.1989	GEN303008 1-1BC2 U3
FDNS	00NR_G15_042	2	16WP	G15_042	TO->FROM	GR ISLD-LNX3345.00 - HOLT.CO3 345.00 345KV CKT 1	720	720	0.04036	102.194	GEN336170 1-GULF OXY U4
FDNS	00NR_G15_042	2	16WP	G15_042	TO->FROM	GR ISLD-LNX3345.00 - HOLT.CO3 345.00 345KV CKT 1	720	720	0.04036	102.1846	GEN334441 1-SABINE UNIT 5
FDNS	00NR_G15_042	2	16WP	G15_042	TO->FROM	GR ISLD-LNX3345.00 - HOLT.CO3 345.00 345KV CKT 1	720	720	0.0404	102.1795	BISMARK - JAMES TOWN 230KV CKT 1
FDNS	00NR_G15_042	2	16WP	G15_042	TO->FROM	GR ISLD-LNX3345.00 - HOLT.CO3 345.00 345KV CKT 1	720	720	0.0404	102.1652	JAMES TOWN - WEBER 230KV CKT 1
FDNS	00NR_G15_042	2	16WP	G15_042	TO->FROM	GR ISLD-LNX3345.00 - HOLT.CO3 345.00 345KV CKT 1	720	720	0.04036	102.1645	GRAND GULF 500/22.0KV TRANSFORMER CKT 1
FDNS	00NR_G15_042	2	16WP	G15_042	TO->FROM	GR ISLD-LNX3345.00 - HOLT.CO3 345.00 345KV CKT 1	720	720	0.0404	102.1633	BISMARK - WEBER 230KV CKT 1
FDNS	00NR_G15_042	2	16WP	G15_042	TO->FROM	GR ISLD-LNX3345.00 - HOLT.CO3 345.00 345KV CKT 1	720	720	0.04057	102.1595	APPLEDORN 4 230.00 - WATERTOWN 230KV CKT 1
FDNS	00NR_G15_042	2	16WP	G15_042	TO->FROM	GR ISLD-LNX3345.00 - HOLT.CO3 345.00 345KV CKT 1	720	720	0.04057	102.1595	APPLEDORN 4 230.00 - WATERTOWN 230KV CKT 1
FDNS	00NR_G15_042	2	16WP	G15_042	TO->FROM	GR ISLD-LNX3345.00 - HOLT.CO3 345.00 345KV CKT 1	720	720	0.04036	102.1586	GEN501811 1-RODEMACHER UNIT 1
FDNS	00NR_G15_042	2	16WP	G15_042	TO->FROM	GR ISLD-LNX3345.00 - HOLT.CO3 345.00 345KV CKT 1	720	720	0.04036	102.1213	PRAIRIE ISLAND 345/20.0KV TRANSFORMER CKT 1
FDNS	00NR_G15_042	2	16WP	G15_042	TO->FROM	GR ISLD-LNX3345.00 - HOLT.CO3 345.00 345KV CKT 1	720	720	0.04036	102.1187	PRAIRIE ISLAND 345/20.0KV TRANSFORMER CKT 2
FDNS	00NR_G15_042	2	16WP	G15_042	TO->FROM	GR ISLD-LNX3345.00 - HOLT.CO3 345.00 345KV CKT 1	720	720	0.04036	102.1106	GEN334433 1-SABINE UNIT 3
FDNS	00NR_G15_042	2	16WP	G15_042	TO->FROM	GR ISLD-LNX3345.00 - HOLT.CO3 345.00 345KV CKT 1	720	720	0.04036	102.1032	GEN334071 1-LEWIS CREEK 2
FDNS	00NR_G15_042	2	16WP	G15_042	TO->FROM	GR ISLD-LNX3345.00 - HOLT.CO3 345.00 345KV CKT 1	720	720	0.04057	102.1024	APPLEDORN 4 230.00 - GRANITE FALLS 230KV CKT 1
FDNS	00NR_G15_042	2	16WP	G15_042	TO->FROM	GR ISLD-LNX3345.00 - HOLT.CO3 345.00 345KV CKT 1	720	720	0.04057	102.1024	APPLEDORN 4 230.00 - GRANITE FALLS 230KV CKT 1
FDNS	00NR_G15_042	2	16WP	G15_042	TO->FROM	GR ISLD-LNX3345.00 - HOLT.CO3 345.00 345KV CKT 1	720	720	0.0404	102.099	FARGO - JAMES TOWN 230KV CKT 1
FDNS	00NR_G15_042	2	16WP	G15_042	TO->FROM	GR ISLD-LNX3345.00 - HOLT.CO3 345.00 345KV CKT 1	720	720	0.04036	102.0989	GEN334070 1-LEWIS CREEK 1
FDNS	00NR_G15_042	2	16WP	G15_042	TO->FROM	GR ISLD-LNX3345.00 - HOLT.CO3 345.00 345KV CKT 1	720	720	0.04036	102.0923	GEN338388 1-1PLUM PT U1 23.000
FDNS	00NR_G15_042	2	16WP	G15_042	TO->FROM	GR ISLD-LNX3345.00 - HOLT.CO3 345.00 345KV CKT 1	720	720	0.04036	102.0888	GEN525562 1-TOLK GEN #2 24 KV
FDNS	00NR_G15_042	2	16WP	G15_042	TO->FROM	GR ISLD-LNX3345.00 - HOLT.CO3 345.00 345KV CKT 1	720	720	0.04036	102.0881	GEN337766 1-TRACTEBEL UNIT S1
FDNS	00NR_G15_042	2	16WP	G15_042	TO->FROM	GR ISLD-LNX3345.00 - HOLT.CO3 345.00 345KV CKT 1	720	720	0.0404	102.084	FARGO - JAMES TOWN 230KV CKT 2
FDNS	00NR_G15_042	2	16WP	G15_042	TO->FROM	GR ISLD-LNX3345.00 - HOLT.CO3 345.00 345KV CKT 1	720	720	0.04046	102.0807	FERGSFL4 230.00 - WAHPETON 230KV CKT 1
FDNS	00NR_G15_042	2	16WP	G15_042	TO->FROM	GR ISLD-LNX3345.00 - HOLT.CO3 345.00 345KV CKT 1	720	720	0.04153	102.0795	ARKANSAS NUCLEAR ONE - FT SMITH 500KV CKT 1
FDNS	00NR_G15_042	2	16WP	G15_042	TO->FROM	GR ISLD-LNX3345.00 - HOLT.CO3 345.00 345KV CKT 1	720	720	0.04153	102.0795	ARKANSAS NUCLEAR ONE - FT SMITH 500KV CKT 1
FDNS	00NR_G15_042	2	16WP	G15_042	TO->FROM	GR ISLD-LNX3345.00 - HOLT.CO3 345.00 345KV CKT 1	720	720	0.04037	102.0732	BALTA - RAMSEY 230KV CKT 1
FDNS	00NR_G15_042	2	16WP	G15_042	TO->FROM	GR ISLD-LNX3345.00 - HOLT.CO3 345.00 345KV CKT 1	720	720	0.04042	102.0692	AUDUBON - SHEYNNE 230KV CKT 1
FDNS	00NR_G15_042	2	16WP	G15_042	TO->FROM	GR ISLD-LNX3345.00 - HOLT.CO3 345.00 345KV CKT 1	720	720	0.04036	102.056	GEN501910 1-ACADIA UNIT ST1
FDNS	00NR_G15_042	2	16WP	G15_042	TO->FROM	GR ISLD-LNX3345.00 - HOLT.CO3 345.00 345KV CKT 1	720	720	0.04017	102.0544	OVEXFRMCCOVE
FDNS	00NR_G15_042	2	16WP	G15_042	TO->FROM	GR ISLD-LNX3345.00 - HOLT.CO3 345.00 345KV CKT 1	720	720	0.04054	102.0442	NORTH LA CROSSE - NORTH ROCHESTER 345KV CKT 1
FDNS	00NR_G15_042	2	16WP	G15_042	TO->FROM	GR ISLD-LNX3345.00 - HOLT.CO3 345.00 345KV CKT 1	720	720	0.04036	102.0437	P12:345:GRDA:CHOUTEAU-SPORTSMANACRES
FDNS	00NR_G15_042	2	16WP	G15_042	TO->FROM	GR ISLD-LNX3345.00 - HOLT.CO3 345.00 345KV CKT 1	720	720	0.04036	102.0399	WHITE BLUFF 500/26.0KV TRANSFORMER CKT 1
FDNS	00NR_G15_042	2	16WP	G15_042	TO->FROM	GR ISLD-LNX3345.00 - HOLT.CO3 345.00 345KV CKT 1	720	720	0.04045	102.03	P13:115-230:TSGT:SIDNEY-KV1A
FDNS	00NR_G15_042	2	16WP	G15_042	TO->FROM	GR ISLD-LNX3345.00 - HOLT.CO3 345.00 345KV CKT 1	720	720	0.04036	102.0276	GEN336222 1-LITTLE GYPSY UNIT#2
FDNS	00NR_G15_042	2	16WP	G15_042	TO->FROM	GR ISLD-LNX3345.00 - HOLT.CO3 345.00 345KV CKT 1	720	720	0.04146	102.0245	PETERSBRG.N7115.00 - PETERSBURG 115KV CKT Z1
FDNS	00NR_G15_042	2	16WP	G15_042	TO->FROM	GR ISLD-LNX3345.00 - HOLT.CO3 345.00 345KV CKT 1	720	720	0.04146	102.0153	P12:115:NPPD:1168B:ALBION 7:PETERSBRG.N7:BTB
FDNS	00NR_G15_042	2	16WP	G15_042	TO->FROM	GR ISLD-LNX3345.00 - HOLT.CO3 345.00 345KV CKT 1	720	720	0.04036	101.5701	BASE CASE
FDNS	00NR_G15_042	2	16WP	G15_042	TO->FROM	GR ISLD-LNX3345.00 - HOLT.CO3 345.00 345KV CKT 1	720	720	0.04036	101.2688	GEN645001 1-FORT CALHOUN 1
FDNS	00NR_G15_042	2	16WP	G15_042	TO->FROM	GR ISLD-LNX3345.00 - HOLT.CO3 345.00 345KV CKT 1	720	720	0.04047	101.1961	P12:345:UMZB:# 102 #: AVS BD IN ND. AVS BRD LR
FDNS	00NR_G15_042	2	16WP	G15_042	TO->FROM	GR ISLD-LNX3345.00 - HOLT.CO3 345.00 345KV CKT 1	720	720	0.04047	101.1956	P12:345:UMZB:# 103 #: BD IN SD. LOSS OF LINE

SOLUTION	GROUP	SCENARIO	SEASON	SOURCE	DIRECTION	MONITORED ELEMENT	RATEA (MVA)	RATEB(MVA)	TDF	TC%LOADING (% MVA)	CONTINGENCY
FDNS	00NR_G15_042	2	16WP	G15_042	TO->FROM	GR ISLD-LNX3345.00 - HOLT.CO3 345.00 345KV CKT 1	720	720	0.04047	101.1912	BRDLAND-LNX3345.00 - HURON 345KV CKT Z
FDNS	00NR_G15_042	2	16WP	G15_042	TO->FROM	GR ISLD-LNX3345.00 - HOLT.CO3 345.00 345KV CKT 1	720	720	0.04047	101.1907	BROADLAND - HURON 230KV CKT 1
FDNS	00NR_G15_042	2	16WP	G15_042	TO->FROM	GR ISLD-LNX3345.00 - HOLT.CO3 345.00 345KV CKT 1	720	720	0.04047	101.1907	HURON (BD KU2A) 345/230/13.8KV TRANSFORMER CKT 1
FDNS	00NR_G15_042	2	16WP	G15_042	TO->FROM	GR ISLD-LNX3345.00 - HOLT.CO3 345.00 345KV CKT 1	720	720	0.04047	101.1907	HURON (BD KU2A) 345/230/13.8KV TRANSFORMER CKT 1
FDNS	00NR_G15_042	2	16WP	G15_042	TO->FROM	GR ISLD-LNX3345.00 - HOLT.CO3 345.00 345KV CKT 1	720	720	0.04047	101.1705	FT THOMPSON - OAHE 230KV CKT 3
FDNS	00NR_G15_042	2	16WP	G15_042	TO->FROM	GR ISLD-LNX3345.00 - HOLT.CO3 345.00 345KV CKT 1	720	720	0.04047	101.1705	FT THOMPSON - OAHE 230KV CKT 3
FDNS	00NR_G15_042	2	16WP	G15_042	TO->FROM	GR ISLD-LNX3345.00 - HOLT.CO3 345.00 345KV CKT 1	720	720	0.04047	101.1705	FT THOMPSON - OAHE 230KV CKT 4
FDNS	00NR_G15_042	2	16WP	G15_042	TO->FROM	GR ISLD-LNX3345.00 - HOLT.CO3 345.00 345KV CKT 1	720	720	0.04047	101.1705	FT THOMPSON - OAHE 230KV CKT 4
FDNS	00NR_G15_042	2	16WP	G15_042	TO->FROM	GR ISLD-LNX3345.00 - HOLT.CO3 345.00 345KV CKT 1	720	720	0.03764	101.158	MINGO - SETAB 345KV CKT 1
FDNS	00NR_G15_042	2	16WP	G15_042	TO->FROM	GR ISLD-LNX3345.00 - HOLT.CO3 345.00 345KV CKT 1	720	720	0.03764	101.158	MINGO - SETAB 345KV CKT 1
FDNS	00NR_G15_042	2	16WP	G15_042	TO->FROM	GR ISLD-LNX3345.00 - HOLT.CO3 345.00 345KV CKT 1	720	720	0.04815	101.1504	COLUMWEST - KELLY 230KV CKT 1
FDNS	00NR_G15_042	2	16WP	G15_042	TO->FROM	GR ISLD-LNX3345.00 - HOLT.CO3 345.00 345KV CKT 1	720	720	0.04047	101.1414	ANTELOP-LNX3345.00 - BRDLAND-LNX3345.00 345KV CKT 1
FDNS	00NR_G15_042	2	16WP	G15_042	TO->FROM	GR ISLD-LNX3345.00 - HOLT.CO3 345.00 345KV CKT 1	720	720	0.04009	101.1301	G14-074T 345.00 - OKLAUNION 345KV CKT 1
FDNSLock	00NR_G15_042	2	16WP	G15_042	TO->FROM	GR ISLD-LNX3345.00 - HOLT.CO3 345.00 345KV CKT 1	720	720	0.04054	101.1081	STEGALL - VICTORY HILL 230KV CKT 1
FDNS	00NR_G15_042	2	16WP	G15_042	TO->FROM	GR ISLD-LNX3345.00 - HOLT.CO3 345.00 345KV CKT 1	720	720	0.04067	101.1044	GRAND ISLAND (GI KU3A) 345/230/13.8KV TRANSFORMER CKT 3
FDNS	00NR_G15_042	2	16WP	G15_042	TO->FROM	GR ISLD-LNX3345.00 - HOLT.CO3 345.00 345KV CKT 1	720	720	0.04067	101.1044	GRAND ISLAND (GI KU3A) 345/230/13.8KV TRANSFORMER CKT 3
FDNS	00NR_G15_042	2	16WP	G15_042	TO->FROM	GR ISLD-LNX3345.00 - HOLT.CO3 345.00 345KV CKT 1	720	720	0.04054	101.1042	VICTORY HILL (VICTORYHL T1) 230/115/13.8KV TRANSFORMER CKT 1
FDNS	00NR_G15_042	2	16WP	G15_042	TO->FROM	GR ISLD-LNX3345.00 - HOLT.CO3 345.00 345KV CKT 1	720	720	0.04054	101.1042	VICTORY HILL (VICTORYHL T1) 230/115/13.8KV TRANSFORMER CKT 1
FDNS	00NR_G15_042	2	16WP	G15_042	TO->FROM	GR ISLD-LNX3345.00 - HOLT.CO3 345.00 345KV CKT 1	720	720	0.04047	101.0852	LARAMIE RIVER - STEGALL 345KV CKT 1
FDNS	00NR_G15_042	2	16WP	G15_042	TO->FROM	GR ISLD-LNX3345.00 - HOLT.CO3 345.00 345KV CKT 1	720	720	0.04047	101.07	ANTELOP-LNX3345.00 - ANTELOPE VALLEY 345KV CKT Z
FDNS	00NR_G15_042	2	16WP	G15_042	TO->FROM	GR ISLD-LNX3345.00 - HOLT.CO3 345.00 345KV CKT 1	720	720	0.04036	101.0687	GEN600013 3-BLACK DOG GEN 3
FDNS	00NR_G15_042	2	16WP	G15_042	TO->FROM	GR ISLD-LNX3345.00 - HOLT.CO3 345.00 345KV CKT 1	720	720	0.04036	101.0683	GEN672340 1-QUEEN ELIZABETH GENERATOR 1
FDNS	00NR_G15_042	2	16WP	G15_042	TO->FROM	GR ISLD-LNX3345.00 - HOLT.CO3 345.00 345KV CKT 1	720	720	0.04052	101.0648	P12:115:UMZW:# 172 #: WI IN SD.
FDNS	00NR_G15_042	2	16WP	G15_042	TO->FROM	GR ISLD-LNX3345.00 - HOLT.CO3 345.00 345KV CKT 1	720	720	0.04036	101.0633	MITCHLCO3 345.00 345/34.5KV TRANSFORMER CKT 1
FDNS	00NR_G15_042	2	16WP	G15_042	TO->FROM	GR ISLD-LNX3345.00 - HOLT.CO3 345.00 345KV CKT 1	720	720	0.04036	101.0502	GEN659018 1-G14_003IS_3 0.6900
FDNS	00NR_G15_042	2	16WP	G15_042	TO->FROM	GR ISLD-LNX3345.00 - HOLT.CO3 345.00 345KV CKT 1	720	720	0.04036	101.0436	GEN672384 1-CENTENNIAL WINDFARM
FDNS	00NR_G15_042	2	16WP	G15_042	TO->FROM	GR ISLD-LNX3345.00 - HOLT.CO3 345.00 345KV CKT 1	720	720	0.04036	101.0425	GEN600125 2-FEP ST G 13.800
FDNS	00NR_G15_042	2	16WP	G15_042	TO->FROM	GR ISLD-LNX3345.00 - HOLT.CO3 345.00 345KV CKT 1	720	720	0.04036	101.0328	LADISH 115/13.2KV TRANSFORMER CKT 1
FDNS	00NR_G15_042	2	16WP	G15_042	TO->FROM	GR ISLD-LNX3345.00 - HOLT.CO3 345.00 345KV CKT 1	720	720	0.04036	101.0297	GEN620323 2-HOOT LAKE 2 GEN
FDNS	00NR_G15_042	2	16WP	G15_042	TO->FROM	GR ISLD-LNX3345.00 - HOLT.CO3 345.00 345KV CKT 1	720	720	0.04036	101.0243	GEN659354 1-DEERCREK STG18.000
FDNS	00NR_G15_042	2	16WP	G15_042	TO->FROM	GR ISLD-LNX3345.00 - HOLT.CO3 345.00 345KV CKT 1	720	720	0.04161	101.0167	AXTELL - PAULINE 345KV CKT 1
FDNS	00NR_G15_042	2	16WP	G15_042	TO->FROM	GR ISLD-LNX3345.00 - HOLT.CO3 345.00 345KV CKT 1	720	720	0.04036	101.0154	GEN657964 1-ASH2GEN9 0.5750
FDNS	00NR_G15_042	2	16WP	G15_042	TO->FROM	GR ISLD-LNX3345.00 - HOLT.CO3 345.00 345KV CKT 1	720	720	0.04161	101.0113	CENTRAL CITY - GRAND ISLAND 115KV CKT 1
FDNS	00NR_G15_042	2	16WP	G15_042	TO->FROM	GR ISLD-LNX3345.00 - HOLT.CO3 345.00 345KV CKT 1	720	720	0.04006	101.0068	SMOKYHL6 230.00 - SUMMIT 230KV CKT 1
FDNS	00NR_G15_042	2	16WP	G15_042	TO->FROM	GR ISLD-LNX3345.00 - HOLT.CO3 345.00 345KV CKT 1	720	720	0.04036	101.0067	GEN652546 1-FT RANDAL
FDNS	00NR_G15_042	2	16WP	G15_042	TO->FROM	GR ISLD-LNX3345.00 - HOLT.CO3 345.00 345KV CKT 1	720	720	0.04136	101.0053	7MAYWOOD 345.00 - 7SPENCER 345.00 345KV CKT 1
FDNS	00NR_G15_042	2	16WP	G15_042	TO->FROM	GR ISLD-LNX3345.00 - HOLT.CO3 345.00 345KV CKT 1	720	720	0.04136	101.0015	7MONTGMRY 345.00 - 7SPENCER 345.00 345KV CKT 1
FDNS	00NR_G15_042	2	16WP	G15_042	TO->FROM	GR ISLD-LNX3345.00 - HOLT.CO3 345.00 345KV CKT 1	720	720	0.04017	100.9887	FALLOW 3 345.00 - POTTCO 3 345.00 345KV CKT 1
FDNS	00NR_G15_042	2	16WP	G15_042	TO->FROM	GR ISLD-LNX3345.00 - HOLT.CO3 345.00 345KV CKT 1	720	720	0.04036	100.9792	GEN600018 S-LS POWER STEAM
FDNS	00NR_G15_042	2	16WP	G15_042	TO->FROM	GR ISLD-LNX3345.00 - HOLT.CO3 345.00 345KV CKT 1	720	720	0.04036	100.9743	GEN659290 1-EDGECOL
FDNS	00NR_G15_042	2	16WP	G15_042	TO->FROM	GR ISLD-LNX3345.00 - HOLT.CO3 345.00 345KV CKT 1	720	720	0.04036	100.9719	GEN652548 5-FT RANDAL
FDNS	00NR_G15_042	2	16WP	G15_042	TO->FROM	GR ISLD-LNX3345.00 - HOLT.CO3 345.00 345KV CKT 1	720	720	0.04036	100.9719	GEN652549 7-FT RANDAL
FDNS	00NR_G15_042	2	16WP	G15_042	TO->FROM	GR ISLD-LNX3345.00 - HOLT.CO3 345.00 345KV CKT 1	720	720	0.04036	100.9718	GEN652547 3-FT RANDAL
FDNS	00NR_G15_042	2	16WP	G15_042	TO->FROM	GR ISLD-LNX3345.00 - HOLT.CO3 345.00 345KV CKT 1	720	720	0.04036	100.9678	GEN590010 1-ERCOT EQUIVALENCE
FDNS	00NR_G15_042	2	16WP	G15_042	TO->FROM	GR ISLD-LNX3345.00 - HOLT.CO3 345.00 345KV CKT 1	720	720	0.04036	100.967	G830_SUB 115.00 - GRE-MCHENRY7115.00 115KV CKT 1
FDNS	00NR_G15_042	2	16WP	G15_042	TO->FROM	GR ISLD-LNX3345.00 - HOLT.CO3 345.00 345KV CKT 1	720	720	0.04036	100.9662	GEN635213 3-NEAL UNIT 3
FDNS	00NR_G15_042	2	16WP	G15_042	TO->FROM	GR ISLD-LNX3345.00 - HOLT.CO3 345.00 345KV CKT 1	720	720	0.04036	100.9588	GEN562003 1-G11_027_3 0.6900
FDNS	00NR_G15_042	2	16WP	G15_042	TO->FROM	GR ISLD-LNX3345.00 - HOLT.CO3 345.00 345KV CKT 1	720	720	0.04036	100.9573	G830_SUB 115.00 115/34.5KV TRANSFORMER CKT 1
FDNS	00NR_G15_042	2	16WP	G15_042	TO->FROM	GR ISLD-LNX3345.00 - HOLT.CO3 345.00 345KV CKT 1	720	720	0.04117	100.9549	SUB 3454 - WAGENER 345KV CKT 1
FDNS	00NR_G15_042	2	16WP	G15_042	TO->FROM	GR ISLD-LNX3345.00 - HOLT.CO3 345.00 345KV CKT 1	720	720	0.04117	100.9549	SUB 3454 - WAGENER 345KV CKT 1
FDNS	00NR_G15_042	2	16WP	G15_042	TO->FROM	GR ISLD-LNX3345.00 - HOLT.CO3 345.00 345KV CKT 1	720	720	0.04036	100.9517	GEN652410 3-FT PECK
FDNS	00NR_G15_042	2	16WP	G15_042	TO->FROM	GR ISLD-LNX3345.00 - HOLT.CO3 345.00 345KV CKT 1	720	720	0.04036	100.9461	GEN300003 1-THOMAS HILL UNIT 3
FDNS	00NR_G15_042	2	16WP	G15_042	TO->FROM	GR ISLD-LNX3345.00 - HOLT.CO3 345.00 345KV CKT 1	720	720	0.04036	100.9389	GEN590011 2-ERCOT EQUIVALENCE
FDNS	00NR_G15_042	2	16WP	G15_042	TO->FROM	GR ISLD-LNX3345.00 - HOLT.CO3 345.00 345KV CKT 1	720	720	0.04036	100.9278	EASTDC - ERCOT EQUIVALENCE 345KV CKT 1
FDNS	00NR_G15_042	2	16WP	G15_042	TO->FROM	GR ISLD-LNX3345.00 - HOLT.CO3 345.00 345KV CKT 1	720	720	0.03957	100.9235	POST ROCK (POSTROCK T1) 345/230/13.8KV TRANSFORMER CKT 1
FDNS	00NR_G15_042	2	16WP	G15_042	TO->FROM	GR ISLD-LNX3345.00 - HOLT.CO3 345.00 345KV CKT 1	720	720	0.04036	100.9177	GEN672347 1-CORY COGEN GENERATOR 1 GT1
FDNS	00NR_G15_042	2	16WP	G15_042	TO->FROM	GR ISLD-LNX3345.00 - HOLT.CO3 345.00 345KV CKT 1	720	720	0.04036	100.9177	GEN672348 2-CORY COGEN GENERATOR 2 GT2
FDNS	00NR_G15_042	2	16WP	G15_042	TO->FROM	GR ISLD-LNX3345.00 - HOLT.CO3 345.00 345KV CKT 1	720	720	0.04036	100.9129	GEN672350 1-NIPAWIN GENERATOR 1
FDNS	00NR_G15_042	2	16WP	G15_042	TO->FROM	GR ISLD-LNX3345.00 - HOLT.CO3 345.00 345KV CKT 1	720	720	0.04036	100.9129	GEN672351 2-NIPAWIN GENERATOR 2
FDNS	00NR_G15_042	2	16WP	G15_042	TO->FROM	GR ISLD-LNX3345.00 - HOLT.CO3 345.00 345KV CKT 1	720	720	0.04036	100.9129	GEN672352 3-NIPAWIN GENERATOR 3
FDNS	00NR_G15_042	2	16WP	G15_042	TO->FROM	GR ISLD-LNX3345.00 - HOLT.CO3 345.00 345KV CKT 1	720	720	0.04036	100.893	GEN657600 1-L1GEN3 9 0.5750
FDNS	00NR_G15_042	2	16WP	G15_042	TO->FROM	GR ISLD-LNX3345.00 - HOLT.CO3 345.00 345KV CKT 1	720	720	0.04036	100.8927	GEN652414 4-FT PECK
FDNS	00NR_G15_042	2	16WP	G15_042	TO->FROM	GR ISLD-LNX3345.00 - HOLT.CO3 345.00 345KV CKT 1	720	720	0.04036	100.8927	GEN652415 5-FT PECK
FDNS	00NR_G15_042	2	16WP	G15_042	TO->FROM	GR ISLD-LNX3345.00 - HOLT.CO3 345.00 345KV CKT 1	720	720	0.04036	100.8757	GEN600012 2-BLACK DOG GEN 2
FDNS	00NR_G15_042	2	16WP	G15_042	TO->FROM	GR ISLD-LNX3345.00 - HOLT.CO3 345.00 345KV CKT 1	720	720	0.04014	100.8744	MADISON COUNTY - RLHILLS3 345.00 345KV CKT 1
FDNS	00NR_G15_042	2	16WP	G15_042	TO->FROM	GR ISLD-LNX3345.00 - HOLT.CO3 345.00 345KV CKT 1	720	720	0.04036	100.8727	GEN660001 2-ABERDEEN SIEBRECHT
FDNS	00NR_G15_042	2	16WP	G15_042	TO->FROM	GR ISLD-LNX3345.00 - HOLT.CO3 345.00 345KV CKT 1	720	720	0.0394	100.8651	G11_051T 345.00 - WOODWARD DISTRICT EHV 345KV CKT 1
FDNS	00NR_G15_042	2	16WP	G15_042	TO->FROM	GR ISLD-LNX3345.00 - HOLT.CO3 345.00 345KV CKT 1	720	720	0.04036	100.861	GEN652345 W-G07_023IS_2 0.6900
FDNS	00NR_G15_042	2	16WP	G15_042	TO->FROM	GR ISLD-LNX3345.00 - HOLT.CO3 345.00 345KV CKT 1	720	720	0.04036	100.8556	GEN629074 1-ARNOLD LOWSIDE OF GSU XFMR
FDNS	00NR_G15_042	2	16WP	G15_042	TO->FROM	GR ISLD-LNX3345.00 - HOLT.CO3 345.00 345KV CKT 1	720	720	0.04036	100.849	GEN615032 2-PLEASANT VALLEY
FDNS	00NR_G15_042	2	16WP	G15_042	TO->FROM	GR ISLD-LNX3345.00 - HOLT.CO3 345.00 345KV CKT 1	720	720	0.04036	100.8383	GEN672367 1-MERIDIAN GENERATOR 1 GT1
FDNS	00NR_G15_042	2	16WP	G15_042	TO->FROM	GR ISLD-LNX3345.00 - HOLT.CO3 345.00 345KV CKT 1	720	720	0.04036	100.8383	GEN672368 2-MERIDIAN GENERATOR 2 GT2
FDNS	00NR_G15_042	2	16WP	G15_042	TO->FROM	GR ISLD-LNX3345.00 - HOLT.CO3 345.00 345KV CKT 1	720	720	0.04036	100.838	GEN672349 3-CORY COGEN GENERATOR 3 ST

SOLUTION	GROUP	SCENARIO	SEASON	SOURCE	DIRECTION	MONITORED ELEMENT	RATEA (MVA)	RATEB(MVA)	TDF	TC%LOADING (% MVA)	CONTINGENCY
FDNS	00NR_G15_042	2	16WP	G15_042	TO->FROM	GR ISLD-LNX3345.00 - HOLT.CO3 345.00 345KV CKT 1	720	720	0.04036	100.8293	GEN300007 1-NEW MADRID UNIT 2
FDNS	00NR_G15_042	2	16WP	G15_042	TO->FROM	GR ISLD-LNX3345.00 - HOLT.CO3 345.00 345KV CKT 1	720	720	0.04036	100.8274	GEN672339 16-QE 16G 13.800
FDNS	00NR_G15_042	2	16WP	G15_042	TO->FROM	GR ISLD-LNX3345.00 - HOLT.CO3 345.00 345KV CKT 1	720	720	0.04036	100.8274	GEN672342 3-QUEEN ELIZABETH GENERATOR 3
FDNS	00NR_G15_042	2	16WP	G15_042	TO->FROM	GR ISLD-LNX3345.00 - HOLT.CO3 345.00 345KV CKT 1	720	720	0.04036	100.8241	GEN300006 1-NEW MADRID UNIT 1
FDNS	00NR_G15_042	2	16WP	G15_042	TO->FROM	GR ISLD-LNX3345.00 - HOLT.CO3 345.00 345KV CKT 1	720	720	0.04036	100.8168	GEN620324 3-HOOT LAKE 3 GEN
FDNS	00NR_G15_042	2	16WP	G15_042	TO->FROM	GR ISLD-LNX3345.00 - HOLT.CO3 345.00 345KV CKT 1	720	720	0.04166	100.8004	ATCHSNT3 345.00 - COOPER 345KV CKT 1
FDNS	00NR_G15_042	2	16WP	G15_042	TO->FROM	GR ISLD-LNX3345.00 - HOLT.CO3 345.00 345KV CKT 1	720	720	0.04166	100.8004	ATCHSNT3 345.00 - COOPER 345KV CKT 1
FDNS	00NR_G15_042	2	16WP	G15_042	TO->FROM	GR ISLD-LNX3345.00 - HOLT.CO3 345.00 345KV CKT 1	720	720	0.04036	100.7978	GEN 11104 1-J262_GEN 0.6000
FDNS	00NR_G15_042	2	16WP	G15_042	TO->FROM	GR ISLD-LNX3345.00 - HOLT.CO3 345.00 345KV CKT 1	720	720	0.04036	100.7978	GEN 11108 1-J263_GEN 0.6000
FDNS	00NR_G15_042	2	16WP	G15_042	TO->FROM	GR ISLD-LNX3345.00 - HOLT.CO3 345.00 345KV CKT 1	720	720	0.04072	100.7939	GLENHAM - L3 HAWDON 230KV CKT 1
FDNS	00NR_G15_042	2	16WP	G15_042	TO->FROM	GR ISLD-LNX3345.00 - HOLT.CO3 345.00 345KV CKT 1	720	720	0.03871	100.7887	HIGHLND 3 345.00 - OBRIEN 3 345.00 345KV CKT 1
FDNS	00NR_G15_042	2	16WP	G15_042	TO->FROM	GR ISLD-LNX3345.00 - HOLT.CO3 345.00 345KV CKT 1	720	720	0.04084	100.7857	103RD & ROKEBY - MOORE 345KV CKT 1
FDNS	00NR_G15_042	2	16WP	G15_042	TO->FROM	GR ISLD-LNX3345.00 - HOLT.CO3 345.00 345KV CKT 1	720	720	0.04084	100.7857	103RD & ROKEBY - MOORE 345KV CKT 1
FDNS	00NR_G15_042	2	16WP	G15_042	TO->FROM	GR ISLD-LNX3345.00 - HOLT.CO3 345.00 345KV CKT 1	720	720	0.04036	100.757	GEN600050 1-FEP
FDNS	00NR_G15_042	2	16WP	G15_042	TO->FROM	GR ISLD-LNX3345.00 - HOLT.CO3 345.00 345KV CKT 1	720	720	0.04036	100.7477	GEN635214 4-NEAL UNIT 4
FDNS	00NR_G15_042	2	16WP	G15_042	TO->FROM	GR ISLD-LNX3345.00 - HOLT.CO3 345.00 345KV CKT 1	720	720	0.04036	100.7448	GEN659273 2-GROTON SYNC COND
FDNS	00NR_G15_042	2	16WP	G15_042	TO->FROM	GR ISLD-LNX3345.00 - HOLT.CO3 345.00 345KV CKT 1	720	720	0.04036	100.7448	GEN659294 1-WILTONCOL9
FDNS	00NR_G15_042	2	16WP	G15_042	TO->FROM	GR ISLD-LNX3345.00 - HOLT.CO3 345.00 345KV CKT 1	720	720	0.04017	100.7443	FALLOW 3 345.00 - GRIMES 345KV CKT 1
FDNS	00NR_G15_042	2	16WP	G15_042	TO->FROM	GR ISLD-LNX3345.00 - HOLT.CO3 345.00 345KV CKT 1	720	720	0.03849	100.7394	GERALD GENTLEMAN STATION - RED WILLOW 345KV CKT 1
FDNS	00NR_G15_042	2	16WP	G15_042	TO->FROM	GR ISLD-LNX3345.00 - HOLT.CO3 345.00 345KV CKT 1	720	720	0.04036	100.7349	CENTER 230/22.0KV TRANSFORMER CKT 1
FDNS	00NR_G15_042	2	16WP	G15_042	TO->FROM	GR ISLD-LNX3345.00 - HOLT.CO3 345.00 345KV CKT 1	720	720	0.0394	100.7174	G11_051T 345.00 - TATONGA7 345.00 345KV CKT 1
FDNS	00NR_G15_042	2	16WP	G15_042	TO->FROM	GR ISLD-LNX3345.00 - HOLT.CO3 345.00 345KV CKT 1	720	720	0.04036	100.7115	GEN672393 2-NBECST2G 13.800
FDNS	00NR_G15_042	2	16WP	G15_042	TO->FROM	GR ISLD-LNX3345.00 - HOLT.CO3 345.00 345KV CKT 1	720	720	0.04036	100.7106	GEN629072 4-LANSING GENERATOR FOR UNITS NO4 EIA CODE 1
FDNS	00NR_G15_042	2	16WP	G15_042	TO->FROM	GR ISLD-LNX3345.00 - HOLT.CO3 345.00 345KV CKT 1	720	720	0.04036	100.6762	GEN600065 7-HIGH BRIDGE
FDNS	00NR_G15_042	2	16WP	G15_042	TO->FROM	GR ISLD-LNX3345.00 - HOLT.CO3 345.00 345KV CKT 1	720	720	0.04036	100.6762	GEN600066 8-HIGH BRIDGE
FDNS	00NR_G15_042	2	16WP	G15_042	TO->FROM	GR ISLD-LNX3345.00 - HOLT.CO3 345.00 345KV CKT 1	720	720	0.04036	100.6667	GEN659192 6-LYNN
FDNS	00NR_G15_042	2	16WP	G15_042	TO->FROM	GR ISLD-LNX3345.00 - HOLT.CO3 345.00 345KV CKT 1	720	720	0.04036	100.6656	GEN659162 4-RED WLCK
FDNS	00NR_G15_042	2	16WP	G15_042	TO->FROM	GR ISLD-LNX3345.00 - HOLT.CO3 345.00 345KV CKT 1	720	720	0.04036	100.6656	GEN659163 5-BLACK WDCK
FDNS	00NR_G15_042	2	16WP	G15_042	TO->FROM	GR ISLD-LNX3345.00 - HOLT.CO3 345.00 345KV CKT 1	720	720	0.03781	100.6609	COOPER - MOORE 345KV CKT 1
FDNS	00NR_G15_042	2	16WP	G15_042	TO->FROM	GR ISLD-LNX3345.00 - HOLT.CO3 345.00 345KV CKT 1	720	720	0.04036	100.6552	LANSING WEST 161/22.0KV TRANSFORMER CKT 1
FDNS	00NR_G15_042	2	16WP	G15_042	TO->FROM	GR ISLD-LNX3345.00 - HOLT.CO3 345.00 345KV CKT 1	720	720	0.04036	100.6538	GEN657985 1-ASH1GEN9 0.5750
FDNS	00NR_G15_042	2	16WP	G15_042	TO->FROM	GR ISLD-LNX3345.00 - HOLT.CO3 345.00 345KV CKT 1	720	720	0.04036	100.6431	GEN652906 1-G09_006IS_3 0.6900
FDNS	00NR_G15_042	2	16WP	G15_042	TO->FROM	GR ISLD-LNX3345.00 - HOLT.CO3 345.00 345KV CKT 1	720	720	0.04036	100.612	GEN 10648 1-G830_GEN 0.6900
FDNS	00NR_G15_042	2	16WP	G15_042	TO->FROM	GR ISLD-LNX3345.00 - HOLT.CO3 345.00 345KV CKT 1	720	720	0.04036	100.5936	GEN600067 9-HIGH BRIDGE
FDNS	00NR_G15_042	2	16WP	G15_042	TO->FROM	GR ISLD-LNX3345.00 - HOLT.CO3 345.00 345KV CKT 1	720	720	0.04166	100.5921	ATCHSNT3 345.00 - BOONEVILLE 345KV CKT 1
FDNS	00NR_G15_042	2	16WP	G15_042	TO->FROM	GR ISLD-LNX3345.00 - HOLT.CO3 345.00 345KV CKT 1	720	720	0.04036	100.5916	GEN600014 4-BLACK DOG GEN 4
FDNS	00NR_G15_042	2	16WP	G15_042	TO->FROM	GR ISLD-LNX3345.00 - HOLT.CO3 345.00 345KV CKT 1	720	720	0.04036	100.591	GEN600070 9-RIVER SIDE
FDNS	00NR_G15_042	2	16WP	G15_042	TO->FROM	GR ISLD-LNX3345.00 - HOLT.CO3 345.00 345KV CKT 1	720	720	0.04036	100.591	GEN600071 10-RIVER SIDE
FDNS	00NR_G15_042	2	16WP	G15_042	TO->FROM	GR ISLD-LNX3345.00 - HOLT.CO3 345.00 345KV CKT 1	720	720	0.04036	100.588	GEN600011 5-BLACK DOG GEN 1
FDNS	00NR_G15_042	2	16WP	G15_042	TO->FROM	GR ISLD-LNX3345.00 - HOLT.CO3 345.00 345KV CKT 1	720	720	0.04036	100.5775	GEN600007 7-RIVERSIDE GEN 7
FDNS	00NR_G15_042	2	16WP	G15_042	TO->FROM	GR ISLD-LNX3345.00 - HOLT.CO3 345.00 345KV CKT 1	720	720	0.04036	100.5554	GEN615015 1-GRE-SPRITWDG13.200
FDNS	00NR_G15_042	2	16WP	G15_042	TO->FROM	GR ISLD-LNX3345.00 - HOLT.CO3 345.00 345KV CKT 1	720	720	0.04036	100.5454	GEN660016 1-B_H WIND 0.7000
FDNS	00NR_G15_042	2	16WP	G15_042	TO->FROM	GR ISLD-LNX3345.00 - HOLT.CO3 345.00 345KV CKT 1	720	720	0.04036	100.5317	GEN652907 1-G09_007IS_3 0.6900
FDNS	00NR_G15_042	2	16WP	G15_042	TO->FROM	GR ISLD-LNX3345.00 - HOLT.CO3 345.00 345KV CKT 1	720	720	0.04036	100.5262	GEN600017 C-LS POWER CT
FDNS	00NR_G15_042	2	16WP	G15_042	TO->FROM	GR ISLD-LNX3345.00 - HOLT.CO3 345.00 345KV CKT 1	720	720	0.04036	100.5251	GEN615052 1-CAMBRIDGE GENERATING STATION
FDNS	00NR_G15_042	2	16WP	G15_042	TO->FROM	GR ISLD-LNX3345.00 - HOLT.CO3 345.00 345KV CKT 1	720	720	0.04036	100.4849	GEN681522 3-GENOA 3
FDNS	00NR_G15_042	2	16WP	G15_042	TO->FROM	GR ISLD-LNX3345.00 - HOLT.CO3 345.00 345KV CKT 1	720	720	0.04036	100.4543	GEN662101 1-WESSINGTON190.5750
FDNS	00NR_G15_042	2	16WP	G15_042	TO->FROM	GR ISLD-LNX3345.00 - HOLT.CO3 345.00 345KV CKT 1	720	720	0.0394	100.4504	MATHWSN7 345.00 - TATONGA7 345.00 345KV CKT 1
FDNS	00NR_G15_042	2	16WP	G15_042	TO->FROM	GR ISLD-LNX3345.00 - HOLT.CO3 345.00 345KV CKT 1	720	720	0.03333	100.4246	AXTELL - POST ROCK 345KV CKT 1
FDNS	00NR_G15_042	2	16WP	G15_042	TO->FROM	GR ISLD-LNX3345.00 - HOLT.CO3 345.00 345KV CKT 1	720	720	0.04036	100.3215	GEN659353 1-DEERCREK CTG18.000
FDNS	00NR_G15_042	2	16WP	G15_042	TO->FROM	GR ISLD-LNX3345.00 - HOLT.CO3 345.00 345KV CKT 1	720	720	0.04036	100.3093	GEN910006 1-G12_012IS_3 0.6900
FDNS	00NR_G15_042	2	16WP	G15_042	TO->FROM	GR ISLD-LNX3345.00 - HOLT.CO3 345.00 345KV CKT 1	720	720	0.04036	100.2557	GEN615021 1-GRE-ER 14G 16.000
FDNS	00NR_G15_042	2	16WP	G15_042	TO->FROM	GR ISLD-LNX3345.00 - HOLT.CO3 345.00 345KV CKT 1	720	720	0.03602	100.208	MINGO - RED WILLOW 345KV CKT 1
FDNS	00NR_G15_042	2	16WP	G15_042	TO->FROM	GR ISLD-LNX3345.00 - HOLT.CO3 345.00 345KV CKT 1	720	720	0.03602	100.208	MINGO - RED WILLOW 345KV CKT 1
FDNS	00NR_G15_042	2	16WP	G15_042	TO->FROM	GR ISLD-LNX3345.00 - HOLT.CO3 345.00 345KV CKT 1	720	720	0.04036	100.2002	GEN672303 3-BOUNDARY DAM GENERATOR 3
FDNS	00NR_G15_042	2	16WP	G15_042	TO->FROM	GR ISLD-LNX3345.00 - HOLT.CO3 345.00 345KV CKT 1	720	720	0.04036	100.2001	GEN672304 4-BOUNDARY DAM GENERATOR 4
FDNS	00NR_G15_042	2	16WP	G15_042	TO->FROM	GR ISLD-LNX3345.00 - HOLT.CO3 345.00 345KV CKT 1	720	720	0.04036	100.2001	GEN672305 5-BOUNDARY DAM GENERATOR 5
FDNS	00NR_G15_042	2	16WP	G15_042	TO->FROM	GR ISLD-LNX3345.00 - HOLT.CO3 345.00 345KV CKT 1	720	720	0.04246	100.1249	MOORE - PAULINE 345KV CKT 1
FDNS	00NR_G15_042	2	16WP	G15_042	TO->FROM	GR ISLD-LNX3345.00 - HOLT.CO3 345.00 345KV CKT 1	720	720	0.04036	100.0985	BISONMP4 230.00 - SQUARE BUTTE 230KV CKT 1
FDNS	00NR_G15_042	2	16WP	G15_042	TO->FROM	GR ISLD-LNX3345.00 - HOLT.CO3 345.00 345KV CKT 1	720	720	0.04815	100	COLUMWEST - GRAND ISLAND 230KV CKT 1
FDNS	00NR_G15_042	2	16WP	G15_042	TO->FROM	GR ISLD-LNX3345.00 - HOLT.CO3 345.00 345KV CKT 1	720	720	0.04036	100	GEN562832 1-G15042_3 0.6900
FDNS	00NR_G15_042	2	16WP	G15_042	TO->FROM	GR ISLD-LNX3345.00 - HOLT.CO3 345.00 345KV CKT 1	720	720	0.04036	100	GEN652460 4-GARRISON
FDNS	00NR_G15_042	2	16WP	G15_042	TO->FROM	GR ISLD-LNX3345.00 - HOLT.CO3 345.00 345KV CKT 1	720	720	0.04036	100	GEN652461 5-GARRISON
FDNS	00NR_G15_042	2	16WP	G15_042	TO->FROM	GR ISLD-LNX3345.00 - HOLT.CO3 345.00 345KV CKT 1	720	720	0.04036	100	GEN672392 1-NBECGT1G 18.000
FDNS	00NR_G15_042	2	16WP	G15_042	TO->FROM	GR ISLD-LNX3345.00 - HOLT.CO3 345.00 345KV CKT 1	720	720	0.04036	99.9	COYOTE 345/24.0KV TRANSFORMER CKT 1
FDNS	00NR_G15_042	2	16WP	G15_042	TO->FROM	GR ISLD-LNX3345.00 - HOLT.CO3 345.00 345KV CKT 1	720	720	0.04036	99.9	GEN652457 1-GARRISON
FDNS	00NR_G15_042	2	16WP	G15_042	TO->FROM	GR ISLD-LNX3345.00 - HOLT.CO3 345.00 345KV CKT 1	720	720	0.04036	99.9	GEN652458 2-GARRISON
FDNS	00NR_G15_042	2	16WP	G15_042	TO->FROM	GR ISLD-LNX3345.00 - HOLT.CO3 345.00 345KV CKT 1	720	720	0.04036	99.9	GEN652459 3-GARRISON
FDNS	00NR_G15_042	2	16WP	G15_042	TO->FROM	GR ISLD-LNX3345.00 - HOLT.CO3 345.00 345KV CKT 1	720	720	0.04036	99.9	GEN652542 1-BIG BEND
FDNS	00NR_G15_042	2	16WP	G15_042	TO->FROM	GR ISLD-LNX3345.00 - HOLT.CO3 345.00 345KV CKT 1	720	720	0.04036	99.9	GEN659010 4-G07_027IS_2 0.6900
FDNS	00NR_G15_042	2	16WP	G15_042	TO->FROM	GR ISLD-LNX3345.00 - HOLT.CO3 345.00 345KV CKT 1	720	720	0.04036	99.9	GEN659194 1-NDPRAIRWND1W0.6900
FDNS	00NR_G15_042	2	16WP	G15_042	TO->FROM	GR ISLD-LNX3345.00 - HOLT.CO3 345.00 345KV CKT 1	720	720	0.04036	99.8	GEN659403 1-NDSUNFLWR W0.6900
FDNS	00NR_G15_042	2	16WP	G15_042	TO->FROM	GR ISLD-LNX3345.00 - HOLT.CO3 345.00 345KV CKT 1	720	720	0.04036	99.7	GEN681542 6-JP MADGETT

SOLUTION	GROUP	SCENARIO	SEASON	SOURCE	DIRECTION	MONITORED ELEMENT	RATEA (MVA)	RATEB(MVA)	TDF	TC%LOADING (% MVA)	CONTINGENCY
FDNS	00NR_G15_042	2	16WP	G15_042	TO->FROM	GR ISLD-LNX3345.00 - HOLT.CO3 345.00 345KV CKT 1	720	720	0.04036	99.5	GEN659411 1-CAMPBLCNTY W0.6900
FDNS	00NR_G15_042	2	16WP	G15_042	TO->FROM	GR ISLD-LNX3345.00 - HOLT.CO3 345.00 345KV CKT 1	720	720	0.04036	99.5	P12:230:UMZB:# 112 #: NU IN SD. NU-RCDC & DRY CREEK XFMR
FDNS	00NR_G15_042	2	16WP	G15_042	TO->FROM	GR ISLD-LNX3345.00 - HOLT.CO3 345.00 345KV CKT 1	720	720	0.04036	99.5	RCDC EAST 4230.00 - RED CEDAR DC 230KV CKT 1
FDNS	00NR_G15_042	2	17SP	G15_042	FROM->TO	HOSKINS (HOSKINS T1) 230/115/13.8KV TRANSFORMER CKT 1	187	187	0.10034	108.344	P13:230-345:NPPD:NUCOR-1
FDNS	00NR_G15_042	2	17SP	G15_042	FROM->TO	HOSKINS (HOSKINS T1) 230/115/13.8KV TRANSFORMER CKT 1	187	187	0.10034	107.5695	P13:230-345:NPPD:NUCOR-1
FDNS	00NR_G15_042	2	25SP	G15_042	FROM->TO	HOSKINS (HOSKINS T1) 230/115/13.8KV TRANSFORMER CKT 1	187	187	0.10036	106.7774	P13:230-345:NPPD:NUCOR-1
FDNS	00NR_G15_042	2	20SP	G15_042	FROM->TO	HOSKINS (HOSKINS T1) 230/115/13.8KV TRANSFORMER CKT 1	187	187	0.10034	106.6716	P13:230-345:NPPD:NUCOR-1
FDNS	00NR_G15_042	2	25SP	G15_042	FROM->TO	HOSKINS (HOSKINS T1) 230/115/13.8KV TRANSFORMER CKT 1	187	187	0.10036	105.9204	P13:230-345:NPPD:NUCOR-1
FDNS	00NR_G15_042	2	20SP	G15_042	FROM->TO	HOSKINS (HOSKINS T1) 230/115/13.8KV TRANSFORMER CKT 1	187	187	0.10034	105.7535	P13:230-345:NPPD:NUCOR-1
FDNS	00NR_G15_042	3	17SP	G15_042	FROM->TO	DIXONCO 230.00 - HOSKINS 230KV CKT 1	320	320	0.58757	120.0181	DIXONCO 230.00 - TWIN CHURCH 230KV CKT 1
FDNS	00NR_G15_042	3	20SP	G15_042	FROM->TO	DIXONCO 230.00 - HOSKINS 230KV CKT 1	320	320	0.58703	118.6179	DIXONCO 230.00 - TWIN CHURCH 230KV CKT 1
FDNS	00NR_G15_042	3	25SP	G15_042	FROM->TO	DIXONCO 230.00 - HOSKINS 230KV CKT 1	320	320	0.58709	118.3242	DIXONCO 230.00 - TWIN CHURCH 230KV CKT 1
FDNS	00NR_G15_042	3	17SP	G15_042	FROM->TO	DIXONCO 230.00 - HOSKINS 230KV CKT 1	320	320	0.3676	106.2704	HOSKINS - RAUN 345KV CKT 1
FDNS	00NR_G15_042	3	25SP	G15_042	FROM->TO	DIXONCO 230.00 - HOSKINS 230KV CKT 1	320	320	0.36664	106.2207	HOSKINS - RAUN 345KV CKT 1
FDNS	00NR_G15_042	3	25SP	G15_042	FROM->TO	DIXONCO 230.00 - HOSKINS 230KV CKT 1	320	320	0.36664	106.2207	HOSKINS - RAUN 345KV CKT 1
FDNS	00NR_G15_042	3	16WP	G15_042	FROM->TO	DIXONCO 230.00 - HOSKINS 230KV CKT 1	320	320	0.58732	106.0632	DIXONCO 230.00 - TWIN CHURCH 230KV CKT 1
FDNS	00NR_G15_042	3	20WP	G15_042	FROM->TO	DIXONCO 230.00 - HOSKINS 230KV CKT 1	320	320	0.58696	105.9702	DIXONCO 230.00 - TWIN CHURCH 230KV CKT 1
FDNS	09NR_G15_042	3	17G	G15_042	FROM->TO	DIXONCO 230.00 - HOSKINS 230KV CKT 1	320	320	0.58739	104.8199	DIXONCO 230.00 - TWIN CHURCH 230KV CKT 1
FDNS	00NR_G15_042	3	20SP	G15_042	FROM->TO	DIXONCO 230.00 - HOSKINS 230KV CKT 1	320	320	0.36647	104.0206	HOSKINS - RAUN 345KV CKT 1
FDNS	09NR_G15_042	3	20L	G15_042	FROM->TO	DIXONCO 230.00 - HOSKINS 230KV CKT 1	320	320	0.58708	100.8771	DIXONCO 230.00 - TWIN CHURCH 230KV CKT 1
FDNS	00NR_G15_042	3	17SP	G15_042	FROM->TO	DIXONCO 230.00 - HOSKINS 230KV CKT 1	320	320	0.40424	100.781	GRPRAR1-LNX3345.00 - HOLT.CO3 345.00 345KV CKT 1
FDNS	00NR_G15_042	3	17SP	G15_042	FROM->TO	DIXONCO 230.00 - HOSKINS 230KV CKT 1	320	320	0.40424	100.7786	GRPRAR1-LNX3345.00 - YANKTON 345KV CKT Z
FDNS	00NR_G15_042	3	17SP	G15_042	FROM->TO	DIXONCO 230.00 - HOSKINS 230KV CKT 1	320	320	0.40293	100.7421	KELLY - MEADOWGROVE4230.00 230KV CKT 1
FDNS	00NR_G15_042	3	17SP	G15_042	FROM->TO	DIXONCO 230.00 - HOSKINS 230KV CKT 1	320	320	0.43661	100.3253	RASMUSN - SIOUX CITY 230KV CKT 1
FDNS	00NR_G15_042	3	20SP	G15_042	FROM->TO	DIXONCO 230.00 - HOSKINS 230KV CKT 1	320	320	0.40202	99.5	KELLY - MEADOWGROVE4230.00 230KV CKT 1
FDNS	09NR_G15_042	3	17G	G15_042	FROM->TO	DIXONCO 230.00 - TWIN CHURCH 230KV CKT 1	320	320	0.57454	116.8254	DIXONCO 230.00 - HOSKINS 230KV CKT 1
FDNS	09NR_G15_042	3	20L	G15_042	FROM->TO	DIXONCO 230.00 - TWIN CHURCH 230KV CKT 1	320	320	0.57454	112.3136	DIXONCO 230.00 - HOSKINS 230KV CKT 1
FDNS	00NR_G15_042	3	17SP	G15_042	FROM->TO	DIXONCO 230.00 - TWIN CHURCH 230KV CKT 1	320	320	0.57454	107.8238	DIXONCO 230.00 - HOSKINS 230KV CKT 1
FDNS	00NR_G15_042	3	20SP	G15_042	FROM->TO	DIXONCO 230.00 - TWIN CHURCH 230KV CKT 1	320	320	0.57453	106.4689	DIXONCO 230.00 - HOSKINS 230KV CKT 1
FDNS	00NR_G15_042	3	25SP	G15_042	FROM->TO	DIXONCO 230.00 - TWIN CHURCH 230KV CKT 1	320	320	0.57453	106.1053	DIXONCO 230.00 - HOSKINS 230KV CKT 1
FDNS	09NR_G15_042	3	17G	G15_042	FROM->TO	DIXONCO 230.00 - TWIN CHURCH 230KV CKT 1	320	320	0.47947	105.4686	DIXONCO 230.00 - RASMUSN 230KV CKT 1
FDNS	09NR_G15_042	3	20L	G15_042	FROM->TO	DIXONCO 230.00 - TWIN CHURCH 230KV CKT 1	320	320	0.47982	105.3242	DIXONCO 230.00 - RASMUSN 230KV CKT 1
FDNS	00NR_G15_042	3	16WP	G15_042	FROM->TO	DIXONCO 230.00 - TWIN CHURCH 230KV CKT 1	320	320	0.57451	103.8878	DIXONCO 230.00 - HOSKINS 230KV CKT 1
FDNS	00NR_G15_042	3	20WP	G15_042	FROM->TO	DIXONCO 230.00 - TWIN CHURCH 230KV CKT 1	320	320	0.57454	102.913	DIXONCO 230.00 - HOSKINS 230KV CKT 1
FDNS	00NR_G15_042	3	17SP	G15_042	FROM->TO	HOSKINS (HOSKINS T1) 230/115/13.8KV TRANSFORMER CKT 1	187	187	0.10033	107.5647	P13:230-345:NPPD:NUCOR-1
FDNS	00NR_G15_042	3	17SP	G15_042	FROM->TO	HOSKINS (HOSKINS T1) 230/115/13.8KV TRANSFORMER CKT 1	187	187	0.10033	106.7877	P13:230-345:NPPD:NUCOR-1
FDNS	00NR_G15_042	3	25SP	G15_042	FROM->TO	HOSKINS (HOSKINS T1) 230/115/13.8KV TRANSFORMER CKT 1	187	187	0.10036	106.7774	P13:230-345:NPPD:NUCOR-1
FDNS	00NR_G15_042	3	20SP	G15_042	FROM->TO	HOSKINS (HOSKINS T1) 230/115/13.8KV TRANSFORMER CKT 1	187	187	0.10034	106.6715	P13:230-345:NPPD:NUCOR-1
FDNS	00NR_G15_042	3	25SP	G15_042	FROM->TO	HOSKINS (HOSKINS T1) 230/115/13.8KV TRANSFORMER CKT 1	187	187	0.10036	105.9204	P13:230-345:NPPD:NUCOR-1
FDNS	00NR_G15_042	3	20SP	G15_042	FROM->TO	HOSKINS (HOSKINS T1) 230/115/13.8KV TRANSFORMER CKT 1	187	187	0.10034	105.7535	P13:230-345:NPPD:NUCOR-1
FDNSLock-Blown up	00NR_G15_046	0	17SP	G15_046		Non-Converged Contingency	717	789	0.05041	-	G09_001IST 345.00 - GROTON 345KV CKT 1
FDNSLock-Blown up	00NR_G15_046	0	17SP	G15_046		Non-Converged Contingency	717	789	0.05041	-	G09_001IST 345.00 - WATERTOWN 345KV CKT 1
FDNSLock-Blown up	00NR_G15_046	2	17SP	G15_046		Non-Converged Contingency	717	789	0.05025	-	G09_001IST 345.00 - WATERTOWN 345KV CKT 1
FDNS	00NR_G15_046	0	20WP	G15_046	FROM->TO	BLAISDELL 4230.00 (BLAISDL KV2A) 230/115/13.8KV TRANSFORMER CKT 1	166	166	0.05518	106.349	NESET 7 115.00 - WHTEARTHTP 7115.00 115KV CKT 1
FDNS	00NR_G15_046	0	20WP	G15_046	FROM->TO	BLAISDELL 4230.00 (BLAISDL KV2A) 230/115/13.8KV TRANSFORMER CKT 1	166	166	0.05518	102.6444	PVALLEY -MW7115.00 - WHTEARTHTP 7115.00 115KV CKT 1
FDNS	00NR_G15_046	0	20WP	G15_046	FROM->TO	BLAISDELL 4230.00 (BLAISDL KV2A) 230/115/13.8KV TRANSFORMER CKT 1	166	166	0.05518	102.6262	NESET 7 115.00 - WHTEARTHTP 7115.00 115KV CKT 1
FDNS	00NR_G15_046	0	20WP	G15_046	FROM->TO	BLAISDELL 4230.00 (BLAISDL KV2A) 230/115/13.8KV TRANSFORMER CKT 1	166	166	0.05518	99.8	PVALLEY -MW7115.00 - WHTEARTHTP 7115.00 115KV CKT 1
FDNS	16NR_G15_046	0	17G	G15_046	TO->FROM	GLENHAM - L3 HAWDON 230KV CKT 1	210	210	0.05516	110.2466	LELAND OLDS - LELAND2-LNX3345.00 345KV CKT Z
FDNS	16NR_G15_046	0	17G	G15_046	TO->FROM	GLENHAM - L3 HAWDON 230KV CKT 1	210	210	0.05516	110.1466	P12:345:UMZB:# 108 #: LOS FT IN ND. LOS FT
FDNS	16NR_G15_046	0	17G	G15_046	TO->FROM	GLENHAM - L3 HAWDON 230KV CKT 1	210	210	0.05516	110.0604	FT THOMPSON - FTTHOM1-LNX3345.00 345KV CKT Z
FDNS	16NR_G15_046	0	17G	G15_046	TO->FROM	GLENHAM - L3 HAWDON 230KV CKT 1	210	210	0.05516	109.9803	FTTHOM1-LNX3345.00 - LELAND2-LNX3345.00 345KV CKT 1
FDNS	16NR_G15_046	0	17G	G15_046	TO->FROM	GLENHAM - L3 HAWDON 230KV CKT 1	210	210	0.0512	102.6227	ANTELOP-LNX3345.00 - BRDLAND-LNX3345.00 345KV CKT 1
FDNS	16NR_G15_046	0	17G	G15_046	TO->FROM	GLENHAM - L3 HAWDON 230KV CKT 1	210	210	0.0512	102.5514	P12:345:UMZB:# 102 #: AVS BD IN ND. AVS BRD LR
FDNS	16NR_G15_046	0	17G	G15_046	TO->FROM	GLENHAM - L3 HAWDON 230KV CKT 1	210	210	0.0512	102.5514	P12:345:UMZB:# 103 #: BD IN SD. LOSS OF LINE
FDNS	16NR_G15_046	0	17G	G15_046	TO->FROM	GLENHAM - L3 HAWDON 230KV CKT 1	210	210	0.0512	102.5446	ANTELOP-LNX3345.00 - ANTELOPE VALLEY 345KV CKT Z
FDNS	16NR_G15_046	0	17G	G15_046	TO->FROM	GLENHAM - L3 HAWDON 230KV CKT 1	210	210	0.0512	102.481	BROADLAND - HURON 230KV CKT 1
FDNS	16NR_G15_046	0	17G	G15_046	TO->FROM	GLENHAM - L3 HAWDON 230KV CKT 1	210	210	0.0512	102.4806	BRDLAND-LNX3345.00 - HURON 345KV CKT Z
FDNS	16NR_G15_046	0	17G	G15_046	TO->FROM	GLENHAM - L3 HAWDON 230KV CKT 1	210	210	0.0512	102.4806	HURON (BD KU2A) 345/230/13.8KV TRANSFORMER CKT 1
FDNS	16NR_G15_046	0	17G	G15_046	TO->FROM	GLENHAM - L3 HAWDON 230KV CKT 1	210	210	0.0512	102.4806	HURON (BD KU2A) 345/230/13.8KV TRANSFORMER CKT 1
FDNS	16NR_G15_046	0	20L	G15_046	TO->FROM	GLENHAM - L3 HAWDON 230KV CKT 1	210	210	0.04407	100.6586	LELAND OLDS - LELAND2-LNX3345.00 345KV CKT Z
FDNS	16NR_G15_046	0	20L	G15_046	TO->FROM	GLENHAM - L3 HAWDON 230KV CKT 1	210	210	0.04407	100.6198	P12:345:UMZB:# 108 #: LOS FT IN ND. LOS FT
FDNS	16NR_G15_046	0	20L	G15_046	TO->FROM	GLENHAM - L3 HAWDON 230KV CKT 1	210	210	0.04407	100.5959	FTTHOM1-LNX3345.00 - LELAND2-LNX3345.00 345KV CKT 1
FDNS	16NR_G15_046	0	20L	G15_046	TO->FROM	GLENHAM - L3 HAWDON 230KV CKT 1	210	210	0.04407	100.5819	FT THOMPSON - FTTHOM1-LNX3345.00 345KV CKT Z
FDNS	16NR_G15_046	0	17G	G15_046	FROM->TO	HURON (BD KU2A) 345/230/13.8KV TRANSFORMER CKT 1	400	400	0.08634	106.9653	LELAND OLDS - LELAND2-LNX3345.00 345KV CKT Z
FDNS	16NR_G15_046	0	17G	G15_046	FROM->TO	HURON (BD KU2A) 345/230/13.8KV TRANSFORMER CKT 1	400	400	0.08044	106.9024	LELAND OLDS - LELAND1-LNX3345.00 345KV CKT Z
FDNS	16NR_G15_046	0	17G	G15_046	FROM->TO	HURON (BD KU2A) 345/230/13.8KV TRANSFORMER CKT 1	400	400	0.08044	106.8617	P12:345:UMZB:# 109 #: LOS GRT IN ND. LOS GRT
FDNS	16NR_G15_046	0	17G	G15_046	FROM->TO	HURON (BD KU2A) 345/230/13.8KV TRANSFORMER CKT 1	400	400	0.08044	106.8575	GROTON - GROTON-LNX3 345.00 345KV CKT Z
FDNS	16NR_G15_046	0	17G	G15_046	FROM->TO	HURON (BD KU2A) 345/230/13.8KV TRANSFORMER CKT 1	400	400	0.08634	106.6075	P12:345:UMZB:# 108 #: LOS FT IN ND. LOS FT
FDNS	16NR_G15_046	0	17G	G15_046	FROM->TO	HURON (BD KU2A) 345/230/13.8KV TRANSFORMER CKT 1	400	400	0.08634	106.5774	FT THOMPSON - FTTHOM1-LNX3345.00 345KV CKT Z
FDNS	16NR_G15_046	0	17G	G15_046	FROM->TO	HURON (BD KU2A) 345/230/13.8KV TRANSFORMER CKT 1	400	400	0.08044	106.4038	GROTON-LNX3 345.00 - LELAND1-LNX3345.00 345KV CKT 1
FDNS	16NR_G15_046	0	17G	G15_046	FROM->TO	HURON (BD KU2A) 345/230/13.8KV TRANSFORMER CKT 1	400	400	0.08634	106.0746	FTTHOM1-LNX3345.00 - LELAND2-LNX3345.00 345KV CKT 1
FDNS	00NR_G15_046	0	17SP	G15_046	FROM->TO	HURON (BD KU2A) 345/230/13.8KV TRANSFORMER CKT 1	400	400	0.09789	105.4832	LELAND OLDS - LELAND2-LNX3345.00 345KV CKT Z
FDNS	00NR_G15_046	0	17SP	G15_046	FROM->TO	HURON (BD KU2A) 345/230/13.8KV TRANSFORMER CKT 1	400	400	0.09789	104.8592	P12:345:UMZB:# 108 #: LOS FT IN ND. LOS FT

SOLUTION	GROUP	SCENARIO	SEASON	SOURCE	DIRECTION	MONITORED ELEMENT	RATEA (MVA)	RATEB(MVA)	TDF	TC%LOADING (% MVA)	CONTINGENCY
FDNS	00NR_G15_046	0	17SP	G15_046	FROM->TO	HURON (BD KU2A) 345/230/13.8KV TRANSFORMER CKT 1	400	400	0.09789	104.8382	FT THOMPSON - FTTHOM1-LNX3345.00 345KV CKT Z
FDNS	00NR_G15_046	0	17SP	G15_046	FROM->TO	HURON (BD KU2A) 345/230/13.8KV TRANSFORMER CKT 1	400	400	0.09789	103.9752	FTTHOM1-LNX3345.00 - LELAND2-LNX3345.00 345KV CKT 1
FDNS	00NR_G15_046	0	17SP	G15_046	FROM->TO	HURON (BD KU2A) 345/230/13.8KV TRANSFORMER CKT 1	400	400	0.09789	103.6393	LELAND OLDS - LELAND2-LNX3345.00 345KV CKT Z
FDNS	16NR_G15_046	0	17G	G15_046	FROM->TO	HURON (BD KU2A) 345/230/13.8KV TRANSFORMER CKT 1	400	400	0.08634	103.5771	LELAND OLDS - LELAND2-LNX3345.00 345KV CKT Z
FDNS	16NR_G15_046	0	17G	G15_046	FROM->TO	HURON (BD KU2A) 345/230/13.8KV TRANSFORMER CKT 1	400	400	0.08044	103.5594	LELAND OLDS - LELAND1-LNX3345.00 345KV CKT Z
FDNS	16NR_G15_046	0	17G	G15_046	FROM->TO	HURON (BD KU2A) 345/230/13.8KV TRANSFORMER CKT 1	400	400	0.08044	103.525	GROTON - GROTON-LNX3 345.00 345KV CKT Z
FDNS	16NR_G15_046	0	17G	G15_046	FROM->TO	HURON (BD KU2A) 345/230/13.8KV TRANSFORMER CKT 1	400	400	0.08044	103.5242	P12:345:UMZB:# 109 #: LOS GRT IN ND. LOS GRT
FDNS	16NR_G15_046	0	17G	G15_046	FROM->TO	HURON (BD KU2A) 345/230/13.8KV TRANSFORMER CKT 1	400	400	0.08634	103.268	FT THOMPSON - FTTHOM1-LNX3345.00 345KV CKT Z
FDNS	16NR_G15_046	0	17G	G15_046	FROM->TO	HURON (BD KU2A) 345/230/13.8KV TRANSFORMER CKT 1	400	400	0.08634	103.2665	P12:345:UMZB:# 108 #: LOS FT IN ND. LOS FT
FDNS	16NR_G15_046	0	17G	G15_046	FROM->TO	HURON (BD KU2A) 345/230/13.8KV TRANSFORMER CKT 1	400	400	0.08044	103.0868	GROTON-LNX3 345.00 - LELAND1-LNX3345.00 345KV CKT 1
FDNS	00NR_G15_046	0	17SP	G15_046	FROM->TO	HURON (BD KU2A) 345/230/13.8KV TRANSFORMER CKT 1	400	400	0.09789	103.0331	P12:345:UMZB:# 108 #: LOS FT IN ND. LOS FT
FDNS	00NR_G15_046	0	17SP	G15_046	FROM->TO	HURON (BD KU2A) 345/230/13.8KV TRANSFORMER CKT 1	400	400	0.09789	103.0183	FT THOMPSON - FTTHOM1-LNX3345.00 345KV CKT Z
FDNS	16NR_G15_046	0	17G	G15_046	FROM->TO	HURON (BD KU2A) 345/230/13.8KV TRANSFORMER CKT 1	400	400	0.08634	102.7753	FTTHOM1-LNX3345.00 - LELAND2-LNX3345.00 345KV CKT 1
FDNS	00NR_G15_046	0	17SP	G15_046	FROM->TO	HURON (BD KU2A) 345/230/13.8KV TRANSFORMER CKT 1	400	400	0.09789	102.2825	LELAND OLDS - LELAND2-LNX3345.00 345KV CKT Z
FDNS	00NR_G15_046	0	17SP	G15_046	FROM->TO	HURON (BD KU2A) 345/230/13.8KV TRANSFORMER CKT 1	400	400	0.09789	102.2148	FTTHOM1-LNX3345.00 - LELAND2-LNX3345.00 345KV CKT 1
FDNS	00NR_G15_046	0	17SP	G15_046	FROM->TO	HURON (BD KU2A) 345/230/13.8KV TRANSFORMER CKT 1	400	400	0.09789	101.7521	FT THOMPSON - FTTHOM1-LNX3345.00 345KV CKT Z
FDNS	00NR_G15_046	0	17SP	G15_046	FROM->TO	HURON (BD KU2A) 345/230/13.8KV TRANSFORMER CKT 1	400	400	0.09789	101.7417	P12:345:UMZB:# 108 #: LOS FT IN ND. LOS FT
FDNS	00NR_G15_046	0	17SP	G15_046	FROM->TO	HURON (BD KU2A) 345/230/13.8KV TRANSFORMER CKT 1	400	400	0.09131	101.698	LELAND OLDS - LELAND1-LNX3345.00 345KV CKT Z
FDNS	00NR_G15_046	0	17SP	G15_046	FROM->TO	HURON (BD KU2A) 345/230/13.8KV TRANSFORMER CKT 1	400	400	0.09131	101.6468	P12:345:UMZB:# 109 #: LOS GRT IN ND. LOS GRT
FDNS	00NR_G15_046	0	17SP	G15_046	FROM->TO	HURON (BD KU2A) 345/230/13.8KV TRANSFORMER CKT 1	400	400	0.09131	101.641	GROTON - GROTON-LNX3 345.00 345KV CKT Z
FDNS	00NR_G15_046	0	17SP	G15_046	FROM->TO	HURON (BD KU2A) 345/230/13.8KV TRANSFORMER CKT 1	400	400	0.09789	100.9418	FTTHOM1-LNX3345.00 - LELAND2-LNX3345.00 345KV CKT 1
FDNS	00NR_G15_046	0	17SP	G15_046	FROM->TO	HURON (BD KU2A) 345/230/13.8KV TRANSFORMER CKT 1	400	400	0.09789	100.6686	LELAND OLDS - LELAND2-LNX3345.00 345KV CKT Z
FDNS	00NR_G15_046	0	17SP	G15_046	FROM->TO	HURON (BD KU2A) 345/230/13.8KV TRANSFORMER CKT 1	400	400	0.09789	100.1567	FT THOMPSON - FTTHOM1-LNX3345.00 345KV CKT Z
FDNS	00NR_G15_046	0	17SP	G15_046	FROM->TO	HURON (BD KU2A) 345/230/13.8KV TRANSFORMER CKT 1	400	400	0.09789	100.1423	P12:345:UMZB:# 108 #: LOS FT IN ND. LOS FT
FDNS	00NR_G15_046	0	17SP	G15_046	FROM->TO	HURON (BD KU2A) 345/230/13.8KV TRANSFORMER CKT 1	400	400	0.09789	99.4	FTTHOM1-LNX3345.00 - LELAND2-LNX3345.00 345KV CKT 1
FDNS	00NR_G15_046	0	17SP	G15_046	FROM->TO	HURON (BD KU2A) 345/230/13.8KV TRANSFORMER CKT 1	400	400	0.09131	99.1	LELAND OLDS - LELAND1-LNX3345.00 345KV CKT Z
FDNS	00NR_G15_046	0	17SP	G15_046	FROM->TO	HURON (BD KU2A) 345/230/13.8KV TRANSFORMER CKT 1	400	400	0.09131	99	GROTON - GROTON-LNX3 345.00 345KV CKT Z
FDNS	00NR_G15_046	0	17SP	G15_046	FROM->TO	HURON (BD KU2A) 345/230/13.8KV TRANSFORMER CKT 1	400	400	0.09131	99	P12:345:UMZB:# 109 #: LOS GRT IN ND. LOS GRT
FDNS	16NR_G15_046	0	20L	G15_046	FROM->TO	NESET 4 230.00 - TIOGA 230KV CKT 1	200	200	0.90589	137.3096	TANDE 3345.00 - TANDE-LNX 345.00 345KV CKT Z
FDNS	16NR_G15_046	0	20L	G15_046	FROM->TO	NESET 4 230.00 - TIOGA 230KV CKT 1	200	200	0.90589	137.2956	JUDSON 3345.00 - TANDE-LNX 345.00 345KV CKT 1
FDNS	16ALL_G15_046	0	20L	G15_046	FROM->TO	NESET 4 230.00 - TIOGA 230KV CKT 1	200	200	0.90565	137.2435	TANDE 3345.00 - TANDE-LNX 345.00 345KV CKT Z
FDNS	16ALL_G15_046	0	20L	G15_046	FROM->TO	NESET 4 230.00 - TIOGA 230KV CKT 1	200	200	0.90565	137.2254	JUDSON 3345.00 - TANDE-LNX 345.00 345KV CKT 1
FDNS	00NR_G15_046	0	17SP	G15_046	FROM->TO	NESET 4 230.00 - TIOGA 230KV CKT 1	200	200	0.90591	131.0126	JUDSON 3345.00 - TANDE-LNX 345.00 345KV CKT 1
FDNS	00NR_G15_046	0	17SP	G15_046	FROM->TO	NESET 4 230.00 - TIOGA 230KV CKT 1	200	200	0.90591	130.9935	TANDE 3345.00 - TANDE-LNX 345.00 345KV CKT Z
FDNS	16ALL_G15_046	0	17SP	G15_046	FROM->TO	NESET 4 230.00 - TIOGA 230KV CKT 1	200	200	0.90568	130.97	JUDSON 3345.00 - TANDE-LNX 345.00 345KV CKT 1
FDNS	16ALL_G15_046	0	17SP	G15_046	FROM->TO	NESET 4 230.00 - TIOGA 230KV CKT 1	200	200	0.90568	130.9591	TANDE 3345.00 - TANDE-LNX 345.00 345KV CKT Z
FDNS	16ALL_G15_046	0	17G	G15_046	FROM->TO	NESET 4 230.00 - TIOGA 230KV CKT 1	200	200	0.90565	127.5394	JUDSON 3345.00 - TANDE-LNX 345.00 345KV CKT 1
FDNS	16ALL_G15_046	0	17G	G15_046	FROM->TO	NESET 4 230.00 - TIOGA 230KV CKT 1	200	200	0.90565	127.513	TANDE 3345.00 - TANDE-LNX 345.00 345KV CKT Z
FDNS	16NR_G15_046	0	17G	G15_046	FROM->TO	NESET 4 230.00 - TIOGA 230KV CKT 1	200	200	0.90583	127.376	JUDSON 3345.00 - TANDE-LNX 345.00 345KV CKT 1
FDNS	16NR_G15_046	0	17G	G15_046	FROM->TO	NESET 4 230.00 - TIOGA 230KV CKT 1	200	200	0.90583	127.3726	TANDE 3345.00 - TANDE-LNX 345.00 345KV CKT Z
FDNS	00NR_G15_046	0	20SP	G15_046	FROM->TO	NESET 4 230.00 - TIOGA 230KV CKT 1	200	200	0.90592	126.45	JUDSON 3345.00 - TANDE-LNX 345.00 345KV CKT 1
FDNS	00NR_G15_046	0	20SP	G15_046	FROM->TO	NESET 4 230.00 - TIOGA 230KV CKT 1	200	200	0.90592	126.4346	TANDE 3345.00 - TANDE-LNX 345.00 345KV CKT Z
FDNS	16ALL_G15_046	0	20SP	G15_046	FROM->TO	NESET 4 230.00 - TIOGA 230KV CKT 1	200	200	0.90565	126.1703	JUDSON 3345.00 - TANDE-LNX 345.00 345KV CKT 1
FDNS	16ALL_G15_046	0	20SP	G15_046	FROM->TO	NESET 4 230.00 - TIOGA 230KV CKT 1	200	200	0.90565	126.1485	TANDE 3345.00 - TANDE-LNX 345.00 345KV CKT Z
FDNS	00NR_G15_046	0	16WP	G15_046	FROM->TO	NESET 4 230.00 - TIOGA 230KV CKT 1	200	200	0.9059	125.3299	TANDE 3345.00 - TANDE-LNX 345.00 345KV CKT Z
FDNS	00NR_G15_046	0	16WP	G15_046	FROM->TO	NESET 4 230.00 - TIOGA 230KV CKT 1	200	200	0.9059	125.3296	JUDSON 3345.00 - TANDE-LNX 345.00 345KV CKT 1
FDNS	16ALL_G15_046	0	16WP	G15_046	FROM->TO	NESET 4 230.00 - TIOGA 230KV CKT 1	200	200	0.90567	125.0251	JUDSON 3345.00 - TANDE-LNX 345.00 345KV CKT 1
FDNS	16ALL_G15_046	0	16WP	G15_046	FROM->TO	NESET 4 230.00 - TIOGA 230KV CKT 1	200	200	0.90567	125.016	TANDE 3345.00 - TANDE-LNX 345.00 345KV CKT Z
FDNS	00NR_G15_046	0	17SP	G15_046	FROM->TO	NESET 4 230.00 - TIOGA 230KV CKT 1	200	200	0.90591	123.8491	JUDSON 3345.00 - TANDE-LNX 345.00 345KV CKT 1
FDNS	00NR_G15_046	0	17SP	G15_046	FROM->TO	NESET 4 230.00 - TIOGA 230KV CKT 1	200	200	0.90591	123.7814	TANDE 3345.00 - TANDE-LNX 345.00 345KV CKT Z
FDNS	16ALL_G15_046	0	17SP	G15_046	FROM->TO	NESET 4 230.00 - TIOGA 230KV CKT 1	200	200	0.90568	122.8009	JUDSON 3345.00 - TANDE-LNX 345.00 345KV CKT 1
FDNS	16ALL_G15_046	0	17SP	G15_046	FROM->TO	NESET 4 230.00 - TIOGA 230KV CKT 1	200	200	0.90568	122.7219	TANDE 3345.00 - TANDE-LNX 345.00 345KV CKT Z
FDNS	00NR_G15_046	0	16WP	G15_046	FROM->TO	NESET 4 230.00 - TIOGA 230KV CKT 1	200	200	0.9059	122.45	TANDE 3345.00 - TANDE-LNX 345.00 345KV CKT Z
FDNS	00NR_G15_046	0	16WP	G15_046	FROM->TO	NESET 4 230.00 - TIOGA 230KV CKT 1	200	200	0.9059	122.437	JUDSON 3345.00 - TANDE-LNX 345.00 345KV CKT 1
FDNS	16ALL_G15_046	0	16WP	G15_046	FROM->TO	NESET 4 230.00 - TIOGA 230KV CKT 1	200	200	0.90567	122.116	TANDE 3345.00 - TANDE-LNX 345.00 345KV CKT Z
FDNS	16ALL_G15_046	0	16WP	G15_046	FROM->TO	NESET 4 230.00 - TIOGA 230KV CKT 1	200	200	0.90567	122.1108	JUDSON 3345.00 - TANDE-LNX 345.00 345KV CKT 1
FDNS	00NR_G15_046	0	25SP	G15_046	FROM->TO	NESET 4 230.00 - TIOGA 230KV CKT 1	200	200	0.90592	121.1398	TANDE 3345.00 - TANDE-LNX 345.00 345KV CKT Z
FDNS	00NR_G15_046	0	25SP	G15_046	FROM->TO	NESET 4 230.00 - TIOGA 230KV CKT 1	200	200	0.90592	121.1267	JUDSON 3345.00 - TANDE-LNX 345.00 345KV CKT 1
FDNS	16ALL_G15_046	0	25SP	G15_046	FROM->TO	NESET 4 230.00 - TIOGA 230KV CKT 1	200	200	0.90565	121.0982	TANDE 3345.00 - TANDE-LNX 345.00 345KV CKT Z
FDNS	16ALL_G15_046	0	25SP	G15_046	FROM->TO	NESET 4 230.00 - TIOGA 230KV CKT 1	200	200	0.90565	121.0846	JUDSON 3345.00 - TANDE-LNX 345.00 345KV CKT 1
FDNS	00NR_G15_046	0	20WP	G15_046	FROM->TO	NESET 4 230.00 - TIOGA 230KV CKT 1	200	200	0.90567	116.3593	TANDE 3345.00 - TANDE-LNX 345.00 345KV CKT Z
FDNS	00NR_G15_046	0	20WP	G15_046	FROM->TO	NESET 4 230.00 - TIOGA 230KV CKT 1	200	200	0.90567	116.3333	JUDSON 3345.00 - TANDE-LNX 345.00 345KV CKT 1
FDNS	16ALL_G15_046	0	20WP	G15_046	FROM->TO	NESET 4 230.00 - TIOGA 230KV CKT 1	200	200	0.90563	116.023	TANDE 3345.00 - TANDE-LNX 345.00 345KV CKT Z
FDNS	16ALL_G15_046	0	20WP	G15_046	FROM->TO	NESET 4 230.00 - TIOGA 230KV CKT 1	200	200	0.90563	116.0071	JUDSON 3345.00 - TANDE-LNX 345.00 345KV CKT 1
FDNS	16ALL_G15_046	0	16WP	G15_046	FROM->TO	NESET 4 230.00 - TIOGA 230KV CKT 1	200	200	0.38217	111.4936	JUDSON 4230.00 - WILLISTON 230KV CKT 1
FDNS	16ALL_G15_046	0	16WP	G15_046	FROM->TO	NESET 4 230.00 - TIOGA 230KV CKT 1	200	200	0.38217	111.4933	JUDSON 3345.00 (JUDSON KU1A) 345/230/13.8KV TRANSFORMER CKT 1
FDNS	00NR_G15_046	0	16WP	G15_046	FROM->TO	NESET 4 230.00 - TIOGA 230KV CKT 1	200	200	0.38489	108.6415	JUDSON 4230.00 - WILLISTON 230KV CKT 1
FDNS	16ALL_G15_046	0	16WP	G15_046	FROM->TO	NESET 4 230.00 - TIOGA 230KV CKT 1	200	200	0.37499	102.2552	NESET 4 230.00 () 230/115/13.8KV TRANSFORMER CKT 1
FDNS	00NR_G15_046	0	20WP	G15_046	FROM->TO	NESET 4 230.00 - TIOGA 230KV CKT 1	200	200	0.37482	101.2539	NESET 4 230.00 () 230/115/13.8KV TRANSFORMER CKT 1
FDNS	16ALL_G15_046	0	20WP	G15_046	FROM->TO	NESET 4 230.00 - TIOGA 230KV CKT 1	200	200	0.3753	99.5	NESET 4 230.00 () 230/115/13.8KV TRANSFORMER CKT 1
FDNS	16ALL_G15_046	0	16WP	G15_046	FROM->TO	NESET 4 230.00 - TIOGA 230KV CKT 1	200	200	0.38216	99.2	JUDSON 3345.00 (JUDSON KU1A) 345/230/13.8KV TRANSFORMER CKT 1
FDNS	16ALL_G15_046	0	16WP	G15_046	FROM->TO	NESET 4 230.00 - TIOGA 230KV CKT 1	200	200	0.38216	99.2	JUDSON 4230.00 - WILLISTON 230KV CKT 1
FDNS	00NR_G15_046	0	20SP	G15_046	TO->FROM	SPLIT ROCK - WHITE 345KV CKT 1	717	717	0.03245	104.3999	HANLON - STORLA 230KV CKT 1

SOLUTION	GROUP	SCENARIO	SEASON	SOURCE	DIRECTION	MONITORED ELEMENT	RATEA (MVA)	RATEB(MVA)	TDF	TC%LOADING (% MVA)	CONTINGENCY
FDNS	00NR_G15_046	0	20SP	G15_046	TO->FROM	SPLIT ROCK - WHITE 345KV CKT 1	717	717	0.03253	104.275	P12:230:UMZB:# 116 #: ST IN SD. WSG-ST-VH
FDNS	00NR_G15_046	0	20SP	G15_046	TO->FROM	SPLIT ROCK - WHITE 345KV CKT 1	717	717	0.0331	103.0036	GR ISLD-LNX3345.00 - HOLT.CO3 345.00 345KV CKT 1
FDNS	00NR_G15_046	0	20SP	G15_046	TO->FROM	SPLIT ROCK - WHITE 345KV CKT 1	717	717	0.03305	102.9996	GEN635214 4-NEAL UNIT 4
FDNS	00NR_G15_046	0	20SP	G15_046	TO->FROM	SPLIT ROCK - WHITE 345KV CKT 1	717	717	0.0331	102.6998	GR ISLD-LNX3345.00 - GRAND ISLAND 345KV CKT Z
FDNS	00NR_G15_046	0	20SP	G15_046	TO->FROM	SPLIT ROCK - WHITE 345KV CKT 1	717	717	0.03305	102.1046	YNG2 4 230.00 230/20.0KV TRANSFORMER CKT 1
FDNS	00NR_G15_046	0	20SP	G15_046	TO->FROM	SPLIT ROCK - WHITE 345KV CKT 1	717	717	0.03305	102.0965	SQUARE BUTTE - YNG2 4 230.00 230KV CKT 1
FDNS	00NR_G15_046	0	20SP	G15_046	TO->FROM	SPLIT ROCK - WHITE 345KV CKT 1	717	717	0.03225	101.7246	FT THOMPSON - LETCHER 230KV CKT 1
FDNS	00NR_G15_046	0	20SP	G15_046	TO->FROM	SPLIT ROCK - WHITE 345KV CKT 1	717	717	0.03225	101.7246	FT THOMPSON - LETCHER 230KV CKT 1
FDNS	00NR_G15_046	0	20SP	G15_046	TO->FROM	SPLIT ROCK - WHITE 345KV CKT 1	717	717	0.03243	101.6895	STORLA - WESSINGTON 230KV CKT 1
FDNS	00NR_G15_046	0	20SP	G15_046	TO->FROM	SPLIT ROCK - WHITE 345KV CKT 1	717	717	0.03305	101.6319	GEN635024 4-WALTER SCOTT UNIT 4
FDNS	00NR_G15_046	0	20SP	G15_046	TO->FROM	SPLIT ROCK - WHITE 345KV CKT 1	717	717	0.03305	101.1854	COYOTE 345/24.0KV TRANSFORMER CKT 1
FDNS	00NR_G15_046	0	20SP	G15_046	TO->FROM	SPLIT ROCK - WHITE 345KV CKT 1	717	717	0.03305	101.1173	ANSON - SPLIT ROCK 115KV CKT 1
FDNS	00NR_G15_046	0	20SP	G15_046	TO->FROM	SPLIT ROCK - WHITE 345KV CKT 1	717	717	0.03305	101.1172	ANSON (ANS 1) 115/13.8/13.8KV TRANSFORMER CKT 2
FDNS	00NR_G15_046	0	20SP	G15_046	TO->FROM	SPLIT ROCK - WHITE 345KV CKT 1	717	717	0.03305	101.0781	GEN635213 3-NEAL UNIT 3
FDNS	00NR_G15_046	0	20SP	G15_046	TO->FROM	SPLIT ROCK - WHITE 345KV CKT 1	717	717	0.03305	100.8441	GEN635023 3-WALTER SCOTT UNIT 3
FDNS	00NR_G15_046	0	20SP	G15_046	TO->FROM	SPLIT ROCK - WHITE 345KV CKT 1	717	717	0.03246	100.6535	LETCHER - SIOUX FALLS 230KV CKT 1
FDNS	00NR_G15_046	0	20SP	G15_046	TO->FROM	SPLIT ROCK - WHITE 345KV CKT 1	717	717	0.03159	100.4879	HANKINSON - WAHPETON 230KV CKT 1
FDNS	00NR_G15_046	0	20SP	G15_046	TO->FROM	SPLIT ROCK - WHITE 345KV CKT 1	717	717	0.03305	100.3437	ANSON 115/17.5KV TRANSFORMER CKT 4
FDNS	00NR_G15_046	0	20SP	G15_046	TO->FROM	SPLIT ROCK - WHITE 345KV CKT 1	717	717	0.03305	100.3422	ANSON - SPLIT ROCK 115KV CKT 2
FDNS	00NR_G15_046	0	20SP	G15_046	TO->FROM	SPLIT ROCK - WHITE 345KV CKT 1	717	717	0.03277	100.1235	GRE-CEDARMT3345.00 - HELENA 345KV CKT 1
FDNS	00NR_G15_046	0	20SP	G15_046	TO->FROM	SPLIT ROCK - WHITE 345KV CKT 1	717	717	0.03277	100.1235	GRE-CEDARMT3345.00 - HELENA 345KV CKT 2
FDNS	00NR_G15_046	0	20SP	G15_046	TO->FROM	SPLIT ROCK - WHITE 345KV CKT 1	717	717	0.03334	100.0965	BUFFALO RIDGE - YANKEE 115KV CKT 1
FDNS	00NR_G15_046	0	20SP	G15_046	TO->FROM	SPLIT ROCK - WHITE 345KV CKT 1	717	717	0.03378	100.0881	ARROWHEAD - ARROWHEAD 230 230KV CKT 1
FDNS	00NR_G15_046	0	20SP	G15_046	TO->FROM	SPLIT ROCK - WHITE 345KV CKT 1	717	717	0.04386	100.0626	FTTHOM1-LNX3345.00 - LELAND2-LNX3345.00 345KV CKT 1
FDNS	00NR_G15_046	0	20SP	G15_046	TO->FROM	SPLIT ROCK - WHITE 345KV CKT 1	717	717	0.03274	100.0516	GRE-CEDARMT3345.00 - LYON COUNTY 345KV CKT 2
FDNS	00NR_G15_046	0	20SP	G15_046	TO->FROM	SPLIT ROCK - WHITE 345KV CKT 1	717	717	0.03274	100	GRE-CEDARMT3345.00 - LYON COUNTY 345KV CKT 1
FDNS	00NR_G15_046	0	20SP	G15_046	TO->FROM	SPLIT ROCK - WHITE 345KV CKT 1	717	717	0.04386	99.9	FT THOMPSON - FTTHOM1-LNX3345.00 345KV CKT Z
FDNS	00NR_G15_046	0	20SP	G15_046	TO->FROM	SPLIT ROCK - WHITE 345KV CKT 1	717	717	0.04386	99.9	P12:345:UMZB:# 108 #: LOS FT IN ND. LOS FT
FDNS	00NR_G15_046	0	20SP	G15_046	TO->FROM	SPLIT ROCK - WHITE 345KV CKT 1	717	717	0.04386	99.8	LELAND OLDS - LELAND2-LNX3345.00 345KV CKT Z
FDNS	00NR_G15_046	0	20SP	G15_046	TO->FROM	SPLIT ROCK - WHITE 345KV CKT 1	717	717	0.03511	99.7	AURORA - BROOKINGS 115KV CKT 1
FDNS	00NR_G15_046	0	20SP	G15_046	TO->FROM	SPLIT ROCK - WHITE 345KV CKT 1	717	717	0.03511	99.7	AURORA - BROOKINGS 115KV CKT 1
FDNS	00NR_G15_046	0	20SP	G15_046	TO->FROM	SPLIT ROCK - WHITE 345KV CKT 1	717	717	0.03428	99.7	FTTHOM2-LNX3345.00 - GRPRAR2-LNX3345.00 345KV CKT 1
FDNS	00NR_G15_046	0	20SP	G15_046	TO->FROM	SPLIT ROCK - WHITE 345KV CKT 1	717	717	0.03305	99.7	CENTER 230/22.0KV TRANSFORMER CKT 1
FDNS	00NR_G15_046	0	20SP	G15_046	TO->FROM	SPLIT ROCK - WHITE 345KV CKT 1	717	717	0.03305	99.6	PROSE CAP7 115.00 - PROSE WIND7 115.00 115KV CKT 1
FDNS	00NR_G15_046	0	20SP	G15_046	TO->FROM	SPLIT ROCK - WHITE 345KV CKT 1	717	717	0.03305	99.6	PROSE CAP7 115.00 - SPLIT ROCK 115KV CKT 1
FDNS	00NR_G15_046	0	25SP	G15_046	TO->FROM	SPLIT ROCK - WHITE 345KV CKT 1	717	717	0.03299	99.6	HANLON - STORLA 230KV CKT 1
FDNS	00NR_G15_046	0	20SP	G15_046	TO->FROM	SPLIT ROCK - WHITE 345KV CKT 1	717	717	0.03428	99.5	FT THOMPSON - FTTHOM2-LNX3345.00 345KV CKT Z
FDNS	00NR_G15_046	0	20SP	G15_046	TO->FROM	SPLIT ROCK - WHITE 345KV CKT 1	717	717	0.03406	99.5	HAZLETON - MITCHLCO3 345.00 345KV CKT 1
FDNS	00NR_G15_046	0	20SP	G15_046	TO->FROM	SPLIT ROCK - WHITE 345KV CKT 1	717	717	0.03372	99.5	CHANARANBIE - FENTON 115KV CKT 1
FDNS	00NR_G15_046	0	20SP	G15_046	TO->FROM	SPLIT ROCK - WHITE 345KV CKT 1	717	717	0.03253	99.5	HANLON - SIOUX FALLS 230KV CKT 1
FDNS	00NR_G15_046	0	25SP	G15_046	TO->FROM	SPLIT ROCK - WHITE 345KV CKT 1	717	717	0.03308	99.5	P12:230:UMZB:# 116 #: ST IN SD. WSG-ST-VH
FDNS	00NR_G15_046	0	20SP	G15_046	TO->FROM	SPLIT ROCK - WHITE 345KV CKT 1	717	717	0.03428	99.4	GRPRAR2-LNX3345.00 - YANKTON 345KV CKT Z
FDNS	00NR_G15_046	0	20SP	G15_046	TO->FROM	SPLIT ROCK - WHITE 345KV CKT 1	717	717	0.03305	99.4	GEN336821 1-GRAND GULF UNIT
FDNS	00NR_G15_046	0	20SP	G15_046	TO->FROM	SPLIT ROCK - WHITE 345KV CKT 1	717	717	0.03349	99.3	AS KING - EAU CLAIRE 345KV CKT 1
FDNS	00NR_G15_046	0	20SP	G15_046	TO->FROM	SPLIT ROCK - WHITE 345KV CKT 1	717	717	0.03305	99.3	GEN344225 1-1CAL G1 25.000
FDNS	00NR_G15_046	0	20SP	G15_046	TO->FROM	SPLIT ROCK - WHITE 345KV CKT 1	717	717	0.03305	99.3	GEN600045 4-ANSON
FDNS	00NR_G15_046	0	20SP	G15_046	TO->FROM	SPLIT ROCK - WHITE 345KV CKT 1	717	717	0.04066	99.2	LAKEFIELD 3 - LKFLDXL3 345KV CKT 1
FDNS	00NR_G15_046	0	20SP	G15_046	TO->FROM	SPLIT ROCK - WHITE 345KV CKT 1	717	717	0.03308	99.2	BLAIR - GRANITE FALLS 230KV CKT 1
FDNS	00NR_G15_046	0	20SP	G15_046	TO->FROM	SPLIT ROCK - WHITE 345KV CKT 1	717	717	0.03308	99.2	BLAIR - GRANITE FALLS 230KV CKT 1
FDNS	00NR_G15_046	0	20SP	G15_046	TO->FROM	SPLIT ROCK - WHITE 345KV CKT 1	717	717	0.03511	99	AURORA - FLANDRU 115KV CKT 1
FDNS	00NR_G15_046	0	20SP	G15_046	TO->FROM	SPLIT ROCK - WHITE 345KV CKT 1	717	717	0.03511	99	AURORA - FLANDRU 115KV CKT 1
FDNS	00NR_G15_046	0	20SP	G15_046	TO->FROM	SPLIT ROCK - WHITE 345KV CKT 1	717	717	0.03305	99	J262_J263 115.00 - JAMESTOWN 115KV CKT 1
FDNS	00NR_G15_046	2	20WP	G15_046	FROM->TO	BLAISDELL 4230.00 (BLAISDL KV2A) 230/115/13.8KV TRANSFORMER CKT 1	166	166	0.05518	106.349	NESET 7 115.00 - WHTEARTHTP 7115.00 115KV CKT 1
FDNS	00NR_G15_046	2	20WP	G15_046	FROM->TO	BLAISDELL 4230.00 (BLAISDL KV2A) 230/115/13.8KV TRANSFORMER CKT 1	166	166	0.05518	102.6444	PVALLEY -MW7115.00 - WHTEARTHTP 7115.00 115KV CKT 1
FDNS	00NR_G15_046	2	20WP	G15_046	FROM->TO	BLAISDELL 4230.00 (BLAISDL KV2A) 230/115/13.8KV TRANSFORMER CKT 1	166	166	0.05518	102.6262	NESET 7 115.00 - WHTEARTHTP 7115.00 115KV CKT 1
FDNS	00NR_G15_046	2	20WP	G15_046	FROM->TO	BLAISDELL 4230.00 (BLAISDL KV2A) 230/115/13.8KV TRANSFORMER CKT 1	166	166	0.05518	99.8	PVALLEY -MW7115.00 - WHTEARTHTP 7115.00 115KV CKT 1
FDNS	16NR_G15_046	2	17G	G15_046	TO->FROM	GLENHAM - L3 HAWDON 230KV CKT 1	210	210	0.05539	110.2421	LELAND OLDS - LELAND2-LNX3345.00 345KV CKT Z
FDNS	16NR_G15_046	2	17G	G15_046	TO->FROM	GLENHAM - L3 HAWDON 230KV CKT 1	210	210	0.05539	110.1425	P12:345:UMZB:# 108 #: LOS FT IN ND. LOS FT
FDNS	16NR_G15_046	2	17G	G15_046	TO->FROM	GLENHAM - L3 HAWDON 230KV CKT 1	210	210	0.05539	110.0564	FT THOMPSON - FTTHOM1-LNX3345.00 345KV CKT Z
FDNS	16NR_G15_046	2	17G	G15_046	TO->FROM	GLENHAM - L3 HAWDON 230KV CKT 1	210	210	0.05539	109.9837	FTTHOM1-LNX3345.00 - LELAND2-LNX3345.00 345KV CKT 1
FDNS	16NR_G15_046	2	17G	G15_046	TO->FROM	GLENHAM - L3 HAWDON 230KV CKT 1	210	210	0.05138	102.6868	ANTELOP-LNX3345.00 - BRDLAND-LNX3345.00 345KV CKT 1
FDNS	16NR_G15_046	2	17G	G15_046	TO->FROM	GLENHAM - L3 HAWDON 230KV CKT 1	210	210	0.05138	102.6163	P12:345:UMZB:# 102 #: AVS BD IN ND. AVS BRD LR
FDNS	16NR_G15_046	2	17G	G15_046	TO->FROM	GLENHAM - L3 HAWDON 230KV CKT 1	210	210	0.05138	102.6147	P12:345:UMZB:# 103 #: BD IN SD. LOSS OF LINE
FDNS	16NR_G15_046	2	17G	G15_046	TO->FROM	GLENHAM - L3 HAWDON 230KV CKT 1	210	210	0.05138	102.6036	ANTELOP-LNX3345.00 - ANTELOPE VALLEY 345KV CKT Z
FDNS	16NR_G15_046	2	17G	G15_046	TO->FROM	GLENHAM - L3 HAWDON 230KV CKT 1	210	210	0.05138	102.5437	BROADLAND - HURON 230KV CKT 1
FDNS	16NR_G15_046	2	17G	G15_046	TO->FROM	GLENHAM - L3 HAWDON 230KV CKT 1	210	210	0.05138	102.5433	BRDLAND-LNX3345.00 - HURON 345KV CKT Z
FDNS	16NR_G15_046	2	17G	G15_046	TO->FROM	GLENHAM - L3 HAWDON 230KV CKT 1	210	210	0.05138	102.5433	HURON (BD KU2A) 345/230/13.8KV TRANSFORMER CKT 1
FDNS	16NR_G15_046	2	17G	G15_046	TO->FROM	GLENHAM - L3 HAWDON 230KV CKT 1	210	210	0.05138	102.5433	HURON (BD KU2A) 345/230/13.8KV TRANSFORMER CKT 1
FDNS	16NR_G15_046	2	20L	G15_046	TO->FROM	GLENHAM - L3 HAWDON 230KV CKT 1	210	210	0.04407	100.6586	LELAND OLDS - LELAND2-LNX3345.00 345KV CKT Z
FDNS	16NR_G15_046	2	20L	G15_046	TO->FROM	GLENHAM - L3 HAWDON 230KV CKT 1	210	210	0.04407	100.6197	P12:345:UMZB:# 108 #: LOS FT IN ND. LOS FT
FDNS	16NR_G15_046	2	20L	G15_046	TO->FROM	GLENHAM - L3 HAWDON 230KV CKT 1	210	210	0.04407	100.5959	FTTHOM1-LNX3345.00 - LELAND2-LNX3345.00 345KV CKT 1
FDNS	16NR_G15_046	2	20L	G15_046	TO->FROM	GLENHAM - L3 HAWDON 230KV CKT 1	210	210	0.04407	100.5819	FT THOMPSON - FTTHOM1-LNX3345.00 345KV CKT Z
FDNS	16NR_G15_046	2	17G	G15_046	TO->FROM	GLENHAM - L3 HAWDON 230KV CKT 1	210	210	0.04683	99.2	BUFFALO - JAMESTOWN 345KV CKT 1

SOLUTION	GROUP	SCENARIO	SEASON	SOURCE	DIRECTION	MONITORED ELEMENT	RATEA (MVA)	RATEB(MVA)	TDF	TC%LOADING (% MVA)	CONTINGENCY
FDNS	16NR_G15_046	2	17G	G15_046	FROM->TO	HURON (BD KU2A) 345/230/13.8KV TRANSFORMER CKT 1	400	400	0.08657	106.9854	LELAND OLDS - LELAND2-LNX3345.00 345KV CKT Z
FDNS	16NR_G15_046	2	17G	G15_046	FROM->TO	HURON (BD KU2A) 345/230/13.8KV TRANSFORMER CKT 1	400	400	0.08053	106.9552	LELAND OLDS - LELAND1-LNX3345.00 345KV CKT Z
FDNS	16NR_G15_046	2	17G	G15_046	FROM->TO	HURON (BD KU2A) 345/230/13.8KV TRANSFORMER CKT 1	400	400	0.08053	106.9146	P12:345:UMZB:# 109 #: LOS GRT IN ND. LOS GRT
FDNS	16NR_G15_046	2	17G	G15_046	FROM->TO	HURON (BD KU2A) 345/230/13.8KV TRANSFORMER CKT 1	400	400	0.08053	106.9102	GROTON - GROTON-LNX3 345.00 345KV CKT Z
FDNS	16NR_G15_046	2	17G	G15_046	FROM->TO	HURON (BD KU2A) 345/230/13.8KV TRANSFORMER CKT 1	400	400	0.08657	106.6291	P12:345:UMZB:# 108 #: LOS FT IN ND. LOS FT
FDNS	16NR_G15_046	2	17G	G15_046	FROM->TO	HURON (BD KU2A) 345/230/13.8KV TRANSFORMER CKT 1	400	400	0.08657	106.599	FT THOMPSON - FTTHOM1-LNX3345.00 345KV CKT Z
FDNS	16NR_G15_046	2	17G	G15_046	FROM->TO	HURON (BD KU2A) 345/230/13.8KV TRANSFORMER CKT 1	400	400	0.08053	106.4671	GROTON-LNX3 345.00 - LELAND1-LNX3345.00 345KV CKT 1
FDNS	16NR_G15_046	2	17G	G15_046	FROM->TO	HURON (BD KU2A) 345/230/13.8KV TRANSFORMER CKT 1	400	400	0.08657	106.1063	FTTHOM1-LNX3345.00 - LELAND2-LNX3345.00 345KV CKT 1
FDNS	00NR_G15_046	2	17SP	G15_046	FROM->TO	HURON (BD KU2A) 345/230/13.8KV TRANSFORMER CKT 1	400	400	0.09804	104.9014	LELAND OLDS - LELAND2-LNX3345.00 345KV CKT Z
FDNS	00NR_G15_046	2	17SP	G15_046	FROM->TO	HURON (BD KU2A) 345/230/13.8KV TRANSFORMER CKT 1	400	400	0.09804	104.425	P12:345:UMZB:# 108 #: LOS FT IN ND. LOS FT
FDNS	00NR_G15_046	2	17SP	G15_046	FROM->TO	HURON (BD KU2A) 345/230/13.8KV TRANSFORMER CKT 1	400	400	0.09804	104.4016	FT THOMPSON - FTTHOM1-LNX3345.00 345KV CKT Z
FDNS	00NR_G15_046	2	17SP	G15_046	FROM->TO	HURON (BD KU2A) 345/230/13.8KV TRANSFORMER CKT 1	400	400	0.09138	103.7807	LELAND OLDS - LELAND1-LNX3345.00 345KV CKT Z
FDNS	00NR_G15_046	2	17SP	G15_046	FROM->TO	HURON (BD KU2A) 345/230/13.8KV TRANSFORMER CKT 1	400	400	0.09138	103.7371	GROTON - GROTON-LNX3 345.00 345KV CKT Z
FDNS	00NR_G15_046	2	17SP	G15_046	FROM->TO	HURON (BD KU2A) 345/230/13.8KV TRANSFORMER CKT 1	400	400	0.09138	103.7348	P12:345:UMZB:# 109 #: LOS GRT IN ND. LOS GRT
FDNS	00NR_G15_046	2	17SP	G15_046	FROM->TO	HURON (BD KU2A) 345/230/13.8KV TRANSFORMER CKT 1	400	400	0.09804	103.6853	FTTHOM1-LNX3345.00 - LELAND2-LNX3345.00 345KV CKT 1
FDNS	16NR_G15_046	2	17G	G15_046	FROM->TO	HURON (BD KU2A) 345/230/13.8KV TRANSFORMER CKT 1	400	400	0.08053	103.6049	LELAND OLDS - LELAND1-LNX3345.00 345KV CKT Z
FDNS	16NR_G15_046	2	17G	G15_046	FROM->TO	HURON (BD KU2A) 345/230/13.8KV TRANSFORMER CKT 1	400	400	0.08657	103.5944	LELAND OLDS - LELAND2-LNX3345.00 345KV CKT Z
FDNS	16NR_G15_046	2	17G	G15_046	FROM->TO	HURON (BD KU2A) 345/230/13.8KV TRANSFORMER CKT 1	400	400	0.08053	103.5706	GROTON - GROTON-LNX3 345.00 345KV CKT Z
FDNS	16NR_G15_046	2	17G	G15_046	FROM->TO	HURON (BD KU2A) 345/230/13.8KV TRANSFORMER CKT 1	400	400	0.08053	103.5699	P12:345:UMZB:# 109 #: LOS GRT IN ND. LOS GRT
FDNS	00NR_G15_046	2	17SP	G15_046	FROM->TO	HURON (BD KU2A) 345/230/13.8KV TRANSFORMER CKT 1	400	400	0.09138	103.3745	GROTON-LNX3 345.00 - LELAND1-LNX3345.00 345KV CKT 1
FDNS	16NR_G15_046	2	17G	G15_046	FROM->TO	HURON (BD KU2A) 345/230/13.8KV TRANSFORMER CKT 1	400	400	0.08657	103.2868	FT THOMPSON - FTTHOM1-LNX3345.00 345KV CKT Z
FDNS	16NR_G15_046	2	17G	G15_046	FROM->TO	HURON (BD KU2A) 345/230/13.8KV TRANSFORMER CKT 1	400	400	0.08657	103.2853	P12:345:UMZB:# 108 #: LOS FT IN ND. LOS FT
FDNS	16NR_G15_046	2	17G	G15_046	FROM->TO	HURON (BD KU2A) 345/230/13.8KV TRANSFORMER CKT 1	400	400	0.08053	103.1414	GROTON-LNX3 345.00 - LELAND1-LNX3345.00 345KV CKT 1
FDNS	16NR_G15_046	2	17G	G15_046	FROM->TO	HURON (BD KU2A) 345/230/13.8KV TRANSFORMER CKT 1	400	400	0.08657	102.8026	FTTHOM1-LNX3345.00 - LELAND2-LNX3345.00 345KV CKT 1
FDNS	00NR_G15_046	2	17SP	G15_046	FROM->TO	HURON (BD KU2A) 345/230/13.8KV TRANSFORMER CKT 1	400	400	0.09804	101.7759	LELAND OLDS - LELAND2-LNX3345.00 345KV CKT Z
FDNS	00NR_G15_046	2	17SP	G15_046	FROM->TO	HURON (BD KU2A) 345/230/13.8KV TRANSFORMER CKT 1	400	400	0.09804	101.3697	FT THOMPSON - FTTHOM1-LNX3345.00 345KV CKT Z
FDNS	00NR_G15_046	2	17SP	G15_046	FROM->TO	HURON (BD KU2A) 345/230/13.8KV TRANSFORMER CKT 1	400	400	0.09804	101.3625	P12:345:UMZB:# 108 #: LOS FT IN ND. LOS FT
FDNS	00NR_G15_046	2	17SP	G15_046	FROM->TO	HURON (BD KU2A) 345/230/13.8KV TRANSFORMER CKT 1	400	400	0.09138	100.8572	LELAND OLDS - LELAND1-LNX3345.00 345KV CKT Z
FDNS	00NR_G15_046	2	17SP	G15_046	FROM->TO	HURON (BD KU2A) 345/230/13.8KV TRANSFORMER CKT 1	400	400	0.09138	100.8242	GROTON - GROTON-LNX3 345.00 345KV CKT Z
FDNS	00NR_G15_046	2	17SP	G15_046	FROM->TO	HURON (BD KU2A) 345/230/13.8KV TRANSFORMER CKT 1	400	400	0.09138	100.8175	P12:345:UMZB:# 109 #: LOS GRT IN ND. LOS GRT
FDNS	00NR_G15_046	2	17SP	G15_046	FROM->TO	HURON (BD KU2A) 345/230/13.8KV TRANSFORMER CKT 1	400	400	0.09804	100.6911	FTTHOM1-LNX3345.00 - LELAND2-LNX3345.00 345KV CKT 1
FDNS	00NR_G15_046	2	17SP	G15_046	FROM->TO	HURON (BD KU2A) 345/230/13.8KV TRANSFORMER CKT 1	400	400	0.09138	100.4691	GROTON-LNX3 345.00 - LELAND1-LNX3345.00 345KV CKT 1
FDNS	00NR_G15_046	2	20SP	G15_046	TO->FROM	SPLIT ROCK - WHITE 345KV CKT 1	717	717	0.03245	104.3999	HANLON - STORLA 230KV CKT 1
FDNS	00NR_G15_046	2	20SP	G15_046	TO->FROM	SPLIT ROCK - WHITE 345KV CKT 1	717	717	0.03253	104.275	P12:230:UMZB:# 116 #: ST IN SD. WSG-ST-VH
FDNS	00NR_G15_046	2	20SP	G15_046	TO->FROM	SPLIT ROCK - WHITE 345KV CKT 1	717	717	0.0331	103.0036	GR ISLD-LNX3345.00 - HOLT.CO3 345.00 345KV CKT 1
FDNS	00NR_G15_046	2	20SP	G15_046	TO->FROM	SPLIT ROCK - WHITE 345KV CKT 1	717	717	0.03305	102.9996	GEN635214 4-NEAL UNIT 4
FDNS	00NR_G15_046	2	20SP	G15_046	TO->FROM	SPLIT ROCK - WHITE 345KV CKT 1	717	717	0.0331	102.6998	GR ISLD-LNX3345.00 - GRAND ISLAND 345KV CKT Z
FDNS	00NR_G15_046	2	20SP	G15_046	TO->FROM	SPLIT ROCK - WHITE 345KV CKT 1	717	717	0.03305	102.0963	SQUARE BUTTE - YNG2 4 230.00 230KV CKT 1
FDNS	00NR_G15_046	2	20SP	G15_046	TO->FROM	SPLIT ROCK - WHITE 345KV CKT 1	717	717	0.03305	102.096	YNG2 4 230.00 230/20.0KV TRANSFORMER CKT 1
FDNS	00NR_G15_046	2	20SP	G15_046	TO->FROM	SPLIT ROCK - WHITE 345KV CKT 1	717	717	0.03225	101.7245	FT THOMPSON - LETCHER 230KV CKT 1
FDNS	00NR_G15_046	2	20SP	G15_046	TO->FROM	SPLIT ROCK - WHITE 345KV CKT 1	717	717	0.03225	101.7245	FT THOMPSON - LETCHER 230KV CKT 1
FDNS	00NR_G15_046	2	20SP	G15_046	TO->FROM	SPLIT ROCK - WHITE 345KV CKT 1	717	717	0.03243	101.6896	STORLA - WESSINGTON 230KV CKT 1
FDNS	00NR_G15_046	2	20SP	G15_046	TO->FROM	SPLIT ROCK - WHITE 345KV CKT 1	717	717	0.03305	101.6318	GEN635024 4-WALTER SCOTT UNIT 4
FDNS	00NR_G15_046	2	20SP	G15_046	TO->FROM	SPLIT ROCK - WHITE 345KV CKT 1	717	717	0.03305	101.1854	COYOTE 345/24.0KV TRANSFORMER CKT 1
FDNS	00NR_G15_046	2	20SP	G15_046	TO->FROM	SPLIT ROCK - WHITE 345KV CKT 1	717	717	0.03305	101.1177	ANSON - SPLIT ROCK 115KV CKT 1
FDNS	00NR_G15_046	2	20SP	G15_046	TO->FROM	SPLIT ROCK - WHITE 345KV CKT 1	717	717	0.03305	101.1174	ANSON (ANS 1) 115/13.8/13.8KV TRANSFORMER CKT 2
FDNS	00NR_G15_046	2	20SP	G15_046	TO->FROM	SPLIT ROCK - WHITE 345KV CKT 1	717	717	0.03305	101.0781	GEN635213 3-NEAL UNIT 3
FDNS	00NR_G15_046	2	20SP	G15_046	TO->FROM	SPLIT ROCK - WHITE 345KV CKT 1	717	717	0.03305	100.8442	GEN635023 3-WALTER SCOTT UNIT 3
FDNS	00NR_G15_046	2	20SP	G15_046	TO->FROM	SPLIT ROCK - WHITE 345KV CKT 1	717	717	0.03246	100.6534	LETCHER - SIOUX FALLS 230KV CKT 1
FDNS	00NR_G15_046	2	20SP	G15_046	TO->FROM	SPLIT ROCK - WHITE 345KV CKT 1	717	717	0.03159	100.4879	HANKINSON - WAHPETON 230KV CKT 1
FDNS	00NR_G15_046	2	20SP	G15_046	TO->FROM	SPLIT ROCK - WHITE 345KV CKT 1	717	717	0.03305	100.3433	ANSON 115/17.5KV TRANSFORMER CKT 4
FDNS	00NR_G15_046	2	20SP	G15_046	TO->FROM	SPLIT ROCK - WHITE 345KV CKT 1	717	717	0.03305	100.3422	ANSON - SPLIT ROCK 115KV CKT 2
FDNS	00NR_G15_046	2	20SP	G15_046	TO->FROM	SPLIT ROCK - WHITE 345KV CKT 1	717	717	0.03277	100.1235	GRE-CEDARMT3345.00 - HELENA 345KV CKT 1
FDNS	00NR_G15_046	2	20SP	G15_046	TO->FROM	SPLIT ROCK - WHITE 345KV CKT 1	717	717	0.03277	100.1235	GRE-CEDARMT3345.00 - HELENA 345KV CKT 2
FDNS	00NR_G15_046	2	20SP	G15_046	TO->FROM	SPLIT ROCK - WHITE 345KV CKT 1	717	717	0.03334	100.0965	BUFFALO RIDGE - YANKEE 115KV CKT 1
FDNS	00NR_G15_046	2	20SP	G15_046	TO->FROM	SPLIT ROCK - WHITE 345KV CKT 1	717	717	0.03378	100.0881	ARROWHEAD - ARROWHEAD 230 230KV CKT 1
FDNS	00NR_G15_046	2	20SP	G15_046	TO->FROM	SPLIT ROCK - WHITE 345KV CKT 1	717	717	0.04386	100.0626	FTTHOM1-LNX3345.00 - LELAND2-LNX3345.00 345KV CKT 1
FDNS	00NR_G15_046	2	20SP	G15_046	TO->FROM	SPLIT ROCK - WHITE 345KV CKT 1	717	717	0.03274	100.0516	GRE-CEDARMT3345.00 - LYON COUNTY 345KV CKT 2
FDNS	00NR_G15_046	2	20SP	G15_046	TO->FROM	SPLIT ROCK - WHITE 345KV CKT 1	717	717	0.03274	100	GRE-CEDARMT3345.00 - LYON COUNTY 345KV CKT 1
FDNS	00NR_G15_046	2	20SP	G15_046	TO->FROM	SPLIT ROCK - WHITE 345KV CKT 1	717	717	0.04386	99.9	FT THOMPSON - FTTHOM1-LNX3345.00 345KV CKT Z
FDNS	00NR_G15_046	2	20SP	G15_046	TO->FROM	SPLIT ROCK - WHITE 345KV CKT 1	717	717	0.04386	99.9	P12:345:UMZB:# 108 #: LOS FT IN ND. LOS FT
FDNS	00NR_G15_046	2	20SP	G15_046	TO->FROM	SPLIT ROCK - WHITE 345KV CKT 1	717	717	0.04386	99.8	LELAND OLDS - LELAND2-LNX3345.00 345KV CKT Z
FDNS	00NR_G15_046	2	20SP	G15_046	TO->FROM	SPLIT ROCK - WHITE 345KV CKT 1	717	717	0.03511	99.7	AURORA - BROOKINGS 115KV CKT 1
FDNS	00NR_G15_046	2	20SP	G15_046	TO->FROM	SPLIT ROCK - WHITE 345KV CKT 1	717	717	0.03511	99.7	AURORA - BROOKINGS 115KV CKT 1
FDNS	00NR_G15_046	2	20SP	G15_046	TO->FROM	SPLIT ROCK - WHITE 345KV CKT 1	717	717	0.03428	99.7	FTTHOM2-LNX3345.00 - GRPRAR2-LNX3345.00 345KV CKT 1
FDNS	00NR_G15_046	2	20SP	G15_046	TO->FROM	SPLIT ROCK - WHITE 345KV CKT 1	717	717	0.03305	99.7	CENTER 230/22.0KV TRANSFORMER CKT 1
FDNS	00NR_G15_046	2	20SP	G15_046	TO->FROM	SPLIT ROCK - WHITE 345KV CKT 1	717	717	0.03305	99.6	PROSE CAP7 115.00 - PROSE WIND7 115.00 115KV CKT 1
FDNS	00NR_G15_046	2	20SP	G15_046	TO->FROM	SPLIT ROCK - WHITE 345KV CKT 1	717	717	0.03305	99.6	PROSE CAP7 115.00 - SPLIT ROCK 115KV CKT 1
FDNS	00NR_G15_046	2	25SP	G15_046	TO->FROM	SPLIT ROCK - WHITE 345KV CKT 1	717	717	0.03299	99.6	HANLON - STORLA 230KV CKT 1
FDNS	00NR_G15_046	2	20SP	G15_046	TO->FROM	SPLIT ROCK - WHITE 345KV CKT 1	717	717	0.03428	99.5	FT THOMPSON - FTTHOM2-LNX3345.00 345KV CKT Z
FDNS	00NR_G15_046	2	20SP	G15_046	TO->FROM	SPLIT ROCK - WHITE 345KV CKT 1	717	717	0.03406	99.5	HAZLETON - MITCHLCO3 345.00 345KV CKT 1
FDNS	00NR_G15_046	2	20SP	G15_046	TO->FROM	SPLIT ROCK - WHITE 345KV CKT 1	717	717	0.03372	99.5	CHANARANBIE - FENTON 115KV CKT 1
FDNS	00NR_G15_046	2	20SP	G15_046	TO->FROM	SPLIT ROCK - WHITE 345KV CKT 1	717	717	0.03253	99.5	HANLON - SIOUX FALLS 230KV CKT 1

SOLUTION	GROUP	SCENARIO	SEASON	SOURCE	DIRECTION	MONITORED ELEMENT	RATEA (MVA)	RATEB(MVA)	TDF	TC%LOADING (% MVA)	CONTINGENCY
FDNS	00NR_G15_046	2	25SP	G15_046	TO->FROM	SPLIT ROCK - WHITE 345KV CKT 1	717	717	0.03308	99.5	P12:230:UMZB:# 116 #: ST IN SD. WSG-ST-VH
FDNS	00NR_G15_046	2	20SP	G15_046	TO->FROM	SPLIT ROCK - WHITE 345KV CKT 1	717	717	0.03428	99.4	GRPRAR2-LNX3345.00 - YANKTON 345KV CKT Z
FDNS	00NR_G15_046	2	20SP	G15_046	TO->FROM	SPLIT ROCK - WHITE 345KV CKT 1	717	717	0.03305	99.4	GEN336821 1-GRAND GULF UNIT
FDNS	00NR_G15_046	2	20SP	G15_046	TO->FROM	SPLIT ROCK - WHITE 345KV CKT 1	717	717	0.03349	99.3	AS KING - EAU CLAIRE 345KV CKT 1
FDNS	00NR_G15_046	2	20SP	G15_046	TO->FROM	SPLIT ROCK - WHITE 345KV CKT 1	717	717	0.03305	99.3	GEN344225 1-1CAL G1 25.000
FDNS	00NR_G15_046	2	20SP	G15_046	TO->FROM	SPLIT ROCK - WHITE 345KV CKT 1	717	717	0.03305	99.3	GEN600045 4-ANSON
FDNS	00NR_G15_046	2	20SP	G15_046	TO->FROM	SPLIT ROCK - WHITE 345KV CKT 1	717	717	0.04066	99.2	LAKEFIELD 3 - LKFLDXL3 345KV CKT 1
FDNS	00NR_G15_046	2	20SP	G15_046	TO->FROM	SPLIT ROCK - WHITE 345KV CKT 1	717	717	0.03308	99.2	BLAIR - GRANITE FALLS 230KV CKT 1
FDNS	00NR_G15_046	2	20SP	G15_046	TO->FROM	SPLIT ROCK - WHITE 345KV CKT 1	717	717	0.03308	99.2	BLAIR - GRANITE FALLS 230KV CKT 1
FDNS	00NR_G15_046	2	20SP	G15_046	TO->FROM	SPLIT ROCK - WHITE 345KV CKT 1	717	717	0.03511	99	AURORA - FLANDRU 115KV CKT 1
FDNS	00NR_G15_046	2	20SP	G15_046	TO->FROM	SPLIT ROCK - WHITE 345KV CKT 1	717	717	0.03511	99	AURORA - FLANDRU 115KV CKT 1
FDNS	00NR_G15_046	2	20SP	G15_046	TO->FROM	SPLIT ROCK - WHITE 345KV CKT 1	717	717	0.03305	99	J262_J263 115.00 - JAMESTOWN 115KV CKT 1
FDNS	00NR_G15_046	3	17SP	G15_046	FROM->TO	WATERTOWN (WT2 KU1A) 345/230/13.8KV TRANSFORMER CKT 1	400	500	0.04152	106.8828	P12:345:UMZW:# 1747 #: WT2 IN SD. WT2-WHT LINE FAULT
FDNS	00NR_G15_046	3	17SP	G15_046	FROM->TO	WATERTOWN (WT2 KU1A) 345/230/13.8KV TRANSFORMER CKT 1	400	500	0.04152	106.8523	WATERTN-LNX3345.00 - WATERTOWN 345KV CKT Z
FDNS	00NR_G15_046	3	17SP	G15_046	FROM->TO	WATERTOWN (WT2 KU1A) 345/230/13.8KV TRANSFORMER CKT 1	400	500	0.04152	106.5562	WATERTN-LNX3345.00 - WHITE 345KV CKT 1
FDNS	00NR_G15_046	3	17SP	G15_046	FROM->TO	WATERTOWN (WT2 KU1A) 345/230/13.8KV TRANSFORMER CKT 1	400	500	0.04152	106.4087	P12:345:UMZW:# 1747 #: WT2 IN SD. WT2-WHT LINE FAULT
FDNS	00NR_G15_046	3	17SP	G15_046	FROM->TO	WATERTOWN (WT2 KU1A) 345/230/13.8KV TRANSFORMER CKT 1	400	500	0.04152	106.386	WATERTN-LNX3345.00 - WATERTOWN 345KV CKT Z
FDNS	00NR_G15_046	3	17SP	G15_046	FROM->TO	WATERTOWN (WT2 KU1A) 345/230/13.8KV TRANSFORMER CKT 1	400	500	0.04152	105.7184	WATERTN-LNX3345.00 - WHITE 345KV CKT 1
FDNS	01ALL_G15_048	0	20WP	G15_048	FROM->TO	CLEO CORNER - CLEOPLT4 138.00 138KV CKT 1	191	191	0.57007	118.2677	MATHWSN7 345.00 - TATONGA7 345.00 345KV CKT 1
FDNS	01ALL_G15_048	0	16WP	G15_048	FROM->TO	CLEO CORNER - CLEOPLT4 138.00 138KV CKT 1	191	191	0.57133	118.1692	MATHWSN7 345.00 - TATONGA7 345.00 345KV CKT 1
FDNS	01ALL_G15_048	0	17SP	G15_048	FROM->TO	CLEO CORNER - CLEOPLT4 138.00 138KV CKT 1	191	191	0.57128	114.2602	MATHWSN7 345.00 - TATONGA7 345.00 345KV CKT 1
FDNS	01ALL_G15_048	0	17G	G15_048	FROM->TO	CLEO CORNER - CLEOPLT4 138.00 138KV CKT 1	191	191	0.57192	113.7198	MATHWSN7 345.00 - TATONGA7 345.00 345KV CKT 1
FDNS	01ALL_G15_048	0	20WP	G15_048	FROM->TO	CLEO CORNER - CLEOPLT4 138.00 138KV CKT 1	191	191	0.63995	112.1614	CLEO CORNER (CLEOCOR1) 138/69/13.8KV TRANSFORMER CKT 1
FDNS	01ALL_G15_048	0	20SP	G15_048	FROM->TO	CLEO CORNER - CLEOPLT4 138.00 138KV CKT 1	191	191	0.57066	110.2342	MATHWSN7 345.00 - TATONGA7 345.00 345KV CKT 1
FDNS	01ALL_G15_048	0	16WP	G15_048	FROM->TO	CLEO CORNER - CLEOPLT4 138.00 138KV CKT 1	191	191	0.64081	110.119	CLEO CORNER (CLEOCOR1) 138/69/13.8KV TRANSFORMER CKT 1
FDNS	01ALL_G15_048	0	17SP	G15_048	FROM->TO	CLEO CORNER - CLEOPLT4 138.00 138KV CKT 1	191	191	0.64081	109.4261	CLEO CORNER (CLEOCOR1) 138/69/13.8KV TRANSFORMER CKT 1
FDNS	01ALL_G15_048	0	20SP	G15_048	FROM->TO	CLEO CORNER - CLEOPLT4 138.00 138KV CKT 1	191	191	0.64041	108.6496	CLEO CORNER (CLEOCOR1) 138/69/13.8KV TRANSFORMER CKT 1
FDNS	01ALL_G15_048	0	17G	G15_048	FROM->TO	CLEO CORNER - CLEOPLT4 138.00 138KV CKT 1	191	191	0.64121	106.8436	CLEO CORNER (CLEOCOR1) 138/69/13.8KV TRANSFORMER CKT 1
FDNS	01NR_G15_048	0	17G	G15_048	FROM->TO	CLEO CORNER - CLEOPLT4 138.00 138KV CKT 1	191	191	0.58033	106.2844	MATHWSN7 345.00 - TATONGA7 345.00 345KV CKT 1
FDNS	01ALL_G15_048	0	20L	G15_048	FROM->TO	CLEO CORNER - CLEOPLT4 138.00 138KV CKT 1	191	191	0.5725	105.5818	MATHWSN7 345.00 - TATONGA7 345.00 345KV CKT 1
FDNS	01ALL_G15_048	0	20WP	G15_048	FROM->TO	CLEO CORNER - CLEOPLT4 138.00 138KV CKT 1	191	191	0.59784	104.4465	CLEO CORNER - CLEO JCT 69KV CKT 1
FDNS	01ALL_G15_048	0	20WP	G15_048	FROM->TO	CLEO CORNER - CLEOPLT4 138.00 138KV CKT 1	191	191	0.59784	104.4446	CLEO JCT - RINGWOOD 69KV CKT 1
FDNS	01ALL_G15_048	0	20WP	G15_048	FROM->TO	CLEO CORNER - CLEOPLT4 138.00 138KV CKT 1	191	191	0.57338	104.2879	MOORELAND - PIC4 138.00 138KV CKT 1
FDNS	01ALL_G15_048	0	20WP	G15_048	FROM->TO	CLEO CORNER - CLEOPLT4 138.00 138KV CKT 1	191	191	0.57338	104.2597	P12:138:WFEC:MSL12
FDNS	01ALL_G15_048	0	20WP	G15_048	FROM->TO	CLEO CORNER - CLEOPLT4 138.00 138KV CKT 1	191	191	0.57338	104.1991	CEDARDALE - PIC4 138.00 138KV CKT 1
FDNS	01ALL_G15_048	0	20WP	G15_048	FROM->TO	CLEO CORNER - CLEOPLT4 138.00 138KV CKT 1	191	191	0.57338	104.001	CEDARDALE - OKEENE 138KV CKT 1
FDNS	01ALL_G15_048	0	20WP	G15_048	FROM->TO	CLEO CORNER - CLEOPLT4 138.00 138KV CKT 1	191	191	0.5771	103.9267	P12:138:WFEC:MSL14
FDNS	01ALL_G15_048	0	20WP	G15_048	FROM->TO	CLEO CORNER - CLEOPLT4 138.00 138KV CKT 1	191	191	0.5771	103.8961	BEARCAT 138.00 - MOORELAND 138KV CKT 1
FDNS	01ALL_G15_048	0	20WP	G15_048	FROM->TO	CLEO CORNER - CLEOPLT4 138.00 138KV CKT 1	191	191	0.5771	103.4538	BEARCAT 138.00 - NINE MILE 138KV CKT 1
FDNS	01ALL_G15_048	0	16WP	G15_048	FROM->TO	CLEO CORNER - CLEOPLT4 138.00 138KV CKT 1	191	191	0.57451	103.2685	MOORELAND - PIC4 138.00 138KV CKT 1
FDNS	01ALL_G15_048	0	16WP	G15_048	FROM->TO	CLEO CORNER - CLEOPLT4 138.00 138KV CKT 1	191	191	0.57451	103.243	P12:138:WFEC:MSL12
FDNS	01ALL_G15_048	0	16WP	G15_048	FROM->TO	CLEO CORNER - CLEOPLT4 138.00 138KV CKT 1	191	191	0.57451	103.1781	CEDARDALE - PIC4 138.00 138KV CKT 1
FDNS	01ALL_G15_048	0	20WP	G15_048	FROM->TO	CLEO CORNER - CLEOPLT4 138.00 138KV CKT 1	191	191	0.57407	103.0422	P12:138:WFEC:MSL15
FDNS	01ALL_G15_048	0	16WP	G15_048	FROM->TO	CLEO CORNER - CLEOPLT4 138.00 138KV CKT 1	191	191	0.57451	102.9916	CEDARDALE - OKEENE 138KV CKT 1
FDNS	01ALL_G15_048	0	20WP	G15_048	FROM->TO	CLEO CORNER - CLEOPLT4 138.00 138KV CKT 1	191	191	0.57257	102.8452	DOVER SW - OKEENE 138KV CKT 1
FDNS	01ALL_G15_048	0	16WP	G15_048	FROM->TO	CLEO CORNER - CLEOPLT4 138.00 138KV CKT 1	191	191	0.59888	102.8307	CLEO CORNER - CLEO JCT 69KV CKT 1
FDNS	01ALL_G15_048	0	16WP	G15_048	FROM->TO	CLEO CORNER - CLEOPLT4 138.00 138KV CKT 1	191	191	0.59888	102.8287	CLEO JCT - RINGWOOD 69KV CKT 1
FDNS	01ALL_G15_048	0	16WP	G15_048	FROM->TO	CLEO CORNER - CLEOPLT4 138.00 138KV CKT 1	191	191	0.57748	102.7574	P12:138:WFEC:MSL14
FDNS	01ALL_G15_048	0	20WP	G15_048	FROM->TO	CLEO CORNER - CLEOPLT4 138.00 138KV CKT 1	191	191	0.5771	102.7374	MOREWOOD SW - NINE MILE 138KV CKT 1
FDNS	01ALL_G15_048	0	16WP	G15_048	FROM->TO	CLEO CORNER - CLEOPLT4 138.00 138KV CKT 1	191	191	0.57748	102.686	BEARCAT 138.00 - MOORELAND 138KV CKT 1
FDNS	01ALL_G15_048	0	20WP	G15_048	FROM->TO	CLEO CORNER - CLEOPLT4 138.00 138KV CKT 1	191	191	0.60152	102.6143	CLEO CORNER - CLEOTP 2 69.000 69KV CKT 1
FDNS	01ALL_G15_048	0	20WP	G15_048	FROM->TO	CLEO CORNER - CLEOPLT4 138.00 138KV CKT 1	191	191	0.60152	102.3885	ALINETP2 69.000 - CLEOTP 2 69.000 69KV CKT 1
FDNS	01ALL_G15_048	0	17SP	G15_048	FROM->TO	CLEO CORNER - CLEOPLT4 138.00 138KV CKT 1	191	191	0.53797	102.3217	WOODRING (WOODRNG2) 345/138/13.8KV TRANSFORMER CKT 1
FDNS	01ALL_G15_048	0	20WP	G15_048	FROM->TO	CLEO CORNER - CLEOPLT4 138.00 138KV CKT 1	191	191	0.60152	102.2931	ALINETP2 69.000 - ALVA 69KV CKT 1
FDNS	01ALL_G15_048	0	20WP	G15_048	FROM->TO	CLEO CORNER - CLEOPLT4 138.00 138KV CKT 1	191	191	0.57206	102.2835	DEWEY - SOUTHARD 138KV CKT 1
FDNS	01ALL_G15_048	0	16WP	G15_048	FROM->TO	CLEO CORNER - CLEOPLT4 138.00 138KV CKT 1	191	191	0.57748	102.2595	BEARCAT 138.00 - NINE MILE 138KV CKT 1
FDNS	01ALL_G15_048	0	16WP	G15_048	FROM->TO	CLEO CORNER - CLEOPLT4 138.00 138KV CKT 1	191	191	0.57512	102.0585	P12:138:WFEC:MSL15
FDNS	01ALL_G15_048	0	16WP	G15_048	FROM->TO	CLEO CORNER - CLEOPLT4 138.00 138KV CKT 1	191	191	0.57373	102.0418	DOVER SW - OKEENE 138KV CKT 1
FDNS	01ALL_G15_048	0	17SP	G15_048	FROM->TO	CLEO CORNER - CLEOPLT4 138.00 138KV CKT 1	191	191	0.57753	102.026	P12:138:WFEC:MSL14
FDNS	01ALL_G15_048	0	17SP	G15_048	FROM->TO	CLEO CORNER - CLEOPLT4 138.00 138KV CKT 1	191	191	0.57753	101.9572	BEARCAT 138.00 - MOORELAND 138KV CKT 1
FDNS	01ALL_G15_048	0	20WP	G15_048	FROM->TO	CLEO CORNER - CLEOPLT4 138.00 138KV CKT 1	191	191	0.57206	101.9155	ROMAN NOSE - SOUTHARD 138KV CKT 1
FDNS	01ALL_G15_048	0	20WP	G15_048	FROM->TO	CLEO CORNER - CLEOPLT4 138.00 138KV CKT 1	191	191	0.57407	101.9128	NOEL_SW 138.00 - SALT_PLAINS 138.00 138KV CKT 1
FDNS	01ALL_G15_048	0	17SP	G15_048	FROM->TO	CLEO CORNER - CLEOPLT4 138.00 138KV CKT 1	191	191	0.59886	101.8141	CLEO CORNER - CLEO JCT 69KV CKT 1
FDNS	01ALL_G15_048	0	17SP	G15_048	FROM->TO	CLEO CORNER - CLEOPLT4 138.00 138KV CKT 1	191	191	0.59886	101.812	CLEO JCT - RINGWOOD 69KV CKT 1
FDNS	01NR_G15_048	0	17G	G15_048	FROM->TO	CLEO CORNER - CLEOPLT4 138.00 138KV CKT 1	191	191	0.64678	101.7412	CLEO CORNER (CLEOCOR1) 138/69/13.8KV TRANSFORMER CKT 1
FDNS	01ALL_G15_048	0	20WP	G15_048	FROM->TO	CLEO CORNER - CLEOPLT4 138.00 138KV CKT 1	191	191	0.59784	101.5869	NSAH - RINGWOOD 69KV CKT 1
FDNS	01ALL_G15_048	0	16WP	G15_048	FROM->TO	CLEO CORNER - CLEOPLT4 138.00 138KV CKT 1	191	191	0.60238	101.5733	CLEO CORNER - CLEOTP 2 69.000 69KV CKT 1
FDNS	01ALL_G15_048	0	16WP	G15_048	FROM->TO	CLEO CORNER - CLEOPLT4 138.00 138KV CKT 1	191	191	0.57748	101.5689	MOREWOOD SW - NINE MILE 138KV CKT 1
FDNS	01ALL_G15_048	0	17SP	G15_048	FROM->TO	CLEO CORNER - CLEOPLT4 138.00 138KV CKT 1	191	191	0.57753	101.5328	BEARCAT 138.00 - NINE MILE 138KV CKT 1
FDNS	01ALL_G15_048	0	17SP	G15_048	FROM->TO	CLEO CORNER - CLEOPLT4 138.00 138KV CKT 1	191	191	0.57451	101.5259	MOORELAND - PIC4 138.00 138KV CKT 1
FDNS	01ALL_G15_048	0	17SP	G15_048	FROM->TO	CLEO CORNER - CLEOPLT4 138.00 138KV CKT 1	191	191	0.57451	101.5027	P12:138:WFEC:MSL12
FDNS	01ALL_G15_048	0	20WP	G15_048	FROM->TO	CLEO CORNER - CLEOPLT4 138.00 138KV CKT 1	191	191	0.57051	101.4947	THISTLE7 345.00 - WOODWARD DISTRICT EHV 345KV CKT 1
FDNS	01ALL_G15_048	0	20WP	G15_048	FROM->TO	CLEO CORNER - CLEOPLT4 138.00 138KV CKT 1	191	191	0.57051	101.4947	THISTLE7 345.00 - WOODWARD DISTRICT EHV 345KV CKT 1

SOLUTION	GROUP	SCENARIO	SEASON	SOURCE	DIRECTION	MONITORED ELEMENT	RATEA (MVA)	RATEB(MVA)	TDF	TC%LOADING (% MVA)	CONTINGENCY
FDNS	01ALL_G15_048	0	20WP	G15_048	FROM->TO	CLEO CORNER - CLEOPLT4 138.00 138KV CKT 1	191	191	0.57051	101.4947	THISTLE7 345.00 - WOODWARD DISTRICT EHV 345KV CKT 2
FDNS	01ALL_G15_048	0	20WP	G15_048	FROM->TO	CLEO CORNER - CLEOPLT4 138.00 138KV CKT 1	191	191	0.57051	101.4947	THISTLE7 345.00 - WOODWARD DISTRICT EHV 345KV CKT 2
FDNS	01ALL_G15_048	0	17SP	G15_048	FROM->TO	CLEO CORNER - CLEOPLT4 138.00 138KV CKT 1	191	191	0.57451	101.4362	CEDARDALE - PIC4 138.00 138KV CKT 1
FDNS	01ALL_G15_048	0	16WP	G15_048	FROM->TO	CLEO CORNER - CLEOPLT4 138.00 138KV CKT 1	191	191	0.57313	101.4061	DEWEY - SOUTHARD 138KV CKT 1
FDNS	01ALL_G15_048	0	16WP	G15_048	FROM->TO	CLEO CORNER - CLEOPLT4 138.00 138KV CKT 1	191	191	0.60238	101.3522	ALINETP2 69.000 - CLEOTP 2 69.000 69KV CKT 1
FDNS	01ALL_G15_048	0	17SP	G15_048	FROM->TO	CLEO CORNER - CLEOPLT4 138.00 138KV CKT 1	191	191	0.57451	101.262	CEDARDALE - OKEENE 138KV CKT 1
FDNS	01ALL_G15_048	0	16WP	G15_048	FROM->TO	CLEO CORNER - CLEOPLT4 138.00 138KV CKT 1	191	191	0.60238	101.2542	ALINETP2 69.000 - ALVA 69KV CKT 1
FDNS	01ALL_G15_048	0	20WP	G15_048	FROM->TO	CLEO CORNER - CLEOPLT4 138.00 138KV CKT 1	191	191	0.53714	101.1665	WOODRING (WOODRNG2) 345/138/13.8KV TRANSFORMER CKT 1
FDNS	01ALL_G15_048	0	20WP	G15_048	FROM->TO	CLEO CORNER - CLEOPLT4 138.00 138KV CKT 1	191	191	0.57007	101.0771	G11_051T 345.00 - TATONGA7 345.00 345KV CKT 1
FDNS	01ALL_G15_048	0	16WP	G15_048	FROM->TO	CLEO CORNER - CLEOPLT4 138.00 138KV CKT 1	191	191	0.57313	101.035	ROMAN NOSE - SOUTHARD 138KV CKT 1
FDNS	01ALL_G15_048	0	16WP	G15_048	FROM->TO	CLEO CORNER - CLEOPLT4 138.00 138KV CKT 1	191	191	0.57512	100.9301	NOEL_SW 138.00 - SALT_PLAINS 138.00 138KV CKT 1
FDNS	01ALL_G15_048	0	17SP	G15_048	FROM->TO	CLEO CORNER - CLEOPLT4 138.00 138KV CKT 1	191	191	0.57753	100.845	MOREWOOD SW - NINE MILE 138KV CKT 1
FDNS	01ALL_G15_048	0	16WP	G15_048	FROM->TO	CLEO CORNER - CLEOPLT4 138.00 138KV CKT 1	191	191	0.57158	100.7503	THISTLE7 345.00 - WOODWARD DISTRICT EHV 345KV CKT 1
FDNS	01ALL_G15_048	0	16WP	G15_048	FROM->TO	CLEO CORNER - CLEOPLT4 138.00 138KV CKT 1	191	191	0.57158	100.7503	THISTLE7 345.00 - WOODWARD DISTRICT EHV 345KV CKT 1
FDNS	01ALL_G15_048	0	16WP	G15_048	FROM->TO	CLEO CORNER - CLEOPLT4 138.00 138KV CKT 1	191	191	0.57158	100.7503	THISTLE7 345.00 - WOODWARD DISTRICT EHV 345KV CKT 2
FDNS	01ALL_G15_048	0	16WP	G15_048	FROM->TO	CLEO CORNER - CLEOPLT4 138.00 138KV CKT 1	191	191	0.57158	100.7503	THISTLE7 345.00 - WOODWARD DISTRICT EHV 345KV CKT 2
FDNS	01ALL_G15_048	0	16WP	G15_048	FROM->TO	CLEO CORNER - CLEOPLT4 138.00 138KV CKT 1	191	191	0.59888	100.7322	NSAH - RINGWOOD 69KV CKT 1
FDNS	01ALL_G15_048	0	20WP	G15_048	FROM->TO	CLEO CORNER - CLEOPLT4 138.00 138KV CKT 1	191	191	0.56983	100.6378	GEN514805 1-SOONER UNIT 1
FDNS	01ALL_G15_048	0	17SP	G15_048	FROM->TO	CLEO CORNER - CLEOPLT4 138.00 138KV CKT 1	191	191	0.5751	100.5041	P12:138:WFEC:MSL15
FDNS	01ALL_G15_048	0	20SP	G15_048	FROM->TO	CLEO CORNER - CLEOPLT4 138.00 138KV CKT 1	191	191	0.59831	100.4777	CLEO CORNER - CLEO JCT 69KV CKT 1
FDNS	01ALL_G15_048	0	20SP	G15_048	FROM->TO	CLEO CORNER - CLEOPLT4 138.00 138KV CKT 1	191	191	0.59831	100.4756	CLEO JCT - RINGWOOD 69KV CKT 1
FDNS	01ALL_G15_048	0	17SP	G15_048	FROM->TO	CLEO CORNER - CLEOPLT4 138.00 138KV CKT 1	191	191	0.60236	100.4	CLEO CORNER - CLEOTP 2 69.000 69KV CKT 1
FDNS	01ALL_G15_048	0	20WP	G15_048	FROM->TO	CLEO CORNER - CLEOPLT4 138.00 138KV CKT 1	191	191	0.56972	100.3496	MOORELAND - ROSE_VALLEY 138.00 138KV CKT 1
FDNS	01ALL_G15_048	0	20WP	G15_048	FROM->TO	CLEO CORNER - CLEOPLT4 138.00 138KV CKT 1	191	191	0.57407	100.2678	C_CITY_138 138.00 - SALT_PLAINS 138.00 138KV CKT 1
FDNS	01ALL_G15_048	0	17SP	G15_048	FROM->TO	CLEO CORNER - CLEOPLT4 138.00 138KV CKT 1	191	191	0.57371	100.1983	DOVER SW - OKEENE 138KV CKT 1
FDNS	01ALL_G15_048	0	16WP	G15_048	FROM->TO	CLEO CORNER - CLEOPLT4 138.00 138KV CKT 1	191	191	0.57081	100.0839	GEN514805 1-SOONER UNIT 1
FDNS	01ALL_G15_048	0	20WP	G15_048	FROM->TO	CLEO CORNER - CLEOPLT4 138.00 138KV CKT 1	191	191	0.56972	100.0555	NOEL_SW 138.00 - ROSE_VALLEY 138.00 138KV CKT 1
FDNS	01ALL_G15_048	0	16WP	G15_048	FROM->TO	CLEO CORNER - CLEOPLT4 138.00 138KV CKT 1	191	191	0.53806	100	WOODRING (WOODRNG2) 345/138/13.8KV TRANSFORMER CKT 1
FDNS	01ALL_G15_048	0	17SP	G15_048	FROM->TO	CLEO CORNER - CLEOPLT4 138.00 138KV CKT 1	191	191	0.60236	100	ALINETP2 69.000 - CLEOTP 2 69.000 69KV CKT 1
FDNS	01ALL_G15_048	0	20SP	G15_048	FROM->TO	CLEO CORNER - CLEOPLT4 138.00 138KV CKT 1	191	191	0.53754	100	WOODRING (WOODRNG2) 345/138/13.8KV TRANSFORMER CKT 1
FDNS	01ALL_G15_048	0	17SP	G15_048	FROM->TO	CLEO CORNER - CLEOPLT4 138.00 138KV CKT 1	191	191	0.60236	99.9	ALINETP2 69.000 - ALVA 69KV CKT 1
FDNS	01ALL_G15_048	0	20WP	G15_048	FROM->TO	CLEO CORNER - CLEOPLT4 138.00 138KV CKT 1	191	191	0.57407	99.9	BYRON_138 138.00 - C_CITY_138 138.00 138KV CKT 1
FDNS	01ALL_G15_048	0	16WP	G15_048	FROM->TO	CLEO CORNER - CLEOPLT4 138.00 138KV CKT 1	191	191	0.59134	99.8	WOODWARD - WWPAR4 138.00 138KV CKT 1
FDNS	01ALL_G15_048	0	16WP	G15_048	FROM->TO	CLEO CORNER - CLEOPLT4 138.00 138KV CKT 1	191	191	0.59134	99.8	WOODWARD EHV - WWPAR4 138.00 138KV CKT 1
FDNS	01ALL_G15_048	0	16WP	G15_048	FROM->TO	CLEO CORNER - CLEOPLT4 138.00 138KV CKT 1	191	191	0.57133	99.7	G11_051T 345.00 - TATONGA7 345.00 345KV CKT 1
FDNS	01ALL_G15_048	0	17SP	G15_048	FROM->TO	CLEO CORNER - CLEOPLT4 138.00 138KV CKT 1	191	191	0.57313	99.6	DEWEY - SOUTHARD 138KV CKT 1
FDNS	01NR_G15_048	0	20L	G15_048	FROM->TO	CLEO CORNER - CLEOPLT4 138.00 138KV CKT 1	191	191	0.57995	99.6	MATHWSN7 345.00 - TATONGA7 345.00 345KV CKT 1
FDNS	01ALL_G15_048	0	20WP	G15_048	FROM->TO	CLEO CORNER - CLEOPLT4 138.00 138KV CKT 1	191	191	0.57338	99.6	ELK CITY - RED HILLS WIND 138KV CKT 1
FDNS	01ALL_G15_048	0	20WP	G15_048	FROM->TO	CLEO CORNER - CLEOPLT4 138.00 138KV CKT 1	191	191	0.57338	99.6	ELK CITY - RED HILLS WIND 138KV CKT 1
FDNS	01ALL_G15_048	0	20WP	G15_048	FROM->TO	CLEO CORNER - CLEOPLT4 138.00 138KV CKT 1	191	191	0.5705	99.6	Hitchland Interchange - WALKTAP7 345.00 345KV CKT 1
FDNS	01ALL_G15_048	0	20WP	G15_048	FROM->TO	CLEO CORNER - CLEOPLT4 138.00 138KV CKT 1	191	191	0.5705	99.6	Hitchland Interchange - WALKTAP7 345.00 345KV CKT 1
FDNS	01ALL_G15_048	0	20WP	G15_048	FROM->TO	CLEO CORNER - CLEOPLT4 138.00 138KV CKT 1	191	191	0.5705	99.6	P12:345:SPS:J07.1.FINN.HITCH
FDNS	01ALL_G15_048	0	20WP	G15_048	FROM->TO	CLEO CORNER - CLEOPLT4 138.00 138KV CKT 1	191	191	0.5694	99.6	CIMARRON - MINCO 345KV CKT 1
FDNS	01ALL_G15_048	0	20WP	G15_048	FROM->TO	CLEO CORNER - CLEOPLT4 138.00 138KV CKT 1	191	191	0.56955	99.57056	LAWTON EASTSIDE - OKLAUNION 345KV CKT 1
FDNS	01ALL_G15_048	0	20WP	G15_048	FROM->TO	CLEO CORNER - CLEOPLT4 138.00 138KV CKT 1	191	191	0.56955	99.57056	LAWTON EASTSIDE - OKLAUNION 345KV CKT 1
FDNS	01ALL_G15_048	0	17G	G15_048	FROM->TO	CLEO CORNER - CLEOPLT4 138.00 138KV CKT 1	191	191	0.5993	99.5	CLEO CORNER - CLEO JCT 69KV CKT 1
FDNS	01ALL_G15_048	0	17G	G15_048	FROM->TO	CLEO CORNER - CLEOPLT4 138.00 138KV CKT 1	191	191	0.5993	99.5	CLEO JCT - RINGWOOD 69KV CKT 1
FDNS	01NR_G15_048	0	17G	G15_048	TO->FROM	ROMAN NOSE - SOUTHARD 138KV CKT 1	133	153	0.04383	105.3304	MATHWSN7 345.00 - TATONGA7 345.00 345KV CKT 1
FDNS	01NR_G15_048	0	20L	G15_048	TO->FROM	ROMAN NOSE - SOUTHARD 138KV CKT 1	133	153	0.04196	103.7546	MATHWSN7 345.00 - TATONGA7 345.00 345KV CKT 1
FDNS	01NR_G15_048	2	17G	G15_048	TO->FROM	ROMAN NOSE - SOUTHARD 138KV CKT 1	133	153	0.04383	105.3304	MATHWSN7 345.00 - TATONGA7 345.00 345KV CKT 1
FDNS	01NR_G15_048	2	20L	G15_048	TO->FROM	ROMAN NOSE - SOUTHARD 138KV CKT 1	133	153	0.04196	103.7546	MATHWSN7 345.00 - TATONGA7 345.00 345KV CKT 1
FDNSLock-Blown up	00NR_G15_053	0	16WP	G15_053		Non-Converged Contingency	720	720	0.05539	-	GR ISLD-LNX3345.00 - GRAND ISLAND 345KV CKT Z
FDNSLock-Blown up	00NR_G15_053	0	16WP	G15_053		Non-Converged Contingency	720	720	0.05539	-	GR ISLD-LNX3345.00 - HOLT.CO3 345.00 345KV CKT 1
FDNSLock-Blown up	09NR_G15_053	0	17G	G15_053		Non-Converged Contingency	720	720	0.05518	-	GR ISLD-LNX3345.00 - GRAND ISLAND 345KV CKT Z
FDNSLock-Blown up	09NR_G15_053	0	17G	G15_053		Non-Converged Contingency	720	720	0.05518	-	GR ISLD-LNX3345.00 - HOLT.CO3 345.00 345KV CKT 1
FDNSLock-Blown up	00NR_G15_053	0	17SP	G15_053		Non-Converged Contingency	720	720	0.05681	-	GR ISLD-LNX3345.00 - GRAND ISLAND 345KV CKT Z
FDNSLock-Blown up	00NR_G15_053	0	17SP	G15_053		Non-Converged Contingency	720	720	0.05681	-	GR ISLD-LNX3345.00 - HOLT.CO3 345.00 345KV CKT 1
FDNS	09ALL_G15_053	0	20L	G15_053	FROM->TO	BLOOMFIELD - GAVINS POINT 115KV CKT 1	120	120	0.19587	106.0037	ANTELOPE 3345.00 (ANTELOPE T1) 345/115/13.8KV TRANSFORMER CKT 1
FDNS	09ALL_G15_053	0	20L	G15_053	FROM->TO	BLOOMFIELD - GAVINS POINT 115KV CKT 1	120	120	0.19587	106.0031	ANTELOPE 3345.00 - HOSKINS 345KV CKT 1
FDNS	09ALL_G15_053	0	17G	G15_053	FROM->TO	BLOOMFIELD - GAVINS POINT 115KV CKT 1	120	120	0.19636	102.6805	ANTELOPE 3345.00 - HOSKINS 345KV CKT 1
FDNS	09ALL_G15_053	0	17G	G15_053	FROM->TO	BLOOMFIELD - GAVINS POINT 115KV CKT 1	120	120	0.19636	102.5921	ANTELOPE 3345.00 (ANTELOPE T1) 345/115/13.8KV TRANSFORMER CKT 1
FDNS	00NR_G15_053	0	17SP	G15_053	FROM->TO	GR ISLD-LNX3345.00 - GRAND ISLAND 345KV CKT Z	720	720	0.05758	137.9298	KELLY - MEADOWGROVE4230.00 230KV CKT 1
FDNS	00NR_G15_053	0	17SP	G15_053	FROM->TO	GR ISLD-LNX3345.00 - GRAND ISLAND 345KV CKT Z	720	720	0.05529	137.7298	P12:230:UMZB:# 116 #: ST IN SD. WSG-ST-VH
FDNS	00NR_G15_053	0	17SP	G15_053	FROM->TO	GR ISLD-LNX3345.00 - GRAND ISLAND 345KV CKT Z	720	720	0.05531	136.6871	STORLA - WESSINGTON 230KV CKT 1
FDNS	00NR_G15_053	0	17SP	G15_053	FROM->TO	GR ISLD-LNX3345.00 - GRAND ISLAND 345KV CKT Z	720	720	0.05614	135.7121	WATERTN-LNX3345.00 - WHITE 345KV CKT 1
FDNS	00NR_G15_053	0	17SP	G15_053	FROM->TO	GR ISLD-LNX3345.00 - GRAND ISLAND 345KV CKT Z	720	720	0.05657	135.5598	G09_001IST 345.00 - WATERTOWN 345KV CKT 1
FDNS	00NR_G15_053	0	17SP	G15_053	FROM->TO	GR ISLD-LNX3345.00 - GRAND ISLAND 345KV CKT Z	720	720	0.05614	135.4743	WATERTN-LNX3345.00 - WATERTOWN 345KV CKT Z
FDNS	00NR_G15_053	0	17SP	G15_053	FROM->TO	GR ISLD-LNX3345.00 - GRAND ISLAND 345KV CKT Z	720	720	0.05614	135.4567	P12:345:UMZW:# 1747 #: WT2 IN SD. WT2-WHT LINE FAULT
FDNS	00NR_G15_053	0	17SP	G15_053	FROM->TO	GR ISLD-LNX3345.00 - GRAND ISLAND 345KV CKT Z	720	720	0.05586	135.3654	HANLON - STORLA 230KV CKT 1
FDNS	00NR_G15_053	0	17SP	G15_053	FROM->TO	GR ISLD-LNX3345.00 - GRAND ISLAND 345KV CKT Z	720	720	0.05521	135.0282	FT THOMPSON - LETCHER 230KV CKT 1
FDNS	00NR_G15_053	0	17SP	G15_053	FROM->TO	GR ISLD-LNX3345.00 - GRAND ISLAND 345KV CKT Z	720	720	0.05521	135.0282	FT THOMPSON - LETCHER 230KV CKT 1
FDNS	00NR_G15_053	0	17SP	G15_053	FROM->TO	GR ISLD-LNX3345.00 - GRAND ISLAND 345KV CKT Z	720	720	0.05677	133.9402	BUFFALO - JAMESTOWN 345KV CKT 1
FDNS	00NR_G15_053	0	17SP	G15_053	FROM->TO	GR ISLD-LNX3345.00 - GRAND ISLAND 345KV CKT Z	720	720	0.05355	133.7352	FT RANDAL - FT THOMPSON 230KV CKT 1

SOLUTION	GROUP	SCENARIO	SEASON	SOURCE	DIRECTION	MONITORED ELEMENT	RATEA (MVA)	RATEB(MVA)	TDF	TC%LOADING (% MVA)	CONTINGENCY
FDNS	00NR_G15_053	0	17SP	G15_053	FROM->TO	GR ISLD-LNX3345.00 - GRAND ISLAND 345KV CKT Z	720	720	0.05355	133.7352	FT RANDAL - FT THOMPSON 230KV CKT 1
FDNS	00NR_G15_053	0	17SP	G15_053	FROM->TO	GR ISLD-LNX3345.00 - GRAND ISLAND 345KV CKT Z	720	720	0.05363	133.6856	FT RANDAL - G12_009IST 230.00 230KV CKT 1
FDNS	00NR_G15_053	0	17SP	G15_053	FROM->TO	GR ISLD-LNX3345.00 - GRAND ISLAND 345KV CKT Z	720	720	0.05363	133.5779	FT THOMPSON - LAKE PLATT 230KV CKT 1
FDNS	00NR_G15_053	0	17SP	G15_053	FROM->TO	GR ISLD-LNX3345.00 - GRAND ISLAND 345KV CKT Z	720	720	0.05363	133.5779	FT THOMPSON - LAKE PLATT 230KV CKT 1
FDNS	00NR_G15_053	0	17SP	G15_053	FROM->TO	GR ISLD-LNX3345.00 - GRAND ISLAND 345KV CKT Z	720	720	0.06492	133.1877	NUNDRWD - WAYSIDE 230KV CKT 1
FDNS	00NR_G15_053	0	17SP	G15_053	FROM->TO	GR ISLD-LNX3345.00 - GRAND ISLAND 345KV CKT Z	720	720	0.05363	133.1854	G12_009IST 230.00 - LAKE PLATT 230KV CKT 1
FDNSLock	00NR_G15_053	0	17SP	G15_053	FROM->TO	GR ISLD-LNX3345.00 - GRAND ISLAND 345KV CKT Z	720	720	0.05678	133.0193	CHISAGO COUNTY - CHISAGO COUNTY 500KV CKT 1
FDNS	00NR_G15_053	0	17SP	G15_053	FROM->TO	GR ISLD-LNX3345.00 - GRAND ISLAND 345KV CKT Z	720	720	0.05681	133.0135	GEN336821 1-GRAND GULF UNIT
FDNS	00NR_G15_053	0	17SP	G15_053	FROM->TO	GR ISLD-LNX3345.00 - GRAND ISLAND 345KV CKT Z	720	720	0.05678	132.997	CHISAGO COUNTY - FORBES 500KV CKT 1
FDNS	00NR_G15_053	0	17SP	G15_053	FROM->TO	GR ISLD-LNX3345.00 - GRAND ISLAND 345KV CKT Z	720	720	0.05758	132.8465	FT RANDAL - MEADOWGROVE4230.00 230KV CKT 1
FDNS	00NR_G15_053	0	17SP	G15_053	FROM->TO	GR ISLD-LNX3345.00 - GRAND ISLAND 345KV CKT Z	720	720	0.05677	132.7748	CENTER - JAMESTOWN 345KV CKT 1
FDNS	00NR_G15_053	0	17SP	G15_053	FROM->TO	GR ISLD-LNX3345.00 - GRAND ISLAND 345KV CKT Z	720	720	0.05681	132.4944	GEN640010 1-GERALD GENTLEMAN STATION UNIT 1
FDNS	00NR_G15_053	0	17SP	G15_053	FROM->TO	GR ISLD-LNX3345.00 - GRAND ISLAND 345KV CKT Z	720	720	0.05681	132.4789	GEN344225 1-1CAL G1 25.000
FDNS	00NR_G15_053	0	17SP	G15_053	FROM->TO	GR ISLD-LNX3345.00 - GRAND ISLAND 345KV CKT Z	720	720	0.05609	132.4491	LETCHER - SIOUX FALLS 230KV CKT 1
FDNS	00NR_G15_053	0	17SP	G15_053	FROM->TO	GR ISLD-LNX3345.00 - GRAND ISLAND 345KV CKT Z	720	720	0.05657	132.4338	G09_001IST 345.00 - GROTON 345KV CKT 1
FDNS	00NR_G15_053	0	17SP	G15_053	FROM->TO	GR ISLD-LNX3345.00 - GRAND ISLAND 345KV CKT Z	720	720	0.05854	132.3666	KEYSTONE - SIDNEY1-LNX3345.00 345KV CKT 1
FDNS	00NR_G15_053	0	17SP	G15_053	FROM->TO	GR ISLD-LNX3345.00 - GRAND ISLAND 345KV CKT Z	720	720	0.05679	132.3454	BISON 3 345.00 - BUFFALO 345KV CKT 1
FDNS	00NR_G15_053	0	17SP	G15_053	FROM->TO	GR ISLD-LNX3345.00 - GRAND ISLAND 345KV CKT Z	720	720	0.05681	132.3378	GEN635024 4-WALTER SCOTT UNIT 4
FDNS	00NR_G15_053	0	17SP	G15_053	FROM->TO	GR ISLD-LNX3345.00 - GRAND ISLAND 345KV CKT Z	720	720	0.05854	132.3032	SIDNEY - SIDNEY1-LNX3345.00 345KV CKT Z
FDNS	00NR_G15_053	0	17SP	G15_053	FROM->TO	GR ISLD-LNX3345.00 - GRAND ISLAND 345KV CKT Z	720	720	0.05681	132.2131	GEN337911 1-ARKANSAS NUCLEAR ONE UNIT #2
FDNS	00NR_G15_053	0	17SP	G15_053	FROM->TO	GR ISLD-LNX3345.00 - GRAND ISLAND 345KV CKT Z	720	720	0.05681	132.1518	GEN336153 1-WATERFORD UNIT#3
FDNS	00NR_G15_053	0	17SP	G15_053	FROM->TO	GR ISLD-LNX3345.00 - GRAND ISLAND 345KV CKT Z	720	720	0.05681	132.0573	GEN640011 2-GERALD GENTLEMAN STATION UNIT 2
FDNS	00NR_G15_053	0	17SP	G15_053	FROM->TO	GR ISLD-LNX3345.00 - GRAND ISLAND 345KV CKT Z	720	720	0.05589	131.94	SPLIT ROCK - WHITE 345KV CKT 1
FDNS	00NR_G15_053	0	17SP	G15_053	FROM->TO	GR ISLD-LNX3345.00 - GRAND ISLAND 345KV CKT Z	720	720	0.05589	131.94	SPLIT ROCK - WHITE 345KV CKT 1
FDNS	00NR_G15_053	0	17SP	G15_053	FROM->TO	GR ISLD-LNX3345.00 - GRAND ISLAND 345KV CKT Z	720	720	0.05681	131.8054	GEN635023 3-WALTER SCOTT UNIT 3
FDNS	00NR_G15_053	0	17SP	G15_053	FROM->TO	GR ISLD-LNX3345.00 - GRAND ISLAND 345KV CKT Z	720	720	0.05659	131.7268	GROTON-LNX3 345.00 - LELAND1-LNX3345.00 345KV CKT 1
FDNS	00NR_G15_053	0	17SP	G15_053	FROM->TO	GR ISLD-LNX3345.00 - GRAND ISLAND 345KV CKT Z	720	720	0.05681	131.7158	GEN335831 1-RIVERBEND UNIT#1
FDNS	00NR_G15_053	0	17SP	G15_053	FROM->TO	GR ISLD-LNX3345.00 - GRAND ISLAND 345KV CKT Z	720	720	0.05681	131.6202	GEN337910 1-ARKANSAS NUCLEAR ONE UNIT #1
FDNS	00NR_G15_053	0	17SP	G15_053	FROM->TO	GR ISLD-LNX3345.00 - GRAND ISLAND 345KV CKT Z	720	720	0.05659	131.5873	P12:345:UMZB:# 109 #: LOS GRT IN ND. LOS GRT
FDNS	00NR_G15_053	0	17SP	G15_053	FROM->TO	GR ISLD-LNX3345.00 - GRAND ISLAND 345KV CKT Z	720	720	0.05659	131.5577	GROTON - GROTON-LNX3 345.00 345KV CKT Z
FDNS	00NR_G15_053	0	17SP	G15_053	FROM->TO	GR ISLD-LNX3345.00 - GRAND ISLAND 345KV CKT Z	720	720	0.05659	131.4813	LELAND OLDS - LELAND1-LNX3345.00 345KV CKT Z
FDNS	00NR_G15_053	0	17SP	G15_053	FROM->TO	GR ISLD-LNX3345.00 - GRAND ISLAND 345KV CKT Z	720	720	0.0645	131.4739	RAUN - SUB 3451 FT CAL 345KV CKT 1
FDNS	00NR_G15_053	0	17SP	G15_053	FROM->TO	GR ISLD-LNX3345.00 - GRAND ISLAND 345KV CKT Z	720	720	0.0645	131.4739	RAUN - SUB 3451 FT CAL 345KV CKT 1
FDNS	00NR_G15_053	0	17SP	G15_053	FROM->TO	GR ISLD-LNX3345.00 - GRAND ISLAND 345KV CKT Z	720	720	0.05692	131.4053	FT RANDAL - SIOUX CITY 230KV CKT 1
FDNS	00NR_G15_053	0	17SP	G15_053	FROM->TO	GR ISLD-LNX3345.00 - GRAND ISLAND 345KV CKT Z	720	720	0.05704	131.2721	ARROWHEAD - ARROWHEAD 230 230KV CKT 1
FDNS	00NR_G15_053	0	17SP	G15_053	FROM->TO	GR ISLD-LNX3345.00 - GRAND ISLAND 345KV CKT Z	720	720	0.0564	131.2212	HANLON - SIOUX FALLS 230KV CKT 1
FDNS	00NR_G15_053	0	17SP	G15_053	FROM->TO	GR ISLD-LNX3345.00 - GRAND ISLAND 345KV CKT Z	720	720	0.0429	131.2101	GRAND ISLAND - SWEETWATER 345KV CKT 1
FDNS	00NR_G15_053	0	17SP	G15_053	FROM->TO	GR ISLD-LNX3345.00 - GRAND ISLAND 345KV CKT Z	720	720	0.05555	131.0232	SIOUXCY-LNX3345.00 - SPLIT ROCK 345KV CKT 1
FDNS	00NR_G15_053	0	17SP	G15_053	FROM->TO	GR ISLD-LNX3345.00 - GRAND ISLAND 345KV CKT Z	720	720	0.05555	131.0232	SIOUXCY-LNX3345.00 - SPLIT ROCK 345KV CKT 1
FDNS	00NR_G15_053	0	17SP	G15_053	FROM->TO	GR ISLD-LNX3345.00 - GRAND ISLAND 345KV CKT Z	720	720	0.05681	131.0071	GEN337653 1-WHITE BLUFF UNIT #2
FDNS	00NR_G15_053	0	17SP	G15_053	FROM->TO	GR ISLD-LNX3345.00 - GRAND ISLAND 345KV CKT Z	720	720	0.05681	130.9956	GEN337652 1-WHITE BLUFF UNIT #1
FDNS	00NR_G15_053	0	17SP	G15_053	FROM->TO	GR ISLD-LNX3345.00 - GRAND ISLAND 345KV CKT Z	720	720	0.05555	130.9682	P12:345:UMZW:# 907 #: SC2-SR IN IA. SC2-SR 345 KV LINE
FDNS	00NR_G15_053	0	17SP	G15_053	FROM->TO	GR ISLD-LNX3345.00 - GRAND ISLAND 345KV CKT Z	720	720	0.0563	130.9649	P12:115:NPPD:1091:VALENTN7:MISSION7:BTB
FDNS	00NR_G15_053	0	17SP	G15_053	FROM->TO	GR ISLD-LNX3345.00 - GRAND ISLAND 345KV CKT Z	720	720	0.05555	130.9306	SIOUX CITY - SIOUXCY-LNX3345.00 345KV CKT Z
FDNS	00NR_G15_053	0	17SP	G15_053	FROM->TO	GR ISLD-LNX3345.00 - GRAND ISLAND 345KV CKT Z	720	720	0.05681	130.9228	GEN338146 1-INDEPENDENCE UNIT #2
FDNS	00NR_G15_053	0	17SP	G15_053	FROM->TO	GR ISLD-LNX3345.00 - GRAND ISLAND 345KV CKT Z	720	720	0.0563	130.9198	MISSION - ST FRANCIS 115KV CKT 1
FDNS	00NR_G15_053	0	17SP	G15_053	FROM->TO	GR ISLD-LNX3345.00 - GRAND ISLAND 345KV CKT Z	720	720	0.05748	130.9185	HAZLETON - MITCHLCO3 345.00 345KV CKT 1
FDNS	00NR_G15_053	0	17SP	G15_053	FROM->TO	GR ISLD-LNX3345.00 - GRAND ISLAND 345KV CKT Z	720	720	0.05681	130.9182	GEN338143 1-INDEPENDENCE UNIT #1
FDNS	00NR_G15_053	0	17SP	G15_053	FROM->TO	GR ISLD-LNX3345.00 - GRAND ISLAND 345KV CKT Z	720	720	0.05827	130.8896	SIDNEY - STEGALL 345KV CKT 1
FDNS	00NR_G15_053	0	17SP	G15_053	FROM->TO	GR ISLD-LNX3345.00 - GRAND ISLAND 345KV CKT Z	720	720	0.05679	130.869	ELLENDALE - OAKES 230KV CKT 1
FDNS	00NR_G15_053	0	17SP	G15_053	FROM->TO	GR ISLD-LNX3345.00 - GRAND ISLAND 345KV CKT Z	720	720	0.05679	130.869	ELLENDALE - OAKES 230KV CKT 1
FDNS	00NR_G15_053	0	17SP	G15_053	FROM->TO	GR ISLD-LNX3345.00 - GRAND ISLAND 345KV CKT Z	720	720	0.05681	130.8599	GEN501801 1-DOLET HILLS UNIT1
FDNS	00NR_G15_053	0	17SP	G15_053	FROM->TO	GR ISLD-LNX3345.00 - GRAND ISLAND 345KV CKT Z	720	720	0.0563	130.8261	HARMONY - ST FRANCIS 115KV CKT 1
FDNS	00NR_G15_053	0	17SP	G15_053	FROM->TO	GR ISLD-LNX3345.00 - GRAND ISLAND 345KV CKT Z	720	720	0.05635	130.8183	FT RANDAL - UTICA JCT 230KV CKT 1
FDNS	00NR_G15_053	0	17SP	G15_053	FROM->TO	GR ISLD-LNX3345.00 - GRAND ISLAND 345KV CKT Z	720	720	0.05679	130.7549	FORMAN - OAKES 230KV CKT 1
FDNS	00NR_G15_053	0	17SP	G15_053	FROM->TO	GR ISLD-LNX3345.00 - GRAND ISLAND 345KV CKT Z	720	720	0.05531	130.7469	FT THOMPSON - WESSINGTON 230KV CKT 1
FDNS	00NR_G15_053	0	17SP	G15_053	FROM->TO	GR ISLD-LNX3345.00 - GRAND ISLAND 345KV CKT Z	720	720	0.05531	130.7469	FT THOMPSON - WESSINGTON 230KV CKT 1
FDNS	00NR_G15_053	0	17SP	G15_053	FROM->TO	GR ISLD-LNX3345.00 - GRAND ISLAND 345KV CKT Z	720	720	0.05673	130.738	CARPENTER - HURON 230KV CKT 1
FDNS	00NR_G15_053	0	17SP	G15_053	FROM->TO	GR ISLD-LNX3345.00 - GRAND ISLAND 345KV CKT Z	720	720	0.05709	130.7376	AS KING - EAU CLAIRE 345KV CKT 1
FDNS	00NR_G15_053	0	17SP	G15_053	FROM->TO	GR ISLD-LNX3345.00 - GRAND ISLAND 345KV CKT Z	720	720	0.05681	130.7208	ALEXMRES3 345.00 - BISON 3 345.00 345KV CKT 1
FDNS	00NR_G15_053	0	17SP	G15_053	FROM->TO	GR ISLD-LNX3345.00 - GRAND ISLAND 345KV CKT Z	720	720	0.05721	130.6357	ARPIN B4 345.00 - EAU CLAIRE 345KV CKT 1
FDNS	00NR_G15_053	0	17SP	G15_053	FROM->TO	GR ISLD-LNX3345.00 - GRAND ISLAND 345KV CKT Z	720	720	0.05673	130.6318	HURON - WATERTOWN 230KV CKT 2
FDNS	00NR_G15_053	0	17SP	G15_053	FROM->TO	GR ISLD-LNX3345.00 - GRAND ISLAND 345KV CKT Z	720	720	0.05673	130.6318	HURON - WATERTOWN 230KV CKT 2
FDNS	00NR_G15_053	0	17SP	G15_053	FROM->TO	GR ISLD-LNX3345.00 - GRAND ISLAND 345KV CKT Z	720	720	0.0563	130.597	HARMONY - VALENTINE 115KV CKT 1
FDNS	00NR_G15_053	0	17SP	G15_053	FROM->TO	GR ISLD-LNX3345.00 - GRAND ISLAND 345KV CKT Z	720	720	0.05673	130.5886	CARPENTER - WATERTOWN 230KV CKT 1
FDNS	00NR_G15_053	0	17SP	G15_053	FROM->TO	GR ISLD-LNX3345.00 - GRAND ISLAND 345KV CKT Z	720	720	0.05673	130.5886	CARPENTER - WATERTOWN 230KV CKT 1
FDNS	00NR_G15_053	0	17SP	G15_053	FROM->TO	GR ISLD-LNX3345.00 - GRAND ISLAND 345KV CKT Z	720	720	0.0521	130.5765	P12:115:NPPD:WAPA6:FTRANDL7:ONEILL 7:BTB
FDNS	00NR_G15_053	0	17SP	G15_053	FROM->TO	GR ISLD-LNX3345.00 - GRAND ISLAND 345KV CKT Z	720	720	0.0521	130.5765	P12:115:UMZB:# 115 #: SE IN NE. FR-SE-ON
FDNS	00NR_G15_053	0	17SP	G15_053	FROM->TO	GR ISLD-LNX3345.00 - GRAND ISLAND 345KV CKT Z	720	720	0.0521	130.5514	FT RANDAL - SPENCER 115KV CKT 1
FDNS	00NR_G15_053	0	17SP	G15_053	FROM->TO	GR ISLD-LNX3345.00 - GRAND ISLAND 345KV CKT Z	720	720	0.05646	130.541	PAHOJA - SIOUX FALLS 230KV CKT 1
FDNS	00NR_G15_053	0	17SP	G15_053	FROM->TO	GR ISLD-LNX3345.00 - GRAND ISLAND 345KV CKT Z	720	720	0.05681	130.5073	GEN336252 1-NINEMILE POINT UNIT#5
FDNS	00NR_G15_053	0	17SP	G15_053	FROM->TO	GR ISLD-LNX3345.00 - GRAND ISLAND 345KV CKT Z	720	720	0.05681	130.4633	GEN501813 1-RODEMACHER UNIT 3
FDNS	00NR_G15_053	0	17SP	G15_053	FROM->TO	GR ISLD-LNX3345.00 - GRAND ISLAND 345KV CKT Z	720	720	0.0521	130.4388	ONEILL - SPENCER 115KV CKT 1

SOLUTION	GROUP	SCENARIO	SEASON	SOURCE	DIRECTION	MONITORED ELEMENT	RATEA (MVA)	RATEB(MVA)	TDF	TC%LOADING (% MVA)	CONTINGENCY
FDNS	00NR_G15_053	0	17SP	G15_053	FROM->TO	GR ISLD-LNX3345.00 - GRAND ISLAND 345KV CKT Z	720	720	0.05681	130.3644	GEN336831 1-BAXTER WILSON SES
FDNS	00NR_G15_053	0	17SP	G15_053	FROM->TO	GR ISLD-LNX3345.00 - GRAND ISLAND 345KV CKT Z	720	720	0.05681	130.3509	GEN336251 1-NINEMILE POINT UNIT#4
FDNS	00NR_G15_053	0	17SP	G15_053	FROM->TO	GR ISLD-LNX3345.00 - GRAND ISLAND 345KV CKT Z	720	720	0.0568	130.3216	CNTSHNT3 345.00 - PRAIRIE3 345.00 345KV CKT 1
FDNS	00NR_G15_053	0	17SP	G15_053	FROM->TO	GR ISLD-LNX3345.00 - GRAND ISLAND 345KV CKT Z	720	720	0.05681	130.3146	GEN641089 2-ENERGY CENTER 2
FDNS	00NR_G15_053	0	17SP	G15_053	FROM->TO	GR ISLD-LNX3345.00 - GRAND ISLAND 345KV CKT Z	720	720	0.05765	130.3077	GERALD GENTLEMAN STATION - KEYSTONE 345KV CKT 1
FDNS	00NR_G15_053	0	17SP	G15_053	FROM->TO	GR ISLD-LNX3345.00 - GRAND ISLAND 345KV CKT Z	720	720	0.05681	130.2767	GEN337041 1-GERALD ANDRUS
FDNS	00NR_G15_053	0	17SP	G15_053	FROM->TO	GR ISLD-LNX3345.00 - GRAND ISLAND 345KV CKT Z	720	720	0.05681	130.2577	GEN335206 1-NELSON UNIT 6
FDNS	00NR_G15_053	0	17SP	G15_053	FROM->TO	GR ISLD-LNX3345.00 - GRAND ISLAND 345KV CKT Z	720	720	0.05681	130.2347	FORMAN - HANKINSON 230KV CKT 1
FDNS	00NR_G15_053	0	17SP	G15_053	FROM->TO	GR ISLD-LNX3345.00 - GRAND ISLAND 345KV CKT Z	720	720	0.05681	130.2309	GEN344897 4-1LAB G4 20.000
FDNS	00NR_G15_053	0	17SP	G15_053	FROM->TO	GR ISLD-LNX3345.00 - GRAND ISLAND 345KV CKT Z	720	720	0.05681	130.2277	GEN344894 1-1LAB G1 20.000
FDNS	00NR_G15_053	0	17SP	G15_053	FROM->TO	GR ISLD-LNX3345.00 - GRAND ISLAND 345KV CKT Z	720	720	0.05681	130.2274	GEN344896 3-1LAB G3 20.000
FDNS	00NR_G15_053	0	17SP	G15_053	FROM->TO	GR ISLD-LNX3345.00 - GRAND ISLAND 345KV CKT Z	720	720	0.0563	130.1957	AINSWORTH - VALENTINE 115KV CKT 1
FDNS	00NR_G15_053	0	17SP	G15_053	FROM->TO	GR ISLD-LNX3345.00 - GRAND ISLAND 345KV CKT Z	720	720	0.05681	130.1709	GEN344895 2-1LAB G2 20.000
FDNS	00NR_G15_053	0	17SP	G15_053	FROM->TO	GR ISLD-LNX3345.00 - GRAND ISLAND 345KV CKT Z	720	720	0.05681	130.159	GEN345670 1-1RUSH G1 18.000
FDNS	00NR_G15_053	0	17SP	G15_053	FROM->TO	GR ISLD-LNX3345.00 - GRAND ISLAND 345KV CKT Z	720	720	0.05681	130.1589	GEN345671 2-1RUSH G2 18.000
FDNS	00NR_G15_053	0	17SP	G15_053	FROM->TO	GR ISLD-LNX3345.00 - GRAND ISLAND 345KV CKT Z	720	720	0.05646	130.1446	EAGLE 4 230.00 - PAHOJA 230KV CKT 1
FDNS	00NR_G15_053	0	17SP	G15_053	FROM->TO	GR ISLD-LNX3345.00 - GRAND ISLAND 345KV CKT Z	720	720	0.0573	130.1011	RASMUSN - UTICA JCT 230KV CKT 1
FDNS	00NR_G15_053	0	17SP	G15_053	FROM->TO	GR ISLD-LNX3345.00 - GRAND ISLAND 345KV CKT Z	720	720	0.05681	130.1003	GEN501812 1-RODEMACHER UNIT 2
FDNS	00NR_G15_053	0	17SP	G15_053	FROM->TO	GR ISLD-LNX3345.00 - GRAND ISLAND 345KV CKT Z	720	720	0.05748	130.0953	ADAMS - MITCHLCO3 345.00 345KV CKT 1
FDNS	00NR_G15_053	0	17SP	G15_053	FROM->TO	GR ISLD-LNX3345.00 - GRAND ISLAND 345KV CKT Z	720	720	0.05681	130.0128	GEN334440 1-SABINE UNIT 4
FDNS	00NR_G15_053	0	17SP	G15_053	FROM->TO	GR ISLD-LNX3345.00 - GRAND ISLAND 345KV CKT Z	720	720	0.0573	129.9008	RASMUSN - SIOUX CITY 230KV CKT 1
FDNSLock	00NR_G15_053	0	17SP	G15_053	FROM->TO	GR ISLD-LNX3345.00 - GRAND ISLAND 345KV CKT Z	720	720	0.0568	129.8923	CENTER - CNTSHNT3 345.00 345KV CKT Z1
FDNS	00NR_G15_053	0	17SP	G15_053	FROM->TO	GR ISLD-LNX3345.00 - GRAND ISLAND 345KV CKT Z	720	720	0.05726	129.8742	ADAMS - PLEASANT VALLEY 345KV CKT 1
FDNS	00NR_G15_053	0	17SP	G15_053	FROM->TO	GR ISLD-LNX3345.00 - GRAND ISLAND 345KV CKT Z	720	720	0.05681	129.856	GEN336191 1-LITTLE GYPSY UNIT#3
FDNS	00NR_G15_053	0	17SP	G15_053	FROM->TO	GR ISLD-LNX3345.00 - GRAND ISLAND 345KV CKT Z	720	720	0.05681	129.7887	GEN338388 1-1PLUM PT U1 23.000
FDNS	00NR_G15_053	0	17SP	G15_053	FROM->TO	GR ISLD-LNX3345.00 - GRAND ISLAND 345KV CKT Z	720	720	0.05681	129.7649	GEN336801 1-BAXTER WILSON UNIT #1
FDNS	00NR_G15_053	0	17SP	G15_053	FROM->TO	GR ISLD-LNX3345.00 - GRAND ISLAND 345KV CKT Z	720	720	0.05681	129.7488	GEN335614 1-WILLOW GLENN UNIT#4
FDNS	00NR_G15_053	0	17SP	G15_053	FROM->TO	GR ISLD-LNX3345.00 - GRAND ISLAND 345KV CKT Z	720	720	0.05681	129.7406	GEN334441 1-SABINE UNIT 5
FDNS	00NR_G15_053	0	17SP	G15_053	FROM->TO	GR ISLD-LNX3345.00 - GRAND ISLAND 345KV CKT Z	720	720	0.05681	129.7326	GEN336464 1-MICHOUD UNIT #3
FDNS	00NR_G15_053	0	17SP	G15_053	FROM->TO	GR ISLD-LNX3345.00 - GRAND ISLAND 345KV CKT Z	720	720	0.05883	129.7266	GRIMES - LEHIGH 345KV CKT 1
FDNS	00NR_G15_053	0	17SP	G15_053	FROM->TO	GR ISLD-LNX3345.00 - GRAND ISLAND 345KV CKT Z	720	720	0.05681	129.7195	GEN335204 1-NELSON UNIT 4
FDNS	00NR_G15_053	0	17SP	G15_053	FROM->TO	GR ISLD-LNX3345.00 - GRAND ISLAND 345KV CKT Z	720	720	0.05725	129.7094	LAKEFIELD 3 - NOBLES 345KV CKT 1
FDNS	00NR_G15_053	0	17SP	G15_053	FROM->TO	GR ISLD-LNX3345.00 - GRAND ISLAND 345KV CKT Z	720	720	0.05709	129.6953	LARAMIE RIVER - SIDNEY2-LNX3345.00 345KV CKT 1
FDNS	00NR_G15_053	0	17SP	G15_053	FROM->TO	GR ISLD-LNX3345.00 - GRAND ISLAND 345KV CKT Z	720	720	0.05709	129.6469	SIDNEY - SIDNEY2-LNX3345.00 345KV CKT Z
FDNS	00NR_G15_053	0	17SP	G15_053	FROM->TO	GR ISLD-LNX3345.00 - GRAND ISLAND 345KV CKT Z	720	720	0.05658	129.6315	FT THOMPSON - HURON 230KV CKT 1
FDNS	00NR_G15_053	0	17SP	G15_053	FROM->TO	GR ISLD-LNX3345.00 - GRAND ISLAND 345KV CKT Z	720	720	0.05658	129.6315	FT THOMPSON - HURON 230KV CKT 1
FDNS	00NR_G15_053	0	17SP	G15_053	FROM->TO	GR ISLD-LNX3345.00 - GRAND ISLAND 345KV CKT Z	720	720	0.05658	129.6315	FT THOMPSON - HURON 230KV CKT 2
FDNS	00NR_G15_053	0	17SP	G15_053	FROM->TO	GR ISLD-LNX3345.00 - GRAND ISLAND 345KV CKT Z	720	720	0.05658	129.6315	FT THOMPSON - HURON 230KV CKT 2
FDNS	00NR_G15_053	0	17SP	G15_053	FROM->TO	GR ISLD-LNX3345.00 - GRAND ISLAND 345KV CKT Z	720	720	0.05706	129.6229	BROOKING COUNTY - LYON COUNTY 345KV CKT 1
FDNS	00NR_G15_053	0	17SP	G15_053	FROM->TO	GR ISLD-LNX3345.00 - GRAND ISLAND 345KV CKT Z	720	720	0.05974	129.6225	STEGALL - STEGALL TRANSFORMER 230KV CKT 1
FDNS	00NR_G15_053	0	17SP	G15_053	FROM->TO	GR ISLD-LNX3345.00 - GRAND ISLAND 345KV CKT Z	720	720	0.05293	129.6142	GAVINS POINT - YANKON JCT 115KV CKT 1
FDNS	00NR_G15_053	0	17SP	G15_053	FROM->TO	GR ISLD-LNX3345.00 - GRAND ISLAND 345KV CKT Z	720	720	0.05293	129.6142	GAVINS POINT - YANKON JCT 115KV CKT 1
FDNS	00NR_G15_053	0	17SP	G15_053	FROM->TO	GR ISLD-LNX3345.00 - GRAND ISLAND 345KV CKT Z	720	720	0.05974	129.6122	P13:230-345:NPPD:STEGALL3:KV3A
FDNS	00NR_G15_053	0	17SP	G15_053	FROM->TO	GR ISLD-LNX3345.00 - GRAND ISLAND 345KV CKT Z	720	720	0.05621	129.6035	MENNO JCT - TRIPP JCT 115KV CKT 1
FDNS	00NR_G15_053	0	17SP	G15_053	FROM->TO	GR ISLD-LNX3345.00 - GRAND ISLAND 345KV CKT Z	720	720	0.05974	129.6032	STEGALL (SGQ KV3A) 345/230/13.8KV TRANSFORMER CKT 1
FDNS	00NR_G15_053	0	17SP	G15_053	FROM->TO	GR ISLD-LNX3345.00 - GRAND ISLAND 345KV CKT Z	720	720	0.05741	129.5953	KOSSUTH 3 345.00 - WEBSTER 345KV CKT 1
FDNS	00NR_G15_053	0	17SP	G15_053	FROM->TO	GR ISLD-LNX3345.00 - GRAND ISLAND 345KV CKT Z	720	720	0.05683	129.5823	BLAIR - GRANITE FALLS 230KV CKT 1
FDNS	00NR_G15_053	0	17SP	G15_053	FROM->TO	GR ISLD-LNX3345.00 - GRAND ISLAND 345KV CKT Z	720	720	0.05683	129.5823	BLAIR - GRANITE FALLS 230KV CKT 1
FDNS	00NR_G15_053	0	17SP	G15_053	FROM->TO	GR ISLD-LNX3345.00 - GRAND ISLAND 345KV CKT Z	720	720	0.05681	129.5728	GEN629075 1-OTTUMWA GENERATOR FOR OTTUMWA UNIT NO 1
FDNS	00NR_G15_053	0	17SP	G15_053	FROM->TO	GR ISLD-LNX3345.00 - GRAND ISLAND 345KV CKT Z	720	720	0.05681	129.5716	GEN334433 1-SABINE UNIT 3
FDNS	00NR_G15_053	0	17SP	G15_053	FROM->TO	GR ISLD-LNX3345.00 - GRAND ISLAND 345KV CKT Z	720	720	0.05681	129.5594	GEN531447 1-HOLCOMB GENERATOR
FDNS	00NR_G15_053	0	17SP	G15_053	FROM->TO	GR ISLD-LNX3345.00 - GRAND ISLAND 345KV CKT Z	720	720	0.05684	129.5523	ALEXMRES3 345.00 - WAITE PARK 345KV CKT 1
FDNS	00NR_G15_053	0	17SP	G15_053	FROM->TO	GR ISLD-LNX3345.00 - GRAND ISLAND 345KV CKT Z	720	720	0.05681	129.5494	P12:115:UMZW:# 162 #: NEL IN ND. FAULT ON ML-NEL-MX-GA 115 KV
FDNS	00NR_G15_053	0	17SP	G15_053	FROM->TO	GR ISLD-LNX3345.00 - GRAND ISLAND 345KV CKT Z	720	720	0.05679	129.5488	CENTER - COYOTE 345KV CKT 1
FDNS	00NR_G15_053	0	17SP	G15_053	FROM->TO	GR ISLD-LNX3345.00 - GRAND ISLAND 345KV CKT Z	720	720	0.05741	129.5471	KOSSUTH 3 345.00 - OBRIEN 3 345.00 345KV CKT 1
FDNS	00NR_G15_053	0	17SP	G15_053	FROM->TO	GR ISLD-LNX3345.00 - GRAND ISLAND 345KV CKT Z	720	720	0.06161	129.5264	STEGALL-LNX3230.00 - WAYSIDE 230KV CKT 1
FDNS	00NR_G15_053	0	17SP	G15_053	FROM->TO	GR ISLD-LNX3345.00 - GRAND ISLAND 345KV CKT Z	720	720	0.06161	129.5162	STEGALL - STEGALL-LNX3230.00 230KV CKT Z
FDNS	00NR_G15_053	0	17SP	G15_053	FROM->TO	GR ISLD-LNX3345.00 - GRAND ISLAND 345KV CKT Z	720	720	0.05681	129.5021	GEN336222 1-LITTLE GYPSY UNIT#2
FDNS	00NR_G15_053	0	17SP	G15_053	FROM->TO	GR ISLD-LNX3345.00 - GRAND ISLAND 345KV CKT Z	720	720	0.05681	129.4874	GEN303007 1-1BC2 U2
FDNS	00NR_G15_053	0	17SP	G15_053	FROM->TO	GR ISLD-LNX3345.00 - GRAND ISLAND 345KV CKT Z	720	720	0.05681	129.4834	GEN303006 1-1BC2 U1
FDNS	00NR_G15_053	0	17SP	G15_053	FROM->TO	GR ISLD-LNX3345.00 - GRAND ISLAND 345KV CKT Z	720	720	0.05621	129.4663	MENNO JCT - UTICA 115KV CKT 1
FDNS	00NR_G15_053	0	17SP	G15_053	FROM->TO	GR ISLD-LNX3345.00 - GRAND ISLAND 345KV CKT Z	720	720	0.05682	129.4559	GLENBORO SOUTH - RUGBY 230KV CKT 1
FDNS	00NR_G15_053	0	17SP	G15_053	FROM->TO	GR ISLD-LNX3345.00 - GRAND ISLAND 345KV CKT Z	720	720	0.05681	129.4281	GEN336152 1-WATERFORD UNIT#2
FDNS	00NR_G15_053	0	17SP	G15_053	FROM->TO	GR ISLD-LNX3345.00 - GRAND ISLAND 345KV CKT Z	720	720	0.05681	129.4278	GEN336151 1-WATERFORD UNIT#1
FDNS	00NR_G15_053	0	17SP	G15_053	FROM->TO	GR ISLD-LNX3345.00 - GRAND ISLAND 345KV CKT Z	720	720	0.05621	129.4248	P12:115:UMZZ:# 237 #: MEN IN SD. MENNO JUNCTION IS A TAP (UJ-MEN-TP).
FDNS	00NR_G15_053	0	17SP	G15_053	FROM->TO	GR ISLD-LNX3345.00 - GRAND ISLAND 345KV CKT Z	720	720	0.0568	129.4136	GARRISON - JAMES TOWN 230KV CKT 1
FDNS	00NR_G15_053	0	17SP	G15_053	FROM->TO	GR ISLD-LNX3345.00 - GRAND ISLAND 345KV CKT Z	720	720	0.05694	129.4097	ARKANSAS NUCLEAR ONE - FT SMITH 500KV CKT 1
FDNS	00NR_G15_053	0	17SP	G15_053	FROM->TO	GR ISLD-LNX3345.00 - GRAND ISLAND 345KV CKT Z	720	720	0.05694	129.4097	ARKANSAS NUCLEAR ONE - FT SMITH 500KV CKT 1
FDNS	00NR_G15_053	0	17SP	G15_053	FROM->TO	GR ISLD-LNX3345.00 - GRAND ISLAND 345KV CKT Z	720	720	0.05681	129.4048	GEN303008 1-1BC2 U3
FDNS	00NR_G15_053	0	17SP	G15_053	FROM->TO	GR ISLD-LNX3345.00 - GRAND ISLAND 345KV CKT Z	720	720	0.05685	129.4028	HANKINSON - WAHPETON 230KV CKT 1
FDNS	00NR_G15_053	0	17SP	G15_053	FROM->TO	GR ISLD-LNX3345.00 - GRAND ISLAND 345KV CKT Z	720	720	0.05681	129.3986	GEN336170 1-GULF OXY U4
FDNS	00NR_G15_053	0	17SP	G15_053	FROM->TO	GR ISLD-LNX3345.00 - GRAND ISLAND 345KV CKT Z	720	720	0.05693	129.3735	RAUN - SIOUX CITY 345KV CKT 1
FDNS	00NR_G15_053	0	17SP	G15_053	FROM->TO	GR ISLD-LNX3345.00 - GRAND ISLAND 345KV CKT Z	720	720	0.05693	129.3735	RAUN - SIOUX CITY 345KV CKT 1

SOLUTION	GROUP	SCENARIO	SEASON	SOURCE	DIRECTION	MONITORED ELEMENT	RATEA (MVA)	RATEB(MVA)	TDF	TC%LOADING (% MVA)	CONTINGENCY
FDNS	00NR_G15_053	0	17SP	G15_053	FROM->TO	GR ISLD-LNX3345.00 - GRAND ISLAND 345KV CKT Z	720	720	0.05712	129.363	BYRON - NORTH ROCHESTER 345KV CKT 1
FDNS	00NR_G15_053	0	17SP	G15_053	FROM->TO	GR ISLD-LNX3345.00 - GRAND ISLAND 345KV CKT Z	720	720	0.05681	129.3022	P13:230:UMZW:# 2218 #: FP IN MT. LOSS OF TRANSFORMER (AT2).
FDNS	00NR_G15_053	0	17SP	G15_053	FROM->TO	GR ISLD-LNX3345.00 - GRAND ISLAND 345KV CKT Z	720	720	0.05681	129.2989	GEN501811 1-RODEMACHER UNIT 1
FDNS	00NR_G15_053	0	17SP	G15_053	FROM->TO	GR ISLD-LNX3345.00 - GRAND ISLAND 345KV CKT Z	720	720	0.05077	129.2961	P12:115:NPPD:1164:ONEILL 7:JEFFREY9:BTB
FDNS	00NR_G15_053	0	17SP	G15_053	FROM->TO	GR ISLD-LNX3345.00 - GRAND ISLAND 345KV CKT Z	720	720	0.05686	129.2755	APPLEDORN 4 230.00 - WATERTOWN 230KV CKT 1
FDNS	00NR_G15_053	0	17SP	G15_053	FROM->TO	GR ISLD-LNX3345.00 - GRAND ISLAND 345KV CKT Z	720	720	0.05686	129.2755	APPLEDORN 4 230.00 - WATERTOWN 230KV CKT 1
FDNS	00NR_G15_053	0	17SP	G15_053	FROM->TO	GR ISLD-LNX3345.00 - GRAND ISLAND 345KV CKT Z	720	720	0.05487	129.2673	P12:115:UMZW:# 1910 #: YJ IN SD. YJ-UJ LINE FAULT
FDNS	00NR_G15_053	0	17SP	G15_053	FROM->TO	GR ISLD-LNX3345.00 - GRAND ISLAND 345KV CKT Z	720	720	0.05487	129.2632	NAPA JCT7 115.00 - YANKON JCT 115KV CKT 1
FDNS	00NR_G15_053	0	17SP	G15_053	FROM->TO	GR ISLD-LNX3345.00 - GRAND ISLAND 345KV CKT Z	720	720	0.05487	129.2632	NAPA JCT7 115.00 - YANKON JCT 115KV CKT 1
FDNS	00NR_G15_053	0	17SP	G15_053	FROM->TO	GR ISLD-LNX3345.00 - GRAND ISLAND 345KV CKT Z	720	720	0.05692	129.2569	NORTH ROCHESTER - PRAIRIE ISLAND 345KV CKT 1
FDNS	00NR_G15_053	0	17SP	G15_053	FROM->TO	GR ISLD-LNX3345.00 - GRAND ISLAND 345KV CKT Z	720	720	0.05487	129.2549	NAPA JCT7 115.00 - UTICA 115KV CKT 1
FDNS	00NR_G15_053	0	17SP	G15_053	FROM->TO	GR ISLD-LNX3345.00 - GRAND ISLAND 345KV CKT Z	720	720	0.05487	129.2549	NAPA JCT7 115.00 - UTICA 115KV CKT 1
FDNS	00NR_G15_053	0	17SP	G15_053	FROM->TO	GR ISLD-LNX3345.00 - GRAND ISLAND 345KV CKT Z	720	720	0.05077	129.2389	CLEARWATER - ONEILL 115KV CKT 1
FDNS	00NR_G15_053	0	17SP	G15_053	FROM->TO	GR ISLD-LNX3345.00 - GRAND ISLAND 345KV CKT Z	720	720	0.05624	129.2257	LAKEFIELD 3 - LKFLDXL3 345KV CKT 1
FDNS	00NR_G15_053	0	17SP	G15_053	FROM->TO	GR ISLD-LNX3345.00 - GRAND ISLAND 345KV CKT Z	720	720	0.0568	129.2221	FARGO - JAMES TOWN 230KV CKT 1
FDNS	00NR_G15_053	0	17SP	G15_053	FROM->TO	GR ISLD-LNX3345.00 - GRAND ISLAND 345KV CKT Z	720	720	0.05681	129.2143	P13:115-230:NPPD:NUCOR-3
FDNS	00NR_G15_053	0	17SP	G15_053	FROM->TO	GR ISLD-LNX3345.00 - GRAND ISLAND 345KV CKT Z	720	720	0.05715	129.2106	GAVINS POINT - HARTINGTON 115KV CKT 1
FDNS	00NR_G15_053	0	17SP	G15_053	FROM->TO	GR ISLD-LNX3345.00 - GRAND ISLAND 345KV CKT Z	720	720	0.05686	129.2052	APPLEDORN 4 230.00 - GRANITE FALLS 230KV CKT 1
FDNS	00NR_G15_053	0	17SP	G15_053	FROM->TO	GR ISLD-LNX3345.00 - GRAND ISLAND 345KV CKT Z	720	720	0.05686	129.2052	APPLEDORN 4 230.00 - GRANITE FALLS 230KV CKT 1
FDNS	00NR_G15_053	0	17SP	G15_053	FROM->TO	GR ISLD-LNX3345.00 - GRAND ISLAND 345KV CKT Z	720	720	0.05683	129.2037	FERGSFL4 230.00 - WAHPETON 230KV CKT 1
FDNS	00NR_G15_053	0	17SP	G15_053	FROM->TO	GR ISLD-LNX3345.00 - GRAND ISLAND 345KV CKT Z	720	720	0.05681	129.2014	GEN334071 1-LEWIS CREEK 2
FDNS	00NR_G15_053	0	17SP	G15_053	FROM->TO	GR ISLD-LNX3345.00 - GRAND ISLAND 345KV CKT Z	720	720	0.0568	129.1998	FARGO - JAMES TOWN 230KV CKT 2
FDNS	00NR_G15_053	0	17SP	G15_053	FROM->TO	GR ISLD-LNX3345.00 - GRAND ISLAND 345KV CKT Z	720	720	0.05681	129.1975	GEN337766 1-TRACTEBEL UNIT S1
FDNS	00NR_G15_053	0	17SP	G15_053	FROM->TO	GR ISLD-LNX3345.00 - GRAND ISLAND 345KV CKT Z	720	720	0.05681	129.1952	GEN334070 1-LEWIS CREEK 1
FDNS	00NR_G15_053	0	17SP	G15_053	FROM->TO	GR ISLD-LNX3345.00 - GRAND ISLAND 345KV CKT Z	720	720	0.0575	129.1814	DENISON - SIOUX CITY 230KV CKT 1
FDNS	00NR_G15_053	0	17SP	G15_053	FROM->TO	GR ISLD-LNX3345.00 - GRAND ISLAND 345KV CKT Z	720	720	0.06425	129.1698	COLUMEAST - SHELL CREEK 345KV CKT 1
FDNS	00NR_G15_053	0	17SP	G15_053	FROM->TO	GR ISLD-LNX3345.00 - GRAND ISLAND 345KV CKT Z	720	720	0.0568	129.1694	BISMARK - JAMES TOWN 230KV CKT 1
FDNS	00NR_G15_053	0	17SP	G15_053	FROM->TO	GR ISLD-LNX3345.00 - GRAND ISLAND 345KV CKT Z	720	720	0.05681	129.1579	P13:230-345:NPPD:NUCOR-1
FDNS	00NR_G15_053	0	17SP	G15_053	FROM->TO	GR ISLD-LNX3345.00 - GRAND ISLAND 345KV CKT Z	720	720	0.05528	129.1539	CROOKED CREEK - RIVERDALE 230KV CKT 1
FDNS	00NR_G15_053	0	17SP	G15_053	FROM->TO	GR ISLD-LNX3345.00 - GRAND ISLAND 345KV CKT Z	720	720	0.0568	129.153	BISMARK - WEBER 230KV CKT 1
FDNS	00NR_G15_053	0	17SP	G15_053	FROM->TO	GR ISLD-LNX3345.00 - GRAND ISLAND 345KV CKT Z	720	720	0.06353	129.1472	P12:115:NPPD:1168B:ALBION 7:PETERSBRG.N7:BTB
FDNS	00NR_G15_053	0	17SP	G15_053	FROM->TO	GR ISLD-LNX3345.00 - GRAND ISLAND 345KV CKT Z	720	720	0.0568	129.1434	JAMES TOWN - WEBER 230KV CKT 1
FDNS	00NR_G15_053	0	17SP	G15_053	FROM->TO	GR ISLD-LNX3345.00 - GRAND ISLAND 345KV CKT Z	720	720	0.05681	129.1396	GEN501910 1-ACADIA UNIT ST1
FDNS	00NR_G15_053	0	17SP	G15_053	FROM->TO	GR ISLD-LNX3345.00 - GRAND ISLAND 345KV CKT Z	720	720	0.05713	129.1179	P13:230-345:NPPD:SIDNEY 3:KV2A
FDNS	00NR_G15_053	0	17SP	G15_053	FROM->TO	GR ISLD-LNX3345.00 - GRAND ISLAND 345KV CKT Z	720	720	0.05712	129.1093	BYRON - PLEASANT VALLEY 345KV CKT 1
FDNS	00NR_G15_053	0	17SP	G15_053	FROM->TO	GR ISLD-LNX3345.00 - GRAND ISLAND 345KV CKT Z	720	720	0.05629	129.1077	MT VERN - STORLA 115KV CKT 1
FDNS	00NR_G15_053	0	17SP	G15_053	FROM->TO	GR ISLD-LNX3345.00 - GRAND ISLAND 345KV CKT Z	720	720	0.05738	129.1038	P12:115:NPPD:WAPA1:CHADRON7:BOXBUTE7:BTB
FDNS	00NR_G15_053	0	17SP	G15_053	FROM->TO	GR ISLD-LNX3345.00 - GRAND ISLAND 345KV CKT Z	720	720	0.05715	129.1008	P13:115-230:TSGT:SIDNEY-KV1A
FDNS	00NR_G15_053	0	17SP	G15_053	FROM->TO	GR ISLD-LNX3345.00 - GRAND ISLAND 345KV CKT Z	720	720	0.05681	129.097	GEN525561 1-TOLK GEN #1 24 KV
FDNS	00NR_G15_053	0	17SP	G15_053	FROM->TO	GR ISLD-LNX3345.00 - GRAND ISLAND 345KV CKT Z	720	720	0.05681	129.0948	GEN345765 H-1SIOUX 2 18.000
FDNS	00NR_G15_053	0	17SP	G15_053	FROM->TO	GR ISLD-LNX3345.00 - GRAND ISLAND 345KV CKT Z	720	720	0.05681	129.0943	PRAIRIE ISLAND 345/20.0KV TRANSFORMER CKT 1
FDNS	00NR_G15_053	0	17SP	G15_053	FROM->TO	GR ISLD-LNX3345.00 - GRAND ISLAND 345KV CKT Z	720	720	0.06353	129.0936	ALBION - PETERSBURG 115KV CKT 1
FDNS	00NR_G15_053	0	17SP	G15_053	FROM->TO	GR ISLD-LNX3345.00 - GRAND ISLAND 345KV CKT Z	720	720	0.05681	129.093	PRAIRIE ISLAND 345/20.0KV TRANSFORMER CKT 2
FDNS	00NR_G15_053	0	17SP	G15_053	FROM->TO	GR ISLD-LNX3345.00 - GRAND ISLAND 345KV CKT Z	720	720	0.05713	129.0914	SIDNEY - SIDNEY TRANSFORMER 230KV CKT 1
FDNS	00NR_G15_053	0	17SP	G15_053	FROM->TO	GR ISLD-LNX3345.00 - GRAND ISLAND 345KV CKT Z	720	720	0.05713	129.0914	SIDNEY (SDQ KV2A) 345/230/13.8KV TRANSFORMER CKT 1
FDNS	00NR_G15_053	0	17SP	G15_053	FROM->TO	GR ISLD-LNX3345.00 - GRAND ISLAND 345KV CKT Z	720	720	0.05681	129.0905	GEN525562 1-TOLK GEN #2 24 KV
FDNS	00NR_G15_053	0	17SP	G15_053	FROM->TO	GR ISLD-LNX3345.00 - GRAND ISLAND 345KV CKT Z	720	720	0.05681	129.0879	P13:115-345:NPPD:NUCOR-2
FDNS	00NR_G15_053	0	17SP	G15_053	FROM->TO	GR ISLD-LNX3345.00 - GRAND ISLAND 345KV CKT Z	720	720	0.0568	129.0802	BALTA - RAMSEY 230KV CKT 1
FDNS	00NR_G15_053	0	17SP	G15_053	FROM->TO	GR ISLD-LNX3345.00 - GRAND ISLAND 345KV CKT Z	720	720	0.05077	129.0667	CLEARWATER - NELIGH 115KV CKT 1
FDNS	00NR_G15_053	0	17SP	G15_053	FROM->TO	GR ISLD-LNX3345.00 - GRAND ISLAND 345KV CKT Z	720	720	0.05704	129.0666	ARPIN B3 345.00 - ROCKY RN B8 345.00 345KV CKT 1
FDNS	00NR_G15_053	0	17SP	G15_053	FROM->TO	GR ISLD-LNX3345.00 - GRAND ISLAND 345KV CKT Z	720	720	0.05498	129.0646	P13:230:UMZW:# 253 #: FR IN SD. LOSS OF TRANSFORMER (E
FDNS	00NR_G15_053	0	17SP	G15_053	FROM->TO	GR ISLD-LNX3345.00 - GRAND ISLAND 345KV CKT Z	720	720	0.05681	129.0634	GEN337764 1-TRACTEBEL UNIT C1
FDNS	00NR_G15_053	0	17SP	G15_053	FROM->TO	GR ISLD-LNX3345.00 - GRAND ISLAND 345KV CKT Z	720	720	0.05681	129.0634	GEN337765 1-TRACTEBEL UNIT C2
FDNS	00NR_G15_053	0	17SP	G15_053	FROM->TO	GR ISLD-LNX3345.00 - GRAND ISLAND 345KV CKT Z	720	720	0.0568	129.0623	ELM CREEK - MONTICELLO 345KV CKT 1
FDNS	00NR_G15_053	0	17SP	G15_053	FROM->TO	GR ISLD-LNX3345.00 - GRAND ISLAND 345KV CKT Z	720	720	0.05683	129.0621	FERGSFL4 230.00 - GRE-SILVRLK4230.00 230KV CKT 1
FDNS	00NR_G15_053	0	17SP	G15_053	FROM->TO	GR ISLD-LNX3345.00 - GRAND ISLAND 345KV CKT Z	720	720	0.05681	129.0537	GEN345756 H-1SIOUX 1 18.000
FDNS	00NR_G15_053	0	17SP	G15_053	FROM->TO	GR ISLD-LNX3345.00 - GRAND ISLAND 345KV CKT Z	720	720	0.05679	129.0506	DKSN_CO5 161.00 - TRIBOJI NO1 + NO2 161KV CKT 1
FDNS	00NR_G15_053	0	17SP	G15_053	FROM->TO	GR ISLD-LNX3345.00 - GRAND ISLAND 345KV CKT Z	720	720	0.05682	129.039	AUDUBON - SHEYNNE 230KV CKT 1
FDNS	00NR_G15_053	0	17SP	G15_053	FROM->TO	GR ISLD-LNX3345.00 - GRAND ISLAND 345KV CKT Z	720	720	0.05681	129.0372	GRAND GULF 500/22.0KV TRANSFORMER CKT 1
FDNS	00NR_G15_053	0	17SP	G15_053	FROM->TO	GR ISLD-LNX3345.00 - GRAND ISLAND 345KV CKT Z	720	720	0.05681	129.0339	GEN659118 1-LARAMIE RIVER UNIT1
FDNS	00NR_G15_053	0	17SP	G15_053	FROM->TO	GR ISLD-LNX3345.00 - GRAND ISLAND 345KV CKT Z	720	720	0.05703	129.0269	CHADRON - WAYSIDE 115KV CKT 1
FDNS	00NR_G15_053	0	17SP	G15_053	FROM->TO	GR ISLD-LNX3345.00 - GRAND ISLAND 345KV CKT Z	720	720	0.05703	129.0269	P13:115-230:NPPD:WAYSIDE4:T1
FDNS	00NR_G15_053	0	17SP	G15_053	FROM->TO	GR ISLD-LNX3345.00 - GRAND ISLAND 345KV CKT Z	720	720	0.05738	129.0255	CHADRON - DUNLAP 115KV CKT 1
FDNS	00NR_G15_053	0	17SP	G15_053	FROM->TO	GR ISLD-LNX3345.00 - GRAND ISLAND 345KV CKT Z	720	720	0.05681	129.025	GEN336221 1-LITTLE GYPSY UNIT#1
FDNS	00NR_G15_053	0	17SP	G15_053	FROM->TO	GR ISLD-LNX3345.00 - GRAND ISLAND 345KV CKT Z	720	720	0.05703	129.0239	WAYSIDE (WAYSIDE T1) 230/115/13.8KV TRANSFORMER CKT 1
FDNS	00NR_G15_053	0	17SP	G15_053	FROM->TO	GR ISLD-LNX3345.00 - GRAND ISLAND 345KV CKT Z	720	720	0.05683	129.0157	GRE-SILVRLK4230.00 - HENNING 230KV CKT 1
FDNS	00NR_G15_053	0	17SP	G15_053	FROM->TO	GR ISLD-LNX3345.00 - GRAND ISLAND 345KV CKT Z	720	720	0.05681	129.0154	GEN336242 1-1NMIL ST1 18.000
FDNS	00NR_G15_053	0	17SP	G15_053	FROM->TO	GR ISLD-LNX3345.00 - GRAND ISLAND 345KV CKT Z	720	720	0.05681	129.0091	GEN337757 1-DUKE HOTSPRINGS STG1
FDNS	00NR_G15_053	0	17SP	G15_053	FROM->TO	GR ISLD-LNX3345.00 - GRAND ISLAND 345KV CKT Z	720	720	0.05693	129.0087	FRANKS - HUBEN 345KV CKT 1
FDNS	00NR_G15_053	0	17SP	G15_053	FROM->TO	GR ISLD-LNX3345.00 - GRAND ISLAND 345KV CKT Z	720	720	0.05681	129.0042	GEN334431 1-SABINE UNIT 1
FDNS	00NR_G15_053	0	17SP	G15_053	FROM->TO	GR ISLD-LNX3345.00 - GRAND ISLAND 345KV CKT Z	720	720	0.05681	129.0042	GEN334432 1-SABINE UNIT 2
FDNS	00NR_G15_053	0	17SP	G15_053	FROM->TO	GR ISLD-LNX3345.00 - GRAND ISLAND 345KV CKT Z	720	720	0.0568	128.9875	EAGLE - PHILIP 115KV CKT 1
FDNS	00NR_G15_053	0	17SP	G15_053	FROM->TO	GR ISLD-LNX3345.00 - GRAND ISLAND 345KV CKT Z	720	720	0.0572	128.9832	NOBLES - SPLIT ROCK 345KV CKT 1

SOLUTION	GROUP	SCENARIO	SEASON	SOURCE	DIRECTION	MONITORED ELEMENT	RATEA (MVA)	RATEB(MVA)	TDF	TC%LOADING (% MVA)	CONTINGENCY
FDNS	00NR_G15_053	0	17SP	G15_053	FROM->TO	GR ISLD-LNX3345.00 - GRAND ISLAND 345KV CKT Z	720	720	0.05681	128.9829	GEN336446 1-MICHOUD UNIT #2
FDNS	00NR_G15_053	0	17SP	G15_053	FROM->TO	GR ISLD-LNX3345.00 - GRAND ISLAND 345KV CKT Z	720	720	0.05681	128.9741	GEN345832 1-1TS G1 13.800
FDNS	00NR_G15_053	0	17SP	G15_053	FROM->TO	GR ISLD-LNX3345.00 - GRAND ISLAND 345KV CKT Z	720	720	0.05681	128.9737	GEN345841 2-1TS G2 13.800
FDNS	00NR_G15_053	0	17SP	G15_053	FROM->TO	GR ISLD-LNX3345.00 - GRAND ISLAND 345KV CKT Z	720	720	0.05681	128.9627	GEN501970 1-EVANGELINE UNIT 7
FDNS	00NR_G15_053	0	17SP	G15_053	FROM->TO	GR ISLD-LNX3345.00 - GRAND ISLAND 345KV CKT Z	720	720	0.05689	128.9604	GENOA 161 - SENECA 161 161KV CKT 1
FDNS	00NR_G15_053	0	17SP	G15_053	FROM->TO	GR ISLD-LNX3345.00 - GRAND ISLAND 345KV CKT Z	720	720	0.05723	128.9548	PALXFRASBTHI
FDNS	00NR_G15_053	0	17SP	G15_053	FROM->TO	GR ISLD-LNX3345.00 - GRAND ISLAND 345KV CKT Z	720	720	0.0568	128.9486	EAGLE - MARTIN 115KV CKT 1
FDNS	00NR_G15_053	0	17SP	G15_053	FROM->TO	GR ISLD-LNX3345.00 - GRAND ISLAND 345KV CKT Z	720	720	0.05681	128.9478	GEN334030 1-FRONTIER UNIT 1
FDNS	00NR_G15_053	0	17SP	G15_053	FROM->TO	GR ISLD-LNX3345.00 - GRAND ISLAND 345KV CKT Z	720	720	0.05681	128.9475	P12:345:GRDA:CHOUTEAU-SPORTSMANACRES
FDNS	00NR_G15_053	0	17SP	G15_053	FROM->TO	GR ISLD-LNX3345.00 - GRAND ISLAND 345KV CKT Z	720	720	0.05681	128.9469	GEN334031 1-FRONTIER UNIT 2
FDNS	00NR_G15_053	0	17SP	G15_053	FROM->TO	GR ISLD-LNX3345.00 - GRAND ISLAND 345KV CKT Z	720	720	0.05681	128.9428	GEN337430 1-PERYVILLE UNIT #3
FDNS	00NR_G15_053	0	17SP	G15_053	FROM->TO	GR ISLD-LNX3345.00 - GRAND ISLAND 345KV CKT Z	720	720	0.05681	128.9425	GEN337428 1-PERYVILLE UNIT #1
FDNS	00NR_G15_053	0	17SP	G15_053	FROM->TO	GR ISLD-LNX3345.00 - GRAND ISLAND 345KV CKT Z	720	720	0.05683	128.9327	HENNING - INMANN 230KV CKT 1
FDNS	00NR_G15_053	0	17SP	G15_053	FROM->TO	GR ISLD-LNX3345.00 - GRAND ISLAND 345KV CKT Z	720	720	0.05687	128.9261	NORTH LA CROSSE - NORTH ROCHESTER 345KV CKT 1
FDNS	00NR_G15_053	0	17SP	G15_053	FROM->TO	GR ISLD-LNX3345.00 - GRAND ISLAND 345KV CKT Z	720	720	0.05723	128.9205	7PALM TAP 345.00 - SUB T 345KV CKT 1
FDNS	00NR_G15_053	0	17SP	G15_053	FROM->TO	GR ISLD-LNX3345.00 - GRAND ISLAND 345KV CKT Z	720	720	0.05681	128.9167	GEN336240 1-1NMIL CT1 18.000
FDNS	00NR_G15_053	0	17SP	G15_053	FROM->TO	GR ISLD-LNX3345.00 - GRAND ISLAND 345KV CKT Z	720	720	0.05681	128.9166	GEN336241 1-1NMIL CT2 18.000
FDNS	00NR_G15_053	0	17SP	G15_053	FROM->TO	GR ISLD-LNX3345.00 - GRAND ISLAND 345KV CKT Z	720	720	0.05684	128.9165	GRANT - MITCHELL 115KV CKT 1
FDNS	00NR_G15_053	0	17SP	G15_053	FROM->TO	GR ISLD-LNX3345.00 - GRAND ISLAND 345KV CKT Z	720	720	0.05684	128.9165	GRANT - MITCHELL 115KV CKT 1
FDNS	00NR_G15_053	0	17SP	G15_053	FROM->TO	GR ISLD-LNX3345.00 - GRAND ISLAND 345KV CKT Z	720	720	0.05681	128.9138	GEN501912 1-ACADIA UNIT CT1B
FDNS	00NR_G15_053	0	17SP	G15_053	FROM->TO	GR ISLD-LNX3345.00 - GRAND ISLAND 345KV CKT Z	720	720	0.05681	128.9135	GEN501911 1-ACADIA UNIT CT1A
FDNS	00NR_G15_053	0	17SP	G15_053	FROM->TO	GR ISLD-LNX3345.00 - GRAND ISLAND 345KV CKT Z	720	720	0.05681	128.9035	WHITE BLUFF 500/26.0KV TRANSFORMER CKT 1
FDNS	00NR_G15_053	0	17SP	G15_053	FROM->TO	GR ISLD-LNX3345.00 - GRAND ISLAND 345KV CKT Z	720	720	0.05681	128.9008	FINNEY SWITCHING STATION - PSCO LAMAR DC TIE 345KV CKT 1
FDNS	00NR_G15_053	0	17SP	G15_053	FROM->TO	GR ISLD-LNX3345.00 - GRAND ISLAND 345KV CKT Z	720	720	0.05681	128.9008	FINNEY SWITCHING STATION - PSCO LAMAR DC TIE 345KV CKT 1
FDNS	00NR_G15_053	0	17SP	G15_053	FROM->TO	GR ISLD-LNX3345.00 - GRAND ISLAND 345KV CKT Z	720	720	0.05923	128.8955	OAHE - PHILIP TAP 230KV CKT 1
FDNS	00NR_G15_053	0	17SP	G15_053	FROM->TO	GR ISLD-LNX3345.00 - GRAND ISLAND 345KV CKT Z	720	720	0.05784	128.8954	MARTIN - SHANNON 115KV CKT 1
FDNS	00NR_G15_053	0	17SP	G15_053	FROM->TO	GR ISLD-LNX3345.00 - GRAND ISLAND 345KV CKT Z	720	720	0.05681	128.8939	GEN335571 1-CARVILLE UNIT #1
FDNS	00NR_G15_053	0	17SP	G15_053	FROM->TO	GR ISLD-LNX3345.00 - GRAND ISLAND 345KV CKT Z	720	720	0.05681	128.8938	GEN335570 1-CARVILLE CTG
FDNS	00NR_G15_053	0	17SP	G15_053	FROM->TO	GR ISLD-LNX3345.00 - GRAND ISLAND 345KV CKT Z	720	720	0.05681	128.8911	GEN336168 1-GULF OXY U2
FDNS	00NR_G15_053	0	17SP	G15_053	FROM->TO	GR ISLD-LNX3345.00 - GRAND ISLAND 345KV CKT Z	720	720	0.05681	128.8911	GEN336169 1-GULF OXY U3
FDNS	00NR_G15_053	0	17SP	G15_053	FROM->TO	GR ISLD-LNX3345.00 - GRAND ISLAND 345KV CKT Z	720	720	0.05681	128.891	GEN336167 1-GULF OXY U1
FDNS	00NR_G15_053	0	17SP	G15_053	FROM->TO	GR ISLD-LNX3345.00 - GRAND ISLAND 345KV CKT Z	720	720	0.05681	128.8899	GEN501823 1-TECHE UNIT 3
FDNS	00NR_G15_053	0	17SP	G15_053	FROM->TO	GR ISLD-LNX3345.00 - GRAND ISLAND 345KV CKT Z	720	720	0.05681	128.8868	GEN336944 1-REX BROWN
FDNS	00NR_G15_053	0	17SP	G15_053	FROM->TO	GR ISLD-LNX3345.00 - GRAND ISLAND 345KV CKT Z	720	720	0.05681	128.8849	GEN335612 1-WILLOW GLENN UNIT#2
FDNS	00NR_G15_053	0	17SP	G15_053	FROM->TO	GR ISLD-LNX3345.00 - GRAND ISLAND 345KV CKT Z	720	720	0.05738	128.8661	BOXBUTE7 115.00 - DUNLAP 115KV CKT 1
FDNS	00NR_G15_053	0	17SP	G15_053	FROM->TO	GR ISLD-LNX3345.00 - GRAND ISLAND 345KV CKT Z	720	720	0.05681	128.5435	KEARNEY 115KV SWITCHED SHUNT
FDNS	00NR_G15_053	0	17SP	G15_053	FROM->TO	GR ISLD-LNX3345.00 - GRAND ISLAND 345KV CKT Z	720	720	0.05838	128.5265	KELLY - SHELL CREEK 230KV CKT 1
FDNS	00NR_G15_053	0	17SP	G15_053	FROM->TO	GR ISLD-LNX3345.00 - GRAND ISLAND 345KV CKT Z	720	720	0.05838	128.5213	SHELL CREEK (SHELLCREEKT1) 345/230/13.8KV TRANSFORMER CKT 1
FDNS	00NR_G15_053	0	17SP	G15_053	FROM->TO	GR ISLD-LNX3345.00 - GRAND ISLAND 345KV CKT Z	720	720	0.05838	128.5213	SHELL CREEK (SHELLCREEKT1) 345/230/13.8KV TRANSFORMER CKT 1
FDNSLock	00NR_G15_053	0	17SP	G15_053	FROM->TO	GR ISLD-LNX3345.00 - GRAND ISLAND 345KV CKT Z	720	720	0.05681	128.4479	KEARNEY 115KV SWITCHED SHUNT
FDNS	00NR_G15_053	0	17SP	G15_053	FROM->TO	GR ISLD-LNX3345.00 - GRAND ISLAND 345KV CKT Z	720	720	0.06993	128.4419	COLUMWEST - KELLY 230KV CKT 1
FDNS	00NR_G15_053	0	17SP	G15_053	FROM->TO	GR ISLD-LNX3345.00 - GRAND ISLAND 345KV CKT Z	720	720	0.05688	128.3981	ANTELOP-LNX3345.00 - BRDLAND-LNX3345.00 345KV CKT 1
FDNS	00NR_G15_053	0	17SP	G15_053	FROM->TO	GR ISLD-LNX3345.00 - GRAND ISLAND 345KV CKT Z	720	720	0.05681	128.3967	P12:115:TSGT:BLKWDCK7-ELSIETP7
FDNS	00NR_G15_053	0	17SP	G15_053	FROM->TO	GR ISLD-LNX3345.00 - GRAND ISLAND 345KV CKT Z	720	720	0.05681	128.358	1303-KEARNEY
FDNS	00NR_G15_053	0	17SP	G15_053	FROM->TO	GR ISLD-LNX3345.00 - GRAND ISLAND 345KV CKT Z	720	720	0.05681	128.358	BASE CASE
FDNS	00NR_G15_053	0	17SP	G15_053	FROM->TO	GR ISLD-LNX3345.00 - GRAND ISLAND 345KV CKT Z	720	720	0.05464	128.3013	GRAND ISLAND - RIVERDALE 230KV CKT 1
FDNS	00NR_G15_053	0	17SP	G15_053	FROM->TO	GR ISLD-LNX3345.00 - GRAND ISLAND 345KV CKT Z	720	720	0.05481	128.2976	COOPER - MOORE 345KV CKT 1
FDNS	00NR_G15_053	0	17SP	G15_053	FROM->TO	GR ISLD-LNX3345.00 - GRAND ISLAND 345KV CKT Z	720	720	0.05681	128.2285	GEN645001 1-FORT CALHOUN 1
FDNS	00NR_G15_053	0	17SP	G15_053	FROM->TO	GR ISLD-LNX3345.00 - GRAND ISLAND 345KV CKT Z	720	720	0.05695	128.2128	MINGO (MINGO) 345/115/13.8KV TRANSFORMER CKT 1
FDNS	00NR_G15_053	0	17SP	G15_053	FROM->TO	GR ISLD-LNX3345.00 - GRAND ISLAND 345KV CKT Z	720	720	0.05695	128.2128	MINGO (MINGO) 345/115/13.8KV TRANSFORMER CKT 1
FDNS	00NR_G15_053	0	17SP	G15_053	FROM->TO	GR ISLD-LNX3345.00 - GRAND ISLAND 345KV CKT Z	720	720	0.05834	128.1849	AXTELL - PAULINE 345KV CKT 1
FDNS	00NR_G15_053	0	17SP	G15_053	FROM->TO	GR ISLD-LNX3345.00 - GRAND ISLAND 345KV CKT Z	720	720	0.05844	128.1628	103RD & ROKEBY - MOORE 345KV CKT 1
FDNS	00NR_G15_053	0	17SP	G15_053	FROM->TO	GR ISLD-LNX3345.00 - GRAND ISLAND 345KV CKT Z	720	720	0.05844	128.1628	103RD & ROKEBY - MOORE 345KV CKT 1
FDNS	00NR_G15_053	0	17SP	G15_053	FROM->TO	GR ISLD-LNX3345.00 - GRAND ISLAND 345KV CKT Z	720	720	0.0567	128.0411	GRAND ISLAND (GRAND.ISD T5) 230/115/13.8KV TRANSFORMER CKT 2
FDNS	00NR_G15_053	0	17SP	G15_053	FROM->TO	GR ISLD-LNX3345.00 - GRAND ISLAND 345KV CKT Z	720	720	0.0567	128.0411	GRAND ISLAND (GRAND.ISD T5) 230/115/13.8KV TRANSFORMER CKT 2
FDNS	00NR_G15_053	0	17SP	G15_053	FROM->TO	GR ISLD-LNX3345.00 - GRAND ISLAND 345KV CKT Z	720	720	0.0567	128.0385	GRAND ISLAND (GRAND.ISD T2) 230/115/13.8KV TRANSFORMER CKT 1
FDNS	00NR_G15_053	0	17SP	G15_053	FROM->TO	GR ISLD-LNX3345.00 - GRAND ISLAND 345KV CKT Z	720	720	0.0567	128.0385	GRAND ISLAND (GRAND.ISD T2) 230/115/13.8KV TRANSFORMER CKT 1
FDNS	00NR_G15_053	0	17SP	G15_053	FROM->TO	GR ISLD-LNX3345.00 - GRAND ISLAND 345KV CKT Z	720	720	0.05714	127.986	AURORA - GRAND ISLAND 115KV CKT 1
FDNS	00NR_G15_053	0	17SP	G15_053	FROM->TO	GR ISLD-LNX3345.00 - GRAND ISLAND 345KV CKT Z	720	720	0.05734	127.9601	SUB 3455 - SUB 3740 345KV CKT 1
FDNS	00NR_G15_053	0	17SP	G15_053	FROM->TO	GR ISLD-LNX3345.00 - GRAND ISLAND 345KV CKT Z	720	720	0.05734	127.9601	SUB 3455 - SUB 3740 345KV CKT 1
FDNS	00NR_G15_053	0	17SP	G15_053	FROM->TO	GR ISLD-LNX3345.00 - GRAND ISLAND 345KV CKT Z	720	720	0.05679	127.9407	MCCOOL (MCCOOL T2) 345/115/13.8KV TRANSFORMER CKT 1
FDNS	00NR_G15_053	0	17SP	G15_053	FROM->TO	GR ISLD-LNX3345.00 - GRAND ISLAND 345KV CKT Z	720	720	0.05679	127.9407	MCCOOL (MCCOOL T2) 345/115/13.8KV TRANSFORMER CKT 1
FDNS	00NR_G15_053	0	17SP	G15_053	FROM->TO	GR ISLD-LNX3345.00 - GRAND ISLAND 345KV CKT Z	720	720	0.05837	127.9121	MAXWELL - NORTH PLATTE 115KV CKT 1
FDNS	00NR_G15_053	0	17SP	G15_053	FROM->TO	GR ISLD-LNX3345.00 - GRAND ISLAND 345KV CKT Z	720	720	0.05722	127.898	FINNEY SWITCHING STATION - WALKTAP7 345.00 345KV CKT 1
FDNS	00NR_G15_053	0	17SP	G15_053	FROM->TO	GR ISLD-LNX3345.00 - GRAND ISLAND 345KV CKT Z	720	720	0.05722	127.898	FINNEY SWITCHING STATION - WALKTAP7 345.00 345KV CKT 1
FDNS	00NR_G15_053	0	17SP	G15_053	FROM->TO	GR ISLD-LNX3345.00 - GRAND ISLAND 345KV CKT Z	720	720	0.06039	127.8935	MAXWELL - STAPLETON 115KV CKT 1
FDNS	00NR_G15_053	0	17SP	G15_053	FROM->TO	GR ISLD-LNX3345.00 - GRAND ISLAND 345KV CKT Z	720	720	0.05742	127.8897	Hitchland Interchange - WALKTAP7 345.00 345KV CKT 1
FDNS	00NR_G15_053	0	17SP	G15_053	FROM->TO	GR ISLD-LNX3345.00 - GRAND ISLAND 345KV CKT Z	720	720	0.05742	127.8897	Hitchland Interchange - WALKTAP7 345.00 345KV CKT 1
FDNS	00NR_G15_053	0	17SP	G15_053	FROM->TO	GR ISLD-LNX3345.00 - GRAND ISLAND 345KV CKT Z	720	720	0.05697	127.8891	G11_051T 345.00 - WOODWARD DISTRICT EHV 345KV CKT 1
FDNS	00NR_G15_053	0	17SP	G15_053	FROM->TO	GR ISLD-LNX3345.00 - GRAND ISLAND 345KV CKT Z	720	720	0.05742	127.8864	P12:345:SPS:J07.1.FINN.HITCH
FDNS	00NR_G15_053	0	17SP	G15_053	FROM->TO	GR ISLD-LNX3345.00 - GRAND ISLAND 345KV CKT Z	720	720	0.05681	127.8541	GEN562003 1-G11_027_3 0.6900
FDNS	00NR_G15_053	0	17SP	G15_053	FROM->TO	GR ISLD-LNX3345.00 - GRAND ISLAND 345KV CKT Z	720	720	0.05693	127.8481	GRAND ISLAND (GI KU1B) 345/230/13.8KV TRANSFORMER CKT 2
FDNS	00NR_G15_053	0	17SP	G15_053	FROM->TO	GR ISLD-LNX3345.00 - GRAND ISLAND 345KV CKT Z	720	720	0.05693	127.8481	GRAND ISLAND (GI KU1B) 345/230/13.8KV TRANSFORMER CKT 2

SOLUTION	GROUP	SCENARIO	SEASON	SOURCE	DIRECTION	MONITORED ELEMENT	RATEA (MVA)	RATEB(MVA)	TDF	TC%LOADING (% MVA)	CONTINGENCY
FDNS	00NR_G15_053	0	17SP	G15_053	FROM->TO	GR ISLD-LNX3345.00 - GRAND ISLAND 345KV CKT Z	720	720	0.05693	127.8471	GRAND ISLAND (GI KU1A) 345/230/13.8KV TRANSFORMER CKT 1
FDNS	00NR_G15_053	0	17SP	G15_053	FROM->TO	GR ISLD-LNX3345.00 - GRAND ISLAND 345KV CKT Z	720	720	0.05693	127.8471	GRAND ISLAND (GI KU1A) 345/230/13.8KV TRANSFORMER CKT 1
FDNS	00NR_G15_053	0	17SP	G15_053	FROM->TO	GR ISLD-LNX3345.00 - GRAND ISLAND 345KV CKT Z	720	720	0.05883	127.8336	MINGO - SETAB 345KV CKT 1
FDNS	00NR_G15_053	0	17SP	G15_053	FROM->TO	GR ISLD-LNX3345.00 - GRAND ISLAND 345KV CKT Z	720	720	0.05883	127.8336	MINGO - SETAB 345KV CKT 1
FDNS	00NR_G15_053	0	17SP	G15_053	FROM->TO	GR ISLD-LNX3345.00 - GRAND ISLAND 345KV CKT Z	720	720	0.05681	127.8135	GEN600125 2-FEP ST G 13.800
FDNS	00NR_G15_053	0	17SP	G15_053	FROM->TO	GR ISLD-LNX3345.00 - GRAND ISLAND 345KV CKT Z	720	720	0.05681	127.8099	GEN652546 1-FT RANDAL
FDNS	00NR_G15_053	0	17SP	G15_053	FROM->TO	GR ISLD-LNX3345.00 - GRAND ISLAND 345KV CKT Z	720	720	0.05697	127.8024	FALLOW 3 345.00 - GRIMES 345KV CKT 1
FDNS	00NR_G15_053	0	17SP	G15_053	FROM->TO	GR ISLD-LNX3345.00 - GRAND ISLAND 345KV CKT Z	720	720	0.05702	127.799	P12:115:UMZW:# 172 #: WI IN SD.
FDNS	00NR_G15_053	0	17SP	G15_053	FROM->TO	GR ISLD-LNX3345.00 - GRAND ISLAND 345KV CKT Z	720	720	0.05681	127.7988	GEN615031 1-PLEASANT VALLEY
FDNS	00NR_G15_053	0	17SP	G15_053	FROM->TO	GR ISLD-LNX3345.00 - GRAND ISLAND 345KV CKT Z	720	720	0.05681	127.7978	GEN672367 1-MERIDIAN GENERATOR 1 GT1
FDNS	00NR_G15_053	0	17SP	G15_053	FROM->TO	GR ISLD-LNX3345.00 - GRAND ISLAND 345KV CKT Z	720	720	0.05681	127.7978	GEN672368 2-MERIDIAN GENERATOR 2 GT2
FDNS	00NR_G15_053	0	17SP	G15_053	FROM->TO	GR ISLD-LNX3345.00 - GRAND ISLAND 345KV CKT Z	720	720	0.05681	127.7939	GEN615032 2-PLEASANT VALLEY
FDNS	00NR_G15_053	0	17SP	G15_053	FROM->TO	GR ISLD-LNX3345.00 - GRAND ISLAND 345KV CKT Z	720	720	0.05709	127.7918	LARAMIE RIVER - STEGALL 345KV CKT 1
FDNS	00NR_G15_053	0	17SP	G15_053	FROM->TO	GR ISLD-LNX3345.00 - GRAND ISLAND 345KV CKT Z	720	720	0.05681	127.7872	GEN672350 1-NIPAWIN GENERATOR 1
FDNS	00NR_G15_053	0	17SP	G15_053	FROM->TO	GR ISLD-LNX3345.00 - GRAND ISLAND 345KV CKT Z	720	720	0.05681	127.7872	GEN672351 2-NIPAWIN GENERATOR 2
FDNS	00NR_G15_053	0	17SP	G15_053	FROM->TO	GR ISLD-LNX3345.00 - GRAND ISLAND 345KV CKT Z	720	720	0.05681	127.7872	GEN672352 3-NIPAWIN GENERATOR 3
FDNS	00NR_G15_053	0	17SP	G15_053	FROM->TO	GR ISLD-LNX3345.00 - GRAND ISLAND 345KV CKT Z	720	720	0.05681	127.7852	GEN600018 S-LS POWER STEAM
FDNS	00NR_G15_053	0	17SP	G15_053	FROM->TO	GR ISLD-LNX3345.00 - GRAND ISLAND 345KV CKT Z	720	720	0.05681	127.7811	GEN657964 1-ASH2GEN9 0.5750
FDNS	00NR_G15_053	0	17SP	G15_053	FROM->TO	GR ISLD-LNX3345.00 - GRAND ISLAND 345KV CKT Z	720	720	0.05681	127.7735	MITCHLCO3 345.00 345/34.5KV TRANSFORMER CKT 1
FDNS	00NR_G15_053	0	17SP	G15_053	FROM->TO	GR ISLD-LNX3345.00 - GRAND ISLAND 345KV CKT Z	720	720	0.05681	127.7725	GEN672349 3-CORY COGEN GENERATOR 3 ST
FDNS	00NR_G15_053	0	17SP	G15_053	FROM->TO	GR ISLD-LNX3345.00 - GRAND ISLAND 345KV CKT Z	720	720	0.05681	127.7579	GEN652548 5-FT RANDAL
FDNS	00NR_G15_053	0	17SP	G15_053	FROM->TO	GR ISLD-LNX3345.00 - GRAND ISLAND 345KV CKT Z	720	720	0.05681	127.7579	GEN652549 7-FT RANDAL
FDNS	00NR_G15_053	0	17SP	G15_053	FROM->TO	GR ISLD-LNX3345.00 - GRAND ISLAND 345KV CKT Z	720	720	0.05681	127.7474	GEN652547 3-FT RANDAL
FDNS	00NR_G15_053	0	17SP	G15_053	FROM->TO	GR ISLD-LNX3345.00 - GRAND ISLAND 345KV CKT Z	720	720	0.05681	127.7446	GEN620324 3-HOOT LAKE 3 GEN
FDNS	00NR_G15_053	0	17SP	G15_053	FROM->TO	GR ISLD-LNX3345.00 - GRAND ISLAND 345KV CKT Z	720	720	0.06059	127.7434	MOORE - PAULINE 345KV CKT 1
FDNS	00NR_G15_053	0	17SP	G15_053	FROM->TO	GR ISLD-LNX3345.00 - GRAND ISLAND 345KV CKT Z	720	720	0.05697	127.74	G11_051T 345.00 - TATONGA7 345.00 345KV CKT 1
FDNS	00NR_G15_053	0	17SP	G15_053	FROM->TO	GR ISLD-LNX3345.00 - GRAND ISLAND 345KV CKT Z	720	720	0.05688	127.7352	P12:345:UMZB:# 102 #: AVS BD IN ND. AVS BRD LR
FDNS	00NR_G15_053	0	17SP	G15_053	FROM->TO	GR ISLD-LNX3345.00 - GRAND ISLAND 345KV CKT Z	720	720	0.05688	127.7341	P12:345:UMZB:# 103 #: BD IN SD. LOSS OF LINE
FDNS	00NR_G15_053	0	17SP	G15_053	FROM->TO	GR ISLD-LNX3345.00 - GRAND ISLAND 345KV CKT Z	720	720	0.05895	127.7305	ATCHSNT3 345.00 - BOONEVILLE 345KV CKT 1
FDNS	00NR_G15_053	0	17SP	G15_053	FROM->TO	GR ISLD-LNX3345.00 - GRAND ISLAND 345KV CKT Z	720	720	0.05688	127.7295	BRDLAND-LNX3345.00 - HURON 345KV CKT Z
FDNS	00NR_G15_053	0	17SP	G15_053	FROM->TO	GR ISLD-LNX3345.00 - GRAND ISLAND 345KV CKT Z	720	720	0.05688	127.7285	BROADLAND - HURON 230KV CKT 1
FDNS	00NR_G15_053	0	17SP	G15_053	FROM->TO	GR ISLD-LNX3345.00 - GRAND ISLAND 345KV CKT Z	720	720	0.05688	127.7283	HURON (BD KU2A) 345/230/13.8KV TRANSFORMER CKT 1
FDNS	00NR_G15_053	0	17SP	G15_053	FROM->TO	GR ISLD-LNX3345.00 - GRAND ISLAND 345KV CKT Z	720	720	0.05688	127.7283	HURON (BD KU2A) 345/230/13.8KV TRANSFORMER CKT 1
FDNS	00NR_G15_053	0	17SP	G15_053	FROM->TO	GR ISLD-LNX3345.00 - GRAND ISLAND 345KV CKT Z	720	720	0.05681	127.7229	GEN600021 3-ANGUS ANSON2
FDNS	00NR_G15_053	0	17SP	G15_053	FROM->TO	GR ISLD-LNX3345.00 - GRAND ISLAND 345KV CKT Z	720	720	0.05681	127.7108	GEN600020 2-ANGUS ANSON1
FDNS	00NR_G15_053	0	17SP	G15_053	FROM->TO	GR ISLD-LNX3345.00 - GRAND ISLAND 345KV CKT Z	720	720	0.05681	127.6974	GEN659290 1-EDGECOL
FDNS	00NR_G15_053	0	17SP	G15_053	FROM->TO	GR ISLD-LNX3345.00 - GRAND ISLAND 345KV CKT Z	720	720	0.05681	127.6967	GEN659158 2-PIONEER G213.800
FDNS	00NR_G15_053	0	17SP	G15_053	FROM->TO	GR ISLD-LNX3345.00 - GRAND ISLAND 345KV CKT Z	720	720	0.05681	127.6967	GEN659159 3-PIONEER G313.800
FDNS	00NR_G15_053	0	17SP	G15_053	FROM->TO	GR ISLD-LNX3345.00 - GRAND ISLAND 345KV CKT Z	720	720	0.05681	127.6948	GEN659156 2-LONESMCRK 2G13.800
FDNS	00NR_G15_053	0	17SP	G15_053	FROM->TO	GR ISLD-LNX3345.00 - GRAND ISLAND 345KV CKT Z	720	720	0.05681	127.6948	GEN659157 3-LONESMCRK 3G13.800
FDNS	00NR_G15_053	0	17SP	G15_053	FROM->TO	GR ISLD-LNX3345.00 - GRAND ISLAND 345KV CKT Z	720	720	0.05681	127.6931	GEN672339 16-QE 16G 13.800
FDNS	00NR_G15_053	0	17SP	G15_053	FROM->TO	GR ISLD-LNX3345.00 - GRAND ISLAND 345KV CKT Z	720	720	0.05681	127.6931	GEN672342 3-QUEEN ELIZABETH GENERATOR 3
FDNS	00NR_G15_053	0	17SP	G15_053	FROM->TO	GR ISLD-LNX3345.00 - GRAND ISLAND 345KV CKT Z	720	720	0.05681	127.6812	GEN590010 1-ERCOT EQUIVALENCE
FDNS	00NR_G15_053	0	17SP	G15_053	FROM->TO	GR ISLD-LNX3345.00 - GRAND ISLAND 345KV CKT Z	720	720	0.05681	127.6798	GEN600012 2-BLACK DOG GEN 2
FDNS	00NR_G15_053	0	17SP	G15_053	FROM->TO	GR ISLD-LNX3345.00 - GRAND ISLAND 345KV CKT Z	720	720	0.05681	127.6797	GEN672393 2-NBECST2G 13.800
FDNS	00NR_G15_053	0	17SP	G15_053	FROM->TO	GR ISLD-LNX3345.00 - GRAND ISLAND 345KV CKT Z	720	720	0.05681	127.6741	LADISH 115/13.2KV TRANSFORMER CKT 1
FDNS	00NR_G15_053	0	17SP	G15_053	FROM->TO	GR ISLD-LNX3345.00 - GRAND ISLAND 345KV CKT Z	720	720	0.05681	127.6686	GEN652410 3-FT PECK
FDNS	00NR_G15_053	0	17SP	G15_053	FROM->TO	GR ISLD-LNX3345.00 - GRAND ISLAND 345KV CKT Z	720	720	0.05681	127.6558	GEN300003 1-THOMAS HILL UNIT 3
FDNS	00NR_G15_053	0	17SP	G15_053	FROM->TO	GR ISLD-LNX3345.00 - GRAND ISLAND 345KV CKT Z	720	720	0.05681	127.6498	GEN590011 2-ERCOT EQUIVALENCE
FDNS	00NR_G15_053	0	17SP	G15_053	FROM->TO	GR ISLD-LNX3345.00 - GRAND ISLAND 345KV CKT Z	720	720	0.05681	127.6359	GEN629072 4-LANSING GENERATOR FOR UNITS NO4 EIA CODE 1
FDNS	00NR_G15_053	0	17SP	G15_053	FROM->TO	GR ISLD-LNX3345.00 - GRAND ISLAND 345KV CKT Z	720	720	0.05681	127.6298	EASTDC - ERCOT EQUIVALENCE 345KV CKT 1
FDNS	00NR_G15_053	0	17SP	G15_053	FROM->TO	GR ISLD-LNX3345.00 - GRAND ISLAND 345KV CKT Z	720	720	0.06116	127.6286	LOUP CITY - NORTH LOUP 115KV CKT 1
FDNS	00NR_G15_053	0	17SP	G15_053	FROM->TO	GR ISLD-LNX3345.00 - GRAND ISLAND 345KV CKT Z	720	720	0.05683	127.6168	DRAYTON - LETELLIER 230KV CKT 1
FDNS	00NR_G15_053	0	17SP	G15_053	FROM->TO	GR ISLD-LNX3345.00 - GRAND ISLAND 345KV CKT Z	720	720	0.05699	127.609	GRAND ISLAND (GI KU3A) 345/230/13.8KV TRANSFORMER CKT 3
FDNS	00NR_G15_053	0	17SP	G15_053	FROM->TO	GR ISLD-LNX3345.00 - GRAND ISLAND 345KV CKT Z	720	720	0.05699	127.609	GRAND ISLAND (GI KU3A) 345/230/13.8KV TRANSFORMER CKT 3
FDNS	00NR_G15_053	0	17SP	G15_053	FROM->TO	GR ISLD-LNX3345.00 - GRAND ISLAND 345KV CKT Z	720	720	0.05681	127.6029	G830_SUB 115.00 - GRE-MCHENRY7115.00 115KV CKT 1
FDNS	00NR_G15_053	0	17SP	G15_053	FROM->TO	GR ISLD-LNX3345.00 - GRAND ISLAND 345KV CKT Z	720	720	0.05681	127.6019	GEN652414 4-FT PECK
FDNS	00NR_G15_053	0	17SP	G15_053	FROM->TO	GR ISLD-LNX3345.00 - GRAND ISLAND 345KV CKT Z	720	720	0.05681	127.6019	GEN652415 5-FT PECK
FDNS	00NR_G15_053	0	17SP	G15_053	FROM->TO	GR ISLD-LNX3345.00 - GRAND ISLAND 345KV CKT Z	720	720	0.05681	127.5947	G830_SUB 115.00 115/34.5KV TRANSFORMER CKT 1
FDNS	00NR_G15_053	0	17SP	G15_053	FROM->TO	GR ISLD-LNX3345.00 - GRAND ISLAND 345KV CKT Z	720	720	0.05676	127.5903	OAHE - SULLEY BUTTE 230KV CKT 1
FDNS	00NR_G15_053	0	17SP	G15_053	FROM->TO	GR ISLD-LNX3345.00 - GRAND ISLAND 345KV CKT Z	720	720	0.05681	127.5875	GEN660003 3-HURON WEST PARK
FDNS	00NR_G15_053	0	17SP	G15_053	FROM->TO	GR ISLD-LNX3345.00 - GRAND ISLAND 345KV CKT Z	720	720	0.05681	127.5684	EMERY 161/18.0KV TRANSFORMER CKT 1
FDNS	00NR_G15_053	0	17SP	G15_053	FROM->TO	GR ISLD-LNX3345.00 - GRAND ISLAND 345KV CKT Z	720	720	0.05681	127.564	GEN652345 W-G07_023IS_2 0.6900
FDNS	00NR_G15_053	0	17SP	G15_053	FROM->TO	GR ISLD-LNX3345.00 - GRAND ISLAND 345KV CKT Z	720	720	0.05681	127.5581	GEN 11104 1-J262_GEN 0.6000
FDNS	00NR_G15_053	0	17SP	G15_053	FROM->TO	GR ISLD-LNX3345.00 - GRAND ISLAND 345KV CKT Z	720	720	0.05681	127.5581	GEN 11108 1-J263_GEN 0.6000
FDNS	00NR_G15_053	0	17SP	G15_053	FROM->TO	GR ISLD-LNX3345.00 - GRAND ISLAND 345KV CKT Z	720	720	0.05707	127.5405	POST ROCK (POSTROCK T1) 345/230/13.8KV TRANSFORMER CKT 1
FDNS	00NR_G15_053	0	17SP	G15_053	FROM->TO	GR ISLD-LNX3345.00 - GRAND ISLAND 345KV CKT Z	720	720	0.05681	127.5366	GEN600050 1-FEP
FDNSLock	00NR_G15_053	0	17SP	G15_053	FROM->TO	GR ISLD-LNX3345.00 - GRAND ISLAND 345KV CKT Z	720	720	0.05911	127.5338	CENTRAL CITY - GRAND ISLAND 115KV CKT 1
FDNS	00NR_G15_053	0	17SP	G15_053	FROM->TO	GR ISLD-LNX3345.00 - GRAND ISLAND 345KV CKT Z	720	720	0.05862	127.5242	GERALD GENTLEMAN STATION - RED WILLOW 345KV CKT 1
FDNS	00NR_G15_053	0	17SP	G15_053	FROM->TO	GR ISLD-LNX3345.00 - GRAND ISLAND 345KV CKT Z	720	720	0.05681	127.4891	GEN300007 1-NEW MADRID UNIT 2
FDNS	00NR_G15_053	0	17SP	G15_053	FROM->TO	GR ISLD-LNX3345.00 - GRAND ISLAND 345KV CKT Z	720	720	0.05681	127.4848	GEN600046 1-MECST
FDNS	00NR_G15_053	0	17SP	G15_053	FROM->TO	GR ISLD-LNX3345.00 - GRAND ISLAND 345KV CKT Z	720	720	0.05697	127.4834	MATHWSN7 345.00 - TATONGA7 345.00 345KV CKT 1
FDNS	00NR_G15_053	0	17SP	G15_053	FROM->TO	GR ISLD-LNX3345.00 - GRAND ISLAND 345KV CKT Z	720	720	0.05681	127.4826	GEN300006 1-NEW MADRID UNIT 1

SOLUTION	GROUP	SCENARIO	SEASON	SOURCE	DIRECTION	MONITORED ELEMENT	RATEA (MVA)	RATEB(MVA)	TDF	TC%LOADING (% MVA)	CONTINGENCY
FDNS	00NR_G15_053	0	17SP	G15_053	FROM->TO	GR ISLD-LNX3345.00 - GRAND ISLAND 345KV CKT Z	720	720	0.05688	127.4733	ANTELOP-LNX3345.00 - ANTELOPE VALLEY 345KV CKT Z
FDNS	00NR_G15_053	0	17SP	G15_053	FROM->TO	GR ISLD-LNX3345.00 - GRAND ISLAND 345KV CKT Z	720	720	0.05681	127.4573	GEN600047 1-MECCT1
FDNS	00NR_G15_053	0	17SP	G15_053	FROM->TO	GR ISLD-LNX3345.00 - GRAND ISLAND 345KV CKT Z	720	720	0.05681	127.4565	GEN600063 1-COLVILLE GEN 1
FDNS	00NR_G15_053	0	17SP	G15_053	FROM->TO	GR ISLD-LNX3345.00 - GRAND ISLAND 345KV CKT Z	720	720	0.05681	127.4565	GEN600064 2-COLVILLE GEN 2
FDNS	00NR_G15_053	0	17SP	G15_053	FROM->TO	GR ISLD-LNX3345.00 - GRAND ISLAND 345KV CKT Z	720	720	0.05676	127.4519	SULLEY BUTTE - SULLYBT-LNX3230.00 230KV CKT Z
FDNS	00NR_G15_053	0	17SP	G15_053	FROM->TO	GR ISLD-LNX3345.00 - GRAND ISLAND 345KV CKT Z	720	720	0.05681	127.4517	GEN600043 7-BLUE LAKE5
FDNS	00NR_G15_053	0	17SP	G15_053	FROM->TO	GR ISLD-LNX3345.00 - GRAND ISLAND 345KV CKT Z	720	720	0.05681	127.4517	GEN600044 8-BLUE LAKE6
FDNS	00NR_G15_053	0	17SP	G15_053	FROM->TO	GR ISLD-LNX3345.00 - GRAND ISLAND 345KV CKT Z	720	720	0.05676	127.4465	SULLYBT-LNX3230.00 - WHITLOK 230KV CKT 1
FDNS	00NR_G15_053	0	17SP	G15_053	FROM->TO	GR ISLD-LNX3345.00 - GRAND ISLAND 345KV CKT Z	720	720	0.05681	127.4452	GEN660001 2-ABERDEEN SIEBRECHT
FDNS	00NR_G15_053	0	17SP	G15_053	FROM->TO	GR ISLD-LNX3345.00 - GRAND ISLAND 345KV CKT Z	720	720	0.05681	127.432	CENTER 230/22.0KV TRANSFORMER CKT 1
FDNS	00NR_G15_053	0	17SP	G15_053	FROM->TO	GR ISLD-LNX3345.00 - GRAND ISLAND 345KV CKT Z	720	720	0.05681	127.4286	GEN659273 2-GROTON SYNC COND
FDNS	00NR_G15_053	0	17SP	G15_053	FROM->TO	GR ISLD-LNX3345.00 - GRAND ISLAND 345KV CKT Z	720	720	0.05681	127.4286	GEN659294 1-WILTONCOL9
FDNS	00NR_G15_053	0	17SP	G15_053	FROM->TO	GR ISLD-LNX3345.00 - GRAND ISLAND 345KV CKT Z	720	720	0.05681	127.416	GEN600065 7-HIGH BRIDGE
FDNS	00NR_G15_053	0	17SP	G15_053	FROM->TO	GR ISLD-LNX3345.00 - GRAND ISLAND 345KV CKT Z	720	720	0.05681	127.416	GEN600066 8-HIGH BRIDGE
FDNS	00NR_G15_053	0	17SP	G15_053	FROM->TO	GR ISLD-LNX3345.00 - GRAND ISLAND 345KV CKT Z	720	720	0.05676	127.4147	P12:230:UMZB:# 114 #: SB IN SD. SB-WK-GH
FDNS	00NR_G15_053	0	17SP	G15_053	FROM->TO	GR ISLD-LNX3345.00 - GRAND ISLAND 345KV CKT Z	720	720	0.05676	127.4147	P12:230:UMZB:# 117 #: WK IN SD. SB-WK-GH
FDNS	00NR_G15_053	0	17SP	G15_053	FROM->TO	GR ISLD-LNX3345.00 - GRAND ISLAND 345KV CKT Z	720	720	0.05681	127.4103	GEN600014 4-BLACK DOG GEN 4
FDNS	00NR_G15_053	0	17SP	G15_053	FROM->TO	GR ISLD-LNX3345.00 - GRAND ISLAND 345KV CKT Z	720	720	0.05681	127.4057	GEN600011 5-BLACK DOG GEN 1
FDNS	00NR_G15_053	0	17SP	G15_053	FROM->TO	GR ISLD-LNX3345.00 - GRAND ISLAND 345KV CKT Z	720	720	0.05681	127.4003	GEN600071 10-RIVER SIDE
FDNS	00NR_G15_053	0	17SP	G15_053	FROM->TO	GR ISLD-LNX3345.00 - GRAND ISLAND 345KV CKT Z	720	720	0.05681	127.4	GEN600070 9-RIVER SIDE
FDNS	00NR_G15_053	0	17SP	G15_053	FROM->TO	GR ISLD-LNX3345.00 - GRAND ISLAND 345KV CKT Z	720	720	0.05681	127.3867	GEN600007 7-RIVERSIDE GEN 7
FDNS	00NR_G15_053	0	17SP	G15_053	FROM->TO	GR ISLD-LNX3345.00 - GRAND ISLAND 345KV CKT Z	720	720	0.05681	127.3865	GEN 10648 1-G830_GEN 0.6900
FDNS	00NR_G15_053	0	17SP	G15_053	FROM->TO	GR ISLD-LNX3345.00 - GRAND ISLAND 345KV CKT Z	720	720	0.05681	127.3797	GEN600045 4-ANSON
FDNS	00NR_G15_053	0	17SP	G15_053	FROM->TO	GR ISLD-LNX3345.00 - GRAND ISLAND 345KV CKT Z	720	720	0.05681	127.3777	GEN659192 6-LYNN
FDNS	00NR_G15_053	0	17SP	G15_053	FROM->TO	GR ISLD-LNX3345.00 - GRAND ISLAND 345KV CKT Z	720	720	0.05681	127.377	GEN659162 4-RED WLCK
FDNS	00NR_G15_053	0	17SP	G15_053	FROM->TO	GR ISLD-LNX3345.00 - GRAND ISLAND 345KV CKT Z	720	720	0.05681	127.377	GEN659163 5-BLACK WDCK
FDNS	00NR_G15_053	0	17SP	G15_053	FROM->TO	GR ISLD-LNX3345.00 - GRAND ISLAND 345KV CKT Z	720	720	0.06993	127.3616	COLUMWEST - GRAND ISLAND 230KV CKT 1
FDNS	00NR_G15_053	0	17SP	G15_053	FROM->TO	GR ISLD-LNX3345.00 - GRAND ISLAND 345KV CKT Z	720	720	0.05676	127.3597	GLENHAM - WHITLOK 230KV CKT 1
FDNS	00NR_G15_053	0	17SP	G15_053	FROM->TO	GR ISLD-LNX3345.00 - GRAND ISLAND 345KV CKT Z	720	720	0.05681	127.358	GEN600017 C-LS POWER CT
FDNS	00NR_G15_053	0	17SP	G15_053	FROM->TO	GR ISLD-LNX3345.00 - GRAND ISLAND 345KV CKT Z	720	720	0.05681	127.3571	LANSING WEST 161/22.0KV TRANSFORMER CKT 1
FDNS	00NR_G15_053	0	17SP	G15_053	FROM->TO	GR ISLD-LNX3345.00 - GRAND ISLAND 345KV CKT Z	720	720	0.05681	127.3321	GEN659031 1-G12_014IS_4 0.6900
FDNS	00NR_G15_053	0	17SP	G15_053	FROM->TO	GR ISLD-LNX3345.00 - GRAND ISLAND 345KV CKT Z	720	720	0.05681	127.3112	GEN615021 1-GRE-ER 14G 16.000
FDNS	00NR_G15_053	0	17SP	G15_053	FROM->TO	GR ISLD-LNX3345.00 - GRAND ISLAND 345KV CKT Z	720	720	0.05681	127.3041	GEN615052 1-CAMBRIDGE GENERATING STATION
FDNS	00NR_G15_053	0	17SP	G15_053	FROM->TO	GR ISLD-LNX3345.00 - GRAND ISLAND 345KV CKT Z	720	720	0.05681	127.2976	GEN615015 1-GRE-SPRITWDG13.200
FDNS	00NR_G15_053	0	17SP	G15_053	FROM->TO	GR ISLD-LNX3345.00 - GRAND ISLAND 345KV CKT Z	720	720	0.05681	127.2345	GEN681522 3-GENOA 3
FDNS	00NR_G15_053	0	17SP	G15_053	FROM->TO	GR ISLD-LNX3345.00 - GRAND ISLAND 345KV CKT Z	720	720	0.05681	127.188	GEN660016 1-B_H WIND 0.7000
FDNS	00NR_G15_053	0	17SP	G15_053	FROM->TO	GR ISLD-LNX3345.00 - GRAND ISLAND 345KV CKT Z	720	720	0.05681	127.1739	BISONMP4 230.00 - SQUARE BUTTE 230KV CKT 1
FDNS	00NR_G15_053	0	17SP	G15_053	FROM->TO	GR ISLD-LNX3345.00 - GRAND ISLAND 345KV CKT Z	720	720	0.05681	127.1307	GEN652906 1-G09_006IS_3 0.6900
FDNS	00NR_G15_053	0	17SP	G15_053	FROM->TO	GR ISLD-LNX3345.00 - GRAND ISLAND 345KV CKT Z	720	720	0.05681	127.1199	GEN672303 3-BOUNDARY DAM GENERATOR 3
FDNS	00NR_G15_053	0	17SP	G15_053	FROM->TO	GR ISLD-LNX3345.00 - GRAND ISLAND 345KV CKT Z	720	720	0.05681	127.1199	GEN672305 5-BOUNDARY DAM GENERATOR 5
FDNS	00NR_G15_053	0	17SP	G15_053	FROM->TO	GR ISLD-LNX3345.00 - GRAND ISLAND 345KV CKT Z	720	720	0.05681	127.1144	GEN662101 1-WESSINGTON190.5750
FDNS	00NR_G15_053	0	17SP	G15_053	FROM->TO	GR ISLD-LNX3345.00 - GRAND ISLAND 345KV CKT Z	720	720	0.05681	127.0961	GEN672392 1-NBECGT1G 18.000
FDNS	00NR_G15_053	0	17SP	G15_053	FROM->TO	GR ISLD-LNX3345.00 - GRAND ISLAND 345KV CKT Z	720	720	0.05681	127.0667	GEN652545 7-BIG BEND
FDNS	00NR_G15_053	0	17SP	G15_053	FROM->TO	GR ISLD-LNX3345.00 - GRAND ISLAND 345KV CKT Z	720	720	0.05681	127.0259	GEN600067 9-HIGH BRIDGE
FDNS	00NR_G15_053	0	17SP	G15_053	FROM->TO	GR ISLD-LNX3345.00 - GRAND ISLAND 345KV CKT Z	720	720	0.05681	126.9897	GEN652907 1-G09_007IS_3 0.6900
FDNS	00NR_G15_053	0	17SP	G15_053	FROM->TO	GR ISLD-LNX3345.00 - GRAND ISLAND 345KV CKT Z	720	720	0.05681	126.9828	GEN910006 1-G12_012IS_3 0.6900
FDNS	00NR_G15_053	0	17SP	G15_053	FROM->TO	GR ISLD-LNX3345.00 - GRAND ISLAND 345KV CKT Z	720	720	0.05681	126.9742	COYOTE 345/24.0KV TRANSFORMER CKT 1
FDNS	00NR_G15_053	0	17SP	G15_053	FROM->TO	GR ISLD-LNX3345.00 - GRAND ISLAND 345KV CKT Z	720	720	0.06032	126.9543	MINGO - RED WILLOW 345KV CKT 1
FDNS	00NR_G15_053	0	17SP	G15_053	FROM->TO	GR ISLD-LNX3345.00 - GRAND ISLAND 345KV CKT Z	720	720	0.06032	126.9543	MINGO - RED WILLOW 345KV CKT 1
FDNS	00NR_G15_053	0	17SP	G15_053	FROM->TO	GR ISLD-LNX3345.00 - GRAND ISLAND 345KV CKT Z	720	720	0.05681	126.9522	SQUARE BUTTE - YNG2 4 230.00 230KV CKT 1
FDNS	00NR_G15_053	0	17SP	G15_053	FROM->TO	GR ISLD-LNX3345.00 - GRAND ISLAND 345KV CKT Z	720	720	0.05681	126.9517	YNG2 4 230.00 230/20.0KV TRANSFORMER CKT 1
FDNS	00NR_G15_053	0	17SP	G15_053	FROM->TO	GR ISLD-LNX3345.00 - GRAND ISLAND 345KV CKT Z	720	720	0.05681	126.8305	GEN659353 1-DEERCREK CTG18.000
FDNS	00NR_G15_053	0	17SP	G15_053	FROM->TO	GR ISLD-LNX3345.00 - GRAND ISLAND 345KV CKT Z	720	720	0.05681	126.8297	GEN659354 1-DEERCREK STG18.000
FDNS	00NR_G15_053	0	17SP	G15_053	FROM->TO	GR ISLD-LNX3345.00 - GRAND ISLAND 345KV CKT Z	720	720	0.05676	126.8128	GLENHAM - L3 HAWDON 230KV CKT 1
FDNS	00NR_G15_053	0	17SP	G15_053	FROM->TO	GR ISLD-LNX3345.00 - GRAND ISLAND 345KV CKT Z	720	720	0.05681	126.6672	GEN659289 1-DAYCNTYWND W0.6900
FDNS	00NR_G15_053	0	17SP	G15_053	FROM->TO	GR ISLD-LNX3345.00 - GRAND ISLAND 345KV CKT Z	720	720	0.05681	126.6332	GEN659018 1-G14_003IS_3 0.6900
FDNS	00NR_G15_053	0	17SP	G15_053	FROM->TO	GR ISLD-LNX3345.00 - GRAND ISLAND 345KV CKT Z	720	720	0.05681	126.5905	GEN681542 6-JP MADGETT
FDNS	00NR_G15_053	0	17SP	G15_053	FROM->TO	GR ISLD-LNX3345.00 - GRAND ISLAND 345KV CKT Z	720	720	0.05681	126.4964	GEN659194 1-NDPRAIRWND1W0.6900
FDNS	00NR_G15_053	0	17SP	G15_053	FROM->TO	GR ISLD-LNX3345.00 - GRAND ISLAND 345KV CKT Z	720	720	0.05681	126.4942	GEN659010 4-G07_027IS_2 0.6900
FDNS	00NR_G15_053	0	17SP	G15_053	FROM->TO	GR ISLD-LNX3345.00 - GRAND ISLAND 345KV CKT Z	720	720	0.05681	126.4823	GEN652460 4-GARRISON
FDNS	00NR_G15_053	0	17SP	G15_053	FROM->TO	GR ISLD-LNX3345.00 - GRAND ISLAND 345KV CKT Z	720	720	0.05681	126.4822	GEN652461 5-GARRISON
FDNS	00NR_G15_053	0	17SP	G15_053	FROM->TO	GR ISLD-LNX3345.00 - GRAND ISLAND 345KV CKT Z	720	720	0.05681	126.4758	GEN652544 5-BIG BEND
FDNS	00NR_G15_053	0	17SP	G15_053	FROM->TO	GR ISLD-LNX3345.00 - GRAND ISLAND 345KV CKT Z	720	720	0.05681	126.4751	GEN652543 3-BIG BEND
FDNS	00NR_G15_053	0	17SP	G15_053	FROM->TO	GR ISLD-LNX3345.00 - GRAND ISLAND 345KV CKT Z	720	720	0.05681	126.4748	GEN652542 1-BIG BEND
FDNS	00NR_G15_053	0	17SP	G15_053	FROM->TO	GR ISLD-LNX3345.00 - GRAND ISLAND 345KV CKT Z	720	720	0.05795	126.4311	AXTELL - POST ROCK 345KV CKT 1
FDNS	00NR_G15_053	0	17SP	G15_053	FROM->TO	GR ISLD-LNX3345.00 - GRAND ISLAND 345KV CKT Z	720	720	0.05681	126.4249	GEN652457 1-GARRISON
FDNS	00NR_G15_053	0	17SP	G15_053	FROM->TO	GR ISLD-LNX3345.00 - GRAND ISLAND 345KV CKT Z	720	720	0.05681	126.4249	GEN652458 2-GARRISON
FDNS	00NR_G15_053	0	17SP	G15_053	FROM->TO	GR ISLD-LNX3345.00 - GRAND ISLAND 345KV CKT Z	720	720	0.05681	126.4249	GEN652459 3-GARRISON
FDNS	00NR_G15_053	0	17SP	G15_053	FROM->TO	GR ISLD-LNX3345.00 - GRAND ISLAND 345KV CKT Z	720	720	0.05681	126.407	STANTON 230/18.0KV TRANSFORMER CKT 1
FDNS	00NR_G15_053	0	17SP	G15_053	FROM->TO	GR ISLD-LNX3345.00 - GRAND ISLAND 345KV CKT Z	720	720	0.05681	126.3466	GEN659403 1-NDSUNFLWR W0.6900
FDNS	00NR_G15_053	0	17SP	G15_053	FROM->TO	GR ISLD-LNX3345.00 - GRAND ISLAND 345KV CKT Z	720	720	0.05681	126.2973	GR ISLD-LNX3345.00 345KV SWITCHED SHUNT
FDNSLock	00NR_G15_053	0	17SP	G15_053	FROM->TO	GR ISLD-LNX3345.00 - GRAND ISLAND 345KV CKT Z	720	720	0.05681	126.297	GR ISLD-LNX3345.00 345KV SWITCHED SHUNT
FDNS	00NR_G15_053	0	17SP	G15_053	FROM->TO	GR ISLD-LNX3345.00 - GRAND ISLAND 345KV CKT Z	720	720	0.06033	126.2697	AXTELL - SWEETWATER 345KV CKT 1

SOLUTION	GROUP	SCENARIO	SEASON	SOURCE	DIRECTION	MONITORED ELEMENT	RATEA (MVA)	RATEB(MVA)	TDF	TC%LOADING (% MVA)	CONTINGENCY
FDNS	00NR_G15_053	0	17SP	G15_053	FROM->TO	GR ISLD-LNX3345.00 - GRAND ISLAND 345KV CKT Z	720	720	0.05681	126.1614	CLAY BOSWELL 230/20.9KV TRANSFORMER CKT 1
FDNS	00NR_G15_053	0	17SP	G15_053	FROM->TO	GR ISLD-LNX3345.00 - GRAND ISLAND 345KV CKT Z	720	720	0.05681	126.0291	GEN659411 1-CAMPBLCNTY W0.6900
FDNS	00NR_G15_053	0	17SP	G15_053	FROM->TO	GR ISLD-LNX3345.00 - GRAND ISLAND 345KV CKT Z	720	720	0.05681	125.8163	GEN659296 2-SDPRAIRWND1W0.6900
FDNS	00NR_G15_053	0	17SP	G15_053	FROM->TO	GR ISLD-LNX3345.00 - GRAND ISLAND 345KV CKT Z	720	720	0.05681	125.812	ALMA 161 161/24.0KV TRANSFORMER CKT 1
FDNS	00NR_G15_053	0	17SP	G15_053	FROM->TO	GR ISLD-LNX3345.00 - GRAND ISLAND 345KV CKT Z	720	720	0.05681	125.759	RCDC EAST 4230.00 - RED CEDAR DC 230KV CKT 1
FDNS	00NR_G15_053	0	17SP	G15_053	FROM->TO	GR ISLD-LNX3345.00 - GRAND ISLAND 345KV CKT Z	720	720	0.05681	125.7526	P12:230:UMZB:# 112 #: NU IN SD. NU-RCDC & DRY CREEK XFMR
FDNS	00NR_G15_053	0	17SP	G15_053	FROM->TO	GR ISLD-LNX3345.00 - GRAND ISLAND 345KV CKT Z	720	720	0.05681	125.7063	GEN652559 1-OAHE
FDNS	00NR_G15_053	0	17SP	G15_053	FROM->TO	GR ISLD-LNX3345.00 - GRAND ISLAND 345KV CKT Z	720	720	0.05681	125.6838	GEN672321 1-SHAND GENERATOR 1
FDNS	00NR_G15_053	0	17SP	G15_053	FROM->TO	GR ISLD-LNX3345.00 - GRAND ISLAND 345KV CKT Z	720	720	0.05681	125.6737	GEN615010 1-STANTON4
FDNS	00NR_G15_053	0	17SP	G15_053	FROM->TO	GR ISLD-LNX3345.00 - GRAND ISLAND 345KV CKT Z	720	720	0.05681	125.6737	GEN672310 1-POPLAR RIVER GENERATOR 1
FDNS	00NR_G15_053	0	17SP	G15_053	FROM->TO	GR ISLD-LNX3345.00 - GRAND ISLAND 345KV CKT Z	720	720	0.05681	125.6737	GEN672311 2-POPLAR RIVER GENERATOR 2
FDNS	00NR_G15_053	0	17SP	G15_053	FROM->TO	GR ISLD-LNX3345.00 - GRAND ISLAND 345KV CKT Z	720	720	0.05681	125.5998	GEN672306 6-BOUNDARY DAM GENERATOR 6
FDNS	00NR_G15_053	0	17SP	G15_053	FROM->TO	GR ISLD-LNX3345.00 - GRAND ISLAND 345KV CKT Z	720	720	0.05681	125.5228	GEN652558 6-OAHE
FDNS	00NR_G15_053	0	17SP	G15_053	FROM->TO	GR ISLD-LNX3345.00 - GRAND ISLAND 345KV CKT Z	720	720	0.05681	125.5227	GEN652556 2-OAHE
FDNS	00NR_G15_053	0	17SP	G15_053	FROM->TO	GR ISLD-LNX3345.00 - GRAND ISLAND 345KV CKT Z	720	720	0.05681	125.5227	GEN652557 4-OAHE
FDNS	00NR_G15_053	0	17SP	G15_053	FROM->TO	GR ISLD-LNX3345.00 - GRAND ISLAND 345KV CKT Z	720	720	0.05681	125.4419	GEN659453 1-GI1414GEN W0.6900
FDNS	00NR_G15_053	0	17SP	G15_053	FROM->TO	GR ISLD-LNX3345.00 - GRAND ISLAND 345KV CKT Z	720	720	0.05681	125.4058	GEN657749 1-YOUNG 1 GENERATOR
FDNS	00NR_G15_053	0	17SP	G15_053	FROM->TO	GR ISLD-LNX3345.00 - GRAND ISLAND 345KV CKT Z	720	720	0.05681	125.3989	GEN600004 2-PRAIRIE ISLAND G2
FDNS	00NR_G15_053	0	17SP	G15_053	FROM->TO	GR ISLD-LNX3345.00 - GRAND ISLAND 345KV CKT Z	720	720	0.05681	125.3948	GEN600003 1-PRAIRIE ISLAND G1
FDNS	00NR_G15_053	0	17SP	G15_053	FROM->TO	GR ISLD-LNX3345.00 - GRAND ISLAND 345KV CKT Z	720	720	0.05681	125.3518	GEN659141 1-K10215A
FDNS	00NR_G15_053	0	17SP	G15_053	FROM->TO	GR ISLD-LNX3345.00 - GRAND ISLAND 345KV CKT Z	720	720	0.05681	125.1185	GEN652173 1-G09_001IS_2 0.6900
FDNS	00NR_G15_053	0	17SP	G15_053	FROM->TO	GR ISLD-LNX3345.00 - GRAND ISLAND 345KV CKT Z	720	720	0.05681	125.0852	GEN600006 1-AS KING
FDNS	00NR_G15_053	0	17SP	G15_053	FROM->TO	GR ISLD-LNX3345.00 - GRAND ISLAND 345KV CKT Z	720	720	0.05681	124.8867	GEN659407 1-ANTELPHILLSW0.6900
FDNS	00NR_G15_053	0	17SP	G15_053	FROM->TO	GR ISLD-LNX3345.00 - GRAND ISLAND 345KV CKT Z	720	720	0.05681	124.7912	GEN659110 1-LELAND OLDS UNIT1
FDNS	00NR_G15_053	0	17SP	G15_053	FROM->TO	GR ISLD-LNX3345.00 - GRAND ISLAND 345KV CKT Z	720	720	0.05681	124.5146	GEN600005 1-MONTICELLO
FDNS	00NR_G15_053	0	17SP	G15_053	FROM->TO	GR ISLD-LNX3345.00 - GRAND ISLAND 345KV CKT Z	720	720	0.06505	124.0214	MCCOOL - MOORE 345KV CKT 1
FDNS	00NR_G15_053	0	17SP	G15_053	FROM->TO	GR ISLD-LNX3345.00 - GRAND ISLAND 345KV CKT Z	720	720	0.05681	123.8274	GEN600000 1-SHERBURNECNTY G1
FDNS	00NR_G15_053	0	17SP	G15_053	FROM->TO	GR ISLD-LNX3345.00 - GRAND ISLAND 345KV CKT Z	720	720	0.05681	123.6116	GEN600001 2-SHERBURNE CNTY G2
FDNS	00NR_G15_053	0	17SP	G15_053	FROM->TO	GR ISLD-LNX3345.00 - GRAND ISLAND 345KV CKT Z	720	720	0.05681	123.3311	GEN620315 1-BIG STONE GEN
FDNS	00NR_G15_053	0	17SP	G15_053	FROM->TO	GR ISLD-LNX3345.00 - GRAND ISLAND 345KV CKT Z	720	720	0.05681	123.3238	GEN661015 1-COYOTE
FDNS	00NR_G15_053	0	17SP	G15_053	FROM->TO	GR ISLD-LNX3345.00 - GRAND ISLAND 345KV CKT Z	720	720	0.05681	122.8801	GEN657748 1-YOUNG 2 GENERATOR
FDNS	00NR_G15_053	0	17SP	G15_053	FROM->TO	GR ISLD-LNX3345.00 - GRAND ISLAND 345KV CKT Z	720	720	0.05681	122.6478	GEN600002 3-SHERBURNE CNTY G3
FDNS	00NR_G15_053	0	20SP	G15_053	FROM->TO	GR ISLD-LNX3345.00 - GRAND ISLAND 345KV CKT Z	720	720	0.05319	122.0763	HOLT.CO3 345.00 - THEDFRD3 345.00 345KV CKT 1
FDNS	00NR_G15_053	0	17SP	G15_053	FROM->TO	GR ISLD-LNX3345.00 - GRAND ISLAND 345KV CKT Z	720	720	0.05681	121.9873	SHERBURNE CO 345/24.0KV TRANSFORMER CKT 1
FDNS	00NR_G15_053	0	17SP	G15_053	FROM->TO	GR ISLD-LNX3345.00 - GRAND ISLAND 345KV CKT Z	720	720	0.05646	121.8137	FTTHOM1-LNX3345.00 - LELAND2-LNX3345.00 345KV CKT 1
FDNS	00NR_G15_053	0	17SP	G15_053	FROM->TO	GR ISLD-LNX3345.00 - GRAND ISLAND 345KV CKT Z	720	720	0.05681	121.7576	BIG STONE 230/24.0KV TRANSFORMER CKT 1
FDNS	00NR_G15_053	0	25SP	G15_053	FROM->TO	GR ISLD-LNX3345.00 - GRAND ISLAND 345KV CKT Z	720	720	0.0541	121.7054	HOLT.CO3 345.00 - THEDFRD3 345.00 345KV CKT 1
FDNS	00NR_G15_053	0	17SP	G15_053	FROM->TO	GR ISLD-LNX3345.00 - GRAND ISLAND 345KV CKT Z	720	720	0.05646	121.5444	P12:345:UMZB:# 108 #: LOS FT IN ND. LOS FT
FDNS	00NR_G15_053	0	17SP	G15_053	FROM->TO	GR ISLD-LNX3345.00 - GRAND ISLAND 345KV CKT Z	720	720	0.05646	121.5376	FT THOMPSON - FTTHOM1-LNX3345.00 345KV CKT Z
FDNS	00NR_G15_053	0	17SP	G15_053	FROM->TO	GR ISLD-LNX3345.00 - GRAND ISLAND 345KV CKT Z	720	720	0.05646	121.3886	LELAND OLDS - LELAND2-LNX3345.00 345KV CKT Z
FDNS	00NR_G15_053	0	17SP	G15_053	FROM->TO	GR ISLD-LNX3345.00 - GRAND ISLAND 345KV CKT Z	720	720	0.05681	120.9952	GEN659111 2-LELAND OLDS UNIT2
FDNS	00NR_G15_053	0	17SP	G15_053	FROM->TO	GR ISLD-LNX3345.00 - GRAND ISLAND 345KV CKT Z	720	720	0.05681	120.7039	GEN659125 1-COVEY
FDNS	00NR_G15_053	0	17SP	G15_053	FROM->TO	GR ISLD-LNX3345.00 - GRAND ISLAND 345KV CKT Z	720	720	0.05681	120.4207	GEN659103 1-ANTELOPE VALLEY UNIT1
FDNS	00NR_G15_053	0	17SP	G15_053	FROM->TO	GR ISLD-LNX3345.00 - GRAND ISLAND 345KV CKT Z	720	720	0.05681	120.4207	GEN659107 2-ANTELOPE VALLEY UNIT2
FDNS	00NR_G15_053	0	17SP	G15_053	FROM->TO	GR ISLD-LNX3345.00 - GRAND ISLAND 345KV CKT Z	720	720	0.06578	120.3704	GRAND ISLAND - MCCOOL 345KV CKT 1
FDNS	00NR_G15_053	0	17SP	G15_053	FROM->TO	GR ISLD-LNX3345.00 - GRAND ISLAND 345KV CKT Z	720	720	0.05681	120.1445	GEN615001 1-COAL CREEK
FDNS	00NR_G15_053	0	17SP	G15_053	FROM->TO	GR ISLD-LNX3345.00 - GRAND ISLAND 345KV CKT Z	720	720	0.05681	120.0577	GEN615002 2-COAL CREEK
FDNS	00NR_G15_053	0	17SP	G15_053	FROM->TO	GR ISLD-LNX3345.00 - GRAND ISLAND 345KV CKT Z	720	720	0.05681	113.2904	GEN562714 1-G15_023_4 0.6900
FDNS	00NR_G15_053	0	17SP	G15_053	FROM->TO	GR ISLD-LNX3345.00 - GRAND ISLAND 345KV CKT Z	720	720	0.05681	113.2904	GEN562715 1-G15_023_5 0.6900
FDNS	00NR_G15_053	0	20SP	G15_053	FROM->TO	GR ISLD-LNX3345.00 - GRAND ISLAND 345KV CKT Z	720	720	0.05541	111.7132	GERALD GENTLEMAN STATION - THEDFRD3 345.00 345KV CKT 1
FDNS	00NR_G15_053	0	25SP	G15_053	FROM->TO	GR ISLD-LNX3345.00 - GRAND ISLAND 345KV CKT Z	720	720	0.05657	110.7447	GERALD GENTLEMAN STATION - THEDFRD3 345.00 345KV CKT 1
FDNS	00NR_G15_053	0	16WP	G15_053	FROM->TO	GR ISLD-LNX3345.00 - GRAND ISLAND 345KV CKT Z	720	720	0.05614	107.9443	KELLY - MEADOWGROVE4230.00 230KV CKT 1
FDNS	00NR_G15_053	0	17SP	G15_053	FROM->TO	GR ISLD-LNX3345.00 - GRAND ISLAND 345KV CKT Z	720	720	0.05681	107.7968	GEN652353 2-GR PRAIRIEG 0.6900
FDNS	00NR_G15_053	0	16WP	G15_053	FROM->TO	GR ISLD-LNX3345.00 - GRAND ISLAND 345KV CKT Z	720	720	0.05391	107.4725	P12:230:UMZB:# 116 #: ST IN SD. WSG-ST-VH
FDNS	00NR_G15_053	0	16WP	G15_053	FROM->TO	GR ISLD-LNX3345.00 - GRAND ISLAND 345KV CKT Z	720	720	0.05393	106.8935	STORLA - WESSINGTON 230KV CKT 1
FDNS	00NR_G15_053	0	16WP	G15_053	FROM->TO	GR ISLD-LNX3345.00 - GRAND ISLAND 345KV CKT Z	720	720	0.05543	106.0389	RIEL - ROSEAU 500KV CKT 1
FDNS	00NR_G15_053	0	16WP	G15_053	FROM->TO	GR ISLD-LNX3345.00 - GRAND ISLAND 345KV CKT Z	720	720	0.05447	105.8162	HANLON - STORLA 230KV CKT 1
FDNS	00NR_G15_053	0	16WP	G15_053	FROM->TO	GR ISLD-LNX3345.00 - GRAND ISLAND 345KV CKT Z	720	720	0.05383	105.4629	FT THOMPSON - LETCHER 230KV CKT 1
FDNS	00NR_G15_053	0	16WP	G15_053	FROM->TO	GR ISLD-LNX3345.00 - GRAND ISLAND 345KV CKT Z	720	720	0.05383	105.4629	FT THOMPSON - LETCHER 230KV CKT 1
FDNSLock	00NR_G15_053	0	16WP	G15_053	FROM->TO	GR ISLD-LNX3345.00 - GRAND ISLAND 345KV CKT Z	720	720	0.05475	105.1593	P12:345:UMZW:# 1747 #: WT2 IN SD. WT2-WHT LINE FAULT
FDNS	00NR_G15_053	0	16WP	G15_053	FROM->TO	GR ISLD-LNX3345.00 - GRAND ISLAND 345KV CKT Z	720	720	0.05475	104.7396	WATERTN-LNX3345.00 - WHITE 345KV CKT 1
FDNS	00NR_G15_053	0	16WP	G15_053	FROM->TO	GR ISLD-LNX3345.00 - GRAND ISLAND 345KV CKT Z	720	720	0.05475	104.6692	WATERTN-LNX3345.00 - WATERTOWN 345KV CKT Z
FDNS	00NR_G15_053	0	16WP	G15_053	FROM->TO	GR ISLD-LNX3345.00 - GRAND ISLAND 345KV CKT Z	720	720	0.05536	104.4611	BUFFALO - JAMESTOWN 345KV CKT 1
FDNS	00NR_G15_053	0	16WP	G15_053	FROM->TO	GR ISLD-LNX3345.00 - GRAND ISLAND 345KV CKT Z	720	720	0.05222	104.2227	FT RANDAL - G12_009IST 230.00 230KV CKT 1
FDNS	00NR_G15_053	0	16WP	G15_053	FROM->TO	GR ISLD-LNX3345.00 - GRAND ISLAND 345KV CKT Z	720	720	0.05705	104.1933	KEYSTONE - SIDNEY1-LNX3345.00 345KV CKT 1
FDNS	00NR_G15_053	0	16WP	G15_053	FROM->TO	GR ISLD-LNX3345.00 - GRAND ISLAND 345KV CKT Z	720	720	0.05705	104.188	SIDNEY - SIDNEY1-LNX3345.00 345KV CKT Z
FDNS	00NR_G15_053	0	16WP	G15_053	FROM->TO	GR ISLD-LNX3345.00 - GRAND ISLAND 345KV CKT Z	720	720	0.05213	104.1272	FT RANDAL - FT THOMPSON 230KV CKT 1
FDNS	00NR_G15_053	0	16WP	G15_053	FROM->TO	GR ISLD-LNX3345.00 - GRAND ISLAND 345KV CKT Z	720	720	0.05213	104.1272	FT RANDAL - FT THOMPSON 230KV CKT 1
FDNS	00NR_G15_053	0	16WP	G15_053	FROM->TO	GR ISLD-LNX3345.00 - GRAND ISLAND 345KV CKT Z	720	720	0.05222	104.1263	FT THOMPSON - LAKE PLATT 230KV CKT 1
FDNS	00NR_G15_053	0	16WP	G15_053	FROM->TO	GR ISLD-LNX3345.00 - GRAND ISLAND 345KV CKT Z	720	720	0.05222	104.1263	FT THOMPSON - LAKE PLATT 230KV CKT 1
FDNS	00NR_G15_053	0	16WP	G15_053	FROM->TO	GR ISLD-LNX3345.00 - GRAND ISLAND 345KV CKT Z	720	720	0.05539	104.1005	GEN336821 1-GRAND GULF UNIT
FDNS	00NR_G15_053	0	16WP	G15_053	FROM->TO	GR ISLD-LNX3345.00 - GRAND ISLAND 345KV CKT Z	720	720	0.0547	104.0052	LETCHER - SIOUX FALLS 230KV CKT 1
FDNS	00NR_G15_053	0	16WP	G15_053	FROM->TO	GR ISLD-LNX3345.00 - GRAND ISLAND 345KV CKT Z	720	720	0.05516	103.9358	G09_001IST 345.00 - WATERTOWN 345KV CKT 1

SOLUTION	GROUP	SCENARIO	SEASON	SOURCE	DIRECTION	MONITORED ELEMENT	RATEA (MVA)	RATEB(MVA)	TDF	TC%LOADING (% MVA)	CONTINGENCY
FDNS	00NR_G15_053	0	16WP	G15_053	FROM->TO	GR ISLD-LNX3345.00 - GRAND ISLAND 345KV CKT Z	720	720	0.05222	103.8548	G12_009IST 230.00 - LAKE PLATT 230KV CKT 1
FDNS	00NR_G15_053	0	16WP	G15_053	FROM->TO	GR ISLD-LNX3345.00 - GRAND ISLAND 345KV CKT Z	720	720	0.05539	103.7922	GEN635024 4-WALTER SCOTT UNIT 4
FDNS	00NR_G15_053	0	16WP	G15_053	FROM->TO	GR ISLD-LNX3345.00 - GRAND ISLAND 345KV CKT Z	720	720	0.05539	103.7745	GEN640010 1-GERALD GENTLEMAN STATION UNIT 1
FDNS	00NR_G15_053	0	16WP	G15_053	FROM->TO	GR ISLD-LNX3345.00 - GRAND ISLAND 345KV CKT Z	720	720	0.05539	103.7385	GEN337911 1-ARKANSAS NUCLEAR ONE UNIT #2
FDNS	00NR_G15_053	0	16WP	G15_053	FROM->TO	GR ISLD-LNX3345.00 - GRAND ISLAND 345KV CKT Z	720	720	0.05536	103.6774	CENTER - JAMESTOWN 345KV CKT 1
FDNS	00NR_G15_053	0	16WP	G15_053	FROM->TO	GR ISLD-LNX3345.00 - GRAND ISLAND 345KV CKT Z	720	720	0.05539	103.6649	GEN640011 2-GERALD GENTLEMAN STATION UNIT 2
FDNS	00NR_G15_053	0	16WP	G15_053	FROM->TO	GR ISLD-LNX3345.00 - GRAND ISLAND 345KV CKT Z	720	720	0.05614	103.656	FT RANDAL - MEADOWGROVE4230.00 230KV CKT 1
FDNS	00NR_G15_053	0	16WP	G15_053	FROM->TO	GR ISLD-LNX3345.00 - GRAND ISLAND 345KV CKT Z	720	720	0.05539	103.6508	GEN344225 1-1CAL G1 25.000
FDNS	00NR_G15_053	0	16WP	G15_053	FROM->TO	GR ISLD-LNX3345.00 - GRAND ISLAND 345KV CKT Z	720	720	0.05539	103.6148	GEN336153 1-WATERFORD UNIT#3
FDNS	00NR_G15_053	0	16WP	G15_053	FROM->TO	GR ISLD-LNX3345.00 - GRAND ISLAND 345KV CKT Z	720	720	0.05609	103.5784	HAZLETON - MITCHLCO3 345.00 345KV CKT 1
FDNS	00NR_G15_053	0	16WP	G15_053	FROM->TO	GR ISLD-LNX3345.00 - GRAND ISLAND 345KV CKT Z	720	720	0.05537	103.5248	BISON 3 345.00 - BUFFALO 345KV CKT 1
FDNS	00NR_G15_053	0	16WP	G15_053	FROM->TO	GR ISLD-LNX3345.00 - GRAND ISLAND 345KV CKT Z	720	720	0.05539	103.4548	GEN635023 3-WALTER SCOTT UNIT 3
FDNS	00NR_G15_053	0	16WP	G15_053	FROM->TO	GR ISLD-LNX3345.00 - GRAND ISLAND 345KV CKT Z	720	720	0.05567	103.3993	AS KING - EAU CLAIRE 345KV CKT 1
FDNS	00NR_G15_053	0	16WP	G15_053	FROM->TO	GR ISLD-LNX3345.00 - GRAND ISLAND 345KV CKT Z	720	720	0.05552	103.3647	FT RANDAL - SIOUX CITY 230KV CKT 1
FDNS	00NR_G15_053	0	16WP	G15_053	FROM->TO	GR ISLD-LNX3345.00 - GRAND ISLAND 345KV CKT Z	720	720	0.05539	103.363	GEN337910 1-ARKANSAS NUCLEAR ONE UNIT #1
FDNS	00NR_G15_053	0	16WP	G15_053	FROM->TO	GR ISLD-LNX3345.00 - GRAND ISLAND 345KV CKT Z	720	720	0.05539	103.3474	GEN335831 1-RIVERBEND UNIT#1
FDNS	00NR_G15_053	0	16WP	G15_053	FROM->TO	GR ISLD-LNX3345.00 - GRAND ISLAND 345KV CKT Z	720	720	0.05562	103.2531	ARROWHEAD - ARROWHEAD 230 230KV CKT 1
FDNS	00NR_G15_053	0	16WP	G15_053	FROM->TO	GR ISLD-LNX3345.00 - GRAND ISLAND 345KV CKT Z	720	720	0.06305	103.1754	RAUN - SUB 3451 FT CAL 345KV CKT 1
FDNS	00NR_G15_053	0	16WP	G15_053	FROM->TO	GR ISLD-LNX3345.00 - GRAND ISLAND 345KV CKT Z	720	720	0.06305	103.1754	RAUN - SUB 3451 FT CAL 345KV CKT 1
FDNS	00NR_G15_053	0	16WP	G15_053	FROM->TO	GR ISLD-LNX3345.00 - GRAND ISLAND 345KV CKT Z	720	720	0.055	103.1395	HANLON - SIOUX FALLS 230KV CKT 1
FDNS	00NR_G15_053	0	16WP	G15_053	FROM->TO	GR ISLD-LNX3345.00 - GRAND ISLAND 345KV CKT Z	720	720	0.05517	103.1183	GROTON-LNX3 345.00 - LELAND1-LNX3345.00 345KV CKT 1
FDNS	00NR_G15_053	0	16WP	G15_053	FROM->TO	GR ISLD-LNX3345.00 - GRAND ISLAND 345KV CKT Z	720	720	0.05517	103.0751	P12:345:UMZB:# 109 #: LOS GRT IN ND. LOS GRT
FDNS	00NR_G15_053	0	16WP	G15_053	FROM->TO	GR ISLD-LNX3345.00 - GRAND ISLAND 345KV CKT Z	720	720	0.05517	103.0716	GROTON - GROTON-LNX3 345.00 345KV CKT Z
FDNS	00NR_G15_053	0	16WP	G15_053	FROM->TO	GR ISLD-LNX3345.00 - GRAND ISLAND 345KV CKT Z	720	720	0.05517	103.0653	LELAND OLDS - LELAND1-LNX3345.00 345KV CKT Z
FDNS	00NR_G15_053	0	16WP	G15_053	FROM->TO	GR ISLD-LNX3345.00 - GRAND ISLAND 345KV CKT Z	720	720	0.05656	103.041	GERALD GENTLEMAN STATION - KEYSTONE 345KV CKT 1
FDNS	00NR_G15_053	0	16WP	G15_053	FROM->TO	GR ISLD-LNX3345.00 - GRAND ISLAND 345KV CKT Z	720	720	0.05676	103.0298	SIDNEY - STEGALL 345KV CKT 1
FDNS	00NR_G15_053	0	16WP	G15_053	FROM->TO	GR ISLD-LNX3345.00 - GRAND ISLAND 345KV CKT Z	720	720	0.05494	103.0294	FT RANDAL - UTICA JCT 230KV CKT 1
FDNS	00NR_G15_053	0	16WP	G15_053	FROM->TO	GR ISLD-LNX3345.00 - GRAND ISLAND 345KV CKT Z	720	720	0.05539	102.9467	GEN337653 1-WHITE BLUFF UNIT #2
FDNS	00NR_G15_053	0	16WP	G15_053	FROM->TO	GR ISLD-LNX3345.00 - GRAND ISLAND 345KV CKT Z	720	720	0.05539	102.8909	GEN501801 1-DOLET HILLS UNIT1
FDNS	00NR_G15_053	0	16WP	G15_053	FROM->TO	GR ISLD-LNX3345.00 - GRAND ISLAND 345KV CKT Z	720	720	0.05533	102.8905	CARPENTER - HURON 230KV CKT 1
FDNS	00NR_G15_053	0	16WP	G15_053	FROM->TO	GR ISLD-LNX3345.00 - GRAND ISLAND 345KV CKT Z	720	720	0.05539	102.8155	GEN337652 1-WHITE BLUFF UNIT #1
FDNS	00NR_G15_053	0	16WP	G15_053	FROM->TO	GR ISLD-LNX3345.00 - GRAND ISLAND 345KV CKT Z	720	720	0.05538	102.7931	ELLENDALE - OAKES 230KV CKT 1
FDNS	00NR_G15_053	0	16WP	G15_053	FROM->TO	GR ISLD-LNX3345.00 - GRAND ISLAND 345KV CKT Z	720	720	0.05538	102.7931	ELLENDALE - OAKES 230KV CKT 1
FDNS	00NR_G15_053	0	16WP	G15_053	FROM->TO	GR ISLD-LNX3345.00 - GRAND ISLAND 345KV CKT Z	720	720	0.05539	102.7882	GEN641089 2-ENERGY CENTER 2
FDNS	00NR_G15_053	0	16WP	G15_053	FROM->TO	GR ISLD-LNX3345.00 - GRAND ISLAND 345KV CKT Z	720	720	0.05609	102.7778	ADAMS - MITCHLCO3 345.00 345KV CKT 1
FDNS	00NR_G15_053	0	16WP	G15_053	FROM->TO	GR ISLD-LNX3345.00 - GRAND ISLAND 345KV CKT Z	720	720	0.05516	102.7736	G09_001IST 345.00 - GROTON 345KV CKT 1
FDNS	00NR_G15_053	0	16WP	G15_053	FROM->TO	GR ISLD-LNX3345.00 - GRAND ISLAND 345KV CKT Z	720	720	0.05447	102.7711	SPLIT ROCK - WHITE 345KV CKT 1
FDNS	00NR_G15_053	0	16WP	G15_053	FROM->TO	GR ISLD-LNX3345.00 - GRAND ISLAND 345KV CKT Z	720	720	0.05447	102.7711	SPLIT ROCK - WHITE 345KV CKT 1
FDNS	00NR_G15_053	0	16WP	G15_053	FROM->TO	GR ISLD-LNX3345.00 - GRAND ISLAND 345KV CKT Z	720	720	0.05533	102.7704	HURON - WATERTOWN 230KV CKT 2
FDNS	00NR_G15_053	0	16WP	G15_053	FROM->TO	GR ISLD-LNX3345.00 - GRAND ISLAND 345KV CKT Z	720	720	0.05533	102.7704	HURON - WATERTOWN 230KV CKT 2
FDNS	00NR_G15_053	0	16WP	G15_053	FROM->TO	GR ISLD-LNX3345.00 - GRAND ISLAND 345KV CKT Z	720	720	0.06327	102.7558	NUNDRWD - WAYSIDE 230KV CKT 1
FDNS	00NR_G15_053	0	16WP	G15_053	FROM->TO	GR ISLD-LNX3345.00 - GRAND ISLAND 345KV CKT Z	720	720	0.0558	102.752	ARPIN B4 345.00 - EAU CLAIRE 345KV CKT 1
FDNS	00NR_G15_053	0	16WP	G15_053	FROM->TO	GR ISLD-LNX3345.00 - GRAND ISLAND 345KV CKT Z	720	720	0.05539	102.7353	GEN338146 1-INDEPENDENCE UNIT #2
FDNS	00NR_G15_053	0	16WP	G15_053	FROM->TO	GR ISLD-LNX3345.00 - GRAND ISLAND 345KV CKT Z	720	720	0.05537	102.7348	FORMAN - OAKES 230KV CKT 1
FDNS	00NR_G15_053	0	16WP	G15_053	FROM->TO	GR ISLD-LNX3345.00 - GRAND ISLAND 345KV CKT Z	720	720	0.05539	102.7298	GEN338143 1-INDEPENDENCE UNIT #1
FDNS	00NR_G15_053	0	16WP	G15_053	FROM->TO	GR ISLD-LNX3345.00 - GRAND ISLAND 345KV CKT Z	720	720	0.05502	102.7147	PAHOJA - SIOUX FALLS 230KV CKT 1
FDNS	00NR_G15_053	0	16WP	G15_053	FROM->TO	GR ISLD-LNX3345.00 - GRAND ISLAND 345KV CKT Z	720	720	0.05533	102.7144	CARPENTER - WATERTOWN 230KV CKT 1
FDNS	00NR_G15_053	0	16WP	G15_053	FROM->TO	GR ISLD-LNX3345.00 - GRAND ISLAND 345KV CKT Z	720	720	0.05533	102.7144	CARPENTER - WATERTOWN 230KV CKT 1
FDNSLock	00NR_G15_053	0	16WP	G15_053	FROM->TO	GR ISLD-LNX3345.00 - GRAND ISLAND 345KV CKT Z	720	720	0.05539	102.6801	CENTER - CNTSHNT3 345.00 345KV CKT Z1
FDNS	00NR_G15_053	0	16WP	G15_053	FROM->TO	GR ISLD-LNX3345.00 - GRAND ISLAND 345KV CKT Z	720	720	0.05539	102.6785	CNTSHNT3 345.00 - PRAIRIE3 345.00 345KV CKT 1
FDNS	00NR_G15_053	0	16WP	G15_053	FROM->TO	GR ISLD-LNX3345.00 - GRAND ISLAND 345KV CKT Z	720	720	0.05738	102.6641	GRIMES - LEHIGH 345KV CKT 1
FDNS	00NR_G15_053	0	16WP	G15_053	FROM->TO	GR ISLD-LNX3345.00 - GRAND ISLAND 345KV CKT Z	720	720	0.05393	102.6521	FT THOMPSON - WESSINGTON 230KV CKT 1
FDNS	00NR_G15_053	0	16WP	G15_053	FROM->TO	GR ISLD-LNX3345.00 - GRAND ISLAND 345KV CKT Z	720	720	0.05393	102.6521	FT THOMPSON - WESSINGTON 230KV CKT 1
FDNS	00NR_G15_053	0	16WP	G15_053	FROM->TO	GR ISLD-LNX3345.00 - GRAND ISLAND 345KV CKT Z	720	720	0.05589	102.598	RASMUSN - UTICA JCT 230KV CKT 1
FDNS	00NR_G15_053	0	16WP	G15_053	FROM->TO	GR ISLD-LNX3345.00 - GRAND ISLAND 345KV CKT Z	720	720	0.05586	102.5798	ADAMS - PLEASANT VALLEY 345KV CKT 1
FDNS	00NR_G15_053	0	16WP	G15_053	FROM->TO	GR ISLD-LNX3345.00 - GRAND ISLAND 345KV CKT Z	720	720	0.05487	102.5517	P12:115:NPPD:1091:VALENTN7:MISSION7:BTB
FDNS	00NR_G15_053	0	16WP	G15_053	FROM->TO	GR ISLD-LNX3345.00 - GRAND ISLAND 345KV CKT Z	720	720	0.05539	102.5468	GEN501813 1-RODEMACHER UNIT 3
FDNS	00NR_G15_053	0	16WP	G15_053	FROM->TO	GR ISLD-LNX3345.00 - GRAND ISLAND 345KV CKT Z	720	720	0.0516	102.5408	GERALD GENTLEMAN STATION - SWEETWATER 345KV CKT 1
FDNS	00NR_G15_053	0	16WP	G15_053	FROM->TO	GR ISLD-LNX3345.00 - GRAND ISLAND 345KV CKT Z	720	720	0.05487	102.4919	MISSION - ST FRANCIS 115KV CKT 1
FDNS	00NR_G15_053	0	16WP	G15_053	FROM->TO	GR ISLD-LNX3345.00 - GRAND ISLAND 345KV CKT Z	720	720	0.05519	102.4803	FT THOMPSON - HURON 230KV CKT 1
FDNS	00NR_G15_053	0	16WP	G15_053	FROM->TO	GR ISLD-LNX3345.00 - GRAND ISLAND 345KV CKT Z	720	720	0.05519	102.4803	FT THOMPSON - HURON 230KV CKT 1
FDNS	00NR_G15_053	0	16WP	G15_053	FROM->TO	GR ISLD-LNX3345.00 - GRAND ISLAND 345KV CKT Z	720	720	0.05519	102.4803	FT THOMPSON - HURON 230KV CKT 2
FDNS	00NR_G15_053	0	16WP	G15_053	FROM->TO	GR ISLD-LNX3345.00 - GRAND ISLAND 345KV CKT Z	720	720	0.05519	102.4803	FT THOMPSON - HURON 230KV CKT 2
FDNS	00NR_G15_053	0	16WP	G15_053	FROM->TO	GR ISLD-LNX3345.00 - GRAND ISLAND 345KV CKT Z	720	720	0.05589	102.4405	RASMUSN - SIOUX CITY 230KV CKT 1
FDNS	00NR_G15_053	0	16WP	G15_053	FROM->TO	GR ISLD-LNX3345.00 - GRAND ISLAND 345KV CKT Z	720	720	0.05487	102.4188	HARMONY - ST FRANCIS 115KV CKT 1
FDNS	00NR_G15_053	0	16WP	G15_053	FROM->TO	GR ISLD-LNX3345.00 - GRAND ISLAND 345KV CKT Z	720	720	0.05539	102.4183	GEN335206 1-NELSON UNIT 6
FDNSLock	00NR_G15_053	0	16WP	G15_053	FROM->TO	GR ISLD-LNX3345.00 - GRAND ISLAND 345KV CKT Z	720	720	0.05536	102.4114	CHISAGO COUNTY - FORBES 500KV CKT 1
FDNS	00NR_G15_053	0	16WP	G15_053	FROM->TO	GR ISLD-LNX3345.00 - GRAND ISLAND 345KV CKT Z	720	720	0.05502	102.3928	EAGLE 4 230.00 - PAHOJA 230KV CKT 1
FDNS	00NR_G15_053	0	16WP	G15_053	FROM->TO	GR ISLD-LNX3345.00 - GRAND ISLAND 345KV CKT Z	720	720	0.05487	102.3606	HARMONY - VALENTINE 115KV CKT 1
FDNS	00NR_G15_053	0	16WP	G15_053	FROM->TO	GR ISLD-LNX3345.00 - GRAND ISLAND 345KV CKT Z	720	720	0.05539	102.3395	FORMAN - HANKINSON 230KV CKT 1
FDNS	00NR_G15_053	0	16WP	G15_053	FROM->TO	GR ISLD-LNX3345.00 - GRAND ISLAND 345KV CKT Z	720	720	0.0554	102.3304	GLENBORO SOUTH - RUGBY 230KV CKT 1
FDNS	00NR_G15_053	0	16WP	G15_053	FROM->TO	GR ISLD-LNX3345.00 - GRAND ISLAND 345KV CKT Z	720	720	0.0554	102.329	ALEXMRES3 345.00 - BISON 3 345.00 345KV CKT 1
FDNS	00NR_G15_053	0	16WP	G15_053	FROM->TO	GR ISLD-LNX3345.00 - GRAND ISLAND 345KV CKT Z	720	720	0.05536	102.3285	CHISAGO COUNTY - CHISAGO COUNTY 500KV CKT 1

SOLUTION	GROUP	SCENARIO	SEASON	SOURCE	DIRECTION	MONITORED ELEMENT	RATEA (MVA)	RATEB(MVA)	TDF	TC%LOADING (% MVA)	CONTINGENCY
FDNS	00NR_G15_053	0	16WP	G15_053	FROM->TO	GR ISLD-LNX3345.00 - GRAND ISLAND 345KV CKT Z	720	720	0.05399	102.3169	P12:345:UMZW:# 907 #: SC2-SR IN IA. SC2-SR 345 KV LINE
FDNS	00NR_G15_053	0	16WP	G15_053	FROM->TO	GR ISLD-LNX3345.00 - GRAND ISLAND 345KV CKT Z	720	720	0.05584	102.3123	LAKEFIELD 3 - NOBLES 345KV CKT 1
FDNS	00NR_G15_053	0	16WP	G15_053	FROM->TO	GR ISLD-LNX3345.00 - GRAND ISLAND 345KV CKT Z	720	720	0.05539	102.312	GEN501812 1-RODEMACHER UNIT 2
FDNS	00NR_G15_053	0	16WP	G15_053	FROM->TO	GR ISLD-LNX3345.00 - GRAND ISLAND 345KV CKT Z	720	720	0.05539	102.2955	GEN532751 1-WOLF CREEK GENERATING STATION UNIT 1
FDNS	00NR_G15_053	0	16WP	G15_053	FROM->TO	GR ISLD-LNX3345.00 - GRAND ISLAND 345KV CKT Z	720	720	0.05539	102.2936	GEN344897 4-1LAB G4 20.000
FDNS	00NR_G15_053	0	16WP	G15_053	FROM->TO	GR ISLD-LNX3345.00 - GRAND ISLAND 345KV CKT Z	720	720	0.05399	102.2919	SIOUX CITY - SIOUXCY-LNX3345.00 345KV CKT Z
FDNS	00NR_G15_053	0	16WP	G15_053	FROM->TO	GR ISLD-LNX3345.00 - GRAND ISLAND 345KV CKT Z	720	720	0.05539	102.2915	GEN344894 1-1LAB G1 20.000
FDNS	00NR_G15_053	0	16WP	G15_053	FROM->TO	GR ISLD-LNX3345.00 - GRAND ISLAND 345KV CKT Z	720	720	0.05539	102.2913	GEN344896 3-1LAB G3 20.000
FDNS	00NR_G15_053	0	16WP	G15_053	FROM->TO	GR ISLD-LNX3345.00 - GRAND ISLAND 345KV CKT Z	720	720	0.05539	102.2681	GEN345670 1-1RUSH G1 18.000
FDNS	00NR_G15_053	0	16WP	G15_053	FROM->TO	GR ISLD-LNX3345.00 - GRAND ISLAND 345KV CKT Z	720	720	0.05539	102.2679	GEN345671 2-1RUSH G2 18.000
FDNS	00NR_G15_053	0	16WP	G15_053	FROM->TO	GR ISLD-LNX3345.00 - GRAND ISLAND 345KV CKT Z	720	720	0.05537	102.2585	CENTER - COYOTE 345KV CKT 1
FDNS	00NR_G15_053	0	16WP	G15_053	FROM->TO	GR ISLD-LNX3345.00 - GRAND ISLAND 345KV CKT Z	720	720	0.05539	102.2581	GEN344895 2-1LAB G2 20.000
FDNS	00NR_G15_053	0	16WP	G15_053	FROM->TO	GR ISLD-LNX3345.00 - GRAND ISLAND 345KV CKT Z	720	720	0.05252	102.2249	FT THOMPSON (FT2 KU1B) 345/230/13.8KV TRANSFORMER CKT 1
FDNS	00NR_G15_053	0	16WP	G15_053	FROM->TO	GR ISLD-LNX3345.00 - GRAND ISLAND 345KV CKT Z	720	720	0.05253	102.2225	FT THOMPSON (FT2 KU1A) 345/230/13.8KV TRANSFORMER CKT 1
FDNS	00NR_G15_053	0	16WP	G15_053	FROM->TO	GR ISLD-LNX3345.00 - GRAND ISLAND 345KV CKT Z	720	720	0.05399	102.2088	SIOUXCY-LNX3345.00 - SPLIT ROCK 345KV CKT 1
FDNS	00NR_G15_053	0	16WP	G15_053	FROM->TO	GR ISLD-LNX3345.00 - GRAND ISLAND 345KV CKT Z	720	720	0.05399	102.2088	SIOUXCY-LNX3345.00 - SPLIT ROCK 345KV CKT 1
FDNS	00NR_G15_053	0	16WP	G15_053	FROM->TO	GR ISLD-LNX3345.00 - GRAND ISLAND 345KV CKT Z	720	720	0.05539	102.2049	GEN336252 1-NINEMILE POINT UNIT#5
FDNS	00NR_G15_053	0	16WP	G15_053	FROM->TO	GR ISLD-LNX3345.00 - GRAND ISLAND 345KV CKT Z	720	720	0.05258	102.1927	GERALD GENTLEMAN STATION - SWEETWATER 345KV CKT 2
FDNS	00NR_G15_053	0	16WP	G15_053	FROM->TO	GR ISLD-LNX3345.00 - GRAND ISLAND 345KV CKT Z	720	720	0.05065	102.1905	P12:115:NPPD:WAPA6:FTRANDL7:ONEILL 7:BTB
FDNS	00NR_G15_053	0	16WP	G15_053	FROM->TO	GR ISLD-LNX3345.00 - GRAND ISLAND 345KV CKT Z	720	720	0.05065	102.1905	P12:115:UMZB:# 115 #: SE IN NE. FR-SE-ON
FDNS	00NR_G15_053	0	16WP	G15_053	FROM->TO	GR ISLD-LNX3345.00 - GRAND ISLAND 345KV CKT Z	720	720	0.05539	102.1855	GEN659118 1-LARAMIE RIVER UNIT1
FDNS	00NR_G15_053	0	16WP	G15_053	FROM->TO	GR ISLD-LNX3345.00 - GRAND ISLAND 345KV CKT Z	720	720	0.05539	102.1657	GEN336831 1-BAXTER WILSON SES
FDNS	00NR_G15_053	0	16WP	G15_053	FROM->TO	GR ISLD-LNX3345.00 - GRAND ISLAND 345KV CKT Z	720	720	0.05565	102.1626	LARAMIE RIVER - SIDNEY2-LNX3345.00 345KV CKT 1
FDNS	00NR_G15_053	0	16WP	G15_053	FROM->TO	GR ISLD-LNX3345.00 - GRAND ISLAND 345KV CKT Z	720	720	0.05565	102.1527	SIDNEY - SIDNEY2-LNX3345.00 345KV CKT Z
FDNS	00NR_G15_053	0	16WP	G15_053	FROM->TO	GR ISLD-LNX3345.00 - GRAND ISLAND 345KV CKT Z	720	720	0.05539	102.1481	P12:115:UMZW:# 162 #: NEL IN ND. FAULT ON ML-NEL-MX-GA 115 KV
FDNS	00NR_G15_053	0	16WP	G15_053	FROM->TO	GR ISLD-LNX3345.00 - GRAND ISLAND 345KV CKT Z	720	720	0.05065	102.1467	FT RANDAL - SPENCER 115KV CKT 1
FDNS	00NR_G15_053	0	16WP	G15_053	FROM->TO	GR ISLD-LNX3345.00 - GRAND ISLAND 345KV CKT Z	720	720	0.05487	102.1176	AINSWORTH - VALENTINE 115KV CKT 1
FDNS	00NR_G15_053	0	16WP	G15_053	FROM->TO	GR ISLD-LNX3345.00 - GRAND ISLAND 345KV CKT Z	720	720	0.05539	102.1055	GEN337041 1-GERALD ANDRUS
FDNS	00NR_G15_053	0	16WP	G15_053	FROM->TO	GR ISLD-LNX3345.00 - GRAND ISLAND 345KV CKT Z	720	720	0.05573	102.103	GAVINS POINT - HARTINGTON 115KV CKT 1
FDNS	00NR_G15_053	0	16WP	G15_053	FROM->TO	GR ISLD-LNX3345.00 - GRAND ISLAND 345KV CKT Z	720	720	0.05571	102.0696	BYRON - NORTH ROCHESTER 345KV CKT 1
FDNS	00NR_G15_053	0	16WP	G15_053	FROM->TO	GR ISLD-LNX3345.00 - GRAND ISLAND 345KV CKT Z	720	720	0.05539	102.0631	GEN334440 1-SABINE UNIT 4
FDNS	00NR_G15_053	0	16WP	G15_053	FROM->TO	GR ISLD-LNX3345.00 - GRAND ISLAND 345KV CKT Z	720	720	0.05539	102.0367	GEN336251 1-NINEMILE POINT UNIT#4
FDNS	00NR_G15_053	0	16WP	G15_053	FROM->TO	GR ISLD-LNX3345.00 - GRAND ISLAND 345KV CKT Z	720	720	0.05541	102.0354	BLAIR - GRANITE FALLS 230KV CKT 1
FDNS	00NR_G15_053	0	16WP	G15_053	FROM->TO	GR ISLD-LNX3345.00 - GRAND ISLAND 345KV CKT Z	720	720	0.05541	102.0354	BLAIR - GRANITE FALLS 230KV CKT 1
FDNS	00NR_G15_053	0	16WP	G15_053	FROM->TO	GR ISLD-LNX3345.00 - GRAND ISLAND 345KV CKT Z	720	720	0.05597	102.0336	KOSSUTH 3 345.00 - WEBSTER 345KV CKT 1
FDNS	00NR_G15_053	0	16WP	G15_053	FROM->TO	GR ISLD-LNX3345.00 - GRAND ISLAND 345KV CKT Z	720	720	0.05597	102.0285	KOSSUTH 3 345.00 - OBRIEN 3 345.00 345KV CKT 1
FDNSLock	00NR_G15_053	0	16WP	G15_053	FROM->TO	GR ISLD-LNX3345.00 - GRAND ISLAND 345KV CKT Z	720	720	0.06321	102.0212	P13:230-345:NPPD:STEGALL3:KV3A
FDNSLock	00NR_G15_053	0	16WP	G15_053	FROM->TO	GR ISLD-LNX3345.00 - GRAND ISLAND 345KV CKT Z	720	720	0.06321	102.0186	STEGALL (SGQ KV3A) 345/230/13.8KV TRANSFORMER CKT 1
FDNS	00NR_G15_053	0	16WP	G15_053	FROM->TO	GR ISLD-LNX3345.00 - GRAND ISLAND 345KV CKT Z	720	720	0.05539	102.0089	P13:115-230:NPPD:NUCOR-3
FDNS	00NR_G15_053	0	16WP	G15_053	FROM->TO	GR ISLD-LNX3345.00 - GRAND ISLAND 345KV CKT Z	720	720	0.05065	102.0035	ONEILL - SPENCER 115KV CKT 1
FDNS	00NR_G15_053	0	16WP	G15_053	FROM->TO	GR ISLD-LNX3345.00 - GRAND ISLAND 345KV CKT Z	720	720	0.05538	101.9892	GARRISON - JAMES TOWN 230KV CKT 1
FDNS	00NR_G15_053	0	16WP	G15_053	FROM->TO	GR ISLD-LNX3345.00 - GRAND ISLAND 345KV CKT Z	720	720	0.05539	101.9888	P13:230-345:NPPD:NUCOR-1
FDNS	00NR_G15_053	0	16WP	G15_053	FROM->TO	GR ISLD-LNX3345.00 - GRAND ISLAND 345KV CKT Z	720	720	0.05539	101.98	GEN525561 1-TOLK GEN #1 24 KV
FDNS	00NR_G15_053	0	16WP	G15_053	FROM->TO	GR ISLD-LNX3345.00 - GRAND ISLAND 345KV CKT Z	720	720	0.05539	101.9758	P13:230:UMZW:# 2218 #: FP IN MT. LOSS OF TRANSFORMER (AT2).
FDNS	00NR_G15_053	0	16WP	G15_053	FROM->TO	GR ISLD-LNX3345.00 - GRAND ISLAND 345KV CKT Z	720	720	0.05608	101.9652	DENISON - SIOUX CITY 230KV CKT 1
FDNS	00NR_G15_053	0	16WP	G15_053	FROM->TO	GR ISLD-LNX3345.00 - GRAND ISLAND 345KV CKT Z	720	720	0.05543	101.9606	HANKINSON - WAHPETON 230KV CKT 1
FDNS	00NR_G15_053	0	16WP	G15_053	FROM->TO	GR ISLD-LNX3345.00 - GRAND ISLAND 345KV CKT Z	720	720	0.05551	101.9561	NORTH ROCHESTER - PRAIRIE ISLAND 345KV CKT 1
FDNS	00NR_G15_053	0	16WP	G15_053	FROM->TO	GR ISLD-LNX3345.00 - GRAND ISLAND 345KV CKT Z	720	720	0.05564	101.9518	BROOKING COUNTY - LYON COUNTY 345KV CKT 1
FDNS	00NR_G15_053	0	16WP	G15_053	FROM->TO	GR ISLD-LNX3345.00 - GRAND ISLAND 345KV CKT Z	720	720	0.04931	101.9493	P12:115:NPPD:1164:ONEILL 7:JEFFREY9:BTB
FDNS	00NR_G15_053	0	16WP	G15_053	FROM->TO	GR ISLD-LNX3345.00 - GRAND ISLAND 345KV CKT Z	720	720	0.04931	101.9389	CLEARWATER - ONEILL 115KV CKT 1
FDNS	00NR_G15_053	0	16WP	G15_053	FROM->TO	GR ISLD-LNX3345.00 - GRAND ISLAND 345KV CKT Z	720	720	0.05539	101.9335	GEN303007 1-1BC2 U2
FDNS	00NR_G15_053	0	16WP	G15_053	FROM->TO	GR ISLD-LNX3345.00 - GRAND ISLAND 345KV CKT Z	720	720	0.05539	101.9306	GEN303006 1-1BC2 U1
FDNS	00NR_G15_053	0	16WP	G15_053	FROM->TO	GR ISLD-LNX3345.00 - GRAND ISLAND 345KV CKT Z	720	720	0.05539	101.9305	GEN335204 1-NELSON UNIT 4
FDNS	00NR_G15_053	0	16WP	G15_053	FROM->TO	GR ISLD-LNX3345.00 - GRAND ISLAND 345KV CKT Z	720	720	0.05539	101.9303	GEN642067 1-PLATTE
FDNS	00NR_G15_053	0	16WP	G15_053	FROM->TO	GR ISLD-LNX3345.00 - GRAND ISLAND 345KV CKT Z	720	720	0.05539	101.9288	GEN336191 1-LITTLE GYPSY UNIT#3
FDNS	00NR_G15_053	0	16WP	G15_053	FROM->TO	GR ISLD-LNX3345.00 - GRAND ISLAND 345KV CKT Z	720	720	0.05539	101.9121	P13:115-345:NPPD:NUCOR-2
FDNS	00NR_G15_053	0	16WP	G15_053	FROM->TO	GR ISLD-LNX3345.00 - GRAND ISLAND 345KV CKT Z	720	720	0.05539	101.9069	GEN531447 1-HOLCOMB GENERATOR
FDNS	00NR_G15_053	0	16WP	G15_053	FROM->TO	GR ISLD-LNX3345.00 - GRAND ISLAND 345KV CKT Z	720	720	0.04931	101.9067	CLEARWATER - NELIGH 115KV CKT 1
FDNS	00NR_G15_053	0	16WP	G15_053	FROM->TO	GR ISLD-LNX3345.00 - GRAND ISLAND 345KV CKT Z	720	720	0.05478	101.898	MENNO JCT - TRIPP JCT 115KV CKT 1
FDNS	00NR_G15_053	0	16WP	G15_053	FROM->TO	GR ISLD-LNX3345.00 - GRAND ISLAND 345KV CKT Z	720	720	0.05539	101.8969	GEN336801 1-BAXTER WILSON UNIT #1
FDNS	00NR_G15_053	0	16WP	G15_053	FROM->TO	GR ISLD-LNX3345.00 - GRAND ISLAND 345KV CKT Z	720	720	0.05539	101.8924	GEN335614 1-WILLOW GLENN UNIT#4
FDNS	00NR_G15_053	0	16WP	G15_053	FROM->TO	GR ISLD-LNX3345.00 - GRAND ISLAND 345KV CKT Z	720	720	0.05571	101.8877	BYRON - PLEASANT VALLEY 345KV CKT 1
FDNS	00NR_G15_053	0	16WP	G15_053	FROM->TO	GR ISLD-LNX3345.00 - GRAND ISLAND 345KV CKT Z	720	720	0.05539	101.882	GEN336464 1-MICHOUD UNIT #3
FDNS	00NR_G15_053	0	16WP	G15_053	FROM->TO	GR ISLD-LNX3345.00 - GRAND ISLAND 345KV CKT Z	720	720	0.05539	101.8816	GEN303008 1-1BC2 U3
FDNS	00NR_G15_053	0	16WP	G15_053	FROM->TO	GR ISLD-LNX3345.00 - GRAND ISLAND 345KV CKT Z	720	720	0.06282	101.8811	COLUMEAST - SHELL CREEK 345KV CKT 1
FDNS	00NR_G15_053	0	16WP	G15_053	FROM->TO	GR ISLD-LNX3345.00 - GRAND ISLAND 345KV CKT Z	720	720	0.05539	101.8767	GEN336170 1-GULF OXY U4
FDNS	00NR_G15_053	0	16WP	G15_053	FROM->TO	GR ISLD-LNX3345.00 - GRAND ISLAND 345KV CKT Z	720	720	0.05539	101.8667	GEN334441 1-SABINE UNIT 5
FDNS	00NR_G15_053	0	16WP	G15_053	FROM->TO	GR ISLD-LNX3345.00 - GRAND ISLAND 345KV CKT Z	720	720	0.05538	101.8632	BISMARK - JAMES TOWN 230KV CKT 1
FDNS	00NR_G15_053	0	16WP	G15_053	FROM->TO	GR ISLD-LNX3345.00 - GRAND ISLAND 345KV CKT Z	720	720	0.05538	101.8508	BISMARK - WEBER 230KV CKT 1
FDNS	00NR_G15_053	0	16WP	G15_053	FROM->TO	GR ISLD-LNX3345.00 - GRAND ISLAND 345KV CKT Z	720	720	0.05538	101.8489	JAMES TOWN - WEBER 230KV CKT 1
FDNS	00NR_G15_053	0	16WP	G15_053	FROM->TO	GR ISLD-LNX3345.00 - GRAND ISLAND 345KV CKT Z	720	720	0.05539	101.8432	GRAND GULF 500/22.0KV TRANSFORMER CKT 1
FDNS	00NR_G15_053	0	16WP	G15_053	FROM->TO	GR ISLD-LNX3345.00 - GRAND ISLAND 345KV CKT Z	720	720	0.05544	101.841	APPLEDORN 4 230.00 - WATERTOWN 230KV CKT 1
FDNS	00NR_G15_053	0	16WP	G15_053	FROM->TO	GR ISLD-LNX3345.00 - GRAND ISLAND 345KV CKT Z	720	720	0.05544	101.841	APPLEDORN 4 230.00 - WATERTOWN 230KV CKT 1

SOLUTION	GROUP	SCENARIO	SEASON	SOURCE	DIRECTION	MONITORED ELEMENT	RATEA (MVA)	RATEB(MVA)	TDF	TC%LOADING (% MVA)	CONTINGENCY
FDNS	00NR_G15_053	0	16WP	G15_053	FROM->TO	GR ISLD-LNX3345.00 - GRAND ISLAND 345KV CKT Z	720	720	0.05539	101.8402	GEN501811 1-RODEMACHER UNIT 1
FDNS	00NR_G15_053	0	16WP	G15_053	FROM->TO	GR ISLD-LNX3345.00 - GRAND ISLAND 345KV CKT Z	720	720	0.05478	101.8196	MENNO JCT - UTICA 115KV CKT 1
FDNS	00NR_G15_053	0	16WP	G15_053	FROM->TO	GR ISLD-LNX3345.00 - GRAND ISLAND 345KV CKT Z	720	720	0.05573	101.8065	BELDEN - HARTINGTON 115KV CKT 1
FDNS	00NR_G15_053	0	16WP	G15_053	FROM->TO	GR ISLD-LNX3345.00 - GRAND ISLAND 345KV CKT Z	720	720	0.05539	101.8056	PRAIRIE ISLAND 345/20.0KV TRANSFORMER CKT 1
FDNS	00NR_G15_053	0	16WP	G15_053	FROM->TO	GR ISLD-LNX3345.00 - GRAND ISLAND 345KV CKT Z	720	720	0.05539	101.8028	PRAIRIE ISLAND 345/20.0KV TRANSFORMER CKT 2
FDNS	00NR_G15_053	0	16WP	G15_053	FROM->TO	GR ISLD-LNX3345.00 - GRAND ISLAND 345KV CKT Z	720	720	0.05539	101.7917	GEN334433 1-SABINE UNIT 3
FDNS	00NR_G15_053	0	16WP	G15_053	FROM->TO	GR ISLD-LNX3345.00 - GRAND ISLAND 345KV CKT Z	720	720	0.05538	101.7846	FARGO - JAMES TOWN 230KV CKT 1
FDNS	00NR_G15_053	0	16WP	G15_053	FROM->TO	GR ISLD-LNX3345.00 - GRAND ISLAND 345KV CKT Z	720	720	0.05539	101.7838	GEN334071 1-LEWIS CREEK 2
FDNS	00NR_G15_053	0	16WP	G15_053	FROM->TO	GR ISLD-LNX3345.00 - GRAND ISLAND 345KV CKT Z	720	720	0.05539	101.7795	GEN334070 1-LEWIS CREEK 1
FDNS	00NR_G15_053	0	16WP	G15_053	FROM->TO	GR ISLD-LNX3345.00 - GRAND ISLAND 345KV CKT Z	720	720	0.05544	101.7777	APPLEDORN 4 230.00 - GRANITE FALLS 230KV CKT 1
FDNS	00NR_G15_053	0	16WP	G15_053	FROM->TO	GR ISLD-LNX3345.00 - GRAND ISLAND 345KV CKT Z	720	720	0.05544	101.7777	APPLEDORN 4 230.00 - GRANITE FALLS 230KV CKT 1
FDNS	00NR_G15_053	0	16WP	G15_053	FROM->TO	GR ISLD-LNX3345.00 - GRAND ISLAND 345KV CKT Z	720	720	0.05539	101.774	GEN338388 1-1PLUM PT U1 23.000
FDNS	00NR_G15_053	0	16WP	G15_053	FROM->TO	GR ISLD-LNX3345.00 - GRAND ISLAND 345KV CKT Z	720	720	0.05539	101.7691	GEN337766 1-TRACTEBEL UNIT S1
FDNS	00NR_G15_053	0	16WP	G15_053	FROM->TO	GR ISLD-LNX3345.00 - GRAND ISLAND 345KV CKT Z	720	720	0.05538	101.7671	FARGO - JAMES TOWN 230KV CKT 2
FDNS	00NR_G15_053	0	16WP	G15_053	FROM->TO	GR ISLD-LNX3345.00 - GRAND ISLAND 345KV CKT Z	720	720	0.05541	101.7626	FERGSFL4 230.00 - WAHPETON 230KV CKT 1
FDNS	00NR_G15_053	0	16WP	G15_053	FROM->TO	GR ISLD-LNX3345.00 - GRAND ISLAND 345KV CKT Z	720	720	0.05539	101.7623	GEN525562 1-TOLK GEN #2 24 KV
FDNS	00NR_G15_053	0	16WP	G15_053	FROM->TO	GR ISLD-LNX3345.00 - GRAND ISLAND 345KV CKT Z	720	720	0.05478	101.7616	P12:115:UMZZ:# 237 #: MEN IN SD. MENNO JUNCTION IS A TAP (UJ-MEN-TP).
FDNS	00NR_G15_053	0	16WP	G15_053	FROM->TO	GR ISLD-LNX3345.00 - GRAND ISLAND 345KV CKT Z	720	720	0.05538	101.7606	BALTA - RAMSEY 230KV CKT 1
FDNS	00NR_G15_053	0	16WP	G15_053	FROM->TO	GR ISLD-LNX3345.00 - GRAND ISLAND 345KV CKT Z	720	720	0.0554	101.7483	AUDUBON - SHEYNNE 230KV CKT 1
FDNS	00NR_G15_053	0	16WP	G15_053	FROM->TO	GR ISLD-LNX3345.00 - GRAND ISLAND 345KV CKT Z	720	720	0.05552	101.744	ARKANSAS NUCLEAR ONE - FT SMITH 500KV CKT 1
FDNS	00NR_G15_053	0	16WP	G15_053	FROM->TO	GR ISLD-LNX3345.00 - GRAND ISLAND 345KV CKT Z	720	720	0.05552	101.744	ARKANSAS NUCLEAR ONE - FT SMITH 500KV CKT 1
FDNS	00NR_G15_053	0	16WP	G15_053	FROM->TO	GR ISLD-LNX3345.00 - GRAND ISLAND 345KV CKT Z	720	720	0.05558	101.739	OVEXFRMCCOVE
FDNS	00NR_G15_053	0	16WP	G15_053	FROM->TO	GR ISLD-LNX3345.00 - GRAND ISLAND 345KV CKT Z	720	720	0.05539	101.7366	GEN501910 1-ACADIA UNIT ST1
FDNS	00NR_G15_053	0	16WP	G15_053	FROM->TO	GR ISLD-LNX3345.00 - GRAND ISLAND 345KV CKT Z	720	720	0.05539	101.7242	P12:345:GRDA:CHOUTEAU-SPORTSMANACRES
FDNS	00NR_G15_053	0	16WP	G15_053	FROM->TO	GR ISLD-LNX3345.00 - GRAND ISLAND 345KV CKT Z	720	720	0.05538	101.7225	ELM CREEK - MONTICELLO 345KV CKT 1
FDNS	00NR_G15_053	0	16WP	G15_053	FROM->TO	GR ISLD-LNX3345.00 - GRAND ISLAND 345KV CKT Z	720	720	0.05545	101.7207	NORTH LA CROSSE - NORTH ROCHESTER 345KV CKT 1
FDNS	00NR_G15_053	0	16WP	G15_053	FROM->TO	GR ISLD-LNX3345.00 - GRAND ISLAND 345KV CKT Z	720	720	0.05539	101.7176	WHITE BLUFF 500/26.0KV TRANSFORMER CKT 1
FDNS	00NR_G15_053	0	16WP	G15_053	FROM->TO	GR ISLD-LNX3345.00 - GRAND ISLAND 345KV CKT Z	720	720	0.05562	101.7172	ARPIN B3 345.00 - ROCKY RN B8 345.00 345KV CKT 1
FDNS	00NR_G15_053	0	16WP	G15_053	FROM->TO	GR ISLD-LNX3345.00 - GRAND ISLAND 345KV CKT Z	720	720	0.05547	101.7115	GENOA 161 - SENECA 161 161KV CKT 1
FDNS	00NR_G15_053	0	16WP	G15_053	FROM->TO	GR ISLD-LNX3345.00 - GRAND ISLAND 345KV CKT Z	720	720	0.05539	101.7089	GEN562547 1-G14_039_3 0.6900
FDNS	00NR_G15_053	0	16WP	G15_053	FROM->TO	GR ISLD-LNX3345.00 - GRAND ISLAND 345KV CKT Z	720	720	0.05539	101.7079	GEN336222 1-LITTLE GYPSY UNIT#2
FDNS	00NR_G15_053	0	16WP	G15_053	FROM->TO	GR ISLD-LNX3345.00 - GRAND ISLAND 345KV CKT Z	720	720	0.05539	101.7022	P12:161:GRDA:KERR-SALINA-CKT1
FDNS	00NR_G15_053	0	16WP	G15_053	FROM->TO	GR ISLD-LNX3345.00 - GRAND ISLAND 345KV CKT Z	720	720	0.05539	101.7022	P12:161:GRDA:KERR-SALINA-CKT2
FDNS	00NR_G15_053	0	16WP	G15_053	FROM->TO	GR ISLD-LNX3345.00 - GRAND ISLAND 345KV CKT Z	720	720	0.05545	101.6963	NORTH LA CROSSE (10008630_001) 345/161/34.5KV TRANSFORMER CKT 9
FDNS	00NR_G15_053	0	16WP	G15_053	FROM->TO	GR ISLD-LNX3345.00 - GRAND ISLAND 345KV CKT Z	720	720	0.05539	101.6915	GEN337764 1-TRACTEBEL UNIT C1
FDNS	00NR_G15_053	0	16WP	G15_053	FROM->TO	GR ISLD-LNX3345.00 - GRAND ISLAND 345KV CKT Z	720	720	0.05539	101.6915	GEN337765 1-TRACTEBEL UNIT C2
FDNS	00NR_G15_053	0	16WP	G15_053	FROM->TO	GR ISLD-LNX3345.00 - GRAND ISLAND 345KV CKT Z	720	720	0.06213	101.6905	PETERSBRG.N7115.00 - PETERSBURG 115KV CKT Z1
FDNS	00NR_G15_053	0	16WP	G15_053	FROM->TO	GR ISLD-LNX3345.00 - GRAND ISLAND 345KV CKT Z	720	720	0.06213	101.6887	P12:115:NPPD:1168B:ALBION 7:PETERSBRG.N7:BTB
FDNS	00NR_G15_053	0	16WP	G15_053	FROM->TO	GR ISLD-LNX3345.00 - GRAND ISLAND 345KV CKT Z	720	720	0.05551	101.6883	FRANKS - HUBEN 345KV CKT 1
FDNS	00NR_G15_053	0	16WP	G15_053	FROM->TO	GR ISLD-LNX3345.00 - GRAND ISLAND 345KV CKT Z	720	720	0.05539	101.688	GEN562023 1-G11_020_3 0.6900
FDNS	00NR_G15_053	0	16WP	G15_053	FROM->TO	GR ISLD-LNX3345.00 - GRAND ISLAND 345KV CKT Z	720	720	0.05539	101.688	GEN562026 1-G11_019_3 0.6900
FDNS	00NR_G15_053	0	16WP	G15_053	FROM->TO	GR ISLD-LNX3345.00 - GRAND ISLAND 345KV CKT Z	720	720	0.05569	101.6859	P13:115-230:TSGT:SIDNEY-KV1A
FDNS	00NR_G15_053	0	16WP	G15_053	FROM->TO	GR ISLD-LNX3345.00 - GRAND ISLAND 345KV CKT Z	720	720	0.05539	101.6815	GEN336152 1-WATERFORD UNIT#2
FDNS	00NR_G15_053	0	16WP	G15_053	FROM->TO	GR ISLD-LNX3345.00 - GRAND ISLAND 345KV CKT Z	720	720	0.05539	101.6806	GEN336151 1-WATERFORD UNIT#1
FDNS	00NR_G15_053	0	16WP	G15_053	FROM->TO	GR ISLD-LNX3345.00 - GRAND ISLAND 345KV CKT Z	720	720	0.06213	101.6723	ALBION - PETERSBURG 115KV CKT 1
FDNS	00NR_G15_053	0	16WP	G15_053	FROM->TO	GR ISLD-LNX3345.00 - GRAND ISLAND 345KV CKT Z	720	720	0.05539	101.2437	BASE CASE
FDNS	00NR_G15_053	0	16WP	G15_053	FROM->TO	GR ISLD-LNX3345.00 - GRAND ISLAND 345KV CKT Z	720	720	0.05692	100.9837	KELLY - SHELL CREEK 230KV CKT 1
FDNS	00NR_G15_053	0	16WP	G15_053	FROM->TO	GR ISLD-LNX3345.00 - GRAND ISLAND 345KV CKT Z	720	720	0.05692	100.983	SHELL CREEK (SHELLCREEKT1) 345/230/13.8KV TRANSFORMER CKT 1
FDNS	00NR_G15_053	0	16WP	G15_053	FROM->TO	GR ISLD-LNX3345.00 - GRAND ISLAND 345KV CKT Z	720	720	0.05692	100.983	SHELL CREEK (SHELLCREEKT1) 345/230/13.8KV TRANSFORMER CKT 1
FDNS	00NR_G15_053	0	16WP	G15_053	FROM->TO	GR ISLD-LNX3345.00 - GRAND ISLAND 345KV CKT Z	720	720	0.05539	100.9487	GEN645001 1-FORT CALHOUN 1
FDNS	00NR_G15_053	0	16WP	G15_053	FROM->TO	GR ISLD-LNX3345.00 - GRAND ISLAND 345KV CKT Z	720	720	0.05738	100.9025	MINGO - SETAB 345KV CKT 1
FDNS	00NR_G15_053	0	16WP	G15_053	FROM->TO	GR ISLD-LNX3345.00 - GRAND ISLAND 345KV CKT Z	720	720	0.05738	100.9025	MINGO - SETAB 345KV CKT 1
FDNS	00NR_G15_053	0	16WP	G15_053	FROM->TO	GR ISLD-LNX3345.00 - GRAND ISLAND 345KV CKT Z	720	720	0.05567	100.8934	AURORA - GRAND ISLAND 115KV CKT 1
FDNS	00NR_G15_053	0	16WP	G15_053	FROM->TO	GR ISLD-LNX3345.00 - GRAND ISLAND 345KV CKT Z	720	720	0.05557	100.8553	CRETE - FRIEND 115KV CKT 1
FDNS	00NR_G15_053	0	16WP	G15_053	FROM->TO	GR ISLD-LNX3345.00 - GRAND ISLAND 345KV CKT Z	720	720	0.05818	100.8423	MOORE - NW68TH & HOLDREGE 345KV CKT 1
FDNS	00NR_G15_053	0	16WP	G15_053	FROM->TO	GR ISLD-LNX3345.00 - GRAND ISLAND 345KV CKT Z	720	720	0.05818	100.8423	MOORE - NW68TH & HOLDREGE 345KV CKT 1
FDNS	00NR_G15_053	0	16WP	G15_053	FROM->TO	GR ISLD-LNX3345.00 - GRAND ISLAND 345KV CKT Z	720	720	0.05546	100.7982	ANTELOP-LNX3345.00 - BRDLAND-LNX3345.00 345KV CKT 1
FDNS	00NR_G15_053	0	16WP	G15_053	FROM->TO	GR ISLD-LNX3345.00 - GRAND ISLAND 345KV CKT Z	720	720	0.05544	100.7968	G14-074T 345.00 - OKLAUNION 345KV CKT 1
FDNS	00NR_G15_053	0	16WP	G15_053	FROM->TO	GR ISLD-LNX3345.00 - GRAND ISLAND 345KV CKT Z	720	720	0.05949	100.7955	LOUP CITY - NORTH LOUP 115KV CKT 1
FDNS	00NR_G15_053	0	16WP	G15_053	FROM->TO	GR ISLD-LNX3345.00 - GRAND ISLAND 345KV CKT Z	720	720	0.05539	100.7918	CLKREACT5 161.00 - LIME CREEK 5 SPLITS INTO LIME EAST TO A 161KV CKT 1
FDNS	00NR_G15_053	0	16WP	G15_053	FROM->TO	GR ISLD-LNX3345.00 - GRAND ISLAND 345KV CKT Z	720	720	0.05539	100.779	GEN659116 1-SPIRIT MOUND UNIT1
FDNS	00NR_G15_053	0	16WP	G15_053	FROM->TO	GR ISLD-LNX3345.00 - GRAND ISLAND 345KV CKT Z	720	720	0.05539	100.779	GEN659117 2-SPIRIT MOUND UNIT2
FDNS	00NR_G15_053	0	16WP	G15_053	FROM->TO	GR ISLD-LNX3345.00 - GRAND ISLAND 345KV CKT Z	720	720	0.05565	100.7721	GRAND ISLAND (GI KU3A) 345/230/13.8KV TRANSFORMER CKT 3
FDNS	00NR_G15_053	0	16WP	G15_053	FROM->TO	GR ISLD-LNX3345.00 - GRAND ISLAND 345KV CKT Z	720	720	0.05565	100.7721	GRAND ISLAND (GI KU3A) 345/230/13.8KV TRANSFORMER CKT 3
FDNS	00NR_G15_053	0	16WP	G15_053	FROM->TO	GR ISLD-LNX3345.00 - GRAND ISLAND 345KV CKT Z	720	720	0.05539	100.7716	CLKREACT5 161.00 - CRYSTLK5 161.00 161KV CKT 1
FDNSLock	00NR_G15_053	0	16WP	G15_053	FROM->TO	GR ISLD-LNX3345.00 - GRAND ISLAND 345KV CKT Z	720	720	0.05581	100.7709	STEGALL - VICTORY HILL 230KV CKT 1
FDNS	00NR_G15_053	0	16WP	G15_053	FROM->TO	GR ISLD-LNX3345.00 - GRAND ISLAND 345KV CKT Z	720	720	0.05581	100.7686	VICTORY HILL (VICTORYHL T1) 230/115/13.8KV TRANSFORMER CKT 1
FDNS	00NR_G15_053	0	16WP	G15_053	FROM->TO	GR ISLD-LNX3345.00 - GRAND ISLAND 345KV CKT Z	720	720	0.05581	100.7686	VICTORY HILL (VICTORYHL T1) 230/115/13.8KV TRANSFORMER CKT 1
FDNS	00NR_G15_053	0	16WP	G15_053	FROM->TO	GR ISLD-LNX3345.00 - GRAND ISLAND 345KV CKT Z	720	720	0.05539	100.7669	GEN562003 1-G11_027_3 0.6900
FDNS	00NR_G15_053	0	16WP	G15_053	FROM->TO	GR ISLD-LNX3345.00 - GRAND ISLAND 345KV CKT Z	720	720	0.05539	100.7614	GEN620115 1-HRDLKGEN 0.6000
FDNS	00NR_G15_053	0	16WP	G15_053	FROM->TO	GR ISLD-LNX3345.00 - GRAND ISLAND 345KV CKT Z	720	720	0.05565	100.7505	LARAMIE RIVER - STEGALL 345KV CKT 1
FDNS	00NR_G15_053	0	16WP	G15_053	FROM->TO	GR ISLD-LNX3345.00 - GRAND ISLAND 345KV CKT Z	720	720	0.05539	100.7331	GEN672340 1-QUEEN ELIZABETH GENERATOR 1
FDNS	00NR_G15_053	0	16WP	G15_053	FROM->TO	GR ISLD-LNX3345.00 - GRAND ISLAND 345KV CKT Z	720	720	0.05539	100.7329	GEN600013 3-BLACK DOG GEN 3

SOLUTION	GROUP	SCENARIO	SEASON	SOURCE	DIRECTION	MONITORED ELEMENT	RATEA (MVA)	RATEB(MVA)	TDF	TC%LOADING (% MVA)	CONTINGENCY
FDNS	00NR_G15_053	0	16WP	G15_053	FROM->TO	GR ISLD-LNX3345.00 - GRAND ISLAND 345KV CKT Z	720	720	0.05539	100.7273	MITCHLCO3 345.00 345/34.5KV TRANSFORMER CKT 1
FDNS	00NR_G15_053	0	16WP	G15_053	FROM->TO	GR ISLD-LNX3345.00 - GRAND ISLAND 345KV CKT Z	720	720	0.05546	100.7162	ANTELOP-LNX3345.00 - ANTELOPE VALLEY 345KV CKT Z
FDNS	00NR_G15_053	0	16WP	G15_053	FROM->TO	GR ISLD-LNX3345.00 - GRAND ISLAND 345KV CKT Z	720	720	0.05539	100.7146	GEN659018 1-G14_003IS_3 0.6900
FDNS	00NR_G15_053	0	16WP	G15_053	FROM->TO	GR ISLD-LNX3345.00 - GRAND ISLAND 345KV CKT Z	720	720	0.05539	100.708	GEN672384 1-CENTENNIAL WINDFARM
FDNS	00NR_G15_053	0	16WP	G15_053	FROM->TO	GR ISLD-LNX3345.00 - GRAND ISLAND 345KV CKT Z	720	720	0.05539	100.7065	GEN600125 2-FEP ST G 13.800
FDNS	00NR_G15_053	0	16WP	G15_053	FROM->TO	GR ISLD-LNX3345.00 - GRAND ISLAND 345KV CKT Z	720	720	0.05559	100.7041	P12:115:UMZW:# 172 #: WI IN SD.
FDNS	00NR_G15_053	0	16WP	G15_053	FROM->TO	GR ISLD-LNX3345.00 - GRAND ISLAND 345KV CKT Z	720	720	0.05539	100.697	LADISH 115/13.2KV TRANSFORMER CKT 1
FDNS	00NR_G15_053	0	16WP	G15_053	FROM->TO	GR ISLD-LNX3345.00 - GRAND ISLAND 345KV CKT Z	720	720	0.05539	100.6947	GEN620323 2-HOOT LAKE 2 GEN
FDNS	00NR_G15_053	0	16WP	G15_053	FROM->TO	GR ISLD-LNX3345.00 - GRAND ISLAND 345KV CKT Z	720	720	0.0556	100.6913	SMOKYHL6 230.00 - SUMMIT 230KV CKT 1
FDNS	00NR_G15_053	0	16WP	G15_053	FROM->TO	GR ISLD-LNX3345.00 - GRAND ISLAND 345KV CKT Z	720	720	0.05539	100.6836	GEN659354 1-DEERCREK STG18.000
FDNS	00NR_G15_053	0	16WP	G15_053	FROM->TO	GR ISLD-LNX3345.00 - GRAND ISLAND 345KV CKT Z	720	720	0.05539	100.6779	GEN657964 1-ASH2GEN9 0.5750
FDNS	00NR_G15_053	0	16WP	G15_053	FROM->TO	GR ISLD-LNX3345.00 - GRAND ISLAND 345KV CKT Z	720	720	0.05539	100.6664	GEN652546 1-FT RANDAL
FDNS	00NR_G15_053	0	16WP	G15_053	FROM->TO	GR ISLD-LNX3345.00 - GRAND ISLAND 345KV CKT Z	720	720	0.05689	100.6654	AXTELL - PAULINE 345KV CKT 1
FDNS	00NR_G15_053	0	16WP	G15_053	FROM->TO	GR ISLD-LNX3345.00 - GRAND ISLAND 345KV CKT Z	720	720	0.05554	100.6505	FALLOW 3 345.00 - POTTCO 3 345.00 345KV CKT 1
FDNS	00NR_G15_053	0	16WP	G15_053	FROM->TO	GR ISLD-LNX3345.00 - GRAND ISLAND 345KV CKT Z	720	720	0.05539	100.6467	GEN635213 3-NEAL UNIT 3
FDNS	00NR_G15_053	0	16WP	G15_053	FROM->TO	GR ISLD-LNX3345.00 - GRAND ISLAND 345KV CKT Z	720	720	0.05759	100.6447	CENTRAL CITY - GRAND ISLAND 115KV CKT 1
FDNS	00NR_G15_053	0	16WP	G15_053	FROM->TO	GR ISLD-LNX3345.00 - GRAND ISLAND 345KV CKT Z	720	720	0.05539	100.6421	GEN600018 S-LS POWER STEAM
FDNS	00NR_G15_053	0	16WP	G15_053	FROM->TO	GR ISLD-LNX3345.00 - GRAND ISLAND 345KV CKT Z	720	720	0.05539	100.6385	GEN659290 1-EDGECOL
FDNS	00NR_G15_053	0	16WP	G15_053	FROM->TO	GR ISLD-LNX3345.00 - GRAND ISLAND 345KV CKT Z	720	720	0.05567	100.636	7MAYWOOD 345.00 - 7SPENCER 345.00 345KV CKT 1
FDNS	00NR_G15_053	0	16WP	G15_053	FROM->TO	GR ISLD-LNX3345.00 - GRAND ISLAND 345KV CKT Z	720	720	0.05567	100.6353	7MONTGMRY 345.00 - 7SPENCER 345.00 345KV CKT 1
FDNS	00NR_G15_053	0	16WP	G15_053	FROM->TO	GR ISLD-LNX3345.00 - GRAND ISLAND 345KV CKT Z	720	720	0.05539	100.6352	GEN652548 5-FT RANDAL
FDNS	00NR_G15_053	0	16WP	G15_053	FROM->TO	GR ISLD-LNX3345.00 - GRAND ISLAND 345KV CKT Z	720	720	0.05539	100.6352	GEN652549 7-FT RANDAL
FDNS	00NR_G15_053	0	16WP	G15_053	FROM->TO	GR ISLD-LNX3345.00 - GRAND ISLAND 345KV CKT Z	720	720	0.05539	100.6311	GEN652547 3-FT RANDAL
FDNS	00NR_G15_053	0	16WP	G15_053	FROM->TO	GR ISLD-LNX3345.00 - GRAND ISLAND 345KV CKT Z	720	720	0.05539	100.6309	G830_SUB 115.00 - GRE-MCHENRY7115.00 115KV CKT 1
FDNS	00NR_G15_053	0	16WP	G15_053	FROM->TO	GR ISLD-LNX3345.00 - GRAND ISLAND 345KV CKT Z	720	720	0.05539	100.6293	GEN590010 1-ERCOT EQUIVALENCE
FDNS	00NR_G15_053	0	16WP	G15_053	FROM->TO	GR ISLD-LNX3345.00 - GRAND ISLAND 345KV CKT Z	720	720	0.05539	100.6193	G830_SUB 115.00 115/34.5KV TRANSFORMER CKT 1
FDNS	00NR_G15_053	0	16WP	G15_053	FROM->TO	GR ISLD-LNX3345.00 - GRAND ISLAND 345KV CKT Z	720	720	0.05539	100.6145	GEN652410 3-FT PECK
FDNS	00NR_G15_053	0	16WP	G15_053	FROM->TO	GR ISLD-LNX3345.00 - GRAND ISLAND 345KV CKT Z	720	720	0.05563	100.6139	POST ROCK (POSTROCK T1) 345/230/13.8KV TRANSFORMER CKT 1
FDNS	00NR_G15_053	0	16WP	G15_053	FROM->TO	GR ISLD-LNX3345.00 - GRAND ISLAND 345KV CKT Z	720	720	0.05539	100.6051	GEN300003 1-THOMAS HILL UNIT 3
FDNS	00NR_G15_053	0	16WP	G15_053	FROM->TO	GR ISLD-LNX3345.00 - GRAND ISLAND 345KV CKT Z	720	720	0.05539	100.6	GEN590011 2-ERCOT EQUIVALENCE
FDNS	00NR_G15_053	0	16WP	G15_053	FROM->TO	GR ISLD-LNX3345.00 - GRAND ISLAND 345KV CKT Z	720	720	0.05689	100.5891	SUB 3454 - WAGENER 345KV CKT 1
FDNS	00NR_G15_053	0	16WP	G15_053	FROM->TO	GR ISLD-LNX3345.00 - GRAND ISLAND 345KV CKT Z	720	720	0.05689	100.5891	SUB 3454 - WAGENER 345KV CKT 1
FDNS	00NR_G15_053	0	16WP	G15_053	FROM->TO	GR ISLD-LNX3345.00 - GRAND ISLAND 345KV CKT Z	720	720	0.05539	100.5884	EASTDC - ERCOT EQUIVALENCE 345KV CKT 1
FDNS	00NR_G15_053	0	16WP	G15_053	FROM->TO	GR ISLD-LNX3345.00 - GRAND ISLAND 345KV CKT Z	720	720	0.05539	100.5802	GEN672347 1-CORY COGEN GENERATOR 1 GT1
FDNS	00NR_G15_053	0	16WP	G15_053	FROM->TO	GR ISLD-LNX3345.00 - GRAND ISLAND 345KV CKT Z	720	720	0.05539	100.5802	GEN672348 2-CORY COGEN GENERATOR 2 GT2
FDNS	00NR_G15_053	0	16WP	G15_053	FROM->TO	GR ISLD-LNX3345.00 - GRAND ISLAND 345KV CKT Z	720	720	0.05539	100.5753	GEN672350 1-NIPAWIN GENERATOR 1
FDNS	00NR_G15_053	0	16WP	G15_053	FROM->TO	GR ISLD-LNX3345.00 - GRAND ISLAND 345KV CKT Z	720	720	0.05539	100.5753	GEN672351 2-NIPAWIN GENERATOR 2
FDNS	00NR_G15_053	0	16WP	G15_053	FROM->TO	GR ISLD-LNX3345.00 - GRAND ISLAND 345KV CKT Z	720	720	0.05539	100.5753	GEN672352 3-NIPAWIN GENERATOR 3
FDNS	00NR_G15_053	0	16WP	G15_053	FROM->TO	GR ISLD-LNX3345.00 - GRAND ISLAND 345KV CKT Z	720	720	0.05544	100.5594	MADISON COUNTY - RLHILLS3 345.00 345KV CKT 1
FDNS	00NR_G15_053	0	16WP	G15_053	FROM->TO	GR ISLD-LNX3345.00 - GRAND ISLAND 345KV CKT Z	720	720	0.05539	100.5551	GEN657600 1-L1GEN3 9 0.5750
FDNS	00NR_G15_053	0	16WP	G15_053	FROM->TO	GR ISLD-LNX3345.00 - GRAND ISLAND 345KV CKT Z	720	720	0.05539	100.5546	GEN652414 4-FT PECK
FDNS	00NR_G15_053	0	16WP	G15_053	FROM->TO	GR ISLD-LNX3345.00 - GRAND ISLAND 345KV CKT Z	720	720	0.05539	100.5546	GEN652415 5-FT PECK
FDNS	00NR_G15_053	0	16WP	G15_053	FROM->TO	GR ISLD-LNX3345.00 - GRAND ISLAND 345KV CKT Z	720	720	0.05554	100.5394	G11_051T 345.00 - WOODWARD DISTRICT EHV 345KV CKT 1
FDNS	00NR_G15_053	0	16WP	G15_053	FROM->TO	GR ISLD-LNX3345.00 - GRAND ISLAND 345KV CKT Z	720	720	0.06817	100.5392	COLUMWEST - KELLY 230KV CKT 1
FDNS	00NR_G15_053	0	16WP	G15_053	FROM->TO	GR ISLD-LNX3345.00 - GRAND ISLAND 345KV CKT Z	720	720	0.05539	100.5366	GEN600012 2-BLACK DOG GEN 2
FDNS	00NR_G15_053	0	16WP	G15_053	FROM->TO	GR ISLD-LNX3345.00 - GRAND ISLAND 345KV CKT Z	720	720	0.05539	100.5266	GEN660001 2-ABERDEEN SIEBRECHT
FDNS	00NR_G15_053	0	16WP	G15_053	FROM->TO	GR ISLD-LNX3345.00 - GRAND ISLAND 345KV CKT Z	720	720	0.05539	100.5228	GEN652345 W-G07_023IS_2 0.6900
FDNS	00NR_G15_053	0	16WP	G15_053	FROM->TO	GR ISLD-LNX3345.00 - GRAND ISLAND 345KV CKT Z	720	720	0.05539	100.5215	GEN629074 1-ARNOLD LOWSIDE OF GSU XFMR
FDNS	00NR_G15_053	0	16WP	G15_053	FROM->TO	GR ISLD-LNX3345.00 - GRAND ISLAND 345KV CKT Z	720	720	0.05539	100.5099	GEN615032 2-PLEASANT VALLEY
FDNS	00NR_G15_053	0	16WP	G15_053	FROM->TO	GR ISLD-LNX3345.00 - GRAND ISLAND 345KV CKT Z	720	720	0.05539	100.4995	GEN672367 1-MERIDIAN GENERATOR 1 GT1
FDNS	00NR_G15_053	0	16WP	G15_053	FROM->TO	GR ISLD-LNX3345.00 - GRAND ISLAND 345KV CKT Z	720	720	0.05539	100.4995	GEN672368 2-MERIDIAN GENERATOR 2 GT2
FDNS	00NR_G15_053	0	16WP	G15_053	FROM->TO	GR ISLD-LNX3345.00 - GRAND ISLAND 345KV CKT Z	720	720	0.05539	100.4993	GEN672349 3-CORY COGEN GENERATOR 3 ST
FDNS	00NR_G15_053	0	16WP	G15_053	FROM->TO	GR ISLD-LNX3345.00 - GRAND ISLAND 345KV CKT Z	720	720	0.0543	100.4929	HIGHLND 3 345.00 - OBRIEN 3 345.00 345KV CKT 1
FDNS	00NR_G15_053	0	16WP	G15_053	FROM->TO	GR ISLD-LNX3345.00 - GRAND ISLAND 345KV CKT Z	720	720	0.05539	100.4885	GEN672339 16-QE 16G 13.800
FDNS	00NR_G15_053	0	16WP	G15_053	FROM->TO	GR ISLD-LNX3345.00 - GRAND ISLAND 345KV CKT Z	720	720	0.05539	100.4885	GEN672342 3-QUEEN ELIZABETH GENERATOR 3
FDNS	00NR_G15_053	0	16WP	G15_053	FROM->TO	GR ISLD-LNX3345.00 - GRAND ISLAND 345KV CKT Z	720	720	0.05539	100.4843	GEN300007 1-NEW MADRID UNIT 2
FDNS	00NR_G15_053	0	16WP	G15_053	FROM->TO	GR ISLD-LNX3345.00 - GRAND ISLAND 345KV CKT Z	720	720	0.05539	100.4789	GEN300006 1-NEW MADRID UNIT 1
FDNS	00NR_G15_053	0	16WP	G15_053	FROM->TO	GR ISLD-LNX3345.00 - GRAND ISLAND 345KV CKT Z	720	720	0.05539	100.4784	GEN620324 3-HOOT LAKE 3 GEN
FDNS	00NR_G15_053	0	16WP	G15_053	FROM->TO	GR ISLD-LNX3345.00 - GRAND ISLAND 345KV CKT Z	720	720	0.0572	100.4749	GERALD GENTLEMAN STATION - RED WILLOW 345KV CKT 1
FDNS	00NR_G15_053	0	16WP	G15_053	FROM->TO	GR ISLD-LNX3345.00 - GRAND ISLAND 345KV CKT Z	720	720	0.05696	100.4586	103RD & ROKEBY - MOORE 345KV CKT 1
FDNS	00NR_G15_053	0	16WP	G15_053	FROM->TO	GR ISLD-LNX3345.00 - GRAND ISLAND 345KV CKT Z	720	720	0.05696	100.4586	103RD & ROKEBY - MOORE 345KV CKT 1
FDNS	00NR_G15_053	0	16WP	G15_053	FROM->TO	GR ISLD-LNX3345.00 - GRAND ISLAND 345KV CKT Z	720	720	0.05539	100.4584	GEN 11104 1-J262_GEN 0.6000
FDNS	00NR_G15_053	0	16WP	G15_053	FROM->TO	GR ISLD-LNX3345.00 - GRAND ISLAND 345KV CKT Z	720	720	0.05539	100.4584	GEN 11108 1-J263_GEN 0.6000
FDNS	00NR_G15_053	0	16WP	G15_053	FROM->TO	GR ISLD-LNX3345.00 - GRAND ISLAND 345KV CKT Z	720	720	0.05536	100.4414	GLENHAM - L3 HAWDON 230KV CKT 1
FDNS	00NR_G15_053	0	16WP	G15_053	FROM->TO	GR ISLD-LNX3345.00 - GRAND ISLAND 345KV CKT Z	720	720	0.05554	100.4217	FALLOW 3 345.00 - GRIMES 345KV CKT 1
FDNS	00NR_G15_053	0	16WP	G15_053	FROM->TO	GR ISLD-LNX3345.00 - GRAND ISLAND 345KV CKT Z	720	720	0.05539	100.416	GEN600050 1-FEP
FDNS	00NR_G15_053	0	16WP	G15_053	FROM->TO	GR ISLD-LNX3345.00 - GRAND ISLAND 345KV CKT Z	720	720	0.05323	100.4144	COOPER - MOORE 345KV CKT 1
FDNS	00NR_G15_053	0	16WP	G15_053	FROM->TO	GR ISLD-LNX3345.00 - GRAND ISLAND 345KV CKT Z	720	720	0.05757	100.4093	ATCHSNT3 345.00 - COOPER 345KV CKT 1
FDNS	00NR_G15_053	0	16WP	G15_053	FROM->TO	GR ISLD-LNX3345.00 - GRAND ISLAND 345KV CKT Z	720	720	0.05757	100.4093	ATCHSNT3 345.00 - COOPER 345KV CKT 1
FDNS	00NR_G15_053	0	16WP	G15_053	FROM->TO	GR ISLD-LNX3345.00 - GRAND ISLAND 345KV CKT Z	720	720	0.05539	100.4044	GEN659273 2-GROTON SYNC COND
FDNS	00NR_G15_053	0	16WP	G15_053	FROM->TO	GR ISLD-LNX3345.00 - GRAND ISLAND 345KV CKT Z	720	720	0.05539	100.4044	GEN659294 1-WILTONCOL9
FDNS	00NR_G15_053	0	16WP	G15_053	FROM->TO	GR ISLD-LNX3345.00 - GRAND ISLAND 345KV CKT Z	720	720	0.05539	100.3978	CENTER 230/22.0KV TRANSFORMER CKT 1
FDNS	00NR_G15_053	0	16WP	G15_053	FROM->TO	GR ISLD-LNX3345.00 - GRAND ISLAND 345KV CKT Z	720	720	0.05554	100.3909	G11_051T 345.00 - TATONGA7 345.00 345KV CKT 1

SOLUTION	GROUP	SCENARIO	SEASON	SOURCE	DIRECTION	MONITORED ELEMENT	RATEA (MVA)	RATEB(MVA)	TDF	TC%LOADING (% MVA)	CONTINGENCY
FDNS	00NR_G15_053	0	16WP	G15_053	FROM->TO	GR ISLD-LNX3345.00 - GRAND ISLAND 345KV CKT Z	720	720	0.05539	100.3708	GEN672393 2-NBECST2G 13.800
FDNS	00NR_G15_053	0	16WP	G15_053	FROM->TO	GR ISLD-LNX3345.00 - GRAND ISLAND 345KV CKT Z	720	720	0.05539	100.3698	GEN629072 4-LANSING GENERATOR FOR UNITS NO4 EIA CODE 1
FDNS	00NR_G15_053	0	16WP	G15_053	FROM->TO	GR ISLD-LNX3345.00 - GRAND ISLAND 345KV CKT Z	720	720	0.05539	100.3342	GEN600065 7-HIGH BRIDGE
FDNS	00NR_G15_053	0	16WP	G15_053	FROM->TO	GR ISLD-LNX3345.00 - GRAND ISLAND 345KV CKT Z	720	720	0.05539	100.3342	GEN600066 8-HIGH BRIDGE
FDNS	00NR_G15_053	0	16WP	G15_053	FROM->TO	GR ISLD-LNX3345.00 - GRAND ISLAND 345KV CKT Z	720	720	0.05539	100.3252	GEN659192 6-LYNN
FDNS	00NR_G15_053	0	16WP	G15_053	FROM->TO	GR ISLD-LNX3345.00 - GRAND ISLAND 345KV CKT Z	720	720	0.05539	100.3242	GEN659162 4-RED WLCK
FDNS	00NR_G15_053	0	16WP	G15_053	FROM->TO	GR ISLD-LNX3345.00 - GRAND ISLAND 345KV CKT Z	720	720	0.05539	100.3242	GEN659163 5-BLACK WDCK
FDNS	00NR_G15_053	0	16WP	G15_053	FROM->TO	GR ISLD-LNX3345.00 - GRAND ISLAND 345KV CKT Z	720	720	0.05539	100.312	GEN657985 1-ASH1GEN9 0.5750
FDNS	00NR_G15_053	0	16WP	G15_053	FROM->TO	GR ISLD-LNX3345.00 - GRAND ISLAND 345KV CKT Z	720	720	0.05539	100.311	LANSING WEST 161/22.0KV TRANSFORMER CKT 1
FDNS	00NR_G15_053	0	16WP	G15_053	FROM->TO	GR ISLD-LNX3345.00 - GRAND ISLAND 345KV CKT Z	720	720	0.05539	100.2946	GEN652906 1-G09_006IS_3 0.6900
FDNS	00NR_G15_053	0	16WP	G15_053	FROM->TO	GR ISLD-LNX3345.00 - GRAND ISLAND 345KV CKT Z	720	720	0.05539	100.2869	GEN635214 4-NEAL UNIT 4
FDNS	00NR_G15_053	0	16WP	G15_053	FROM->TO	GR ISLD-LNX3345.00 - GRAND ISLAND 345KV CKT Z	720	720	0.05644	100.2866	AXTELL - POST ROCK 345KV CKT 1
FDNS	00NR_G15_053	0	16WP	G15_053	FROM->TO	GR ISLD-LNX3345.00 - GRAND ISLAND 345KV CKT Z	720	720	0.05539	100.2701	GEN 10648 1-G830_GEN 0.6900
FDNS	00NR_G15_053	0	16WP	G15_053	FROM->TO	GR ISLD-LNX3345.00 - GRAND ISLAND 345KV CKT Z	720	720	0.05539	100.2504	GEN600067 9-HIGH BRIDGE
FDNS	00NR_G15_053	0	16WP	G15_053	FROM->TO	GR ISLD-LNX3345.00 - GRAND ISLAND 345KV CKT Z	720	720	0.05539	100.248	GEN600014 4-BLACK DOG GEN 4
FDNS	00NR_G15_053	0	16WP	G15_053	FROM->TO	GR ISLD-LNX3345.00 - GRAND ISLAND 345KV CKT Z	720	720	0.05539	100.2477	GEN600071 10-RIVER SIDE
FDNS	00NR_G15_053	0	16WP	G15_053	FROM->TO	GR ISLD-LNX3345.00 - GRAND ISLAND 345KV CKT Z	720	720	0.05539	100.2476	GEN600070 9-RIVER SIDE
FDNS	00NR_G15_053	0	16WP	G15_053	FROM->TO	GR ISLD-LNX3345.00 - GRAND ISLAND 345KV CKT Z	720	720	0.05539	100.2442	GEN600011 5-BLACK DOG GEN 1
FDNS	00NR_G15_053	0	16WP	G15_053	FROM->TO	GR ISLD-LNX3345.00 - GRAND ISLAND 345KV CKT Z	720	720	0.05539	100.234	GEN600007 7-RIVERSIDE GEN 7
FDNS	00NR_G15_053	0	16WP	G15_053	FROM->TO	GR ISLD-LNX3345.00 - GRAND ISLAND 345KV CKT Z	720	720	0.05539	100.2124	GEN615015 1-GRE-SPRITWDG13.200
FDNS	00NR_G15_053	0	16WP	G15_053	FROM->TO	GR ISLD-LNX3345.00 - GRAND ISLAND 345KV CKT Z	720	720	0.05757	100.1926	ATCHSNT3 345.00 - BOONEVILLE 345KV CKT 1
FDNS	00NR_G15_053	0	16WP	G15_053	FROM->TO	GR ISLD-LNX3345.00 - GRAND ISLAND 345KV CKT Z	720	720	0.05539	100.185	GEN660016 1-B_H WIND 0.7000
FDNS	00NR_G15_053	0	16WP	G15_053	FROM->TO	GR ISLD-LNX3345.00 - GRAND ISLAND 345KV CKT Z	720	720	0.05539	100.1818	GEN600017 C-LS POWER CT
FDNS	00NR_G15_053	0	16WP	G15_053	FROM->TO	GR ISLD-LNX3345.00 - GRAND ISLAND 345KV CKT Z	720	720	0.05539	100.181	GEN615052 1-CAMBRIDGE GENERATING STATION
FDNS	00NR_G15_053	0	16WP	G15_053	FROM->TO	GR ISLD-LNX3345.00 - GRAND ISLAND 345KV CKT Z	720	720	0.05539	100.181	GEN652907 1-G09_007IS_3 0.6900
FDNS	00NR_G15_053	0	16WP	G15_053	FROM->TO	GR ISLD-LNX3345.00 - GRAND ISLAND 345KV CKT Z	720	720	0.05539	100.1399	GEN681522 3-GENOA 3
FDNS	00NR_G15_053	0	16WP	G15_053	FROM->TO	GR ISLD-LNX3345.00 - GRAND ISLAND 345KV CKT Z	720	720	0.05554	100.1259	MATHWSN7 345.00 - TATONGA7 345.00 345KV CKT 1
FDNS	00NR_G15_053	0	16WP	G15_053	FROM->TO	GR ISLD-LNX3345.00 - GRAND ISLAND 345KV CKT Z	720	720	0.05539	100.1104	GEN662101 1-WESSINGTON190.5750
FDNS	00NR_G15_053	0	16WP	G15_053	FROM->TO	GR ISLD-LNX3345.00 - GRAND ISLAND 345KV CKT Z	720	720	0.05885	100	MINGO - RED WILLOW 345KV CKT 1
FDNS	00NR_G15_053	0	16WP	G15_053	FROM->TO	GR ISLD-LNX3345.00 - GRAND ISLAND 345KV CKT Z	720	720	0.05885	100	MINGO - RED WILLOW 345KV CKT 1
FDNS	00NR_G15_053	0	16WP	G15_053	FROM->TO	GR ISLD-LNX3345.00 - GRAND ISLAND 345KV CKT Z	720	720	0.05539	100	GEN659353 1-DEERCREK CTG18.000
FDNS	00NR_G15_053	0	16WP	G15_053	FROM->TO	GR ISLD-LNX3345.00 - GRAND ISLAND 345KV CKT Z	720	720	0.05539	100	GEN910006 1-G12_012IS_3 0.6900
FDNS	00NR_G15_053	0	16WP	G15_053	FROM->TO	GR ISLD-LNX3345.00 - GRAND ISLAND 345KV CKT Z	720	720	0.05539	99.9	GEN615021 1-GRE-ER 14G 16.000
FDNS	00NR_G15_053	0	16WP	G15_053	FROM->TO	GR ISLD-LNX3345.00 - GRAND ISLAND 345KV CKT Z	720	720	0.05539	99.9	GEN672303 3-BOUNDARY DAM GENERATOR 3
FDNS	00NR_G15_053	0	16WP	G15_053	FROM->TO	GR ISLD-LNX3345.00 - GRAND ISLAND 345KV CKT Z	720	720	0.05539	99.9	GEN672304 4-BOUNDARY DAM GENERATOR 4
FDNS	00NR_G15_053	0	16WP	G15_053	FROM->TO	GR ISLD-LNX3345.00 - GRAND ISLAND 345KV CKT Z	720	720	0.05539	99.9	GEN672305 5-BOUNDARY DAM GENERATOR 5
FDNS	00NR_G15_053	0	16WP	G15_053	FROM->TO	GR ISLD-LNX3345.00 - GRAND ISLAND 345KV CKT Z	720	720	0.05904	99.7	MOORE - PAULINE 345KV CKT 1
FDNS	00NR_G15_053	0	16WP	G15_053	FROM->TO	GR ISLD-LNX3345.00 - GRAND ISLAND 345KV CKT Z	720	720	0.05539	99.7	BISONMP4 230.00 - SQUARE BUTTE 230KV CKT 1
FDNS	00NR_G15_053	0	16WP	G15_053	FROM->TO	GR ISLD-LNX3345.00 - GRAND ISLAND 345KV CKT Z	720	720	0.05539	99.6	GEN652457 1-GARRISON
FDNS	00NR_G15_053	0	16WP	G15_053	FROM->TO	GR ISLD-LNX3345.00 - GRAND ISLAND 345KV CKT Z	720	720	0.05539	99.6	GEN652458 2-GARRISON
FDNS	00NR_G15_053	0	16WP	G15_053	FROM->TO	GR ISLD-LNX3345.00 - GRAND ISLAND 345KV CKT Z	720	720	0.05539	99.6	GEN652459 3-GARRISON
FDNS	00NR_G15_053	0	16WP	G15_053	FROM->TO	GR ISLD-LNX3345.00 - GRAND ISLAND 345KV CKT Z	720	720	0.05539	99.6	GEN652460 4-GARRISON
FDNS	00NR_G15_053	0	16WP	G15_053	FROM->TO	GR ISLD-LNX3345.00 - GRAND ISLAND 345KV CKT Z	720	720	0.05539	99.6	GEN652461 5-GARRISON
FDNS	00NR_G15_053	0	16WP	G15_053	FROM->TO	GR ISLD-LNX3345.00 - GRAND ISLAND 345KV CKT Z	720	720	0.05539	99.6	GEN652542 1-BIG BEND
FDNS	00NR_G15_053	0	16WP	G15_053	FROM->TO	GR ISLD-LNX3345.00 - GRAND ISLAND 345KV CKT Z	720	720	0.05539	99.6	GEN672392 1-NBECGT1G 18.000
FDNS	00NR_G15_053	0	16WP	G15_053	FROM->TO	GR ISLD-LNX3345.00 - GRAND ISLAND 345KV CKT Z	720	720	0.05539	99.5	COYOTE 345/24.0KV TRANSFORMER CKT 1
FDNS	00NR_G15_053	0	16WP	G15_053	FROM->TO	GR ISLD-LNX3345.00 - GRAND ISLAND 345KV CKT Z	720	720	0.05539	99.5	GEN659010 4-G07_027IS_2 0.6900
FDNS	00NR_G15_053	0	16WP	G15_053	FROM->TO	GR ISLD-LNX3345.00 - GRAND ISLAND 345KV CKT Z	720	720	0.05539	99.5	GEN659194 1-NDPRAIRWND1W0.6900
FDNS	00NR_G15_053	0	16WP	G15_053	FROM->TO	GR ISLD-LNX3345.00 - GRAND ISLAND 345KV CKT Z	720	720	0.05539	99.5	SQUARE BUTTE - YNG2 4 230.00 230KV CKT 1
FDNS	00NR_G15_053	0	16WP	G15_053	FROM->TO	GR ISLD-LNX3345.00 - GRAND ISLAND 345KV CKT Z	720	720	0.05539	99.5	YNG2 4 230.00 230/20.0KV TRANSFORMER CKT 1
FDNS	00NR_G15_053	0	17SP	G15_053	TO->FROM	GR ISLD-LNX3345.00 - HOLT.CO3 345.00 345KV CKT 1	720	720	0.05758	136.9058	KELLY - MEADOWGROVE4230.00 230KV CKT 1
FDNS	00NR_G15_053	0	17SP	G15_053	TO->FROM	GR ISLD-LNX3345.00 - HOLT.CO3 345.00 345KV CKT 1	720	720	0.05529	136.7209	P12:230:UMZB:# 116 #: ST IN SD. WSG-ST-VH
FDNS	00NR_G15_053	0	17SP	G15_053	TO->FROM	GR ISLD-LNX3345.00 - HOLT.CO3 345.00 345KV CKT 1	720	720	0.05531	135.6796	STORLA - WESSINGTON 230KV CKT 1
FDNS	00NR_G15_053	0	17SP	G15_053	TO->FROM	GR ISLD-LNX3345.00 - HOLT.CO3 345.00 345KV CKT 1	720	720	0.05614	134.7175	WATERTN-LNX3345.00 - WHITE 345KV CKT 1
FDNS	00NR_G15_053	0	17SP	G15_053	TO->FROM	GR ISLD-LNX3345.00 - HOLT.CO3 345.00 345KV CKT 1	720	720	0.05657	134.5939	G09_001IST 345.00 - WATERTOWN 345KV CKT 1
FDNS	00NR_G15_053	0	17SP	G15_053	TO->FROM	GR ISLD-LNX3345.00 - HOLT.CO3 345.00 345KV CKT 1	720	720	0.05614	134.4685	WATERTN-LNX3345.00 - WATERTOWN 345KV CKT Z
FDNS	00NR_G15_053	0	17SP	G15_053	TO->FROM	GR ISLD-LNX3345.00 - HOLT.CO3 345.00 345KV CKT 1	720	720	0.05614	134.4493	P12:345:UMZW:# 1747 #: WT2 IN SD. WT2-WHT LINE FAULT
FDNS	00NR_G15_053	0	17SP	G15_053	TO->FROM	GR ISLD-LNX3345.00 - HOLT.CO3 345.00 345KV CKT 1	720	720	0.05586	134.3522	HANLON - STORLA 230KV CKT 1
FDNS	00NR_G15_053	0	17SP	G15_053	TO->FROM	GR ISLD-LNX3345.00 - HOLT.CO3 345.00 345KV CKT 1	720	720	0.05521	134.0124	FT THOMPSON - LETCHER 230KV CKT 1
FDNS	00NR_G15_053	0	17SP	G15_053	TO->FROM	GR ISLD-LNX3345.00 - HOLT.CO3 345.00 345KV CKT 1	720	720	0.05521	134.0124	FT THOMPSON - LETCHER 230KV CKT 1
FDNS	00NR_G15_053	0	17SP	G15_053	TO->FROM	GR ISLD-LNX3345.00 - HOLT.CO3 345.00 345KV CKT 1	720	720	0.05677	132.9548	BUFFALO - JAMESTOWN 345KV CKT 1
FDNS	00NR_G15_053	0	17SP	G15_053	TO->FROM	GR ISLD-LNX3345.00 - HOLT.CO3 345.00 345KV CKT 1	720	720	0.05355	132.7289	FT RANDAL - FT THOMPSON 230KV CKT 1
FDNS	00NR_G15_053	0	17SP	G15_053	TO->FROM	GR ISLD-LNX3345.00 - HOLT.CO3 345.00 345KV CKT 1	720	720	0.05355	132.7289	FT RANDAL - FT THOMPSON 230KV CKT 1
FDNS	00NR_G15_053	0	17SP	G15_053	TO->FROM	GR ISLD-LNX3345.00 - HOLT.CO3 345.00 345KV CKT 1	720	720	0.05363	132.6786	FT RANDAL - G12_009IST 230.00 230KV CKT 1
FDNS	00NR_G15_053	0	17SP	G15_053	TO->FROM	GR ISLD-LNX3345.00 - HOLT.CO3 345.00 345KV CKT 1	720	720	0.05363	132.5745	FT THOMPSON - LAKE PLATT 230KV CKT 1
FDNS	00NR_G15_053	0	17SP	G15_053	TO->FROM	GR ISLD-LNX3345.00 - HOLT.CO3 345.00 345KV CKT 1	720	720	0.05363	132.5745	FT THOMPSON - LAKE PLATT 230KV CKT 1
FDNS	00NR_G15_053	0	17SP	G15_053	TO->FROM	GR ISLD-LNX3345.00 - HOLT.CO3 345.00 345KV CKT 1	720	720	0.06492	132.1815	NUNDRWD - WAYSIDE 230KV CKT 1
FDNS	00NR_G15_053	0	17SP	G15_053	TO->FROM	GR ISLD-LNX3345.00 - HOLT.CO3 345.00 345KV CKT 1	720	720	0.05363	132.1809	G12_009IST 230.00 - LAKE PLATT 230KV CKT 1
FDNSLock	00NR_G15_053	0	17SP	G15_053	TO->FROM	GR ISLD-LNX3345.00 - HOLT.CO3 345.00 345KV CKT 1	720	720	0.05678	132.0373	CHISAGO COUNTY - CHISAGO COUNTY 500KV CKT 1
FDNS	00NR_G15_053	0	17SP	G15_053	TO->FROM	GR ISLD-LNX3345.00 - HOLT.CO3 345.00 345KV CKT 1	720	720	0.05678	132.0058	CHISAGO COUNTY - FORBES 500KV CKT 1
FDNS	00NR_G15_053	0	17SP	G15_053	TO->FROM	GR ISLD-LNX3345.00 - HOLT.CO3 345.00 345KV CKT 1	720	720	0.05681	132.0025	GEN336821 1-GRAND GULF UNIT
FDNS	00NR_G15_053	0	17SP	G15_053	TO->FROM	GR ISLD-LNX3345.00 - HOLT.CO3 345.00 345KV CKT 1	720	720	0.05758	131.8367	FT RANDAL - MEADOWGROVE4230.00 230KV CKT 1
FDNS	00NR_G15_053	0	17SP	G15_053	TO->FROM	GR ISLD-LNX3345.00 - HOLT.CO3 345.00 345KV CKT 1	720	720	0.05677	131.7827	CENTER - JAMESTOWN 345KV CKT 1

SOLUTION	GROUP	SCENARIO	SEASON	SOURCE	DIRECTION	MONITORED ELEMENT	RATEA (MVA)	RATEB(MVA)	TDF	TC%LOADING (% MVA)	CONTINGENCY
FDNS	00NR_G15_053	0	17SP	G15_053	TO->FROM	GR ISLD-LNX3345.00 - HOLT.CO3 345.00 345KV CKT 1	720	720	0.05681	131.5011	GEN640010 1-GERALD GENTLEMAN STATION UNIT 1
FDNS	00NR_G15_053	0	17SP	G15_053	TO->FROM	GR ISLD-LNX3345.00 - HOLT.CO3 345.00 345KV CKT 1	720	720	0.05681	131.4679	GEN344225 1-1CAL G1 25.000
FDNS	00NR_G15_053	0	17SP	G15_053	TO->FROM	GR ISLD-LNX3345.00 - HOLT.CO3 345.00 345KV CKT 1	720	720	0.05657	131.4448	G09_001IST 345.00 - GROTON 345KV CKT 1
FDNS	00NR_G15_053	0	17SP	G15_053	TO->FROM	GR ISLD-LNX3345.00 - HOLT.CO3 345.00 345KV CKT 1	720	720	0.05609	131.4263	LETCHER - SIOUX FALLS 230KV CKT 1
FDNS	00NR_G15_053	0	17SP	G15_053	TO->FROM	GR ISLD-LNX3345.00 - HOLT.CO3 345.00 345KV CKT 1	720	720	0.05854	131.3664	KEYSTONE - SIDNEY1-LNX3345.00 345KV CKT 1
FDNS	00NR_G15_053	0	17SP	G15_053	TO->FROM	GR ISLD-LNX3345.00 - HOLT.CO3 345.00 345KV CKT 1	720	720	0.05679	131.3607	BISON 3 345.00 - BUFFALO 345KV CKT 1
FDNS	00NR_G15_053	0	17SP	G15_053	TO->FROM	GR ISLD-LNX3345.00 - HOLT.CO3 345.00 345KV CKT 1	720	720	0.05681	131.3249	GEN635024 4-WALTER SCOTT UNIT 4
FDNS	00NR_G15_053	0	17SP	G15_053	TO->FROM	GR ISLD-LNX3345.00 - HOLT.CO3 345.00 345KV CKT 1	720	720	0.05854	131.3047	SIDNEY - SIDNEY1-LNX3345.00 345KV CKT Z
FDNS	00NR_G15_053	0	17SP	G15_053	TO->FROM	GR ISLD-LNX3345.00 - HOLT.CO3 345.00 345KV CKT 1	720	720	0.05681	131.2046	GEN337911 1-ARKANSAS NUCLEAR ONE UNIT #2
FDNS	00NR_G15_053	0	17SP	G15_053	TO->FROM	GR ISLD-LNX3345.00 - HOLT.CO3 345.00 345KV CKT 1	720	720	0.05681	131.1431	GEN336153 1-WATERFORD UNIT#3
FDNS	00NR_G15_053	0	17SP	G15_053	TO->FROM	GR ISLD-LNX3345.00 - HOLT.CO3 345.00 345KV CKT 1	720	720	0.05681	131.0626	GEN640011 2-GERALD GENTLEMAN STATION UNIT 2
FDNS	00NR_G15_053	0	17SP	G15_053	TO->FROM	GR ISLD-LNX3345.00 - HOLT.CO3 345.00 345KV CKT 1	720	720	0.05589	130.9371	SPLIT ROCK - WHITE 345KV CKT 1
FDNS	00NR_G15_053	0	17SP	G15_053	TO->FROM	GR ISLD-LNX3345.00 - HOLT.CO3 345.00 345KV CKT 1	720	720	0.05589	130.9371	SPLIT ROCK - WHITE 345KV CKT 1
FDNS	00NR_G15_053	0	17SP	G15_053	TO->FROM	GR ISLD-LNX3345.00 - HOLT.CO3 345.00 345KV CKT 1	720	720	0.05681	130.7951	GEN635023 3-WALTER SCOTT UNIT 3
FDNS	00NR_G15_053	0	17SP	G15_053	TO->FROM	GR ISLD-LNX3345.00 - HOLT.CO3 345.00 345KV CKT 1	720	720	0.05659	130.7425	GROTON-LNX3 345.00 - LELAND1-LNX3345.00 345KV CKT 1
FDNS	00NR_G15_053	0	17SP	G15_053	TO->FROM	GR ISLD-LNX3345.00 - HOLT.CO3 345.00 345KV CKT 1	720	720	0.05681	130.7087	GEN335831 1-RIVERBEND UNIT#1
FDNS	00NR_G15_053	0	17SP	G15_053	TO->FROM	GR ISLD-LNX3345.00 - HOLT.CO3 345.00 345KV CKT 1	720	720	0.05681	130.6128	GEN337910 1-ARKANSAS NUCLEAR ONE UNIT #1
FDNS	00NR_G15_053	0	17SP	G15_053	TO->FROM	GR ISLD-LNX3345.00 - HOLT.CO3 345.00 345KV CKT 1	720	720	0.05659	130.6004	P12:345:UMZB:# 109 #: LOS GRT IN ND. LOS GRT
FDNS	00NR_G15_053	0	17SP	G15_053	TO->FROM	GR ISLD-LNX3345.00 - HOLT.CO3 345.00 345KV CKT 1	720	720	0.05659	130.5717	GROTON - GROTON-LNX3 345.00 345KV CKT Z
FDNS	00NR_G15_053	0	17SP	G15_053	TO->FROM	GR ISLD-LNX3345.00 - HOLT.CO3 345.00 345KV CKT 1	720	720	0.05659	130.4982	LELAND OLDS - LELAND1-LNX3345.00 345KV CKT Z
FDNS	00NR_G15_053	0	17SP	G15_053	TO->FROM	GR ISLD-LNX3345.00 - HOLT.CO3 345.00 345KV CKT 1	720	720	0.0645	130.4586	RAUN - SUB 3451 FT CAL 345KV CKT 1
FDNS	00NR_G15_053	0	17SP	G15_053	TO->FROM	GR ISLD-LNX3345.00 - HOLT.CO3 345.00 345KV CKT 1	720	720	0.0645	130.4586	RAUN - SUB 3451 FT CAL 345KV CKT 1
FDNS	00NR_G15_053	0	17SP	G15_053	TO->FROM	GR ISLD-LNX3345.00 - HOLT.CO3 345.00 345KV CKT 1	720	720	0.05692	130.391	FT RANDAL - SIOUX CITY 230KV CKT 1
FDNS	00NR_G15_053	0	17SP	G15_053	TO->FROM	GR ISLD-LNX3345.00 - HOLT.CO3 345.00 345KV CKT 1	720	720	0.05704	130.2666	ARROWHEAD - ARROWHEAD 230 230KV CKT 1
FDNS	00NR_G15_053	0	17SP	G15_053	TO->FROM	GR ISLD-LNX3345.00 - HOLT.CO3 345.00 345KV CKT 1	720	720	0.0564	130.2108	HANLON - SIOUX FALLS 230KV CKT 1
FDNS	00NR_G15_053	0	17SP	G15_053	TO->FROM	GR ISLD-LNX3345.00 - HOLT.CO3 345.00 345KV CKT 1	720	720	0.0429	130.1451	GRAND ISLAND - SWEETWATER 345KV CKT 1
FDNS	00NR_G15_053	0	17SP	G15_053	TO->FROM	GR ISLD-LNX3345.00 - HOLT.CO3 345.00 345KV CKT 1	720	720	0.05555	130.0144	SIOUXCY-LNX3345.00 - SPLIT ROCK 345KV CKT 1
FDNS	00NR_G15_053	0	17SP	G15_053	TO->FROM	GR ISLD-LNX3345.00 - HOLT.CO3 345.00 345KV CKT 1	720	720	0.05555	130.0144	SIOUXCY-LNX3345.00 - SPLIT ROCK 345KV CKT 1
FDNS	00NR_G15_053	0	17SP	G15_053	TO->FROM	GR ISLD-LNX3345.00 - HOLT.CO3 345.00 345KV CKT 1	720	720	0.05681	130	GEN337653 1-WHITE BLUFF UNIT #2
FDNS	00NR_G15_053	0	17SP	G15_053	TO->FROM	GR ISLD-LNX3345.00 - HOLT.CO3 345.00 345KV CKT 1	720	720	0.05681	129.9885	GEN337652 1-WHITE BLUFF UNIT #1
FDNS	00NR_G15_053	0	17SP	G15_053	TO->FROM	GR ISLD-LNX3345.00 - HOLT.CO3 345.00 345KV CKT 1	720	720	0.0563	129.9641	P12:115:NPPD:1091:VALENTN7:MISSION7:BTB
FDNS	00NR_G15_053	0	17SP	G15_053	TO->FROM	GR ISLD-LNX3345.00 - HOLT.CO3 345.00 345KV CKT 1	720	720	0.05555	129.9589	P12:345:UMZW:# 907 #: SC2-SR IN IA. SC2-SR 345 KV LINE
FDNS	00NR_G15_053	0	17SP	G15_053	TO->FROM	GR ISLD-LNX3345.00 - HOLT.CO3 345.00 345KV CKT 1	720	720	0.05555	129.9209	SIOUX CITY - SIOUXCY-LNX3345.00 345KV CKT Z
FDNS	00NR_G15_053	0	17SP	G15_053	TO->FROM	GR ISLD-LNX3345.00 - HOLT.CO3 345.00 345KV CKT 1	720	720	0.0563	129.9178	MISSION - ST FRANCIS 115KV CKT 1
FDNS	00NR_G15_053	0	17SP	G15_053	TO->FROM	GR ISLD-LNX3345.00 - HOLT.CO3 345.00 345KV CKT 1	720	720	0.05681	129.9153	GEN338146 1-INDEPENDENCE UNIT #2
FDNS	00NR_G15_053	0	17SP	G15_053	TO->FROM	GR ISLD-LNX3345.00 - HOLT.CO3 345.00 345KV CKT 1	720	720	0.05748	129.9109	HAZLETON - MITCHLCO3 345.00 345KV CKT 1
FDNS	00NR_G15_053	0	17SP	G15_053	TO->FROM	GR ISLD-LNX3345.00 - HOLT.CO3 345.00 345KV CKT 1	720	720	0.05681	129.9105	GEN338143 1-INDEPENDENCE UNIT #1
FDNS	00NR_G15_053	0	17SP	G15_053	TO->FROM	GR ISLD-LNX3345.00 - HOLT.CO3 345.00 345KV CKT 1	720	720	0.05827	129.891	SIDNEY - STEGALL 345KV CKT 1
FDNS	00NR_G15_053	0	17SP	G15_053	TO->FROM	GR ISLD-LNX3345.00 - HOLT.CO3 345.00 345KV CKT 1	720	720	0.05679	129.8776	ELLENDALE - OAKES 230KV CKT 1
FDNS	00NR_G15_053	0	17SP	G15_053	TO->FROM	GR ISLD-LNX3345.00 - HOLT.CO3 345.00 345KV CKT 1	720	720	0.05679	129.8776	ELLENDALE - OAKES 230KV CKT 1
FDNS	00NR_G15_053	0	17SP	G15_053	TO->FROM	GR ISLD-LNX3345.00 - HOLT.CO3 345.00 345KV CKT 1	720	720	0.05681	129.852	GEN501801 1-DOLET HILLS UNIT1
FDNS	00NR_G15_053	0	17SP	G15_053	TO->FROM	GR ISLD-LNX3345.00 - HOLT.CO3 345.00 345KV CKT 1	720	720	0.0563	129.824	HARMONY - ST FRANCIS 115KV CKT 1
FDNS	00NR_G15_053	0	17SP	G15_053	TO->FROM	GR ISLD-LNX3345.00 - HOLT.CO3 345.00 345KV CKT 1	720	720	0.05635	129.8009	FT RANDAL - UTICA JCT 230KV CKT 1
FDNS	00NR_G15_053	0	17SP	G15_053	TO->FROM	GR ISLD-LNX3345.00 - HOLT.CO3 345.00 345KV CKT 1	720	720	0.05679	129.7596	FORMAN - OAKES 230KV CKT 1
FDNS	00NR_G15_053	0	17SP	G15_053	TO->FROM	GR ISLD-LNX3345.00 - HOLT.CO3 345.00 345KV CKT 1	720	720	0.05531	129.7362	FT THOMPSON - WESSINGTON 230KV CKT 1
FDNS	00NR_G15_053	0	17SP	G15_053	TO->FROM	GR ISLD-LNX3345.00 - HOLT.CO3 345.00 345KV CKT 1	720	720	0.05531	129.7362	FT THOMPSON - WESSINGTON 230KV CKT 1
FDNS	00NR_G15_053	0	17SP	G15_053	TO->FROM	GR ISLD-LNX3345.00 - HOLT.CO3 345.00 345KV CKT 1	720	720	0.05673	129.7321	CARPENTER - HURON 230KV CKT 1
FDNS	00NR_G15_053	0	17SP	G15_053	TO->FROM	GR ISLD-LNX3345.00 - HOLT.CO3 345.00 345KV CKT 1	720	720	0.05709	129.7312	AS KING - EAU CLAIRE 345KV CKT 1
FDNS	00NR_G15_053	0	17SP	G15_053	TO->FROM	GR ISLD-LNX3345.00 - HOLT.CO3 345.00 345KV CKT 1	720	720	0.05681	129.7223	ALEXMRES3 345.00 - BISON 3 345.00 345KV CKT 1
FDNS	00NR_G15_053	0	17SP	G15_053	TO->FROM	GR ISLD-LNX3345.00 - HOLT.CO3 345.00 345KV CKT 1	720	720	0.05721	129.6286	ARPIN B4 345.00 - EAU CLAIRE 345KV CKT 1
FDNS	00NR_G15_053	0	17SP	G15_053	TO->FROM	GR ISLD-LNX3345.00 - HOLT.CO3 345.00 345KV CKT 1	720	720	0.05673	129.6222	HURON - WATERTOWN 230KV CKT 2
FDNS	00NR_G15_053	0	17SP	G15_053	TO->FROM	GR ISLD-LNX3345.00 - HOLT.CO3 345.00 345KV CKT 1	720	720	0.05673	129.6222	HURON - WATERTOWN 230KV CKT 2
FDNS	00NR_G15_053	0	17SP	G15_053	TO->FROM	GR ISLD-LNX3345.00 - HOLT.CO3 345.00 345KV CKT 1	720	720	0.0563	129.591	HARMONY - VALENTINE 115KV CKT 1
FDNS	00NR_G15_053	0	17SP	G15_053	TO->FROM	GR ISLD-LNX3345.00 - HOLT.CO3 345.00 345KV CKT 1	720	720	0.05673	129.5783	CARPENTER - WATERTOWN 230KV CKT 1
FDNS	00NR_G15_053	0	17SP	G15_053	TO->FROM	GR ISLD-LNX3345.00 - HOLT.CO3 345.00 345KV CKT 1	720	720	0.05673	129.5783	CARPENTER - WATERTOWN 230KV CKT 1
FDNS	00NR_G15_053	0	17SP	G15_053	TO->FROM	GR ISLD-LNX3345.00 - HOLT.CO3 345.00 345KV CKT 1	720	720	0.0521	129.5639	P12:115:NPPD:WAPA6:FTRANDL7:ONEILL 7:BTB
FDNS	00NR_G15_053	0	17SP	G15_053	TO->FROM	GR ISLD-LNX3345.00 - HOLT.CO3 345.00 345KV CKT 1	720	720	0.0521	129.5639	P12:115:UMZB:# 115 #: SE IN NE. FR-SE-ON
FDNS	00NR_G15_053	0	17SP	G15_053	TO->FROM	GR ISLD-LNX3345.00 - HOLT.CO3 345.00 345KV CKT 1	720	720	0.0521	129.5402	FT RANDAL - SPENCER 115KV CKT 1
FDNS	00NR_G15_053	0	17SP	G15_053	TO->FROM	GR ISLD-LNX3345.00 - HOLT.CO3 345.00 345KV CKT 1	720	720	0.05646	129.5272	PAHOJA - SIOUX FALLS 230KV CKT 1
FDNS	00NR_G15_053	0	17SP	G15_053	TO->FROM	GR ISLD-LNX3345.00 - HOLT.CO3 345.00 345KV CKT 1	720	720	0.05681	129.4995	GEN336252 1-NINEMILE POINT UNIT#5
FDNS	00NR_G15_053	0	17SP	G15_053	TO->FROM	GR ISLD-LNX3345.00 - HOLT.CO3 345.00 345KV CKT 1	720	720	0.05681	129.4554	GEN501813 1-RODEMACHER UNIT 3
FDNS	00NR_G15_053	0	17SP	G15_053	TO->FROM	GR ISLD-LNX3345.00 - HOLT.CO3 345.00 345KV CKT 1	720	720	0.0521	129.4264	ONEILL - SPENCER 115KV CKT 1
FDNS	00NR_G15_053	0	17SP	G15_053	TO->FROM	GR ISLD-LNX3345.00 - HOLT.CO3 345.00 345KV CKT 1	720	720	0.05681	129.3562	GEN336831 1-BAXTER WILSON SES
FDNS	00NR_G15_053	0	17SP	G15_053	TO->FROM	GR ISLD-LNX3345.00 - HOLT.CO3 345.00 345KV CKT 1	720	720	0.05681	129.3427	GEN336251 1-NINEMILE POINT UNIT#4
FDNS	00NR_G15_053	0	17SP	G15_053	TO->FROM	GR ISLD-LNX3345.00 - HOLT.CO3 345.00 345KV CKT 1	720	720	0.0568	129.3226	CNTSHNT3 345.00 - PRAIRIE3 345.00 345KV CKT 1
FDNS	00NR_G15_053	0	17SP	G15_053	TO->FROM	GR ISLD-LNX3345.00 - HOLT.CO3 345.00 345KV CKT 1	720	720	0.05765	129.3087	GERALD GENTLEMAN STATION - KEYSTONE 345KV CKT 1
FDNS	00NR_G15_053	0	17SP	G15_053	TO->FROM	GR ISLD-LNX3345.00 - HOLT.CO3 345.00 345KV CKT 1	720	720	0.05681	129.3023	GEN641089 2-ENERGY CENTER 2
FDNS	00NR_G15_053	0	17SP	G15_053	TO->FROM	GR ISLD-LNX3345.00 - HOLT.CO3 345.00 345KV CKT 1	720	720	0.05681	129.2692	GEN337041 1-GERALD ANDRUS
FDNS	00NR_G15_053	0	17SP	G15_053	TO->FROM	GR ISLD-LNX3345.00 - HOLT.CO3 345.00 345KV CKT 1	720	720	0.05681	129.2503	GEN335206 1-NELSON UNIT 6
FDNS	00NR_G15_053	0	17SP	G15_053	TO->FROM	GR ISLD-LNX3345.00 - HOLT.CO3 345.00 345KV CKT 1	720	720	0.05681	129.2351	FORMAN - HANKINSON 230KV CKT 1
FDNS	00NR_G15_053	0	17SP	G15_053	TO->FROM	GR ISLD-LNX3345.00 - HOLT.CO3 345.00 345KV CKT 1	720	720	0.05681	129.2231	GEN344897 4-1LAB G4 20.000
FDNS	00NR_G15_053	0	17SP	G15_053	TO->FROM	GR ISLD-LNX3345.00 - HOLT.CO3 345.00 345KV CKT 1	720	720	0.05681	129.2199	GEN344894 1-1LAB G1 20.000
FDNS	00NR_G15_053	0	17SP	G15_053	TO->FROM	GR ISLD-LNX3345.00 - HOLT.CO3 345.00 345KV CKT 1	720	720	0.05681	129.2196	GEN344896 3-1LAB G3 20.000

SOLUTION	GROUP	SCENARIO	SEASON	SOURCE	DIRECTION	MONITORED ELEMENT	RATEA (MVA)	RATEB(MVA)	TDF	TC%LOADING (% MVA)	CONTINGENCY
FDNS	00NR_G15_053	0	17SP	G15_053	TO->FROM	GR ISLD-LNX3345.00 - HOLT.CO3 345.00 345KV CKT 1	720	720	0.0563	129.1913	AINSWORTH - VALENTINE 115KV CKT 1
FDNS	00NR_G15_053	0	17SP	G15_053	TO->FROM	GR ISLD-LNX3345.00 - HOLT.CO3 345.00 345KV CKT 1	720	720	0.05681	129.1632	GEN344895 2-1LAB G2 20.000
FDNS	00NR_G15_053	0	17SP	G15_053	TO->FROM	GR ISLD-LNX3345.00 - HOLT.CO3 345.00 345KV CKT 1	720	720	0.05681	129.1517	GEN345670 1-1RUSH G1 18.000
FDNS	00NR_G15_053	0	17SP	G15_053	TO->FROM	GR ISLD-LNX3345.00 - HOLT.CO3 345.00 345KV CKT 1	720	720	0.05681	129.1516	GEN345671 2-1RUSH G2 18.000
FDNS	00NR_G15_053	0	17SP	G15_053	TO->FROM	GR ISLD-LNX3345.00 - HOLT.CO3 345.00 345KV CKT 1	720	720	0.05646	129.1311	EAGLE 4 230.00 - PAHOJA 230KV CKT 1
FDNS	00NR_G15_053	0	17SP	G15_053	TO->FROM	GR ISLD-LNX3345.00 - HOLT.CO3 345.00 345KV CKT 1	720	720	0.05681	129.093	GEN501812 1-RODEMACHER UNIT 2
FDNS	00NR_G15_053	0	17SP	G15_053	TO->FROM	GR ISLD-LNX3345.00 - HOLT.CO3 345.00 345KV CKT 1	720	720	0.0573	129.0883	RASMUSN - UTICA JCT 230KV CKT 1
FDNS	00NR_G15_053	0	17SP	G15_053	TO->FROM	GR ISLD-LNX3345.00 - HOLT.CO3 345.00 345KV CKT 1	720	720	0.05748	129.0796	ADAMS - MITCHLCO3 345.00 345KV CKT 1
FDNS	00NR_G15_053	0	17SP	G15_053	TO->FROM	GR ISLD-LNX3345.00 - HOLT.CO3 345.00 345KV CKT 1	720	720	0.05681	129.0079	GEN334440 1-SABINE UNIT 4
FDNSLock	00NR_G15_053	0	17SP	G15_053	TO->FROM	GR ISLD-LNX3345.00 - HOLT.CO3 345.00 345KV CKT 1	720	720	0.0568	128.8946	CENTER - CNTSHNT3 345.00 345KV CKT Z1
FDNS	00NR_G15_053	0	17SP	G15_053	TO->FROM	GR ISLD-LNX3345.00 - HOLT.CO3 345.00 345KV CKT 1	720	720	0.0573	128.888	RASMUSN - SIOUX CITY 230KV CKT 1
FDNS	00NR_G15_053	0	17SP	G15_053	TO->FROM	GR ISLD-LNX3345.00 - HOLT.CO3 345.00 345KV CKT 1	720	720	0.05726	128.8701	ADAMS - PLEASANT VALLEY 345KV CKT 1
FDNS	00NR_G15_053	0	17SP	G15_053	TO->FROM	GR ISLD-LNX3345.00 - HOLT.CO3 345.00 345KV CKT 1	720	720	0.05681	128.8506	GEN336191 1-LITTLE GYPSY UNIT#3
FDNS	00NR_G15_053	0	17SP	G15_053	TO->FROM	GR ISLD-LNX3345.00 - HOLT.CO3 345.00 345KV CKT 1	720	720	0.05681	128.7839	GEN338388 1-1PLUM PT U1 23.000
FDNS	00NR_G15_053	0	17SP	G15_053	TO->FROM	GR ISLD-LNX3345.00 - HOLT.CO3 345.00 345KV CKT 1	720	720	0.05681	128.7601	GEN336801 1-BAXTER WILSON UNIT #1
FDNS	00NR_G15_053	0	17SP	G15_053	TO->FROM	GR ISLD-LNX3345.00 - HOLT.CO3 345.00 345KV CKT 1	720	720	0.05681	128.7439	GEN335614 1-WILLOW GLENN UNIT#4
FDNS	00NR_G15_053	0	17SP	G15_053	TO->FROM	GR ISLD-LNX3345.00 - HOLT.CO3 345.00 345KV CKT 1	720	720	0.05681	128.7356	GEN334441 1-SABINE UNIT 5
FDNS	00NR_G15_053	0	17SP	G15_053	TO->FROM	GR ISLD-LNX3345.00 - HOLT.CO3 345.00 345KV CKT 1	720	720	0.05681	128.7277	GEN336464 1-MICHOUD UNIT #3
FDNS	00NR_G15_053	0	17SP	G15_053	TO->FROM	GR ISLD-LNX3345.00 - HOLT.CO3 345.00 345KV CKT 1	720	720	0.05883	128.7187	GRIMES - LEHIGH 345KV CKT 1
FDNS	00NR_G15_053	0	17SP	G15_053	TO->FROM	GR ISLD-LNX3345.00 - HOLT.CO3 345.00 345KV CKT 1	720	720	0.05681	128.7146	GEN335204 1-NELSON UNIT 4
FDNS	00NR_G15_053	0	17SP	G15_053	TO->FROM	GR ISLD-LNX3345.00 - HOLT.CO3 345.00 345KV CKT 1	720	720	0.05725	128.7044	LAKEFIELD 3 - NOBLES 345KV CKT 1
FDNS	00NR_G15_053	0	17SP	G15_053	TO->FROM	GR ISLD-LNX3345.00 - HOLT.CO3 345.00 345KV CKT 1	720	720	0.05709	128.6922	LARAMIE RIVER - SIDNEY2-LNX3345.00 345KV CKT 1
FDNS	00NR_G15_053	0	17SP	G15_053	TO->FROM	GR ISLD-LNX3345.00 - HOLT.CO3 345.00 345KV CKT 1	720	720	0.05709	128.6455	SIDNEY - SIDNEY2-LNX3345.00 345KV CKT Z
FDNS	00NR_G15_053	0	17SP	G15_053	TO->FROM	GR ISLD-LNX3345.00 - HOLT.CO3 345.00 345KV CKT 1	720	720	0.05658	128.6272	FT THOMPSON - HURON 230KV CKT 1
FDNS	00NR_G15_053	0	17SP	G15_053	TO->FROM	GR ISLD-LNX3345.00 - HOLT.CO3 345.00 345KV CKT 1	720	720	0.05658	128.6272	FT THOMPSON - HURON 230KV CKT 1
FDNS	00NR_G15_053	0	17SP	G15_053	TO->FROM	GR ISLD-LNX3345.00 - HOLT.CO3 345.00 345KV CKT 1	720	720	0.05658	128.6272	FT THOMPSON - HURON 230KV CKT 2
FDNS	00NR_G15_053	0	17SP	G15_053	TO->FROM	GR ISLD-LNX3345.00 - HOLT.CO3 345.00 345KV CKT 1	720	720	0.05658	128.6272	FT THOMPSON - HURON 230KV CKT 2
FDNS	00NR_G15_053	0	17SP	G15_053	TO->FROM	GR ISLD-LNX3345.00 - HOLT.CO3 345.00 345KV CKT 1	720	720	0.05974	128.6217	STEGALL - STEGALL TRANSFORMER 230KV CKT 1
FDNS	00NR_G15_053	0	17SP	G15_053	TO->FROM	GR ISLD-LNX3345.00 - HOLT.CO3 345.00 345KV CKT 1	720	720	0.05706	128.6161	BROOKING COUNTY - LYON COUNTY 345KV CKT 1
FDNS	00NR_G15_053	0	17SP	G15_053	TO->FROM	GR ISLD-LNX3345.00 - HOLT.CO3 345.00 345KV CKT 1	720	720	0.05974	128.6107	P13:230-345:NPPD:STEGALL3:KV3A
FDNS	00NR_G15_053	0	17SP	G15_053	TO->FROM	GR ISLD-LNX3345.00 - HOLT.CO3 345.00 345KV CKT 1	720	720	0.05293	128.6071	GAVINS POINT - YANKON JCT 115KV CKT 1
FDNS	00NR_G15_053	0	17SP	G15_053	TO->FROM	GR ISLD-LNX3345.00 - HOLT.CO3 345.00 345KV CKT 1	720	720	0.05293	128.6071	GAVINS POINT - YANKON JCT 115KV CKT 1
FDNS	00NR_G15_053	0	17SP	G15_053	TO->FROM	GR ISLD-LNX3345.00 - HOLT.CO3 345.00 345KV CKT 1	720	720	0.05621	128.6016	MENNO JCT - TRIPP JCT 115KV CKT 1
FDNS	00NR_G15_053	0	17SP	G15_053	TO->FROM	GR ISLD-LNX3345.00 - HOLT.CO3 345.00 345KV CKT 1	720	720	0.05974	128.6014	STEGALL (SGQ KV3A) 345/230/13.8KV TRANSFORMER CKT 1
FDNS	00NR_G15_053	0	17SP	G15_053	TO->FROM	GR ISLD-LNX3345.00 - HOLT.CO3 345.00 345KV CKT 1	720	720	0.05544	128.6007	CROOKED CREEK - NORTH PLATTE 230KV CKT 1
FDNS	00NR_G15_053	0	17SP	G15_053	TO->FROM	GR ISLD-LNX3345.00 - HOLT.CO3 345.00 345KV CKT 1	720	720	0.05741	128.5897	KOSSUTH 3 345.00 - WEBSTER 345KV CKT 1
FDNS	00NR_G15_053	0	17SP	G15_053	TO->FROM	GR ISLD-LNX3345.00 - HOLT.CO3 345.00 345KV CKT 1	720	720	0.05683	128.5798	BLAIR - GRANITE FALLS 230KV CKT 1
FDNS	00NR_G15_053	0	17SP	G15_053	TO->FROM	GR ISLD-LNX3345.00 - HOLT.CO3 345.00 345KV CKT 1	720	720	0.05683	128.5798	BLAIR - GRANITE FALLS 230KV CKT 1
FDNS	00NR_G15_053	0	17SP	G15_053	TO->FROM	GR ISLD-LNX3345.00 - HOLT.CO3 345.00 345KV CKT 1	720	720	0.05681	128.5668	GEN334433 1-SABINE UNIT 3
FDNS	00NR_G15_053	0	17SP	G15_053	TO->FROM	GR ISLD-LNX3345.00 - HOLT.CO3 345.00 345KV CKT 1	720	720	0.05681	128.5561	GEN531447 1-HOLCOMB GENERATOR
FDNS	00NR_G15_053	0	17SP	G15_053	TO->FROM	GR ISLD-LNX3345.00 - HOLT.CO3 345.00 345KV CKT 1	720	720	0.05679	128.5499	CENTER - COYOTE 345KV CKT 1
FDNS	00NR_G15_053	0	17SP	G15_053	TO->FROM	GR ISLD-LNX3345.00 - HOLT.CO3 345.00 345KV CKT 1	720	720	0.05684	128.549	ALEXMRES3 345.00 - WAITE PARK 345KV CKT 1
FDNS	00NR_G15_053	0	17SP	G15_053	TO->FROM	GR ISLD-LNX3345.00 - HOLT.CO3 345.00 345KV CKT 1	720	720	0.05681	128.5443	P12:115:UMZW:# 162 #: NEL IN ND. FAULT ON ML-NEL-MX-GA 115 KV
FDNS	00NR_G15_053	0	17SP	G15_053	TO->FROM	GR ISLD-LNX3345.00 - HOLT.CO3 345.00 345KV CKT 1	720	720	0.05741	128.5402	KOSSUTH 3 345.00 - OBRIEN 3 345.00 345KV CKT 1
FDNS	00NR_G15_053	0	17SP	G15_053	TO->FROM	GR ISLD-LNX3345.00 - HOLT.CO3 345.00 345KV CKT 1	720	720	0.06161	128.5252	STEGALL-LNX3230.00 - WAYSIDE 230KV CKT 1
FDNS	00NR_G15_053	0	17SP	G15_053	TO->FROM	GR ISLD-LNX3345.00 - HOLT.CO3 345.00 345KV CKT 1	720	720	0.06161	128.5151	STEGALL - STEGALL-LNX3230.00 230KV CKT Z
FDNS	00NR_G15_053	0	17SP	G15_053	TO->FROM	GR ISLD-LNX3345.00 - HOLT.CO3 345.00 345KV CKT 1	720	720	0.05681	128.4974	GEN336222 1-LITTLE GYPSY UNIT#2
FDNS	00NR_G15_053	0	17SP	G15_053	TO->FROM	GR ISLD-LNX3345.00 - HOLT.CO3 345.00 345KV CKT 1	720	720	0.05681	128.4827	GEN303007 1-1BC2 U2
FDNS	00NR_G15_053	0	17SP	G15_053	TO->FROM	GR ISLD-LNX3345.00 - HOLT.CO3 345.00 345KV CKT 1	720	720	0.05681	128.4787	GEN303006 1-1BC2 U1
FDNS	00NR_G15_053	0	17SP	G15_053	TO->FROM	GR ISLD-LNX3345.00 - HOLT.CO3 345.00 345KV CKT 1	720	720	0.05621	128.4617	MENNO JCT - UTICA 115KV CKT 1
FDNS	00NR_G15_053	0	17SP	G15_053	TO->FROM	GR ISLD-LNX3345.00 - HOLT.CO3 345.00 345KV CKT 1	720	720	0.05681	128.4229	GEN336152 1-WATERFORD UNIT#2
FDNS	00NR_G15_053	0	17SP	G15_053	TO->FROM	GR ISLD-LNX3345.00 - HOLT.CO3 345.00 345KV CKT 1	720	720	0.05681	128.4226	GEN336151 1-WATERFORD UNIT#1
FDNS	00NR_G15_053	0	17SP	G15_053	TO->FROM	GR ISLD-LNX3345.00 - HOLT.CO3 345.00 345KV CKT 1	720	720	0.05621	128.4219	P12:115:UMZZ:# 237 #: MEN IN SD. MENNO JUNCTION IS A TAP (UJ-MEN-TP).
FDNS	00NR_G15_053	0	17SP	G15_053	TO->FROM	GR ISLD-LNX3345.00 - HOLT.CO3 345.00 345KV CKT 1	720	720	0.05694	128.4054	ARKANSAS NUCLEAR ONE - FT SMITH 500KV CKT 1
FDNS	00NR_G15_053	0	17SP	G15_053	TO->FROM	GR ISLD-LNX3345.00 - HOLT.CO3 345.00 345KV CKT 1	720	720	0.05694	128.4054	ARKANSAS NUCLEAR ONE - FT SMITH 500KV CKT 1
FDNS	00NR_G15_053	0	17SP	G15_053	TO->FROM	GR ISLD-LNX3345.00 - HOLT.CO3 345.00 345KV CKT 1	720	720	0.05681	128.4	GEN303008 1-1BC2 U3
FDNS	00NR_G15_053	0	17SP	G15_053	TO->FROM	GR ISLD-LNX3345.00 - HOLT.CO3 345.00 345KV CKT 1	720	720	0.05685	128.3997	HANKINSON - WAHPETON 230KV CKT 1
FDNS	00NR_G15_053	0	17SP	G15_053	TO->FROM	GR ISLD-LNX3345.00 - HOLT.CO3 345.00 345KV CKT 1	720	720	0.05681	128.3934	GEN336170 1-GULF OXY U4
FDNS	00NR_G15_053	0	17SP	G15_053	TO->FROM	GR ISLD-LNX3345.00 - HOLT.CO3 345.00 345KV CKT 1	720	720	0.05693	128.3707	RAUN - SIOUX CITY 345KV CKT 1
FDNS	00NR_G15_053	0	17SP	G15_053	TO->FROM	GR ISLD-LNX3345.00 - HOLT.CO3 345.00 345KV CKT 1	720	720	0.05693	128.3707	RAUN - SIOUX CITY 345KV CKT 1
FDNS	00NR_G15_053	0	17SP	G15_053	TO->FROM	GR ISLD-LNX3345.00 - HOLT.CO3 345.00 345KV CKT 1	720	720	0.05712	128.3585	BYRON - NORTH ROCHESTER 345KV CKT 1
FDNS	00NR_G15_053	0	17SP	G15_053	TO->FROM	GR ISLD-LNX3345.00 - HOLT.CO3 345.00 345KV CKT 1	720	720	0.05681	128.2973	P13:230:UMZW:# 2218 #: FP IN MT. LOSS OF TRANSFORMER (AT2).
FDNS	00NR_G15_053	0	17SP	G15_053	TO->FROM	GR ISLD-LNX3345.00 - HOLT.CO3 345.00 345KV CKT 1	720	720	0.05681	128.2944	GEN501811 1-RODEMACHER UNIT 1
FDNS	00NR_G15_053	0	17SP	G15_053	TO->FROM	GR ISLD-LNX3345.00 - HOLT.CO3 345.00 345KV CKT 1	720	720	0.05077	128.2866	P12:115:NPPD:1164:ONEILL 7:JEFFREY9:BTB
FDNS	00NR_G15_053	0	17SP	G15_053	TO->FROM	GR ISLD-LNX3345.00 - HOLT.CO3 345.00 345KV CKT 1	720	720	0.05686	128.2701	APPLEDORN 4 230.00 - WATERTOWN 230KV CKT 1
FDNS	00NR_G15_053	0	17SP	G15_053	TO->FROM	GR ISLD-LNX3345.00 - HOLT.CO3 345.00 345KV CKT 1	720	720	0.05686	128.2701	APPLEDORN 4 230.00 - WATERTOWN 230KV CKT 1
FDNS	00NR_G15_053	0	17SP	G15_053	TO->FROM	GR ISLD-LNX3345.00 - HOLT.CO3 345.00 345KV CKT 1	720	720	0.05487	128.2616	P12:115:UMZW:# 1910 #: YJ IN SD. YJ-UJ LINE FAULT
FDNS	00NR_G15_053	0	17SP	G15_053	TO->FROM	GR ISLD-LNX3345.00 - HOLT.CO3 345.00 345KV CKT 1	720	720	0.05487	128.2574	NAPA JCT7 115.00 - YANKON JCT 115KV CKT 1
FDNS	00NR_G15_053	0	17SP	G15_053	TO->FROM	GR ISLD-LNX3345.00 - HOLT.CO3 345.00 345KV CKT 1	720	720	0.05487	128.2574	NAPA JCT7 115.00 - YANKON JCT 115KV CKT 1
FDNS	00NR_G15_053	0	17SP	G15_053	TO->FROM	GR ISLD-LNX3345.00 - HOLT.CO3 345.00 345KV CKT 1	720	720	0.05487	128.2497	NAPA JCT7 115.00 - UTICA 115KV CKT 1
FDNS	00NR_G15_053	0	17SP	G15_053	TO->FROM	GR ISLD-LNX3345.00 - HOLT.CO3 345.00 345KV CKT 1	720	720	0.05487	128.2497	NAPA JCT7 115.00 - UTICA 115KV CKT 1
FDNS	00NR_G15_053	0	17SP	G15_053	TO->FROM	GR ISLD-LNX3345.00 - HOLT.CO3 345.00 345KV CKT 1	720	720	0.05681	128.2052	P13:115-230:NPPD:NUCOR-3
FDNS	00NR_G15_053	0	17SP	G15_053	TO->FROM	GR ISLD-LNX3345.00 - HOLT.CO3 345.00 345KV CKT 1	720	720	0.05715	128.2031	GAVINS POINT - HARTINGTON 115KV CKT 1

SOLUTION	GROUP	SCENARIO	SEASON	SOURCE	DIRECTION	MONITORED ELEMENT	RATEA (MVA)	RATEB(MVA)	TDF	TC%LOADING (% MVA)	CONTINGENCY
FDNS	00NR_G15_053	0	17SP	G15_053	TO->FROM	GR ISLD-LNX3345.00 - HOLT.CO3 345.00 345KV CKT 1	720	720	0.05686	128.199	APPLEDORN 4 230.00 - GRANITE FALLS 230KV CKT 1
FDNS	00NR_G15_053	0	17SP	G15_053	TO->FROM	GR ISLD-LNX3345.00 - HOLT.CO3 345.00 345KV CKT 1	720	720	0.05686	128.199	APPLEDORN 4 230.00 - GRANITE FALLS 230KV CKT 1
FDNS	00NR_G15_053	0	17SP	G15_053	TO->FROM	GR ISLD-LNX3345.00 - HOLT.CO3 345.00 345KV CKT 1	720	720	0.05681	128.1967	GEN334071 1-LEWIS CREEK 2
FDNS	00NR_G15_053	0	17SP	G15_053	TO->FROM	GR ISLD-LNX3345.00 - HOLT.CO3 345.00 345KV CKT 1	720	720	0.05681	128.1928	GEN337766 1-TRACTEBEL UNIT S1
FDNS	00NR_G15_053	0	17SP	G15_053	TO->FROM	GR ISLD-LNX3345.00 - HOLT.CO3 345.00 345KV CKT 1	720	720	0.05681	128.19	GEN334070 1-LEWIS CREEK 1
FDNS	00NR_G15_053	0	17SP	G15_053	TO->FROM	GR ISLD-LNX3345.00 - HOLT.CO3 345.00 345KV CKT 1	720	720	0.0575	128.1736	DENISON - SIOUX CITY 230KV CKT 1
FDNS	00NR_G15_053	0	17SP	G15_053	TO->FROM	GR ISLD-LNX3345.00 - HOLT.CO3 345.00 345KV CKT 1	720	720	0.06425	128.1618	COLUMEAST - SHELL CREEK 345KV CKT 1
FDNS	00NR_G15_053	0	17SP	G15_053	TO->FROM	GR ISLD-LNX3345.00 - HOLT.CO3 345.00 345KV CKT 1	720	720	0.05681	128.1507	P13:230-345:NPPD:NUCOR-1
FDNS	00NR_G15_053	0	17SP	G15_053	TO->FROM	GR ISLD-LNX3345.00 - HOLT.CO3 345.00 345KV CKT 1	720	720	0.05681	128.1356	GEN501910 1-ACADIA UNIT ST1
FDNS	00NR_G15_053	0	17SP	G15_053	TO->FROM	GR ISLD-LNX3345.00 - HOLT.CO3 345.00 345KV CKT 1	720	720	0.05528	128.1286	CROOKED CREEK - RIVERDALE 230KV CKT 1
FDNS	00NR_G15_053	0	17SP	G15_053	TO->FROM	GR ISLD-LNX3345.00 - HOLT.CO3 345.00 345KV CKT 1	720	720	0.05681	128.0468	GEN659118 1-LARAMIE RIVER UNIT1
FDNS	00NR_G15_053	0	17SP	G15_053	TO->FROM	GR ISLD-LNX3345.00 - HOLT.CO3 345.00 345KV CKT 1	720	720	0.05681	127.5267	KEARNEY 115KV SWITCHED SHUNT
FDNS	00NR_G15_053	0	17SP	G15_053	TO->FROM	GR ISLD-LNX3345.00 - HOLT.CO3 345.00 345KV CKT 1	720	720	0.05838	127.5112	KELLY - SHELL CREEK 230KV CKT 1
FDNS	00NR_G15_053	0	17SP	G15_053	TO->FROM	GR ISLD-LNX3345.00 - HOLT.CO3 345.00 345KV CKT 1	720	720	0.05838	127.5061	SHELL CREEK (SHELLCREEKT1) 345/230/13.8KV TRANSFORMER CKT 1
FDNS	00NR_G15_053	0	17SP	G15_053	TO->FROM	GR ISLD-LNX3345.00 - HOLT.CO3 345.00 345KV CKT 1	720	720	0.05838	127.5061	SHELL CREEK (SHELLCREEKT1) 345/230/13.8KV TRANSFORMER CKT 1
FDNSLock	00NR_G15_053	0	17SP	G15_053	TO->FROM	GR ISLD-LNX3345.00 - HOLT.CO3 345.00 345KV CKT 1	720	720	0.05681	127.4389	KEARNEY 115KV SWITCHED SHUNT
FDNS	00NR_G15_053	0	17SP	G15_053	TO->FROM	GR ISLD-LNX3345.00 - HOLT.CO3 345.00 345KV CKT 1	720	720	0.05688	127.4295	ANTELOP-LNX3345.00 - BRDLAND-LNX3345.00 345KV CKT 1
FDNS	00NR_G15_053	0	17SP	G15_053	TO->FROM	GR ISLD-LNX3345.00 - HOLT.CO3 345.00 345KV CKT 1	720	720	0.06993	127.4216	COLUMWEST - KELLY 230KV CKT 1
FDNS	00NR_G15_053	0	17SP	G15_053	TO->FROM	GR ISLD-LNX3345.00 - HOLT.CO3 345.00 345KV CKT 1	720	720	0.05681	127.3538	1303-KEARNEY
FDNS	00NR_G15_053	0	17SP	G15_053	TO->FROM	GR ISLD-LNX3345.00 - HOLT.CO3 345.00 345KV CKT 1	720	720	0.05681	127.3538	BASE CASE
FDNS	00NR_G15_053	0	17SP	G15_053	TO->FROM	GR ISLD-LNX3345.00 - HOLT.CO3 345.00 345KV CKT 1	720	720	0.05464	127.2891	GRAND ISLAND - RIVERDALE 230KV CKT 1
FDNS	00NR_G15_053	0	17SP	G15_053	TO->FROM	GR ISLD-LNX3345.00 - HOLT.CO3 345.00 345KV CKT 1	720	720	0.05481	127.286	COOPER - MOORE 345KV CKT 1
FDNS	00NR_G15_053	0	17SP	G15_053	TO->FROM	GR ISLD-LNX3345.00 - HOLT.CO3 345.00 345KV CKT 1	720	720	0.05681	127.2208	GEN645001 1-FORT CALHOUN 1
FDNS	00NR_G15_053	0	17SP	G15_053	TO->FROM	GR ISLD-LNX3345.00 - HOLT.CO3 345.00 345KV CKT 1	720	720	0.05681	127.186	GEN635214 4-NEAL UNIT 4
FDNS	00NR_G15_053	0	17SP	G15_053	TO->FROM	GR ISLD-LNX3345.00 - HOLT.CO3 345.00 345KV CKT 1	720	720	0.05834	127.1722	AXTELL - PAULINE 345KV CKT 1
FDNS	00NR_G15_053	0	17SP	G15_053	TO->FROM	GR ISLD-LNX3345.00 - HOLT.CO3 345.00 345KV CKT 1	720	720	0.05844	127.1512	103RD & ROKEBY - MOORE 345KV CKT 1
FDNS	00NR_G15_053	0	17SP	G15_053	TO->FROM	GR ISLD-LNX3345.00 - HOLT.CO3 345.00 345KV CKT 1	720	720	0.05844	127.1512	103RD & ROKEBY - MOORE 345KV CKT 1
FDNS	00NR_G15_053	0	17SP	G15_053	TO->FROM	GR ISLD-LNX3345.00 - HOLT.CO3 345.00 345KV CKT 1	720	720	0.05681	127.1288	FTTHOM2-LNX3345.00 345KV SWITCHED SHUNT
FDNSLock	00NR_G15_053	0	17SP	G15_053	TO->FROM	GR ISLD-LNX3345.00 - HOLT.CO3 345.00 345KV CKT 1	720	720	0.05681	127.1286	FTTHOM2-LNX3345.00 345KV SWITCHED SHUNT
FDNS	00NR_G15_053	0	17SP	G15_053	TO->FROM	GR ISLD-LNX3345.00 - HOLT.CO3 345.00 345KV CKT 1	720	720	0.05695	127.1037	FT THOMPSON - OAHE 230KV CKT 1
FDNS	00NR_G15_053	0	17SP	G15_053	TO->FROM	GR ISLD-LNX3345.00 - HOLT.CO3 345.00 345KV CKT 1	720	720	0.05695	127.1037	FT THOMPSON - OAHE 230KV CKT 1
FDNS	00NR_G15_053	0	17SP	G15_053	TO->FROM	GR ISLD-LNX3345.00 - HOLT.CO3 345.00 345KV CKT 1	720	720	0.05695	127.1037	FT THOMPSON - OAHE 230KV CKT 2
FDNS	00NR_G15_053	0	17SP	G15_053	TO->FROM	GR ISLD-LNX3345.00 - HOLT.CO3 345.00 345KV CKT 1	720	720	0.05695	127.1037	FT THOMPSON - OAHE 230KV CKT 2
FDNS	00NR_G15_053	0	17SP	G15_053	TO->FROM	GR ISLD-LNX3345.00 - HOLT.CO3 345.00 345KV CKT 1	720	720	0.05696	127.0458	FT THOMPSON - OAHE 230KV CKT 3
FDNS	00NR_G15_053	0	17SP	G15_053	TO->FROM	GR ISLD-LNX3345.00 - HOLT.CO3 345.00 345KV CKT 1	720	720	0.05696	127.0458	FT THOMPSON - OAHE 230KV CKT 3
FDNS	00NR_G15_053	0	17SP	G15_053	TO->FROM	GR ISLD-LNX3345.00 - HOLT.CO3 345.00 345KV CKT 1	720	720	0.05696	127.0458	FT THOMPSON - OAHE 230KV CKT 4
FDNS	00NR_G15_053	0	17SP	G15_053	TO->FROM	GR ISLD-LNX3345.00 - HOLT.CO3 345.00 345KV CKT 1	720	720	0.05696	127.0458	FT THOMPSON - OAHE 230KV CKT 4
FDNS	00NR_G15_053	0	17SP	G15_053	TO->FROM	GR ISLD-LNX3345.00 - HOLT.CO3 345.00 345KV CKT 1	720	720	0.0567	127.032	GRAND ISLAND (GRAND.ISD T5) 230/115/13.8KV TRANSFORMER CKT 2
FDNS	00NR_G15_053	0	17SP	G15_053	TO->FROM	GR ISLD-LNX3345.00 - HOLT.CO3 345.00 345KV CKT 1	720	720	0.0567	127.032	GRAND ISLAND (GRAND.ISD T5) 230/115/13.8KV TRANSFORMER CKT 2
FDNS	00NR_G15_053	0	17SP	G15_053	TO->FROM	GR ISLD-LNX3345.00 - HOLT.CO3 345.00 345KV CKT 1	720	720	0.0567	127.0294	GRAND ISLAND (GRAND.ISD T2) 230/115/13.8KV TRANSFORMER CKT 1
FDNS	00NR_G15_053	0	17SP	G15_053	TO->FROM	GR ISLD-LNX3345.00 - HOLT.CO3 345.00 345KV CKT 1	720	720	0.0567	127.0294	GRAND ISLAND (GRAND.ISD T2) 230/115/13.8KV TRANSFORMER CKT 1
FDNS	00NR_G15_053	0	17SP	G15_053	TO->FROM	GR ISLD-LNX3345.00 - HOLT.CO3 345.00 345KV CKT 1	720	720	0.05679	126.9332	MCCOOL (MCCOOL T2) 345/115/13.8KV TRANSFORMER CKT 1
FDNS	00NR_G15_053	0	17SP	G15_053	TO->FROM	GR ISLD-LNX3345.00 - HOLT.CO3 345.00 345KV CKT 1	720	720	0.05679	126.9332	MCCOOL (MCCOOL T2) 345/115/13.8KV TRANSFORMER CKT 1
FDNS	00NR_G15_053	0	17SP	G15_053	TO->FROM	GR ISLD-LNX3345.00 - HOLT.CO3 345.00 345KV CKT 1	720	720	0.05837	126.9061	MAXWELL - NORTH PLATTE 115KV CKT 1
FDNS	00NR_G15_053	0	17SP	G15_053	TO->FROM	GR ISLD-LNX3345.00 - HOLT.CO3 345.00 345KV CKT 1	720	720	0.05722	126.8888	FINNEY SWITCHING STATION - WALKTAP7 345.00 345KV CKT 1
FDNS	00NR_G15_053	0	17SP	G15_053	TO->FROM	GR ISLD-LNX3345.00 - HOLT.CO3 345.00 345KV CKT 1	720	720	0.05722	126.8888	FINNEY SWITCHING STATION - WALKTAP7 345.00 345KV CKT 1
FDNS	00NR_G15_053	0	17SP	G15_053	TO->FROM	GR ISLD-LNX3345.00 - HOLT.CO3 345.00 345KV CKT 1	720	720	0.05742	126.8839	Hitchland Interchange - WALKTAP7 345.00 345KV CKT 1
FDNS	00NR_G15_053	0	17SP	G15_053	TO->FROM	GR ISLD-LNX3345.00 - HOLT.CO3 345.00 345KV CKT 1	720	720	0.05742	126.8839	Hitchland Interchange - WALKTAP7 345.00 345KV CKT 1
FDNS	00NR_G15_053	0	17SP	G15_053	TO->FROM	GR ISLD-LNX3345.00 - HOLT.CO3 345.00 345KV CKT 1	720	720	0.05742	126.8798	P12:345:SPS:J07.1.FINN.HITCH
FDNS	00NR_G15_053	0	17SP	G15_053	TO->FROM	GR ISLD-LNX3345.00 - HOLT.CO3 345.00 345KV CKT 1	720	720	0.05693	126.8425	GRAND ISLAND (GI KU1B) 345/230/13.8KV TRANSFORMER CKT 2
FDNS	00NR_G15_053	0	17SP	G15_053	TO->FROM	GR ISLD-LNX3345.00 - HOLT.CO3 345.00 345KV CKT 1	720	720	0.05693	126.8425	GRAND ISLAND (GI KU1B) 345/230/13.8KV TRANSFORMER CKT 2
FDNS	00NR_G15_053	0	17SP	G15_053	TO->FROM	GR ISLD-LNX3345.00 - HOLT.CO3 345.00 345KV CKT 1	720	720	0.05693	126.8415	GRAND ISLAND (GI KU1A) 345/230/13.8KV TRANSFORMER CKT 1
FDNS	00NR_G15_053	0	17SP	G15_053	TO->FROM	GR ISLD-LNX3345.00 - HOLT.CO3 345.00 345KV CKT 1	720	720	0.05693	126.8415	GRAND ISLAND (GI KU1A) 345/230/13.8KV TRANSFORMER CKT 1
FDNS	00NR_G15_053	0	17SP	G15_053	TO->FROM	GR ISLD-LNX3345.00 - HOLT.CO3 345.00 345KV CKT 1	720	720	0.05883	126.8216	MINGO - SETAB 345KV CKT 1
FDNS	00NR_G15_053	0	17SP	G15_053	TO->FROM	GR ISLD-LNX3345.00 - HOLT.CO3 345.00 345KV CKT 1	720	720	0.05883	126.8216	MINGO - SETAB 345KV CKT 1
FDNS	00NR_G15_053	0	17SP	G15_053	TO->FROM	GR ISLD-LNX3345.00 - HOLT.CO3 345.00 345KV CKT 1	720	720	0.05709	126.7873	LARAMIE RIVER - STEGALL 345KV CKT 1
FDNS	00NR_G15_053	0	17SP	G15_053	TO->FROM	GR ISLD-LNX3345.00 - HOLT.CO3 345.00 345KV CKT 1	720	720	0.05681	126.7586	GEN652548 5-FT RANDAL
FDNS	00NR_G15_053	0	17SP	G15_053	TO->FROM	GR ISLD-LNX3345.00 - HOLT.CO3 345.00 345KV CKT 1	720	720	0.05681	126.7586	GEN652549 7-FT RANDAL
FDNS	00NR_G15_053	0	17SP	G15_053	TO->FROM	GR ISLD-LNX3345.00 - HOLT.CO3 345.00 345KV CKT 1	720	720	0.05688	126.7555	P12:345:UMZB:# 102 #: AVS BD IN ND. AVS BRD LR
FDNS	00NR_G15_053	0	17SP	G15_053	TO->FROM	GR ISLD-LNX3345.00 - HOLT.CO3 345.00 345KV CKT 1	720	720	0.05688	126.7545	P12:345:UMZB:# 103 #: BD IN SD. LOSS OF LINE
FDNS	00NR_G15_053	0	17SP	G15_053	TO->FROM	GR ISLD-LNX3345.00 - HOLT.CO3 345.00 345KV CKT 1	720	720	0.05688	126.7497	BRDLAND-LNX3345.00 - HURON 345KV CKT Z
FDNS	00NR_G15_053	0	17SP	G15_053	TO->FROM	GR ISLD-LNX3345.00 - HOLT.CO3 345.00 345KV CKT 1	720	720	0.05688	126.7485	BROADLAND - HURON 230KV CKT 1
FDNS	00NR_G15_053	0	17SP	G15_053	TO->FROM	GR ISLD-LNX3345.00 - HOLT.CO3 345.00 345KV CKT 1	720	720	0.05681	126.7481	GEN652547 3-FT RANDAL
FDNS	00NR_G15_053	0	17SP	G15_053	TO->FROM	GR ISLD-LNX3345.00 - HOLT.CO3 345.00 345KV CKT 1	720	720	0.05688	126.748	HURON (BD KU2A) 345/230/13.8KV TRANSFORMER CKT 1
FDNS	00NR_G15_053	0	17SP	G15_053	TO->FROM	GR ISLD-LNX3345.00 - HOLT.CO3 345.00 345KV CKT 1	720	720	0.05688	126.748	HURON (BD KU2A) 345/230/13.8KV TRANSFORMER CKT 1
FDNS	00NR_G15_053	0	17SP	G15_053	TO->FROM	GR ISLD-LNX3345.00 - HOLT.CO3 345.00 345KV CKT 1	720	720	0.05697	126.7368	G11_051T 345.00 - TATONGA7 345.00 345KV CKT 1
FDNS	00NR_G15_053	0	17SP	G15_053	TO->FROM	GR ISLD-LNX3345.00 - HOLT.CO3 345.00 345KV CKT 1	720	720	0.05895	126.7294	ATCHSNT3 345.00 - BOONEVILLE 345KV CKT 1
FDNS	00NR_G15_053	0	17SP	G15_053	TO->FROM	GR ISLD-LNX3345.00 - HOLT.CO3 345.00 345KV CKT 1	720	720	0.06059	126.7277	MOORE - PAULINE 345KV CKT 1
FDNS	00NR_G15_053	0	17SP	G15_053	TO->FROM	GR ISLD-LNX3345.00 - HOLT.CO3 345.00 345KV CKT 1	720	720	0.05681	126.7231	GEN600021 3-ANGUS ANSON2
FDNS	00NR_G15_053	0	17SP	G15_053	TO->FROM	GR ISLD-LNX3345.00 - HOLT.CO3 345.00 345KV CKT 1	720	720	0.05681	126.7105	GEN600020 2-ANGUS ANSON1
FDNS	00NR_G15_053	0	17SP	G15_053	TO->FROM	GR ISLD-LNX3345.00 - HOLT.CO3 345.00 345KV CKT 1	720	720	0.05681	126.6957	GEN659290 1-EDGECOL
FDNS	00NR_G15_053	0	17SP	G15_053	TO->FROM	GR ISLD-LNX3345.00 - HOLT.CO3 345.00 345KV CKT 1	720	720	0.05681	126.6943	GEN659158 2-PIONEER G213.800
FDNS	00NR_G15_053	0	17SP	G15_053	TO->FROM	GR ISLD-LNX3345.00 - HOLT.CO3 345.00 345KV CKT 1	720	720	0.05681	126.6943	GEN659159 3-PIONEER G313.800

SOLUTION	GROUP	SCENARIO	SEASON	SOURCE	DIRECTION	MONITORED ELEMENT	RATEA (MVA)	RATEB(MVA)	TDF	TC%LOADING (% MVA)	CONTINGENCY
FDNS	00NR_G15_053	0	17SP	G15_053	TO->FROM	GR ISLD-LNX3345.00 - HOLT.CO3 345.00 345KV CKT 1	720	720	0.05681	126.6925	GEN659156 2-LONESMCRK 2G13.800
FDNS	00NR_G15_053	0	17SP	G15_053	TO->FROM	GR ISLD-LNX3345.00 - HOLT.CO3 345.00 345KV CKT 1	720	720	0.05681	126.6925	GEN659157 3-LONESMCRK 3G13.800
FDNS	00NR_G15_053	0	17SP	G15_053	TO->FROM	GR ISLD-LNX3345.00 - HOLT.CO3 345.00 345KV CKT 1	720	720	0.05681	126.6788	GEN600012 2-BLACK DOG GEN 2
FDNS	00NR_G15_053	0	17SP	G15_053	TO->FROM	GR ISLD-LNX3345.00 - HOLT.CO3 345.00 345KV CKT 1	720	720	0.05681	126.6785	GEN590010 1-ERCOT EQUIVALENCE
FDNS	00NR_G15_053	0	17SP	G15_053	TO->FROM	GR ISLD-LNX3345.00 - HOLT.CO3 345.00 345KV CKT 1	720	720	0.05681	126.6778	GEN672393 2-NBECST2G 13.800
FDNS	00NR_G15_053	0	17SP	G15_053	TO->FROM	GR ISLD-LNX3345.00 - HOLT.CO3 345.00 345KV CKT 1	720	720	0.05681	126.6664	GEN652410 3-FT PECK
FDNS	00NR_G15_053	0	17SP	G15_053	TO->FROM	GR ISLD-LNX3345.00 - HOLT.CO3 345.00 345KV CKT 1	720	720	0.05681	126.6513	GEN300003 1-THOMAS HILL UNIT 3
FDNS	00NR_G15_053	0	17SP	G15_053	TO->FROM	GR ISLD-LNX3345.00 - HOLT.CO3 345.00 345KV CKT 1	720	720	0.05681	126.6473	GEN590011 2-ERCOT EQUIVALENCE
FDNS	00NR_G15_053	0	17SP	G15_053	TO->FROM	GR ISLD-LNX3345.00 - HOLT.CO3 345.00 345KV CKT 1	720	720	0.05681	126.6353	GEN629072 4-LANSING GENERATOR FOR UNITS NO4 EIA CODE 1
FDNS	00NR_G15_053	0	17SP	G15_053	TO->FROM	GR ISLD-LNX3345.00 - HOLT.CO3 345.00 345KV CKT 1	720	720	0.05681	126.6284	EASTDC - ERCOT EQUIVALENCE 345KV CKT 1
FDNS	00NR_G15_053	0	17SP	G15_053	TO->FROM	GR ISLD-LNX3345.00 - HOLT.CO3 345.00 345KV CKT 1	720	720	0.06116	126.6263	LOUP CITY - NORTH LOUP 115KV CKT 1
FDNS	00NR_G15_053	0	17SP	G15_053	TO->FROM	GR ISLD-LNX3345.00 - HOLT.CO3 345.00 345KV CKT 1	720	720	0.05683	126.6147	DRAYTON - LETELLIER 230KV CKT 1
FDNS	00NR_G15_053	0	17SP	G15_053	TO->FROM	GR ISLD-LNX3345.00 - HOLT.CO3 345.00 345KV CKT 1	720	720	0.05699	126.6031	GRAND ISLAND (GI KU3A) 345/230/13.8KV TRANSFORMER CKT 3
FDNS	00NR_G15_053	0	17SP	G15_053	TO->FROM	GR ISLD-LNX3345.00 - HOLT.CO3 345.00 345KV CKT 1	720	720	0.05699	126.6031	GRAND ISLAND (GI KU3A) 345/230/13.8KV TRANSFORMER CKT 3
FDNS	00NR_G15_053	0	17SP	G15_053	TO->FROM	GR ISLD-LNX3345.00 - HOLT.CO3 345.00 345KV CKT 1	720	720	0.05681	126.6002	G830_SUB 115.00 - GRE-MCHENRY7115.00 115KV CKT 1
FDNS	00NR_G15_053	0	17SP	G15_053	TO->FROM	GR ISLD-LNX3345.00 - HOLT.CO3 345.00 345KV CKT 1	720	720	0.05681	126.6	GEN652414 4-FT PECK
FDNS	00NR_G15_053	0	17SP	G15_053	TO->FROM	GR ISLD-LNX3345.00 - HOLT.CO3 345.00 345KV CKT 1	720	720	0.05681	126.6	GEN652415 5-FT PECK
FDNS	00NR_G15_053	0	17SP	G15_053	TO->FROM	GR ISLD-LNX3345.00 - HOLT.CO3 345.00 345KV CKT 1	720	720	0.05681	126.5922	G830_SUB 115.00 115/34.5KV TRANSFORMER CKT 1
FDNS	00NR_G15_053	0	17SP	G15_053	TO->FROM	GR ISLD-LNX3345.00 - HOLT.CO3 345.00 345KV CKT 1	720	720	0.05676	126.5898	OAHE - SULLEY BUTTE 230KV CKT 1
FDNS	00NR_G15_053	0	17SP	G15_053	TO->FROM	GR ISLD-LNX3345.00 - HOLT.CO3 345.00 345KV CKT 1	720	720	0.05681	126.589	GEN660003 3-HURON WEST PARK
FDNS	00NR_G15_053	0	17SP	G15_053	TO->FROM	GR ISLD-LNX3345.00 - HOLT.CO3 345.00 345KV CKT 1	720	720	0.05681	126.5682	EMERY 161/18.0KV TRANSFORMER CKT 1
FDNS	00NR_G15_053	0	17SP	G15_053	TO->FROM	GR ISLD-LNX3345.00 - HOLT.CO3 345.00 345KV CKT 1	720	720	0.05681	126.5634	GEN652345 W-G07_023IS_2 0.6900
FDNS	00NR_G15_053	0	17SP	G15_053	TO->FROM	GR ISLD-LNX3345.00 - HOLT.CO3 345.00 345KV CKT 1	720	720	0.05681	126.5566	GEN 11104 1-J262_GEN 0.6000
FDNS	00NR_G15_053	0	17SP	G15_053	TO->FROM	GR ISLD-LNX3345.00 - HOLT.CO3 345.00 345KV CKT 1	720	720	0.05681	126.5566	GEN 11108 1-J263_GEN 0.6000
FDNS	00NR_G15_053	0	17SP	G15_053	TO->FROM	GR ISLD-LNX3345.00 - HOLT.CO3 345.00 345KV CKT 1	720	720	0.05707	126.5423	POST ROCK (POSTROCK T1) 345/230/13.8KV TRANSFORMER CKT 1
FDNS	00NR_G15_053	0	17SP	G15_053	TO->FROM	GR ISLD-LNX3345.00 - HOLT.CO3 345.00 345KV CKT 1	720	720	0.05681	126.5364	GEN600050 1-FEP
FDNSLock	00NR_G15_053	0	17SP	G15_053	TO->FROM	GR ISLD-LNX3345.00 - HOLT.CO3 345.00 345KV CKT 1	720	720	0.05911	126.5329	CENTRAL CITY - GRAND ISLAND 115KV CKT 1
FDNS	00NR_G15_053	0	17SP	G15_053	TO->FROM	GR ISLD-LNX3345.00 - HOLT.CO3 345.00 345KV CKT 1	720	720	0.05862	126.4992	GERALD GENTLEMAN STATION - RED WILLOW 345KV CKT 1
FDNS	00NR_G15_053	0	17SP	G15_053	TO->FROM	GR ISLD-LNX3345.00 - HOLT.CO3 345.00 345KV CKT 1	720	720	0.05681	126.4868	GEN300007 1-NEW MADRID UNIT 2
FDNS	00NR_G15_053	0	17SP	G15_053	TO->FROM	GR ISLD-LNX3345.00 - HOLT.CO3 345.00 345KV CKT 1	720	720	0.05681	126.4855	GEN600046 1-MECST
FDNS	00NR_G15_053	0	17SP	G15_053	TO->FROM	GR ISLD-LNX3345.00 - HOLT.CO3 345.00 345KV CKT 1	720	720	0.05688	126.4839	ANTELOP-LNX3345.00 - ANTELOPE VALLEY 345KV CKT Z
FDNS	00NR_G15_053	0	17SP	G15_053	TO->FROM	GR ISLD-LNX3345.00 - HOLT.CO3 345.00 345KV CKT 1	720	720	0.05697	126.4804	MATHWSN7 345.00 - TATONGA7 345.00 345KV CKT 1
FDNS	00NR_G15_053	0	17SP	G15_053	TO->FROM	GR ISLD-LNX3345.00 - HOLT.CO3 345.00 345KV CKT 1	720	720	0.05681	126.4803	GEN300006 1-NEW MADRID UNIT 1
FDNS	00NR_G15_053	0	17SP	G15_053	TO->FROM	GR ISLD-LNX3345.00 - HOLT.CO3 345.00 345KV CKT 1	720	720	0.05681	126.4581	GEN600047 1-MECCT1
FDNS	00NR_G15_053	0	17SP	G15_053	TO->FROM	GR ISLD-LNX3345.00 - HOLT.CO3 345.00 345KV CKT 1	720	720	0.05681	126.4568	GEN600063 1-COLVILLE GEN 1
FDNS	00NR_G15_053	0	17SP	G15_053	TO->FROM	GR ISLD-LNX3345.00 - HOLT.CO3 345.00 345KV CKT 1	720	720	0.05681	126.4568	GEN600064 2-COLVILLE GEN 2
FDNS	00NR_G15_053	0	17SP	G15_053	TO->FROM	GR ISLD-LNX3345.00 - HOLT.CO3 345.00 345KV CKT 1	720	720	0.05676	126.4524	SULLEY BUTTE - SULLYBT-LNX3230.00 230KV CKT Z
FDNS	00NR_G15_053	0	17SP	G15_053	TO->FROM	GR ISLD-LNX3345.00 - HOLT.CO3 345.00 345KV CKT 1	720	720	0.05681	126.4519	GEN600043 7-BLUE LAKE5
FDNS	00NR_G15_053	0	17SP	G15_053	TO->FROM	GR ISLD-LNX3345.00 - HOLT.CO3 345.00 345KV CKT 1	720	720	0.05681	126.4519	GEN600044 8-BLUE LAKE6
FDNS	00NR_G15_053	0	17SP	G15_053	TO->FROM	GR ISLD-LNX3345.00 - HOLT.CO3 345.00 345KV CKT 1	720	720	0.05676	126.4467	SULLYBT-LNX3230.00 - WHITLOK 230KV CKT 1
FDNS	00NR_G15_053	0	17SP	G15_053	TO->FROM	GR ISLD-LNX3345.00 - HOLT.CO3 345.00 345KV CKT 1	720	720	0.05681	126.4451	GEN660001 2-ABERDEEN SIEBRECHT
FDNS	00NR_G15_053	0	17SP	G15_053	TO->FROM	GR ISLD-LNX3345.00 - HOLT.CO3 345.00 345KV CKT 1	720	720	0.05681	126.4285	CENTER 230/22.0KV TRANSFORMER CKT 1
FDNS	00NR_G15_053	0	17SP	G15_053	TO->FROM	GR ISLD-LNX3345.00 - HOLT.CO3 345.00 345KV CKT 1	720	720	0.05681	126.4274	GEN659273 2-GROTON SYNC COND
FDNS	00NR_G15_053	0	17SP	G15_053	TO->FROM	GR ISLD-LNX3345.00 - HOLT.CO3 345.00 345KV CKT 1	720	720	0.05681	126.4274	GEN659294 1-WILTONCOL9
FDNS	00NR_G15_053	0	17SP	G15_053	TO->FROM	GR ISLD-LNX3345.00 - HOLT.CO3 345.00 345KV CKT 1	720	720	0.05681	126.4164	GEN600065 7-HIGH BRIDGE
FDNS	00NR_G15_053	0	17SP	G15_053	TO->FROM	GR ISLD-LNX3345.00 - HOLT.CO3 345.00 345KV CKT 1	720	720	0.05681	126.4164	GEN600066 8-HIGH BRIDGE
FDNS	00NR_G15_053	0	17SP	G15_053	TO->FROM	GR ISLD-LNX3345.00 - HOLT.CO3 345.00 345KV CKT 1	720	720	0.05676	126.4151	P12:230:UMZB:# 114 #: SB IN SD. SB-WK-GH
FDNS	00NR_G15_053	0	17SP	G15_053	TO->FROM	GR ISLD-LNX3345.00 - HOLT.CO3 345.00 345KV CKT 1	720	720	0.05676	126.4151	P12:230:UMZB:# 117 #: WK IN SD. SB-WK-GH
FDNS	00NR_G15_053	0	17SP	G15_053	TO->FROM	GR ISLD-LNX3345.00 - HOLT.CO3 345.00 345KV CKT 1	720	720	0.05681	126.4108	GEN600014 4-BLACK DOG GEN 4
FDNS	00NR_G15_053	0	17SP	G15_053	TO->FROM	GR ISLD-LNX3345.00 - HOLT.CO3 345.00 345KV CKT 1	720	720	0.05681	126.4062	GEN600011 5-BLACK DOG GEN 1
FDNS	00NR_G15_053	0	17SP	G15_053	TO->FROM	GR ISLD-LNX3345.00 - HOLT.CO3 345.00 345KV CKT 1	720	720	0.05681	126.4007	GEN600071 10-RIVER SIDE
FDNS	00NR_G15_053	0	17SP	G15_053	TO->FROM	GR ISLD-LNX3345.00 - HOLT.CO3 345.00 345KV CKT 1	720	720	0.05681	126.4004	GEN600070 9-RIVER SIDE
FDNS	00NR_G15_053	0	17SP	G15_053	TO->FROM	GR ISLD-LNX3345.00 - HOLT.CO3 345.00 345KV CKT 1	720	720	0.05681	126.3872	GEN600007 7-RIVERSIDE GEN 7
FDNS	00NR_G15_053	0	17SP	G15_053	TO->FROM	GR ISLD-LNX3345.00 - HOLT.CO3 345.00 345KV CKT 1	720	720	0.05681	126.3853	GEN 10648 1-G830_GEN 0.6900
FDNS	00NR_G15_053	0	17SP	G15_053	TO->FROM	GR ISLD-LNX3345.00 - HOLT.CO3 345.00 345KV CKT 1	720	720	0.05681	126.383	GEN600045 4-ANSON
FDNS	00NR_G15_053	0	17SP	G15_053	TO->FROM	GR ISLD-LNX3345.00 - HOLT.CO3 345.00 345KV CKT 1	720	720	0.05681	126.3766	GEN659192 6-LYNN
FDNS	00NR_G15_053	0	17SP	G15_053	TO->FROM	GR ISLD-LNX3345.00 - HOLT.CO3 345.00 345KV CKT 1	720	720	0.05681	126.3759	GEN659162 4-RED WLCK
FDNS	00NR_G15_053	0	17SP	G15_053	TO->FROM	GR ISLD-LNX3345.00 - HOLT.CO3 345.00 345KV CKT 1	720	720	0.05681	126.3759	GEN659163 5-BLACK WDCK
FDNS	00NR_G15_053	0	17SP	G15_053	TO->FROM	GR ISLD-LNX3345.00 - HOLT.CO3 345.00 345KV CKT 1	720	720	0.05676	126.3606	GLENHAM - WHITLOK 230KV CKT 1
FDNS	00NR_G15_053	0	17SP	G15_053	TO->FROM	GR ISLD-LNX3345.00 - HOLT.CO3 345.00 345KV CKT 1	720	720	0.05681	126.3588	GEN600017 C-LS POWER CT
FDNS	00NR_G15_053	0	17SP	G15_053	TO->FROM	GR ISLD-LNX3345.00 - HOLT.CO3 345.00 345KV CKT 1	720	720	0.05681	126.3578	LANSING WEST 161/22.0KV TRANSFORMER CKT 1
FDNS	00NR_G15_053	0	17SP	G15_053	TO->FROM	GR ISLD-LNX3345.00 - HOLT.CO3 345.00 345KV CKT 1	720	720	0.06993	126.3492	COLUMWEST - GRAND ISLAND 230KV CKT 1
FDNS	00NR_G15_053	0	17SP	G15_053	TO->FROM	GR ISLD-LNX3345.00 - HOLT.CO3 345.00 345KV CKT 1	720	720	0.05681	126.3322	GEN659031 1-G12_014IS_4 0.6900
FDNS	00NR_G15_053	0	17SP	G15_053	TO->FROM	GR ISLD-LNX3345.00 - HOLT.CO3 345.00 345KV CKT 1	720	720	0.05681	126.3119	GEN615021 1-GRE-ER 14G 16.000
FDNS	00NR_G15_053	0	17SP	G15_053	TO->FROM	GR ISLD-LNX3345.00 - HOLT.CO3 345.00 345KV CKT 1	720	720	0.05681	126.3049	GEN615052 1-CAMBRIDGE GENERATING STATION
FDNS	00NR_G15_053	0	17SP	G15_053	TO->FROM	GR ISLD-LNX3345.00 - HOLT.CO3 345.00 345KV CKT 1	720	720	0.05681	126.2971	GEN615015 1-GRE-SPRITWDG13.200
FDNS	00NR_G15_053	0	17SP	G15_053	TO->FROM	GR ISLD-LNX3345.00 - HOLT.CO3 345.00 345KV CKT 1	720	720	0.05681	126.2362	GEN681522 3-GENOA 3
FDNS	00NR_G15_053	0	17SP	G15_053	TO->FROM	GR ISLD-LNX3345.00 - HOLT.CO3 345.00 345KV CKT 1	720	720	0.05681	126.1906	GEN660016 1-B_H WIND 0.7000
FDNS	00NR_G15_053	0	17SP	G15_053	TO->FROM	GR ISLD-LNX3345.00 - HOLT.CO3 345.00 345KV CKT 1	720	720	0.05681	126.173	BISONMP4 230.00 - SQUARE BUTTE 230KV CKT 1
FDNS	00NR_G15_053	0	17SP	G15_053	TO->FROM	GR ISLD-LNX3345.00 - HOLT.CO3 345.00 345KV CKT 1	720	720	0.05681	126.1336	GEN652906 1-G09_006IS_3 0.6900
FDNS	00NR_G15_053	0	17SP	G15_053	TO->FROM	GR ISLD-LNX3345.00 - HOLT.CO3 345.00 345KV CKT 1	720	720	0.05681	126.1206	GEN672303 3-BOUNDARY DAM GENERATOR 3
FDNS	00NR_G15_053	0	17SP	G15_053	TO->FROM	GR ISLD-LNX3345.00 - HOLT.CO3 345.00 345KV CKT 1	720	720	0.05681	126.1206	GEN672305 5-BOUNDARY DAM GENERATOR 5
FDNS	00NR_G15_053	0	17SP	G15_053	TO->FROM	GR ISLD-LNX3345.00 - HOLT.CO3 345.00 345KV CKT 1	720	720	0.05681	126.118	GEN662101 1-WESSINGTON190.5750

SOLUTION	GROUP	SCENARIO	SEASON	SOURCE	DIRECTION	MONITORED ELEMENT	RATEA (MVA)	RATEB(MVA)	TDF	TC%LOADING (% MVA)	CONTINGENCY
FDNS	00NR_G15_053	0	17SP	G15_053	TO->FROM	GR ISLD-LNX3345.00 - HOLT.CO3 345.00 345KV CKT 1	720	720	0.05681	126.0969	GEN672392 1-NBECGT1G 18.000
FDNS	00NR_G15_053	0	17SP	G15_053	TO->FROM	GR ISLD-LNX3345.00 - HOLT.CO3 345.00 345KV CKT 1	720	720	0.05681	126.0755	GEN652545 7-BIG BEND
FDNS	00NR_G15_053	0	17SP	G15_053	TO->FROM	GR ISLD-LNX3345.00 - HOLT.CO3 345.00 345KV CKT 1	720	720	0.05681	126.0285	GEN600067 9-HIGH BRIDGE
FDNS	00NR_G15_053	0	17SP	G15_053	TO->FROM	GR ISLD-LNX3345.00 - HOLT.CO3 345.00 345KV CKT 1	720	720	0.05681	125.9935	GEN652907 1-G09_007IS_3 0.6900
FDNS	00NR_G15_053	0	17SP	G15_053	TO->FROM	GR ISLD-LNX3345.00 - HOLT.CO3 345.00 345KV CKT 1	720	720	0.05681	125.9835	GEN910006 1-G12_012IS_3 0.6900
FDNS	00NR_G15_053	0	17SP	G15_053	TO->FROM	GR ISLD-LNX3345.00 - HOLT.CO3 345.00 345KV CKT 1	720	720	0.05681	125.9714	COYOTE 345/24.0KV TRANSFORMER CKT 1
FDNS	00NR_G15_053	0	17SP	G15_053	TO->FROM	GR ISLD-LNX3345.00 - HOLT.CO3 345.00 345KV CKT 1	720	720	0.05681	125.9496	SQUARE BUTTE - YNG2 4 230.00 230KV CKT 1
FDNS	00NR_G15_053	0	17SP	G15_053	TO->FROM	GR ISLD-LNX3345.00 - HOLT.CO3 345.00 345KV CKT 1	720	720	0.05681	125.9491	YNG2 4 230.00 230/20.0KV TRANSFORMER CKT 1
FDNS	00NR_G15_053	0	17SP	G15_053	TO->FROM	GR ISLD-LNX3345.00 - HOLT.CO3 345.00 345KV CKT 1	720	720	0.06032	125.9246	MINGO - RED WILLOW 345KV CKT 1
FDNS	00NR_G15_053	0	17SP	G15_053	TO->FROM	GR ISLD-LNX3345.00 - HOLT.CO3 345.00 345KV CKT 1	720	720	0.06032	125.9246	MINGO - RED WILLOW 345KV CKT 1
FDNS	00NR_G15_053	0	17SP	G15_053	TO->FROM	GR ISLD-LNX3345.00 - HOLT.CO3 345.00 345KV CKT 1	720	720	0.05681	125.8344	GEN659353 1-DEERCREK CTG18.000
FDNS	00NR_G15_053	0	17SP	G15_053	TO->FROM	GR ISLD-LNX3345.00 - HOLT.CO3 345.00 345KV CKT 1	720	720	0.05681	125.8336	GEN659354 1-DEERCREK STG18.000
FDNS	00NR_G15_053	0	17SP	G15_053	TO->FROM	GR ISLD-LNX3345.00 - HOLT.CO3 345.00 345KV CKT 1	720	720	0.05676	125.8166	GLENHAM - L3 HAWDON 230KV CKT 1
FDNS	00NR_G15_053	0	17SP	G15_053	TO->FROM	GR ISLD-LNX3345.00 - HOLT.CO3 345.00 345KV CKT 1	720	720	0.05681	125.6706	GEN659289 1-DAYCNTYWND W0.6900
FDNS	00NR_G15_053	0	17SP	G15_053	TO->FROM	GR ISLD-LNX3345.00 - HOLT.CO3 345.00 345KV CKT 1	720	720	0.05681	125.6351	GEN659018 1-G14_003IS_3 0.6900
FDNS	00NR_G15_053	0	17SP	G15_053	TO->FROM	GR ISLD-LNX3345.00 - HOLT.CO3 345.00 345KV CKT 1	720	720	0.05681	125.5958	GEN681542 6-JP MADGETT
FDNS	00NR_G15_053	0	17SP	G15_053	TO->FROM	GR ISLD-LNX3345.00 - HOLT.CO3 345.00 345KV CKT 1	720	720	0.05681	125.4989	GEN659194 1-NDPRAIRWND1W0.6900
FDNS	00NR_G15_053	0	17SP	G15_053	TO->FROM	GR ISLD-LNX3345.00 - HOLT.CO3 345.00 345KV CKT 1	720	720	0.05681	125.4968	GEN659010 4-G07_027IS_2 0.6900
FDNS	00NR_G15_053	0	17SP	G15_053	TO->FROM	GR ISLD-LNX3345.00 - HOLT.CO3 345.00 345KV CKT 1	720	720	0.05681	125.4849	GEN652460 4-GARRISON
FDNS	00NR_G15_053	0	17SP	G15_053	TO->FROM	GR ISLD-LNX3345.00 - HOLT.CO3 345.00 345KV CKT 1	720	720	0.05681	125.4848	GEN652461 5-GARRISON
FDNS	00NR_G15_053	0	17SP	G15_053	TO->FROM	GR ISLD-LNX3345.00 - HOLT.CO3 345.00 345KV CKT 1	720	720	0.05681	125.4834	GEN652544 5-BIG BEND
FDNS	00NR_G15_053	0	17SP	G15_053	TO->FROM	GR ISLD-LNX3345.00 - HOLT.CO3 345.00 345KV CKT 1	720	720	0.05681	125.4821	GEN652543 3-BIG BEND
FDNS	00NR_G15_053	0	17SP	G15_053	TO->FROM	GR ISLD-LNX3345.00 - HOLT.CO3 345.00 345KV CKT 1	720	720	0.05681	125.4819	GEN652542 1-BIG BEND
FDNS	00NR_G15_053	0	17SP	G15_053	TO->FROM	GR ISLD-LNX3345.00 - HOLT.CO3 345.00 345KV CKT 1	720	720	0.05795	125.4325	AXTELL - POST ROCK 345KV CKT 1
FDNS	00NR_G15_053	0	17SP	G15_053	TO->FROM	GR ISLD-LNX3345.00 - HOLT.CO3 345.00 345KV CKT 1	720	720	0.05681	125.4276	GEN652457 1-GARRISON
FDNS	00NR_G15_053	0	17SP	G15_053	TO->FROM	GR ISLD-LNX3345.00 - HOLT.CO3 345.00 345KV CKT 1	720	720	0.05681	125.4276	GEN652458 2-GARRISON
FDNS	00NR_G15_053	0	17SP	G15_053	TO->FROM	GR ISLD-LNX3345.00 - HOLT.CO3 345.00 345KV CKT 1	720	720	0.05681	125.4276	GEN652459 3-GARRISON
FDNS	00NR_G15_053	0	17SP	G15_053	TO->FROM	GR ISLD-LNX3345.00 - HOLT.CO3 345.00 345KV CKT 1	720	720	0.05681	125.4086	STANTON 230/18.0KV TRANSFORMER CKT 1
FDNS	00NR_G15_053	0	17SP	G15_053	TO->FROM	GR ISLD-LNX3345.00 - HOLT.CO3 345.00 345KV CKT 1	720	720	0.05681	125.3499	GEN659403 1-NDSUNFLWR W0.6900
FDNS	00NR_G15_053	0	17SP	G15_053	TO->FROM	GR ISLD-LNX3345.00 - HOLT.CO3 345.00 345KV CKT 1	720	720	0.06033	125.2361	AXTELL - SWEETWATER 345KV CKT 1
FDNS	00NR_G15_053	0	17SP	G15_053	TO->FROM	GR ISLD-LNX3345.00 - HOLT.CO3 345.00 345KV CKT 1	720	720	0.05681	125.1675	CLAY BOSWELL 230/20.9KV TRANSFORMER CKT 1
FDNS	00NR_G15_053	0	17SP	G15_053	TO->FROM	GR ISLD-LNX3345.00 - HOLT.CO3 345.00 345KV CKT 1	720	720	0.05681	125.0344	GEN659411 1-CAMPBLCNTY W0.6900
FDNS	00NR_G15_053	0	17SP	G15_053	TO->FROM	GR ISLD-LNX3345.00 - HOLT.CO3 345.00 345KV CKT 1	720	720	0.05681	124.8269	GEN659296 2-SDPRAIRWND1W0.6900
FDNS	00NR_G15_053	0	17SP	G15_053	TO->FROM	GR ISLD-LNX3345.00 - HOLT.CO3 345.00 345KV CKT 1	720	720	0.05681	124.8211	ALMA 161 161/24.0KV TRANSFORMER CKT 1
FDNS	00NR_G15_053	0	17SP	G15_053	TO->FROM	GR ISLD-LNX3345.00 - HOLT.CO3 345.00 345KV CKT 1	720	720	0.05681	124.7689	RCDC EAST 4230.00 - RED CEDAR DC 230KV CKT 1
FDNS	00NR_G15_053	0	17SP	G15_053	TO->FROM	GR ISLD-LNX3345.00 - HOLT.CO3 345.00 345KV CKT 1	720	720	0.05681	124.7615	P12:230:UMZB:# 112 #: NU IN SD. NU-RCDC & DRY CREEK XFMR
FDNS	00NR_G15_053	0	17SP	G15_053	TO->FROM	GR ISLD-LNX3345.00 - HOLT.CO3 345.00 345KV CKT 1	720	720	0.05681	124.714	GEN652559 1-OAHE
FDNS	00NR_G15_053	0	17SP	G15_053	TO->FROM	GR ISLD-LNX3345.00 - HOLT.CO3 345.00 345KV CKT 1	720	720	0.05681	124.6914	GEN672321 1-SHAND GENERATOR 1
FDNS	00NR_G15_053	0	17SP	G15_053	TO->FROM	GR ISLD-LNX3345.00 - HOLT.CO3 345.00 345KV CKT 1	720	720	0.05681	124.6814	GEN672311 2-POPLAR RIVER GENERATOR 2
FDNS	00NR_G15_053	0	17SP	G15_053	TO->FROM	GR ISLD-LNX3345.00 - HOLT.CO3 345.00 345KV CKT 1	720	720	0.05681	124.6813	GEN672310 1-POPLAR RIVER GENERATOR 1
FDNS	00NR_G15_053	0	17SP	G15_053	TO->FROM	GR ISLD-LNX3345.00 - HOLT.CO3 345.00 345KV CKT 1	720	720	0.05681	124.6795	GEN615010 1-STANTON4
FDNS	00NR_G15_053	0	17SP	G15_053	TO->FROM	GR ISLD-LNX3345.00 - HOLT.CO3 345.00 345KV CKT 1	720	720	0.05681	124.6078	GEN672306 6-BOUNDARY DAM GENERATOR 6
FDNS	00NR_G15_053	0	17SP	G15_053	TO->FROM	GR ISLD-LNX3345.00 - HOLT.CO3 345.00 345KV CKT 1	720	720	0.05681	124.531	GEN652556 2-OAHE
FDNS	00NR_G15_053	0	17SP	G15_053	TO->FROM	GR ISLD-LNX3345.00 - HOLT.CO3 345.00 345KV CKT 1	720	720	0.05681	124.531	GEN652557 4-OAHE
FDNS	00NR_G15_053	0	17SP	G15_053	TO->FROM	GR ISLD-LNX3345.00 - HOLT.CO3 345.00 345KV CKT 1	720	720	0.05681	124.531	GEN652558 6-OAHE
FDNS	00NR_G15_053	0	17SP	G15_053	TO->FROM	GR ISLD-LNX3345.00 - HOLT.CO3 345.00 345KV CKT 1	720	720	0.05681	124.4488	GEN659453 1-GI1414GEN W0.6900
FDNS	00NR_G15_053	0	17SP	G15_053	TO->FROM	GR ISLD-LNX3345.00 - HOLT.CO3 345.00 345KV CKT 1	720	720	0.05681	124.413	GEN657749 1-YOUNG 1 GENERATOR
FDNS	00NR_G15_053	0	17SP	G15_053	TO->FROM	GR ISLD-LNX3345.00 - HOLT.CO3 345.00 345KV CKT 1	720	720	0.05681	124.4112	GEN600004 2-PRAIRIE ISLAND G2
FDNS	00NR_G15_053	0	17SP	G15_053	TO->FROM	GR ISLD-LNX3345.00 - HOLT.CO3 345.00 345KV CKT 1	720	720	0.05681	124.4071	GEN600003 1-PRAIRIE ISLAND G1
FDNS	00NR_G15_053	0	17SP	G15_053	TO->FROM	GR ISLD-LNX3345.00 - HOLT.CO3 345.00 345KV CKT 1	720	720	0.05681	124.3588	GEN659141 1-K10215A
FDNS	00NR_G15_053	0	17SP	G15_053	TO->FROM	GR ISLD-LNX3345.00 - HOLT.CO3 345.00 345KV CKT 1	720	720	0.05681	124.1305	GEN652173 1-G09_001IS_2 0.6900
FDNS	00NR_G15_053	0	17SP	G15_053	TO->FROM	GR ISLD-LNX3345.00 - HOLT.CO3 345.00 345KV CKT 1	720	720	0.05681	124.0988	GEN600006 1-AS KING
FDNS	00NR_G15_053	0	17SP	G15_053	TO->FROM	GR ISLD-LNX3345.00 - HOLT.CO3 345.00 345KV CKT 1	720	720	0.05681	123.8947	GEN659407 1-ANTELPHILLSW0.6900
FDNS	00NR_G15_053	0	17SP	G15_053	TO->FROM	GR ISLD-LNX3345.00 - HOLT.CO3 345.00 345KV CKT 1	720	720	0.05681	123.8002	GEN659110 1-LELAND OLDS UNIT1
FDNS	00NR_G15_053	0	17SP	G15_053	TO->FROM	GR ISLD-LNX3345.00 - HOLT.CO3 345.00 345KV CKT 1	720	720	0.05681	123.5307	GEN600005 1-MONTICELLO
FDNS	00NR_G15_053	0	17SP	G15_053	TO->FROM	GR ISLD-LNX3345.00 - HOLT.CO3 345.00 345KV CKT 1	720	720	0.06505	122.9433	MCCOOL - MOORE 345KV CKT 1
FDNS	00NR_G15_053	0	17SP	G15_053	TO->FROM	GR ISLD-LNX3345.00 - HOLT.CO3 345.00 345KV CKT 1	720	720	0.05681	122.8469	GEN600000 1-SHERBURNECNTY G1
FDNS	00NR_G15_053	0	17SP	G15_053	TO->FROM	GR ISLD-LNX3345.00 - HOLT.CO3 345.00 345KV CKT 1	720	720	0.05681	122.6323	GEN600001 2-SHERBURNE CNTY G2
FDNS	00NR_G15_053	0	17SP	G15_053	TO->FROM	GR ISLD-LNX3345.00 - HOLT.CO3 345.00 345KV CKT 1	720	720	0.05681	122.354	GEN620315 1-BIG STONE GEN
FDNS	00NR_G15_053	0	17SP	G15_053	TO->FROM	GR ISLD-LNX3345.00 - HOLT.CO3 345.00 345KV CKT 1	720	720	0.05681	122.338	GEN661015 1-COYOTE
FDNS	00NR_G15_053	0	17SP	G15_053	TO->FROM	GR ISLD-LNX3345.00 - HOLT.CO3 345.00 345KV CKT 1	720	720	0.05681	121.896	GEN657748 1-YOUNG 2 GENERATOR
FDNS	00NR_G15_053	0	17SP	G15_053	TO->FROM	GR ISLD-LNX3345.00 - HOLT.CO3 345.00 345KV CKT 1	720	720	0.05681	121.6731	GEN600002 3-SHERBURNE CNTY G3
FDNS	00NR_G15_053	0	20SP	G15_053	TO->FROM	GR ISLD-LNX3345.00 - HOLT.CO3 345.00 345KV CKT 1	720	720	0.05319	121.2075	HOLT.CO3 345.00 - THEDFRD3 345.00 345KV CKT 1
FDNS	00NR_G15_053	0	17SP	G15_053	TO->FROM	GR ISLD-LNX3345.00 - HOLT.CO3 345.00 345KV CKT 1	720	720	0.05681	121.0151	SHERBURNE CO 345/24.0KV TRANSFORMER CKT 1
FDNS	00NR_G15_053	0	17SP	G15_053	TO->FROM	GR ISLD-LNX3345.00 - HOLT.CO3 345.00 345KV CKT 1	720	720	0.05646	120.8584	FTTHOM1-LNX3345.00 - LELAND2-LNX3345.00 345KV CKT 1
FDNS	00NR_G15_053	0	25SP	G15_053	TO->FROM	GR ISLD-LNX3345.00 - HOLT.CO3 345.00 345KV CKT 1	720	720	0.0541	120.8228	HOLT.CO3 345.00 - THEDFRD3 345.00 345KV CKT 1
FDNS	00NR_G15_053	0	17SP	G15_053	TO->FROM	GR ISLD-LNX3345.00 - HOLT.CO3 345.00 345KV CKT 1	720	720	0.05681	120.7875	BIG STONE 230/24.0KV TRANSFORMER CKT 1
FDNS	00NR_G15_053	0	17SP	G15_053	TO->FROM	GR ISLD-LNX3345.00 - HOLT.CO3 345.00 345KV CKT 1	720	720	0.05646	120.5657	P12:345:UMZB:# 108 #: LOS FT IN ND. LOS FT
FDNS	00NR_G15_053	0	17SP	G15_053	TO->FROM	GR ISLD-LNX3345.00 - HOLT.CO3 345.00 345KV CKT 1	720	720	0.05646	120.5589	FT THOMPSON - FTTHOM1-LNX3345.00 345KV CKT Z
FDNS	00NR_G15_053	0	17SP	G15_053	TO->FROM	GR ISLD-LNX3345.00 - HOLT.CO3 345.00 345KV CKT 1	720	720	0.05646	120.393	LELAND OLDS - LELAND2-LNX3345.00 345KV CKT Z
FDNS	00NR_G15_053	0	17SP	G15_053	TO->FROM	GR ISLD-LNX3345.00 - HOLT.CO3 345.00 345KV CKT 1	720	720	0.05681	120.017	GEN659111 2-LELAND OLDS UNIT2
FDNS	00NR_G15_053	0	17SP	G15_053	TO->FROM	GR ISLD-LNX3345.00 - HOLT.CO3 345.00 345KV CKT 1	720	720	0.05681	119.7268	GEN659125 1-COVEY
FDNS	00NR_G15_053	0	17SP	G15_053	TO->FROM	GR ISLD-LNX3345.00 - HOLT.CO3 345.00 345KV CKT 1	720	720	0.05681	119.4441	GEN659103 1-ANTELOPE VALLEY UNIT1

SOLUTION	GROUP	SCENARIO	SEASON	SOURCE	DIRECTION	MONITORED ELEMENT	RATEA (MVA)	RATEB(MVA)	TDF	TC%LOADING (% MVA)	CONTINGENCY
FDNS	00NR_G15_053	0	17SP	G15_053	TO->FROM	GR ISLD-LNX3345.00 - HOLT.CO3 345.00 345KV CKT 1	720	720	0.05681	119.4441	GEN659107 2-ANTELOPE VALLEY UNIT2
FDNS	00NR_G15_053	0	17SP	G15_053	TO->FROM	GR ISLD-LNX3345.00 - HOLT.CO3 345.00 345KV CKT 1	720	720	0.06578	119.302	GRAND ISLAND - MCCOOL 345KV CKT 1
FDNS	00NR_G15_053	0	17SP	G15_053	TO->FROM	GR ISLD-LNX3345.00 - HOLT.CO3 345.00 345KV CKT 1	720	720	0.05681	119.1714	GEN615001 1-COAL CREEK
FDNS	00NR_G15_053	0	17SP	G15_053	TO->FROM	GR ISLD-LNX3345.00 - HOLT.CO3 345.00 345KV CKT 1	720	720	0.05681	119.0853	GEN615002 2-COAL CREEK
FDNS	00NR_G15_053	0	17SP	G15_053	TO->FROM	GR ISLD-LNX3345.00 - HOLT.CO3 345.00 345KV CKT 1	720	720	0.05681	112.4924	GEN562714 1-G15_023_4 0.6900
FDNS	00NR_G15_053	0	17SP	G15_053	TO->FROM	GR ISLD-LNX3345.00 - HOLT.CO3 345.00 345KV CKT 1	720	720	0.05681	112.4924	GEN562715 1-G15_023_5 0.6900
FDNS	00NR_G15_053	0	20SP	G15_053	TO->FROM	GR ISLD-LNX3345.00 - HOLT.CO3 345.00 345KV CKT 1	720	720	0.05541	110.9105	GERALD GENTLEMAN STATION - THEDFRD3 345.00 345KV CKT 1
FDNS	00NR_G15_053	0	25SP	G15_053	TO->FROM	GR ISLD-LNX3345.00 - HOLT.CO3 345.00 345KV CKT 1	720	720	0.05657	109.9246	GERALD GENTLEMAN STATION - THEDFRD3 345.00 345KV CKT 1
FDNS	00NR_G15_053	0	16WP	G15_053	TO->FROM	GR ISLD-LNX3345.00 - HOLT.CO3 345.00 345KV CKT 1	720	720	0.05614	107.2573	KELLY - MEADOWGROVE4230.00 230KV CKT 1
FDNS	00NR_G15_053	0	17SP	G15_053	TO->FROM	GR ISLD-LNX3345.00 - HOLT.CO3 345.00 345KV CKT 1	720	720	0.05681	106.9356	GEN652353 2-GR PRAIRIEG 0.6900
FDNS	00NR_G15_053	0	16WP	G15_053	TO->FROM	GR ISLD-LNX3345.00 - HOLT.CO3 345.00 345KV CKT 1	720	720	0.05391	106.7931	P12:230:UMZB:# 116 #: ST IN SD. WSG-ST-VH
FDNS	00NR_G15_053	0	16WP	G15_053	TO->FROM	GR ISLD-LNX3345.00 - HOLT.CO3 345.00 345KV CKT 1	720	720	0.05393	106.221	STORLA - WESSINGTON 230KV CKT 1
FDNS	00NR_G15_053	0	16WP	G15_053	TO->FROM	GR ISLD-LNX3345.00 - HOLT.CO3 345.00 345KV CKT 1	720	720	0.05543	105.3751	RIEL - ROSEAU 500KV CKT 1
FDNS	00NR_G15_053	0	16WP	G15_053	TO->FROM	GR ISLD-LNX3345.00 - HOLT.CO3 345.00 345KV CKT 1	720	720	0.05447	105.1516	HANLON - STORLA 230KV CKT 1
FDNS	00NR_G15_053	0	16WP	G15_053	TO->FROM	GR ISLD-LNX3345.00 - HOLT.CO3 345.00 345KV CKT 1	720	720	0.05383	104.8003	FT THOMPSON - LETCHER 230KV CKT 1
FDNS	00NR_G15_053	0	16WP	G15_053	TO->FROM	GR ISLD-LNX3345.00 - HOLT.CO3 345.00 345KV CKT 1	720	720	0.05383	104.8003	FT THOMPSON - LETCHER 230KV CKT 1
FDNSLock	00NR_G15_053	0	16WP	G15_053	TO->FROM	GR ISLD-LNX3345.00 - HOLT.CO3 345.00 345KV CKT 1	720	720	0.05475	104.504	P12:345:UMZW:# 1747 #: WT2 IN SD. WT2-WHT LINE FAULT
FDNS	00NR_G15_053	0	16WP	G15_053	TO->FROM	GR ISLD-LNX3345.00 - HOLT.CO3 345.00 345KV CKT 1	720	720	0.05475	104.0862	WATERTN-LNX3345.00 - WHITE 345KV CKT 1
FDNS	00NR_G15_053	0	16WP	G15_053	TO->FROM	GR ISLD-LNX3345.00 - HOLT.CO3 345.00 345KV CKT 1	720	720	0.05475	104.0156	WATERTN-LNX3345.00 - WATERTOWN 345KV CKT Z
FDNS	00NR_G15_053	0	16WP	G15_053	TO->FROM	GR ISLD-LNX3345.00 - HOLT.CO3 345.00 345KV CKT 1	720	720	0.05536	103.8138	BUFFALO - JAMESTOWN 345KV CKT 1
FDNS	00NR_G15_053	0	16WP	G15_053	TO->FROM	GR ISLD-LNX3345.00 - HOLT.CO3 345.00 345KV CKT 1	720	720	0.05222	103.5802	FT RANDAL - G12_009IST 230.00 230KV CKT 1
FDNS	00NR_G15_053	0	16WP	G15_053	TO->FROM	GR ISLD-LNX3345.00 - HOLT.CO3 345.00 345KV CKT 1	720	720	0.05705	103.5584	KEYSTONE - SIDNEY1-LNX3345.00 345KV CKT 1
FDNS	00NR_G15_053	0	16WP	G15_053	TO->FROM	GR ISLD-LNX3345.00 - HOLT.CO3 345.00 345KV CKT 1	720	720	0.05705	103.5559	SIDNEY - SIDNEY1-LNX3345.00 345KV CKT Z
FDNS	00NR_G15_053	0	16WP	G15_053	TO->FROM	GR ISLD-LNX3345.00 - HOLT.CO3 345.00 345KV CKT 1	720	720	0.05213	103.4871	FT RANDAL - FT THOMPSON 230KV CKT 1
FDNS	00NR_G15_053	0	16WP	G15_053	TO->FROM	GR ISLD-LNX3345.00 - HOLT.CO3 345.00 345KV CKT 1	720	720	0.05213	103.4871	FT RANDAL - FT THOMPSON 230KV CKT 1
FDNS	00NR_G15_053	0	16WP	G15_053	TO->FROM	GR ISLD-LNX3345.00 - HOLT.CO3 345.00 345KV CKT 1	720	720	0.05222	103.4865	FT THOMPSON - LAKE PLATT 230KV CKT 1
FDNS	00NR_G15_053	0	16WP	G15_053	TO->FROM	GR ISLD-LNX3345.00 - HOLT.CO3 345.00 345KV CKT 1	720	720	0.05222	103.4865	FT THOMPSON - LAKE PLATT 230KV CKT 1
FDNS	00NR_G15_053	0	16WP	G15_053	TO->FROM	GR ISLD-LNX3345.00 - HOLT.CO3 345.00 345KV CKT 1	720	720	0.05539	103.4584	GEN336821 1-GRAND GULF UNIT
FDNS	00NR_G15_053	0	16WP	G15_053	TO->FROM	GR ISLD-LNX3345.00 - HOLT.CO3 345.00 345KV CKT 1	720	720	0.0547	103.3582	LETCHER - SIOUX FALLS 230KV CKT 1
FDNS	00NR_G15_053	0	16WP	G15_053	TO->FROM	GR ISLD-LNX3345.00 - HOLT.CO3 345.00 345KV CKT 1	720	720	0.05516	103.2955	G09_001IST 345.00 - WATERTOWN 345KV CKT 1
FDNS	00NR_G15_053	0	16WP	G15_053	TO->FROM	GR ISLD-LNX3345.00 - HOLT.CO3 345.00 345KV CKT 1	720	720	0.05222	103.2168	G12_009IST 230.00 - LAKE PLATT 230KV CKT 1
FDNS	00NR_G15_053	0	16WP	G15_053	TO->FROM	GR ISLD-LNX3345.00 - HOLT.CO3 345.00 345KV CKT 1	720	720	0.05539	103.1736	GEN640010 1-GERALD GENTLEMAN STATION UNIT 1
FDNS	00NR_G15_053	0	16WP	G15_053	TO->FROM	GR ISLD-LNX3345.00 - HOLT.CO3 345.00 345KV CKT 1	720	720	0.05539	103.1378	GEN635024 4-WALTER SCOTT UNIT 4
FDNS	00NR_G15_053	0	16WP	G15_053	TO->FROM	GR ISLD-LNX3345.00 - HOLT.CO3 345.00 345KV CKT 1	720	720	0.05539	103.1003	GEN337911 1-ARKANSAS NUCLEAR ONE UNIT #2
FDNS	00NR_G15_053	0	16WP	G15_053	TO->FROM	GR ISLD-LNX3345.00 - HOLT.CO3 345.00 345KV CKT 1	720	720	0.05539	103.0612	GEN640011 2-GERALD GENTLEMAN STATION UNIT 2
FDNS	00NR_G15_053	0	16WP	G15_053	TO->FROM	GR ISLD-LNX3345.00 - HOLT.CO3 345.00 345KV CKT 1	720	720	0.05536	103.04	CENTER - JAMESTOWN 345KV CKT 1
FDNS	00NR_G15_053	0	16WP	G15_053	TO->FROM	GR ISLD-LNX3345.00 - HOLT.CO3 345.00 345KV CKT 1	720	720	0.05614	103.019	FT RANDAL - MEADOWGROVE4230.00 230KV CKT 1
FDNS	00NR_G15_053	0	16WP	G15_053	TO->FROM	GR ISLD-LNX3345.00 - HOLT.CO3 345.00 345KV CKT 1	720	720	0.05539	103.0096	GEN344225 1-1CAL G1 25.000
FDNS	00NR_G15_053	0	16WP	G15_053	TO->FROM	GR ISLD-LNX3345.00 - HOLT.CO3 345.00 345KV CKT 1	720	720	0.05539	102.9777	GEN336153 1-WATERFORD UNIT#3
FDNS	00NR_G15_053	0	16WP	G15_053	TO->FROM	GR ISLD-LNX3345.00 - HOLT.CO3 345.00 345KV CKT 1	720	720	0.05609	102.9384	HAZLETON - MITCHLCO3 345.00 345KV CKT 1
FDNS	00NR_G15_053	0	16WP	G15_053	TO->FROM	GR ISLD-LNX3345.00 - HOLT.CO3 345.00 345KV CKT 1	720	720	0.05537	102.8887	BISON 3 345.00 - BUFFALO 345KV CKT 1
FDNS	00NR_G15_053	0	16WP	G15_053	TO->FROM	GR ISLD-LNX3345.00 - HOLT.CO3 345.00 345KV CKT 1	720	720	0.05539	102.8063	GEN635023 3-WALTER SCOTT UNIT 3
FDNS	00NR_G15_053	0	16WP	G15_053	TO->FROM	GR ISLD-LNX3345.00 - HOLT.CO3 345.00 345KV CKT 1	720	720	0.05567	102.762	AS KING - EAU CLAIRE 345KV CKT 1
FDNS	00NR_G15_053	0	16WP	G15_053	TO->FROM	GR ISLD-LNX3345.00 - HOLT.CO3 345.00 345KV CKT 1	720	720	0.05539	102.7286	GEN337910 1-ARKANSAS NUCLEAR ONE UNIT #1
FDNS	00NR_G15_053	0	16WP	G15_053	TO->FROM	GR ISLD-LNX3345.00 - HOLT.CO3 345.00 345KV CKT 1	720	720	0.05552	102.7221	FT RANDAL - SIOUX CITY 230KV CKT 1
FDNS	00NR_G15_053	0	16WP	G15_053	TO->FROM	GR ISLD-LNX3345.00 - HOLT.CO3 345.00 345KV CKT 1	720	720	0.05539	102.713	GEN335831 1-RIVERBEND UNIT#1
FDNS	00NR_G15_053	0	16WP	G15_053	TO->FROM	GR ISLD-LNX3345.00 - HOLT.CO3 345.00 345KV CKT 1	720	720	0.05562	102.6179	ARROWHEAD - ARROWHEAD 230 230KV CKT 1
FDNS	00NR_G15_053	0	16WP	G15_053	TO->FROM	GR ISLD-LNX3345.00 - HOLT.CO3 345.00 345KV CKT 1	720	720	0.06305	102.536	RAUN - SUB 3451 FT CAL 345KV CKT 1
FDNS	00NR_G15_053	0	16WP	G15_053	TO->FROM	GR ISLD-LNX3345.00 - HOLT.CO3 345.00 345KV CKT 1	720	720	0.06305	102.536	RAUN - SUB 3451 FT CAL 345KV CKT 1
FDNS	00NR_G15_053	0	16WP	G15_053	TO->FROM	GR ISLD-LNX3345.00 - HOLT.CO3 345.00 345KV CKT 1	720	720	0.055	102.5042	HANLON - SIOUX FALLS 230KV CKT 1
FDNS	00NR_G15_053	0	16WP	G15_053	TO->FROM	GR ISLD-LNX3345.00 - HOLT.CO3 345.00 345KV CKT 1	720	720	0.05517	102.49	GROTON-LNX3 345.00 - LELAND1-LNX3345.00 345KV CKT 1
FDNS	00NR_G15_053	0	16WP	G15_053	TO->FROM	GR ISLD-LNX3345.00 - HOLT.CO3 345.00 345KV CKT 1	720	720	0.04131	102.4705	GRAND ISLAND - SWEETWATER 345KV CKT 1
FDNS	00NR_G15_053	0	16WP	G15_053	TO->FROM	GR ISLD-LNX3345.00 - HOLT.CO3 345.00 345KV CKT 1	720	720	0.05517	102.4464	P12:345:UMZB:# 109 #: LOS GRT IN ND. LOS GRT
FDNS	00NR_G15_053	0	16WP	G15_053	TO->FROM	GR ISLD-LNX3345.00 - HOLT.CO3 345.00 345KV CKT 1	720	720	0.05517	102.4429	GROTON - GROTON-LNX3 345.00 345KV CKT Z
FDNS	00NR_G15_053	0	16WP	G15_053	TO->FROM	GR ISLD-LNX3345.00 - HOLT.CO3 345.00 345KV CKT 1	720	720	0.05517	102.4367	LELAND OLDS - LELAND1-LNX3345.00 345KV CKT Z
FDNS	00NR_G15_053	0	16WP	G15_053	TO->FROM	GR ISLD-LNX3345.00 - HOLT.CO3 345.00 345KV CKT 1	720	720	0.05656	102.4186	GERALD GENTLEMAN STATION - KEYSTONE 345KV CKT 1
FDNS	00NR_G15_053	0	16WP	G15_053	TO->FROM	GR ISLD-LNX3345.00 - HOLT.CO3 345.00 345KV CKT 1	720	720	0.05676	102.4041	SIDNEY - STEGALL 345KV CKT 1
FDNS	00NR_G15_053	0	16WP	G15_053	TO->FROM	GR ISLD-LNX3345.00 - HOLT.CO3 345.00 345KV CKT 1	720	720	0.05494	102.3911	FT RANDAL - UTICA JCT 230KV CKT 1
FDNS	00NR_G15_053	0	16WP	G15_053	TO->FROM	GR ISLD-LNX3345.00 - HOLT.CO3 345.00 345KV CKT 1	720	720	0.05539	102.3163	GEN337653 1-WHITE BLUFF UNIT #2
FDNS	00NR_G15_053	0	16WP	G15_053	TO->FROM	GR ISLD-LNX3345.00 - HOLT.CO3 345.00 345KV CKT 1	720	720	0.05539	102.2617	GEN501801 1-DOLET HILLS UNIT1
FDNS	00NR_G15_053	0	16WP	G15_053	TO->FROM	GR ISLD-LNX3345.00 - HOLT.CO3 345.00 345KV CKT 1	720	720	0.05533	102.2581	CARPENTER - HURON 230KV CKT 1
FDNS	00NR_G15_053	0	16WP	G15_053	TO->FROM	GR ISLD-LNX3345.00 - HOLT.CO3 345.00 345KV CKT 1	720	720	0.05539	102.1864	GEN337652 1-WHITE BLUFF UNIT #1
FDNS	00NR_G15_053	0	16WP	G15_053	TO->FROM	GR ISLD-LNX3345.00 - HOLT.CO3 345.00 345KV CKT 1	720	720	0.05538	102.1644	ELLENDALE - OAKES 230KV CKT 1
FDNS	00NR_G15_053	0	16WP	G15_053	TO->FROM	GR ISLD-LNX3345.00 - HOLT.CO3 345.00 345KV CKT 1	720	720	0.05538	102.1644	ELLENDALE - OAKES 230KV CKT 1
FDNS	00NR_G15_053	0	16WP	G15_053	TO->FROM	GR ISLD-LNX3345.00 - HOLT.CO3 345.00 345KV CKT 1	720	720	0.05539	102.1628	GEN641089 2-ENERGY CENTER 2
FDNS	00NR_G15_053	0	16WP	G15_053	TO->FROM	GR ISLD-LNX3345.00 - HOLT.CO3 345.00 345KV CKT 1	720	720	0.05609	102.1468	ADAMS - MITCHLCO3 345.00 345KV CKT 1
FDNS	00NR_G15_053	0	16WP	G15_053	TO->FROM	GR ISLD-LNX3345.00 - HOLT.CO3 345.00 345KV CKT 1	720	720	0.05516	102.1454	G09_001IST 345.00 - GROTON 345KV CKT 1
FDNS	00NR_G15_053	0	16WP	G15_053	TO->FROM	GR ISLD-LNX3345.00 - HOLT.CO3 345.00 345KV CKT 1	720	720	0.05447	102.1414	SPLIT ROCK - WHITE 345KV CKT 1
FDNS	00NR_G15_053	0	16WP	G15_053	TO->FROM	GR ISLD-LNX3345.00 - HOLT.CO3 345.00 345KV CKT 1	720	720	0.05447	102.1414	SPLIT ROCK - WHITE 345KV CKT 1
FDNS	00NR_G15_053	0	16WP	G15_053	TO->FROM	GR ISLD-LNX3345.00 - HOLT.CO3 345.00 345KV CKT 1	720	720	0.05533	102.1397	HURON - WATERTOWN 230KV CKT 2
FDNS	00NR_G15_053	0	16WP	G15_053	TO->FROM	GR ISLD-LNX3345.00 - HOLT.CO3 345.00 345KV CKT 1	720	720	0.05533	102.1397	HURON - WATERTOWN 230KV CKT 2
FDNS	00NR_G15_053	0	16WP	G15_053	TO->FROM	GR ISLD-LNX3345.00 - HOLT.CO3 345.00 345KV CKT 1	720	720	0.06327	102.133	NUNDRWD - WAYSIDE 230KV CKT 1
FDNS	00NR_G15_053	0	16WP	G15_053	TO->FROM	GR ISLD-LNX3345.00 - HOLT.CO3 345.00 345KV CKT 1	720	720	0.0558	102.1219	ARPIN B4 345.00 - EAU CLAIRE 345KV CKT 1

SOLUTION	GROUP	SCENARIO	SEASON	SOURCE	DIRECTION	MONITORED ELEMENT	RATEA (MVA)	RATEB(MVA)	TDF	TC%LOADING (% MVA)	CONTINGENCY
FDNS	00NR_G15_053	0	16WP	G15_053	TO->FROM	GR ISLD-LNX3345.00 - HOLT.CO3 345.00 345KV CKT 1	720	720	0.05537	102.1078	FORMAN - OAKES 230KV CKT 1
FDNS	00NR_G15_053	0	16WP	G15_053	TO->FROM	GR ISLD-LNX3345.00 - HOLT.CO3 345.00 345KV CKT 1	720	720	0.05539	102.1067	GEN338146 1-INDEPENDENCE UNIT #2
FDNS	00NR_G15_053	0	16WP	G15_053	TO->FROM	GR ISLD-LNX3345.00 - HOLT.CO3 345.00 345KV CKT 1	720	720	0.05539	102.1012	GEN338143 1-INDEPENDENCE UNIT #1
FDNS	00NR_G15_053	0	16WP	G15_053	TO->FROM	GR ISLD-LNX3345.00 - HOLT.CO3 345.00 345KV CKT 1	720	720	0.05533	102.0842	CARPENTER - WATERTOWN 230KV CKT 1
FDNS	00NR_G15_053	0	16WP	G15_053	TO->FROM	GR ISLD-LNX3345.00 - HOLT.CO3 345.00 345KV CKT 1	720	720	0.05533	102.0842	CARPENTER - WATERTOWN 230KV CKT 1
FDNS	00NR_G15_053	0	16WP	G15_053	TO->FROM	GR ISLD-LNX3345.00 - HOLT.CO3 345.00 345KV CKT 1	720	720	0.05502	102.0832	PAHOJA - SIOUX FALLS 230KV CKT 1
FDNSLock	00NR_G15_053	0	16WP	G15_053	TO->FROM	GR ISLD-LNX3345.00 - HOLT.CO3 345.00 345KV CKT 1	720	720	0.05539	102.0524	CENTER - CNTSHNT3 345.00 345KV CKT Z1
FDNS	00NR_G15_053	0	16WP	G15_053	TO->FROM	GR ISLD-LNX3345.00 - HOLT.CO3 345.00 345KV CKT 1	720	720	0.05539	102.0507	CNTSHNT3 345.00 - PRAIRIE3 345.00 345KV CKT 1
FDNS	00NR_G15_053	0	16WP	G15_053	TO->FROM	GR ISLD-LNX3345.00 - HOLT.CO3 345.00 345KV CKT 1	720	720	0.05738	102.0319	GRIMES - LEHIGH 345KV CKT 1
FDNS	00NR_G15_053	0	16WP	G15_053	TO->FROM	GR ISLD-LNX3345.00 - HOLT.CO3 345.00 345KV CKT 1	720	720	0.05393	102.024	FT THOMPSON - WESSINGTON 230KV CKT 1
FDNS	00NR_G15_053	0	16WP	G15_053	TO->FROM	GR ISLD-LNX3345.00 - HOLT.CO3 345.00 345KV CKT 1	720	720	0.05393	102.024	FT THOMPSON - WESSINGTON 230KV CKT 1
FDNS	00NR_G15_053	0	16WP	G15_053	TO->FROM	GR ISLD-LNX3345.00 - HOLT.CO3 345.00 345KV CKT 1	720	720	0.05589	101.9666	RASMUSN - UTICA JCT 230KV CKT 1
FDNS	00NR_G15_053	0	16WP	G15_053	TO->FROM	GR ISLD-LNX3345.00 - HOLT.CO3 345.00 345KV CKT 1	720	720	0.05586	101.9513	ADAMS - PLEASANT VALLEY 345KV CKT 1
FDNS	00NR_G15_053	0	16WP	G15_053	TO->FROM	GR ISLD-LNX3345.00 - HOLT.CO3 345.00 345KV CKT 1	720	720	0.05487	101.9261	P12:115:NPPD:1091:VALENTN7:MISSION7:BTB
FDNS	00NR_G15_053	0	16WP	G15_053	TO->FROM	GR ISLD-LNX3345.00 - HOLT.CO3 345.00 345KV CKT 1	720	720	0.05539	101.9206	GEN501813 1-RODEMACHER UNIT 3
FDNS	00NR_G15_053	0	16WP	G15_053	TO->FROM	GR ISLD-LNX3345.00 - HOLT.CO3 345.00 345KV CKT 1	720	720	0.0516	101.883	GERALD GENTLEMAN STATION - SWEETWATER 345KV CKT 1
FDNS	00NR_G15_053	0	16WP	G15_053	TO->FROM	GR ISLD-LNX3345.00 - HOLT.CO3 345.00 345KV CKT 1	720	720	0.05487	101.8677	MISSION - ST FRANCIS 115KV CKT 1
FDNS	00NR_G15_053	0	16WP	G15_053	TO->FROM	GR ISLD-LNX3345.00 - HOLT.CO3 345.00 345KV CKT 1	720	720	0.05519	101.8535	FT THOMPSON - HURON 230KV CKT 1
FDNS	00NR_G15_053	0	16WP	G15_053	TO->FROM	GR ISLD-LNX3345.00 - HOLT.CO3 345.00 345KV CKT 1	720	720	0.05519	101.8535	FT THOMPSON - HURON 230KV CKT 1
FDNS	00NR_G15_053	0	16WP	G15_053	TO->FROM	GR ISLD-LNX3345.00 - HOLT.CO3 345.00 345KV CKT 1	720	720	0.05519	101.8535	FT THOMPSON - HURON 230KV CKT 2
FDNS	00NR_G15_053	0	16WP	G15_053	TO->FROM	GR ISLD-LNX3345.00 - HOLT.CO3 345.00 345KV CKT 1	720	720	0.05519	101.8535	FT THOMPSON - HURON 230KV CKT 2
FDNS	00NR_G15_053	0	16WP	G15_053	TO->FROM	GR ISLD-LNX3345.00 - HOLT.CO3 345.00 345KV CKT 1	720	720	0.05589	101.8112	RASMUSN - SIOUX CITY 230KV CKT 1
FDNS	00NR_G15_053	0	16WP	G15_053	TO->FROM	GR ISLD-LNX3345.00 - HOLT.CO3 345.00 345KV CKT 1	720	720	0.05487	101.7953	HARMONY - ST FRANCIS 115KV CKT 1
FDNS	00NR_G15_053	0	16WP	G15_053	TO->FROM	GR ISLD-LNX3345.00 - HOLT.CO3 345.00 345KV CKT 1	720	720	0.05539	101.7934	GEN335206 1-NELSON UNIT 6
FDNSLock	00NR_G15_053	0	16WP	G15_053	TO->FROM	GR ISLD-LNX3345.00 - HOLT.CO3 345.00 345KV CKT 1	720	720	0.05536	101.7863	CHISAGO COUNTY - FORBES 500KV CKT 1
FDNS	00NR_G15_053	0	16WP	G15_053	TO->FROM	GR ISLD-LNX3345.00 - HOLT.CO3 345.00 345KV CKT 1	720	720	0.05502	101.7654	EAGLE 4 230.00 - PAHOJA 230KV CKT 1
FDNS	00NR_G15_053	0	16WP	G15_053	TO->FROM	GR ISLD-LNX3345.00 - HOLT.CO3 345.00 345KV CKT 1	720	720	0.05487	101.7375	HARMONY - VALENTINE 115KV CKT 1
FDNS	00NR_G15_053	0	16WP	G15_053	TO->FROM	GR ISLD-LNX3345.00 - HOLT.CO3 345.00 345KV CKT 1	720	720	0.05539	101.7151	FORMAN - HANKINSON 230KV CKT 1
FDNS	00NR_G15_053	0	16WP	G15_053	TO->FROM	GR ISLD-LNX3345.00 - HOLT.CO3 345.00 345KV CKT 1	720	720	0.0554	101.7061	GLENBORO SOUTH - RUGBY 230KV CKT 1
FDNS	00NR_G15_053	0	16WP	G15_053	TO->FROM	GR ISLD-LNX3345.00 - HOLT.CO3 345.00 345KV CKT 1	720	720	0.0554	101.7044	ALEXMRES3 345.00 - BISON 3 345.00 345KV CKT 1
FDNS	00NR_G15_053	0	16WP	G15_053	TO->FROM	GR ISLD-LNX3345.00 - HOLT.CO3 345.00 345KV CKT 1	720	720	0.05536	101.7042	CHISAGO COUNTY - CHISAGO COUNTY 500KV CKT 1
FDNS	00NR_G15_053	0	16WP	G15_053	TO->FROM	GR ISLD-LNX3345.00 - HOLT.CO3 345.00 345KV CKT 1	720	720	0.05399	101.6907	P12:345:UMZW:# 907 #: SC2-SR IN IA. SC2-SR 345 KV LINE
FDNS	00NR_G15_053	0	16WP	G15_053	TO->FROM	GR ISLD-LNX3345.00 - HOLT.CO3 345.00 345KV CKT 1	720	720	0.05539	101.6881	GEN501812 1-RODEMACHER UNIT 2
FDNS	00NR_G15_053	0	16WP	G15_053	TO->FROM	GR ISLD-LNX3345.00 - HOLT.CO3 345.00 345KV CKT 1	720	720	0.05584	101.6853	LAKEFIELD 3 - NOBLES 345KV CKT 1
FDNS	00NR_G15_053	0	16WP	G15_053	TO->FROM	GR ISLD-LNX3345.00 - HOLT.CO3 345.00 345KV CKT 1	720	720	0.05539	101.6681	GEN344897 4-1LAB G4 20.000
FDNS	00NR_G15_053	0	16WP	G15_053	TO->FROM	GR ISLD-LNX3345.00 - HOLT.CO3 345.00 345KV CKT 1	720	720	0.05539	101.666	GEN344894 1-1LAB G1 20.000
FDNS	00NR_G15_053	0	16WP	G15_053	TO->FROM	GR ISLD-LNX3345.00 - HOLT.CO3 345.00 345KV CKT 1	720	720	0.05539	101.6659	GEN344896 3-1LAB G3 20.000
FDNS	00NR_G15_053	0	16WP	G15_053	TO->FROM	GR ISLD-LNX3345.00 - HOLT.CO3 345.00 345KV CKT 1	720	720	0.05399	101.6659	SIOUX CITY - SIOUXCY-LNX3345.00 345KV CKT Z
FDNS	00NR_G15_053	0	16WP	G15_053	TO->FROM	GR ISLD-LNX3345.00 - HOLT.CO3 345.00 345KV CKT 1	720	720	0.05539	101.6587	GEN532751 1-WOLF CREEK GENERATING STATION UNIT 1
FDNS	00NR_G15_053	0	16WP	G15_053	TO->FROM	GR ISLD-LNX3345.00 - HOLT.CO3 345.00 345KV CKT 1	720	720	0.05539	101.6432	GEN345670 1-1RUSH G1 18.000
FDNS	00NR_G15_053	0	16WP	G15_053	TO->FROM	GR ISLD-LNX3345.00 - HOLT.CO3 345.00 345KV CKT 1	720	720	0.05539	101.643	GEN345671 2-1RUSH G2 18.000
FDNS	00NR_G15_053	0	16WP	G15_053	TO->FROM	GR ISLD-LNX3345.00 - HOLT.CO3 345.00 345KV CKT 1	720	720	0.05537	101.6348	CENTER - COYOTE 345KV CKT 1
FDNS	00NR_G15_053	0	16WP	G15_053	TO->FROM	GR ISLD-LNX3345.00 - HOLT.CO3 345.00 345KV CKT 1	720	720	0.05539	101.633	GEN344895 2-1LAB G2 20.000
FDNS	00NR_G15_053	0	16WP	G15_053	TO->FROM	GR ISLD-LNX3345.00 - HOLT.CO3 345.00 345KV CKT 1	720	720	0.05252	101.6079	FT THOMPSON (FT2 KU1B) 345/230/13.8KV TRANSFORMER CKT 1
FDNS	00NR_G15_053	0	16WP	G15_053	TO->FROM	GR ISLD-LNX3345.00 - HOLT.CO3 345.00 345KV CKT 1	720	720	0.05253	101.6055	FT THOMPSON (FT2 KU1A) 345/230/13.8KV TRANSFORMER CKT 1
FDNS	00NR_G15_053	0	16WP	G15_053	TO->FROM	GR ISLD-LNX3345.00 - HOLT.CO3 345.00 345KV CKT 1	720	720	0.05539	101.6032	GEN659118 1-LARAMIE RIVER UNIT1
FDNS	00NR_G15_053	0	16WP	G15_053	TO->FROM	GR ISLD-LNX3345.00 - HOLT.CO3 345.00 345KV CKT 1	720	720	0.05399	101.5829	SIOUXCY-LNX3345.00 - SPLIT ROCK 345KV CKT 1
FDNS	00NR_G15_053	0	16WP	G15_053	TO->FROM	GR ISLD-LNX3345.00 - HOLT.CO3 345.00 345KV CKT 1	720	720	0.05399	101.5829	SIOUXCY-LNX3345.00 - SPLIT ROCK 345KV CKT 1
FDNS	00NR_G15_053	0	16WP	G15_053	TO->FROM	GR ISLD-LNX3345.00 - HOLT.CO3 345.00 345KV CKT 1	720	720	0.05539	101.5819	GEN336252 1-NINEMILE POINT UNIT#5
FDNS	00NR_G15_053	0	16WP	G15_053	TO->FROM	GR ISLD-LNX3345.00 - HOLT.CO3 345.00 345KV CKT 1	720	720	0.05065	101.5672	P12:115:NPPD:WAPA6:FTRANDL7:ONEILL 7:BTB
FDNS	00NR_G15_053	0	16WP	G15_053	TO->FROM	GR ISLD-LNX3345.00 - HOLT.CO3 345.00 345KV CKT 1	720	720	0.05065	101.5672	P12:115:UMZB:# 115 #: SE IN NE. FR-SE-ON
FDNS	00NR_G15_053	0	16WP	G15_053	TO->FROM	GR ISLD-LNX3345.00 - HOLT.CO3 345.00 345KV CKT 1	720	720	0.05258	101.5595	GERALD GENTLEMAN STATION - SWEETWATER 345KV CKT 2
FDNS	00NR_G15_053	0	16WP	G15_053	TO->FROM	GR ISLD-LNX3345.00 - HOLT.CO3 345.00 345KV CKT 1	720	720	0.05539	101.5431	GEN336831 1-BAXTER WILSON SES
FDNS	00NR_G15_053	0	16WP	G15_053	TO->FROM	GR ISLD-LNX3345.00 - HOLT.CO3 345.00 345KV CKT 1	720	720	0.05565	101.5419	LARAMIE RIVER - SIDNEY2-LNX3345.00 345KV CKT 1
FDNS	00NR_G15_053	0	16WP	G15_053	TO->FROM	GR ISLD-LNX3345.00 - HOLT.CO3 345.00 345KV CKT 1	720	720	0.05565	101.5326	SIDNEY - SIDNEY2-LNX3345.00 345KV CKT Z
FDNS	00NR_G15_053	0	16WP	G15_053	TO->FROM	GR ISLD-LNX3345.00 - HOLT.CO3 345.00 345KV CKT 1	720	720	0.05539	101.5246	P12:115:UMZW:# 162 #: NEL IN ND. FAULT ON ML-NEL-MX-GA 115 KV
FDNS	00NR_G15_053	0	16WP	G15_053	TO->FROM	GR ISLD-LNX3345.00 - HOLT.CO3 345.00 345KV CKT 1	720	720	0.05065	101.5245	FT RANDAL - SPENCER 115KV CKT 1
FDNS	00NR_G15_053	0	16WP	G15_053	TO->FROM	GR ISLD-LNX3345.00 - HOLT.CO3 345.00 345KV CKT 1	720	720	0.05487	101.4964	AINSWORTH - VALENTINE 115KV CKT 1
FDNS	00NR_G15_053	0	16WP	G15_053	TO->FROM	GR ISLD-LNX3345.00 - HOLT.CO3 345.00 345KV CKT 1	720	720	0.05539	101.4834	GEN337041 1-GERALD ANDRUS
FDNS	00NR_G15_053	0	16WP	G15_053	TO->FROM	GR ISLD-LNX3345.00 - HOLT.CO3 345.00 345KV CKT 1	720	720	0.05573	101.4786	GAVINS POINT - HARTINGTON 115KV CKT 1
FDNS	00NR_G15_053	0	16WP	G15_053	TO->FROM	GR ISLD-LNX3345.00 - HOLT.CO3 345.00 345KV CKT 1	720	720	0.05571	101.4469	BYRON - NORTH ROCHESTER 345KV CKT 1
FDNS	00NR_G15_053	0	16WP	G15_053	TO->FROM	GR ISLD-LNX3345.00 - HOLT.CO3 345.00 345KV CKT 1	720	720	0.05539	101.4417	GEN334440 1-SABINE UNIT 4
FDNS	00NR_G15_053	0	16WP	G15_053	TO->FROM	GR ISLD-LNX3345.00 - HOLT.CO3 345.00 345KV CKT 1	720	720	0.05539	101.4154	GEN336251 1-NINEMILE POINT UNIT#4
FDNS	00NR_G15_053	0	16WP	G15_053	TO->FROM	GR ISLD-LNX3345.00 - HOLT.CO3 345.00 345KV CKT 1	720	720	0.05541	101.4131	BLAIR - GRANITE FALLS 230KV CKT 1
FDNS	00NR_G15_053	0	16WP	G15_053	TO->FROM	GR ISLD-LNX3345.00 - HOLT.CO3 345.00 345KV CKT 1	720	720	0.05541	101.4131	BLAIR - GRANITE FALLS 230KV CKT 1
FDNS	00NR_G15_053	0	16WP	G15_053	TO->FROM	GR ISLD-LNX3345.00 - HOLT.CO3 345.00 345KV CKT 1	720	720	0.05597	101.4103	KOSSUTH 3 345.00 - WEBSTER 345KV CKT 1
FDNS	00NR_G15_053	0	16WP	G15_053	TO->FROM	GR ISLD-LNX3345.00 - HOLT.CO3 345.00 345KV CKT 1	720	720	0.05597	101.4051	KOSSUTH 3 345.00 - OBRIEN 3 345.00 345KV CKT 1
FDNSLock	00NR_G15_053	0	16WP	G15_053	TO->FROM	GR ISLD-LNX3345.00 - HOLT.CO3 345.00 345KV CKT 1	720	720	0.06321	101.4038	P13:230-345:NPPD:STEGALL3:KV3A
FDNSLock	00NR_G15_053	0	16WP	G15_053	TO->FROM	GR ISLD-LNX3345.00 - HOLT.CO3 345.00 345KV CKT 1	720	720	0.06321	101.4011	STEGALL (SGQ KV3A) 345/230/13.8KV TRANSFORMER CKT 1
FDNS	00NR_G15_053	0	16WP	G15_053	TO->FROM	GR ISLD-LNX3345.00 - HOLT.CO3 345.00 345KV CKT 1	720	720	0.05539	101.3863	P13:115-230:NPPD:NUCOR-3
FDNS	00NR_G15_053	0	16WP	G15_053	TO->FROM	GR ISLD-LNX3345.00 - HOLT.CO3 345.00 345KV CKT 1	720	720	0.05065	101.3826	ONEILL - SPENCER 115KV CKT 1
FDNS	00NR_G15_053	0	16WP	G15_053	TO->FROM	GR ISLD-LNX3345.00 - HOLT.CO3 345.00 345KV CKT 1	720	720	0.05538	101.3689	GARRISON - JAMES TOWN 230KV CKT 1
FDNS	00NR_G15_053	0	16WP	G15_053	TO->FROM	GR ISLD-LNX3345.00 - HOLT.CO3 345.00 345KV CKT 1	720	720	0.05539	101.3671	P13:230-345:NPPD:NUCOR-1

SOLUTION	GROUP	SCENARIO	SEASON	SOURCE	DIRECTION	MONITORED ELEMENT	RATEA (MVA)	RATEB(MVA)	TDF	TC%LOADING (% MVA)	CONTINGENCY
FDNS	00NR_G15_053	0	16WP	G15_053	TO->FROM	GR ISLD-LNX3345.00 - HOLT.CO3 345.00 345KV CKT 1	720	720	0.05539	101.36	GEN525561 1-TOLK GEN #1 24 KV
FDNS	00NR_G15_053	0	16WP	G15_053	TO->FROM	GR ISLD-LNX3345.00 - HOLT.CO3 345.00 345KV CKT 1	720	720	0.05539	101.3544	P13:230:UMZW:# 2218 #: FP IN MT. LOSS OF TRANSFORMER (AT2).
FDNS	00NR_G15_053	0	16WP	G15_053	TO->FROM	GR ISLD-LNX3345.00 - HOLT.CO3 345.00 345KV CKT 1	720	720	0.05608	101.3423	DENISON - SIOUX CITY 230KV CKT 1
FDNS	00NR_G15_053	0	16WP	G15_053	TO->FROM	GR ISLD-LNX3345.00 - HOLT.CO3 345.00 345KV CKT 1	720	720	0.05543	101.3391	HANKINSON - WAHPETON 230KV CKT 1
FDNS	00NR_G15_053	0	16WP	G15_053	TO->FROM	GR ISLD-LNX3345.00 - HOLT.CO3 345.00 345KV CKT 1	720	720	0.05551	101.3347	NORTH ROCHESTER - PRAIRIE ISLAND 345KV CKT 1
FDNS	00NR_G15_053	0	16WP	G15_053	TO->FROM	GR ISLD-LNX3345.00 - HOLT.CO3 345.00 345KV CKT 1	720	720	0.05564	101.329	BROOKING COUNTY - LYON COUNTY 345KV CKT 1
FDNS	00NR_G15_053	0	16WP	G15_053	TO->FROM	GR ISLD-LNX3345.00 - HOLT.CO3 345.00 345KV CKT 1	720	720	0.04931	101.3268	P12:115:NPPD:1164:ONEILL 7:JEFFREY9:BTB
FDNS	00NR_G15_053	0	16WP	G15_053	TO->FROM	GR ISLD-LNX3345.00 - HOLT.CO3 345.00 345KV CKT 1	720	720	0.04931	101.3163	CLEARWATER - ONEILL 115KV CKT 1
FDNS	00NR_G15_053	0	16WP	G15_053	TO->FROM	GR ISLD-LNX3345.00 - HOLT.CO3 345.00 345KV CKT 1	720	720	0.05539	101.3132	GEN303007 1-1BC2 U2
FDNS	00NR_G15_053	0	16WP	G15_053	TO->FROM	GR ISLD-LNX3345.00 - HOLT.CO3 345.00 345KV CKT 1	720	720	0.05539	101.3104	GEN303006 1-1BC2 U1
FDNS	00NR_G15_053	0	16WP	G15_053	TO->FROM	GR ISLD-LNX3345.00 - HOLT.CO3 345.00 345KV CKT 1	720	720	0.05539	101.3104	GEN335204 1-NELSON UNIT 4
FDNS	00NR_G15_053	0	16WP	G15_053	TO->FROM	GR ISLD-LNX3345.00 - HOLT.CO3 345.00 345KV CKT 1	720	720	0.05539	101.3086	GEN336191 1-LITTLE GYPSY UNIT#3
FDNS	00NR_G15_053	0	16WP	G15_053	TO->FROM	GR ISLD-LNX3345.00 - HOLT.CO3 345.00 345KV CKT 1	720	720	0.05539	101.3077	GEN642067 1-PLATTE
FDNS	00NR_G15_053	0	16WP	G15_053	TO->FROM	GR ISLD-LNX3345.00 - HOLT.CO3 345.00 345KV CKT 1	720	720	0.05539	101.291	GEN531447 1-HOLCOMB GENERATOR
FDNS	00NR_G15_053	0	16WP	G15_053	TO->FROM	GR ISLD-LNX3345.00 - HOLT.CO3 345.00 345KV CKT 1	720	720	0.05539	101.2908	P13:115-345:NPPD:NUCOR-2
FDNS	00NR_G15_053	0	16WP	G15_053	TO->FROM	GR ISLD-LNX3345.00 - HOLT.CO3 345.00 345KV CKT 1	720	720	0.04931	101.2844	CLEARWATER - NELIGH 115KV CKT 1
FDNS	00NR_G15_053	0	16WP	G15_053	TO->FROM	GR ISLD-LNX3345.00 - HOLT.CO3 345.00 345KV CKT 1	720	720	0.05478	101.2779	MENNO JCT - TRIPP JCT 115KV CKT 1
FDNS	00NR_G15_053	0	16WP	G15_053	TO->FROM	GR ISLD-LNX3345.00 - HOLT.CO3 345.00 345KV CKT 1	720	720	0.05539	101.2769	GEN336801 1-BAXTER WILSON UNIT #1
FDNS	00NR_G15_053	0	16WP	G15_053	TO->FROM	GR ISLD-LNX3345.00 - HOLT.CO3 345.00 345KV CKT 1	720	720	0.05539	101.2725	GEN335614 1-WILLOW GLENN UNIT#4
FDNS	00NR_G15_053	0	16WP	G15_053	TO->FROM	GR ISLD-LNX3345.00 - HOLT.CO3 345.00 345KV CKT 1	720	720	0.05571	101.2671	BYRON - PLEASANT VALLEY 345KV CKT 1
FDNS	00NR_G15_053	0	16WP	G15_053	TO->FROM	GR ISLD-LNX3345.00 - HOLT.CO3 345.00 345KV CKT 1	720	720	0.05539	101.2622	GEN336464 1-MICHOUD UNIT #3
FDNS	00NR_G15_053	0	16WP	G15_053	TO->FROM	GR ISLD-LNX3345.00 - HOLT.CO3 345.00 345KV CKT 1	720	720	0.05539	101.2619	GEN303008 1-1BC2 U3
FDNS	00NR_G15_053	0	16WP	G15_053	TO->FROM	GR ISLD-LNX3345.00 - HOLT.CO3 345.00 345KV CKT 1	720	720	0.06282	101.2592	COLUMEAST - SHELL CREEK 345KV CKT 1
FDNS	00NR_G15_053	0	16WP	G15_053	TO->FROM	GR ISLD-LNX3345.00 - HOLT.CO3 345.00 345KV CKT 1	720	720	0.05539	101.257	GEN336170 1-GULF OXY U4
FDNS	00NR_G15_053	0	16WP	G15_053	TO->FROM	GR ISLD-LNX3345.00 - HOLT.CO3 345.00 345KV CKT 1	720	720	0.05539	101.2472	GEN334441 1-SABINE UNIT 5
FDNS	00NR_G15_053	0	16WP	G15_053	TO->FROM	GR ISLD-LNX3345.00 - HOLT.CO3 345.00 345KV CKT 1	720	720	0.05538	101.2438	BISMARK - JAMES TOWN 230KV CKT 1
FDNS	00NR_G15_053	0	16WP	G15_053	TO->FROM	GR ISLD-LNX3345.00 - HOLT.CO3 345.00 345KV CKT 1	720	720	0.05538	101.2314	BISMARK - WEBER 230KV CKT 1
FDNS	00NR_G15_053	0	16WP	G15_053	TO->FROM	GR ISLD-LNX3345.00 - HOLT.CO3 345.00 345KV CKT 1	720	720	0.05538	101.2298	JAMES TOWN - WEBER 230KV CKT 1
FDNS	00NR_G15_053	0	16WP	G15_053	TO->FROM	GR ISLD-LNX3345.00 - HOLT.CO3 345.00 345KV CKT 1	720	720	0.05539	101.2247	GRAND GULF 500/22.0KV TRANSFORMER CKT 1
FDNS	00NR_G15_053	0	16WP	G15_053	TO->FROM	GR ISLD-LNX3345.00 - HOLT.CO3 345.00 345KV CKT 1	720	720	0.05539	101.2209	GEN501811 1-RODEMACHER UNIT 1
FDNS	00NR_G15_053	0	16WP	G15_053	TO->FROM	GR ISLD-LNX3345.00 - HOLT.CO3 345.00 345KV CKT 1	720	720	0.05544	101.2208	APPLEDORN 4 230.00 - WATERTOWN 230KV CKT 1
FDNS	00NR_G15_053	0	16WP	G15_053	TO->FROM	GR ISLD-LNX3345.00 - HOLT.CO3 345.00 345KV CKT 1	720	720	0.05544	101.2208	APPLEDORN 4 230.00 - WATERTOWN 230KV CKT 1
FDNS	00NR_G15_053	0	16WP	G15_053	TO->FROM	GR ISLD-LNX3345.00 - HOLT.CO3 345.00 345KV CKT 1	720	720	0.05478	101.2004	MENNO JCT - UTICA 115KV CKT 1
FDNS	00NR_G15_053	0	16WP	G15_053	TO->FROM	GR ISLD-LNX3345.00 - HOLT.CO3 345.00 345KV CKT 1	720	720	0.05573	101.1866	BELDEN - HARTINGTON 115KV CKT 1
FDNS	00NR_G15_053	0	16WP	G15_053	TO->FROM	GR ISLD-LNX3345.00 - HOLT.CO3 345.00 345KV CKT 1	720	720	0.05539	101.1862	PRAIRIE ISLAND 345/20.0KV TRANSFORMER CKT 1
FDNS	00NR_G15_053	0	16WP	G15_053	TO->FROM	GR ISLD-LNX3345.00 - HOLT.CO3 345.00 345KV CKT 1	720	720	0.05539	101.1834	PRAIRIE ISLAND 345/20.0KV TRANSFORMER CKT 2
FDNS	00NR_G15_053	0	16WP	G15_053	TO->FROM	GR ISLD-LNX3345.00 - HOLT.CO3 345.00 345KV CKT 1	720	720	0.05539	101.173	GEN334433 1-SABINE UNIT 3
FDNS	00NR_G15_053	0	16WP	G15_053	TO->FROM	GR ISLD-LNX3345.00 - HOLT.CO3 345.00 345KV CKT 1	720	720	0.05402	101.1726	CROOKED CREEK - NORTH PLATTE 230KV CKT 1
FDNS	00NR_G15_053	0	16WP	G15_053	TO->FROM	GR ISLD-LNX3345.00 - HOLT.CO3 345.00 345KV CKT 1	720	720	0.05538	101.166	FARGO - JAMES TOWN 230KV CKT 1
FDNS	00NR_G15_053	0	16WP	G15_053	TO->FROM	GR ISLD-LNX3345.00 - HOLT.CO3 345.00 345KV CKT 1	720	720	0.05539	101.1651	GEN334071 1-LEWIS CREEK 2
FDNS	00NR_G15_053	0	16WP	G15_053	TO->FROM	GR ISLD-LNX3345.00 - HOLT.CO3 345.00 345KV CKT 1	720	720	0.05539	101.1609	GEN334070 1-LEWIS CREEK 1
FDNS	00NR_G15_053	0	16WP	G15_053	TO->FROM	GR ISLD-LNX3345.00 - HOLT.CO3 345.00 345KV CKT 1	720	720	0.05544	101.1581	APPLEDORN 4 230.00 - GRANITE FALLS 230KV CKT 1
FDNS	00NR_G15_053	0	16WP	G15_053	TO->FROM	GR ISLD-LNX3345.00 - HOLT.CO3 345.00 345KV CKT 1	720	720	0.05544	101.1581	APPLEDORN 4 230.00 - GRANITE FALLS 230KV CKT 1
FDNS	00NR_G15_053	0	16WP	G15_053	TO->FROM	GR ISLD-LNX3345.00 - HOLT.CO3 345.00 345KV CKT 1	720	720	0.05539	101.1551	GEN338388 1-1PLUM PT U1 23.000
FDNS	00NR_G15_053	0	16WP	G15_053	TO->FROM	GR ISLD-LNX3345.00 - HOLT.CO3 345.00 345KV CKT 1	720	720	0.05539	101.1505	GEN337766 1-TRACTEBEL UNIT S1
FDNS	00NR_G15_053	0	16WP	G15_053	TO->FROM	GR ISLD-LNX3345.00 - HOLT.CO3 345.00 345KV CKT 1	720	720	0.05538	101.1486	FARGO - JAMES TOWN 230KV CKT 2
FDNS	00NR_G15_053	0	16WP	G15_053	TO->FROM	GR ISLD-LNX3345.00 - HOLT.CO3 345.00 345KV CKT 1	720	720	0.05539	101.1443	GEN525562 1-TOLK GEN #2 24 KV
FDNS	00NR_G15_053	0	16WP	G15_053	TO->FROM	GR ISLD-LNX3345.00 - HOLT.CO3 345.00 345KV CKT 1	720	720	0.05541	101.1437	FERGSFL4 230.00 - WAHPETON 230KV CKT 1
FDNS	00NR_G15_053	0	16WP	G15_053	TO->FROM	GR ISLD-LNX3345.00 - HOLT.CO3 345.00 345KV CKT 1	720	720	0.05478	101.1424	P12:115:UMZZ:# 237 #: MEN IN SD. MENNO JUNCTION IS A TAP (UJ-MEN-TP).
FDNS	00NR_G15_053	0	16WP	G15_053	TO->FROM	GR ISLD-LNX3345.00 - HOLT.CO3 345.00 345KV CKT 1	720	720	0.05538	101.142	BALTA - RAMSEY 230KV CKT 1
FDNS	00NR_G15_053	0	16WP	G15_053	TO->FROM	GR ISLD-LNX3345.00 - HOLT.CO3 345.00 345KV CKT 1	720	720	0.0554	101.1298	AUDUBON - SHEYNNE 230KV CKT 1
FDNS	00NR_G15_053	0	16WP	G15_053	TO->FROM	GR ISLD-LNX3345.00 - HOLT.CO3 345.00 345KV CKT 1	720	720	0.05552	101.1263	ARKANSAS NUCLEAR ONE - FT SMITH 500KV CKT 1
FDNS	00NR_G15_053	0	16WP	G15_053	TO->FROM	GR ISLD-LNX3345.00 - HOLT.CO3 345.00 345KV CKT 1	720	720	0.05552	101.1263	ARKANSAS NUCLEAR ONE - FT SMITH 500KV CKT 1
FDNS	00NR_G15_053	0	16WP	G15_053	TO->FROM	GR ISLD-LNX3345.00 - HOLT.CO3 345.00 345KV CKT 1	720	720	0.05558	101.1192	OVEXFRMCCOVE
FDNS	00NR_G15_053	0	16WP	G15_053	TO->FROM	GR ISLD-LNX3345.00 - HOLT.CO3 345.00 345KV CKT 1	720	720	0.05539	101.1183	GEN501910 1-ACADIA UNIT ST1
FDNS	00NR_G15_053	0	16WP	G15_053	TO->FROM	GR ISLD-LNX3345.00 - HOLT.CO3 345.00 345KV CKT 1	720	720	0.05539	101.1084	P12:345:GRDA:CHOUTEAU-SPORTSMANACRES
FDNS	00NR_G15_053	0	16WP	G15_053	TO->FROM	GR ISLD-LNX3345.00 - HOLT.CO3 345.00 345KV CKT 1	720	720	0.05545	101.102	NORTH LA CROSSE - NORTH ROCHESTER 345KV CKT 1
FDNS	00NR_G15_053	0	16WP	G15_053	TO->FROM	GR ISLD-LNX3345.00 - HOLT.CO3 345.00 345KV CKT 1	720	720	0.05539	101.1001	WHITE BLUFF 500/26.0KV TRANSFORMER CKT 1
FDNS	00NR_G15_053	0	16WP	G15_053	TO->FROM	GR ISLD-LNX3345.00 - HOLT.CO3 345.00 345KV CKT 1	720	720	0.05562	101.0985	ARPIN B3 345.00 - ROCKY RN B8 345.00 345KV CKT 1
FDNS	00NR_G15_053	0	16WP	G15_053	TO->FROM	GR ISLD-LNX3345.00 - HOLT.CO3 345.00 345KV CKT 1	720	720	0.05539	101.0899	GEN336222 1-LITTLE GYPSY UNIT#2
FDNS	00NR_G15_053	0	16WP	G15_053	TO->FROM	GR ISLD-LNX3345.00 - HOLT.CO3 345.00 345KV CKT 1	720	720	0.05539	101.0737	GEN337764 1-TRACTEBEL UNIT C1
FDNS	00NR_G15_053	0	16WP	G15_053	TO->FROM	GR ISLD-LNX3345.00 - HOLT.CO3 345.00 345KV CKT 1	720	720	0.05539	101.0736	GEN337765 1-TRACTEBEL UNIT C2
FDNS	00NR_G15_053	0	16WP	G15_053	TO->FROM	GR ISLD-LNX3345.00 - HOLT.CO3 345.00 345KV CKT 1	720	720	0.05539	100.6303	BASE CASE
FDNS	00NR_G15_053	0	16WP	G15_053	TO->FROM	GR ISLD-LNX3345.00 - HOLT.CO3 345.00 345KV CKT 1	720	720	0.05539	100.3192	GEN645001 1-FORT CALHOUN 1
FDNS	00NR_G15_053	0	16WP	G15_053	TO->FROM	GR ISLD-LNX3345.00 - HOLT.CO3 345.00 345KV CKT 1	720	720	0.05546	100.2472	P12:345:UMZB:# 103 #: BD IN SD. LOSS OF LINE
FDNS	00NR_G15_053	0	16WP	G15_053	TO->FROM	GR ISLD-LNX3345.00 - HOLT.CO3 345.00 345KV CKT 1	720	720	0.05546	100.2456	P12:345:UMZB:# 102 #: AVS BD IN ND. AVS BRD LR
FDNS	00NR_G15_053	0	16WP	G15_053	TO->FROM	GR ISLD-LNX3345.00 - HOLT.CO3 345.00 345KV CKT 1	720	720	0.05546	100.2431	BRDLAND-LNX3345.00 - HURON 345KV CKT Z
FDNS	00NR_G15_053	0	16WP	G15_053	TO->FROM	GR ISLD-LNX3345.00 - HOLT.CO3 345.00 345KV CKT 1	720	720	0.05546	100.2429	HURON (BD KU2A) 345/230/13.8KV TRANSFORMER CKT 1
FDNS	00NR_G15_053	0	16WP	G15_053	TO->FROM	GR ISLD-LNX3345.00 - HOLT.CO3 345.00 345KV CKT 1	720	720	0.05546	100.2429	HURON (BD KU2A) 345/230/13.8KV TRANSFORMER CKT 1
FDNS	00NR_G15_053	0	16WP	G15_053	TO->FROM	GR ISLD-LNX3345.00 - HOLT.CO3 345.00 345KV CKT 1	720	720	0.05546	100.2425	BROADLAND - HURON 230KV CKT 1
FDNS	00NR_G15_053	0	16WP	G15_053	TO->FROM	GR ISLD-LNX3345.00 - HOLT.CO3 345.00 345KV CKT 1	720	720	0.05553	100.2334	FT THOMPSON - OAHE 230KV CKT 3
FDNS	00NR_G15_053	0	16WP	G15_053	TO->FROM	GR ISLD-LNX3345.00 - HOLT.CO3 345.00 345KV CKT 1	720	720	0.05553	100.2334	FT THOMPSON - OAHE 230KV CKT 3
FDNS	00NR_G15_053	0	16WP	G15_053	TO->FROM	GR ISLD-LNX3345.00 - HOLT.CO3 345.00 345KV CKT 1	720	720	0.05553	100.2334	FT THOMPSON - OAHE 230KV CKT 4

SOLUTION	GROUP	SCENARIO	SEASON	SOURCE	DIRECTION	MONITORED ELEMENT	RATEA (MVA)	RATEB(MVA)	TDF	TC%LOADING (% MVA)	CONTINGENCY
FDNS	00NR_G15_053	0	16WP	G15_053	TO->FROM	GR ISLD-LNX3345.00 - HOLT.CO3 345.00 345KV CKT 1	720	720	0.05553	100.2334	FT THOMPSON - OAHE 230KV CKT 4
FDNS	00NR_G15_053	0	16WP	G15_053	TO->FROM	GR ISLD-LNX3345.00 - HOLT.CO3 345.00 345KV CKT 1	720	720	0.05546	100.1976	ANTELOP-LNX3345.00 - BRDLAND-LNX3345.00 345KV CKT 1
FDNS	00NR_G15_053	0	16WP	G15_053	TO->FROM	GR ISLD-LNX3345.00 - HOLT.CO3 345.00 345KV CKT 1	720	720	0.05544	100.1839	G14-074T 345.00 - OKLAUNION 345KV CKT 1
FDNS	00NR_G15_053	0	16WP	G15_053	TO->FROM	GR ISLD-LNX3345.00 - HOLT.CO3 345.00 345KV CKT 1	720	720	0.05949	100.1833	LOUP CITY - NORTH LOUP 115KV CKT 1
FDNS	00NR_G15_053	0	16WP	G15_053	TO->FROM	GR ISLD-LNX3345.00 - HOLT.CO3 345.00 345KV CKT 1	720	720	0.05539	100.1705	GEN659116 1-SPIRIT MOUND UNIT1
FDNS	00NR_G15_053	0	16WP	G15_053	TO->FROM	GR ISLD-LNX3345.00 - HOLT.CO3 345.00 345KV CKT 1	720	720	0.05539	100.1705	GEN659117 2-SPIRIT MOUND UNIT2
FDNS	00NR_G15_053	0	16WP	G15_053	TO->FROM	GR ISLD-LNX3345.00 - HOLT.CO3 345.00 345KV CKT 1	720	720	0.05539	100.1635	CLKREACT5 161.00 - CRYSTLK5 161.00 161KV CKT 1
FDNSLock	00NR_G15_053	0	16WP	G15_053	TO->FROM	GR ISLD-LNX3345.00 - HOLT.CO3 345.00 345KV CKT 1	720	720	0.05581	100.1604	STEGALL - VICTORY HILL 230KV CKT 1
FDNS	00NR_G15_053	0	16WP	G15_053	TO->FROM	GR ISLD-LNX3345.00 - HOLT.CO3 345.00 345KV CKT 1	720	720	0.05581	100.1581	VICTORY HILL (VICTORYHL T1) 230/115/13.8KV TRANSFORMER CKT 1
FDNS	00NR_G15_053	0	16WP	G15_053	TO->FROM	GR ISLD-LNX3345.00 - HOLT.CO3 345.00 345KV CKT 1	720	720	0.05581	100.1581	VICTORY HILL (VICTORYHL T1) 230/115/13.8KV TRANSFORMER CKT 1
FDNS	00NR_G15_053	0	16WP	G15_053	TO->FROM	GR ISLD-LNX3345.00 - HOLT.CO3 345.00 345KV CKT 1	720	720	0.05565	100.1573	GRAND ISLAND (GI KU3A) 345/230/13.8KV TRANSFORMER CKT 3
FDNS	00NR_G15_053	0	16WP	G15_053	TO->FROM	GR ISLD-LNX3345.00 - HOLT.CO3 345.00 345KV CKT 1	720	720	0.05565	100.1573	GRAND ISLAND (GI KU3A) 345/230/13.8KV TRANSFORMER CKT 3
FDNS	00NR_G15_053	0	16WP	G15_053	TO->FROM	GR ISLD-LNX3345.00 - HOLT.CO3 345.00 345KV CKT 1	720	720	0.05539	100.1572	GEN562003 1-G11_027_3 0.6900
FDNS	00NR_G15_053	0	16WP	G15_053	TO->FROM	GR ISLD-LNX3345.00 - HOLT.CO3 345.00 345KV CKT 1	720	720	0.05539	100.1531	GEN620115 1-HRDLKGEN 0.6000
FDNS	00NR_G15_053	0	16WP	G15_053	TO->FROM	GR ISLD-LNX3345.00 - HOLT.CO3 345.00 345KV CKT 1	720	720	0.05565	100.1392	LARAMIE RIVER - STEGALL 345KV CKT 1
FDNS	00NR_G15_053	0	16WP	G15_053	TO->FROM	GR ISLD-LNX3345.00 - HOLT.CO3 345.00 345KV CKT 1	720	720	0.05539	100.1253	GEN672340 1-QUEEN ELIZABETH GENERATOR 1
FDNS	00NR_G15_053	0	16WP	G15_053	TO->FROM	GR ISLD-LNX3345.00 - HOLT.CO3 345.00 345KV CKT 1	720	720	0.05539	100.1252	GEN600013 3-BLACK DOG GEN 3
FDNS	00NR_G15_053	0	16WP	G15_053	TO->FROM	GR ISLD-LNX3345.00 - HOLT.CO3 345.00 345KV CKT 1	720	720	0.05539	100.1199	MITCHLCO3 345.00 345/34.5KV TRANSFORMER CKT 1
FDNS	00NR_G15_053	0	16WP	G15_053	TO->FROM	GR ISLD-LNX3345.00 - HOLT.CO3 345.00 345KV CKT 1	720	720	0.05546	100.1115	ANTELOP-LNX3345.00 - ANTELOPE VALLEY 345KV CKT Z
FDNS	00NR_G15_053	0	16WP	G15_053	TO->FROM	GR ISLD-LNX3345.00 - HOLT.CO3 345.00 345KV CKT 1	720	720	0.05539	100.1065	GEN659018 1-G14_003IS_3 0.6900
FDNS	00NR_G15_053	0	16WP	G15_053	TO->FROM	GR ISLD-LNX3345.00 - HOLT.CO3 345.00 345KV CKT 1	720	720	0.05539	100.1004	GEN672384 1-CENTENNIAL WINDFARM
FDNS	00NR_G15_053	0	16WP	G15_053	TO->FROM	GR ISLD-LNX3345.00 - HOLT.CO3 345.00 345KV CKT 1	720	720	0.05539	100.1	GEN635213 3-NEAL UNIT 3
FDNS	00NR_G15_053	0	16WP	G15_053	TO->FROM	GR ISLD-LNX3345.00 - HOLT.CO3 345.00 345KV CKT 1	720	720	0.05539	100.0991	GEN600125 2-FEP ST G 13.800
FDNS	00NR_G15_053	0	16WP	G15_053	TO->FROM	GR ISLD-LNX3345.00 - HOLT.CO3 345.00 345KV CKT 1	720	720	0.05559	100.0953	P12:115:UMZW:# 172 #: WI IN SD.
FDNS	00NR_G15_053	0	16WP	G15_053	TO->FROM	GR ISLD-LNX3345.00 - HOLT.CO3 345.00 345KV CKT 1	720	720	0.05539	100.0893	LADISH 115/13.2KV TRANSFORMER CKT 1
FDNS	00NR_G15_053	0	16WP	G15_053	TO->FROM	GR ISLD-LNX3345.00 - HOLT.CO3 345.00 345KV CKT 1	720	720	0.05539	100.0873	GEN620323 2-HOOT LAKE 2 GEN
FDNS	00NR_G15_053	0	16WP	G15_053	TO->FROM	GR ISLD-LNX3345.00 - HOLT.CO3 345.00 345KV CKT 1	720	720	0.0556	100.0792	SMOKYHL6 230.00 - SUMMIT 230KV CKT 1
FDNS	00NR_G15_053	0	16WP	G15_053	TO->FROM	GR ISLD-LNX3345.00 - HOLT.CO3 345.00 345KV CKT 1	720	720	0.05539	100.0759	GEN659354 1-DEERCREK STG18.000
FDNS	00NR_G15_053	0	16WP	G15_053	TO->FROM	GR ISLD-LNX3345.00 - HOLT.CO3 345.00 345KV CKT 1	720	720	0.05539	100.0706	GEN657964 1-ASH2GEN9 0.5750
FDNS	00NR_G15_053	0	16WP	G15_053	TO->FROM	GR ISLD-LNX3345.00 - HOLT.CO3 345.00 345KV CKT 1	720	720	0.05539	100.0598	GEN652546 1-FT RANDAL
FDNS	00NR_G15_053	0	16WP	G15_053	TO->FROM	GR ISLD-LNX3345.00 - HOLT.CO3 345.00 345KV CKT 1	720	720	0.05759	100	CENTRAL CITY - GRAND ISLAND 115KV CKT 1
FDNS	00NR_G15_053	0	16WP	G15_053	TO->FROM	GR ISLD-LNX3345.00 - HOLT.CO3 345.00 345KV CKT 1	720	720	0.05689	100	AXTELL - PAULINE 345KV CKT 1
FDNS	00NR_G15_053	0	16WP	G15_053	TO->FROM	GR ISLD-LNX3345.00 - HOLT.CO3 345.00 345KV CKT 1	720	720	0.05689	100	SUB 3454 - WAGENER 345KV CKT 1
FDNS	00NR_G15_053	0	16WP	G15_053	TO->FROM	GR ISLD-LNX3345.00 - HOLT.CO3 345.00 345KV CKT 1	720	720	0.05689	100	SUB 3454 - WAGENER 345KV CKT 1
FDNS	00NR_G15_053	0	16WP	G15_053	TO->FROM	GR ISLD-LNX3345.00 - HOLT.CO3 345.00 345KV CKT 1	720	720	0.05567	100	7MAYWOOD 345.00 - 7SPENCER 345.00 345KV CKT 1
FDNS	00NR_G15_053	0	16WP	G15_053	TO->FROM	GR ISLD-LNX3345.00 - HOLT.CO3 345.00 345KV CKT 1	720	720	0.05567	100	7MONTGMRY 345.00 - 7SPENCER 345.00 345KV CKT 1
FDNS	00NR_G15_053	0	16WP	G15_053	TO->FROM	GR ISLD-LNX3345.00 - HOLT.CO3 345.00 345KV CKT 1	720	720	0.05563	100	POST ROCK (POSTROCK T1) 345/230/13.8KV TRANSFORMER CKT 1
FDNS	00NR_G15_053	0	16WP	G15_053	TO->FROM	GR ISLD-LNX3345.00 - HOLT.CO3 345.00 345KV CKT 1	720	720	0.05554	100	FALLOW 3 345.00 - POTTCO 3 345.00 345KV CKT 1
FDNS	00NR_G15_053	0	16WP	G15_053	TO->FROM	GR ISLD-LNX3345.00 - HOLT.CO3 345.00 345KV CKT 1	720	720	0.05544	100	MADISON COUNTY - RLHILLS3 345.00 345KV CKT 1
FDNS	00NR_G15_053	0	16WP	G15_053	TO->FROM	GR ISLD-LNX3345.00 - HOLT.CO3 345.00 345KV CKT 1	720	720	0.05539	100	EASTDC - ERCOT EQUIVALENCE 345KV CKT 1
FDNS	00NR_G15_053	0	16WP	G15_053	TO->FROM	GR ISLD-LNX3345.00 - HOLT.CO3 345.00 345KV CKT 1	720	720	0.05539	100	G830_SUB 115.00 - GRE-MCHENRY7115.00 115KV CKT 1
FDNS	00NR_G15_053	0	16WP	G15_053	TO->FROM	GR ISLD-LNX3345.00 - HOLT.CO3 345.00 345KV CKT 1	720	720	0.05539	100	G830_SUB 115.00 115/34.5KV TRANSFORMER CKT 1
FDNS	00NR_G15_053	0	16WP	G15_053	TO->FROM	GR ISLD-LNX3345.00 - HOLT.CO3 345.00 345KV CKT 1	720	720	0.05539	100	GEN300003 1-THOMAS HILL UNIT 3
FDNS	00NR_G15_053	0	16WP	G15_053	TO->FROM	GR ISLD-LNX3345.00 - HOLT.CO3 345.00 345KV CKT 1	720	720	0.05539	100	GEN590010 1-ERCOT EQUIVALENCE
FDNS	00NR_G15_053	0	16WP	G15_053	TO->FROM	GR ISLD-LNX3345.00 - HOLT.CO3 345.00 345KV CKT 1	720	720	0.05539	100	GEN590011 2-ERCOT EQUIVALENCE
FDNS	00NR_G15_053	0	16WP	G15_053	TO->FROM	GR ISLD-LNX3345.00 - HOLT.CO3 345.00 345KV CKT 1	720	720	0.05539	100	GEN600018 S-LS POWER STEAM
FDNS	00NR_G15_053	0	16WP	G15_053	TO->FROM	GR ISLD-LNX3345.00 - HOLT.CO3 345.00 345KV CKT 1	720	720	0.05539	100	GEN629074 1-ARNOLD LOWSIDE OF GSU XFMR
FDNS	00NR_G15_053	0	16WP	G15_053	TO->FROM	GR ISLD-LNX3345.00 - HOLT.CO3 345.00 345KV CKT 1	720	720	0.05539	100	GEN652410 3-FT PECK
FDNS	00NR_G15_053	0	16WP	G15_053	TO->FROM	GR ISLD-LNX3345.00 - HOLT.CO3 345.00 345KV CKT 1	720	720	0.05539	100	GEN652547 3-FT RANDAL
FDNS	00NR_G15_053	0	16WP	G15_053	TO->FROM	GR ISLD-LNX3345.00 - HOLT.CO3 345.00 345KV CKT 1	720	720	0.05539	100	GEN652548 5-FT RANDAL
FDNS	00NR_G15_053	0	16WP	G15_053	TO->FROM	GR ISLD-LNX3345.00 - HOLT.CO3 345.00 345KV CKT 1	720	720	0.05539	100	GEN652549 7-FT RANDAL
FDNS	00NR_G15_053	0	16WP	G15_053	TO->FROM	GR ISLD-LNX3345.00 - HOLT.CO3 345.00 345KV CKT 1	720	720	0.05539	100	GEN657600 1-L1GEN3 9 0.5750
FDNS	00NR_G15_053	0	16WP	G15_053	TO->FROM	GR ISLD-LNX3345.00 - HOLT.CO3 345.00 345KV CKT 1	720	720	0.05539	100	GEN659290 1-EDGECOL
FDNS	00NR_G15_053	0	16WP	G15_053	TO->FROM	GR ISLD-LNX3345.00 - HOLT.CO3 345.00 345KV CKT 1	720	720	0.05539	100	GEN672347 1-CORY COGEN GENERATOR 1 GT1
FDNS	00NR_G15_053	0	16WP	G15_053	TO->FROM	GR ISLD-LNX3345.00 - HOLT.CO3 345.00 345KV CKT 1	720	720	0.05539	100	GEN672348 2-CORY COGEN GENERATOR 2 GT2
FDNS	00NR_G15_053	0	16WP	G15_053	TO->FROM	GR ISLD-LNX3345.00 - HOLT.CO3 345.00 345KV CKT 1	720	720	0.05539	100	GEN672350 1-NIPAWIN GENERATOR 1
FDNS	00NR_G15_053	0	16WP	G15_053	TO->FROM	GR ISLD-LNX3345.00 - HOLT.CO3 345.00 345KV CKT 1	720	720	0.05539	100	GEN672351 2-NIPAWIN GENERATOR 2
FDNS	00NR_G15_053	0	16WP	G15_053	TO->FROM	GR ISLD-LNX3345.00 - HOLT.CO3 345.00 345KV CKT 1	720	720	0.05539	100	GEN672352 3-NIPAWIN GENERATOR 3
FDNS	00NR_G15_053	0	16WP	G15_053	TO->FROM	GR ISLD-LNX3345.00 - HOLT.CO3 345.00 345KV CKT 1	720	720	0.06817	99.9	COLUMWEST - KELLY 230KV CKT 1
FDNS	00NR_G15_053	0	16WP	G15_053	TO->FROM	GR ISLD-LNX3345.00 - HOLT.CO3 345.00 345KV CKT 1	720	720	0.05554	99.9	G11_051T 345.00 - WOODWARD DISTRICT EHV 345KV CKT 1
FDNS	00NR_G15_053	0	16WP	G15_053	TO->FROM	GR ISLD-LNX3345.00 - HOLT.CO3 345.00 345KV CKT 1	720	720	0.05539	99.9	GEN 11104 1-J262_GEN 0.6000
FDNS	00NR_G15_053	0	16WP	G15_053	TO->FROM	GR ISLD-LNX3345.00 - HOLT.CO3 345.00 345KV CKT 1	720	720	0.05539	99.9	GEN 11108 1-J263_GEN 0.6000
FDNS	00NR_G15_053	0	16WP	G15_053	TO->FROM	GR ISLD-LNX3345.00 - HOLT.CO3 345.00 345KV CKT 1	720	720	0.05539	99.9	GEN300006 1-NEW MADRID UNIT 1
FDNS	00NR_G15_053	0	16WP	G15_053	TO->FROM	GR ISLD-LNX3345.00 - HOLT.CO3 345.00 345KV CKT 1	720	720	0.05539	99.9	GEN300007 1-NEW MADRID UNIT 2
FDNS	00NR_G15_053	0	16WP	G15_053	TO->FROM	GR ISLD-LNX3345.00 - HOLT.CO3 345.00 345KV CKT 1	720	720	0.05539	99.9	GEN600012 2-BLACK DOG GEN 2
FDNS	00NR_G15_053	0	16WP	G15_053	TO->FROM	GR ISLD-LNX3345.00 - HOLT.CO3 345.00 345KV CKT 1	720	720	0.05539	99.9	GEN615032 2-PLEASANT VALLEY
FDNS	00NR_G15_053	0	16WP	G15_053	TO->FROM	GR ISLD-LNX3345.00 - HOLT.CO3 345.00 345KV CKT 1	720	720	0.05539	99.9	GEN620324 3-HOOT LAKE 3 GEN
FDNS	00NR_G15_053	0	16WP	G15_053	TO->FROM	GR ISLD-LNX3345.00 - HOLT.CO3 345.00 345KV CKT 1	720	720	0.05539	99.9	GEN652345 W-G07_023IS_2 0.6900
FDNS	00NR_G15_053	0	16WP	G15_053	TO->FROM	GR ISLD-LNX3345.00 - HOLT.CO3 345.00 345KV CKT 1	720	720	0.05539	99.9	GEN652414 4-FT PECK
FDNS	00NR_G15_053	0	16WP	G15_053	TO->FROM	GR ISLD-LNX3345.00 - HOLT.CO3 345.00 345KV CKT 1	720	720	0.05539	99.9	GEN652415 5-FT PECK
FDNS	00NR_G15_053	0	16WP	G15_053	TO->FROM	GR ISLD-LNX3345.00 - HOLT.CO3 345.00 345KV CKT 1	720	720	0.05539	99.9	GEN660001 2-ABERDEEN SIEBRECHT
FDNS	00NR_G15_053	0	16WP	G15_053	TO->FROM	GR ISLD-LNX3345.00 - HOLT.CO3 345.00 345KV CKT 1	720	720	0.05539	99.9	GEN672339 16-QE 16G 13.800
FDNS	00NR_G15_053	0	16WP	G15_053	TO->FROM	GR ISLD-LNX3345.00 - HOLT.CO3 345.00 345KV CKT 1	720	720	0.05539	99.9	GEN672342 3-QUEEN ELIZABETH GENERATOR 3

SOLUTION	GROUP	SCENARIO	SEASON	SOURCE	DIRECTION	MONITORED ELEMENT	RATEA (MVA)	RATEB(MVA)	TDF	TC%LOADING (% MVA)	CONTINGENCY
FDNS	00NR_G15_053	0	16WP	G15_053	TO->FROM	GR ISLD-LNX3345.00 - HOLT.CO3 345.00 345KV CKT 1	720	720	0.05539	99.9	GEN672349 3-CORY COGEN GENERATOR 3 ST
FDNS	00NR_G15_053	0	16WP	G15_053	TO->FROM	GR ISLD-LNX3345.00 - HOLT.CO3 345.00 345KV CKT 1	720	720	0.05539	99.9	GEN672367 1-MERIDIAN GENERATOR 1 GT1
FDNS	00NR_G15_053	0	16WP	G15_053	TO->FROM	GR ISLD-LNX3345.00 - HOLT.CO3 345.00 345KV CKT 1	720	720	0.05539	99.9	GEN672368 2-MERIDIAN GENERATOR 2 GT2
FDNS	00NR_G15_053	0	16WP	G15_053	TO->FROM	GR ISLD-LNX3345.00 - HOLT.CO3 345.00 345KV CKT 1	720	720	0.0543	99.9	HIGHLND 3 345.00 - OBRIEN 3 345.00 345KV CKT 1
FDNS	00NR_G15_053	0	16WP	G15_053	TO->FROM	GR ISLD-LNX3345.00 - HOLT.CO3 345.00 345KV CKT 1	720	720	0.05757	99.8	ATCHSNT3 345.00 - COOPER 345KV CKT 1
FDNS	00NR_G15_053	0	16WP	G15_053	TO->FROM	GR ISLD-LNX3345.00 - HOLT.CO3 345.00 345KV CKT 1	720	720	0.05757	99.8	ATCHSNT3 345.00 - COOPER 345KV CKT 1
FDNS	00NR_G15_053	0	16WP	G15_053	TO->FROM	GR ISLD-LNX3345.00 - HOLT.CO3 345.00 345KV CKT 1	720	720	0.0572	99.8	GERALD GENTLEMAN STATION - RED WILLOW 345KV CKT 1
FDNS	00NR_G15_053	0	16WP	G15_053	TO->FROM	GR ISLD-LNX3345.00 - HOLT.CO3 345.00 345KV CKT 1	720	720	0.05696	99.8	103RD & ROKEBY - MOORE 345KV CKT 1
FDNS	00NR_G15_053	0	16WP	G15_053	TO->FROM	GR ISLD-LNX3345.00 - HOLT.CO3 345.00 345KV CKT 1	720	720	0.05696	99.8	103RD & ROKEBY - MOORE 345KV CKT 1
FDNS	00NR_G15_053	0	16WP	G15_053	TO->FROM	GR ISLD-LNX3345.00 - HOLT.CO3 345.00 345KV CKT 1	720	720	0.05554	99.8	FALLOW 3 345.00 - GRIMES 345KV CKT 1
FDNS	00NR_G15_053	0	16WP	G15_053	TO->FROM	GR ISLD-LNX3345.00 - HOLT.CO3 345.00 345KV CKT 1	720	720	0.05554	99.8	G11_051T 345.00 - TATONGA7 345.00 345KV CKT 1
FDNS	00NR_G15_053	0	16WP	G15_053	TO->FROM	GR ISLD-LNX3345.00 - HOLT.CO3 345.00 345KV CKT 1	720	720	0.05539	99.8	CENTER 230/22.0KV TRANSFORMER CKT 1
FDNS	00NR_G15_053	0	16WP	G15_053	TO->FROM	GR ISLD-LNX3345.00 - HOLT.CO3 345.00 345KV CKT 1	720	720	0.05539	99.8	GEN600050 1-FEP
FDNS	00NR_G15_053	0	16WP	G15_053	TO->FROM	GR ISLD-LNX3345.00 - HOLT.CO3 345.00 345KV CKT 1	720	720	0.05539	99.8	GEN629072 4-LANSING GENERATOR FOR UNITS NO4 EIA CODE 1
FDNS	00NR_G15_053	0	16WP	G15_053	TO->FROM	GR ISLD-LNX3345.00 - HOLT.CO3 345.00 345KV CKT 1	720	720	0.05539	99.8	GEN635214 4-NEAL UNIT 4
FDNS	00NR_G15_053	0	16WP	G15_053	TO->FROM	GR ISLD-LNX3345.00 - HOLT.CO3 345.00 345KV CKT 1	720	720	0.05539	99.8	GEN659273 2-GROTON SYNC COND
FDNS	00NR_G15_053	0	16WP	G15_053	TO->FROM	GR ISLD-LNX3345.00 - HOLT.CO3 345.00 345KV CKT 1	720	720	0.05539	99.8	GEN659294 1-WILTONCOL9
FDNS	00NR_G15_053	0	16WP	G15_053	TO->FROM	GR ISLD-LNX3345.00 - HOLT.CO3 345.00 345KV CKT 1	720	720	0.05539	99.8	GEN672393 2-NBECST2G 13.800
FDNS	00NR_G15_053	0	16WP	G15_053	TO->FROM	GR ISLD-LNX3345.00 - HOLT.CO3 345.00 345KV CKT 1	720	720	0.05536	99.8	GLENHAM - L3 HAWDON 230KV CKT 1
FDNS	00NR_G15_053	0	16WP	G15_053	TO->FROM	GR ISLD-LNX3345.00 - HOLT.CO3 345.00 345KV CKT 1	720	720	0.05323	99.8	COOPER - MOORE 345KV CKT 1
FDNS	00NR_G15_053	0	16WP	G15_053	TO->FROM	GR ISLD-LNX3345.00 - HOLT.CO3 345.00 345KV CKT 1	720	720	0.05644	99.7	AXTELL - POST ROCK 345KV CKT 1
FDNS	00NR_G15_053	0	16WP	G15_053	TO->FROM	GR ISLD-LNX3345.00 - HOLT.CO3 345.00 345KV CKT 1	720	720	0.05539	99.7	GEN 10648 1-G830_GEN 0.6900
FDNS	00NR_G15_053	0	16WP	G15_053	TO->FROM	GR ISLD-LNX3345.00 - HOLT.CO3 345.00 345KV CKT 1	720	720	0.05539	99.7	GEN600011 5-BLACK DOG GEN 1
FDNS	00NR_G15_053	0	16WP	G15_053	TO->FROM	GR ISLD-LNX3345.00 - HOLT.CO3 345.00 345KV CKT 1	720	720	0.05539	99.7	GEN600014 4-BLACK DOG GEN 4
FDNS	00NR_G15_053	0	16WP	G15_053	TO->FROM	GR ISLD-LNX3345.00 - HOLT.CO3 345.00 345KV CKT 1	720	720	0.05539	99.7	GEN600065 7-HIGH BRIDGE
FDNS	00NR_G15_053	0	16WP	G15_053	TO->FROM	GR ISLD-LNX3345.00 - HOLT.CO3 345.00 345KV CKT 1	720	720	0.05539	99.7	GEN600066 8-HIGH BRIDGE
FDNS	00NR_G15_053	0	16WP	G15_053	TO->FROM	GR ISLD-LNX3345.00 - HOLT.CO3 345.00 345KV CKT 1	720	720	0.05539	99.7	GEN600067 9-HIGH BRIDGE
FDNS	00NR_G15_053	0	16WP	G15_053	TO->FROM	GR ISLD-LNX3345.00 - HOLT.CO3 345.00 345KV CKT 1	720	720	0.05539	99.7	GEN600070 9-RIVER SIDE
FDNS	00NR_G15_053	0	16WP	G15_053	TO->FROM	GR ISLD-LNX3345.00 - HOLT.CO3 345.00 345KV CKT 1	720	720	0.05539	99.7	GEN600071 10-RIVER SIDE
FDNS	00NR_G15_053	0	16WP	G15_053	TO->FROM	GR ISLD-LNX3345.00 - HOLT.CO3 345.00 345KV CKT 1	720	720	0.05539	99.7	GEN652906 1-G09_006IS_3 0.6900
FDNS	00NR_G15_053	0	16WP	G15_053	TO->FROM	GR ISLD-LNX3345.00 - HOLT.CO3 345.00 345KV CKT 1	720	720	0.05539	99.7	GEN657985 1-ASH1GEN9 0.5750
FDNS	00NR_G15_053	0	16WP	G15_053	TO->FROM	GR ISLD-LNX3345.00 - HOLT.CO3 345.00 345KV CKT 1	720	720	0.05539	99.7	GEN659162 4-RED WLCK
FDNS	00NR_G15_053	0	16WP	G15_053	TO->FROM	GR ISLD-LNX3345.00 - HOLT.CO3 345.00 345KV CKT 1	720	720	0.05539	99.7	GEN659163 5-BLACK WDCK
FDNS	00NR_G15_053	0	16WP	G15_053	TO->FROM	GR ISLD-LNX3345.00 - HOLT.CO3 345.00 345KV CKT 1	720	720	0.05539	99.7	GEN659192 6-LYNN
FDNS	00NR_G15_053	0	16WP	G15_053	TO->FROM	GR ISLD-LNX3345.00 - HOLT.CO3 345.00 345KV CKT 1	720	720	0.05539	99.7	LANSING WEST 161/22.0KV TRANSFORMER CKT 1
FDNS	00NR_G15_053	0	16WP	G15_053	TO->FROM	GR ISLD-LNX3345.00 - HOLT.CO3 345.00 345KV CKT 1	720	720	0.05757	99.6	ATCHSNT3 345.00 - BOONEVILLE 345KV CKT 1
FDNS	00NR_G15_053	0	16WP	G15_053	TO->FROM	GR ISLD-LNX3345.00 - HOLT.CO3 345.00 345KV CKT 1	720	720	0.05539	99.6	GEN600007 7-RIVERSIDE GEN 7
FDNS	00NR_G15_053	0	16WP	G15_053	TO->FROM	GR ISLD-LNX3345.00 - HOLT.CO3 345.00 345KV CKT 1	720	720	0.05539	99.6	GEN600017 C-LS POWER CT
FDNS	00NR_G15_053	0	16WP	G15_053	TO->FROM	GR ISLD-LNX3345.00 - HOLT.CO3 345.00 345KV CKT 1	720	720	0.05539	99.6	GEN615015 1-GRE-SPRITWDG13.200
FDNS	00NR_G15_053	0	16WP	G15_053	TO->FROM	GR ISLD-LNX3345.00 - HOLT.CO3 345.00 345KV CKT 1	720	720	0.05539	99.6	GEN615052 1-CAMBRIDGE GENERATING STATION
FDNS	00NR_G15_053	0	16WP	G15_053	TO->FROM	GR ISLD-LNX3345.00 - HOLT.CO3 345.00 345KV CKT 1	720	720	0.05539	99.6	GEN652907 1-G09_007IS_3 0.6900
FDNS	00NR_G15_053	0	16WP	G15_053	TO->FROM	GR ISLD-LNX3345.00 - HOLT.CO3 345.00 345KV CKT 1	720	720	0.05539	99.6	GEN660016 1-B_H WIND 0.7000
FDNS	00NR_G15_053	0	16WP	G15_053	TO->FROM	GR ISLD-LNX3345.00 - HOLT.CO3 345.00 345KV CKT 1	720	720	0.05539	99.6	GEN681522 3-GENOA 3
FDNS	00NR_G15_053	0	16WP	G15_053	TO->FROM	GR ISLD-LNX3345.00 - HOLT.CO3 345.00 345KV CKT 1	720	720	0.05554	99.5	MATHWSN7 345.00 - TATONGA7 345.00 345KV CKT 1
FDNS	00NR_G15_053	0	16WP	G15_053	TO->FROM	GR ISLD-LNX3345.00 - HOLT.CO3 345.00 345KV CKT 1	720	720	0.05539	99.5	GEN662101 1-WESSINGTON190.5750
FDNS	00NR_G15_053	0	17SP	G15_053	TO->FROM	OGALLALA - SIDNEY 230KV CKT 1	320	320	0.03217	111.519	SIDNEY - SIDNEY1-LNX3345.00 345KV CKT Z
FDNS	00NR_G15_053	0	17SP	G15_053	TO->FROM	OGALLALA - SIDNEY 230KV CKT 1	320	320	0.03217	111.4674	KEYSTONE - SIDNEY1-LNX3345.00 345KV CKT 1
FDNS	00NR_G15_053	0	17SP	G15_053	TO->FROM	SIDNEY - SIDNEY TRANSFORMER 230KV CKT 1	400	400	0.03658	111.0624	KEYSTONE - SIDNEY1-LNX3345.00 345KV CKT 1
FDNS	00NR_G15_053	0	17SP	G15_053	TO->FROM	SIDNEY - SIDNEY TRANSFORMER 230KV CKT 1	400	400	0.03658	110.4565	SIDNEY - SIDNEY1-LNX3345.00 345KV CKT Z
FDNS	00NR_G15_053	0	20SP	G15_053	TO->FROM	SIDNEY - SIDNEY TRANSFORMER 230KV CKT 1	400	400	0.03074	101.0032	KEYSTONE - SIDNEY1-LNX3345.00 345KV CKT 1
FDNS	00NR_G15_053	0	20SP	G15_053	TO->FROM	SIDNEY - SIDNEY TRANSFORMER 230KV CKT 1	400	400	0.03074	100.4863	SIDNEY - SIDNEY1-LNX3345.00 345KV CKT Z
FDNS	00NR_G15_053	0	25SP	G15_053	TO->FROM	SIDNEY - SIDNEY TRANSFORMER 230KV CKT 1	400	400	0.03052	99.8	KEYSTONE - SIDNEY1-LNX3345.00 345KV CKT 1
FDNS	00NR_G15_053	2	17SP	G15_053	FROM->TO	GR ISLD-LNX3345.00 - GRAND ISLAND 345KV CKT Z	720	720	0.03246	131.4346	RAUN - SUB 3451 FT CAL 345KV CKT 1
FDNS	00NR_G15_053	2	17SP	G15_053	FROM->TO	GR ISLD-LNX3345.00 - GRAND ISLAND 345KV CKT Z	720	720	0.03246	131.4346	RAUN - SUB 3451 FT CAL 345KV CKT 1
FDNS	00NR_G15_053	2	17SP	G15_053	FROM->TO	GR ISLD-LNX3345.00 - GRAND ISLAND 345KV CKT Z	720	720	0.03229	129.1353	COLUMEAST - SHELL CREEK 345KV CKT 1
FDNS	00NR_G15_053	2	17SP	G15_053	FROM->TO	GR ISLD-LNX3345.00 - GRAND ISLAND 345KV CKT Z	720	720	0.03153	129.1195	P12:115:NPPD:1168B:ALBION 7:PETERSBRG.N7:BTB
FDNS	00NR_G15_053	2	17SP	G15_053	FROM->TO	GR ISLD-LNX3345.00 - GRAND ISLAND 345KV CKT Z	720	720	0.03153	129.0661	ALBION - PETERSBURG 115KV CKT 1
FDNS	00NR_G15_053	2	17SP	G15_053	FROM->TO	GR ISLD-LNX3345.00 - GRAND ISLAND 345KV CKT Z	720	720	0.0349	128.3895	COLUMWEST - KELLY 230KV CKT 1
FDNS	00NR_G15_053	2	17SP	G15_053	FROM->TO	GR ISLD-LNX3345.00 - GRAND ISLAND 345KV CKT Z	720	720	0.0349	127.326	COLUMWEST - GRAND ISLAND 230KV CKT 1
FDNS	00NR_G15_053	2	20SP	G15_053	FROM->TO	GR ISLD-LNX3345.00 - GRAND ISLAND 345KV CKT Z	720	720	0.03128	111.6829	GERALD GENTLEMAN STATION - THEDFRD3 345.00 345KV CKT 1
FDNS	00NR_G15_053	2	25SP	G15_053	FROM->TO	GR ISLD-LNX3345.00 - GRAND ISLAND 345KV CKT Z	720	720	0.03162	110.713	GERALD GENTLEMAN STATION - THEDFRD3 345.00 345KV CKT 1
FDNS	00NR_G15_053	2	16WP	G15_053	FROM->TO	GR ISLD-LNX3345.00 - GRAND ISLAND 345KV CKT Z	720	720	0.03156	103.1658	RAUN - SUB 3451 FT CAL 345KV CKT 1
FDNS	00NR_G15_053	2	16WP	G15_053	FROM->TO	GR ISLD-LNX3345.00 - GRAND ISLAND 345KV CKT Z	720	720	0.03156	103.1658	RAUN - SUB 3451 FT CAL 345KV CKT 1
FDNS	00NR_G15_053	2	16WP	G15_053	FROM->TO	GR ISLD-LNX3345.00 - GRAND ISLAND 345KV CKT Z	720	720	0.03142	101.8731	COLUMEAST - SHELL CREEK 345KV CKT 1
FDNS	00NR_G15_053	2	16WP	G15_053	FROM->TO	GR ISLD-LNX3345.00 - GRAND ISLAND 345KV CKT Z	720	720	0.03069	101.6861	PETERSBRG.N7115.00 - PETERSBURG 115KV CKT Z1
FDNS	00NR_G15_053	2	16WP	G15_053	FROM->TO	GR ISLD-LNX3345.00 - GRAND ISLAND 345KV CKT Z	720	720	0.03069	101.6843	P12:115:NPPD:1168B:ALBION 7:PETERSBRG.N7:BTB
FDNS	00NR_G15_053	2	16WP	G15_053	FROM->TO	GR ISLD-LNX3345.00 - GRAND ISLAND 345KV CKT Z	720	720	0.03069	101.6657	ALBION - PETERSBURG 115KV CKT 1
FDNS	00NR_G15_053	2	16WP	G15_053	FROM->TO	GR ISLD-LNX3345.00 - GRAND ISLAND 345KV CKT Z	720	720	0.03401	100.5319	COLUMWEST - KELLY 230KV CKT 1
FDNS	00NR_G15_053	2	17SP	G15_053	TO->FROM	GR ISLD-LNX3345.00 - HOLT.CO3 345.00 345KV CKT 1	720	720	0.03246	130.4193	RAUN - SUB 3451 FT CAL 345KV CKT 1
FDNS	00NR_G15_053	2	17SP	G15_053	TO->FROM	GR ISLD-LNX3345.00 - HOLT.CO3 345.00 345KV CKT 1	720	720	0.03246	130.4193	RAUN - SUB 3451 FT CAL 345KV CKT 1
FDNS	00NR_G15_053	2	17SP	G15_053	TO->FROM	GR ISLD-LNX3345.00 - HOLT.CO3 345.00 345KV CKT 1	720	720	0.03229	128.1278	COLUMEAST - SHELL CREEK 345KV CKT 1
FDNS	00NR_G15_053	2	17SP	G15_053	TO->FROM	GR ISLD-LNX3345.00 - HOLT.CO3 345.00 345KV CKT 1	720	720	0.0349	127.3698	COLUMWEST - KELLY 230KV CKT 1
FDNS	00NR_G15_053	2	17SP	G15_053	TO->FROM	GR ISLD-LNX3345.00 - HOLT.CO3 345.00 345KV CKT 1	720	720	0.0349	126.3135	COLUMWEST - GRAND ISLAND 230KV CKT 1

SOLUTION	GROUP	SCENARIO	SEASON	SOURCE	DIRECTION	MONITORED ELEMENT	RATEA (MVA)	RATEB(MVA)	TDF	TC%LOADING (% MVA)	CONTINGENCY
FDNS	00NR_G15_053	2	20SP	G15_053	TO->FROM	GR ISLD-LNX3345.00 - HOLT.CO3 345.00 345KV CKT 1	720	720	0.03128	110.8803	GERALD GENTLEMAN STATION - THEDFRD3 345.00 345KV CKT 1
FDNS	00NR_G15_053	2	25SP	G15_053	TO->FROM	GR ISLD-LNX3345.00 - HOLT.CO3 345.00 345KV CKT 1	720	720	0.03162	109.9007	GERALD GENTLEMAN STATION - THEDFRD3 345.00 345KV CKT 1
FDNS	00NR_G15_053	2	16WP	G15_053	TO->FROM	GR ISLD-LNX3345.00 - HOLT.CO3 345.00 345KV CKT 1	720	720	0.03156	102.5264	RAUN - SUB 3451 FT CAL 345KV CKT 1
FDNS	00NR_G15_053	2	16WP	G15_053	TO->FROM	GR ISLD-LNX3345.00 - HOLT.CO3 345.00 345KV CKT 1	720	720	0.03156	102.5264	RAUN - SUB 3451 FT CAL 345KV CKT 1
FDNS	00NR_G15_053	2	16WP	G15_053	TO->FROM	GR ISLD-LNX3345.00 - HOLT.CO3 345.00 345KV CKT 1	720	720	0.03142	101.2513	COLUMEAST - SHELL CREEK 345KV CKT 1
FDNS	00NR_G15_053	2	16WP	G15_053	TO->FROM	GR ISLD-LNX3345.00 - HOLT.CO3 345.00 345KV CKT 1	720	720	0.03401	99.9	COLUMWEST - KELLY 230KV CKT 1
FDNSLock-Blown up	00NR_G15_054	0	16WP	G15_054		Non-Converged Contingency	720	720	0.05539	-	GR ISLD-LNX3345.00 - GRAND ISLAND 345KV CKT Z
FDNSLock-Blown up	00NR_G15_054	0	16WP	G15_054		Non-Converged Contingency	720	720	0.05539	-	GR ISLD-LNX3345.00 - HOLT.CO3 345.00 345KV CKT 1
FDNSLock-Blown up	09NR_G15_054	0	17G	G15_054		Non-Converged Contingency	720	720	0.05518	-	GR ISLD-LNX3345.00 - GRAND ISLAND 345KV CKT Z
FDNSLock-Blown up	09NR_G15_054	0	17G	G15_054		Non-Converged Contingency	720	720	0.05518	-	GR ISLD-LNX3345.00 - HOLT.CO3 345.00 345KV CKT 1
FDNSLock-Blown up	00NR_G15_054	0	17SP	G15_054		Non-Converged Contingency	720	720	0.05681	-	GR ISLD-LNX3345.00 - GRAND ISLAND 345KV CKT Z
FDNSLock-Blown up	00NR_G15_054	0	17SP	G15_054		Non-Converged Contingency	720	720	0.05681	-	GR ISLD-LNX3345.00 - HOLT.CO3 345.00 345KV CKT 1
FDNS	09ALL_G15_054	0	20L	G15_054	FROM->TO	BLOOMFIELD - GAVINS POINT 115KV CKT 1	120	120	0.19586	109.7552	ANTELOPE 3345.00 - HOSKINS 345KV CKT 1
FDNS	09ALL_G15_054	0	20L	G15_054	FROM->TO	BLOOMFIELD - GAVINS POINT 115KV CKT 1	120	120	0.19586	109.6617	ANTELOPE 3345.00 (ANTELOPE T1) 345/115/13.8KV TRANSFORMER CKT 1
FDNS	09ALL_G15_054	0	17G	G15_054	FROM->TO	BLOOMFIELD - GAVINS POINT 115KV CKT 1	120	120	0.19636	106.305	ANTELOPE 3345.00 (ANTELOPE T1) 345/115/13.8KV TRANSFORMER CKT 1
FDNS	09ALL_G15_054	0	17G	G15_054	FROM->TO	BLOOMFIELD - GAVINS POINT 115KV CKT 1	120	120	0.19636	106.3037	ANTELOPE 3345.00 - HOSKINS 345KV CKT 1
FDNS	09ALL_G15_054	0	16WP	G15_054	FROM->TO	BLOOMFIELD - GAVINS POINT 115KV CKT 1	120	120	0.19654	102.8093	ANTELOPE 3345.00 (ANTELOPE T1) 345/115/13.8KV TRANSFORMER CKT 1
FDNS	09ALL_G15_054	0	16WP	G15_054	FROM->TO	BLOOMFIELD - GAVINS POINT 115KV CKT 1	120	120	0.19654	102.8041	ANTELOPE 3345.00 - HOSKINS 345KV CKT 1
FDNS	00NR_G15_054	0	17SP	G15_054	FROM->TO	GR ISLD-LNX3345.00 - GRAND ISLAND 345KV CKT Z	720	720	0.05758	137.945	KELLY - MEADOWGROVE4230.00 230KV CKT 1
FDNS	00NR_G15_054	0	17SP	G15_054	FROM->TO	GR ISLD-LNX3345.00 - GRAND ISLAND 345KV CKT Z	720	720	0.05529	137.7522	P12:230:UMZB:# 116 #: ST IN SD. WSG-ST-VH
FDNS	00NR_G15_054	0	17SP	G15_054	FROM->TO	GR ISLD-LNX3345.00 - GRAND ISLAND 345KV CKT Z	720	720	0.05531	136.7339	STORLA - WESSINGTON 230KV CKT 1
FDNS	00NR_G15_054	0	17SP	G15_054	FROM->TO	GR ISLD-LNX3345.00 - GRAND ISLAND 345KV CKT Z	720	720	0.05614	135.7396	WATERTN-LNX3345.00 - WHITE 345KV CKT 1
FDNS	00NR_G15_054	0	17SP	G15_054	FROM->TO	GR ISLD-LNX3345.00 - GRAND ISLAND 345KV CKT Z	720	720	0.05657	135.5783	G09_001IST 345.00 - WATERTOWN 345KV CKT 1
FDNS	00NR_G15_054	0	17SP	G15_054	FROM->TO	GR ISLD-LNX3345.00 - GRAND ISLAND 345KV CKT Z	720	720	0.05614	135.4927	WATERTN-LNX3345.00 - WATERTOWN 345KV CKT Z
FDNS	00NR_G15_054	0	17SP	G15_054	FROM->TO	GR ISLD-LNX3345.00 - GRAND ISLAND 345KV CKT Z	720	720	0.05614	135.4279	P12:345:UMZW:# 1747 #: WT2 IN SD. WT2-WHT LINE FAULT
FDNS	00NR_G15_054	0	17SP	G15_054	FROM->TO	GR ISLD-LNX3345.00 - GRAND ISLAND 345KV CKT Z	720	720	0.05586	135.4069	HANLON - STORLA 230KV CKT 1
FDNS	00NR_G15_054	0	17SP	G15_054	FROM->TO	GR ISLD-LNX3345.00 - GRAND ISLAND 345KV CKT Z	720	720	0.05521	135.0738	FT THOMPSON - LETCHER 230KV CKT 1
FDNS	00NR_G15_054	0	17SP	G15_054	FROM->TO	GR ISLD-LNX3345.00 - GRAND ISLAND 345KV CKT Z	720	720	0.05521	135.0738	FT THOMPSON - LETCHER 230KV CKT 1
FDNS	00NR_G15_054	0	17SP	G15_054	FROM->TO	GR ISLD-LNX3345.00 - GRAND ISLAND 345KV CKT Z	720	720	0.05677	133.978	BUFFALO - JAMESTOWN 345KV CKT 1
FDNS	00NR_G15_054	0	17SP	G15_054	FROM->TO	GR ISLD-LNX3345.00 - GRAND ISLAND 345KV CKT Z	720	720	0.05355	133.7709	FT RANDAL - FT THOMPSON 230KV CKT 1
FDNS	00NR_G15_054	0	17SP	G15_054	FROM->TO	GR ISLD-LNX3345.00 - GRAND ISLAND 345KV CKT Z	720	720	0.05355	133.7709	FT RANDAL - FT THOMPSON 230KV CKT 1
FDNS	00NR_G15_054	0	17SP	G15_054	FROM->TO	GR ISLD-LNX3345.00 - GRAND ISLAND 345KV CKT Z	720	720	0.05363	133.7209	FT RANDAL - G12_009IST 230.00 230KV CKT 1
FDNS	00NR_G15_054	0	17SP	G15_054	FROM->TO	GR ISLD-LNX3345.00 - GRAND ISLAND 345KV CKT Z	720	720	0.05363	133.6144	FT THOMPSON - LAKE PLATT 230KV CKT 1
FDNS	00NR_G15_054	0	17SP	G15_054	FROM->TO	GR ISLD-LNX3345.00 - GRAND ISLAND 345KV CKT Z	720	720	0.05363	133.6144	FT THOMPSON - LAKE PLATT 230KV CKT 1
FDNS	00NR_G15_054	0	17SP	G15_054	FROM->TO	GR ISLD-LNX3345.00 - GRAND ISLAND 345KV CKT Z	720	720	0.06492	133.2488	NUNDRWD - WAYSIDE 230KV CKT 1
FDNS	00NR_G15_054	0	17SP	G15_054	FROM->TO	GR ISLD-LNX3345.00 - GRAND ISLAND 345KV CKT Z	720	720	0.05363	133.2352	G12_009IST 230.00 - LAKE PLATT 230KV CKT 1
FDNS	00NR_G15_054	0	17SP	G15_054	FROM->TO	GR ISLD-LNX3345.00 - GRAND ISLAND 345KV CKT Z	720	720	0.05681	133.0722	GEN336821 1-GRAND GULF UNIT
FDNSLock	00NR_G15_054	0	17SP	G15_054	FROM->TO	GR ISLD-LNX3345.00 - GRAND ISLAND 345KV CKT Z	720	720	0.05678	133.0632	CHISAGO COUNTY - CHISAGO COUNTY 500KV CKT 1
FDNS	00NR_G15_054	0	17SP	G15_054	FROM->TO	GR ISLD-LNX3345.00 - GRAND ISLAND 345KV CKT Z	720	720	0.05678	133.0358	CHISAGO COUNTY - FORBES 500KV CKT 1
FDNS	00NR_G15_054	0	17SP	G15_054	FROM->TO	GR ISLD-LNX3345.00 - GRAND ISLAND 345KV CKT Z	720	720	0.05758	132.8977	FT RANDAL - MEADOWGROVE4230.00 230KV CKT 1
FDNS	00NR_G15_054	0	17SP	G15_054	FROM->TO	GR ISLD-LNX3345.00 - GRAND ISLAND 345KV CKT Z	720	720	0.05677	132.8135	CENTER - JAMESTOWN 345KV CKT 1
FDNS	00NR_G15_054	0	17SP	G15_054	FROM->TO	GR ISLD-LNX3345.00 - GRAND ISLAND 345KV CKT Z	720	720	0.05681	132.5406	GEN640010 1-GERALD GENTLEMAN STATION UNIT 1
FDNS	00NR_G15_054	0	17SP	G15_054	FROM->TO	GR ISLD-LNX3345.00 - GRAND ISLAND 345KV CKT Z	720	720	0.05681	132.537	GEN344225 1-1CAL G1 25.000
FDNS	00NR_G15_054	0	17SP	G15_054	FROM->TO	GR ISLD-LNX3345.00 - GRAND ISLAND 345KV CKT Z	720	720	0.05609	132.4975	LETCHER - SIOUX FALLS 230KV CKT 1
FDNS	00NR_G15_054	0	17SP	G15_054	FROM->TO	GR ISLD-LNX3345.00 - GRAND ISLAND 345KV CKT Z	720	720	0.05657	132.4845	G09_001IST 345.00 - GROTON 345KV CKT 1
FDNS	00NR_G15_054	0	17SP	G15_054	FROM->TO	GR ISLD-LNX3345.00 - GRAND ISLAND 345KV CKT Z	720	720	0.05854	132.4216	KEYSTONE - SIDNEY1-LNX3345.00 345KV CKT 1
FDNS	00NR_G15_054	0	17SP	G15_054	FROM->TO	GR ISLD-LNX3345.00 - GRAND ISLAND 345KV CKT Z	720	720	0.05681	132.3926	GEN635024 4-WALTER SCOTT UNIT 4
FDNS	00NR_G15_054	0	17SP	G15_054	FROM->TO	GR ISLD-LNX3345.00 - GRAND ISLAND 345KV CKT Z	720	720	0.05679	132.3892	BISON 3 345.00 - BUFFALO 345KV CKT 1
FDNS	00NR_G15_054	0	17SP	G15_054	FROM->TO	GR ISLD-LNX3345.00 - GRAND ISLAND 345KV CKT Z	720	720	0.05854	132.3848	SIDNEY - SIDNEY1-LNX3345.00 345KV CKT Z
FDNS	00NR_G15_054	0	17SP	G15_054	FROM->TO	GR ISLD-LNX3345.00 - GRAND ISLAND 345KV CKT Z	720	720	0.05681	132.2544	GEN337911 1-ARKANSAS NUCLEAR ONE UNIT #2
FDNS	00NR_G15_054	0	17SP	G15_054	FROM->TO	GR ISLD-LNX3345.00 - GRAND ISLAND 345KV CKT Z	720	720	0.05681	132.2012	GEN336153 1-WATERFORD UNIT#3
FDNS	00NR_G15_054	0	17SP	G15_054	FROM->TO	GR ISLD-LNX3345.00 - GRAND ISLAND 345KV CKT Z	720	720	0.05681	132.1168	GEN640011 2-GERALD GENTLEMAN STATION UNIT 2
FDNS	00NR_G15_054	0	17SP	G15_054	FROM->TO	GR ISLD-LNX3345.00 - GRAND ISLAND 345KV CKT Z	720	720	0.05589	131.9646	SPLIT ROCK - WHITE 345KV CKT 1
FDNS	00NR_G15_054	0	17SP	G15_054	FROM->TO	GR ISLD-LNX3345.00 - GRAND ISLAND 345KV CKT Z	720	720	0.05589	131.9646	SPLIT ROCK - WHITE 345KV CKT 1
FDNS	00NR_G15_054	0	17SP	G15_054	FROM->TO	GR ISLD-LNX3345.00 - GRAND ISLAND 345KV CKT Z	720	720	0.05681	131.8616	GEN635023 3-WALTER SCOTT UNIT 3
FDNS	00NR_G15_054	0	17SP	G15_054	FROM->TO	GR ISLD-LNX3345.00 - GRAND ISLAND 345KV CKT Z	720	720	0.05659	131.777	GROTON-LNX3 345.00 - LELAND1-LNX3345.00 345KV CKT 1
FDNS	00NR_G15_054	0	17SP	G15_054	FROM->TO	GR ISLD-LNX3345.00 - GRAND ISLAND 345KV CKT Z	720	720	0.05681	131.7634	GEN335831 1-RIVERBEND UNIT#1
FDNS	00NR_G15_054	0	17SP	G15_054	FROM->TO	GR ISLD-LNX3345.00 - GRAND ISLAND 345KV CKT Z	720	720	0.05681	131.6682	GEN337910 1-ARKANSAS NUCLEAR ONE UNIT #1
FDNS	00NR_G15_054	0	17SP	G15_054	FROM->TO	GR ISLD-LNX3345.00 - GRAND ISLAND 345KV CKT Z	720	720	0.05659	131.6137	P12:345:UMZB:# 109 #: LOS GRT IN ND. LOS GRT
FDNS	00NR_G15_054	0	17SP	G15_054	FROM->TO	GR ISLD-LNX3345.00 - GRAND ISLAND 345KV CKT Z	720	720	0.0645	131.5639	RAUN - SUB 3451 FT CAL 345KV CKT 1
FDNS	00NR_G15_054	0	17SP	G15_054	FROM->TO	GR ISLD-LNX3345.00 - GRAND ISLAND 345KV CKT Z	720	720	0.0645	131.5639	RAUN - SUB 3451 FT CAL 345KV CKT 1
FDNS	00NR_G15_054	0	17SP	G15_054	FROM->TO	GR ISLD-LNX3345.00 - GRAND ISLAND 345KV CKT Z	720	720	0.05659	131.5282	GROTON - GROTON-LNX3 345.00 345KV CKT Z
FDNS	00NR_G15_054	0	17SP	G15_054	FROM->TO	GR ISLD-LNX3345.00 - GRAND ISLAND 345KV CKT Z	720	720	0.05659	131.5165	LELAND OLDS - LELAND1-LNX3345.00 345KV CKT Z
FDNS	00NR_G15_054	0	17SP	G15_054	FROM->TO	GR ISLD-LNX3345.00 - GRAND ISLAND 345KV CKT Z	720	720	0.05692	131.4608	FT RANDAL - SIOUX CITY 230KV CKT 1
FDNS	00NR_G15_054	0	17SP	G15_054	FROM->TO	GR ISLD-LNX3345.00 - GRAND ISLAND 345KV CKT Z	720	720	0.05704	131.3441	ARROWHEAD - ARROWHEAD 230 230KV CKT 1
FDNS	00NR_G15_054	0	17SP	G15_054	FROM->TO	GR ISLD-LNX3345.00 - GRAND ISLAND 345KV CKT Z	720	720	0.0564	131.2743	HANLON - SIOUX FALLS 230KV CKT 1
FDNS	00NR_G15_054	0	17SP	G15_054	FROM->TO	GR ISLD-LNX3345.00 - GRAND ISLAND 345KV CKT Z	720	720	0.0429	131.2493	GRAND ISLAND - SWEETWATER 345KV CKT 1
FDNS	00NR_G15_054	0	17SP	G15_054	FROM->TO	GR ISLD-LNX3345.00 - GRAND ISLAND 345KV CKT Z	720	720	0.05681	131.0648	GEN337653 1-WHITE BLUFF UNIT #2
FDNS	00NR_G15_054	0	17SP	G15_054	FROM->TO	GR ISLD-LNX3345.00 - GRAND ISLAND 345KV CKT Z	720	720	0.05555	131.0617	SIOUXCY-LNX3345.00 - SPLIT ROCK 345KV CKT 1
FDNS	00NR_G15_054	0	17SP	G15_054	FROM->TO	GR ISLD-LNX3345.00 - GRAND ISLAND 345KV CKT Z	720	720	0.05555	131.0617	SIOUXCY-LNX3345.00 - SPLIT ROCK 345KV CKT 1
FDNS	00NR_G15_054	0	17SP	G15_054	FROM->TO	GR ISLD-LNX3345.00 - GRAND ISLAND 345KV CKT Z	720	720	0.0563	131.0603	P12:115:NPPD:1091:VALENTN7:MISSION7:BTB
FDNS	00NR_G15_054	0	17SP	G15_054	FROM->TO	GR ISLD-LNX3345.00 - GRAND ISLAND 345KV CKT Z	720	720	0.05681	131.0531	GEN337652 1-WHITE BLUFF UNIT #1
FDNS	00NR_G15_054	0	17SP	G15_054	FROM->TO	GR ISLD-LNX3345.00 - GRAND ISLAND 345KV CKT Z	720	720	0.05555	131.0137	P12:345:UMZW:# 907 #: SC2-SR IN IA. SC2-SR 345 KV LINE

SOLUTION	GROUP	SCENARIO	SEASON	SOURCE	DIRECTION	MONITORED ELEMENT	RATEA (MVA)	RATEB(MVA)	TDF	TC%LOADING (% MVA)	CONTINGENCY
FDNS	00NR_G15_054	0	17SP	G15_054	FROM->TO	GR ISLD-LNX3345.00 - GRAND ISLAND 345KV CKT Z	720	720	0.05681	130.9807	GEN338146 1-INDEPENDENCE UNIT #2
FDNS	00NR_G15_054	0	17SP	G15_054	FROM->TO	GR ISLD-LNX3345.00 - GRAND ISLAND 345KV CKT Z	720	720	0.05681	130.9758	GEN338143 1-INDEPENDENCE UNIT #1
FDNS	00NR_G15_054	0	17SP	G15_054	FROM->TO	GR ISLD-LNX3345.00 - GRAND ISLAND 345KV CKT Z	720	720	0.05748	130.9736	HAZLETON - MITCHLCO3 345.00 345KV CKT 1
FDNS	00NR_G15_054	0	17SP	G15_054	FROM->TO	GR ISLD-LNX3345.00 - GRAND ISLAND 345KV CKT Z	720	720	0.05555	130.9682	SIOUX CITY - SIOUXCY-LNX3345.00 345KV CKT Z
FDNS	00NR_G15_054	0	17SP	G15_054	FROM->TO	GR ISLD-LNX3345.00 - GRAND ISLAND 345KV CKT Z	720	720	0.0563	130.961	MISSION - ST FRANCIS 115KV CKT 1
FDNS	00NR_G15_054	0	17SP	G15_054	FROM->TO	GR ISLD-LNX3345.00 - GRAND ISLAND 345KV CKT Z	720	720	0.05827	130.9482	SIDNEY - STEGALL 345KV CKT 1
FDNS	00NR_G15_054	0	17SP	G15_054	FROM->TO	GR ISLD-LNX3345.00 - GRAND ISLAND 345KV CKT Z	720	720	0.05681	130.9179	GEN501801 1-DOLET HILLS UNIT1
FDNS	00NR_G15_054	0	17SP	G15_054	FROM->TO	GR ISLD-LNX3345.00 - GRAND ISLAND 345KV CKT Z	720	720	0.05679	130.8966	ELLENDALE - OAKES 230KV CKT 1
FDNS	00NR_G15_054	0	17SP	G15_054	FROM->TO	GR ISLD-LNX3345.00 - GRAND ISLAND 345KV CKT Z	720	720	0.05679	130.8966	ELLENDALE - OAKES 230KV CKT 1
FDNS	00NR_G15_054	0	17SP	G15_054	FROM->TO	GR ISLD-LNX3345.00 - GRAND ISLAND 345KV CKT Z	720	720	0.05635	130.872	FT RANDAL - UTICA JCT 230KV CKT 1
FDNS	00NR_G15_054	0	17SP	G15_054	FROM->TO	GR ISLD-LNX3345.00 - GRAND ISLAND 345KV CKT Z	720	720	0.0563	130.8612	HARMONY - ST FRANCIS 115KV CKT 1
FDNS	00NR_G15_054	0	17SP	G15_054	FROM->TO	GR ISLD-LNX3345.00 - GRAND ISLAND 345KV CKT Z	720	720	0.05679	130.8061	FORMAN - OAKES 230KV CKT 1
FDNS	00NR_G15_054	0	17SP	G15_054	FROM->TO	GR ISLD-LNX3345.00 - GRAND ISLAND 345KV CKT Z	720	720	0.05531	130.7982	FT THOMPSON - WESSINGTON 230KV CKT 1
FDNS	00NR_G15_054	0	17SP	G15_054	FROM->TO	GR ISLD-LNX3345.00 - GRAND ISLAND 345KV CKT Z	720	720	0.05531	130.7982	FT THOMPSON - WESSINGTON 230KV CKT 1
FDNS	00NR_G15_054	0	17SP	G15_054	FROM->TO	GR ISLD-LNX3345.00 - GRAND ISLAND 345KV CKT Z	720	720	0.05709	130.7936	AS KING - EAU CLAIRE 345KV CKT 1
FDNS	00NR_G15_054	0	17SP	G15_054	FROM->TO	GR ISLD-LNX3345.00 - GRAND ISLAND 345KV CKT Z	720	720	0.05673	130.7917	CARPENTER - HURON 230KV CKT 1
FDNS	00NR_G15_054	0	17SP	G15_054	FROM->TO	GR ISLD-LNX3345.00 - GRAND ISLAND 345KV CKT Z	720	720	0.05681	130.7714	ALEXMRES3 345.00 - BISON 3 345.00 345KV CKT 1
FDNS	00NR_G15_054	0	17SP	G15_054	FROM->TO	GR ISLD-LNX3345.00 - GRAND ISLAND 345KV CKT Z	720	720	0.05721	130.6912	ARPIN B4 345.00 - EAU CLAIRE 345KV CKT 1
FDNS	00NR_G15_054	0	17SP	G15_054	FROM->TO	GR ISLD-LNX3345.00 - GRAND ISLAND 345KV CKT Z	720	720	0.05673	130.6855	HURON - WATERTOWN 230KV CKT 2
FDNS	00NR_G15_054	0	17SP	G15_054	FROM->TO	GR ISLD-LNX3345.00 - GRAND ISLAND 345KV CKT Z	720	720	0.05673	130.6855	HURON - WATERTOWN 230KV CKT 2
FDNS	00NR_G15_054	0	17SP	G15_054	FROM->TO	GR ISLD-LNX3345.00 - GRAND ISLAND 345KV CKT Z	720	720	0.0563	130.6381	HARMONY - VALENTINE 115KV CKT 1
FDNS	00NR_G15_054	0	17SP	G15_054	FROM->TO	GR ISLD-LNX3345.00 - GRAND ISLAND 345KV CKT Z	720	720	0.05673	130.6304	CARPENTER - WATERTOWN 230KV CKT 1
FDNS	00NR_G15_054	0	17SP	G15_054	FROM->TO	GR ISLD-LNX3345.00 - GRAND ISLAND 345KV CKT Z	720	720	0.05673	130.6304	CARPENTER - WATERTOWN 230KV CKT 1
FDNS	00NR_G15_054	0	17SP	G15_054	FROM->TO	GR ISLD-LNX3345.00 - GRAND ISLAND 345KV CKT Z	720	720	0.0521	130.5985	P12:115:NPPD:WAPA6:FTRANDL7:ONEILL 7:BTB
FDNS	00NR_G15_054	0	17SP	G15_054	FROM->TO	GR ISLD-LNX3345.00 - GRAND ISLAND 345KV CKT Z	720	720	0.0521	130.5985	P12:115:UMZB:# 115 #: SE IN NE. FR-SE-ON
FDNS	00NR_G15_054	0	17SP	G15_054	FROM->TO	GR ISLD-LNX3345.00 - GRAND ISLAND 345KV CKT Z	720	720	0.05646	130.5934	PAHOJA - SIOUX FALLS 230KV CKT 1
FDNS	00NR_G15_054	0	17SP	G15_054	FROM->TO	GR ISLD-LNX3345.00 - GRAND ISLAND 345KV CKT Z	720	720	0.0521	130.5789	FT RANDAL - SPENCER 115KV CKT 1
FDNS	00NR_G15_054	0	17SP	G15_054	FROM->TO	GR ISLD-LNX3345.00 - GRAND ISLAND 345KV CKT Z	720	720	0.05681	130.5639	GEN336252 1-NINEMILE POINT UNIT#5
FDNS	00NR_G15_054	0	17SP	G15_054	FROM->TO	GR ISLD-LNX3345.00 - GRAND ISLAND 345KV CKT Z	720	720	0.05681	130.5209	GEN501813 1-RODEMACHER UNIT 3
FDNS	00NR_G15_054	0	17SP	G15_054	FROM->TO	GR ISLD-LNX3345.00 - GRAND ISLAND 345KV CKT Z	720	720	0.0521	130.4628	ONEILL - SPENCER 115KV CKT 1
FDNS	00NR_G15_054	0	17SP	G15_054	FROM->TO	GR ISLD-LNX3345.00 - GRAND ISLAND 345KV CKT Z	720	720	0.05681	130.421	GEN336831 1-BAXTER WILSON SES
FDNS	00NR_G15_054	0	17SP	G15_054	FROM->TO	GR ISLD-LNX3345.00 - GRAND ISLAND 345KV CKT Z	720	720	0.05681	130.4091	GEN336251 1-NINEMILE POINT UNIT#4
FDNS	00NR_G15_054	0	17SP	G15_054	FROM->TO	GR ISLD-LNX3345.00 - GRAND ISLAND 345KV CKT Z	720	720	0.05681	130.3859	GEN641089 2-ENERGY CENTER 2
FDNS	00NR_G15_054	0	17SP	G15_054	FROM->TO	GR ISLD-LNX3345.00 - GRAND ISLAND 345KV CKT Z	720	720	0.0568	130.3741	CNTSHNT3 345.00 - PRAIRIE3 345.00 345KV CKT 1
FDNS	00NR_G15_054	0	17SP	G15_054	FROM->TO	GR ISLD-LNX3345.00 - GRAND ISLAND 345KV CKT Z	720	720	0.05765	130.3643	GERALD GENTLEMAN STATION - KEYSTONE 345KV CKT 1
FDNS	00NR_G15_054	0	17SP	G15_054	FROM->TO	GR ISLD-LNX3345.00 - GRAND ISLAND 345KV CKT Z	720	720	0.05681	130.332	GEN337041 1-GERALD ANDRUS
FDNS	00NR_G15_054	0	17SP	G15_054	FROM->TO	GR ISLD-LNX3345.00 - GRAND ISLAND 345KV CKT Z	720	720	0.05681	130.3138	GEN335206 1-NELSON UNIT 6
FDNS	00NR_G15_054	0	17SP	G15_054	FROM->TO	GR ISLD-LNX3345.00 - GRAND ISLAND 345KV CKT Z	720	720	0.05681	130.2879	GEN344897 4-1LAB G4 20.000
FDNS	00NR_G15_054	0	17SP	G15_054	FROM->TO	GR ISLD-LNX3345.00 - GRAND ISLAND 345KV CKT Z	720	720	0.05681	130.2867	FORMAN - HANKINSON 230KV CKT 1
FDNS	00NR_G15_054	0	17SP	G15_054	FROM->TO	GR ISLD-LNX3345.00 - GRAND ISLAND 345KV CKT Z	720	720	0.05681	130.2846	GEN344894 1-1LAB G1 20.000
FDNS	00NR_G15_054	0	17SP	G15_054	FROM->TO	GR ISLD-LNX3345.00 - GRAND ISLAND 345KV CKT Z	720	720	0.05681	130.2843	GEN344896 3-1LAB G3 20.000
FDNS	00NR_G15_054	0	17SP	G15_054	FROM->TO	GR ISLD-LNX3345.00 - GRAND ISLAND 345KV CKT Z	720	720	0.05646	130.2414	EAGLE 4 230.00 - PAHOJA 230KV CKT 1
FDNS	00NR_G15_054	0	17SP	G15_054	FROM->TO	GR ISLD-LNX3345.00 - GRAND ISLAND 345KV CKT Z	720	720	0.05681	130.2278	GEN344895 2-1LAB G2 20.000
FDNS	00NR_G15_054	0	17SP	G15_054	FROM->TO	GR ISLD-LNX3345.00 - GRAND ISLAND 345KV CKT Z	720	720	0.05681	130.2145	GEN345670 1-1RUSH G1 18.000
FDNS	00NR_G15_054	0	17SP	G15_054	FROM->TO	GR ISLD-LNX3345.00 - GRAND ISLAND 345KV CKT Z	720	720	0.05681	130.2144	GEN345671 2-1RUSH G2 18.000
FDNS	00NR_G15_054	0	17SP	G15_054	FROM->TO	GR ISLD-LNX3345.00 - GRAND ISLAND 345KV CKT Z	720	720	0.0573	130.177	RASMUSN - UTICA JCT 230KV CKT 1
FDNS	00NR_G15_054	0	17SP	G15_054	FROM->TO	GR ISLD-LNX3345.00 - GRAND ISLAND 345KV CKT Z	720	720	0.0563	130.1602	AINSWORTH - VALENTINE 115KV CKT 1
FDNS	00NR_G15_054	0	17SP	G15_054	FROM->TO	GR ISLD-LNX3345.00 - GRAND ISLAND 345KV CKT Z	720	720	0.05748	130.1594	ADAMS - MITCHLCO3 345.00 345KV CKT 1
FDNS	00NR_G15_054	0	17SP	G15_054	FROM->TO	GR ISLD-LNX3345.00 - GRAND ISLAND 345KV CKT Z	720	720	0.05681	130.1575	GEN501812 1-RODEMACHER UNIT 2
FDNS	00NR_G15_054	0	17SP	G15_054	FROM->TO	GR ISLD-LNX3345.00 - GRAND ISLAND 345KV CKT Z	720	720	0.05681	130.0702	GEN334440 1-SABINE UNIT 4
FDNS	00NR_G15_054	0	17SP	G15_054	FROM->TO	GR ISLD-LNX3345.00 - GRAND ISLAND 345KV CKT Z	720	720	0.0573	129.9686	RASMUSN - SIOUX CITY 230KV CKT 1
FDNSLock	00NR_G15_054	0	17SP	G15_054	FROM->TO	GR ISLD-LNX3345.00 - GRAND ISLAND 345KV CKT Z	720	720	0.0568	129.9479	CENTER - CNTSHNT3 345.00 345KV CKT Z1
FDNS	00NR_G15_054	0	17SP	G15_054	FROM->TO	GR ISLD-LNX3345.00 - GRAND ISLAND 345KV CKT Z	720	720	0.05726	129.9337	ADAMS - PLEASANT VALLEY 345KV CKT 1
FDNS	00NR_G15_054	0	17SP	G15_054	FROM->TO	GR ISLD-LNX3345.00 - GRAND ISLAND 345KV CKT Z	720	720	0.05681	129.914	GEN336191 1-LITTLE GYPSY UNIT#3
FDNS	00NR_G15_054	0	17SP	G15_054	FROM->TO	GR ISLD-LNX3345.00 - GRAND ISLAND 345KV CKT Z	720	720	0.05681	129.8459	GEN338388 1-1PLUM PT U1 23.000
FDNS	00NR_G15_054	0	17SP	G15_054	FROM->TO	GR ISLD-LNX3345.00 - GRAND ISLAND 345KV CKT Z	720	720	0.05681	129.8221	GEN336801 1-BAXTER WILSON UNIT #1
FDNS	00NR_G15_054	0	17SP	G15_054	FROM->TO	GR ISLD-LNX3345.00 - GRAND ISLAND 345KV CKT Z	720	720	0.05681	129.8057	GEN335614 1-WILLOW GLENN UNIT#4
FDNS	00NR_G15_054	0	17SP	G15_054	FROM->TO	GR ISLD-LNX3345.00 - GRAND ISLAND 345KV CKT Z	720	720	0.05681	129.7956	GEN334441 1-SABINE UNIT 5
FDNS	00NR_G15_054	0	17SP	G15_054	FROM->TO	GR ISLD-LNX3345.00 - GRAND ISLAND 345KV CKT Z	720	720	0.05883	129.7929	GRIMES - LEHIGH 345KV CKT 1
FDNS	00NR_G15_054	0	17SP	G15_054	FROM->TO	GR ISLD-LNX3345.00 - GRAND ISLAND 345KV CKT Z	720	720	0.05681	129.7897	GEN336464 1-MICHOUD UNIT #3
FDNS	00NR_G15_054	0	17SP	G15_054	FROM->TO	GR ISLD-LNX3345.00 - GRAND ISLAND 345KV CKT Z	720	720	0.05681	129.7769	GEN335204 1-NELSON UNIT 4
FDNS	00NR_G15_054	0	17SP	G15_054	FROM->TO	GR ISLD-LNX3345.00 - GRAND ISLAND 345KV CKT Z	720	720	0.05725	129.7691	LAKEFIELD 3 - NOBLES 345KV CKT 1
FDNS	00NR_G15_054	0	17SP	G15_054	FROM->TO	GR ISLD-LNX3345.00 - GRAND ISLAND 345KV CKT Z	720	720	0.05709	129.748	LARAMIE RIVER - SIDNEY2-LNX3345.00 345KV CKT 1
FDNS	00NR_G15_054	0	17SP	G15_054	FROM->TO	GR ISLD-LNX3345.00 - GRAND ISLAND 345KV CKT Z	720	720	0.05709	129.7032	SIDNEY - SIDNEY2-LNX3345.00 345KV CKT Z
FDNS	00NR_G15_054	0	17SP	G15_054	FROM->TO	GR ISLD-LNX3345.00 - GRAND ISLAND 345KV CKT Z	720	720	0.05658	129.6848	FT THOMPSON - HURON 230KV CKT 1
FDNS	00NR_G15_054	0	17SP	G15_054	FROM->TO	GR ISLD-LNX3345.00 - GRAND ISLAND 345KV CKT Z	720	720	0.05658	129.6848	FT THOMPSON - HURON 230KV CKT 1
FDNS	00NR_G15_054	0	17SP	G15_054	FROM->TO	GR ISLD-LNX3345.00 - GRAND ISLAND 345KV CKT Z	720	720	0.05658	129.6848	FT THOMPSON - HURON 230KV CKT 2
FDNS	00NR_G15_054	0	17SP	G15_054	FROM->TO	GR ISLD-LNX3345.00 - GRAND ISLAND 345KV CKT Z	720	720	0.05658	129.6848	FT THOMPSON - HURON 230KV CKT 2
FDNS	00NR_G15_054	0	17SP	G15_054	FROM->TO	GR ISLD-LNX3345.00 - GRAND ISLAND 345KV CKT Z	720	720	0.05706	129.681	BROOKING COUNTY - LYON COUNTY 345KV CKT 1
FDNS	00NR_G15_054	0	17SP	G15_054	FROM->TO	GR ISLD-LNX3345.00 - GRAND ISLAND 345KV CKT Z	720	720	0.05974	129.6797	STEGALL - STEGALL TRANSFORMER 230KV CKT 1
FDNS	00NR_G15_054	0	17SP	G15_054	FROM->TO	GR ISLD-LNX3345.00 - GRAND ISLAND 345KV CKT Z	720	720	0.05974	129.6761	P13:230-345:NPPD:STEGALL3:KV3A
FDNS	00NR_G15_054	0	17SP	G15_054	FROM->TO	GR ISLD-LNX3345.00 - GRAND ISLAND 345KV CKT Z	720	720	0.05974	129.6733	STEGALL (SGQ KV3A) 345/230/13.8KV TRANSFORMER CKT 1
FDNS	00NR_G15_054	0	17SP	G15_054	FROM->TO	GR ISLD-LNX3345.00 - GRAND ISLAND 345KV CKT Z	720	720	0.05741	129.6544	KOSSUTH 3 345.00 - WEBSTER 345KV CKT 1

SOLUTION	GROUP	SCENARIO	SEASON	SOURCE	DIRECTION	MONITORED ELEMENT	RATEA (MVA)	RATEB(MVA)	TDF	TC%LOADING (% MVA)	CONTINGENCY
FDNS	00NR_G15_054	0	17SP	G15_054	FROM->TO	GR ISLD-LNX3345.00 - GRAND ISLAND 345KV CKT Z	720	720	0.05621	129.6514	MENNO JCT - TRIPP JCT 115KV CKT 1
FDNS	00NR_G15_054	0	17SP	G15_054	FROM->TO	GR ISLD-LNX3345.00 - GRAND ISLAND 345KV CKT Z	720	720	0.05683	129.6346	BLAIR - GRANITE FALLS 230KV CKT 1
FDNS	00NR_G15_054	0	17SP	G15_054	FROM->TO	GR ISLD-LNX3345.00 - GRAND ISLAND 345KV CKT Z	720	720	0.05683	129.6346	BLAIR - GRANITE FALLS 230KV CKT 1
FDNS	00NR_G15_054	0	17SP	G15_054	FROM->TO	GR ISLD-LNX3345.00 - GRAND ISLAND 345KV CKT Z	720	720	0.05681	129.6293	GEN629075 1-OTTUMWA GENERATOR FOR OTTUMWA UNIT NO 1
FDNS	00NR_G15_054	0	17SP	G15_054	FROM->TO	GR ISLD-LNX3345.00 - GRAND ISLAND 345KV CKT Z	720	720	0.05681	129.6284	GEN334433 1-SABINE UNIT 3
FDNS	00NR_G15_054	0	17SP	G15_054	FROM->TO	GR ISLD-LNX3345.00 - GRAND ISLAND 345KV CKT Z	720	720	0.05741	129.618	KOSSUTH 3 345.00 - OBRIEN 3 345.00 345KV CKT 1
FDNS	00NR_G15_054	0	17SP	G15_054	FROM->TO	GR ISLD-LNX3345.00 - GRAND ISLAND 345KV CKT Z	720	720	0.05681	129.6167	GEN531447 1-HOLCOMB GENERATOR
FDNS	00NR_G15_054	0	17SP	G15_054	FROM->TO	GR ISLD-LNX3345.00 - GRAND ISLAND 345KV CKT Z	720	720	0.05681	129.6053	P12:115:UMZW:# 162 #: NEL IN ND. FAULT ON ML-NEL-MX-GA 115 KV
FDNS	00NR_G15_054	0	17SP	G15_054	FROM->TO	GR ISLD-LNX3345.00 - GRAND ISLAND 345KV CKT Z	720	720	0.05679	129.6047	CENTER - COYOTE 345KV CKT 1
FDNS	00NR_G15_054	0	17SP	G15_054	FROM->TO	GR ISLD-LNX3345.00 - GRAND ISLAND 345KV CKT Z	720	720	0.05684	129.5934	ALEXMRES3 345.00 - WAITE PARK 345KV CKT 1
FDNS	00NR_G15_054	0	17SP	G15_054	FROM->TO	GR ISLD-LNX3345.00 - GRAND ISLAND 345KV CKT Z	720	720	0.06161	129.5907	STEGALL-LNX3230.00 - WAYSIDE 230KV CKT 1
FDNS	00NR_G15_054	0	17SP	G15_054	FROM->TO	GR ISLD-LNX3345.00 - GRAND ISLAND 345KV CKT Z	720	720	0.05293	129.5885	GAVINS POINT - YANKON JCT 115KV CKT 1
FDNS	00NR_G15_054	0	17SP	G15_054	FROM->TO	GR ISLD-LNX3345.00 - GRAND ISLAND 345KV CKT Z	720	720	0.05293	129.5885	GAVINS POINT - YANKON JCT 115KV CKT 1
FDNS	00NR_G15_054	0	17SP	G15_054	FROM->TO	GR ISLD-LNX3345.00 - GRAND ISLAND 345KV CKT Z	720	720	0.06161	129.58	STEGALL - STEGALL-LNX3230.00 230KV CKT Z
FDNS	00NR_G15_054	0	17SP	G15_054	FROM->TO	GR ISLD-LNX3345.00 - GRAND ISLAND 345KV CKT Z	720	720	0.05681	129.559	GEN336222 1-LITTLE GYPSY UNIT#2
FDNS	00NR_G15_054	0	17SP	G15_054	FROM->TO	GR ISLD-LNX3345.00 - GRAND ISLAND 345KV CKT Z	720	720	0.05681	129.5442	GEN303007 1-1BC2 U2
FDNS	00NR_G15_054	0	17SP	G15_054	FROM->TO	GR ISLD-LNX3345.00 - GRAND ISLAND 345KV CKT Z	720	720	0.05681	129.5401	GEN303006 1-1BC2 U1
FDNS	00NR_G15_054	0	17SP	G15_054	FROM->TO	GR ISLD-LNX3345.00 - GRAND ISLAND 345KV CKT Z	720	720	0.05621	129.5154	MENNO JCT - UTICA 115KV CKT 1
FDNS	00NR_G15_054	0	17SP	G15_054	FROM->TO	GR ISLD-LNX3345.00 - GRAND ISLAND 345KV CKT Z	720	720	0.05682	129.5079	GLENBORO SOUTH - RUGBY 230KV CKT 1
FDNS	00NR_G15_054	0	17SP	G15_054	FROM->TO	GR ISLD-LNX3345.00 - GRAND ISLAND 345KV CKT Z	720	720	0.05681	129.4851	GEN336152 1-WATERFORD UNIT#2
FDNS	00NR_G15_054	0	17SP	G15_054	FROM->TO	GR ISLD-LNX3345.00 - GRAND ISLAND 345KV CKT Z	720	720	0.05681	129.4846	GEN336151 1-WATERFORD UNIT#1
FDNS	00NR_G15_054	0	17SP	G15_054	FROM->TO	GR ISLD-LNX3345.00 - GRAND ISLAND 345KV CKT Z	720	720	0.05621	129.4754	P12:115:UMZZ:# 237 #: MEN IN SD. MENNO JUNCTION IS A TAP (UJ-MEN-TP).
FDNS	00NR_G15_054	0	17SP	G15_054	FROM->TO	GR ISLD-LNX3345.00 - GRAND ISLAND 345KV CKT Z	720	720	0.05694	129.467	ARKANSAS NUCLEAR ONE - FT SMITH 500KV CKT 1
FDNS	00NR_G15_054	0	17SP	G15_054	FROM->TO	GR ISLD-LNX3345.00 - GRAND ISLAND 345KV CKT Z	720	720	0.05694	129.467	ARKANSAS NUCLEAR ONE - FT SMITH 500KV CKT 1
FDNS	00NR_G15_054	0	17SP	G15_054	FROM->TO	GR ISLD-LNX3345.00 - GRAND ISLAND 345KV CKT Z	720	720	0.0568	129.465	GARRISON - JAMES TOWN 230KV CKT 1
FDNS	00NR_G15_054	0	17SP	G15_054	FROM->TO	GR ISLD-LNX3345.00 - GRAND ISLAND 345KV CKT Z	720	720	0.05681	129.4617	GEN303008 1-1BC2 U3
FDNS	00NR_G15_054	0	17SP	G15_054	FROM->TO	GR ISLD-LNX3345.00 - GRAND ISLAND 345KV CKT Z	720	720	0.05681	129.4558	GEN336170 1-GULF OXY U4
FDNS	00NR_G15_054	0	17SP	G15_054	FROM->TO	GR ISLD-LNX3345.00 - GRAND ISLAND 345KV CKT Z	720	720	0.05685	129.4542	HANKINSON - WAHPETON 230KV CKT 1
FDNS	00NR_G15_054	0	17SP	G15_054	FROM->TO	GR ISLD-LNX3345.00 - GRAND ISLAND 345KV CKT Z	720	720	0.05693	129.4311	RAUN - SIOUX CITY 345KV CKT 1
FDNS	00NR_G15_054	0	17SP	G15_054	FROM->TO	GR ISLD-LNX3345.00 - GRAND ISLAND 345KV CKT Z	720	720	0.05693	129.4311	RAUN - SIOUX CITY 345KV CKT 1
FDNS	00NR_G15_054	0	17SP	G15_054	FROM->TO	GR ISLD-LNX3345.00 - GRAND ISLAND 345KV CKT Z	720	720	0.05712	129.4172	BYRON - NORTH ROCHESTER 345KV CKT 1
FDNS	00NR_G15_054	0	17SP	G15_054	FROM->TO	GR ISLD-LNX3345.00 - GRAND ISLAND 345KV CKT Z	720	720	0.05681	129.3589	P13:230:UMZW:# 2218 #: FP IN MT. LOSS OF TRANSFORMER (AT2).
FDNS	00NR_G15_054	0	17SP	G15_054	FROM->TO	GR ISLD-LNX3345.00 - GRAND ISLAND 345KV CKT Z	720	720	0.05681	129.3559	GEN501811 1-RODEMACHER UNIT 1
FDNS	00NR_G15_054	0	17SP	G15_054	FROM->TO	GR ISLD-LNX3345.00 - GRAND ISLAND 345KV CKT Z	720	720	0.05077	129.3429	P12:115:NPPD:1164:ONEILL 7:JEFFREY9:BTB
FDNS	00NR_G15_054	0	17SP	G15_054	FROM->TO	GR ISLD-LNX3345.00 - GRAND ISLAND 345KV CKT Z	720	720	0.05686	129.3319	APPLEDORN 4 230.00 - WATERTOWN 230KV CKT 1
FDNS	00NR_G15_054	0	17SP	G15_054	FROM->TO	GR ISLD-LNX3345.00 - GRAND ISLAND 345KV CKT Z	720	720	0.05686	129.3319	APPLEDORN 4 230.00 - WATERTOWN 230KV CKT 1
FDNS	00NR_G15_054	0	17SP	G15_054	FROM->TO	GR ISLD-LNX3345.00 - GRAND ISLAND 345KV CKT Z	720	720	0.05487	129.3099	P12:115:UMZW:# 1910 #: YJ IN SD. YJ-UJ LINE FAULT
FDNS	00NR_G15_054	0	17SP	G15_054	FROM->TO	GR ISLD-LNX3345.00 - GRAND ISLAND 345KV CKT Z	720	720	0.05692	129.3071	NORTH ROCHESTER - PRAIRIE ISLAND 345KV CKT 1
FDNS	00NR_G15_054	0	17SP	G15_054	FROM->TO	GR ISLD-LNX3345.00 - GRAND ISLAND 345KV CKT Z	720	720	0.05487	129.3057	NAPA JCT7 115.00 - YANKON JCT 115KV CKT 1
FDNS	00NR_G15_054	0	17SP	G15_054	FROM->TO	GR ISLD-LNX3345.00 - GRAND ISLAND 345KV CKT Z	720	720	0.05487	129.3057	NAPA JCT7 115.00 - YANKON JCT 115KV CKT 1
FDNS	00NR_G15_054	0	17SP	G15_054	FROM->TO	GR ISLD-LNX3345.00 - GRAND ISLAND 345KV CKT Z	720	720	0.05487	129.3019	NAPA JCT7 115.00 - UTICA 115KV CKT 1
FDNS	00NR_G15_054	0	17SP	G15_054	FROM->TO	GR ISLD-LNX3345.00 - GRAND ISLAND 345KV CKT Z	720	720	0.05487	129.3019	NAPA JCT7 115.00 - UTICA 115KV CKT 1
FDNS	00NR_G15_054	0	17SP	G15_054	FROM->TO	GR ISLD-LNX3345.00 - GRAND ISLAND 345KV CKT Z	720	720	0.0568	129.2808	FARGO - JAMES TOWN 230KV CKT 1
FDNS	00NR_G15_054	0	17SP	G15_054	FROM->TO	GR ISLD-LNX3345.00 - GRAND ISLAND 345KV CKT Z	720	720	0.05681	129.272	P13:115-230:NPPD:NUCOR-3
FDNS	00NR_G15_054	0	17SP	G15_054	FROM->TO	GR ISLD-LNX3345.00 - GRAND ISLAND 345KV CKT Z	720	720	0.05686	129.2709	APPLEDORN 4 230.00 - GRANITE FALLS 230KV CKT 1
FDNS	00NR_G15_054	0	17SP	G15_054	FROM->TO	GR ISLD-LNX3345.00 - GRAND ISLAND 345KV CKT Z	720	720	0.05686	129.2709	APPLEDORN 4 230.00 - GRANITE FALLS 230KV CKT 1
FDNS	00NR_G15_054	0	17SP	G15_054	FROM->TO	GR ISLD-LNX3345.00 - GRAND ISLAND 345KV CKT Z	720	720	0.05077	129.2649	CLEARWATER - ONEILL 115KV CKT 1
FDNS	00NR_G15_054	0	17SP	G15_054	FROM->TO	GR ISLD-LNX3345.00 - GRAND ISLAND 345KV CKT Z	720	720	0.05624	129.2635	LAKEFIELD 3 - LKFLDXL3 345KV CKT 1
FDNS	00NR_G15_054	0	17SP	G15_054	FROM->TO	GR ISLD-LNX3345.00 - GRAND ISLAND 345KV CKT Z	720	720	0.05715	129.2625	GAVINS POINT - HARTINGTON 115KV CKT 1
FDNS	00NR_G15_054	0	17SP	G15_054	FROM->TO	GR ISLD-LNX3345.00 - GRAND ISLAND 345KV CKT Z	720	720	0.05683	129.2602	FERGSFL4 230.00 - WAHPETON 230KV CKT 1
FDNS	00NR_G15_054	0	17SP	G15_054	FROM->TO	GR ISLD-LNX3345.00 - GRAND ISLAND 345KV CKT Z	720	720	0.0568	129.2587	FARGO - JAMES TOWN 230KV CKT 2
FDNS	00NR_G15_054	0	17SP	G15_054	FROM->TO	GR ISLD-LNX3345.00 - GRAND ISLAND 345KV CKT Z	720	720	0.05681	129.2583	GEN334071 1-LEWIS CREEK 2
FDNS	00NR_G15_054	0	17SP	G15_054	FROM->TO	GR ISLD-LNX3345.00 - GRAND ISLAND 345KV CKT Z	720	720	0.06425	129.2556	COLUMEAST - SHELL CREEK 345KV CKT 1
FDNS	00NR_G15_054	0	17SP	G15_054	FROM->TO	GR ISLD-LNX3345.00 - GRAND ISLAND 345KV CKT Z	720	720	0.05681	129.2545	GEN337766 1-TRACTEBEL UNIT S1
FDNS	00NR_G15_054	0	17SP	G15_054	FROM->TO	GR ISLD-LNX3345.00 - GRAND ISLAND 345KV CKT Z	720	720	0.05703	129.2524	COUNCIL BLUFFS - SUB 3456 345KV CKT 1
FDNS	00NR_G15_054	0	17SP	G15_054	FROM->TO	GR ISLD-LNX3345.00 - GRAND ISLAND 345KV CKT Z	720	720	0.05703	129.2524	COUNCIL BLUFFS - SUB 3456 345KV CKT 1
FDNS	00NR_G15_054	0	17SP	G15_054	FROM->TO	GR ISLD-LNX3345.00 - GRAND ISLAND 345KV CKT Z	720	720	0.05681	129.2523	GEN334070 1-LEWIS CREEK 1
FDNS	00NR_G15_054	0	17SP	G15_054	FROM->TO	GR ISLD-LNX3345.00 - GRAND ISLAND 345KV CKT Z	720	720	0.05681	129.2419	P13:230-345:NPPD:NUCOR-1
FDNS	00NR_G15_054	0	17SP	G15_054	FROM->TO	GR ISLD-LNX3345.00 - GRAND ISLAND 345KV CKT Z	720	720	0.0575	129.2362	DENISON - SIOUX CITY 230KV CKT 1
FDNS	00NR_G15_054	0	17SP	G15_054	FROM->TO	GR ISLD-LNX3345.00 - GRAND ISLAND 345KV CKT Z	720	720	0.06353	129.2305	P12:115:NPPD:1168B:ALBION 7:PETERSBRG.N7:BTB
FDNS	00NR_G15_054	0	17SP	G15_054	FROM->TO	GR ISLD-LNX3345.00 - GRAND ISLAND 345KV CKT Z	720	720	0.0568	129.2256	BISMARK - JAMES TOWN 230KV CKT 1
FDNS	00NR_G15_054	0	17SP	G15_054	FROM->TO	GR ISLD-LNX3345.00 - GRAND ISLAND 345KV CKT Z	720	720	0.05528	129.2157	CROOKED CREEK - RIVERDALE 230KV CKT 1
FDNS	00NR_G15_054	0	17SP	G15_054	FROM->TO	GR ISLD-LNX3345.00 - GRAND ISLAND 345KV CKT Z	720	720	0.05681	129.2096	GEN501910 1-ACADIA UNIT ST1
FDNS	00NR_G15_054	0	17SP	G15_054	FROM->TO	GR ISLD-LNX3345.00 - GRAND ISLAND 345KV CKT Z	720	720	0.0568	129.2093	BISMARK - WEBER 230KV CKT 1
FDNS	00NR_G15_054	0	17SP	G15_054	FROM->TO	GR ISLD-LNX3345.00 - GRAND ISLAND 345KV CKT Z	720	720	0.0568	129.1997	JAMES TOWN - WEBER 230KV CKT 1
FDNS	00NR_G15_054	0	17SP	G15_054	FROM->TO	GR ISLD-LNX3345.00 - GRAND ISLAND 345KV CKT Z	720	720	0.05713	129.1814	P13:230-345:NPPD:SIDNEY 3:KV2A
FDNS	00NR_G15_054	0	17SP	G15_054	FROM->TO	GR ISLD-LNX3345.00 - GRAND ISLAND 345KV CKT Z	720	720	0.05713	129.1811	SIDNEY (SDQ KV2A) 345/230/13.8KV TRANSFORMER CKT 1
FDNS	00NR_G15_054	0	17SP	G15_054	FROM->TO	GR ISLD-LNX3345.00 - GRAND ISLAND 345KV CKT Z	720	720	0.05713	129.1799	SIDNEY - SIDNEY TRANSFORMER 230KV CKT 1
FDNS	00NR_G15_054	0	17SP	G15_054	FROM->TO	GR ISLD-LNX3345.00 - GRAND ISLAND 345KV CKT Z	720	720	0.05715	129.1749	P13:115-230:TSGT:SIDNEY-KV1A
FDNS	00NR_G15_054	0	17SP	G15_054	FROM->TO	GR ISLD-LNX3345.00 - GRAND ISLAND 345KV CKT Z	720	720	0.06353	129.1698	ALBION - PETERSBURG 115KV CKT 1
FDNS	00NR_G15_054	0	17SP	G15_054	FROM->TO	GR ISLD-LNX3345.00 - GRAND ISLAND 345KV CKT Z	720	720	0.05712	129.1678	BYRON - PLEASANT VALLEY 345KV CKT 1
FDNS	00NR_G15_054	0	17SP	G15_054	FROM->TO	GR ISLD-LNX3345.00 - GRAND ISLAND 345KV CKT Z	720	720	0.05738	129.1611	P12:115:NPPD:WAPA1:CHADRON7:BOXBUTE7:BTB
FDNS	00NR_G15_054	0	17SP	G15_054	FROM->TO	GR ISLD-LNX3345.00 - GRAND ISLAND 345KV CKT Z	720	720	0.05629	129.1607	MT VERN - STORLA 115KV CKT 1

SOLUTION	GROUP	SCENARIO	SEASON	SOURCE	DIRECTION	MONITORED ELEMENT	RATEA (MVA)	RATEB(MVA)	TDF	TC%LOADING (% MVA)	CONTINGENCY
FDNS	00NR_G15_054	0	17SP	G15_054	FROM->TO	GR ISLD-LNX3345.00 - GRAND ISLAND 345KV CKT Z	720	720	0.05681	129.1538	GEN525561 1-TOLK GEN #1 24 KV
FDNS	00NR_G15_054	0	17SP	G15_054	FROM->TO	GR ISLD-LNX3345.00 - GRAND ISLAND 345KV CKT Z	720	720	0.05681	129.1479	PRAIRIE ISLAND 345/20.0KV TRANSFORMER CKT 2
FDNS	00NR_G15_054	0	17SP	G15_054	FROM->TO	GR ISLD-LNX3345.00 - GRAND ISLAND 345KV CKT Z	720	720	0.05681	129.1472	GEN525562 1-TOLK GEN #2 24 KV
FDNS	00NR_G15_054	0	17SP	G15_054	FROM->TO	GR ISLD-LNX3345.00 - GRAND ISLAND 345KV CKT Z	720	720	0.05681	129.147	GEN345765 H-1SIOUX 2 18.000
FDNS	00NR_G15_054	0	17SP	G15_054	FROM->TO	GR ISLD-LNX3345.00 - GRAND ISLAND 345KV CKT Z	720	720	0.05681	129.1468	PRAIRIE ISLAND 345/20.0KV TRANSFORMER CKT 1
FDNS	00NR_G15_054	0	17SP	G15_054	FROM->TO	GR ISLD-LNX3345.00 - GRAND ISLAND 345KV CKT Z	720	720	0.05681	129.1464	P13:115-345:NPPD:NUCOR-2
FDNS	00NR_G15_054	0	17SP	G15_054	FROM->TO	GR ISLD-LNX3345.00 - GRAND ISLAND 345KV CKT Z	720	720	0.0568	129.136	BALTA - RAMSEY 230KV CKT 1
FDNS	00NR_G15_054	0	17SP	G15_054	FROM->TO	GR ISLD-LNX3345.00 - GRAND ISLAND 345KV CKT Z	720	720	0.0568	129.1268	ELM CREEK - MONTICELLO 345KV CKT 1
FDNS	00NR_G15_054	0	17SP	G15_054	FROM->TO	GR ISLD-LNX3345.00 - GRAND ISLAND 345KV CKT Z	720	720	0.05681	129.1203	GEN337764 1-TRACTEBEL UNIT C1
FDNS	00NR_G15_054	0	17SP	G15_054	FROM->TO	GR ISLD-LNX3345.00 - GRAND ISLAND 345KV CKT Z	720	720	0.05681	129.1202	GEN337765 1-TRACTEBEL UNIT C2
FDNS	00NR_G15_054	0	17SP	G15_054	FROM->TO	GR ISLD-LNX3345.00 - GRAND ISLAND 345KV CKT Z	720	720	0.05683	129.1146	FERGSFL4 230.00 - GRE-SILVRLK4230.00 230KV CKT 1
FDNS	00NR_G15_054	0	17SP	G15_054	FROM->TO	GR ISLD-LNX3345.00 - GRAND ISLAND 345KV CKT Z	720	720	0.05704	129.1141	ARPIN B3 345.00 - ROCKY RN B8 345.00 345KV CKT 1
FDNS	00NR_G15_054	0	17SP	G15_054	FROM->TO	GR ISLD-LNX3345.00 - GRAND ISLAND 345KV CKT Z	720	720	0.05498	129.1119	P13:230:UMZW:# 253 #: FR IN SD. LOSS OF TRANSFORMER (E
FDNS	00NR_G15_054	0	17SP	G15_054	FROM->TO	GR ISLD-LNX3345.00 - GRAND ISLAND 345KV CKT Z	720	720	0.05679	129.1065	DKSN_CO5 161.00 - TRIBOJI NO1 + NO2 161KV CKT 1
FDNS	00NR_G15_054	0	17SP	G15_054	FROM->TO	GR ISLD-LNX3345.00 - GRAND ISLAND 345KV CKT Z	720	720	0.05681	129.1005	GEN345756 H-1SIOUX 1 18.000
FDNS	00NR_G15_054	0	17SP	G15_054	FROM->TO	GR ISLD-LNX3345.00 - GRAND ISLAND 345KV CKT Z	720	720	0.05682	129.0952	AUDUBON - SHEYNNE 230KV CKT 1
FDNS	00NR_G15_054	0	17SP	G15_054	FROM->TO	GR ISLD-LNX3345.00 - GRAND ISLAND 345KV CKT Z	720	720	0.05077	129.095	CLEARWATER - NELIGH 115KV CKT 1
FDNS	00NR_G15_054	0	17SP	G15_054	FROM->TO	GR ISLD-LNX3345.00 - GRAND ISLAND 345KV CKT Z	720	720	0.05681	129.0941	GRAND GULF 500/22.0KV TRANSFORMER CKT 1
FDNS	00NR_G15_054	0	17SP	G15_054	FROM->TO	GR ISLD-LNX3345.00 - GRAND ISLAND 345KV CKT Z	720	720	0.05681	129.0905	GEN659118 1-LARAMIE RIVER UNIT1
FDNS	00NR_G15_054	0	17SP	G15_054	FROM->TO	GR ISLD-LNX3345.00 - GRAND ISLAND 345KV CKT Z	720	720	0.05703	129.0838	CHADRON - WAYSIDE 115KV CKT 1
FDNS	00NR_G15_054	0	17SP	G15_054	FROM->TO	GR ISLD-LNX3345.00 - GRAND ISLAND 345KV CKT Z	720	720	0.05703	129.0838	P13:115-230:NPPD:WAYSIDE4:T1
FDNS	00NR_G15_054	0	17SP	G15_054	FROM->TO	GR ISLD-LNX3345.00 - GRAND ISLAND 345KV CKT Z	720	720	0.05738	129.083	CHADRON - DUNLAP 115KV CKT 1
FDNS	00NR_G15_054	0	17SP	G15_054	FROM->TO	GR ISLD-LNX3345.00 - GRAND ISLAND 345KV CKT Z	720	720	0.05703	129.0823	WAYSIDE (WAYSIDE T1) 230/115/13.8KV TRANSFORMER CKT 1
FDNS	00NR_G15_054	0	17SP	G15_054	FROM->TO	GR ISLD-LNX3345.00 - GRAND ISLAND 345KV CKT Z	720	720	0.05681	129.0818	GEN336221 1-LITTLE GYPSY UNIT#1
FDNS	00NR_G15_054	0	17SP	G15_054	FROM->TO	GR ISLD-LNX3345.00 - GRAND ISLAND 345KV CKT Z	720	720	0.05683	129.0724	GRE-SILVRLK4230.00 - HENNING 230KV CKT 1
FDNS	00NR_G15_054	0	17SP	G15_054	FROM->TO	GR ISLD-LNX3345.00 - GRAND ISLAND 345KV CKT Z	720	720	0.05681	129.0723	GEN336242 1-1NMIL ST1 18.000
FDNS	00NR_G15_054	0	17SP	G15_054	FROM->TO	GR ISLD-LNX3345.00 - GRAND ISLAND 345KV CKT Z	720	720	0.05693	129.0673	FRANKS - HUBEN 345KV CKT 1
FDNS	00NR_G15_054	0	17SP	G15_054	FROM->TO	GR ISLD-LNX3345.00 - GRAND ISLAND 345KV CKT Z	720	720	0.05681	129.0659	GEN337757 1-DUKE HOTSPRINGS STG1
FDNS	00NR_G15_054	0	17SP	G15_054	FROM->TO	GR ISLD-LNX3345.00 - GRAND ISLAND 345KV CKT Z	720	720	0.0572	129.0611	NOBLES - SPLIT ROCK 345KV CKT 1
FDNS	00NR_G15_054	0	17SP	G15_054	FROM->TO	GR ISLD-LNX3345.00 - GRAND ISLAND 345KV CKT Z	720	720	0.05681	129.061	GEN334431 1-SABINE UNIT 1
FDNS	00NR_G15_054	0	17SP	G15_054	FROM->TO	GR ISLD-LNX3345.00 - GRAND ISLAND 345KV CKT Z	720	720	0.05681	129.061	GEN334432 1-SABINE UNIT 2
FDNS	00NR_G15_054	0	17SP	G15_054	FROM->TO	GR ISLD-LNX3345.00 - GRAND ISLAND 345KV CKT Z	720	720	0.0568	129.0424	EAGLE - PHILIP 115KV CKT 1
FDNS	00NR_G15_054	0	17SP	G15_054	FROM->TO	GR ISLD-LNX3345.00 - GRAND ISLAND 345KV CKT Z	720	720	0.05681	129.0397	GEN336446 1-MICHOUD UNIT #2
FDNS	00NR_G15_054	0	17SP	G15_054	FROM->TO	GR ISLD-LNX3345.00 - GRAND ISLAND 345KV CKT Z	720	720	0.05681	129.0267	GEN345832 1-1TS G1 13.800
FDNS	00NR_G15_054	0	17SP	G15_054	FROM->TO	GR ISLD-LNX3345.00 - GRAND ISLAND 345KV CKT Z	720	720	0.05681	129.0263	GEN345841 2-1TS G2 13.800
FDNS	00NR_G15_054	0	17SP	G15_054	FROM->TO	GR ISLD-LNX3345.00 - GRAND ISLAND 345KV CKT Z	720	720	0.05681	129.0197	GEN501970 1-EVANGELINE UNIT 7
FDNS	00NR_G15_054	0	17SP	G15_054	FROM->TO	GR ISLD-LNX3345.00 - GRAND ISLAND 345KV CKT Z	720	720	0.05689	129.0178	GENOA 161 - SENECA 161 161KV CKT 1
FDNS	00NR_G15_054	0	17SP	G15_054	FROM->TO	GR ISLD-LNX3345.00 - GRAND ISLAND 345KV CKT Z	720	720	0.05723	129.015	PALXFRASBTHI
FDNS	00NR_G15_054	0	17SP	G15_054	FROM->TO	GR ISLD-LNX3345.00 - GRAND ISLAND 345KV CKT Z	720	720	0.05681	129.0047	GEN334030 1-FRONTIER UNIT 1
FDNS	00NR_G15_054	0	17SP	G15_054	FROM->TO	GR ISLD-LNX3345.00 - GRAND ISLAND 345KV CKT Z	720	720	0.05681	129.0039	GEN334031 1-FRONTIER UNIT 2
FDNS	00NR_G15_054	0	17SP	G15_054	FROM->TO	GR ISLD-LNX3345.00 - GRAND ISLAND 345KV CKT Z	720	720	0.05681	129.0037	P12:345:GRDA:CHOUTEAU-SPORTSMANACRES
FDNS	00NR_G15_054	0	17SP	G15_054	FROM->TO	GR ISLD-LNX3345.00 - GRAND ISLAND 345KV CKT Z	720	720	0.0568	129.0037	EAGLE - MARTIN 115KV CKT 1
FDNS	00NR_G15_054	0	17SP	G15_054	FROM->TO	GR ISLD-LNX3345.00 - GRAND ISLAND 345KV CKT Z	720	720	0.05681	128.9995	GEN337430 1-PERYVILLE UNIT #3
FDNS	00NR_G15_054	0	17SP	G15_054	FROM->TO	GR ISLD-LNX3345.00 - GRAND ISLAND 345KV CKT Z	720	720	0.05681	128.9993	GEN337428 1-PERYVILLE UNIT #1
FDNS	00NR_G15_054	0	17SP	G15_054	FROM->TO	GR ISLD-LNX3345.00 - GRAND ISLAND 345KV CKT Z	720	720	0.05683	128.9892	HENNING - INMANN 230KV CKT 1
FDNS	00NR_G15_054	0	17SP	G15_054	FROM->TO	GR ISLD-LNX3345.00 - GRAND ISLAND 345KV CKT Z	720	720	0.05723	128.9873	7PALM TAP 345.00 - SUB T 345KV CKT 1
FDNS	00NR_G15_054	0	17SP	G15_054	FROM->TO	GR ISLD-LNX3345.00 - GRAND ISLAND 345KV CKT Z	720	720	0.05681	128.9734	GEN336240 1-1NMIL CT1 18.000
FDNS	00NR_G15_054	0	17SP	G15_054	FROM->TO	GR ISLD-LNX3345.00 - GRAND ISLAND 345KV CKT Z	720	720	0.05681	128.9733	GEN336241 1-1NMIL CT2 18.000
FDNS	00NR_G15_054	0	17SP	G15_054	FROM->TO	GR ISLD-LNX3345.00 - GRAND ISLAND 345KV CKT Z	720	720	0.05684	128.973	GRANT - MITCHELL 115KV CKT 1
FDNS	00NR_G15_054	0	17SP	G15_054	FROM->TO	GR ISLD-LNX3345.00 - GRAND ISLAND 345KV CKT Z	720	720	0.05684	128.973	GRANT - MITCHELL 115KV CKT 1
FDNS	00NR_G15_054	0	17SP	G15_054	FROM->TO	GR ISLD-LNX3345.00 - GRAND ISLAND 345KV CKT Z	720	720	0.05681	128.9706	GEN501912 1-ACADIA UNIT CT1B
FDNS	00NR_G15_054	0	17SP	G15_054	FROM->TO	GR ISLD-LNX3345.00 - GRAND ISLAND 345KV CKT Z	720	720	0.05681	128.9703	GEN501911 1-ACADIA UNIT CT1A
FDNS	00NR_G15_054	0	17SP	G15_054	FROM->TO	GR ISLD-LNX3345.00 - GRAND ISLAND 345KV CKT Z	720	720	0.05681	128.9578	FINNEY SWITCHING STATION - PSCO LAMAR DC TIE 345KV CKT 1
FDNS	00NR_G15_054	0	17SP	G15_054	FROM->TO	GR ISLD-LNX3345.00 - GRAND ISLAND 345KV CKT Z	720	720	0.05681	128.9578	FINNEY SWITCHING STATION - PSCO LAMAR DC TIE 345KV CKT 1
FDNS	00NR_G15_054	0	17SP	G15_054	FROM->TO	GR ISLD-LNX3345.00 - GRAND ISLAND 345KV CKT Z	720	720	0.05923	128.9558	OAHE - PHILIP TAP 230KV CKT 1
FDNS	00NR_G15_054	0	17SP	G15_054	FROM->TO	GR ISLD-LNX3345.00 - GRAND ISLAND 345KV CKT Z	720	720	0.05784	128.9547	MARTIN - SHANNON 115KV CKT 1
FDNS	00NR_G15_054	0	17SP	G15_054	FROM->TO	GR ISLD-LNX3345.00 - GRAND ISLAND 345KV CKT Z	720	720	0.05681	128.9547	WHITE BLUFF 500/26.0KV TRANSFORMER CKT 1
FDNS	00NR_G15_054	0	17SP	G15_054	FROM->TO	GR ISLD-LNX3345.00 - GRAND ISLAND 345KV CKT Z	720	720	0.05681	128.9506	GEN335571 1-CARVILLE UNIT #1
FDNS	00NR_G15_054	0	17SP	G15_054	FROM->TO	GR ISLD-LNX3345.00 - GRAND ISLAND 345KV CKT Z	720	720	0.05681	128.9505	GEN335570 1-CARVILLE CTG
FDNS	00NR_G15_054	0	17SP	G15_054	FROM->TO	GR ISLD-LNX3345.00 - GRAND ISLAND 345KV CKT Z	720	720	0.05681	128.9473	GEN336167 1-GULF OXY U1
FDNS	00NR_G15_054	0	17SP	G15_054	FROM->TO	GR ISLD-LNX3345.00 - GRAND ISLAND 345KV CKT Z	720	720	0.05681	128.9473	GEN336168 1-GULF OXY U2
FDNS	00NR_G15_054	0	17SP	G15_054	FROM->TO	GR ISLD-LNX3345.00 - GRAND ISLAND 345KV CKT Z	720	720	0.05681	128.9473	GEN336169 1-GULF OXY U3
FDNS	00NR_G15_054	0	17SP	G15_054	FROM->TO	GR ISLD-LNX3345.00 - GRAND ISLAND 345KV CKT Z	720	720	0.05681	128.9436	GEN336944 1-REX BROWN
FDNS	00NR_G15_054	0	17SP	G15_054	FROM->TO	GR ISLD-LNX3345.00 - GRAND ISLAND 345KV CKT Z	720	720	0.05681	128.9418	GEN335612 1-WILLOW GLENN UNIT#2
FDNS	00NR_G15_054	0	17SP	G15_054	FROM->TO	GR ISLD-LNX3345.00 - GRAND ISLAND 345KV CKT Z	720	720	0.05738	128.9237	BOXBUTE7 115.00 - DUNLAP 115KV CKT 1
FDNS	00NR_G15_054	0	17SP	G15_054	FROM->TO	GR ISLD-LNX3345.00 - GRAND ISLAND 345KV CKT Z	720	720	0.05681	128.6299	KEARNEY 115KV SWITCHED SHUNT
FDNS	00NR_G15_054	0	17SP	G15_054	FROM->TO	GR ISLD-LNX3345.00 - GRAND ISLAND 345KV CKT Z	720	720	0.05838	128.5864	KELLY - SHELL CREEK 230KV CKT 1
FDNS	00NR_G15_054	0	17SP	G15_054	FROM->TO	GR ISLD-LNX3345.00 - GRAND ISLAND 345KV CKT Z	720	720	0.05838	128.5812	SHELL CREEK (SHELLCREEKT1) 345/230/13.8KV TRANSFORMER CKT 1
FDNS	00NR_G15_054	0	17SP	G15_054	FROM->TO	GR ISLD-LNX3345.00 - GRAND ISLAND 345KV CKT Z	720	720	0.05838	128.5812	SHELL CREEK (SHELLCREEKT1) 345/230/13.8KV TRANSFORMER CKT 1
FDNS	00NR_G15_054	0	17SP	G15_054	FROM->TO	GR ISLD-LNX3345.00 - GRAND ISLAND 345KV CKT Z	720	720	0.06993	128.5545	COLUMWEST - KELLY 230KV CKT 1
FDNSLock	00NR_G15_054	0	17SP	G15_054	FROM->TO	GR ISLD-LNX3345.00 - GRAND ISLAND 345KV CKT Z	720	720	0.05681	128.5044	KEARNEY 115KV SWITCHED SHUNT
FDNS	00NR_G15_054	0	17SP	G15_054	FROM->TO	GR ISLD-LNX3345.00 - GRAND ISLAND 345KV CKT Z	720	720	0.05688	128.4511	ANTELOP-LNX3345.00 - BRDLAND-LNX3345.00 345KV CKT 1
FDNS	00NR_G15_054	0	17SP	G15_054	FROM->TO	GR ISLD-LNX3345.00 - GRAND ISLAND 345KV CKT Z	720	720	0.05681	128.4146	1303-KEARNEY

SOLUTION	GROUP	SCENARIO	SEASON	SOURCE	DIRECTION	MONITORED ELEMENT	RATEA (MVA)	RATEB(MVA)	TDF	TC%LOADING (% MVA)	CONTINGENCY
FDNS	00NR_G15_054	0	17SP	G15_054	FROM->TO	GR ISLD-LNX3345.00 - GRAND ISLAND 345KV CKT Z	720	720	0.05681	128.4146	BASE CASE
FDNS	00NR_G15_054	0	17SP	G15_054	FROM->TO	GR ISLD-LNX3345.00 - GRAND ISLAND 345KV CKT Z	720	720	0.05481	128.355	COOPER - MOORE 345KV CKT 1
FDNS	00NR_G15_054	0	17SP	G15_054	FROM->TO	GR ISLD-LNX3345.00 - GRAND ISLAND 345KV CKT Z	720	720	0.05464	128.3507	GRAND ISLAND - RIVERDALE 230KV CKT 1
FDNS	00NR_G15_054	0	17SP	G15_054	FROM->TO	GR ISLD-LNX3345.00 - GRAND ISLAND 345KV CKT Z	720	720	0.05681	128.2758	GEN645001 1-FORT CALHOUN 1
FDNS	00NR_G15_054	0	17SP	G15_054	FROM->TO	GR ISLD-LNX3345.00 - GRAND ISLAND 345KV CKT Z	720	720	0.05695	128.2685	MINGO (MINGO) 345/115/13.8KV TRANSFORMER CKT 1
FDNS	00NR_G15_054	0	17SP	G15_054	FROM->TO	GR ISLD-LNX3345.00 - GRAND ISLAND 345KV CKT Z	720	720	0.05695	128.2685	MINGO (MINGO) 345/115/13.8KV TRANSFORMER CKT 1
FDNS	00NR_G15_054	0	17SP	G15_054	FROM->TO	GR ISLD-LNX3345.00 - GRAND ISLAND 345KV CKT Z	720	720	0.05834	128.2442	AXTELL - PAULINE 345KV CKT 1
FDNS	00NR_G15_054	0	17SP	G15_054	FROM->TO	GR ISLD-LNX3345.00 - GRAND ISLAND 345KV CKT Z	720	720	0.05844	128.22	103RD & ROKEBY - MOORE 345KV CKT 1
FDNS	00NR_G15_054	0	17SP	G15_054	FROM->TO	GR ISLD-LNX3345.00 - GRAND ISLAND 345KV CKT Z	720	720	0.05844	128.22	103RD & ROKEBY - MOORE 345KV CKT 1
FDNS	00NR_G15_054	0	17SP	G15_054	FROM->TO	GR ISLD-LNX3345.00 - GRAND ISLAND 345KV CKT Z	720	720	0.0567	128.1029	GRAND ISLAND (GRAND.ISD T5) 230/115/13.8KV TRANSFORMER CKT 2
FDNS	00NR_G15_054	0	17SP	G15_054	FROM->TO	GR ISLD-LNX3345.00 - GRAND ISLAND 345KV CKT Z	720	720	0.0567	128.1029	GRAND ISLAND (GRAND.ISD T5) 230/115/13.8KV TRANSFORMER CKT 2
FDNS	00NR_G15_054	0	17SP	G15_054	FROM->TO	GR ISLD-LNX3345.00 - GRAND ISLAND 345KV CKT Z	720	720	0.0567	128.1005	GRAND ISLAND (GRAND.ISD T2) 230/115/13.8KV TRANSFORMER CKT 1
FDNS	00NR_G15_054	0	17SP	G15_054	FROM->TO	GR ISLD-LNX3345.00 - GRAND ISLAND 345KV CKT Z	720	720	0.0567	128.1005	GRAND ISLAND (GRAND.ISD T2) 230/115/13.8KV TRANSFORMER CKT 1
FDNS	00NR_G15_054	0	17SP	G15_054	FROM->TO	GR ISLD-LNX3345.00 - GRAND ISLAND 345KV CKT Z	720	720	0.05714	128.0426	AURORA - GRAND ISLAND 115KV CKT 1
FDNS	00NR_G15_054	0	17SP	G15_054	FROM->TO	GR ISLD-LNX3345.00 - GRAND ISLAND 345KV CKT Z	720	720	0.05734	128.0154	SUB 3455 - SUB 3740 345KV CKT 1
FDNS	00NR_G15_054	0	17SP	G15_054	FROM->TO	GR ISLD-LNX3345.00 - GRAND ISLAND 345KV CKT Z	720	720	0.05734	128.0154	SUB 3455 - SUB 3740 345KV CKT 1
FDNS	00NR_G15_054	0	17SP	G15_054	FROM->TO	GR ISLD-LNX3345.00 - GRAND ISLAND 345KV CKT Z	720	720	0.05679	127.9972	MCCOOL (MCCOOL T2) 345/115/13.8KV TRANSFORMER CKT 1
FDNS	00NR_G15_054	0	17SP	G15_054	FROM->TO	GR ISLD-LNX3345.00 - GRAND ISLAND 345KV CKT Z	720	720	0.05679	127.9972	MCCOOL (MCCOOL T2) 345/115/13.8KV TRANSFORMER CKT 1
FDNS	00NR_G15_054	0	17SP	G15_054	FROM->TO	GR ISLD-LNX3345.00 - GRAND ISLAND 345KV CKT Z	720	720	0.05837	127.9684	MAXWELL - NORTH PLATTE 115KV CKT 1
FDNS	00NR_G15_054	0	17SP	G15_054	FROM->TO	GR ISLD-LNX3345.00 - GRAND ISLAND 345KV CKT Z	720	720	0.06039	127.9536	MAXWELL - STAPLETON 115KV CKT 1
FDNS	00NR_G15_054	0	17SP	G15_054	FROM->TO	GR ISLD-LNX3345.00 - GRAND ISLAND 345KV CKT Z	720	720	0.05722	127.9479	FINNEY SWITCHING STATION - WALKTAP7 345.00 345KV CKT 1
FDNS	00NR_G15_054	0	17SP	G15_054	FROM->TO	GR ISLD-LNX3345.00 - GRAND ISLAND 345KV CKT Z	720	720	0.05722	127.9479	FINNEY SWITCHING STATION - WALKTAP7 345.00 345KV CKT 1
FDNS	00NR_G15_054	0	17SP	G15_054	FROM->TO	GR ISLD-LNX3345.00 - GRAND ISLAND 345KV CKT Z	720	720	0.05742	127.9474	Hitchland Interchange - WALKTAP7 345.00 345KV CKT 1
FDNS	00NR_G15_054	0	17SP	G15_054	FROM->TO	GR ISLD-LNX3345.00 - GRAND ISLAND 345KV CKT Z	720	720	0.05742	127.9474	Hitchland Interchange - WALKTAP7 345.00 345KV CKT 1
FDNS	00NR_G15_054	0	17SP	G15_054	FROM->TO	GR ISLD-LNX3345.00 - GRAND ISLAND 345KV CKT Z	720	720	0.05697	127.945	G11_051T 345.00 - WOODWARD DISTRICT EHV 345KV CKT 1
FDNS	00NR_G15_054	0	17SP	G15_054	FROM->TO	GR ISLD-LNX3345.00 - GRAND ISLAND 345KV CKT Z	720	720	0.05742	127.9328	P12:345:SPS:J07.1.FINN.HITCH
FDNS	00NR_G15_054	0	17SP	G15_054	FROM->TO	GR ISLD-LNX3345.00 - GRAND ISLAND 345KV CKT Z	720	720	0.05681	127.9095	GEN562003 1-G11_027_3 0.6900
FDNS	00NR_G15_054	0	17SP	G15_054	FROM->TO	GR ISLD-LNX3345.00 - GRAND ISLAND 345KV CKT Z	720	720	0.05693	127.9062	GRAND ISLAND (GI KU1B) 345/230/13.8KV TRANSFORMER CKT 2
FDNS	00NR_G15_054	0	17SP	G15_054	FROM->TO	GR ISLD-LNX3345.00 - GRAND ISLAND 345KV CKT Z	720	720	0.05693	127.9062	GRAND ISLAND (GI KU1B) 345/230/13.8KV TRANSFORMER CKT 2
FDNS	00NR_G15_054	0	17SP	G15_054	FROM->TO	GR ISLD-LNX3345.00 - GRAND ISLAND 345KV CKT Z	720	720	0.05693	127.9051	GRAND ISLAND (GI KU1A) 345/230/13.8KV TRANSFORMER CKT 1
FDNS	00NR_G15_054	0	17SP	G15_054	FROM->TO	GR ISLD-LNX3345.00 - GRAND ISLAND 345KV CKT Z	720	720	0.05693	127.9051	GRAND ISLAND (GI KU1A) 345/230/13.8KV TRANSFORMER CKT 1
FDNS	00NR_G15_054	0	17SP	G15_054	FROM->TO	GR ISLD-LNX3345.00 - GRAND ISLAND 345KV CKT Z	720	720	0.05883	127.884	MINGO - SETAB 345KV CKT 1
FDNS	00NR_G15_054	0	17SP	G15_054	FROM->TO	GR ISLD-LNX3345.00 - GRAND ISLAND 345KV CKT Z	720	720	0.05883	127.884	MINGO - SETAB 345KV CKT 1
FDNS	00NR_G15_054	0	17SP	G15_054	FROM->TO	GR ISLD-LNX3345.00 - GRAND ISLAND 345KV CKT Z	720	720	0.05681	127.8699	GEN600125 2-FEP ST G 13.800
FDNS	00NR_G15_054	0	17SP	G15_054	FROM->TO	GR ISLD-LNX3345.00 - GRAND ISLAND 345KV CKT Z	720	720	0.05681	127.8693	GEN652546 1-FT RANDAL
FDNS	00NR_G15_054	0	17SP	G15_054	FROM->TO	GR ISLD-LNX3345.00 - GRAND ISLAND 345KV CKT Z	720	720	0.05697	127.8587	FALLOW 3 345.00 - GRIMES 345KV CKT 1
FDNS	00NR_G15_054	0	17SP	G15_054	FROM->TO	GR ISLD-LNX3345.00 - GRAND ISLAND 345KV CKT Z	720	720	0.05702	127.8568	P12:115:UMZW:# 172 #: WI IN SD.
FDNS	00NR_G15_054	0	17SP	G15_054	FROM->TO	GR ISLD-LNX3345.00 - GRAND ISLAND 345KV CKT Z	720	720	0.05681	127.8554	GEN615031 1-PLEASANT VALLEY
FDNS	00NR_G15_054	0	17SP	G15_054	FROM->TO	GR ISLD-LNX3345.00 - GRAND ISLAND 345KV CKT Z	720	720	0.05681	127.8546	GEN672367 1-MERIDIAN GENERATOR 1 GT1
FDNS	00NR_G15_054	0	17SP	G15_054	FROM->TO	GR ISLD-LNX3345.00 - GRAND ISLAND 345KV CKT Z	720	720	0.05681	127.8546	GEN672368 2-MERIDIAN GENERATOR 2 GT2
FDNS	00NR_G15_054	0	17SP	G15_054	FROM->TO	GR ISLD-LNX3345.00 - GRAND ISLAND 345KV CKT Z	720	720	0.05681	127.8504	GEN615032 2-PLEASANT VALLEY
FDNS	00NR_G15_054	0	17SP	G15_054	FROM->TO	GR ISLD-LNX3345.00 - GRAND ISLAND 345KV CKT Z	720	720	0.05709	127.8494	LARAMIE RIVER - STEGALL 345KV CKT 1
FDNS	00NR_G15_054	0	17SP	G15_054	FROM->TO	GR ISLD-LNX3345.00 - GRAND ISLAND 345KV CKT Z	720	720	0.05681	127.8438	GEN672352 3-NIPAWIN GENERATOR 3
FDNS	00NR_G15_054	0	17SP	G15_054	FROM->TO	GR ISLD-LNX3345.00 - GRAND ISLAND 345KV CKT Z	720	720	0.05681	127.8437	GEN672350 1-NIPAWIN GENERATOR 1
FDNS	00NR_G15_054	0	17SP	G15_054	FROM->TO	GR ISLD-LNX3345.00 - GRAND ISLAND 345KV CKT Z	720	720	0.05681	127.8437	GEN672351 2-NIPAWIN GENERATOR 2
FDNS	00NR_G15_054	0	17SP	G15_054	FROM->TO	GR ISLD-LNX3345.00 - GRAND ISLAND 345KV CKT Z	720	720	0.05681	127.8418	GEN600018 S-LS POWER STEAM
FDNS	00NR_G15_054	0	17SP	G15_054	FROM->TO	GR ISLD-LNX3345.00 - GRAND ISLAND 345KV CKT Z	720	720	0.05681	127.8378	GEN657964 1-ASH2GEN9 0.5750
FDNS	00NR_G15_054	0	17SP	G15_054	FROM->TO	GR ISLD-LNX3345.00 - GRAND ISLAND 345KV CKT Z	720	720	0.05681	127.8328	MITCHLCO3 345.00 345/34.5KV TRANSFORMER CKT 1
FDNS	00NR_G15_054	0	17SP	G15_054	FROM->TO	GR ISLD-LNX3345.00 - GRAND ISLAND 345KV CKT Z	720	720	0.05681	127.8291	GEN672349 3-CORY COGEN GENERATOR 3 ST
FDNS	00NR_G15_054	0	17SP	G15_054	FROM->TO	GR ISLD-LNX3345.00 - GRAND ISLAND 345KV CKT Z	720	720	0.05681	127.8142	GEN652548 5-FT RANDAL
FDNS	00NR_G15_054	0	17SP	G15_054	FROM->TO	GR ISLD-LNX3345.00 - GRAND ISLAND 345KV CKT Z	720	720	0.05681	127.8142	GEN652549 7-FT RANDAL
FDNS	00NR_G15_054	0	17SP	G15_054	FROM->TO	GR ISLD-LNX3345.00 - GRAND ISLAND 345KV CKT Z	720	720	0.05681	127.8036	GEN652547 3-FT RANDAL
FDNS	00NR_G15_054	0	17SP	G15_054	FROM->TO	GR ISLD-LNX3345.00 - GRAND ISLAND 345KV CKT Z	720	720	0.06059	127.8032	MOORE - PAULINE 345KV CKT 1
FDNS	00NR_G15_054	0	17SP	G15_054	FROM->TO	GR ISLD-LNX3345.00 - GRAND ISLAND 345KV CKT Z	720	720	0.05681	127.8014	GEN620324 3-HOOT LAKE 3 GEN
FDNS	00NR_G15_054	0	17SP	G15_054	FROM->TO	GR ISLD-LNX3345.00 - GRAND ISLAND 345KV CKT Z	720	720	0.05697	127.7958	G11_051T 345.00 - TATONGA7 345.00 345KV CKT 1
FDNS	00NR_G15_054	0	17SP	G15_054	FROM->TO	GR ISLD-LNX3345.00 - GRAND ISLAND 345KV CKT Z	720	720	0.05688	127.7923	P12:345:UMZB:# 102 #: AVS BD IN ND. AVS BRD LR
FDNS	00NR_G15_054	0	17SP	G15_054	FROM->TO	GR ISLD-LNX3345.00 - GRAND ISLAND 345KV CKT Z	720	720	0.05688	127.7913	P12:345:UMZB:# 103 #: BD IN SD. LOSS OF LINE
FDNS	00NR_G15_054	0	17SP	G15_054	FROM->TO	GR ISLD-LNX3345.00 - GRAND ISLAND 345KV CKT Z	720	720	0.05895	127.7907	ATCHSNT3 345.00 - BOONEVILLE 345KV CKT 1
FDNS	00NR_G15_054	0	17SP	G15_054	FROM->TO	GR ISLD-LNX3345.00 - GRAND ISLAND 345KV CKT Z	720	720	0.05688	127.7868	BRDLAND-LNX3345.00 - HURON 345KV CKT Z
FDNS	00NR_G15_054	0	17SP	G15_054	FROM->TO	GR ISLD-LNX3345.00 - GRAND ISLAND 345KV CKT Z	720	720	0.05681	127.7794	GEN600021 3-ANGUS ANSON2
FDNS	00NR_G15_054	0	17SP	G15_054	FROM->TO	GR ISLD-LNX3345.00 - GRAND ISLAND 345KV CKT Z	720	720	0.05688	127.7685	BROADLAND - HURON 230KV CKT 1
FDNS	00NR_G15_054	0	17SP	G15_054	FROM->TO	GR ISLD-LNX3345.00 - GRAND ISLAND 345KV CKT Z	720	720	0.05688	127.7684	HURON (BD KU2A) 345/230/13.8KV TRANSFORMER CKT 1
FDNS	00NR_G15_054	0	17SP	G15_054	FROM->TO	GR ISLD-LNX3345.00 - GRAND ISLAND 345KV CKT Z	720	720	0.05688	127.7684	HURON (BD KU2A) 345/230/13.8KV TRANSFORMER CKT 1
FDNS	00NR_G15_054	0	17SP	G15_054	FROM->TO	GR ISLD-LNX3345.00 - GRAND ISLAND 345KV CKT Z	720	720	0.05681	127.7671	GEN600020 2-ANGUS ANSON1
FDNS	00NR_G15_054	0	17SP	G15_054	FROM->TO	GR ISLD-LNX3345.00 - GRAND ISLAND 345KV CKT Z	720	720	0.05681	127.754	GEN659290 1-EDGECOL
FDNS	00NR_G15_054	0	17SP	G15_054	FROM->TO	GR ISLD-LNX3345.00 - GRAND ISLAND 345KV CKT Z	720	720	0.05681	127.7534	GEN659158 2-PIONEER G213.800
FDNS	00NR_G15_054	0	17SP	G15_054	FROM->TO	GR ISLD-LNX3345.00 - GRAND ISLAND 345KV CKT Z	720	720	0.05681	127.7534	GEN659159 3-PIONEER G313.800
FDNS	00NR_G15_054	0	17SP	G15_054	FROM->TO	GR ISLD-LNX3345.00 - GRAND ISLAND 345KV CKT Z	720	720	0.05681	127.7517	GEN659156 2-LONESMCRK 2G13.800
FDNS	00NR_G15_054	0	17SP	G15_054	FROM->TO	GR ISLD-LNX3345.00 - GRAND ISLAND 345KV CKT Z	720	720	0.05681	127.7517	GEN659157 3-LONESMCRK 3G13.800
FDNS	00NR_G15_054	0	17SP	G15_054	FROM->TO	GR ISLD-LNX3345.00 - GRAND ISLAND 345KV CKT Z	720	720	0.05681	127.7499	GEN672339 16-QE 16G 13.800
FDNS	00NR_G15_054	0	17SP	G15_054	FROM->TO	GR ISLD-LNX3345.00 - GRAND ISLAND 345KV CKT Z	720	720	0.05681	127.7499	GEN672342 3-QUEEN ELIZABETH GENERATOR 3
FDNS	00NR_G15_054	0	17SP	G15_054	FROM->TO	GR ISLD-LNX3345.00 - GRAND ISLAND 345KV CKT Z	720	720	0.05681	127.7369	GEN590010 1-ERCOT EQUIVALENCE
FDNS	00NR_G15_054	0	17SP	G15_054	FROM->TO	GR ISLD-LNX3345.00 - GRAND ISLAND 345KV CKT Z	720	720	0.05681	127.7364	GEN600012 2-BLACK DOG GEN 2

SOLUTION	GROUP	SCENARIO	SEASON	SOURCE	DIRECTION	MONITORED ELEMENT	RATEA (MVA)	RATEB(MVA)	TDF	TC%LOADING (% MVA)	CONTINGENCY
FDNS	00NR_G15_054	0	17SP	G15_054	FROM->TO	GR ISLD-LNX3345.00 - GRAND ISLAND 345KV CKT Z	720	720	0.05681	127.7361	GEN672393 2-NBECST2G 13.800
FDNS	00NR_G15_054	0	17SP	G15_054	FROM->TO	GR ISLD-LNX3345.00 - GRAND ISLAND 345KV CKT Z	720	720	0.05681	127.734	LADISH 115/13.2KV TRANSFORMER CKT 1
FDNS	00NR_G15_054	0	17SP	G15_054	FROM->TO	GR ISLD-LNX3345.00 - GRAND ISLAND 345KV CKT Z	720	720	0.05681	127.7252	GEN652410 3-FT PECK
FDNS	00NR_G15_054	0	17SP	G15_054	FROM->TO	GR ISLD-LNX3345.00 - GRAND ISLAND 345KV CKT Z	720	720	0.05681	127.7101	GEN300003 1-THOMAS HILL UNIT 3
FDNS	00NR_G15_054	0	17SP	G15_054	FROM->TO	GR ISLD-LNX3345.00 - GRAND ISLAND 345KV CKT Z	720	720	0.05681	127.7056	GEN590011 2-ERCOT EQUIVALENCE
FDNS	00NR_G15_054	0	17SP	G15_054	FROM->TO	GR ISLD-LNX3345.00 - GRAND ISLAND 345KV CKT Z	720	720	0.06116	127.6989	LOUP CITY - NORTH LOUP 115KV CKT 1
FDNS	00NR_G15_054	0	17SP	G15_054	FROM->TO	GR ISLD-LNX3345.00 - GRAND ISLAND 345KV CKT Z	720	720	0.05681	127.6972	EASTDC - ERCOT EQUIVALENCE 345KV CKT 1
FDNS	00NR_G15_054	0	17SP	G15_054	FROM->TO	GR ISLD-LNX3345.00 - GRAND ISLAND 345KV CKT Z	720	720	0.05681	127.6923	GEN629072 4-LANSING GENERATOR FOR UNITS NO4 EIA CODE 1
FDNS	00NR_G15_054	0	17SP	G15_054	FROM->TO	GR ISLD-LNX3345.00 - GRAND ISLAND 345KV CKT Z	720	720	0.05683	127.6748	DRAYTON - LETELLIER 230KV CKT 1
FDNS	00NR_G15_054	0	17SP	G15_054	FROM->TO	GR ISLD-LNX3345.00 - GRAND ISLAND 345KV CKT Z	720	720	0.05699	127.6678	GRAND ISLAND (GI KU3A) 345/230/13.8KV TRANSFORMER CKT 3
FDNS	00NR_G15_054	0	17SP	G15_054	FROM->TO	GR ISLD-LNX3345.00 - GRAND ISLAND 345KV CKT Z	720	720	0.05699	127.6678	GRAND ISLAND (GI KU3A) 345/230/13.8KV TRANSFORMER CKT 3
FDNS	00NR_G15_054	0	17SP	G15_054	FROM->TO	GR ISLD-LNX3345.00 - GRAND ISLAND 345KV CKT Z	720	720	0.05681	127.6601	G830_SUB 115.00 - GRE-MCHENRY7115.00 115KV CKT 1
FDNS	00NR_G15_054	0	17SP	G15_054	FROM->TO	GR ISLD-LNX3345.00 - GRAND ISLAND 345KV CKT Z	720	720	0.05681	127.6587	GEN652414 4-FT PECK
FDNS	00NR_G15_054	0	17SP	G15_054	FROM->TO	GR ISLD-LNX3345.00 - GRAND ISLAND 345KV CKT Z	720	720	0.05681	127.6587	GEN652415 5-FT PECK
FDNS	00NR_G15_054	0	17SP	G15_054	FROM->TO	GR ISLD-LNX3345.00 - GRAND ISLAND 345KV CKT Z	720	720	0.05681	127.6515	G830_SUB 115.00 115/34.5KV TRANSFORMER CKT 1
FDNS	00NR_G15_054	0	17SP	G15_054	FROM->TO	GR ISLD-LNX3345.00 - GRAND ISLAND 345KV CKT Z	720	720	0.05676	127.649	OAHE - SULLEY BUTTE 230KV CKT 1
FDNS	00NR_G15_054	0	17SP	G15_054	FROM->TO	GR ISLD-LNX3345.00 - GRAND ISLAND 345KV CKT Z	720	720	0.05681	127.6433	GEN660003 3-HURON WEST PARK
FDNS	00NR_G15_054	0	17SP	G15_054	FROM->TO	GR ISLD-LNX3345.00 - GRAND ISLAND 345KV CKT Z	720	720	0.05681	127.6238	EMERY 161/18.0KV TRANSFORMER CKT 1
FDNS	00NR_G15_054	0	17SP	G15_054	FROM->TO	GR ISLD-LNX3345.00 - GRAND ISLAND 345KV CKT Z	720	720	0.05681	127.6205	GEN652345 W-G07_023IS_2 0.6900
FDNS	00NR_G15_054	0	17SP	G15_054	FROM->TO	GR ISLD-LNX3345.00 - GRAND ISLAND 345KV CKT Z	720	720	0.05681	127.6151	GEN 11104 1-J262_GEN 0.6000
FDNS	00NR_G15_054	0	17SP	G15_054	FROM->TO	GR ISLD-LNX3345.00 - GRAND ISLAND 345KV CKT Z	720	720	0.05681	127.6151	GEN 11108 1-J263_GEN 0.6000
FDNS	00NR_G15_054	0	17SP	G15_054	FROM->TO	GR ISLD-LNX3345.00 - GRAND ISLAND 345KV CKT Z	720	720	0.05707	127.5973	POST ROCK (POSTROCK T1) 345/230/13.8KV TRANSFORMER CKT 1
FDNSLock	00NR_G15_054	0	17SP	G15_054	FROM->TO	GR ISLD-LNX3345.00 - GRAND ISLAND 345KV CKT Z	720	720	0.05911	127.5967	CENTRAL CITY - GRAND ISLAND 115KV CKT 1
FDNS	00NR_G15_054	0	17SP	G15_054	FROM->TO	GR ISLD-LNX3345.00 - GRAND ISLAND 345KV CKT Z	720	720	0.05681	127.593	GEN600050 1-FEP
FDNS	00NR_G15_054	0	17SP	G15_054	FROM->TO	GR ISLD-LNX3345.00 - GRAND ISLAND 345KV CKT Z	720	720	0.05862	127.577	GERALD GENTLEMAN STATION - RED WILLOW 345KV CKT 1
FDNS	00NR_G15_054	0	17SP	G15_054	FROM->TO	GR ISLD-LNX3345.00 - GRAND ISLAND 345KV CKT Z	720	720	0.05681	127.5444	GEN300007 1-NEW MADRID UNIT 2
FDNS	00NR_G15_054	0	17SP	G15_054	FROM->TO	GR ISLD-LNX3345.00 - GRAND ISLAND 345KV CKT Z	720	720	0.05681	127.5415	GEN600046 1-MECST
FDNS	00NR_G15_054	0	17SP	G15_054	FROM->TO	GR ISLD-LNX3345.00 - GRAND ISLAND 345KV CKT Z	720	720	0.05681	127.5378	GEN300006 1-NEW MADRID UNIT 1
FDNS	00NR_G15_054	0	17SP	G15_054	FROM->TO	GR ISLD-LNX3345.00 - GRAND ISLAND 345KV CKT Z	720	720	0.05697	127.5327	MATHWSN7 345.00 - TATONGA7 345.00 345KV CKT 1
FDNS	00NR_G15_054	0	17SP	G15_054	FROM->TO	GR ISLD-LNX3345.00 - GRAND ISLAND 345KV CKT Z	720	720	0.05688	127.5309	ANTELOP-LNX3345.00 - ANTELOPE VALLEY 345KV CKT Z
FDNS	00NR_G15_054	0	17SP	G15_054	FROM->TO	GR ISLD-LNX3345.00 - GRAND ISLAND 345KV CKT Z	720	720	0.05681	127.514	GEN600047 1-MECCT1
FDNS	00NR_G15_054	0	17SP	G15_054	FROM->TO	GR ISLD-LNX3345.00 - GRAND ISLAND 345KV CKT Z	720	720	0.05681	127.5133	GEN600063 1-COLVILLE GEN 1
FDNS	00NR_G15_054	0	17SP	G15_054	FROM->TO	GR ISLD-LNX3345.00 - GRAND ISLAND 345KV CKT Z	720	720	0.05681	127.5133	GEN600064 2-COLVILLE GEN 2
FDNS	00NR_G15_054	0	17SP	G15_054	FROM->TO	GR ISLD-LNX3345.00 - GRAND ISLAND 345KV CKT Z	720	720	0.05681	127.5081	GEN600043 7-BLUE LAKE5
FDNS	00NR_G15_054	0	17SP	G15_054	FROM->TO	GR ISLD-LNX3345.00 - GRAND ISLAND 345KV CKT Z	720	720	0.05681	127.5081	GEN600044 8-BLUE LAKE6
FDNS	00NR_G15_054	0	17SP	G15_054	FROM->TO	GR ISLD-LNX3345.00 - GRAND ISLAND 345KV CKT Z	720	720	0.05676	127.5058	SULLEY BUTTE - SULLYBT-LNX3230.00 230KV CKT Z
FDNS	00NR_G15_054	0	17SP	G15_054	FROM->TO	GR ISLD-LNX3345.00 - GRAND ISLAND 345KV CKT Z	720	720	0.05676	127.5056	SULLYBT-LNX3230.00 - WHITLOK 230KV CKT 1
FDNS	00NR_G15_054	0	17SP	G15_054	FROM->TO	GR ISLD-LNX3345.00 - GRAND ISLAND 345KV CKT Z	720	720	0.05681	127.5023	GEN660001 2-ABERDEEN SIEBRECHT
FDNS	00NR_G15_054	0	17SP	G15_054	FROM->TO	GR ISLD-LNX3345.00 - GRAND ISLAND 345KV CKT Z	720	720	0.05681	127.489	CENTER 230/22.0KV TRANSFORMER CKT 1
FDNS	00NR_G15_054	0	17SP	G15_054	FROM->TO	GR ISLD-LNX3345.00 - GRAND ISLAND 345KV CKT Z	720	720	0.05681	127.4854	GEN659273 2-GROTON SYNC COND
FDNS	00NR_G15_054	0	17SP	G15_054	FROM->TO	GR ISLD-LNX3345.00 - GRAND ISLAND 345KV CKT Z	720	720	0.05681	127.4854	GEN659294 1-WILTONCOL9
FDNS	00NR_G15_054	0	17SP	G15_054	FROM->TO	GR ISLD-LNX3345.00 - GRAND ISLAND 345KV CKT Z	720	720	0.05676	127.4755	P12:230:UMZB:# 114 #: SB IN SD. SB-WK-GH
FDNS	00NR_G15_054	0	17SP	G15_054	FROM->TO	GR ISLD-LNX3345.00 - GRAND ISLAND 345KV CKT Z	720	720	0.05676	127.4755	P12:230:UMZB:# 117 #: WK IN SD. SB-WK-GH
FDNS	00NR_G15_054	0	17SP	G15_054	FROM->TO	GR ISLD-LNX3345.00 - GRAND ISLAND 345KV CKT Z	720	720	0.05681	127.4726	GEN600065 7-HIGH BRIDGE
FDNS	00NR_G15_054	0	17SP	G15_054	FROM->TO	GR ISLD-LNX3345.00 - GRAND ISLAND 345KV CKT Z	720	720	0.05681	127.4726	GEN600066 8-HIGH BRIDGE
FDNS	00NR_G15_054	0	17SP	G15_054	FROM->TO	GR ISLD-LNX3345.00 - GRAND ISLAND 345KV CKT Z	720	720	0.05681	127.4671	GEN600014 4-BLACK DOG GEN 4
FDNS	00NR_G15_054	0	17SP	G15_054	FROM->TO	GR ISLD-LNX3345.00 - GRAND ISLAND 345KV CKT Z	720	720	0.05681	127.4622	GEN600011 5-BLACK DOG GEN 1
FDNS	00NR_G15_054	0	17SP	G15_054	FROM->TO	GR ISLD-LNX3345.00 - GRAND ISLAND 345KV CKT Z	720	720	0.05681	127.4567	GEN600070 9-RIVER SIDE
FDNS	00NR_G15_054	0	17SP	G15_054	FROM->TO	GR ISLD-LNX3345.00 - GRAND ISLAND 345KV CKT Z	720	720	0.05681	127.4567	GEN600071 10-RIVER SIDE
FDNS	00NR_G15_054	0	17SP	G15_054	FROM->TO	GR ISLD-LNX3345.00 - GRAND ISLAND 345KV CKT Z	720	720	0.06993	127.4538	COLUMWEST - GRAND ISLAND 230KV CKT 1
FDNS	00NR_G15_054	0	17SP	G15_054	FROM->TO	GR ISLD-LNX3345.00 - GRAND ISLAND 345KV CKT Z	720	720	0.05681	127.4433	GEN600007 7-RIVERSIDE GEN 7
FDNS	00NR_G15_054	0	17SP	G15_054	FROM->TO	GR ISLD-LNX3345.00 - GRAND ISLAND 345KV CKT Z	720	720	0.05681	127.4432	GEN 10648 1-G830_GEN 0.6900
FDNS	00NR_G15_054	0	17SP	G15_054	FROM->TO	GR ISLD-LNX3345.00 - GRAND ISLAND 345KV CKT Z	720	720	0.05681	127.4357	GEN600045 4-ANSON
FDNS	00NR_G15_054	0	17SP	G15_054	FROM->TO	GR ISLD-LNX3345.00 - GRAND ISLAND 345KV CKT Z	720	720	0.05681	127.4343	GEN659192 6-LYNN
FDNS	00NR_G15_054	0	17SP	G15_054	FROM->TO	GR ISLD-LNX3345.00 - GRAND ISLAND 345KV CKT Z	720	720	0.05681	127.4336	GEN659162 4-RED WLCK
FDNS	00NR_G15_054	0	17SP	G15_054	FROM->TO	GR ISLD-LNX3345.00 - GRAND ISLAND 345KV CKT Z	720	720	0.05681	127.4336	GEN659163 5-BLACK WDCK
FDNS	00NR_G15_054	0	17SP	G15_054	FROM->TO	GR ISLD-LNX3345.00 - GRAND ISLAND 345KV CKT Z	720	720	0.05676	127.4182	GLENHAM - WHITLOK 230KV CKT 1
FDNS	00NR_G15_054	0	17SP	G15_054	FROM->TO	GR ISLD-LNX3345.00 - GRAND ISLAND 345KV CKT Z	720	720	0.05681	127.4145	GEN600017 C-LS POWER CT
FDNS	00NR_G15_054	0	17SP	G15_054	FROM->TO	GR ISLD-LNX3345.00 - GRAND ISLAND 345KV CKT Z	720	720	0.05681	127.3886	GEN659031 1-G12_014IS_4 0.6900
FDNS	00NR_G15_054	0	17SP	G15_054	FROM->TO	GR ISLD-LNX3345.00 - GRAND ISLAND 345KV CKT Z	720	720	0.05681	127.3757	LANSING WEST 161/22.0KV TRANSFORMER CKT 1
FDNS	00NR_G15_054	0	17SP	G15_054	FROM->TO	GR ISLD-LNX3345.00 - GRAND ISLAND 345KV CKT Z	720	720	0.05681	127.3677	GEN615021 1-GRE-ER 14G 16.000
FDNS	00NR_G15_054	0	17SP	G15_054	FROM->TO	GR ISLD-LNX3345.00 - GRAND ISLAND 345KV CKT Z	720	720	0.05681	127.3616	GEN615052 1-CAMBRIDGE GENERATING STATION
FDNS	00NR_G15_054	0	17SP	G15_054	FROM->TO	GR ISLD-LNX3345.00 - GRAND ISLAND 345KV CKT Z	720	720	0.05681	127.3544	GEN615015 1-GRE-SPRITWDG13.200
FDNS	00NR_G15_054	0	17SP	G15_054	FROM->TO	GR ISLD-LNX3345.00 - GRAND ISLAND 345KV CKT Z	720	720	0.05681	127.2894	GEN681522 3-GENOA 3
FDNS	00NR_G15_054	0	17SP	G15_054	FROM->TO	GR ISLD-LNX3345.00 - GRAND ISLAND 345KV CKT Z	720	720	0.05681	127.2411	GEN660016 1-B_H WIND 0.7000
FDNS	00NR_G15_054	0	17SP	G15_054	FROM->TO	GR ISLD-LNX3345.00 - GRAND ISLAND 345KV CKT Z	720	720	0.05681	127.2321	BISONMP4 230.00 - SQUARE BUTTE 230KV CKT 1
FDNS	00NR_G15_054	0	17SP	G15_054	FROM->TO	GR ISLD-LNX3345.00 - GRAND ISLAND 345KV CKT Z	720	720	0.05681	127.187	GEN652906 1-G09_006IS_3 0.6900
FDNS	00NR_G15_054	0	17SP	G15_054	FROM->TO	GR ISLD-LNX3345.00 - GRAND ISLAND 345KV CKT Z	720	720	0.05681	127.1764	GEN672303 3-BOUNDARY DAM GENERATOR 3
FDNS	00NR_G15_054	0	17SP	G15_054	FROM->TO	GR ISLD-LNX3345.00 - GRAND ISLAND 345KV CKT Z	720	720	0.05681	127.1764	GEN672305 5-BOUNDARY DAM GENERATOR 5
FDNS	00NR_G15_054	0	17SP	G15_054	FROM->TO	GR ISLD-LNX3345.00 - GRAND ISLAND 345KV CKT Z	720	720	0.05681	127.1709	GEN662101 1-WESSINGTON190.5750
FDNS	00NR_G15_054	0	17SP	G15_054	FROM->TO	GR ISLD-LNX3345.00 - GRAND ISLAND 345KV CKT Z	720	720	0.05681	127.1575	GEN652545 7-BIG BEND
FDNS	00NR_G15_054	0	17SP	G15_054	FROM->TO	GR ISLD-LNX3345.00 - GRAND ISLAND 345KV CKT Z	720	720	0.05681	127.1527	GEN672392 1-NBECGT1G 18.000
FDNS	00NR_G15_054	0	17SP	G15_054	FROM->TO	GR ISLD-LNX3345.00 - GRAND ISLAND 345KV CKT Z	720	720	0.05681	127.0821	GEN600067 9-HIGH BRIDGE

SOLUTION	GROUP	SCENARIO	SEASON	SOURCE	DIRECTION	MONITORED ELEMENT	RATEA (MVA)	RATEB(MVA)	TDF	TC%LOADING (% MVA)	CONTINGENCY
FDNS	00NR_G15_054	0	17SP	G15_054	FROM->TO	GR ISLD-LNX3345.00 - GRAND ISLAND 345KV CKT Z	720	720	0.05681	127.0463	GEN652907 1-G09_007IS_3 0.6900
FDNS	00NR_G15_054	0	17SP	G15_054	FROM->TO	GR ISLD-LNX3345.00 - GRAND ISLAND 345KV CKT Z	720	720	0.05681	127.0394	GEN910006 1-G12_012IS_3 0.6900
FDNS	00NR_G15_054	0	17SP	G15_054	FROM->TO	GR ISLD-LNX3345.00 - GRAND ISLAND 345KV CKT Z	720	720	0.05681	127.0314	COYOTE 345/24.0KV TRANSFORMER CKT 1
FDNS	00NR_G15_054	0	17SP	G15_054	FROM->TO	GR ISLD-LNX3345.00 - GRAND ISLAND 345KV CKT Z	720	720	0.05681	127.0093	SQUARE BUTTE - YNG2 4 230.00 230KV CKT 1
FDNS	00NR_G15_054	0	17SP	G15_054	FROM->TO	GR ISLD-LNX3345.00 - GRAND ISLAND 345KV CKT Z	720	720	0.05681	127.0089	YNG2 4 230.00 230/20.0KV TRANSFORMER CKT 1
FDNS	00NR_G15_054	0	17SP	G15_054	FROM->TO	GR ISLD-LNX3345.00 - GRAND ISLAND 345KV CKT Z	720	720	0.06032	127.0006	MINGO - RED WILLOW 345KV CKT 1
FDNS	00NR_G15_054	0	17SP	G15_054	FROM->TO	GR ISLD-LNX3345.00 - GRAND ISLAND 345KV CKT Z	720	720	0.06032	127.0006	MINGO - RED WILLOW 345KV CKT 1
FDNS	00NR_G15_054	0	17SP	G15_054	FROM->TO	GR ISLD-LNX3345.00 - GRAND ISLAND 345KV CKT Z	720	720	0.05681	126.8871	GEN659353 1-DEERCREK CTG18.000
FDNS	00NR_G15_054	0	17SP	G15_054	FROM->TO	GR ISLD-LNX3345.00 - GRAND ISLAND 345KV CKT Z	720	720	0.05681	126.8863	GEN659354 1-DEERCREK STG18.000
FDNS	00NR_G15_054	0	17SP	G15_054	FROM->TO	GR ISLD-LNX3345.00 - GRAND ISLAND 345KV CKT Z	720	720	0.05676	126.8715	GLENHAM - L3 HAWDON 230KV CKT 1
FDNS	00NR_G15_054	0	17SP	G15_054	FROM->TO	GR ISLD-LNX3345.00 - GRAND ISLAND 345KV CKT Z	720	720	0.05681	126.7236	GEN659289 1-DAYCNTYWND W0.6900
FDNS	00NR_G15_054	0	17SP	G15_054	FROM->TO	GR ISLD-LNX3345.00 - GRAND ISLAND 345KV CKT Z	720	720	0.05681	126.6899	GEN659018 1-G14_003IS_3 0.6900
FDNS	00NR_G15_054	0	17SP	G15_054	FROM->TO	GR ISLD-LNX3345.00 - GRAND ISLAND 345KV CKT Z	720	720	0.05681	126.6474	GEN681542 6-JP MADGETT
FDNS	00NR_G15_054	0	17SP	G15_054	FROM->TO	GR ISLD-LNX3345.00 - GRAND ISLAND 345KV CKT Z	720	720	0.05681	126.5528	GEN659194 1-NDPRAIRWND1W0.6900
FDNS	00NR_G15_054	0	17SP	G15_054	FROM->TO	GR ISLD-LNX3345.00 - GRAND ISLAND 345KV CKT Z	720	720	0.05681	126.5507	GEN659010 4-G07_027IS_2 0.6900
FDNS	00NR_G15_054	0	17SP	G15_054	FROM->TO	GR ISLD-LNX3345.00 - GRAND ISLAND 345KV CKT Z	720	720	0.05681	126.5388	GEN652460 4-GARRISON
FDNS	00NR_G15_054	0	17SP	G15_054	FROM->TO	GR ISLD-LNX3345.00 - GRAND ISLAND 345KV CKT Z	720	720	0.05681	126.5387	GEN652461 5-GARRISON
FDNS	00NR_G15_054	0	17SP	G15_054	FROM->TO	GR ISLD-LNX3345.00 - GRAND ISLAND 345KV CKT Z	720	720	0.05681	126.5326	GEN652544 5-BIG BEND
FDNS	00NR_G15_054	0	17SP	G15_054	FROM->TO	GR ISLD-LNX3345.00 - GRAND ISLAND 345KV CKT Z	720	720	0.05681	126.5318	GEN652543 3-BIG BEND
FDNS	00NR_G15_054	0	17SP	G15_054	FROM->TO	GR ISLD-LNX3345.00 - GRAND ISLAND 345KV CKT Z	720	720	0.05681	126.5316	GEN652542 1-BIG BEND
FDNS	00NR_G15_054	0	17SP	G15_054	FROM->TO	GR ISLD-LNX3345.00 - GRAND ISLAND 345KV CKT Z	720	720	0.05681	126.4814	GEN652457 1-GARRISON
FDNS	00NR_G15_054	0	17SP	G15_054	FROM->TO	GR ISLD-LNX3345.00 - GRAND ISLAND 345KV CKT Z	720	720	0.05681	126.4814	GEN652458 2-GARRISON
FDNS	00NR_G15_054	0	17SP	G15_054	FROM->TO	GR ISLD-LNX3345.00 - GRAND ISLAND 345KV CKT Z	720	720	0.05681	126.4814	GEN652459 3-GARRISON
FDNS	00NR_G15_054	0	17SP	G15_054	FROM->TO	GR ISLD-LNX3345.00 - GRAND ISLAND 345KV CKT Z	720	720	0.05795	126.4672	AXTELL - POST ROCK 345KV CKT 1
FDNS	00NR_G15_054	0	17SP	G15_054	FROM->TO	GR ISLD-LNX3345.00 - GRAND ISLAND 345KV CKT Z	720	720	0.05681	126.4641	STANTON 230/18.0KV TRANSFORMER CKT 1
FDNS	00NR_G15_054	0	17SP	G15_054	FROM->TO	GR ISLD-LNX3345.00 - GRAND ISLAND 345KV CKT Z	720	720	0.05681	126.403	GEN659403 1-NDSUNFLWR W0.6900
FDNS	00NR_G15_054	0	17SP	G15_054	FROM->TO	GR ISLD-LNX3345.00 - GRAND ISLAND 345KV CKT Z	720	720	0.05681	126.353	GR ISLD-LNX3345.00 345KV SWITCHED SHUNT
FDNSLock	00NR_G15_054	0	17SP	G15_054	FROM->TO	GR ISLD-LNX3345.00 - GRAND ISLAND 345KV CKT Z	720	720	0.05681	126.3526	GR ISLD-LNX3345.00 345KV SWITCHED SHUNT
FDNS	00NR_G15_054	0	17SP	G15_054	FROM->TO	GR ISLD-LNX3345.00 - GRAND ISLAND 345KV CKT Z	720	720	0.06033	126.3237	AXTELL - SWEETWATER 345KV CKT 1
FDNS	00NR_G15_054	0	17SP	G15_054	FROM->TO	GR ISLD-LNX3345.00 - GRAND ISLAND 345KV CKT Z	720	720	0.05681	126.2185	CLAY BOSWELL 230/20.9KV TRANSFORMER CKT 1
FDNS	00NR_G15_054	0	17SP	G15_054	FROM->TO	GR ISLD-LNX3345.00 - GRAND ISLAND 345KV CKT Z	720	720	0.05681	126.0858	GEN659411 1-CAMPBLCNTY W0.6900
FDNS	00NR_G15_054	0	17SP	G15_054	FROM->TO	GR ISLD-LNX3345.00 - GRAND ISLAND 345KV CKT Z	720	720	0.05681	125.873	GEN659296 2-SDPRAIRWND1W0.6900
FDNS	00NR_G15_054	0	17SP	G15_054	FROM->TO	GR ISLD-LNX3345.00 - GRAND ISLAND 345KV CKT Z	720	720	0.05681	125.8677	ALMA 161 161/24.0KV TRANSFORMER CKT 1
FDNS	00NR_G15_054	0	17SP	G15_054	FROM->TO	GR ISLD-LNX3345.00 - GRAND ISLAND 345KV CKT Z	720	720	0.05681	125.8167	RCDC EAST 4230.00 - RED CEDAR DC 230KV CKT 1
FDNS	00NR_G15_054	0	17SP	G15_054	FROM->TO	GR ISLD-LNX3345.00 - GRAND ISLAND 345KV CKT Z	720	720	0.05681	125.8092	P12:230:UMZB:# 112 #: NU IN SD. NU-RCDC & DRY CREEK XFMR
FDNS	00NR_G15_054	0	17SP	G15_054	FROM->TO	GR ISLD-LNX3345.00 - GRAND ISLAND 345KV CKT Z	720	720	0.05681	125.7633	GEN652559 1-OAHE
FDNS	00NR_G15_054	0	17SP	G15_054	FROM->TO	GR ISLD-LNX3345.00 - GRAND ISLAND 345KV CKT Z	720	720	0.05681	125.7402	GEN672321 1-SHAND GENERATOR 1
FDNS	00NR_G15_054	0	17SP	G15_054	FROM->TO	GR ISLD-LNX3345.00 - GRAND ISLAND 345KV CKT Z	720	720	0.05681	125.7305	GEN615010 1-STANTON4
FDNS	00NR_G15_054	0	17SP	G15_054	FROM->TO	GR ISLD-LNX3345.00 - GRAND ISLAND 345KV CKT Z	720	720	0.05681	125.7301	GEN672310 1-POPLAR RIVER GENERATOR 1
FDNS	00NR_G15_054	0	17SP	G15_054	FROM->TO	GR ISLD-LNX3345.00 - GRAND ISLAND 345KV CKT Z	720	720	0.05681	125.73	GEN672311 2-POPLAR RIVER GENERATOR 2
FDNS	00NR_G15_054	0	17SP	G15_054	FROM->TO	GR ISLD-LNX3345.00 - GRAND ISLAND 345KV CKT Z	720	720	0.05681	125.6562	GEN672306 6-BOUNDARY DAM GENERATOR 6
FDNS	00NR_G15_054	0	17SP	G15_054	FROM->TO	GR ISLD-LNX3345.00 - GRAND ISLAND 345KV CKT Z	720	720	0.05681	125.5796	GEN652556 2-OAHE
FDNS	00NR_G15_054	0	17SP	G15_054	FROM->TO	GR ISLD-LNX3345.00 - GRAND ISLAND 345KV CKT Z	720	720	0.05681	125.5796	GEN652557 4-OAHE
FDNS	00NR_G15_054	0	17SP	G15_054	FROM->TO	GR ISLD-LNX3345.00 - GRAND ISLAND 345KV CKT Z	720	720	0.05681	125.5796	GEN652558 6-OAHE
FDNS	00NR_G15_054	0	17SP	G15_054	FROM->TO	GR ISLD-LNX3345.00 - GRAND ISLAND 345KV CKT Z	720	720	0.05681	125.4983	GEN659453 1-GI1414GEN W0.6900
FDNS	00NR_G15_054	0	17SP	G15_054	FROM->TO	GR ISLD-LNX3345.00 - GRAND ISLAND 345KV CKT Z	720	720	0.05681	125.4628	GEN657749 1-YOUNG 1 GENERATOR
FDNS	00NR_G15_054	0	17SP	G15_054	FROM->TO	GR ISLD-LNX3345.00 - GRAND ISLAND 345KV CKT Z	720	720	0.05681	125.4549	GEN600004 2-PRAIRIE ISLAND G2
FDNS	00NR_G15_054	0	17SP	G15_054	FROM->TO	GR ISLD-LNX3345.00 - GRAND ISLAND 345KV CKT Z	720	720	0.05681	125.4502	GEN600003 1-PRAIRIE ISLAND G1
FDNS	00NR_G15_054	0	17SP	G15_054	FROM->TO	GR ISLD-LNX3345.00 - GRAND ISLAND 345KV CKT Z	720	720	0.05681	125.4082	GEN659141 1-K10215A
FDNS	00NR_G15_054	0	17SP	G15_054	FROM->TO	GR ISLD-LNX3345.00 - GRAND ISLAND 345KV CKT Z	720	720	0.05681	125.1743	GEN652173 1-G09_001IS_2 0.6900
FDNS	00NR_G15_054	0	17SP	G15_054	FROM->TO	GR ISLD-LNX3345.00 - GRAND ISLAND 345KV CKT Z	720	720	0.05681	125.1418	GEN600006 1-AS KING
FDNS	00NR_G15_054	0	17SP	G15_054	FROM->TO	GR ISLD-LNX3345.00 - GRAND ISLAND 345KV CKT Z	720	720	0.05681	124.9433	GEN659407 1-ANTELPHILLSW0.6900
FDNS	00NR_G15_054	0	17SP	G15_054	FROM->TO	GR ISLD-LNX3345.00 - GRAND ISLAND 345KV CKT Z	720	720	0.05681	124.8494	GEN659110 1-LELAND OLDS UNIT1
FDNS	00NR_G15_054	0	17SP	G15_054	FROM->TO	GR ISLD-LNX3345.00 - GRAND ISLAND 345KV CKT Z	720	720	0.05681	124.5706	GEN600005 1-MONTICELLO
FDNS	00NR_G15_054	0	17SP	G15_054	FROM->TO	GR ISLD-LNX3345.00 - GRAND ISLAND 345KV CKT Z	720	720	0.06505	124.0894	MCCOOL - MOORE 345KV CKT 1
FDNS	00NR_G15_054	0	17SP	G15_054	FROM->TO	GR ISLD-LNX3345.00 - GRAND ISLAND 345KV CKT Z	720	720	0.05681	123.8834	GEN600000 1-SHERBURNECNTY G1
FDNS	00NR_G15_054	0	17SP	G15_054	FROM->TO	GR ISLD-LNX3345.00 - GRAND ISLAND 345KV CKT Z	720	720	0.05681	123.6664	GEN600001 2-SHERBURNE CNTY G2
FDNS	00NR_G15_054	0	17SP	G15_054	FROM->TO	GR ISLD-LNX3345.00 - GRAND ISLAND 345KV CKT Z	720	720	0.05681	123.3841	GEN620315 1-BIG STONE GEN
FDNS	00NR_G15_054	0	17SP	G15_054	FROM->TO	GR ISLD-LNX3345.00 - GRAND ISLAND 345KV CKT Z	720	720	0.05681	123.3785	GEN661015 1-COYOTE
FDNS	00NR_G15_054	0	17SP	G15_054	FROM->TO	GR ISLD-LNX3345.00 - GRAND ISLAND 345KV CKT Z	720	720	0.05681	122.9356	GEN657748 1-YOUNG 2 GENERATOR
FDNS	00NR_G15_054	0	17SP	G15_054	FROM->TO	GR ISLD-LNX3345.00 - GRAND ISLAND 345KV CKT Z	720	720	0.05681	122.7022	GEN600002 3-SHERBURNE CNTY G3
FDNS	00NR_G15_054	0	20SP	G15_054	FROM->TO	GR ISLD-LNX3345.00 - GRAND ISLAND 345KV CKT Z	720	720	0.05319	122.1352	HOLT.CO3 345.00 - THEDFRD3 345.00 345KV CKT 1
FDNS	00NR_G15_054	0	17SP	G15_054	FROM->TO	GR ISLD-LNX3345.00 - GRAND ISLAND 345KV CKT Z	720	720	0.05681	122.0396	SHERBURNE CO 345/24.0KV TRANSFORMER CKT 1
FDNS	00NR_G15_054	0	17SP	G15_054	FROM->TO	GR ISLD-LNX3345.00 - GRAND ISLAND 345KV CKT Z	720	720	0.05646	121.874	FTTHOM1-LNX3345.00 - LELAND2-LNX3345.00 345KV CKT 1
FDNS	00NR_G15_054	0	17SP	G15_054	FROM->TO	GR ISLD-LNX3345.00 - GRAND ISLAND 345KV CKT Z	720	720	0.05681	121.8136	BIG STONE 230/24.0KV TRANSFORMER CKT 1
FDNS	00NR_G15_054	0	25SP	G15_054	FROM->TO	GR ISLD-LNX3345.00 - GRAND ISLAND 345KV CKT Z	720	720	0.0541	121.7696	HOLT.CO3 345.00 - THEDFRD3 345.00 345KV CKT 1
FDNS	00NR_G15_054	0	17SP	G15_054	FROM->TO	GR ISLD-LNX3345.00 - GRAND ISLAND 345KV CKT Z	720	720	0.05646	121.6078	P12:345:UMZB:# 108 #: LOS FT IN ND. LOS FT
FDNS	00NR_G15_054	0	17SP	G15_054	FROM->TO	GR ISLD-LNX3345.00 - GRAND ISLAND 345KV CKT Z	720	720	0.05646	121.601	FT THOMPSON - FTTHOM1-LNX3345.00 345KV CKT Z
FDNS	00NR_G15_054	0	17SP	G15_054	FROM->TO	GR ISLD-LNX3345.00 - GRAND ISLAND 345KV CKT Z	720	720	0.05646	121.4494	LELAND OLDS - LELAND2-LNX3345.00 345KV CKT Z
FDNS	00NR_G15_054	0	17SP	G15_054	FROM->TO	GR ISLD-LNX3345.00 - GRAND ISLAND 345KV CKT Z	720	720	0.05681	121.0552	GEN659111 2-LELAND OLDS UNIT2
FDNS	00NR_G15_054	0	17SP	G15_054	FROM->TO	GR ISLD-LNX3345.00 - GRAND ISLAND 345KV CKT Z	720	720	0.05681	120.7603	GEN659125 1-COVEY
FDNS	00NR_G15_054	0	17SP	G15_054	FROM->TO	GR ISLD-LNX3345.00 - GRAND ISLAND 345KV CKT Z	720	720	0.05681	120.4843	GEN659103 1-ANTELOPE VALLEY UNIT1
FDNS	00NR_G15_054	0	17SP	G15_054	FROM->TO	GR ISLD-LNX3345.00 - GRAND ISLAND 345KV CKT Z	720	720	0.05681	120.4843	GEN659107 2-ANTELOPE VALLEY UNIT2

SOLUTION	GROUP	SCENARIO	SEASON	SOURCE	DIRECTION	MONITORED ELEMENT	RATEA (MVA)	RATEB(MVA)	TDF	TC%LOADING (% MVA)	CONTINGENCY
FDNS	00NR_G15_054	0	17SP	G15_054	FROM->TO	GR ISLD-LNX3345.00 - GRAND ISLAND 345KV CKT Z	720	720	0.06578	120.4238	GRAND ISLAND - MCCOOL 345KV CKT 1
FDNS	00NR_G15_054	0	17SP	G15_054	FROM->TO	GR ISLD-LNX3345.00 - GRAND ISLAND 345KV CKT Z	720	720	0.05681	120.2037	GEN615001 1-COAL CREEK
FDNS	00NR_G15_054	0	17SP	G15_054	FROM->TO	GR ISLD-LNX3345.00 - GRAND ISLAND 345KV CKT Z	720	720	0.05681	120.1182	GEN615002 2-COAL CREEK
FDNS	00NR_G15_054	0	17SP	G15_054	FROM->TO	GR ISLD-LNX3345.00 - GRAND ISLAND 345KV CKT Z	720	720	0.05681	113.3469	GEN562714 1-G15_023_4 0.6900
FDNS	00NR_G15_054	0	17SP	G15_054	FROM->TO	GR ISLD-LNX3345.00 - GRAND ISLAND 345KV CKT Z	720	720	0.05681	113.3469	GEN562715 1-G15_023_5 0.6900
FDNS	00NR_G15_054	0	20SP	G15_054	FROM->TO	GR ISLD-LNX3345.00 - GRAND ISLAND 345KV CKT Z	720	720	0.05541	111.8019	GERALD GENTLEMAN STATION - THEDFRD3 345.00 345KV CKT 1
FDNS	00NR_G15_054	0	25SP	G15_054	FROM->TO	GR ISLD-LNX3345.00 - GRAND ISLAND 345KV CKT Z	720	720	0.05657	110.837	GERALD GENTLEMAN STATION - THEDFRD3 345.00 345KV CKT 1
FDNS	00NR_G15_054	0	16WP	G15_054	FROM->TO	GR ISLD-LNX3345.00 - GRAND ISLAND 345KV CKT Z	720	720	0.05614	107.992	KELLY - MEADOWGROVE4230.00 230KV CKT 1
FDNS	00NR_G15_054	0	17SP	G15_054	FROM->TO	GR ISLD-LNX3345.00 - GRAND ISLAND 345KV CKT Z	720	720	0.05681	107.8521	GEN652353 2-GR PRAIRIEG 0.6900
FDNS	00NR_G15_054	0	16WP	G15_054	FROM->TO	GR ISLD-LNX3345.00 - GRAND ISLAND 345KV CKT Z	720	720	0.05391	107.5153	P12:230:UMZB:# 116 #: ST IN SD. WSG-ST-VH
FDNS	00NR_G15_054	0	16WP	G15_054	FROM->TO	GR ISLD-LNX3345.00 - GRAND ISLAND 345KV CKT Z	720	720	0.05393	106.9359	STORLA - WESSINGTON 230KV CKT 1
FDNS	00NR_G15_054	0	16WP	G15_054	FROM->TO	GR ISLD-LNX3345.00 - GRAND ISLAND 345KV CKT Z	720	720	0.05543	106.0841	RIEL - ROSEAU 500KV CKT 1
FDNS	00NR_G15_054	0	16WP	G15_054	FROM->TO	GR ISLD-LNX3345.00 - GRAND ISLAND 345KV CKT Z	720	720	0.05447	105.8625	HANLON - STORLA 230KV CKT 1
FDNS	00NR_G15_054	0	16WP	G15_054	FROM->TO	GR ISLD-LNX3345.00 - GRAND ISLAND 345KV CKT Z	720	720	0.05383	105.5063	FT THOMPSON - LETCHER 230KV CKT 1
FDNS	00NR_G15_054	0	16WP	G15_054	FROM->TO	GR ISLD-LNX3345.00 - GRAND ISLAND 345KV CKT Z	720	720	0.05383	105.5063	FT THOMPSON - LETCHER 230KV CKT 1
FDNSLock	00NR_G15_054	0	16WP	G15_054	FROM->TO	GR ISLD-LNX3345.00 - GRAND ISLAND 345KV CKT Z	720	720	0.05475	105.2049	P12:345:UMZW:# 1747 #: WT2 IN SD. WT2-WHT LINE FAULT
FDNS	00NR_G15_054	0	16WP	G15_054	FROM->TO	GR ISLD-LNX3345.00 - GRAND ISLAND 345KV CKT Z	720	720	0.05475	104.7851	WATERTN-LNX3345.00 - WHITE 345KV CKT 1
FDNS	00NR_G15_054	0	16WP	G15_054	FROM->TO	GR ISLD-LNX3345.00 - GRAND ISLAND 345KV CKT Z	720	720	0.05475	104.7151	WATERTN-LNX3345.00 - WATERTOWN 345KV CKT Z
FDNS	00NR_G15_054	0	16WP	G15_054	FROM->TO	GR ISLD-LNX3345.00 - GRAND ISLAND 345KV CKT Z	720	720	0.05536	104.5074	BUFFALO - JAMESTOWN 345KV CKT 1
FDNS	00NR_G15_054	0	16WP	G15_054	FROM->TO	GR ISLD-LNX3345.00 - GRAND ISLAND 345KV CKT Z	720	720	0.05222	104.2543	FT RANDAL - G12_009IST 230.00 230KV CKT 1
FDNS	00NR_G15_054	0	16WP	G15_054	FROM->TO	GR ISLD-LNX3345.00 - GRAND ISLAND 345KV CKT Z	720	720	0.05705	104.2452	KEYSTONE - SIDNEY1-LNX3345.00 345KV CKT 1
FDNS	00NR_G15_054	0	16WP	G15_054	FROM->TO	GR ISLD-LNX3345.00 - GRAND ISLAND 345KV CKT Z	720	720	0.05705	104.2318	SIDNEY - SIDNEY1-LNX3345.00 345KV CKT Z
FDNS	00NR_G15_054	0	16WP	G15_054	FROM->TO	GR ISLD-LNX3345.00 - GRAND ISLAND 345KV CKT Z	720	720	0.05222	104.1582	FT THOMPSON - LAKE PLATT 230KV CKT 1
FDNS	00NR_G15_054	0	16WP	G15_054	FROM->TO	GR ISLD-LNX3345.00 - GRAND ISLAND 345KV CKT Z	720	720	0.05222	104.1582	FT THOMPSON - LAKE PLATT 230KV CKT 1
FDNS	00NR_G15_054	0	16WP	G15_054	FROM->TO	GR ISLD-LNX3345.00 - GRAND ISLAND 345KV CKT Z	720	720	0.05213	104.1581	FT RANDAL - FT THOMPSON 230KV CKT 1
FDNS	00NR_G15_054	0	16WP	G15_054	FROM->TO	GR ISLD-LNX3345.00 - GRAND ISLAND 345KV CKT Z	720	720	0.05213	104.1581	FT RANDAL - FT THOMPSON 230KV CKT 1
FDNS	00NR_G15_054	0	16WP	G15_054	FROM->TO	GR ISLD-LNX3345.00 - GRAND ISLAND 345KV CKT Z	720	720	0.05539	104.1499	GEN336821 1-GRAND GULF UNIT
FDNS	00NR_G15_054	0	16WP	G15_054	FROM->TO	GR ISLD-LNX3345.00 - GRAND ISLAND 345KV CKT Z	720	720	0.0547	104.0517	LETCHER - SIOUX FALLS 230KV CKT 1
FDNS	00NR_G15_054	0	16WP	G15_054	FROM->TO	GR ISLD-LNX3345.00 - GRAND ISLAND 345KV CKT Z	720	720	0.05516	103.9827	G09_001IST 345.00 - WATERTOWN 345KV CKT 1
FDNS	00NR_G15_054	0	16WP	G15_054	FROM->TO	GR ISLD-LNX3345.00 - GRAND ISLAND 345KV CKT Z	720	720	0.05222	103.8865	G12_009IST 230.00 - LAKE PLATT 230KV CKT 1
FDNS	00NR_G15_054	0	16WP	G15_054	FROM->TO	GR ISLD-LNX3345.00 - GRAND ISLAND 345KV CKT Z	720	720	0.05539	103.8391	GEN635024 4-WALTER SCOTT UNIT 4
FDNS	00NR_G15_054	0	16WP	G15_054	FROM->TO	GR ISLD-LNX3345.00 - GRAND ISLAND 345KV CKT Z	720	720	0.05539	103.8214	GEN640010 1-GERALD GENTLEMAN STATION UNIT 1
FDNS	00NR_G15_054	0	16WP	G15_054	FROM->TO	GR ISLD-LNX3345.00 - GRAND ISLAND 345KV CKT Z	720	720	0.05539	103.7877	GEN337911 1-ARKANSAS NUCLEAR ONE UNIT #2
FDNS	00NR_G15_054	0	16WP	G15_054	FROM->TO	GR ISLD-LNX3345.00 - GRAND ISLAND 345KV CKT Z	720	720	0.05539	103.712	GEN640011 2-GERALD GENTLEMAN STATION UNIT 2
FDNS	00NR_G15_054	0	16WP	G15_054	FROM->TO	GR ISLD-LNX3345.00 - GRAND ISLAND 345KV CKT Z	720	720	0.05539	103.6999	GEN344225 1-1CAL G1 25.000
FDNS	00NR_G15_054	0	16WP	G15_054	FROM->TO	GR ISLD-LNX3345.00 - GRAND ISLAND 345KV CKT Z	720	720	0.05614	103.699	FT RANDAL - MEADOWGROVE4230.00 230KV CKT 1
FDNS	00NR_G15_054	0	16WP	G15_054	FROM->TO	GR ISLD-LNX3345.00 - GRAND ISLAND 345KV CKT Z	720	720	0.05539	103.6636	GEN336153 1-WATERFORD UNIT#3
FDNS	00NR_G15_054	0	16WP	G15_054	FROM->TO	GR ISLD-LNX3345.00 - GRAND ISLAND 345KV CKT Z	720	720	0.05609	103.6314	HAZLETON - MITCHLCO3 345.00 345KV CKT 1
FDNS	00NR_G15_054	0	16WP	G15_054	FROM->TO	GR ISLD-LNX3345.00 - GRAND ISLAND 345KV CKT Z	720	720	0.05537	103.5732	BISON 3 345.00 - BUFFALO 345KV CKT 1
FDNS	00NR_G15_054	0	16WP	G15_054	FROM->TO	GR ISLD-LNX3345.00 - GRAND ISLAND 345KV CKT Z	720	720	0.05536	103.5633	CENTER - JAMESTOWN 345KV CKT 1
FDNS	00NR_G15_054	0	16WP	G15_054	FROM->TO	GR ISLD-LNX3345.00 - GRAND ISLAND 345KV CKT Z	720	720	0.05539	103.5034	GEN635023 3-WALTER SCOTT UNIT 3
FDNS	00NR_G15_054	0	16WP	G15_054	FROM->TO	GR ISLD-LNX3345.00 - GRAND ISLAND 345KV CKT Z	720	720	0.05567	103.4502	AS KING - EAU CLAIRE 345KV CKT 1
FDNS	00NR_G15_054	0	16WP	G15_054	FROM->TO	GR ISLD-LNX3345.00 - GRAND ISLAND 345KV CKT Z	720	720	0.05539	103.4118	GEN337910 1-ARKANSAS NUCLEAR ONE UNIT #1
FDNS	00NR_G15_054	0	16WP	G15_054	FROM->TO	GR ISLD-LNX3345.00 - GRAND ISLAND 345KV CKT Z	720	720	0.05552	103.4105	FT RANDAL - SIOUX CITY 230KV CKT 1
FDNS	00NR_G15_054	0	16WP	G15_054	FROM->TO	GR ISLD-LNX3345.00 - GRAND ISLAND 345KV CKT Z	720	720	0.05539	103.396	GEN335831 1-RIVERBEND UNIT#1
FDNS	00NR_G15_054	0	16WP	G15_054	FROM->TO	GR ISLD-LNX3345.00 - GRAND ISLAND 345KV CKT Z	720	720	0.05562	103.3037	ARROWHEAD - ARROWHEAD 230 230KV CKT 1
FDNS	00NR_G15_054	0	16WP	G15_054	FROM->TO	GR ISLD-LNX3345.00 - GRAND ISLAND 345KV CKT Z	720	720	0.06305	103.2503	RAUN - SUB 3451 FT CAL 345KV CKT 1
FDNS	00NR_G15_054	0	16WP	G15_054	FROM->TO	GR ISLD-LNX3345.00 - GRAND ISLAND 345KV CKT Z	720	720	0.06305	103.2503	RAUN - SUB 3451 FT CAL 345KV CKT 1
FDNS	00NR_G15_054	0	16WP	G15_054	FROM->TO	GR ISLD-LNX3345.00 - GRAND ISLAND 345KV CKT Z	720	720	0.055	103.19	HANLON - SIOUX FALLS 230KV CKT 1
FDNS	00NR_G15_054	0	16WP	G15_054	FROM->TO	GR ISLD-LNX3345.00 - GRAND ISLAND 345KV CKT Z	720	720	0.05517	103.1651	GROTON-LNX3 345.00 - LELAND1-LNX3345.00 345KV CKT 1
FDNS	00NR_G15_054	0	16WP	G15_054	FROM->TO	GR ISLD-LNX3345.00 - GRAND ISLAND 345KV CKT Z	720	720	0.05517	103.1219	P12:345:UMZB:# 109 #: LOS GRT IN ND. LOS GRT
FDNS	00NR_G15_054	0	16WP	G15_054	FROM->TO	GR ISLD-LNX3345.00 - GRAND ISLAND 345KV CKT Z	720	720	0.05517	103.1215	GROTON - GROTON-LNX3 345.00 345KV CKT Z
FDNS	00NR_G15_054	0	16WP	G15_054	FROM->TO	GR ISLD-LNX3345.00 - GRAND ISLAND 345KV CKT Z	720	720	0.05517	103.1152	LELAND OLDS - LELAND1-LNX3345.00 345KV CKT Z
FDNS	00NR_G15_054	0	16WP	G15_054	FROM->TO	GR ISLD-LNX3345.00 - GRAND ISLAND 345KV CKT Z	720	720	0.05656	103.0896	GERALD GENTLEMAN STATION - KEYSTONE 345KV CKT 1
FDNS	00NR_G15_054	0	16WP	G15_054	FROM->TO	GR ISLD-LNX3345.00 - GRAND ISLAND 345KV CKT Z	720	720	0.05494	103.0783	FT RANDAL - UTICA JCT 230KV CKT 1
FDNS	00NR_G15_054	0	16WP	G15_054	FROM->TO	GR ISLD-LNX3345.00 - GRAND ISLAND 345KV CKT Z	720	720	0.05676	103.076	SIDNEY - STEGALL 345KV CKT 1
FDNS	00NR_G15_054	0	16WP	G15_054	FROM->TO	GR ISLD-LNX3345.00 - GRAND ISLAND 345KV CKT Z	720	720	0.05539	102.9959	GEN337653 1-WHITE BLUFF UNIT #2
FDNS	00NR_G15_054	0	16WP	G15_054	FROM->TO	GR ISLD-LNX3345.00 - GRAND ISLAND 345KV CKT Z	720	720	0.05539	102.9401	GEN501801 1-DOLET HILLS UNIT1
FDNS	00NR_G15_054	0	16WP	G15_054	FROM->TO	GR ISLD-LNX3345.00 - GRAND ISLAND 345KV CKT Z	720	720	0.05533	102.9394	CARPENTER - HURON 230KV CKT 1
FDNS	00NR_G15_054	0	16WP	G15_054	FROM->TO	GR ISLD-LNX3345.00 - GRAND ISLAND 345KV CKT Z	720	720	0.05539	102.8645	GEN337652 1-WHITE BLUFF UNIT #1
FDNS	00NR_G15_054	0	16WP	G15_054	FROM->TO	GR ISLD-LNX3345.00 - GRAND ISLAND 345KV CKT Z	720	720	0.05538	102.8412	ELLENDALE - OAKES 230KV CKT 1
FDNS	00NR_G15_054	0	16WP	G15_054	FROM->TO	GR ISLD-LNX3345.00 - GRAND ISLAND 345KV CKT Z	720	720	0.05538	102.8412	ELLENDALE - OAKES 230KV CKT 1
FDNS	00NR_G15_054	0	16WP	G15_054	FROM->TO	GR ISLD-LNX3345.00 - GRAND ISLAND 345KV CKT Z	720	720	0.05539	102.8337	GEN641089 2-ENERGY CENTER 2
FDNS	00NR_G15_054	0	16WP	G15_054	FROM->TO	GR ISLD-LNX3345.00 - GRAND ISLAND 345KV CKT Z	720	720	0.05609	102.8256	ADAMS - MITCHLCO3 345.00 345KV CKT 1
FDNS	00NR_G15_054	0	16WP	G15_054	FROM->TO	GR ISLD-LNX3345.00 - GRAND ISLAND 345KV CKT Z	720	720	0.05516	102.8203	G09_001IST 345.00 - GROTON 345KV CKT 1
FDNS	00NR_G15_054	0	16WP	G15_054	FROM->TO	GR ISLD-LNX3345.00 - GRAND ISLAND 345KV CKT Z	720	720	0.05533	102.8156	HURON - WATERTOWN 230KV CKT 2
FDNS	00NR_G15_054	0	16WP	G15_054	FROM->TO	GR ISLD-LNX3345.00 - GRAND ISLAND 345KV CKT Z	720	720	0.05533	102.8156	HURON - WATERTOWN 230KV CKT 2
FDNS	00NR_G15_054	0	16WP	G15_054	FROM->TO	GR ISLD-LNX3345.00 - GRAND ISLAND 345KV CKT Z	720	720	0.05447	102.8135	SPLIT ROCK - WHITE 345KV CKT 1
FDNS	00NR_G15_054	0	16WP	G15_054	FROM->TO	GR ISLD-LNX3345.00 - GRAND ISLAND 345KV CKT Z	720	720	0.05447	102.8135	SPLIT ROCK - WHITE 345KV CKT 1
FDNS	00NR_G15_054	0	16WP	G15_054	FROM->TO	GR ISLD-LNX3345.00 - GRAND ISLAND 345KV CKT Z	720	720	0.06327	102.8121	NUNDRWD - WAYSIDE 230KV CKT 1
FDNS	00NR_G15_054	0	16WP	G15_054	FROM->TO	GR ISLD-LNX3345.00 - GRAND ISLAND 345KV CKT Z	720	720	0.0558	102.8039	ARPIN B4 345.00 - EAU CLAIRE 345KV CKT 1
FDNS	00NR_G15_054	0	16WP	G15_054	FROM->TO	GR ISLD-LNX3345.00 - GRAND ISLAND 345KV CKT Z	720	720	0.05539	102.7843	GEN338146 1-INDEPENDENCE UNIT #2
FDNS	00NR_G15_054	0	16WP	G15_054	FROM->TO	GR ISLD-LNX3345.00 - GRAND ISLAND 345KV CKT Z	720	720	0.05537	102.7826	FORMAN - OAKES 230KV CKT 1

SOLUTION	GROUP	SCENARIO	SEASON	SOURCE	DIRECTION	MONITORED ELEMENT	RATEA (MVA)	RATEB(MVA)	TDF	TC%LOADING (% MVA)	CONTINGENCY
FDNS	00NR_G15_054	0	16WP	G15_054	FROM->TO	GR ISLD-LNX3345.00 - GRAND ISLAND 345KV CKT Z	720	720	0.05539	102.7789	GEN338143 1-INDEPENDENCE UNIT #1
FDNS	00NR_G15_054	0	16WP	G15_054	FROM->TO	GR ISLD-LNX3345.00 - GRAND ISLAND 345KV CKT Z	720	720	0.05533	102.7632	CARPENTER - WATERTOWN 230KV CKT 1
FDNS	00NR_G15_054	0	16WP	G15_054	FROM->TO	GR ISLD-LNX3345.00 - GRAND ISLAND 345KV CKT Z	720	720	0.05533	102.7632	CARPENTER - WATERTOWN 230KV CKT 1
FDNS	00NR_G15_054	0	16WP	G15_054	FROM->TO	GR ISLD-LNX3345.00 - GRAND ISLAND 345KV CKT Z	720	720	0.05502	102.7613	PAHOJA - SIOUX FALLS 230KV CKT 1
FDNSLock	00NR_G15_054	0	16WP	G15_054	FROM->TO	GR ISLD-LNX3345.00 - GRAND ISLAND 345KV CKT Z	720	720	0.05539	102.7284	CENTER - CNTSHNT3 345.00 345KV CKT Z1
FDNS	00NR_G15_054	0	16WP	G15_054	FROM->TO	GR ISLD-LNX3345.00 - GRAND ISLAND 345KV CKT Z	720	720	0.05539	102.7268	CNTSHNT3 345.00 - PRAIRIE3 345.00 345KV CKT 1
FDNS	00NR_G15_054	0	16WP	G15_054	FROM->TO	GR ISLD-LNX3345.00 - GRAND ISLAND 345KV CKT Z	720	720	0.05738	102.721	GRIMES - LEHIGH 345KV CKT 1
FDNS	00NR_G15_054	0	16WP	G15_054	FROM->TO	GR ISLD-LNX3345.00 - GRAND ISLAND 345KV CKT Z	720	720	0.05393	102.6955	FT THOMPSON - WESSINGTON 230KV CKT 1
FDNS	00NR_G15_054	0	16WP	G15_054	FROM->TO	GR ISLD-LNX3345.00 - GRAND ISLAND 345KV CKT Z	720	720	0.05393	102.6955	FT THOMPSON - WESSINGTON 230KV CKT 1
FDNS	00NR_G15_054	0	16WP	G15_054	FROM->TO	GR ISLD-LNX3345.00 - GRAND ISLAND 345KV CKT Z	720	720	0.05589	102.6482	RASMUSN - UTICA JCT 230KV CKT 1
FDNS	00NR_G15_054	0	16WP	G15_054	FROM->TO	GR ISLD-LNX3345.00 - GRAND ISLAND 345KV CKT Z	720	720	0.05586	102.6311	ADAMS - PLEASANT VALLEY 345KV CKT 1
FDNS	00NR_G15_054	0	16WP	G15_054	FROM->TO	GR ISLD-LNX3345.00 - GRAND ISLAND 345KV CKT Z	720	720	0.05539	102.5954	GEN501813 1-RODEMACHER UNIT 3
FDNS	00NR_G15_054	0	16WP	G15_054	FROM->TO	GR ISLD-LNX3345.00 - GRAND ISLAND 345KV CKT Z	720	720	0.05487	102.5952	P12:115:NPPD:1091:VALENTN7:MISSION7:BTB
FDNS	00NR_G15_054	0	16WP	G15_054	FROM->TO	GR ISLD-LNX3345.00 - GRAND ISLAND 345KV CKT Z	720	720	0.0516	102.5877	GERALD GENTLEMAN STATION - SWEETWATER 345KV CKT 1
FDNS	00NR_G15_054	0	16WP	G15_054	FROM->TO	GR ISLD-LNX3345.00 - GRAND ISLAND 345KV CKT Z	720	720	0.05487	102.5364	MISSION - ST FRANCIS 115KV CKT 1
FDNS	00NR_G15_054	0	16WP	G15_054	FROM->TO	GR ISLD-LNX3345.00 - GRAND ISLAND 345KV CKT Z	720	720	0.05519	102.5296	FT THOMPSON - HURON 230KV CKT 1
FDNS	00NR_G15_054	0	16WP	G15_054	FROM->TO	GR ISLD-LNX3345.00 - GRAND ISLAND 345KV CKT Z	720	720	0.05519	102.5296	FT THOMPSON - HURON 230KV CKT 1
FDNS	00NR_G15_054	0	16WP	G15_054	FROM->TO	GR ISLD-LNX3345.00 - GRAND ISLAND 345KV CKT Z	720	720	0.05519	102.5296	FT THOMPSON - HURON 230KV CKT 2
FDNS	00NR_G15_054	0	16WP	G15_054	FROM->TO	GR ISLD-LNX3345.00 - GRAND ISLAND 345KV CKT Z	720	720	0.05519	102.5296	FT THOMPSON - HURON 230KV CKT 2
FDNS	00NR_G15_054	0	16WP	G15_054	FROM->TO	GR ISLD-LNX3345.00 - GRAND ISLAND 345KV CKT Z	720	720	0.05589	102.4909	RASMUSN - SIOUX CITY 230KV CKT 1
FDNSLock	00NR_G15_054	0	16WP	G15_054	FROM->TO	GR ISLD-LNX3345.00 - GRAND ISLAND 345KV CKT Z	720	720	0.05536	102.4707	CHISAGO COUNTY - FORBES 500KV CKT 1
FDNS	00NR_G15_054	0	16WP	G15_054	FROM->TO	GR ISLD-LNX3345.00 - GRAND ISLAND 345KV CKT Z	720	720	0.05539	102.4668	GEN335206 1-NELSON UNIT 6
FDNS	00NR_G15_054	0	16WP	G15_054	FROM->TO	GR ISLD-LNX3345.00 - GRAND ISLAND 345KV CKT Z	720	720	0.05487	102.4631	HARMONY - ST FRANCIS 115KV CKT 1
FDNS	00NR_G15_054	0	16WP	G15_054	FROM->TO	GR ISLD-LNX3345.00 - GRAND ISLAND 345KV CKT Z	720	720	0.05502	102.4388	EAGLE 4 230.00 - PAHOJA 230KV CKT 1
FDNS	00NR_G15_054	0	16WP	G15_054	FROM->TO	GR ISLD-LNX3345.00 - GRAND ISLAND 345KV CKT Z	720	720	0.05487	102.4088	HARMONY - VALENTINE 115KV CKT 1
FDNS	00NR_G15_054	0	16WP	G15_054	FROM->TO	GR ISLD-LNX3345.00 - GRAND ISLAND 345KV CKT Z	720	720	0.05539	102.3898	FORMAN - HANKINSON 230KV CKT 1
FDNS	00NR_G15_054	0	16WP	G15_054	FROM->TO	GR ISLD-LNX3345.00 - GRAND ISLAND 345KV CKT Z	720	720	0.0554	102.378	GLENBORO SOUTH - RUGBY 230KV CKT 1
FDNS	00NR_G15_054	0	16WP	G15_054	FROM->TO	GR ISLD-LNX3345.00 - GRAND ISLAND 345KV CKT Z	720	720	0.0554	102.3773	ALEXMRES3 345.00 - BISON 3 345.00 345KV CKT 1
FDNS	00NR_G15_054	0	16WP	G15_054	FROM->TO	GR ISLD-LNX3345.00 - GRAND ISLAND 345KV CKT Z	720	720	0.05536	102.3766	CHISAGO COUNTY - CHISAGO COUNTY 500KV CKT 1
FDNS	00NR_G15_054	0	16WP	G15_054	FROM->TO	GR ISLD-LNX3345.00 - GRAND ISLAND 345KV CKT Z	720	720	0.05584	102.363	LAKEFIELD 3 - NOBLES 345KV CKT 1
FDNS	00NR_G15_054	0	16WP	G15_054	FROM->TO	GR ISLD-LNX3345.00 - GRAND ISLAND 345KV CKT Z	720	720	0.05539	102.3605	GEN501812 1-RODEMACHER UNIT 2
FDNS	00NR_G15_054	0	16WP	G15_054	FROM->TO	GR ISLD-LNX3345.00 - GRAND ISLAND 345KV CKT Z	720	720	0.05399	102.358	P12:345:UMZW:# 907 #: SC2-SR IN IA. SC2-SR 345 KV LINE
FDNS	00NR_G15_054	0	16WP	G15_054	FROM->TO	GR ISLD-LNX3345.00 - GRAND ISLAND 345KV CKT Z	720	720	0.05539	102.3457	GEN532751 1-WOLF CREEK GENERATING STATION UNIT 1
FDNS	00NR_G15_054	0	16WP	G15_054	FROM->TO	GR ISLD-LNX3345.00 - GRAND ISLAND 345KV CKT Z	720	720	0.05539	102.3419	GEN344897 4-1LAB G4 20.000
FDNS	00NR_G15_054	0	16WP	G15_054	FROM->TO	GR ISLD-LNX3345.00 - GRAND ISLAND 345KV CKT Z	720	720	0.05539	102.3398	GEN344894 1-1LAB G1 20.000
FDNS	00NR_G15_054	0	16WP	G15_054	FROM->TO	GR ISLD-LNX3345.00 - GRAND ISLAND 345KV CKT Z	720	720	0.05539	102.3397	GEN344896 3-1LAB G3 20.000
FDNS	00NR_G15_054	0	16WP	G15_054	FROM->TO	GR ISLD-LNX3345.00 - GRAND ISLAND 345KV CKT Z	720	720	0.05399	102.3332	SIOUX CITY - SIOUXCY-LNX3345.00 345KV CKT Z
FDNS	00NR_G15_054	0	16WP	G15_054	FROM->TO	GR ISLD-LNX3345.00 - GRAND ISLAND 345KV CKT Z	720	720	0.05539	102.3165	GEN345670 1-1RUSH G1 18.000
FDNS	00NR_G15_054	0	16WP	G15_054	FROM->TO	GR ISLD-LNX3345.00 - GRAND ISLAND 345KV CKT Z	720	720	0.05539	102.3164	GEN345671 2-1RUSH G2 18.000
FDNS	00NR_G15_054	0	16WP	G15_054	FROM->TO	GR ISLD-LNX3345.00 - GRAND ISLAND 345KV CKT Z	720	720	0.05537	102.3065	CENTER - COYOTE 345KV CKT 1
FDNS	00NR_G15_054	0	16WP	G15_054	FROM->TO	GR ISLD-LNX3345.00 - GRAND ISLAND 345KV CKT Z	720	720	0.05539	102.3064	GEN344895 2-1LAB G2 20.000
FDNS	00NR_G15_054	0	16WP	G15_054	FROM->TO	GR ISLD-LNX3345.00 - GRAND ISLAND 345KV CKT Z	720	720	0.05252	102.2685	FT THOMPSON (FT2 KU1B) 345/230/13.8KV TRANSFORMER CKT 1
FDNS	00NR_G15_054	0	16WP	G15_054	FROM->TO	GR ISLD-LNX3345.00 - GRAND ISLAND 345KV CKT Z	720	720	0.05253	102.2661	FT THOMPSON (FT2 KU1A) 345/230/13.8KV TRANSFORMER CKT 1
FDNS	00NR_G15_054	0	16WP	G15_054	FROM->TO	GR ISLD-LNX3345.00 - GRAND ISLAND 345KV CKT Z	720	720	0.05539	102.2533	GEN336252 1-NINEMILE POINT UNIT#5
FDNS	00NR_G15_054	0	16WP	G15_054	FROM->TO	GR ISLD-LNX3345.00 - GRAND ISLAND 345KV CKT Z	720	720	0.05399	102.2493	SIOUXCY-LNX3345.00 - SPLIT ROCK 345KV CKT 1
FDNS	00NR_G15_054	0	16WP	G15_054	FROM->TO	GR ISLD-LNX3345.00 - GRAND ISLAND 345KV CKT Z	720	720	0.05399	102.2493	SIOUXCY-LNX3345.00 - SPLIT ROCK 345KV CKT 1
FDNS	00NR_G15_054	0	16WP	G15_054	FROM->TO	GR ISLD-LNX3345.00 - GRAND ISLAND 345KV CKT Z	720	720	0.05258	102.2391	GERALD GENTLEMAN STATION - SWEETWATER 345KV CKT 2
FDNS	00NR_G15_054	0	16WP	G15_054	FROM->TO	GR ISLD-LNX3345.00 - GRAND ISLAND 345KV CKT Z	720	720	0.05539	102.2338	GEN659118 1-LARAMIE RIVER UNIT1
FDNS	00NR_G15_054	0	16WP	G15_054	FROM->TO	GR ISLD-LNX3345.00 - GRAND ISLAND 345KV CKT Z	720	720	0.05065	102.22	P12:115:NPPD:WAPA6:FTRANDL7:ONEILL 7:BTB
FDNS	00NR_G15_054	0	16WP	G15_054	FROM->TO	GR ISLD-LNX3345.00 - GRAND ISLAND 345KV CKT Z	720	720	0.05065	102.22	P12:115:UMZB:# 115 #: SE IN NE. FR-SE-ON
FDNS	00NR_G15_054	0	16WP	G15_054	FROM->TO	GR ISLD-LNX3345.00 - GRAND ISLAND 345KV CKT Z	720	720	0.05539	102.2141	GEN336831 1-BAXTER WILSON SES
FDNS	00NR_G15_054	0	16WP	G15_054	FROM->TO	GR ISLD-LNX3345.00 - GRAND ISLAND 345KV CKT Z	720	720	0.05565	102.2107	LARAMIE RIVER - SIDNEY2-LNX3345.00 345KV CKT 1
FDNS	00NR_G15_054	0	16WP	G15_054	FROM->TO	GR ISLD-LNX3345.00 - GRAND ISLAND 345KV CKT Z	720	720	0.05565	102.1972	SIDNEY - SIDNEY2-LNX3345.00 345KV CKT Z
FDNS	00NR_G15_054	0	16WP	G15_054	FROM->TO	GR ISLD-LNX3345.00 - GRAND ISLAND 345KV CKT Z	720	720	0.05539	102.1964	P12:115:UMZW:# 162 #: NEL IN ND. FAULT ON ML-NEL-MX-GA 115 KV
FDNS	00NR_G15_054	0	16WP	G15_054	FROM->TO	GR ISLD-LNX3345.00 - GRAND ISLAND 345KV CKT Z	720	720	0.05065	102.177	FT RANDAL - SPENCER 115KV CKT 1
FDNS	00NR_G15_054	0	16WP	G15_054	FROM->TO	GR ISLD-LNX3345.00 - GRAND ISLAND 345KV CKT Z	720	720	0.05487	102.1615	AINSWORTH - VALENTINE 115KV CKT 1
FDNS	00NR_G15_054	0	16WP	G15_054	FROM->TO	GR ISLD-LNX3345.00 - GRAND ISLAND 345KV CKT Z	720	720	0.05539	102.1539	GEN337041 1-GERALD ANDRUS
FDNS	00NR_G15_054	0	16WP	G15_054	FROM->TO	GR ISLD-LNX3345.00 - GRAND ISLAND 345KV CKT Z	720	720	0.05573	102.1535	GAVINS POINT - HARTINGTON 115KV CKT 1
FDNS	00NR_G15_054	0	16WP	G15_054	FROM->TO	GR ISLD-LNX3345.00 - GRAND ISLAND 345KV CKT Z	720	720	0.05571	102.1203	BYRON - NORTH ROCHESTER 345KV CKT 1
FDNS	00NR_G15_054	0	16WP	G15_054	FROM->TO	GR ISLD-LNX3345.00 - GRAND ISLAND 345KV CKT Z	720	720	0.05539	102.1115	GEN334440 1-SABINE UNIT 4
FDNS	00NR_G15_054	0	16WP	G15_054	FROM->TO	GR ISLD-LNX3345.00 - GRAND ISLAND 345KV CKT Z	720	720	0.05539	102.085	GEN336251 1-NINEMILE POINT UNIT#4
FDNS	00NR_G15_054	0	16WP	G15_054	FROM->TO	GR ISLD-LNX3345.00 - GRAND ISLAND 345KV CKT Z	720	720	0.05597	102.0843	KOSSUTH 3 345.00 - WEBSTER 345KV CKT 1
FDNS	00NR_G15_054	0	16WP	G15_054	FROM->TO	GR ISLD-LNX3345.00 - GRAND ISLAND 345KV CKT Z	720	720	0.05541	102.0836	BLAIR - GRANITE FALLS 230KV CKT 1
FDNS	00NR_G15_054	0	16WP	G15_054	FROM->TO	GR ISLD-LNX3345.00 - GRAND ISLAND 345KV CKT Z	720	720	0.05541	102.0836	BLAIR - GRANITE FALLS 230KV CKT 1
FDNSLock	00NR_G15_054	0	16WP	G15_054	FROM->TO	GR ISLD-LNX3345.00 - GRAND ISLAND 345KV CKT Z	720	720	0.06321	102.0793	P13:230-345:NPPD:STEGALL3:KV3A
FDNS	00NR_G15_054	0	16WP	G15_054	FROM->TO	GR ISLD-LNX3345.00 - GRAND ISLAND 345KV CKT Z	720	720	0.05597	102.0792	KOSSUTH 3 345.00 - OBRIEN 3 345.00 345KV CKT 1
FDNSLock	00NR_G15_054	0	16WP	G15_054	FROM->TO	GR ISLD-LNX3345.00 - GRAND ISLAND 345KV CKT Z	720	720	0.06321	102.0766	STEGALL (SGQ KV3A) 345/230/13.8KV TRANSFORMER CKT 1
FDNS	00NR_G15_054	0	16WP	G15_054	FROM->TO	GR ISLD-LNX3345.00 - GRAND ISLAND 345KV CKT Z	720	720	0.05539	102.06	P13:115-230:NPPD:NUCOR-3
FDNS	00NR_G15_054	0	16WP	G15_054	FROM->TO	GR ISLD-LNX3345.00 - GRAND ISLAND 345KV CKT Z	720	720	0.05538	102.0382	GARRISON - JAMES TOWN 230KV CKT 1
FDNS	00NR_G15_054	0	16WP	G15_054	FROM->TO	GR ISLD-LNX3345.00 - GRAND ISLAND 345KV CKT Z	720	720	0.05539	102.0333	P13:230-345:NPPD:NUCOR-1
FDNS	00NR_G15_054	0	16WP	G15_054	FROM->TO	GR ISLD-LNX3345.00 - GRAND ISLAND 345KV CKT Z	720	720	0.05065	102.0325	ONEILL - SPENCER 115KV CKT 1
FDNS	00NR_G15_054	0	16WP	G15_054	FROM->TO	GR ISLD-LNX3345.00 - GRAND ISLAND 345KV CKT Z	720	720	0.05539	102.029	GEN525561 1-TOLK GEN #1 24 KV
FDNS	00NR_G15_054	0	16WP	G15_054	FROM->TO	GR ISLD-LNX3345.00 - GRAND ISLAND 345KV CKT Z	720	720	0.05539	102.0238	P13:230:UMZW:# 2218 #: FP IN MT. LOSS OF TRANSFORMER (AT2).

SOLUTION	GROUP	SCENARIO	SEASON	SOURCE	DIRECTION	MONITORED ELEMENT	RATEA (MVA)	RATEB(MVA)	TDF	TC%LOADING (% MVA)	CONTINGENCY
FDNS	00NR_G15_054	0	16WP	G15_054	FROM->TO	GR ISLD-LNX3345.00 - GRAND ISLAND 345KV CKT Z	720	720	0.05608	102.0157	DENISON - SIOUX CITY 230KV CKT 1
FDNS	00NR_G15_054	0	16WP	G15_054	FROM->TO	GR ISLD-LNX3345.00 - GRAND ISLAND 345KV CKT Z	720	720	0.05543	102.0093	HANKINSON - WAHPETON 230KV CKT 1
FDNS	00NR_G15_054	0	16WP	G15_054	FROM->TO	GR ISLD-LNX3345.00 - GRAND ISLAND 345KV CKT Z	720	720	0.05551	102.0049	NORTH ROCHESTER - PRAIRIE ISLAND 345KV CKT 1
FDNS	00NR_G15_054	0	16WP	G15_054	FROM->TO	GR ISLD-LNX3345.00 - GRAND ISLAND 345KV CKT Z	720	720	0.05564	102.0019	BROOKING COUNTY - LYON COUNTY 345KV CKT 1
FDNS	00NR_G15_054	0	16WP	G15_054	FROM->TO	GR ISLD-LNX3345.00 - GRAND ISLAND 345KV CKT Z	720	720	0.05539	101.9818	GEN303007 1-1BC2 U2
FDNS	00NR_G15_054	0	16WP	G15_054	FROM->TO	GR ISLD-LNX3345.00 - GRAND ISLAND 345KV CKT Z	720	720	0.05539	101.9789	GEN303006 1-1BC2 U1
FDNS	00NR_G15_054	0	16WP	G15_054	FROM->TO	GR ISLD-LNX3345.00 - GRAND ISLAND 345KV CKT Z	720	720	0.05539	101.9789	GEN335204 1-NELSON UNIT 4
FDNS	00NR_G15_054	0	16WP	G15_054	FROM->TO	GR ISLD-LNX3345.00 - GRAND ISLAND 345KV CKT Z	720	720	0.05539	101.9781	GEN642067 1-PLATTE
FDNS	00NR_G15_054	0	16WP	G15_054	FROM->TO	GR ISLD-LNX3345.00 - GRAND ISLAND 345KV CKT Z	720	720	0.05539	101.9771	GEN336191 1-LITTLE GYPSY UNIT#3
FDNS	00NR_G15_054	0	16WP	G15_054	FROM->TO	GR ISLD-LNX3345.00 - GRAND ISLAND 345KV CKT Z	720	720	0.04931	101.9743	P12:115:NPPD:1164:ONEILL 7:JEFFREY9:BTB
FDNS	00NR_G15_054	0	16WP	G15_054	FROM->TO	GR ISLD-LNX3345.00 - GRAND ISLAND 345KV CKT Z	720	720	0.04931	101.9616	CLEARWATER - ONEILL 115KV CKT 1
FDNS	00NR_G15_054	0	16WP	G15_054	FROM->TO	GR ISLD-LNX3345.00 - GRAND ISLAND 345KV CKT Z	720	720	0.05539	101.9615	P13:115-345:NPPD:NUCOR-2
FDNS	00NR_G15_054	0	16WP	G15_054	FROM->TO	GR ISLD-LNX3345.00 - GRAND ISLAND 345KV CKT Z	720	720	0.05539	101.9544	GEN531447 1-HOLCOMB GENERATOR
FDNS	00NR_G15_054	0	16WP	G15_054	FROM->TO	GR ISLD-LNX3345.00 - GRAND ISLAND 345KV CKT Z	720	720	0.05539	101.9452	GEN336801 1-BAXTER WILSON UNIT #1
FDNS	00NR_G15_054	0	16WP	G15_054	FROM->TO	GR ISLD-LNX3345.00 - GRAND ISLAND 345KV CKT Z	720	720	0.05478	101.9452	MENNO JCT - TRIPP JCT 115KV CKT 1
FDNS	00NR_G15_054	0	16WP	G15_054	FROM->TO	GR ISLD-LNX3345.00 - GRAND ISLAND 345KV CKT Z	720	720	0.06282	101.9445	COLUMEAST - SHELL CREEK 345KV CKT 1
FDNS	00NR_G15_054	0	16WP	G15_054	FROM->TO	GR ISLD-LNX3345.00 - GRAND ISLAND 345KV CKT Z	720	720	0.05539	101.9407	GEN335614 1-WILLOW GLENN UNIT#4
FDNS	00NR_G15_054	0	16WP	G15_054	FROM->TO	GR ISLD-LNX3345.00 - GRAND ISLAND 345KV CKT Z	720	720	0.05571	101.9379	BYRON - PLEASANT VALLEY 345KV CKT 1
FDNS	00NR_G15_054	0	16WP	G15_054	FROM->TO	GR ISLD-LNX3345.00 - GRAND ISLAND 345KV CKT Z	720	720	0.05539	101.9303	GEN336464 1-MICHOUD UNIT #3
FDNS	00NR_G15_054	0	16WP	G15_054	FROM->TO	GR ISLD-LNX3345.00 - GRAND ISLAND 345KV CKT Z	720	720	0.05539	101.9299	GEN303008 1-1BC2 U3
FDNS	00NR_G15_054	0	16WP	G15_054	FROM->TO	GR ISLD-LNX3345.00 - GRAND ISLAND 345KV CKT Z	720	720	0.04931	101.9294	CLEARWATER - NELIGH 115KV CKT 1
FDNS	00NR_G15_054	0	16WP	G15_054	FROM->TO	GR ISLD-LNX3345.00 - GRAND ISLAND 345KV CKT Z	720	720	0.05539	101.925	GEN336170 1-GULF OXY U4
FDNS	00NR_G15_054	0	16WP	G15_054	FROM->TO	GR ISLD-LNX3345.00 - GRAND ISLAND 345KV CKT Z	720	720	0.05539	101.915	GEN334441 1-SABINE UNIT 5
FDNS	00NR_G15_054	0	16WP	G15_054	FROM->TO	GR ISLD-LNX3345.00 - GRAND ISLAND 345KV CKT Z	720	720	0.05538	101.9113	BISMARK - JAMES TOWN 230KV CKT 1
FDNS	00NR_G15_054	0	16WP	G15_054	FROM->TO	GR ISLD-LNX3345.00 - GRAND ISLAND 345KV CKT Z	720	720	0.05538	101.899	BISMARK - WEBER 230KV CKT 1
FDNS	00NR_G15_054	0	16WP	G15_054	FROM->TO	GR ISLD-LNX3345.00 - GRAND ISLAND 345KV CKT Z	720	720	0.05538	101.8969	JAMES TOWN - WEBER 230KV CKT 1
FDNS	00NR_G15_054	0	16WP	G15_054	FROM->TO	GR ISLD-LNX3345.00 - GRAND ISLAND 345KV CKT Z	720	720	0.05539	101.8913	GRAND GULF 500/22.0KV TRANSFORMER CKT 1
FDNS	00NR_G15_054	0	16WP	G15_054	FROM->TO	GR ISLD-LNX3345.00 - GRAND ISLAND 345KV CKT Z	720	720	0.05544	101.8895	APPLEDORN 4 230.00 - WATERTOWN 230KV CKT 1
FDNS	00NR_G15_054	0	16WP	G15_054	FROM->TO	GR ISLD-LNX3345.00 - GRAND ISLAND 345KV CKT Z	720	720	0.05544	101.8895	APPLEDORN 4 230.00 - WATERTOWN 230KV CKT 1
FDNS	00NR_G15_054	0	16WP	G15_054	FROM->TO	GR ISLD-LNX3345.00 - GRAND ISLAND 345KV CKT Z	720	720	0.05539	101.8884	GEN501811 1-RODEMACHER UNIT 1
FDNS	00NR_G15_054	0	16WP	G15_054	FROM->TO	GR ISLD-LNX3345.00 - GRAND ISLAND 345KV CKT Z	720	720	0.05478	101.8651	MENNO JCT - UTICA 115KV CKT 1
FDNS	00NR_G15_054	0	16WP	G15_054	FROM->TO	GR ISLD-LNX3345.00 - GRAND ISLAND 345KV CKT Z	720	720	0.05573	101.8574	BELDEN - HARTINGTON 115KV CKT 1
FDNS	00NR_G15_054	0	16WP	G15_054	FROM->TO	GR ISLD-LNX3345.00 - GRAND ISLAND 345KV CKT Z	720	720	0.05539	101.8511	PRAIRIE ISLAND 345/20.0KV TRANSFORMER CKT 1
FDNS	00NR_G15_054	0	16WP	G15_054	FROM->TO	GR ISLD-LNX3345.00 - GRAND ISLAND 345KV CKT Z	720	720	0.05539	101.8485	PRAIRIE ISLAND 345/20.0KV TRANSFORMER CKT 2
FDNS	00NR_G15_054	0	16WP	G15_054	FROM->TO	GR ISLD-LNX3345.00 - GRAND ISLAND 345KV CKT Z	720	720	0.05539	101.8399	GEN334433 1-SABINE UNIT 3
FDNS	00NR_G15_054	0	16WP	G15_054	FROM->TO	GR ISLD-LNX3345.00 - GRAND ISLAND 345KV CKT Z	720	720	0.05538	101.8327	FARGO - JAMES TOWN 230KV CKT 1
FDNS	00NR_G15_054	0	16WP	G15_054	FROM->TO	GR ISLD-LNX3345.00 - GRAND ISLAND 345KV CKT Z	720	720	0.05539	101.832	GEN334071 1-LEWIS CREEK 2
FDNS	00NR_G15_054	0	16WP	G15_054	FROM->TO	GR ISLD-LNX3345.00 - GRAND ISLAND 345KV CKT Z	720	720	0.05539	101.8278	GEN334070 1-LEWIS CREEK 1
FDNS	00NR_G15_054	0	16WP	G15_054	FROM->TO	GR ISLD-LNX3345.00 - GRAND ISLAND 345KV CKT Z	720	720	0.05544	101.8262	APPLEDORN 4 230.00 - GRANITE FALLS 230KV CKT 1
FDNS	00NR_G15_054	0	16WP	G15_054	FROM->TO	GR ISLD-LNX3345.00 - GRAND ISLAND 345KV CKT Z	720	720	0.05544	101.8262	APPLEDORN 4 230.00 - GRANITE FALLS 230KV CKT 1
FDNS	00NR_G15_054	0	16WP	G15_054	FROM->TO	GR ISLD-LNX3345.00 - GRAND ISLAND 345KV CKT Z	720	720	0.05539	101.8222	GEN338388 1-1PLUM PT U1 23.000
FDNS	00NR_G15_054	0	16WP	G15_054	FROM->TO	GR ISLD-LNX3345.00 - GRAND ISLAND 345KV CKT Z	720	720	0.05539	101.8173	GEN337766 1-TRACTEBEL UNIT S1
FDNS	00NR_G15_054	0	16WP	G15_054	FROM->TO	GR ISLD-LNX3345.00 - GRAND ISLAND 345KV CKT Z	720	720	0.05538	101.8151	FARGO - JAMES TOWN 230KV CKT 2
FDNS	00NR_G15_054	0	16WP	G15_054	FROM->TO	GR ISLD-LNX3345.00 - GRAND ISLAND 345KV CKT Z	720	720	0.05541	101.8111	FERGSFL4 230.00 - WAHPETON 230KV CKT 1
FDNS	00NR_G15_054	0	16WP	G15_054	FROM->TO	GR ISLD-LNX3345.00 - GRAND ISLAND 345KV CKT Z	720	720	0.05539	101.8105	GEN525562 1-TOLK GEN #2 24 KV
FDNS	00NR_G15_054	0	16WP	G15_054	FROM->TO	GR ISLD-LNX3345.00 - GRAND ISLAND 345KV CKT Z	720	720	0.05538	101.8087	BALTA - RAMSEY 230KV CKT 1
FDNS	00NR_G15_054	0	16WP	G15_054	FROM->TO	GR ISLD-LNX3345.00 - GRAND ISLAND 345KV CKT Z	720	720	0.05478	101.8084	P12:115:UMZZ:# 237 #: MEN IN SD. MENNO JUNCTION IS A TAP (UJ-MEN-TP).
FDNS	00NR_G15_054	0	16WP	G15_054	FROM->TO	GR ISLD-LNX3345.00 - GRAND ISLAND 345KV CKT Z	720	720	0.0554	101.7997	AUDUBON - SHEYNNE 230KV CKT 1
FDNS	00NR_G15_054	0	16WP	G15_054	FROM->TO	GR ISLD-LNX3345.00 - GRAND ISLAND 345KV CKT Z	720	720	0.05552	101.7935	ARKANSAS NUCLEAR ONE - FT SMITH 500KV CKT 1
FDNS	00NR_G15_054	0	16WP	G15_054	FROM->TO	GR ISLD-LNX3345.00 - GRAND ISLAND 345KV CKT Z	720	720	0.05552	101.7935	ARKANSAS NUCLEAR ONE - FT SMITH 500KV CKT 1
FDNS	00NR_G15_054	0	16WP	G15_054	FROM->TO	GR ISLD-LNX3345.00 - GRAND ISLAND 345KV CKT Z	720	720	0.05558	101.7871	OVEXFRMCCOVE
FDNS	00NR_G15_054	0	16WP	G15_054	FROM->TO	GR ISLD-LNX3345.00 - GRAND ISLAND 345KV CKT Z	720	720	0.05539	101.7847	GEN501910 1-ACADIA UNIT ST1
FDNS	00NR_G15_054	0	16WP	G15_054	FROM->TO	GR ISLD-LNX3345.00 - GRAND ISLAND 345KV CKT Z	720	720	0.05539	101.7725	P12:345:GRDA:CHOUTEAU-SPORTSMANACRES
FDNS	00NR_G15_054	0	16WP	G15_054	FROM->TO	GR ISLD-LNX3345.00 - GRAND ISLAND 345KV CKT Z	720	720	0.05538	101.7706	ELM CREEK - MONTICELLO 345KV CKT 1
FDNS	00NR_G15_054	0	16WP	G15_054	FROM->TO	GR ISLD-LNX3345.00 - GRAND ISLAND 345KV CKT Z	720	720	0.05545	101.7693	NORTH LA CROSSE - NORTH ROCHESTER 345KV CKT 1
FDNS	00NR_G15_054	0	16WP	G15_054	FROM->TO	GR ISLD-LNX3345.00 - GRAND ISLAND 345KV CKT Z	720	720	0.05562	101.767	ARPIN B3 345.00 - ROCKY RN B8 345.00 345KV CKT 1
FDNS	00NR_G15_054	0	16WP	G15_054	FROM->TO	GR ISLD-LNX3345.00 - GRAND ISLAND 345KV CKT Z	720	720	0.05539	101.7657	WHITE BLUFF 500/26.0KV TRANSFORMER CKT 1
FDNS	00NR_G15_054	0	16WP	G15_054	FROM->TO	GR ISLD-LNX3345.00 - GRAND ISLAND 345KV CKT Z	720	720	0.05547	101.7602	GENOA 161 - SENECA 161 161KV CKT 1
FDNS	00NR_G15_054	0	16WP	G15_054	FROM->TO	GR ISLD-LNX3345.00 - GRAND ISLAND 345KV CKT Z	720	720	0.06213	101.7601	PETERSBRG.N7115.00 - PETERSBURG 115KV CKT Z1
FDNS	00NR_G15_054	0	16WP	G15_054	FROM->TO	GR ISLD-LNX3345.00 - GRAND ISLAND 345KV CKT Z	720	720	0.05539	101.7572	GEN562547 1-G14_039_3 0.6900
FDNS	00NR_G15_054	0	16WP	G15_054	FROM->TO	GR ISLD-LNX3345.00 - GRAND ISLAND 345KV CKT Z	720	720	0.05539	101.7561	GEN336222 1-LITTLE GYPSY UNIT#2
FDNS	00NR_G15_054	0	16WP	G15_054	FROM->TO	GR ISLD-LNX3345.00 - GRAND ISLAND 345KV CKT Z	720	720	0.06213	101.7526	P12:115:NPPD:1168B:ALBION 7:PETERSBRG.N7:BTB
FDNS	00NR_G15_054	0	16WP	G15_054	FROM->TO	GR ISLD-LNX3345.00 - GRAND ISLAND 345KV CKT Z	720	720	0.05539	101.7494	P12:161:GRDA:KERR-SALINA-CKT1
FDNS	00NR_G15_054	0	16WP	G15_054	FROM->TO	GR ISLD-LNX3345.00 - GRAND ISLAND 345KV CKT Z	720	720	0.05539	101.7494	P12:161:GRDA:KERR-SALINA-CKT2
FDNS	00NR_G15_054	0	16WP	G15_054	FROM->TO	GR ISLD-LNX3345.00 - GRAND ISLAND 345KV CKT Z	720	720	0.05545	101.7448	NORTH LA CROSSE (10008630_001) 345/161/34.5KV TRANSFORMER CKT 9
FDNS	00NR_G15_054	0	16WP	G15_054	FROM->TO	GR ISLD-LNX3345.00 - GRAND ISLAND 345KV CKT Z	720	720	0.06213	101.7422	ALBION - PETERSBURG 115KV CKT 1
FDNS	00NR_G15_054	0	16WP	G15_054	FROM->TO	GR ISLD-LNX3345.00 - GRAND ISLAND 345KV CKT Z	720	720	0.05539	101.7397	GEN337764 1-TRACTEBEL UNIT C1
FDNS	00NR_G15_054	0	16WP	G15_054	FROM->TO	GR ISLD-LNX3345.00 - GRAND ISLAND 345KV CKT Z	720	720	0.05539	101.7397	GEN337765 1-TRACTEBEL UNIT C2
FDNS	00NR_G15_054	0	16WP	G15_054	FROM->TO	GR ISLD-LNX3345.00 - GRAND ISLAND 345KV CKT Z	720	720	0.05551	101.7373	FRANKS - HUBEN 345KV CKT 1
FDNS	00NR_G15_054	0	16WP	G15_054	FROM->TO	GR ISLD-LNX3345.00 - GRAND ISLAND 345KV CKT Z	720	720	0.05539	101.7366	GEN562023 1-G11_020_3 0.6900
FDNS	00NR_G15_054	0	16WP	G15_054	FROM->TO	GR ISLD-LNX3345.00 - GRAND ISLAND 345KV CKT Z	720	720	0.05539	101.7366	GEN562026 1-G11_019_3 0.6900
FDNS	00NR_G15_054	0	16WP	G15_054	FROM->TO	GR ISLD-LNX3345.00 - GRAND ISLAND 345KV CKT Z	720	720	0.05569	101.7333	P13:115-230:TSGT:SIDNEY-KV1A
FDNS	00NR_G15_054	0	16WP	G15_054	FROM->TO	GR ISLD-LNX3345.00 - GRAND ISLAND 345KV CKT Z	720	720	0.05539	101.7297	GEN336152 1-WATERFORD UNIT#2

SOLUTION	GROUP	SCENARIO	SEASON	SOURCE	DIRECTION	MONITORED ELEMENT	RATEA (MVA)	RATEB(MVA)	TDF	TC%LOADING (% MVA)	CONTINGENCY
FDNS	00NR_G15_054	0	16WP	G15_054	FROM->TO	GR ISLD-LNX3345.00 - GRAND ISLAND 345KV CKT Z	720	720	0.05539	101.7288	GEN336151 1-WATERFORD UNIT#1
FDNS	00NR_G15_054	0	16WP	G15_054	FROM->TO	GR ISLD-LNX3345.00 - GRAND ISLAND 345KV CKT Z	720	720	0.05539	101.2918	BASE CASE
FDNS	00NR_G15_054	0	16WP	G15_054	FROM->TO	GR ISLD-LNX3345.00 - GRAND ISLAND 345KV CKT Z	720	720	0.05692	101.0326	KELLY - SHELL CREEK 230KV CKT 1
FDNS	00NR_G15_054	0	16WP	G15_054	FROM->TO	GR ISLD-LNX3345.00 - GRAND ISLAND 345KV CKT Z	720	720	0.05692	101.0319	SHELL CREEK (SHELLCREEKT1) 345/230/13.8KV TRANSFORMER CKT 1
FDNS	00NR_G15_054	0	16WP	G15_054	FROM->TO	GR ISLD-LNX3345.00 - GRAND ISLAND 345KV CKT Z	720	720	0.05692	101.0319	SHELL CREEK (SHELLCREEKT1) 345/230/13.8KV TRANSFORMER CKT 1
FDNS	00NR_G15_054	0	16WP	G15_054	FROM->TO	GR ISLD-LNX3345.00 - GRAND ISLAND 345KV CKT Z	720	720	0.05539	100.9957	GEN645001 1-FORT CALHOUN 1
FDNS	00NR_G15_054	0	16WP	G15_054	FROM->TO	GR ISLD-LNX3345.00 - GRAND ISLAND 345KV CKT Z	720	720	0.05738	100.9437	MINGO - SETAB 345KV CKT 1
FDNS	00NR_G15_054	0	16WP	G15_054	FROM->TO	GR ISLD-LNX3345.00 - GRAND ISLAND 345KV CKT Z	720	720	0.05738	100.9437	MINGO - SETAB 345KV CKT 1
FDNS	00NR_G15_054	0	16WP	G15_054	FROM->TO	GR ISLD-LNX3345.00 - GRAND ISLAND 345KV CKT Z	720	720	0.05567	100.9414	AURORA - GRAND ISLAND 115KV CKT 1
FDNS	00NR_G15_054	0	16WP	G15_054	FROM->TO	GR ISLD-LNX3345.00 - GRAND ISLAND 345KV CKT Z	720	720	0.05557	100.9032	CRETE - FRIEND 115KV CKT 1
FDNS	00NR_G15_054	0	16WP	G15_054	FROM->TO	GR ISLD-LNX3345.00 - GRAND ISLAND 345KV CKT Z	720	720	0.05818	100.8988	MOORE - NW68TH & HOLDREGE 345KV CKT 1
FDNS	00NR_G15_054	0	16WP	G15_054	FROM->TO	GR ISLD-LNX3345.00 - GRAND ISLAND 345KV CKT Z	720	720	0.05818	100.8988	MOORE - NW68TH & HOLDREGE 345KV CKT 1
FDNS	00NR_G15_054	0	16WP	G15_054	FROM->TO	GR ISLD-LNX3345.00 - GRAND ISLAND 345KV CKT Z	720	720	0.05949	100.8569	LOUP CITY - NORTH LOUP 115KV CKT 1
FDNS	00NR_G15_054	0	16WP	G15_054	FROM->TO	GR ISLD-LNX3345.00 - GRAND ISLAND 345KV CKT Z	720	720	0.05544	100.8484	G14-074T 345.00 - OKLAUNION 345KV CKT 1
FDNS	00NR_G15_054	0	16WP	G15_054	FROM->TO	GR ISLD-LNX3345.00 - GRAND ISLAND 345KV CKT Z	720	720	0.05546	100.8464	ANTELOP-LNX3345.00 - BRDLAND-LNX3345.00 345KV CKT 1
FDNS	00NR_G15_054	0	16WP	G15_054	FROM->TO	GR ISLD-LNX3345.00 - GRAND ISLAND 345KV CKT Z	720	720	0.05539	100.8399	CLKREACT5 161.00 - LIME CREEK 5 SPLITS INTO LIME EAST TO A 161KV CKT 1
FDNS	00NR_G15_054	0	16WP	G15_054	FROM->TO	GR ISLD-LNX3345.00 - GRAND ISLAND 345KV CKT Z	720	720	0.05539	100.8269	GEN659116 1-SPIRIT MOUND UNIT1
FDNS	00NR_G15_054	0	16WP	G15_054	FROM->TO	GR ISLD-LNX3345.00 - GRAND ISLAND 345KV CKT Z	720	720	0.05539	100.8269	GEN659117 2-SPIRIT MOUND UNIT2
FDNS	00NR_G15_054	0	16WP	G15_054	FROM->TO	GR ISLD-LNX3345.00 - GRAND ISLAND 345KV CKT Z	720	720	0.05565	100.8222	GRAND ISLAND (GI KU3A) 345/230/13.8KV TRANSFORMER CKT 3
FDNS	00NR_G15_054	0	16WP	G15_054	FROM->TO	GR ISLD-LNX3345.00 - GRAND ISLAND 345KV CKT Z	720	720	0.05565	100.8222	GRAND ISLAND (GI KU3A) 345/230/13.8KV TRANSFORMER CKT 3
FDNSLock	00NR_G15_054	0	16WP	G15_054	FROM->TO	GR ISLD-LNX3345.00 - GRAND ISLAND 345KV CKT Z	720	720	0.05581	100.8196	STEGALL - VICTORY HILL 230KV CKT 1
FDNS	00NR_G15_054	0	16WP	G15_054	FROM->TO	GR ISLD-LNX3345.00 - GRAND ISLAND 345KV CKT Z	720	720	0.05539	100.8195	CLKREACT5 161.00 - CRYSTLK5 161.00 161KV CKT 1
FDNS	00NR_G15_054	0	16WP	G15_054	FROM->TO	GR ISLD-LNX3345.00 - GRAND ISLAND 345KV CKT Z	720	720	0.05581	100.8172	VICTORY HILL (VICTORYHL T1) 230/115/13.8KV TRANSFORMER CKT 1
FDNS	00NR_G15_054	0	16WP	G15_054	FROM->TO	GR ISLD-LNX3345.00 - GRAND ISLAND 345KV CKT Z	720	720	0.05581	100.8172	VICTORY HILL (VICTORYHL T1) 230/115/13.8KV TRANSFORMER CKT 1
FDNS	00NR_G15_054	0	16WP	G15_054	FROM->TO	GR ISLD-LNX3345.00 - GRAND ISLAND 345KV CKT Z	720	720	0.05539	100.8146	GEN562003 1-G11_027_3 0.6900
FDNS	00NR_G15_054	0	16WP	G15_054	FROM->TO	GR ISLD-LNX3345.00 - GRAND ISLAND 345KV CKT Z	720	720	0.05539	100.8094	GEN620115 1-HRDLKGEN 0.6000
FDNS	00NR_G15_054	0	16WP	G15_054	FROM->TO	GR ISLD-LNX3345.00 - GRAND ISLAND 345KV CKT Z	720	720	0.05565	100.7992	LARAMIE RIVER - STEGALL 345KV CKT 1
FDNS	00NR_G15_054	0	16WP	G15_054	FROM->TO	GR ISLD-LNX3345.00 - GRAND ISLAND 345KV CKT Z	720	720	0.05539	100.7809	GEN672340 1-QUEEN ELIZABETH GENERATOR 1
FDNS	00NR_G15_054	0	16WP	G15_054	FROM->TO	GR ISLD-LNX3345.00 - GRAND ISLAND 345KV CKT Z	720	720	0.05539	100.7807	GEN600013 3-BLACK DOG GEN 3
FDNS	00NR_G15_054	0	16WP	G15_054	FROM->TO	GR ISLD-LNX3345.00 - GRAND ISLAND 345KV CKT Z	720	720	0.05539	100.7748	MITCHLCO3 345.00 345/34.5KV TRANSFORMER CKT 1
FDNS	00NR_G15_054	0	16WP	G15_054	FROM->TO	GR ISLD-LNX3345.00 - GRAND ISLAND 345KV CKT Z	720	720	0.05546	100.7648	ANTELOP-LNX3345.00 - ANTELOPE VALLEY 345KV CKT Z
FDNS	00NR_G15_054	0	16WP	G15_054	FROM->TO	GR ISLD-LNX3345.00 - GRAND ISLAND 345KV CKT Z	720	720	0.05539	100.7626	GEN659018 1-G14_003IS_3 0.6900
FDNS	00NR_G15_054	0	16WP	G15_054	FROM->TO	GR ISLD-LNX3345.00 - GRAND ISLAND 345KV CKT Z	720	720	0.05539	100.7558	GEN672384 1-CENTENNIAL WINDFARM
FDNS	00NR_G15_054	0	16WP	G15_054	FROM->TO	GR ISLD-LNX3345.00 - GRAND ISLAND 345KV CKT Z	720	720	0.05539	100.7542	GEN600125 2-FEP ST G 13.800
FDNS	00NR_G15_054	0	16WP	G15_054	FROM->TO	GR ISLD-LNX3345.00 - GRAND ISLAND 345KV CKT Z	720	720	0.05559	100.7527	P12:115:UMZW:# 172 #: WI IN SD.
FDNS	00NR_G15_054	0	16WP	G15_054	FROM->TO	GR ISLD-LNX3345.00 - GRAND ISLAND 345KV CKT Z	720	720	0.05539	100.7442	LADISH 115/13.2KV TRANSFORMER CKT 1
FDNS	00NR_G15_054	0	16WP	G15_054	FROM->TO	GR ISLD-LNX3345.00 - GRAND ISLAND 345KV CKT Z	720	720	0.05539	100.7426	GEN620323 2-HOOT LAKE 2 GEN
FDNS	00NR_G15_054	0	16WP	G15_054	FROM->TO	GR ISLD-LNX3345.00 - GRAND ISLAND 345KV CKT Z	720	720	0.0556	100.7384	SMOKYHL6 230.00 - SUMMIT 230KV CKT 1
FDNS	00NR_G15_054	0	16WP	G15_054	FROM->TO	GR ISLD-LNX3345.00 - GRAND ISLAND 345KV CKT Z	720	720	0.05539	100.732	GEN659354 1-DEERCREK STG18.000
FDNS	00NR_G15_054	0	16WP	G15_054	FROM->TO	GR ISLD-LNX3345.00 - GRAND ISLAND 345KV CKT Z	720	720	0.05539	100.7257	GEN657964 1-ASH2GEN9 0.5750
FDNS	00NR_G15_054	0	16WP	G15_054	FROM->TO	GR ISLD-LNX3345.00 - GRAND ISLAND 345KV CKT Z	720	720	0.05689	100.718	AXTELL - PAULINE 345KV CKT 1
FDNS	00NR_G15_054	0	16WP	G15_054	FROM->TO	GR ISLD-LNX3345.00 - GRAND ISLAND 345KV CKT Z	720	720	0.05539	100.7143	GEN652546 1-FT RANDAL
FDNS	00NR_G15_054	0	16WP	G15_054	FROM->TO	GR ISLD-LNX3345.00 - GRAND ISLAND 345KV CKT Z	720	720	0.05554	100.7012	FALLOW 3 345.00 - POTTCO 3 345.00 345KV CKT 1
FDNS	00NR_G15_054	0	16WP	G15_054	FROM->TO	GR ISLD-LNX3345.00 - GRAND ISLAND 345KV CKT Z	720	720	0.05759	100.6984	CENTRAL CITY - GRAND ISLAND 115KV CKT 1
FDNS	00NR_G15_054	0	16WP	G15_054	FROM->TO	GR ISLD-LNX3345.00 - GRAND ISLAND 345KV CKT Z	720	720	0.05539	100.6935	GEN635213 3-NEAL UNIT 3
FDNS	00NR_G15_054	0	16WP	G15_054	FROM->TO	GR ISLD-LNX3345.00 - GRAND ISLAND 345KV CKT Z	720	720	0.05539	100.6899	GEN600018 S-LS POWER STEAM
FDNS	00NR_G15_054	0	16WP	G15_054	FROM->TO	GR ISLD-LNX3345.00 - GRAND ISLAND 345KV CKT Z	720	720	0.05539	100.6865	GEN659290 1-EDGECOL
FDNS	00NR_G15_054	0	16WP	G15_054	FROM->TO	GR ISLD-LNX3345.00 - GRAND ISLAND 345KV CKT Z	720	720	0.05567	100.6862	7MAYWOOD 345.00 - 7SPENCER 345.00 345KV CKT 1
FDNS	00NR_G15_054	0	16WP	G15_054	FROM->TO	GR ISLD-LNX3345.00 - GRAND ISLAND 345KV CKT Z	720	720	0.05567	100.6856	7MONTGMRY 345.00 - 7SPENCER 345.00 345KV CKT 1
FDNS	00NR_G15_054	0	16WP	G15_054	FROM->TO	GR ISLD-LNX3345.00 - GRAND ISLAND 345KV CKT Z	720	720	0.05539	100.6832	GEN652548 5-FT RANDAL
FDNS	00NR_G15_054	0	16WP	G15_054	FROM->TO	GR ISLD-LNX3345.00 - GRAND ISLAND 345KV CKT Z	720	720	0.05539	100.6832	GEN652549 7-FT RANDAL
FDNS	00NR_G15_054	0	16WP	G15_054	FROM->TO	GR ISLD-LNX3345.00 - GRAND ISLAND 345KV CKT Z	720	720	0.05539	100.6791	GEN652547 3-FT RANDAL
FDNS	00NR_G15_054	0	16WP	G15_054	FROM->TO	GR ISLD-LNX3345.00 - GRAND ISLAND 345KV CKT Z	720	720	0.05539	100.679	G830_SUB 115.00 - GRE-MCHENRY7115.00 115KV CKT 1
FDNS	00NR_G15_054	0	16WP	G15_054	FROM->TO	GR ISLD-LNX3345.00 - GRAND ISLAND 345KV CKT Z	720	720	0.05539	100.6776	GEN590010 1-ERCOT EQUIVALENCE
FDNS	00NR_G15_054	0	16WP	G15_054	FROM->TO	GR ISLD-LNX3345.00 - GRAND ISLAND 345KV CKT Z	720	720	0.05539	100.6673	G830_SUB 115.00 115/34.5KV TRANSFORMER CKT 1
FDNS	00NR_G15_054	0	16WP	G15_054	FROM->TO	GR ISLD-LNX3345.00 - GRAND ISLAND 345KV CKT Z	720	720	0.05539	100.6624	GEN652410 3-FT PECK
FDNS	00NR_G15_054	0	16WP	G15_054	FROM->TO	GR ISLD-LNX3345.00 - GRAND ISLAND 345KV CKT Z	720	720	0.05563	100.6593	POST ROCK (POSTROCK T1) 345/230/13.8KV TRANSFORMER CKT 1
FDNS	00NR_G15_054	0	16WP	G15_054	FROM->TO	GR ISLD-LNX3345.00 - GRAND ISLAND 345KV CKT Z	720	720	0.05539	100.6534	GEN300003 1-THOMAS HILL UNIT 3
FDNS	00NR_G15_054	0	16WP	G15_054	FROM->TO	GR ISLD-LNX3345.00 - GRAND ISLAND 345KV CKT Z	720	720	0.05539	100.6483	GEN590011 2-ERCOT EQUIVALENCE
FDNS	00NR_G15_054	0	16WP	G15_054	FROM->TO	GR ISLD-LNX3345.00 - GRAND ISLAND 345KV CKT Z	720	720	0.05539	100.6363	EASTDC - ERCOT EQUIVALENCE 345KV CKT 1
FDNS	00NR_G15_054	0	16WP	G15_054	FROM->TO	GR ISLD-LNX3345.00 - GRAND ISLAND 345KV CKT Z	720	720	0.05689	100.6362	SUB 3454 - WAGENER 345KV CKT 1
FDNS	00NR_G15_054	0	16WP	G15_054	FROM->TO	GR ISLD-LNX3345.00 - GRAND ISLAND 345KV CKT Z	720	720	0.05689	100.6362	SUB 3454 - WAGENER 345KV CKT 1
FDNS	00NR_G15_054	0	16WP	G15_054	FROM->TO	GR ISLD-LNX3345.00 - GRAND ISLAND 345KV CKT Z	720	720	0.05539	100.6281	GEN672347 1-CORY COGEN GENERATOR 1 GT1
FDNS	00NR_G15_054	0	16WP	G15_054	FROM->TO	GR ISLD-LNX3345.00 - GRAND ISLAND 345KV CKT Z	720	720	0.05539	100.628	GEN672348 2-CORY COGEN GENERATOR 2 GT2
FDNS	00NR_G15_054	0	16WP	G15_054	FROM->TO	GR ISLD-LNX3345.00 - GRAND ISLAND 345KV CKT Z	720	720	0.05539	100.6231	GEN672350 1-NIPAWIN GENERATOR 1
FDNS	00NR_G15_054	0	16WP	G15_054	FROM->TO	GR ISLD-LNX3345.00 - GRAND ISLAND 345KV CKT Z	720	720	0.05539	100.6231	GEN672351 2-NIPAWIN GENERATOR 2
FDNS	00NR_G15_054	0	16WP	G15_054	FROM->TO	GR ISLD-LNX3345.00 - GRAND ISLAND 345KV CKT Z	720	720	0.05539	100.6231	GEN672352 3-NIPAWIN GENERATOR 3
FDNS	00NR_G15_054	0	16WP	G15_054	FROM->TO	GR ISLD-LNX3345.00 - GRAND ISLAND 345KV CKT Z	720	720	0.06817	100.6184	COLUMWEST - KELLY 230KV CKT 1
FDNS	00NR_G15_054	0	16WP	G15_054	FROM->TO	GR ISLD-LNX3345.00 - GRAND ISLAND 345KV CKT Z	720	720	0.05544	100.6069	MADISON COUNTY - RLHILLS3 345.00 345KV CKT 1
FDNS	00NR_G15_054	0	16WP	G15_054	FROM->TO	GR ISLD-LNX3345.00 - GRAND ISLAND 345KV CKT Z	720	720	0.05539	100.6031	GEN657600 1-L1GEN3 9 0.5750
FDNS	00NR_G15_054	0	16WP	G15_054	FROM->TO	GR ISLD-LNX3345.00 - GRAND ISLAND 345KV CKT Z	720	720	0.05539	100.6026	GEN652414 4-FT PECK
FDNS	00NR_G15_054	0	16WP	G15_054	FROM->TO	GR ISLD-LNX3345.00 - GRAND ISLAND 345KV CKT Z	720	720	0.05539	100.6026	GEN652415 5-FT PECK
FDNS	00NR_G15_054	0	16WP	G15_054	FROM->TO	GR ISLD-LNX3345.00 - GRAND ISLAND 345KV CKT Z	720	720	0.05554	100.5866	G11_051T 345.00 - WOODWARD DISTRICT EHV 345KV CKT 1

SOLUTION	GROUP	SCENARIO	SEASON	SOURCE	DIRECTION	MONITORED ELEMENT	RATEA (MVA)	RATEB(MVA)	TDF	TC%LOADING (% MVA)	CONTINGENCY
FDNS	00NR_G15_054	0	16WP	G15_054	FROM->TO	GR ISLD-LNX3345.00 - GRAND ISLAND 345KV CKT Z	720	720	0.05539	100.5844	GEN600012 2-BLACK DOG GEN 2
FDNS	00NR_G15_054	0	16WP	G15_054	FROM->TO	GR ISLD-LNX3345.00 - GRAND ISLAND 345KV CKT Z	720	720	0.05539	100.575	GEN660001 2-ABERDEEN SIEBRECHT
FDNS	00NR_G15_054	0	16WP	G15_054	FROM->TO	GR ISLD-LNX3345.00 - GRAND ISLAND 345KV CKT Z	720	720	0.05539	100.5707	GEN652345 W-G07_023IS_2 0.6900
FDNS	00NR_G15_054	0	16WP	G15_054	FROM->TO	GR ISLD-LNX3345.00 - GRAND ISLAND 345KV CKT Z	720	720	0.05539	100.5688	GEN629074 1-ARNOLD LOWSIDE OF GSU XFMR
FDNS	00NR_G15_054	0	16WP	G15_054	FROM->TO	GR ISLD-LNX3345.00 - GRAND ISLAND 345KV CKT Z	720	720	0.05539	100.5576	GEN615032 2-PLEASANT VALLEY
FDNS	00NR_G15_054	0	16WP	G15_054	FROM->TO	GR ISLD-LNX3345.00 - GRAND ISLAND 345KV CKT Z	720	720	0.05539	100.5473	GEN672367 1-MERIDIAN GENERATOR 1 GT1
FDNS	00NR_G15_054	0	16WP	G15_054	FROM->TO	GR ISLD-LNX3345.00 - GRAND ISLAND 345KV CKT Z	720	720	0.05539	100.5473	GEN672368 2-MERIDIAN GENERATOR 2 GT2
FDNS	00NR_G15_054	0	16WP	G15_054	FROM->TO	GR ISLD-LNX3345.00 - GRAND ISLAND 345KV CKT Z	720	720	0.05539	100.5464	GEN672349 3-CORY COGEN GENERATOR 3 ST
FDNS	00NR_G15_054	0	16WP	G15_054	FROM->TO	GR ISLD-LNX3345.00 - GRAND ISLAND 345KV CKT Z	720	720	0.05539	100.5363	GEN672339 16-QE 16G 13.800
FDNS	00NR_G15_054	0	16WP	G15_054	FROM->TO	GR ISLD-LNX3345.00 - GRAND ISLAND 345KV CKT Z	720	720	0.05539	100.5363	GEN672342 3-QUEEN ELIZABETH GENERATOR 3
FDNS	00NR_G15_054	0	16WP	G15_054	FROM->TO	GR ISLD-LNX3345.00 - GRAND ISLAND 345KV CKT Z	720	720	0.0543	100.5359	HIGHLND 3 345.00 - OBRIEN 3 345.00 345KV CKT 1
FDNS	00NR_G15_054	0	16WP	G15_054	FROM->TO	GR ISLD-LNX3345.00 - GRAND ISLAND 345KV CKT Z	720	720	0.05539	100.5326	GEN300007 1-NEW MADRID UNIT 2
FDNS	00NR_G15_054	0	16WP	G15_054	FROM->TO	GR ISLD-LNX3345.00 - GRAND ISLAND 345KV CKT Z	720	720	0.05539	100.5272	GEN300006 1-NEW MADRID UNIT 1
FDNS	00NR_G15_054	0	16WP	G15_054	FROM->TO	GR ISLD-LNX3345.00 - GRAND ISLAND 345KV CKT Z	720	720	0.05539	100.5263	GEN620324 3-HOOT LAKE 3 GEN
FDNS	00NR_G15_054	0	16WP	G15_054	FROM->TO	GR ISLD-LNX3345.00 - GRAND ISLAND 345KV CKT Z	720	720	0.0572	100.5185	GERALD GENTLEMAN STATION - RED WILLOW 345KV CKT 1
FDNS	00NR_G15_054	0	16WP	G15_054	FROM->TO	GR ISLD-LNX3345.00 - GRAND ISLAND 345KV CKT Z	720	720	0.05696	100.5067	103RD & ROKEBY - MOORE 345KV CKT 1
FDNS	00NR_G15_054	0	16WP	G15_054	FROM->TO	GR ISLD-LNX3345.00 - GRAND ISLAND 345KV CKT Z	720	720	0.05696	100.5067	103RD & ROKEBY - MOORE 345KV CKT 1
FDNS	00NR_G15_054	0	16WP	G15_054	FROM->TO	GR ISLD-LNX3345.00 - GRAND ISLAND 345KV CKT Z	720	720	0.05539	100.5062	GEN 11104 1-J262_GEN 0.6000
FDNS	00NR_G15_054	0	16WP	G15_054	FROM->TO	GR ISLD-LNX3345.00 - GRAND ISLAND 345KV CKT Z	720	720	0.05539	100.5062	GEN 11108 1-J263_GEN 0.6000
FDNS	00NR_G15_054	0	16WP	G15_054	FROM->TO	GR ISLD-LNX3345.00 - GRAND ISLAND 345KV CKT Z	720	720	0.05536	100.4912	GLENHAM - L3 HAWDON 230KV CKT 1
FDNS	00NR_G15_054	0	16WP	G15_054	FROM->TO	GR ISLD-LNX3345.00 - GRAND ISLAND 345KV CKT Z	720	720	0.05554	100.4717	FALLOW 3 345.00 - GRIMES 345KV CKT 1
FDNS	00NR_G15_054	0	16WP	G15_054	FROM->TO	GR ISLD-LNX3345.00 - GRAND ISLAND 345KV CKT Z	720	720	0.05539	100.4636	GEN600050 1-FEP
FDNS	00NR_G15_054	0	16WP	G15_054	FROM->TO	GR ISLD-LNX3345.00 - GRAND ISLAND 345KV CKT Z	720	720	0.05757	100.457	ATCHSNT3 345.00 - COOPER 345KV CKT 1
FDNS	00NR_G15_054	0	16WP	G15_054	FROM->TO	GR ISLD-LNX3345.00 - GRAND ISLAND 345KV CKT Z	720	720	0.05757	100.457	ATCHSNT3 345.00 - COOPER 345KV CKT 1
FDNS	00NR_G15_054	0	16WP	G15_054	FROM->TO	GR ISLD-LNX3345.00 - GRAND ISLAND 345KV CKT Z	720	720	0.05323	100.4533	COOPER - MOORE 345KV CKT 1
FDNS	00NR_G15_054	0	16WP	G15_054	FROM->TO	GR ISLD-LNX3345.00 - GRAND ISLAND 345KV CKT Z	720	720	0.05539	100.4523	GEN659273 2-GROTON SYNC COND
FDNS	00NR_G15_054	0	16WP	G15_054	FROM->TO	GR ISLD-LNX3345.00 - GRAND ISLAND 345KV CKT Z	720	720	0.05539	100.4523	GEN659294 1-WILTONCOL9
FDNS	00NR_G15_054	0	16WP	G15_054	FROM->TO	GR ISLD-LNX3345.00 - GRAND ISLAND 345KV CKT Z	720	720	0.05539	100.4455	CENTER 230/22.0KV TRANSFORMER CKT 1
FDNS	00NR_G15_054	0	16WP	G15_054	FROM->TO	GR ISLD-LNX3345.00 - GRAND ISLAND 345KV CKT Z	720	720	0.05554	100.4382	G11_051T 345.00 - TATONGA7 345.00 345KV CKT 1
FDNS	00NR_G15_054	0	16WP	G15_054	FROM->TO	GR ISLD-LNX3345.00 - GRAND ISLAND 345KV CKT Z	720	720	0.05539	100.4185	GEN672393 2-NBECST2G 13.800
FDNS	00NR_G15_054	0	16WP	G15_054	FROM->TO	GR ISLD-LNX3345.00 - GRAND ISLAND 345KV CKT Z	720	720	0.05539	100.4174	GEN629072 4-LANSING GENERATOR FOR UNITS NO4 EIA CODE 1
FDNS	00NR_G15_054	0	16WP	G15_054	FROM->TO	GR ISLD-LNX3345.00 - GRAND ISLAND 345KV CKT Z	720	720	0.05539	100.3819	GEN600065 7-HIGH BRIDGE
FDNS	00NR_G15_054	0	16WP	G15_054	FROM->TO	GR ISLD-LNX3345.00 - GRAND ISLAND 345KV CKT Z	720	720	0.05539	100.3819	GEN600066 8-HIGH BRIDGE
FDNS	00NR_G15_054	0	16WP	G15_054	FROM->TO	GR ISLD-LNX3345.00 - GRAND ISLAND 345KV CKT Z	720	720	0.05539	100.3731	GEN659192 6-LYNN
FDNS	00NR_G15_054	0	16WP	G15_054	FROM->TO	GR ISLD-LNX3345.00 - GRAND ISLAND 345KV CKT Z	720	720	0.05539	100.372	GEN659162 4-RED WLCK
FDNS	00NR_G15_054	0	16WP	G15_054	FROM->TO	GR ISLD-LNX3345.00 - GRAND ISLAND 345KV CKT Z	720	720	0.05539	100.372	GEN659163 5-BLACK WDCK
FDNS	00NR_G15_054	0	16WP	G15_054	FROM->TO	GR ISLD-LNX3345.00 - GRAND ISLAND 345KV CKT Z	720	720	0.05539	100.3598	GEN657985 1-ASH1GEN9 0.5750
FDNS	00NR_G15_054	0	16WP	G15_054	FROM->TO	GR ISLD-LNX3345.00 - GRAND ISLAND 345KV CKT Z	720	720	0.05539	100.3593	LANSING WEST 161/22.0KV TRANSFORMER CKT 1
FDNS	00NR_G15_054	0	16WP	G15_054	FROM->TO	GR ISLD-LNX3345.00 - GRAND ISLAND 345KV CKT Z	720	720	0.05539	100.3423	GEN652906 1-G09_006IS_3 0.6900
FDNS	00NR_G15_054	0	16WP	G15_054	FROM->TO	GR ISLD-LNX3345.00 - GRAND ISLAND 345KV CKT Z	720	720	0.05539	100.3339	GEN635214 4-NEAL UNIT 4
FDNS	00NR_G15_054	0	16WP	G15_054	FROM->TO	GR ISLD-LNX3345.00 - GRAND ISLAND 345KV CKT Z	720	720	0.05539	100.3179	GEN 10648 1-G830_GEN 0.6900
FDNS	00NR_G15_054	0	16WP	G15_054	FROM->TO	GR ISLD-LNX3345.00 - GRAND ISLAND 345KV CKT Z	720	720	0.05644	100.3163	AXTELL - POST ROCK 345KV CKT 1
FDNS	00NR_G15_054	0	16WP	G15_054	FROM->TO	GR ISLD-LNX3345.00 - GRAND ISLAND 345KV CKT Z	720	720	0.05539	100.298	GEN600067 9-HIGH BRIDGE
FDNS	00NR_G15_054	0	16WP	G15_054	FROM->TO	GR ISLD-LNX3345.00 - GRAND ISLAND 345KV CKT Z	720	720	0.05539	100.2955	GEN600014 4-BLACK DOG GEN 4
FDNS	00NR_G15_054	0	16WP	G15_054	FROM->TO	GR ISLD-LNX3345.00 - GRAND ISLAND 345KV CKT Z	720	720	0.05539	100.2952	GEN600070 9-RIVER SIDE
FDNS	00NR_G15_054	0	16WP	G15_054	FROM->TO	GR ISLD-LNX3345.00 - GRAND ISLAND 345KV CKT Z	720	720	0.05539	100.2951	GEN600071 10-RIVER SIDE
FDNS	00NR_G15_054	0	16WP	G15_054	FROM->TO	GR ISLD-LNX3345.00 - GRAND ISLAND 345KV CKT Z	720	720	0.05539	100.2917	GEN600011 5-BLACK DOG GEN 1
FDNS	00NR_G15_054	0	16WP	G15_054	FROM->TO	GR ISLD-LNX3345.00 - GRAND ISLAND 345KV CKT Z	720	720	0.05539	100.2816	GEN600007 7-RIVERSIDE GEN 7
FDNS	00NR_G15_054	0	16WP	G15_054	FROM->TO	GR ISLD-LNX3345.00 - GRAND ISLAND 345KV CKT Z	720	720	0.05539	100.2602	GEN615015 1-GRE-SPRITWDG13.200
FDNS	00NR_G15_054	0	16WP	G15_054	FROM->TO	GR ISLD-LNX3345.00 - GRAND ISLAND 345KV CKT Z	720	720	0.05757	100.2438	ATCHSNT3 345.00 - BOONEVILLE 345KV CKT 1
FDNS	00NR_G15_054	0	16WP	G15_054	FROM->TO	GR ISLD-LNX3345.00 - GRAND ISLAND 345KV CKT Z	720	720	0.05539	100.2326	GEN660016 1-B_H WIND 0.7000
FDNS	00NR_G15_054	0	16WP	G15_054	FROM->TO	GR ISLD-LNX3345.00 - GRAND ISLAND 345KV CKT Z	720	720	0.05539	100.2294	GEN600017 C-LS POWER CT
FDNS	00NR_G15_054	0	16WP	G15_054	FROM->TO	GR ISLD-LNX3345.00 - GRAND ISLAND 345KV CKT Z	720	720	0.05539	100.2287	GEN652907 1-G09_007IS_3 0.6900
FDNS	00NR_G15_054	0	16WP	G15_054	FROM->TO	GR ISLD-LNX3345.00 - GRAND ISLAND 345KV CKT Z	720	720	0.05539	100.2286	GEN615052 1-CAMBRIDGE GENERATING STATION
FDNS	00NR_G15_054	0	16WP	G15_054	FROM->TO	GR ISLD-LNX3345.00 - GRAND ISLAND 345KV CKT Z	720	720	0.05539	100.1875	GEN681522 3-GENOA 3
FDNS	00NR_G15_054	0	16WP	G15_054	FROM->TO	GR ISLD-LNX3345.00 - GRAND ISLAND 345KV CKT Z	720	720	0.05554	100.1746	MATHWSN7 345.00 - TATONGA7 345.00 345KV CKT 1
FDNS	00NR_G15_054	0	16WP	G15_054	FROM->TO	GR ISLD-LNX3345.00 - GRAND ISLAND 345KV CKT Z	720	720	0.05539	100.158	GEN662101 1-WESSINGTON190.5750
FDNS	00NR_G15_054	0	16WP	G15_054	FROM->TO	GR ISLD-LNX3345.00 - GRAND ISLAND 345KV CKT Z	720	720	0.05885	100.0559	MINGO - RED WILLOW 345KV CKT 1
FDNS	00NR_G15_054	0	16WP	G15_054	FROM->TO	GR ISLD-LNX3345.00 - GRAND ISLAND 345KV CKT Z	720	720	0.05885	100.0559	MINGO - RED WILLOW 345KV CKT 1
FDNS	00NR_G15_054	0	16WP	G15_054	FROM->TO	GR ISLD-LNX3345.00 - GRAND ISLAND 345KV CKT Z	720	720	0.05539	100	GEN615021 1-GRE-ER 14G 16.000
FDNS	00NR_G15_054	0	16WP	G15_054	FROM->TO	GR ISLD-LNX3345.00 - GRAND ISLAND 345KV CKT Z	720	720	0.05539	100	GEN659353 1-DEERCREK CTG18.000
FDNS	00NR_G15_054	0	16WP	G15_054	FROM->TO	GR ISLD-LNX3345.00 - GRAND ISLAND 345KV CKT Z	720	720	0.05539	100	GEN910006 1-G12_012IS_3 0.6900
FDNS	00NR_G15_054	0	16WP	G15_054	FROM->TO	GR ISLD-LNX3345.00 - GRAND ISLAND 345KV CKT Z	720	720	0.05539	99.9	GEN672303 3-BOUNDARY DAM GENERATOR 3
FDNS	00NR_G15_054	0	16WP	G15_054	FROM->TO	GR ISLD-LNX3345.00 - GRAND ISLAND 345KV CKT Z	720	720	0.05539	99.9	GEN672304 4-BOUNDARY DAM GENERATOR 4
FDNS	00NR_G15_054	0	16WP	G15_054	FROM->TO	GR ISLD-LNX3345.00 - GRAND ISLAND 345KV CKT Z	720	720	0.05539	99.9	GEN672305 5-BOUNDARY DAM GENERATOR 5
FDNS	00NR_G15_054	0	16WP	G15_054	FROM->TO	GR ISLD-LNX3345.00 - GRAND ISLAND 345KV CKT Z	720	720	0.05904	99.8	MOORE - PAULINE 345KV CKT 1
FDNS	00NR_G15_054	0	16WP	G15_054	FROM->TO	GR ISLD-LNX3345.00 - GRAND ISLAND 345KV CKT Z	720	720	0.05539	99.8	BISONMP4 230.00 - SQUARE BUTTE 230KV CKT 1
FDNS	00NR_G15_054	0	16WP	G15_054	FROM->TO	GR ISLD-LNX3345.00 - GRAND ISLAND 345KV CKT Z	720	720	0.05539	99.7	GEN652460 4-GARRISON
FDNS	00NR_G15_054	0	16WP	G15_054	FROM->TO	GR ISLD-LNX3345.00 - GRAND ISLAND 345KV CKT Z	720	720	0.05539	99.7	GEN652461 5-GARRISON
FDNS	00NR_G15_054	0	16WP	G15_054	FROM->TO	GR ISLD-LNX3345.00 - GRAND ISLAND 345KV CKT Z	720	720	0.05539	99.7	GEN672392 1-NBECGT1G 18.000
FDNS	00NR_G15_054	0	16WP	G15_054	FROM->TO	GR ISLD-LNX3345.00 - GRAND ISLAND 345KV CKT Z	720	720	0.05539	99.6	COYOTE 345/24.0KV TRANSFORMER CKT 1
FDNS	00NR_G15_054	0	16WP	G15_054	FROM->TO	GR ISLD-LNX3345.00 - GRAND ISLAND 345KV CKT Z	720	720	0.05539	99.6	GEN652457 1-GARRISON
FDNS	00NR_G15_054	0	16WP	G15_054	FROM->TO	GR ISLD-LNX3345.00 - GRAND ISLAND 345KV CKT Z	720	720	0.05539	99.6	GEN652458 2-GARRISON

SOLUTION	GROUP	SCENARIO	SEASON	SOURCE	DIRECTION	MONITORED ELEMENT	RATEA (MVA)	RATEB(MVA)	TDF	TC%LOADING (% MVA)	CONTINGENCY
FDNS	00NR_G15_054	0	16WP	G15_054	FROM->TO	GR ISLD-LNX3345.00 - GRAND ISLAND 345KV CKT Z	720	720	0.05539	99.6	GEN652459 3-GARRISON
FDNS	00NR_G15_054	0	16WP	G15_054	FROM->TO	GR ISLD-LNX3345.00 - GRAND ISLAND 345KV CKT Z	720	720	0.05539	99.6	GEN652542 1-BIG BEND
FDNS	00NR_G15_054	0	16WP	G15_054	FROM->TO	GR ISLD-LNX3345.00 - GRAND ISLAND 345KV CKT Z	720	720	0.05539	99.6	GEN659010 4-G07_027IS_2 0.6900
FDNS	00NR_G15_054	0	16WP	G15_054	FROM->TO	GR ISLD-LNX3345.00 - GRAND ISLAND 345KV CKT Z	720	720	0.05539	99.6	GEN659194 1-NDPRAIRWND1W0.6900
FDNS	00NR_G15_054	0	16WP	G15_054	FROM->TO	GR ISLD-LNX3345.00 - GRAND ISLAND 345KV CKT Z	720	720	0.06817	99.5	COLUMWEST - GRAND ISLAND 230KV CKT 1
FDNS	00NR_G15_054	0	16WP	G15_054	FROM->TO	GR ISLD-LNX3345.00 - GRAND ISLAND 345KV CKT Z	720	720	0.05539	99.5	GEN659403 1-NDSUNFLWR W0.6900
FDNS	00NR_G15_054	0	16WP	G15_054	FROM->TO	GR ISLD-LNX3345.00 - GRAND ISLAND 345KV CKT Z	720	720	0.05539	99.5	GR ISLD-LNX3345.00 345KV SWITCHED SHUNT
FDNS	00NR_G15_054	0	16WP	G15_054	FROM->TO	GR ISLD-LNX3345.00 - GRAND ISLAND 345KV CKT Z	720	720	0.05539	99.5	SQUARE BUTTE - YNG2 4 230.00 230KV CKT 1
FDNS	00NR_G15_054	0	16WP	G15_054	FROM->TO	GR ISLD-LNX3345.00 - GRAND ISLAND 345KV CKT Z	720	720	0.05539	99.5	YNG2 4 230.00 230/20.0KV TRANSFORMER CKT 1
FDNSLock	00NR_G15_054	0	16WP	G15_054	FROM->TO	GR ISLD-LNX3345.00 - GRAND ISLAND 345KV CKT Z	720	720	0.05539	99.5	GR ISLD-LNX3345.00 345KV SWITCHED SHUNT
FDNS	00NR_G15_054	0	17SP	G15_054	TO->FROM	GR ISLD-LNX3345.00 - HOLT.CO3 345.00 345KV CKT 1	720	720	0.05758	136.9253	KELLY - MEADOWGROVE4230.00 230KV CKT 1
FDNS	00NR_G15_054	0	17SP	G15_054	TO->FROM	GR ISLD-LNX3345.00 - HOLT.CO3 345.00 345KV CKT 1	720	720	0.05529	136.7449	P12:230:UMZB:# 116 #: ST IN SD. WSG-ST-VH
FDNS	00NR_G15_054	0	17SP	G15_054	TO->FROM	GR ISLD-LNX3345.00 - HOLT.CO3 345.00 345KV CKT 1	720	720	0.05531	135.7263	STORLA - WESSINGTON 230KV CKT 1
FDNS	00NR_G15_054	0	17SP	G15_054	TO->FROM	GR ISLD-LNX3345.00 - HOLT.CO3 345.00 345KV CKT 1	720	720	0.05614	134.751	WATERTN-LNX3345.00 - WHITE 345KV CKT 1
FDNS	00NR_G15_054	0	17SP	G15_054	TO->FROM	GR ISLD-LNX3345.00 - HOLT.CO3 345.00 345KV CKT 1	720	720	0.05657	134.6097	G09_001IST 345.00 - WATERTOWN 345KV CKT 1
FDNS	00NR_G15_054	0	17SP	G15_054	TO->FROM	GR ISLD-LNX3345.00 - HOLT.CO3 345.00 345KV CKT 1	720	720	0.05614	134.4934	WATERTN-LNX3345.00 - WATERTOWN 345KV CKT Z
FDNS	00NR_G15_054	0	17SP	G15_054	TO->FROM	GR ISLD-LNX3345.00 - HOLT.CO3 345.00 345KV CKT 1	720	720	0.05614	134.4238	P12:345:UMZW:# 1747 #: WT2 IN SD. WT2-WHT LINE FAULT
FDNS	00NR_G15_054	0	17SP	G15_054	TO->FROM	GR ISLD-LNX3345.00 - HOLT.CO3 345.00 345KV CKT 1	720	720	0.05586	134.3952	HANLON - STORLA 230KV CKT 1
FDNS	00NR_G15_054	0	17SP	G15_054	TO->FROM	GR ISLD-LNX3345.00 - HOLT.CO3 345.00 345KV CKT 1	720	720	0.05521	134.0557	FT THOMPSON - LETCHER 230KV CKT 1
FDNS	00NR_G15_054	0	17SP	G15_054	TO->FROM	GR ISLD-LNX3345.00 - HOLT.CO3 345.00 345KV CKT 1	720	720	0.05521	134.0557	FT THOMPSON - LETCHER 230KV CKT 1
FDNS	00NR_G15_054	0	17SP	G15_054	TO->FROM	GR ISLD-LNX3345.00 - HOLT.CO3 345.00 345KV CKT 1	720	720	0.05677	132.992	BUFFALO - JAMESTOWN 345KV CKT 1
FDNS	00NR_G15_054	0	17SP	G15_054	TO->FROM	GR ISLD-LNX3345.00 - HOLT.CO3 345.00 345KV CKT 1	720	720	0.05355	132.7643	FT RANDAL - FT THOMPSON 230KV CKT 1
FDNS	00NR_G15_054	0	17SP	G15_054	TO->FROM	GR ISLD-LNX3345.00 - HOLT.CO3 345.00 345KV CKT 1	720	720	0.05355	132.7643	FT RANDAL - FT THOMPSON 230KV CKT 1
FDNS	00NR_G15_054	0	17SP	G15_054	TO->FROM	GR ISLD-LNX3345.00 - HOLT.CO3 345.00 345KV CKT 1	720	720	0.05363	132.7136	FT RANDAL - G12_009IST 230.00 230KV CKT 1
FDNS	00NR_G15_054	0	17SP	G15_054	TO->FROM	GR ISLD-LNX3345.00 - HOLT.CO3 345.00 345KV CKT 1	720	720	0.05363	132.6107	FT THOMPSON - LAKE PLATT 230KV CKT 1
FDNS	00NR_G15_054	0	17SP	G15_054	TO->FROM	GR ISLD-LNX3345.00 - HOLT.CO3 345.00 345KV CKT 1	720	720	0.05363	132.6107	FT THOMPSON - LAKE PLATT 230KV CKT 1
FDNS	00NR_G15_054	0	17SP	G15_054	TO->FROM	GR ISLD-LNX3345.00 - HOLT.CO3 345.00 345KV CKT 1	720	720	0.06492	132.2489	NUNDRWD - WAYSIDE 230KV CKT 1
FDNS	00NR_G15_054	0	17SP	G15_054	TO->FROM	GR ISLD-LNX3345.00 - HOLT.CO3 345.00 345KV CKT 1	720	720	0.05363	132.2331	G12_009IST 230.00 - LAKE PLATT 230KV CKT 1
FDNSLock	00NR_G15_054	0	17SP	G15_054	TO->FROM	GR ISLD-LNX3345.00 - HOLT.CO3 345.00 345KV CKT 1	720	720	0.05678	132.0807	CHISAGO COUNTY - CHISAGO COUNTY 500KV CKT 1
FDNS	00NR_G15_054	0	17SP	G15_054	TO->FROM	GR ISLD-LNX3345.00 - HOLT.CO3 345.00 345KV CKT 1	720	720	0.05681	132.0608	GEN336821 1-GRAND GULF UNIT
FDNS	00NR_G15_054	0	17SP	G15_054	TO->FROM	GR ISLD-LNX3345.00 - HOLT.CO3 345.00 345KV CKT 1	720	720	0.05678	132.0442	CHISAGO COUNTY - FORBES 500KV CKT 1
FDNS	00NR_G15_054	0	17SP	G15_054	TO->FROM	GR ISLD-LNX3345.00 - HOLT.CO3 345.00 345KV CKT 1	720	720	0.05758	131.8861	FT RANDAL - MEADOWGROVE4230.00 230KV CKT 1
FDNS	00NR_G15_054	0	17SP	G15_054	TO->FROM	GR ISLD-LNX3345.00 - HOLT.CO3 345.00 345KV CKT 1	720	720	0.05677	131.8211	CENTER - JAMESTOWN 345KV CKT 1
FDNS	00NR_G15_054	0	17SP	G15_054	TO->FROM	GR ISLD-LNX3345.00 - HOLT.CO3 345.00 345KV CKT 1	720	720	0.05681	131.547	GEN640010 1-GERALD GENTLEMAN STATION UNIT 1
FDNS	00NR_G15_054	0	17SP	G15_054	TO->FROM	GR ISLD-LNX3345.00 - HOLT.CO3 345.00 345KV CKT 1	720	720	0.05681	131.5257	GEN344225 1-1CAL G1 25.000
FDNS	00NR_G15_054	0	17SP	G15_054	TO->FROM	GR ISLD-LNX3345.00 - HOLT.CO3 345.00 345KV CKT 1	720	720	0.05657	131.495	G09_001IST 345.00 - GROTON 345KV CKT 1
FDNS	00NR_G15_054	0	17SP	G15_054	TO->FROM	GR ISLD-LNX3345.00 - HOLT.CO3 345.00 345KV CKT 1	720	720	0.05609	131.4743	LETCHER - SIOUX FALLS 230KV CKT 1
FDNS	00NR_G15_054	0	17SP	G15_054	TO->FROM	GR ISLD-LNX3345.00 - HOLT.CO3 345.00 345KV CKT 1	720	720	0.05854	131.4214	KEYSTONE - SIDNEY1-LNX3345.00 345KV CKT 1
FDNS	00NR_G15_054	0	17SP	G15_054	TO->FROM	GR ISLD-LNX3345.00 - HOLT.CO3 345.00 345KV CKT 1	720	720	0.05679	131.4041	BISON 3 345.00 - BUFFALO 345KV CKT 1
FDNS	00NR_G15_054	0	17SP	G15_054	TO->FROM	GR ISLD-LNX3345.00 - HOLT.CO3 345.00 345KV CKT 1	720	720	0.05854	131.3859	SIDNEY - SIDNEY1-LNX3345.00 345KV CKT Z
FDNS	00NR_G15_054	0	17SP	G15_054	TO->FROM	GR ISLD-LNX3345.00 - HOLT.CO3 345.00 345KV CKT 1	720	720	0.05681	131.3816	GEN635024 4-WALTER SCOTT UNIT 4
FDNS	00NR_G15_054	0	17SP	G15_054	TO->FROM	GR ISLD-LNX3345.00 - HOLT.CO3 345.00 345KV CKT 1	720	720	0.05681	131.2451	GEN337911 1-ARKANSAS NUCLEAR ONE UNIT #2
FDNS	00NR_G15_054	0	17SP	G15_054	TO->FROM	GR ISLD-LNX3345.00 - HOLT.CO3 345.00 345KV CKT 1	720	720	0.05681	131.1928	GEN336153 1-WATERFORD UNIT#3
FDNS	00NR_G15_054	0	17SP	G15_054	TO->FROM	GR ISLD-LNX3345.00 - HOLT.CO3 345.00 345KV CKT 1	720	720	0.05681	131.1217	GEN640011 2-GERALD GENTLEMAN STATION UNIT 2
FDNS	00NR_G15_054	0	17SP	G15_054	TO->FROM	GR ISLD-LNX3345.00 - HOLT.CO3 345.00 345KV CKT 1	720	720	0.05589	130.9677	SPLIT ROCK - WHITE 345KV CKT 1
FDNS	00NR_G15_054	0	17SP	G15_054	TO->FROM	GR ISLD-LNX3345.00 - HOLT.CO3 345.00 345KV CKT 1	720	720	0.05589	130.9677	SPLIT ROCK - WHITE 345KV CKT 1
FDNS	00NR_G15_054	0	17SP	G15_054	TO->FROM	GR ISLD-LNX3345.00 - HOLT.CO3 345.00 345KV CKT 1	720	720	0.05681	130.8518	GEN635023 3-WALTER SCOTT UNIT 3
FDNS	00NR_G15_054	0	17SP	G15_054	TO->FROM	GR ISLD-LNX3345.00 - HOLT.CO3 345.00 345KV CKT 1	720	720	0.05659	130.7922	GROTON-LNX3 345.00 - LELAND1-LNX3345.00 345KV CKT 1
FDNS	00NR_G15_054	0	17SP	G15_054	TO->FROM	GR ISLD-LNX3345.00 - HOLT.CO3 345.00 345KV CKT 1	720	720	0.05681	130.7561	GEN335831 1-RIVERBEND UNIT#1
FDNS	00NR_G15_054	0	17SP	G15_054	TO->FROM	GR ISLD-LNX3345.00 - HOLT.CO3 345.00 345KV CKT 1	720	720	0.05681	130.6607	GEN337910 1-ARKANSAS NUCLEAR ONE UNIT #1
FDNS	00NR_G15_054	0	17SP	G15_054	TO->FROM	GR ISLD-LNX3345.00 - HOLT.CO3 345.00 345KV CKT 1	720	720	0.05659	130.6282	P12:345:UMZB:# 109 #: LOS GRT IN ND. LOS GRT
FDNS	00NR_G15_054	0	17SP	G15_054	TO->FROM	GR ISLD-LNX3345.00 - HOLT.CO3 345.00 345KV CKT 1	720	720	0.0645	130.5481	RAUN - SUB 3451 FT CAL 345KV CKT 1
FDNS	00NR_G15_054	0	17SP	G15_054	TO->FROM	GR ISLD-LNX3345.00 - HOLT.CO3 345.00 345KV CKT 1	720	720	0.0645	130.5481	RAUN - SUB 3451 FT CAL 345KV CKT 1
FDNS	00NR_G15_054	0	17SP	G15_054	TO->FROM	GR ISLD-LNX3345.00 - HOLT.CO3 345.00 345KV CKT 1	720	720	0.05659	130.5441	GROTON - GROTON-LNX3 345.00 345KV CKT Z
FDNS	00NR_G15_054	0	17SP	G15_054	TO->FROM	GR ISLD-LNX3345.00 - HOLT.CO3 345.00 345KV CKT 1	720	720	0.05659	130.5326	LELAND OLDS - LELAND1-LNX3345.00 345KV CKT Z
FDNS	00NR_G15_054	0	17SP	G15_054	TO->FROM	GR ISLD-LNX3345.00 - HOLT.CO3 345.00 345KV CKT 1	720	720	0.05692	130.4454	FT RANDAL - SIOUX CITY 230KV CKT 1
FDNS	00NR_G15_054	0	17SP	G15_054	TO->FROM	GR ISLD-LNX3345.00 - HOLT.CO3 345.00 345KV CKT 1	720	720	0.05704	130.3398	ARROWHEAD - ARROWHEAD 230 230KV CKT 1
FDNS	00NR_G15_054	0	17SP	G15_054	TO->FROM	GR ISLD-LNX3345.00 - HOLT.CO3 345.00 345KV CKT 1	720	720	0.0564	130.2624	HANLON - SIOUX FALLS 230KV CKT 1
FDNS	00NR_G15_054	0	17SP	G15_054	TO->FROM	GR ISLD-LNX3345.00 - HOLT.CO3 345.00 345KV CKT 1	720	720	0.0429	130.1882	GRAND ISLAND - SWEETWATER 345KV CKT 1
FDNS	00NR_G15_054	0	17SP	G15_054	TO->FROM	GR ISLD-LNX3345.00 - HOLT.CO3 345.00 345KV CKT 1	720	720	0.0563	130.0585	P12:115:NPPD:1091:VALENTN7:MISSION7:BTB
FDNS	00NR_G15_054	0	17SP	G15_054	TO->FROM	GR ISLD-LNX3345.00 - HOLT.CO3 345.00 345KV CKT 1	720	720	0.05681	130.0573	GEN337653 1-WHITE BLUFF UNIT #2
FDNS	00NR_G15_054	0	17SP	G15_054	TO->FROM	GR ISLD-LNX3345.00 - HOLT.CO3 345.00 345KV CKT 1	720	720	0.05555	130.0527	SIOUXCY-LNX3345.00 - SPLIT ROCK 345KV CKT 1
FDNS	00NR_G15_054	0	17SP	G15_054	TO->FROM	GR ISLD-LNX3345.00 - HOLT.CO3 345.00 345KV CKT 1	720	720	0.05555	130.0527	SIOUXCY-LNX3345.00 - SPLIT ROCK 345KV CKT 1
FDNS	00NR_G15_054	0	17SP	G15_054	TO->FROM	GR ISLD-LNX3345.00 - HOLT.CO3 345.00 345KV CKT 1	720	720	0.05681	130.0456	GEN337652 1-WHITE BLUFF UNIT #1
FDNS	00NR_G15_054	0	17SP	G15_054	TO->FROM	GR ISLD-LNX3345.00 - HOLT.CO3 345.00 345KV CKT 1	720	720	0.05555	130.0041	P12:345:UMZW:# 907 #: SC2-SR IN IA. SC2-SR 345 KV LINE
FDNS	00NR_G15_054	0	17SP	G15_054	TO->FROM	GR ISLD-LNX3345.00 - HOLT.CO3 345.00 345KV CKT 1	720	720	0.05681	129.9728	GEN338146 1-INDEPENDENCE UNIT #2
FDNS	00NR_G15_054	0	17SP	G15_054	TO->FROM	GR ISLD-LNX3345.00 - HOLT.CO3 345.00 345KV CKT 1	720	720	0.05681	129.9677	GEN338143 1-INDEPENDENCE UNIT #1
FDNS	00NR_G15_054	0	17SP	G15_054	TO->FROM	GR ISLD-LNX3345.00 - HOLT.CO3 345.00 345KV CKT 1	720	720	0.05748	129.9663	HAZLETON - MITCHLCO3 345.00 345KV CKT 1
FDNS	00NR_G15_054	0	17SP	G15_054	TO->FROM	GR ISLD-LNX3345.00 - HOLT.CO3 345.00 345KV CKT 1	720	720	0.0563	129.9585	MISSION - ST FRANCIS 115KV CKT 1
FDNS	00NR_G15_054	0	17SP	G15_054	TO->FROM	GR ISLD-LNX3345.00 - HOLT.CO3 345.00 345KV CKT 1	720	720	0.05555	129.9582	SIOUX CITY - SIOUXCY-LNX3345.00 345KV CKT Z
FDNS	00NR_G15_054	0	17SP	G15_054	TO->FROM	GR ISLD-LNX3345.00 - HOLT.CO3 345.00 345KV CKT 1	720	720	0.05827	129.9488	SIDNEY - STEGALL 345KV CKT 1
FDNS	00NR_G15_054	0	17SP	G15_054	TO->FROM	GR ISLD-LNX3345.00 - HOLT.CO3 345.00 345KV CKT 1	720	720	0.05681	129.9096	GEN501801 1-DOLET HILLS UNIT1
FDNS	00NR_G15_054	0	17SP	G15_054	TO->FROM	GR ISLD-LNX3345.00 - HOLT.CO3 345.00 345KV CKT 1	720	720	0.05679	129.9013	ELLENDALE - OAKES 230KV CKT 1

SOLUTION	GROUP	SCENARIO	SEASON	SOURCE	DIRECTION	MONITORED ELEMENT	RATEA (MVA)	RATEB(MVA)	TDF	TC%LOADING (% MVA)	CONTINGENCY
FDNS	00NR_G15_054	0	17SP	G15_054	TO->FROM	GR ISLD-LNX3345.00 - HOLT.CO3 345.00 345KV CKT 1	720	720	0.05679	129.9013	ELLENDALE - OAKES 230KV CKT 1
FDNS	00NR_G15_054	0	17SP	G15_054	TO->FROM	GR ISLD-LNX3345.00 - HOLT.CO3 345.00 345KV CKT 1	720	720	0.0563	129.8621	HARMONY - ST FRANCIS 115KV CKT 1
FDNS	00NR_G15_054	0	17SP	G15_054	TO->FROM	GR ISLD-LNX3345.00 - HOLT.CO3 345.00 345KV CKT 1	720	720	0.05635	129.8542	FT RANDAL - UTICA JCT 230KV CKT 1
FDNS	00NR_G15_054	0	17SP	G15_054	TO->FROM	GR ISLD-LNX3345.00 - HOLT.CO3 345.00 345KV CKT 1	720	720	0.05679	129.8082	FORMAN - OAKES 230KV CKT 1
FDNS	00NR_G15_054	0	17SP	G15_054	TO->FROM	GR ISLD-LNX3345.00 - HOLT.CO3 345.00 345KV CKT 1	720	720	0.05531	129.7872	FT THOMPSON - WESSINGTON 230KV CKT 1
FDNS	00NR_G15_054	0	17SP	G15_054	TO->FROM	GR ISLD-LNX3345.00 - HOLT.CO3 345.00 345KV CKT 1	720	720	0.05531	129.7872	FT THOMPSON - WESSINGTON 230KV CKT 1
FDNS	00NR_G15_054	0	17SP	G15_054	TO->FROM	GR ISLD-LNX3345.00 - HOLT.CO3 345.00 345KV CKT 1	720	720	0.05709	129.7869	AS KING - EAU CLAIRE 345KV CKT 1
FDNS	00NR_G15_054	0	17SP	G15_054	TO->FROM	GR ISLD-LNX3345.00 - HOLT.CO3 345.00 345KV CKT 1	720	720	0.05673	129.781	CARPENTER - HURON 230KV CKT 1
FDNS	00NR_G15_054	0	17SP	G15_054	TO->FROM	GR ISLD-LNX3345.00 - HOLT.CO3 345.00 345KV CKT 1	720	720	0.05681	129.7719	ALEXMRES3 345.00 - BISON 3 345.00 345KV CKT 1
FDNS	00NR_G15_054	0	17SP	G15_054	TO->FROM	GR ISLD-LNX3345.00 - HOLT.CO3 345.00 345KV CKT 1	720	720	0.05721	129.6839	ARPIN B4 345.00 - EAU CLAIRE 345KV CKT 1
FDNS	00NR_G15_054	0	17SP	G15_054	TO->FROM	GR ISLD-LNX3345.00 - HOLT.CO3 345.00 345KV CKT 1	720	720	0.05673	129.6756	HURON - WATERTOWN 230KV CKT 2
FDNS	00NR_G15_054	0	17SP	G15_054	TO->FROM	GR ISLD-LNX3345.00 - HOLT.CO3 345.00 345KV CKT 1	720	720	0.05673	129.6756	HURON - WATERTOWN 230KV CKT 2
FDNS	00NR_G15_054	0	17SP	G15_054	TO->FROM	GR ISLD-LNX3345.00 - HOLT.CO3 345.00 345KV CKT 1	720	720	0.0563	129.6321	HARMONY - VALENTINE 115KV CKT 1
FDNS	00NR_G15_054	0	17SP	G15_054	TO->FROM	GR ISLD-LNX3345.00 - HOLT.CO3 345.00 345KV CKT 1	720	720	0.05673	129.6201	CARPENTER - WATERTOWN 230KV CKT 1
FDNS	00NR_G15_054	0	17SP	G15_054	TO->FROM	GR ISLD-LNX3345.00 - HOLT.CO3 345.00 345KV CKT 1	720	720	0.05673	129.6201	CARPENTER - WATERTOWN 230KV CKT 1
FDNS	00NR_G15_054	0	17SP	G15_054	TO->FROM	GR ISLD-LNX3345.00 - HOLT.CO3 345.00 345KV CKT 1	720	720	0.0521	129.5857	P12:115:NPPD:WAPA6:FTRANDL7:ONEILL 7:BTB
FDNS	00NR_G15_054	0	17SP	G15_054	TO->FROM	GR ISLD-LNX3345.00 - HOLT.CO3 345.00 345KV CKT 1	720	720	0.0521	129.5857	P12:115:UMZB:# 115 #: SE IN NE. FR-SE-ON
FDNS	00NR_G15_054	0	17SP	G15_054	TO->FROM	GR ISLD-LNX3345.00 - HOLT.CO3 345.00 345KV CKT 1	720	720	0.05646	129.5801	PAHOJA - SIOUX FALLS 230KV CKT 1
FDNS	00NR_G15_054	0	17SP	G15_054	TO->FROM	GR ISLD-LNX3345.00 - HOLT.CO3 345.00 345KV CKT 1	720	720	0.0521	129.5668	FT RANDAL - SPENCER 115KV CKT 1
FDNS	00NR_G15_054	0	17SP	G15_054	TO->FROM	GR ISLD-LNX3345.00 - HOLT.CO3 345.00 345KV CKT 1	720	720	0.05681	129.5557	GEN336252 1-NINEMILE POINT UNIT#5
FDNS	00NR_G15_054	0	17SP	G15_054	TO->FROM	GR ISLD-LNX3345.00 - HOLT.CO3 345.00 345KV CKT 1	720	720	0.05681	129.5126	GEN501813 1-RODEMACHER UNIT 3
FDNS	00NR_G15_054	0	17SP	G15_054	TO->FROM	GR ISLD-LNX3345.00 - HOLT.CO3 345.00 345KV CKT 1	720	720	0.0521	129.4503	ONEILL - SPENCER 115KV CKT 1
FDNS	00NR_G15_054	0	17SP	G15_054	TO->FROM	GR ISLD-LNX3345.00 - HOLT.CO3 345.00 345KV CKT 1	720	720	0.05681	129.4128	GEN336831 1-BAXTER WILSON SES
FDNS	00NR_G15_054	0	17SP	G15_054	TO->FROM	GR ISLD-LNX3345.00 - HOLT.CO3 345.00 345KV CKT 1	720	720	0.05681	129.4013	GEN336251 1-NINEMILE POINT UNIT#4
FDNS	00NR_G15_054	0	17SP	G15_054	TO->FROM	GR ISLD-LNX3345.00 - HOLT.CO3 345.00 345KV CKT 1	720	720	0.0568	129.3747	CNTSHNT3 345.00 - PRAIRIE3 345.00 345KV CKT 1
FDNS	00NR_G15_054	0	17SP	G15_054	TO->FROM	GR ISLD-LNX3345.00 - HOLT.CO3 345.00 345KV CKT 1	720	720	0.05681	129.3735	GEN641089 2-ENERGY CENTER 2
FDNS	00NR_G15_054	0	17SP	G15_054	TO->FROM	GR ISLD-LNX3345.00 - HOLT.CO3 345.00 345KV CKT 1	720	720	0.05765	129.3649	GERALD GENTLEMAN STATION - KEYSTONE 345KV CKT 1
FDNS	00NR_G15_054	0	17SP	G15_054	TO->FROM	GR ISLD-LNX3345.00 - HOLT.CO3 345.00 345KV CKT 1	720	720	0.05681	129.3242	GEN337041 1-GERALD ANDRUS
FDNS	00NR_G15_054	0	17SP	G15_054	TO->FROM	GR ISLD-LNX3345.00 - HOLT.CO3 345.00 345KV CKT 1	720	720	0.05681	129.3059	GEN335206 1-NELSON UNIT 6
FDNS	00NR_G15_054	0	17SP	G15_054	TO->FROM	GR ISLD-LNX3345.00 - HOLT.CO3 345.00 345KV CKT 1	720	720	0.05681	129.2866	FORMAN - HANKINSON 230KV CKT 1
FDNS	00NR_G15_054	0	17SP	G15_054	TO->FROM	GR ISLD-LNX3345.00 - HOLT.CO3 345.00 345KV CKT 1	720	720	0.05681	129.2798	GEN344897 4-1LAB G4 20.000
FDNS	00NR_G15_054	0	17SP	G15_054	TO->FROM	GR ISLD-LNX3345.00 - HOLT.CO3 345.00 345KV CKT 1	720	720	0.05681	129.2765	GEN344894 1-1LAB G1 20.000
FDNS	00NR_G15_054	0	17SP	G15_054	TO->FROM	GR ISLD-LNX3345.00 - HOLT.CO3 345.00 345KV CKT 1	720	720	0.05681	129.2762	GEN344896 3-1LAB G3 20.000
FDNS	00NR_G15_054	0	17SP	G15_054	TO->FROM	GR ISLD-LNX3345.00 - HOLT.CO3 345.00 345KV CKT 1	720	720	0.05646	129.2287	EAGLE 4 230.00 - PAHOJA 230KV CKT 1
FDNS	00NR_G15_054	0	17SP	G15_054	TO->FROM	GR ISLD-LNX3345.00 - HOLT.CO3 345.00 345KV CKT 1	720	720	0.05681	129.2197	GEN344895 2-1LAB G2 20.000
FDNS	00NR_G15_054	0	17SP	G15_054	TO->FROM	GR ISLD-LNX3345.00 - HOLT.CO3 345.00 345KV CKT 1	720	720	0.05681	129.2064	GEN345670 1-1RUSH G1 18.000
FDNS	00NR_G15_054	0	17SP	G15_054	TO->FROM	GR ISLD-LNX3345.00 - HOLT.CO3 345.00 345KV CKT 1	720	720	0.05681	129.2063	GEN345671 2-1RUSH G2 18.000
FDNS	00NR_G15_054	0	17SP	G15_054	TO->FROM	GR ISLD-LNX3345.00 - HOLT.CO3 345.00 345KV CKT 1	720	720	0.0573	129.1647	RASMUSN - UTICA JCT 230KV CKT 1
FDNS	00NR_G15_054	0	17SP	G15_054	TO->FROM	GR ISLD-LNX3345.00 - HOLT.CO3 345.00 345KV CKT 1	720	720	0.0563	129.1567	AINSWORTH - VALENTINE 115KV CKT 1
FDNS	00NR_G15_054	0	17SP	G15_054	TO->FROM	GR ISLD-LNX3345.00 - HOLT.CO3 345.00 345KV CKT 1	720	720	0.05681	129.1498	GEN501812 1-RODEMACHER UNIT 2
FDNS	00NR_G15_054	0	17SP	G15_054	TO->FROM	GR ISLD-LNX3345.00 - HOLT.CO3 345.00 345KV CKT 1	720	720	0.05748	129.1496	ADAMS - MITCHLCO3 345.00 345KV CKT 1
FDNS	00NR_G15_054	0	17SP	G15_054	TO->FROM	GR ISLD-LNX3345.00 - HOLT.CO3 345.00 345KV CKT 1	720	720	0.05681	129.0651	GEN334440 1-SABINE UNIT 4
FDNS	00NR_G15_054	0	17SP	G15_054	TO->FROM	GR ISLD-LNX3345.00 - HOLT.CO3 345.00 345KV CKT 1	720	720	0.0573	128.9554	RASMUSN - SIOUX CITY 230KV CKT 1
FDNSLock	00NR_G15_054	0	17SP	G15_054	TO->FROM	GR ISLD-LNX3345.00 - HOLT.CO3 345.00 345KV CKT 1	720	720	0.0568	128.9499	CENTER - CNTSHNT3 345.00 345KV CKT Z1
FDNS	00NR_G15_054	0	17SP	G15_054	TO->FROM	GR ISLD-LNX3345.00 - HOLT.CO3 345.00 345KV CKT 1	720	720	0.05726	128.9292	ADAMS - PLEASANT VALLEY 345KV CKT 1
FDNS	00NR_G15_054	0	17SP	G15_054	TO->FROM	GR ISLD-LNX3345.00 - HOLT.CO3 345.00 345KV CKT 1	720	720	0.05681	128.9091	GEN336191 1-LITTLE GYPSY UNIT#3
FDNS	00NR_G15_054	0	17SP	G15_054	TO->FROM	GR ISLD-LNX3345.00 - HOLT.CO3 345.00 345KV CKT 1	720	720	0.05681	128.8409	GEN338388 1-1PLUM PT U1 23.000
FDNS	00NR_G15_054	0	17SP	G15_054	TO->FROM	GR ISLD-LNX3345.00 - HOLT.CO3 345.00 345KV CKT 1	720	720	0.05681	128.817	GEN336801 1-BAXTER WILSON UNIT #1
FDNS	00NR_G15_054	0	17SP	G15_054	TO->FROM	GR ISLD-LNX3345.00 - HOLT.CO3 345.00 345KV CKT 1	720	720	0.05681	128.8004	GEN335614 1-WILLOW GLENN UNIT#4
FDNS	00NR_G15_054	0	17SP	G15_054	TO->FROM	GR ISLD-LNX3345.00 - HOLT.CO3 345.00 345KV CKT 1	720	720	0.05681	128.7903	GEN334441 1-SABINE UNIT 5
FDNS	00NR_G15_054	0	17SP	G15_054	TO->FROM	GR ISLD-LNX3345.00 - HOLT.CO3 345.00 345KV CKT 1	720	720	0.05883	128.7847	GRIMES - LEHIGH 345KV CKT 1
FDNS	00NR_G15_054	0	17SP	G15_054	TO->FROM	GR ISLD-LNX3345.00 - HOLT.CO3 345.00 345KV CKT 1	720	720	0.05681	128.7844	GEN336464 1-MICHOUD UNIT #3
FDNS	00NR_G15_054	0	17SP	G15_054	TO->FROM	GR ISLD-LNX3345.00 - HOLT.CO3 345.00 345KV CKT 1	720	720	0.05681	128.7718	GEN335204 1-NELSON UNIT 4
FDNS	00NR_G15_054	0	17SP	G15_054	TO->FROM	GR ISLD-LNX3345.00 - HOLT.CO3 345.00 345KV CKT 1	720	720	0.05725	128.7596	LAKEFIELD 3 - NOBLES 345KV CKT 1
FDNS	00NR_G15_054	0	17SP	G15_054	TO->FROM	GR ISLD-LNX3345.00 - HOLT.CO3 345.00 345KV CKT 1	720	720	0.05709	128.7447	LARAMIE RIVER - SIDNEY2-LNX3345.00 345KV CKT 1
FDNS	00NR_G15_054	0	17SP	G15_054	TO->FROM	GR ISLD-LNX3345.00 - HOLT.CO3 345.00 345KV CKT 1	720	720	0.05709	128.7014	SIDNEY - SIDNEY2-LNX3345.00 345KV CKT Z
FDNS	00NR_G15_054	0	17SP	G15_054	TO->FROM	GR ISLD-LNX3345.00 - HOLT.CO3 345.00 345KV CKT 1	720	720	0.05658	128.6815	FT THOMPSON - HURON 230KV CKT 1
FDNS	00NR_G15_054	0	17SP	G15_054	TO->FROM	GR ISLD-LNX3345.00 - HOLT.CO3 345.00 345KV CKT 1	720	720	0.05658	128.6815	FT THOMPSON - HURON 230KV CKT 1
FDNS	00NR_G15_054	0	17SP	G15_054	TO->FROM	GR ISLD-LNX3345.00 - HOLT.CO3 345.00 345KV CKT 1	720	720	0.05658	128.6815	FT THOMPSON - HURON 230KV CKT 2
FDNS	00NR_G15_054	0	17SP	G15_054	TO->FROM	GR ISLD-LNX3345.00 - HOLT.CO3 345.00 345KV CKT 1	720	720	0.05658	128.6815	FT THOMPSON - HURON 230KV CKT 2
FDNS	00NR_G15_054	0	17SP	G15_054	TO->FROM	GR ISLD-LNX3345.00 - HOLT.CO3 345.00 345KV CKT 1	720	720	0.05974	128.6793	STEGALL - STEGALL TRANSFORMER 230KV CKT 1
FDNS	00NR_G15_054	0	17SP	G15_054	TO->FROM	GR ISLD-LNX3345.00 - HOLT.CO3 345.00 345KV CKT 1	720	720	0.05974	128.6745	P13:230-345:NPPD:STEGALL3:KV3A
FDNS	00NR_G15_054	0	17SP	G15_054	TO->FROM	GR ISLD-LNX3345.00 - HOLT.CO3 345.00 345KV CKT 1	720	720	0.05706	128.674	BROOKING COUNTY - LYON COUNTY 345KV CKT 1
FDNS	00NR_G15_054	0	17SP	G15_054	TO->FROM	GR ISLD-LNX3345.00 - HOLT.CO3 345.00 345KV CKT 1	720	720	0.05974	128.6716	STEGALL (SGQ KV3A) 345/230/13.8KV TRANSFORMER CKT 1
FDNS	00NR_G15_054	0	17SP	G15_054	TO->FROM	GR ISLD-LNX3345.00 - HOLT.CO3 345.00 345KV CKT 1	720	720	0.05544	128.6498	CROOKED CREEK - NORTH PLATTE 230KV CKT 1
FDNS	00NR_G15_054	0	17SP	G15_054	TO->FROM	GR ISLD-LNX3345.00 - HOLT.CO3 345.00 345KV CKT 1	720	720	0.05621	128.6491	MENNO JCT - TRIPP JCT 115KV CKT 1
FDNS	00NR_G15_054	0	17SP	G15_054	TO->FROM	GR ISLD-LNX3345.00 - HOLT.CO3 345.00 345KV CKT 1	720	720	0.05741	128.6483	KOSSUTH 3 345.00 - WEBSTER 345KV CKT 1
FDNS	00NR_G15_054	0	17SP	G15_054	TO->FROM	GR ISLD-LNX3345.00 - HOLT.CO3 345.00 345KV CKT 1	720	720	0.05683	128.6324	BLAIR - GRANITE FALLS 230KV CKT 1
FDNS	00NR_G15_054	0	17SP	G15_054	TO->FROM	GR ISLD-LNX3345.00 - HOLT.CO3 345.00 345KV CKT 1	720	720	0.05683	128.6324	BLAIR - GRANITE FALLS 230KV CKT 1
FDNS	00NR_G15_054	0	17SP	G15_054	TO->FROM	GR ISLD-LNX3345.00 - HOLT.CO3 345.00 345KV CKT 1	720	720	0.05681	128.6231	GEN334433 1-SABINE UNIT 3
FDNS	00NR_G15_054	0	17SP	G15_054	TO->FROM	GR ISLD-LNX3345.00 - HOLT.CO3 345.00 345KV CKT 1	720	720	0.05681	128.6131	GEN531447 1-HOLCOMB GENERATOR
FDNS	00NR_G15_054	0	17SP	G15_054	TO->FROM	GR ISLD-LNX3345.00 - HOLT.CO3 345.00 345KV CKT 1	720	720	0.05741	128.6094	KOSSUTH 3 345.00 - OBRIEN 3 345.00 345KV CKT 1
FDNS	00NR_G15_054	0	17SP	G15_054	TO->FROM	GR ISLD-LNX3345.00 - HOLT.CO3 345.00 345KV CKT 1	720	720	0.05679	128.6054	CENTER - COYOTE 345KV CKT 1

SOLUTION	GROUP	SCENARIO	SEASON	SOURCE	DIRECTION	MONITORED ELEMENT	RATEA (MVA)	RATEB(MVA)	TDF	TC%LOADING (% MVA)	CONTINGENCY
FDNS	00NR_G15_054	0	17SP	G15_054	TO->FROM	GR ISLD-LNX3345.00 - HOLT.CO3 345.00 345KV CKT 1	720	720	0.05681	128.5998	P12:115:UMZW:# 162 #: NEL IN ND. FAULT ON ML-NEL-MX-GA 115 KV
FDNS	00NR_G15_054	0	17SP	G15_054	TO->FROM	GR ISLD-LNX3345.00 - HOLT.CO3 345.00 345KV CKT 1	720	720	0.05684	128.592	ALEXMRES3 345.00 - WAITE PARK 345KV CKT 1
FDNS	00NR_G15_054	0	17SP	G15_054	TO->FROM	GR ISLD-LNX3345.00 - HOLT.CO3 345.00 345KV CKT 1	720	720	0.06161	128.5892	STEGALL-LNX3230.00 - WAYSIDE 230KV CKT 1
FDNS	00NR_G15_054	0	17SP	G15_054	TO->FROM	GR ISLD-LNX3345.00 - HOLT.CO3 345.00 345KV CKT 1	720	720	0.05293	128.5843	GAVINS POINT - YANKON JCT 115KV CKT 1
FDNS	00NR_G15_054	0	17SP	G15_054	TO->FROM	GR ISLD-LNX3345.00 - HOLT.CO3 345.00 345KV CKT 1	720	720	0.05293	128.5843	GAVINS POINT - YANKON JCT 115KV CKT 1
FDNS	00NR_G15_054	0	17SP	G15_054	TO->FROM	GR ISLD-LNX3345.00 - HOLT.CO3 345.00 345KV CKT 1	720	720	0.06161	128.5785	STEGALL - STEGALL-LNX3230.00 230KV CKT Z
FDNS	00NR_G15_054	0	17SP	G15_054	TO->FROM	GR ISLD-LNX3345.00 - HOLT.CO3 345.00 345KV CKT 1	720	720	0.05681	128.5539	GEN336222 1-LITTLE GYPSY UNIT#2
FDNS	00NR_G15_054	0	17SP	G15_054	TO->FROM	GR ISLD-LNX3345.00 - HOLT.CO3 345.00 345KV CKT 1	720	720	0.05681	128.5391	GEN303007 1-1BC2 U2
FDNS	00NR_G15_054	0	17SP	G15_054	TO->FROM	GR ISLD-LNX3345.00 - HOLT.CO3 345.00 345KV CKT 1	720	720	0.05681	128.535	GEN303006 1-1BC2 U1
FDNS	00NR_G15_054	0	17SP	G15_054	TO->FROM	GR ISLD-LNX3345.00 - HOLT.CO3 345.00 345KV CKT 1	720	720	0.05621	128.5117	MENNO JCT - UTICA 115KV CKT 1
FDNS	00NR_G15_054	0	17SP	G15_054	TO->FROM	GR ISLD-LNX3345.00 - HOLT.CO3 345.00 345KV CKT 1	720	720	0.05681	128.4796	GEN336152 1-WATERFORD UNIT#2
FDNS	00NR_G15_054	0	17SP	G15_054	TO->FROM	GR ISLD-LNX3345.00 - HOLT.CO3 345.00 345KV CKT 1	720	720	0.05681	128.4791	GEN336151 1-WATERFORD UNIT#1
FDNS	00NR_G15_054	0	17SP	G15_054	TO->FROM	GR ISLD-LNX3345.00 - HOLT.CO3 345.00 345KV CKT 1	720	720	0.05621	128.4721	P12:115:UMZZ:# 237 #: MEN IN SD. MENNO JUNCTION IS A TAP (UJ-MEN-TP).
FDNS	00NR_G15_054	0	17SP	G15_054	TO->FROM	GR ISLD-LNX3345.00 - HOLT.CO3 345.00 345KV CKT 1	720	720	0.05694	128.4627	ARKANSAS NUCLEAR ONE - FT SMITH 500KV CKT 1
FDNS	00NR_G15_054	0	17SP	G15_054	TO->FROM	GR ISLD-LNX3345.00 - HOLT.CO3 345.00 345KV CKT 1	720	720	0.05694	128.4627	ARKANSAS NUCLEAR ONE - FT SMITH 500KV CKT 1
FDNS	00NR_G15_054	0	17SP	G15_054	TO->FROM	GR ISLD-LNX3345.00 - HOLT.CO3 345.00 345KV CKT 1	720	720	0.05681	128.4566	GEN303008 1-1BC2 U3
FDNS	00NR_G15_054	0	17SP	G15_054	TO->FROM	GR ISLD-LNX3345.00 - HOLT.CO3 345.00 345KV CKT 1	720	720	0.05685	128.4509	HANKINSON - WAHPETON 230KV CKT 1
FDNS	00NR_G15_054	0	17SP	G15_054	TO->FROM	GR ISLD-LNX3345.00 - HOLT.CO3 345.00 345KV CKT 1	720	720	0.05681	128.4506	GEN336170 1-GULF OXY U4
FDNS	00NR_G15_054	0	17SP	G15_054	TO->FROM	GR ISLD-LNX3345.00 - HOLT.CO3 345.00 345KV CKT 1	720	720	0.05693	128.426	RAUN - SIOUX CITY 345KV CKT 1
FDNS	00NR_G15_054	0	17SP	G15_054	TO->FROM	GR ISLD-LNX3345.00 - HOLT.CO3 345.00 345KV CKT 1	720	720	0.05693	128.426	RAUN - SIOUX CITY 345KV CKT 1
FDNS	00NR_G15_054	0	17SP	G15_054	TO->FROM	GR ISLD-LNX3345.00 - HOLT.CO3 345.00 345KV CKT 1	720	720	0.05712	128.4124	BYRON - NORTH ROCHESTER 345KV CKT 1
FDNS	00NR_G15_054	0	17SP	G15_054	TO->FROM	GR ISLD-LNX3345.00 - HOLT.CO3 345.00 345KV CKT 1	720	720	0.05681	128.3535	P13:230:UMZW:# 2218 #: FP IN MT. LOSS OF TRANSFORMER (AT2).
FDNS	00NR_G15_054	0	17SP	G15_054	TO->FROM	GR ISLD-LNX3345.00 - HOLT.CO3 345.00 345KV CKT 1	720	720	0.05681	128.351	GEN501811 1-RODEMACHER UNIT 1
FDNS	00NR_G15_054	0	17SP	G15_054	TO->FROM	GR ISLD-LNX3345.00 - HOLT.CO3 345.00 345KV CKT 1	720	720	0.05077	128.335	P12:115:NPPD:1164:ONEILL 7:JEFFREY9:BTB
FDNS	00NR_G15_054	0	17SP	G15_054	TO->FROM	GR ISLD-LNX3345.00 - HOLT.CO3 345.00 345KV CKT 1	720	720	0.05686	128.3261	APPLEDORN 4 230.00 - WATERTOWN 230KV CKT 1
FDNS	00NR_G15_054	0	17SP	G15_054	TO->FROM	GR ISLD-LNX3345.00 - HOLT.CO3 345.00 345KV CKT 1	720	720	0.05686	128.3261	APPLEDORN 4 230.00 - WATERTOWN 230KV CKT 1
FDNS	00NR_G15_054	0	17SP	G15_054	TO->FROM	GR ISLD-LNX3345.00 - HOLT.CO3 345.00 345KV CKT 1	720	720	0.05487	128.3038	P12:115:UMZW:# 1910 #: YJ IN SD. YJ-UJ LINE FAULT
FDNS	00NR_G15_054	0	17SP	G15_054	TO->FROM	GR ISLD-LNX3345.00 - HOLT.CO3 345.00 345KV CKT 1	720	720	0.05692	128.3031	NORTH ROCHESTER - PRAIRIE ISLAND 345KV CKT 1
FDNS	00NR_G15_054	0	17SP	G15_054	TO->FROM	GR ISLD-LNX3345.00 - HOLT.CO3 345.00 345KV CKT 1	720	720	0.05487	128.2996	NAPA JCT7 115.00 - YANKON JCT 115KV CKT 1
FDNS	00NR_G15_054	0	17SP	G15_054	TO->FROM	GR ISLD-LNX3345.00 - HOLT.CO3 345.00 345KV CKT 1	720	720	0.05487	128.2996	NAPA JCT7 115.00 - YANKON JCT 115KV CKT 1
FDNS	00NR_G15_054	0	17SP	G15_054	TO->FROM	GR ISLD-LNX3345.00 - HOLT.CO3 345.00 345KV CKT 1	720	720	0.05487	128.2976	NAPA JCT7 115.00 - UTICA 115KV CKT 1
FDNS	00NR_G15_054	0	17SP	G15_054	TO->FROM	GR ISLD-LNX3345.00 - HOLT.CO3 345.00 345KV CKT 1	720	720	0.05487	128.2976	NAPA JCT7 115.00 - UTICA 115KV CKT 1
FDNS	00NR_G15_054	0	17SP	G15_054	TO->FROM	GR ISLD-LNX3345.00 - HOLT.CO3 345.00 345KV CKT 1	720	720	0.05686	128.2637	APPLEDORN 4 230.00 - GRANITE FALLS 230KV CKT 1
FDNS	00NR_G15_054	0	17SP	G15_054	TO->FROM	GR ISLD-LNX3345.00 - HOLT.CO3 345.00 345KV CKT 1	720	720	0.05686	128.2637	APPLEDORN 4 230.00 - GRANITE FALLS 230KV CKT 1
FDNS	00NR_G15_054	0	17SP	G15_054	TO->FROM	GR ISLD-LNX3345.00 - HOLT.CO3 345.00 345KV CKT 1	720	720	0.05681	128.2626	P13:115-230:NPPD:NUCOR-3
FDNS	00NR_G15_054	0	17SP	G15_054	TO->FROM	GR ISLD-LNX3345.00 - HOLT.CO3 345.00 345KV CKT 1	720	720	0.05715	128.2548	GAVINS POINT - HARTINGTON 115KV CKT 1
FDNS	00NR_G15_054	0	17SP	G15_054	TO->FROM	GR ISLD-LNX3345.00 - HOLT.CO3 345.00 345KV CKT 1	720	720	0.05681	128.2532	GEN334071 1-LEWIS CREEK 2
FDNS	00NR_G15_054	0	17SP	G15_054	TO->FROM	GR ISLD-LNX3345.00 - HOLT.CO3 345.00 345KV CKT 1	720	720	0.05681	128.2494	GEN337766 1-TRACTEBEL UNIT S1
FDNS	00NR_G15_054	0	17SP	G15_054	TO->FROM	GR ISLD-LNX3345.00 - HOLT.CO3 345.00 345KV CKT 1	720	720	0.06425	128.2482	COLUMEAST - SHELL CREEK 345KV CKT 1
FDNS	00NR_G15_054	0	17SP	G15_054	TO->FROM	GR ISLD-LNX3345.00 - HOLT.CO3 345.00 345KV CKT 1	720	720	0.05681	128.2473	GEN334070 1-LEWIS CREEK 1
FDNS	00NR_G15_054	0	17SP	G15_054	TO->FROM	GR ISLD-LNX3345.00 - HOLT.CO3 345.00 345KV CKT 1	720	720	0.05681	128.2328	P13:230-345:NPPD:NUCOR-1
FDNS	00NR_G15_054	0	17SP	G15_054	TO->FROM	GR ISLD-LNX3345.00 - HOLT.CO3 345.00 345KV CKT 1	720	720	0.0575	128.2283	DENISON - SIOUX CITY 230KV CKT 1
FDNS	00NR_G15_054	0	17SP	G15_054	TO->FROM	GR ISLD-LNX3345.00 - HOLT.CO3 345.00 345KV CKT 1	720	720	0.05681	128.2047	GEN501910 1-ACADIA UNIT ST1
FDNS	00NR_G15_054	0	17SP	G15_054	TO->FROM	GR ISLD-LNX3345.00 - HOLT.CO3 345.00 345KV CKT 1	720	720	0.05528	128.1907	CROOKED CREEK - RIVERDALE 230KV CKT 1
FDNS	00NR_G15_054	0	17SP	G15_054	TO->FROM	GR ISLD-LNX3345.00 - HOLT.CO3 345.00 345KV CKT 1	720	720	0.05681	128.103	GEN659118 1-LARAMIE RIVER UNIT1
FDNS	00NR_G15_054	0	17SP	G15_054	TO->FROM	GR ISLD-LNX3345.00 - HOLT.CO3 345.00 345KV CKT 1	720	720	0.05681	127.612	KEARNEY 115KV SWITCHED SHUNT
FDNS	00NR_G15_054	0	17SP	G15_054	TO->FROM	GR ISLD-LNX3345.00 - HOLT.CO3 345.00 345KV CKT 1	720	720	0.05838	127.5707	KELLY - SHELL CREEK 230KV CKT 1
FDNS	00NR_G15_054	0	17SP	G15_054	TO->FROM	GR ISLD-LNX3345.00 - HOLT.CO3 345.00 345KV CKT 1	720	720	0.05838	127.5656	SHELL CREEK (SHELLCREEKT1) 345/230/13.8KV TRANSFORMER CKT 1
FDNS	00NR_G15_054	0	17SP	G15_054	TO->FROM	GR ISLD-LNX3345.00 - HOLT.CO3 345.00 345KV CKT 1	720	720	0.05838	127.5656	SHELL CREEK (SHELLCREEKT1) 345/230/13.8KV TRANSFORMER CKT 1
FDNS	00NR_G15_054	0	17SP	G15_054	TO->FROM	GR ISLD-LNX3345.00 - HOLT.CO3 345.00 345KV CKT 1	720	720	0.06993	127.5324	COLUMWEST - KELLY 230KV CKT 1
FDNSLock	00NR_G15_054	0	17SP	G15_054	TO->FROM	GR ISLD-LNX3345.00 - HOLT.CO3 345.00 345KV CKT 1	720	720	0.05681	127.495	KEARNEY 115KV SWITCHED SHUNT
FDNS	00NR_G15_054	0	17SP	G15_054	TO->FROM	GR ISLD-LNX3345.00 - HOLT.CO3 345.00 345KV CKT 1	720	720	0.05688	127.4811	ANTELOP-LNX3345.00 - BRDLAND-LNX3345.00 345KV CKT 1
FDNS	00NR_G15_054	0	17SP	G15_054	TO->FROM	GR ISLD-LNX3345.00 - HOLT.CO3 345.00 345KV CKT 1	720	720	0.05681	127.4102	1303-KEARNEY
FDNS	00NR_G15_054	0	17SP	G15_054	TO->FROM	GR ISLD-LNX3345.00 - HOLT.CO3 345.00 345KV CKT 1	720	720	0.05681	127.4102	BASE CASE
FDNS	00NR_G15_054	0	17SP	G15_054	TO->FROM	GR ISLD-LNX3345.00 - HOLT.CO3 345.00 345KV CKT 1	720	720	0.05481	127.3399	COOPER - MOORE 345KV CKT 1
FDNS	00NR_G15_054	0	17SP	G15_054	TO->FROM	GR ISLD-LNX3345.00 - HOLT.CO3 345.00 345KV CKT 1	720	720	0.05464	127.3392	GRAND ISLAND - RIVERDALE 230KV CKT 1
FDNS	00NR_G15_054	0	17SP	G15_054	TO->FROM	GR ISLD-LNX3345.00 - HOLT.CO3 345.00 345KV CKT 1	720	720	0.05681	127.2678	GEN645001 1-FORT CALHOUN 1
FDNS	00NR_G15_054	0	17SP	G15_054	TO->FROM	GR ISLD-LNX3345.00 - HOLT.CO3 345.00 345KV CKT 1	720	720	0.05834	127.2312	AXTELL - PAULINE 345KV CKT 1
FDNS	00NR_G15_054	0	17SP	G15_054	TO->FROM	GR ISLD-LNX3345.00 - HOLT.CO3 345.00 345KV CKT 1	720	720	0.05681	127.2277	GEN635214 4-NEAL UNIT 4
FDNS	00NR_G15_054	0	17SP	G15_054	TO->FROM	GR ISLD-LNX3345.00 - HOLT.CO3 345.00 345KV CKT 1	720	720	0.05844	127.2081	103RD & ROKEBY - MOORE 345KV CKT 1
FDNS	00NR_G15_054	0	17SP	G15_054	TO->FROM	GR ISLD-LNX3345.00 - HOLT.CO3 345.00 345KV CKT 1	720	720	0.05844	127.2081	103RD & ROKEBY - MOORE 345KV CKT 1
FDNS	00NR_G15_054	0	17SP	G15_054	TO->FROM	GR ISLD-LNX3345.00 - HOLT.CO3 345.00 345KV CKT 1	720	720	0.05681	127.1859	FTTHOM2-LNX3345.00 345KV SWITCHED SHUNT
FDNSLock	00NR_G15_054	0	17SP	G15_054	TO->FROM	GR ISLD-LNX3345.00 - HOLT.CO3 345.00 345KV CKT 1	720	720	0.05681	127.1857	FTTHOM2-LNX3345.00 345KV SWITCHED SHUNT
FDNS	00NR_G15_054	0	17SP	G15_054	TO->FROM	GR ISLD-LNX3345.00 - HOLT.CO3 345.00 345KV CKT 1	720	720	0.05695	127.1432	FT THOMPSON - OAHE 230KV CKT 1
FDNS	00NR_G15_054	0	17SP	G15_054	TO->FROM	GR ISLD-LNX3345.00 - HOLT.CO3 345.00 345KV CKT 1	720	720	0.05695	127.1432	FT THOMPSON - OAHE 230KV CKT 1
FDNS	00NR_G15_054	0	17SP	G15_054	TO->FROM	GR ISLD-LNX3345.00 - HOLT.CO3 345.00 345KV CKT 1	720	720	0.05695	127.1432	FT THOMPSON - OAHE 230KV CKT 2
FDNS	00NR_G15_054	0	17SP	G15_054	TO->FROM	GR ISLD-LNX3345.00 - HOLT.CO3 345.00 345KV CKT 1	720	720	0.05695	127.1432	FT THOMPSON - OAHE 230KV CKT 2
FDNS	00NR_G15_054	0	17SP	G15_054	TO->FROM	GR ISLD-LNX3345.00 - HOLT.CO3 345.00 345KV CKT 1	720	720	0.05696	127.1	FT THOMPSON - OAHE 230KV CKT 3
FDNS	00NR_G15_054	0	17SP	G15_054	TO->FROM	GR ISLD-LNX3345.00 - HOLT.CO3 345.00 345KV CKT 1	720	720	0.05696	127.1	FT THOMPSON - OAHE 230KV CKT 3
FDNS	00NR_G15_054	0	17SP	G15_054	TO->FROM	GR ISLD-LNX3345.00 - HOLT.CO3 345.00 345KV CKT 1	720	720	0.05696	127.1	FT THOMPSON - OAHE 230KV CKT 4
FDNS	00NR_G15_054	0	17SP	G15_054	TO->FROM	GR ISLD-LNX3345.00 - HOLT.CO3 345.00 345KV CKT 1	720	720	0.05696	127.1	FT THOMPSON - OAHE 230KV CKT 4
FDNS	00NR_G15_054	0	17SP	G15_054	TO->FROM	GR ISLD-LNX3345.00 - HOLT.CO3 345.00 345KV CKT 1	720	720	0.0567	127.0932	GRAND ISLAND (GRAND.ISD T5) 230/115/13.8KV TRANSFORMER CKT 2
FDNS	00NR_G15_054	0	17SP	G15_054	TO->FROM	GR ISLD-LNX3345.00 - HOLT.CO3 345.00 345KV CKT 1	720	720	0.0567	127.0932	GRAND ISLAND (GRAND.ISD T5) 230/115/13.8KV TRANSFORMER CKT 2

SOLUTION	GROUP	SCENARIO	SEASON	SOURCE	DIRECTION	MONITORED ELEMENT	RATEA (MVA)	RATEB(MVA)	TDF	TC%LOADING (% MVA)	CONTINGENCY
FDNS	00NR_G15_054	0	17SP	G15_054	TO->FROM	GR ISLD-LNX3345.00 - HOLT.CO3 345.00 345KV CKT 1	720	720	0.0567	127.0908	GRAND ISLAND (GRAND.ISD T2) 230/115/13.8KV TRANSFORMER CKT 1
FDNS	00NR_G15_054	0	17SP	G15_054	TO->FROM	GR ISLD-LNX3345.00 - HOLT.CO3 345.00 345KV CKT 1	720	720	0.0567	127.0908	GRAND ISLAND (GRAND.ISD T2) 230/115/13.8KV TRANSFORMER CKT 1
FDNS	00NR_G15_054	0	17SP	G15_054	TO->FROM	GR ISLD-LNX3345.00 - HOLT.CO3 345.00 345KV CKT 1	720	720	0.05679	126.9899	MCCOOL (MCCOOL T2) 345/115/13.8KV TRANSFORMER CKT 1
FDNS	00NR_G15_054	0	17SP	G15_054	TO->FROM	GR ISLD-LNX3345.00 - HOLT.CO3 345.00 345KV CKT 1	720	720	0.05679	126.9899	MCCOOL (MCCOOL T2) 345/115/13.8KV TRANSFORMER CKT 1
FDNS	00NR_G15_054	0	17SP	G15_054	TO->FROM	GR ISLD-LNX3345.00 - HOLT.CO3 345.00 345KV CKT 1	720	720	0.05837	126.9621	MAXWELL - NORTH PLATTE 115KV CKT 1
FDNS	00NR_G15_054	0	17SP	G15_054	TO->FROM	GR ISLD-LNX3345.00 - HOLT.CO3 345.00 345KV CKT 1	720	720	0.05742	126.94	Hitchland Interchange - WALKTAP7 345.00 345KV CKT 1
FDNS	00NR_G15_054	0	17SP	G15_054	TO->FROM	GR ISLD-LNX3345.00 - HOLT.CO3 345.00 345KV CKT 1	720	720	0.05742	126.94	Hitchland Interchange - WALKTAP7 345.00 345KV CKT 1
FDNS	00NR_G15_054	0	17SP	G15_054	TO->FROM	GR ISLD-LNX3345.00 - HOLT.CO3 345.00 345KV CKT 1	720	720	0.05722	126.9384	FINNEY SWITCHING STATION - WALKTAP7 345.00 345KV CKT 1
FDNS	00NR_G15_054	0	17SP	G15_054	TO->FROM	GR ISLD-LNX3345.00 - HOLT.CO3 345.00 345KV CKT 1	720	720	0.05722	126.9384	FINNEY SWITCHING STATION - WALKTAP7 345.00 345KV CKT 1
FDNS	00NR_G15_054	0	17SP	G15_054	TO->FROM	GR ISLD-LNX3345.00 - HOLT.CO3 345.00 345KV CKT 1	720	720	0.05742	126.9259	P12:345:SPS:J07.1.FINN.HITCH
FDNS	00NR_G15_054	0	17SP	G15_054	TO->FROM	GR ISLD-LNX3345.00 - HOLT.CO3 345.00 345KV CKT 1	720	720	0.05693	126.9002	GRAND ISLAND (GI KU1B) 345/230/13.8KV TRANSFORMER CKT 2
FDNS	00NR_G15_054	0	17SP	G15_054	TO->FROM	GR ISLD-LNX3345.00 - HOLT.CO3 345.00 345KV CKT 1	720	720	0.05693	126.9002	GRAND ISLAND (GI KU1B) 345/230/13.8KV TRANSFORMER CKT 2
FDNS	00NR_G15_054	0	17SP	G15_054	TO->FROM	GR ISLD-LNX3345.00 - HOLT.CO3 345.00 345KV CKT 1	720	720	0.05693	126.8992	GRAND ISLAND (GI KU1A) 345/230/13.8KV TRANSFORMER CKT 1
FDNS	00NR_G15_054	0	17SP	G15_054	TO->FROM	GR ISLD-LNX3345.00 - HOLT.CO3 345.00 345KV CKT 1	720	720	0.05693	126.8992	GRAND ISLAND (GI KU1A) 345/230/13.8KV TRANSFORMER CKT 1
FDNS	00NR_G15_054	0	17SP	G15_054	TO->FROM	GR ISLD-LNX3345.00 - HOLT.CO3 345.00 345KV CKT 1	720	720	0.05883	126.8718	MINGO - SETAB 345KV CKT 1
FDNS	00NR_G15_054	0	17SP	G15_054	TO->FROM	GR ISLD-LNX3345.00 - HOLT.CO3 345.00 345KV CKT 1	720	720	0.05883	126.8718	MINGO - SETAB 345KV CKT 1
FDNS	00NR_G15_054	0	17SP	G15_054	TO->FROM	GR ISLD-LNX3345.00 - HOLT.CO3 345.00 345KV CKT 1	720	720	0.05681	126.8146	GEN652548 5-FT RANDAL
FDNS	00NR_G15_054	0	17SP	G15_054	TO->FROM	GR ISLD-LNX3345.00 - HOLT.CO3 345.00 345KV CKT 1	720	720	0.05681	126.8146	GEN652549 7-FT RANDAL
FDNS	00NR_G15_054	0	17SP	G15_054	TO->FROM	GR ISLD-LNX3345.00 - HOLT.CO3 345.00 345KV CKT 1	720	720	0.05688	126.8122	P12:345:UMZB:# 102 #: AVS BD IN ND. AVS BRD LR
FDNS	00NR_G15_054	0	17SP	G15_054	TO->FROM	GR ISLD-LNX3345.00 - HOLT.CO3 345.00 345KV CKT 1	720	720	0.05688	126.8112	P12:345:UMZB:# 103 #: BD IN SD. LOSS OF LINE
FDNS	00NR_G15_054	0	17SP	G15_054	TO->FROM	GR ISLD-LNX3345.00 - HOLT.CO3 345.00 345KV CKT 1	720	720	0.05688	126.8065	BRDLAND-LNX3345.00 - HURON 345KV CKT Z
FDNS	00NR_G15_054	0	17SP	G15_054	TO->FROM	GR ISLD-LNX3345.00 - HOLT.CO3 345.00 345KV CKT 1	720	720	0.05681	126.804	GEN652547 3-FT RANDAL
FDNS	00NR_G15_054	0	17SP	G15_054	TO->FROM	GR ISLD-LNX3345.00 - HOLT.CO3 345.00 345KV CKT 1	720	720	0.05697	126.7923	G11_051T 345.00 - TATONGA7 345.00 345KV CKT 1
FDNS	00NR_G15_054	0	17SP	G15_054	TO->FROM	GR ISLD-LNX3345.00 - HOLT.CO3 345.00 345KV CKT 1	720	720	0.05895	126.7892	ATCHSNT3 345.00 - BOONEVILLE 345KV CKT 1
FDNS	00NR_G15_054	0	17SP	G15_054	TO->FROM	GR ISLD-LNX3345.00 - HOLT.CO3 345.00 345KV CKT 1	720	720	0.06059	126.7872	MOORE - PAULINE 345KV CKT 1
FDNS	00NR_G15_054	0	17SP	G15_054	TO->FROM	GR ISLD-LNX3345.00 - HOLT.CO3 345.00 345KV CKT 1	720	720	0.05688	126.785	BROADLAND - HURON 230KV CKT 1
FDNS	00NR_G15_054	0	17SP	G15_054	TO->FROM	GR ISLD-LNX3345.00 - HOLT.CO3 345.00 345KV CKT 1	720	720	0.05688	126.7849	HURON (BD KU2A) 345/230/13.8KV TRANSFORMER CKT 1
FDNS	00NR_G15_054	0	17SP	G15_054	TO->FROM	GR ISLD-LNX3345.00 - HOLT.CO3 345.00 345KV CKT 1	720	720	0.05688	126.7849	HURON (BD KU2A) 345/230/13.8KV TRANSFORMER CKT 1
FDNS	00NR_G15_054	0	17SP	G15_054	TO->FROM	GR ISLD-LNX3345.00 - HOLT.CO3 345.00 345KV CKT 1	720	720	0.05681	126.7792	GEN600021 3-ANGUS ANSON2
FDNS	00NR_G15_054	0	17SP	G15_054	TO->FROM	GR ISLD-LNX3345.00 - HOLT.CO3 345.00 345KV CKT 1	720	720	0.05681	126.7664	GEN600020 2-ANGUS ANSON1
FDNS	00NR_G15_054	0	17SP	G15_054	TO->FROM	GR ISLD-LNX3345.00 - HOLT.CO3 345.00 345KV CKT 1	720	720	0.05681	126.7519	GEN659290 1-EDGECOL
FDNS	00NR_G15_054	0	17SP	G15_054	TO->FROM	GR ISLD-LNX3345.00 - HOLT.CO3 345.00 345KV CKT 1	720	720	0.05681	126.7507	GEN659158 2-PIONEER G213.800
FDNS	00NR_G15_054	0	17SP	G15_054	TO->FROM	GR ISLD-LNX3345.00 - HOLT.CO3 345.00 345KV CKT 1	720	720	0.05681	126.7507	GEN659159 3-PIONEER G313.800
FDNS	00NR_G15_054	0	17SP	G15_054	TO->FROM	GR ISLD-LNX3345.00 - HOLT.CO3 345.00 345KV CKT 1	720	720	0.05681	126.749	GEN659156 2-LONESMCRK 2G13.800
FDNS	00NR_G15_054	0	17SP	G15_054	TO->FROM	GR ISLD-LNX3345.00 - HOLT.CO3 345.00 345KV CKT 1	720	720	0.05681	126.749	GEN659157 3-LONESMCRK 3G13.800
FDNS	00NR_G15_054	0	17SP	G15_054	TO->FROM	GR ISLD-LNX3345.00 - HOLT.CO3 345.00 345KV CKT 1	720	720	0.05681	126.735	GEN600012 2-BLACK DOG GEN 2
FDNS	00NR_G15_054	0	17SP	G15_054	TO->FROM	GR ISLD-LNX3345.00 - HOLT.CO3 345.00 345KV CKT 1	720	720	0.05681	126.7339	GEN590010 1-ERCOT EQUIVALENCE
FDNS	00NR_G15_054	0	17SP	G15_054	TO->FROM	GR ISLD-LNX3345.00 - HOLT.CO3 345.00 345KV CKT 1	720	720	0.05681	126.7338	GEN672393 2-NBECST2G 13.800
FDNS	00NR_G15_054	0	17SP	G15_054	TO->FROM	GR ISLD-LNX3345.00 - HOLT.CO3 345.00 345KV CKT 1	720	720	0.05681	126.7227	GEN652410 3-FT PECK
FDNS	00NR_G15_054	0	17SP	G15_054	TO->FROM	GR ISLD-LNX3345.00 - HOLT.CO3 345.00 345KV CKT 1	720	720	0.05681	126.7054	GEN300003 1-THOMAS HILL UNIT 3
FDNS	00NR_G15_054	0	17SP	G15_054	TO->FROM	GR ISLD-LNX3345.00 - HOLT.CO3 345.00 345KV CKT 1	720	720	0.05681	126.7027	GEN590011 2-ERCOT EQUIVALENCE
FDNS	00NR_G15_054	0	17SP	G15_054	TO->FROM	GR ISLD-LNX3345.00 - HOLT.CO3 345.00 345KV CKT 1	720	720	0.06116	126.6963	LOUP CITY - NORTH LOUP 115KV CKT 1
FDNS	00NR_G15_054	0	17SP	G15_054	TO->FROM	GR ISLD-LNX3345.00 - HOLT.CO3 345.00 345KV CKT 1	720	720	0.05681	126.6954	EASTDC - ERCOT EQUIVALENCE 345KV CKT 1
FDNS	00NR_G15_054	0	17SP	G15_054	TO->FROM	GR ISLD-LNX3345.00 - HOLT.CO3 345.00 345KV CKT 1	720	720	0.05681	126.6914	GEN629072 4-LANSING GENERATOR FOR UNITS NO4 EIA CODE 1
FDNS	00NR_G15_054	0	17SP	G15_054	TO->FROM	GR ISLD-LNX3345.00 - HOLT.CO3 345.00 345KV CKT 1	720	720	0.05683	126.6722	DRAYTON - LETELLIER 230KV CKT 1
FDNS	00NR_G15_054	0	17SP	G15_054	TO->FROM	GR ISLD-LNX3345.00 - HOLT.CO3 345.00 345KV CKT 1	720	720	0.05699	126.6616	GRAND ISLAND (GI KU3A) 345/230/13.8KV TRANSFORMER CKT 3
FDNS	00NR_G15_054	0	17SP	G15_054	TO->FROM	GR ISLD-LNX3345.00 - HOLT.CO3 345.00 345KV CKT 1	720	720	0.05699	126.6616	GRAND ISLAND (GI KU3A) 345/230/13.8KV TRANSFORMER CKT 3
FDNS	00NR_G15_054	0	17SP	G15_054	TO->FROM	GR ISLD-LNX3345.00 - HOLT.CO3 345.00 345KV CKT 1	720	720	0.05681	126.657	G830_SUB 115.00 - GRE-MCHENRY7115.00 115KV CKT 1
FDNS	00NR_G15_054	0	17SP	G15_054	TO->FROM	GR ISLD-LNX3345.00 - HOLT.CO3 345.00 345KV CKT 1	720	720	0.05681	126.6564	GEN652414 4-FT PECK
FDNS	00NR_G15_054	0	17SP	G15_054	TO->FROM	GR ISLD-LNX3345.00 - HOLT.CO3 345.00 345KV CKT 1	720	720	0.05681	126.6564	GEN652415 5-FT PECK
FDNS	00NR_G15_054	0	17SP	G15_054	TO->FROM	GR ISLD-LNX3345.00 - HOLT.CO3 345.00 345KV CKT 1	720	720	0.05681	126.6487	G830_SUB 115.00 115/34.5KV TRANSFORMER CKT 1
FDNS	00NR_G15_054	0	17SP	G15_054	TO->FROM	GR ISLD-LNX3345.00 - HOLT.CO3 345.00 345KV CKT 1	720	720	0.05676	126.648	OAHE - SULLEY BUTTE 230KV CKT 1
FDNS	00NR_G15_054	0	17SP	G15_054	TO->FROM	GR ISLD-LNX3345.00 - HOLT.CO3 345.00 345KV CKT 1	720	720	0.05681	126.6444	GEN660003 3-HURON WEST PARK
FDNS	00NR_G15_054	0	17SP	G15_054	TO->FROM	GR ISLD-LNX3345.00 - HOLT.CO3 345.00 345KV CKT 1	720	720	0.05681	126.6232	EMERY 161/18.0KV TRANSFORMER CKT 1
FDNS	00NR_G15_054	0	17SP	G15_054	TO->FROM	GR ISLD-LNX3345.00 - HOLT.CO3 345.00 345KV CKT 1	720	720	0.05681	126.6196	GEN652345 W-G07_023IS_2 0.6900
FDNS	00NR_G15_054	0	17SP	G15_054	TO->FROM	GR ISLD-LNX3345.00 - HOLT.CO3 345.00 345KV CKT 1	720	720	0.05681	126.6132	GEN 11104 1-J262_GEN 0.6000
FDNS	00NR_G15_054	0	17SP	G15_054	TO->FROM	GR ISLD-LNX3345.00 - HOLT.CO3 345.00 345KV CKT 1	720	720	0.05681	126.6132	GEN 11108 1-J263_GEN 0.6000
FDNS	00NR_G15_054	0	17SP	G15_054	TO->FROM	GR ISLD-LNX3345.00 - HOLT.CO3 345.00 345KV CKT 1	720	720	0.05707	126.5985	POST ROCK (POSTROCK T1) 345/230/13.8KV TRANSFORMER CKT 1
FDNSLock	00NR_G15_054	0	17SP	G15_054	TO->FROM	GR ISLD-LNX3345.00 - HOLT.CO3 345.00 345KV CKT 1	720	720	0.05911	126.5955	CENTRAL CITY - GRAND ISLAND 115KV CKT 1
FDNS	00NR_G15_054	0	17SP	G15_054	TO->FROM	GR ISLD-LNX3345.00 - HOLT.CO3 345.00 345KV CKT 1	720	720	0.05681	126.5925	GEN600050 1-FEP
FDNS	00NR_G15_054	0	17SP	G15_054	TO->FROM	GR ISLD-LNX3345.00 - HOLT.CO3 345.00 345KV CKT 1	720	720	0.05862	126.5521	GERALD GENTLEMAN STATION - RED WILLOW 345KV CKT 1
FDNS	00NR_G15_054	0	17SP	G15_054	TO->FROM	GR ISLD-LNX3345.00 - HOLT.CO3 345.00 345KV CKT 1	720	720	0.05681	126.5418	GEN600046 1-MECST
FDNS	00NR_G15_054	0	17SP	G15_054	TO->FROM	GR ISLD-LNX3345.00 - HOLT.CO3 345.00 345KV CKT 1	720	720	0.05681	126.5417	GEN300007 1-NEW MADRID UNIT 2
FDNS	00NR_G15_054	0	17SP	G15_054	TO->FROM	GR ISLD-LNX3345.00 - HOLT.CO3 345.00 345KV CKT 1	720	720	0.05688	126.5412	ANTELOP-LNX3345.00 - ANTELOPE VALLEY 345KV CKT Z
FDNS	00NR_G15_054	0	17SP	G15_054	TO->FROM	GR ISLD-LNX3345.00 - HOLT.CO3 345.00 345KV CKT 1	720	720	0.05681	126.5352	GEN300006 1-NEW MADRID UNIT 1
FDNS	00NR_G15_054	0	17SP	G15_054	TO->FROM	GR ISLD-LNX3345.00 - HOLT.CO3 345.00 345KV CKT 1	720	720	0.05697	126.5296	MATHWSN7 345.00 - TATONGA7 345.00 345KV CKT 1
FDNS	00NR_G15_054	0	17SP	G15_054	TO->FROM	GR ISLD-LNX3345.00 - HOLT.CO3 345.00 345KV CKT 1	720	720	0.05681	126.5144	GEN600047 1-MECCT1
FDNS	00NR_G15_054	0	17SP	G15_054	TO->FROM	GR ISLD-LNX3345.00 - HOLT.CO3 345.00 345KV CKT 1	720	720	0.05681	126.5132	GEN600063 1-COLVILLE GEN 1
FDNS	00NR_G15_054	0	17SP	G15_054	TO->FROM	GR ISLD-LNX3345.00 - HOLT.CO3 345.00 345KV CKT 1	720	720	0.05681	126.5132	GEN600064 2-COLVILLE GEN 2
FDNS	00NR_G15_054	0	17SP	G15_054	TO->FROM	GR ISLD-LNX3345.00 - HOLT.CO3 345.00 345KV CKT 1	720	720	0.05681	126.508	GEN600043 7-BLUE LAKE5
FDNS	00NR_G15_054	0	17SP	G15_054	TO->FROM	GR ISLD-LNX3345.00 - HOLT.CO3 345.00 345KV CKT 1	720	720	0.05681	126.508	GEN600044 8-BLUE LAKE6
FDNS	00NR_G15_054	0	17SP	G15_054	TO->FROM	GR ISLD-LNX3345.00 - HOLT.CO3 345.00 345KV CKT 1	720	720	0.05676	126.5058	SULLEY BUTTE - SULLYBT-LNX3230.00 230KV CKT Z
FDNS	00NR_G15_054	0	17SP	G15_054	TO->FROM	GR ISLD-LNX3345.00 - HOLT.CO3 345.00 345KV CKT 1	720	720	0.05676	126.5056	SULLYBT-LNX3230.00 - WHITLOK 230KV CKT 1

SOLUTION	GROUP	SCENARIO	SEASON	SOURCE	DIRECTION	MONITORED ELEMENT	RATEA (MVA)	RATEB(MVA)	TDF	TC%LOADING (% MVA)	CONTINGENCY
FDNS	00NR_G15_054	0	17SP	G15_054	TO->FROM	GR ISLD-LNX3345.00 - HOLT.CO3 345.00 345KV CKT 1	720	720	0.05681	126.5019	GEN660001 2-ABERDEEN SIEBRECHT
FDNS	00NR_G15_054	0	17SP	G15_054	TO->FROM	GR ISLD-LNX3345.00 - HOLT.CO3 345.00 345KV CKT 1	720	720	0.05681	126.4851	CENTER 230/22.0KV TRANSFORMER CKT 1
FDNS	00NR_G15_054	0	17SP	G15_054	TO->FROM	GR ISLD-LNX3345.00 - HOLT.CO3 345.00 345KV CKT 1	720	720	0.05681	126.4838	GEN659273 2-GROTON SYNC COND
FDNS	00NR_G15_054	0	17SP	G15_054	TO->FROM	GR ISLD-LNX3345.00 - HOLT.CO3 345.00 345KV CKT 1	720	720	0.05681	126.4838	GEN659294 1-WILTONCOL9
FDNS	00NR_G15_054	0	17SP	G15_054	TO->FROM	GR ISLD-LNX3345.00 - HOLT.CO3 345.00 345KV CKT 1	720	720	0.05676	126.4755	P12:230:UMZB:# 114 #: SB IN SD. SB-WK-GH
FDNS	00NR_G15_054	0	17SP	G15_054	TO->FROM	GR ISLD-LNX3345.00 - HOLT.CO3 345.00 345KV CKT 1	720	720	0.05676	126.4755	P12:230:UMZB:# 117 #: WK IN SD. SB-WK-GH
FDNS	00NR_G15_054	0	17SP	G15_054	TO->FROM	GR ISLD-LNX3345.00 - HOLT.CO3 345.00 345KV CKT 1	720	720	0.05681	126.4726	GEN600065 7-HIGH BRIDGE
FDNS	00NR_G15_054	0	17SP	G15_054	TO->FROM	GR ISLD-LNX3345.00 - HOLT.CO3 345.00 345KV CKT 1	720	720	0.05681	126.4726	GEN600066 8-HIGH BRIDGE
FDNS	00NR_G15_054	0	17SP	G15_054	TO->FROM	GR ISLD-LNX3345.00 - HOLT.CO3 345.00 345KV CKT 1	720	720	0.05681	126.4672	GEN600014 4-BLACK DOG GEN 4
FDNS	00NR_G15_054	0	17SP	G15_054	TO->FROM	GR ISLD-LNX3345.00 - HOLT.CO3 345.00 345KV CKT 1	720	720	0.05681	126.4624	GEN600011 5-BLACK DOG GEN 1
FDNS	00NR_G15_054	0	17SP	G15_054	TO->FROM	GR ISLD-LNX3345.00 - HOLT.CO3 345.00 345KV CKT 1	720	720	0.05681	126.4568	GEN600070 9-RIVER SIDE
FDNS	00NR_G15_054	0	17SP	G15_054	TO->FROM	GR ISLD-LNX3345.00 - HOLT.CO3 345.00 345KV CKT 1	720	720	0.05681	126.4568	GEN600071 10-RIVER SIDE
FDNS	00NR_G15_054	0	17SP	G15_054	TO->FROM	GR ISLD-LNX3345.00 - HOLT.CO3 345.00 345KV CKT 1	720	720	0.05681	126.4434	GEN600007 7-RIVERSIDE GEN 7
FDNS	00NR_G15_054	0	17SP	G15_054	TO->FROM	GR ISLD-LNX3345.00 - HOLT.CO3 345.00 345KV CKT 1	720	720	0.05681	126.4417	GEN 10648 1-G830_GEN 0.6900
FDNS	00NR_G15_054	0	17SP	G15_054	TO->FROM	GR ISLD-LNX3345.00 - HOLT.CO3 345.00 345KV CKT 1	720	720	0.06993	126.4409	COLUMWEST - GRAND ISLAND 230KV CKT 1
FDNS	00NR_G15_054	0	17SP	G15_054	TO->FROM	GR ISLD-LNX3345.00 - HOLT.CO3 345.00 345KV CKT 1	720	720	0.05681	126.4386	GEN600045 4-ANSON
FDNS	00NR_G15_054	0	17SP	G15_054	TO->FROM	GR ISLD-LNX3345.00 - HOLT.CO3 345.00 345KV CKT 1	720	720	0.05681	126.4328	GEN659192 6-LYNN
FDNS	00NR_G15_054	0	17SP	G15_054	TO->FROM	GR ISLD-LNX3345.00 - HOLT.CO3 345.00 345KV CKT 1	720	720	0.05681	126.4321	GEN659162 4-RED WLCK
FDNS	00NR_G15_054	0	17SP	G15_054	TO->FROM	GR ISLD-LNX3345.00 - HOLT.CO3 345.00 345KV CKT 1	720	720	0.05681	126.4321	GEN659163 5-BLACK WDCK
FDNS	00NR_G15_054	0	17SP	G15_054	TO->FROM	GR ISLD-LNX3345.00 - HOLT.CO3 345.00 345KV CKT 1	720	720	0.05676	126.4187	GLENHAM - WHITLOK 230KV CKT 1
FDNS	00NR_G15_054	0	17SP	G15_054	TO->FROM	GR ISLD-LNX3345.00 - HOLT.CO3 345.00 345KV CKT 1	720	720	0.05681	126.4148	GEN600017 C-LS POWER CT
FDNS	00NR_G15_054	0	17SP	G15_054	TO->FROM	GR ISLD-LNX3345.00 - HOLT.CO3 345.00 345KV CKT 1	720	720	0.05681	126.3883	GEN659031 1-G12_014IS_4 0.6900
FDNS	00NR_G15_054	0	17SP	G15_054	TO->FROM	GR ISLD-LNX3345.00 - HOLT.CO3 345.00 345KV CKT 1	720	720	0.05681	126.3762	LANSING WEST 161/22.0KV TRANSFORMER CKT 1
FDNS	00NR_G15_054	0	17SP	G15_054	TO->FROM	GR ISLD-LNX3345.00 - HOLT.CO3 345.00 345KV CKT 1	720	720	0.05681	126.3681	GEN615021 1-GRE-ER 14G 16.000
FDNS	00NR_G15_054	0	17SP	G15_054	TO->FROM	GR ISLD-LNX3345.00 - HOLT.CO3 345.00 345KV CKT 1	720	720	0.05681	126.3623	GEN615052 1-CAMBRIDGE GENERATING STATION
FDNS	00NR_G15_054	0	17SP	G15_054	TO->FROM	GR ISLD-LNX3345.00 - HOLT.CO3 345.00 345KV CKT 1	720	720	0.05681	126.3536	GEN615015 1-GRE-SPRITWDG13.200
FDNS	00NR_G15_054	0	17SP	G15_054	TO->FROM	GR ISLD-LNX3345.00 - HOLT.CO3 345.00 345KV CKT 1	720	720	0.05681	126.2908	GEN681522 3-GENOA 3
FDNS	00NR_G15_054	0	17SP	G15_054	TO->FROM	GR ISLD-LNX3345.00 - HOLT.CO3 345.00 345KV CKT 1	720	720	0.05681	126.2435	GEN660016 1-B_H WIND 0.7000
FDNS	00NR_G15_054	0	17SP	G15_054	TO->FROM	GR ISLD-LNX3345.00 - HOLT.CO3 345.00 345KV CKT 1	720	720	0.05681	126.2309	BISONMP4 230.00 - SQUARE BUTTE 230KV CKT 1
FDNS	00NR_G15_054	0	17SP	G15_054	TO->FROM	GR ISLD-LNX3345.00 - HOLT.CO3 345.00 345KV CKT 1	720	720	0.05681	126.1898	GEN652906 1-G09_006IS_3 0.6900
FDNS	00NR_G15_054	0	17SP	G15_054	TO->FROM	GR ISLD-LNX3345.00 - HOLT.CO3 345.00 345KV CKT 1	720	720	0.05681	126.1768	GEN672303 3-BOUNDARY DAM GENERATOR 3
FDNS	00NR_G15_054	0	17SP	G15_054	TO->FROM	GR ISLD-LNX3345.00 - HOLT.CO3 345.00 345KV CKT 1	720	720	0.05681	126.1768	GEN672305 5-BOUNDARY DAM GENERATOR 5
FDNS	00NR_G15_054	0	17SP	G15_054	TO->FROM	GR ISLD-LNX3345.00 - HOLT.CO3 345.00 345KV CKT 1	720	720	0.05681	126.1743	GEN662101 1-WESSINGTON190.5750
FDNS	00NR_G15_054	0	17SP	G15_054	TO->FROM	GR ISLD-LNX3345.00 - HOLT.CO3 345.00 345KV CKT 1	720	720	0.05681	126.1658	GEN652545 7-BIG BEND
FDNS	00NR_G15_054	0	17SP	G15_054	TO->FROM	GR ISLD-LNX3345.00 - HOLT.CO3 345.00 345KV CKT 1	720	720	0.05681	126.1532	GEN672392 1-NBECGT1G 18.000
FDNS	00NR_G15_054	0	17SP	G15_054	TO->FROM	GR ISLD-LNX3345.00 - HOLT.CO3 345.00 345KV CKT 1	720	720	0.05681	126.0844	GEN600067 9-HIGH BRIDGE
FDNS	00NR_G15_054	0	17SP	G15_054	TO->FROM	GR ISLD-LNX3345.00 - HOLT.CO3 345.00 345KV CKT 1	720	720	0.05681	126.0498	GEN652907 1-G09_007IS_3 0.6900
FDNS	00NR_G15_054	0	17SP	G15_054	TO->FROM	GR ISLD-LNX3345.00 - HOLT.CO3 345.00 345KV CKT 1	720	720	0.05681	126.0397	GEN910006 1-G12_012IS_3 0.6900
FDNS	00NR_G15_054	0	17SP	G15_054	TO->FROM	GR ISLD-LNX3345.00 - HOLT.CO3 345.00 345KV CKT 1	720	720	0.05681	126.0283	COYOTE 345/24.0KV TRANSFORMER CKT 1
FDNS	00NR_G15_054	0	17SP	G15_054	TO->FROM	GR ISLD-LNX3345.00 - HOLT.CO3 345.00 345KV CKT 1	720	720	0.05681	126.0064	SQUARE BUTTE - YNG2 4 230.00 230KV CKT 1
FDNS	00NR_G15_054	0	17SP	G15_054	TO->FROM	GR ISLD-LNX3345.00 - HOLT.CO3 345.00 345KV CKT 1	720	720	0.05681	126.0061	YNG2 4 230.00 230/20.0KV TRANSFORMER CKT 1
FDNS	00NR_G15_054	0	17SP	G15_054	TO->FROM	GR ISLD-LNX3345.00 - HOLT.CO3 345.00 345KV CKT 1	720	720	0.06032	125.9704	MINGO - RED WILLOW 345KV CKT 1
FDNS	00NR_G15_054	0	17SP	G15_054	TO->FROM	GR ISLD-LNX3345.00 - HOLT.CO3 345.00 345KV CKT 1	720	720	0.06032	125.9704	MINGO - RED WILLOW 345KV CKT 1
FDNS	00NR_G15_054	0	17SP	G15_054	TO->FROM	GR ISLD-LNX3345.00 - HOLT.CO3 345.00 345KV CKT 1	720	720	0.05681	125.8907	GEN659353 1-DEERCREK CTG18.000
FDNS	00NR_G15_054	0	17SP	G15_054	TO->FROM	GR ISLD-LNX3345.00 - HOLT.CO3 345.00 345KV CKT 1	720	720	0.05681	125.8899	GEN659354 1-DEERCREK STG18.000
FDNS	00NR_G15_054	0	17SP	G15_054	TO->FROM	GR ISLD-LNX3345.00 - HOLT.CO3 345.00 345KV CKT 1	720	720	0.05676	125.875	GLENHAM - L3 HAWDON 230KV CKT 1
FDNS	00NR_G15_054	0	17SP	G15_054	TO->FROM	GR ISLD-LNX3345.00 - HOLT.CO3 345.00 345KV CKT 1	720	720	0.05681	125.7267	GEN659289 1-DAYCNTYWND W0.6900
FDNS	00NR_G15_054	0	17SP	G15_054	TO->FROM	GR ISLD-LNX3345.00 - HOLT.CO3 345.00 345KV CKT 1	720	720	0.05681	125.6915	GEN659018 1-G14_003IS_3 0.6900
FDNS	00NR_G15_054	0	17SP	G15_054	TO->FROM	GR ISLD-LNX3345.00 - HOLT.CO3 345.00 345KV CKT 1	720	720	0.05681	125.6524	GEN681542 6-JP MADGETT
FDNS	00NR_G15_054	0	17SP	G15_054	TO->FROM	GR ISLD-LNX3345.00 - HOLT.CO3 345.00 345KV CKT 1	720	720	0.05681	125.5551	GEN659194 1-NDPRAIRWND1W0.6900
FDNS	00NR_G15_054	0	17SP	G15_054	TO->FROM	GR ISLD-LNX3345.00 - HOLT.CO3 345.00 345KV CKT 1	720	720	0.05681	125.553	GEN659010 4-G07_027IS_2 0.6900
FDNS	00NR_G15_054	0	17SP	G15_054	TO->FROM	GR ISLD-LNX3345.00 - HOLT.CO3 345.00 345KV CKT 1	720	720	0.05681	125.541	GEN652460 4-GARRISON
FDNS	00NR_G15_054	0	17SP	G15_054	TO->FROM	GR ISLD-LNX3345.00 - HOLT.CO3 345.00 345KV CKT 1	720	720	0.05681	125.5409	GEN652461 5-GARRISON
FDNS	00NR_G15_054	0	17SP	G15_054	TO->FROM	GR ISLD-LNX3345.00 - HOLT.CO3 345.00 345KV CKT 1	720	720	0.05681	125.5398	GEN652544 5-BIG BEND
FDNS	00NR_G15_054	0	17SP	G15_054	TO->FROM	GR ISLD-LNX3345.00 - HOLT.CO3 345.00 345KV CKT 1	720	720	0.05681	125.5386	GEN652543 3-BIG BEND
FDNS	00NR_G15_054	0	17SP	G15_054	TO->FROM	GR ISLD-LNX3345.00 - HOLT.CO3 345.00 345KV CKT 1	720	720	0.05681	125.5383	GEN652542 1-BIG BEND
FDNS	00NR_G15_054	0	17SP	G15_054	TO->FROM	GR ISLD-LNX3345.00 - HOLT.CO3 345.00 345KV CKT 1	720	720	0.05681	125.4838	GEN652457 1-GARRISON
FDNS	00NR_G15_054	0	17SP	G15_054	TO->FROM	GR ISLD-LNX3345.00 - HOLT.CO3 345.00 345KV CKT 1	720	720	0.05681	125.4838	GEN652458 2-GARRISON
FDNS	00NR_G15_054	0	17SP	G15_054	TO->FROM	GR ISLD-LNX3345.00 - HOLT.CO3 345.00 345KV CKT 1	720	720	0.05681	125.4838	GEN652459 3-GARRISON
FDNS	00NR_G15_054	0	17SP	G15_054	TO->FROM	GR ISLD-LNX3345.00 - HOLT.CO3 345.00 345KV CKT 1	720	720	0.05795	125.4685	AXTELL - POST ROCK 345KV CKT 1
FDNS	00NR_G15_054	0	17SP	G15_054	TO->FROM	GR ISLD-LNX3345.00 - HOLT.CO3 345.00 345KV CKT 1	720	720	0.05681	125.4653	STANTON 230/18.0KV TRANSFORMER CKT 1
FDNS	00NR_G15_054	0	17SP	G15_054	TO->FROM	GR ISLD-LNX3345.00 - HOLT.CO3 345.00 345KV CKT 1	720	720	0.05681	125.406	GEN659403 1-NDSUNFLWR W0.6900
FDNS	00NR_G15_054	0	17SP	G15_054	TO->FROM	GR ISLD-LNX3345.00 - HOLT.CO3 345.00 345KV CKT 1	720	720	0.06033	125.2915	AXTELL - SWEETWATER 345KV CKT 1
FDNS	00NR_G15_054	0	17SP	G15_054	TO->FROM	GR ISLD-LNX3345.00 - HOLT.CO3 345.00 345KV CKT 1	720	720	0.05681	125.2243	CLAY BOSWELL 230/20.9KV TRANSFORMER CKT 1
FDNS	00NR_G15_054	0	17SP	G15_054	TO->FROM	GR ISLD-LNX3345.00 - HOLT.CO3 345.00 345KV CKT 1	720	720	0.05681	125.0909	GEN659411 1-CAMPBLCNTY W0.6900
FDNS	00NR_G15_054	0	17SP	G15_054	TO->FROM	GR ISLD-LNX3345.00 - HOLT.CO3 345.00 345KV CKT 1	720	720	0.05681	124.8833	GEN659296 2-SDPRAIRWND1W0.6900
FDNS	00NR_G15_054	0	17SP	G15_054	TO->FROM	GR ISLD-LNX3345.00 - HOLT.CO3 345.00 345KV CKT 1	720	720	0.05681	124.8765	ALMA 161 161/24.0KV TRANSFORMER CKT 1
FDNS	00NR_G15_054	0	17SP	G15_054	TO->FROM	GR ISLD-LNX3345.00 - HOLT.CO3 345.00 345KV CKT 1	720	720	0.05681	124.8263	RCDC EAST 4230.00 - RED CEDAR DC 230KV CKT 1
FDNS	00NR_G15_054	0	17SP	G15_054	TO->FROM	GR ISLD-LNX3345.00 - HOLT.CO3 345.00 345KV CKT 1	720	720	0.05681	124.8173	P12:230:UMZB:# 112 #: NU IN SD. NU-RCDC & DRY CREEK XFMR
FDNS	00NR_G15_054	0	17SP	G15_054	TO->FROM	GR ISLD-LNX3345.00 - HOLT.CO3 345.00 345KV CKT 1	720	720	0.05681	124.7706	GEN652559 1-OAHE
FDNS	00NR_G15_054	0	17SP	G15_054	TO->FROM	GR ISLD-LNX3345.00 - HOLT.CO3 345.00 345KV CKT 1	720	720	0.05681	124.7475	GEN672321 1-SHAND GENERATOR 1
FDNS	00NR_G15_054	0	17SP	G15_054	TO->FROM	GR ISLD-LNX3345.00 - HOLT.CO3 345.00 345KV CKT 1	720	720	0.05681	124.7374	GEN672310 1-POPLAR RIVER GENERATOR 1
FDNS	00NR_G15_054	0	17SP	G15_054	TO->FROM	GR ISLD-LNX3345.00 - HOLT.CO3 345.00 345KV CKT 1	720	720	0.05681	124.7374	GEN672311 2-POPLAR RIVER GENERATOR 2

SOLUTION	GROUP	SCENARIO	SEASON	SOURCE	DIRECTION	MONITORED ELEMENT	RATEA (MVA)	RATEB(MVA)	TDF	TC%LOADING (% MVA)	CONTINGENCY
FDNS	00NR_G15_054	0	17SP	G15_054	TO->FROM	GR ISLD-LNX3345.00 - HOLT.CO3 345.00 345KV CKT 1	720	720	0.05681	124.736	GEN615010 1-STANTON4
FDNS	00NR_G15_054	0	17SP	G15_054	TO->FROM	GR ISLD-LNX3345.00 - HOLT.CO3 345.00 345KV CKT 1	720	720	0.05681	124.6639	GEN672306 6-BOUNDARY DAM GENERATOR 6
FDNS	00NR_G15_054	0	17SP	G15_054	TO->FROM	GR ISLD-LNX3345.00 - HOLT.CO3 345.00 345KV CKT 1	720	720	0.05681	124.5876	GEN652556 2-OAHE
FDNS	00NR_G15_054	0	17SP	G15_054	TO->FROM	GR ISLD-LNX3345.00 - HOLT.CO3 345.00 345KV CKT 1	720	720	0.05681	124.5876	GEN652557 4-OAHE
FDNS	00NR_G15_054	0	17SP	G15_054	TO->FROM	GR ISLD-LNX3345.00 - HOLT.CO3 345.00 345KV CKT 1	720	720	0.05681	124.5876	GEN652558 6-OAHE
FDNS	00NR_G15_054	0	17SP	G15_054	TO->FROM	GR ISLD-LNX3345.00 - HOLT.CO3 345.00 345KV CKT 1	720	720	0.05681	124.5049	GEN659453 1-GI1414GEN W0.6900
FDNS	00NR_G15_054	0	17SP	G15_054	TO->FROM	GR ISLD-LNX3345.00 - HOLT.CO3 345.00 345KV CKT 1	720	720	0.05681	124.4696	GEN657749 1-YOUNG 1 GENERATOR
FDNS	00NR_G15_054	0	17SP	G15_054	TO->FROM	GR ISLD-LNX3345.00 - HOLT.CO3 345.00 345KV CKT 1	720	720	0.05681	124.4669	GEN600004 2-PRAIRIE ISLAND G2
FDNS	00NR_G15_054	0	17SP	G15_054	TO->FROM	GR ISLD-LNX3345.00 - HOLT.CO3 345.00 345KV CKT 1	720	720	0.05681	124.4622	GEN600003 1-PRAIRIE ISLAND G1
FDNS	00NR_G15_054	0	17SP	G15_054	TO->FROM	GR ISLD-LNX3345.00 - HOLT.CO3 345.00 345KV CKT 1	720	720	0.05681	124.4149	GEN659141 1-K10215A
FDNS	00NR_G15_054	0	17SP	G15_054	TO->FROM	GR ISLD-LNX3345.00 - HOLT.CO3 345.00 345KV CKT 1	720	720	0.05681	124.186	GEN652173 1-G09_001IS_2 0.6900
FDNS	00NR_G15_054	0	17SP	G15_054	TO->FROM	GR ISLD-LNX3345.00 - HOLT.CO3 345.00 345KV CKT 1	720	720	0.05681	124.155	GEN600006 1-AS KING
FDNS	00NR_G15_054	0	17SP	G15_054	TO->FROM	GR ISLD-LNX3345.00 - HOLT.CO3 345.00 345KV CKT 1	720	720	0.05681	123.951	GEN659407 1-ANTELPHILLSW0.6900
FDNS	00NR_G15_054	0	17SP	G15_054	TO->FROM	GR ISLD-LNX3345.00 - HOLT.CO3 345.00 345KV CKT 1	720	720	0.05681	123.858	GEN659110 1-LELAND OLDS UNIT1
FDNS	00NR_G15_054	0	17SP	G15_054	TO->FROM	GR ISLD-LNX3345.00 - HOLT.CO3 345.00 345KV CKT 1	720	720	0.05681	123.5864	GEN600005 1-MONTICELLO
FDNS	00NR_G15_054	0	17SP	G15_054	TO->FROM	GR ISLD-LNX3345.00 - HOLT.CO3 345.00 345KV CKT 1	720	720	0.06505	123.0176	MCCOOL - MOORE 345KV CKT 1
FDNS	00NR_G15_054	0	17SP	G15_054	TO->FROM	GR ISLD-LNX3345.00 - HOLT.CO3 345.00 345KV CKT 1	720	720	0.05681	122.9026	GEN600000 1-SHERBURNECNTY G1
FDNS	00NR_G15_054	0	17SP	G15_054	TO->FROM	GR ISLD-LNX3345.00 - HOLT.CO3 345.00 345KV CKT 1	720	720	0.05681	122.6867	GEN600001 2-SHERBURNE CNTY G2
FDNS	00NR_G15_054	0	17SP	G15_054	TO->FROM	GR ISLD-LNX3345.00 - HOLT.CO3 345.00 345KV CKT 1	720	720	0.05681	122.4067	GEN620315 1-BIG STONE GEN
FDNS	00NR_G15_054	0	17SP	G15_054	TO->FROM	GR ISLD-LNX3345.00 - HOLT.CO3 345.00 345KV CKT 1	720	720	0.05681	122.3924	GEN661015 1-COYOTE
FDNS	00NR_G15_054	0	17SP	G15_054	TO->FROM	GR ISLD-LNX3345.00 - HOLT.CO3 345.00 345KV CKT 1	720	720	0.05681	121.9512	GEN657748 1-YOUNG 2 GENERATOR
FDNS	00NR_G15_054	0	17SP	G15_054	TO->FROM	GR ISLD-LNX3345.00 - HOLT.CO3 345.00 345KV CKT 1	720	720	0.05681	121.7272	GEN600002 3-SHERBURNE CNTY G3
FDNS	00NR_G15_054	0	20SP	G15_054	TO->FROM	GR ISLD-LNX3345.00 - HOLT.CO3 345.00 345KV CKT 1	720	720	0.05319	121.2664	HOLT.CO3 345.00 - THEDFRD3 345.00 345KV CKT 1
FDNS	00NR_G15_054	0	17SP	G15_054	TO->FROM	GR ISLD-LNX3345.00 - HOLT.CO3 345.00 345KV CKT 1	720	720	0.05681	121.0671	SHERBURNE CO 345/24.0KV TRANSFORMER CKT 1
FDNS	00NR_G15_054	0	17SP	G15_054	TO->FROM	GR ISLD-LNX3345.00 - HOLT.CO3 345.00 345KV CKT 1	720	720	0.05646	120.9183	FTTHOM1-LNX3345.00 - LELAND2-LNX3345.00 345KV CKT 1
FDNS	00NR_G15_054	0	25SP	G15_054	TO->FROM	GR ISLD-LNX3345.00 - HOLT.CO3 345.00 345KV CKT 1	720	720	0.0541	120.8868	HOLT.CO3 345.00 - THEDFRD3 345.00 345KV CKT 1
FDNS	00NR_G15_054	0	17SP	G15_054	TO->FROM	GR ISLD-LNX3345.00 - HOLT.CO3 345.00 345KV CKT 1	720	720	0.05681	120.8432	BIG STONE 230/24.0KV TRANSFORMER CKT 1
FDNS	00NR_G15_054	0	17SP	G15_054	TO->FROM	GR ISLD-LNX3345.00 - HOLT.CO3 345.00 345KV CKT 1	720	720	0.05646	120.6288	P12:345:UMZB:# 108 #: LOS FT IN ND. LOS FT
FDNS	00NR_G15_054	0	17SP	G15_054	TO->FROM	GR ISLD-LNX3345.00 - HOLT.CO3 345.00 345KV CKT 1	720	720	0.05646	120.622	FT THOMPSON - FTTHOM1-LNX3345.00 345KV CKT Z
FDNS	00NR_G15_054	0	17SP	G15_054	TO->FROM	GR ISLD-LNX3345.00 - HOLT.CO3 345.00 345KV CKT 1	720	720	0.05646	120.4535	LELAND OLDS - LELAND2-LNX3345.00 345KV CKT Z
FDNS	00NR_G15_054	0	17SP	G15_054	TO->FROM	GR ISLD-LNX3345.00 - HOLT.CO3 345.00 345KV CKT 1	720	720	0.05681	120.0767	GEN659111 2-LELAND OLDS UNIT2
FDNS	00NR_G15_054	0	17SP	G15_054	TO->FROM	GR ISLD-LNX3345.00 - HOLT.CO3 345.00 345KV CKT 1	720	720	0.05681	119.783	GEN659125 1-COVEY
FDNS	00NR_G15_054	0	17SP	G15_054	TO->FROM	GR ISLD-LNX3345.00 - HOLT.CO3 345.00 345KV CKT 1	720	720	0.05681	119.5076	GEN659103 1-ANTELOPE VALLEY UNIT1
FDNS	00NR_G15_054	0	17SP	G15_054	TO->FROM	GR ISLD-LNX3345.00 - HOLT.CO3 345.00 345KV CKT 1	720	720	0.05681	119.5076	GEN659107 2-ANTELOPE VALLEY UNIT2
FDNS	00NR_G15_054	0	17SP	G15_054	TO->FROM	GR ISLD-LNX3345.00 - HOLT.CO3 345.00 345KV CKT 1	720	720	0.06578	119.3553	GRAND ISLAND - MCCOOL 345KV CKT 1
FDNS	00NR_G15_054	0	17SP	G15_054	TO->FROM	GR ISLD-LNX3345.00 - HOLT.CO3 345.00 345KV CKT 1	720	720	0.05681	119.2303	GEN615001 1-COAL CREEK
FDNS	00NR_G15_054	0	17SP	G15_054	TO->FROM	GR ISLD-LNX3345.00 - HOLT.CO3 345.00 345KV CKT 1	720	720	0.05681	119.1455	GEN615002 2-COAL CREEK
FDNS	00NR_G15_054	0	17SP	G15_054	TO->FROM	GR ISLD-LNX3345.00 - HOLT.CO3 345.00 345KV CKT 1	720	720	0.05681	112.5486	GEN562714 1-G15_023_4 0.6900
FDNS	00NR_G15_054	0	17SP	G15_054	TO->FROM	GR ISLD-LNX3345.00 - HOLT.CO3 345.00 345KV CKT 1	720	720	0.05681	112.5486	GEN562715 1-G15_023_5 0.6900
FDNS	00NR_G15_054	0	20SP	G15_054	TO->FROM	GR ISLD-LNX3345.00 - HOLT.CO3 345.00 345KV CKT 1	720	720	0.05541	110.9984	GERALD GENTLEMAN STATION - THEDFRD3 345.00 345KV CKT 1
FDNS	00NR_G15_054	0	25SP	G15_054	TO->FROM	GR ISLD-LNX3345.00 - HOLT.CO3 345.00 345KV CKT 1	720	720	0.05657	110.0238	GERALD GENTLEMAN STATION - THEDFRD3 345.00 345KV CKT 1
FDNS	00NR_G15_054	0	16WP	G15_054	TO->FROM	GR ISLD-LNX3345.00 - HOLT.CO3 345.00 345KV CKT 1	720	720	0.05614	107.3043	KELLY - MEADOWGROVE4230.00 230KV CKT 1
FDNS	00NR_G15_054	0	17SP	G15_054	TO->FROM	GR ISLD-LNX3345.00 - HOLT.CO3 345.00 345KV CKT 1	720	720	0.05681	106.9907	GEN652353 2-GR PRAIRIEG 0.6900
FDNS	00NR_G15_054	0	16WP	G15_054	TO->FROM	GR ISLD-LNX3345.00 - HOLT.CO3 345.00 345KV CKT 1	720	720	0.05391	106.8349	P12:230:UMZB:# 116 #: ST IN SD. WSG-ST-VH
FDNS	00NR_G15_054	0	16WP	G15_054	TO->FROM	GR ISLD-LNX3345.00 - HOLT.CO3 345.00 345KV CKT 1	720	720	0.05393	106.2624	STORLA - WESSINGTON 230KV CKT 1
FDNS	00NR_G15_054	0	16WP	G15_054	TO->FROM	GR ISLD-LNX3345.00 - HOLT.CO3 345.00 345KV CKT 1	720	720	0.05543	105.4196	RIEL - ROSEAU 500KV CKT 1
FDNS	00NR_G15_054	0	16WP	G15_054	TO->FROM	GR ISLD-LNX3345.00 - HOLT.CO3 345.00 345KV CKT 1	720	720	0.05447	105.1969	HANLON - STORLA 230KV CKT 1
FDNS	00NR_G15_054	0	16WP	G15_054	TO->FROM	GR ISLD-LNX3345.00 - HOLT.CO3 345.00 345KV CKT 1	720	720	0.05383	104.8426	FT THOMPSON - LETCHER 230KV CKT 1
FDNS	00NR_G15_054	0	16WP	G15_054	TO->FROM	GR ISLD-LNX3345.00 - HOLT.CO3 345.00 345KV CKT 1	720	720	0.05383	104.8426	FT THOMPSON - LETCHER 230KV CKT 1
FDNSLock	00NR_G15_054	0	16WP	G15_054	TO->FROM	GR ISLD-LNX3345.00 - HOLT.CO3 345.00 345KV CKT 1	720	720	0.05475	104.5484	P12:345:UMZW:# 1747 #: WT2 IN SD. WT2-WHT LINE FAULT
FDNS	00NR_G15_054	0	16WP	G15_054	TO->FROM	GR ISLD-LNX3345.00 - HOLT.CO3 345.00 345KV CKT 1	720	720	0.05475	104.1306	WATERTN-LNX3345.00 - WHITE 345KV CKT 1
FDNS	00NR_G15_054	0	16WP	G15_054	TO->FROM	GR ISLD-LNX3345.00 - HOLT.CO3 345.00 345KV CKT 1	720	720	0.05475	104.0604	WATERTN-LNX3345.00 - WATERTOWN 345KV CKT Z
FDNS	00NR_G15_054	0	16WP	G15_054	TO->FROM	GR ISLD-LNX3345.00 - HOLT.CO3 345.00 345KV CKT 1	720	720	0.05536	103.859	BUFFALO - JAMESTOWN 345KV CKT 1
FDNS	00NR_G15_054	0	16WP	G15_054	TO->FROM	GR ISLD-LNX3345.00 - HOLT.CO3 345.00 345KV CKT 1	720	720	0.05222	103.6108	FT RANDAL - G12_009IST 230.00 230KV CKT 1
FDNS	00NR_G15_054	0	16WP	G15_054	TO->FROM	GR ISLD-LNX3345.00 - HOLT.CO3 345.00 345KV CKT 1	720	720	0.05705	103.609	KEYSTONE - SIDNEY1-LNX3345.00 345KV CKT 1
FDNS	00NR_G15_054	0	16WP	G15_054	TO->FROM	GR ISLD-LNX3345.00 - HOLT.CO3 345.00 345KV CKT 1	720	720	0.05705	103.5987	SIDNEY - SIDNEY1-LNX3345.00 345KV CKT Z
FDNS	00NR_G15_054	0	16WP	G15_054	TO->FROM	GR ISLD-LNX3345.00 - HOLT.CO3 345.00 345KV CKT 1	720	720	0.05222	103.5175	FT THOMPSON - LAKE PLATT 230KV CKT 1
FDNS	00NR_G15_054	0	16WP	G15_054	TO->FROM	GR ISLD-LNX3345.00 - HOLT.CO3 345.00 345KV CKT 1	720	720	0.05222	103.5175	FT THOMPSON - LAKE PLATT 230KV CKT 1
FDNS	00NR_G15_054	0	16WP	G15_054	TO->FROM	GR ISLD-LNX3345.00 - HOLT.CO3 345.00 345KV CKT 1	720	720	0.05213	103.5171	FT RANDAL - FT THOMPSON 230KV CKT 1
FDNS	00NR_G15_054	0	16WP	G15_054	TO->FROM	GR ISLD-LNX3345.00 - HOLT.CO3 345.00 345KV CKT 1	720	720	0.05213	103.5171	FT RANDAL - FT THOMPSON 230KV CKT 1
FDNS	00NR_G15_054	0	16WP	G15_054	TO->FROM	GR ISLD-LNX3345.00 - HOLT.CO3 345.00 345KV CKT 1	720	720	0.05539	103.5065	GEN336821 1-GRAND GULF UNIT
FDNS	00NR_G15_054	0	16WP	G15_054	TO->FROM	GR ISLD-LNX3345.00 - HOLT.CO3 345.00 345KV CKT 1	720	720	0.0547	103.4036	LETCHER - SIOUX FALLS 230KV CKT 1
FDNS	00NR_G15_054	0	16WP	G15_054	TO->FROM	GR ISLD-LNX3345.00 - HOLT.CO3 345.00 345KV CKT 1	720	720	0.05516	103.3413	G09_001IST 345.00 - WATERTOWN 345KV CKT 1
FDNS	00NR_G15_054	0	16WP	G15_054	TO->FROM	GR ISLD-LNX3345.00 - HOLT.CO3 345.00 345KV CKT 1	720	720	0.05222	103.2476	G12_009IST 230.00 - LAKE PLATT 230KV CKT 1
FDNS	00NR_G15_054	0	16WP	G15_054	TO->FROM	GR ISLD-LNX3345.00 - HOLT.CO3 345.00 345KV CKT 1	720	720	0.05539	103.2193	GEN640010 1-GERALD GENTLEMAN STATION UNIT 1
FDNS	00NR_G15_054	0	16WP	G15_054	TO->FROM	GR ISLD-LNX3345.00 - HOLT.CO3 345.00 345KV CKT 1	720	720	0.05539	103.1844	GEN635024 4-WALTER SCOTT UNIT 4
FDNS	00NR_G15_054	0	16WP	G15_054	TO->FROM	GR ISLD-LNX3345.00 - HOLT.CO3 345.00 345KV CKT 1	720	720	0.05539	103.1483	GEN337911 1-ARKANSAS NUCLEAR ONE UNIT #2
FDNS	00NR_G15_054	0	16WP	G15_054	TO->FROM	GR ISLD-LNX3345.00 - HOLT.CO3 345.00 345KV CKT 1	720	720	0.05539	103.107	GEN640011 2-GERALD GENTLEMAN STATION UNIT 2
FDNS	00NR_G15_054	0	16WP	G15_054	TO->FROM	GR ISLD-LNX3345.00 - HOLT.CO3 345.00 345KV CKT 1	720	720	0.05614	103.0609	FT RANDAL - MEADOWGROVE4230.00 230KV CKT 1
FDNS	00NR_G15_054	0	16WP	G15_054	TO->FROM	GR ISLD-LNX3345.00 - HOLT.CO3 345.00 345KV CKT 1	720	720	0.05539	103.0575	GEN344225 1-1CAL G1 25.000
FDNS	00NR_G15_054	0	16WP	G15_054	TO->FROM	GR ISLD-LNX3345.00 - HOLT.CO3 345.00 345KV CKT 1	720	720	0.05539	103.0253	GEN336153 1-WATERFORD UNIT#3
FDNS	00NR_G15_054	0	16WP	G15_054	TO->FROM	GR ISLD-LNX3345.00 - HOLT.CO3 345.00 345KV CKT 1	720	720	0.05609	102.9901	HAZLETON - MITCHLCO3 345.00 345KV CKT 1
FDNS	00NR_G15_054	0	16WP	G15_054	TO->FROM	GR ISLD-LNX3345.00 - HOLT.CO3 345.00 345KV CKT 1	720	720	0.05537	102.936	BISON 3 345.00 - BUFFALO 345KV CKT 1

SOLUTION	GROUP	SCENARIO	SEASON	SOURCE	DIRECTION	MONITORED ELEMENT	RATEA (MVA)	RATEB(MVA)	TDF	TC%LOADING (% MVA)	CONTINGENCY
FDNS	00NR_G15_054	0	16WP	G15_054	TO->FROM	GR ISLD-LNX3345.00 - HOLT.CO3 345.00 345KV CKT 1	720	720	0.05536	102.9259	CENTER - JAMESTOWN 345KV CKT 1
FDNS	00NR_G15_054	0	16WP	G15_054	TO->FROM	GR ISLD-LNX3345.00 - HOLT.CO3 345.00 345KV CKT 1	720	720	0.05539	102.8542	GEN635023 3-WALTER SCOTT UNIT 3
FDNS	00NR_G15_054	0	16WP	G15_054	TO->FROM	GR ISLD-LNX3345.00 - HOLT.CO3 345.00 345KV CKT 1	720	720	0.05567	102.8117	AS KING - EAU CLAIRE 345KV CKT 1
FDNS	00NR_G15_054	0	16WP	G15_054	TO->FROM	GR ISLD-LNX3345.00 - HOLT.CO3 345.00 345KV CKT 1	720	720	0.05539	102.7762	GEN337910 1-ARKANSAS NUCLEAR ONE UNIT #1
FDNS	00NR_G15_054	0	16WP	G15_054	TO->FROM	GR ISLD-LNX3345.00 - HOLT.CO3 345.00 345KV CKT 1	720	720	0.05552	102.7672	FT RANDAL - SIOUX CITY 230KV CKT 1
FDNS	00NR_G15_054	0	16WP	G15_054	TO->FROM	GR ISLD-LNX3345.00 - HOLT.CO3 345.00 345KV CKT 1	720	720	0.05539	102.7604	GEN335831 1-RIVERBEND UNIT#1
FDNS	00NR_G15_054	0	16WP	G15_054	TO->FROM	GR ISLD-LNX3345.00 - HOLT.CO3 345.00 345KV CKT 1	720	720	0.05562	102.6673	ARROWHEAD - ARROWHEAD 230 230KV CKT 1
FDNS	00NR_G15_054	0	16WP	G15_054	TO->FROM	GR ISLD-LNX3345.00 - HOLT.CO3 345.00 345KV CKT 1	720	720	0.06305	102.6093	RAUN - SUB 3451 FT CAL 345KV CKT 1
FDNS	00NR_G15_054	0	16WP	G15_054	TO->FROM	GR ISLD-LNX3345.00 - HOLT.CO3 345.00 345KV CKT 1	720	720	0.06305	102.6093	RAUN - SUB 3451 FT CAL 345KV CKT 1
FDNS	00NR_G15_054	0	16WP	G15_054	TO->FROM	GR ISLD-LNX3345.00 - HOLT.CO3 345.00 345KV CKT 1	720	720	0.055	102.5534	HANLON - SIOUX FALLS 230KV CKT 1
FDNS	00NR_G15_054	0	16WP	G15_054	TO->FROM	GR ISLD-LNX3345.00 - HOLT.CO3 345.00 345KV CKT 1	720	720	0.05517	102.5357	GROTON-LNX3 345.00 - LELAND1-LNX3345.00 345KV CKT 1
FDNS	00NR_G15_054	0	16WP	G15_054	TO->FROM	GR ISLD-LNX3345.00 - HOLT.CO3 345.00 345KV CKT 1	720	720	0.04131	102.4959	GRAND ISLAND - SWEETWATER 345KV CKT 1
FDNS	00NR_G15_054	0	16WP	G15_054	TO->FROM	GR ISLD-LNX3345.00 - HOLT.CO3 345.00 345KV CKT 1	720	720	0.05517	102.4921	P12:345:UMZB:# 109 #: LOS GRT IN ND. LOS GRT
FDNS	00NR_G15_054	0	16WP	G15_054	TO->FROM	GR ISLD-LNX3345.00 - HOLT.CO3 345.00 345KV CKT 1	720	720	0.05517	102.4916	GROTON - GROTON-LNX3 345.00 345KV CKT Z
FDNS	00NR_G15_054	0	16WP	G15_054	TO->FROM	GR ISLD-LNX3345.00 - HOLT.CO3 345.00 345KV CKT 1	720	720	0.05517	102.4854	LELAND OLDS - LELAND1-LNX3345.00 345KV CKT Z
FDNS	00NR_G15_054	0	16WP	G15_054	TO->FROM	GR ISLD-LNX3345.00 - HOLT.CO3 345.00 345KV CKT 1	720	720	0.05656	102.466	GERALD GENTLEMAN STATION - KEYSTONE 345KV CKT 1
FDNS	00NR_G15_054	0	16WP	G15_054	TO->FROM	GR ISLD-LNX3345.00 - HOLT.CO3 345.00 345KV CKT 1	720	720	0.05676	102.4491	SIDNEY - STEGALL 345KV CKT 1
FDNS	00NR_G15_054	0	16WP	G15_054	TO->FROM	GR ISLD-LNX3345.00 - HOLT.CO3 345.00 345KV CKT 1	720	720	0.05494	102.4395	FT RANDAL - UTICA JCT 230KV CKT 1
FDNS	00NR_G15_054	0	16WP	G15_054	TO->FROM	GR ISLD-LNX3345.00 - HOLT.CO3 345.00 345KV CKT 1	720	720	0.05539	102.3643	GEN337653 1-WHITE BLUFF UNIT #2
FDNS	00NR_G15_054	0	16WP	G15_054	TO->FROM	GR ISLD-LNX3345.00 - HOLT.CO3 345.00 345KV CKT 1	720	720	0.05539	102.3096	GEN501801 1-DOLET HILLS UNIT1
FDNS	00NR_G15_054	0	16WP	G15_054	TO->FROM	GR ISLD-LNX3345.00 - HOLT.CO3 345.00 345KV CKT 1	720	720	0.05533	102.3059	CARPENTER - HURON 230KV CKT 1
FDNS	00NR_G15_054	0	16WP	G15_054	TO->FROM	GR ISLD-LNX3345.00 - HOLT.CO3 345.00 345KV CKT 1	720	720	0.05539	102.2342	GEN337652 1-WHITE BLUFF UNIT #1
FDNS	00NR_G15_054	0	16WP	G15_054	TO->FROM	GR ISLD-LNX3345.00 - HOLT.CO3 345.00 345KV CKT 1	720	720	0.05538	102.2114	ELLENDALE - OAKES 230KV CKT 1
FDNS	00NR_G15_054	0	16WP	G15_054	TO->FROM	GR ISLD-LNX3345.00 - HOLT.CO3 345.00 345KV CKT 1	720	720	0.05538	102.2114	ELLENDALE - OAKES 230KV CKT 1
FDNS	00NR_G15_054	0	16WP	G15_054	TO->FROM	GR ISLD-LNX3345.00 - HOLT.CO3 345.00 345KV CKT 1	720	720	0.05539	102.2081	GEN641089 2-ENERGY CENTER 2
FDNS	00NR_G15_054	0	16WP	G15_054	TO->FROM	GR ISLD-LNX3345.00 - HOLT.CO3 345.00 345KV CKT 1	720	720	0.05609	102.1935	ADAMS - MITCHLCO3 345.00 345KV CKT 1
FDNS	00NR_G15_054	0	16WP	G15_054	TO->FROM	GR ISLD-LNX3345.00 - HOLT.CO3 345.00 345KV CKT 1	720	720	0.05516	102.191	G09_001IST 345.00 - GROTON 345KV CKT 1
FDNS	00NR_G15_054	0	16WP	G15_054	TO->FROM	GR ISLD-LNX3345.00 - HOLT.CO3 345.00 345KV CKT 1	720	720	0.06327	102.1882	NUNDRWD - WAYSIDE 230KV CKT 1
FDNS	00NR_G15_054	0	16WP	G15_054	TO->FROM	GR ISLD-LNX3345.00 - HOLT.CO3 345.00 345KV CKT 1	720	720	0.05533	102.1838	HURON - WATERTOWN 230KV CKT 2
FDNS	00NR_G15_054	0	16WP	G15_054	TO->FROM	GR ISLD-LNX3345.00 - HOLT.CO3 345.00 345KV CKT 1	720	720	0.05533	102.1838	HURON - WATERTOWN 230KV CKT 2
FDNS	00NR_G15_054	0	16WP	G15_054	TO->FROM	GR ISLD-LNX3345.00 - HOLT.CO3 345.00 345KV CKT 1	720	720	0.05447	102.1827	SPLIT ROCK - WHITE 345KV CKT 1
FDNS	00NR_G15_054	0	16WP	G15_054	TO->FROM	GR ISLD-LNX3345.00 - HOLT.CO3 345.00 345KV CKT 1	720	720	0.05447	102.1827	SPLIT ROCK - WHITE 345KV CKT 1
FDNS	00NR_G15_054	0	16WP	G15_054	TO->FROM	GR ISLD-LNX3345.00 - HOLT.CO3 345.00 345KV CKT 1	720	720	0.0558	102.1726	ARPIN B4 345.00 - EAU CLAIRE 345KV CKT 1
FDNS	00NR_G15_054	0	16WP	G15_054	TO->FROM	GR ISLD-LNX3345.00 - HOLT.CO3 345.00 345KV CKT 1	720	720	0.05539	102.1545	GEN338146 1-INDEPENDENCE UNIT #2
FDNS	00NR_G15_054	0	16WP	G15_054	TO->FROM	GR ISLD-LNX3345.00 - HOLT.CO3 345.00 345KV CKT 1	720	720	0.05537	102.1544	FORMAN - OAKES 230KV CKT 1
FDNS	00NR_G15_054	0	16WP	G15_054	TO->FROM	GR ISLD-LNX3345.00 - HOLT.CO3 345.00 345KV CKT 1	720	720	0.05539	102.1491	GEN338143 1-INDEPENDENCE UNIT #1
FDNS	00NR_G15_054	0	16WP	G15_054	TO->FROM	GR ISLD-LNX3345.00 - HOLT.CO3 345.00 345KV CKT 1	720	720	0.05533	102.1319	CARPENTER - WATERTOWN 230KV CKT 1
FDNS	00NR_G15_054	0	16WP	G15_054	TO->FROM	GR ISLD-LNX3345.00 - HOLT.CO3 345.00 345KV CKT 1	720	720	0.05533	102.1319	CARPENTER - WATERTOWN 230KV CKT 1
FDNS	00NR_G15_054	0	16WP	G15_054	TO->FROM	GR ISLD-LNX3345.00 - HOLT.CO3 345.00 345KV CKT 1	720	720	0.05502	102.1286	PAHOJA - SIOUX FALLS 230KV CKT 1
FDNSLock	00NR_G15_054	0	16WP	G15_054	TO->FROM	GR ISLD-LNX3345.00 - HOLT.CO3 345.00 345KV CKT 1	720	720	0.05539	102.0995	CENTER - CNTSHNT3 345.00 345KV CKT Z1
FDNS	00NR_G15_054	0	16WP	G15_054	TO->FROM	GR ISLD-LNX3345.00 - HOLT.CO3 345.00 345KV CKT 1	720	720	0.05539	102.0978	CNTSHNT3 345.00 - PRAIRIE3 345.00 345KV CKT 1
FDNS	00NR_G15_054	0	16WP	G15_054	TO->FROM	GR ISLD-LNX3345.00 - HOLT.CO3 345.00 345KV CKT 1	720	720	0.05738	102.0875	GRIMES - LEHIGH 345KV CKT 1
FDNS	00NR_G15_054	0	16WP	G15_054	TO->FROM	GR ISLD-LNX3345.00 - HOLT.CO3 345.00 345KV CKT 1	720	720	0.05393	102.0663	FT THOMPSON - WESSINGTON 230KV CKT 1
FDNS	00NR_G15_054	0	16WP	G15_054	TO->FROM	GR ISLD-LNX3345.00 - HOLT.CO3 345.00 345KV CKT 1	720	720	0.05393	102.0663	FT THOMPSON - WESSINGTON 230KV CKT 1
FDNS	00NR_G15_054	0	16WP	G15_054	TO->FROM	GR ISLD-LNX3345.00 - HOLT.CO3 345.00 345KV CKT 1	720	720	0.05589	102.0161	RASMUSN - UTICA JCT 230KV CKT 1
FDNS	00NR_G15_054	0	16WP	G15_054	TO->FROM	GR ISLD-LNX3345.00 - HOLT.CO3 345.00 345KV CKT 1	720	720	0.05586	102.0013	ADAMS - PLEASANT VALLEY 345KV CKT 1
FDNS	00NR_G15_054	0	16WP	G15_054	TO->FROM	GR ISLD-LNX3345.00 - HOLT.CO3 345.00 345KV CKT 1	720	720	0.05487	101.9685	P12:115:NPPD:1091:VALENTN7:MISSION7:BTB
FDNS	00NR_G15_054	0	16WP	G15_054	TO->FROM	GR ISLD-LNX3345.00 - HOLT.CO3 345.00 345KV CKT 1	720	720	0.05539	101.9681	GEN501813 1-RODEMACHER UNIT 3
FDNS	00NR_G15_054	0	16WP	G15_054	TO->FROM	GR ISLD-LNX3345.00 - HOLT.CO3 345.00 345KV CKT 1	720	720	0.0516	101.926	GERALD GENTLEMAN STATION - SWEETWATER 345KV CKT 1
FDNS	00NR_G15_054	0	16WP	G15_054	TO->FROM	GR ISLD-LNX3345.00 - HOLT.CO3 345.00 345KV CKT 1	720	720	0.05487	101.9112	MISSION - ST FRANCIS 115KV CKT 1
FDNS	00NR_G15_054	0	16WP	G15_054	TO->FROM	GR ISLD-LNX3345.00 - HOLT.CO3 345.00 345KV CKT 1	720	720	0.05519	101.9017	FT THOMPSON - HURON 230KV CKT 1
FDNS	00NR_G15_054	0	16WP	G15_054	TO->FROM	GR ISLD-LNX3345.00 - HOLT.CO3 345.00 345KV CKT 1	720	720	0.05519	101.9017	FT THOMPSON - HURON 230KV CKT 1
FDNS	00NR_G15_054	0	16WP	G15_054	TO->FROM	GR ISLD-LNX3345.00 - HOLT.CO3 345.00 345KV CKT 1	720	720	0.05519	101.9017	FT THOMPSON - HURON 230KV CKT 2
FDNS	00NR_G15_054	0	16WP	G15_054	TO->FROM	GR ISLD-LNX3345.00 - HOLT.CO3 345.00 345KV CKT 1	720	720	0.05519	101.9017	FT THOMPSON - HURON 230KV CKT 2
FDNS	00NR_G15_054	0	16WP	G15_054	TO->FROM	GR ISLD-LNX3345.00 - HOLT.CO3 345.00 345KV CKT 1	720	720	0.05589	101.8608	RASMUSN - SIOUX CITY 230KV CKT 1
FDNSLock	00NR_G15_054	0	16WP	G15_054	TO->FROM	GR ISLD-LNX3345.00 - HOLT.CO3 345.00 345KV CKT 1	720	720	0.05536	101.8442	CHISAGO COUNTY - FORBES 500KV CKT 1
FDNS	00NR_G15_054	0	16WP	G15_054	TO->FROM	GR ISLD-LNX3345.00 - HOLT.CO3 345.00 345KV CKT 1	720	720	0.05539	101.8407	GEN335206 1-NELSON UNIT 6
FDNS	00NR_G15_054	0	16WP	G15_054	TO->FROM	GR ISLD-LNX3345.00 - HOLT.CO3 345.00 345KV CKT 1	720	720	0.05487	101.8384	HARMONY - ST FRANCIS 115KV CKT 1
FDNS	00NR_G15_054	0	16WP	G15_054	TO->FROM	GR ISLD-LNX3345.00 - HOLT.CO3 345.00 345KV CKT 1	720	720	0.05502	101.8102	EAGLE 4 230.00 - PAHOJA 230KV CKT 1
FDNS	00NR_G15_054	0	16WP	G15_054	TO->FROM	GR ISLD-LNX3345.00 - HOLT.CO3 345.00 345KV CKT 1	720	720	0.05487	101.7846	HARMONY - VALENTINE 115KV CKT 1
FDNS	00NR_G15_054	0	16WP	G15_054	TO->FROM	GR ISLD-LNX3345.00 - HOLT.CO3 345.00 345KV CKT 1	720	720	0.05539	101.7643	FORMAN - HANKINSON 230KV CKT 1
FDNS	00NR_G15_054	0	16WP	G15_054	TO->FROM	GR ISLD-LNX3345.00 - HOLT.CO3 345.00 345KV CKT 1	720	720	0.0554	101.7526	GLENBORO SOUTH - RUGBY 230KV CKT 1
FDNS	00NR_G15_054	0	16WP	G15_054	TO->FROM	GR ISLD-LNX3345.00 - HOLT.CO3 345.00 345KV CKT 1	720	720	0.0554	101.7516	ALEXMRES3 345.00 - BISON 3 345.00 345KV CKT 1
FDNS	00NR_G15_054	0	16WP	G15_054	TO->FROM	GR ISLD-LNX3345.00 - HOLT.CO3 345.00 345KV CKT 1	720	720	0.05536	101.7512	CHISAGO COUNTY - CHISAGO COUNTY 500KV CKT 1
FDNS	00NR_G15_054	0	16WP	G15_054	TO->FROM	GR ISLD-LNX3345.00 - HOLT.CO3 345.00 345KV CKT 1	720	720	0.05539	101.7354	GEN501812 1-RODEMACHER UNIT 2
FDNS	00NR_G15_054	0	16WP	G15_054	TO->FROM	GR ISLD-LNX3345.00 - HOLT.CO3 345.00 345KV CKT 1	720	720	0.05584	101.7348	LAKEFIELD 3 - NOBLES 345KV CKT 1
FDNS	00NR_G15_054	0	16WP	G15_054	TO->FROM	GR ISLD-LNX3345.00 - HOLT.CO3 345.00 345KV CKT 1	720	720	0.05399	101.7307	P12:345:UMZW:# 907 #: SC2-SR IN IA. SC2-SR 345 KV LINE
FDNS	00NR_G15_054	0	16WP	G15_054	TO->FROM	GR ISLD-LNX3345.00 - HOLT.CO3 345.00 345KV CKT 1	720	720	0.05539	101.7152	GEN344897 4-1LAB G4 20.000
FDNS	00NR_G15_054	0	16WP	G15_054	TO->FROM	GR ISLD-LNX3345.00 - HOLT.CO3 345.00 345KV CKT 1	720	720	0.05539	101.7132	GEN344894 1-1LAB G1 20.000
FDNS	00NR_G15_054	0	16WP	G15_054	TO->FROM	GR ISLD-LNX3345.00 - HOLT.CO3 345.00 345KV CKT 1	720	720	0.05539	101.7131	GEN344896 3-1LAB G3 20.000
FDNS	00NR_G15_054	0	16WP	G15_054	TO->FROM	GR ISLD-LNX3345.00 - HOLT.CO3 345.00 345KV CKT 1	720	720	0.05539	101.7077	GEN532751 1-WOLF CREEK GENERATING STATION UNIT 1
FDNS	00NR_G15_054	0	16WP	G15_054	TO->FROM	GR ISLD-LNX3345.00 - HOLT.CO3 345.00 345KV CKT 1	720	720	0.05399	101.706	SIOUX CITY - SIOUXCY-LNX3345.00 345KV CKT Z
FDNS	00NR_G15_054	0	16WP	G15_054	TO->FROM	GR ISLD-LNX3345.00 - HOLT.CO3 345.00 345KV CKT 1	720	720	0.05539	101.6904	GEN345670 1-1RUSH G1 18.000

SOLUTION	GROUP	SCENARIO	SEASON	SOURCE	DIRECTION	MONITORED ELEMENT	RATEA (MVA)	RATEB(MVA)	TDF	TC%LOADING (% MVA)	CONTINGENCY
FDNS	00NR_G15_054	0	16WP	G15_054	TO->FROM	GR ISLD-LNX3345.00 - HOLT.CO3 345.00 345KV CKT 1	720	720	0.05539	101.6903	GEN345671 2-1RUSH G2 18.000
FDNS	00NR_G15_054	0	16WP	G15_054	TO->FROM	GR ISLD-LNX3345.00 - HOLT.CO3 345.00 345KV CKT 1	720	720	0.05537	101.6817	CENTER - COYOTE 345KV CKT 1
FDNS	00NR_G15_054	0	16WP	G15_054	TO->FROM	GR ISLD-LNX3345.00 - HOLT.CO3 345.00 345KV CKT 1	720	720	0.05539	101.6802	GEN344895 2-1LAB G2 20.000
FDNS	00NR_G15_054	0	16WP	G15_054	TO->FROM	GR ISLD-LNX3345.00 - HOLT.CO3 345.00 345KV CKT 1	720	720	0.05252	101.6504	FT THOMPSON (FT2 KU1B) 345/230/13.8KV TRANSFORMER CKT 1
FDNS	00NR_G15_054	0	16WP	G15_054	TO->FROM	GR ISLD-LNX3345.00 - HOLT.CO3 345.00 345KV CKT 1	720	720	0.05539	101.6503	GEN659118 1-LARAMIE RIVER UNIT1
FDNS	00NR_G15_054	0	16WP	G15_054	TO->FROM	GR ISLD-LNX3345.00 - HOLT.CO3 345.00 345KV CKT 1	720	720	0.05253	101.648	FT THOMPSON (FT2 KU1A) 345/230/13.8KV TRANSFORMER CKT 1
FDNS	00NR_G15_054	0	16WP	G15_054	TO->FROM	GR ISLD-LNX3345.00 - HOLT.CO3 345.00 345KV CKT 1	720	720	0.05539	101.6291	GEN336252 1-NINEMILE POINT UNIT#5
FDNS	00NR_G15_054	0	16WP	G15_054	TO->FROM	GR ISLD-LNX3345.00 - HOLT.CO3 345.00 345KV CKT 1	720	720	0.05399	101.6225	SIOUXCY-LNX3345.00 - SPLIT ROCK 345KV CKT 1
FDNS	00NR_G15_054	0	16WP	G15_054	TO->FROM	GR ISLD-LNX3345.00 - HOLT.CO3 345.00 345KV CKT 1	720	720	0.05399	101.6225	SIOUXCY-LNX3345.00 - SPLIT ROCK 345KV CKT 1
FDNS	00NR_G15_054	0	16WP	G15_054	TO->FROM	GR ISLD-LNX3345.00 - HOLT.CO3 345.00 345KV CKT 1	720	720	0.05258	101.6047	GERALD GENTLEMAN STATION - SWEETWATER 345KV CKT 2
FDNS	00NR_G15_054	0	16WP	G15_054	TO->FROM	GR ISLD-LNX3345.00 - HOLT.CO3 345.00 345KV CKT 1	720	720	0.05065	101.5959	P12:115:NPPD:WAPA6:FTRANDL7:ONEILL 7:BTB
FDNS	00NR_G15_054	0	16WP	G15_054	TO->FROM	GR ISLD-LNX3345.00 - HOLT.CO3 345.00 345KV CKT 1	720	720	0.05065	101.5959	P12:115:UMZB:# 115 #: SE IN NE. FR-SE-ON
FDNS	00NR_G15_054	0	16WP	G15_054	TO->FROM	GR ISLD-LNX3345.00 - HOLT.CO3 345.00 345KV CKT 1	720	720	0.05539	101.5903	GEN336831 1-BAXTER WILSON SES
FDNS	00NR_G15_054	0	16WP	G15_054	TO->FROM	GR ISLD-LNX3345.00 - HOLT.CO3 345.00 345KV CKT 1	720	720	0.05565	101.5888	LARAMIE RIVER - SIDNEY2-LNX3345.00 345KV CKT 1
FDNS	00NR_G15_054	0	16WP	G15_054	TO->FROM	GR ISLD-LNX3345.00 - HOLT.CO3 345.00 345KV CKT 1	720	720	0.05565	101.576	SIDNEY - SIDNEY2-LNX3345.00 345KV CKT Z
FDNS	00NR_G15_054	0	16WP	G15_054	TO->FROM	GR ISLD-LNX3345.00 - HOLT.CO3 345.00 345KV CKT 1	720	720	0.05539	101.5717	P12:115:UMZW:# 162 #: NEL IN ND. FAULT ON ML-NEL-MX-GA 115 KV
FDNS	00NR_G15_054	0	16WP	G15_054	TO->FROM	GR ISLD-LNX3345.00 - HOLT.CO3 345.00 345KV CKT 1	720	720	0.05065	101.5535	FT RANDAL - SPENCER 115KV CKT 1
FDNS	00NR_G15_054	0	16WP	G15_054	TO->FROM	GR ISLD-LNX3345.00 - HOLT.CO3 345.00 345KV CKT 1	720	720	0.05487	101.5393	AINSWORTH - VALENTINE 115KV CKT 1
FDNS	00NR_G15_054	0	16WP	G15_054	TO->FROM	GR ISLD-LNX3345.00 - HOLT.CO3 345.00 345KV CKT 1	720	720	0.05539	101.5306	GEN337041 1-GERALD ANDRUS
FDNS	00NR_G15_054	0	16WP	G15_054	TO->FROM	GR ISLD-LNX3345.00 - HOLT.CO3 345.00 345KV CKT 1	720	720	0.05573	101.5283	GAVINS POINT - HARTINGTON 115KV CKT 1
FDNS	00NR_G15_054	0	16WP	G15_054	TO->FROM	GR ISLD-LNX3345.00 - HOLT.CO3 345.00 345KV CKT 1	720	720	0.05571	101.4963	BYRON - NORTH ROCHESTER 345KV CKT 1
FDNS	00NR_G15_054	0	16WP	G15_054	TO->FROM	GR ISLD-LNX3345.00 - HOLT.CO3 345.00 345KV CKT 1	720	720	0.05539	101.4889	GEN334440 1-SABINE UNIT 4
FDNS	00NR_G15_054	0	16WP	G15_054	TO->FROM	GR ISLD-LNX3345.00 - HOLT.CO3 345.00 345KV CKT 1	720	720	0.05539	101.4625	GEN336251 1-NINEMILE POINT UNIT#4
FDNSLock	00NR_G15_054	0	16WP	G15_054	TO->FROM	GR ISLD-LNX3345.00 - HOLT.CO3 345.00 345KV CKT 1	720	720	0.06321	101.4606	P13:230-345:NPPD:STEGALL3:KV3A
FDNS	00NR_G15_054	0	16WP	G15_054	TO->FROM	GR ISLD-LNX3345.00 - HOLT.CO3 345.00 345KV CKT 1	720	720	0.05541	101.4603	BLAIR - GRANITE FALLS 230KV CKT 1
FDNS	00NR_G15_054	0	16WP	G15_054	TO->FROM	GR ISLD-LNX3345.00 - HOLT.CO3 345.00 345KV CKT 1	720	720	0.05541	101.4603	BLAIR - GRANITE FALLS 230KV CKT 1
FDNS	00NR_G15_054	0	16WP	G15_054	TO->FROM	GR ISLD-LNX3345.00 - HOLT.CO3 345.00 345KV CKT 1	720	720	0.05597	101.4599	KOSSUTH 3 345.00 - WEBSTER 345KV CKT 1
FDNSLock	00NR_G15_054	0	16WP	G15_054	TO->FROM	GR ISLD-LNX3345.00 - HOLT.CO3 345.00 345KV CKT 1	720	720	0.06321	101.4579	STEGALL (SGQ KV3A) 345/230/13.8KV TRANSFORMER CKT 1
FDNS	00NR_G15_054	0	16WP	G15_054	TO->FROM	GR ISLD-LNX3345.00 - HOLT.CO3 345.00 345KV CKT 1	720	720	0.05597	101.4546	KOSSUTH 3 345.00 - OBRIEN 3 345.00 345KV CKT 1
FDNS	00NR_G15_054	0	16WP	G15_054	TO->FROM	GR ISLD-LNX3345.00 - HOLT.CO3 345.00 345KV CKT 1	720	720	0.05539	101.4361	P13:115-230:NPPD:NUCOR-3
FDNS	00NR_G15_054	0	16WP	G15_054	TO->FROM	GR ISLD-LNX3345.00 - HOLT.CO3 345.00 345KV CKT 1	720	720	0.05538	101.4164	GARRISON - JAMES TOWN 230KV CKT 1
FDNS	00NR_G15_054	0	16WP	G15_054	TO->FROM	GR ISLD-LNX3345.00 - HOLT.CO3 345.00 345KV CKT 1	720	720	0.05065	101.4107	ONEILL - SPENCER 115KV CKT 1
FDNS	00NR_G15_054	0	16WP	G15_054	TO->FROM	GR ISLD-LNX3345.00 - HOLT.CO3 345.00 345KV CKT 1	720	720	0.05539	101.4105	P13:230-345:NPPD:NUCOR-1
FDNS	00NR_G15_054	0	16WP	G15_054	TO->FROM	GR ISLD-LNX3345.00 - HOLT.CO3 345.00 345KV CKT 1	720	720	0.05539	101.4077	GEN525561 1-TOLK GEN #1 24 KV
FDNS	00NR_G15_054	0	16WP	G15_054	TO->FROM	GR ISLD-LNX3345.00 - HOLT.CO3 345.00 345KV CKT 1	720	720	0.05539	101.4013	P13:230:UMZW:# 2218 #: FP IN MT. LOSS OF TRANSFORMER (AT2).
FDNS	00NR_G15_054	0	16WP	G15_054	TO->FROM	GR ISLD-LNX3345.00 - HOLT.CO3 345.00 345KV CKT 1	720	720	0.05608	101.3916	DENISON - SIOUX CITY 230KV CKT 1
FDNS	00NR_G15_054	0	16WP	G15_054	TO->FROM	GR ISLD-LNX3345.00 - HOLT.CO3 345.00 345KV CKT 1	720	720	0.05543	101.3866	HANKINSON - WAHPETON 230KV CKT 1
FDNS	00NR_G15_054	0	16WP	G15_054	TO->FROM	GR ISLD-LNX3345.00 - HOLT.CO3 345.00 345KV CKT 1	720	720	0.05551	101.3823	NORTH ROCHESTER - PRAIRIE ISLAND 345KV CKT 1
FDNS	00NR_G15_054	0	16WP	G15_054	TO->FROM	GR ISLD-LNX3345.00 - HOLT.CO3 345.00 345KV CKT 1	720	720	0.05564	101.3779	BROOKING COUNTY - LYON COUNTY 345KV CKT 1
FDNS	00NR_G15_054	0	16WP	G15_054	TO->FROM	GR ISLD-LNX3345.00 - HOLT.CO3 345.00 345KV CKT 1	720	720	0.05539	101.3604	GEN303007 1-1BC2 U2
FDNS	00NR_G15_054	0	16WP	G15_054	TO->FROM	GR ISLD-LNX3345.00 - HOLT.CO3 345.00 345KV CKT 1	720	720	0.05539	101.3576	GEN335204 1-NELSON UNIT 4
FDNS	00NR_G15_054	0	16WP	G15_054	TO->FROM	GR ISLD-LNX3345.00 - HOLT.CO3 345.00 345KV CKT 1	720	720	0.05539	101.3575	GEN303006 1-1BC2 U1
FDNS	00NR_G15_054	0	16WP	G15_054	TO->FROM	GR ISLD-LNX3345.00 - HOLT.CO3 345.00 345KV CKT 1	720	720	0.05539	101.3557	GEN336191 1-LITTLE GYPSY UNIT#3
FDNS	00NR_G15_054	0	16WP	G15_054	TO->FROM	GR ISLD-LNX3345.00 - HOLT.CO3 345.00 345KV CKT 1	720	720	0.05539	101.3543	GEN642067 1-PLATTE
FDNS	00NR_G15_054	0	16WP	G15_054	TO->FROM	GR ISLD-LNX3345.00 - HOLT.CO3 345.00 345KV CKT 1	720	720	0.04931	101.3507	P12:115:NPPD:1164:ONEILL 7:JEFFREY9:BTB
FDNS	00NR_G15_054	0	16WP	G15_054	TO->FROM	GR ISLD-LNX3345.00 - HOLT.CO3 345.00 345KV CKT 1	720	720	0.05539	101.339	P13:115-345:NPPD:NUCOR-2
FDNS	00NR_G15_054	0	16WP	G15_054	TO->FROM	GR ISLD-LNX3345.00 - HOLT.CO3 345.00 345KV CKT 1	720	720	0.04931	101.3382	CLEARWATER - ONEILL 115KV CKT 1
FDNS	00NR_G15_054	0	16WP	G15_054	TO->FROM	GR ISLD-LNX3345.00 - HOLT.CO3 345.00 345KV CKT 1	720	720	0.05539	101.3374	GEN531447 1-HOLCOMB GENERATOR
FDNS	00NR_G15_054	0	16WP	G15_054	TO->FROM	GR ISLD-LNX3345.00 - HOLT.CO3 345.00 345KV CKT 1	720	720	0.05539	101.3241	GEN336801 1-BAXTER WILSON UNIT #1
FDNS	00NR_G15_054	0	16WP	G15_054	TO->FROM	GR ISLD-LNX3345.00 - HOLT.CO3 345.00 345KV CKT 1	720	720	0.05478	101.324	MENNO JCT - TRIPP JCT 115KV CKT 1
FDNS	00NR_G15_054	0	16WP	G15_054	TO->FROM	GR ISLD-LNX3345.00 - HOLT.CO3 345.00 345KV CKT 1	720	720	0.06282	101.3212	COLUMEAST - SHELL CREEK 345KV CKT 1
FDNS	00NR_G15_054	0	16WP	G15_054	TO->FROM	GR ISLD-LNX3345.00 - HOLT.CO3 345.00 345KV CKT 1	720	720	0.05539	101.3197	GEN335614 1-WILLOW GLENN UNIT#4
FDNS	00NR_G15_054	0	16WP	G15_054	TO->FROM	GR ISLD-LNX3345.00 - HOLT.CO3 345.00 345KV CKT 1	720	720	0.05571	101.316	BYRON - PLEASANT VALLEY 345KV CKT 1
FDNS	00NR_G15_054	0	16WP	G15_054	TO->FROM	GR ISLD-LNX3345.00 - HOLT.CO3 345.00 345KV CKT 1	720	720	0.05539	101.3094	GEN336464 1-MICHOUD UNIT #3
FDNS	00NR_G15_054	0	16WP	G15_054	TO->FROM	GR ISLD-LNX3345.00 - HOLT.CO3 345.00 345KV CKT 1	720	720	0.05539	101.309	GEN303008 1-1BC2 U3
FDNS	00NR_G15_054	0	16WP	G15_054	TO->FROM	GR ISLD-LNX3345.00 - HOLT.CO3 345.00 345KV CKT 1	720	720	0.04931	101.3064	CLEARWATER - NELIGH 115KV CKT 1
FDNS	00NR_G15_054	0	16WP	G15_054	TO->FROM	GR ISLD-LNX3345.00 - HOLT.CO3 345.00 345KV CKT 1	720	720	0.05539	101.3041	GEN336170 1-GULF OXY U4
FDNS	00NR_G15_054	0	16WP	G15_054	TO->FROM	GR ISLD-LNX3345.00 - HOLT.CO3 345.00 345KV CKT 1	720	720	0.05539	101.2943	GEN334441 1-SABINE UNIT 5
FDNS	00NR_G15_054	0	16WP	G15_054	TO->FROM	GR ISLD-LNX3345.00 - HOLT.CO3 345.00 345KV CKT 1	720	720	0.05538	101.2908	BISMARK - JAMES TOWN 230KV CKT 1
FDNS	00NR_G15_054	0	16WP	G15_054	TO->FROM	GR ISLD-LNX3345.00 - HOLT.CO3 345.00 345KV CKT 1	720	720	0.05538	101.2784	BISMARK - WEBER 230KV CKT 1
FDNS	00NR_G15_054	0	16WP	G15_054	TO->FROM	GR ISLD-LNX3345.00 - HOLT.CO3 345.00 345KV CKT 1	720	720	0.05538	101.2765	JAMES TOWN - WEBER 230KV CKT 1
FDNS	00NR_G15_054	0	16WP	G15_054	TO->FROM	GR ISLD-LNX3345.00 - HOLT.CO3 345.00 345KV CKT 1	720	720	0.05539	101.2717	GRAND GULF 500/22.0KV TRANSFORMER CKT 1
FDNS	00NR_G15_054	0	16WP	G15_054	TO->FROM	GR ISLD-LNX3345.00 - HOLT.CO3 345.00 345KV CKT 1	720	720	0.05544	101.2681	APPLEDORN 4 230.00 - WATERTOWN 230KV CKT 1
FDNS	00NR_G15_054	0	16WP	G15_054	TO->FROM	GR ISLD-LNX3345.00 - HOLT.CO3 345.00 345KV CKT 1	720	720	0.05544	101.2681	APPLEDORN 4 230.00 - WATERTOWN 230KV CKT 1
FDNS	00NR_G15_054	0	16WP	G15_054	TO->FROM	GR ISLD-LNX3345.00 - HOLT.CO3 345.00 345KV CKT 1	720	720	0.05539	101.268	GEN501811 1-RODEMACHER UNIT 1
FDNS	00NR_G15_054	0	16WP	G15_054	TO->FROM	GR ISLD-LNX3345.00 - HOLT.CO3 345.00 345KV CKT 1	720	720	0.05478	101.2448	MENNO JCT - UTICA 115KV CKT 1
FDNS	00NR_G15_054	0	16WP	G15_054	TO->FROM	GR ISLD-LNX3345.00 - HOLT.CO3 345.00 345KV CKT 1	720	720	0.05573	101.2362	BELDEN - HARTINGTON 115KV CKT 1
FDNS	00NR_G15_054	0	16WP	G15_054	TO->FROM	GR ISLD-LNX3345.00 - HOLT.CO3 345.00 345KV CKT 1	720	720	0.05539	101.2306	PRAIRIE ISLAND 345/20.0KV TRANSFORMER CKT 1
FDNS	00NR_G15_054	0	16WP	G15_054	TO->FROM	GR ISLD-LNX3345.00 - HOLT.CO3 345.00 345KV CKT 1	720	720	0.05539	101.2281	PRAIRIE ISLAND 345/20.0KV TRANSFORMER CKT 2
FDNS	00NR_G15_054	0	16WP	G15_054	TO->FROM	GR ISLD-LNX3345.00 - HOLT.CO3 345.00 345KV CKT 1	720	720	0.05539	101.22	GEN334433 1-SABINE UNIT 3
FDNS	00NR_G15_054	0	16WP	G15_054	TO->FROM	GR ISLD-LNX3345.00 - HOLT.CO3 345.00 345KV CKT 1	720	720	0.05402	101.2183	CROOKED CREEK - NORTH PLATTE 230KV CKT 1
FDNS	00NR_G15_054	0	16WP	G15_054	TO->FROM	GR ISLD-LNX3345.00 - HOLT.CO3 345.00 345KV CKT 1	720	720	0.05538	101.2129	FARGO - JAMES TOWN 230KV CKT 1
FDNS	00NR_G15_054	0	16WP	G15_054	TO->FROM	GR ISLD-LNX3345.00 - HOLT.CO3 345.00 345KV CKT 1	720	720	0.05539	101.2123	GEN334071 1-LEWIS CREEK 2

SOLUTION	GROUP	SCENARIO	SEASON	SOURCE	DIRECTION	MONITORED ELEMENT	RATEA (MVA)	RATEB(MVA)	TDF	TC%LOADING (% MVA)	CONTINGENCY
FDNS	00NR_G15_054	0	16WP	G15_054	TO->FROM	GR ISLD-LNX3345.00 - HOLT.CO3 345.00 345KV CKT 1	720	720	0.05539	101.208	GEN334070 1-LEWIS CREEK 1
FDNS	00NR_G15_054	0	16WP	G15_054	TO->FROM	GR ISLD-LNX3345.00 - HOLT.CO3 345.00 345KV CKT 1	720	720	0.05544	101.2054	APPLEDORN 4 230.00 - GRANITE FALLS 230KV CKT 1
FDNS	00NR_G15_054	0	16WP	G15_054	TO->FROM	GR ISLD-LNX3345.00 - HOLT.CO3 345.00 345KV CKT 1	720	720	0.05544	101.2054	APPLEDORN 4 230.00 - GRANITE FALLS 230KV CKT 1
FDNS	00NR_G15_054	0	16WP	G15_054	TO->FROM	GR ISLD-LNX3345.00 - HOLT.CO3 345.00 345KV CKT 1	720	720	0.05539	101.2022	GEN338388 1-1PLUM PT U1 23.000
FDNS	00NR_G15_054	0	16WP	G15_054	TO->FROM	GR ISLD-LNX3345.00 - HOLT.CO3 345.00 345KV CKT 1	720	720	0.05539	101.1975	GEN337766 1-TRACTEBEL UNIT S1
FDNS	00NR_G15_054	0	16WP	G15_054	TO->FROM	GR ISLD-LNX3345.00 - HOLT.CO3 345.00 345KV CKT 1	720	720	0.05538	101.1955	FARGO - JAMES TOWN 230KV CKT 2
FDNS	00NR_G15_054	0	16WP	G15_054	TO->FROM	GR ISLD-LNX3345.00 - HOLT.CO3 345.00 345KV CKT 1	720	720	0.05539	101.1914	GEN525562 1-TOLK GEN #2 24 KV
FDNS	00NR_G15_054	0	16WP	G15_054	TO->FROM	GR ISLD-LNX3345.00 - HOLT.CO3 345.00 345KV CKT 1	720	720	0.05541	101.191	FERGSFL4 230.00 - WAHPETON 230KV CKT 1
FDNS	00NR_G15_054	0	16WP	G15_054	TO->FROM	GR ISLD-LNX3345.00 - HOLT.CO3 345.00 345KV CKT 1	720	720	0.05538	101.189	BALTA - RAMSEY 230KV CKT 1
FDNS	00NR_G15_054	0	16WP	G15_054	TO->FROM	GR ISLD-LNX3345.00 - HOLT.CO3 345.00 345KV CKT 1	720	720	0.05478	101.1881	P12:115:UMZZ:# 237 #: MEN IN SD. MENNO JUNCTION IS A TAP (UJ-MEN-TP).
FDNS	00NR_G15_054	0	16WP	G15_054	TO->FROM	GR ISLD-LNX3345.00 - HOLT.CO3 345.00 345KV CKT 1	720	720	0.0554	101.1799	AUDUBON - SHEYNNE 230KV CKT 1
FDNS	00NR_G15_054	0	16WP	G15_054	TO->FROM	GR ISLD-LNX3345.00 - HOLT.CO3 345.00 345KV CKT 1	720	720	0.05552	101.1746	ARKANSAS NUCLEAR ONE - FT SMITH 500KV CKT 1
FDNS	00NR_G15_054	0	16WP	G15_054	TO->FROM	GR ISLD-LNX3345.00 - HOLT.CO3 345.00 345KV CKT 1	720	720	0.05552	101.1746	ARKANSAS NUCLEAR ONE - FT SMITH 500KV CKT 1
FDNS	00NR_G15_054	0	16WP	G15_054	TO->FROM	GR ISLD-LNX3345.00 - HOLT.CO3 345.00 345KV CKT 1	720	720	0.05558	101.1661	OVEXFRMCCOVE
FDNS	00NR_G15_054	0	16WP	G15_054	TO->FROM	GR ISLD-LNX3345.00 - HOLT.CO3 345.00 345KV CKT 1	720	720	0.05539	101.1652	GEN501910 1-ACADIA UNIT ST1
FDNS	00NR_G15_054	0	16WP	G15_054	TO->FROM	GR ISLD-LNX3345.00 - HOLT.CO3 345.00 345KV CKT 1	720	720	0.05539	101.1556	P12:345:GRDA:CHOUTEAU-SPORTSMANACRES
FDNS	00NR_G15_054	0	16WP	G15_054	TO->FROM	GR ISLD-LNX3345.00 - HOLT.CO3 345.00 345KV CKT 1	720	720	0.05545	101.1494	NORTH LA CROSSE - NORTH ROCHESTER 345KV CKT 1
FDNS	00NR_G15_054	0	16WP	G15_054	TO->FROM	GR ISLD-LNX3345.00 - HOLT.CO3 345.00 345KV CKT 1	720	720	0.05562	101.1471	ARPIN B3 345.00 - ROCKY RN B8 345.00 345KV CKT 1
FDNS	00NR_G15_054	0	16WP	G15_054	TO->FROM	GR ISLD-LNX3345.00 - HOLT.CO3 345.00 345KV CKT 1	720	720	0.05539	101.147	WHITE BLUFF 500/26.0KV TRANSFORMER CKT 1
FDNS	00NR_G15_054	0	16WP	G15_054	TO->FROM	GR ISLD-LNX3345.00 - HOLT.CO3 345.00 345KV CKT 1	720	720	0.06213	101.1426	PETERSBRG.N7115.00 - PETERSBURG 115KV CKT Z1
FDNS	00NR_G15_054	0	16WP	G15_054	TO->FROM	GR ISLD-LNX3345.00 - HOLT.CO3 345.00 345KV CKT 1	720	720	0.05539	101.1369	GEN336222 1-LITTLE GYPSY UNIT#2
FDNS	00NR_G15_054	0	16WP	G15_054	TO->FROM	GR ISLD-LNX3345.00 - HOLT.CO3 345.00 345KV CKT 1	720	720	0.06213	101.1351	P12:115:NPPD:1168B:ALBION 7:PETERSBRG.N7:BTB
FDNS	00NR_G15_054	0	16WP	G15_054	TO->FROM	GR ISLD-LNX3345.00 - HOLT.CO3 345.00 345KV CKT 1	720	720	0.06213	101.1249	ALBION - PETERSBURG 115KV CKT 1
FDNS	00NR_G15_054	0	16WP	G15_054	TO->FROM	GR ISLD-LNX3345.00 - HOLT.CO3 345.00 345KV CKT 1	720	720	0.05539	101.1207	GEN337764 1-TRACTEBEL UNIT C1
FDNS	00NR_G15_054	0	16WP	G15_054	TO->FROM	GR ISLD-LNX3345.00 - HOLT.CO3 345.00 345KV CKT 1	720	720	0.05539	101.1207	GEN337765 1-TRACTEBEL UNIT C2
FDNS	00NR_G15_054	0	16WP	G15_054	TO->FROM	GR ISLD-LNX3345.00 - HOLT.CO3 345.00 345KV CKT 1	720	720	0.05539	100.6772	BASE CASE
FDNS	00NR_G15_054	0	16WP	G15_054	TO->FROM	GR ISLD-LNX3345.00 - HOLT.CO3 345.00 345KV CKT 1	720	720	0.05539	100.3659	GEN645001 1-FORT CALHOUN 1
FDNS	00NR_G15_054	0	16WP	G15_054	TO->FROM	GR ISLD-LNX3345.00 - HOLT.CO3 345.00 345KV CKT 1	720	720	0.05546	100.2942	P12:345:UMZB:# 103 #: BD IN SD. LOSS OF LINE
FDNS	00NR_G15_054	0	16WP	G15_054	TO->FROM	GR ISLD-LNX3345.00 - HOLT.CO3 345.00 345KV CKT 1	720	720	0.05546	100.2928	P12:345:UMZB:# 102 #: AVS BD IN ND. AVS BRD LR
FDNS	00NR_G15_054	0	16WP	G15_054	TO->FROM	GR ISLD-LNX3345.00 - HOLT.CO3 345.00 345KV CKT 1	720	720	0.05546	100.2903	BRDLAND-LNX3345.00 - HURON 345KV CKT Z
FDNS	00NR_G15_054	0	16WP	G15_054	TO->FROM	GR ISLD-LNX3345.00 - HOLT.CO3 345.00 345KV CKT 1	720	720	0.05546	100.2898	BROADLAND - HURON 230KV CKT 1
FDNS	00NR_G15_054	0	16WP	G15_054	TO->FROM	GR ISLD-LNX3345.00 - HOLT.CO3 345.00 345KV CKT 1	720	720	0.05546	100.2898	HURON (BD KU2A) 345/230/13.8KV TRANSFORMER CKT 1
FDNS	00NR_G15_054	0	16WP	G15_054	TO->FROM	GR ISLD-LNX3345.00 - HOLT.CO3 345.00 345KV CKT 1	720	720	0.05546	100.2898	HURON (BD KU2A) 345/230/13.8KV TRANSFORMER CKT 1
FDNS	00NR_G15_054	0	16WP	G15_054	TO->FROM	GR ISLD-LNX3345.00 - HOLT.CO3 345.00 345KV CKT 1	720	720	0.05553	100.2803	FT THOMPSON - OAHE 230KV CKT 3
FDNS	00NR_G15_054	0	16WP	G15_054	TO->FROM	GR ISLD-LNX3345.00 - HOLT.CO3 345.00 345KV CKT 1	720	720	0.05553	100.2803	FT THOMPSON - OAHE 230KV CKT 3
FDNS	00NR_G15_054	0	16WP	G15_054	TO->FROM	GR ISLD-LNX3345.00 - HOLT.CO3 345.00 345KV CKT 1	720	720	0.05553	100.2803	FT THOMPSON - OAHE 230KV CKT 4
FDNS	00NR_G15_054	0	16WP	G15_054	TO->FROM	GR ISLD-LNX3345.00 - HOLT.CO3 345.00 345KV CKT 1	720	720	0.05553	100.2803	FT THOMPSON - OAHE 230KV CKT 4
FDNS	00NR_G15_054	0	16WP	G15_054	TO->FROM	GR ISLD-LNX3345.00 - HOLT.CO3 345.00 345KV CKT 1	720	720	0.05546	100.2447	ANTELOP-LNX3345.00 - BRDLAND-LNX3345.00 345KV CKT 1
FDNS	00NR_G15_054	0	16WP	G15_054	TO->FROM	GR ISLD-LNX3345.00 - HOLT.CO3 345.00 345KV CKT 1	720	720	0.05949	100.2436	LOUP CITY - NORTH LOUP 115KV CKT 1
FDNS	00NR_G15_054	0	16WP	G15_054	TO->FROM	GR ISLD-LNX3345.00 - HOLT.CO3 345.00 345KV CKT 1	720	720	0.05544	100.2342	G14-074T 345.00 - OKLAUNION 345KV CKT 1
FDNS	00NR_G15_054	0	16WP	G15_054	TO->FROM	GR ISLD-LNX3345.00 - HOLT.CO3 345.00 345KV CKT 1	720	720	0.05539	100.2173	GEN659116 1-SPIRIT MOUND UNIT1
FDNS	00NR_G15_054	0	16WP	G15_054	TO->FROM	GR ISLD-LNX3345.00 - HOLT.CO3 345.00 345KV CKT 1	720	720	0.05539	100.2173	GEN659117 2-SPIRIT MOUND UNIT2
FDNS	00NR_G15_054	0	16WP	G15_054	TO->FROM	GR ISLD-LNX3345.00 - HOLT.CO3 345.00 345KV CKT 1	720	720	0.05539	100.2103	CLKREACT5 161.00 - CRYSTLK5 161.00 161KV CKT 1
FDNSLock	00NR_G15_054	0	16WP	G15_054	TO->FROM	GR ISLD-LNX3345.00 - HOLT.CO3 345.00 345KV CKT 1	720	720	0.05581	100.2079	STEGALL - VICTORY HILL 230KV CKT 1
FDNS	00NR_G15_054	0	16WP	G15_054	TO->FROM	GR ISLD-LNX3345.00 - HOLT.CO3 345.00 345KV CKT 1	720	720	0.05565	100.2063	GRAND ISLAND (GI KU3A) 345/230/13.8KV TRANSFORMER CKT 3
FDNS	00NR_G15_054	0	16WP	G15_054	TO->FROM	GR ISLD-LNX3345.00 - HOLT.CO3 345.00 345KV CKT 1	720	720	0.05565	100.2063	GRAND ISLAND (GI KU3A) 345/230/13.8KV TRANSFORMER CKT 3
FDNS	00NR_G15_054	0	16WP	G15_054	TO->FROM	GR ISLD-LNX3345.00 - HOLT.CO3 345.00 345KV CKT 1	720	720	0.05581	100.2056	VICTORY HILL (VICTORYHL T1) 230/115/13.8KV TRANSFORMER CKT 1
FDNS	00NR_G15_054	0	16WP	G15_054	TO->FROM	GR ISLD-LNX3345.00 - HOLT.CO3 345.00 345KV CKT 1	720	720	0.05581	100.2056	VICTORY HILL (VICTORYHL T1) 230/115/13.8KV TRANSFORMER CKT 1
FDNS	00NR_G15_054	0	16WP	G15_054	TO->FROM	GR ISLD-LNX3345.00 - HOLT.CO3 345.00 345KV CKT 1	720	720	0.05539	100.2038	GEN562003 1-G11_027_3 0.6900
FDNS	00NR_G15_054	0	16WP	G15_054	TO->FROM	GR ISLD-LNX3345.00 - HOLT.CO3 345.00 345KV CKT 1	720	720	0.05539	100.1999	GEN620115 1-HRDLKGEN 0.6000
FDNS	00NR_G15_054	0	16WP	G15_054	TO->FROM	GR ISLD-LNX3345.00 - HOLT.CO3 345.00 345KV CKT 1	720	720	0.05565	100.1868	LARAMIE RIVER - STEGALL 345KV CKT 1
FDNS	00NR_G15_054	0	16WP	G15_054	TO->FROM	GR ISLD-LNX3345.00 - HOLT.CO3 345.00 345KV CKT 1	720	720	0.05539	100.1719	GEN600013 3-BLACK DOG GEN 3
FDNS	00NR_G15_054	0	16WP	G15_054	TO->FROM	GR ISLD-LNX3345.00 - HOLT.CO3 345.00 345KV CKT 1	720	720	0.05539	100.1719	GEN672340 1-QUEEN ELIZABETH GENERATOR 1
FDNS	00NR_G15_054	0	16WP	G15_054	TO->FROM	GR ISLD-LNX3345.00 - HOLT.CO3 345.00 345KV CKT 1	720	720	0.05539	100.1663	MITCHLCO3 345.00 345/34.5KV TRANSFORMER CKT 1
FDNS	00NR_G15_054	0	16WP	G15_054	TO->FROM	GR ISLD-LNX3345.00 - HOLT.CO3 345.00 345KV CKT 1	720	720	0.05546	100.1589	ANTELOP-LNX3345.00 - ANTELOPE VALLEY 345KV CKT Z
FDNS	00NR_G15_054	0	16WP	G15_054	TO->FROM	GR ISLD-LNX3345.00 - HOLT.CO3 345.00 345KV CKT 1	720	720	0.05539	100.1533	GEN659018 1-G14_003IS_3 0.6900
FDNS	00NR_G15_054	0	16WP	G15_054	TO->FROM	GR ISLD-LNX3345.00 - HOLT.CO3 345.00 345KV CKT 1	720	720	0.05539	100.1471	GEN672384 1-CENTENNIAL WINDFARM
FDNS	00NR_G15_054	0	16WP	G15_054	TO->FROM	GR ISLD-LNX3345.00 - HOLT.CO3 345.00 345KV CKT 1	720	720	0.05539	100.1457	GEN600125 2-FEP ST G 13.800
FDNS	00NR_G15_054	0	16WP	G15_054	TO->FROM	GR ISLD-LNX3345.00 - HOLT.CO3 345.00 345KV CKT 1	720	720	0.05559	100.1428	P12:115:UMZW:# 172 #: WI IN SD.
FDNS	00NR_G15_054	0	16WP	G15_054	TO->FROM	GR ISLD-LNX3345.00 - HOLT.CO3 345.00 345KV CKT 1	720	720	0.05539	100.1353	LADISH 115/13.2KV TRANSFORMER CKT 1
FDNS	00NR_G15_054	0	16WP	G15_054	TO->FROM	GR ISLD-LNX3345.00 - HOLT.CO3 345.00 345KV CKT 1	720	720	0.05539	100.1341	GEN620323 2-HOOT LAKE 2 GEN
FDNS	00NR_G15_054	0	16WP	G15_054	TO->FROM	GR ISLD-LNX3345.00 - HOLT.CO3 345.00 345KV CKT 1	720	720	0.0556	100.1253	SMOKYHL6 230.00 - SUMMIT 230KV CKT 1
FDNS	00NR_G15_054	0	16WP	G15_054	TO->FROM	GR ISLD-LNX3345.00 - HOLT.CO3 345.00 345KV CKT 1	720	720	0.05539	100.1231	GEN659354 1-DEERCREK STG18.000
FDNS	00NR_G15_054	0	16WP	G15_054	TO->FROM	GR ISLD-LNX3345.00 - HOLT.CO3 345.00 345KV CKT 1	720	720	0.05539	100.1173	GEN657964 1-ASH2GEN9 0.5750
FDNS	00NR_G15_054	0	16WP	G15_054	TO->FROM	GR ISLD-LNX3345.00 - HOLT.CO3 345.00 345KV CKT 1	720	720	0.05539	100.1065	GEN652546 1-FT RANDAL
FDNS	00NR_G15_054	0	16WP	G15_054	TO->FROM	GR ISLD-LNX3345.00 - HOLT.CO3 345.00 345KV CKT 1	720	720	0.05554	100.0945	FALLOW 3 345.00 - POTTCO 3 345.00 345KV CKT 1
FDNS	00NR_G15_054	0	16WP	G15_054	TO->FROM	GR ISLD-LNX3345.00 - HOLT.CO3 345.00 345KV CKT 1	720	720	0.05689	100.0912	AXTELL - PAULINE 345KV CKT 1
FDNS	00NR_G15_054	0	16WP	G15_054	TO->FROM	GR ISLD-LNX3345.00 - HOLT.CO3 345.00 345KV CKT 1	720	720	0.05759	100.0864	CENTRAL CITY - GRAND ISLAND 115KV CKT 1
FDNS	00NR_G15_054	0	16WP	G15_054	TO->FROM	GR ISLD-LNX3345.00 - HOLT.CO3 345.00 345KV CKT 1	720	720	0.05539	100.0838	GEN635213 3-NEAL UNIT 3
FDNS	00NR_G15_054	0	16WP	G15_054	TO->FROM	GR ISLD-LNX3345.00 - HOLT.CO3 345.00 345KV CKT 1	720	720	0.05539	100.082	GEN600018 S-LS POWER STEAM
FDNS	00NR_G15_054	0	16WP	G15_054	TO->FROM	GR ISLD-LNX3345.00 - HOLT.CO3 345.00 345KV CKT 1	720	720	0.05539	100.078	GEN659290 1-EDGECOL
FDNS	00NR_G15_054	0	16WP	G15_054	TO->FROM	GR ISLD-LNX3345.00 - HOLT.CO3 345.00 345KV CKT 1	720	720	0.05567	100.0778	7MAYWOOD 345.00 - 7SPENCER 345.00 345KV CKT 1
FDNS	00NR_G15_054	0	16WP	G15_054	TO->FROM	GR ISLD-LNX3345.00 - HOLT.CO3 345.00 345KV CKT 1	720	720	0.05567	100.0772	7MONTGMRY 345.00 - 7SPENCER 345.00 345KV CKT 1

SOLUTION	GROUP	SCENARIO	SEASON	SOURCE	DIRECTION	MONITORED ELEMENT	RATEA (MVA)	RATEB(MVA)	TDF	TC%LOADING (% MVA)	CONTINGENCY
FDNS	00NR_G15_054	0	16WP	G15_054	TO->FROM	GR ISLD-LNX3345.00 - HOLT.CO3 345.00 345KV CKT 1	720	720	0.05539	100.0758	GEN652548 5-FT RANDAL
FDNS	00NR_G15_054	0	16WP	G15_054	TO->FROM	GR ISLD-LNX3345.00 - HOLT.CO3 345.00 345KV CKT 1	720	720	0.05539	100.0758	GEN652549 7-FT RANDAL
FDNS	00NR_G15_054	0	16WP	G15_054	TO->FROM	GR ISLD-LNX3345.00 - HOLT.CO3 345.00 345KV CKT 1	720	720	0.05539	100.0717	GEN652547 3-FT RANDAL
FDNS	00NR_G15_054	0	16WP	G15_054	TO->FROM	GR ISLD-LNX3345.00 - HOLT.CO3 345.00 345KV CKT 1	720	720	0.05539	100.0707	G830_SUB 115.00 - GRE-MCHENRY7115.00 115KV CKT 1
FDNS	00NR_G15_054	0	16WP	G15_054	TO->FROM	GR ISLD-LNX3345.00 - HOLT.CO3 345.00 345KV CKT 1	720	720	0.05539	100.0649	GEN590010 1-ERCOT EQUIVALENCE
FDNS	00NR_G15_054	0	16WP	G15_054	TO->FROM	GR ISLD-LNX3345.00 - HOLT.CO3 345.00 345KV CKT 1	720	720	0.05539	100.0591	G830_SUB 115.00 115/34.5KV TRANSFORMER CKT 1
FDNS	00NR_G15_054	0	16WP	G15_054	TO->FROM	GR ISLD-LNX3345.00 - HOLT.CO3 345.00 345KV CKT 1	720	720	0.05539	100.0541	GEN652410 3-FT PECK
FDNS	00NR_G15_054	0	16WP	G15_054	TO->FROM	GR ISLD-LNX3345.00 - HOLT.CO3 345.00 345KV CKT 1	720	720	0.05563	100.0499	POST ROCK (POSTROCK T1) 345/230/13.8KV TRANSFORMER CKT 1
FDNS	00NR_G15_054	0	16WP	G15_054	TO->FROM	GR ISLD-LNX3345.00 - HOLT.CO3 345.00 345KV CKT 1	720	720	0.06817	100	COLUMWEST - KELLY 230KV CKT 1
FDNS	00NR_G15_054	0	16WP	G15_054	TO->FROM	GR ISLD-LNX3345.00 - HOLT.CO3 345.00 345KV CKT 1	720	720	0.05689	100	SUB 3454 - WAGENER 345KV CKT 1
FDNS	00NR_G15_054	0	16WP	G15_054	TO->FROM	GR ISLD-LNX3345.00 - HOLT.CO3 345.00 345KV CKT 1	720	720	0.05689	100	SUB 3454 - WAGENER 345KV CKT 1
FDNS	00NR_G15_054	0	16WP	G15_054	TO->FROM	GR ISLD-LNX3345.00 - HOLT.CO3 345.00 345KV CKT 1	720	720	0.05554	100	G11_051T 345.00 - WOODWARD DISTRICT EHV 345KV CKT 1
FDNS	00NR_G15_054	0	16WP	G15_054	TO->FROM	GR ISLD-LNX3345.00 - HOLT.CO3 345.00 345KV CKT 1	720	720	0.05544	100	MADISON COUNTY - RLHILLS3 345.00 345KV CKT 1
FDNS	00NR_G15_054	0	16WP	G15_054	TO->FROM	GR ISLD-LNX3345.00 - HOLT.CO3 345.00 345KV CKT 1	720	720	0.05539	100	EASTDC - ERCOT EQUIVALENCE 345KV CKT 1
FDNS	00NR_G15_054	0	16WP	G15_054	TO->FROM	GR ISLD-LNX3345.00 - HOLT.CO3 345.00 345KV CKT 1	720	720	0.05539	100	GEN300003 1-THOMAS HILL UNIT 3
FDNS	00NR_G15_054	0	16WP	G15_054	TO->FROM	GR ISLD-LNX3345.00 - HOLT.CO3 345.00 345KV CKT 1	720	720	0.05539	100	GEN590011 2-ERCOT EQUIVALENCE
FDNS	00NR_G15_054	0	16WP	G15_054	TO->FROM	GR ISLD-LNX3345.00 - HOLT.CO3 345.00 345KV CKT 1	720	720	0.05539	100	GEN600012 2-BLACK DOG GEN 2
FDNS	00NR_G15_054	0	16WP	G15_054	TO->FROM	GR ISLD-LNX3345.00 - HOLT.CO3 345.00 345KV CKT 1	720	720	0.05539	100	GEN615032 2-PLEASANT VALLEY
FDNS	00NR_G15_054	0	16WP	G15_054	TO->FROM	GR ISLD-LNX3345.00 - HOLT.CO3 345.00 345KV CKT 1	720	720	0.05539	100	GEN629074 1-ARNOLD LOWSIDE OF GSU XFMR
FDNS	00NR_G15_054	0	16WP	G15_054	TO->FROM	GR ISLD-LNX3345.00 - HOLT.CO3 345.00 345KV CKT 1	720	720	0.05539	100	GEN652345 W-G07_023IS_2 0.6900
FDNS	00NR_G15_054	0	16WP	G15_054	TO->FROM	GR ISLD-LNX3345.00 - HOLT.CO3 345.00 345KV CKT 1	720	720	0.05539	100	GEN652414 4-FT PECK
FDNS	00NR_G15_054	0	16WP	G15_054	TO->FROM	GR ISLD-LNX3345.00 - HOLT.CO3 345.00 345KV CKT 1	720	720	0.05539	100	GEN652415 5-FT PECK
FDNS	00NR_G15_054	0	16WP	G15_054	TO->FROM	GR ISLD-LNX3345.00 - HOLT.CO3 345.00 345KV CKT 1	720	720	0.05539	100	GEN657600 1-L1GEN3 9 0.5750
FDNS	00NR_G15_054	0	16WP	G15_054	TO->FROM	GR ISLD-LNX3345.00 - HOLT.CO3 345.00 345KV CKT 1	720	720	0.05539	100	GEN660001 2-ABERDEEN SIEBRECHT
FDNS	00NR_G15_054	0	16WP	G15_054	TO->FROM	GR ISLD-LNX3345.00 - HOLT.CO3 345.00 345KV CKT 1	720	720	0.05539	100	GEN672347 1-CORY COGEN GENERATOR 1 GT1
FDNS	00NR_G15_054	0	16WP	G15_054	TO->FROM	GR ISLD-LNX3345.00 - HOLT.CO3 345.00 345KV CKT 1	720	720	0.05539	100	GEN672348 2-CORY COGEN GENERATOR 2 GT2
FDNS	00NR_G15_054	0	16WP	G15_054	TO->FROM	GR ISLD-LNX3345.00 - HOLT.CO3 345.00 345KV CKT 1	720	720	0.05539	100	GEN672350 1-NIPAWIN GENERATOR 1
FDNS	00NR_G15_054	0	16WP	G15_054	TO->FROM	GR ISLD-LNX3345.00 - HOLT.CO3 345.00 345KV CKT 1	720	720	0.05539	100	GEN672351 2-NIPAWIN GENERATOR 2
FDNS	00NR_G15_054	0	16WP	G15_054	TO->FROM	GR ISLD-LNX3345.00 - HOLT.CO3 345.00 345KV CKT 1	720	720	0.05539	100	GEN672352 3-NIPAWIN GENERATOR 3
FDNS	00NR_G15_054	0	16WP	G15_054	TO->FROM	GR ISLD-LNX3345.00 - HOLT.CO3 345.00 345KV CKT 1	720	720	0.05757	99.9	ATCHSNT3 345.00 - COOPER 345KV CKT 1
FDNS	00NR_G15_054	0	16WP	G15_054	TO->FROM	GR ISLD-LNX3345.00 - HOLT.CO3 345.00 345KV CKT 1	720	720	0.05757	99.9	ATCHSNT3 345.00 - COOPER 345KV CKT 1
FDNS	00NR_G15_054	0	16WP	G15_054	TO->FROM	GR ISLD-LNX3345.00 - HOLT.CO3 345.00 345KV CKT 1	720	720	0.0572	99.9	GERALD GENTLEMAN STATION - RED WILLOW 345KV CKT 1
FDNS	00NR_G15_054	0	16WP	G15_054	TO->FROM	GR ISLD-LNX3345.00 - HOLT.CO3 345.00 345KV CKT 1	720	720	0.05696	99.9	103RD & ROKEBY - MOORE 345KV CKT 1
FDNS	00NR_G15_054	0	16WP	G15_054	TO->FROM	GR ISLD-LNX3345.00 - HOLT.CO3 345.00 345KV CKT 1	720	720	0.05696	99.9	103RD & ROKEBY - MOORE 345KV CKT 1
FDNS	00NR_G15_054	0	16WP	G15_054	TO->FROM	GR ISLD-LNX3345.00 - HOLT.CO3 345.00 345KV CKT 1	720	720	0.05554	99.9	FALLOW 3 345.00 - GRIMES 345KV CKT 1
FDNS	00NR_G15_054	0	16WP	G15_054	TO->FROM	GR ISLD-LNX3345.00 - HOLT.CO3 345.00 345KV CKT 1	720	720	0.05539	99.9	GEN 11104 1-J262_GEN 0.6000
FDNS	00NR_G15_054	0	16WP	G15_054	TO->FROM	GR ISLD-LNX3345.00 - HOLT.CO3 345.00 345KV CKT 1	720	720	0.05539	99.9	GEN 11108 1-J263_GEN 0.6000
FDNS	00NR_G15_054	0	16WP	G15_054	TO->FROM	GR ISLD-LNX3345.00 - HOLT.CO3 345.00 345KV CKT 1	720	720	0.05539	99.9	GEN300006 1-NEW MADRID UNIT 1
FDNS	00NR_G15_054	0	16WP	G15_054	TO->FROM	GR ISLD-LNX3345.00 - HOLT.CO3 345.00 345KV CKT 1	720	720	0.05539	99.9	GEN300007 1-NEW MADRID UNIT 2
FDNS	00NR_G15_054	0	16WP	G15_054	TO->FROM	GR ISLD-LNX3345.00 - HOLT.CO3 345.00 345KV CKT 1	720	720	0.05539	99.9	GEN600050 1-FEP
FDNS	00NR_G15_054	0	16WP	G15_054	TO->FROM	GR ISLD-LNX3345.00 - HOLT.CO3 345.00 345KV CKT 1	720	720	0.05539	99.9	GEN620324 3-HOOT LAKE 3 GEN
FDNS	00NR_G15_054	0	16WP	G15_054	TO->FROM	GR ISLD-LNX3345.00 - HOLT.CO3 345.00 345KV CKT 1	720	720	0.05539	99.9	GEN672339 16-QE 16G 13.800
FDNS	00NR_G15_054	0	16WP	G15_054	TO->FROM	GR ISLD-LNX3345.00 - HOLT.CO3 345.00 345KV CKT 1	720	720	0.05539	99.9	GEN672342 3-QUEEN ELIZABETH GENERATOR 3
FDNS	00NR_G15_054	0	16WP	G15_054	TO->FROM	GR ISLD-LNX3345.00 - HOLT.CO3 345.00 345KV CKT 1	720	720	0.05539	99.9	GEN672349 3-CORY COGEN GENERATOR 3 ST
FDNS	00NR_G15_054	0	16WP	G15_054	TO->FROM	GR ISLD-LNX3345.00 - HOLT.CO3 345.00 345KV CKT 1	720	720	0.05539	99.9	GEN672367 1-MERIDIAN GENERATOR 1 GT1
FDNS	00NR_G15_054	0	16WP	G15_054	TO->FROM	GR ISLD-LNX3345.00 - HOLT.CO3 345.00 345KV CKT 1	720	720	0.05539	99.9	GEN672368 2-MERIDIAN GENERATOR 2 GT2
FDNS	00NR_G15_054	0	16WP	G15_054	TO->FROM	GR ISLD-LNX3345.00 - HOLT.CO3 345.00 345KV CKT 1	720	720	0.05536	99.9	GLENHAM - L3 HAWDON 230KV CKT 1
FDNS	00NR_G15_054	0	16WP	G15_054	TO->FROM	GR ISLD-LNX3345.00 - HOLT.CO3 345.00 345KV CKT 1	720	720	0.0543	99.9	HIGHLND 3 345.00 - OBRIEN 3 345.00 345KV CKT 1
FDNS	00NR_G15_054	0	16WP	G15_054	TO->FROM	GR ISLD-LNX3345.00 - HOLT.CO3 345.00 345KV CKT 1	720	720	0.05554	99.8	G11_051T 345.00 - TATONGA7 345.00 345KV CKT 1
FDNS	00NR_G15_054	0	16WP	G15_054	TO->FROM	GR ISLD-LNX3345.00 - HOLT.CO3 345.00 345KV CKT 1	720	720	0.05539	99.8	CENTER 230/22.0KV TRANSFORMER CKT 1
FDNS	00NR_G15_054	0	16WP	G15_054	TO->FROM	GR ISLD-LNX3345.00 - HOLT.CO3 345.00 345KV CKT 1	720	720	0.05539	99.8	GEN600065 7-HIGH BRIDGE
FDNS	00NR_G15_054	0	16WP	G15_054	TO->FROM	GR ISLD-LNX3345.00 - HOLT.CO3 345.00 345KV CKT 1	720	720	0.05539	99.8	GEN600066 8-HIGH BRIDGE
FDNS	00NR_G15_054	0	16WP	G15_054	TO->FROM	GR ISLD-LNX3345.00 - HOLT.CO3 345.00 345KV CKT 1	720	720	0.05539	99.8	GEN629072 4-LANSING GENERATOR FOR UNITS NO4 EIA CODE 1
FDNS	00NR_G15_054	0	16WP	G15_054	TO->FROM	GR ISLD-LNX3345.00 - HOLT.CO3 345.00 345KV CKT 1	720	720	0.05539	99.8	GEN635214 4-NEAL UNIT 4
FDNS	00NR_G15_054	0	16WP	G15_054	TO->FROM	GR ISLD-LNX3345.00 - HOLT.CO3 345.00 345KV CKT 1	720	720	0.05539	99.8	GEN657985 1-ASH1GEN9 0.5750
FDNS	00NR_G15_054	0	16WP	G15_054	TO->FROM	GR ISLD-LNX3345.00 - HOLT.CO3 345.00 345KV CKT 1	720	720	0.05539	99.8	GEN659162 4-RED WLCK
FDNS	00NR_G15_054	0	16WP	G15_054	TO->FROM	GR ISLD-LNX3345.00 - HOLT.CO3 345.00 345KV CKT 1	720	720	0.05539	99.8	GEN659163 5-BLACK WDCK
FDNS	00NR_G15_054	0	16WP	G15_054	TO->FROM	GR ISLD-LNX3345.00 - HOLT.CO3 345.00 345KV CKT 1	720	720	0.05539	99.8	GEN659192 6-LYNN
FDNS	00NR_G15_054	0	16WP	G15_054	TO->FROM	GR ISLD-LNX3345.00 - HOLT.CO3 345.00 345KV CKT 1	720	720	0.05539	99.8	GEN659273 2-GROTON SYNC COND
FDNS	00NR_G15_054	0	16WP	G15_054	TO->FROM	GR ISLD-LNX3345.00 - HOLT.CO3 345.00 345KV CKT 1	720	720	0.05539	99.8	GEN659294 1-WILTONCOL9
FDNS	00NR_G15_054	0	16WP	G15_054	TO->FROM	GR ISLD-LNX3345.00 - HOLT.CO3 345.00 345KV CKT 1	720	720	0.05539	99.8	GEN672393 2-NBECST2G 13.800
FDNS	00NR_G15_054	0	16WP	G15_054	TO->FROM	GR ISLD-LNX3345.00 - HOLT.CO3 345.00 345KV CKT 1	720	720	0.05539	99.8	LANSING WEST 161/22.0KV TRANSFORMER CKT 1
FDNS	00NR_G15_054	0	16WP	G15_054	TO->FROM	GR ISLD-LNX3345.00 - HOLT.CO3 345.00 345KV CKT 1	720	720	0.05323	99.8	COOPER - MOORE 345KV CKT 1
FDNS	00NR_G15_054	0	16WP	G15_054	TO->FROM	GR ISLD-LNX3345.00 - HOLT.CO3 345.00 345KV CKT 1	720	720	0.05644	99.7	AXTELL - POST ROCK 345KV CKT 1
FDNS	00NR_G15_054	0	16WP	G15_054	TO->FROM	GR ISLD-LNX3345.00 - HOLT.CO3 345.00 345KV CKT 1	720	720	0.05539	99.7	GEN 10648 1-G830_GEN 0.6900
FDNS	00NR_G15_054	0	16WP	G15_054	TO->FROM	GR ISLD-LNX3345.00 - HOLT.CO3 345.00 345KV CKT 1	720	720	0.05539	99.7	GEN600007 7-RIVERSIDE GEN 7
FDNS	00NR_G15_054	0	16WP	G15_054	TO->FROM	GR ISLD-LNX3345.00 - HOLT.CO3 345.00 345KV CKT 1	720	720	0.05539	99.7	GEN600011 5-BLACK DOG GEN 1
FDNS	00NR_G15_054	0	16WP	G15_054	TO->FROM	GR ISLD-LNX3345.00 - HOLT.CO3 345.00 345KV CKT 1	720	720	0.05539	99.7	GEN600014 4-BLACK DOG GEN 4
FDNS	00NR_G15_054	0	16WP	G15_054	TO->FROM	GR ISLD-LNX3345.00 - HOLT.CO3 345.00 345KV CKT 1	720	720	0.05539	99.7	GEN600067 9-HIGH BRIDGE
FDNS	00NR_G15_054	0	16WP	G15_054	TO->FROM	GR ISLD-LNX3345.00 - HOLT.CO3 345.00 345KV CKT 1	720	720	0.05539	99.7	GEN600070 9-RIVER SIDE
FDNS	00NR_G15_054	0	16WP	G15_054	TO->FROM	GR ISLD-LNX3345.00 - HOLT.CO3 345.00 345KV CKT 1	720	720	0.05539	99.7	GEN600071 10-RIVER SIDE
FDNS	00NR_G15_054	0	16WP	G15_054	TO->FROM	GR ISLD-LNX3345.00 - HOLT.CO3 345.00 345KV CKT 1	720	720	0.05539	99.7	GEN615015 1-GRE-SPRITWDG13.200
FDNS	00NR_G15_054	0	16WP	G15_054	TO->FROM	GR ISLD-LNX3345.00 - HOLT.CO3 345.00 345KV CKT 1	720	720	0.05539	99.7	GEN652906 1-G09_006IS_3 0.6900

SOLUTION	GROUP	SCENARIO	SEASON	SOURCE	DIRECTION	MONITORED ELEMENT	RATEA (MVA)	RATEB(MVA)	TDF	TC%LOADING (% MVA)	CONTINGENCY
FDNS	00NR_G15_054	0	16WP	G15_054	TO->FROM	GR ISLD-LNX3345.00 - HOLT.CO3 345.00 345KV CKT 1	720	720	0.05757	99.6	ATCHSNT3 345.00 - BOONEVILLE 345KV CKT 1
FDNS	00NR_G15_054	0	16WP	G15_054	TO->FROM	GR ISLD-LNX3345.00 - HOLT.CO3 345.00 345KV CKT 1	720	720	0.05554	99.6	MATHWSN7 345.00 - TATONGA7 345.00 345KV CKT 1
FDNS	00NR_G15_054	0	16WP	G15_054	TO->FROM	GR ISLD-LNX3345.00 - HOLT.CO3 345.00 345KV CKT 1	720	720	0.05539	99.6	GEN600017 C-LS POWER CT
FDNS	00NR_G15_054	0	16WP	G15_054	TO->FROM	GR ISLD-LNX3345.00 - HOLT.CO3 345.00 345KV CKT 1	720	720	0.05539	99.6	GEN615052 1-CAMBRIDGE GENERATING STATION
FDNS	00NR_G15_054	0	16WP	G15_054	TO->FROM	GR ISLD-LNX3345.00 - HOLT.CO3 345.00 345KV CKT 1	720	720	0.05539	99.6	GEN652907 1-G09_007IS_3 0.6900
FDNS	00NR_G15_054	0	16WP	G15_054	TO->FROM	GR ISLD-LNX3345.00 - HOLT.CO3 345.00 345KV CKT 1	720	720	0.05539	99.6	GEN660016 1-B_H WIND 0.7000
FDNS	00NR_G15_054	0	16WP	G15_054	TO->FROM	GR ISLD-LNX3345.00 - HOLT.CO3 345.00 345KV CKT 1	720	720	0.05539	99.6	GEN662101 1-WESSINGTON190.5750
FDNS	00NR_G15_054	0	16WP	G15_054	TO->FROM	GR ISLD-LNX3345.00 - HOLT.CO3 345.00 345KV CKT 1	720	720	0.05539	99.6	GEN681522 3-GENOA 3
FDNS	00NR_G15_054	0	17SP	G15_054	TO->FROM	OGALLALA - SIDNEY 230KV CKT 1	320	320	0.03217	111.5891	SIDNEY - SIDNEY1-LNX3345.00 345KV CKT Z
FDNS	00NR_G15_054	0	17SP	G15_054	TO->FROM	OGALLALA - SIDNEY 230KV CKT 1	320	320	0.03217	111.5195	KEYSTONE - SIDNEY1-LNX3345.00 345KV CKT 1
FDNS	09ALL_G15_054	0	17SP	G15_054	FROM->TO	PETERSBRG.N7115.00 - PETERSBURG 115KV CKT Z1	137	137	0.22063	101.8221	ANTELOPE 3345.00 (ANTELOPE T1) 345/115/13.8KV TRANSFORMER CKT 1
FDNS	09ALL_G15_054	0	17SP	G15_054	FROM->TO	PETERSBRG.N7115.00 - PETERSBURG 115KV CKT Z1	137	137	0.22063	101.7741	ANTELOPE 3345.00 - HOSKINS 345KV CKT 1
FDNS	00NR_G15_054	0	17SP	G15_054	TO->FROM	SIDNEY - SIDNEY TRANSFORMER 230KV CKT 1	400	400	0.03658	111.1114	KEYSTONE - SIDNEY1-LNX3345.00 345KV CKT 1
FDNS	00NR_G15_054	0	17SP	G15_054	TO->FROM	SIDNEY - SIDNEY TRANSFORMER 230KV CKT 1	400	400	0.03658	110.5216	SIDNEY - SIDNEY1-LNX3345.00 345KV CKT Z
FDNS	00NR_G15_054	0	20SP	G15_054	TO->FROM	SIDNEY - SIDNEY TRANSFORMER 230KV CKT 1	400	400	0.03074	101.0386	KEYSTONE - SIDNEY1-LNX3345.00 345KV CKT 1
FDNS	00NR_G15_054	0	20SP	G15_054	TO->FROM	SIDNEY - SIDNEY TRANSFORMER 230KV CKT 1	400	400	0.03074	100.5224	SIDNEY - SIDNEY1-LNX3345.00 345KV CKT Z
FDNS	00NR_G15_054	0	25SP	G15_054	TO->FROM	SIDNEY - SIDNEY TRANSFORMER 230KV CKT 1	400	400	0.03052	99.8	KEYSTONE - SIDNEY1-LNX3345.00 345KV CKT 1
FDNS	00NR_G15_054	2	17SP	G15_054	FROM->TO	GR ISLD-LNX3345.00 - GRAND ISLAND 345KV CKT Z	720	720	0.03246	131.5262	RAUN - SUB 3451 FT CAL 345KV CKT 1
FDNS	00NR_G15_054	2	17SP	G15_054	FROM->TO	GR ISLD-LNX3345.00 - GRAND ISLAND 345KV CKT Z	720	720	0.03246	131.5262	RAUN - SUB 3451 FT CAL 345KV CKT 1
FDNS	00NR_G15_054	2	17SP	G15_054	FROM->TO	GR ISLD-LNX3345.00 - GRAND ISLAND 345KV CKT Z	720	720	0.03229	129.2212	COLUMEAST - SHELL CREEK 345KV CKT 1
FDNS	00NR_G15_054	2	17SP	G15_054	FROM->TO	GR ISLD-LNX3345.00 - GRAND ISLAND 345KV CKT Z	720	720	0.03153	129.2018	P12:115:NPPD:1168B:ALBION 7:PETERSBRG.N7:BTB
FDNS	00NR_G15_054	2	17SP	G15_054	FROM->TO	GR ISLD-LNX3345.00 - GRAND ISLAND 345KV CKT Z	720	720	0.03153	129.1409	ALBION - PETERSBURG 115KV CKT 1
FDNS	00NR_G15_054	2	17SP	G15_054	FROM->TO	GR ISLD-LNX3345.00 - GRAND ISLAND 345KV CKT Z	720	720	0.0349	128.4837	COLUMWEST - KELLY 230KV CKT 1
FDNS	00NR_G15_054	2	17SP	G15_054	FROM->TO	GR ISLD-LNX3345.00 - GRAND ISLAND 345KV CKT Z	720	720	0.0349	127.4159	COLUMWEST - GRAND ISLAND 230KV CKT 1
FDNS	00NR_G15_054	2	20SP	G15_054	FROM->TO	GR ISLD-LNX3345.00 - GRAND ISLAND 345KV CKT Z	720	720	0.03128	111.7727	GERALD GENTLEMAN STATION - THEDFRD3 345.00 345KV CKT 1
FDNS	00NR_G15_054	2	25SP	G15_054	FROM->TO	GR ISLD-LNX3345.00 - GRAND ISLAND 345KV CKT Z	720	720	0.03162	110.805	GERALD GENTLEMAN STATION - THEDFRD3 345.00 345KV CKT 1
FDNS	00NR_G15_054	2	16WP	G15_054	FROM->TO	GR ISLD-LNX3345.00 - GRAND ISLAND 345KV CKT Z	720	720	0.03156	103.2416	RAUN - SUB 3451 FT CAL 345KV CKT 1
FDNS	00NR_G15_054	2	16WP	G15_054	FROM->TO	GR ISLD-LNX3345.00 - GRAND ISLAND 345KV CKT Z	720	720	0.03156	103.2416	RAUN - SUB 3451 FT CAL 345KV CKT 1
FDNS	00NR_G15_054	2	16WP	G15_054	FROM->TO	GR ISLD-LNX3345.00 - GRAND ISLAND 345KV CKT Z	720	720	0.03142	101.9437	COLUMEAST - SHELL CREEK 345KV CKT 1
FDNS	00NR_G15_054	2	16WP	G15_054	FROM->TO	GR ISLD-LNX3345.00 - GRAND ISLAND 345KV CKT Z	720	720	0.03069	101.7544	PETERSBRG.N7115.00 - PETERSBURG 115KV CKT Z1
FDNS	00NR_G15_054	2	16WP	G15_054	FROM->TO	GR ISLD-LNX3345.00 - GRAND ISLAND 345KV CKT Z	720	720	0.03069	101.7475	P12:115:NPPD:1168B:ALBION 7:PETERSBRG.N7:BTB
FDNS	00NR_G15_054	2	16WP	G15_054	FROM->TO	GR ISLD-LNX3345.00 - GRAND ISLAND 345KV CKT Z	720	720	0.03069	101.7364	ALBION - PETERSBURG 115KV CKT 1
FDNS	00NR_G15_054	2	16WP	G15_054	FROM->TO	GR ISLD-LNX3345.00 - GRAND ISLAND 345KV CKT Z	720	720	0.03401	100.6105	COLUMWEST - KELLY 230KV CKT 1
FDNS	00NR_G15_054	2	16WP	G15_054	FROM->TO	GR ISLD-LNX3345.00 - GRAND ISLAND 345KV CKT Z	720	720	0.03401	99.5	COLUMWEST - GRAND ISLAND 230KV CKT 1
FDNS	00NR_G15_054	2	17SP	G15_054	TO->FROM	GR ISLD-LNX3345.00 - HOLT.CO3 345.00 345KV CKT 1	720	720	0.03246	130.5104	RAUN - SUB 3451 FT CAL 345KV CKT 1
FDNS	00NR_G15_054	2	17SP	G15_054	TO->FROM	GR ISLD-LNX3345.00 - HOLT.CO3 345.00 345KV CKT 1	720	720	0.03246	130.5104	RAUN - SUB 3451 FT CAL 345KV CKT 1
FDNS	00NR_G15_054	2	17SP	G15_054	TO->FROM	GR ISLD-LNX3345.00 - HOLT.CO3 345.00 345KV CKT 1	720	720	0.03229	128.2134	COLUMEAST - SHELL CREEK 345KV CKT 1
FDNS	00NR_G15_054	2	17SP	G15_054	TO->FROM	GR ISLD-LNX3345.00 - HOLT.CO3 345.00 345KV CKT 1	720	720	0.0349	127.4636	COLUMWEST - KELLY 230KV CKT 1
FDNS	00NR_G15_054	2	17SP	G15_054	TO->FROM	GR ISLD-LNX3345.00 - HOLT.CO3 345.00 345KV CKT 1	720	720	0.0349	126.4022	COLUMWEST - GRAND ISLAND 230KV CKT 1
FDNS	00NR_G15_054	2	20SP	G15_054	TO->FROM	GR ISLD-LNX3345.00 - HOLT.CO3 345.00 345KV CKT 1	720	720	0.03128	110.9696	GERALD GENTLEMAN STATION - THEDFRD3 345.00 345KV CKT 1
FDNS	00NR_G15_054	2	25SP	G15_054	TO->FROM	GR ISLD-LNX3345.00 - HOLT.CO3 345.00 345KV CKT 1	720	720	0.03162	109.992	GERALD GENTLEMAN STATION - THEDFRD3 345.00 345KV CKT 1
FDNS	00NR_G15_054	2	16WP	G15_054	TO->FROM	GR ISLD-LNX3345.00 - HOLT.CO3 345.00 345KV CKT 1	720	720	0.03156	102.6007	RAUN - SUB 3451 FT CAL 345KV CKT 1
FDNS	00NR_G15_054	2	16WP	G15_054	TO->FROM	GR ISLD-LNX3345.00 - HOLT.CO3 345.00 345KV CKT 1	720	720	0.03156	102.6007	RAUN - SUB 3451 FT CAL 345KV CKT 1
FDNS	00NR_G15_054	2	16WP	G15_054	TO->FROM	GR ISLD-LNX3345.00 - HOLT.CO3 345.00 345KV CKT 1	720	720	0.03142	101.3204	COLUMEAST - SHELL CREEK 345KV CKT 1
FDNS	00NR_G15_054	2	16WP	G15_054	TO->FROM	GR ISLD-LNX3345.00 - HOLT.CO3 345.00 345KV CKT 1	720	720	0.03069	101.1369	PETERSBRG.N7115.00 - PETERSBURG 115KV CKT Z1
FDNS	00NR_G15_054	2	16WP	G15_054	TO->FROM	GR ISLD-LNX3345.00 - HOLT.CO3 345.00 345KV CKT 1	720	720	0.03069	101.13	P12:115:NPPD:1168B:ALBION 7:PETERSBRG.N7:BTB
FDNS	00NR_G15_054	2	16WP	G15_054	TO->FROM	GR ISLD-LNX3345.00 - HOLT.CO3 345.00 345KV CKT 1	720	720	0.03069	101.1192	ALBION - PETERSBURG 115KV CKT 1
FDNS	00NR_G15_054	2	16WP	G15_054	TO->FROM	GR ISLD-LNX3345.00 - HOLT.CO3 345.00 345KV CKT 1	720	720	0.03401	100	COLUMWEST - KELLY 230KV CKT 1
FDNS	07ALL_G15_055	0	17SP	G15_055	TO->FROM	CLINTON JUNCTION - ELK CITY 138KV CKT 1	136	152	0.3221	108.2723	P12:230:AEPW-SPS:SWEETWT6:WHEELER 6
FDNS	07ALL_G15_055	0	17SP	G15_055	TO->FROM	CLINTON JUNCTION - ELK CITY 138KV CKT 1	136	152	0.3221	108.2696	STLN-DEMARC6 - SWEETWATER 230KV CKT 1
FDNS	07ALL_G15_055	0	17SP	G15_055	TO->FROM	CLINTON JUNCTION - ELK CITY 138KV CKT 1	136	152	0.3221	108.2636	STATELINE INTERCHANGE - STLN-DEMARC6 230KV CKT 1
FDNS	07ALL_G15_055	0	25SP	G15_055	TO->FROM	STATELINE INTERCHANGE - STLN-DEMARC6 230KV CKT 1	348.58	381.24	0.13276	107.6273	BASE CASE
FDNS	07ALL_G15_055	0	25SP	G15_055	TO->FROM	STATELINE INTERCHANGE - STLN-DEMARC6 230KV CKT 1	348.58	381.24	0.25285	100.767	CHISHOLM7 345.00 - GRACEMONT 345KV CKT 1
FDNS	07ALL_G15_055	0	25SP	G15_055	TO->FROM	STATELINE INTERCHANGE - STLN-DEMARC6 230KV CKT 1	348.58	381.24	0.25285	100.7121	CHISHOLM7 345.00 () 345/230/13.2KV TRANSFORMER CKT 1
FDNS	07ALL_G15_055	0	25SP	G15_055	TO->FROM	STLN-DEMARC6 - SWEETWATER 230KV CKT 1	353	353	0.25285	108.8285	CHISHOLM7 345.00 - GRACEMONT 345KV CKT 1
FDNS	07ALL_G15_055	0	25SP	G15_055	TO->FROM	STLN-DEMARC6 - SWEETWATER 230KV CKT 1	353	353	0.25285	108.7692	CHISHOLM7 345.00 () 345/230/13.2KV TRANSFORMER CKT 1
FDNS	07ALL_G15_055	0	25SP	G15_055	TO->FROM	STLN-DEMARC6 - SWEETWATER 230KV CKT 1	353	353	0.13276	106.2797	BASE CASE
FDNS	07ALL_G15_055	2	25SP	G15_055	TO->FROM	STATELINE INTERCHANGE - STLN-DEMARC6 230KV CKT 1	348.58	381.24	0.13276	107.659	BASE CASE
FDNS	07ALL_G15_055	2	25SP	G15_055	TO->FROM	STATELINE INTERCHANGE - STLN-DEMARC6 230KV CKT 1	348.58	381.24	0.25285	100.8433	CHISHOLM7 345.00 - GRACEMONT 345KV CKT 1
FDNS	07ALL_G15_055	2	25SP	G15_055	TO->FROM	STATELINE INTERCHANGE - STLN-DEMARC6 230KV CKT 1	348.58	381.24	0.25285	100.7883	CHISHOLM7 345.00 () 345/230/13.2KV TRANSFORMER CKT 1
FDNS	07ALL_G15_055	2	25SP	G15_055	TO->FROM	STLN-DEMARC6 - SWEETWATER 230KV CKT 1	353	353	0.25285	108.9109	CHISHOLM7 345.00 - GRACEMONT 345KV CKT 1
FDNS	07ALL_G15_055	2	25SP	G15_055	TO->FROM	STLN-DEMARC6 - SWEETWATER 230KV CKT 1	353	353	0.25285	108.8514	CHISHOLM7 345.00 () 345/230/13.2KV TRANSFORMER CKT 1
FDNS	07ALL_G15_055	2	25SP	G15_055	TO->FROM	STLN-DEMARC6 - SWEETWATER 230KV CKT 1	353	353	0.13276	106.311	BASE CASE
FDNSLock-Blown up	06ALL_G15_056	0	20L	G15_056		Non-Converged Contingency	0	0	1.8605	-	P12:345:SPS:J02.1.TOLK.EDDY
FDNS	06ALL_G15_056	0	17SP	G15_056	TO->FROM	DEAF SMITH COUNTY INTERCHANGE - PLANT X STATION 230KV CKT 1	318.7	350.57	0.19758	103.6689	G14-074T 345.00 - OKLAUNION 345KV CKT 1
FDNS	01NR_G15_060	0	20L	G15_060	FROM->TO	DEWEY - TALOGA 138KV CKT 1	132	165	0.05743	100.6977	DEWEY - SOUTHARD 138KV CKT 1
FDNS	01NR_G15_060	0	20L	G15_060	FROM->TO	FPL SWITCH - MOORELAND 138KV CKT 1	268	287	0.14118	103.4174	MATHWSN7 345.00 - TATONGA7 345.00 345KV CKT 1
FDNS	01NR_G15_060	0	20L	G15_060	TO->FROM	FPL SWITCH - WOODWARD 138KV CKT 1	133	153	0.14118	144.0643	MATHWSN7 345.00 - TATONGA7 345.00 345KV CKT 1
FDNS	01NR_G15_060	0	17G	G15_060	TO->FROM	FPL SWITCH - WOODWARD 138KV CKT 1	133	153	0.13995	104.9642	MATHWSN7 345.00 - TATONGA7 345.00 345KV CKT 1
FDNS	01ALL_G15_060	0	20WP	G15_060	TO->FROM	MATHWSN7 345.00 - TATONGA7 345.00 345KV CKT 1	1195	1195	0.26166	110.6829	THISTLE7 345.00 - WOODWARD DISTRICT EHV 345KV CKT 1
FDNS	01ALL_G15_060	0	20WP	G15_060	TO->FROM	MATHWSN7 345.00 - TATONGA7 345.00 345KV CKT 1	1195	1195	0.26166	110.6829	THISTLE7 345.00 - WOODWARD DISTRICT EHV 345KV CKT 1
FDNS	01ALL_G15_060	0	20WP	G15_060	TO->FROM	MATHWSN7 345.00 - TATONGA7 345.00 345KV CKT 1	1195	1195	0.26166	110.6829	THISTLE7 345.00 - WOODWARD DISTRICT EHV 345KV CKT 2
FDNS	01ALL_G15_060	0	20WP	G15_060	TO->FROM	MATHWSN7 345.00 - TATONGA7 345.00 345KV CKT 1	1195	1195	0.26166	110.6829	THISTLE7 345.00 - WOODWARD DISTRICT EHV 345KV CKT 2

SOLUTION	GROUP	SCENARIO	SEASON	SOURCE	DIRECTION	MONITORED ELEMENT	RATEA (MVA)	RATEB(MVA)	TDF	TC%LOADING (% MVA)	CONTINGENCY
FDNS	01ALL_G15_060	0	20WP	G15_060	TO->FROM	MATHWSN7 345.00 - TATONGA7 345.00 345KV CKT 1	1195	1195	0.23706	107.8868	LAWTON EASTSIDE - OKLAUNION 345KV CKT 1
FDNS	01ALL_G15_060	0	20WP	G15_060	TO->FROM	MATHWSN7 345.00 - TATONGA7 345.00 345KV CKT 1	1195	1195	0.23706	107.8868	LAWTON EASTSIDE - OKLAUNION 345KV CKT 1
FDNS	01ALL_G15_060	0	16WP	G15_060	TO->FROM	MATHWSN7 345.00 - TATONGA7 345.00 345KV CKT 1	1195	1195	0.27255	106.2769	THISTLE7 345.00 - WOODWARD DISTRICT EHV 345KV CKT 1
FDNS	01ALL_G15_060	0	16WP	G15_060	TO->FROM	MATHWSN7 345.00 - TATONGA7 345.00 345KV CKT 1	1195	1195	0.27255	106.2769	THISTLE7 345.00 - WOODWARD DISTRICT EHV 345KV CKT 1
FDNS	01ALL_G15_060	0	16WP	G15_060	TO->FROM	MATHWSN7 345.00 - TATONGA7 345.00 345KV CKT 1	1195	1195	0.27255	106.2769	THISTLE7 345.00 - WOODWARD DISTRICT EHV 345KV CKT 2
FDNS	01ALL_G15_060	0	16WP	G15_060	TO->FROM	MATHWSN7 345.00 - TATONGA7 345.00 345KV CKT 1	1195	1195	0.27255	106.2769	THISTLE7 345.00 - WOODWARD DISTRICT EHV 345KV CKT 2
FDNS	01ALL_G15_060	0	20WP	G15_060	TO->FROM	MATHWSN7 345.00 - TATONGA7 345.00 345KV CKT 1	1195	1195	0.24018	105.2173	G1524G1525 345.00 - THISTLE7 345.00 345KV CKT 1
FDNS	01ALL_G15_060	0	20WP	G15_060	TO->FROM	MATHWSN7 345.00 - TATONGA7 345.00 345KV CKT 1	1195	1195	0.24018	105.2173	G1524G1525 345.00 - THISTLE7 345.00 345KV CKT 2
FDNS	01ALL_G15_060	0	20WP	G15_060	TO->FROM	MATHWSN7 345.00 - TATONGA7 345.00 345KV CKT 1	1195	1195	0.24318	105.1329	BORDER 7345.00 - TUCO_2 345.00 345KV CKT 1
FDNS	01ALL_G15_060	0	20WP	G15_060	TO->FROM	MATHWSN7 345.00 - TATONGA7 345.00 345KV CKT 1	1195	1195	0.24162	104.7014	Hitchland Interchange - WALKTAP7 345.00 345KV CKT 1
FDNS	01ALL_G15_060	0	20WP	G15_060	TO->FROM	MATHWSN7 345.00 - TATONGA7 345.00 345KV CKT 1	1195	1195	0.24162	104.7014	Hitchland Interchange - WALKTAP7 345.00 345KV CKT 1
FDNS	01ALL_G15_060	0	20WP	G15_060	TO->FROM	MATHWSN7 345.00 - TATONGA7 345.00 345KV CKT 1	1195	1195	0.24162	104.6764	P12:345:SPS:J07.1.FINN.HITCH
FDNS	01ALL_G15_060	0	20WP	G15_060	TO->FROM	MATHWSN7 345.00 - TATONGA7 345.00 345KV CKT 1	1195	1195	0.24318	104.1455	BORDER 7345.00 - WOODWARD DISTRICT EHV 345KV CKT 1
FDNS	01ALL_G15_060	0	20WP	G15_060	TO->FROM	MATHWSN7 345.00 - TATONGA7 345.00 345KV CKT 1	1195	1195	0.23972	103.5736	DEWEY - SOUTHARD 138KV CKT 1
FDNS	01ALL_G15_060	0	20WP	G15_060	TO->FROM	MATHWSN7 345.00 - TATONGA7 345.00 345KV CKT 1	1195	1195	0.23178	103.4523	CHISHOLM6 230.00 - SWEETWATER 230KV CKT 1
FDNS	01ALL_G15_060	0	20WP	G15_060	TO->FROM	MATHWSN7 345.00 - TATONGA7 345.00 345KV CKT 1	1195	1195	0.23972	103.3594	ROMAN NOSE - SOUTHARD 138KV CKT 1
FDNS	01ALL_G15_060	0	20WP	G15_060	TO->FROM	MATHWSN7 345.00 - TATONGA7 345.00 345KV CKT 1	1195	1195	0.2283	103.3221	CIMARRON - MINCO 345KV CKT 1
FDNS	01ALL_G15_060	0	20WP	G15_060	TO->FROM	MATHWSN7 345.00 - TATONGA7 345.00 345KV CKT 1	1195	1195	0.23296	103.2492	P12:230:AEPW:ELKCITY6:SWEETWT6
FDNS	01ALL_G15_060	0	20L	G15_060	TO->FROM	MATHWSN7 345.00 - TATONGA7 345.00 345KV CKT 1	1195	1195	0.265	103.2215	THISTLE7 345.00 - WOODWARD DISTRICT EHV 345KV CKT 1
FDNS	01ALL_G15_060	0	20L	G15_060	TO->FROM	MATHWSN7 345.00 - TATONGA7 345.00 345KV CKT 1	1195	1195	0.265	103.2215	THISTLE7 345.00 - WOODWARD DISTRICT EHV 345KV CKT 1
FDNS	01ALL_G15_060	0	20L	G15_060	TO->FROM	MATHWSN7 345.00 - TATONGA7 345.00 345KV CKT 1	1195	1195	0.265	103.2215	THISTLE7 345.00 - WOODWARD DISTRICT EHV 345KV CKT 2
FDNS	01ALL_G15_060	0	20L	G15_060	TO->FROM	MATHWSN7 345.00 - TATONGA7 345.00 345KV CKT 1	1195	1195	0.265	103.2215	THISTLE7 345.00 - WOODWARD DISTRICT EHV 345KV CKT 2
FDNS	01ALL_G15_060	0	20WP	G15_060	TO->FROM	MATHWSN7 345.00 - TATONGA7 345.00 345KV CKT 1	1195	1195	0.24536	102.9679	IODINE - WOODWARD EHV 138KV CKT 1
FDNS	01ALL_G15_060	0	20WP	G15_060	TO->FROM	MATHWSN7 345.00 - TATONGA7 345.00 345KV CKT 1	1195	1195	0.24617	102.8987	FPL SWITCH - MOORELAND 138KV CKT 1
FDNS	01ALL_G15_060	0	20WP	G15_060	TO->FROM	MATHWSN7 345.00 - TATONGA7 345.00 345KV CKT 1	1195	1195	0.24536	102.8171	DEWEY - IODINE 138KV CKT 1
FDNS	01ALL_G15_060	0	20WP	G15_060	TO->FROM	MATHWSN7 345.00 - TATONGA7 345.00 345KV CKT 1	1195	1195	0.23285	102.8042	G13-010T 345.00 - POST ROCK 345KV CKT 1
FDNS	01ALL_G15_060	0	20WP	G15_060	TO->FROM	MATHWSN7 345.00 - TATONGA7 345.00 345KV CKT 1	1195	1195	0.23631	102.7269	FINNEY SWITCHING STATION - HOLCOMB 345KV CKT 1
FDNS	01ALL_G15_060	0	20WP	G15_060	TO->FROM	MATHWSN7 345.00 - TATONGA7 345.00 345KV CKT 1	1195	1195	0.23631	102.7269	FINNEY SWITCHING STATION - HOLCOMB 345KV CKT 1
FDNS	01ALL_G15_060	0	20WP	G15_060	TO->FROM	MATHWSN7 345.00 - TATONGA7 345.00 345KV CKT 1	1195	1195	0.23285	102.6963	G13-010T 345.00 - SPEARVILLE 345KV CKT 1
FDNS	01ALL_G15_060	0	20WP	G15_060	TO->FROM	MATHWSN7 345.00 - TATONGA7 345.00 345KV CKT 1	1195	1195	0.22827	102.4802	GEN509416 1-TURK GENERATION
FDNS	01ALL_G15_060	0	20WP	G15_060	TO->FROM	MATHWSN7 345.00 - TATONGA7 345.00 345KV CKT 1	1195	1195	0.22827	102.4769	GEN514806 1-SOONER UNIT 2
FDNS	01ALL_G15_060	0	20WP	G15_060	TO->FROM	MATHWSN7 345.00 - TATONGA7 345.00 345KV CKT 1	1195	1195	0.22827	102.4497	GEN520947 1-HUGO1
FDNS	01ALL_G15_060	0	16WP	G15_060	TO->FROM	MATHWSN7 345.00 - TATONGA7 345.00 345KV CKT 1	1195	1195	0.25162	102.3967	LAWTON EASTSIDE - OKLAUNION 345KV CKT 1
FDNS	01ALL_G15_060	0	16WP	G15_060	TO->FROM	MATHWSN7 345.00 - TATONGA7 345.00 345KV CKT 1	1195	1195	0.25162	102.3967	LAWTON EASTSIDE - OKLAUNION 345KV CKT 1
FDNS	01ALL_G15_060	0	20WP	G15_060	TO->FROM	MATHWSN7 345.00 - TATONGA7 345.00 345KV CKT 1	1195	1195	0.2301	102.3826	GRAPEVINE INTERCHANGE - NICHOLS STATION 230KV CKT 1
FDNS	01ALL_G15_060	0	20WP	G15_060	TO->FROM	MATHWSN7 345.00 - TATONGA7 345.00 345KV CKT 1	1195	1195	0.2301	102.3826	GRAPEVINE INTERCHANGE - NICHOLS STATION 230KV CKT 1
FDNS	01ALL_G15_060	0	20WP	G15_060	TO->FROM	MATHWSN7 345.00 - TATONGA7 345.00 345KV CKT 1	1195	1195	0.22827	102.3819	GEN509403 1-PIRKEY GENERATION
FDNS	01ALL_G15_060	0	20WP	G15_060	TO->FROM	MATHWSN7 345.00 - TATONGA7 345.00 345KV CKT 1	1195	1195	0.2337	102.3628	MINGO - SETAB 345KV CKT 1
FDNS	01ALL_G15_060	0	20WP	G15_060	TO->FROM	MATHWSN7 345.00 - TATONGA7 345.00 345KV CKT 1	1195	1195	0.2337	102.3628	MINGO - SETAB 345KV CKT 1
FDNS	01ALL_G15_060	0	20WP	G15_060	TO->FROM	MATHWSN7 345.00 - TATONGA7 345.00 345KV CKT 1	1195	1195	0.23706	102.3221	G14-074T 345.00 - OKLAUNION 345KV CKT 1
FDNS	01ALL_G15_060	0	20WP	G15_060	TO->FROM	MATHWSN7 345.00 - TATONGA7 345.00 345KV CKT 1	1195	1195	0.22827	102.288	GEN336821 1-GRAND GULF UNIT
FDNS	01ALL_G15_060	0	20WP	G15_060	TO->FROM	MATHWSN7 345.00 - TATONGA7 345.00 345KV CKT 1	1195	1195	0.23631	102.2647	FINNEY SWITCHING STATION - WALKTAP7 345.00 345KV CKT 1
FDNS	01ALL_G15_060	0	20WP	G15_060	TO->FROM	MATHWSN7 345.00 - TATONGA7 345.00 345KV CKT 1	1195	1195	0.23631	102.2647	FINNEY SWITCHING STATION - WALKTAP7 345.00 345KV CKT 1
FDNS	01ALL_G15_060	0	20WP	G15_060	TO->FROM	MATHWSN7 345.00 - TATONGA7 345.00 345KV CKT 1	1195	1195	0.22827	102.2621	GEN514805 1-SOONER UNIT 1
FDNS	01ALL_G15_060	0	20WP	G15_060	TO->FROM	MATHWSN7 345.00 - TATONGA7 345.00 345KV CKT 1	1195	1195	0.22827	102.2285	GEN337911 1-ARKANSAS NUCLEAR ONE UNIT #2
FDNS	01ALL_G15_060	0	20WP	G15_060	TO->FROM	MATHWSN7 345.00 - TATONGA7 345.00 345KV CKT 1	1195	1195	0.22827	102.1658	GEN515226 1-MUSKOGEE 6G
FDNS	01ALL_G15_060	0	20WP	G15_060	TO->FROM	MATHWSN7 345.00 - TATONGA7 345.00 345KV CKT 1	1195	1195	0.22827	102.1514	GEN515602 1-KNGFSR12 0.7000
FDNS	01ALL_G15_060	0	20WP	G15_060	TO->FROM	MATHWSN7 345.00 - TATONGA7 345.00 345KV CKT 1	1195	1195	0.22827	102.1356	GEN562587 1-G14_056_3 0.6900
FDNS	01ALL_G15_060	0	20WP	G15_060	TO->FROM	MATHWSN7 345.00 - TATONGA7 345.00 345KV CKT 1	1195	1195	0.22827	102.0072	GEN336153 1-WATERFORD UNIT#3
FDNS	01ALL_G15_060	0	20WP	G15_060	TO->FROM	MATHWSN7 345.00 - TATONGA7 345.00 345KV CKT 1	1195	1195	0.22827	102.0019	GEN509406 1-WELSH #3
FDNS	01ALL_G15_060	0	20WP	G15_060	TO->FROM	MATHWSN7 345.00 - TATONGA7 345.00 345KV CKT 1	1195	1195	0.22827	102.0017	GEN509404 1-WELSH #1
FDNS	01ALL_G15_060	0	20WP	G15_060	TO->FROM	MATHWSN7 345.00 - TATONGA7 345.00 345KV CKT 1	1195	1195	0.22827	101.9897	GEN515042 1-SEMINOLE 3G
FDNS	01ALL_G15_060	0	20WP	G15_060	TO->FROM	MATHWSN7 345.00 - TATONGA7 345.00 345KV CKT 1	1195	1195	0.22827	101.9814	GEN511843 1-RIVERSIDE STATION #2
FDNS	01ALL_G15_060	0	20WP	G15_060	TO->FROM	MATHWSN7 345.00 - TATONGA7 345.00 345KV CKT 1	1195	1195	0.22827	101.9758	GEN515223 1-MUSKOGEE 4G
FDNS	01ALL_G15_060	0	20WP	G15_060	TO->FROM	MATHWSN7 345.00 - TATONGA7 345.00 345KV CKT 1	1195	1195	0.22827	101.9758	GEN515225 1-MUSKOGEE 5G
FDNS	01ALL_G15_060	0	20WP	G15_060	TO->FROM	MATHWSN7 345.00 - TATONGA7 345.00 345KV CKT 1	1195	1195	0.23266	101.9733	AXTELL - POST ROCK 345KV CKT 1
FDNS	01ALL_G15_060	0	20WP	G15_060	TO->FROM	MATHWSN7 345.00 - TATONGA7 345.00 345KV CKT 1	1195	1195	0.22827	101.9289	GEN337910 1-ARKANSAS NUCLEAR ONE UNIT #1
FDNS	01ALL_G15_060	0	20WP	G15_060	TO->FROM	MATHWSN7 345.00 - TATONGA7 345.00 345KV CKT 1	1195	1195	0.23227	101.904	HOLCOMB - SETAB 345KV CKT 1
FDNS	01ALL_G15_060	0	20WP	G15_060	TO->FROM	MATHWSN7 345.00 - TATONGA7 345.00 345KV CKT 1	1195	1195	0.23227	101.904	HOLCOMB - SETAB 345KV CKT 1
FDNS	01ALL_G15_060	0	20WP	G15_060	TO->FROM	MATHWSN7 345.00 - TATONGA7 345.00 345KV CKT 1	1195	1195	0.23128	101.8923	MOORELAND - ROSE_VALLEY 138.00 138KV CKT 1
FDNS	01ALL_G15_060	0	20WP	G15_060	TO->FROM	MATHWSN7 345.00 - TATONGA7 345.00 345KV CKT 1	1195	1195	0.22827	101.8657	GEN501801 1-DOLET HILLS UNIT1
FDNS	01ALL_G15_060	0	20WP	G15_060	TO->FROM	MATHWSN7 345.00 - TATONGA7 345.00 345KV CKT 1	1195	1195	0.23178	101.828	P12:230:AEPW-SPS:SWEETWT6:WHEELER 6
FDNS	01ALL_G15_060	0	20WP	G15_060	TO->FROM	MATHWSN7 345.00 - TATONGA7 345.00 345KV CKT 1	1195	1195	0.23178	101.8279	STATELINE INTERCHANGE - STLN-DEMARC6 230KV CKT 1
FDNS	01ALL_G15_060	0	20WP	G15_060	TO->FROM	MATHWSN7 345.00 - TATONGA7 345.00 345KV CKT 1	1195	1195	0.23178	101.8248	STLN-DEMARC6 - SWEETWATER 230KV CKT 1
FDNS	01ALL_G15_060	0	20WP	G15_060	TO->FROM	MATHWSN7 345.00 - TATONGA7 345.00 345KV CKT 1	1195	1195	0.22827	101.8152	GEN335831 1-RIVERBEND UNIT#1
FDNS	01ALL_G15_060	0	20WP	G15_060	TO->FROM	MATHWSN7 345.00 - TATONGA7 345.00 345KV CKT 1	1195	1195	0.23263	101.7833	GLASS MOUNTAIN - MOORELAND 138KV CKT 1
FDNS	01ALL_G15_060	0	20WP	G15_060	TO->FROM	MATHWSN7 345.00 - TATONGA7 345.00 345KV CKT 1	1195	1195	0.22827	101.779	P12:345:GRDA:CHOUTEAU-SPORTSMANACRES
FDNS	01ALL_G15_060	0	20WP	G15_060	TO->FROM	MATHWSN7 345.00 - TATONGA7 345.00 345KV CKT 1	1195	1195	0.23128	101.7747	NOEL_SW 138.00 - ROSE_VALLEY 138.00 138KV CKT 1
FDNS	01ALL_G15_060	0	20WP	G15_060	TO->FROM	MATHWSN7 345.00 - TATONGA7 345.00 345KV CKT 1	1195	1195	0.22827	101.7696	GEN515443 1-MNCOWND1 0.7000
FDNS	01ALL_G15_060	0	20WP	G15_060	TO->FROM	MATHWSN7 345.00 - TATONGA7 345.00 345KV CKT 1	1195	1195	0.23263	101.74	CLEO CORNER - GLASS MOUNTAIN 138KV CKT 1
FDNS	01ALL_G15_060	0	20WP	G15_060	TO->FROM	MATHWSN7 345.00 - TATONGA7 345.00 345KV CKT 1	1195	1195	0.23244	101.7354	P12:138:WFEC:MSL14
FDNS	01ALL_G15_060	0	20WP	G15_060	TO->FROM	MATHWSN7 345.00 - TATONGA7 345.00 345KV CKT 1	1195	1195	0.23506	101.7264	MINGO - RED WILLOW 345KV CKT 1
FDNS	01ALL_G15_060	0	20WP	G15_060	TO->FROM	MATHWSN7 345.00 - TATONGA7 345.00 345KV CKT 1	1195	1195	0.23506	101.7264	MINGO - RED WILLOW 345KV CKT 1

SOLUTION	GROUP	SCENARIO	SEASON	SOURCE	DIRECTION	MONITORED ELEMENT	RATEA (MVA)	RATEB(MVA)	TDF	TC%LOADING (% MVA)	CONTINGENCY
FDNS	01ALL_G15_060	0	20WP	G15_060	TO->FROM	MATHWSN7 345.00 - TATONGA7 345.00 345KV CKT 1	1195	1195	0.23164	101.715	G1524G1525 345.00 - WICHITA 345KV CKT 1
FDNS	01ALL_G15_060	0	20WP	G15_060	TO->FROM	MATHWSN7 345.00 - TATONGA7 345.00 345KV CKT 1	1195	1195	0.23164	101.715	G1524G1525 345.00 - WICHITA 345KV CKT 2
FDNS	01ALL_G15_060	0	16WP	G15_060	TO->FROM	MATHWSN7 345.00 - TATONGA7 345.00 345KV CKT 1	1195	1195	0.25116	101.7002	BORDER 7345.00 - TUCO_2 345.00 345KV CKT 1
FDNS	01ALL_G15_060	0	20WP	G15_060	TO->FROM	MATHWSN7 345.00 - TATONGA7 345.00 345KV CKT 1	1195	1195	0.23244	101.6897	BEARCAT 138.00 - MOORELAND 138KV CKT 1
FDNS	01ALL_G15_060	0	20WP	G15_060	TO->FROM	MATHWSN7 345.00 - TATONGA7 345.00 345KV CKT 1	1195	1195	0.22827	101.6798	GEN515040 1-SEMINOLE 1G
FDNS	01ALL_G15_060	0	20WP	G15_060	TO->FROM	MATHWSN7 345.00 - TATONGA7 345.00 345KV CKT 1	1195	1195	0.22827	101.6776	GEN515606 1-CANDN11 0.6900
FDNS	01ALL_G15_060	0	20WP	G15_060	TO->FROM	MATHWSN7 345.00 - TATONGA7 345.00 345KV CKT 1	1195	1195	0.22827	101.6776	GEN515607 1-CANDN12 0.6900
FDNS	01ALL_G15_060	0	20WP	G15_060	TO->FROM	MATHWSN7 345.00 - TATONGA7 345.00 345KV CKT 1	1195	1195	0.23024	101.6724	GRAPEVINE INTERCHANGE - STATELINE INTERCHANGE 230KV CKT 1
FDNS	01ALL_G15_060	0	20WP	G15_060	TO->FROM	MATHWSN7 345.00 - TATONGA7 345.00 345KV CKT 1	1195	1195	0.23024	101.6724	GRAPEVINE INTERCHANGE - STATELINE INTERCHANGE 230KV CKT 1
FDNS	01ALL_G15_060	0	20WP	G15_060	TO->FROM	MATHWSN7 345.00 - TATONGA7 345.00 345KV CKT 1	1195	1195	0.22827	101.6687	GEN509394 1-FLINT CREEK
FDNS	01ALL_G15_060	0	20WP	G15_060	TO->FROM	MATHWSN7 345.00 - TATONGA7 345.00 345KV CKT 1	1195	1195	0.22827	101.6621	GEN511840 1-NORTHEASTERN STATION #3
FDNS	01ALL_G15_060	0	20WP	G15_060	TO->FROM	MATHWSN7 345.00 - TATONGA7 345.00 345KV CKT 1	1195	1195	0.22827	101.6562	GEN515041 1-SEMINOLE 2G
FDNS	01ALL_G15_060	0	20WP	G15_060	TO->FROM	MATHWSN7 345.00 - TATONGA7 345.00 345KV CKT 1	1195	1195	0.23244	101.6061	BEARCAT 138.00 - NINE MILE 138KV CKT 1
FDNS	01ALL_G15_060	0	20WP	G15_060	TO->FROM	MATHWSN7 345.00 - TATONGA7 345.00 345KV CKT 1	1195	1195	0.22827	101.5904	GEN511839 1-NORTHEASTERN STATION #2
FDNS	01ALL_G15_060	0	20WP	G15_060	TO->FROM	MATHWSN7 345.00 - TATONGA7 345.00 345KV CKT 1	1195	1195	0.23166	101.5809	P12:138:WFEC:MSL12
FDNS	01ALL_G15_060	0	20WP	G15_060	TO->FROM	MATHWSN7 345.00 - TATONGA7 345.00 345KV CKT 1	1195	1195	0.22827	101.5695	GEN511842 1-RIVERSIDE STATION #1
FDNS	01ALL_G15_060	0	20WP	G15_060	TO->FROM	MATHWSN7 345.00 - TATONGA7 345.00 345KV CKT 1	1195	1195	0.23166	101.5663	MOORELAND - PIC4 138.00 138KV CKT 1
FDNS	01ALL_G15_060	0	20WP	G15_060	TO->FROM	MATHWSN7 345.00 - TATONGA7 345.00 345KV CKT 1	1195	1195	0.23706	101.5547	G14-074T 345.00 - TUCO INTERCHANGE 345KV CKT 1
FDNS	01ALL_G15_060	0	20WP	G15_060	TO->FROM	MATHWSN7 345.00 - TATONGA7 345.00 345KV CKT 1	1195	1195	0.23166	101.5513	CEDARDALE - PIC4 138.00 138KV CKT 1
FDNS	01ALL_G15_060	0	20WP	G15_060	TO->FROM	MATHWSN7 345.00 - TATONGA7 345.00 345KV CKT 1	1195	1195	0.23166	101.521	CEDARDALE - OKEENE 138KV CKT 1
FDNS	01ALL_G15_060	0	20WP	G15_060	TO->FROM	MATHWSN7 345.00 - TATONGA7 345.00 345KV CKT 1	1195	1195	0.22827	101.4807	GEN337653 1-WHITE BLUFF UNIT #2
FDNS	01ALL_G15_060	0	20WP	G15_060	TO->FROM	MATHWSN7 345.00 - TATONGA7 345.00 345KV CKT 1	1195	1195	0.23205	101.4766	POTTER COUNTY INTERCHANGE (WAUK 90343-A) 345/230/13.2KV TRANSFORMER CKT 1
FDNS	01ALL_G15_060	0	20WP	G15_060	TO->FROM	MATHWSN7 345.00 - TATONGA7 345.00 345KV CKT 1	1195	1195	0.23205	101.4766	POTTER COUNTY INTERCHANGE (WAUK 90343-A) 345/230/13.2KV TRANSFORMER CKT 1
FDNS	01ALL_G15_060	0	20WP	G15_060	TO->FROM	MATHWSN7 345.00 - TATONGA7 345.00 345KV CKT 1	1195	1195	0.23244	101.4634	MOREWOOD SW - NINE MILE 138KV CKT 1
FDNS	01ALL_G15_060	0	20WP	G15_060	TO->FROM	MATHWSN7 345.00 - TATONGA7 345.00 345KV CKT 1	1195	1195	0.23005	101.4578	FLATRDG3 - HARPER 138KV CKT 1
FDNS	01ALL_G15_060	0	20WP	G15_060	TO->FROM	MATHWSN7 345.00 - TATONGA7 345.00 345KV CKT 1	1195	1195	0.23005	101.4578	FLATRDG3 - HARPER 138KV CKT 1
FDNS	01ALL_G15_060	0	20WP	G15_060	TO->FROM	MATHWSN7 345.00 - TATONGA7 345.00 345KV CKT 1	1195	1195	0.23398	101.4544	BENTON - WICHITA 345KV CKT 1
FDNS	01ALL_G15_060	0	20WP	G15_060	TO->FROM	MATHWSN7 345.00 - TATONGA7 345.00 345KV CKT 1	1195	1195	0.2305	101.3817	P12:138:WFEC:MSL15
FDNS	01ALL_G15_060	0	20WP	G15_060	TO->FROM	MATHWSN7 345.00 - TATONGA7 345.00 345KV CKT 1	1195	1195	0.22827	101.3809	GEN513601 1-GRECCTG_1 20.000
FDNS	01ALL_G15_060	0	20WP	G15_060	TO->FROM	MATHWSN7 345.00 - TATONGA7 345.00 345KV CKT 1	1195	1195	0.2289	101.3775	HOYT - JEFFREY ENERGY CENTER 345KV CKT 1
FDNS	01ALL_G15_060	0	20WP	G15_060	TO->FROM	MATHWSN7 345.00 - TATONGA7 345.00 345KV CKT 1	1195	1195	0.22827	101.3732	GEN337652 1-WHITE BLUFF UNIT #1
FDNS	01ALL_G15_060	0	20WP	G15_060	TO->FROM	MATHWSN7 345.00 - TATONGA7 345.00 345KV CKT 1	1195	1195	0.24617	101.3657	FPL SWITCH - WOODWARD 138KV CKT 1
FDNS	01ALL_G15_060	0	20WP	G15_060	TO->FROM	MATHWSN7 345.00 - TATONGA7 345.00 345KV CKT 1	1195	1195	0.22827	101.3604	GEN501813 1-RODEMACHER UNIT 3
FDNS	01ALL_G15_060	0	20WP	G15_060	TO->FROM	MATHWSN7 345.00 - TATONGA7 345.00 345KV CKT 1	1195	1195	0.22827	101.3309	GEN509409 1-WILKES #3
FDNS	01ALL_G15_060	0	20WP	G15_060	TO->FROM	MATHWSN7 345.00 - TATONGA7 345.00 345KV CKT 1	1195	1195	0.23247	101.3149	CLEO CORNER - CLEOPLT4 138.00 138KV CKT 1
FDNS	01ALL_G15_060	0	20WP	G15_060	TO->FROM	MATHWSN7 345.00 - TATONGA7 345.00 345KV CKT 1	1195	1195	0.23264	101.3142	DOVER SW - OKEENE 138KV CKT 1
FDNS	01ALL_G15_060	0	20WP	G15_060	TO->FROM	MATHWSN7 345.00 - TATONGA7 345.00 345KV CKT 1	1195	1195	0.22827	101.292	GEN512688 2-GRDA1 GSU2 22
FDNS	01ALL_G15_060	0	20WP	G15_060	TO->FROM	MATHWSN7 345.00 - TATONGA7 345.00 345KV CKT 1	1195	1195	0.22827	101.2792	GEN514910 2-REDBUD GEN
FDNS	01ALL_G15_060	0	20WP	G15_060	TO->FROM	MATHWSN7 345.00 - TATONGA7 345.00 345KV CKT 1	1195	1195	0.23046	101.2664	THISTLE7 345.00 (THISTLE T1) 345/138/13.8KV TRANSFORMER CKT 1
FDNS	01ALL_G15_060	0	20WP	G15_060	TO->FROM	MATHWSN7 345.00 - TATONGA7 345.00 345KV CKT 1	1195	1195	0.23046	101.2661	FLATRDG3 - THISTLE4 138.00 138KV CKT 1
FDNS	01ALL_G15_060	0	20WP	G15_060	TO->FROM	MATHWSN7 345.00 - TATONGA7 345.00 345KV CKT 1	1195	1195	0.23046	101.2661	FLATRDG3 - THISTLE4 138.00 138KV CKT 1
FDNS	01ALL_G15_060	0	20WP	G15_060	TO->FROM	MATHWSN7 345.00 - TATONGA7 345.00 345KV CKT 1	1195	1195	0.22942	101.257	G14-057T 345.00 - SUNNYSIDE 345KV CKT 1
FDNS	01ALL_G15_060	0	20WP	G15_060	TO->FROM	MATHWSN7 345.00 - TATONGA7 345.00 345KV CKT 1	1195	1195	0.22827	101.2536	GEN335206 1-NELSON UNIT 6
FDNS	01ALL_G15_060	0	20WP	G15_060	TO->FROM	MATHWSN7 345.00 - TATONGA7 345.00 345KV CKT 1	1195	1195	0.23247	101.2514	CLEOPLT4 138.00 - MEN TAP 138KV CKT 1
FDNS	01ALL_G15_060	0	20WP	G15_060	TO->FROM	MATHWSN7 345.00 - TATONGA7 345.00 345KV CKT 1	1195	1195	0.22827	101.2238	GRAND GULF 500/22.0KV TRANSFORMER CKT 1
FDNS	01ALL_G15_060	0	20WP	G15_060	TO->FROM	MATHWSN7 345.00 - TATONGA7 345.00 345KV CKT 1	1195	1195	0.22827	101.2182	GEN514911 2-REDBUD GEN
FDNS	01ALL_G15_060	0	20WP	G15_060	TO->FROM	MATHWSN7 345.00 - TATONGA7 345.00 345KV CKT 1	1195	1195	0.22827	101.2182	GEN514942 2-REDBUD4G
FDNS	01ALL_G15_060	0	20WP	G15_060	TO->FROM	MATHWSN7 345.00 - TATONGA7 345.00 345KV CKT 1	1195	1195	0.23247	101.2159	IMO TAP - MEN TAP 138KV CKT 1
FDNS	01ALL_G15_060	0	20WP	G15_060	TO->FROM	MATHWSN7 345.00 - TATONGA7 345.00 345KV CKT 1	1195	1195	0.22827	101.2009	GEN515601 1-KNGFSR11 0.7000
FDNS	01ALL_G15_060	0	20WP	G15_060	TO->FROM	MATHWSN7 345.00 - TATONGA7 345.00 345KV CKT 1	1195	1195	0.22827	101.1891	DELL 500 - ESSEX UNIT 2 500KV CKT Z1
FDNS	01ALL_G15_060	0	20WP	G15_060	TO->FROM	MATHWSN7 345.00 - TATONGA7 345.00 345KV CKT 1	1195	1195	0.22827	101.167	GEN511848 1-SOUTHWESTERN STATION #3
FDNS	01ALL_G15_060	0	20WP	G15_060	TO->FROM	MATHWSN7 345.00 - TATONGA7 345.00 345KV CKT 1	1195	1195	0.22827	101.159	GEN501812 1-RODEMACHER UNIT 2
FDNS	01ALL_G15_060	0	20WP	G15_060	TO->FROM	MATHWSN7 345.00 - TATONGA7 345.00 345KV CKT 1	1195	1195	0.22827	101.1579	GEN514940 1-REDBUD GEN
FDNS	01ALL_G15_060	0	20WP	G15_060	TO->FROM	MATHWSN7 345.00 - TATONGA7 345.00 345KV CKT 1	1195	1195	0.22827	101.1561	GEN300006 1-NEW MADRID UNIT 1
FDNS	01ALL_G15_060	0	20WP	G15_060	TO->FROM	MATHWSN7 345.00 - TATONGA7 345.00 345KV CKT 1	1195	1195	0.22827	101.1514	GEN514900 1-REDBUD2S
FDNS	01ALL_G15_060	0	20WP	G15_060	TO->FROM	MATHWSN7 345.00 - TATONGA7 345.00 345KV CKT 1	1195	1195	0.22827	101.1513	GEN514899 1-REDBUD1S
FDNS	01ALL_G15_060	0	20WP	G15_060	TO->FROM	MATHWSN7 345.00 - TATONGA7 345.00 345KV CKT 1	1195	1195	0.22827	101.148	GEN300007 1-NEW MADRID UNIT 2
FDNS	01ALL_G15_060	0	20WP	G15_060	TO->FROM	MATHWSN7 345.00 - TATONGA7 345.00 345KV CKT 1	1195	1195	0.22942	101.1439	G14-057T 345.00 - LAWTON EASTSIDE 345KV CKT 1
FDNS	01ALL_G15_060	0	20WP	G15_060	TO->FROM	MATHWSN7 345.00 - TATONGA7 345.00 345KV CKT 1	1195	1195	0.22827	101.1156	GEN338146 1-INDEPENDENCE UNIT #2
FDNS	01ALL_G15_060	0	20WP	G15_060	TO->FROM	MATHWSN7 345.00 - TATONGA7 345.00 345KV CKT 1	1195	1195	0.23021	101.1121	CANEYRV7 345.00 - NEOSHO 345KV CKT 1
FDNS	01ALL_G15_060	0	20WP	G15_060	TO->FROM	MATHWSN7 345.00 - TATONGA7 345.00 345KV CKT 1	1195	1195	0.22827	101.1002	GEN514905 1-REDBUD3S
FDNS	01ALL_G15_060	0	20WP	G15_060	TO->FROM	MATHWSN7 345.00 - TATONGA7 345.00 345KV CKT 1	1195	1195	0.22827	101.0844	GEN336252 1-NINEMILE POINT UNIT#5
FDNS	01ALL_G15_060	0	20WP	G15_060	TO->FROM	MATHWSN7 345.00 - TATONGA7 345.00 345KV CKT 1	1195	1195	0.22827	101.0732	GEN338143 1-INDEPENDENCE UNIT #1
FDNS	01ALL_G15_060	0	20WP	G15_060	TO->FROM	MATHWSN7 345.00 - TATONGA7 345.00 345KV CKT 1	1195	1195	0.2321	101.0699	CHISHOLM7 345.00 () 345/230/13.2KV TRANSFORMER CKT 1
FDNS	01ALL_G15_060	0	20WP	G15_060	TO->FROM	MATHWSN7 345.00 - TATONGA7 345.00 345KV CKT 1	1195	1195	0.2321	101.0649	CHISHOLM7 345.00 - GRACEMONT 345KV CKT 1
FDNS	01ALL_G15_060	0	20WP	G15_060	TO->FROM	MATHWSN7 345.00 - TATONGA7 345.00 345KV CKT 1	1195	1195	0.22894	101.0633	HOYT - STRANGER CREEK 345KV CKT 1
FDNS	01ALL_G15_060	0	20WP	G15_060	TO->FROM	MATHWSN7 345.00 - TATONGA7 345.00 345KV CKT 1	1195	1195	0.229	101.0617	LACYGNE - WAVERLY7 345.00 345KV CKT 1
FDNS	01ALL_G15_060	0	20WP	G15_060	TO->FROM	MATHWSN7 345.00 - TATONGA7 345.00 345KV CKT 1	1195	1195	0.2305	101.0468	NOEL_SW 138.00 - SALT_PLAINS 138.00 138KV CKT 1
FDNS	01ALL_G15_060	0	20WP	G15_060	TO->FROM	MATHWSN7 345.00 - TATONGA7 345.00 345KV CKT 1	1195	1195	0.22827	101.0425	GEN334440 1-SABINE UNIT 4
FDNS	01ALL_G15_060	0	20WP	G15_060	TO->FROM	MATHWSN7 345.00 - TATONGA7 345.00 345KV CKT 1	1195	1195	0.22909	101.0282	AXTELL - PAULINE 345KV CKT 1
FDNS	01ALL_G15_060	0	20WP	G15_060	TO->FROM	MATHWSN7 345.00 - TATONGA7 345.00 345KV CKT 1	1195	1195	0.23479	101.0271	G11-14T 345.00 - WOODWARD DISTRICT EHV 345KV CKT 1
FDNS	01ALL_G15_060	0	20WP	G15_060	TO->FROM	MATHWSN7 345.00 - TATONGA7 345.00 345KV CKT 1	1195	1195	0.23479	101.0271	G11-14T 345.00 - WOODWARD DISTRICT EHV 345KV CKT 2
FDNS	01ALL_G15_060	0	20WP	G15_060	TO->FROM	MATHWSN7 345.00 - TATONGA7 345.00 345KV CKT 1	1195	1195	0.22827	101.0203	GEN336831 1-BAXTER WILSON SES

SOLUTION	GROUP	SCENARIO	SEASON	SOURCE	DIRECTION	MONITORED ELEMENT	RATEA (MVA)	RATEB(MVA)	TDF	TC%LOADING (% MVA)	CONTINGENCY
FDNS	01ALL_G15_060	0	20WP	G15_060	TO->FROM	MATHWSN7 345.00 - TATONGA7 345.00 345KV CKT 1	1195	1195	0.22827	101.0142	GEN515550 1-MNCWND31 0.6900
FDNS	01ALL_G15_060	0	20WP	G15_060	TO->FROM	MATHWSN7 345.00 - TATONGA7 345.00 345KV CKT 1	1195	1195	0.22912	101.0116	MULLERGREN - SPEARVILLE 230KV CKT 1
FDNS	01ALL_G15_060	0	20WP	G15_060	TO->FROM	MATHWSN7 345.00 - TATONGA7 345.00 345KV CKT 1	1195	1195	0.22912	101.0116	MULLERGREN - SPEARVILLE 230KV CKT 1
FDNS	01ALL_G15_060	0	16WP	G15_060	TO->FROM	MATHWSN7 345.00 - TATONGA7 345.00 345KV CKT 1	1195	1195	0.25218	101.0113	FINNEY SWITCHING STATION - HOLCOMB 345KV CKT 1
FDNS	01ALL_G15_060	0	16WP	G15_060	TO->FROM	MATHWSN7 345.00 - TATONGA7 345.00 345KV CKT 1	1195	1195	0.25218	101.0113	FINNEY SWITCHING STATION - HOLCOMB 345KV CKT 1
FDNS	01ALL_G15_060	0	20WP	G15_060	TO->FROM	MATHWSN7 345.00 - TATONGA7 345.00 345KV CKT 1	1195	1195	0.22773	101.0091	ARKANSAS NUCLEAR ONE - FT SMITH 500KV CKT 1
FDNS	01ALL_G15_060	0	20WP	G15_060	TO->FROM	MATHWSN7 345.00 - TATONGA7 345.00 345KV CKT 1	1195	1195	0.22773	101.0091	ARKANSAS NUCLEAR ONE - FT SMITH 500KV CKT 1
FDNS	01ALL_G15_060	0	20WP	G15_060	TO->FROM	MATHWSN7 345.00 - TATONGA7 345.00 345KV CKT 1	1195	1195	0.229	100.9973	WAVERLY7 345.00 - WOLF CREEK 345KV CKT 1
FDNS	01ALL_G15_060	0	20WP	G15_060	TO->FROM	MATHWSN7 345.00 - TATONGA7 345.00 345KV CKT 1	1195	1195	0.23205	100.9953	Hitchland Interchange - POTTER COUNTY INTERCHANGE 345KV CKT 1
FDNS	01ALL_G15_060	0	20WP	G15_060	TO->FROM	MATHWSN7 345.00 - TATONGA7 345.00 345KV CKT 1	1195	1195	0.23205	100.9953	Hitchland Interchange - POTTER COUNTY INTERCHANGE 345KV CKT 1
FDNS	01ALL_G15_060	0	20WP	G15_060	TO->FROM	MATHWSN7 345.00 - TATONGA7 345.00 345KV CKT 1	1195	1195	0.23021	100.9917	CANEYRV7 345.00 - LATHAMS7 345.00 345KV CKT 1
FDNS	01ALL_G15_060	0	20WP	G15_060	TO->FROM	MATHWSN7 345.00 - TATONGA7 345.00 345KV CKT 1	1195	1195	0.22882	100.9914	GRAND ISLAND - SWEETWATER 345KV CKT 1
FDNS	01ALL_G15_060	0	20WP	G15_060	TO->FROM	MATHWSN7 345.00 - TATONGA7 345.00 345KV CKT 1	1195	1195	0.23005	100.9911	P12:138:MKEC:HARPER-CLEARWATER::
FDNS	01ALL_G15_060	0	20WP	G15_060	TO->FROM	MATHWSN7 345.00 - TATONGA7 345.00 345KV CKT 1	1195	1195	0.23005	100.9876	P12:138:WERE:CLWA-MKEC_138F::
FDNS	01ALL_G15_060	0	20WP	G15_060	TO->FROM	MATHWSN7 345.00 - TATONGA7 345.00 345KV CKT 1	1195	1195	0.23005	100.9798	CLEARWATER - MILAN TAP 138KV CKT 1
FDNS	01ALL_G15_060	0	20WP	G15_060	TO->FROM	MATHWSN7 345.00 - TATONGA7 345.00 345KV CKT 1	1195	1195	0.22827	100.9765	GEN336251 1-NINEMILE POINT UNIT#4
FDNS	01ALL_G15_060	0	20WP	G15_060	TO->FROM	MATHWSN7 345.00 - TATONGA7 345.00 345KV CKT 1	1195	1195	0.22827	100.9744	GEN511938 1-OEC STEAM # 1
FDNS	01ALL_G15_060	0	20WP	G15_060	TO->FROM	MATHWSN7 345.00 - TATONGA7 345.00 345KV CKT 1	1195	1195	0.22827	100.9618	GEN562512 1-G14_020_3 0.6900
FDNS	01ALL_G15_060	0	20WP	G15_060	TO->FROM	MATHWSN7 345.00 - TATONGA7 345.00 345KV CKT 1	1195	1195	0.23012	100.9595	TUCO INTERCHANGE - TUCO_2 345.00 345KV CKT 1
FDNS	01ALL_G15_060	0	20WP	G15_060	TO->FROM	MATHWSN7 345.00 - TATONGA7 345.00 345KV CKT 1	1195	1195	0.23002	100.9487	P12:138:WERE:MURR-MKEC_138P::
FDNS	01ALL_G15_060	0	20WP	G15_060	TO->FROM	MATHWSN7 345.00 - TATONGA7 345.00 345KV CKT 1	1195	1195	0.22865	100.9378	BUCKNER7 345.00 - SPEARVILLE 345KV CKT 1
FDNS	01ALL_G15_060	0	20WP	G15_060	TO->FROM	MATHWSN7 345.00 - TATONGA7 345.00 345KV CKT 1	1195	1195	0.22865	100.9378	BUCKNER7 345.00 - SPEARVILLE 345KV CKT 1
FDNS	01ALL_G15_060	0	20WP	G15_060	TO->FROM	MATHWSN7 345.00 - TATONGA7 345.00 345KV CKT 1	1195	1195	0.22827	100.9368	GEN337041 1-GERALD ANDRUS
FDNS	01ALL_G15_060	0	20WP	G15_060	TO->FROM	MATHWSN7 345.00 - TATONGA7 345.00 345KV CKT 1	1195	1195	0.2287	100.9278	SMOKYHL6 230.00 - SUMMIT 230KV CKT 1
FDNS	01ALL_G15_060	0	20WP	G15_060	TO->FROM	MATHWSN7 345.00 - TATONGA7 345.00 345KV CKT 1	1195	1195	0.22896	100.9127	MOORE - PAULINE 345KV CKT 1
FDNS	01ALL_G15_060	0	17G	G15_060	TO->FROM	MATHWSN7 345.00 - TATONGA7 345.00 345KV CKT 1	1195	1195	0.27599	100.907	THISTLE7 345.00 - WOODWARD DISTRICT EHV 345KV CKT 1
FDNS	01ALL_G15_060	0	17G	G15_060	TO->FROM	MATHWSN7 345.00 - TATONGA7 345.00 345KV CKT 1	1195	1195	0.27599	100.907	THISTLE7 345.00 - WOODWARD DISTRICT EHV 345KV CKT 2
FDNS	01ALL_G15_060	0	20WP	G15_060	TO->FROM	MATHWSN7 345.00 - TATONGA7 345.00 345KV CKT 1	1195	1195	0.22827	100.9061	WHITE BLUFF 500/26.0KV TRANSFORMER CKT 1
FDNS	01ALL_G15_060	0	20WP	G15_060	TO->FROM	MATHWSN7 345.00 - TATONGA7 345.00 345KV CKT 1	1195	1195	0.22827	100.9015	GEN335204 1-NELSON UNIT 4
FDNS	01ALL_G15_060	0	20WP	G15_060	TO->FROM	MATHWSN7 345.00 - TATONGA7 345.00 345KV CKT 1	1195	1195	0.22827	100.8979	GEN511941 1-OEC STEAM # 2
FDNS	01ALL_G15_060	0	20WP	G15_060	TO->FROM	MATHWSN7 345.00 - TATONGA7 345.00 345KV CKT 1	1195	1195	0.22787	100.8822	LACYGNE - NEOSHO 345KV CKT 1
FDNS	01ALL_G15_060	0	20WP	G15_060	TO->FROM	MATHWSN7 345.00 - TATONGA7 345.00 345KV CKT 1	1195	1195	0.22827	100.875	GEN334441 1-SABINE UNIT 5
FDNS	01ALL_G15_060	0	20WP	G15_060	TO->FROM	MATHWSN7 345.00 - TATONGA7 345.00 345KV CKT 1	1195	1195	0.22827	100.8749	GEN513602 1-GRECSTG_1 17.500
FDNS	01ALL_G15_060	0	20WP	G15_060	TO->FROM	MATHWSN7 345.00 - TATONGA7 345.00 345KV CKT 1	1195	1195	0.22827	100.8656	GEN590011 2-ERCOT EQUIVALENCE
FDNS	01ALL_G15_060	0	20WP	G15_060	TO->FROM	MATHWSN7 345.00 - TATONGA7 345.00 345KV CKT 1	1195	1195	0.23105	100.8592	EL RENO - ROMAN NOSE 138KV CKT 1
FDNS	01ALL_G15_060	0	20WP	G15_060	TO->FROM	MATHWSN7 345.00 - TATONGA7 345.00 345KV CKT 1	1195	1195	0.23089	100.8568	BVRCNTY7 345.00 - Hitchland Interchange 345KV CKT 1
FDNS	01ALL_G15_060	0	20WP	G15_060	TO->FROM	MATHWSN7 345.00 - TATONGA7 345.00 345KV CKT 1	1195	1195	0.23089	100.8568	BVRCNTY7 345.00 - Hitchland Interchange 345KV CKT 1
FDNS	01ALL_G15_060	0	20WP	G15_060	TO->FROM	MATHWSN7 345.00 - TATONGA7 345.00 345KV CKT 1	1195	1195	0.23089	100.8568	BVRCNTY7 345.00 - Hitchland Interchange 345KV CKT 2
FDNS	01ALL_G15_060	0	20WP	G15_060	TO->FROM	MATHWSN7 345.00 - TATONGA7 345.00 345KV CKT 1	1195	1195	0.23089	100.8568	BVRCNTY7 345.00 - Hitchland Interchange 345KV CKT 2
FDNS	01ALL_G15_060	0	20WP	G15_060	TO->FROM	MATHWSN7 345.00 - TATONGA7 345.00 345KV CKT 1	1195	1195	0.22827	100.8428	GEN336191 1-LITTLE GYPSY UNIT#3
FDNS	01ALL_G15_060	0	20WP	G15_060	TO->FROM	MATHWSN7 345.00 - TATONGA7 345.00 345KV CKT 1	1195	1195	0.2292	100.8417	SWISSVALE - WEST GARDNER 345KV CKT 1
FDNS	01ALL_G15_060	0	20WP	G15_060	TO->FROM	MATHWSN7 345.00 - TATONGA7 345.00 345KV CKT 1	1195	1195	0.22827	100.8384	GEN590010 1-ERCOT EQUIVALENCE
FDNS	01ALL_G15_060	0	20WP	G15_060	TO->FROM	MATHWSN7 345.00 - TATONGA7 345.00 345KV CKT 1	1195	1195	0.2305	100.8229	C_CITY_138 138.00 - SALT_PLAINS 138.00 138KV CKT 1
FDNS	01ALL_G15_060	0	20WP	G15_060	TO->FROM	MATHWSN7 345.00 - TATONGA7 345.00 345KV CKT 1	1195	1195	0.22827	100.8217	GEN335614 1-WILLOW GLENN UNIT#4
FDNS	01ALL_G15_060	0	20WP	G15_060	TO->FROM	MATHWSN7 345.00 - TATONGA7 345.00 345KV CKT 1	1195	1195	0.22827	100.8153	GEN509393 S1-ARSENAL HILL GENS #4 (STALL)
FDNS	01ALL_G15_060	0	20WP	G15_060	TO->FROM	MATHWSN7 345.00 - TATONGA7 345.00 345KV CKT 1	1195	1195	0.22827	100.8138	GEN300024 1-1CHOTST6 16.000
FDNS	01ALL_G15_060	0	20WP	G15_060	TO->FROM	MATHWSN7 345.00 - TATONGA7 345.00 345KV CKT 1	1195	1195	0.22827	100.8136	GEN300031 1-CHOUTEAU CTG 1
FDNS	01ALL_G15_060	0	20WP	G15_060	TO->FROM	MATHWSN7 345.00 - TATONGA7 345.00 345KV CKT 1	1195	1195	0.22827	100.8041	GEN336464 1-MICHOUD UNIT #3
FDNS	01ALL_G15_060	0	20WP	G15_060	TO->FROM	MATHWSN7 345.00 - TATONGA7 345.00 345KV CKT 1	1195	1195	0.22827	100.7991	GEN334433 1-SABINE UNIT 3
FDNS	01ALL_G15_060	0	20WP	G15_060	TO->FROM	MATHWSN7 345.00 - TATONGA7 345.00 345KV CKT 1	1195	1195	0.22827	100.7975	GEN336801 1-BAXTER WILSON UNIT #1
FDNS	01ALL_G15_060	0	20WP	G15_060	TO->FROM	MATHWSN7 345.00 - TATONGA7 345.00 345KV CKT 1	1195	1195	0.23031	100.7961	ELK CITY - RED HILLS WIND 138KV CKT 1
FDNS	01ALL_G15_060	0	20WP	G15_060	TO->FROM	MATHWSN7 345.00 - TATONGA7 345.00 345KV CKT 1	1195	1195	0.23031	100.7961	ELK CITY - RED HILLS WIND 138KV CKT 1
FDNS	01ALL_G15_060	0	20WP	G15_060	TO->FROM	MATHWSN7 345.00 - TATONGA7 345.00 345KV CKT 1	1195	1195	0.22827	100.7931	GEN300020 1-1CHOTCT4 16.000
FDNS	01ALL_G15_060	0	20WP	G15_060	TO->FROM	MATHWSN7 345.00 - TATONGA7 345.00 345KV CKT 1	1195	1195	0.22827	100.7931	GEN300021 1-1CHOTCT5 16.000
FDNS	01ALL_G15_060	0	20WP	G15_060	TO->FROM	MATHWSN7 345.00 - TATONGA7 345.00 345KV CKT 1	1195	1195	0.22827	100.7929	GEN300032 1-CHOUTEAU CTG 2
FDNS	01ALL_G15_060	0	20WP	G15_060	TO->FROM	MATHWSN7 345.00 - TATONGA7 345.00 345KV CKT 1	1195	1195	0.22827	100.7929	GEN300033 1-CHOUTEAU STG 3
FDNS	01ALL_G15_060	0	20WP	G15_060	TO->FROM	MATHWSN7 345.00 - TATONGA7 345.00 345KV CKT 1	1195	1195	0.23021	100.7883	LATHAMS7 345.00 - ROSE HILL 345KV CKT 1
FDNS	01ALL_G15_060	0	20WP	G15_060	TO->FROM	MATHWSN7 345.00 - TATONGA7 345.00 345KV CKT 1	1195	1195	0.22827	100.7854	GEN303007 1-1BC2 U2
FDNS	01ALL_G15_060	0	20WP	G15_060	TO->FROM	MATHWSN7 345.00 - TATONGA7 345.00 345KV CKT 1	1195	1195	0.22827	100.785	GEN303006 1-1BC2 U1
FDNS	01ALL_G15_060	0	20WP	G15_060	TO->FROM	MATHWSN7 345.00 - TATONGA7 345.00 345KV CKT 1	1195	1195	0.22978	100.7793	DEWEY - TALOGA 138KV CKT 1
FDNS	01ALL_G15_060	0	20WP	G15_060	TO->FROM	MATHWSN7 345.00 - TATONGA7 345.00 345KV CKT 1	1195	1195	0.2299	100.7744	EMPORIA ENERGY CENTER - G14_001T 345.00 345KV CKT 1
FDNS	01ALL_G15_060	0	20WP	G15_060	TO->FROM	MATHWSN7 345.00 - TATONGA7 345.00 345KV CKT 1	1195	1195	0.2305	100.7637	BYRON_138 138.00 - C_CITY_138 138.00 138KV CKT 1
FDNS	01ALL_G15_060	0	20WP	G15_060	TO->FROM	MATHWSN7 345.00 - TATONGA7 345.00 345KV CKT 1	1195	1195	0.22842	100.7618	GRAND ISLAND - MCCOOL 345KV CKT 1
FDNS	01ALL_G15_060	0	20WP	G15_060	TO->FROM	MATHWSN7 345.00 - TATONGA7 345.00 345KV CKT 1	1195	1195	0.22827	100.7611	GEN334071 1-LEWIS CREEK 2
FDNS	01ALL_G15_060	0	20WP	G15_060	TO->FROM	MATHWSN7 345.00 - TATONGA7 345.00 345KV CKT 1	1195	1195	0.22827	100.7574	GEN334070 1-LEWIS CREEK 1
FDNS	01ALL_G15_060	0	20WP	G15_060	TO->FROM	MATHWSN7 345.00 - TATONGA7 345.00 345KV CKT 1	1195	1195	0.22827	100.7567	GEN501811 1-RODEMACHER UNIT 1
FDNS	01ALL_G15_060	0	20WP	G15_060	TO->FROM	MATHWSN7 345.00 - TATONGA7 345.00 345KV CKT 1	1195	1195	0.2299	100.7566	G14_001T 345.00 - WICHITA 345KV CKT 1
FDNS	01ALL_G15_060	0	20WP	G15_060	TO->FROM	MATHWSN7 345.00 - TATONGA7 345.00 345KV CKT 1	1195	1195	0.22827	100.7474	GEN520812 1-ANADRK5
FDNS	01ALL_G15_060	0	20WP	G15_060	TO->FROM	MATHWSN7 345.00 - TATONGA7 345.00 345KV CKT 1	1195	1195	0.22827	100.7474	GEN520813 1-ANADRK6
FDNS	01ALL_G15_060	0	20WP	G15_060	TO->FROM	MATHWSN7 345.00 - TATONGA7 345.00 345KV CKT 1	1195	1195	0.22827	100.7471	GEN303008 1-1BC2 U3
FDNS	01ALL_G15_060	0	20WP	G15_060	TO->FROM	MATHWSN7 345.00 - TATONGA7 345.00 345KV CKT 1	1195	1195	0.22827	100.7426	GEN503909 1-FULTONU1 1 16.000
FDNS	01ALL_G15_060	0	20WP	G15_060	TO->FROM	MATHWSN7 345.00 - TATONGA7 345.00 345KV CKT 1	1195	1195	0.22827	100.7426	GEN509392 G2-ARSENAL HILL GENS #3 (STALL)
FDNS	01ALL_G15_060	0	20WP	G15_060	TO->FROM	MATHWSN7 345.00 - TATONGA7 345.00 345KV CKT 1	1195	1195	0.22827	100.7425	GEN511939 1-OEC GAS # 1-1

SOLUTION	GROUP	SCENARIO	SEASON	SOURCE	DIRECTION	MONITORED ELEMENT	RATEA (MVA)	RATEB(MVA)	TDF	TC%LOADING (% MVA)	CONTINGENCY
FDNS	01ALL_G15_060	0	20WP	G15_060	TO->FROM	MATHWSN7 345.00 - TATONGA7 345.00 345KV CKT 1	1195	1195	0.2293	100.7402	TALOGA (TALOGA) 138/69/13.8KV TRANSFORMER CKT 1
FDNS	01ALL_G15_060	0	20WP	G15_060	TO->FROM	MATHWSN7 345.00 - TATONGA7 345.00 345KV CKT 1	1195	1195	0.22827	100.7361	GEN336170 1-GULF OXY U4
FDNS	01ALL_G15_060	0	20WP	G15_060	TO->FROM	MATHWSN7 345.00 - TATONGA7 345.00 345KV CKT 1	1195	1195	0.22827	100.7356	GEN506754 1-LEBROCK STEAM 1
FDNS	01ALL_G15_060	0	20WP	G15_060	TO->FROM	MATHWSN7 345.00 - TATONGA7 345.00 345KV CKT 1	1195	1195	0.22827	100.7305	GEN509391 G1-ARSENAL HILL GENS #2 (STALL)
FDNS	01ALL_G15_060	0	20WP	G15_060	TO->FROM	MATHWSN7 345.00 - TATONGA7 345.00 345KV CKT 1	1195	1195	0.22827	100.7247	GEN515266 1-AES 1G
FDNS	01ALL_G15_060	0	20WP	G15_060	TO->FROM	MATHWSN7 345.00 - TATONGA7 345.00 345KV CKT 1	1195	1195	0.22827	100.7247	GEN515267 1-AES 2G
FDNS	01ALL_G15_060	0	16WP	G15_060	TO->FROM	MATHWSN7 345.00 - TATONGA7 345.00 345KV CKT 1	1195	1195	0.25116	100.7177	BORDER 7345.00 - WOODWARD DISTRICT EHV 345KV CKT 1
FDNS	01ALL_G15_060	0	20WP	G15_060	TO->FROM	MATHWSN7 345.00 - TATONGA7 345.00 345KV CKT 1	1195	1195	0.22827	100.7165	GEN511837 1-NORTHEASTERN STATION # 1-1A
FDNS	01ALL_G15_060	0	20WP	G15_060	TO->FROM	MATHWSN7 345.00 - TATONGA7 345.00 345KV CKT 1	1195	1195	0.22827	100.7165	GEN511838 1-NORTHEASTERN STATION # 1-1B
FDNS	01ALL_G15_060	0	20WP	G15_060	TO->FROM	MATHWSN7 345.00 - TATONGA7 345.00 345KV CKT 1	1195	1195	0.25936	100.7099	WOODWARD EHV - WWPAR4 138.00 138KV CKT 1
FDNS	01ALL_G15_060	0	20WP	G15_060	TO->FROM	MATHWSN7 345.00 - TATONGA7 345.00 345KV CKT 1	1195	1195	0.22944	100.7098	CANTON - TALOGA 69KV CKT 1
FDNS	01ALL_G15_060	0	16WP	G15_060	TO->FROM	MATHWSN7 345.00 - TATONGA7 345.00 345KV CKT 1	1195	1195	0.25061	100.7094	G1524G1525 345.00 - THISTLE7 345.00 345KV CKT 1
FDNS	01ALL_G15_060	0	16WP	G15_060	TO->FROM	MATHWSN7 345.00 - TATONGA7 345.00 345KV CKT 1	1195	1195	0.25061	100.7094	G1524G1525 345.00 - THISTLE7 345.00 345KV CKT 2
FDNS	01ALL_G15_060	0	20WP	G15_060	TO->FROM	MATHWSN7 345.00 - TATONGA7 345.00 345KV CKT 1	1195	1195	0.25936	100.7084	WOODWARD - WWPAR4 138.00 138KV CKT 1
FDNS	01ALL_G15_060	0	20WP	G15_060	TO->FROM	MATHWSN7 345.00 - TATONGA7 345.00 345KV CKT 1	1195	1195	0.2309	100.6976	BENTON - ROSE HILL 345KV CKT 1
FDNS	01ALL_G15_060	0	20WP	G15_060	TO->FROM	MATHWSN7 345.00 - TATONGA7 345.00 345KV CKT 1	1195	1195	0.22875	100.6874	CIRCLE - MULLERGREN 230KV CKT 1
FDNS	01ALL_G15_060	0	20WP	G15_060	TO->FROM	MATHWSN7 345.00 - TATONGA7 345.00 345KV CKT 1	1195	1195	0.22875	100.6874	CIRCLE - MULLERGREN 230KV CKT 1
FDNS	01ALL_G15_060	0	20WP	G15_060	TO->FROM	MATHWSN7 345.00 - TATONGA7 345.00 345KV CKT 1	1195	1195	0.22827	100.6849	GEN511955 G-COGENTRIX GAS # 2
FDNS	01ALL_G15_060	0	20WP	G15_060	TO->FROM	MATHWSN7 345.00 - TATONGA7 345.00 345KV CKT 1	1195	1195	0.22912	100.6788	EMPORIA ENERGY CENTER - SWISSVALE 345KV CKT 1
FDNS	01ALL_G15_060	0	20WP	G15_060	TO->FROM	MATHWSN7 345.00 - TATONGA7 345.00 345KV CKT 1	1195	1195	0.22827	100.6781	GEN300015 1-1SGPDEL 18.000
FDNS	01ALL_G15_060	0	20WP	G15_060	TO->FROM	MATHWSN7 345.00 - TATONGA7 345.00 345KV CKT 1	1195	1195	0.22827	100.672	GEN336222 1-LITTLE GYPSY UNIT#2
FDNS	01ALL_G15_060	0	20WP	G15_060	TO->FROM	MATHWSN7 345.00 - TATONGA7 345.00 345KV CKT 1	1195	1195	0.22861	100.671	GERALD GENTLEMAN STATION - THEDFRD3 345.00 345KV CKT 1
FDNS	01ALL_G15_060	0	20WP	G15_060	TO->FROM	MATHWSN7 345.00 - TATONGA7 345.00 345KV CKT 1	1195	1195	0.22944	100.6675	CANTON - OKEENE 69KV CKT 1
FDNS	01ALL_G15_060	0	20WP	G15_060	TO->FROM	MATHWSN7 345.00 - TATONGA7 345.00 345KV CKT 1	1195	1195	0.22827	100.6668	GEN549893 2-SOUTHWEST 2
FDNS	01ALL_G15_060	0	20WP	G15_060	TO->FROM	MATHWSN7 345.00 - TATONGA7 345.00 345KV CKT 1	1195	1195	0.22826	100.6658	DOLET HILLS - SOUTHWEST SHREVEPORT 345KV CKT 1
FDNS	01ALL_G15_060	0	20WP	G15_060	TO->FROM	MATHWSN7 345.00 - TATONGA7 345.00 345KV CKT 1	1195	1195	0.22826	100.6658	DOLET HILLS - SOUTHWEST SHREVEPORT 345KV CKT 1
FDNS	01ALL_G15_060	0	20WP	G15_060	TO->FROM	MATHWSN7 345.00 - TATONGA7 345.00 345KV CKT 1	1195	1195	0.23031	100.6637	ELLIS 4 138.00 - MOREWOOD SW 138KV CKT 1
FDNS	01ALL_G15_060	0	20WP	G15_060	TO->FROM	MATHWSN7 345.00 - TATONGA7 345.00 345KV CKT 1	1195	1195	0.22827	100.663	GEN337766 1-TRACTEBEL UNIT S1
FDNS	01ALL_G15_060	0	20WP	G15_060	TO->FROM	MATHWSN7 345.00 - TATONGA7 345.00 345KV CKT 1	1195	1195	0.22827	100.6589	GEN501910 1-ACADIA UNIT ST1
FDNS	01ALL_G15_060	0	20WP	G15_060	TO->FROM	MATHWSN7 345.00 - TATONGA7 345.00 345KV CKT 1	1195	1195	0.22827	100.6588	GEN511953 G-COGENTRIX GAS # 1
FDNS	01ALL_G15_060	0	20WP	G15_060	TO->FROM	MATHWSN7 345.00 - TATONGA7 345.00 345KV CKT 1	1195	1195	0.22959	100.6582	DARLINGTNRD4138.00 - ROMAN NOSE 138KV CKT 1
FDNS	01ALL_G15_060	0	20WP	G15_060	TO->FROM	MATHWSN7 345.00 - TATONGA7 345.00 345KV CKT 1	1195	1195	0.22827	100.657	GEN334030 1-FRONTIER UNIT 1
FDNS	01ALL_G15_060	0	20WP	G15_060	TO->FROM	MATHWSN7 345.00 - TATONGA7 345.00 345KV CKT 1	1195	1195	0.22827	100.6563	GEN334031 1-FRONTIER UNIT 2
FDNS	01ALL_G15_060	0	20WP	G15_060	TO->FROM	MATHWSN7 345.00 - TATONGA7 345.00 345KV CKT 1	1195	1195	0.2291	100.6553	HARPER - MILAN TAP 138KV CKT 1
FDNS	01ALL_G15_060	0	20WP	G15_060	TO->FROM	MATHWSN7 345.00 - TATONGA7 345.00 345KV CKT 1	1195	1195	0.22827	100.6531	GEN336152 1-WATERFORD UNIT#2
FDNS	01ALL_G15_060	0	20WP	G15_060	TO->FROM	MATHWSN7 345.00 - TATONGA7 345.00 345KV CKT 1	1195	1195	0.22827	100.6526	GEN336151 1-WATERFORD UNIT#1
FDNS	01ALL_G15_060	0	20WP	G15_060	TO->FROM	MATHWSN7 345.00 - TATONGA7 345.00 345KV CKT 1	1195	1195	0.22827	100.6393	GEN514912 2-REDBUD GEN
FDNS	01ALL_G15_060	0	20WP	G15_060	TO->FROM	MATHWSN7 345.00 - TATONGA7 345.00 345KV CKT 1	1195	1195	0.22827	100.6391	GEN520811 1-ANADRK4
FDNS	01ALL_G15_060	0	20WP	G15_060	TO->FROM	MATHWSN7 345.00 - TATONGA7 345.00 345KV CKT 1	1195	1195	0.22827	100.6379	GEN511957 G-COGENTRIX GAS # 3
FDNS	01ALL_G15_060	0	20WP	G15_060	TO->FROM	MATHWSN7 345.00 - TATONGA7 345.00 345KV CKT 1	1195	1195	0.22827	100.6364	GEN511954 S-COGENTRIX STEAM # 1
FDNS	01ALL_G15_060	0	20WP	G15_060	TO->FROM	MATHWSN7 345.00 - TATONGA7 345.00 345KV CKT 1	1195	1195	0.22827	100.6364	GEN511956 S-COGENTRIX STEAM # 2
FDNS	01ALL_G15_060	0	20WP	G15_060	TO->FROM	MATHWSN7 345.00 - TATONGA7 345.00 345KV CKT 1	1195	1195	0.22827	100.6336	DOLET HILLS 345/24.0KV TRANSFORMER CKT 1
FDNS	01ALL_G15_060	0	20WP	G15_060	TO->FROM	MATHWSN7 345.00 - TATONGA7 345.00 345KV CKT 1	1195	1195	0.22827	100.6327	GEN300010 1-ST FRANCIS UNIT 1
FDNS	01ALL_G15_060	0	20WP	G15_060	TO->FROM	MATHWSN7 345.00 - TATONGA7 345.00 345KV CKT 1	1195	1195	0.22827	100.6295	GEN511836 1-NORTHEASTERN STATION #1
FDNS	01ALL_G15_060	0	20WP	G15_060	TO->FROM	MATHWSN7 345.00 - TATONGA7 345.00 345KV CKT 1	1195	1195	0.22854	100.6206	CONWAY SUB - NICHOLS STATION 115KV CKT 1
FDNS	01ALL_G15_060	0	20WP	G15_060	TO->FROM	MATHWSN7 345.00 - TATONGA7 345.00 345KV CKT 1	1195	1195	0.22827	100.6108	GEN506752 1-LEBROCK GAS 1
FDNS	01ALL_G15_060	0	20WP	G15_060	TO->FROM	MATHWSN7 345.00 - TATONGA7 345.00 345KV CKT 1	1195	1195	0.22827	100.6107	GEN506753 1-LEBROCK GAS 2
FDNS	01ALL_G15_060	0	20WP	G15_060	TO->FROM	MATHWSN7 345.00 - TATONGA7 345.00 345KV CKT 1	1195	1195	0.22976	100.6106	P12:138:AEPW-OGE:WTH_JCT4:JENSEN4
FDNS	01ALL_G15_060	0	20WP	G15_060	TO->FROM	MATHWSN7 345.00 - TATONGA7 345.00 345KV CKT 1	1195	1195	0.22827	100.6099	GEN511940 1-OEC GAS # 1-2
FDNS	01ALL_G15_060	0	20WP	G15_060	TO->FROM	MATHWSN7 345.00 - TATONGA7 345.00 345KV CKT 1	1195	1195	0.22827	100.6091	ST FRANCIS - ST FRANCIS 1 161KV CKT Z1
FDNS	01ALL_G15_060	0	20WP	G15_060	TO->FROM	MATHWSN7 345.00 - TATONGA7 345.00 345KV CKT 1	1195	1195	0.22972	100.6061	WOODWARD (WOODWRD2) 138/69/13.2KV TRANSFORMER CKT 1
FDNS	01ALL_G15_060	0	20WP	G15_060	TO->FROM	MATHWSN7 345.00 - TATONGA7 345.00 345KV CKT 1	1195	1195	0.22827	100.6054	GEN511851 1-COMANCHE #1
FDNS	01ALL_G15_060	0	20WP	G15_060	TO->FROM	MATHWSN7 345.00 - TATONGA7 345.00 345KV CKT 1	1195	1195	0.22827	100.6023	GEN337764 1-TRACTEBEL UNIT C1
FDNS	01ALL_G15_060	0	20WP	G15_060	TO->FROM	MATHWSN7 345.00 - TATONGA7 345.00 345KV CKT 1	1195	1195	0.22827	100.6023	GEN337765 1-TRACTEBEL UNIT C2
FDNS	01ALL_G15_060	0	20WP	G15_060	TO->FROM	MATHWSN7 345.00 - TATONGA7 345.00 345KV CKT 1	1195	1195	0.22825	100.6007	WEBRE - WELLS 500KV CKT 1
FDNS	01ALL_G15_060	0	20WP	G15_060	TO->FROM	MATHWSN7 345.00 - TATONGA7 345.00 345KV CKT 1	1195	1195	0.22827	100.6	GEN300011 1-ST FRANCIS UNIT 2
FDNS	01ALL_G15_060	0	20WP	G15_060	TO->FROM	MATHWSN7 345.00 - TATONGA7 345.00 345KV CKT 1	1195	1195	0.22843	100.5954	MCCOOL - MOORE 345KV CKT 1
FDNS	01ALL_G15_060	0	20WP	G15_060	TO->FROM	MATHWSN7 345.00 - TATONGA7 345.00 345KV CKT 1	1195	1195	0.22925	100.5949	HITCHLAND INTERCHANGE - MOORE COUNTY INTERCHANGE 230KV CKT 1
FDNS	01ALL_G15_060	0	20WP	G15_060	TO->FROM	MATHWSN7 345.00 - TATONGA7 345.00 345KV CKT 1	1195	1195	0.22925	100.5949	HITCHLAND INTERCHANGE - MOORE COUNTY INTERCHANGE 230KV CKT 1
FDNS	01ALL_G15_060	0	20WP	G15_060	TO->FROM	MATHWSN7 345.00 - TATONGA7 345.00 345KV CKT 1	1195	1195	0.22827	100.5943	GEN505432 1-SIKESTON
FDNS	01ALL_G15_060	0	20WP	G15_060	TO->FROM	MATHWSN7 345.00 - TATONGA7 345.00 345KV CKT 1	1195	1195	0.22959	100.5917	DARLINGTNRD4138.00 - REDROCKRD4 138.00 138KV CKT 1
FDNS	01ALL_G15_060	0	20WP	G15_060	TO->FROM	MATHWSN7 345.00 - TATONGA7 345.00 345KV CKT 1	1195	1195	0.22959	100.5917	DARLINGTNRD4138.00 - REDROCKRD4 138.00 138KV CKT 1
FDNS	01ALL_G15_060	0	20WP	G15_060	TO->FROM	MATHWSN7 345.00 - TATONGA7 345.00 345KV CKT 1	1195	1195	0.22827	100.5861	GEN501823 1-TECHE UNIT 3
FDNS	01ALL_G15_060	0	20WP	G15_060	TO->FROM	MATHWSN7 345.00 - TATONGA7 345.00 345KV CKT 1	1195	1195	0.22854	100.5809	P12:115:SPS:T53.1.NICHLS.KIRBY
FDNS	01ALL_G15_060	0	20WP	G15_060	TO->FROM	MATHWSN7 345.00 - TATONGA7 345.00 345KV CKT 1	1195	1195	0.22827	100.5777	ST FRANCIS 345/161KV TRANSFORMER CKT 1
FDNS	01ALL_G15_060	0	20WP	G15_060	TO->FROM	MATHWSN7 345.00 - TATONGA7 345.00 345KV CKT 1	1195	1195	0.22855	100.5764	HOLT.CO3 345.00 - THEDFRD3 345.00 345KV CKT 1
FDNS	01ALL_G15_060	0	20WP	G15_060	TO->FROM	MATHWSN7 345.00 - TATONGA7 345.00 345KV CKT 1	1195	1195	0.22871	100.5763	BLACKBERRY - NEOSHO 345KV CKT 1
FDNS	01ALL_G15_060	0	20WP	G15_060	TO->FROM	MATHWSN7 345.00 - TATONGA7 345.00 345KV CKT 1	1195	1195	0.22962	100.5747	Canadian Pump Station - REDROCKRD4 138.00 138KV CKT 1
FDNS	01ALL_G15_060	0	20WP	G15_060	TO->FROM	MATHWSN7 345.00 - TATONGA7 345.00 345KV CKT 1	1195	1195	0.22827	100.5742	GEN501970 1-EVANGELINE UNIT 7
FDNS	01ALL_G15_060	0	20WP	G15_060	TO->FROM	MATHWSN7 345.00 - TATONGA7 345.00 345KV CKT 1	1195	1195	0.22828	100.569	7SAREPTA% 345.00 - LONGWOOD 345KV CKT 1
FDNS	01ALL_G15_060	0	20WP	G15_060	TO->FROM	MATHWSN7 345.00 - TATONGA7 345.00 345KV CKT 1	1195	1195	0.22828	100.569	7SAREPTA% 345.00 - LONGWOOD 345KV CKT 1
FDNS	01ALL_G15_060	0	20WP	G15_060	TO->FROM	MATHWSN7 345.00 - TATONGA7 345.00 345KV CKT 1	1195	1195	0.2285	100.5674	MCCLELLAN SUB - MCLEAN RURAL SUB 115KV CKT 1
FDNS	01ALL_G15_060	0	20WP	G15_060	TO->FROM	MATHWSN7 345.00 - TATONGA7 345.00 345KV CKT 1	1195	1195	0.2285	100.5665	KIRBY SWITCHING STATION - MCCLELLAN SUB 115KV CKT 1

SOLUTION	GROUP	SCENARIO	SEASON	SOURCE	DIRECTION	MONITORED ELEMENT	RATEA (MVA)	RATEB(MVA)	TDF	TC%LOADING (% MVA)	CONTINGENCY
FDNS	01ALL_G15_060	0	20WP	G15_060	TO->FROM	MATHWSN7 345.00 - TATONGA7 345.00 345KV CKT 1	1195	1195	0.22927	100.5659	PUTNAM - TALOGA 69KV CKT 1
FDNS	01ALL_G15_060	0	20WP	G15_060	TO->FROM	MATHWSN7 345.00 - TATONGA7 345.00 345KV CKT 1	1195	1195	0.22854	100.5655	CONWAY SUB - KIRBY SWITCHING STATION 115KV CKT 1
FDNS	01ALL_G15_060	0	20WP	G15_060	TO->FROM	MATHWSN7 345.00 - TATONGA7 345.00 345KV CKT 1	1195	1195	0.23031	100.5646	CUSTER4 138.00 - ELLIS 4 138.00 138KV CKT 1
FDNS	01ALL_G15_060	0	20WP	G15_060	TO->FROM	MATHWSN7 345.00 - TATONGA7 345.00 345KV CKT 1	1195	1195	0.22827	100.5636	ARKANSAS NUCLEAR ONE 500/22.0KV TRANSFORMER CKT 1
FDNS	01ALL_G15_060	0	20WP	G15_060	TO->FROM	MATHWSN7 345.00 - TATONGA7 345.00 345KV CKT 1	1195	1195	0.22827	100.5629	GEN336242 1-1NMIL ST1 18.000
FDNS	01ALL_G15_060	0	20WP	G15_060	TO->FROM	MATHWSN7 345.00 - TATONGA7 345.00 345KV CKT 1	1195	1195	0.22826	100.5621	8DANIEL8 500.00 - MCKNIGHT 500KV CKT 1
FDNS	01ALL_G15_060	0	20WP	G15_060	TO->FROM	MATHWSN7 345.00 - TATONGA7 345.00 345KV CKT 1	1195	1195	0.22865	100.5562	CLINTON JUNCTION - ELK CITY 138KV CKT 1
FDNS	01ALL_G15_060	0	20WP	G15_060	TO->FROM	MATHWSN7 345.00 - TATONGA7 345.00 345KV CKT 1	1195	1195	0.22865	100.5562	CLINTON JUNCTION - ELK CITY 138KV CKT 1
FDNS	01ALL_G15_060	0	20WP	G15_060	TO->FROM	MATHWSN7 345.00 - TATONGA7 345.00 345KV CKT 1	1195	1195	0.22868	100.5556	P12:115:MKEC:BARBER-RIVERROAD::
FDNS	01ALL_G15_060	0	20WP	G15_060	TO->FROM	MATHWSN7 345.00 - TATONGA7 345.00 345KV CKT 1	1195	1195	0.22827	100.5555	3TR3AR8EL7EL
FDNS	01ALL_G15_060	0	20WP	G15_060	TO->FROM	MATHWSN7 345.00 - TATONGA7 345.00 345KV CKT 1	1195	1195	0.22827	100.5555	7SAREPTA% 345.00 - ELDORADO EHV 345KV CKT 1
FDNS	01ALL_G15_060	0	20WP	G15_060	TO->FROM	MATHWSN7 345.00 - TATONGA7 345.00 345KV CKT 1	1195	1195	0.22827	100.5552	ELDORADO EHV 500/345KV TRANSFORMER CKT 1
FDNS	01ALL_G15_060	0	20WP	G15_060	TO->FROM	MATHWSN7 345.00 - TATONGA7 345.00 345KV CKT 1	1195	1195	0.22827	100.5548	GEN300016 1-1G1GPDEL 18.000
FDNS	01ALL_G15_060	0	20WP	G15_060	TO->FROM	MATHWSN7 345.00 - TATONGA7 345.00 345KV CKT 1	1195	1195	0.22827	100.5548	GEN338388 1-1PLUM PT U1 23.000
FDNS	01ALL_G15_060	0	20WP	G15_060	TO->FROM	MATHWSN7 345.00 - TATONGA7 345.00 345KV CKT 1	1195	1195	0.22827	100.5536	GEN334432 1-SABINE UNIT 2
FDNS	01ALL_G15_060	0	20WP	G15_060	TO->FROM	MATHWSN7 345.00 - TATONGA7 345.00 345KV CKT 1	1195	1195	0.22827	100.5535	GEN334431 1-SABINE UNIT 1
FDNS	01ALL_G15_060	0	20WP	G15_060	TO->FROM	MATHWSN7 345.00 - TATONGA7 345.00 345KV CKT 1	1195	1195	0.22852	100.5534	NUNDRWD - WAYSIDE 230KV CKT 1
FDNS	01ALL_G15_060	0	20WP	G15_060	TO->FROM	MATHWSN7 345.00 - TATONGA7 345.00 345KV CKT 1	1195	1195	0.22868	100.5494	BARBER 3 115.00 - SAWYER 3 115.00 115KV CKT 1
FDNS	01ALL_G15_060	0	20WP	G15_060	TO->FROM	MATHWSN7 345.00 - TATONGA7 345.00 345KV CKT 1	1195	1195	0.22794	100.549	CANADIAN RIVER - MUSKOGEE 345KV CKT 1
FDNS	01ALL_G15_060	0	20WP	G15_060	TO->FROM	MATHWSN7 345.00 - TATONGA7 345.00 345KV CKT 1	1195	1195	0.22962	100.5489	P12:138:OKGE-AEPW:JENSEN4:REDROCKRD4
FDNS	01ALL_G15_060	0	20WP	G15_060	TO->FROM	MATHWSN7 345.00 - TATONGA7 345.00 345KV CKT 1	1195	1195	0.22827	100.545	GEN549890 1-SOUTHWEST 1
FDNS	01ALL_G15_060	0	20WP	G15_060	TO->FROM	MATHWSN7 345.00 - TATONGA7 345.00 345KV CKT 1	1195	1195	0.23031	100.5442	CUSTER4 138.00 - RED HILLS WIND 138KV CKT 1
FDNS	01ALL_G15_060	0	20WP	G15_060	TO->FROM	MATHWSN7 345.00 - TATONGA7 345.00 345KV CKT 1	1195	1195	0.22827	100.5435	FRONTIER - GRIMES 345KV CKT 1
FDNS	01ALL_G15_060	0	20WP	G15_060	TO->FROM	MATHWSN7 345.00 - TATONGA7 345.00 345KV CKT 1	1195	1195	0.22827	100.5426	GEN501972 1-EVANGELINE UNIT 7-2
FDNS	01ALL_G15_060	0	20WP	G15_060	TO->FROM	MATHWSN7 345.00 - TATONGA7 345.00 345KV CKT 1	1195	1195	0.22827	100.5426	GEN503900 1-FITZHUGH CT1
FDNS	01ALL_G15_060	0	20WP	G15_060	TO->FROM	MATHWSN7 345.00 - TATONGA7 345.00 345KV CKT 1	1195	1195	0.22827	100.5425	GEN501971 1-EVANGELINE UNIT 7-1
FDNS	01ALL_G15_060	0	20WP	G15_060	TO->FROM	MATHWSN7 345.00 - TATONGA7 345.00 345KV CKT 1	1195	1195	0.22827	100.5414	RODEMACHER 230/22.0KV TRANSFORMER CKT 1
FDNS	01ALL_G15_060	0	20WP	G15_060	TO->FROM	MATHWSN7 345.00 - TATONGA7 345.00 345KV CKT 1	1195	1195	0.22827	100.5408	GEN337430 1-PERYVILLE UNIT #3
FDNS	01ALL_G15_060	0	20WP	G15_060	TO->FROM	MATHWSN7 345.00 - TATONGA7 345.00 345KV CKT 1	1195	1195	0.22827	100.5404	GEN337428 1-PERYVILLE UNIT #1
FDNS	01ALL_G15_060	0	20WP	G15_060	TO->FROM	MATHWSN7 345.00 - TATONGA7 345.00 345KV CKT 1	1195	1195	0.22827	100.5402	GEN501912 1-ACADIA UNIT CT1B
FDNS	01ALL_G15_060	0	20WP	G15_060	TO->FROM	MATHWSN7 345.00 - TATONGA7 345.00 345KV CKT 1	1195	1195	0.22827	100.5399	GEN501911 1-ACADIA UNIT CT1A
FDNS	01ALL_G15_060	0	20WP	G15_060	TO->FROM	MATHWSN7 345.00 - TATONGA7 345.00 345KV CKT 1	1195	1195	0.22868	100.5359	ALEXANDER - SAWYER 3 115.00 115KV CKT 1
FDNS	01ALL_G15_060	0	20WP	G15_060	TO->FROM	MATHWSN7 345.00 - TATONGA7 345.00 345KV CKT 1	1195	1195	0.22827	100.5359	GEN334392 1-EXXON MOBIL IPP 1
FDNS	01ALL_G15_060	0	20WP	G15_060	TO->FROM	MATHWSN7 345.00 - TATONGA7 345.00 345KV CKT 1	1195	1195	0.22827	100.5354	GEN334393 1-EXXON MOBIL IPP 2
FDNS	01ALL_G15_060	0	20WP	G15_060	TO->FROM	MATHWSN7 345.00 - TATONGA7 345.00 345KV CKT 1	1195	1195	0.22827	100.5354	GEN334394 1-EXXON MOBIL IPP 3
FDNS	01ALL_G15_060	0	20L	G15_060	TO->FROM	MATHWSN7 345.00 - TATONGA7 345.00 345KV CKT 1	1195	1195	0.24927	100.5215	BORDER 7345.00 - TUCQ_2 345.00 345KV CKT 1
FDNS	01ALL_G15_060	0	16WP	G15_060	TO->FROM	MATHWSN7 345.00 - TATONGA7 345.00 345KV CKT 1	1195	1195	0.25218	100.3262	FINNEY SWITCHING STATION - Hitchland Interchange 345KV CKT 1
FDNS	01ALL_G15_060	0	20WP	G15_060	TO->FROM	MATHWSN7 345.00 - TATONGA7 345.00 345KV CKT 1	1195	1195	0.22827	100.2519	BASE CASE
FDNS	01ALL_G15_060	0	20WP	G15_060	TO->FROM	MATHWSN7 345.00 - TATONGA7 345.00 345KV CKT 1	1195	1195	0.22862	100	P12:138:WERE:CRSW-OGE_138::
FDNS	01ALL_G15_060	0	20WP	G15_060	TO->FROM	MATHWSN7 345.00 - TATONGA7 345.00 345KV CKT 1	1195	1195	0.22837	100	NEWKIRK4 - PECKHAM TAP 138KV CKT 1
FDNS	01ALL_G15_060	0	20WP	G15_060	TO->FROM	MATHWSN7 345.00 - TATONGA7 345.00 345KV CKT 1	1195	1195	0.22827	100	GEN344225 1-1CAL G1 25.000
FDNS	01ALL_G15_060	0	20WP	G15_060	TO->FROM	MATHWSN7 345.00 - TATONGA7 345.00 345KV CKT 1	1195	1195	0.22827	100	GEN523170 1-GOODWELL_1 10.6900
FDNS	01ALL_G15_060	0	20WP	G15_060	TO->FROM	MATHWSN7 345.00 - TATONGA7 345.00 345KV CKT 1	1195	1195	0.22827	100	GEN523171 1-GOODWELL_2 10.6900
FDNS	01ALL_G15_060	0	20WP	G15_060	TO->FROM	MATHWSN7 345.00 - TATONGA7 345.00 345KV CKT 1	1195	1195	0.22827	100	GEN539785 1-ENSNGW 1 0.5750
FDNS	01ALL_G15_060	0	20WP	G15_060	TO->FROM	MATHWSN7 345.00 - TATONGA7 345.00 345KV CKT 1	1195	1195	0.22827	100	GEN542955 1-LACYGNE UNIT #1
FDNS	01ALL_G15_060	0	20WP	G15_060	TO->FROM	MATHWSN7 345.00 - TATONGA7 345.00 345KV CKT 1	1195	1195	0.22827	100	GEN542956 2-LACYGNE UNIT #2
FDNS	01ALL_G15_060	0	20WP	G15_060	TO->FROM	MATHWSN7 345.00 - TATONGA7 345.00 345KV CKT 1	1195	1195	0.22827	100	GEN560694 1-G11-008-2 0.6900
FDNS	01ALL_G15_060	0	20WP	G15_060	TO->FROM	MATHWSN7 345.00 - TATONGA7 345.00 345KV CKT 1	1195	1195	0.22827	100	GEN600050 1-FEP
FDNS	01ALL_G15_060	0	20WP	G15_060	TO->FROM	MATHWSN7 345.00 - TATONGA7 345.00 345KV CKT 1	1195	1195	0.22827	100	GEN615032 2-PLEASANT VALLEY
FDNS	01ALL_G15_060	0	20WP	G15_060	TO->FROM	MATHWSN7 345.00 - TATONGA7 345.00 345KV CKT 1	1195	1195	0.22827	100	GEN629067 1-EMERY GAS TURBINE 1
FDNS	01ALL_G15_060	0	20WP	G15_060	TO->FROM	MATHWSN7 345.00 - TATONGA7 345.00 345KV CKT 1	1195	1195	0.22827	100	GEN629068 1-EMERY GAS TURBINE 2
FDNS	01ALL_G15_060	0	20WP	G15_060	TO->FROM	MATHWSN7 345.00 - TATONGA7 345.00 345KV CKT 1	1195	1195	0.22827	100	GEN657705 X-DRAYTON
FDNS	01ALL_G15_060	0	20WP	G15_060	TO->FROM	MATHWSN7 345.00 - TATONGA7 345.00 345KV CKT 1	1195	1195	0.22827	100	GEN659110 1-LELAND OLDS UNIT1
FDNS	01ALL_G15_060	0	20WP	G15_060	TO->FROM	MATHWSN7 345.00 - TATONGA7 345.00 345KV CKT 1	1195	1195	0.22827	100	INDEPENDENCE 500/26.0KV TRANSFORMER CKT 1
FDNS	01ALL_G15_060	0	20WP	G15_060	TO->FROM	MATHWSN7 345.00 - TATONGA7 345.00 345KV CKT 1	1195	1195	0.22817	100	VIOLA 7 345.00 (VIOLA 1X) 345/138/13.8KV TRANSFORMER CKT 1
FDNS	01ALL_G15_060	0	20WP	G15_060	TO->FROM	MATHWSN7 345.00 - TATONGA7 345.00 345KV CKT 1	1195	1195	0.22808	100	7JASPER 345.00 - BLACKBERRY 345KV CKT 1
FDNS	01ALL_G15_060	0	20WP	G15_060	TO->FROM	MATHWSN7 345.00 - TATONGA7 345.00 345KV CKT 1	1195	1195	0.22723	100	CLEVELAND - TULSA NORTH 345KV CKT 1
FDNS	01ALL_G15_060	0	20WP	G15_060	TO->FROM	MATHWSN7 345.00 - TATONGA7 345.00 345KV CKT 1	1195	1195	0.22723	100	CLEVELAND - TULSA NORTH 345KV CKT 1
FDNS	01ALL_G15_060	0	20WP	G15_060	TO->FROM	MATHWSN7 345.00 - TATONGA7 345.00 345KV CKT 1	1195	1195	0.2245	100	ARCADIA - NORTHWEST 345KV CKT 1
FDNS	01ALL_G15_060	0	20WP	G15_060	TO->FROM	MATHWSN7 345.00 - TATONGA7 345.00 345KV CKT 1	1195	1195	0.22817	99.9713	FLINT CREEK - SILOAM SPRINGS TAP 345KV CKT 1
FDNS	01ALL_G15_060	0	20WP	G15_060	TO->FROM	MATHWSN7 345.00 - TATONGA7 345.00 345KV CKT 1	1195	1195	0.22817	99.9713	FLINT CREEK - SILOAM SPRINGS TAP 345KV CKT 1
FDNS	01ALL_G15_060	0	20WP	G15_060	TO->FROM	MATHWSN7 345.00 - TATONGA7 345.00 345KV CKT 1	1195	1195	0.22816	99.9033	GRDA1 - SILOAM SPRINGS TAP 345KV CKT 1
FDNS	01ALL_G15_060	0	20WP	G15_060	TO->FROM	MATHWSN7 345.00 - TATONGA7 345.00 345KV CKT 1	1195	1195	0.22816	99.9033	GRDA1 - SILOAM SPRINGS TAP 345KV CKT 1
FDNS	01ALL_G15_060	0	20WP	G15_060	TO->FROM	MATHWSN7 345.00 - TATONGA7 345.00 345KV CKT 1	1195	1195	0.22862	99.9	P12:138:OKGE:3TERM7
FDNS	01ALL_G15_060	0	20WP	G15_060	TO->FROM	MATHWSN7 345.00 - TATONGA7 345.00 345KV CKT 1	1195	1195	0.22837	99.9	7MCCREDIE 345.00 - 7MONTGMRY 345.00 345KV CKT 1
FDNS	01ALL_G15_060	0	20WP	G15_060	TO->FROM	MATHWSN7 345.00 - TATONGA7 345.00 345KV CKT 1	1195	1195	0.22837	99.9	KILDARE4 - NWKRKAT4 138.00 138KV CKT 1
FDNS	01ALL_G15_060	0	20WP	G15_060	TO->FROM	MATHWSN7 345.00 - TATONGA7 345.00 345KV CKT 1	1195	1195	0.22837	99.9	NEWKIRK4 - NWKRKAT4 138.00 138KV CKT 1
FDNS	01ALL_G15_060	0	20WP	G15_060	TO->FROM	MATHWSN7 345.00 - TATONGA7 345.00 345KV CKT 1	1195	1195	0.22832	99.9	CLARKSVILLE - MUSKOGEE 345KV CKT 1
FDNS	01ALL_G15_060	0	20WP	G15_060	TO->FROM	MATHWSN7 345.00 - TATONGA7 345.00 345KV CKT 1	1195	1195	0.22832	99.9	CLARKSVILLE - MUSKOGEE 345KV CKT 1
FDNS	01ALL_G15_060	0	20WP	G15_060	TO->FROM	MATHWSN7 345.00 - TATONGA7 345.00 345KV CKT 1	1195	1195	0.22827	99.9	4SIOUX 1 138.00 138/18.0KV TRANSFORMER CKT 1
FDNS	01ALL_G15_060	0	20WP	G15_060	TO->FROM	MATHWSN7 345.00 - TATONGA7 345.00 345KV CKT 1	1195	1195	0.22827	99.9	BURLINGTON NO1 + NO 2 + NO 3 161/20.0KV TRANSFORMER CKT 1
FDNS	01ALL_G15_060	0	20WP	G15_060	TO->FROM	MATHWSN7 345.00 - TATONGA7 345.00 345KV CKT 1	1195	1195	0.22827	99.9	GEN530594 1-SMKYP1G1 0.6900
FDNS	01ALL_G15_060	0	20WP	G15_060	TO->FROM	MATHWSN7 345.00 - TATONGA7 345.00 345KV CKT 1	1195	1195	0.22827	99.9	GEN531503 1-CIMRRN 1 0.6900

SOLUTION	GROUP	SCENARIO	SEASON	SOURCE	DIRECTION	MONITORED ELEMENT	RATEA (MVA)	RATEB(MVA)	TDF	TC%LOADING (% MVA)	CONTINGENCY
FDNS	01ALL_G15_060	0	20WP	G15_060	TO->FROM	MATHWSN7 345.00 - TATONGA7 345.00 345KV CKT 1	1195	1195	0.22827	99.9	GEN531505 1-CIMWD2 1 0.6900
FDNS	01ALL_G15_060	0	20WP	G15_060	TO->FROM	MATHWSN7 345.00 - TATONGA7 345.00 345KV CKT 1	1195	1195	0.22827	99.9	GEN532663 1-LAWRENCE ENERGY CENTER UNIT 5
FDNS	01ALL_G15_060	0	20WP	G15_060	TO->FROM	MATHWSN7 345.00 - TATONGA7 345.00 345KV CKT 1	1195	1195	0.22827	99.9	GEN533202 1-CNTRPL-WTG1 1.0000
FDNS	01ALL_G15_060	0	20WP	G15_060	TO->FROM	MATHWSN7 345.00 - TATONGA7 345.00 345KV CKT 1	1195	1195	0.22827	99.9	GEN539630 1-FLTRDG-WG1 0.6000
FDNS	01ALL_G15_060	0	20WP	G15_060	TO->FROM	MATHWSN7 345.00 - TATONGA7 345.00 345KV CKT 1	1195	1195	0.22827	99.9	GEN539762 1-SSWIND 1 34.500
FDNS	01ALL_G15_060	0	20WP	G15_060	TO->FROM	MATHWSN7 345.00 - TATONGA7 345.00 345KV CKT 1	1195	1195	0.22827	99.9	GEN542902 1-GPW_G1 0.7000
FDNS	01ALL_G15_060	0	20WP	G15_060	TO->FROM	MATHWSN7 345.00 - TATONGA7 345.00 345KV CKT 1	1195	1195	0.22827	99.9	GEN560329 1-G10-45 0.6900
FDNS	01ALL_G15_060	0	20WP	G15_060	TO->FROM	MATHWSN7 345.00 - TATONGA7 345.00 345KV CKT 1	1195	1195	0.22827	99.9	GEN560432 1-G08-124 0.6900
FDNS	01ALL_G15_060	0	20WP	G15_060	TO->FROM	MATHWSN7 345.00 - TATONGA7 345.00 345KV CKT 1	1195	1195	0.22827	99.9	GEN560585 1-G06-44-3 4.1600
FDNS	01ALL_G15_060	0	20WP	G15_060	TO->FROM	MATHWSN7 345.00 - TATONGA7 345.00 345KV CKT 1	1195	1195	0.22827	99.9	GEN560586 1-G06-44-4 4.1600
FDNS	01ALL_G15_060	0	20WP	G15_060	TO->FROM	MATHWSN7 345.00 - TATONGA7 345.00 345KV CKT 1	1195	1195	0.22827	99.9	GEN560693 1-G11-008-1 0.6900
FDNS	01ALL_G15_060	0	20WP	G15_060	TO->FROM	MATHWSN7 345.00 - TATONGA7 345.00 345KV CKT 1	1195	1195	0.22827	99.9	GEN562035 1-G11_016_3 0.6900
FDNS	01ALL_G15_060	0	20WP	G15_060	TO->FROM	MATHWSN7 345.00 - TATONGA7 345.00 345KV CKT 1	1195	1195	0.22827	99.9	GEN562298 1-G12-024 0.6500
FDNS	01ALL_G15_060	0	20WP	G15_060	TO->FROM	MATHWSN7 345.00 - TATONGA7 345.00 345KV CKT 1	1195	1195	0.22827	99.9	GEN562483 1-G13_027_3 0.6900
FDNS	01ALL_G15_060	0	20WP	G15_060	TO->FROM	MATHWSN7 345.00 - TATONGA7 345.00 345KV CKT 1	1195	1195	0.22827	99.9	GEN562688 1-G15_014_3 0.6900
FDNS	01ALL_G15_060	0	20WP	G15_060	TO->FROM	MATHWSN7 345.00 - TATONGA7 345.00 345KV CKT 1	1195	1195	0.22827	99.9	GEN600007 7-RIVERSIDE GEN 7
FDNS	01ALL_G15_060	0	20WP	G15_060	TO->FROM	MATHWSN7 345.00 - TATONGA7 345.00 345KV CKT 1	1195	1195	0.22827	99.9	GEN600011 5-BLACK DOG GEN 1
FDNS	01ALL_G15_060	0	20WP	G15_060	TO->FROM	MATHWSN7 345.00 - TATONGA7 345.00 345KV CKT 1	1195	1195	0.22827	99.9	GEN600014 4-BLACK DOG GEN 4
FDNS	01ALL_G15_060	0	20WP	G15_060	TO->FROM	MATHWSN7 345.00 - TATONGA7 345.00 345KV CKT 1	1195	1195	0.22827	99.9	GEN600017 C-LS POWER CT
FDNS	01ALL_G15_060	0	20WP	G15_060	TO->FROM	MATHWSN7 345.00 - TATONGA7 345.00 345KV CKT 1	1195	1195	0.22827	99.9	GEN600046 1-MECST
FDNS	01ALL_G15_060	0	20WP	G15_060	TO->FROM	MATHWSN7 345.00 - TATONGA7 345.00 345KV CKT 1	1195	1195	0.22827	99.9	GEN600047 1-MECCT1
FDNS	01ALL_G15_060	0	20WP	G15_060	TO->FROM	MATHWSN7 345.00 - TATONGA7 345.00 345KV CKT 1	1195	1195	0.22827	99.9	GEN600065 7-HIGH BRIDGE
FDNS	01ALL_G15_060	0	20WP	G15_060	TO->FROM	MATHWSN7 345.00 - TATONGA7 345.00 345KV CKT 1	1195	1195	0.22827	99.9	GEN600066 8-HIGH BRIDGE
FDNS	01ALL_G15_060	0	20WP	G15_060	TO->FROM	MATHWSN7 345.00 - TATONGA7 345.00 345KV CKT 1	1195	1195	0.22827	99.9	GEN600070 9-RIVER SIDE
FDNS	01ALL_G15_060	0	20WP	G15_060	TO->FROM	MATHWSN7 345.00 - TATONGA7 345.00 345KV CKT 1	1195	1195	0.22827	99.9	GEN600071 10-RIVER SIDE
FDNS	01ALL_G15_060	0	20WP	G15_060	TO->FROM	MATHWSN7 345.00 - TATONGA7 345.00 345KV CKT 1	1195	1195	0.22827	99.9	GEN615021 1-GRE-ER 14G 16.000
FDNS	01ALL_G15_060	0	20WP	G15_060	TO->FROM	MATHWSN7 345.00 - TATONGA7 345.00 345KV CKT 1	1195	1195	0.22827	99.9	GEN615052 1-CAMBRIDGE GENERATING STATION
FDNS	01ALL_G15_060	0	20WP	G15_060	TO->FROM	MATHWSN7 345.00 - TATONGA7 345.00 345KV CKT 1	1195	1195	0.22827	99.9	GEN672303 3-BOUNDARY DAM GENERATOR 3
FDNS	01ALL_G15_060	0	20WP	G15_060	TO->FROM	MATHWSN7 345.00 - TATONGA7 345.00 345KV CKT 1	1195	1195	0.22827	99.9	GEN672304 4-BOUNDARY DAM GENERATOR 4
FDNS	01ALL_G15_060	0	20WP	G15_060	TO->FROM	MATHWSN7 345.00 - TATONGA7 345.00 345KV CKT 1	1195	1195	0.22827	99.9	GEN672305 5-BOUNDARY DAM GENERATOR 5
FDNS	01ALL_G15_060	0	20WP	G15_060	TO->FROM	MATHWSN7 345.00 - TATONGA7 345.00 345KV CKT 1	1195	1195	0.22827	99.9	GEN672392 1-NBECGT1G 18.000
FDNS	01ALL_G15_060	0	20WP	G15_060	TO->FROM	MATHWSN7 345.00 - TATONGA7 345.00 345KV CKT 1	1195	1195	0.22823	99.9	DELL 500 - INDEPENDENCE 500KV CKT 1
FDNS	01ALL_G15_060	0	20WP	G15_060	TO->FROM	MATHWSN7 345.00 - TATONGA7 345.00 345KV CKT 1	1195	1195	0.22822	99.9	ARKANSAS NUCLEAR ONE - PLEASANT HILL 500KV CKT 1
FDNS	01ALL_G15_060	0	20WP	G15_060	TO->FROM	MATHWSN7 345.00 - TATONGA7 345.00 345KV CKT 1	1195	1195	0.22818	99.9	7MAYWOOD 345.00 - 7SPENCER 345.00 345KV CKT 1
FDNS	01ALL_G15_060	0	20WP	G15_060	TO->FROM	MATHWSN7 345.00 - TATONGA7 345.00 345KV CKT 1	1195	1195	0.22818	99.9	7MONTGMRY 345.00 - 7SPENCER 345.00 345KV CKT 1
FDNS	01ALL_G15_060	0	20WP	G15_060	TO->FROM	MATHWSN7 345.00 - TATONGA7 345.00 345KV CKT 1	1195	1195	0.22793	99.9	ARCADIA - SEMINOLE 345KV CKT 1
FDNS	01ALL_G15_060	0	20WP	G15_060	TO->FROM	MATHWSN7 345.00 - TATONGA7 345.00 345KV CKT 1	1195	1195	0.22775	99.9	LYDIA - VALLIANT 345KV CKT 1
FDNS	01ALL_G15_060	0	20WP	G15_060	TO->FROM	MATHWSN7 345.00 - TATONGA7 345.00 345KV CKT 1	1195	1195	0.22775	99.9	LYDIA - VALLIANT 345KV CKT 1
FDNS	01ALL_G15_060	0	20WP	G15_060	TO->FROM	MATHWSN7 345.00 - TATONGA7 345.00 345KV CKT 1	1195	1195	0.22766	99.9	FT SMITH - MUSKOGEE 345KV CKT 1
FDNS	01ALL_G15_060	0	20WP	G15_060	TO->FROM	MATHWSN7 345.00 - TATONGA7 345.00 345KV CKT 1	1195	1195	0.22901	99.8	WOODRING (WOODRNG2) 345/138/13.8KV TRANSFORMER CKT 1
FDNS	01ALL_G15_060	0	20WP	G15_060	TO->FROM	MATHWSN7 345.00 - TATONGA7 345.00 345KV CKT 1	1195	1195	0.2284	99.8	OVEXFRMCCOVE
FDNS	01ALL_G15_060	0	20WP	G15_060	TO->FROM	MATHWSN7 345.00 - TATONGA7 345.00 345KV CKT 1	1195	1195	0.22827	99.8	GEN530690 1-PRWINDG1 0.6900
FDNS	01ALL_G15_060	0	20WP	G15_060	TO->FROM	MATHWSN7 345.00 - TATONGA7 345.00 345KV CKT 1	1195	1195	0.22827	99.8	GEN539653 1-CIMARRON RIVER PLANT GENERATOR
FDNS	01ALL_G15_060	0	20WP	G15_060	TO->FROM	MATHWSN7 345.00 - TATONGA7 345.00 345KV CKT 1	1195	1195	0.22827	99.8	GEN539807 1-G05-12-1 0.6900
FDNS	01ALL_G15_060	0	20WP	G15_060	TO->FROM	MATHWSN7 345.00 - TATONGA7 345.00 345KV CKT 1	1195	1195	0.22827	99.8	GEN542951 5-HAWTHORN UNIT #5
FDNS	01ALL_G15_060	0	20WP	G15_060	TO->FROM	MATHWSN7 345.00 - TATONGA7 345.00 345KV CKT 1	1195	1195	0.22827	99.8	GEN562269 1-G12-020-1 0.6900
FDNS	01ALL_G15_060	0	20WP	G15_060	TO->FROM	MATHWSN7 345.00 - TATONGA7 345.00 345KV CKT 1	1195	1195	0.22827	99.8	GEN600067 9-HIGH BRIDGE
FDNS	01ALL_G15_060	0	20WP	G15_060	TO->FROM	MATHWSN7 345.00 - TATONGA7 345.00 345KV CKT 1	1195	1195	0.22827	99.8	GEN615010 1-STANTON4
FDNS	01ALL_G15_060	0	20WP	G15_060	TO->FROM	MATHWSN7 345.00 - TATONGA7 345.00 345KV CKT 1	1195	1195	0.22821	99.8	KEO EHV - WEST MEMPHIS 500 500KV CKT 1
FDNS	01ALL_G15_060	0	20WP	G15_060	TO->FROM	MATHWSN7 345.00 - TATONGA7 345.00 345KV CKT 1	1195	1195	0.22815	99.8	LACYGNE - WEST GARDNER 345KV CKT 1
FDNS	01ALL_G15_060	0	20WP	G15_060	TO->FROM	MATHWSN7 345.00 - TATONGA7 345.00 345KV CKT 1	1195	1195	0.2281	99.8	LACYGNE - STILWELL 345KV CKT 1
FDNS	01ALL_G15_060	0	20WP	G15_060	TO->FROM	MATHWSN7 345.00 - TATONGA7 345.00 345KV CKT 1	1195	1195	0.228	99.8	BROOKLINE - FLINT CREEK 345KV CKT 1
FDNS	01ALL_G15_060	0	20WP	G15_060	TO->FROM	MATHWSN7 345.00 - TATONGA7 345.00 345KV CKT 1	1195	1195	0.228	99.8	BROOKLINE - FLINT CREEK 345KV CKT 1
FDNS	01ALL_G15_060	0	20WP	G15_060	TO->FROM	MATHWSN7 345.00 - TATONGA7 345.00 345KV CKT 1	1195	1195	0.22828	99.7	CIMARRON (CIMARON1) 345/138/13.8KV TRANSFORMER CKT 1
FDNS	01ALL_G15_060	0	20WP	G15_060	TO->FROM	MATHWSN7 345.00 - TATONGA7 345.00 345KV CKT 1	1195	1195	0.22828	99.7	CIMARRON (CIMARON2) 345/138/13.8KV TRANSFORMER CKT 1
FDNS	01ALL_G15_060	0	20WP	G15_060	TO->FROM	MATHWSN7 345.00 - TATONGA7 345.00 345KV CKT 1	1195	1195	0.22827	99.7	GEN525844 1-ELK_1 118.000
FDNS	01ALL_G15_060	0	20WP	G15_060	TO->FROM	MATHWSN7 345.00 - TATONGA7 345.00 345KV CKT 1	1195	1195	0.22827	99.7	GEN528361 1-MADDOX GEN #1
FDNS	01ALL_G15_060	0	20WP	G15_060	TO->FROM	MATHWSN7 345.00 - TATONGA7 345.00 345KV CKT 1	1195	1195	0.22827	99.7	GEN560256 1-G10-14-1 0.6900
FDNS	01ALL_G15_060	0	20WP	G15_060	TO->FROM	MATHWSN7 345.00 - TATONGA7 345.00 345KV CKT 1	1195	1195	0.22827	99.7	GEN560257 1-G10-14-2 0.6900
FDNS	01ALL_G15_060	0	20WP	G15_060	TO->FROM	MATHWSN7 345.00 - TATONGA7 345.00 345KV CKT 1	1195	1195	0.22827	99.7	GEN560286 1-G10-01-1WTG 0.6900
FDNS	01ALL_G15_060	0	20WP	G15_060	TO->FROM	MATHWSN7 345.00 - TATONGA7 345.00 345KV CKT 1	1195	1195	0.22827	99.7	GEN560287 1-G10-01-2WTG 0.6900
FDNS	01ALL_G15_060	0	20WP	G15_060	TO->FROM	MATHWSN7 345.00 - TATONGA7 345.00 345KV CKT 1	1195	1195	0.22827	99.7	GEN562270 1-G12-020-2 0.6900
FDNS	01ALL_G15_060	0	20WP	G15_060	TO->FROM	MATHWSN7 345.00 - TATONGA7 345.00 345KV CKT 1	1195	1195	0.22827	99.7	GEN562524 1-G14_026_3 12.000
FDNS	01ALL_G15_060	0	20WP	G15_060	TO->FROM	MATHWSN7 345.00 - TATONGA7 345.00 345KV CKT 1	1195	1195	0.22827	99.7	GEN641089 2-ENERGY CENTER 2
FDNS	01ALL_G15_060	0	20WP	G15_060	TO->FROM	MATHWSN7 345.00 - TATONGA7 345.00 345KV CKT 1	1195	1195	0.22827	99.7	GEN659111 2-LELAND OLDS UNIT2
FDNS	01ALL_G15_060	0	20WP	G15_060	TO->FROM	MATHWSN7 345.00 - TATONGA7 345.00 345KV CKT 1	1195	1195	0.22827	99.7	GEN681522 3-GENOA 3
FDNS	01ALL_G15_060	0	20WP	G15_060	TO->FROM	MATHWSN7 345.00 - TATONGA7 345.00 345KV CKT 1	1195	1195	0.22827	99.7	P12:230:UMZB:# 112 #: NU IN SD. NU-RCDC & DRY CREEK XFMR
FDNS	01ALL_G15_060	0	20WP	G15_060	TO->FROM	MATHWSN7 345.00 - TATONGA7 345.00 345KV CKT 1	1195	1195	0.22827	99.7	RCDC EAST 4230.00 - RED CEDAR DC 230KV CKT 1
FDNS	01ALL_G15_060	0	20WP	G15_060	TO->FROM	MATHWSN7 345.00 - TATONGA7 345.00 345KV CKT 1	1195	1195	0.22704	99.7	CLEVELAND - SOONER 345KV CKT 1
FDNS	01ALL_G15_060	0	20WP	G15_060	TO->FROM	MATHWSN7 345.00 - TATONGA7 345.00 345KV CKT 1	1195	1195	0.22704	99.7	CLEVELAND - SOONER 345KV CKT 1
FDNS	01ALL_G15_060	0	20WP	G15_060	TO->FROM	MATHWSN7 345.00 - TATONGA7 345.00 345KV CKT 1	1195	1195	0.22688	99.7	CIMARRON - MATHWSN7 345.00 345KV CKT 1
FDNS	01ALL_G15_060	0	20WP	G15_060	TO->FROM	MATHWSN7 345.00 - TATONGA7 345.00 345KV CKT 1	1195	1195	0.22688	99.7	CIMARRON - MATHWSN7 345.00 345KV CKT 2
FDNS	01ALL_G15_060	0	20WP	G15_060	TO->FROM	MATHWSN7 345.00 - TATONGA7 345.00 345KV CKT 1	1195	1195	0.22898	99.6	RANCHRD7 345.00 - SOONER 345KV CKT 1

SOLUTION	GROUP	SCENARIO	SEASON	SOURCE	DIRECTION	MONITORED ELEMENT	RATEA (MVA)	RATEB(MVA)	TDF	TC%LOADING (% MVA)	CONTINGENCY
FDNS	01ALL_G15_060	0	20WP	G15_060	TO->FROM	MATHWSN7 345.00 - TATONGA7 345.00 345KV CKT 1	1195	1195	0.22835	99.6	RENFROW7 345.00 - VIOLA 7 345.00 345KV CKT 1
FDNS	01ALL_G15_060	0	20WP	G15_060	TO->FROM	MATHWSN7 345.00 - TATONGA7 345.00 345KV CKT 1	1195	1195	0.22827	99.6	GEN524285 1-WILDORADO WIND GEN
FDNS	01ALL_G15_060	0	20WP	G15_060	TO->FROM	MATHWSN7 345.00 - TATONGA7 345.00 345KV CKT 1	1195	1195	0.22827	99.6	GEN525493 1-PLANT X GEN #3
FDNS	01ALL_G15_060	0	20WP	G15_060	TO->FROM	MATHWSN7 345.00 - TATONGA7 345.00 345KV CKT 1	1195	1195	0.22827	99.6	GEN528501 1-G14_012 24.000
FDNS	01ALL_G15_060	0	20WP	G15_060	TO->FROM	MATHWSN7 345.00 - TATONGA7 345.00 345KV CKT 1	1195	1195	0.22827	99.6	GEN560105 1-G08-22 0.6900
FDNS	01ALL_G15_060	0	20WP	G15_060	TO->FROM	MATHWSN7 345.00 - TATONGA7 345.00 345KV CKT 1	1195	1195	0.22827	99.6	GEN562550 1-G14_040_3 0.6900
FDNS	01ALL_G15_060	0	20WP	G15_060	TO->FROM	MATHWSN7 345.00 - TATONGA7 345.00 345KV CKT 1	1195	1195	0.22827	99.6	GEN657749 1-YOUNG 1 GENERATOR
FDNS	01ALL_G15_060	0	20WP	G15_060	TO->FROM	MATHWSN7 345.00 - TATONGA7 345.00 345KV CKT 1	1195	1195	0.22827	99.6	GEN659103 1-ANTELOPE VALLEY UNIT1
FDNS	01ALL_G15_060	0	20WP	G15_060	TO->FROM	MATHWSN7 345.00 - TATONGA7 345.00 345KV CKT 1	1195	1195	0.22827	99.6	GEN659107 2-ANTELOPE VALLEY UNIT2
FDNS	01ALL_G15_060	0	20WP	G15_060	TO->FROM	MATHWSN7 345.00 - TATONGA7 345.00 345KV CKT 1	1195	1195	0.22827	99.6	GEN681542 6-JP MADGETT
FDNS	01ALL_G15_060	0	20WP	G15_060	TO->FROM	MATHWSN7 345.00 - TATONGA7 345.00 345KV CKT 1	1195	1195	0.22819	99.6	7SPORTSMAN - BLACKBERRY 345KV CKT 1
FDNS	01ALL_G15_060	0	20WP	G15_060	TO->FROM	MATHWSN7 345.00 - TATONGA7 345.00 345KV CKT 1	1195	1195	0.22791	99.6	GRDA1 - GREC TAP5 345.00 345KV CKT 1
FDNS	01ALL_G15_060	0	20WP	G15_060	TO->FROM	MATHWSN7 345.00 - TATONGA7 345.00 345KV CKT 1	1195	1195	0.22731	99.6	PITTSBURG - VALLIANT 345KV CKT 1
FDNS	01ALL_G15_060	0	20WP	G15_060	TO->FROM	MATHWSN7 345.00 - TATONGA7 345.00 345KV CKT 1	1195	1195	0.22731	99.6	PITTSBURG - VALLIANT 345KV CKT 1
FDNS	01ALL_G15_060	0	20L	G15_060	TO->FROM	MATHWSN7 345.00 - TATONGA7 345.00 345KV CKT 1	1195	1195	0.24927	99.5	BORDER 7345.00 - WOODWARD DISTRICT EHV 345KV CKT 1
FDNS	01ALL_G15_060	0	20WP	G15_060	TO->FROM	MATHWSN7 345.00 - TATONGA7 345.00 345KV CKT 1	1195	1195	0.23055	99.5	HUNTERS7 345.00 - WOODRING 345KV CKT 1
FDNS	01ALL_G15_060	0	20WP	G15_060	TO->FROM	MATHWSN7 345.00 - TATONGA7 345.00 345KV CKT 1	1195	1195	0.22827	99.5	CLAY BOSWELL 230/20.9KV TRANSFORMER CKT 1
FDNS	01ALL_G15_060	0	20WP	G15_060	TO->FROM	MATHWSN7 345.00 - TATONGA7 345.00 345KV CKT 1	1195	1195	0.22827	99.5	GEN542957 1-IATAN UNIT #1
FDNS	01ALL_G15_060	0	20WP	G15_060	TO->FROM	MATHWSN7 345.00 - TATONGA7 345.00 345KV CKT 1	1195	1195	0.22827	99.5	GEN562042 1-G11_014_3 0.6900
FDNS	01ALL_G15_060	0	20WP	G15_060	TO->FROM	MATHWSN7 345.00 - TATONGA7 345.00 345KV CKT 1	1195	1195	0.22827	99.5	GEN672306 6-BOUNDARY DAM GENERATOR 6
FDNS	01ALL_G15_060	0	20WP	G15_060	TO->FROM	MATHWSN7 345.00 - TATONGA7 345.00 345KV CKT 1	1195	1195	0.22827	99.5	GEN672310 1-POPLAR RIVER GENERATOR 1
FDNS	01ALL_G15_060	0	20WP	G15_060	TO->FROM	MATHWSN7 345.00 - TATONGA7 345.00 345KV CKT 1	1195	1195	0.22827	99.5	GEN672311 2-POPLAR RIVER GENERATOR 2
FDNS	01ALL_G15_060	0	20WP	G15_060	TO->FROM	MATHWSN7 345.00 - TATONGA7 345.00 345KV CKT 1	1195	1195	0.22827	99.5	GEN672321 1-SHAND GENERATOR 1
FDNS	01ALL_G15_060	0	20WP	G15_060	TO->FROM	MATHWSN7 345.00 - TATONGA7 345.00 345KV CKT 1	1195	1195	0.22566	99.5	REDBUD - RIVERSIDE STATION 345KV CKT 1
FDNS	01ALL_G15_060	0	20WP	G15_060	TO->FROM	MATHWSN7 345.00 - TATONGA7 345.00 345KV CKT 1	1195	1195	0.22566	99.5	REDBUD - RIVERSIDE STATION 345KV CKT 1
FDNS	01NR_G15_060	0	17G	G15_060	TO->FROM	ROMAN NOSE - SOUTHARD 138KV CKT 1	133	153	0.07505	111.2101	MATHWSN7 345.00 - TATONGA7 345.00 345KV CKT 1
FDNS	01NR_G15_060	0	20L	G15_060	TO->FROM	ROMAN NOSE - SOUTHARD 138KV CKT 1	133	153	0.07227	109.4054	MATHWSN7 345.00 - TATONGA7 345.00 345KV CKT 1
FDNS	00NR_G15_060	0	25SP	G15_060	TO->FROM	TUCO INTERCHANGE - TUCO_2 230.00 230KV CKT 1	318.7	350.57	0.04014	129.7451	TUCO INTERCHANGE - TUCO_2 345.00 345KV CKT 1
FDNS	01NR_G15_060	2	20L	G15_060	FROM->TO	DEWEY - TALOGA 138KV CKT 1	132	165	0.05881	108.9262	DEWEY - SOUTHARD 138KV CKT 1
FDNS	01NR_G15_060	2	20L	G15_060	FROM->TO	DEWEY - TALOGA 138KV CKT 1	132	165	0.05881	106.8309	ROMAN NOSE - SOUTHARD 138KV CKT 1
FDNS	01NR_G15_060	2	20L	G15_060	TO->FROM	FPL SWITCH - WOODWARD 138KV CKT 1	133	153	0.13637	118.4454	MATHWSN7 345.00 - TATONGA7 345.00 345KV CKT 1
FDNS	01NR_G15_060	2	17G	G15_060	TO->FROM	FPL SWITCH - WOODWARD 138KV CKT 1	133	153	0.13995	104.9643	MATHWSN7 345.00 - TATONGA7 345.00 345KV CKT 1
FDNS	01NR_G15_060	2	17G	G15_060	TO->FROM	ROMAN NOSE - SOUTHARD 138KV CKT 1	133	153	0.07505	111.2101	MATHWSN7 345.00 - TATONGA7 345.00 345KV CKT 1
FDNS	01NR_G15_060	2	20L	G15_060	TO->FROM	ROMAN NOSE - SOUTHARD 138KV CKT 1	133	153	0.07205	108.7785	MATHWSN7 345.00 - TATONGA7 345.00 345KV CKT 1
FDNS	00NR_G15_060	2	25SP	G15_060	TO->FROM	TUCO INTERCHANGE - TUCO_2 230.00 230KV CKT 1	318.7	350.57	0.04014	129.7451	TUCO INTERCHANGE - TUCO_2 345.00 345KV CKT 1
FDNS	00NR_G15_061	0	25SP	G15_061	FROM->TO	GR ISLD-LNX3345.00 - GRAND ISLAND 345KV CKT Z	720	720	0.0428	109.4615	MINGO - SETAB 345KV CKT 1
FDNS	00NR_G15_061	0	25SP	G15_061	FROM->TO	GR ISLD-LNX3345.00 - GRAND ISLAND 345KV CKT Z	720	720	0.0428	109.4615	MINGO - SETAB 345KV CKT 1
FDNS	00NR_G15_061	0	20SP	G15_061	FROM->TO	GR ISLD-LNX3345.00 - GRAND ISLAND 345KV CKT Z	720	720	0.04295	109.4603	MINGO - SETAB 345KV CKT 1
FDNS	00NR_G15_061	0	20SP	G15_061	FROM->TO	GR ISLD-LNX3345.00 - GRAND ISLAND 345KV CKT Z	720	720	0.04295	109.4603	MINGO - SETAB 345KV CKT 1
FDNS	00NR_G15_061	0	25SP	G15_061	FROM->TO	GR ISLD-LNX3345.00 - GRAND ISLAND 345KV CKT Z	720	720	0.0311	108.3132	HOLCOMB - SETAB 345KV CKT 1
FDNS	00NR_G15_061	0	25SP	G15_061	FROM->TO	GR ISLD-LNX3345.00 - GRAND ISLAND 345KV CKT Z	720	720	0.0311	108.3132	HOLCOMB - SETAB 345KV CKT 1
FDNS	00NR_G15_061	0	20SP	G15_061	TO->FROM	GR ISLD-LNX3345.00 - HOLT.CO3 345.00 345KV CKT 1	720	720	0.04295	108.5662	MINGO - SETAB 345KV CKT 1
FDNS	00NR_G15_061	0	20SP	G15_061	TO->FROM	GR ISLD-LNX3345.00 - HOLT.CO3 345.00 345KV CKT 1	720	720	0.04295	108.5662	MINGO - SETAB 345KV CKT 1
FDNS	00NR_G15_061	0	25SP	G15_061	TO->FROM	GR ISLD-LNX3345.00 - HOLT.CO3 345.00 345KV CKT 1	720	720	0.0428	108.5301	MINGO - SETAB 345KV CKT 1
FDNS	00NR_G15_061	0	25SP	G15_061	TO->FROM	GR ISLD-LNX3345.00 - HOLT.CO3 345.00 345KV CKT 1	720	720	0.0428	108.5301	MINGO - SETAB 345KV CKT 1
FDNS	00NR_G15_061	0	20SP	G15_061	TO->FROM	GR ISLD-LNX3345.00 - HOLT.CO3 345.00 345KV CKT 1	720	720	0.03141	107.782	HOLCOMB - SETAB 345KV CKT 1
FDNS	00NR_G15_061	0	20SP	G15_061	TO->FROM	GR ISLD-LNX3345.00 - HOLT.CO3 345.00 345KV CKT 1	720	720	0.03141	107.782	HOLCOMB - SETAB 345KV CKT 1
FDNS	00NR_G15_061	0	25SP	G15_061	TO->FROM	GR ISLD-LNX3345.00 - HOLT.CO3 345.00 345KV CKT 1	720	720	0.0311	107.4251	HOLCOMB - SETAB 345KV CKT 1
FDNS	00NR_G15_061	0	25SP	G15_061	TO->FROM	GR ISLD-LNX3345.00 - HOLT.CO3 345.00 345KV CKT 1	720	720	0.0311	107.4251	HOLCOMB - SETAB 345KV CKT 1
FDNS	00NR_G15_061	2	25SP	G15_061	FROM->TO	Hitchland Interchange (H TB80155502) 345/230/13.2KV TRANSFORMER CKT 1	560	644	0.04114	104.8995	Hitchland Interchange (SIEM 8743067) 345/230/13.2KV TRANSFORMER CKT 2
FDNS	00NR_G15_061	2	25SP	G15_061	FROM->TO	Hitchland Interchange (H TB80155502) 345/230/13.2KV TRANSFORMER CKT 1	560	644	0.04114	104.8995	Hitchland Interchange (SIEM 8743067) 345/230/13.2KV TRANSFORMER CKT 2
FDNS	00NR_G15_061	2	25SP	G15_061	FROM->TO	Hitchland Interchange (H TB80155502) 345/230/13.2KV TRANSFORMER CKT 1	560	644	0.04114	102.251	Hitchland Interchange (SIEM 8743067) 345/230/13.2KV TRANSFORMER CKT 2
FDNS	00NR_G15_061	2	25SP	G15_061	FROM->TO	Hitchland Interchange (H TB80155502) 345/230/13.2KV TRANSFORMER CKT 1	560	644	0.04114	102.251	Hitchland Interchange (SIEM 8743067) 345/230/13.2KV TRANSFORMER CKT 2
FDNS	00NR_G15_061	2	25SP	G15_061	FROM->TO	Hitchland Interchange (SIEM 8743067) 345/230/13.2KV TRANSFORMER CKT 2	560	644	0.04205	107.3426	Hitchland Interchange (H TB80155502) 345/230/13.2KV TRANSFORMER CKT 1
FDNS	00NR_G15_061	2	25SP	G15_061	FROM->TO	Hitchland Interchange (SIEM 8743067) 345/230/13.2KV TRANSFORMER CKT 2	560	644	0.04205	107.3426	Hitchland Interchange (H TB80155502) 345/230/13.2KV TRANSFORMER CKT 1
FDNS	00NR_G15_061	2	25SP	G15_061	FROM->TO	Hitchland Interchange (SIEM 8743067) 345/230/13.2KV TRANSFORMER CKT 2	560	644	0.04205	105.0089	Hitchland Interchange (H TB80155502) 345/230/13.2KV TRANSFORMER CKT 1
FDNS	00NR_G15_061	2	25SP	G15_061	FROM->TO	Hitchland Interchange (SIEM 8743067) 345/230/13.2KV TRANSFORMER CKT 2	560	644	0.04205	105.0089	Hitchland Interchange (H TB80155502) 345/230/13.2KV TRANSFORMER CKT 1
FDNS	08ALL_G15_063	0	25SP	G15_063	FROM->TO	G15063_T 345.00 - MATHWSN7 345.00 345KV CKT 1	956	956	0.58152	100.6997	NORTHWEST - SPRING CREEK 345KV CKT 1
FDNSLock-Blown up	06ALL_G15_068	0	16WP	G15_068		Non-Converged Contingency	1022	1124	0.32842	-	G14-074T 345.00 - OKLAUNION 345KV CKT 1
FDNSLock-Blown up	06ALL_G15_068	0	17G	G15_068		Non-Converged Contingency	1022	1124	0.32386	-	G14-074T 345.00 - OKLAUNION 345KV CKT 1
FDNSLock-Blown up	06ALL_G15_068	0	20L	G15_068		Non-Converged Contingency	1022	1124	0.27663	-	G14-074T 345.00 - OKLAUNION 345KV CKT 1
FDNSLock-Blown up	06ALL_G15_068	0	20L	G15_068		Non-Converged Contingency	1022	1124	0.27663	-	G14-074T 345.00 - TUCO INTERCHANGE 345KV CKT 1
FDNSLock-Blown up	06ALL_G15_068	0	20L	G15_068		Non-Converged Contingency	1792	1972	0.2237	-	BORDER 7345.00 - TUCO_2 345.00 345KV CKT 1
FDNSLock-Blown up	06ALL_G15_068	0	20L	G15_068		Non-Converged Contingency	1792	1792	0.2237	-	BORDER 7345.00 - WOODWARD DISTRICT EHV 345KV CKT 1
FDNSLock-Blown up	06ALL_G15_068	0	20WP	G15_068		Non-Converged Contingency	1022	1124	0.3063	-	G14-074T 345.00 - OKLAUNION 345KV CKT 1
FDNSLock-Blown up	06ALL_G15_068	0	20WP	G15_068		Non-Converged Contingency	1022	1124	0.3063	-	G14-074T 345.00 - TUCO INTERCHANGE 345KV CKT 1
FDNSLock-Blown up	06ALL_G15_068	0	20WP	G15_068		Non-Converged Contingency	1792	1792	0.24534	-	BORDER 7345.00 - WOODWARD DISTRICT EHV 345KV CKT 1
FDNS	00NR_G15_068	0	25SP	G15_068	TO->FROM	AMOCO SWITCHING STATION - SUNDOWN INTERCHANGE 230KV CKT 1	437	437	0.12686	102.9888	TUCO INTERCHANGE - YOAKUM_345 345.00 345KV CKT 1
FDNS	00NR_G15_068	0	25SP	G15_068	FROM->TO	CARLISLE INTERCHANGE - LP-DOUD_TP 3115.00 115KV CKT 1	159	160	0.03329	121.1427	WOLFFORTH INTERCHANGE (WH 7001668) 230/115/13.2KV TRANSFORMER CKT 1
FDNS	00NR_G15_068	0	25SP	G15_068	FROM->TO	CARLISLE INTERCHANGE - LP-DOUD_TP 3115.00 115KV CKT 1	159	160	0.03329	121.1427	WOLFFORTH INTERCHANGE (WH 7001668) 230/115/13.2KV TRANSFORMER CKT 1
FDNS	00NR_G15_068	0	16WP	G15_068	FROM->TO	CARLISLE INTERCHANGE - LP-DOUD_TP 3115.00 115KV CKT 1	165	177	0.12526	118.8826	LUBBOCK SOUTH INTERCHANGE - WOLFFORTH INTERCHANGE 230KV CKT 1
FDNS	00NR_G15_068	0	16WP	G15_068	FROM->TO	CARLISLE INTERCHANGE - LP-DOUD_TP 3115.00 115KV CKT 1	165	177	0.12526	118.8826	LUBBOCK SOUTH INTERCHANGE - WOLFFORTH INTERCHANGE 230KV CKT 1
FDNS	00NR_G15_068	0	25SP	G15_068	FROM->TO	CARLISLE INTERCHANGE - LP-DOUD_TP 3115.00 115KV CKT 1	159	160	0.05	104.207	TUCO INTERCHANGE - YOAKUM_345 345.00 345KV CKT 1

SOLUTION	GROUP	SCENARIO	SEASON	SOURCE	DIRECTION	MONITORED ELEMENT	RATEA (MVA)	RATEB(MVA)	TDF	TC%LOADING (% MVA)	CONTINGENCY
FDNS	00NR_G15_068	0	17SP	G15_068	FROM->TO	CARLISLE INTERCHANGE - LP-DOUD_TP 3115.00 115KV CKT 1	159	160	0.06383	101.5889	WOLFFORTH INTERCHANGE (WH 7001668) 230/115/13.2KV TRANSFORMER CKT 1
FDNS	00NR_G15_068	0	17SP	G15_068	FROM->TO	CARLISLE INTERCHANGE - LP-DOUD_TP 3115.00 115KV CKT 1	159	160	0.06383	101.5889	WOLFFORTH INTERCHANGE (WH 7001668) 230/115/13.2KV TRANSFORMER CKT 1
FDNS	00NR_G15_068	0	25SP	G15_068	FROM->TO	CARLISLE INTERCHANGE (WH XHS70711) 230/115/13.2KV TRANSFORMER CKT 1	168	168	0.03932	105.8803	CARLISLE INTERCHANGE - WOLFFORTH INTERCHANGE 230KV CKT 1
FDNS	00NR_G15_068	0	25SP	G15_068	FROM->TO	CARLISLE INTERCHANGE (WH XHS70711) 230/115/13.2KV TRANSFORMER CKT 1	168	168	0.03932	105.2044	CARLISLE INTERCHANGE - WOLFFORTH INTERCHANGE 230KV CKT 1
FDNS	06ALL_G15_068	0	20L	G15_068	TO->FROM	CHISHOLM6 230.00 - SWEETWATER 230KV CKT 1	421	439	0.061	100	BASE CASE
FDNS	00NR_G15_068	0	25SP	G15_068	TO->FROM	JONES STATION - TUCO INTERCHANGE 230KV CKT 1	343.79	343.79	0.17401	122.7426	CARLISLE INTERCHANGE - TUCO INTERCHANGE 230KV CKT 1
FDNS	00NR_G15_068	0	25SP	G15_068	TO->FROM	JONES STATION - TUCO INTERCHANGE 230KV CKT 1	343.79	343.79	0.17401	122.7426	CARLISLE INTERCHANGE - TUCO INTERCHANGE 230KV CKT 1
FDNS	00NR_G15_068	0	25SP	G15_068	TO->FROM	JONES STATION - TUCO INTERCHANGE 230KV CKT 1	343.79	343.79	0.17131	111.2402	TUCO INTERCHANGE - YOAKUM_345 345.00 345KV CKT 1
FDNS	00NR_G15_068	0	25SP	G15_068	TO->FROM	JONES STATION - TUCO INTERCHANGE 230KV CKT 1	343.79	343.79	0.1316	103.4326	GEN526333 1-JONES GEN #3 21 KV
FDNS	00NR_G15_068	0	25SP	G15_068	TO->FROM	JONES STATION - TUCO INTERCHANGE 230KV CKT 1	343.79	343.79	0.1316	103.0001	GEN526334 1-JONES_4 116.500
FDNS	00NR_G15_068	0	25SP	G15_068	TO->FROM	JONES STATION - TUCO INTERCHANGE 230KV CKT 1	343.79	343.79	0.1316	100.8233	GEN526332 1-JONES GEN #2 21 KV
FDNS	00NR_G15_068	0	25SP	G15_068	TO->FROM	JONES STATION - TUCO INTERCHANGE 230KV CKT 1	343.79	343.79	0.1316	100.7999	GEN526331 1-JONES GEN #1 22 KV
FDNS	00NR_G15_068	0	16WP	G15_068	FROM->TO	LP-DOUD_TP 3115.00 - SP-WOLF_TP 3115.00 115KV CKT 1	165	180	0.12526	111.2071	LUBBOCK SOUTH INTERCHANGE - WOLFFORTH INTERCHANGE 230KV CKT 1
FDNS	00NR_G15_068	0	16WP	G15_068	FROM->TO	LP-DOUD_TP 3115.00 - SP-WOLF_TP 3115.00 115KV CKT 1	165	180	0.12526	111.2071	LUBBOCK SOUTH INTERCHANGE - WOLFFORTH INTERCHANGE 230KV CKT 1
FDNS	00NR_G15_068	0	16WP	G15_068	FROM->TO	SP-WOLF_TP 3115.00 - YUMA INTERCHANGE 115KV CKT 1	165	180	0.12526	104.889	LUBBOCK SOUTH INTERCHANGE - WOLFFORTH INTERCHANGE 230KV CKT 1
FDNS	00NR_G15_068	0	16WP	G15_068	FROM->TO	SP-WOLF_TP 3115.00 - YUMA INTERCHANGE 115KV CKT 1	165	180	0.12526	104.889	LUBBOCK SOUTH INTERCHANGE - WOLFFORTH INTERCHANGE 230KV CKT 1
FDNS	06ALL_G15_068	0	20L	G15_068	FROM->TO	STATELINE INTERCHANGE - STLN-DEMARC6 230KV CKT 1	348.58	381.24	0.061	104.9095	BASE CASE
FDNS	06ALL_G15_068	0	20L	G15_068	FROM->TO	STLN-DEMARC6 - SWEETWATER 230KV CKT 1	353	353	0.061	103.2206	BASE CASE
FDNS	00NR_G15_068	0	25SP	G15_068	TO->FROM	SUNDOWN INTERCHANGE - WOLFFORTH INTERCHANGE 230KV CKT 1	318.7	350.57	0.16477	109.4089	TUCO INTERCHANGE - YOAKUM_345 345.00 345KV CKT 1
FDNS	00NR_G15_068	0	17SP	G15_068	FROM->TO	SUNDOWN INTERCHANGE (WH XDS70381) 230/115/13.8KV TRANSFORMER CKT 1	187	187	0.06892	111.238	AMOCO SWITCHING STATION - SUNDOWN INTERCHANGE 230KV CKT 1
FDNS	00NR_G15_068	0	17SP	G15_068	FROM->TO	SUNDOWN INTERCHANGE (WH XDS70381) 230/115/13.8KV TRANSFORMER CKT 1	187	187	0.06892	111.238	AMOCO SWITCHING STATION - SUNDOWN INTERCHANGE 230KV CKT 1
FDNS	00NR_G15_068	0	17SP	G15_068	FROM->TO	SUNDOWN INTERCHANGE (WH XDS70381) 230/115/13.8KV TRANSFORMER CKT 1	187	187	0.06892	108.5436	AMOCO SWITCHING STATION - SUNDOWN INTERCHANGE 230KV CKT 1
FDNS	00NR_G15_068	0	17SP	G15_068	FROM->TO	SUNDOWN INTERCHANGE (WH XDS70381) 230/115/13.8KV TRANSFORMER CKT 1	187	187	0.06892	108.5436	AMOCO SWITCHING STATION - SUNDOWN INTERCHANGE 230KV CKT 1
FDNS	00NR_G15_068	0	25SP	G15_068	TO->FROM	TERRY COUNTY INTERCHANGE - WOLFFORTH INTERCHANGE 115KV CKT 1	119.51	153.97	0.06701	116.9764	TUCO INTERCHANGE - YOAKUM_345 345.00 345KV CKT 1
FDNS	00NR_G15_068	0	25SP	G15_068	TO->FROM	TUCO INTERCHANGE - TUCO_2 230.00 230KV CKT 1	318.7	350.57	0.15517	117.0838	TUCO INTERCHANGE (GE M1022338) 345/230/13.2KV TRANSFORMER CKT 1
FDNS	00NR_G15_068	0	25SP	G15_068	TO->FROM	TUCO INTERCHANGE - TUCO_2 230.00 230KV CKT 1	318.7	350.57	0.15517	117.0838	TUCO INTERCHANGE (GE M1022338) 345/230/13.2KV TRANSFORMER CKT 1
FDNS	00NR_G15_068	0	25SP	G15_068	TO->FROM	TUCO INTERCHANGE - TUCO_2 230.00 230KV CKT 1	318.7	350.57	0.13719	108.8729	TUCO INTERCHANGE (SIEM 8743066) 345/230/13.2KV TRANSFORMER CKT 2
FDNS	00NR_G15_068	0	25SP	G15_068	TO->FROM	TUCO INTERCHANGE - TUCO_2 230.00 230KV CKT 1	318.7	350.57	0.13719	108.8729	TUCO INTERCHANGE (SIEM 8743066) 345/230/13.2KV TRANSFORMER CKT 2
FDNS	00NR_G15_068	0	25SP	G15_068	FROM->TO	TUCO INTERCHANGE (ENRCO 136401) 230/115/13.2KV TRANSFORMER CKT 1	250	288	0.07112	123.8097	TUCO INTERCHANGE (ENRCO 136401) 230/115/13.2KV TRANSFORMER CKT 2
FDNS	00NR_G15_068	0	25SP	G15_068	FROM->TO	TUCO INTERCHANGE (ENRCO 136401) 230/115/13.2KV TRANSFORMER CKT 1	250	288	0.07112	123.8097	TUCO INTERCHANGE (ENRCO 136401) 230/115/13.2KV TRANSFORMER CKT 2
FDNS	00NR_G15_068	0	25SP	G15_068	FROM->TO	TUCO INTERCHANGE (ENRCO 136401) 230/115/13.2KV TRANSFORMER CKT 1	250	288	0.07112	116.1705	TUCO INTERCHANGE (ENRCO 136401) 230/115/13.2KV TRANSFORMER CKT 2
FDNS	00NR_G15_068	0	25SP	G15_068	FROM->TO	TUCO INTERCHANGE (ENRCO 136401) 230/115/13.2KV TRANSFORMER CKT 1	250	288	0.07112	116.1705	TUCO INTERCHANGE (ENRCO 136401) 230/115/13.2KV TRANSFORMER CKT 2
FDNS	00NR_G15_068	0	25SP	G15_068	FROM->TO	TUCO INTERCHANGE (ENRCO 136401) 230/115/13.2KV TRANSFORMER CKT 2	250	288	0.07112	123.8097	TUCO INTERCHANGE (ENRCO 136401) 230/115/13.2KV TRANSFORMER CKT 1
FDNS	00NR_G15_068	0	25SP	G15_068	FROM->TO	TUCO INTERCHANGE (ENRCO 136401) 230/115/13.2KV TRANSFORMER CKT 2	250	288	0.07112	123.8097	TUCO INTERCHANGE (ENRCO 136401) 230/115/13.2KV TRANSFORMER CKT 1
FDNS	00NR_G15_068	0	25SP	G15_068	FROM->TO	TUCO INTERCHANGE (ENRCO 136401) 230/115/13.2KV TRANSFORMER CKT 2	250	288	0.07112	116.1705	TUCO INTERCHANGE (ENRCO 136401) 230/115/13.2KV TRANSFORMER CKT 1
FDNS	00NR_G15_068	0	25SP	G15_068	FROM->TO	TUCO INTERCHANGE (ENRCO 136401) 230/115/13.2KV TRANSFORMER CKT 2	250	288	0.07112	116.1705	TUCO INTERCHANGE (ENRCO 136401) 230/115/13.2KV TRANSFORMER CKT 1
FDNS	00NR_G15_068	0	17SP	G15_068	FROM->TO	TUCO INTERCHANGE (GE M102345) 230/115/13.2KV TRANSFORMER CKT 1	242	252	0.09743	109.8418	TUCO INTERCHANGE (ENRCO 136401) 230/115/13.2KV TRANSFORMER CKT 2
FDNS	00NR_G15_068	0	17SP	G15_068	FROM->TO	TUCO INTERCHANGE (GE M102345) 230/115/13.2KV TRANSFORMER CKT 1	242	252	0.09743	109.8418	TUCO INTERCHANGE (ENRCO 136401) 230/115/13.2KV TRANSFORMER CKT 2
FDNS	00NR_G15_068	0	17SP	G15_068	FROM->TO	TUCO INTERCHANGE (GE M102345) 230/115/13.2KV TRANSFORMER CKT 1	242	252	0.09743	109.2788	TUCO INTERCHANGE (ENRCO 136401) 230/115/13.2KV TRANSFORMER CKT 2
FDNS	00NR_G15_068	0	17SP	G15_068	FROM->TO	TUCO INTERCHANGE (GE M102345) 230/115/13.2KV TRANSFORMER CKT 1	242	252	0.09743	109.2788	TUCO INTERCHANGE (ENRCO 136401) 230/115/13.2KV TRANSFORMER CKT 2
FDNS	00NR_G15_068	0	17SP	G15_068	FROM->TO	WOLFFORTH INTERCHANGE (WH 7001668) 230/115/13.2KV TRANSFORMER CKT 1	120	154	0.05558	113.5205	CARLISLE INTERCHANGE - LP-DOUD_TP 3115.00 115KV CKT 1
FDNS	00NR_G15_068	0	17SP	G15_068	FROM->TO	WOLFFORTH INTERCHANGE (WH 7001668) 230/115/13.2KV TRANSFORMER CKT 1	120	154	0.05558	109.7738	CARLISLE INTERCHANGE - LP-DOUD_TP 3115.00 115KV CKT 1
FDNS	00NR_G15_068	0	17SP	G15_068	FROM->TO	WOLFFORTH INTERCHANGE (WH 7001668) 230/115/13.2KV TRANSFORMER CKT 1	120	154	0.05558	102.7064	LP-DOUD_TP 3115.00 - SP-WOLF_TP 3115.00 115KV CKT 1
FDNS	00NR_G15_068	0	17SP	G15_068	FROM->TO	WOLFFORTH INTERCHANGE (WH 7001668) 230/115/13.2KV TRANSFORMER CKT 1	120	154	0.05558	99.8	LP-DOUD_TP 3115.00 - SP-WOLF_TP 3115.00 115KV CKT 1
FDNS	00NR_G15_068	2	25SP	G15_068	TO->FROM	AMOCO SWITCHING STATION - SUNDOWN INTERCHANGE 230KV CKT 1	437	437	0.12597	103.4508	TUCO INTERCHANGE - YOAKUM_345 345.00 345KV CKT 1
FDNS	00NR_G15_068	2	25SP	G15_068	FROM->TO	CARLISLE INTERCHANGE - LP-DOUD_TP 3115.00 115KV CKT 1	159	160	0.03287	121.9485	WOLFFORTH INTERCHANGE (WH 7001668) 230/115/13.2KV TRANSFORMER CKT 1
FDNS	00NR_G15_068	2	25SP	G15_068	FROM->TO	CARLISLE INTERCHANGE - LP-DOUD_TP 3115.00 115KV CKT 1	159	160	0.03287	121.9485	WOLFFORTH INTERCHANGE (WH 7001668) 230/115/13.2KV TRANSFORMER CKT 1
FDNS	00NR_G15_068	2	16WP	G15_068	FROM->TO	CARLISLE INTERCHANGE - LP-DOUD_TP 3115.00 115KV CKT 1	165	177	0.12128	114.7185	LUBBOCK SOUTH INTERCHANGE - WOLFFORTH INTERCHANGE 230KV CKT 1
FDNS	00NR_G15_068	2	16WP	G15_068	FROM->TO	CARLISLE INTERCHANGE - LP-DOUD_TP 3115.00 115KV CKT 1	165	177	0.12128	114.7185	LUBBOCK SOUTH INTERCHANGE - WOLFFORTH INTERCHANGE 230KV CKT 1
FDNS	00NR_G15_068	2	25SP	G15_068	FROM->TO	CARLISLE INTERCHANGE - LP-DOUD_TP 3115.00 115KV CKT 1	159	160	0.04915	105.5044	TUCO INTERCHANGE - YOAKUM_345 345.00 345KV CKT 1
FDNS	00NR_G15_068	2	17SP	G15_068	FROM->TO	CARLISLE INTERCHANGE - LP-DOUD_TP 3115.00 115KV CKT 1	159	160	0.06258	100.6266	WOLFFORTH INTERCHANGE (WH 7001668) 230/115/13.2KV TRANSFORMER CKT 1
FDNS	00NR_G15_068	2	17SP	G15_068	FROM->TO	CARLISLE INTERCHANGE - LP-DOUD_TP 3115.00 115KV CKT 1	159	160	0.06258	100.6266	WOLFFORTH INTERCHANGE (WH 7001668) 230/115/13.2KV TRANSFORMER CKT 1
FDNS	00NR_G15_068	2	25SP	G15_068	FROM->TO	CARLISLE INTERCHANGE (WH XHS70711) 230/115/13.2KV TRANSFORMER CKT 1	168	168	0.03857	107.233	CARLISLE INTERCHANGE - WOLFFORTH INTERCHANGE 230KV CKT 1
FDNS	00NR_G15_068	2	25SP	G15_068	FROM->TO	CARLISLE INTERCHANGE (WH XHS70711) 230/115/13.2KV TRANSFORMER CKT 1	168	168	0.03857	106.4154	CARLISLE INTERCHANGE - WOLFFORTH INTERCHANGE 230KV CKT 1
FDNS	00NR_G15_068	2	25SP	G15_068	TO->FROM	JONES STATION - TUCO INTERCHANGE 230KV CKT 1	343.79	343.79	0.17159	123.794	CARLISLE INTERCHANGE - TUCO INTERCHANGE 230KV CKT 1
FDNS	00NR_G15_068	2	25SP	G15_068	TO->FROM	JONES STATION - TUCO INTERCHANGE 230KV CKT 1	343.79	343.79	0.17159	123.794	CARLISLE INTERCHANGE - TUCO INTERCHANGE 230KV CKT 1
FDNS	00NR_G15_068	2	25SP	G15_068	TO->FROM	JONES STATION - TUCO INTERCHANGE 230KV CKT 1	343.79	343.79	0.16859	111.8877	TUCO INTERCHANGE - YOAKUM_345 345.00 345KV CKT 1
FDNS	00NR_G15_068	2	25SP	G15_068	TO->FROM	JONES STATION - TUCO INTERCHANGE 230KV CKT 1	343.79	343.79	0.12995	104.0443	GEN526333 1-JONES GEN #3 21 KV
FDNS	00NR_G15_068	2	25SP	G15_068	TO->FROM	JONES STATION - TUCO INTERCHANGE 230KV CKT 1	343.79	343.79	0.12995	103.634	GEN526334 1-JONES_4 116.500
FDNS	00NR_G15_068	2	25SP	G15_068	TO->FROM	JONES STATION - TUCO INTERCHANGE 230KV CKT 1	343.79	343.79	0.12995	101.7083	GEN526332 1-JONES GEN #2 21 KV
FDNS	00NR_G15_068	2	25SP	G15_068	TO->FROM	JONES STATION - TUCO INTERCHANGE 230KV CKT 1	343.79	343.79	0.12995	101.689	GEN526331 1-JONES GEN #1 22 KV
FDNS	00NR_G15_068	2	16WP	G15_068	FROM->TO	LP-DOUD_TP 3115.00 - SP-WOLF_TP 3115.00 115KV CKT 1	165	180	0.12128	107.1204	LUBBOCK SOUTH INTERCHANGE - WOLFFORTH INTERCHANGE 230KV CKT 1
FDNS	00NR_G15_068	2	16WP	G15_068	FROM->TO	LP-DOUD_TP 3115.00 - SP-WOLF_TP 3115.00 115KV CKT 1	165	180	0.12128	107.1204	LUBBOCK SOUTH INTERCHANGE - WOLFFORTH INTERCHANGE 230KV CKT 1
FDNS	00NR_G15_068	2	16WP	G15_068	FROM->TO	SP-WOLF_TP 3115.00 - YUMA INTERCHANGE 115KV CKT 1	165	180	0.12128	100.8084	LUBBOCK SOUTH INTERCHANGE - WOLFFORTH INTERCHANGE 230KV CKT 1
FDNS	00NR_G15_068	2	16WP	G15_068	FROM->TO	SP-WOLF_TP 3115.00 - YUMA INTERCHANGE 115KV CKT 1	165	180	0.12128	100.8084	LUBBOCK SOUTH INTERCHANGE - WOLFFORTH INTERCHANGE 230KV CKT 1
FDNS	00NR_G15_068	2	25SP	G15_068	TO->FROM	SUNDOWN INTERCHANGE - WOLFFORTH INTERCHANGE 230KV CKT 1	318.7	350.57	0.16021	112.0685	TUCO INTERCHANGE - YOAKUM_345 345.00 345KV CKT 1
FDNS	00NR_G15_068	2	17SP	G15_068	FROM->TO	SUNDOWN INTERCHANGE (WH XDS70381) 230/115/13.8KV TRANSFORMER CKT 1	187	187	0.06814	110.7914	AMOCO SWITCHING STATION - SUNDOWN INTERCHANGE 230KV CKT 1
FDNS	00NR_G15_068	2	17SP	G15_068	FROM->TO	SUNDOWN INTERCHANGE (WH XDS70381) 230/115/13.8KV TRANSFORMER CKT 1	187	187	0.06814	110.7914	AMOCO SWITCHING STATION - SUNDOWN INTERCHANGE 230KV CKT 1
FDNS	00NR_G15_068	2	17SP	G15_068	FROM->TO	SUNDOWN INTERCHANGE (WH XDS70381) 230/115/13.8KV TRANSFORMER CKT 1	187	187	0.06814	108.0956	AMOCO SWITCHING STATION - SUNDOWN INTERCHANGE 230KV CKT 1
FDNS	00NR_G15_068	2	17SP	G15_068	FROM->TO	SUNDOWN INTERCHANGE (WH XDS70381) 230/115/13.8KV TRANSFORMER CKT 1	187	187	0.06814	108.0956	AMOCO SWITCHING STATION - SUNDOWN INTERCHANGE 230KV CKT 1
FDNS	00NR_G15_068	2	25SP	G15_068	TO->FROM	TERRY COUNTY INTERCHANGE - WOLFFORTH INTERCHANGE 115KV CKT 1	119.51	153.97	0.06588	118.5658	TUCO INTERCHANGE - YOAKUM_345 345.00 345KV CKT 1
FDNS	06ALL_G15_068	2	17SP	G15_068	FROM->TO	TUCO INTERCHANGE - TUCO_2 230.00 230KV CKT 1	497	547	0.4553	129.8888	TUCO INTERCHANGE - TUCO_2 345.00 345KV CKT 1
FDNS	06ALL_G15_068	2	20SP	G15_068	FROM->TO	TUCO INTERCHANGE - TUCO_2 230.00 230KV CKT 1	497	547	0.43722	127.1096	TUCO INTERCHANGE - TUCO_2 345.00 345KV CKT 1

SOLUTION	GROUP	SCENARIO	SEASON	SOURCE	DIRECTION	MONITORED ELEMENT	RATEA (MVA)	RATEB(MVA)	TDF	TC%LOADING (% MVA)	CONTINGENCY
FDNS	00NR_G15_068	2	25SP	G15_068	TO->FROM	TUCO INTERCHANGE - TUCO_2 230.00 230KV CKT 1	318.7	350.57	0.15344	117.1608	TUCO INTERCHANGE (GE M1022338) 345/230/13.2KV TRANSFORMER CKT 1
FDNS	00NR_G15_068	2	25SP	G15_068	TO->FROM	TUCO INTERCHANGE - TUCO_2 230.00 230KV CKT 1	318.7	350.57	0.15344	117.1608	TUCO INTERCHANGE (GE M1022338) 345/230/13.2KV TRANSFORMER CKT 1
FDNS	06ALL_G15_068	2	17G	G15_068	FROM->TO	TUCO INTERCHANGE - TUCO_2 230.00 230KV CKT 1	497	547	0.45471	112.6658	TUCO INTERCHANGE - TUCO_2 345.00 345KV CKT 1
FDNS	00NR_G15_068	2	25SP	G15_068	TO->FROM	TUCO INTERCHANGE - TUCO_2 230.00 230KV CKT 1	318.7	350.57	0.13604	108.6253	TUCO INTERCHANGE (SIEM 8743066) 345/230/13.2KV TRANSFORMER CKT 2
FDNS	00NR_G15_068	2	25SP	G15_068	TO->FROM	TUCO INTERCHANGE - TUCO_2 230.00 230KV CKT 1	318.7	350.57	0.13604	108.6253	TUCO INTERCHANGE (SIEM 8743066) 345/230/13.2KV TRANSFORMER CKT 2
FDNS	06ALL_G15_068	2	20L	G15_068	FROM->TO	TUCO INTERCHANGE - TUCO_2 230.00 230KV CKT 1	497	547	0.40464	104.6203	TUCO INTERCHANGE - TUCO_2 345.00 345KV CKT 1
FDNS	00NR_G15_068	2	25SP	G15_068	FROM->TO	TUCO INTERCHANGE (ENRCO 136401) 230/115/13.2KV TRANSFORMER CKT 1	250	288	0.06867	125.3725	TUCO INTERCHANGE (ENRCO 136401) 230/115/13.2KV TRANSFORMER CKT 2
FDNS	00NR_G15_068	2	25SP	G15_068	FROM->TO	TUCO INTERCHANGE (ENRCO 136401) 230/115/13.2KV TRANSFORMER CKT 1	250	288	0.06867	125.3725	TUCO INTERCHANGE (ENRCO 136401) 230/115/13.2KV TRANSFORMER CKT 2
FDNS	00NR_G15_068	2	25SP	G15_068	FROM->TO	TUCO INTERCHANGE (ENRCO 136401) 230/115/13.2KV TRANSFORMER CKT 1	250	288	0.06867	117.941	TUCO INTERCHANGE (ENRCO 136401) 230/115/13.2KV TRANSFORMER CKT 2
FDNS	00NR_G15_068	2	25SP	G15_068	FROM->TO	TUCO INTERCHANGE (ENRCO 136401) 230/115/13.2KV TRANSFORMER CKT 1	250	288	0.06867	117.941	TUCO INTERCHANGE (ENRCO 136401) 230/115/13.2KV TRANSFORMER CKT 2
FDNS	00NR_G15_068	2	25SP	G15_068	FROM->TO	TUCO INTERCHANGE (ENRCO 136401) 230/115/13.2KV TRANSFORMER CKT 2	250	288	0.06867	125.3726	TUCO INTERCHANGE (ENRCO 136401) 230/115/13.2KV TRANSFORMER CKT 1
FDNS	00NR_G15_068	2	25SP	G15_068	FROM->TO	TUCO INTERCHANGE (ENRCO 136401) 230/115/13.2KV TRANSFORMER CKT 2	250	288	0.06867	125.3726	TUCO INTERCHANGE (ENRCO 136401) 230/115/13.2KV TRANSFORMER CKT 1
FDNS	00NR_G15_068	2	25SP	G15_068	FROM->TO	TUCO INTERCHANGE (ENRCO 136401) 230/115/13.2KV TRANSFORMER CKT 2	250	288	0.06867	117.941	TUCO INTERCHANGE (ENRCO 136401) 230/115/13.2KV TRANSFORMER CKT 1
FDNS	00NR_G15_068	2	25SP	G15_068	FROM->TO	TUCO INTERCHANGE (ENRCO 136401) 230/115/13.2KV TRANSFORMER CKT 2	250	288	0.06867	117.941	TUCO INTERCHANGE (ENRCO 136401) 230/115/13.2KV TRANSFORMER CKT 1
FDNS	00NR_G15_068	2	17SP	G15_068	FROM->TO	TUCO INTERCHANGE (GE M102345) 230/115/13.2KV TRANSFORMER CKT 1	242	252	0.09327	107.5866	TUCO INTERCHANGE (ENRCO 136401) 230/115/13.2KV TRANSFORMER CKT 2
FDNS	00NR_G15_068	2	17SP	G15_068	FROM->TO	TUCO INTERCHANGE (GE M102345) 230/115/13.2KV TRANSFORMER CKT 1	242	252	0.09327	107.5866	TUCO INTERCHANGE (ENRCO 136401) 230/115/13.2KV TRANSFORMER CKT 2
FDNS	00NR_G15_068	2	17SP	G15_068	FROM->TO	TUCO INTERCHANGE (GE M102345) 230/115/13.2KV TRANSFORMER CKT 1	242	252	0.09327	107.0024	TUCO INTERCHANGE (ENRCO 136401) 230/115/13.2KV TRANSFORMER CKT 2
FDNS	00NR_G15_068	2	17SP	G15_068	FROM->TO	TUCO INTERCHANGE (GE M102345) 230/115/13.2KV TRANSFORMER CKT 1	242	252	0.09327	107.0024	TUCO INTERCHANGE (ENRCO 136401) 230/115/13.2KV TRANSFORMER CKT 2
FDNS	06ALL_G15_068	2	20WP	G15_068	FROM->TO	TUCO_2 345.00 (TUCO_2 XFMR) 345/230/13.2KV TRANSFORMER CKT 1	560	560	0.31489	120.9965	TUCO INTERCHANGE - TUCO_2 345.00 345KV CKT 1
FDNS	06ALL_G15_068	2	20WP	G15_068	FROM->TO	TUCO_2 345.00 (TUCO_2 XFMR) 345/230/13.2KV TRANSFORMER CKT 1	560	560	0.31489	119.743	TUCO INTERCHANGE - TUCO_2 345.00 345KV CKT 1
FDNS	06ALL_G15_068	2	20L	G15_068	FROM->TO	TUCO_2 345.00 (TUCO_2 XFMR) 345/230/13.2KV TRANSFORMER CKT 1	560	560	0.28526	114.3996	TUCO INTERCHANGE - TUCO_2 345.00 345KV CKT 1
FDNS	06ALL_G15_068	2	17G	G15_068	FROM->TO	TUCO_2 345.00 (TUCO_2 XFMR) 345/230/13.2KV TRANSFORMER CKT 1	560	560	0.32369	114.2166	TUCO INTERCHANGE - TUCO_2 345.00 345KV CKT 1
FDNS	06ALL_G15_068	2	20L	G15_068	FROM->TO	TUCO_2 345.00 (TUCO_2 XFMR) 345/230/13.2KV TRANSFORMER CKT 1	560	560	0.28526	113.4707	TUCO INTERCHANGE - TUCO_2 345.00 345KV CKT 1
FDNS	06ALL_G15_068	2	17G	G15_068	FROM->TO	TUCO_2 345.00 (TUCO_2 XFMR) 345/230/13.2KV TRANSFORMER CKT 1	560	560	0.32369	113.3845	TUCO INTERCHANGE - TUCO_2 345.00 345KV CKT 1
FDNS	06ALL_G15_068	2	17SP	G15_068	FROM->TO	TUCO_2 345.00 (TUCO_2 XFMR) 345/230/13.2KV TRANSFORMER CKT 1	560	560	0.3275	111.2308	TUCO INTERCHANGE - TUCO_2 345.00 345KV CKT 1
FDNS	06ALL_G15_068	2	16WP	G15_068	FROM->TO	TUCO_2 345.00 (TUCO_2 XFMR) 345/230/13.2KV TRANSFORMER CKT 1	560	560	0.32906	110.7532	TUCO INTERCHANGE - TUCO_2 345.00 345KV CKT 1
FDNS	06ALL_G15_068	2	17SP	G15_068	FROM->TO	TUCO_2 345.00 (TUCO_2 XFMR) 345/230/13.2KV TRANSFORMER CKT 1	560	560	0.3275	110.7113	TUCO INTERCHANGE - TUCO_2 345.00 345KV CKT 1
FDNS	06ALL_G15_068	2	16WP	G15_068	FROM->TO	TUCO_2 345.00 (TUCO_2 XFMR) 345/230/13.2KV TRANSFORMER CKT 1	560	560	0.32906	110.2191	TUCO INTERCHANGE - TUCO_2 345.00 345KV CKT 1
FDNS	06ALL_G15_068	2	20SP	G15_068	FROM->TO	TUCO_2 345.00 (TUCO_2 XFMR) 345/230/13.2KV TRANSFORMER CKT 1	560	560	0.32284	109.8933	TUCO INTERCHANGE - TUCO_2 345.00 345KV CKT 1
FDNS	06ALL_G15_068	2	20SP	G15_068	FROM->TO	TUCO_2 345.00 (TUCO_2 XFMR) 345/230/13.2KV TRANSFORMER CKT 1	560	560	0.32284	109.3055	TUCO INTERCHANGE - TUCO_2 345.00 345KV CKT 1
FDNS	06NR_G15_068	2	20L	G15_068	FROM->TO	TUCO_2 345.00 (TUCO_2 XFMR) 345/230/13.2KV TRANSFORMER CKT 1	560	560	0.07523	102.2243	TUCO INTERCHANGE - TUCO_2 345.00 345KV CKT 1
FDNS	06NR_G15_068	2	20L	G15_068	FROM->TO	TUCO_2 345.00 (TUCO_2 XFMR) 345/230/13.2KV TRANSFORMER CKT 1	560	560	0.07523	101.8649	TUCO INTERCHANGE - TUCO_2 345.00 345KV CKT 1
FDNS	00NR_G15_068	2	17SP	G15_068	FROM->TO	WOLFFORTH INTERCHANGE (WH 7001668) 230/115/13.2KV TRANSFORMER CKT 1	120	154	0.0545	112.0927	CARLISLE INTERCHANGE - LP-DOUD_TP 3115.00 115KV CKT 1
FDNS	00NR_G15_068	2	17SP	G15_068	FROM->TO	WOLFFORTH INTERCHANGE (WH 7001668) 230/115/13.2KV TRANSFORMER CKT 1	120	154	0.0545	108.584	CARLISLE INTERCHANGE - LP-DOUD_TP 3115.00 115KV CKT 1
FDNS	00NR_G15_068	2	17SP	G15_068	FROM->TO	WOLFFORTH INTERCHANGE (WH 7001668) 230/115/13.2KV TRANSFORMER CKT 1	120	154	0.0545	101.8921	LP-DOUD_TP 3115.00 - SP-WOLF_TP 3115.00 115KV CKT 1
FDNS	00NR_G15_068	3	25SP	G15_068	TO->FROM	AMOCO SWITCHING STATION - SUNDOWN INTERCHANGE 230KV CKT 1	437	437	0.12659	105.3015	TUCO INTERCHANGE - YOAKUM_345 345.00 345KV CKT 1
FDNS	00NR_G15_068	3	25SP	G15_068	TO->FROM	STANTON SUB - TUCO INTERCHANGE 115KV CKT 1	159	160	0.03598	100.0772	CARLISLE INTERCHANGE - TUCO INTERCHANGE 230KV CKT 1
FDNS	00NR_G15_068	3	25SP	G15_068	TO->FROM	STANTON SUB - TUCO INTERCHANGE 115KV CKT 1	159	160	0.03598	100.0772	CARLISLE INTERCHANGE - TUCO INTERCHANGE 230KV CKT 1
FDNS	00NR_G15_068	3	25SP	G15_068	TO->FROM	SUNDOWN INTERCHANGE - WOLFFORTH INTERCHANGE 230KV CKT 1	318.7	350.57	0.15956	112.2204	TUCO INTERCHANGE - YOAKUM_345 345.00 345KV CKT 1
FDNS	00NR_G15_068	3	25SP	G15_068	TO->FROM	TUCO INTERCHANGE - TUCO_2 230.00 230KV CKT 1	318.7	350.57	0.15349	116.8502	TUCO INTERCHANGE (GE M1022338) 345/230/13.2KV TRANSFORMER CKT 1
FDNS	00NR_G15_068	3	25SP	G15_068	TO->FROM	TUCO INTERCHANGE - TUCO_2 230.00 230KV CKT 1	318.7	350.57	0.15349	116.8502	TUCO INTERCHANGE (GE M1022338) 345/230/13.2KV TRANSFORMER CKT 1
FDNS	00NR_G15_068	3	25SP	G15_068	TO->FROM	TUCO INTERCHANGE - TUCO_2 230.00 230KV CKT 1	318.7	350.57	0.13609	108.327	TUCO INTERCHANGE (SIEM 8743066) 345/230/13.2KV TRANSFORMER CKT 2
FDNS	00NR_G15_068	3	25SP	G15_068	TO->FROM	TUCO INTERCHANGE - TUCO_2 230.00 230KV CKT 1	318.7	350.57	0.13609	108.327	TUCO INTERCHANGE (SIEM 8743066) 345/230/13.2KV TRANSFORMER CKT 2
FDNS	00NR_G15_068	3	25SP	G15_068	FROM->TO	TUCO INTERCHANGE (ENRCO 136401) 230/115/13.2KV TRANSFORMER CKT 1	250	288	0.06884	127.6589	TUCO INTERCHANGE (ENRCO 136401) 230/115/13.2KV TRANSFORMER CKT 2
FDNS	00NR_G15_068	3	25SP	G15_068	FROM->TO	TUCO INTERCHANGE (ENRCO 136401) 230/115/13.2KV TRANSFORMER CKT 1	250	288	0.06884	127.6589	TUCO INTERCHANGE (ENRCO 136401) 230/115/13.2KV TRANSFORMER CKT 2
FDNS	00NR_G15_068	3	25SP	G15_068	FROM->TO	TUCO INTERCHANGE (ENRCO 136401) 230/115/13.2KV TRANSFORMER CKT 1	250	288	0.06884	118.833	TUCO INTERCHANGE (ENRCO 136401) 230/115/13.2KV TRANSFORMER CKT 2
FDNS	00NR_G15_068	3	25SP	G15_068	FROM->TO	TUCO INTERCHANGE (ENRCO 136401) 230/115/13.2KV TRANSFORMER CKT 1	250	288	0.06884	118.833	TUCO INTERCHANGE (ENRCO 136401) 230/115/13.2KV TRANSFORMER CKT 2
FDNS	00NR_G15_068	3	25SP	G15_068	FROM->TO	TUCO INTERCHANGE (ENRCO 136401) 230/115/13.2KV TRANSFORMER CKT 2	250	288	0.06884	127.6588	TUCO INTERCHANGE (ENRCO 136401) 230/115/13.2KV TRANSFORMER CKT 1
FDNS	00NR_G15_068	3	25SP	G15_068	FROM->TO	TUCO INTERCHANGE (ENRCO 136401) 230/115/13.2KV TRANSFORMER CKT 2	250	288	0.06884	127.6588	TUCO INTERCHANGE (ENRCO 136401) 230/115/13.2KV TRANSFORMER CKT 1
FDNS	00NR_G15_068	3	25SP	G15_068	FROM->TO	TUCO INTERCHANGE (ENRCO 136401) 230/115/13.2KV TRANSFORMER CKT 2	250	288	0.06884	118.8332	TUCO INTERCHANGE (ENRCO 136401) 230/115/13.2KV TRANSFORMER CKT 1
FDNS	00NR_G15_068	3	25SP	G15_068	FROM->TO	TUCO INTERCHANGE (ENRCO 136401) 230/115/13.2KV TRANSFORMER CKT 2	250	288	0.06884	118.8332	TUCO INTERCHANGE (ENRCO 136401) 230/115/13.2KV TRANSFORMER CKT 1
FDNS	06NR_G15_068	3	20L	G15_068	FROM->TO	TUCO_2 345.00 (TUCO_2 XFMR) 345/230/13.2KV TRANSFORMER CKT 1	560	560	0.07525	102.1396	TUCO INTERCHANGE - TUCO_2 345.00 345KV CKT 1
FDNS	06NR_G15_068	3	20L	G15_068	FROM->TO	TUCO_2 345.00 (TUCO_2 XFMR) 345/230/13.2KV TRANSFORMER CKT 1	560	560	0.07525	101.7818	TUCO INTERCHANGE - TUCO_2 345.00 345KV CKT 1
FDNS	08ALL_G15_069	0	17SP	G15_069	FROM->TO	SWISSVALE - WEST GARDNER 345KV CKT 1	717	717	0.24792	100.8136	HOYT - STRANGER CREEK 345KV CKT 1
FDNS	08ALL_G15_069	0	17SP	G15_069	FROM->TO	SWISSVALE - WEST GARDNER 345KV CKT 1	717	717	0.23252	99.6	HOYT - JEFFREY ENERGY CENTER 345KV CKT 1
FDNS	07ALL_G15_071	0	25SP	G15_071	TO->FROM	STATELINE INTERCHANGE - STLN-DEMARC6 230KV CKT 1	348.58	381.24	0.41359	120.1764	CHISHOLM7 345.00 - GRACEMONT 345KV CKT 1
FDNS	07ALL_G15_071	0	25SP	G15_071	TO->FROM	STATELINE INTERCHANGE - STLN-DEMARC6 230KV CKT 1	348.58	381.24	0.16683	116.0245	BASE CASE
FDNS	07ALL_G15_071	0	25SP	G15_071	TO->FROM	STATELINE INTERCHANGE - STLN-DEMARC6 230KV CKT 1	348.58	381.24	0.19932	111.6495	CIMARRON - MINCO 345KV CKT 1
FDNS	07ALL_G15_071	0	25SP	G15_071	TO->FROM	STATELINE INTERCHANGE - STLN-DEMARC6 230KV CKT 1	348.58	381.24	0.22331	111.1969	CHISHOLM6 230.00 - ELK CITY 230KV 230KV CKT 1
FDNS	07ALL_G15_071	0	25SP	G15_071	TO->FROM	STATELINE INTERCHANGE - STLN-DEMARC6 230KV CKT 1	348.58	381.24	0.22331	111.1896	ELK CITY 230KV (ELKCTY-6) 230/138/13.8KV TRANSFORMER CKT 1
FDNS	07ALL_G15_071	0	25SP	G15_071	TO->FROM	STATELINE INTERCHANGE - STLN-DEMARC6 230KV CKT 1	348.58	381.24	0.22331	111.1896	ELK CITY 230KV (ELKCTY-6) 230/138/13.8KV TRANSFORMER CKT 1
FDNS	07ALL_G15_071	0	25SP	G15_071	TO->FROM	STATELINE INTERCHANGE - STLN-DEMARC6 230KV CKT 1	348.58	381.24	0.19932	109.1894	GRACEMONT - MINCO 345KV CKT 1
FDNS	07ALL_G15_071	0	25SP	G15_071	TO->FROM	STLN-DEMARC6 - SWEETWATER 230KV CKT 1	353	353	0.41359	129.7774	CHISHOLM7 345.00 - GRACEMONT 345KV CKT 1
FDNS	07ALL_G15_071	0	25SP	G15_071	TO->FROM	STLN-DEMARC6 - SWEETWATER 230KV CKT 1	353	353	0.19932	120.5805	CIMARRON - MINCO 345KV CKT 1
FDNS	07ALL_G15_071	0	25SP	G15_071	TO->FROM	STLN-DEMARC6 - SWEETWATER 230KV CKT 1	353	353	0.22331	120.0877	CHISHOLM6 230.00 - ELK CITY 230KV 230KV CKT 1
FDNS	07ALL_G15_071	0	25SP	G15_071	TO->FROM	STLN-DEMARC6 - SWEETWATER 230KV CKT 1	353	353	0.22331	120.0796	ELK CITY 230KV (ELKCTY-6) 230/138/13.8KV TRANSFORMER CKT 1
FDNS	07ALL_G15_071	0	25SP	G15_071	TO->FROM	STLN-DEMARC6 - SWEETWATER 230KV CKT 1	353	353	0.22331	120.0796	ELK CITY 230KV (ELKCTY-6) 230/138/13.8KV TRANSFORMER CKT 1
FDNS	07ALL_G15_071	0	25SP	G15_071	TO->FROM	STLN-DEMARC6 - SWEETWATER 230KV CKT 1	353	353	0.19932	117.9243	GRACEMONT - MINCO 345KV CKT 1
FDNS	07ALL_G15_071	0	25SP	G15_071	TO->FROM	STLN-DEMARC6 - SWEETWATER 230KV CKT 1	353	353	0.16683	114.5717	BASE CASE
FDNS	07ALL_G15_071	2	25SP	G15_071	TO->FROM	STATELINE INTERCHANGE - STLN-DEMARC6 230KV CKT 1	348.58	381.24	0.41394	120.2835	CHISHOLM7 345.00 - GRACEMONT 345KV CKT 1
FDNS	07ALL_G15_071	2	25SP	G15_071	TO->FROM	STATELINE INTERCHANGE - STLN-DEMARC6 230KV CKT 1	348.58	381.24	0.16702	116.1511	BASE CASE
FDNS	07ALL_G15_071	2	25SP	G15_071	TO->FROM	STATELINE INTERCHANGE - STLN-DEMARC6 230KV CKT 1	348.58	381.24	0.19954	111.7691	CIMARRON - MINCO 345KV CKT 1
FDNS	07ALL_G15_071	2	25SP	G15_071	TO->FROM	STATELINE INTERCHANGE - STLN-DEMARC6 230KV CKT 1	348.58	381.24	0.22354	111.2929	CHISHOLM6 230.00 - ELK CITY 230KV 230KV CKT 1

SOLUTION	GROUP	SCENARIO	SEASON	SOURCE	DIRECTION	MONITORED ELEMENT	RATEA (MVA)	RATEB(MVA)	TDF	TC%LOADING (% MVA)	CONTINGENCY
FDNS	07ALL_G15_071	2	25SP	G15_071	TO->FROM	STATELINE INTERCHANGE - STLN-DEMARC6 230KV CKT 1	348.58	381.24	0.22354	111.2857	ELK CITY 230KV (ELKCTY-6) 230/138/13.8KV TRANSFORMER CKT 1
FDNS	07ALL_G15_071	2	25SP	G15_071	TO->FROM	STATELINE INTERCHANGE - STLN-DEMARC6 230KV CKT 1	348.58	381.24	0.22354	111.2857	ELK CITY 230KV (ELKCTY-6) 230/138/13.8KV TRANSFORMER CKT 1
FDNS	07ALL_G15_071	2	25SP	G15_071	TO->FROM	STATELINE INTERCHANGE - STLN-DEMARC6 230KV CKT 1	348.58	381.24	0.22354	111.2857	ELK CITY 230KV (ELKCTY-6) 230/138/13.8KV TRANSFORMER CKT 1
FDNS	07ALL_G15_071	2	25SP	G15_071	TO->FROM	STATELINE INTERCHANGE - STLN-DEMARC6 230KV CKT 1	348.58	381.24	0.19954	109.3038	GRACEMONT - MINCO 345KV CKT 1
FDNS	04ALL_G15_072	0	20L	G15_072	FROM->TO	SMOKYHL6 230.00 - SUMMIT 230KV CKT 1	330	350	0.30137	101.4512	POST ROCK (POSTROCK T1) 345/230/13.8KV TRANSFORMER CKT 1
FDNS	08ALL_G15_073	0	17SP	G15_073	FROM->TO	EMPORIA ENERGY CENTER - SWISSVALE 345KV CKT 1	717	717	0.4034	101.1128	HOYT - JEFFREY ENERGY CENTER 345KV CKT 1
FDNS	08ALL_G15_073	0	17SP	G15_073	FROM->TO	SWISSVALE - WEST GARDNER 345KV CKT 1	717	717	0.34322	100	HOYT - STRANGER CREEK 345KV CKT 1
FDNS	00NR_G15_075	0	25SP	G15_075	TO->FROM	AMOCO SWITCHING STATION - SUNDOWN INTERCHANGE 230KV CKT 1	437	437	0.13684	101.5007	TUCO INTERCHANGE - YOAKUM_345 345.00 345KV CKT 1
FDNS	00NR_G15_075	0	25SP	G15_075	FROM->TO	CARLISLE INTERCHANGE - LP-DOUD_TP 3115.00 115KV CKT 1	159	160	0.18112	124.3664	WOLFFORTH INTERCHANGE (WH 7001668) 230/115/13.2KV TRANSFORMER CKT 1
FDNS	00NR_G15_075	0	25SP	G15_075	FROM->TO	CARLISLE INTERCHANGE - LP-DOUD_TP 3115.00 115KV CKT 1	159	160	0.18112	124.3664	WOLFFORTH INTERCHANGE (WH 7001668) 230/115/13.2KV TRANSFORMER CKT 1
FDNS	00NR_G15_075	0	16WP	G15_075	FROM->TO	CARLISLE INTERCHANGE - LP-DOUD_TP 3115.00 115KV CKT 1	165	177	0.32597	119.1516	LUBBOCK SOUTH INTERCHANGE - WOLFFORTH INTERCHANGE 230KV CKT 1
FDNS	00NR_G15_075	0	16WP	G15_075	FROM->TO	CARLISLE INTERCHANGE - LP-DOUD_TP 3115.00 115KV CKT 1	165	177	0.32597	119.1516	LUBBOCK SOUTH INTERCHANGE - WOLFFORTH INTERCHANGE 230KV CKT 1
FDNS	00NR_G15_075	0	25SP	G15_075	FROM->TO	CARLISLE INTERCHANGE - LP-DOUD_TP 3115.00 115KV CKT 1	159	160	0.28683	109.1924	TUCO INTERCHANGE - YOAKUM_345 345.00 345KV CKT 1
FDNS	00NR_G15_075	0	17SP	G15_075	FROM->TO	CARLISLE INTERCHANGE - LP-DOUD_TP 3115.00 115KV CKT 1	159	160	0.19563	103.2052	WOLFFORTH INTERCHANGE (WH 7001668) 230/115/13.2KV TRANSFORMER CKT 1
FDNS	00NR_G15_075	0	17SP	G15_075	FROM->TO	CARLISLE INTERCHANGE - LP-DOUD_TP 3115.00 115KV CKT 1	159	160	0.19563	103.2052	WOLFFORTH INTERCHANGE (WH 7001668) 230/115/13.2KV TRANSFORMER CKT 1
FDNS	06NR_G15_075	0	20L	G15_075	FROM->TO	CARLISLE INTERCHANGE (WH RLP38371) 115/69/13.2KV TRANSFORMER CKT 1	44.37	44.4	1	111.6046	BASE CASE
FDNS	06ALL_G15_075	0	20L	G15_075	FROM->TO	CARLISLE INTERCHANGE (WH RLP38371) 115/69/13.2KV TRANSFORMER CKT 1	44.37	44.4	1	111.5109	BASE CASE
FDNS	06NR_G15_075	0	20L	G15_075	FROM->TO	CARLISLE INTERCHANGE (WH RLP38371) 115/69/13.2KV TRANSFORMER CKT 1	44.37	44.4	1	109.7353	BASE CASE
FDNS	06ALL_G15_075	0	20L	G15_075	FROM->TO	CARLISLE INTERCHANGE (WH RLP38371) 115/69/13.2KV TRANSFORMER CKT 1	44.37	44.4	1	109.6995	BASE CASE
FDNS	00NR_G15_075	0	16WP	G15_075	FROM->TO	CARLISLE INTERCHANGE (WH RLP38371) 115/69/13.2KV TRANSFORMER CKT 1	44.37	44.4	1	108.2977	BASE CASE
FDNS	06ALL_G15_075	0	16WP	G15_075	FROM->TO	CARLISLE INTERCHANGE (WH RLP38371) 115/69/13.2KV TRANSFORMER CKT 1	44.37	44.4	1	108.1248	BASE CASE
FDNS	06ALL_G15_075	0	20WP	G15_075	FROM->TO	CARLISLE INTERCHANGE (WH RLP38371) 115/69/13.2KV TRANSFORMER CKT 1	44.37	44.4	1	107.3671	BASE CASE
FDNS	00NR_G15_075	0	20WP	G15_075	FROM->TO	CARLISLE INTERCHANGE (WH RLP38371) 115/69/13.2KV TRANSFORMER CKT 1	44.37	44.4	1	107.2212	BASE CASE
FDNS	00NR_G15_075	0	16WP	G15_075	FROM->TO	CARLISLE INTERCHANGE (WH RLP38371) 115/69/13.2KV TRANSFORMER CKT 1	44.37	44.4	1	106.3923	BASE CASE
FDNS	06ALL_G15_075	0	16WP	G15_075	FROM->TO	CARLISLE INTERCHANGE (WH RLP38371) 115/69/13.2KV TRANSFORMER CKT 1	44.37	44.4	1	106.3165	BASE CASE
FDNS	06ALL_G15_075	0	20WP	G15_075	FROM->TO	CARLISLE INTERCHANGE (WH RLP38371) 115/69/13.2KV TRANSFORMER CKT 1	44.37	44.4	1	105.5968	BASE CASE
FDNS	00NR_G15_075	0	20WP	G15_075	FROM->TO	CARLISLE INTERCHANGE (WH RLP38371) 115/69/13.2KV TRANSFORMER CKT 1	44.37	44.4	1	105.5512	BASE CASE
FDNS	06NR_G15_075	0	17G	G15_075	FROM->TO	CARLISLE INTERCHANGE (WH RLP38371) 115/69/13.2KV TRANSFORMER CKT 1	44.37	44.4	1	103.9141	BASE CASE
FDNS	06ALL_G15_075	0	17G	G15_075	FROM->TO	CARLISLE INTERCHANGE (WH RLP38371) 115/69/13.2KV TRANSFORMER CKT 1	44.37	44.4	1	103.7613	BASE CASE
FDNS	06NR_G15_075	0	17G	G15_075	FROM->TO	CARLISLE INTERCHANGE (WH RLP38371) 115/69/13.2KV TRANSFORMER CKT 1	44.37	44.4	1	102.1944	BASE CASE
FDNS	06ALL_G15_075	0	17G	G15_075	FROM->TO	CARLISLE INTERCHANGE (WH RLP38371) 115/69/13.2KV TRANSFORMER CKT 1	44.37	44.4	1	102.1263	BASE CASE
FDNS	00NR_G15_075	0	17SP	G15_075	FROM->TO	CARLISLE INTERCHANGE (WH RLP38371) 115/69/13.2KV TRANSFORMER CKT 1	44.37	44.4	1	99.9	BASE CASE
FDNS	06ALL_G15_075	0	17SP	G15_075	FROM->TO	CARLISLE INTERCHANGE (WH RLP38371) 115/69/13.2KV TRANSFORMER CKT 1	44.37	44.4	1	99.7	BASE CASE
FDNS	00NR_G15_075	0	16WP	G15_075	FROM->TO	LP-DOUD_TP 3115.00 - SP-WOLF_TP 3115.00 115KV CKT 1	165	180	0.32597	111.4776	LUBBOCK SOUTH INTERCHANGE - WOLFFORTH INTERCHANGE 230KV CKT 1
FDNS	00NR_G15_075	0	16WP	G15_075	FROM->TO	LP-DOUD_TP 3115.00 - SP-WOLF_TP 3115.00 115KV CKT 1	165	180	0.32597	111.4776	LUBBOCK SOUTH INTERCHANGE - WOLFFORTH INTERCHANGE 230KV CKT 1
FDNS	00NR_G15_075	0	25SP	G15_075	FROM->TO	LP-DOUD_TP 3115.00 - SP-WOLF_TP 3115.00 115KV CKT 1	159	175	0.18112	99.5	WOLFFORTH INTERCHANGE (WH 7001668) 230/115/13.2KV TRANSFORMER CKT 1
FDNS	00NR_G15_075	0	25SP	G15_075	FROM->TO	LP-DOUD_TP 3115.00 - SP-WOLF_TP 3115.00 115KV CKT 1	159	175	0.18112	99.5	WOLFFORTH INTERCHANGE (WH 7001668) 230/115/13.2KV TRANSFORMER CKT 1
FDNS	00NR_G15_075	0	16WP	G15_075	FROM->TO	SP-WOLF_TP 3115.00 - YUMA INTERCHANGE 115KV CKT 1	165	180	0.32597	105.1556	LUBBOCK SOUTH INTERCHANGE - WOLFFORTH INTERCHANGE 230KV CKT 1
FDNS	00NR_G15_075	0	16WP	G15_075	FROM->TO	SP-WOLF_TP 3115.00 - YUMA INTERCHANGE 115KV CKT 1	165	180	0.32597	105.1556	LUBBOCK SOUTH INTERCHANGE - WOLFFORTH INTERCHANGE 230KV CKT 1
FDNS	00NR_G15_075	0	25SP	G15_075	TO->FROM	SUNDOWN INTERCHANGE - WOLFFORTH INTERCHANGE 230KV CKT 1	318.7	350.57	0.23567	104.8408	TUCO INTERCHANGE - YOAKUM_345 345.00 345KV CKT 1
FDNS	00NR_G15_075	0	25SP	G15_075	FROM->TO	SUNDOWN INTERCHANGE (WH XDS70381) 230/115/13.8KV TRANSFORMER CKT 1	187	187	0.03812	120.5859	AMOCO SWITCHING STATION - SUNDOWN INTERCHANGE 230KV CKT 1
FDNS	00NR_G15_075	0	25SP	G15_075	FROM->TO	SUNDOWN INTERCHANGE (WH XDS70381) 230/115/13.8KV TRANSFORMER CKT 1	187	187	0.03812	120.5859	AMOCO SWITCHING STATION - SUNDOWN INTERCHANGE 230KV CKT 1
FDNS	00NR_G15_075	0	25SP	G15_075	FROM->TO	SUNDOWN INTERCHANGE (WH XDS70381) 230/115/13.8KV TRANSFORMER CKT 1	187	187	0.03812	116.3114	AMOCO SWITCHING STATION - SUNDOWN INTERCHANGE 230KV CKT 1
FDNS	00NR_G15_075	0	25SP	G15_075	FROM->TO	SUNDOWN INTERCHANGE (WH XDS70381) 230/115/13.8KV TRANSFORMER CKT 1	187	187	0.03812	116.3114	AMOCO SWITCHING STATION - SUNDOWN INTERCHANGE 230KV CKT 1
FDNS	00NR_G15_075	0	17SP	G15_075	FROM->TO	SUNDOWN INTERCHANGE (WH XDS70381) 230/115/13.8KV TRANSFORMER CKT 1	187	187	0.06262	109.4288	AMOCO SWITCHING STATION - SUNDOWN INTERCHANGE 230KV CKT 1
FDNS	00NR_G15_075	0	17SP	G15_075	FROM->TO	SUNDOWN INTERCHANGE (WH XDS70381) 230/115/13.8KV TRANSFORMER CKT 1	187	187	0.06262	109.4288	AMOCO SWITCHING STATION - SUNDOWN INTERCHANGE 230KV CKT 1
FDNS	00NR_G15_075	0	17SP	G15_075	FROM->TO	SUNDOWN INTERCHANGE (WH XDS70381) 230/115/13.8KV TRANSFORMER CKT 1	187	187	0.06262	106.7382	AMOCO SWITCHING STATION - SUNDOWN INTERCHANGE 230KV CKT 1
FDNS	00NR_G15_075	0	17SP	G15_075	FROM->TO	SUNDOWN INTERCHANGE (WH XDS70381) 230/115/13.8KV TRANSFORMER CKT 1	187	187	0.06262	106.7382	AMOCO SWITCHING STATION - SUNDOWN INTERCHANGE 230KV CKT 1
FDNS	00NR_G15_075	0	25SP	G15_075	FROM->TO	SUNDOWN INTERCHANGE (WH XDS70381) 230/115/13.8KV TRANSFORMER CKT 1	187	187	0.05542	104.2747	TERRY COUNTY INTERCHANGE - WOLFFORTH INTERCHANGE 115KV CKT 1
FDNS	00NR_G15_075	0	25SP	G15_075	FROM->TO	SUNDOWN INTERCHANGE (WH XDS70381) 230/115/13.8KV TRANSFORMER CKT 1	187	187	0.05542	104.2747	TERRY COUNTY INTERCHANGE - WOLFFORTH INTERCHANGE 115KV CKT 1
FDNS	00NR_G15_075	0	25SP	G15_075	FROM->TO	SUNDOWN INTERCHANGE (WH XDS70381) 230/115/13.8KV TRANSFORMER CKT 1	187	187	0.05542	100.6715	TERRY COUNTY INTERCHANGE - WOLFFORTH INTERCHANGE 115KV CKT 1
FDNS	00NR_G15_075	0	25SP	G15_075	FROM->TO	SUNDOWN INTERCHANGE (WH XDS70381) 230/115/13.8KV TRANSFORMER CKT 1	187	187	0.05542	100.6715	TERRY COUNTY INTERCHANGE - WOLFFORTH INTERCHANGE 115KV CKT 1
FDNS	00NR_G15_075	0	25SP	G15_075	TO->FROM	TERRY COUNTY INTERCHANGE - WOLFFORTH INTERCHANGE 115KV CKT 1	119.51	153.97	0.15004	116.1116	TUCO INTERCHANGE - YOAKUM_345 345.00 345KV CKT 1
FDNS	00NR_G15_075	0	25SP	G15_075	FROM->TO	WOLFFORTH INTERCHANGE (WH 7001668) 230/115/13.2KV TRANSFORMER CKT 1	168	168	0.05545	124.1332	CARLISLE INTERCHANGE - LP-DOUD_TP 3115.00 115KV CKT 1
FDNS	00NR_G15_075	0	25SP	G15_075	FROM->TO	WOLFFORTH INTERCHANGE (WH 7001668) 230/115/13.2KV TRANSFORMER CKT 1	168	168	0.05545	117.8545	CARLISLE INTERCHANGE - LP-DOUD_TP 3115.00 115KV CKT 1
FDNS	00NR_G15_075	0	25SP	G15_075	FROM->TO	WOLFFORTH INTERCHANGE (WH 7001668) 230/115/13.2KV TRANSFORMER CKT 1	168	168	0.05545	113.37	LP-DOUD_TP 3115.00 - SP-WOLF_TP 3115.00 115KV CKT 1
FDNS	00NR_G15_075	0	17SP	G15_075	FROM->TO	WOLFFORTH INTERCHANGE (WH 7001668) 230/115/13.2KV TRANSFORMER CKT 1	120	154	0.07282	111.1749	CARLISLE INTERCHANGE - LP-DOUD_TP 3115.00 115KV CKT 1
FDNS	00NR_G15_075	0	25SP	G15_075	FROM->TO	WOLFFORTH INTERCHANGE (WH 7001668) 230/115/13.2KV TRANSFORMER CKT 1	168	168	0.05545	107.9831	LP-DOUD_TP 3115.00 - SP-WOLF_TP 3115.00 115KV CKT 1
FDNS	00NR_G15_075	0	17SP	G15_075	FROM->TO	WOLFFORTH INTERCHANGE (WH 7001668) 230/115/13.2KV TRANSFORMER CKT 1	120	154	0.07282	107.6863	CARLISLE INTERCHANGE - LP-DOUD_TP 3115.00 115KV CKT 1
FDNS	00NR_G15_075	0	25SP	G15_075	FROM->TO	WOLFFORTH INTERCHANGE (WH 7001668) 230/115/13.2KV TRANSFORMER CKT 1	168	168	0.05545	105.1349	P12:115:SPS:T71.1.CRLSLE.YUMA
FDNS	00NR_G15_075	0	25SP	G15_075	FROM->TO	WOLFFORTH INTERCHANGE (WH 7001668) 230/115/13.2KV TRANSFORMER CKT 1	168	168	0.05545	103.5344	SP-WOLF_TP 3115.00 - YUMA INTERCHANGE 115KV CKT 1
FDNS	00NR_G15_075	0	25SP	G15_075	FROM->TO	WOLFFORTH INTERCHANGE (WH 7001668) 230/115/13.2KV TRANSFORMER CKT 1	168	168	0.05545	100.5977	P12:115:SPS:T71.1.CRLSLE.YUMA
FDNS	00NR_G15_075	0	20SP	G15_075	FROM->TO	WOLFFORTH INTERCHANGE (WH 7001668) 230/115/13.2KV TRANSFORMER CKT 1	120	154	0.056	100.3617	CARLISLE INTERCHANGE - LP-DOUD_TP 3115.00 115KV CKT 1
FDNS	00NR_G15_075	0	17SP	G15_075	FROM->TO	WOLFFORTH INTERCHANGE (WH 7001668) 230/115/13.2KV TRANSFORMER CKT 1	120	154	0.07282	100.3602	LP-DOUD_TP 3115.00 - SP-WOLF_TP 3115.00 115KV CKT 1
FDNS	00NR_G15_075	2	25SP	G15_075	TO->FROM	AMOCO SWITCHING STATION - SUNDOWN INTERCHANGE 230KV CKT 1	437	437	0.13684	101.5121	TUCO INTERCHANGE - YOAKUM_345 345.00 345KV CKT 1
FDNS	00NR_G15_075	2	25SP	G15_075	FROM->TO	CARLISLE INTERCHANGE - LP-DOUD_TP 3115.00 115KV CKT 1	159	160	0.18112	124.3672	WOLFFORTH INTERCHANGE (WH 7001668) 230/115/13.2KV TRANSFORMER CKT 1
FDNS	00NR_G15_075	2	25SP	G15_075	FROM->TO	CARLISLE INTERCHANGE - LP-DOUD_TP 3115.00 115KV CKT 1	159	160	0.18112	124.3672	WOLFFORTH INTERCHANGE (WH 7001668) 230/115/13.2KV TRANSFORMER CKT 1
FDNS	00NR_G15_075	2	16WP	G15_075	FROM->TO	CARLISLE INTERCHANGE - LP-DOUD_TP 3115.00 115KV CKT 1	165	177	0.32597	119.2697	LUBBOCK SOUTH INTERCHANGE - WOLFFORTH INTERCHANGE 230KV CKT 1
FDNS	00NR_G15_075	2	16WP	G15_075	FROM->TO	CARLISLE INTERCHANGE - LP-DOUD_TP 3115.00 115KV CKT 1	165	177	0.32597	119.2697	LUBBOCK SOUTH INTERCHANGE - WOLFFORTH INTERCHANGE 230KV CKT 1
FDNS	00NR_G15_075	2	25SP	G15_075	FROM->TO	CARLISLE INTERCHANGE - LP-DOUD_TP 3115.00 115KV CKT 1	159	160	0.28683	109.28	TUCO INTERCHANGE - YOAKUM_345 345.00 345KV CKT 1
FDNS	00NR_G15_075	2	17SP	G15_075	FROM->TO	CARLISLE INTERCHANGE - LP-DOUD_TP 3115.00 115KV CKT 1	159	160	0.19563	103.2107	WOLFFORTH INTERCHANGE (WH 7001668) 230/115/13.2KV TRANSFORMER CKT 1
FDNS	00NR_G15_075	2	17SP	G15_075	FROM->TO	CARLISLE INTERCHANGE - LP-DOUD_TP 3115.00 115KV CKT 1	159	160	0.19563	103.2107	WOLFFORTH INTERCHANGE (WH 7001668) 230/115/13.2KV TRANSFORMER CKT 1
FDNS	00NR_G15_075	2	16WP	G15_075	FROM->TO	LP-DOUD_TP 3115.00 - SP-WOLF_TP 3115.00 115KV CKT 1	165	180	0.32597	111.5891	LUBBOCK SOUTH INTERCHANGE - WOLFFORTH INTERCHANGE 230KV CKT 1

SOLUTION	GROUP	SCENARIO	SEASON	SOURCE	DIRECTION	MONITORED ELEMENT	RATEA (MVA)	RATEB(MVA)	TDF	TC%LOADING (% MVA)	CONTINGENCY
FDNS	00NR_G15_075	2	16WP	G15_075	FROM->TO	LP-DOUD_TP 3115.00 - SP-WOLF_TP 3115.00 115KV CKT 1	165	180	0.32597	111.5891	LUBBOCK SOUTH INTERCHANGE - WOLFFORTH INTERCHANGE 230KV CKT 1
FDNS	00NR_G15_075	2	16WP	G15_075	FROM->TO	SP-WOLF_TP 3115.00 - YUMA INTERCHANGE 115KV CKT 1	165	180	0.32597	105.2701	LUBBOCK SOUTH INTERCHANGE - WOLFFORTH INTERCHANGE 230KV CKT 1
FDNS	00NR_G15_075	2	16WP	G15_075	FROM->TO	SP-WOLF_TP 3115.00 - YUMA INTERCHANGE 115KV CKT 1	165	180	0.32597	105.2701	LUBBOCK SOUTH INTERCHANGE - WOLFFORTH INTERCHANGE 230KV CKT 1
FDNS	00NR_G15_075	2	25SP	G15_075	TO->FROM	SUNDOWN INTERCHANGE - WOLFFORTH INTERCHANGE 230KV CKT 1	318.7	350.57	0.23567	104.7996	TUCO INTERCHANGE - YOAKUM_345 345.00 345KV CKT 1
FDNS	00NR_G15_075	2	25SP	G15_075	FROM->TO	SUNDOWN INTERCHANGE (WH XDS70381) 230/115/13.8KV TRANSFORMER CKT 1	187	187	0.03812	120.4612	AMOCO SWITCHING STATION - SUNDOWN INTERCHANGE 230KV CKT 1
FDNS	00NR_G15_075	2	25SP	G15_075	FROM->TO	SUNDOWN INTERCHANGE (WH XDS70381) 230/115/13.8KV TRANSFORMER CKT 1	187	187	0.03812	120.4612	AMOCO SWITCHING STATION - SUNDOWN INTERCHANGE 230KV CKT 1
FDNS	00NR_G15_075	2	25SP	G15_075	FROM->TO	SUNDOWN INTERCHANGE (WH XDS70381) 230/115/13.8KV TRANSFORMER CKT 1	187	187	0.03812	116.2219	AMOCO SWITCHING STATION - SUNDOWN INTERCHANGE 230KV CKT 1
FDNS	00NR_G15_075	2	25SP	G15_075	FROM->TO	SUNDOWN INTERCHANGE (WH XDS70381) 230/115/13.8KV TRANSFORMER CKT 1	187	187	0.03812	116.2219	AMOCO SWITCHING STATION - SUNDOWN INTERCHANGE 230KV CKT 1
FDNS	00NR_G15_075	2	17SP	G15_075	FROM->TO	SUNDOWN INTERCHANGE (WH XDS70381) 230/115/13.8KV TRANSFORMER CKT 1	187	187	0.06262	109.4511	AMOCO SWITCHING STATION - SUNDOWN INTERCHANGE 230KV CKT 1
FDNS	00NR_G15_075	2	17SP	G15_075	FROM->TO	SUNDOWN INTERCHANGE (WH XDS70381) 230/115/13.8KV TRANSFORMER CKT 1	187	187	0.06262	109.4511	AMOCO SWITCHING STATION - SUNDOWN INTERCHANGE 230KV CKT 1
FDNS	00NR_G15_075	2	17SP	G15_075	FROM->TO	SUNDOWN INTERCHANGE (WH XDS70381) 230/115/13.8KV TRANSFORMER CKT 1	187	187	0.06262	106.7663	AMOCO SWITCHING STATION - SUNDOWN INTERCHANGE 230KV CKT 1
FDNS	00NR_G15_075	2	17SP	G15_075	FROM->TO	SUNDOWN INTERCHANGE (WH XDS70381) 230/115/13.8KV TRANSFORMER CKT 1	187	187	0.06262	106.7663	AMOCO SWITCHING STATION - SUNDOWN INTERCHANGE 230KV CKT 1
FDNS	00NR_G15_075	2	25SP	G15_075	FROM->TO	SUNDOWN INTERCHANGE (WH XDS70381) 230/115/13.8KV TRANSFORMER CKT 1	187	187	0.05542	104.1785	TERRY COUNTY INTERCHANGE - WOLFFORTH INTERCHANGE 115KV CKT 1
FDNS	00NR_G15_075	2	25SP	G15_075	FROM->TO	SUNDOWN INTERCHANGE (WH XDS70381) 230/115/13.8KV TRANSFORMER CKT 1	187	187	0.05542	104.1785	TERRY COUNTY INTERCHANGE - WOLFFORTH INTERCHANGE 115KV CKT 1
FDNS	00NR_G15_075	2	25SP	G15_075	FROM->TO	SUNDOWN INTERCHANGE (WH XDS70381) 230/115/13.8KV TRANSFORMER CKT 1	187	187	0.05542	100.5981	TERRY COUNTY INTERCHANGE - WOLFFORTH INTERCHANGE 115KV CKT 1
FDNS	00NR_G15_075	2	25SP	G15_075	FROM->TO	SUNDOWN INTERCHANGE (WH XDS70381) 230/115/13.8KV TRANSFORMER CKT 1	187	187	0.05542	100.5981	TERRY COUNTY INTERCHANGE - WOLFFORTH INTERCHANGE 115KV CKT 1
FDNS	00NR_G15_075	2	25SP	G15_075	TO->FROM	TERRY COUNTY INTERCHANGE - WOLFFORTH INTERCHANGE 115KV CKT 1	119.51	153.97	0.15004	116.1355	TUCO INTERCHANGE - YOAKUM_345 345.00 345KV CKT 1
FDNS	00NR_G15_075	2	25SP	G15_075	FROM->TO	WOLFFORTH INTERCHANGE (WH 7001668) 230/115/13.2KV TRANSFORMER CKT 1	168	168	0.05545	124.6145	CARLISLE INTERCHANGE - LP-DOUD_TP 3115.00 115KV CKT 1
FDNS	00NR_G15_075	2	25SP	G15_075	FROM->TO	WOLFFORTH INTERCHANGE (WH 7001668) 230/115/13.2KV TRANSFORMER CKT 1	168	168	0.05545	118.101	CARLISLE INTERCHANGE - LP-DOUD_TP 3115.00 115KV CKT 1
FDNS	00NR_G15_075	2	25SP	G15_075	FROM->TO	WOLFFORTH INTERCHANGE (WH 7001668) 230/115/13.2KV TRANSFORMER CKT 1	168	168	0.05545	113.2062	LP-DOUD_TP 3115.00 - SP-WOLF_TP 3115.00 115KV CKT 1
FDNS	00NR_G15_075	2	17SP	G15_075	FROM->TO	WOLFFORTH INTERCHANGE (WH 7001668) 230/115/13.2KV TRANSFORMER CKT 1	120	154	0.07282	111.1231	CARLISLE INTERCHANGE - LP-DOUD_TP 3115.00 115KV CKT 1
FDNS	00NR_G15_075	2	25SP	G15_075	FROM->TO	WOLFFORTH INTERCHANGE (WH 7001668) 230/115/13.2KV TRANSFORMER CKT 1	168	168	0.05545	107.8528	LP-DOUD_TP 3115.00 - SP-WOLF_TP 3115.00 115KV CKT 1
FDNS	00NR_G15_075	2	17SP	G15_075	FROM->TO	WOLFFORTH INTERCHANGE (WH 7001668) 230/115/13.2KV TRANSFORMER CKT 1	120	154	0.07282	107.645	CARLISLE INTERCHANGE - LP-DOUD_TP 3115.00 115KV CKT 1
FDNS	00NR_G15_075	2	25SP	G15_075	FROM->TO	WOLFFORTH INTERCHANGE (WH 7001668) 230/115/13.2KV TRANSFORMER CKT 1	168	168	0.05545	104.9728	P12:115:SPS:T71.1.CRLSLE.YUMA
FDNS	00NR_G15_075	2	25SP	G15_075	FROM->TO	WOLFFORTH INTERCHANGE (WH 7001668) 230/115/13.2KV TRANSFORMER CKT 1	168	168	0.05545	103.3759	SP-WOLF_TP 3115.00 - YUMA INTERCHANGE 115KV CKT 1
FDNS	00NR_G15_075	2	25SP	G15_075	FROM->TO	WOLFFORTH INTERCHANGE (WH 7001668) 230/115/13.2KV TRANSFORMER CKT 1	168	168	0.05545	100.4686	P12:115:SPS:T71.1.CRLSLE.YUMA
FDNS	00NR_G15_075	2	17SP	G15_075	FROM->TO	WOLFFORTH INTERCHANGE (WH 7001668) 230/115/13.2KV TRANSFORMER CKT 1	120	154	0.07282	100.3096	LP-DOUD_TP 3115.00 - SP-WOLF_TP 3115.00 115KV CKT 1
FDNS	00NR_G15_075	2	20SP	G15_075	FROM->TO	WOLFFORTH INTERCHANGE (WH 7001668) 230/115/13.2KV TRANSFORMER CKT 1	120	154	0.056	100.3013	CARLISLE INTERCHANGE - LP-DOUD_TP 3115.00 115KV CKT 1
FDNS	00NR_G15_075	3	25SP	G15_075	TO->FROM	AMOCO SWITCHING STATION - SUNDOWN INTERCHANGE 230KV CKT 1	437	437	0.13636	103.2702	TUCO INTERCHANGE - YOAKUM_345 345.00 345KV CKT 1
FDNS	00NR_G15_075	3	25SP	G15_075	TO->FROM	SUNDOWN INTERCHANGE - WOLFFORTH INTERCHANGE 230KV CKT 1	318.7	350.57	0.23377	104.8938	TUCO INTERCHANGE - YOAKUM_345 345.00 345KV CKT 1
FDNSLock-Blown up	00NR_G15_076	0	16WP	G15_076		Non-Converged Contingency	720	720	0.07302	-	GR ISLD-LNX3345.00 - GRAND ISLAND 345KV CKT Z
FDNSLock-Blown up	00NR_G15_076	0	16WP	G15_076		Non-Converged Contingency	720	720	0.07302	-	GR ISLD-LNX3345.00 - HOLT.CO3 345.00 345KV CKT 1
FDNSLock-Blown up	09NR_G15_076	0	17G	G15_076		Non-Converged Contingency	720	720	0.07264	-	GR ISLD-LNX3345.00 - GRAND ISLAND 345KV CKT Z
FDNSLock-Blown up	09NR_G15_076	0	17G	G15_076		Non-Converged Contingency	720	720	0.07264	-	GR ISLD-LNX3345.00 - HOLT.CO3 345.00 345KV CKT 1
FDNSLock-Blown up	00NR_G15_076	0	17SP	G15_076		Non-Converged Contingency	720	720	0.0743	-	GR ISLD-LNX3345.00 - GRAND ISLAND 345KV CKT Z
FDNSLock-Blown up	00NR_G15_076	0	17SP	G15_076		Non-Converged Contingency	720	720	0.0743	-	GR ISLD-LNX3345.00 - HOLT.CO3 345.00 345KV CKT 1
FDNSLock-Blown up	00NR_G15_076	2	16WP	G15_076		Non-Converged Contingency	720	720	0.0421	-	GR ISLD-LNX3345.00 - GRAND ISLAND 345KV CKT Z
FDNSLock-Blown up	00NR_G15_076	2	16WP	G15_076		Non-Converged Contingency	720	720	0.0421	-	GR ISLD-LNX3345.00 - HOLT.CO3 345.00 345KV CKT 1
FDNSLock-Blown up	09NR_G15_076	2	17G	G15_076		Non-Converged Contingency	720	720	0.04235	-	GR ISLD-LNX3345.00 - GRAND ISLAND 345KV CKT Z
FDNSLock-Blown up	09NR_G15_076	2	17G	G15_076		Non-Converged Contingency	720	720	0.04235	-	GR ISLD-LNX3345.00 - HOLT.CO3 345.00 345KV CKT 1
FDNSLock-Blown up	00NR_G15_076	2	17SP	G15_076		Non-Converged Contingency	720	720	0.04279	-	GR ISLD-LNX3345.00 - GRAND ISLAND 345KV CKT Z
FDNSLock-Blown up	00NR_G15_076	2	17SP	G15_076		Non-Converged Contingency	720	720	0.04279	-	GR ISLD-LNX3345.00 - HOLT.CO3 345.00 345KV CKT 1
FDNS	00NR_G15_076	0	16WP	G15_076	FROM->TO	BELDEN - HOSKINS 115KV CKT 1	115	115	0.5926	115.3651	BELDEN - TWIN CHURCH 115KV CKT 1
FDNS	00NR_G15_076	0	20WP	G15_076	FROM->TO	BELDEN - HOSKINS 115KV CKT 1	115	115	0.59208	113.6345	BELDEN - TWIN CHURCH 115KV CKT 1
FDNS	00NR_G15_076	0	20SP	G15_076	FROM->TO	BELDEN - HOSKINS 115KV CKT 1	115	115	0.59205	107.8505	BELDEN - TWIN CHURCH 115KV CKT 1
FDNS	00NR_G15_076	0	25SP	G15_076	FROM->TO	BELDEN - HOSKINS 115KV CKT 1	115	115	0.59207	104.4661	BELDEN - TWIN CHURCH 115KV CKT 1
FDNS	00NR_G15_076	0	16WP	G15_076	FROM->TO	BELDEN - TWIN CHURCH 115KV CKT 1	110	110	0.49739	104.2372	BELDEN - HOSKINS 115KV CKT 1
FDNS	00NR_G15_076	0	20WP	G15_076	FROM->TO	BELDEN - TWIN CHURCH 115KV CKT 1	110	110	0.49702	102.0339	BELDEN - HOSKINS 115KV CKT 1
FDNS	09ALL_G15_076	0	20L	G15_076	FROM->TO	GAVINS POINT - YANKON JCT 115KV CKT 1	120	120	0.2142	111.0415	GAVINS POINT - SPIRIT MOUND 115KV CKT 1
FDNS	09ALL_G15_076	0	25SP	G15_076	FROM->TO	GAVINS POINT - YANKON JCT 115KV CKT 1	120	120	0.2179	107.1792	BLOOMFIELD - CREIGHTON 115KV CKT 1
FDNS	09ALL_G15_076	0	20SP	G15_076	FROM->TO	GAVINS POINT - YANKON JCT 115KV CKT 1	120	120	0.21787	106.8133	BLOOMFIELD - CREIGHTON 115KV CKT 1
FDNS	09ALL_G15_076	0	20WP	G15_076	FROM->TO	GAVINS POINT - YANKON JCT 115KV CKT 1	120	120	0.21704	105.6716	GAVINS POINT - SPIRIT MOUND 115KV CKT 1
FDNS	09ALL_G15_076	0	20SP	G15_076	FROM->TO	GAVINS POINT - YANKON JCT 115KV CKT 1	120	120	0.21581	104.6581	MANNING - SPIRIT MOUND 115KV CKT 1
FDNS	09ALL_G15_076	0	20L	G15_076	FROM->TO	GAVINS POINT - YANKON JCT 115KV CKT 1	120	120	0.2142	103.8015	MANNING - SPIRIT MOUND 115KV CKT 1
FDNS	09ALL_G15_076	0	16WP	G15_076	FROM->TO	GAVINS POINT - YANKON JCT 115KV CKT 1	120	120	0.21663	103.5713	GAVINS POINT - SPIRIT MOUND 115KV CKT 1
FDNS	09ALL_G15_076	0	25SP	G15_076	FROM->TO	GAVINS POINT - YANKON JCT 115KV CKT 1	120	120	0.2158	103.5064	MANNING - SPIRIT MOUND 115KV CKT 1
FDNS	09ALL_G15_076	0	17G	G15_076	FROM->TO	GAVINS POINT - YANKON JCT 115KV CKT 1	120	120	0.21555	101.4964	GAVINS POINT - SPIRIT MOUND 115KV CKT 1
FDNS	09ALL_G15_076	0	20L	G15_076	FROM->TO	GAVINS POINT - YANKON JCT 115KV CKT 1	120	120	0.2142	100.3942	BERSFORD - MANNING 115KV CKT 1
FDNS	09ALL_G15_076	0	20SP	G15_076	FROM->TO	GAVINS POINT - YANKON JCT 115KV CKT 1	120	120	0.21581	100.1128	BERSFORD - MANNING 115KV CKT 1
FDNS	00NR_G15_076	0	17SP	G15_076	FROM->TO	GR ISLD-LNX3345.00 - GRAND ISLAND 345KV CKT Z	720	720	0.07812	138.4445	KELLY - MEADOWGROVE4230.00 230KV CKT 1
FDNS	00NR_G15_076	0	17SP	G15_076	FROM->TO	GR ISLD-LNX3345.00 - GRAND ISLAND 345KV CKT Z	720	720	0.07196	138.1659	P12:230:UMZB:# 116 #: ST IN SD. WSG-ST-VH
FDNS	00NR_G15_076	0	17SP	G15_076	FROM->TO	GR ISLD-LNX3345.00 - GRAND ISLAND 345KV CKT Z	720	720	0.0722	137.2378	STORLA - WESSINGTON 230KV CKT 1
FDNS	00NR_G15_076	0	17SP	G15_076	FROM->TO	GR ISLD-LNX3345.00 - GRAND ISLAND 345KV CKT Z	720	720	0.07342	136.3172	WATERTN-LNX3345.00 - WHITE 345KV CKT 1
FDNS	00NR_G15_076	0	17SP	G15_076	FROM->TO	GR ISLD-LNX3345.00 - GRAND ISLAND 345KV CKT Z	720	720	0.07342	136.0511	WATERTN-LNX3345.00 - WATERTOWN 345KV CKT Z
FDNS	00NR_G15_076	0	17SP	G15_076	FROM->TO	GR ISLD-LNX3345.00 - GRAND ISLAND 345KV CKT Z	720	720	0.07342	136.0311	P12:345:UMZW:# 1747 #: WT2 IN SD. WT2-WHT LINE FAULT
FDNS	00NR_G15_076	0	17SP	G15_076	FROM->TO	GR ISLD-LNX3345.00 - GRAND ISLAND 345KV CKT Z	720	720	0.074	135.9874	G09_001IST 345.00 - WATERTOWN 345KV CKT 1
FDNS	00NR_G15_076	0	17SP	G15_076	FROM->TO	GR ISLD-LNX3345.00 - GRAND ISLAND 345KV CKT Z	720	720	0.07255	135.8836	HANLON - STORLA 230KV CKT 1
FDNS	00NR_G15_076	0	17SP	G15_076	FROM->TO	GR ISLD-LNX3345.00 - GRAND ISLAND 345KV CKT Z	720	720	0.0715	135.51	FT THOMPSON - LETCHER 230KV CKT 1
FDNS	00NR_G15_076	0	17SP	G15_076	FROM->TO	GR ISLD-LNX3345.00 - GRAND ISLAND 345KV CKT Z	720	720	0.0715	135.51	FT THOMPSON - LETCHER 230KV CKT 1
FDNS	00NR_G15_076	0	17SP	G15_076	FROM->TO	GR ISLD-LNX3345.00 - GRAND ISLAND 345KV CKT Z	720	720	0.07427	134.5034	BUFFALO - JAMESTOWN 345KV CKT 1
FDNS	00NR_G15_076	0	17SP	G15_076	FROM->TO	GR ISLD-LNX3345.00 - GRAND ISLAND 345KV CKT Z	720	720	0.07071	134.267	FT RANDAL - FT THOMPSON 230KV CKT 1
FDNS	00NR_G15_076	0	17SP	G15_076	FROM->TO	GR ISLD-LNX3345.00 - GRAND ISLAND 345KV CKT Z	720	720	0.07071	134.267	FT RANDAL - FT THOMPSON 230KV CKT 1
FDNS	00NR_G15_076	0	17SP	G15_076	FROM->TO	GR ISLD-LNX3345.00 - GRAND ISLAND 345KV CKT Z	720	720	0.0708	134.241	FT RANDAL - G12_009IST 230.00 230KV CKT 1

SOLUTION	GROUP	SCENARIO	SEASON	SOURCE	DIRECTION	MONITORED ELEMENT	RATEA (MVA)	RATEB(MVA)	TDF	TC%LOADING (% MVA)	CONTINGENCY
FDNS	00NR_G15_076	0	17SP	G15_076	FROM->TO	GR ISLD-LNX3345.00 - GRAND ISLAND 345KV CKT Z	720	720	0.0708	134.1335	FT THOMPSON - LAKE PLATT 230KV CKT 1
FDNS	00NR_G15_076	0	17SP	G15_076	FROM->TO	GR ISLD-LNX3345.00 - GRAND ISLAND 345KV CKT Z	720	720	0.0708	134.1335	FT THOMPSON - LAKE PLATT 230KV CKT 1
FDNS	00NR_G15_076	0	17SP	G15_076	FROM->TO	GR ISLD-LNX3345.00 - GRAND ISLAND 345KV CKT Z	720	720	0.08347	133.8758	NUNDRWD - WAYSIDE 230KV CKT 1
FDNS	00NR_G15_076	0	17SP	G15_076	FROM->TO	GR ISLD-LNX3345.00 - GRAND ISLAND 345KV CKT Z	720	720	0.0708	133.6785	G12_009IST 230.00 - LAKE PLATT 230KV CKT 1
FDNS	00NR_G15_076	0	17SP	G15_076	FROM->TO	GR ISLD-LNX3345.00 - GRAND ISLAND 345KV CKT Z	720	720	0.0743	133.6003	GEN336821 1-GRAND GULF UNIT
FDNSLock	00NR_G15_076	0	17SP	G15_076	FROM->TO	GR ISLD-LNX3345.00 - GRAND ISLAND 345KV CKT Z	720	720	0.07428	133.5532	CHISAGO COUNTY - CHISAGO COUNTY 500KV CKT 1
FDNS	00NR_G15_076	0	17SP	G15_076	FROM->TO	GR ISLD-LNX3345.00 - GRAND ISLAND 345KV CKT Z	720	720	0.07428	133.5338	CHISAGO COUNTY - FORBES 500KV CKT 1
FDNS	00NR_G15_076	0	17SP	G15_076	FROM->TO	GR ISLD-LNX3345.00 - GRAND ISLAND 345KV CKT Z	720	720	0.07812	133.4764	FT RANDAL - MEADOWGROVE4230.00 230KV CKT 1
FDNS	00NR_G15_076	0	17SP	G15_076	FROM->TO	GR ISLD-LNX3345.00 - GRAND ISLAND 345KV CKT Z	720	720	0.07427	133.3936	CENTER - JAMESTOWN 345KV CKT 1
FDNS	00NR_G15_076	0	17SP	G15_076	FROM->TO	GR ISLD-LNX3345.00 - GRAND ISLAND 345KV CKT Z	720	720	0.0743	133.1	GEN640010 1-GERALD GENTLEMAN STATION UNIT 1
FDNS	00NR_G15_076	0	17SP	G15_076	FROM->TO	GR ISLD-LNX3345.00 - GRAND ISLAND 345KV CKT Z	720	720	0.07334	133.0952	LETCHER - SIOUX FALLS 230KV CKT 1
FDNS	00NR_G15_076	0	17SP	G15_076	FROM->TO	GR ISLD-LNX3345.00 - GRAND ISLAND 345KV CKT Z	720	720	0.0743	133.0842	GEN344225 1-1CAL G1 25.000
FDNS	00NR_G15_076	0	17SP	G15_076	FROM->TO	GR ISLD-LNX3345.00 - GRAND ISLAND 345KV CKT Z	720	720	0.074	133.0095	G09_001IST 345.00 - GROTON 345KV CKT 1
FDNS	00NR_G15_076	0	17SP	G15_076	FROM->TO	GR ISLD-LNX3345.00 - GRAND ISLAND 345KV CKT Z	720	720	0.07618	132.9807	KEYSTONE - SIDNEY1-LNX3345.00 345KV CKT 1
FDNS	00NR_G15_076	0	17SP	G15_076	FROM->TO	GR ISLD-LNX3345.00 - GRAND ISLAND 345KV CKT Z	720	720	0.07618	132.9413	SIDNEY - SIDNEY1-LNX3345.00 345KV CKT Z
FDNS	00NR_G15_076	0	17SP	G15_076	FROM->TO	GR ISLD-LNX3345.00 - GRAND ISLAND 345KV CKT Z	720	720	0.07428	132.9189	BISON 3 345.00 - BUFFALO 345KV CKT 1
FDNS	00NR_G15_076	0	17SP	G15_076	FROM->TO	GR ISLD-LNX3345.00 - GRAND ISLAND 345KV CKT Z	720	720	0.0743	132.909	GEN635024 4-WALTER SCOTT UNIT 4
FDNS	00NR_G15_076	0	17SP	G15_076	FROM->TO	GR ISLD-LNX3345.00 - GRAND ISLAND 345KV CKT Z	720	720	0.0743	132.8836	GEN337911 1-ARKANSAS NUCLEAR ONE UNIT #2
FDNS	00NR_G15_076	0	17SP	G15_076	FROM->TO	GR ISLD-LNX3345.00 - GRAND ISLAND 345KV CKT Z	720	720	0.0743	132.8248	GEN336153 1-WATERFORD UNIT#3
FDNS	00NR_G15_076	0	17SP	G15_076	FROM->TO	GR ISLD-LNX3345.00 - GRAND ISLAND 345KV CKT Z	720	720	0.0743	132.655	GEN640011 2-GERALD GENTLEMAN STATION UNIT 2
FDNS	00NR_G15_076	0	17SP	G15_076	FROM->TO	GR ISLD-LNX3345.00 - GRAND ISLAND 345KV CKT Z	720	720	0.07303	132.4446	SPLIT ROCK - WHITE 345KV CKT 1
FDNS	00NR_G15_076	0	17SP	G15_076	FROM->TO	GR ISLD-LNX3345.00 - GRAND ISLAND 345KV CKT Z	720	720	0.07303	132.4446	SPLIT ROCK - WHITE 345KV CKT 1
FDNS	00NR_G15_076	0	17SP	G15_076	FROM->TO	GR ISLD-LNX3345.00 - GRAND ISLAND 345KV CKT Z	720	720	0.0743	132.4155	GEN635023 3-WALTER SCOTT UNIT 3
FDNS	00NR_G15_076	0	17SP	G15_076	FROM->TO	GR ISLD-LNX3345.00 - GRAND ISLAND 345KV CKT Z	720	720	0.0743	132.346	GEN335831 1-RIVERBEND UNIT#1
FDNS	00NR_G15_076	0	17SP	G15_076	FROM->TO	GR ISLD-LNX3345.00 - GRAND ISLAND 345KV CKT Z	720	720	0.07401	132.2787	GROTON-LNX3 345.00 - LELAND1-LNX3345.00 345KV CKT 1
FDNS	00NR_G15_076	0	17SP	G15_076	FROM->TO	GR ISLD-LNX3345.00 - GRAND ISLAND 345KV CKT Z	720	720	0.08281	132.259	RAUN - SUB 3451 FT CAL 345KV CKT 1
FDNS	00NR_G15_076	0	17SP	G15_076	FROM->TO	GR ISLD-LNX3345.00 - GRAND ISLAND 345KV CKT Z	720	720	0.08281	132.259	RAUN - SUB 3451 FT CAL 345KV CKT 1
FDNS	00NR_G15_076	0	17SP	G15_076	FROM->TO	GR ISLD-LNX3345.00 - GRAND ISLAND 345KV CKT Z	720	720	0.0743	132.2492	GEN337910 1-ARKANSAS NUCLEAR ONE UNIT #1
FDNS	00NR_G15_076	0	17SP	G15_076	FROM->TO	GR ISLD-LNX3345.00 - GRAND ISLAND 345KV CKT Z	720	720	0.07401	132.138	P12:345:UMZB:# 109 #: LOS GRT IN ND. LOS GRT
FDNS	00NR_G15_076	0	17SP	G15_076	FROM->TO	GR ISLD-LNX3345.00 - GRAND ISLAND 345KV CKT Z	720	720	0.07401	132.1202	GROTON - GROTON-LNX3 345.00 345KV CKT Z
FDNS	00NR_G15_076	0	17SP	G15_076	FROM->TO	GR ISLD-LNX3345.00 - GRAND ISLAND 345KV CKT Z	720	720	0.07401	132.1086	LELAND OLDS - LELAND1-LNX3345.00 345KV CKT Z
FDNS	00NR_G15_076	0	17SP	G15_076	FROM->TO	GR ISLD-LNX3345.00 - GRAND ISLAND 345KV CKT Z	720	720	0.07398	132.0479	FT RANDAL - SIOUX CITY 230KV CKT 1
FDNS	00NR_G15_076	0	17SP	G15_076	FROM->TO	GR ISLD-LNX3345.00 - GRAND ISLAND 345KV CKT Z	720	720	0.07459	131.9041	ARROWHEAD - ARROWHEAD 230 230KV CKT 1
FDNS	00NR_G15_076	0	17SP	G15_076	FROM->TO	GR ISLD-LNX3345.00 - GRAND ISLAND 345KV CKT Z	720	720	0.07357	131.8122	HANLON - SIOUX FALLS 230KV CKT 1
FDNS	00NR_G15_076	0	17SP	G15_076	FROM->TO	GR ISLD-LNX3345.00 - GRAND ISLAND 345KV CKT Z	720	720	0.06044	131.7209	GRAND ISLAND - SWEETWATER 345KV CKT 1
FDNS	00NR_G15_076	0	17SP	G15_076	FROM->TO	GR ISLD-LNX3345.00 - GRAND ISLAND 345KV CKT Z	720	720	0.07452	131.6351	P12:115:NPPD:1091:VALENTN7:MISSION7:BTB
FDNS	00NR_G15_076	0	17SP	G15_076	FROM->TO	GR ISLD-LNX3345.00 - GRAND ISLAND 345KV CKT Z	720	720	0.0743	131.6134	GEN337653 1-WHITE BLUFF UNIT #2
FDNS	00NR_G15_076	0	17SP	G15_076	FROM->TO	GR ISLD-LNX3345.00 - GRAND ISLAND 345KV CKT Z	720	720	0.0743	131.6014	GEN337652 1-WHITE BLUFF UNIT #1
FDNS	00NR_G15_076	0	17SP	G15_076	FROM->TO	GR ISLD-LNX3345.00 - GRAND ISLAND 345KV CKT Z	720	720	0.0759	131.5765	SIDNEY - STEGALL 345KV CKT 1
FDNS	00NR_G15_076	0	17SP	G15_076	FROM->TO	GR ISLD-LNX3345.00 - GRAND ISLAND 345KV CKT Z	720	720	0.07333	131.5722	SIOUXCY-LNX3345.00 - SPLIT ROCK 345KV CKT 1
FDNS	00NR_G15_076	0	17SP	G15_076	FROM->TO	GR ISLD-LNX3345.00 - GRAND ISLAND 345KV CKT Z	720	720	0.07333	131.5722	SIOUXCY-LNX3345.00 - SPLIT ROCK 345KV CKT 1
FDNS	00NR_G15_076	0	17SP	G15_076	FROM->TO	GR ISLD-LNX3345.00 - GRAND ISLAND 345KV CKT Z	720	720	0.07516	131.553	HAZLETON - MITCHLCO3 345.00 345KV CKT 1
FDNS	00NR_G15_076	0	17SP	G15_076	FROM->TO	GR ISLD-LNX3345.00 - GRAND ISLAND 345KV CKT Z	720	720	0.07333	131.5391	P12:345:UMZW:# 907 #: SC2-SR IN IA. SC2-SR 345 KV LINE
FDNS	00NR_G15_076	0	17SP	G15_076	FROM->TO	GR ISLD-LNX3345.00 - GRAND ISLAND 345KV CKT Z	720	720	0.0743	131.5361	GEN338146 1-INDEPENDENCE UNIT #2
FDNS	00NR_G15_076	0	17SP	G15_076	FROM->TO	GR ISLD-LNX3345.00 - GRAND ISLAND 345KV CKT Z	720	720	0.0743	131.5205	GEN338143 1-INDEPENDENCE UNIT #1
FDNS	00NR_G15_076	0	17SP	G15_076	FROM->TO	GR ISLD-LNX3345.00 - GRAND ISLAND 345KV CKT Z	720	720	0.07452	131.5016	MISSION - ST FRANCIS 115KV CKT 1
FDNS	00NR_G15_076	0	17SP	G15_076	FROM->TO	GR ISLD-LNX3345.00 - GRAND ISLAND 345KV CKT Z	720	720	0.07333	131.496	SIOUX CITY - SIOUXCY-LNX3345.00 345KV CKT Z
FDNS	00NR_G15_076	0	17SP	G15_076	FROM->TO	GR ISLD-LNX3345.00 - GRAND ISLAND 345KV CKT Z	720	720	0.0743	131.4655	GEN501801 1-DOLET HILLS UNIT1
FDNS	00NR_G15_076	0	17SP	G15_076	FROM->TO	GR ISLD-LNX3345.00 - GRAND ISLAND 345KV CKT Z	720	720	0.07429	131.4533	ELLENDALE - OAKES 230KV CKT 1
FDNS	00NR_G15_076	0	17SP	G15_076	FROM->TO	GR ISLD-LNX3345.00 - GRAND ISLAND 345KV CKT Z	720	720	0.07429	131.4533	ELLENDALE - OAKES 230KV CKT 1
FDNS	00NR_G15_076	0	17SP	G15_076	FROM->TO	GR ISLD-LNX3345.00 - GRAND ISLAND 345KV CKT Z	720	720	0.07452	131.4111	HARMONY - ST FRANCIS 115KV CKT 1
FDNS	00NR_G15_076	0	17SP	G15_076	FROM->TO	GR ISLD-LNX3345.00 - GRAND ISLAND 345KV CKT Z	720	720	0.07422	131.3625	CARPENTER - HURON 230KV CKT 1
FDNS	00NR_G15_076	0	17SP	G15_076	FROM->TO	GR ISLD-LNX3345.00 - GRAND ISLAND 345KV CKT Z	720	720	0.07465	131.3621	AS KING - EAU CLAIRE 345KV CKT 1
FDNS	00NR_G15_076	0	17SP	G15_076	FROM->TO	GR ISLD-LNX3345.00 - GRAND ISLAND 345KV CKT Z	720	720	0.07429	131.3568	FORMAN - OAKES 230KV CKT 1
FDNS	00NR_G15_076	0	17SP	G15_076	FROM->TO	GR ISLD-LNX3345.00 - GRAND ISLAND 345KV CKT Z	720	720	0.07201	131.3451	FT RANDAL - UTICA JCT 230KV CKT 1
FDNS	00NR_G15_076	0	17SP	G15_076	FROM->TO	GR ISLD-LNX3345.00 - GRAND ISLAND 345KV CKT Z	720	720	0.07432	131.3399	ALEXMRES3 345.00 - BISON 3 345.00 345KV CKT 1
FDNS	00NR_G15_076	0	17SP	G15_076	FROM->TO	GR ISLD-LNX3345.00 - GRAND ISLAND 345KV CKT Z	720	720	0.0722	131.3212	FT THOMPSON - WESSINGTON 230KV CKT 1
FDNS	00NR_G15_076	0	17SP	G15_076	FROM->TO	GR ISLD-LNX3345.00 - GRAND ISLAND 345KV CKT Z	720	720	0.0722	131.3212	FT THOMPSON - WESSINGTON 230KV CKT 1
FDNS	00NR_G15_076	0	17SP	G15_076	FROM->TO	GR ISLD-LNX3345.00 - GRAND ISLAND 345KV CKT Z	720	720	0.0748	131.2511	ARPIN B4 345.00 - EAU CLAIRE 345KV CKT 1
FDNS	00NR_G15_076	0	17SP	G15_076	FROM->TO	GR ISLD-LNX3345.00 - GRAND ISLAND 345KV CKT Z	720	720	0.07422	131.2379	HURON - WATERTOWN 230KV CKT 2
FDNS	00NR_G15_076	0	17SP	G15_076	FROM->TO	GR ISLD-LNX3345.00 - GRAND ISLAND 345KV CKT Z	720	720	0.07422	131.2379	HURON - WATERTOWN 230KV CKT 2
FDNS	00NR_G15_076	0	17SP	G15_076	FROM->TO	GR ISLD-LNX3345.00 - GRAND ISLAND 345KV CKT Z	720	720	0.07466	131.2241	P12:115:NPPD:WAPA6:FTRANDL7:ONEILL 7:BTB
FDNS	00NR_G15_076	0	17SP	G15_076	FROM->TO	GR ISLD-LNX3345.00 - GRAND ISLAND 345KV CKT Z	720	720	0.07466	131.2241	P12:115:UMZB:# 115 #: SE IN NE. FR-SE-ON
FDNS	00NR_G15_076	0	17SP	G15_076	FROM->TO	GR ISLD-LNX3345.00 - GRAND ISLAND 345KV CKT Z	720	720	0.07452	131.2073	HARMONY - VALENTINE 115KV CKT 1
FDNS	00NR_G15_076	0	17SP	G15_076	FROM->TO	GR ISLD-LNX3345.00 - GRAND ISLAND 345KV CKT Z	720	720	0.07466	131.1895	FT RANDAL - SPENCER 115KV CKT 1
FDNS	00NR_G15_076	0	17SP	G15_076	FROM->TO	GR ISLD-LNX3345.00 - GRAND ISLAND 345KV CKT Z	720	720	0.07422	131.18	CARPENTER - WATERTOWN 230KV CKT 1
FDNS	00NR_G15_076	0	17SP	G15_076	FROM->TO	GR ISLD-LNX3345.00 - GRAND ISLAND 345KV CKT Z	720	720	0.07422	131.18	CARPENTER - WATERTOWN 230KV CKT 1
FDNS	00NR_G15_076	0	17SP	G15_076	FROM->TO	GR ISLD-LNX3345.00 - GRAND ISLAND 345KV CKT Z	720	720	0.07399	131.1271	PAHOJA - SIOUX FALLS 230KV CKT 1
FDNS	00NR_G15_076	0	17SP	G15_076	FROM->TO	GR ISLD-LNX3345.00 - GRAND ISLAND 345KV CKT Z	720	720	0.0743	131.1024	GEN336252 1-NINEMILE POINT UNIT#5
FDNS	00NR_G15_076	0	17SP	G15_076	FROM->TO	GR ISLD-LNX3345.00 - GRAND ISLAND 345KV CKT Z	720	720	0.07466	131.088	ONEILL - SPENCER 115KV CKT 1
FDNS	00NR_G15_076	0	17SP	G15_076	FROM->TO	GR ISLD-LNX3345.00 - GRAND ISLAND 345KV CKT Z	720	720	0.0743	131.0589	GEN501813 1-RODEMACHER UNIT 3
FDNS	00NR_G15_076	0	17SP	G15_076	FROM->TO	GR ISLD-LNX3345.00 - GRAND ISLAND 345KV CKT Z	720	720	0.0743	130.9597	GEN336831 1-BAXTER WILSON SES
FDNS	00NR_G15_076	0	17SP	G15_076	FROM->TO	GR ISLD-LNX3345.00 - GRAND ISLAND 345KV CKT Z	720	720	0.0743	130.9455	GEN336251 1-NINEMILE POINT UNIT#4

SOLUTION	GROUP	SCENARIO	SEASON	SOURCE	DIRECTION	MONITORED ELEMENT	RATEA (MVA)	RATEB(MVA)	TDF	TC%LOADING (% MVA)	CONTINGENCY
FDNS	00NR_G15_076	0	17SP	G15_076	FROM->TO	GR ISLD-LNX3345.00 - GRAND ISLAND 345KV CKT Z	720	720	0.07522	130.9258	GERALD GENTLEMAN STATION - KEYSTONE 345KV CKT 1
FDNS	00NR_G15_076	0	17SP	G15_076	FROM->TO	GR ISLD-LNX3345.00 - GRAND ISLAND 345KV CKT Z	720	720	0.0743	130.9098	GEN641089 2-ENERGY CENTER 2
FDNS	00NR_G15_076	0	17SP	G15_076	FROM->TO	GR ISLD-LNX3345.00 - GRAND ISLAND 345KV CKT Z	720	720	0.0743	130.8776	CNTSHNT3 345.00 - PRAIRIE3 345.00 345KV CKT 1
FDNS	00NR_G15_076	0	17SP	G15_076	FROM->TO	GR ISLD-LNX3345.00 - GRAND ISLAND 345KV CKT Z	720	720	0.0743	130.8677	GEN337041 1-GERALD ANDRUS
FDNS	00NR_G15_076	0	17SP	G15_076	FROM->TO	GR ISLD-LNX3345.00 - GRAND ISLAND 345KV CKT Z	720	720	0.0743	130.8498	GEN335206 1-NELSON UNIT 6
FDNS	00NR_G15_076	0	17SP	G15_076	FROM->TO	GR ISLD-LNX3345.00 - GRAND ISLAND 345KV CKT Z	720	720	0.0743	130.8438	GEN344897 4-1LAB G4 20.000
FDNS	00NR_G15_076	0	17SP	G15_076	FROM->TO	GR ISLD-LNX3345.00 - GRAND ISLAND 345KV CKT Z	720	720	0.0743	130.8403	GEN344894 1-1LAB G1 20.000
FDNS	00NR_G15_076	0	17SP	G15_076	FROM->TO	GR ISLD-LNX3345.00 - GRAND ISLAND 345KV CKT Z	720	720	0.0743	130.8401	GEN344896 3-1LAB G3 20.000
FDNS	00NR_G15_076	0	17SP	G15_076	FROM->TO	GR ISLD-LNX3345.00 - GRAND ISLAND 345KV CKT Z	720	720	0.07431	130.8352	FORMAN - HANKINSON 230KV CKT 1
FDNS	00NR_G15_076	0	17SP	G15_076	FROM->TO	GR ISLD-LNX3345.00 - GRAND ISLAND 345KV CKT Z	720	720	0.07452	130.7986	AINSWORTH - VALENTINE 115KV CKT 1
FDNS	00NR_G15_076	0	17SP	G15_076	FROM->TO	GR ISLD-LNX3345.00 - GRAND ISLAND 345KV CKT Z	720	720	0.0743	130.7761	GEN344895 2-1LAB G2 20.000
FDNS	00NR_G15_076	0	17SP	G15_076	FROM->TO	GR ISLD-LNX3345.00 - GRAND ISLAND 345KV CKT Z	720	720	0.07399	130.7616	EAGLE 4 230.00 - PAHOJA 230KV CKT 1
FDNS	00NR_G15_076	0	17SP	G15_076	FROM->TO	GR ISLD-LNX3345.00 - GRAND ISLAND 345KV CKT Z	720	720	0.07566	130.7582	RASMUSN - UTICA JCT 230KV CKT 1
FDNS	00NR_G15_076	0	17SP	G15_076	FROM->TO	GR ISLD-LNX3345.00 - GRAND ISLAND 345KV CKT Z	720	720	0.0743	130.7517	GEN345670 1-1RUSH G1 18.000
FDNS	00NR_G15_076	0	17SP	G15_076	FROM->TO	GR ISLD-LNX3345.00 - GRAND ISLAND 345KV CKT Z	720	720	0.0743	130.7514	GEN345671 2-1RUSH G2 18.000
FDNS	00NR_G15_076	0	17SP	G15_076	FROM->TO	GR ISLD-LNX3345.00 - GRAND ISLAND 345KV CKT Z	720	720	0.07516	130.7001	ADAMS - MITCHLCO3 345.00 345KV CKT 1
FDNS	00NR_G15_076	0	17SP	G15_076	FROM->TO	GR ISLD-LNX3345.00 - GRAND ISLAND 345KV CKT Z	720	720	0.0743	130.6902	GEN501812 1-RODEMACHER UNIT 2
FDNS	00NR_G15_076	0	17SP	G15_076	FROM->TO	GR ISLD-LNX3345.00 - GRAND ISLAND 345KV CKT Z	720	720	0.0743	130.6673	GEN334440 1-SABINE UNIT 4
FDNS	00NR_G15_076	0	17SP	G15_076	FROM->TO	GR ISLD-LNX3345.00 - GRAND ISLAND 345KV CKT Z	720	720	0.07489	130.5642	ADAMS - PLEASANT VALLEY 345KV CKT 1
FDNS	00NR_G15_076	0	17SP	G15_076	FROM->TO	GR ISLD-LNX3345.00 - GRAND ISLAND 345KV CKT Z	720	720	0.07566	130.534	RASMUSN - SIOUX CITY 230KV CKT 1
FDNS	00NR_G15_076	0	17SP	G15_076	FROM->TO	GR ISLD-LNX3345.00 - GRAND ISLAND 345KV CKT Z	720	720	0.0743	130.513	GEN336191 1-LITTLE GYPSY UNIT#3
FDNSLock	00NR_G15_076	0	17SP	G15_076	FROM->TO	GR ISLD-LNX3345.00 - GRAND ISLAND 345KV CKT Z	720	720	0.0743	130.4996	CENTER - CNTSHNT3 345.00 345KV CKT Z1
FDNS	00NR_G15_076	0	17SP	G15_076	FROM->TO	GR ISLD-LNX3345.00 - GRAND ISLAND 345KV CKT Z	720	720	0.0743	130.4471	GEN338388 1-1PLUM PT U1 23.000
FDNS	00NR_G15_076	0	17SP	G15_076	FROM->TO	GR ISLD-LNX3345.00 - GRAND ISLAND 345KV CKT Z	720	720	0.07658	130.4349	GRIMES - LEHIGH 345KV CKT 1
FDNS	00NR_G15_076	0	17SP	G15_076	FROM->TO	GR ISLD-LNX3345.00 - GRAND ISLAND 345KV CKT Z	720	720	0.0743	130.4143	GEN336801 1-BAXTER WILSON UNIT #1
FDNS	00NR_G15_076	0	17SP	G15_076	FROM->TO	GR ISLD-LNX3345.00 - GRAND ISLAND 345KV CKT Z	720	720	0.0743	130.4041	GEN335614 1-WILLOW GLENN UNIT#4
FDNS	00NR_G15_076	0	17SP	G15_076	FROM->TO	GR ISLD-LNX3345.00 - GRAND ISLAND 345KV CKT Z	720	720	0.0743	130.3957	GEN334441 1-SABINE UNIT 5
FDNS	00NR_G15_076	0	17SP	G15_076	FROM->TO	GR ISLD-LNX3345.00 - GRAND ISLAND 345KV CKT Z	720	720	0.0743	130.3883	GEN336464 1-MICHOUD UNIT #3
FDNS	00NR_G15_076	0	17SP	G15_076	FROM->TO	GR ISLD-LNX3345.00 - GRAND ISLAND 345KV CKT Z	720	720	0.07524	130.3784	LAKEFIELD 3 - NOBLES 345KV CKT 1
FDNS	00NR_G15_076	0	17SP	G15_076	FROM->TO	GR ISLD-LNX3345.00 - GRAND ISLAND 345KV CKT Z	720	720	0.0743	130.3745	GEN335204 1-NELSON UNIT 4
FDNS	00NR_G15_076	0	17SP	G15_076	FROM->TO	GR ISLD-LNX3345.00 - GRAND ISLAND 345KV CKT Z	720	720	0.07468	130.3113	BROOKING COUNTY - LYON COUNTY 345KV CKT 1
FDNS	00NR_G15_076	0	17SP	G15_076	FROM->TO	GR ISLD-LNX3345.00 - GRAND ISLAND 345KV CKT Z	720	720	0.07395	130.2971	FT THOMPSON - HURON 230KV CKT 1
FDNS	00NR_G15_076	0	17SP	G15_076	FROM->TO	GR ISLD-LNX3345.00 - GRAND ISLAND 345KV CKT Z	720	720	0.07395	130.2971	FT THOMPSON - HURON 230KV CKT 1
FDNS	00NR_G15_076	0	17SP	G15_076	FROM->TO	GR ISLD-LNX3345.00 - GRAND ISLAND 345KV CKT Z	720	720	0.07395	130.2971	FT THOMPSON - HURON 230KV CKT 2
FDNS	00NR_G15_076	0	17SP	G15_076	FROM->TO	GR ISLD-LNX3345.00 - GRAND ISLAND 345KV CKT Z	720	720	0.07395	130.2971	FT THOMPSON - HURON 230KV CKT 2
FDNS	00NR_G15_076	0	17SP	G15_076	FROM->TO	GR ISLD-LNX3345.00 - GRAND ISLAND 345KV CKT Z	720	720	0.07504	130.2858	KOSSUTH 3 345.00 - OBRIEN 3 345.00 345KV CKT 1
FDNS	00NR_G15_076	0	17SP	G15_076	FROM->TO	GR ISLD-LNX3345.00 - GRAND ISLAND 345KV CKT Z	720	720	0.0746	130.2827	LARAMIE RIVER - SIDNEY2-LNX3345.00 345KV CKT 1
FDNS	00NR_G15_076	0	17SP	G15_076	FROM->TO	GR ISLD-LNX3345.00 - GRAND ISLAND 345KV CKT Z	720	720	0.07504	130.2728	KOSSUTH 3 345.00 - WEBSTER 345KV CKT 1
FDNS	00NR_G15_076	0	17SP	G15_076	FROM->TO	GR ISLD-LNX3345.00 - GRAND ISLAND 345KV CKT Z	720	720	0.0746	130.2564	SIDNEY - SIDNEY2-LNX3345.00 345KV CKT Z
FDNS	00NR_G15_076	0	17SP	G15_076	FROM->TO	GR ISLD-LNX3345.00 - GRAND ISLAND 345KV CKT Z	720	720	0.07751	130.2461	STEGALL - STEGALL TRANSFORMER 230KV CKT 1
FDNS	00NR_G15_076	0	17SP	G15_076	FROM->TO	GR ISLD-LNX3345.00 - GRAND ISLAND 345KV CKT Z	720	720	0.07434	130.2343	BLAIR - GRANITE FALLS 230KV CKT 1
FDNS	00NR_G15_076	0	17SP	G15_076	FROM->TO	GR ISLD-LNX3345.00 - GRAND ISLAND 345KV CKT Z	720	720	0.07434	130.2343	BLAIR - GRANITE FALLS 230KV CKT 1
FDNS	00NR_G15_076	0	17SP	G15_076	FROM->TO	GR ISLD-LNX3345.00 - GRAND ISLAND 345KV CKT Z	720	720	0.07751	130.2271	P13:230-345:NPPD:STEGALL3:KV3A
FDNS	00NR_G15_076	0	17SP	G15_076	FROM->TO	GR ISLD-LNX3345.00 - GRAND ISLAND 345KV CKT Z	720	720	0.07751	130.2262	STEGALL (SGQ KV3A) 345/230/13.8KV TRANSFORMER CKT 1
FDNS	00NR_G15_076	0	17SP	G15_076	FROM->TO	GR ISLD-LNX3345.00 - GRAND ISLAND 345KV CKT Z	720	720	0.0743	130.2247	GEN334433 1-SABINE UNIT 3
FDNS	00NR_G15_076	0	17SP	G15_076	FROM->TO	GR ISLD-LNX3345.00 - GRAND ISLAND 345KV CKT Z	720	720	0.07297	130.2211	CROOKED CREEK - NORTH PLATTE 230KV CKT 1
FDNS	00NR_G15_076	0	17SP	G15_076	FROM->TO	GR ISLD-LNX3345.00 - GRAND ISLAND 345KV CKT Z	720	720	0.07429	130.221	CENTER - COYOTE 345KV CKT 1
FDNS	00NR_G15_076	0	17SP	G15_076	FROM->TO	GR ISLD-LNX3345.00 - GRAND ISLAND 345KV CKT Z	720	720	0.07436	130.1924	ALEXMRES3 345.00 - WAITE PARK 345KV CKT 1
FDNS	00NR_G15_076	0	17SP	G15_076	FROM->TO	GR ISLD-LNX3345.00 - GRAND ISLAND 345KV CKT Z	720	720	0.0743	130.1915	P12:115:UMZW:# 162 #: NEL IN ND. FAULT ON ML-NEL-MX-GA 115 KV
FDNS	00NR_G15_076	0	17SP	G15_076	FROM->TO	GR ISLD-LNX3345.00 - GRAND ISLAND 345KV CKT Z	720	720	0.0743	130.1818	GEN531447 1-HOLCOMB GENERATOR
FDNS	00NR_G15_076	0	17SP	G15_076	FROM->TO	GR ISLD-LNX3345.00 - GRAND ISLAND 345KV CKT Z	720	720	0.0729	130.1791	MENNO JCT - TRIPP JCT 115KV CKT 1
FDNS	00NR_G15_076	0	17SP	G15_076	FROM->TO	GR ISLD-LNX3345.00 - GRAND ISLAND 345KV CKT Z	720	720	0.0743	130.1696	GEN629075 1-OTTUMWA GENERATOR FOR OTTUMWA UNIT NO 1
FDNS	00NR_G15_076	0	17SP	G15_076	FROM->TO	GR ISLD-LNX3345.00 - GRAND ISLAND 345KV CKT Z	720	720	0.0796	130.1641	STEGALL-LNX3230.00 - WAYSIDE 230KV CKT 1
FDNS	00NR_G15_076	0	17SP	G15_076	FROM->TO	GR ISLD-LNX3345.00 - GRAND ISLAND 345KV CKT Z	720	720	0.0743	130.1608	GEN336222 1-LITTLE GYPSY UNIT#2
FDNS	00NR_G15_076	0	17SP	G15_076	FROM->TO	GR ISLD-LNX3345.00 - GRAND ISLAND 345KV CKT Z	720	720	0.0796	130.1557	STEGALL - STEGALL-LNX3230.00 230KV CKT Z
FDNS	00NR_G15_076	0	17SP	G15_076	FROM->TO	GR ISLD-LNX3345.00 - GRAND ISLAND 345KV CKT Z	720	720	0.0743	130.1392	GEN303007 1-1BC2 U2
FDNS	00NR_G15_076	0	17SP	G15_076	FROM->TO	GR ISLD-LNX3345.00 - GRAND ISLAND 345KV CKT Z	720	720	0.0743	130.1351	GEN303006 1-1BC2 U1
FDNS	00NR_G15_076	0	17SP	G15_076	FROM->TO	GR ISLD-LNX3345.00 - GRAND ISLAND 345KV CKT Z	720	720	0.07777	130.1296	RAUN - SIOUX CITY 345KV CKT 1
FDNS	00NR_G15_076	0	17SP	G15_076	FROM->TO	GR ISLD-LNX3345.00 - GRAND ISLAND 345KV CKT Z	720	720	0.07777	130.1296	RAUN - SIOUX CITY 345KV CKT 1
FDNS	00NR_G15_076	0	17SP	G15_076	FROM->TO	GR ISLD-LNX3345.00 - GRAND ISLAND 345KV CKT Z	720	720	0.07433	130.0916	GLENBORO SOUTH - RUGBY 230KV CKT 1
FDNS	00NR_G15_076	0	17SP	G15_076	FROM->TO	GR ISLD-LNX3345.00 - GRAND ISLAND 345KV CKT Z	720	720	0.0743	130.0807	GEN336152 1-WATERFORD UNIT#2
FDNS	00NR_G15_076	0	17SP	G15_076	FROM->TO	GR ISLD-LNX3345.00 - GRAND ISLAND 345KV CKT Z	720	720	0.0743	130.0804	GEN336151 1-WATERFORD UNIT#1
FDNS	00NR_G15_076	0	17SP	G15_076	FROM->TO	GR ISLD-LNX3345.00 - GRAND ISLAND 345KV CKT Z	720	720	0.07429	130.0696	GARRISON - JAMES TOWN 230KV CKT 1
FDNS	00NR_G15_076	0	17SP	G15_076	FROM->TO	GR ISLD-LNX3345.00 - GRAND ISLAND 345KV CKT Z	720	720	0.07436	130.0609	HANKINSON - WAHPETON 230KV CKT 1
FDNS	00NR_G15_076	0	17SP	G15_076	FROM->TO	GR ISLD-LNX3345.00 - GRAND ISLAND 345KV CKT Z	720	720	0.0743	130.0562	GEN303008 1-1BC2 U3
FDNS	00NR_G15_076	0	17SP	G15_076	FROM->TO	GR ISLD-LNX3345.00 - GRAND ISLAND 345KV CKT Z	720	720	0.0743	130.0524	GEN336170 1-GULF OXY U4
FDNS	00NR_G15_076	0	17SP	G15_076	FROM->TO	GR ISLD-LNX3345.00 - GRAND ISLAND 345KV CKT Z	720	720	0.07471	130.0265	BYRON - NORTH ROCHESTER 345KV CKT 1
FDNS	00NR_G15_076	0	17SP	G15_076	FROM->TO	GR ISLD-LNX3345.00 - GRAND ISLAND 345KV CKT Z	720	720	0.07445	130.0221	ARKANSAS NUCLEAR ONE - FT SMITH 500KV CKT 1
FDNS	00NR_G15_076	0	17SP	G15_076	FROM->TO	GR ISLD-LNX3345.00 - GRAND ISLAND 345KV CKT Z	720	720	0.07445	130.0221	ARKANSAS NUCLEAR ONE - FT SMITH 500KV CKT 1
FDNS	00NR_G15_076	0	17SP	G15_076	FROM->TO	GR ISLD-LNX3345.00 - GRAND ISLAND 345KV CKT Z	720	720	0.07326	129.9884	P12:115:NPPD:1164:ONEILL 7:JEFFREY9:BTB
FDNS	00NR_G15_076	0	17SP	G15_076	FROM->TO	GR ISLD-LNX3345.00 - GRAND ISLAND 345KV CKT Z	720	720	0.0729	129.9671	MENNO JCT - UTICA 115KV CKT 1
FDNS	00NR_G15_076	0	17SP	G15_076	FROM->TO	GR ISLD-LNX3345.00 - GRAND ISLAND 345KV CKT Z	720	720	0.0743	129.9596	P13:230:UMZW:# 2218 #: FP IN MT. LOSS OF TRANSFORMER (AT2).
FDNS	00NR_G15_076	0	17SP	G15_076	FROM->TO	GR ISLD-LNX3345.00 - GRAND ISLAND 345KV CKT Z	720	720	0.07439	129.9394	APPLEDORN 4 230.00 - WATERTOWN 230KV CKT 1

SOLUTION	GROUP	SCENARIO	SEASON	SOURCE	DIRECTION	MONITORED ELEMENT	RATEA (MVA)	RATEB(MVA)	TDF	TC%LOADING (% MVA)	CONTINGENCY
FDNS	00NR_G15_076	0	17SP	G15_076	FROM->TO	GR ISLD-LNX3345.00 - GRAND ISLAND 345KV CKT Z	720	720	0.07439	129.9394	APPLEDORN 4 230.00 - WATERTOWN 230KV CKT 1
FDNS	00NR_G15_076	0	17SP	G15_076	FROM->TO	GR ISLD-LNX3345.00 - GRAND ISLAND 345KV CKT Z	720	720	0.07326	129.926	CLEARWATER - ONEILL 115KV CKT 1
FDNS	00NR_G15_076	0	17SP	G15_076	FROM->TO	GR ISLD-LNX3345.00 - GRAND ISLAND 345KV CKT Z	720	720	0.06263	129.9253	GAVINS POINT - YANKON JCT 115KV CKT 1
FDNS	00NR_G15_076	0	17SP	G15_076	FROM->TO	GR ISLD-LNX3345.00 - GRAND ISLAND 345KV CKT Z	720	720	0.06263	129.9253	GAVINS POINT - YANKON JCT 115KV CKT 1
FDNS	00NR_G15_076	0	17SP	G15_076	FROM->TO	GR ISLD-LNX3345.00 - GRAND ISLAND 345KV CKT Z	720	720	0.0729	129.9245	P12:115:UMZZ:# 237 #: MEN IN SD. MENNO JUNCTION IS A TAP (UJ-MEN-TP).
FDNS	00NR_G15_076	0	17SP	G15_076	FROM->TO	GR ISLD-LNX3345.00 - GRAND ISLAND 345KV CKT Z	720	720	0.07445	129.9224	NORTH ROCHESTER - PRAIRIE ISLAND 345KV CKT 1
FDNS	00NR_G15_076	0	17SP	G15_076	FROM->TO	GR ISLD-LNX3345.00 - GRAND ISLAND 345KV CKT Z	720	720	0.07429	129.89	FARGO - JAMES TOWN 230KV CKT 1
FDNS	00NR_G15_076	0	17SP	G15_076	FROM->TO	GR ISLD-LNX3345.00 - GRAND ISLAND 345KV CKT Z	720	720	0.0743	129.8894	GEN501811 1-RODEMACHER UNIT 1
FDNS	00NR_G15_076	0	17SP	G15_076	FROM->TO	GR ISLD-LNX3345.00 - GRAND ISLAND 345KV CKT Z	720	720	0.08034	129.8611	COLUMEAST - SHELL CREEK 345KV CKT 1
FDNS	00NR_G15_076	0	17SP	G15_076	FROM->TO	GR ISLD-LNX3345.00 - GRAND ISLAND 345KV CKT Z	720	720	0.07371	129.8408	LAKEFIELD 3 - LKFLDXL3 345KV CKT 1
FDNS	00NR_G15_076	0	17SP	G15_076	FROM->TO	GR ISLD-LNX3345.00 - GRAND ISLAND 345KV CKT Z	720	720	0.0743	129.7975	P13:230-345:NPPD:NUCOR-1
FDNS	00NR_G15_076	0	17SP	G15_076	FROM->TO	GR ISLD-LNX3345.00 - GRAND ISLAND 345KV CKT Z	720	720	0.07439	129.7912	APPLEDORN 4 230.00 - GRANITE FALLS 230KV CKT 1
FDNS	00NR_G15_076	0	17SP	G15_076	FROM->TO	GR ISLD-LNX3345.00 - GRAND ISLAND 345KV CKT Z	720	720	0.07439	129.7912	APPLEDORN 4 230.00 - GRANITE FALLS 230KV CKT 1
FDNS	00NR_G15_076	0	17SP	G15_076	FROM->TO	GR ISLD-LNX3345.00 - GRAND ISLAND 345KV CKT Z	720	720	0.0743	129.7911	GEN334071 1-LEWIS CREEK 2
FDNS	00NR_G15_076	0	17SP	G15_076	FROM->TO	GR ISLD-LNX3345.00 - GRAND ISLAND 345KV CKT Z	720	720	0.0743	129.7873	GEN337766 1-TRACTEBEL UNIT S1
FDNS	00NR_G15_076	0	17SP	G15_076	FROM->TO	GR ISLD-LNX3345.00 - GRAND ISLAND 345KV CKT Z	720	720	0.07433	129.7865	FERGSFL4 230.00 - WAHPETON 230KV CKT 1
FDNS	00NR_G15_076	0	17SP	G15_076	FROM->TO	GR ISLD-LNX3345.00 - GRAND ISLAND 345KV CKT Z	720	720	0.0743	129.7852	GEN334070 1-LEWIS CREEK 1
FDNS	00NR_G15_076	0	17SP	G15_076	FROM->TO	GR ISLD-LNX3345.00 - GRAND ISLAND 345KV CKT Z	720	720	0.07429	129.782	FARGO - JAMES TOWN 230KV CKT 2
FDNS	00NR_G15_076	0	17SP	G15_076	FROM->TO	GR ISLD-LNX3345.00 - GRAND ISLAND 345KV CKT Z	720	720	0.07532	129.7719	DENISON - SIOUX CITY 230KV CKT 1
FDNS	00NR_G15_076	0	17SP	G15_076	FROM->TO	GR ISLD-LNX3345.00 - GRAND ISLAND 345KV CKT Z	720	720	0.0743	129.7695	P13:115-230:NPPD:NUCOR-3
FDNS	00NR_G15_076	0	17SP	G15_076	FROM->TO	GR ISLD-LNX3345.00 - GRAND ISLAND 345KV CKT Z	720	720	0.0727	129.7443	CROOKED CREEK - RIVERDALE 230KV CKT 1
FDNS	00NR_G15_076	0	17SP	G15_076	FROM->TO	GR ISLD-LNX3345.00 - GRAND ISLAND 345KV CKT Z	720	720	0.0743	129.744	GEN501910 1-ACADIA UNIT ST1
FDNS	00NR_G15_076	0	17SP	G15_076	FROM->TO	GR ISLD-LNX3345.00 - GRAND ISLAND 345KV CKT Z	720	720	0.07429	129.7401	BISMARK - JAMES TOWN 230KV CKT 1
FDNS	00NR_G15_076	0	17SP	G15_076	FROM->TO	GR ISLD-LNX3345.00 - GRAND ISLAND 345KV CKT Z	720	720	0.07429	129.7292	BISMARK - WEBER 230KV CKT 1
FDNS	00NR_G15_076	0	17SP	G15_076	FROM->TO	GR ISLD-LNX3345.00 - GRAND ISLAND 345KV CKT Z	720	720	0.07465	129.7184	SIDNEY - SIDNEY TRANSFORMER 230KV CKT 1
FDNS	00NR_G15_076	0	17SP	G15_076	FROM->TO	GR ISLD-LNX3345.00 - GRAND ISLAND 345KV CKT Z	720	720	0.07429	129.7138	JAMES TOWN - WEBER 230KV CKT 1
FDNS	00NR_G15_076	0	17SP	G15_076	FROM->TO	GR ISLD-LNX3345.00 - GRAND ISLAND 345KV CKT Z	720	720	0.07467	129.7096	P13:115-230:TSGT:SIDNEY-KV1A
FDNS	00NR_G15_076	0	17SP	G15_076	FROM->TO	GR ISLD-LNX3345.00 - GRAND ISLAND 345KV CKT Z	720	720	0.07472	129.7034	BYRON - PLEASANT VALLEY 345KV CKT 1
FDNS	00NR_G15_076	0	17SP	G15_076	FROM->TO	GR ISLD-LNX3345.00 - GRAND ISLAND 345KV CKT Z	720	720	0.07465	129.7029	P13:230-345:NPPD:SIDNEY 3:KV2A
FDNS	00NR_G15_076	0	17SP	G15_076	FROM->TO	GR ISLD-LNX3345.00 - GRAND ISLAND 345KV CKT Z	720	720	0.07465	129.7028	SIDNEY (SDQ KV2A) 345/230/13.8KV TRANSFORMER CKT 1
FDNS	00NR_G15_076	0	17SP	G15_076	FROM->TO	GR ISLD-LNX3345.00 - GRAND ISLAND 345KV CKT Z	720	720	0.0743	129.6964	GEN525561 1-TOLK GEN #1 24 KV
FDNS	00NR_G15_076	0	17SP	G15_076	FROM->TO	GR ISLD-LNX3345.00 - GRAND ISLAND 345KV CKT Z	720	720	0.0743	129.6883	GEN525562 1-TOLK GEN #2 24 KV
FDNS	00NR_G15_076	0	17SP	G15_076	FROM->TO	GR ISLD-LNX3345.00 - GRAND ISLAND 345KV CKT Z	720	720	0.07387	129.6855	MT VERN - STORLA 115KV CKT 1
FDNS	00NR_G15_076	0	17SP	G15_076	FROM->TO	GR ISLD-LNX3345.00 - GRAND ISLAND 345KV CKT Z	720	720	0.0743	129.6827	GEN345765 H-1SIOUX 2 18.000
FDNS	00NR_G15_076	0	17SP	G15_076	FROM->TO	GR ISLD-LNX3345.00 - GRAND ISLAND 345KV CKT Z	720	720	0.0743	129.6784	P13:115-345:NPPD:NUCOR-2
FDNS	00NR_G15_076	0	17SP	G15_076	FROM->TO	GR ISLD-LNX3345.00 - GRAND ISLAND 345KV CKT Z	720	720	0.07491	129.6771	P12:115:NPPD:WAPA1:CHADRON7:BOXBUTE7:BTB
FDNS	00NR_G15_076	0	17SP	G15_076	FROM->TO	GR ISLD-LNX3345.00 - GRAND ISLAND 345KV CKT Z	720	720	0.07326	129.675	CLEARWATER - NELIGH 115KV CKT 1
FDNS	00NR_G15_076	0	17SP	G15_076	FROM->TO	GR ISLD-LNX3345.00 - GRAND ISLAND 345KV CKT Z	720	720	0.0743	129.6749	PRAIRIE ISLAND 345/20.0KV TRANSFORMER CKT 1
FDNS	00NR_G15_076	0	17SP	G15_076	FROM->TO	GR ISLD-LNX3345.00 - GRAND ISLAND 345KV CKT Z	720	720	0.0743	129.6735	PRAIRIE ISLAND 345/20.0KV TRANSFORMER CKT 2
FDNS	00NR_G15_076	0	17SP	G15_076	FROM->TO	GR ISLD-LNX3345.00 - GRAND ISLAND 345KV CKT Z	720	720	0.0743	129.6674	GEN337764 1-TRACTEBEL UNIT C1
FDNS	00NR_G15_076	0	17SP	G15_076	FROM->TO	GR ISLD-LNX3345.00 - GRAND ISLAND 345KV CKT Z	720	720	0.0743	129.6674	GEN337765 1-TRACTEBEL UNIT C2
FDNS	00NR_G15_076	0	17SP	G15_076	FROM->TO	GR ISLD-LNX3345.00 - GRAND ISLAND 345KV CKT Z	720	720	0.07459	129.6564	ARPIN B3 345.00 - ROCKY RN B8 345.00 345KV CKT 1
FDNS	00NR_G15_076	0	17SP	G15_076	FROM->TO	GR ISLD-LNX3345.00 - GRAND ISLAND 345KV CKT Z	720	720	0.0743	129.654	BALTA - RAMSEY 230KV CKT 1
FDNS	00NR_G15_076	0	17SP	G15_076	FROM->TO	GR ISLD-LNX3345.00 - GRAND ISLAND 345KV CKT Z	720	720	0.07429	129.6494	ELM CREEK - MONTICELLO 345KV CKT 1
FDNS	00NR_G15_076	0	17SP	G15_076	FROM->TO	GR ISLD-LNX3345.00 - GRAND ISLAND 345KV CKT Z	720	720	0.0689	129.64	P12:115:UMZW:# 1910 #: YJ IN SD. YJ-UJ LINE FAULT
FDNS	00NR_G15_076	0	17SP	G15_076	FROM->TO	GR ISLD-LNX3345.00 - GRAND ISLAND 345KV CKT Z	720	720	0.0689	129.6395	NAPA JCT7 115.00 - UTICA 115KV CKT 1
FDNS	00NR_G15_076	0	17SP	G15_076	FROM->TO	GR ISLD-LNX3345.00 - GRAND ISLAND 345KV CKT Z	720	720	0.0689	129.6395	NAPA JCT7 115.00 - UTICA 115KV CKT 1
FDNS	00NR_G15_076	0	17SP	G15_076	FROM->TO	GR ISLD-LNX3345.00 - GRAND ISLAND 345KV CKT Z	720	720	0.07426	129.6373	DKSN_CO5 161.00 - TRIBOJI NO1 + NO2 161KV CKT 1
FDNS	00NR_G15_076	0	17SP	G15_076	FROM->TO	GR ISLD-LNX3345.00 - GRAND ISLAND 345KV CKT Z	720	720	0.07433	129.6367	FERGSFL4 230.00 - GRE-SILVRLK4230.00 230KV CKT 1
FDNS	00NR_G15_076	0	17SP	G15_076	FROM->TO	GR ISLD-LNX3345.00 - GRAND ISLAND 345KV CKT Z	720	720	0.0689	129.6366	NAPA JCT7 115.00 - YANKON JCT 115KV CKT 1
FDNS	00NR_G15_076	0	17SP	G15_076	FROM->TO	GR ISLD-LNX3345.00 - GRAND ISLAND 345KV CKT Z	720	720	0.0689	129.6366	NAPA JCT7 115.00 - YANKON JCT 115KV CKT 1
FDNS	00NR_G15_076	0	17SP	G15_076	FROM->TO	GR ISLD-LNX3345.00 - GRAND ISLAND 345KV CKT Z	720	720	0.0743	129.6363	GRAND GULF 500/22.0KV TRANSFORMER CKT 1
FDNS	00NR_G15_076	0	17SP	G15_076	FROM->TO	GR ISLD-LNX3345.00 - GRAND ISLAND 345KV CKT Z	720	720	0.0743	129.6352	GEN345756 H-1SIOUX 1 18.000
FDNS	00NR_G15_076	0	17SP	G15_076	FROM->TO	GR ISLD-LNX3345.00 - GRAND ISLAND 345KV CKT Z	720	720	0.07765	129.6297	BLOOMFIELD - CREIGHTON 115KV CKT 1
FDNS	00NR_G15_076	0	17SP	G15_076	FROM->TO	GR ISLD-LNX3345.00 - GRAND ISLAND 345KV CKT Z	720	720	0.0743	129.6288	GEN336221 1-LITTLE GYPSY UNIT#1
FDNSLock	00NR_G15_076	0	17SP	G15_076	FROM->TO	GR ISLD-LNX3345.00 - GRAND ISLAND 345KV CKT Z	720	720	0.07444	129.6246	FRANKS - HUBEN 345KV CKT 1
FDNS	00NR_G15_076	0	17SP	G15_076	FROM->TO	GR ISLD-LNX3345.00 - GRAND ISLAND 345KV CKT Z	720	720	0.07459	129.6235	WAYSIDE (WAYSIDE T1) 230/115/13.8KV TRANSFORMER CKT 1
FDNS	00NR_G15_076	0	17SP	G15_076	FROM->TO	GR ISLD-LNX3345.00 - GRAND ISLAND 345KV CKT Z	720	720	0.07459	129.6228	CHADRON - WAYSIDE 115KV CKT 1
FDNS	00NR_G15_076	0	17SP	G15_076	FROM->TO	GR ISLD-LNX3345.00 - GRAND ISLAND 345KV CKT Z	720	720	0.07459	129.6227	P13:115-230:NPPD:WAYSIDE4:T1
FDNS	00NR_G15_076	0	17SP	G15_076	FROM->TO	GR ISLD-LNX3345.00 - GRAND ISLAND 345KV CKT Z	720	720	0.07431	129.6223	AUDUBON - SHEYNNE 230KV CKT 1
FDNS	00NR_G15_076	0	17SP	G15_076	FROM->TO	GR ISLD-LNX3345.00 - GRAND ISLAND 345KV CKT Z	720	720	0.0743	129.6189	GEN336242 1-1NMIL ST1 18.000
FDNS	00NR_G15_076	0	17SP	G15_076	FROM->TO	GR ISLD-LNX3345.00 - GRAND ISLAND 345KV CKT Z	720	720	0.07765	129.6136	BLOOMFIELD - GAVINS POINT 115KV CKT 1
FDNS	00NR_G15_076	0	17SP	G15_076	FROM->TO	GR ISLD-LNX3345.00 - GRAND ISLAND 345KV CKT Z	720	720	0.0743	129.6127	GEN337757 1-DUKE HOTSPRINGS STG1
FDNS	00NR_G15_076	0	17SP	G15_076	FROM->TO	GR ISLD-LNX3345.00 - GRAND ISLAND 345KV CKT Z	720	720	0.07507	129.6089	NOBLES - SPLIT ROCK 345KV CKT 1
FDNS	00NR_G15_076	0	17SP	G15_076	FROM->TO	GR ISLD-LNX3345.00 - GRAND ISLAND 345KV CKT Z	720	720	0.0743	129.6077	GEN334431 1-SABINE UNIT 1
FDNS	00NR_G15_076	0	17SP	G15_076	FROM->TO	GR ISLD-LNX3345.00 - GRAND ISLAND 345KV CKT Z	720	720	0.0743	129.6077	GEN334432 1-SABINE UNIT 2
FDNS	00NR_G15_076	0	17SP	G15_076	FROM->TO	GR ISLD-LNX3345.00 - GRAND ISLAND 345KV CKT Z	720	720	0.07318	129.6074	P13:230:UMZW:# 253 #: FR IN SD. LOSS OF TRANSFORMER (E
FDNS	00NR_G15_076	0	17SP	G15_076	FROM->TO	GR ISLD-LNX3345.00 - GRAND ISLAND 345KV CKT Z	720	720	0.07491	129.5986	CHADRON - DUNLAP 115KV CKT 1
FDNS	00NR_G15_076	0	17SP	G15_076	FROM->TO	GR ISLD-LNX3345.00 - GRAND ISLAND 345KV CKT Z	720	720	0.07433	129.5938	GRE-SILVRLK4230.00 - HENNING 230KV CKT 1
FDNS	00NR_G15_076	0	17SP	G15_076	FROM->TO	GR ISLD-LNX3345.00 - GRAND ISLAND 345KV CKT Z	720	720	0.0743	129.5883	GEN659118 1-LARAMIE RIVER UNIT1
FDNS	00NR_G15_076	0	17SP	G15_076	FROM->TO	GR ISLD-LNX3345.00 - GRAND ISLAND 345KV CKT Z	720	720	0.0743	129.5861	GEN336446 1-MICHOUD UNIT #2
FDNS	00NR_G15_076	0	17SP	G15_076	FROM->TO	GR ISLD-LNX3345.00 - GRAND ISLAND 345KV CKT Z	720	720	0.07464	129.5792	EAGLE - PHILIP 115KV CKT 1
FDNS	00NR_G15_076	0	17SP	G15_076	FROM->TO	GR ISLD-LNX3345.00 - GRAND ISLAND 345KV CKT Z	720	720	0.0743	129.5732	GEN345832 1-1TS G1 13.800

SOLUTION	GROUP	SCENARIO	SEASON	SOURCE	DIRECTION	MONITORED ELEMENT	RATEA (MVA)	RATEB(MVA)	TDF	TC%LOADING (% MVA)	CONTINGENCY
FDNS	00NR_G15_076	0	17SP	G15_076	FROM->TO	GR ISLD-LNX3345.00 - GRAND ISLAND 345KV CKT Z	720	720	0.07479	129.5729	PALXFRASBTHI
FDNS	00NR_G15_076	0	17SP	G15_076	FROM->TO	GR ISLD-LNX3345.00 - GRAND ISLAND 345KV CKT Z	720	720	0.0743	129.5728	GEN345841 2-1TS G2 13.800
FDNS	00NR_G15_076	0	17SP	G15_076	FROM->TO	GR ISLD-LNX3345.00 - GRAND ISLAND 345KV CKT Z	720	720	0.0743	129.566	GEN501970 1-EVANGELINE UNIT 7
FDNS	00NR_G15_076	0	17SP	G15_076	FROM->TO	GR ISLD-LNX3345.00 - GRAND ISLAND 345KV CKT Z	720	720	0.0744	129.5643	GENOA 161 - SENECA 161 161KV CKT 1
FDNS	00NR_G15_076	0	17SP	G15_076	FROM->TO	GR ISLD-LNX3345.00 - GRAND ISLAND 345KV CKT Z	720	720	0.07452	129.5506	OVEXFRMCCOVE
FDNS	00NR_G15_076	0	17SP	G15_076	FROM->TO	GR ISLD-LNX3345.00 - GRAND ISLAND 345KV CKT Z	720	720	0.0743	129.5503	GEN334030 1-FRONTIER UNIT 1
FDNS	00NR_G15_076	0	17SP	G15_076	FROM->TO	GR ISLD-LNX3345.00 - GRAND ISLAND 345KV CKT Z	720	720	0.07479	129.5497	7PALM TAP 345.00 - SUB T 345KV CKT 1
FDNS	00NR_G15_076	0	17SP	G15_076	FROM->TO	GR ISLD-LNX3345.00 - GRAND ISLAND 345KV CKT Z	720	720	0.0743	129.5488	GEN334031 1-FRONTIER UNIT 2
FDNS	00NR_G15_076	0	17SP	G15_076	FROM->TO	GR ISLD-LNX3345.00 - GRAND ISLAND 345KV CKT Z	720	720	0.07392	129.5475	HURON WEST PARK - MITCHELL NW 115KV CKT 1
FDNS	00NR_G15_076	0	17SP	G15_076	FROM->TO	GR ISLD-LNX3345.00 - GRAND ISLAND 345KV CKT Z	720	720	0.07392	129.5475	HURON WEST PARK - MITCHELL NW 115KV CKT 1
FDNS	00NR_G15_076	0	17SP	G15_076	FROM->TO	GR ISLD-LNX3345.00 - GRAND ISLAND 345KV CKT Z	720	720	0.0743	129.5457	GEN337430 1-PERYVILLE UNIT #3
FDNS	00NR_G15_076	0	17SP	G15_076	FROM->TO	GR ISLD-LNX3345.00 - GRAND ISLAND 345KV CKT Z	720	720	0.0743	129.5454	GEN337428 1-PERYVILLE UNIT #1
FDNS	00NR_G15_076	0	17SP	G15_076	FROM->TO	GR ISLD-LNX3345.00 - GRAND ISLAND 345KV CKT Z	720	720	0.07464	129.542	EAGLE - MARTIN 115KV CKT 1
FDNS	00NR_G15_076	0	17SP	G15_076	FROM->TO	GR ISLD-LNX3345.00 - GRAND ISLAND 345KV CKT Z	720	720	0.07433	129.5338	HENNING - INMANN 230KV CKT 1
FDNS	00NR_G15_076	0	17SP	G15_076	FROM->TO	GR ISLD-LNX3345.00 - GRAND ISLAND 345KV CKT Z	720	720	0.07445	129.5294	GRANT - MITCHELL 115KV CKT 1
FDNS	00NR_G15_076	0	17SP	G15_076	FROM->TO	GR ISLD-LNX3345.00 - GRAND ISLAND 345KV CKT Z	720	720	0.07445	129.5294	GRANT - MITCHELL 115KV CKT 1
FDNS	00NR_G15_076	0	17SP	G15_076	FROM->TO	GR ISLD-LNX3345.00 - GRAND ISLAND 345KV CKT Z	720	720	0.07438	129.5282	NORTH LA CROSSE - NORTH ROCHESTER 345KV CKT 1
FDNS	00NR_G15_076	0	17SP	G15_076	FROM->TO	GR ISLD-LNX3345.00 - GRAND ISLAND 345KV CKT Z	720	720	0.07727	129.5198	OAHE - PHILIP TAP 230KV CKT 1
FDNS	00NR_G15_076	0	17SP	G15_076	FROM->TO	GR ISLD-LNX3345.00 - GRAND ISLAND 345KV CKT Z	720	720	0.0743	129.5194	GEN336240 1-1NMIL CT1 18.000
FDNS	00NR_G15_076	0	17SP	G15_076	FROM->TO	GR ISLD-LNX3345.00 - GRAND ISLAND 345KV CKT Z	720	720	0.0743	129.5194	GEN336241 1-1NMIL CT2 18.000
FDNS	00NR_G15_076	0	17SP	G15_076	FROM->TO	GR ISLD-LNX3345.00 - GRAND ISLAND 345KV CKT Z	720	720	0.0743	129.5164	GEN501912 1-ACADIA UNIT CT1B
FDNS	00NR_G15_076	0	17SP	G15_076	FROM->TO	GR ISLD-LNX3345.00 - GRAND ISLAND 345KV CKT Z	720	720	0.0743	129.5163	GEN501911 1-ACADIA UNIT CT1A
FDNS	00NR_G15_076	0	17SP	G15_076	FROM->TO	GR ISLD-LNX3345.00 - GRAND ISLAND 345KV CKT Z	720	720	0.0743	129.5143	FINNEY SWITCHING STATION - PSCO LAMAR DC TIE 345KV CKT 1
FDNS	00NR_G15_076	0	17SP	G15_076	FROM->TO	GR ISLD-LNX3345.00 - GRAND ISLAND 345KV CKT Z	720	720	0.0743	129.5143	FINNEY SWITCHING STATION - PSCO LAMAR DC TIE 345KV CKT 1
FDNS	00NR_G15_076	0	17SP	G15_076	FROM->TO	GR ISLD-LNX3345.00 - GRAND ISLAND 345KV CKT Z	720	720	0.07529	129.5116	MARTIN - SHANNON 115KV CKT 1
FDNS	00NR_G15_076	0	17SP	G15_076	FROM->TO	GR ISLD-LNX3345.00 - GRAND ISLAND 345KV CKT Z	720	720	0.0743	129.5068	GEN501971 1-EVANGELINE UNIT 7-1
FDNS	00NR_G15_076	0	17SP	G15_076	FROM->TO	GR ISLD-LNX3345.00 - GRAND ISLAND 345KV CKT Z	720	720	0.0743	129.5068	GEN501972 1-EVANGELINE UNIT 7-2
FDNS	00NR_G15_076	0	17SP	G15_076	FROM->TO	GR ISLD-LNX3345.00 - GRAND ISLAND 345KV CKT Z	720	720	0.0743	129.4963	GEN335570 1-CARVILLE CTG
FDNS	00NR_G15_076	0	17SP	G15_076	FROM->TO	GR ISLD-LNX3345.00 - GRAND ISLAND 345KV CKT Z	720	720	0.0743	129.4963	GEN335571 1-CARVILLE UNIT #1
FDNS	00NR_G15_076	0	17SP	G15_076	FROM->TO	GR ISLD-LNX3345.00 - GRAND ISLAND 345KV CKT Z	720	720	0.0743	129.493	GEN336167 1-GULF OXY U1
FDNS	00NR_G15_076	0	17SP	G15_076	FROM->TO	GR ISLD-LNX3345.00 - GRAND ISLAND 345KV CKT Z	720	720	0.0743	129.493	GEN336168 1-GULF OXY U2
FDNS	00NR_G15_076	0	17SP	G15_076	FROM->TO	GR ISLD-LNX3345.00 - GRAND ISLAND 345KV CKT Z	720	720	0.0743	129.493	GEN336169 1-GULF OXY U3
FDNS	00NR_G15_076	0	17SP	G15_076	FROM->TO	GR ISLD-LNX3345.00 - GRAND ISLAND 345KV CKT Z	720	720	0.0743	129.4919	GEN501823 1-TECHE UNIT 3
FDNS	00NR_G15_076	0	17SP	G15_076	FROM->TO	GR ISLD-LNX3345.00 - GRAND ISLAND 345KV CKT Z	720	720	0.0743	129.4893	GEN336944 1-REX BROWN
FDNS	00NR_G15_076	0	17SP	G15_076	FROM->TO	GR ISLD-LNX3345.00 - GRAND ISLAND 345KV CKT Z	720	720	0.0743	129.4874	GEN335612 1-WILLOW GLENN UNIT#2
FDNS	00NR_G15_076	0	17SP	G15_076	FROM->TO	GR ISLD-LNX3345.00 - GRAND ISLAND 345KV CKT Z	720	720	0.07491	129.4677	BOXBUTE7 115.00 - DUNLAP 115KV CKT 1
FDNS	00NR_G15_076	0	17SP	G15_076	FROM->TO	GR ISLD-LNX3345.00 - GRAND ISLAND 345KV CKT Z	720	720	0.07554	129.1725	KELLY - SHELL CREEK 230KV CKT 1
FDNS	00NR_G15_076	0	17SP	G15_076	FROM->TO	GR ISLD-LNX3345.00 - GRAND ISLAND 345KV CKT Z	720	720	0.07554	129.1558	SHELL CREEK (SHELLCREEKT1) 345/230/13.8KV TRANSFORMER CKT 1
FDNS	00NR_G15_076	0	17SP	G15_076	FROM->TO	GR ISLD-LNX3345.00 - GRAND ISLAND 345KV CKT Z	720	720	0.07554	129.1558	SHELL CREEK (SHELLCREEKT1) 345/230/13.8KV TRANSFORMER CKT 1
FDNS	00NR_G15_076	0	17SP	G15_076	FROM->TO	GR ISLD-LNX3345.00 - GRAND ISLAND 345KV CKT Z	720	720	0.08619	129.1451	COLUMWEST - KELLY 230KV CKT 1
FDNS	00NR_G15_076	0	17SP	G15_076	FROM->TO	GR ISLD-LNX3345.00 - GRAND ISLAND 345KV CKT Z	720	720	0.0743	129.1323	KEARNEY 115KV SWITCHED SHUNT
FDNSLock	00NR_G15_076	0	17SP	G15_076	FROM->TO	GR ISLD-LNX3345.00 - GRAND ISLAND 345KV CKT Z	720	720	0.0743	129.0429	KEARNEY 115KV SWITCHED SHUNT
FDNS	00NR_G15_076	0	17SP	G15_076	FROM->TO	GR ISLD-LNX3345.00 - GRAND ISLAND 345KV CKT Z	720	720	0.0744	128.9747	ANTELOP-LNX3345.00 - BRDLAND-LNX3345.00 345KV CKT 1
FDNS	00NR_G15_076	0	17SP	G15_076	FROM->TO	GR ISLD-LNX3345.00 - GRAND ISLAND 345KV CKT Z	720	720	0.0743	128.9501	1303-KEARNEY
FDNS	00NR_G15_076	0	17SP	G15_076	FROM->TO	GR ISLD-LNX3345.00 - GRAND ISLAND 345KV CKT Z	720	720	0.0743	128.9501	BASE CASE
FDNS	00NR_G15_076	0	17SP	G15_076	FROM->TO	GR ISLD-LNX3345.00 - GRAND ISLAND 345KV CKT Z	720	720	0.07449	128.9258	BUCKNER7 345.00 - SPEARVILLE 345KV CKT 1
FDNS	00NR_G15_076	0	17SP	G15_076	FROM->TO	GR ISLD-LNX3345.00 - GRAND ISLAND 345KV CKT Z	720	720	0.07449	128.9258	BUCKNER7 345.00 - SPEARVILLE 345KV CKT 1
FDNS	00NR_G15_076	0	17SP	G15_076	FROM->TO	GR ISLD-LNX3345.00 - GRAND ISLAND 345KV CKT Z	720	720	0.07206	128.8649	GRAND ISLAND - RIVERDALE 230KV CKT 1
FDNS	00NR_G15_076	0	17SP	G15_076	FROM->TO	GR ISLD-LNX3345.00 - GRAND ISLAND 345KV CKT Z	720	720	0.07445	128.8425	MINGO (MINGO) 345/115/13.8KV TRANSFORMER CKT 1
FDNS	00NR_G15_076	0	17SP	G15_076	FROM->TO	GR ISLD-LNX3345.00 - GRAND ISLAND 345KV CKT Z	720	720	0.07445	128.8425	MINGO (MINGO) 345/115/13.8KV TRANSFORMER CKT 1
FDNS	00NR_G15_076	0	17SP	G15_076	FROM->TO	GR ISLD-LNX3345.00 - GRAND ISLAND 345KV CKT Z	720	720	0.07274	128.8342	COOPER - MOORE 345KV CKT 1
FDNS	00NR_G15_076	0	17SP	G15_076	FROM->TO	GR ISLD-LNX3345.00 - GRAND ISLAND 345KV CKT Z	720	720	0.0743	128.8274	GEN645001 1-FORT CALHOUN 1
FDNS	00NR_G15_076	0	17SP	G15_076	FROM->TO	GR ISLD-LNX3345.00 - GRAND ISLAND 345KV CKT Z	720	720	0.07439	128.8099	P12:115:TSGT:GRANTNB7-OGALALA7_2
FDNS	00NR_G15_076	0	17SP	G15_076	FROM->TO	GR ISLD-LNX3345.00 - GRAND ISLAND 345KV CKT Z	720	720	0.07584	128.7801	AXTELL - PAULINE 345KV CKT 1
FDNS	00NR_G15_076	0	17SP	G15_076	FROM->TO	GR ISLD-LNX3345.00 - GRAND ISLAND 345KV CKT Z	720	720	0.07629	128.7201	103RD & ROKEBY - MOORE 345KV CKT 1
FDNS	00NR_G15_076	0	17SP	G15_076	FROM->TO	GR ISLD-LNX3345.00 - GRAND ISLAND 345KV CKT Z	720	720	0.07629	128.7201	103RD & ROKEBY - MOORE 345KV CKT 1
FDNS	00NR_G15_076	0	17SP	G15_076	FROM->TO	GR ISLD-LNX3345.00 - GRAND ISLAND 345KV CKT Z	720	720	0.07463	128.689	LOUP CITY - ST LIBORY 115KV CKT 1
FDNS	00NR_G15_076	0	17SP	G15_076	FROM->TO	GR ISLD-LNX3345.00 - GRAND ISLAND 345KV CKT Z	720	720	0.07409	128.637	GRAND ISLAND (GRAND.ISD T5) 230/115/13.8KV TRANSFORMER CKT 2
FDNS	00NR_G15_076	0	17SP	G15_076	FROM->TO	GR ISLD-LNX3345.00 - GRAND ISLAND 345KV CKT Z	720	720	0.07409	128.637	GRAND ISLAND (GRAND.ISD T5) 230/115/13.8KV TRANSFORMER CKT 2
FDNS	00NR_G15_076	0	17SP	G15_076	FROM->TO	GR ISLD-LNX3345.00 - GRAND ISLAND 345KV CKT Z	720	720	0.07409	128.6345	GRAND ISLAND (GRAND.ISD T2) 230/115/13.8KV TRANSFORMER CKT 1
FDNS	00NR_G15_076	0	17SP	G15_076	FROM->TO	GR ISLD-LNX3345.00 - GRAND ISLAND 345KV CKT Z	720	720	0.07409	128.6345	GRAND ISLAND (GRAND.ISD T2) 230/115/13.8KV TRANSFORMER CKT 1
FDNS	00NR_G15_076	0	17SP	G15_076	FROM->TO	GR ISLD-LNX3345.00 - GRAND ISLAND 345KV CKT Z	720	720	0.07468	128.5882	AURORA - GRAND ISLAND 115KV CKT 1
FDNS	00NR_G15_076	0	17SP	G15_076	FROM->TO	GR ISLD-LNX3345.00 - GRAND ISLAND 345KV CKT Z	720	720	0.07425	128.5769	MCCOOL (MCCOOL T2) 345/115/13.8KV TRANSFORMER CKT 1
FDNS	00NR_G15_076	0	17SP	G15_076	FROM->TO	GR ISLD-LNX3345.00 - GRAND ISLAND 345KV CKT Z	720	720	0.07425	128.5769	MCCOOL (MCCOOL T2) 345/115/13.8KV TRANSFORMER CKT 1
FDNS	00NR_G15_076	0	17SP	G15_076	FROM->TO	GR ISLD-LNX3345.00 - GRAND ISLAND 345KV CKT Z	720	720	0.07549	128.539	MAXWELL - NORTH PLATTE 115KV CKT 1
FDNS	00NR_G15_076	0	17SP	G15_076	FROM->TO	GR ISLD-LNX3345.00 - GRAND ISLAND 345KV CKT Z	720	720	0.07702	128.4996	MAXWELL - STAPLETON 115KV CKT 1
FDNS	00NR_G15_076	0	17SP	G15_076	FROM->TO	GR ISLD-LNX3345.00 - GRAND ISLAND 345KV CKT Z	720	720	0.07475	128.4657	FINNEY SWITCHING STATION - WALKTAP7 345.00 345KV CKT 1
FDNS	00NR_G15_076	0	17SP	G15_076	FROM->TO	GR ISLD-LNX3345.00 - GRAND ISLAND 345KV CKT Z	720	720	0.07475	128.4657	FINNEY SWITCHING STATION - WALKTAP7 345.00 345KV CKT 1
FDNS	00NR_G15_076	0	17SP	G15_076	FROM->TO	GR ISLD-LNX3345.00 - GRAND ISLAND 345KV CKT Z	720	720	0.07448	128.4596	G11_051T 345.00 - WOODWARD DISTRICT EHV 345KV CKT 1
FDNS	00NR_G15_076	0	17SP	G15_076	FROM->TO	GR ISLD-LNX3345.00 - GRAND ISLAND 345KV CKT Z	720	720	0.07427	128.4453	GRAND ISLAND (GI KU1B) 345/230/13.8KV TRANSFORMER CKT 2
FDNS	00NR_G15_076	0	17SP	G15_076	FROM->TO	GR ISLD-LNX3345.00 - GRAND ISLAND 345KV CKT Z	720	720	0.07427	128.4453	GRAND ISLAND (GI KU1B) 345/230/13.8KV TRANSFORMER CKT 2
FDNS	00NR_G15_076	0	17SP	G15_076	FROM->TO	GR ISLD-LNX3345.00 - GRAND ISLAND 345KV CKT Z	720	720	0.07427	128.4442	GRAND ISLAND (GI KU1A) 345/230/13.8KV TRANSFORMER CKT 1
FDNS	00NR_G15_076	0	17SP	G15_076	FROM->TO	GR ISLD-LNX3345.00 - GRAND ISLAND 345KV CKT Z	720	720	0.07427	128.4442	GRAND ISLAND (GI KU1A) 345/230/13.8KV TRANSFORMER CKT 1

SOLUTION	GROUP	SCENARIO	SEASON	SOURCE	DIRECTION	MONITORED ELEMENT	RATEA (MVA)	RATEB(MVA)	TDF	TC%LOADING (% MVA)	CONTINGENCY
FDNS	00NR_G15_076	0	17SP	G15_076	FROM->TO	GR ISLD-LNX3345.00 - GRAND ISLAND 345KV CKT Z	720	720	0.0743	128.4406	GEN562003 1-G11_027_3 0.6900
FDNS	00NR_G15_076	0	17SP	G15_076	FROM->TO	GR ISLD-LNX3345.00 - GRAND ISLAND 345KV CKT Z	720	720	0.07497	128.4377	Hitchland Interchange - WALKTAP7 345.00 345KV CKT 1
FDNS	00NR_G15_076	0	17SP	G15_076	FROM->TO	GR ISLD-LNX3345.00 - GRAND ISLAND 345KV CKT Z	720	720	0.07497	128.4377	Hitchland Interchange - WALKTAP7 345.00 345KV CKT 1
FDNS	00NR_G15_076	0	17SP	G15_076	FROM->TO	GR ISLD-LNX3345.00 - GRAND ISLAND 345KV CKT Z	720	720	0.07498	128.4326	P12:345:SPS:J07.1.FINN.HITCH
FDNS	00NR_G15_076	0	17SP	G15_076	FROM->TO	GR ISLD-LNX3345.00 - GRAND ISLAND 345KV CKT Z	720	720	0.07647	128.4068	MINGO - SETAB 345KV CKT 1
FDNS	00NR_G15_076	0	17SP	G15_076	FROM->TO	GR ISLD-LNX3345.00 - GRAND ISLAND 345KV CKT Z	720	720	0.07647	128.4068	MINGO - SETAB 345KV CKT 1
FDNS	00NR_G15_076	0	17SP	G15_076	FROM->TO	GR ISLD-LNX3345.00 - GRAND ISLAND 345KV CKT Z	720	720	0.0743	128.4034	GEN652546 1-FT RANDAL
FDNS	00NR_G15_076	0	17SP	G15_076	FROM->TO	GR ISLD-LNX3345.00 - GRAND ISLAND 345KV CKT Z	720	720	0.0743	128.3837	GEN600125 2-FEP ST G 13.800
FDNS	00NR_G15_076	0	17SP	G15_076	FROM->TO	GR ISLD-LNX3345.00 - GRAND ISLAND 345KV CKT Z	720	720	0.07825	128.3822	MOORE - PAULINE 345KV CKT 1
FDNS	00NR_G15_076	0	17SP	G15_076	FROM->TO	GR ISLD-LNX3345.00 - GRAND ISLAND 345KV CKT Z	720	720	0.0746	128.3741	LARAMIE RIVER - STEGALL 345KV CKT 1
FDNS	00NR_G15_076	0	17SP	G15_076	FROM->TO	GR ISLD-LNX3345.00 - GRAND ISLAND 345KV CKT Z	720	720	0.07455	128.3719	FALLOW 3 345.00 - GRIMES 345KV CKT 1
FDNS	00NR_G15_076	0	17SP	G15_076	FROM->TO	GR ISLD-LNX3345.00 - GRAND ISLAND 345KV CKT Z	720	720	0.0743	128.3696	GEN615031 1-PLEASANT VALLEY
FDNS	00NR_G15_076	0	17SP	G15_076	FROM->TO	GR ISLD-LNX3345.00 - GRAND ISLAND 345KV CKT Z	720	720	0.0743	128.3642	GEN615032 2-PLEASANT VALLEY
FDNS	00NR_G15_076	0	17SP	G15_076	FROM->TO	GR ISLD-LNX3345.00 - GRAND ISLAND 345KV CKT Z	720	720	0.0743	128.3627	GEN672367 1-MERIDIAN GENERATOR 1 GT1
FDNS	00NR_G15_076	0	17SP	G15_076	FROM->TO	GR ISLD-LNX3345.00 - GRAND ISLAND 345KV CKT Z	720	720	0.0743	128.3627	GEN672368 2-MERIDIAN GENERATOR 2 GT2
FDNS	00NR_G15_076	0	17SP	G15_076	FROM->TO	GR ISLD-LNX3345.00 - GRAND ISLAND 345KV CKT Z	720	720	0.07466	128.3571	P12:115:UMZW:# 172 #: WI IN SD.
FDNS	00NR_G15_076	0	17SP	G15_076	FROM->TO	GR ISLD-LNX3345.00 - GRAND ISLAND 345KV CKT Z	720	720	0.0743	128.3526	GEN600018 S-LS POWER STEAM
FDNS	00NR_G15_076	0	17SP	G15_076	FROM->TO	GR ISLD-LNX3345.00 - GRAND ISLAND 345KV CKT Z	720	720	0.0743	128.352	GEN672350 1-NIPAWIN GENERATOR 1
FDNS	00NR_G15_076	0	17SP	G15_076	FROM->TO	GR ISLD-LNX3345.00 - GRAND ISLAND 345KV CKT Z	720	720	0.0743	128.352	GEN672351 2-NIPAWIN GENERATOR 2
FDNS	00NR_G15_076	0	17SP	G15_076	FROM->TO	GR ISLD-LNX3345.00 - GRAND ISLAND 345KV CKT Z	720	720	0.0743	128.3519	GEN672352 3-NIPAWIN GENERATOR 3
FDNS	00NR_G15_076	0	17SP	G15_076	FROM->TO	GR ISLD-LNX3345.00 - GRAND ISLAND 345KV CKT Z	720	720	0.0743	128.3465	GEN657964 1-ASH2GEN9 0.5750
FDNS	00NR_G15_076	0	17SP	G15_076	FROM->TO	GR ISLD-LNX3345.00 - GRAND ISLAND 345KV CKT Z	720	720	0.0743	128.3417	GEN652548 5-FT RANDAL
FDNS	00NR_G15_076	0	17SP	G15_076	FROM->TO	GR ISLD-LNX3345.00 - GRAND ISLAND 345KV CKT Z	720	720	0.0743	128.3417	GEN652549 7-FT RANDAL
FDNS	00NR_G15_076	0	17SP	G15_076	FROM->TO	GR ISLD-LNX3345.00 - GRAND ISLAND 345KV CKT Z	720	720	0.0743	128.3394	MITCHLCO3 345.00 345/34.5KV TRANSFORMER CKT 1
FDNS	00NR_G15_076	0	17SP	G15_076	FROM->TO	GR ISLD-LNX3345.00 - GRAND ISLAND 345KV CKT Z	720	720	0.0743	128.3373	GEN672349 3-CORY COGEN GENERATOR 3 ST
FDNS	00NR_G15_076	0	17SP	G15_076	FROM->TO	GR ISLD-LNX3345.00 - GRAND ISLAND 345KV CKT Z	720	720	0.0743	128.3292	GEN652547 3-FT RANDAL
FDNS	00NR_G15_076	0	17SP	G15_076	FROM->TO	GR ISLD-LNX3345.00 - GRAND ISLAND 345KV CKT Z	720	720	0.07672	128.3248	ATCHSNT3 345.00 - BOONEVILLE 345KV CKT 1
FDNS	00NR_G15_076	0	17SP	G15_076	FROM->TO	GR ISLD-LNX3345.00 - GRAND ISLAND 345KV CKT Z	720	720	0.0744	128.3226	P12:345:UMZB:# 102 #: AVS BD IN ND. AVS BRD LR
FDNS	00NR_G15_076	0	17SP	G15_076	FROM->TO	GR ISLD-LNX3345.00 - GRAND ISLAND 345KV CKT Z	720	720	0.0744	128.3216	P12:345:UMZB:# 103 #: BD IN SD. LOSS OF LINE
FDNS	00NR_G15_076	0	17SP	G15_076	FROM->TO	GR ISLD-LNX3345.00 - GRAND ISLAND 345KV CKT Z	720	720	0.07448	128.3167	G11_051T 345.00 - TATONGA7 345.00 345KV CKT 1
FDNS	00NR_G15_076	0	17SP	G15_076	FROM->TO	GR ISLD-LNX3345.00 - GRAND ISLAND 345KV CKT Z	720	720	0.0743	128.3091	GEN620324 3-HOOT LAKE 3 GEN
FDNS	00NR_G15_076	0	17SP	G15_076	FROM->TO	GR ISLD-LNX3345.00 - GRAND ISLAND 345KV CKT Z	720	720	0.0744	128.2977	BRDLAND-LNX3345.00 - HURON 345KV CKT Z
FDNS	00NR_G15_076	0	17SP	G15_076	FROM->TO	GR ISLD-LNX3345.00 - GRAND ISLAND 345KV CKT Z	720	720	0.0744	128.2969	BROADLAND - HURON 230KV CKT 1
FDNS	00NR_G15_076	0	17SP	G15_076	FROM->TO	GR ISLD-LNX3345.00 - GRAND ISLAND 345KV CKT Z	720	720	0.0744	128.2956	HURON (BD KU2A) 345/230/13.8KV TRANSFORMER CKT 1
FDNS	00NR_G15_076	0	17SP	G15_076	FROM->TO	GR ISLD-LNX3345.00 - GRAND ISLAND 345KV CKT Z	720	720	0.0744	128.2956	HURON (BD KU2A) 345/230/13.8KV TRANSFORMER CKT 1
FDNS	00NR_G15_076	0	17SP	G15_076	FROM->TO	GR ISLD-LNX3345.00 - GRAND ISLAND 345KV CKT Z	720	720	0.0743	128.2937	GEN600021 3-ANGUS ANSON2
FDNS	00NR_G15_076	0	17SP	G15_076	FROM->TO	GR ISLD-LNX3345.00 - GRAND ISLAND 345KV CKT Z	720	720	0.07426	128.2781	GRAND ISLAND (GI KU3A) 345/230/13.8KV TRANSFORMER CKT 3
FDNS	00NR_G15_076	0	17SP	G15_076	FROM->TO	GR ISLD-LNX3345.00 - GRAND ISLAND 345KV CKT Z	720	720	0.07426	128.2781	GRAND ISLAND (GI KU3A) 345/230/13.8KV TRANSFORMER CKT 3
FDNS	00NR_G15_076	0	17SP	G15_076	FROM->TO	GR ISLD-LNX3345.00 - GRAND ISLAND 345KV CKT Z	720	720	0.0743	128.2778	GEN600020 2-ANGUS ANSON1
FDNS	00NR_G15_076	0	17SP	G15_076	FROM->TO	GR ISLD-LNX3345.00 - GRAND ISLAND 345KV CKT Z	720	720	0.0743	128.2661	GEN659290 1-EDGECOL
FDNS	00NR_G15_076	0	17SP	G15_076	FROM->TO	GR ISLD-LNX3345.00 - GRAND ISLAND 345KV CKT Z	720	720	0.0743	128.2622	GEN659158 2-PIONEER G213.800
FDNS	00NR_G15_076	0	17SP	G15_076	FROM->TO	GR ISLD-LNX3345.00 - GRAND ISLAND 345KV CKT Z	720	720	0.0743	128.2622	GEN659159 3-PIONEER G313.800
FDNS	00NR_G15_076	0	17SP	G15_076	FROM->TO	GR ISLD-LNX3345.00 - GRAND ISLAND 345KV CKT Z	720	720	0.0743	128.2605	GEN659156 2-LONESMCRK 2G13.800
FDNS	00NR_G15_076	0	17SP	G15_076	FROM->TO	GR ISLD-LNX3345.00 - GRAND ISLAND 345KV CKT Z	720	720	0.0743	128.2605	GEN659157 3-LONESMCRK 3G13.800
FDNS	00NR_G15_076	0	17SP	G15_076	FROM->TO	GR ISLD-LNX3345.00 - GRAND ISLAND 345KV CKT Z	720	720	0.0743	128.2572	GEN590010 1-ERCOT EQUIVALENCE
FDNS	00NR_G15_076	0	17SP	G15_076	FROM->TO	GR ISLD-LNX3345.00 - GRAND ISLAND 345KV CKT Z	720	720	0.0743	128.2571	GEN672339 16-QE 16G 13.800
FDNS	00NR_G15_076	0	17SP	G15_076	FROM->TO	GR ISLD-LNX3345.00 - GRAND ISLAND 345KV CKT Z	720	720	0.0743	128.2571	GEN672342 3-QUEEN ELIZABETH GENERATOR 3
FDNS	00NR_G15_076	0	17SP	G15_076	FROM->TO	GR ISLD-LNX3345.00 - GRAND ISLAND 345KV CKT Z	720	720	0.0743	128.2499	GEN300003 1-THOMAS HILL UNIT 3
FDNS	00NR_G15_076	0	17SP	G15_076	FROM->TO	GR ISLD-LNX3345.00 - GRAND ISLAND 345KV CKT Z	720	720	0.0743	128.2451	GEN600012 2-BLACK DOG GEN 2
FDNS	00NR_G15_076	0	17SP	G15_076	FROM->TO	GR ISLD-LNX3345.00 - GRAND ISLAND 345KV CKT Z	720	720	0.0743	128.243	GEN672393 2-NBECST2G 13.800
FDNS	00NR_G15_076	0	17SP	G15_076	FROM->TO	GR ISLD-LNX3345.00 - GRAND ISLAND 345KV CKT Z	720	720	0.0743	128.2381	LADISH 115/13.2KV TRANSFORMER CKT 1
FDNS	00NR_G15_076	0	17SP	G15_076	FROM->TO	GR ISLD-LNX3345.00 - GRAND ISLAND 345KV CKT Z	720	720	0.0743	128.2326	GEN652410 3-FT PECK
FDNS	00NR_G15_076	0	17SP	G15_076	FROM->TO	GR ISLD-LNX3345.00 - GRAND ISLAND 345KV CKT Z	720	720	0.07652	128.226	LOUP CITY - NORTH LOUP 115KV CKT 1
FDNS	00NR_G15_076	0	17SP	G15_076	FROM->TO	GR ISLD-LNX3345.00 - GRAND ISLAND 345KV CKT Z	720	720	0.0743	128.2249	GEN590011 2-ERCOT EQUIVALENCE
FDNS	00NR_G15_076	0	17SP	G15_076	FROM->TO	GR ISLD-LNX3345.00 - GRAND ISLAND 345KV CKT Z	720	720	0.0743	128.2063	EASTDC - ERCOT EQUIVALENCE 345KV CKT 1
FDNS	00NR_G15_076	0	17SP	G15_076	FROM->TO	GR ISLD-LNX3345.00 - GRAND ISLAND 345KV CKT Z	720	720	0.0743	128.2019	GEN629072 4-LANSING GENERATOR FOR UNITS NO4 EIA CODE 1
FDNS	00NR_G15_076	0	17SP	G15_076	FROM->TO	GR ISLD-LNX3345.00 - GRAND ISLAND 345KV CKT Z	720	720	0.07433	128.1839	DRAYTON - LETELLIER 230KV CKT 1
FDNS	00NR_G15_076	0	17SP	G15_076	FROM->TO	GR ISLD-LNX3345.00 - GRAND ISLAND 345KV CKT Z	720	720	0.0743	128.1676	G830_SUB 115.00 - GRE-MCHENRY7115.00 115KV CKT 1
FDNS	00NR_G15_076	0	17SP	G15_076	FROM->TO	GR ISLD-LNX3345.00 - GRAND ISLAND 345KV CKT Z	720	720	0.0743	128.1653	GEN652414 4-FT PECK
FDNS	00NR_G15_076	0	17SP	G15_076	FROM->TO	GR ISLD-LNX3345.00 - GRAND ISLAND 345KV CKT Z	720	720	0.0743	128.1653	GEN652415 5-FT PECK
FDNS	00NR_G15_076	0	17SP	G15_076	FROM->TO	GR ISLD-LNX3345.00 - GRAND ISLAND 345KV CKT Z	720	720	0.0743	128.1596	GEN660003 3-HURON WEST PARK
FDNS	00NR_G15_076	0	17SP	G15_076	FROM->TO	GR ISLD-LNX3345.00 - GRAND ISLAND 345KV CKT Z	720	720	0.07425	128.1588	OAHE - SULLEY BUTTE 230KV CKT 1
FDNS	00NR_G15_076	0	17SP	G15_076	FROM->TO	GR ISLD-LNX3345.00 - GRAND ISLAND 345KV CKT Z	720	720	0.0743	128.1567	G830_SUB 115.00 115/34.5KV TRANSFORMER CKT 1
FDNS	00NR_G15_076	0	17SP	G15_076	FROM->TO	GR ISLD-LNX3345.00 - GRAND ISLAND 345KV CKT Z	720	720	0.0743	128.1319	EMERY 161/18.0KV TRANSFORMER CKT 1
FDNSLock	00NR_G15_076	0	17SP	G15_076	FROM->TO	GR ISLD-LNX3345.00 - GRAND ISLAND 345KV CKT Z	720	720	0.07634	128.1279	CENTRAL CITY - GRAND ISLAND 115KV CKT 1
FDNS	00NR_G15_076	0	17SP	G15_076	FROM->TO	GR ISLD-LNX3345.00 - GRAND ISLAND 345KV CKT Z	720	720	0.0743	128.1261	GEN652345 W-G07_023IS_2 0.6900
FDNS	00NR_G15_076	0	17SP	G15_076	FROM->TO	GR ISLD-LNX3345.00 - GRAND ISLAND 345KV CKT Z	720	720	0.0762	128.1248	GERALD GENTLEMAN STATION - RED WILLOW 345KV CKT 1
FDNS	00NR_G15_076	0	17SP	G15_076	FROM->TO	GR ISLD-LNX3345.00 - GRAND ISLAND 345KV CKT Z	720	720	0.0743	128.1207	GEN 11104 1-J262_GEN 0.6000
FDNS	00NR_G15_076	0	17SP	G15_076	FROM->TO	GR ISLD-LNX3345.00 - GRAND ISLAND 345KV CKT Z	720	720	0.0743	128.1207	GEN 11108 1-J263_GEN 0.6000
FDNS	00NR_G15_076	0	17SP	G15_076	FROM->TO	GR ISLD-LNX3345.00 - GRAND ISLAND 345KV CKT Z	720	720	0.07462	128.1011	POST ROCK (POSTROCK T1) 345/230/13.8KV TRANSFORMER CKT 1
FDNS	00NR_G15_076	0	17SP	G15_076	FROM->TO	GR ISLD-LNX3345.00 - GRAND ISLAND 345KV CKT Z	720	720	0.0743	128.101	GEN600050 1-FEP
FDNS	00NR_G15_076	0	17SP	G15_076	FROM->TO	GR ISLD-LNX3345.00 - GRAND ISLAND 345KV CKT Z	720	720	0.08619	128.0706	COLUMWEST - GRAND ISLAND 230KV CKT 1
FDNS	00NR_G15_076	0	17SP	G15_076	FROM->TO	GR ISLD-LNX3345.00 - GRAND ISLAND 345KV CKT Z	720	720	0.0743	128.0694	GEN300007 1-NEW MADRID UNIT 2

SOLUTION	GROUP	SCENARIO	SEASON	SOURCE	DIRECTION	MONITORED ELEMENT	RATEA (MVA)	RATEB(MVA)	TDF	TC%LOADING (% MVA)	CONTINGENCY
FDNS	00NR_G15_076	0	17SP	G15_076	FROM->TO	GR ISLD-LNX3345.00 - GRAND ISLAND 345KV CKT Z	720	720	0.0743	128.0625	GEN300006 1-NEW MADRID UNIT 1
FDNS	00NR_G15_076	0	17SP	G15_076	FROM->TO	GR ISLD-LNX3345.00 - GRAND ISLAND 345KV CKT Z	720	720	0.0744	128.0523	ANTELOP-LNX3345.00 - ANTELOPE VALLEY 345KV CKT Z
FDNS	00NR_G15_076	0	17SP	G15_076	FROM->TO	GR ISLD-LNX3345.00 - GRAND ISLAND 345KV CKT Z	720	720	0.0743	128.0506	GEN600046 1-MECST
FDNS	00NR_G15_076	0	17SP	G15_076	FROM->TO	GR ISLD-LNX3345.00 - GRAND ISLAND 345KV CKT Z	720	720	0.07448	128.0459	MATHWSN7 345.00 - TATONGA7 345.00 345KV CKT 1
FDNS	00NR_G15_076	0	17SP	G15_076	FROM->TO	GR ISLD-LNX3345.00 - GRAND ISLAND 345KV CKT Z	720	720	0.0743	128.0227	GEN600047 1-MECCT1
FDNS	00NR_G15_076	0	17SP	G15_076	FROM->TO	GR ISLD-LNX3345.00 - GRAND ISLAND 345KV CKT Z	720	720	0.0743	128.0199	GEN600064 2-COLVILLE GEN 2
FDNS	00NR_G15_076	0	17SP	G15_076	FROM->TO	GR ISLD-LNX3345.00 - GRAND ISLAND 345KV CKT Z	720	720	0.0743	128.0198	GEN600063 1-COLVILLE GEN 1
FDNS	00NR_G15_076	0	17SP	G15_076	FROM->TO	GR ISLD-LNX3345.00 - GRAND ISLAND 345KV CKT Z	720	720	0.07425	128.0171	SULLYBT-LNX3230.00 - WHITLOK 230KV CKT 1
FDNS	00NR_G15_076	0	17SP	G15_076	FROM->TO	GR ISLD-LNX3345.00 - GRAND ISLAND 345KV CKT Z	720	720	0.0743	128.0146	GEN600043 7-BLUE LAKE5
FDNS	00NR_G15_076	0	17SP	G15_076	FROM->TO	GR ISLD-LNX3345.00 - GRAND ISLAND 345KV CKT Z	720	720	0.0743	128.0146	GEN600044 8-BLUE LAKE6
FDNS	00NR_G15_076	0	17SP	G15_076	FROM->TO	GR ISLD-LNX3345.00 - GRAND ISLAND 345KV CKT Z	720	720	0.07425	128.0136	SULLEY BUTTE - SULLYBT-LNX3230.00 230KV CKT Z
FDNS	00NR_G15_076	0	17SP	G15_076	FROM->TO	GR ISLD-LNX3345.00 - GRAND ISLAND 345KV CKT Z	720	720	0.0743	128.0091	GEN660001 2-ABERDEEN SIEBRECHT
FDNS	00NR_G15_076	0	17SP	G15_076	FROM->TO	GR ISLD-LNX3345.00 - GRAND ISLAND 345KV CKT Z	720	720	0.0743	127.9968	CENTER 230/22.0KV TRANSFORMER CKT 1
FDNS	00NR_G15_076	0	17SP	G15_076	FROM->TO	GR ISLD-LNX3345.00 - GRAND ISLAND 345KV CKT Z	720	720	0.0743	127.9907	GEN659273 2-GROTON SYNC COND
FDNS	00NR_G15_076	0	17SP	G15_076	FROM->TO	GR ISLD-LNX3345.00 - GRAND ISLAND 345KV CKT Z	720	720	0.0743	127.9907	GEN659294 1-WILTONCOL9
FDNS	00NR_G15_076	0	17SP	G15_076	FROM->TO	GR ISLD-LNX3345.00 - GRAND ISLAND 345KV CKT Z	720	720	0.07425	127.9799	P12:230:UMZB:# 114 #: SB IN SD. SB-WK-GH
FDNS	00NR_G15_076	0	17SP	G15_076	FROM->TO	GR ISLD-LNX3345.00 - GRAND ISLAND 345KV CKT Z	720	720	0.07425	127.9799	P12:230:UMZB:# 117 #: WK IN SD. SB-WK-GH
FDNS	00NR_G15_076	0	17SP	G15_076	FROM->TO	GR ISLD-LNX3345.00 - GRAND ISLAND 345KV CKT Z	720	720	0.0743	127.9788	GEN600065 7-HIGH BRIDGE
FDNS	00NR_G15_076	0	17SP	G15_076	FROM->TO	GR ISLD-LNX3345.00 - GRAND ISLAND 345KV CKT Z	720	720	0.0743	127.9788	GEN600066 8-HIGH BRIDGE
FDNS	00NR_G15_076	0	17SP	G15_076	FROM->TO	GR ISLD-LNX3345.00 - GRAND ISLAND 345KV CKT Z	720	720	0.0743	127.9738	GEN600014 4-BLACK DOG GEN 4
FDNS	00NR_G15_076	0	17SP	G15_076	FROM->TO	GR ISLD-LNX3345.00 - GRAND ISLAND 345KV CKT Z	720	720	0.0743	127.9687	GEN600011 5-BLACK DOG GEN 1
FDNS	00NR_G15_076	0	17SP	G15_076	FROM->TO	GR ISLD-LNX3345.00 - GRAND ISLAND 345KV CKT Z	720	720	0.0743	127.9629	GEN600070 9-RIVER SIDE
FDNS	00NR_G15_076	0	17SP	G15_076	FROM->TO	GR ISLD-LNX3345.00 - GRAND ISLAND 345KV CKT Z	720	720	0.0743	127.9629	GEN600071 10-RIVER SIDE
FDNS	00NR_G15_076	0	17SP	G15_076	FROM->TO	GR ISLD-LNX3345.00 - GRAND ISLAND 345KV CKT Z	720	720	0.0743	127.9524	GEN600045 4-ANSON
FDNS	00NR_G15_076	0	17SP	G15_076	FROM->TO	GR ISLD-LNX3345.00 - GRAND ISLAND 345KV CKT Z	720	720	0.0743	127.9492	GEN600007 7-RIVERSIDE GEN 7
FDNS	00NR_G15_076	0	17SP	G15_076	FROM->TO	GR ISLD-LNX3345.00 - GRAND ISLAND 345KV CKT Z	720	720	0.0743	127.9475	GEN 10648 1-G830_GEN 0.6900
FDNS	00NR_G15_076	0	17SP	G15_076	FROM->TO	GR ISLD-LNX3345.00 - GRAND ISLAND 345KV CKT Z	720	720	0.0743	127.939	GEN659192 6-LYNN
FDNS	00NR_G15_076	0	17SP	G15_076	FROM->TO	GR ISLD-LNX3345.00 - GRAND ISLAND 345KV CKT Z	720	720	0.0743	127.9383	GEN659162 4-RED WLCK
FDNS	00NR_G15_076	0	17SP	G15_076	FROM->TO	GR ISLD-LNX3345.00 - GRAND ISLAND 345KV CKT Z	720	720	0.0743	127.9383	GEN659163 5-BLACK WDCK
FDNS	00NR_G15_076	0	17SP	G15_076	FROM->TO	GR ISLD-LNX3345.00 - GRAND ISLAND 345KV CKT Z	720	720	0.07425	127.9328	GLENHAM - WHITLOK 230KV CKT 1
FDNS	00NR_G15_076	0	17SP	G15_076	FROM->TO	GR ISLD-LNX3345.00 - GRAND ISLAND 345KV CKT Z	720	720	0.0743	127.9214	LANSING WEST 161/22.0KV TRANSFORMER CKT 1
FDNS	00NR_G15_076	0	17SP	G15_076	FROM->TO	GR ISLD-LNX3345.00 - GRAND ISLAND 345KV CKT Z	720	720	0.0743	127.9203	GEN600017 C-LS POWER CT
FDNS	00NR_G15_076	0	17SP	G15_076	FROM->TO	GR ISLD-LNX3345.00 - GRAND ISLAND 345KV CKT Z	720	720	0.0743	127.8927	GEN659031 1-G12_014IS_4 0.6900
FDNS	00NR_G15_076	0	17SP	G15_076	FROM->TO	GR ISLD-LNX3345.00 - GRAND ISLAND 345KV CKT Z	720	720	0.0743	127.8727	GEN615021 1-GRE-ER 14G 16.000
FDNS	00NR_G15_076	0	17SP	G15_076	FROM->TO	GR ISLD-LNX3345.00 - GRAND ISLAND 345KV CKT Z	720	720	0.0743	127.8666	GEN652545 7-BIG BEND
FDNS	00NR_G15_076	0	17SP	G15_076	FROM->TO	GR ISLD-LNX3345.00 - GRAND ISLAND 345KV CKT Z	720	720	0.0743	127.8658	GEN615052 1-CAMBRIDGE GENERATING STATION
FDNS	00NR_G15_076	0	17SP	G15_076	FROM->TO	GR ISLD-LNX3345.00 - GRAND ISLAND 345KV CKT Z	720	720	0.0743	127.8577	GEN615015 1-GRE-SPRITWDG13.200
FDNS	00NR_G15_076	0	17SP	G15_076	FROM->TO	GR ISLD-LNX3345.00 - GRAND ISLAND 345KV CKT Z	720	720	0.0743	127.7965	GEN681522 3-GENOA 3
FDNS	00NR_G15_076	0	17SP	G15_076	FROM->TO	GR ISLD-LNX3345.00 - GRAND ISLAND 345KV CKT Z	720	720	0.0743	127.7283	GEN660016 1-B_H WIND 0.7000
FDNS	00NR_G15_076	0	17SP	G15_076	FROM->TO	GR ISLD-LNX3345.00 - GRAND ISLAND 345KV CKT Z	720	720	0.0743	127.7192	BISONMP4 230.00 - SQUARE BUTTE 230KV CKT 1
FDNS	00NR_G15_076	0	17SP	G15_076	FROM->TO	GR ISLD-LNX3345.00 - GRAND ISLAND 345KV CKT Z	720	720	0.0743	127.6787	GEN672303 3-BOUNDARY DAM GENERATOR 3
FDNS	00NR_G15_076	0	17SP	G15_076	FROM->TO	GR ISLD-LNX3345.00 - GRAND ISLAND 345KV CKT Z	720	720	0.0743	127.6787	GEN672305 5-BOUNDARY DAM GENERATOR 5
FDNS	00NR_G15_076	0	17SP	G15_076	FROM->TO	GR ISLD-LNX3345.00 - GRAND ISLAND 345KV CKT Z	720	720	0.0743	127.676	GEN652906 1-G09_006IS_3 0.6900
FDNS	00NR_G15_076	0	17SP	G15_076	FROM->TO	GR ISLD-LNX3345.00 - GRAND ISLAND 345KV CKT Z	720	720	0.0743	127.6739	GEN662101 1-WESSINGTON190.5750
FDNS	00NR_G15_076	0	17SP	G15_076	FROM->TO	GR ISLD-LNX3345.00 - GRAND ISLAND 345KV CKT Z	720	720	0.0743	127.6547	GEN672392 1-NBECGT1G 18.000
FDNS	00NR_G15_076	0	17SP	G15_076	FROM->TO	GR ISLD-LNX3345.00 - GRAND ISLAND 345KV CKT Z	720	720	0.0743	127.5858	GEN600067 9-HIGH BRIDGE
FDNS	00NR_G15_076	0	17SP	G15_076	FROM->TO	GR ISLD-LNX3345.00 - GRAND ISLAND 345KV CKT Z	720	720	0.0743	127.5405	GEN910006 1-G12_012IS_3 0.6900
FDNS	00NR_G15_076	0	17SP	G15_076	FROM->TO	GR ISLD-LNX3345.00 - GRAND ISLAND 345KV CKT Z	720	720	0.0743	127.5338	GEN652907 1-G09_007IS_3 0.6900
FDNS	00NR_G15_076	0	17SP	G15_076	FROM->TO	GR ISLD-LNX3345.00 - GRAND ISLAND 345KV CKT Z	720	720	0.0743	127.531	SQUARE BUTTE - YNG2 4 230.00 230KV CKT 1
FDNS	00NR_G15_076	0	17SP	G15_076	FROM->TO	GR ISLD-LNX3345.00 - GRAND ISLAND 345KV CKT Z	720	720	0.0743	127.5305	YNG2 4 230.00 230/20.0KV TRANSFORMER CKT 1
FDNS	00NR_G15_076	0	17SP	G15_076	FROM->TO	GR ISLD-LNX3345.00 - GRAND ISLAND 345KV CKT Z	720	720	0.07807	127.5021	MINGO - RED WILLOW 345KV CKT 1
FDNS	00NR_G15_076	0	17SP	G15_076	FROM->TO	GR ISLD-LNX3345.00 - GRAND ISLAND 345KV CKT Z	720	720	0.07807	127.5021	MINGO - RED WILLOW 345KV CKT 1
FDNS	00NR_G15_076	0	17SP	G15_076	FROM->TO	GR ISLD-LNX3345.00 - GRAND ISLAND 345KV CKT Z	720	720	0.0743	127.4431	COYOTE 345/24.0KV TRANSFORMER CKT 1
FDNS	00NR_G15_076	0	17SP	G15_076	FROM->TO	GR ISLD-LNX3345.00 - GRAND ISLAND 345KV CKT Z	720	720	0.0743	127.3925	GEN659353 1-DEERCREK CTG18.000
FDNS	00NR_G15_076	0	17SP	G15_076	FROM->TO	GR ISLD-LNX3345.00 - GRAND ISLAND 345KV CKT Z	720	720	0.0743	127.3917	GEN659354 1-DEERCREK STG18.000
FDNS	00NR_G15_076	0	17SP	G15_076	FROM->TO	GR ISLD-LNX3345.00 - GRAND ISLAND 345KV CKT Z	720	720	0.07425	127.3735	GLENHAM - L3 HAWDON 230KV CKT 1
FDNS	00NR_G15_076	0	17SP	G15_076	FROM->TO	GR ISLD-LNX3345.00 - GRAND ISLAND 345KV CKT Z	720	720	0.0743	127.2218	GEN659289 1-DAYCNTYWND W0.6900
FDNS	00NR_G15_076	0	17SP	G15_076	FROM->TO	GR ISLD-LNX3345.00 - GRAND ISLAND 345KV CKT Z	720	720	0.0743	127.1882	GEN659018 1-G14_003IS_3 0.6900
FDNS	00NR_G15_076	0	17SP	G15_076	FROM->TO	GR ISLD-LNX3345.00 - GRAND ISLAND 345KV CKT Z	720	720	0.0743	127.1464	GEN681542 6-JP MADGETT
FDNS	00NR_G15_076	0	17SP	G15_076	FROM->TO	GR ISLD-LNX3345.00 - GRAND ISLAND 345KV CKT Z	720	720	0.0743	127.0513	GEN659194 1-NDPRAIRWND1W0.6900
FDNS	00NR_G15_076	0	17SP	G15_076	FROM->TO	GR ISLD-LNX3345.00 - GRAND ISLAND 345KV CKT Z	720	720	0.0743	127.0481	GEN659010 4-G07_027IS_2 0.6900
FDNS	00NR_G15_076	0	17SP	G15_076	FROM->TO	GR ISLD-LNX3345.00 - GRAND ISLAND 345KV CKT Z	720	720	0.0743	127.0363	GEN652460 4-GARRISON
FDNS	00NR_G15_076	0	17SP	G15_076	FROM->TO	GR ISLD-LNX3345.00 - GRAND ISLAND 345KV CKT Z	720	720	0.0743	127.0362	GEN652461 5-GARRISON
FDNS	00NR_G15_076	0	17SP	G15_076	FROM->TO	GR ISLD-LNX3345.00 - GRAND ISLAND 345KV CKT Z	720	720	0.0743	127.032	GEN652544 5-BIG BEND
FDNS	00NR_G15_076	0	17SP	G15_076	FROM->TO	GR ISLD-LNX3345.00 - GRAND ISLAND 345KV CKT Z	720	720	0.0743	127.0308	GEN652543 3-BIG BEND
FDNS	00NR_G15_076	0	17SP	G15_076	FROM->TO	GR ISLD-LNX3345.00 - GRAND ISLAND 345KV CKT Z	720	720	0.0743	127.0305	GEN652542 1-BIG BEND
FDNS	00NR_G15_076	0	17SP	G15_076	FROM->TO	GR ISLD-LNX3345.00 - GRAND ISLAND 345KV CKT Z	720	720	0.0743	126.9783	GEN652457 1-GARRISON
FDNS	00NR_G15_076	0	17SP	G15_076	FROM->TO	GR ISLD-LNX3345.00 - GRAND ISLAND 345KV CKT Z	720	720	0.0743	126.9783	GEN652458 2-GARRISON
FDNS	00NR_G15_076	0	17SP	G15_076	FROM->TO	GR ISLD-LNX3345.00 - GRAND ISLAND 345KV CKT Z	720	720	0.0743	126.9783	GEN652459 3-GARRISON
FDNS	00NR_G15_076	0	17SP	G15_076	FROM->TO	GR ISLD-LNX3345.00 - GRAND ISLAND 345KV CKT Z	720	720	0.0743	126.9604	STANTON 230/18.0KV TRANSFORMER CKT 1
FDNS	00NR_G15_076	0	17SP	G15_076	FROM->TO	GR ISLD-LNX3345.00 - GRAND ISLAND 345KV CKT Z	720	720	0.07577	126.9166	AXTELL - POST ROCK 345KV CKT 1
FDNS	00NR_G15_076	0	17SP	G15_076	FROM->TO	GR ISLD-LNX3345.00 - GRAND ISLAND 345KV CKT Z	720	720	0.0743	126.8992	GEN659403 1-NDSUNFLWR W0.6900
FDNS	00NR_G15_076	0	17SP	G15_076	FROM->TO	GR ISLD-LNX3345.00 - GRAND ISLAND 345KV CKT Z	720	720	0.07795	126.8632	AXTELL - SWEETWATER 345KV CKT 1

SOLUTION	GROUP	SCENARIO	SEASON	SOURCE	DIRECTION	MONITORED ELEMENT	RATEA (MVA)	RATEB(MVA)	TDF	TC%LOADING (% MVA)	CONTINGENCY
FDNSLock	00NR_G15_076	0	17SP	G15_076	FROM->TO	GR ISLD-LNX3345.00 - GRAND ISLAND 345KV CKT Z	720	720	0.0743	126.8551	GR ISLD-LNX3345.00 345KV SWITCHED SHUNT
FDNS	00NR_G15_076	0	17SP	G15_076	FROM->TO	GR ISLD-LNX3345.00 - GRAND ISLAND 345KV CKT Z	720	720	0.0743	126.8545	GR ISLD-LNX3345.00 345KV SWITCHED SHUNT
FDNS	00NR_G15_076	0	17SP	G15_076	FROM->TO	GR ISLD-LNX3345.00 - GRAND ISLAND 345KV CKT Z	720	720	0.0743	126.715	CLAY BOSWELL 230/20.9KV TRANSFORMER CKT 1
FDNS	00NR_G15_076	0	17SP	G15_076	FROM->TO	GR ISLD-LNX3345.00 - GRAND ISLAND 345KV CKT Z	720	720	0.0743	126.5804	GEN659411 1-CAMPBLCNTY W0.6900
FDNS	00NR_G15_076	0	17SP	G15_076	FROM->TO	GR ISLD-LNX3345.00 - GRAND ISLAND 345KV CKT Z	720	720	0.0743	126.3666	GEN659296 2-SDPRAIRWND1W0.6900
FDNS	00NR_G15_076	0	17SP	G15_076	FROM->TO	GR ISLD-LNX3345.00 - GRAND ISLAND 345KV CKT Z	720	720	0.0743	126.3577	ALMA 161 161/24.0KV TRANSFORMER CKT 1
FDNS	00NR_G15_076	0	17SP	G15_076	FROM->TO	GR ISLD-LNX3345.00 - GRAND ISLAND 345KV CKT Z	720	720	0.0743	126.3169	RCDC EAST 4230.00 - RED CEDAR DC 230KV CKT 1
FDNS	00NR_G15_076	0	17SP	G15_076	FROM->TO	GR ISLD-LNX3345.00 - GRAND ISLAND 345KV CKT Z	720	720	0.0743	126.3025	P12:230:UMZB:# 112 #: NU IN SD. NU-RCDC & DRY CREEK XFMR
FDNS	00NR_G15_076	0	17SP	G15_076	FROM->TO	GR ISLD-LNX3345.00 - GRAND ISLAND 345KV CKT Z	720	720	0.0743	126.2483	GEN652559 1-OAHE
FDNS	00NR_G15_076	0	17SP	G15_076	FROM->TO	GR ISLD-LNX3345.00 - GRAND ISLAND 345KV CKT Z	720	720	0.0743	126.2325	GEN672321 1-SHAND GENERATOR 1
FDNS	00NR_G15_076	0	17SP	G15_076	FROM->TO	GR ISLD-LNX3345.00 - GRAND ISLAND 345KV CKT Z	720	720	0.0743	126.2225	GEN672310 1-POPLAR RIVER GENERATOR 1
FDNS	00NR_G15_076	0	17SP	G15_076	FROM->TO	GR ISLD-LNX3345.00 - GRAND ISLAND 345KV CKT Z	720	720	0.0743	126.2224	GEN615010 1-STANTON4
FDNS	00NR_G15_076	0	17SP	G15_076	FROM->TO	GR ISLD-LNX3345.00 - GRAND ISLAND 345KV CKT Z	720	720	0.0743	126.2224	GEN672311 2-POPLAR RIVER GENERATOR 2
FDNS	00NR_G15_076	0	17SP	G15_076	FROM->TO	GR ISLD-LNX3345.00 - GRAND ISLAND 345KV CKT Z	720	720	0.0743	126.1481	GEN672306 6-BOUNDARY DAM GENERATOR 6
FDNS	00NR_G15_076	0	17SP	G15_076	FROM->TO	GR ISLD-LNX3345.00 - GRAND ISLAND 345KV CKT Z	720	720	0.0743	126.072	GEN652556 2-OAHE
FDNS	00NR_G15_076	0	17SP	G15_076	FROM->TO	GR ISLD-LNX3345.00 - GRAND ISLAND 345KV CKT Z	720	720	0.0743	126.072	GEN652557 4-OAHE
FDNS	00NR_G15_076	0	17SP	G15_076	FROM->TO	GR ISLD-LNX3345.00 - GRAND ISLAND 345KV CKT Z	720	720	0.0743	126.072	GEN652558 6-OAHE
FDNS	00NR_G15_076	0	17SP	G15_076	FROM->TO	GR ISLD-LNX3345.00 - GRAND ISLAND 345KV CKT Z	720	720	0.0743	125.9895	GEN659453 1-GI1414GEN W0.6900
FDNS	00NR_G15_076	0	17SP	G15_076	FROM->TO	GR ISLD-LNX3345.00 - GRAND ISLAND 345KV CKT Z	720	720	0.0743	125.952	GEN657749 1-YOUNG 1 GENERATOR
FDNS	00NR_G15_076	0	17SP	G15_076	FROM->TO	GR ISLD-LNX3345.00 - GRAND ISLAND 345KV CKT Z	720	720	0.0743	125.947	GEN600004 2-PRAIRIE ISLAND G2
FDNS	00NR_G15_076	0	17SP	G15_076	FROM->TO	GR ISLD-LNX3345.00 - GRAND ISLAND 345KV CKT Z	720	720	0.0743	125.9435	GEN600003 1-PRAIRIE ISLAND G1
FDNS	00NR_G15_076	0	17SP	G15_076	FROM->TO	GR ISLD-LNX3345.00 - GRAND ISLAND 345KV CKT Z	720	720	0.0743	125.8959	GEN659141 1-K10215A
FDNS	00NR_G15_076	0	17SP	G15_076	FROM->TO	GR ISLD-LNX3345.00 - GRAND ISLAND 345KV CKT Z	720	720	0.0743	125.6644	GEN652173 1-G09_001IS_2 0.6900
FDNS	00NR_G15_076	0	17SP	G15_076	FROM->TO	GR ISLD-LNX3345.00 - GRAND ISLAND 345KV CKT Z	720	720	0.0743	125.6324	GEN600006 1-AS KING
FDNS	00NR_G15_076	0	17SP	G15_076	FROM->TO	GR ISLD-LNX3345.00 - GRAND ISLAND 345KV CKT Z	720	720	0.0743	125.432	GEN659407 1-ANTELPHILLSW0.6900
FDNS	00NR_G15_076	0	17SP	G15_076	FROM->TO	GR ISLD-LNX3345.00 - GRAND ISLAND 345KV CKT Z	720	720	0.0743	125.3438	GEN659110 1-LELAND OLDS UNIT1
FDNS	00NR_G15_076	0	17SP	G15_076	FROM->TO	GR ISLD-LNX3345.00 - GRAND ISLAND 345KV CKT Z	720	720	0.0743	125.058	GEN600005 1-MONTICELLO
FDNS	00NR_G15_076	0	17SP	G15_076	FROM->TO	GR ISLD-LNX3345.00 - GRAND ISLAND 345KV CKT Z	720	720	0.08342	124.6276	MCCOOL - MOORE 345KV CKT 1
FDNS	00NR_G15_076	0	17SP	G15_076	FROM->TO	GR ISLD-LNX3345.00 - GRAND ISLAND 345KV CKT Z	720	720	0.0743	124.368	GEN600000 1-SHERBURNECNTY G1
FDNS	00NR_G15_076	0	17SP	G15_076	FROM->TO	GR ISLD-LNX3345.00 - GRAND ISLAND 345KV CKT Z	720	720	0.0743	124.1431	GEN600001 2-SHERBURNE CNTY G2
FDNS	00NR_G15_076	0	17SP	G15_076	FROM->TO	GR ISLD-LNX3345.00 - GRAND ISLAND 345KV CKT Z	720	720	0.0743	123.874	GEN661015 1-COYOTE
FDNS	00NR_G15_076	0	17SP	G15_076	FROM->TO	GR ISLD-LNX3345.00 - GRAND ISLAND 345KV CKT Z	720	720	0.0743	123.8679	GEN620315 1-BIG STONE GEN
FDNS	00NR_G15_076	0	17SP	G15_076	FROM->TO	GR ISLD-LNX3345.00 - GRAND ISLAND 345KV CKT Z	720	720	0.0743	123.4288	GEN657748 1-YOUNG 2 GENERATOR
FDNS	00NR_G15_076	0	17SP	G15_076	FROM->TO	GR ISLD-LNX3345.00 - GRAND ISLAND 345KV CKT Z	720	720	0.0743	123.1816	GEN600002 3-SHERBURNE CNTY G3
FDNS	00NR_G15_076	0	20SP	G15_076	FROM->TO	GR ISLD-LNX3345.00 - GRAND ISLAND 345KV CKT Z	720	720	0.07064	122.6809	HOLT.CO3 345.00 - THEDFRD3 345.00 345KV CKT 1
FDNS	00NR_G15_076	0	17SP	G15_076	FROM->TO	GR ISLD-LNX3345.00 - GRAND ISLAND 345KV CKT Z	720	720	0.0743	122.5092	SHERBURNE CO 345/24.0KV TRANSFORMER CKT 1
FDNS	00NR_G15_076	0	17SP	G15_076	FROM->TO	GR ISLD-LNX3345.00 - GRAND ISLAND 345KV CKT Z	720	720	0.07382	122.3695	FTTHOM1-LNX3345.00 - LELAND2-LNX3345.00 345KV CKT 1
FDNS	00NR_G15_076	0	17SP	G15_076	FROM->TO	GR ISLD-LNX3345.00 - GRAND ISLAND 345KV CKT Z	720	720	0.07382	122.118	P12:345:UMZB:# 108 #: LOS FT IN ND. LOS FT
FDNS	00NR_G15_076	0	17SP	G15_076	FROM->TO	GR ISLD-LNX3345.00 - GRAND ISLAND 345KV CKT Z	720	720	0.07382	122.111	FT THOMPSON - FTTHOM1-LNX3345.00 345KV CKT Z
FDNS	00NR_G15_076	0	17SP	G15_076	FROM->TO	GR ISLD-LNX3345.00 - GRAND ISLAND 345KV CKT Z	720	720	0.07382	121.962	LELAND OLDS - LELAND2-LNX3345.00 345KV CKT Z
FDNS	00NR_G15_076	0	17SP	G15_076	FROM->TO	GR ISLD-LNX3345.00 - GRAND ISLAND 345KV CKT Z	720	720	0.0743	121.5611	GEN659111 2-LELAND OLDS UNIT2
FDNS	00NR_G15_076	0	25SP	G15_076	FROM->TO	GR ISLD-LNX3345.00 - GRAND ISLAND 345KV CKT Z	720	720	0.07153	121.3592	HOLT.CO3 345.00 - THEDFRD3 345.00 345KV CKT 1
FDNS	00NR_G15_076	0	17SP	G15_076	FROM->TO	GR ISLD-LNX3345.00 - GRAND ISLAND 345KV CKT Z	720	720	0.0743	121.2552	GEN659125 1-COVEY
FDNS	00NR_G15_076	0	17SP	G15_076	FROM->TO	GR ISLD-LNX3345.00 - GRAND ISLAND 345KV CKT Z	720	720	0.0743	120.992	GEN659103 1-ANTELOPE VALLEY UNIT1
FDNS	00NR_G15_076	0	17SP	G15_076	FROM->TO	GR ISLD-LNX3345.00 - GRAND ISLAND 345KV CKT Z	720	720	0.0743	120.992	GEN659107 2-ANTELOPE VALLEY UNIT2
FDNS	00NR_G15_076	0	17SP	G15_076	FROM->TO	GR ISLD-LNX3345.00 - GRAND ISLAND 345KV CKT Z	720	720	0.08404	120.9314	GRAND ISLAND - MCCOOL 345KV CKT 1
FDNS	00NR_G15_076	0	17SP	G15_076	FROM->TO	GR ISLD-LNX3345.00 - GRAND ISLAND 345KV CKT Z	720	720	0.0743	120.7169	GEN615001 1-COAL CREEK
FDNS	00NR_G15_076	0	17SP	G15_076	FROM->TO	GR ISLD-LNX3345.00 - GRAND ISLAND 345KV CKT Z	720	720	0.0743	120.6289	GEN615002 2-COAL CREEK
FDNS	00NR_G15_076	0	17SP	G15_076	FROM->TO	GR ISLD-LNX3345.00 - GRAND ISLAND 345KV CKT Z	720	720	0.0743	113.8407	GEN562714 1-G15_023_4 0.6900
FDNS	00NR_G15_076	0	17SP	G15_076	FROM->TO	GR ISLD-LNX3345.00 - GRAND ISLAND 345KV CKT Z	720	720	0.0743	113.8407	GEN562715 1-G15_023_5 0.6900
FDNS	00NR_G15_076	0	20SP	G15_076	FROM->TO	GR ISLD-LNX3345.00 - GRAND ISLAND 345KV CKT Z	720	720	0.06576	112.2389	GERALD GENTLEMAN STATION - THEDFRD3 345.00 345KV CKT 1
FDNS	00NR_G15_076	0	25SP	G15_076	FROM->TO	GR ISLD-LNX3345.00 - GRAND ISLAND 345KV CKT Z	720	720	0.06691	111.3057	GERALD GENTLEMAN STATION - THEDFRD3 345.00 345KV CKT 1
FDNS	00NR_G15_076	0	16WP	G15_076	FROM->TO	GR ISLD-LNX3345.00 - GRAND ISLAND 345KV CKT Z	720	720	0.07685	108.5346	KELLY - MEADOWGROVE4230.00 230KV CKT 1
FDNS	00NR_G15_076	0	17SP	G15_076	FROM->TO	GR ISLD-LNX3345.00 - GRAND ISLAND 345KV CKT Z	720	720	0.0743	108.3177	GEN652353 2-GR PRAIRIEG 0.6900
FDNS	00NR_G15_076	0	16WP	G15_076	FROM->TO	GR ISLD-LNX3345.00 - GRAND ISLAND 345KV CKT Z	720	720	0.07072	107.9685	P12:230:UMZB:# 116 #: ST IN SD. WSG-ST-VH
FDNS	00NR_G15_076	0	16WP	G15_076	FROM->TO	GR ISLD-LNX3345.00 - GRAND ISLAND 345KV CKT Z	720	720	0.07095	107.3836	STORLA - WESSINGTON 230KV CKT 1
FDNS	00NR_G15_076	0	16WP	G15_076	FROM->TO	GR ISLD-LNX3345.00 - GRAND ISLAND 345KV CKT Z	720	720	0.07309	106.5787	RIEL - ROSEAU 500KV CKT 1
FDNS	00NR_G15_076	0	16WP	G15_076	FROM->TO	GR ISLD-LNX3345.00 - GRAND ISLAND 345KV CKT Z	720	720	0.0713	106.333	HANLON - STORLA 230KV CKT 1
FDNS	00NR_G15_076	0	16WP	G15_076	FROM->TO	GR ISLD-LNX3345.00 - GRAND ISLAND 345KV CKT Z	720	720	0.07027	105.9585	FT THOMPSON - LETCHER 230KV CKT 1
FDNS	00NR_G15_076	0	16WP	G15_076	FROM->TO	GR ISLD-LNX3345.00 - GRAND ISLAND 345KV CKT Z	720	720	0.07027	105.9585	FT THOMPSON - LETCHER 230KV CKT 1
FDNSLock	00NR_G15_076	0	16WP	G15_076	FROM->TO	GR ISLD-LNX3345.00 - GRAND ISLAND 345KV CKT Z	720	720	0.07217	105.6925	WATERTN-LNX3345.00 - WATERTOWN 345KV CKT Z
FDNSLock	00NR_G15_076	0	16WP	G15_076	FROM->TO	GR ISLD-LNX3345.00 - GRAND ISLAND 345KV CKT Z	720	720	0.07217	105.6822	P12:345:UMZW:# 1747 #: WT2 IN SD. WT2-WHT LINE FAULT
FDNS	00NR_G15_076	0	16WP	G15_076	FROM->TO	GR ISLD-LNX3345.00 - GRAND ISLAND 345KV CKT Z	720	720	0.07217	105.2546	WATERTN-LNX3345.00 - WHITE 345KV CKT 1
FDNS	00NR_G15_076	0	16WP	G15_076	FROM->TO	GR ISLD-LNX3345.00 - GRAND ISLAND 345KV CKT Z	720	720	0.073	104.9685	BUFFALO - JAMESTOWN 345KV CKT 1
FDNS	00NR_G15_076	0	16WP	G15_076	FROM->TO	GR ISLD-LNX3345.00 - GRAND ISLAND 345KV CKT Z	720	720	0.07484	104.7553	KEYSTONE - SIDNEY1-LNX3345.00 345KV CKT 1
FDNS	00NR_G15_076	0	16WP	G15_076	FROM->TO	GR ISLD-LNX3345.00 - GRAND ISLAND 345KV CKT Z	720	720	0.07484	104.7472	SIDNEY - SIDNEY1-LNX3345.00 345KV CKT Z
FDNS	00NR_G15_076	0	16WP	G15_076	FROM->TO	GR ISLD-LNX3345.00 - GRAND ISLAND 345KV CKT Z	720	720	0.06953	104.6905	FT RANDAL - G12_009IST 230.00 230KV CKT 1
FDNS	00NR_G15_076	0	16WP	G15_076	FROM->TO	GR ISLD-LNX3345.00 - GRAND ISLAND 345KV CKT Z	720	720	0.07302	104.6535	GEN336821 1-GRAND GULF UNIT
FDNS	00NR_G15_076	0	16WP	G15_076	FROM->TO	GR ISLD-LNX3345.00 - GRAND ISLAND 345KV CKT Z	720	720	0.06953	104.5944	FT THOMPSON - LAKE PLATT 230KV CKT 1
FDNS	00NR_G15_076	0	16WP	G15_076	FROM->TO	GR ISLD-LNX3345.00 - GRAND ISLAND 345KV CKT Z	720	720	0.06953	104.5944	FT THOMPSON - LAKE PLATT 230KV CKT 1
FDNS	00NR_G15_076	0	16WP	G15_076	FROM->TO	GR ISLD-LNX3345.00 - GRAND ISLAND 345KV CKT Z	720	720	0.06944	104.5915	FT RANDAL - FT THOMPSON 230KV CKT 1
FDNS	00NR_G15_076	0	16WP	G15_076	FROM->TO	GR ISLD-LNX3345.00 - GRAND ISLAND 345KV CKT Z	720	720	0.06944	104.5915	FT RANDAL - FT THOMPSON 230KV CKT 1
FDNS	00NR_G15_076	0	16WP	G15_076	FROM->TO	GR ISLD-LNX3345.00 - GRAND ISLAND 345KV CKT Z	720	720	0.07208	104.5347	LETCHER - SIOUX FALLS 230KV CKT 1

SOLUTION	GROUP	SCENARIO	SEASON	SOURCE	DIRECTION	MONITORED ELEMENT	RATEA (MVA)	RATEB(MVA)	TDF	TC%LOADING (% MVA)	CONTINGENCY
FDNS	00NR_G15_076	0	16WP	G15_076	FROM->TO	GR ISLD-LNX3345.00 - GRAND ISLAND 345KV CKT Z	720	720	0.07273	104.3463	G09_001IST 345.00 - WATERTOWN 345KV CKT 1
FDNS	00NR_G15_076	0	16WP	G15_076	FROM->TO	GR ISLD-LNX3345.00 - GRAND ISLAND 345KV CKT Z	720	720	0.07302	104.3433	GEN635024 4-WALTER SCOTT UNIT 4
FDNS	00NR_G15_076	0	16WP	G15_076	FROM->TO	GR ISLD-LNX3345.00 - GRAND ISLAND 345KV CKT Z	720	720	0.06953	104.3184	G12_009IST 230.00 - LAKE PLATT 230KV CKT 1
FDNS	00NR_G15_076	0	16WP	G15_076	FROM->TO	GR ISLD-LNX3345.00 - GRAND ISLAND 345KV CKT Z	720	720	0.07302	104.3156	GEN640010 1-GERALD GENTLEMAN STATION UNIT 1
FDNS	00NR_G15_076	0	16WP	G15_076	FROM->TO	GR ISLD-LNX3345.00 - GRAND ISLAND 345KV CKT Z	720	720	0.07302	104.2911	GEN337911 1-ARKANSAS NUCLEAR ONE UNIT #2
FDNS	00NR_G15_076	0	16WP	G15_076	FROM->TO	GR ISLD-LNX3345.00 - GRAND ISLAND 345KV CKT Z	720	720	0.07685	104.256	FT RANDAL - MEADOWGROVE4230.00 230KV CKT 1
FDNS	00NR_G15_076	0	16WP	G15_076	FROM->TO	GR ISLD-LNX3345.00 - GRAND ISLAND 345KV CKT Z	720	720	0.07302	104.2064	GEN640011 2-GERALD GENTLEMAN STATION UNIT 2
FDNS	00NR_G15_076	0	16WP	G15_076	FROM->TO	GR ISLD-LNX3345.00 - GRAND ISLAND 345KV CKT Z	720	720	0.07302	104.2019	GEN344225 1-1CAL G1 25.000
FDNS	00NR_G15_076	0	16WP	G15_076	FROM->TO	GR ISLD-LNX3345.00 - GRAND ISLAND 345KV CKT Z	720	720	0.07302	104.1667	GEN336153 1-WATERFORD UNIT#3
FDNS	00NR_G15_076	0	16WP	G15_076	FROM->TO	GR ISLD-LNX3345.00 - GRAND ISLAND 345KV CKT Z	720	720	0.07392	104.147	HAZLETON - MITCHLCO3 345.00 345KV CKT 1
FDNS	00NR_G15_076	0	16WP	G15_076	FROM->TO	GR ISLD-LNX3345.00 - GRAND ISLAND 345KV CKT Z	720	720	0.073	104.0614	CENTER - JAMESTOWN 345KV CKT 1
FDNS	00NR_G15_076	0	16WP	G15_076	FROM->TO	GR ISLD-LNX3345.00 - GRAND ISLAND 345KV CKT Z	720	720	0.07302	104.0069	GEN635023 3-WALTER SCOTT UNIT 3
FDNS	00NR_G15_076	0	16WP	G15_076	FROM->TO	GR ISLD-LNX3345.00 - GRAND ISLAND 345KV CKT Z	720	720	0.07338	103.9606	AS KING - EAU CLAIRE 345KV CKT 1
FDNS	00NR_G15_076	0	16WP	G15_076	FROM->TO	GR ISLD-LNX3345.00 - GRAND ISLAND 345KV CKT Z	720	720	0.07301	103.924	BISON 3 345.00 - BUFFALO 345KV CKT 1
FDNS	00NR_G15_076	0	16WP	G15_076	FROM->TO	GR ISLD-LNX3345.00 - GRAND ISLAND 345KV CKT Z	720	720	0.07302	103.9153	GEN337910 1-ARKANSAS NUCLEAR ONE UNIT #1
FDNS	00NR_G15_076	0	16WP	G15_076	FROM->TO	GR ISLD-LNX3345.00 - GRAND ISLAND 345KV CKT Z	720	720	0.07272	103.9132	FT RANDAL - SIOUX CITY 230KV CKT 1
FDNS	00NR_G15_076	0	16WP	G15_076	FROM->TO	GR ISLD-LNX3345.00 - GRAND ISLAND 345KV CKT Z	720	720	0.07302	103.8985	GEN335831 1-RIVERBEND UNIT#1
FDNS	00NR_G15_076	0	16WP	G15_076	FROM->TO	GR ISLD-LNX3345.00 - GRAND ISLAND 345KV CKT Z	720	720	0.08147	103.853	RAUN - SUB 3451 FT CAL 345KV CKT 1
FDNS	00NR_G15_076	0	16WP	G15_076	FROM->TO	GR ISLD-LNX3345.00 - GRAND ISLAND 345KV CKT Z	720	720	0.08147	103.853	RAUN - SUB 3451 FT CAL 345KV CKT 1
FDNS	00NR_G15_076	0	16WP	G15_076	FROM->TO	GR ISLD-LNX3345.00 - GRAND ISLAND 345KV CKT Z	720	720	0.07332	103.7973	ARROWHEAD - ARROWHEAD 230 230KV CKT 1
FDNS	00NR_G15_076	0	16WP	G15_076	FROM->TO	GR ISLD-LNX3345.00 - GRAND ISLAND 345KV CKT Z	720	720	0.0723	103.6757	HANLON - SIOUX FALLS 230KV CKT 1
FDNS	00NR_G15_076	0	16WP	G15_076	FROM->TO	GR ISLD-LNX3345.00 - GRAND ISLAND 345KV CKT Z	720	720	0.07274	103.6521	GROTON-LNX3 345.00 - LELAND1-LNX3345.00 345KV CKT 1
FDNS	00NR_G15_076	0	16WP	G15_076	FROM->TO	GR ISLD-LNX3345.00 - GRAND ISLAND 345KV CKT Z	720	720	0.07274	103.6077	P12:345:UMZB:# 109 #: LOS GRT IN ND. LOS GRT
FDNS	00NR_G15_076	0	16WP	G15_076	FROM->TO	GR ISLD-LNX3345.00 - GRAND ISLAND 345KV CKT Z	720	720	0.07274	103.6073	GROTON - GROTON-LNX3 345.00 345KV CKT Z
FDNS	00NR_G15_076	0	16WP	G15_076	FROM->TO	GR ISLD-LNX3345.00 - GRAND ISLAND 345KV CKT Z	720	720	0.07274	103.601	LELAND OLDS - LELAND1-LNX3345.00 345KV CKT Z
FDNS	00NR_G15_076	0	16WP	G15_076	FROM->TO	GR ISLD-LNX3345.00 - GRAND ISLAND 345KV CKT Z	720	720	0.07427	103.5954	GERALD GENTLEMAN STATION - KEYSTONE 345KV CKT 1
FDNS	00NR_G15_076	0	16WP	G15_076	FROM->TO	GR ISLD-LNX3345.00 - GRAND ISLAND 345KV CKT Z	720	720	0.07453	103.5819	SIDNEY - STEGALL 345KV CKT 1
FDNS	00NR_G15_076	0	16WP	G15_076	FROM->TO	GR ISLD-LNX3345.00 - GRAND ISLAND 345KV CKT Z	720	720	0.07075	103.5154	FT RANDAL - UTICA JCT 230KV CKT 1
FDNS	00NR_G15_076	0	16WP	G15_076	FROM->TO	GR ISLD-LNX3345.00 - GRAND ISLAND 345KV CKT Z	720	720	0.07302	103.4987	GEN337653 1-WHITE BLUFF UNIT #2
FDNS	00NR_G15_076	0	16WP	G15_076	FROM->TO	GR ISLD-LNX3345.00 - GRAND ISLAND 345KV CKT Z	720	720	0.07302	103.4437	GEN501801 1-DOLET HILLS UNIT1
FDNS	00NR_G15_076	0	16WP	G15_076	FROM->TO	GR ISLD-LNX3345.00 - GRAND ISLAND 345KV CKT Z	720	720	0.07295	103.4414	CARPENTER - HURON 230KV CKT 1
FDNS	00NR_G15_076	0	16WP	G15_076	FROM->TO	GR ISLD-LNX3345.00 - GRAND ISLAND 345KV CKT Z	720	720	0.08196	103.3699	NUNDRWD - WAYSIDE 230KV CKT 1
FDNS	00NR_G15_076	0	16WP	G15_076	FROM->TO	GR ISLD-LNX3345.00 - GRAND ISLAND 345KV CKT Z	720	720	0.07302	103.3673	GEN337652 1-WHITE BLUFF UNIT #1
FDNS	00NR_G15_076	0	16WP	G15_076	FROM->TO	GR ISLD-LNX3345.00 - GRAND ISLAND 345KV CKT Z	720	720	0.07392	103.3511	ADAMS - MITCHLCO3 345.00 345KV CKT 1
FDNS	00NR_G15_076	0	16WP	G15_076	FROM->TO	GR ISLD-LNX3345.00 - GRAND ISLAND 345KV CKT Z	720	720	0.07301	103.3385	ELLENDALE - OAKES 230KV CKT 1
FDNS	00NR_G15_076	0	16WP	G15_076	FROM->TO	GR ISLD-LNX3345.00 - GRAND ISLAND 345KV CKT Z	720	720	0.07301	103.3385	ELLENDALE - OAKES 230KV CKT 1
FDNS	00NR_G15_076	0	16WP	G15_076	FROM->TO	GR ISLD-LNX3345.00 - GRAND ISLAND 345KV CKT Z	720	720	0.07302	103.3314	GEN641089 2-ENERGY CENTER 2
FDNS	00NR_G15_076	0	16WP	G15_076	FROM->TO	GR ISLD-LNX3345.00 - GRAND ISLAND 345KV CKT Z	720	720	0.07295	103.3209	HURON - WATERTOWN 230KV CKT 2
FDNS	00NR_G15_076	0	16WP	G15_076	FROM->TO	GR ISLD-LNX3345.00 - GRAND ISLAND 345KV CKT Z	720	720	0.07295	103.3209	HURON - WATERTOWN 230KV CKT 2
FDNS	00NR_G15_076	0	16WP	G15_076	FROM->TO	GR ISLD-LNX3345.00 - GRAND ISLAND 345KV CKT Z	720	720	0.07353	103.3175	ARPIN B4 345.00 - EAU CLAIRE 345KV CKT 1
FDNS	00NR_G15_076	0	16WP	G15_076	FROM->TO	GR ISLD-LNX3345.00 - GRAND ISLAND 345KV CKT Z	720	720	0.07273	103.3123	G09_001IST 345.00 - GROTON 345KV CKT 1
FDNS	00NR_G15_076	0	16WP	G15_076	FROM->TO	GR ISLD-LNX3345.00 - GRAND ISLAND 345KV CKT Z	720	720	0.07302	103.2867	GEN338146 1-INDEPENDENCE UNIT #2
FDNS	00NR_G15_076	0	16WP	G15_076	FROM->TO	GR ISLD-LNX3345.00 - GRAND ISLAND 345KV CKT Z	720	720	0.07175	103.2859	SPLIT ROCK - WHITE 345KV CKT 1
FDNS	00NR_G15_076	0	16WP	G15_076	FROM->TO	GR ISLD-LNX3345.00 - GRAND ISLAND 345KV CKT Z	720	720	0.07175	103.2859	SPLIT ROCK - WHITE 345KV CKT 1
FDNS	00NR_G15_076	0	16WP	G15_076	FROM->TO	GR ISLD-LNX3345.00 - GRAND ISLAND 345KV CKT Z	720	720	0.07302	103.2811	GEN338143 1-INDEPENDENCE UNIT #1
FDNS	00NR_G15_076	0	16WP	G15_076	FROM->TO	GR ISLD-LNX3345.00 - GRAND ISLAND 345KV CKT Z	720	720	0.07301	103.2802	FORMAN - OAKES 230KV CKT 1
FDNS	00NR_G15_076	0	16WP	G15_076	FROM->TO	GR ISLD-LNX3345.00 - GRAND ISLAND 345KV CKT Z	720	720	0.07295	103.2653	CARPENTER - WATERTOWN 230KV CKT 1
FDNS	00NR_G15_076	0	16WP	G15_076	FROM->TO	GR ISLD-LNX3345.00 - GRAND ISLAND 345KV CKT Z	720	720	0.07295	103.2653	CARPENTER - WATERTOWN 230KV CKT 1
FDNS	00NR_G15_076	0	16WP	G15_076	FROM->TO	GR ISLD-LNX3345.00 - GRAND ISLAND 345KV CKT Z	720	720	0.07271	103.2587	PAHOJA - SIOUX FALLS 230KV CKT 1
FDNS	00NR_G15_076	0	16WP	G15_076	FROM->TO	GR ISLD-LNX3345.00 - GRAND ISLAND 345KV CKT Z	720	720	0.07526	103.255	GRIMES - LEHIGH 345KV CKT 1
FDNSLock	00NR_G15_076	0	16WP	G15_076	FROM->TO	GR ISLD-LNX3345.00 - GRAND ISLAND 345KV CKT Z	720	720	0.07302	103.228	CENTER - CNTSHNT3 345.00 345KV CKT Z1
FDNS	00NR_G15_076	0	16WP	G15_076	FROM->TO	GR ISLD-LNX3345.00 - GRAND ISLAND 345KV CKT Z	720	720	0.07302	103.2262	CNTSHNT3 345.00 - PRAIRIE3 345.00 345KV CKT 1
FDNS	00NR_G15_076	0	16WP	G15_076	FROM->TO	GR ISLD-LNX3345.00 - GRAND ISLAND 345KV CKT Z	720	720	0.07095	103.1652	FT THOMPSON - WESSINGTON 230KV CKT 1
FDNS	00NR_G15_076	0	16WP	G15_076	FROM->TO	GR ISLD-LNX3345.00 - GRAND ISLAND 345KV CKT Z	720	720	0.07095	103.1652	FT THOMPSON - WESSINGTON 230KV CKT 1
FDNS	00NR_G15_076	0	16WP	G15_076	FROM->TO	GR ISLD-LNX3345.00 - GRAND ISLAND 345KV CKT Z	720	720	0.07364	103.149	ADAMS - PLEASANT VALLEY 345KV CKT 1
FDNS	00NR_G15_076	0	16WP	G15_076	FROM->TO	GR ISLD-LNX3345.00 - GRAND ISLAND 345KV CKT Z	720	720	0.07324	103.105	P12:115:NPPD:1091:VALENTN7:MISSION7:BTB
FDNS	00NR_G15_076	0	16WP	G15_076	FROM->TO	GR ISLD-LNX3345.00 - GRAND ISLAND 345KV CKT Z	720	720	0.07302	103.0984	GEN501813 1-RODEMACHER UNIT 3
FDNS	00NR_G15_076	0	16WP	G15_076	FROM->TO	GR ISLD-LNX3345.00 - GRAND ISLAND 345KV CKT Z	720	720	0.06919	103.0763	GERALD GENTLEMAN STATION - SWEETWATER 345KV CKT 1
FDNS	00NR_G15_076	0	16WP	G15_076	FROM->TO	GR ISLD-LNX3345.00 - GRAND ISLAND 345KV CKT Z	720	720	0.07324	103.0449	MISSION - ST FRANCIS 115KV CKT 1
FDNS	00NR_G15_076	0	16WP	G15_076	FROM->TO	GR ISLD-LNX3345.00 - GRAND ISLAND 345KV CKT Z	720	720	0.07441	103.0398	RASMUSN - UTICA JCT 230KV CKT 1
FDNS	00NR_G15_076	0	16WP	G15_076	FROM->TO	GR ISLD-LNX3345.00 - GRAND ISLAND 345KV CKT Z	720	720	0.0727	103.0314	FT THOMPSON - HURON 230KV CKT 1
FDNS	00NR_G15_076	0	16WP	G15_076	FROM->TO	GR ISLD-LNX3345.00 - GRAND ISLAND 345KV CKT Z	720	720	0.0727	103.0314	FT THOMPSON - HURON 230KV CKT 1
FDNS	00NR_G15_076	0	16WP	G15_076	FROM->TO	GR ISLD-LNX3345.00 - GRAND ISLAND 345KV CKT Z	720	720	0.0727	103.0314	FT THOMPSON - HURON 230KV CKT 2
FDNS	00NR_G15_076	0	16WP	G15_076	FROM->TO	GR ISLD-LNX3345.00 - GRAND ISLAND 345KV CKT Z	720	720	0.0727	103.0314	FT THOMPSON - HURON 230KV CKT 2
FDNS	00NR_G15_076	0	16WP	G15_076	FROM->TO	GR ISLD-LNX3345.00 - GRAND ISLAND 345KV CKT Z	720	720	0.07441	103.0211	RASMUSN - SIOUX CITY 230KV CKT 1
FDNS	00NR_G15_076	0	16WP	G15_076	FROM->TO	GR ISLD-LNX3345.00 - GRAND ISLAND 345KV CKT Z	720	720	0.07324	102.9717	HARMONY - ST FRANCIS 115KV CKT 1
FDNSLock	00NR_G15_076	0	16WP	G15_076	FROM->TO	GR ISLD-LNX3345.00 - GRAND ISLAND 345KV CKT Z	720	720	0.073	102.9697	CHISAGO COUNTY - FORBES 500KV CKT 1
FDNS	00NR_G15_076	0	16WP	G15_076	FROM->TO	GR ISLD-LNX3345.00 - GRAND ISLAND 345KV CKT Z	720	720	0.07302	102.9694	GEN335206 1-NELSON UNIT 6
FDNS	00NR_G15_076	0	16WP	G15_076	FROM->TO	GR ISLD-LNX3345.00 - GRAND ISLAND 345KV CKT Z	720	720	0.07271	102.9377	EAGLE 4 230.00 - PAHOJA 230KV CKT 1
FDNS	00NR_G15_076	0	16WP	G15_076	FROM->TO	GR ISLD-LNX3345.00 - GRAND ISLAND 345KV CKT Z	720	720	0.07324	102.9173	HARMONY - VALENTINE 115KV CKT 1
FDNS	00NR_G15_076	0	16WP	G15_076	FROM->TO	GR ISLD-LNX3345.00 - GRAND ISLAND 345KV CKT Z	720	720	0.07303	102.889	FORMAN - HANKINSON 230KV CKT 1
FDNS	00NR_G15_076	0	16WP	G15_076	FROM->TO	GR ISLD-LNX3345.00 - GRAND ISLAND 345KV CKT Z	720	720	0.0739	102.8838	LAKEFIELD 3 - NOBLES 345KV CKT 1
FDNS	00NR_G15_076	0	16WP	G15_076	FROM->TO	GR ISLD-LNX3345.00 - GRAND ISLAND 345KV CKT Z	720	720	0.07305	102.8792	GLENBORO SOUTH - RUGBY 230KV CKT 1

SOLUTION	GROUP	SCENARIO	SEASON	SOURCE	DIRECTION	MONITORED ELEMENT	RATEA (MVA)	RATEB(MVA)	TDF	TC%LOADING (% MVA)	CONTINGENCY
FDNS	00NR_G15_076	0	16WP	G15_076	FROM->TO	GR ISLD-LNX3345.00 - GRAND ISLAND 345KV CKT Z	720	720	0.07305	102.8775	ALEXMRES3 345.00 - BISON 3 345.00 345KV CKT 1
FDNS	00NR_G15_076	0	16WP	G15_076	FROM->TO	GR ISLD-LNX3345.00 - GRAND ISLAND 345KV CKT Z	720	720	0.073	102.8754	CHISAGO COUNTY - CHISAGO COUNTY 500KV CKT 1
FDNS	00NR_G15_076	0	16WP	G15_076	FROM->TO	GR ISLD-LNX3345.00 - GRAND ISLAND 345KV CKT Z	720	720	0.07302	102.8635	GEN532751 1-WOLF CREEK GENERATING STATION UNIT 1
FDNS	00NR_G15_076	0	16WP	G15_076	FROM->TO	GR ISLD-LNX3345.00 - GRAND ISLAND 345KV CKT Z	720	720	0.07302	102.8629	GEN501812 1-RODEMACHER UNIT 2
FDNS	00NR_G15_076	0	16WP	G15_076	FROM->TO	GR ISLD-LNX3345.00 - GRAND ISLAND 345KV CKT Z	720	720	0.07302	102.844	GEN344897 4-1LAB G4 20.000
FDNS	00NR_G15_076	0	16WP	G15_076	FROM->TO	GR ISLD-LNX3345.00 - GRAND ISLAND 345KV CKT Z	720	720	0.07302	102.842	GEN344894 1-1LAB G1 20.000
FDNS	00NR_G15_076	0	16WP	G15_076	FROM->TO	GR ISLD-LNX3345.00 - GRAND ISLAND 345KV CKT Z	720	720	0.07302	102.8418	GEN344896 3-1LAB G3 20.000
FDNS	00NR_G15_076	0	16WP	G15_076	FROM->TO	GR ISLD-LNX3345.00 - GRAND ISLAND 345KV CKT Z	720	720	0.07302	102.8181	GEN345670 1-1RUSH G1 18.000
FDNS	00NR_G15_076	0	16WP	G15_076	FROM->TO	GR ISLD-LNX3345.00 - GRAND ISLAND 345KV CKT Z	720	720	0.07302	102.818	GEN345671 2-1RUSH G2 18.000
FDNS	00NR_G15_076	0	16WP	G15_076	FROM->TO	GR ISLD-LNX3345.00 - GRAND ISLAND 345KV CKT Z	720	720	0.07199	102.8126	SIOUX CITY - SIOUXCY-LNX3345.00 345KV CKT Z
FDNS	00NR_G15_076	0	16WP	G15_076	FROM->TO	GR ISLD-LNX3345.00 - GRAND ISLAND 345KV CKT Z	720	720	0.07302	102.8084	GEN344895 2-1LAB G2 20.000
FDNS	00NR_G15_076	0	16WP	G15_076	FROM->TO	GR ISLD-LNX3345.00 - GRAND ISLAND 345KV CKT Z	720	720	0.07301	102.8052	CENTER - COYOTE 345KV CKT 1
FDNS	00NR_G15_076	0	16WP	G15_076	FROM->TO	GR ISLD-LNX3345.00 - GRAND ISLAND 345KV CKT Z	720	720	0.07338	102.7733	P12:115:NPPD:WAPA6:FTRANDL7:ONEILL 7:BTB
FDNS	00NR_G15_076	0	16WP	G15_076	FROM->TO	GR ISLD-LNX3345.00 - GRAND ISLAND 345KV CKT Z	720	720	0.07338	102.7733	P12:115:UMZB:# 115 #: SE IN NE. FR-SE-ON
FDNS	00NR_G15_076	0	16WP	G15_076	FROM->TO	GR ISLD-LNX3345.00 - GRAND ISLAND 345KV CKT Z	720	720	0.07302	102.7558	GEN336252 1-NINEMILE POINT UNIT#5
FDNS	00NR_G15_076	0	16WP	G15_076	FROM->TO	GR ISLD-LNX3345.00 - GRAND ISLAND 345KV CKT Z	720	720	0.06926	102.7359	FT THOMPSON (FT2 KU1B) 345/230/13.8KV TRANSFORMER CKT 1
FDNS	00NR_G15_076	0	16WP	G15_076	FROM->TO	GR ISLD-LNX3345.00 - GRAND ISLAND 345KV CKT Z	720	720	0.07338	102.7346	FT RANDAL - SPENCER 115KV CKT 1
FDNS	00NR_G15_076	0	16WP	G15_076	FROM->TO	GR ISLD-LNX3345.00 - GRAND ISLAND 345KV CKT Z	720	720	0.07018	102.7337	GERALD GENTLEMAN STATION - SWEETWATER 345KV CKT 2
FDNS	00NR_G15_076	0	16WP	G15_076	FROM->TO	GR ISLD-LNX3345.00 - GRAND ISLAND 345KV CKT Z	720	720	0.06927	102.7336	FT THOMPSON (FT2 KU1A) 345/230/13.8KV TRANSFORMER CKT 1
FDNS	00NR_G15_076	0	16WP	G15_076	FROM->TO	GR ISLD-LNX3345.00 - GRAND ISLAND 345KV CKT Z	720	720	0.07199	102.7286	SIOUXCY-LNX3345.00 - SPLIT ROCK 345KV CKT 1
FDNS	00NR_G15_076	0	16WP	G15_076	FROM->TO	GR ISLD-LNX3345.00 - GRAND ISLAND 345KV CKT Z	720	720	0.07199	102.7286	SIOUXCY-LNX3345.00 - SPLIT ROCK 345KV CKT 1
FDNS	00NR_G15_076	0	16WP	G15_076	FROM->TO	GR ISLD-LNX3345.00 - GRAND ISLAND 345KV CKT Z	720	720	0.07302	102.7221	GEN659118 1-LARAMIE RIVER UNIT1
FDNS	00NR_G15_076	0	16WP	G15_076	FROM->TO	GR ISLD-LNX3345.00 - GRAND ISLAND 345KV CKT Z	720	720	0.07302	102.7163	GEN336831 1-BAXTER WILSON SES
FDNS	00NR_G15_076	0	16WP	G15_076	FROM->TO	GR ISLD-LNX3345.00 - GRAND ISLAND 345KV CKT Z	720	720	0.07331	102.7151	LARAMIE RIVER - SIDNEY2-LNX3345.00 345KV CKT 1
FDNS	00NR_G15_076	0	16WP	G15_076	FROM->TO	GR ISLD-LNX3345.00 - GRAND ISLAND 345KV CKT Z	720	720	0.07331	102.7032	SIDNEY - SIDNEY2-LNX3345.00 345KV CKT Z
FDNS	00NR_G15_076	0	16WP	G15_076	FROM->TO	GR ISLD-LNX3345.00 - GRAND ISLAND 345KV CKT Z	720	720	0.07199	102.6985	P12:345:UMZW:# 907 #: SC2-SR IN IA. SC2-SR 345 KV LINE
FDNS	00NR_G15_076	0	16WP	G15_076	FROM->TO	GR ISLD-LNX3345.00 - GRAND ISLAND 345KV CKT Z	720	720	0.07302	102.6907	P12:115:UMZW:# 162 #: NEL IN ND. FAULT ON ML-NEL-MX-GA 115 KV
FDNS	00NR_G15_076	0	16WP	G15_076	FROM->TO	GR ISLD-LNX3345.00 - GRAND ISLAND 345KV CKT Z	720	720	0.07324	102.6717	AINSWORTH - VALENTINE 115KV CKT 1
FDNS	00NR_G15_076	0	16WP	G15_076	FROM->TO	GR ISLD-LNX3345.00 - GRAND ISLAND 345KV CKT Z	720	720	0.07302	102.656	GEN337041 1-GERALD ANDRUS
FDNS	00NR_G15_076	0	16WP	G15_076	FROM->TO	GR ISLD-LNX3345.00 - GRAND ISLAND 345KV CKT Z	720	720	0.07345	102.6295	BYRON - NORTH ROCHESTER 345KV CKT 1
FDNSLock	00NR_G15_076	0	16WP	G15_076	FROM->TO	GR ISLD-LNX3345.00 - GRAND ISLAND 345KV CKT Z	720	720	0.08159	102.6209	P13:230-345:NPPD:STEGALL3:KV3A
FDNSLock	00NR_G15_076	0	16WP	G15_076	FROM->TO	GR ISLD-LNX3345.00 - GRAND ISLAND 345KV CKT Z	720	720	0.08159	102.6175	STEGALL (SGQ KV3A) 345/230/13.8KV TRANSFORMER CKT 1
FDNS	00NR_G15_076	0	16WP	G15_076	FROM->TO	GR ISLD-LNX3345.00 - GRAND ISLAND 345KV CKT Z	720	720	0.07302	102.6134	GEN334440 1-SABINE UNIT 4
FDNS	00NR_G15_076	0	16WP	G15_076	FROM->TO	GR ISLD-LNX3345.00 - GRAND ISLAND 345KV CKT Z	720	720	0.0737	102.5965	KOSSUTH 3 345.00 - WEBSTER 345KV CKT 1
FDNS	00NR_G15_076	0	16WP	G15_076	FROM->TO	GR ISLD-LNX3345.00 - GRAND ISLAND 345KV CKT Z	720	720	0.0737	102.5905	KOSSUTH 3 345.00 - OBRIEN 3 345.00 345KV CKT 1
FDNS	00NR_G15_076	0	16WP	G15_076	FROM->TO	GR ISLD-LNX3345.00 - GRAND ISLAND 345KV CKT Z	720	720	0.07338	102.589	ONEILL - SPENCER 115KV CKT 1
FDNS	00NR_G15_076	0	16WP	G15_076	FROM->TO	GR ISLD-LNX3345.00 - GRAND ISLAND 345KV CKT Z	720	720	0.07302	102.587	GEN336251 1-NINEMILE POINT UNIT#4
FDNS	00NR_G15_076	0	16WP	G15_076	FROM->TO	GR ISLD-LNX3345.00 - GRAND ISLAND 345KV CKT Z	720	720	0.07306	102.5851	BLAIR - GRANITE FALLS 230KV CKT 1
FDNS	00NR_G15_076	0	16WP	G15_076	FROM->TO	GR ISLD-LNX3345.00 - GRAND ISLAND 345KV CKT Z	720	720	0.07306	102.5851	BLAIR - GRANITE FALLS 230KV CKT 1
FDNS	00NR_G15_076	0	16WP	G15_076	FROM->TO	GR ISLD-LNX3345.00 - GRAND ISLAND 345KV CKT Z	720	720	0.07302	102.5752	P13:230-345:NPPD:NUCOR-1
FDNS	00NR_G15_076	0	16WP	G15_076	FROM->TO	GR ISLD-LNX3345.00 - GRAND ISLAND 345KV CKT Z	720	720	0.07302	102.5567	P13:115-230:NPPD:NUCOR-3
FDNS	00NR_G15_076	0	16WP	G15_076	FROM->TO	GR ISLD-LNX3345.00 - GRAND ISLAND 345KV CKT Z	720	720	0.07301	102.5398	GARRISON - JAMES TOWN 230KV CKT 1
FDNS	00NR_G15_076	0	16WP	G15_076	FROM->TO	GR ISLD-LNX3345.00 - GRAND ISLAND 345KV CKT Z	720	720	0.07302	102.535	GEN525561 1-TOLK GEN #1 24 KV
FDNS	00NR_G15_076	0	16WP	G15_076	FROM->TO	GR ISLD-LNX3345.00 - GRAND ISLAND 345KV CKT Z	720	720	0.07405	102.5262	DENISON - SIOUX CITY 230KV CKT 1
FDNS	00NR_G15_076	0	16WP	G15_076	FROM->TO	GR ISLD-LNX3345.00 - GRAND ISLAND 345KV CKT Z	720	720	0.07199	102.5238	P12:115:NPPD:1164:ONEILL 7:JEFFREY9:BTB
FDNS	00NR_G15_076	0	16WP	G15_076	FROM->TO	GR ISLD-LNX3345.00 - GRAND ISLAND 345KV CKT Z	720	720	0.07302	102.5223	P13:230:UMZW:# 2218 #: FP IN MT. LOSS OF TRANSFORMER (AT2).
FDNS	00NR_G15_076	0	16WP	G15_076	FROM->TO	GR ISLD-LNX3345.00 - GRAND ISLAND 345KV CKT Z	720	720	0.07199	102.5131	CLEARWATER - ONEILL 115KV CKT 1
FDNS	00NR_G15_076	0	16WP	G15_076	FROM->TO	GR ISLD-LNX3345.00 - GRAND ISLAND 345KV CKT Z	720	720	0.0734	102.5128	BROOKING COUNTY - LYON COUNTY 345KV CKT 1
FDNS	00NR_G15_076	0	16WP	G15_076	FROM->TO	GR ISLD-LNX3345.00 - GRAND ISLAND 345KV CKT Z	720	720	0.07308	102.5115	HANKINSON - WAHPETON 230KV CKT 1
FDNS	00NR_G15_076	0	16WP	G15_076	FROM->TO	GR ISLD-LNX3345.00 - GRAND ISLAND 345KV CKT Z	720	720	0.07318	102.5092	NORTH ROCHESTER - PRAIRIE ISLAND 345KV CKT 1
FDNS	00NR_G15_076	0	16WP	G15_076	FROM->TO	GR ISLD-LNX3345.00 - GRAND ISLAND 345KV CKT Z	720	720	0.07905	102.504	COLUMEAST - SHELL CREEK 345KV CKT 1
FDNS	00NR_G15_076	0	16WP	G15_076	FROM->TO	GR ISLD-LNX3345.00 - GRAND ISLAND 345KV CKT Z	720	720	0.07302	102.4925	P13:115-345:NPPD:NUCOR-2
FDNS	00NR_G15_076	0	16WP	G15_076	FROM->TO	GR ISLD-LNX3345.00 - GRAND ISLAND 345KV CKT Z	720	720	0.07302	102.4838	GEN303007 1-1BC2 U2
FDNS	00NR_G15_076	0	16WP	G15_076	FROM->TO	GR ISLD-LNX3345.00 - GRAND ISLAND 345KV CKT Z	720	720	0.07199	102.4809	CLEARWATER - NELIGH 115KV CKT 1
FDNS	00NR_G15_076	0	16WP	G15_076	FROM->TO	GR ISLD-LNX3345.00 - GRAND ISLAND 345KV CKT Z	720	720	0.07302	102.4808	GEN303006 1-1BC2 U1
FDNS	00NR_G15_076	0	16WP	G15_076	FROM->TO	GR ISLD-LNX3345.00 - GRAND ISLAND 345KV CKT Z	720	720	0.07302	102.4806	GEN335204 1-NELSON UNIT 4
FDNS	00NR_G15_076	0	16WP	G15_076	FROM->TO	GR ISLD-LNX3345.00 - GRAND ISLAND 345KV CKT Z	720	720	0.07302	102.479	GEN336191 1-LITTLE GYPSY UNIT#3
FDNS	00NR_G15_076	0	16WP	G15_076	FROM->TO	GR ISLD-LNX3345.00 - GRAND ISLAND 345KV CKT Z	720	720	0.07302	102.4775	GEN642067 1-PLATTE
FDNS	00NR_G15_076	0	16WP	G15_076	FROM->TO	GR ISLD-LNX3345.00 - GRAND ISLAND 345KV CKT Z	720	720	0.07302	102.4537	GEN531447 1-HOLCOMB GENERATOR
FDNS	00NR_G15_076	0	16WP	G15_076	FROM->TO	GR ISLD-LNX3345.00 - GRAND ISLAND 345KV CKT Z	720	720	0.07346	102.4476	BYRON - PLEASANT VALLEY 345KV CKT 1
FDNS	00NR_G15_076	0	16WP	G15_076	FROM->TO	GR ISLD-LNX3345.00 - GRAND ISLAND 345KV CKT Z	720	720	0.07302	102.447	GEN336801 1-BAXTER WILSON UNIT #1
FDNS	00NR_G15_076	0	16WP	G15_076	FROM->TO	GR ISLD-LNX3345.00 - GRAND ISLAND 345KV CKT Z	720	720	0.07302	102.4426	GEN335614 1-WILLOW GLENN UNIT#4
FDNS	00NR_G15_076	0	16WP	G15_076	FROM->TO	GR ISLD-LNX3345.00 - GRAND ISLAND 345KV CKT Z	720	720	0.07302	102.4322	GEN336464 1-MICHOUD UNIT #3
FDNS	00NR_G15_076	0	16WP	G15_076	FROM->TO	GR ISLD-LNX3345.00 - GRAND ISLAND 345KV CKT Z	720	720	0.07302	102.4318	GEN303008 1-1BC2 U3
FDNS	00NR_G15_076	0	16WP	G15_076	FROM->TO	GR ISLD-LNX3345.00 - GRAND ISLAND 345KV CKT Z	720	720	0.07302	102.4268	GEN336170 1-GULF OXY U4
FDNS	00NR_G15_076	0	16WP	G15_076	FROM->TO	GR ISLD-LNX3345.00 - GRAND ISLAND 345KV CKT Z	720	720	0.07161	102.4238	MENNO JCT - TRIPP JCT 115KV CKT 1
FDNS	00NR_G15_076	0	16WP	G15_076	FROM->TO	GR ISLD-LNX3345.00 - GRAND ISLAND 345KV CKT Z	720	720	0.07302	102.4167	GEN334441 1-SABINE UNIT 5
FDNS	00NR_G15_076	0	16WP	G15_076	FROM->TO	GR ISLD-LNX3345.00 - GRAND ISLAND 345KV CKT Z	720	720	0.07301	102.4117	BISMARK - JAMES TOWN 230KV CKT 1
FDNS	00NR_G15_076	0	16WP	G15_076	FROM->TO	GR ISLD-LNX3345.00 - GRAND ISLAND 345KV CKT Z	720	720	0.07896	102.4087	COLUMEAST - NW68TH & HOLDREGE 345KV CKT 1
FDNS	00NR_G15_076	0	16WP	G15_076	FROM->TO	GR ISLD-LNX3345.00 - GRAND ISLAND 345KV CKT Z	720	720	0.07896	102.4087	COLUMEAST - NW68TH & HOLDREGE 345KV CKT 1
FDNS	00NR_G15_076	0	16WP	G15_076	FROM->TO	GR ISLD-LNX3345.00 - GRAND ISLAND 345KV CKT Z	720	720	0.07301	102.3992	BISMARK - WEBER 230KV CKT 1
FDNS	00NR_G15_076	0	16WP	G15_076	FROM->TO	GR ISLD-LNX3345.00 - GRAND ISLAND 345KV CKT Z	720	720	0.07301	102.3973	JAMES TOWN - WEBER 230KV CKT 1
FDNS	00NR_G15_076	0	16WP	G15_076	FROM->TO	GR ISLD-LNX3345.00 - GRAND ISLAND 345KV CKT Z	720	720	0.07302	102.3948	GRAND GULF 500/22.0KV TRANSFORMER CKT 1

SOLUTION	GROUP	SCENARIO	SEASON	SOURCE	DIRECTION	MONITORED ELEMENT	RATEA (MVA)	RATEB(MVA)	TDF	TC%LOADING (% MVA)	CONTINGENCY
FDNS	00NR_G15_076	0	16WP	G15_076	FROM->TO	GR ISLD-LNX3345.00 - GRAND ISLAND 345KV CKT Z	720	720	0.07311	102.3921	APPLEDORN 4 230.00 - WATERTOWN 230KV CKT 1
FDNS	00NR_G15_076	0	16WP	G15_076	FROM->TO	GR ISLD-LNX3345.00 - GRAND ISLAND 345KV CKT Z	720	720	0.07311	102.3921	APPLEDORN 4 230.00 - WATERTOWN 230KV CKT 1
FDNS	00NR_G15_076	0	16WP	G15_076	FROM->TO	GR ISLD-LNX3345.00 - GRAND ISLAND 345KV CKT Z	720	720	0.07302	102.3902	GEN501811 1-RODEMACHER UNIT 1
FDNS	00NR_G15_076	0	16WP	G15_076	FROM->TO	GR ISLD-LNX3345.00 - GRAND ISLAND 345KV CKT Z	720	720	0.07302	102.3529	PRAIRIE ISLAND 345/20.0KV TRANSFORMER CKT 1
FDNS	00NR_G15_076	0	16WP	G15_076	FROM->TO	GR ISLD-LNX3345.00 - GRAND ISLAND 345KV CKT Z	720	720	0.07302	102.35	PRAIRIE ISLAND 345/20.0KV TRANSFORMER CKT 2
FDNS	00NR_G15_076	0	16WP	G15_076	FROM->TO	GR ISLD-LNX3345.00 - GRAND ISLAND 345KV CKT Z	720	720	0.07641	102.3437	BLOOMFIELD - CREIGHTON 115KV CKT 1
FDNS	00NR_G15_076	0	16WP	G15_076	FROM->TO	GR ISLD-LNX3345.00 - GRAND ISLAND 345KV CKT Z	720	720	0.07302	102.3416	GEN334433 1-SABINE UNIT 3
FDNS	00NR_G15_076	0	16WP	G15_076	FROM->TO	GR ISLD-LNX3345.00 - GRAND ISLAND 345KV CKT Z	720	720	0.07161	102.3376	MENNO JCT - UTICA 115KV CKT 1
FDNS	00NR_G15_076	0	16WP	G15_076	FROM->TO	GR ISLD-LNX3345.00 - GRAND ISLAND 345KV CKT Z	720	720	0.07302	102.3338	GEN334071 1-LEWIS CREEK 2
FDNS	00NR_G15_076	0	16WP	G15_076	FROM->TO	GR ISLD-LNX3345.00 - GRAND ISLAND 345KV CKT Z	720	720	0.07302	102.3316	FARGO - JAMES TOWN 230KV CKT 1
FDNS	00NR_G15_076	0	16WP	G15_076	FROM->TO	GR ISLD-LNX3345.00 - GRAND ISLAND 345KV CKT Z	720	720	0.07302	102.3295	GEN334070 1-LEWIS CREEK 1
FDNS	00NR_G15_076	0	16WP	G15_076	FROM->TO	GR ISLD-LNX3345.00 - GRAND ISLAND 345KV CKT Z	720	720	0.07311	102.3289	APPLEDORN 4 230.00 - GRANITE FALLS 230KV CKT 1
FDNS	00NR_G15_076	0	16WP	G15_076	FROM->TO	GR ISLD-LNX3345.00 - GRAND ISLAND 345KV CKT Z	720	720	0.07311	102.3289	APPLEDORN 4 230.00 - GRANITE FALLS 230KV CKT 1
FDNS	00NR_G15_076	0	16WP	G15_076	FROM->TO	GR ISLD-LNX3345.00 - GRAND ISLAND 345KV CKT Z	720	720	0.09026	102.3262	BELDEN - HOSKINS 115KV CKT 1
FDNS	00NR_G15_076	0	16WP	G15_076	FROM->TO	GR ISLD-LNX3345.00 - GRAND ISLAND 345KV CKT Z	720	720	0.07302	102.324	GEN338388 1-1PLUM PT U1 23.000
FDNS	00NR_G15_076	0	16WP	G15_076	FROM->TO	GR ISLD-LNX3345.00 - GRAND ISLAND 345KV CKT Z	720	720	0.07302	102.3189	GEN337766 1-TRACTEBEL UNIT S1
FDNS	00NR_G15_076	0	16WP	G15_076	FROM->TO	GR ISLD-LNX3345.00 - GRAND ISLAND 345KV CKT Z	720	720	0.07302	102.3154	FARGO - JAMES TOWN 230KV CKT 2
FDNS	00NR_G15_076	0	16WP	G15_076	FROM->TO	GR ISLD-LNX3345.00 - GRAND ISLAND 345KV CKT Z	720	720	0.07302	102.3142	GEN525562 1-TOLK GEN #2 24 KV
FDNS	00NR_G15_076	0	16WP	G15_076	FROM->TO	GR ISLD-LNX3345.00 - GRAND ISLAND 345KV CKT Z	720	720	0.07305	102.3127	FERGSFL4 230.00 - WAHPETON 230KV CKT 1
FDNS	00NR_G15_076	0	16WP	G15_076	FROM->TO	GR ISLD-LNX3345.00 - GRAND ISLAND 345KV CKT Z	720	720	0.07302	102.3047	BALTA - RAMSEY 230KV CKT 1
FDNS	00NR_G15_076	0	16WP	G15_076	FROM->TO	GR ISLD-LNX3345.00 - GRAND ISLAND 345KV CKT Z	720	720	0.07303	102.3008	AUDUBON - SHEYNNE 230KV CKT 1
FDNS	00NR_G15_076	0	16WP	G15_076	FROM->TO	GR ISLD-LNX3345.00 - GRAND ISLAND 345KV CKT Z	720	720	0.07317	102.2998	ARKANSAS NUCLEAR ONE - FT SMITH 500KV CKT 1
FDNS	00NR_G15_076	0	16WP	G15_076	FROM->TO	GR ISLD-LNX3345.00 - GRAND ISLAND 345KV CKT Z	720	720	0.07317	102.2998	ARKANSAS NUCLEAR ONE - FT SMITH 500KV CKT 1
FDNS	00NR_G15_076	0	16WP	G15_076	FROM->TO	GR ISLD-LNX3345.00 - GRAND ISLAND 345KV CKT Z	720	720	0.07325	102.2879	OVEXFRMCCOVE
FDNS	00NR_G15_076	0	16WP	G15_076	FROM->TO	GR ISLD-LNX3345.00 - GRAND ISLAND 345KV CKT Z	720	720	0.07302	102.2863	GEN501910 1-ACADIA UNIT ST1
FDNS	00NR_G15_076	0	16WP	G15_076	FROM->TO	GR ISLD-LNX3345.00 - GRAND ISLAND 345KV CKT Z	720	720	0.07161	102.2813	P12:115:UMZZ:# 237 #: MEN IN SD. MENNO JUNCTION IS A TAP (UJ-MEN-TP).
FDNS	00NR_G15_076	0	16WP	G15_076	FROM->TO	GR ISLD-LNX3345.00 - GRAND ISLAND 345KV CKT Z	720	720	0.07331	102.2729	ARPIN B3 345.00 - ROCKY RN B8 345.00 345KV CKT 1
FDNS	00NR_G15_076	0	16WP	G15_076	FROM->TO	GR ISLD-LNX3345.00 - GRAND ISLAND 345KV CKT Z	720	720	0.0731	102.2724	NORTH LA CROSSE - NORTH ROCHESTER 345KV CKT 1
FDNS	00NR_G15_076	0	16WP	G15_076	FROM->TO	GR ISLD-LNX3345.00 - GRAND ISLAND 345KV CKT Z	720	720	0.07301	102.2704	ELM CREEK - MONTICELLO 345KV CKT 1
FDNS	00NR_G15_076	0	16WP	G15_076	FROM->TO	GR ISLD-LNX3345.00 - GRAND ISLAND 345KV CKT Z	720	720	0.07302	102.2701	P12:345:GRDA:CHOUTEAU-SPORTSMANACRES
FDNS	00NR_G15_076	0	16WP	G15_076	FROM->TO	GR ISLD-LNX3345.00 - GRAND ISLAND 345KV CKT Z	720	720	0.05733	102.2664	GAVINS POINT - HARTINGTON 115KV CKT 1
FDNS	00NR_G15_076	0	16WP	G15_076	FROM->TO	GR ISLD-LNX3345.00 - GRAND ISLAND 345KV CKT Z	720	720	0.07302	102.2663	WHITE BLUFF 500/26.0KV TRANSFORMER CKT 1
FDNS	00NR_G15_076	0	16WP	G15_076	FROM->TO	GR ISLD-LNX3345.00 - GRAND ISLAND 345KV CKT Z	720	720	0.07312	102.2632	GENOA 161 - SENECA 161 161KV CKT 1
FDNS	00NR_G15_076	0	16WP	G15_076	FROM->TO	GR ISLD-LNX3345.00 - GRAND ISLAND 345KV CKT Z	720	720	0.07302	102.2592	GEN562547 1-G14_039_3 0.6900
FDNS	00NR_G15_076	0	16WP	G15_076	FROM->TO	GR ISLD-LNX3345.00 - GRAND ISLAND 345KV CKT Z	720	720	0.07302	102.2577	GEN336222 1-LITTLE GYPSY UNIT#2
FDNS	00NR_G15_076	0	16WP	G15_076	FROM->TO	GR ISLD-LNX3345.00 - GRAND ISLAND 345KV CKT Z	720	720	0.0731	102.2475	NORTH LA CROSSE (10008630_001) 345/161/34.5KV TRANSFORMER CKT 9
FDNS	00NR_G15_076	0	16WP	G15_076	FROM->TO	GR ISLD-LNX3345.00 - GRAND ISLAND 345KV CKT Z	720	720	0.07302	102.2467	P12:161:GRDA:KERR-SALINA-CKT1
FDNS	00NR_G15_076	0	16WP	G15_076	FROM->TO	GR ISLD-LNX3345.00 - GRAND ISLAND 345KV CKT Z	720	720	0.07302	102.2467	P12:161:GRDA:KERR-SALINA-CKT2
FDNS	00NR_G15_076	0	16WP	G15_076	FROM->TO	GR ISLD-LNX3345.00 - GRAND ISLAND 345KV CKT Z	720	720	0.07316	102.2434	FRANKS - HUBEN 345KV CKT 1
FDNS	00NR_G15_076	0	16WP	G15_076	FROM->TO	GR ISLD-LNX3345.00 - GRAND ISLAND 345KV CKT Z	720	720	0.07302	102.2413	GEN562023 1-G11_020_3 0.6900
FDNS	00NR_G15_076	0	16WP	G15_076	FROM->TO	GR ISLD-LNX3345.00 - GRAND ISLAND 345KV CKT Z	720	720	0.07302	102.2413	GEN562026 1-G11_019_3 0.6900
FDNS	00NR_G15_076	0	16WP	G15_076	FROM->TO	GR ISLD-LNX3345.00 - GRAND ISLAND 345KV CKT Z	720	720	0.07302	102.2412	GEN337764 1-TRACTEBEL UNIT C1
FDNS	00NR_G15_076	0	16WP	G15_076	FROM->TO	GR ISLD-LNX3345.00 - GRAND ISLAND 345KV CKT Z	720	720	0.07302	102.2412	GEN337765 1-TRACTEBEL UNIT C2
FDNS	00NR_G15_076	0	16WP	G15_076	FROM->TO	GR ISLD-LNX3345.00 - GRAND ISLAND 345KV CKT Z	720	720	0.07336	102.237	P13:115-230:TSGT:SIDNEY-KV1A
FDNS	00NR_G15_076	0	16WP	G15_076	FROM->TO	GR ISLD-LNX3345.00 - GRAND ISLAND 345KV CKT Z	720	720	0.07302	102.2313	GEN336152 1-WATERFORD UNIT#2
FDNS	00NR_G15_076	0	16WP	G15_076	FROM->TO	GR ISLD-LNX3345.00 - GRAND ISLAND 345KV CKT Z	720	720	0.07302	102.2304	GEN336151 1-WATERFORD UNIT#1
FDNS	00NR_G15_076	0	16WP	G15_076	FROM->TO	GR ISLD-LNX3345.00 - GRAND ISLAND 345KV CKT Z	720	720	0.0751	102.2301	PETERSBRG.N7115.00 - PETERSBURG 115KV CKT Z1
FDNS	00NR_G15_076	0	16WP	G15_076	FROM->TO	GR ISLD-LNX3345.00 - GRAND ISLAND 345KV CKT Z	720	720	0.0751	102.2288	P12:115:NPPD:1168B:ALBION 7:PETERSBRG.N7:BTB
FDNS	00NR_G15_076	0	16WP	G15_076	FROM->TO	GR ISLD-LNX3345.00 - GRAND ISLAND 345KV CKT Z	720	720	0.0751	102.2121	ALBION - PETERSBURG 115KV CKT 1
FDNS	00NR_G15_076	0	16WP	G15_076	FROM->TO	GR ISLD-LNX3345.00 - GRAND ISLAND 345KV CKT Z	720	720	0.07077	101.8464	GRAND ISLAND - RIVERDALE 230KV CKT 1
FDNS	00NR_G15_076	0	16WP	G15_076	FROM->TO	GR ISLD-LNX3345.00 - GRAND ISLAND 345KV CKT Z	720	720	0.07302	101.793	BASE CASE
FDNS	00NR_G15_076	0	16WP	G15_076	FROM->TO	GR ISLD-LNX3345.00 - GRAND ISLAND 345KV CKT Z	720	720	0.07422	101.5346	KELLY - SHELL CREEK 230KV CKT 1
FDNS	00NR_G15_076	0	16WP	G15_076	FROM->TO	GR ISLD-LNX3345.00 - GRAND ISLAND 345KV CKT Z	720	720	0.07422	101.5339	SHELL CREEK (SHELLCREEKT1) 345/230/13.8KV TRANSFORMER CKT 1
FDNS	00NR_G15_076	0	16WP	G15_076	FROM->TO	GR ISLD-LNX3345.00 - GRAND ISLAND 345KV CKT Z	720	720	0.07422	101.5339	SHELL CREEK (SHELLCREEKT1) 345/230/13.8KV TRANSFORMER CKT 1
FDNS	00NR_G15_076	0	16WP	G15_076	FROM->TO	GR ISLD-LNX3345.00 - GRAND ISLAND 345KV CKT Z	720	720	0.07302	101.5062	GEN645001 1-FORT CALHOUN 1
FDNS	00NR_G15_076	0	16WP	G15_076	FROM->TO	GR ISLD-LNX3345.00 - GRAND ISLAND 345KV CKT Z	720	720	0.07335	101.4439	AURORA - GRAND ISLAND 115KV CKT 1
FDNS	00NR_G15_076	0	16WP	G15_076	FROM->TO	GR ISLD-LNX3345.00 - GRAND ISLAND 345KV CKT Z	720	720	0.07517	101.4224	MINGO - SETAB 345KV CKT 1
FDNS	00NR_G15_076	0	16WP	G15_076	FROM->TO	GR ISLD-LNX3345.00 - GRAND ISLAND 345KV CKT Z	720	720	0.07517	101.4224	MINGO - SETAB 345KV CKT 1
FDNS	00NR_G15_076	0	16WP	G15_076	FROM->TO	GR ISLD-LNX3345.00 - GRAND ISLAND 345KV CKT Z	720	720	0.07323	101.4077	CRETE - FRIEND 115KV CKT 1
FDNS	00NR_G15_076	0	16WP	G15_076	FROM->TO	GR ISLD-LNX3345.00 - GRAND ISLAND 345KV CKT Z	720	720	0.07499	101.3504	LOUP CITY - NORTH LOUP 115KV CKT 1
FDNS	00NR_G15_076	0	16WP	G15_076	FROM->TO	GR ISLD-LNX3345.00 - GRAND ISLAND 345KV CKT Z	720	720	0.07308	101.3503	G14-074T 345.00 - OKLAUNION 345KV CKT 1
FDNS	00NR_G15_076	0	16WP	G15_076	FROM->TO	GR ISLD-LNX3345.00 - GRAND ISLAND 345KV CKT Z	720	720	0.07312	101.3402	ANTELOP-LNX3345.00 - BRDLAND-LNX3345.00 345KV CKT 1
FDNS	00NR_G15_076	0	16WP	G15_076	FROM->TO	GR ISLD-LNX3345.00 - GRAND ISLAND 345KV CKT Z	720	720	0.07302	101.336	CLKREACT5 161.00 - LIME CREEK 5 SPLITS INTO LIME EAST TO A 161KV CKT 1
FDNS	00NR_G15_076	0	16WP	G15_076	FROM->TO	GR ISLD-LNX3345.00 - GRAND ISLAND 345KV CKT Z	720	720	0.07302	101.3334	GEN659116 1-SPIRIT MOUND UNIT1
FDNS	00NR_G15_076	0	16WP	G15_076	FROM->TO	GR ISLD-LNX3345.00 - GRAND ISLAND 345KV CKT Z	720	720	0.07302	101.3334	GEN659117 2-SPIRIT MOUND UNIT2
FDNS	00NR_G15_076	0	16WP	G15_076	FROM->TO	GR ISLD-LNX3345.00 - GRAND ISLAND 345KV CKT Z	720	720	0.07306	101.3245	GRAND ISLAND (GI KU3A) 345/230/13.8KV TRANSFORMER CKT 3
FDNS	00NR_G15_076	0	16WP	G15_076	FROM->TO	GR ISLD-LNX3345.00 - GRAND ISLAND 345KV CKT Z	720	720	0.07306	101.3245	GRAND ISLAND (GI KU3A) 345/230/13.8KV TRANSFORMER CKT 3
FDNSLock	00NR_G15_076	0	16WP	G15_076	FROM->TO	GR ISLD-LNX3345.00 - GRAND ISLAND 345KV CKT Z	720	720	0.07346	101.3233	STEGALL - VICTORY HILL 230KV CKT 1
FDNS	00NR_G15_076	0	16WP	G15_076	FROM->TO	GR ISLD-LNX3345.00 - GRAND ISLAND 345KV CKT Z	720	720	0.07302	101.3208	CLKREACT5 161.00 - CRYSTLK5 161.00 161KV CKT 1
FDNS	00NR_G15_076	0	16WP	G15_076	FROM->TO	GR ISLD-LNX3345.00 - GRAND ISLAND 345KV CKT Z	720	720	0.07302	101.3198	GEN562003 1-G11_027_3 0.6900
FDNS	00NR_G15_076	0	16WP	G15_076	FROM->TO	GR ISLD-LNX3345.00 - GRAND ISLAND 345KV CKT Z	720	720	0.07346	101.3194	VICTORY HILL (VICTORYHL T1) 230/115/13.8KV TRANSFORMER CKT 1
FDNS	00NR_G15_076	0	16WP	G15_076	FROM->TO	GR ISLD-LNX3345.00 - GRAND ISLAND 345KV CKT Z	720	720	0.07346	101.3194	VICTORY HILL (VICTORYHL T1) 230/115/13.8KV TRANSFORMER CKT 1
FDNS	00NR_G15_076	0	16WP	G15_076	FROM->TO	GR ISLD-LNX3345.00 - GRAND ISLAND 345KV CKT Z	720	720	0.07302	101.3103	GEN620115 1-HRDLKGEN 0.6000

SOLUTION	GROUP	SCENARIO	SEASON	SOURCE	DIRECTION	MONITORED ELEMENT	RATEA (MVA)	RATEB(MVA)	TDF	TC%LOADING (% MVA)	CONTINGENCY
FDNS	00NR_G15_076	0	16WP	G15_076	FROM->TO	GR ISLD-LNX3345.00 - GRAND ISLAND 345KV CKT Z	720	720	0.07331	101.2991	LARAMIE RIVER - STEGALL 345KV CKT 1
FDNS	00NR_G15_076	0	16WP	G15_076	FROM->TO	GR ISLD-LNX3345.00 - GRAND ISLAND 345KV CKT Z	720	720	0.07302	101.2816	GEN672340 1-QUEEN ELIZABETH GENERATOR 1
FDNS	00NR_G15_076	0	16WP	G15_076	FROM->TO	GR ISLD-LNX3345.00 - GRAND ISLAND 345KV CKT Z	720	720	0.07302	101.2813	GEN600013 3-BLACK DOG GEN 3
FDNS	00NR_G15_076	0	16WP	G15_076	FROM->TO	GR ISLD-LNX3345.00 - GRAND ISLAND 345KV CKT Z	720	720	0.07302	101.2763	MITCHLCO3 345.00 345/34.5KV TRANSFORMER CKT 1
FDNS	00NR_G15_076	0	16WP	G15_076	FROM->TO	GR ISLD-LNX3345.00 - GRAND ISLAND 345KV CKT Z	720	720	0.07312	101.268	ANTELOP-LNX3345.00 - ANTELOPE VALLEY 345KV CKT Z
FDNS	00NR_G15_076	0	16WP	G15_076	FROM->TO	GR ISLD-LNX3345.00 - GRAND ISLAND 345KV CKT Z	720	720	0.07302	101.2637	GEN659018 1-G14_003IS_3 0.6900
FDNS	00NR_G15_076	0	16WP	G15_076	FROM->TO	GR ISLD-LNX3345.00 - GRAND ISLAND 345KV CKT Z	720	720	0.07337	101.2631	P12:115:UMZW:# 172 #: WI IN SD.
FDNS	00NR_G15_076	0	16WP	G15_076	FROM->TO	GR ISLD-LNX3345.00 - GRAND ISLAND 345KV CKT Z	720	720	0.07302	101.2564	GEN672384 1-CENTENNIAL WINDFARM
FDNS	00NR_G15_076	0	16WP	G15_076	FROM->TO	GR ISLD-LNX3345.00 - GRAND ISLAND 345KV CKT Z	720	720	0.07302	101.2548	GEN600125 2-FEP ST G 13.800
FDNS	00NR_G15_076	0	16WP	G15_076	FROM->TO	GR ISLD-LNX3345.00 - GRAND ISLAND 345KV CKT Z	720	720	0.07302	101.2476	LADISH 115/13.2KV TRANSFORMER CKT 1
FDNS	00NR_G15_076	0	16WP	G15_076	FROM->TO	GR ISLD-LNX3345.00 - GRAND ISLAND 345KV CKT Z	720	720	0.07302	101.2434	GEN620323 2-HOOT LAKE 2 GEN
FDNS	00NR_G15_076	0	16WP	G15_076	FROM->TO	GR ISLD-LNX3345.00 - GRAND ISLAND 345KV CKT Z	720	720	0.07326	101.2382	SMOKYHL6 230.00 - SUMMIT 230KV CKT 1
FDNS	00NR_G15_076	0	16WP	G15_076	FROM->TO	GR ISLD-LNX3345.00 - GRAND ISLAND 345KV CKT Z	720	720	0.07302	101.238	GEN659354 1-DEERCREK STG18.000
FDNS	00NR_G15_076	0	16WP	G15_076	FROM->TO	GR ISLD-LNX3345.00 - GRAND ISLAND 345KV CKT Z	720	720	0.07454	101.227	AXTELL - PAULINE 345KV CKT 1
FDNS	00NR_G15_076	0	16WP	G15_076	FROM->TO	GR ISLD-LNX3345.00 - GRAND ISLAND 345KV CKT Z	720	720	0.07302	101.2263	GEN657964 1-ASH2GEN9 0.5750
FDNS	00NR_G15_076	0	16WP	G15_076	FROM->TO	GR ISLD-LNX3345.00 - GRAND ISLAND 345KV CKT Z	720	720	0.07302	101.2182	GEN652546 1-FT RANDAL
FDNS	00NR_G15_076	0	16WP	G15_076	FROM->TO	GR ISLD-LNX3345.00 - GRAND ISLAND 345KV CKT Z	720	720	0.07496	101.2122	CENTRAL CITY - GRAND ISLAND 115KV CKT 1
FDNS	00NR_G15_076	0	16WP	G15_076	FROM->TO	GR ISLD-LNX3345.00 - GRAND ISLAND 345KV CKT Z	720	720	0.08457	101.2002	COLUMWEST - KELLY 230KV CKT 1
FDNS	00NR_G15_076	0	16WP	G15_076	FROM->TO	GR ISLD-LNX3345.00 - GRAND ISLAND 345KV CKT Z	720	720	0.07335	101.2001	7MAYWOOD 345.00 - 7SPENCER 345.00 345KV CKT 1
FDNS	00NR_G15_076	0	16WP	G15_076	FROM->TO	GR ISLD-LNX3345.00 - GRAND ISLAND 345KV CKT Z	720	720	0.07335	101.1994	7MONTGMRY 345.00 - 7SPENCER 345.00 345KV CKT 1
FDNS	00NR_G15_076	0	16WP	G15_076	FROM->TO	GR ISLD-LNX3345.00 - GRAND ISLAND 345KV CKT Z	720	720	0.07327	101.1975	FALLOW 3 345.00 - POTTCO 3 345.00 345KV CKT 1
FDNS	00NR_G15_076	0	16WP	G15_076	FROM->TO	GR ISLD-LNX3345.00 - GRAND ISLAND 345KV CKT Z	720	720	0.07302	101.1961	GEN635213 3-NEAL UNIT 3
FDNS	00NR_G15_076	0	16WP	G15_076	FROM->TO	GR ISLD-LNX3345.00 - GRAND ISLAND 345KV CKT Z	720	720	0.07302	101.1902	GEN600018 S-LS POWER STEAM
FDNS	00NR_G15_076	0	16WP	G15_076	FROM->TO	GR ISLD-LNX3345.00 - GRAND ISLAND 345KV CKT Z	720	720	0.07302	101.1876	GEN659290 1-EDGECOL
FDNS	00NR_G15_076	0	16WP	G15_076	FROM->TO	GR ISLD-LNX3345.00 - GRAND ISLAND 345KV CKT Z	720	720	0.07302	101.1846	GEN652548 5-FT RANDAL
FDNS	00NR_G15_076	0	16WP	G15_076	FROM->TO	GR ISLD-LNX3345.00 - GRAND ISLAND 345KV CKT Z	720	720	0.07302	101.1846	GEN652549 7-FT RANDAL
FDNS	00NR_G15_076	0	16WP	G15_076	FROM->TO	GR ISLD-LNX3345.00 - GRAND ISLAND 345KV CKT Z	720	720	0.07302	101.184	GEN590010 1-ERCOT EQUIVALENCE
FDNS	00NR_G15_076	0	16WP	G15_076	FROM->TO	GR ISLD-LNX3345.00 - GRAND ISLAND 345KV CKT Z	720	720	0.07302	101.1819	GEN652547 3-FT RANDAL
FDNS	00NR_G15_076	0	16WP	G15_076	FROM->TO	GR ISLD-LNX3345.00 - GRAND ISLAND 345KV CKT Z	720	720	0.07302	101.177	G830_SUB 115.00 - GRE-MCHENRY7115.00 115KV CKT 1
FDNS	00NR_G15_076	0	16WP	G15_076	FROM->TO	GR ISLD-LNX3345.00 - GRAND ISLAND 345KV CKT Z	720	720	0.07302	101.1715	G830_SUB 115.00 115/34.5KV TRANSFORMER CKT 1
FDNS	00NR_G15_076	0	16WP	G15_076	FROM->TO	GR ISLD-LNX3345.00 - GRAND ISLAND 345KV CKT Z	720	720	0.07302	101.1636	GEN652410 3-FT PECK
FDNS	00NR_G15_076	0	16WP	G15_076	FROM->TO	GR ISLD-LNX3345.00 - GRAND ISLAND 345KV CKT Z	720	720	0.07302	101.163	GEN300003 1-THOMAS HILL UNIT 3
FDNS	00NR_G15_076	0	16WP	G15_076	FROM->TO	GR ISLD-LNX3345.00 - GRAND ISLAND 345KV CKT Z	720	720	0.07302	101.155	GEN590011 2-ERCOT EQUIVALENCE
FDNS	00NR_G15_076	0	16WP	G15_076	FROM->TO	GR ISLD-LNX3345.00 - GRAND ISLAND 345KV CKT Z	720	720	0.07332	101.1529	POST ROCK (POSTROCK T1) 345/230/13.8KV TRANSFORMER CKT 1
FDNS	00NR_G15_076	0	16WP	G15_076	FROM->TO	GR ISLD-LNX3345.00 - GRAND ISLAND 345KV CKT Z	720	720	0.07543	101.1459	SUB 3454 - WAGENER 345KV CKT 1
FDNS	00NR_G15_076	0	16WP	G15_076	FROM->TO	GR ISLD-LNX3345.00 - GRAND ISLAND 345KV CKT Z	720	720	0.07543	101.1459	SUB 3454 - WAGENER 345KV CKT 1
FDNS	00NR_G15_076	0	16WP	G15_076	FROM->TO	GR ISLD-LNX3345.00 - GRAND ISLAND 345KV CKT Z	720	720	0.07302	101.1422	EASTDC - ERCOT EQUIVALENCE 345KV CKT 1
FDNS	00NR_G15_076	0	16WP	G15_076	FROM->TO	GR ISLD-LNX3345.00 - GRAND ISLAND 345KV CKT Z	720	720	0.07302	101.1286	GEN672348 2-CORY COGEN GENERATOR 2 GT2
FDNS	00NR_G15_076	0	16WP	G15_076	FROM->TO	GR ISLD-LNX3345.00 - GRAND ISLAND 345KV CKT Z	720	720	0.07302	101.1285	GEN672347 1-CORY COGEN GENERATOR 1 GT1
FDNS	00NR_G15_076	0	16WP	G15_076	FROM->TO	GR ISLD-LNX3345.00 - GRAND ISLAND 345KV CKT Z	720	720	0.07302	101.1236	GEN672350 1-NIPAWIN GENERATOR 1
FDNS	00NR_G15_076	0	16WP	G15_076	FROM->TO	GR ISLD-LNX3345.00 - GRAND ISLAND 345KV CKT Z	720	720	0.07302	101.1236	GEN672351 2-NIPAWIN GENERATOR 2
FDNS	00NR_G15_076	0	16WP	G15_076	FROM->TO	GR ISLD-LNX3345.00 - GRAND ISLAND 345KV CKT Z	720	720	0.07302	101.1236	GEN672352 3-NIPAWIN GENERATOR 3
FDNS	00NR_G15_076	0	16WP	G15_076	FROM->TO	GR ISLD-LNX3345.00 - GRAND ISLAND 345KV CKT Z	720	720	0.07314	101.1067	MADISON COUNTY - RLHILLS3 345.00 345KV CKT 1
FDNS	00NR_G15_076	0	16WP	G15_076	FROM->TO	GR ISLD-LNX3345.00 - GRAND ISLAND 345KV CKT Z	720	720	0.07302	101.1037	GEN652414 4-FT PECK
FDNS	00NR_G15_076	0	16WP	G15_076	FROM->TO	GR ISLD-LNX3345.00 - GRAND ISLAND 345KV CKT Z	720	720	0.07302	101.1037	GEN652415 5-FT PECK
FDNS	00NR_G15_076	0	16WP	G15_076	FROM->TO	GR ISLD-LNX3345.00 - GRAND ISLAND 345KV CKT Z	720	720	0.07302	101.1036	GEN657600 1-L1GEN3 9 0.5750
FDNS	00NR_G15_076	0	16WP	G15_076	FROM->TO	GR ISLD-LNX3345.00 - GRAND ISLAND 345KV CKT Z	720	720	0.0732	101.0903	G11_051T 345.00 - WOODWARD DISTRICT EHV 345KV CKT 1
FDNS	00NR_G15_076	0	16WP	G15_076	FROM->TO	GR ISLD-LNX3345.00 - GRAND ISLAND 345KV CKT Z	720	720	0.07302	101.0848	GEN600012 2-BLACK DOG GEN 2
FDNS	00NR_G15_076	0	16WP	G15_076	FROM->TO	GR ISLD-LNX3345.00 - GRAND ISLAND 345KV CKT Z	720	720	0.07302	101.0815	GEN660001 2-ABERDEEN SIEBRECHT
FDNS	00NR_G15_076	0	16WP	G15_076	FROM->TO	GR ISLD-LNX3345.00 - GRAND ISLAND 345KV CKT Z	720	720	0.07302	101.0749	GEN652345 W-G07_023IS_2 0.6900
FDNS	00NR_G15_076	0	16WP	G15_076	FROM->TO	GR ISLD-LNX3345.00 - GRAND ISLAND 345KV CKT Z	720	720	0.07302	101.0729	GEN629074 1-ARNOLD LOWSIDE OF GSU XFMR
FDNS	00NR_G15_076	0	16WP	G15_076	FROM->TO	GR ISLD-LNX3345.00 - GRAND ISLAND 345KV CKT Z	720	720	0.07302	101.0579	GEN615032 2-PLEASANT VALLEY
FDNS	00NR_G15_076	0	16WP	G15_076	FROM->TO	GR ISLD-LNX3345.00 - GRAND ISLAND 345KV CKT Z	720	720	0.07302	101.0477	GEN672367 1-MERIDIAN GENERATOR 1 GT1
FDNS	00NR_G15_076	0	16WP	G15_076	FROM->TO	GR ISLD-LNX3345.00 - GRAND ISLAND 345KV CKT Z	720	720	0.07302	101.0477	GEN672368 2-MERIDIAN GENERATOR 2 GT2
FDNS	00NR_G15_076	0	16WP	G15_076	FROM->TO	GR ISLD-LNX3345.00 - GRAND ISLAND 345KV CKT Z	720	720	0.07302	101.0474	GEN672349 3-CORY COGEN GENERATOR 3 ST
FDNS	00NR_G15_076	0	16WP	G15_076	FROM->TO	GR ISLD-LNX3345.00 - GRAND ISLAND 345KV CKT Z	720	720	0.07302	101.0409	GEN300007 1-NEW MADRID UNIT 2
FDNS	00NR_G15_076	0	16WP	G15_076	FROM->TO	GR ISLD-LNX3345.00 - GRAND ISLAND 345KV CKT Z	720	720	0.07302	101.0367	GEN672339 16-QE 16G 13.800
FDNS	00NR_G15_076	0	16WP	G15_076	FROM->TO	GR ISLD-LNX3345.00 - GRAND ISLAND 345KV CKT Z	720	720	0.07302	101.0367	GEN672342 3-QUEEN ELIZABETH GENERATOR 3
FDNS	00NR_G15_076	0	16WP	G15_076	FROM->TO	GR ISLD-LNX3345.00 - GRAND ISLAND 345KV CKT Z	720	720	0.07302	101.0358	GEN300006 1-NEW MADRID UNIT 1
FDNS	00NR_G15_076	0	16WP	G15_076	FROM->TO	GR ISLD-LNX3345.00 - GRAND ISLAND 345KV CKT Z	720	720	0.07302	101.0269	GEN620324 3-HOOT LAKE 3 GEN
FDNS	00NR_G15_076	0	16WP	G15_076	FROM->TO	GR ISLD-LNX3345.00 - GRAND ISLAND 345KV CKT Z	720	720	0.0722	101.0261	HIGHLND 3 345.00 - OBRIEN 3 345.00 345KV CKT 1
FDNS	00NR_G15_076	0	16WP	G15_076	FROM->TO	GR ISLD-LNX3345.00 - GRAND ISLAND 345KV CKT Z	720	720	0.07494	101.0106	103RD & ROKEBY - MOORE 345KV CKT 1
FDNS	00NR_G15_076	0	16WP	G15_076	FROM->TO	GR ISLD-LNX3345.00 - GRAND ISLAND 345KV CKT Z	720	720	0.07494	101.0106	103RD & ROKEBY - MOORE 345KV CKT 1
FDNS	00NR_G15_076	0	16WP	G15_076	FROM->TO	GR ISLD-LNX3345.00 - GRAND ISLAND 345KV CKT Z	720	720	0.07302	101.0101	GEN 11104 1-J262_GEN 0.6000
FDNS	00NR_G15_076	0	16WP	G15_076	FROM->TO	GR ISLD-LNX3345.00 - GRAND ISLAND 345KV CKT Z	720	720	0.07302	101.0101	GEN 11108 1-J263_GEN 0.6000
FDNS	00NR_G15_076	0	16WP	G15_076	FROM->TO	GR ISLD-LNX3345.00 - GRAND ISLAND 345KV CKT Z	720	720	0.07492	101.0058	GERALD GENTLEMAN STATION - RED WILLOW 345KV CKT 1
FDNS	00NR_G15_076	0	16WP	G15_076	FROM->TO	GR ISLD-LNX3345.00 - GRAND ISLAND 345KV CKT Z	720	720	0.07299	101.0001	GLENHAM - L3 HAWDON 230KV CKT 1
FDNS	00NR_G15_076	0	16WP	G15_076	FROM->TO	GR ISLD-LNX3345.00 - GRAND ISLAND 345KV CKT Z	720	720	0.07547	100.9775	ATCHSNT3 345.00 - COOPER 345KV CKT 1
FDNS	00NR_G15_076	0	16WP	G15_076	FROM->TO	GR ISLD-LNX3345.00 - GRAND ISLAND 345KV CKT Z	720	720	0.07547	100.9775	ATCHSNT3 345.00 - COOPER 345KV CKT 1
FDNS	00NR_G15_076	0	16WP	G15_076	FROM->TO	GR ISLD-LNX3345.00 - GRAND ISLAND 345KV CKT Z	720	720	0.07327	100.971	FALLOW 3 345.00 - GRIMES 345KV CKT 1
FDNS	00NR_G15_076	0	16WP	G15_076	FROM->TO	GR ISLD-LNX3345.00 - GRAND ISLAND 345KV CKT Z	720	720	0.07302	100.9672	GEN600050 1-FEP
FDNS	00NR_G15_076	0	16WP	G15_076	FROM->TO	GR ISLD-LNX3345.00 - GRAND ISLAND 345KV CKT Z	720	720	0.07302	100.9565	GEN659273 2-GROTON SYNC COND
FDNS	00NR_G15_076	0	16WP	G15_076	FROM->TO	GR ISLD-LNX3345.00 - GRAND ISLAND 345KV CKT Z	720	720	0.07302	100.9565	GEN659294 1-WILTONCOL9

SOLUTION	GROUP	SCENARIO	SEASON	SOURCE	DIRECTION	MONITORED ELEMENT	RATEA (MVA)	RATEB(MVA)	TDF	TC%LOADING (% MVA)	CONTINGENCY
FDNS	00NR_G15_076	0	16WP	G15_076	FROM->TO	GR ISLD-LNX3345.00 - GRAND ISLAND 345KV CKT Z	720	720	0.07302	100.9525	CENTER 230/22.0KV TRANSFORMER CKT 1
FDNS	00NR_G15_076	0	16WP	G15_076	FROM->TO	GR ISLD-LNX3345.00 - GRAND ISLAND 345KV CKT Z	720	720	0.0732	100.9428	G11_051T 345.00 - TATONGA7 345.00 345KV CKT 1
FDNS	00NR_G15_076	0	16WP	G15_076	FROM->TO	GR ISLD-LNX3345.00 - GRAND ISLAND 345KV CKT Z	720	720	0.07131	100.9243	COOPER - MOORE 345KV CKT 1
FDNS	00NR_G15_076	0	16WP	G15_076	FROM->TO	GR ISLD-LNX3345.00 - GRAND ISLAND 345KV CKT Z	720	720	0.07302	100.9209	GEN629072 4-LANSING GENERATOR FOR UNITS NO4 EIA CODE 1
FDNS	00NR_G15_076	0	16WP	G15_076	FROM->TO	GR ISLD-LNX3345.00 - GRAND ISLAND 345KV CKT Z	720	720	0.07302	100.9189	GEN672393 2-NBECST2G 13.800
FDNS	00NR_G15_076	0	16WP	G15_076	FROM->TO	GR ISLD-LNX3345.00 - GRAND ISLAND 345KV CKT Z	720	720	0.07302	100.8854	GEN600065 7-HIGH BRIDGE
FDNS	00NR_G15_076	0	16WP	G15_076	FROM->TO	GR ISLD-LNX3345.00 - GRAND ISLAND 345KV CKT Z	720	720	0.07302	100.8854	GEN600066 8-HIGH BRIDGE
FDNS	00NR_G15_076	0	16WP	G15_076	FROM->TO	GR ISLD-LNX3345.00 - GRAND ISLAND 345KV CKT Z	720	720	0.07302	100.8742	GEN659192 6-LYNN
FDNS	00NR_G15_076	0	16WP	G15_076	FROM->TO	GR ISLD-LNX3345.00 - GRAND ISLAND 345KV CKT Z	720	720	0.07302	100.8731	GEN659162 4-RED WLCK
FDNS	00NR_G15_076	0	16WP	G15_076	FROM->TO	GR ISLD-LNX3345.00 - GRAND ISLAND 345KV CKT Z	720	720	0.07302	100.8731	GEN659163 5-BLACK WDCK
FDNS	00NR_G15_076	0	16WP	G15_076	FROM->TO	GR ISLD-LNX3345.00 - GRAND ISLAND 345KV CKT Z	720	720	0.07302	100.8611	LANSING WEST 161/22.0KV TRANSFORMER CKT 1
FDNS	00NR_G15_076	0	16WP	G15_076	FROM->TO	GR ISLD-LNX3345.00 - GRAND ISLAND 345KV CKT Z	720	720	0.07302	100.8602	GEN657985 1-ASH1GEN9 0.5750
FDNS	00NR_G15_076	0	16WP	G15_076	FROM->TO	GR ISLD-LNX3345.00 - GRAND ISLAND 345KV CKT Z	720	720	0.07302	100.8437	GEN652906 1-G09_006IS_3 0.6900
FDNS	00NR_G15_076	0	16WP	G15_076	FROM->TO	GR ISLD-LNX3345.00 - GRAND ISLAND 345KV CKT Z	720	720	0.07302	100.8377	GEN635214 4-NEAL UNIT 4
FDNS	00NR_G15_076	0	16WP	G15_076	FROM->TO	GR ISLD-LNX3345.00 - GRAND ISLAND 345KV CKT Z	720	720	0.07302	100.8218	GEN 10648 1-G830_GEN 0.6900
FDNS	00NR_G15_076	0	16WP	G15_076	FROM->TO	GR ISLD-LNX3345.00 - GRAND ISLAND 345KV CKT Z	720	720	0.07302	100.8011	GEN600067 9-HIGH BRIDGE
FDNS	00NR_G15_076	0	16WP	G15_076	FROM->TO	GR ISLD-LNX3345.00 - GRAND ISLAND 345KV CKT Z	720	720	0.07302	100.7989	GEN600014 4-BLACK DOG GEN 4
FDNS	00NR_G15_076	0	16WP	G15_076	FROM->TO	GR ISLD-LNX3345.00 - GRAND ISLAND 345KV CKT Z	720	720	0.07302	100.7984	GEN600071 10-RIVER SIDE
FDNS	00NR_G15_076	0	16WP	G15_076	FROM->TO	GR ISLD-LNX3345.00 - GRAND ISLAND 345KV CKT Z	720	720	0.07302	100.7983	GEN600070 9-RIVER SIDE
FDNS	00NR_G15_076	0	16WP	G15_076	FROM->TO	GR ISLD-LNX3345.00 - GRAND ISLAND 345KV CKT Z	720	720	0.07302	100.7951	GEN600011 5-BLACK DOG GEN 1
FDNS	00NR_G15_076	0	16WP	G15_076	FROM->TO	GR ISLD-LNX3345.00 - GRAND ISLAND 345KV CKT Z	720	720	0.07302	100.785	GEN600007 7-RIVERSIDE GEN 7
FDNS	00NR_G15_076	0	16WP	G15_076	FROM->TO	GR ISLD-LNX3345.00 - GRAND ISLAND 345KV CKT Z	720	720	0.07302	100.7636	GEN615015 1-GRE-SPRITWDG13.200
FDNS	00NR_G15_076	0	16WP	G15_076	FROM->TO	GR ISLD-LNX3345.00 - GRAND ISLAND 345KV CKT Z	720	720	0.07547	100.7635	ATCHSNT3 345.00 - BOONEVILLE 345KV CKT 1
FDNS	00NR_G15_076	0	16WP	G15_076	FROM->TO	GR ISLD-LNX3345.00 - GRAND ISLAND 345KV CKT Z	720	720	0.07441	100.7571	AXTELL - POST ROCK 345KV CKT 1
FDNS	00NR_G15_076	0	16WP	G15_076	FROM->TO	GR ISLD-LNX3345.00 - GRAND ISLAND 345KV CKT Z	720	720	0.07302	100.7367	GEN660016 1-B_H WIND 0.7000
FDNS	00NR_G15_076	0	16WP	G15_076	FROM->TO	GR ISLD-LNX3345.00 - GRAND ISLAND 345KV CKT Z	720	720	0.07302	100.7328	GEN600017 C-LS POWER CT
FDNS	00NR_G15_076	0	16WP	G15_076	FROM->TO	GR ISLD-LNX3345.00 - GRAND ISLAND 345KV CKT Z	720	720	0.07302	100.7314	GEN615052 1-CAMBRIDGE GENERATING STATION
FDNS	00NR_G15_076	0	16WP	G15_076	FROM->TO	GR ISLD-LNX3345.00 - GRAND ISLAND 345KV CKT Z	720	720	0.07302	100.7298	GEN652907 1-G09_007IS_3 0.6900
FDNS	00NR_G15_076	0	16WP	G15_076	FROM->TO	GR ISLD-LNX3345.00 - GRAND ISLAND 345KV CKT Z	720	720	0.07302	100.6909	GEN681522 3-GENOA 3
FDNS	00NR_G15_076	0	16WP	G15_076	FROM->TO	GR ISLD-LNX3345.00 - GRAND ISLAND 345KV CKT Z	720	720	0.0732	100.6714	MATHWSN7 345.00 - TATONGA7 345.00 345KV CKT 1
FDNS	00NR_G15_076	0	16WP	G15_076	FROM->TO	GR ISLD-LNX3345.00 - GRAND ISLAND 345KV CKT Z	720	720	0.07302	100.6611	GEN662101 1-WESSINGTON190.5750
FDNS	00NR_G15_076	0	16WP	G15_076	FROM->TO	GR ISLD-LNX3345.00 - GRAND ISLAND 345KV CKT Z	720	720	0.07674	100.5235	MINGO - RED WILLOW 345KV CKT 1
FDNS	00NR_G15_076	0	16WP	G15_076	FROM->TO	GR ISLD-LNX3345.00 - GRAND ISLAND 345KV CKT Z	720	720	0.07674	100.5235	MINGO - RED WILLOW 345KV CKT 1
FDNS	00NR_G15_076	0	16WP	G15_076	FROM->TO	GR ISLD-LNX3345.00 - GRAND ISLAND 345KV CKT Z	720	720	0.07302	100.5145	GEN659353 1-DEERCREK CTG18.000
FDNS	00NR_G15_076	0	16WP	G15_076	FROM->TO	GR ISLD-LNX3345.00 - GRAND ISLAND 345KV CKT Z	720	720	0.07302	100.511	GEN910006 1-G12_012IS_3 0.6900
FDNS	00NR_G15_076	0	16WP	G15_076	FROM->TO	GR ISLD-LNX3345.00 - GRAND ISLAND 345KV CKT Z	720	720	0.07302	100.4578	GEN615021 1-GRE-ER 14G 16.000
FDNS	00NR_G15_076	0	16WP	G15_076	FROM->TO	GR ISLD-LNX3345.00 - GRAND ISLAND 345KV CKT Z	720	720	0.07302	100.4024	GEN672303 3-BOUNDARY DAM GENERATOR 3
FDNS	00NR_G15_076	0	16WP	G15_076	FROM->TO	GR ISLD-LNX3345.00 - GRAND ISLAND 345KV CKT Z	720	720	0.07302	100.4024	GEN672305 5-BOUNDARY DAM GENERATOR 5
FDNS	00NR_G15_076	0	16WP	G15_076	FROM->TO	GR ISLD-LNX3345.00 - GRAND ISLAND 345KV CKT Z	720	720	0.07302	100.4023	GEN672304 4-BOUNDARY DAM GENERATOR 4
FDNS	00NR_G15_076	0	16WP	G15_076	FROM->TO	GR ISLD-LNX3345.00 - GRAND ISLAND 345KV CKT Z	720	720	0.07684	100.3309	MOORE - PAULINE 345KV CKT 1
FDNS	00NR_G15_076	0	16WP	G15_076	FROM->TO	GR ISLD-LNX3345.00 - GRAND ISLAND 345KV CKT Z	720	720	0.07302	100.2948	BISONMP4 230.00 - SQUARE BUTTE 230KV CKT 1
FDNS	00NR_G15_076	0	16WP	G15_076	FROM->TO	GR ISLD-LNX3345.00 - GRAND ISLAND 345KV CKT Z	720	720	0.07302	100.1893	GEN652460 4-GARRISON
FDNS	00NR_G15_076	0	16WP	G15_076	FROM->TO	GR ISLD-LNX3345.00 - GRAND ISLAND 345KV CKT Z	720	720	0.07302	100.1893	GEN652461 5-GARRISON
FDNS	00NR_G15_076	0	16WP	G15_076	FROM->TO	GR ISLD-LNX3345.00 - GRAND ISLAND 345KV CKT Z	720	720	0.07302	100.1765	GEN672392 1-NBECGT1G 18.000
FDNS	00NR_G15_076	0	16WP	G15_076	FROM->TO	GR ISLD-LNX3345.00 - GRAND ISLAND 345KV CKT Z	720	720	0.07302	100.1422	GEN652457 1-GARRISON
FDNS	00NR_G15_076	0	16WP	G15_076	FROM->TO	GR ISLD-LNX3345.00 - GRAND ISLAND 345KV CKT Z	720	720	0.07302	100.1422	GEN652458 2-GARRISON
FDNS	00NR_G15_076	0	16WP	G15_076	FROM->TO	GR ISLD-LNX3345.00 - GRAND ISLAND 345KV CKT Z	720	720	0.07302	100.1422	GEN652459 3-GARRISON
FDNS	00NR_G15_076	0	16WP	G15_076	FROM->TO	GR ISLD-LNX3345.00 - GRAND ISLAND 345KV CKT Z	720	720	0.07302	100.1306	GEN652542 1-BIG BEND
FDNS	00NR_G15_076	0	16WP	G15_076	FROM->TO	GR ISLD-LNX3345.00 - GRAND ISLAND 345KV CKT Z	720	720	0.07302	100.1023	COYOTE 345/24.0KV TRANSFORMER CKT 1
FDNS	00NR_G15_076	0	16WP	G15_076	FROM->TO	GR ISLD-LNX3345.00 - GRAND ISLAND 345KV CKT Z	720	720	0.07302	100.0954	GEN659010 4-G07_027IS_2 0.6900
FDNS	00NR_G15_076	0	16WP	G15_076	FROM->TO	GR ISLD-LNX3345.00 - GRAND ISLAND 345KV CKT Z	720	720	0.07302	100.0599	GEN659194 1-NDPRAIRWND1W0.6900
FDNS	00NR_G15_076	0	16WP	G15_076	FROM->TO	GR ISLD-LNX3345.00 - GRAND ISLAND 345KV CKT Z	720	720	0.08457	100	COLUMWEST - GRAND ISLAND 230KV CKT 1
FDNS	00NR_G15_076	0	16WP	G15_076	FROM->TO	GR ISLD-LNX3345.00 - GRAND ISLAND 345KV CKT Z	720	720	0.07302	100	GEN659403 1-NDSUNFLWR W0.6900
FDNS	00NR_G15_076	0	16WP	G15_076	FROM->TO	GR ISLD-LNX3345.00 - GRAND ISLAND 345KV CKT Z	720	720	0.07302	100	GR ISLD-LNX3345.00 345KV SWITCHED SHUNT
FDNSLock	00NR_G15_076	0	16WP	G15_076	FROM->TO	GR ISLD-LNX3345.00 - GRAND ISLAND 345KV CKT Z	720	720	0.07302	100	GR ISLD-LNX3345.00 345KV SWITCHED SHUNT
FDNS	00NR_G15_076	0	16WP	G15_076	FROM->TO	GR ISLD-LNX3345.00 - GRAND ISLAND 345KV CKT Z	720	720	0.07302	99.9	GEN681542 6-JP MADGETT
FDNS	00NR_G15_076	0	16WP	G15_076	FROM->TO	GR ISLD-LNX3345.00 - GRAND ISLAND 345KV CKT Z	720	720	0.07302	99.9	SQUARE BUTTE - YNG2 4 230.00 230KV CKT 1
FDNS	00NR_G15_076	0	16WP	G15_076	FROM->TO	GR ISLD-LNX3345.00 - GRAND ISLAND 345KV CKT Z	720	720	0.07302	99.9	YNG2 4 230.00 230/20.0KV TRANSFORMER CKT 1
FDNS	00NR_G15_076	0	16WP	G15_076	FROM->TO	GR ISLD-LNX3345.00 - GRAND ISLAND 345KV CKT Z	720	720	0.07662	99.7	AXTELL - SWEETWATER 345KV CKT 1
FDNS	00NR_G15_076	0	16WP	G15_076	FROM->TO	GR ISLD-LNX3345.00 - GRAND ISLAND 345KV CKT Z	720	720	0.07302	99.7	GEN659411 1-CAMPBLCNTY W0.6900
FDNS	00NR_G15_076	0	16WP	G15_076	FROM->TO	GR ISLD-LNX3345.00 - GRAND ISLAND 345KV CKT Z	720	720	0.07302	99.7	RCDC EAST 4230.00 - RED CEDAR DC 230KV CKT 1
FDNS	00NR_G15_076	0	16WP	G15_076	FROM->TO	GR ISLD-LNX3345.00 - GRAND ISLAND 345KV CKT Z	720	720	0.07302	99.6	P12:230:UMZB:# 112 #: NU IN SD. NU-RCDC & DRY CREEK XFMR
FDNS	00NR_G15_076	0	20WP	G15_076	FROM->TO	GR ISLD-LNX3345.00 - GRAND ISLAND 345KV CKT Z	720	720	0.06902	99.6	HOLT.CO3 345.00 - THEDFRD3 345.00 345KV CKT 1
FDNS	00NR_G15_076	0	16WP	G15_076	FROM->TO	GR ISLD-LNX3345.00 - GRAND ISLAND 345KV CKT Z	720	720	0.07302	99.5	ALMA 161 161/24.0KV TRANSFORMER CKT 1
FDNS	00NR_G15_076	0	16WP	G15_076	FROM->TO	GR ISLD-LNX3345.00 - GRAND ISLAND 345KV CKT Z	720	720	0.07302	99.5	GEN659296 2-SDPRAIRWND1W0.6900
FDNS	00NR_G15_076	0	17SP	G15_076	TO->FROM	GR ISLD-LNX3345.00 - HOLT.CO3 345.00 345KV CKT 1	720	720	0.07812	137.4197	KELLY - MEADOWGROVE4230.00 230KV CKT 1
FDNS	00NR_G15_076	0	17SP	G15_076	TO->FROM	GR ISLD-LNX3345.00 - HOLT.CO3 345.00 345KV CKT 1	720	720	0.07196	137.1511	P12:230:UMZB:# 116 #: ST IN SD. WSG-ST-VH
FDNS	00NR_G15_076	0	17SP	G15_076	TO->FROM	GR ISLD-LNX3345.00 - HOLT.CO3 345.00 345KV CKT 1	720	720	0.0722	136.2296	STORLA - WESSINGTON 230KV CKT 1
FDNS	00NR_G15_076	0	17SP	G15_076	TO->FROM	GR ISLD-LNX3345.00 - HOLT.CO3 345.00 345KV CKT 1	720	720	0.07342	135.3238	WATERTN-LNX3345.00 - WHITE 345KV CKT 1
FDNS	00NR_G15_076	0	17SP	G15_076	TO->FROM	GR ISLD-LNX3345.00 - HOLT.CO3 345.00 345KV CKT 1	720	720	0.07342	135.0491	WATERTN-LNX3345.00 - WATERTOWN 345KV CKT Z
FDNS	00NR_G15_076	0	17SP	G15_076	TO->FROM	GR ISLD-LNX3345.00 - HOLT.CO3 345.00 345KV CKT 1	720	720	0.07342	135.029	P12:345:UMZW:# 1747 #: WT2 IN SD. WT2-WHT LINE FAULT
FDNS	00NR_G15_076	0	17SP	G15_076	TO->FROM	GR ISLD-LNX3345.00 - HOLT.CO3 345.00 345KV CKT 1	720	720	0.074	135.0139	G09_001IST 345.00 - WATERTOWN 345KV CKT 1
FDNS	00NR_G15_076	0	17SP	G15_076	TO->FROM	GR ISLD-LNX3345.00 - HOLT.CO3 345.00 345KV CKT 1	720	720	0.07255	134.8655	HANLON - STORLA 230KV CKT 1

SOLUTION	GROUP	SCENARIO	SEASON	SOURCE	DIRECTION	MONITORED ELEMENT	RATEA (MVA)	RATEB(MVA)	TDF	TC%LOADING (% MVA)	CONTINGENCY
FDNS	00NR_G15_076	0	17SP	G15_076	TO->FROM	GR ISLD-LNX3345.00 - HOLT.CO3 345.00 345KV CKT 1	720	720	0.0715	134.4892	FT THOMPSON - LETCHER 230KV CKT 1
FDNS	00NR_G15_076	0	17SP	G15_076	TO->FROM	GR ISLD-LNX3345.00 - HOLT.CO3 345.00 345KV CKT 1	720	720	0.0715	134.4892	FT THOMPSON - LETCHER 230KV CKT 1
FDNS	00NR_G15_076	0	17SP	G15_076	TO->FROM	GR ISLD-LNX3345.00 - HOLT.CO3 345.00 345KV CKT 1	720	720	0.07427	133.5133	BUFFALO - JAMESTOWN 345KV CKT 1
FDNS	00NR_G15_076	0	17SP	G15_076	TO->FROM	GR ISLD-LNX3345.00 - HOLT.CO3 345.00 345KV CKT 1	720	720	0.07071	133.2561	FT RANDAL - FT THOMPSON 230KV CKT 1
FDNS	00NR_G15_076	0	17SP	G15_076	TO->FROM	GR ISLD-LNX3345.00 - HOLT.CO3 345.00 345KV CKT 1	720	720	0.07071	133.2561	FT RANDAL - FT THOMPSON 230KV CKT 1
FDNS	00NR_G15_076	0	17SP	G15_076	TO->FROM	GR ISLD-LNX3345.00 - HOLT.CO3 345.00 345KV CKT 1	720	720	0.0708	133.2241	FT RANDAL - G12_009IST 230.00 230KV CKT 1
FDNS	00NR_G15_076	0	17SP	G15_076	TO->FROM	GR ISLD-LNX3345.00 - HOLT.CO3 345.00 345KV CKT 1	720	720	0.0708	133.1212	FT THOMPSON - LAKE PLATT 230KV CKT 1
FDNS	00NR_G15_076	0	17SP	G15_076	TO->FROM	GR ISLD-LNX3345.00 - HOLT.CO3 345.00 345KV CKT 1	720	720	0.0708	133.1212	FT THOMPSON - LAKE PLATT 230KV CKT 1
FDNS	00NR_G15_076	0	17SP	G15_076	TO->FROM	GR ISLD-LNX3345.00 - HOLT.CO3 345.00 345KV CKT 1	720	720	0.08347	132.8773	NUNDRWD - WAYSIDE 230KV CKT 1
FDNS	00NR_G15_076	0	17SP	G15_076	TO->FROM	GR ISLD-LNX3345.00 - HOLT.CO3 345.00 345KV CKT 1	720	720	0.0708	132.6668	G12_009IST 230.00 - LAKE PLATT 230KV CKT 1
FDNS	00NR_G15_076	0	17SP	G15_076	TO->FROM	GR ISLD-LNX3345.00 - HOLT.CO3 345.00 345KV CKT 1	720	720	0.0743	132.5867	GEN336821 1-GRAND GULF UNIT
FDNSLock	00NR_G15_076	0	17SP	G15_076	TO->FROM	GR ISLD-LNX3345.00 - HOLT.CO3 345.00 345KV CKT 1	720	720	0.07428	132.567	CHISAGO COUNTY - CHISAGO COUNTY 500KV CKT 1
FDNS	00NR_G15_076	0	17SP	G15_076	TO->FROM	GR ISLD-LNX3345.00 - HOLT.CO3 345.00 345KV CKT 1	720	720	0.07428	132.5389	CHISAGO COUNTY - FORBES 500KV CKT 1
FDNS	00NR_G15_076	0	17SP	G15_076	TO->FROM	GR ISLD-LNX3345.00 - HOLT.CO3 345.00 345KV CKT 1	720	720	0.07812	132.4621	FT RANDAL - MEADOWGROVE4230.00 230KV CKT 1
FDNS	00NR_G15_076	0	17SP	G15_076	TO->FROM	GR ISLD-LNX3345.00 - HOLT.CO3 345.00 345KV CKT 1	720	720	0.07427	132.4004	CENTER - JAMESTOWN 345KV CKT 1
FDNS	00NR_G15_076	0	17SP	G15_076	TO->FROM	GR ISLD-LNX3345.00 - HOLT.CO3 345.00 345KV CKT 1	720	720	0.0743	132.103	GEN640010 1-GERALD GENTLEMAN STATION UNIT 1
FDNS	00NR_G15_076	0	17SP	G15_076	TO->FROM	GR ISLD-LNX3345.00 - HOLT.CO3 345.00 345KV CKT 1	720	720	0.07334	132.0785	LETCHER - SIOUX FALLS 230KV CKT 1
FDNS	00NR_G15_076	0	17SP	G15_076	TO->FROM	GR ISLD-LNX3345.00 - HOLT.CO3 345.00 345KV CKT 1	720	720	0.0743	132.0671	GEN344225 1-1CAL G1 25.000
FDNS	00NR_G15_076	0	17SP	G15_076	TO->FROM	GR ISLD-LNX3345.00 - HOLT.CO3 345.00 345KV CKT 1	720	720	0.074	132.0194	G09_001IST 345.00 - GROTON 345KV CKT 1
FDNS	00NR_G15_076	0	17SP	G15_076	TO->FROM	GR ISLD-LNX3345.00 - HOLT.CO3 345.00 345KV CKT 1	720	720	0.07618	131.9773	KEYSTONE - SIDNEY1-LNX3345.00 345KV CKT 1
FDNS	00NR_G15_076	0	17SP	G15_076	TO->FROM	GR ISLD-LNX3345.00 - HOLT.CO3 345.00 345KV CKT 1	720	720	0.07618	131.9379	SIDNEY - SIDNEY1-LNX3345.00 345KV CKT Z
FDNS	00NR_G15_076	0	17SP	G15_076	TO->FROM	GR ISLD-LNX3345.00 - HOLT.CO3 345.00 345KV CKT 1	720	720	0.07428	131.922	BISON 3 345.00 - BUFFALO 345KV CKT 1
FDNS	00NR_G15_076	0	17SP	G15_076	TO->FROM	GR ISLD-LNX3345.00 - HOLT.CO3 345.00 345KV CKT 1	720	720	0.0743	131.896	GEN635024 4-WALTER SCOTT UNIT 4
FDNS	00NR_G15_076	0	17SP	G15_076	TO->FROM	GR ISLD-LNX3345.00 - HOLT.CO3 345.00 345KV CKT 1	720	720	0.0743	131.8685	GEN337911 1-ARKANSAS NUCLEAR ONE UNIT #2
FDNS	00NR_G15_076	0	17SP	G15_076	TO->FROM	GR ISLD-LNX3345.00 - HOLT.CO3 345.00 345KV CKT 1	720	720	0.0743	131.8084	GEN336153 1-WATERFORD UNIT#3
FDNS	00NR_G15_076	0	17SP	G15_076	TO->FROM	GR ISLD-LNX3345.00 - HOLT.CO3 345.00 345KV CKT 1	720	720	0.0743	131.6566	GEN640011 2-GERALD GENTLEMAN STATION UNIT 2
FDNS	00NR_G15_076	0	17SP	G15_076	TO->FROM	GR ISLD-LNX3345.00 - HOLT.CO3 345.00 345KV CKT 1	720	720	0.07303	131.442	SPLIT ROCK - WHITE 345KV CKT 1
FDNS	00NR_G15_076	0	17SP	G15_076	TO->FROM	GR ISLD-LNX3345.00 - HOLT.CO3 345.00 345KV CKT 1	720	720	0.07303	131.442	SPLIT ROCK - WHITE 345KV CKT 1
FDNS	00NR_G15_076	0	17SP	G15_076	TO->FROM	GR ISLD-LNX3345.00 - HOLT.CO3 345.00 345KV CKT 1	720	720	0.0743	131.4012	GEN635023 3-WALTER SCOTT UNIT 3
FDNS	00NR_G15_076	0	17SP	G15_076	TO->FROM	GR ISLD-LNX3345.00 - HOLT.CO3 345.00 345KV CKT 1	720	720	0.0743	131.3349	GEN335831 1-RIVERBEND UNIT#1
FDNS	00NR_G15_076	0	17SP	G15_076	TO->FROM	GR ISLD-LNX3345.00 - HOLT.CO3 345.00 345KV CKT 1	720	720	0.07401	131.294	GROTON-LNX3 345.00 - LELAND1-LNX3345.00 345KV CKT 1
FDNS	00NR_G15_076	0	17SP	G15_076	TO->FROM	GR ISLD-LNX3345.00 - HOLT.CO3 345.00 345KV CKT 1	720	720	0.0743	131.2379	GEN337910 1-ARKANSAS NUCLEAR ONE UNIT #1
FDNS	00NR_G15_076	0	17SP	G15_076	TO->FROM	GR ISLD-LNX3345.00 - HOLT.CO3 345.00 345KV CKT 1	720	720	0.08281	131.2374	RAUN - SUB 3451 FT CAL 345KV CKT 1
FDNS	00NR_G15_076	0	17SP	G15_076	TO->FROM	GR ISLD-LNX3345.00 - HOLT.CO3 345.00 345KV CKT 1	720	720	0.08281	131.2374	RAUN - SUB 3451 FT CAL 345KV CKT 1
FDNS	00NR_G15_076	0	17SP	G15_076	TO->FROM	GR ISLD-LNX3345.00 - HOLT.CO3 345.00 345KV CKT 1	720	720	0.07401	131.1497	P12:345:UMZB:# 109 #: LOS GRT IN ND. LOS GRT
FDNS	00NR_G15_076	0	17SP	G15_076	TO->FROM	GR ISLD-LNX3345.00 - HOLT.CO3 345.00 345KV CKT 1	720	720	0.07401	131.1338	GROTON - GROTON-LNX3 345.00 345KV CKT Z
FDNS	00NR_G15_076	0	17SP	G15_076	TO->FROM	GR ISLD-LNX3345.00 - HOLT.CO3 345.00 345KV CKT 1	720	720	0.07401	131.1222	LELAND OLDS - LELAND1-LNX3345.00 345KV CKT Z
FDNS	00NR_G15_076	0	17SP	G15_076	TO->FROM	GR ISLD-LNX3345.00 - HOLT.CO3 345.00 345KV CKT 1	720	720	0.07398	131.0322	FT RANDAL - SIOUX CITY 230KV CKT 1
FDNS	00NR_G15_076	0	17SP	G15_076	TO->FROM	GR ISLD-LNX3345.00 - HOLT.CO3 345.00 345KV CKT 1	720	720	0.07459	130.8946	ARROWHEAD - ARROWHEAD 230 230KV CKT 1
FDNS	00NR_G15_076	0	17SP	G15_076	TO->FROM	GR ISLD-LNX3345.00 - HOLT.CO3 345.00 345KV CKT 1	720	720	0.07357	130.8	HANLON - SIOUX FALLS 230KV CKT 1
FDNS	00NR_G15_076	0	17SP	G15_076	TO->FROM	GR ISLD-LNX3345.00 - HOLT.CO3 345.00 345KV CKT 1	720	720	0.06044	130.6577	GRAND ISLAND - SWEETWATER 345KV CKT 1
FDNS	00NR_G15_076	0	17SP	G15_076	TO->FROM	GR ISLD-LNX3345.00 - HOLT.CO3 345.00 345KV CKT 1	720	720	0.07452	130.6288	P12:115:NPPD:1091:VALENTN7:MISSION7:BTB
FDNS	00NR_G15_076	0	17SP	G15_076	TO->FROM	GR ISLD-LNX3345.00 - HOLT.CO3 345.00 345KV CKT 1	720	720	0.0743	130.603	GEN337653 1-WHITE BLUFF UNIT #2
FDNS	00NR_G15_076	0	17SP	G15_076	TO->FROM	GR ISLD-LNX3345.00 - HOLT.CO3 345.00 345KV CKT 1	720	720	0.0743	130.591	GEN337652 1-WHITE BLUFF UNIT #1
FDNS	00NR_G15_076	0	17SP	G15_076	TO->FROM	GR ISLD-LNX3345.00 - HOLT.CO3 345.00 345KV CKT 1	720	720	0.0759	130.5713	SIDNEY - STEGALL 345KV CKT 1
FDNS	00NR_G15_076	0	17SP	G15_076	TO->FROM	GR ISLD-LNX3345.00 - HOLT.CO3 345.00 345KV CKT 1	720	720	0.07333	130.5635	SIOUXCY-LNX3345.00 - SPLIT ROCK 345KV CKT 1
FDNS	00NR_G15_076	0	17SP	G15_076	TO->FROM	GR ISLD-LNX3345.00 - HOLT.CO3 345.00 345KV CKT 1	720	720	0.07333	130.5635	SIOUXCY-LNX3345.00 - SPLIT ROCK 345KV CKT 1
FDNS	00NR_G15_076	0	17SP	G15_076	TO->FROM	GR ISLD-LNX3345.00 - HOLT.CO3 345.00 345KV CKT 1	720	720	0.07516	130.544	HAZLETON - MITCHLCO3 345.00 345KV CKT 1
FDNS	00NR_G15_076	0	17SP	G15_076	TO->FROM	GR ISLD-LNX3345.00 - HOLT.CO3 345.00 345KV CKT 1	720	720	0.07333	130.5269	P12:345:UMZW:# 907 #: SC2-SR IN IA. SC2-SR 345 KV LINE
FDNS	00NR_G15_076	0	17SP	G15_076	TO->FROM	GR ISLD-LNX3345.00 - HOLT.CO3 345.00 345KV CKT 1	720	720	0.0743	130.5255	GEN338146 1-INDEPENDENCE UNIT #2
FDNS	00NR_G15_076	0	17SP	G15_076	TO->FROM	GR ISLD-LNX3345.00 - HOLT.CO3 345.00 345KV CKT 1	720	720	0.0743	130.5103	GEN338143 1-INDEPENDENCE UNIT #1
FDNS	00NR_G15_076	0	17SP	G15_076	TO->FROM	GR ISLD-LNX3345.00 - HOLT.CO3 345.00 345KV CKT 1	720	720	0.07452	130.4937	MISSION - ST FRANCIS 115KV CKT 1
FDNS	00NR_G15_076	0	17SP	G15_076	TO->FROM	GR ISLD-LNX3345.00 - HOLT.CO3 345.00 345KV CKT 1	720	720	0.07333	130.4832	SIOUX CITY - SIOUXCY-LNX3345.00 345KV CKT Z
FDNS	00NR_G15_076	0	17SP	G15_076	TO->FROM	GR ISLD-LNX3345.00 - HOLT.CO3 345.00 345KV CKT 1	720	720	0.07429	130.4583	ELLENDALE - OAKES 230KV CKT 1
FDNS	00NR_G15_076	0	17SP	G15_076	TO->FROM	GR ISLD-LNX3345.00 - HOLT.CO3 345.00 345KV CKT 1	720	720	0.07429	130.4583	ELLENDALE - OAKES 230KV CKT 1
FDNS	00NR_G15_076	0	17SP	G15_076	TO->FROM	GR ISLD-LNX3345.00 - HOLT.CO3 345.00 345KV CKT 1	720	720	0.0743	130.455	GEN501801 1-DOLET HILLS UNIT1
FDNS	00NR_G15_076	0	17SP	G15_076	TO->FROM	GR ISLD-LNX3345.00 - HOLT.CO3 345.00 345KV CKT 1	720	720	0.07452	130.4062	HARMONY - ST FRANCIS 115KV CKT 1
FDNS	00NR_G15_076	0	17SP	G15_076	TO->FROM	GR ISLD-LNX3345.00 - HOLT.CO3 345.00 345KV CKT 1	720	720	0.07429	130.361	FORMAN - OAKES 230KV CKT 1
FDNS	00NR_G15_076	0	17SP	G15_076	TO->FROM	GR ISLD-LNX3345.00 - HOLT.CO3 345.00 345KV CKT 1	720	720	0.07422	130.3533	CARPENTER - HURON 230KV CKT 1
FDNS	00NR_G15_076	0	17SP	G15_076	TO->FROM	GR ISLD-LNX3345.00 - HOLT.CO3 345.00 345KV CKT 1	720	720	0.07465	130.3527	AS KING - EAU CLAIRE 345KV CKT 1
FDNS	00NR_G15_076	0	17SP	G15_076	TO->FROM	GR ISLD-LNX3345.00 - HOLT.CO3 345.00 345KV CKT 1	720	720	0.07432	130.3374	ALEXMRES3 345.00 - BISON 3 345.00 345KV CKT 1
FDNS	00NR_G15_076	0	17SP	G15_076	TO->FROM	GR ISLD-LNX3345.00 - HOLT.CO3 345.00 345KV CKT 1	720	720	0.07201	130.3281	FT RANDAL - UTICA JCT 230KV CKT 1
FDNS	00NR_G15_076	0	17SP	G15_076	TO->FROM	GR ISLD-LNX3345.00 - HOLT.CO3 345.00 345KV CKT 1	720	720	0.0722	130.3083	FT THOMPSON - WESSINGTON 230KV CKT 1
FDNS	00NR_G15_076	0	17SP	G15_076	TO->FROM	GR ISLD-LNX3345.00 - HOLT.CO3 345.00 345KV CKT 1	720	720	0.0722	130.3083	FT THOMPSON - WESSINGTON 230KV CKT 1
FDNS	00NR_G15_076	0	17SP	G15_076	TO->FROM	GR ISLD-LNX3345.00 - HOLT.CO3 345.00 345KV CKT 1	720	720	0.0748	130.2411	ARPIN B4 345.00 - EAU CLAIRE 345KV CKT 1
FDNS	00NR_G15_076	0	17SP	G15_076	TO->FROM	GR ISLD-LNX3345.00 - HOLT.CO3 345.00 345KV CKT 1	720	720	0.07422	130.2287	HURON - WATERTOWN 230KV CKT 2
FDNS	00NR_G15_076	0	17SP	G15_076	TO->FROM	GR ISLD-LNX3345.00 - HOLT.CO3 345.00 345KV CKT 1	720	720	0.07422	130.2287	HURON - WATERTOWN 230KV CKT 2
FDNS	00NR_G15_076	0	17SP	G15_076	TO->FROM	GR ISLD-LNX3345.00 - HOLT.CO3 345.00 345KV CKT 1	720	720	0.07466	130.209	P12:115:NPPD:WAPA6:FTRANDL7:ONEILL 7:BTB
FDNS	00NR_G15_076	0	17SP	G15_076	TO->FROM	GR ISLD-LNX3345.00 - HOLT.CO3 345.00 345KV CKT 1	720	720	0.07466	130.209	P12:115:UMZB:# 115 #: SE IN NE. FR-SE-ON
FDNS	00NR_G15_076	0	17SP	G15_076	TO->FROM	GR ISLD-LNX3345.00 - HOLT.CO3 345.00 345KV CKT 1	720	720	0.07452	130.2016	HARMONY - VALENTINE 115KV CKT 1
FDNS	00NR_G15_076	0	17SP	G15_076	TO->FROM	GR ISLD-LNX3345.00 - HOLT.CO3 345.00 345KV CKT 1	720	720	0.07466	130.1738	FT RANDAL - SPENCER 115KV CKT 1
FDNS	00NR_G15_076	0	17SP	G15_076	TO->FROM	GR ISLD-LNX3345.00 - HOLT.CO3 345.00 345KV CKT 1	720	720	0.07422	130.1707	CARPENTER - WATERTOWN 230KV CKT 1
FDNS	00NR_G15_076	0	17SP	G15_076	TO->FROM	GR ISLD-LNX3345.00 - HOLT.CO3 345.00 345KV CKT 1	720	720	0.07422	130.1707	CARPENTER - WATERTOWN 230KV CKT 1

SOLUTION	GROUP	SCENARIO	SEASON	SOURCE	DIRECTION	MONITORED ELEMENT	RATEA (MVA)	RATEB(MVA)	TDF	TC%LOADING (% MVA)	CONTINGENCY
FDNS	00NR_G15_076	0	17SP	G15_076	TO->FROM	GR ISLD-LNX3345.00 - HOLT.CO3 345.00 345KV CKT 1	720	720	0.07399	130.1113	PAHOJA - SIOUX FALLS 230KV CKT 1
FDNS	00NR_G15_076	0	17SP	G15_076	TO->FROM	GR ISLD-LNX3345.00 - HOLT.CO3 345.00 345KV CKT 1	720	720	0.0743	130.0921	GEN336252 1-NINEMILE POINT UNIT#5
FDNS	00NR_G15_076	0	17SP	G15_076	TO->FROM	GR ISLD-LNX3345.00 - HOLT.CO3 345.00 345KV CKT 1	720	720	0.07466	130.0732	ONEILL - SPENCER 115KV CKT 1
FDNS	00NR_G15_076	0	17SP	G15_076	TO->FROM	GR ISLD-LNX3345.00 - HOLT.CO3 345.00 345KV CKT 1	720	720	0.0743	130.0485	GEN501813 1-RODEMACHER UNIT 3
FDNS	00NR_G15_076	0	17SP	G15_076	TO->FROM	GR ISLD-LNX3345.00 - HOLT.CO3 345.00 345KV CKT 1	720	720	0.0743	129.9495	GEN336831 1-BAXTER WILSON SES
FDNS	00NR_G15_076	0	17SP	G15_076	TO->FROM	GR ISLD-LNX3345.00 - HOLT.CO3 345.00 345KV CKT 1	720	720	0.0743	129.9352	GEN336251 1-NINEMILE POINT UNIT#4
FDNS	00NR_G15_076	0	17SP	G15_076	TO->FROM	GR ISLD-LNX3345.00 - HOLT.CO3 345.00 345KV CKT 1	720	720	0.07522	129.923	GERALD GENTLEMAN STATION - KEYSTONE 345KV CKT 1
FDNS	00NR_G15_076	0	17SP	G15_076	TO->FROM	GR ISLD-LNX3345.00 - HOLT.CO3 345.00 345KV CKT 1	720	720	0.0743	129.8947	GEN641089 2-ENERGY CENTER 2
FDNS	00NR_G15_076	0	17SP	G15_076	TO->FROM	GR ISLD-LNX3345.00 - HOLT.CO3 345.00 345KV CKT 1	720	720	0.0743	129.8771	CNTSHNT3 345.00 - PRAIRIE3 345.00 345KV CKT 1
FDNS	00NR_G15_076	0	17SP	G15_076	TO->FROM	GR ISLD-LNX3345.00 - HOLT.CO3 345.00 345KV CKT 1	720	720	0.0743	129.8574	GEN337041 1-GERALD ANDRUS
FDNS	00NR_G15_076	0	17SP	G15_076	TO->FROM	GR ISLD-LNX3345.00 - HOLT.CO3 345.00 345KV CKT 1	720	720	0.0743	129.8394	GEN335206 1-NELSON UNIT 6
FDNS	00NR_G15_076	0	17SP	G15_076	TO->FROM	GR ISLD-LNX3345.00 - HOLT.CO3 345.00 345KV CKT 1	720	720	0.0743	129.8334	GEN344897 4-1LAB G4 20.000
FDNS	00NR_G15_076	0	17SP	G15_076	TO->FROM	GR ISLD-LNX3345.00 - HOLT.CO3 345.00 345KV CKT 1	720	720	0.07431	129.8325	FORMAN - HANKINSON 230KV CKT 1
FDNS	00NR_G15_076	0	17SP	G15_076	TO->FROM	GR ISLD-LNX3345.00 - HOLT.CO3 345.00 345KV CKT 1	720	720	0.0743	129.8299	GEN344894 1-1LAB G1 20.000
FDNS	00NR_G15_076	0	17SP	G15_076	TO->FROM	GR ISLD-LNX3345.00 - HOLT.CO3 345.00 345KV CKT 1	720	720	0.0743	129.8297	GEN344896 3-1LAB G3 20.000
FDNS	00NR_G15_076	0	17SP	G15_076	TO->FROM	GR ISLD-LNX3345.00 - HOLT.CO3 345.00 345KV CKT 1	720	720	0.07452	129.7912	AINSWORTH - VALENTINE 115KV CKT 1
FDNS	00NR_G15_076	0	17SP	G15_076	TO->FROM	GR ISLD-LNX3345.00 - HOLT.CO3 345.00 345KV CKT 1	720	720	0.0743	129.7659	GEN344895 2-1LAB G2 20.000
FDNS	00NR_G15_076	0	17SP	G15_076	TO->FROM	GR ISLD-LNX3345.00 - HOLT.CO3 345.00 345KV CKT 1	720	720	0.07399	129.7455	EAGLE 4 230.00 - PAHOJA 230KV CKT 1
FDNS	00NR_G15_076	0	17SP	G15_076	TO->FROM	GR ISLD-LNX3345.00 - HOLT.CO3 345.00 345KV CKT 1	720	720	0.07566	129.7432	RASMUSN - UTICA JCT 230KV CKT 1
FDNS	00NR_G15_076	0	17SP	G15_076	TO->FROM	GR ISLD-LNX3345.00 - HOLT.CO3 345.00 345KV CKT 1	720	720	0.0743	129.7416	GEN345670 1-1RUSH G1 18.000
FDNS	00NR_G15_076	0	17SP	G15_076	TO->FROM	GR ISLD-LNX3345.00 - HOLT.CO3 345.00 345KV CKT 1	720	720	0.0743	129.7413	GEN345671 2-1RUSH G2 18.000
FDNS	00NR_G15_076	0	17SP	G15_076	TO->FROM	GR ISLD-LNX3345.00 - HOLT.CO3 345.00 345KV CKT 1	720	720	0.07516	129.6898	ADAMS - MITCHLCO3 345.00 345KV CKT 1
FDNS	00NR_G15_076	0	17SP	G15_076	TO->FROM	GR ISLD-LNX3345.00 - HOLT.CO3 345.00 345KV CKT 1	720	720	0.0743	129.6795	GEN501812 1-RODEMACHER UNIT 2
FDNS	00NR_G15_076	0	17SP	G15_076	TO->FROM	GR ISLD-LNX3345.00 - HOLT.CO3 345.00 345KV CKT 1	720	720	0.0743	129.6566	GEN334440 1-SABINE UNIT 4
FDNS	00NR_G15_076	0	17SP	G15_076	TO->FROM	GR ISLD-LNX3345.00 - HOLT.CO3 345.00 345KV CKT 1	720	720	0.07489	129.5545	ADAMS - PLEASANT VALLEY 345KV CKT 1
FDNS	00NR_G15_076	0	17SP	G15_076	TO->FROM	GR ISLD-LNX3345.00 - HOLT.CO3 345.00 345KV CKT 1	720	720	0.07566	129.5176	RASMUSN - SIOUX CITY 230KV CKT 1
FDNS	00NR_G15_076	0	17SP	G15_076	TO->FROM	GR ISLD-LNX3345.00 - HOLT.CO3 345.00 345KV CKT 1	720	720	0.0743	129.5021	GEN336191 1-LITTLE GYPSY UNIT#3
FDNSLock	00NR_G15_076	0	17SP	G15_076	TO->FROM	GR ISLD-LNX3345.00 - HOLT.CO3 345.00 345KV CKT 1	720	720	0.0743	129.4982	CENTER - CNTSHNT3 345.00 345KV CKT Z1
FDNS	00NR_G15_076	0	17SP	G15_076	TO->FROM	GR ISLD-LNX3345.00 - HOLT.CO3 345.00 345KV CKT 1	720	720	0.0743	129.4363	GEN338388 1-1PLUM PT U1 23.000
FDNS	00NR_G15_076	0	17SP	G15_076	TO->FROM	GR ISLD-LNX3345.00 - HOLT.CO3 345.00 345KV CKT 1	720	720	0.07658	129.4214	GRIMES - LEHIGH 345KV CKT 1
FDNS	00NR_G15_076	0	17SP	G15_076	TO->FROM	GR ISLD-LNX3345.00 - HOLT.CO3 345.00 345KV CKT 1	720	720	0.0743	129.4033	GEN336801 1-BAXTER WILSON UNIT #1
FDNS	00NR_G15_076	0	17SP	G15_076	TO->FROM	GR ISLD-LNX3345.00 - HOLT.CO3 345.00 345KV CKT 1	720	720	0.0743	129.3932	GEN335614 1-WILLOW GLENN UNIT#4
FDNS	00NR_G15_076	0	17SP	G15_076	TO->FROM	GR ISLD-LNX3345.00 - HOLT.CO3 345.00 345KV CKT 1	720	720	0.0743	129.3847	GEN334441 1-SABINE UNIT 5
FDNS	00NR_G15_076	0	17SP	G15_076	TO->FROM	GR ISLD-LNX3345.00 - HOLT.CO3 345.00 345KV CKT 1	720	720	0.0743	129.3774	GEN336464 1-MICHOUD UNIT #3
FDNS	00NR_G15_076	0	17SP	G15_076	TO->FROM	GR ISLD-LNX3345.00 - HOLT.CO3 345.00 345KV CKT 1	720	720	0.07524	129.3645	LAKEFIELD 3 - NOBLES 345KV CKT 1
FDNS	00NR_G15_076	0	17SP	G15_076	TO->FROM	GR ISLD-LNX3345.00 - HOLT.CO3 345.00 345KV CKT 1	720	720	0.0743	129.3636	GEN335204 1-NELSON UNIT 4
FDNS	00NR_G15_076	0	17SP	G15_076	TO->FROM	GR ISLD-LNX3345.00 - HOLT.CO3 345.00 345KV CKT 1	720	720	0.07468	129.3014	BROOKING COUNTY - LYON COUNTY 345KV CKT 1
FDNS	00NR_G15_076	0	17SP	G15_076	TO->FROM	GR ISLD-LNX3345.00 - HOLT.CO3 345.00 345KV CKT 1	720	720	0.07395	129.2886	FT THOMPSON - HURON 230KV CKT 1
FDNS	00NR_G15_076	0	17SP	G15_076	TO->FROM	GR ISLD-LNX3345.00 - HOLT.CO3 345.00 345KV CKT 1	720	720	0.07395	129.2886	FT THOMPSON - HURON 230KV CKT 1
FDNS	00NR_G15_076	0	17SP	G15_076	TO->FROM	GR ISLD-LNX3345.00 - HOLT.CO3 345.00 345KV CKT 1	720	720	0.07395	129.2886	FT THOMPSON - HURON 230KV CKT 2
FDNS	00NR_G15_076	0	17SP	G15_076	TO->FROM	GR ISLD-LNX3345.00 - HOLT.CO3 345.00 345KV CKT 1	720	720	0.07395	129.2886	FT THOMPSON - HURON 230KV CKT 2
FDNS	00NR_G15_076	0	17SP	G15_076	TO->FROM	GR ISLD-LNX3345.00 - HOLT.CO3 345.00 345KV CKT 1	720	720	0.0746	129.2769	LARAMIE RIVER - SIDNEY2-LNX3345.00 345KV CKT 1
FDNS	00NR_G15_076	0	17SP	G15_076	TO->FROM	GR ISLD-LNX3345.00 - HOLT.CO3 345.00 345KV CKT 1	720	720	0.07504	129.2766	KOSSUTH 3 345.00 - OBRIEN 3 345.00 345KV CKT 1
FDNS	00NR_G15_076	0	17SP	G15_076	TO->FROM	GR ISLD-LNX3345.00 - HOLT.CO3 345.00 345KV CKT 1	720	720	0.07504	129.2616	KOSSUTH 3 345.00 - WEBSTER 345KV CKT 1
FDNS	00NR_G15_076	0	17SP	G15_076	TO->FROM	GR ISLD-LNX3345.00 - HOLT.CO3 345.00 345KV CKT 1	720	720	0.0746	129.2512	SIDNEY - SIDNEY2-LNX3345.00 345KV CKT Z
FDNS	00NR_G15_076	0	17SP	G15_076	TO->FROM	GR ISLD-LNX3345.00 - HOLT.CO3 345.00 345KV CKT 1	720	720	0.07751	129.2418	STEGALL - STEGALL TRANSFORMER 230KV CKT 1
FDNS	00NR_G15_076	0	17SP	G15_076	TO->FROM	GR ISLD-LNX3345.00 - HOLT.CO3 345.00 345KV CKT 1	720	720	0.07751	129.2223	P13:230-345:NPPD:STEGALL3:KV3A
FDNS	00NR_G15_076	0	17SP	G15_076	TO->FROM	GR ISLD-LNX3345.00 - HOLT.CO3 345.00 345KV CKT 1	720	720	0.07751	129.2216	STEGALL (SGQ KV3A) 345/230/13.8KV TRANSFORMER CKT 1
FDNS	00NR_G15_076	0	17SP	G15_076	TO->FROM	GR ISLD-LNX3345.00 - HOLT.CO3 345.00 345KV CKT 1	720	720	0.07434	129.2191	BLAIR - GRANITE FALLS 230KV CKT 1
FDNS	00NR_G15_076	0	17SP	G15_076	TO->FROM	GR ISLD-LNX3345.00 - HOLT.CO3 345.00 345KV CKT 1	720	720	0.07434	129.2191	BLAIR - GRANITE FALLS 230KV CKT 1
FDNS	00NR_G15_076	0	17SP	G15_076	TO->FROM	GR ISLD-LNX3345.00 - HOLT.CO3 345.00 345KV CKT 1	720	720	0.0743	129.214	GEN334433 1-SABINE UNIT 3
FDNS	00NR_G15_076	0	17SP	G15_076	TO->FROM	GR ISLD-LNX3345.00 - HOLT.CO3 345.00 345KV CKT 1	720	720	0.07297	129.1912	CROOKED CREEK - NORTH PLATTE 230KV CKT 1
FDNS	00NR_G15_076	0	17SP	G15_076	TO->FROM	GR ISLD-LNX3345.00 - HOLT.CO3 345.00 345KV CKT 1	720	720	0.0743	129.1818	P12:115:UMZW:# 162 #: NEL IN ND. FAULT ON ML-NEL-MX-GA 115 KV
FDNS	00NR_G15_076	0	17SP	G15_076	TO->FROM	GR ISLD-LNX3345.00 - HOLT.CO3 345.00 345KV CKT 1	720	720	0.0743	129.1749	GEN531447 1-HOLCOMB GENERATOR
FDNS	00NR_G15_076	0	17SP	G15_076	TO->FROM	GR ISLD-LNX3345.00 - HOLT.CO3 345.00 345KV CKT 1	720	720	0.0729	129.1735	MENNO JCT - TRIPP JCT 115KV CKT 1
FDNS	00NR_G15_076	0	17SP	G15_076	TO->FROM	GR ISLD-LNX3345.00 - HOLT.CO3 345.00 345KV CKT 1	720	720	0.0796	129.1599	STEGALL-LNX3230.00 - WAYSIDE 230KV CKT 1
FDNS	00NR_G15_076	0	17SP	G15_076	TO->FROM	GR ISLD-LNX3345.00 - HOLT.CO3 345.00 345KV CKT 1	720	720	0.0796	129.151	STEGALL - STEGALL-LNX3230.00 230KV CKT Z
FDNS	00NR_G15_076	0	17SP	G15_076	TO->FROM	GR ISLD-LNX3345.00 - HOLT.CO3 345.00 345KV CKT 1	720	720	0.0743	129.15	GEN336222 1-LITTLE GYPSY UNIT#2
FDNS	00NR_G15_076	0	17SP	G15_076	TO->FROM	GR ISLD-LNX3345.00 - HOLT.CO3 345.00 345KV CKT 1	720	720	0.0743	129.1284	GEN303007 1-1BC2 U2
FDNS	00NR_G15_076	0	17SP	G15_076	TO->FROM	GR ISLD-LNX3345.00 - HOLT.CO3 345.00 345KV CKT 1	720	720	0.0743	129.1243	GEN303006 1-1BC2 U1
FDNS	00NR_G15_076	0	17SP	G15_076	TO->FROM	GR ISLD-LNX3345.00 - HOLT.CO3 345.00 345KV CKT 1	720	720	0.0743	129.0702	GEN336152 1-WATERFORD UNIT#2
FDNS	00NR_G15_076	0	17SP	G15_076	TO->FROM	GR ISLD-LNX3345.00 - HOLT.CO3 345.00 345KV CKT 1	720	720	0.0743	129.0699	GEN336151 1-WATERFORD UNIT#1
FDNS	00NR_G15_076	0	17SP	G15_076	TO->FROM	GR ISLD-LNX3345.00 - HOLT.CO3 345.00 345KV CKT 1	720	720	0.0743	129.0457	GEN303008 1-1BC2 U3
FDNS	00NR_G15_076	0	17SP	G15_076	TO->FROM	GR ISLD-LNX3345.00 - HOLT.CO3 345.00 345KV CKT 1	720	720	0.0743	129.0419	GEN336170 1-GULF OXY U4
FDNS	00NR_G15_076	0	17SP	G15_076	TO->FROM	GR ISLD-LNX3345.00 - HOLT.CO3 345.00 345KV CKT 1	720	720	0.07445	129.014	ARKANSAS NUCLEAR ONE - FT SMITH 500KV CKT 1
FDNS	00NR_G15_076	0	17SP	G15_076	TO->FROM	GR ISLD-LNX3345.00 - HOLT.CO3 345.00 345KV CKT 1	720	720	0.07445	129.014	ARKANSAS NUCLEAR ONE - FT SMITH 500KV CKT 1
FDNS	00NR_G15_076	0	17SP	G15_076	TO->FROM	GR ISLD-LNX3345.00 - HOLT.CO3 345.00 345KV CKT 1	720	720	0.0729	128.9611	MENNO JCT - UTICA 115KV CKT 1
FDNS	00NR_G15_076	0	17SP	G15_076	TO->FROM	GR ISLD-LNX3345.00 - HOLT.CO3 345.00 345KV CKT 1	720	720	0.0729	128.9182	P12:115:UMZZ:# 237 #: MEN IN SD. MENNO JUNCTION IS A TAP (UJ-MEN-TP).
FDNS	00NR_G15_076	0	17SP	G15_076	TO->FROM	GR ISLD-LNX3345.00 - HOLT.CO3 345.00 345KV CKT 1	720	720	0.0743	128.8815	GEN501811 1-RODEMACHER UNIT 1
FDNS	00NR_G15_076	0	17SP	G15_076	TO->FROM	GR ISLD-LNX3345.00 - HOLT.CO3 345.00 345KV CKT 1	720	720	0.08034	128.8508	COLUMEAST - SHELL CREEK 345KV CKT 1
FDNS	00NR_G15_076	0	17SP	G15_076	TO->FROM	GR ISLD-LNX3345.00 - HOLT.CO3 345.00 345KV CKT 1	720	720	0.0743	128.7863	P13:230-345:NPPD:NUCOR-1
FDNS	00NR_G15_076	0	17SP	G15_076	TO->FROM	GR ISLD-LNX3345.00 - HOLT.CO3 345.00 345KV CKT 1	720	720	0.0743	128.7832	GEN334071 1-LEWIS CREEK 2
FDNS	00NR_G15_076	0	17SP	G15_076	TO->FROM	GR ISLD-LNX3345.00 - HOLT.CO3 345.00 345KV CKT 1	720	720	0.07439	128.7825	APPLEDORN 4 230.00 - GRANITE FALLS 230KV CKT 1

SOLUTION	GROUP	SCENARIO	SEASON	SOURCE	DIRECTION	MONITORED ELEMENT	RATEA (MVA)	RATEB(MVA)	TDF	TC%LOADING (% MVA)	CONTINGENCY
FDNS	00NR_G15_076	0	17SP	G15_076	TO->FROM	GR ISLD-LNX3345.00 - HOLT.CO3 345.00 345KV CKT 1	720	720	0.07439	128.7825	APPLEDORN 4 230.00 - GRANITE FALLS 230KV CKT 1
FDNS	00NR_G15_076	0	17SP	G15_076	TO->FROM	GR ISLD-LNX3345.00 - HOLT.CO3 345.00 345KV CKT 1	720	720	0.0743	128.7794	GEN337766 1-TRACTEBEL UNIT S1
FDNS	00NR_G15_076	0	17SP	G15_076	TO->FROM	GR ISLD-LNX3345.00 - HOLT.CO3 345.00 345KV CKT 1	720	720	0.0743	128.7772	GEN334070 1-LEWIS CREEK 1
FDNS	00NR_G15_076	0	17SP	G15_076	TO->FROM	GR ISLD-LNX3345.00 - HOLT.CO3 345.00 345KV CKT 1	720	720	0.07532	128.7608	DENISON - SIOUX CITY 230KV CKT 1
FDNS	00NR_G15_076	0	17SP	G15_076	TO->FROM	GR ISLD-LNX3345.00 - HOLT.CO3 345.00 345KV CKT 1	720	720	0.0743	128.7593	P13:115-230:NPPD:NUCOR-3
FDNS	00NR_G15_076	0	17SP	G15_076	TO->FROM	GR ISLD-LNX3345.00 - HOLT.CO3 345.00 345KV CKT 1	720	720	0.0743	128.7363	GEN501910 1-ACADIA UNIT ST1
FDNS	00NR_G15_076	0	17SP	G15_076	TO->FROM	GR ISLD-LNX3345.00 - HOLT.CO3 345.00 345KV CKT 1	720	720	0.0727	128.7178	CROOKED CREEK - RIVERDALE 230KV CKT 1
FDNS	00NR_G15_076	0	17SP	G15_076	TO->FROM	GR ISLD-LNX3345.00 - HOLT.CO3 345.00 345KV CKT 1	720	720	0.0743	128.6687	P13:115-345:NPPD:NUCOR-2
FDNS	00NR_G15_076	0	17SP	G15_076	TO->FROM	GR ISLD-LNX3345.00 - HOLT.CO3 345.00 345KV CKT 1	720	720	0.07048	128.6543	FT THOMPSON (FT2 KU1B) 345/230/13.8KV TRANSFORMER CKT 1
FDNS	00NR_G15_076	0	17SP	G15_076	TO->FROM	GR ISLD-LNX3345.00 - HOLT.CO3 345.00 345KV CKT 1	720	720	0.07049	128.6531	FT THOMPSON (FT2 KU1A) 345/230/13.8KV TRANSFORMER CKT 1
FDNS	00NR_G15_076	0	17SP	G15_076	TO->FROM	GR ISLD-LNX3345.00 - HOLT.CO3 345.00 345KV CKT 1	720	720	0.0743	128.5952	GEN659118 1-LARAMIE RIVER UNIT1
FDNS	00NR_G15_076	0	17SP	G15_076	TO->FROM	GR ISLD-LNX3345.00 - HOLT.CO3 345.00 345KV CKT 1	720	720	0.07554	128.1539	KELLY - SHELL CREEK 230KV CKT 1
FDNS	00NR_G15_076	0	17SP	G15_076	TO->FROM	GR ISLD-LNX3345.00 - HOLT.CO3 345.00 345KV CKT 1	720	720	0.07554	128.1383	SHELL CREEK (SHELLCREEKT1) 345/230/13.8KV TRANSFORMER CKT 1
FDNS	00NR_G15_076	0	17SP	G15_076	TO->FROM	GR ISLD-LNX3345.00 - HOLT.CO3 345.00 345KV CKT 1	720	720	0.07554	128.1383	SHELL CREEK (SHELLCREEKT1) 345/230/13.8KV TRANSFORMER CKT 1
FDNS	00NR_G15_076	0	17SP	G15_076	TO->FROM	GR ISLD-LNX3345.00 - HOLT.CO3 345.00 345KV CKT 1	720	720	0.08619	128.1202	COLUMWEST - KELLY 230KV CKT 1
FDNS	00NR_G15_076	0	17SP	G15_076	TO->FROM	GR ISLD-LNX3345.00 - HOLT.CO3 345.00 345KV CKT 1	720	720	0.0744	128.0026	ANTELOP-LNX3345.00 - BRDLAND-LNX3345.00 345KV CKT 1
FDNS	00NR_G15_076	0	17SP	G15_076	TO->FROM	GR ISLD-LNX3345.00 - HOLT.CO3 345.00 345KV CKT 1	720	720	0.0743	127.9424	BASE CASE
FDNS	00NR_G15_076	0	17SP	G15_076	TO->FROM	GR ISLD-LNX3345.00 - HOLT.CO3 345.00 345KV CKT 1	720	720	0.07206	127.8501	GRAND ISLAND - RIVERDALE 230KV CKT 1
FDNS	00NR_G15_076	0	17SP	G15_076	TO->FROM	GR ISLD-LNX3345.00 - HOLT.CO3 345.00 345KV CKT 1	720	720	0.07274	127.8168	COOPER - MOORE 345KV CKT 1
FDNS	00NR_G15_076	0	17SP	G15_076	TO->FROM	GR ISLD-LNX3345.00 - HOLT.CO3 345.00 345KV CKT 1	720	720	0.0743	127.816	GEN645001 1-FORT CALHOUN 1
FDNSLock	00NR_G15_076	0	17SP	G15_076	TO->FROM	GR ISLD-LNX3345.00 - HOLT.CO3 345.00 345KV CKT 1	720	720	0.0743	127.767	GR ISLD-LNX3345.00 345KV SWITCHED SHUNT
FDNS	00NR_G15_076	0	17SP	G15_076	TO->FROM	GR ISLD-LNX3345.00 - HOLT.CO3 345.00 345KV CKT 1	720	720	0.0743	127.7659	GR ISLD-LNX3345.00 345KV SWITCHED SHUNT
FDNS	00NR_G15_076	0	17SP	G15_076	TO->FROM	GR ISLD-LNX3345.00 - HOLT.CO3 345.00 345KV CKT 1	720	720	0.07584	127.7644	AXTELL - PAULINE 345KV CKT 1
FDNS	00NR_G15_076	0	17SP	G15_076	TO->FROM	GR ISLD-LNX3345.00 - HOLT.CO3 345.00 345KV CKT 1	720	720	0.0743	127.7136	FTTHOM1-LNX3345.00 345KV SWITCHED SHUNT
FDNSLock	00NR_G15_076	0	17SP	G15_076	TO->FROM	GR ISLD-LNX3345.00 - HOLT.CO3 345.00 345KV CKT 1	720	720	0.0743	127.7062	FTTHOM1-LNX3345.00 345KV SWITCHED SHUNT
FDNS	00NR_G15_076	0	17SP	G15_076	TO->FROM	GR ISLD-LNX3345.00 - HOLT.CO3 345.00 345KV CKT 1	720	720	0.07629	127.706	103RD & ROKEBY - MOORE 345KV CKT 1
FDNS	00NR_G15_076	0	17SP	G15_076	TO->FROM	GR ISLD-LNX3345.00 - HOLT.CO3 345.00 345KV CKT 1	720	720	0.07629	127.706	103RD & ROKEBY - MOORE 345KV CKT 1
FDNS	00NR_G15_076	0	17SP	G15_076	TO->FROM	GR ISLD-LNX3345.00 - HOLT.CO3 345.00 345KV CKT 1	720	720	0.0743	127.6862	FTTHOM2-LNX3345.00 345KV SWITCHED SHUNT
FDNSLock	00NR_G15_076	0	17SP	G15_076	TO->FROM	GR ISLD-LNX3345.00 - HOLT.CO3 345.00 345KV CKT 1	720	720	0.0743	127.6856	FTTHOM2-LNX3345.00 345KV SWITCHED SHUNT
FDNS	00NR_G15_076	0	17SP	G15_076	TO->FROM	GR ISLD-LNX3345.00 - HOLT.CO3 345.00 345KV CKT 1	720	720	0.07448	127.6672	FT THOMPSON - OAHE 230KV CKT 1
FDNS	00NR_G15_076	0	17SP	G15_076	TO->FROM	GR ISLD-LNX3345.00 - HOLT.CO3 345.00 345KV CKT 1	720	720	0.07448	127.6672	FT THOMPSON - OAHE 230KV CKT 1
FDNS	00NR_G15_076	0	17SP	G15_076	TO->FROM	GR ISLD-LNX3345.00 - HOLT.CO3 345.00 345KV CKT 1	720	720	0.07448	127.6672	FT THOMPSON - OAHE 230KV CKT 2
FDNS	00NR_G15_076	0	17SP	G15_076	TO->FROM	GR ISLD-LNX3345.00 - HOLT.CO3 345.00 345KV CKT 1	720	720	0.07448	127.6672	FT THOMPSON - OAHE 230KV CKT 2
FDNS	00NR_G15_076	0	17SP	G15_076	TO->FROM	GR ISLD-LNX3345.00 - HOLT.CO3 345.00 345KV CKT 1	720	720	0.07449	127.6296	FT THOMPSON - OAHE 230KV CKT 3
FDNS	00NR_G15_076	0	17SP	G15_076	TO->FROM	GR ISLD-LNX3345.00 - HOLT.CO3 345.00 345KV CKT 1	720	720	0.07449	127.6296	FT THOMPSON - OAHE 230KV CKT 3
FDNS	00NR_G15_076	0	17SP	G15_076	TO->FROM	GR ISLD-LNX3345.00 - HOLT.CO3 345.00 345KV CKT 1	720	720	0.07449	127.6296	FT THOMPSON - OAHE 230KV CKT 4
FDNS	00NR_G15_076	0	17SP	G15_076	TO->FROM	GR ISLD-LNX3345.00 - HOLT.CO3 345.00 345KV CKT 1	720	720	0.07449	127.6296	FT THOMPSON - OAHE 230KV CKT 4
FDNS	00NR_G15_076	0	17SP	G15_076	TO->FROM	GR ISLD-LNX3345.00 - HOLT.CO3 345.00 345KV CKT 1	720	720	0.07409	127.624	GRAND ISLAND (GRAND.ISD T5) 230/115/13.8KV TRANSFORMER CKT 2
FDNS	00NR_G15_076	0	17SP	G15_076	TO->FROM	GR ISLD-LNX3345.00 - HOLT.CO3 345.00 345KV CKT 1	720	720	0.07409	127.624	GRAND ISLAND (GRAND.ISD T5) 230/115/13.8KV TRANSFORMER CKT 2
FDNS	00NR_G15_076	0	17SP	G15_076	TO->FROM	GR ISLD-LNX3345.00 - HOLT.CO3 345.00 345KV CKT 1	720	720	0.07409	127.6215	GRAND ISLAND (GRAND.ISD T2) 230/115/13.8KV TRANSFORMER CKT 1
FDNS	00NR_G15_076	0	17SP	G15_076	TO->FROM	GR ISLD-LNX3345.00 - HOLT.CO3 345.00 345KV CKT 1	720	720	0.07409	127.6215	GRAND ISLAND (GRAND.ISD T2) 230/115/13.8KV TRANSFORMER CKT 1
FDNS	00NR_G15_076	0	17SP	G15_076	TO->FROM	GR ISLD-LNX3345.00 - HOLT.CO3 345.00 345KV CKT 1	720	720	0.07425	127.565	MCCOOL (MCCOOL T2) 345/115/13.8KV TRANSFORMER CKT 1
FDNS	00NR_G15_076	0	17SP	G15_076	TO->FROM	GR ISLD-LNX3345.00 - HOLT.CO3 345.00 345KV CKT 1	720	720	0.07425	127.565	MCCOOL (MCCOOL T2) 345/115/13.8KV TRANSFORMER CKT 1
FDNS	00NR_G15_076	0	17SP	G15_076	TO->FROM	GR ISLD-LNX3345.00 - HOLT.CO3 345.00 345KV CKT 1	720	720	0.07549	127.5247	MAXWELL - NORTH PLATTE 115KV CKT 1
FDNS	00NR_G15_076	0	17SP	G15_076	TO->FROM	GR ISLD-LNX3345.00 - HOLT.CO3 345.00 345KV CKT 1	720	720	0.07475	127.4566	FINNEY SWITCHING STATION - WALKTAP7 345.00 345KV CKT 1
FDNS	00NR_G15_076	0	17SP	G15_076	TO->FROM	GR ISLD-LNX3345.00 - HOLT.CO3 345.00 345KV CKT 1	720	720	0.07475	127.4566	FINNEY SWITCHING STATION - WALKTAP7 345.00 345KV CKT 1
FDNS	00NR_G15_076	0	17SP	G15_076	TO->FROM	GR ISLD-LNX3345.00 - HOLT.CO3 345.00 345KV CKT 1	720	720	0.07427	127.4359	GRAND ISLAND (GI KU1B) 345/230/13.8KV TRANSFORMER CKT 2
FDNS	00NR_G15_076	0	17SP	G15_076	TO->FROM	GR ISLD-LNX3345.00 - HOLT.CO3 345.00 345KV CKT 1	720	720	0.07427	127.4359	GRAND ISLAND (GI KU1B) 345/230/13.8KV TRANSFORMER CKT 2
FDNS	00NR_G15_076	0	17SP	G15_076	TO->FROM	GR ISLD-LNX3345.00 - HOLT.CO3 345.00 345KV CKT 1	720	720	0.07427	127.4349	GRAND ISLAND (GI KU1A) 345/230/13.8KV TRANSFORMER CKT 1
FDNS	00NR_G15_076	0	17SP	G15_076	TO->FROM	GR ISLD-LNX3345.00 - HOLT.CO3 345.00 345KV CKT 1	720	720	0.07427	127.4349	GRAND ISLAND (GI KU1A) 345/230/13.8KV TRANSFORMER CKT 1
FDNS	00NR_G15_076	0	17SP	G15_076	TO->FROM	GR ISLD-LNX3345.00 - HOLT.CO3 345.00 345KV CKT 1	720	720	0.07497	127.4287	Hitchland Interchange - WALKTAP7 345.00 345KV CKT 1
FDNS	00NR_G15_076	0	17SP	G15_076	TO->FROM	GR ISLD-LNX3345.00 - HOLT.CO3 345.00 345KV CKT 1	720	720	0.07497	127.4287	Hitchland Interchange - WALKTAP7 345.00 345KV CKT 1
FDNS	00NR_G15_076	0	17SP	G15_076	TO->FROM	GR ISLD-LNX3345.00 - HOLT.CO3 345.00 345KV CKT 1	720	720	0.07498	127.4239	P12:345:SPS:J07.1.FINN.HITCH
FDNS	00NR_G15_076	0	17SP	G15_076	TO->FROM	GR ISLD-LNX3345.00 - HOLT.CO3 345.00 345KV CKT 1	720	720	0.07647	127.391	MINGO - SETAB 345KV CKT 1
FDNS	00NR_G15_076	0	17SP	G15_076	TO->FROM	GR ISLD-LNX3345.00 - HOLT.CO3 345.00 345KV CKT 1	720	720	0.07647	127.391	MINGO - SETAB 345KV CKT 1
FDNS	00NR_G15_076	0	17SP	G15_076	TO->FROM	GR ISLD-LNX3345.00 - HOLT.CO3 345.00 345KV CKT 1	720	720	0.07825	127.3624	MOORE - PAULINE 345KV CKT 1
FDNS	00NR_G15_076	0	17SP	G15_076	TO->FROM	GR ISLD-LNX3345.00 - HOLT.CO3 345.00 345KV CKT 1	720	720	0.0744	127.3402	P12:345:UMZB:# 102 #: AVS BD IN ND. AVS BRD LR
FDNS	00NR_G15_076	0	17SP	G15_076	TO->FROM	GR ISLD-LNX3345.00 - HOLT.CO3 345.00 345KV CKT 1	720	720	0.0744	127.3393	P12:345:UMZB:# 103 #: BD IN SD. LOSS OF LINE
FDNS	00NR_G15_076	0	17SP	G15_076	TO->FROM	GR ISLD-LNX3345.00 - HOLT.CO3 345.00 345KV CKT 1	720	720	0.0744	127.3103	BRDLAND-LNX3345.00 - HURON 345KV CKT Z
FDNS	00NR_G15_076	0	17SP	G15_076	TO->FROM	GR ISLD-LNX3345.00 - HOLT.CO3 345.00 345KV CKT 1	720	720	0.0744	127.3095	BROADLAND - HURON 230KV CKT 1
FDNS	00NR_G15_076	0	17SP	G15_076	TO->FROM	GR ISLD-LNX3345.00 - HOLT.CO3 345.00 345KV CKT 1	720	720	0.07448	127.3087	G11_051T 345.00 - TATONGA7 345.00 345KV CKT 1
FDNS	00NR_G15_076	0	17SP	G15_076	TO->FROM	GR ISLD-LNX3345.00 - HOLT.CO3 345.00 345KV CKT 1	720	720	0.0744	127.3084	HURON (BD KU2A) 345/230/13.8KV TRANSFORMER CKT 1
FDNS	00NR_G15_076	0	17SP	G15_076	TO->FROM	GR ISLD-LNX3345.00 - HOLT.CO3 345.00 345KV CKT 1	720	720	0.0744	127.3084	HURON (BD KU2A) 345/230/13.8KV TRANSFORMER CKT 1
FDNS	00NR_G15_076	0	17SP	G15_076	TO->FROM	GR ISLD-LNX3345.00 - HOLT.CO3 345.00 345KV CKT 1	720	720	0.07426	127.269	GRAND ISLAND (GI KU3A) 345/230/13.8KV TRANSFORMER CKT 3
FDNS	00NR_G15_076	0	17SP	G15_076	TO->FROM	GR ISLD-LNX3345.00 - HOLT.CO3 345.00 345KV CKT 1	720	720	0.07426	127.269	GRAND ISLAND (GI KU3A) 345/230/13.8KV TRANSFORMER CKT 3
FDNS	00NR_G15_076	0	17SP	G15_076	TO->FROM	GR ISLD-LNX3345.00 - HOLT.CO3 345.00 345KV CKT 1	720	720	0.0743	127.25	GEN590010 1-ERCOT EQUIVALENCE
FDNS	00NR_G15_076	0	17SP	G15_076	TO->FROM	GR ISLD-LNX3345.00 - HOLT.CO3 345.00 345KV CKT 1	720	720	0.0743	127.2417	GEN300003 1-THOMAS HILL UNIT 3
FDNS	00NR_G15_076	0	17SP	G15_076	TO->FROM	GR ISLD-LNX3345.00 - HOLT.CO3 345.00 345KV CKT 1	720	720	0.07652	127.2191	LOUP CITY - NORTH LOUP 115KV CKT 1
FDNS	00NR_G15_076	0	17SP	G15_076	TO->FROM	GR ISLD-LNX3345.00 - HOLT.CO3 345.00 345KV CKT 1	720	720	0.0743	127.2178	GEN590011 2-ERCOT EQUIVALENCE
FDNS	00NR_G15_076	0	17SP	G15_076	TO->FROM	GR ISLD-LNX3345.00 - HOLT.CO3 345.00 345KV CKT 1	720	720	0.0743	127.1989	EASTDC - ERCOT EQUIVALENCE 345KV CKT 1
FDNS	00NR_G15_076	0	17SP	G15_076	TO->FROM	GR ISLD-LNX3345.00 - HOLT.CO3 345.00 345KV CKT 1	720	720	0.0743	127.1952	GEN629072 4-LANSING GENERATOR FOR UNITS NO4 EIA CODE 1
FDNS	00NR_G15_076	0	17SP	G15_076	TO->FROM	GR ISLD-LNX3345.00 - HOLT.CO3 345.00 345KV CKT 1	720	720	0.0743	127.1586	GEN660003 3-HURON WEST PARK
FDNS	00NR_G15_076	0	17SP	G15_076	TO->FROM	GR ISLD-LNX3345.00 - HOLT.CO3 345.00 345KV CKT 1	720	720	0.0743	127.1573	GEN652414 4-FT PECK

SOLUTION	GROUP	SCENARIO	SEASON	SOURCE	DIRECTION	MONITORED ELEMENT	RATEA (MVA)	RATEB(MVA)	TDF	TC%LOADING (% MVA)	CONTINGENCY
FDNS	00NR_G15_076	0	17SP	G15_076	TO->FROM	GR ISLD-LNX3345.00 - HOLT.CO3 345.00 345KV CKT 1	720	720	0.0743	127.1573	GEN652415 5-FT PECK
FDNS	00NR_G15_076	0	17SP	G15_076	TO->FROM	GR ISLD-LNX3345.00 - HOLT.CO3 345.00 345KV CKT 1	720	720	0.07425	127.152	OAHE - SULLEY BUTTE 230KV CKT 1
FDNS	00NR_G15_076	0	17SP	G15_076	TO->FROM	GR ISLD-LNX3345.00 - HOLT.CO3 345.00 345KV CKT 1	720	720	0.0743	127.1256	EMERY 161/18.0KV TRANSFORMER CKT 1
FDNSLock	00NR_G15_076	0	17SP	G15_076	TO->FROM	GR ISLD-LNX3345.00 - HOLT.CO3 345.00 345KV CKT 1	720	720	0.07634	127.1226	CENTRAL CITY - GRAND ISLAND 115KV CKT 1
FDNS	00NR_G15_076	0	17SP	G15_076	TO->FROM	GR ISLD-LNX3345.00 - HOLT.CO3 345.00 345KV CKT 1	720	720	0.0743	127.1215	GEN652345 W-G07_023IS_2 0.6900
FDNS	00NR_G15_076	0	17SP	G15_076	TO->FROM	GR ISLD-LNX3345.00 - HOLT.CO3 345.00 345KV CKT 1	720	720	0.0743	127.113	GEN 11104 1-J262_GEN 0.6000
FDNS	00NR_G15_076	0	17SP	G15_076	TO->FROM	GR ISLD-LNX3345.00 - HOLT.CO3 345.00 345KV CKT 1	720	720	0.0743	127.113	GEN 11108 1-J263_GEN 0.6000
FDNS	00NR_G15_076	0	17SP	G15_076	TO->FROM	GR ISLD-LNX3345.00 - HOLT.CO3 345.00 345KV CKT 1	720	720	0.07462	127.0966	POST ROCK (POSTROCK T1) 345/230/13.8KV TRANSFORMER CKT 1
FDNS	00NR_G15_076	0	17SP	G15_076	TO->FROM	GR ISLD-LNX3345.00 - HOLT.CO3 345.00 345KV CKT 1	720	720	0.0762	127.0951	GERALD GENTLEMAN STATION - RED WILLOW 345KV CKT 1
FDNS	00NR_G15_076	0	17SP	G15_076	TO->FROM	GR ISLD-LNX3345.00 - HOLT.CO3 345.00 345KV CKT 1	720	720	0.0743	127.0948	GEN600050 1-FEP
FDNS	00NR_G15_076	0	17SP	G15_076	TO->FROM	GR ISLD-LNX3345.00 - HOLT.CO3 345.00 345KV CKT 1	720	720	0.0743	127.0621	GEN300007 1-NEW MADRID UNIT 2
FDNS	00NR_G15_076	0	17SP	G15_076	TO->FROM	GR ISLD-LNX3345.00 - HOLT.CO3 345.00 345KV CKT 1	720	720	0.0744	127.0589	ANTELOP-LNX3345.00 - ANTELOPE VALLEY 345KV CKT Z
FDNS	00NR_G15_076	0	17SP	G15_076	TO->FROM	GR ISLD-LNX3345.00 - HOLT.CO3 345.00 345KV CKT 1	720	720	0.0743	127.0551	GEN300006 1-NEW MADRID UNIT 1
FDNS	00NR_G15_076	0	17SP	G15_076	TO->FROM	GR ISLD-LNX3345.00 - HOLT.CO3 345.00 345KV CKT 1	720	720	0.08619	127.0532	COLUMWEST - GRAND ISLAND 230KV CKT 1
FDNS	00NR_G15_076	0	17SP	G15_076	TO->FROM	GR ISLD-LNX3345.00 - HOLT.CO3 345.00 345KV CKT 1	720	720	0.0743	127.0451	GEN600046 1-MECST
FDNS	00NR_G15_076	0	17SP	G15_076	TO->FROM	GR ISLD-LNX3345.00 - HOLT.CO3 345.00 345KV CKT 1	720	720	0.07448	127.0377	MATHWSN7 345.00 - TATONGA7 345.00 345KV CKT 1
FDNS	00NR_G15_076	0	17SP	G15_076	TO->FROM	GR ISLD-LNX3345.00 - HOLT.CO3 345.00 345KV CKT 1	720	720	0.0743	127.0174	GEN600047 1-MECCT1
FDNS	00NR_G15_076	0	17SP	G15_076	TO->FROM	GR ISLD-LNX3345.00 - HOLT.CO3 345.00 345KV CKT 1	720	720	0.0743	127.014	GEN600063 1-COLVILLE GEN 1
FDNS	00NR_G15_076	0	17SP	G15_076	TO->FROM	GR ISLD-LNX3345.00 - HOLT.CO3 345.00 345KV CKT 1	720	720	0.0743	127.014	GEN600064 2-COLVILLE GEN 2
FDNS	00NR_G15_076	0	17SP	G15_076	TO->FROM	GR ISLD-LNX3345.00 - HOLT.CO3 345.00 345KV CKT 1	720	720	0.07425	127.0114	SULLYBT-LNX3230.00 - WHITLOK 230KV CKT 1
FDNS	00NR_G15_076	0	17SP	G15_076	TO->FROM	GR ISLD-LNX3345.00 - HOLT.CO3 345.00 345KV CKT 1	720	720	0.0743	127.0087	GEN600043 7-BLUE LAKE5
FDNS	00NR_G15_076	0	17SP	G15_076	TO->FROM	GR ISLD-LNX3345.00 - HOLT.CO3 345.00 345KV CKT 1	720	720	0.0743	127.0087	GEN600044 8-BLUE LAKE6
FDNS	00NR_G15_076	0	17SP	G15_076	TO->FROM	GR ISLD-LNX3345.00 - HOLT.CO3 345.00 345KV CKT 1	720	720	0.07425	127.0076	SULLEY BUTTE - SULLYBT-LNX3230.00 230KV CKT Z
FDNS	00NR_G15_076	0	17SP	G15_076	TO->FROM	GR ISLD-LNX3345.00 - HOLT.CO3 345.00 345KV CKT 1	720	720	0.0743	127.0028	GEN660001 2-ABERDEEN SIEBRECHT
FDNS	00NR_G15_076	0	17SP	G15_076	TO->FROM	GR ISLD-LNX3345.00 - HOLT.CO3 345.00 345KV CKT 1	720	720	0.0743	126.987	CENTER 230/22.0KV TRANSFORMER CKT 1
FDNS	00NR_G15_076	0	17SP	G15_076	TO->FROM	GR ISLD-LNX3345.00 - HOLT.CO3 345.00 345KV CKT 1	720	720	0.0743	126.9834	GEN659273 2-GROTON SYNC COND
FDNS	00NR_G15_076	0	17SP	G15_076	TO->FROM	GR ISLD-LNX3345.00 - HOLT.CO3 345.00 345KV CKT 1	720	720	0.0743	126.9834	GEN659294 1-WILTONCOL9
FDNS	00NR_G15_076	0	17SP	G15_076	TO->FROM	GR ISLD-LNX3345.00 - HOLT.CO3 345.00 345KV CKT 1	720	720	0.07425	126.9742	P12:230:UMZB:# 114 #: SB IN SD. SB-WK-GH
FDNS	00NR_G15_076	0	17SP	G15_076	TO->FROM	GR ISLD-LNX3345.00 - HOLT.CO3 345.00 345KV CKT 1	720	720	0.07425	126.9742	P12:230:UMZB:# 117 #: WK IN SD. SB-WK-GH
FDNS	00NR_G15_076	0	17SP	G15_076	TO->FROM	GR ISLD-LNX3345.00 - HOLT.CO3 345.00 345KV CKT 1	720	720	0.0743	126.9731	GEN600065 7-HIGH BRIDGE
FDNS	00NR_G15_076	0	17SP	G15_076	TO->FROM	GR ISLD-LNX3345.00 - HOLT.CO3 345.00 345KV CKT 1	720	720	0.0743	126.9731	GEN600066 8-HIGH BRIDGE
FDNS	00NR_G15_076	0	17SP	G15_076	TO->FROM	GR ISLD-LNX3345.00 - HOLT.CO3 345.00 345KV CKT 1	720	720	0.0743	126.9681	GEN600014 4-BLACK DOG GEN 4
FDNS	00NR_G15_076	0	17SP	G15_076	TO->FROM	GR ISLD-LNX3345.00 - HOLT.CO3 345.00 345KV CKT 1	720	720	0.0743	126.9631	GEN600011 5-BLACK DOG GEN 1
FDNS	00NR_G15_076	0	17SP	G15_076	TO->FROM	GR ISLD-LNX3345.00 - HOLT.CO3 345.00 345KV CKT 1	720	720	0.0743	126.9572	GEN600070 9-RIVER SIDE
FDNS	00NR_G15_076	0	17SP	G15_076	TO->FROM	GR ISLD-LNX3345.00 - HOLT.CO3 345.00 345KV CKT 1	720	720	0.0743	126.9572	GEN600071 10-RIVER SIDE
FDNS	00NR_G15_076	0	17SP	G15_076	TO->FROM	GR ISLD-LNX3345.00 - HOLT.CO3 345.00 345KV CKT 1	720	720	0.0743	126.9497	GEN600045 4-ANSON
FDNS	00NR_G15_076	0	17SP	G15_076	TO->FROM	GR ISLD-LNX3345.00 - HOLT.CO3 345.00 345KV CKT 1	720	720	0.0743	126.9436	GEN600007 7-RIVERSIDE GEN 7
FDNS	00NR_G15_076	0	17SP	G15_076	TO->FROM	GR ISLD-LNX3345.00 - HOLT.CO3 345.00 345KV CKT 1	720	720	0.0743	126.9403	GEN 10648 1-G830_GEN 0.6900
FDNS	00NR_G15_076	0	17SP	G15_076	TO->FROM	GR ISLD-LNX3345.00 - HOLT.CO3 345.00 345KV CKT 1	720	720	0.0743	126.9318	GEN659192 6-LYNN
FDNS	00NR_G15_076	0	17SP	G15_076	TO->FROM	GR ISLD-LNX3345.00 - HOLT.CO3 345.00 345KV CKT 1	720	720	0.0743	126.9311	GEN659162 4-RED WLCK
FDNS	00NR_G15_076	0	17SP	G15_076	TO->FROM	GR ISLD-LNX3345.00 - HOLT.CO3 345.00 345KV CKT 1	720	720	0.0743	126.9311	GEN659163 5-BLACK WDCK
FDNS	00NR_G15_076	0	17SP	G15_076	TO->FROM	GR ISLD-LNX3345.00 - HOLT.CO3 345.00 345KV CKT 1	720	720	0.07425	126.9272	GLENHAM - WHITLOK 230KV CKT 1
FDNS	00NR_G15_076	0	17SP	G15_076	TO->FROM	GR ISLD-LNX3345.00 - HOLT.CO3 345.00 345KV CKT 1	720	720	0.0743	126.916	LANSING WEST 161/22.0KV TRANSFORMER CKT 1
FDNS	00NR_G15_076	0	17SP	G15_076	TO->FROM	GR ISLD-LNX3345.00 - HOLT.CO3 345.00 345KV CKT 1	720	720	0.0743	126.915	GEN600017 C-LS POWER CT
FDNS	00NR_G15_076	0	17SP	G15_076	TO->FROM	GR ISLD-LNX3345.00 - HOLT.CO3 345.00 345KV CKT 1	720	720	0.0743	126.8866	GEN659031 1-G12_014IS_4 0.6900
FDNS	00NR_G15_076	0	17SP	G15_076	TO->FROM	GR ISLD-LNX3345.00 - HOLT.CO3 345.00 345KV CKT 1	720	720	0.0743	126.8715	GEN652545 7-BIG BEND
FDNS	00NR_G15_076	0	17SP	G15_076	TO->FROM	GR ISLD-LNX3345.00 - HOLT.CO3 345.00 345KV CKT 1	720	720	0.0743	126.8674	GEN615021 1-GRE-ER 14G 16.000
FDNS	00NR_G15_076	0	17SP	G15_076	TO->FROM	GR ISLD-LNX3345.00 - HOLT.CO3 345.00 345KV CKT 1	720	720	0.0743	126.8605	GEN615052 1-CAMBRIDGE GENERATING STATION
FDNS	00NR_G15_076	0	17SP	G15_076	TO->FROM	GR ISLD-LNX3345.00 - HOLT.CO3 345.00 345KV CKT 1	720	720	0.0743	126.8512	GEN615015 1-GRE-SPRITWDG13.200
FDNS	00NR_G15_076	0	17SP	G15_076	TO->FROM	GR ISLD-LNX3345.00 - HOLT.CO3 345.00 345KV CKT 1	720	720	0.0743	126.7922	GEN681522 3-GENOA 3
FDNS	00NR_G15_076	0	17SP	G15_076	TO->FROM	GR ISLD-LNX3345.00 - HOLT.CO3 345.00 345KV CKT 1	720	720	0.0743	126.7249	GEN660016 1-B_H WIND 0.7000
FDNS	00NR_G15_076	0	17SP	G15_076	TO->FROM	GR ISLD-LNX3345.00 - HOLT.CO3 345.00 345KV CKT 1	720	720	0.0743	126.7119	BISONMP4 230.00 - SQUARE BUTTE 230KV CKT 1
FDNS	00NR_G15_076	0	17SP	G15_076	TO->FROM	GR ISLD-LNX3345.00 - HOLT.CO3 345.00 345KV CKT 1	720	720	0.0743	126.6734	GEN672303 3-BOUNDARY DAM GENERATOR 3
FDNS	00NR_G15_076	0	17SP	G15_076	TO->FROM	GR ISLD-LNX3345.00 - HOLT.CO3 345.00 345KV CKT 1	720	720	0.0743	126.6734	GEN672305 5-BOUNDARY DAM GENERATOR 5
FDNS	00NR_G15_076	0	17SP	G15_076	TO->FROM	GR ISLD-LNX3345.00 - HOLT.CO3 345.00 345KV CKT 1	720	720	0.0743	126.6729	GEN652906 1-G09_006IS_3 0.6900
FDNS	00NR_G15_076	0	17SP	G15_076	TO->FROM	GR ISLD-LNX3345.00 - HOLT.CO3 345.00 345KV CKT 1	720	720	0.0743	126.6714	GEN662101 1-WESSINGTON190.5750
FDNS	00NR_G15_076	0	17SP	G15_076	TO->FROM	GR ISLD-LNX3345.00 - HOLT.CO3 345.00 345KV CKT 1	720	720	0.0743	126.6495	GEN672392 1-NBECGT1G 18.000
FDNS	00NR_G15_076	0	17SP	G15_076	TO->FROM	GR ISLD-LNX3345.00 - HOLT.CO3 345.00 345KV CKT 1	720	720	0.0743	126.5823	GEN600067 9-HIGH BRIDGE
FDNS	00NR_G15_076	0	17SP	G15_076	TO->FROM	GR ISLD-LNX3345.00 - HOLT.CO3 345.00 345KV CKT 1	720	720	0.0743	126.535	GEN910006 1-G12_012IS_3 0.6900
FDNS	00NR_G15_076	0	17SP	G15_076	TO->FROM	GR ISLD-LNX3345.00 - HOLT.CO3 345.00 345KV CKT 1	720	720	0.0743	126.5317	GEN652907 1-G09_007IS_3 0.6900
FDNS	00NR_G15_076	0	17SP	G15_076	TO->FROM	GR ISLD-LNX3345.00 - HOLT.CO3 345.00 345KV CKT 1	720	720	0.0743	126.5224	SQUARE BUTTE - YNG2 4 230.00 230KV CKT 1
FDNS	00NR_G15_076	0	17SP	G15_076	TO->FROM	GR ISLD-LNX3345.00 - HOLT.CO3 345.00 345KV CKT 1	720	720	0.0743	126.5219	YNG2 4 230.00 230/20.0KV TRANSFORMER CKT 1
FDNS	00NR_G15_076	0	17SP	G15_076	TO->FROM	GR ISLD-LNX3345.00 - HOLT.CO3 345.00 345KV CKT 1	720	720	0.07807	126.4673	MINGO - RED WILLOW 345KV CKT 1
FDNS	00NR_G15_076	0	17SP	G15_076	TO->FROM	GR ISLD-LNX3345.00 - HOLT.CO3 345.00 345KV CKT 1	720	720	0.07807	126.4673	MINGO - RED WILLOW 345KV CKT 1
FDNS	00NR_G15_076	0	17SP	G15_076	TO->FROM	GR ISLD-LNX3345.00 - HOLT.CO3 345.00 345KV CKT 1	720	720	0.0743	126.4343	COYOTE 345/24.0KV TRANSFORMER CKT 1
FDNS	00NR_G15_076	0	17SP	G15_076	TO->FROM	GR ISLD-LNX3345.00 - HOLT.CO3 345.00 345KV CKT 1	720	720	0.0743	126.3905	GEN659353 1-DEERCREK CTG18.000
FDNS	00NR_G15_076	0	17SP	G15_076	TO->FROM	GR ISLD-LNX3345.00 - HOLT.CO3 345.00 345KV CKT 1	720	720	0.0743	126.3896	GEN659354 1-DEERCREK STG18.000
FDNS	00NR_G15_076	0	17SP	G15_076	TO->FROM	GR ISLD-LNX3345.00 - HOLT.CO3 345.00 345KV CKT 1	720	720	0.07425	126.3712	GLENHAM - L3 HAWDON 230KV CKT 1
FDNS	00NR_G15_076	0	17SP	G15_076	TO->FROM	GR ISLD-LNX3345.00 - HOLT.CO3 345.00 345KV CKT 1	720	720	0.0743	126.2192	GEN659289 1-DAYCNTYWND W0.6900
FDNS	00NR_G15_076	0	17SP	G15_076	TO->FROM	GR ISLD-LNX3345.00 - HOLT.CO3 345.00 345KV CKT 1	720	720	0.0743	126.184	GEN659018 1-G14_003IS_3 0.6900
FDNS	00NR_G15_076	0	17SP	G15_076	TO->FROM	GR ISLD-LNX3345.00 - HOLT.CO3 345.00 345KV CKT 1	720	720	0.0743	126.1456	GEN681542 6-JP MADGETT
FDNS	00NR_G15_076	0	17SP	G15_076	TO->FROM	GR ISLD-LNX3345.00 - HOLT.CO3 345.00 345KV CKT 1	720	720	0.0743	126.048	GEN659194 1-NDPRAIRWND1W0.6900
FDNS	00NR_G15_076	0	17SP	G15_076	TO->FROM	GR ISLD-LNX3345.00 - HOLT.CO3 345.00 345KV CKT 1	720	720	0.0743	126.0446	GEN659010 4-G07_027IS_2 0.6900

SOLUTION	GROUP	SCENARIO	SEASON	SOURCE	DIRECTION	MONITORED ELEMENT	RATEA (MVA)	RATEB(MVA)	TDF	TC%LOADING (% MVA)	CONTINGENCY
FDNS	00NR_G15_076	0	17SP	G15_076	TO->FROM	GR ISLD-LNX3345.00 - HOLT.CO3 345.00 345KV CKT 1	720	720	0.0743	126.0334	GEN652544 5-BIG BEND
FDNS	00NR_G15_076	0	17SP	G15_076	TO->FROM	GR ISLD-LNX3345.00 - HOLT.CO3 345.00 345KV CKT 1	720	720	0.0743	126.0328	GEN652460 4-GARRISON
FDNS	00NR_G15_076	0	17SP	G15_076	TO->FROM	GR ISLD-LNX3345.00 - HOLT.CO3 345.00 345KV CKT 1	720	720	0.0743	126.0327	GEN652461 5-GARRISON
FDNS	00NR_G15_076	0	17SP	G15_076	TO->FROM	GR ISLD-LNX3345.00 - HOLT.CO3 345.00 345KV CKT 1	720	720	0.0743	126.0318	GEN652543 3-BIG BEND
FDNS	00NR_G15_076	0	17SP	G15_076	TO->FROM	GR ISLD-LNX3345.00 - HOLT.CO3 345.00 345KV CKT 1	720	720	0.0743	126.0316	GEN652542 1-BIG BEND
FDNS	00NR_G15_076	0	17SP	G15_076	TO->FROM	GR ISLD-LNX3345.00 - HOLT.CO3 345.00 345KV CKT 1	720	720	0.0743	125.9749	GEN652457 1-GARRISON
FDNS	00NR_G15_076	0	17SP	G15_076	TO->FROM	GR ISLD-LNX3345.00 - HOLT.CO3 345.00 345KV CKT 1	720	720	0.0743	125.9749	GEN652458 2-GARRISON
FDNS	00NR_G15_076	0	17SP	G15_076	TO->FROM	GR ISLD-LNX3345.00 - HOLT.CO3 345.00 345KV CKT 1	720	720	0.0743	125.9749	GEN652459 3-GARRISON
FDNS	00NR_G15_076	0	17SP	G15_076	TO->FROM	GR ISLD-LNX3345.00 - HOLT.CO3 345.00 345KV CKT 1	720	720	0.0743	125.9559	STANTON 230/18.0KV TRANSFORMER CKT 1
FDNS	00NR_G15_076	0	17SP	G15_076	TO->FROM	GR ISLD-LNX3345.00 - HOLT.CO3 345.00 345KV CKT 1	720	720	0.07577	125.9135	AXTELL - POST ROCK 345KV CKT 1
FDNS	00NR_G15_076	0	17SP	G15_076	TO->FROM	GR ISLD-LNX3345.00 - HOLT.CO3 345.00 345KV CKT 1	720	720	0.0743	125.8965	GEN659403 1-NDSUNFLWR W0.6900
FDNS	00NR_G15_076	0	17SP	G15_076	TO->FROM	GR ISLD-LNX3345.00 - HOLT.CO3 345.00 345KV CKT 1	720	720	0.07795	125.8244	AXTELL - SWEETWATER 345KV CKT 1
FDNS	00NR_G15_076	0	17SP	G15_076	TO->FROM	GR ISLD-LNX3345.00 - HOLT.CO3 345.00 345KV CKT 1	720	720	0.0743	125.7151	CLAY BOSWELL 230/20.9KV TRANSFORMER CKT 1
FDNS	00NR_G15_076	0	17SP	G15_076	TO->FROM	GR ISLD-LNX3345.00 - HOLT.CO3 345.00 345KV CKT 1	720	720	0.0743	125.5798	GEN659411 1-CAMPBLCNTY W0.6900
FDNS	00NR_G15_076	0	17SP	G15_076	TO->FROM	GR ISLD-LNX3345.00 - HOLT.CO3 345.00 345KV CKT 1	720	720	0.0743	125.3712	GEN659296 2-SDPRAIRWND1W0.6900
FDNS	00NR_G15_076	0	17SP	G15_076	TO->FROM	GR ISLD-LNX3345.00 - HOLT.CO3 345.00 345KV CKT 1	720	720	0.0743	125.361	ALMA 161 161/24.0KV TRANSFORMER CKT 1
FDNS	00NR_G15_076	0	17SP	G15_076	TO->FROM	GR ISLD-LNX3345.00 - HOLT.CO3 345.00 345KV CKT 1	720	720	0.0743	125.3209	RCDC EAST 4230.00 - RED CEDAR DC 230KV CKT 1
FDNS	00NR_G15_076	0	17SP	G15_076	TO->FROM	GR ISLD-LNX3345.00 - HOLT.CO3 345.00 345KV CKT 1	720	720	0.0743	125.3058	P12:230:UMZB:# 112 #: NU IN SD. NU-RCDC & DRY CREEK XFMR
FDNS	00NR_G15_076	0	17SP	G15_076	TO->FROM	GR ISLD-LNX3345.00 - HOLT.CO3 345.00 345KV CKT 1	720	720	0.0743	125.2499	GEN652559 1-OAHE
FDNS	00NR_G15_076	0	17SP	G15_076	TO->FROM	GR ISLD-LNX3345.00 - HOLT.CO3 345.00 345KV CKT 1	720	720	0.0743	125.2341	GEN672321 1-SHAND GENERATOR 1
FDNS	00NR_G15_076	0	17SP	G15_076	TO->FROM	GR ISLD-LNX3345.00 - HOLT.CO3 345.00 345KV CKT 1	720	720	0.0743	125.2241	GEN672310 1-POPLAR RIVER GENERATOR 1
FDNS	00NR_G15_076	0	17SP	G15_076	TO->FROM	GR ISLD-LNX3345.00 - HOLT.CO3 345.00 345KV CKT 1	720	720	0.0743	125.2241	GEN672311 2-POPLAR RIVER GENERATOR 2
FDNS	00NR_G15_076	0	17SP	G15_076	TO->FROM	GR ISLD-LNX3345.00 - HOLT.CO3 345.00 345KV CKT 1	720	720	0.0743	125.2221	GEN615010 1-STANTON4
FDNS	00NR_G15_076	0	17SP	G15_076	TO->FROM	GR ISLD-LNX3345.00 - HOLT.CO3 345.00 345KV CKT 1	720	720	0.0743	125.1501	GEN672306 6-BOUNDARY DAM GENERATOR 6
FDNS	00NR_G15_076	0	17SP	G15_076	TO->FROM	GR ISLD-LNX3345.00 - HOLT.CO3 345.00 345KV CKT 1	720	720	0.0743	125.0742	GEN652556 2-OAHE
FDNS	00NR_G15_076	0	17SP	G15_076	TO->FROM	GR ISLD-LNX3345.00 - HOLT.CO3 345.00 345KV CKT 1	720	720	0.0743	125.0742	GEN652557 4-OAHE
FDNS	00NR_G15_076	0	17SP	G15_076	TO->FROM	GR ISLD-LNX3345.00 - HOLT.CO3 345.00 345KV CKT 1	720	720	0.0743	125.0742	GEN652558 6-OAHE
FDNS	00NR_G15_076	0	17SP	G15_076	TO->FROM	GR ISLD-LNX3345.00 - HOLT.CO3 345.00 345KV CKT 1	720	720	0.0743	124.9903	GEN659453 1-GI1414GEN W0.6900
FDNS	00NR_G15_076	0	17SP	G15_076	TO->FROM	GR ISLD-LNX3345.00 - HOLT.CO3 345.00 345KV CKT 1	720	720	0.0743	124.9533	GEN600004 2-PRAIRIE ISLAND G2
FDNS	00NR_G15_076	0	17SP	G15_076	TO->FROM	GR ISLD-LNX3345.00 - HOLT.CO3 345.00 345KV CKT 1	720	720	0.0743	124.953	GEN657749 1-YOUNG 1 GENERATOR
FDNS	00NR_G15_076	0	17SP	G15_076	TO->FROM	GR ISLD-LNX3345.00 - HOLT.CO3 345.00 345KV CKT 1	720	720	0.0743	124.9498	GEN600003 1-PRAIRIE ISLAND G1
FDNS	00NR_G15_076	0	17SP	G15_076	TO->FROM	GR ISLD-LNX3345.00 - HOLT.CO3 345.00 345KV CKT 1	720	720	0.0743	124.8971	GEN659141 1-K10215A
FDNS	00NR_G15_076	0	17SP	G15_076	TO->FROM	GR ISLD-LNX3345.00 - HOLT.CO3 345.00 345KV CKT 1	720	720	0.0743	124.6704	GEN652173 1-G09_001IS_2 0.6900
FDNS	00NR_G15_076	0	17SP	G15_076	TO->FROM	GR ISLD-LNX3345.00 - HOLT.CO3 345.00 345KV CKT 1	720	720	0.0743	124.64	GEN600006 1-AS KING
FDNS	00NR_G15_076	0	17SP	G15_076	TO->FROM	GR ISLD-LNX3345.00 - HOLT.CO3 345.00 345KV CKT 1	720	720	0.0743	124.4342	GEN659407 1-ANTELPHILLSW0.6900
FDNS	00NR_G15_076	0	17SP	G15_076	TO->FROM	GR ISLD-LNX3345.00 - HOLT.CO3 345.00 345KV CKT 1	720	720	0.0743	124.347	GEN659110 1-LELAND OLDS UNIT1
FDNS	00NR_G15_076	0	17SP	G15_076	TO->FROM	GR ISLD-LNX3345.00 - HOLT.CO3 345.00 345KV CKT 1	720	720	0.0743	124.0685	GEN600005 1-MONTICELLO
FDNS	00NR_G15_076	0	17SP	G15_076	TO->FROM	GR ISLD-LNX3345.00 - HOLT.CO3 345.00 345KV CKT 1	720	720	0.08342	123.5554	MCCOOL - MOORE 345KV CKT 1
FDNS	00NR_G15_076	0	17SP	G15_076	TO->FROM	GR ISLD-LNX3345.00 - HOLT.CO3 345.00 345KV CKT 1	720	720	0.0743	123.382	GEN600000 1-SHERBURNECNTY G1
FDNS	00NR_G15_076	0	17SP	G15_076	TO->FROM	GR ISLD-LNX3345.00 - HOLT.CO3 345.00 345KV CKT 1	720	720	0.0743	123.1583	GEN600001 2-SHERBURNE CNTY G2
FDNS	00NR_G15_076	0	17SP	G15_076	TO->FROM	GR ISLD-LNX3345.00 - HOLT.CO3 345.00 345KV CKT 1	720	720	0.0743	122.8853	GEN620315 1-BIG STONE GEN
FDNS	00NR_G15_076	0	17SP	G15_076	TO->FROM	GR ISLD-LNX3345.00 - HOLT.CO3 345.00 345KV CKT 1	720	720	0.0743	122.8828	GEN661015 1-COYOTE
FDNS	00NR_G15_076	0	17SP	G15_076	TO->FROM	GR ISLD-LNX3345.00 - HOLT.CO3 345.00 345KV CKT 1	720	720	0.0743	122.4393	GEN657748 1-YOUNG 2 GENERATOR
FDNS	00NR_G15_076	0	17SP	G15_076	TO->FROM	GR ISLD-LNX3345.00 - HOLT.CO3 345.00 345KV CKT 1	720	720	0.0743	122.2014	GEN600002 3-SHERBURNE CNTY G3
FDNS	00NR_G15_076	0	20SP	G15_076	TO->FROM	GR ISLD-LNX3345.00 - HOLT.CO3 345.00 345KV CKT 1	720	720	0.07064	121.8085	HOLT.CO3 345.00 - THEDFRD3 345.00 345KV CKT 1
FDNS	00NR_G15_076	0	17SP	G15_076	TO->FROM	GR ISLD-LNX3345.00 - HOLT.CO3 345.00 345KV CKT 1	720	720	0.0743	121.5317	SHERBURNE CO 345/24.0KV TRANSFORMER CKT 1
FDNS	00NR_G15_076	0	17SP	G15_076	TO->FROM	GR ISLD-LNX3345.00 - HOLT.CO3 345.00 345KV CKT 1	720	720	0.07382	121.4082	FTTHOM1-LNX3345.00 - LELAND2-LNX3345.00 345KV CKT 1
FDNS	00NR_G15_076	0	17SP	G15_076	TO->FROM	GR ISLD-LNX3345.00 - HOLT.CO3 345.00 345KV CKT 1	720	720	0.07382	121.1337	P12:345:UMZB:# 108 #: LOS FT IN ND. LOS FT
FDNS	00NR_G15_076	0	17SP	G15_076	TO->FROM	GR ISLD-LNX3345.00 - HOLT.CO3 345.00 345KV CKT 1	720	720	0.07382	121.1266	FT THOMPSON - FTTHOM1-LNX3345.00 345KV CKT Z
FDNS	00NR_G15_076	0	17SP	G15_076	TO->FROM	GR ISLD-LNX3345.00 - HOLT.CO3 345.00 345KV CKT 1	720	720	0.07382	120.9606	LELAND OLDS - LELAND2-LNX3345.00 345KV CKT Z
FDNS	00NR_G15_076	0	17SP	G15_076	TO->FROM	GR ISLD-LNX3345.00 - HOLT.CO3 345.00 345KV CKT 1	720	720	0.0743	120.5775	GEN659111 2-LELAND OLDS UNIT2
FDNS	00NR_G15_076	0	25SP	G15_076	TO->FROM	GR ISLD-LNX3345.00 - HOLT.CO3 345.00 345KV CKT 1	720	720	0.07153	120.3602	HOLT.CO3 345.00 - THEDFRD3 345.00 345KV CKT 1
FDNS	00NR_G15_076	0	17SP	G15_076	TO->FROM	GR ISLD-LNX3345.00 - HOLT.CO3 345.00 345KV CKT 1	720	720	0.0743	120.2729	GEN659125 1-COVEY
FDNS	00NR_G15_076	0	17SP	G15_076	TO->FROM	GR ISLD-LNX3345.00 - HOLT.CO3 345.00 345KV CKT 1	720	720	0.0743	120.0101	GEN659103 1-ANTELOPE VALLEY UNIT1
FDNS	00NR_G15_076	0	17SP	G15_076	TO->FROM	GR ISLD-LNX3345.00 - HOLT.CO3 345.00 345KV CKT 1	720	720	0.0743	120.0101	GEN659107 2-ANTELOPE VALLEY UNIT2
FDNS	00NR_G15_076	0	17SP	G15_076	TO->FROM	GR ISLD-LNX3345.00 - HOLT.CO3 345.00 345KV CKT 1	720	720	0.08404	119.8589	GRAND ISLAND - MCCOOL 345KV CKT 1
FDNS	00NR_G15_076	0	17SP	G15_076	TO->FROM	GR ISLD-LNX3345.00 - HOLT.CO3 345.00 345KV CKT 1	720	720	0.0743	119.7373	GEN615001 1-COAL CREEK
FDNS	00NR_G15_076	0	17SP	G15_076	TO->FROM	GR ISLD-LNX3345.00 - HOLT.CO3 345.00 345KV CKT 1	720	720	0.0743	119.6498	GEN615002 2-COAL CREEK
FDNS	00NR_G15_076	0	17SP	G15_076	TO->FROM	GR ISLD-LNX3345.00 - HOLT.CO3 345.00 345KV CKT 1	720	720	0.0743	113.0391	GEN562714 1-G15_023_4 0.6900
FDNS	00NR_G15_076	0	17SP	G15_076	TO->FROM	GR ISLD-LNX3345.00 - HOLT.CO3 345.00 345KV CKT 1	720	720	0.0743	113.0391	GEN562715 1-G15_023_5 0.6900
FDNS	00NR_G15_076	0	20SP	G15_076	TO->FROM	GR ISLD-LNX3345.00 - HOLT.CO3 345.00 345KV CKT 1	720	720	0.06576	111.435	GERALD GENTLEMAN STATION - THEDFRD3 345.00 345KV CKT 1
FDNS	00NR_G15_076	0	25SP	G15_076	TO->FROM	GR ISLD-LNX3345.00 - HOLT.CO3 345.00 345KV CKT 1	720	720	0.06691	110.4881	GERALD GENTLEMAN STATION - THEDFRD3 345.00 345KV CKT 1
FDNS	00NR_G15_076	0	16WP	G15_076	TO->FROM	GR ISLD-LNX3345.00 - HOLT.CO3 345.00 345KV CKT 1	720	720	0.07685	107.8416	KELLY - MEADOWGROVE4230.00 230KV CKT 1
FDNS	00NR_G15_076	0	17SP	G15_076	TO->FROM	GR ISLD-LNX3345.00 - HOLT.CO3 345.00 345KV CKT 1	720	720	0.0743	107.4494	GEN652353 2-GR PRAIRIEG 0.6900
FDNS	00NR_G15_076	0	20SP	G15_076	TO->FROM	GR ISLD-LNX3345.00 - HOLT.CO3 345.00 345KV CKT 1	720	720	0.02968	107.2888	HOSKINS - SHELL CREEK 345KV CKT 1
FDNS	00NR_G15_076	0	16WP	G15_076	TO->FROM	GR ISLD-LNX3345.00 - HOLT.CO3 345.00 345KV CKT 1	720	720	0.07072	107.2837	P12:230:UMZB:# 116 #: ST IN SD. WSG-ST-VH
FDNS	00NR_G15_076	0	16WP	G15_076	TO->FROM	GR ISLD-LNX3345.00 - HOLT.CO3 345.00 345KV CKT 1	720	720	0.07095	106.7057	STORLA - WESSINGTON 230KV CKT 1
FDNS	00NR_G15_076	0	16WP	G15_076	TO->FROM	GR ISLD-LNX3345.00 - HOLT.CO3 345.00 345KV CKT 1	720	720	0.07309	105.909	RIEL - ROSEAU 500KV CKT 1
FDNS	00NR_G15_076	0	16WP	G15_076	TO->FROM	GR ISLD-LNX3345.00 - HOLT.CO3 345.00 345KV CKT 1	720	720	0.0713	105.6625	HANLON - STORLA 230KV CKT 1
FDNS	00NR_G15_076	0	16WP	G15_076	TO->FROM	GR ISLD-LNX3345.00 - HOLT.CO3 345.00 345KV CKT 1	720	720	0.07027	105.2905	FT THOMPSON - LETCHER 230KV CKT 1
FDNS	00NR_G15_076	0	16WP	G15_076	TO->FROM	GR ISLD-LNX3345.00 - HOLT.CO3 345.00 345KV CKT 1	720	720	0.07027	105.2905	FT THOMPSON - LETCHER 230KV CKT 1
FDNSLock	00NR_G15_076	0	16WP	G15_076	TO->FROM	GR ISLD-LNX3345.00 - HOLT.CO3 345.00 345KV CKT 1	720	720	0.07217	105.0312	WATERTN-LNX3345.00 - WATERTOWN 345KV CKT Z
FDNSLock	00NR_G15_076	0	16WP	G15_076	TO->FROM	GR ISLD-LNX3345.00 - HOLT.CO3 345.00 345KV CKT 1	720	720	0.07217	105.021	P12:345:UMZW:# 1747 #: WT2 IN SD. WT2-WHT LINE FAULT

SOLUTION	GROUP	SCENARIO	SEASON	SOURCE	DIRECTION	MONITORED ELEMENT	RATEA (MVA)	RATEB(MVA)	TDF	TC%LOADING (% MVA)	CONTINGENCY
FDNS	00NR_G15_076	0	16WP	G15_076	TO->FROM	GR ISLD-LNX3345.00 - HOLT.CO3 345.00 345KV CKT 1	720	720	0.07217	104.5955	WATERTN-LNX3345.00 - WHITE 345KV CKT 1
FDNS	00NR_G15_076	0	16WP	G15_076	TO->FROM	GR ISLD-LNX3345.00 - HOLT.CO3 345.00 345KV CKT 1	720	720	0.073	104.3153	BUFFALO - JAMESTOWN 345KV CKT 1
FDNS	00NR_G15_076	0	16WP	G15_076	TO->FROM	GR ISLD-LNX3345.00 - HOLT.CO3 345.00 345KV CKT 1	720	720	0.07484	104.1139	KEYSTONE - SIDNEY1-LNX3345.00 345KV CKT 1
FDNS	00NR_G15_076	0	16WP	G15_076	TO->FROM	GR ISLD-LNX3345.00 - HOLT.CO3 345.00 345KV CKT 1	720	720	0.07484	104.1087	SIDNEY - SIDNEY1-LNX3345.00 345KV CKT Z
FDNS	00NR_G15_076	0	16WP	G15_076	TO->FROM	GR ISLD-LNX3345.00 - HOLT.CO3 345.00 345KV CKT 1	720	720	0.06953	104.0427	FT RANDAL - G12_009IST 230.00 230KV CKT 1
FDNS	00NR_G15_076	0	16WP	G15_076	TO->FROM	GR ISLD-LNX3345.00 - HOLT.CO3 345.00 345KV CKT 1	720	720	0.07302	104.0048	GEN336821 1-GRAND GULF UNIT
FDNS	00NR_G15_076	0	16WP	G15_076	TO->FROM	GR ISLD-LNX3345.00 - HOLT.CO3 345.00 345KV CKT 1	720	720	0.06953	103.9493	FT THOMPSON - LAKE PLATT 230KV CKT 1
FDNS	00NR_G15_076	0	16WP	G15_076	TO->FROM	GR ISLD-LNX3345.00 - HOLT.CO3 345.00 345KV CKT 1	720	720	0.06953	103.9493	FT THOMPSON - LAKE PLATT 230KV CKT 1
FDNS	00NR_G15_076	0	16WP	G15_076	TO->FROM	GR ISLD-LNX3345.00 - HOLT.CO3 345.00 345KV CKT 1	720	720	0.06944	103.9461	FT RANDAL - FT THOMPSON 230KV CKT 1
FDNS	00NR_G15_076	0	16WP	G15_076	TO->FROM	GR ISLD-LNX3345.00 - HOLT.CO3 345.00 345KV CKT 1	720	720	0.06944	103.9461	FT RANDAL - FT THOMPSON 230KV CKT 1
FDNS	00NR_G15_076	0	16WP	G15_076	TO->FROM	GR ISLD-LNX3345.00 - HOLT.CO3 345.00 345KV CKT 1	720	720	0.07208	103.8819	LETCHER - SIOUX FALLS 230KV CKT 1
FDNS	00NR_G15_076	0	16WP	G15_076	TO->FROM	GR ISLD-LNX3345.00 - HOLT.CO3 345.00 345KV CKT 1	720	720	0.07302	103.708	GEN640010 1-GERALD GENTLEMAN STATION UNIT 1
FDNS	00NR_G15_076	0	16WP	G15_076	TO->FROM	GR ISLD-LNX3345.00 - HOLT.CO3 345.00 345KV CKT 1	720	720	0.07273	103.7008	G09_001IST 345.00 - WATERTOWN 345KV CKT 1
FDNS	00NR_G15_076	0	16WP	G15_076	TO->FROM	GR ISLD-LNX3345.00 - HOLT.CO3 345.00 345KV CKT 1	720	720	0.07302	103.6835	GEN635024 4-WALTER SCOTT UNIT 4
FDNS	00NR_G15_076	0	16WP	G15_076	TO->FROM	GR ISLD-LNX3345.00 - HOLT.CO3 345.00 345KV CKT 1	720	720	0.06953	103.6752	G12_009IST 230.00 - LAKE PLATT 230KV CKT 1
FDNS	00NR_G15_076	0	16WP	G15_076	TO->FROM	GR ISLD-LNX3345.00 - HOLT.CO3 345.00 345KV CKT 1	720	720	0.07302	103.6464	GEN337911 1-ARKANSAS NUCLEAR ONE UNIT #2
FDNS	00NR_G15_076	0	16WP	G15_076	TO->FROM	GR ISLD-LNX3345.00 - HOLT.CO3 345.00 345KV CKT 1	720	720	0.07685	103.6125	FT RANDAL - MEADOWGROVE4230.00 230KV CKT 1
FDNS	00NR_G15_076	0	16WP	G15_076	TO->FROM	GR ISLD-LNX3345.00 - HOLT.CO3 345.00 345KV CKT 1	720	720	0.07302	103.5958	GEN640011 2-GERALD GENTLEMAN STATION UNIT 2
FDNS	00NR_G15_076	0	16WP	G15_076	TO->FROM	GR ISLD-LNX3345.00 - HOLT.CO3 345.00 345KV CKT 1	720	720	0.07302	103.5544	GEN344225 1-1CAL G1 25.000
FDNS	00NR_G15_076	0	16WP	G15_076	TO->FROM	GR ISLD-LNX3345.00 - HOLT.CO3 345.00 345KV CKT 1	720	720	0.07302	103.5231	GEN336153 1-WATERFORD UNIT#3
FDNS	00NR_G15_076	0	16WP	G15_076	TO->FROM	GR ISLD-LNX3345.00 - HOLT.CO3 345.00 345KV CKT 1	720	720	0.07392	103.5003	HAZLETON - MITCHLCO3 345.00 345KV CKT 1
FDNS	00NR_G15_076	0	16WP	G15_076	TO->FROM	GR ISLD-LNX3345.00 - HOLT.CO3 345.00 345KV CKT 1	720	720	0.073	103.419	CENTER - JAMESTOWN 345KV CKT 1
FDNS	00NR_G15_076	0	16WP	G15_076	TO->FROM	GR ISLD-LNX3345.00 - HOLT.CO3 345.00 345KV CKT 1	720	720	0.07302	103.3526	GEN635023 3-WALTER SCOTT UNIT 3
FDNS	00NR_G15_076	0	16WP	G15_076	TO->FROM	GR ISLD-LNX3345.00 - HOLT.CO3 345.00 345KV CKT 1	720	720	0.07338	103.3168	AS KING - EAU CLAIRE 345KV CKT 1
FDNS	00NR_G15_076	0	16WP	G15_076	TO->FROM	GR ISLD-LNX3345.00 - HOLT.CO3 345.00 345KV CKT 1	720	720	0.07301	103.2829	BISON 3 345.00 - BUFFALO 345KV CKT 1
FDNS	00NR_G15_076	0	16WP	G15_076	TO->FROM	GR ISLD-LNX3345.00 - HOLT.CO3 345.00 345KV CKT 1	720	720	0.07302	103.2744	GEN337910 1-ARKANSAS NUCLEAR ONE UNIT #1
FDNS	00NR_G15_076	0	16WP	G15_076	TO->FROM	GR ISLD-LNX3345.00 - HOLT.CO3 345.00 345KV CKT 1	720	720	0.07272	103.2648	FT RANDAL - SIOUX CITY 230KV CKT 1
FDNS	00NR_G15_076	0	16WP	G15_076	TO->FROM	GR ISLD-LNX3345.00 - HOLT.CO3 345.00 345KV CKT 1	720	720	0.07302	103.2577	GEN335831 1-RIVERBEND UNIT#1
FDNS	00NR_G15_076	0	16WP	G15_076	TO->FROM	GR ISLD-LNX3345.00 - HOLT.CO3 345.00 345KV CKT 1	720	720	0.08147	103.2056	RAUN - SUB 3451 FT CAL 345KV CKT 1
FDNS	00NR_G15_076	0	16WP	G15_076	TO->FROM	GR ISLD-LNX3345.00 - HOLT.CO3 345.00 345KV CKT 1	720	720	0.08147	103.2056	RAUN - SUB 3451 FT CAL 345KV CKT 1
FDNS	00NR_G15_076	0	16WP	G15_076	TO->FROM	GR ISLD-LNX3345.00 - HOLT.CO3 345.00 345KV CKT 1	720	720	0.07332	103.1559	ARROWHEAD - ARROWHEAD 230 230KV CKT 1
FDNS	00NR_G15_076	0	16WP	G15_076	TO->FROM	GR ISLD-LNX3345.00 - HOLT.CO3 345.00 345KV CKT 1	720	720	0.0723	103.0344	HANLON - SIOUX FALLS 230KV CKT 1
FDNS	00NR_G15_076	0	16WP	G15_076	TO->FROM	GR ISLD-LNX3345.00 - HOLT.CO3 345.00 345KV CKT 1	720	720	0.07274	103.018	GROTON-LNX3 345.00 - LELAND1-LNX3345.00 345KV CKT 1
FDNS	00NR_G15_076	0	16WP	G15_076	TO->FROM	GR ISLD-LNX3345.00 - HOLT.CO3 345.00 345KV CKT 1	720	720	0.07274	102.973	P12:345:UMZB:# 109 #: LOS GRT IN ND. LOS GRT
FDNS	00NR_G15_076	0	16WP	G15_076	TO->FROM	GR ISLD-LNX3345.00 - HOLT.CO3 345.00 345KV CKT 1	720	720	0.07274	102.9726	GROTON - GROTON-LNX3 345.00 345KV CKT Z
FDNS	00NR_G15_076	0	16WP	G15_076	TO->FROM	GR ISLD-LNX3345.00 - HOLT.CO3 345.00 345KV CKT 1	720	720	0.07427	102.9666	GERALD GENTLEMAN STATION - KEYSTONE 345KV CKT 1
FDNS	00NR_G15_076	0	16WP	G15_076	TO->FROM	GR ISLD-LNX3345.00 - HOLT.CO3 345.00 345KV CKT 1	720	720	0.07274	102.9664	LELAND OLDS - LELAND1-LNX3345.00 345KV CKT Z
FDNS	00NR_G15_076	0	16WP	G15_076	TO->FROM	GR ISLD-LNX3345.00 - HOLT.CO3 345.00 345KV CKT 1	720	720	0.07453	102.9499	SIDNEY - STEGALL 345KV CKT 1
FDNS	00NR_G15_076	0	16WP	G15_076	TO->FROM	GR ISLD-LNX3345.00 - HOLT.CO3 345.00 345KV CKT 1	720	720	0.05899	102.9118	GRAND ISLAND - SWEETWATER 345KV CKT 1
FDNS	00NR_G15_076	0	16WP	G15_076	TO->FROM	GR ISLD-LNX3345.00 - HOLT.CO3 345.00 345KV CKT 1	720	720	0.07075	102.8724	FT RANDAL - UTICA JCT 230KV CKT 1
FDNS	00NR_G15_076	0	16WP	G15_076	TO->FROM	GR ISLD-LNX3345.00 - HOLT.CO3 345.00 345KV CKT 1	720	720	0.07302	102.8618	GEN337653 1-WHITE BLUFF UNIT #2
FDNS	00NR_G15_076	0	16WP	G15_076	TO->FROM	GR ISLD-LNX3345.00 - HOLT.CO3 345.00 345KV CKT 1	720	720	0.07302	102.808	GEN501801 1-DOLET HILLS UNIT1
FDNS	00NR_G15_076	0	16WP	G15_076	TO->FROM	GR ISLD-LNX3345.00 - HOLT.CO3 345.00 345KV CKT 1	720	720	0.07295	102.8029	CARPENTER - HURON 230KV CKT 1
FDNS	00NR_G15_076	0	16WP	G15_076	TO->FROM	GR ISLD-LNX3345.00 - HOLT.CO3 345.00 345KV CKT 1	720	720	0.08196	102.7406	NUNDRWD - WAYSIDE 230KV CKT 1
FDNS	00NR_G15_076	0	16WP	G15_076	TO->FROM	GR ISLD-LNX3345.00 - HOLT.CO3 345.00 345KV CKT 1	720	720	0.07302	102.7318	GEN337652 1-WHITE BLUFF UNIT #1
FDNS	00NR_G15_076	0	16WP	G15_076	TO->FROM	GR ISLD-LNX3345.00 - HOLT.CO3 345.00 345KV CKT 1	720	720	0.07392	102.7135	ADAMS - MITCHLCO3 345.00 345KV CKT 1
FDNS	00NR_G15_076	0	16WP	G15_076	TO->FROM	GR ISLD-LNX3345.00 - HOLT.CO3 345.00 345KV CKT 1	720	720	0.07301	102.7037	ELLENDALE - OAKES 230KV CKT 1
FDNS	00NR_G15_076	0	16WP	G15_076	TO->FROM	GR ISLD-LNX3345.00 - HOLT.CO3 345.00 345KV CKT 1	720	720	0.07301	102.7037	ELLENDALE - OAKES 230KV CKT 1
FDNS	00NR_G15_076	0	16WP	G15_076	TO->FROM	GR ISLD-LNX3345.00 - HOLT.CO3 345.00 345KV CKT 1	720	720	0.07302	102.7006	GEN641089 2-ENERGY CENTER 2
FDNS	00NR_G15_076	0	16WP	G15_076	TO->FROM	GR ISLD-LNX3345.00 - HOLT.CO3 345.00 345KV CKT 1	720	720	0.07295	102.684	HURON - WATERTOWN 230KV CKT 2
FDNS	00NR_G15_076	0	16WP	G15_076	TO->FROM	GR ISLD-LNX3345.00 - HOLT.CO3 345.00 345KV CKT 1	720	720	0.07295	102.684	HURON - WATERTOWN 230KV CKT 2
FDNS	00NR_G15_076	0	16WP	G15_076	TO->FROM	GR ISLD-LNX3345.00 - HOLT.CO3 345.00 345KV CKT 1	720	720	0.07353	102.681	ARPIN B4 345.00 - EAU CLAIRE 345KV CKT 1
FDNS	00NR_G15_076	0	16WP	G15_076	TO->FROM	GR ISLD-LNX3345.00 - HOLT.CO3 345.00 345KV CKT 1	720	720	0.07273	102.6782	G09_001IST 345.00 - GROTON 345KV CKT 1
FDNS	00NR_G15_076	0	16WP	G15_076	TO->FROM	GR ISLD-LNX3345.00 - HOLT.CO3 345.00 345KV CKT 1	720	720	0.07302	102.6517	GEN338146 1-INDEPENDENCE UNIT #2
FDNS	00NR_G15_076	0	16WP	G15_076	TO->FROM	GR ISLD-LNX3345.00 - HOLT.CO3 345.00 345KV CKT 1	720	720	0.07175	102.6504	SPLIT ROCK - WHITE 345KV CKT 1
FDNS	00NR_G15_076	0	16WP	G15_076	TO->FROM	GR ISLD-LNX3345.00 - HOLT.CO3 345.00 345KV CKT 1	720	720	0.07175	102.6504	SPLIT ROCK - WHITE 345KV CKT 1
FDNS	00NR_G15_076	0	16WP	G15_076	TO->FROM	GR ISLD-LNX3345.00 - HOLT.CO3 345.00 345KV CKT 1	720	720	0.07301	102.647	FORMAN - OAKES 230KV CKT 1
FDNS	00NR_G15_076	0	16WP	G15_076	TO->FROM	GR ISLD-LNX3345.00 - HOLT.CO3 345.00 345KV CKT 1	720	720	0.07302	102.6461	GEN338143 1-INDEPENDENCE UNIT #1
FDNS	00NR_G15_076	0	16WP	G15_076	TO->FROM	GR ISLD-LNX3345.00 - HOLT.CO3 345.00 345KV CKT 1	720	720	0.07295	102.629	CARPENTER - WATERTOWN 230KV CKT 1
FDNS	00NR_G15_076	0	16WP	G15_076	TO->FROM	GR ISLD-LNX3345.00 - HOLT.CO3 345.00 345KV CKT 1	720	720	0.07295	102.629	CARPENTER - WATERTOWN 230KV CKT 1
FDNS	00NR_G15_076	0	16WP	G15_076	TO->FROM	GR ISLD-LNX3345.00 - HOLT.CO3 345.00 345KV CKT 1	720	720	0.07271	102.621	PAHOJA - SIOUX FALLS 230KV CKT 1
FDNS	00NR_G15_076	0	16WP	G15_076	TO->FROM	GR ISLD-LNX3345.00 - HOLT.CO3 345.00 345KV CKT 1	720	720	0.07526	102.6162	GRIMES - LEHIGH 345KV CKT 1
FDNSLock	00NR_G15_076	0	16WP	G15_076	TO->FROM	GR ISLD-LNX3345.00 - HOLT.CO3 345.00 345KV CKT 1	720	720	0.07302	102.594	CENTER - CNTSHNT3 345.00 345KV CKT Z1
FDNS	00NR_G15_076	0	16WP	G15_076	TO->FROM	GR ISLD-LNX3345.00 - HOLT.CO3 345.00 345KV CKT 1	720	720	0.07302	102.5922	CNTSHNT3 345.00 - PRAIRIE3 345.00 345KV CKT 1
FDNS	00NR_G15_076	0	16WP	G15_076	TO->FROM	GR ISLD-LNX3345.00 - HOLT.CO3 345.00 345KV CKT 1	720	720	0.07095	102.5313	FT THOMPSON - WESSINGTON 230KV CKT 1
FDNS	00NR_G15_076	0	16WP	G15_076	TO->FROM	GR ISLD-LNX3345.00 - HOLT.CO3 345.00 345KV CKT 1	720	720	0.07095	102.5313	FT THOMPSON - WESSINGTON 230KV CKT 1
FDNS	00NR_G15_076	0	16WP	G15_076	TO->FROM	GR ISLD-LNX3345.00 - HOLT.CO3 345.00 345KV CKT 1	720	720	0.07364	102.5138	ADAMS - PLEASANT VALLEY 345KV CKT 1
FDNS	00NR_G15_076	0	16WP	G15_076	TO->FROM	GR ISLD-LNX3345.00 - HOLT.CO3 345.00 345KV CKT 1	720	720	0.07324	102.4732	P12:115:NPPD:1091:VALENTN7:MISSION7:BTB
FDNS	00NR_G15_076	0	16WP	G15_076	TO->FROM	GR ISLD-LNX3345.00 - HOLT.CO3 345.00 345KV CKT 1	720	720	0.07302	102.4658	GEN501813 1-RODEMACHER UNIT 3
FDNS	00NR_G15_076	0	16WP	G15_076	TO->FROM	GR ISLD-LNX3345.00 - HOLT.CO3 345.00 345KV CKT 1	720	720	0.07324	102.4145	MISSION - ST FRANCIS 115KV CKT 1
FDNS	00NR_G15_076	0	16WP	G15_076	TO->FROM	GR ISLD-LNX3345.00 - HOLT.CO3 345.00 345KV CKT 1	720	720	0.06919	102.4098	GERALD GENTLEMAN STATION - SWEETWATER 345KV CKT 1
FDNS	00NR_G15_076	0	16WP	G15_076	TO->FROM	GR ISLD-LNX3345.00 - HOLT.CO3 345.00 345KV CKT 1	720	720	0.07441	102.4029	RASMUSN - UTICA JCT 230KV CKT 1
FDNS	00NR_G15_076	0	16WP	G15_076	TO->FROM	GR ISLD-LNX3345.00 - HOLT.CO3 345.00 345KV CKT 1	720	720	0.0727	102.3984	FT THOMPSON - HURON 230KV CKT 1

SOLUTION	GROUP	SCENARIO	SEASON	SOURCE	DIRECTION	MONITORED ELEMENT	RATEA (MVA)	RATEB(MVA)	TDF	TC%LOADING (% MVA)	CONTINGENCY
FDNS	00NR_G15_076	0	16WP	G15_076	TO->FROM	GR ISLD-LNX3345.00 - HOLT.CO3 345.00 345KV CKT 1	720	720	0.0727	102.3984	FT THOMPSON - HURON 230KV CKT 1
FDNS	00NR_G15_076	0	16WP	G15_076	TO->FROM	GR ISLD-LNX3345.00 - HOLT.CO3 345.00 345KV CKT 1	720	720	0.0727	102.3984	FT THOMPSON - HURON 230KV CKT 2
FDNS	00NR_G15_076	0	16WP	G15_076	TO->FROM	GR ISLD-LNX3345.00 - HOLT.CO3 345.00 345KV CKT 1	720	720	0.0727	102.3984	FT THOMPSON - HURON 230KV CKT 2
FDNS	00NR_G15_076	0	16WP	G15_076	TO->FROM	GR ISLD-LNX3345.00 - HOLT.CO3 345.00 345KV CKT 1	720	720	0.07441	102.3852	RASMUSN - SIOUX CITY 230KV CKT 1
FDNS	00NR_G15_076	0	16WP	G15_076	TO->FROM	GR ISLD-LNX3345.00 - HOLT.CO3 345.00 345KV CKT 1	720	720	0.07324	102.342	HARMONY - ST FRANCIS 115KV CKT 1
FDNSLock	00NR_G15_076	0	16WP	G15_076	TO->FROM	GR ISLD-LNX3345.00 - HOLT.CO3 345.00 345KV CKT 1	720	720	0.073	102.3383	CHISAGO COUNTY - FORBES 500KV CKT 1
FDNS	00NR_G15_076	0	16WP	G15_076	TO->FROM	GR ISLD-LNX3345.00 - HOLT.CO3 345.00 345KV CKT 1	720	720	0.07302	102.3381	GEN335206 1-NELSON UNIT 6
FDNS	00NR_G15_076	0	16WP	G15_076	TO->FROM	GR ISLD-LNX3345.00 - HOLT.CO3 345.00 345KV CKT 1	720	720	0.07271	102.304	EAGLE 4 230.00 - PAHOJA 230KV CKT 1
FDNS	00NR_G15_076	0	16WP	G15_076	TO->FROM	GR ISLD-LNX3345.00 - HOLT.CO3 345.00 345KV CKT 1	720	720	0.07324	102.2879	HARMONY - VALENTINE 115KV CKT 1
FDNS	00NR_G15_076	0	16WP	G15_076	TO->FROM	GR ISLD-LNX3345.00 - HOLT.CO3 345.00 345KV CKT 1	720	720	0.07303	102.2584	FORMAN - HANKINSON 230KV CKT 1
FDNS	00NR_G15_076	0	16WP	G15_076	TO->FROM	GR ISLD-LNX3345.00 - HOLT.CO3 345.00 345KV CKT 1	720	720	0.0739	102.2502	LAKEFIELD 3 - NOBLES 345KV CKT 1
FDNS	00NR_G15_076	0	16WP	G15_076	TO->FROM	GR ISLD-LNX3345.00 - HOLT.CO3 345.00 345KV CKT 1	720	720	0.07305	102.2487	GLENBORO SOUTH - RUGBY 230KV CKT 1
FDNS	00NR_G15_076	0	16WP	G15_076	TO->FROM	GR ISLD-LNX3345.00 - HOLT.CO3 345.00 345KV CKT 1	720	720	0.07305	102.2468	ALEXMRES3 345.00 - BISON 3 345.00 345KV CKT 1
FDNS	00NR_G15_076	0	16WP	G15_076	TO->FROM	GR ISLD-LNX3345.00 - HOLT.CO3 345.00 345KV CKT 1	720	720	0.073	102.2449	CHISAGO COUNTY - CHISAGO COUNTY 500KV CKT 1
FDNS	00NR_G15_076	0	16WP	G15_076	TO->FROM	GR ISLD-LNX3345.00 - HOLT.CO3 345.00 345KV CKT 1	720	720	0.07302	102.2327	GEN501812 1-RODEMACHER UNIT 2
FDNS	00NR_G15_076	0	16WP	G15_076	TO->FROM	GR ISLD-LNX3345.00 - HOLT.CO3 345.00 345KV CKT 1	720	720	0.07302	102.2204	GEN532751 1-WOLF CREEK GENERATING STATION UNIT 1
FDNS	00NR_G15_076	0	16WP	G15_076	TO->FROM	GR ISLD-LNX3345.00 - HOLT.CO3 345.00 345KV CKT 1	720	720	0.07302	102.2123	GEN344897 4-1LAB G4 20.000
FDNS	00NR_G15_076	0	16WP	G15_076	TO->FROM	GR ISLD-LNX3345.00 - HOLT.CO3 345.00 345KV CKT 1	720	720	0.07302	102.2102	GEN344894 1-1LAB G1 20.000
FDNS	00NR_G15_076	0	16WP	G15_076	TO->FROM	GR ISLD-LNX3345.00 - HOLT.CO3 345.00 345KV CKT 1	720	720	0.07302	102.2101	GEN344896 3-1LAB G3 20.000
FDNS	00NR_G15_076	0	16WP	G15_076	TO->FROM	GR ISLD-LNX3345.00 - HOLT.CO3 345.00 345KV CKT 1	720	720	0.07302	102.1869	GEN345670 1-1RUSH G1 18.000
FDNS	00NR_G15_076	0	16WP	G15_076	TO->FROM	GR ISLD-LNX3345.00 - HOLT.CO3 345.00 345KV CKT 1	720	720	0.07302	102.1868	GEN345671 2-1RUSH G2 18.000
FDNS	00NR_G15_076	0	16WP	G15_076	TO->FROM	GR ISLD-LNX3345.00 - HOLT.CO3 345.00 345KV CKT 1	720	720	0.07199	102.1807	SIOUX CITY - SIOUXCY-LNX3345.00 345KV CKT Z
FDNS	00NR_G15_076	0	16WP	G15_076	TO->FROM	GR ISLD-LNX3345.00 - HOLT.CO3 345.00 345KV CKT 1	720	720	0.07302	102.177	GEN344895 2-1LAB G2 20.000
FDNS	00NR_G15_076	0	16WP	G15_076	TO->FROM	GR ISLD-LNX3345.00 - HOLT.CO3 345.00 345KV CKT 1	720	720	0.07301	102.1753	CENTER - COYOTE 345KV CKT 1
FDNS	00NR_G15_076	0	16WP	G15_076	TO->FROM	GR ISLD-LNX3345.00 - HOLT.CO3 345.00 345KV CKT 1	720	720	0.07338	102.1439	P12:115:NPPD:WAPA6:FTRANDL7:ONEILL 7:BTB
FDNS	00NR_G15_076	0	16WP	G15_076	TO->FROM	GR ISLD-LNX3345.00 - HOLT.CO3 345.00 345KV CKT 1	720	720	0.07338	102.1439	P12:115:UMZB:# 115 #: SE IN NE. FR-SE-ON
FDNS	00NR_G15_076	0	16WP	G15_076	TO->FROM	GR ISLD-LNX3345.00 - HOLT.CO3 345.00 345KV CKT 1	720	720	0.07302	102.1332	GEN659118 1-LARAMIE RIVER UNIT1
FDNS	00NR_G15_076	0	16WP	G15_076	TO->FROM	GR ISLD-LNX3345.00 - HOLT.CO3 345.00 345KV CKT 1	720	720	0.07302	102.1265	GEN336252 1-NINEMILE POINT UNIT#5
FDNS	00NR_G15_076	0	16WP	G15_076	TO->FROM	GR ISLD-LNX3345.00 - HOLT.CO3 345.00 345KV CKT 1	720	720	0.06926	102.1131	FT THOMPSON (FT2 KU1B) 345/230/13.8KV TRANSFORMER CKT 1
FDNS	00NR_G15_076	0	16WP	G15_076	TO->FROM	GR ISLD-LNX3345.00 - HOLT.CO3 345.00 345KV CKT 1	720	720	0.06927	102.1109	FT THOMPSON (FT2 KU1A) 345/230/13.8KV TRANSFORMER CKT 1
FDNS	00NR_G15_076	0	16WP	G15_076	TO->FROM	GR ISLD-LNX3345.00 - HOLT.CO3 345.00 345KV CKT 1	720	720	0.07338	102.1054	FT RANDAL - SPENCER 115KV CKT 1
FDNS	00NR_G15_076	0	16WP	G15_076	TO->FROM	GR ISLD-LNX3345.00 - HOLT.CO3 345.00 345KV CKT 1	720	720	0.07199	102.097	SIOUXCY-LNX3345.00 - SPLIT ROCK 345KV CKT 1
FDNS	00NR_G15_076	0	16WP	G15_076	TO->FROM	GR ISLD-LNX3345.00 - HOLT.CO3 345.00 345KV CKT 1	720	720	0.07199	102.097	SIOUXCY-LNX3345.00 - SPLIT ROCK 345KV CKT 1
FDNS	00NR_G15_076	0	16WP	G15_076	TO->FROM	GR ISLD-LNX3345.00 - HOLT.CO3 345.00 345KV CKT 1	720	720	0.07018	102.0943	GERALD GENTLEMAN STATION - SWEETWATER 345KV CKT 2
FDNS	00NR_G15_076	0	16WP	G15_076	TO->FROM	GR ISLD-LNX3345.00 - HOLT.CO3 345.00 345KV CKT 1	720	720	0.07331	102.0881	LARAMIE RIVER - SIDNEY2-LNX3345.00 345KV CKT 1
FDNS	00NR_G15_076	0	16WP	G15_076	TO->FROM	GR ISLD-LNX3345.00 - HOLT.CO3 345.00 345KV CKT 1	720	720	0.07302	102.0874	GEN336831 1-BAXTER WILSON SES
FDNS	00NR_G15_076	0	16WP	G15_076	TO->FROM	GR ISLD-LNX3345.00 - HOLT.CO3 345.00 345KV CKT 1	720	720	0.07331	102.0769	SIDNEY - SIDNEY2-LNX3345.00 345KV CKT Z
FDNS	00NR_G15_076	0	16WP	G15_076	TO->FROM	GR ISLD-LNX3345.00 - HOLT.CO3 345.00 345KV CKT 1	720	720	0.07199	102.0674	P12:345:UMZW:# 907 #: SC2-SR IN IA. SC2-SR 345 KV LINE
FDNS	00NR_G15_076	0	16WP	G15_076	TO->FROM	GR ISLD-LNX3345.00 - HOLT.CO3 345.00 345KV CKT 1	720	720	0.07302	102.0612	P12:115:UMZW:# 162 #: NEL IN ND. FAULT ON ML-NEL-MX-GA 115 KV
FDNS	00NR_G15_076	0	16WP	G15_076	TO->FROM	GR ISLD-LNX3345.00 - HOLT.CO3 345.00 345KV CKT 1	720	720	0.07324	102.0443	AINSWORTH - VALENTINE 115KV CKT 1
FDNS	00NR_G15_076	0	16WP	G15_076	TO->FROM	GR ISLD-LNX3345.00 - HOLT.CO3 345.00 345KV CKT 1	720	720	0.07302	102.0276	GEN337041 1-GERALD ANDRUS
FDNS	00NR_G15_076	0	16WP	G15_076	TO->FROM	GR ISLD-LNX3345.00 - HOLT.CO3 345.00 345KV CKT 1	720	720	0.07345	102.0004	BYRON - NORTH ROCHESTER 345KV CKT 1
FDNSLock	00NR_G15_076	0	16WP	G15_076	TO->FROM	GR ISLD-LNX3345.00 - HOLT.CO3 345.00 345KV CKT 1	720	720	0.08159	101.9969	P13:230-345:NPPD:STEGALL3:KV3A
FDNSLock	00NR_G15_076	0	16WP	G15_076	TO->FROM	GR ISLD-LNX3345.00 - HOLT.CO3 345.00 345KV CKT 1	720	720	0.08159	101.9935	STEGALL (SGQ KV3A) 345/230/13.8KV TRANSFORMER CKT 1
FDNS	00NR_G15_076	0	16WP	G15_076	TO->FROM	GR ISLD-LNX3345.00 - HOLT.CO3 345.00 345KV CKT 1	720	720	0.07302	101.9857	GEN334440 1-SABINE UNIT 4
FDNS	00NR_G15_076	0	16WP	G15_076	TO->FROM	GR ISLD-LNX3345.00 - HOLT.CO3 345.00 345KV CKT 1	720	720	0.0737	101.9669	KOSSUTH 3 345.00 - WEBSTER 345KV CKT 1
FDNS	00NR_G15_076	0	16WP	G15_076	TO->FROM	GR ISLD-LNX3345.00 - HOLT.CO3 345.00 345KV CKT 1	720	720	0.07338	101.9615	ONEILL - SPENCER 115KV CKT 1
FDNS	00NR_G15_076	0	16WP	G15_076	TO->FROM	GR ISLD-LNX3345.00 - HOLT.CO3 345.00 345KV CKT 1	720	720	0.0737	101.9607	KOSSUTH 3 345.00 - OBRIEN 3 345.00 345KV CKT 1
FDNS	00NR_G15_076	0	16WP	G15_076	TO->FROM	GR ISLD-LNX3345.00 - HOLT.CO3 345.00 345KV CKT 1	720	720	0.07302	101.9594	GEN336251 1-NINEMILE POINT UNIT#4
FDNS	00NR_G15_076	0	16WP	G15_076	TO->FROM	GR ISLD-LNX3345.00 - HOLT.CO3 345.00 345KV CKT 1	720	720	0.07306	101.9567	BLAIR - GRANITE FALLS 230KV CKT 1
FDNS	00NR_G15_076	0	16WP	G15_076	TO->FROM	GR ISLD-LNX3345.00 - HOLT.CO3 345.00 345KV CKT 1	720	720	0.07306	101.9567	BLAIR - GRANITE FALLS 230KV CKT 1
FDNS	00NR_G15_076	0	16WP	G15_076	TO->FROM	GR ISLD-LNX3345.00 - HOLT.CO3 345.00 345KV CKT 1	720	720	0.07302	101.9471	P13:230-345:NPPD:NUCOR-1
FDNS	00NR_G15_076	0	16WP	G15_076	TO->FROM	GR ISLD-LNX3345.00 - HOLT.CO3 345.00 345KV CKT 1	720	720	0.07302	101.9279	P13:115-230:NPPD:NUCOR-3
FDNS	00NR_G15_076	0	16WP	G15_076	TO->FROM	GR ISLD-LNX3345.00 - HOLT.CO3 345.00 345KV CKT 1	720	720	0.07301	101.9132	GARRISON - JAMES TOWN 230KV CKT 1
FDNS	00NR_G15_076	0	16WP	G15_076	TO->FROM	GR ISLD-LNX3345.00 - HOLT.CO3 345.00 345KV CKT 1	720	720	0.07302	101.9085	GEN525561 1-TOLK GEN #1 24 KV
FDNS	00NR_G15_076	0	16WP	G15_076	TO->FROM	GR ISLD-LNX3345.00 - HOLT.CO3 345.00 345KV CKT 1	720	720	0.07405	101.8967	DENISON - SIOUX CITY 230KV CKT 1
FDNS	00NR_G15_076	0	16WP	G15_076	TO->FROM	GR ISLD-LNX3345.00 - HOLT.CO3 345.00 345KV CKT 1	720	720	0.07199	101.8949	P12:115:NPPD:1164:ONEILL 7:JEFFREY9:BTB
FDNS	00NR_G15_076	0	16WP	G15_076	TO->FROM	GR ISLD-LNX3345.00 - HOLT.CO3 345.00 345KV CKT 1	720	720	0.07302	101.8947	P13:230:UMZW:# 2218 #: FP IN MT. LOSS OF TRANSFORMER (AT2).
FDNS	00NR_G15_076	0	16WP	G15_076	TO->FROM	GR ISLD-LNX3345.00 - HOLT.CO3 345.00 345KV CKT 1	720	720	0.07199	101.884	CLEARWATER - ONEILL 115KV CKT 1
FDNS	00NR_G15_076	0	16WP	G15_076	TO->FROM	GR ISLD-LNX3345.00 - HOLT.CO3 345.00 345KV CKT 1	720	720	0.07308	101.8837	HANKINSON - WAHPETON 230KV CKT 1
FDNS	00NR_G15_076	0	16WP	G15_076	TO->FROM	GR ISLD-LNX3345.00 - HOLT.CO3 345.00 345KV CKT 1	720	720	0.0734	101.8836	BROOKING COUNTY - LYON COUNTY 345KV CKT 1
FDNS	00NR_G15_076	0	16WP	G15_076	TO->FROM	GR ISLD-LNX3345.00 - HOLT.CO3 345.00 345KV CKT 1	720	720	0.07318	101.8815	NORTH ROCHESTER - PRAIRIE ISLAND 345KV CKT 1
FDNS	00NR_G15_076	0	16WP	G15_076	TO->FROM	GR ISLD-LNX3345.00 - HOLT.CO3 345.00 345KV CKT 1	720	720	0.07905	101.8749	COLUMEAST - SHELL CREEK 345KV CKT 1
FDNS	00NR_G15_076	0	16WP	G15_076	TO->FROM	GR ISLD-LNX3345.00 - HOLT.CO3 345.00 345KV CKT 1	720	720	0.07302	101.8648	P13:115-345:NPPD:NUCOR-2
FDNS	00NR_G15_076	0	16WP	G15_076	TO->FROM	GR ISLD-LNX3345.00 - HOLT.CO3 345.00 345KV CKT 1	720	720	0.07302	101.8572	GEN303007 1-1BC2 U2
FDNS	00NR_G15_076	0	16WP	G15_076	TO->FROM	GR ISLD-LNX3345.00 - HOLT.CO3 345.00 345KV CKT 1	720	720	0.07302	101.8543	GEN303006 1-1BC2 U1
FDNS	00NR_G15_076	0	16WP	G15_076	TO->FROM	GR ISLD-LNX3345.00 - HOLT.CO3 345.00 345KV CKT 1	720	720	0.07302	101.8542	GEN335204 1-NELSON UNIT 4
FDNS	00NR_G15_076	0	16WP	G15_076	TO->FROM	GR ISLD-LNX3345.00 - HOLT.CO3 345.00 345KV CKT 1	720	720	0.07302	101.8525	GEN336191 1-LITTLE GYPSY UNIT#3
FDNS	00NR_G15_076	0	16WP	G15_076	TO->FROM	GR ISLD-LNX3345.00 - HOLT.CO3 345.00 345KV CKT 1	720	720	0.07199	101.8523	CLEARWATER - NELIGH 115KV CKT 1
FDNS	00NR_G15_076	0	16WP	G15_076	TO->FROM	GR ISLD-LNX3345.00 - HOLT.CO3 345.00 345KV CKT 1	720	720	0.07302	101.8487	GEN642067 1-PLATTE
FDNS	00NR_G15_076	0	16WP	G15_076	TO->FROM	GR ISLD-LNX3345.00 - HOLT.CO3 345.00 345KV CKT 1	720	720	0.07302	101.8314	GEN531447 1-HOLCOMB GENERATOR
FDNS	00NR_G15_076	0	16WP	G15_076	TO->FROM	GR ISLD-LNX3345.00 - HOLT.CO3 345.00 345KV CKT 1	720	720	0.07302	101.8208	GEN336801 1-BAXTER WILSON UNIT #1
FDNS	00NR_G15_076	0	16WP	G15_076	TO->FROM	GR ISLD-LNX3345.00 - HOLT.CO3 345.00 345KV CKT 1	720	720	0.07346	101.8206	BYRON - PLEASANT VALLEY 345KV CKT 1

SOLUTION	GROUP	SCENARIO	SEASON	SOURCE	DIRECTION	MONITORED ELEMENT	RATEA (MVA)	RATEB(MVA)	TDF	TC%LOADING (% MVA)	CONTINGENCY
FDNS	00NR_G15_076	0	16WP	G15_076	TO->FROM	GR ISLD-LNX3345.00 - HOLT.CO3 345.00 345KV CKT 1	720	720	0.07302	101.8164	GEN335614 1-WILLOW GLENN UNIT#4
FDNS	00NR_G15_076	0	16WP	G15_076	TO->FROM	GR ISLD-LNX3345.00 - HOLT.CO3 345.00 345KV CKT 1	720	720	0.07302	101.8061	GEN336464 1-MICHOUD UNIT #3
FDNS	00NR_G15_076	0	16WP	G15_076	TO->FROM	GR ISLD-LNX3345.00 - HOLT.CO3 345.00 345KV CKT 1	720	720	0.07302	101.8057	GEN303008 1-1BC2 U3
FDNS	00NR_G15_076	0	16WP	G15_076	TO->FROM	GR ISLD-LNX3345.00 - HOLT.CO3 345.00 345KV CKT 1	720	720	0.07302	101.8008	GEN336170 1-GULF OXY U4
FDNS	00NR_G15_076	0	16WP	G15_076	TO->FROM	GR ISLD-LNX3345.00 - HOLT.CO3 345.00 345KV CKT 1	720	720	0.07161	101.7978	MENNO JCT - TRIPP JCT 115KV CKT 1
FDNS	00NR_G15_076	0	16WP	G15_076	TO->FROM	GR ISLD-LNX3345.00 - HOLT.CO3 345.00 345KV CKT 1	720	720	0.07302	101.7909	GEN334441 1-SABINE UNIT 5
FDNS	00NR_G15_076	0	16WP	G15_076	TO->FROM	GR ISLD-LNX3345.00 - HOLT.CO3 345.00 345KV CKT 1	720	720	0.07301	101.7863	BISMARK - JAMES TOWN 230KV CKT 1
FDNS	00NR_G15_076	0	16WP	G15_076	TO->FROM	GR ISLD-LNX3345.00 - HOLT.CO3 345.00 345KV CKT 1	720	720	0.07896	101.7737	COLUMEAST - NW68TH & HOLDREGE 345KV CKT 1
FDNS	00NR_G15_076	0	16WP	G15_076	TO->FROM	GR ISLD-LNX3345.00 - HOLT.CO3 345.00 345KV CKT 1	720	720	0.07896	101.7737	COLUMEAST - NW68TH & HOLDREGE 345KV CKT 1
FDNS	00NR_G15_076	0	16WP	G15_076	TO->FROM	GR ISLD-LNX3345.00 - HOLT.CO3 345.00 345KV CKT 1	720	720	0.07301	101.7736	BISMARK - WEBER 230KV CKT 1
FDNS	00NR_G15_076	0	16WP	G15_076	TO->FROM	GR ISLD-LNX3345.00 - HOLT.CO3 345.00 345KV CKT 1	720	720	0.07301	101.772	JAMES TOWN - WEBER 230KV CKT 1
FDNS	00NR_G15_076	0	16WP	G15_076	TO->FROM	GR ISLD-LNX3345.00 - HOLT.CO3 345.00 345KV CKT 1	720	720	0.07302	101.7701	GRAND GULF 500/22.0KV TRANSFORMER CKT 1
FDNS	00NR_G15_076	0	16WP	G15_076	TO->FROM	GR ISLD-LNX3345.00 - HOLT.CO3 345.00 345KV CKT 1	720	720	0.07311	101.7656	APPLEDORN 4 230.00 - WATERTOWN 230KV CKT 1
FDNS	00NR_G15_076	0	16WP	G15_076	TO->FROM	GR ISLD-LNX3345.00 - HOLT.CO3 345.00 345KV CKT 1	720	720	0.07311	101.7656	APPLEDORN 4 230.00 - WATERTOWN 230KV CKT 1
FDNS	00NR_G15_076	0	16WP	G15_076	TO->FROM	GR ISLD-LNX3345.00 - HOLT.CO3 345.00 345KV CKT 1	720	720	0.07302	101.7647	GEN501811 1-RODEMACHER UNIT 1
FDNS	00NR_G15_076	0	16WP	G15_076	TO->FROM	GR ISLD-LNX3345.00 - HOLT.CO3 345.00 345KV CKT 1	720	720	0.07302	101.7274	PRAIRIE ISLAND 345/20.0KV TRANSFORMER CKT 1
FDNS	00NR_G15_076	0	16WP	G15_076	TO->FROM	GR ISLD-LNX3345.00 - HOLT.CO3 345.00 345KV CKT 1	720	720	0.07302	101.7244	PRAIRIE ISLAND 345/20.0KV TRANSFORMER CKT 2
FDNS	00NR_G15_076	0	16WP	G15_076	TO->FROM	GR ISLD-LNX3345.00 - HOLT.CO3 345.00 345KV CKT 1	720	720	0.07302	101.7215	GEN532651 1-JEFFREY ENERGY CENTER UNIT 1
FDNS	00NR_G15_076	0	16WP	G15_076	TO->FROM	GR ISLD-LNX3345.00 - HOLT.CO3 345.00 345KV CKT 1	720	720	0.07641	101.7178	BLOOMFIELD - CREIGHTON 115KV CKT 1
FDNS	00NR_G15_076	0	16WP	G15_076	TO->FROM	GR ISLD-LNX3345.00 - HOLT.CO3 345.00 345KV CKT 1	720	720	0.07302	101.7166	GEN334433 1-SABINE UNIT 3
FDNS	00NR_G15_076	0	16WP	G15_076	TO->FROM	GR ISLD-LNX3345.00 - HOLT.CO3 345.00 345KV CKT 1	720	720	0.07161	101.7124	MENNO JCT - UTICA 115KV CKT 1
FDNS	00NR_G15_076	0	16WP	G15_076	TO->FROM	GR ISLD-LNX3345.00 - HOLT.CO3 345.00 345KV CKT 1	720	720	0.07302	101.7088	GEN334071 1-LEWIS CREEK 2
FDNS	00NR_G15_076	0	16WP	G15_076	TO->FROM	GR ISLD-LNX3345.00 - HOLT.CO3 345.00 345KV CKT 1	720	720	0.07302	101.7066	FARGO - JAMES TOWN 230KV CKT 1
FDNS	00NR_G15_076	0	16WP	G15_076	TO->FROM	GR ISLD-LNX3345.00 - HOLT.CO3 345.00 345KV CKT 1	720	720	0.07302	101.7045	GEN334070 1-LEWIS CREEK 1
FDNS	00NR_G15_076	0	16WP	G15_076	TO->FROM	GR ISLD-LNX3345.00 - HOLT.CO3 345.00 345KV CKT 1	720	720	0.07311	101.7031	APPLEDORN 4 230.00 - GRANITE FALLS 230KV CKT 1
FDNS	00NR_G15_076	0	16WP	G15_076	TO->FROM	GR ISLD-LNX3345.00 - HOLT.CO3 345.00 345KV CKT 1	720	720	0.07311	101.7031	APPLEDORN 4 230.00 - GRANITE FALLS 230KV CKT 1
FDNS	00NR_G15_076	0	16WP	G15_076	TO->FROM	GR ISLD-LNX3345.00 - HOLT.CO3 345.00 345KV CKT 1	720	720	0.09026	101.701	BELDEN - HOSKINS 115KV CKT 1
FDNS	00NR_G15_076	0	16WP	G15_076	TO->FROM	GR ISLD-LNX3345.00 - HOLT.CO3 345.00 345KV CKT 1	720	720	0.07302	101.6988	GEN338388 1-1PLUM PT U1 23.000
FDNS	00NR_G15_076	0	16WP	G15_076	TO->FROM	GR ISLD-LNX3345.00 - HOLT.CO3 345.00 345KV CKT 1	720	720	0.07302	101.694	GEN337766 1-TRACTEBEL UNIT S1
FDNS	00NR_G15_076	0	16WP	G15_076	TO->FROM	GR ISLD-LNX3345.00 - HOLT.CO3 345.00 345KV CKT 1	720	720	0.07302	101.6907	FARGO - JAMES TOWN 230KV CKT 2
FDNS	00NR_G15_076	0	16WP	G15_076	TO->FROM	GR ISLD-LNX3345.00 - HOLT.CO3 345.00 345KV CKT 1	720	720	0.07302	101.6899	GEN525562 1-TOLK GEN #2 24 KV
FDNS	00NR_G15_076	0	16WP	G15_076	TO->FROM	GR ISLD-LNX3345.00 - HOLT.CO3 345.00 345KV CKT 1	720	720	0.07305	101.6876	FERGSFL4 230.00 - WAHPETON 230KV CKT 1
FDNS	00NR_G15_076	0	16WP	G15_076	TO->FROM	GR ISLD-LNX3345.00 - HOLT.CO3 345.00 345KV CKT 1	720	720	0.07302	101.68	BALTA - RAMSEY 230KV CKT 1
FDNS	00NR_G15_076	0	16WP	G15_076	TO->FROM	GR ISLD-LNX3345.00 - HOLT.CO3 345.00 345KV CKT 1	720	720	0.07303	101.676	AUDUBON - SHEYNNE 230KV CKT 1
FDNS	00NR_G15_076	0	16WP	G15_076	TO->FROM	GR ISLD-LNX3345.00 - HOLT.CO3 345.00 345KV CKT 1	720	720	0.07317	101.6757	ARKANSAS NUCLEAR ONE - FT SMITH 500KV CKT 1
FDNS	00NR_G15_076	0	16WP	G15_076	TO->FROM	GR ISLD-LNX3345.00 - HOLT.CO3 345.00 345KV CKT 1	720	720	0.07317	101.6757	ARKANSAS NUCLEAR ONE - FT SMITH 500KV CKT 1
FDNS	00NR_G15_076	0	16WP	G15_076	TO->FROM	GR ISLD-LNX3345.00 - HOLT.CO3 345.00 345KV CKT 1	720	720	0.07325	101.6618	OVEXFRMCCOVE
FDNS	00NR_G15_076	0	16WP	G15_076	TO->FROM	GR ISLD-LNX3345.00 - HOLT.CO3 345.00 345KV CKT 1	720	720	0.07302	101.6617	GEN501910 1-ACADIA UNIT ST1
FDNS	00NR_G15_076	0	16WP	G15_076	TO->FROM	GR ISLD-LNX3345.00 - HOLT.CO3 345.00 345KV CKT 1	720	720	0.07161	101.6563	P12:115:UMZZ:# 237 #: MEN IN SD. MENNO JUNCTION IS A TAP (UJ-MEN-TP).
FDNS	00NR_G15_076	0	16WP	G15_076	TO->FROM	GR ISLD-LNX3345.00 - HOLT.CO3 345.00 345KV CKT 1	720	720	0.07302	101.648	P12:345:GRDA:CHOUTEAU-SPORTSMANACRES
FDNS	00NR_G15_076	0	16WP	G15_076	TO->FROM	GR ISLD-LNX3345.00 - HOLT.CO3 345.00 345KV CKT 1	720	720	0.07331	101.6478	ARPIN B3 345.00 - ROCKY RN B8 345.00 345KV CKT 1
FDNS	00NR_G15_076	0	16WP	G15_076	TO->FROM	GR ISLD-LNX3345.00 - HOLT.CO3 345.00 345KV CKT 1	720	720	0.0731	101.6474	NORTH LA CROSSE - NORTH ROCHESTER 345KV CKT 1
FDNS	00NR_G15_076	0	16WP	G15_076	TO->FROM	GR ISLD-LNX3345.00 - HOLT.CO3 345.00 345KV CKT 1	720	720	0.07302	101.6426	WHITE BLUFF 500/26.0KV TRANSFORMER CKT 1
FDNS	00NR_G15_076	0	16WP	G15_076	TO->FROM	GR ISLD-LNX3345.00 - HOLT.CO3 345.00 345KV CKT 1	720	720	0.05733	101.6414	GAVINS POINT - HARTINGTON 115KV CKT 1
FDNS	00NR_G15_076	0	16WP	G15_076	TO->FROM	GR ISLD-LNX3345.00 - HOLT.CO3 345.00 345KV CKT 1	720	720	0.07302	101.6333	GEN336222 1-LITTLE GYPSY UNIT#2
FDNS	00NR_G15_076	0	16WP	G15_076	TO->FROM	GR ISLD-LNX3345.00 - HOLT.CO3 345.00 345KV CKT 1	720	720	0.07302	101.6171	GEN337764 1-TRACTEBEL UNIT C1
FDNS	00NR_G15_076	0	16WP	G15_076	TO->FROM	GR ISLD-LNX3345.00 - HOLT.CO3 345.00 345KV CKT 1	720	720	0.07302	101.6171	GEN337765 1-TRACTEBEL UNIT C2
FDNS	00NR_G15_076	0	16WP	G15_076	TO->FROM	GR ISLD-LNX3345.00 - HOLT.CO3 345.00 345KV CKT 1	720	720	0.07302	101.1733	BASE CASE
FDNS	00NR_G15_076	0	16WP	G15_076	TO->FROM	GR ISLD-LNX3345.00 - HOLT.CO3 345.00 345KV CKT 1	720	720	0.07302	100.8714	GEN645001 1-FORT CALHOUN 1
FDNS	00NR_G15_076	0	16WP	G15_076	TO->FROM	GR ISLD-LNX3345.00 - HOLT.CO3 345.00 345KV CKT 1	720	720	0.07312	100.7915	P12:345:UMZB:# 103 #: BD IN SD. LOSS OF LINE
FDNS	00NR_G15_076	0	16WP	G15_076	TO->FROM	GR ISLD-LNX3345.00 - HOLT.CO3 345.00 345KV CKT 1	720	720	0.07312	100.7898	P12:345:UMZB:# 102 #: AVS BD IN ND. AVS BRD LR
FDNS	00NR_G15_076	0	16WP	G15_076	TO->FROM	GR ISLD-LNX3345.00 - HOLT.CO3 345.00 345KV CKT 1	720	720	0.07312	100.7877	BRDLAND-LNX3345.00 - HURON 345KV CKT Z
FDNS	00NR_G15_076	0	16WP	G15_076	TO->FROM	GR ISLD-LNX3345.00 - HOLT.CO3 345.00 345KV CKT 1	720	720	0.07312	100.7872	HURON (BD KU2A) 345/230/13.8KV TRANSFORMER CKT 1
FDNS	00NR_G15_076	0	16WP	G15_076	TO->FROM	GR ISLD-LNX3345.00 - HOLT.CO3 345.00 345KV CKT 1	720	720	0.07312	100.7872	HURON (BD KU2A) 345/230/13.8KV TRANSFORMER CKT 1
FDNS	00NR_G15_076	0	16WP	G15_076	TO->FROM	GR ISLD-LNX3345.00 - HOLT.CO3 345.00 345KV CKT 1	720	720	0.07312	100.7871	BROADLAND - HURON 230KV CKT 1
FDNS	00NR_G15_076	0	16WP	G15_076	TO->FROM	GR ISLD-LNX3345.00 - HOLT.CO3 345.00 345KV CKT 1	720	720	0.0732	100.7749	FT THOMPSON - OAHE 230KV CKT 3
FDNS	00NR_G15_076	0	16WP	G15_076	TO->FROM	GR ISLD-LNX3345.00 - HOLT.CO3 345.00 345KV CKT 1	720	720	0.0732	100.7749	FT THOMPSON - OAHE 230KV CKT 3
FDNS	00NR_G15_076	0	16WP	G15_076	TO->FROM	GR ISLD-LNX3345.00 - HOLT.CO3 345.00 345KV CKT 1	720	720	0.0732	100.7749	FT THOMPSON - OAHE 230KV CKT 4
FDNS	00NR_G15_076	0	16WP	G15_076	TO->FROM	GR ISLD-LNX3345.00 - HOLT.CO3 345.00 345KV CKT 1	720	720	0.0732	100.7749	FT THOMPSON - OAHE 230KV CKT 4
FDNS	00NR_G15_076	0	16WP	G15_076	TO->FROM	GR ISLD-LNX3345.00 - HOLT.CO3 345.00 345KV CKT 1	720	720	0.07312	100.7339	ANTELOP-LNX3345.00 - BRDLAND-LNX3345.00 345KV CKT 1
FDNS	00NR_G15_076	0	16WP	G15_076	TO->FROM	GR ISLD-LNX3345.00 - HOLT.CO3 345.00 345KV CKT 1	720	720	0.07499	100.7321	LOUP CITY - NORTH LOUP 115KV CKT 1
FDNS	00NR_G15_076	0	16WP	G15_076	TO->FROM	GR ISLD-LNX3345.00 - HOLT.CO3 345.00 345KV CKT 1	720	720	0.07308	100.7312	G14-074T 345.00 - OKLAUNION 345KV CKT 1
FDNS	00NR_G15_076	0	16WP	G15_076	TO->FROM	GR ISLD-LNX3345.00 - HOLT.CO3 345.00 345KV CKT 1	720	720	0.07302	100.7066	CLKREACT5 161.00 - CRYSTLK5 161.00 161KV CKT 1
FDNSLock	00NR_G15_076	0	16WP	G15_076	TO->FROM	GR ISLD-LNX3345.00 - HOLT.CO3 345.00 345KV CKT 1	720	720	0.07346	100.7065	STEGALL - VICTORY HILL 230KV CKT 1
FDNS	00NR_G15_076	0	16WP	G15_076	TO->FROM	GR ISLD-LNX3345.00 - HOLT.CO3 345.00 345KV CKT 1	720	720	0.07302	100.7041	GEN562003 1-G11_027_3 0.6900
FDNS	00NR_G15_076	0	16WP	G15_076	TO->FROM	GR ISLD-LNX3345.00 - HOLT.CO3 345.00 345KV CKT 1	720	720	0.07306	100.7034	GRAND ISLAND (GI KU3A) 345/230/13.8KV TRANSFORMER CKT 3
FDNS	00NR_G15_076	0	16WP	G15_076	TO->FROM	GR ISLD-LNX3345.00 - HOLT.CO3 345.00 345KV CKT 1	720	720	0.07306	100.7034	GRAND ISLAND (GI KU3A) 345/230/13.8KV TRANSFORMER CKT 3
FDNS	00NR_G15_076	0	16WP	G15_076	TO->FROM	GR ISLD-LNX3345.00 - HOLT.CO3 345.00 345KV CKT 1	720	720	0.07346	100.7028	VICTORY HILL (VICTORYHL T1) 230/115/13.8KV TRANSFORMER CKT 1
FDNS	00NR_G15_076	0	16WP	G15_076	TO->FROM	GR ISLD-LNX3345.00 - HOLT.CO3 345.00 345KV CKT 1	720	720	0.07346	100.7028	VICTORY HILL (VICTORYHL T1) 230/115/13.8KV TRANSFORMER CKT 1
FDNS	00NR_G15_076	0	16WP	G15_076	TO->FROM	GR ISLD-LNX3345.00 - HOLT.CO3 345.00 345KV CKT 1	720	720	0.07331	100.6815	LARAMIE RIVER - STEGALL 345KV CKT 1
FDNS	00NR_G15_076	0	16WP	G15_076	TO->FROM	GR ISLD-LNX3345.00 - HOLT.CO3 345.00 345KV CKT 1	720	720	0.07302	100.6676	GEN672340 1-QUEEN ELIZABETH GENERATOR 1
FDNS	00NR_G15_076	0	16WP	G15_076	TO->FROM	GR ISLD-LNX3345.00 - HOLT.CO3 345.00 345KV CKT 1	720	720	0.07302	100.6674	GEN600013 3-BLACK DOG GEN 3
FDNS	00NR_G15_076	0	16WP	G15_076	TO->FROM	GR ISLD-LNX3345.00 - HOLT.CO3 345.00 345KV CKT 1	720	720	0.07302	100.6627	MITCHLCO3 345.00 345/34.5KV TRANSFORMER CKT 1

SOLUTION	GROUP	SCENARIO	SEASON	SOURCE	DIRECTION	MONITORED ELEMENT	RATEA (MVA)	RATEB(MVA)	TDF	TC%LOADING (% MVA)	CONTINGENCY
FDNS	00NR_G15_076	0	16WP	G15_076	TO->FROM	GR ISLD-LNX3345.00 - HOLT.CO3 345.00 345KV CKT 1	720	720	0.07312	100.6569	ANTELOP-LNX3345.00 - ANTELOPE VALLEY 345KV CKT Z
FDNS	00NR_G15_076	0	16WP	G15_076	TO->FROM	GR ISLD-LNX3345.00 - HOLT.CO3 345.00 345KV CKT 1	720	720	0.07302	100.6493	GEN659018 1-G14_003IS_3 0.6900
FDNS	00NR_G15_076	0	16WP	G15_076	TO->FROM	GR ISLD-LNX3345.00 - HOLT.CO3 345.00 345KV CKT 1	720	720	0.07337	100.6481	P12:115:UMZW:# 172 #: WI IN SD.
FDNS	00NR_G15_076	0	16WP	G15_076	TO->FROM	GR ISLD-LNX3345.00 - HOLT.CO3 345.00 345KV CKT 1	720	720	0.07302	100.6426	GEN672384 1-CENTENNIAL WINDFARM
FDNS	00NR_G15_076	0	16WP	G15_076	TO->FROM	GR ISLD-LNX3345.00 - HOLT.CO3 345.00 345KV CKT 1	720	720	0.07302	100.6412	GEN600125 2-FEP ST G 13.800
FDNS	00NR_G15_076	0	16WP	G15_076	TO->FROM	GR ISLD-LNX3345.00 - HOLT.CO3 345.00 345KV CKT 1	720	720	0.07302	100.6336	LADISH 115/13.2KV TRANSFORMER CKT 1
FDNS	00NR_G15_076	0	16WP	G15_076	TO->FROM	GR ISLD-LNX3345.00 - HOLT.CO3 345.00 345KV CKT 1	720	720	0.07302	100.6298	GEN620323 2-HOOT LAKE 2 GEN
FDNS	00NR_G15_076	0	16WP	G15_076	TO->FROM	GR ISLD-LNX3345.00 - HOLT.CO3 345.00 345KV CKT 1	720	720	0.07302	100.6241	GEN659354 1-DEERCREK STG18.000
FDNS	00NR_G15_076	0	16WP	G15_076	TO->FROM	GR ISLD-LNX3345.00 - HOLT.CO3 345.00 345KV CKT 1	720	720	0.07326	100.6202	SMOKYHL6 230.00 - SUMMIT 230KV CKT 1
FDNS	00NR_G15_076	0	16WP	G15_076	TO->FROM	GR ISLD-LNX3345.00 - HOLT.CO3 345.00 345KV CKT 1	720	720	0.07302	100.6129	GEN657964 1-ASH2GEN9 0.5750
FDNS	00NR_G15_076	0	16WP	G15_076	TO->FROM	GR ISLD-LNX3345.00 - HOLT.CO3 345.00 345KV CKT 1	720	720	0.07302	100.6053	GEN652546 1-FT RANDAL
FDNS	00NR_G15_076	0	16WP	G15_076	TO->FROM	GR ISLD-LNX3345.00 - HOLT.CO3 345.00 345KV CKT 1	720	720	0.07454	100.5955	AXTELL - PAULINE 345KV CKT 1
FDNS	00NR_G15_076	0	16WP	G15_076	TO->FROM	GR ISLD-LNX3345.00 - HOLT.CO3 345.00 345KV CKT 1	720	720	0.07496	100.5951	CENTRAL CITY - GRAND ISLAND 115KV CKT 1
FDNS	00NR_G15_076	0	16WP	G15_076	TO->FROM	GR ISLD-LNX3345.00 - HOLT.CO3 345.00 345KV CKT 1	720	720	0.07335	100.5866	7MAYWOOD 345.00 - 7SPENCER 345.00 345KV CKT 1
FDNS	00NR_G15_076	0	16WP	G15_076	TO->FROM	GR ISLD-LNX3345.00 - HOLT.CO3 345.00 345KV CKT 1	720	720	0.07335	100.5859	7MONTGMRY 345.00 - 7SPENCER 345.00 345KV CKT 1
FDNS	00NR_G15_076	0	16WP	G15_076	TO->FROM	GR ISLD-LNX3345.00 - HOLT.CO3 345.00 345KV CKT 1	720	720	0.07327	100.5859	FALLOW 3 345.00 - POTTCO 3 345.00 345KV CKT 1
FDNS	00NR_G15_076	0	16WP	G15_076	TO->FROM	GR ISLD-LNX3345.00 - HOLT.CO3 345.00 345KV CKT 1	720	720	0.07302	100.5817	GEN635213 3-NEAL UNIT 3
FDNS	00NR_G15_076	0	16WP	G15_076	TO->FROM	GR ISLD-LNX3345.00 - HOLT.CO3 345.00 345KV CKT 1	720	720	0.08457	100.5785	COLUMWEST - KELLY 230KV CKT 1
FDNS	00NR_G15_076	0	16WP	G15_076	TO->FROM	GR ISLD-LNX3345.00 - HOLT.CO3 345.00 345KV CKT 1	720	720	0.07302	100.5773	GEN600018 S-LS POWER STEAM
FDNS	00NR_G15_076	0	16WP	G15_076	TO->FROM	GR ISLD-LNX3345.00 - HOLT.CO3 345.00 345KV CKT 1	720	720	0.07302	100.574	GEN659290 1-EDGECOL
FDNS	00NR_G15_076	0	16WP	G15_076	TO->FROM	GR ISLD-LNX3345.00 - HOLT.CO3 345.00 345KV CKT 1	720	720	0.07302	100.5721	GEN652548 5-FT RANDAL
FDNS	00NR_G15_076	0	16WP	G15_076	TO->FROM	GR ISLD-LNX3345.00 - HOLT.CO3 345.00 345KV CKT 1	720	720	0.07302	100.5721	GEN652549 7-FT RANDAL
FDNS	00NR_G15_076	0	16WP	G15_076	TO->FROM	GR ISLD-LNX3345.00 - HOLT.CO3 345.00 345KV CKT 1	720	720	0.07302	100.5694	GEN652547 3-FT RANDAL
FDNS	00NR_G15_076	0	16WP	G15_076	TO->FROM	GR ISLD-LNX3345.00 - HOLT.CO3 345.00 345KV CKT 1	720	720	0.07302	100.5663	GEN590010 1-ERCOT EQUIVALENCE
FDNS	00NR_G15_076	0	16WP	G15_076	TO->FROM	GR ISLD-LNX3345.00 - HOLT.CO3 345.00 345KV CKT 1	720	720	0.07302	100.5637	G830_SUB 115.00 - GRE-MCHENRY7115.00 115KV CKT 1
FDNS	00NR_G15_076	0	16WP	G15_076	TO->FROM	GR ISLD-LNX3345.00 - HOLT.CO3 345.00 345KV CKT 1	720	720	0.07302	100.5582	G830_SUB 115.00 115/34.5KV TRANSFORMER CKT 1
FDNS	00NR_G15_076	0	16WP	G15_076	TO->FROM	GR ISLD-LNX3345.00 - HOLT.CO3 345.00 345KV CKT 1	720	720	0.07302	100.5502	GEN652410 3-FT PECK
FDNS	00NR_G15_076	0	16WP	G15_076	TO->FROM	GR ISLD-LNX3345.00 - HOLT.CO3 345.00 345KV CKT 1	720	720	0.07332	100.5387	POST ROCK (POSTROCK T1) 345/230/13.8KV TRANSFORMER CKT 1
FDNS	00NR_G15_076	0	16WP	G15_076	TO->FROM	GR ISLD-LNX3345.00 - HOLT.CO3 345.00 345KV CKT 1	720	720	0.07302	100.5386	GEN300003 1-THOMAS HILL UNIT 3
FDNS	00NR_G15_076	0	16WP	G15_076	TO->FROM	GR ISLD-LNX3345.00 - HOLT.CO3 345.00 345KV CKT 1	720	720	0.07302	100.5374	GEN590011 2-ERCOT EQUIVALENCE
FDNS	00NR_G15_076	0	16WP	G15_076	TO->FROM	GR ISLD-LNX3345.00 - HOLT.CO3 345.00 345KV CKT 1	720	720	0.07543	100.5323	SUB 3454 - WAGENER 345KV CKT 1
FDNS	00NR_G15_076	0	16WP	G15_076	TO->FROM	GR ISLD-LNX3345.00 - HOLT.CO3 345.00 345KV CKT 1	720	720	0.07543	100.5323	SUB 3454 - WAGENER 345KV CKT 1
FDNS	00NR_G15_076	0	16WP	G15_076	TO->FROM	GR ISLD-LNX3345.00 - HOLT.CO3 345.00 345KV CKT 1	720	720	0.07302	100.5278	EASTDC - ERCOT EQUIVALENCE 345KV CKT 1
FDNS	00NR_G15_076	0	16WP	G15_076	TO->FROM	GR ISLD-LNX3345.00 - HOLT.CO3 345.00 345KV CKT 1	720	720	0.07302	100.5161	GEN672347 1-CORY COGEN GENERATOR 1 GT1
FDNS	00NR_G15_076	0	16WP	G15_076	TO->FROM	GR ISLD-LNX3345.00 - HOLT.CO3 345.00 345KV CKT 1	720	720	0.07302	100.5161	GEN672348 2-CORY COGEN GENERATOR 2 GT2
FDNS	00NR_G15_076	0	16WP	G15_076	TO->FROM	GR ISLD-LNX3345.00 - HOLT.CO3 345.00 345KV CKT 1	720	720	0.07302	100.5113	GEN672350 1-NIPAWIN GENERATOR 1
FDNS	00NR_G15_076	0	16WP	G15_076	TO->FROM	GR ISLD-LNX3345.00 - HOLT.CO3 345.00 345KV CKT 1	720	720	0.07302	100.5113	GEN672351 2-NIPAWIN GENERATOR 2
FDNS	00NR_G15_076	0	16WP	G15_076	TO->FROM	GR ISLD-LNX3345.00 - HOLT.CO3 345.00 345KV CKT 1	720	720	0.07302	100.5112	GEN672352 3-NIPAWIN GENERATOR 3
FDNS	00NR_G15_076	0	16WP	G15_076	TO->FROM	GR ISLD-LNX3345.00 - HOLT.CO3 345.00 345KV CKT 1	720	720	0.07314	100.4965	MADISON COUNTY - RLHILLS3 345.00 345KV CKT 1
FDNS	00NR_G15_076	0	16WP	G15_076	TO->FROM	GR ISLD-LNX3345.00 - HOLT.CO3 345.00 345KV CKT 1	720	720	0.07302	100.4914	GEN657600 1-L1GEN3 9 0.5750
FDNS	00NR_G15_076	0	16WP	G15_076	TO->FROM	GR ISLD-LNX3345.00 - HOLT.CO3 345.00 345KV CKT 1	720	720	0.07302	100.491	GEN652414 4-FT PECK
FDNS	00NR_G15_076	0	16WP	G15_076	TO->FROM	GR ISLD-LNX3345.00 - HOLT.CO3 345.00 345KV CKT 1	720	720	0.07302	100.491	GEN652415 5-FT PECK
FDNS	00NR_G15_076	0	16WP	G15_076	TO->FROM	GR ISLD-LNX3345.00 - HOLT.CO3 345.00 345KV CKT 1	720	720	0.07302	100.4731	GEN600012 2-BLACK DOG GEN 2
FDNS	00NR_G15_076	0	16WP	G15_076	TO->FROM	GR ISLD-LNX3345.00 - HOLT.CO3 345.00 345KV CKT 1	720	720	0.0732	100.4717	G11_051T 345.00 - WOODWARD DISTRICT EHV 345KV CKT 1
FDNS	00NR_G15_076	0	16WP	G15_076	TO->FROM	GR ISLD-LNX3345.00 - HOLT.CO3 345.00 345KV CKT 1	720	720	0.07302	100.4695	GEN660001 2-ABERDEEN SIEBRECHT
FDNS	00NR_G15_076	0	16WP	G15_076	TO->FROM	GR ISLD-LNX3345.00 - HOLT.CO3 345.00 345KV CKT 1	720	720	0.07302	100.4627	GEN652345 W-G07_023IS_2 0.6900
FDNS	00NR_G15_076	0	16WP	G15_076	TO->FROM	GR ISLD-LNX3345.00 - HOLT.CO3 345.00 345KV CKT 1	720	720	0.07302	100.4591	GEN629074 1-ARNOLD LOWSIDE OF GSU XFMR
FDNS	00NR_G15_076	0	16WP	G15_076	TO->FROM	GR ISLD-LNX3345.00 - HOLT.CO3 345.00 345KV CKT 1	720	720	0.07302	100.4464	GEN615032 2-PLEASANT VALLEY
FDNS	00NR_G15_076	0	16WP	G15_076	TO->FROM	GR ISLD-LNX3345.00 - HOLT.CO3 345.00 345KV CKT 1	720	720	0.07302	100.4362	GEN672367 1-MERIDIAN GENERATOR 1 GT1
FDNS	00NR_G15_076	0	16WP	G15_076	TO->FROM	GR ISLD-LNX3345.00 - HOLT.CO3 345.00 345KV CKT 1	720	720	0.07302	100.4362	GEN672368 2-MERIDIAN GENERATOR 2 GT2
FDNS	00NR_G15_076	0	16WP	G15_076	TO->FROM	GR ISLD-LNX3345.00 - HOLT.CO3 345.00 345KV CKT 1	720	720	0.07302	100.4359	GEN672349 3-CORY COGEN GENERATOR 3 ST
FDNS	00NR_G15_076	0	16WP	G15_076	TO->FROM	GR ISLD-LNX3345.00 - HOLT.CO3 345.00 345KV CKT 1	720	720	0.07302	100.4253	GEN672339 16-QE 16G 13.800
FDNS	00NR_G15_076	0	16WP	G15_076	TO->FROM	GR ISLD-LNX3345.00 - HOLT.CO3 345.00 345KV CKT 1	720	720	0.07302	100.4253	GEN672342 3-QUEEN ELIZABETH GENERATOR 3
FDNS	00NR_G15_076	0	16WP	G15_076	TO->FROM	GR ISLD-LNX3345.00 - HOLT.CO3 345.00 345KV CKT 1	720	720	0.07302	100.4224	GEN300007 1-NEW MADRID UNIT 2
FDNS	00NR_G15_076	0	16WP	G15_076	TO->FROM	GR ISLD-LNX3345.00 - HOLT.CO3 345.00 345KV CKT 1	720	720	0.07302	100.4173	GEN300006 1-NEW MADRID UNIT 1
FDNS	00NR_G15_076	0	16WP	G15_076	TO->FROM	GR ISLD-LNX3345.00 - HOLT.CO3 345.00 345KV CKT 1	720	720	0.07302	100.4157	GEN620324 3-HOOT LAKE 3 GEN
FDNS	00NR_G15_076	0	16WP	G15_076	TO->FROM	GR ISLD-LNX3345.00 - HOLT.CO3 345.00 345KV CKT 1	720	720	0.0722	100.4156	HIGHLND 3 345.00 - OBRIEN 3 345.00 345KV CKT 1
FDNS	00NR_G15_076	0	16WP	G15_076	TO->FROM	GR ISLD-LNX3345.00 - HOLT.CO3 345.00 345KV CKT 1	720	720	0.07302	100.3989	GEN 11104 1-J262_GEN 0.6000
FDNS	00NR_G15_076	0	16WP	G15_076	TO->FROM	GR ISLD-LNX3345.00 - HOLT.CO3 345.00 345KV CKT 1	720	720	0.07302	100.3989	GEN 11108 1-J263_GEN 0.6000
FDNS	00NR_G15_076	0	16WP	G15_076	TO->FROM	GR ISLD-LNX3345.00 - HOLT.CO3 345.00 345KV CKT 1	720	720	0.07299	100.3894	GLENHAM - L3 HAWDON 230KV CKT 1
FDNS	00NR_G15_076	0	16WP	G15_076	TO->FROM	GR ISLD-LNX3345.00 - HOLT.CO3 345.00 345KV CKT 1	720	720	0.07494	100.3887	103RD & ROKEBY - MOORE 345KV CKT 1
FDNS	00NR_G15_076	0	16WP	G15_076	TO->FROM	GR ISLD-LNX3345.00 - HOLT.CO3 345.00 345KV CKT 1	720	720	0.07494	100.3887	103RD & ROKEBY - MOORE 345KV CKT 1
FDNS	00NR_G15_076	0	16WP	G15_076	TO->FROM	GR ISLD-LNX3345.00 - HOLT.CO3 345.00 345KV CKT 1	720	720	0.07492	100.3703	GERALD GENTLEMAN STATION - RED WILLOW 345KV CKT 1
FDNS	00NR_G15_076	0	16WP	G15_076	TO->FROM	GR ISLD-LNX3345.00 - HOLT.CO3 345.00 345KV CKT 1	720	720	0.07547	100.3697	ATCHSNT3 345.00 - COOPER 345KV CKT 1
FDNS	00NR_G15_076	0	16WP	G15_076	TO->FROM	GR ISLD-LNX3345.00 - HOLT.CO3 345.00 345KV CKT 1	720	720	0.07547	100.3697	ATCHSNT3 345.00 - COOPER 345KV CKT 1
FDNS	00NR_G15_076	0	16WP	G15_076	TO->FROM	GR ISLD-LNX3345.00 - HOLT.CO3 345.00 345KV CKT 1	720	720	0.07327	100.3625	FALLOW 3 345.00 - GRIMES 345KV CKT 1
FDNS	00NR_G15_076	0	16WP	G15_076	TO->FROM	GR ISLD-LNX3345.00 - HOLT.CO3 345.00 345KV CKT 1	720	720	0.07302	100.3568	GEN600050 1-FEP
FDNS	00NR_G15_076	0	16WP	G15_076	TO->FROM	GR ISLD-LNX3345.00 - HOLT.CO3 345.00 345KV CKT 1	720	720	0.07302	100.345	GEN659273 2-GROTON SYNC COND
FDNS	00NR_G15_076	0	16WP	G15_076	TO->FROM	GR ISLD-LNX3345.00 - HOLT.CO3 345.00 345KV CKT 1	720	720	0.07302	100.345	GEN659294 1-WILTONCOL9
FDNS	00NR_G15_076	0	16WP	G15_076	TO->FROM	GR ISLD-LNX3345.00 - HOLT.CO3 345.00 345KV CKT 1	720	720	0.07302	100.3407	CENTER 230/22.0KV TRANSFORMER CKT 1
FDNS	00NR_G15_076	0	16WP	G15_076	TO->FROM	GR ISLD-LNX3345.00 - HOLT.CO3 345.00 345KV CKT 1	720	720	0.0732	100.3243	G11_051T 345.00 - TATONGA7 345.00 345KV CKT 1
FDNS	00NR_G15_076	0	16WP	G15_076	TO->FROM	GR ISLD-LNX3345.00 - HOLT.CO3 345.00 345KV CKT 1	720	720	0.07302	100.3106	GEN629072 4-LANSING GENERATOR FOR UNITS NO4 EIA CODE 1
FDNS	00NR_G15_076	0	16WP	G15_076	TO->FROM	GR ISLD-LNX3345.00 - HOLT.CO3 345.00 345KV CKT 1	720	720	0.07302	100.3087	GEN672393 2-NBECST2G 13.800

SOLUTION	GROUP	SCENARIO	SEASON	SOURCE	DIRECTION	MONITORED ELEMENT	RATEA (MVA)	RATEB(MVA)	TDF	TC%LOADING (% MVA)	CONTINGENCY
FDNS	00NR_G15_076	0	16WP	G15_076	TO->FROM	GR ISLD-LNX3345.00 - HOLT.CO3 345.00 345KV CKT 1	720	720	0.07131	100.3024	COOPER - MOORE 345KV CKT 1
FDNS	00NR_G15_076	0	16WP	G15_076	TO->FROM	GR ISLD-LNX3345.00 - HOLT.CO3 345.00 345KV CKT 1	720	720	0.07302	100.2759	GEN600065 7-HIGH BRIDGE
FDNS	00NR_G15_076	0	16WP	G15_076	TO->FROM	GR ISLD-LNX3345.00 - HOLT.CO3 345.00 345KV CKT 1	720	720	0.07302	100.2759	GEN600066 8-HIGH BRIDGE
FDNS	00NR_G15_076	0	16WP	G15_076	TO->FROM	GR ISLD-LNX3345.00 - HOLT.CO3 345.00 345KV CKT 1	720	720	0.07302	100.2637	GEN659192 6-LYNN
FDNS	00NR_G15_076	0	16WP	G15_076	TO->FROM	GR ISLD-LNX3345.00 - HOLT.CO3 345.00 345KV CKT 1	720	720	0.07302	100.2626	GEN659162 4-RED WLCK
FDNS	00NR_G15_076	0	16WP	G15_076	TO->FROM	GR ISLD-LNX3345.00 - HOLT.CO3 345.00 345KV CKT 1	720	720	0.07302	100.2626	GEN659163 5-BLACK WDCK
FDNS	00NR_G15_076	0	16WP	G15_076	TO->FROM	GR ISLD-LNX3345.00 - HOLT.CO3 345.00 345KV CKT 1	720	720	0.07302	100.2522	LANSING WEST 161/22.0KV TRANSFORMER CKT 1
FDNS	00NR_G15_076	0	16WP	G15_076	TO->FROM	GR ISLD-LNX3345.00 - HOLT.CO3 345.00 345KV CKT 1	720	720	0.07302	100.2506	GEN657985 1-ASH1GEN9 0.5750
FDNS	00NR_G15_076	0	16WP	G15_076	TO->FROM	GR ISLD-LNX3345.00 - HOLT.CO3 345.00 345KV CKT 1	720	720	0.07302	100.2369	GEN652906 1-G09_006IS_3 0.6900
FDNS	00NR_G15_076	0	16WP	G15_076	TO->FROM	GR ISLD-LNX3345.00 - HOLT.CO3 345.00 345KV CKT 1	720	720	0.07302	100.2254	GEN635214 4-NEAL UNIT 4
FDNS	00NR_G15_076	0	16WP	G15_076	TO->FROM	GR ISLD-LNX3345.00 - HOLT.CO3 345.00 345KV CKT 1	720	720	0.07302	100.2123	GEN 10648 1-G830_GEN 0.6900
FDNS	00NR_G15_076	0	16WP	G15_076	TO->FROM	GR ISLD-LNX3345.00 - HOLT.CO3 345.00 345KV CKT 1	720	720	0.07302	100.1925	GEN600067 9-HIGH BRIDGE
FDNS	00NR_G15_076	0	16WP	G15_076	TO->FROM	GR ISLD-LNX3345.00 - HOLT.CO3 345.00 345KV CKT 1	720	720	0.07302	100.1904	GEN600014 4-BLACK DOG GEN 4
FDNS	00NR_G15_076	0	16WP	G15_076	TO->FROM	GR ISLD-LNX3345.00 - HOLT.CO3 345.00 345KV CKT 1	720	720	0.07302	100.1898	GEN600071 10-RIVER SIDE
FDNS	00NR_G15_076	0	16WP	G15_076	TO->FROM	GR ISLD-LNX3345.00 - HOLT.CO3 345.00 345KV CKT 1	720	720	0.07302	100.1897	GEN600070 9-RIVER SIDE
FDNS	00NR_G15_076	0	16WP	G15_076	TO->FROM	GR ISLD-LNX3345.00 - HOLT.CO3 345.00 345KV CKT 1	720	720	0.07302	100.1866	GEN600011 5-BLACK DOG GEN 1
FDNS	00NR_G15_076	0	16WP	G15_076	TO->FROM	GR ISLD-LNX3345.00 - HOLT.CO3 345.00 345KV CKT 1	720	720	0.07302	100.1765	GEN600007 7-RIVERSIDE GEN 7
FDNS	00NR_G15_076	0	16WP	G15_076	TO->FROM	GR ISLD-LNX3345.00 - HOLT.CO3 345.00 345KV CKT 1	720	720	0.07547	100.1567	ATCHSNT3 345.00 - BOONEVILLE 345KV CKT 1
FDNS	00NR_G15_076	0	16WP	G15_076	TO->FROM	GR ISLD-LNX3345.00 - HOLT.CO3 345.00 345KV CKT 1	720	720	0.07302	100.155	GEN615015 1-GRE-SPRITWDG13.200
FDNS	00NR_G15_076	0	16WP	G15_076	TO->FROM	GR ISLD-LNX3345.00 - HOLT.CO3 345.00 345KV CKT 1	720	720	0.07441	100.1409	AXTELL - POST ROCK 345KV CKT 1
FDNS	00NR_G15_076	0	16WP	G15_076	TO->FROM	GR ISLD-LNX3345.00 - HOLT.CO3 345.00 345KV CKT 1	720	720	0.07302	100.1286	GEN660016 1-B_H WIND 0.7000
FDNS	00NR_G15_076	0	16WP	G15_076	TO->FROM	GR ISLD-LNX3345.00 - HOLT.CO3 345.00 345KV CKT 1	720	720	0.07302	100.1249	GEN600017 C-LS POWER CT
FDNS	00NR_G15_076	0	16WP	G15_076	TO->FROM	GR ISLD-LNX3345.00 - HOLT.CO3 345.00 345KV CKT 1	720	720	0.07302	100.1245	GEN652907 1-G09_007IS_3 0.6900
FDNS	00NR_G15_076	0	16WP	G15_076	TO->FROM	GR ISLD-LNX3345.00 - HOLT.CO3 345.00 345KV CKT 1	720	720	0.07302	100.1235	GEN615052 1-CAMBRIDGE GENERATING STATION
FDNS	00NR_G15_076	0	16WP	G15_076	TO->FROM	GR ISLD-LNX3345.00 - HOLT.CO3 345.00 345KV CKT 1	720	720	0.07302	100.0832	GEN681522 3-GENOA 3
FDNS	00NR_G15_076	0	16WP	G15_076	TO->FROM	GR ISLD-LNX3345.00 - HOLT.CO3 345.00 345KV CKT 1	720	720	0.07302	100.0544	GEN662101 1-WESSINGTON190.5750
FDNS	00NR_G15_076	0	16WP	G15_076	TO->FROM	GR ISLD-LNX3345.00 - HOLT.CO3 345.00 345KV CKT 1	720	720	0.0732	100.0532	MATHWSN7 345.00 - TATONGA7 345.00 345KV CKT 1
FDNS	00NR_G15_076	0	16WP	G15_076	TO->FROM	GR ISLD-LNX3345.00 - HOLT.CO3 345.00 345KV CKT 1	720	720	0.07674	99.9	MINGO - RED WILLOW 345KV CKT 1
FDNS	00NR_G15_076	0	16WP	G15_076	TO->FROM	GR ISLD-LNX3345.00 - HOLT.CO3 345.00 345KV CKT 1	720	720	0.07674	99.9	MINGO - RED WILLOW 345KV CKT 1
FDNS	00NR_G15_076	0	16WP	G15_076	TO->FROM	GR ISLD-LNX3345.00 - HOLT.CO3 345.00 345KV CKT 1	720	720	0.07302	99.9	GEN615021 1-GRE-ER 14G 16.000
FDNS	00NR_G15_076	0	16WP	G15_076	TO->FROM	GR ISLD-LNX3345.00 - HOLT.CO3 345.00 345KV CKT 1	720	720	0.07302	99.9	GEN659353 1-DEERCREK CTG18.000
FDNS	00NR_G15_076	0	16WP	G15_076	TO->FROM	GR ISLD-LNX3345.00 - HOLT.CO3 345.00 345KV CKT 1	720	720	0.07302	99.9	GEN910006 1-G12_012IS_3 0.6900
FDNS	00NR_G15_076	0	16WP	G15_076	TO->FROM	GR ISLD-LNX3345.00 - HOLT.CO3 345.00 345KV CKT 1	720	720	0.07302	99.8	GEN672303 3-BOUNDARY DAM GENERATOR 3
FDNS	00NR_G15_076	0	16WP	G15_076	TO->FROM	GR ISLD-LNX3345.00 - HOLT.CO3 345.00 345KV CKT 1	720	720	0.07302	99.8	GEN672304 4-BOUNDARY DAM GENERATOR 4
FDNS	00NR_G15_076	0	16WP	G15_076	TO->FROM	GR ISLD-LNX3345.00 - HOLT.CO3 345.00 345KV CKT 1	720	720	0.07302	99.8	GEN672305 5-BOUNDARY DAM GENERATOR 5
FDNS	00NR_G15_076	0	16WP	G15_076	TO->FROM	GR ISLD-LNX3345.00 - HOLT.CO3 345.00 345KV CKT 1	720	720	0.07684	99.7	MOORE - PAULINE 345KV CKT 1
FDNS	00NR_G15_076	0	16WP	G15_076	TO->FROM	GR ISLD-LNX3345.00 - HOLT.CO3 345.00 345KV CKT 1	720	720	0.07302	99.7	BISONMP4 230.00 - SQUARE BUTTE 230KV CKT 1
FDNS	00NR_G15_076	0	16WP	G15_076	TO->FROM	GR ISLD-LNX3345.00 - HOLT.CO3 345.00 345KV CKT 1	720	720	0.07302	99.6	GEN652460 4-GARRISON
FDNS	00NR_G15_076	0	16WP	G15_076	TO->FROM	GR ISLD-LNX3345.00 - HOLT.CO3 345.00 345KV CKT 1	720	720	0.07302	99.6	GEN652461 5-GARRISON
FDNS	00NR_G15_076	0	16WP	G15_076	TO->FROM	GR ISLD-LNX3345.00 - HOLT.CO3 345.00 345KV CKT 1	720	720	0.07302	99.6	GEN672392 1-NBECGT1G 18.000
FDNS	00NR_G15_076	0	16WP	G15_076	TO->FROM	GR ISLD-LNX3345.00 - HOLT.CO3 345.00 345KV CKT 1	720	720	0.07302	99.5	COYOTE 345/24.0KV TRANSFORMER CKT 1
FDNS	00NR_G15_076	0	16WP	G15_076	TO->FROM	GR ISLD-LNX3345.00 - HOLT.CO3 345.00 345KV CKT 1	720	720	0.07302	99.5	GEN652457 1-GARRISON
FDNS	00NR_G15_076	0	16WP	G15_076	TO->FROM	GR ISLD-LNX3345.00 - HOLT.CO3 345.00 345KV CKT 1	720	720	0.07302	99.5	GEN652458 2-GARRISON
FDNS	00NR_G15_076	0	16WP	G15_076	TO->FROM	GR ISLD-LNX3345.00 - HOLT.CO3 345.00 345KV CKT 1	720	720	0.07302	99.5	GEN652459 3-GARRISON
FDNS	00NR_G15_076	0	16WP	G15_076	TO->FROM	GR ISLD-LNX3345.00 - HOLT.CO3 345.00 345KV CKT 1	720	720	0.07302	99.5	GEN652542 1-BIG BEND
FDNS	00NR_G15_076	0	16WP	G15_076	TO->FROM	GR ISLD-LNX3345.00 - HOLT.CO3 345.00 345KV CKT 1	720	720	0.07302	99.5	GEN659010 4-G07_027IS_2 0.6900
FDNS	00NR_G15_076	0	16WP	G15_076	TO->FROM	GR ISLD-LNX3345.00 - HOLT.CO3 345.00 345KV CKT 1	720	720	0.07302	99.5	GEN659194 1-NDPRAIRWND1W0.6900
FDNS	00NR_G15_076	0	17SP	G15_076	TO->FROM	KELLY - MEADOWGROVE4230.00 230KV CKT 1	368	368	0.03281	106.1895	GRPRAR1-LNX3345.00 - HOLT.CO3 345.00 345KV CKT 1
FDNS	00NR_G15_076	0	17SP	G15_076	TO->FROM	KELLY - MEADOWGROVE4230.00 230KV CKT 1	368	368	0.03281	106.1819	GRPRAR1-LNX3345.00 - YANKTON 345KV CKT Z
FDNS	00NR_G15_076	0	20SP	G15_076	TO->FROM	KELLY - MEADOWGROVE4230.00 230KV CKT 1	368	368	0.03226	99.6	GRPRAR1-LNX3345.00 - HOLT.CO3 345.00 345KV CKT 1
FDNS	00NR_G15_076	0	20SP	G15_076	TO->FROM	KELLY - MEADOWGROVE4230.00 230KV CKT 1	368	368	0.03226	99.6	GRPRAR1-LNX3345.00 - YANKTON 345KV CKT Z
FDNS	00NR_G15_076	0	17SP	G15_076	TO->FROM	OGALLALA - SIDNEY 230KV CKT 1	320	320	0.03513	111.7508	SIDNEY - SIDNEY1-LNX3345.00 345KV CKT Z
FDNS	00NR_G15_076	0	17SP	G15_076	TO->FROM	OGALLALA - SIDNEY 230KV CKT 1	320	320	0.03513	111.6882	KEYSTONE - SIDNEY1-LNX3345.00 345KV CKT 1
FDNS	00NR_G15_076	0	20SP	G15_076	TO->FROM	OGALLALA - SIDNEY 230KV CKT 1	320	320	0.03039	100.955	SIDNEY - SIDNEY1-LNX3345.00 345KV CKT Z
FDNS	00NR_G15_076	0	20SP	G15_076	TO->FROM	OGALLALA - SIDNEY 230KV CKT 1	320	320	0.03039	100.9416	KEYSTONE - SIDNEY1-LNX3345.00 345KV CKT 1
FDNS	00NR_G15_076	0	25SP	G15_076	TO->FROM	OGALLALA - SIDNEY 230KV CKT 1	320	320	0.03019	99.8	KEYSTONE - SIDNEY1-LNX3345.00 345KV CKT 1
FDNS	00NR_G15_076	0	25SP	G15_076	TO->FROM	OGALLALA - SIDNEY 230KV CKT 1	320	320	0.03019	99.8	SIDNEY - SIDNEY1-LNX3345.00 345KV CKT Z
FDNS	00NR_G15_076	0	17SP	G15_076	TO->FROM	SIDNEY - SIDNEY TRANSFORMER 230KV CKT 1	400	400	0.03998	111.2727	KEYSTONE - SIDNEY1-LNX3345.00 345KV CKT 1
FDNS	00NR_G15_076	0	17SP	G15_076	TO->FROM	SIDNEY - SIDNEY TRANSFORMER 230KV CKT 1	400	400	0.03998	110.6742	SIDNEY - SIDNEY1-LNX3345.00 345KV CKT Z
FDNS	00NR_G15_076	0	20SP	G15_076	TO->FROM	SIDNEY - SIDNEY TRANSFORMER 230KV CKT 1	400	400	0.03448	101.1137	KEYSTONE - SIDNEY1-LNX3345.00 345KV CKT 1
FDNS	00NR_G15_076	0	20SP	G15_076	TO->FROM	SIDNEY - SIDNEY TRANSFORMER 230KV CKT 1	400	400	0.03448	100.6233	SIDNEY - SIDNEY1-LNX3345.00 345KV CKT Z
FDNS	00NR_G15_076	0	25SP	G15_076	TO->FROM	SIDNEY - SIDNEY TRANSFORMER 230KV CKT 1	400	400	0.03426	99.9	KEYSTONE - SIDNEY1-LNX3345.00 345KV CKT 1
FDNS	00NR_G15_076	2	16WP	G15_076	FROM->TO	BELDEN - HOSKINS 115KV CKT 1	115	115	0.58992	115.3704	BELDEN - TWIN CHURCH 115KV CKT 1
FDNS	00NR_G15_076	2	20WP	G15_076	FROM->TO	BELDEN - HOSKINS 115KV CKT 1	115	115	0.58961	113.6116	BELDEN - TWIN CHURCH 115KV CKT 1
FDNS	00NR_G15_076	2	20SP	G15_076	FROM->TO	BELDEN - HOSKINS 115KV CKT 1	115	115	0.58962	108.1717	BELDEN - TWIN CHURCH 115KV CKT 1
FDNS	00NR_G15_076	2	25SP	G15_076	FROM->TO	BELDEN - HOSKINS 115KV CKT 1	115	115	0.58963	104.8	BELDEN - TWIN CHURCH 115KV CKT 1
FDNS	00NR_G15_076	2	17SP	G15_076	FROM->TO	BELDEN - HOSKINS 115KV CKT 1	115	115	0.58999	99.6	BELDEN - TWIN CHURCH 115KV CKT 1
FDNS	00NR_G15_076	2	16WP	G15_076	FROM->TO	BELDEN - TWIN CHURCH 115KV CKT 1	110	110	0.49677	104.204	BELDEN - HOSKINS 115KV CKT 1
FDNS	00NR_G15_076	2	20WP	G15_076	FROM->TO	BELDEN - TWIN CHURCH 115KV CKT 1	110	110	0.49659	101.9737	BELDEN - HOSKINS 115KV CKT 1
FDNS	00NR_G15_076	2	17SP	G15_076	FROM->TO	GR ISLD-LNX3345.00 - GRAND ISLAND 345KV CKT Z	720	720	0.0452	138.4012	KELLY - MEADOWGROVE4230.00 230KV CKT 1
FDNS	00NR_G15_076	2	17SP	G15_076	FROM->TO	GR ISLD-LNX3345.00 - GRAND ISLAND 345KV CKT Z	720	720	0.04125	138.1405	P12:230:UMZB:# 116 #: ST IN SD. WSG-ST-VH
FDNS	00NR_G15_076	2	17SP	G15_076	FROM->TO	GR ISLD-LNX3345.00 - GRAND ISLAND 345KV CKT Z	720	720	0.04136	137.2019	STORLA - WESSINGTON 230KV CKT 1
FDNS	00NR_G15_076	2	17SP	G15_076	FROM->TO	GR ISLD-LNX3345.00 - GRAND ISLAND 345KV CKT Z	720	720	0.04231	136.2778	WATERTN-LNX3345.00 - WHITE 345KV CKT 1

SOLUTION	GROUP	SCENARIO	SEASON	SOURCE	DIRECTION	MONITORED ELEMENT	RATEA (MVA)	RATEB(MVA)	TDF	TC%LOADING (% MVA)	CONTINGENCY
FDNS	00NR_G15_076	2	17SP	G15_076	FROM->TO	GR ISLD-LNX3345.00 - GRAND ISLAND 345KV CKT Z	720	720	0.04231	136.0107	WATERTN-LNX3345.00 - WATERTOWN 345KV CKT Z
FDNS	00NR_G15_076	2	17SP	G15_076	FROM->TO	GR ISLD-LNX3345.00 - GRAND ISLAND 345KV CKT Z	720	720	0.04231	135.9911	P12:345:UMZW:# 1747 #: WT2 IN SD. WT2-WHT LINE FAULT
FDNS	00NR_G15_076	2	17SP	G15_076	FROM->TO	GR ISLD-LNX3345.00 - GRAND ISLAND 345KV CKT Z	720	720	0.04266	135.9455	G09_001IST 345.00 - WATERTOWN 345KV CKT 1
FDNS	00NR_G15_076	2	17SP	G15_076	FROM->TO	GR ISLD-LNX3345.00 - GRAND ISLAND 345KV CKT Z	720	720	0.04169	135.8435	HANLON - STORLA 230KV CKT 1
FDNS	00NR_G15_076	2	17SP	G15_076	FROM->TO	GR ISLD-LNX3345.00 - GRAND ISLAND 345KV CKT Z	720	720	0.04081	135.4761	FT THOMPSON - LETCHER 230KV CKT 1
FDNS	00NR_G15_076	2	17SP	G15_076	FROM->TO	GR ISLD-LNX3345.00 - GRAND ISLAND 345KV CKT Z	720	720	0.04081	135.4761	FT THOMPSON - LETCHER 230KV CKT 1
FDNS	00NR_G15_076	2	17SP	G15_076	FROM->TO	GR ISLD-LNX3345.00 - GRAND ISLAND 345KV CKT Z	720	720	0.043	134.4657	BUFFALO - JAMESTOWN 345KV CKT 1
FDNS	00NR_G15_076	2	17SP	G15_076	FROM->TO	GR ISLD-LNX3345.00 - GRAND ISLAND 345KV CKT Z	720	720	0.0392	134.24	FT RANDAL - FT THOMPSON 230KV CKT 1
FDNS	00NR_G15_076	2	17SP	G15_076	FROM->TO	GR ISLD-LNX3345.00 - GRAND ISLAND 345KV CKT Z	720	720	0.0392	134.24	FT RANDAL - FT THOMPSON 230KV CKT 1
FDNS	00NR_G15_076	2	17SP	G15_076	FROM->TO	GR ISLD-LNX3345.00 - GRAND ISLAND 345KV CKT Z	720	720	0.0393	134.2137	FT RANDAL - G12_009IST 230.00 230KV CKT 1
FDNS	00NR_G15_076	2	17SP	G15_076	FROM->TO	GR ISLD-LNX3345.00 - GRAND ISLAND 345KV CKT Z	720	720	0.0393	134.1063	FT THOMPSON - LAKE PLATT 230KV CKT 1
FDNS	00NR_G15_076	2	17SP	G15_076	FROM->TO	GR ISLD-LNX3345.00 - GRAND ISLAND 345KV CKT Z	720	720	0.0393	134.1063	FT THOMPSON - LAKE PLATT 230KV CKT 1
FDNS	00NR_G15_076	2	17SP	G15_076	FROM->TO	GR ISLD-LNX3345.00 - GRAND ISLAND 345KV CKT Z	720	720	0.04651	133.8438	NUNDRWD - WAYSIDE 230KV CKT 1
FDNS	00NR_G15_076	2	17SP	G15_076	FROM->TO	GR ISLD-LNX3345.00 - GRAND ISLAND 345KV CKT Z	720	720	0.0393	133.6514	G12_009IST 230.00 - LAKE PLATT 230KV CKT 1
FDNS	00NR_G15_076	2	17SP	G15_076	FROM->TO	GR ISLD-LNX3345.00 - GRAND ISLAND 345KV CKT Z	720	720	0.04279	133.5797	GEN336821 1-GRAND GULF UNIT
FDNS	00NR_G15_076	2	17SP	G15_076	FROM->TO	GR ISLD-LNX3345.00 - GRAND ISLAND 345KV CKT Z	720	720	0.0429	133.4966	CHISAGO COUNTY - FORBES 500KV CKT 1
FDNS	00NR_G15_076	2	17SP	G15_076	FROM->TO	GR ISLD-LNX3345.00 - GRAND ISLAND 345KV CKT Z	720	720	0.0452	133.4302	FT RANDAL - MEADOWGROVE4230.00 230KV CKT 1
FDNS	00NR_G15_076	2	17SP	G15_076	FROM->TO	GR ISLD-LNX3345.00 - GRAND ISLAND 345KV CKT Z	720	720	0.04299	133.3566	CENTER - JAMESTOWN 345KV CKT 1
FDNS	00NR_G15_076	2	17SP	G15_076	FROM->TO	GR ISLD-LNX3345.00 - GRAND ISLAND 345KV CKT Z	720	720	0.04279	133.0819	GEN640010 1-GERALD GENTLEMAN STATION UNIT 1
FDNS	00NR_G15_076	2	17SP	G15_076	FROM->TO	GR ISLD-LNX3345.00 - GRAND ISLAND 345KV CKT Z	720	720	0.04237	133.0571	LETCHER - SIOUX FALLS 230KV CKT 1
FDNS	00NR_G15_076	2	17SP	G15_076	FROM->TO	GR ISLD-LNX3345.00 - GRAND ISLAND 345KV CKT Z	720	720	0.04279	133.0419	GEN344225 1-1CAL G1 25.000
FDNS	00NR_G15_076	2	17SP	G15_076	FROM->TO	GR ISLD-LNX3345.00 - GRAND ISLAND 345KV CKT Z	720	720	0.04266	132.9729	G09_001IST 345.00 - GROTON 345KV CKT 1
FDNS	00NR_G15_076	2	17SP	G15_076	FROM->TO	GR ISLD-LNX3345.00 - GRAND ISLAND 345KV CKT Z	720	720	0.04373	132.9452	KEYSTONE - SIDNEY1-LNX3345.00 345KV CKT 1
FDNS	00NR_G15_076	2	17SP	G15_076	FROM->TO	GR ISLD-LNX3345.00 - GRAND ISLAND 345KV CKT Z	720	720	0.04373	132.902	SIDNEY - SIDNEY1-LNX3345.00 345KV CKT Z
FDNS	00NR_G15_076	2	17SP	G15_076	FROM->TO	GR ISLD-LNX3345.00 - GRAND ISLAND 345KV CKT Z	720	720	0.04279	132.8873	GEN635024 4-WALTER SCOTT UNIT 4
FDNS	00NR_G15_076	2	17SP	G15_076	FROM->TO	GR ISLD-LNX3345.00 - GRAND ISLAND 345KV CKT Z	720	720	0.04294	132.8741	BISON 3 345.00 - BUFFALO 345KV CKT 1
FDNS	00NR_G15_076	2	17SP	G15_076	FROM->TO	GR ISLD-LNX3345.00 - GRAND ISLAND 345KV CKT Z	720	720	0.04279	132.8623	GEN337911 1-ARKANSAS NUCLEAR ONE UNIT #2
FDNS	00NR_G15_076	2	17SP	G15_076	FROM->TO	GR ISLD-LNX3345.00 - GRAND ISLAND 345KV CKT Z	720	720	0.04279	132.8036	GEN336153 1-WATERFORD UNIT#3
FDNS	00NR_G15_076	2	17SP	G15_076	FROM->TO	GR ISLD-LNX3345.00 - GRAND ISLAND 345KV CKT Z	720	720	0.04279	132.6371	GEN640011 2-GERALD GENTLEMAN STATION UNIT 2
FDNS	00NR_G15_076	2	17SP	G15_076	FROM->TO	GR ISLD-LNX3345.00 - GRAND ISLAND 345KV CKT Z	720	720	0.04117	132.4096	SPLIT ROCK - WHITE 345KV CKT 1
FDNS	00NR_G15_076	2	17SP	G15_076	FROM->TO	GR ISLD-LNX3345.00 - GRAND ISLAND 345KV CKT Z	720	720	0.04117	132.4096	SPLIT ROCK - WHITE 345KV CKT 1
FDNS	00NR_G15_076	2	17SP	G15_076	FROM->TO	GR ISLD-LNX3345.00 - GRAND ISLAND 345KV CKT Z	720	720	0.04279	132.3939	GEN635023 3-WALTER SCOTT UNIT 3
FDNS	00NR_G15_076	2	17SP	G15_076	FROM->TO	GR ISLD-LNX3345.00 - GRAND ISLAND 345KV CKT Z	720	720	0.04279	132.3265	GEN335831 1-RIVERBEND UNIT#1
FDNS	00NR_G15_076	2	17SP	G15_076	FROM->TO	GR ISLD-LNX3345.00 - GRAND ISLAND 345KV CKT Z	720	720	0.04263	132.2431	GROTON-LNX3 345.00 - LELAND1-LNX3345.00 345KV CKT 1
FDNS	00NR_G15_076	2	17SP	G15_076	FROM->TO	GR ISLD-LNX3345.00 - GRAND ISLAND 345KV CKT Z	720	720	0.04279	132.231	GEN337910 1-ARKANSAS NUCLEAR ONE UNIT #1
FDNS	00NR_G15_076	2	17SP	G15_076	FROM->TO	GR ISLD-LNX3345.00 - GRAND ISLAND 345KV CKT Z	720	720	0.05076	132.2277	RAUN - SUB 3451 FT CAL 345KV CKT 1
FDNS	00NR_G15_076	2	17SP	G15_076	FROM->TO	GR ISLD-LNX3345.00 - GRAND ISLAND 345KV CKT Z	720	720	0.05076	132.2277	RAUN - SUB 3451 FT CAL 345KV CKT 1
FDNS	00NR_G15_076	2	17SP	G15_076	FROM->TO	GR ISLD-LNX3345.00 - GRAND ISLAND 345KV CKT Z	720	720	0.04263	132.1026	P12:345:UMZB:# 109 #: LOS GRT IN ND. LOS GRT
FDNS	00NR_G15_076	2	17SP	G15_076	FROM->TO	GR ISLD-LNX3345.00 - GRAND ISLAND 345KV CKT Z	720	720	0.04263	132.0818	GROTON - GROTON-LNX3 345.00 345KV CKT Z
FDNS	00NR_G15_076	2	17SP	G15_076	FROM->TO	GR ISLD-LNX3345.00 - GRAND ISLAND 345KV CKT Z	720	720	0.04263	132.0702	LELAND OLDS - LELAND1-LNX3345.00 345KV CKT Z
FDNS	00NR_G15_076	2	17SP	G15_076	FROM->TO	GR ISLD-LNX3345.00 - GRAND ISLAND 345KV CKT Z	720	720	0.04297	132.0269	FT RANDAL - SIOUX CITY 230KV CKT 1
FDNS	00NR_G15_076	2	17SP	G15_076	FROM->TO	GR ISLD-LNX3345.00 - GRAND ISLAND 345KV CKT Z	720	720	0.04358	131.872	ARROWHEAD - ARROWHEAD 230 230KV CKT 1
FDNS	00NR_G15_076	2	17SP	G15_076	FROM->TO	GR ISLD-LNX3345.00 - GRAND ISLAND 345KV CKT Z	720	720	0.04246	131.7762	HANLON - SIOUX FALLS 230KV CKT 1
FDNS	00NR_G15_076	2	17SP	G15_076	FROM->TO	GR ISLD-LNX3345.00 - GRAND ISLAND 345KV CKT Z	720	720	0.03512	131.6722	GRAND ISLAND - SWEETWATER 345KV CKT 1
FDNS	00NR_G15_076	2	17SP	G15_076	FROM->TO	GR ISLD-LNX3345.00 - GRAND ISLAND 345KV CKT Z	720	720	0.04279	131.6025	GEN337653 1-WHITE BLUFF UNIT #2
FDNS	00NR_G15_076	2	17SP	G15_076	FROM->TO	GR ISLD-LNX3345.00 - GRAND ISLAND 345KV CKT Z	720	720	0.04281	131.5993	P12:115:NPPD:1091:VALENTN7:MISSION7:BTB
FDNS	00NR_G15_076	2	17SP	G15_076	FROM->TO	GR ISLD-LNX3345.00 - GRAND ISLAND 345KV CKT Z	720	720	0.04279	131.5904	GEN337652 1-WHITE BLUFF UNIT #1
FDNS	00NR_G15_076	2	17SP	G15_076	FROM->TO	GR ISLD-LNX3345.00 - GRAND ISLAND 345KV CKT Z	720	720	0.04348	131.5435	SIDNEY - STEGALL 345KV CKT 1
FDNS	00NR_G15_076	2	17SP	G15_076	FROM->TO	GR ISLD-LNX3345.00 - GRAND ISLAND 345KV CKT Z	720	720	0.0413	131.5364	SIOUXCY-LNX3345.00 - SPLIT ROCK 345KV CKT 1
FDNS	00NR_G15_076	2	17SP	G15_076	FROM->TO	GR ISLD-LNX3345.00 - GRAND ISLAND 345KV CKT Z	720	720	0.0413	131.5364	SIOUXCY-LNX3345.00 - SPLIT ROCK 345KV CKT 1
FDNS	00NR_G15_076	2	17SP	G15_076	FROM->TO	GR ISLD-LNX3345.00 - GRAND ISLAND 345KV CKT Z	720	720	0.04279	131.5178	GEN338146 1-INDEPENDENCE UNIT #2
FDNS	00NR_G15_076	2	17SP	G15_076	FROM->TO	GR ISLD-LNX3345.00 - GRAND ISLAND 345KV CKT Z	720	720	0.04448	131.5131	HAZLETON - MITCHLCO3 345.00 345KV CKT 1
FDNS	00NR_G15_076	2	17SP	G15_076	FROM->TO	GR ISLD-LNX3345.00 - GRAND ISLAND 345KV CKT Z	720	720	0.04279	131.5099	GEN338143 1-INDEPENDENCE UNIT #1
FDNS	00NR_G15_076	2	17SP	G15_076	FROM->TO	GR ISLD-LNX3345.00 - GRAND ISLAND 345KV CKT Z	720	720	0.0413	131.5034	P12:345:UMZW:# 907 #: SC2-SR IN IA. SC2-SR 345 KV LINE
FDNS	00NR_G15_076	2	17SP	G15_076	FROM->TO	GR ISLD-LNX3345.00 - GRAND ISLAND 345KV CKT Z	720	720	0.04281	131.4655	MISSION - ST FRANCIS 115KV CKT 1
FDNS	00NR_G15_076	2	17SP	G15_076	FROM->TO	GR ISLD-LNX3345.00 - GRAND ISLAND 345KV CKT Z	720	720	0.0413	131.4602	SIOUX CITY - SIOUXCY-LNX3345.00 345KV CKT Z
FDNS	00NR_G15_076	2	17SP	G15_076	FROM->TO	GR ISLD-LNX3345.00 - GRAND ISLAND 345KV CKT Z	720	720	0.04279	131.4473	GEN501801 1-DOLET HILLS UNIT1
FDNS	00NR_G15_076	2	17SP	G15_076	FROM->TO	GR ISLD-LNX3345.00 - GRAND ISLAND 345KV CKT Z	720	720	0.04286	131.4124	ELLENDALE - OAKES 230KV CKT 1
FDNS	00NR_G15_076	2	17SP	G15_076	FROM->TO	GR ISLD-LNX3345.00 - GRAND ISLAND 345KV CKT Z	720	720	0.04286	131.4124	ELLENDALE - OAKES 230KV CKT 1
FDNS	00NR_G15_076	2	17SP	G15_076	FROM->TO	GR ISLD-LNX3345.00 - GRAND ISLAND 345KV CKT Z	720	720	0.04281	131.3708	HARMONY - ST FRANCIS 115KV CKT 1
FDNS	00NR_G15_076	2	17SP	G15_076	FROM->TO	GR ISLD-LNX3345.00 - GRAND ISLAND 345KV CKT Z	720	720	0.04368	131.3279	AS KING - EAU CLAIRE 345KV CKT 1
FDNS	00NR_G15_076	2	17SP	G15_076	FROM->TO	GR ISLD-LNX3345.00 - GRAND ISLAND 345KV CKT Z	720	720	0.04091	131.3228	FT RANDAL - UTICA JCT 230KV CKT 1
FDNS	00NR_G15_076	2	17SP	G15_076	FROM->TO	GR ISLD-LNX3345.00 - GRAND ISLAND 345KV CKT Z	720	720	0.04286	131.3215	FORMAN - OAKES 230KV CKT 1
FDNS	00NR_G15_076	2	17SP	G15_076	FROM->TO	GR ISLD-LNX3345.00 - GRAND ISLAND 345KV CKT Z	720	720	0.04325	131.3118	CARPENTER - HURON 230KV CKT 1
FDNS	00NR_G15_076	2	17SP	G15_076	FROM->TO	GR ISLD-LNX3345.00 - GRAND ISLAND 345KV CKT Z	720	720	0.04309	131.3011	ALEXMRES3 345.00 - BISON 3 345.00 345KV CKT 1
FDNS	00NR_G15_076	2	17SP	G15_076	FROM->TO	GR ISLD-LNX3345.00 - GRAND ISLAND 345KV CKT Z	720	720	0.04136	131.2579	FT THOMPSON - WESSINGTON 230KV CKT 1
FDNS	00NR_G15_076	2	17SP	G15_076	FROM->TO	GR ISLD-LNX3345.00 - GRAND ISLAND 345KV CKT Z	720	720	0.04136	131.2579	FT THOMPSON - WESSINGTON 230KV CKT 1
FDNS	00NR_G15_076	2	17SP	G15_076	FROM->TO	GR ISLD-LNX3345.00 - GRAND ISLAND 345KV CKT Z	720	720	0.04409	131.2191	ARPIN B4 345.00 - EAU CLAIRE 345KV CKT 1
FDNS	00NR_G15_076	2	17SP	G15_076	FROM->TO	GR ISLD-LNX3345.00 - GRAND ISLAND 345KV CKT Z	720	720	0.04325	131.2026	HURON - WATERTOWN 230KV CKT 2
FDNS	00NR_G15_076	2	17SP	G15_076	FROM->TO	GR ISLD-LNX3345.00 - GRAND ISLAND 345KV CKT Z	720	720	0.04325	131.2026	HURON - WATERTOWN 230KV CKT 2
FDNS	00NR_G15_076	2	17SP	G15_076	FROM->TO	GR ISLD-LNX3345.00 - GRAND ISLAND 345KV CKT Z	720	720	0.04274	131.1808	P12:115:NPPD:WAPA6:FTRANDL7:ONEILL 7:BTB
FDNS	00NR_G15_076	2	17SP	G15_076	FROM->TO	GR ISLD-LNX3345.00 - GRAND ISLAND 345KV CKT Z	720	720	0.04274	131.1808	P12:115:UMZB:# 115 #: SE IN NE. FR-SE-ON
FDNS	00NR_G15_076	2	17SP	G15_076	FROM->TO	GR ISLD-LNX3345.00 - GRAND ISLAND 345KV CKT Z	720	720	0.04281	131.1718	HARMONY - VALENTINE 115KV CKT 1

SOLUTION	GROUP	SCENARIO	SEASON	SOURCE	DIRECTION	MONITORED ELEMENT	RATEA (MVA)	RATEB(MVA)	TDF	TC%LOADING (% MVA)	CONTINGENCY
FDNS	00NR_G15_076	2	17SP	G15_076	FROM->TO	GR ISLD-LNX3345.00 - GRAND ISLAND 345KV CKT Z	720	720	0.04274	131.1455	FT RANDAL - SPENCER 115KV CKT 1
FDNS	00NR_G15_076	2	17SP	G15_076	FROM->TO	GR ISLD-LNX3345.00 - GRAND ISLAND 345KV CKT Z	720	720	0.04325	131.145	CARPENTER - WATERTOWN 230KV CKT 1
FDNS	00NR_G15_076	2	17SP	G15_076	FROM->TO	GR ISLD-LNX3345.00 - GRAND ISLAND 345KV CKT Z	720	720	0.04325	131.145	CARPENTER - WATERTOWN 230KV CKT 1
FDNS	00NR_G15_076	2	17SP	G15_076	FROM->TO	GR ISLD-LNX3345.00 - GRAND ISLAND 345KV CKT Z	720	720	0.04249	131.0907	PAHOJA - SIOUX FALLS 230KV CKT 1
FDNS	00NR_G15_076	2	17SP	G15_076	FROM->TO	GR ISLD-LNX3345.00 - GRAND ISLAND 345KV CKT Z	720	720	0.04279	131.0846	GEN336252 1-NINEMILE POINT UNIT#5
FDNS	00NR_G15_076	2	17SP	G15_076	FROM->TO	GR ISLD-LNX3345.00 - GRAND ISLAND 345KV CKT Z	720	720	0.04274	131.045	ONEILL - SPENCER 115KV CKT 1
FDNS	00NR_G15_076	2	17SP	G15_076	FROM->TO	GR ISLD-LNX3345.00 - GRAND ISLAND 345KV CKT Z	720	720	0.04279	131.0407	GEN501813 1-RODEMACHER UNIT 3
FDNS	00NR_G15_076	2	17SP	G15_076	FROM->TO	GR ISLD-LNX3345.00 - GRAND ISLAND 345KV CKT Z	720	720	0.04279	130.9407	GEN336831 1-BAXTER WILSON SES
FDNS	00NR_G15_076	2	17SP	G15_076	FROM->TO	GR ISLD-LNX3345.00 - GRAND ISLAND 345KV CKT Z	720	720	0.04279	130.9273	GEN336251 1-NINEMILE POINT UNIT#4
FDNS	00NR_G15_076	2	17SP	G15_076	FROM->TO	GR ISLD-LNX3345.00 - GRAND ISLAND 345KV CKT Z	720	720	0.04279	130.8915	GEN641089 2-ENERGY CENTER 2
FDNS	00NR_G15_076	2	17SP	G15_076	FROM->TO	GR ISLD-LNX3345.00 - GRAND ISLAND 345KV CKT Z	720	720	0.04349	130.8884	GERALD GENTLEMAN STATION - KEYSTONE 345KV CKT 1
FDNS	00NR_G15_076	2	17SP	G15_076	FROM->TO	GR ISLD-LNX3345.00 - GRAND ISLAND 345KV CKT Z	720	720	0.04279	130.8498	GEN337041 1-GERALD ANDRUS
FDNS	00NR_G15_076	2	17SP	G15_076	FROM->TO	GR ISLD-LNX3345.00 - GRAND ISLAND 345KV CKT Z	720	720	0.04288	130.8433	CNTSHNT3 345.00 - PRAIRIE3 345.00 345KV CKT 1
FDNS	00NR_G15_076	2	17SP	G15_076	FROM->TO	GR ISLD-LNX3345.00 - GRAND ISLAND 345KV CKT Z	720	720	0.04279	130.8315	GEN335206 1-NELSON UNIT 6
FDNS	00NR_G15_076	2	17SP	G15_076	FROM->TO	GR ISLD-LNX3345.00 - GRAND ISLAND 345KV CKT Z	720	720	0.04279	130.8214	GEN344897 4-1LAB G4 20.000
FDNS	00NR_G15_076	2	17SP	G15_076	FROM->TO	GR ISLD-LNX3345.00 - GRAND ISLAND 345KV CKT Z	720	720	0.04279	130.8181	GEN344894 1-1LAB G1 20.000
FDNS	00NR_G15_076	2	17SP	G15_076	FROM->TO	GR ISLD-LNX3345.00 - GRAND ISLAND 345KV CKT Z	720	720	0.04279	130.8179	GEN344896 3-1LAB G3 20.000
FDNS	00NR_G15_076	2	17SP	G15_076	FROM->TO	GR ISLD-LNX3345.00 - GRAND ISLAND 345KV CKT Z	720	720	0.0429	130.7903	FORMAN - HANKINSON 230KV CKT 1
FDNS	00NR_G15_076	2	17SP	G15_076	FROM->TO	GR ISLD-LNX3345.00 - GRAND ISLAND 345KV CKT Z	720	720	0.04281	130.7637	AINSWORTH - VALENTINE 115KV CKT 1
FDNS	00NR_G15_076	2	17SP	G15_076	FROM->TO	GR ISLD-LNX3345.00 - GRAND ISLAND 345KV CKT Z	720	720	0.04279	130.7577	GEN344895 2-1LAB G2 20.000
FDNS	00NR_G15_076	2	17SP	G15_076	FROM->TO	GR ISLD-LNX3345.00 - GRAND ISLAND 345KV CKT Z	720	720	0.04279	130.7333	GEN345670 1-1RUSH G1 18.000
FDNS	00NR_G15_076	2	17SP	G15_076	FROM->TO	GR ISLD-LNX3345.00 - GRAND ISLAND 345KV CKT Z	720	720	0.04279	130.7332	GEN345671 2-1RUSH G2 18.000
FDNS	00NR_G15_076	2	17SP	G15_076	FROM->TO	GR ISLD-LNX3345.00 - GRAND ISLAND 345KV CKT Z	720	720	0.04249	130.7258	EAGLE 4 230.00 - PAHOJA 230KV CKT 1
FDNS	00NR_G15_076	2	17SP	G15_076	FROM->TO	GR ISLD-LNX3345.00 - GRAND ISLAND 345KV CKT Z	720	720	0.04443	130.7114	RASMUSN - UTICA JCT 230KV CKT 1
FDNS	00NR_G15_076	2	17SP	G15_076	FROM->TO	GR ISLD-LNX3345.00 - GRAND ISLAND 345KV CKT Z	720	720	0.04279	130.6716	GEN501812 1-RODEMACHER UNIT 2
FDNS	00NR_G15_076	2	17SP	G15_076	FROM->TO	GR ISLD-LNX3345.00 - GRAND ISLAND 345KV CKT Z	720	720	0.04448	130.6657	ADAMS - MITCHLCO3 345.00 345KV CKT 1
FDNS	00NR_G15_076	2	17SP	G15_076	FROM->TO	GR ISLD-LNX3345.00 - GRAND ISLAND 345KV CKT Z	720	720	0.04279	130.6493	GEN334440 1-SABINE UNIT 4
FDNS	00NR_G15_076	2	17SP	G15_076	FROM->TO	GR ISLD-LNX3345.00 - GRAND ISLAND 345KV CKT Z	720	720	0.04394	130.5329	ADAMS - PLEASANT VALLEY 345KV CKT 1
FDNS	00NR_G15_076	2	17SP	G15_076	FROM->TO	GR ISLD-LNX3345.00 - GRAND ISLAND 345KV CKT Z	720	720	0.04279	130.4949	GEN336191 1-LITTLE GYPSY UNIT#3
FDNS	00NR_G15_076	2	17SP	G15_076	FROM->TO	GR ISLD-LNX3345.00 - GRAND ISLAND 345KV CKT Z	720	720	0.04443	130.4886	RASMUSN - SIOUX CITY 230KV CKT 1
FDNS	00NR_G15_076	2	17SP	G15_076	FROM->TO	GR ISLD-LNX3345.00 - GRAND ISLAND 345KV CKT Z	720	720	0.04279	130.4288	GEN338388 1-1PLUM PT U1 23.000
FDNS	00NR_G15_076	2	17SP	G15_076	FROM->TO	GR ISLD-LNX3345.00 - GRAND ISLAND 345KV CKT Z	720	720	0.0454	130.3982	GRIMES - LEHIGH 345KV CKT 1
FDNS	00NR_G15_076	2	17SP	G15_076	FROM->TO	GR ISLD-LNX3345.00 - GRAND ISLAND 345KV CKT Z	720	720	0.04279	130.396	GEN336801 1-BAXTER WILSON UNIT #1
FDNS	00NR_G15_076	2	17SP	G15_076	FROM->TO	GR ISLD-LNX3345.00 - GRAND ISLAND 345KV CKT Z	720	720	0.04279	130.3856	GEN335614 1-WILLOW GLENN UNIT#4
FDNS	00NR_G15_076	2	17SP	G15_076	FROM->TO	GR ISLD-LNX3345.00 - GRAND ISLAND 345KV CKT Z	720	720	0.04279	130.3776	GEN334441 1-SABINE UNIT 5
FDNS	00NR_G15_076	2	17SP	G15_076	FROM->TO	GR ISLD-LNX3345.00 - GRAND ISLAND 345KV CKT Z	720	720	0.04279	130.37	GEN336464 1-MICHOUD UNIT #3
FDNS	00NR_G15_076	2	17SP	G15_076	FROM->TO	GR ISLD-LNX3345.00 - GRAND ISLAND 345KV CKT Z	720	720	0.04279	130.3564	GEN335204 1-NELSON UNIT 4
FDNS	00NR_G15_076	2	17SP	G15_076	FROM->TO	GR ISLD-LNX3345.00 - GRAND ISLAND 345KV CKT Z	720	720	0.04235	130.3521	GERALD GENTLEMAN STATION - SWEETWATER 345KV CKT 2
FDNS	00NR_G15_076	2	17SP	G15_076	FROM->TO	GR ISLD-LNX3345.00 - GRAND ISLAND 345KV CKT Z	720	720	0.04414	130.3464	LAKEFIELD 3 - NOBLES 345KV CKT 1
FDNS	00NR_G15_076	2	17SP	G15_076	FROM->TO	GR ISLD-LNX3345.00 - GRAND ISLAND 345KV CKT Z	720	720	0.04348	130.2776	BROOKING COUNTY - LYON COUNTY 345KV CKT 1
FDNS	00NR_G15_076	2	17SP	G15_076	FROM->TO	GR ISLD-LNX3345.00 - GRAND ISLAND 345KV CKT Z	720	720	0.04319	130.2648	FT THOMPSON - HURON 230KV CKT 1
FDNS	00NR_G15_076	2	17SP	G15_076	FROM->TO	GR ISLD-LNX3345.00 - GRAND ISLAND 345KV CKT Z	720	720	0.04319	130.2648	FT THOMPSON - HURON 230KV CKT 1
FDNS	00NR_G15_076	2	17SP	G15_076	FROM->TO	GR ISLD-LNX3345.00 - GRAND ISLAND 345KV CKT Z	720	720	0.04319	130.2648	FT THOMPSON - HURON 230KV CKT 2
FDNS	00NR_G15_076	2	17SP	G15_076	FROM->TO	GR ISLD-LNX3345.00 - GRAND ISLAND 345KV CKT Z	720	720	0.04319	130.2648	FT THOMPSON - HURON 230KV CKT 2
FDNS	00NR_G15_076	2	17SP	G15_076	FROM->TO	GR ISLD-LNX3345.00 - GRAND ISLAND 345KV CKT Z	720	720	0.04369	130.2611	KOSSUTH 3 345.00 - WEBSTER 345KV CKT 1
FDNS	00NR_G15_076	2	17SP	G15_076	FROM->TO	GR ISLD-LNX3345.00 - GRAND ISLAND 345KV CKT Z	720	720	0.04293	130.2515	LARAMIE RIVER - SIDNEY2-LNX3345.00 345KV CKT 1
FDNS	00NR_G15_076	2	17SP	G15_076	FROM->TO	GR ISLD-LNX3345.00 - GRAND ISLAND 345KV CKT Z	720	720	0.04369	130.25	KOSSUTH 3 345.00 - OBRIEN 3 345.00 345KV CKT 1
FDNS	00NR_G15_076	2	17SP	G15_076	FROM->TO	GR ISLD-LNX3345.00 - GRAND ISLAND 345KV CKT Z	720	720	0.04293	130.2251	SIDNEY - SIDNEY2-LNX3345.00 345KV CKT Z
FDNS	00NR_G15_076	2	17SP	G15_076	FROM->TO	GR ISLD-LNX3345.00 - GRAND ISLAND 345KV CKT Z	720	720	0.04417	130.2141	STEGALL - STEGALL TRANSFORMER 230KV CKT 1
FDNS	00NR_G15_076	2	17SP	G15_076	FROM->TO	GR ISLD-LNX3345.00 - GRAND ISLAND 345KV CKT Z	720	720	0.04279	130.2067	GEN334433 1-SABINE UNIT 3
FDNS	00NR_G15_076	2	17SP	G15_076	FROM->TO	GR ISLD-LNX3345.00 - GRAND ISLAND 345KV CKT Z	720	720	0.04294	130.1998	BLAIR - GRANITE FALLS 230KV CKT 1
FDNS	00NR_G15_076	2	17SP	G15_076	FROM->TO	GR ISLD-LNX3345.00 - GRAND ISLAND 345KV CKT Z	720	720	0.04294	130.1998	BLAIR - GRANITE FALLS 230KV CKT 1
FDNS	00NR_G15_076	2	17SP	G15_076	FROM->TO	GR ISLD-LNX3345.00 - GRAND ISLAND 345KV CKT Z	720	720	0.04417	130.1952	P13:230-345:NPPD:STEGALL3:KV3A
FDNS	00NR_G15_076	2	17SP	G15_076	FROM->TO	GR ISLD-LNX3345.00 - GRAND ISLAND 345KV CKT Z	720	720	0.04417	130.1943	STEGALL (SGQ KV3A) 345/230/13.8KV TRANSFORMER CKT 1
FDNS	00NR_G15_076	2	17SP	G15_076	FROM->TO	GR ISLD-LNX3345.00 - GRAND ISLAND 345KV CKT Z	720	720	0.04249	130.1883	CROOKED CREEK - NORTH PLATTE 230KV CKT 1
FDNS	00NR_G15_076	2	17SP	G15_076	FROM->TO	GR ISLD-LNX3345.00 - GRAND ISLAND 345KV CKT Z	720	720	0.04282	130.1879	CENTER - COYOTE 345KV CKT 1
FDNS	00NR_G15_076	2	17SP	G15_076	FROM->TO	GR ISLD-LNX3345.00 - GRAND ISLAND 345KV CKT Z	720	720	0.04315	130.1617	ALEXMRES3 345.00 - WAITE PARK 345KV CKT 1
FDNS	00NR_G15_076	2	17SP	G15_076	FROM->TO	GR ISLD-LNX3345.00 - GRAND ISLAND 345KV CKT Z	720	720	0.04279	130.1591	P12:115:UMZW:# 162 #: NEL IN ND. FAULT ON ML-NEL-MX-GA 115 KV
FDNS	00NR_G15_076	2	17SP	G15_076	FROM->TO	GR ISLD-LNX3345.00 - GRAND ISLAND 345KV CKT Z	720	720	0.04134	130.1573	MENNO JCT - TRIPP JCT 115KV CKT 1
FDNS	00NR_G15_076	2	17SP	G15_076	FROM->TO	GR ISLD-LNX3345.00 - GRAND ISLAND 345KV CKT Z	720	720	0.04279	130.1426	GEN336222 1-LITTLE GYPSY UNIT#2
FDNS	00NR_G15_076	2	17SP	G15_076	FROM->TO	GR ISLD-LNX3345.00 - GRAND ISLAND 345KV CKT Z	720	720	0.04279	130.1419	GEN629075 1-OTTUMWA GENERATOR FOR OTTUMWA UNIT NO 1
FDNS	00NR_G15_076	2	17SP	G15_076	FROM->TO	GR ISLD-LNX3345.00 - GRAND ISLAND 345KV CKT Z	720	720	0.04279	130.1411	GEN531447 1-HOLCOMB GENERATOR
FDNS	00NR_G15_076	2	17SP	G15_076	FROM->TO	GR ISLD-LNX3345.00 - GRAND ISLAND 345KV CKT Z	720	720	0.04503	130.1365	STEGALL-LNX3230.00 - WAYSIDE 230KV CKT 1
FDNS	00NR_G15_076	2	17SP	G15_076	FROM->TO	GR ISLD-LNX3345.00 - GRAND ISLAND 345KV CKT Z	720	720	0.04503	130.1232	STEGALL - STEGALL-LNX3230.00 230KV CKT Z
FDNS	00NR_G15_076	2	17SP	G15_076	FROM->TO	GR ISLD-LNX3345.00 - GRAND ISLAND 345KV CKT Z	720	720	0.04279	130.1209	GEN303007 1-1BC2 U2
FDNS	00NR_G15_076	2	17SP	G15_076	FROM->TO	GR ISLD-LNX3345.00 - GRAND ISLAND 345KV CKT Z	720	720	0.04279	130.1171	GEN303006 1-1BC2 U1
FDNS	00NR_G15_076	2	17SP	G15_076	FROM->TO	GR ISLD-LNX3345.00 - GRAND ISLAND 345KV CKT Z	720	720	0.04616	130.0935	RAUN - SIOUX CITY 345KV CKT 1
FDNS	00NR_G15_076	2	17SP	G15_076	FROM->TO	GR ISLD-LNX3345.00 - GRAND ISLAND 345KV CKT Z	720	720	0.04616	130.0935	RAUN - SIOUX CITY 345KV CKT 1
FDNS	00NR_G15_076	2	17SP	G15_076	FROM->TO	GR ISLD-LNX3345.00 - GRAND ISLAND 345KV CKT Z	720	720	0.04279	130.0627	GEN336152 1-WATERFORD UNIT#2
FDNS	00NR_G15_076	2	17SP	G15_076	FROM->TO	GR ISLD-LNX3345.00 - GRAND ISLAND 345KV CKT Z	720	720	0.04279	130.0622	GEN336151 1-WATERFORD UNIT#1
FDNS	00NR_G15_076	2	17SP	G15_076	FROM->TO	GR ISLD-LNX3345.00 - GRAND ISLAND 345KV CKT Z	720	720	0.04302	130.06	GLENBORO SOUTH - RUGBY 230KV CKT 1
FDNS	00NR_G15_076	2	17SP	G15_076	FROM->TO	GR ISLD-LNX3345.00 - GRAND ISLAND 345KV CKT Z	720	720	0.04279	130.038	GEN303008 1-1BC2 U3
FDNS	00NR_G15_076	2	17SP	G15_076	FROM->TO	GR ISLD-LNX3345.00 - GRAND ISLAND 345KV CKT Z	720	720	0.04284	130.0356	GARRISON - JAMES TOWN 230KV CKT 1

SOLUTION	GROUP	SCENARIO	SEASON	SOURCE	DIRECTION	MONITORED ELEMENT	RATEA (MVA)	RATEB(MVA)	TDF	TC%LOADING (% MVA)	CONTINGENCY
FDNS	00NR_G15_076	2	17SP	G15_076	FROM->TO	GR ISLD-LNX3345.00 - GRAND ISLAND 345KV CKT Z	720	720	0.04279	130.0341	GEN336170 1-GULF OXY U4
FDNS	00NR_G15_076	2	17SP	G15_076	FROM->TO	GR ISLD-LNX3345.00 - GRAND ISLAND 345KV CKT Z	720	720	0.04293	130.0287	HANKINSON - WAHPETON 230KV CKT 1
FDNS	00NR_G15_076	2	17SP	G15_076	FROM->TO	GR ISLD-LNX3345.00 - GRAND ISLAND 345KV CKT Z	720	720	0.0436	129.9952	BYRON - NORTH ROCHESTER 345KV CKT 1
FDNS	00NR_G15_076	2	17SP	G15_076	FROM->TO	GR ISLD-LNX3345.00 - GRAND ISLAND 345KV CKT Z	720	720	0.04388	129.9916	ARKANSAS NUCLEAR ONE - FT SMITH 500KV CKT 1
FDNS	00NR_G15_076	2	17SP	G15_076	FROM->TO	GR ISLD-LNX3345.00 - GRAND ISLAND 345KV CKT Z	720	720	0.04388	129.9916	ARKANSAS NUCLEAR ONE - FT SMITH 500KV CKT 1
FDNS	00NR_G15_076	2	17SP	G15_076	FROM->TO	GR ISLD-LNX3345.00 - GRAND ISLAND 345KV CKT Z	720	720	0.04193	129.9524	P12:115:NPPD:1164:ONEILL 7:JEFFREY9:BTB
FDNS	00NR_G15_076	2	17SP	G15_076	FROM->TO	GR ISLD-LNX3345.00 - GRAND ISLAND 345KV CKT Z	720	720	0.04134	129.9456	MENNO JCT - UTICA 115KV CKT 1
FDNS	00NR_G15_076	2	17SP	G15_076	FROM->TO	GR ISLD-LNX3345.00 - GRAND ISLAND 345KV CKT Z	720	720	0.04279	129.9282	P13:230:UMZW:# 2218 #: FP IN MT. LOSS OF TRANSFORMER (AT2).
FDNS	00NR_G15_076	2	17SP	G15_076	FROM->TO	GR ISLD-LNX3345.00 - GRAND ISLAND 345KV CKT Z	720	720	0.03092	129.9253	GAVINS POINT - YANKON JCT 115KV CKT 1
FDNS	00NR_G15_076	2	17SP	G15_076	FROM->TO	GR ISLD-LNX3345.00 - GRAND ISLAND 345KV CKT Z	720	720	0.03092	129.9253	GAVINS POINT - YANKON JCT 115KV CKT 1
FDNS	00NR_G15_076	2	17SP	G15_076	FROM->TO	GR ISLD-LNX3345.00 - GRAND ISLAND 345KV CKT Z	720	720	0.04304	129.9081	APPLEDORN 4 230.00 - WATERTOWN 230KV CKT 1
FDNS	00NR_G15_076	2	17SP	G15_076	FROM->TO	GR ISLD-LNX3345.00 - GRAND ISLAND 345KV CKT Z	720	720	0.04304	129.9081	APPLEDORN 4 230.00 - WATERTOWN 230KV CKT 1
FDNS	00NR_G15_076	2	17SP	G15_076	FROM->TO	GR ISLD-LNX3345.00 - GRAND ISLAND 345KV CKT Z	720	720	0.04134	129.9031	P12:115:UMZZ:# 237 #: MEN IN SD. MENNO JUNCTION IS A TAP (UJ-MEN-TP).
FDNS	00NR_G15_076	2	17SP	G15_076	FROM->TO	GR ISLD-LNX3345.00 - GRAND ISLAND 345KV CKT Z	720	720	0.04311	129.8912	NORTH ROCHESTER - PRAIRIE ISLAND 345KV CKT 1
FDNS	00NR_G15_076	2	17SP	G15_076	FROM->TO	GR ISLD-LNX3345.00 - GRAND ISLAND 345KV CKT Z	720	720	0.04193	129.8871	CLEARWATER - ONEILL 115KV CKT 1
FDNS	00NR_G15_076	2	17SP	G15_076	FROM->TO	GR ISLD-LNX3345.00 - GRAND ISLAND 345KV CKT Z	720	720	0.04279	129.8713	GEN501811 1-RODEMACHER UNIT 1
FDNS	00NR_G15_076	2	17SP	G15_076	FROM->TO	GR ISLD-LNX3345.00 - GRAND ISLAND 345KV CKT Z	720	720	0.04836	129.8111	COLUMEAST - SHELL CREEK 345KV CKT 1
FDNS	00NR_G15_076	2	17SP	G15_076	FROM->TO	GR ISLD-LNX3345.00 - GRAND ISLAND 345KV CKT Z	720	720	0.04171	129.807	LAKEFIELD 3 - LKFLDXL3 345KV CKT 1
FDNS	00NR_G15_076	2	17SP	G15_076	FROM->TO	GR ISLD-LNX3345.00 - GRAND ISLAND 345KV CKT Z	720	720	0.04285	129.7733	FARGO - JAMES TOWN 230KV CKT 1
FDNS	00NR_G15_076	2	17SP	G15_076	FROM->TO	GR ISLD-LNX3345.00 - GRAND ISLAND 345KV CKT Z	720	720	0.04279	129.7729	GEN334071 1-LEWIS CREEK 2
FDNS	00NR_G15_076	2	17SP	G15_076	FROM->TO	GR ISLD-LNX3345.00 - GRAND ISLAND 345KV CKT Z	720	720	0.04279	129.769	GEN337766 1-TRACTEBEL UNIT S1
FDNS	00NR_G15_076	2	17SP	G15_076	FROM->TO	GR ISLD-LNX3345.00 - GRAND ISLAND 345KV CKT Z	720	720	0.04279	129.7685	P13:230-345:NPPD:NUCOR-1
FDNS	00NR_G15_076	2	17SP	G15_076	FROM->TO	GR ISLD-LNX3345.00 - GRAND ISLAND 345KV CKT Z	720	720	0.04279	129.7669	GEN334070 1-LEWIS CREEK 1
FDNS	00NR_G15_076	2	17SP	G15_076	FROM->TO	GR ISLD-LNX3345.00 - GRAND ISLAND 345KV CKT Z	720	720	0.04304	129.7614	APPLEDORN 4 230.00 - GRANITE FALLS 230KV CKT 1
FDNS	00NR_G15_076	2	17SP	G15_076	FROM->TO	GR ISLD-LNX3345.00 - GRAND ISLAND 345KV CKT Z	720	720	0.04304	129.7614	APPLEDORN 4 230.00 - GRANITE FALLS 230KV CKT 1
FDNS	00NR_G15_076	2	17SP	G15_076	FROM->TO	GR ISLD-LNX3345.00 - GRAND ISLAND 345KV CKT Z	720	720	0.04291	129.7554	FERGSFL4 230.00 - WAHPETON 230KV CKT 1
FDNS	00NR_G15_076	2	17SP	G15_076	FROM->TO	GR ISLD-LNX3345.00 - GRAND ISLAND 345KV CKT Z	720	720	0.04285	129.7509	FARGO - JAMES TOWN 230KV CKT 2
FDNS	00NR_G15_076	2	17SP	G15_076	FROM->TO	GR ISLD-LNX3345.00 - GRAND ISLAND 345KV CKT Z	720	720	0.04401	129.7413	DENISON - SIOUX CITY 230KV CKT 1
FDNS	00NR_G15_076	2	17SP	G15_076	FROM->TO	GR ISLD-LNX3345.00 - GRAND ISLAND 345KV CKT Z	720	720	0.04279	129.7397	P13:115-230:NPPD:NUCOR-3
FDNS	00NR_G15_076	2	17SP	G15_076	FROM->TO	GR ISLD-LNX3345.00 - GRAND ISLAND 345KV CKT Z	720	720	0.04279	129.7259	GEN501910 1-ACADIA UNIT ST1
FDNS	00NR_G15_076	2	17SP	G15_076	FROM->TO	GR ISLD-LNX3345.00 - GRAND ISLAND 345KV CKT Z	720	720	0.04237	129.7114	CROOKED CREEK - RIVERDALE 230KV CKT 1
FDNS	00NR_G15_076	2	17SP	G15_076	FROM->TO	GR ISLD-LNX3345.00 - GRAND ISLAND 345KV CKT Z	720	720	0.04285	129.7059	BISMARK - JAMES TOWN 230KV CKT 1
FDNS	00NR_G15_076	2	17SP	G15_076	FROM->TO	GR ISLD-LNX3345.00 - GRAND ISLAND 345KV CKT Z	720	720	0.04285	129.6984	BISMARK - WEBER 230KV CKT 1
FDNS	00NR_G15_076	2	17SP	G15_076	FROM->TO	GR ISLD-LNX3345.00 - GRAND ISLAND 345KV CKT Z	720	720	0.0429	129.6879	SIDNEY - SIDNEY TRANSFORMER 230KV CKT 1
FDNS	00NR_G15_076	2	17SP	G15_076	FROM->TO	GR ISLD-LNX3345.00 - GRAND ISLAND 345KV CKT Z	720	720	0.04285	129.6831	JAMES TOWN - WEBER 230KV CKT 1
FDNS	00NR_G15_076	2	17SP	G15_076	FROM->TO	GR ISLD-LNX3345.00 - GRAND ISLAND 345KV CKT Z	720	720	0.04279	129.6783	GEN525561 1-TOLK GEN #1 24 KV
FDNS	00NR_G15_076	2	17SP	G15_076	FROM->TO	GR ISLD-LNX3345.00 - GRAND ISLAND 345KV CKT Z	720	720	0.0429	129.6781	P13:115-230:TSGT:SIDNEY-KV1A
FDNS	00NR_G15_076	2	17SP	G15_076	FROM->TO	GR ISLD-LNX3345.00 - GRAND ISLAND 345KV CKT Z	720	720	0.04361	129.6723	BYRON - PLEASANT VALLEY 345KV CKT 1
FDNS	00NR_G15_076	2	17SP	G15_076	FROM->TO	GR ISLD-LNX3345.00 - GRAND ISLAND 345KV CKT Z	720	720	0.0429	129.6718	P13:230-345:NPPD:SIDNEY 3:KV2A
FDNS	00NR_G15_076	2	17SP	G15_076	FROM->TO	GR ISLD-LNX3345.00 - GRAND ISLAND 345KV CKT Z	720	720	0.0429	129.6714	SIDNEY (SDQ KV2A) 345/230/13.8KV TRANSFORMER CKT 1
FDNS	00NR_G15_076	2	17SP	G15_076	FROM->TO	GR ISLD-LNX3345.00 - GRAND ISLAND 345KV CKT Z	720	720	0.04279	129.6701	GEN525562 1-TOLK GEN #2 24 KV
FDNS	00NR_G15_076	2	17SP	G15_076	FROM->TO	GR ISLD-LNX3345.00 - GRAND ISLAND 345KV CKT Z	720	720	0.04279	129.6645	GEN345765 H-1SIOUX 2 18.000
FDNS	00NR_G15_076	2	17SP	G15_076	FROM->TO	GR ISLD-LNX3345.00 - GRAND ISLAND 345KV CKT Z	720	720	0.04226	129.6562	MT VERN - STORLA 115KV CKT 1
FDNS	00NR_G15_076	2	17SP	G15_076	FROM->TO	GR ISLD-LNX3345.00 - GRAND ISLAND 345KV CKT Z	720	720	0.04279	129.6492	GEN337764 1-TRACTEBEL UNIT C1
FDNS	00NR_G15_076	2	17SP	G15_076	FROM->TO	GR ISLD-LNX3345.00 - GRAND ISLAND 345KV CKT Z	720	720	0.04279	129.6492	GEN337765 1-TRACTEBEL UNIT C2
FDNS	00NR_G15_076	2	17SP	G15_076	FROM->TO	GR ISLD-LNX3345.00 - GRAND ISLAND 345KV CKT Z	720	720	0.04279	129.6477	P13:115-345:NPPD:NUCOR-2
FDNS	00NR_G15_076	2	17SP	G15_076	FROM->TO	GR ISLD-LNX3345.00 - GRAND ISLAND 345KV CKT Z	720	720	0.04306	129.646	P12:115:NPPD:WAPA1:CHADRON7:BOXBUTE7:BTB
FDNS	00NR_G15_076	2	17SP	G15_076	FROM->TO	GR ISLD-LNX3345.00 - GRAND ISLAND 345KV CKT Z	720	720	0.04279	129.6439	PRAIRIE ISLAND 345/20.0KV TRANSFORMER CKT 1
FDNS	00NR_G15_076	2	17SP	G15_076	FROM->TO	GR ISLD-LNX3345.00 - GRAND ISLAND 345KV CKT Z	720	720	0.04279	129.6432	PRAIRIE ISLAND 345/20.0KV TRANSFORMER CKT 2
FDNS	00NR_G15_076	2	17SP	G15_076	FROM->TO	GR ISLD-LNX3345.00 - GRAND ISLAND 345KV CKT Z	720	720	0.04193	129.6391	CLEARWATER - NELIGH 115KV CKT 1
FDNS	00NR_G15_076	2	17SP	G15_076	FROM->TO	GR ISLD-LNX3345.00 - GRAND ISLAND 345KV CKT Z	720	720	0.04281	129.6356	BALTA - RAMSEY 230KV CKT 1
FDNS	00NR_G15_076	2	17SP	G15_076	FROM->TO	GR ISLD-LNX3345.00 - GRAND ISLAND 345KV CKT Z	720	720	0.03719	129.6304	P12:115:UMZW:# 1910 #: YJ IN SD. YJ-UJ LINE FAULT
FDNS	00NR_G15_076	2	17SP	G15_076	FROM->TO	GR ISLD-LNX3345.00 - GRAND ISLAND 345KV CKT Z	720	720	0.03719	129.63	NAPA JCT7 115.00 - UTICA 115KV CKT 1
FDNS	00NR_G15_076	2	17SP	G15_076	FROM->TO	GR ISLD-LNX3345.00 - GRAND ISLAND 345KV CKT Z	720	720	0.03719	129.63	NAPA JCT7 115.00 - UTICA 115KV CKT 1
FDNS	00NR_G15_076	2	17SP	G15_076	FROM->TO	GR ISLD-LNX3345.00 - GRAND ISLAND 345KV CKT Z	720	720	0.03719	129.6259	NAPA JCT7 115.00 - YANKON JCT 115KV CKT 1
FDNS	00NR_G15_076	2	17SP	G15_076	FROM->TO	GR ISLD-LNX3345.00 - GRAND ISLAND 345KV CKT Z	720	720	0.03719	129.6259	NAPA JCT7 115.00 - YANKON JCT 115KV CKT 1
FDNS	00NR_G15_076	2	17SP	G15_076	FROM->TO	GR ISLD-LNX3345.00 - GRAND ISLAND 345KV CKT Z	720	720	0.04279	129.6183	ELM CREEK - MONTICELLO 345KV CKT 1
FDNS	00NR_G15_076	2	17SP	G15_076	FROM->TO	GR ISLD-LNX3345.00 - GRAND ISLAND 345KV CKT Z	720	720	0.04279	129.617	GEN345756 H-1SIOUX 1 18.000
FDNS	00NR_G15_076	2	17SP	G15_076	FROM->TO	GR ISLD-LNX3345.00 - GRAND ISLAND 345KV CKT Z	720	720	0.04598	129.6123	BLOOMFIELD - CREIGHTON 115KV CKT 1
FDNS	00NR_G15_076	2	17SP	G15_076	FROM->TO	GR ISLD-LNX3345.00 - GRAND ISLAND 345KV CKT Z	720	720	0.04279	129.6106	GEN336221 1-LITTLE GYPSY UNIT#1
FDNS	00NR_G15_076	2	17SP	G15_076	FROM->TO	GR ISLD-LNX3345.00 - GRAND ISLAND 345KV CKT Z	720	720	0.04275	129.6081	DKSN_CO5 161.00 - TRIBOJI NO1 + NO2 161KV CKT 1
FDNS	00NR_G15_076	2	17SP	G15_076	FROM->TO	GR ISLD-LNX3345.00 - GRAND ISLAND 345KV CKT Z	720	720	0.04279	129.6058	GRAND GULF 500/22.0KV TRANSFORMER CKT 1
FDNS	00NR_G15_076	2	17SP	G15_076	FROM->TO	GR ISLD-LNX3345.00 - GRAND ISLAND 345KV CKT Z	720	720	0.04289	129.6057	FERGSFL4 230.00 - GRE-SILVRLK4230.00 230KV CKT 1
FDNS	00NR_G15_076	2	17SP	G15_076	FROM->TO	GR ISLD-LNX3345.00 - GRAND ISLAND 345KV CKT Z	720	720	0.04598	129.6026	BLOOMFIELD - GAVINS POINT 115KV CKT 1
FDNS	00NR_G15_076	2	17SP	G15_076	FROM->TO	GR ISLD-LNX3345.00 - GRAND ISLAND 345KV CKT Z	720	720	0.04279	129.6009	GEN336242 1-1NMIL ST1 18.000
FDNS	00NR_G15_076	2	17SP	G15_076	FROM->TO	GR ISLD-LNX3345.00 - GRAND ISLAND 345KV CKT Z	720	720	0.04288	129.5994	P13:115-230:NPPD:WAYSIDE4:T1
FDNS	00NR_G15_076	2	17SP	G15_076	FROM->TO	GR ISLD-LNX3345.00 - GRAND ISLAND 345KV CKT Z	720	720	0.04288	129.5993	CHADRON - WAYSIDE 115KV CKT 1
FDNS	00NR_G15_076	2	17SP	G15_076	FROM->TO	GR ISLD-LNX3345.00 - GRAND ISLAND 345KV CKT Z	720	720	0.04279	129.5945	GEN337757 1-DUKE HOTSPRINGS STG1
FDNS	00NR_G15_076	2	17SP	G15_076	FROM->TO	GR ISLD-LNX3345.00 - GRAND ISLAND 345KV CKT Z	720	720	0.04288	129.5926	WAYSIDE (WAYSIDE T1) 230/115/13.8KV TRANSFORMER CKT 1
FDNS	00NR_G15_076	2	17SP	G15_076	FROM->TO	GR ISLD-LNX3345.00 - GRAND ISLAND 345KV CKT Z	720	720	0.04287	129.5913	AUDUBON - SHEYNNE 230KV CKT 1
FDNS	00NR_G15_076	2	17SP	G15_076	FROM->TO	GR ISLD-LNX3345.00 - GRAND ISLAND 345KV CKT Z	720	720	0.04279	129.5896	GEN334432 1-SABINE UNIT 2
FDNS	00NR_G15_076	2	17SP	G15_076	FROM->TO	GR ISLD-LNX3345.00 - GRAND ISLAND 345KV CKT Z	720	720	0.04279	129.5895	GEN334431 1-SABINE UNIT 1
FDNS	00NR_G15_076	2	17SP	G15_076	FROM->TO	GR ISLD-LNX3345.00 - GRAND ISLAND 345KV CKT Z	720	720	0.04146	129.5808	P13:230:UMZW:# 253 #: FR IN SD. LOSS OF TRANSFORMER (E

SOLUTION	GROUP	SCENARIO	SEASON	SOURCE	DIRECTION	MONITORED ELEMENT	RATEA (MVA)	RATEB(MVA)	TDF	TC%LOADING (% MVA)	CONTINGENCY
FDNS	00NR_G15_076	2	17SP	G15_076	FROM->TO	GR ISLD-LNX3345.00 - GRAND ISLAND 345KV CKT Z	720	720	0.0439	129.5773	NOBLES - SPLIT ROCK 345KV CKT 1
FDNS	00NR_G15_076	2	17SP	G15_076	FROM->TO	GR ISLD-LNX3345.00 - GRAND ISLAND 345KV CKT Z	720	720	0.04279	129.5715	GEN659118 1-LARAMIE RIVER UNIT1
FDNS	00NR_G15_076	2	17SP	G15_076	FROM->TO	GR ISLD-LNX3345.00 - GRAND ISLAND 345KV CKT Z	720	720	0.04279	129.5681	GEN336446 1-MICHOUD UNIT #2
FDNS	00NR_G15_076	2	17SP	G15_076	FROM->TO	GR ISLD-LNX3345.00 - GRAND ISLAND 345KV CKT Z	720	720	0.04306	129.5669	CHADRON - DUNLAP 115KV CKT 1
FDNS	00NR_G15_076	2	17SP	G15_076	FROM->TO	GR ISLD-LNX3345.00 - GRAND ISLAND 345KV CKT Z	720	720	0.04289	129.5629	GRE-SILVRLK4230.00 - HENNING 230KV CKT 1
FDNS	00NR_G15_076	2	17SP	G15_076	FROM->TO	GR ISLD-LNX3345.00 - GRAND ISLAND 345KV CKT Z	720	720	0.04279	129.5551	GEN345832 1-1TS G1 13.800
FDNS	00NR_G15_076	2	17SP	G15_076	FROM->TO	GR ISLD-LNX3345.00 - GRAND ISLAND 345KV CKT Z	720	720	0.04279	129.5546	GEN345841 2-1TS G2 13.800
FDNS	00NR_G15_076	2	17SP	G15_076	FROM->TO	GR ISLD-LNX3345.00 - GRAND ISLAND 345KV CKT Z	720	720	0.04274	129.5484	EAGLE - PHILIP 115KV CKT 1
FDNS	00NR_G15_076	2	17SP	G15_076	FROM->TO	GR ISLD-LNX3345.00 - GRAND ISLAND 345KV CKT Z	720	720	0.04279	129.5478	GEN501970 1-EVANGELINE UNIT 7
FDNS	00NR_G15_076	2	17SP	G15_076	FROM->TO	GR ISLD-LNX3345.00 - GRAND ISLAND 345KV CKT Z	720	720	0.04427	129.5427	PALXFRASBTHI
FDNS	00NR_G15_076	2	17SP	G15_076	FROM->TO	GR ISLD-LNX3345.00 - GRAND ISLAND 345KV CKT Z	720	720	0.04303	129.5335	GENOA 161 - SENECA 161 161KV CKT 1
FDNS	00NR_G15_076	2	17SP	G15_076	FROM->TO	GR ISLD-LNX3345.00 - GRAND ISLAND 345KV CKT Z	720	720	0.04279	129.5322	GEN334030 1-FRONTIER UNIT 1
FDNS	00NR_G15_076	2	17SP	G15_076	FROM->TO	GR ISLD-LNX3345.00 - GRAND ISLAND 345KV CKT Z	720	720	0.04279	129.5307	GEN334031 1-FRONTIER UNIT 2
FDNS	00NR_G15_076	2	17SP	G15_076	FROM->TO	GR ISLD-LNX3345.00 - GRAND ISLAND 345KV CKT Z	720	720	0.04279	129.5276	GEN337430 1-PERYVILLE UNIT #3
FDNS	00NR_G15_076	2	17SP	G15_076	FROM->TO	GR ISLD-LNX3345.00 - GRAND ISLAND 345KV CKT Z	720	720	0.04279	129.5273	GEN337428 1-PERYVILLE UNIT #1
FDNS	00NR_G15_076	2	17SP	G15_076	FROM->TO	GR ISLD-LNX3345.00 - GRAND ISLAND 345KV CKT Z	720	720	0.04261	129.5223	OVEXFRMCCOVE
FDNS	00NR_G15_076	2	17SP	G15_076	FROM->TO	GR ISLD-LNX3345.00 - GRAND ISLAND 345KV CKT Z	720	720	0.04428	129.5211	7PALM TAP 345.00 - SUB T 345KV CKT 1
FDNS	00NR_G15_076	2	17SP	G15_076	FROM->TO	GR ISLD-LNX3345.00 - GRAND ISLAND 345KV CKT Z	720	720	0.04274	129.5113	EAGLE - MARTIN 115KV CKT 1
FDNS	00NR_G15_076	2	17SP	G15_076	FROM->TO	GR ISLD-LNX3345.00 - GRAND ISLAND 345KV CKT Z	720	720	0.04279	129.5012	GEN336240 1-1NMIL CT1 18.000
FDNS	00NR_G15_076	2	17SP	G15_076	FROM->TO	GR ISLD-LNX3345.00 - GRAND ISLAND 345KV CKT Z	720	720	0.04279	129.5012	GEN336241 1-1NMIL CT2 18.000
FDNS	00NR_G15_076	2	17SP	G15_076	FROM->TO	GR ISLD-LNX3345.00 - GRAND ISLAND 345KV CKT Z	720	720	0.04279	129.4983	GEN501912 1-ACADIA UNIT CT1B
FDNS	00NR_G15_076	2	17SP	G15_076	FROM->TO	GR ISLD-LNX3345.00 - GRAND ISLAND 345KV CKT Z	720	720	0.04279	129.4981	GEN501911 1-ACADIA UNIT CT1A
FDNS	00NR_G15_076	2	17SP	G15_076	FROM->TO	GR ISLD-LNX3345.00 - GRAND ISLAND 345KV CKT Z	720	720	0.04279	129.4887	GEN501971 1-EVANGELINE UNIT 7-1
FDNS	00NR_G15_076	2	17SP	G15_076	FROM->TO	GR ISLD-LNX3345.00 - GRAND ISLAND 345KV CKT Z	720	720	0.04279	129.4887	GEN501972 1-EVANGELINE UNIT 7-2
FDNS	00NR_G15_076	2	17SP	G15_076	FROM->TO	GR ISLD-LNX3345.00 - GRAND ISLAND 345KV CKT Z	720	720	0.04414	129.4878	OAHE - PHILIP TAP 230KV CKT 1
FDNS	00NR_G15_076	2	17SP	G15_076	FROM->TO	GR ISLD-LNX3345.00 - GRAND ISLAND 345KV CKT Z	720	720	0.04279	129.4835	FINNEY SWITCHING STATION - PSCO LAMAR DC TIE 345KV CKT 1
FDNS	00NR_G15_076	2	17SP	G15_076	FROM->TO	GR ISLD-LNX3345.00 - GRAND ISLAND 345KV CKT Z	720	720	0.04279	129.4835	FINNEY SWITCHING STATION - PSCO LAMAR DC TIE 345KV CKT 1
FDNS	00NR_G15_076	2	17SP	G15_076	FROM->TO	GR ISLD-LNX3345.00 - GRAND ISLAND 345KV CKT Z	720	720	0.04279	129.4781	GEN335570 1-CARVILLE CTG
FDNS	00NR_G15_076	2	17SP	G15_076	FROM->TO	GR ISLD-LNX3345.00 - GRAND ISLAND 345KV CKT Z	720	720	0.04279	129.4781	GEN335571 1-CARVILLE UNIT #1
FDNS	00NR_G15_076	2	17SP	G15_076	FROM->TO	GR ISLD-LNX3345.00 - GRAND ISLAND 345KV CKT Z	720	720	0.04331	129.478	MARTIN - SHANNON 115KV CKT 1
FDNS	00NR_G15_076	2	17SP	G15_076	FROM->TO	GR ISLD-LNX3345.00 - GRAND ISLAND 345KV CKT Z	720	720	0.04279	129.4749	GEN336167 1-GULF OXY U1
FDNS	00NR_G15_076	2	17SP	G15_076	FROM->TO	GR ISLD-LNX3345.00 - GRAND ISLAND 345KV CKT Z	720	720	0.04279	129.4749	GEN336168 1-GULF OXY U2
FDNS	00NR_G15_076	2	17SP	G15_076	FROM->TO	GR ISLD-LNX3345.00 - GRAND ISLAND 345KV CKT Z	720	720	0.04279	129.4749	GEN336169 1-GULF OXY U3
FDNS	00NR_G15_076	2	17SP	G15_076	FROM->TO	GR ISLD-LNX3345.00 - GRAND ISLAND 345KV CKT Z	720	720	0.04279	129.4736	GEN501823 1-TECHE UNIT 3
FDNS	00NR_G15_076	2	17SP	G15_076	FROM->TO	GR ISLD-LNX3345.00 - GRAND ISLAND 345KV CKT Z	720	720	0.04279	129.4711	GEN336944 1-REX BROWN
FDNS	00NR_G15_076	2	17SP	G15_076	FROM->TO	GR ISLD-LNX3345.00 - GRAND ISLAND 345KV CKT Z	720	720	0.04279	129.4693	GEN335612 1-WILLOW GLENN UNIT#2
FDNS	00NR_G15_076	2	17SP	G15_076	FROM->TO	GR ISLD-LNX3345.00 - GRAND ISLAND 345KV CKT Z	720	720	0.04306	129.4368	BOXBUTE7 115.00 - DUNLAP 115KV CKT 1
FDNS	00NR_G15_076	2	17SP	G15_076	FROM->TO	GR ISLD-LNX3345.00 - GRAND ISLAND 345KV CKT Z	720	720	0.04354	129.1408	KELLY - SHELL CREEK 230KV CKT 1
FDNS	00NR_G15_076	2	17SP	G15_076	FROM->TO	GR ISLD-LNX3345.00 - GRAND ISLAND 345KV CKT Z	720	720	0.04354	129.1321	SHELL CREEK (SHELLCREEKT1) 345/230/13.8KV TRANSFORMER CKT 1
FDNS	00NR_G15_076	2	17SP	G15_076	FROM->TO	GR ISLD-LNX3345.00 - GRAND ISLAND 345KV CKT Z	720	720	0.04354	129.1321	SHELL CREEK (SHELLCREEKT1) 345/230/13.8KV TRANSFORMER CKT 1
FDNS	00NR_G15_076	2	17SP	G15_076	FROM->TO	GR ISLD-LNX3345.00 - GRAND ISLAND 345KV CKT Z	720	720	0.05115	129.1143	COLUMWEST - KELLY 230KV CKT 1
FDNS	00NR_G15_076	2	17SP	G15_076	FROM->TO	GR ISLD-LNX3345.00 - GRAND ISLAND 345KV CKT Z	720	720	0.04293	128.9437	ANTELOP-LNX3345.00 - BRDLAND-LNX3345.00 345KV CKT 1
FDNS	00NR_G15_076	2	17SP	G15_076	FROM->TO	GR ISLD-LNX3345.00 - GRAND ISLAND 345KV CKT Z	720	720	0.04279	128.9381	P12:115:TSGT:BLKWDCK7-ELSIETP7
FDNS	00NR_G15_076	2	17SP	G15_076	FROM->TO	GR ISLD-LNX3345.00 - GRAND ISLAND 345KV CKT Z	720	720	0.04279	128.9322	1303-KEARNEY
FDNS	00NR_G15_076	2	17SP	G15_076	FROM->TO	GR ISLD-LNX3345.00 - GRAND ISLAND 345KV CKT Z	720	720	0.04279	128.9322	BASE CASE
FDNS	00NR_G15_076	2	17SP	G15_076	FROM->TO	GR ISLD-LNX3345.00 - GRAND ISLAND 345KV CKT Z	720	720	0.04274	128.8953	BUCKNER7 345.00 - SPEARVILLE 345KV CKT 1
FDNS	00NR_G15_076	2	17SP	G15_076	FROM->TO	GR ISLD-LNX3345.00 - GRAND ISLAND 345KV CKT Z	720	720	0.04274	128.8953	BUCKNER7 345.00 - SPEARVILLE 345KV CKT 1
FDNS	00NR_G15_076	2	17SP	G15_076	FROM->TO	GR ISLD-LNX3345.00 - GRAND ISLAND 345KV CKT Z	720	720	0.04186	128.8344	GRAND ISLAND - RIVERDALE 230KV CKT 1
FDNS	00NR_G15_076	2	17SP	G15_076	FROM->TO	GR ISLD-LNX3345.00 - GRAND ISLAND 345KV CKT Z	720	720	0.04268	128.8119	MINGO (MINGO) 345/115/13.8KV TRANSFORMER CKT 1
FDNS	00NR_G15_076	2	17SP	G15_076	FROM->TO	GR ISLD-LNX3345.00 - GRAND ISLAND 345KV CKT Z	720	720	0.04268	128.8119	MINGO (MINGO) 345/115/13.8KV TRANSFORMER CKT 1
FDNS	00NR_G15_076	2	17SP	G15_076	FROM->TO	GR ISLD-LNX3345.00 - GRAND ISLAND 345KV CKT Z	720	720	0.04007	128.8068	COOPER - MOORE 345KV CKT 1
FDNS	00NR_G15_076	2	17SP	G15_076	FROM->TO	GR ISLD-LNX3345.00 - GRAND ISLAND 345KV CKT Z	720	720	0.04279	128.8067	GEN645001 1-FORT CALHOUN 1
FDNS	00NR_G15_076	2	17SP	G15_076	FROM->TO	GR ISLD-LNX3345.00 - GRAND ISLAND 345KV CKT Z	720	720	0.04279	128.7813	P12:115:TSGT:GRANTNB7-OGALALA7_2
FDNS	00NR_G15_076	2	17SP	G15_076	FROM->TO	GR ISLD-LNX3345.00 - GRAND ISLAND 345KV CKT Z	720	720	0.04405	128.7493	AXTELL - PAULINE 345KV CKT 1
FDNS	00NR_G15_076	2	17SP	G15_076	FROM->TO	GR ISLD-LNX3345.00 - GRAND ISLAND 345KV CKT Z	720	720	0.04313	128.6664	103RD & ROKEBY - MOORE 345KV CKT 1
FDNS	00NR_G15_076	2	17SP	G15_076	FROM->TO	GR ISLD-LNX3345.00 - GRAND ISLAND 345KV CKT Z	720	720	0.04313	128.6664	103RD & ROKEBY - MOORE 345KV CKT 1
FDNS	00NR_G15_076	2	17SP	G15_076	FROM->TO	GR ISLD-LNX3345.00 - GRAND ISLAND 345KV CKT Z	720	720	0.04323	128.6429	LOUP CITY - ST LIBORY 115KV CKT 1
FDNS	00NR_G15_076	2	17SP	G15_076	FROM->TO	GR ISLD-LNX3345.00 - GRAND ISLAND 345KV CKT Z	720	720	0.04285	128.6064	GRAND ISLAND (GRAND.ISD T5) 230/115/13.8KV TRANSFORMER CKT 2
FDNS	00NR_G15_076	2	17SP	G15_076	FROM->TO	GR ISLD-LNX3345.00 - GRAND ISLAND 345KV CKT Z	720	720	0.04285	128.6064	GRAND ISLAND (GRAND.ISD T5) 230/115/13.8KV TRANSFORMER CKT 2
FDNS	00NR_G15_076	2	17SP	G15_076	FROM->TO	GR ISLD-LNX3345.00 - GRAND ISLAND 345KV CKT Z	720	720	0.04285	128.604	GRAND ISLAND (GRAND.ISD T2) 230/115/13.8KV TRANSFORMER CKT 1
FDNS	00NR_G15_076	2	17SP	G15_076	FROM->TO	GR ISLD-LNX3345.00 - GRAND ISLAND 345KV CKT Z	720	720	0.04285	128.604	GRAND ISLAND (GRAND.ISD T2) 230/115/13.8KV TRANSFORMER CKT 1
FDNS	00NR_G15_076	2	17SP	G15_076	FROM->TO	GR ISLD-LNX3345.00 - GRAND ISLAND 345KV CKT Z	720	720	0.04282	128.561	AURORA - GRAND ISLAND 115KV CKT 1
FDNS	00NR_G15_076	2	17SP	G15_076	FROM->TO	GR ISLD-LNX3345.00 - GRAND ISLAND 345KV CKT Z	720	720	0.0428	128.5488	MCCOOL (MCCOOL T2) 345/115/13.8KV TRANSFORMER CKT 1
FDNS	00NR_G15_076	2	17SP	G15_076	FROM->TO	GR ISLD-LNX3345.00 - GRAND ISLAND 345KV CKT Z	720	720	0.0428	128.5488	MCCOOL (MCCOOL T2) 345/115/13.8KV TRANSFORMER CKT 1
FDNS	00NR_G15_076	2	17SP	G15_076	FROM->TO	GR ISLD-LNX3345.00 - GRAND ISLAND 345KV CKT Z	720	720	0.04339	128.5079	MAXWELL - NORTH PLATTE 115KV CKT 1
FDNS	00NR_G15_076	2	17SP	G15_076	FROM->TO	GR ISLD-LNX3345.00 - GRAND ISLAND 345KV CKT Z	720	720	0.0443	128.4706	MAXWELL - STAPLETON 115KV CKT 1
FDNS	00NR_G15_076	2	17SP	G15_076	FROM->TO	GR ISLD-LNX3345.00 - GRAND ISLAND 345KV CKT Z	720	720	0.04177	128.4393	G11_051T 345.00 - WOODWARD DISTRICT EHV 345KV CKT 1
FDNS	00NR_G15_076	2	17SP	G15_076	FROM->TO	GR ISLD-LNX3345.00 - GRAND ISLAND 345KV CKT Z	720	720	0.04166	128.4354	FINNEY SWITCHING STATION - WALKTAP7 345.00 345KV CKT 1
FDNS	00NR_G15_076	2	17SP	G15_076	FROM->TO	GR ISLD-LNX3345.00 - GRAND ISLAND 345KV CKT Z	720	720	0.04166	128.4354	FINNEY SWITCHING STATION - WALKTAP7 345.00 345KV CKT 1
FDNS	00NR_G15_076	2	17SP	G15_076	FROM->TO	GR ISLD-LNX3345.00 - GRAND ISLAND 345KV CKT Z	720	720	0.04279	128.4222	GEN562003 1-G11_027_3 0.6900
FDNS	00NR_G15_076	2	17SP	G15_076	FROM->TO	GR ISLD-LNX3345.00 - GRAND ISLAND 345KV CKT Z	720	720	0.04304	128.4145	GRAND ISLAND (GI KU1B) 345/230/13.8KV TRANSFORMER CKT 2
FDNS	00NR_G15_076	2	17SP	G15_076	FROM->TO	GR ISLD-LNX3345.00 - GRAND ISLAND 345KV CKT Z	720	720	0.04304	128.4145	GRAND ISLAND (GI KU1B) 345/230/13.8KV TRANSFORMER CKT 2
FDNS	00NR_G15_076	2	17SP	G15_076	FROM->TO	GR ISLD-LNX3345.00 - GRAND ISLAND 345KV CKT Z	720	720	0.04304	128.4135	GRAND ISLAND (GI KU1A) 345/230/13.8KV TRANSFORMER CKT 1

SOLUTION	GROUP	SCENARIO	SEASON	SOURCE	DIRECTION	MONITORED ELEMENT	RATEA (MVA)	RATEB(MVA)	TDF	TC%LOADING (% MVA)	CONTINGENCY
FDNS	00NR_G15_076	2	17SP	G15_076	FROM->TO	GR ISLD-LNX3345.00 - GRAND ISLAND 345KV CKT Z	720	720	0.04304	128.4135	GRAND ISLAND (GI KU1A) 345/230/13.8KV TRANSFORMER CKT 1
FDNS	00NR_G15_076	2	17SP	G15_076	FROM->TO	GR ISLD-LNX3345.00 - GRAND ISLAND 345KV CKT Z	720	720	0.04106	128.4072	Hitchland Interchange - WALKTAP7 345.00 345KV CKT 1
FDNS	00NR_G15_076	2	17SP	G15_076	FROM->TO	GR ISLD-LNX3345.00 - GRAND ISLAND 345KV CKT Z	720	720	0.04106	128.4072	Hitchland Interchange - WALKTAP7 345.00 345KV CKT 1
FDNS	00NR_G15_076	2	17SP	G15_076	FROM->TO	GR ISLD-LNX3345.00 - GRAND ISLAND 345KV CKT Z	720	720	0.04106	128.4022	P12:345:SPS:J07.1.FINN.HITCH
FDNS	00NR_G15_076	2	17SP	G15_076	FROM->TO	GR ISLD-LNX3345.00 - GRAND ISLAND 345KV CKT Z	720	720	0.04279	128.3856	GEN652546 1-FT RANDAL
FDNS	00NR_G15_076	2	17SP	G15_076	FROM->TO	GR ISLD-LNX3345.00 - GRAND ISLAND 345KV CKT Z	720	720	0.03996	128.3762	MINGO - SETAB 345KV CKT 1
FDNS	00NR_G15_076	2	17SP	G15_076	FROM->TO	GR ISLD-LNX3345.00 - GRAND ISLAND 345KV CKT Z	720	720	0.03996	128.3762	MINGO - SETAB 345KV CKT 1
FDNS	00NR_G15_076	2	17SP	G15_076	FROM->TO	GR ISLD-LNX3345.00 - GRAND ISLAND 345KV CKT Z	720	720	0.04279	128.3657	GEN600125 2-FEP ST G 13.800
FDNS	00NR_G15_076	2	17SP	G15_076	FROM->TO	GR ISLD-LNX3345.00 - GRAND ISLAND 345KV CKT Z	720	720	0.04483	128.3517	MOORE - PAULINE 345KV CKT 1
FDNS	00NR_G15_076	2	17SP	G15_076	FROM->TO	GR ISLD-LNX3345.00 - GRAND ISLAND 345KV CKT Z	720	720	0.04279	128.3514	GEN615031 1-PLEASANT VALLEY
FDNS	00NR_G15_076	2	17SP	G15_076	FROM->TO	GR ISLD-LNX3345.00 - GRAND ISLAND 345KV CKT Z	720	720	0.04279	128.3461	GEN615032 2-PLEASANT VALLEY
FDNS	00NR_G15_076	2	17SP	G15_076	FROM->TO	GR ISLD-LNX3345.00 - GRAND ISLAND 345KV CKT Z	720	720	0.04279	128.3454	GEN672367 1-MERIDIAN GENERATOR 1 GT1
FDNS	00NR_G15_076	2	17SP	G15_076	FROM->TO	GR ISLD-LNX3345.00 - GRAND ISLAND 345KV CKT Z	720	720	0.04279	128.3454	GEN672368 2-MERIDIAN GENERATOR 2 GT2
FDNS	00NR_G15_076	2	17SP	G15_076	FROM->TO	GR ISLD-LNX3345.00 - GRAND ISLAND 345KV CKT Z	720	720	0.04293	128.3438	LARAMIE RIVER - STEGALL 345KV CKT 1
FDNS	00NR_G15_076	2	17SP	G15_076	FROM->TO	GR ISLD-LNX3345.00 - GRAND ISLAND 345KV CKT Z	720	720	0.04257	128.3419	FALLOW 3 345.00 - GRIMES 345KV CKT 1
FDNS	00NR_G15_076	2	17SP	G15_076	FROM->TO	GR ISLD-LNX3345.00 - GRAND ISLAND 345KV CKT Z	720	720	0.04279	128.3347	GEN672352 3-NIPAWIN GENERATOR 3
FDNS	00NR_G15_076	2	17SP	G15_076	FROM->TO	GR ISLD-LNX3345.00 - GRAND ISLAND 345KV CKT Z	720	720	0.04279	128.3346	GEN672350 1-NIPAWIN GENERATOR 1
FDNS	00NR_G15_076	2	17SP	G15_076	FROM->TO	GR ISLD-LNX3345.00 - GRAND ISLAND 345KV CKT Z	720	720	0.04279	128.3346	GEN672351 2-NIPAWIN GENERATOR 2
FDNS	00NR_G15_076	2	17SP	G15_076	FROM->TO	GR ISLD-LNX3345.00 - GRAND ISLAND 345KV CKT Z	720	720	0.04279	128.3345	GEN600018 S-LS POWER STEAM
FDNS	00NR_G15_076	2	17SP	G15_076	FROM->TO	GR ISLD-LNX3345.00 - GRAND ISLAND 345KV CKT Z	720	720	0.04279	128.3332	GEN657964 1-ASH2GEN9 0.5750
FDNS	00NR_G15_076	2	17SP	G15_076	FROM->TO	GR ISLD-LNX3345.00 - GRAND ISLAND 345KV CKT Z	720	720	0.04302	128.3274	P12:115:UMZW:# 172 #: WI IN SD.
FDNS	00NR_G15_076	2	17SP	G15_076	FROM->TO	GR ISLD-LNX3345.00 - GRAND ISLAND 345KV CKT Z	720	720	0.04279	128.3239	GEN652548 5-FT RANDAL
FDNS	00NR_G15_076	2	17SP	G15_076	FROM->TO	GR ISLD-LNX3345.00 - GRAND ISLAND 345KV CKT Z	720	720	0.04279	128.3239	GEN652549 7-FT RANDAL
FDNS	00NR_G15_076	2	17SP	G15_076	FROM->TO	GR ISLD-LNX3345.00 - GRAND ISLAND 345KV CKT Z	720	720	0.04279	128.32	GEN672349 3-CORY COGEN GENERATOR 3 ST
FDNS	00NR_G15_076	2	17SP	G15_076	FROM->TO	GR ISLD-LNX3345.00 - GRAND ISLAND 345KV CKT Z	720	720	0.04279	128.3127	MITCHLCO3 345.00 345/34.5KV TRANSFORMER CKT 1
FDNS	00NR_G15_076	2	17SP	G15_076	FROM->TO	GR ISLD-LNX3345.00 - GRAND ISLAND 345KV CKT Z	720	720	0.04279	128.3114	GEN652547 3-FT RANDAL
FDNS	00NR_G15_076	2	17SP	G15_076	FROM->TO	GR ISLD-LNX3345.00 - GRAND ISLAND 345KV CKT Z	720	720	0.04293	128.2927	P12:345:UMZB:# 102 #: AVS BD IN ND. AVS BRD LR
FDNS	00NR_G15_076	2	17SP	G15_076	FROM->TO	GR ISLD-LNX3345.00 - GRAND ISLAND 345KV CKT Z	720	720	0.044	128.2926	ATCHSNT3 345.00 - BOONEVILLE 345KV CKT 1
FDNS	00NR_G15_076	2	17SP	G15_076	FROM->TO	GR ISLD-LNX3345.00 - GRAND ISLAND 345KV CKT Z	720	720	0.04279	128.2919	GEN620324 3-HOOT LAKE 3 GEN
FDNS	00NR_G15_076	2	17SP	G15_076	FROM->TO	GR ISLD-LNX3345.00 - GRAND ISLAND 345KV CKT Z	720	720	0.04293	128.2916	P12:345:UMZB:# 103 #: BD IN SD. LOSS OF LINE
FDNS	00NR_G15_076	2	17SP	G15_076	FROM->TO	GR ISLD-LNX3345.00 - GRAND ISLAND 345KV CKT Z	720	720	0.04177	128.2859	G11_051T 345.00 - TATONGA7 345.00 345KV CKT 1
FDNS	00NR_G15_076	2	17SP	G15_076	FROM->TO	GR ISLD-LNX3345.00 - GRAND ISLAND 345KV CKT Z	720	720	0.04279	128.2757	GEN600021 3-ANGUS ANSON2
FDNS	00NR_G15_076	2	17SP	G15_076	FROM->TO	GR ISLD-LNX3345.00 - GRAND ISLAND 345KV CKT Z	720	720	0.04293	128.2678	BRDLAND-LNX3345.00 - HURON 345KV CKT Z
FDNS	00NR_G15_076	2	17SP	G15_076	FROM->TO	GR ISLD-LNX3345.00 - GRAND ISLAND 345KV CKT Z	720	720	0.04293	128.2657	BROADLAND - HURON 230KV CKT 1
FDNS	00NR_G15_076	2	17SP	G15_076	FROM->TO	GR ISLD-LNX3345.00 - GRAND ISLAND 345KV CKT Z	720	720	0.04293	128.2657	HURON (BD KU2A) 345/230/13.8KV TRANSFORMER CKT 1
FDNS	00NR_G15_076	2	17SP	G15_076	FROM->TO	GR ISLD-LNX3345.00 - GRAND ISLAND 345KV CKT Z	720	720	0.04293	128.2657	HURON (BD KU2A) 345/230/13.8KV TRANSFORMER CKT 1
FDNS	00NR_G15_076	2	17SP	G15_076	FROM->TO	GR ISLD-LNX3345.00 - GRAND ISLAND 345KV CKT Z	720	720	0.04279	128.2597	GEN600020 2-ANGUS ANSON1
FDNS	00NR_G15_076	2	17SP	G15_076	FROM->TO	GR ISLD-LNX3345.00 - GRAND ISLAND 345KV CKT Z	720	720	0.04279	128.2486	GEN659290 1-EDGECOL
FDNS	00NR_G15_076	2	17SP	G15_076	FROM->TO	GR ISLD-LNX3345.00 - GRAND ISLAND 345KV CKT Z	720	720	0.04316	128.2476	GRAND ISLAND (GI KU3A) 345/230/13.8KV TRANSFORMER CKT 3
FDNS	00NR_G15_076	2	17SP	G15_076	FROM->TO	GR ISLD-LNX3345.00 - GRAND ISLAND 345KV CKT Z	720	720	0.04316	128.2476	GRAND ISLAND (GI KU3A) 345/230/13.8KV TRANSFORMER CKT 3
FDNS	00NR_G15_076	2	17SP	G15_076	FROM->TO	GR ISLD-LNX3345.00 - GRAND ISLAND 345KV CKT Z	720	720	0.04279	128.2449	GEN659158 2-PIONEER G213.800
FDNS	00NR_G15_076	2	17SP	G15_076	FROM->TO	GR ISLD-LNX3345.00 - GRAND ISLAND 345KV CKT Z	720	720	0.04279	128.2449	GEN659159 3-PIONEER G313.800
FDNS	00NR_G15_076	2	17SP	G15_076	FROM->TO	GR ISLD-LNX3345.00 - GRAND ISLAND 345KV CKT Z	720	720	0.04279	128.2432	GEN659156 2-LONESMCRK 2G13.800
FDNS	00NR_G15_076	2	17SP	G15_076	FROM->TO	GR ISLD-LNX3345.00 - GRAND ISLAND 345KV CKT Z	720	720	0.04279	128.2432	GEN659157 3-LONESMCRK 3G13.800
FDNS	00NR_G15_076	2	17SP	G15_076	FROM->TO	GR ISLD-LNX3345.00 - GRAND ISLAND 345KV CKT Z	720	720	0.04279	128.2396	GEN672339 16-QE 16G 13.800
FDNS	00NR_G15_076	2	17SP	G15_076	FROM->TO	GR ISLD-LNX3345.00 - GRAND ISLAND 345KV CKT Z	720	720	0.04279	128.2396	GEN672342 3-QUEEN ELIZABETH GENERATOR 3
FDNS	00NR_G15_076	2	17SP	G15_076	FROM->TO	GR ISLD-LNX3345.00 - GRAND ISLAND 345KV CKT Z	720	720	0.04279	128.2392	GEN590010 1-ERCOT EQUIVALENCE
FDNS	00NR_G15_076	2	17SP	G15_076	FROM->TO	GR ISLD-LNX3345.00 - GRAND ISLAND 345KV CKT Z	720	720	0.04279	128.2317	GEN300003 1-THOMAS HILL UNIT 3
FDNS	00NR_G15_076	2	17SP	G15_076	FROM->TO	GR ISLD-LNX3345.00 - GRAND ISLAND 345KV CKT Z	720	720	0.04279	128.2277	GEN600012 2-BLACK DOG GEN 2
FDNS	00NR_G15_076	2	17SP	G15_076	FROM->TO	GR ISLD-LNX3345.00 - GRAND ISLAND 345KV CKT Z	720	720	0.04279	128.2257	GEN672393 2-NBECST2G 13.800
FDNS	00NR_G15_076	2	17SP	G15_076	FROM->TO	GR ISLD-LNX3345.00 - GRAND ISLAND 345KV CKT Z	720	720	0.04279	128.2153	GEN652410 3-FT PECK
FDNS	00NR_G15_076	2	17SP	G15_076	FROM->TO	GR ISLD-LNX3345.00 - GRAND ISLAND 345KV CKT Z	720	720	0.04279	128.2094	LADISH 115/13.2KV TRANSFORMER CKT 1
FDNS	00NR_G15_076	2	17SP	G15_076	FROM->TO	GR ISLD-LNX3345.00 - GRAND ISLAND 345KV CKT Z	720	720	0.04279	128.2067	GEN590011 2-ERCOT EQUIVALENCE
FDNS	00NR_G15_076	2	17SP	G15_076	FROM->TO	GR ISLD-LNX3345.00 - GRAND ISLAND 345KV CKT Z	720	720	0.04429	128.1987	LOUP CITY - NORTH LOUP 115KV CKT 1
FDNS	00NR_G15_076	2	17SP	G15_076	FROM->TO	GR ISLD-LNX3345.00 - GRAND ISLAND 345KV CKT Z	720	720	0.04279	128.1846	GEN629072 4-LANSING GENERATOR FOR UNITS NO4 EIA CODE 1
FDNS	00NR_G15_076	2	17SP	G15_076	FROM->TO	GR ISLD-LNX3345.00 - GRAND ISLAND 345KV CKT Z	720	720	0.04279	128.1777	EASTDC - ERCOT EQUIVALENCE 345KV CKT 1
FDNS	00NR_G15_076	2	17SP	G15_076	FROM->TO	GR ISLD-LNX3345.00 - GRAND ISLAND 345KV CKT Z	720	720	0.04279	128.148	GEN652414 4-FT PECK
FDNS	00NR_G15_076	2	17SP	G15_076	FROM->TO	GR ISLD-LNX3345.00 - GRAND ISLAND 345KV CKT Z	720	720	0.04279	128.148	GEN652415 5-FT PECK
FDNS	00NR_G15_076	2	17SP	G15_076	FROM->TO	GR ISLD-LNX3345.00 - GRAND ISLAND 345KV CKT Z	720	720	0.04279	128.1418	GEN660003 3-HURON WEST PARK
FDNS	00NR_G15_076	2	17SP	G15_076	FROM->TO	GR ISLD-LNX3345.00 - GRAND ISLAND 345KV CKT Z	720	720	0.04279	128.1393	G830_SUB 115.00 - GRE-MCHENRY7115.00 115KV CKT 1
FDNS	00NR_G15_076	2	17SP	G15_076	FROM->TO	GR ISLD-LNX3345.00 - GRAND ISLAND 345KV CKT Z	720	720	0.04326	128.1322	OAHE - SULLEY BUTTE 230KV CKT 1
FDNS	00NR_G15_076	2	17SP	G15_076	FROM->TO	GR ISLD-LNX3345.00 - GRAND ISLAND 345KV CKT Z	720	720	0.04279	128.1284	G830_SUB 115.00 115/34.5KV TRANSFORMER CKT 1
FDNS	00NR_G15_076	2	17SP	G15_076	FROM->TO	GR ISLD-LNX3345.00 - GRAND ISLAND 345KV CKT Z	720	720	0.04279	128.109	GEN652345 W-G07_023IS_2 0.6900
FDNS	00NR_G15_076	2	17SP	G15_076	FROM->TO	GR ISLD-LNX3345.00 - GRAND ISLAND 345KV CKT Z	720	720	0.04279	128.1048	EMERY 161/18.0KV TRANSFORMER CKT 1
FDNS	00NR_G15_076	2	17SP	G15_076	FROM->TO	GR ISLD-LNX3345.00 - GRAND ISLAND 345KV CKT Z	720	720	0.04279	128.1034	GEN 11104 1-J262_GEN 0.6000
FDNS	00NR_G15_076	2	17SP	G15_076	FROM->TO	GR ISLD-LNX3345.00 - GRAND ISLAND 345KV CKT Z	720	720	0.04279	128.1034	GEN 11108 1-J263_GEN 0.6000
FDNSLock	00NR_G15_076	2	17SP	G15_076	FROM->TO	GR ISLD-LNX3345.00 - GRAND ISLAND 345KV CKT Z	720	720	0.04422	128.1007	CENTRAL CITY - GRAND ISLAND 115KV CKT 1
FDNS	00NR_G15_076	2	17SP	G15_076	FROM->TO	GR ISLD-LNX3345.00 - GRAND ISLAND 345KV CKT Z	720	720	0.04084	128.0919	GERALD GENTLEMAN STATION - RED WILLOW 345KV CKT 1
FDNS	00NR_G15_076	2	17SP	G15_076	FROM->TO	GR ISLD-LNX3345.00 - GRAND ISLAND 345KV CKT Z	720	720	0.04279	128.0838	GEN600050 1-FEP
FDNS	00NR_G15_076	2	17SP	G15_076	FROM->TO	GR ISLD-LNX3345.00 - GRAND ISLAND 345KV CKT Z	720	720	0.04199	128.0723	POST ROCK (POSTROCK T1) 345/230/13.8KV TRANSFORMER CKT 1
FDNS	00NR_G15_076	2	17SP	G15_076	FROM->TO	GR ISLD-LNX3345.00 - GRAND ISLAND 345KV CKT Z	720	720	0.04279	128.0511	GEN300007 1-NEW MADRID UNIT 2
FDNS	00NR_G15_076	2	17SP	G15_076	FROM->TO	GR ISLD-LNX3345.00 - GRAND ISLAND 345KV CKT Z	720	720	0.04279	128.0445	GEN300006 1-NEW MADRID UNIT 1
FDNS	00NR_G15_076	2	17SP	G15_076	FROM->TO	GR ISLD-LNX3345.00 - GRAND ISLAND 345KV CKT Z	720	720	0.05115	128.038	COLUMWEST - GRAND ISLAND 230KV CKT 1

SOLUTION	GROUP	SCENARIO	SEASON	SOURCE	DIRECTION	MONITORED ELEMENT	RATEA (MVA)	RATEB(MVA)	TDF	TC%LOADING (% MVA)	CONTINGENCY
FDNS	00NR_G15_076	2	17SP	G15_076	FROM->TO	GR ISLD-LNX3345.00 - GRAND ISLAND 345KV CKT Z	720	720	0.04279	128.0331	GEN600046 1-MECST
FDNS	00NR_G15_076	2	17SP	G15_076	FROM->TO	GR ISLD-LNX3345.00 - GRAND ISLAND 345KV CKT Z	720	720	0.04293	128.0229	ANTELOP-LNX3345.00 - ANTELOPE VALLEY 345KV CKT Z
FDNS	00NR_G15_076	2	17SP	G15_076	FROM->TO	GR ISLD-LNX3345.00 - GRAND ISLAND 345KV CKT Z	720	720	0.04177	128.0151	MATHWSN7 345.00 - TATONGA7 345.00 345KV CKT 1
FDNS	00NR_G15_076	2	17SP	G15_076	FROM->TO	GR ISLD-LNX3345.00 - GRAND ISLAND 345KV CKT Z	720	720	0.04279	128.0055	GEN600047 1-MECCT1
FDNS	00NR_G15_076	2	17SP	G15_076	FROM->TO	GR ISLD-LNX3345.00 - GRAND ISLAND 345KV CKT Z	720	720	0.04279	128.0027	GEN600063 1-COLVILLE GEN 1
FDNS	00NR_G15_076	2	17SP	G15_076	FROM->TO	GR ISLD-LNX3345.00 - GRAND ISLAND 345KV CKT Z	720	720	0.04279	128.0027	GEN600064 2-COLVILLE GEN 2
FDNS	00NR_G15_076	2	17SP	G15_076	FROM->TO	GR ISLD-LNX3345.00 - GRAND ISLAND 345KV CKT Z	720	720	0.04279	127.9974	GEN600043 7-BLUE LAKE5
FDNS	00NR_G15_076	2	17SP	G15_076	FROM->TO	GR ISLD-LNX3345.00 - GRAND ISLAND 345KV CKT Z	720	720	0.04279	127.9974	GEN600044 8-BLUE LAKE6
FDNS	00NR_G15_076	2	17SP	G15_076	FROM->TO	GR ISLD-LNX3345.00 - GRAND ISLAND 345KV CKT Z	720	720	0.04279	127.9918	GEN660001 2-ABERDEEN SIEBRECHT
FDNS	00NR_G15_076	2	17SP	G15_076	FROM->TO	GR ISLD-LNX3345.00 - GRAND ISLAND 345KV CKT Z	720	720	0.04326	127.9879	SULLYBT-LNX3230.00 - WHITLOK 230KV CKT 1
FDNS	00NR_G15_076	2	17SP	G15_076	FROM->TO	GR ISLD-LNX3345.00 - GRAND ISLAND 345KV CKT Z	720	720	0.04326	127.9862	SULLEY BUTTE - SULLYBT-LNX3230.00 230KV CKT Z
FDNS	00NR_G15_076	2	17SP	G15_076	FROM->TO	GR ISLD-LNX3345.00 - GRAND ISLAND 345KV CKT Z	720	720	0.04279	127.9735	GEN659273 2-GROTON SYNC COND
FDNS	00NR_G15_076	2	17SP	G15_076	FROM->TO	GR ISLD-LNX3345.00 - GRAND ISLAND 345KV CKT Z	720	720	0.04279	127.9734	GEN659294 1-WILTONCOL9
FDNS	00NR_G15_076	2	17SP	G15_076	FROM->TO	GR ISLD-LNX3345.00 - GRAND ISLAND 345KV CKT Z	720	720	0.04279	127.9615	GEN600065 7-HIGH BRIDGE
FDNS	00NR_G15_076	2	17SP	G15_076	FROM->TO	GR ISLD-LNX3345.00 - GRAND ISLAND 345KV CKT Z	720	720	0.04279	127.9615	GEN600066 8-HIGH BRIDGE
FDNS	00NR_G15_076	2	17SP	G15_076	FROM->TO	GR ISLD-LNX3345.00 - GRAND ISLAND 345KV CKT Z	720	720	0.04279	127.9563	GEN600014 4-BLACK DOG GEN 4
FDNS	00NR_G15_076	2	17SP	G15_076	FROM->TO	GR ISLD-LNX3345.00 - GRAND ISLAND 345KV CKT Z	720	720	0.04279	127.9513	GEN600011 5-BLACK DOG GEN 1
FDNS	00NR_G15_076	2	17SP	G15_076	FROM->TO	GR ISLD-LNX3345.00 - GRAND ISLAND 345KV CKT Z	720	720	0.04326	127.9508	P12:230:UMZB:# 114 #: SB IN SD. SB-WK-GH
FDNS	00NR_G15_076	2	17SP	G15_076	FROM->TO	GR ISLD-LNX3345.00 - GRAND ISLAND 345KV CKT Z	720	720	0.04326	127.9508	P12:230:UMZB:# 117 #: WK IN SD. SB-WK-GH
FDNS	00NR_G15_076	2	17SP	G15_076	FROM->TO	GR ISLD-LNX3345.00 - GRAND ISLAND 345KV CKT Z	720	720	0.04279	127.9456	GEN600071 10-RIVER SIDE
FDNS	00NR_G15_076	2	17SP	G15_076	FROM->TO	GR ISLD-LNX3345.00 - GRAND ISLAND 345KV CKT Z	720	720	0.04279	127.9455	GEN600070 9-RIVER SIDE
FDNS	00NR_G15_076	2	17SP	G15_076	FROM->TO	GR ISLD-LNX3345.00 - GRAND ISLAND 345KV CKT Z	720	720	0.04279	127.9343	GEN600045 4-ANSON
FDNS	00NR_G15_076	2	17SP	G15_076	FROM->TO	GR ISLD-LNX3345.00 - GRAND ISLAND 345KV CKT Z	720	720	0.04279	127.932	GEN600007 7-RIVERSIDE GEN 7
FDNS	00NR_G15_076	2	17SP	G15_076	FROM->TO	GR ISLD-LNX3345.00 - GRAND ISLAND 345KV CKT Z	720	720	0.04279	127.9303	GEN 10648 1-G830_GEN 0.6900
FDNS	00NR_G15_076	2	17SP	G15_076	FROM->TO	GR ISLD-LNX3345.00 - GRAND ISLAND 345KV CKT Z	720	720	0.04279	127.9217	GEN659192 6-LYNN
FDNS	00NR_G15_076	2	17SP	G15_076	FROM->TO	GR ISLD-LNX3345.00 - GRAND ISLAND 345KV CKT Z	720	720	0.04279	127.921	GEN659162 4-RED WLCK
FDNS	00NR_G15_076	2	17SP	G15_076	FROM->TO	GR ISLD-LNX3345.00 - GRAND ISLAND 345KV CKT Z	720	720	0.04279	127.921	GEN659163 5-BLACK WDCK
FDNS	00NR_G15_076	2	17SP	G15_076	FROM->TO	GR ISLD-LNX3345.00 - GRAND ISLAND 345KV CKT Z	720	720	0.04326	127.9037	GLENHAM - WHITLOK 230KV CKT 1
FDNS	00NR_G15_076	2	17SP	G15_076	FROM->TO	GR ISLD-LNX3345.00 - GRAND ISLAND 345KV CKT Z	720	720	0.04279	127.903	GEN600017 C-LS POWER CT
FDNS	00NR_G15_076	2	17SP	G15_076	FROM->TO	GR ISLD-LNX3345.00 - GRAND ISLAND 345KV CKT Z	720	720	0.04279	127.8942	LANSING WEST 161/22.0KV TRANSFORMER CKT 1
FDNS	00NR_G15_076	2	17SP	G15_076	FROM->TO	GR ISLD-LNX3345.00 - GRAND ISLAND 345KV CKT Z	720	720	0.04279	127.8754	GEN659031 1-G12_014IS_4 0.6900
FDNS	00NR_G15_076	2	17SP	G15_076	FROM->TO	GR ISLD-LNX3345.00 - GRAND ISLAND 345KV CKT Z	720	720	0.04279	127.8555	GEN615021 1-GRE-ER 14G 16.000
FDNS	00NR_G15_076	2	17SP	G15_076	FROM->TO	GR ISLD-LNX3345.00 - GRAND ISLAND 345KV CKT Z	720	720	0.04279	127.8487	GEN652545 7-BIG BEND
FDNS	00NR_G15_076	2	17SP	G15_076	FROM->TO	GR ISLD-LNX3345.00 - GRAND ISLAND 345KV CKT Z	720	720	0.04279	127.8484	GEN615052 1-CAMBRIDGE GENERATING STATION
FDNS	00NR_G15_076	2	17SP	G15_076	FROM->TO	GR ISLD-LNX3345.00 - GRAND ISLAND 345KV CKT Z	720	720	0.04279	127.8405	GEN615015 1-GRE-SPRITWDG13.200
FDNS	00NR_G15_076	2	17SP	G15_076	FROM->TO	GR ISLD-LNX3345.00 - GRAND ISLAND 345KV CKT Z	720	720	0.04279	127.7792	GEN681522 3-GENOA 3
FDNS	00NR_G15_076	2	17SP	G15_076	FROM->TO	GR ISLD-LNX3345.00 - GRAND ISLAND 345KV CKT Z	720	720	0.04279	127.7126	GEN660016 1-B_H WIND 0.7000
FDNS	00NR_G15_076	2	17SP	G15_076	FROM->TO	GR ISLD-LNX3345.00 - GRAND ISLAND 345KV CKT Z	720	720	0.04279	127.6909	BISONMP4 230.00 - SQUARE BUTTE 230KV CKT 1
FDNS	00NR_G15_076	2	17SP	G15_076	FROM->TO	GR ISLD-LNX3345.00 - GRAND ISLAND 345KV CKT Z	720	720	0.04279	127.6616	GEN672303 3-BOUNDARY DAM GENERATOR 3
FDNS	00NR_G15_076	2	17SP	G15_076	FROM->TO	GR ISLD-LNX3345.00 - GRAND ISLAND 345KV CKT Z	720	720	0.04279	127.6616	GEN672305 5-BOUNDARY DAM GENERATOR 5
FDNS	00NR_G15_076	2	17SP	G15_076	FROM->TO	GR ISLD-LNX3345.00 - GRAND ISLAND 345KV CKT Z	720	720	0.04279	127.6593	GEN652906 1-G09_006IS_3 0.6900
FDNS	00NR_G15_076	2	17SP	G15_076	FROM->TO	GR ISLD-LNX3345.00 - GRAND ISLAND 345KV CKT Z	720	720	0.04279	127.6505	GEN662101 1-WESSINGTON190.5750
FDNS	00NR_G15_076	2	17SP	G15_076	FROM->TO	GR ISLD-LNX3345.00 - GRAND ISLAND 345KV CKT Z	720	720	0.04279	127.6375	GEN672392 1-NBECGT1G 18.000
FDNS	00NR_G15_076	2	17SP	G15_076	FROM->TO	GR ISLD-LNX3345.00 - GRAND ISLAND 345KV CKT Z	720	720	0.04279	127.5687	GEN600067 9-HIGH BRIDGE
FDNS	00NR_G15_076	2	17SP	G15_076	FROM->TO	GR ISLD-LNX3345.00 - GRAND ISLAND 345KV CKT Z	720	720	0.04279	127.5234	GEN910006 1-G12_012IS_3 0.6900
FDNS	00NR_G15_076	2	17SP	G15_076	FROM->TO	GR ISLD-LNX3345.00 - GRAND ISLAND 345KV CKT Z	720	720	0.04279	127.5172	GEN652907 1-G09_007IS_3 0.6900
FDNS	00NR_G15_076	2	17SP	G15_076	FROM->TO	GR ISLD-LNX3345.00 - GRAND ISLAND 345KV CKT Z	720	720	0.03826	127.469	MINGO - RED WILLOW 345KV CKT 1
FDNS	00NR_G15_076	2	17SP	G15_076	FROM->TO	GR ISLD-LNX3345.00 - GRAND ISLAND 345KV CKT Z	720	720	0.03826	127.469	MINGO - RED WILLOW 345KV CKT 1
FDNS	00NR_G15_076	2	17SP	G15_076	FROM->TO	GR ISLD-LNX3345.00 - GRAND ISLAND 345KV CKT Z	720	720	0.04279	127.4039	SQUARE BUTTE - YNG2 4 230.00 230KV CKT 1
FDNS	00NR_G15_076	2	17SP	G15_076	FROM->TO	GR ISLD-LNX3345.00 - GRAND ISLAND 345KV CKT Z	720	720	0.04279	127.3753	GEN659353 1-DEERCREK CTG18.000
FDNS	00NR_G15_076	2	17SP	G15_076	FROM->TO	GR ISLD-LNX3345.00 - GRAND ISLAND 345KV CKT Z	720	720	0.04279	127.3745	GEN659354 1-DEERCREK STG18.000
FDNS	00NR_G15_076	2	17SP	G15_076	FROM->TO	GR ISLD-LNX3345.00 - GRAND ISLAND 345KV CKT Z	720	720	0.04326	127.3448	GLENHAM - L3 HAWDON 230KV CKT 1
FDNS	00NR_G15_076	2	17SP	G15_076	FROM->TO	GR ISLD-LNX3345.00 - GRAND ISLAND 345KV CKT Z	720	720	0.04279	127.2047	GEN659289 1-DAYCNTYWND W0.6900
FDNS	00NR_G15_076	2	17SP	G15_076	FROM->TO	GR ISLD-LNX3345.00 - GRAND ISLAND 345KV CKT Z	720	720	0.04279	127.171	GEN659018 1-G14_003IS_3 0.6900
FDNS	00NR_G15_076	2	17SP	G15_076	FROM->TO	GR ISLD-LNX3345.00 - GRAND ISLAND 345KV CKT Z	720	720	0.04279	127.1312	GEN681542 6-JP MADGETT
FDNS	00NR_G15_076	2	17SP	G15_076	FROM->TO	GR ISLD-LNX3345.00 - GRAND ISLAND 345KV CKT Z	720	720	0.04279	127.0335	GEN659194 1-NDPRAIRWND1W0.6900
FDNS	00NR_G15_076	2	17SP	G15_076	FROM->TO	GR ISLD-LNX3345.00 - GRAND ISLAND 345KV CKT Z	720	720	0.04279	127.0311	GEN659010 4-G07_027IS_2 0.6900
FDNS	00NR_G15_076	2	17SP	G15_076	FROM->TO	GR ISLD-LNX3345.00 - GRAND ISLAND 345KV CKT Z	720	720	0.04279	127.0191	GEN652460 4-GARRISON
FDNS	00NR_G15_076	2	17SP	G15_076	FROM->TO	GR ISLD-LNX3345.00 - GRAND ISLAND 345KV CKT Z	720	720	0.04279	127.0191	GEN652461 5-GARRISON
FDNS	00NR_G15_076	2	17SP	G15_076	FROM->TO	GR ISLD-LNX3345.00 - GRAND ISLAND 345KV CKT Z	720	720	0.04279	127.0149	GEN652544 5-BIG BEND
FDNS	00NR_G15_076	2	17SP	G15_076	FROM->TO	GR ISLD-LNX3345.00 - GRAND ISLAND 345KV CKT Z	720	720	0.04279	127.0138	GEN652543 3-BIG BEND
FDNS	00NR_G15_076	2	17SP	G15_076	FROM->TO	GR ISLD-LNX3345.00 - GRAND ISLAND 345KV CKT Z	720	720	0.04279	127.0135	GEN652542 1-BIG BEND
FDNS	00NR_G15_076	2	17SP	G15_076	FROM->TO	GR ISLD-LNX3345.00 - GRAND ISLAND 345KV CKT Z	720	720	0.04279	126.9613	GEN652457 1-GARRISON
FDNS	00NR_G15_076	2	17SP	G15_076	FROM->TO	GR ISLD-LNX3345.00 - GRAND ISLAND 345KV CKT Z	720	720	0.04279	126.9613	GEN652458 2-GARRISON
FDNS	00NR_G15_076	2	17SP	G15_076	FROM->TO	GR ISLD-LNX3345.00 - GRAND ISLAND 345KV CKT Z	720	720	0.04279	126.9613	GEN652459 3-GARRISON
FDNS	00NR_G15_076	2	17SP	G15_076	FROM->TO	GR ISLD-LNX3345.00 - GRAND ISLAND 345KV CKT Z	720	720	0.04279	126.9321	STANTON 230/18.0KV TRANSFORMER CKT 1
FDNS	00NR_G15_076	2	17SP	G15_076	FROM->TO	GR ISLD-LNX3345.00 - GRAND ISLAND 345KV CKT Z	720	720	0.03552	126.8894	AXTELL - POST ROCK 345KV CKT 1
FDNS	00NR_G15_076	2	17SP	G15_076	FROM->TO	GR ISLD-LNX3345.00 - GRAND ISLAND 345KV CKT Z	720	720	0.04279	126.8822	GEN659403 1-NDSUNFLWR W0.6900
FDNS	00NR_G15_076	2	17SP	G15_076	FROM->TO	GR ISLD-LNX3345.00 - GRAND ISLAND 345KV CKT Z	720	720	0.04094	126.8299	AXTELL - SWEETWATER 345KV CKT 1
FDNS	00NR_G15_076	2	17SP	G15_076	FROM->TO	GR ISLD-LNX3345.00 - GRAND ISLAND 345KV CKT Z	720	720	0.04279	126.6867	CLAY BOSWELL 230/20.9KV TRANSFORMER CKT 1
FDNS	00NR_G15_076	2	17SP	G15_076	FROM->TO	GR ISLD-LNX3345.00 - GRAND ISLAND 345KV CKT Z	720	720	0.04279	126.5635	GEN659411 1-CAMPBLCNTY W0.6900
FDNS	00NR_G15_076	2	17SP	G15_076	FROM->TO	GR ISLD-LNX3345.00 - GRAND ISLAND 345KV CKT Z	720	720	0.04279	126.3498	GEN659296 2-SDPRAIRWND1W0.6900
FDNS	00NR_G15_076	2	17SP	G15_076	FROM->TO	GR ISLD-LNX3345.00 - GRAND ISLAND 345KV CKT Z	720	720	0.04279	126.2781	RCDC EAST 4230.00 - RED CEDAR DC 230KV CKT 1

SOLUTION	GROUP	SCENARIO	SEASON	SOURCE	DIRECTION	MONITORED ELEMENT	RATEA (MVA)	RATEB(MVA)	TDF	TC%LOADING (% MVA)	CONTINGENCY
FDNS	00NR_G15_076	2	17SP	G15_076	FROM->TO	GR ISLD-LNX3345.00 - GRAND ISLAND 345KV CKT Z	720	720	0.0428	126.2756	P12:230:UMZB:# 112 #: NU IN SD. NU-RCDC & DRY CREEK XFMR
FDNS	00NR_G15_076	2	17SP	G15_076	FROM->TO	GR ISLD-LNX3345.00 - GRAND ISLAND 345KV CKT Z	720	720	0.04279	126.2315	GEN652559 1-OAHE
FDNS	00NR_G15_076	2	17SP	G15_076	FROM->TO	GR ISLD-LNX3345.00 - GRAND ISLAND 345KV CKT Z	720	720	0.04279	126.2156	GEN672321 1-SHAND GENERATOR 1
FDNS	00NR_G15_076	2	17SP	G15_076	FROM->TO	GR ISLD-LNX3345.00 - GRAND ISLAND 345KV CKT Z	720	720	0.04279	126.2056	GEN615010 1-STANTON4
FDNS	00NR_G15_076	2	17SP	G15_076	FROM->TO	GR ISLD-LNX3345.00 - GRAND ISLAND 345KV CKT Z	720	720	0.04279	126.2056	GEN672310 1-POPLAR RIVER GENERATOR 1
FDNS	00NR_G15_076	2	17SP	G15_076	FROM->TO	GR ISLD-LNX3345.00 - GRAND ISLAND 345KV CKT Z	720	720	0.04279	126.2056	GEN672311 2-POPLAR RIVER GENERATOR 2
FDNS	00NR_G15_076	2	17SP	G15_076	FROM->TO	GR ISLD-LNX3345.00 - GRAND ISLAND 345KV CKT Z	720	720	0.04279	126.1312	GEN672306 6-BOUNDARY DAM GENERATOR 6
FDNS	00NR_G15_076	2	17SP	G15_076	FROM->TO	GR ISLD-LNX3345.00 - GRAND ISLAND 345KV CKT Z	720	720	0.04279	126.0552	GEN652556 2-OAHE
FDNS	00NR_G15_076	2	17SP	G15_076	FROM->TO	GR ISLD-LNX3345.00 - GRAND ISLAND 345KV CKT Z	720	720	0.04279	126.0552	GEN652557 4-OAHE
FDNS	00NR_G15_076	2	17SP	G15_076	FROM->TO	GR ISLD-LNX3345.00 - GRAND ISLAND 345KV CKT Z	720	720	0.04279	126.0552	GEN652558 6-OAHE
FDNS	00NR_G15_076	2	17SP	G15_076	FROM->TO	GR ISLD-LNX3345.00 - GRAND ISLAND 345KV CKT Z	720	720	0.04279	125.9726	GEN659453 1-GI1414GEN W0.6900
FDNS	00NR_G15_076	2	17SP	G15_076	FROM->TO	GR ISLD-LNX3345.00 - GRAND ISLAND 345KV CKT Z	720	720	0.04279	125.9356	GEN657749 1-YOUNG 1 GENERATOR
FDNS	00NR_G15_076	2	17SP	G15_076	FROM->TO	GR ISLD-LNX3345.00 - GRAND ISLAND 345KV CKT Z	720	720	0.04279	125.9315	GEN600004 2-PRAIRIE ISLAND G2
FDNS	00NR_G15_076	2	17SP	G15_076	FROM->TO	GR ISLD-LNX3345.00 - GRAND ISLAND 345KV CKT Z	720	720	0.04279	125.9267	GEN600003 1-PRAIRIE ISLAND G1
FDNS	00NR_G15_076	2	17SP	G15_076	FROM->TO	GR ISLD-LNX3345.00 - GRAND ISLAND 345KV CKT Z	720	720	0.04279	125.8792	GEN659141 1-K10215A
FDNS	00NR_G15_076	2	17SP	G15_076	FROM->TO	GR ISLD-LNX3345.00 - GRAND ISLAND 345KV CKT Z	720	720	0.04279	125.6475	GEN652173 1-G09_001IS_2 0.6900
FDNS	00NR_G15_076	2	17SP	G15_076	FROM->TO	GR ISLD-LNX3345.00 - GRAND ISLAND 345KV CKT Z	720	720	0.04279	125.6155	GEN600006 1-AS KING
FDNS	00NR_G15_076	2	17SP	G15_076	FROM->TO	GR ISLD-LNX3345.00 - GRAND ISLAND 345KV CKT Z	720	720	0.04279	125.4152	GEN659407 1-ANTELPHILLSW0.6900
FDNS	00NR_G15_076	2	17SP	G15_076	FROM->TO	GR ISLD-LNX3345.00 - GRAND ISLAND 345KV CKT Z	720	720	0.04279	125.327	GEN659110 1-LELAND OLDS UNIT1
FDNS	00NR_G15_076	2	17SP	G15_076	FROM->TO	GR ISLD-LNX3345.00 - GRAND ISLAND 345KV CKT Z	720	720	0.04279	125.0412	GEN600005 1-MONTICELLO
FDNS	00NR_G15_076	2	17SP	G15_076	FROM->TO	GR ISLD-LNX3345.00 - GRAND ISLAND 345KV CKT Z	720	720	0.04234	124.5841	MCCOOL - MOORE 345KV CKT 1
FDNS	00NR_G15_076	2	17SP	G15_076	FROM->TO	GR ISLD-LNX3345.00 - GRAND ISLAND 345KV CKT Z	720	720	0.04279	124.3512	GEN600000 1-SHERBURNECNTY G1
FDNS	00NR_G15_076	2	17SP	G15_076	FROM->TO	GR ISLD-LNX3345.00 - GRAND ISLAND 345KV CKT Z	720	720	0.04279	124.1265	GEN600001 2-SHERBURNE CNTY G2
FDNS	00NR_G15_076	2	17SP	G15_076	FROM->TO	GR ISLD-LNX3345.00 - GRAND ISLAND 345KV CKT Z	720	720	0.04279	123.8575	GEN661015 1-COYOTE
FDNS	00NR_G15_076	2	17SP	G15_076	FROM->TO	GR ISLD-LNX3345.00 - GRAND ISLAND 345KV CKT Z	720	720	0.04279	123.8518	GEN620315 1-BIG STONE GEN
FDNS	00NR_G15_076	2	17SP	G15_076	FROM->TO	GR ISLD-LNX3345.00 - GRAND ISLAND 345KV CKT Z	720	720	0.04279	123.413	GEN657748 1-YOUNG 2 GENERATOR
FDNS	00NR_G15_076	2	17SP	G15_076	FROM->TO	GR ISLD-LNX3345.00 - GRAND ISLAND 345KV CKT Z	720	720	0.04279	123.1651	GEN600002 3-SHERBURNE CNTY G3
FDNS	00NR_G15_076	2	20SP	G15_076	FROM->TO	GR ISLD-LNX3345.00 - GRAND ISLAND 345KV CKT Z	720	720	0.03993	122.663	HOLT.CO3 345.00 - THEDFRD3 345.00 345KV CKT 1
FDNS	00NR_G15_076	2	17SP	G15_076	FROM->TO	GR ISLD-LNX3345.00 - GRAND ISLAND 345KV CKT Z	720	720	0.04279	122.4893	SHERBURNE CO 345/24.0KV TRANSFORMER CKT 1
FDNS	00NR_G15_076	2	17SP	G15_076	FROM->TO	GR ISLD-LNX3345.00 - GRAND ISLAND 345KV CKT Z	720	720	0.04414	122.341	FTTHOM1-LNX3345.00 - LELAND2-LNX3345.00 345KV CKT 1
FDNS	00NR_G15_076	2	17SP	G15_076	FROM->TO	GR ISLD-LNX3345.00 - GRAND ISLAND 345KV CKT Z	720	720	0.04414	122.09	P12:345:UMZB:# 108 #: LOS FT IN ND. LOS FT
FDNS	00NR_G15_076	2	17SP	G15_076	FROM->TO	GR ISLD-LNX3345.00 - GRAND ISLAND 345KV CKT Z	720	720	0.04414	122.0832	FT THOMPSON - FTTHOM1-LNX3345.00 345KV CKT Z
FDNS	00NR_G15_076	2	17SP	G15_076	FROM->TO	GR ISLD-LNX3345.00 - GRAND ISLAND 345KV CKT Z	720	720	0.04414	121.9343	LELAND OLDS - LELAND2-LNX3345.00 345KV CKT Z
FDNS	00NR_G15_076	2	17SP	G15_076	FROM->TO	GR ISLD-LNX3345.00 - GRAND ISLAND 345KV CKT Z	720	720	0.04279	121.5454	GEN659111 2-LELAND OLDS UNIT2
FDNS	00NR_G15_076	2	25SP	G15_076	FROM->TO	GR ISLD-LNX3345.00 - GRAND ISLAND 345KV CKT Z	720	720	0.04029	121.3312	HOLT.CO3 345.00 - THEDFRD3 345.00 345KV CKT 1
FDNS	00NR_G15_076	2	17SP	G15_076	FROM->TO	GR ISLD-LNX3345.00 - GRAND ISLAND 345KV CKT Z	720	720	0.04279	121.2394	GEN659125 1-COVEY
FDNS	00NR_G15_076	2	17SP	G15_076	FROM->TO	GR ISLD-LNX3345.00 - GRAND ISLAND 345KV CKT Z	720	720	0.04279	120.976	GEN659103 1-ANTELOPE VALLEY UNIT1
FDNS	00NR_G15_076	2	17SP	G15_076	FROM->TO	GR ISLD-LNX3345.00 - GRAND ISLAND 345KV CKT Z	720	720	0.04279	120.976	GEN659107 2-ANTELOPE VALLEY UNIT2
FDNS	00NR_G15_076	2	17SP	G15_076	FROM->TO	GR ISLD-LNX3345.00 - GRAND ISLAND 345KV CKT Z	720	720	0.04234	120.8905	GRAND ISLAND - MCCOOL 345KV CKT 1
FDNS	00NR_G15_076	2	17SP	G15_076	FROM->TO	GR ISLD-LNX3345.00 - GRAND ISLAND 345KV CKT Z	720	720	0.04279	120.7008	GEN615001 1-COAL CREEK
FDNS	00NR_G15_076	2	17SP	G15_076	FROM->TO	GR ISLD-LNX3345.00 - GRAND ISLAND 345KV CKT Z	720	720	0.04279	120.613	GEN615002 2-COAL CREEK
FDNS	00NR_G15_076	2	17SP	G15_076	FROM->TO	GR ISLD-LNX3345.00 - GRAND ISLAND 345KV CKT Z	720	720	0.04279	113.8236	GEN562714 1-G15_023_4 0.6900
FDNS	00NR_G15_076	2	17SP	G15_076	FROM->TO	GR ISLD-LNX3345.00 - GRAND ISLAND 345KV CKT Z	720	720	0.04279	113.8236	GEN562715 1-G15_023_5 0.6900
FDNS	00NR_G15_076	2	20SP	G15_076	FROM->TO	GR ISLD-LNX3345.00 - GRAND ISLAND 345KV CKT Z	720	720	0.04164	112.2225	GERALD GENTLEMAN STATION - THEDFRD3 345.00 345KV CKT 1
FDNS	00NR_G15_076	2	25SP	G15_076	FROM->TO	GR ISLD-LNX3345.00 - GRAND ISLAND 345KV CKT Z	720	720	0.04196	111.2906	GERALD GENTLEMAN STATION - THEDFRD3 345.00 345KV CKT 1
FDNS	00NR_G15_076	2	16WP	G15_076	FROM->TO	GR ISLD-LNX3345.00 - GRAND ISLAND 345KV CKT Z	720	720	0.04448	108.5198	KELLY - MEADOWGROVE4230.00 230KV CKT 1
FDNS	00NR_G15_076	2	17SP	G15_076	FROM->TO	GR ISLD-LNX3345.00 - GRAND ISLAND 345KV CKT Z	720	720	0.04279	108.302	GEN652353 2-GR PRAIRIEG 0.6900
FDNS	00NR_G15_076	2	16WP	G15_076	FROM->TO	GR ISLD-LNX3345.00 - GRAND ISLAND 345KV CKT Z	720	720	0.04057	107.9601	P12:230:UMZB:# 116 #: ST IN SD. WSG-ST-VH
FDNS	00NR_G15_076	2	16WP	G15_076	FROM->TO	GR ISLD-LNX3345.00 - GRAND ISLAND 345KV CKT Z	720	720	0.04069	107.376	STORLA - WESSINGTON 230KV CKT 1
FDNS	00NR_G15_076	2	16WP	G15_076	FROM->TO	GR ISLD-LNX3345.00 - GRAND ISLAND 345KV CKT Z	720	720	0.04252	106.6	ROSEAU - ROSEAUM 2 500.00 500KV CKT 1
FDNS	00NR_G15_076	2	16WP	G15_076	FROM->TO	GR ISLD-LNX3345.00 - GRAND ISLAND 345KV CKT Z	720	720	0.04252	106.5703	RIEL - ROSEAU 500KV CKT 1
FDNS	00NR_G15_076	2	16WP	G15_076	FROM->TO	GR ISLD-LNX3345.00 - GRAND ISLAND 345KV CKT Z	720	720	0.04102	106.3244	HANLON - STORLA 230KV CKT 1
FDNS	00NR_G15_076	2	16WP	G15_076	FROM->TO	GR ISLD-LNX3345.00 - GRAND ISLAND 345KV CKT Z	720	720	0.04014	105.9515	FT THOMPSON - LETCHER 230KV CKT 1
FDNS	00NR_G15_076	2	16WP	G15_076	FROM->TO	GR ISLD-LNX3345.00 - GRAND ISLAND 345KV CKT Z	720	720	0.04014	105.9515	FT THOMPSON - LETCHER 230KV CKT 1
FDNSLock	00NR_G15_076	2	16WP	G15_076	FROM->TO	GR ISLD-LNX3345.00 - GRAND ISLAND 345KV CKT Z	720	720	0.04164	105.6833	WATERTN-LNX3345.00 - WATERTOWN 345KV CKT Z
FDNS	00NR_G15_076	2	16WP	G15_076	FROM->TO	GR ISLD-LNX3345.00 - GRAND ISLAND 345KV CKT Z	720	720	0.04164	105.2459	WATERTN-LNX3345.00 - WHITE 345KV CKT 1
FDNS	00NR_G15_076	2	16WP	G15_076	FROM->TO	GR ISLD-LNX3345.00 - GRAND ISLAND 345KV CKT Z	720	720	0.04231	104.9618	BUFFALO - JAMESTOWN 345KV CKT 1
FDNS	00NR_G15_076	2	16WP	G15_076	FROM->TO	GR ISLD-LNX3345.00 - GRAND ISLAND 345KV CKT Z	720	720	0.04299	104.7487	KEYSTONE - SIDNEY1-LNX3345.00 345KV CKT 1
FDNS	00NR_G15_076	2	16WP	G15_076	FROM->TO	GR ISLD-LNX3345.00 - GRAND ISLAND 345KV CKT Z	720	720	0.04299	104.7406	SIDNEY - SIDNEY1-LNX3345.00 345KV CKT Z
FDNS	00NR_G15_076	2	16WP	G15_076	FROM->TO	GR ISLD-LNX3345.00 - GRAND ISLAND 345KV CKT Z	720	720	0.03858	104.6855	FT RANDAL - G12_009IST 230.00 230KV CKT 1
FDNS	00NR_G15_076	2	16WP	G15_076	FROM->TO	GR ISLD-LNX3345.00 - GRAND ISLAND 345KV CKT Z	720	720	0.0421	104.649	GEN336821 1-GRAND GULF UNIT
FDNS	00NR_G15_076	2	16WP	G15_076	FROM->TO	GR ISLD-LNX3345.00 - GRAND ISLAND 345KV CKT Z	720	720	0.03858	104.5893	FT THOMPSON - LAKE PLATT 230KV CKT 1
FDNS	00NR_G15_076	2	16WP	G15_076	FROM->TO	GR ISLD-LNX3345.00 - GRAND ISLAND 345KV CKT Z	720	720	0.03858	104.5893	FT THOMPSON - LAKE PLATT 230KV CKT 1
FDNS	00NR_G15_076	2	16WP	G15_076	FROM->TO	GR ISLD-LNX3345.00 - GRAND ISLAND 345KV CKT Z	720	720	0.03849	104.5864	FT RANDAL - FT THOMPSON 230KV CKT 1
FDNS	00NR_G15_076	2	16WP	G15_076	FROM->TO	GR ISLD-LNX3345.00 - GRAND ISLAND 345KV CKT Z	720	720	0.03849	104.5864	FT RANDAL - FT THOMPSON 230KV CKT 1
FDNS	00NR_G15_076	2	16WP	G15_076	FROM->TO	GR ISLD-LNX3345.00 - GRAND ISLAND 345KV CKT Z	720	720	0.04169	104.5255	LETCHER - SIOUX FALLS 230KV CKT 1
FDNS	00NR_G15_076	2	16WP	G15_076	FROM->TO	GR ISLD-LNX3345.00 - GRAND ISLAND 345KV CKT Z	720	720	0.04197	104.3398	G09_001IST 345.00 - WATERTOWN 345KV CKT 1
FDNS	00NR_G15_076	2	16WP	G15_076	FROM->TO	GR ISLD-LNX3345.00 - GRAND ISLAND 345KV CKT Z	720	720	0.0421	104.3384	GEN635024 4-WALTER SCOTT UNIT 4
FDNS	00NR_G15_076	2	16WP	G15_076	FROM->TO	GR ISLD-LNX3345.00 - GRAND ISLAND 345KV CKT Z	720	720	0.03858	104.3133	G12_009IST 230.00 - LAKE PLATT 230KV CKT 1
FDNS	00NR_G15_076	2	16WP	G15_076	FROM->TO	GR ISLD-LNX3345.00 - GRAND ISLAND 345KV CKT Z	720	720	0.0421	104.3117	GEN640010 1-GERALD GENTLEMAN STATION UNIT 1
FDNS	00NR_G15_076	2	16WP	G15_076	FROM->TO	GR ISLD-LNX3345.00 - GRAND ISLAND 345KV CKT Z	720	720	0.0421	104.2867	GEN337911 1-ARKANSAS NUCLEAR ONE UNIT #2
FDNS	00NR_G15_076	2	16WP	G15_076	FROM->TO	GR ISLD-LNX3345.00 - GRAND ISLAND 345KV CKT Z	720	720	0.04448	104.2466	FT RANDAL - MEADOWGROVE4230.00 230KV CKT 1
FDNS	00NR_G15_076	2	16WP	G15_076	FROM->TO	GR ISLD-LNX3345.00 - GRAND ISLAND 345KV CKT Z	720	720	0.0421	104.2024	GEN640011 2-GERALD GENTLEMAN STATION UNIT 2

SOLUTION	GROUP	SCENARIO	SEASON	SOURCE	DIRECTION	MONITORED ELEMENT	RATEA (MVA)	RATEB(MVA)	TDF	TC%LOADING (% MVA)	CONTINGENCY
FDNS	00NR_G15_076	2	16WP	G15_076	FROM->TO	GR ISLD-LNX3345.00 - GRAND ISLAND 345KV CKT Z	720	720	0.0421	104.1973	GEN344225 1-1CAL G1 25.000
FDNS	00NR_G15_076	2	16WP	G15_076	FROM->TO	GR ISLD-LNX3345.00 - GRAND ISLAND 345KV CKT Z	720	720	0.0421	104.1624	GEN336153 1-WATERFORD UNIT#3
FDNS	00NR_G15_076	2	16WP	G15_076	FROM->TO	GR ISLD-LNX3345.00 - GRAND ISLAND 345KV CKT Z	720	720	0.04388	104.1409	HAZLETON - MITCHLCO3 345.00 345KV CKT 1
FDNS	00NR_G15_076	2	16WP	G15_076	FROM->TO	GR ISLD-LNX3345.00 - GRAND ISLAND 345KV CKT Z	720	720	0.04231	104.0579	CENTER - JAMESTOWN 345KV CKT 1
FDNS	00NR_G15_076	2	16WP	G15_076	FROM->TO	GR ISLD-LNX3345.00 - GRAND ISLAND 345KV CKT Z	720	720	0.0421	104.0023	GEN635023 3-WALTER SCOTT UNIT 3
FDNS	00NR_G15_076	2	16WP	G15_076	FROM->TO	GR ISLD-LNX3345.00 - GRAND ISLAND 345KV CKT Z	720	720	0.043	103.9544	AS KING - EAU CLAIRE 345KV CKT 1
FDNS	00NR_G15_076	2	16WP	G15_076	FROM->TO	GR ISLD-LNX3345.00 - GRAND ISLAND 345KV CKT Z	720	720	0.04226	103.9176	BISON 3 345.00 - BUFFALO 345KV CKT 1
FDNS	00NR_G15_076	2	16WP	G15_076	FROM->TO	GR ISLD-LNX3345.00 - GRAND ISLAND 345KV CKT Z	720	720	0.0421	103.9109	GEN337910 1-ARKANSAS NUCLEAR ONE UNIT #1
FDNS	00NR_G15_076	2	16WP	G15_076	FROM->TO	GR ISLD-LNX3345.00 - GRAND ISLAND 345KV CKT Z	720	720	0.04227	103.9037	FT RANDAL - SIOUX CITY 230KV CKT 1
FDNS	00NR_G15_076	2	16WP	G15_076	FROM->TO	GR ISLD-LNX3345.00 - GRAND ISLAND 345KV CKT Z	720	720	0.0421	103.8943	GEN335831 1-RIVERBEND UNIT#1
FDNS	00NR_G15_076	2	16WP	G15_076	FROM->TO	GR ISLD-LNX3345.00 - GRAND ISLAND 345KV CKT Z	720	720	0.04997	103.8473	RAUN - SUB 3451 FT CAL 345KV CKT 1
FDNS	00NR_G15_076	2	16WP	G15_076	FROM->TO	GR ISLD-LNX3345.00 - GRAND ISLAND 345KV CKT Z	720	720	0.04997	103.8473	RAUN - SUB 3451 FT CAL 345KV CKT 1
FDNS	00NR_G15_076	2	16WP	G15_076	FROM->TO	GR ISLD-LNX3345.00 - GRAND ISLAND 345KV CKT Z	720	720	0.04289	103.7907	ARROWHEAD - ARROWHEAD 230 230KV CKT 1
FDNS	00NR_G15_076	2	16WP	G15_076	FROM->TO	GR ISLD-LNX3345.00 - GRAND ISLAND 345KV CKT Z	720	720	0.04178	103.6688	HANLON - SIOUX FALLS 230KV CKT 1
FDNS	00NR_G15_076	2	16WP	G15_076	FROM->TO	GR ISLD-LNX3345.00 - GRAND ISLAND 345KV CKT Z	720	720	0.04195	103.6446	GROTON-LNX3 345.00 - LELAND1-LNX3345.00 345KV CKT 1
FDNS	00NR_G15_076	2	16WP	G15_076	FROM->TO	GR ISLD-LNX3345.00 - GRAND ISLAND 345KV CKT Z	720	720	0.04195	103.6002	P12:345:UMZB:# 109 #: LOS GRT IN ND. LOS GRT
FDNS	00NR_G15_076	2	16WP	G15_076	FROM->TO	GR ISLD-LNX3345.00 - GRAND ISLAND 345KV CKT Z	720	720	0.04195	103.6	GROTON - GROTON-LNX3 345.00 345KV CKT Z
FDNS	00NR_G15_076	2	16WP	G15_076	FROM->TO	GR ISLD-LNX3345.00 - GRAND ISLAND 345KV CKT Z	720	720	0.04195	103.5939	LELAND OLDS - LELAND1-LNX3345.00 345KV CKT Z
FDNS	00NR_G15_076	2	16WP	G15_076	FROM->TO	GR ISLD-LNX3345.00 - GRAND ISLAND 345KV CKT Z	720	720	0.04277	103.5891	GERALD GENTLEMAN STATION - KEYSTONE 345KV CKT 1
FDNS	00NR_G15_076	2	16WP	G15_076	FROM->TO	GR ISLD-LNX3345.00 - GRAND ISLAND 345KV CKT Z	720	720	0.04275	103.5756	SIDNEY - STEGALL 345KV CKT 1
FDNS	00NR_G15_076	2	16WP	G15_076	FROM->TO	GR ISLD-LNX3345.00 - GRAND ISLAND 345KV CKT Z	720	720	0.04022	103.5082	FT RANDAL - UTICA JCT 230KV CKT 1
FDNS	00NR_G15_076	2	16WP	G15_076	FROM->TO	GR ISLD-LNX3345.00 - GRAND ISLAND 345KV CKT Z	720	720	0.0421	103.4943	GEN337653 1-WHITE BLUFF UNIT #2
FDNS	00NR_G15_076	2	16WP	G15_076	FROM->TO	GR ISLD-LNX3345.00 - GRAND ISLAND 345KV CKT Z	720	720	0.0421	103.4394	GEN501801 1-DOLET HILLS UNIT1
FDNS	00NR_G15_076	2	16WP	G15_076	FROM->TO	GR ISLD-LNX3345.00 - GRAND ISLAND 345KV CKT Z	720	720	0.04257	103.4346	CARPENTER - HURON 230KV CKT 1
FDNS	00NR_G15_076	2	16WP	G15_076	FROM->TO	GR ISLD-LNX3345.00 - GRAND ISLAND 345KV CKT Z	720	720	0.0457	103.3632	NUNDRWD - WAYSIDE 230KV CKT 1
FDNS	00NR_G15_076	2	16WP	G15_076	FROM->TO	GR ISLD-LNX3345.00 - GRAND ISLAND 345KV CKT Z	720	720	0.0421	103.363	GEN337652 1-WHITE BLUFF UNIT #1
FDNS	00NR_G15_076	2	16WP	G15_076	FROM->TO	GR ISLD-LNX3345.00 - GRAND ISLAND 345KV CKT Z	720	720	0.04388	103.3448	ADAMS - MITCHLCO3 345.00 345KV CKT 1
FDNS	00NR_G15_076	2	16WP	G15_076	FROM->TO	GR ISLD-LNX3345.00 - GRAND ISLAND 345KV CKT Z	720	720	0.04217	103.332	ELLENDALE - OAKES 230KV CKT 1
FDNS	00NR_G15_076	2	16WP	G15_076	FROM->TO	GR ISLD-LNX3345.00 - GRAND ISLAND 345KV CKT Z	720	720	0.04217	103.332	ELLENDALE - OAKES 230KV CKT 1
FDNS	00NR_G15_076	2	16WP	G15_076	FROM->TO	GR ISLD-LNX3345.00 - GRAND ISLAND 345KV CKT Z	720	720	0.0421	103.3272	GEN641089 2-ENERGY CENTER 2
FDNS	00NR_G15_076	2	16WP	G15_076	FROM->TO	GR ISLD-LNX3345.00 - GRAND ISLAND 345KV CKT Z	720	720	0.04257	103.3142	HURON - WATERTOWN 230KV CKT 2
FDNS	00NR_G15_076	2	16WP	G15_076	FROM->TO	GR ISLD-LNX3345.00 - GRAND ISLAND 345KV CKT Z	720	720	0.04257	103.3142	HURON - WATERTOWN 230KV CKT 2
FDNS	00NR_G15_076	2	16WP	G15_076	FROM->TO	GR ISLD-LNX3345.00 - GRAND ISLAND 345KV CKT Z	720	720	0.04342	103.3113	ARPIN B4 345.00 - EAU CLAIRE 345KV CKT 1
FDNS	00NR_G15_076	2	16WP	G15_076	FROM->TO	GR ISLD-LNX3345.00 - GRAND ISLAND 345KV CKT Z	720	720	0.04197	103.3057	G09_001IST 345.00 - GROTON 345KV CKT 1
FDNS	00NR_G15_076	2	16WP	G15_076	FROM->TO	GR ISLD-LNX3345.00 - GRAND ISLAND 345KV CKT Z	720	720	0.0421	103.2822	GEN338146 1-INDEPENDENCE UNIT #2
FDNS	00NR_G15_076	2	16WP	G15_076	FROM->TO	GR ISLD-LNX3345.00 - GRAND ISLAND 345KV CKT Z	720	720	0.04045	103.279	SPLIT ROCK - WHITE 345KV CKT 1
FDNS	00NR_G15_076	2	16WP	G15_076	FROM->TO	GR ISLD-LNX3345.00 - GRAND ISLAND 345KV CKT Z	720	720	0.04045	103.279	SPLIT ROCK - WHITE 345KV CKT 1
FDNS	00NR_G15_076	2	16WP	G15_076	FROM->TO	GR ISLD-LNX3345.00 - GRAND ISLAND 345KV CKT Z	720	720	0.0421	103.2768	GEN338143 1-INDEPENDENCE UNIT #1
FDNS	00NR_G15_076	2	16WP	G15_076	FROM->TO	GR ISLD-LNX3345.00 - GRAND ISLAND 345KV CKT Z	720	720	0.04217	103.2736	FORMAN - OAKES 230KV CKT 1
FDNS	00NR_G15_076	2	16WP	G15_076	FROM->TO	GR ISLD-LNX3345.00 - GRAND ISLAND 345KV CKT Z	720	720	0.04257	103.2586	CARPENTER - WATERTOWN 230KV CKT 1
FDNS	00NR_G15_076	2	16WP	G15_076	FROM->TO	GR ISLD-LNX3345.00 - GRAND ISLAND 345KV CKT Z	720	720	0.04257	103.2586	CARPENTER - WATERTOWN 230KV CKT 1
FDNS	00NR_G15_076	2	16WP	G15_076	FROM->TO	GR ISLD-LNX3345.00 - GRAND ISLAND 345KV CKT Z	720	720	0.04177	103.2519	PAHOJA - SIOUX FALLS 230KV CKT 1
FDNS	00NR_G15_076	2	16WP	G15_076	FROM->TO	GR ISLD-LNX3345.00 - GRAND ISLAND 345KV CKT Z	720	720	0.04465	103.2493	GRIMES - LEHIGH 345KV CKT 1
FDNS	00NR_G15_076	2	16WP	G15_076	FROM->TO	GR ISLD-LNX3345.00 - GRAND ISLAND 345KV CKT Z	720	720	0.04219	103.2197	CNTSHNT3 345.00 - PRAIRIE3 345.00 345KV CKT 1
FDNS	00NR_G15_076	2	16WP	G15_076	FROM->TO	GR ISLD-LNX3345.00 - GRAND ISLAND 345KV CKT Z	720	720	0.04069	103.1594	FT THOMPSON - WESSINGTON 230KV CKT 1
FDNS	00NR_G15_076	2	16WP	G15_076	FROM->TO	GR ISLD-LNX3345.00 - GRAND ISLAND 345KV CKT Z	720	720	0.04069	103.1594	FT THOMPSON - WESSINGTON 230KV CKT 1
FDNS	00NR_G15_076	2	16WP	G15_076	FROM->TO	GR ISLD-LNX3345.00 - GRAND ISLAND 345KV CKT Z	720	720	0.04331	103.1427	ADAMS - PLEASANT VALLEY 345KV CKT 1
FDNS	00NR_G15_076	2	16WP	G15_076	FROM->TO	GR ISLD-LNX3345.00 - GRAND ISLAND 345KV CKT Z	720	720	0.04211	103.0984	P12:115:NPPD:1091:VALENTN7:MISSION7:BTB
FDNS	00NR_G15_076	2	16WP	G15_076	FROM->TO	GR ISLD-LNX3345.00 - GRAND ISLAND 345KV CKT Z	720	720	0.0421	103.0941	GEN501813 1-RODEMACHER UNIT 3
FDNS	00NR_G15_076	2	16WP	G15_076	FROM->TO	GR ISLD-LNX3345.00 - GRAND ISLAND 345KV CKT Z	720	720	0.04152	103.0701	GERALD GENTLEMAN STATION - SWEETWATER 345KV CKT 1
FDNS	00NR_G15_076	2	16WP	G15_076	FROM->TO	GR ISLD-LNX3345.00 - GRAND ISLAND 345KV CKT Z	720	720	0.04211	103.0384	MISSION - ST FRANCIS 115KV CKT 1
FDNS	00NR_G15_076	2	16WP	G15_076	FROM->TO	GR ISLD-LNX3345.00 - GRAND ISLAND 345KV CKT Z	720	720	0.04376	103.0298	RASMUSN - UTICA JCT 230KV CKT 1
FDNS	00NR_G15_076	2	16WP	G15_076	FROM->TO	GR ISLD-LNX3345.00 - GRAND ISLAND 345KV CKT Z	720	720	0.04251	103.0251	FT THOMPSON - HURON 230KV CKT 1
FDNS	00NR_G15_076	2	16WP	G15_076	FROM->TO	GR ISLD-LNX3345.00 - GRAND ISLAND 345KV CKT Z	720	720	0.04251	103.0251	FT THOMPSON - HURON 230KV CKT 1
FDNS	00NR_G15_076	2	16WP	G15_076	FROM->TO	GR ISLD-LNX3345.00 - GRAND ISLAND 345KV CKT Z	720	720	0.04251	103.0251	FT THOMPSON - HURON 230KV CKT 2
FDNS	00NR_G15_076	2	16WP	G15_076	FROM->TO	GR ISLD-LNX3345.00 - GRAND ISLAND 345KV CKT Z	720	720	0.04251	103.0251	FT THOMPSON - HURON 230KV CKT 2
FDNS	00NR_G15_076	2	16WP	G15_076	FROM->TO	GR ISLD-LNX3345.00 - GRAND ISLAND 345KV CKT Z	720	720	0.04376	103.0113	RASMUSN - SIOUX CITY 230KV CKT 1
FDNS	00NR_G15_076	2	16WP	G15_076	FROM->TO	GR ISLD-LNX3345.00 - GRAND ISLAND 345KV CKT Z	720	720	0.04211	102.9652	HARMONY - ST FRANCIS 115KV CKT 1
FDNS	00NR_G15_076	2	16WP	G15_076	FROM->TO	GR ISLD-LNX3345.00 - GRAND ISLAND 345KV CKT Z	720	720	0.0421	102.9651	GEN335206 1-NELSON UNIT 6
FDNS	00NR_G15_076	2	16WP	G15_076	FROM->TO	GR ISLD-LNX3345.00 - GRAND ISLAND 345KV CKT Z	720	720	0.04177	102.931	EAGLE 4 230.00 - PAHOJA 230KV CKT 1
FDNS	00NR_G15_076	2	16WP	G15_076	FROM->TO	GR ISLD-LNX3345.00 - GRAND ISLAND 345KV CKT Z	720	720	0.04211	102.9116	HARMONY - VALENTINE 115KV CKT 1
FDNS	00NR_G15_076	2	16WP	G15_076	FROM->TO	GR ISLD-LNX3345.00 - GRAND ISLAND 345KV CKT Z	720	720	0.04221	102.8779	FORMAN - HANKINSON 230KV CKT 1
FDNS	00NR_G15_076	2	16WP	G15_076	FROM->TO	GR ISLD-LNX3345.00 - GRAND ISLAND 345KV CKT Z	720	720	0.0434	102.8775	LAKEFIELD 3 - NOBLES 345KV CKT 1
FDNS	00NR_G15_076	2	16WP	G15_076	FROM->TO	GR ISLD-LNX3345.00 - GRAND ISLAND 345KV CKT Z	720	720	0.04233	102.8728	GLENBORO SOUTH - RUGBY 230KV CKT 1
FDNS	00NR_G15_076	2	16WP	G15_076	FROM->TO	GR ISLD-LNX3345.00 - GRAND ISLAND 345KV CKT Z	720	720	0.0424	102.8712	ALEXMRES3 345.00 - BISON 3 345.00 345KV CKT 1
FDNS	00NR_G15_076	2	16WP	G15_076	FROM->TO	GR ISLD-LNX3345.00 - GRAND ISLAND 345KV CKT Z	720	720	0.04222	102.8692	CHISAGO COUNTY - CHISAGO COUNTY 500KV CKT 1
FDNS	00NR_G15_076	2	16WP	G15_076	FROM->TO	GR ISLD-LNX3345.00 - GRAND ISLAND 345KV CKT Z	720	720	0.0421	102.8589	GEN532751 1-WOLF CREEK GENERATING STATION UNIT 1
FDNS	00NR_G15_076	2	16WP	G15_076	FROM->TO	GR ISLD-LNX3345.00 - GRAND ISLAND 345KV CKT Z	720	720	0.0421	102.8587	GEN501812 1-RODEMACHER UNIT 2
FDNS	00NR_G15_076	2	16WP	G15_076	FROM->TO	GR ISLD-LNX3345.00 - GRAND ISLAND 345KV CKT Z	720	720	0.0421	102.8397	GEN344897 4-1LAB G4 20.000
FDNS	00NR_G15_076	2	16WP	G15_076	FROM->TO	GR ISLD-LNX3345.00 - GRAND ISLAND 345KV CKT Z	720	720	0.0421	102.8376	GEN344894 1-1LAB G1 20.000
FDNS	00NR_G15_076	2	16WP	G15_076	FROM->TO	GR ISLD-LNX3345.00 - GRAND ISLAND 345KV CKT Z	720	720	0.0421	102.8375	GEN344896 3-1LAB G3 20.000
FDNS	00NR_G15_076	2	16WP	G15_076	FROM->TO	GR ISLD-LNX3345.00 - GRAND ISLAND 345KV CKT Z	720	720	0.0421	102.8138	GEN345670 1-1RUSH G1 18.000
FDNS	00NR_G15_076	2	16WP	G15_076	FROM->TO	GR ISLD-LNX3345.00 - GRAND ISLAND 345KV CKT Z	720	720	0.0421	102.8136	GEN345671 2-1RUSH G2 18.000

SOLUTION	GROUP	SCENARIO	SEASON	SOURCE	DIRECTION	MONITORED ELEMENT	RATEA (MVA)	RATEB(MVA)	TDF	TC%LOADING (% MVA)	CONTINGENCY
FDNS	00NR_G15_076	2	16WP	G15_076	FROM->TO	GR ISLD-LNX3345.00 - GRAND ISLAND 345KV CKT Z	720	720	0.04042	102.8064	SIOUX CITY - SIOUXCY-LNX3345.00 345KV CKT Z
FDNS	00NR_G15_076	2	16WP	G15_076	FROM->TO	GR ISLD-LNX3345.00 - GRAND ISLAND 345KV CKT Z	720	720	0.0421	102.8041	GEN344895 2-1LAB G2 20.000
FDNS	00NR_G15_076	2	16WP	G15_076	FROM->TO	GR ISLD-LNX3345.00 - GRAND ISLAND 345KV CKT Z	720	720	0.04213	102.7989	CENTER - COYOTE 345KV CKT 1
FDNS	00NR_G15_076	2	16WP	G15_076	FROM->TO	GR ISLD-LNX3345.00 - GRAND ISLAND 345KV CKT Z	720	720	0.04204	102.7652	P12:115:NPPD:WAPA6:FTRANDL7:ONEILL 7:BTB
FDNS	00NR_G15_076	2	16WP	G15_076	FROM->TO	GR ISLD-LNX3345.00 - GRAND ISLAND 345KV CKT Z	720	720	0.04204	102.7652	P12:115:UMZB:# 115 #: SE IN NE. FR-SE-ON
FDNS	00NR_G15_076	2	16WP	G15_076	FROM->TO	GR ISLD-LNX3345.00 - GRAND ISLAND 345KV CKT Z	720	720	0.0421	102.7516	GEN336252 1-NINEMILE POINT UNIT#5
FDNS	00NR_G15_076	2	16WP	G15_076	FROM->TO	GR ISLD-LNX3345.00 - GRAND ISLAND 345KV CKT Z	720	720	0.03943	102.7321	FT THOMPSON (FT2 KU1B) 345/230/13.8KV TRANSFORMER CKT 1
FDNS	00NR_G15_076	2	16WP	G15_076	FROM->TO	GR ISLD-LNX3345.00 - GRAND ISLAND 345KV CKT Z	720	720	0.03943	102.7298	FT THOMPSON (FT2 KU1A) 345/230/13.8KV TRANSFORMER CKT 1
FDNS	00NR_G15_076	2	16WP	G15_076	FROM->TO	GR ISLD-LNX3345.00 - GRAND ISLAND 345KV CKT Z	720	720	0.04167	102.7278	GERALD GENTLEMAN STATION - SWEETWATER 345KV CKT 2
FDNS	00NR_G15_076	2	16WP	G15_076	FROM->TO	GR ISLD-LNX3345.00 - GRAND ISLAND 345KV CKT Z	720	720	0.04204	102.727	FT RANDAL - SPENCER 115KV CKT 1
FDNS	00NR_G15_076	2	16WP	G15_076	FROM->TO	GR ISLD-LNX3345.00 - GRAND ISLAND 345KV CKT Z	720	720	0.04042	102.7224	SIOUXCY-LNX3345.00 - SPLIT ROCK 345KV CKT 1
FDNS	00NR_G15_076	2	16WP	G15_076	FROM->TO	GR ISLD-LNX3345.00 - GRAND ISLAND 345KV CKT Z	720	720	0.04042	102.7224	SIOUXCY-LNX3345.00 - SPLIT ROCK 345KV CKT 1
FDNS	00NR_G15_076	2	16WP	G15_076	FROM->TO	GR ISLD-LNX3345.00 - GRAND ISLAND 345KV CKT Z	720	720	0.0421	102.7186	GEN659118 1-LARAMIE RIVER UNIT1
FDNS	00NR_G15_076	2	16WP	G15_076	FROM->TO	GR ISLD-LNX3345.00 - GRAND ISLAND 345KV CKT Z	720	720	0.0421	102.7121	GEN336831 1-BAXTER WILSON SES
FDNS	00NR_G15_076	2	16WP	G15_076	FROM->TO	GR ISLD-LNX3345.00 - GRAND ISLAND 345KV CKT Z	720	720	0.04222	102.709	LARAMIE RIVER - SIDNEY2-LNX3345.00 345KV CKT 1
FDNS	00NR_G15_076	2	16WP	G15_076	FROM->TO	GR ISLD-LNX3345.00 - GRAND ISLAND 345KV CKT Z	720	720	0.04222	102.697	SIDNEY - SIDNEY2-LNX3345.00 345KV CKT Z
FDNS	00NR_G15_076	2	16WP	G15_076	FROM->TO	GR ISLD-LNX3345.00 - GRAND ISLAND 345KV CKT Z	720	720	0.04042	102.6909	P12:345:UMZW:# 907 #: SC2-SR IN IA. SC2-SR 345 KV LINE
FDNS	00NR_G15_076	2	16WP	G15_076	FROM->TO	GR ISLD-LNX3345.00 - GRAND ISLAND 345KV CKT Z	720	720	0.0421	102.6844	P12:115:UMZW:# 162 #: NEL IN ND. FAULT ON ML-NEL-MX-GA 115 KV
FDNS	00NR_G15_076	2	16WP	G15_076	FROM->TO	GR ISLD-LNX3345.00 - GRAND ISLAND 345KV CKT Z	720	720	0.04211	102.6652	AINSWORTH - VALENTINE 115KV CKT 1
FDNS	00NR_G15_076	2	16WP	G15_076	FROM->TO	GR ISLD-LNX3345.00 - GRAND ISLAND 345KV CKT Z	720	720	0.0421	102.6518	GEN337041 1-GERALD ANDRUS
FDNS	00NR_G15_076	2	16WP	G15_076	FROM->TO	GR ISLD-LNX3345.00 - GRAND ISLAND 345KV CKT Z	720	720	0.04295	102.6232	BYRON - NORTH ROCHESTER 345KV CKT 1
FDNSLock	00NR_G15_076	2	16WP	G15_076	FROM->TO	GR ISLD-LNX3345.00 - GRAND ISLAND 345KV CKT Z	720	720	0.04576	102.6116	STEGALL (SGQ KV3A) 345/230/13.8KV TRANSFORMER CKT 1
FDNS	00NR_G15_076	2	16WP	G15_076	FROM->TO	GR ISLD-LNX3345.00 - GRAND ISLAND 345KV CKT Z	720	720	0.0421	102.6092	GEN334440 1-SABINE UNIT 4
FDNS	00NR_G15_076	2	16WP	G15_076	FROM->TO	GR ISLD-LNX3345.00 - GRAND ISLAND 345KV CKT Z	720	720	0.04295	102.5906	KOSSUTH 3 345.00 - WEBSTER 345KV CKT 1
FDNS	00NR_G15_076	2	16WP	G15_076	FROM->TO	GR ISLD-LNX3345.00 - GRAND ISLAND 345KV CKT Z	720	720	0.04295	102.5847	KOSSUTH 3 345.00 - OBRIEN 3 345.00 345KV CKT 1
FDNS	00NR_G15_076	2	16WP	G15_076	FROM->TO	GR ISLD-LNX3345.00 - GRAND ISLAND 345KV CKT Z	720	720	0.04204	102.5829	ONEILL - SPENCER 115KV CKT 1
FDNS	00NR_G15_076	2	16WP	G15_076	FROM->TO	GR ISLD-LNX3345.00 - GRAND ISLAND 345KV CKT Z	720	720	0.0421	102.5828	GEN336251 1-NINEMILE POINT UNIT#4
FDNS	00NR_G15_076	2	16WP	G15_076	FROM->TO	GR ISLD-LNX3345.00 - GRAND ISLAND 345KV CKT Z	720	720	0.04225	102.5788	BLAIR - GRANITE FALLS 230KV CKT 1
FDNS	00NR_G15_076	2	16WP	G15_076	FROM->TO	GR ISLD-LNX3345.00 - GRAND ISLAND 345KV CKT Z	720	720	0.04225	102.5788	BLAIR - GRANITE FALLS 230KV CKT 1
FDNS	00NR_G15_076	2	16WP	G15_076	FROM->TO	GR ISLD-LNX3345.00 - GRAND ISLAND 345KV CKT Z	720	720	0.0421	102.5696	P13:230-345:NPPD:NUCOR-1
FDNS	00NR_G15_076	2	16WP	G15_076	FROM->TO	GR ISLD-LNX3345.00 - GRAND ISLAND 345KV CKT Z	720	720	0.0421	102.5509	P13:115-230:NPPD:NUCOR-3
FDNS	00NR_G15_076	2	16WP	G15_076	FROM->TO	GR ISLD-LNX3345.00 - GRAND ISLAND 345KV CKT Z	720	720	0.04215	102.5308	GARRISON - JAMES TOWN 230KV CKT 1
FDNS	00NR_G15_076	2	16WP	G15_076	FROM->TO	GR ISLD-LNX3345.00 - GRAND ISLAND 345KV CKT Z	720	720	0.0421	102.5308	GEN525561 1-TOLK GEN #1 24 KV
FDNS	00NR_G15_076	2	16WP	G15_076	FROM->TO	GR ISLD-LNX3345.00 - GRAND ISLAND 345KV CKT Z	720	720	0.04332	102.5203	DENISON - SIOUX CITY 230KV CKT 1
FDNS	00NR_G15_076	2	16WP	G15_076	FROM->TO	GR ISLD-LNX3345.00 - GRAND ISLAND 345KV CKT Z	720	720	0.0421	102.516	P13:230:UMZW:# 2218 #: FP IN MT. LOSS OF TRANSFORMER (AT2).
FDNS	00NR_G15_076	2	16WP	G15_076	FROM->TO	GR ISLD-LNX3345.00 - GRAND ISLAND 345KV CKT Z	720	720	0.04123	102.5159	P12:115:NPPD:1164:ONEILL 7:JEFFREY9:BTB
FDNS	00NR_G15_076	2	16WP	G15_076	FROM->TO	GR ISLD-LNX3345.00 - GRAND ISLAND 345KV CKT Z	720	720	0.04278	102.5069	BROOKING COUNTY - LYON COUNTY 345KV CKT 1
FDNS	00NR_G15_076	2	16WP	G15_076	FROM->TO	GR ISLD-LNX3345.00 - GRAND ISLAND 345KV CKT Z	720	720	0.04224	102.5053	HANKINSON - WAHPETON 230KV CKT 1
FDNS	00NR_G15_076	2	16WP	G15_076	FROM->TO	GR ISLD-LNX3345.00 - GRAND ISLAND 345KV CKT Z	720	720	0.04123	102.5052	CLEARWATER - ONEILL 115KV CKT 1
FDNS	00NR_G15_076	2	16WP	G15_076	FROM->TO	GR ISLD-LNX3345.00 - GRAND ISLAND 345KV CKT Z	720	720	0.04243	102.503	NORTH ROCHESTER - PRAIRIE ISLAND 345KV CKT 1
FDNS	00NR_G15_076	2	16WP	G15_076	FROM->TO	GR ISLD-LNX3345.00 - GRAND ISLAND 345KV CKT Z	720	720	0.04764	102.4986	COLUMEAST - SHELL CREEK 345KV CKT 1
FDNS	00NR_G15_076	2	16WP	G15_076	FROM->TO	GR ISLD-LNX3345.00 - GRAND ISLAND 345KV CKT Z	720	720	0.0421	102.4868	P13:115-345:NPPD:NUCOR-2
FDNS	00NR_G15_076	2	16WP	G15_076	FROM->TO	GR ISLD-LNX3345.00 - GRAND ISLAND 345KV CKT Z	720	720	0.0421	102.4796	GEN303007 1-1BC2 U2
FDNS	00NR_G15_076	2	16WP	G15_076	FROM->TO	GR ISLD-LNX3345.00 - GRAND ISLAND 345KV CKT Z	720	720	0.0421	102.4766	GEN303006 1-1BC2 U1
FDNS	00NR_G15_076	2	16WP	G15_076	FROM->TO	GR ISLD-LNX3345.00 - GRAND ISLAND 345KV CKT Z	720	720	0.0421	102.4764	GEN335204 1-NELSON UNIT 4
FDNS	00NR_G15_076	2	16WP	G15_076	FROM->TO	GR ISLD-LNX3345.00 - GRAND ISLAND 345KV CKT Z	720	720	0.0421	102.4748	GEN336191 1-LITTLE GYPSY UNIT#3
FDNS	00NR_G15_076	2	16WP	G15_076	FROM->TO	GR ISLD-LNX3345.00 - GRAND ISLAND 345KV CKT Z	720	720	0.0421	102.4733	GEN642067 1-PLATTE
FDNS	00NR_G15_076	2	16WP	G15_076	FROM->TO	GR ISLD-LNX3345.00 - GRAND ISLAND 345KV CKT Z	720	720	0.04123	102.4731	CLEARWATER - NELIGH 115KV CKT 1
FDNS	00NR_G15_076	2	16WP	G15_076	FROM->TO	GR ISLD-LNX3345.00 - GRAND ISLAND 345KV CKT Z	720	720	0.0421	102.4495	GEN531447 1-HOLCOMB GENERATOR
FDNS	00NR_G15_076	2	16WP	G15_076	FROM->TO	GR ISLD-LNX3345.00 - GRAND ISLAND 345KV CKT Z	720	720	0.0421	102.4428	GEN336801 1-BAXTER WILSON UNIT #1
FDNS	00NR_G15_076	2	16WP	G15_076	FROM->TO	GR ISLD-LNX3345.00 - GRAND ISLAND 345KV CKT Z	720	720	0.04296	102.4425	BYRON - PLEASANT VALLEY 345KV CKT 1
FDNS	00NR_G15_076	2	16WP	G15_076	FROM->TO	GR ISLD-LNX3345.00 - GRAND ISLAND 345KV CKT Z	720	720	0.0421	102.4384	GEN335614 1-WILLOW GLENN UNIT#4
FDNS	00NR_G15_076	2	16WP	G15_076	FROM->TO	GR ISLD-LNX3345.00 - GRAND ISLAND 345KV CKT Z	720	720	0.0421	102.428	GEN336464 1-MICHOUD UNIT #3
FDNS	00NR_G15_076	2	16WP	G15_076	FROM->TO	GR ISLD-LNX3345.00 - GRAND ISLAND 345KV CKT Z	720	720	0.0421	102.4276	GEN303008 1-1BC2 U3
FDNS	00NR_G15_076	2	16WP	G15_076	FROM->TO	GR ISLD-LNX3345.00 - GRAND ISLAND 345KV CKT Z	720	720	0.0421	102.4226	GEN336170 1-GULF OXY U4
FDNS	00NR_G15_076	2	16WP	G15_076	FROM->TO	GR ISLD-LNX3345.00 - GRAND ISLAND 345KV CKT Z	720	720	0.0421	102.4125	GEN334441 1-SABINE UNIT 5
FDNS	00NR_G15_076	2	16WP	G15_076	FROM->TO	GR ISLD-LNX3345.00 - GRAND ISLAND 345KV CKT Z	720	720	0.04062	102.4124	MENNO JCT - TRIPP JCT 115KV CKT 1
FDNS	00NR_G15_076	2	16WP	G15_076	FROM->TO	GR ISLD-LNX3345.00 - GRAND ISLAND 345KV CKT Z	720	720	0.04216	102.4055	BISMARK - JAMES TOWN 230KV CKT 1
FDNS	00NR_G15_076	2	16WP	G15_076	FROM->TO	GR ISLD-LNX3345.00 - GRAND ISLAND 345KV CKT Z	720	720	0.04835	102.4031	COLUMEAST - NW68TH & HOLDREGE 345KV CKT 1
FDNS	00NR_G15_076	2	16WP	G15_076	FROM->TO	GR ISLD-LNX3345.00 - GRAND ISLAND 345KV CKT Z	720	720	0.04835	102.4031	COLUMEAST - NW68TH & HOLDREGE 345KV CKT 1
FDNS	00NR_G15_076	2	16WP	G15_076	FROM->TO	GR ISLD-LNX3345.00 - GRAND ISLAND 345KV CKT Z	720	720	0.04216	102.393	BISMARK - WEBER 230KV CKT 1
FDNS	00NR_G15_076	2	16WP	G15_076	FROM->TO	GR ISLD-LNX3345.00 - GRAND ISLAND 345KV CKT Z	720	720	0.04216	102.3912	JAMES TOWN - WEBER 230KV CKT 1
FDNS	00NR_G15_076	2	16WP	G15_076	FROM->TO	GR ISLD-LNX3345.00 - GRAND ISLAND 345KV CKT Z	720	720	0.0421	102.3888	GRAND GULF 500/22.0KV TRANSFORMER CKT 1
FDNS	00NR_G15_076	2	16WP	G15_076	FROM->TO	GR ISLD-LNX3345.00 - GRAND ISLAND 345KV CKT Z	720	720	0.0421	102.386	GEN501811 1-RODEMACHER UNIT 1
FDNS	00NR_G15_076	2	16WP	G15_076	FROM->TO	GR ISLD-LNX3345.00 - GRAND ISLAND 345KV CKT Z	720	720	0.04235	102.3859	APPLEDORN 4 230.00 - WATERTOWN 230KV CKT 1
FDNS	00NR_G15_076	2	16WP	G15_076	FROM->TO	GR ISLD-LNX3345.00 - GRAND ISLAND 345KV CKT Z	720	720	0.04235	102.3859	APPLEDORN 4 230.00 - WATERTOWN 230KV CKT 1
FDNS	00NR_G15_076	2	16WP	G15_076	FROM->TO	GR ISLD-LNX3345.00 - GRAND ISLAND 345KV CKT Z	720	720	0.0421	102.3468	PRAIRIE ISLAND 345/20.0KV TRANSFORMER CKT 1
FDNS	00NR_G15_076	2	16WP	G15_076	FROM->TO	GR ISLD-LNX3345.00 - GRAND ISLAND 345KV CKT Z	720	720	0.0421	102.3441	PRAIRIE ISLAND 345/20.0KV TRANSFORMER CKT 2
FDNS	00NR_G15_076	2	16WP	G15_076	FROM->TO	GR ISLD-LNX3345.00 - GRAND ISLAND 345KV CKT Z	720	720	0.04532	102.341	BLOOMFIELD - CREIGHTON 115KV CKT 1
FDNS	00NR_G15_076	2	16WP	G15_076	FROM->TO	GR ISLD-LNX3345.00 - GRAND ISLAND 345KV CKT Z	720	720	0.0421	102.3374	GEN334433 1-SABINE UNIT 3
FDNS	00NR_G15_076	2	16WP	G15_076	FROM->TO	GR ISLD-LNX3345.00 - GRAND ISLAND 345KV CKT Z	720	720	0.0421	102.3296	GEN334071 1-LEWIS CREEK 2
FDNS	00NR_G15_076	2	16WP	G15_076	FROM->TO	GR ISLD-LNX3345.00 - GRAND ISLAND 345KV CKT Z	720	720	0.04216	102.3254	FARGO - JAMES TOWN 230KV CKT 1
FDNS	00NR_G15_076	2	16WP	G15_076	FROM->TO	GR ISLD-LNX3345.00 - GRAND ISLAND 345KV CKT Z	720	720	0.0421	102.3253	GEN334070 1-LEWIS CREEK 1

SOLUTION	GROUP	SCENARIO	SEASON	SOURCE	DIRECTION	MONITORED ELEMENT	RATEA (MVA)	RATEB(MVA)	TDF	TC%LOADING (% MVA)	CONTINGENCY
FDNS	00NR_G15_076	2	16WP	G15_076	FROM->TO	GR ISLD-LNX3345.00 - GRAND ISLAND 345KV CKT Z	720	720	0.05929	102.3229	BELDEN - HOSKINS 115KV CKT 1
FDNS	00NR_G15_076	2	16WP	G15_076	FROM->TO	GR ISLD-LNX3345.00 - GRAND ISLAND 345KV CKT Z	720	720	0.04235	102.3227	APPLEDORN 4 230.00 - GRANITE FALLS 230KV CKT 1
FDNS	00NR_G15_076	2	16WP	G15_076	FROM->TO	GR ISLD-LNX3345.00 - GRAND ISLAND 345KV CKT Z	720	720	0.04235	102.3227	APPLEDORN 4 230.00 - GRANITE FALLS 230KV CKT 1
FDNS	00NR_G15_076	2	16WP	G15_076	FROM->TO	GR ISLD-LNX3345.00 - GRAND ISLAND 345KV CKT Z	720	720	0.0421	102.3198	GEN338388 1-1PLUM PT U1 23.000
FDNS	00NR_G15_076	2	16WP	G15_076	FROM->TO	GR ISLD-LNX3345.00 - GRAND ISLAND 345KV CKT Z	720	720	0.0421	102.3147	GEN337766 1-TRACTEBEL UNIT S1
FDNS	00NR_G15_076	2	16WP	G15_076	FROM->TO	GR ISLD-LNX3345.00 - GRAND ISLAND 345KV CKT Z	720	720	0.0421	102.31	GEN525562 1-TOLK GEN #2 24 KV
FDNS	00NR_G15_076	2	16WP	G15_076	FROM->TO	GR ISLD-LNX3345.00 - GRAND ISLAND 345KV CKT Z	720	720	0.04216	102.3093	FARGO - JAMES TOWN 230KV CKT 2
FDNS	00NR_G15_076	2	16WP	G15_076	FROM->TO	GR ISLD-LNX3345.00 - GRAND ISLAND 345KV CKT Z	720	720	0.04222	102.3065	FERGSFL4 230.00 - WAHPETON 230KV CKT 1
FDNS	00NR_G15_076	2	16WP	G15_076	FROM->TO	GR ISLD-LNX3345.00 - GRAND ISLAND 345KV CKT Z	720	720	0.04212	102.2985	BALTA - RAMSEY 230KV CKT 1
FDNS	00NR_G15_076	2	16WP	G15_076	FROM->TO	GR ISLD-LNX3345.00 - GRAND ISLAND 345KV CKT Z	720	720	0.04062	102.2978	MENNO JCT - UTICA 115KV CKT 1
FDNS	00NR_G15_076	2	16WP	G15_076	FROM->TO	GR ISLD-LNX3345.00 - GRAND ISLAND 345KV CKT Z	720	720	0.04218	102.2946	AUDUBON - SHEYNNE 230KV CKT 1
FDNS	00NR_G15_076	2	16WP	G15_076	FROM->TO	GR ISLD-LNX3345.00 - GRAND ISLAND 345KV CKT Z	720	720	0.04328	102.2938	ARKANSAS NUCLEAR ONE - FT SMITH 500KV CKT 1
FDNS	00NR_G15_076	2	16WP	G15_076	FROM->TO	GR ISLD-LNX3345.00 - GRAND ISLAND 345KV CKT Z	720	720	0.04328	102.2938	ARKANSAS NUCLEAR ONE - FT SMITH 500KV CKT 1
FDNS	00NR_G15_076	2	16WP	G15_076	FROM->TO	GR ISLD-LNX3345.00 - GRAND ISLAND 345KV CKT Z	720	720	0.0421	102.2821	GEN501910 1-ACADIA UNIT ST1
FDNS	00NR_G15_076	2	16WP	G15_076	FROM->TO	GR ISLD-LNX3345.00 - GRAND ISLAND 345KV CKT Z	720	720	0.0419	102.2819	OVEXFRMCCOVE
FDNS	00NR_G15_076	2	16WP	G15_076	FROM->TO	GR ISLD-LNX3345.00 - GRAND ISLAND 345KV CKT Z	720	720	0.04062	102.2792	P12:115:UMZZ:# 237 #: MEN IN SD. MENNO JUNCTION IS A TAP (UJ-MEN-TP).
FDNS	00NR_G15_076	2	16WP	G15_076	FROM->TO	GR ISLD-LNX3345.00 - GRAND ISLAND 345KV CKT Z	720	720	0.04229	102.2663	NORTH LA CROSSE - NORTH ROCHESTER 345KV CKT 1
FDNS	00NR_G15_076	2	16WP	G15_076	FROM->TO	GR ISLD-LNX3345.00 - GRAND ISLAND 345KV CKT Z	720	720	0.0421	102.2643	ELM CREEK - MONTICELLO 345KV CKT 1
FDNS	00NR_G15_076	2	16WP	G15_076	FROM->TO	GR ISLD-LNX3345.00 - GRAND ISLAND 345KV CKT Z	720	720	0.0421	102.2642	P12:345:GRDA:CHOUTEAU-SPORTSMANACRES
FDNS	00NR_G15_076	2	16WP	G15_076	FROM->TO	GR ISLD-LNX3345.00 - GRAND ISLAND 345KV CKT Z	720	720	0.0421	102.2603	WHITE BLUFF 500/26.0KV TRANSFORMER CKT 1
FDNS	00NR_G15_076	2	16WP	G15_076	FROM->TO	GR ISLD-LNX3345.00 - GRAND ISLAND 345KV CKT Z	720	720	0.04235	102.2572	GENOA 161 - SENECA 161 161KV CKT 1
FDNS	00NR_G15_076	2	16WP	G15_076	FROM->TO	GR ISLD-LNX3345.00 - GRAND ISLAND 345KV CKT Z	720	720	0.0421	102.255	GEN562547 1-G14_039_3 0.6900
FDNS	00NR_G15_076	2	16WP	G15_076	FROM->TO	GR ISLD-LNX3345.00 - GRAND ISLAND 345KV CKT Z	720	720	0.0421	102.2534	GEN336222 1-LITTLE GYPSY UNIT#2
FDNS	00NR_G15_076	2	16WP	G15_076	FROM->TO	GR ISLD-LNX3345.00 - GRAND ISLAND 345KV CKT Z	720	720	0.04229	102.2415	NORTH LA CROSSE (10008630_001) 345/161/34.5KV TRANSFORMER CKT 9
FDNS	00NR_G15_076	2	16WP	G15_076	FROM->TO	GR ISLD-LNX3345.00 - GRAND ISLAND 345KV CKT Z	720	720	0.0421	102.2406	P12:161:GRDA:KERR-SALINA-CKT1
FDNS	00NR_G15_076	2	16WP	G15_076	FROM->TO	GR ISLD-LNX3345.00 - GRAND ISLAND 345KV CKT Z	720	720	0.0421	102.2406	P12:161:GRDA:KERR-SALINA-CKT2
FDNS	00NR_G15_076	2	16WP	G15_076	FROM->TO	GR ISLD-LNX3345.00 - GRAND ISLAND 345KV CKT Z	720	720	0.04275	102.2375	FRANKS - HUBEN 345KV CKT 1
FDNS	00NR_G15_076	2	16WP	G15_076	FROM->TO	GR ISLD-LNX3345.00 - GRAND ISLAND 345KV CKT Z	720	720	0.0421	102.237	GEN337764 1-TRACTEBEL UNIT C1
FDNS	00NR_G15_076	2	16WP	G15_076	FROM->TO	GR ISLD-LNX3345.00 - GRAND ISLAND 345KV CKT Z	720	720	0.0421	102.237	GEN337765 1-TRACTEBEL UNIT C2
FDNS	00NR_G15_076	2	16WP	G15_076	FROM->TO	GR ISLD-LNX3345.00 - GRAND ISLAND 345KV CKT Z	720	720	0.0421	102.237	GEN562023 1-G11_020_3 0.6900
FDNS	00NR_G15_076	2	16WP	G15_076	FROM->TO	GR ISLD-LNX3345.00 - GRAND ISLAND 345KV CKT Z	720	720	0.0421	102.237	GEN562026 1-G11_019_3 0.6900
FDNS	00NR_G15_076	2	16WP	G15_076	FROM->TO	GR ISLD-LNX3345.00 - GRAND ISLAND 345KV CKT Z	720	720	0.0422	102.2311	P13:115-230:TSGT:SIDNEY-KV1A
FDNS	00NR_G15_076	2	16WP	G15_076	FROM->TO	GR ISLD-LNX3345.00 - GRAND ISLAND 345KV CKT Z	720	720	0.0421	102.2271	GEN336152 1-WATERFORD UNIT#2
FDNS	00NR_G15_076	2	16WP	G15_076	FROM->TO	GR ISLD-LNX3345.00 - GRAND ISLAND 345KV CKT Z	720	720	0.0421	102.2262	GEN336151 1-WATERFORD UNIT#1
FDNS	00NR_G15_076	2	16WP	G15_076	FROM->TO	GR ISLD-LNX3345.00 - GRAND ISLAND 345KV CKT Z	720	720	0.04364	102.2249	PETERSBRG.N7115.00 - PETERSBURG 115KV CKT Z1
FDNS	00NR_G15_076	2	16WP	G15_076	FROM->TO	GR ISLD-LNX3345.00 - GRAND ISLAND 345KV CKT Z	720	720	0.04364	102.2234	P12:115:NPPD:1168B:ALBION 7:PETERSBRG.N7:BTB
FDNS	00NR_G15_076	2	16WP	G15_076	FROM->TO	GR ISLD-LNX3345.00 - GRAND ISLAND 345KV CKT Z	720	720	0.04364	102.2068	ALBION - PETERSBURG 115KV CKT 1
FDNS	00NR_G15_076	2	16WP	G15_076	FROM->TO	GR ISLD-LNX3345.00 - GRAND ISLAND 345KV CKT Z	720	720	0.04119	101.8423	GRAND ISLAND - RIVERDALE 230KV CKT 1
FDNS	00NR_G15_076	2	16WP	G15_076	FROM->TO	GR ISLD-LNX3345.00 - GRAND ISLAND 345KV CKT Z	720	720	0.0421	101.7888	BASE CASE
FDNS	00NR_G15_076	2	16WP	G15_076	FROM->TO	GR ISLD-LNX3345.00 - GRAND ISLAND 345KV CKT Z	720	720	0.04284	101.5285	KELLY - SHELL CREEK 230KV CKT 1
FDNS	00NR_G15_076	2	16WP	G15_076	FROM->TO	GR ISLD-LNX3345.00 - GRAND ISLAND 345KV CKT Z	720	720	0.04284	101.5278	SHELL CREEK (SHELLCREEKT1) 345/230/13.8KV TRANSFORMER CKT 1
FDNS	00NR_G15_076	2	16WP	G15_076	FROM->TO	GR ISLD-LNX3345.00 - GRAND ISLAND 345KV CKT Z	720	720	0.04284	101.5278	SHELL CREEK (SHELLCREEKT1) 345/230/13.8KV TRANSFORMER CKT 1
FDNS	00NR_G15_076	2	16WP	G15_076	FROM->TO	GR ISLD-LNX3345.00 - GRAND ISLAND 345KV CKT Z	720	720	0.0421	101.5015	GEN645001 1-FORT CALHOUN 1
FDNS	00NR_G15_076	2	16WP	G15_076	FROM->TO	GR ISLD-LNX3345.00 - GRAND ISLAND 345KV CKT Z	720	720	0.04213	101.4397	AURORA - GRAND ISLAND 115KV CKT 1
FDNS	00NR_G15_076	2	16WP	G15_076	FROM->TO	GR ISLD-LNX3345.00 - GRAND ISLAND 345KV CKT Z	720	720	0.03931	101.4163	MINGO - SETAB 345KV CKT 1
FDNS	00NR_G15_076	2	16WP	G15_076	FROM->TO	GR ISLD-LNX3345.00 - GRAND ISLAND 345KV CKT Z	720	720	0.03931	101.4163	MINGO - SETAB 345KV CKT 1
FDNS	00NR_G15_076	2	16WP	G15_076	FROM->TO	GR ISLD-LNX3345.00 - GRAND ISLAND 345KV CKT Z	720	720	0.04419	101.4125	MOORE - NW68TH & HOLDREGE 345KV CKT 1
FDNS	00NR_G15_076	2	16WP	G15_076	FROM->TO	GR ISLD-LNX3345.00 - GRAND ISLAND 345KV CKT Z	720	720	0.04419	101.4125	MOORE - NW68TH & HOLDREGE 345KV CKT 1
FDNS	00NR_G15_076	2	16WP	G15_076	FROM->TO	GR ISLD-LNX3345.00 - GRAND ISLAND 345KV CKT Z	720	720	0.04214	101.402	CRETE - FRIEND 115KV CKT 1
FDNS	00NR_G15_076	2	16WP	G15_076	FROM->TO	GR ISLD-LNX3345.00 - GRAND ISLAND 345KV CKT Z	720	720	0.04358	101.3446	LOUP CITY - NORTH LOUP 115KV CKT 1
FDNS	00NR_G15_076	2	16WP	G15_076	FROM->TO	GR ISLD-LNX3345.00 - GRAND ISLAND 345KV CKT Z	720	720	0.04184	101.3444	G14-074T 345.00 - OKLAUNION 345KV CKT 1
FDNS	00NR_G15_076	2	16WP	G15_076	FROM->TO	GR ISLD-LNX3345.00 - GRAND ISLAND 345KV CKT Z	720	720	0.04223	101.3347	ANTELOP-LNX3345.00 - BRDLAND-LNX3345.00 345KV CKT 1
FDNS	00NR_G15_076	2	16WP	G15_076	FROM->TO	GR ISLD-LNX3345.00 - GRAND ISLAND 345KV CKT Z	720	720	0.0421	101.3303	CLKREACT5 161.00 - LIME CREEK 5 SPLITS INTO LIME EAST TO A 161KV CKT 1
FDNS	00NR_G15_076	2	16WP	G15_076	FROM->TO	GR ISLD-LNX3345.00 - GRAND ISLAND 345KV CKT Z	720	720	0.0421	101.327	GEN659116 1-SPIRIT MOUND UNIT1
FDNS	00NR_G15_076	2	16WP	G15_076	FROM->TO	GR ISLD-LNX3345.00 - GRAND ISLAND 345KV CKT Z	720	720	0.0421	101.327	GEN659117 2-SPIRIT MOUND UNIT2
FDNS	00NR_G15_076	2	16WP	G15_076	FROM->TO	GR ISLD-LNX3345.00 - GRAND ISLAND 345KV CKT Z	720	720	0.04247	101.3186	GRAND ISLAND (GI KU3A) 345/230/13.8KV TRANSFORMER CKT 3
FDNS	00NR_G15_076	2	16WP	G15_076	FROM->TO	GR ISLD-LNX3345.00 - GRAND ISLAND 345KV CKT Z	720	720	0.04247	101.3186	GRAND ISLAND (GI KU3A) 345/230/13.8KV TRANSFORMER CKT 3
FDNSLock	00NR_G15_076	2	16WP	G15_076	FROM->TO	GR ISLD-LNX3345.00 - GRAND ISLAND 345KV CKT Z	720	720	0.0423	101.3176	STEGALL - VICTORY HILL 230KV CKT 1
FDNS	00NR_G15_076	2	16WP	G15_076	FROM->TO	GR ISLD-LNX3345.00 - GRAND ISLAND 345KV CKT Z	720	720	0.0421	101.3151	GEN562003 1-G11_027_3 0.6900
FDNS	00NR_G15_076	2	16WP	G15_076	FROM->TO	GR ISLD-LNX3345.00 - GRAND ISLAND 345KV CKT Z	720	720	0.0421	101.315	CLKREACT5 161.00 - CRYSTLK5 161.00 161KV CKT 1
FDNS	00NR_G15_076	2	16WP	G15_076	FROM->TO	GR ISLD-LNX3345.00 - GRAND ISLAND 345KV CKT Z	720	720	0.0423	101.3138	VICTORY HILL (VICTORYHL T1) 230/115/13.8KV TRANSFORMER CKT 1
FDNS	00NR_G15_076	2	16WP	G15_076	FROM->TO	GR ISLD-LNX3345.00 - GRAND ISLAND 345KV CKT Z	720	720	0.0423	101.3138	VICTORY HILL (VICTORYHL T1) 230/115/13.8KV TRANSFORMER CKT 1
FDNS	00NR_G15_076	2	16WP	G15_076	FROM->TO	GR ISLD-LNX3345.00 - GRAND ISLAND 345KV CKT Z	720	720	0.0421	101.3062	GEN620115 1-HRDLKGEN 0.6000
FDNS	00NR_G15_076	2	16WP	G15_076	FROM->TO	GR ISLD-LNX3345.00 - GRAND ISLAND 345KV CKT Z	720	720	0.04222	101.2969	LARAMIE RIVER - STEGALL 345KV CKT 1
FDNS	00NR_G15_076	2	16WP	G15_076	FROM->TO	GR ISLD-LNX3345.00 - GRAND ISLAND 345KV CKT Z	720	720	0.0421	101.2775	GEN672340 1-QUEEN ELIZABETH GENERATOR 1
FDNS	00NR_G15_076	2	16WP	G15_076	FROM->TO	GR ISLD-LNX3345.00 - GRAND ISLAND 345KV CKT Z	720	720	0.0421	101.2772	GEN600013 3-BLACK DOG GEN 3
FDNS	00NR_G15_076	2	16WP	G15_076	FROM->TO	GR ISLD-LNX3345.00 - GRAND ISLAND 345KV CKT Z	720	720	0.0421	101.2704	MITCHLCO3 345.00 345/34.5KV TRANSFORMER CKT 1
FDNS	00NR_G15_076	2	16WP	G15_076	FROM->TO	GR ISLD-LNX3345.00 - GRAND ISLAND 345KV CKT Z	720	720	0.04223	101.2625	ANTELOP-LNX3345.00 - ANTELOPE VALLEY 345KV CKT Z
FDNS	00NR_G15_076	2	16WP	G15_076	FROM->TO	GR ISLD-LNX3345.00 - GRAND ISLAND 345KV CKT Z	720	720	0.0421	101.2596	GEN659018 1-G14_003IS_3 0.6900
FDNS	00NR_G15_076	2	16WP	G15_076	FROM->TO	GR ISLD-LNX3345.00 - GRAND ISLAND 345KV CKT Z	720	720	0.04232	101.2578	P12:115:UMZW:# 172 #: WI IN SD.
FDNS	00NR_G15_076	2	16WP	G15_076	FROM->TO	GR ISLD-LNX3345.00 - GRAND ISLAND 345KV CKT Z	720	720	0.0421	101.2524	GEN672384 1-CENTENNIAL WINDFARM
FDNS	00NR_G15_076	2	16WP	G15_076	FROM->TO	GR ISLD-LNX3345.00 - GRAND ISLAND 345KV CKT Z	720	720	0.0421	101.2507	GEN600125 2-FEP ST G 13.800
FDNS	00NR_G15_076	2	16WP	G15_076	FROM->TO	GR ISLD-LNX3345.00 - GRAND ISLAND 345KV CKT Z	720	720	0.0421	101.2419	LADISH 115/13.2KV TRANSFORMER CKT 1

SOLUTION	GROUP	SCENARIO	SEASON	SOURCE	DIRECTION	MONITORED ELEMENT	RATEA (MVA)	RATEB(MVA)	TDF	TC%LOADING (% MVA)	CONTINGENCY
FDNS	00NR_G15_076	2	16WP	G15_076	FROM->TO	GR ISLD-LNX3345.00 - GRAND ISLAND 345KV CKT Z	720	720	0.0421	101.2393	GEN620323 2-HOOT LAKE 2 GEN
FDNS	00NR_G15_076	2	16WP	G15_076	FROM->TO	GR ISLD-LNX3345.00 - GRAND ISLAND 345KV CKT Z	720	720	0.0421	101.2339	GEN659354 1-DEERCREK STG18.000
FDNS	00NR_G15_076	2	16WP	G15_076	FROM->TO	GR ISLD-LNX3345.00 - GRAND ISLAND 345KV CKT Z	720	720	0.04179	101.232	SMOKYHL6 230.00 - SUMMIT 230KV CKT 1
FDNS	00NR_G15_076	2	16WP	G15_076	FROM->TO	GR ISLD-LNX3345.00 - GRAND ISLAND 345KV CKT Z	720	720	0.0421	101.2223	GEN657964 1-ASH2GEN9 0.5750
FDNS	00NR_G15_076	2	16WP	G15_076	FROM->TO	GR ISLD-LNX3345.00 - GRAND ISLAND 345KV CKT Z	720	720	0.04333	101.2211	AXTELL - PAULINE 345KV CKT 1
FDNS	00NR_G15_076	2	16WP	G15_076	FROM->TO	GR ISLD-LNX3345.00 - GRAND ISLAND 345KV CKT Z	720	720	0.0421	101.2147	GEN652546 1-FT RANDAL
FDNS	00NR_G15_076	2	16WP	G15_076	FROM->TO	GR ISLD-LNX3345.00 - GRAND ISLAND 345KV CKT Z	720	720	0.04352	101.2062	CENTRAL CITY - GRAND ISLAND 115KV CKT 1
FDNS	00NR_G15_076	2	16WP	G15_076	FROM->TO	GR ISLD-LNX3345.00 - GRAND ISLAND 345KV CKT Z	720	720	0.0504	101.1962	COLUMWEST - KELLY 230KV CKT 1
FDNS	00NR_G15_076	2	16WP	G15_076	FROM->TO	GR ISLD-LNX3345.00 - GRAND ISLAND 345KV CKT Z	720	720	0.0431	101.1942	7MAYWOOD 345.00 - 7SPENCER 345.00 345KV CKT 1
FDNS	00NR_G15_076	2	16WP	G15_076	FROM->TO	GR ISLD-LNX3345.00 - GRAND ISLAND 345KV CKT Z	720	720	0.0431	101.1934	7MONTGMRY 345.00 - 7SPENCER 345.00 345KV CKT 1
FDNS	00NR_G15_076	2	16WP	G15_076	FROM->TO	GR ISLD-LNX3345.00 - GRAND ISLAND 345KV CKT Z	720	720	0.04186	101.1916	FALLOW 3 345.00 - POTTCO 3 345.00 345KV CKT 1
FDNS	00NR_G15_076	2	16WP	G15_076	FROM->TO	GR ISLD-LNX3345.00 - GRAND ISLAND 345KV CKT Z	720	720	0.0421	101.1914	GEN635213 3-NEAL UNIT 3
FDNS	00NR_G15_076	2	16WP	G15_076	FROM->TO	GR ISLD-LNX3345.00 - GRAND ISLAND 345KV CKT Z	720	720	0.0421	101.1862	GEN600018 S-LS POWER STEAM
FDNS	00NR_G15_076	2	16WP	G15_076	FROM->TO	GR ISLD-LNX3345.00 - GRAND ISLAND 345KV CKT Z	720	720	0.0421	101.1835	GEN659290 1-EDGECOL
FDNS	00NR_G15_076	2	16WP	G15_076	FROM->TO	GR ISLD-LNX3345.00 - GRAND ISLAND 345KV CKT Z	720	720	0.0421	101.1798	GEN590010 1-ERCOT EQUIVALENCE
FDNS	00NR_G15_076	2	16WP	G15_076	FROM->TO	GR ISLD-LNX3345.00 - GRAND ISLAND 345KV CKT Z	720	720	0.0421	101.1798	GEN652548 5-FT RANDAL
FDNS	00NR_G15_076	2	16WP	G15_076	FROM->TO	GR ISLD-LNX3345.00 - GRAND ISLAND 345KV CKT Z	720	720	0.0421	101.1798	GEN652549 7-FT RANDAL
FDNS	00NR_G15_076	2	16WP	G15_076	FROM->TO	GR ISLD-LNX3345.00 - GRAND ISLAND 345KV CKT Z	720	720	0.0421	101.1781	GEN652547 3-FT RANDAL
FDNS	00NR_G15_076	2	16WP	G15_076	FROM->TO	GR ISLD-LNX3345.00 - GRAND ISLAND 345KV CKT Z	720	720	0.0421	101.1714	G830_SUB 115.00 - GRE-MCHENRY7115.00 115KV CKT 1
FDNS	00NR_G15_076	2	16WP	G15_076	FROM->TO	GR ISLD-LNX3345.00 - GRAND ISLAND 345KV CKT Z	720	720	0.0421	101.1658	G830_SUB 115.00 115/34.5KV TRANSFORMER CKT 1
FDNS	00NR_G15_076	2	16WP	G15_076	FROM->TO	GR ISLD-LNX3345.00 - GRAND ISLAND 345KV CKT Z	720	720	0.0421	101.1595	GEN652410 3-FT PECK
FDNS	00NR_G15_076	2	16WP	G15_076	FROM->TO	GR ISLD-LNX3345.00 - GRAND ISLAND 345KV CKT Z	720	720	0.0421	101.1587	GEN300003 1-THOMAS HILL UNIT 3
FDNS	00NR_G15_076	2	16WP	G15_076	FROM->TO	GR ISLD-LNX3345.00 - GRAND ISLAND 345KV CKT Z	720	720	0.0421	101.1509	GEN590011 2-ERCOT EQUIVALENCE
FDNS	00NR_G15_076	2	16WP	G15_076	FROM->TO	GR ISLD-LNX3345.00 - GRAND ISLAND 345KV CKT Z	720	720	0.04129	101.1468	POST ROCK (POSTROCK T1) 345/230/13.8KV TRANSFORMER CKT 1
FDNS	00NR_G15_076	2	16WP	G15_076	FROM->TO	GR ISLD-LNX3345.00 - GRAND ISLAND 345KV CKT Z	720	720	0.04253	101.1399	SUB 3454 - WAGENER 345KV CKT 1
FDNS	00NR_G15_076	2	16WP	G15_076	FROM->TO	GR ISLD-LNX3345.00 - GRAND ISLAND 345KV CKT Z	720	720	0.04253	101.1399	SUB 3454 - WAGENER 345KV CKT 1
FDNS	00NR_G15_076	2	16WP	G15_076	FROM->TO	GR ISLD-LNX3345.00 - GRAND ISLAND 345KV CKT Z	720	720	0.0421	101.1361	EASTDC - ERCOT EQUIVALENCE 345KV CKT 1
FDNS	00NR_G15_076	2	16WP	G15_076	FROM->TO	GR ISLD-LNX3345.00 - GRAND ISLAND 345KV CKT Z	720	720	0.0421	101.1245	GEN672347 1-CORY COGEN GENERATOR 1 GT1
FDNS	00NR_G15_076	2	16WP	G15_076	FROM->TO	GR ISLD-LNX3345.00 - GRAND ISLAND 345KV CKT Z	720	720	0.0421	101.1245	GEN672348 2-CORY COGEN GENERATOR 2 GT2
FDNS	00NR_G15_076	2	16WP	G15_076	FROM->TO	GR ISLD-LNX3345.00 - GRAND ISLAND 345KV CKT Z	720	720	0.0421	101.1197	GEN672352 3-NIPAWIN GENERATOR 3
FDNS	00NR_G15_076	2	16WP	G15_076	FROM->TO	GR ISLD-LNX3345.00 - GRAND ISLAND 345KV CKT Z	720	720	0.0421	101.1195	GEN672350 1-NIPAWIN GENERATOR 1
FDNS	00NR_G15_076	2	16WP	G15_076	FROM->TO	GR ISLD-LNX3345.00 - GRAND ISLAND 345KV CKT Z	720	720	0.0421	101.1195	GEN672351 2-NIPAWIN GENERATOR 2
FDNS	00NR_G15_076	2	16WP	G15_076	FROM->TO	GR ISLD-LNX3345.00 - GRAND ISLAND 345KV CKT Z	720	720	0.04185	101.1008	MADISON COUNTY - RLHILLS3 345.00 345KV CKT 1
FDNS	00NR_G15_076	2	16WP	G15_076	FROM->TO	GR ISLD-LNX3345.00 - GRAND ISLAND 345KV CKT Z	720	720	0.0421	101.0997	GEN652414 4-FT PECK
FDNS	00NR_G15_076	2	16WP	G15_076	FROM->TO	GR ISLD-LNX3345.00 - GRAND ISLAND 345KV CKT Z	720	720	0.0421	101.0997	GEN652415 5-FT PECK
FDNS	00NR_G15_076	2	16WP	G15_076	FROM->TO	GR ISLD-LNX3345.00 - GRAND ISLAND 345KV CKT Z	720	720	0.0421	101.0996	GEN657600 1-L1GEN3 9 0.5750
FDNS	00NR_G15_076	2	16WP	G15_076	FROM->TO	GR ISLD-LNX3345.00 - GRAND ISLAND 345KV CKT Z	720	720	0.04114	101.0844	G11_051T 345.00 - WOODWARD DISTRICT EHV 345KV CKT 1
FDNS	00NR_G15_076	2	16WP	G15_076	FROM->TO	GR ISLD-LNX3345.00 - GRAND ISLAND 345KV CKT Z	720	720	0.0421	101.0807	GEN600012 2-BLACK DOG GEN 2
FDNS	00NR_G15_076	2	16WP	G15_076	FROM->TO	GR ISLD-LNX3345.00 - GRAND ISLAND 345KV CKT Z	720	720	0.0421	101.0775	GEN660001 2-ABERDEEN SIEBRECHT
FDNS	00NR_G15_076	2	16WP	G15_076	FROM->TO	GR ISLD-LNX3345.00 - GRAND ISLAND 345KV CKT Z	720	720	0.0421	101.0709	GEN652345 W-G07_023IS_2 0.6900
FDNS	00NR_G15_076	2	16WP	G15_076	FROM->TO	GR ISLD-LNX3345.00 - GRAND ISLAND 345KV CKT Z	720	720	0.0421	101.0685	GEN629074 1-ARNOLD LOWSIDE OF GSU XFMR
FDNS	00NR_G15_076	2	16WP	G15_076	FROM->TO	GR ISLD-LNX3345.00 - GRAND ISLAND 345KV CKT Z	720	720	0.0421	101.0538	GEN615032 2-PLEASANT VALLEY
FDNS	00NR_G15_076	2	16WP	G15_076	FROM->TO	GR ISLD-LNX3345.00 - GRAND ISLAND 345KV CKT Z	720	720	0.0421	101.0437	GEN672367 1-MERIDIAN GENERATOR 1 GT1
FDNS	00NR_G15_076	2	16WP	G15_076	FROM->TO	GR ISLD-LNX3345.00 - GRAND ISLAND 345KV CKT Z	720	720	0.0421	101.0437	GEN672368 2-MERIDIAN GENERATOR 2 GT2
FDNS	00NR_G15_076	2	16WP	G15_076	FROM->TO	GR ISLD-LNX3345.00 - GRAND ISLAND 345KV CKT Z	720	720	0.0421	101.0434	GEN672349 3-CORY COGEN GENERATOR 3 ST
FDNS	00NR_G15_076	2	16WP	G15_076	FROM->TO	GR ISLD-LNX3345.00 - GRAND ISLAND 345KV CKT Z	720	720	0.0421	101.0368	GEN300007 1-NEW MADRID UNIT 2
FDNS	00NR_G15_076	2	16WP	G15_076	FROM->TO	GR ISLD-LNX3345.00 - GRAND ISLAND 345KV CKT Z	720	720	0.0421	101.0327	GEN672339 16-QE 16G 13.800
FDNS	00NR_G15_076	2	16WP	G15_076	FROM->TO	GR ISLD-LNX3345.00 - GRAND ISLAND 345KV CKT Z	720	720	0.0421	101.0327	GEN672342 3-QUEEN ELIZABETH GENERATOR 3
FDNS	00NR_G15_076	2	16WP	G15_076	FROM->TO	GR ISLD-LNX3345.00 - GRAND ISLAND 345KV CKT Z	720	720	0.0421	101.0316	GEN300006 1-NEW MADRID UNIT 1
FDNS	00NR_G15_076	2	16WP	G15_076	FROM->TO	GR ISLD-LNX3345.00 - GRAND ISLAND 345KV CKT Z	720	720	0.0421	101.0229	GEN620324 3-HOOT LAKE 3 GEN
FDNS	00NR_G15_076	2	16WP	G15_076	FROM->TO	GR ISLD-LNX3345.00 - GRAND ISLAND 345KV CKT Z	720	720	0.04066	101.0205	HIGHLND 3 345.00 - OBRIEN 3 345.00 345KV CKT 1
FDNS	00NR_G15_076	2	16WP	G15_076	FROM->TO	GR ISLD-LNX3345.00 - GRAND ISLAND 345KV CKT Z	720	720	0.0421	101.0061	GEN 11104 1-J262_GEN 0.6000
FDNS	00NR_G15_076	2	16WP	G15_076	FROM->TO	GR ISLD-LNX3345.00 - GRAND ISLAND 345KV CKT Z	720	720	0.0421	101.0061	GEN 11108 1-J263_GEN 0.6000
FDNS	00NR_G15_076	2	16WP	G15_076	FROM->TO	GR ISLD-LNX3345.00 - GRAND ISLAND 345KV CKT Z	720	720	0.04242	101.0047	103RD & ROKEBY - MOORE 345KV CKT 1
FDNS	00NR_G15_076	2	16WP	G15_076	FROM->TO	GR ISLD-LNX3345.00 - GRAND ISLAND 345KV CKT Z	720	720	0.04242	101.0047	103RD & ROKEBY - MOORE 345KV CKT 1
FDNS	00NR_G15_076	2	16WP	G15_076	FROM->TO	GR ISLD-LNX3345.00 - GRAND ISLAND 345KV CKT Z	720	720	0.04018	100.9996	GERALD GENTLEMAN STATION - RED WILLOW 345KV CKT 1
FDNS	00NR_G15_076	2	16WP	G15_076	FROM->TO	GR ISLD-LNX3345.00 - GRAND ISLAND 345KV CKT Z	720	720	0.04258	100.9943	GLENHAM - L3 HAWDON 230KV CKT 1
FDNS	00NR_G15_076	2	16WP	G15_076	FROM->TO	GR ISLD-LNX3345.00 - GRAND ISLAND 345KV CKT Z	720	720	0.04327	100.9715	ATCHSNT3 345.00 - COOPER 345KV CKT 1
FDNS	00NR_G15_076	2	16WP	G15_076	FROM->TO	GR ISLD-LNX3345.00 - GRAND ISLAND 345KV CKT Z	720	720	0.04327	100.9715	ATCHSNT3 345.00 - COOPER 345KV CKT 1
FDNS	00NR_G15_076	2	16WP	G15_076	FROM->TO	GR ISLD-LNX3345.00 - GRAND ISLAND 345KV CKT Z	720	720	0.04186	100.9652	FALLOW 3 345.00 - GRIMES 345KV CKT 1
FDNS	00NR_G15_076	2	16WP	G15_076	FROM->TO	GR ISLD-LNX3345.00 - GRAND ISLAND 345KV CKT Z	720	720	0.0421	100.9633	GEN600050 1-FEP
FDNS	00NR_G15_076	2	16WP	G15_076	FROM->TO	GR ISLD-LNX3345.00 - GRAND ISLAND 345KV CKT Z	720	720	0.0421	100.9525	GEN659273 2-GROTON SYNC COND
FDNS	00NR_G15_076	2	16WP	G15_076	FROM->TO	GR ISLD-LNX3345.00 - GRAND ISLAND 345KV CKT Z	720	720	0.0421	100.9525	GEN659294 1-WILTONCOL9
FDNS	00NR_G15_076	2	16WP	G15_076	FROM->TO	GR ISLD-LNX3345.00 - GRAND ISLAND 345KV CKT Z	720	720	0.0421	100.9466	CENTER 230/22.0KV TRANSFORMER CKT 1
FDNS	00NR_G15_076	2	16WP	G15_076	FROM->TO	GR ISLD-LNX3345.00 - GRAND ISLAND 345KV CKT Z	720	720	0.04114	100.9368	G11_051T 345.00 - TATONGA7 345.00 345KV CKT 1
FDNS	00NR_G15_076	2	16WP	G15_076	FROM->TO	GR ISLD-LNX3345.00 - GRAND ISLAND 345KV CKT Z	720	720	0.03935	100.9183	COOPER - MOORE 345KV CKT 1
FDNS	00NR_G15_076	2	16WP	G15_076	FROM->TO	GR ISLD-LNX3345.00 - GRAND ISLAND 345KV CKT Z	720	720	0.0421	100.9168	GEN629072 4-LANSING GENERATOR FOR UNITS NO4 EIA CODE 1
FDNS	00NR_G15_076	2	16WP	G15_076	FROM->TO	GR ISLD-LNX3345.00 - GRAND ISLAND 345KV CKT Z	720	720	0.0421	100.9149	GEN672393 2-NBECST2G 13.800
FDNS	00NR_G15_076	2	16WP	G15_076	FROM->TO	GR ISLD-LNX3345.00 - GRAND ISLAND 345KV CKT Z	720	720	0.0421	100.8814	GEN600065 7-HIGH BRIDGE
FDNS	00NR_G15_076	2	16WP	G15_076	FROM->TO	GR ISLD-LNX3345.00 - GRAND ISLAND 345KV CKT Z	720	720	0.0421	100.8814	GEN600066 8-HIGH BRIDGE
FDNS	00NR_G15_076	2	16WP	G15_076	FROM->TO	GR ISLD-LNX3345.00 - GRAND ISLAND 345KV CKT Z	720	720	0.0421	100.8702	GEN659192 6-LYNN
FDNS	00NR_G15_076	2	16WP	G15_076	FROM->TO	GR ISLD-LNX3345.00 - GRAND ISLAND 345KV CKT Z	720	720	0.0421	100.8691	GEN659162 4-RED WLCK
FDNS	00NR_G15_076	2	16WP	G15_076	FROM->TO	GR ISLD-LNX3345.00 - GRAND ISLAND 345KV CKT Z	720	720	0.0421	100.8691	GEN659163 5-BLACK WDCK

SOLUTION	GROUP	SCENARIO	SEASON	SOURCE	DIRECTION	MONITORED ELEMENT	RATEA (MVA)	RATEB(MVA)	TDF	TC%LOADING (% MVA)	CONTINGENCY
FDNS	00NR_G15_076	2	16WP	G15_076	FROM->TO	GR ISLD-LNX3345.00 - GRAND ISLAND 345KV CKT Z	720	720	0.0421	100.8562	GEN657985 1-ASH1GEN9 0.5750
FDNS	00NR_G15_076	2	16WP	G15_076	FROM->TO	GR ISLD-LNX3345.00 - GRAND ISLAND 345KV CKT Z	720	720	0.0421	100.8555	LANSING WEST 161/22.0KV TRANSFORMER CKT 1
FDNS	00NR_G15_076	2	16WP	G15_076	FROM->TO	GR ISLD-LNX3345.00 - GRAND ISLAND 345KV CKT Z	720	720	0.0421	100.8401	GEN652906 1-G09_006IS_3 0.6900
FDNS	00NR_G15_076	2	16WP	G15_076	FROM->TO	GR ISLD-LNX3345.00 - GRAND ISLAND 345KV CKT Z	720	720	0.0421	100.8328	GEN635214 4-NEAL UNIT 4
FDNS	00NR_G15_076	2	16WP	G15_076	FROM->TO	GR ISLD-LNX3345.00 - GRAND ISLAND 345KV CKT Z	720	720	0.0421	100.8178	GEN 10648 1-G830_GEN 0.6900
FDNS	00NR_G15_076	2	16WP	G15_076	FROM->TO	GR ISLD-LNX3345.00 - GRAND ISLAND 345KV CKT Z	720	720	0.0421	100.7971	GEN600067 9-HIGH BRIDGE
FDNS	00NR_G15_076	2	16WP	G15_076	FROM->TO	GR ISLD-LNX3345.00 - GRAND ISLAND 345KV CKT Z	720	720	0.0421	100.7949	GEN600014 4-BLACK DOG GEN 4
FDNS	00NR_G15_076	2	16WP	G15_076	FROM->TO	GR ISLD-LNX3345.00 - GRAND ISLAND 345KV CKT Z	720	720	0.0421	100.7945	GEN600071 10-RIVER SIDE
FDNS	00NR_G15_076	2	16WP	G15_076	FROM->TO	GR ISLD-LNX3345.00 - GRAND ISLAND 345KV CKT Z	720	720	0.0421	100.7942	GEN600070 9-RIVER SIDE
FDNS	00NR_G15_076	2	16WP	G15_076	FROM->TO	GR ISLD-LNX3345.00 - GRAND ISLAND 345KV CKT Z	720	720	0.0421	100.791	GEN600011 5-BLACK DOG GEN 1
FDNS	00NR_G15_076	2	16WP	G15_076	FROM->TO	GR ISLD-LNX3345.00 - GRAND ISLAND 345KV CKT Z	720	720	0.0421	100.7807	GEN600007 7-RIVERSIDE GEN 7
FDNS	00NR_G15_076	2	16WP	G15_076	FROM->TO	GR ISLD-LNX3345.00 - GRAND ISLAND 345KV CKT Z	720	720	0.0421	100.7598	GEN615015 1-GRE-SPRITWDG13.200
FDNS	00NR_G15_076	2	16WP	G15_076	FROM->TO	GR ISLD-LNX3345.00 - GRAND ISLAND 345KV CKT Z	720	720	0.04327	100.7576	ATCHSNT3 345.00 - BOONEVILLE 345KV CKT 1
FDNS	00NR_G15_076	2	16WP	G15_076	FROM->TO	GR ISLD-LNX3345.00 - GRAND ISLAND 345KV CKT Z	720	720	0.03492	100.7474	AXTELL - POST ROCK 345KV CKT 1
FDNS	00NR_G15_076	2	16WP	G15_076	FROM->TO	GR ISLD-LNX3345.00 - GRAND ISLAND 345KV CKT Z	720	720	0.0421	100.7356	GEN660016 1-B_H WIND 0.7000
FDNS	00NR_G15_076	2	16WP	G15_076	FROM->TO	GR ISLD-LNX3345.00 - GRAND ISLAND 345KV CKT Z	720	720	0.0421	100.7286	GEN600017 C-LS POWER CT
FDNS	00NR_G15_076	2	16WP	G15_076	FROM->TO	GR ISLD-LNX3345.00 - GRAND ISLAND 345KV CKT Z	720	720	0.0421	100.7275	GEN615052 1-CAMBRIDGE GENERATING STATION
FDNS	00NR_G15_076	2	16WP	G15_076	FROM->TO	GR ISLD-LNX3345.00 - GRAND ISLAND 345KV CKT Z	720	720	0.0421	100.7263	GEN652907 1-G09_007IS_3 0.6900
FDNS	00NR_G15_076	2	16WP	G15_076	FROM->TO	GR ISLD-LNX3345.00 - GRAND ISLAND 345KV CKT Z	720	720	0.0421	100.6869	GEN681522 3-GENOA 3
FDNS	00NR_G15_076	2	16WP	G15_076	FROM->TO	GR ISLD-LNX3345.00 - GRAND ISLAND 345KV CKT Z	720	720	0.04114	100.6654	MATHWSN7 345.00 - TATONGA7 345.00 345KV CKT 1
FDNS	00NR_G15_076	2	16WP	G15_076	FROM->TO	GR ISLD-LNX3345.00 - GRAND ISLAND 345KV CKT Z	720	720	0.0421	100.6572	GEN662101 1-WESSINGTON190.5750
FDNS	00NR_G15_076	2	16WP	G15_076	FROM->TO	GR ISLD-LNX3345.00 - GRAND ISLAND 345KV CKT Z	720	720	0.03765	100.5174	MINGO - RED WILLOW 345KV CKT 1
FDNS	00NR_G15_076	2	16WP	G15_076	FROM->TO	GR ISLD-LNX3345.00 - GRAND ISLAND 345KV CKT Z	720	720	0.03765	100.5174	MINGO - RED WILLOW 345KV CKT 1
FDNS	00NR_G15_076	2	16WP	G15_076	FROM->TO	GR ISLD-LNX3345.00 - GRAND ISLAND 345KV CKT Z	720	720	0.0421	100.5105	GEN659353 1-DEERCREK CTG18.000
FDNS	00NR_G15_076	2	16WP	G15_076	FROM->TO	GR ISLD-LNX3345.00 - GRAND ISLAND 345KV CKT Z	720	720	0.0421	100.5072	GEN910006 1-G12_012IS_3 0.6900
FDNS	00NR_G15_076	2	16WP	G15_076	FROM->TO	GR ISLD-LNX3345.00 - GRAND ISLAND 345KV CKT Z	720	720	0.0421	100.4539	GEN615021 1-GRE-ER 14G 16.000
FDNS	00NR_G15_076	2	16WP	G15_076	FROM->TO	GR ISLD-LNX3345.00 - GRAND ISLAND 345KV CKT Z	720	720	0.0421	100.3985	GEN672304 4-BOUNDARY DAM GENERATOR 4
FDNS	00NR_G15_076	2	16WP	G15_076	FROM->TO	GR ISLD-LNX3345.00 - GRAND ISLAND 345KV CKT Z	720	720	0.0421	100.3985	GEN672305 5-BOUNDARY DAM GENERATOR 5
FDNS	00NR_G15_076	2	16WP	G15_076	FROM->TO	GR ISLD-LNX3345.00 - GRAND ISLAND 345KV CKT Z	720	720	0.0421	100.3984	GEN672303 3-BOUNDARY DAM GENERATOR 3
FDNS	00NR_G15_076	2	16WP	G15_076	FROM->TO	GR ISLD-LNX3345.00 - GRAND ISLAND 345KV CKT Z	720	720	0.04409	100.3078	MOORE - PAULINE 345KV CKT 1
FDNS	00NR_G15_076	2	16WP	G15_076	FROM->TO	GR ISLD-LNX3345.00 - GRAND ISLAND 345KV CKT Z	720	720	0.0421	100.2894	BISONMP4 230.00 - SQUARE BUTTE 230KV CKT 1
FDNS	00NR_G15_076	2	16WP	G15_076	FROM->TO	GR ISLD-LNX3345.00 - GRAND ISLAND 345KV CKT Z	720	720	0.0421	100.1855	GEN652460 4-GARRISON
FDNS	00NR_G15_076	2	16WP	G15_076	FROM->TO	GR ISLD-LNX3345.00 - GRAND ISLAND 345KV CKT Z	720	720	0.0421	100.1855	GEN652461 5-GARRISON
FDNS	00NR_G15_076	2	16WP	G15_076	FROM->TO	GR ISLD-LNX3345.00 - GRAND ISLAND 345KV CKT Z	720	720	0.0421	100.1726	GEN672392 1-NBECGT1G 18.000
FDNS	00NR_G15_076	2	16WP	G15_076	FROM->TO	GR ISLD-LNX3345.00 - GRAND ISLAND 345KV CKT Z	720	720	0.0421	100.1384	GEN652457 1-GARRISON
FDNS	00NR_G15_076	2	16WP	G15_076	FROM->TO	GR ISLD-LNX3345.00 - GRAND ISLAND 345KV CKT Z	720	720	0.0421	100.1384	GEN652458 2-GARRISON
FDNS	00NR_G15_076	2	16WP	G15_076	FROM->TO	GR ISLD-LNX3345.00 - GRAND ISLAND 345KV CKT Z	720	720	0.0421	100.1384	GEN652459 3-GARRISON
FDNS	00NR_G15_076	2	16WP	G15_076	FROM->TO	GR ISLD-LNX3345.00 - GRAND ISLAND 345KV CKT Z	720	720	0.0421	100.1269	GEN652542 1-BIG BEND
FDNS	00NR_G15_076	2	16WP	G15_076	FROM->TO	GR ISLD-LNX3345.00 - GRAND ISLAND 345KV CKT Z	720	720	0.0421	100.0969	COYOTE 345/24.0KV TRANSFORMER CKT 1
FDNS	00NR_G15_076	2	16WP	G15_076	FROM->TO	GR ISLD-LNX3345.00 - GRAND ISLAND 345KV CKT Z	720	720	0.0421	100.0916	GEN659010 4-G07_027IS_2 0.6900
FDNS	00NR_G15_076	2	16WP	G15_076	FROM->TO	GR ISLD-LNX3345.00 - GRAND ISLAND 345KV CKT Z	720	720	0.0421	100.0561	GEN659194 1-NDPRAIRWND1W0.6900
FDNS	00NR_G15_076	2	16WP	G15_076	FROM->TO	GR ISLD-LNX3345.00 - GRAND ISLAND 345KV CKT Z	720	720	0.0504	100	COLUMWEST - GRAND ISLAND 230KV CKT 1
FDNS	00NR_G15_076	2	16WP	G15_076	FROM->TO	GR ISLD-LNX3345.00 - GRAND ISLAND 345KV CKT Z	720	720	0.0421	100	GEN659403 1-NDSUNFLWR W0.6900
FDNS	00NR_G15_076	2	16WP	G15_076	FROM->TO	GR ISLD-LNX3345.00 - GRAND ISLAND 345KV CKT Z	720	720	0.0421	99.9	GEN681542 6-JP MADGETT
FDNS	00NR_G15_076	2	16WP	G15_076	FROM->TO	GR ISLD-LNX3345.00 - GRAND ISLAND 345KV CKT Z	720	720	0.0421	99.9	SQUARE BUTTE - YNG2 4 230.00 230KV CKT 1
FDNS	00NR_G15_076	2	16WP	G15_076	FROM->TO	GR ISLD-LNX3345.00 - GRAND ISLAND 345KV CKT Z	720	720	0.0421	99.9	YNG2 4 230.00 230/20.0KV TRANSFORMER CKT 1
FDNS	00NR_G15_076	2	16WP	G15_076	FROM->TO	GR ISLD-LNX3345.00 - GRAND ISLAND 345KV CKT Z	720	720	0.0421	99.7	GEN659411 1-CAMPBLCNTY W0.6900
FDNS	00NR_G15_076	2	16WP	G15_076	FROM->TO	GR ISLD-LNX3345.00 - GRAND ISLAND 345KV CKT Z	720	720	0.0421	99.7	RCDC EAST 4230.00 - RED CEDAR DC 230KV CKT 1
FDNS	00NR_G15_076	2	16WP	G15_076	FROM->TO	GR ISLD-LNX3345.00 - GRAND ISLAND 345KV CKT Z	720	720	0.04026	99.7	AXTELL - SWEETWATER 345KV CKT 1
FDNS	00NR_G15_076	2	16WP	G15_076	FROM->TO	GR ISLD-LNX3345.00 - GRAND ISLAND 345KV CKT Z	720	720	0.0421	99.6	P12:230:UMZB:# 112 #: NU IN SD. NU-RCDC & DRY CREEK XFMR
FDNS	00NR_G15_076	2	20WP	G15_076	FROM->TO	GR ISLD-LNX3345.00 - GRAND ISLAND 345KV CKT Z	720	720	0.03962	99.6	HOLT.CO3 345.00 - THEDFRD3 345.00 345KV CKT 1
FDNS	00NR_G15_076	2	16WP	G15_076	FROM->TO	GR ISLD-LNX3345.00 - GRAND ISLAND 345KV CKT Z	720	720	0.0421	99.5	GEN659296 2-SDPRAIRWND1W0.6900
FDNS	00NR_G15_076	2	17SP	G15_076	TO->FROM	GR ISLD-LNX3345.00 - HOLT.CO3 345.00 345KV CKT 1	720	720	0.0452	137.3778	KELLY - MEADOWGROVE4230.00 230KV CKT 1
FDNS	00NR_G15_076	2	17SP	G15_076	TO->FROM	GR ISLD-LNX3345.00 - HOLT.CO3 345.00 345KV CKT 1	720	720	0.04125	137.1333	P12:230:UMZB:# 116 #: ST IN SD. WSG-ST-VH
FDNS	00NR_G15_076	2	17SP	G15_076	TO->FROM	GR ISLD-LNX3345.00 - HOLT.CO3 345.00 345KV CKT 1	720	720	0.04136	136.1938	STORLA - WESSINGTON 230KV CKT 1
FDNS	00NR_G15_076	2	17SP	G15_076	TO->FROM	GR ISLD-LNX3345.00 - HOLT.CO3 345.00 345KV CKT 1	720	720	0.04231	135.284	WATERTN-LNX3345.00 - WHITE 345KV CKT 1
FDNS	00NR_G15_076	2	17SP	G15_076	TO->FROM	GR ISLD-LNX3345.00 - HOLT.CO3 345.00 345KV CKT 1	720	720	0.04231	135.0088	WATERTN-LNX3345.00 - WATERTOWN 345KV CKT Z
FDNS	00NR_G15_076	2	17SP	G15_076	TO->FROM	GR ISLD-LNX3345.00 - HOLT.CO3 345.00 345KV CKT 1	720	720	0.04231	134.9889	P12:345:UMZW:# 1747 #: WT2 IN SD. WT2-WHT LINE FAULT
FDNS	00NR_G15_076	2	17SP	G15_076	TO->FROM	GR ISLD-LNX3345.00 - HOLT.CO3 345.00 345KV CKT 1	720	720	0.04266	134.9746	G09_001IST 345.00 - WATERTOWN 345KV CKT 1
FDNS	00NR_G15_076	2	17SP	G15_076	TO->FROM	GR ISLD-LNX3345.00 - HOLT.CO3 345.00 345KV CKT 1	720	720	0.04169	134.8239	HANLON - STORLA 230KV CKT 1
FDNS	00NR_G15_076	2	17SP	G15_076	TO->FROM	GR ISLD-LNX3345.00 - HOLT.CO3 345.00 345KV CKT 1	720	720	0.04081	134.4553	FT THOMPSON - LETCHER 230KV CKT 1
FDNS	00NR_G15_076	2	17SP	G15_076	TO->FROM	GR ISLD-LNX3345.00 - HOLT.CO3 345.00 345KV CKT 1	720	720	0.04081	134.4553	FT THOMPSON - LETCHER 230KV CKT 1
FDNS	00NR_G15_076	2	17SP	G15_076	TO->FROM	GR ISLD-LNX3345.00 - HOLT.CO3 345.00 345KV CKT 1	720	720	0.043	133.4758	BUFFALO - JAMESTOWN 345KV CKT 1
FDNS	00NR_G15_076	2	17SP	G15_076	TO->FROM	GR ISLD-LNX3345.00 - HOLT.CO3 345.00 345KV CKT 1	720	720	0.0392	133.2291	FT RANDAL - FT THOMPSON 230KV CKT 1
FDNS	00NR_G15_076	2	17SP	G15_076	TO->FROM	GR ISLD-LNX3345.00 - HOLT.CO3 345.00 345KV CKT 1	720	720	0.0392	133.2291	FT RANDAL - FT THOMPSON 230KV CKT 1
FDNS	00NR_G15_076	2	17SP	G15_076	TO->FROM	GR ISLD-LNX3345.00 - HOLT.CO3 345.00 345KV CKT 1	720	720	0.0393	133.1968	FT RANDAL - G12_009IST 230.00 230KV CKT 1
FDNS	00NR_G15_076	2	17SP	G15_076	TO->FROM	GR ISLD-LNX3345.00 - HOLT.CO3 345.00 345KV CKT 1	720	720	0.0393	133.094	FT THOMPSON - LAKE PLATT 230KV CKT 1
FDNS	00NR_G15_076	2	17SP	G15_076	TO->FROM	GR ISLD-LNX3345.00 - HOLT.CO3 345.00 345KV CKT 1	720	720	0.0393	133.094	FT THOMPSON - LAKE PLATT 230KV CKT 1
FDNS	00NR_G15_076	2	17SP	G15_076	TO->FROM	GR ISLD-LNX3345.00 - HOLT.CO3 345.00 345KV CKT 1	720	720	0.04651	132.8438	NUNDRWD - WAYSIDE 230KV CKT 1
FDNS	00NR_G15_076	2	17SP	G15_076	TO->FROM	GR ISLD-LNX3345.00 - HOLT.CO3 345.00 345KV CKT 1	720	720	0.0393	132.6397	G12_009IST 230.00 - LAKE PLATT 230KV CKT 1
FDNS	00NR_G15_076	2	17SP	G15_076	TO->FROM	GR ISLD-LNX3345.00 - HOLT.CO3 345.00 345KV CKT 1	720	720	0.04279	132.5662	GEN336821 1-GRAND GULF UNIT
FDNS	00NR_G15_076	2	17SP	G15_076	TO->FROM	GR ISLD-LNX3345.00 - HOLT.CO3 345.00 345KV CKT 1	720	720	0.0429	132.5016	CHISAGO COUNTY - FORBES 500KV CKT 1
FDNS	00NR_G15_076	2	17SP	G15_076	TO->FROM	GR ISLD-LNX3345.00 - HOLT.CO3 345.00 345KV CKT 1	720	720	0.0452	132.4158	FT RANDAL - MEADOWGROVE4230.00 230KV CKT 1

SOLUTION	GROUP	SCENARIO	SEASON	SOURCE	DIRECTION	MONITORED ELEMENT	RATEA (MVA)	RATEB(MVA)	TDF	TC%LOADING (% MVA)	CONTINGENCY
FDNS	00NR_G15_076	2	17SP	G15_076	TO->FROM	GR ISLD-LNX3345.00 - HOLT.CO3 345.00 345KV CKT 1	720	720	0.04299	132.3633	CENTER - JAMESTOWN 345KV CKT 1
FDNS	00NR_G15_076	2	17SP	G15_076	TO->FROM	GR ISLD-LNX3345.00 - HOLT.CO3 345.00 345KV CKT 1	720	720	0.04279	132.0851	GEN640010 1-GERALD GENTLEMAN STATION UNIT 1
FDNS	00NR_G15_076	2	17SP	G15_076	TO->FROM	GR ISLD-LNX3345.00 - HOLT.CO3 345.00 345KV CKT 1	720	720	0.04237	132.0403	LETCHER - SIOUX FALLS 230KV CKT 1
FDNS	00NR_G15_076	2	17SP	G15_076	TO->FROM	GR ISLD-LNX3345.00 - HOLT.CO3 345.00 345KV CKT 1	720	720	0.04279	132.025	GEN344225 1-1CAL G1 25.000
FDNS	00NR_G15_076	2	17SP	G15_076	TO->FROM	GR ISLD-LNX3345.00 - HOLT.CO3 345.00 345KV CKT 1	720	720	0.04266	131.9828	G09_001IST 345.00 - GROTON 345KV CKT 1
FDNS	00NR_G15_076	2	17SP	G15_076	TO->FROM	GR ISLD-LNX3345.00 - HOLT.CO3 345.00 345KV CKT 1	720	720	0.04373	131.9418	KEYSTONE - SIDNEY1-LNX3345.00 345KV CKT 1
FDNS	00NR_G15_076	2	17SP	G15_076	TO->FROM	GR ISLD-LNX3345.00 - HOLT.CO3 345.00 345KV CKT 1	720	720	0.04373	131.9007	SIDNEY - SIDNEY1-LNX3345.00 345KV CKT Z
FDNS	00NR_G15_076	2	17SP	G15_076	TO->FROM	GR ISLD-LNX3345.00 - HOLT.CO3 345.00 345KV CKT 1	720	720	0.04294	131.8847	BISON 3 345.00 - BUFFALO 345KV CKT 1
FDNS	00NR_G15_076	2	17SP	G15_076	TO->FROM	GR ISLD-LNX3345.00 - HOLT.CO3 345.00 345KV CKT 1	720	720	0.04279	131.8744	GEN635024 4-WALTER SCOTT UNIT 4
FDNS	00NR_G15_076	2	17SP	G15_076	TO->FROM	GR ISLD-LNX3345.00 - HOLT.CO3 345.00 345KV CKT 1	720	720	0.04279	131.8472	GEN337911 1-ARKANSAS NUCLEAR ONE UNIT #2
FDNS	00NR_G15_076	2	17SP	G15_076	TO->FROM	GR ISLD-LNX3345.00 - HOLT.CO3 345.00 345KV CKT 1	720	720	0.04279	131.7873	GEN336153 1-WATERFORD UNIT#3
FDNS	00NR_G15_076	2	17SP	G15_076	TO->FROM	GR ISLD-LNX3345.00 - HOLT.CO3 345.00 345KV CKT 1	720	720	0.04279	131.6387	GEN640011 2-GERALD GENTLEMAN STATION UNIT 2
FDNS	00NR_G15_076	2	17SP	G15_076	TO->FROM	GR ISLD-LNX3345.00 - HOLT.CO3 345.00 345KV CKT 1	720	720	0.04117	131.407	SPLIT ROCK - WHITE 345KV CKT 1
FDNS	00NR_G15_076	2	17SP	G15_076	TO->FROM	GR ISLD-LNX3345.00 - HOLT.CO3 345.00 345KV CKT 1	720	720	0.04117	131.407	SPLIT ROCK - WHITE 345KV CKT 1
FDNS	00NR_G15_076	2	17SP	G15_076	TO->FROM	GR ISLD-LNX3345.00 - HOLT.CO3 345.00 345KV CKT 1	720	720	0.04279	131.3797	GEN635023 3-WALTER SCOTT UNIT 3
FDNS	00NR_G15_076	2	17SP	G15_076	TO->FROM	GR ISLD-LNX3345.00 - HOLT.CO3 345.00 345KV CKT 1	720	720	0.04279	131.3155	GEN335831 1-RIVERBEND UNIT#1
FDNS	00NR_G15_076	2	17SP	G15_076	TO->FROM	GR ISLD-LNX3345.00 - HOLT.CO3 345.00 345KV CKT 1	720	720	0.04263	131.2584	GROTON-LNX3 345.00 - LELAND1-LNX3345.00 345KV CKT 1
FDNS	00NR_G15_076	2	17SP	G15_076	TO->FROM	GR ISLD-LNX3345.00 - HOLT.CO3 345.00 345KV CKT 1	720	720	0.04279	131.2197	GEN337910 1-ARKANSAS NUCLEAR ONE UNIT #1
FDNS	00NR_G15_076	2	17SP	G15_076	TO->FROM	GR ISLD-LNX3345.00 - HOLT.CO3 345.00 345KV CKT 1	720	720	0.05076	131.206	RAUN - SUB 3451 FT CAL 345KV CKT 1
FDNS	00NR_G15_076	2	17SP	G15_076	TO->FROM	GR ISLD-LNX3345.00 - HOLT.CO3 345.00 345KV CKT 1	720	720	0.05076	131.206	RAUN - SUB 3451 FT CAL 345KV CKT 1
FDNS	00NR_G15_076	2	17SP	G15_076	TO->FROM	GR ISLD-LNX3345.00 - HOLT.CO3 345.00 345KV CKT 1	720	720	0.04263	131.1144	P12:345:UMZB:# 109 #: LOS GRT IN ND. LOS GRT
FDNS	00NR_G15_076	2	17SP	G15_076	TO->FROM	GR ISLD-LNX3345.00 - HOLT.CO3 345.00 345KV CKT 1	720	720	0.04263	131.0955	GROTON - GROTON-LNX3 345.00 345KV CKT Z
FDNS	00NR_G15_076	2	17SP	G15_076	TO->FROM	GR ISLD-LNX3345.00 - HOLT.CO3 345.00 345KV CKT 1	720	720	0.04263	131.084	LELAND OLDS - LELAND1-LNX3345.00 345KV CKT Z
FDNS	00NR_G15_076	2	17SP	G15_076	TO->FROM	GR ISLD-LNX3345.00 - HOLT.CO3 345.00 345KV CKT 1	720	720	0.04297	131.0065	FT RANDAL - SIOUX CITY 230KV CKT 1
FDNS	00NR_G15_076	2	17SP	G15_076	TO->FROM	GR ISLD-LNX3345.00 - HOLT.CO3 345.00 345KV CKT 1	720	720	0.04358	130.8628	ARROWHEAD - ARROWHEAD 230 230KV CKT 1
FDNS	00NR_G15_076	2	17SP	G15_076	TO->FROM	GR ISLD-LNX3345.00 - HOLT.CO3 345.00 345KV CKT 1	720	720	0.04246	130.7641	HANLON - SIOUX FALLS 230KV CKT 1
FDNS	00NR_G15_076	2	17SP	G15_076	TO->FROM	GR ISLD-LNX3345.00 - HOLT.CO3 345.00 345KV CKT 1	720	720	0.03512	130.6072	GRAND ISLAND - SWEETWATER 345KV CKT 1
FDNS	00NR_G15_076	2	17SP	G15_076	TO->FROM	GR ISLD-LNX3345.00 - HOLT.CO3 345.00 345KV CKT 1	720	720	0.04281	130.593	P12:115:NPPD:1091:VALENTN7:MISSION7:BTB
FDNS	00NR_G15_076	2	17SP	G15_076	TO->FROM	GR ISLD-LNX3345.00 - HOLT.CO3 345.00 345KV CKT 1	720	720	0.04279	130.5921	GEN337653 1-WHITE BLUFF UNIT #2
FDNS	00NR_G15_076	2	17SP	G15_076	TO->FROM	GR ISLD-LNX3345.00 - HOLT.CO3 345.00 345KV CKT 1	720	720	0.04279	130.58	GEN337652 1-WHITE BLUFF UNIT #1
FDNS	00NR_G15_076	2	17SP	G15_076	TO->FROM	GR ISLD-LNX3345.00 - HOLT.CO3 345.00 345KV CKT 1	720	720	0.04348	130.5379	SIDNEY - STEGALL 345KV CKT 1
FDNS	00NR_G15_076	2	17SP	G15_076	TO->FROM	GR ISLD-LNX3345.00 - HOLT.CO3 345.00 345KV CKT 1	720	720	0.0413	130.5277	SIOUXCY-LNX3345.00 - SPLIT ROCK 345KV CKT 1
FDNS	00NR_G15_076	2	17SP	G15_076	TO->FROM	GR ISLD-LNX3345.00 - HOLT.CO3 345.00 345KV CKT 1	720	720	0.0413	130.5277	SIOUXCY-LNX3345.00 - SPLIT ROCK 345KV CKT 1
FDNS	00NR_G15_076	2	17SP	G15_076	TO->FROM	GR ISLD-LNX3345.00 - HOLT.CO3 345.00 345KV CKT 1	720	720	0.04279	130.5073	GEN338146 1-INDEPENDENCE UNIT #2
FDNS	00NR_G15_076	2	17SP	G15_076	TO->FROM	GR ISLD-LNX3345.00 - HOLT.CO3 345.00 345KV CKT 1	720	720	0.04448	130.5031	HAZLETON - MITCHLCO3 345.00 345KV CKT 1
FDNS	00NR_G15_076	2	17SP	G15_076	TO->FROM	GR ISLD-LNX3345.00 - HOLT.CO3 345.00 345KV CKT 1	720	720	0.04279	130.4995	GEN338143 1-INDEPENDENCE UNIT #1
FDNS	00NR_G15_076	2	17SP	G15_076	TO->FROM	GR ISLD-LNX3345.00 - HOLT.CO3 345.00 345KV CKT 1	720	720	0.0413	130.4911	P12:345:UMZW:# 907 #: SC2-SR IN IA. SC2-SR 345 KV LINE
FDNS	00NR_G15_076	2	17SP	G15_076	TO->FROM	GR ISLD-LNX3345.00 - HOLT.CO3 345.00 345KV CKT 1	720	720	0.04281	130.4576	MISSION - ST FRANCIS 115KV CKT 1
FDNS	00NR_G15_076	2	17SP	G15_076	TO->FROM	GR ISLD-LNX3345.00 - HOLT.CO3 345.00 345KV CKT 1	720	720	0.0413	130.4473	SIOUX CITY - SIOUXCY-LNX3345.00 345KV CKT Z
FDNS	00NR_G15_076	2	17SP	G15_076	TO->FROM	GR ISLD-LNX3345.00 - HOLT.CO3 345.00 345KV CKT 1	720	720	0.04279	130.4368	GEN501801 1-DOLET HILLS UNIT1
FDNS	00NR_G15_076	2	17SP	G15_076	TO->FROM	GR ISLD-LNX3345.00 - HOLT.CO3 345.00 345KV CKT 1	720	720	0.04286	130.4175	ELLENDALE - OAKES 230KV CKT 1
FDNS	00NR_G15_076	2	17SP	G15_076	TO->FROM	GR ISLD-LNX3345.00 - HOLT.CO3 345.00 345KV CKT 1	720	720	0.04286	130.4175	ELLENDALE - OAKES 230KV CKT 1
FDNS	00NR_G15_076	2	17SP	G15_076	TO->FROM	GR ISLD-LNX3345.00 - HOLT.CO3 345.00 345KV CKT 1	720	720	0.04281	130.3662	HARMONY - ST FRANCIS 115KV CKT 1
FDNS	00NR_G15_076	2	17SP	G15_076	TO->FROM	GR ISLD-LNX3345.00 - HOLT.CO3 345.00 345KV CKT 1	720	720	0.04286	130.3257	FORMAN - OAKES 230KV CKT 1
FDNS	00NR_G15_076	2	17SP	G15_076	TO->FROM	GR ISLD-LNX3345.00 - HOLT.CO3 345.00 345KV CKT 1	720	720	0.04368	130.3185	AS KING - EAU CLAIRE 345KV CKT 1
FDNS	00NR_G15_076	2	17SP	G15_076	TO->FROM	GR ISLD-LNX3345.00 - HOLT.CO3 345.00 345KV CKT 1	720	720	0.04091	130.3059	FT RANDAL - UTICA JCT 230KV CKT 1
FDNS	00NR_G15_076	2	17SP	G15_076	TO->FROM	GR ISLD-LNX3345.00 - HOLT.CO3 345.00 345KV CKT 1	720	720	0.04325	130.3014	CARPENTER - HURON 230KV CKT 1
FDNS	00NR_G15_076	2	17SP	G15_076	TO->FROM	GR ISLD-LNX3345.00 - HOLT.CO3 345.00 345KV CKT 1	720	720	0.04309	130.301	ALEXMRES3 345.00 - BISON 3 345.00 345KV CKT 1
FDNS	00NR_G15_076	2	17SP	G15_076	TO->FROM	GR ISLD-LNX3345.00 - HOLT.CO3 345.00 345KV CKT 1	720	720	0.04136	130.2471	FT THOMPSON - WESSINGTON 230KV CKT 1
FDNS	00NR_G15_076	2	17SP	G15_076	TO->FROM	GR ISLD-LNX3345.00 - HOLT.CO3 345.00 345KV CKT 1	720	720	0.04136	130.2471	FT THOMPSON - WESSINGTON 230KV CKT 1
FDNS	00NR_G15_076	2	17SP	G15_076	TO->FROM	GR ISLD-LNX3345.00 - HOLT.CO3 345.00 345KV CKT 1	720	720	0.04409	130.2089	ARPIN B4 345.00 - EAU CLAIRE 345KV CKT 1
FDNS	00NR_G15_076	2	17SP	G15_076	TO->FROM	GR ISLD-LNX3345.00 - HOLT.CO3 345.00 345KV CKT 1	720	720	0.04325	130.1935	HURON - WATERTOWN 230KV CKT 2
FDNS	00NR_G15_076	2	17SP	G15_076	TO->FROM	GR ISLD-LNX3345.00 - HOLT.CO3 345.00 345KV CKT 1	720	720	0.04325	130.1935	HURON - WATERTOWN 230KV CKT 2
FDNS	00NR_G15_076	2	17SP	G15_076	TO->FROM	GR ISLD-LNX3345.00 - HOLT.CO3 345.00 345KV CKT 1	720	720	0.04281	130.1662	HARMONY - VALENTINE 115KV CKT 1
FDNS	00NR_G15_076	2	17SP	G15_076	TO->FROM	GR ISLD-LNX3345.00 - HOLT.CO3 345.00 345KV CKT 1	720	720	0.04274	130.1657	P12:115:NPPD:WAPA6:FTRANDL7:ONEILL 7:BTB
FDNS	00NR_G15_076	2	17SP	G15_076	TO->FROM	GR ISLD-LNX3345.00 - HOLT.CO3 345.00 345KV CKT 1	720	720	0.04274	130.1657	P12:115:UMZB:# 115 #: SE IN NE. FR-SE-ON
FDNS	00NR_G15_076	2	17SP	G15_076	TO->FROM	GR ISLD-LNX3345.00 - HOLT.CO3 345.00 345KV CKT 1	720	720	0.04325	130.1357	CARPENTER - WATERTOWN 230KV CKT 1
FDNS	00NR_G15_076	2	17SP	G15_076	TO->FROM	GR ISLD-LNX3345.00 - HOLT.CO3 345.00 345KV CKT 1	720	720	0.04325	130.1357	CARPENTER - WATERTOWN 230KV CKT 1
FDNS	00NR_G15_076	2	17SP	G15_076	TO->FROM	GR ISLD-LNX3345.00 - HOLT.CO3 345.00 345KV CKT 1	720	720	0.04274	130.13	FT RANDAL - SPENCER 115KV CKT 1
FDNS	00NR_G15_076	2	17SP	G15_076	TO->FROM	GR ISLD-LNX3345.00 - HOLT.CO3 345.00 345KV CKT 1	720	720	0.04249	130.075	PAHOJA - SIOUX FALLS 230KV CKT 1
FDNS	00NR_G15_076	2	17SP	G15_076	TO->FROM	GR ISLD-LNX3345.00 - HOLT.CO3 345.00 345KV CKT 1	720	720	0.04279	130.0745	GEN336252 1-NINEMILE POINT UNIT#5
FDNS	00NR_G15_076	2	17SP	G15_076	TO->FROM	GR ISLD-LNX3345.00 - HOLT.CO3 345.00 345KV CKT 1	720	720	0.04279	130.0304	GEN501813 1-RODEMACHER UNIT 3
FDNS	00NR_G15_076	2	17SP	G15_076	TO->FROM	GR ISLD-LNX3345.00 - HOLT.CO3 345.00 345KV CKT 1	720	720	0.04274	130.0301	ONEILL - SPENCER 115KV CKT 1
FDNS	00NR_G15_076	2	17SP	G15_076	TO->FROM	GR ISLD-LNX3345.00 - HOLT.CO3 345.00 345KV CKT 1	720	720	0.04279	129.9304	GEN336831 1-BAXTER WILSON SES
FDNS	00NR_G15_076	2	17SP	G15_076	TO->FROM	GR ISLD-LNX3345.00 - HOLT.CO3 345.00 345KV CKT 1	720	720	0.04279	129.9171	GEN336251 1-NINEMILE POINT UNIT#4
FDNS	00NR_G15_076	2	17SP	G15_076	TO->FROM	GR ISLD-LNX3345.00 - HOLT.CO3 345.00 345KV CKT 1	720	720	0.04349	129.8867	GERALD GENTLEMAN STATION - KEYSTONE 345KV CKT 1
FDNS	00NR_G15_076	2	17SP	G15_076	TO->FROM	GR ISLD-LNX3345.00 - HOLT.CO3 345.00 345KV CKT 1	720	720	0.04279	129.8766	GEN641089 2-ENERGY CENTER 2
FDNS	00NR_G15_076	2	17SP	G15_076	TO->FROM	GR ISLD-LNX3345.00 - HOLT.CO3 345.00 345KV CKT 1	720	720	0.04288	129.8429	CNTSHNT3 345.00 - PRAIRIE3 345.00 345KV CKT 1
FDNS	00NR_G15_076	2	17SP	G15_076	TO->FROM	GR ISLD-LNX3345.00 - HOLT.CO3 345.00 345KV CKT 1	720	720	0.04279	129.8395	GEN337041 1-GERALD ANDRUS
FDNS	00NR_G15_076	2	17SP	G15_076	TO->FROM	GR ISLD-LNX3345.00 - HOLT.CO3 345.00 345KV CKT 1	720	720	0.04279	129.8212	GEN335206 1-NELSON UNIT 6
FDNS	00NR_G15_076	2	17SP	G15_076	TO->FROM	GR ISLD-LNX3345.00 - HOLT.CO3 345.00 345KV CKT 1	720	720	0.04279	129.8111	GEN344897 4-1LAB G4 20.000
FDNS	00NR_G15_076	2	17SP	G15_076	TO->FROM	GR ISLD-LNX3345.00 - HOLT.CO3 345.00 345KV CKT 1	720	720	0.04279	129.8078	GEN344894 1-1LAB G1 20.000
FDNS	00NR_G15_076	2	17SP	G15_076	TO->FROM	GR ISLD-LNX3345.00 - HOLT.CO3 345.00 345KV CKT 1	720	720	0.04279	129.8076	GEN344896 3-1LAB G3 20.000

SOLUTION	GROUP	SCENARIO	SEASON	SOURCE	DIRECTION	MONITORED ELEMENT	RATEA (MVA)	RATEB(MVA)	TDF	TC%LOADING (% MVA)	CONTINGENCY
FDNS	00NR_G15_076	2	17SP	G15_076	TO->FROM	GR ISLD-LNX3345.00 - HOLT.CO3 345.00 345KV CKT 1	720	720	0.0429	129.7873	FORMAN - HANKINSON 230KV CKT 1
FDNS	00NR_G15_076	2	17SP	G15_076	TO->FROM	GR ISLD-LNX3345.00 - HOLT.CO3 345.00 345KV CKT 1	720	720	0.04281	129.7563	AINSWORTH - VALENTINE 115KV CKT 1
FDNS	00NR_G15_076	2	17SP	G15_076	TO->FROM	GR ISLD-LNX3345.00 - HOLT.CO3 345.00 345KV CKT 1	720	720	0.04279	129.7476	GEN344895 2-1LAB G2 20.000
FDNS	00NR_G15_076	2	17SP	G15_076	TO->FROM	GR ISLD-LNX3345.00 - HOLT.CO3 345.00 345KV CKT 1	720	720	0.04279	129.7233	GEN345670 1-1RUSH G1 18.000
FDNS	00NR_G15_076	2	17SP	G15_076	TO->FROM	GR ISLD-LNX3345.00 - HOLT.CO3 345.00 345KV CKT 1	720	720	0.04279	129.7231	GEN345671 2-1RUSH G2 18.000
FDNS	00NR_G15_076	2	17SP	G15_076	TO->FROM	GR ISLD-LNX3345.00 - HOLT.CO3 345.00 345KV CKT 1	720	720	0.04249	129.7104	EAGLE 4 230.00 - PAHOJA 230KV CKT 1
FDNS	00NR_G15_076	2	17SP	G15_076	TO->FROM	GR ISLD-LNX3345.00 - HOLT.CO3 345.00 345KV CKT 1	720	720	0.04443	129.6963	RASMUSN - UTICA JCT 230KV CKT 1
FDNS	00NR_G15_076	2	17SP	G15_076	TO->FROM	GR ISLD-LNX3345.00 - HOLT.CO3 345.00 345KV CKT 1	720	720	0.04279	129.6609	GEN501812 1-RODEMACHER UNIT 2
FDNS	00NR_G15_076	2	17SP	G15_076	TO->FROM	GR ISLD-LNX3345.00 - HOLT.CO3 345.00 345KV CKT 1	720	720	0.04448	129.6556	ADAMS - MITCHLCO3 345.00 345KV CKT 1
FDNS	00NR_G15_076	2	17SP	G15_076	TO->FROM	GR ISLD-LNX3345.00 - HOLT.CO3 345.00 345KV CKT 1	720	720	0.04279	129.6385	GEN334440 1-SABINE UNIT 4
FDNS	00NR_G15_076	2	17SP	G15_076	TO->FROM	GR ISLD-LNX3345.00 - HOLT.CO3 345.00 345KV CKT 1	720	720	0.04394	129.5231	ADAMS - PLEASANT VALLEY 345KV CKT 1
FDNS	00NR_G15_076	2	17SP	G15_076	TO->FROM	GR ISLD-LNX3345.00 - HOLT.CO3 345.00 345KV CKT 1	720	720	0.04279	129.4841	GEN336191 1-LITTLE GYPSY UNIT#3
FDNS	00NR_G15_076	2	17SP	G15_076	TO->FROM	GR ISLD-LNX3345.00 - HOLT.CO3 345.00 345KV CKT 1	720	720	0.04443	129.4722	RASMUSN - SIOUX CITY 230KV CKT 1
FDNS	00NR_G15_076	2	17SP	G15_076	TO->FROM	GR ISLD-LNX3345.00 - HOLT.CO3 345.00 345KV CKT 1	720	720	0.04279	129.4181	GEN338388 1-1PLUM PT U1 23.000
FDNS	00NR_G15_076	2	17SP	G15_076	TO->FROM	GR ISLD-LNX3345.00 - HOLT.CO3 345.00 345KV CKT 1	720	720	0.0454	129.3851	GRIMES - LEHIGH 345KV CKT 1
FDNS	00NR_G15_076	2	17SP	G15_076	TO->FROM	GR ISLD-LNX3345.00 - HOLT.CO3 345.00 345KV CKT 1	720	720	0.04279	129.3851	GEN336801 1-BAXTER WILSON UNIT #1
FDNS	00NR_G15_076	2	17SP	G15_076	TO->FROM	GR ISLD-LNX3345.00 - HOLT.CO3 345.00 345KV CKT 1	720	720	0.04279	129.3748	GEN335614 1-WILLOW GLENN UNIT#4
FDNS	00NR_G15_076	2	17SP	G15_076	TO->FROM	GR ISLD-LNX3345.00 - HOLT.CO3 345.00 345KV CKT 1	720	720	0.04279	129.3667	GEN334441 1-SABINE UNIT 5
FDNS	00NR_G15_076	2	17SP	G15_076	TO->FROM	GR ISLD-LNX3345.00 - HOLT.CO3 345.00 345KV CKT 1	720	720	0.04279	129.3592	GEN336464 1-MICHOUD UNIT #3
FDNS	00NR_G15_076	2	17SP	G15_076	TO->FROM	GR ISLD-LNX3345.00 - HOLT.CO3 345.00 345KV CKT 1	720	720	0.04279	129.3455	GEN335204 1-NELSON UNIT 4
FDNS	00NR_G15_076	2	17SP	G15_076	TO->FROM	GR ISLD-LNX3345.00 - HOLT.CO3 345.00 345KV CKT 1	720	720	0.04414	129.3326	LAKEFIELD 3 - NOBLES 345KV CKT 1
FDNS	00NR_G15_076	2	17SP	G15_076	TO->FROM	GR ISLD-LNX3345.00 - HOLT.CO3 345.00 345KV CKT 1	720	720	0.04348	129.2677	BROOKING COUNTY - LYON COUNTY 345KV CKT 1
FDNS	00NR_G15_076	2	17SP	G15_076	TO->FROM	GR ISLD-LNX3345.00 - HOLT.CO3 345.00 345KV CKT 1	720	720	0.04319	129.2564	FT THOMPSON - HURON 230KV CKT 1
FDNS	00NR_G15_076	2	17SP	G15_076	TO->FROM	GR ISLD-LNX3345.00 - HOLT.CO3 345.00 345KV CKT 1	720	720	0.04319	129.2564	FT THOMPSON - HURON 230KV CKT 1
FDNS	00NR_G15_076	2	17SP	G15_076	TO->FROM	GR ISLD-LNX3345.00 - HOLT.CO3 345.00 345KV CKT 1	720	720	0.04319	129.2564	FT THOMPSON - HURON 230KV CKT 2
FDNS	00NR_G15_076	2	17SP	G15_076	TO->FROM	GR ISLD-LNX3345.00 - HOLT.CO3 345.00 345KV CKT 1	720	720	0.04319	129.2564	FT THOMPSON - HURON 230KV CKT 2
FDNS	00NR_G15_076	2	17SP	G15_076	TO->FROM	GR ISLD-LNX3345.00 - HOLT.CO3 345.00 345KV CKT 1	720	720	0.04369	129.2471	KOSSUTH 3 345.00 - WEBSTER 345KV CKT 1
FDNS	00NR_G15_076	2	17SP	G15_076	TO->FROM	GR ISLD-LNX3345.00 - HOLT.CO3 345.00 345KV CKT 1	720	720	0.04293	129.2457	LARAMIE RIVER - SIDNEY2-LNX3345.00 345KV CKT 1
FDNS	00NR_G15_076	2	17SP	G15_076	TO->FROM	GR ISLD-LNX3345.00 - HOLT.CO3 345.00 345KV CKT 1	720	720	0.04369	129.2394	KOSSUTH 3 345.00 - OBRIEN 3 345.00 345KV CKT 1
FDNS	00NR_G15_076	2	17SP	G15_076	TO->FROM	GR ISLD-LNX3345.00 - HOLT.CO3 345.00 345KV CKT 1	720	720	0.04293	129.22	SIDNEY - SIDNEY2-LNX3345.00 345KV CKT Z
FDNS	00NR_G15_076	2	17SP	G15_076	TO->FROM	GR ISLD-LNX3345.00 - HOLT.CO3 345.00 345KV CKT 1	720	720	0.04417	129.2099	STEGALL - STEGALL TRANSFORMER 230KV CKT 1
FDNS	00NR_G15_076	2	17SP	G15_076	TO->FROM	GR ISLD-LNX3345.00 - HOLT.CO3 345.00 345KV CKT 1	720	720	0.04279	129.1962	GEN334433 1-SABINE UNIT 3
FDNS	00NR_G15_076	2	17SP	G15_076	TO->FROM	GR ISLD-LNX3345.00 - HOLT.CO3 345.00 345KV CKT 1	720	720	0.04417	129.1904	P13:230-345:NPPD:STEGALL3:KV3A
FDNS	00NR_G15_076	2	17SP	G15_076	TO->FROM	GR ISLD-LNX3345.00 - HOLT.CO3 345.00 345KV CKT 1	720	720	0.04417	129.1897	STEGALL (SGQ KV3A) 345/230/13.8KV TRANSFORMER CKT 1
FDNS	00NR_G15_076	2	17SP	G15_076	TO->FROM	GR ISLD-LNX3345.00 - HOLT.CO3 345.00 345KV CKT 1	720	720	0.04294	129.1843	BLAIR - GRANITE FALLS 230KV CKT 1
FDNS	00NR_G15_076	2	17SP	G15_076	TO->FROM	GR ISLD-LNX3345.00 - HOLT.CO3 345.00 345KV CKT 1	720	720	0.04294	129.1843	BLAIR - GRANITE FALLS 230KV CKT 1
FDNS	00NR_G15_076	2	17SP	G15_076	TO->FROM	GR ISLD-LNX3345.00 - HOLT.CO3 345.00 345KV CKT 1	720	720	0.04249	129.158	CROOKED CREEK - NORTH PLATTE 230KV CKT 1
FDNS	00NR_G15_076	2	17SP	G15_076	TO->FROM	GR ISLD-LNX3345.00 - HOLT.CO3 345.00 345KV CKT 1	720	720	0.04134	129.1518	MENNO JCT - TRIPP JCT 115KV CKT 1
FDNS	00NR_G15_076	2	17SP	G15_076	TO->FROM	GR ISLD-LNX3345.00 - HOLT.CO3 345.00 345KV CKT 1	720	720	0.04279	129.1493	P12:115:UMZW:# 162 #: NEL IN ND. FAULT ON ML-NEL-MX-GA 115 KV
FDNS	00NR_G15_076	2	17SP	G15_076	TO->FROM	GR ISLD-LNX3345.00 - HOLT.CO3 345.00 345KV CKT 1	720	720	0.04503	129.1321	STEGALL-LNX3230.00 - WAYSIDE 230KV CKT 1
FDNS	00NR_G15_076	2	17SP	G15_076	TO->FROM	GR ISLD-LNX3345.00 - HOLT.CO3 345.00 345KV CKT 1	720	720	0.04279	129.1319	GEN531447 1-HOLCOMB GENERATOR
FDNS	00NR_G15_076	2	17SP	G15_076	TO->FROM	GR ISLD-LNX3345.00 - HOLT.CO3 345.00 345KV CKT 1	720	720	0.04279	129.1318	GEN336222 1-LITTLE GYPSY UNIT#2
FDNS	00NR_G15_076	2	17SP	G15_076	TO->FROM	GR ISLD-LNX3345.00 - HOLT.CO3 345.00 345KV CKT 1	720	720	0.04503	129.1185	STEGALL - STEGALL-LNX3230.00 230KV CKT Z
FDNS	00NR_G15_076	2	17SP	G15_076	TO->FROM	GR ISLD-LNX3345.00 - HOLT.CO3 345.00 345KV CKT 1	720	720	0.04279	129.1102	GEN303007 1-1BC2 U2
FDNS	00NR_G15_076	2	17SP	G15_076	TO->FROM	GR ISLD-LNX3345.00 - HOLT.CO3 345.00 345KV CKT 1	720	720	0.04279	129.1064	GEN303006 1-1BC2 U1
FDNS	00NR_G15_076	2	17SP	G15_076	TO->FROM	GR ISLD-LNX3345.00 - HOLT.CO3 345.00 345KV CKT 1	720	720	0.04279	129.0522	GEN336152 1-WATERFORD UNIT#2
FDNS	00NR_G15_076	2	17SP	G15_076	TO->FROM	GR ISLD-LNX3345.00 - HOLT.CO3 345.00 345KV CKT 1	720	720	0.04279	129.0517	GEN336151 1-WATERFORD UNIT#1
FDNS	00NR_G15_076	2	17SP	G15_076	TO->FROM	GR ISLD-LNX3345.00 - HOLT.CO3 345.00 345KV CKT 1	720	720	0.04279	129.0276	GEN303008 1-1BC2 U3
FDNS	00NR_G15_076	2	17SP	G15_076	TO->FROM	GR ISLD-LNX3345.00 - HOLT.CO3 345.00 345KV CKT 1	720	720	0.04279	129.0237	GEN336170 1-GULF OXY U4
FDNS	00NR_G15_076	2	17SP	G15_076	TO->FROM	GR ISLD-LNX3345.00 - HOLT.CO3 345.00 345KV CKT 1	720	720	0.04388	128.9837	ARKANSAS NUCLEAR ONE - FT SMITH 500KV CKT 1
FDNS	00NR_G15_076	2	17SP	G15_076	TO->FROM	GR ISLD-LNX3345.00 - HOLT.CO3 345.00 345KV CKT 1	720	720	0.04388	128.9837	ARKANSAS NUCLEAR ONE - FT SMITH 500KV CKT 1
FDNS	00NR_G15_076	2	17SP	G15_076	TO->FROM	GR ISLD-LNX3345.00 - HOLT.CO3 345.00 345KV CKT 1	720	720	0.04134	128.9396	MENNO JCT - UTICA 115KV CKT 1
FDNS	00NR_G15_076	2	17SP	G15_076	TO->FROM	GR ISLD-LNX3345.00 - HOLT.CO3 345.00 345KV CKT 1	720	720	0.04134	128.8968	P12:115:UMZZ:# 237 #: MEN IN SD. MENNO JUNCTION IS A TAP (UJ-MEN-TP).
FDNS	00NR_G15_076	2	17SP	G15_076	TO->FROM	GR ISLD-LNX3345.00 - HOLT.CO3 345.00 345KV CKT 1	720	720	0.04279	128.8634	GEN501811 1-RODEMACHER UNIT 1
FDNS	00NR_G15_076	2	17SP	G15_076	TO->FROM	GR ISLD-LNX3345.00 - HOLT.CO3 345.00 345KV CKT 1	720	720	0.04836	128.801	COLUMEAST - SHELL CREEK 345KV CKT 1
FDNS	00NR_G15_076	2	17SP	G15_076	TO->FROM	GR ISLD-LNX3345.00 - HOLT.CO3 345.00 345KV CKT 1	720	720	0.04279	128.765	GEN334071 1-LEWIS CREEK 2
FDNS	00NR_G15_076	2	17SP	G15_076	TO->FROM	GR ISLD-LNX3345.00 - HOLT.CO3 345.00 345KV CKT 1	720	720	0.04279	128.7612	GEN337766 1-TRACTEBEL UNIT S1
FDNS	00NR_G15_076	2	17SP	G15_076	TO->FROM	GR ISLD-LNX3345.00 - HOLT.CO3 345.00 345KV CKT 1	720	720	0.04279	128.759	GEN334070 1-LEWIS CREEK 1
FDNS	00NR_G15_076	2	17SP	G15_076	TO->FROM	GR ISLD-LNX3345.00 - HOLT.CO3 345.00 345KV CKT 1	720	720	0.04279	128.7573	P13:230-345:NPPD:NUCOR-1
FDNS	00NR_G15_076	2	17SP	G15_076	TO->FROM	GR ISLD-LNX3345.00 - HOLT.CO3 345.00 345KV CKT 1	720	720	0.04304	128.7526	APPLEDORN 4 230.00 - GRANITE FALLS 230KV CKT 1
FDNS	00NR_G15_076	2	17SP	G15_076	TO->FROM	GR ISLD-LNX3345.00 - HOLT.CO3 345.00 345KV CKT 1	720	720	0.04304	128.7526	APPLEDORN 4 230.00 - GRANITE FALLS 230KV CKT 1
FDNS	00NR_G15_076	2	17SP	G15_076	TO->FROM	GR ISLD-LNX3345.00 - HOLT.CO3 345.00 345KV CKT 1	720	720	0.04401	128.7302	DENISON - SIOUX CITY 230KV CKT 1
FDNS	00NR_G15_076	2	17SP	G15_076	TO->FROM	GR ISLD-LNX3345.00 - HOLT.CO3 345.00 345KV CKT 1	720	720	0.04279	128.7294	P13:115-230:NPPD:NUCOR-3
FDNS	00NR_G15_076	2	17SP	G15_076	TO->FROM	GR ISLD-LNX3345.00 - HOLT.CO3 345.00 345KV CKT 1	720	720	0.04279	128.7182	GEN501910 1-ACADIA UNIT ST1
FDNS	00NR_G15_076	2	17SP	G15_076	TO->FROM	GR ISLD-LNX3345.00 - HOLT.CO3 345.00 345KV CKT 1	720	720	0.04237	128.6838	CROOKED CREEK - RIVERDALE 230KV CKT 1
FDNS	00NR_G15_076	2	17SP	G15_076	TO->FROM	GR ISLD-LNX3345.00 - HOLT.CO3 345.00 345KV CKT 1	720	720	0.04009	128.6252	FT THOMPSON (FT2 KU1B) 345/230/13.8KV TRANSFORMER CKT 1
FDNS	00NR_G15_076	2	17SP	G15_076	TO->FROM	GR ISLD-LNX3345.00 - HOLT.CO3 345.00 345KV CKT 1	720	720	0.0401	128.6241	FT THOMPSON (FT2 KU1A) 345/230/13.8KV TRANSFORMER CKT 1
FDNS	00NR_G15_076	2	17SP	G15_076	TO->FROM	GR ISLD-LNX3345.00 - HOLT.CO3 345.00 345KV CKT 1	720	720	0.04279	128.5785	GEN659118 1-LARAMIE RIVER UNIT1
FDNS	00NR_G15_076	2	17SP	G15_076	TO->FROM	GR ISLD-LNX3345.00 - HOLT.CO3 345.00 345KV CKT 1	720	720	0.04354	128.1223	KELLY - SHELL CREEK 230KV CKT 1
FDNS	00NR_G15_076	2	17SP	G15_076	TO->FROM	GR ISLD-LNX3345.00 - HOLT.CO3 345.00 345KV CKT 1	720	720	0.04354	128.1135	SHELL CREEK (SHELLCREEKT1) 345/230/13.8KV TRANSFORMER CKT 1
FDNS	00NR_G15_076	2	17SP	G15_076	TO->FROM	GR ISLD-LNX3345.00 - HOLT.CO3 345.00 345KV CKT 1	720	720	0.04354	128.1135	SHELL CREEK (SHELLCREEKT1) 345/230/13.8KV TRANSFORMER CKT 1
FDNS	00NR_G15_076	2	17SP	G15_076	TO->FROM	GR ISLD-LNX3345.00 - HOLT.CO3 345.00 345KV CKT 1	720	720	0.05115	128.0891	COLUMWEST - KELLY 230KV CKT 1
FDNS	00NR_G15_076	2	17SP	G15_076	TO->FROM	GR ISLD-LNX3345.00 - HOLT.CO3 345.00 345KV CKT 1	720	720	0.04293	127.9716	ANTELOP-LNX3345.00 - BRDLAND-LNX3345.00 345KV CKT 1

SOLUTION	GROUP	SCENARIO	SEASON	SOURCE	DIRECTION	MONITORED ELEMENT	RATEA (MVA)	RATEB(MVA)	TDF	TC%LOADING (% MVA)	CONTINGENCY
FDNS	00NR_G15_076	2	17SP	G15_076	TO->FROM	GR ISLD-LNX3345.00 - HOLT.CO3 345.00 345KV CKT 1	720	720	0.04279	127.9246	BASE CASE
FDNS	00NR_G15_076	2	17SP	G15_076	TO->FROM	GR ISLD-LNX3345.00 - HOLT.CO3 345.00 345KV CKT 1	720	720	0.04186	127.8195	GRAND ISLAND - RIVERDALE 230KV CKT 1
FDNS	00NR_G15_076	2	17SP	G15_076	TO->FROM	GR ISLD-LNX3345.00 - HOLT.CO3 345.00 345KV CKT 1	720	720	0.04279	127.7954	GEN645001 1-FORT CALHOUN 1
FDNS	00NR_G15_076	2	17SP	G15_076	TO->FROM	GR ISLD-LNX3345.00 - HOLT.CO3 345.00 345KV CKT 1	720	720	0.04007	127.7892	COOPER - MOORE 345KV CKT 1
FDNS	00NR_G15_076	2	17SP	G15_076	TO->FROM	GR ISLD-LNX3345.00 - HOLT.CO3 345.00 345KV CKT 1	720	720	0.04405	127.7337	AXTELL - PAULINE 345KV CKT 1
FDNS	00NR_G15_076	2	17SP	G15_076	TO->FROM	GR ISLD-LNX3345.00 - HOLT.CO3 345.00 345KV CKT 1	720	720	0.04313	127.6493	103RD & ROKEBY - MOORE 345KV CKT 1
FDNS	00NR_G15_076	2	17SP	G15_076	TO->FROM	GR ISLD-LNX3345.00 - HOLT.CO3 345.00 345KV CKT 1	720	720	0.04313	127.6493	103RD & ROKEBY - MOORE 345KV CKT 1
FDNS	00NR_G15_076	2	17SP	G15_076	TO->FROM	GR ISLD-LNX3345.00 - HOLT.CO3 345.00 345KV CKT 1	720	720	0.04291	127.6368	FT THOMPSON - OAHE 230KV CKT 1
FDNS	00NR_G15_076	2	17SP	G15_076	TO->FROM	GR ISLD-LNX3345.00 - HOLT.CO3 345.00 345KV CKT 1	720	720	0.04291	127.6368	FT THOMPSON - OAHE 230KV CKT 1
FDNS	00NR_G15_076	2	17SP	G15_076	TO->FROM	GR ISLD-LNX3345.00 - HOLT.CO3 345.00 345KV CKT 1	720	720	0.04291	127.6368	FT THOMPSON - OAHE 230KV CKT 2
FDNS	00NR_G15_076	2	17SP	G15_076	TO->FROM	GR ISLD-LNX3345.00 - HOLT.CO3 345.00 345KV CKT 1	720	720	0.04291	127.6368	FT THOMPSON - OAHE 230KV CKT 2
FDNS	00NR_G15_076	2	17SP	G15_076	TO->FROM	GR ISLD-LNX3345.00 - HOLT.CO3 345.00 345KV CKT 1	720	720	0.04292	127.5986	FT THOMPSON - OAHE 230KV CKT 3
FDNS	00NR_G15_076	2	17SP	G15_076	TO->FROM	GR ISLD-LNX3345.00 - HOLT.CO3 345.00 345KV CKT 1	720	720	0.04292	127.5986	FT THOMPSON - OAHE 230KV CKT 3
FDNS	00NR_G15_076	2	17SP	G15_076	TO->FROM	GR ISLD-LNX3345.00 - HOLT.CO3 345.00 345KV CKT 1	720	720	0.04292	127.5986	FT THOMPSON - OAHE 230KV CKT 4
FDNS	00NR_G15_076	2	17SP	G15_076	TO->FROM	GR ISLD-LNX3345.00 - HOLT.CO3 345.00 345KV CKT 1	720	720	0.04292	127.5986	FT THOMPSON - OAHE 230KV CKT 4
FDNS	00NR_G15_076	2	17SP	G15_076	TO->FROM	GR ISLD-LNX3345.00 - HOLT.CO3 345.00 345KV CKT 1	720	720	0.04285	127.5934	GRAND ISLAND (GRAND.ISD T5) 230/115/13.8KV TRANSFORMER CKT 2
FDNS	00NR_G15_076	2	17SP	G15_076	TO->FROM	GR ISLD-LNX3345.00 - HOLT.CO3 345.00 345KV CKT 1	720	720	0.04285	127.5934	GRAND ISLAND (GRAND.ISD T5) 230/115/13.8KV TRANSFORMER CKT 2
FDNS	00NR_G15_076	2	17SP	G15_076	TO->FROM	GR ISLD-LNX3345.00 - HOLT.CO3 345.00 345KV CKT 1	720	720	0.04285	127.5911	GRAND ISLAND (GRAND.ISD T2) 230/115/13.8KV TRANSFORMER CKT 1
FDNS	00NR_G15_076	2	17SP	G15_076	TO->FROM	GR ISLD-LNX3345.00 - HOLT.CO3 345.00 345KV CKT 1	720	720	0.04285	127.5911	GRAND ISLAND (GRAND.ISD T2) 230/115/13.8KV TRANSFORMER CKT 1
FDNS	00NR_G15_076	2	17SP	G15_076	TO->FROM	GR ISLD-LNX3345.00 - HOLT.CO3 345.00 345KV CKT 1	720	720	0.0428	127.5372	MCCOOL (MCCOOL T2) 345/115/13.8KV TRANSFORMER CKT 1
FDNS	00NR_G15_076	2	17SP	G15_076	TO->FROM	GR ISLD-LNX3345.00 - HOLT.CO3 345.00 345KV CKT 1	720	720	0.0428	127.5372	MCCOOL (MCCOOL T2) 345/115/13.8KV TRANSFORMER CKT 1
FDNS	00NR_G15_076	2	17SP	G15_076	TO->FROM	GR ISLD-LNX3345.00 - HOLT.CO3 345.00 345KV CKT 1	720	720	0.04339	127.4936	MAXWELL - NORTH PLATTE 115KV CKT 1
FDNS	00NR_G15_076	2	17SP	G15_076	TO->FROM	GR ISLD-LNX3345.00 - HOLT.CO3 345.00 345KV CKT 1	720	720	0.04166	127.4262	FINNEY SWITCHING STATION - WALKTAP7 345.00 345KV CKT 1
FDNS	00NR_G15_076	2	17SP	G15_076	TO->FROM	GR ISLD-LNX3345.00 - HOLT.CO3 345.00 345KV CKT 1	720	720	0.04166	127.4262	FINNEY SWITCHING STATION - WALKTAP7 345.00 345KV CKT 1
FDNS	00NR_G15_076	2	17SP	G15_076	TO->FROM	GR ISLD-LNX3345.00 - HOLT.CO3 345.00 345KV CKT 1	720	720	0.04304	127.4056	GRAND ISLAND (GI KU1B) 345/230/13.8KV TRANSFORMER CKT 2
FDNS	00NR_G15_076	2	17SP	G15_076	TO->FROM	GR ISLD-LNX3345.00 - HOLT.CO3 345.00 345KV CKT 1	720	720	0.04304	127.4056	GRAND ISLAND (GI KU1B) 345/230/13.8KV TRANSFORMER CKT 2
FDNS	00NR_G15_076	2	17SP	G15_076	TO->FROM	GR ISLD-LNX3345.00 - HOLT.CO3 345.00 345KV CKT 1	720	720	0.04304	127.4046	GRAND ISLAND (GI KU1A) 345/230/13.8KV TRANSFORMER CKT 1
FDNS	00NR_G15_076	2	17SP	G15_076	TO->FROM	GR ISLD-LNX3345.00 - HOLT.CO3 345.00 345KV CKT 1	720	720	0.04304	127.4046	GRAND ISLAND (GI KU1A) 345/230/13.8KV TRANSFORMER CKT 1
FDNS	00NR_G15_076	2	17SP	G15_076	TO->FROM	GR ISLD-LNX3345.00 - HOLT.CO3 345.00 345KV CKT 1	720	720	0.04106	127.3983	Hitchland Interchange - WALKTAP7 345.00 345KV CKT 1
FDNS	00NR_G15_076	2	17SP	G15_076	TO->FROM	GR ISLD-LNX3345.00 - HOLT.CO3 345.00 345KV CKT 1	720	720	0.04106	127.3983	Hitchland Interchange - WALKTAP7 345.00 345KV CKT 1
FDNS	00NR_G15_076	2	17SP	G15_076	TO->FROM	GR ISLD-LNX3345.00 - HOLT.CO3 345.00 345KV CKT 1	720	720	0.04106	127.3934	P12:345:SPS:J07.1.FINN.HITCH
FDNS	00NR_G15_076	2	17SP	G15_076	TO->FROM	GR ISLD-LNX3345.00 - HOLT.CO3 345.00 345KV CKT 1	720	720	0.03996	127.3605	MINGO - SETAB 345KV CKT 1
FDNS	00NR_G15_076	2	17SP	G15_076	TO->FROM	GR ISLD-LNX3345.00 - HOLT.CO3 345.00 345KV CKT 1	720	720	0.03996	127.3605	MINGO - SETAB 345KV CKT 1
FDNS	00NR_G15_076	2	17SP	G15_076	TO->FROM	GR ISLD-LNX3345.00 - HOLT.CO3 345.00 345KV CKT 1	720	720	0.04483	127.332	MOORE - PAULINE 345KV CKT 1
FDNS	00NR_G15_076	2	17SP	G15_076	TO->FROM	GR ISLD-LNX3345.00 - HOLT.CO3 345.00 345KV CKT 1	720	720	0.04293	127.3104	P12:345:UMZB:# 102 #: AVS BD IN ND. AVS BRD LR
FDNS	00NR_G15_076	2	17SP	G15_076	TO->FROM	GR ISLD-LNX3345.00 - HOLT.CO3 345.00 345KV CKT 1	720	720	0.04293	127.3093	P12:345:UMZB:# 103 #: BD IN SD. LOSS OF LINE
FDNS	00NR_G15_076	2	17SP	G15_076	TO->FROM	GR ISLD-LNX3345.00 - HOLT.CO3 345.00 345KV CKT 1	720	720	0.04293	127.2805	BRDLAND-LNX3345.00 - HURON 345KV CKT Z
FDNS	00NR_G15_076	2	17SP	G15_076	TO->FROM	GR ISLD-LNX3345.00 - HOLT.CO3 345.00 345KV CKT 1	720	720	0.04293	127.2786	BROADLAND - HURON 230KV CKT 1
FDNS	00NR_G15_076	2	17SP	G15_076	TO->FROM	GR ISLD-LNX3345.00 - HOLT.CO3 345.00 345KV CKT 1	720	720	0.04293	127.2786	HURON (BD KU2A) 345/230/13.8KV TRANSFORMER CKT 1
FDNS	00NR_G15_076	2	17SP	G15_076	TO->FROM	GR ISLD-LNX3345.00 - HOLT.CO3 345.00 345KV CKT 1	720	720	0.04293	127.2786	HURON (BD KU2A) 345/230/13.8KV TRANSFORMER CKT 1
FDNS	00NR_G15_076	2	17SP	G15_076	TO->FROM	GR ISLD-LNX3345.00 - HOLT.CO3 345.00 345KV CKT 1	720	720	0.04177	127.2779	G11_051T 345.00 - TATONGA7 345.00 345KV CKT 1
FDNS	00NR_G15_076	2	17SP	G15_076	TO->FROM	GR ISLD-LNX3345.00 - HOLT.CO3 345.00 345KV CKT 1	720	720	0.04316	127.2384	GRAND ISLAND (GI KU3A) 345/230/13.8KV TRANSFORMER CKT 3
FDNS	00NR_G15_076	2	17SP	G15_076	TO->FROM	GR ISLD-LNX3345.00 - HOLT.CO3 345.00 345KV CKT 1	720	720	0.04316	127.2384	GRAND ISLAND (GI KU3A) 345/230/13.8KV TRANSFORMER CKT 3
FDNS	00NR_G15_076	2	17SP	G15_076	TO->FROM	GR ISLD-LNX3345.00 - HOLT.CO3 345.00 345KV CKT 1	720	720	0.04279	127.232	GEN590010 1-ERCOT EQUIVALENCE
FDNS	00NR_G15_076	2	17SP	G15_076	TO->FROM	GR ISLD-LNX3345.00 - HOLT.CO3 345.00 345KV CKT 1	720	720	0.04279	127.2237	GEN300003 1-THOMAS HILL UNIT 3
FDNS	00NR_G15_076	2	17SP	G15_076	TO->FROM	GR ISLD-LNX3345.00 - HOLT.CO3 345.00 345KV CKT 1	720	720	0.04279	127.1996	GEN590011 2-ERCOT EQUIVALENCE
FDNS	00NR_G15_076	2	17SP	G15_076	TO->FROM	GR ISLD-LNX3345.00 - HOLT.CO3 345.00 345KV CKT 1	720	720	0.04429	127.1926	LOUP CITY - NORTH LOUP 115KV CKT 1
FDNS	00NR_G15_076	2	17SP	G15_076	TO->FROM	GR ISLD-LNX3345.00 - HOLT.CO3 345.00 345KV CKT 1	720	720	0.04279	127.178	GEN629072 4-LANSING GENERATOR FOR UNITS NO4 EIA CODE 1
FDNS	00NR_G15_076	2	17SP	G15_076	TO->FROM	GR ISLD-LNX3345.00 - HOLT.CO3 345.00 345KV CKT 1	720	720	0.04279	127.1705	EASTDC - ERCOT EQUIVALENCE 345KV CKT 1
FDNS	00NR_G15_076	2	17SP	G15_076	TO->FROM	GR ISLD-LNX3345.00 - HOLT.CO3 345.00 345KV CKT 1	720	720	0.04279	127.1408	GEN660003 3-HURON WEST PARK
FDNS	00NR_G15_076	2	17SP	G15_076	TO->FROM	GR ISLD-LNX3345.00 - HOLT.CO3 345.00 345KV CKT 1	720	720	0.04279	127.1401	GEN652414 4-FT PECK
FDNS	00NR_G15_076	2	17SP	G15_076	TO->FROM	GR ISLD-LNX3345.00 - HOLT.CO3 345.00 345KV CKT 1	720	720	0.04279	127.1401	GEN652415 5-FT PECK
FDNS	00NR_G15_076	2	17SP	G15_076	TO->FROM	GR ISLD-LNX3345.00 - HOLT.CO3 345.00 345KV CKT 1	720	720	0.04326	127.1259	OAHE - SULLEY BUTTE 230KV CKT 1
FDNS	00NR_G15_076	2	17SP	G15_076	TO->FROM	GR ISLD-LNX3345.00 - HOLT.CO3 345.00 345KV CKT 1	720	720	0.04279	127.12	G830_SUB 115.00 115/34.5KV TRANSFORMER CKT 1
FDNS	00NR_G15_076	2	17SP	G15_076	TO->FROM	GR ISLD-LNX3345.00 - HOLT.CO3 345.00 345KV CKT 1	720	720	0.04279	127.1023	GEN652345 W-G07_023IS_2 0.6900
FDNS	00NR_G15_076	2	17SP	G15_076	TO->FROM	GR ISLD-LNX3345.00 - HOLT.CO3 345.00 345KV CKT 1	720	720	0.04279	127.0986	EMERY 161/18.0KV TRANSFORMER CKT 1
FDNSLock	00NR_G15_076	2	17SP	G15_076	TO->FROM	GR ISLD-LNX3345.00 - HOLT.CO3 345.00 345KV CKT 1	720	720	0.04422	127.0962	CENTRAL CITY - GRAND ISLAND 115KV CKT 1
FDNS	00NR_G15_076	2	17SP	G15_076	TO->FROM	GR ISLD-LNX3345.00 - HOLT.CO3 345.00 345KV CKT 1	720	720	0.04279	127.0959	GEN 11104 1-J262_GEN 0.6000
FDNS	00NR_G15_076	2	17SP	G15_076	TO->FROM	GR ISLD-LNX3345.00 - HOLT.CO3 345.00 345KV CKT 1	720	720	0.04279	127.0959	GEN 11108 1-J263_GEN 0.6000
FDNS	00NR_G15_076	2	17SP	G15_076	TO->FROM	GR ISLD-LNX3345.00 - HOLT.CO3 345.00 345KV CKT 1	720	720	0.04279	127.0777	GEN600050 1-FEP
FDNS	00NR_G15_076	2	17SP	G15_076	TO->FROM	GR ISLD-LNX3345.00 - HOLT.CO3 345.00 345KV CKT 1	720	720	0.04199	127.068	POST ROCK (POSTROCK T1) 345/230/13.8KV TRANSFORMER CKT 1
FDNS	00NR_G15_076	2	17SP	G15_076	TO->FROM	GR ISLD-LNX3345.00 - HOLT.CO3 345.00 345KV CKT 1	720	720	0.04084	127.0626	GERALD GENTLEMAN STATION - RED WILLOW 345KV CKT 1
FDNS	00NR_G15_076	2	17SP	G15_076	TO->FROM	GR ISLD-LNX3345.00 - HOLT.CO3 345.00 345KV CKT 1	720	720	0.04279	127.0438	GEN300007 1-NEW MADRID UNIT 2
FDNS	00NR_G15_076	2	17SP	G15_076	TO->FROM	GR ISLD-LNX3345.00 - HOLT.CO3 345.00 345KV CKT 1	720	720	0.04279	127.0372	GEN300006 1-NEW MADRID UNIT 1
FDNS	00NR_G15_076	2	17SP	G15_076	TO->FROM	GR ISLD-LNX3345.00 - HOLT.CO3 345.00 345KV CKT 1	720	720	0.04293	127.0295	ANTELOP-LNX3345.00 - ANTELOPE VALLEY 345KV CKT Z
FDNS	00NR_G15_076	2	17SP	G15_076	TO->FROM	GR ISLD-LNX3345.00 - HOLT.CO3 345.00 345KV CKT 1	720	720	0.04279	127.0277	GEN600046 1-MECST
FDNS	00NR_G15_076	2	17SP	G15_076	TO->FROM	GR ISLD-LNX3345.00 - HOLT.CO3 345.00 345KV CKT 1	720	720	0.05115	127.0209	COLUMWEST - GRAND ISLAND 230KV CKT 1
FDNS	00NR_G15_076	2	17SP	G15_076	TO->FROM	GR ISLD-LNX3345.00 - HOLT.CO3 345.00 345KV CKT 1	720	720	0.04177	127.007	MATHWSN7 345.00 - TATONGA7 345.00 345KV CKT 1
FDNS	00NR_G15_076	2	17SP	G15_076	TO->FROM	GR ISLD-LNX3345.00 - HOLT.CO3 345.00 345KV CKT 1	720	720	0.04279	127.0003	GEN600047 1-MECCT1
FDNS	00NR_G15_076	2	17SP	G15_076	TO->FROM	GR ISLD-LNX3345.00 - HOLT.CO3 345.00 345KV CKT 1	720	720	0.04279	126.9969	GEN600063 1-COLVILLE GEN 1
FDNS	00NR_G15_076	2	17SP	G15_076	TO->FROM	GR ISLD-LNX3345.00 - HOLT.CO3 345.00 345KV CKT 1	720	720	0.04279	126.9969	GEN600064 2-COLVILLE GEN 2
FDNS	00NR_G15_076	2	17SP	G15_076	TO->FROM	GR ISLD-LNX3345.00 - HOLT.CO3 345.00 345KV CKT 1	720	720	0.04279	126.9917	GEN600043 7-BLUE LAKE5
FDNS	00NR_G15_076	2	17SP	G15_076	TO->FROM	GR ISLD-LNX3345.00 - HOLT.CO3 345.00 345KV CKT 1	720	720	0.04279	126.9917	GEN600044 8-BLUE LAKE6

SOLUTION	GROUP	SCENARIO	SEASON	SOURCE	DIRECTION	MONITORED ELEMENT	RATEA (MVA)	RATEB(MVA)	TDF	TC%LOADING (% MVA)	CONTINGENCY
FDNS	00NR_G15_076	2	17SP	G15_076	TO->FROM	GR ISLD-LNX3345.00 - HOLT.CO3 345.00 345KV CKT 1	720	720	0.04279	126.9857	GEN660001 2-ABERDEEN SIEBRECHT
FDNS	00NR_G15_076	2	17SP	G15_076	TO->FROM	GR ISLD-LNX3345.00 - HOLT.CO3 345.00 345KV CKT 1	720	720	0.04326	126.9824	SULLYBT-LNX3230.00 - WHITLOK 230KV CKT 1
FDNS	00NR_G15_076	2	17SP	G15_076	TO->FROM	GR ISLD-LNX3345.00 - HOLT.CO3 345.00 345KV CKT 1	720	720	0.04326	126.9804	SULLEY BUTTE - SULLYBT-LNX3230.00 230KV CKT Z
FDNS	00NR_G15_076	2	17SP	G15_076	TO->FROM	GR ISLD-LNX3345.00 - HOLT.CO3 345.00 345KV CKT 1	720	720	0.04279	126.9663	GEN659273 2-GROTON SYNC COND
FDNS	00NR_G15_076	2	17SP	G15_076	TO->FROM	GR ISLD-LNX3345.00 - HOLT.CO3 345.00 345KV CKT 1	720	720	0.04279	126.9663	GEN659294 1-WILTONCOL9
FDNS	00NR_G15_076	2	17SP	G15_076	TO->FROM	GR ISLD-LNX3345.00 - HOLT.CO3 345.00 345KV CKT 1	720	720	0.04279	126.9559	GEN600065 7-HIGH BRIDGE
FDNS	00NR_G15_076	2	17SP	G15_076	TO->FROM	GR ISLD-LNX3345.00 - HOLT.CO3 345.00 345KV CKT 1	720	720	0.04279	126.9559	GEN600066 8-HIGH BRIDGE
FDNS	00NR_G15_076	2	17SP	G15_076	TO->FROM	GR ISLD-LNX3345.00 - HOLT.CO3 345.00 345KV CKT 1	720	720	0.04279	126.9508	GEN600014 4-BLACK DOG GEN 4
FDNS	00NR_G15_076	2	17SP	G15_076	TO->FROM	GR ISLD-LNX3345.00 - HOLT.CO3 345.00 345KV CKT 1	720	720	0.04279	126.9459	GEN600011 5-BLACK DOG GEN 1
FDNS	00NR_G15_076	2	17SP	G15_076	TO->FROM	GR ISLD-LNX3345.00 - HOLT.CO3 345.00 345KV CKT 1	720	720	0.04326	126.9453	P12:230:UMZB:# 114 #: SB IN SD. SB-WK-GH
FDNS	00NR_G15_076	2	17SP	G15_076	TO->FROM	GR ISLD-LNX3345.00 - HOLT.CO3 345.00 345KV CKT 1	720	720	0.04326	126.9453	P12:230:UMZB:# 117 #: WK IN SD. SB-WK-GH
FDNS	00NR_G15_076	2	17SP	G15_076	TO->FROM	GR ISLD-LNX3345.00 - HOLT.CO3 345.00 345KV CKT 1	720	720	0.04279	126.94	GEN600071 10-RIVER SIDE
FDNS	00NR_G15_076	2	17SP	G15_076	TO->FROM	GR ISLD-LNX3345.00 - HOLT.CO3 345.00 345KV CKT 1	720	720	0.04279	126.9399	GEN600070 9-RIVER SIDE
FDNS	00NR_G15_076	2	17SP	G15_076	TO->FROM	GR ISLD-LNX3345.00 - HOLT.CO3 345.00 345KV CKT 1	720	720	0.04279	126.9316	GEN600045 4-ANSON
FDNS	00NR_G15_076	2	17SP	G15_076	TO->FROM	GR ISLD-LNX3345.00 - HOLT.CO3 345.00 345KV CKT 1	720	720	0.04279	126.9265	GEN600007 7-RIVERSIDE GEN 7
FDNS	00NR_G15_076	2	17SP	G15_076	TO->FROM	GR ISLD-LNX3345.00 - HOLT.CO3 345.00 345KV CKT 1	720	720	0.04279	126.9232	GEN 10648 1-G830_GEN 0.6900
FDNS	00NR_G15_076	2	17SP	G15_076	TO->FROM	GR ISLD-LNX3345.00 - HOLT.CO3 345.00 345KV CKT 1	720	720	0.04279	126.9146	GEN659192 6-LYNN
FDNS	00NR_G15_076	2	17SP	G15_076	TO->FROM	GR ISLD-LNX3345.00 - HOLT.CO3 345.00 345KV CKT 1	720	720	0.04279	126.914	GEN659162 4-RED WLCK
FDNS	00NR_G15_076	2	17SP	G15_076	TO->FROM	GR ISLD-LNX3345.00 - HOLT.CO3 345.00 345KV CKT 1	720	720	0.04279	126.914	GEN659163 5-BLACK WDCK
FDNS	00NR_G15_076	2	17SP	G15_076	TO->FROM	GR ISLD-LNX3345.00 - HOLT.CO3 345.00 345KV CKT 1	720	720	0.04326	126.8983	GLENHAM - WHITLOK 230KV CKT 1
FDNS	00NR_G15_076	2	17SP	G15_076	TO->FROM	GR ISLD-LNX3345.00 - HOLT.CO3 345.00 345KV CKT 1	720	720	0.04279	126.8978	GEN600017 C-LS POWER CT
FDNS	00NR_G15_076	2	17SP	G15_076	TO->FROM	GR ISLD-LNX3345.00 - HOLT.CO3 345.00 345KV CKT 1	720	720	0.04279	126.8889	LANSING WEST 161/22.0KV TRANSFORMER CKT 1
FDNS	00NR_G15_076	2	17SP	G15_076	TO->FROM	GR ISLD-LNX3345.00 - HOLT.CO3 345.00 345KV CKT 1	720	720	0.04279	126.8695	GEN659031 1-G12_014IS_4 0.6900
FDNS	00NR_G15_076	2	17SP	G15_076	TO->FROM	GR ISLD-LNX3345.00 - HOLT.CO3 345.00 345KV CKT 1	720	720	0.04279	126.8537	GEN652545 7-BIG BEND
FDNS	00NR_G15_076	2	17SP	G15_076	TO->FROM	GR ISLD-LNX3345.00 - HOLT.CO3 345.00 345KV CKT 1	720	720	0.04279	126.8504	GEN615021 1-GRE-ER 14G 16.000
FDNS	00NR_G15_076	2	17SP	G15_076	TO->FROM	GR ISLD-LNX3345.00 - HOLT.CO3 345.00 345KV CKT 1	720	720	0.04279	126.8432	GEN615052 1-CAMBRIDGE GENERATING STATION
FDNS	00NR_G15_076	2	17SP	G15_076	TO->FROM	GR ISLD-LNX3345.00 - HOLT.CO3 345.00 345KV CKT 1	720	720	0.04279	126.834	GEN615015 1-GRE-SPRITWDG13.200
FDNS	00NR_G15_076	2	17SP	G15_076	TO->FROM	GR ISLD-LNX3345.00 - HOLT.CO3 345.00 345KV CKT 1	720	720	0.04279	126.775	GEN681522 3-GENOA 3
FDNS	00NR_G15_076	2	17SP	G15_076	TO->FROM	GR ISLD-LNX3345.00 - HOLT.CO3 345.00 345KV CKT 1	720	720	0.04279	126.7093	GEN660016 1-B_H WIND 0.7000
FDNS	00NR_G15_076	2	17SP	G15_076	TO->FROM	GR ISLD-LNX3345.00 - HOLT.CO3 345.00 345KV CKT 1	720	720	0.04279	126.6838	BISONMP4 230.00 - SQUARE BUTTE 230KV CKT 1
FDNS	00NR_G15_076	2	17SP	G15_076	TO->FROM	GR ISLD-LNX3345.00 - HOLT.CO3 345.00 345KV CKT 1	720	720	0.04279	126.6564	GEN652906 1-G09_006IS_3 0.6900
FDNS	00NR_G15_076	2	17SP	G15_076	TO->FROM	GR ISLD-LNX3345.00 - HOLT.CO3 345.00 345KV CKT 1	720	720	0.04279	126.6563	GEN672303 3-BOUNDARY DAM GENERATOR 3
FDNS	00NR_G15_076	2	17SP	G15_076	TO->FROM	GR ISLD-LNX3345.00 - HOLT.CO3 345.00 345KV CKT 1	720	720	0.04279	126.6563	GEN672305 5-BOUNDARY DAM GENERATOR 5
FDNS	00NR_G15_076	2	17SP	G15_076	TO->FROM	GR ISLD-LNX3345.00 - HOLT.CO3 345.00 345KV CKT 1	720	720	0.04279	126.6483	GEN662101 1-WESSINGTON190.5750
FDNS	00NR_G15_076	2	17SP	G15_076	TO->FROM	GR ISLD-LNX3345.00 - HOLT.CO3 345.00 345KV CKT 1	720	720	0.04279	126.6324	GEN672392 1-NBECGT1G 18.000
FDNS	00NR_G15_076	2	17SP	G15_076	TO->FROM	GR ISLD-LNX3345.00 - HOLT.CO3 345.00 345KV CKT 1	720	720	0.04279	126.5652	GEN600067 9-HIGH BRIDGE
FDNS	00NR_G15_076	2	17SP	G15_076	TO->FROM	GR ISLD-LNX3345.00 - HOLT.CO3 345.00 345KV CKT 1	720	720	0.04279	126.518	GEN910006 1-G12_012IS_3 0.6900
FDNS	00NR_G15_076	2	17SP	G15_076	TO->FROM	GR ISLD-LNX3345.00 - HOLT.CO3 345.00 345KV CKT 1	720	720	0.04279	126.5153	GEN652907 1-G09_007IS_3 0.6900
FDNS	00NR_G15_076	2	17SP	G15_076	TO->FROM	GR ISLD-LNX3345.00 - HOLT.CO3 345.00 345KV CKT 1	720	720	0.03826	126.4342	MINGO - RED WILLOW 345KV CKT 1
FDNS	00NR_G15_076	2	17SP	G15_076	TO->FROM	GR ISLD-LNX3345.00 - HOLT.CO3 345.00 345KV CKT 1	720	720	0.03826	126.4342	MINGO - RED WILLOW 345KV CKT 1
FDNS	00NR_G15_076	2	17SP	G15_076	TO->FROM	GR ISLD-LNX3345.00 - HOLT.CO3 345.00 345KV CKT 1	720	720	0.04279	126.3953	SQUARE BUTTE - YNG2 4 230.00 230KV CKT 1
FDNS	00NR_G15_076	2	17SP	G15_076	TO->FROM	GR ISLD-LNX3345.00 - HOLT.CO3 345.00 345KV CKT 1	720	720	0.04279	126.3734	GEN659353 1-DEERCREK CTG18.000
FDNS	00NR_G15_076	2	17SP	G15_076	TO->FROM	GR ISLD-LNX3345.00 - HOLT.CO3 345.00 345KV CKT 1	720	720	0.04279	126.3725	GEN659354 1-DEERCREK STG18.000
FDNS	00NR_G15_076	2	17SP	G15_076	TO->FROM	GR ISLD-LNX3345.00 - HOLT.CO3 345.00 345KV CKT 1	720	720	0.04326	126.3427	GLENHAM - L3 HAWDON 230KV CKT 1
FDNS	00NR_G15_076	2	17SP	G15_076	TO->FROM	GR ISLD-LNX3345.00 - HOLT.CO3 345.00 345KV CKT 1	720	720	0.04279	126.2023	GEN659289 1-DAYCNTYWND W0.6900
FDNS	00NR_G15_076	2	17SP	G15_076	TO->FROM	GR ISLD-LNX3345.00 - HOLT.CO3 345.00 345KV CKT 1	720	720	0.04279	126.1674	GEN659018 1-G14_003IS_3 0.6900
FDNS	00NR_G15_076	2	17SP	G15_076	TO->FROM	GR ISLD-LNX3345.00 - HOLT.CO3 345.00 345KV CKT 1	720	720	0.04279	126.1308	GEN681542 6-JP MADGETT
FDNS	00NR_G15_076	2	17SP	G15_076	TO->FROM	GR ISLD-LNX3345.00 - HOLT.CO3 345.00 345KV CKT 1	720	720	0.04279	126.0302	GEN659194 1-NDPRAIRWND1W0.6900
FDNS	00NR_G15_076	2	17SP	G15_076	TO->FROM	GR ISLD-LNX3345.00 - HOLT.CO3 345.00 345KV CKT 1	720	720	0.04279	126.0277	GEN659010 4-G07_027IS_2 0.6900
FDNS	00NR_G15_076	2	17SP	G15_076	TO->FROM	GR ISLD-LNX3345.00 - HOLT.CO3 345.00 345KV CKT 1	720	720	0.04279	126.0165	GEN652544 5-BIG BEND
FDNS	00NR_G15_076	2	17SP	G15_076	TO->FROM	GR ISLD-LNX3345.00 - HOLT.CO3 345.00 345KV CKT 1	720	720	0.04279	126.0158	GEN652460 4-GARRISON
FDNS	00NR_G15_076	2	17SP	G15_076	TO->FROM	GR ISLD-LNX3345.00 - HOLT.CO3 345.00 345KV CKT 1	720	720	0.04279	126.0158	GEN652461 5-GARRISON
FDNS	00NR_G15_076	2	17SP	G15_076	TO->FROM	GR ISLD-LNX3345.00 - HOLT.CO3 345.00 345KV CKT 1	720	720	0.04279	126.0149	GEN652543 3-BIG BEND
FDNS	00NR_G15_076	2	17SP	G15_076	TO->FROM	GR ISLD-LNX3345.00 - HOLT.CO3 345.00 345KV CKT 1	720	720	0.04279	126.0147	GEN652542 1-BIG BEND
FDNS	00NR_G15_076	2	17SP	G15_076	TO->FROM	GR ISLD-LNX3345.00 - HOLT.CO3 345.00 345KV CKT 1	720	720	0.04279	125.9581	GEN652457 1-GARRISON
FDNS	00NR_G15_076	2	17SP	G15_076	TO->FROM	GR ISLD-LNX3345.00 - HOLT.CO3 345.00 345KV CKT 1	720	720	0.04279	125.9581	GEN652458 2-GARRISON
FDNS	00NR_G15_076	2	17SP	G15_076	TO->FROM	GR ISLD-LNX3345.00 - HOLT.CO3 345.00 345KV CKT 1	720	720	0.04279	125.9581	GEN652459 3-GARRISON
FDNS	00NR_G15_076	2	17SP	G15_076	TO->FROM	GR ISLD-LNX3345.00 - HOLT.CO3 345.00 345KV CKT 1	720	720	0.04279	125.9277	STANTON 230/18.0KV TRANSFORMER CKT 1
FDNS	00NR_G15_076	2	17SP	G15_076	TO->FROM	GR ISLD-LNX3345.00 - HOLT.CO3 345.00 345KV CKT 1	720	720	0.03552	125.8864	AXTELL - POST ROCK 345KV CKT 1
FDNS	00NR_G15_076	2	17SP	G15_076	TO->FROM	GR ISLD-LNX3345.00 - HOLT.CO3 345.00 345KV CKT 1	720	720	0.04279	125.8796	GEN659403 1-NDSUNFLWR W0.6900
FDNS	00NR_G15_076	2	17SP	G15_076	TO->FROM	GR ISLD-LNX3345.00 - HOLT.CO3 345.00 345KV CKT 1	720	720	0.04094	125.791	AXTELL - SWEETWATER 345KV CKT 1
FDNS	00NR_G15_076	2	17SP	G15_076	TO->FROM	GR ISLD-LNX3345.00 - HOLT.CO3 345.00 345KV CKT 1	720	720	0.04279	125.687	CLAY BOSWELL 230/20.9KV TRANSFORMER CKT 1
FDNS	00NR_G15_076	2	17SP	G15_076	TO->FROM	GR ISLD-LNX3345.00 - HOLT.CO3 345.00 345KV CKT 1	720	720	0.04279	125.5629	GEN659411 1-CAMPBLCNTY W0.6900
FDNS	00NR_G15_076	2	17SP	G15_076	TO->FROM	GR ISLD-LNX3345.00 - HOLT.CO3 345.00 345KV CKT 1	720	720	0.04279	125.3545	GEN659296 2-SDPRAIRWND1W0.6900
FDNS	00NR_G15_076	2	17SP	G15_076	TO->FROM	GR ISLD-LNX3345.00 - HOLT.CO3 345.00 345KV CKT 1	720	720	0.04279	125.2828	RCDC EAST 4230.00 - RED CEDAR DC 230KV CKT 1
FDNS	00NR_G15_076	2	17SP	G15_076	TO->FROM	GR ISLD-LNX3345.00 - HOLT.CO3 345.00 345KV CKT 1	720	720	0.0428	125.2791	P12:230:UMZB:# 112 #: NU IN SD. NU-RCDC & DRY CREEK XFMR
FDNS	00NR_G15_076	2	17SP	G15_076	TO->FROM	GR ISLD-LNX3345.00 - HOLT.CO3 345.00 345KV CKT 1	720	720	0.04279	125.2333	GEN652559 1-OAHE
FDNS	00NR_G15_076	2	17SP	G15_076	TO->FROM	GR ISLD-LNX3345.00 - HOLT.CO3 345.00 345KV CKT 1	720	720	0.04279	125.2173	GEN672321 1-SHAND GENERATOR 1
FDNS	00NR_G15_076	2	17SP	G15_076	TO->FROM	GR ISLD-LNX3345.00 - HOLT.CO3 345.00 345KV CKT 1	720	720	0.04279	125.2073	GEN672310 1-POPLAR RIVER GENERATOR 1
FDNS	00NR_G15_076	2	17SP	G15_076	TO->FROM	GR ISLD-LNX3345.00 - HOLT.CO3 345.00 345KV CKT 1	720	720	0.04279	125.2073	GEN672311 2-POPLAR RIVER GENERATOR 2
FDNS	00NR_G15_076	2	17SP	G15_076	TO->FROM	GR ISLD-LNX3345.00 - HOLT.CO3 345.00 345KV CKT 1	720	720	0.04279	125.2055	GEN615010 1-STANTON4
FDNS	00NR_G15_076	2	17SP	G15_076	TO->FROM	GR ISLD-LNX3345.00 - HOLT.CO3 345.00 345KV CKT 1	720	720	0.04279	125.1334	GEN672306 6-BOUNDARY DAM GENERATOR 6
FDNS	00NR_G15_076	2	17SP	G15_076	TO->FROM	GR ISLD-LNX3345.00 - HOLT.CO3 345.00 345KV CKT 1	720	720	0.04279	125.0576	GEN652556 2-OAHE

SOLUTION	GROUP	SCENARIO	SEASON	SOURCE	DIRECTION	MONITORED ELEMENT	RATEA (MVA)	RATEB(MVA)	TDF	TC%LOADING (% MVA)	CONTINGENCY
FDNS	00NR_G15_076	2	17SP	G15_076	TO->FROM	GR ISLD-LNX3345.00 - HOLT.CO3 345.00 345KV CKT 1	720	720	0.04279	125.0576	GEN652557 4-OAHE
FDNS	00NR_G15_076	2	17SP	G15_076	TO->FROM	GR ISLD-LNX3345.00 - HOLT.CO3 345.00 345KV CKT 1	720	720	0.04279	125.0576	GEN652558 6-OAHE
FDNS	00NR_G15_076	2	17SP	G15_076	TO->FROM	GR ISLD-LNX3345.00 - HOLT.CO3 345.00 345KV CKT 1	720	720	0.04279	124.9736	GEN659453 1-GI1414GEN W0.6900
FDNS	00NR_G15_076	2	17SP	G15_076	TO->FROM	GR ISLD-LNX3345.00 - HOLT.CO3 345.00 345KV CKT 1	720	720	0.04279	124.9379	GEN600004 2-PRAIRIE ISLAND G2
FDNS	00NR_G15_076	2	17SP	G15_076	TO->FROM	GR ISLD-LNX3345.00 - HOLT.CO3 345.00 345KV CKT 1	720	720	0.04279	124.9366	GEN657749 1-YOUNG 1 GENERATOR
FDNS	00NR_G15_076	2	17SP	G15_076	TO->FROM	GR ISLD-LNX3345.00 - HOLT.CO3 345.00 345KV CKT 1	720	720	0.04279	124.9332	GEN600003 1-PRAIRIE ISLAND G1
FDNS	00NR_G15_076	2	17SP	G15_076	TO->FROM	GR ISLD-LNX3345.00 - HOLT.CO3 345.00 345KV CKT 1	720	720	0.04279	124.8805	GEN659141 1-K10215A
FDNS	00NR_G15_076	2	17SP	G15_076	TO->FROM	GR ISLD-LNX3345.00 - HOLT.CO3 345.00 345KV CKT 1	720	720	0.04279	124.6537	GEN652173 1-G09_001IS_2 0.6900
FDNS	00NR_G15_076	2	17SP	G15_076	TO->FROM	GR ISLD-LNX3345.00 - HOLT.CO3 345.00 345KV CKT 1	720	720	0.04279	124.6231	GEN600006 1-AS KING
FDNS	00NR_G15_076	2	17SP	G15_076	TO->FROM	GR ISLD-LNX3345.00 - HOLT.CO3 345.00 345KV CKT 1	720	720	0.04279	124.4176	GEN659407 1-ANTELPHILLSW0.6900
FDNS	00NR_G15_076	2	17SP	G15_076	TO->FROM	GR ISLD-LNX3345.00 - HOLT.CO3 345.00 345KV CKT 1	720	720	0.04279	124.3303	GEN659110 1-LELAND OLDS UNIT1
FDNS	00NR_G15_076	2	17SP	G15_076	TO->FROM	GR ISLD-LNX3345.00 - HOLT.CO3 345.00 345KV CKT 1	720	720	0.04279	124.0518	GEN600005 1-MONTICELLO
FDNS	00NR_G15_076	2	17SP	G15_076	TO->FROM	GR ISLD-LNX3345.00 - HOLT.CO3 345.00 345KV CKT 1	720	720	0.04234	123.509	MCCOOL - MOORE 345KV CKT 1
FDNS	00NR_G15_076	2	17SP	G15_076	TO->FROM	GR ISLD-LNX3345.00 - HOLT.CO3 345.00 345KV CKT 1	720	720	0.04279	123.3654	GEN600000 1-SHERBURNECNTY G1
FDNS	00NR_G15_076	2	17SP	G15_076	TO->FROM	GR ISLD-LNX3345.00 - HOLT.CO3 345.00 345KV CKT 1	720	720	0.04279	123.1418	GEN600001 2-SHERBURNE CNTY G2
FDNS	00NR_G15_076	2	17SP	G15_076	TO->FROM	GR ISLD-LNX3345.00 - HOLT.CO3 345.00 345KV CKT 1	720	720	0.04279	122.8692	GEN620315 1-BIG STONE GEN
FDNS	00NR_G15_076	2	17SP	G15_076	TO->FROM	GR ISLD-LNX3345.00 - HOLT.CO3 345.00 345KV CKT 1	720	720	0.04279	122.8664	GEN661015 1-COYOTE
FDNS	00NR_G15_076	2	17SP	G15_076	TO->FROM	GR ISLD-LNX3345.00 - HOLT.CO3 345.00 345KV CKT 1	720	720	0.04279	122.4235	GEN657748 1-YOUNG 2 GENERATOR
FDNS	00NR_G15_076	2	17SP	G15_076	TO->FROM	GR ISLD-LNX3345.00 - HOLT.CO3 345.00 345KV CKT 1	720	720	0.04279	122.185	GEN600002 3-SHERBURNE CNTY G3
FDNS	00NR_G15_076	2	20SP	G15_076	TO->FROM	GR ISLD-LNX3345.00 - HOLT.CO3 345.00 345KV CKT 1	720	720	0.03993	121.7907	HOLT.CO3 345.00 - THEDFRD3 345.00 345KV CKT 1
FDNS	00NR_G15_076	2	17SP	G15_076	TO->FROM	GR ISLD-LNX3345.00 - HOLT.CO3 345.00 345KV CKT 1	720	720	0.04279	121.5118	SHERBURNE CO 345/24.0KV TRANSFORMER CKT 1
FDNS	00NR_G15_076	2	17SP	G15_076	TO->FROM	GR ISLD-LNX3345.00 - HOLT.CO3 345.00 345KV CKT 1	720	720	0.04414	121.3799	FTTHOM1-LNX3345.00 - LELAND2-LNX3345.00 345KV CKT 1
FDNS	00NR_G15_076	2	17SP	G15_076	TO->FROM	GR ISLD-LNX3345.00 - HOLT.CO3 345.00 345KV CKT 1	720	720	0.04414	121.1058	P12:345:UMZB:# 108 #: LOS FT IN ND. LOS FT
FDNS	00NR_G15_076	2	17SP	G15_076	TO->FROM	GR ISLD-LNX3345.00 - HOLT.CO3 345.00 345KV CKT 1	720	720	0.04414	121.0989	FT THOMPSON - FTTHOM1-LNX3345.00 345KV CKT Z
FDNS	00NR_G15_076	2	17SP	G15_076	TO->FROM	GR ISLD-LNX3345.00 - HOLT.CO3 345.00 345KV CKT 1	720	720	0.04414	120.933	LELAND OLDS - LELAND2-LNX3345.00 345KV CKT Z
FDNS	00NR_G15_076	2	17SP	G15_076	TO->FROM	GR ISLD-LNX3345.00 - HOLT.CO3 345.00 345KV CKT 1	720	720	0.04279	120.5618	GEN659111 2-LELAND OLDS UNIT2
FDNS	00NR_G15_076	2	25SP	G15_076	TO->FROM	GR ISLD-LNX3345.00 - HOLT.CO3 345.00 345KV CKT 1	720	720	0.04029	120.3338	HOLT.CO3 345.00 - THEDFRD3 345.00 345KV CKT 1
FDNS	00NR_G15_076	2	17SP	G15_076	TO->FROM	GR ISLD-LNX3345.00 - HOLT.CO3 345.00 345KV CKT 1	720	720	0.04279	120.2572	GEN659125 1-COVEY
FDNS	00NR_G15_076	2	17SP	G15_076	TO->FROM	GR ISLD-LNX3345.00 - HOLT.CO3 345.00 345KV CKT 1	720	720	0.04279	119.9942	GEN659103 1-ANTELOPE VALLEY UNIT1
FDNS	00NR_G15_076	2	17SP	G15_076	TO->FROM	GR ISLD-LNX3345.00 - HOLT.CO3 345.00 345KV CKT 1	720	720	0.04279	119.9942	GEN659107 2-ANTELOPE VALLEY UNIT2
FDNS	00NR_G15_076	2	17SP	G15_076	TO->FROM	GR ISLD-LNX3345.00 - HOLT.CO3 345.00 345KV CKT 1	720	720	0.04234	119.8178	GRAND ISLAND - MCCOOL 345KV CKT 1
FDNS	00NR_G15_076	2	17SP	G15_076	TO->FROM	GR ISLD-LNX3345.00 - HOLT.CO3 345.00 345KV CKT 1	720	720	0.04279	119.7214	GEN615001 1-COAL CREEK
FDNS	00NR_G15_076	2	17SP	G15_076	TO->FROM	GR ISLD-LNX3345.00 - HOLT.CO3 345.00 345KV CKT 1	720	720	0.04279	119.634	GEN615002 2-COAL CREEK
FDNS	00NR_G15_076	2	17SP	G15_076	TO->FROM	GR ISLD-LNX3345.00 - HOLT.CO3 345.00 345KV CKT 1	720	720	0.04279	113.022	GEN562714 1-G15_023_4 0.6900
FDNS	00NR_G15_076	2	17SP	G15_076	TO->FROM	GR ISLD-LNX3345.00 - HOLT.CO3 345.00 345KV CKT 1	720	720	0.04279	113.022	GEN562715 1-G15_023_5 0.6900
FDNS	00NR_G15_076	2	20SP	G15_076	TO->FROM	GR ISLD-LNX3345.00 - HOLT.CO3 345.00 345KV CKT 1	720	720	0.04164	111.4187	GERALD GENTLEMAN STATION - THEDFRD3 345.00 345KV CKT 1
FDNS	00NR_G15_076	2	25SP	G15_076	TO->FROM	GR ISLD-LNX3345.00 - HOLT.CO3 345.00 345KV CKT 1	720	720	0.04196	110.473	GERALD GENTLEMAN STATION - THEDFRD3 345.00 345KV CKT 1
FDNS	00NR_G15_076	2	16WP	G15_076	TO->FROM	GR ISLD-LNX3345.00 - HOLT.CO3 345.00 345KV CKT 1	720	720	0.04448	107.8269	KELLY - MEADOWGROVE4230.00 230KV CKT 1
FDNS	00NR_G15_076	2	17SP	G15_076	TO->FROM	GR ISLD-LNX3345.00 - HOLT.CO3 345.00 345KV CKT 1	720	720	0.04279	107.4338	GEN652353 2-GR PRAIRIEG 0.6900
FDNS	00NR_G15_076	2	20SP	G15_076	TO->FROM	GR ISLD-LNX3345.00 - HOLT.CO3 345.00 345KV CKT 1	720	720	0.03378	107.2813	HOSKINS - SHELL CREEK 345KV CKT 1
FDNS	00NR_G15_076	2	16WP	G15_076	TO->FROM	GR ISLD-LNX3345.00 - HOLT.CO3 345.00 345KV CKT 1	720	720	0.04057	107.2754	P12:230:UMZB:# 116 #: ST IN SD. WSG-ST-VH
FDNS	00NR_G15_076	2	16WP	G15_076	TO->FROM	GR ISLD-LNX3345.00 - HOLT.CO3 345.00 345KV CKT 1	720	720	0.04069	106.6982	STORLA - WESSINGTON 230KV CKT 1
FDNS	00NR_G15_076	2	16WP	G15_076	TO->FROM	GR ISLD-LNX3345.00 - HOLT.CO3 345.00 345KV CKT 1	720	720	0.04252	105.9006	RIEL - ROSEAU 500KV CKT 1
FDNS	00NR_G15_076	2	16WP	G15_076	TO->FROM	GR ISLD-LNX3345.00 - HOLT.CO3 345.00 345KV CKT 1	720	720	0.04252	105.9	ROSEAU - ROSEAUM 2 500.00 500KV CKT 1
FDNS	00NR_G15_076	2	16WP	G15_076	TO->FROM	GR ISLD-LNX3345.00 - HOLT.CO3 345.00 345KV CKT 1	720	720	0.04102	105.654	HANLON - STORLA 230KV CKT 1
FDNS	00NR_G15_076	2	16WP	G15_076	TO->FROM	GR ISLD-LNX3345.00 - HOLT.CO3 345.00 345KV CKT 1	720	720	0.04014	105.2835	FT THOMPSON - LETCHER 230KV CKT 1
FDNS	00NR_G15_076	2	16WP	G15_076	TO->FROM	GR ISLD-LNX3345.00 - HOLT.CO3 345.00 345KV CKT 1	720	720	0.04014	105.2835	FT THOMPSON - LETCHER 230KV CKT 1
FDNSLock	00NR_G15_076	2	16WP	G15_076	TO->FROM	GR ISLD-LNX3345.00 - HOLT.CO3 345.00 345KV CKT 1	720	720	0.04164	105.0221	WATERTN-LNX3345.00 - WATERTOWN 345KV CKT Z
FDNS	00NR_G15_076	2	16WP	G15_076	TO->FROM	GR ISLD-LNX3345.00 - HOLT.CO3 345.00 345KV CKT 1	720	720	0.04164	104.5869	WATERTN-LNX3345.00 - WHITE 345KV CKT 1
FDNS	00NR_G15_076	2	16WP	G15_076	TO->FROM	GR ISLD-LNX3345.00 - HOLT.CO3 345.00 345KV CKT 1	720	720	0.04231	104.3087	BUFFALO - JAMESTOWN 345KV CKT 1
FDNS	00NR_G15_076	2	16WP	G15_076	TO->FROM	GR ISLD-LNX3345.00 - HOLT.CO3 345.00 345KV CKT 1	720	720	0.04299	104.1074	KEYSTONE - SIDNEY1-LNX3345.00 345KV CKT 1
FDNS	00NR_G15_076	2	16WP	G15_076	TO->FROM	GR ISLD-LNX3345.00 - HOLT.CO3 345.00 345KV CKT 1	720	720	0.04299	104.1022	SIDNEY - SIDNEY1-LNX3345.00 345KV CKT Z
FDNS	00NR_G15_076	2	16WP	G15_076	TO->FROM	GR ISLD-LNX3345.00 - HOLT.CO3 345.00 345KV CKT 1	720	720	0.03858	104.0377	FT RANDAL - G12_009IST 230.00 230KV CKT 1
FDNS	00NR_G15_076	2	16WP	G15_076	TO->FROM	GR ISLD-LNX3345.00 - HOLT.CO3 345.00 345KV CKT 1	720	720	0.0421	104.0004	GEN336821 1-GRAND GULF UNIT
FDNS	00NR_G15_076	2	16WP	G15_076	TO->FROM	GR ISLD-LNX3345.00 - HOLT.CO3 345.00 345KV CKT 1	720	720	0.03858	103.9443	FT THOMPSON - LAKE PLATT 230KV CKT 1
FDNS	00NR_G15_076	2	16WP	G15_076	TO->FROM	GR ISLD-LNX3345.00 - HOLT.CO3 345.00 345KV CKT 1	720	720	0.03858	103.9443	FT THOMPSON - LAKE PLATT 230KV CKT 1
FDNS	00NR_G15_076	2	16WP	G15_076	TO->FROM	GR ISLD-LNX3345.00 - HOLT.CO3 345.00 345KV CKT 1	720	720	0.03849	103.9411	FT RANDAL - FT THOMPSON 230KV CKT 1
FDNS	00NR_G15_076	2	16WP	G15_076	TO->FROM	GR ISLD-LNX3345.00 - HOLT.CO3 345.00 345KV CKT 1	720	720	0.03849	103.9411	FT RANDAL - FT THOMPSON 230KV CKT 1
FDNS	00NR_G15_076	2	16WP	G15_076	TO->FROM	GR ISLD-LNX3345.00 - HOLT.CO3 345.00 345KV CKT 1	720	720	0.04169	103.8728	LETCHER - SIOUX FALLS 230KV CKT 1
FDNS	00NR_G15_076	2	16WP	G15_076	TO->FROM	GR ISLD-LNX3345.00 - HOLT.CO3 345.00 345KV CKT 1	720	720	0.0421	103.704	GEN640010 1-GERALD GENTLEMAN STATION UNIT 1
FDNS	00NR_G15_076	2	16WP	G15_076	TO->FROM	GR ISLD-LNX3345.00 - HOLT.CO3 345.00 345KV CKT 1	720	720	0.04197	103.6944	G09_001IST 345.00 - WATERTOWN 345KV CKT 1
FDNS	00NR_G15_076	2	16WP	G15_076	TO->FROM	GR ISLD-LNX3345.00 - HOLT.CO3 345.00 345KV CKT 1	720	720	0.0421	103.6787	GEN635024 4-WALTER SCOTT UNIT 4
FDNS	00NR_G15_076	2	16WP	G15_076	TO->FROM	GR ISLD-LNX3345.00 - HOLT.CO3 345.00 345KV CKT 1	720	720	0.03858	103.6702	G12_009IST 230.00 - LAKE PLATT 230KV CKT 1
FDNS	00NR_G15_076	2	16WP	G15_076	TO->FROM	GR ISLD-LNX3345.00 - HOLT.CO3 345.00 345KV CKT 1	720	720	0.0421	103.642	GEN337911 1-ARKANSAS NUCLEAR ONE UNIT #2
FDNS	00NR_G15_076	2	16WP	G15_076	TO->FROM	GR ISLD-LNX3345.00 - HOLT.CO3 345.00 345KV CKT 1	720	720	0.04448	103.6032	FT RANDAL - MEADOWGROVE4230.00 230KV CKT 1
FDNS	00NR_G15_076	2	16WP	G15_076	TO->FROM	GR ISLD-LNX3345.00 - HOLT.CO3 345.00 345KV CKT 1	720	720	0.0421	103.5919	GEN640011 2-GERALD GENTLEMAN STATION UNIT 2
FDNS	00NR_G15_076	2	16WP	G15_076	TO->FROM	GR ISLD-LNX3345.00 - HOLT.CO3 345.00 345KV CKT 1	720	720	0.0421	103.5499	GEN344225 1-1CAL G1 25.000
FDNS	00NR_G15_076	2	16WP	G15_076	TO->FROM	GR ISLD-LNX3345.00 - HOLT.CO3 345.00 345KV CKT 1	720	720	0.0421	103.5188	GEN336153 1-WATERFORD UNIT#3
FDNS	00NR_G15_076	2	16WP	G15_076	TO->FROM	GR ISLD-LNX3345.00 - HOLT.CO3 345.00 345KV CKT 1	720	720	0.04388	103.4943	HAZLETON - MITCHLCO3 345.00 345KV CKT 1
FDNS	00NR_G15_076	2	16WP	G15_076	TO->FROM	GR ISLD-LNX3345.00 - HOLT.CO3 345.00 345KV CKT 1	720	720	0.04231	103.4155	CENTER - JAMESTOWN 345KV CKT 1
FDNS	00NR_G15_076	2	16WP	G15_076	TO->FROM	GR ISLD-LNX3345.00 - HOLT.CO3 345.00 345KV CKT 1	720	720	0.0421	103.348	GEN635023 3-WALTER SCOTT UNIT 3
FDNS	00NR_G15_076	2	16WP	G15_076	TO->FROM	GR ISLD-LNX3345.00 - HOLT.CO3 345.00 345KV CKT 1	720	720	0.043	103.3107	AS KING - EAU CLAIRE 345KV CKT 1
FDNS	00NR_G15_076	2	16WP	G15_076	TO->FROM	GR ISLD-LNX3345.00 - HOLT.CO3 345.00 345KV CKT 1	720	720	0.04226	103.2767	BISON 3 345.00 - BUFFALO 345KV CKT 1

SOLUTION	GROUP	SCENARIO	SEASON	SOURCE	DIRECTION	MONITORED ELEMENT	RATEA (MVA)	RATEB(MVA)	TDF	TC%LOADING (% MVA)	CONTINGENCY
FDNS	00NR_G15_076	2	16WP	G15_076	TO->FROM	GR ISLD-LNX3345.00 - HOLT.CO3 345.00 345KV CKT 1	720	720	0.0421	103.27	GEN337910 1-ARKANSAS NUCLEAR ONE UNIT #1
FDNS	00NR_G15_076	2	16WP	G15_076	TO->FROM	GR ISLD-LNX3345.00 - HOLT.CO3 345.00 345KV CKT 1	720	720	0.04227	103.2554	FT RANDAL - SIOUX CITY 230KV CKT 1
FDNS	00NR_G15_076	2	16WP	G15_076	TO->FROM	GR ISLD-LNX3345.00 - HOLT.CO3 345.00 345KV CKT 1	720	720	0.0421	103.2534	GEN335831 1-RIVERBEND UNIT#1
FDNS	00NR_G15_076	2	16WP	G15_076	TO->FROM	GR ISLD-LNX3345.00 - HOLT.CO3 345.00 345KV CKT 1	720	720	0.04997	103.1999	RAUN - SUB 3451 FT CAL 345KV CKT 1
FDNS	00NR_G15_076	2	16WP	G15_076	TO->FROM	GR ISLD-LNX3345.00 - HOLT.CO3 345.00 345KV CKT 1	720	720	0.04997	103.1999	RAUN - SUB 3451 FT CAL 345KV CKT 1
FDNS	00NR_G15_076	2	16WP	G15_076	TO->FROM	GR ISLD-LNX3345.00 - HOLT.CO3 345.00 345KV CKT 1	720	720	0.04289	103.1493	ARROWHEAD - ARROWHEAD 230 230KV CKT 1
FDNS	00NR_G15_076	2	16WP	G15_076	TO->FROM	GR ISLD-LNX3345.00 - HOLT.CO3 345.00 345KV CKT 1	720	720	0.04178	103.0276	HANLON - SIOUX FALLS 230KV CKT 1
FDNS	00NR_G15_076	2	16WP	G15_076	TO->FROM	GR ISLD-LNX3345.00 - HOLT.CO3 345.00 345KV CKT 1	720	720	0.04195	103.0105	GROTON-LNX3 345.00 - LELAND1-LNX3345.00 345KV CKT 1
FDNS	00NR_G15_076	2	16WP	G15_076	TO->FROM	GR ISLD-LNX3345.00 - HOLT.CO3 345.00 345KV CKT 1	720	720	0.04195	102.9656	P12:345:UMZB:# 109 #: LOS GRT IN ND. LOS GRT
FDNS	00NR_G15_076	2	16WP	G15_076	TO->FROM	GR ISLD-LNX3345.00 - HOLT.CO3 345.00 345KV CKT 1	720	720	0.04195	102.9653	GROTON - GROTON-LNX3 345.00 345KV CKT Z
FDNS	00NR_G15_076	2	16WP	G15_076	TO->FROM	GR ISLD-LNX3345.00 - HOLT.CO3 345.00 345KV CKT 1	720	720	0.04277	102.9603	GERALD GENTLEMAN STATION - KEYSTONE 345KV CKT 1
FDNS	00NR_G15_076	2	16WP	G15_076	TO->FROM	GR ISLD-LNX3345.00 - HOLT.CO3 345.00 345KV CKT 1	720	720	0.04195	102.9593	LELAND OLDS - LELAND1-LNX3345.00 345KV CKT Z
FDNS	00NR_G15_076	2	16WP	G15_076	TO->FROM	GR ISLD-LNX3345.00 - HOLT.CO3 345.00 345KV CKT 1	720	720	0.04275	102.9437	SIDNEY - STEGALL 345KV CKT 1
FDNS	00NR_G15_076	2	16WP	G15_076	TO->FROM	GR ISLD-LNX3345.00 - HOLT.CO3 345.00 345KV CKT 1	720	720	0.03456	102.9061	GRAND ISLAND - SWEETWATER 345KV CKT 1
FDNS	00NR_G15_076	2	16WP	G15_076	TO->FROM	GR ISLD-LNX3345.00 - HOLT.CO3 345.00 345KV CKT 1	720	720	0.04022	102.8652	FT RANDAL - UTICA JCT 230KV CKT 1
FDNS	00NR_G15_076	2	16WP	G15_076	TO->FROM	GR ISLD-LNX3345.00 - HOLT.CO3 345.00 345KV CKT 1	720	720	0.0421	102.8575	GEN337653 1-WHITE BLUFF UNIT #2
FDNS	00NR_G15_076	2	16WP	G15_076	TO->FROM	GR ISLD-LNX3345.00 - HOLT.CO3 345.00 345KV CKT 1	720	720	0.0421	102.8038	GEN501801 1-DOLET HILLS UNIT1
FDNS	00NR_G15_076	2	16WP	G15_076	TO->FROM	GR ISLD-LNX3345.00 - HOLT.CO3 345.00 345KV CKT 1	720	720	0.04257	102.7961	CARPENTER - HURON 230KV CKT 1
FDNS	00NR_G15_076	2	16WP	G15_076	TO->FROM	GR ISLD-LNX3345.00 - HOLT.CO3 345.00 345KV CKT 1	720	720	0.0457	102.734	NUNDRWD - WAYSIDE 230KV CKT 1
FDNS	00NR_G15_076	2	16WP	G15_076	TO->FROM	GR ISLD-LNX3345.00 - HOLT.CO3 345.00 345KV CKT 1	720	720	0.0421	102.7276	GEN337652 1-WHITE BLUFF UNIT #1
FDNS	00NR_G15_076	2	16WP	G15_076	TO->FROM	GR ISLD-LNX3345.00 - HOLT.CO3 345.00 345KV CKT 1	720	720	0.04388	102.7073	ADAMS - MITCHLCO3 345.00 345KV CKT 1
FDNS	00NR_G15_076	2	16WP	G15_076	TO->FROM	GR ISLD-LNX3345.00 - HOLT.CO3 345.00 345KV CKT 1	720	720	0.04217	102.6972	ELLENDALE - OAKES 230KV CKT 1
FDNS	00NR_G15_076	2	16WP	G15_076	TO->FROM	GR ISLD-LNX3345.00 - HOLT.CO3 345.00 345KV CKT 1	720	720	0.04217	102.6972	ELLENDALE - OAKES 230KV CKT 1
FDNS	00NR_G15_076	2	16WP	G15_076	TO->FROM	GR ISLD-LNX3345.00 - HOLT.CO3 345.00 345KV CKT 1	720	720	0.0421	102.6965	GEN641089 2-ENERGY CENTER 2
FDNS	00NR_G15_076	2	16WP	G15_076	TO->FROM	GR ISLD-LNX3345.00 - HOLT.CO3 345.00 345KV CKT 1	720	720	0.04257	102.6774	HURON - WATERTOWN 230KV CKT 2
FDNS	00NR_G15_076	2	16WP	G15_076	TO->FROM	GR ISLD-LNX3345.00 - HOLT.CO3 345.00 345KV CKT 1	720	720	0.04257	102.6774	HURON - WATERTOWN 230KV CKT 2
FDNS	00NR_G15_076	2	16WP	G15_076	TO->FROM	GR ISLD-LNX3345.00 - HOLT.CO3 345.00 345KV CKT 1	720	720	0.04342	102.6748	ARPIN B4 345.00 - EAU CLAIRE 345KV CKT 1
FDNS	00NR_G15_076	2	16WP	G15_076	TO->FROM	GR ISLD-LNX3345.00 - HOLT.CO3 345.00 345KV CKT 1	720	720	0.04197	102.6717	G09_001IST 345.00 - GROTON 345KV CKT 1
FDNS	00NR_G15_076	2	16WP	G15_076	TO->FROM	GR ISLD-LNX3345.00 - HOLT.CO3 345.00 345KV CKT 1	720	720	0.0421	102.6473	GEN338146 1-INDEPENDENCE UNIT #2
FDNS	00NR_G15_076	2	16WP	G15_076	TO->FROM	GR ISLD-LNX3345.00 - HOLT.CO3 345.00 345KV CKT 1	720	720	0.04045	102.6436	SPLIT ROCK - WHITE 345KV CKT 1
FDNS	00NR_G15_076	2	16WP	G15_076	TO->FROM	GR ISLD-LNX3345.00 - HOLT.CO3 345.00 345KV CKT 1	720	720	0.04045	102.6436	SPLIT ROCK - WHITE 345KV CKT 1
FDNS	00NR_G15_076	2	16WP	G15_076	TO->FROM	GR ISLD-LNX3345.00 - HOLT.CO3 345.00 345KV CKT 1	720	720	0.0421	102.6419	GEN338143 1-INDEPENDENCE UNIT #1
FDNS	00NR_G15_076	2	16WP	G15_076	TO->FROM	GR ISLD-LNX3345.00 - HOLT.CO3 345.00 345KV CKT 1	720	720	0.04217	102.6405	FORMAN - OAKES 230KV CKT 1
FDNS	00NR_G15_076	2	16WP	G15_076	TO->FROM	GR ISLD-LNX3345.00 - HOLT.CO3 345.00 345KV CKT 1	720	720	0.04257	102.6224	CARPENTER - WATERTOWN 230KV CKT 1
FDNS	00NR_G15_076	2	16WP	G15_076	TO->FROM	GR ISLD-LNX3345.00 - HOLT.CO3 345.00 345KV CKT 1	720	720	0.04257	102.6224	CARPENTER - WATERTOWN 230KV CKT 1
FDNS	00NR_G15_076	2	16WP	G15_076	TO->FROM	GR ISLD-LNX3345.00 - HOLT.CO3 345.00 345KV CKT 1	720	720	0.04177	102.6143	PAHOJA - SIOUX FALLS 230KV CKT 1
FDNS	00NR_G15_076	2	16WP	G15_076	TO->FROM	GR ISLD-LNX3345.00 - HOLT.CO3 345.00 345KV CKT 1	720	720	0.04465	102.6106	GRIMES - LEHIGH 345KV CKT 1
FDNS	00NR_G15_076	2	16WP	G15_076	TO->FROM	GR ISLD-LNX3345.00 - HOLT.CO3 345.00 345KV CKT 1	720	720	0.04219	102.5858	CNTSHNT3 345.00 - PRAIRIE3 345.00 345KV CKT 1
FDNS	00NR_G15_076	2	16WP	G15_076	TO->FROM	GR ISLD-LNX3345.00 - HOLT.CO3 345.00 345KV CKT 1	720	720	0.04069	102.5256	FT THOMPSON - WESSINGTON 230KV CKT 1
FDNS	00NR_G15_076	2	16WP	G15_076	TO->FROM	GR ISLD-LNX3345.00 - HOLT.CO3 345.00 345KV CKT 1	720	720	0.04069	102.5256	FT THOMPSON - WESSINGTON 230KV CKT 1
FDNS	00NR_G15_076	2	16WP	G15_076	TO->FROM	GR ISLD-LNX3345.00 - HOLT.CO3 345.00 345KV CKT 1	720	720	0.04331	102.5076	ADAMS - PLEASANT VALLEY 345KV CKT 1
FDNS	00NR_G15_076	2	16WP	G15_076	TO->FROM	GR ISLD-LNX3345.00 - HOLT.CO3 345.00 345KV CKT 1	720	720	0.04211	102.4667	P12:115:NPPD:1091:VALENTN7:MISSION7:BTB
FDNS	00NR_G15_076	2	16WP	G15_076	TO->FROM	GR ISLD-LNX3345.00 - HOLT.CO3 345.00 345KV CKT 1	720	720	0.0421	102.4615	GEN501813 1-RODEMACHER UNIT 3
FDNS	00NR_G15_076	2	16WP	G15_076	TO->FROM	GR ISLD-LNX3345.00 - HOLT.CO3 345.00 345KV CKT 1	720	720	0.04211	102.4081	MISSION - ST FRANCIS 115KV CKT 1
FDNS	00NR_G15_076	2	16WP	G15_076	TO->FROM	GR ISLD-LNX3345.00 - HOLT.CO3 345.00 345KV CKT 1	720	720	0.04152	102.4038	GERALD GENTLEMAN STATION - SWEETWATER 345KV CKT 1
FDNS	00NR_G15_076	2	16WP	G15_076	TO->FROM	GR ISLD-LNX3345.00 - HOLT.CO3 345.00 345KV CKT 1	720	720	0.04376	102.393	RASMUSN - UTICA JCT 230KV CKT 1
FDNS	00NR_G15_076	2	16WP	G15_076	TO->FROM	GR ISLD-LNX3345.00 - HOLT.CO3 345.00 345KV CKT 1	720	720	0.04251	102.3922	FT THOMPSON - HURON 230KV CKT 1
FDNS	00NR_G15_076	2	16WP	G15_076	TO->FROM	GR ISLD-LNX3345.00 - HOLT.CO3 345.00 345KV CKT 1	720	720	0.04251	102.3922	FT THOMPSON - HURON 230KV CKT 1
FDNS	00NR_G15_076	2	16WP	G15_076	TO->FROM	GR ISLD-LNX3345.00 - HOLT.CO3 345.00 345KV CKT 1	720	720	0.04251	102.3922	FT THOMPSON - HURON 230KV CKT 2
FDNS	00NR_G15_076	2	16WP	G15_076	TO->FROM	GR ISLD-LNX3345.00 - HOLT.CO3 345.00 345KV CKT 1	720	720	0.04251	102.3922	FT THOMPSON - HURON 230KV CKT 2
FDNS	00NR_G15_076	2	16WP	G15_076	TO->FROM	GR ISLD-LNX3345.00 - HOLT.CO3 345.00 345KV CKT 1	720	720	0.04376	102.3756	RASMUSN - SIOUX CITY 230KV CKT 1
FDNS	00NR_G15_076	2	16WP	G15_076	TO->FROM	GR ISLD-LNX3345.00 - HOLT.CO3 345.00 345KV CKT 1	720	720	0.04211	102.3355	HARMONY - ST FRANCIS 115KV CKT 1
FDNS	00NR_G15_076	2	16WP	G15_076	TO->FROM	GR ISLD-LNX3345.00 - HOLT.CO3 345.00 345KV CKT 1	720	720	0.0421	102.3339	GEN335206 1-NELSON UNIT 6
FDNS	00NR_G15_076	2	16WP	G15_076	TO->FROM	GR ISLD-LNX3345.00 - HOLT.CO3 345.00 345KV CKT 1	720	720	0.04177	102.2974	EAGLE 4 230.00 - PAHOJA 230KV CKT 1
FDNS	00NR_G15_076	2	16WP	G15_076	TO->FROM	GR ISLD-LNX3345.00 - HOLT.CO3 345.00 345KV CKT 1	720	720	0.04211	102.2822	HARMONY - VALENTINE 115KV CKT 1
FDNS	00NR_G15_076	2	16WP	G15_076	TO->FROM	GR ISLD-LNX3345.00 - HOLT.CO3 345.00 345KV CKT 1	720	720	0.04221	102.2474	FORMAN - HANKINSON 230KV CKT 1
FDNS	00NR_G15_076	2	16WP	G15_076	TO->FROM	GR ISLD-LNX3345.00 - HOLT.CO3 345.00 345KV CKT 1	720	720	0.0434	102.244	LAKEFIELD 3 - NOBLES 345KV CKT 1
FDNS	00NR_G15_076	2	16WP	G15_076	TO->FROM	GR ISLD-LNX3345.00 - HOLT.CO3 345.00 345KV CKT 1	720	720	0.04233	102.2424	GLENBORO SOUTH - RUGBY 230KV CKT 1
FDNS	00NR_G15_076	2	16WP	G15_076	TO->FROM	GR ISLD-LNX3345.00 - HOLT.CO3 345.00 345KV CKT 1	720	720	0.0424	102.2405	ALEXMRES3 345.00 - BISON 3 345.00 345KV CKT 1
FDNS	00NR_G15_076	2	16WP	G15_076	TO->FROM	GR ISLD-LNX3345.00 - HOLT.CO3 345.00 345KV CKT 1	720	720	0.04222	102.2388	CHISAGO COUNTY - CHISAGO COUNTY 500KV CKT 1
FDNS	00NR_G15_076	2	16WP	G15_076	TO->FROM	GR ISLD-LNX3345.00 - HOLT.CO3 345.00 345KV CKT 1	720	720	0.0421	102.2285	GEN501812 1-RODEMACHER UNIT 2
FDNS	00NR_G15_076	2	16WP	G15_076	TO->FROM	GR ISLD-LNX3345.00 - HOLT.CO3 345.00 345KV CKT 1	720	720	0.0421	102.2158	GEN532751 1-WOLF CREEK GENERATING STATION UNIT 1
FDNS	00NR_G15_076	2	16WP	G15_076	TO->FROM	GR ISLD-LNX3345.00 - HOLT.CO3 345.00 345KV CKT 1	720	720	0.0421	102.208	GEN344897 4-1LAB G4 20.000
FDNS	00NR_G15_076	2	16WP	G15_076	TO->FROM	GR ISLD-LNX3345.00 - HOLT.CO3 345.00 345KV CKT 1	720	720	0.0421	102.206	GEN344894 1-1LAB G1 20.000
FDNS	00NR_G15_076	2	16WP	G15_076	TO->FROM	GR ISLD-LNX3345.00 - HOLT.CO3 345.00 345KV CKT 1	720	720	0.0421	102.2058	GEN344896 3-1LAB G3 20.000
FDNS	00NR_G15_076	2	16WP	G15_076	TO->FROM	GR ISLD-LNX3345.00 - HOLT.CO3 345.00 345KV CKT 1	720	720	0.0421	102.1827	GEN345670 1-1RUSH G1 18.000
FDNS	00NR_G15_076	2	16WP	G15_076	TO->FROM	GR ISLD-LNX3345.00 - HOLT.CO3 345.00 345KV CKT 1	720	720	0.0421	102.1825	GEN345671 2-1RUSH G2 18.000
FDNS	00NR_G15_076	2	16WP	G15_076	TO->FROM	GR ISLD-LNX3345.00 - HOLT.CO3 345.00 345KV CKT 1	720	720	0.04042	102.1746	SIOUX CITY - SIOUXCY-LNX3345.00 345KV CKT Z
FDNS	00NR_G15_076	2	16WP	G15_076	TO->FROM	GR ISLD-LNX3345.00 - HOLT.CO3 345.00 345KV CKT 1	720	720	0.0421	102.1728	GEN344895 2-1LAB G2 20.000
FDNS	00NR_G15_076	2	16WP	G15_076	TO->FROM	GR ISLD-LNX3345.00 - HOLT.CO3 345.00 345KV CKT 1	720	720	0.04213	102.1691	CENTER - COYOTE 345KV CKT 1
FDNS	00NR_G15_076	2	16WP	G15_076	TO->FROM	GR ISLD-LNX3345.00 - HOLT.CO3 345.00 345KV CKT 1	720	720	0.04204	102.1359	P12:115:NPPD:WAPA6:FTRANDL7:ONEILL 7:BTB
FDNS	00NR_G15_076	2	16WP	G15_076	TO->FROM	GR ISLD-LNX3345.00 - HOLT.CO3 345.00 345KV CKT 1	720	720	0.04204	102.1359	P12:115:UMZB:# 115 #: SE IN NE. FR-SE-ON
FDNS	00NR_G15_076	2	16WP	G15_076	TO->FROM	GR ISLD-LNX3345.00 - HOLT.CO3 345.00 345KV CKT 1	720	720	0.0421	102.1297	GEN659118 1-LARAMIE RIVER UNIT1

SOLUTION	GROUP	SCENARIO	SEASON	SOURCE	DIRECTION	MONITORED ELEMENT	RATEA (MVA)	RATEB(MVA)	TDF	TC%LOADING (% MVA)	CONTINGENCY
FDNS	00NR_G15_076	2	16WP	G15_076	TO->FROM	GR ISLD-LNX3345.00 - HOLT.CO3 345.00 345KV CKT 1	720	720	0.0421	102.1223	GEN336252 1-NINEMILE POINT UNIT#5
FDNS	00NR_G15_076	2	16WP	G15_076	TO->FROM	GR ISLD-LNX3345.00 - HOLT.CO3 345.00 345KV CKT 1	720	720	0.03943	102.1094	FT THOMPSON (FT2 KU1B) 345/230/13.8KV TRANSFORMER CKT 1
FDNS	00NR_G15_076	2	16WP	G15_076	TO->FROM	GR ISLD-LNX3345.00 - HOLT.CO3 345.00 345KV CKT 1	720	720	0.03943	102.1071	FT THOMPSON (FT2 KU1A) 345/230/13.8KV TRANSFORMER CKT 1
FDNS	00NR_G15_076	2	16WP	G15_076	TO->FROM	GR ISLD-LNX3345.00 - HOLT.CO3 345.00 345KV CKT 1	720	720	0.04204	102.0981	FT RANDAL - SPENCER 115KV CKT 1
FDNS	00NR_G15_076	2	16WP	G15_076	TO->FROM	GR ISLD-LNX3345.00 - HOLT.CO3 345.00 345KV CKT 1	720	720	0.04042	102.0909	SIOUXCY-LNX3345.00 - SPLIT ROCK 345KV CKT 1
FDNS	00NR_G15_076	2	16WP	G15_076	TO->FROM	GR ISLD-LNX3345.00 - HOLT.CO3 345.00 345KV CKT 1	720	720	0.04042	102.0909	SIOUXCY-LNX3345.00 - SPLIT ROCK 345KV CKT 1
FDNS	00NR_G15_076	2	16WP	G15_076	TO->FROM	GR ISLD-LNX3345.00 - HOLT.CO3 345.00 345KV CKT 1	720	720	0.04167	102.0886	GERALD GENTLEMAN STATION - SWEETWATER 345KV CKT 2
FDNS	00NR_G15_076	2	16WP	G15_076	TO->FROM	GR ISLD-LNX3345.00 - HOLT.CO3 345.00 345KV CKT 1	720	720	0.0421	102.0831	GEN336831 1-BAXTER WILSON SES
FDNS	00NR_G15_076	2	16WP	G15_076	TO->FROM	GR ISLD-LNX3345.00 - HOLT.CO3 345.00 345KV CKT 1	720	720	0.04222	102.082	LARAMIE RIVER - SIDNEY2-LNX3345.00 345KV CKT 1
FDNS	00NR_G15_076	2	16WP	G15_076	TO->FROM	GR ISLD-LNX3345.00 - HOLT.CO3 345.00 345KV CKT 1	720	720	0.04222	102.0708	SIDNEY - SIDNEY2-LNX3345.00 345KV CKT Z
FDNS	00NR_G15_076	2	16WP	G15_076	TO->FROM	GR ISLD-LNX3345.00 - HOLT.CO3 345.00 345KV CKT 1	720	720	0.04042	102.0599	P12:345:UMZW:# 907 #: SC2-SR IN IA. SC2-SR 345 KV LINE
FDNS	00NR_G15_076	2	16WP	G15_076	TO->FROM	GR ISLD-LNX3345.00 - HOLT.CO3 345.00 345KV CKT 1	720	720	0.0421	102.0549	P12:115:UMZW:# 162 #: NEL IN ND. FAULT ON ML-NEL-MX-GA 115 KV
FDNS	00NR_G15_076	2	16WP	G15_076	TO->FROM	GR ISLD-LNX3345.00 - HOLT.CO3 345.00 345KV CKT 1	720	720	0.04211	102.0379	AINSWORTH - VALENTINE 115KV CKT 1
FDNS	00NR_G15_076	2	16WP	G15_076	TO->FROM	GR ISLD-LNX3345.00 - HOLT.CO3 345.00 345KV CKT 1	720	720	0.0421	102.0234	GEN337041 1-GERALD ANDRUS
FDNS	00NR_G15_076	2	16WP	G15_076	TO->FROM	GR ISLD-LNX3345.00 - HOLT.CO3 345.00 345KV CKT 1	720	720	0.04295	101.9942	BYRON - NORTH ROCHESTER 345KV CKT 1
FDNSLock	00NR_G15_076	2	16WP	G15_076	TO->FROM	GR ISLD-LNX3345.00 - HOLT.CO3 345.00 345KV CKT 1	720	720	0.04576	101.9877	STEGALL (SGQ KV3A) 345/230/13.8KV TRANSFORMER CKT 1
FDNS	00NR_G15_076	2	16WP	G15_076	TO->FROM	GR ISLD-LNX3345.00 - HOLT.CO3 345.00 345KV CKT 1	720	720	0.0421	101.9815	GEN334440 1-SABINE UNIT 4
FDNS	00NR_G15_076	2	16WP	G15_076	TO->FROM	GR ISLD-LNX3345.00 - HOLT.CO3 345.00 345KV CKT 1	720	720	0.04295	101.961	KOSSUTH 3 345.00 - WEBSTER 345KV CKT 1
FDNS	00NR_G15_076	2	16WP	G15_076	TO->FROM	GR ISLD-LNX3345.00 - HOLT.CO3 345.00 345KV CKT 1	720	720	0.04204	101.9555	ONEILL - SPENCER 115KV CKT 1
FDNS	00NR_G15_076	2	16WP	G15_076	TO->FROM	GR ISLD-LNX3345.00 - HOLT.CO3 345.00 345KV CKT 1	720	720	0.0421	101.9552	GEN336251 1-NINEMILE POINT UNIT#4
FDNS	00NR_G15_076	2	16WP	G15_076	TO->FROM	GR ISLD-LNX3345.00 - HOLT.CO3 345.00 345KV CKT 1	720	720	0.04295	101.955	KOSSUTH 3 345.00 - OBRIEN 3 345.00 345KV CKT 1
FDNS	00NR_G15_076	2	16WP	G15_076	TO->FROM	GR ISLD-LNX3345.00 - HOLT.CO3 345.00 345KV CKT 1	720	720	0.04225	101.9504	BLAIR - GRANITE FALLS 230KV CKT 1
FDNS	00NR_G15_076	2	16WP	G15_076	TO->FROM	GR ISLD-LNX3345.00 - HOLT.CO3 345.00 345KV CKT 1	720	720	0.04225	101.9504	BLAIR - GRANITE FALLS 230KV CKT 1
FDNS	00NR_G15_076	2	16WP	G15_076	TO->FROM	GR ISLD-LNX3345.00 - HOLT.CO3 345.00 345KV CKT 1	720	720	0.0421	101.9415	P13:230-345:NPPD:NUCOR-1
FDNS	00NR_G15_076	2	16WP	G15_076	TO->FROM	GR ISLD-LNX3345.00 - HOLT.CO3 345.00 345KV CKT 1	720	720	0.0421	101.9222	P13:115-230:NPPD:NUCOR-3
FDNS	00NR_G15_076	2	16WP	G15_076	TO->FROM	GR ISLD-LNX3345.00 - HOLT.CO3 345.00 345KV CKT 1	720	720	0.04215	101.9044	GARRISON - JAMES TOWN 230KV CKT 1
FDNS	00NR_G15_076	2	16WP	G15_076	TO->FROM	GR ISLD-LNX3345.00 - HOLT.CO3 345.00 345KV CKT 1	720	720	0.0421	101.9043	GEN525561 1-TOLK GEN #1 24 KV
FDNS	00NR_G15_076	2	16WP	G15_076	TO->FROM	GR ISLD-LNX3345.00 - HOLT.CO3 345.00 345KV CKT 1	720	720	0.04332	101.8909	DENISON - SIOUX CITY 230KV CKT 1
FDNS	00NR_G15_076	2	16WP	G15_076	TO->FROM	GR ISLD-LNX3345.00 - HOLT.CO3 345.00 345KV CKT 1	720	720	0.0421	101.8885	P13:230:UMZW:# 2218 #: FP IN MT. LOSS OF TRANSFORMER (AT2).
FDNS	00NR_G15_076	2	16WP	G15_076	TO->FROM	GR ISLD-LNX3345.00 - HOLT.CO3 345.00 345KV CKT 1	720	720	0.04123	101.8871	P12:115:NPPD:1164:ONEILL 7:JEFFREY9:BTB
FDNS	00NR_G15_076	2	16WP	G15_076	TO->FROM	GR ISLD-LNX3345.00 - HOLT.CO3 345.00 345KV CKT 1	720	720	0.04278	101.8778	BROOKING COUNTY - LYON COUNTY 345KV CKT 1
FDNS	00NR_G15_076	2	16WP	G15_076	TO->FROM	GR ISLD-LNX3345.00 - HOLT.CO3 345.00 345KV CKT 1	720	720	0.04224	101.8775	HANKINSON - WAHPETON 230KV CKT 1
FDNS	00NR_G15_076	2	16WP	G15_076	TO->FROM	GR ISLD-LNX3345.00 - HOLT.CO3 345.00 345KV CKT 1	720	720	0.04123	101.8762	CLEARWATER - ONEILL 115KV CKT 1
FDNS	00NR_G15_076	2	16WP	G15_076	TO->FROM	GR ISLD-LNX3345.00 - HOLT.CO3 345.00 345KV CKT 1	720	720	0.04243	101.8754	NORTH ROCHESTER - PRAIRIE ISLAND 345KV CKT 1
FDNS	00NR_G15_076	2	16WP	G15_076	TO->FROM	GR ISLD-LNX3345.00 - HOLT.CO3 345.00 345KV CKT 1	720	720	0.04764	101.8696	COLUMEAST - SHELL CREEK 345KV CKT 1
FDNS	00NR_G15_076	2	16WP	G15_076	TO->FROM	GR ISLD-LNX3345.00 - HOLT.CO3 345.00 345KV CKT 1	720	720	0.0421	101.8591	P13:115-345:NPPD:NUCOR-2
FDNS	00NR_G15_076	2	16WP	G15_076	TO->FROM	GR ISLD-LNX3345.00 - HOLT.CO3 345.00 345KV CKT 1	720	720	0.0421	101.8531	GEN303007 1-1BC2 U2
FDNS	00NR_G15_076	2	16WP	G15_076	TO->FROM	GR ISLD-LNX3345.00 - HOLT.CO3 345.00 345KV CKT 1	720	720	0.0421	101.8501	GEN303006 1-1BC2 U1
FDNS	00NR_G15_076	2	16WP	G15_076	TO->FROM	GR ISLD-LNX3345.00 - HOLT.CO3 345.00 345KV CKT 1	720	720	0.0421	101.85	GEN335204 1-NELSON UNIT 4
FDNS	00NR_G15_076	2	16WP	G15_076	TO->FROM	GR ISLD-LNX3345.00 - HOLT.CO3 345.00 345KV CKT 1	720	720	0.0421	101.8483	GEN336191 1-LITTLE GYPSY UNIT#3
FDNS	00NR_G15_076	2	16WP	G15_076	TO->FROM	GR ISLD-LNX3345.00 - HOLT.CO3 345.00 345KV CKT 1	720	720	0.0421	101.8446	GEN642067 1-PLATTE
FDNS	00NR_G15_076	2	16WP	G15_076	TO->FROM	GR ISLD-LNX3345.00 - HOLT.CO3 345.00 345KV CKT 1	720	720	0.04123	101.8446	CLEARWATER - NELIGH 115KV CKT 1
FDNS	00NR_G15_076	2	16WP	G15_076	TO->FROM	GR ISLD-LNX3345.00 - HOLT.CO3 345.00 345KV CKT 1	720	720	0.0421	101.8273	GEN531447 1-HOLCOMB GENERATOR
FDNS	00NR_G15_076	2	16WP	G15_076	TO->FROM	GR ISLD-LNX3345.00 - HOLT.CO3 345.00 345KV CKT 1	720	720	0.0421	101.8166	GEN336801 1-BAXTER WILSON UNIT #1
FDNS	00NR_G15_076	2	16WP	G15_076	TO->FROM	GR ISLD-LNX3345.00 - HOLT.CO3 345.00 345KV CKT 1	720	720	0.04296	101.8155	BYRON - PLEASANT VALLEY 345KV CKT 1
FDNS	00NR_G15_076	2	16WP	G15_076	TO->FROM	GR ISLD-LNX3345.00 - HOLT.CO3 345.00 345KV CKT 1	720	720	0.0421	101.8122	GEN335614 1-WILLOW GLENN UNIT#4
FDNS	00NR_G15_076	2	16WP	G15_076	TO->FROM	GR ISLD-LNX3345.00 - HOLT.CO3 345.00 345KV CKT 1	720	720	0.0421	101.8019	GEN336464 1-MICHOUD UNIT #3
FDNS	00NR_G15_076	2	16WP	G15_076	TO->FROM	GR ISLD-LNX3345.00 - HOLT.CO3 345.00 345KV CKT 1	720	720	0.0421	101.8015	GEN303008 1-1BC2 U3
FDNS	00NR_G15_076	2	16WP	G15_076	TO->FROM	GR ISLD-LNX3345.00 - HOLT.CO3 345.00 345KV CKT 1	720	720	0.0421	101.7967	GEN336170 1-GULF OXY U4
FDNS	00NR_G15_076	2	16WP	G15_076	TO->FROM	GR ISLD-LNX3345.00 - HOLT.CO3 345.00 345KV CKT 1	720	720	0.0421	101.7867	GEN334441 1-SABINE UNIT 5
FDNS	00NR_G15_076	2	16WP	G15_076	TO->FROM	GR ISLD-LNX3345.00 - HOLT.CO3 345.00 345KV CKT 1	720	720	0.04062	101.7865	MENNO JCT - TRIPP JCT 115KV CKT 1
FDNS	00NR_G15_076	2	16WP	G15_076	TO->FROM	GR ISLD-LNX3345.00 - HOLT.CO3 345.00 345KV CKT 1	720	720	0.04216	101.7802	BISMARK - JAMES TOWN 230KV CKT 1
FDNS	00NR_G15_076	2	16WP	G15_076	TO->FROM	GR ISLD-LNX3345.00 - HOLT.CO3 345.00 345KV CKT 1	720	720	0.04835	101.7682	COLUMEAST - NW68TH & HOLDREGE 345KV CKT 1
FDNS	00NR_G15_076	2	16WP	G15_076	TO->FROM	GR ISLD-LNX3345.00 - HOLT.CO3 345.00 345KV CKT 1	720	720	0.04835	101.7682	COLUMEAST - NW68TH & HOLDREGE 345KV CKT 1
FDNS	00NR_G15_076	2	16WP	G15_076	TO->FROM	GR ISLD-LNX3345.00 - HOLT.CO3 345.00 345KV CKT 1	720	720	0.04216	101.7675	BISMARK - WEBER 230KV CKT 1
FDNS	00NR_G15_076	2	16WP	G15_076	TO->FROM	GR ISLD-LNX3345.00 - HOLT.CO3 345.00 345KV CKT 1	720	720	0.04216	101.7659	JAMES TOWN - WEBER 230KV CKT 1
FDNS	00NR_G15_076	2	16WP	G15_076	TO->FROM	GR ISLD-LNX3345.00 - HOLT.CO3 345.00 345KV CKT 1	720	720	0.0421	101.7641	GRAND GULF 500/22.0KV TRANSFORMER CKT 1
FDNS	00NR_G15_076	2	16WP	G15_076	TO->FROM	GR ISLD-LNX3345.00 - HOLT.CO3 345.00 345KV CKT 1	720	720	0.0421	101.7605	GEN501811 1-RODEMACHER UNIT 1
FDNS	00NR_G15_076	2	16WP	G15_076	TO->FROM	GR ISLD-LNX3345.00 - HOLT.CO3 345.00 345KV CKT 1	720	720	0.04235	101.7595	APPLEDORN 4 230.00 - WATERTOWN 230KV CKT 1
FDNS	00NR_G15_076	2	16WP	G15_076	TO->FROM	GR ISLD-LNX3345.00 - HOLT.CO3 345.00 345KV CKT 1	720	720	0.04235	101.7595	APPLEDORN 4 230.00 - WATERTOWN 230KV CKT 1
FDNS	00NR_G15_076	2	16WP	G15_076	TO->FROM	GR ISLD-LNX3345.00 - HOLT.CO3 345.00 345KV CKT 1	720	720	0.0421	101.7213	PRAIRIE ISLAND 345/20.0KV TRANSFORMER CKT 1
FDNS	00NR_G15_076	2	16WP	G15_076	TO->FROM	GR ISLD-LNX3345.00 - HOLT.CO3 345.00 345KV CKT 1	720	720	0.0421	101.7186	PRAIRIE ISLAND 345/20.0KV TRANSFORMER CKT 2
FDNS	00NR_G15_076	2	16WP	G15_076	TO->FROM	GR ISLD-LNX3345.00 - HOLT.CO3 345.00 345KV CKT 1	720	720	0.0421	101.7172	GEN532651 1-JEFFREY ENERGY CENTER UNIT 1
FDNS	00NR_G15_076	2	16WP	G15_076	TO->FROM	GR ISLD-LNX3345.00 - HOLT.CO3 345.00 345KV CKT 1	720	720	0.04532	101.7151	BLOOMFIELD - CREIGHTON 115KV CKT 1
FDNS	00NR_G15_076	2	16WP	G15_076	TO->FROM	GR ISLD-LNX3345.00 - HOLT.CO3 345.00 345KV CKT 1	720	720	0.0421	101.7124	GEN334433 1-SABINE UNIT 3
FDNS	00NR_G15_076	2	16WP	G15_076	TO->FROM	GR ISLD-LNX3345.00 - HOLT.CO3 345.00 345KV CKT 1	720	720	0.0421	101.7046	GEN334071 1-LEWIS CREEK 2
FDNS	00NR_G15_076	2	16WP	G15_076	TO->FROM	GR ISLD-LNX3345.00 - HOLT.CO3 345.00 345KV CKT 1	720	720	0.04216	101.7006	FARGO - JAMES TOWN 230KV CKT 1
FDNS	00NR_G15_076	2	16WP	G15_076	TO->FROM	GR ISLD-LNX3345.00 - HOLT.CO3 345.00 345KV CKT 1	720	720	0.0421	101.7004	GEN334070 1-LEWIS CREEK 1
FDNS	00NR_G15_076	2	16WP	G15_076	TO->FROM	GR ISLD-LNX3345.00 - HOLT.CO3 345.00 345KV CKT 1	720	720	0.05929	101.6977	BELDEN - HOSKINS 115KV CKT 1
FDNS	00NR_G15_076	2	16WP	G15_076	TO->FROM	GR ISLD-LNX3345.00 - HOLT.CO3 345.00 345KV CKT 1	720	720	0.04235	101.697	APPLEDORN 4 230.00 - GRANITE FALLS 230KV CKT 1
FDNS	00NR_G15_076	2	16WP	G15_076	TO->FROM	GR ISLD-LNX3345.00 - HOLT.CO3 345.00 345KV CKT 1	720	720	0.04235	101.697	APPLEDORN 4 230.00 - GRANITE FALLS 230KV CKT 1
FDNS	00NR_G15_076	2	16WP	G15_076	TO->FROM	GR ISLD-LNX3345.00 - HOLT.CO3 345.00 345KV CKT 1	720	720	0.0421	101.6947	GEN338388 1-1PLUM PT U1 23.000
FDNS	00NR_G15_076	2	16WP	G15_076	TO->FROM	GR ISLD-LNX3345.00 - HOLT.CO3 345.00 345KV CKT 1	720	720	0.0421	101.6898	GEN337766 1-TRACTEBEL UNIT S1

SOLUTION	GROUP	SCENARIO	SEASON	SOURCE	DIRECTION	MONITORED ELEMENT	RATEA (MVA)	RATEB(MVA)	TDF	TC%LOADING (% MVA)	CONTINGENCY
FDNS	00NR_G15_076	2	16WP	G15_076	TO->FROM	GR ISLD-LNX3345.00 - HOLT.CO3 345.00 345KV CKT 1	720	720	0.0421	101.6857	GEN525562 1-TOLK GEN #2 24 KV
FDNS	00NR_G15_076	2	16WP	G15_076	TO->FROM	GR ISLD-LNX3345.00 - HOLT.CO3 345.00 345KV CKT 1	720	720	0.04216	101.6847	FARGO - JAMES TOWN 230KV CKT 2
FDNS	00NR_G15_076	2	16WP	G15_076	TO->FROM	GR ISLD-LNX3345.00 - HOLT.CO3 345.00 345KV CKT 1	720	720	0.04222	101.6815	FERGSFL4 230.00 - WAHPETON 230KV CKT 1
FDNS	00NR_G15_076	2	16WP	G15_076	TO->FROM	GR ISLD-LNX3345.00 - HOLT.CO3 345.00 345KV CKT 1	720	720	0.04212	101.6739	BALTA - RAMSEY 230KV CKT 1
FDNS	00NR_G15_076	2	16WP	G15_076	TO->FROM	GR ISLD-LNX3345.00 - HOLT.CO3 345.00 345KV CKT 1	720	720	0.04062	101.6729	MENNO JCT - UTICA 115KV CKT 1
FDNS	00NR_G15_076	2	16WP	G15_076	TO->FROM	GR ISLD-LNX3345.00 - HOLT.CO3 345.00 345KV CKT 1	720	720	0.04328	101.6698	ARKANSAS NUCLEAR ONE - FT SMITH 500KV CKT 1
FDNS	00NR_G15_076	2	16WP	G15_076	TO->FROM	GR ISLD-LNX3345.00 - HOLT.CO3 345.00 345KV CKT 1	720	720	0.04328	101.6698	ARKANSAS NUCLEAR ONE - FT SMITH 500KV CKT 1
FDNS	00NR_G15_076	2	16WP	G15_076	TO->FROM	GR ISLD-LNX3345.00 - HOLT.CO3 345.00 345KV CKT 1	720	720	0.04218	101.6698	AUDUBON - SHEYNNE 230KV CKT 1
FDNS	00NR_G15_076	2	16WP	G15_076	TO->FROM	GR ISLD-LNX3345.00 - HOLT.CO3 345.00 345KV CKT 1	720	720	0.0421	101.6576	GEN501910 1-ACADIA UNIT ST1
FDNS	00NR_G15_076	2	16WP	G15_076	TO->FROM	GR ISLD-LNX3345.00 - HOLT.CO3 345.00 345KV CKT 1	720	720	0.0419	101.6558	OVEXFRMCCOVE
FDNS	00NR_G15_076	2	16WP	G15_076	TO->FROM	GR ISLD-LNX3345.00 - HOLT.CO3 345.00 345KV CKT 1	720	720	0.04062	101.6542	P12:115:UMZZ:# 237 #: MEN IN SD. MENNO JUNCTION IS A TAP (UJ-MEN-TP).
FDNS	00NR_G15_076	2	16WP	G15_076	TO->FROM	GR ISLD-LNX3345.00 - HOLT.CO3 345.00 345KV CKT 1	720	720	0.0421	101.6421	P12:345:GRDA:CHOUTEAU-SPORTSMANACRES
FDNS	00NR_G15_076	2	16WP	G15_076	TO->FROM	GR ISLD-LNX3345.00 - HOLT.CO3 345.00 345KV CKT 1	720	720	0.04229	101.6414	NORTH LA CROSSE - NORTH ROCHESTER 345KV CKT 1
FDNS	00NR_G15_076	2	16WP	G15_076	TO->FROM	GR ISLD-LNX3345.00 - HOLT.CO3 345.00 345KV CKT 1	720	720	0.0421	101.6366	WHITE BLUFF 500/26.0KV TRANSFORMER CKT 1
FDNS	00NR_G15_076	2	16WP	G15_076	TO->FROM	GR ISLD-LNX3345.00 - HOLT.CO3 345.00 345KV CKT 1	720	720	0.0421	101.6292	GEN336222 1-LITTLE GYPSY UNIT#2
FDNS	00NR_G15_076	2	16WP	G15_076	TO->FROM	GR ISLD-LNX3345.00 - HOLT.CO3 345.00 345KV CKT 1	720	720	0.0421	101.613	GEN337764 1-TRACTEBEL UNIT C1
FDNS	00NR_G15_076	2	16WP	G15_076	TO->FROM	GR ISLD-LNX3345.00 - HOLT.CO3 345.00 345KV CKT 1	720	720	0.0421	101.613	GEN337765 1-TRACTEBEL UNIT C2
FDNS	00NR_G15_076	2	16WP	G15_076	TO->FROM	GR ISLD-LNX3345.00 - HOLT.CO3 345.00 345KV CKT 1	720	720	0.0421	101.1692	BASE CASE
FDNS	00NR_G15_076	2	16WP	G15_076	TO->FROM	GR ISLD-LNX3345.00 - HOLT.CO3 345.00 345KV CKT 1	720	720	0.0421	100.8668	GEN645001 1-FORT CALHOUN 1
FDNS	00NR_G15_076	2	16WP	G15_076	TO->FROM	GR ISLD-LNX3345.00 - HOLT.CO3 345.00 345KV CKT 1	720	720	0.04223	100.786	P12:345:UMZB:# 103 #: BD IN SD. LOSS OF LINE
FDNS	00NR_G15_076	2	16WP	G15_076	TO->FROM	GR ISLD-LNX3345.00 - HOLT.CO3 345.00 345KV CKT 1	720	720	0.04223	100.7843	P12:345:UMZB:# 102 #: AVS BD IN ND. AVS BRD LR
FDNS	00NR_G15_076	2	16WP	G15_076	TO->FROM	GR ISLD-LNX3345.00 - HOLT.CO3 345.00 345KV CKT 1	720	720	0.04223	100.7817	HURON (BD KU2A) 345/230/13.8KV TRANSFORMER CKT 1
FDNS	00NR_G15_076	2	16WP	G15_076	TO->FROM	GR ISLD-LNX3345.00 - HOLT.CO3 345.00 345KV CKT 1	720	720	0.04223	100.7817	HURON (BD KU2A) 345/230/13.8KV TRANSFORMER CKT 1
FDNS	00NR_G15_076	2	16WP	G15_076	TO->FROM	GR ISLD-LNX3345.00 - HOLT.CO3 345.00 345KV CKT 1	720	720	0.04223	100.7816	BROADLAND - HURON 230KV CKT 1
FDNS	00NR_G15_076	2	16WP	G15_076	TO->FROM	GR ISLD-LNX3345.00 - HOLT.CO3 345.00 345KV CKT 1	720	720	0.04223	100.78	BRDLAND-LNX3345.00 - HURON 345KV CKT Z
FDNS	00NR_G15_076	2	16WP	G15_076	TO->FROM	GR ISLD-LNX3345.00 - HOLT.CO3 345.00 345KV CKT 1	720	720	0.04222	100.7691	FT THOMPSON - OAHE 230KV CKT 3
FDNS	00NR_G15_076	2	16WP	G15_076	TO->FROM	GR ISLD-LNX3345.00 - HOLT.CO3 345.00 345KV CKT 1	720	720	0.04222	100.7691	FT THOMPSON - OAHE 230KV CKT 3
FDNS	00NR_G15_076	2	16WP	G15_076	TO->FROM	GR ISLD-LNX3345.00 - HOLT.CO3 345.00 345KV CKT 1	720	720	0.04222	100.7691	FT THOMPSON - OAHE 230KV CKT 4
FDNS	00NR_G15_076	2	16WP	G15_076	TO->FROM	GR ISLD-LNX3345.00 - HOLT.CO3 345.00 345KV CKT 1	720	720	0.04222	100.7691	FT THOMPSON - OAHE 230KV CKT 4
FDNS	00NR_G15_076	2	16WP	G15_076	TO->FROM	GR ISLD-LNX3345.00 - HOLT.CO3 345.00 345KV CKT 1	720	720	0.04223	100.7285	ANTELOP-LNX3345.00 - BRDLAND-LNX3345.00 345KV CKT 1
FDNS	00NR_G15_076	2	16WP	G15_076	TO->FROM	GR ISLD-LNX3345.00 - HOLT.CO3 345.00 345KV CKT 1	720	720	0.04358	100.7264	LOUP CITY - NORTH LOUP 115KV CKT 1
FDNS	00NR_G15_076	2	16WP	G15_076	TO->FROM	GR ISLD-LNX3345.00 - HOLT.CO3 345.00 345KV CKT 1	720	720	0.04184	100.7253	G14-074T 345.00 - OKLAUNION 345KV CKT 1
FDNSLock	00NR_G15_076	2	16WP	G15_076	TO->FROM	GR ISLD-LNX3345.00 - HOLT.CO3 345.00 345KV CKT 1	720	720	0.0423	100.701	STEGALL - VICTORY HILL 230KV CKT 1
FDNS	00NR_G15_076	2	16WP	G15_076	TO->FROM	GR ISLD-LNX3345.00 - HOLT.CO3 345.00 345KV CKT 1	720	720	0.0421	100.7008	CLKREACT5 161.00 - CRYSTLK5 161.00 161KV CKT 1
FDNS	00NR_G15_076	2	16WP	G15_076	TO->FROM	GR ISLD-LNX3345.00 - HOLT.CO3 345.00 345KV CKT 1	720	720	0.0421	100.6995	GEN562003 1-G11_027_3 0.6900
FDNS	00NR_G15_076	2	16WP	G15_076	TO->FROM	GR ISLD-LNX3345.00 - HOLT.CO3 345.00 345KV CKT 1	720	720	0.04247	100.6976	GRAND ISLAND (GI KU3A) 345/230/13.8KV TRANSFORMER CKT 3
FDNS	00NR_G15_076	2	16WP	G15_076	TO->FROM	GR ISLD-LNX3345.00 - HOLT.CO3 345.00 345KV CKT 1	720	720	0.04247	100.6976	GRAND ISLAND (GI KU3A) 345/230/13.8KV TRANSFORMER CKT 3
FDNS	00NR_G15_076	2	16WP	G15_076	TO->FROM	GR ISLD-LNX3345.00 - HOLT.CO3 345.00 345KV CKT 1	720	720	0.0423	100.6972	VICTORY HILL (VICTORYHL T1) 230/115/13.8KV TRANSFORMER CKT 1
FDNS	00NR_G15_076	2	16WP	G15_076	TO->FROM	GR ISLD-LNX3345.00 - HOLT.CO3 345.00 345KV CKT 1	720	720	0.0423	100.6972	VICTORY HILL (VICTORYHL T1) 230/115/13.8KV TRANSFORMER CKT 1
FDNS	00NR_G15_076	2	16WP	G15_076	TO->FROM	GR ISLD-LNX3345.00 - HOLT.CO3 345.00 345KV CKT 1	720	720	0.04222	100.6792	LARAMIE RIVER - STEGALL 345KV CKT 1
FDNS	00NR_G15_076	2	16WP	G15_076	TO->FROM	GR ISLD-LNX3345.00 - HOLT.CO3 345.00 345KV CKT 1	720	720	0.0421	100.6634	GEN672340 1-QUEEN ELIZABETH GENERATOR 1
FDNS	00NR_G15_076	2	16WP	G15_076	TO->FROM	GR ISLD-LNX3345.00 - HOLT.CO3 345.00 345KV CKT 1	720	720	0.0421	100.6633	GEN600013 3-BLACK DOG GEN 3
FDNS	00NR_G15_076	2	16WP	G15_076	TO->FROM	GR ISLD-LNX3345.00 - HOLT.CO3 345.00 345KV CKT 1	720	720	0.0421	100.6568	MITCHLCO3 345.00 345/34.5KV TRANSFORMER CKT 1
FDNS	00NR_G15_076	2	16WP	G15_076	TO->FROM	GR ISLD-LNX3345.00 - HOLT.CO3 345.00 345KV CKT 1	720	720	0.04223	100.6516	ANTELOP-LNX3345.00 - ANTELOPE VALLEY 345KV CKT Z
FDNS	00NR_G15_076	2	16WP	G15_076	TO->FROM	GR ISLD-LNX3345.00 - HOLT.CO3 345.00 345KV CKT 1	720	720	0.0421	100.6453	GEN659018 1-G14_003IS_3 0.6900
FDNS	00NR_G15_076	2	16WP	G15_076	TO->FROM	GR ISLD-LNX3345.00 - HOLT.CO3 345.00 345KV CKT 1	720	720	0.04232	100.6429	P12:115:UMZW:# 172 #: WI IN SD.
FDNS	00NR_G15_076	2	16WP	G15_076	TO->FROM	GR ISLD-LNX3345.00 - HOLT.CO3 345.00 345KV CKT 1	720	720	0.0421	100.6387	GEN672384 1-CENTENNIAL WINDFARM
FDNS	00NR_G15_076	2	16WP	G15_076	TO->FROM	GR ISLD-LNX3345.00 - HOLT.CO3 345.00 345KV CKT 1	720	720	0.0421	100.6372	GEN600125 2-FEP ST G 13.800
FDNS	00NR_G15_076	2	16WP	G15_076	TO->FROM	GR ISLD-LNX3345.00 - HOLT.CO3 345.00 345KV CKT 1	720	720	0.0421	100.628	LADISH 115/13.2KV TRANSFORMER CKT 1
FDNS	00NR_G15_076	2	16WP	G15_076	TO->FROM	GR ISLD-LNX3345.00 - HOLT.CO3 345.00 345KV CKT 1	720	720	0.0421	100.6258	GEN620323 2-HOOT LAKE 2 GEN
FDNS	00NR_G15_076	2	16WP	G15_076	TO->FROM	GR ISLD-LNX3345.00 - HOLT.CO3 345.00 345KV CKT 1	720	720	0.0421	100.62	GEN659354 1-DEERCREK STG18.000
FDNS	00NR_G15_076	2	16WP	G15_076	TO->FROM	GR ISLD-LNX3345.00 - HOLT.CO3 345.00 345KV CKT 1	720	720	0.04179	100.614	SMOKYHL6 230.00 - SUMMIT 230KV CKT 1
FDNS	00NR_G15_076	2	16WP	G15_076	TO->FROM	GR ISLD-LNX3345.00 - HOLT.CO3 345.00 345KV CKT 1	720	720	0.0421	100.6089	GEN657964 1-ASH2GEN9 0.5750
FDNS	00NR_G15_076	2	16WP	G15_076	TO->FROM	GR ISLD-LNX3345.00 - HOLT.CO3 345.00 345KV CKT 1	720	720	0.0421	100.6018	GEN652546 1-FT RANDAL
FDNS	00NR_G15_076	2	16WP	G15_076	TO->FROM	GR ISLD-LNX3345.00 - HOLT.CO3 345.00 345KV CKT 1	720	720	0.04333	100.5897	AXTELL - PAULINE 345KV CKT 1
FDNS	00NR_G15_076	2	16WP	G15_076	TO->FROM	GR ISLD-LNX3345.00 - HOLT.CO3 345.00 345KV CKT 1	720	720	0.04352	100.5892	CENTRAL CITY - GRAND ISLAND 115KV CKT 1
FDNS	00NR_G15_076	2	16WP	G15_076	TO->FROM	GR ISLD-LNX3345.00 - HOLT.CO3 345.00 345KV CKT 1	720	720	0.0431	100.5807	7MAYWOOD 345.00 - 7SPENCER 345.00 345KV CKT 1
FDNS	00NR_G15_076	2	16WP	G15_076	TO->FROM	GR ISLD-LNX3345.00 - HOLT.CO3 345.00 345KV CKT 1	720	720	0.04186	100.5801	FALLOW 3 345.00 - POTTCO 3 345.00 345KV CKT 1
FDNS	00NR_G15_076	2	16WP	G15_076	TO->FROM	GR ISLD-LNX3345.00 - HOLT.CO3 345.00 345KV CKT 1	720	720	0.0431	100.5799	7MONTGMRY 345.00 - 7SPENCER 345.00 345KV CKT 1
FDNS	00NR_G15_076	2	16WP	G15_076	TO->FROM	GR ISLD-LNX3345.00 - HOLT.CO3 345.00 345KV CKT 1	720	720	0.0421	100.577	GEN635213 3-NEAL UNIT 3
FDNS	00NR_G15_076	2	16WP	G15_076	TO->FROM	GR ISLD-LNX3345.00 - HOLT.CO3 345.00 345KV CKT 1	720	720	0.0504	100.5745	COLUMWEST - KELLY 230KV CKT 1
FDNS	00NR_G15_076	2	16WP	G15_076	TO->FROM	GR ISLD-LNX3345.00 - HOLT.CO3 345.00 345KV CKT 1	720	720	0.0421	100.5733	GEN600018 S-LS POWER STEAM
FDNS	00NR_G15_076	2	16WP	G15_076	TO->FROM	GR ISLD-LNX3345.00 - HOLT.CO3 345.00 345KV CKT 1	720	720	0.0421	100.57	GEN659290 1-EDGECOL
FDNS	00NR_G15_076	2	16WP	G15_076	TO->FROM	GR ISLD-LNX3345.00 - HOLT.CO3 345.00 345KV CKT 1	720	720	0.0421	100.5674	GEN652548 5-FT RANDAL
FDNS	00NR_G15_076	2	16WP	G15_076	TO->FROM	GR ISLD-LNX3345.00 - HOLT.CO3 345.00 345KV CKT 1	720	720	0.0421	100.5674	GEN652549 7-FT RANDAL
FDNS	00NR_G15_076	2	16WP	G15_076	TO->FROM	GR ISLD-LNX3345.00 - HOLT.CO3 345.00 345KV CKT 1	720	720	0.0421	100.5657	GEN652547 3-FT RANDAL
FDNS	00NR_G15_076	2	16WP	G15_076	TO->FROM	GR ISLD-LNX3345.00 - HOLT.CO3 345.00 345KV CKT 1	720	720	0.0421	100.5622	GEN590010 1-ERCOT EQUIVALENCE
FDNS	00NR_G15_076	2	16WP	G15_076	TO->FROM	GR ISLD-LNX3345.00 - HOLT.CO3 345.00 345KV CKT 1	720	720	0.0421	100.5581	G830_SUB 115.00 - GRE-MCHENRY7115.00 115KV CKT 1
FDNS	00NR_G15_076	2	16WP	G15_076	TO->FROM	GR ISLD-LNX3345.00 - HOLT.CO3 345.00 345KV CKT 1	720	720	0.0421	100.5526	G830_SUB 115.00 115/34.5KV TRANSFORMER CKT 1
FDNS	00NR_G15_076	2	16WP	G15_076	TO->FROM	GR ISLD-LNX3345.00 - HOLT.CO3 345.00 345KV CKT 1	720	720	0.0421	100.5462	GEN652410 3-FT PECK
FDNS	00NR_G15_076	2	16WP	G15_076	TO->FROM	GR ISLD-LNX3345.00 - HOLT.CO3 345.00 345KV CKT 1	720	720	0.0421	100.5343	GEN300003 1-THOMAS HILL UNIT 3
FDNS	00NR_G15_076	2	16WP	G15_076	TO->FROM	GR ISLD-LNX3345.00 - HOLT.CO3 345.00 345KV CKT 1	720	720	0.0421	100.5334	GEN590011 2-ERCOT EQUIVALENCE
FDNS	00NR_G15_076	2	16WP	G15_076	TO->FROM	GR ISLD-LNX3345.00 - HOLT.CO3 345.00 345KV CKT 1	720	720	0.04129	100.5326	POST ROCK (POSTROCK T1) 345/230/13.8KV TRANSFORMER CKT 1

SOLUTION	GROUP	SCENARIO	SEASON	SOURCE	DIRECTION	MONITORED ELEMENT	RATEA (MVA)	RATEB(MVA)	TDF	TC%LOADING (% MVA)	CONTINGENCY
FDNS	00NR_G15_076	2	16WP	G15_076	TO->FROM	GR ISLD-LNX3345.00 - HOLT.CO3 345.00 345KV CKT 1	720	720	0.04253	100.5264	SUB 3454 - WAGENER 345KV CKT 1
FDNS	00NR_G15_076	2	16WP	G15_076	TO->FROM	GR ISLD-LNX3345.00 - HOLT.CO3 345.00 345KV CKT 1	720	720	0.04253	100.5264	SUB 3454 - WAGENER 345KV CKT 1
FDNS	00NR_G15_076	2	16WP	G15_076	TO->FROM	GR ISLD-LNX3345.00 - HOLT.CO3 345.00 345KV CKT 1	720	720	0.0421	100.5217	EASTDC - ERCOT EQUIVALENCE 345KV CKT 1
FDNS	00NR_G15_076	2	16WP	G15_076	TO->FROM	GR ISLD-LNX3345.00 - HOLT.CO3 345.00 345KV CKT 1	720	720	0.0421	100.5121	GEN672347 1-CORY COGEN GENERATOR 1 GT1
FDNS	00NR_G15_076	2	16WP	G15_076	TO->FROM	GR ISLD-LNX3345.00 - HOLT.CO3 345.00 345KV CKT 1	720	720	0.0421	100.5121	GEN672348 2-CORY COGEN GENERATOR 2 GT2
FDNS	00NR_G15_076	2	16WP	G15_076	TO->FROM	GR ISLD-LNX3345.00 - HOLT.CO3 345.00 345KV CKT 1	720	720	0.0421	100.5074	GEN672352 3-NIPAWIN GENERATOR 3
FDNS	00NR_G15_076	2	16WP	G15_076	TO->FROM	GR ISLD-LNX3345.00 - HOLT.CO3 345.00 345KV CKT 1	720	720	0.0421	100.5072	GEN672350 1-NIPAWIN GENERATOR 1
FDNS	00NR_G15_076	2	16WP	G15_076	TO->FROM	GR ISLD-LNX3345.00 - HOLT.CO3 345.00 345KV CKT 1	720	720	0.0421	100.5072	GEN672351 2-NIPAWIN GENERATOR 2
FDNS	00NR_G15_076	2	16WP	G15_076	TO->FROM	GR ISLD-LNX3345.00 - HOLT.CO3 345.00 345KV CKT 1	720	720	0.04185	100.4906	MADISON COUNTY - RLHILLS3 345.00 345KV CKT 1
FDNS	00NR_G15_076	2	16WP	G15_076	TO->FROM	GR ISLD-LNX3345.00 - HOLT.CO3 345.00 345KV CKT 1	720	720	0.0421	100.4874	GEN657600 1-L1GEN3 9 0.5750
FDNS	00NR_G15_076	2	16WP	G15_076	TO->FROM	GR ISLD-LNX3345.00 - HOLT.CO3 345.00 345KV CKT 1	720	720	0.0421	100.487	GEN652414 4-FT PECK
FDNS	00NR_G15_076	2	16WP	G15_076	TO->FROM	GR ISLD-LNX3345.00 - HOLT.CO3 345.00 345KV CKT 1	720	720	0.0421	100.487	GEN652415 5-FT PECK
FDNS	00NR_G15_076	2	16WP	G15_076	TO->FROM	GR ISLD-LNX3345.00 - HOLT.CO3 345.00 345KV CKT 1	720	720	0.0421	100.469	GEN600012 2-BLACK DOG GEN 2
FDNS	00NR_G15_076	2	16WP	G15_076	TO->FROM	GR ISLD-LNX3345.00 - HOLT.CO3 345.00 345KV CKT 1	720	720	0.04114	100.4658	G11_051T 345.00 - WOODWARD DISTRICT EHV 345KV CKT 1
FDNS	00NR_G15_076	2	16WP	G15_076	TO->FROM	GR ISLD-LNX3345.00 - HOLT.CO3 345.00 345KV CKT 1	720	720	0.0421	100.4656	GEN660001 2-ABERDEEN SIEBRECHT
FDNS	00NR_G15_076	2	16WP	G15_076	TO->FROM	GR ISLD-LNX3345.00 - HOLT.CO3 345.00 345KV CKT 1	720	720	0.0421	100.4587	GEN652345 W-G07_023IS_2 0.6900
FDNS	00NR_G15_076	2	16WP	G15_076	TO->FROM	GR ISLD-LNX3345.00 - HOLT.CO3 345.00 345KV CKT 1	720	720	0.0421	100.4547	GEN629074 1-ARNOLD LOWSIDE OF GSU XFMR
FDNS	00NR_G15_076	2	16WP	G15_076	TO->FROM	GR ISLD-LNX3345.00 - HOLT.CO3 345.00 345KV CKT 1	720	720	0.0421	100.4423	GEN615032 2-PLEASANT VALLEY
FDNS	00NR_G15_076	2	16WP	G15_076	TO->FROM	GR ISLD-LNX3345.00 - HOLT.CO3 345.00 345KV CKT 1	720	720	0.0421	100.4322	GEN672367 1-MERIDIAN GENERATOR 1 GT1
FDNS	00NR_G15_076	2	16WP	G15_076	TO->FROM	GR ISLD-LNX3345.00 - HOLT.CO3 345.00 345KV CKT 1	720	720	0.0421	100.4322	GEN672368 2-MERIDIAN GENERATOR 2 GT2
FDNS	00NR_G15_076	2	16WP	G15_076	TO->FROM	GR ISLD-LNX3345.00 - HOLT.CO3 345.00 345KV CKT 1	720	720	0.0421	100.4319	GEN672349 3-CORY COGEN GENERATOR 3 ST
FDNS	00NR_G15_076	2	16WP	G15_076	TO->FROM	GR ISLD-LNX3345.00 - HOLT.CO3 345.00 345KV CKT 1	720	720	0.0421	100.4213	GEN672339 16-QE 16G 13.800
FDNS	00NR_G15_076	2	16WP	G15_076	TO->FROM	GR ISLD-LNX3345.00 - HOLT.CO3 345.00 345KV CKT 1	720	720	0.0421	100.4213	GEN672342 3-QUEEN ELIZABETH GENERATOR 3
FDNS	00NR_G15_076	2	16WP	G15_076	TO->FROM	GR ISLD-LNX3345.00 - HOLT.CO3 345.00 345KV CKT 1	720	720	0.0421	100.4183	GEN300007 1-NEW MADRID UNIT 2
FDNS	00NR_G15_076	2	16WP	G15_076	TO->FROM	GR ISLD-LNX3345.00 - HOLT.CO3 345.00 345KV CKT 1	720	720	0.0421	100.4132	GEN300006 1-NEW MADRID UNIT 1
FDNS	00NR_G15_076	2	16WP	G15_076	TO->FROM	GR ISLD-LNX3345.00 - HOLT.CO3 345.00 345KV CKT 1	720	720	0.0421	100.4117	GEN620324 3-HOOT LAKE 3 GEN
FDNS	00NR_G15_076	2	16WP	G15_076	TO->FROM	GR ISLD-LNX3345.00 - HOLT.CO3 345.00 345KV CKT 1	720	720	0.04066	100.4101	HIGHLND 3 345.00 - OBRIEN 3 345.00 345KV CKT 1
FDNS	00NR_G15_076	2	16WP	G15_076	TO->FROM	GR ISLD-LNX3345.00 - HOLT.CO3 345.00 345KV CKT 1	720	720	0.0421	100.3949	GEN 11104 1-J262_GEN 0.6000
FDNS	00NR_G15_076	2	16WP	G15_076	TO->FROM	GR ISLD-LNX3345.00 - HOLT.CO3 345.00 345KV CKT 1	720	720	0.0421	100.3949	GEN 11108 1-J263_GEN 0.6000
FDNS	00NR_G15_076	2	16WP	G15_076	TO->FROM	GR ISLD-LNX3345.00 - HOLT.CO3 345.00 345KV CKT 1	720	720	0.04258	100.3836	GLENHAM - L3 HAWDON 230KV CKT 1
FDNS	00NR_G15_076	2	16WP	G15_076	TO->FROM	GR ISLD-LNX3345.00 - HOLT.CO3 345.00 345KV CKT 1	720	720	0.04242	100.3829	103RD & ROKEBY - MOORE 345KV CKT 1
FDNS	00NR_G15_076	2	16WP	G15_076	TO->FROM	GR ISLD-LNX3345.00 - HOLT.CO3 345.00 345KV CKT 1	720	720	0.04242	100.3829	103RD & ROKEBY - MOORE 345KV CKT 1
FDNS	00NR_G15_076	2	16WP	G15_076	TO->FROM	GR ISLD-LNX3345.00 - HOLT.CO3 345.00 345KV CKT 1	720	720	0.04018	100.3642	GERALD GENTLEMAN STATION - RED WILLOW 345KV CKT 1
FDNS	00NR_G15_076	2	16WP	G15_076	TO->FROM	GR ISLD-LNX3345.00 - HOLT.CO3 345.00 345KV CKT 1	720	720	0.04327	100.3638	ATCHSNT3 345.00 - COOPER 345KV CKT 1
FDNS	00NR_G15_076	2	16WP	G15_076	TO->FROM	GR ISLD-LNX3345.00 - HOLT.CO3 345.00 345KV CKT 1	720	720	0.04327	100.3638	ATCHSNT3 345.00 - COOPER 345KV CKT 1
FDNS	00NR_G15_076	2	16WP	G15_076	TO->FROM	GR ISLD-LNX3345.00 - HOLT.CO3 345.00 345KV CKT 1	720	720	0.04186	100.3567	FALLOW 3 345.00 - GRIMES 345KV CKT 1
FDNS	00NR_G15_076	2	16WP	G15_076	TO->FROM	GR ISLD-LNX3345.00 - HOLT.CO3 345.00 345KV CKT 1	720	720	0.0421	100.3529	GEN600050 1-FEP
FDNS	00NR_G15_076	2	16WP	G15_076	TO->FROM	GR ISLD-LNX3345.00 - HOLT.CO3 345.00 345KV CKT 1	720	720	0.0421	100.3411	GEN659273 2-GROTON SYNC COND
FDNS	00NR_G15_076	2	16WP	G15_076	TO->FROM	GR ISLD-LNX3345.00 - HOLT.CO3 345.00 345KV CKT 1	720	720	0.0421	100.3411	GEN659294 1-WILTONCOL9
FDNS	00NR_G15_076	2	16WP	G15_076	TO->FROM	GR ISLD-LNX3345.00 - HOLT.CO3 345.00 345KV CKT 1	720	720	0.0421	100.3349	CENTER 230/22.0KV TRANSFORMER CKT 1
FDNS	00NR_G15_076	2	16WP	G15_076	TO->FROM	GR ISLD-LNX3345.00 - HOLT.CO3 345.00 345KV CKT 1	720	720	0.04114	100.3183	G11_051T 345.00 - TATONGA7 345.00 345KV CKT 1
FDNS	00NR_G15_076	2	16WP	G15_076	TO->FROM	GR ISLD-LNX3345.00 - HOLT.CO3 345.00 345KV CKT 1	720	720	0.0421	100.3066	GEN629072 4-LANSING GENERATOR FOR UNITS NO4 EIA CODE 1
FDNS	00NR_G15_076	2	16WP	G15_076	TO->FROM	GR ISLD-LNX3345.00 - HOLT.CO3 345.00 345KV CKT 1	720	720	0.0421	100.3048	GEN672393 2-NBECST2G 13.800
FDNS	00NR_G15_076	2	16WP	G15_076	TO->FROM	GR ISLD-LNX3345.00 - HOLT.CO3 345.00 345KV CKT 1	720	720	0.03935	100.2965	COOPER - MOORE 345KV CKT 1
FDNS	00NR_G15_076	2	16WP	G15_076	TO->FROM	GR ISLD-LNX3345.00 - HOLT.CO3 345.00 345KV CKT 1	720	720	0.0421	100.2719	GEN600065 7-HIGH BRIDGE
FDNS	00NR_G15_076	2	16WP	G15_076	TO->FROM	GR ISLD-LNX3345.00 - HOLT.CO3 345.00 345KV CKT 1	720	720	0.0421	100.2719	GEN600066 8-HIGH BRIDGE
FDNS	00NR_G15_076	2	16WP	G15_076	TO->FROM	GR ISLD-LNX3345.00 - HOLT.CO3 345.00 345KV CKT 1	720	720	0.0421	100.2598	GEN659192 6-LYNN
FDNS	00NR_G15_076	2	16WP	G15_076	TO->FROM	GR ISLD-LNX3345.00 - HOLT.CO3 345.00 345KV CKT 1	720	720	0.0421	100.2586	GEN659162 4-RED WLCK
FDNS	00NR_G15_076	2	16WP	G15_076	TO->FROM	GR ISLD-LNX3345.00 - HOLT.CO3 345.00 345KV CKT 1	720	720	0.0421	100.2586	GEN659163 5-BLACK WDCK
FDNS	00NR_G15_076	2	16WP	G15_076	TO->FROM	GR ISLD-LNX3345.00 - HOLT.CO3 345.00 345KV CKT 1	720	720	0.0421	100.2467	GEN657985 1-ASH1GEN9 0.5750
FDNS	00NR_G15_076	2	16WP	G15_076	TO->FROM	GR ISLD-LNX3345.00 - HOLT.CO3 345.00 345KV CKT 1	720	720	0.0421	100.2467	LANSING WEST 161/22.0KV TRANSFORMER CKT 1
FDNS	00NR_G15_076	2	16WP	G15_076	TO->FROM	GR ISLD-LNX3345.00 - HOLT.CO3 345.00 345KV CKT 1	720	720	0.0421	100.2334	GEN652906 1-G09_006IS_3 0.6900
FDNS	00NR_G15_076	2	16WP	G15_076	TO->FROM	GR ISLD-LNX3345.00 - HOLT.CO3 345.00 345KV CKT 1	720	720	0.0421	100.2206	GEN635214 4-NEAL UNIT 4
FDNS	00NR_G15_076	2	16WP	G15_076	TO->FROM	GR ISLD-LNX3345.00 - HOLT.CO3 345.00 345KV CKT 1	720	720	0.0421	100.2085	GEN 10648 1-G830_GEN 0.6900
FDNS	00NR_G15_076	2	16WP	G15_076	TO->FROM	GR ISLD-LNX3345.00 - HOLT.CO3 345.00 345KV CKT 1	720	720	0.0421	100.1885	GEN600067 9-HIGH BRIDGE
FDNS	00NR_G15_076	2	16WP	G15_076	TO->FROM	GR ISLD-LNX3345.00 - HOLT.CO3 345.00 345KV CKT 1	720	720	0.0421	100.1864	GEN600014 4-BLACK DOG GEN 4
FDNS	00NR_G15_076	2	16WP	G15_076	TO->FROM	GR ISLD-LNX3345.00 - HOLT.CO3 345.00 345KV CKT 1	720	720	0.0421	100.1859	GEN600071 10-RIVER SIDE
FDNS	00NR_G15_076	2	16WP	G15_076	TO->FROM	GR ISLD-LNX3345.00 - HOLT.CO3 345.00 345KV CKT 1	720	720	0.0421	100.1857	GEN600070 9-RIVER SIDE
FDNS	00NR_G15_076	2	16WP	G15_076	TO->FROM	GR ISLD-LNX3345.00 - HOLT.CO3 345.00 345KV CKT 1	720	720	0.0421	100.1825	GEN600011 5-BLACK DOG GEN 1
FDNS	00NR_G15_076	2	16WP	G15_076	TO->FROM	GR ISLD-LNX3345.00 - HOLT.CO3 345.00 345KV CKT 1	720	720	0.0421	100.1723	GEN600007 7-RIVERSIDE GEN 7
FDNS	00NR_G15_076	2	16WP	G15_076	TO->FROM	GR ISLD-LNX3345.00 - HOLT.CO3 345.00 345KV CKT 1	720	720	0.0421	100.1512	GEN615015 1-GRE-SPRITWDG13.200
FDNS	00NR_G15_076	2	16WP	G15_076	TO->FROM	GR ISLD-LNX3345.00 - HOLT.CO3 345.00 345KV CKT 1	720	720	0.04327	100.1508	ATCHSNT3 345.00 - BOONEVILLE 345KV CKT 1
FDNS	00NR_G15_076	2	16WP	G15_076	TO->FROM	GR ISLD-LNX3345.00 - HOLT.CO3 345.00 345KV CKT 1	720	720	0.03492	100.1313	AXTELL - POST ROCK 345KV CKT 1
FDNS	00NR_G15_076	2	16WP	G15_076	TO->FROM	GR ISLD-LNX3345.00 - HOLT.CO3 345.00 345KV CKT 1	720	720	0.0421	100.1274	GEN660016 1-B_H WIND 0.7000
FDNS	00NR_G15_076	2	16WP	G15_076	TO->FROM	GR ISLD-LNX3345.00 - HOLT.CO3 345.00 345KV CKT 1	720	720	0.0421	100.1211	GEN652907 1-G09_007IS_3 0.6900
FDNS	00NR_G15_076	2	16WP	G15_076	TO->FROM	GR ISLD-LNX3345.00 - HOLT.CO3 345.00 345KV CKT 1	720	720	0.0421	100.1208	GEN600017 C-LS POWER CT
FDNS	00NR_G15_076	2	16WP	G15_076	TO->FROM	GR ISLD-LNX3345.00 - HOLT.CO3 345.00 345KV CKT 1	720	720	0.0421	100.1196	GEN615052 1-CAMBRIDGE GENERATING STATION
FDNS	00NR_G15_076	2	16WP	G15_076	TO->FROM	GR ISLD-LNX3345.00 - HOLT.CO3 345.00 345KV CKT 1	720	720	0.0421	100.0792	GEN681522 3-GENOA 3
FDNS	00NR_G15_076	2	16WP	G15_076	TO->FROM	GR ISLD-LNX3345.00 - HOLT.CO3 345.00 345KV CKT 1	720	720	0.0421	100.0506	GEN662101 1-WESSINGTON190.5750
FDNS	00NR_G15_076	2	16WP	G15_076	TO->FROM	GR ISLD-LNX3345.00 - HOLT.CO3 345.00 345KV CKT 1	720	720	0.04114	100	MATHWSN7 345.00 - TATONGA7 345.00 345KV CKT 1
FDNS	00NR_G15_076	2	16WP	G15_076	TO->FROM	GR ISLD-LNX3345.00 - HOLT.CO3 345.00 345KV CKT 1	720	720	0.0421	99.9	GEN615021 1-GRE-ER 14G 16.000
FDNS	00NR_G15_076	2	16WP	G15_076	TO->FROM	GR ISLD-LNX3345.00 - HOLT.CO3 345.00 345KV CKT 1	720	720	0.0421	99.9	GEN659353 1-DEERCREK CTG18.000
FDNS	00NR_G15_076	2	16WP	G15_076	TO->FROM	GR ISLD-LNX3345.00 - HOLT.CO3 345.00 345KV CKT 1	720	720	0.0421	99.9	GEN910006 1-G12_012IS_3 0.6900

SOLUTION	GROUP	SCENARIO	SEASON	SOURCE	DIRECTION	MONITORED ELEMENT	RATEA (MVA)	RATEB(MVA)	TDF	TC%LOADING (% MVA)	CONTINGENCY
FDNS	00NR_G15_076	2	16WP	G15_076	TO->FROM	GR ISLD-LNX3345.00 - HOLT.CO3 345.00 345KV CKT 1	720	720	0.03765	99.9	MINGO - RED WILLOW 345KV CKT 1
FDNS	00NR_G15_076	2	16WP	G15_076	TO->FROM	GR ISLD-LNX3345.00 - HOLT.CO3 345.00 345KV CKT 1	720	720	0.03765	99.9	MINGO - RED WILLOW 345KV CKT 1
FDNS	00NR_G15_076	2	16WP	G15_076	TO->FROM	GR ISLD-LNX3345.00 - HOLT.CO3 345.00 345KV CKT 1	720	720	0.0421	99.8	GEN672303 3-BOUNDARY DAM GENERATOR 3
FDNS	00NR_G15_076	2	16WP	G15_076	TO->FROM	GR ISLD-LNX3345.00 - HOLT.CO3 345.00 345KV CKT 1	720	720	0.0421	99.8	GEN672304 4-BOUNDARY DAM GENERATOR 4
FDNS	00NR_G15_076	2	16WP	G15_076	TO->FROM	GR ISLD-LNX3345.00 - HOLT.CO3 345.00 345KV CKT 1	720	720	0.0421	99.8	GEN672305 5-BOUNDARY DAM GENERATOR 5
FDNS	00NR_G15_076	2	16WP	G15_076	TO->FROM	GR ISLD-LNX3345.00 - HOLT.CO3 345.00 345KV CKT 1	720	720	0.04409	99.7	MOORE - PAULINE 345KV CKT 1
FDNS	00NR_G15_076	2	16WP	G15_076	TO->FROM	GR ISLD-LNX3345.00 - HOLT.CO3 345.00 345KV CKT 1	720	720	0.0421	99.7	BISONMP4 230.00 - SQUARE BUTTE 230KV CKT 1
FDNS	00NR_G15_076	2	16WP	G15_076	TO->FROM	GR ISLD-LNX3345.00 - HOLT.CO3 345.00 345KV CKT 1	720	720	0.0421	99.6	GEN652460 4-GARRISON
FDNS	00NR_G15_076	2	16WP	G15_076	TO->FROM	GR ISLD-LNX3345.00 - HOLT.CO3 345.00 345KV CKT 1	720	720	0.0421	99.6	GEN652461 5-GARRISON
FDNS	00NR_G15_076	2	16WP	G15_076	TO->FROM	GR ISLD-LNX3345.00 - HOLT.CO3 345.00 345KV CKT 1	720	720	0.0421	99.6	GEN672392 1-NBECGT1G 18.000
FDNS	00NR_G15_076	2	16WP	G15_076	TO->FROM	GR ISLD-LNX3345.00 - HOLT.CO3 345.00 345KV CKT 1	720	720	0.0421	99.5	COYOTE 345/24.0KV TRANSFORMER CKT 1
FDNS	00NR_G15_076	2	16WP	G15_076	TO->FROM	GR ISLD-LNX3345.00 - HOLT.CO3 345.00 345KV CKT 1	720	720	0.0421	99.5	GEN652457 1-GARRISON
FDNS	00NR_G15_076	2	16WP	G15_076	TO->FROM	GR ISLD-LNX3345.00 - HOLT.CO3 345.00 345KV CKT 1	720	720	0.0421	99.5	GEN652458 2-GARRISON
FDNS	00NR_G15_076	2	16WP	G15_076	TO->FROM	GR ISLD-LNX3345.00 - HOLT.CO3 345.00 345KV CKT 1	720	720	0.0421	99.5	GEN652459 3-GARRISON
FDNS	00NR_G15_076	2	16WP	G15_076	TO->FROM	GR ISLD-LNX3345.00 - HOLT.CO3 345.00 345KV CKT 1	720	720	0.0421	99.5	GEN652542 1-BIG BEND
FDNS	00NR_G15_076	2	16WP	G15_076	TO->FROM	GR ISLD-LNX3345.00 - HOLT.CO3 345.00 345KV CKT 1	720	720	0.0421	99.5	GEN659010 4-G07_027IS_2 0.6900
FDNS	00NR_G15_076	2	16WP	G15_076	TO->FROM	GR ISLD-LNX3345.00 - HOLT.CO3 345.00 345KV CKT 1	720	720	0.0421	99.5	GEN659194 1-NDPRAIRWND1W0.6900
FDNS	00NR_G15_078	0	25SP	G15_078	TO->FROM	ALLRED TAP - SHELL C3 TAP 115KV CKT 1	179	179	0.03029	101.7497	P12:115:LCEC:W56.1.HOBBG.LE-LVN
FDNS	00NR_G15_078	0	25SP	G15_078	TO->FROM	ALLRED TAP - SHELL C3 TAP 115KV CKT 1	179	179	0.03029	101.1666	LE-WEST_SUB3115.00 - LEA COUNTY REC-LOVINGTON INTERCHANGE 115KV CKT 1
FDNS	00NR_G15_078	0	25SP	G15_078	FROM->TO	DENVER CITY INTERCHANGE S. - SAN_ANDS_TP3115.00 115KV CKT 1	159	160	0.05377	137.5363	MUSTANG STATION - SEMINOLE 230KV CKT 1
FDNS	00NR_G15_078	0	25SP	G15_078	FROM->TO	DENVER CITY INTERCHANGE S. - SAN_ANDS_TP3115.00 115KV CKT 1	159	160	0.05377	137.5363	MUSTANG STATION - SEMINOLE 230KV CKT 1
FDNS	00NR_G15_078	0	20SP	G15_078	FROM->TO	DENVER CITY INTERCHANGE S. - SAN_ANDS_TP3115.00 115KV CKT 1	159	160	0.05507	116.3768	MUSTANG STATION - SEMINOLE 230KV CKT 1
FDNS	00NR_G15_078	0	20SP	G15_078	FROM->TO	DENVER CITY INTERCHANGE S. - SAN_ANDS_TP3115.00 115KV CKT 1	159	160	0.05507	116.3768	MUSTANG STATION - SEMINOLE 230KV CKT 1
FDNS	00NR_G15_078	0	17SP	G15_078	FROM->TO	DENVER CITY INTERCHANGE S. - SAN_ANDS_TP3115.00 115KV CKT 1	159	160	0.05595	114.0064	MUSTANG STATION - SEMINOLE 230KV CKT 1
FDNS	00NR_G15_078	0	17SP	G15_078	FROM->TO	DENVER CITY INTERCHANGE S. - SAN_ANDS_TP3115.00 115KV CKT 1	159	160	0.05595	114.0064	MUSTANG STATION - SEMINOLE 230KV CKT 1
FDNS	00NR_G15_078	0	20WP	G15_078	FROM->TO	DENVER CITY INTERCHANGE S. - SAN_ANDS_TP3115.00 115KV CKT 1	165	177	0.05511	102.403	MUSTANG STATION - SEMINOLE 230KV CKT 1
FDNS	00NR_G15_078	0	20WP	G15_078	FROM->TO	DENVER CITY INTERCHANGE S. - SAN_ANDS_TP3115.00 115KV CKT 1	165	177	0.05511	102.403	MUSTANG STATION - SEMINOLE 230KV CKT 1
FDNS	00NR_G15_078	0	25SP	G15_078	FROM->TO	DENVER CITY INTERCHANGE S. - SHELL C2 SUB 115KV CKT 1	159	175	0.03029	113.9616	P12:115:LCEC:W56.1.HOBBG.LE-LVN
FDNS	00NR_G15_078	0	25SP	G15_078	FROM->TO	DENVER CITY INTERCHANGE S. - SHELL C2 SUB 115KV CKT 1	159	175	0.03029	113.3568	LE-WEST_SUB3115.00 - LEA COUNTY REC-LOVINGTON INTERCHANGE 115KV CKT 1
FDNS	00NR_G15_078	0	25SP	G15_078	FROM->TO	SAN_ANDS_TP3115.00 - SEMINOLE 115KV CKT 1	159	160	0.05377	117.5279	MUSTANG STATION - SEMINOLE 230KV CKT 1
FDNS	00NR_G15_078	0	25SP	G15_078	FROM->TO	SAN_ANDS_TP3115.00 - SEMINOLE 115KV CKT 1	159	160	0.05377	117.5279	MUSTANG STATION - SEMINOLE 230KV CKT 1
FDNS	00NR_G15_078	0	25SP	G15_078	FROM->TO	SHELL C2 SUB - SHELL C3 TAP 115KV CKT 1	179	179	0.03029	104.4559	P12:115:LCEC:W56.1.HOBBG.LE-LVN
FDNS	00NR_G15_078	0	25SP	G15_078	FROM->TO	SHELL C2 SUB - SHELL C3 TAP 115KV CKT 1	179	179	0.03029	103.8702	LE-WEST_SUB3115.00 - LEA COUNTY REC-LOVINGTON INTERCHANGE 115KV CKT 1
FDNS	00NR_G15_078	2	25SP	G15_078	TO->FROM	GAINES COUNTY INTERCHANGE - SEMINOLE 115KV CKT 1	159.95	159.95	0.04523	104.6117	DOSS INTERCHANGE - SEMINOLE 115KV CKT 1
FDNS	00NR_G15_078	2	25SP	G15_078	TO->FROM	GAINES COUNTY INTERCHANGE - SEMINOLE 115KV CKT 1	159.95	159.95	0.04523	104.6117	DOSS INTERCHANGE - SEMINOLE 115KV CKT 1
FDNSLock-Blown up	06ALL_G15_079	0	20L	G15_079		Non-Converged Contingency	1022	1124	0.24242	-	G14-074T 345.00 - OKLAUNION 345KV CKT 1
FDNSLock-Blown up	06ALL_G15_079	0	20WP	G15_079		Non-Converged Contingency	1022	1124	0.27235	-	G14-074T 345.00 - OKLAUNION 345KV CKT 1
FDNS	00NR_G15_079	0	25SP	G15_079	TO->FROM	JONES STATION - TUCO INTERCHANGE 230KV CKT 1	343.79	343.79	0.03348	114.4618	CARLISLE INTERCHANGE - TUCO INTERCHANGE 230KV CKT 1
FDNS	00NR_G15_079	0	25SP	G15_079	TO->FROM	JONES STATION - TUCO INTERCHANGE 230KV CKT 1	343.79	343.79	0.03348	114.4618	CARLISLE INTERCHANGE - TUCO INTERCHANGE 230KV CKT 1
FDNS	00NR_G15_079	0	25SP	G15_079	FROM->TO	MUSTANG STATION (ENRCO 136161) 230/115/13.2KV TRANSFORMER CKT 1	250	288	0.0318	99.7	MUSTANG STATION - SEMINOLE 230KV CKT 1
FDNS	00NR_G15_079	0	25SP	G15_079	FROM->TO	MUSTANG STATION (ENRCO 136161) 230/115/13.2KV TRANSFORMER CKT 1	250	288	0.0318	99.7	MUSTANG STATION - SEMINOLE 230KV CKT 1
FDNS	00NR_G15_079	0	25SP	G15_079	FROM->TO	MUSTANG STATION (ENRCO 136161) 230/115/13.2KV TRANSFORMER CKT 1	250	288	0.0318	99.5	MUSTANG STATION - SEMINOLE 230KV CKT 1
FDNS	00NR_G15_079	0	25SP	G15_079	FROM->TO	MUSTANG STATION (ENRCO 136161) 230/115/13.2KV TRANSFORMER CKT 1	250	288	0.0318	99.5	MUSTANG STATION - SEMINOLE 230KV CKT 1
FDNS	00NR_G15_079	2	25SP	G15_079	TO->FROM	JONES STATION - TUCO INTERCHANGE 230KV CKT 1	343.79	343.79	0.03348	114.3044	CARLISLE INTERCHANGE - TUCO INTERCHANGE 230KV CKT 1
FDNS	00NR_G15_079	2	25SP	G15_079	TO->FROM	JONES STATION - TUCO INTERCHANGE 230KV CKT 1	343.79	343.79	0.03348	114.3044	CARLISLE INTERCHANGE - TUCO INTERCHANGE 230KV CKT 1
FDNS	00NR_G15_079	2	25SP	G15_079	FROM->TO	MUSTANG STATION (ENRCO 136161) 230/115/13.2KV TRANSFORMER CKT 1	250	288	0.0318	99.7	MUSTANG STATION - SEMINOLE 230KV CKT 1
FDNS	00NR_G15_079	2	25SP	G15_079	FROM->TO	MUSTANG STATION (ENRCO 136161) 230/115/13.2KV TRANSFORMER CKT 1	250	288	0.0318	99.7	MUSTANG STATION - SEMINOLE 230KV CKT 1
FDNS	00NR_G15_079	2	25SP	G15_079	FROM->TO	MUSTANG STATION (ENRCO 136161) 230/115/13.2KV TRANSFORMER CKT 1	250	288	0.0318	99.5	MUSTANG STATION - SEMINOLE 230KV CKT 1
FDNS	00NR_G15_079	2	25SP	G15_079	FROM->TO	MUSTANG STATION (ENRCO 136161) 230/115/13.2KV TRANSFORMER CKT 1	250	288	0.0318	99.5	MUSTANG STATION - SEMINOLE 230KV CKT 1
FDNSLock-Blown up	06ALL_G15_080	0	20L	G15_080		Non-Converged Contingency	1022	1124	0.24242	-	G14-074T 345.00 - OKLAUNION 345KV CKT 1
FDNSLock-Blown up	06ALL_G15_080	0	20WP	G15_080		Non-Converged Contingency	1022	1124	0.27235	-	G14-074T 345.00 - OKLAUNION 345KV CKT 1
FDNS	00NR_G15_080	0	25SP	G15_080	TO->FROM	JONES STATION - TUCO INTERCHANGE 230KV CKT 1	343.79	343.79	0.03348	114.4618	CARLISLE INTERCHANGE - TUCO INTERCHANGE 230KV CKT 1
FDNS	00NR_G15_080	0	25SP	G15_080	TO->FROM	JONES STATION - TUCO INTERCHANGE 230KV CKT 1	343.79	343.79	0.03348	114.4618	CARLISLE INTERCHANGE - TUCO INTERCHANGE 230KV CKT 1
FDNS	00NR_G15_080	0	25SP	G15_080	FROM->TO	MUSTANG STATION (ENRCO 136161) 230/115/13.2KV TRANSFORMER CKT 1	250	288	0.0318	99.7	MUSTANG STATION - SEMINOLE 230KV CKT 1
FDNS	00NR_G15_080	0	25SP	G15_080	FROM->TO	MUSTANG STATION (ENRCO 136161) 230/115/13.2KV TRANSFORMER CKT 1	250	288	0.0318	99.7	MUSTANG STATION - SEMINOLE 230KV CKT 1
FDNS	00NR_G15_080	0	25SP	G15_080	FROM->TO	MUSTANG STATION (ENRCO 136161) 230/115/13.2KV TRANSFORMER CKT 1	250	288	0.0318	99.5	MUSTANG STATION - SEMINOLE 230KV CKT 1
FDNS	00NR_G15_080	0	25SP	G15_080	FROM->TO	MUSTANG STATION (ENRCO 136161) 230/115/13.2KV TRANSFORMER CKT 1	250	288	0.0318	99.5	MUSTANG STATION - SEMINOLE 230KV CKT 1
FDNS	00NR_G15_080	2	25SP	G15_080	TO->FROM	JONES STATION - TUCO INTERCHANGE 230KV CKT 1	343.79	343.79	0.03348	114.3044	CARLISLE INTERCHANGE - TUCO INTERCHANGE 230KV CKT 1
FDNS	00NR_G15_080	2	25SP	G15_080	TO->FROM	JONES STATION - TUCO INTERCHANGE 230KV CKT 1	343.79	343.79	0.03348	114.3044	CARLISLE INTERCHANGE - TUCO INTERCHANGE 230KV CKT 1
FDNS	00NR_G15_080	2	25SP	G15_080	FROM->TO	MUSTANG STATION (ENRCO 136161) 230/115/13.2KV TRANSFORMER CKT 1	250	288	0.0318	99.7	MUSTANG STATION - SEMINOLE 230KV CKT 1
FDNS	00NR_G15_080	2	25SP	G15_080	FROM->TO	MUSTANG STATION (ENRCO 136161) 230/115/13.2KV TRANSFORMER CKT 1	250	288	0.0318	99.7	MUSTANG STATION - SEMINOLE 230KV CKT 1
FDNS	00NR_G15_080	2	25SP	G15_080	FROM->TO	MUSTANG STATION (ENRCO 136161) 230/115/13.2KV TRANSFORMER CKT 1	250	288	0.0318	99.5	MUSTANG STATION - SEMINOLE 230KV CKT 1
FDNS	00NR_G15_080	2	25SP	G15_080	FROM->TO	MUSTANG STATION (ENRCO 136161) 230/115/13.2KV TRANSFORMER CKT 1	250	288	0.0318	99.5	MUSTANG STATION - SEMINOLE 230KV CKT 1
FDNS	01NR_G15_081	0	20L	G15_081	TO->FROM	FPL SWITCH - WOODWARD 138KV CKT 1	133	153	0.09778	133.9025	MATHWSN7 345.00 - TATONGA7 345.00 345KV CKT 1
FDNS	01ALL_G15_081	0	20WP	G15_081	TO->FROM	MATHWSN7 345.00 - TATONGA7 345.00 345KV CKT 1	1195	1195	0.42993	111.8366	THISTLE7 345.00 - WOODWARD DISTRICT EHV 345KV CKT 1
FDNS	01ALL_G15_081	0	20WP	G15_081	TO->FROM	MATHWSN7 345.00 - TATONGA7 345.00 345KV CKT 1	1195	1195	0.42993	111.8366	THISTLE7 345.00 - WOODWARD DISTRICT EHV 345KV CKT 1
FDNS	01ALL_G15_081	0	20WP	G15_081	TO->FROM	MATHWSN7 345.00 - TATONGA7 345.00 345KV CKT 1	1195	1195	0.42993	111.8366	THISTLE7 345.00 - WOODWARD DISTRICT EHV 345KV CKT 2
FDNS	01ALL_G15_081	0	20WP	G15_081	TO->FROM	MATHWSN7 345.00 - TATONGA7 345.00 345KV CKT 1	1195	1195	0.42993	111.8366	THISTLE7 345.00 - WOODWARD DISTRICT EHV 345KV CKT 2
FDNS	01ALL_G15_081	0	20WP	G15_081	TO->FROM	MATHWSN7 345.00 - TATONGA7 345.00 345KV CKT 1	1195	1195	0.40601	109.2083	LAWTON EASTSIDE - OKLAUNION 345KV CKT 1
FDNS	01ALL_G15_081	0	20WP	G15_081	TO->FROM	MATHWSN7 345.00 - TATONGA7 345.00 345KV CKT 1	1195	1195	0.40601	109.2083	LAWTON EASTSIDE - OKLAUNION 345KV CKT 1
FDNS	01ALL_G15_081	0	16WP	G15_081	TO->FROM	MATHWSN7 345.00 - TATONGA7 345.00 345KV CKT 1	1195	1195	0.43837	106.5938	THISTLE7 345.00 - WOODWARD DISTRICT EHV 345KV CKT 1
FDNS	01ALL_G15_081	0	16WP	G15_081	TO->FROM	MATHWSN7 345.00 - TATONGA7 345.00 345KV CKT 1	1195	1195	0.43837	106.5938	THISTLE7 345.00 - WOODWARD DISTRICT EHV 345KV CKT 1
FDNS	01ALL_G15_081	0	16WP	G15_081	TO->FROM	MATHWSN7 345.00 - TATONGA7 345.00 345KV CKT 1	1195	1195	0.43837	106.5938	THISTLE7 345.00 - WOODWARD DISTRICT EHV 345KV CKT 2

SOLUTION	GROUP	SCENARIO	SEASON	SOURCE	DIRECTION	MONITORED ELEMENT	RATEA (MVA)	RATEB(MVA)	TDF	TC%LOADING (% MVA)	CONTINGENCY
FDNS	01ALL_G15_081	0	16WP	G15_081	TO->FROM	MATHWSN7 345.00 - TATONGA7 345.00 345KV CKT 1	1195	1195	0.43837	106.5938	THISTLE7 345.00 - WOODWARD DISTRICT EHV 345KV CKT 2
FDNS	01ALL_G15_081	0	20WP	G15_081	TO->FROM	MATHWSN7 345.00 - TATONGA7 345.00 345KV CKT 1	1195	1195	0.41047	106.5016	G1524G1525 345.00 - THISTLE7 345.00 345KV CKT 1
FDNS	01ALL_G15_081	0	20WP	G15_081	TO->FROM	MATHWSN7 345.00 - TATONGA7 345.00 345KV CKT 1	1195	1195	0.41047	106.5016	G1524G1525 345.00 - THISTLE7 345.00 345KV CKT 2
FDNS	01ALL_G15_081	0	20WP	G15_081	TO->FROM	MATHWSN7 345.00 - TATONGA7 345.00 345KV CKT 1	1195	1195	0.41361	106.4292	BORDER 7345.00 - TUCO_2 345.00 345KV CKT 1
FDNS	01ALL_G15_081	0	20WP	G15_081	TO->FROM	MATHWSN7 345.00 - TATONGA7 345.00 345KV CKT 1	1195	1195	0.41211	105.9931	Hitchland Interchange - WALKTAP7 345.00 345KV CKT 1
FDNS	01ALL_G15_081	0	20WP	G15_081	TO->FROM	MATHWSN7 345.00 - TATONGA7 345.00 345KV CKT 1	1195	1195	0.41211	105.9931	Hitchland Interchange - WALKTAP7 345.00 345KV CKT 1
FDNS	01ALL_G15_081	0	20WP	G15_081	TO->FROM	MATHWSN7 345.00 - TATONGA7 345.00 345KV CKT 1	1195	1195	0.41211	105.9691	P12:345:SPS:J07.1.FINN.HITCH
FDNS	01ALL_G15_081	0	20WP	G15_081	TO->FROM	MATHWSN7 345.00 - TATONGA7 345.00 345KV CKT 1	1195	1195	0.41361	105.4576	BORDER 7345.00 - WOODWARD DISTRICT EHV 345KV CKT 1
FDNS	01ALL_G15_081	0	20WP	G15_081	TO->FROM	MATHWSN7 345.00 - TATONGA7 345.00 345KV CKT 1	1195	1195	0.40274	104.8213	CHISHOLM6 230.00 - SWEETWATER 230KV CKT 1
FDNS	01ALL_G15_081	0	20WP	G15_081	TO->FROM	MATHWSN7 345.00 - TATONGA7 345.00 345KV CKT 1	1195	1195	0.40432	104.7741	DEWEY - SOUTHARD 138KV CKT 1
FDNS	01ALL_G15_081	0	20WP	G15_081	TO->FROM	MATHWSN7 345.00 - TATONGA7 345.00 345KV CKT 1	1195	1195	0.39657	104.6593	CIMARRON - MINCO 345KV CKT 1
FDNS	01ALL_G15_081	0	20WP	G15_081	TO->FROM	MATHWSN7 345.00 - TATONGA7 345.00 345KV CKT 1	1195	1195	0.40313	104.6013	P12:230:AEPW:ELKCITY6:SWEETWT6
FDNS	01ALL_G15_081	0	20WP	G15_081	TO->FROM	MATHWSN7 345.00 - TATONGA7 345.00 345KV CKT 1	1195	1195	0.40432	104.5608	ROMAN NOSE - SOUTHARD 138KV CKT 1
FDNS	01ALL_G15_081	0	20L	G15_081	TO->FROM	MATHWSN7 345.00 - TATONGA7 345.00 345KV CKT 1	1195	1195	0.43296	104.4842	THISTLE7 345.00 - WOODWARD DISTRICT EHV 345KV CKT 1
FDNS	01ALL_G15_081	0	20L	G15_081	TO->FROM	MATHWSN7 345.00 - TATONGA7 345.00 345KV CKT 1	1195	1195	0.43296	104.4842	THISTLE7 345.00 - WOODWARD DISTRICT EHV 345KV CKT 1
FDNS	01ALL_G15_081	0	20L	G15_081	TO->FROM	MATHWSN7 345.00 - TATONGA7 345.00 345KV CKT 1	1195	1195	0.43296	104.4842	THISTLE7 345.00 - WOODWARD DISTRICT EHV 345KV CKT 2
FDNS	01ALL_G15_081	0	20L	G15_081	TO->FROM	MATHWSN7 345.00 - TATONGA7 345.00 345KV CKT 1	1195	1195	0.43296	104.4842	THISTLE7 345.00 - WOODWARD DISTRICT EHV 345KV CKT 2
FDNS	01ALL_G15_081	0	20WP	G15_081	TO->FROM	MATHWSN7 345.00 - TATONGA7 345.00 345KV CKT 1	1195	1195	0.40429	104.1578	G13-010T 345.00 - POST ROCK 345KV CKT 1
FDNS	01ALL_G15_081	0	20WP	G15_081	TO->FROM	MATHWSN7 345.00 - TATONGA7 345.00 345KV CKT 1	1195	1195	0.40695	104.0965	IODINE - WOODWARD EHV 138KV CKT 1
FDNS	01ALL_G15_081	0	20WP	G15_081	TO->FROM	MATHWSN7 345.00 - TATONGA7 345.00 345KV CKT 1	1195	1195	0.40731	104.0627	FINNEY SWITCHING STATION - HOLCOMB 345KV CKT 1
FDNS	01ALL_G15_081	0	20WP	G15_081	TO->FROM	MATHWSN7 345.00 - TATONGA7 345.00 345KV CKT 1	1195	1195	0.40731	104.0627	FINNEY SWITCHING STATION - HOLCOMB 345KV CKT 1
FDNS	01ALL_G15_081	0	20WP	G15_081	TO->FROM	MATHWSN7 345.00 - TATONGA7 345.00 345KV CKT 1	1195	1195	0.40429	104.0484	G13-010T 345.00 - SPEARVILLE 345KV CKT 1
FDNS	01ALL_G15_081	0	20WP	G15_081	TO->FROM	MATHWSN7 345.00 - TATONGA7 345.00 345KV CKT 1	1195	1195	0.4076	104.0207	FPL SWITCH - MOORELAND 138KV CKT 1
FDNS	01ALL_G15_081	0	20WP	G15_081	TO->FROM	MATHWSN7 345.00 - TATONGA7 345.00 345KV CKT 1	1195	1195	0.40695	103.9494	DEWEY - IODINE 138KV CKT 1
FDNS	01ALL_G15_081	0	20WP	G15_081	TO->FROM	MATHWSN7 345.00 - TATONGA7 345.00 345KV CKT 1	1195	1195	0.40005	103.8736	GEN509416 1-TURK GENERATION
FDNS	01ALL_G15_081	0	20WP	G15_081	TO->FROM	MATHWSN7 345.00 - TATONGA7 345.00 345KV CKT 1	1195	1195	0.40005	103.8709	GEN514806 1-SOONER UNIT 2
FDNS	01ALL_G15_081	0	20WP	G15_081	TO->FROM	MATHWSN7 345.00 - TATONGA7 345.00 345KV CKT 1	1195	1195	0.40005	103.8392	GEN520947 1-HUGO1
FDNS	01ALL_G15_081	0	20WP	G15_081	TO->FROM	MATHWSN7 345.00 - TATONGA7 345.00 345KV CKT 1	1195	1195	0.40005	103.7749	GEN509403 1-PIRKEY GENERATION
FDNS	01ALL_G15_081	0	20WP	G15_081	TO->FROM	MATHWSN7 345.00 - TATONGA7 345.00 345KV CKT 1	1195	1195	0.40145	103.7659	GRAPEVINE INTERCHANGE - NICHOLS STATION 230KV CKT 1
FDNS	01ALL_G15_081	0	20WP	G15_081	TO->FROM	MATHWSN7 345.00 - TATONGA7 345.00 345KV CKT 1	1195	1195	0.40145	103.7659	GRAPEVINE INTERCHANGE - NICHOLS STATION 230KV CKT 1
FDNS	01ALL_G15_081	0	20WP	G15_081	TO->FROM	MATHWSN7 345.00 - TATONGA7 345.00 345KV CKT 1	1195	1195	0.40511	103.7074	MINGO - SETAB 345KV CKT 1
FDNS	01ALL_G15_081	0	20WP	G15_081	TO->FROM	MATHWSN7 345.00 - TATONGA7 345.00 345KV CKT 1	1195	1195	0.40511	103.7074	MINGO - SETAB 345KV CKT 1
FDNS	01ALL_G15_081	0	20WP	G15_081	TO->FROM	MATHWSN7 345.00 - TATONGA7 345.00 345KV CKT 1	1195	1195	0.40005	103.6811	GEN336821 1-GRAND GULF UNIT
FDNS	01ALL_G15_081	0	20WP	G15_081	TO->FROM	MATHWSN7 345.00 - TATONGA7 345.00 345KV CKT 1	1195	1195	0.40005	103.657	GEN514805 1-SOONER UNIT 1
FDNS	01ALL_G15_081	0	20WP	G15_081	TO->FROM	MATHWSN7 345.00 - TATONGA7 345.00 345KV CKT 1	1195	1195	0.40601	103.6332	G14-074T 345.00 - OKLAUNION 345KV CKT 1
FDNS	01ALL_G15_081	0	20WP	G15_081	TO->FROM	MATHWSN7 345.00 - TATONGA7 345.00 345KV CKT 1	1195	1195	0.40005	103.6218	GEN337911 1-ARKANSAS NUCLEAR ONE UNIT #2
FDNS	01ALL_G15_081	0	20WP	G15_081	TO->FROM	MATHWSN7 345.00 - TATONGA7 345.00 345KV CKT 1	1195	1195	0.40731	103.5983	FINNEY SWITCHING STATION - WALKTAP7 345.00 345KV CKT 1
FDNS	01ALL_G15_081	0	20WP	G15_081	TO->FROM	MATHWSN7 345.00 - TATONGA7 345.00 345KV CKT 1	1195	1195	0.40731	103.5983	FINNEY SWITCHING STATION - WALKTAP7 345.00 345KV CKT 1
FDNS	01ALL_G15_081	0	20WP	G15_081	TO->FROM	MATHWSN7 345.00 - TATONGA7 345.00 345KV CKT 1	1195	1195	0.40005	103.5603	GEN515226 1-MUSKOGEE 6G
FDNS	01ALL_G15_081	0	20WP	G15_081	TO->FROM	MATHWSN7 345.00 - TATONGA7 345.00 345KV CKT 1	1195	1195	0.40005	103.5437	GEN515602 1-KNGFSR12 0.7000
FDNS	01ALL_G15_081	0	20WP	G15_081	TO->FROM	MATHWSN7 345.00 - TATONGA7 345.00 345KV CKT 1	1195	1195	0.40005	103.5281	GEN562587 1-G14_056_3 0.6900
FDNS	01ALL_G15_081	0	20WP	G15_081	TO->FROM	MATHWSN7 345.00 - TATONGA7 345.00 345KV CKT 1	1195	1195	0.40005	103.4003	GEN336153 1-WATERFORD UNIT#3
FDNS	01ALL_G15_081	0	20WP	G15_081	TO->FROM	MATHWSN7 345.00 - TATONGA7 345.00 345KV CKT 1	1195	1195	0.40005	103.3957	GEN509406 1-WELSH #3
FDNS	01ALL_G15_081	0	20WP	G15_081	TO->FROM	MATHWSN7 345.00 - TATONGA7 345.00 345KV CKT 1	1195	1195	0.40005	103.3956	GEN509404 1-WELSH #1
FDNS	01ALL_G15_081	0	20WP	G15_081	TO->FROM	MATHWSN7 345.00 - TATONGA7 345.00 345KV CKT 1	1195	1195	0.40005	103.3852	GEN515042 1-SEMINOLE 3G
FDNS	01ALL_G15_081	0	20WP	G15_081	TO->FROM	MATHWSN7 345.00 - TATONGA7 345.00 345KV CKT 1	1195	1195	0.40005	103.3758	GEN511843 1-RIVERSIDE STATION #2
FDNS	01ALL_G15_081	0	20WP	G15_081	TO->FROM	MATHWSN7 345.00 - TATONGA7 345.00 345KV CKT 1	1195	1195	0.40005	103.3702	GEN515223 1-MUSKOGEE 4G
FDNS	01ALL_G15_081	0	20WP	G15_081	TO->FROM	MATHWSN7 345.00 - TATONGA7 345.00 345KV CKT 1	1195	1195	0.40005	103.3701	GEN515225 1-MUSKOGEE 5G
FDNS	01ALL_G15_081	0	20WP	G15_081	TO->FROM	MATHWSN7 345.00 - TATONGA7 345.00 345KV CKT 1	1195	1195	0.40421	103.3371	AXTELL - POST ROCK 345KV CKT 1
FDNS	01ALL_G15_081	0	20WP	G15_081	TO->FROM	MATHWSN7 345.00 - TATONGA7 345.00 345KV CKT 1	1195	1195	0.40005	103.3221	GEN337910 1-ARKANSAS NUCLEAR ONE UNIT #1
FDNS	01ALL_G15_081	0	20WP	G15_081	TO->FROM	MATHWSN7 345.00 - TATONGA7 345.00 345KV CKT 1	1195	1195	0.40377	103.2655	HOLCOMB - SETAB 345KV CKT 1
FDNS	01ALL_G15_081	0	20WP	G15_081	TO->FROM	MATHWSN7 345.00 - TATONGA7 345.00 345KV CKT 1	1195	1195	0.40377	103.2655	HOLCOMB - SETAB 345KV CKT 1
FDNS	01ALL_G15_081	0	20WP	G15_081	TO->FROM	MATHWSN7 345.00 - TATONGA7 345.00 345KV CKT 1	1195	1195	0.40005	103.2588	GEN501801 1-DOLET HILLS UNIT1
FDNS	01ALL_G15_081	0	20WP	G15_081	TO->FROM	MATHWSN7 345.00 - TATONGA7 345.00 345KV CKT 1	1195	1195	0.40124	103.2186	MOORELAND - ROSE_VALLEY 138.00 138KV CKT 1
FDNS	01ALL_G15_081	0	20WP	G15_081	TO->FROM	MATHWSN7 345.00 - TATONGA7 345.00 345KV CKT 1	1195	1195	0.40005	103.2083	GEN335831 1-RIVERBEND UNIT#1
FDNS	01ALL_G15_081	0	20WP	G15_081	TO->FROM	MATHWSN7 345.00 - TATONGA7 345.00 345KV CKT 1	1195	1195	0.40274	103.1992	P12:230:AEPW-SPS:SWEETWT6:WHEELER 6
FDNS	01ALL_G15_081	0	20WP	G15_081	TO->FROM	MATHWSN7 345.00 - TATONGA7 345.00 345KV CKT 1	1195	1195	0.40274	103.1992	STATELINE INTERCHANGE - STLN-DEMARC6 230KV CKT 1
FDNS	01ALL_G15_081	0	20WP	G15_081	TO->FROM	MATHWSN7 345.00 - TATONGA7 345.00 345KV CKT 1	1195	1195	0.40274	103.196	STLN-DEMARC6 - SWEETWATER 230KV CKT 1
FDNS	01ALL_G15_081	0	20WP	G15_081	TO->FROM	MATHWSN7 345.00 - TATONGA7 345.00 345KV CKT 1	1195	1195	0.40005	103.1737	P12:345:GRDA:CHOUTEAU-SPORTSMANACRES
FDNS	01ALL_G15_081	0	20WP	G15_081	TO->FROM	MATHWSN7 345.00 - TATONGA7 345.00 345KV CKT 1	1195	1195	0.40005	103.162	GEN515443 1-MNCOWND1 0.7000
FDNS	01ALL_G15_081	0	20WP	G15_081	TO->FROM	MATHWSN7 345.00 - TATONGA7 345.00 345KV CKT 1	1195	1195	0.40124	103.1069	NOEL_SW 138.00 - ROSE_VALLEY 138.00 138KV CKT 1
FDNS	01ALL_G15_081	0	20WP	G15_081	TO->FROM	MATHWSN7 345.00 - TATONGA7 345.00 345KV CKT 1	1195	1195	0.40178	103.0994	GLASS MOUNTAIN - MOORELAND 138KV CKT 1
FDNS	01ALL_G15_081	0	20WP	G15_081	TO->FROM	MATHWSN7 345.00 - TATONGA7 345.00 345KV CKT 1	1195	1195	0.403	103.0793	G1524G1525 345.00 - WICHITA 345KV CKT 1
FDNS	01ALL_G15_081	0	20WP	G15_081	TO->FROM	MATHWSN7 345.00 - TATONGA7 345.00 345KV CKT 1	1195	1195	0.403	103.0793	G1524G1525 345.00 - WICHITA 345KV CKT 2
FDNS	01ALL_G15_081	0	20WP	G15_081	TO->FROM	MATHWSN7 345.00 - TATONGA7 345.00 345KV CKT 1	1195	1195	0.40005	103.0704	GEN515606 1-CANDN11 0.6900
FDNS	01ALL_G15_081	0	20WP	G15_081	TO->FROM	MATHWSN7 345.00 - TATONGA7 345.00 345KV CKT 1	1195	1195	0.40005	103.0704	GEN515607 1-CANDN12 0.6900
FDNS	01ALL_G15_081	0	20WP	G15_081	TO->FROM	MATHWSN7 345.00 - TATONGA7 345.00 345KV CKT 1	1195	1195	0.40641	103.067	MINGO - RED WILLOW 345KV CKT 1
FDNS	01ALL_G15_081	0	20WP	G15_081	TO->FROM	MATHWSN7 345.00 - TATONGA7 345.00 345KV CKT 1	1195	1195	0.40641	103.067	MINGO - RED WILLOW 345KV CKT 1
FDNS	01ALL_G15_081	0	20WP	G15_081	TO->FROM	MATHWSN7 345.00 - TATONGA7 345.00 345KV CKT 1	1195	1195	0.40005	103.0628	GEN509394 1-FLINT CREEK
FDNS	01ALL_G15_081	0	20WP	G15_081	TO->FROM	MATHWSN7 345.00 - TATONGA7 345.00 345KV CKT 1	1195	1195	0.40005	103.0562	GEN511840 1-NORTHEASTERN STATION #3
FDNS	01ALL_G15_081	0	20WP	G15_081	TO->FROM	MATHWSN7 345.00 - TATONGA7 345.00 345KV CKT 1	1195	1195	0.40178	103.0558	CLEO CORNER - GLASS MOUNTAIN 138KV CKT 1
FDNS	01ALL_G15_081	0	20WP	G15_081	TO->FROM	MATHWSN7 345.00 - TATONGA7 345.00 345KV CKT 1	1195	1195	0.40156	103.0535	GRAPEVINE INTERCHANGE - STATELINE INTERCHANGE 230KV CKT 1
FDNS	01ALL_G15_081	0	20WP	G15_081	TO->FROM	MATHWSN7 345.00 - TATONGA7 345.00 345KV CKT 1	1195	1195	0.40156	103.0535	GRAPEVINE INTERCHANGE - STATELINE INTERCHANGE 230KV CKT 1

SOLUTION	GROUP	SCENARIO	SEASON	SOURCE	DIRECTION	MONITORED ELEMENT	RATEA (MVA)	RATEB(MVA)	TDF	TC%LOADING (% MVA)	CONTINGENCY
FDNS	01ALL_G15_081	0	20WP	G15_081	TO->FROM	MATHWSN7 345.00 - TATONGA7 345.00 345KV CKT 1	1195	1195	0.40005	103.0513	GEN515041 1-SEMINOLE 2G
FDNS	01ALL_G15_081	0	20WP	G15_081	TO->FROM	MATHWSN7 345.00 - TATONGA7 345.00 345KV CKT 1	1195	1195	0.40153	103.0496	P12:138:WFEC:MSL14
FDNS	01ALL_G15_081	0	20WP	G15_081	TO->FROM	MATHWSN7 345.00 - TATONGA7 345.00 345KV CKT 1	1195	1195	0.40005	103.0349	GEN515040 1-SEMINOLE 1G
FDNS	01ALL_G15_081	0	20WP	G15_081	TO->FROM	MATHWSN7 345.00 - TATONGA7 345.00 345KV CKT 1	1195	1195	0.40153	103.0035	BEARCAT 138.00 - MOORELAND 138KV CKT 1
FDNS	01ALL_G15_081	0	20WP	G15_081	TO->FROM	MATHWSN7 345.00 - TATONGA7 345.00 345KV CKT 1	1195	1195	0.40005	102.9837	GEN511839 1-NORTHEASTERN STATION #2
FDNS	01ALL_G15_081	0	20WP	G15_081	TO->FROM	MATHWSN7 345.00 - TATONGA7 345.00 345KV CKT 1	1195	1195	0.40005	102.9636	GEN511842 1-RIVERSIDE STATION #1
FDNS	01ALL_G15_081	0	20WP	G15_081	TO->FROM	MATHWSN7 345.00 - TATONGA7 345.00 345KV CKT 1	1195	1195	0.40153	102.9206	BEARCAT 138.00 - NINE MILE 138KV CKT 1
FDNS	01ALL_G15_081	0	20WP	G15_081	TO->FROM	MATHWSN7 345.00 - TATONGA7 345.00 345KV CKT 1	1195	1195	0.40137	102.917	P12:138:WFEC:MSL12
FDNS	01ALL_G15_081	0	20WP	G15_081	TO->FROM	MATHWSN7 345.00 - TATONGA7 345.00 345KV CKT 1	1195	1195	0.40137	102.9023	MOORELAND - PIC4 138.00 138KV CKT 1
FDNS	01ALL_G15_081	0	20WP	G15_081	TO->FROM	MATHWSN7 345.00 - TATONGA7 345.00 345KV CKT 1	1195	1195	0.40137	102.8873	CEDARDALE - PIC4 138.00 138KV CKT 1
FDNS	01ALL_G15_081	0	20WP	G15_081	TO->FROM	MATHWSN7 345.00 - TATONGA7 345.00 345KV CKT 1	1195	1195	0.40005	102.8739	GEN337653 1-WHITE BLUFF UNIT #2
FDNS	01ALL_G15_081	0	20WP	G15_081	TO->FROM	MATHWSN7 345.00 - TATONGA7 345.00 345KV CKT 1	1195	1195	0.40601	102.8649	G14-074T 345.00 - TUCO INTERCHANGE 345KV CKT 1
FDNS	01ALL_G15_081	0	20WP	G15_081	TO->FROM	MATHWSN7 345.00 - TATONGA7 345.00 345KV CKT 1	1195	1195	0.40137	102.8569	CEDARDALE - OKEENE 138KV CKT 1
FDNS	01ALL_G15_081	0	20WP	G15_081	TO->FROM	MATHWSN7 345.00 - TATONGA7 345.00 345KV CKT 1	1195	1195	0.4035	102.8483	POTTER COUNTY INTERCHANGE (WAUK 90343-A) 345/230/13.2KV TRANSFORMER CKT 1
FDNS	01ALL_G15_081	0	20WP	G15_081	TO->FROM	MATHWSN7 345.00 - TATONGA7 345.00 345KV CKT 1	1195	1195	0.4035	102.8483	POTTER COUNTY INTERCHANGE (WAUK 90343-A) 345/230/13.2KV TRANSFORMER CKT 1
FDNS	01ALL_G15_081	0	20WP	G15_081	TO->FROM	MATHWSN7 345.00 - TATONGA7 345.00 345KV CKT 1	1195	1195	0.40157	102.839	FLATRDG3 - HARPER 138KV CKT 1
FDNS	01ALL_G15_081	0	20WP	G15_081	TO->FROM	MATHWSN7 345.00 - TATONGA7 345.00 345KV CKT 1	1195	1195	0.40157	102.839	FLATRDG3 - HARPER 138KV CKT 1
FDNS	01ALL_G15_081	0	20WP	G15_081	TO->FROM	MATHWSN7 345.00 - TATONGA7 345.00 345KV CKT 1	1195	1195	0.40491	102.8037	BENTON - WICHITA 345KV CKT 1
FDNS	01ALL_G15_081	0	20WP	G15_081	TO->FROM	MATHWSN7 345.00 - TATONGA7 345.00 345KV CKT 1	1195	1195	0.40153	102.7784	MOREWOOD SW - NINE MILE 138KV CKT 1
FDNS	01ALL_G15_081	0	20WP	G15_081	TO->FROM	MATHWSN7 345.00 - TATONGA7 345.00 345KV CKT 1	1195	1195	0.40005	102.7721	GEN513601 1-GRECCTG_1 20.000
FDNS	01ALL_G15_081	0	20WP	G15_081	TO->FROM	MATHWSN7 345.00 - TATONGA7 345.00 345KV CKT 1	1195	1195	0.40064	102.7675	HOYT - JEFFREY ENERGY CENTER 345KV CKT 1
FDNS	01ALL_G15_081	0	20WP	G15_081	TO->FROM	MATHWSN7 345.00 - TATONGA7 345.00 345KV CKT 1	1195	1195	0.40005	102.7664	GEN337652 1-WHITE BLUFF UNIT #1
FDNS	01ALL_G15_081	0	20WP	G15_081	TO->FROM	MATHWSN7 345.00 - TATONGA7 345.00 345KV CKT 1	1195	1195	0.40005	102.7536	GEN501813 1-RODEMACHER UNIT 3
FDNS	01ALL_G15_081	0	20WP	G15_081	TO->FROM	MATHWSN7 345.00 - TATONGA7 345.00 345KV CKT 1	1195	1195	0.40095	102.7328	P12:138:WFEC:MSL15
FDNS	01ALL_G15_081	0	20WP	G15_081	TO->FROM	MATHWSN7 345.00 - TATONGA7 345.00 345KV CKT 1	1195	1195	0.40005	102.7243	GEN509409 1-WILKES #3
FDNS	01ALL_G15_081	0	20WP	G15_081	TO->FROM	MATHWSN7 345.00 - TATONGA7 345.00 345KV CKT 1	1195	1195	0.40005	102.6835	GEN512688 2-GRDA1 GSU2 22
FDNS	01ALL_G15_081	0	20WP	G15_081	TO->FROM	MATHWSN7 345.00 - TATONGA7 345.00 345KV CKT 1	1195	1195	0.40005	102.6737	GEN514910 2-REDBUD GEN
FDNS	01ALL_G15_081	0	16WP	G15_081	TO->FROM	MATHWSN7 345.00 - TATONGA7 345.00 345KV CKT 1	1195	1195	0.41719	102.6706	LAWTON EASTSIDE - OKLAUNION 345KV CKT 1
FDNS	01ALL_G15_081	0	16WP	G15_081	TO->FROM	MATHWSN7 345.00 - TATONGA7 345.00 345KV CKT 1	1195	1195	0.41719	102.6706	LAWTON EASTSIDE - OKLAUNION 345KV CKT 1
FDNS	01ALL_G15_081	0	20WP	G15_081	TO->FROM	MATHWSN7 345.00 - TATONGA7 345.00 345KV CKT 1	1195	1195	0.40005	102.6467	GEN335206 1-NELSON UNIT 6
FDNS	01ALL_G15_081	0	20WP	G15_081	TO->FROM	MATHWSN7 345.00 - TATONGA7 345.00 345KV CKT 1	1195	1195	0.402	102.6424	FLATRDG3 - THISTLE4 138.00 138KV CKT 1
FDNS	01ALL_G15_081	0	20WP	G15_081	TO->FROM	MATHWSN7 345.00 - TATONGA7 345.00 345KV CKT 1	1195	1195	0.402	102.6424	FLATRDG3 - THISTLE4 138.00 138KV CKT 1
FDNS	01ALL_G15_081	0	20WP	G15_081	TO->FROM	MATHWSN7 345.00 - TATONGA7 345.00 345KV CKT 1	1195	1195	0.402	102.6423	THISTLE7 345.00 (THISTLE T1) 345/138/13.8KV TRANSFORMER CKT 1
FDNS	01ALL_G15_081	0	20WP	G15_081	TO->FROM	MATHWSN7 345.00 - TATONGA7 345.00 345KV CKT 1	1195	1195	0.40171	102.6381	CLEO CORNER - CLEOPLT4 138.00 138KV CKT 1
FDNS	01ALL_G15_081	0	20WP	G15_081	TO->FROM	MATHWSN7 345.00 - TATONGA7 345.00 345KV CKT 1	1195	1195	0.4018	102.635	DOVER SW - OKEENE 138KV CKT 1
FDNS	01ALL_G15_081	0	20WP	G15_081	TO->FROM	MATHWSN7 345.00 - TATONGA7 345.00 345KV CKT 1	1195	1195	0.40112	102.6334	G14-057T 345.00 - SUNNYSIDE 345KV CKT 1
FDNS	01ALL_G15_081	0	20WP	G15_081	TO->FROM	MATHWSN7 345.00 - TATONGA7 345.00 345KV CKT 1	1195	1195	0.40005	102.6179	GRAND GULF 500/22.0KV TRANSFORMER CKT 1
FDNS	01ALL_G15_081	0	20WP	G15_081	TO->FROM	MATHWSN7 345.00 - TATONGA7 345.00 345KV CKT 1	1195	1195	0.40005	102.6126	GEN514911 2-REDBUD GEN
FDNS	01ALL_G15_081	0	20WP	G15_081	TO->FROM	MATHWSN7 345.00 - TATONGA7 345.00 345KV CKT 1	1195	1195	0.40005	102.6126	GEN514942 2-REDBUD4G
FDNS	01ALL_G15_081	0	20WP	G15_081	TO->FROM	MATHWSN7 345.00 - TATONGA7 345.00 345KV CKT 1	1195	1195	0.40005	102.5937	GEN515601 1-KNGFSR11 0.7000
FDNS	01ALL_G15_081	0	20WP	G15_081	TO->FROM	MATHWSN7 345.00 - TATONGA7 345.00 345KV CKT 1	1195	1195	0.40005	102.5837	DELL 500 - ESSEX UNIT 2 500KV CKT Z1
FDNS	01ALL_G15_081	0	20WP	G15_081	TO->FROM	MATHWSN7 345.00 - TATONGA7 345.00 345KV CKT 1	1195	1195	0.40171	102.5748	CLEOPLT4 138.00 - MEN TAP 138KV CKT 1
FDNS	01ALL_G15_081	0	20WP	G15_081	TO->FROM	MATHWSN7 345.00 - TATONGA7 345.00 345KV CKT 1	1195	1195	0.40005	102.5609	GEN511848 1-SOUTHWESTERN STATION #3
FDNS	01ALL_G15_081	0	20WP	G15_081	TO->FROM	MATHWSN7 345.00 - TATONGA7 345.00 345KV CKT 1	1195	1195	0.40005	102.5522	GEN514940 1-REDBUD GEN
FDNS	01ALL_G15_081	0	20WP	G15_081	TO->FROM	MATHWSN7 345.00 - TATONGA7 345.00 345KV CKT 1	1195	1195	0.40005	102.5521	GEN501812 1-RODEMACHER UNIT 2
FDNS	01ALL_G15_081	0	20WP	G15_081	TO->FROM	MATHWSN7 345.00 - TATONGA7 345.00 345KV CKT 1	1195	1195	0.40005	102.5466	GEN300006 1-NEW MADRID UNIT 1
FDNS	01ALL_G15_081	0	20WP	G15_081	TO->FROM	MATHWSN7 345.00 - TATONGA7 345.00 345KV CKT 1	1195	1195	0.40005	102.5457	GEN514900 1-REDBUD2S
FDNS	01ALL_G15_081	0	20WP	G15_081	TO->FROM	MATHWSN7 345.00 - TATONGA7 345.00 345KV CKT 1	1195	1195	0.40005	102.5456	GEN514899 1-REDBUD1S
FDNS	01ALL_G15_081	0	20WP	G15_081	TO->FROM	MATHWSN7 345.00 - TATONGA7 345.00 345KV CKT 1	1195	1195	0.40171	102.5394	IMO TAP - MEN TAP 138KV CKT 1
FDNS	01ALL_G15_081	0	20WP	G15_081	TO->FROM	MATHWSN7 345.00 - TATONGA7 345.00 345KV CKT 1	1195	1195	0.40005	102.5386	GEN300007 1-NEW MADRID UNIT 2
FDNS	01ALL_G15_081	0	20WP	G15_081	TO->FROM	MATHWSN7 345.00 - TATONGA7 345.00 345KV CKT 1	1195	1195	0.40112	102.5304	G14-057T 345.00 - LAWTON EASTSIDE 345KV CKT 1
FDNS	01ALL_G15_081	0	20WP	G15_081	TO->FROM	MATHWSN7 345.00 - TATONGA7 345.00 345KV CKT 1	1195	1195	0.40005	102.5088	GEN338146 1-INDEPENDENCE UNIT #2
FDNS	01ALL_G15_081	0	20WP	G15_081	TO->FROM	MATHWSN7 345.00 - TATONGA7 345.00 345KV CKT 1	1195	1195	0.4076	102.5041	FPL SWITCH - WOODWARD 138KV CKT 1
FDNS	01ALL_G15_081	0	20WP	G15_081	TO->FROM	MATHWSN7 345.00 - TATONGA7 345.00 345KV CKT 1	1195	1195	0.40005	102.4945	GEN514905 1-REDBUD3S
FDNS	01ALL_G15_081	0	20WP	G15_081	TO->FROM	MATHWSN7 345.00 - TATONGA7 345.00 345KV CKT 1	1195	1195	0.40184	102.4932	CANEYRV7 345.00 - NEOSHO 345KV CKT 1
FDNS	01ALL_G15_081	0	20WP	G15_081	TO->FROM	MATHWSN7 345.00 - TATONGA7 345.00 345KV CKT 1	1195	1195	0.40005	102.4775	GEN336252 1-NINEMILE POINT UNIT#5
FDNS	01ALL_G15_081	0	20WP	G15_081	TO->FROM	MATHWSN7 345.00 - TATONGA7 345.00 345KV CKT 1	1195	1195	0.40005	102.4664	GEN338143 1-INDEPENDENCE UNIT #1
FDNS	01ALL_G15_081	0	20WP	G15_081	TO->FROM	MATHWSN7 345.00 - TATONGA7 345.00 345KV CKT 1	1195	1195	0.40068	102.4519	HOYT - STRANGER CREEK 345KV CKT 1
FDNS	01ALL_G15_081	0	20WP	G15_081	TO->FROM	MATHWSN7 345.00 - TATONGA7 345.00 345KV CKT 1	1195	1195	0.40077	102.4414	LACYGNE - WAVERLY7 345.00 345KV CKT 1
FDNS	01ALL_G15_081	0	20WP	G15_081	TO->FROM	MATHWSN7 345.00 - TATONGA7 345.00 345KV CKT 1	1195	1195	0.40005	102.4356	GEN334440 1-SABINE UNIT 4
FDNS	01ALL_G15_081	0	20WP	G15_081	TO->FROM	MATHWSN7 345.00 - TATONGA7 345.00 345KV CKT 1	1195	1195	0.40081	102.4164	AXTELL - PAULINE 345KV CKT 1
FDNS	01ALL_G15_081	0	20WP	G15_081	TO->FROM	MATHWSN7 345.00 - TATONGA7 345.00 345KV CKT 1	1195	1195	0.4019	102.4134	CHISHOLM7 345.00 () 345/230/13.2KV TRANSFORMER CKT 1
FDNS	01ALL_G15_081	0	20WP	G15_081	TO->FROM	MATHWSN7 345.00 - TATONGA7 345.00 345KV CKT 1	1195	1195	0.40005	102.4134	GEN336831 1-BAXTER WILSON SES
FDNS	01ALL_G15_081	0	20WP	G15_081	TO->FROM	MATHWSN7 345.00 - TATONGA7 345.00 345KV CKT 1	1195	1195	0.4019	102.4088	CHISHOLM7 345.00 - GRACEMONT 345KV CKT 1
FDNS	01ALL_G15_081	0	20WP	G15_081	TO->FROM	MATHWSN7 345.00 - TATONGA7 345.00 345KV CKT 1	1195	1195	0.40005	102.4069	GEN515550 1-MNCWND31 0.6900
FDNS	01ALL_G15_081	0	20WP	G15_081	TO->FROM	MATHWSN7 345.00 - TATONGA7 345.00 345KV CKT 1	1195	1195	0.39944	102.4062	ARKANSAS NUCLEAR ONE - FT SMITH 500KV CKT 1
FDNS	01ALL_G15_081	0	20WP	G15_081	TO->FROM	MATHWSN7 345.00 - TATONGA7 345.00 345KV CKT 1	1195	1195	0.39944	102.4062	ARKANSAS NUCLEAR ONE - FT SMITH 500KV CKT 1
FDNS	01ALL_G15_081	0	20WP	G15_081	TO->FROM	MATHWSN7 345.00 - TATONGA7 345.00 345KV CKT 1	1195	1195	0.40612	102.4013	G11-14T 345.00 - WOODWARD DISTRICT EHV 345KV CKT 1
FDNS	01ALL_G15_081	0	20WP	G15_081	TO->FROM	MATHWSN7 345.00 - TATONGA7 345.00 345KV CKT 1	1195	1195	0.40612	102.4013	G11-14T 345.00 - WOODWARD DISTRICT EHV 345KV CKT 2
FDNS	01ALL_G15_081	0	20WP	G15_081	TO->FROM	MATHWSN7 345.00 - TATONGA7 345.00 345KV CKT 1	1195	1195	0.40095	102.3999	NOEL_SW 138.00 - SALT_PLAINS 138.00 138KV CKT 1
FDNS	01ALL_G15_081	0	20WP	G15_081	TO->FROM	MATHWSN7 345.00 - TATONGA7 345.00 345KV CKT 1	1195	1195	0.40081	102.3986	MULLERGREN - SPEARVILLE 230KV CKT 1
FDNS	01ALL_G15_081	0	20WP	G15_081	TO->FROM	MATHWSN7 345.00 - TATONGA7 345.00 345KV CKT 1	1195	1195	0.40081	102.3986	MULLERGREN - SPEARVILLE 230KV CKT 1
FDNS	01ALL_G15_081	0	20WP	G15_081	TO->FROM	MATHWSN7 345.00 - TATONGA7 345.00 345KV CKT 1	1195	1195	0.40055	102.3817	GRAND ISLAND - SWEETWATER 345KV CKT 1

SOLUTION	GROUP	SCENARIO	SEASON	SOURCE	DIRECTION	MONITORED ELEMENT	RATEA (MVA)	RATEB(MVA)	TDF	TC%LOADING (% MVA)	CONTINGENCY
FDNS	01ALL_G15_081	0	20WP	G15_081	TO->FROM	MATHWSN7 345.00 - TATONGA7 345.00 345KV CKT 1	1195	1195	0.40077	102.3768	WAVERLY7 345.00 - WOLF CREEK 345KV CKT 1
FDNS	01ALL_G15_081	0	20WP	G15_081	TO->FROM	MATHWSN7 345.00 - TATONGA7 345.00 345KV CKT 1	1195	1195	0.40184	102.373	CANEYRV7 345.00 - LATHAMS7 345.00 345KV CKT 1
FDNS	01ALL_G15_081	0	20WP	G15_081	TO->FROM	MATHWSN7 345.00 - TATONGA7 345.00 345KV CKT 1	1195	1195	0.40157	102.3704	P12:138:MKEC:HARPER-CLEARWATER::
FDNS	01ALL_G15_081	0	20WP	G15_081	TO->FROM	MATHWSN7 345.00 - TATONGA7 345.00 345KV CKT 1	1195	1195	0.40005	102.3696	GEN336251 1-NINEMILE POINT UNIT#4
FDNS	01ALL_G15_081	0	20WP	G15_081	TO->FROM	MATHWSN7 345.00 - TATONGA7 345.00 345KV CKT 1	1195	1195	0.40005	102.3679	GEN511938 1-OEC STEAM # 1
FDNS	01ALL_G15_081	0	20WP	G15_081	TO->FROM	MATHWSN7 345.00 - TATONGA7 345.00 345KV CKT 1	1195	1195	0.40157	102.3667	P12:138:WERE:CLWA-MKEC_138F::
FDNS	01ALL_G15_081	0	20WP	G15_081	TO->FROM	MATHWSN7 345.00 - TATONGA7 345.00 345KV CKT 1	1195	1195	0.4035	102.3616	Hitchland Interchange - POTTER COUNTY INTERCHANGE 345KV CKT 1
FDNS	01ALL_G15_081	0	20WP	G15_081	TO->FROM	MATHWSN7 345.00 - TATONGA7 345.00 345KV CKT 1	1195	1195	0.4035	102.3616	Hitchland Interchange - POTTER COUNTY INTERCHANGE 345KV CKT 1
FDNS	01ALL_G15_081	0	20WP	G15_081	TO->FROM	MATHWSN7 345.00 - TATONGA7 345.00 345KV CKT 1	1195	1195	0.40157	102.3587	CLEARWATER - MILAN TAP 138KV CKT 1
FDNS	01ALL_G15_081	0	20WP	G15_081	TO->FROM	MATHWSN7 345.00 - TATONGA7 345.00 345KV CKT 1	1195	1195	0.40005	102.3545	GEN562512 1-G14_020_3 0.6900
FDNS	01ALL_G15_081	0	20WP	G15_081	TO->FROM	MATHWSN7 345.00 - TATONGA7 345.00 345KV CKT 1	1195	1195	0.40168	102.3399	TUCO INTERCHANGE - TUCO_2 345.00 345KV CKT 1
FDNS	01ALL_G15_081	0	20WP	G15_081	TO->FROM	MATHWSN7 345.00 - TATONGA7 345.00 345KV CKT 1	1195	1195	0.40031	102.3331	BUCKNER7 345.00 - SPEARVILLE 345KV CKT 1
FDNS	01ALL_G15_081	0	20WP	G15_081	TO->FROM	MATHWSN7 345.00 - TATONGA7 345.00 345KV CKT 1	1195	1195	0.40031	102.3331	BUCKNER7 345.00 - SPEARVILLE 345KV CKT 1
FDNS	01ALL_G15_081	0	20WP	G15_081	TO->FROM	MATHWSN7 345.00 - TATONGA7 345.00 345KV CKT 1	1195	1195	0.40005	102.3299	GEN337041 1-GERALD ANDRUS
FDNS	01ALL_G15_081	0	20WP	G15_081	TO->FROM	MATHWSN7 345.00 - TATONGA7 345.00 345KV CKT 1	1195	1195	0.40154	102.328	P12:138:WERE:MURR-MKEC_138P::
FDNS	01ALL_G15_081	0	20WP	G15_081	TO->FROM	MATHWSN7 345.00 - TATONGA7 345.00 345KV CKT 1	1195	1195	0.40041	102.3176	SMOKYHL6 230.00 - SUMMIT 230KV CKT 1
FDNS	01ALL_G15_081	0	20WP	G15_081	TO->FROM	MATHWSN7 345.00 - TATONGA7 345.00 345KV CKT 1	1195	1195	0.40068	102.3019	MOORE - PAULINE 345KV CKT 1
FDNS	01ALL_G15_081	0	20WP	G15_081	TO->FROM	MATHWSN7 345.00 - TATONGA7 345.00 345KV CKT 1	1195	1195	0.40005	102.2999	WHITE BLUFF 500/26.0KV TRANSFORMER CKT 1
FDNS	01ALL_G15_081	0	20WP	G15_081	TO->FROM	MATHWSN7 345.00 - TATONGA7 345.00 345KV CKT 1	1195	1195	0.40005	102.2946	GEN335204 1-NELSON UNIT 4
FDNS	01ALL_G15_081	0	20WP	G15_081	TO->FROM	MATHWSN7 345.00 - TATONGA7 345.00 345KV CKT 1	1195	1195	0.40005	102.2915	GEN511941 1-OEC STEAM # 2
FDNS	01ALL_G15_081	0	20WP	G15_081	TO->FROM	MATHWSN7 345.00 - TATONGA7 345.00 345KV CKT 1	1195	1195	0.39946	102.2775	LACYGNE - NEOSHO 345KV CKT 1
FDNS	01ALL_G15_081	0	20WP	G15_081	TO->FROM	MATHWSN7 345.00 - TATONGA7 345.00 345KV CKT 1	1195	1195	0.40005	102.272	GEN513602 1-GRECSTG_1 17.500
FDNS	01ALL_G15_081	0	20WP	G15_081	TO->FROM	MATHWSN7 345.00 - TATONGA7 345.00 345KV CKT 1	1195	1195	0.40005	102.2681	GEN334441 1-SABINE UNIT 5
FDNS	01ALL_G15_081	0	20WP	G15_081	TO->FROM	MATHWSN7 345.00 - TATONGA7 345.00 345KV CKT 1	1195	1195	0.40005	102.2564	GEN590011 2-ERCOT EQUIVALENCE
FDNS	01ALL_G15_081	0	20WP	G15_081	TO->FROM	MATHWSN7 345.00 - TATONGA7 345.00 345KV CKT 1	1195	1195	0.40005	102.2359	GEN336191 1-LITTLE GYPSY UNIT#3
FDNS	01ALL_G15_081	0	20WP	G15_081	TO->FROM	MATHWSN7 345.00 - TATONGA7 345.00 345KV CKT 1	1195	1195	0.40249	102.2337	BVRCNTY7 345.00 - Hitchland Interchange 345KV CKT 1
FDNS	01ALL_G15_081	0	20WP	G15_081	TO->FROM	MATHWSN7 345.00 - TATONGA7 345.00 345KV CKT 1	1195	1195	0.40249	102.2337	BVRCNTY7 345.00 - Hitchland Interchange 345KV CKT 1
FDNS	01ALL_G15_081	0	20WP	G15_081	TO->FROM	MATHWSN7 345.00 - TATONGA7 345.00 345KV CKT 1	1195	1195	0.40249	102.2337	BVRCNTY7 345.00 - Hitchland Interchange 345KV CKT 2
FDNS	01ALL_G15_081	0	20WP	G15_081	TO->FROM	MATHWSN7 345.00 - TATONGA7 345.00 345KV CKT 1	1195	1195	0.40249	102.2337	BVRCNTY7 345.00 - Hitchland Interchange 345KV CKT 2
FDNS	01ALL_G15_081	0	20WP	G15_081	TO->FROM	MATHWSN7 345.00 - TATONGA7 345.00 345KV CKT 1	1195	1195	0.40091	102.2295	SWISSVALE - WEST GARDNER 345KV CKT 1
FDNS	01ALL_G15_081	0	20WP	G15_081	TO->FROM	MATHWSN7 345.00 - TATONGA7 345.00 345KV CKT 1	1195	1195	0.40005	102.2293	GEN590010 1-ERCOT EQUIVALENCE
FDNS	01ALL_G15_081	0	20WP	G15_081	TO->FROM	MATHWSN7 345.00 - TATONGA7 345.00 345KV CKT 1	1195	1195	0.40005	102.2148	GEN335614 1-WILLOW GLENN UNIT#4
FDNS	01ALL_G15_081	0	20WP	G15_081	TO->FROM	MATHWSN7 345.00 - TATONGA7 345.00 345KV CKT 1	1195	1195	0.40005	102.2084	GEN509393 S1-ARSENAL HILL GENS #4 (STALL)
FDNS	01ALL_G15_081	0	20WP	G15_081	TO->FROM	MATHWSN7 345.00 - TATONGA7 345.00 345KV CKT 1	1195	1195	0.40106	102.2072	EL RENO - ROMAN NOSE 138KV CKT 1
FDNS	01ALL_G15_081	0	20WP	G15_081	TO->FROM	MATHWSN7 345.00 - TATONGA7 345.00 345KV CKT 1	1195	1195	0.40005	102.2059	GEN300024 1-1CHOTST6 16.000
FDNS	01ALL_G15_081	0	20WP	G15_081	TO->FROM	MATHWSN7 345.00 - TATONGA7 345.00 345KV CKT 1	1195	1195	0.40005	102.2056	GEN300031 1-CHOUTEAU CTG 1
FDNS	01ALL_G15_081	0	20WP	G15_081	TO->FROM	MATHWSN7 345.00 - TATONGA7 345.00 345KV CKT 1	1195	1195	0.40005	102.1972	GEN336464 1-MICHOUD UNIT #3
FDNS	01ALL_G15_081	0	20WP	G15_081	TO->FROM	MATHWSN7 345.00 - TATONGA7 345.00 345KV CKT 1	1195	1195	0.40005	102.1922	GEN334433 1-SABINE UNIT 3
FDNS	01ALL_G15_081	0	20WP	G15_081	TO->FROM	MATHWSN7 345.00 - TATONGA7 345.00 345KV CKT 1	1195	1195	0.40005	102.1906	GEN336801 1-BAXTER WILSON UNIT #1
FDNS	01ALL_G15_081	0	20WP	G15_081	TO->FROM	MATHWSN7 345.00 - TATONGA7 345.00 345KV CKT 1	1195	1195	0.40005	102.1852	GEN300020 1-1CHOTCT4 16.000
FDNS	01ALL_G15_081	0	20WP	G15_081	TO->FROM	MATHWSN7 345.00 - TATONGA7 345.00 345KV CKT 1	1195	1195	0.40005	102.1852	GEN300021 1-1CHOTCT5 16.000
FDNS	01ALL_G15_081	0	20WP	G15_081	TO->FROM	MATHWSN7 345.00 - TATONGA7 345.00 345KV CKT 1	1195	1195	0.40005	102.185	GEN300032 1-CHOUTEAU CTG 2
FDNS	01ALL_G15_081	0	20WP	G15_081	TO->FROM	MATHWSN7 345.00 - TATONGA7 345.00 345KV CKT 1	1195	1195	0.40005	102.185	GEN300033 1-CHOUTEAU STG 3
FDNS	01ALL_G15_081	0	20WP	G15_081	TO->FROM	MATHWSN7 345.00 - TATONGA7 345.00 345KV CKT 1	1195	1195	0.40005	102.1785	GEN303007 1-1BC2 U2
FDNS	01ALL_G15_081	0	20WP	G15_081	TO->FROM	MATHWSN7 345.00 - TATONGA7 345.00 345KV CKT 1	1195	1195	0.40005	102.1781	GEN303006 1-1BC2 U1
FDNS	01ALL_G15_081	0	20WP	G15_081	TO->FROM	MATHWSN7 345.00 - TATONGA7 345.00 345KV CKT 1	1195	1195	0.40095	102.1768	C_CITY_138 138.00 - SALT_PLAINS 138.00 138KV CKT 1
FDNS	01ALL_G15_081	0	20WP	G15_081	TO->FROM	MATHWSN7 345.00 - TATONGA7 345.00 345KV CKT 1	1195	1195	0.40184	102.1697	LATHAMS7 345.00 - ROSE HILL 345KV CKT 1
FDNS	01ALL_G15_081	0	20WP	G15_081	TO->FROM	MATHWSN7 345.00 - TATONGA7 345.00 345KV CKT 1	1195	1195	0.40017	102.1542	GRAND ISLAND - MCCOOL 345KV CKT 1
FDNS	01ALL_G15_081	0	20WP	G15_081	TO->FROM	MATHWSN7 345.00 - TATONGA7 345.00 345KV CKT 1	1195	1195	0.40005	102.1541	GEN334071 1-LEWIS CREEK 2
FDNS	01ALL_G15_081	0	20WP	G15_081	TO->FROM	MATHWSN7 345.00 - TATONGA7 345.00 345KV CKT 1	1195	1195	0.40162	102.1525	EMPORIA ENERGY CENTER - G14_001T 345.00 345KV CKT 1
FDNS	01ALL_G15_081	0	20WP	G15_081	TO->FROM	MATHWSN7 345.00 - TATONGA7 345.00 345KV CKT 1	1195	1195	0.40077	102.151	ELK CITY - RED HILLS WIND 138KV CKT 1
FDNS	01ALL_G15_081	0	20WP	G15_081	TO->FROM	MATHWSN7 345.00 - TATONGA7 345.00 345KV CKT 1	1195	1195	0.40077	102.151	ELK CITY - RED HILLS WIND 138KV CKT 1
FDNS	01ALL_G15_081	0	20WP	G15_081	TO->FROM	MATHWSN7 345.00 - TATONGA7 345.00 345KV CKT 1	1195	1195	0.40005	102.1504	GEN334070 1-LEWIS CREEK 1
FDNS	01ALL_G15_081	0	20WP	G15_081	TO->FROM	MATHWSN7 345.00 - TATONGA7 345.00 345KV CKT 1	1195	1195	0.40005	102.1497	GEN501811 1-RODEMACHER UNIT 1
FDNS	01ALL_G15_081	0	20WP	G15_081	TO->FROM	MATHWSN7 345.00 - TATONGA7 345.00 345KV CKT 1	1195	1195	0.40074	102.1411	DEWEY - TALOGA 138KV CKT 1
FDNS	01ALL_G15_081	0	20WP	G15_081	TO->FROM	MATHWSN7 345.00 - TATONGA7 345.00 345KV CKT 1	1195	1195	0.40005	102.1402	GEN303008 1-1BC2 U3
FDNS	01ALL_G15_081	0	20WP	G15_081	TO->FROM	MATHWSN7 345.00 - TATONGA7 345.00 345KV CKT 1	1195	1195	0.40005	102.1399	GEN520812 1-ANADRK5
FDNS	01ALL_G15_081	0	20WP	G15_081	TO->FROM	MATHWSN7 345.00 - TATONGA7 345.00 345KV CKT 1	1195	1195	0.40005	102.1398	GEN520813 1-ANADRK6
FDNS	01ALL_G15_081	0	20WP	G15_081	TO->FROM	MATHWSN7 345.00 - TATONGA7 345.00 345KV CKT 1	1195	1195	0.40162	102.1391	G14_001T 345.00 - WICHITA 345KV CKT 1
FDNS	01ALL_G15_081	0	20WP	G15_081	TO->FROM	MATHWSN7 345.00 - TATONGA7 345.00 345KV CKT 1	1195	1195	0.40005	102.1358	GEN503909 1-FULTONU1 1 16.000
FDNS	01ALL_G15_081	0	20WP	G15_081	TO->FROM	MATHWSN7 345.00 - TATONGA7 345.00 345KV CKT 1	1195	1195	0.40005	102.1358	GEN511939 1-OEC GAS # 1-1
FDNS	01ALL_G15_081	0	20WP	G15_081	TO->FROM	MATHWSN7 345.00 - TATONGA7 345.00 345KV CKT 1	1195	1195	0.40005	102.1357	GEN509392 G2-ARSENAL HILL GENS #3 (STALL)
FDNS	01ALL_G15_081	0	20WP	G15_081	TO->FROM	MATHWSN7 345.00 - TATONGA7 345.00 345KV CKT 1	1195	1195	0.40005	102.1292	GEN336170 1-GULF OXY U4
FDNS	01ALL_G15_081	0	20WP	G15_081	TO->FROM	MATHWSN7 345.00 - TATONGA7 345.00 345KV CKT 1	1195	1195	0.40005	102.1288	GEN506754 1-LEBROCK STEAM 1
FDNS	01ALL_G15_081	0	20WP	G15_081	TO->FROM	MATHWSN7 345.00 - TATONGA7 345.00 345KV CKT 1	1195	1195	0.40005	102.1236	GEN509391 G1-ARSENAL HILL GENS #2 (STALL)
FDNS	01ALL_G15_081	0	20WP	G15_081	TO->FROM	MATHWSN7 345.00 - TATONGA7 345.00 345KV CKT 1	1195	1195	0.40095	102.1178	BYRON_138 138.00 - C_CITY_138 138.00 138KV CKT 1
FDNS	01ALL_G15_081	0	20WP	G15_081	TO->FROM	MATHWSN7 345.00 - TATONGA7 345.00 345KV CKT 1	1195	1195	0.40005	102.1178	GEN515266 1-AES 1G
FDNS	01ALL_G15_081	0	20WP	G15_081	TO->FROM	MATHWSN7 345.00 - TATONGA7 345.00 345KV CKT 1	1195	1195	0.40005	102.1178	GEN515267 1-AES 2G
FDNS	01ALL_G15_081	0	20WP	G15_081	TO->FROM	MATHWSN7 345.00 - TATONGA7 345.00 345KV CKT 1	1195	1195	0.40047	102.1121	TALOGA (TALOGA) 138/69/13.8KV TRANSFORMER CKT 1
FDNS	01ALL_G15_081	0	20WP	G15_081	TO->FROM	MATHWSN7 345.00 - TATONGA7 345.00 345KV CKT 1	1195	1195	0.40005	102.1094	GEN511837 1-NORTHEASTERN STATION # 1-1A
FDNS	01ALL_G15_081	0	20WP	G15_081	TO->FROM	MATHWSN7 345.00 - TATONGA7 345.00 345KV CKT 1	1195	1195	0.40005	102.1094	GEN511838 1-NORTHEASTERN STATION # 1-1B
FDNS	01ALL_G15_081	0	16WP	G15_081	TO->FROM	MATHWSN7 345.00 - TATONGA7 345.00 345KV CKT 1	1195	1195	0.41936	102.1016	BORDER 7345.00 - TUCO_2 345.00 345KV CKT 1
FDNS	01ALL_G15_081	0	20WP	G15_081	TO->FROM	MATHWSN7 345.00 - TATONGA7 345.00 345KV CKT 1	1195	1195	0.40053	102.0815	CANTON - TALOGA 69KV CKT 1

SOLUTION	GROUP	SCENARIO	SEASON	SOURCE	DIRECTION	MONITORED ELEMENT	RATEA (MVA)	RATEB(MVA)	TDF	TC%LOADING (% MVA)	CONTINGENCY
FDNS	01ALL_G15_081	0	20WP	G15_081	TO->FROM	MATHWSN7 345.00 - TATONGA7 345.00 345KV CKT 1	1195	1195	0.40005	102.0783	GEN511955 G-COGENTRIX GAS # 2
FDNS	01ALL_G15_081	0	20WP	G15_081	TO->FROM	MATHWSN7 345.00 - TATONGA7 345.00 345KV CKT 1	1195	1195	0.40046	102.0765	CIRCLE - MULLERGREN 230KV CKT 1
FDNS	01ALL_G15_081	0	20WP	G15_081	TO->FROM	MATHWSN7 345.00 - TATONGA7 345.00 345KV CKT 1	1195	1195	0.40046	102.0765	CIRCLE - MULLERGREN 230KV CKT 1
FDNS	01ALL_G15_081	0	20WP	G15_081	TO->FROM	MATHWSN7 345.00 - TATONGA7 345.00 345KV CKT 1	1195	1195	0.40215	102.0713	BENTON - ROSE HILL 345KV CKT 1
FDNS	01ALL_G15_081	0	20WP	G15_081	TO->FROM	MATHWSN7 345.00 - TATONGA7 345.00 345KV CKT 1	1195	1195	0.40005	102.0694	GEN300015 1-1SGPDEL 18.000
FDNS	01ALL_G15_081	0	20WP	G15_081	TO->FROM	MATHWSN7 345.00 - TATONGA7 345.00 345KV CKT 1	1195	1195	0.40085	102.0661	EMPORIA ENERGY CENTER - SWISSVALE 345KV CKT 1
FDNS	01ALL_G15_081	0	20WP	G15_081	TO->FROM	MATHWSN7 345.00 - TATONGA7 345.00 345KV CKT 1	1195	1195	0.40005	102.0651	GEN336222 1-LITTLE GYPSY UNIT#2
FDNS	01ALL_G15_081	0	17G	G15_081	TO->FROM	MATHWSN7 345.00 - TATONGA7 345.00 345KV CKT 1	1195	1195	0.44175	102.0644	THISTLE7 345.00 - WOODWARD DISTRICT EHV 345KV CKT 1
FDNS	01ALL_G15_081	0	17G	G15_081	TO->FROM	MATHWSN7 345.00 - TATONGA7 345.00 345KV CKT 1	1195	1195	0.44175	102.0644	THISTLE7 345.00 - WOODWARD DISTRICT EHV 345KV CKT 1
FDNS	01ALL_G15_081	0	17G	G15_081	TO->FROM	MATHWSN7 345.00 - TATONGA7 345.00 345KV CKT 1	1195	1195	0.44175	102.0644	THISTLE7 345.00 - WOODWARD DISTRICT EHV 345KV CKT 2
FDNS	01ALL_G15_081	0	17G	G15_081	TO->FROM	MATHWSN7 345.00 - TATONGA7 345.00 345KV CKT 1	1195	1195	0.44175	102.0644	THISTLE7 345.00 - WOODWARD DISTRICT EHV 345KV CKT 2
FDNS	01ALL_G15_081	0	20WP	G15_081	TO->FROM	MATHWSN7 345.00 - TATONGA7 345.00 345KV CKT 1	1195	1195	0.40037	102.0606	GERALD GENTLEMAN STATION - THEDFRD3 345.00 345KV CKT 1
FDNS	01ALL_G15_081	0	20WP	G15_081	TO->FROM	MATHWSN7 345.00 - TATONGA7 345.00 345KV CKT 1	1195	1195	0.40005	102.0596	GEN549893 2-SOUTHWEST 2
FDNS	01ALL_G15_081	0	20WP	G15_081	TO->FROM	MATHWSN7 345.00 - TATONGA7 345.00 345KV CKT 1	1195	1195	0.40004	102.0588	DOLET HILLS - SOUTHWEST SHREVEPORT 345KV CKT 1
FDNS	01ALL_G15_081	0	20WP	G15_081	TO->FROM	MATHWSN7 345.00 - TATONGA7 345.00 345KV CKT 1	1195	1195	0.40004	102.0588	DOLET HILLS - SOUTHWEST SHREVEPORT 345KV CKT 1
FDNS	01ALL_G15_081	0	20WP	G15_081	TO->FROM	MATHWSN7 345.00 - TATONGA7 345.00 345KV CKT 1	1195	1195	0.40005	102.0561	GEN337766 1-TRACTEBEL UNIT S1
FDNS	01ALL_G15_081	0	20WP	G15_081	TO->FROM	MATHWSN7 345.00 - TATONGA7 345.00 345KV CKT 1	1195	1195	0.40005	102.0519	GEN501910 1-ACADIA UNIT ST1
FDNS	01ALL_G15_081	0	20WP	G15_081	TO->FROM	MATHWSN7 345.00 - TATONGA7 345.00 345KV CKT 1	1195	1195	0.40005	102.0519	GEN511953 G-COGENTRIX GAS # 1
FDNS	01ALL_G15_081	0	20WP	G15_081	TO->FROM	MATHWSN7 345.00 - TATONGA7 345.00 345KV CKT 1	1195	1195	0.40005	102.0501	GEN334030 1-FRONTIER UNIT 1
FDNS	01ALL_G15_081	0	20WP	G15_081	TO->FROM	MATHWSN7 345.00 - TATONGA7 345.00 345KV CKT 1	1195	1195	0.40005	102.0493	GEN334031 1-FRONTIER UNIT 2
FDNS	01ALL_G15_081	0	20WP	G15_081	TO->FROM	MATHWSN7 345.00 - TATONGA7 345.00 345KV CKT 1	1195	1195	0.40005	102.0461	GEN336152 1-WATERFORD UNIT#2
FDNS	01ALL_G15_081	0	20WP	G15_081	TO->FROM	MATHWSN7 345.00 - TATONGA7 345.00 345KV CKT 1	1195	1195	0.40005	102.0456	GEN336151 1-WATERFORD UNIT#1
FDNS	01ALL_G15_081	0	20WP	G15_081	TO->FROM	MATHWSN7 345.00 - TATONGA7 345.00 345KV CKT 1	1195	1195	0.40076	102.043	HARPER - MILAN TAP 138KV CKT 1
FDNS	01ALL_G15_081	0	20WP	G15_081	TO->FROM	MATHWSN7 345.00 - TATONGA7 345.00 345KV CKT 1	1195	1195	0.40053	102.04	CANTON - OKEENE 69KV CKT 1
FDNS	01ALL_G15_081	0	20WP	G15_081	TO->FROM	MATHWSN7 345.00 - TATONGA7 345.00 345KV CKT 1	1195	1195	0.40005	102.04	GEN520811 1-ANADRK4
FDNS	01ALL_G15_081	0	20WP	G15_081	TO->FROM	MATHWSN7 345.00 - TATONGA7 345.00 345KV CKT 1	1195	1195	0.40005	102.0327	GEN514912 2-REDBUD GEN
FDNS	01ALL_G15_081	0	20WP	G15_081	TO->FROM	MATHWSN7 345.00 - TATONGA7 345.00 345KV CKT 1	1195	1195	0.40005	102.031	GEN511957 G-COGENTRIX GAS # 3
FDNS	01ALL_G15_081	0	20WP	G15_081	TO->FROM	MATHWSN7 345.00 - TATONGA7 345.00 345KV CKT 1	1195	1195	0.40005	102.0295	GEN511954 S-COGENTRIX STEAM # 1
FDNS	01ALL_G15_081	0	20WP	G15_081	TO->FROM	MATHWSN7 345.00 - TATONGA7 345.00 345KV CKT 1	1195	1195	0.40005	102.0295	GEN511956 S-COGENTRIX STEAM # 2
FDNS	01ALL_G15_081	0	20WP	G15_081	TO->FROM	MATHWSN7 345.00 - TATONGA7 345.00 345KV CKT 1	1195	1195	0.40056	102.0285	DARLINGTNRD4138.00 - ROMAN NOSE 138KV CKT 1
FDNS	01ALL_G15_081	0	20WP	G15_081	TO->FROM	MATHWSN7 345.00 - TATONGA7 345.00 345KV CKT 1	1195	1195	0.40005	102.0268	DOLET HILLS 345/24.0KV TRANSFORMER CKT 1
FDNS	01ALL_G15_081	0	20WP	G15_081	TO->FROM	MATHWSN7 345.00 - TATONGA7 345.00 345KV CKT 1	1195	1195	0.40005	102.0241	GEN300010 1-ST FRANCIS UNIT 1
FDNS	01ALL_G15_081	0	20WP	G15_081	TO->FROM	MATHWSN7 345.00 - TATONGA7 345.00 345KV CKT 1	1195	1195	0.40005	102.0222	GEN511836 1-NORTHEASTERN STATION #1
FDNS	01ALL_G15_081	0	20WP	G15_081	TO->FROM	MATHWSN7 345.00 - TATONGA7 345.00 345KV CKT 1	1195	1195	0.40077	102.0187	ELLIS 4 138.00 - MOREWOOD SW 138KV CKT 1
FDNS	01ALL_G15_081	0	20WP	G15_081	TO->FROM	MATHWSN7 345.00 - TATONGA7 345.00 345KV CKT 1	1195	1195	0.40025	102.0117	CONWAY SUB - NICHOLS STATION 115KV CKT 1
FDNS	01ALL_G15_081	0	20WP	G15_081	TO->FROM	MATHWSN7 345.00 - TATONGA7 345.00 345KV CKT 1	1195	1195	0.40005	102.0039	GEN506752 1-LEBROCK GAS 1
FDNS	01ALL_G15_081	0	20WP	G15_081	TO->FROM	MATHWSN7 345.00 - TATONGA7 345.00 345KV CKT 1	1195	1195	0.40005	102.0038	GEN506753 1-LEBROCK GAS 2
FDNS	01ALL_G15_081	0	20WP	G15_081	TO->FROM	MATHWSN7 345.00 - TATONGA7 345.00 345KV CKT 1	1195	1195	0.40005	102.003	GEN511940 1-OEC GAS # 1-2
FDNS	01ALL_G15_081	0	20WP	G15_081	TO->FROM	MATHWSN7 345.00 - TATONGA7 345.00 345KV CKT 1	1195	1195	0.40005	102.0024	ST FRANCIS - ST FRANCIS 1 161KV CKT Z1
FDNS	01ALL_G15_081	0	20WP	G15_081	TO->FROM	MATHWSN7 345.00 - TATONGA7 345.00 345KV CKT 1	1195	1195	0.40005	101.9986	GEN511851 1-COMANCHE #1
FDNS	01ALL_G15_081	0	20WP	G15_081	TO->FROM	MATHWSN7 345.00 - TATONGA7 345.00 345KV CKT 1	1195	1195	0.40005	101.9954	GEN337764 1-TRACTEBEL UNIT C1
FDNS	01ALL_G15_081	0	20WP	G15_081	TO->FROM	MATHWSN7 345.00 - TATONGA7 345.00 345KV CKT 1	1195	1195	0.40005	101.9954	GEN337765 1-TRACTEBEL UNIT C2
FDNS	01ALL_G15_081	0	20WP	G15_081	TO->FROM	MATHWSN7 345.00 - TATONGA7 345.00 345KV CKT 1	1195	1195	0.40003	101.994	WEBRE - WELLS 500KV CKT 1
FDNS	01ALL_G15_081	0	20WP	G15_081	TO->FROM	MATHWSN7 345.00 - TATONGA7 345.00 345KV CKT 1	1195	1195	0.40005	101.9914	GEN300011 1-ST FRANCIS UNIT 2
FDNS	01ALL_G15_081	0	20WP	G15_081	TO->FROM	MATHWSN7 345.00 - TATONGA7 345.00 345KV CKT 1	1195	1195	0.40018	101.9873	MCCOOL - MOORE 345KV CKT 1
FDNS	01ALL_G15_081	0	20WP	G15_081	TO->FROM	MATHWSN7 345.00 - TATONGA7 345.00 345KV CKT 1	1195	1195	0.40005	101.9857	GEN505432 1-SIKESTON
FDNS	01ALL_G15_081	0	20WP	G15_081	TO->FROM	MATHWSN7 345.00 - TATONGA7 345.00 345KV CKT 1	1195	1195	0.40062	101.9836	WOODWARD (WOODWRD2) 138/69/13.2KV TRANSFORMER CKT 1
FDNS	01ALL_G15_081	0	20WP	G15_081	TO->FROM	MATHWSN7 345.00 - TATONGA7 345.00 345KV CKT 1	1195	1195	0.40094	101.9809	HITCHLAND INTERCHANGE - MOORE COUNTY INTERCHANGE 230KV CKT 1
FDNS	01ALL_G15_081	0	20WP	G15_081	TO->FROM	MATHWSN7 345.00 - TATONGA7 345.00 345KV CKT 1	1195	1195	0.40094	101.9809	HITCHLAND INTERCHANGE - MOORE COUNTY INTERCHANGE 230KV CKT 1
FDNS	01ALL_G15_081	0	20WP	G15_081	TO->FROM	MATHWSN7 345.00 - TATONGA7 345.00 345KV CKT 1	1195	1195	0.40005	101.9791	GEN501823 1-TECHE UNIT 3
FDNS	01ALL_G15_081	0	20WP	G15_081	TO->FROM	MATHWSN7 345.00 - TATONGA7 345.00 345KV CKT 1	1195	1195	0.40058	101.9785	P12:138:AEPW-OGE:WTH_JCT4:JENSEN4
FDNS	01ALL_G15_081	0	20WP	G15_081	TO->FROM	MATHWSN7 345.00 - TATONGA7 345.00 345KV CKT 1	1195	1195	0.40025	101.9722	P12:115:SPS:T53.1.NICHLS.KIRBY
FDNS	01ALL_G15_081	0	20WP	G15_081	TO->FROM	MATHWSN7 345.00 - TATONGA7 345.00 345KV CKT 1	1195	1195	0.40005	101.9706	ST FRANCIS 345/161KV TRANSFORMER CKT 1
FDNS	01ALL_G15_081	0	20WP	G15_081	TO->FROM	MATHWSN7 345.00 - TATONGA7 345.00 345KV CKT 1	1195	1195	0.40045	101.9673	BLACKBERRY - NEOSHO 345KV CKT 1
FDNS	01ALL_G15_081	0	20WP	G15_081	TO->FROM	MATHWSN7 345.00 - TATONGA7 345.00 345KV CKT 1	1195	1195	0.40032	101.9673	HOLT.CO3 345.00 - THEDFRD3 345.00 345KV CKT 1
FDNS	01ALL_G15_081	0	20WP	G15_081	TO->FROM	MATHWSN7 345.00 - TATONGA7 345.00 345KV CKT 1	1195	1195	0.40005	101.9668	GEN501970 1-EVANGELINE UNIT 7
FDNS	01ALL_G15_081	0	20WP	G15_081	TO->FROM	MATHWSN7 345.00 - TATONGA7 345.00 345KV CKT 1	1195	1195	0.40056	101.9622	DARLINGTNRD4138.00 - REDROCKRD4 138.00 138KV CKT 1
FDNS	01ALL_G15_081	0	20WP	G15_081	TO->FROM	MATHWSN7 345.00 - TATONGA7 345.00 345KV CKT 1	1195	1195	0.40056	101.9622	DARLINGTNRD4138.00 - REDROCKRD4 138.00 138KV CKT 1
FDNS	01ALL_G15_081	0	20WP	G15_081	TO->FROM	MATHWSN7 345.00 - TATONGA7 345.00 345KV CKT 1	1195	1195	0.40004	101.9617	7SAREPTA% 345.00 - LONGWOOD 345KV CKT 1
FDNS	01ALL_G15_081	0	20WP	G15_081	TO->FROM	MATHWSN7 345.00 - TATONGA7 345.00 345KV CKT 1	1195	1195	0.40004	101.9617	7SAREPTA% 345.00 - LONGWOOD 345KV CKT 1
FDNS	01ALL_G15_081	0	20WP	G15_081	TO->FROM	MATHWSN7 345.00 - TATONGA7 345.00 345KV CKT 1	1195	1195	0.40023	101.959	MCCLELLAN SUB - MCLEAN RURAL SUB 115KV CKT 1
FDNS	01ALL_G15_081	0	20WP	G15_081	TO->FROM	MATHWSN7 345.00 - TATONGA7 345.00 345KV CKT 1	1195	1195	0.40023	101.9582	KIRBY SWITCHING STATION - MCCLELLAN SUB 115KV CKT 1
FDNS	01ALL_G15_081	0	20WP	G15_081	TO->FROM	MATHWSN7 345.00 - TATONGA7 345.00 345KV CKT 1	1195	1195	0.40005	101.9567	ARKANSAS NUCLEAR ONE 500/22.0KV TRANSFORMER CKT 1
FDNS	01ALL_G15_081	0	20WP	G15_081	TO->FROM	MATHWSN7 345.00 - TATONGA7 345.00 345KV CKT 1	1195	1195	0.40025	101.9565	CONWAY SUB - KIRBY SWITCHING STATION 115KV CKT 1
FDNS	01ALL_G15_081	0	20WP	G15_081	TO->FROM	MATHWSN7 345.00 - TATONGA7 345.00 345KV CKT 1	1195	1195	0.40005	101.9559	GEN336242 1-1NMIL ST1 18.000
FDNS	01ALL_G15_081	0	20WP	G15_081	TO->FROM	MATHWSN7 345.00 - TATONGA7 345.00 345KV CKT 1	1195	1195	0.40004	101.9555	8DANIEL8 500.00 - MCKNIGHT 500KV CKT 1
FDNS	01ALL_G15_081	0	20WP	G15_081	TO->FROM	MATHWSN7 345.00 - TATONGA7 345.00 345KV CKT 1	1195	1195	0.40004	101.9483	3TR3AR8EL7EL
FDNS	01ALL_G15_081	0	20WP	G15_081	TO->FROM	MATHWSN7 345.00 - TATONGA7 345.00 345KV CKT 1	1195	1195	0.40004	101.9483	7SAREPTA% 345.00 - ELDORADO EHV 345KV CKT 1
FDNS	01ALL_G15_081	0	20WP	G15_081	TO->FROM	MATHWSN7 345.00 - TATONGA7 345.00 345KV CKT 1	1195	1195	0.40004	101.9481	ELDORADO EHV 500/345KV TRANSFORMER CKT 1
FDNS	01ALL_G15_081	0	20WP	G15_081	TO->FROM	MATHWSN7 345.00 - TATONGA7 345.00 345KV CKT 1	1195	1195	0.40005	101.9479	GEN338388 1-1PLUM PT U1 23.000
FDNS	01ALL_G15_081	0	20WP	G15_081	TO->FROM	MATHWSN7 345.00 - TATONGA7 345.00 345KV CKT 1	1195	1195	0.40052	101.9471	Canadian Pump Station - REDROCKRD4 138.00 138KV CKT 1
FDNS	01ALL_G15_081	0	20WP	G15_081	TO->FROM	MATHWSN7 345.00 - TATONGA7 345.00 345KV CKT 1	1195	1195	0.40005	101.9466	GEN300016 1-1G1GPDEL 18.000
FDNS	01ALL_G15_081	0	20WP	G15_081	TO->FROM	MATHWSN7 345.00 - TATONGA7 345.00 345KV CKT 1	1195	1195	0.40005	101.9466	GEN334432 1-SABINE UNIT 2

SOLUTION	GROUP	SCENARIO	SEASON	SOURCE	DIRECTION	MONITORED ELEMENT	RATEA (MVA)	RATEB(MVA)	TDF	TC%LOADING (% MVA)	CONTINGENCY
FDNS	01ALL_G15_081	0	20WP	G15_081	TO->FROM	MATHWSN7 345.00 - TATONGA7 345.00 345KV CKT 1	1195	1195	0.40005	101.9465	GEN334431 1-SABINE UNIT 1
FDNS	01ALL_G15_081	0	20WP	G15_081	TO->FROM	MATHWSN7 345.00 - TATONGA7 345.00 345KV CKT 1	1195	1195	0.40043	101.9439	P12:115:MKEC:BARBER-RIVERROAD::
FDNS	01ALL_G15_081	0	20WP	G15_081	TO->FROM	MATHWSN7 345.00 - TATONGA7 345.00 345KV CKT 1	1195	1195	0.40023	101.9438	CLINTON JUNCTION - ELK CITY 138KV CKT 1
FDNS	01ALL_G15_081	0	20WP	G15_081	TO->FROM	MATHWSN7 345.00 - TATONGA7 345.00 345KV CKT 1	1195	1195	0.40023	101.9438	CLINTON JUNCTION - ELK CITY 138KV CKT 1
FDNS	01ALL_G15_081	0	20WP	G15_081	TO->FROM	MATHWSN7 345.00 - TATONGA7 345.00 345KV CKT 1	1195	1195	0.3997	101.9437	CANADIAN RIVER - MUSKOGEE 345KV CKT 1
FDNS	01ALL_G15_081	0	20WP	G15_081	TO->FROM	MATHWSN7 345.00 - TATONGA7 345.00 345KV CKT 1	1195	1195	0.40029	101.9426	NUNDRWD - WAYSIDE 230KV CKT 1
FDNS	01ALL_G15_081	0	20WP	G15_081	TO->FROM	MATHWSN7 345.00 - TATONGA7 345.00 345KV CKT 1	1195	1195	0.40045	101.9413	PUTNAM - TALOGA 69KV CKT 1
FDNS	01ALL_G15_081	0	20WP	G15_081	TO->FROM	MATHWSN7 345.00 - TATONGA7 345.00 345KV CKT 1	1195	1195	0.40005	101.9374	GEN549890 1-SOUTHWEST 1
FDNS	01ALL_G15_081	0	20WP	G15_081	TO->FROM	MATHWSN7 345.00 - TATONGA7 345.00 345KV CKT 1	1195	1195	0.40043	101.9369	BARBER 3 115.00 - SAWYER 3 115.00 115KV CKT 1
FDNS	01ALL_G15_081	0	20WP	G15_081	TO->FROM	MATHWSN7 345.00 - TATONGA7 345.00 345KV CKT 1	1195	1195	0.40005	101.9368	FRONTIER - GRIMES 345KV CKT 1
FDNS	01ALL_G15_081	0	20WP	G15_081	TO->FROM	MATHWSN7 345.00 - TATONGA7 345.00 345KV CKT 1	1195	1195	0.40005	101.9356	GEN501971 1-EVANGELINE UNIT 7-1
FDNS	01ALL_G15_081	0	20WP	G15_081	TO->FROM	MATHWSN7 345.00 - TATONGA7 345.00 345KV CKT 1	1195	1195	0.40005	101.9356	GEN501972 1-EVANGELINE UNIT 7-2
FDNS	01ALL_G15_081	0	20WP	G15_081	TO->FROM	MATHWSN7 345.00 - TATONGA7 345.00 345KV CKT 1	1195	1195	0.40005	101.9356	GEN503900 1-FITZHUGH CT1
FDNS	01ALL_G15_081	0	20WP	G15_081	TO->FROM	MATHWSN7 345.00 - TATONGA7 345.00 345KV CKT 1	1195	1195	0.40005	101.9344	RODEMACHER 230/22.0KV TRANSFORMER CKT 1
FDNS	01ALL_G15_081	0	20WP	G15_081	TO->FROM	MATHWSN7 345.00 - TATONGA7 345.00 345KV CKT 1	1195	1195	0.40005	101.9339	GEN337430 1-PERYVILLE UNIT #3
FDNS	01ALL_G15_081	0	20WP	G15_081	TO->FROM	MATHWSN7 345.00 - TATONGA7 345.00 345KV CKT 1	1195	1195	0.40005	101.9335	GEN337428 1-PERYVILLE UNIT #1
FDNS	01ALL_G15_081	0	20WP	G15_081	TO->FROM	MATHWSN7 345.00 - TATONGA7 345.00 345KV CKT 1	1195	1195	0.40005	101.9332	GEN501912 1-ACADIA UNIT CT1B
FDNS	01ALL_G15_081	0	20WP	G15_081	TO->FROM	MATHWSN7 345.00 - TATONGA7 345.00 345KV CKT 1	1195	1195	0.40005	101.9329	GEN501911 1-ACADIA UNIT CT1A
FDNS	01ALL_G15_081	0	20WP	G15_081	TO->FROM	MATHWSN7 345.00 - TATONGA7 345.00 345KV CKT 1	1195	1195	0.40005	101.9289	GEN334392 1-EXXON MOBIL IPP 1
FDNS	01ALL_G15_081	0	20WP	G15_081	TO->FROM	MATHWSN7 345.00 - TATONGA7 345.00 345KV CKT 1	1195	1195	0.40005	101.9285	GEN334393 1-EXXON MOBIL IPP 2
FDNS	01ALL_G15_081	0	20WP	G15_081	TO->FROM	MATHWSN7 345.00 - TATONGA7 345.00 345KV CKT 1	1195	1195	0.40005	101.9285	GEN334394 1-EXXON MOBIL IPP 3
FDNS	01ALL_G15_081	0	20WP	G15_081	TO->FROM	MATHWSN7 345.00 - TATONGA7 345.00 345KV CKT 1	1195	1195	0.40043	101.9241	ALEXANDER - SAWYER 3 115.00 115KV CKT 1
FDNS	01ALL_G15_081	0	20WP	G15_081	TO->FROM	MATHWSN7 345.00 - TATONGA7 345.00 345KV CKT 1	1195	1195	0.40052	101.9213	P12:138:OKGE-AEPW:JENSEN4:REDROCKRD4
FDNS	01ALL_G15_081	0	20L	G15_081	TO->FROM	MATHWSN7 345.00 - TATONGA7 345.00 345KV CKT 1	1195	1195	0.41941	101.8781	BORDER 7345.00 - TUCO_2 345.00 345KV CKT 1
FDNS	01ALL_G15_081	0	20WP	G15_081	TO->FROM	MATHWSN7 345.00 - TATONGA7 345.00 345KV CKT 1	1195	1195	0.40005	101.6447	BASE CASE
FDNS	01ALL_G15_081	0	16WP	G15_081	TO->FROM	MATHWSN7 345.00 - TATONGA7 345.00 345KV CKT 1	1195	1195	0.42018	101.4968	FINNEY SWITCHING STATION - HOLCOMB 345KV CKT 1
FDNS	01ALL_G15_081	0	16WP	G15_081	TO->FROM	MATHWSN7 345.00 - TATONGA7 345.00 345KV CKT 1	1195	1195	0.42018	101.4968	FINNEY SWITCHING STATION - HOLCOMB 345KV CKT 1
FDNS	01ALL_G15_081	0	20WP	G15_081	TO->FROM	MATHWSN7 345.00 - TATONGA7 345.00 345KV CKT 1	1195	1195	0.39544	101.3855	ARCADIA - NORTHWEST 345KV CKT 1
FDNS	01ALL_G15_081	0	20WP	G15_081	TO->FROM	MATHWSN7 345.00 - TATONGA7 345.00 345KV CKT 1	1195	1195	0.39898	101.3736	CLEVELAND - TULSA NORTH 345KV CKT 1
FDNS	01ALL_G15_081	0	20WP	G15_081	TO->FROM	MATHWSN7 345.00 - TATONGA7 345.00 345KV CKT 1	1195	1195	0.39898	101.3736	CLEVELAND - TULSA NORTH 345KV CKT 1
FDNS	01ALL_G15_081	0	20WP	G15_081	TO->FROM	MATHWSN7 345.00 - TATONGA7 345.00 345KV CKT 1	1195	1195	0.40005	101.3704	GEN560694 1-G11-008-2 0.6900
FDNS	01ALL_G15_081	0	20WP	G15_081	TO->FROM	MATHWSN7 345.00 - TATONGA7 345.00 345KV CKT 1	1195	1195	0.40028	101.3701	P12:138:WERE:CRSW-OGE_138::
FDNS	01ALL_G15_081	0	20WP	G15_081	TO->FROM	MATHWSN7 345.00 - TATONGA7 345.00 345KV CKT 1	1195	1195	0.40005	101.3648	GEN659110 1-LELAND OLDS UNIT1
FDNS	01ALL_G15_081	0	20WP	G15_081	TO->FROM	MATHWSN7 345.00 - TATONGA7 345.00 345KV CKT 1	1195	1195	0.39995	101.364	FLINT CREEK - SILOAM SPRINGS TAP 345KV CKT 1
FDNS	01ALL_G15_081	0	20WP	G15_081	TO->FROM	MATHWSN7 345.00 - TATONGA7 345.00 345KV CKT 1	1195	1195	0.39995	101.364	FLINT CREEK - SILOAM SPRINGS TAP 345KV CKT 1
FDNS	01ALL_G15_081	0	20WP	G15_081	TO->FROM	MATHWSN7 345.00 - TATONGA7 345.00 345KV CKT 1	1195	1195	0.40005	101.3632	GEN542956 2-LACYGNE UNIT #2
FDNS	01ALL_G15_081	0	20WP	G15_081	TO->FROM	MATHWSN7 345.00 - TATONGA7 345.00 345KV CKT 1	1195	1195	0.40005	101.3584	INDEPENDENCE 500/26.0KV TRANSFORMER CKT 1
FDNS	01ALL_G15_081	0	20WP	G15_081	TO->FROM	MATHWSN7 345.00 - TATONGA7 345.00 345KV CKT 1	1195	1195	0.39992	101.3549	VIOLA 7 345.00 (VIOLA 1X) 345/138/13.8KV TRANSFORMER CKT 1
FDNS	01ALL_G15_081	0	20WP	G15_081	TO->FROM	MATHWSN7 345.00 - TATONGA7 345.00 345KV CKT 1	1195	1195	0.40005	101.3541	GEN523170 1-GOODWELL_1 10.6900
FDNS	01ALL_G15_081	0	20WP	G15_081	TO->FROM	MATHWSN7 345.00 - TATONGA7 345.00 345KV CKT 1	1195	1195	0.40005	101.3541	GEN657705 X-DRAYTON
FDNS	01ALL_G15_081	0	20WP	G15_081	TO->FROM	MATHWSN7 345.00 - TATONGA7 345.00 345KV CKT 1	1195	1195	0.4001	101.3509	NEWKIRK4 - PECKHAM TAP 138KV CKT 1
FDNS	01ALL_G15_081	0	20WP	G15_081	TO->FROM	MATHWSN7 345.00 - TATONGA7 345.00 345KV CKT 1	1195	1195	0.40096	101.35	RENFROW4 138.00 - RENFROW4 138.00 138KV CKT 1
FDNS	01ALL_G15_081	0	20WP	G15_081	TO->FROM	MATHWSN7 345.00 - TATONGA7 345.00 345KV CKT 1	1195	1195	0.39986	101.35	7JASPER 345.00 - BLACKBERRY 345KV CKT 1
FDNS	01ALL_G15_081	0	20WP	G15_081	TO->FROM	MATHWSN7 345.00 - TATONGA7 345.00 345KV CKT 1	1195	1195	0.40005	101.3498	GEN629068 1-EMERY GAS TURBINE 2
FDNS	01ALL_G15_081	0	20WP	G15_081	TO->FROM	MATHWSN7 345.00 - TATONGA7 345.00 345KV CKT 1	1195	1195	0.40005	101.3492	GEN539785 1-ENSNGW 1 0.5750
FDNS	01ALL_G15_081	0	20WP	G15_081	TO->FROM	MATHWSN7 345.00 - TATONGA7 345.00 345KV CKT 1	1195	1195	0.40005	101.3466	GEN629067 1-EMERY GAS TURBINE 1
FDNS	01ALL_G15_081	0	20WP	G15_081	TO->FROM	MATHWSN7 345.00 - TATONGA7 345.00 345KV CKT 1	1195	1195	0.40005	101.3463	GEN600050 1-FEP
FDNS	01ALL_G15_081	0	20WP	G15_081	TO->FROM	MATHWSN7 345.00 - TATONGA7 345.00 345KV CKT 1	1195	1195	0.40005	101.3423	GEN523171 1-GOODWELL_2 10.6900
FDNS	01ALL_G15_081	0	20WP	G15_081	TO->FROM	MATHWSN7 345.00 - TATONGA7 345.00 345KV CKT 1	1195	1195	0.40005	101.3398	GEN615032 2-PLEASANT VALLEY
FDNS	01ALL_G15_081	0	20WP	G15_081	TO->FROM	MATHWSN7 345.00 - TATONGA7 345.00 345KV CKT 1	1195	1195	0.40005	101.3366	GEN615052 1-CAMBRIDGE GENERATING STATION
FDNS	01ALL_G15_081	0	20WP	G15_081	TO->FROM	MATHWSN7 345.00 - TATONGA7 345.00 345KV CKT 1	1195	1195	0.40005	101.3336	GEN600065 7-HIGH BRIDGE
FDNS	01ALL_G15_081	0	20WP	G15_081	TO->FROM	MATHWSN7 345.00 - TATONGA7 345.00 345KV CKT 1	1195	1195	0.40005	101.3336	GEN600066 8-HIGH BRIDGE
FDNS	01ALL_G15_081	0	20WP	G15_081	TO->FROM	MATHWSN7 345.00 - TATONGA7 345.00 345KV CKT 1	1195	1195	0.39965	101.3332	ARCADIA - SEMINOLE 345KV CKT 1
FDNS	01ALL_G15_081	0	20WP	G15_081	TO->FROM	MATHWSN7 345.00 - TATONGA7 345.00 345KV CKT 1	1195	1195	0.40005	101.3326	GEN600070 9-RIVER SIDE
FDNS	01ALL_G15_081	0	20WP	G15_081	TO->FROM	MATHWSN7 345.00 - TATONGA7 345.00 345KV CKT 1	1195	1195	0.40005	101.3326	GEN600071 10-RIVER SIDE
FDNS	01ALL_G15_081	0	20WP	G15_081	TO->FROM	MATHWSN7 345.00 - TATONGA7 345.00 345KV CKT 1	1195	1195	0.40005	101.3321	BURLINGTON NO1 + NO 2 + NO 3 161/20.0KV TRANSFORMER CKT 1
FDNS	01ALL_G15_081	0	20WP	G15_081	TO->FROM	MATHWSN7 345.00 - TATONGA7 345.00 345KV CKT 1	1195	1195	0.4001	101.3302	NEWKIRK4 - NWKRKAT4 138.00 138KV CKT 1
FDNS	01ALL_G15_081	0	20WP	G15_081	TO->FROM	MATHWSN7 345.00 - TATONGA7 345.00 345KV CKT 1	1195	1195	0.40005	101.3287	GEN600007 7-RIVERSIDE GEN 7
FDNS	01ALL_G15_081	0	20WP	G15_081	TO->FROM	MATHWSN7 345.00 - TATONGA7 345.00 345KV CKT 1	1195	1195	0.40005	101.326	GEN600011 5-BLACK DOG GEN 1
FDNS	01ALL_G15_081	0	20WP	G15_081	TO->FROM	MATHWSN7 345.00 - TATONGA7 345.00 345KV CKT 1	1195	1195	0.40005	101.3248	GEN562483 1-G13_027_3 0.6900
FDNS	01ALL_G15_081	0	20WP	G15_081	TO->FROM	MATHWSN7 345.00 - TATONGA7 345.00 345KV CKT 1	1195	1195	0.40005	101.3235	GEN530594 1-SMKYP1G1 0.6900
FDNS	01ALL_G15_081	0	20WP	G15_081	TO->FROM	MATHWSN7 345.00 - TATONGA7 345.00 345KV CKT 1	1195	1195	0.40005	101.3229	GEN600014 4-BLACK DOG GEN 4
FDNS	01ALL_G15_081	0	20WP	G15_081	TO->FROM	MATHWSN7 345.00 - TATONGA7 345.00 345KV CKT 1	1195	1195	0.40005	101.3209	GEN542955 1-LACYGNE UNIT #1
FDNS	01ALL_G15_081	0	20WP	G15_081	TO->FROM	MATHWSN7 345.00 - TATONGA7 345.00 345KV CKT 1	1195	1195	0.40005	101.3201	GEN539762 1-SSWIND 1 34.500
FDNS	01ALL_G15_081	0	20WP	G15_081	TO->FROM	MATHWSN7 345.00 - TATONGA7 345.00 345KV CKT 1	1195	1195	0.40005	101.3176	GEN560586 1-G06-44-4 4.1600
FDNS	01ALL_G15_081	0	20WP	G15_081	TO->FROM	MATHWSN7 345.00 - TATONGA7 345.00 345KV CKT 1	1195	1195	0.40005	101.3141	GEN531505 1-CIMWD2 1 0.6900
FDNS	01ALL_G15_081	0	20WP	G15_081	TO->FROM	MATHWSN7 345.00 - TATONGA7 345.00 345KV CKT 1	1195	1195	0.40005	101.3128	GEN562298 1-G12-024 0.6500
FDNS	01ALL_G15_081	0	20WP	G15_081	TO->FROM	MATHWSN7 345.00 - TATONGA7 345.00 345KV CKT 1	1195	1195	0.40005	101.312	GEN344225 1-1CAL G1 25.000
FDNS	01ALL_G15_081	0	20WP	G15_081	TO->FROM	MATHWSN7 345.00 - TATONGA7 345.00 345KV CKT 1	1195	1195	0.40005	101.3102	GEN562688 1-G15_014_3 0.6900
FDNS	01ALL_G15_081	0	20WP	G15_081	TO->FROM	MATHWSN7 345.00 - TATONGA7 345.00 345KV CKT 1	1195	1195	0.39999	101.3098	ARKANSAS NUCLEAR ONE - PLEASANT HILL 500KV CKT 1
FDNS	01ALL_G15_081	0	20WP	G15_081	TO->FROM	MATHWSN7 345.00 - TATONGA7 345.00 345KV CKT 1	1195	1195	0.40013	101.3083	7MCCREDIE 345.00 - 7MONTGMRY 345.00 345KV CKT 1
FDNS	01ALL_G15_081	0	20WP	G15_081	TO->FROM	MATHWSN7 345.00 - TATONGA7 345.00 345KV CKT 1	1195	1195	0.40005	101.3037	GEN542902 1-GPW_G1 0.7000
FDNS	01ALL_G15_081	0	20WP	G15_081	TO->FROM	MATHWSN7 345.00 - TATONGA7 345.00 345KV CKT 1	1195	1195	0.40005	101.3014	GEN533202 1-CNTRPL-WTG1 1.0000

SOLUTION	GROUP	SCENARIO	SEASON	SOURCE	DIRECTION	MONITORED ELEMENT	RATEA (MVA)	RATEB(MVA)	TDF	TC%LOADING (% MVA)	CONTINGENCY
FDNS	01ALL_G15_081	0	20WP	G15_081	TO->FROM	MATHWSN7 345.00 - TATONGA7 345.00 345KV CKT 1	1195	1195	0.39951	101.3012	LYDIA - VALLIANT 345KV CKT 1
FDNS	01ALL_G15_081	0	20WP	G15_081	TO->FROM	MATHWSN7 345.00 - TATONGA7 345.00 345KV CKT 1	1195	1195	0.39951	101.3012	LYDIA - VALLIANT 345KV CKT 1
FDNS	01ALL_G15_081	0	20WP	G15_081	TO->FROM	MATHWSN7 345.00 - TATONGA7 345.00 345KV CKT 1	1195	1195	0.40005	101.301	GEN600017 C-LS POWER CT
FDNS	01ALL_G15_081	0	20WP	G15_081	TO->FROM	MATHWSN7 345.00 - TATONGA7 345.00 345KV CKT 1	1195	1195	0.39993	101.296	GRDA1 - SILOAM SPRINGS TAP 345KV CKT 1
FDNS	01ALL_G15_081	0	20WP	G15_081	TO->FROM	MATHWSN7 345.00 - TATONGA7 345.00 345KV CKT 1	1195	1195	0.39993	101.296	GRDA1 - SILOAM SPRINGS TAP 345KV CKT 1
FDNS	01ALL_G15_081	0	20WP	G15_081	TO->FROM	MATHWSN7 345.00 - TATONGA7 345.00 345KV CKT 1	1195	1195	0.40005	101.2932	GEN539630 1-FLTRDG-WG1 0.6000
FDNS	01ALL_G15_081	0	20WP	G15_081	TO->FROM	MATHWSN7 345.00 - TATONGA7 345.00 345KV CKT 1	1195	1195	0.40005	101.29	GEN672303 3-BOUNDARY DAM GENERATOR 3
FDNS	01ALL_G15_081	0	20WP	G15_081	TO->FROM	MATHWSN7 345.00 - TATONGA7 345.00 345KV CKT 1	1195	1195	0.40005	101.29	GEN672304 4-BOUNDARY DAM GENERATOR 4
FDNS	01ALL_G15_081	0	20WP	G15_081	TO->FROM	MATHWSN7 345.00 - TATONGA7 345.00 345KV CKT 1	1195	1195	0.40005	101.29	GEN672305 5-BOUNDARY DAM GENERATOR 5
FDNS	01ALL_G15_081	0	20WP	G15_081	TO->FROM	MATHWSN7 345.00 - TATONGA7 345.00 345KV CKT 1	1195	1195	0.4001	101.2869	KILDARE4 - NWKRKAT4 138.00 138KV CKT 1
FDNS	01ALL_G15_081	0	20WP	G15_081	TO->FROM	MATHWSN7 345.00 - TATONGA7 345.00 345KV CKT 1	1195	1195	0.40005	101.2861	GEN562035 1-G11_016_3 0.6900
FDNS	01ALL_G15_081	0	20WP	G15_081	TO->FROM	MATHWSN7 345.00 - TATONGA7 345.00 345KV CKT 1	1195	1195	0.39938	101.2851	FT SMITH - MUSKOGEE 345KV CKT 1
FDNS	01ALL_G15_081	0	20WP	G15_081	TO->FROM	MATHWSN7 345.00 - TATONGA7 345.00 345KV CKT 1	1195	1195	0.40005	101.2849	GEN560585 1-G06-44-3 4.1600
FDNS	01ALL_G15_081	0	20WP	G15_081	TO->FROM	MATHWSN7 345.00 - TATONGA7 345.00 345KV CKT 1	1195	1195	0.40028	101.284	P12:138:OKGE:3TERM7
FDNS	01ALL_G15_081	0	20WP	G15_081	TO->FROM	MATHWSN7 345.00 - TATONGA7 345.00 345KV CKT 1	1195	1195	0.40007	101.284	CLARKSVILLE - MUSKOGEE 345KV CKT 1
FDNS	01ALL_G15_081	0	20WP	G15_081	TO->FROM	MATHWSN7 345.00 - TATONGA7 345.00 345KV CKT 1	1195	1195	0.40007	101.284	CLARKSVILLE - MUSKOGEE 345KV CKT 1
FDNS	01ALL_G15_081	0	20WP	G15_081	TO->FROM	MATHWSN7 345.00 - TATONGA7 345.00 345KV CKT 1	1195	1195	0.39996	101.2803	7MONTGMRY 345.00 - 7SPENCER 345.00 345KV CKT 1
FDNS	01ALL_G15_081	0	20WP	G15_081	TO->FROM	MATHWSN7 345.00 - TATONGA7 345.00 345KV CKT 1	1195	1195	0.39996	101.2797	7MAYWOOD 345.00 - 7SPENCER 345.00 345KV CKT 1
FDNS	01ALL_G15_081	0	20WP	G15_081	TO->FROM	MATHWSN7 345.00 - TATONGA7 345.00 345KV CKT 1	1195	1195	0.40005	101.276	GEN600046 1-MECST
FDNS	01ALL_G15_081	0	20WP	G15_081	TO->FROM	MATHWSN7 345.00 - TATONGA7 345.00 345KV CKT 1	1195	1195	0.40005	101.2759	GEN560693 1-G11-008-1 0.6900
FDNS	01ALL_G15_081	0	20WP	G15_081	TO->FROM	MATHWSN7 345.00 - TATONGA7 345.00 345KV CKT 1	1195	1195	0.40241	101.2713	WOODWARD DISTRICT EHV (WWDEHV) 345/138/13.8KV TRANSFORMER CKT 1
FDNS	01ALL_G15_081	0	20WP	G15_081	TO->FROM	MATHWSN7 345.00 - TATONGA7 345.00 345KV CKT 1	1195	1195	0.40005	101.2676	GEN560432 1-G08-124 0.6900
FDNS	01ALL_G15_081	0	20WP	G15_081	TO->FROM	MATHWSN7 345.00 - TATONGA7 345.00 345KV CKT 1	1195	1195	0.40005	101.2663	GEN600047 1-MECCT1
FDNS	01ALL_G15_081	0	20WP	G15_081	TO->FROM	MATHWSN7 345.00 - TATONGA7 345.00 345KV CKT 1	1195	1195	0.40005	101.2651	GEN532663 1-LAWRENCE ENERGY CENTER UNIT 5
FDNS	01ALL_G15_081	0	20WP	G15_081	TO->FROM	MATHWSN7 345.00 - TATONGA7 345.00 345KV CKT 1	1195	1195	0.40005	101.2635	GEN672392 1-NBECGT1G 18.000
FDNS	01ALL_G15_081	0	20WP	G15_081	TO->FROM	MATHWSN7 345.00 - TATONGA7 345.00 345KV CKT 1	1195	1195	0.40253	101.252	WOODWARD DISTRICT EHV (WWDEHV-T2) 345/138/13.8KV TRANSFORMER CKT 2
FDNS	01ALL_G15_081	0	20WP	G15_081	TO->FROM	MATHWSN7 345.00 - TATONGA7 345.00 345KV CKT 1	1195	1195	0.40005	101.2496	GEN560329 1-G10-45 0.6900
FDNS	01ALL_G15_081	0	20WP	G15_081	TO->FROM	MATHWSN7 345.00 - TATONGA7 345.00 345KV CKT 1	1195	1195	0.4	101.2478	DELL 500 - INDEPENDENCE 500KV CKT 1
FDNS	01ALL_G15_081	0	20WP	G15_081	TO->FROM	MATHWSN7 345.00 - TATONGA7 345.00 345KV CKT 1	1195	1195	0.40005	101.2477	4SIOUX 1 138.00 138/18.0KV TRANSFORMER CKT 1
FDNS	01ALL_G15_081	0	20WP	G15_081	TO->FROM	MATHWSN7 345.00 - TATONGA7 345.00 345KV CKT 1	1195	1195	0.40005	101.2467	GEN615021 1-GRE-ER 14G 16.000
FDNS	01ALL_G15_081	0	20WP	G15_081	TO->FROM	MATHWSN7 345.00 - TATONGA7 345.00 345KV CKT 1	1195	1195	0.40005	101.2439	GEN531503 1-CIMRRN 1 0.6900
FDNS	01ALL_G15_081	0	20WP	G15_081	TO->FROM	MATHWSN7 345.00 - TATONGA7 345.00 345KV CKT 1	1195	1195	0.40016	101.2401	OVEXFRMCCOVE
FDNS	01ALL_G15_081	0	20WP	G15_081	TO->FROM	MATHWSN7 345.00 - TATONGA7 345.00 345KV CKT 1	1195	1195	0.40005	101.2155	GEN530690 1-PRWINDG1 0.6900
FDNS	01ALL_G15_081	0	20WP	G15_081	TO->FROM	MATHWSN7 345.00 - TATONGA7 345.00 345KV CKT 1	1195	1195	0.40005	101.207	GEN539653 1-CIMARRON RIVER PLANT GENERATOR
FDNS	01ALL_G15_081	0	20WP	G15_081	TO->FROM	MATHWSN7 345.00 - TATONGA7 345.00 345KV CKT 1	1195	1195	0.40005	101.2037	GEN600067 9-HIGH BRIDGE
FDNS	01ALL_G15_081	0	20WP	G15_081	TO->FROM	MATHWSN7 345.00 - TATONGA7 345.00 345KV CKT 1	1195	1195	0.40005	101.1939	GEN542951 5-HAWTHORN UNIT #5
FDNS	01ALL_G15_081	0	20WP	G15_081	TO->FROM	MATHWSN7 345.00 - TATONGA7 345.00 345KV CKT 1	1195	1195	0.39988	101.1839	LACYGNE - STILWELL 345KV CKT 1
FDNS	01ALL_G15_081	0	20WP	G15_081	TO->FROM	MATHWSN7 345.00 - TATONGA7 345.00 345KV CKT 1	1195	1195	0.4	101.1802	WOODRING (WOODRNG2) 345/138/13.8KV TRANSFORMER CKT 1
FDNS	01ALL_G15_081	0	20WP	G15_081	TO->FROM	MATHWSN7 345.00 - TATONGA7 345.00 345KV CKT 1	1195	1195	0.39973	101.1757	BROOKLINE - FLINT CREEK 345KV CKT 1
FDNS	01ALL_G15_081	0	20WP	G15_081	TO->FROM	MATHWSN7 345.00 - TATONGA7 345.00 345KV CKT 1	1195	1195	0.39973	101.1757	BROOKLINE - FLINT CREEK 345KV CKT 1
FDNS	01ALL_G15_081	0	20WP	G15_081	TO->FROM	MATHWSN7 345.00 - TATONGA7 345.00 345KV CKT 1	1195	1195	0.39992	101.1677	LACYGNE - WEST GARDNER 345KV CKT 1
FDNS	01ALL_G15_081	0	16WP	G15_081	TO->FROM	MATHWSN7 345.00 - TATONGA7 345.00 345KV CKT 1	1195	1195	0.41845	101.1656	G1524G1525 345.00 - THISTLE7 345.00 345KV CKT 1
FDNS	01ALL_G15_081	0	16WP	G15_081	TO->FROM	MATHWSN7 345.00 - TATONGA7 345.00 345KV CKT 1	1195	1195	0.41845	101.1656	G1524G1525 345.00 - THISTLE7 345.00 345KV CKT 2
FDNS	01ALL_G15_081	0	20WP	G15_081	TO->FROM	MATHWSN7 345.00 - TATONGA7 345.00 345KV CKT 1	1195	1195	0.39997	101.1649	KEO EHV - WEST MEMPHIS 500 500KV CKT 1
FDNS	01ALL_G15_081	0	20WP	G15_081	TO->FROM	MATHWSN7 345.00 - TATONGA7 345.00 345KV CKT 1	1195	1195	0.40005	101.1635	GEN562269 1-G12-020-1 0.6900
FDNS	01ALL_G15_081	0	20WP	G15_081	TO->FROM	MATHWSN7 345.00 - TATONGA7 345.00 345KV CKT 1	1195	1195	0.40005	101.162	GEN615010 1-STANTON4
FDNS	01ALL_G15_081	0	20WP	G15_081	TO->FROM	MATHWSN7 345.00 - TATONGA7 345.00 345KV CKT 1	1195	1195	0.40005	101.142	GEN539807 1-G05-12-1 0.6900
FDNS	01ALL_G15_081	0	16WP	G15_081	TO->FROM	MATHWSN7 345.00 - TATONGA7 345.00 345KV CKT 1	1195	1195	0.41936	101.1413	BORDER 7345.00 - WOODWARD DISTRICT EHV 345KV CKT 1
FDNS	01ALL_G15_081	0	20WP	G15_081	TO->FROM	MATHWSN7 345.00 - TATONGA7 345.00 345KV CKT 1	1195	1195	0.40005	101.1355	GEN562270 1-G12-020-2 0.6900
FDNS	01ALL_G15_081	0	20WP	G15_081	TO->FROM	MATHWSN7 345.00 - TATONGA7 345.00 345KV CKT 1	1195	1195	0.3976	101.1249	CIMARRON - MATHWSN7 345.00 345KV CKT 1
FDNS	01ALL_G15_081	0	20WP	G15_081	TO->FROM	MATHWSN7 345.00 - TATONGA7 345.00 345KV CKT 1	1195	1195	0.3976	101.1249	CIMARRON - MATHWSN7 345.00 345KV CKT 2
FDNS	01ALL_G15_081	0	20WP	G15_081	TO->FROM	MATHWSN7 345.00 - TATONGA7 345.00 345KV CKT 1	1195	1195	0.40005	101.1234	GEN525844 1-ELK_1 118.000
FDNS	01ALL_G15_081	0	20WP	G15_081	TO->FROM	MATHWSN7 345.00 - TATONGA7 345.00 345KV CKT 1	1195	1195	0.40005	101.114	GEN562524 1-G14_026_3 12.000
FDNS	01ALL_G15_081	0	20WP	G15_081	TO->FROM	MATHWSN7 345.00 - TATONGA7 345.00 345KV CKT 1	1195	1195	0.40005	101.1069	GEN560286 1-G10-01-1WTG 0.6900
FDNS	01ALL_G15_081	0	20WP	G15_081	TO->FROM	MATHWSN7 345.00 - TATONGA7 345.00 345KV CKT 1	1195	1195	0.40005	101.1069	GEN560287 1-G10-01-2WTG 0.6900
FDNS	01ALL_G15_081	0	20WP	G15_081	TO->FROM	MATHWSN7 345.00 - TATONGA7 345.00 345KV CKT 1	1195	1195	0.40005	101.1045	RCDC EAST 4230.00 - RED CEDAR DC 230KV CKT 1
FDNS	01ALL_G15_081	0	20WP	G15_081	TO->FROM	MATHWSN7 345.00 - TATONGA7 345.00 345KV CKT 1	1195	1195	0.40005	101.1044	GEN641089 2-ENERGY CENTER 2
FDNS	01ALL_G15_081	0	20WP	G15_081	TO->FROM	MATHWSN7 345.00 - TATONGA7 345.00 345KV CKT 1	1195	1195	0.40005	101.1011	P12:230:UMZB:# 112 #: NU IN SD. NU-RCDC & DRY CREEK XFMR
FDNS	01ALL_G15_081	0	20WP	G15_081	TO->FROM	MATHWSN7 345.00 - TATONGA7 345.00 345KV CKT 1	1195	1195	0.39878	101.0936	CLEVELAND - SOONER 345KV CKT 1
FDNS	01ALL_G15_081	0	20WP	G15_081	TO->FROM	MATHWSN7 345.00 - TATONGA7 345.00 345KV CKT 1	1195	1195	0.39878	101.0936	CLEVELAND - SOONER 345KV CKT 1
FDNS	01ALL_G15_081	0	20WP	G15_081	TO->FROM	MATHWSN7 345.00 - TATONGA7 345.00 345KV CKT 1	1195	1195	0.39975	101.0769	CIMARRON (CIMARON1) 345/138/13.8KV TRANSFORMER CKT 1
FDNS	01ALL_G15_081	0	20WP	G15_081	TO->FROM	MATHWSN7 345.00 - TATONGA7 345.00 345KV CKT 1	1195	1195	0.39973	101.066	CIMARRON (CIMARON2) 345/138/13.8KV TRANSFORMER CKT 1
FDNS	01ALL_G15_081	0	20WP	G15_081	TO->FROM	MATHWSN7 345.00 - TATONGA7 345.00 345KV CKT 1	1195	1195	0.40005	101.0648	GEN560256 1-G10-14-1 0.6900
FDNS	01ALL_G15_081	0	20WP	G15_081	TO->FROM	MATHWSN7 345.00 - TATONGA7 345.00 345KV CKT 1	1195	1195	0.40005	101.0638	GEN681522 3-GENOA 3
FDNS	01ALL_G15_081	0	20WP	G15_081	TO->FROM	MATHWSN7 345.00 - TATONGA7 345.00 345KV CKT 1	1195	1195	0.40005	101.0574	GEN659111 2-LELAND OLDS UNIT2
FDNS	01ALL_G15_081	0	20WP	G15_081	TO->FROM	MATHWSN7 345.00 - TATONGA7 345.00 345KV CKT 1	1195	1195	0.40005	101.0498	GEN560257 1-G10-14-2 0.6900
FDNS	01ALL_G15_081	0	20WP	G15_081	TO->FROM	MATHWSN7 345.00 - TATONGA7 345.00 345KV CKT 1	1195	1195	0.40005	101.0427	GEN528361 1-MADDOX GEN #1
FDNS	01ALL_G15_081	0	20WP	G15_081	TO->FROM	MATHWSN7 345.00 - TATONGA7 345.00 345KV CKT 1	1195	1195	0.40005	101.0268	GEN524285 1-WILDORADO WIND GEN
FDNS	01ALL_G15_081	0	20WP	G15_081	TO->FROM	MATHWSN7 345.00 - TATONGA7 345.00 345KV CKT 1	1195	1195	0.40005	101.0012	GEN657749 1-YOUNG 1 GENERATOR
FDNS	01ALL_G15_081	0	20WP	G15_081	TO->FROM	MATHWSN7 345.00 - TATONGA7 345.00 345KV CKT 1	1195	1195	0.40005	100.9957	GEN525493 1-PLANT X GEN #3
FDNS	01ALL_G15_081	0	20WP	G15_081	TO->FROM	MATHWSN7 345.00 - TATONGA7 345.00 345KV CKT 1	1195	1195	0.40005	100.995	GEN560105 1-G08-22 0.6900
FDNS	01ALL_G15_081	0	20WP	G15_081	TO->FROM	MATHWSN7 345.00 - TATONGA7 345.00 345KV CKT 1	1195	1195	0.39902	100.9927	PITTSBURG - VALLIANT 345KV CKT 1
FDNS	01ALL_G15_081	0	20WP	G15_081	TO->FROM	MATHWSN7 345.00 - TATONGA7 345.00 345KV CKT 1	1195	1195	0.39902	100.9927	PITTSBURG - VALLIANT 345KV CKT 1

SOLUTION	GROUP	SCENARIO	SEASON	SOURCE	DIRECTION	MONITORED ELEMENT	RATEA (MVA)	RATEB(MVA)	TDF	TC%LOADING (% MVA)	CONTINGENCY
FDNS	01ALL_G15_081	0	20WP	G15_081	TO->FROM	MATHWSN7 345.00 - TATONGA7 345.00 345KV CKT 1	1195	1195	0.40005	100.9918	GEN659103 1-ANTELOPE VALLEY UNIT1
FDNS	01ALL_G15_081	0	20WP	G15_081	TO->FROM	MATHWSN7 345.00 - TATONGA7 345.00 345KV CKT 1	1195	1195	0.40005	100.9918	GEN659107 2-ANTELOPE VALLEY UNIT2
FDNS	01ALL_G15_081	0	20WP	G15_081	TO->FROM	MATHWSN7 345.00 - TATONGA7 345.00 345KV CKT 1	1195	1195	1	100.9818	G11_051T 345.00 - WOODWARD DISTRICT EHV 345KV CKT 1
FDNS	01ALL_G15_081	0	20WP	G15_081	TO->FROM	MATHWSN7 345.00 - TATONGA7 345.00 345KV CKT 1	1195	1195	0.39965	100.9801	GRDA1 - GREC TAP5 345.00 345KV CKT 1
FDNS	01ALL_G15_081	0	20WP	G15_081	TO->FROM	MATHWSN7 345.00 - TATONGA7 345.00 345KV CKT 1	1195	1195	0.39989	100.9776	7SPORTSMAN - BLACKBERRY 345KV CKT 1
FDNS	01ALL_G15_081	0	20WP	G15_081	TO->FROM	MATHWSN7 345.00 - TATONGA7 345.00 345KV CKT 1	1195	1195	0.40005	100.9756	GEN528501 1-G14_012 24.000
FDNS	01ALL_G15_081	0	20WP	G15_081	TO->FROM	MATHWSN7 345.00 - TATONGA7 345.00 345KV CKT 1	1195	1195	0.39944	100.9755	RANCHRD7 345.00 - SOONER 345KV CKT 1
FDNS	01ALL_G15_081	0	20WP	G15_081	TO->FROM	MATHWSN7 345.00 - TATONGA7 345.00 345KV CKT 1	1195	1195	0.39865	100.9679	RENFROW7 345.00 - VIOLA 7 345.00 345KV CKT 1
FDNS	01ALL_G15_081	0	20WP	G15_081	TO->FROM	MATHWSN7 345.00 - TATONGA7 345.00 345KV CKT 1	1195	1195	0.40005	100.9534	GEN562550 1-G14_040_3 0.6900
FDNSLock	01ALL_G15_081	0	20WP	G15_081	TO->FROM	MATHWSN7 345.00 - TATONGA7 345.00 345KV CKT 1	1195	1195	0.40005	100.9529	GEN681542 6-JP MADGETT
FDNS	01ALL_G15_081	0	20L	G15_081	TO->FROM	MATHWSN7 345.00 - TATONGA7 345.00 345KV CKT 1	1195	1195	0.41941	100.9164	BORDER 7345.00 - WOODWARD DISTRICT EHV 345KV CKT 1
FDNS	01ALL_G15_081	0	20WP	G15_081	TO->FROM	MATHWSN7 345.00 - TATONGA7 345.00 345KV CKT 1	1195	1195	0.39704	100.8945	REDBUD - RIVERSIDE STATION 345KV CKT 1
FDNS	01ALL_G15_081	0	20WP	G15_081	TO->FROM	MATHWSN7 345.00 - TATONGA7 345.00 345KV CKT 1	1195	1195	0.39704	100.8945	REDBUD - RIVERSIDE STATION 345KV CKT 1
FDNS	01ALL_G15_081	0	20WP	G15_081	TO->FROM	MATHWSN7 345.00 - TATONGA7 345.00 345KV CKT 1	1195	1195	0.40005	100.893	GEN562042 1-G11_014_3 0.6900
FDNS	01ALL_G15_081	0	20WP	G15_081	TO->FROM	MATHWSN7 345.00 - TATONGA7 345.00 345KV CKT 1	1195	1195	0.40005	100.8909	GEN542957 1-IATAN UNIT #1
FDNS	01ALL_G15_081	0	20WP	G15_081	TO->FROM	MATHWSN7 345.00 - TATONGA7 345.00 345KV CKT 1	1195	1195	0.39903	100.8789	HUNTERS7 345.00 - WOODRING 345KV CKT 1
FDNS	01ALL_G15_081	0	20WP	G15_081	TO->FROM	MATHWSN7 345.00 - TATONGA7 345.00 345KV CKT 1	1195	1195	0.40005	100.8692	GEN672321 1-SHAND GENERATOR 1
FDNS	01ALL_G15_081	0	20WP	G15_081	TO->FROM	MATHWSN7 345.00 - TATONGA7 345.00 345KV CKT 1	1195	1195	0.40005	100.864	CLAY BOSWELL 230/20.9KV TRANSFORMER CKT 1
FDNS	01ALL_G15_081	0	20WP	G15_081	TO->FROM	MATHWSN7 345.00 - TATONGA7 345.00 345KV CKT 1	1195	1195	0.40005	100.8523	GEN672310 1-POPLAR RIVER GENERATOR 1
FDNS	01ALL_G15_081	0	20WP	G15_081	TO->FROM	MATHWSN7 345.00 - TATONGA7 345.00 345KV CKT 1	1195	1195	0.40005	100.8523	GEN672311 2-POPLAR RIVER GENERATOR 2
FDNS	01ALL_G15_081	0	20L	G15_081	TO->FROM	MATHWSN7 345.00 - TATONGA7 345.00 345KV CKT 1	1195	1195	1	100.8471	G11_051T 345.00 - WOODWARD DISTRICT EHV 345KV CKT 1
FDNS	01ALL_G15_081	0	20WP	G15_081	TO->FROM	MATHWSN7 345.00 - TATONGA7 345.00 345KV CKT 1	1195	1195	0.40005	100.8424	GEN672306 6-BOUNDARY DAM GENERATOR 6
FDNS	01ALL_G15_081	0	20WP	G15_081	TO->FROM	MATHWSN7 345.00 - TATONGA7 345.00 345KV CKT 1	1195	1195	0.39977	100.8385	DELAWARE - NEOSHO 345KV CKT 1
FDNS	01ALL_G15_081	0	20WP	G15_081	TO->FROM	MATHWSN7 345.00 - TATONGA7 345.00 345KV CKT 1	1195	1195	0.39977	100.8385	DELAWARE - NEOSHO 345KV CKT 1
FDNS	01ALL_G15_081	0	16WP	G15_081	TO->FROM	MATHWSN7 345.00 - TATONGA7 345.00 345KV CKT 1	1195	1195	0.42018	100.8144	FINNEY SWITCHING STATION - Hitchland Interchange 345KV CKT 1
FDNS	01ALL_G15_081	0	20WP	G15_081	TO->FROM	MATHWSN7 345.00 - TATONGA7 345.00 345KV CKT 1	1195	1195	0.40005	100.8086	GEN515787 1-OKLA WIND ENERGY CENTER
FDNS	01ALL_G15_081	0	20WP	G15_081	TO->FROM	MATHWSN7 345.00 - TATONGA7 345.00 345KV CKT 1	1195	1195	0.40005	100.8038	GEN524295 1-SPNSPUR_WND10.6900
FDNS	01ALL_G15_081	0	20WP	G15_081	TO->FROM	MATHWSN7 345.00 - TATONGA7 345.00 345KV CKT 1	1195	1195	0.40005	100.7987	GEN645011 1-NEBRASKA CITY 1
FDNS	01ALL_G15_081	0	20WP	G15_081	TO->FROM	MATHWSN7 345.00 - TATONGA7 345.00 345KV CKT 1	1195	1195	0.40005	100.7984	GEN520922 1-SLEEPING BEAR
FDNS	01ALL_G15_081	0	20WP	G15_081	TO->FROM	MATHWSN7 345.00 - TATONGA7 345.00 345KV CKT 1	1195	1195	0.39983	100.7954	CHAMBER SPRINGS - CLARKSVILLE 345KV CKT 1
FDNS	01ALL_G15_081	0	20WP	G15_081	TO->FROM	MATHWSN7 345.00 - TATONGA7 345.00 345KV CKT 1	1195	1195	0.40005	100.7799	GEN524022 1-NICHOLS GEN #2
FDNS	01ALL_G15_081	0	20WP	G15_081	TO->FROM	MATHWSN7 345.00 - TATONGA7 345.00 345KV CKT 1	1195	1195	0.40005	100.7744	GEN542962 2-IATAN UNIT #2
FDNS	01ALL_G15_081	0	16WP	G15_081	TO->FROM	MATHWSN7 345.00 - TATONGA7 345.00 345KV CKT 1	1195	1195	1	100.7728	G11_051T 345.00 - WOODWARD DISTRICT EHV 345KV CKT 1
FDNS	01ALL_G15_081	0	20WP	G15_081	TO->FROM	MATHWSN7 345.00 - TATONGA7 345.00 345KV CKT 1	1195	1195	0.40005	100.7413	GEN515591 1-PALDRW11 0.6900
FDNS	01ALL_G15_081	0	20WP	G15_081	TO->FROM	MATHWSN7 345.00 - TATONGA7 345.00 345KV CKT 1	1195	1195	0.40005	100.7401	GEN645012 2-NEBRASKA CITY 2
FDNS	01ALL_G15_081	0	20WP	G15_081	TO->FROM	MATHWSN7 345.00 - TATONGA7 345.00 345KV CKT 1	1195	1195	0.40005	100.7341	GEN636641 1-LOUISA UNIT 1
FDNS	01ALL_G15_081	0	20WP	G15_081	TO->FROM	MATHWSN7 345.00 - TATONGA7 345.00 345KV CKT 1	1195	1195	0.40005	100.7028	GEN532751 1-WOLF CREEK GENERATING STATION UNIT 1
FDNS	01ALL_G15_081	0	20WP	G15_081	TO->FROM	MATHWSN7 345.00 - TATONGA7 345.00 345KV CKT 1	1195	1195	0.40005	100.6975	GEN562074 1-G1149G1504 0.6900
FDNS	01ALL_G15_081	0	20WP	G15_081	TO->FROM	MATHWSN7 345.00 - TATONGA7 345.00 345KV CKT 1	1195	1195	0.40005	100.6785	GEN562017 1-G11_022_3 0.6900
FDNS	01ALL_G15_081	0	20WP	G15_081	TO->FROM	MATHWSN7 345.00 - TATONGA7 345.00 345KV CKT 1	1195	1195	0.40005	100.6666	GEN527883 1-CUNNINGHAM GEN #3 22 KV
FDNS	01ALL_G15_081	0	20WP	G15_081	TO->FROM	MATHWSN7 345.00 - TATONGA7 345.00 345KV CKT 1	1195	1195	0.40005	100.6638	GEN527884 1-CUNNINGHAM GEN #4 22 KV
FDNS	01ALL_G15_081	0	20WP	G15_081	TO->FROM	MATHWSN7 345.00 - TATONGA7 345.00 345KV CKT 1	1195	1195	0.40005	100.654	GEN629074 1-ARNOLD LOWSIDE OF GSU XFMR
FDNS	01ALL_G15_081	0	20WP	G15_081	TO->FROM	MATHWSN7 345.00 - TATONGA7 345.00 345KV CKT 1	1195	1195	0.39838	100.6433	PITTSBURG - SEMINOLE 345KV CKT 1
FDNS	01ALL_G15_081	0	20WP	G15_081	TO->FROM	MATHWSN7 345.00 - TATONGA7 345.00 345KV CKT 1	1195	1195	0.39838	100.6433	PITTSBURG - SEMINOLE 345KV CKT 1
FDNS	01ALL_G15_081	0	20WP	G15_081	TO->FROM	MATHWSN7 345.00 - TATONGA7 345.00 345KV CKT 1	1195	1195	0.40005	100.6335	GEN645001 1-FORT CALHOUN 1
FDNS	01ALL_G15_081	0	20WP	G15_081	TO->FROM	MATHWSN7 345.00 - TATONGA7 345.00 345KV CKT 1	1195	1195	0.39944	100.6126	OPENSKY7 345.00 - RANCHRD7 345.00 345KV CKT 1
FDNS	01ALL_G15_081	0	20WP	G15_081	TO->FROM	MATHWSN7 345.00 - TATONGA7 345.00 345KV CKT 1	1195	1195	0.40005	100.6007	GEN640009 1-COOPER NUCLEAR STATION
FDNS	01ALL_G15_081	0	20WP	G15_081	TO->FROM	MATHWSN7 345.00 - TATONGA7 345.00 345KV CKT 1	1195	1195	0.40005	100.5951	GEN523461 1-BLACKHAWK GEN #1
FDNS	01ALL_G15_081	0	20WP	G15_081	TO->FROM	MATHWSN7 345.00 - TATONGA7 345.00 345KV CKT 1	1195	1195	0.40005	100.5949	GEN523462 1-BLACKHAWK GEN #2
FDNS	01ALL_G15_081	0	20WP	G15_081	TO->FROM	MATHWSN7 345.00 - TATONGA7 345.00 345KV CKT 1	1195	1195	0.40005	100.5938	GEN620315 1-BIG STONE GEN
FDNS	01ALL_G15_081	0	20WP	G15_081	TO->FROM	MATHWSN7 345.00 - TATONGA7 345.00 345KV CKT 1	1195	1195	0.40005	100.5844	GEN562432 1-G13-030 0.6900
FDNS	01ALL_G15_081	0	20WP	G15_081	TO->FROM	MATHWSN7 345.00 - TATONGA7 345.00 345KV CKT 1	1195	1195	0.40005	100.5791	GEN600004 2-PRAIRIE ISLAND G2
FDNS	01ALL_G15_081	0	20WP	G15_081	TO->FROM	MATHWSN7 345.00 - TATONGA7 345.00 345KV CKT 1	1195	1195	0.40005	100.5773	GEN600003 1-PRAIRIE ISLAND G1
FDNS	01ALL_G15_081	0	20WP	G15_081	TO->FROM	MATHWSN7 345.00 - TATONGA7 345.00 345KV CKT 1	1195	1195	0.40005	100.577	GEN661015 1-COYOTE
FDNS	01ALL_G15_081	0	20WP	G15_081	TO->FROM	MATHWSN7 345.00 - TATONGA7 345.00 345KV CKT 1	1195	1195	0.40005	100.5689	GEN629075 1-OTTUMWA GENERATOR FOR OTTUMWA UNIT NO 1
FDNS	01ALL_G15_081	0	20WP	G15_081	TO->FROM	MATHWSN7 345.00 - TATONGA7 345.00 345KV CKT 1	1195	1195	0.40005	100.5607	GEN520997 1-MORLND2
FDNS	01ALL_G15_081	0	20WP	G15_081	TO->FROM	MATHWSN7 345.00 - TATONGA7 345.00 345KV CKT 1	1195	1195	0.40005	100.5468	GEN600006 1-AS KING
FDNS	01ALL_G15_081	0	20WP	G15_081	TO->FROM	MATHWSN7 345.00 - TATONGA7 345.00 345KV CKT 1	1195	1195	0.40005	100.5146	GEN532653 1-JEFFREY ENERGY CENTER UNIT 3
FDNS	01ALL_G15_081	0	20WP	G15_081	TO->FROM	MATHWSN7 345.00 - TATONGA7 345.00 345KV CKT 1	1195	1195	0.40005	100.5144	GEN532652 1-JEFFREY ENERGY CENTER UNIT 2
FDNS	01ALL_G15_081	0	20WP	G15_081	TO->FROM	MATHWSN7 345.00 - TATONGA7 345.00 345KV CKT 1	1195	1195	0.40005	100.5104	GEN515389 1-TLGWND-WTG1 0.7000
FDNS	01ALL_G15_081	0	20WP	G15_081	TO->FROM	MATHWSN7 345.00 - TATONGA7 345.00 345KV CKT 1	1195	1195	0.39978	100.5097	DELAWARE - NORTHEAST STATION 345KV CKT 1
FDNS	01ALL_G15_081	0	20WP	G15_081	TO->FROM	MATHWSN7 345.00 - TATONGA7 345.00 345KV CKT 1	1195	1195	0.39978	100.5097	DELAWARE - NORTHEAST STATION 345KV CKT 1
FDNS	01ALL_G15_081	0	20WP	G15_081	TO->FROM	MATHWSN7 345.00 - TATONGA7 345.00 345KV CKT 1	1195	1195	0.40005	100.5007	GEN532651 1-JEFFREY ENERGY CENTER UNIT 1
FDNS	01ALL_G15_081	0	20WP	G15_081	TO->FROM	MATHWSN7 345.00 - TATONGA7 345.00 345KV CKT 1	1195	1195	0.40005	100.4933	GEN520998 1-MORLND3
FDNS	01ALL_G15_081	0	20WP	G15_081	TO->FROM	MATHWSN7 345.00 - TATONGA7 345.00 345KV CKT 1	1195	1195	0.40005	100.4759	GEN539670 4-JUDSON LARGE GENERATOR
FDNS	01ALL_G15_081	0	20WP	G15_081	TO->FROM	MATHWSN7 345.00 - TATONGA7 345.00 345KV CKT 1	1195	1195	0.40005	100.4743	GEN657748 1-YOUNG 2 GENERATOR
FDNS	01ALL_G15_081	0	20WP	G15_081	TO->FROM	MATHWSN7 345.00 - TATONGA7 345.00 345KV CKT 1	1195	1195	0.39839	100.4489	GRACEMONT - LAWTON EASTSIDE 345KV CKT 1
FDNS	01ALL_G15_081	0	20WP	G15_081	TO->FROM	MATHWSN7 345.00 - TATONGA7 345.00 345KV CKT 1	1195	1195	0.39839	100.4489	GRACEMONT - LAWTON EASTSIDE 345KV CKT 1
FDNS	01ALL_G15_081	0	20WP	G15_081	TO->FROM	MATHWSN7 345.00 - TATONGA7 345.00 345KV CKT 1	1195	1195	0.40005	100.4218	GEN635213 3-NEAL UNIT 3
FDNS	01ALL_G15_081	0	20WP	G15_081	TO->FROM	MATHWSN7 345.00 - TATONGA7 345.00 345KV CKT 1	1195	1195	0.40005	100.4207	BIG STONE 230/24.0KV TRANSFORMER CKT 1
FDNS	01ALL_G15_081	0	17G	G15_081	TO->FROM	MATHWSN7 345.00 - TATONGA7 345.00 345KV CKT 1	1195	1195	1	100.4055	G11_051T 345.00 - WOODWARD DISTRICT EHV 345KV CKT 1
FDNS	01ALL_G15_081	0	20WP	G15_081	TO->FROM	MATHWSN7 345.00 - TATONGA7 345.00 345KV CKT 1	1195	1195	0.40005	100.393	GEN524023 1-NICHOLS GEN #3 22 KV
FDNS	01ALL_G15_081	0	17SP	G15_081	TO->FROM	MATHWSN7 345.00 - TATONGA7 345.00 345KV CKT 1	1195	1195	1	100.3589	G11_051T 345.00 - WOODWARD DISTRICT EHV 345KV CKT 1

SOLUTION	GROUP	SCENARIO	SEASON	SOURCE	DIRECTION	MONITORED ELEMENT	RATEA (MVA)	RATEB(MVA)	TDF	TC%LOADING (% MVA)	CONTINGENCY
FDNS	01ALL_G15_081	0	20WP	G15_081	TO->FROM	MATHWSN7 345.00 - TATONGA7 345.00 345KV CKT 1	1195	1195	0.40005	100.335	GEN600001 2-SHERBURNE CNTY G2
FDNS	01ALL_G15_081	0	20WP	G15_081	TO->FROM	MATHWSN7 345.00 - TATONGA7 345.00 345KV CKT 1	1195	1195	0.40005	100.3217	GEN526333 1-JONES GEN #3 21 KV
FDNS	01ALL_G15_081	0	20WP	G15_081	TO->FROM	MATHWSN7 345.00 - TATONGA7 345.00 345KV CKT 1	1195	1195	0.40005	100.3196	GEN527161 1-MUSTANG GEN #1
FDNS	01ALL_G15_081	0	20WP	G15_081	TO->FROM	MATHWSN7 345.00 - TATONGA7 345.00 345KV CKT 1	1195	1195	0.40005	100.3196	GEN527162 1-MUSTANG GEN #2
FDNS	01ALL_G15_081	0	20SP	G15_081	TO->FROM	MATHWSN7 345.00 - TATONGA7 345.00 345KV CKT 1	1195	1195	1	100.3127	G11_051T 345.00 - WOODWARD DISTRICT EHV 345KV CKT 1
FDNS	01ALL_G15_081	0	20WP	G15_081	TO->FROM	MATHWSN7 345.00 - TATONGA7 345.00 345KV CKT 1	1195	1195	0.40005	100.3039	GEN600005 1-MONTICELLO
FDNS	01ALL_G15_081	0	20WP	G15_081	TO->FROM	MATHWSN7 345.00 - TATONGA7 345.00 345KV CKT 1	1195	1195	0.40005	100.2302	GEN527882 1-CUNNINGHAM GEN #2 20 KV
FDNS	01ALL_G15_081	0	20WP	G15_081	TO->FROM	MATHWSN7 345.00 - TATONGA7 345.00 345KV CKT 1	1195	1195	0.40005	100.2161	GEN527163 1-MUSTANG GEN #3 22 KV
FDNS	01ALL_G15_081	0	20WP	G15_081	TO->FROM	MATHWSN7 345.00 - TATONGA7 345.00 345KV CKT 1	1195	1195	0.40005	100.2125	GEN600000 1-SHERBURNECNTY G1
FDNS	01ALL_G15_081	0	20WP	G15_081	TO->FROM	MATHWSN7 345.00 - TATONGA7 345.00 345KV CKT 1	1195	1195	0.40005	100.2069	GEN525494 1-PLANT X GEN #4 20 KV
FDNS	01ALL_G15_081	0	20WP	G15_081	TO->FROM	MATHWSN7 345.00 - TATONGA7 345.00 345KV CKT 1	1195	1195	0.40005	100.168	GEN560155 1-G10-11 0.7000
FDNS	01ALL_G15_081	0	20WP	G15_081	TO->FROM	MATHWSN7 345.00 - TATONGA7 345.00 345KV CKT 1	1195	1195	0.39903	100.1431	HUNTERS7 345.00 - RENFROW7 345.00 345KV CKT 1
FDNS	01ALL_G15_081	0	20WP	G15_081	TO->FROM	MATHWSN7 345.00 - TATONGA7 345.00 345KV CKT 1	1195	1195	0.40005	100.1257	GEN615001 1-COAL CREEK
FDNS	01ALL_G15_081	0	20WP	G15_081	TO->FROM	MATHWSN7 345.00 - TATONGA7 345.00 345KV CKT 1	1195	1195	0.40005	100.1146	SHERBURNE CO 345/24.0KV TRANSFORMER CKT 1
FDNS	01ALL_G15_081	0	20WP	G15_081	TO->FROM	MATHWSN7 345.00 - TATONGA7 345.00 345KV CKT 1	1195	1195	0.39944	100.1123	OPENSKY7 345.00 - ROSE HILL 345KV CKT 1
FDNS	01ALL_G15_081	0	20WP	G15_081	TO->FROM	MATHWSN7 345.00 - TATONGA7 345.00 345KV CKT 1	1195	1195	0.40005	100.1026	GEN615002 2-COAL CREEK
FDNS	01ALL_G15_081	0	20WP	G15_081	TO->FROM	MATHWSN7 345.00 - TATONGA7 345.00 345KV CKT 1	1195	1195	0.40005	100.0637	GEN527901 1-HOBBS PLANT #1 (CT)
FDNS	01ALL_G15_081	0	20WP	G15_081	TO->FROM	MATHWSN7 345.00 - TATONGA7 345.00 345KV CKT 1	1195	1195	0.40005	100.0637	GEN527902 1-HOBBS PLANT #2 (CT)
FDNS	01ALL_G15_081	0	20WP	G15_081	TO->FROM	MATHWSN7 345.00 - TATONGA7 345.00 345KV CKT 1	1195	1195	0.40005	100	GEN515365 1-CENT 21 0.7000
FDNS	01ALL_G15_081	0	20WP	G15_081	TO->FROM	MATHWSN7 345.00 - TATONGA7 345.00 345KV CKT 1	1195	1195	0.40005	100	GEN635214 4-NEAL UNIT 4
FDNS	01ALL_G15_081	0	20L	G15_081	TO->FROM	MATHWSN7 345.00 - TATONGA7 345.00 345KV CKT 1	1195	1195	0.40703	99.9735	LAWTON EASTSIDE - OKLAUNION 345KV CKT 1
FDNS	01ALL_G15_081	0	20L	G15_081	TO->FROM	MATHWSN7 345.00 - TATONGA7 345.00 345KV CKT 1	1195	1195	0.40703	99.9735	LAWTON EASTSIDE - OKLAUNION 345KV CKT 1
FDNS	01ALL_G15_081	0	20WP	G15_081	TO->FROM	MATHWSN7 345.00 - TATONGA7 345.00 345KV CKT 1	1195	1195	0.40005	99.9	GEN600002 3-SHERBURNE CNTY G3
FDNS	01ALL_G15_081	0	20WP	G15_081	TO->FROM	MATHWSN7 345.00 - TATONGA7 345.00 345KV CKT 1	1195	1195	0.40005	99.8	GEN635023 3-WALTER SCOTT UNIT 3
FDNS	01ALL_G15_081	0	20WP	G15_081	TO->FROM	MATHWSN7 345.00 - TATONGA7 345.00 345KV CKT 1	1195	1195	0.40005	99.8	GEN640011 2-GERALD GENTLEMAN STATION UNIT 2
FDNS	01ALL_G15_081	0	20WP	G15_081	TO->FROM	MATHWSN7 345.00 - TATONGA7 345.00 345KV CKT 1	1195	1195	0.40005	99.8	GEN659118 1-LARAMIE RIVER UNIT1
FDNS	01ALL_G15_081	0	20L	G15_081	TO->FROM	MATHWSN7 345.00 - TATONGA7 345.00 345KV CKT 1	1195	1195	0.41582	99.7	Hitchland Interchange - WALKTAP7 345.00 345KV CKT 1
FDNS	01ALL_G15_081	0	20L	G15_081	TO->FROM	MATHWSN7 345.00 - TATONGA7 345.00 345KV CKT 1	1195	1195	0.41582	99.7	Hitchland Interchange - WALKTAP7 345.00 345KV CKT 1
FDNS	01ALL_G15_081	0	20L	G15_081	TO->FROM	MATHWSN7 345.00 - TATONGA7 345.00 345KV CKT 1	1195	1195	0.414	99.7	G1524G1525 345.00 - THISTLE7 345.00 345KV CKT 1
FDNS	01ALL_G15_081	0	20L	G15_081	TO->FROM	MATHWSN7 345.00 - TATONGA7 345.00 345KV CKT 1	1195	1195	0.414	99.7	G1524G1525 345.00 - THISTLE7 345.00 345KV CKT 2
FDNS	01ALL_G15_081	0	20WP	G15_081	TO->FROM	MATHWSN7 345.00 - TATONGA7 345.00 345KV CKT 1	1195	1195	0.40005	99.7	GEN515397 1-OUSPRT 1 0.6900
FDNS	01ALL_G15_081	0	20WP	G15_081	TO->FROM	MATHWSN7 345.00 - TATONGA7 345.00 345KV CKT 1	1195	1195	0.40005	99.7	GEN526331 1-JONES GEN #1 22 KV
FDNS	01ALL_G15_081	0	20WP	G15_081	TO->FROM	MATHWSN7 345.00 - TATONGA7 345.00 345KV CKT 1	1195	1195	0.40005	99.7	GEN526332 1-JONES GEN #2 21 KV
FDNS	01ALL_G15_081	0	20WP	G15_081	TO->FROM	MATHWSN7 345.00 - TATONGA7 345.00 345KV CKT 1	1195	1195	0.40005	99.7	GEN640010 1-GERALD GENTLEMAN STATION UNIT 1
FDNS	01ALL_G15_081	0	20WP	G15_081	TO->FROM	MATHWSN7 345.00 - TATONGA7 345.00 345KV CKT 1	1195	1195	0.39621	99.7	CIMARRON - DRAPER LAKE 345KV CKT 1
FDNS	01ALL_G15_081	0	16WP	G15_081	TO->FROM	MATHWSN7 345.00 - TATONGA7 345.00 345KV CKT 1	1195	1195	0.41188	99.6	DEWEY - SOUTHARD 138KV CKT 1
FDNS	01ALL_G15_081	0	20L	G15_081	TO->FROM	MATHWSN7 345.00 - TATONGA7 345.00 345KV CKT 1	1195	1195	0.41582	99.6	P12:345:SPS:J07.1.FINN.HITCH
FDNS	01ALL_G15_081	0	20WP	G15_081	TO->FROM	MATHWSN7 345.00 - TATONGA7 345.00 345KV CKT 1	1195	1195	0.40005	99.5	GEN635024 4-WALTER SCOTT UNIT 4
FDNS	01ALL_G15_081	0	20WP	G15_081	TO->FROM	MATHWSN7 345.00 - TATONGA7 345.00 345KV CKT 1	1195	1195	0.39047	99.5	MATHWSN7 345.00 - WOODRING 345KV CKT 1
FDNS	01NR_G15_081	0	17G	G15_081	TO->FROM	ROMAN NOSE - SOUTHARD 138KV CKT 1	133	153	0.05559	106.5024	MATHWSN7 345.00 - TATONGA7 345.00 345KV CKT 1
FDNS	01NR_G15_081	0	20L	G15_081	TO->FROM	ROMAN NOSE - SOUTHARD 138KV CKT 1	133	153	0.05281	104.992	MATHWSN7 345.00 - TATONGA7 345.00 345KV CKT 1
FDNS	00NR_G15_081	0	25SP	G15_081	TO->FROM	TUCO INTERCHANGE - TUCO_2 230.00 230KV CKT 1	318.7	350.57	0.0357	128.3208	TUCO INTERCHANGE - TUCO_2 345.00 345KV CKT 1
FDNS	01NR_G15_081	2	20L	G15_081	TO->FROM	FPL SWITCH - WOODWARD 138KV CKT 1	133	153	0.09447	109.5537	MATHWSN7 345.00 - TATONGA7 345.00 345KV CKT 1
FDNS	01NR_G15_081	2	17G	G15_081	TO->FROM	ROMAN NOSE - SOUTHARD 138KV CKT 1	133	153	0.05559	106.5024	MATHWSN7 345.00 - TATONGA7 345.00 345KV CKT 1
FDNS	01NR_G15_081	2	20L	G15_081	TO->FROM	ROMAN NOSE - SOUTHARD 138KV CKT 1	133	153	0.05266	103.8253	MATHWSN7 345.00 - TATONGA7 345.00 345KV CKT 1
FDNS	00NR_G15_081	2	25SP	G15_081	TO->FROM	TUCO INTERCHANGE - TUCO_2 230.00 230KV CKT 1	318.7	350.57	0.0357	128.3208	TUCO INTERCHANGE - TUCO_2 345.00 345KV CKT 1
FDNSLock-Blown up	02ALL_G15_082	0	17G	G15_082		Non-Converged Contingency	956.09	1051.7	0.19259	-	FINNEY SWITCHING STATION - Hitchland Interchange 345KV CKT 1
FDNSLock-Blown up	02ALL_G15_082	0	17G	G15_082		Non-Converged Contingency	956.09	1051.7	0.19259	-	FINNEY SWITCHING STATION - HOLCOMB 345KV CKT 1
FDNSLock-Blown up	02ALL_G15_082	0	20L	G15_082		Non-Converged Contingency	0	0	0.347	-	P12:345:SPS:J07.1.FINN.HITCH
FDNSLock-Blown up	02ALL_G15_082	0	20L	G15_082		Non-Converged Contingency	1420	1775	0.20607	-	G11_051T 345.00 - TATONGA7 345.00 345KV CKT 1
FDNSLock-Blown up	02ALL_G15_082	0	20L	G15_082		Non-Converged Contingency	1195	1195	0.20607	-	MATHWSN7 345.00 - TATONGA7 345.00 345KV CKT 1
FDNSLock-Blown up	02ALL_G15_082	0	20L	G15_082		Non-Converged Contingency	956.09	1051.7	0.18527	-	Hitchland Interchange - WALKTAP7 345.00 345KV CKT 1
FDNSLock-Blown up	02ALL_G15_082	0	20L	G15_082		Non-Converged Contingency	956.09	1051.7	0.18527	-	Hitchland Interchange - WALKTAP7 345.00 345KV CKT 1
FDNSLock-Blown up	02ALL_G15_082	0	20WP	G15_082		Non-Converged Contingency	0	0	0.37577	-	P12:345:SPS:J07.1.FINN.HITCH
FDNSLock-Blown up	02ALL_G15_082	0	20WP	G15_082		Non-Converged Contingency	987.16	1082.8	0.20028	-	Hitchland Interchange - WALKTAP7 345.00 345KV CKT 1
FDNSLock-Blown up	02ALL_G15_082	0	20WP	G15_082		Non-Converged Contingency	987.16	1082.8	0.20028	-	Hitchland Interchange - WALKTAP7 345.00 345KV CKT 1
FDNS	02NR_G15_082	0	20L	G15_082	TO->FROM	CLEARWATER - MILAN TAP 138KV CKT 1	110	110	0.03201	99.6	MATHWSN7 345.00 - TATONGA7 345.00 345KV CKT 1
FDNS	02NR_G15_082	0	20L	G15_082	TO->FROM	FPL SWITCH - WOODWARD 138KV CKT 1	133	153	0.08016	134.5097	MATHWSN7 345.00 - TATONGA7 345.00 345KV CKT 1
FDNS	02NR_G15_082	0	20L	G15_082	TO->FROM	FPL SWITCH - WOODWARD 138KV CKT 1	133	153	0.08016	116.7317	G11_051T 345.00 - TATONGA7 345.00 345KV CKT 1
FDNS	02NR_G15_082	0	20L	G15_082	TO->FROM	FPL SWITCH - WOODWARD 138KV CKT 1	133	153	0.08016	115.3677	G11_051T 345.00 - WOODWARD DISTRICT EHV 345KV CKT 1
FDNS	02NR_G15_082	0	20L	G15_082	TO->FROM	FPL SWITCH - WOODWARD 138KV CKT 1	133	153	0.06367	101.8417	IODINE - WOODWARD EHV 138KV CKT 1
FDNS	02NR_G15_082	0	20L	G15_082	TO->FROM	FPL SWITCH - WOODWARD 138KV CKT 1	133	153	0.06367	100.462	DEWEY - IODINE 138KV CKT 1
FDNS	00NR_G15_082	0	25SP	G15_082	FROM->TO	Hitchland Interchange (SIEM 8743067) 345/230/13.2KV TRANSFORMER CKT 2	560	644	0.07463	112.3617	Hitchland Interchange (H TB80155502) 345/230/13.2KV TRANSFORMER CKT 1
FDNS	00NR_G15_082	0	25SP	G15_082	FROM->TO	Hitchland Interchange (SIEM 8743067) 345/230/13.2KV TRANSFORMER CKT 2	560	644	0.07463	112.3617	Hitchland Interchange (H TB80155502) 345/230/13.2KV TRANSFORMER CKT 1
FDNS	00NR_G15_082	0	25SP	G15_082	FROM->TO	Hitchland Interchange (SIEM 8743067) 345/230/13.2KV TRANSFORMER CKT 2	560	644	0.07463	109.6741	Hitchland Interchange (H TB80155502) 345/230/13.2KV TRANSFORMER CKT 1
FDNS	00NR_G15_082	0	25SP	G15_082	FROM->TO	Hitchland Interchange (SIEM 8743067) 345/230/13.2KV TRANSFORMER CKT 2	560	644	0.07463	109.6741	Hitchland Interchange (H TB80155502) 345/230/13.2KV TRANSFORMER CKT 1
FDNS	00NR_G15_082	0	25SP	G15_082	FROM->TO	HITCHLAND INTERCHANGE (UPDATE LATER) 230/115/13.2KV TRANSFORMER CKT 2	250	288	0.03184	107.2711	HITCHLAND INTERCHANGE (H TP80148301) 230/115/13.2KV TRANSFORMER CKT 1
FDNS	00NR_G15_082	0	25SP	G15_082	FROM->TO	HITCHLAND INTERCHANGE (UPDATE LATER) 230/115/13.2KV TRANSFORMER CKT 2	250	288	0.03184	107.2711	HITCHLAND INTERCHANGE (H TP80148301) 230/115/13.2KV TRANSFORMER CKT 1
FDNS	00NR_G15_082	0	25SP	G15_082	FROM->TO	HITCHLAND INTERCHANGE (UPDATE LATER) 230/115/13.2KV TRANSFORMER CKT 2	250	288	0.03184	105.9128	HITCHLAND INTERCHANGE (H TP80148301) 230/115/13.2KV TRANSFORMER CKT 1
FDNS	00NR_G15_082	0	25SP	G15_082	FROM->TO	HITCHLAND INTERCHANGE (UPDATE LATER) 230/115/13.2KV TRANSFORMER CKT 2	250	288	0.03184	105.9128	HITCHLAND INTERCHANGE (H TP80148301) 230/115/13.2KV TRANSFORMER CKT 1
FDNS	00NR_G15_082	0	25SP	G15_082	FROM->TO	POTTER COUNTY INTERCHANGE (WAUK 90343-A) 345/230/13.2KV TRANSFORMER CKT 1	560	560	0.08185	124.9874	BORDER 7345.00 - TUCO_2 345.00 345KV CKT 1
FDNS	00NR_G15_082	0	25SP	G15_082	FROM->TO	POTTER COUNTY INTERCHANGE (WAUK 90343-A) 345/230/13.2KV TRANSFORMER CKT 1	560	560	0.09282	122.2837	HITCHLAND INTERCHANGE - MOORE COUNTY INTERCHANGE 230KV CKT 1
FDNS	00NR_G15_082	0	25SP	G15_082	FROM->TO	POTTER COUNTY INTERCHANGE (WAUK 90343-A) 345/230/13.2KV TRANSFORMER CKT 1	560	560	0.09282	122.2837	HITCHLAND INTERCHANGE - MOORE COUNTY INTERCHANGE 230KV CKT 1

SOLUTION	GROUP	SCENARIO	SEASON	SOURCE	DIRECTION	MONITORED ELEMENT	RATEA (MVA)	RATEB(MVA)	TDF	TC%LOADING (% MVA)	CONTINGENCY
FDNS	00NR_G15_082	0	25SP	G15_082	FROM->TO	POTTER COUNTY INTERCHANGE (WAUK 90343-A) 345/230/13.2KV TRANSFORMER CKT 1	560	560	0.08185	122.0862	BORDER 7345.00 - WOODWARD DISTRICT EHV 345KV CKT 1
FDNS	00NR_G15_082	0	25SP	G15_082	FROM->TO	POTTER COUNTY INTERCHANGE (WAUK 90343-A) 345/230/13.2KV TRANSFORMER CKT 1	560	560	0.08185	121.2732	BORDER 7345.00 - TUCO_2 345.00 345KV CKT 1
FDNS	00NR_G15_082	0	25SP	G15_082	FROM->TO	POTTER COUNTY INTERCHANGE (WAUK 90343-A) 345/230/13.2KV TRANSFORMER CKT 1	560	560	0.09282	119.2259	HITCHLAND INTERCHANGE - MOORE COUNTY INTERCHANGE 230KV CKT 1
FDNS	00NR_G15_082	0	25SP	G15_082	FROM->TO	POTTER COUNTY INTERCHANGE (WAUK 90343-A) 345/230/13.2KV TRANSFORMER CKT 1	560	560	0.09282	119.2259	HITCHLAND INTERCHANGE - MOORE COUNTY INTERCHANGE 230KV CKT 1
FDNS	00NR_G15_082	0	25SP	G15_082	FROM->TO	POTTER COUNTY INTERCHANGE (WAUK 90343-A) 345/230/13.2KV TRANSFORMER CKT 1	560	560	0.06284	118.9479	G14-074T 345.00 - OKLAUNION 345KV CKT 1
FDNS	00NR_G15_082	0	25SP	G15_082	FROM->TO	POTTER COUNTY INTERCHANGE (WAUK 90343-A) 345/230/13.2KV TRANSFORMER CKT 1	560	560	0.08185	118.704	BORDER 7345.00 - WOODWARD DISTRICT EHV 345KV CKT 1
FDNS	00NR_G15_082	0	25SP	G15_082	FROM->TO	POTTER COUNTY INTERCHANGE (WAUK 90343-A) 345/230/13.2KV TRANSFORMER CKT 1	560	560	0.07935	118.2996	GEN525561 1-TOLK GEN #1 24 KV
FDNS	00NR_G15_082	0	25SP	G15_082	FROM->TO	POTTER COUNTY INTERCHANGE (WAUK 90343-A) 345/230/13.2KV TRANSFORMER CKT 1	560	560	0.07935	116.8648	GEN525562 1-TOLK GEN #2 24 KV
FDNS	00NR_G15_082	0	25SP	G15_082	FROM->TO	POTTER COUNTY INTERCHANGE (WAUK 90343-A) 345/230/13.2KV TRANSFORMER CKT 1	560	560	0.06075	115.8725	STLN-DEMARC6 - SWEETWATER 230KV CKT 1
FDNS	00NR_G15_082	0	25SP	G15_082	FROM->TO	POTTER COUNTY INTERCHANGE (WAUK 90343-A) 345/230/13.2KV TRANSFORMER CKT 1	560	560	0.06075	115.8533	P12:230:AEPW-SPS:SWEETWT6:WHEELER 6
FDNS	00NR_G15_082	0	25SP	G15_082	FROM->TO	POTTER COUNTY INTERCHANGE (WAUK 90343-A) 345/230/13.2KV TRANSFORMER CKT 1	560	560	0.06075	115.849	STATELINE INTERCHANGE - STLN-DEMARC6 230KV CKT 1
FDNS	00NR_G15_082	0	25SP	G15_082	FROM->TO	POTTER COUNTY INTERCHANGE (WAUK 90343-A) 345/230/13.2KV TRANSFORMER CKT 1	560	560	0.06284	115.8065	G14-074T 345.00 - OKLAUNION 345KV CKT 1
FDNS	00NR_G15_082	0	25SP	G15_082	FROM->TO	POTTER COUNTY INTERCHANGE (WAUK 90343-A) 345/230/13.2KV TRANSFORMER CKT 1	560	560	0.07935	115.2549	GEN525561 1-TOLK GEN #1 24 KV
FDNS	00NR_G15_082	0	25SP	G15_082	FROM->TO	POTTER COUNTY INTERCHANGE (WAUK 90343-A) 345/230/13.2KV TRANSFORMER CKT 1	560	560	0.07935	113.9999	GEN525562 1-TOLK GEN #2 24 KV
FDNS	00NR_G15_082	0	25SP	G15_082	FROM->TO	POTTER COUNTY INTERCHANGE (WAUK 90343-A) 345/230/13.2KV TRANSFORMER CKT 1	560	560	0.07935	113.1377	GEN523971 1-HARRINGTON GEN #1 24 KV
FDNS	00NR_G15_082	0	25SP	G15_082	FROM->TO	POTTER COUNTY INTERCHANGE (WAUK 90343-A) 345/230/13.2KV TRANSFORMER CKT 1	560	560	0.07935	113.1373	GEN523973 1-HARRINGTON GEN #3 24 KV
FDNS	00NR_G15_082	0	25SP	G15_082	FROM->TO	POTTER COUNTY INTERCHANGE (WAUK 90343-A) 345/230/13.2KV TRANSFORMER CKT 1	560	560	0.07935	113.109	GEN523972 1-HARRINGTON GEN #2 24 KV
FDNS	00NR_G15_082	0	25SP	G15_082	FROM->TO	POTTER COUNTY INTERCHANGE (WAUK 90343-A) 345/230/13.2KV TRANSFORMER CKT 1	560	560	0.06075	113.0698	STLN-DEMARC6 - SWEETWATER 230KV CKT 1
FDNS	00NR_G15_082	0	25SP	G15_082	FROM->TO	POTTER COUNTY INTERCHANGE (WAUK 90343-A) 345/230/13.2KV TRANSFORMER CKT 1	560	560	0.06075	113.055	P12:230:AEPW-SPS:SWEETWT6:WHEELER 6
FDNS	00NR_G15_082	0	25SP	G15_082	FROM->TO	POTTER COUNTY INTERCHANGE (WAUK 90343-A) 345/230/13.2KV TRANSFORMER CKT 1	560	560	0.06075	113.0512	STATELINE INTERCHANGE - STLN-DEMARC6 230KV CKT 1
FDNS	02ALL_G15_082	0	25SP	G15_082	FROM->TO	POTTER COUNTY INTERCHANGE (WAUK 90343-A) 345/230/13.2KV TRANSFORMER CKT 1	560	560	0.08471	111.447	BASE CASE
FDNS	00NR_G15_082	0	25SP	G15_082	FROM->TO	POTTER COUNTY INTERCHANGE (WAUK 90343-A) 345/230/13.2KV TRANSFORMER CKT 1	560	560	0.07935	111.338	GEN527903 1-HOBBS PLANT #3 (ST)
FDNS	00NR_G15_082	0	25SP	G15_082	FROM->TO	POTTER COUNTY INTERCHANGE (WAUK 90343-A) 345/230/13.2KV TRANSFORMER CKT 1	560	560	0.06077	111.2055	P12:230:AEPW:ELKCITY6:SWEETWT6
FDNS	00NR_G15_082	0	25SP	G15_082	FROM->TO	POTTER COUNTY INTERCHANGE (WAUK 90343-A) 345/230/13.2KV TRANSFORMER CKT 1	560	560	0.06075	111.1933	CHISHOLM6 230.00 - SWEETWATER 230KV CKT 1
FDNS	00NR_G15_082	0	25SP	G15_082	FROM->TO	POTTER COUNTY INTERCHANGE (WAUK 90343-A) 345/230/13.2KV TRANSFORMER CKT 1	560	560	0.07935	110.6837	GEN523971 1-HARRINGTON GEN #1 24 KV
FDNS	00NR_G15_082	0	25SP	G15_082	FROM->TO	POTTER COUNTY INTERCHANGE (WAUK 90343-A) 345/230/13.2KV TRANSFORMER CKT 1	560	560	0.07935	110.6835	GEN523973 1-HARRINGTON GEN #3 24 KV
FDNS	00NR_G15_082	0	25SP	G15_082	FROM->TO	POTTER COUNTY INTERCHANGE (WAUK 90343-A) 345/230/13.2KV TRANSFORMER CKT 1	560	560	0.07935	110.6621	GEN523972 1-HARRINGTON GEN #2 24 KV
FDNS	00NR_G15_082	0	25SP	G15_082	FROM->TO	POTTER COUNTY INTERCHANGE (WAUK 90343-A) 345/230/13.2KV TRANSFORMER CKT 1	560	560	0.07935	110.5428	GEN528501 1-G14_012 24.000
FDNS	00NR_G15_082	0	25SP	G15_082	FROM->TO	POTTER COUNTY INTERCHANGE (WAUK 90343-A) 345/230/13.2KV TRANSFORMER CKT 1	560	560	0.06284	110.4843	LAWTON EASTSIDE - OKLAUNION 345KV CKT 1
FDNS	00NR_G15_082	0	25SP	G15_082	FROM->TO	POTTER COUNTY INTERCHANGE (WAUK 90343-A) 345/230/13.2KV TRANSFORMER CKT 1	560	560	0.06284	110.4843	LAWTON EASTSIDE - OKLAUNION 345KV CKT 1
FDNS	00NR_G15_082	0	25SP	G15_082	FROM->TO	POTTER COUNTY INTERCHANGE (WAUK 90343-A) 345/230/13.2KV TRANSFORMER CKT 1	560	560	0.07935	110.3542	GEN524023 1-NICHOLS GEN #3 22 KV
FDNS	00NR_G15_082	0	25SP	G15_082	FROM->TO	POTTER COUNTY INTERCHANGE (WAUK 90343-A) 345/230/13.2KV TRANSFORMER CKT 1	560	560	0.08322	110.3027	Hitchland Interchange (SIEM 8743067) 345/230/13.2KV TRANSFORMER CKT 2
FDNS	00NR_G15_082	0	25SP	G15_082	FROM->TO	POTTER COUNTY INTERCHANGE (WAUK 90343-A) 345/230/13.2KV TRANSFORMER CKT 1	560	560	0.08322	110.3027	Hitchland Interchange (SIEM 8743067) 345/230/13.2KV TRANSFORMER CKT 2
FDNS	00NR_G15_082	0	25SP	G15_082	FROM->TO	POTTER COUNTY INTERCHANGE (WAUK 90343-A) 345/230/13.2KV TRANSFORMER CKT 1	560	560	0.07935	109.7525	GEN527166 1-MUSTANG_6 118.000
FDNS	00NR_G15_082	0	25SP	G15_082	FROM->TO	POTTER COUNTY INTERCHANGE (WAUK 90343-A) 345/230/13.2KV TRANSFORMER CKT 1	560	560	0.07935	109.468	GEN526333 1-JONES GEN #3 21 KV
FDNS	00NR_G15_082	0	25SP	G15_082	FROM->TO	POTTER COUNTY INTERCHANGE (WAUK 90343-A) 345/230/13.2KV TRANSFORMER CKT 1	560	560	0.07935	109.3571	GEN526334 1-JONES_4 116.500
FDNS	00NR_G15_082	0	25SP	G15_082	FROM->TO	POTTER COUNTY INTERCHANGE (WAUK 90343-A) 345/230/13.2KV TRANSFORMER CKT 1	560	560	0.07935	109.247	GEN525844 1-ELK_1 118.000
FDNS	00NR_G15_082	0	25SP	G15_082	FROM->TO	POTTER COUNTY INTERCHANGE (WAUK 90343-A) 345/230/13.2KV TRANSFORMER CKT 1	560	560	0.07935	109.2456	GEN525845 1-ELK_2 1 18.000
FDNS	00NR_G15_082	0	25SP	G15_082	FROM->TO	POTTER COUNTY INTERCHANGE (WAUK 90343-A) 345/230/13.2KV TRANSFORMER CKT 1	560	560	0.0826	109.1678	Hansford County Switch Station - SPEARMAN INTERCHANGE 115KV CKT 1
FDNS	00NR_G15_082	0	25SP	G15_082	FROM->TO	POTTER COUNTY INTERCHANGE (WAUK 90343-A) 345/230/13.2KV TRANSFORMER CKT 1	560	560	0.0826	109.1678	Hansford County Switch Station - SPEARMAN INTERCHANGE 115KV CKT 1
FDNS	02ALL_G15_082	0	25SP	G15_082	FROM->TO	POTTER COUNTY INTERCHANGE (WAUK 90343-A) 345/230/13.2KV TRANSFORMER CKT 1	560	560	0.08471	109.1266	BASE CASE
FDNS	00NR_G15_082	0	25SP	G15_082	FROM->TO	POTTER COUNTY INTERCHANGE (WAUK 90343-A) 345/230/13.2KV TRANSFORMER CKT 1	560	560	0.07935	109.0474	GEN527903 1-HOBBS PLANT #3 (ST)
FDNS	00NR_G15_082	0	25SP	G15_082	FROM->TO	POTTER COUNTY INTERCHANGE (WAUK 90343-A) 345/230/13.2KV TRANSFORMER CKT 1	560	560	0.07935	108.9067	GEN526331 1-JONES GEN #1 22 KV
FDNS	00NR_G15_082	0	25SP	G15_082	FROM->TO	POTTER COUNTY INTERCHANGE (WAUK 90343-A) 345/230/13.2KV TRANSFORMER CKT 1	560	560	0.07935	108.901	GEN526332 1-JONES GEN #2 21 KV
FDNS	00NR_G15_082	0	25SP	G15_082	FROM->TO	POTTER COUNTY INTERCHANGE (WAUK 90343-A) 345/230/13.2KV TRANSFORMER CKT 1	560	560	0.08197	108.8816	DWS FRISCO - SHERMAN COUNTY TAP 115KV CKT 1
FDNS	00NR_G15_082	0	25SP	G15_082	FROM->TO	POTTER COUNTY INTERCHANGE (WAUK 90343-A) 345/230/13.2KV TRANSFORMER CKT 1	560	560	0.06077	108.8458	P12:230:AEPW:ELKCITY6:SWEETWT6
FDNS	00NR_G15_082	0	25SP	G15_082	FROM->TO	POTTER COUNTY INTERCHANGE (WAUK 90343-A) 345/230/13.2KV TRANSFORMER CKT 1	560	560	0.06075	108.8398	CHISHOLM6 230.00 - SWEETWATER 230KV CKT 1
FDNS	00NR_G15_082	0	25SP	G15_082	FROM->TO	POTTER COUNTY INTERCHANGE (WAUK 90343-A) 345/230/13.2KV TRANSFORMER CKT 1	560	560	0.07935	108.8291	GEN527901 1-HOBBS PLANT #1 (CT)
FDNS	00NR_G15_082	0	25SP	G15_082	FROM->TO	POTTER COUNTY INTERCHANGE (WAUK 90343-A) 345/230/13.2KV TRANSFORMER CKT 1	560	560	0.07935	108.8291	GEN527902 1-HOBBS PLANT #2 (CT)
FDNS	00NR_G15_082	0	25SP	G15_082	FROM->TO	POTTER COUNTY INTERCHANGE (WAUK 90343-A) 345/230/13.2KV TRANSFORMER CKT 1	560	560	0.08235	108.8048	Hitchland Interchange (H TB80155502) 345/230/13.2KV TRANSFORMER CKT 1
FDNS	00NR_G15_082	0	25SP	G15_082	FROM->TO	POTTER COUNTY INTERCHANGE (WAUK 90343-A) 345/230/13.2KV TRANSFORMER CKT 1	560	560	0.08235	108.8048	Hitchland Interchange (H TB80155502) 345/230/13.2KV TRANSFORMER CKT 1
FDNS	00NR_G15_082	0	25SP	G15_082	FROM->TO	POTTER COUNTY INTERCHANGE (WAUK 90343-A) 345/230/13.2KV TRANSFORMER CKT 1	560	560	0.08197	108.7258	P12:115:SPS:W08.1.HITCH.LASLEY
FDNS	00NR_G15_082	0	25SP	G15_082	FROM->TO	POTTER COUNTY INTERCHANGE (WAUK 90343-A) 345/230/13.2KV TRANSFORMER CKT 1	560	560	0.08197	108.7015	DWS FRISCO - HITCHLAND INTERCHANGE 115KV CKT 1
FDNS	00NR_G15_082	0	25SP	G15_082	FROM->TO	POTTER COUNTY INTERCHANGE (WAUK 90343-A) 345/230/13.2KV TRANSFORMER CKT 1	560	560	0.0826	108.5651	HITCHLAND INTERCHANGE - Hansford County Switch Station 115KV CKT 1
FDNS	00NR_G15_082	0	25SP	G15_082	FROM->TO	POTTER COUNTY INTERCHANGE (WAUK 90343-A) 345/230/13.2KV TRANSFORMER CKT 1	560	560	0.0826	108.5651	HITCHLAND INTERCHANGE - Hansford County Switch Station 115KV CKT 1
FDNS	00NR_G15_082	0	25SP	G15_082	FROM->TO	POTTER COUNTY INTERCHANGE (WAUK 90343-A) 345/230/13.2KV TRANSFORMER CKT 1	560	560	0.08705	108.414	MOORE COUNTY INTERCHANGE - POTTER COUNTY INTERCHANGE 230KV CKT 1
FDNS	00NR_G15_082	0	25SP	G15_082	FROM->TO	POTTER COUNTY INTERCHANGE (WAUK 90343-A) 345/230/13.2KV TRANSFORMER CKT 1	560	560	0.08705	108.414	MOORE COUNTY INTERCHANGE - POTTER COUNTY INTERCHANGE 230KV CKT 1
FDNS	00NR_G15_082	0	25SP	G15_082	FROM->TO	POTTER COUNTY INTERCHANGE (WAUK 90343-A) 345/230/13.2KV TRANSFORMER CKT 1	560	560	0.07935	108.3185	GEN528501 1-G14_012 24.000
FDNS	00NR_G15_082	0	25SP	G15_082	FROM->TO	POTTER COUNTY INTERCHANGE (WAUK 90343-A) 345/230/13.2KV TRANSFORMER CKT 1	560	560	0.06284	108.2696	LAWTON EASTSIDE - OKLAUNION 345KV CKT 1
FDNS	00NR_G15_082	0	25SP	G15_082	FROM->TO	POTTER COUNTY INTERCHANGE (WAUK 90343-A) 345/230/13.2KV TRANSFORMER CKT 1	560	560	0.06284	108.2696	LAWTON EASTSIDE - OKLAUNION 345KV CKT 1
FDNS	00NR_G15_082	0	25SP	G15_082	FROM->TO	POTTER COUNTY INTERCHANGE (WAUK 90343-A) 345/230/13.2KV TRANSFORMER CKT 1	560	560	0.06875	108.1958	GRAPEVINE INTERCHANGE - STATELINE INTERCHANGE 230KV CKT 1
FDNS	00NR_G15_082	0	25SP	G15_082	FROM->TO	POTTER COUNTY INTERCHANGE (WAUK 90343-A) 345/230/13.2KV TRANSFORMER CKT 1	560	560	0.06875	108.1958	GRAPEVINE INTERCHANGE - STATELINE INTERCHANGE 230KV CKT 1
FDNS	00NR_G15_082	0	25SP	G15_082	FROM->TO	POTTER COUNTY INTERCHANGE (WAUK 90343-A) 345/230/13.2KV TRANSFORMER CKT 1	560	560	0.07935	108.121	GEN524023 1-NICHOLS GEN #3 22 KV
FDNS	00NR_G15_082	0	25SP	G15_082	FROM->TO	POTTER COUNTY INTERCHANGE (WAUK 90343-A) 345/230/13.2KV TRANSFORMER CKT 1	560	560	0.08322	108.1091	Hitchland Interchange (SIEM 8743067) 345/230/13.2KV TRANSFORMER CKT 2
FDNS	00NR_G15_082	0	25SP	G15_082	FROM->TO	POTTER COUNTY INTERCHANGE (WAUK 90343-A) 345/230/13.2KV TRANSFORMER CKT 1	560	560	0.08322	108.1091	Hitchland Interchange (SIEM 8743067) 345/230/13.2KV TRANSFORMER CKT 2
FDNS	00NR_G15_082	0	25SP	G15_082	FROM->TO	POTTER COUNTY INTERCHANGE (WAUK 90343-A) 345/230/13.2KV TRANSFORMER CKT 1	560	560	0.07935	107.911	GEN525494 1-PLANT X GEN #4 20 KV
FDNS	00NR_G15_082	0	25SP	G15_082	FROM->TO	POTTER COUNTY INTERCHANGE (WAUK 90343-A) 345/230/13.2KV TRANSFORMER CKT 1	560	560	0.07365	107.6756	CHISHOLM7 345.00 - GRACEMONT 345KV CKT 1
FDNS	00NR_G15_082	0	25SP	G15_082	FROM->TO	POTTER COUNTY INTERCHANGE (WAUK 90343-A) 345/230/13.2KV TRANSFORMER CKT 1	560	560	0.07935	107.6276	GEN562710 1-G15_022_3 0.5500
FDNS	00NR_G15_082	0	25SP	G15_082	FROM->TO	POTTER COUNTY INTERCHANGE (WAUK 90343-A) 345/230/13.2KV TRANSFORMER CKT 1	560	560	0.07365	107.6185	CHISHOLM7 345.00 () 345/230/13.2KV TRANSFORMER CKT 1
FDNS	00NR_G15_082	0	25SP	G15_082	FROM->TO	POTTER COUNTY INTERCHANGE (WAUK 90343-A) 345/230/13.2KV TRANSFORMER CKT 1	560	560	0.07935	107.5924	GEN527166 1-MUSTANG_6 118.000
FDNS	00NR_G15_082	0	25SP	G15_082	FROM->TO	POTTER COUNTY INTERCHANGE (WAUK 90343-A) 345/230/13.2KV TRANSFORMER CKT 1	560	560	0.07935	107.5652	GEN527163 1-MUSTANG GEN #3 22 KV
FDNS	00NR_G15_082	0	25SP	G15_082	FROM->TO	POTTER COUNTY INTERCHANGE (WAUK 90343-A) 345/230/13.2KV TRANSFORMER CKT 1	560	560	0.07881	107.3668	TUCO INTERCHANGE - YOAKUM_345 345.00 345KV CKT 1
FDNS	00NR_G15_082	0	25SP	G15_082	FROM->TO	POTTER COUNTY INTERCHANGE (WAUK 90343-A) 345/230/13.2KV TRANSFORMER CKT 1	560	560	0.07935	107.3427	GEN527161 1-MUSTANG GEN #1

SOLUTION	GROUP	SCENARIO	SEASON	SOURCE	DIRECTION	MONITORED ELEMENT	RATEA (MVA)	RATEB(MVA)	TDF	TC%LOADING (% MVA)	CONTINGENCY
FDNS	00NR_G15_082	0	25SP	G15_082	FROM->TO	POTTER COUNTY INTERCHANGE (WAUK 90343-A) 345/230/13.2KV TRANSFORMER CKT 1	560	560	0.07935	107.3427	GEN527162 1-MUSTANG GEN #2
FDNS	00NR_G15_082	0	25SP	G15_082	FROM->TO	POTTER COUNTY INTERCHANGE (WAUK 90343-A) 345/230/13.2KV TRANSFORMER CKT 1	560	560	0.07935	107.3291	GEN526333 1-JONES GEN #3 21 KV
FDNS	00NR_G15_082	0	25SP	G15_082	FROM->TO	POTTER COUNTY INTERCHANGE (WAUK 90343-A) 345/230/13.2KV TRANSFORMER CKT 1	560	560	0.07935	107.2262	GEN526334 1-JONES_4 116.500
FDNS	00NR_G15_082	0	25SP	G15_082	FROM->TO	POTTER COUNTY INTERCHANGE (WAUK 90343-A) 345/230/13.2KV TRANSFORMER CKT 1	560	560	0.07935	107.1188	GEN525844 1-ELK_1 118.000
FDNS	00NR_G15_082	0	25SP	G15_082	FROM->TO	POTTER COUNTY INTERCHANGE (WAUK 90343-A) 345/230/13.2KV TRANSFORMER CKT 1	560	560	0.07935	107.1175	GEN525845 1-ELK_2 1 18.000
FDNS	00NR_G15_082	0	25SP	G15_082	FROM->TO	POTTER COUNTY INTERCHANGE (WAUK 90343-A) 345/230/13.2KV TRANSFORMER CKT 1	560	560	0.0826	107.0889	Hansford County Switch Station - SPEARMAN INTERCHANGE 115KV CKT 1
FDNS	00NR_G15_082	0	25SP	G15_082	FROM->TO	POTTER COUNTY INTERCHANGE (WAUK 90343-A) 345/230/13.2KV TRANSFORMER CKT 1	560	560	0.0826	107.0889	Hansford County Switch Station - SPEARMAN INTERCHANGE 115KV CKT 1
FDNS	00NR_G15_082	0	25SP	G15_082	FROM->TO	POTTER COUNTY INTERCHANGE (WAUK 90343-A) 345/230/13.2KV TRANSFORMER CKT 1	560	560	0.07935	107.0202	GEN527164 1-MUSTANG GEN #4 22 KV
FDNS	00NR_G15_082	0	25SP	G15_082	FROM->TO	POTTER COUNTY INTERCHANGE (WAUK 90343-A) 345/230/13.2KV TRANSFORMER CKT 1	560	560	0.07935	107.0185	GEN527165 1-Mustang Gen #5
FDNS	00NR_G15_082	0	25SP	G15_082	FROM->TO	POTTER COUNTY INTERCHANGE (WAUK 90343-A) 345/230/13.2KV TRANSFORMER CKT 1	560	560	0.07611	106.932	GRACEMONT - MINCO 345KV CKT 1
FDNS	00NR_G15_082	0	25SP	G15_082	FROM->TO	POTTER COUNTY INTERCHANGE (WAUK 90343-A) 345/230/13.2KV TRANSFORMER CKT 1	560	560	0.07935	106.8847	GEN562655 1-G14_074_3 0.6900
FDNS	00NR_G15_082	0	25SP	G15_082	FROM->TO	POTTER COUNTY INTERCHANGE (WAUK 90343-A) 345/230/13.2KV TRANSFORMER CKT 1	560	560	0.08197	106.8424	DWS FRISCO - SHERMAN COUNTY TAP 115KV CKT 1
FDNS	00NR_G15_082	0	25SP	G15_082	FROM->TO	POTTER COUNTY INTERCHANGE (WAUK 90343-A) 345/230/13.2KV TRANSFORMER CKT 1	560	560	0.07935	106.8142	GEN526331 1-JONES GEN #1 22 KV
FDNS	00NR_G15_082	0	25SP	G15_082	FROM->TO	POTTER COUNTY INTERCHANGE (WAUK 90343-A) 345/230/13.2KV TRANSFORMER CKT 1	560	560	0.07935	106.8088	GEN526332 1-JONES GEN #2 21 KV
FDNS	00NR_G15_082	0	25SP	G15_082	FROM->TO	POTTER COUNTY INTERCHANGE (WAUK 90343-A) 345/230/13.2KV TRANSFORMER CKT 1	560	560	0.07935	106.7664	GEN527884 1-CUNNINGHAM GEN #4 22 KV
FDNS	00NR_G15_082	0	25SP	G15_082	FROM->TO	POTTER COUNTY INTERCHANGE (WAUK 90343-A) 345/230/13.2KV TRANSFORMER CKT 1	560	560	0.07935	106.7519	GEN527883 1-CUNNINGHAM GEN #3 22 KV
FDNS	00NR_G15_082	0	25SP	G15_082	FROM->TO	POTTER COUNTY INTERCHANGE (WAUK 90343-A) 345/230/13.2KV TRANSFORMER CKT 1	560	560	0.07935	106.7452	GEN527901 1-HOBBS PLANT #1 (CT)
FDNS	00NR_G15_082	0	25SP	G15_082	FROM->TO	POTTER COUNTY INTERCHANGE (WAUK 90343-A) 345/230/13.2KV TRANSFORMER CKT 1	560	560	0.07935	106.7452	GEN527902 1-HOBBS PLANT #2 (CT)
FDNS	00NR_G15_082	0	25SP	G15_082	FROM->TO	POTTER COUNTY INTERCHANGE (WAUK 90343-A) 345/230/13.2KV TRANSFORMER CKT 1	560	560	0.08235	106.7247	Hitchland Interchange (H TB80155502) 345/230/13.2KV TRANSFORMER CKT 1
FDNS	00NR_G15_082	0	25SP	G15_082	FROM->TO	POTTER COUNTY INTERCHANGE (WAUK 90343-A) 345/230/13.2KV TRANSFORMER CKT 1	560	560	0.08235	106.7247	Hitchland Interchange (H TB80155502) 345/230/13.2KV TRANSFORMER CKT 1
FDNS	00NR_G15_082	0	25SP	G15_082	FROM->TO	POTTER COUNTY INTERCHANGE (WAUK 90343-A) 345/230/13.2KV TRANSFORMER CKT 1	560	560	0.08197	106.6893	P12:115:SPS:W08.1.HITCH.LASLEY
FDNS	00NR_G15_082	0	25SP	G15_082	FROM->TO	POTTER COUNTY INTERCHANGE (WAUK 90343-A) 345/230/13.2KV TRANSFORMER CKT 1	560	560	0.08197	106.673	DWS FRISCO - HITCHLAND INTERCHANGE 115KV CKT 1
FDNS	00NR_G15_082	0	25SP	G15_082	FROM->TO	POTTER COUNTY INTERCHANGE (WAUK 90343-A) 345/230/13.2KV TRANSFORMER CKT 1	560	560	0.08051	106.5966	HITCHLAND INTERCHANGE - OCHILTREE 230KV CKT 1
FDNS	00NR_G15_082	0	25SP	G15_082	FROM->TO	POTTER COUNTY INTERCHANGE (WAUK 90343-A) 345/230/13.2KV TRANSFORMER CKT 1	560	560	0.08051	106.5966	HITCHLAND INTERCHANGE - OCHILTREE 230KV CKT 1
FDNS	00NR_G15_082	0	25SP	G15_082	FROM->TO	POTTER COUNTY INTERCHANGE (WAUK 90343-A) 345/230/13.2KV TRANSFORMER CKT 1	560	560	0.08051	106.5678	OCHILTREE (H TP80219401) 230/115/13.2KV TRANSFORMER CKT 1
FDNS	00NR_G15_082	0	25SP	G15_082	FROM->TO	POTTER COUNTY INTERCHANGE (WAUK 90343-A) 345/230/13.2KV TRANSFORMER CKT 1	560	560	0.08051	106.5678	OCHILTREE (H TP80219401) 230/115/13.2KV TRANSFORMER CKT 1
FDNS	00NR_G15_082	0	25SP	G15_082	FROM->TO	POTTER COUNTY INTERCHANGE (WAUK 90343-A) 345/230/13.2KV TRANSFORMER CKT 1	560	560	0.0826	106.5354	HITCHLAND INTERCHANGE - Hansford County Switch Station 115KV CKT 1
FDNS	00NR_G15_082	0	25SP	G15_082	FROM->TO	POTTER COUNTY INTERCHANGE (WAUK 90343-A) 345/230/13.2KV TRANSFORMER CKT 1	560	560	0.0826	106.5354	HITCHLAND INTERCHANGE - Hansford County Switch Station 115KV CKT 1
FDNS	00NR_G15_082	0	25SP	G15_082	FROM->TO	POTTER COUNTY INTERCHANGE (WAUK 90343-A) 345/230/13.2KV TRANSFORMER CKT 1	560	560	0.07935	106.2905	GEN523462 1-BLACKHAWK GEN #2
FDNS	00NR_G15_082	0	25SP	G15_082	FROM->TO	POTTER COUNTY INTERCHANGE (WAUK 90343-A) 345/230/13.2KV TRANSFORMER CKT 1	560	560	0.07935	106.29	GEN523461 1-BLACKHAWK GEN #1
FDNS	00NR_G15_082	0	25SP	G15_082	FROM->TO	POTTER COUNTY INTERCHANGE (WAUK 90343-A) 345/230/13.2KV TRANSFORMER CKT 1	560	560	0.08705	106.242	MOORE COUNTY INTERCHANGE - POTTER COUNTY INTERCHANGE 230KV CKT 1
FDNS	00NR_G15_082	0	25SP	G15_082	FROM->TO	POTTER COUNTY INTERCHANGE (WAUK 90343-A) 345/230/13.2KV TRANSFORMER CKT 1	560	560	0.08705	106.242	MOORE COUNTY INTERCHANGE - POTTER COUNTY INTERCHANGE 230KV CKT 1
FDNS	00NR_G15_082	0	25SP	G15_082	FROM->TO	POTTER COUNTY INTERCHANGE (WAUK 90343-A) 345/230/13.2KV TRANSFORMER CKT 1	560	560	0.07935	106.1924	GEN528361 1-MADDOX GEN #1
FDNS	00NR_G15_082	0	25SP	G15_082	FROM->TO	POTTER COUNTY INTERCHANGE (WAUK 90343-A) 345/230/13.2KV TRANSFORMER CKT 1	560	560	0.06875	106.1281	GRAPEVINE INTERCHANGE - STATELINE INTERCHANGE 230KV CKT 1
FDNS	00NR_G15_082	0	25SP	G15_082	FROM->TO	POTTER COUNTY INTERCHANGE (WAUK 90343-A) 345/230/13.2KV TRANSFORMER CKT 1	560	560	0.06875	106.1281	GRAPEVINE INTERCHANGE - STATELINE INTERCHANGE 230KV CKT 1
FDNS	00NR_G15_082	0	25SP	G15_082	FROM->TO	POTTER COUNTY INTERCHANGE (WAUK 90343-A) 345/230/13.2KV TRANSFORMER CKT 1	560	560	0.07935	105.9806	GEN562550 1-G14_040_3 0.6900
FDNS	00NR_G15_082	0	25SP	G15_082	FROM->TO	POTTER COUNTY INTERCHANGE (WAUK 90343-A) 345/230/13.2KV TRANSFORMER CKT 1	560	560	0.08063	105.9616	HITCHLAND INTERCHANGE (H TP80148301) 230/115/13.2KV TRANSFORMER CKT 1
FDNS	00NR_G15_082	0	25SP	G15_082	FROM->TO	POTTER COUNTY INTERCHANGE (WAUK 90343-A) 345/230/13.2KV TRANSFORMER CKT 1	560	560	0.08063	105.9616	HITCHLAND INTERCHANGE (H TP80148301) 230/115/13.2KV TRANSFORMER CKT 1
FDNS	00NR_G15_082	0	25SP	G15_082	FROM->TO	POTTER COUNTY INTERCHANGE (WAUK 90343-A) 345/230/13.2KV TRANSFORMER CKT 1	560	560	0.08063	105.9616	HITCHLAND INTERCHANGE (UPDATE LATER) 230/115/13.2KV TRANSFORMER CKT 2
FDNS	00NR_G15_082	0	25SP	G15_082	FROM->TO	POTTER COUNTY INTERCHANGE (WAUK 90343-A) 345/230/13.2KV TRANSFORMER CKT 1	560	560	0.08063	105.9616	HITCHLAND INTERCHANGE (UPDATE LATER) 230/115/13.2KV TRANSFORMER CKT 2
FDNS	00NR_G15_082	0	25SP	G15_082	FROM->TO	POTTER COUNTY INTERCHANGE (WAUK 90343-A) 345/230/13.2KV TRANSFORMER CKT 1	560	560	0.07935	105.921	GEN525494 1-PLANT X GEN #4 20 KV
FDNS	00NR_G15_082	0	25SP	G15_082	FROM->TO	POTTER COUNTY INTERCHANGE (WAUK 90343-A) 345/230/13.2KV TRANSFORMER CKT 1	560	560	0.07935	105.6869	GEN560105 1-G08-22 0.6900
FDNS	00NR_G15_082	0	25SP	G15_082	FROM->TO	POTTER COUNTY INTERCHANGE (WAUK 90343-A) 345/230/13.2KV TRANSFORMER CKT 1	560	560	0.07935	105.6354	GEN562710 1-G15_022_3 0.5500
FDNS	00NR_G15_082	0	25SP	G15_082	FROM->TO	POTTER COUNTY INTERCHANGE (WAUK 90343-A) 345/230/13.2KV TRANSFORMER CKT 1	560	560	0.07365	105.6305	CHISHOLM7 345.00 - GRACEMONT 345KV CKT 1
FDNS	00NR_G15_082	0	25SP	G15_082	FROM->TO	POTTER COUNTY INTERCHANGE (WAUK 90343-A) 345/230/13.2KV TRANSFORMER CKT 1	560	560	0.07611	105.603	CIMARRON - MINCO 345KV CKT 1
FDNS	00NR_G15_082	0	25SP	G15_082	FROM->TO	POTTER COUNTY INTERCHANGE (WAUK 90343-A) 345/230/13.2KV TRANSFORMER CKT 1	560	560	0.07935	105.5871	GEN562531 1-G14_033_3 0.3420
FDNS	00NR_G15_082	0	25SP	G15_082	FROM->TO	POTTER COUNTY INTERCHANGE (WAUK 90343-A) 345/230/13.2KV TRANSFORMER CKT 1	560	560	0.07935	105.5871	GEN562535 1-G14_034_3 0.3420
FDNS	00NR_G15_082	0	25SP	G15_082	FROM->TO	POTTER COUNTY INTERCHANGE (WAUK 90343-A) 345/230/13.2KV TRANSFORMER CKT 1	560	560	0.07365	105.5785	CHISHOLM7 345.00 () 345/230/13.2KV TRANSFORMER CKT 1
FDNS	00NR_G15_082	0	25SP	G15_082	FROM->TO	POTTER COUNTY INTERCHANGE (WAUK 90343-A) 345/230/13.2KV TRANSFORMER CKT 1	560	560	0.07935	105.5771	GEN527163 1-MUSTANG GEN #3 22 KV
FDNS	00NR_G15_082	0	25SP	G15_082	FROM->TO	POTTER COUNTY INTERCHANGE (WAUK 90343-A) 345/230/13.2KV TRANSFORMER CKT 1	560	560	0.07881	105.4469	TUCO INTERCHANGE - YOAKUM_345 345.00 345KV CKT 1
FDNS	00NR_G15_082	0	25SP	G15_082	FROM->TO	POTTER COUNTY INTERCHANGE (WAUK 90343-A) 345/230/13.2KV TRANSFORMER CKT 1	560	560	0.07935	105.3719	GEN527161 1-MUSTANG GEN #1
FDNS	00NR_G15_082	0	25SP	G15_082	FROM->TO	POTTER COUNTY INTERCHANGE (WAUK 90343-A) 345/230/13.2KV TRANSFORMER CKT 1	560	560	0.07935	105.3719	GEN527162 1-MUSTANG GEN #2
FDNS	00NR_G15_082	0	25SP	G15_082	FROM->TO	POTTER COUNTY INTERCHANGE (WAUK 90343-A) 345/230/13.2KV TRANSFORMER CKT 1	560	560	0.08077	105.2862	P12:115:SPS:W29.1.OCLTRE.SPRMN
FDNS	00NR_G15_082	0	25SP	G15_082	FROM->TO	POTTER COUNTY INTERCHANGE (WAUK 90343-A) 345/230/13.2KV TRANSFORMER CKT 1	560	560	0.08077	105.1391	OCHILTREE - TEXAS FARMS SUB 115KV CKT 1
FDNS	00NR_G15_082	0	25SP	G15_082	FROM->TO	POTTER COUNTY INTERCHANGE (WAUK 90343-A) 345/230/13.2KV TRANSFORMER CKT 1	560	560	0.07935	105.0702	GEN527164 1-MUSTANG GEN #4 22 KV
FDNS	00NR_G15_082	0	25SP	G15_082	FROM->TO	POTTER COUNTY INTERCHANGE (WAUK 90343-A) 345/230/13.2KV TRANSFORMER CKT 1	560	560	0.07935	105.0691	GEN527165 1-Mustang Gen #5
FDNS	00NR_G15_082	0	25SP	G15_082	FROM->TO	POTTER COUNTY INTERCHANGE (WAUK 90343-A) 345/230/13.2KV TRANSFORMER CKT 1	560	560	0.08077	105.0152	SPEARMAN SUB - TEXAS FARMS SUB 115KV CKT 1
FDNS	00NR_G15_082	0	25SP	G15_082	FROM->TO	POTTER COUNTY INTERCHANGE (WAUK 90343-A) 345/230/13.2KV TRANSFORMER CKT 1	560	560	0.0801	105.0102	P12:115:SPS:W24.1.MOOREE.LASLEY
FDNS	00NR_G15_082	0	25SP	G15_082	FROM->TO	POTTER COUNTY INTERCHANGE (WAUK 90343-A) 345/230/13.2KV TRANSFORMER CKT 1	560	560	0.07935	105.0017	GEN562270 1-G12-020-2 0.6900
FDNS	00NR_G15_082	0	25SP	G15_082	FROM->TO	POTTER COUNTY INTERCHANGE (WAUK 90343-A) 345/230/13.2KV TRANSFORMER CKT 1	560	560	0.0801	104.9861	RB-ELKS 3115.00 - SHERMAN COUNTY TAP 115KV CKT 1
FDNS	00NR_G15_082	0	25SP	G15_082	FROM->TO	POTTER COUNTY INTERCHANGE (WAUK 90343-A) 345/230/13.2KV TRANSFORMER CKT 1	560	560	0.07611	104.9589	GRACEMONT - MINCO 345KV CKT 1
FDNS	00NR_G15_082	0	25SP	G15_082	FROM->TO	POTTER COUNTY INTERCHANGE (WAUK 90343-A) 345/230/13.2KV TRANSFORMER CKT 1	560	560	0.07935	104.9524	GEN562627 1-ASGI14_002_30.8200
FDNS	00NR_G15_082	0	25SP	G15_082	FROM->TO	POTTER COUNTY INTERCHANGE (WAUK 90343-A) 345/230/13.2KV TRANSFORMER CKT 1	560	560	0.07935	104.9352	GEN562655 1-G14_074_3 0.6900
FDNS	00NR_G15_082	0	25SP	G15_082	FROM->TO	POTTER COUNTY INTERCHANGE (WAUK 90343-A) 345/230/13.2KV TRANSFORMER CKT 1	560	560	0.07935	104.9218	GEN524285 1-WILDORADO WIND GEN
FDNS	00NR_G15_082	0	25SP	G15_082	FROM->TO	POTTER COUNTY INTERCHANGE (WAUK 90343-A) 345/230/13.2KV TRANSFORMER CKT 1	560	560	0.07935	104.9105	GEN562269 1-G12-020-1 0.6900
FDNS	00NR_G15_082	0	25SP	G15_082	FROM->TO	POTTER COUNTY INTERCHANGE (WAUK 90343-A) 345/230/13.2KV TRANSFORMER CKT 1	560	560	0.08428	104.8507	BUCKNER7 345.00 - SPEARVILLE 345KV CKT 1
FDNS	00NR_G15_082	0	25SP	G15_082	FROM->TO	POTTER COUNTY INTERCHANGE (WAUK 90343-A) 345/230/13.2KV TRANSFORMER CKT 1	560	560	0.08428	104.8507	BUCKNER7 345.00 - SPEARVILLE 345KV CKT 1
FDNS	00NR_G15_082	0	25SP	G15_082	FROM->TO	POTTER COUNTY INTERCHANGE (WAUK 90343-A) 345/230/13.2KV TRANSFORMER CKT 1	560	560	0.07935	104.8352	GEN527884 1-CUNNINGHAM GEN #4 22 KV
FDNS	00NR_G15_082	0	25SP	G15_082	FROM->TO	POTTER COUNTY INTERCHANGE (WAUK 90343-A) 345/230/13.2KV TRANSFORMER CKT 1	560	560	0.07759	104.8246	CHILDRESS - LAKE PAULINE 138KV CKT 1
FDNS	00NR_G15_082	0	25SP	G15_082	FROM->TO	POTTER COUNTY INTERCHANGE (WAUK 90343-A) 345/230/13.2KV TRANSFORMER CKT 1	560	560	0.07759	104.8246	CHILDRESS - LAKE PAULINE 138KV CKT 1
FDNS	00NR_G15_082	0	25SP	G15_082	FROM->TO	POTTER COUNTY INTERCHANGE (WAUK 90343-A) 345/230/13.2KV TRANSFORMER CKT 1	560	560	0.07935	104.8219	GEN527883 1-CUNNINGHAM GEN #3 22 KV
FDNS	00NR_G15_082	0	25SP	G15_082	FROM->TO	POTTER COUNTY INTERCHANGE (WAUK 90343-A) 345/230/13.2KV TRANSFORMER CKT 1	560	560	0.0776	104.8184	P12:69:WFEC-AEPW:RUSSELL2:LAKEP2WT
FDNS	00NR_G15_082	0	25SP	G15_082	FROM->TO	POTTER COUNTY INTERCHANGE (WAUK 90343-A) 345/230/13.2KV TRANSFORMER CKT 1	560	560	0.08002	104.8108	SHERMAN COUNTY SUB - SHERMAN COUNTY TAP 115KV CKT 1

SOLUTION	GROUP	SCENARIO	SEASON	SOURCE	DIRECTION	MONITORED ELEMENT	RATEA (MVA)	RATEB(MVA)	TDF	TC%LOADING (% MVA)	CONTINGENCY
FDNS	00NR_G15_082	0	25SP	G15_082	FROM->TO	POTTER COUNTY INTERCHANGE (WAUK 90343-A) 345/230/13.2KV TRANSFORMER CKT 1	560	560	0.0801	104.772	RB-ELKS 3115.00 - RB-SPURLOCK3115.00 115KV CKT 1
FDNS	00NR_G15_082	0	25SP	G15_082	FROM->TO	POTTER COUNTY INTERCHANGE (WAUK 90343-A) 345/230/13.2KV TRANSFORMER CKT 1	560	560	0.08002	104.7626	P12:115:SPS:W05.1.DALLAM.LASLEY
FDNS	00NR_G15_082	0	25SP	G15_082	FROM->TO	POTTER COUNTY INTERCHANGE (WAUK 90343-A) 345/230/13.2KV TRANSFORMER CKT 1	560	560	0.07971	104.7577	MOORE COUNTY INTERCHANGE (ENRCO 136402) 230/115/13.2KV TRANSFORMER CKT 1
FDNS	00NR_G15_082	0	25SP	G15_082	FROM->TO	POTTER COUNTY INTERCHANGE (WAUK 90343-A) 345/230/13.2KV TRANSFORMER CKT 1	560	560	0.07971	104.7577	MOORE COUNTY INTERCHANGE (ENRCO 136402) 230/115/13.2KV TRANSFORMER CKT 1
FDNS	00NR_G15_082	0	25SP	G15_082	FROM->TO	POTTER COUNTY INTERCHANGE (WAUK 90343-A) 345/230/13.2KV TRANSFORMER CKT 1	560	560	0.08438	104.7475	MATHWSN7 345.00 - TATONGA7 345.00 345KV CKT 1
FDNS	00NR_G15_082	0	25SP	G15_082	FROM->TO	POTTER COUNTY INTERCHANGE (WAUK 90343-A) 345/230/13.2KV TRANSFORMER CKT 1	560	560	0.08438	104.7475	MATHWSN7 345.00 - TATONGA7 345.00 345KV CKT 2
FDNS	00NR_G15_082	0	25SP	G15_082	FROM->TO	POTTER COUNTY INTERCHANGE (WAUK 90343-A) 345/230/13.2KV TRANSFORMER CKT 1	560	560	0.08077	104.7005	SPEARMAN INTERCHANGE - SPEARMAN SUB 115KV CKT 1
FDNS	00NR_G15_082	0	25SP	G15_082	FROM->TO	POTTER COUNTY INTERCHANGE (WAUK 90343-A) 345/230/13.2KV TRANSFORMER CKT 1	560	560	0.0691	104.6859	GRAPEVINE INTERCHANGE - NICHOLS STATION 230KV CKT 1
FDNS	00NR_G15_082	0	25SP	G15_082	FROM->TO	POTTER COUNTY INTERCHANGE (WAUK 90343-A) 345/230/13.2KV TRANSFORMER CKT 1	560	560	0.0691	104.6859	GRAPEVINE INTERCHANGE - NICHOLS STATION 230KV CKT 1
FDNS	00NR_G15_082	0	25SP	G15_082	FROM->TO	POTTER COUNTY INTERCHANGE (WAUK 90343-A) 345/230/13.2KV TRANSFORMER CKT 1	560	560	0.07935	104.6796	GEN560331 1-G10-46 13.800
FDNSLock	00NR_G15_082	0	25SP	G15_082	FROM->TO	POTTER COUNTY INTERCHANGE (WAUK 90343-A) 345/230/13.2KV TRANSFORMER CKT 1	560	560	0.07862	104.6783	STATELINE INTERCHANGE (H TP80154301) 230/115/13.2KV TRANSFORMER CKT 1
FDNS	00NR_G15_082	0	25SP	G15_082	FROM->TO	POTTER COUNTY INTERCHANGE (WAUK 90343-A) 345/230/13.2KV TRANSFORMER CKT 1	560	560	0.08051	104.6594	OCHILTREE (H TP80219401) 230/115/13.2KV TRANSFORMER CKT 1
FDNS	00NR_G15_082	0	25SP	G15_082	FROM->TO	POTTER COUNTY INTERCHANGE (WAUK 90343-A) 345/230/13.2KV TRANSFORMER CKT 1	560	560	0.08051	104.6594	OCHILTREE (H TP80219401) 230/115/13.2KV TRANSFORMER CKT 1
FDNS	00NR_G15_082	0	25SP	G15_082	FROM->TO	POTTER COUNTY INTERCHANGE (WAUK 90343-A) 345/230/13.2KV TRANSFORMER CKT 1	560	560	0.08051	104.6494	HITCHLAND INTERCHANGE - OCHILTREE 230KV CKT 1
FDNS	00NR_G15_082	0	25SP	G15_082	FROM->TO	POTTER COUNTY INTERCHANGE (WAUK 90343-A) 345/230/13.2KV TRANSFORMER CKT 1	560	560	0.08051	104.6494	HITCHLAND INTERCHANGE - OCHILTREE 230KV CKT 1
FDNS	00NR_G15_082	0	25SP	G15_082	FROM->TO	POTTER COUNTY INTERCHANGE (WAUK 90343-A) 345/230/13.2KV TRANSFORMER CKT 1	560	560	0.07935	104.6478	GEN562559 1-G14_047_3 0.4800
FDNS	00NR_G15_082	0	25SP	G15_082	FROM->TO	POTTER COUNTY INTERCHANGE (WAUK 90343-A) 345/230/13.2KV TRANSFORMER CKT 1	560	560	0.07935	104.639	GEN527881 1-CUNNINGHAM GEN #1
FDNS	00NR_G15_082	0	25SP	G15_082	FROM->TO	POTTER COUNTY INTERCHANGE (WAUK 90343-A) 345/230/13.2KV TRANSFORMER CKT 1	560	560	0.07935	104.6305	GEN562688 1-G15_014_3 0.6900
FDNS	00NR_G15_082	0	25SP	G15_082	FROM->TO	POTTER COUNTY INTERCHANGE (WAUK 90343-A) 345/230/13.2KV TRANSFORMER CKT 1	560	560	0.07935	104.5973	GEN336821 1-GRAND GULF UNIT
FDNS	00NR_G15_082	0	25SP	G15_082	FROM->TO	POTTER COUNTY INTERCHANGE (WAUK 90343-A) 345/230/13.2KV TRANSFORMER CKT 1	560	560	0.08106	104.5953	PRINGLE INTERCHANGE - SPEARMAN INTERCHANGE 115KV CKT 1
FDNS	00NR_G15_082	0	25SP	G15_082	FROM->TO	POTTER COUNTY INTERCHANGE (WAUK 90343-A) 345/230/13.2KV TRANSFORMER CKT 1	560	560	0.08106	104.5953	PRINGLE INTERCHANGE - SPEARMAN INTERCHANGE 115KV CKT 1
FDNS	00NR_G15_082	0	25SP	G15_082	FROM->TO	POTTER COUNTY INTERCHANGE (WAUK 90343-A) 345/230/13.2KV TRANSFORMER CKT 1	560	560	0.07935	104.5748	GEN562483 1-G13_027_3 0.6900
FDNS	00NR_G15_082	0	25SP	G15_082	FROM->TO	POTTER COUNTY INTERCHANGE (WAUK 90343-A) 345/230/13.2KV TRANSFORMER CKT 1	560	560	0.07862	104.5678	Graves Sub - STATELINE INTERCHANGE 115KV CKT 1
FDNS	00NR_G15_082	0	25SP	G15_082	FROM->TO	POTTER COUNTY INTERCHANGE (WAUK 90343-A) 345/230/13.2KV TRANSFORMER CKT 1	560	560	0.07862	104.5678	Graves Sub - STATELINE INTERCHANGE 115KV CKT 1
FDNS	00NR_G15_082	0	25SP	G15_082	FROM->TO	POTTER COUNTY INTERCHANGE (WAUK 90343-A) 345/230/13.2KV TRANSFORMER CKT 1	560	560	0.08002	104.5143	DALLAM COUNTY INTERCHANGE - SHERMAN COUNTY SUB 115KV CKT 1
FDNS	00NR_G15_082	0	25SP	G15_082	FROM->TO	POTTER COUNTY INTERCHANGE (WAUK 90343-A) 345/230/13.2KV TRANSFORMER CKT 1	560	560	0.07644	104.5038	G14-057T 345.00 - LAWTON EASTSIDE 345KV CKT 1
FDNS	00NR_G15_082	0	25SP	G15_082	FROM->TO	POTTER COUNTY INTERCHANGE (WAUK 90343-A) 345/230/13.2KV TRANSFORMER CKT 1	560	560	0.0801	104.4923	MOORE COUNTY INTERCHANGE EAST BUS - RB-SPURLOCK3115.00 115KV CKT 1
FDNS	00NR_G15_082	0	25SP	G15_082	FROM->TO	POTTER COUNTY INTERCHANGE (WAUK 90343-A) 345/230/13.2KV TRANSFORMER CKT 1	560	560	0.08006	104.4922	BEARCAT 138.00 - MOORELAND 138KV CKT 1
FDNS	00NR_G15_082	0	25SP	G15_082	FROM->TO	POTTER COUNTY INTERCHANGE (WAUK 90343-A) 345/230/13.2KV TRANSFORMER CKT 1	560	560	0.07935	104.4662	GEN501801 1-DOLET HILLS UNIT1
FDNS	00NR_G15_082	0	25SP	G15_082	FROM->TO	POTTER COUNTY INTERCHANGE (WAUK 90343-A) 345/230/13.2KV TRANSFORMER CKT 1	560	560	0.07891	104.4573	TUCO_2 345.00 (TUCO_2 XFMR) 345/230/13.2KV TRANSFORMER CKT 1
FDNS	00NR_G15_082	0	25SP	G15_082	FROM->TO	POTTER COUNTY INTERCHANGE (WAUK 90343-A) 345/230/13.2KV TRANSFORMER CKT 1	560	560	0.07935	104.4528	GEN336153 1-WATERFORD UNIT#3
FDNS	00NR_G15_082	0	25SP	G15_082	FROM->TO	POTTER COUNTY INTERCHANGE (WAUK 90343-A) 345/230/13.2KV TRANSFORMER CKT 1	560	560	0.07935	104.4261	GEN562414 1-G13_022 0.4800
FDNS	00NR_G15_082	0	25SP	G15_082	FROM->TO	POTTER COUNTY INTERCHANGE (WAUK 90343-A) 345/230/13.2KV TRANSFORMER CKT 1	560	560	0.079	104.4165	TUCO INTERCHANGE (GE M1022338) 345/230/13.2KV TRANSFORMER CKT 1
FDNS	00NR_G15_082	0	25SP	G15_082	FROM->TO	POTTER COUNTY INTERCHANGE (WAUK 90343-A) 345/230/13.2KV TRANSFORMER CKT 1	560	560	0.079	104.4165	TUCO INTERCHANGE (GE M1022338) 345/230/13.2KV TRANSFORMER CKT 1
FDNS	00NR_G15_082	0	25SP	G15_082	FROM->TO	POTTER COUNTY INTERCHANGE (WAUK 90343-A) 345/230/13.2KV TRANSFORMER CKT 1	560	560	0.07935	104.3953	GEN337911 1-ARKANSAS NUCLEAR ONE UNIT #2
FDNS	00NR_G15_082	0	25SP	G15_082	FROM->TO	POTTER COUNTY INTERCHANGE (WAUK 90343-A) 345/230/13.2KV TRANSFORMER CKT 1	560	560	0.08006	104.3894	BEARCAT 138.00 - NINE MILE 138KV CKT 1
FDNS	00NR_G15_082	0	25SP	G15_082	FROM->TO	POTTER COUNTY INTERCHANGE (WAUK 90343-A) 345/230/13.2KV TRANSFORMER CKT 1	560	560	0.07935	104.3872	GEN524890 1-SNJN-WTGA1 10.6000
FDNS	00NR_G15_082	0	25SP	G15_082	FROM->TO	POTTER COUNTY INTERCHANGE (WAUK 90343-A) 345/230/13.2KV TRANSFORMER CKT 1	560	560	0.07857	104.3839	LAKE PAULINE - RUSSELL 138KV CKT 1
FDNS	00NR_G15_082	0	25SP	G15_082	FROM->TO	POTTER COUNTY INTERCHANGE (WAUK 90343-A) 345/230/13.2KV TRANSFORMER CKT 1	560	560	0.07857	104.3839	LAKE PAULINE - RUSSELL 138KV CKT 1
FDNS	00NR_G15_082	0	25SP	G15_082	FROM->TO	POTTER COUNTY INTERCHANGE (WAUK 90343-A) 345/230/13.2KV TRANSFORMER CKT 1	560	560	0.07935	104.3822	GEN562538 1-G14_035_3 0.3420
FDNS	00NR_G15_082	0	25SP	G15_082	FROM->TO	POTTER COUNTY INTERCHANGE (WAUK 90343-A) 345/230/13.2KV TRANSFORMER CKT 1	560	560	0.07935	104.3499	GEN335831 1-RIVERBEND UNIT#1
FDNS	00NR_G15_082	0	25SP	G15_082	FROM->TO	POTTER COUNTY INTERCHANGE (WAUK 90343-A) 345/230/13.2KV TRANSFORMER CKT 1	560	560	0.07935	104.3486	GEN523462 1-BLACKHAWK GEN #2
FDNS	00NR_G15_082	0	25SP	G15_082	FROM->TO	POTTER COUNTY INTERCHANGE (WAUK 90343-A) 345/230/13.2KV TRANSFORMER CKT 1	560	560	0.07935	104.348	GEN523461 1-BLACKHAWK GEN #1
FDNS	00NR_G15_082	0	25SP	G15_082	FROM->TO	POTTER COUNTY INTERCHANGE (WAUK 90343-A) 345/230/13.2KV TRANSFORMER CKT 1	560	560	0.07929	104.3357	HOBBS - YOAKUM_345 345.00 345KV CKT 1
FDNS	00NR_G15_082	0	25SP	G15_082	FROM->TO	POTTER COUNTY INTERCHANGE (WAUK 90343-A) 345/230/13.2KV TRANSFORMER CKT 1	560	560	0.07935	104.3302	GEN522866 1-LUBBOCK POWER & LIGHT-HOLLY GEN
FDNS	00NR_G15_082	0	25SP	G15_082	FROM->TO	POTTER COUNTY INTERCHANGE (WAUK 90343-A) 345/230/13.2KV TRANSFORMER CKT 1	560	560	0.07913	104.3278	GRACEMONT - LAWTON EASTSIDE 345KV CKT 1
FDNS	00NR_G15_082	0	25SP	G15_082	FROM->TO	POTTER COUNTY INTERCHANGE (WAUK 90343-A) 345/230/13.2KV TRANSFORMER CKT 1	560	560	0.07913	104.3278	GRACEMONT - LAWTON EASTSIDE 345KV CKT 1
FDNS	00NR_G15_082	0	25SP	G15_082	FROM->TO	POTTER COUNTY INTERCHANGE (WAUK 90343-A) 345/230/13.2KV TRANSFORMER CKT 1	560	560	0.08006	104.3266	P12:138:WFEC:MSL14
FDNS	00NR_G15_082	0	25SP	G15_082	FROM->TO	POTTER COUNTY INTERCHANGE (WAUK 90343-A) 345/230/13.2KV TRANSFORMER CKT 1	560	560	0.07869	104.3182	TOLK STATION EAST - TUCO INTERCHANGE 230KV CKT 1
FDNS	00NR_G15_082	0	25SP	G15_082	FROM->TO	POTTER COUNTY INTERCHANGE (WAUK 90343-A) 345/230/13.2KV TRANSFORMER CKT 1	560	560	0.07869	104.3182	TOLK STATION EAST - TUCO INTERCHANGE 230KV CKT 1
FDNS	00NR_G15_082	0	25SP	G15_082	FROM->TO	POTTER COUNTY INTERCHANGE (WAUK 90343-A) 345/230/13.2KV TRANSFORMER CKT 1	560	560	0.07935	104.3017	GEN528361 1-MADDOX GEN #1
FDNS	00NR_G15_082	0	25SP	G15_082	FROM->TO	POTTER COUNTY INTERCHANGE (WAUK 90343-A) 345/230/13.2KV TRANSFORMER CKT 1	560	560	0.08007	104.2582	PRINGLE INTERCHANGE - RIVERVIEW INTERCHANGE 115KV CKT 1
FDNS	00NR_G15_082	0	25SP	G15_082	FROM->TO	POTTER COUNTY INTERCHANGE (WAUK 90343-A) 345/230/13.2KV TRANSFORMER CKT 1	560	560	0.08007	104.2582	PRINGLE INTERCHANGE - RIVERVIEW INTERCHANGE 115KV CKT 1
FDNS	00NR_G15_082	0	25SP	G15_082	FROM->TO	POTTER COUNTY INTERCHANGE (WAUK 90343-A) 345/230/13.2KV TRANSFORMER CKT 1	560	560	0.07935	104.2566	GEN337910 1-ARKANSAS NUCLEAR ONE UNIT #1
FDNS	00NR_G15_082	0	25SP	G15_082	FROM->TO	POTTER COUNTY INTERCHANGE (WAUK 90343-A) 345/230/13.2KV TRANSFORMER CKT 1	560	560	0.07998	104.2498	MOORE COUNTY INTERCHANGE W. - RB-S&S 3115.00 115KV CKT 1
FDNS	00NR_G15_082	0	25SP	G15_082	FROM->TO	POTTER COUNTY INTERCHANGE (WAUK 90343-A) 345/230/13.2KV TRANSFORMER CKT 1	560	560	0.07906	104.2388	TUCO INTERCHANGE (SIEM 8743066) 345/230/13.2KV TRANSFORMER CKT 2
FDNS	00NR_G15_082	0	25SP	G15_082	FROM->TO	POTTER COUNTY INTERCHANGE (WAUK 90343-A) 345/230/13.2KV TRANSFORMER CKT 1	560	560	0.07906	104.2388	TUCO INTERCHANGE (SIEM 8743066) 345/230/13.2KV TRANSFORMER CKT 2
FDNS	00NR_G15_082	0	25SP	G15_082	FROM->TO	POTTER COUNTY INTERCHANGE (WAUK 90343-A) 345/230/13.2KV TRANSFORMER CKT 1	560	560	0.08006	104.2228	MOREWOOD SW - NINE MILE 138KV CKT 1
FDNS	00NR_G15_082	0	25SP	G15_082	FROM->TO	POTTER COUNTY INTERCHANGE (WAUK 90343-A) 345/230/13.2KV TRANSFORMER CKT 1	560	560	0.07887	104.2125	JOHNSON COUNTY - PITTSBURG 345KV CKT 1
FDNS	00NR_G15_082	0	25SP	G15_082	FROM->TO	POTTER COUNTY INTERCHANGE (WAUK 90343-A) 345/230/13.2KV TRANSFORMER CKT 1	560	560	0.07887	104.2125	JOHNSON COUNTY - PITTSBURG 345KV CKT 1
FDNS	00NR_G15_082	0	25SP	G15_082	FROM->TO	POTTER COUNTY INTERCHANGE (WAUK 90343-A) 345/230/13.2KV TRANSFORMER CKT 1	560	560	0.07914	104.206	SUNDOWN INTERCHANGE - WOLFFORTH INTERCHANGE 230KV CKT 1
FDNS	00NR_G15_082	0	25SP	G15_082	FROM->TO	POTTER COUNTY INTERCHANGE (WAUK 90343-A) 345/230/13.2KV TRANSFORMER CKT 1	560	560	0.07914	104.206	SUNDOWN INTERCHANGE - WOLFFORTH INTERCHANGE 230KV CKT 1
FDNS	00NR_G15_082	0	25SP	G15_082	FROM->TO	POTTER COUNTY INTERCHANGE (WAUK 90343-A) 345/230/13.2KV TRANSFORMER CKT 1	560	560	0.08037	104.1899	PRINGLE INTERCHANGE - SPEARMAN INTERCHANGE 115KV CKT 2
FDNS	00NR_G15_082	0	25SP	G15_082	FROM->TO	POTTER COUNTY INTERCHANGE (WAUK 90343-A) 345/230/13.2KV TRANSFORMER CKT 1	560	560	0.08037	104.1899	PRINGLE INTERCHANGE - SPEARMAN INTERCHANGE 115KV CKT 2
FDNS	00NR_G15_082	0	25SP	G15_082	FROM->TO	POTTER COUNTY INTERCHANGE (WAUK 90343-A) 345/230/13.2KV TRANSFORMER CKT 1	560	560	0.07935	104.1884	GEN524287 1-GS-PHWD_GEN10.6900
FDNS	00NR_G15_082	0	25SP	G15_082	FROM->TO	POTTER COUNTY INTERCHANGE (WAUK 90343-A) 345/230/13.2KV TRANSFORMER CKT 1	560	560	0.07935	104.1634	GEN524485 1-CAPROCK WIND GEN
FDNS	00NR_G15_082	0	25SP	G15_082	FROM->TO	POTTER COUNTY INTERCHANGE (WAUK 90343-A) 345/230/13.2KV TRANSFORMER CKT 1	560	560	0.07981	104.1632	TUCO INTERCHANGE - TUCO_2 345.00 345KV CKT 1
FDNS	00NR_G15_082	0	25SP	G15_082	FROM->TO	POTTER COUNTY INTERCHANGE (WAUK 90343-A) 345/230/13.2KV TRANSFORMER CKT 1	560	560	0.07935	104.1471	GEN523815 1-LLANO ESTACADO WIND GEN
FDNS	00NR_G15_082	0	25SP	G15_082	FROM->TO	POTTER COUNTY INTERCHANGE (WAUK 90343-A) 345/230/13.2KV TRANSFORMER CKT 1	560	560	0.07899	104.1396	P12:138:AEPW:S.W.S.-4:L.E.S.-4
FDNS	00NR_G15_082	0	25SP	G15_082	FROM->TO	POTTER COUNTY INTERCHANGE (WAUK 90343-A) 345/230/13.2KV TRANSFORMER CKT 1	560	560	0.07927	104.1325	CARLISLE INTERCHANGE - TUCO INTERCHANGE 230KV CKT 1
FDNS	00NR_G15_082	0	25SP	G15_082	FROM->TO	POTTER COUNTY INTERCHANGE (WAUK 90343-A) 345/230/13.2KV TRANSFORMER CKT 1	560	560	0.07927	104.1325	CARLISLE INTERCHANGE - TUCO INTERCHANGE 230KV CKT 1
FDNS	00NR_G15_082	0	25SP	G15_082	FROM->TO	POTTER COUNTY INTERCHANGE (WAUK 90343-A) 345/230/13.2KV TRANSFORMER CKT 1	560	560	0.07935	104.1323	GEN562550 1-G14_040_3 0.6900
FDNS	00NR_G15_082	0	25SP	G15_082	FROM->TO	POTTER COUNTY INTERCHANGE (WAUK 90343-A) 345/230/13.2KV TRANSFORMER CKT 1	560	560	0.07839	104.1292	CHILDRESS - HOLLIS TAP 138KV CKT 1

SOLUTION	GROUP	SCENARIO	SEASON	SOURCE	DIRECTION	MONITORED ELEMENT	RATEA (MVA)	RATEB(MVA)	TDF	TC%LOADING (% MVA)	CONTINGENCY
FDNS	00NR_G15_082	0	25SP	G15_082	FROM->TO	POTTER COUNTY INTERCHANGE (WAUK 90343-A) 345/230/13.2KV TRANSFORMER CKT 1	560	560	0.07928	104.1262	JONES STATION - TUCO INTERCHANGE 230KV CKT 1
FDNS	00NR_G15_082	0	25SP	G15_082	FROM->TO	POTTER COUNTY INTERCHANGE (WAUK 90343-A) 345/230/13.2KV TRANSFORMER CKT 1	560	560	0.07928	104.1262	JONES STATION - TUCO INTERCHANGE 230KV CKT 1
FDNS	00NR_G15_082	0	25SP	G15_082	FROM->TO	POTTER COUNTY INTERCHANGE (WAUK 90343-A) 345/230/13.2KV TRANSFORMER CKT 1	560	560	0.07935	104.1214	GEN523941 1-MAJSTC-WTG110.6900
FDNS	00NR_G15_082	0	25SP	G15_082	FROM->TO	POTTER COUNTY INTERCHANGE (WAUK 90343-A) 345/230/13.2KV TRANSFORMER CKT 1	560	560	0.07935	104.1206	GEN523942 1-MAJSTC-WTG210.6900
FDNS	00NR_G15_082	0	25SP	G15_082	FROM->TO	POTTER COUNTY INTERCHANGE (WAUK 90343-A) 345/230/13.2KV TRANSFORMER CKT 1	560	560	0.0788	104.1189	ALTUS JUNCTION - RUSSELL 138KV CKT 1
FDNS	00NR_G15_082	0	25SP	G15_082	FROM->TO	POTTER COUNTY INTERCHANGE (WAUK 90343-A) 345/230/13.2KV TRANSFORMER CKT 1	560	560	0.0788	104.1189	ALTUS JUNCTION - RUSSELL 138KV CKT 1
FDNS	00NR_G15_082	0	25SP	G15_082	FROM->TO	POTTER COUNTY INTERCHANGE (WAUK 90343-A) 345/230/13.2KV TRANSFORMER CKT 1	560	560	0.07935	104.116	GEN337652 1-WHITE BLUFF UNIT #1
FDNS	00NR_G15_082	0	25SP	G15_082	FROM->TO	POTTER COUNTY INTERCHANGE (WAUK 90343-A) 345/230/13.2KV TRANSFORMER CKT 1	560	560	0.07935	104.1119	GEN501813 1-RODEMACHER UNIT 3
FDNS	00NR_G15_082	0	25SP	G15_082	FROM->TO	POTTER COUNTY INTERCHANGE (WAUK 90343-A) 345/230/13.2KV TRANSFORMER CKT 1	560	560	0.07998	104.1067	P12:115:SPS:T25.1.MOOREW.DUMAS19
FDNS	00NR_G15_082	0	25SP	G15_082	FROM->TO	POTTER COUNTY INTERCHANGE (WAUK 90343-A) 345/230/13.2KV TRANSFORMER CKT 1	560	560	0.08063	104.0921	HITCHLAND INTERCHANGE (H TP80148301) 230/115/13.2KV TRANSFORMER CKT 1
FDNS	00NR_G15_082	0	25SP	G15_082	FROM->TO	POTTER COUNTY INTERCHANGE (WAUK 90343-A) 345/230/13.2KV TRANSFORMER CKT 1	560	560	0.08063	104.0921	HITCHLAND INTERCHANGE (H TP80148301) 230/115/13.2KV TRANSFORMER CKT 1
FDNS	00NR_G15_082	0	25SP	G15_082	FROM->TO	POTTER COUNTY INTERCHANGE (WAUK 90343-A) 345/230/13.2KV TRANSFORMER CKT 1	560	560	0.08063	104.092	HITCHLAND INTERCHANGE (UPDATE LATER) 230/115/13.2KV TRANSFORMER CKT 2
FDNS	00NR_G15_082	0	25SP	G15_082	FROM->TO	POTTER COUNTY INTERCHANGE (WAUK 90343-A) 345/230/13.2KV TRANSFORMER CKT 1	560	560	0.08063	104.092	HITCHLAND INTERCHANGE (UPDATE LATER) 230/115/13.2KV TRANSFORMER CKT 2
FDNS	00NR_G15_082	0	25SP	G15_082	FROM->TO	POTTER COUNTY INTERCHANGE (WAUK 90343-A) 345/230/13.2KV TRANSFORMER CKT 1	560	560	0.07935	104.0908	GEN337653 1-WHITE BLUFF UNIT #2
FDNS	00NR_G15_082	0	25SP	G15_082	FROM->TO	POTTER COUNTY INTERCHANGE (WAUK 90343-A) 345/230/13.2KV TRANSFORMER CKT 1	560	560	0.07902	104.0892	NORTHWEST - SPRING CREEK 345KV CKT 1
FDNS	00NR_G15_082	0	25SP	G15_082	FROM->TO	POTTER COUNTY INTERCHANGE (WAUK 90343-A) 345/230/13.2KV TRANSFORMER CKT 1	560	560	0.07966	104.0887	LACYGNE - NEOSHO 345KV CKT 1
FDNS	00NR_G15_082	0	25SP	G15_082	FROM->TO	POTTER COUNTY INTERCHANGE (WAUK 90343-A) 345/230/13.2KV TRANSFORMER CKT 1	560	560	0.07931	104.0777	P12:138:WFEC:MSL15
FDNS	00NR_G15_082	0	25SP	G15_082	FROM->TO	POTTER COUNTY INTERCHANGE (WAUK 90343-A) 345/230/13.2KV TRANSFORMER CKT 1	560	560	0.07935	104.0758	GEN336252 1-NINEMILE POINT UNIT#5
FDNS	00NR_G15_082	0	25SP	G15_082	FROM->TO	POTTER COUNTY INTERCHANGE (WAUK 90343-A) 345/230/13.2KV TRANSFORMER CKT 1	560	560	0.07644	104.0665	G14-057T 345.00 - SUNNYSIDE 345KV CKT 1
FDNS	00NR_G15_082	0	25SP	G15_082	FROM->TO	POTTER COUNTY INTERCHANGE (WAUK 90343-A) 345/230/13.2KV TRANSFORMER CKT 1	560	560	0.07935	104.0621	GEN562007 1-G11_025_3 0.6900
FDNS	00NR_G15_082	0	25SP	G15_082	FROM->TO	POTTER COUNTY INTERCHANGE (WAUK 90343-A) 345/230/13.2KV TRANSFORMER CKT 1	560	560	0.07935	104.0584	GEN334440 1-SABINE UNIT 4
FDNS	00NR_G15_082	0	25SP	G15_082	FROM->TO	POTTER COUNTY INTERCHANGE (WAUK 90343-A) 345/230/13.2KV TRANSFORMER CKT 1	560	560	0.07935	104.0505	GEN336251 1-NINEMILE POINT UNIT#4
FDNS	00NR_G15_082	0	25SP	G15_082	FROM->TO	POTTER COUNTY INTERCHANGE (WAUK 90343-A) 345/230/13.2KV TRANSFORMER CKT 1	560	560	0.08045	104.0495	RENFROW7 345.00 - VIOLA 7 345.00 345KV CKT 1
FDNS	00NR_G15_082	0	25SP	G15_082	FROM->TO	POTTER COUNTY INTERCHANGE (WAUK 90343-A) 345/230/13.2KV TRANSFORMER CKT 1	560	560	0.07935	104.0475	GEN335206 1-NELSON UNIT 6
FDNS	00NR_G15_082	0	25SP	G15_082	FROM->TO	POTTER COUNTY INTERCHANGE (WAUK 90343-A) 345/230/13.2KV TRANSFORMER CKT 1	560	560	0.08022	104.0316	IODINE - WOODWARD EHV 138KV CKT 1
FDNS	00NR_G15_082	0	25SP	G15_082	FROM->TO	POTTER COUNTY INTERCHANGE (WAUK 90343-A) 345/230/13.2KV TRANSFORMER CKT 1	560	560	0.07998	104.0303	DUMAS SUB - RB-S&S 3115.00 115KV CKT 1
FDNS	00NR_G15_082	0	25SP	G15_082	FROM->TO	POTTER COUNTY INTERCHANGE (WAUK 90343-A) 345/230/13.2KV TRANSFORMER CKT 1	560	560	0.07935	104.0248	GRAND GULF 500/22.0KV TRANSFORMER CKT 1
FDNS	00NR_G15_082	0	25SP	G15_082	FROM->TO	POTTER COUNTY INTERCHANGE (WAUK 90343-A) 345/230/13.2KV TRANSFORMER CKT 1	560	560	0.07935	104.0133	GEN336831 1-BAXTER WILSON SES
FDNS	00NR_G15_082	0	25SP	G15_082	FROM->TO	POTTER COUNTY INTERCHANGE (WAUK 90343-A) 345/230/13.2KV TRANSFORMER CKT 1	560	560	0.07935	103.8323	GEN560105 1-G08-22 0.6900
FDNS	00NR_G15_082	0	25SP	G15_082	FROM->TO	POTTER COUNTY INTERCHANGE (WAUK 90343-A) 345/230/13.2KV TRANSFORMER CKT 1	560	560	0.07935	103.74	GEN562531 1-G14_033_3 0.3420
FDNS	00NR_G15_082	0	25SP	G15_082	FROM->TO	POTTER COUNTY INTERCHANGE (WAUK 90343-A) 345/230/13.2KV TRANSFORMER CKT 1	560	560	0.07935	103.74	GEN562535 1-G14_034_3 0.3420
FDNS	00NR_G15_082	0	25SP	G15_082	FROM->TO	POTTER COUNTY INTERCHANGE (WAUK 90343-A) 345/230/13.2KV TRANSFORMER CKT 1	560	560	0.07611	103.7354	CIMARRON - MINCO 345KV CKT 1
FDNS	00NR_G15_082	0	25SP	G15_082	FROM->TO	POTTER COUNTY INTERCHANGE (WAUK 90343-A) 345/230/13.2KV TRANSFORMER CKT 1	560	560	0.08077	103.4987	P12:115:SPS:W29.1.OCLTRE.SPRMN
FDNS	00NR_G15_082	0	25SP	G15_082	FROM->TO	POTTER COUNTY INTERCHANGE (WAUK 90343-A) 345/230/13.2KV TRANSFORMER CKT 1	560	560	0.07935	103.4884	2109-BUSHLAND INTERCHANGE
FDNS	00NR_G15_082	0	25SP	G15_082	FROM->TO	POTTER COUNTY INTERCHANGE (WAUK 90343-A) 345/230/13.2KV TRANSFORMER CKT 1	560	560	0.07935	103.4884	BASE CASE
FDNS	00NR_G15_082	0	25SP	G15_082	FROM->TO	POTTER COUNTY INTERCHANGE (WAUK 90343-A) 345/230/13.2KV TRANSFORMER CKT 1	560	560	0.08077	103.3528	OCHILTREE - TEXAS FARMS SUB 115KV CKT 1
FDNS	00NR_G15_082	0	25SP	G15_082	FROM->TO	POTTER COUNTY INTERCHANGE (WAUK 90343-A) 345/230/13.2KV TRANSFORMER CKT 1	560	560	0.08077	103.2311	SPEARMAN SUB - TEXAS FARMS SUB 115KV CKT 1
FDNS	00NR_G15_082	0	25SP	G15_082	FROM->TO	POTTER COUNTY INTERCHANGE (WAUK 90343-A) 345/230/13.2KV TRANSFORMER CKT 1	560	560	0.0801	103.2022	P12:115:SPS:W24.1.MOOREE.LASLEY
FDNS	00NR_G15_082	0	25SP	G15_082	FROM->TO	POTTER COUNTY INTERCHANGE (WAUK 90343-A) 345/230/13.2KV TRANSFORMER CKT 1	560	560	0.07935	103.1909	GEN562270 1-G12-020-2 0.6900
FDNS	00NR_G15_082	0	25SP	G15_082	FROM->TO	POTTER COUNTY INTERCHANGE (WAUK 90343-A) 345/230/13.2KV TRANSFORMER CKT 1	560	560	0.0801	103.1784	RB-ELKS 3115.00 - SHERMAN COUNTY TAP 115KV CKT 1
FDNS	00NR_G15_082	0	25SP	G15_082	FROM->TO	POTTER COUNTY INTERCHANGE (WAUK 90343-A) 345/230/13.2KV TRANSFORMER CKT 1	560	560	0.07935	103.1467	GEN562627 1-ASGI14_002_30.8200
FDNS	00NR_G15_082	0	25SP	G15_082	FROM->TO	POTTER COUNTY INTERCHANGE (WAUK 90343-A) 345/230/13.2KV TRANSFORMER CKT 1	560	560	0.07935	103.1276	GEN524285 1-WILDORADO WIND GEN
FDNS	00NR_G15_082	0	25SP	G15_082	FROM->TO	POTTER COUNTY INTERCHANGE (WAUK 90343-A) 345/230/13.2KV TRANSFORMER CKT 1	560	560	0.07935	103.1061	GEN562269 1-G12-020-1 0.6900
FDNS	00NR_G15_082	0	25SP	G15_082	FROM->TO	POTTER COUNTY INTERCHANGE (WAUK 90343-A) 345/230/13.2KV TRANSFORMER CKT 1	560	560	0.08002	103.0606	SHERMAN COUNTY SUB - SHERMAN COUNTY TAP 115KV CKT 1
FDNS	00NR_G15_082	0	25SP	G15_082	FROM->TO	POTTER COUNTY INTERCHANGE (WAUK 90343-A) 345/230/13.2KV TRANSFORMER CKT 1	560	560	0.07971	103.0314	MOORE COUNTY INTERCHANGE (ENRCO 136402) 230/115/13.2KV TRANSFORMER CKT 1
FDNS	00NR_G15_082	0	25SP	G15_082	FROM->TO	POTTER COUNTY INTERCHANGE (WAUK 90343-A) 345/230/13.2KV TRANSFORMER CKT 1	560	560	0.07971	103.0314	MOORE COUNTY INTERCHANGE (ENRCO 136402) 230/115/13.2KV TRANSFORMER CKT 1
FDNS	00NR_G15_082	0	25SP	G15_082	FROM->TO	POTTER COUNTY INTERCHANGE (WAUK 90343-A) 345/230/13.2KV TRANSFORMER CKT 1	560	560	0.07759	103.0218	CHILDRESS - LAKE PAULINE 138KV CKT 1
FDNS	00NR_G15_082	0	25SP	G15_082	FROM->TO	POTTER COUNTY INTERCHANGE (WAUK 90343-A) 345/230/13.2KV TRANSFORMER CKT 1	560	560	0.07759	103.0218	CHILDRESS - LAKE PAULINE 138KV CKT 1
FDNS	00NR_G15_082	0	25SP	G15_082	FROM->TO	POTTER COUNTY INTERCHANGE (WAUK 90343-A) 345/230/13.2KV TRANSFORMER CKT 1	560	560	0.08002	103.0097	P12:115:SPS:W05.1.DALLAM.LASLEY
FDNS	00NR_G15_082	0	25SP	G15_082	FROM->TO	POTTER COUNTY INTERCHANGE (WAUK 90343-A) 345/230/13.2KV TRANSFORMER CKT 1	560	560	0.0776	103.0084	P12:69:WFEC-AEPW:RUSSELL2:LAKEP2WT
FDNS	00NR_G15_082	0	25SP	G15_082	FROM->TO	POTTER COUNTY INTERCHANGE (WAUK 90343-A) 345/230/13.2KV TRANSFORMER CKT 1	560	560	0.0801	102.9733	RB-ELKS 3115.00 - RB-SPURLOCK3115.00 115KV CKT 1
FDNS	00NR_G15_082	0	25SP	G15_082	FROM->TO	POTTER COUNTY INTERCHANGE (WAUK 90343-A) 345/230/13.2KV TRANSFORMER CKT 1	560	560	0.08428	102.9715	BUCKNER7 345.00 - SPEARVILLE 345KV CKT 1
FDNS	00NR_G15_082	0	25SP	G15_082	FROM->TO	POTTER COUNTY INTERCHANGE (WAUK 90343-A) 345/230/13.2KV TRANSFORMER CKT 1	560	560	0.08428	102.9715	BUCKNER7 345.00 - SPEARVILLE 345KV CKT 1
FDNS	00NR_G15_082	0	25SP	G15_082	FROM->TO	POTTER COUNTY INTERCHANGE (WAUK 90343-A) 345/230/13.2KV TRANSFORMER CKT 1	560	560	0.08438	102.9584	MATHWSN7 345.00 - TATONGA7 345.00 345KV CKT 1
FDNS	00NR_G15_082	0	25SP	G15_082	FROM->TO	POTTER COUNTY INTERCHANGE (WAUK 90343-A) 345/230/13.2KV TRANSFORMER CKT 1	560	560	0.08438	102.9584	MATHWSN7 345.00 - TATONGA7 345.00 345KV CKT 2
FDNS	00NR_G15_082	0	25SP	G15_082	FROM->TO	POTTER COUNTY INTERCHANGE (WAUK 90343-A) 345/230/13.2KV TRANSFORMER CKT 1	560	560	0.07935	102.948	GEN531503 1-CIMRRN 1 0.6900
FDNS	00NR_G15_082	0	25SP	G15_082	FROM->TO	POTTER COUNTY INTERCHANGE (WAUK 90343-A) 345/230/13.2KV TRANSFORMER CKT 1	560	560	0.07935	102.9468	GEN560329 1-G10-45 0.6900
FDNS	00NR_G15_082	0	25SP	G15_082	FROM->TO	POTTER COUNTY INTERCHANGE (WAUK 90343-A) 345/230/13.2KV TRANSFORMER CKT 1	560	560	0.0792	102.9465	DEAF SMITH REC-#6 - FRIONA SUB 115KV CKT 1
FDNS	00NR_G15_082	0	25SP	G15_082	FROM->TO	POTTER COUNTY INTERCHANGE (WAUK 90343-A) 345/230/13.2KV TRANSFORMER CKT 1	560	560	0.07935	102.946	GEN560585 1-G06-44-3 4.1600
FDNS	00NR_G15_082	0	25SP	G15_082	FROM->TO	POTTER COUNTY INTERCHANGE (WAUK 90343-A) 345/230/13.2KV TRANSFORMER CKT 1	560	560	0.07935	102.9413	GEN532733 1-GILL ENERGY CENTER UNIT 3
FDNS	00NR_G15_082	0	25SP	G15_082	FROM->TO	POTTER COUNTY INTERCHANGE (WAUK 90343-A) 345/230/13.2KV TRANSFORMER CKT 1	560	560	0.07935	102.9353	GEN635213 3-NEAL UNIT 3
FDNS	00NR_G15_082	0	25SP	G15_082	FROM->TO	POTTER COUNTY INTERCHANGE (WAUK 90343-A) 345/230/13.2KV TRANSFORMER CKT 1	560	560	0.07923	102.9353	AMARILLO SOUTH INTERCHANGE - NICHOLS STATION 230KV CKT 1
FDNS	00NR_G15_082	0	25SP	G15_082	FROM->TO	POTTER COUNTY INTERCHANGE (WAUK 90343-A) 345/230/13.2KV TRANSFORMER CKT 1	560	560	0.07923	102.9353	AMARILLO SOUTH INTERCHANGE - NICHOLS STATION 230KV CKT 1
FDNS	00NR_G15_082	0	25SP	G15_082	FROM->TO	POTTER COUNTY INTERCHANGE (WAUK 90343-A) 345/230/13.2KV TRANSFORMER CKT 1	560	560	0.08077	102.9344	SPEARMAN INTERCHANGE - SPEARMAN SUB 115KV CKT 1
FDNS	00NR_G15_082	0	25SP	G15_082	FROM->TO	POTTER COUNTY INTERCHANGE (WAUK 90343-A) 345/230/13.2KV TRANSFORMER CKT 1	560	560	0.07935	102.9316	GEN503900 1-FITZHUGH CT1
FDNS	00NR_G15_082	0	25SP	G15_082	FROM->TO	POTTER COUNTY INTERCHANGE (WAUK 90343-A) 345/230/13.2KV TRANSFORMER CKT 1	560	560	0.07935	102.9253	GEN600005 1-MONTICELLO
FDNS	00NR_G15_082	0	25SP	G15_082	FROM->TO	POTTER COUNTY INTERCHANGE (WAUK 90343-A) 345/230/13.2KV TRANSFORMER CKT 1	560	560	0.0792	102.9219	P12:115:SPS:T58.1.HERFRD.CARGIL
FDNS	00NR_G15_082	0	25SP	G15_082	FROM->TO	POTTER COUNTY INTERCHANGE (WAUK 90343-A) 345/230/13.2KV TRANSFORMER CKT 1	560	560	0.07935	102.921	GEN300012 1-HOLDEN UNIT 1
FDNS	00NR_G15_082	0	25SP	G15_082	FROM->TO	POTTER COUNTY INTERCHANGE (WAUK 90343-A) 345/230/13.2KV TRANSFORMER CKT 1	560	560	0.07935	102.9137	GEN511942 1-OEC GAS # 2-1
FDNS	00NR_G15_082	0	25SP	G15_082	FROM->TO	POTTER COUNTY INTERCHANGE (WAUK 90343-A) 345/230/13.2KV TRANSFORMER CKT 1	560	560	0.0691	102.9024	GRAPEVINE INTERCHANGE - NICHOLS STATION 230KV CKT 1
FDNS	00NR_G15_082	0	25SP	G15_082	FROM->TO	POTTER COUNTY INTERCHANGE (WAUK 90343-A) 345/230/13.2KV TRANSFORMER CKT 1	560	560	0.0691	102.9024	GRAPEVINE INTERCHANGE - NICHOLS STATION 230KV CKT 1
FDNS	00NR_G15_082	0	25SP	G15_082	FROM->TO	POTTER COUNTY INTERCHANGE (WAUK 90343-A) 345/230/13.2KV TRANSFORMER CKT 1	560	560	0.0792	102.9022	DEAF SMITH REC-#6 - HEREFORD INTERCHANGE 115KV CKT 1
FDNS	00NR_G15_082	0	25SP	G15_082	FROM->TO	POTTER COUNTY INTERCHANGE (WAUK 90343-A) 345/230/13.2KV TRANSFORMER CKT 1	560	560	0.07935	102.8966	GEN600001 2-SHERBURNE CNTY G2

SOLUTION	GROUP	SCENARIO	SEASON	SOURCE	DIRECTION	MONITORED ELEMENT	RATEA (MVA)	RATEB(MVA)	TDF	TC%LOADING (% MVA)	CONTINGENCY
FDNS	00NR_G15_082	0	25SP	G15_082	FROM->TO	POTTER COUNTY INTERCHANGE (WAUK 90343-A) 345/230/13.2KV TRANSFORMER CKT 1	560	560	0.07935	102.8909	GEN560331 1-G10-46 13.800
FDNS	00NR_G15_082	0	25SP	G15_082	FROM->TO	POTTER COUNTY INTERCHANGE (WAUK 90343-A) 345/230/13.2KV TRANSFORMER CKT 1	560	560	0.07935	102.8905	GEN511954 S-COGENTRIX STEAM # 1
FDNS	00NR_G15_082	0	25SP	G15_082	FROM->TO	POTTER COUNTY INTERCHANGE (WAUK 90343-A) 345/230/13.2KV TRANSFORMER CKT 1	560	560	0.07935	102.8875	GEN532671 1-TECUMSEH ENERGY CENTER UNIT 7
FDNS	00NR_G15_082	0	25SP	G15_082	FROM->TO	POTTER COUNTY INTERCHANGE (WAUK 90343-A) 345/230/13.2KV TRANSFORMER CKT 1	560	560	0.07935	102.885	GEN600000 1-SHERBURNECNTY G1
FDNS	00NR_G15_082	0	25SP	G15_082	FROM->TO	POTTER COUNTY INTERCHANGE (WAUK 90343-A) 345/230/13.2KV TRANSFORMER CKT 1	560	560	0.07935	102.8821	GEN515000 1-MCCLAIN UNIT 3
FDNSLock	00NR_G15_082	0	25SP	G15_082	FROM->TO	POTTER COUNTY INTERCHANGE (WAUK 90343-A) 345/230/13.2KV TRANSFORMER CKT 1	560	560	0.07862	102.8819	STATELINE INTERCHANGE (H TP80154301) 230/115/13.2KV TRANSFORMER CKT 1
FDNS	00NR_G15_082	0	25SP	G15_082	FROM->TO	POTTER COUNTY INTERCHANGE (WAUK 90343-A) 345/230/13.2KV TRANSFORMER CKT 1	560	560	0.07923	102.8808	G13_027T 230.00 - YOAKUM COUNTY INTERCHANGE 230KV CKT 1
FDNS	00NR_G15_082	0	25SP	G15_082	FROM->TO	POTTER COUNTY INTERCHANGE (WAUK 90343-A) 345/230/13.2KV TRANSFORMER CKT 1	560	560	0.07935	102.8669	GEN529201 1-OMCDLEC1 13.800
FDNS	00NR_G15_082	0	25SP	G15_082	FROM->TO	POTTER COUNTY INTERCHANGE (WAUK 90343-A) 345/230/13.2KV TRANSFORMER CKT 1	560	560	0.07935	102.8625	GEN562559 1-G14_047_3 0.4800
FDNS	00NR_G15_082	0	25SP	G15_082	FROM->TO	POTTER COUNTY INTERCHANGE (WAUK 90343-A) 345/230/13.2KV TRANSFORMER CKT 1	560	560	0.07935	102.862	GEN640028 1-COLUMCOGENERATION
FDNS	00NR_G15_082	0	25SP	G15_082	FROM->TO	POTTER COUNTY INTERCHANGE (WAUK 90343-A) 345/230/13.2KV TRANSFORMER CKT 1	560	560	0.07943	102.858	GRPRAR1-LNX3345.00 - YANKTON 345KV CKT Z
FDNS	00NR_G15_082	0	25SP	G15_082	FROM->TO	POTTER COUNTY INTERCHANGE (WAUK 90343-A) 345/230/13.2KV TRANSFORMER CKT 1	560	560	0.07943	102.8559	GRPRAR1-LNX3345.00 - HOLT.CO3 345.00 345KV CKT 1
FDNS	00NR_G15_082	0	25SP	G15_082	FROM->TO	POTTER COUNTY INTERCHANGE (WAUK 90343-A) 345/230/13.2KV TRANSFORMER CKT 1	560	560	0.07935	102.8544	GEN527881 1-CUNNINGHAM GEN #1
FDNS	00NR_G15_082	0	25SP	G15_082	FROM->TO	POTTER COUNTY INTERCHANGE (WAUK 90343-A) 345/230/13.2KV TRANSFORMER CKT 1	560	560	0.07935	102.8503	GEN910006 1-G12_012IS_3 0.6900
FDNS	00NR_G15_082	0	25SP	G15_082	FROM->TO	POTTER COUNTY INTERCHANGE (WAUK 90343-A) 345/230/13.2KV TRANSFORMER CKT 1	560	560	0.07935	102.8476	GEN562688 1-G15_014_3 0.6900
FDNS	00NR_G15_082	0	25SP	G15_082	FROM->TO	POTTER COUNTY INTERCHANGE (WAUK 90343-A) 345/230/13.2KV TRANSFORMER CKT 1	560	560	0.07935	102.8449	GEN520997 1-MORLND2
FDNS	00NR_G15_082	0	25SP	G15_082	FROM->TO	POTTER COUNTY INTERCHANGE (WAUK 90343-A) 345/230/13.2KV TRANSFORMER CKT 1	560	560	0.07935	102.8445	GEN562500 1-G14_013_3 0.6900
FDNS	00NR_G15_082	0	25SP	G15_082	FROM->TO	POTTER COUNTY INTERCHANGE (WAUK 90343-A) 345/230/13.2KV TRANSFORMER CKT 1	560	560	0.07974	102.8379	AXTELL - POST ROCK 345KV CKT 1
FDNS	00NR_G15_082	0	25SP	G15_082	FROM->TO	POTTER COUNTY INTERCHANGE (WAUK 90343-A) 345/230/13.2KV TRANSFORMER CKT 1	560	560	0.07935	102.8379	GEN647418 8-FREMONT 8
FDNS	00NR_G15_082	0	25SP	G15_082	FROM->TO	POTTER COUNTY INTERCHANGE (WAUK 90343-A) 345/230/13.2KV TRANSFORMER CKT 1	560	560	0.07935	102.8369	GEN560286 1-G10-01-1WTG 0.6900
FDNS	00NR_G15_082	0	25SP	G15_082	FROM->TO	POTTER COUNTY INTERCHANGE (WAUK 90343-A) 345/230/13.2KV TRANSFORMER CKT 1	560	560	0.07935	102.8369	GEN560287 1-G10-01-2WTG 0.6900
FDNS	00NR_G15_082	0	25SP	G15_082	FROM->TO	POTTER COUNTY INTERCHANGE (WAUK 90343-A) 345/230/13.2KV TRANSFORMER CKT 1	560	560	0.07935	102.8357	GEN642067 1-PLATTE
FDNS	00NR_G15_082	0	25SP	G15_082	FROM->TO	POTTER COUNTY INTERCHANGE (WAUK 90343-A) 345/230/13.2KV TRANSFORMER CKT 1	560	560	0.07935	102.8345	GEN562405 1-G13-019 0.6900
FDNS	00NR_G15_082	0	25SP	G15_082	FROM->TO	POTTER COUNTY INTERCHANGE (WAUK 90343-A) 345/230/13.2KV TRANSFORMER CKT 1	560	560	0.07935	102.8339	GEN506752 1-LEBROCK GAS 1
FDNS	00NR_G15_082	0	25SP	G15_082	FROM->TO	POTTER COUNTY INTERCHANGE (WAUK 90343-A) 345/230/13.2KV TRANSFORMER CKT 1	560	560	0.07935	102.8339	GEN514899 1-REDBUD1S
FDNS	00NR_G15_082	0	25SP	G15_082	FROM->TO	POTTER COUNTY INTERCHANGE (WAUK 90343-A) 345/230/13.2KV TRANSFORMER CKT 1	560	560	0.07935	102.8338	GEN506753 1-LEBROCK GAS 2
FDNS	00NR_G15_082	0	25SP	G15_082	FROM->TO	POTTER COUNTY INTERCHANGE (WAUK 90343-A) 345/230/13.2KV TRANSFORMER CKT 1	560	560	0.07935	102.8338	GEN514900 1-REDBUD2S
FDNS	00NR_G15_082	0	25SP	G15_082	FROM->TO	POTTER COUNTY INTERCHANGE (WAUK 90343-A) 345/230/13.2KV TRANSFORMER CKT 1	560	560	0.07935	102.8335	GEN514905 1-REDBUD3S
FDNS	00NR_G15_082	0	25SP	G15_082	FROM->TO	POTTER COUNTY INTERCHANGE (WAUK 90343-A) 345/230/13.2KV TRANSFORMER CKT 1	560	560	0.07935	102.8292	GEN514940 1-REDBUD GEN
FDNS	00NR_G15_082	0	25SP	G15_082	FROM->TO	POTTER COUNTY INTERCHANGE (WAUK 90343-A) 345/230/13.2KV TRANSFORMER CKT 1	560	560	0.07935	102.8285	GEN640555 W-S.FLATS.GENW0.6900
FDNS	00NR_G15_082	0	25SP	G15_082	FROM->TO	POTTER COUNTY INTERCHANGE (WAUK 90343-A) 345/230/13.2KV TRANSFORMER CKT 1	560	560	0.07935	102.8262	GEN539655 1-CLIFTON GENERATOR
FDNS	00NR_G15_082	0	25SP	G15_082	FROM->TO	POTTER COUNTY INTERCHANGE (WAUK 90343-A) 345/230/13.2KV TRANSFORMER CKT 1	560	560	0.07935	102.8236	GEN562547 1-G14_039_3 0.6900
FDNS	00NR_G15_082	0	25SP	G15_082	FROM->TO	POTTER COUNTY INTERCHANGE (WAUK 90343-A) 345/230/13.2KV TRANSFORMER CKT 1	560	560	0.07935	102.8171	GEN511836 1-NORTHEASTERN STATION #1
FDNS	00NR_G15_082	0	25SP	G15_082	FROM->TO	POTTER COUNTY INTERCHANGE (WAUK 90343-A) 345/230/13.2KV TRANSFORMER CKT 1	560	560	0.07935	102.8118	GEN506749 1-EASTMAN GENERATION A
FDNS	00NR_G15_082	0	25SP	G15_082	FROM->TO	POTTER COUNTY INTERCHANGE (WAUK 90343-A) 345/230/13.2KV TRANSFORMER CKT 1	560	560	0.07935	102.8116	GEN660016 1-B_H WIND 0.7000
FDNS	00NR_G15_082	0	25SP	G15_082	FROM->TO	POTTER COUNTY INTERCHANGE (WAUK 90343-A) 345/230/13.2KV TRANSFORMER CKT 1	560	560	0.07935	102.8076	GEN514998 1-MCCLAIN UNIT 1
FDNS	00NR_G15_082	0	25SP	G15_082	FROM->TO	POTTER COUNTY INTERCHANGE (WAUK 90343-A) 345/230/13.2KV TRANSFORMER CKT 1	560	560	0.07935	102.8076	GEN514999 1-MCCLAIN UNIT 2
FDNS	00NR_G15_082	0	25SP	G15_082	FROM->TO	POTTER COUNTY INTERCHANGE (WAUK 90343-A) 345/230/13.2KV TRANSFORMER CKT 1	560	560	0.07935	102.8061	GEN520998 1-MORLND3
FDNS	00NR_G15_082	0	25SP	G15_082	FROM->TO	POTTER COUNTY INTERCHANGE (WAUK 90343-A) 345/230/13.2KV TRANSFORMER CKT 1	560	560	0.08106	102.8059	PRINGLE INTERCHANGE - SPEARMAN INTERCHANGE 115KV CKT 1
FDNS	00NR_G15_082	0	25SP	G15_082	FROM->TO	POTTER COUNTY INTERCHANGE (WAUK 90343-A) 345/230/13.2KV TRANSFORMER CKT 1	560	560	0.08106	102.8059	PRINGLE INTERCHANGE - SPEARMAN INTERCHANGE 115KV CKT 1
FDNS	00NR_G15_082	0	25SP	G15_082	FROM->TO	POTTER COUNTY INTERCHANGE (WAUK 90343-A) 345/230/13.2KV TRANSFORMER CKT 1	560	560	0.07927	102.8044	P12:345:SPS:J02.1.TOLK.EDDY
FDNS	00NR_G15_082	0	25SP	G15_082	FROM->TO	POTTER COUNTY INTERCHANGE (WAUK 90343-A) 345/230/13.2KV TRANSFORMER CKT 1	560	560	0.07935	102.8018	GEN511955 G-COGENTRIX GAS # 2
FDNS	00NR_G15_082	0	25SP	G15_082	FROM->TO	POTTER COUNTY INTERCHANGE (WAUK 90343-A) 345/230/13.2KV TRANSFORMER CKT 1	560	560	0.07935	102.7945	GEN562483 1-G13_027_3 0.6900
FDNS	00NR_G15_082	0	25SP	G15_082	FROM->TO	POTTER COUNTY INTERCHANGE (WAUK 90343-A) 345/230/13.2KV TRANSFORMER CKT 1	560	560	0.07935	102.787	GEN503909 1-FULTONU1 1 16.000
FDNS	00NR_G15_082	0	25SP	G15_082	FROM->TO	POTTER COUNTY INTERCHANGE (WAUK 90343-A) 345/230/13.2KV TRANSFORMER CKT 1	560	560	0.07935	102.7848	GEN336821 1-GRAND GULF UNIT
FDNS	00NR_G15_082	0	25SP	G15_082	FROM->TO	POTTER COUNTY INTERCHANGE (WAUK 90343-A) 345/230/13.2KV TRANSFORMER CKT 1	560	560	0.07862	102.7806	Graves Sub - STATELINE INTERCHANGE 115KV CKT 1
FDNS	00NR_G15_082	0	25SP	G15_082	FROM->TO	POTTER COUNTY INTERCHANGE (WAUK 90343-A) 345/230/13.2KV TRANSFORMER CKT 1	560	560	0.07862	102.7806	Graves Sub - STATELINE INTERCHANGE 115KV CKT 1
FDNS	00NR_G15_082	0	25SP	G15_082	FROM->TO	POTTER COUNTY INTERCHANGE (WAUK 90343-A) 345/230/13.2KV TRANSFORMER CKT 1	560	560	0.07935	102.779	GEN645033 3-SARPY COUNTY 3
FDNS	00NR_G15_082	0	25SP	G15_082	FROM->TO	POTTER COUNTY INTERCHANGE (WAUK 90343-A) 345/230/13.2KV TRANSFORMER CKT 1	560	560	0.07935	102.7744	GEN541167 3-SHARPR#3
FDNS	00NR_G15_082	0	25SP	G15_082	FROM->TO	POTTER COUNTY INTERCHANGE (WAUK 90343-A) 345/230/13.2KV TRANSFORMER CKT 1	560	560	0.07935	102.7676	GEN541165 1-SHARPR#1
FDNS	00NR_G15_082	0	25SP	G15_082	FROM->TO	POTTER COUNTY INTERCHANGE (WAUK 90343-A) 345/230/13.2KV TRANSFORMER CKT 1	560	560	0.07935	102.7676	GEN541166 2-SHARPR#2
FDNS	00NR_G15_082	0	25SP	G15_082	FROM->TO	POTTER COUNTY INTERCHANGE (WAUK 90343-A) 345/230/13.2KV TRANSFORMER CKT 1	560	560	0.07935	102.7608	GEN599951 1-PSCO LAMAR DC TIE
FDNS	00NR_G15_082	0	25SP	G15_082	FROM->TO	POTTER COUNTY INTERCHANGE (WAUK 90343-A) 345/230/13.2KV TRANSFORMER CKT 1	560	560	0.08002	102.7607	DALLAM COUNTY INTERCHANGE - SHERMAN COUNTY SUB 115KV CKT 1
FDNS	00NR_G15_082	0	25SP	G15_082	FROM->TO	POTTER COUNTY INTERCHANGE (WAUK 90343-A) 345/230/13.2KV TRANSFORMER CKT 1	560	560	0.07935	102.7587	GEN514912 2-REDBUD GEN
FDNS	00NR_G15_082	0	25SP	G15_082	FROM->TO	POTTER COUNTY INTERCHANGE (WAUK 90343-A) 345/230/13.2KV TRANSFORMER CKT 1	560	560	0.07935	102.756	FINNEY SWITCHING STATION - PSCO LAMAR DC TIE 345KV CKT 1
FDNS	00NR_G15_082	0	25SP	G15_082	FROM->TO	POTTER COUNTY INTERCHANGE (WAUK 90343-A) 345/230/13.2KV TRANSFORMER CKT 1	560	560	0.07935	102.756	FINNEY SWITCHING STATION - PSCO LAMAR DC TIE 345KV CKT 1
FDNS	00NR_G15_082	0	25SP	G15_082	FROM->TO	POTTER COUNTY INTERCHANGE (WAUK 90343-A) 345/230/13.2KV TRANSFORMER CKT 1	560	560	0.07935	102.7443	GEN542961 6-HAWTHORN COMBUSTION TURBINE #6
FDNS	00NR_G15_082	0	25SP	G15_082	FROM->TO	POTTER COUNTY INTERCHANGE (WAUK 90343-A) 345/230/13.2KV TRANSFORMER CKT 1	560	560	0.07935	102.7402	GEN514911 2-REDBUD GEN
FDNS	00NR_G15_082	0	25SP	G15_082	FROM->TO	POTTER COUNTY INTERCHANGE (WAUK 90343-A) 345/230/13.2KV TRANSFORMER CKT 1	560	560	0.07935	102.7402	GEN514942 2-REDBUD4G
FDNS	00NR_G15_082	0	25SP	G15_082	FROM->TO	POTTER COUNTY INTERCHANGE (WAUK 90343-A) 345/230/13.2KV TRANSFORMER CKT 1	560	560	0.07935	102.74	GEN514910 2-REDBUD GEN
FDNS	00NR_G15_082	0	25SP	G15_082	FROM->TO	POTTER COUNTY INTERCHANGE (WAUK 90343-A) 345/230/13.2KV TRANSFORMER CKT 1	560	560	0.07935	102.7332	GEN635214 4-NEAL UNIT 4
FDNS	00NR_G15_082	0	25SP	G15_082	FROM->TO	POTTER COUNTY INTERCHANGE (WAUK 90343-A) 345/230/13.2KV TRANSFORMER CKT 1	560	560	0.07935	102.7307	GEN531461 4-S4 GENERATOR
FDNS	00NR_G15_082	0	25SP	G15_082	FROM->TO	POTTER COUNTY INTERCHANGE (WAUK 90343-A) 345/230/13.2KV TRANSFORMER CKT 1	560	560	0.07935	102.7296	GEN600002 3-SHERBURNE CNTY G3
FDNS	00NR_G15_082	0	25SP	G15_082	FROM->TO	POTTER COUNTY INTERCHANGE (WAUK 90343-A) 345/230/13.2KV TRANSFORMER CKT 1	560	560	0.07935	102.7277	GEN509391 G1-ARSENAL HILL GENS #2 (STALL)
FDNS	00NR_G15_082	0	25SP	G15_082	FROM->TO	POTTER COUNTY INTERCHANGE (WAUK 90343-A) 345/230/13.2KV TRANSFORMER CKT 1	560	560	0.07935	102.7254	GEN511858 1-TULSA POWER STATION # 4-1
FDNS	00NR_G15_082	0	25SP	G15_082	FROM->TO	POTTER COUNTY INTERCHANGE (WAUK 90343-A) 345/230/13.2KV TRANSFORMER CKT 1	560	560	0.07644	102.7223	G14-057T 345.00 - LAWTON EASTSIDE 345KV CKT 1
FDNS	00NR_G15_082	0	25SP	G15_082	FROM->TO	POTTER COUNTY INTERCHANGE (WAUK 90343-A) 345/230/13.2KV TRANSFORMER CKT 1	560	560	0.07926	102.719	CANYON E_TP3115.00 - RANDALL COUNTY INTERCHANGE 115KV CKT 1
FDNS	00NR_G15_082	0	25SP	G15_082	FROM->TO	POTTER COUNTY INTERCHANGE (WAUK 90343-A) 345/230/13.2KV TRANSFORMER CKT 1	560	560	0.07935	102.7189	GEN659018 1-G14_003IS_3 0.6900
FDNS	00NR_G15_082	0	25SP	G15_082	FROM->TO	POTTER COUNTY INTERCHANGE (WAUK 90343-A) 345/230/13.2KV TRANSFORMER CKT 1	560	560	0.08006	102.7104	BEARCAT 138.00 - MOORELAND 138KV CKT 1
FDNS	00NR_G15_082	0	25SP	G15_082	FROM->TO	POTTER COUNTY INTERCHANGE (WAUK 90343-A) 345/230/13.2KV TRANSFORMER CKT 1	560	560	0.07935	102.7102	GEN509407 1-WILKES #1
FDNS	00NR_G15_082	0	25SP	G15_082	FROM->TO	POTTER COUNTY INTERCHANGE (WAUK 90343-A) 345/230/13.2KV TRANSFORMER CKT 1	560	560	0.08094	102.7092	HOLCOMB - SETAB 345KV CKT 1
FDNS	00NR_G15_082	0	25SP	G15_082	FROM->TO	POTTER COUNTY INTERCHANGE (WAUK 90343-A) 345/230/13.2KV TRANSFORMER CKT 1	560	560	0.08094	102.7092	HOLCOMB - SETAB 345KV CKT 1
FDNS	00NR_G15_082	0	25SP	G15_082	FROM->TO	POTTER COUNTY INTERCHANGE (WAUK 90343-A) 345/230/13.2KV TRANSFORMER CKT 1	560	560	0.07935	102.7087	GEN509392 G2-ARSENAL HILL GENS #3 (STALL)

SOLUTION	GROUP	SCENARIO	SEASON	SOURCE	DIRECTION	MONITORED ELEMENT	RATEA (MVA)	RATEB(MVA)	TDF	TC%LOADING (% MVA)	CONTINGENCY
FDNS	00NR_G15_082	0	25SP	G15_082	FROM->TO	POTTER COUNTY INTERCHANGE (WAUK 90343-A) 345/230/13.2KV TRANSFORMER CKT 1	560	560	0.0801	102.7012	MOORE COUNTY INTERCHANGE EAST BUS - RB-SPURLOCK3115.00 115KV CKT 1
FDNS	00NR_G15_082	0	25SP	G15_082	FROM->TO	POTTER COUNTY INTERCHANGE (WAUK 90343-A) 345/230/13.2KV TRANSFORMER CKT 1	560	560	0.07935	102.7007	GEN531462 5-S5 GENERATOR
FDNS	00NR_G15_082	0	25SP	G15_082	FROM->TO	POTTER COUNTY INTERCHANGE (WAUK 90343-A) 345/230/13.2KV TRANSFORMER CKT 1	560	560	0.07757	102.7002	Harrington Station East Bus - POTTER COUNTY INTERCHANGE 230KV CKT 1
FDNS	00NR_G15_082	0	25SP	G15_082	FROM->TO	POTTER COUNTY INTERCHANGE (WAUK 90343-A) 345/230/13.2KV TRANSFORMER CKT 1	560	560	0.07757	102.7002	Harrington Station East Bus - POTTER COUNTY INTERCHANGE 230KV CKT 1
FDNS	00NR_G15_082	0	25SP	G15_082	FROM->TO	POTTER COUNTY INTERCHANGE (WAUK 90343-A) 345/230/13.2KV TRANSFORMER CKT 1	560	560	0.07935	102.6972	GEN511838 1-NORTHEASTERN STATION # 1-1B
FDNS	00NR_G15_082	0	25SP	G15_082	FROM->TO	POTTER COUNTY INTERCHANGE (WAUK 90343-A) 345/230/13.2KV TRANSFORMER CKT 1	560	560	0.07935	102.6949	GEN652906 1-G09_006IS_3 0.6900
FDNS	00NR_G15_082	0	25SP	G15_082	FROM->TO	POTTER COUNTY INTERCHANGE (WAUK 90343-A) 345/230/13.2KV TRANSFORMER CKT 1	560	560	0.07935	102.6938	GEN562042 1-G11_014_3 0.6900
FDNS	00NR_G15_082	0	25SP	G15_082	FROM->TO	POTTER COUNTY INTERCHANGE (WAUK 90343-A) 345/230/13.2KV TRANSFORMER CKT 1	560	560	0.07824	102.6911	CHISHOLM6 230.00 - ELK CITY 230KV 230KV CKT 1
FDNS	00NR_G15_082	0	25SP	G15_082	FROM->TO	POTTER COUNTY INTERCHANGE (WAUK 90343-A) 345/230/13.2KV TRANSFORMER CKT 1	560	560	0.07935	102.6908	GEN506750 1-EASTMAN GENERATION B
FDNS	00NR_G15_082	0	25SP	G15_082	FROM->TO	POTTER COUNTY INTERCHANGE (WAUK 90343-A) 345/230/13.2KV TRANSFORMER CKT 1	560	560	0.07891	102.6879	TUCO_2 345.00 (TUCO_2 XFMR) 345/230/13.2KV TRANSFORMER CKT 1
FDNS	00NR_G15_082	0	25SP	G15_082	FROM->TO	POTTER COUNTY INTERCHANGE (WAUK 90343-A) 345/230/13.2KV TRANSFORMER CKT 1	560	560	0.07824	102.6865	ELK CITY 230KV (ELKCTY-6) 230/138/13.8KV TRANSFORMER CKT 1
FDNS	00NR_G15_082	0	25SP	G15_082	FROM->TO	POTTER COUNTY INTERCHANGE (WAUK 90343-A) 345/230/13.2KV TRANSFORMER CKT 1	560	560	0.07824	102.6865	ELK CITY 230KV (ELKCTY-6) 230/138/13.8KV TRANSFORMER CKT 1
FDNS	00NR_G15_082	0	25SP	G15_082	FROM->TO	POTTER COUNTY INTERCHANGE (WAUK 90343-A) 345/230/13.2KV TRANSFORMER CKT 1	560	560	0.07935	102.6863	GEN511837 1-NORTHEASTERN STATION # 1-1A
FDNS	00NR_G15_082	0	25SP	G15_082	FROM->TO	POTTER COUNTY INTERCHANGE (WAUK 90343-A) 345/230/13.2KV TRANSFORMER CKT 1	560	560	0.07903	102.6833	HAPPY INTERCHANGE - PALO DURO SUB 115KV CKT 1
FDNS	00NR_G15_082	0	25SP	G15_082	FROM->TO	POTTER COUNTY INTERCHANGE (WAUK 90343-A) 345/230/13.2KV TRANSFORMER CKT 1	560	560	0.07929	102.682	EDDY COUNTY INTERCHANGE (ABB AEM30711) 345/230/13.2KV TRANSFORMER CKT 1
FDNS	00NR_G15_082	0	25SP	G15_082	FROM->TO	POTTER COUNTY INTERCHANGE (WAUK 90343-A) 345/230/13.2KV TRANSFORMER CKT 1	560	560	0.07929	102.682	EDDY COUNTY INTERCHANGE (ABB AEM30711) 345/230/13.2KV TRANSFORMER CKT 1
FDNS	00NR_G15_082	0	25SP	G15_082	FROM->TO	POTTER COUNTY INTERCHANGE (WAUK 90343-A) 345/230/13.2KV TRANSFORMER CKT 1	560	560	0.07935	102.6806	GEN546698 1-QN GEN2
FDNS	00NR_G15_082	0	25SP	G15_082	FROM->TO	POTTER COUNTY INTERCHANGE (WAUK 90343-A) 345/230/13.2KV TRANSFORMER CKT 1	560	560	0.07545	102.6766	BVRCNTY7 345.00 - G11-14T 345.00 345KV CKT 1
FDNS	00NR_G15_082	0	25SP	G15_082	FROM->TO	POTTER COUNTY INTERCHANGE (WAUK 90343-A) 345/230/13.2KV TRANSFORMER CKT 1	560	560	0.07545	102.6766	BVRCNTY7 345.00 - G11-14T 345.00 345KV CKT 2
FDNS	00NR_G15_082	0	25SP	G15_082	FROM->TO	POTTER COUNTY INTERCHANGE (WAUK 90343-A) 345/230/13.2KV TRANSFORMER CKT 1	560	560	0.07926	102.6741	P12:115:SPS:V05.1.OSAGE.WCANYON
FDNS	00NR_G15_082	0	25SP	G15_082	FROM->TO	POTTER COUNTY INTERCHANGE (WAUK 90343-A) 345/230/13.2KV TRANSFORMER CKT 1	560	560	0.07935	102.6738	SHERBURNE CO 345/24.0KV TRANSFORMER CKT 1
FDNS	00NR_G15_082	0	25SP	G15_082	FROM->TO	POTTER COUNTY INTERCHANGE (WAUK 90343-A) 345/230/13.2KV TRANSFORMER CKT 1	560	560	0.07935	102.6708	GEN501801 1-DOLET HILLS UNIT1
FDNS	00NR_G15_082	0	25SP	G15_082	FROM->TO	POTTER COUNTY INTERCHANGE (WAUK 90343-A) 345/230/13.2KV TRANSFORMER CKT 1	560	560	0.07935	102.6683	GEN547642 1-RIVERTON GEN #12
FDNS	00NR_G15_082	0	25SP	G15_082	FROM->TO	POTTER COUNTY INTERCHANGE (WAUK 90343-A) 345/230/13.2KV TRANSFORMER CKT 1	560	560	0.07929	102.6603	P12:345:SPS:J14.1.EDDY.XRDS
FDNS	00NR_G15_082	0	25SP	G15_082	FROM->TO	POTTER COUNTY INTERCHANGE (WAUK 90343-A) 345/230/13.2KV TRANSFORMER CKT 1	560	560	0.07929	102.6601	CROSSROADS 7345.00 - EDDY COUNTY INTERCHANGE 345KV CKT 1
FDNS	00NR_G15_082	0	25SP	G15_082	FROM->TO	POTTER COUNTY INTERCHANGE (WAUK 90343-A) 345/230/13.2KV TRANSFORMER CKT 1	560	560	0.07935	102.6578	GEN652559 1-OAHE
FDNS	00NR_G15_082	0	25SP	G15_082	FROM->TO	POTTER COUNTY INTERCHANGE (WAUK 90343-A) 345/230/13.2KV TRANSFORMER CKT 1	560	560	0.07935	102.6562	GEN562414 1-G13_022 0.4800
FDNS	00NR_G15_082	0	25SP	G15_082	FROM->TO	POTTER COUNTY INTERCHANGE (WAUK 90343-A) 345/230/13.2KV TRANSFORMER CKT 1	560	560	0.07935	102.655	GEN336153 1-WATERFORD UNIT#3
FDNS	00NR_G15_082	0	25SP	G15_082	FROM->TO	POTTER COUNTY INTERCHANGE (WAUK 90343-A) 345/230/13.2KV TRANSFORMER CKT 1	560	560	0.07935	102.6547	GEN542967 9-HAWTHORN UNIT #9
FDNS	00NR_G15_082	0	25SP	G15_082	FROM->TO	POTTER COUNTY INTERCHANGE (WAUK 90343-A) 345/230/13.2KV TRANSFORMER CKT 1	560	560	0.07935	102.6541	GEN659010 4-G07_027IS_2 0.6900
FDNS	00NR_G15_082	0	25SP	G15_082	FROM->TO	POTTER COUNTY INTERCHANGE (WAUK 90343-A) 345/230/13.2KV TRANSFORMER CKT 1	560	560	0.07935	102.6527	GEN511854 1-TULSA POWER STATION # 2-1
FDNS	00NR_G15_082	0	25SP	G15_082	FROM->TO	POTTER COUNTY INTERCHANGE (WAUK 90343-A) 345/230/13.2KV TRANSFORMER CKT 1	560	560	0.079	102.6506	TUCO INTERCHANGE (GE M1022338) 345/230/13.2KV TRANSFORMER CKT 1
FDNS	00NR_G15_082	0	25SP	G15_082	FROM->TO	POTTER COUNTY INTERCHANGE (WAUK 90343-A) 345/230/13.2KV TRANSFORMER CKT 1	560	560	0.079	102.6506	TUCO INTERCHANGE (GE M1022338) 345/230/13.2KV TRANSFORMER CKT 1
FDNS	00NR_G15_082	0	25SP	G15_082	FROM->TO	POTTER COUNTY INTERCHANGE (WAUK 90343-A) 345/230/13.2KV TRANSFORMER CKT 1	560	560	0.07935	102.6474	GEN659289 1-DAYCNTYWND W0.6900
FDNS	00NR_G15_082	0	25SP	G15_082	FROM->TO	POTTER COUNTY INTERCHANGE (WAUK 90343-A) 345/230/13.2KV TRANSFORMER CKT 1	560	560	0.07935	102.6446	GEN652556 2-OAHE
FDNS	00NR_G15_082	0	25SP	G15_082	FROM->TO	POTTER COUNTY INTERCHANGE (WAUK 90343-A) 345/230/13.2KV TRANSFORMER CKT 1	560	560	0.07935	102.6446	GEN652557 4-OAHE
FDNS	00NR_G15_082	0	25SP	G15_082	FROM->TO	POTTER COUNTY INTERCHANGE (WAUK 90343-A) 345/230/13.2KV TRANSFORMER CKT 1	560	560	0.07935	102.6446	GEN652558 6-OAHE
FDNS	00NR_G15_082	0	25SP	G15_082	FROM->TO	POTTER COUNTY INTERCHANGE (WAUK 90343-A) 345/230/13.2KV TRANSFORMER CKT 1	560	560	0.07935	102.6436	GEN659194 1-NDPRAIRWND1W0.6900
FDNS	00NR_G15_082	0	25SP	G15_082	FROM->TO	POTTER COUNTY INTERCHANGE (WAUK 90343-A) 345/230/13.2KV TRANSFORMER CKT 1	560	560	0.07935	102.6415	GEN659411 1-CAMPBLCNTY W0.6900
FDNS	00NR_G15_082	0	25SP	G15_082	FROM->TO	POTTER COUNTY INTERCHANGE (WAUK 90343-A) 345/230/13.2KV TRANSFORMER CKT 1	560	560	0.07935	102.6394	GEN515266 1-AES 1G
FDNS	00NR_G15_082	0	25SP	G15_082	FROM->TO	POTTER COUNTY INTERCHANGE (WAUK 90343-A) 345/230/13.2KV TRANSFORMER CKT 1	560	560	0.07935	102.6394	GEN515267 1-AES 2G
FDNS	00NR_G15_082	0	25SP	G15_082	FROM->TO	POTTER COUNTY INTERCHANGE (WAUK 90343-A) 345/230/13.2KV TRANSFORMER CKT 1	560	560	0.07935	102.631	GEN652460 4-GARRISON
FDNS	00NR_G15_082	0	25SP	G15_082	FROM->TO	POTTER COUNTY INTERCHANGE (WAUK 90343-A) 345/230/13.2KV TRANSFORMER CKT 1	560	560	0.07935	102.631	GEN652461 5-GARRISON
FDNS	00NR_G15_082	0	25SP	G15_082	FROM->TO	POTTER COUNTY INTERCHANGE (WAUK 90343-A) 345/230/13.2KV TRANSFORMER CKT 1	560	560	0.07935	102.6294	GEN652457 1-GARRISON
FDNS	00NR_G15_082	0	25SP	G15_082	FROM->TO	POTTER COUNTY INTERCHANGE (WAUK 90343-A) 345/230/13.2KV TRANSFORMER CKT 1	560	560	0.07935	102.6294	GEN652458 2-GARRISON
FDNS	00NR_G15_082	0	25SP	G15_082	FROM->TO	POTTER COUNTY INTERCHANGE (WAUK 90343-A) 345/230/13.2KV TRANSFORMER CKT 1	560	560	0.07935	102.6294	GEN652459 3-GARRISON
FDNS	00NR_G15_082	0	25SP	G15_082	FROM->TO	POTTER COUNTY INTERCHANGE (WAUK 90343-A) 345/230/13.2KV TRANSFORMER CKT 1	560	560	0.07935	102.6229	GEN547656 1-STATE LINE UNIT #2
FDNS	00NR_G15_082	0	25SP	G15_082	FROM->TO	POTTER COUNTY INTERCHANGE (WAUK 90343-A) 345/230/13.2KV TRANSFORMER CKT 1	560	560	0.07935	102.6229	GEN547657 1-STATE LINE UNIT #3
FDNS	00NR_G15_082	0	25SP	G15_082	FROM->TO	POTTER COUNTY INTERCHANGE (WAUK 90343-A) 345/230/13.2KV TRANSFORMER CKT 1	560	560	0.07935	102.6224	GEN659296 2-SDPRAIRWND1W0.6900
FDNS	00NR_G15_082	0	25SP	G15_082	FROM->TO	POTTER COUNTY INTERCHANGE (WAUK 90343-A) 345/230/13.2KV TRANSFORMER CKT 1	560	560	0.07903	102.62	P12:115:SPS:T66.1.RNDALL.HAPPY
FDNS	00NR_G15_082	0	25SP	G15_082	FROM->TO	POTTER COUNTY INTERCHANGE (WAUK 90343-A) 345/230/13.2KV TRANSFORMER CKT 1	560	560	0.07935	102.6196	GEN524890 1-SNJN-WTGA1 10.6000
FDNS	00NR_G15_082	0	25SP	G15_082	FROM->TO	POTTER COUNTY INTERCHANGE (WAUK 90343-A) 345/230/13.2KV TRANSFORMER CKT 1	560	560	0.07903	102.6185	PALO DURO SUB - RANDALL COUNTY INTERCHANGE 115KV CKT 1
FDNS	00NR_G15_082	0	25SP	G15_082	FROM->TO	POTTER COUNTY INTERCHANGE (WAUK 90343-A) 345/230/13.2KV TRANSFORMER CKT 1	560	560	0.07935	102.6184	GEN645024 4-NORTH OMAHA 4
FDNS	00NR_G15_082	0	25SP	G15_082	FROM->TO	POTTER COUNTY INTERCHANGE (WAUK 90343-A) 345/230/13.2KV TRANSFORMER CKT 1	560	560	0.07935	102.6172	GEN511939 1-OEC GAS # 1-1
FDNS	00NR_G15_082	0	25SP	G15_082	FROM->TO	POTTER COUNTY INTERCHANGE (WAUK 90343-A) 345/230/13.2KV TRANSFORMER CKT 1	560	560	0.07935	102.6172	GEN511940 1-OEC GAS # 1-2
FDNS	00NR_G15_082	0	25SP	G15_082	FROM->TO	POTTER COUNTY INTERCHANGE (WAUK 90343-A) 345/230/13.2KV TRANSFORMER CKT 1	560	560	0.07935	102.616	GEN635023 3-WALTER SCOTT UNIT 3
FDNS	00NR_G15_082	0	25SP	G15_082	FROM->TO	POTTER COUNTY INTERCHANGE (WAUK 90343-A) 345/230/13.2KV TRANSFORMER CKT 1	560	560	0.08006	102.6152	BEARCAT 138.00 - NINE MILE 138KV CKT 1
FDNS	00NR_G15_082	0	25SP	G15_082	FROM->TO	POTTER COUNTY INTERCHANGE (WAUK 90343-A) 345/230/13.2KV TRANSFORMER CKT 1	560	560	0.07935	102.6151	GEN562538 1-G14_035_3 0.3420
FDNS	00NR_G15_082	0	25SP	G15_082	FROM->TO	POTTER COUNTY INTERCHANGE (WAUK 90343-A) 345/230/13.2KV TRANSFORMER CKT 1	560	560	0.07857	102.6125	LAKE PAULINE - RUSSELL 138KV CKT 1
FDNS	00NR_G15_082	0	25SP	G15_082	FROM->TO	POTTER COUNTY INTERCHANGE (WAUK 90343-A) 345/230/13.2KV TRANSFORMER CKT 1	560	560	0.07857	102.6125	LAKE PAULINE - RUSSELL 138KV CKT 1
FDNS	00NR_G15_082	0	25SP	G15_082	FROM->TO	POTTER COUNTY INTERCHANGE (WAUK 90343-A) 345/230/13.2KV TRANSFORMER CKT 1	560	560	0.07935	102.6064	GEN652907 1-G09_007IS_3 0.6900
FDNS	00NR_G15_082	0	25SP	G15_082	FROM->TO	POTTER COUNTY INTERCHANGE (WAUK 90343-A) 345/230/13.2KV TRANSFORMER CKT 1	560	560	0.07935	102.6042	GEN506754 1-LEBROCK STEAM 1
FDNS	00NR_G15_082	0	25SP	G15_082	FROM->TO	POTTER COUNTY INTERCHANGE (WAUK 90343-A) 345/230/13.2KV TRANSFORMER CKT 1	560	560	0.07935	102.6012	GEN560256 1-G10-14-1 0.6900
FDNS	00NR_G15_082	0	25SP	G15_082	FROM->TO	POTTER COUNTY INTERCHANGE (WAUK 90343-A) 345/230/13.2KV TRANSFORMER CKT 1	560	560	0.07935	102.5995	GEN337911 1-ARKANSAS NUCLEAR ONE UNIT #2
FDNS	00NR_G15_082	0	25SP	G15_082	FROM->TO	POTTER COUNTY INTERCHANGE (WAUK 90343-A) 345/230/13.2KV TRANSFORMER CKT 1	560	560	0.07935	102.5954	GEN509393 S1-ARSENAL HILL GENS #4 (STALL)
FDNS	00NR_G15_082	0	25SP	G15_082	FROM->TO	POTTER COUNTY INTERCHANGE (WAUK 90343-A) 345/230/13.2KV TRANSFORMER CKT 1	560	560	0.07935	102.5868	GEN659403 1-NDSUNFLWR W0.6900
FDNS	00NR_G15_082	0	25SP	G15_082	FROM->TO	POTTER COUNTY INTERCHANGE (WAUK 90343-A) 345/230/13.2KV TRANSFORMER CKT 1	560	560	0.07935	102.5864	GEN532662 1-LAWRENCE ENERGY CENTER UNIT 4
FDNS	00NR_G15_082	0	25SP	G15_082	FROM->TO	POTTER COUNTY INTERCHANGE (WAUK 90343-A) 345/230/13.2KV TRANSFORMER CKT 1	560	560	0.07929	102.5831	HOBBS - YOAKUM_345 345.00 345KV CKT 1
FDNS	00NR_G15_082	0	25SP	G15_082	FROM->TO	POTTER COUNTY INTERCHANGE (WAUK 90343-A) 345/230/13.2KV TRANSFORMER CKT 1	560	560	0.07935	102.5806	GEN640019 1-SHELDON STATION UNIT 1
FDNS	00NR_G15_082	0	25SP	G15_082	FROM->TO	POTTER COUNTY INTERCHANGE (WAUK 90343-A) 345/230/13.2KV TRANSFORMER CKT 1	560	560	0.07935	102.5765	GEN560257 1-G10-14-2 0.6900
FDNS	00NR_G15_082	0	25SP	G15_082	FROM->TO	POTTER COUNTY INTERCHANGE (WAUK 90343-A) 345/230/13.2KV TRANSFORMER CKT 1	560	560	0.07742	102.574	CHERRY1 - POTTER COUNTY INTERCHANGE 230KV CKT 1
FDNS	00NR_G15_082	0	25SP	G15_082	FROM->TO	POTTER COUNTY INTERCHANGE (WAUK 90343-A) 345/230/13.2KV TRANSFORMER CKT 1	560	560	0.07742	102.574	CHERRY1 - POTTER COUNTY INTERCHANGE 230KV CKT 1
FDNS	00NR_G15_082	0	25SP	G15_082	FROM->TO	POTTER COUNTY INTERCHANGE (WAUK 90343-A) 345/230/13.2KV TRANSFORMER CKT 1	560	560	0.07913	102.5699	GRACEMONT - LAWTON EASTSIDE 345KV CKT 1

SOLUTION	GROUP	SCENARIO	SEASON	SOURCE	DIRECTION	MONITORED ELEMENT	RATEA (MVA)	RATEB(MVA)	TDF	TC%LOADING (% MVA)	CONTINGENCY
FDNS	00NR_G15_082	0	25SP	G15_082	FROM->TO	POTTER COUNTY INTERCHANGE (WAUK 90343-A) 345/230/13.2KV TRANSFORMER CKT 1	560	560	0.07913	102.5699	GRACEMONT - LAWTON EASTSIDE 345KV CKT 1
FDNS	00NR_G15_082	0	25SP	G15_082	FROM->TO	POTTER COUNTY INTERCHANGE (WAUK 90343-A) 345/230/13.2KV TRANSFORMER CKT 1	560	560	0.07869	102.5679	TOLK STATION EAST - TUCO INTERCHANGE 230KV CKT 1
FDNS	00NR_G15_082	0	25SP	G15_082	FROM->TO	POTTER COUNTY INTERCHANGE (WAUK 90343-A) 345/230/13.2KV TRANSFORMER CKT 1	560	560	0.07869	102.5679	TOLK STATION EAST - TUCO INTERCHANGE 230KV CKT 1
FDNS	00NR_G15_082	0	25SP	G15_082	FROM->TO	POTTER COUNTY INTERCHANGE (WAUK 90343-A) 345/230/13.2KV TRANSFORMER CKT 1	560	560	0.07935	102.5667	GEN522866 1-LUBBOCK POWER & LIGHT-HOLLY GEN
FDNS	00NR_G15_082	0	25SP	G15_082	FROM->TO	POTTER COUNTY INTERCHANGE (WAUK 90343-A) 345/230/13.2KV TRANSFORMER CKT 1	560	560	0.07916	102.5621	Harrington Station Mid Bus - RANDALL COUNTY INTERCHANGE 230KV CKT 1
FDNS	00NR_G15_082	0	25SP	G15_082	FROM->TO	POTTER COUNTY INTERCHANGE (WAUK 90343-A) 345/230/13.2KV TRANSFORMER CKT 1	560	560	0.07916	102.5621	Harrington Station Mid Bus - RANDALL COUNTY INTERCHANGE 230KV CKT 1
FDNS	00NR_G15_082	0	25SP	G15_082	FROM->TO	POTTER COUNTY INTERCHANGE (WAUK 90343-A) 345/230/13.2KV TRANSFORMER CKT 1	560	560	0.07935	102.5619	GEN335831 1-RIVERBEND UNIT#1
FDNS	00NR_G15_082	0	25SP	G15_082	FROM->TO	POTTER COUNTY INTERCHANGE (WAUK 90343-A) 345/230/13.2KV TRANSFORMER CKT 1	560	560	0.10732	102.5612	G11-14T 345.00 - WOODWARD DISTRICT EHV 345KV CKT 1
FDNS	00NR_G15_082	0	25SP	G15_082	FROM->TO	POTTER COUNTY INTERCHANGE (WAUK 90343-A) 345/230/13.2KV TRANSFORMER CKT 1	560	560	0.10732	102.5612	G11-14T 345.00 - WOODWARD DISTRICT EHV 345KV CKT 2
FDNS	00NR_G15_082	0	25SP	G15_082	FROM->TO	POTTER COUNTY INTERCHANGE (WAUK 90343-A) 345/230/13.2KV TRANSFORMER CKT 1	560	560	0.08006	102.5585	P12:138:WFEC:MSL14
FDNS	00NR_G15_082	0	25SP	G15_082	FROM->TO	POTTER COUNTY INTERCHANGE (WAUK 90343-A) 345/230/13.2KV TRANSFORMER CKT 1	560	560	0.07935	102.541	GEN511953 G-COGENTRIX GAS # 1
FDNS	00NR_G15_082	0	25SP	G15_082	FROM->TO	POTTER COUNTY INTERCHANGE (WAUK 90343-A) 345/230/13.2KV TRANSFORMER CKT 1	560	560	0.07935	102.5325	GEN514936 1-HORSESHOE LAKE 7S
FDNS	00NR_G15_082	0	25SP	G15_082	FROM->TO	POTTER COUNTY INTERCHANGE (WAUK 90343-A) 345/230/13.2KV TRANSFORMER CKT 1	560	560	0.07998	102.5322	MOORE COUNTY INTERCHANGE W. - RB-S&S 3115.00 115KV CKT 1
FDNS	00NR_G15_082	0	25SP	G15_082	FROM->TO	POTTER COUNTY INTERCHANGE (WAUK 90343-A) 345/230/13.2KV TRANSFORMER CKT 1	560	560	0.07935	102.5159	GEN532742 5-EMPORIA ENERGY CENTER UNIT 5
FDNS	00NR_G15_082	0	25SP	G15_082	FROM->TO	POTTER COUNTY INTERCHANGE (WAUK 90343-A) 345/230/13.2KV TRANSFORMER CKT 1	560	560	0.07935	102.5159	GEN532743 6-EMPORIA ENERGY CENTER UNIT 6
FDNS	00NR_G15_082	0	25SP	G15_082	FROM->TO	POTTER COUNTY INTERCHANGE (WAUK 90343-A) 345/230/13.2KV TRANSFORMER CKT 1	560	560	0.07935	102.5115	GEN509408 1-WILKES #2
FDNS	00NR_G15_082	0	25SP	G15_082	FROM->TO	POTTER COUNTY INTERCHANGE (WAUK 90343-A) 345/230/13.2KV TRANSFORMER CKT 1	560	560	0.07935	102.5091	GEN539653 1-CIMARRON RIVER PLANT GENERATOR
FDNS	00NR_G15_082	0	25SP	G15_082	FROM->TO	POTTER COUNTY INTERCHANGE (WAUK 90343-A) 345/230/13.2KV TRANSFORMER CKT 1	560	560	0.08007	102.4968	PRINGLE INTERCHANGE - RIVERVIEW INTERCHANGE 115KV CKT 1
FDNS	00NR_G15_082	0	25SP	G15_082	FROM->TO	POTTER COUNTY INTERCHANGE (WAUK 90343-A) 345/230/13.2KV TRANSFORMER CKT 1	560	560	0.08007	102.4968	PRINGLE INTERCHANGE - RIVERVIEW INTERCHANGE 115KV CKT 1
FDNS	00NR_G15_082	0	25SP	G15_082	FROM->TO	POTTER COUNTY INTERCHANGE (WAUK 90343-A) 345/230/13.2KV TRANSFORMER CKT 1	560	560	0.07935	102.4866	GEN300020 1-1CHOTCT4 16.000
FDNS	00NR_G15_082	0	25SP	G15_082	FROM->TO	POTTER COUNTY INTERCHANGE (WAUK 90343-A) 345/230/13.2KV TRANSFORMER CKT 1	560	560	0.07935	102.4866	GEN300021 1-1CHOTCT5 16.000
FDNS	00NR_G15_082	0	25SP	G15_082	FROM->TO	POTTER COUNTY INTERCHANGE (WAUK 90343-A) 345/230/13.2KV TRANSFORMER CKT 1	560	560	0.07935	102.4865	GEN300032 1-CHOUTEAU CTG 2
FDNS	00NR_G15_082	0	25SP	G15_082	FROM->TO	POTTER COUNTY INTERCHANGE (WAUK 90343-A) 345/230/13.2KV TRANSFORMER CKT 1	560	560	0.07935	102.4865	GEN300033 1-CHOUTEAU STG 3
FDNS	00NR_G15_082	0	25SP	G15_082	FROM->TO	POTTER COUNTY INTERCHANGE (WAUK 90343-A) 345/230/13.2KV TRANSFORMER CKT 1	560	560	0.07906	102.4844	TUCO INTERCHANGE (SIEM 8743066) 345/230/13.2KV TRANSFORMER CKT 2
FDNS	00NR_G15_082	0	25SP	G15_082	FROM->TO	POTTER COUNTY INTERCHANGE (WAUK 90343-A) 345/230/13.2KV TRANSFORMER CKT 1	560	560	0.07906	102.4844	TUCO INTERCHANGE (SIEM 8743066) 345/230/13.2KV TRANSFORMER CKT 2
FDNS	00NR_G15_082	0	25SP	G15_082	FROM->TO	POTTER COUNTY INTERCHANGE (WAUK 90343-A) 345/230/13.2KV TRANSFORMER CKT 1	560	560	0.07935	102.4815	GEN635024 4-WALTER SCOTT UNIT 4
FDNS	00NR_G15_082	0	25SP	G15_082	FROM->TO	POTTER COUNTY INTERCHANGE (WAUK 90343-A) 345/230/13.2KV TRANSFORMER CKT 1	560	560	0.07935	102.4746	GEN337910 1-ARKANSAS NUCLEAR ONE UNIT #1
FDNS	00NR_G15_082	0	25SP	G15_082	FROM->TO	POTTER COUNTY INTERCHANGE (WAUK 90343-A) 345/230/13.2KV TRANSFORMER CKT 1	560	560	0.07914	102.4666	SUNDOWN INTERCHANGE - WOLFFORTH INTERCHANGE 230KV CKT 1
FDNS	00NR_G15_082	0	25SP	G15_082	FROM->TO	POTTER COUNTY INTERCHANGE (WAUK 90343-A) 345/230/13.2KV TRANSFORMER CKT 1	560	560	0.07914	102.4666	SUNDOWN INTERCHANGE - WOLFFORTH INTERCHANGE 230KV CKT 1
FDNS	00NR_G15_082	0	25SP	G15_082	FROM->TO	POTTER COUNTY INTERCHANGE (WAUK 90343-A) 345/230/13.2KV TRANSFORMER CKT 1	560	560	0.08006	102.4612	MOREWOOD SW - NINE MILE 138KV CKT 1
FDNS	00NR_G15_082	0	25SP	G15_082	FROM->TO	POTTER COUNTY INTERCHANGE (WAUK 90343-A) 345/230/13.2KV TRANSFORMER CKT 1	560	560	0.07935	102.4591	GEN659354 1-DEERCREK STG18.000
FDNS	00NR_G15_082	0	25SP	G15_082	FROM->TO	POTTER COUNTY INTERCHANGE (WAUK 90343-A) 345/230/13.2KV TRANSFORMER CKT 1	560	560	0.07935	102.4589	GEN659353 1-DEERCREK CTG18.000
FDNS	00NR_G15_082	0	25SP	G15_082	FROM->TO	POTTER COUNTY INTERCHANGE (WAUK 90343-A) 345/230/13.2KV TRANSFORMER CKT 1	560	560	0.07887	102.4521	JOHNSON COUNTY - PITTSBURG 345KV CKT 1
FDNS	00NR_G15_082	0	25SP	G15_082	FROM->TO	POTTER COUNTY INTERCHANGE (WAUK 90343-A) 345/230/13.2KV TRANSFORMER CKT 1	560	560	0.07887	102.4521	JOHNSON COUNTY - PITTSBURG 345KV CKT 1
FDNS	00NR_G15_082	0	25SP	G15_082	FROM->TO	POTTER COUNTY INTERCHANGE (WAUK 90343-A) 345/230/13.2KV TRANSFORMER CKT 1	560	560	0.07935	102.4493	GEN562003 1-G11_027_3 0.6900
FDNS	00NR_G15_082	0	25SP	G15_082	FROM->TO	POTTER COUNTY INTERCHANGE (WAUK 90343-A) 345/230/13.2KV TRANSFORMER CKT 1	560	560	0.07935	102.4479	GEN300024 1-1CHOTST6 16.000
FDNS	00NR_G15_082	0	25SP	G15_082	FROM->TO	POTTER COUNTY INTERCHANGE (WAUK 90343-A) 345/230/13.2KV TRANSFORMER CKT 1	560	560	0.07935	102.4478	GEN300031 1-CHOUTEAU CTG 1
FDNS	00NR_G15_082	0	25SP	G15_082	FROM->TO	POTTER COUNTY INTERCHANGE (WAUK 90343-A) 345/230/13.2KV TRANSFORMER CKT 1	560	560	0.07935	102.4374	GEN524287 1-GS-PHWD_GEN10.6900
FDNS	00NR_G15_082	0	25SP	G15_082	FROM->TO	POTTER COUNTY INTERCHANGE (WAUK 90343-A) 345/230/13.2KV TRANSFORMER CKT 1	560	560	0.08037	102.4326	PRINGLE INTERCHANGE - SPEARMAN INTERCHANGE 115KV CKT 2
FDNS	00NR_G15_082	0	25SP	G15_082	FROM->TO	POTTER COUNTY INTERCHANGE (WAUK 90343-A) 345/230/13.2KV TRANSFORMER CKT 1	560	560	0.08037	102.4326	PRINGLE INTERCHANGE - SPEARMAN INTERCHANGE 115KV CKT 2
FDNS	00NR_G15_082	0	25SP	G15_082	FROM->TO	POTTER COUNTY INTERCHANGE (WAUK 90343-A) 345/230/13.2KV TRANSFORMER CKT 1	560	560	0.07935	102.4215	GEN562078 1-G11_051_3 0.6900
FDNS	00NR_G15_082	0	25SP	G15_082	FROM->TO	POTTER COUNTY INTERCHANGE (WAUK 90343-A) 345/230/13.2KV TRANSFORMER CKT 1	560	560	0.07935	102.4196	GEN640020 2-SHELDON STATION UNIT 2
FDNS	00NR_G15_082	0	25SP	G15_082	FROM->TO	POTTER COUNTY INTERCHANGE (WAUK 90343-A) 345/230/13.2KV TRANSFORMER CKT 1	560	560	0.07935	102.4177	GEN515591 1-PALDRW11 0.6900
FDNS	00NR_G15_082	0	25SP	G15_082	FROM->TO	POTTER COUNTY INTERCHANGE (WAUK 90343-A) 345/230/13.2KV TRANSFORMER CKT 1	560	560	0.07981	102.4169	TUCO INTERCHANGE - TUCO_2 345.00 345KV CKT 1
FDNS	00NR_G15_082	0	25SP	G15_082	FROM->TO	POTTER COUNTY INTERCHANGE (WAUK 90343-A) 345/230/13.2KV TRANSFORMER CKT 1	560	560	0.07935	102.4122	GEN539677 3-A. M. MULLERGREN GENERATOR
FDNS	00NR_G15_082	0	25SP	G15_082	FROM->TO	POTTER COUNTY INTERCHANGE (WAUK 90343-A) 345/230/13.2KV TRANSFORMER CKT 1	560	560	0.07935	102.4103	GEN524485 1-CAPROCK WIND GEN
FDNS	00NR_G15_082	0	25SP	G15_082	FROM->TO	POTTER COUNTY INTERCHANGE (WAUK 90343-A) 345/230/13.2KV TRANSFORMER CKT 1	560	560	0.07935	102.4001	GEN645041 1-CASS COUNTY 1
FDNS	00NR_G15_082	0	25SP	G15_082	FROM->TO	POTTER COUNTY INTERCHANGE (WAUK 90343-A) 345/230/13.2KV TRANSFORMER CKT 1	560	560	0.07935	102.396	GEN645042 2-CASS COUNTY 2
FDNS	00NR_G15_082	0	25SP	G15_082	FROM->TO	POTTER COUNTY INTERCHANGE (WAUK 90343-A) 345/230/13.2KV TRANSFORMER CKT 1	560	560	0.07927	102.3909	CARLISLE INTERCHANGE - TUCO INTERCHANGE 230KV CKT 1
FDNS	00NR_G15_082	0	25SP	G15_082	FROM->TO	POTTER COUNTY INTERCHANGE (WAUK 90343-A) 345/230/13.2KV TRANSFORMER CKT 1	560	560	0.07927	102.3909	CARLISLE INTERCHANGE - TUCO INTERCHANGE 230KV CKT 1
FDNS	00NR_G15_082	0	25SP	G15_082	FROM->TO	POTTER COUNTY INTERCHANGE (WAUK 90343-A) 345/230/13.2KV TRANSFORMER CKT 1	560	560	0.07935	102.3899	GEN523815 1-LLANO ESTACADO WIND GEN
FDNS	00NR_G15_082	0	25SP	G15_082	FROM->TO	POTTER COUNTY INTERCHANGE (WAUK 90343-A) 345/230/13.2KV TRANSFORMER CKT 1	560	560	0.07935	102.3896	GEN549890 1-SOUTHWEST 1
FDNS	00NR_G15_082	0	25SP	G15_082	FROM->TO	POTTER COUNTY INTERCHANGE (WAUK 90343-A) 345/230/13.2KV TRANSFORMER CKT 1	560	560	0.07998	102.3892	P12:115:SPS:T25.1.MOOREW.DUMAS19
FDNS	00NR_G15_082	0	25SP	G15_082	FROM->TO	POTTER COUNTY INTERCHANGE (WAUK 90343-A) 345/230/13.2KV TRANSFORMER CKT 1	560	560	0.07928	102.3878	JONES STATION - TUCO INTERCHANGE 230KV CKT 1
FDNS	00NR_G15_082	0	25SP	G15_082	FROM->TO	POTTER COUNTY INTERCHANGE (WAUK 90343-A) 345/230/13.2KV TRANSFORMER CKT 1	560	560	0.07928	102.3878	JONES STATION - TUCO INTERCHANGE 230KV CKT 1
FDNS	00NR_G15_082	0	25SP	G15_082	FROM->TO	POTTER COUNTY INTERCHANGE (WAUK 90343-A) 345/230/13.2KV TRANSFORMER CKT 1	560	560	0.07901	102.3874	PLANT X STATION - SUNDOWN INTERCHANGE 230KV CKT 1
FDNS	00NR_G15_082	0	25SP	G15_082	FROM->TO	POTTER COUNTY INTERCHANGE (WAUK 90343-A) 345/230/13.2KV TRANSFORMER CKT 1	560	560	0.07901	102.3874	PLANT X STATION - SUNDOWN INTERCHANGE 230KV CKT 1
FDNS	00NR_G15_082	0	25SP	G15_082	FROM->TO	POTTER COUNTY INTERCHANGE (WAUK 90343-A) 345/230/13.2KV TRANSFORMER CKT 1	560	560	0.07935	102.3858	GEN532672 1-TECUMSEH ENERGY CENTER UNIT 8
FDNS	00NR_G15_082	0	25SP	G15_082	FROM->TO	POTTER COUNTY INTERCHANGE (WAUK 90343-A) 345/230/13.2KV TRANSFORMER CKT 1	560	560	0.07899	102.3851	P12:138:AEPW:S.W.S.-4:L.E.S.-4
FDNS	00NR_G15_082	0	25SP	G15_082	FROM->TO	POTTER COUNTY INTERCHANGE (WAUK 90343-A) 345/230/13.2KV TRANSFORMER CKT 1	560	560	0.07935	102.3805	GEN547649 1-ASBURY UNIT #1
FDNS	00NR_G15_082	0	25SP	G15_082	FROM->TO	POTTER COUNTY INTERCHANGE (WAUK 90343-A) 345/230/13.2KV TRANSFORMER CKT 1	560	560	0.07839	102.3752	CHILDRESS - HOLLIS TAP 138KV CKT 1
FDNS	00NR_G15_082	0	25SP	G15_082	FROM->TO	POTTER COUNTY INTERCHANGE (WAUK 90343-A) 345/230/13.2KV TRANSFORMER CKT 1	560	560	0.0788	102.3645	ALTUS JUNCTION - RUSSELL 138KV CKT 1
FDNS	00NR_G15_082	0	25SP	G15_082	FROM->TO	POTTER COUNTY INTERCHANGE (WAUK 90343-A) 345/230/13.2KV TRANSFORMER CKT 1	560	560	0.0788	102.3645	ALTUS JUNCTION - RUSSELL 138KV CKT 1
FDNS	00NR_G15_082	0	25SP	G15_082	FROM->TO	POTTER COUNTY INTERCHANGE (WAUK 90343-A) 345/230/13.2KV TRANSFORMER CKT 1	560	560	0.07935	102.3627	GEN523941 1-MAJSTC-WTG110.6900
FDNS	00NR_G15_082	0	25SP	G15_082	FROM->TO	POTTER COUNTY INTERCHANGE (WAUK 90343-A) 345/230/13.2KV TRANSFORMER CKT 1	560	560	0.07935	102.3622	GEN523942 1-MAJSTC-WTG210.6900
FDNS	00NR_G15_082	0	25SP	G15_082	FROM->TO	POTTER COUNTY INTERCHANGE (WAUK 90343-A) 345/230/13.2KV TRANSFORMER CKT 1	560	560	0.08045	102.3592	DALLAM COUNTY INTERCHANGE - XIT_INTG 3115.00 115KV CKT 1
FDNS	00NR_G15_082	0	25SP	G15_082	FROM->TO	POTTER COUNTY INTERCHANGE (WAUK 90343-A) 345/230/13.2KV TRANSFORMER CKT 1	560	560	0.08045	102.3557	XIT_INTG 6230.00 (PRE_XFR_DATA) 230/115/13.2KV TRANSFORMER CKT 1
FDNS	00NR_G15_082	0	25SP	G15_082	FROM->TO	POTTER COUNTY INTERCHANGE (WAUK 90343-A) 345/230/13.2KV TRANSFORMER CKT 1	560	560	0.08045	102.3557	XIT_INTG 6230.00 (PRE_XFR_DATA) 230/115/13.2KV TRANSFORMER CKT 1
FDNS	00NR_G15_082	0	25SP	G15_082	FROM->TO	POTTER COUNTY INTERCHANGE (WAUK 90343-A) 345/230/13.2KV TRANSFORMER CKT 1	560	560	0.07935	102.3511	GEN562691 1-G15_015_3 0.6900
FDNS	00NR_G15_082	0	25SP	G15_082	FROM->TO	POTTER COUNTY INTERCHANGE (WAUK 90343-A) 345/230/13.2KV TRANSFORMER CKT 1	560	560	0.07935	102.3486	GEN337652 1-WHITE BLUFF UNIT #1
FDNS	00NR_G15_082	0	25SP	G15_082	FROM->TO	POTTER COUNTY INTERCHANGE (WAUK 90343-A) 345/230/13.2KV TRANSFORMER CKT 1	560	560	0.07935	102.3475	GEN501813 1-RODEMACHER UNIT 3
FDNS	00NR_G15_082	0	25SP	G15_082	FROM->TO	POTTER COUNTY INTERCHANGE (WAUK 90343-A) 345/230/13.2KV TRANSFORMER CKT 1	560	560	0.07935	102.3407	GEN300017 1-1G2GPDEL 18.000
FDNS	00NR_G15_082	0	25SP	G15_082	FROM->TO	POTTER COUNTY INTERCHANGE (WAUK 90343-A) 345/230/13.2KV TRANSFORMER CKT 1	560	560	0.07935	102.3367	GEN547658 1-STATE LINE COMBINED CYCLE

SOLUTION	GROUP	SCENARIO	SEASON	SOURCE	DIRECTION	MONITORED ELEMENT	RATEA (MVA)	RATEB(MVA)	TDF	TC%LOADING (% MVA)	CONTINGENCY
FDNS	00NR_G15_082	0	25SP	G15_082	FROM->TO	POTTER COUNTY INTERCHANGE (WAUK 90343-A) 345/230/13.2KV TRANSFORMER CKT 1	560	560	0.07931	102.3267	P12:138:WFEC:MSL15
FDNS	00NR_G15_082	0	25SP	G15_082	FROM->TO	POTTER COUNTY INTERCHANGE (WAUK 90343-A) 345/230/13.2KV TRANSFORMER CKT 1	560	560	0.07897	102.3266	NEWHART 230 - PLANT X STATION 230KV CKT 1
FDNS	00NR_G15_082	0	25SP	G15_082	FROM->TO	POTTER COUNTY INTERCHANGE (WAUK 90343-A) 345/230/13.2KV TRANSFORMER CKT 1	560	560	0.07935	102.3259	GEN337653 1-WHITE BLUFF UNIT #2
FDNS	00NR_G15_082	0	25SP	G15_082	FROM->TO	POTTER COUNTY INTERCHANGE (WAUK 90343-A) 345/230/13.2KV TRANSFORMER CKT 1	560	560	0.07966	102.3245	LACYGNE - NEOSHO 345KV CKT 1
FDNS	00NR_G15_082	0	25SP	G15_082	FROM->TO	POTTER COUNTY INTERCHANGE (WAUK 90343-A) 345/230/13.2KV TRANSFORMER CKT 1	560	560	0.07902	102.3241	NORTHWEST - SPRING CREEK 345KV CKT 1
FDNS	00NR_G15_082	0	25SP	G15_082	FROM->TO	POTTER COUNTY INTERCHANGE (WAUK 90343-A) 345/230/13.2KV TRANSFORMER CKT 1	560	560	0.07935	102.3181	GEN562007 1-G11_025_3 0.6900
FDNS	00NR_G15_082	0	25SP	G15_082	FROM->TO	POTTER COUNTY INTERCHANGE (WAUK 90343-A) 345/230/13.2KV TRANSFORMER CKT 1	560	560	0.07644	102.3173	G14-057T 345.00 - SUNNYSIDE 345KV CKT 1
FDNS	00NR_G15_082	0	25SP	G15_082	FROM->TO	POTTER COUNTY INTERCHANGE (WAUK 90343-A) 345/230/13.2KV TRANSFORMER CKT 1	560	560	0.07935	102.3139	GEN336252 1-NINEMILE POINT UNIT#5
FDNS	00NR_G15_082	0	25SP	G15_082	FROM->TO	POTTER COUNTY INTERCHANGE (WAUK 90343-A) 345/230/13.2KV TRANSFORMER CKT 1	560	560	0.07935	102.287	GEN300016 1-1G1GPDEL 18.000
FDNS	00NR_G15_082	0	25SP	G15_082	FROM->TO	POTTER COUNTY INTERCHANGE (WAUK 90343-A) 345/230/13.2KV TRANSFORMER CKT 1	560	560	0.07935	102.2862	GEN541163 1-ARIES COMBUSTION TURBINE #1
FDNS	00NR_G15_082	0	25SP	G15_082	FROM->TO	POTTER COUNTY INTERCHANGE (WAUK 90343-A) 345/230/13.2KV TRANSFORMER CKT 1	560	560	0.07935	102.267	GEN562518 1-G14_021_N2 0.6900
FDNS	00NR_G15_082	0	25SP	G15_082	FROM->TO	POTTER COUNTY INTERCHANGE (WAUK 90343-A) 345/230/13.2KV TRANSFORMER CKT 1	560	560	0.08045	102.2607	CHAN/TASCOS6230.00 - XIT_INTG 6230.00 230KV CKT 1
FDNS	00NR_G15_082	0	25SP	G15_082	FROM->TO	POTTER COUNTY INTERCHANGE (WAUK 90343-A) 345/230/13.2KV TRANSFORMER CKT 1	560	560	0.07935	102.2411	GEN511941 1-OEC STEAM # 2
FDNS	00NR_G15_082	0	25SP	G15_082	FROM->TO	POTTER COUNTY INTERCHANGE (WAUK 90343-A) 345/230/13.2KV TRANSFORMER CKT 1	560	560	0.07935	102.2241	GEN541162 1-ARIES STEAM TURBINE
FDNS	00NR_G15_082	0	25SP	G15_082	FROM->TO	POTTER COUNTY INTERCHANGE (WAUK 90343-A) 345/230/13.2KV TRANSFORMER CKT 1	560	560	0.07935	102.2222	GEN511938 1-OEC STEAM # 1
FDNS	00NR_G15_082	0	25SP	G15_082	FROM->TO	POTTER COUNTY INTERCHANGE (WAUK 90343-A) 345/230/13.2KV TRANSFORMER CKT 1	560	560	0.08142	102.2188	MINGO - SETAB 345KV CKT 1
FDNS	00NR_G15_082	0	25SP	G15_082	FROM->TO	POTTER COUNTY INTERCHANGE (WAUK 90343-A) 345/230/13.2KV TRANSFORMER CKT 1	560	560	0.08142	102.2188	MINGO - SETAB 345KV CKT 1
FDNS	00NR_G15_082	0	25SP	G15_082	FROM->TO	POTTER COUNTY INTERCHANGE (WAUK 90343-A) 345/230/13.2KV TRANSFORMER CKT 1	560	560	0.07935	102.21	GEN659141 1-K10215A
FDNS	00NR_G15_082	0	25SP	G15_082	FROM->TO	POTTER COUNTY INTERCHANGE (WAUK 90343-A) 345/230/13.2KV TRANSFORMER CKT 1	560	560	0.07935	102.2034	GEN562432 1-G13-030 0.6900
FDNS	00NR_G15_082	0	25SP	G15_082	FROM->TO	POTTER COUNTY INTERCHANGE (WAUK 90343-A) 345/230/13.2KV TRANSFORMER CKT 1	560	560	0.07935	102.1935	GEN300001 1-THOMAS HILL UNIT 1
FDNS	00NR_G15_082	0	25SP	G15_082	FROM->TO	POTTER COUNTY INTERCHANGE (WAUK 90343-A) 345/230/13.2KV TRANSFORMER CKT 1	560	560	0.07935	102.1878	GEN513602 1-GRECSTG_1 17.500
FDNS	00NR_G15_082	0	25SP	G15_082	FROM->TO	POTTER COUNTY INTERCHANGE (WAUK 90343-A) 345/230/13.2KV TRANSFORMER CKT 1	560	560	0.07935	102.1715	GEN532721 1-EVANS ENERGY CENTER UNIT 1
FDNS	00NR_G15_082	0	25SP	G15_082	FROM->TO	POTTER COUNTY INTERCHANGE (WAUK 90343-A) 345/230/13.2KV TRANSFORMER CKT 1	560	560	0.07796	102.146	Harrington Station East Bus - Harrington Station Mid Bus 230KV CKT @1
FDNS	00NR_G15_082	0	25SP	G15_082	FROM->TO	POTTER COUNTY INTERCHANGE (WAUK 90343-A) 345/230/13.2KV TRANSFORMER CKT 1	560	560	0.07935	102.1302	GEN562517 1-G14_021_S2 0.6900
FDNS	00NR_G15_082	0	25SP	G15_082	FROM->TO	POTTER COUNTY INTERCHANGE (WAUK 90343-A) 345/230/13.2KV TRANSFORMER CKT 1	560	560	0.07935	102.0805	GEN520947 1-HUGO1
FDNS	00NR_G15_082	0	25SP	G15_082	FROM->TO	POTTER COUNTY INTERCHANGE (WAUK 90343-A) 345/230/13.2KV TRANSFORMER CKT 1	560	560	0.07935	102.0746	GEN562714 1-G15_023_4 0.6900
FDNS	00NR_G15_082	0	25SP	G15_082	FROM->TO	POTTER COUNTY INTERCHANGE (WAUK 90343-A) 345/230/13.2KV TRANSFORMER CKT 1	560	560	0.07935	102.0746	GEN562715 1-G15_023_5 0.6900
FDNS	00NR_G15_082	0	25SP	G15_082	FROM->TO	POTTER COUNTY INTERCHANGE (WAUK 90343-A) 345/230/13.2KV TRANSFORMER CKT 1	560	560	0.07935	102.0615	GEN645025 5-NORTH OMAHA 5
FDNS	00NR_G15_082	0	25SP	G15_082	FROM->TO	POTTER COUNTY INTERCHANGE (WAUK 90343-A) 345/230/13.2KV TRANSFORMER CKT 1	560	560	0.07935	102.0331	GEN659407 1-ANTELPHILLSW0.6900
FDNS	00NR_G15_082	0	25SP	G15_082	FROM->TO	POTTER COUNTY INTERCHANGE (WAUK 90343-A) 345/230/13.2KV TRANSFORMER CKT 1	560	560	0.07935	102.0216	GEN562017 1-G11_022_3 0.6900
FDNS	00NR_G15_082	0	25SP	G15_082	FROM->TO	POTTER COUNTY INTERCHANGE (WAUK 90343-A) 345/230/13.2KV TRANSFORMER CKT 1	560	560	0.07935	102.0193	GEN531459 2-S2 GENERATOR
FDNS	00NR_G15_082	0	25SP	G15_082	FROM->TO	POTTER COUNTY INTERCHANGE (WAUK 90343-A) 345/230/13.2KV TRANSFORMER CKT 1	560	560	0.07935	102.0122	GEN659110 1-LELAND OLDS UNIT1
FDNS	00NR_G15_082	0	25SP	G15_082	FROM->TO	POTTER COUNTY INTERCHANGE (WAUK 90343-A) 345/230/13.2KV TRANSFORMER CKT 1	560	560	0.07935	101.9797	GEN514939 1-HORSESHOE LAKE 8G
FDNS	00NR_G15_082	0	25SP	G15_082	FROM->TO	POTTER COUNTY INTERCHANGE (WAUK 90343-A) 345/230/13.2KV TRANSFORMER CKT 1	560	560	0.07935	101.9431	GEN562694 1-G15_016_3 0.6900
FDNS	00NR_G15_082	0	25SP	G15_082	FROM->TO	POTTER COUNTY INTERCHANGE (WAUK 90343-A) 345/230/13.2KV TRANSFORMER CKT 1	560	560	0.07394	101.9066	BVRCNTY7 345.00 - Hitchland Interchange 345KV CKT 1
FDNS	00NR_G15_082	0	25SP	G15_082	FROM->TO	POTTER COUNTY INTERCHANGE (WAUK 90343-A) 345/230/13.2KV TRANSFORMER CKT 1	560	560	0.07394	101.9066	BVRCNTY7 345.00 - Hitchland Interchange 345KV CKT 1
FDNS	00NR_G15_082	0	25SP	G15_082	FROM->TO	POTTER COUNTY INTERCHANGE (WAUK 90343-A) 345/230/13.2KV TRANSFORMER CKT 1	560	560	0.07394	101.9066	BVRCNTY7 345.00 - Hitchland Interchange 345KV CKT 2
FDNS	00NR_G15_082	0	25SP	G15_082	FROM->TO	POTTER COUNTY INTERCHANGE (WAUK 90343-A) 345/230/13.2KV TRANSFORMER CKT 1	560	560	0.07394	101.9066	BVRCNTY7 345.00 - Hitchland Interchange 345KV CKT 2
FDNS	00NR_G15_082	0	25SP	G15_082	FROM->TO	POTTER COUNTY INTERCHANGE (WAUK 90343-A) 345/230/13.2KV TRANSFORMER CKT 1	560	560	0.07935	101.8942	GEN509398 1-KNOXLEE #5
FDNS	00NR_G15_082	0	25SP	G15_082	FROM->TO	POTTER COUNTY INTERCHANGE (WAUK 90343-A) 345/230/13.2KV TRANSFORMER CKT 1	560	560	0.07935	101.8933	GEN549893 2-SOUTHWEST 2
FDNS	00NR_G15_082	0	25SP	G15_082	FROM->TO	POTTER COUNTY INTERCHANGE (WAUK 90343-A) 345/230/13.2KV TRANSFORMER CKT 1	560	560	0.07935	101.888	GEN641089 2-ENERGY CENTER 2
FDNS	00NR_G15_082	0	25SP	G15_082	FROM->TO	POTTER COUNTY INTERCHANGE (WAUK 90343-A) 345/230/13.2KV TRANSFORMER CKT 1	560	560	0.07935	101.8785	GEN509409 1-WILKES #3
FDNS	00NR_G15_082	0	25SP	G15_082	FROM->TO	POTTER COUNTY INTERCHANGE (WAUK 90343-A) 345/230/13.2KV TRANSFORMER CKT 1	560	560	0.07935	101.8715	GEN546702 1-NM GEN N1
FDNS	00NR_G15_082	0	25SP	G15_082	FROM->TO	POTTER COUNTY INTERCHANGE (WAUK 90343-A) 345/230/13.2KV TRANSFORMER CKT 1	560	560	0.07935	101.8408	GEN300010 1-ST FRANCIS UNIT 1
FDNS	00NR_G15_082	0	25SP	G15_082	FROM->TO	POTTER COUNTY INTERCHANGE (WAUK 90343-A) 345/230/13.2KV TRANSFORMER CKT 1	560	560	0.07935	101.8026	GEN300015 1-1SGPDEL 18.000
FDNS	00NR_G15_082	0	25SP	G15_082	FROM->TO	POTTER COUNTY INTERCHANGE (WAUK 90343-A) 345/230/13.2KV TRANSFORMER CKT 1	560	560	0.07935	101.7933	GEN652173 1-G09_001IS_2 0.6900
FDNS	00NR_G15_082	0	25SP	G15_082	FROM->TO	POTTER COUNTY INTERCHANGE (WAUK 90343-A) 345/230/13.2KV TRANSFORMER CKT 1	560	560	0.07935	101.7812	2109-BUSHLAND INTERCHANGE
FDNS	00NR_G15_082	0	25SP	G15_082	FROM->TO	POTTER COUNTY INTERCHANGE (WAUK 90343-A) 345/230/13.2KV TRANSFORMER CKT 1	560	560	0.07935	101.7812	BASE CASE
FDNS	00NR_G15_082	0	25SP	G15_082	FROM->TO	POTTER COUNTY INTERCHANGE (WAUK 90343-A) 345/230/13.2KV TRANSFORMER CKT 1	560	560	0.07935	101.7785	GEN505432 1-SIKESTON
FDNS	00NR_G15_082	0	25SP	G15_082	FROM->TO	POTTER COUNTY INTERCHANGE (WAUK 90343-A) 345/230/13.2KV TRANSFORMER CKT 1	560	560	0.07935	101.7754	GEN300011 1-ST FRANCIS UNIT 2
FDNS	00NR_G15_082	0	25SP	G15_082	FROM->TO	POTTER COUNTY INTERCHANGE (WAUK 90343-A) 345/230/13.2KV TRANSFORMER CKT 1	560	560	0.07935	101.6619	GEN539670 4-JUDSON LARGE GENERATOR
FDNS	00NR_G15_082	0	25SP	G15_082	FROM->TO	POTTER COUNTY INTERCHANGE (WAUK 90343-A) 345/230/13.2KV TRANSFORMER CKT 1	560	560	0.07795	101.6143	DEAF SMITH COUNTY INTERCHANGE - PLANT X STATION 230KV CKT 1
FDNS	00NR_G15_082	0	25SP	G15_082	FROM->TO	POTTER COUNTY INTERCHANGE (WAUK 90343-A) 345/230/13.2KV TRANSFORMER CKT 1	560	560	0.07795	101.6143	DEAF SMITH COUNTY INTERCHANGE - PLANT X STATION 230KV CKT 1
FDNS	00NR_G15_082	0	25SP	G15_082	FROM->TO	POTTER COUNTY INTERCHANGE (WAUK 90343-A) 345/230/13.2KV TRANSFORMER CKT 1	560	560	0.08045	101.5967	CHAN/TASCOS6230.00 - POTTER COUNTY INTERCHANGE 230KV CKT 1
FDNS	00NR_G15_082	0	25SP	G15_082	FROM->TO	POTTER COUNTY INTERCHANGE (WAUK 90343-A) 345/230/13.2KV TRANSFORMER CKT 1	560	560	0.07935	101.5741	GEN515040 1-SEMINOLE 1G
FDNS	00NR_G15_082	0	25SP	G15_082	FROM->TO	POTTER COUNTY INTERCHANGE (WAUK 90343-A) 345/230/13.2KV TRANSFORMER CKT 1	560	560	0.07935	101.531	GEN530690 1-PRWINDG1 0.6900
FDNS	00NR_G15_082	0	25SP	G15_082	FROM->TO	POTTER COUNTY INTERCHANGE (WAUK 90343-A) 345/230/13.2KV TRANSFORMER CKT 1	560	560	0.07935	101.383	GEN515041 1-SEMINOLE 2G
FDNS	00NR_G15_082	0	25SP	G15_082	FROM->TO	POTTER COUNTY INTERCHANGE (WAUK 90343-A) 345/230/13.2KV TRANSFORMER CKT 1	560	560	0.07935	101.3488	GEN300002 1-THOMAS HILL UNIT 2
FDNS	00NR_G15_082	0	25SP	G15_082	FROM->TO	POTTER COUNTY INTERCHANGE (WAUK 90343-A) 345/230/13.2KV TRANSFORMER CKT 1	560	560	0.07935	101.3394	GEN652353 2-GR PRAIRIEG 0.6900
FDNS	00NR_G15_082	0	25SP	G15_082	FROM->TO	POTTER COUNTY INTERCHANGE (WAUK 90343-A) 345/230/13.2KV TRANSFORMER CKT 1	560	560	0.07935	101.3064	GEN515042 1-SEMINOLE 3G
FDNS	00NR_G15_082	0	25SP	G15_082	FROM->TO	POTTER COUNTY INTERCHANGE (WAUK 90343-A) 345/230/13.2KV TRANSFORMER CKT 1	560	560	0.07935	101.2959	GEN513601 1-GRECCTG_1 20.000
FDNS	00NR_G15_082	0	25SP	G15_082	FROM->TO	POTTER COUNTY INTERCHANGE (WAUK 90343-A) 345/230/13.2KV TRANSFORMER CKT 1	560	560	0.07935	101.2451	GEN511942 1-OEC GAS # 2-1
FDNS	00NR_G15_082	0	25SP	G15_082	FROM->TO	POTTER COUNTY INTERCHANGE (WAUK 90343-A) 345/230/13.2KV TRANSFORMER CKT 1	560	560	0.0792	101.2371	DEAF SMITH REC-#6 - HEREFORD INTERCHANGE 115KV CKT 1
FDNS	00NR_G15_082	0	25SP	G15_082	FROM->TO	POTTER COUNTY INTERCHANGE (WAUK 90343-A) 345/230/13.2KV TRANSFORMER CKT 1	560	560	0.07935	101.2236	GEN532671 1-TECUMSEH ENERGY CENTER UNIT 7
FDNS	00NR_G15_082	0	25SP	G15_082	FROM->TO	POTTER COUNTY INTERCHANGE (WAUK 90343-A) 345/230/13.2KV TRANSFORMER CKT 1	560	560	0.07935	101.2233	GEN511954 S-COGENTRIX STEAM # 1
FDNS	00NR_G15_082	0	25SP	G15_082	FROM->TO	POTTER COUNTY INTERCHANGE (WAUK 90343-A) 345/230/13.2KV TRANSFORMER CKT 1	560	560	0.07943	101.2215	GRPRAR1-LNX3345.00 - YANKTON 345KV CKT Z
FDNS	00NR_G15_082	0	25SP	G15_082	FROM->TO	POTTER COUNTY INTERCHANGE (WAUK 90343-A) 345/230/13.2KV TRANSFORMER CKT 1	560	560	0.07943	101.2197	GRPRAR1-LNX3345.00 - HOLT.CO3 345.00 345KV CKT 1
FDNS	00NR_G15_082	0	25SP	G15_082	FROM->TO	POTTER COUNTY INTERCHANGE (WAUK 90343-A) 345/230/13.2KV TRANSFORMER CKT 1	560	560	0.07923	101.2125	G13_027T 230.00 - YOAKUM COUNTY INTERCHANGE 230KV CKT 1
FDNS	00NR_G15_082	0	25SP	G15_082	FROM->TO	POTTER COUNTY INTERCHANGE (WAUK 90343-A) 345/230/13.2KV TRANSFORMER CKT 1	560	560	0.07935	101.2117	GEN515000 1-MCCLAIN UNIT 3
FDNS	00NR_G15_082	0	25SP	G15_082	FROM->TO	POTTER COUNTY INTERCHANGE (WAUK 90343-A) 345/230/13.2KV TRANSFORMER CKT 1	560	560	0.07935	101.2019	GEN529201 1-OMCDLEC1 13.800
FDNS	00NR_G15_082	0	25SP	G15_082	FROM->TO	POTTER COUNTY INTERCHANGE (WAUK 90343-A) 345/230/13.2KV TRANSFORMER CKT 1	560	560	0.07935	101.2017	GEN640028 1-COLUMCOGENERATION
FDNS	00NR_G15_082	0	25SP	G15_082	FROM->TO	POTTER COUNTY INTERCHANGE (WAUK 90343-A) 345/230/13.2KV TRANSFORMER CKT 1	560	560	0.07935	101.1913	GEN910006 1-G12_012IS_3 0.6900
FDNS	00NR_G15_082	0	25SP	G15_082	FROM->TO	POTTER COUNTY INTERCHANGE (WAUK 90343-A) 345/230/13.2KV TRANSFORMER CKT 1	560	560	0.07935	101.1857	GEN562500 1-G14_013_3 0.6900

SOLUTION	GROUP	SCENARIO	SEASON	SOURCE	DIRECTION	MONITORED ELEMENT	RATEA (MVA)	RATEB(MVA)	TDF	TC%LOADING (% MVA)	CONTINGENCY
FDNS	00NR_G15_082	0	25SP	G15_082	FROM->TO	POTTER COUNTY INTERCHANGE (WAUK 90343-A) 345/230/13.2KV TRANSFORMER CKT 1	560	560	0.07935	101.1789	GEN647418 8-FREMONT 8
FDNS	00NR_G15_082	0	25SP	G15_082	FROM->TO	POTTER COUNTY INTERCHANGE (WAUK 90343-A) 345/230/13.2KV TRANSFORMER CKT 1	560	560	0.07935	101.1783	GEN642067 1-PLATTE
FDNS	00NR_G15_082	0	25SP	G15_082	FROM->TO	POTTER COUNTY INTERCHANGE (WAUK 90343-A) 345/230/13.2KV TRANSFORMER CKT 1	560	560	0.07757	101.1774	Harrington Station East Bus - POTTER COUNTY INTERCHANGE 230KV CKT 1
FDNS	00NR_G15_082	0	25SP	G15_082	FROM->TO	POTTER COUNTY INTERCHANGE (WAUK 90343-A) 345/230/13.2KV TRANSFORMER CKT 1	560	560	0.07757	101.1774	Harrington Station East Bus - POTTER COUNTY INTERCHANGE 230KV CKT 1
FDNS	00NR_G15_082	0	25SP	G15_082	FROM->TO	POTTER COUNTY INTERCHANGE (WAUK 90343-A) 345/230/13.2KV TRANSFORMER CKT 1	560	560	0.07974	101.1771	AXTELL - POST ROCK 345KV CKT 1
FDNS	00NR_G15_082	0	25SP	G15_082	FROM->TO	POTTER COUNTY INTERCHANGE (WAUK 90343-A) 345/230/13.2KV TRANSFORMER CKT 1	560	560	0.07935	101.176	GEN562405 1-G13-019 0.6900
FDNS	00NR_G15_082	0	25SP	G15_082	FROM->TO	POTTER COUNTY INTERCHANGE (WAUK 90343-A) 345/230/13.2KV TRANSFORMER CKT 1	560	560	0.07935	101.174	GEN520997 1-MORLND2
FDNS	00NR_G15_082	0	25SP	G15_082	FROM->TO	POTTER COUNTY INTERCHANGE (WAUK 90343-A) 345/230/13.2KV TRANSFORMER CKT 1	560	560	0.07935	101.1716	GEN560286 1-G10-01-1WTG 0.6900
FDNS	00NR_G15_082	0	25SP	G15_082	FROM->TO	POTTER COUNTY INTERCHANGE (WAUK 90343-A) 345/230/13.2KV TRANSFORMER CKT 1	560	560	0.07935	101.1716	GEN560287 1-G10-01-2WTG 0.6900
FDNS	00NR_G15_082	0	25SP	G15_082	FROM->TO	POTTER COUNTY INTERCHANGE (WAUK 90343-A) 345/230/13.2KV TRANSFORMER CKT 1	560	560	0.07935	101.1709	GEN506752 1-LEBROCK GAS 1
FDNS	00NR_G15_082	0	25SP	G15_082	FROM->TO	POTTER COUNTY INTERCHANGE (WAUK 90343-A) 345/230/13.2KV TRANSFORMER CKT 1	560	560	0.07935	101.1708	GEN506753 1-LEBROCK GAS 2
FDNS	00NR_G15_082	0	25SP	G15_082	FROM->TO	POTTER COUNTY INTERCHANGE (WAUK 90343-A) 345/230/13.2KV TRANSFORMER CKT 1	560	560	0.07935	101.1702	GEN640555 W-S.FLATS.GENW0.6900
FDNS	00NR_G15_082	0	25SP	G15_082	FROM->TO	POTTER COUNTY INTERCHANGE (WAUK 90343-A) 345/230/13.2KV TRANSFORMER CKT 1	560	560	0.07935	101.1681	GEN514899 1-REDBUD1S
FDNS	00NR_G15_082	0	25SP	G15_082	FROM->TO	POTTER COUNTY INTERCHANGE (WAUK 90343-A) 345/230/13.2KV TRANSFORMER CKT 1	560	560	0.07935	101.1681	GEN514900 1-REDBUD2S
FDNS	00NR_G15_082	0	25SP	G15_082	FROM->TO	POTTER COUNTY INTERCHANGE (WAUK 90343-A) 345/230/13.2KV TRANSFORMER CKT 1	560	560	0.07935	101.1679	GEN539655 1-CLIFTON GENERATOR
FDNS	00NR_G15_082	0	25SP	G15_082	FROM->TO	POTTER COUNTY INTERCHANGE (WAUK 90343-A) 345/230/13.2KV TRANSFORMER CKT 1	560	560	0.07935	101.1677	GEN514905 1-REDBUD3S
FDNS	00NR_G15_082	0	25SP	G15_082	FROM->TO	POTTER COUNTY INTERCHANGE (WAUK 90343-A) 345/230/13.2KV TRANSFORMER CKT 1	560	560	0.07935	101.1665	GEN562547 1-G14_039_3 0.6900
FDNS	00NR_G15_082	0	25SP	G15_082	FROM->TO	POTTER COUNTY INTERCHANGE (WAUK 90343-A) 345/230/13.2KV TRANSFORMER CKT 1	560	560	0.07935	101.1637	GEN514940 1-REDBUD GEN
FDNS	00NR_G15_082	0	25SP	G15_082	FROM->TO	POTTER COUNTY INTERCHANGE (WAUK 90343-A) 345/230/13.2KV TRANSFORMER CKT 1	560	560	0.07935	101.1553	GEN511836 1-NORTHEASTERN STATION #1
FDNS	00NR_G15_082	0	25SP	G15_082	FROM->TO	POTTER COUNTY INTERCHANGE (WAUK 90343-A) 345/230/13.2KV TRANSFORMER CKT 1	560	560	0.07935	101.1548	GEN660016 1-B_H WIND 0.7000
FDNS	00NR_G15_082	0	25SP	G15_082	FROM->TO	POTTER COUNTY INTERCHANGE (WAUK 90343-A) 345/230/13.2KV TRANSFORMER CKT 1	560	560	0.07935	101.1541	GEN511842 1-RIVERSIDE STATION #1
FDNS	00NR_G15_082	0	25SP	G15_082	FROM->TO	POTTER COUNTY INTERCHANGE (WAUK 90343-A) 345/230/13.2KV TRANSFORMER CKT 1	560	560	0.07935	101.1505	GEN511839 1-NORTHEASTERN STATION #2
FDNS	00NR_G15_082	0	25SP	G15_082	FROM->TO	POTTER COUNTY INTERCHANGE (WAUK 90343-A) 345/230/13.2KV TRANSFORMER CKT 1	560	560	0.07935	101.1503	GEN506749 1-EASTMAN GENERATION A
FDNS	00NR_G15_082	0	25SP	G15_082	FROM->TO	POTTER COUNTY INTERCHANGE (WAUK 90343-A) 345/230/13.2KV TRANSFORMER CKT 1	560	560	0.07927	101.1483	P12:345:SPS:J02.1.TOLK.EDDY
FDNS	00NR_G15_082	0	25SP	G15_082	FROM->TO	POTTER COUNTY INTERCHANGE (WAUK 90343-A) 345/230/13.2KV TRANSFORMER CKT 1	560	560	0.07935	101.144	GEN511843 1-RIVERSIDE STATION #2
FDNS	00NR_G15_082	0	25SP	G15_082	FROM->TO	POTTER COUNTY INTERCHANGE (WAUK 90343-A) 345/230/13.2KV TRANSFORMER CKT 1	560	560	0.07935	101.1416	GEN514998 1-MCCLAIN UNIT 1
FDNS	00NR_G15_082	0	25SP	G15_082	FROM->TO	POTTER COUNTY INTERCHANGE (WAUK 90343-A) 345/230/13.2KV TRANSFORMER CKT 1	560	560	0.07935	101.1416	GEN514999 1-MCCLAIN UNIT 2
FDNS	00NR_G15_082	0	25SP	G15_082	FROM->TO	POTTER COUNTY INTERCHANGE (WAUK 90343-A) 345/230/13.2KV TRANSFORMER CKT 1	560	560	0.07935	101.1403	GEN511955 G-COGENTRIX GAS # 2
FDNS	00NR_G15_082	0	25SP	G15_082	FROM->TO	POTTER COUNTY INTERCHANGE (WAUK 90343-A) 345/230/13.2KV TRANSFORMER CKT 1	560	560	0.07935	101.1373	GEN520998 1-MORLND3
FDNS	00NR_G15_082	0	25SP	G15_082	FROM->TO	POTTER COUNTY INTERCHANGE (WAUK 90343-A) 345/230/13.2KV TRANSFORMER CKT 1	560	560	0.07935	101.1268	GEN503909 1-FULTONU1 1 16.000
FDNS	00NR_G15_082	0	25SP	G15_082	FROM->TO	POTTER COUNTY INTERCHANGE (WAUK 90343-A) 345/230/13.2KV TRANSFORMER CKT 1	560	560	0.07935	101.1254	GEN509406 1-WELSH #3
FDNS	00NR_G15_082	0	25SP	G15_082	FROM->TO	POTTER COUNTY INTERCHANGE (WAUK 90343-A) 345/230/13.2KV TRANSFORMER CKT 1	560	560	0.07935	101.1252	GEN509404 1-WELSH #1
FDNS	00NR_G15_082	0	25SP	G15_082	FROM->TO	POTTER COUNTY INTERCHANGE (WAUK 90343-A) 345/230/13.2KV TRANSFORMER CKT 1	560	560	0.07935	101.1243	GEN645033 3-SARPY COUNTY 3
FDNS	00NR_G15_082	0	25SP	G15_082	FROM->TO	POTTER COUNTY INTERCHANGE (WAUK 90343-A) 345/230/13.2KV TRANSFORMER CKT 1	560	560	0.07935	101.1187	GEN541167 3-SHARPR#3
FDNS	00NR_G15_082	0	25SP	G15_082	FROM->TO	POTTER COUNTY INTERCHANGE (WAUK 90343-A) 345/230/13.2KV TRANSFORMER CKT 1	560	560	0.07935	101.1175	FINNEY SWITCHING STATION - PSCO LAMAR DC TIE 345KV CKT 1
FDNS	00NR_G15_082	0	25SP	G15_082	FROM->TO	POTTER COUNTY INTERCHANGE (WAUK 90343-A) 345/230/13.2KV TRANSFORMER CKT 1	560	560	0.07935	101.1175	FINNEY SWITCHING STATION - PSCO LAMAR DC TIE 345KV CKT 1
FDNS	00NR_G15_082	0	25SP	G15_082	FROM->TO	POTTER COUNTY INTERCHANGE (WAUK 90343-A) 345/230/13.2KV TRANSFORMER CKT 1	560	560	0.07935	101.1124	GEN541165 1-SHARPR#1
FDNS	00NR_G15_082	0	25SP	G15_082	FROM->TO	POTTER COUNTY INTERCHANGE (WAUK 90343-A) 345/230/13.2KV TRANSFORMER CKT 1	560	560	0.07935	101.1124	GEN541166 2-SHARPR#2
FDNS	00NR_G15_082	0	25SP	G15_082	FROM->TO	POTTER COUNTY INTERCHANGE (WAUK 90343-A) 345/230/13.2KV TRANSFORMER CKT 1	560	560	0.07926	101.112	CANYON E_TP3115.00 - RANDALL COUNTY INTERCHANGE 115KV CKT 1
FDNS	00NR_G15_082	0	25SP	G15_082	FROM->TO	POTTER COUNTY INTERCHANGE (WAUK 90343-A) 345/230/13.2KV TRANSFORMER CKT 1	560	560	0.07935	101.1052	GEN599951 1-PSCO LAMAR DC TIE
FDNS	00NR_G15_082	0	25SP	G15_082	FROM->TO	POTTER COUNTY INTERCHANGE (WAUK 90343-A) 345/230/13.2KV TRANSFORMER CKT 1	560	560	0.07935	101.0975	GEN514912 2-REDBUD GEN
FDNS	00NR_G15_082	0	25SP	G15_082	FROM->TO	POTTER COUNTY INTERCHANGE (WAUK 90343-A) 345/230/13.2KV TRANSFORMER CKT 1	560	560	0.07935	101.0962	GEN635214 4-NEAL UNIT 4
FDNS	00NR_G15_082	0	25SP	G15_082	FROM->TO	POTTER COUNTY INTERCHANGE (WAUK 90343-A) 345/230/13.2KV TRANSFORMER CKT 1	560	560	0.07935	101.0936	GEN600002 3-SHERBURNE CNTY G3
FDNS	00NR_G15_082	0	25SP	G15_082	FROM->TO	POTTER COUNTY INTERCHANGE (WAUK 90343-A) 345/230/13.2KV TRANSFORMER CKT 1	560	560	0.07935	101.0911	GEN542961 6-HAWTHORN COMBUSTION TURBINE #6
FDNS	00NR_G15_082	0	25SP	G15_082	FROM->TO	POTTER COUNTY INTERCHANGE (WAUK 90343-A) 345/230/13.2KV TRANSFORMER CKT 1	560	560	0.07935	101.0847	GEN531461 4-S4 GENERATOR
FDNS	00NR_G15_082	0	25SP	G15_082	FROM->TO	POTTER COUNTY INTERCHANGE (WAUK 90343-A) 345/230/13.2KV TRANSFORMER CKT 1	560	560	0.07935	101.0802	GEN514911 2-REDBUD GEN
FDNS	00NR_G15_082	0	25SP	G15_082	FROM->TO	POTTER COUNTY INTERCHANGE (WAUK 90343-A) 345/230/13.2KV TRANSFORMER CKT 1	560	560	0.07935	101.0802	GEN514942 2-REDBUD4G
FDNS	00NR_G15_082	0	25SP	G15_082	FROM->TO	POTTER COUNTY INTERCHANGE (WAUK 90343-A) 345/230/13.2KV TRANSFORMER CKT 1	560	560	0.07935	101.08	GEN514910 2-REDBUD GEN
FDNS	00NR_G15_082	0	25SP	G15_082	FROM->TO	POTTER COUNTY INTERCHANGE (WAUK 90343-A) 345/230/13.2KV TRANSFORMER CKT 1	560	560	0.07935	101.0719	GEN509391 G1-ARSENAL HILL GENS #2 (STALL)
FDNS	00NR_G15_082	0	25SP	G15_082	FROM->TO	POTTER COUNTY INTERCHANGE (WAUK 90343-A) 345/230/13.2KV TRANSFORMER CKT 1	560	560	0.07935	101.0694	GEN659018 1-G14_003IS_3 0.6900
FDNS	00NR_G15_082	0	25SP	G15_082	FROM->TO	POTTER COUNTY INTERCHANGE (WAUK 90343-A) 345/230/13.2KV TRANSFORMER CKT 1	560	560	0.08094	101.069	HOLCOMB - SETAB 345KV CKT 1
FDNS	00NR_G15_082	0	25SP	G15_082	FROM->TO	POTTER COUNTY INTERCHANGE (WAUK 90343-A) 345/230/13.2KV TRANSFORMER CKT 1	560	560	0.08094	101.069	HOLCOMB - SETAB 345KV CKT 1
FDNS	00NR_G15_082	0	25SP	G15_082	FROM->TO	POTTER COUNTY INTERCHANGE (WAUK 90343-A) 345/230/13.2KV TRANSFORMER CKT 1	560	560	0.07935	101.069	GEN511858 1-TULSA POWER STATION # 4-1
FDNS	00NR_G15_082	0	25SP	G15_082	FROM->TO	POTTER COUNTY INTERCHANGE (WAUK 90343-A) 345/230/13.2KV TRANSFORMER CKT 1	560	560	0.07935	101.0568	GEN531462 5-S5 GENERATOR
FDNS	00NR_G15_082	0	25SP	G15_082	FROM->TO	POTTER COUNTY INTERCHANGE (WAUK 90343-A) 345/230/13.2KV TRANSFORMER CKT 1	560	560	0.07935	101.0552	GEN509407 1-WILKES #1
FDNS	00NR_G15_082	0	25SP	G15_082	FROM->TO	POTTER COUNTY INTERCHANGE (WAUK 90343-A) 345/230/13.2KV TRANSFORMER CKT 1	560	560	0.07935	101.0542	GEN509392 G2-ARSENAL HILL GENS #3 (STALL)
FDNS	00NR_G15_082	0	25SP	G15_082	FROM->TO	POTTER COUNTY INTERCHANGE (WAUK 90343-A) 345/230/13.2KV TRANSFORMER CKT 1	560	560	0.07935	101.0528	GEN541151 3-SIBLEY GENERATING UNIT #3
FDNS	00NR_G15_082	0	25SP	G15_082	FROM->TO	POTTER COUNTY INTERCHANGE (WAUK 90343-A) 345/230/13.2KV TRANSFORMER CKT 1	560	560	0.07926	101.052	P12:115:SPS:V05.1.OSAGE.WCANYON
FDNS	00NR_G15_082	0	25SP	G15_082	FROM->TO	POTTER COUNTY INTERCHANGE (WAUK 90343-A) 345/230/13.2KV TRANSFORMER CKT 1	560	560	0.07935	101.0484	GEN652906 1-G09_006IS_3 0.6900
FDNS	00NR_G15_082	0	25SP	G15_082	FROM->TO	POTTER COUNTY INTERCHANGE (WAUK 90343-A) 345/230/13.2KV TRANSFORMER CKT 1	560	560	0.07903	101.0464	HAPPY INTERCHANGE - PALO DURO SUB 115KV CKT 1
FDNS	00NR_G15_082	0	25SP	G15_082	FROM->TO	POTTER COUNTY INTERCHANGE (WAUK 90343-A) 345/230/13.2KV TRANSFORMER CKT 1	560	560	0.07935	101.0457	SHERBURNE CO 345/24.0KV TRANSFORMER CKT 1
FDNS	00NR_G15_082	0	25SP	G15_082	FROM->TO	POTTER COUNTY INTERCHANGE (WAUK 90343-A) 345/230/13.2KV TRANSFORMER CKT 1	560	560	0.07935	101.0433	GEN511838 1-NORTHEASTERN STATION # 1-1B
FDNS	00NR_G15_082	0	25SP	G15_082	FROM->TO	POTTER COUNTY INTERCHANGE (WAUK 90343-A) 345/230/13.2KV TRANSFORMER CKT 1	560	560	0.07824	101.0416	CHISHOLM6 230.00 - ELK CITY 230KV 230KV CKT 1
FDNS	00NR_G15_082	0	25SP	G15_082	FROM->TO	POTTER COUNTY INTERCHANGE (WAUK 90343-A) 345/230/13.2KV TRANSFORMER CKT 1	560	560	0.07935	101.0372	GEN506750 1-EASTMAN GENERATION B
FDNS	00NR_G15_082	0	25SP	G15_082	FROM->TO	POTTER COUNTY INTERCHANGE (WAUK 90343-A) 345/230/13.2KV TRANSFORMER CKT 1	560	560	0.07824	101.0371	ELK CITY 230KV (ELKCTY-6) 230/138/13.8KV TRANSFORMER CKT 1
FDNS	00NR_G15_082	0	25SP	G15_082	FROM->TO	POTTER COUNTY INTERCHANGE (WAUK 90343-A) 345/230/13.2KV TRANSFORMER CKT 1	560	560	0.07824	101.0371	ELK CITY 230KV (ELKCTY-6) 230/138/13.8KV TRANSFORMER CKT 1
FDNS	00NR_G15_082	0	25SP	G15_082	FROM->TO	POTTER COUNTY INTERCHANGE (WAUK 90343-A) 345/230/13.2KV TRANSFORMER CKT 1	560	560	0.07935	101.0331	GEN511837 1-NORTHEASTERN STATION # 1-1A
FDNS	00NR_G15_082	0	25SP	G15_082	FROM->TO	POTTER COUNTY INTERCHANGE (WAUK 90343-A) 345/230/13.2KV TRANSFORMER CKT 1	560	560	0.07935	101.0318	GEN546698 1-QN GEN2
FDNS	00NR_G15_082	0	25SP	G15_082	FROM->TO	POTTER COUNTY INTERCHANGE (WAUK 90343-A) 345/230/13.2KV TRANSFORMER CKT 1	560	560	0.07935	101.0283	GEN562042 1-G11_014_3 0.6900
FDNS	00NR_G15_082	0	25SP	G15_082	FROM->TO	POTTER COUNTY INTERCHANGE (WAUK 90343-A) 345/230/13.2KV TRANSFORMER CKT 1	560	560	0.07929	101.0269	EDDY COUNTY INTERCHANGE (ABB AEM30711) 345/230/13.2KV TRANSFORMER CKT 1
FDNS	00NR_G15_082	0	25SP	G15_082	FROM->TO	POTTER COUNTY INTERCHANGE (WAUK 90343-A) 345/230/13.2KV TRANSFORMER CKT 1	560	560	0.07929	101.0269	EDDY COUNTY INTERCHANGE (ABB AEM30711) 345/230/13.2KV TRANSFORMER CKT 1
FDNS	00NR_G15_082	0	25SP	G15_082	FROM->TO	POTTER COUNTY INTERCHANGE (WAUK 90343-A) 345/230/13.2KV TRANSFORMER CKT 1	560	560	0.07935	101.0176	GEN547642 1-RIVERTON GEN #12
FDNS	00NR_G15_082	0	25SP	G15_082	FROM->TO	POTTER COUNTY INTERCHANGE (WAUK 90343-A) 345/230/13.2KV TRANSFORMER CKT 1	560	560	0.07935	101.0136	GEN652559 1-OAHE

SOLUTION	GROUP	SCENARIO	SEASON	SOURCE	DIRECTION	MONITORED ELEMENT	RATEA (MVA)	RATEB(MVA)	TDF	TC%LOADING (% MVA)	CONTINGENCY
FDNS	00NR_G15_082	0	25SP	G15_082	FROM->TO	POTTER COUNTY INTERCHANGE (WAUK 90343-A) 345/230/13.2KV TRANSFORMER CKT 1	560	560	0.07929	101.0128	P12:345:SPS:J14.1.EDDY.XRDS
FDNS	00NR_G15_082	0	25SP	G15_082	FROM->TO	POTTER COUNTY INTERCHANGE (WAUK 90343-A) 345/230/13.2KV TRANSFORMER CKT 1	560	560	0.07929	101.0126	CROSSROADS 7345.00 - EDDY COUNTY INTERCHANGE 345KV CKT 1
FDNS	00NR_G15_082	0	25SP	G15_082	FROM->TO	POTTER COUNTY INTERCHANGE (WAUK 90343-A) 345/230/13.2KV TRANSFORMER CKT 1	560	560	0.07935	101.0093	GEN659010 4-G07_027IS_2 0.6900
FDNS	00NR_G15_082	0	25SP	G15_082	FROM->TO	POTTER COUNTY INTERCHANGE (WAUK 90343-A) 345/230/13.2KV TRANSFORMER CKT 1	560	560	0.07935	101.0078	GEN542967 9-HAWTHORN UNIT #9
FDNS	00NR_G15_082	0	25SP	G15_082	FROM->TO	POTTER COUNTY INTERCHANGE (WAUK 90343-A) 345/230/13.2KV TRANSFORMER CKT 1	560	560	0.07935	101.003	GEN659289 1-DAYCNTYWND W0.6900
FDNS	00NR_G15_082	0	25SP	G15_082	FROM->TO	POTTER COUNTY INTERCHANGE (WAUK 90343-A) 345/230/13.2KV TRANSFORMER CKT 1	560	560	0.07742	101.0022	CHERRY1 - POTTER COUNTY INTERCHANGE 230KV CKT 1
FDNS	00NR_G15_082	0	25SP	G15_082	FROM->TO	POTTER COUNTY INTERCHANGE (WAUK 90343-A) 345/230/13.2KV TRANSFORMER CKT 1	560	560	0.07742	101.0022	CHERRY1 - POTTER COUNTY INTERCHANGE 230KV CKT 1
FDNS	00NR_G15_082	0	25SP	G15_082	FROM->TO	POTTER COUNTY INTERCHANGE (WAUK 90343-A) 345/230/13.2KV TRANSFORMER CKT 1	560	560	0.07935	101.0013	GEN652556 2-OAHE
FDNS	00NR_G15_082	0	25SP	G15_082	FROM->TO	POTTER COUNTY INTERCHANGE (WAUK 90343-A) 345/230/13.2KV TRANSFORMER CKT 1	560	560	0.07935	101.0013	GEN652557 4-OAHE
FDNS	00NR_G15_082	0	25SP	G15_082	FROM->TO	POTTER COUNTY INTERCHANGE (WAUK 90343-A) 345/230/13.2KV TRANSFORMER CKT 1	560	560	0.07935	101.0013	GEN652558 6-OAHE
FDNS	00NR_G15_082	0	25SP	G15_082	FROM->TO	POTTER COUNTY INTERCHANGE (WAUK 90343-A) 345/230/13.2KV TRANSFORMER CKT 1	560	560	0.07935	101.001	GEN511854 1-TULSA POWER STATION # 2-1
FDNS	00NR_G15_082	0	25SP	G15_082	FROM->TO	POTTER COUNTY INTERCHANGE (WAUK 90343-A) 345/230/13.2KV TRANSFORMER CKT 1	560	560	0.07935	100.9995	GEN659194 1-NDPRAIRWND1W0.6900
FDNS	00NR_G15_082	0	25SP	G15_082	FROM->TO	POTTER COUNTY INTERCHANGE (WAUK 90343-A) 345/230/13.2KV TRANSFORMER CKT 1	560	560	0.07935	100.998	GEN659411 1-CAMPBLCNTY W0.6900
FDNS	00NR_G15_082	0	25SP	G15_082	FROM->TO	POTTER COUNTY INTERCHANGE (WAUK 90343-A) 345/230/13.2KV TRANSFORMER CKT 1	560	560	0.07935	100.9897	GEN515266 1-AES 1G
FDNS	00NR_G15_082	0	25SP	G15_082	FROM->TO	POTTER COUNTY INTERCHANGE (WAUK 90343-A) 345/230/13.2KV TRANSFORMER CKT 1	560	560	0.07935	100.9897	GEN515267 1-AES 2G
FDNS	00NR_G15_082	0	25SP	G15_082	FROM->TO	POTTER COUNTY INTERCHANGE (WAUK 90343-A) 345/230/13.2KV TRANSFORMER CKT 1	560	560	0.07903	100.9879	P12:115:SPS:T66.1.RNDALL.HAPPY
FDNS	00NR_G15_082	0	25SP	G15_082	FROM->TO	POTTER COUNTY INTERCHANGE (WAUK 90343-A) 345/230/13.2KV TRANSFORMER CKT 1	560	560	0.07935	100.9878	GEN652460 4-GARRISON
FDNS	00NR_G15_082	0	25SP	G15_082	FROM->TO	POTTER COUNTY INTERCHANGE (WAUK 90343-A) 345/230/13.2KV TRANSFORMER CKT 1	560	560	0.07935	100.9878	GEN652461 5-GARRISON
FDNS	00NR_G15_082	0	25SP	G15_082	FROM->TO	POTTER COUNTY INTERCHANGE (WAUK 90343-A) 345/230/13.2KV TRANSFORMER CKT 1	560	560	0.07935	100.9876	GEN635023 3-WALTER SCOTT UNIT 3
FDNS	00NR_G15_082	0	25SP	G15_082	FROM->TO	POTTER COUNTY INTERCHANGE (WAUK 90343-A) 345/230/13.2KV TRANSFORMER CKT 1	560	560	0.07935	100.9864	GEN652457 1-GARRISON
FDNS	00NR_G15_082	0	25SP	G15_082	FROM->TO	POTTER COUNTY INTERCHANGE (WAUK 90343-A) 345/230/13.2KV TRANSFORMER CKT 1	560	560	0.07935	100.9864	GEN652459 3-GARRISON
FDNS	00NR_G15_082	0	25SP	G15_082	FROM->TO	POTTER COUNTY INTERCHANGE (WAUK 90343-A) 345/230/13.2KV TRANSFORMER CKT 1	560	560	0.07935	100.9863	GEN652458 2-GARRISON
FDNS	00NR_G15_082	0	25SP	G15_082	FROM->TO	POTTER COUNTY INTERCHANGE (WAUK 90343-A) 345/230/13.2KV TRANSFORMER CKT 1	560	560	0.07903	100.9821	PALO DURO SUB - RANDALL COUNTY INTERCHANGE 115KV CKT 1
FDNS	00NR_G15_082	0	25SP	G15_082	FROM->TO	POTTER COUNTY INTERCHANGE (WAUK 90343-A) 345/230/13.2KV TRANSFORMER CKT 1	560	560	0.07935	100.9804	GEN659296 2-SDPRAIRWND1W0.6900
FDNS	00NR_G15_082	0	25SP	G15_082	FROM->TO	POTTER COUNTY INTERCHANGE (WAUK 90343-A) 345/230/13.2KV TRANSFORMER CKT 1	560	560	0.07935	100.9763	GEN511840 1-NORTHEASTERN STATION #3
FDNS	00NR_G15_082	0	25SP	G15_082	FROM->TO	POTTER COUNTY INTERCHANGE (WAUK 90343-A) 345/230/13.2KV TRANSFORMER CKT 1	560	560	0.07935	100.9754	GEN547657 1-STATE LINE UNIT #3
FDNS	00NR_G15_082	0	25SP	G15_082	FROM->TO	POTTER COUNTY INTERCHANGE (WAUK 90343-A) 345/230/13.2KV TRANSFORMER CKT 1	560	560	0.07935	100.9753	GEN547656 1-STATE LINE UNIT #2
FDNS	00NR_G15_082	0	25SP	G15_082	FROM->TO	POTTER COUNTY INTERCHANGE (WAUK 90343-A) 345/230/13.2KV TRANSFORMER CKT 1	560	560	0.07935	100.9752	GEN645024 4-NORTH OMAHA 4
FDNS	00NR_G15_082	0	25SP	G15_082	FROM->TO	POTTER COUNTY INTERCHANGE (WAUK 90343-A) 345/230/13.2KV TRANSFORMER CKT 1	560	560	0.07935	100.9681	GEN511939 1-OEC GAS # 1-1
FDNS	00NR_G15_082	0	25SP	G15_082	FROM->TO	POTTER COUNTY INTERCHANGE (WAUK 90343-A) 345/230/13.2KV TRANSFORMER CKT 1	560	560	0.07935	100.9681	GEN511940 1-OEC GAS # 1-2
FDNS	00NR_G15_082	0	25SP	G15_082	FROM->TO	POTTER COUNTY INTERCHANGE (WAUK 90343-A) 345/230/13.2KV TRANSFORMER CKT 1	560	560	0.07935	100.9665	GEN652907 1-G09_007IS_3 0.6900
FDNS	00NR_G15_082	0	25SP	G15_082	FROM->TO	POTTER COUNTY INTERCHANGE (WAUK 90343-A) 345/230/13.2KV TRANSFORMER CKT 1	560	560	0.07916	100.9586	Harrington Station Mid Bus - RANDALL COUNTY INTERCHANGE 230KV CKT 1
FDNS	00NR_G15_082	0	25SP	G15_082	FROM->TO	POTTER COUNTY INTERCHANGE (WAUK 90343-A) 345/230/13.2KV TRANSFORMER CKT 1	560	560	0.07916	100.9586	Harrington Station Mid Bus - RANDALL COUNTY INTERCHANGE 230KV CKT 1
FDNS	00NR_G15_082	0	25SP	G15_082	FROM->TO	POTTER COUNTY INTERCHANGE (WAUK 90343-A) 345/230/13.2KV TRANSFORMER CKT 1	560	560	0.07935	100.9563	GEN506754 1-LEBROCK STEAM 1
FDNS	00NR_G15_082	0	25SP	G15_082	FROM->TO	POTTER COUNTY INTERCHANGE (WAUK 90343-A) 345/230/13.2KV TRANSFORMER CKT 1	560	560	0.07935	100.9483	GEN509393 S1-ARSENAL HILL GENS #4 (STALL)
FDNS	00NR_G15_082	0	25SP	G15_082	FROM->TO	POTTER COUNTY INTERCHANGE (WAUK 90343-A) 345/230/13.2KV TRANSFORMER CKT 1	560	560	0.07935	100.947	GEN659403 1-NDSUNFLWR W0.6900
FDNS	00NR_G15_082	0	25SP	G15_082	FROM->TO	POTTER COUNTY INTERCHANGE (WAUK 90343-A) 345/230/13.2KV TRANSFORMER CKT 1	560	560	0.07935	100.946	GEN515223 1-MUSKOGEE 4G
FDNS	00NR_G15_082	0	25SP	G15_082	FROM->TO	POTTER COUNTY INTERCHANGE (WAUK 90343-A) 345/230/13.2KV TRANSFORMER CKT 1	560	560	0.07935	100.9443	GEN532662 1-LAWRENCE ENERGY CENTER UNIT 4
FDNS	00NR_G15_082	0	25SP	G15_082	FROM->TO	POTTER COUNTY INTERCHANGE (WAUK 90343-A) 345/230/13.2KV TRANSFORMER CKT 1	560	560	0.07935	100.9406	GEN640019 1-SHELDON STATION UNIT 1
FDNS	00NR_G15_082	0	25SP	G15_082	FROM->TO	POTTER COUNTY INTERCHANGE (WAUK 90343-A) 345/230/13.2KV TRANSFORMER CKT 1	560	560	0.07545	100.938	BVRCNTY7 345.00 - G11-14T 345.00 345KV CKT 1
FDNS	00NR_G15_082	0	25SP	G15_082	FROM->TO	POTTER COUNTY INTERCHANGE (WAUK 90343-A) 345/230/13.2KV TRANSFORMER CKT 1	560	560	0.07545	100.938	BVRCNTY7 345.00 - G11-14T 345.00 345KV CKT 2
FDNS	00NR_G15_082	0	25SP	G15_082	FROM->TO	POTTER COUNTY INTERCHANGE (WAUK 90343-A) 345/230/13.2KV TRANSFORMER CKT 1	560	560	0.07935	100.9319	GEN560256 1-G10-14-1 0.6900
FDNS	00NR_G15_082	0	25SP	G15_082	FROM->TO	POTTER COUNTY INTERCHANGE (WAUK 90343-A) 345/230/13.2KV TRANSFORMER CKT 1	560	560	0.07935	100.9231	GEN515226 1-MUSKOGEE 6G
FDNS	00NR_G15_082	0	25SP	G15_082	FROM->TO	POTTER COUNTY INTERCHANGE (WAUK 90343-A) 345/230/13.2KV TRANSFORMER CKT 1	560	560	0.08149	100.9169	MINGO - RED WILLOW 345KV CKT 1
FDNS	00NR_G15_082	0	25SP	G15_082	FROM->TO	POTTER COUNTY INTERCHANGE (WAUK 90343-A) 345/230/13.2KV TRANSFORMER CKT 1	560	560	0.08149	100.9169	MINGO - RED WILLOW 345KV CKT 1
FDNS	00NR_G15_082	0	25SP	G15_082	FROM->TO	POTTER COUNTY INTERCHANGE (WAUK 90343-A) 345/230/13.2KV TRANSFORMER CKT 1	560	560	0.07935	100.9085	GEN560257 1-G10-14-2 0.6900
FDNS	00NR_G15_082	0	25SP	G15_082	FROM->TO	POTTER COUNTY INTERCHANGE (WAUK 90343-A) 345/230/13.2KV TRANSFORMER CKT 1	560	560	0.07935	100.8964	GEN511953 G-COGENTRIX GAS # 1
FDNS	00NR_G15_082	0	25SP	G15_082	FROM->TO	POTTER COUNTY INTERCHANGE (WAUK 90343-A) 345/230/13.2KV TRANSFORMER CKT 1	560	560	0.07935	100.8907	GEN515225 1-MUSKOGEE 5G
FDNS	00NR_G15_082	0	25SP	G15_082	FROM->TO	POTTER COUNTY INTERCHANGE (WAUK 90343-A) 345/230/13.2KV TRANSFORMER CKT 1	560	560	0.07935	100.8842	GEN514936 1-HORSESHOE LAKE 7S
FDNS	00NR_G15_082	0	25SP	G15_082	FROM->TO	POTTER COUNTY INTERCHANGE (WAUK 90343-A) 345/230/13.2KV TRANSFORMER CKT 1	560	560	0.07935	100.8783	GEN532742 5-EMPORIA ENERGY CENTER UNIT 5
FDNS	00NR_G15_082	0	25SP	G15_082	FROM->TO	POTTER COUNTY INTERCHANGE (WAUK 90343-A) 345/230/13.2KV TRANSFORMER CKT 1	560	560	0.07935	100.8783	GEN532743 6-EMPORIA ENERGY CENTER UNIT 6
FDNS	00NR_G15_082	0	25SP	G15_082	FROM->TO	POTTER COUNTY INTERCHANGE (WAUK 90343-A) 345/230/13.2KV TRANSFORMER CKT 1	560	560	0.07781	100.8737	AMARILLO SOUTH INTERCHANGE - SWISHER COUNTY INTERCHANGE 230KV CKT 1
FDNS	00NR_G15_082	0	25SP	G15_082	FROM->TO	POTTER COUNTY INTERCHANGE (WAUK 90343-A) 345/230/13.2KV TRANSFORMER CKT 1	560	560	0.07781	100.8737	AMARILLO SOUTH INTERCHANGE - SWISHER COUNTY INTERCHANGE 230KV CKT 1
FDNS	00NR_G15_082	0	25SP	G15_082	FROM->TO	POTTER COUNTY INTERCHANGE (WAUK 90343-A) 345/230/13.2KV TRANSFORMER CKT 1	560	560	0.07935	100.8693	GEN509408 1-WILKES #2
FDNS	00NR_G15_082	0	25SP	G15_082	FROM->TO	POTTER COUNTY INTERCHANGE (WAUK 90343-A) 345/230/13.2KV TRANSFORMER CKT 1	560	560	0.07935	100.8678	GEN539653 1-CIMARRON RIVER PLANT GENERATOR
FDNS	00NR_G15_082	0	25SP	G15_082	FROM->TO	POTTER COUNTY INTERCHANGE (WAUK 90343-A) 345/230/13.2KV TRANSFORMER CKT 1	560	560	0.07935	100.8652	GEN635024 4-WALTER SCOTT UNIT 4
FDNS	00NR_G15_082	0	25SP	G15_082	FROM->TO	POTTER COUNTY INTERCHANGE (WAUK 90343-A) 345/230/13.2KV TRANSFORMER CKT 1	560	560	0.07935	100.847	GEN300020 1-1CHOTCT4 16.000
FDNS	00NR_G15_082	0	25SP	G15_082	FROM->TO	POTTER COUNTY INTERCHANGE (WAUK 90343-A) 345/230/13.2KV TRANSFORMER CKT 1	560	560	0.07935	100.847	GEN300021 1-1CHOTCT5 16.000
FDNS	00NR_G15_082	0	25SP	G15_082	FROM->TO	POTTER COUNTY INTERCHANGE (WAUK 90343-A) 345/230/13.2KV TRANSFORMER CKT 1	560	560	0.07935	100.8469	GEN300032 1-CHOUTEAU CTG 2
FDNS	00NR_G15_082	0	25SP	G15_082	FROM->TO	POTTER COUNTY INTERCHANGE (WAUK 90343-A) 345/230/13.2KV TRANSFORMER CKT 1	560	560	0.07935	100.8469	GEN300033 1-CHOUTEAU STG 3
FDNS	00NR_G15_082	0	25SP	G15_082	FROM->TO	POTTER COUNTY INTERCHANGE (WAUK 90343-A) 345/230/13.2KV TRANSFORMER CKT 1	560	560	0.07935	100.8284	GEN659354 1-DEERCREK STG18.000
FDNS	00NR_G15_082	0	25SP	G15_082	FROM->TO	POTTER COUNTY INTERCHANGE (WAUK 90343-A) 345/230/13.2KV TRANSFORMER CKT 1	560	560	0.07935	100.8282	GEN659353 1-DEERCREK CTG18.000
FDNS	00NR_G15_082	0	25SP	G15_082	FROM->TO	POTTER COUNTY INTERCHANGE (WAUK 90343-A) 345/230/13.2KV TRANSFORMER CKT 1	560	560	0.07935	100.8191	GEN562003 1-G11_027_3 0.6900
FDNS	00NR_G15_082	0	25SP	G15_082	FROM->TO	POTTER COUNTY INTERCHANGE (WAUK 90343-A) 345/230/13.2KV TRANSFORMER CKT 1	560	560	0.07935	100.8108	GEN300024 1-1CHOTST6 16.000
FDNS	00NR_G15_082	0	25SP	G15_082	FROM->TO	POTTER COUNTY INTERCHANGE (WAUK 90343-A) 345/230/13.2KV TRANSFORMER CKT 1	560	560	0.07935	100.8108	GEN300031 1-CHOUTEAU CTG 1
FDNS	00NR_G15_082	0	25SP	G15_082	FROM->TO	POTTER COUNTY INTERCHANGE (WAUK 90343-A) 345/230/13.2KV TRANSFORMER CKT 1	560	560	0.10732	100.8093	G11-14T 345.00 - WOODWARD DISTRICT EHV 345KV CKT 1
FDNS	00NR_G15_082	0	25SP	G15_082	FROM->TO	POTTER COUNTY INTERCHANGE (WAUK 90343-A) 345/230/13.2KV TRANSFORMER CKT 1	560	560	0.10732	100.8093	G11-14T 345.00 - WOODWARD DISTRICT EHV 345KV CKT 2
FDNS	00NR_G15_082	0	25SP	G15_082	FROM->TO	POTTER COUNTY INTERCHANGE (WAUK 90343-A) 345/230/13.2KV TRANSFORMER CKT 1	560	560	0.07935	100.7913	GEN640020 2-SHELDON STATION UNIT 2
FDNS	00NR_G15_082	0	25SP	G15_082	FROM->TO	POTTER COUNTY INTERCHANGE (WAUK 90343-A) 345/230/13.2KV TRANSFORMER CKT 1	560	560	0.07935	100.7885	GEN562078 1-G11_051_3 0.6900
FDNS	00NR_G15_082	0	25SP	G15_082	FROM->TO	POTTER COUNTY INTERCHANGE (WAUK 90343-A) 345/230/13.2KV TRANSFORMER CKT 1	560	560	0.07935	100.7853	GEN539677 3-A. M. MULLERGREN GENERATOR
FDNS	00NR_G15_082	0	25SP	G15_082	FROM->TO	POTTER COUNTY INTERCHANGE (WAUK 90343-A) 345/230/13.2KV TRANSFORMER CKT 1	560	560	0.07935	100.7729	GEN645041 1-CASS COUNTY 1
FDNS	00NR_G15_082	0	25SP	G15_082	FROM->TO	POTTER COUNTY INTERCHANGE (WAUK 90343-A) 345/230/13.2KV TRANSFORMER CKT 1	560	560	0.07935	100.7691	GEN645042 2-CASS COUNTY 2
FDNS	00NR_G15_082	0	25SP	G15_082	FROM->TO	POTTER COUNTY INTERCHANGE (WAUK 90343-A) 345/230/13.2KV TRANSFORMER CKT 1	560	560	0.07935	100.7583	GEN549890 1-SOUTHWEST 1

SOLUTION	GROUP	SCENARIO	SEASON	SOURCE	DIRECTION	MONITORED ELEMENT	RATEA (MVA)	RATEB(MVA)	TDF	TC%LOADING (% MVA)	CONTINGENCY
FDNS	00NR_G15_082	0	25SP	G15_082	FROM->TO	POTTER COUNTY INTERCHANGE (WAUK 90343-A) 345/230/13.2KV TRANSFORMER CKT 1	560	560	0.07935	100.7578	GEN532672 1-TECUMSEH ENERGY CENTER UNIT 8
FDNS	00NR_G15_082	0	25SP	G15_082	FROM->TO	POTTER COUNTY INTERCHANGE (WAUK 90343-A) 345/230/13.2KV TRANSFORMER CKT 1	560	560	0.07897	100.7573	NEWHART 230 - PLANT X STATION 230KV CKT 1
FDNS	00NR_G15_082	0	25SP	G15_082	FROM->TO	POTTER COUNTY INTERCHANGE (WAUK 90343-A) 345/230/13.2KV TRANSFORMER CKT 1	560	560	0.07935	100.7494	GEN547649 1-ASBURY UNIT #1
FDNS	00NR_G15_082	0	25SP	G15_082	FROM->TO	POTTER COUNTY INTERCHANGE (WAUK 90343-A) 345/230/13.2KV TRANSFORMER CKT 1	560	560	0.07935	100.7479	GEN515591 1-PALDRW11 0.6900
FDNS	00NR_G15_082	0	25SP	G15_082	FROM->TO	POTTER COUNTY INTERCHANGE (WAUK 90343-A) 345/230/13.2KV TRANSFORMER CKT 1	560	560	0.07901	100.735	PLANT X STATION - SUNDOWN INTERCHANGE 230KV CKT 1
FDNS	00NR_G15_082	0	25SP	G15_082	FROM->TO	POTTER COUNTY INTERCHANGE (WAUK 90343-A) 345/230/13.2KV TRANSFORMER CKT 1	560	560	0.07901	100.735	PLANT X STATION - SUNDOWN INTERCHANGE 230KV CKT 1
FDNS	00NR_G15_082	0	25SP	G15_082	FROM->TO	POTTER COUNTY INTERCHANGE (WAUK 90343-A) 345/230/13.2KV TRANSFORMER CKT 1	560	560	0.07935	100.7191	GEN562691 1-G15_015_3 0.6900
FDNS	00NR_G15_082	0	25SP	G15_082	FROM->TO	POTTER COUNTY INTERCHANGE (WAUK 90343-A) 345/230/13.2KV TRANSFORMER CKT 1	560	560	0.07935	100.7137	GEN300017 1-1G2GPDEL 18.000
FDNS	00NR_G15_082	0	25SP	G15_082	FROM->TO	POTTER COUNTY INTERCHANGE (WAUK 90343-A) 345/230/13.2KV TRANSFORMER CKT 1	560	560	0.07935	100.7134	GEN509416 1-TURK GENERATION
FDNS	00NR_G15_082	0	25SP	G15_082	FROM->TO	POTTER COUNTY INTERCHANGE (WAUK 90343-A) 345/230/13.2KV TRANSFORMER CKT 1	560	560	0.07935	100.7083	GEN547658 1-STATE LINE COMBINED CYCLE
FDNS	00NR_G15_082	0	25SP	G15_082	FROM->TO	POTTER COUNTY INTERCHANGE (WAUK 90343-A) 345/230/13.2KV TRANSFORMER CKT 1	560	560	0.08045	100.6922	DALLAM COUNTY INTERCHANGE - XIT_INTG 3115.00 115KV CKT 1
FDNS	00NR_G15_082	0	25SP	G15_082	FROM->TO	POTTER COUNTY INTERCHANGE (WAUK 90343-A) 345/230/13.2KV TRANSFORMER CKT 1	560	560	0.08045	100.6889	XIT_INTG 6230.00 (PRE_XFR_DATA) 230/115/13.2KV TRANSFORMER CKT 1
FDNS	00NR_G15_082	0	25SP	G15_082	FROM->TO	POTTER COUNTY INTERCHANGE (WAUK 90343-A) 345/230/13.2KV TRANSFORMER CKT 1	560	560	0.08045	100.6889	XIT_INTG 6230.00 (PRE_XFR_DATA) 230/115/13.2KV TRANSFORMER CKT 1
FDNS	00NR_G15_082	0	25SP	G15_082	FROM->TO	POTTER COUNTY INTERCHANGE (WAUK 90343-A) 345/230/13.2KV TRANSFORMER CKT 1	560	560	0.07935	100.6652	GEN541163 1-ARIES COMBUSTION TURBINE #1
FDNS	00NR_G15_082	0	25SP	G15_082	FROM->TO	POTTER COUNTY INTERCHANGE (WAUK 90343-A) 345/230/13.2KV TRANSFORMER CKT 1	560	560	0.07935	100.6641	GEN300016 1-1G1GPDEL 18.000
FDNS	00NR_G15_082	0	25SP	G15_082	FROM->TO	POTTER COUNTY INTERCHANGE (WAUK 90343-A) 345/230/13.2KV TRANSFORMER CKT 1	560	560	0.07935	100.6496	GEN562518 1-G14_021_N2 0.6900
FDNS	00NR_G15_082	0	25SP	G15_082	FROM->TO	POTTER COUNTY INTERCHANGE (WAUK 90343-A) 345/230/13.2KV TRANSFORMER CKT 1	560	560	0.08142	100.6311	MINGO - SETAB 345KV CKT 1
FDNS	00NR_G15_082	0	25SP	G15_082	FROM->TO	POTTER COUNTY INTERCHANGE (WAUK 90343-A) 345/230/13.2KV TRANSFORMER CKT 1	560	560	0.08142	100.6311	MINGO - SETAB 345KV CKT 1
FDNS	00NR_G15_082	0	25SP	G15_082	FROM->TO	POTTER COUNTY INTERCHANGE (WAUK 90343-A) 345/230/13.2KV TRANSFORMER CKT 1	560	560	0.08045	100.6166	CHAN/TASCOS6230.00 - XIT_INTG 6230.00 230KV CKT 1
FDNS	00NR_G15_082	0	25SP	G15_082	FROM->TO	POTTER COUNTY INTERCHANGE (WAUK 90343-A) 345/230/13.2KV TRANSFORMER CKT 1	560	560	0.07935	100.6162	GEN511941 1-OEC STEAM # 2
FDNS	00NR_G15_082	0	25SP	G15_082	FROM->TO	POTTER COUNTY INTERCHANGE (WAUK 90343-A) 345/230/13.2KV TRANSFORMER CKT 1	560	560	0.07935	100.6075	GEN541162 1-ARIES STEAM TURBINE
FDNS	00NR_G15_082	0	25SP	G15_082	FROM->TO	POTTER COUNTY INTERCHANGE (WAUK 90343-A) 345/230/13.2KV TRANSFORMER CKT 1	560	560	0.07935	100.5989	GEN511938 1-OEC STEAM # 1
FDNS	00NR_G15_082	0	25SP	G15_082	FROM->TO	POTTER COUNTY INTERCHANGE (WAUK 90343-A) 345/230/13.2KV TRANSFORMER CKT 1	560	560	0.07935	100.5982	GEN659141 1-K10215A
FDNS	00NR_G15_082	0	25SP	G15_082	FROM->TO	POTTER COUNTY INTERCHANGE (WAUK 90343-A) 345/230/13.2KV TRANSFORMER CKT 1	560	560	0.07935	100.5791	GEN300001 1-THOMAS HILL UNIT 1
FDNS	00NR_G15_082	0	25SP	G15_082	FROM->TO	POTTER COUNTY INTERCHANGE (WAUK 90343-A) 345/230/13.2KV TRANSFORMER CKT 1	560	560	0.07935	100.5698	GEN509394 1-FLINT CREEK
FDNS	00NR_G15_082	0	25SP	G15_082	FROM->TO	POTTER COUNTY INTERCHANGE (WAUK 90343-A) 345/230/13.2KV TRANSFORMER CKT 1	560	560	0.07935	100.5683	GEN513602 1-GRECSTG_1 17.500
FDNS	00NR_G15_082	0	25SP	G15_082	FROM->TO	POTTER COUNTY INTERCHANGE (WAUK 90343-A) 345/230/13.2KV TRANSFORMER CKT 1	560	560	0.07935	100.5556	GEN532721 1-EVANS ENERGY CENTER UNIT 1
FDNS	00NR_G15_082	0	25SP	G15_082	FROM->TO	POTTER COUNTY INTERCHANGE (WAUK 90343-A) 345/230/13.2KV TRANSFORMER CKT 1	560	560	0.07935	100.5426	GEN562432 1-G13-030 0.6900
FDNS	00NR_G15_082	0	25SP	G15_082	FROM->TO	POTTER COUNTY INTERCHANGE (WAUK 90343-A) 345/230/13.2KV TRANSFORMER CKT 1	560	560	0.07796	100.5387	Harrington Station East Bus - Harrington Station Mid Bus 230KV CKT @1
FDNS	00NR_G15_082	0	25SP	G15_082	FROM->TO	POTTER COUNTY INTERCHANGE (WAUK 90343-A) 345/230/13.2KV TRANSFORMER CKT 1	560	560	0.07935	100.5377	GEN514805 1-SOONER UNIT 1
FDNS	00NR_G15_082	0	25SP	G15_082	FROM->TO	POTTER COUNTY INTERCHANGE (WAUK 90343-A) 345/230/13.2KV TRANSFORMER CKT 1	560	560	0.07935	100.5225	GEN562517 1-G14_021_S2 0.6900
FDNS	00NR_G15_082	0	25SP	G15_082	FROM->TO	POTTER COUNTY INTERCHANGE (WAUK 90343-A) 345/230/13.2KV TRANSFORMER CKT 1	560	560	0.07935	100.5169	GEN514806 1-SOONER UNIT 2
FDNS	00NR_G15_082	0	25SP	G15_082	FROM->TO	POTTER COUNTY INTERCHANGE (WAUK 90343-A) 345/230/13.2KV TRANSFORMER CKT 1	560	560	0.07935	100.4765	GEN562714 1-G15_023_4 0.6900
FDNS	00NR_G15_082	0	25SP	G15_082	FROM->TO	POTTER COUNTY INTERCHANGE (WAUK 90343-A) 345/230/13.2KV TRANSFORMER CKT 1	560	560	0.07935	100.4765	GEN562715 1-G15_023_5 0.6900
FDNS	00NR_G15_082	0	25SP	G15_082	FROM->TO	POTTER COUNTY INTERCHANGE (WAUK 90343-A) 345/230/13.2KV TRANSFORMER CKT 1	560	560	0.07935	100.4615	GEN520947 1-HUGO1
FDNS	00NR_G15_082	0	25SP	G15_082	FROM->TO	POTTER COUNTY INTERCHANGE (WAUK 90343-A) 345/230/13.2KV TRANSFORMER CKT 1	560	560	0.07935	100.4587	GEN645025 5-NORTH OMAHA 5
FDNS	00NR_G15_082	0	25SP	G15_082	FROM->TO	POTTER COUNTY INTERCHANGE (WAUK 90343-A) 345/230/13.2KV TRANSFORMER CKT 1	560	560	0.07935	100.4338	GEN659407 1-ANTELPHILLSW0.6900
FDNS	00NR_G15_082	0	25SP	G15_082	FROM->TO	POTTER COUNTY INTERCHANGE (WAUK 90343-A) 345/230/13.2KV TRANSFORMER CKT 1	560	560	0.07935	100.4275	GEN531459 2-S2 GENERATOR
FDNS	00NR_G15_082	0	25SP	G15_082	FROM->TO	POTTER COUNTY INTERCHANGE (WAUK 90343-A) 345/230/13.2KV TRANSFORMER CKT 1	560	560	0.07935	100.4145	GEN659110 1-LELAND OLDS UNIT1
FDNS	00NR_G15_082	0	25SP	G15_082	FROM->TO	POTTER COUNTY INTERCHANGE (WAUK 90343-A) 345/230/13.2KV TRANSFORMER CKT 1	560	560	0.07935	100.3783	GEN509403 1-PIRKEY GENERATION
FDNS	00NR_G15_082	0	25SP	G15_082	FROM->TO	POTTER COUNTY INTERCHANGE (WAUK 90343-A) 345/230/13.2KV TRANSFORMER CKT 1	560	560	0.07935	100.364	GEN514939 1-HORSESHOE LAKE 8G
FDNS	00NR_G15_082	0	25SP	G15_082	FROM->TO	POTTER COUNTY INTERCHANGE (WAUK 90343-A) 345/230/13.2KV TRANSFORMER CKT 1	560	560	0.07935	100.3453	GEN562017 1-G11_022_3 0.6900
FDNS	00NR_G15_082	0	25SP	G15_082	FROM->TO	POTTER COUNTY INTERCHANGE (WAUK 90343-A) 345/230/13.2KV TRANSFORMER CKT 1	560	560	0.07935	100.3434	GEN562694 1-G15_016_3 0.6900
FDNS	00NR_G15_082	0	25SP	G15_082	FROM->TO	POTTER COUNTY INTERCHANGE (WAUK 90343-A) 345/230/13.2KV TRANSFORMER CKT 1	560	560	0.07935	100.3011	GEN641089 2-ENERGY CENTER 2
FDNS	00NR_G15_082	0	25SP	G15_082	FROM->TO	POTTER COUNTY INTERCHANGE (WAUK 90343-A) 345/230/13.2KV TRANSFORMER CKT 1	560	560	0.07935	100.2955	GEN549893 2-SOUTHWEST 2
FDNS	00NR_G15_082	0	25SP	G15_082	FROM->TO	POTTER COUNTY INTERCHANGE (WAUK 90343-A) 345/230/13.2KV TRANSFORMER CKT 1	560	560	0.07935	100.2927	GEN509398 1-KNOXLEE #5
FDNS	00NR_G15_082	0	25SP	G15_082	FROM->TO	POTTER COUNTY INTERCHANGE (WAUK 90343-A) 345/230/13.2KV TRANSFORMER CKT 1	560	560	0.07935	100.2798	GEN546702 1-NM GEN N1
FDNS	00NR_G15_082	0	25SP	G15_082	FROM->TO	POTTER COUNTY INTERCHANGE (WAUK 90343-A) 345/230/13.2KV TRANSFORMER CKT 1	560	560	0.07935	100.2778	GEN509409 1-WILKES #3
FDNS	00NR_G15_082	0	25SP	G15_082	FROM->TO	POTTER COUNTY INTERCHANGE (WAUK 90343-A) 345/230/13.2KV TRANSFORMER CKT 1	560	560	0.07935	100.2511	GEN532722 1-EVANS ENERGY CENTER UNIT 2
FDNS	00NR_G15_082	0	25SP	G15_082	FROM->TO	POTTER COUNTY INTERCHANGE (WAUK 90343-A) 345/230/13.2KV TRANSFORMER CKT 1	560	560	0.07935	100.2484	GEN300010 1-ST FRANCIS UNIT 1
FDNS	00NR_G15_082	0	25SP	G15_082	FROM->TO	POTTER COUNTY INTERCHANGE (WAUK 90343-A) 345/230/13.2KV TRANSFORMER CKT 1	560	560	0.07935	100.2329	GEN659125 1-COVEY
FDNS	00NR_G15_082	0	25SP	G15_082	FROM->TO	POTTER COUNTY INTERCHANGE (WAUK 90343-A) 345/230/13.2KV TRANSFORMER CKT 1	560	560	0.07935	100.2125	GEN300015 1-1SGPDEL 18.000
FDNS	00NR_G15_082	0	25SP	G15_082	FROM->TO	POTTER COUNTY INTERCHANGE (WAUK 90343-A) 345/230/13.2KV TRANSFORMER CKT 1	560	560	0.07935	100.211	GEN652173 1-G09_001IS_2 0.6900
FDNS	00NR_G15_082	0	25SP	G15_082	FROM->TO	POTTER COUNTY INTERCHANGE (WAUK 90343-A) 345/230/13.2KV TRANSFORMER CKT 1	560	560	0.07935	100.1907	GEN505432 1-SIKESTON
FDNS	00NR_G15_082	0	25SP	G15_082	FROM->TO	POTTER COUNTY INTERCHANGE (WAUK 90343-A) 345/230/13.2KV TRANSFORMER CKT 1	560	560	0.07935	100.1876	GEN300011 1-ST FRANCIS UNIT 2
FDNS	00NR_G15_082	0	25SP	G15_082	FROM->TO	POTTER COUNTY INTERCHANGE (WAUK 90343-A) 345/230/13.2KV TRANSFORMER CKT 1	560	560	0.07935	100.1366	GEN532663 1-LAWRENCE ENERGY CENTER UNIT 5
FDNS	00NR_G15_082	0	25SP	G15_082	FROM->TO	POTTER COUNTY INTERCHANGE (WAUK 90343-A) 345/230/13.2KV TRANSFORMER CKT 1	560	560	0.07795	100.1274	DEAF SMITH COUNTY INTERCHANGE - PLANT X STATION 230KV CKT 1
FDNS	00NR_G15_082	0	25SP	G15_082	FROM->TO	POTTER COUNTY INTERCHANGE (WAUK 90343-A) 345/230/13.2KV TRANSFORMER CKT 1	560	560	0.07795	100.1274	DEAF SMITH COUNTY INTERCHANGE - PLANT X STATION 230KV CKT 1
FDNS	00NR_G15_082	0	25SP	G15_082	FROM->TO	POTTER COUNTY INTERCHANGE (WAUK 90343-A) 345/230/13.2KV TRANSFORMER CKT 1	560	560	0.07935	100.1199	GEN562023 1-G11_020_3 0.6900
FDNS	00NR_G15_082	0	25SP	G15_082	FROM->TO	POTTER COUNTY INTERCHANGE (WAUK 90343-A) 345/230/13.2KV TRANSFORMER CKT 1	560	560	0.07935	100.1199	GEN562026 1-G11_019_3 0.6900
FDNS	00NR_G15_082	0	25SP	G15_082	FROM->TO	POTTER COUNTY INTERCHANGE (WAUK 90343-A) 345/230/13.2KV TRANSFORMER CKT 1	560	560	0.07935	100.0935	GEN539670 4-JUDSON LARGE GENERATOR
FDNS	00NR_G15_082	0	25SP	G15_082	FROM->TO	POTTER COUNTY INTERCHANGE (WAUK 90343-A) 345/230/13.2KV TRANSFORMER CKT 1	560	560	0.07394	100.0601	BVRCNTY7 345.00 - Hitchland Interchange 345KV CKT 1
FDNS	00NR_G15_082	0	25SP	G15_082	FROM->TO	POTTER COUNTY INTERCHANGE (WAUK 90343-A) 345/230/13.2KV TRANSFORMER CKT 1	560	560	0.07394	100.0601	BVRCNTY7 345.00 - Hitchland Interchange 345KV CKT 1
FDNS	00NR_G15_082	0	25SP	G15_082	FROM->TO	POTTER COUNTY INTERCHANGE (WAUK 90343-A) 345/230/13.2KV TRANSFORMER CKT 1	560	560	0.07394	100.0601	BVRCNTY7 345.00 - Hitchland Interchange 345KV CKT 2
FDNS	00NR_G15_082	0	25SP	G15_082	FROM->TO	POTTER COUNTY INTERCHANGE (WAUK 90343-A) 345/230/13.2KV TRANSFORMER CKT 1	560	560	0.07394	100.0601	BVRCNTY7 345.00 - Hitchland Interchange 345KV CKT 2
FDNS	00NR_G15_082	0	25SP	G15_082	FROM->TO	POTTER COUNTY INTERCHANGE (WAUK 90343-A) 345/230/13.2KV TRANSFORMER CKT 1	560	560	0.08045	100	CHAN/TASCOS6230.00 - POTTER COUNTY INTERCHANGE 230KV CKT 1
FDNS	00NR_G15_082	0	25SP	G15_082	FROM->TO	POTTER COUNTY INTERCHANGE (WAUK 90343-A) 345/230/13.2KV TRANSFORMER CKT 1	560	560	0.07935	100	GEN512688 2-GRDA1 GSU2 22
FDNS	00NR_G15_082	0	25SP	G15_082	FROM->TO	POTTER COUNTY INTERCHANGE (WAUK 90343-A) 345/230/13.2KV TRANSFORMER CKT 1	560	560	0.07935	100	GEN515040 1-SEMINOLE 1G
FDNS	00NR_G15_082	0	25SP	G15_082	FROM->TO	POTTER COUNTY INTERCHANGE (WAUK 90343-A) 345/230/13.2KV TRANSFORMER CKT 1	560	560	0.07935	100	GEN530690 1-PRWINDG1 0.6900
FDNS	00NR_G15_082	0	25SP	G15_082	FROM->TO	POTTER COUNTY INTERCHANGE (WAUK 90343-A) 345/230/13.2KV TRANSFORMER CKT 1	560	560	0.07935	99.8	GEN300002 1-THOMAS HILL UNIT 2
FDNS	00NR_G15_082	0	25SP	G15_082	FROM->TO	POTTER COUNTY INTERCHANGE (WAUK 90343-A) 345/230/13.2KV TRANSFORMER CKT 1	560	560	0.07935	99.8	GEN515041 1-SEMINOLE 2G
FDNS	00NR_G15_082	0	25SP	G15_082	FROM->TO	POTTER COUNTY INTERCHANGE (WAUK 90343-A) 345/230/13.2KV TRANSFORMER CKT 1	560	560	0.07935	99.8	GEN652353 2-GR PRAIRIEG 0.6900
FDNS	00NR_G15_082	0	25SP	G15_082	FROM->TO	POTTER COUNTY INTERCHANGE (WAUK 90343-A) 345/230/13.2KV TRANSFORMER CKT 1	560	560	0.07935	99.7	GEN513601 1-GRECCTG_1 20.000

SOLUTION	GROUP	SCENARIO	SEASON	SOURCE	DIRECTION	MONITORED ELEMENT	RATEA (MVA)	RATEB(MVA)	TDF	TC%LOADING (% MVA)	CONTINGENCY
FDNS	00NR_G15_082	0	25SP	G15_082	FROM->TO	POTTER COUNTY INTERCHANGE (WAUK 90343-A) 345/230/13.2KV TRANSFORMER CKT 1	560	560	0.07935	99.7	GEN515042 1-SEMINOLE 3G
FDNS	00NR_G15_082	0	25SP	G15_082	FROM->TO	POTTER COUNTY INTERCHANGE (WAUK 90343-A) 345/230/13.2KV TRANSFORMER CKT 1	560	560	0.07935	99.7	GEN590010 1-ERCOT EQUIVALENCE
FDNS	00NR_G15_082	0	25SP	G15_082	FROM->TO	POTTER COUNTY INTERCHANGE (WAUK 90343-A) 345/230/13.2KV TRANSFORMER CKT 1	560	560	0.07935	99.6	GEN509404 1-WELSH #1
FDNS	00NR_G15_082	0	25SP	G15_082	FROM->TO	POTTER COUNTY INTERCHANGE (WAUK 90343-A) 345/230/13.2KV TRANSFORMER CKT 1	560	560	0.07935	99.6	GEN509406 1-WELSH #3
FDNS	00NR_G15_082	0	25SP	G15_082	FROM->TO	POTTER COUNTY INTERCHANGE (WAUK 90343-A) 345/230/13.2KV TRANSFORMER CKT 1	560	560	0.07935	99.6	GEN511839 1-NORTHEASTERN STATION #2
FDNS	00NR_G15_082	0	25SP	G15_082	FROM->TO	POTTER COUNTY INTERCHANGE (WAUK 90343-A) 345/230/13.2KV TRANSFORMER CKT 1	560	560	0.07935	99.6	GEN511842 1-RIVERSIDE STATION #1
FDNS	00NR_G15_082	0	25SP	G15_082	FROM->TO	POTTER COUNTY INTERCHANGE (WAUK 90343-A) 345/230/13.2KV TRANSFORMER CKT 1	560	560	0.07935	99.6	GEN511843 1-RIVERSIDE STATION #2
FDNS	00NR_G15_082	0	25SP	G15_082	FROM->TO	POTTER COUNTY INTERCHANGE (WAUK 90343-A) 345/230/13.2KV TRANSFORMER CKT 1	560	560	0.07935	99.6	GEN563173 1-G15082_3 0.6900
FDNS	00NR_G15_082	0	25SP	G15_082	FROM->TO	POTTER COUNTY INTERCHANGE (WAUK 90343-A) 345/230/13.2KV TRANSFORMER CKT 1	560	560	0.07935	99.6	GEN590011 2-ERCOT EQUIVALENCE
FDNS	00NR_G15_082	0	25SP	G15_082	FROM->TO	POTTER COUNTY INTERCHANGE (WAUK 90343-A) 345/230/13.2KV TRANSFORMER CKT 1	560	560	0.08149	99.5	MINGO - RED WILLOW 345KV CKT 1
FDNS	00NR_G15_082	0	25SP	G15_082	FROM->TO	POTTER COUNTY INTERCHANGE (WAUK 90343-A) 345/230/13.2KV TRANSFORMER CKT 1	560	560	0.08149	99.5	MINGO - RED WILLOW 345KV CKT 1
FDNS	00NR_G15_082	0	25SP	G15_082	FROM->TO	POTTER COUNTY INTERCHANGE (WAUK 90343-A) 345/230/13.2KV TRANSFORMER CKT 1	560	560	0.07935	99.5	GEN541151 3-SIBLEY GENERATING UNIT #3
FDNS	00NR_G15_082	0	25SP	G15_082	TO->FROM	TUCO INTERCHANGE - TUCO_2 230.00 230KV CKT 1	318.7	350.57	0.03331	137.3729	TUCO INTERCHANGE - TUCO_2 345.00 345KV CKT 1
FDNS	02ALL_G15_082	2	25SP	G15_082	FROM->TO	POTTER COUNTY INTERCHANGE (WAUK 90343-A) 345/230/13.2KV TRANSFORMER CKT 1	560	560	0.08476	111.5104	BASE CASE
FDNS	02ALL_G15_082	2	25SP	G15_082	FROM->TO	POTTER COUNTY INTERCHANGE (WAUK 90343-A) 345/230/13.2KV TRANSFORMER CKT 1	560	560	0.08476	111.5104	BASE CASE
FDNS	02ALL_G15_082	2	25SP	G15_082	FROM->TO	POTTER COUNTY INTERCHANGE (WAUK 90343-A) 345/230/13.2KV TRANSFORMER CKT 1	560	560	0.08476	109.2265	BASE CASE
FDNS	02ALL_G15_082	2	25SP	G15_082	FROM->TO	POTTER COUNTY INTERCHANGE (WAUK 90343-A) 345/230/13.2KV TRANSFORMER CKT 1	560	560	0.08476	109.2265	BASE CASE
FDNS	00NR_G15_084	0	25SP	G15_084	FROM->TO	BOWERS INTERCHANGE (NA 70456-A) 115/69/13.2KV TRANSFORMER CKT 1	84	84	0.03484	103.1001	BOWERS INTERCHANGE (NEEDS_UPDATE) 115/69/13.2KV TRANSFORMER CKT 2
FDNS	00NR_G15_084	0	25SP	G15_084	FROM->TO	BOWERS INTERCHANGE (NA 70456-A) 115/69/13.2KV TRANSFORMER CKT 1	84	84	0.03484	103.1001	BOWERS INTERCHANGE (NEEDS_UPDATE) 115/69/13.2KV TRANSFORMER CKT 2
FDNS	00NR_G15_084	0	25SP	G15_084	FROM->TO	BOWERS INTERCHANGE (NA 70456-A) 115/69/13.2KV TRANSFORMER CKT 1	84	84	0.03484	103.0804	BOWERS INTERCHANGE (NEEDS_UPDATE) 115/69/13.2KV TRANSFORMER CKT 2
FDNS	00NR_G15_084	0	25SP	G15_084	FROM->TO	BOWERS INTERCHANGE (NA 70456-A) 115/69/13.2KV TRANSFORMER CKT 1	84	84	0.03484	103.0804	BOWERS INTERCHANGE (NEEDS_UPDATE) 115/69/13.2KV TRANSFORMER CKT 2
FDNS	00NR_G15_084	0	25SP	G15_084	FROM->TO	BOWERS INTERCHANGE (NEEDS_UPDATE) 115/69/13.2KV TRANSFORMER CKT 2	84	84	0.03485	103.1336	BOWERS INTERCHANGE (NA 70456-A) 115/69/13.2KV TRANSFORMER CKT 1
FDNS	00NR_G15_084	0	25SP	G15_084	FROM->TO	BOWERS INTERCHANGE (NEEDS_UPDATE) 115/69/13.2KV TRANSFORMER CKT 2	84	84	0.03485	103.1336	BOWERS INTERCHANGE (NA 70456-A) 115/69/13.2KV TRANSFORMER CKT 1
FDNS	00NR_G15_084	0	25SP	G15_084	FROM->TO	BOWERS INTERCHANGE (NEEDS_UPDATE) 115/69/13.2KV TRANSFORMER CKT 2	84	84	0.03485	103.1171	BOWERS INTERCHANGE (NA 70456-A) 115/69/13.2KV TRANSFORMER CKT 1
FDNS	00NR_G15_084	0	25SP	G15_084	FROM->TO	BOWERS INTERCHANGE (NEEDS_UPDATE) 115/69/13.2KV TRANSFORMER CKT 2	84	84	0.03485	103.1171	BOWERS INTERCHANGE (NA 70456-A) 115/69/13.2KV TRANSFORMER CKT 1
FDNS	00NR_G15_084	0	20SP	G15_084	TO->FROM	OMPA-MANGUM - RUSSELL 69KV CKT 1	48	48	0.04221	102.1024	ELK CITY (ELKCTY-4) 138/69/13.8KV TRANSFORMER CKT 1
FDNS	00NR_G15_084	0	20SP	G15_084	TO->FROM	OMPA-MANGUM - RUSSELL 69KV CKT 1	48	48	0.04221	102.1024	ELK CITY (ELKCTY-4) 138/69/13.8KV TRANSFORMER CKT 1
FDNSLock-Blown up	07NR_G15_085	0	20L	G15_085		Non-Converged Contingency	63	69	0.06533	-	LAKE PAULINE (LAKEPAUL) 138/69/14.4KV TRANSFORMER CKT 1
FDNSLock-Blown up	07NR_G15_085	0	20L	G15_085		Non-Converged Contingency	63	69	0.06533	-	LAKE PAULINE (LAKEPAUL) 138/69/14.4KV TRANSFORMER CKT 1
FDNSLock-Blown up	07ALL_G15_085	0	25SP	G15_085		Non-Converged Contingency	956	1042	0.04246	-	GEN525562 1-TOLK GEN #2 24 KV
FDNSLock-Blown up	07ALL_G15_085	2	25SP	G15_085		Non-Converged Contingency	956	1042	0.04816	-	GEN525562 1-TOLK GEN #2 24 KV
FDNS	07NR_G15_085	0	20L	G15_085	FROM->TO	ELDORADO - ELDORADO JCT 69KV CKT 1	22	27	0.42736	176.4216	G15085_T 138.00 - RUSSELL 138KV CKT 1
FDNS	07NR_G15_085	0	17G	G15_085	FROM->TO	ELDORADO - ELDORADO JCT 69KV CKT 1	22	27	0.42998	169.0635	G15085_T 138.00 - RUSSELL 138KV CKT 1
FDNS	07ALL_G15_085	0	20L	G15_085	FROM->TO	ELDORADO - ELDORADO JCT 69KV CKT 1	22	27	0.4251	168.5773	G15085_T 138.00 - RUSSELL 138KV CKT 1
FDNS	00NR_G15_085	0	16WP	G15_085	FROM->TO	ELDORADO - ELDORADO JCT 69KV CKT 1	29	32	0.42998	165.989	G15085_T 138.00 - RUSSELL 138KV CKT 1
FDNS	00NR_G15_085	0	20WP	G15_085	FROM->TO	ELDORADO - ELDORADO JCT 69KV CKT 1	29	32	0.42766	162.4346	G15085_T 138.00 - RUSSELL 138KV CKT 1
FDNS	07ALL_G15_085	0	17G	G15_085	FROM->TO	ELDORADO - ELDORADO JCT 69KV CKT 1	22	27	0.42796	161.8063	G15085_T 138.00 - RUSSELL 138KV CKT 1
FDNS	00NR_G15_085	0	20SP	G15_085	FROM->TO	ELDORADO - ELDORADO JCT 69KV CKT 1	22	27	0.42776	145.957	G15085_T 138.00 - RUSSELL 138KV CKT 1
FDNS	00NR_G15_085	0	17SP	G15_085	FROM->TO	ELDORADO - ELDORADO JCT 69KV CKT 1	22	27	0.4301	145.9187	G15085_T 138.00 - RUSSELL 138KV CKT 1
FDNS	07ALL_G15_085	0	20WP	G15_085	FROM->TO	ELDORADO - ELDORADO JCT 69KV CKT 1	29	32	0.42567	140.3419	G15085_T 138.00 - RUSSELL 138KV CKT 1
FDNS	07ALL_G15_085	0	16WP	G15_085	FROM->TO	ELDORADO - ELDORADO JCT 69KV CKT 1	29	32	0.42802	140.2095	G15085_T 138.00 - RUSSELL 138KV CKT 1
FDNS	07ALL_G15_085	0	17SP	G15_085	FROM->TO	ELDORADO - ELDORADO JCT 69KV CKT 1	22	27	0.42803	131.9226	G15085_T 138.00 - RUSSELL 138KV CKT 1
FDNS	07ALL_G15_085	0	20SP	G15_085	FROM->TO	ELDORADO - ELDORADO JCT 69KV CKT 1	22	27	0.42585	124.7767	G15085_T 138.00 - RUSSELL 138KV CKT 1
FDNSLock	00NR_G15_085	0	25SP	G15_085	TO->FROM	ELDORADO - ELDORADO JCT 69KV CKT 1	22	27	0.03499	106.314	G15085_T 138.00 - LAKE PAULINE 138KV CKT 1
FDNS	00NR_G15_085	0	16WP	G15_085	TO->FROM	ELDORADO - LAKE PAULINE 69KV CKT 1	26	33	0.42998	164.9375	G15085_T 138.00 - RUSSELL 138KV CKT 1
FDNS	00NR_G15_085	0	20WP	G15_085	TO->FROM	ELDORADO - LAKE PAULINE 69KV CKT 1	26	33	0.42766	161.4964	G15085_T 138.00 - RUSSELL 138KV CKT 1
FDNS	07NR_G15_085	0	20L	G15_085	TO->FROM	ELDORADO - LAKE PAULINE 69KV CKT 1	26	33	0.42736	146.375	G15085_T 138.00 - RUSSELL 138KV CKT 1
FDNS	07NR_G15_085	0	17G	G15_085	TO->FROM	ELDORADO - LAKE PAULINE 69KV CKT 1	26	33	0.42998	141.478	G15085_T 138.00 - RUSSELL 138KV CKT 1
FDNS	07ALL_G15_085	0	20WP	G15_085	TO->FROM	ELDORADO - LAKE PAULINE 69KV CKT 1	26	33	0.42567	140.0854	G15085_T 138.00 - RUSSELL 138KV CKT 1
FDNS	07ALL_G15_085	0	16WP	G15_085	TO->FROM	ELDORADO - LAKE PAULINE 69KV CKT 1	26	33	0.42802	140.0758	G15085_T 138.00 - RUSSELL 138KV CKT 1
FDNS	07ALL_G15_085	0	20L	G15_085	TO->FROM	ELDORADO - LAKE PAULINE 69KV CKT 1	26	33	0.4251	139.9835	G15085_T 138.00 - RUSSELL 138KV CKT 1
FDNS	07ALL_G15_085	0	17G	G15_085	TO->FROM	ELDORADO - LAKE PAULINE 69KV CKT 1	26	33	0.42796	135.5694	G15085_T 138.00 - RUSSELL 138KV CKT 1
FDNS	00NR_G15_085	0	20SP	G15_085	TO->FROM	ELDORADO - LAKE PAULINE 69KV CKT 1	26	33	0.42776	126.5979	G15085_T 138.00 - RUSSELL 138KV CKT 1
FDNS	00NR_G15_085	0	17SP	G15_085	TO->FROM	ELDORADO - LAKE PAULINE 69KV CKT 1	26	33	0.4301	125.8768	G15085_T 138.00 - RUSSELL 138KV CKT 1
FDNS	07ALL_G15_085	0	17SP	G15_085	TO->FROM	ELDORADO - LAKE PAULINE 69KV CKT 1	26	33	0.42803	114.8098	G15085_T 138.00 - RUSSELL 138KV CKT 1
FDNS	07ALL_G15_085	0	20SP	G15_085	TO->FROM	ELDORADO - LAKE PAULINE 69KV CKT 1	26	33	0.42585	109.668	G15085_T 138.00 - RUSSELL 138KV CKT 1
FDNS	07NR_G15_085	0	20L	G15_085	FROM->TO	ELDORADO JCT - GYPSUM 69KV CKT 1	22	27	0.42736	172.8684	G15085_T 138.00 - RUSSELL 138KV CKT 1
FDNS	07ALL_G15_085	0	20L	G15_085	FROM->TO	ELDORADO JCT - GYPSUM 69KV CKT 1	22	27	0.4251	164.9071	G15085_T 138.00 - RUSSELL 138KV CKT 1
FDNS	07NR_G15_085	0	17G	G15_085	FROM->TO	ELDORADO JCT - GYPSUM 69KV CKT 1	22	27	0.42998	163.8443	G15085_T 138.00 - RUSSELL 138KV CKT 1
FDNS	00NR_G15_085	0	16WP	G15_085	FROM->TO	ELDORADO JCT - GYPSUM 69KV CKT 1	29	32	0.42998	161.9828	G15085_T 138.00 - RUSSELL 138KV CKT 1
FDNS	00NR_G15_085	0	20WP	G15_085	FROM->TO	ELDORADO JCT - GYPSUM 69KV CKT 1	29	32	0.42766	158.3889	G15085_T 138.00 - RUSSELL 138KV CKT 1
FDNS	07ALL_G15_085	0	17G	G15_085	FROM->TO	ELDORADO JCT - GYPSUM 69KV CKT 1	22	27	0.42796	156.4931	G15085_T 138.00 - RUSSELL 138KV CKT 1
FDNS	00NR_G15_085	0	17SP	G15_085	FROM->TO	ELDORADO JCT - GYPSUM 69KV CKT 1	22	27	0.4301	136.9723	G15085_T 138.00 - RUSSELL 138KV CKT 1
FDNS	07ALL_G15_085	0	20WP	G15_085	FROM->TO	ELDORADO JCT - GYPSUM 69KV CKT 1	29	32	0.42567	136.1776	G15085_T 138.00 - RUSSELL 138KV CKT 1
FDNS	00NR_G15_085	0	20SP	G15_085	FROM->TO	ELDORADO JCT - GYPSUM 69KV CKT 1	22	27	0.42776	136.1157	G15085_T 138.00 - RUSSELL 138KV CKT 1
FDNS	07ALL_G15_085	0	16WP	G15_085	FROM->TO	ELDORADO JCT - GYPSUM 69KV CKT 1	29	32	0.42802	136.0214	G15085_T 138.00 - RUSSELL 138KV CKT 1
FDNS	07ALL_G15_085	0	17SP	G15_085	FROM->TO	ELDORADO JCT - GYPSUM 69KV CKT 1	22	27	0.42803	121.6797	G15085_T 138.00 - RUSSELL 138KV CKT 1
FDNSLock	00NR_G15_085	0	25SP	G15_085	TO->FROM	ELDORADO JCT - GYPSUM 69KV CKT 1	22	27	0.03499	119.8104	G15085_T 138.00 - LAKE PAULINE 138KV CKT 1
FDNS	07ALL_G15_085	0	20SP	G15_085	FROM->TO	ELDORADO JCT - GYPSUM 69KV CKT 1	22	27	0.42585	113.539	G15085_T 138.00 - RUSSELL 138KV CKT 1
FDNS	00NR_G15_085	0	20SP	G15_085	FROM->TO	G15085_T 138.00 - LAKE PAULINE 138KV CKT 1	108	118	1	101.9777	G15085_T 138.00 - RUSSELL 138KV CKT 1
FDNS	00NR_G15_085	0	17SP	G15_085	FROM->TO	G15085_T 138.00 - LAKE PAULINE 138KV CKT 1	108	118	1	101.9712	G15085_T 138.00 - RUSSELL 138KV CKT 1
FDNS	00NR_G15_085	0	25SP	G15_085	FROM->TO	G15085_T 138.00 - LAKE PAULINE 138KV CKT 1	108	118	1	101.9626	G15085_T 138.00 - RUSSELL 138KV CKT 1
FDNS	07ALL_G15_085	0	25SP	G15_085	FROM->TO	G15085_T 138.00 - LAKE PAULINE 138KV CKT 1	108	118	1	101.8173	G15085_T 138.00 - RUSSELL 138KV CKT 1

SOLUTION	GROUP	SCENARIO	SEASON	SOURCE	DIRECTION	MONITORED ELEMENT	RATEA (MVA)	RATEB(MVA)	TDF	TC%LOADING (% MVA)	CONTINGENCY
FDNS	07ALL_G15_085	0	17G	G15_085	FROM->TO	G15085_T 138.00 - LAKE PAULINE 138KV CKT 1	108	118	1	101.8018	G15085_T 138.00 - RUSSELL 138KV CKT 1
FDNS	07ALL_G15_085	0	20L	G15_085	FROM->TO	G15085_T 138.00 - LAKE PAULINE 138KV CKT 1	108	118	1	101.7986	G15085_T 138.00 - RUSSELL 138KV CKT 1
FDNS	07ALL_G15_085	0	16WP	G15_085	FROM->TO	G15085_T 138.00 - LAKE PAULINE 138KV CKT 1	108	118	1	101.7753	G15085_T 138.00 - RUSSELL 138KV CKT 1
FDNS	07NR_G15_085	0	20L	G15_085	FROM->TO	G15085_T 138.00 - LAKE PAULINE 138KV CKT 1	108	118	1	101.7705	G15085_T 138.00 - RUSSELL 138KV CKT 1
FDNS	07NR_G15_085	0	17G	G15_085	FROM->TO	G15085_T 138.00 - LAKE PAULINE 138KV CKT 1	108	118	1	101.7588	G15085_T 138.00 - RUSSELL 138KV CKT 1
FDNS	07ALL_G15_085	0	20SP	G15_085	FROM->TO	G15085_T 138.00 - LAKE PAULINE 138KV CKT 1	108	118	1	101.7357	G15085_T 138.00 - RUSSELL 138KV CKT 1
FDNS	07ALL_G15_085	0	17SP	G15_085	FROM->TO	G15085_T 138.00 - LAKE PAULINE 138KV CKT 1	108	118	1	101.7346	G15085_T 138.00 - RUSSELL 138KV CKT 1
FDNS	00NR_G15_085	0	16WP	G15_085	FROM->TO	G15085_T 138.00 - LAKE PAULINE 138KV CKT 1	108	118	1	101.7294	G15085_T 138.00 - RUSSELL 138KV CKT 1
FDNS	07ALL_G15_085	0	20WP	G15_085	FROM->TO	G15085_T 138.00 - LAKE PAULINE 138KV CKT 1	108	118	1	101.7244	G15085_T 138.00 - RUSSELL 138KV CKT 1
FDNS	00NR_G15_085	0	20WP	G15_085	FROM->TO	G15085_T 138.00 - LAKE PAULINE 138KV CKT 1	108	118	1	101.7134	G15085_T 138.00 - RUSSELL 138KV CKT 1
FDNS	07NR_G15_085	0	20L	G15_085	FROM->TO	G15085_T 138.00 - RUSSELL 138KV CKT 1	108	118	0.78331	103.7315	CHISHOLM6 230.00 - SWEETWATER 230KV CKT 1
FDNS	07NR_G15_085	0	20L	G15_085	FROM->TO	G15085_T 138.00 - RUSSELL 138KV CKT 1	108	118	0.78197	103.038	P12:230:AEPW:ELKCITY6:SWEETWT6
FDNSLock	00NR_G15_085	0	25SP	G15_085	FROM->TO	G15085_T 138.00 - RUSSELL 138KV CKT 1	108	118	1	102.2794	G15085_T 138.00 - LAKE PAULINE 138KV CKT 1
FDNS	07ALL_G15_085	0	25SP	G15_085	FROM->TO	G15085_T 138.00 - RUSSELL 138KV CKT 1	108	118	1	102.2514	G15085_T 138.00 - LAKE PAULINE 138KV CKT 1
FDNS	07ALL_G15_085	0	17G	G15_085	FROM->TO	G15085_T 138.00 - RUSSELL 138KV CKT 1	108	118	1	102.215	G15085_T 138.00 - LAKE PAULINE 138KV CKT 1
FDNS	07ALL_G15_085	0	20SP	G15_085	FROM->TO	G15085_T 138.00 - RUSSELL 138KV CKT 1	108	118	1	102.1777	G15085_T 138.00 - LAKE PAULINE 138KV CKT 1
FDNS	07ALL_G15_085	0	17SP	G15_085	FROM->TO	G15085_T 138.00 - RUSSELL 138KV CKT 1	108	118	1	102.1531	G15085_T 138.00 - LAKE PAULINE 138KV CKT 1
FDNS	07ALL_G15_085	0	20L	G15_085	FROM->TO	G15085_T 138.00 - RUSSELL 138KV CKT 1	108	118	0.77781	102.1506	CHISHOLM6 230.00 - SWEETWATER 230KV CKT 1
FDNS	07ALL_G15_085	0	20L	G15_085	FROM->TO	G15085_T 138.00 - RUSSELL 138KV CKT 1	108	118	1	102.0841	G15085_T 138.00 - LAKE PAULINE 138KV CKT 1
FDNS	07ALL_G15_085	0	16WP	G15_085	FROM->TO	G15085_T 138.00 - RUSSELL 138KV CKT 1	108	118	1	102.0789	G15085_T 138.00 - LAKE PAULINE 138KV CKT 1
FDNS	07ALL_G15_085	0	20WP	G15_085	FROM->TO	G15085_T 138.00 - RUSSELL 138KV CKT 1	108	118	1	102.0221	G15085_T 138.00 - LAKE PAULINE 138KV CKT 1
FDNS	07NR_G15_085	0	17G	G15_085	FROM->TO	G15085_T 138.00 - RUSSELL 138KV CKT 1	108	118	1	102.0007	G15085_T 138.00 - LAKE PAULINE 138KV CKT 1
FDNSLock	00NR_G15_085	0	17SP	G15_085	FROM->TO	G15085_T 138.00 - RUSSELL 138KV CKT 1	108	118	1	101.9378	G15085_T 138.00 - LAKE PAULINE 138KV CKT 1
FDNS	00NR_G15_085	0	20SP	G15_085	FROM->TO	G15085_T 138.00 - RUSSELL 138KV CKT 1	108	118	1	101.9267	G15085_T 138.00 - LAKE PAULINE 138KV CKT 1
FDNS	07NR_G15_085	0	20L	G15_085	FROM->TO	G15085_T 138.00 - RUSSELL 138KV CKT 1	108	118	1	101.9259	G15085_T 138.00 - LAKE PAULINE 138KV CKT 1
FDNS	00NR_G15_085	0	16WP	G15_085	FROM->TO	G15085_T 138.00 - RUSSELL 138KV CKT 1	108	118	1	101.8078	G15085_T 138.00 - LAKE PAULINE 138KV CKT 1
FDNS	00NR_G15_085	0	20WP	G15_085	FROM->TO	G15085_T 138.00 - RUSSELL 138KV CKT 1	108	118	1	101.8074	G15085_T 138.00 - LAKE PAULINE 138KV CKT 1
FDNS	00NR_G15_085	0	20WP	G15_085	FROM->TO	G15085_T 138.00 - RUSSELL 138KV CKT 1	108	118	0.78259	101.436	P12:230:AEPW:ELKCITY6:SWEETWT6
FDNS	07ALL_G15_085	0	20L	G15_085	FROM->TO	G15085_T 138.00 - RUSSELL 138KV CKT 1	108	118	0.77652	101.2144	P12:230:AEPW:ELKCITY6:SWEETWT6
FDNS	00NR_G15_085	0	20WP	G15_085	FROM->TO	G15085_T 138.00 - RUSSELL 138KV CKT 1	108	118	0.78392	101.036	CHISHOLM6 230.00 - SWEETWATER 230KV CKT 1
FDNS	00NR_G15_085	0	16WP	G15_085	FROM->TO	G15085_T 138.00 - RUSSELL 138KV CKT 1	108	118	0.78445	100.8889	LAWTON EASTSIDE - OKLAUNION 345KV CKT 1
FDNS	00NR_G15_085	0	16WP	G15_085	FROM->TO	G15085_T 138.00 - RUSSELL 138KV CKT 1	108	118	0.78445	100.8889	LAWTON EASTSIDE - OKLAUNION 345KV CKT 1
FDNS	07ALL_G15_085	0	20WP	G15_085	FROM->TO	G15085_T 138.00 - RUSSELL 138KV CKT 1	108	118	0.77915	100.2376	CHISHOLM6 230.00 - SWEETWATER 230KV CKT 1
FDNS	00NR_G15_085	0	16WP	G15_085	FROM->TO	G15085_T 138.00 - RUSSELL 138KV CKT 1	108	118	0.78153	100.2049	ELK CITY 230KV (ELKCTY-6) 230/138/13.8KV TRANSFORMER CKT 1
FDNS	00NR_G15_085	0	16WP	G15_085	FROM->TO	G15085_T 138.00 - RUSSELL 138KV CKT 1	108	118	0.78153	100.2049	ELK CITY 230KV (ELKCTY-6) 230/138/13.8KV TRANSFORMER CKT 1
FDNS	00NR_G15_085	0	16WP	G15_085	FROM->TO	G15085_T 138.00 - RUSSELL 138KV CKT 1	108	118	0.78153	100.2012	ELK CITY 230KV - SWEETWATER 230KV CKT 1
FDNS	07NR_G15_085	0	20L	G15_085	FROM->TO	GYPSUM - RUSSELL 69KV CKT 1	22	27	0.42736	168.1588	G15085_T 138.00 - RUSSELL 138KV CKT 1
FDNS	07ALL_G15_085	0	20L	G15_085	FROM->TO	GYPSUM - RUSSELL 69KV CKT 1	22	27	0.4251	160.1763	G15085_T 138.00 - RUSSELL 138KV CKT 1
FDNS	07NR_G15_085	0	17G	G15_085	FROM->TO	GYPSUM - RUSSELL 69KV CKT 1	22	27	0.42998	156.2864	G15085_T 138.00 - RUSSELL 138KV CKT 1
FDNS	00NR_G15_085	0	16WP	G15_085	FROM->TO	GYPSUM - RUSSELL 69KV CKT 1	29	32	0.42998	155.8967	G15085_T 138.00 - RUSSELL 138KV CKT 1
FDNS	00NR_G15_085	0	20WP	G15_085	FROM->TO	GYPSUM - RUSSELL 69KV CKT 1	29	32	0.42766	152.1898	G15085_T 138.00 - RUSSELL 138KV CKT 1
FDNS	07ALL_G15_085	0	17G	G15_085	FROM->TO	GYPSUM - RUSSELL 69KV CKT 1	22	27	0.42796	148.8019	G15085_T 138.00 - RUSSELL 138KV CKT 1
FDNSLock	00NR_G15_085	0	25SP	G15_085	TO->FROM	GYPSUM - RUSSELL 69KV CKT 1	22	27	0.03499	137.2939	G15085_T 138.00 - LAKE PAULINE 138KV CKT 1
FDNS	00NR_G15_085	0	17SP	G15_085	FROM->TO	GYPSUM - RUSSELL 69KV CKT 1	22	27	0.4301	130.3385	G15085_T 138.00 - RUSSELL 138KV CKT 1
FDNS	07ALL_G15_085	0	20WP	G15_085	FROM->TO	GYPSUM - RUSSELL 69KV CKT 1	29	32	0.42567	129.7151	G15085_T 138.00 - RUSSELL 138KV CKT 1
FDNS	07ALL_G15_085	0	16WP	G15_085	FROM->TO	GYPSUM - RUSSELL 69KV CKT 1	29	32	0.42802	129.5761	G15085_T 138.00 - RUSSELL 138KV CKT 1
FDNS	00NR_G15_085	0	20SP	G15_085	FROM->TO	GYPSUM - RUSSELL 69KV CKT 1	22	27	0.42776	128.9934	G15085_T 138.00 - RUSSELL 138KV CKT 1
FDNS	07ALL_G15_085	0	17SP	G15_085	FROM->TO	GYPSUM - RUSSELL 69KV CKT 1	22	27	0.42803	113.4666	G15085_T 138.00 - RUSSELL 138KV CKT 1
FDNS	07ALL_G15_085	0	20SP	G15_085	FROM->TO	GYPSUM - RUSSELL 69KV CKT 1	22	27	0.42585	104.9438	G15085_T 138.00 - RUSSELL 138KV CKT 1
FDNS	00NR_G15_085	0	20SP	G15_085	TO->FROM	OMPA-MANGUM - RUSSELL 69KV CKT 1	48	48	0.05014	105.5895	ELK CITY (ELKCTY-4) 138/69/13.8KV TRANSFORMER CKT 1
FDNS	00NR_G15_085	0	20SP	G15_085	TO->FROM	OMPA-MANGUM - RUSSELL 69KV CKT 1	48	48	0.05014	105.5895	ELK CITY (ELKCTY-4) 138/69/13.8KV TRANSFORMER CKT 1
FDNS	00NR_G15_085	2	25SP	G15_085	TO->FROM	ELDORADO - ELDORADO JCT 69KV CKT 1	22	27	0.03136	104.9102	G15085_T 138.00 - LAKE PAULINE 138KV CKT 1
FDNS	00NR_G15_085	2	25SP	G15_085	TO->FROM	ELDORADO - ELDORADO JCT 69KV CKT 1	22	27	0.03136	104.9102	G15085_T 138.00 - LAKE PAULINE 138KV CKT 1
FDNS	00NR_G15_085	2	25SP	G15_085	TO->FROM	ELDORADO JCT - GYPSUM 69KV CKT 1	22	27	0.03136	118.3639	G15085_T 138.00 - LAKE PAULINE 138KV CKT 1
FDNS	00NR_G15_085	2	25SP	G15_085	TO->FROM	ELDORADO JCT - GYPSUM 69KV CKT 1	22	27	0.03136	118.3639	G15085_T 138.00 - LAKE PAULINE 138KV CKT 1
FDNS	00NR_G15_085	2	25SP	G15_085	TO->FROM	GYPSUM - RUSSELL 69KV CKT 1	22	27	0.03136	135.8048	G15085_T 138.00 - LAKE PAULINE 138KV CKT 1
FDNS	00NR_G15_085	2	25SP	G15_085	TO->FROM	GYPSUM - RUSSELL 69KV CKT 1	22	27	0.03136	135.8048	G15085_T 138.00 - LAKE PAULINE 138KV CKT 1
FDNS	00NR_G15_085	2	20SP	G15_085	TO->FROM	OMPA-MANGUM - RUSSELL 69KV CKT 1	48	48	0.04423	105.3763	ELK CITY (ELKCTY-4) 138/69/13.8KV TRANSFORMER CKT 1
FDNS	00NR_G15_085	2	20SP	G15_085	TO->FROM	OMPA-MANGUM - RUSSELL 69KV CKT 1	48	48	0.04423	105.3763	ELK CITY (ELKCTY-4) 138/69/13.8KV TRANSFORMER CKT 1
FDNS	00NR_G15_085	2	20SP	G15_085	TO->FROM	OMPA-MANGUM - RUSSELL 69KV CKT 1	48	48	0.04423	105.3763	ELK CITY (ELKCTY-4) 138/69/13.8KV TRANSFORMER CKT 1
FDNS	00NR_G15_085	2	20SP	G15_085	TO->FROM	OMPA-MANGUM - RUSSELL 69KV CKT 1	48	48	0.04423	105.3763	ELK CITY (ELKCTY-4) 138/69/13.8KV TRANSFORMER CKT 1
FDNS	08NR_G15_090	0	17G	G15_090	FROM->TO	WICHITA (WICH TX-12) 345/138/13.8KV TRANSFORMER CKT 1	400	430	0.05075	100.1972	WICHITA (WICH TX-11) 345/138/13.8KV TRANSFORMER CKT 1
FDNS	00NR_G15_094	0	25SP	G15_094	TO->FROM	CHAPPEL - COLTON 7 115.00 115KV CKT 1	109	109	0.03247	105.7523	P12:115:TSGT:GRANTNB7-OGALALA7_2
FDNS	00NR_G15_094	0	17SP	G15_094	TO->FROM	CHAPPEL - COLTON 7 115.00 115KV CKT 1	109	109	0.08694	104.5984	SIDNEY - SIDNEY1-LNX3345.00 345KV CKT Z
FDNS	00NR_G15_094	0	17SP	G15_094	TO->FROM	CHAPPEL - COLTON 7 115.00 115KV CKT 1	109	109	0.08694	104.5607	KEYSTONE - SIDNEY1-LNX3345.00 345KV CKT 1
FDNS	00NR_G15_094	0	17SP	G15_094	TO->FROM	CHAPPEL - COLTON 7 115.00 115KV CKT 1	109	109	0.03314	102.4905	P12:115:TSGT:GRANTNB7-OGALALA7_2
FDNS	00NR_G15_094	0	20SP	G15_094	TO->FROM	CHAPPEL - COLTON 7 115.00 115KV CKT 1	109	109	0.03246	101.9536	P12:115:TSGT:GRANTNB7-OGALALA7_2
FDNS	00NR_G15_094	0	25SP	G15_094	TO->FROM	CHAPPEL - COLTON 7 115.00 115KV CKT 1	109	109	0.08845	100	SIDNEY - SIDNEY1-LNX3345.00 345KV CKT Z
FDNS	00NR_G15_094	0	25SP	G15_094	TO->FROM	CHAPPEL - COLTON 7 115.00 115KV CKT 1	109	109	0.08845	99.6	KEYSTONE - SIDNEY1-LNX3345.00 345KV CKT 1
FDNS	00NR_G15_094	0	25SP	G15_094	TO->FROM	COLTON 7 115.00 - SIDNEY 115KV CKT 1	109	109	0.03247	108.9001	P12:115:TSGT:GRANTNB7-OGALALA7_2
FDNS	00NR_G15_094	0	17SP	G15_094	TO->FROM	COLTON 7 115.00 - SIDNEY 115KV CKT 1	109	109	0.08694	107.6432	SIDNEY - SIDNEY1-LNX3345.00 345KV CKT Z
FDNS	00NR_G15_094	0	17SP	G15_094	TO->FROM	COLTON 7 115.00 - SIDNEY 115KV CKT 1	109	109	0.08694	107.6023	KEYSTONE - SIDNEY1-LNX3345.00 345KV CKT 1
FDNS	00NR_G15_094	0	17SP	G15_094	TO->FROM	COLTON 7 115.00 - SIDNEY 115KV CKT 1	109	109	0.03314	105.734	P12:115:TSGT:GRANTNB7-OGALALA7_2

SOLUTION	GROUP	SCENARIO	SEASON	SOURCE	DIRECTION	MONITORED ELEMENT	RATEA (MVA)	RATEB(MVA)	TDF	TC%LOADING (% MVA)	CONTINGENCY
FDNS	00NR_G15_094	0	20SP	G15_094	TO->FROM	COLTON 7 115.00 - SIDNEY 115KV CKT 1	109	109	0.03246	105.1382	P12:115:TSGT:GRANTNB7-OGALALA7_2
FDNS	00NR_G15_094	0	25SP	G15_094	TO->FROM	COLTON 7 115.00 - SIDNEY 115KV CKT 1	109	109	0.08845	102.9318	SIDNEY - SIDNEY1-LNX3345.00 345KV CKT Z
FDNS	00NR_G15_094	0	25SP	G15_094	TO->FROM	COLTON 7 115.00 - SIDNEY 115KV CKT 1	109	109	0.08845	102.5382	KEYSTONE - SIDNEY1-LNX3345.00 345KV CKT 1
FDNS	00NR_G15_094	0	20SP	G15_094	TO->FROM	COLTON 7 115.00 - SIDNEY 115KV CKT 1	109	109	0.08845	101.8953	SIDNEY - SIDNEY1-LNX3345.00 345KV CKT Z
FDNS	00NR_G15_094	0	20SP	G15_094	TO->FROM	COLTON 7 115.00 - SIDNEY 115KV CKT 1	109	109	0.08845	101.8784	KEYSTONE - SIDNEY1-LNX3345.00 345KV CKT 1
FDNS	00NR_G15_094	0	25SP	G15_094	FROM->TO	GGS	1635	1635	0.48867	103.6078	BASE CASE
FDNS	00NR_G15_094	0	17SP	G15_094	TO->FROM	OGALLALA - SIDNEY 230KV CKT 1	320	320	0.44647	136.6224	SIDNEY - SIDNEY1-LNX3345.00 345KV CKT Z
FDNS	00NR_G15_094	0	17SP	G15_094	TO->FROM	OGALLALA - SIDNEY 230KV CKT 1	320	320	0.44647	136.541	KEYSTONE - SIDNEY1-LNX3345.00 345KV CKT 1
FDNS	00NR_G15_094	0	20SP	G15_094	TO->FROM	OGALLALA - SIDNEY 230KV CKT 1	320	320	0.45526	125.2951	SIDNEY - SIDNEY1-LNX3345.00 345KV CKT Z
FDNS	00NR_G15_094	0	20SP	G15_094	TO->FROM	OGALLALA - SIDNEY 230KV CKT 1	320	320	0.45526	125.2899	KEYSTONE - SIDNEY1-LNX3345.00 345KV CKT 1
FDNS	00NR_G15_094	0	25SP	G15_094	TO->FROM	OGALLALA - SIDNEY 230KV CKT 1	320	320	0.45523	124.2797	SIDNEY - SIDNEY1-LNX3345.00 345KV CKT Z
FDNS	00NR_G15_094	0	25SP	G15_094	TO->FROM	OGALLALA - SIDNEY 230KV CKT 1	320	320	0.45523	124.2134	KEYSTONE - SIDNEY1-LNX3345.00 345KV CKT 1
FDNS	00NR_G15_094	0	16WP	G15_094	TO->FROM	OGALLALA - SIDNEY 230KV CKT 1	320	320	0.45266	121.7171	SIDNEY - SIDNEY1-LNX3345.00 345KV CKT Z
FDNS	00NR_G15_094	0	16WP	G15_094	TO->FROM	OGALLALA - SIDNEY 230KV CKT 1	320	320	0.45266	121.6615	KEYSTONE - SIDNEY1-LNX3345.00 345KV CKT 1
FDNSLock	09ALL_G15_094	0	17G	G15_094	TO->FROM	OGALLALA - SIDNEY 230KV CKT 1	320	320	0.53805	117.1414	KEYSTONE - SIDNEY1-LNX3345.00 345KV CKT 1
FDNSLock	00NR_G15_094	0	20WP	G15_094	TO->FROM	OGALLALA - SIDNEY 230KV CKT 1	320	320	0.45341	113.5839	SIDNEY - SIDNEY1-LNX3345.00 345KV CKT Z
FDNSLock	00NR_G15_094	0	20WP	G15_094	TO->FROM	OGALLALA - SIDNEY 230KV CKT 1	320	320	0.45341	113.573	KEYSTONE - SIDNEY1-LNX3345.00 345KV CKT 1
FDNS	09ALL_G15_094	0	17SP	G15_094	TO->FROM	OGALLALA - SIDNEY 230KV CKT 1	320	320	0.53334	111.9361	SIDNEY - SIDNEY1-LNX3345.00 345KV CKT Z
FDNS	09ALL_G15_094	0	17SP	G15_094	TO->FROM	OGALLALA - SIDNEY 230KV CKT 1	320	320	0.53334	111.9346	KEYSTONE - SIDNEY1-LNX3345.00 345KV CKT 1
FDNSLock	09ALL_G15_094	0	16WP	G15_094	TO->FROM	OGALLALA - SIDNEY 230KV CKT 1	320	320	0.53821	109.3027	KEYSTONE - SIDNEY1-LNX3345.00 345KV CKT 1
FDNSLock	09ALL_G15_094	0	16WP	G15_094	TO->FROM	OGALLALA - SIDNEY 230KV CKT 1	320	320	0.53821	109.2923	SIDNEY - SIDNEY1-LNX3345.00 345KV CKT Z
FDNS	09ALL_G15_094	0	25SP	G15_094	TO->FROM	OGALLALA - SIDNEY 230KV CKT 1	320	320	0.53626	106.5256	KEYSTONE - SIDNEY1-LNX3345.00 345KV CKT 1
FDNS	09ALL_G15_094	0	25SP	G15_094	TO->FROM	OGALLALA - SIDNEY 230KV CKT 1	320	320	0.53626	106.5222	SIDNEY - SIDNEY1-LNX3345.00 345KV CKT Z
FDNS	09ALL_G15_094	0	20SP	G15_094	TO->FROM	OGALLALA - SIDNEY 230KV CKT 1	320	320	0.53609	105.3298	KEYSTONE - SIDNEY1-LNX3345.00 345KV CKT 1
FDNS	09ALL_G15_094	0	20SP	G15_094	TO->FROM	OGALLALA - SIDNEY 230KV CKT 1	320	320	0.53609	105.2995	SIDNEY - SIDNEY1-LNX3345.00 345KV CKT Z
FDNS	00NR_G15_094	0	17SP	G15_094	TO->FROM	SIDNEY - SIDNEY TRANSFORMER 230KV CKT 1	400	400	0.53341	134.6278	KEYSTONE - SIDNEY1-LNX3345.00 345KV CKT 1
FDNS	00NR_G15_094	0	17SP	G15_094	TO->FROM	SIDNEY - SIDNEY TRANSFORMER 230KV CKT 1	400	400	0.53341	133.7746	SIDNEY - SIDNEY1-LNX3345.00 345KV CKT Z
FDNS	00NR_G15_094	0	20SP	G15_094	TO->FROM	SIDNEY - SIDNEY TRANSFORMER 230KV CKT 1	400	400	0.54371	124.2415	KEYSTONE - SIDNEY1-LNX3345.00 345KV CKT 1
FDNS	00NR_G15_094	0	20SP	G15_094	TO->FROM	SIDNEY - SIDNEY TRANSFORMER 230KV CKT 1	400	400	0.54371	123.4756	SIDNEY - SIDNEY1-LNX3345.00 345KV CKT Z
FDNS	00NR_G15_094	0	25SP	G15_094	TO->FROM	SIDNEY - SIDNEY TRANSFORMER 230KV CKT 1	400	400	0.54368	123.0043	KEYSTONE - SIDNEY1-LNX3345.00 345KV CKT 1
FDNS	00NR_G15_094	0	25SP	G15_094	TO->FROM	SIDNEY - SIDNEY TRANSFORMER 230KV CKT 1	400	400	0.54368	122.4751	SIDNEY - SIDNEY1-LNX3345.00 345KV CKT Z
FDNS	00NR_G15_094	0	16WP	G15_094	TO->FROM	SIDNEY - SIDNEY TRANSFORMER 230KV CKT 1	400	400	0.54282	117.8776	KEYSTONE - SIDNEY1-LNX3345.00 345KV CKT 1
FDNS	00NR_G15_094	0	16WP	G15_094	TO->FROM	SIDNEY - SIDNEY TRANSFORMER 230KV CKT 1	400	400	0.54282	116.9662	SIDNEY - SIDNEY1-LNX3345.00 345KV CKT Z
FDNSLock	09ALL_G15_094	0	17G	G15_094	TO->FROM	SIDNEY - SIDNEY TRANSFORMER 230KV CKT 1	400	400	0.64324	112.9181	KEYSTONE - SIDNEY1-LNX3345.00 345KV CKT 1
FDNS	09ALL_G15_094	0	17SP	G15_094	TO->FROM	SIDNEY - SIDNEY TRANSFORMER 230KV CKT 1	400	400	0.63541	112.5239	KEYSTONE - SIDNEY1-LNX3345.00 345KV CKT 1
FDNS	09ALL_G15_094	0	17SP	G15_094	TO->FROM	SIDNEY - SIDNEY TRANSFORMER 230KV CKT 1	400	400	0.63541	111.7513	SIDNEY - SIDNEY1-LNX3345.00 345KV CKT Z
FDNSLock	00NR_G15_094	0	20WP	G15_094	TO->FROM	SIDNEY - SIDNEY TRANSFORMER 230KV CKT 1	400	400	0.54152	108.9898	KEYSTONE - SIDNEY1-LNX3345.00 345KV CKT 1
FDNSLock	00NR_G15_094	0	20WP	G15_094	TO->FROM	SIDNEY - SIDNEY TRANSFORMER 230KV CKT 1	400	400	0.54152	108.3256	SIDNEY - SIDNEY1-LNX3345.00 345KV CKT Z
FDNS	09ALL_G15_094	0	25SP	G15_094	TO->FROM	SIDNEY - SIDNEY TRANSFORMER 230KV CKT 1	400	400	0.63881	107.5473	KEYSTONE - SIDNEY1-LNX3345.00 345KV CKT 1
FDNSLock	09ALL_G15_094	0	16WP	G15_094	TO->FROM	SIDNEY - SIDNEY TRANSFORMER 230KV CKT 1	400	400	0.64343	107.2249	KEYSTONE - SIDNEY1-LNX3345.00 345KV CKT 1
FDNS	09ALL_G15_094	0	25SP	G15_094	TO->FROM	SIDNEY - SIDNEY TRANSFORMER 230KV CKT 1	400	400	0.63881	106.7594	SIDNEY - SIDNEY1-LNX3345.00 345KV CKT Z
FDNS	09ALL_G15_094	0	20SP	G15_094	TO->FROM	SIDNEY - SIDNEY TRANSFORMER 230KV CKT 1	400	400	0.6386	106.4131	KEYSTONE - SIDNEY1-LNX3345.00 345KV CKT 1
FDNSLock	09ALL_G15_094	0	16WP	G15_094	TO->FROM	SIDNEY - SIDNEY TRANSFORMER 230KV CKT 1	400	400	0.64343	106.1035	SIDNEY - SIDNEY1-LNX3345.00 345KV CKT Z
FDNS	09ALL_G15_094	0	20SP	G15_094	TO->FROM	SIDNEY - SIDNEY TRANSFORMER 230KV CKT 1	400	400	0.6386	105.6044	SIDNEY - SIDNEY1-LNX3345.00 345KV CKT Z
FDNS	00NR_G15_094	0	25SP	G15_094	FROM->TO	SIDNEY (SD KV1A) 230/115/13.8KV TRANSFORMER CKT 1	112	112	0.03247	108.154	P12:115:TSGT:GRANTNB7-OGALALA7_2
FDNS	00NR_G15_094	0	17SP	G15_094	FROM->TO	SIDNEY (SD KV1A) 230/115/13.8KV TRANSFORMER CKT 1	112	112	0.08694	106.9052	SIDNEY - SIDNEY1-LNX3345.00 345KV CKT Z
FDNS	00NR_G15_094	0	17SP	G15_094	FROM->TO	SIDNEY (SD KV1A) 230/115/13.8KV TRANSFORMER CKT 1	112	112	0.08694	106.8645	KEYSTONE - SIDNEY1-LNX3345.00 345KV CKT 1
FDNS	00NR_G15_094	0	17SP	G15_094	FROM->TO	SIDNEY (SD KV1A) 230/115/13.8KV TRANSFORMER CKT 1	112	112	0.08694	106.4534	SIDNEY - SIDNEY1-LNX3345.00 345KV CKT Z
FDNS	00NR_G15_094	0	17SP	G15_094	FROM->TO	SIDNEY (SD KV1A) 230/115/13.8KV TRANSFORMER CKT 1	112	112	0.08694	106.4394	KEYSTONE - SIDNEY1-LNX3345.00 345KV CKT 1
FDNS	00NR_G15_094	0	25SP	G15_094	FROM->TO	SIDNEY (SD KV1A) 230/115/13.8KV TRANSFORMER CKT 1	112	112	0.03247	105.9658	P12:115:TSGT:GRANTNB7-OGALALA7_2
FDNS	00NR_G15_094	0	17SP	G15_094	FROM->TO	SIDNEY (SD KV1A) 230/115/13.8KV TRANSFORMER CKT 1	112	112	0.03314	105.0021	P12:115:TSGT:GRANTNB7-OGALALA7_2
FDNS	00NR_G15_094	0	20SP	G15_094	FROM->TO	SIDNEY (SD KV1A) 230/115/13.8KV TRANSFORMER CKT 1	112	112	0.03246	104.4177	P12:115:TSGT:GRANTNB7-OGALALA7_2
FDNS	00NR_G15_094	0	17SP	G15_094	FROM->TO	SIDNEY (SD KV1A) 230/115/13.8KV TRANSFORMER CKT 1	112	112	0.03314	102.6485	P12:115:TSGT:GRANTNB7-OGALALA7_2
FDNS	00NR_G15_094	0	20SP	G15_094	FROM->TO	SIDNEY (SD KV1A) 230/115/13.8KV TRANSFORMER CKT 1	112	112	0.03246	102.4058	P12:115:TSGT:GRANTNB7-OGALALA7_2
FDNS	00NR_G15_094	0	25SP	G15_094	FROM->TO	SIDNEY (SD KV1A) 230/115/13.8KV TRANSFORMER CKT 1	112	112	0.08845	102.2257	SIDNEY - SIDNEY1-LNX3345.00 345KV CKT Z
FDNS	00NR_G15_094	0	25SP	G15_094	FROM->TO	SIDNEY (SD KV1A) 230/115/13.8KV TRANSFORMER CKT 1	112	112	0.08845	102.0736	SIDNEY - SIDNEY1-LNX3345.00 345KV CKT Z
FDNS	00NR_G15_094	0	25SP	G15_094	FROM->TO	SIDNEY (SD KV1A) 230/115/13.8KV TRANSFORMER CKT 1	112	112	0.08845	101.8361	KEYSTONE - SIDNEY1-LNX3345.00 345KV CKT 1
FDNS	00NR_G15_094	0	25SP	G15_094	FROM->TO	SIDNEY (SD KV1A) 230/115/13.8KV TRANSFORMER CKT 1	112	112	0.08845	101.5629	KEYSTONE - SIDNEY1-LNX3345.00 345KV CKT 1
FDNS	00NR_G15_094	0	20SP	G15_094	FROM->TO	SIDNEY (SD KV1A) 230/115/13.8KV TRANSFORMER CKT 1	112	112	0.08845	101.1973	SIDNEY - SIDNEY1-LNX3345.00 345KV CKT Z
FDNS	00NR_G15_094	0	20SP	G15_094	FROM->TO	SIDNEY (SD KV1A) 230/115/13.8KV TRANSFORMER CKT 1	112	112	0.08845	101.1807	KEYSTONE - SIDNEY1-LNX3345.00 345KV CKT 1
FDNS	00NR_G15_094	0	20SP	G15_094	FROM->TO	SIDNEY (SD KV1A) 230/115/13.8KV TRANSFORMER CKT 1	112	112	0.08845	100.991	SIDNEY - SIDNEY1-LNX3345.00 345KV CKT Z
FDNS	00NR_G15_094	0	20SP	G15_094	FROM->TO	SIDNEY (SD KV1A) 230/115/13.8KV TRANSFORMER CKT 1	112	112	0.08845	100.9536	KEYSTONE - SIDNEY1-LNX3345.00 345KV CKT 1
FDNS	00NR_G15_094	0	17SP	G15_094	FROM->TO	SIDNEY (SDQ KV2A) 345/230/13.8KV TRANSFORMER CKT 1	400	480	0.53341	114.2424	KEYSTONE - SIDNEY1-LNX3345.00 345KV CKT 1
FDNS	00NR_G15_094	0	17SP	G15_094	FROM->TO	SIDNEY (SDQ KV2A) 345/230/13.8KV TRANSFORMER CKT 1	400	480	0.53341	113.6727	SIDNEY - SIDNEY1-LNX3345.00 345KV CKT Z
FDNS	00NR_G15_094	0	17SP	G15_094	FROM->TO	SIDNEY (SDQ KV2A) 345/230/13.8KV TRANSFORMER CKT 1	400	480	0.53341	113.3298	KEYSTONE - SIDNEY1-LNX3345.00 345KV CKT 1
FDNS	00NR_G15_094	0	17SP	G15_094	FROM->TO	SIDNEY (SDQ KV2A) 345/230/13.8KV TRANSFORMER CKT 1	400	480	0.53341	113.1933	SIDNEY - SIDNEY1-LNX3345.00 345KV CKT Z
FDNS	00NR_G15_094	0	20SP	G15_094	FROM->TO	SIDNEY (SDQ KV2A) 345/230/13.8KV TRANSFORMER CKT 1	400	480	0.54371	105.4854	KEYSTONE - SIDNEY1-LNX3345.00 345KV CKT 1
FDNS	00NR_G15_094	0	20SP	G15_094	FROM->TO	SIDNEY (SDQ KV2A) 345/230/13.8KV TRANSFORMER CKT 1	400	480	0.54371	104.9779	SIDNEY - SIDNEY1-LNX3345.00 345KV CKT Z
FDNS	00NR_G15_094	0	20SP	G15_094	FROM->TO	SIDNEY (SDQ KV2A) 345/230/13.8KV TRANSFORMER CKT 1	400	480	0.54371	104.7839	KEYSTONE - SIDNEY1-LNX3345.00 345KV CKT 1
FDNS	00NR_G15_094	0	20SP	G15_094	FROM->TO	SIDNEY (SDQ KV2A) 345/230/13.8KV TRANSFORMER CKT 1	400	480	0.54371	104.6775	SIDNEY - SIDNEY1-LNX3345.00 345KV CKT Z
FDNS	00NR_G15_094	0	25SP	G15_094	FROM->TO	SIDNEY (SDQ KV2A) 345/230/13.8KV TRANSFORMER CKT 1	400	480	0.54368	104.4365	KEYSTONE - SIDNEY1-LNX3345.00 345KV CKT 1
FDNS	00NR_G15_094	0	25SP	G15_094	FROM->TO	SIDNEY (SDQ KV2A) 345/230/13.8KV TRANSFORMER CKT 1	400	480	0.54368	104.1217	SIDNEY - SIDNEY1-LNX3345.00 345KV CKT Z
FDNS	00NR_G15_094	0	25SP	G15_094	FROM->TO	SIDNEY (SDQ KV2A) 345/230/13.8KV TRANSFORMER CKT 1	400	480	0.54368	103.8066	SIDNEY - SIDNEY1-LNX3345.00 345KV CKT Z

SOLUTION	GROUP	SCENARIO	SEASON	SOURCE	DIRECTION	MONITORED ELEMENT	RATEA (MVA)	RATEB(MVA)	TDF	TC%LOADING (% MVA)	CONTINGENCY
FDNS	00NR_G15_094	0	25SP	G15_094	FROM->TO	SIDNEY (SDQ KV2A) 345/230/13.8KV TRANSFORMER CKT 1	400	480	0.54368	103.7444	KEYSTONE - SIDNEY1-LNX3345.00 345KV CKT 1
FDNS	00NR_G15_094	0	16WP	G15_094	FROM->TO	SIDNEY (SDQ KV2A) 345/230/13.8KV TRANSFORMER CKT 1	400	480	0.54282	100	KEYSTONE - SIDNEY1-LNX3345.00 345KV CKT 1
FDNS	00NR_G15_094	2	25SP	G15_094	TO->FROM	CHAPPEL - COLTON 7 115.00 115KV CKT 1	109	109	0.03692	105.7523	P12:115:TSGT:GRANTNB7-OGALALA7_2
FDNS	00NR_G15_094	2	17SP	G15_094	TO->FROM	CHAPPEL - COLTON 7 115.00 115KV CKT 1	109	109	0.10369	104.5984	SIDNEY - SIDNEY1-LNX3345.00 345KV CKT Z
FDNS	00NR_G15_094	2	17SP	G15_094	TO->FROM	CHAPPEL - COLTON 7 115.00 115KV CKT 1	109	109	0.10369	104.5606	KEYSTONE - SIDNEY1-LNX3345.00 345KV CKT 1
FDNS	00NR_G15_094	2	17SP	G15_094	TO->FROM	CHAPPEL - COLTON 7 115.00 115KV CKT 1	109	109	0.03757	102.4905	P12:115:TSGT:GRANTNB7-OGALALA7_2
FDNS	00NR_G15_094	2	20SP	G15_094	TO->FROM	CHAPPEL - COLTON 7 115.00 115KV CKT 1	109	109	0.0369	101.9536	P12:115:TSGT:GRANTNB7-OGALALA7_2
FDNS	00NR_G15_094	2	25SP	G15_094	TO->FROM	CHAPPEL - COLTON 7 115.00 115KV CKT 1	109	109	0.10404	100	SIDNEY - SIDNEY1-LNX3345.00 345KV CKT Z
FDNS	00NR_G15_094	2	25SP	G15_094	TO->FROM	CHAPPEL - COLTON 7 115.00 115KV CKT 1	109	109	0.10404	99.6	KEYSTONE - SIDNEY1-LNX3345.00 345KV CKT 1
FDNS	00NR_G15_094	2	25SP	G15_094	TO->FROM	COLTON 7 115.00 - SIDNEY 115KV CKT 1	109	109	0.03692	108.9001	P12:115:TSGT:GRANTNB7-OGALALA7_2
FDNS	00NR_G15_094	2	17SP	G15_094	TO->FROM	COLTON 7 115.00 - SIDNEY 115KV CKT 1	109	109	0.10369	107.6432	SIDNEY - SIDNEY1-LNX3345.00 345KV CKT Z
FDNS	00NR_G15_094	2	17SP	G15_094	TO->FROM	COLTON 7 115.00 - SIDNEY 115KV CKT 1	109	109	0.10369	107.6023	KEYSTONE - SIDNEY1-LNX3345.00 345KV CKT 1
FDNS	00NR_G15_094	2	17SP	G15_094	TO->FROM	COLTON 7 115.00 - SIDNEY 115KV CKT 1	109	109	0.03757	105.734	P12:115:TSGT:GRANTNB7-OGALALA7_2
FDNS	00NR_G15_094	2	20SP	G15_094	TO->FROM	COLTON 7 115.00 - SIDNEY 115KV CKT 1	109	109	0.0369	105.1382	P12:115:TSGT:GRANTNB7-OGALALA7_2
FDNS	00NR_G15_094	2	25SP	G15_094	TO->FROM	COLTON 7 115.00 - SIDNEY 115KV CKT 1	109	109	0.10404	102.9318	SIDNEY - SIDNEY1-LNX3345.00 345KV CKT Z
FDNS	00NR_G15_094	2	25SP	G15_094	TO->FROM	COLTON 7 115.00 - SIDNEY 115KV CKT 1	109	109	0.10404	102.5382	KEYSTONE - SIDNEY1-LNX3345.00 345KV CKT 1
FDNS	00NR_G15_094	2	20SP	G15_094	TO->FROM	COLTON 7 115.00 - SIDNEY 115KV CKT 1	109	109	0.10406	101.8953	SIDNEY - SIDNEY1-LNX3345.00 345KV CKT Z
FDNS	00NR_G15_094	2	20SP	G15_094	TO->FROM	COLTON 7 115.00 - SIDNEY 115KV CKT 1	109	109	0.10406	101.8784	KEYSTONE - SIDNEY1-LNX3345.00 345KV CKT 1
FDNS	00NR_G15_094	2	25SP	G15_094	FROM->TO	GGS	1635	1635	0.65387	103.6078	BASE CASE
FDNS	00NR_G15_094	2	20SP	G15_094	FROM->TO	GR ISLD-LNX3345.00 - GRAND ISLAND 345KV CKT Z	720	720	0.08115	115.7966	GERALD GENTLEMAN STATION - SWEETWATER 345KV CKT 1
FDNS	00NR_G15_094	2	25SP	G15_094	FROM->TO	GR ISLD-LNX3345.00 - GRAND ISLAND 345KV CKT Z	720	720	0.0812	115.71	GERALD GENTLEMAN STATION - SWEETWATER 345KV CKT 1
FDNS	00NR_G15_094	2	20SP	G15_094	FROM->TO	GR ISLD-LNX3345.00 - GRAND ISLAND 345KV CKT Z	720	720	0.05647	115.2172	KELLY - MEADOWGROVE4230.00 230KV CKT 1
FDNS	00NR_G15_094	2	25SP	G15_094	FROM->TO	GR ISLD-LNX3345.00 - GRAND ISLAND 345KV CKT Z	720	720	0.05661	114.862	KELLY - MEADOWGROVE4230.00 230KV CKT 1
FDNS	00NR_G15_094	2	20SP	G15_094	FROM->TO	GR ISLD-LNX3345.00 - GRAND ISLAND 345KV CKT Z	720	720	0.08619	114.4421	GRAND ISLAND - SWEETWATER 345KV CKT 1
FDNS	00NR_G15_094	2	20SP	G15_094	FROM->TO	GR ISLD-LNX3345.00 - GRAND ISLAND 345KV CKT Z	720	720	0.07489	114.0112	GERALD GENTLEMAN STATION - SWEETWATER 345KV CKT 2
FDNS	00NR_G15_094	2	20SP	G15_094	FROM->TO	GR ISLD-LNX3345.00 - GRAND ISLAND 345KV CKT Z	720	720	0.05817	113.9414	P12:230:UMZB:# 116 #: ST IN SD. WSG-ST-VH
FDNS	00NR_G15_094	2	25SP	G15_094	FROM->TO	GR ISLD-LNX3345.00 - GRAND ISLAND 345KV CKT Z	720	720	0.07496	113.8749	GERALD GENTLEMAN STATION - SWEETWATER 345KV CKT 2
FDNS	00NR_G15_094	2	25SP	G15_094	FROM->TO	GR ISLD-LNX3345.00 - GRAND ISLAND 345KV CKT Z	720	720	0.05829	113.6512	P12:230:UMZB:# 116 #: ST IN SD. WSG-ST-VH
FDNS	00NR_G15_094	2	25SP	G15_094	FROM->TO	GR ISLD-LNX3345.00 - GRAND ISLAND 345KV CKT Z	720	720	0.086	113.4613	GRAND ISLAND - SWEETWATER 345KV CKT 1
FDNS	00NR_G15_094	2	20SP	G15_094	FROM->TO	GR ISLD-LNX3345.00 - GRAND ISLAND 345KV CKT Z	720	720	0.05785	113.3664	STORLA - WESSINGTON 230KV CKT 1
FDNS	00NR_G15_094	2	25SP	G15_094	FROM->TO	GR ISLD-LNX3345.00 - GRAND ISLAND 345KV CKT Z	720	720	0.07217	113.2881	MINGO - RED WILLOW 345KV CKT 1
FDNS	00NR_G15_094	2	25SP	G15_094	FROM->TO	GR ISLD-LNX3345.00 - GRAND ISLAND 345KV CKT Z	720	720	0.07217	113.2881	MINGO - RED WILLOW 345KV CKT 1
FDNS	00NR_G15_094	2	25SP	G15_094	FROM->TO	GR ISLD-LNX3345.00 - GRAND ISLAND 345KV CKT Z	720	720	0.05797	113.0613	STORLA - WESSINGTON 230KV CKT 1
FDNS	00NR_G15_094	2	25SP	G15_094	FROM->TO	GR ISLD-LNX3345.00 - GRAND ISLAND 345KV CKT Z	720	720	0.06724	112.6392	GERALD GENTLEMAN STATION - RED WILLOW 345KV CKT 1
FDNS	00NR_G15_094	2	20SP	G15_094	FROM->TO	GR ISLD-LNX3345.00 - GRAND ISLAND 345KV CKT Z	720	720	0.05774	112.6168	HANLON - STORLA 230KV CKT 1
FDNS	00NR_G15_094	2	25SP	G15_094	FROM->TO	GR ISLD-LNX3345.00 - GRAND ISLAND 345KV CKT Z	720	720	0.05786	112.2533	HANLON - STORLA 230KV CKT 1
FDNS	00NR_G15_094	2	20SP	G15_094	FROM->TO	GR ISLD-LNX3345.00 - GRAND ISLAND 345KV CKT Z	720	720	0.05821	112.2233	FT THOMPSON - LETCHER 230KV CKT 1
FDNS	00NR_G15_094	2	20SP	G15_094	FROM->TO	GR ISLD-LNX3345.00 - GRAND ISLAND 345KV CKT Z	720	720	0.05821	112.2233	FT THOMPSON - LETCHER 230KV CKT 1
FDNS	00NR_G15_094	2	20SP	G15_094	FROM->TO	GR ISLD-LNX3345.00 - GRAND ISLAND 345KV CKT Z	720	720	0.06478	112.1906	CROOKED CREEK - NORTH PLATTE 230KV CKT 1
FDNS	00NR_G15_094	2	20SP	G15_094	FROM->TO	GR ISLD-LNX3345.00 - GRAND ISLAND 345KV CKT Z	720	720	0.07192	112.1793	MINGO - RED WILLOW 345KV CKT 1
FDNS	00NR_G15_094	2	20SP	G15_094	FROM->TO	GR ISLD-LNX3345.00 - GRAND ISLAND 345KV CKT Z	720	720	0.07192	112.1793	MINGO - RED WILLOW 345KV CKT 1
FDNS	00NR_G15_094	2	20SP	G15_094	FROM->TO	GR ISLD-LNX3345.00 - GRAND ISLAND 345KV CKT Z	720	720	0.05596	112.0919	GEN635024 4-WALTER SCOTT UNIT 4
FDNS	00NR_G15_094	2	20SP	G15_094	FROM->TO	GR ISLD-LNX3345.00 - GRAND ISLAND 345KV CKT Z	720	720	0.06701	112.0474	GERALD GENTLEMAN STATION - RED WILLOW 345KV CKT 1
FDNS	00NR_G15_094	2	25SP	G15_094	FROM->TO	GR ISLD-LNX3345.00 - GRAND ISLAND 345KV CKT Z	720	720	0.06487	111.9899	CROOKED CREEK - NORTH PLATTE 230KV CKT 1
FDNS	00NR_G15_094	2	25SP	G15_094	FROM->TO	GR ISLD-LNX3345.00 - GRAND ISLAND 345KV CKT Z	720	720	0.05833	111.9129	FT THOMPSON - LETCHER 230KV CKT 1
FDNS	00NR_G15_094	2	25SP	G15_094	FROM->TO	GR ISLD-LNX3345.00 - GRAND ISLAND 345KV CKT Z	720	720	0.05833	111.9129	FT THOMPSON - LETCHER 230KV CKT 1
FDNS	00NR_G15_094	2	25SP	G15_094	FROM->TO	GR ISLD-LNX3345.00 - GRAND ISLAND 345KV CKT Z	720	720	0.05652	111.7208	BUFFALO - JAMESTOWN 345KV CKT 1
FDNS	00NR_G15_094	2	20SP	G15_094	FROM->TO	GR ISLD-LNX3345.00 - GRAND ISLAND 345KV CKT Z	720	720	0.05647	111.7014	FT RANDAL - MEADOWGROVE4230.00 230KV CKT 1
FDNS	00NR_G15_094	2	20SP	G15_094	FROM->TO	GR ISLD-LNX3345.00 - GRAND ISLAND 345KV CKT Z	720	720	0.0564	111.6899	BUFFALO - JAMESTOWN 345KV CKT 1
FDNS	00NR_G15_094	2	20SP	G15_094	FROM->TO	GR ISLD-LNX3345.00 - GRAND ISLAND 345KV CKT Z	720	720	0.05596	111.6184	GEN635023 3-WALTER SCOTT UNIT 3
FDNS	00NR_G15_094	2	25SP	G15_094	FROM->TO	GR ISLD-LNX3345.00 - GRAND ISLAND 345KV CKT Z	720	720	0.05608	111.5235	GEN635024 4-WALTER SCOTT UNIT 4
FDNS	00NR_G15_094	2	20SP	G15_094	FROM->TO	GR ISLD-LNX3345.00 - GRAND ISLAND 345KV CKT Z	720	720	0.05753	111.4441	FT RANDAL - G12_009IST 230.00 230KV CKT 1
FDNS	00NR_G15_094	2	20SP	G15_094	FROM->TO	GR ISLD-LNX3345.00 - GRAND ISLAND 345KV CKT Z	720	720	0.05757	111.435	FT RANDAL - FT THOMPSON 230KV CKT 1
FDNS	00NR_G15_094	2	20SP	G15_094	FROM->TO	GR ISLD-LNX3345.00 - GRAND ISLAND 345KV CKT Z	720	720	0.05757	111.435	FT RANDAL - FT THOMPSON 230KV CKT 1
FDNS	00NR_G15_094	2	20SP	G15_094	FROM->TO	GR ISLD-LNX3345.00 - GRAND ISLAND 345KV CKT Z	720	720	0.05753	111.3852	FT THOMPSON - LAKE PLATT 230KV CKT 1
FDNS	00NR_G15_094	2	20SP	G15_094	FROM->TO	GR ISLD-LNX3345.00 - GRAND ISLAND 345KV CKT Z	720	720	0.05753	111.3852	FT THOMPSON - LAKE PLATT 230KV CKT 1
FDNS	00NR_G15_094	2	20SP	G15_094	FROM->TO	GR ISLD-LNX3345.00 - GRAND ISLAND 345KV CKT Z	720	720	0.0564	111.2942	G09_001IST 345.00 - WATERTOWN 345KV CKT 1
FDNS	00NR_G15_094	2	25SP	G15_094	FROM->TO	GR ISLD-LNX3345.00 - GRAND ISLAND 345KV CKT Z	720	720	0.05661	111.2158	FT RANDAL - MEADOWGROVE4230.00 230KV CKT 1
FDNS	00NR_G15_094	2	20SP	G15_094	FROM->TO	GR ISLD-LNX3345.00 - GRAND ISLAND 345KV CKT Z	720	720	0.05753	111.1552	G12_009IST 230.00 - LAKE PLATT 230KV CKT 1
FDNS	00NR_G15_094	2	20SP	G15_094	FROM->TO	GR ISLD-LNX3345.00 - GRAND ISLAND 345KV CKT Z	720	720	0.05596	111.1253	GEN336821 1-GRAND GULF UNIT
FDNS	00NR_G15_094	2	25SP	G15_094	FROM->TO	GR ISLD-LNX3345.00 - GRAND ISLAND 345KV CKT Z	720	720	0.05608	111.0454	GEN635023 3-WALTER SCOTT UNIT 3
FDNS	00NR_G15_094	2	25SP	G15_094	FROM->TO	GR ISLD-LNX3345.00 - GRAND ISLAND 345KV CKT Z	720	720	0.05766	111.0021	FT RANDAL - G12_009IST 230.00 230KV CKT 1
FDNS	00NR_G15_094	2	25SP	G15_094	FROM->TO	GR ISLD-LNX3345.00 - GRAND ISLAND 345KV CKT Z	720	720	0.0577	110.9893	FT RANDAL - FT THOMPSON 230KV CKT 1
FDNS	00NR_G15_094	2	25SP	G15_094	FROM->TO	GR ISLD-LNX3345.00 - GRAND ISLAND 345KV CKT Z	720	720	0.0577	110.9893	FT RANDAL - FT THOMPSON 230KV CKT 1
FDNS	00NR_G15_094	2	20SP	G15_094	FROM->TO	GR ISLD-LNX3345.00 - GRAND ISLAND 345KV CKT Z	720	720	0.05596	110.973	GEN344225 1-1CAL G1 25.000
FDNS	00NR_G15_094	2	25SP	G15_094	FROM->TO	GR ISLD-LNX3345.00 - GRAND ISLAND 345KV CKT Z	720	720	0.05652	110.9576	G09_001IST 345.00 - WATERTOWN 345KV CKT 1
FDNS	00NR_G15_094	2	25SP	G15_094	FROM->TO	GR ISLD-LNX3345.00 - GRAND ISLAND 345KV CKT Z	720	720	0.05766	110.9552	FT THOMPSON - LAKE PLATT 230KV CKT 1
FDNS	00NR_G15_094	2	25SP	G15_094	FROM->TO	GR ISLD-LNX3345.00 - GRAND ISLAND 345KV CKT Z	720	720	0.05766	110.9552	FT THOMPSON - LAKE PLATT 230KV CKT 1
FDNS	00NR_G15_094	2	20SP	G15_094	FROM->TO	GR ISLD-LNX3345.00 - GRAND ISLAND 345KV CKT Z	720	720	0.05694	110.8955	WATERTN-LNX3345.00 - WHITE 345KV CKT 1
FDNS	00NR_G15_094	2	20SP	G15_094	FROM->TO	GR ISLD-LNX3345.00 - GRAND ISLAND 345KV CKT Z	720	720	0.05596	110.8546	GEN640009 1-COOPER NUCLEAR STATION
FDNS	00NR_G15_094	2	20SP	G15_094	FROM->TO	GR ISLD-LNX3345.00 - GRAND ISLAND 345KV CKT Z	720	720	0.05616	110.8485	SPLIT ROCK - WHITE 345KV CKT 1
FDNS	00NR_G15_094	2	20SP	G15_094	FROM->TO	GR ISLD-LNX3345.00 - GRAND ISLAND 345KV CKT Z	720	720	0.05616	110.8485	SPLIT ROCK - WHITE 345KV CKT 1
FDNS	00NR_G15_094	2	20SP	G15_094	FROM->TO	GR ISLD-LNX3345.00 - GRAND ISLAND 345KV CKT Z	720	720	0.05694	110.8249	WATERTN-LNX3345.00 - WATERTOWN 345KV CKT Z

SOLUTION	GROUP	SCENARIO	SEASON	SOURCE	DIRECTION	MONITORED ELEMENT	RATEA (MVA)	RATEB(MVA)	TDF	TC%LOADING (% MVA)	CONTINGENCY
FDNS	00NR_G15_094	2	20SP	G15_094	FROM->TO	GR ISLD-LNX3345.00 - GRAND ISLAND 345KV CKT Z	720	720	0.05742	110.8185	LETCHER - SIOUX FALLS 230KV CKT 1
FDNS	00NR_G15_094	2	20SP	G15_094	FROM->TO	GR ISLD-LNX3345.00 - GRAND ISLAND 345KV CKT Z	720	720	0.05694	110.8181	P12:345:UMZW:# 1747 #: WT2 IN SD. WT2-WHT LINE FAULT
FDNS	00NR_G15_094	2	25SP	G15_094	FROM->TO	GR ISLD-LNX3345.00 - GRAND ISLAND 345KV CKT Z	720	720	0.05766	110.7116	G12_009IST 230.00 - LAKE PLATT 230KV CKT 1
FDNS	00NR_G15_094	2	20SP	G15_094	FROM->TO	GR ISLD-LNX3345.00 - GRAND ISLAND 345KV CKT Z	720	720	0.05641	110.6752	CENTER - JAMESTOWN 345KV CKT 1
FDNS	00NR_G15_094	2	20SP	G15_094	FROM->TO	GR ISLD-LNX3345.00 - GRAND ISLAND 345KV CKT Z	720	720	0.05596	110.6558	GEN336153 1-WATERFORD UNIT#3
FDNS	00NR_G15_094	2	20SP	G15_094	FROM->TO	GR ISLD-LNX3345.00 - GRAND ISLAND 345KV CKT Z	720	720	0.05596	110.6547	GEN337911 1-ARKANSAS NUCLEAR ONE UNIT #2
FDNS	00NR_G15_094	2	25SP	G15_094	FROM->TO	GR ISLD-LNX3345.00 - GRAND ISLAND 345KV CKT Z	720	720	0.05608	110.6233	GEN336821 1-GRAND GULF UNIT
FDNS	00NR_G15_094	2	25SP	G15_094	FROM->TO	GR ISLD-LNX3345.00 - GRAND ISLAND 345KV CKT Z	720	720	0.05653	110.5905	CENTER - JAMESTOWN 345KV CKT 1
FDNS	00NR_G15_094	2	20SP	G15_094	FROM->TO	GR ISLD-LNX3345.00 - GRAND ISLAND 345KV CKT Z	720	720	0.057	110.5162	RAUN - SUB 3451 FT CAL 345KV CKT 1
FDNS	00NR_G15_094	2	20SP	G15_094	FROM->TO	GR ISLD-LNX3345.00 - GRAND ISLAND 345KV CKT Z	720	720	0.057	110.5162	RAUN - SUB 3451 FT CAL 345KV CKT 1
FDNS	00NR_G15_094	2	20SP	G15_094	FROM->TO	GR ISLD-LNX3345.00 - GRAND ISLAND 345KV CKT Z	720	720	0.05628	110.4685	BISON 3 345.00 - BUFFALO 345KV CKT 1
FDNS	00NR_G15_094	2	20SP	G15_094	FROM->TO	GR ISLD-LNX3345.00 - GRAND ISLAND 345KV CKT Z	720	720	0.05712	110.4676	FT RANDAL - SIOUX CITY 230KV CKT 1
FDNS	00NR_G15_094	2	25SP	G15_094	FROM->TO	GR ISLD-LNX3345.00 - GRAND ISLAND 345KV CKT Z	720	720	0.05608	110.4362	GEN344225 1-1CAL G1 25.000
FDNS	00NR_G15_094	2	20SP	G15_094	FROM->TO	GR ISLD-LNX3345.00 - GRAND ISLAND 345KV CKT Z	720	720	0.05773	110.4334	THEDFRD3 345.00 (THEDFORDT2) 345/115/13.8KV TRANSFORMER CKT 1
FDNS	00NR_G15_094	2	25SP	G15_094	FROM->TO	GR ISLD-LNX3345.00 - GRAND ISLAND 345KV CKT Z	720	720	0.05754	110.4205	LETCHER - SIOUX FALLS 230KV CKT 1
FDNS	00NR_G15_094	2	25SP	G15_094	FROM->TO	GR ISLD-LNX3345.00 - GRAND ISLAND 345KV CKT Z	720	720	0.05608	110.4183	GEN640009 1-COOPER NUCLEAR STATION
FDNS	00NR_G15_094	2	20SP	G15_094	FROM->TO	GR ISLD-LNX3345.00 - GRAND ISLAND 345KV CKT Z	720	720	0.05596	110.4026	GEN335831 1-RIVERBEND UNIT#1
FDNS	00NR_G15_094	2	20SP	G15_094	FROM->TO	GR ISLD-LNX3345.00 - GRAND ISLAND 345KV CKT Z	720	720	0.05596	110.398	GEN641089 2-ENERGY CENTER 2
FDNS	00NR_G15_094	2	20SP	G15_094	FROM->TO	GR ISLD-LNX3345.00 - GRAND ISLAND 345KV CKT Z	720	720	0.05633	110.3732	SIOUXCY-LNX3345.00 - SPLIT ROCK 345KV CKT 1
FDNS	00NR_G15_094	2	20SP	G15_094	FROM->TO	GR ISLD-LNX3345.00 - GRAND ISLAND 345KV CKT Z	720	720	0.05633	110.3732	SIOUXCY-LNX3345.00 - SPLIT ROCK 345KV CKT 1
FDNS	00NR_G15_094	2	20SP	G15_094	FROM->TO	GR ISLD-LNX3345.00 - GRAND ISLAND 345KV CKT Z	720	720	0.05633	110.3606	P12:345:UMZW:# 907 #: SC2-SR IN IA. SC2-SR 345 KV LINE
FDNS	00NR_G15_094	2	25SP	G15_094	FROM->TO	GR ISLD-LNX3345.00 - GRAND ISLAND 345KV CKT Z	720	720	0.05706	110.3594	WATERTN-LNX3345.00 - WHITE 345KV CKT 1
FDNS	00NR_G15_094	2	20SP	G15_094	FROM->TO	GR ISLD-LNX3345.00 - GRAND ISLAND 345KV CKT Z	720	720	0.05623	110.3486	CHISAGO COUNTY - CHISAGO COUNTY 500KV CKT 1
FDNS	00NR_G15_094	2	20SP	G15_094	FROM->TO	GR ISLD-LNX3345.00 - GRAND ISLAND 345KV CKT Z	720	720	0.05633	110.3437	SIOUX CITY - SIOUXCY-LNX3345.00 345KV CKT Z
FDNS	00NR_G15_094	2	20SP	G15_094	FROM->TO	GR ISLD-LNX3345.00 - GRAND ISLAND 345KV CKT Z	720	720	0.05596	110.3231	GEN337910 1-ARKANSAS NUCLEAR ONE UNIT #1
FDNS	00NR_G15_094	2	25SP	G15_094	FROM->TO	GR ISLD-LNX3345.00 - GRAND ISLAND 345KV CKT Z	720	720	0.05629	110.3219	SPLIT ROCK - WHITE 345KV CKT 1
FDNS	00NR_G15_094	2	25SP	G15_094	FROM->TO	GR ISLD-LNX3345.00 - GRAND ISLAND 345KV CKT Z	720	720	0.05629	110.3219	SPLIT ROCK - WHITE 345KV CKT 1
FDNS	00NR_G15_094	2	20SP	G15_094	FROM->TO	GR ISLD-LNX3345.00 - GRAND ISLAND 345KV CKT Z	720	720	0.05623	110.3085	CHISAGO COUNTY - FORBES 500KV CKT 1
FDNS	00NR_G15_094	2	25SP	G15_094	FROM->TO	GR ISLD-LNX3345.00 - GRAND ISLAND 345KV CKT Z	720	720	0.05706	110.2902	WATERTN-LNX3345.00 - WATERTOWN 345KV CKT Z
FDNS	00NR_G15_094	2	25SP	G15_094	FROM->TO	GR ISLD-LNX3345.00 - GRAND ISLAND 345KV CKT Z	720	720	0.05706	110.2839	P12:345:UMZW:# 1747 #: WT2 IN SD. WT2-WHT LINE FAULT
FDNS	00NR_G15_094	2	20SP	G15_094	FROM->TO	GR ISLD-LNX3345.00 - GRAND ISLAND 345KV CKT Z	720	720	0.05611	110.2791	ROSEAU - ROSEAUM 2 500.00 500KV CKT 1
FDNS	00NR_G15_094	2	20SP	G15_094	FROM->TO	GR ISLD-LNX3345.00 - GRAND ISLAND 345KV CKT Z	720	720	0.05611	110.279	ROSEAU - ROSEAUM 2 500.00 500KV CKT 1
FDNS	00NR_G15_094	2	20SP	G15_094	FROM->TO	GR ISLD-LNX3345.00 - GRAND ISLAND 345KV CKT Z	720	720	0.05611	110.2789	RIEL - ROSEAU 500KV CKT 1
FDNS	00NR_G15_094	2	20SP	G15_094	FROM->TO	GR ISLD-LNX3345.00 - GRAND ISLAND 345KV CKT Z	720	720	0.05596	110.2437	GEN645012 2-NEBRASKA CITY 2
FDNS	00NR_G15_094	2	25SP	G15_094	FROM->TO	GR ISLD-LNX3345.00 - GRAND ISLAND 345KV CKT Z	720	720	0.0564	110.2044	BISON 3 345.00 - BUFFALO 345KV CKT 1
FDNS	00NR_G15_094	2	25SP	G15_094	FROM->TO	GR ISLD-LNX3345.00 - GRAND ISLAND 345KV CKT Z	720	720	0.05608	110.1725	GEN337911 1-ARKANSAS NUCLEAR ONE UNIT #2
FDNS	00NR_G15_094	2	25SP	G15_094	FROM->TO	GR ISLD-LNX3345.00 - GRAND ISLAND 345KV CKT Z	720	720	0.05608	110.1498	GEN336153 1-WATERFORD UNIT#3
FDNS	00NR_G15_094	2	20SP	G15_094	FROM->TO	GR ISLD-LNX3345.00 - GRAND ISLAND 345KV CKT Z	720	720	0.05699	110.1427	HANLON - SIOUX FALLS 230KV CKT 1
FDNS	00NR_G15_094	2	20SP	G15_094	FROM->TO	GR ISLD-LNX3345.00 - GRAND ISLAND 345KV CKT Z	720	720	0.05596	110.1338	GEN645011 1-NEBRASKA CITY 1
FDNS	00NR_G15_094	2	25SP	G15_094	FROM->TO	GR ISLD-LNX3345.00 - GRAND ISLAND 345KV CKT Z	720	720	0.05784	110.1282	THEDFRD3 345.00 (THEDFORDT2) 345/115/13.8KV TRANSFORMER CKT 1
FDNS	00NR_G15_094	2	20SP	G15_094	FROM->TO	GR ISLD-LNX3345.00 - GRAND ISLAND 345KV CKT Z	720	720	0.05786	110.1103	P12:115:NPPD:1167A:AINSWRT7:ONEILL 7:BTB
FDNS	00NR_G15_094	2	20SP	G15_094	FROM->TO	GR ISLD-LNX3345.00 - GRAND ISLAND 345KV CKT Z	720	720	0.05641	110.1081	ARROWHEAD - ARROWHEAD 230 230KV CKT 1
FDNS	00NR_G15_094	2	20SP	G15_094	FROM->TO	GR ISLD-LNX3345.00 - GRAND ISLAND 345KV CKT Z	720	720	0.0581	110.0841	CALLAWAY - MAXWELL 115KV CKT 1
FDNS	00NR_G15_094	2	25SP	G15_094	FROM->TO	GR ISLD-LNX3345.00 - GRAND ISLAND 345KV CKT Z	720	720	0.05713	110.0753	RAUN - SUB 3451 FT CAL 345KV CKT 1
FDNS	00NR_G15_094	2	25SP	G15_094	FROM->TO	GR ISLD-LNX3345.00 - GRAND ISLAND 345KV CKT Z	720	720	0.05713	110.0753	RAUN - SUB 3451 FT CAL 345KV CKT 1
FDNS	00NR_G15_094	2	20SP	G15_094	FROM->TO	GR ISLD-LNX3345.00 - GRAND ISLAND 345KV CKT Z	720	720	0.05637	110.0551	GROTON-LNX3 345.00 - LELAND1-LNX3345.00 345KV CKT 1
FDNS	00NR_G15_094	2	20SP	G15_094	FROM->TO	GR ISLD-LNX3345.00 - GRAND ISLAND 345KV CKT Z	720	720	0.0564	110.0514	G09_001IST 345.00 - GROTON 345KV CKT 1
FDNS	00NR_G15_094	2	20SP	G15_094	FROM->TO	GR ISLD-LNX3345.00 - GRAND ISLAND 345KV CKT Z	720	720	0.05684	110.0501	FT RANDAL - UTICA JCT 230KV CKT 1
FDNS	00NR_G15_094	2	25SP	G15_094	FROM->TO	GR ISLD-LNX3345.00 - GRAND ISLAND 345KV CKT Z	720	720	0.05725	110.0429	FT RANDAL - SIOUX CITY 230KV CKT 1
FDNS	00NR_G15_094	2	20SP	G15_094	FROM->TO	GR ISLD-LNX3345.00 - GRAND ISLAND 345KV CKT Z	720	720	0.05637	110.0077	GROTON - GROTON-LNX3 345.00 345KV CKT Z
FDNS	00NR_G15_094	2	20SP	G15_094	FROM->TO	GR ISLD-LNX3345.00 - GRAND ISLAND 345KV CKT Z	720	720	0.05637	110.0072	P12:345:UMZB:# 109 #: LOS GRT IN ND. LOS GRT
FDNS	00NR_G15_094	2	20SP	G15_094	FROM->TO	GR ISLD-LNX3345.00 - GRAND ISLAND 345KV CKT Z	720	720	0.05637	110.0027	LELAND OLDS - LELAND1-LNX3345.00 345KV CKT Z
FDNS	00NR_G15_094	2	20SP	G15_094	FROM->TO	GR ISLD-LNX3345.00 - GRAND ISLAND 345KV CKT Z	720	720	0.05596	109.9975	GEN337653 1-WHITE BLUFF UNIT #2
FDNS	00NR_G15_094	2	25SP	G15_094	FROM->TO	GR ISLD-LNX3345.00 - GRAND ISLAND 345KV CKT Z	720	720	0.05608	109.9934	GEN641089 2-ENERGY CENTER 2
FDNS	00NR_G15_094	2	25SP	G15_094	FROM->TO	GR ISLD-LNX3345.00 - GRAND ISLAND 345KV CKT Z	720	720	0.05635	109.9923	CHISAGO COUNTY - CHISAGO COUNTY 500KV CKT 1
FDNS	00NR_G15_094	2	20SP	G15_094	FROM->TO	GR ISLD-LNX3345.00 - GRAND ISLAND 345KV CKT Z	720	720	0.05675	109.9769	LAKEFIELD 3 - NOBLES 345KV CKT 1
FDNS	00NR_G15_094	2	20SP	G15_094	FROM->TO	GR ISLD-LNX3345.00 - GRAND ISLAND 345KV CKT Z	720	720	0.05646	109.9733	PAHOJA - SIOUX FALLS 230KV CKT 1
FDNS	00NR_G15_094	2	20SP	G15_094	FROM->TO	GR ISLD-LNX3345.00 - GRAND ISLAND 345KV CKT Z	720	720	0.05596	109.965	GEN338146 1-INDEPENDENCE UNIT #2
FDNS	00NR_G15_094	2	20SP	G15_094	FROM->TO	GR ISLD-LNX3345.00 - GRAND ISLAND 345KV CKT Z	720	720	0.05596	109.9641	GEN337652 1-WHITE BLUFF UNIT #1
FDNS	00NR_G15_094	2	20SP	G15_094	FROM->TO	GR ISLD-LNX3345.00 - GRAND ISLAND 345KV CKT Z	720	720	0.05596	109.9634	GEN338143 1-INDEPENDENCE UNIT #1
FDNS	00NR_G15_094	2	25SP	G15_094	FROM->TO	GR ISLD-LNX3345.00 - GRAND ISLAND 345KV CKT Z	720	720	0.05608	109.9016	GEN335831 1-RIVERBEND UNIT#1
FDNS	00NR_G15_094	2	25SP	G15_094	FROM->TO	GR ISLD-LNX3345.00 - GRAND ISLAND 345KV CKT Z	720	720	0.06466	109.8922	MINGO - SETAB 345KV CKT 1
FDNS	00NR_G15_094	2	25SP	G15_094	FROM->TO	GR ISLD-LNX3345.00 - GRAND ISLAND 345KV CKT Z	720	720	0.06466	109.8922	MINGO - SETAB 345KV CKT 1
FDNS	00NR_G15_094	2	20SP	G15_094	FROM->TO	GR ISLD-LNX3345.00 - GRAND ISLAND 345KV CKT Z	720	720	0.05596	109.871	GEN501801 1-DOLET HILLS UNIT1
FDNS	00NR_G15_094	2	25SP	G15_094	FROM->TO	GR ISLD-LNX3345.00 - GRAND ISLAND 345KV CKT Z	720	720	0.05647	109.841	SIOUXCY-LNX3345.00 - SPLIT ROCK 345KV CKT 1
FDNS	00NR_G15_094	2	25SP	G15_094	FROM->TO	GR ISLD-LNX3345.00 - GRAND ISLAND 345KV CKT Z	720	720	0.05647	109.841	SIOUXCY-LNX3345.00 - SPLIT ROCK 345KV CKT 1
FDNS	00NR_G15_094	2	25SP	G15_094	FROM->TO	GR ISLD-LNX3345.00 - GRAND ISLAND 345KV CKT Z	720	720	0.05608	109.8405	GEN337910 1-ARKANSAS NUCLEAR ONE UNIT #1
FDNS	00NR_G15_094	2	20SP	G15_094	FROM->TO	GR ISLD-LNX3345.00 - GRAND ISLAND 345KV CKT Z	720	720	0.05695	109.8347	CARPENTER - HURON 230KV CKT 1
FDNS	00NR_G15_094	2	25SP	G15_094	FROM->TO	GR ISLD-LNX3345.00 - GRAND ISLAND 345KV CKT Z	720	720	0.05623	109.8311	RIEL - ROSEAU 500KV CKT 1
FDNS	00NR_G15_094	2	25SP	G15_094	FROM->TO	GR ISLD-LNX3345.00 - GRAND ISLAND 345KV CKT Z	720	720	0.05623	109.8279	ROSEAU - ROSEAUM 2 500.00 500KV CKT 1
FDNS	00NR_G15_094	2	25SP	G15_094	FROM->TO	GR ISLD-LNX3345.00 - GRAND ISLAND 345KV CKT Z	720	720	0.05623	109.8279	ROSEAU - ROSEAUM 2 500.00 500KV CKT 1
FDNS	00NR_G15_094	2	20SP	G15_094	FROM->TO	GR ISLD-LNX3345.00 - GRAND ISLAND 345KV CKT Z	720	720	0.05596	109.8262	GEN336252 1-NINEMILE POINT UNIT#5
FDNS	00NR_G15_094	2	25SP	G15_094	FROM->TO	GR ISLD-LNX3345.00 - GRAND ISLAND 345KV CKT Z	720	720	0.05647	109.8169	P12:345:UMZW:# 907 #: SC2-SR IN IA. SC2-SR 345 KV LINE

SOLUTION	GROUP	SCENARIO	SEASON	SOURCE	DIRECTION	MONITORED ELEMENT	RATEA (MVA)	RATEB(MVA)	TDF	TC%LOADING (% MVA)	CONTINGENCY
FDNS	00NR_G15_094	2	20SP	G15_094	FROM->TO	GR ISLD-LNX3345.00 - GRAND ISLAND 345KV CKT Z	720	720	0.05785	109.8141	FT THOMPSON - WESSINGTON 230KV CKT 1
FDNS	00NR_G15_094	2	20SP	G15_094	FROM->TO	GR ISLD-LNX3345.00 - GRAND ISLAND 345KV CKT Z	720	720	0.05785	109.8141	FT THOMPSON - WESSINGTON 230KV CKT 1
FDNS	00NR_G15_094	2	20SP	G15_094	FROM->TO	GR ISLD-LNX3345.00 - GRAND ISLAND 345KV CKT Z	720	720	0.05636	109.8086	BROOKING COUNTY - LYON COUNTY 345KV CKT 1
FDNS	00NR_G15_094	2	20SP	G15_094	FROM->TO	GR ISLD-LNX3345.00 - GRAND ISLAND 345KV CKT Z	720	720	0.05637	109.8075	AS KING - EAU CLAIRE 345KV CKT 1
FDNS	00NR_G15_094	2	25SP	G15_094	FROM->TO	GR ISLD-LNX3345.00 - GRAND ISLAND 345KV CKT Z	720	720	0.05647	109.7853	SIOUX CITY - SIOUXCY-LNX3345.00 345KV CKT Z
FDNS	00NR_G15_094	2	20SP	G15_094	FROM->TO	GR ISLD-LNX3345.00 - GRAND ISLAND 345KV CKT Z	720	720	0.05596	109.7751	GEN542962 2-IATAN UNIT #2
FDNS	00NR_G15_094	2	20SP	G15_094	FROM->TO	GR ISLD-LNX3345.00 - GRAND ISLAND 345KV CKT Z	720	720	0.05596	109.7702	GEN336251 1-NINEMILE POINT UNIT#4
FDNS	00NR_G15_094	2	20SP	G15_094	FROM->TO	GR ISLD-LNX3345.00 - GRAND ISLAND 345KV CKT Z	720	720	0.05695	109.7652	HURON - WATERTOWN 230KV CKT 2
FDNS	00NR_G15_094	2	20SP	G15_094	FROM->TO	GR ISLD-LNX3345.00 - GRAND ISLAND 345KV CKT Z	720	720	0.05695	109.7652	HURON - WATERTOWN 230KV CKT 2
FDNS	00NR_G15_094	2	20SP	G15_094	FROM->TO	GR ISLD-LNX3345.00 - GRAND ISLAND 345KV CKT Z	720	720	0.05596	109.7598	GEN336831 1-BAXTER WILSON SES
FDNS	00NR_G15_094	2	25SP	G15_094	FROM->TO	GR ISLD-LNX3345.00 - GRAND ISLAND 345KV CKT Z	720	720	0.05822	109.7432	CALLAWAY - MAXWELL 115KV CKT 1
FDNS	00NR_G15_094	2	20SP	G15_094	FROM->TO	GR ISLD-LNX3345.00 - GRAND ISLAND 345KV CKT Z	720	720	0.05646	109.7408	EAGLE 4 230.00 - PAHOJA 230KV CKT 1
FDNS	00NR_G15_094	2	20SP	G15_094	FROM->TO	GR ISLD-LNX3345.00 - GRAND ISLAND 345KV CKT Z	720	720	0.05695	109.7349	CARPENTER - WATERTOWN 230KV CKT 1
FDNS	00NR_G15_094	2	20SP	G15_094	FROM->TO	GR ISLD-LNX3345.00 - GRAND ISLAND 345KV CKT Z	720	720	0.05695	109.7349	CARPENTER - WATERTOWN 230KV CKT 1
FDNS	00NR_G15_094	2	20SP	G15_094	FROM->TO	GR ISLD-LNX3345.00 - GRAND ISLAND 345KV CKT Z	720	720	0.05596	109.7282	GEN337041 1-GERALD ANDRUS
FDNS	00NR_G15_094	2	25SP	G15_094	FROM->TO	GR ISLD-LNX3345.00 - GRAND ISLAND 345KV CKT Z	720	720	0.05608	109.7248	GEN645012 2-NEBRASKA CITY 2
FDNS	00NR_G15_094	2	20SP	G15_094	FROM->TO	GR ISLD-LNX3345.00 - GRAND ISLAND 345KV CKT Z	720	720	0.05596	109.7211	GEN532751 1-WOLF CREEK GENERATING STATION UNIT 1
FDNS	00NR_G15_094	2	20SP	G15_094	FROM->TO	GR ISLD-LNX3345.00 - GRAND ISLAND 345KV CKT Z	720	720	0.0551	109.7106	STAPLETON - THEDFORD 115KV CKT 1
FDNS	00NR_G15_094	2	25SP	G15_094	FROM->TO	GR ISLD-LNX3345.00 - GRAND ISLAND 345KV CKT Z	720	720	0.05711	109.6932	HANLON - SIOUX FALLS 230KV CKT 1
FDNS	00NR_G15_094	2	20SP	G15_094	FROM->TO	GR ISLD-LNX3345.00 - GRAND ISLAND 345KV CKT Z	720	720	0.05641	109.689	ALEXMRES3 345.00 - BISON 3 345.00 345KV CKT 1
FDNS	00NR_G15_094	2	25SP	G15_094	FROM->TO	GR ISLD-LNX3345.00 - GRAND ISLAND 345KV CKT Z	720	720	0.05797	109.6871	P12:115:NPPD:1167A:AINSWRT7:ONEILL 7:BTB
FDNS	00NR_G15_094	2	20SP	G15_094	FROM->TO	GR ISLD-LNX3345.00 - GRAND ISLAND 345KV CKT Z	720	720	0.05596	109.6849	GEN501813 1-RODEMACHER UNIT 3
FDNS	00NR_G15_094	2	20SP	G15_094	FROM->TO	GR ISLD-LNX3345.00 - GRAND ISLAND 345KV CKT Z	720	720	0.05669	109.6827	RASMUSN - UTICA JCT 230KV CKT 1
FDNS	00NR_G15_094	2	20SP	G15_094	FROM->TO	GR ISLD-LNX3345.00 - GRAND ISLAND 345KV CKT Z	720	720	0.05668	109.6692	HAZLETON - MITCHLCO3 345.00 345KV CKT 1
FDNS	00NR_G15_094	2	20SP	G15_094	FROM->TO	GR ISLD-LNX3345.00 - GRAND ISLAND 345KV CKT Z	720	720	0.05596	109.659	GEN344897 4-1LAB G4 20.000
FDNS	00NR_G15_094	2	20SP	G15_094	FROM->TO	GR ISLD-LNX3345.00 - GRAND ISLAND 345KV CKT Z	720	720	0.05596	109.6577	GEN344894 1-1LAB G1 20.000
FDNS	00NR_G15_094	2	20SP	G15_094	FROM->TO	GR ISLD-LNX3345.00 - GRAND ISLAND 345KV CKT Z	720	720	0.05596	109.6577	GEN344895 2-1LAB G2 20.000
FDNS	00NR_G15_094	2	20SP	G15_094	FROM->TO	GR ISLD-LNX3345.00 - GRAND ISLAND 345KV CKT Z	720	720	0.05596	109.6576	GEN344896 3-1LAB G3 20.000
FDNS	00NR_G15_094	2	25SP	G15_094	FROM->TO	GR ISLD-LNX3345.00 - GRAND ISLAND 345KV CKT Z	720	720	0.05696	109.6514	FT RANDAL - UTICA JCT 230KV CKT 1
FDNS	00NR_G15_094	2	20SP	G15_094	FROM->TO	GR ISLD-LNX3345.00 - GRAND ISLAND 345KV CKT Z	720	720	0.05596	109.6394	GEN629075 1-OTTUMWA GENERATOR FOR OTTUMWA UNIT NO 1
FDNS	00NR_G15_094	2	20SP	G15_094	FROM->TO	GR ISLD-LNX3345.00 - GRAND ISLAND 345KV CKT Z	720	720	0.05713	109.6308	P12:115:NPPD:1164:ONEILL 7:JEFFREY9:BTB
FDNS	00NR_G15_094	2	25SP	G15_094	FROM->TO	GR ISLD-LNX3345.00 - GRAND ISLAND 345KV CKT Z	720	720	0.05608	109.6243	GEN645011 1-NEBRASKA CITY 1
FDNS	00NR_G15_094	2	20SP	G15_094	FROM->TO	GR ISLD-LNX3345.00 - GRAND ISLAND 345KV CKT Z	720	720	0.05596	109.6062	GEN345671 2-1RUSH G2 18.000
FDNS	00NR_G15_094	2	20SP	G15_094	FROM->TO	GR ISLD-LNX3345.00 - GRAND ISLAND 345KV CKT Z	720	720	0.05596	109.6031	GEN345670 1-1RUSH G1 18.000
FDNS	00NR_G15_094	2	20SP	G15_094	FROM->TO	GR ISLD-LNX3345.00 - GRAND ISLAND 345KV CKT Z	720	720	0.05786	109.5997	BASSETT 7115.00 - STUART 115KV CKT 1
FDNS	00NR_G15_094	2	20SP	G15_094	FROM->TO	GR ISLD-LNX3345.00 - GRAND ISLAND 345KV CKT Z	720	720	0.05673	109.5891	GRIMES - LEHIGH 345KV CKT 1
FDNS	00NR_G15_094	2	25SP	G15_094	FROM->TO	GR ISLD-LNX3345.00 - GRAND ISLAND 345KV CKT Z	720	720	0.05649	109.5878	GROTON-LNX3 345.00 - LELAND1-LNX3345.00 345KV CKT 1
FDNS	00NR_G15_094	2	20SP	G15_094	FROM->TO	GR ISLD-LNX3345.00 - GRAND ISLAND 345KV CKT Z	720	720	0.05596	109.5866	GEN542957 1-IATAN UNIT #1
FDNS	00NR_G15_094	2	25SP	G15_094	FROM->TO	GR ISLD-LNX3345.00 - GRAND ISLAND 345KV CKT Z	720	720	0.05653	109.5858	ARROWHEAD - ARROWHEAD 230 230KV CKT 1
FDNS	00NR_G15_094	2	25SP	G15_094	FROM->TO	GR ISLD-LNX3345.00 - GRAND ISLAND 345KV CKT Z	720	720	0.05687	109.5818	LAKEFIELD 3 - NOBLES 345KV CKT 1
FDNS	00NR_G15_094	2	20SP	G15_094	FROM->TO	GR ISLD-LNX3345.00 - GRAND ISLAND 345KV CKT Z	720	720	0.05713	109.5714	CLEARWATER - ONEILL 115KV CKT 1
FDNS	00NR_G15_094	2	20SP	G15_094	FROM->TO	GR ISLD-LNX3345.00 - GRAND ISLAND 345KV CKT Z	720	720	0.05596	109.5714	GEN645001 1-FORT CALHOUN 1
FDNS	00NR_G15_094	2	20SP	G15_094	FROM->TO	GR ISLD-LNX3345.00 - GRAND ISLAND 345KV CKT Z	720	720	0.05596	109.565	GEN335206 1-NELSON UNIT 6
FDNS	00NR_G15_094	2	25SP	G15_094	FROM->TO	GR ISLD-LNX3345.00 - GRAND ISLAND 345KV CKT Z	720	720	0.05608	109.5644	GEN337652 1-WHITE BLUFF UNIT #1
FDNS	00NR_G15_094	2	20SP	G15_094	FROM->TO	GR ISLD-LNX3345.00 - GRAND ISLAND 345KV CKT Z	720	720	0.05786	109.5636	AINSWORTH - BASSETT 7115.00 115KV CKT 1
FDNS	00NR_G15_094	2	20SP	G15_094	FROM->TO	GR ISLD-LNX3345.00 - GRAND ISLAND 345KV CKT Z	720	720	0.05611	109.5549	CNTSHNT3 345.00 - PRAIRIE3 345.00 345KV CKT 1
FDNS	00NR_G15_094	2	25SP	G15_094	FROM->TO	GR ISLD-LNX3345.00 - GRAND ISLAND 345KV CKT Z	720	720	0.05652	109.5517	G09_001IST 345.00 - GROTON 345KV CKT 1
FDNS	00NR_G15_094	2	25SP	G15_094	FROM->TO	GR ISLD-LNX3345.00 - GRAND ISLAND 345KV CKT Z	720	720	0.05649	109.5462	GROTON - GROTON-LNX3 345.00 345KV CKT Z
FDNS	00NR_G15_094	2	25SP	G15_094	FROM->TO	GR ISLD-LNX3345.00 - GRAND ISLAND 345KV CKT Z	720	720	0.05649	109.546	P12:345:UMZB:# 109 #: LOS GRT IN ND. LOS GRT
FDNS	00NR_G15_094	2	20SP	G15_094	FROM->TO	GR ISLD-LNX3345.00 - GRAND ISLAND 345KV CKT Z	720	720	0.05669	109.543	RASMUSN - SIOUX CITY 230KV CKT 1
FDNS	00NR_G15_094	2	25SP	G15_094	FROM->TO	GR ISLD-LNX3345.00 - GRAND ISLAND 345KV CKT Z	720	720	0.05649	109.5414	LELAND OLDS - LELAND1-LNX3345.00 345KV CKT Z
FDNS	00NR_G15_094	2	25SP	G15_094	FROM->TO	GR ISLD-LNX3345.00 - GRAND ISLAND 345KV CKT Z	720	720	0.05608	109.5406	GEN338143 1-INDEPENDENCE UNIT #1
FDNS	00NR_G15_094	2	25SP	G15_094	FROM->TO	GR ISLD-LNX3345.00 - GRAND ISLAND 345KV CKT Z	720	720	0.05608	109.5396	GEN338146 1-INDEPENDENCE UNIT #2
FDNS	00NR_G15_094	2	20SP	G15_094	FROM->TO	GR ISLD-LNX3345.00 - GRAND ISLAND 345KV CKT Z	720	720	0.05743	109.5377	BUCKNER7 345.00 - SPEARVILLE 345KV CKT 1
FDNS	00NR_G15_094	2	20SP	G15_094	FROM->TO	GR ISLD-LNX3345.00 - GRAND ISLAND 345KV CKT Z	720	720	0.05743	109.5377	BUCKNER7 345.00 - SPEARVILLE 345KV CKT 1
FDNS	00NR_G15_094	2	20SP	G15_094	FROM->TO	GR ISLD-LNX3345.00 - GRAND ISLAND 345KV CKT Z	720	720	0.06683	109.5358	KEYSTONE - SIDNEY1-LNX3345.00 345KV CKT 1
FDNS	00NR_G15_094	2	20SP	G15_094	FROM->TO	GR ISLD-LNX3345.00 - GRAND ISLAND 345KV CKT Z	720	720	0.05596	109.5318	GEN334440 1-SABINE UNIT 4
FDNS	00NR_G15_094	2	20SP	G15_094	FROM->TO	GR ISLD-LNX3345.00 - GRAND ISLAND 345KV CKT Z	720	720	0.06444	109.529	MINGO - SETAB 345KV CKT 1
FDNS	00NR_G15_094	2	20SP	G15_094	FROM->TO	GR ISLD-LNX3345.00 - GRAND ISLAND 345KV CKT Z	720	720	0.06444	109.529	MINGO - SETAB 345KV CKT 1
FDNS	00NR_G15_094	2	25SP	G15_094	FROM->TO	GR ISLD-LNX3345.00 - GRAND ISLAND 345KV CKT Z	720	720	0.05658	109.5164	PAHOJA - SIOUX FALLS 230KV CKT 1
FDNS	00NR_G15_094	2	20SP	G15_094	FROM->TO	GR ISLD-LNX3345.00 - GRAND ISLAND 345KV CKT Z	720	720	0.05596	109.5148	GEN642067 1-PLATTE
FDNS	00NR_G15_094	2	20SP	G15_094	FROM->TO	GR ISLD-LNX3345.00 - GRAND ISLAND 345KV CKT Z	720	720	0.05608	109.5104	P12:115:NPPD:WAPA4:SIDNEY 7:B.SPRGS7:BTB
FDNS	00NR_G15_094	2	20SP	G15_094	FROM->TO	GR ISLD-LNX3345.00 - GRAND ISLAND 345KV CKT Z	720	720	0.05608	109.5104	P12:115:UMZB:# 119 #: IN NE.
FDNS	00NR_G15_094	2	25SP	G15_094	FROM->TO	GR ISLD-LNX3345.00 - GRAND ISLAND 345KV CKT Z	720	720	0.05608	109.5018	GEN337653 1-WHITE BLUFF UNIT #2
FDNS	00NR_G15_094	2	20SP	G15_094	FROM->TO	GR ISLD-LNX3345.00 - GRAND ISLAND 345KV CKT Z	720	720	0.05792	109.4974	JEFFREY - NORTH PLATTE 115KV CKT 1
FDNS	00NR_G15_094	2	20SP	G15_094	FROM->TO	GR ISLD-LNX3345.00 - GRAND ISLAND 345KV CKT Z	720	720	0.05645	109.4944	ARPIN B4 345.00 - EAU CLAIRE 345KV CKT 1
FDNS	00NR_G15_094	2	20SP	G15_094	FROM->TO	GR ISLD-LNX3345.00 - GRAND ISLAND 345KV CKT Z	720	720	0.05596	109.4891	GEN532652 1-JEFFREY ENERGY CENTER UNIT 2
FDNS	00NR_G15_094	2	20SP	G15_094	FROM->TO	GR ISLD-LNX3345.00 - GRAND ISLAND 345KV CKT Z	720	720	0.05596	109.489	GEN532653 1-JEFFREY ENERGY CENTER UNIT 3
FDNS	00NR_G15_094	2	20SP	G15_094	FROM->TO	GR ISLD-LNX3345.00 - GRAND ISLAND 345KV CKT Z	720	720	0.05596	109.4879	GEN532651 1-JEFFREY ENERGY CENTER UNIT 1
FDNS	00NR_G15_094	2	20SP	G15_094	FROM->TO	GR ISLD-LNX3345.00 - GRAND ISLAND 345KV CKT Z	720	720	0.05786	109.487	ATKINSON - STUART 115KV CKT 1
FDNS	00NR_G15_094	2	20SP	G15_094	FROM->TO	GR ISLD-LNX3345.00 - GRAND ISLAND 345KV CKT Z	720	720	0.06683	109.4769	SIDNEY - SIDNEY1-LNX3345.00 345KV CKT Z
FDNS	00NR_G15_094	2	20SP	G15_094	FROM->TO	GR ISLD-LNX3345.00 - GRAND ISLAND 345KV CKT Z	720	720	0.05596	109.4725	GEN501812 1-RODEMACHER UNIT 2
FDNS	00NR_G15_094	2	20SP	G15_094	FROM->TO	GR ISLD-LNX3345.00 - GRAND ISLAND 345KV CKT Z	720	720	0.05596	109.4716	GEN338388 1-1PLUM PT U1 23.000

SOLUTION	GROUP	SCENARIO	SEASON	SOURCE	DIRECTION	MONITORED ELEMENT	RATEA (MVA)	RATEB(MVA)	TDF	TC%LOADING (% MVA)	CONTINGENCY
FDNS	00NR_G15_094	2	20SP	G15_094	FROM->TO	GR ISLD-LNX3345.00 - GRAND ISLAND 345KV CKT Z	720	720	0.05596	109.4618	GEN336191 1-LITTLE GYPSY UNIT#3
FDNS	00NR_G15_094	2	25SP	G15_094	FROM->TO	GR ISLD-LNX3345.00 - GRAND ISLAND 345KV CKT Z	720	720	0.05648	109.436	BROOKING COUNTY - LYON COUNTY 345KV CKT 1
FDNS	00NR_G15_094	2	25SP	G15_094	FROM->TO	GR ISLD-LNX3345.00 - GRAND ISLAND 345KV CKT Z	720	720	0.05706	109.4341	CARPENTER - HURON 230KV CKT 1
FDNS	00NR_G15_094	2	20SP	G15_094	FROM->TO	GR ISLD-LNX3345.00 - GRAND ISLAND 345KV CKT Z	720	720	0.05596	109.4148	GEN335614 1-WILLOW GLENN UNIT#4
FDNS	00NR_G15_094	2	20SP	G15_094	FROM->TO	GR ISLD-LNX3345.00 - GRAND ISLAND 345KV CKT Z	720	720	0.05596	109.4139	GEN336801 1-BAXTER WILSON UNIT #1
FDNS	00NR_G15_094	2	20SP	G15_094	FROM->TO	GR ISLD-LNX3345.00 - GRAND ISLAND 345KV CKT Z	720	720	0.05544	109.412	P12:115:NPPD:WAPA2:HEMINGF7:SNAKECK7:BTB
FDNS	00NR_G15_094	2	20SP	G15_094	FROM->TO	GR ISLD-LNX3345.00 - GRAND ISLAND 345KV CKT Z	720	720	0.05596	109.4058	GEN336464 1-MICHOUD UNIT #3
FDNS	00NR_G15_094	2	20SP	G15_094	FROM->TO	GR ISLD-LNX3345.00 - GRAND ISLAND 345KV CKT Z	720	720	0.05596	109.4043	P12:115:UMZW:# 162 #: NEL IN ND. FAULT ON ML-NEL-MX-GA 115 KV
FDNS	00NR_G15_094	2	20SP	G15_094	FROM->TO	GR ISLD-LNX3345.00 - GRAND ISLAND 345KV CKT Z	720	720	0.05618	109.4019	KOSSUTH 3 345.00 - WEBSTER 345KV CKT 1
FDNS	00NR_G15_094	2	20SP	G15_094	FROM->TO	GR ISLD-LNX3345.00 - GRAND ISLAND 345KV CKT Z	720	720	0.05596	109.3864	GEN335204 1-NELSON UNIT 4
FDNS	00NR_G15_094	2	20SP	G15_094	FROM->TO	GR ISLD-LNX3345.00 - GRAND ISLAND 345KV CKT Z	720	720	0.05629	109.3824	NORTH LA CROSSE - NORTH ROCHESTER 345KV CKT 1
FDNS	00NR_G15_094	2	25SP	G15_094	FROM->TO	GR ISLD-LNX3345.00 - GRAND ISLAND 345KV CKT Z	720	720	0.06235	109.3818	CROOKED CREEK - RIVERDALE 230KV CKT 1
FDNS	00NR_G15_094	2	25SP	G15_094	FROM->TO	GR ISLD-LNX3345.00 - GRAND ISLAND 345KV CKT Z	720	720	0.05608	109.3801	GEN501801 1-DOLET HILLS UNIT1
FDNS	00NR_G15_094	2	20SP	G15_094	FROM->TO	GR ISLD-LNX3345.00 - GRAND ISLAND 345KV CKT Z	720	720	0.05596	109.3776	GEN334441 1-SABINE UNIT 5
FDNS	00NR_G15_094	2	20SP	G15_094	FROM->TO	GR ISLD-LNX3345.00 - GRAND ISLAND 345KV CKT Z	720	720	0.05631	109.3682	GLENBORO SOUTH - RUGBY 230KV CKT 1
FDNS	00NR_G15_094	2	20SP	G15_094	FROM->TO	GR ISLD-LNX3345.00 - GRAND ISLAND 345KV CKT Z	720	720	0.0573	109.3647	FT THOMPSON - HURON 230KV CKT 1
FDNS	00NR_G15_094	2	20SP	G15_094	FROM->TO	GR ISLD-LNX3345.00 - GRAND ISLAND 345KV CKT Z	720	720	0.0573	109.3647	FT THOMPSON - HURON 230KV CKT 1
FDNS	00NR_G15_094	2	20SP	G15_094	FROM->TO	GR ISLD-LNX3345.00 - GRAND ISLAND 345KV CKT Z	720	720	0.0573	109.3647	FT THOMPSON - HURON 230KV CKT 2
FDNS	00NR_G15_094	2	20SP	G15_094	FROM->TO	GR ISLD-LNX3345.00 - GRAND ISLAND 345KV CKT Z	720	720	0.0573	109.3647	FT THOMPSON - HURON 230KV CKT 2
FDNS	00NR_G15_094	2	25SP	G15_094	FROM->TO	GR ISLD-LNX3345.00 - GRAND ISLAND 345KV CKT Z	720	720	0.05706	109.3624	HURON - WATERTOWN 230KV CKT 2
FDNS	00NR_G15_094	2	25SP	G15_094	FROM->TO	GR ISLD-LNX3345.00 - GRAND ISLAND 345KV CKT Z	720	720	0.05706	109.3624	HURON - WATERTOWN 230KV CKT 2
FDNS	00NR_G15_094	2	20SP	G15_094	FROM->TO	GR ISLD-LNX3345.00 - GRAND ISLAND 345KV CKT Z	720	720	0.05596	109.3487	GEN542951 5-HAWTHORN UNIT #5
FDNS	00NR_G15_094	2	20SP	G15_094	FROM->TO	GR ISLD-LNX3345.00 - GRAND ISLAND 345KV CKT Z	720	720	0.0581	109.3484	BROKEN BOW - CALLAWAY 115KV CKT 1
FDNS	00NR_G15_094	2	20SP	G15_094	FROM->TO	GR ISLD-LNX3345.00 - GRAND ISLAND 345KV CKT Z	720	720	0.05596	109.3448	GEN542955 1-LACYGNE UNIT #1
FDNS	00NR_G15_094	2	25SP	G15_094	FROM->TO	GR ISLD-LNX3345.00 - GRAND ISLAND 345KV CKT Z	720	720	0.05706	109.3317	CARPENTER - WATERTOWN 230KV CKT 1
FDNS	00NR_G15_094	2	25SP	G15_094	FROM->TO	GR ISLD-LNX3345.00 - GRAND ISLAND 345KV CKT Z	720	720	0.05706	109.3317	CARPENTER - WATERTOWN 230KV CKT 1
FDNS	00NR_G15_094	2	25SP	G15_094	FROM->TO	GR ISLD-LNX3345.00 - GRAND ISLAND 345KV CKT Z	720	720	0.05608	109.3286	GEN336252 1-NINEMILE POINT UNIT#5
FDNS	00NR_G15_094	2	25SP	G15_094	FROM->TO	GR ISLD-LNX3345.00 - GRAND ISLAND 345KV CKT Z	720	720	0.05608	109.3264	GEN532751 1-WOLF CREEK GENERATING STATION UNIT 1
FDNS	00NR_G15_094	2	25SP	G15_094	FROM->TO	GR ISLD-LNX3345.00 - GRAND ISLAND 345KV CKT Z	720	720	0.05608	109.3263	GEN542962 2-IATAN UNIT #2
FDNS	00NR_G15_094	2	20SP	G15_094	FROM->TO	GR ISLD-LNX3345.00 - GRAND ISLAND 345KV CKT Z	720	720	0.05596	109.3238	GEN334433 1-SABINE UNIT 3
FDNS	00NR_G15_094	2	25SP	G15_094	FROM->TO	GR ISLD-LNX3345.00 - GRAND ISLAND 345KV CKT Z	720	720	0.05797	109.3178	FT THOMPSON - WESSINGTON 230KV CKT 1
FDNS	00NR_G15_094	2	25SP	G15_094	FROM->TO	GR ISLD-LNX3345.00 - GRAND ISLAND 345KV CKT Z	720	720	0.05797	109.3178	FT THOMPSON - WESSINGTON 230KV CKT 1
FDNS	00NR_G15_094	2	20SP	G15_094	FROM->TO	GR ISLD-LNX3345.00 - GRAND ISLAND 345KV CKT Z	720	720	0.05786	109.3132	ATKINSON - EMMET 115KV CKT 1
FDNS	00NR_G15_094	2	20SP	G15_094	FROM->TO	GR ISLD-LNX3345.00 - GRAND ISLAND 345KV CKT Z	720	720	0.05612	109.3061	GAVINS POINT - HARTINGTON 115KV CKT 1
FDNS	00NR_G15_094	2	25SP	G15_094	FROM->TO	GR ISLD-LNX3345.00 - GRAND ISLAND 345KV CKT Z	720	720	0.05649	109.2926	AS KING - EAU CLAIRE 345KV CKT 1
FDNS	00NR_G15_094	2	20SP	G15_094	FROM->TO	GR ISLD-LNX3345.00 - GRAND ISLAND 345KV CKT Z	720	720	0.05713	109.2844	CLEARWATER - NELIGH 115KV CKT 1
FDNS	00NR_G15_094	2	20SP	G15_094	FROM->TO	GR ISLD-LNX3345.00 - GRAND ISLAND 345KV CKT Z	720	720	0.05705	109.28	SIDNEY - STEGALL 345KV CKT 1
FDNS	00NR_G15_094	2	25SP	G15_094	FROM->TO	GR ISLD-LNX3345.00 - GRAND ISLAND 345KV CKT Z	720	720	0.05608	109.2738	GEN336251 1-NINEMILE POINT UNIT#4
FDNS	00NR_G15_094	2	25SP	G15_094	FROM->TO	GR ISLD-LNX3345.00 - GRAND ISLAND 345KV CKT Z	720	720	0.05653	109.2711	ALEXMRES3 345.00 - BISON 3 345.00 345KV CKT 1
FDNS	00NR_G15_094	2	25SP	G15_094	FROM->TO	GR ISLD-LNX3345.00 - GRAND ISLAND 345KV CKT Z	720	720	0.0568	109.2703	HAZLETON - MITCHLCO3 345.00 345KV CKT 1
FDNS	00NR_G15_094	2	20SP	G15_094	FROM->TO	GR ISLD-LNX3345.00 - GRAND ISLAND 345KV CKT Z	720	720	0.05652	109.269	WINNER - WITTEN 115KV CKT 1
FDNS	00NR_G15_094	2	20SP	G15_094	FROM->TO	GR ISLD-LNX3345.00 - GRAND ISLAND 345KV CKT Z	720	720	0.05579	109.2671	P12:115:NPPD:WAPA6:FTRANDL7:ONEILL 7:BTB
FDNS	00NR_G15_094	2	20SP	G15_094	FROM->TO	GR ISLD-LNX3345.00 - GRAND ISLAND 345KV CKT Z	720	720	0.05579	109.2671	P12:115:UMZB:# 115 #: SE IN NE. FR-SE-ON
FDNS	00NR_G15_094	2	20SP	G15_094	FROM->TO	GR ISLD-LNX3345.00 - GRAND ISLAND 345KV CKT Z	720	720	0.05761	109.2643	AINSWORTH - AINSWORTH 115KV CKT 1
FDNS	00NR_G15_094	2	25SP	G15_094	FROM->TO	GR ISLD-LNX3345.00 - GRAND ISLAND 345KV CKT Z	720	720	0.05524	109.2627	STAPLETON - THEDFORD 115KV CKT 1
FDNS	00NR_G15_094	2	20SP	G15_094	FROM->TO	GR ISLD-LNX3345.00 - GRAND ISLAND 345KV CKT Z	720	720	0.05644	109.2622	NMA B3 345 345.00 - NORTH LA CROSSE 345KV CKT 1
FDNS	00NR_G15_094	2	25SP	G15_094	FROM->TO	GR ISLD-LNX3345.00 - GRAND ISLAND 345KV CKT Z	720	720	0.05608	109.25	GEN336831 1-BAXTER WILSON SES
FDNS	00NR_G15_094	2	20SP	G15_094	FROM->TO	GR ISLD-LNX3345.00 - GRAND ISLAND 345KV CKT Z	720	720	0.05606	109.2495	CENTER - COYOTE 345KV CKT 1
FDNS	00NR_G15_094	2	20SP	G15_094	FROM->TO	GR ISLD-LNX3345.00 - GRAND ISLAND 345KV CKT Z	720	720	0.05596	109.2483	GEN336222 1-LITTLE GYPSY UNIT#2
FDNS	00NR_G15_094	2	25SP	G15_094	FROM->TO	GR ISLD-LNX3345.00 - GRAND ISLAND 345KV CKT Z	720	720	0.05623	109.2441	CNTSHNT3 345.00 - PRAIRIE3 345.00 345KV CKT 1
FDNS	00NR_G15_094	2	20SP	G15_094	FROM->TO	GR ISLD-LNX3345.00 - GRAND ISLAND 345KV CKT Z	720	720	0.05603	109.2228	MENNO JCT - TRIPP JCT 115KV CKT 1
FDNS	00NR_G15_094	2	25SP	G15_094	FROM->TO	GR ISLD-LNX3345.00 - GRAND ISLAND 345KV CKT Z	720	720	0.05608	109.2197	GEN337041 1-GERALD ANDRUS
FDNS	00NR_G15_094	2	20SP	G15_094	FROM->TO	GR ISLD-LNX3345.00 - GRAND ISLAND 345KV CKT Z	720	720	0.05596	109.2191	P13:230-345:NPPD:NUCOR-1
FDNS	00NR_G15_094	2	25SP	G15_094	FROM->TO	GR ISLD-LNX3345.00 - GRAND ISLAND 345KV CKT Z	720	720	0.067	109.2183	KEYSTONE - SIDNEY1-LNX3345.00 345KV CKT 1
FDNS	00NR_G15_094	2	20SP	G15_094	FROM->TO	GR ISLD-LNX3345.00 - GRAND ISLAND 345KV CKT Z	720	720	0.05596	109.2181	P13:115-230:NPPD:NUCOR-3
FDNS	00NR_G15_094	2	20SP	G15_094	FROM->TO	GR ISLD-LNX3345.00 - GRAND ISLAND 345KV CKT Z	720	720	0.05596	109.2159	GEN336152 1-WATERFORD UNIT#2
FDNS	00NR_G15_094	2	20SP	G15_094	FROM->TO	GR ISLD-LNX3345.00 - GRAND ISLAND 345KV CKT Z	720	720	0.05596	109.2158	GEN336151 1-WATERFORD UNIT#1
FDNS	00NR_G15_094	2	20SP	G15_094	FROM->TO	GR ISLD-LNX3345.00 - GRAND ISLAND 345KV CKT Z	720	720	0.06252	109.2128	G15094_T 345.00 - SIDNEY2-LNX3345.00 345KV CKT 1
FDNS	00NR_G15_094	2	25SP	G15_094	FROM->TO	GR ISLD-LNX3345.00 - GRAND ISLAND 345KV CKT Z	720	720	0.05682	109.2034	RASMUSN - UTICA JCT 230KV CKT 1
FDNS	00NR_G15_094	2	20SP	G15_094	FROM->TO	GR ISLD-LNX3345.00 - GRAND ISLAND 345KV CKT Z	720	720	0.05596	109.2027	GEN303007 1-1BC2 U2
FDNS	00NR_G15_094	2	20SP	G15_094	FROM->TO	GR ISLD-LNX3345.00 - GRAND ISLAND 345KV CKT Z	720	720	0.05668	109.2006	ADAMS - MITCHLCO3 345.00 345KV CKT 1
FDNS	00NR_G15_094	2	20SP	G15_094	FROM->TO	GR ISLD-LNX3345.00 - GRAND ISLAND 345KV CKT Z	720	720	0.05596	109.2001	GEN303006 1-1BC2 U1
FDNS	00NR_G15_094	2	25SP	G15_094	FROM->TO	GR ISLD-LNX3345.00 - GRAND ISLAND 345KV CKT Z	720	720	0.05658	109.1956	EAGLE 4 230.00 - PAHOJA 230KV CKT 1
FDNS	00NR_G15_094	2	20SP	G15_094	FROM->TO	GR ISLD-LNX3345.00 - GRAND ISLAND 345KV CKT Z	720	720	0.06252	109.1913	SIDNEY - SIDNEY2-LNX3345.00 345KV CKT Z
FDNS	00NR_G15_094	2	20SP	G15_094	FROM->TO	GR ISLD-LNX3345.00 - GRAND ISLAND 345KV CKT Z	720	720	0.0568	109.1884	RAUN - SIOUX CITY 345KV CKT 1
FDNS	00NR_G15_094	2	20SP	G15_094	FROM->TO	GR ISLD-LNX3345.00 - GRAND ISLAND 345KV CKT Z	720	720	0.0568	109.1884	RAUN - SIOUX CITY 345KV CKT 1
FDNS	00NR_G15_094	2	20SP	G15_094	FROM->TO	GR ISLD-LNX3345.00 - GRAND ISLAND 345KV CKT Z	720	720	0.05596	109.1774	GEN562547 1-G14_039_3 0.6900
FDNS	00NR_G15_094	2	25SP	G15_094	FROM->TO	GR ISLD-LNX3345.00 - GRAND ISLAND 345KV CKT Z	720	720	0.05608	109.1763	GEN501813 1-RODEMACHER UNIT 3
FDNS	00NR_G15_094	2	20SP	G15_094	FROM->TO	GR ISLD-LNX3345.00 - GRAND ISLAND 345KV CKT Z	720	720	0.05603	109.1627	BROOKING COUNTY - BSSOUTH3 345.00 345KV CKT 1
FDNS	00NR_G15_094	2	25SP	G15_094	FROM->TO	GR ISLD-LNX3345.00 - GRAND ISLAND 345KV CKT Z	720	720	0.05685	109.1606	GRIMES - LEHIGH 345KV CKT 1
FDNS	00NR_G15_094	2	20SP	G15_094	FROM->TO	GR ISLD-LNX3345.00 - GRAND ISLAND 345KV CKT Z	720	720	0.04574	109.1565	NUNDRWD - WAYSIDE 230KV CKT 1
FDNS	00NR_G15_094	2	20SP	G15_094	FROM->TO	GR ISLD-LNX3345.00 - GRAND ISLAND 345KV CKT Z	720	720	0.05596	109.1541	GEN303008 1-1BC2 U3
FDNS	00NR_G15_094	2	20SP	G15_094	FROM->TO	GR ISLD-LNX3345.00 - GRAND ISLAND 345KV CKT Z	720	720	0.05596	109.1515	GEN336170 1-GULF OXY U4

SOLUTION	GROUP	SCENARIO	SEASON	SOURCE	DIRECTION	MONITORED ELEMENT	RATEA (MVA)	RATEB(MVA)	TDF	TC%LOADING (% MVA)	CONTINGENCY
FDNS	00NR_G15_094	2	20SP	G15_094	FROM->TO	GR ISLD-LNX3345.00 - GRAND ISLAND 345KV CKT Z	720	720	0.05652	109.1506	GREGORY - WINNER 115KV CKT 1
FDNS	00NR_G15_094	2	20SP	G15_094	FROM->TO	GR ISLD-LNX3345.00 - GRAND ISLAND 345KV CKT Z	720	720	0.05646	109.1495	ADAMS - PLEASANT VALLEY 345KV CKT 1
FDNS	00NR_G15_094	2	20SP	G15_094	FROM->TO	GR ISLD-LNX3345.00 - GRAND ISLAND 345KV CKT Z	720	720	0.05607	109.1485	GARRISON - JAMES TOWN 230KV CKT 1
FDNS	00NR_G15_094	2	20SP	G15_094	FROM->TO	GR ISLD-LNX3345.00 - GRAND ISLAND 345KV CKT Z	720	720	0.05652	109.1453	P12:115:UMZW:# 172 #: WI IN SD.
FDNS	00NR_G15_094	2	20SP	G15_094	FROM->TO	GR ISLD-LNX3345.00 - GRAND ISLAND 345KV CKT Z	720	720	0.05603	109.1446	MENNO JCT - UTICA 115KV CKT 1
FDNS	00NR_G15_094	2	25SP	G15_094	FROM->TO	GR ISLD-LNX3345.00 - GRAND ISLAND 345KV CKT Z	720	720	0.05608	109.1347	GEN344897 4-1LAB G4 20.000
FDNS	00NR_G15_094	2	25SP	G15_094	FROM->TO	GR ISLD-LNX3345.00 - GRAND ISLAND 345KV CKT Z	720	720	0.05608	109.1336	GEN344894 1-1LAB G1 20.000
FDNS	00NR_G15_094	2	25SP	G15_094	FROM->TO	GR ISLD-LNX3345.00 - GRAND ISLAND 345KV CKT Z	720	720	0.05608	109.1336	GEN344895 2-1LAB G2 20.000
FDNS	00NR_G15_094	2	25SP	G15_094	FROM->TO	GR ISLD-LNX3345.00 - GRAND ISLAND 345KV CKT Z	720	720	0.05608	109.1335	GEN344896 3-1LAB G3 20.000
FDNS	00NR_G15_094	2	25SP	G15_094	FROM->TO	GR ISLD-LNX3345.00 - GRAND ISLAND 345KV CKT Z	720	720	0.05797	109.1334	BASSETT 7115.00 - STUART 115KV CKT 1
FDNS	00NR_G15_094	2	25SP	G15_094	FROM->TO	GR ISLD-LNX3345.00 - GRAND ISLAND 345KV CKT Z	720	720	0.05804	109.1292	JEFFREY - NORTH PLATTE 115KV CKT 1
FDNS	00NR_G15_094	2	25SP	G15_094	FROM->TO	GR ISLD-LNX3345.00 - GRAND ISLAND 345KV CKT Z	720	720	0.05608	109.1235	GEN542957 1-IATAN UNIT #1
FDNS	00NR_G15_094	2	25SP	G15_094	FROM->TO	GR ISLD-LNX3345.00 - GRAND ISLAND 345KV CKT Z	720	720	0.0562	109.1205	P12:115:NPPD:WAPA4:SIDNEY 7:B.SPRGS7:BTB
FDNS	00NR_G15_094	2	25SP	G15_094	FROM->TO	GR ISLD-LNX3345.00 - GRAND ISLAND 345KV CKT Z	720	720	0.0562	109.1205	P12:115:UMZB:# 119 #: IN NE.
FDNS	00NR_G15_094	2	20SP	G15_094	FROM->TO	GR ISLD-LNX3345.00 - GRAND ISLAND 345KV CKT Z	720	720	0.0551	109.0999	MAXWELL - STAPLETON 115KV CKT 1
FDNS	00NR_G15_094	2	25SP	G15_094	FROM->TO	GR ISLD-LNX3345.00 - GRAND ISLAND 345KV CKT Z	720	720	0.05797	109.0978	AINSWORTH - BASSETT 7115.00 115KV CKT 1
FDNS	00NR_G15_094	2	20SP	G15_094	FROM->TO	GR ISLD-LNX3345.00 - GRAND ISLAND 345KV CKT Z	720	720	0.05596	109.0949	GEN636641 1-LOUISA UNIT 1
FDNS	00NR_G15_094	2	25SP	G15_094	FROM->TO	GR ISLD-LNX3345.00 - GRAND ISLAND 345KV CKT Z	720	720	0.05608	109.0816	GEN345671 2-1RUSH G2 18.000
FDNS	00NR_G15_094	2	25SP	G15_094	FROM->TO	GR ISLD-LNX3345.00 - GRAND ISLAND 345KV CKT Z	720	720	0.05608	109.0786	GEN345670 1-1RUSH G1 18.000
FDNS	00NR_G15_094	2	25SP	G15_094	FROM->TO	GR ISLD-LNX3345.00 - GRAND ISLAND 345KV CKT Z	720	720	0.05608	109.0689	GEN335206 1-NELSON UNIT 6
FDNS	00NR_G15_094	2	25SP	G15_094	FROM->TO	GR ISLD-LNX3345.00 - GRAND ISLAND 345KV CKT Z	720	720	0.05725	109.0589	P12:115:NPPD:1164:ONEILL 7:JEFFREY9:BTB
FDNS	00NR_G15_094	2	25SP	G15_094	FROM->TO	GR ISLD-LNX3345.00 - GRAND ISLAND 345KV CKT Z	720	720	0.05682	109.0563	RASMUSN - SIOUX CITY 230KV CKT 1
FDNS	00NR_G15_094	2	25SP	G15_094	FROM->TO	GR ISLD-LNX3345.00 - GRAND ISLAND 345KV CKT Z	720	720	0.05608	109.0497	GEN629075 1-OTTUMWA GENERATOR FOR OTTUMWA UNIT NO 1
FDNS	00NR_G15_094	2	25SP	G15_094	FROM->TO	GR ISLD-LNX3345.00 - GRAND ISLAND 345KV CKT Z	720	720	0.05608	109.0494	GEN334440 1-SABINE UNIT 4
FDNS	00NR_G15_094	2	25SP	G15_094	FROM->TO	GR ISLD-LNX3345.00 - GRAND ISLAND 345KV CKT Z	720	720	0.05643	109.0468	GLENBORO SOUTH - RUGBY 230KV CKT 1
FDNS	00NR_G15_094	2	25SP	G15_094	FROM->TO	GR ISLD-LNX3345.00 - GRAND ISLAND 345KV CKT Z	720	720	0.05608	109.0427	GEN532652 1-JEFFREY ENERGY CENTER UNIT 2
FDNS	00NR_G15_094	2	25SP	G15_094	FROM->TO	GR ISLD-LNX3345.00 - GRAND ISLAND 345KV CKT Z	720	720	0.05608	109.0426	GEN532653 1-JEFFREY ENERGY CENTER UNIT 3
FDNS	00NR_G15_094	2	25SP	G15_094	FROM->TO	GR ISLD-LNX3345.00 - GRAND ISLAND 345KV CKT Z	720	720	0.05608	109.0421	GEN532651 1-JEFFREY ENERGY CENTER UNIT 1
FDNS	00NR_G15_094	2	25SP	G15_094	FROM->TO	GR ISLD-LNX3345.00 - GRAND ISLAND 345KV CKT Z	720	720	0.05608	109.03	GEN338388 1-1PLUM PT U1 23.000
FDNS	00NR_G15_094	2	25SP	G15_094	FROM->TO	GR ISLD-LNX3345.00 - GRAND ISLAND 345KV CKT Z	720	720	0.067	109.0259	SIDNEY - SIDNEY1-LNX3345.00 345KV CKT Z
FDNS	00NR_G15_094	2	25SP	G15_094	FROM->TO	GR ISLD-LNX3345.00 - GRAND ISLAND 345KV CKT Z	720	720	0.05608	109.0209	GEN642067 1-PLATTE
FDNS	00NR_G15_094	2	25SP	G15_094	FROM->TO	GR ISLD-LNX3345.00 - GRAND ISLAND 345KV CKT Z	720	720	0.05608	109.0164	GEN645001 1-FORT CALHOUN 1
FDNS	00NR_G15_094	2	25SP	G15_094	FROM->TO	GR ISLD-LNX3345.00 - GRAND ISLAND 345KV CKT Z	720	720	0.05608	109.0072	GEN501812 1-RODEMACHER UNIT 2
FDNS	00NR_G15_094	2	25SP	G15_094	FROM->TO	GR ISLD-LNX3345.00 - GRAND ISLAND 345KV CKT Z	720	720	0.05725	109.0042	CLEARWATER - ONEILL 115KV CKT 1
FDNS	00NR_G15_094	2	25SP	G15_094	FROM->TO	GR ISLD-LNX3345.00 - GRAND ISLAND 345KV CKT Z	720	720	0.05608	109.0017	GEN336191 1-LITTLE GYPSY UNIT#3
FDNS	00NR_G15_094	2	20SP	G15_094	FROM->TO	GR ISLD-LNX3345.00 - GRAND ISLAND 345KV CKT Z	720	720	0.05614	108.9973	AXTELL - SWEETWATER 345KV CKT 1
FDNS	00NR_G15_094	2	25SP	G15_094	FROM->TO	GR ISLD-LNX3345.00 - GRAND ISLAND 345KV CKT Z	720	720	0.05656	108.9929	ARPIN B4 345.00 - EAU CLAIRE 345KV CKT 1
FDNS	00NR_G15_094	2	25SP	G15_094	FROM->TO	GR ISLD-LNX3345.00 - GRAND ISLAND 345KV CKT Z	720	720	0.05797	108.9846	ATKINSON - STUART 115KV CKT 1
FDNS	00NR_G15_094	2	25SP	G15_094	FROM->TO	GR ISLD-LNX3345.00 - GRAND ISLAND 345KV CKT Z	720	720	0.05556	108.9841	P12:115:NPPD:WAPA2:HEMINGF7:SNAKECK7:BTB
FDNS	00NR_G15_094	2	25SP	G15_094	FROM->TO	GR ISLD-LNX3345.00 - GRAND ISLAND 345KV CKT Z	720	720	0.0563	108.9618	KOSSUTH 3 345.00 - WEBSTER 345KV CKT 1
FDNS	00NR_G15_094	2	25SP	G15_094	FROM->TO	GR ISLD-LNX3345.00 - GRAND ISLAND 345KV CKT Z	720	720	0.05608	108.9552	P12:115:UMZW:# 162 #: NEL IN ND. FAULT ON ML-NEL-MX-GA 115 KV
FDNS	00NR_G15_094	2	25SP	G15_094	FROM->TO	GR ISLD-LNX3345.00 - GRAND ISLAND 345KV CKT Z	720	720	0.05608	108.946	GEN335614 1-WILLOW GLENN UNIT#4
FDNS	00NR_G15_094	2	25SP	G15_094	FROM->TO	GR ISLD-LNX3345.00 - GRAND ISLAND 345KV CKT Z	720	720	0.05608	108.9457	GEN336801 1-BAXTER WILSON UNIT #1
FDNS	00NR_G15_094	2	25SP	G15_094	FROM->TO	GR ISLD-LNX3345.00 - GRAND ISLAND 345KV CKT Z	720	720	0.06156	108.9371	HOLCOMB - SETAB 345KV CKT 1
FDNS	00NR_G15_094	2	25SP	G15_094	FROM->TO	GR ISLD-LNX3345.00 - GRAND ISLAND 345KV CKT Z	720	720	0.06156	108.9371	HOLCOMB - SETAB 345KV CKT 1
FDNS	00NR_G15_094	2	25SP	G15_094	FROM->TO	GR ISLD-LNX3345.00 - GRAND ISLAND 345KV CKT Z	720	720	0.05608	108.9363	GEN336464 1-MICHOUD UNIT #3
FDNS	00NR_G15_094	2	25SP	G15_094	FROM->TO	GR ISLD-LNX3345.00 - GRAND ISLAND 345KV CKT Z	720	720	0.05608	108.9265	GEN334441 1-SABINE UNIT 5
FDNS	00NR_G15_094	2	25SP	G15_094	FROM->TO	GR ISLD-LNX3345.00 - GRAND ISLAND 345KV CKT Z	720	720	0.05608	108.9203	GEN335204 1-NELSON UNIT 4
FDNS	00NR_G15_094	2	25SP	G15_094	FROM->TO	GR ISLD-LNX3345.00 - GRAND ISLAND 345KV CKT Z	720	720	0.05608	108.8953	GEN542955 1-LACYGNE UNIT #1
FDNS	00NR_G15_094	2	25SP	G15_094	FROM->TO	GR ISLD-LNX3345.00 - GRAND ISLAND 345KV CKT Z	720	720	0.05742	108.8927	FT THOMPSON - HURON 230KV CKT 1
FDNS	00NR_G15_094	2	25SP	G15_094	FROM->TO	GR ISLD-LNX3345.00 - GRAND ISLAND 345KV CKT Z	720	720	0.05742	108.8927	FT THOMPSON - HURON 230KV CKT 1
FDNS	00NR_G15_094	2	25SP	G15_094	FROM->TO	GR ISLD-LNX3345.00 - GRAND ISLAND 345KV CKT Z	720	720	0.05742	108.8927	FT THOMPSON - HURON 230KV CKT 2
FDNS	00NR_G15_094	2	25SP	G15_094	FROM->TO	GR ISLD-LNX3345.00 - GRAND ISLAND 345KV CKT Z	720	720	0.05742	108.8927	FT THOMPSON - HURON 230KV CKT 2
FDNS	00NR_G15_094	2	25SP	G15_094	FROM->TO	GR ISLD-LNX3345.00 - GRAND ISLAND 345KV CKT Z	720	720	0.05608	108.8733	GEN542951 5-HAWTHORN UNIT #5
FDNS	00NR_G15_094	2	25SP	G15_094	FROM->TO	GR ISLD-LNX3345.00 - GRAND ISLAND 345KV CKT Z	720	720	0.05822	108.8686	BROKEN BOW - CALLAWAY 115KV CKT 1
FDNS	00NR_G15_094	2	25SP	G15_094	FROM->TO	GR ISLD-LNX3345.00 - GRAND ISLAND 345KV CKT Z	720	720	0.05627	108.8554	AXTELL - SWEETWATER 345KV CKT 1
FDNS	00NR_G15_094	2	25SP	G15_094	FROM->TO	GR ISLD-LNX3345.00 - GRAND ISLAND 345KV CKT Z	720	720	0.05639	108.85	NORTH LA CROSSE - NORTH ROCHESTER 345KV CKT 1
FDNS	00NR_G15_094	2	25SP	G15_094	FROM->TO	GR ISLD-LNX3345.00 - GRAND ISLAND 345KV CKT Z	720	720	0.05773	108.8343	AINSWORTH - AINSWORTH 115KV CKT 1
FDNS	00NR_G15_094	2	25SP	G15_094	FROM->TO	GR ISLD-LNX3345.00 - GRAND ISLAND 345KV CKT Z	720	720	0.05608	108.828	GEN334433 1-SABINE UNIT 3
FDNS	00NR_G15_094	2	25SP	G15_094	FROM->TO	GR ISLD-LNX3345.00 - GRAND ISLAND 345KV CKT Z	720	720	0.05718	108.8031	SIDNEY - STEGALL 345KV CKT 1
FDNS	00NR_G15_094	2	25SP	G15_094	FROM->TO	GR ISLD-LNX3345.00 - GRAND ISLAND 345KV CKT Z	720	720	0.05592	108.8025	P12:115:NPPD:WAPA6:FTRANDL7:ONEILL 7:BTB
FDNS	00NR_G15_094	2	25SP	G15_094	FROM->TO	GR ISLD-LNX3345.00 - GRAND ISLAND 345KV CKT Z	720	720	0.05592	108.8025	P12:115:UMZB:# 115 #: SE IN NE. FR-SE-ON
FDNS	00NR_G15_094	2	25SP	G15_094	FROM->TO	GR ISLD-LNX3345.00 - GRAND ISLAND 345KV CKT Z	720	720	0.05625	108.7995	GAVINS POINT - HARTINGTON 115KV CKT 1
FDNS	00NR_G15_094	2	25SP	G15_094	FROM->TO	GR ISLD-LNX3345.00 - GRAND ISLAND 345KV CKT Z	720	720	0.05608	108.7903	GEN336222 1-LITTLE GYPSY UNIT#2
FDNS	00NR_G15_094	2	25SP	G15_094	FROM->TO	GR ISLD-LNX3345.00 - GRAND ISLAND 345KV CKT Z	720	720	0.05619	108.7759	CENTER - COYOTE 345KV CKT 1
FDNS	00NR_G15_094	2	25SP	G15_094	FROM->TO	GR ISLD-LNX3345.00 - GRAND ISLAND 345KV CKT Z	720	720	0.0568	108.7698	ADAMS - MITCHLCO3 345.00 345KV CKT 1
FDNS	00NR_G15_094	2	25SP	G15_094	FROM->TO	GR ISLD-LNX3345.00 - GRAND ISLAND 345KV CKT Z	720	720	0.05797	108.7655	ATKINSON - EMMET 115KV CKT 1
FDNS	00NR_G15_094	2	25SP	G15_094	FROM->TO	GR ISLD-LNX3345.00 - GRAND ISLAND 345KV CKT Z	720	720	0.05664	108.7647	WINNER - WITTEN 115KV CKT 1
FDNS	00NR_G15_094	2	25SP	G15_094	FROM->TO	GR ISLD-LNX3345.00 - GRAND ISLAND 345KV CKT Z	720	720	0.05608	108.744	GEN336152 1-WATERFORD UNIT#2
FDNS	00NR_G15_094	2	25SP	G15_094	FROM->TO	GR ISLD-LNX3345.00 - GRAND ISLAND 345KV CKT Z	720	720	0.05608	108.7439	GEN336151 1-WATERFORD UNIT#1
FDNS	00NR_G15_094	2	25SP	G15_094	FROM->TO	GR ISLD-LNX3345.00 - GRAND ISLAND 345KV CKT Z	720	720	0.05608	108.7211	P13:115-230:NPPD:NUCOR-3
FDNS	00NR_G15_094	2	25SP	G15_094	FROM->TO	GR ISLD-LNX3345.00 - GRAND ISLAND 345KV CKT Z	720	720	0.06267	108.7041	G15094_T 345.00 - SIDNEY2-LNX3345.00 345KV CKT 1
FDNS	00NR_G15_094	2	25SP	G15_094	FROM->TO	GR ISLD-LNX3345.00 - GRAND ISLAND 345KV CKT Z	720	720	0.05615	108.6948	MENNO JCT - TRIPP JCT 115KV CKT 1

SOLUTION	GROUP	SCENARIO	SEASON	SOURCE	DIRECTION	MONITORED ELEMENT	RATEA (MVA)	RATEB(MVA)	TDF	TC%LOADING (% MVA)	CONTINGENCY
FDNS	00NR_G15_094	2	25SP	G15_094	FROM->TO	GR ISLD-LNX3345.00 - GRAND ISLAND 345KV CKT Z	720	720	0.05608	108.6919	P12:115:NPPD:1091:VALENTN7:MISSION7:BTB
FDNS	00NR_G15_094	2	25SP	G15_094	FROM->TO	GR ISLD-LNX3345.00 - GRAND ISLAND 345KV CKT Z	720	720	0.05608	108.6908	P13:230-345:NPPD:NUCOR-1
FDNS	00NR_G15_094	2	25SP	G15_094	FROM->TO	GR ISLD-LNX3345.00 - GRAND ISLAND 345KV CKT Z	720	720	0.06267	108.6681	SIDNEY - SIDNEY2-LNX3345.00 345KV CKT Z
FDNS	00NR_G15_094	2	25SP	G15_094	FROM->TO	GR ISLD-LNX3345.00 - GRAND ISLAND 345KV CKT Z	720	720	0.04584	108.6218	NUNDRWD - WAYSIDE 230KV CKT 1
FDNS	00NR_G15_094	2	25SP	G15_094	FROM->TO	GR ISLD-LNX3345.00 - GRAND ISLAND 345KV CKT Z	720	720	0.05524	108.5955	MAXWELL - STAPLETON 115KV CKT 1
FDNS	00NR_G15_094	2	25SP	G15_094	FROM->TO	GR ISLD-LNX3345.00 - GRAND ISLAND 345KV CKT Z	720	720	0.05615	108.5933	MENNO JCT - UTICA 115KV CKT 1
FDNS	00NR_G15_094	2	25SP	G15_094	FROM->TO	GR ISLD-LNX3345.00 - GRAND ISLAND 345KV CKT Z	720	720	0.05608	108.5888	P13:115-345:NPPD:NUCOR-2
FDNS	00NR_G15_094	2	25SP	G15_094	FROM->TO	GR ISLD-LNX3345.00 - GRAND ISLAND 345KV CKT Z	720	720	0.05615	108.5542	P12:115:UMZZ:# 237 #: MEN IN SD. MENNO JUNCTION IS A TAP (UJ-MEN-TP).
FDNS	00NR_G15_094	2	20SP	G15_094	FROM->TO	GR ISLD-LNX3345.00 - GRAND ISLAND 345KV CKT Z	720	720	0.05596	108.5422	1303-KEARNEY
FDNS	00NR_G15_094	2	20SP	G15_094	FROM->TO	GR ISLD-LNX3345.00 - GRAND ISLAND 345KV CKT Z	720	720	0.05596	108.5422	BASE CASE
FDNS	00NR_G15_094	2	20SP	G15_094	FROM->TO	GR ISLD-LNX3345.00 - GRAND ISLAND 345KV CKT Z	720	720	0.05482	108.3812	MOORE - PAULINE 345KV CKT 1
FDNS	00NR_G15_094	2	20SP	G15_094	FROM->TO	GR ISLD-LNX3345.00 - GRAND ISLAND 345KV CKT Z	720	720	0.05512	108.3464	KELLY - SHELL CREEK 230KV CKT 1
FDNS	00NR_G15_094	2	20SP	G15_094	FROM->TO	GR ISLD-LNX3345.00 - GRAND ISLAND 345KV CKT Z	720	720	0.05512	108.3302	SHELL CREEK (SHELLCREEKT1) 345/230/13.8KV TRANSFORMER CKT 1
FDNS	00NR_G15_094	2	20SP	G15_094	FROM->TO	GR ISLD-LNX3345.00 - GRAND ISLAND 345KV CKT Z	720	720	0.05512	108.3302	SHELL CREEK (SHELLCREEKT1) 345/230/13.8KV TRANSFORMER CKT 1
FDNS	00NR_G15_094	2	20SP	G15_094	FROM->TO	GR ISLD-LNX3345.00 - GRAND ISLAND 345KV CKT Z	720	720	0.05188	108.318	COOPER - MOORE 345KV CKT 1
FDNS	00NR_G15_094	2	20SP	G15_094	FROM->TO	GR ISLD-LNX3345.00 - GRAND ISLAND 345KV CKT Z	720	720	0.05611	108.2422	SUB 3455 - SUB 3740 345KV CKT 1
FDNS	00NR_G15_094	2	20SP	G15_094	FROM->TO	GR ISLD-LNX3345.00 - GRAND ISLAND 345KV CKT Z	720	720	0.05611	108.2422	SUB 3455 - SUB 3740 345KV CKT 1
FDNS	00NR_G15_094	2	20SP	G15_094	FROM->TO	GR ISLD-LNX3345.00 - GRAND ISLAND 345KV CKT Z	720	720	0.05596	108.2323	ANTELOP-LNX3345.00 - BRDLAND-LNX3345.00 345KV CKT 1
FDNS	00NR_G15_094	2	20SP	G15_094	FROM->TO	GR ISLD-LNX3345.00 - GRAND ISLAND 345KV CKT Z	720	720	0.04949	108.2015	COLUMWEST - KELLY 230KV CKT 1
FDNS	00NR_G15_094	2	20SP	G15_094	FROM->TO	GR ISLD-LNX3345.00 - GRAND ISLAND 345KV CKT Z	720	720	0.05559	108.1888	MOORE - NW68TH & HOLDREGE 345KV CKT 1
FDNS	00NR_G15_094	2	20SP	G15_094	FROM->TO	GR ISLD-LNX3345.00 - GRAND ISLAND 345KV CKT Z	720	720	0.05559	108.1888	MOORE - NW68TH & HOLDREGE 345KV CKT 1
FDNS	00NR_G15_094	2	20SP	G15_094	FROM->TO	GR ISLD-LNX3345.00 - GRAND ISLAND 345KV CKT Z	720	720	0.05543	108.1888	AURORA - GRAND ISLAND 115KV CKT 1
FDNS	00NR_G15_094	2	25SP	G15_094	FROM->TO	GR ISLD-LNX3345.00 - GRAND ISLAND 345KV CKT Z	720	720	0.05608	108.1876	KEARNEY 115KV SWITCHED SHUNT
FDNS	00NR_G15_094	2	20SP	G15_094	FROM->TO	GR ISLD-LNX3345.00 - GRAND ISLAND 345KV CKT Z	720	720	0.05355	108.1838	103RD & ROKEBY - MOORE 345KV CKT 1
FDNS	00NR_G15_094	2	20SP	G15_094	FROM->TO	GR ISLD-LNX3345.00 - GRAND ISLAND 345KV CKT Z	720	720	0.05355	108.1838	103RD & ROKEBY - MOORE 345KV CKT 1
FDNS	00NR_G15_094	2	20SP	G15_094	FROM->TO	GR ISLD-LNX3345.00 - GRAND ISLAND 345KV CKT Z	720	720	0.05555	108.1705	MISSION - WITTEN 115KV CKT 1
FDNS	00NR_G15_094	2	20SP	G15_094	FROM->TO	GR ISLD-LNX3345.00 - GRAND ISLAND 345KV CKT Z	720	720	0.05676	108.1616	LOUP CITY - ST LIBORY 115KV CKT 1
FDNS	00NR_G15_094	2	20SP	G15_094	FROM->TO	GR ISLD-LNX3345.00 - GRAND ISLAND 345KV CKT Z	720	720	0.05492	108.1289	CENTRAL CITY - CLARKS 115KV CKT 1
FDNS	00NR_G15_094	2	25SP	G15_094	FROM->TO	GR ISLD-LNX3345.00 - GRAND ISLAND 345KV CKT Z	720	720	0.05204	108.0945	COOPER - MOORE 345KV CKT 1
FDNS	00NR_G15_094	2	20SP	G15_094	FROM->TO	GR ISLD-LNX3345.00 - GRAND ISLAND 345KV CKT Z	720	720	0.05596	108.0653	BRDLAND-LNX3345.00 - HURON 345KV CKT Z
FDNS	00NR_G15_094	2	20SP	G15_094	FROM->TO	GR ISLD-LNX3345.00 - GRAND ISLAND 345KV CKT Z	720	720	0.05596	108.065	HURON (BD KU2A) 345/230/13.8KV TRANSFORMER CKT 1
FDNS	00NR_G15_094	2	20SP	G15_094	FROM->TO	GR ISLD-LNX3345.00 - GRAND ISLAND 345KV CKT Z	720	720	0.05596	108.065	HURON (BD KU2A) 345/230/13.8KV TRANSFORMER CKT 1
FDNS	00NR_G15_094	2	20SP	G15_094	FROM->TO	GR ISLD-LNX3345.00 - GRAND ISLAND 345KV CKT Z	720	720	0.05596	108.0649	BROADLAND - HURON 230KV CKT 1
FDNS	00NR_G15_094	2	20SP	G15_094	FROM->TO	GR ISLD-LNX3345.00 - GRAND ISLAND 345KV CKT Z	720	720	0.05596	108.0649	P12:345:UMZB:# 102 #: AVS BD IN ND. AVS BRD LR
FDNS	00NR_G15_094	2	20SP	G15_094	FROM->TO	GR ISLD-LNX3345.00 - GRAND ISLAND 345KV CKT Z	720	720	0.05596	108.0647	P12:345:UMZB:# 103 #: BD IN SD. LOSS OF LINE
FDNS	00NR_G15_094	2	20SP	G15_094	FROM->TO	GR ISLD-LNX3345.00 - GRAND ISLAND 345KV CKT Z	720	720	0.05596	108.0465	G830_SUB 115.00 - GRE-MCHENRY7115.00 115KV CKT 1
FDNS	00NR_G15_094	2	20SP	G15_094	FROM->TO	GR ISLD-LNX3345.00 - GRAND ISLAND 345KV CKT Z	720	720	0.05596	108.0436	G830_SUB 115.00 115/34.5KV TRANSFORMER CKT 1
FDNS	00NR_G15_094	2	20SP	G15_094	FROM->TO	GR ISLD-LNX3345.00 - GRAND ISLAND 345KV CKT Z	720	720	0.05703	108.0431	P12:230:UMZB:# 114 #: SB IN SD. SB-WK-GH
FDNS	00NR_G15_094	2	20SP	G15_094	FROM->TO	GR ISLD-LNX3345.00 - GRAND ISLAND 345KV CKT Z	720	720	0.05703	108.0431	P12:230:UMZB:# 117 #: WK IN SD. SB-WK-GH
FDNS	00NR_G15_094	2	20SP	G15_094	FROM->TO	GR ISLD-LNX3345.00 - GRAND ISLAND 345KV CKT Z	720	720	0.05596	108.0431	GEN620324 3-HOOT LAKE 3 GEN
FDNS	00NR_G15_094	2	20SP	G15_094	FROM->TO	GR ISLD-LNX3345.00 - GRAND ISLAND 345KV CKT Z	720	720	0.05596	108.0387	GEN652414 4-FT PECK
FDNS	00NR_G15_094	2	20SP	G15_094	FROM->TO	GR ISLD-LNX3345.00 - GRAND ISLAND 345KV CKT Z	720	720	0.05596	108.0387	GEN652415 5-FT PECK
FDNS	00NR_G15_094	2	25SP	G15_094	FROM->TO	GR ISLD-LNX3345.00 - GRAND ISLAND 345KV CKT Z	720	720	0.05496	108.038	MOORE - PAULINE 345KV CKT 1
FDNS	00NR_G15_094	2	20SP	G15_094	FROM->TO	GR ISLD-LNX3345.00 - GRAND ISLAND 345KV CKT Z	720	720	0.05596	108.0342	GEN600050 1-FEP
FDNS	00NR_G15_094	2	25SP	G15_094	FROM->TO	GR ISLD-LNX3345.00 - GRAND ISLAND 345KV CKT Z	720	720	0.05608	108.0313	1303-KEARNEY
FDNS	00NR_G15_094	2	25SP	G15_094	FROM->TO	GR ISLD-LNX3345.00 - GRAND ISLAND 345KV CKT Z	720	720	0.05608	108.0313	BASE CASE
FDNS	00NR_G15_094	2	20SP	G15_094	FROM->TO	GR ISLD-LNX3345.00 - GRAND ISLAND 345KV CKT Z	720	720	0.05596	108.0286	GEN 11104 1-J262_GEN 0.6000
FDNS	00NR_G15_094	2	20SP	G15_094	FROM->TO	GR ISLD-LNX3345.00 - GRAND ISLAND 345KV CKT Z	720	720	0.05596	108.0286	GEN 11108 1-J263_GEN 0.6000
FDNS	00NR_G15_094	2	20SP	G15_094	FROM->TO	GR ISLD-LNX3345.00 - GRAND ISLAND 345KV CKT Z	720	720	0.05555	108.028	FALLOW 3 345.00 - GRIMES 345KV CKT 1
FDNS	00NR_G15_094	2	20SP	G15_094	FROM->TO	GR ISLD-LNX3345.00 - GRAND ISLAND 345KV CKT Z	720	720	0.05596	108.0245	GEN600046 1-MECST
FDNS	00NR_G15_094	2	20SP	G15_094	FROM->TO	GR ISLD-LNX3345.00 - GRAND ISLAND 345KV CKT Z	720	720	0.05703	108.011	GLENHAM - WHITLOK 230KV CKT 1
FDNS	00NR_G15_094	2	20SP	G15_094	FROM->TO	GR ISLD-LNX3345.00 - GRAND ISLAND 345KV CKT Z	720	720	0.05596	108.0064	GEN600047 1-MECCT1
FDNS	00NR_G15_094	2	20SP	G15_094	FROM->TO	GR ISLD-LNX3345.00 - GRAND ISLAND 345KV CKT Z	720	720	0.05455	108.0003	MAXWELL - NORTH PLATTE 115KV CKT 1
FDNS	00NR_G15_094	2	20SP	G15_094	FROM->TO	GR ISLD-LNX3345.00 - GRAND ISLAND 345KV CKT Z	720	720	0.05518	107.9971	COOPER - FAIRPORT 345KV CKT 1
FDNS	00NR_G15_094	2	25SP	G15_094	FROM->TO	GR ISLD-LNX3345.00 - GRAND ISLAND 345KV CKT Z	720	720	0.04968	107.9963	COLUMWEST - KELLY 230KV CKT 1
FDNS	00NR_G15_094	2	20SP	G15_094	FROM->TO	GR ISLD-LNX3345.00 - GRAND ISLAND 345KV CKT Z	720	720	0.05596	107.9955	GEN660001 2-ABERDEEN SIEBRECHT
FDNS	00NR_G15_094	2	20SP	G15_094	FROM->TO	GR ISLD-LNX3345.00 - GRAND ISLAND 345KV CKT Z	720	720	0.05596	107.9931	GEN660003 3-HURON WEST PARK
FDNS	00NR_G15_094	2	20SP	G15_094	FROM->TO	GR ISLD-LNX3345.00 - GRAND ISLAND 345KV CKT Z	720	720	0.05496	107.9911	POST ROCK (POSTROCK T1) 345/230/13.8KV TRANSFORMER CKT 1
FDNS	00NR_G15_094	2	20SP	G15_094	FROM->TO	GR ISLD-LNX3345.00 - GRAND ISLAND 345KV CKT Z	720	720	0.05596	107.9801	GEN600063 1-COLVILLE GEN 1
FDNS	00NR_G15_094	2	20SP	G15_094	FROM->TO	GR ISLD-LNX3345.00 - GRAND ISLAND 345KV CKT Z	720	720	0.05596	107.9801	GEN600064 2-COLVILLE GEN 2
FDNS	00NR_G15_094	2	20SP	G15_094	FROM->TO	GR ISLD-LNX3345.00 - GRAND ISLAND 345KV CKT Z	720	720	0.05596	107.9726	ANTELOP-LNX3345.00 - ANTELOPE VALLEY 345KV CKT Z
FDNS	00NR_G15_094	2	20SP	G15_094	FROM->TO	GR ISLD-LNX3345.00 - GRAND ISLAND 345KV CKT Z	720	720	0.05596	107.9723	GEN681522 3-GENOA 3
FDNS	00NR_G15_094	2	20SP	G15_094	FROM->TO	GR ISLD-LNX3345.00 - GRAND ISLAND 345KV CKT Z	720	720	0.05596	107.969	GEN659273 2-GROTON SYNC COND
FDNS	00NR_G15_094	2	20SP	G15_094	FROM->TO	GR ISLD-LNX3345.00 - GRAND ISLAND 345KV CKT Z	720	720	0.05596	107.969	GEN659294 1-WILTONCOL9
FDNS	00NR_G15_094	2	20SP	G15_094	FROM->TO	GR ISLD-LNX3345.00 - GRAND ISLAND 345KV CKT Z	720	720	0.05596	107.9608	GEN600043 7-BLUE LAKE5
FDNS	00NR_G15_094	2	20SP	G15_094	FROM->TO	GR ISLD-LNX3345.00 - GRAND ISLAND 345KV CKT Z	720	720	0.05596	107.9608	GEN600044 8-BLUE LAKE6
FDNS	00NR_G15_094	2	20SP	G15_094	FROM->TO	GR ISLD-LNX3345.00 - GRAND ISLAND 345KV CKT Z	720	720	0.05581	107.9596	GRAND ISLAND (GRAND.ISD T5) 230/115/13.8KV TRANSFORMER CKT 2
FDNS	00NR_G15_094	2	20SP	G15_094	FROM->TO	GR ISLD-LNX3345.00 - GRAND ISLAND 345KV CKT Z	720	720	0.05581	107.9596	GRAND ISLAND (GRAND.ISD T5) 230/115/13.8KV TRANSFORMER CKT 2
FDNS	00NR_G15_094	2	20SP	G15_094	FROM->TO	GR ISLD-LNX3345.00 - GRAND ISLAND 345KV CKT Z	720	720	0.05581	107.9563	GRAND ISLAND (GRAND.ISD T2) 230/115/13.8KV TRANSFORMER CKT 1
FDNS	00NR_G15_094	2	20SP	G15_094	FROM->TO	GR ISLD-LNX3345.00 - GRAND ISLAND 345KV CKT Z	720	720	0.05581	107.9563	GRAND ISLAND (GRAND.ISD T2) 230/115/13.8KV TRANSFORMER CKT 1
FDNS	00NR_G15_094	2	20SP	G15_094	FROM->TO	GR ISLD-LNX3345.00 - GRAND ISLAND 345KV CKT Z	720	720	0.05593	107.954	ATCHSNT3 345.00 - BOONEVILLE 345KV CKT 1
FDNS	00NR_G15_094	2	20SP	G15_094	FROM->TO	GR ISLD-LNX3345.00 - GRAND ISLAND 345KV CKT Z	720	720	0.05596	107.9411	GEN600014 4-BLACK DOG GEN 4
FDNS	00NR_G15_094	2	20SP	G15_094	FROM->TO	GR ISLD-LNX3345.00 - GRAND ISLAND 345KV CKT Z	720	720	0.05596	107.9408	GEN600065 7-HIGH BRIDGE

SOLUTION	GROUP	SCENARIO	SEASON	SOURCE	DIRECTION	MONITORED ELEMENT	RATEA (MVA)	RATEB(MVA)	TDF	TC%LOADING (% MVA)	CONTINGENCY
FDNS	00NR_G15_094	2	20SP	G15_094	FROM->TO	GR ISLD-LNX3345.00 - GRAND ISLAND 345KV CKT Z	720	720	0.05596	107.9408	GEN600066 8-HIGH BRIDGE
FDNS	00NR_G15_094	2	20SP	G15_094	FROM->TO	GR ISLD-LNX3345.00 - GRAND ISLAND 345KV CKT Z	720	720	0.05596	107.9369	GEN600011 5-BLACK DOG GEN 1
FDNS	00NR_G15_094	2	20SP	G15_094	FROM->TO	GR ISLD-LNX3345.00 - GRAND ISLAND 345KV CKT Z	720	720	0.05596	107.935	LANSING WEST 161/22.0KV TRANSFORMER CKT 1
FDNS	00NR_G15_094	2	20SP	G15_094	FROM->TO	GR ISLD-LNX3345.00 - GRAND ISLAND 345KV CKT Z	720	720	0.05596	107.9313	GEN600071 10-RIVER SIDE
FDNS	00NR_G15_094	2	20SP	G15_094	FROM->TO	GR ISLD-LNX3345.00 - GRAND ISLAND 345KV CKT Z	720	720	0.05596	107.9312	GEN600070 9-RIVER SIDE
FDNS	00NR_G15_094	2	20SP	G15_094	FROM->TO	GR ISLD-LNX3345.00 - GRAND ISLAND 345KV CKT Z	720	720	0.05596	107.9231	GEN600007 7-RIVERSIDE GEN 7
FDNS	00NR_G15_094	2	20SP	G15_094	FROM->TO	GR ISLD-LNX3345.00 - GRAND ISLAND 345KV CKT Z	720	720	0.05596	107.9229	GEN659031 1-G12_014IS_4 0.6900
FDNS	00NR_G15_094	2	20SP	G15_094	FROM->TO	GR ISLD-LNX3345.00 - GRAND ISLAND 345KV CKT Z	720	720	0.05596	107.9114	GEN600017 C-LS POWER CT
FDNS	00NR_G15_094	2	20SP	G15_094	FROM->TO	GR ISLD-LNX3345.00 - GRAND ISLAND 345KV CKT Z	720	720	0.05596	107.909	GEN659192 6-LYNN
FDNS	00NR_G15_094	2	20SP	G15_094	FROM->TO	GR ISLD-LNX3345.00 - GRAND ISLAND 345KV CKT Z	720	720	0.05596	107.9083	GEN659162 4-RED WLCK
FDNS	00NR_G15_094	2	20SP	G15_094	FROM->TO	GR ISLD-LNX3345.00 - GRAND ISLAND 345KV CKT Z	720	720	0.05596	107.9083	GEN659163 5-BLACK WDCK
FDNS	00NR_G15_094	2	20SP	G15_094	FROM->TO	GR ISLD-LNX3345.00 - GRAND ISLAND 345KV CKT Z	720	720	0.05596	107.8988	GEN600045 4-ANSON
FDNS	00NR_G15_094	2	25SP	G15_094	FROM->TO	GR ISLD-LNX3345.00 - GRAND ISLAND 345KV CKT Z	720	720	0.05525	107.8958	KELLY - SHELL CREEK 230KV CKT 1
FDNS	00NR_G15_094	2	20SP	G15_094	FROM->TO	GR ISLD-LNX3345.00 - GRAND ISLAND 345KV CKT Z	720	720	0.05596	107.8945	GEN 10648 1-G830_GEN 0.6900
FDNS	00NR_G15_094	2	25SP	G15_094	FROM->TO	GR ISLD-LNX3345.00 - GRAND ISLAND 345KV CKT Z	720	720	0.05525	107.8936	SHELL CREEK (SHELLCREEKT1) 345/230/13.8KV TRANSFORMER CKT 1
FDNS	00NR_G15_094	2	25SP	G15_094	FROM->TO	GR ISLD-LNX3345.00 - GRAND ISLAND 345KV CKT Z	720	720	0.05525	107.8936	SHELL CREEK (SHELLCREEKT1) 345/230/13.8KV TRANSFORMER CKT 1
FDNS	00NR_G15_094	2	20SP	G15_094	FROM->TO	GR ISLD-LNX3345.00 - GRAND ISLAND 345KV CKT Z	720	720	0.05596	107.8677	GEN615052 1-CAMBRIDGE GENERATING STATION
FDNS	00NR_G15_094	2	20SP	G15_094	FROM->TO	GR ISLD-LNX3345.00 - GRAND ISLAND 345KV CKT Z	720	720	0.05572	107.8624	GRAND ISLAND (GI KU1B) 345/230/13.8KV TRANSFORMER CKT 2
FDNS	00NR_G15_094	2	20SP	G15_094	FROM->TO	GR ISLD-LNX3345.00 - GRAND ISLAND 345KV CKT Z	720	720	0.05572	107.8624	GRAND ISLAND (GI KU1B) 345/230/13.8KV TRANSFORMER CKT 2
FDNS	00NR_G15_094	2	20SP	G15_094	FROM->TO	GR ISLD-LNX3345.00 - GRAND ISLAND 345KV CKT Z	720	720	0.05596	107.8622	GEN615015 1-GRE-SPRITWDG13.200
FDNS	00NR_G15_094	2	20SP	G15_094	FROM->TO	GR ISLD-LNX3345.00 - GRAND ISLAND 345KV CKT Z	720	720	0.05572	107.8609	GRAND ISLAND (GI KU1A) 345/230/13.8KV TRANSFORMER CKT 1
FDNS	00NR_G15_094	2	20SP	G15_094	FROM->TO	GR ISLD-LNX3345.00 - GRAND ISLAND 345KV CKT Z	720	720	0.05572	107.8609	GRAND ISLAND (GI KU1A) 345/230/13.8KV TRANSFORMER CKT 1
FDNS	00NR_G15_094	2	20SP	G15_094	FROM->TO	GR ISLD-LNX3345.00 - GRAND ISLAND 345KV CKT Z	720	720	0.05596	107.8538	GEN615021 1-GRE-ER 14G 16.000
FDNSLock	00NR_G15_094	2	20SP	G15_094	FROM->TO	GR ISLD-LNX3345.00 - GRAND ISLAND 345KV CKT Z	720	720	0.05518	107.8505	STMDSJFAFACO
FDNS	00NR_G15_094	2	20SP	G15_094	FROM->TO	GR ISLD-LNX3345.00 - GRAND ISLAND 345KV CKT Z	720	720	0.05596	107.8456	BISONMP4 230.00 - SQUARE BUTTE 230KV CKT 1
FDNSLock	00NR_G15_094	2	20SP	G15_094	FROM->TO	GR ISLD-LNX3345.00 - GRAND ISLAND 345KV CKT Z	720	720	0.05518	107.8389	COPSTJCPFRSJ
FDNS	00NR_G15_094	2	20SP	G15_094	FROM->TO	GR ISLD-LNX3345.00 - GRAND ISLAND 345KV CKT Z	720	720	0.05596	107.8326	GEN660016 1-B_H WIND 0.7000
FDNS	00NR_G15_094	2	25SP	G15_094	FROM->TO	GR ISLD-LNX3345.00 - GRAND ISLAND 345KV CKT Z	720	720	0.0537	107.818	103RD & ROKEBY - MOORE 345KV CKT 1
FDNS	00NR_G15_094	2	25SP	G15_094	FROM->TO	GR ISLD-LNX3345.00 - GRAND ISLAND 345KV CKT Z	720	720	0.0537	107.818	103RD & ROKEBY - MOORE 345KV CKT 1
FDNS	00NR_G15_094	2	20SP	G15_094	FROM->TO	GR ISLD-LNX3345.00 - GRAND ISLAND 345KV CKT Z	720	720	0.05572	107.8122	MCCOOL (MCCOOL T2) 345/115/13.8KV TRANSFORMER CKT 1
FDNS	00NR_G15_094	2	20SP	G15_094	FROM->TO	GR ISLD-LNX3345.00 - GRAND ISLAND 345KV CKT Z	720	720	0.05572	107.8122	MCCOOL (MCCOOL T2) 345/115/13.8KV TRANSFORMER CKT 1
FDNS	00NR_G15_094	2	20SP	G15_094	FROM->TO	GR ISLD-LNX3345.00 - GRAND ISLAND 345KV CKT Z	720	720	0.05519	107.8051	FT THOMPSON - LOWERBRULE 4230.00 230KV CKT 1
FDNS	00NR_G15_094	2	20SP	G15_094	FROM->TO	GR ISLD-LNX3345.00 - GRAND ISLAND 345KV CKT Z	720	720	0.05519	107.8051	FT THOMPSON - LOWERBRULE 4230.00 230KV CKT 1
FDNS	00NR_G15_094	2	25SP	G15_094	FROM->TO	GR ISLD-LNX3345.00 - GRAND ISLAND 345KV CKT Z	720	720	0.05658	107.7767	ALDA - SUB A 115KV CKT 1
FDNS	00NR_G15_094	2	20SP	G15_094	FROM->TO	GR ISLD-LNX3345.00 - GRAND ISLAND 345KV CKT Z	720	720	0.05596	107.7731	GEN672304 4-BOUNDARY DAM GENERATOR 4
FDNS	00NR_G15_094	2	20SP	G15_094	FROM->TO	GR ISLD-LNX3345.00 - GRAND ISLAND 345KV CKT Z	720	720	0.05596	107.773	GEN672303 3-BOUNDARY DAM GENERATOR 3
FDNS	00NR_G15_094	2	20SP	G15_094	FROM->TO	GR ISLD-LNX3345.00 - GRAND ISLAND 345KV CKT Z	720	720	0.05596	107.773	GEN672305 5-BOUNDARY DAM GENERATOR 5
FDNS	00NR_G15_094	2	20SP	G15_094	FROM->TO	GR ISLD-LNX3345.00 - GRAND ISLAND 345KV CKT Z	720	720	0.05465	107.7571	COOPER - ST JOE 345KV CKT 1
FDNS	00NR_G15_094	2	25SP	G15_094	FROM->TO	GR ISLD-LNX3345.00 - GRAND ISLAND 345KV CKT Z	720	720	0.0616	107.7567	GRAND ISLAND - RIVERDALE 230KV CKT 1
FDNS	00NR_G15_094	2	20SP	G15_094	FROM->TO	GR ISLD-LNX3345.00 - GRAND ISLAND 345KV CKT Z	720	720	0.05596	107.7372	GEN672392 1-NBECGT1G 18.000
FDNS	00NR_G15_094	2	20SP	G15_094	FROM->TO	GR ISLD-LNX3345.00 - GRAND ISLAND 345KV CKT Z	720	720	0.05596	107.7252	GEN662101 1-WESSINGTON190.5750
FDNS	00NR_G15_094	2	25SP	G15_094	FROM->TO	GR ISLD-LNX3345.00 - GRAND ISLAND 345KV CKT Z	720	720	0.05624	107.7154	SUB 3455 - SUB 3740 345KV CKT 1
FDNS	00NR_G15_094	2	25SP	G15_094	FROM->TO	GR ISLD-LNX3345.00 - GRAND ISLAND 345KV CKT Z	720	720	0.05624	107.7154	SUB 3455 - SUB 3740 345KV CKT 1
FDNS	00NR_G15_094	2	20SP	G15_094	FROM->TO	GR ISLD-LNX3345.00 - GRAND ISLAND 345KV CKT Z	720	720	0.05596	107.7071	CENTER 230/22.0KV TRANSFORMER CKT 1
FDNS	00NR_G15_094	2	20SP	G15_094	FROM->TO	GR ISLD-LNX3345.00 - GRAND ISLAND 345KV CKT Z	720	720	0.05483	107.7071	G14-021T 345.00 - MULLNCR7 345.00 345KV CKT 1
FDNS	00NR_G15_094	2	20SP	G15_094	FROM->TO	GR ISLD-LNX3345.00 - GRAND ISLAND 345KV CKT Z	720	720	0.05596	107.706	GEN600067 9-HIGH BRIDGE
FDNS	00NR_G15_094	2	20SP	G15_094	FROM->TO	GR ISLD-LNX3345.00 - GRAND ISLAND 345KV CKT Z	720	720	0.05483	107.7055	G15-005T 345.00 - MULLNCR7 345.00 345KV CKT 1
FDNS	00NR_G15_094	2	25SP	G15_094	FROM->TO	GR ISLD-LNX3345.00 - GRAND ISLAND 345KV CKT Z	720	720	0.05556	107.7002	AURORA - GRAND ISLAND 115KV CKT 1
FDNS	00NR_G15_094	2	25SP	G15_094	FROM->TO	GR ISLD-LNX3345.00 - GRAND ISLAND 345KV CKT Z	720	720	0.05505	107.6524	CENTRAL CITY - CLARKS 115KV CKT 1
FDNS	00NR_G15_094	2	20SP	G15_094	FROM->TO	GR ISLD-LNX3345.00 - GRAND ISLAND 345KV CKT Z	720	720	0.05596	107.635	GEN659353 1-DEERCREK CTG18.000
FDNS	00NR_G15_094	2	20SP	G15_094	FROM->TO	GR ISLD-LNX3345.00 - GRAND ISLAND 345KV CKT Z	720	720	0.05596	107.6349	GEN659354 1-DEERCREK STG18.000
FDNS	00NR_G15_094	2	20SP	G15_094	FROM->TO	GR ISLD-LNX3345.00 - GRAND ISLAND 345KV CKT Z	720	720	0.05483	107.6223	G15-005T 345.00 - SIBLEY 345KV CKT 1
FDNS	00NR_G15_094	2	25SP	G15_094	FROM->TO	GR ISLD-LNX3345.00 - GRAND ISLAND 345KV CKT Z	720	720	0.05688	107.6201	LOUP CITY - ST LIBORY 115KV CKT 1
FDNS	00NR_G15_094	2	20SP	G15_094	FROM->TO	GR ISLD-LNX3345.00 - GRAND ISLAND 345KV CKT Z	720	720	0.05596	107.612	GEN910006 1-G12_012IS_3 0.6900
FDNSLock	00NR_G15_094	2	20SP	G15_094	FROM->TO	GR ISLD-LNX3345.00 - GRAND ISLAND 345KV CKT Z	720	720	0.05492	107.6054	CENTRAL CITY - GRAND ISLAND 115KV CKT 1
FDNS	00NR_G15_094	2	20SP	G15_094	FROM->TO	GR ISLD-LNX3345.00 - GRAND ISLAND 345KV CKT Z	720	720	0.05703	107.5835	GLENHAM - L3 HAWDON 230KV CKT 1
FDNS	00NR_G15_094	2	20SP	G15_094	FROM->TO	GR ISLD-LNX3345.00 - GRAND ISLAND 345KV CKT Z	720	720	0.05596	107.5763	GEN681542 6-JP MADGETT
FDNS	00NR_G15_094	2	25SP	G15_094	FROM->TO	GR ISLD-LNX3345.00 - GRAND ISLAND 345KV CKT Z	720	720	0.05468	107.5467	MAXWELL - NORTH PLATTE 115KV CKT 1
FDNS	00NR_G15_094	2	25SP	G15_094	FROM->TO	GR ISLD-LNX3345.00 - GRAND ISLAND 345KV CKT Z	720	720	0.05608	107.5442	GEN652345 W-G07_023IS_2 0.6900
FDNS	00NR_G15_094	2	25SP	G15_094	FROM->TO	GR ISLD-LNX3345.00 - GRAND ISLAND 345KV CKT Z	720	720	0.05608	107.5433	P12:345:UMZB:# 103 #: BD IN SD. LOSS OF LINE
FDNS	00NR_G15_094	2	25SP	G15_094	FROM->TO	GR ISLD-LNX3345.00 - GRAND ISLAND 345KV CKT Z	720	720	0.05608	107.5414	BRDLAND-LNX3345.00 - HURON 345KV CKT Z
FDNS	00NR_G15_094	2	25SP	G15_094	FROM->TO	GR ISLD-LNX3345.00 - GRAND ISLAND 345KV CKT Z	720	720	0.05608	107.5413	P12:345:UMZB:# 102 #: AVS BD IN ND. AVS BRD LR
FDNS	00NR_G15_094	2	25SP	G15_094	FROM->TO	GR ISLD-LNX3345.00 - GRAND ISLAND 345KV CKT Z	720	720	0.05608	107.5408	HURON (BD KU2A) 345/230/13.8KV TRANSFORMER CKT 1
FDNS	00NR_G15_094	2	25SP	G15_094	FROM->TO	GR ISLD-LNX3345.00 - GRAND ISLAND 345KV CKT Z	720	720	0.05608	107.5408	HURON (BD KU2A) 345/230/13.8KV TRANSFORMER CKT 1
FDNS	00NR_G15_094	2	25SP	G15_094	FROM->TO	GR ISLD-LNX3345.00 - GRAND ISLAND 345KV CKT Z	720	720	0.05608	107.5407	BROADLAND - HURON 230KV CKT 1
FDNS	00NR_G15_094	2	25SP	G15_094	FROM->TO	GR ISLD-LNX3345.00 - GRAND ISLAND 345KV CKT Z	720	720	0.05608	107.54	EMERY 161/18.0KV TRANSFORMER CKT 1
FDNS	00NR_G15_094	2	25SP	G15_094	FROM->TO	GR ISLD-LNX3345.00 - GRAND ISLAND 345KV CKT Z	720	720	0.05531	107.5289	COOPER - FAIRPORT 345KV CKT 1
FDNS	00NR_G15_094	2	25SP	G15_094	FROM->TO	GR ISLD-LNX3345.00 - GRAND ISLAND 345KV CKT Z	720	720	0.05531	107.5289	COOPER - FAIRPORT 345KV CKT 1
FDNS	00NR_G15_094	2	25SP	G15_094	FROM->TO	GR ISLD-LNX3345.00 - GRAND ISLAND 345KV CKT Z	720	720	0.05608	107.5208	G830_SUB 115.00 - GRE-MCHENRY7115.00 115KV CKT 1
FDNS	00NR_G15_094	2	25SP	G15_094	FROM->TO	GR ISLD-LNX3345.00 - GRAND ISLAND 345KV CKT Z	720	720	0.05608	107.5204	G830_SUB 115.00 115/34.5KV TRANSFORMER CKT 1
FDNS	00NR_G15_094	2	20SP	G15_094	FROM->TO	GR ISLD-LNX3345.00 - GRAND ISLAND 345KV CKT Z	720	720	0.05596	107.5198	GEN659289 1-DAYCNTYWND W0.6900
FDNS	00NR_G15_094	2	20SP	G15_094	FROM->TO	GR ISLD-LNX3345.00 - GRAND ISLAND 345KV CKT Z	720	720	0.05561	107.5119	GRAND ISLAND (GI KU3A) 345/230/13.8KV TRANSFORMER CKT 3
FDNS	00NR_G15_094	2	20SP	G15_094	FROM->TO	GR ISLD-LNX3345.00 - GRAND ISLAND 345KV CKT Z	720	720	0.05561	107.5119	GRAND ISLAND (GI KU3A) 345/230/13.8KV TRANSFORMER CKT 3

SOLUTION	GROUP	SCENARIO	SEASON	SOURCE	DIRECTION	MONITORED ELEMENT	RATEA (MVA)	RATEB(MVA)	TDF	TC%LOADING (% MVA)	CONTINGENCY
FDNS	00NR_G15_094	2	25SP	G15_094	FROM->TO	GR ISLD-LNX3345.00 - GRAND ISLAND 345KV CKT Z	720	720	0.05608	107.5076	GEN652414 4-FT PECK
FDNS	00NR_G15_094	2	25SP	G15_094	FROM->TO	GR ISLD-LNX3345.00 - GRAND ISLAND 345KV CKT Z	720	720	0.05608	107.5076	GEN652415 5-FT PECK
FDNS	00NR_G15_094	2	25SP	G15_094	FROM->TO	GR ISLD-LNX3345.00 - GRAND ISLAND 345KV CKT Z	720	720	0.05608	107.5029	GEN620324 3-HOOT LAKE 3 GEN
FDNS	00NR_G15_094	2	25SP	G15_094	FROM->TO	GR ISLD-LNX3345.00 - GRAND ISLAND 345KV CKT Z	720	720	0.05608	107.4989	GEN600046 1-MECST
FDNS	00NR_G15_094	2	25SP	G15_094	FROM->TO	GR ISLD-LNX3345.00 - GRAND ISLAND 345KV CKT Z	720	720	0.05608	107.4988	GEN 11104 1-J262_GEN 0.6000
FDNS	00NR_G15_094	2	25SP	G15_094	FROM->TO	GR ISLD-LNX3345.00 - GRAND ISLAND 345KV CKT Z	720	720	0.05608	107.4988	GEN 11108 1-J263_GEN 0.6000
FDNS	00NR_G15_094	2	25SP	G15_094	FROM->TO	GR ISLD-LNX3345.00 - GRAND ISLAND 345KV CKT Z	720	720	0.05568	107.4814	FALLOW 3 345.00 - GRIMES 345KV CKT 1
FDNS	00NR_G15_094	2	25SP	G15_094	FROM->TO	GR ISLD-LNX3345.00 - GRAND ISLAND 345KV CKT Z	720	720	0.05608	107.4798	GEN600047 1-MECCT1
FDNS	00NR_G15_094	2	25SP	G15_094	FROM->TO	GR ISLD-LNX3345.00 - GRAND ISLAND 345KV CKT Z	720	720	0.05606	107.4712	ATCHSNT3 345.00 - COOPER 345KV CKT 1
FDNS	00NR_G15_094	2	25SP	G15_094	FROM->TO	GR ISLD-LNX3345.00 - GRAND ISLAND 345KV CKT Z	720	720	0.05606	107.4712	ATCHSNT3 345.00 - COOPER 345KV CKT 1
FDNS	00NR_G15_094	2	25SP	G15_094	FROM->TO	GR ISLD-LNX3345.00 - GRAND ISLAND 345KV CKT Z	720	720	0.05608	107.4682	GEN660003 3-HURON WEST PARK
FDNS	00NR_G15_094	2	25SP	G15_094	FROM->TO	GR ISLD-LNX3345.00 - GRAND ISLAND 345KV CKT Z	720	720	0.05608	107.4678	GEN600063 1-COLVILLE GEN 1
FDNS	00NR_G15_094	2	25SP	G15_094	FROM->TO	GR ISLD-LNX3345.00 - GRAND ISLAND 345KV CKT Z	720	720	0.05608	107.4678	GEN600064 2-COLVILLE GEN 2
FDNS	00NR_G15_094	2	25SP	G15_094	FROM->TO	GR ISLD-LNX3345.00 - GRAND ISLAND 345KV CKT Z	720	720	0.05608	107.463	GEN660001 2-ABERDEEN SIEBRECHT
FDNS	00NR_G15_094	2	25SP	G15_094	FROM->TO	GR ISLD-LNX3345.00 - GRAND ISLAND 345KV CKT Z	720	720	0.05593	107.4551	GRAND ISLAND (GRAND.ISD T5) 230/115/13.8KV TRANSFORMER CKT 2
FDNS	00NR_G15_094	2	25SP	G15_094	FROM->TO	GR ISLD-LNX3345.00 - GRAND ISLAND 345KV CKT Z	720	720	0.05593	107.4551	GRAND ISLAND (GRAND.ISD T5) 230/115/13.8KV TRANSFORMER CKT 2
FDNS	00NR_G15_094	2	25SP	G15_094	FROM->TO	GR ISLD-LNX3345.00 - GRAND ISLAND 345KV CKT Z	720	720	0.05608	107.4538	GEN600043 7-BLUE LAKE5
FDNS	00NR_G15_094	2	25SP	G15_094	FROM->TO	GR ISLD-LNX3345.00 - GRAND ISLAND 345KV CKT Z	720	720	0.05608	107.4538	GEN600044 8-BLUE LAKE6
FDNS	00NR_G15_094	2	25SP	G15_094	FROM->TO	GR ISLD-LNX3345.00 - GRAND ISLAND 345KV CKT Z	720	720	0.05593	107.4517	GRAND ISLAND (GRAND.ISD T2) 230/115/13.8KV TRANSFORMER CKT 1
FDNS	00NR_G15_094	2	25SP	G15_094	FROM->TO	GR ISLD-LNX3345.00 - GRAND ISLAND 345KV CKT Z	720	720	0.05593	107.4517	GRAND ISLAND (GRAND.ISD T2) 230/115/13.8KV TRANSFORMER CKT 1
FDNS	00NR_G15_094	2	25SP	G15_094	FROM->TO	GR ISLD-LNX3345.00 - GRAND ISLAND 345KV CKT Z	720	720	0.05608	107.448	ANTELOP-LNX3345.00 - ANTELOPE VALLEY 345KV CKT Z
FDNS	00NR_G15_094	2	25SP	G15_094	FROM->TO	GR ISLD-LNX3345.00 - GRAND ISLAND 345KV CKT Z	720	720	0.05608	107.442	GEN659273 2-GROTON SYNC COND
FDNS	00NR_G15_094	2	25SP	G15_094	FROM->TO	GR ISLD-LNX3345.00 - GRAND ISLAND 345KV CKT Z	720	720	0.05608	107.442	GEN659294 1-WILTONCOL9
FDNS	00NR_G15_094	2	20SP	G15_094	FROM->TO	GR ISLD-LNX3345.00 - GRAND ISLAND 345KV CKT Z	720	720	0.05596	107.437	COYOTE 345/24.0KV TRANSFORMER CKT 1
FDNS	00NR_G15_094	2	25SP	G15_094	FROM->TO	GR ISLD-LNX3345.00 - GRAND ISLAND 345KV CKT Z	720	720	0.05608	107.4368	GEN681522 3-GENOA 3
FDNS	00NR_G15_094	2	25SP	G15_094	FROM->TO	GR ISLD-LNX3345.00 - GRAND ISLAND 345KV CKT Z	720	720	0.05608	107.4319	GEN600065 7-HIGH BRIDGE
FDNS	00NR_G15_094	2	25SP	G15_094	FROM->TO	GR ISLD-LNX3345.00 - GRAND ISLAND 345KV CKT Z	720	720	0.05608	107.4319	GEN600066 8-HIGH BRIDGE
FDNS	00NR_G15_094	2	25SP	G15_094	FROM->TO	GR ISLD-LNX3345.00 - GRAND ISLAND 345KV CKT Z	720	720	0.05608	107.4312	GEN600014 4-BLACK DOG GEN 4
FDNS	00NR_G15_094	2	20SP	G15_094	FROM->TO	GR ISLD-LNX3345.00 - GRAND ISLAND 345KV CKT Z	720	720	0.05596	107.4295	GEN659018 1-G14_003IS_3 0.6900
FDNS	00NR_G15_094	2	25SP	G15_094	FROM->TO	GR ISLD-LNX3345.00 - GRAND ISLAND 345KV CKT Z	720	720	0.05608	107.4275	GEN600011 5-BLACK DOG GEN 1
FDNS	00NR_G15_094	2	25SP	G15_094	FROM->TO	GR ISLD-LNX3345.00 - GRAND ISLAND 345KV CKT Z	720	720	0.05608	107.4225	GEN600071 10-RIVER SIDE
FDNS	00NR_G15_094	2	25SP	G15_094	FROM->TO	GR ISLD-LNX3345.00 - GRAND ISLAND 345KV CKT Z	720	720	0.05608	107.4223	GEN600070 9-RIVER SIDE
FDNS	00NR_G15_094	2	25SP	G15_094	FROM->TO	GR ISLD-LNX3345.00 - GRAND ISLAND 345KV CKT Z	720	720	0.05608	107.4173	LANSING WEST 161/22.0KV TRANSFORMER CKT 1
FDNS	00NR_G15_094	2	25SP	G15_094	FROM->TO	GR ISLD-LNX3345.00 - GRAND ISLAND 345KV CKT Z	720	720	0.05608	107.4138	GEN600007 7-RIVERSIDE GEN 7
FDNS	00NR_G15_094	2	25SP	G15_094	FROM->TO	GR ISLD-LNX3345.00 - GRAND ISLAND 345KV CKT Z	720	720	0.05608	107.4003	GEN600017 C-LS POWER CT
FDNS	00NR_G15_094	2	25SP	G15_094	FROM->TO	GR ISLD-LNX3345.00 - GRAND ISLAND 345KV CKT Z	720	720	0.05608	107.3962	GEN659031 1-G12_014IS_4 0.6900
FDNS	00NR_G15_094	2	20SP	G15_094	FROM->TO	GR ISLD-LNX3345.00 - GRAND ISLAND 345KV CKT Z	720	720	0.05596	107.3865	GEN659010 4-G07_027IS_2 0.6900
FDNS	00NR_G15_094	2	20SP	G15_094	FROM->TO	GR ISLD-LNX3345.00 - GRAND ISLAND 345KV CKT Z	720	720	0.05596	107.3798	GEN659194 1-NDPRAIRWND1W0.6900
FDNS	00NR_G15_094	2	25SP	G15_094	FROM->TO	GR ISLD-LNX3345.00 - GRAND ISLAND 345KV CKT Z	720	720	0.05531	107.379	COPSTJCPFRSJ
FDNS	00NR_G15_094	2	25SP	G15_094	FROM->TO	GR ISLD-LNX3345.00 - GRAND ISLAND 345KV CKT Z	720	720	0.05531	107.379	P12:345:NPPD:3517:COOPER 3:ST JOE 3:BTB
FDNS	00NR_G15_094	2	25SP	G15_094	FROM->TO	GR ISLD-LNX3345.00 - GRAND ISLAND 345KV CKT Z	720	720	0.05531	107.379	STMDSJFAFACO
FDNS	00NR_G15_094	2	20SP	G15_094	FROM->TO	GR ISLD-LNX3345.00 - GRAND ISLAND 345KV CKT Z	720	720	0.05596	107.3786	GEN652461 5-GARRISON
FDNS	00NR_G15_094	2	20SP	G15_094	FROM->TO	GR ISLD-LNX3345.00 - GRAND ISLAND 345KV CKT Z	720	720	0.05596	107.3785	GEN652460 4-GARRISON
FDNS	00NR_G15_094	2	25SP	G15_094	FROM->TO	GR ISLD-LNX3345.00 - GRAND ISLAND 345KV CKT Z	720	720	0.05608	107.3688	GEN659192 6-LYNN
FDNS	00NR_G15_094	2	25SP	G15_094	FROM->TO	GR ISLD-LNX3345.00 - GRAND ISLAND 345KV CKT Z	720	720	0.05608	107.3677	GEN659162 4-RED WLCK
FDNS	00NR_G15_094	2	25SP	G15_094	FROM->TO	GR ISLD-LNX3345.00 - GRAND ISLAND 345KV CKT Z	720	720	0.05608	107.3677	GEN659163 5-BLACK WDCK
FDNS	00NR_G15_094	2	25SP	G15_094	FROM->TO	GR ISLD-LNX3345.00 - GRAND ISLAND 345KV CKT Z	720	720	0.05608	107.3674	GEN600045 4-ANSON
FDNS	00NR_G15_094	2	25SP	G15_094	FROM->TO	GR ISLD-LNX3345.00 - GRAND ISLAND 345KV CKT Z	720	720	0.05608	107.3654	GEN 10648 1-G830_GEN 0.6900
FDNS	00NR_G15_094	2	20SP	G15_094	FROM->TO	GR ISLD-LNX3345.00 - GRAND ISLAND 345KV CKT Z	720	720	0.05596	107.3584	GEN652545 7-BIG BEND
FDNS	00NR_G15_094	2	25SP	G15_094	FROM->TO	GR ISLD-LNX3345.00 - GRAND ISLAND 345KV CKT Z	720	720	0.05608	107.3555	GEN615052 1-CAMBRIDGE GENERATING STATION
FDNS	00NR_G15_094	2	20SP	G15_094	FROM->TO	GR ISLD-LNX3345.00 - GRAND ISLAND 345KV CKT Z	720	720	0.05596	107.3502	CLAY BOSWELL 230/20.9KV TRANSFORMER CKT 1
FDNS	00NR_G15_094	2	25SP	G15_094	FROM->TO	GR ISLD-LNX3345.00 - GRAND ISLAND 345KV CKT Z	720	720	0.05606	107.3489	ATCHSNT3 345.00 - BOONEVILLE 345KV CKT 1
FDNS	00NR_G15_094	2	25SP	G15_094	FROM->TO	GR ISLD-LNX3345.00 - GRAND ISLAND 345KV CKT Z	720	720	0.05608	107.3446	BISONMP4 230.00 - SQUARE BUTTE 230KV CKT 1
FDNS	00NR_G15_094	2	20SP	G15_094	FROM->TO	GR ISLD-LNX3345.00 - GRAND ISLAND 345KV CKT Z	720	720	0.05596	107.3397	GEN652457 1-GARRISON
FDNS	00NR_G15_094	2	20SP	G15_094	FROM->TO	GR ISLD-LNX3345.00 - GRAND ISLAND 345KV CKT Z	720	720	0.05596	107.3397	GEN652458 2-GARRISON
FDNS	00NR_G15_094	2	20SP	G15_094	FROM->TO	GR ISLD-LNX3345.00 - GRAND ISLAND 345KV CKT Z	720	720	0.05596	107.3397	GEN652459 3-GARRISON
FDNS	00NR_G15_094	2	25SP	G15_094	FROM->TO	GR ISLD-LNX3345.00 - GRAND ISLAND 345KV CKT Z	720	720	0.05585	107.3354	GRAND ISLAND (GI KU1B) 345/230/13.8KV TRANSFORMER CKT 2
FDNS	00NR_G15_094	2	25SP	G15_094	FROM->TO	GR ISLD-LNX3345.00 - GRAND ISLAND 345KV CKT Z	720	720	0.05585	107.3354	GRAND ISLAND (GI KU1B) 345/230/13.8KV TRANSFORMER CKT 2
FDNS	00NR_G15_094	2	25SP	G15_094	FROM->TO	GR ISLD-LNX3345.00 - GRAND ISLAND 345KV CKT Z	720	720	0.05585	107.3339	GRAND ISLAND (GI KU1A) 345/230/13.8KV TRANSFORMER CKT 1
FDNS	00NR_G15_094	2	25SP	G15_094	FROM->TO	GR ISLD-LNX3345.00 - GRAND ISLAND 345KV CKT Z	720	720	0.05585	107.3339	GRAND ISLAND (GI KU1A) 345/230/13.8KV TRANSFORMER CKT 1
FDNS	00NR_G15_094	2	20SP	G15_094	FROM->TO	GR ISLD-LNX3345.00 - GRAND ISLAND 345KV CKT Z	720	720	0.05596	107.3314	GEN652544 5-BIG BEND
FDNS	00NR_G15_094	2	25SP	G15_094	FROM->TO	GR ISLD-LNX3345.00 - GRAND ISLAND 345KV CKT Z	720	720	0.05479	107.3296	COOPER - ST JOE 345KV CKT 1
FDNS	00NR_G15_094	2	20SP	G15_094	FROM->TO	GR ISLD-LNX3345.00 - GRAND ISLAND 345KV CKT Z	720	720	0.05596	107.3189	GEN652543 3-BIG BEND
FDNS	00NR_G15_094	2	20SP	G15_094	FROM->TO	GR ISLD-LNX3345.00 - GRAND ISLAND 345KV CKT Z	720	720	0.05596	107.3188	GEN652542 1-BIG BEND
FDNS	00NR_G15_094	2	25SP	G15_094	FROM->TO	GR ISLD-LNX3345.00 - GRAND ISLAND 345KV CKT Z	720	720	0.05608	107.3121	GEN615015 1-GRE-SPRITWDG13.200
FDNS	00NR_G15_094	2	25SP	G15_094	FROM->TO	GR ISLD-LNX3345.00 - GRAND ISLAND 345KV CKT Z	720	720	0.05608	107.3032	GEN615021 1-GRE-ER 14G 16.000
FDNS	00NR_G15_094	2	25SP	G15_094	FROM->TO	GR ISLD-LNX3345.00 - GRAND ISLAND 345KV CKT Z	720	720	0.05608	107.3003	GEN660016 1-B_H WIND 0.7000
FDNS	00NR_G15_094	2	25SP	G15_094	FROM->TO	GR ISLD-LNX3345.00 - GRAND ISLAND 345KV CKT Z	720	720	0.05608	107.2926	GEN657705 X-DRAYTON
FDNS	00NR_G15_094	2	20SP	G15_094	FROM->TO	GR ISLD-LNX3345.00 - GRAND ISLAND 345KV CKT Z	720	720	0.05596	107.2833	GEN563282 1-G15094_3 0.6900
FDNS	00NR_G15_094	2	20SP	G15_094	FROM->TO	GR ISLD-LNX3345.00 - GRAND ISLAND 345KV CKT Z	720	720	0.04949	107.2733	COLUMWEST - GRAND ISLAND 230KV CKT 1
FDNSLock	00NR_G15_094	2	25SP	G15_094	FROM->TO	GR ISLD-LNX3345.00 - GRAND ISLAND 345KV CKT Z	720	720	0.05584	107.2704	MCCOOL (MCCOOL T2) 345/115/13.8KV TRANSFORMER CKT 1
FDNS	00NR_G15_094	2	20SP	G15_094	FROM->TO	GR ISLD-LNX3345.00 - GRAND ISLAND 345KV CKT Z	720	720	0.05596	107.2699	GEN659403 1-NDSUNFLWR W0.6900
FDNS	00NR_G15_094	2	25SP	G15_094	FROM->TO	GR ISLD-LNX3345.00 - GRAND ISLAND 345KV CKT Z	720	720	0.05497	107.2588	G14-021T 345.00 - MULLNCR7 345.00 345KV CKT 1

SOLUTION	GROUP	SCENARIO	SEASON	SOURCE	DIRECTION	MONITORED ELEMENT	RATEA (MVA)	RATEB(MVA)	TDF	TC%LOADING (% MVA)	CONTINGENCY
FDNS	00NR_G15_094	2	25SP	G15_094	FROM->TO	GR ISLD-LNX3345.00 - GRAND ISLAND 345KV CKT Z	720	720	0.05497	107.2567	G15-005T 345.00 - MULLNCR7 345.00 345KV CKT 1
FDNS	00NR_G15_094	2	20SP	G15_094	FROM->TO	GR ISLD-LNX3345.00 - GRAND ISLAND 345KV CKT Z	720	720	0.05596	107.2499	YNG2 4 230.00 230/20.0KV TRANSFORMER CKT 1
FDNS	00NR_G15_094	2	20SP	G15_094	FROM->TO	GR ISLD-LNX3345.00 - GRAND ISLAND 345KV CKT Z	720	720	0.05596	107.2457	SQUARE BUTTE - YNG2 4 230.00 230KV CKT 1
FDNS	00NR_G15_094	2	20SP	G15_094	FROM->TO	GR ISLD-LNX3345.00 - GRAND ISLAND 345KV CKT Z	720	720	0.05596	107.2348	STANTON 230/18.0KV TRANSFORMER CKT 1
FDNS	00NR_G15_094	2	25SP	G15_094	FROM->TO	GR ISLD-LNX3345.00 - GRAND ISLAND 345KV CKT Z	720	720	0.05608	107.2253	GEN672303 3-BOUNDARY DAM GENERATOR 3
FDNS	00NR_G15_094	2	25SP	G15_094	FROM->TO	GR ISLD-LNX3345.00 - GRAND ISLAND 345KV CKT Z	720	720	0.05608	107.2253	GEN672304 4-BOUNDARY DAM GENERATOR 4
FDNS	00NR_G15_094	2	25SP	G15_094	FROM->TO	GR ISLD-LNX3345.00 - GRAND ISLAND 345KV CKT Z	720	720	0.05608	107.2253	GEN672305 5-BOUNDARY DAM GENERATOR 5
FDNS	00NR_G15_094	2	25SP	G15_094	FROM->TO	GR ISLD-LNX3345.00 - GRAND ISLAND 345KV CKT Z	720	720	0.05568	107.2188	HIGHLND 3 345.00 - OBRIEN 3 345.00 345KV CKT 1
FDNS	00NR_G15_094	2	25SP	G15_094	FROM->TO	GR ISLD-LNX3345.00 - GRAND ISLAND 345KV CKT Z	720	720	0.05608	107.2078	GEN662101 1-WESSINGTON190.5750
FDNS	00NR_G15_094	2	25SP	G15_094	FROM->TO	GR ISLD-LNX3345.00 - GRAND ISLAND 345KV CKT Z	720	720	0.05533	107.206	FT THOMPSON - LOWERBRULE 4230.00 230KV CKT 1
FDNS	00NR_G15_094	2	25SP	G15_094	FROM->TO	GR ISLD-LNX3345.00 - GRAND ISLAND 345KV CKT Z	720	720	0.05533	107.206	FT THOMPSON - LOWERBRULE 4230.00 230KV CKT 1
FDNS	00NR_G15_094	2	25SP	G15_094	FROM->TO	GR ISLD-LNX3345.00 - GRAND ISLAND 345KV CKT Z	720	720	0.05608	107.2046	GEN672356 1-FUT-WL1X 18.000
FDNS	00NR_G15_094	2	25SP	G15_094	FROM->TO	GR ISLD-LNX3345.00 - GRAND ISLAND 345KV CKT Z	720	720	0.05608	107.1866	CENTER 230/22.0KV TRANSFORMER CKT 1
FDNS	00NR_G15_094	2	25SP	G15_094	FROM->TO	GR ISLD-LNX3345.00 - GRAND ISLAND 345KV CKT Z	720	720	0.05608	107.1855	GEN600067 9-HIGH BRIDGE
FDNS	00NR_G15_094	2	25SP	G15_094	FROM->TO	GR ISLD-LNX3345.00 - GRAND ISLAND 345KV CKT Z	720	720	0.05608	107.1831	GEN672389 1-FUT-SW1X 18.000
FDNS	00NR_G15_094	2	25SP	G15_094	FROM->TO	GR ISLD-LNX3345.00 - GRAND ISLAND 345KV CKT Z	720	720	0.05497	107.1792	G15-005T 345.00 - SIBLEY 345KV CKT 1
FDNS	00NR_G15_094	2	25SP	G15_094	FROM->TO	GR ISLD-LNX3345.00 - GRAND ISLAND 345KV CKT Z	720	720	0.05608	107.1769	GEN672392 1-NBECGT1G 18.000
FDNSLock	00NR_G15_094	2	25SP	G15_094	FROM->TO	GR ISLD-LNX3345.00 - GRAND ISLAND 345KV CKT Z	720	720	0.05505	107.1292	CENTRAL CITY - GRAND ISLAND 115KV CKT 1
FDNS	00NR_G15_094	2	25SP	G15_094	FROM->TO	GR ISLD-LNX3345.00 - GRAND ISLAND 345KV CKT Z	720	720	0.05608	107.0906	GEN659353 1-DEERCREK CTG18.000
FDNS	00NR_G15_094	2	25SP	G15_094	FROM->TO	GR ISLD-LNX3345.00 - GRAND ISLAND 345KV CKT Z	720	720	0.05608	107.0906	GEN659354 1-DEERCREK STG18.000
FDNS	00NR_G15_094	2	20SP	G15_094	FROM->TO	GR ISLD-LNX3345.00 - GRAND ISLAND 345KV CKT Z	720	720	0.05596	107.0778	GEN652906 1-G09_006IS_3 0.6900
FDNS	00NR_G15_094	2	25SP	G15_094	FROM->TO	GR ISLD-LNX3345.00 - GRAND ISLAND 345KV CKT Z	720	720	0.05608	107.071	GEN910006 1-G12_012IS_3 0.6900
FDNS	00NR_G15_094	2	25SP	G15_094	FROM->TO	GR ISLD-LNX3345.00 - GRAND ISLAND 345KV CKT Z	720	720	0.05715	107.0582	GLENHAM - L3 HAWDON 230KV CKT 1
FDNS	00NR_G15_094	2	20SP	G15_094	FROM->TO	GR ISLD-LNX3345.00 - GRAND ISLAND 345KV CKT Z	720	720	0.04713	107.0553	AXTELL - POST ROCK 345KV CKT 1
FDNS	00NR_G15_094	2	20SP	G15_094	FROM->TO	GR ISLD-LNX3345.00 - GRAND ISLAND 345KV CKT Z	720	720	0.05596	107.0504	GEN659411 1-CAMPBLCNTY W0.6900
FDNS	00NR_G15_094	2	25SP	G15_094	FROM->TO	GR ISLD-LNX3345.00 - GRAND ISLAND 345KV CKT Z	720	720	0.05608	107.0496	GEN681542 6-JP MADGETT
FDNS	00NR_G15_094	2	25SP	G15_094	FROM->TO	GR ISLD-LNX3345.00 - GRAND ISLAND 345KV CKT Z	720	720	0.05608	106.9869	GEN659289 1-DAYCNTYWND W0.6900
FDNS	00NR_G15_094	2	25SP	G15_094	FROM->TO	GR ISLD-LNX3345.00 - GRAND ISLAND 345KV CKT Z	720	720	0.05573	106.9811	GRAND ISLAND (GI KU3A) 345/230/13.8KV TRANSFORMER CKT 3
FDNS	00NR_G15_094	2	25SP	G15_094	FROM->TO	GR ISLD-LNX3345.00 - GRAND ISLAND 345KV CKT Z	720	720	0.05573	106.9811	GRAND ISLAND (GI KU3A) 345/230/13.8KV TRANSFORMER CKT 3
FDNS	00NR_G15_094	2	25SP	G15_094	FROM->TO	GR ISLD-LNX3345.00 - GRAND ISLAND 345KV CKT Z	720	720	0.04968	106.9605	COLUMWEST - GRAND ISLAND 230KV CKT 1
FDNS	00NR_G15_094	2	20SP	G15_094	FROM->TO	GR ISLD-LNX3345.00 - GRAND ISLAND 345KV CKT Z	720	720	0.05596	106.9171	GEN659296 2-SDPRAIRWND1W0.6900
FDNS	00NR_G15_094	2	20SP	G15_094	FROM->TO	GR ISLD-LNX3345.00 - GRAND ISLAND 345KV CKT Z	720	720	0.05596	106.9089	GEN652907 1-G09_007IS_3 0.6900
FDNS	00NR_G15_094	2	25SP	G15_094	FROM->TO	GR ISLD-LNX3345.00 - GRAND ISLAND 345KV CKT Z	720	720	0.05608	106.8896	GEN659018 1-G14_003IS_3 0.6900
FDNS	00NR_G15_094	2	25SP	G15_094	FROM->TO	GR ISLD-LNX3345.00 - GRAND ISLAND 345KV CKT Z	720	720	0.05608	106.8506	GEN659010 4-G07_027IS_2 0.6900
FDNS	00NR_G15_094	2	20SP	G15_094	FROM->TO	GR ISLD-LNX3345.00 - GRAND ISLAND 345KV CKT Z	720	720	0.05596	106.8476	GEN672321 1-SHAND GENERATOR 1
FDNS	00NR_G15_094	2	25SP	G15_094	FROM->TO	GR ISLD-LNX3345.00 - GRAND ISLAND 345KV CKT Z	720	720	0.05608	106.8441	COYOTE 345/24.0KV TRANSFORMER CKT 1
FDNS	00NR_G15_094	2	25SP	G15_094	FROM->TO	GR ISLD-LNX3345.00 - GRAND ISLAND 345KV CKT Z	720	720	0.05608	106.8403	GEN652460 4-GARRISON
FDNS	00NR_G15_094	2	25SP	G15_094	FROM->TO	GR ISLD-LNX3345.00 - GRAND ISLAND 345KV CKT Z	720	720	0.05608	106.8403	GEN652461 5-GARRISON
FDNS	00NR_G15_094	2	25SP	G15_094	FROM->TO	GR ISLD-LNX3345.00 - GRAND ISLAND 345KV CKT Z	720	720	0.05608	106.8385	GEN659194 1-NDPRAIRWND1W0.6900
FDNS	00NR_G15_094	2	25SP	G15_094	FROM->TO	GR ISLD-LNX3345.00 - GRAND ISLAND 345KV CKT Z	720	720	0.05608	106.8167	GEN652545 7-BIG BEND
FDNS	00NR_G15_094	2	20SP	G15_094	FROM->TO	GR ISLD-LNX3345.00 - GRAND ISLAND 345KV CKT Z	720	720	0.05596	106.8144	GEN652559 1-OAHE
FDNS	00NR_G15_094	2	20SP	G15_094	FROM->TO	GR ISLD-LNX3345.00 - GRAND ISLAND 345KV CKT Z	720	720	0.05596	106.8056	GEN672310 1-POPLAR RIVER GENERATOR 1
FDNS	00NR_G15_094	2	20SP	G15_094	FROM->TO	GR ISLD-LNX3345.00 - GRAND ISLAND 345KV CKT Z	720	720	0.05596	106.8056	GEN672311 2-POPLAR RIVER GENERATOR 2
FDNS	00NR_G15_094	2	25SP	G15_094	FROM->TO	GR ISLD-LNX3345.00 - GRAND ISLAND 345KV CKT Z	720	720	0.05608	106.8026	GEN652544 5-BIG BEND
FDNS	00NR_G15_094	2	25SP	G15_094	FROM->TO	GR ISLD-LNX3345.00 - GRAND ISLAND 345KV CKT Z	720	720	0.05608	106.8017	GEN652457 1-GARRISON
FDNS	00NR_G15_094	2	25SP	G15_094	FROM->TO	GR ISLD-LNX3345.00 - GRAND ISLAND 345KV CKT Z	720	720	0.05608	106.8017	GEN652458 2-GARRISON
FDNS	00NR_G15_094	2	25SP	G15_094	FROM->TO	GR ISLD-LNX3345.00 - GRAND ISLAND 345KV CKT Z	720	720	0.05608	106.8017	GEN652459 3-GARRISON
FDNS	00NR_G15_094	2	20SP	G15_094	FROM->TO	GR ISLD-LNX3345.00 - GRAND ISLAND 345KV CKT Z	720	720	0.05596	106.7931	GEN672306 6-BOUNDARY DAM GENERATOR 6
FDNS	00NR_G15_094	2	25SP	G15_094	FROM->TO	GR ISLD-LNX3345.00 - GRAND ISLAND 345KV CKT Z	720	720	0.05608	106.7913	GEN652543 3-BIG BEND
FDNS	00NR_G15_094	2	25SP	G15_094	FROM->TO	GR ISLD-LNX3345.00 - GRAND ISLAND 345KV CKT Z	720	720	0.05608	106.7912	GEN652542 1-BIG BEND
FDNS	00NR_G15_094	2	20SP	G15_094	FROM->TO	GR ISLD-LNX3345.00 - GRAND ISLAND 345KV CKT Z	720	720	0.05596	106.7798	GEN600004 2-PRAIRIE ISLAND G2
FDNS	00NR_G15_094	2	20SP	G15_094	FROM->TO	GR ISLD-LNX3345.00 - GRAND ISLAND 345KV CKT Z	720	720	0.05596	106.777	GEN600003 1-PRAIRIE ISLAND G1
FDNS	00NR_G15_094	2	20SP	G15_094	FROM->TO	GR ISLD-LNX3345.00 - GRAND ISLAND 345KV CKT Z	720	720	0.05596	106.7296	GEN615010 1-STANTON4
FDNS	00NR_G15_094	2	25SP	G15_094	FROM->TO	GR ISLD-LNX3345.00 - GRAND ISLAND 345KV CKT Z	720	720	0.05608	106.729	GEN659403 1-NDSUNFLWR W0.6900
FDNS	00NR_G15_094	2	25SP	G15_094	FROM->TO	GR ISLD-LNX3345.00 - GRAND ISLAND 345KV CKT Z	720	720	0.05608	106.7138	STANTON 230/18.0KV TRANSFORMER CKT 1
FDNS	00NR_G15_094	2	25SP	G15_094	FROM->TO	GR ISLD-LNX3345.00 - GRAND ISLAND 345KV CKT Z	720	720	0.05608	106.7087	GEN563282 1-G15094_3 0.6900
FDNS	00NR_G15_094	2	20SP	G15_094	FROM->TO	GR ISLD-LNX3345.00 - GRAND ISLAND 345KV CKT Z	720	720	0.05596	106.6916	GEN652556 2-OAHE
FDNS	00NR_G15_094	2	20SP	G15_094	FROM->TO	GR ISLD-LNX3345.00 - GRAND ISLAND 345KV CKT Z	720	720	0.05596	106.6916	GEN652557 4-OAHE
FDNS	00NR_G15_094	2	20SP	G15_094	FROM->TO	GR ISLD-LNX3345.00 - GRAND ISLAND 345KV CKT Z	720	720	0.05596	106.6916	GEN652558 6-OAHE
FDNS	00NR_G15_094	2	20SP	G15_094	FROM->TO	GR ISLD-LNX3345.00 - GRAND ISLAND 345KV CKT Z	720	720	0.05596	106.6573	GEN659453 1-GI1414GEN W0.6900
FDNS	00NR_G15_094	2	25SP	G15_094	FROM->TO	GR ISLD-LNX3345.00 - GRAND ISLAND 345KV CKT Z	720	720	0.05608	106.6499	ALMA 161 161/24.0KV TRANSFORMER CKT 1
FDNS	00NR_G15_094	2	20SP	G15_094	FROM->TO	GR ISLD-LNX3345.00 - GRAND ISLAND 345KV CKT Z	720	720	0.05596	106.6138	GEN659141 1-K10215A
FDNS	00NR_G15_094	2	20SP	G15_094	FROM->TO	GR ISLD-LNX3345.00 - GRAND ISLAND 345KV CKT Z	720	720	0.05596	106.5589	GEN652173 1-G09_001IS_2 0.6900
FDNS	00NR_G15_094	2	25SP	G15_094	FROM->TO	GR ISLD-LNX3345.00 - GRAND ISLAND 345KV CKT Z	720	720	0.05608	106.5362	GEN652906 1-G09_006IS_3 0.6900
FDNS	00NR_G15_094	2	20SP	G15_094	FROM->TO	GR ISLD-LNX3345.00 - GRAND ISLAND 345KV CKT Z	720	720	0.05596	106.534	GEN600006 1-AS KING
FDNS	00NR_G15_094	2	25SP	G15_094	FROM->TO	GR ISLD-LNX3345.00 - GRAND ISLAND 345KV CKT Z	720	720	0.05608	106.5123	GEN659411 1-CAMPBLCNTY W0.6900
FDNS	00NR_G15_094	2	25SP	G15_094	FROM->TO	GR ISLD-LNX3345.00 - GRAND ISLAND 345KV CKT Z	720	720	0.05608	106.504	SQUARE BUTTE - YNG2 4 230.00 230KV CKT 1
FDNS	00NR_G15_094	2	25SP	G15_094	FROM->TO	GR ISLD-LNX3345.00 - GRAND ISLAND 345KV CKT Z	720	720	0.05608	106.5037	YNG2 4 230.00 230/20.0KV TRANSFORMER CKT 1
FDNS	00NR_G15_094	2	20SP	G15_094	FROM->TO	GR ISLD-LNX3345.00 - GRAND ISLAND 345KV CKT Z	720	720	0.05596	106.4166	P12:230:UMZB:# 112 #: NU IN SD. NU-RCDC & DRY CREEK XFMR
FDNS	00NR_G15_094	2	20SP	G15_094	FROM->TO	GR ISLD-LNX3345.00 - GRAND ISLAND 345KV CKT Z	720	720	0.05596	106.4159	RCDC EAST 4230.00 - RED CEDAR DC 230KV CKT 1
FDNS	00NR_G15_094	2	25SP	G15_094	FROM->TO	GR ISLD-LNX3345.00 - GRAND ISLAND 345KV CKT Z	720	720	0.05608	106.3823	GEN659296 2-SDPRAIRWND1W0.6900
FDNS	00NR_G15_094	2	25SP	G15_094	FROM->TO	GR ISLD-LNX3345.00 - GRAND ISLAND 345KV CKT Z	720	720	0.05608	106.3646	GEN652907 1-G09_007IS_3 0.6900
FDNS	00NR_G15_094	2	20SP	G15_094	FROM->TO	GR ISLD-LNX3345.00 - GRAND ISLAND 345KV CKT Z	720	720	0.05596	106.3492	GEN659407 1-ANTELPHILLSW0.6900

SOLUTION	GROUP	SCENARIO	SEASON	SOURCE	DIRECTION	MONITORED ELEMENT	RATEA (MVA)	RATEB(MVA)	TDF	TC%LOADING (% MVA)	CONTINGENCY
FDNS	00NR_G15_094	2	20SP	G15_094	FROM->TO	GR ISLD-LNX3345.00 - GRAND ISLAND 345KV CKT Z	720	720	0.05596	106.3083	GEN657749 1-YOUNG 1 GENERATOR
FDNS	00NR_G15_094	2	20SP	G15_094	FROM->TO	GR ISLD-LNX3345.00 - GRAND ISLAND 345KV CKT Z	720	720	0.05596	106.2989	GEN659110 1-LELAND OLDS UNIT1
FDNS	00NR_G15_094	2	25SP	G15_094	FROM->TO	GR ISLD-LNX3345.00 - GRAND ISLAND 345KV CKT Z	720	720	0.05608	106.2634	GEN672310 1-POPLAR RIVER GENERATOR 1
FDNS	00NR_G15_094	2	25SP	G15_094	FROM->TO	GR ISLD-LNX3345.00 - GRAND ISLAND 345KV CKT Z	720	720	0.05608	106.2634	GEN672311 2-POPLAR RIVER GENERATOR 2
FDNS	00NR_G15_094	2	25SP	G15_094	FROM->TO	GR ISLD-LNX3345.00 - GRAND ISLAND 345KV CKT Z	720	720	0.05608	106.2526	GEN672321 1-SHAND GENERATOR 1
FDNS	00NR_G15_094	2	25SP	G15_094	FROM->TO	GR ISLD-LNX3345.00 - GRAND ISLAND 345KV CKT Z	720	720	0.05608	106.2108	GEN652559 1-OAHE
FDNS	00NR_G15_094	2	25SP	G15_094	FROM->TO	GR ISLD-LNX3345.00 - GRAND ISLAND 345KV CKT Z	720	720	0.05608	106.1959	GEN672306 6-BOUNDARY DAM GENERATOR 6
FDNS	00NR_G15_094	2	25SP	G15_094	FROM->TO	GR ISLD-LNX3345.00 - GRAND ISLAND 345KV CKT Z	720	720	0.05608	106.1769	GEN615010 1-STANTON4
FDNS	00NR_G15_094	2	25SP	G15_094	FROM->TO	GR ISLD-LNX3345.00 - GRAND ISLAND 345KV CKT Z	720	720	0.05608	106.1636	GEN600004 2-PRAIRIE ISLAND G2
FDNS	00NR_G15_094	2	25SP	G15_094	FROM->TO	GR ISLD-LNX3345.00 - GRAND ISLAND 345KV CKT Z	720	720	0.05608	106.1605	GEN600003 1-PRAIRIE ISLAND G1
FDNS	00NR_G15_094	2	25SP	G15_094	FROM->TO	GR ISLD-LNX3345.00 - GRAND ISLAND 345KV CKT Z	720	720	0.05608	106.1509	GEN652556 2-OAHE
FDNS	00NR_G15_094	2	25SP	G15_094	FROM->TO	GR ISLD-LNX3345.00 - GRAND ISLAND 345KV CKT Z	720	720	0.05608	106.1509	GEN652557 4-OAHE
FDNS	00NR_G15_094	2	25SP	G15_094	FROM->TO	GR ISLD-LNX3345.00 - GRAND ISLAND 345KV CKT Z	720	720	0.05608	106.1509	GEN652558 6-OAHE
FDNS	00NR_G15_094	2	25SP	G15_094	FROM->TO	GR ISLD-LNX3345.00 - GRAND ISLAND 345KV CKT Z	720	720	0.04715	106.1088	AXTELL - POST ROCK 345KV CKT 1
FDNS	00NR_G15_094	2	25SP	G15_094	FROM->TO	GR ISLD-LNX3345.00 - GRAND ISLAND 345KV CKT Z	720	720	0.05608	106.0987	GEN659453 1-GI1414GEN W0.6900
FDNS	00NR_G15_094	2	25SP	G15_094	FROM->TO	GR ISLD-LNX3345.00 - GRAND ISLAND 345KV CKT Z	720	720	0.05608	106.0483	GEN659141 1-K10215A
FDNS	00NR_G15_094	2	25SP	G15_094	FROM->TO	GR ISLD-LNX3345.00 - GRAND ISLAND 345KV CKT Z	720	720	0.05608	106.0093	GEN652173 1-G09_001IS_2 0.6900
FDNS	00NR_G15_094	2	20SP	G15_094	FROM->TO	GR ISLD-LNX3345.00 - GRAND ISLAND 345KV CKT Z	720	720	0.05596	105.8991	GEN600005 1-MONTICELLO
FDNS	00NR_G15_094	2	25SP	G15_094	FROM->TO	GR ISLD-LNX3345.00 - GRAND ISLAND 345KV CKT Z	720	720	0.05608	105.8978	GEN600006 1-AS KING
FDNS	00NR_G15_094	2	25SP	G15_094	FROM->TO	GR ISLD-LNX3345.00 - GRAND ISLAND 345KV CKT Z	720	720	0.05608	105.866	P12:230:UMZB:# 112 #: NU IN SD. NU-RCDC & DRY CREEK XFMR
FDNS	00NR_G15_094	2	25SP	G15_094	FROM->TO	GR ISLD-LNX3345.00 - GRAND ISLAND 345KV CKT Z	720	720	0.05608	105.8634	RCDC EAST 4230.00 - RED CEDAR DC 230KV CKT 1
FDNS	00NR_G15_094	2	25SP	G15_094	FROM->TO	GR ISLD-LNX3345.00 - GRAND ISLAND 345KV CKT Z	720	720	0.05608	105.8154	GEN659407 1-ANTELPHILLSW0.6900
FDNS	00NR_G15_094	2	20SP	G15_094	FROM->TO	GR ISLD-LNX3345.00 - GRAND ISLAND 345KV CKT Z	720	720	0.05596	105.7828	GEN600001 2-SHERBURNE CNTY G2
FDNS	00NR_G15_094	2	25SP	G15_094	FROM->TO	GR ISLD-LNX3345.00 - GRAND ISLAND 345KV CKT Z	720	720	0.05608	105.7503	GEN659110 1-LELAND OLDS UNIT1
FDNS	00NR_G15_094	2	20SP	G15_094	FROM->TO	GR ISLD-LNX3345.00 - GRAND ISLAND 345KV CKT Z	720	720	0.05596	105.7353	GEN600000 1-SHERBURNECNTY G1
FDNS	00NR_G15_094	2	25SP	G15_094	FROM->TO	GR ISLD-LNX3345.00 - GRAND ISLAND 345KV CKT Z	720	720	0.05608	105.7159	GEN657749 1-YOUNG 1 GENERATOR
FDNS	00NR_G15_094	2	20SP	G15_094	FROM->TO	GR ISLD-LNX3345.00 - GRAND ISLAND 345KV CKT Z	720	720	0.05596	105.5694	GEN661015 1-COYOTE
FDNS	00NR_G15_094	2	25SP	G15_094	FROM->TO	GR ISLD-LNX3345.00 - GRAND ISLAND 345KV CKT Z	720	720	0.05608	105.5547	CLAY BOSWELL 230/20.9KV TRANSFORMER CKT 1
FDNS	00NR_G15_094	2	20SP	G15_094	FROM->TO	GR ISLD-LNX3345.00 - GRAND ISLAND 345KV CKT Z	720	720	0.05596	105.459	GEN620315 1-BIG STONE GEN
FDNS	00NR_G15_094	2	25SP	G15_094	FROM->TO	GR ISLD-LNX3345.00 - GRAND ISLAND 345KV CKT Z	720	720	0.05608	105.212	GEN600005 1-MONTICELLO
FDNS	00NR_G15_094	2	25SP	G15_094	FROM->TO	GR ISLD-LNX3345.00 - GRAND ISLAND 345KV CKT Z	720	720	0.05608	105.1032	GEN600001 2-SHERBURNE CNTY G2
FDNS	00NR_G15_094	2	25SP	G15_094	FROM->TO	GR ISLD-LNX3345.00 - GRAND ISLAND 345KV CKT Z	720	720	0.05608	105.0402	GEN600000 1-SHERBURNECNTY G1
FDNS	00NR_G15_094	2	20SP	G15_094	FROM->TO	GR ISLD-LNX3345.00 - GRAND ISLAND 345KV CKT Z	720	720	0.05596	105.0002	GEN640010 1-GERALD GENTLEMAN STATION UNIT 1
FDNS	00NR_G15_094	2	20SP	G15_094	FROM->TO	GR ISLD-LNX3345.00 - GRAND ISLAND 345KV CKT Z	720	720	0.05596	104.9783	GEN600002 3-SHERBURNE CNTY G3
FDNS	00NR_G15_094	2	20SP	G15_094	FROM->TO	GR ISLD-LNX3345.00 - GRAND ISLAND 345KV CKT Z	720	720	0.05596	104.9617	GEN640011 2-GERALD GENTLEMAN STATION UNIT 2
FDNS	00NR_G15_094	2	20SP	G15_094	FROM->TO	GR ISLD-LNX3345.00 - GRAND ISLAND 345KV CKT Z	720	720	0.05596	104.9445	GEN657748 1-YOUNG 2 GENERATOR
FDNS	00NR_G15_094	2	20SP	G15_094	FROM->TO	GR ISLD-LNX3345.00 - GRAND ISLAND 345KV CKT Z	720	720	0.05596	104.8544	SHERBURNE CO 345/24.0KV TRANSFORMER CKT 1
FDNS	00NR_G15_094	2	25SP	G15_094	FROM->TO	GR ISLD-LNX3345.00 - GRAND ISLAND 345KV CKT Z	720	720	0.05608	104.8438	GEN620315 1-BIG STONE GEN
FDNS	00NR_G15_094	2	25SP	G15_094	FROM->TO	GR ISLD-LNX3345.00 - GRAND ISLAND 345KV CKT Z	720	720	0.05608	104.7984	GEN661015 1-COYOTE
FDNS	00NR_G15_094	2	20SP	G15_094	FROM->TO	GR ISLD-LNX3345.00 - GRAND ISLAND 345KV CKT Z	720	720	0.0583	104.6547	FTTHOM1-LNX3345.00 - LELAND2-LNX3345.00 345KV CKT 1
FDNS	00NR_G15_094	2	20SP	G15_094	FROM->TO	GR ISLD-LNX3345.00 - GRAND ISLAND 345KV CKT Z	720	720	0.0583	104.5863	P12:345:UMZB:# 108 #: LOS FT IN ND. LOS FT
FDNS	00NR_G15_094	2	20SP	G15_094	FROM->TO	GR ISLD-LNX3345.00 - GRAND ISLAND 345KV CKT Z	720	720	0.0583	104.5826	FT THOMPSON - FTTHOM1-LNX3345.00 345KV CKT Z
FDNS	00NR_G15_094	2	20SP	G15_094	FROM->TO	GR ISLD-LNX3345.00 - GRAND ISLAND 345KV CKT Z	720	720	0.05596	104.5669	BIG STONE 230/24.0KV TRANSFORMER CKT 1
FDNS	00NR_G15_094	2	20SP	G15_094	FROM->TO	GR ISLD-LNX3345.00 - GRAND ISLAND 345KV CKT Z	720	720	0.0583	104.5661	LELAND OLDS - LELAND2-LNX3345.00 345KV CKT Z
FDNS	00NR_G15_094	2	25SP	G15_094	FROM->TO	GR ISLD-LNX3345.00 - GRAND ISLAND 345KV CKT Z	720	720	0.05608	104.2974	SHERBURNE CO 345/24.0KV TRANSFORMER CKT 1
FDNS	00NR_G15_094	2	25SP	G15_094	FROM->TO	GR ISLD-LNX3345.00 - GRAND ISLAND 345KV CKT Z	720	720	0.05608	104.2926	GEN600002 3-SHERBURNE CNTY G3
FDNS	00NR_G15_094	2	20SP	G15_094	FROM->TO	GR ISLD-LNX3345.00 - GRAND ISLAND 345KV CKT Z	720	720	0.05596	104.2748	GEN659118 1-LARAMIE RIVER UNIT1
FDNS	00NR_G15_094	2	25SP	G15_094	FROM->TO	GR ISLD-LNX3345.00 - GRAND ISLAND 345KV CKT Z	720	720	0.05841	104.2135	FTTHOM1-LNX3345.00 - LELAND2-LNX3345.00 345KV CKT 1
FDNS	00NR_G15_094	2	25SP	G15_094	FROM->TO	GR ISLD-LNX3345.00 - GRAND ISLAND 345KV CKT Z	720	720	0.05841	104.1501	P12:345:UMZB:# 108 #: LOS FT IN ND. LOS FT
FDNS	00NR_G15_094	2	25SP	G15_094	FROM->TO	GR ISLD-LNX3345.00 - GRAND ISLAND 345KV CKT Z	720	720	0.05841	104.1458	FT THOMPSON - FTTHOM1-LNX3345.00 345KV CKT Z
FDNS	00NR_G15_094	2	25SP	G15_094	FROM->TO	GR ISLD-LNX3345.00 - GRAND ISLAND 345KV CKT Z	720	720	0.05608	104.1325	GEN640010 1-GERALD GENTLEMAN STATION UNIT 1
FDNS	00NR_G15_094	2	25SP	G15_094	FROM->TO	GR ISLD-LNX3345.00 - GRAND ISLAND 345KV CKT Z	720	720	0.05841	104.1287	LELAND OLDS - LELAND2-LNX3345.00 345KV CKT Z
FDNS	00NR_G15_094	2	20SP	G15_094	FROM->TO	GR ISLD-LNX3345.00 - GRAND ISLAND 345KV CKT Z	720	720	0.05596	103.8556	GEN659111 2-LELAND OLDS UNIT2
FDNS	00NR_G15_094	2	25SP	G15_094	FROM->TO	GR ISLD-LNX3345.00 - GRAND ISLAND 345KV CKT Z	720	720	0.05608	103.7941	GEN657748 1-YOUNG 2 GENERATOR
FDNS	00NR_G15_094	2	20SP	G15_094	FROM->TO	GR ISLD-LNX3345.00 - GRAND ISLAND 345KV CKT Z	720	720	0.05596	103.6165	GEN659125 1-COVEY
FDNS	00NR_G15_094	2	25SP	G15_094	FROM->TO	GR ISLD-LNX3345.00 - GRAND ISLAND 345KV CKT Z	720	720	0.05608	103.5971	GEN640011 2-GERALD GENTLEMAN STATION UNIT 2
FDNS	00NR_G15_094	2	25SP	G15_094	FROM->TO	GR ISLD-LNX3345.00 - GRAND ISLAND 345KV CKT Z	720	720	0.05608	103.5518	GEN659118 1-LARAMIE RIVER UNIT1
FDNS	00NR_G15_094	2	20SP	G15_094	FROM->TO	GR ISLD-LNX3345.00 - GRAND ISLAND 345KV CKT Z	720	720	0.05596	103.4784	GEN659103 1-ANTELOPE VALLEY UNIT1
FDNS	00NR_G15_094	2	20SP	G15_094	FROM->TO	GR ISLD-LNX3345.00 - GRAND ISLAND 345KV CKT Z	720	720	0.05596	103.4784	GEN659107 2-ANTELOPE VALLEY UNIT2
FDNS	00NR_G15_094	2	25SP	G15_094	FROM->TO	GR ISLD-LNX3345.00 - GRAND ISLAND 345KV CKT Z	720	720	0.05608	103.2423	GEN659111 2-LELAND OLDS UNIT2
FDNS	00NR_G15_094	2	25SP	G15_094	FROM->TO	GR ISLD-LNX3345.00 - GRAND ISLAND 345KV CKT Z	720	720	0.0325	103.2056	MCCOOL - MOORE 345KV CKT 1
FDNS	00NR_G15_094	2	25SP	G15_094	FROM->TO	GR ISLD-LNX3345.00 - GRAND ISLAND 345KV CKT Z	720	720	0.05608	103.025	GEN659125 1-COVEY
FDNS	00NR_G15_094	2	20SP	G15_094	FROM->TO	GR ISLD-LNX3345.00 - GRAND ISLAND 345KV CKT Z	720	720	0.05596	102.9843	GEN615001 1-COAL CREEK
FDNS	00NR_G15_094	2	20SP	G15_094	FROM->TO	GR ISLD-LNX3345.00 - GRAND ISLAND 345KV CKT Z	720	720	0.05596	102.9017	GEN615002 2-COAL CREEK
FDNS	00NR_G15_094	2	25SP	G15_094	FROM->TO	GR ISLD-LNX3345.00 - GRAND ISLAND 345KV CKT Z	720	720	0.05608	102.8543	GEN659103 1-ANTELOPE VALLEY UNIT1
FDNS	00NR_G15_094	2	25SP	G15_094	FROM->TO	GR ISLD-LNX3345.00 - GRAND ISLAND 345KV CKT Z	720	720	0.05608	102.8543	GEN659107 2-ANTELOPE VALLEY UNIT2
FDNS	00NR_G15_094	2	20SP	G15_094	FROM->TO	GR ISLD-LNX3345.00 - GRAND ISLAND 345KV CKT Z	720	720	0.0322	102.6527	MCCOOL - MOORE 345KV CKT 1
FDNS	00NR_G15_094	2	25SP	G15_094	FROM->TO	GR ISLD-LNX3345.00 - GRAND ISLAND 345KV CKT Z	720	720	0.05608	102.3413	GEN615001 1-COAL CREEK
FDNS	00NR_G15_094	2	25SP	G15_094	FROM->TO	GR ISLD-LNX3345.00 - GRAND ISLAND 345KV CKT Z	720	720	0.05608	102.2572	GEN615002 2-COAL CREEK
FDNS	00NR_G15_094	2	20SP	G15_094	TO->FROM	GR ISLD-LNX3345.00 - HOLT.CO3 345.00 345KV CKT 1	720	720	0.08115	114.8446	GERALD GENTLEMAN STATION - SWEETWATER 345KV CKT 1
FDNS	00NR_G15_094	2	25SP	G15_094	TO->FROM	GR ISLD-LNX3345.00 - HOLT.CO3 345.00 345KV CKT 1	720	720	0.0812	114.7461	GERALD GENTLEMAN STATION - SWEETWATER 345KV CKT 1
FDNS	00NR_G15_094	2	20SP	G15_094	TO->FROM	GR ISLD-LNX3345.00 - HOLT.CO3 345.00 345KV CKT 1	720	720	0.05647	114.3254	KELLY - MEADOWGROVE4230.00 230KV CKT 1
FDNS	00NR_G15_094	2	25SP	G15_094	TO->FROM	GR ISLD-LNX3345.00 - HOLT.CO3 345.00 345KV CKT 1	720	720	0.05661	113.9593	KELLY - MEADOWGROVE4230.00 230KV CKT 1

SOLUTION	GROUP	SCENARIO	SEASON	SOURCE	DIRECTION	MONITORED ELEMENT	RATEA (MVA)	RATEB(MVA)	TDF	TC%LOADING (% MVA)	CONTINGENCY
FDNS	00NR_G15_094	2	20SP	G15_094	TO->FROM	GR ISLD-LNX3345.00 - HOLT.CO3 345.00 345KV CKT 1	720	720	0.08619	113.4495	GRAND ISLAND - SWEETWATER 345KV CKT 1
FDNS	00NR_G15_094	2	20SP	G15_094	TO->FROM	GR ISLD-LNX3345.00 - HOLT.CO3 345.00 345KV CKT 1	720	720	0.07489	113.0965	GERALD GENTLEMAN STATION - SWEETWATER 345KV CKT 2
FDNS	00NR_G15_094	2	20SP	G15_094	TO->FROM	GR ISLD-LNX3345.00 - HOLT.CO3 345.00 345KV CKT 1	720	720	0.05817	113.0682	P12:230:UMZB:# 116 #: ST IN SD. WSG-ST-VH
FDNS	00NR_G15_094	2	25SP	G15_094	TO->FROM	GR ISLD-LNX3345.00 - HOLT.CO3 345.00 345KV CKT 1	720	720	0.07496	112.9466	GERALD GENTLEMAN STATION - SWEETWATER 345KV CKT 2
FDNS	00NR_G15_094	2	25SP	G15_094	TO->FROM	GR ISLD-LNX3345.00 - HOLT.CO3 345.00 345KV CKT 1	720	720	0.05829	112.7653	P12:230:UMZB:# 116 #: ST IN SD. WSG-ST-VH
FDNS	00NR_G15_094	2	20SP	G15_094	TO->FROM	GR ISLD-LNX3345.00 - HOLT.CO3 345.00 345KV CKT 1	720	720	0.05785	112.4949	STORLA - WESSINGTON 230KV CKT 1
FDNS	00NR_G15_094	2	25SP	G15_094	TO->FROM	GR ISLD-LNX3345.00 - HOLT.CO3 345.00 345KV CKT 1	720	720	0.086	112.4734	GRAND ISLAND - SWEETWATER 345KV CKT 1
FDNS	00NR_G15_094	2	25SP	G15_094	TO->FROM	GR ISLD-LNX3345.00 - HOLT.CO3 345.00 345KV CKT 1	720	720	0.07217	112.2856	MINGO - RED WILLOW 345KV CKT 1
FDNS	00NR_G15_094	2	25SP	G15_094	TO->FROM	GR ISLD-LNX3345.00 - HOLT.CO3 345.00 345KV CKT 1	720	720	0.07217	112.2856	MINGO - RED WILLOW 345KV CKT 1
FDNS	00NR_G15_094	2	25SP	G15_094	TO->FROM	GR ISLD-LNX3345.00 - HOLT.CO3 345.00 345KV CKT 1	720	720	0.05797	112.18	STORLA - WESSINGTON 230KV CKT 1
FDNS	00NR_G15_094	2	20SP	G15_094	TO->FROM	GR ISLD-LNX3345.00 - HOLT.CO3 345.00 345KV CKT 1	720	720	0.05774	111.7401	HANLON - STORLA 230KV CKT 1
FDNS	00NR_G15_094	2	25SP	G15_094	TO->FROM	GR ISLD-LNX3345.00 - HOLT.CO3 345.00 345KV CKT 1	720	720	0.06724	111.6628	GERALD GENTLEMAN STATION - RED WILLOW 345KV CKT 1
FDNS	00NR_G15_094	2	25SP	G15_094	TO->FROM	GR ISLD-LNX3345.00 - HOLT.CO3 345.00 345KV CKT 1	720	720	0.05786	111.3663	HANLON - STORLA 230KV CKT 1
FDNS	00NR_G15_094	2	20SP	G15_094	TO->FROM	GR ISLD-LNX3345.00 - HOLT.CO3 345.00 345KV CKT 1	720	720	0.05821	111.3518	FT THOMPSON - LETCHER 230KV CKT 1
FDNS	00NR_G15_094	2	20SP	G15_094	TO->FROM	GR ISLD-LNX3345.00 - HOLT.CO3 345.00 345KV CKT 1	720	720	0.05821	111.3518	FT THOMPSON - LETCHER 230KV CKT 1
FDNS	00NR_G15_094	2	20SP	G15_094	TO->FROM	GR ISLD-LNX3345.00 - HOLT.CO3 345.00 345KV CKT 1	720	720	0.06478	111.2666	CROOKED CREEK - NORTH PLATTE 230KV CKT 1
FDNS	00NR_G15_094	2	20SP	G15_094	TO->FROM	GR ISLD-LNX3345.00 - HOLT.CO3 345.00 345KV CKT 1	720	720	0.07192	111.2174	MINGO - RED WILLOW 345KV CKT 1
FDNS	00NR_G15_094	2	20SP	G15_094	TO->FROM	GR ISLD-LNX3345.00 - HOLT.CO3 345.00 345KV CKT 1	720	720	0.07192	111.2174	MINGO - RED WILLOW 345KV CKT 1
FDNS	00NR_G15_094	2	20SP	G15_094	TO->FROM	GR ISLD-LNX3345.00 - HOLT.CO3 345.00 345KV CKT 1	720	720	0.05596	111.2054	GEN635024 4-WALTER SCOTT UNIT 4
FDNS	00NR_G15_094	2	20SP	G15_094	TO->FROM	GR ISLD-LNX3345.00 - HOLT.CO3 345.00 345KV CKT 1	720	720	0.06701	111.1087	GERALD GENTLEMAN STATION - RED WILLOW 345KV CKT 1
FDNS	00NR_G15_094	2	25SP	G15_094	TO->FROM	GR ISLD-LNX3345.00 - HOLT.CO3 345.00 345KV CKT 1	720	720	0.06487	111.0521	CROOKED CREEK - NORTH PLATTE 230KV CKT 1
FDNS	00NR_G15_094	2	25SP	G15_094	TO->FROM	GR ISLD-LNX3345.00 - HOLT.CO3 345.00 345KV CKT 1	720	720	0.05833	111.0205	FT THOMPSON - LETCHER 230KV CKT 1
FDNS	00NR_G15_094	2	25SP	G15_094	TO->FROM	GR ISLD-LNX3345.00 - HOLT.CO3 345.00 345KV CKT 1	720	720	0.05833	111.0205	FT THOMPSON - LETCHER 230KV CKT 1
FDNS	00NR_G15_094	2	25SP	G15_094	TO->FROM	GR ISLD-LNX3345.00 - HOLT.CO3 345.00 345KV CKT 1	720	720	0.05652	110.8492	BUFFALO - JAMESTOWN 345KV CKT 1
FDNS	00NR_G15_094	2	20SP	G15_094	TO->FROM	GR ISLD-LNX3345.00 - HOLT.CO3 345.00 345KV CKT 1	720	720	0.05647	110.841	FT RANDAL - MEADOWGROVE4230.00 230KV CKT 1
FDNS	00NR_G15_094	2	20SP	G15_094	TO->FROM	GR ISLD-LNX3345.00 - HOLT.CO3 345.00 345KV CKT 1	720	720	0.0564	110.8304	BUFFALO - JAMESTOWN 345KV CKT 1
FDNS	00NR_G15_094	2	20SP	G15_094	TO->FROM	GR ISLD-LNX3345.00 - HOLT.CO3 345.00 345KV CKT 1	720	720	0.05596	110.7364	GEN635023 3-WALTER SCOTT UNIT 3
FDNS	00NR_G15_094	2	25SP	G15_094	TO->FROM	GR ISLD-LNX3345.00 - HOLT.CO3 345.00 345KV CKT 1	720	720	0.05608	110.6255	GEN635024 4-WALTER SCOTT UNIT 4
FDNS	00NR_G15_094	2	20SP	G15_094	TO->FROM	GR ISLD-LNX3345.00 - HOLT.CO3 345.00 345KV CKT 1	720	720	0.05753	110.5868	FT RANDAL - G12_009IST 230.00 230KV CKT 1
FDNS	00NR_G15_094	2	20SP	G15_094	TO->FROM	GR ISLD-LNX3345.00 - HOLT.CO3 345.00 345KV CKT 1	720	720	0.05757	110.5788	FT RANDAL - FT THOMPSON 230KV CKT 1
FDNS	00NR_G15_094	2	20SP	G15_094	TO->FROM	GR ISLD-LNX3345.00 - HOLT.CO3 345.00 345KV CKT 1	720	720	0.05757	110.5788	FT RANDAL - FT THOMPSON 230KV CKT 1
FDNS	00NR_G15_094	2	20SP	G15_094	TO->FROM	GR ISLD-LNX3345.00 - HOLT.CO3 345.00 345KV CKT 1	720	720	0.05753	110.5299	FT THOMPSON - LAKE PLATT 230KV CKT 1
FDNS	00NR_G15_094	2	20SP	G15_094	TO->FROM	GR ISLD-LNX3345.00 - HOLT.CO3 345.00 345KV CKT 1	720	720	0.05753	110.5299	FT THOMPSON - LAKE PLATT 230KV CKT 1
FDNS	00NR_G15_094	2	20SP	G15_094	TO->FROM	GR ISLD-LNX3345.00 - HOLT.CO3 345.00 345KV CKT 1	720	720	0.0564	110.44	G09_001IST 345.00 - WATERTOWN 345KV CKT 1
FDNS	00NR_G15_094	2	25SP	G15_094	TO->FROM	GR ISLD-LNX3345.00 - HOLT.CO3 345.00 345KV CKT 1	720	720	0.05661	110.3386	FT RANDAL - MEADOWGROVE4230.00 230KV CKT 1
FDNS	00NR_G15_094	2	20SP	G15_094	TO->FROM	GR ISLD-LNX3345.00 - HOLT.CO3 345.00 345KV CKT 1	720	720	0.05753	110.3	G12_009IST 230.00 - LAKE PLATT 230KV CKT 1
FDNS	00NR_G15_094	2	20SP	G15_094	TO->FROM	GR ISLD-LNX3345.00 - HOLT.CO3 345.00 345KV CKT 1	720	720	0.05596	110.2687	GEN336821 1-GRAND GULF UNIT
FDNS	00NR_G15_094	2	25SP	G15_094	TO->FROM	GR ISLD-LNX3345.00 - HOLT.CO3 345.00 345KV CKT 1	720	720	0.05608	110.1509	GEN635023 3-WALTER SCOTT UNIT 3
FDNS	00NR_G15_094	2	25SP	G15_094	TO->FROM	GR ISLD-LNX3345.00 - HOLT.CO3 345.00 345KV CKT 1	720	720	0.05766	110.1279	FT RANDAL - G12_009IST 230.00 230KV CKT 1
FDNS	00NR_G15_094	2	25SP	G15_094	TO->FROM	GR ISLD-LNX3345.00 - HOLT.CO3 345.00 345KV CKT 1	720	720	0.0577	110.1158	FT RANDAL - FT THOMPSON 230KV CKT 1
FDNS	00NR_G15_094	2	25SP	G15_094	TO->FROM	GR ISLD-LNX3345.00 - HOLT.CO3 345.00 345KV CKT 1	720	720	0.0577	110.1158	FT RANDAL - FT THOMPSON 230KV CKT 1
FDNS	00NR_G15_094	2	20SP	G15_094	TO->FROM	GR ISLD-LNX3345.00 - HOLT.CO3 345.00 345KV CKT 1	720	720	0.05596	110.1124	GEN344225 1-1CAL G1 25.000
FDNS	00NR_G15_094	2	25SP	G15_094	TO->FROM	GR ISLD-LNX3345.00 - HOLT.CO3 345.00 345KV CKT 1	720	720	0.05652	110.0899	G09_001IST 345.00 - WATERTOWN 345KV CKT 1
FDNS	00NR_G15_094	2	25SP	G15_094	TO->FROM	GR ISLD-LNX3345.00 - HOLT.CO3 345.00 345KV CKT 1	720	720	0.05766	110.0831	FT THOMPSON - LAKE PLATT 230KV CKT 1
FDNS	00NR_G15_094	2	25SP	G15_094	TO->FROM	GR ISLD-LNX3345.00 - HOLT.CO3 345.00 345KV CKT 1	720	720	0.05766	110.0831	FT THOMPSON - LAKE PLATT 230KV CKT 1
FDNS	00NR_G15_094	2	20SP	G15_094	TO->FROM	GR ISLD-LNX3345.00 - HOLT.CO3 345.00 345KV CKT 1	720	720	0.05694	110.0364	WATERTN-LNX3345.00 - WHITE 345KV CKT 1
FDNS	00NR_G15_094	2	20SP	G15_094	TO->FROM	GR ISLD-LNX3345.00 - HOLT.CO3 345.00 345KV CKT 1	720	720	0.05616	109.9923	SPLIT ROCK - WHITE 345KV CKT 1
FDNS	00NR_G15_094	2	20SP	G15_094	TO->FROM	GR ISLD-LNX3345.00 - HOLT.CO3 345.00 345KV CKT 1	720	720	0.05616	109.9923	SPLIT ROCK - WHITE 345KV CKT 1
FDNS	00NR_G15_094	2	20SP	G15_094	TO->FROM	GR ISLD-LNX3345.00 - HOLT.CO3 345.00 345KV CKT 1	720	720	0.05694	109.9656	WATERTN-LNX3345.00 - WATERTOWN 345KV CKT Z
FDNS	00NR_G15_094	2	20SP	G15_094	TO->FROM	GR ISLD-LNX3345.00 - HOLT.CO3 345.00 345KV CKT 1	720	720	0.05596	109.962	GEN640009 1-COOPER NUCLEAR STATION
FDNS	00NR_G15_094	2	20SP	G15_094	TO->FROM	GR ISLD-LNX3345.00 - HOLT.CO3 345.00 345KV CKT 1	720	720	0.05694	109.9586	P12:345:UMZW:# 1747 #: WT2 IN SD. WT2-WHT LINE FAULT
FDNS	00NR_G15_094	2	20SP	G15_094	TO->FROM	GR ISLD-LNX3345.00 - HOLT.CO3 345.00 345KV CKT 1	720	720	0.05742	109.9549	LETCHER - SIOUX FALLS 230KV CKT 1
FDNS	00NR_G15_094	2	25SP	G15_094	TO->FROM	GR ISLD-LNX3345.00 - HOLT.CO3 345.00 345KV CKT 1	720	720	0.05766	109.8396	G12_009IST 230.00 - LAKE PLATT 230KV CKT 1
FDNS	00NR_G15_094	2	20SP	G15_094	TO->FROM	GR ISLD-LNX3345.00 - HOLT.CO3 345.00 345KV CKT 1	720	720	0.05641	109.8204	CENTER - JAMESTOWN 345KV CKT 1
FDNS	00NR_G15_094	2	20SP	G15_094	TO->FROM	GR ISLD-LNX3345.00 - HOLT.CO3 345.00 345KV CKT 1	720	720	0.05596	109.8009	GEN336153 1-WATERFORD UNIT#3
FDNS	00NR_G15_094	2	20SP	G15_094	TO->FROM	GR ISLD-LNX3345.00 - HOLT.CO3 345.00 345KV CKT 1	720	720	0.05596	109.8001	GEN337911 1-ARKANSAS NUCLEAR ONE UNIT #2
FDNS	00NR_G15_094	2	25SP	G15_094	TO->FROM	GR ISLD-LNX3345.00 - HOLT.CO3 345.00 345KV CKT 1	720	720	0.05608	109.7476	GEN336821 1-GRAND GULF UNIT
FDNS	00NR_G15_094	2	25SP	G15_094	TO->FROM	GR ISLD-LNX3345.00 - HOLT.CO3 345.00 345KV CKT 1	720	720	0.05653	109.717	CENTER - JAMESTOWN 345KV CKT 1
FDNS	00NR_G15_094	2	20SP	G15_094	TO->FROM	GR ISLD-LNX3345.00 - HOLT.CO3 345.00 345KV CKT 1	720	720	0.057	109.653	RAUN - SUB 3451 FT CAL 345KV CKT 1
FDNS	00NR_G15_094	2	20SP	G15_094	TO->FROM	GR ISLD-LNX3345.00 - HOLT.CO3 345.00 345KV CKT 1	720	720	0.057	109.653	RAUN - SUB 3451 FT CAL 345KV CKT 1
FDNS	00NR_G15_094	2	20SP	G15_094	TO->FROM	GR ISLD-LNX3345.00 - HOLT.CO3 345.00 345KV CKT 1	720	720	0.05628	109.6145	BISON 3 345.00 - BUFFALO 345KV CKT 1
FDNS	00NR_G15_094	2	20SP	G15_094	TO->FROM	GR ISLD-LNX3345.00 - HOLT.CO3 345.00 345KV CKT 1	720	720	0.05712	109.6044	FT RANDAL - SIOUX CITY 230KV CKT 1
FDNS	00NR_G15_094	2	20SP	G15_094	TO->FROM	GR ISLD-LNX3345.00 - HOLT.CO3 345.00 345KV CKT 1	720	720	0.05773	109.567	THEDFRD3 345.00 (THEDFORDT2) 345/115/13.8KV TRANSFORMER CKT 1
FDNS	00NR_G15_094	2	25SP	G15_094	TO->FROM	GR ISLD-LNX3345.00 - HOLT.CO3 345.00 345KV CKT 1	720	720	0.05608	109.5584	GEN344225 1-1CAL G1 25.000
FDNS	00NR_G15_094	2	20SP	G15_094	TO->FROM	GR ISLD-LNX3345.00 - HOLT.CO3 345.00 345KV CKT 1	720	720	0.05596	109.549	GEN335831 1-RIVERBEND UNIT#1
FDNS	00NR_G15_094	2	25SP	G15_094	TO->FROM	GR ISLD-LNX3345.00 - HOLT.CO3 345.00 345KV CKT 1	720	720	0.05754	109.5423	LETCHER - SIOUX FALLS 230KV CKT 1
FDNS	00NR_G15_094	2	20SP	G15_094	TO->FROM	GR ISLD-LNX3345.00 - HOLT.CO3 345.00 345KV CKT 1	720	720	0.05596	109.5314	GEN641089 2-ENERGY CENTER 2
FDNS	00NR_G15_094	2	20SP	G15_094	TO->FROM	GR ISLD-LNX3345.00 - HOLT.CO3 345.00 345KV CKT 1	720	720	0.05633	109.515	SIOUXCY-LNX3345.00 - SPLIT ROCK 345KV CKT 1
FDNS	00NR_G15_094	2	20SP	G15_094	TO->FROM	GR ISLD-LNX3345.00 - HOLT.CO3 345.00 345KV CKT 1	720	720	0.05633	109.515	SIOUXCY-LNX3345.00 - SPLIT ROCK 345KV CKT 1
FDNS	00NR_G15_094	2	25SP	G15_094	TO->FROM	GR ISLD-LNX3345.00 - HOLT.CO3 345.00 345KV CKT 1	720	720	0.05608	109.5117	GEN640009 1-COOPER NUCLEAR STATION
FDNS	00NR_G15_094	2	20SP	G15_094	TO->FROM	GR ISLD-LNX3345.00 - HOLT.CO3 345.00 345KV CKT 1	720	720	0.05633	109.503	P12:345:UMZW:# 907 #: SC2-SR IN IA. SC2-SR 345 KV LINE
FDNS	00NR_G15_094	2	20SP	G15_094	TO->FROM	GR ISLD-LNX3345.00 - HOLT.CO3 345.00 345KV CKT 1	720	720	0.05623	109.4947	CHISAGO COUNTY - CHISAGO COUNTY 500KV CKT 1
FDNS	00NR_G15_094	2	20SP	G15_094	TO->FROM	GR ISLD-LNX3345.00 - HOLT.CO3 345.00 345KV CKT 1	720	720	0.05633	109.4884	SIOUX CITY - SIOUXCY-LNX3345.00 345KV CKT Z

SOLUTION	GROUP	SCENARIO	SEASON	SOURCE	DIRECTION	MONITORED ELEMENT	RATEA (MVA)	RATEB(MVA)	TDF	TC%LOADING (% MVA)	CONTINGENCY
FDNS	00NR_G15_094	2	25SP	G15_094	TO->FROM	GR ISLD-LNX3345.00 - HOLT.CO3 345.00 345KV CKT 1	720	720	0.05706	109.4867	WATERTN-LNX3345.00 - WHITE 345KV CKT 1
FDNS	00NR_G15_094	2	20SP	G15_094	TO->FROM	GR ISLD-LNX3345.00 - HOLT.CO3 345.00 345KV CKT 1	720	720	0.05596	109.4699	GEN337910 1-ARKANSAS NUCLEAR ONE UNIT #1
FDNS	00NR_G15_094	2	20SP	G15_094	TO->FROM	GR ISLD-LNX3345.00 - HOLT.CO3 345.00 345KV CKT 1	720	720	0.05623	109.4546	CHISAGO COUNTY - FORBES 500KV CKT 1
FDNS	00NR_G15_094	2	25SP	G15_094	TO->FROM	GR ISLD-LNX3345.00 - HOLT.CO3 345.00 345KV CKT 1	720	720	0.05629	109.4519	SPLIT ROCK - WHITE 345KV CKT 1
FDNS	00NR_G15_094	2	25SP	G15_094	TO->FROM	GR ISLD-LNX3345.00 - HOLT.CO3 345.00 345KV CKT 1	720	720	0.05629	109.4519	SPLIT ROCK - WHITE 345KV CKT 1
FDNS	00NR_G15_094	2	20SP	G15_094	TO->FROM	GR ISLD-LNX3345.00 - HOLT.CO3 345.00 345KV CKT 1	720	720	0.05611	109.4254	ROSEAU - ROSEAUM 2 500.00 500KV CKT 1
FDNS	00NR_G15_094	2	20SP	G15_094	TO->FROM	GR ISLD-LNX3345.00 - HOLT.CO3 345.00 345KV CKT 1	720	720	0.05611	109.4253	RIEL - ROSEAU 500KV CKT 1
FDNS	00NR_G15_094	2	20SP	G15_094	TO->FROM	GR ISLD-LNX3345.00 - HOLT.CO3 345.00 345KV CKT 1	720	720	0.05611	109.4253	ROSEAU - ROSEAUM 2 500.00 500KV CKT 1
FDNS	00NR_G15_094	2	25SP	G15_094	TO->FROM	GR ISLD-LNX3345.00 - HOLT.CO3 345.00 345KV CKT 1	720	720	0.05706	109.417	WATERTN-LNX3345.00 - WATERTOWN 345KV CKT Z
FDNS	00NR_G15_094	2	25SP	G15_094	TO->FROM	GR ISLD-LNX3345.00 - HOLT.CO3 345.00 345KV CKT 1	720	720	0.05706	109.4105	P12:345:UMZW:# 1747 #: WT2 IN SD. WT2-WHT LINE FAULT
FDNS	00NR_G15_094	2	20SP	G15_094	TO->FROM	GR ISLD-LNX3345.00 - HOLT.CO3 345.00 345KV CKT 1	720	720	0.05596	109.3644	GEN645012 2-NEBRASKA CITY 2
FDNS	00NR_G15_094	2	25SP	G15_094	TO->FROM	GR ISLD-LNX3345.00 - HOLT.CO3 345.00 345KV CKT 1	720	720	0.0564	109.3316	BISON 3 345.00 - BUFFALO 345KV CKT 1
FDNS	00NR_G15_094	2	25SP	G15_094	TO->FROM	GR ISLD-LNX3345.00 - HOLT.CO3 345.00 345KV CKT 1	720	720	0.05608	109.3006	GEN337911 1-ARKANSAS NUCLEAR ONE UNIT #2
FDNS	00NR_G15_094	2	20SP	G15_094	TO->FROM	GR ISLD-LNX3345.00 - HOLT.CO3 345.00 345KV CKT 1	720	720	0.05699	109.2898	HANLON - SIOUX FALLS 230KV CKT 1
FDNS	00NR_G15_094	2	25SP	G15_094	TO->FROM	GR ISLD-LNX3345.00 - HOLT.CO3 345.00 345KV CKT 1	720	720	0.05608	109.2777	GEN336153 1-WATERFORD UNIT#3
FDNS	00NR_G15_094	2	20SP	G15_094	TO->FROM	GR ISLD-LNX3345.00 - HOLT.CO3 345.00 345KV CKT 1	720	720	0.05596	109.262	GEN645011 1-NEBRASKA CITY 1
FDNS	00NR_G15_094	2	20SP	G15_094	TO->FROM	GR ISLD-LNX3345.00 - HOLT.CO3 345.00 345KV CKT 1	720	720	0.05641	109.2572	ARROWHEAD - ARROWHEAD 230 230KV CKT 1
FDNS	00NR_G15_094	2	20SP	G15_094	TO->FROM	GR ISLD-LNX3345.00 - HOLT.CO3 345.00 345KV CKT 1	720	720	0.05786	109.248	P12:115:NPPD:1167A:AINSWRT7:ONEILL 7:BTB
FDNS	00NR_G15_094	2	25SP	G15_094	TO->FROM	GR ISLD-LNX3345.00 - HOLT.CO3 345.00 345KV CKT 1	720	720	0.05784	109.2361	THEDFRD3 345.00 (THEDFORDT2) 345/115/13.8KV TRANSFORMER CKT 1
FDNS	00NR_G15_094	2	20SP	G15_094	TO->FROM	GR ISLD-LNX3345.00 - HOLT.CO3 345.00 345KV CKT 1	720	720	0.0581	109.2145	CALLAWAY - MAXWELL 115KV CKT 1
FDNS	00NR_G15_094	2	20SP	G15_094	TO->FROM	GR ISLD-LNX3345.00 - HOLT.CO3 345.00 345KV CKT 1	720	720	0.05637	109.2104	GROTON-LNX3 345.00 - LELAND1-LNX3345.00 345KV CKT 1
FDNS	00NR_G15_094	2	20SP	G15_094	TO->FROM	GR ISLD-LNX3345.00 - HOLT.CO3 345.00 345KV CKT 1	720	720	0.0564	109.2035	G09_001IST 345.00 - GROTON 345KV CKT 1
FDNS	00NR_G15_094	2	25SP	G15_094	TO->FROM	GR ISLD-LNX3345.00 - HOLT.CO3 345.00 345KV CKT 1	720	720	0.05713	109.1945	RAUN - SUB 3451 FT CAL 345KV CKT 1
FDNS	00NR_G15_094	2	25SP	G15_094	TO->FROM	GR ISLD-LNX3345.00 - HOLT.CO3 345.00 345KV CKT 1	720	720	0.05713	109.1945	RAUN - SUB 3451 FT CAL 345KV CKT 1
FDNS	00NR_G15_094	2	20SP	G15_094	TO->FROM	GR ISLD-LNX3345.00 - HOLT.CO3 345.00 345KV CKT 1	720	720	0.05684	109.1906	FT RANDAL - UTICA JCT 230KV CKT 1
FDNS	00NR_G15_094	2	25SP	G15_094	TO->FROM	GR ISLD-LNX3345.00 - HOLT.CO3 345.00 345KV CKT 1	720	720	0.05725	109.1623	FT RANDAL - SIOUX CITY 230KV CKT 1
FDNS	00NR_G15_094	2	20SP	G15_094	TO->FROM	GR ISLD-LNX3345.00 - HOLT.CO3 345.00 345KV CKT 1	720	720	0.05637	109.1622	GROTON - GROTON-LNX3 345.00 345KV CKT Z
FDNS	00NR_G15_094	2	20SP	G15_094	TO->FROM	GR ISLD-LNX3345.00 - HOLT.CO3 345.00 345KV CKT 1	720	720	0.05637	109.1618	P12:345:UMZB:# 109 #: LOS GRT IN ND. LOS GRT
FDNS	00NR_G15_094	2	20SP	G15_094	TO->FROM	GR ISLD-LNX3345.00 - HOLT.CO3 345.00 345KV CKT 1	720	720	0.05637	109.1573	LELAND OLDS - LELAND1-LNX3345.00 345KV CKT Z
FDNS	00NR_G15_094	2	20SP	G15_094	TO->FROM	GR ISLD-LNX3345.00 - HOLT.CO3 345.00 345KV CKT 1	720	720	0.05596	109.1492	GEN337653 1-WHITE BLUFF UNIT #2
FDNS	00NR_G15_094	2	20SP	G15_094	TO->FROM	GR ISLD-LNX3345.00 - HOLT.CO3 345.00 345KV CKT 1	720	720	0.05675	109.1242	LAKEFIELD 3 - NOBLES 345KV CKT 1
FDNS	00NR_G15_094	2	25SP	G15_094	TO->FROM	GR ISLD-LNX3345.00 - HOLT.CO3 345.00 345KV CKT 1	720	720	0.05635	109.1235	CHISAGO COUNTY - CHISAGO COUNTY 500KV CKT 1
FDNS	00NR_G15_094	2	20SP	G15_094	TO->FROM	GR ISLD-LNX3345.00 - HOLT.CO3 345.00 345KV CKT 1	720	720	0.05646	109.1204	PAHOJA - SIOUX FALLS 230KV CKT 1
FDNS	00NR_G15_094	2	20SP	G15_094	TO->FROM	GR ISLD-LNX3345.00 - HOLT.CO3 345.00 345KV CKT 1	720	720	0.05596	109.1166	GEN338146 1-INDEPENDENCE UNIT #2
FDNS	00NR_G15_094	2	20SP	G15_094	TO->FROM	GR ISLD-LNX3345.00 - HOLT.CO3 345.00 345KV CKT 1	720	720	0.05596	109.1161	GEN337652 1-WHITE BLUFF UNIT #1
FDNS	00NR_G15_094	2	20SP	G15_094	TO->FROM	GR ISLD-LNX3345.00 - HOLT.CO3 345.00 345KV CKT 1	720	720	0.05596	109.115	GEN338143 1-INDEPENDENCE UNIT #1
FDNS	00NR_G15_094	2	25SP	G15_094	TO->FROM	GR ISLD-LNX3345.00 - HOLT.CO3 345.00 345KV CKT 1	720	720	0.05608	109.1113	GEN641089 2-ENERGY CENTER 2
FDNS	00NR_G15_094	2	25SP	G15_094	TO->FROM	GR ISLD-LNX3345.00 - HOLT.CO3 345.00 345KV CKT 1	720	720	0.05608	109.0306	GEN335831 1-RIVERBEND UNIT#1
FDNS	00NR_G15_094	2	20SP	G15_094	TO->FROM	GR ISLD-LNX3345.00 - HOLT.CO3 345.00 345KV CKT 1	720	720	0.05596	109.0243	GEN501801 1-DOLET HILLS UNIT1
FDNS	00NR_G15_094	2	20SP	G15_094	TO->FROM	GR ISLD-LNX3345.00 - HOLT.CO3 345.00 345KV CKT 1	720	720	0.05695	108.9855	CARPENTER - HURON 230KV CKT 1
FDNS	00NR_G15_094	2	20SP	G15_094	TO->FROM	GR ISLD-LNX3345.00 - HOLT.CO3 345.00 345KV CKT 1	720	720	0.06225	108.9826	CROOKED CREEK - RIVERDALE 230KV CKT 1
FDNS	00NR_G15_094	2	20SP	G15_094	TO->FROM	GR ISLD-LNX3345.00 - HOLT.CO3 345.00 345KV CKT 1	720	720	0.05596	108.9791	GEN336252 1-NINEMILE POINT UNIT#5
FDNS	00NR_G15_094	2	25SP	G15_094	TO->FROM	GR ISLD-LNX3345.00 - HOLT.CO3 345.00 345KV CKT 1	720	720	0.06466	108.976	MINGO - SETAB 345KV CKT 1
FDNS	00NR_G15_094	2	25SP	G15_094	TO->FROM	GR ISLD-LNX3345.00 - HOLT.CO3 345.00 345KV CKT 1	720	720	0.06466	108.976	MINGO - SETAB 345KV CKT 1
FDNS	00NR_G15_094	2	25SP	G15_094	TO->FROM	GR ISLD-LNX3345.00 - HOLT.CO3 345.00 345KV CKT 1	720	720	0.05608	108.97	GEN337910 1-ARKANSAS NUCLEAR ONE UNIT #1
FDNS	00NR_G15_094	2	25SP	G15_094	TO->FROM	GR ISLD-LNX3345.00 - HOLT.CO3 345.00 345KV CKT 1	720	720	0.05647	108.9682	SIOUXCY-LNX3345.00 - SPLIT ROCK 345KV CKT 1
FDNS	00NR_G15_094	2	25SP	G15_094	TO->FROM	GR ISLD-LNX3345.00 - HOLT.CO3 345.00 345KV CKT 1	720	720	0.05647	108.9682	SIOUXCY-LNX3345.00 - SPLIT ROCK 345KV CKT 1
FDNS	00NR_G15_094	2	20SP	G15_094	TO->FROM	GR ISLD-LNX3345.00 - HOLT.CO3 345.00 345KV CKT 1	720	720	0.05785	108.9656	FT THOMPSON - WESSINGTON 230KV CKT 1
FDNS	00NR_G15_094	2	20SP	G15_094	TO->FROM	GR ISLD-LNX3345.00 - HOLT.CO3 345.00 345KV CKT 1	720	720	0.05785	108.9656	FT THOMPSON - WESSINGTON 230KV CKT 1
FDNS	00NR_G15_094	2	25SP	G15_094	TO->FROM	GR ISLD-LNX3345.00 - HOLT.CO3 345.00 345KV CKT 1	720	720	0.05623	108.9627	RIEL - ROSEAU 500KV CKT 1
FDNS	00NR_G15_094	2	25SP	G15_094	TO->FROM	GR ISLD-LNX3345.00 - HOLT.CO3 345.00 345KV CKT 1	720	720	0.05623	108.9595	ROSEAU - ROSEAUM 2 500.00 500KV CKT 1
FDNS	00NR_G15_094	2	25SP	G15_094	TO->FROM	GR ISLD-LNX3345.00 - HOLT.CO3 345.00 345KV CKT 1	720	720	0.05623	108.9594	ROSEAU - ROSEAUM 2 500.00 500KV CKT 1
FDNS	00NR_G15_094	2	20SP	G15_094	TO->FROM	GR ISLD-LNX3345.00 - HOLT.CO3 345.00 345KV CKT 1	720	720	0.05636	108.959	BROOKING COUNTY - LYON COUNTY 345KV CKT 1
FDNS	00NR_G15_094	2	20SP	G15_094	TO->FROM	GR ISLD-LNX3345.00 - HOLT.CO3 345.00 345KV CKT 1	720	720	0.05637	108.9588	AS KING - EAU CLAIRE 345KV CKT 1
FDNS	00NR_G15_094	2	25SP	G15_094	TO->FROM	GR ISLD-LNX3345.00 - HOLT.CO3 345.00 345KV CKT 1	720	720	0.05647	108.9443	P12:345:UMZW:# 907 #: SC2-SR IN IA. SC2-SR 345 KV LINE
FDNS	00NR_G15_094	2	20SP	G15_094	TO->FROM	GR ISLD-LNX3345.00 - HOLT.CO3 345.00 345KV CKT 1	720	720	0.05596	108.9235	GEN336251 1-NINEMILE POINT UNIT#4
FDNS	00NR_G15_094	2	20SP	G15_094	TO->FROM	GR ISLD-LNX3345.00 - HOLT.CO3 345.00 345KV CKT 1	720	720	0.05695	108.9171	HURON - WATERTOWN 230KV CKT 2
FDNS	00NR_G15_094	2	20SP	G15_094	TO->FROM	GR ISLD-LNX3345.00 - HOLT.CO3 345.00 345KV CKT 1	720	720	0.05695	108.9171	HURON - WATERTOWN 230KV CKT 2
FDNS	00NR_G15_094	2	20SP	G15_094	TO->FROM	GR ISLD-LNX3345.00 - HOLT.CO3 345.00 345KV CKT 1	720	720	0.05596	108.9132	GEN336831 1-BAXTER WILSON SES
FDNS	00NR_G15_094	2	25SP	G15_094	TO->FROM	GR ISLD-LNX3345.00 - HOLT.CO3 345.00 345KV CKT 1	720	720	0.05647	108.9128	SIOUX CITY - SIOUXCY-LNX3345.00 345KV CKT Z
FDNS	00NR_G15_094	2	20SP	G15_094	TO->FROM	GR ISLD-LNX3345.00 - HOLT.CO3 345.00 345KV CKT 1	720	720	0.05596	108.9119	GEN542962 2-IATAN UNIT #2
FDNS	00NR_G15_094	2	20SP	G15_094	TO->FROM	GR ISLD-LNX3345.00 - HOLT.CO3 345.00 345KV CKT 1	720	720	0.05646	108.8908	EAGLE 4 230.00 - PAHOJA 230KV CKT 1
FDNS	00NR_G15_094	2	20SP	G15_094	TO->FROM	GR ISLD-LNX3345.00 - HOLT.CO3 345.00 345KV CKT 1	720	720	0.05695	108.8869	CARPENTER - WATERTOWN 230KV CKT 1
FDNS	00NR_G15_094	2	20SP	G15_094	TO->FROM	GR ISLD-LNX3345.00 - HOLT.CO3 345.00 345KV CKT 1	720	720	0.05695	108.8869	CARPENTER - WATERTOWN 230KV CKT 1
FDNS	00NR_G15_094	2	20SP	G15_094	TO->FROM	GR ISLD-LNX3345.00 - HOLT.CO3 345.00 345KV CKT 1	720	720	0.05596	108.8818	GEN337041 1-GERALD ANDRUS
FDNS	00NR_G15_094	2	20SP	G15_094	TO->FROM	GR ISLD-LNX3345.00 - HOLT.CO3 345.00 345KV CKT 1	720	720	0.05596	108.8628	GEN532751 1-WOLF CREEK GENERATING STATION UNIT 1
FDNS	00NR_G15_094	2	20SP	G15_094	TO->FROM	GR ISLD-LNX3345.00 - HOLT.CO3 345.00 345KV CKT 1	720	720	0.0551	108.8587	STAPLETON - THEDFORD 115KV CKT 1
FDNS	00NR_G15_094	2	25SP	G15_094	TO->FROM	GR ISLD-LNX3345.00 - HOLT.CO3 345.00 345KV CKT 1	720	720	0.05822	108.8451	CALLAWAY - MAXWELL 115KV CKT 1
FDNS	00NR_G15_094	2	20SP	G15_094	TO->FROM	GR ISLD-LNX3345.00 - HOLT.CO3 345.00 345KV CKT 1	720	720	0.05641	108.8424	ALEXMRES3 345.00 - BISON 3 345.00 345KV CKT 1
FDNS	00NR_G15_094	2	20SP	G15_094	TO->FROM	GR ISLD-LNX3345.00 - HOLT.CO3 345.00 345KV CKT 1	720	720	0.05596	108.8391	GEN501813 1-RODEMACHER UNIT 3
FDNS	00NR_G15_094	2	25SP	G15_094	TO->FROM	GR ISLD-LNX3345.00 - HOLT.CO3 345.00 345KV CKT 1	720	720	0.05608	108.8355	GEN645012 2-NEBRASKA CITY 2
FDNS	00NR_G15_094	2	20SP	G15_094	TO->FROM	GR ISLD-LNX3345.00 - HOLT.CO3 345.00 345KV CKT 1	720	720	0.05669	108.8319	RASMUSN - UTICA JCT 230KV CKT 1
FDNS	00NR_G15_094	2	25SP	G15_094	TO->FROM	GR ISLD-LNX3345.00 - HOLT.CO3 345.00 345KV CKT 1	720	720	0.05711	108.8216	HANLON - SIOUX FALLS 230KV CKT 1

SOLUTION	GROUP	SCENARIO	SEASON	SOURCE	DIRECTION	MONITORED ELEMENT	RATEA (MVA)	RATEB(MVA)	TDF	TC%LOADING (% MVA)	CONTINGENCY
FDNS	00NR_G15_094	2	20SP	G15_094	TO->FROM	GR ISLD-LNX3345.00 - HOLT.CO3 345.00 345KV CKT 1	720	720	0.05668	108.8213	HAZLETON - MITCHLCO3 345.00 345KV CKT 1
FDNS	00NR_G15_094	2	20SP	G15_094	TO->FROM	GR ISLD-LNX3345.00 - HOLT.CO3 345.00 345KV CKT 1	720	720	0.05596	108.8115	GEN344897 4-1LAB G4 20.000
FDNS	00NR_G15_094	2	20SP	G15_094	TO->FROM	GR ISLD-LNX3345.00 - HOLT.CO3 345.00 345KV CKT 1	720	720	0.05596	108.8103	GEN344894 1-1LAB G1 20.000
FDNS	00NR_G15_094	2	20SP	G15_094	TO->FROM	GR ISLD-LNX3345.00 - HOLT.CO3 345.00 345KV CKT 1	720	720	0.05596	108.8102	GEN344895 2-1LAB G2 20.000
FDNS	00NR_G15_094	2	20SP	G15_094	TO->FROM	GR ISLD-LNX3345.00 - HOLT.CO3 345.00 345KV CKT 1	720	720	0.05596	108.8102	GEN344896 3-1LAB G3 20.000
FDNS	00NR_G15_094	2	25SP	G15_094	TO->FROM	GR ISLD-LNX3345.00 - HOLT.CO3 345.00 345KV CKT 1	720	720	0.05797	108.8085	P12:115:NPPD:1167A:AINSWRT7:ONEILL 7:BTB
FDNS	00NR_G15_094	2	20SP	G15_094	TO->FROM	GR ISLD-LNX3345.00 - HOLT.CO3 345.00 345KV CKT 1	720	720	0.05596	108.7896	GEN629075 1-OTTUMWA GENERATOR FOR OTTUMWA UNIT NO 1
FDNS	00NR_G15_094	2	20SP	G15_094	TO->FROM	GR ISLD-LNX3345.00 - HOLT.CO3 345.00 345KV CKT 1	720	720	0.05713	108.7807	P12:115:NPPD:1164:ONEILL 7:JEFFREY9:BTB
FDNS	00NR_G15_094	2	25SP	G15_094	TO->FROM	GR ISLD-LNX3345.00 - HOLT.CO3 345.00 345KV CKT 1	720	720	0.05696	108.7762	FT RANDAL - UTICA JCT 230KV CKT 1
FDNS	00NR_G15_094	2	20SP	G15_094	TO->FROM	GR ISLD-LNX3345.00 - HOLT.CO3 345.00 345KV CKT 1	720	720	0.05596	108.7593	GEN345671 2-1RUSH G2 18.000
FDNS	00NR_G15_094	2	20SP	G15_094	TO->FROM	GR ISLD-LNX3345.00 - HOLT.CO3 345.00 345KV CKT 1	720	720	0.05596	108.7562	GEN345670 1-1RUSH G1 18.000
FDNS	00NR_G15_094	2	20SP	G15_094	TO->FROM	GR ISLD-LNX3345.00 - HOLT.CO3 345.00 345KV CKT 1	720	720	0.05459	108.7469	HOSKINS - RAUN 345KV CKT 1
FDNS	00NR_G15_094	2	20SP	G15_094	TO->FROM	GR ISLD-LNX3345.00 - HOLT.CO3 345.00 345KV CKT 1	720	720	0.05459	108.7469	HOSKINS - RAUN 345KV CKT 1
FDNS	00NR_G15_094	2	20SP	G15_094	TO->FROM	GR ISLD-LNX3345.00 - HOLT.CO3 345.00 345KV CKT 1	720	720	0.05786	108.7455	BASSETT 7115.00 - STUART 115KV CKT 1
FDNS	00NR_G15_094	2	20SP	G15_094	TO->FROM	GR ISLD-LNX3345.00 - HOLT.CO3 345.00 345KV CKT 1	720	720	0.05673	108.7403	GRIMES - LEHIGH 345KV CKT 1
FDNS	00NR_G15_094	2	25SP	G15_094	TO->FROM	GR ISLD-LNX3345.00 - HOLT.CO3 345.00 345KV CKT 1	720	720	0.05608	108.7395	GEN645011 1-NEBRASKA CITY 1
FDNS	00NR_G15_094	2	20SP	G15_094	TO->FROM	GR ISLD-LNX3345.00 - HOLT.CO3 345.00 345KV CKT 1	720	720	0.05596	108.7272	GEN542957 1-IATAN UNIT #1
FDNS	00NR_G15_094	2	25SP	G15_094	TO->FROM	GR ISLD-LNX3345.00 - HOLT.CO3 345.00 345KV CKT 1	720	720	0.05649	108.7258	GROTON-LNX3 345.00 - LELAND1-LNX3345.00 345KV CKT 1
FDNS	00NR_G15_094	2	20SP	G15_094	TO->FROM	GR ISLD-LNX3345.00 - HOLT.CO3 345.00 345KV CKT 1	720	720	0.05713	108.7215	CLEARWATER - ONEILL 115KV CKT 1
FDNS	00NR_G15_094	2	20SP	G15_094	TO->FROM	GR ISLD-LNX3345.00 - HOLT.CO3 345.00 345KV CKT 1	720	720	0.05596	108.7203	GEN335206 1-NELSON UNIT 6
FDNS	00NR_G15_094	2	20SP	G15_094	TO->FROM	GR ISLD-LNX3345.00 - HOLT.CO3 345.00 345KV CKT 1	720	720	0.06683	108.7201	KEYSTONE - SIDNEY1-LNX3345.00 345KV CKT 1
FDNS	00NR_G15_094	2	25SP	G15_094	TO->FROM	GR ISLD-LNX3345.00 - HOLT.CO3 345.00 345KV CKT 1	720	720	0.05653	108.7168	ARROWHEAD - ARROWHEAD 230 230KV CKT 1
FDNS	00NR_G15_094	2	20SP	G15_094	TO->FROM	GR ISLD-LNX3345.00 - HOLT.CO3 345.00 345KV CKT 1	720	720	0.05786	108.7111	AINSWORTH - BASSETT 7115.00 115KV CKT 1
FDNS	00NR_G15_094	2	20SP	G15_094	TO->FROM	GR ISLD-LNX3345.00 - HOLT.CO3 345.00 345KV CKT 1	720	720	0.05611	108.7095	CNTSHNT3 345.00 - PRAIRIE3 345.00 345KV CKT 1
FDNS	00NR_G15_094	2	25SP	G15_094	TO->FROM	GR ISLD-LNX3345.00 - HOLT.CO3 345.00 345KV CKT 1	720	720	0.05687	108.7095	LAKEFIELD 3 - NOBLES 345KV CKT 1
FDNS	00NR_G15_094	2	20SP	G15_094	TO->FROM	GR ISLD-LNX3345.00 - HOLT.CO3 345.00 345KV CKT 1	720	720	0.05596	108.702	GEN645001 1-FORT CALHOUN 1
FDNS	00NR_G15_094	2	25SP	G15_094	TO->FROM	GR ISLD-LNX3345.00 - HOLT.CO3 345.00 345KV CKT 1	720	720	0.05608	108.6967	GEN337652 1-WHITE BLUFF UNIT #1
FDNS	00NR_G15_094	2	20SP	G15_094	TO->FROM	GR ISLD-LNX3345.00 - HOLT.CO3 345.00 345KV CKT 1	720	720	0.05669	108.6937	RASMUSN - SIOUX CITY 230KV CKT 1
FDNS	00NR_G15_094	2	20SP	G15_094	TO->FROM	GR ISLD-LNX3345.00 - HOLT.CO3 345.00 345KV CKT 1	720	720	0.05596	108.6874	GEN334440 1-SABINE UNIT 4
FDNS	00NR_G15_094	2	25SP	G15_094	TO->FROM	GR ISLD-LNX3345.00 - HOLT.CO3 345.00 345KV CKT 1	720	720	0.05652	108.6859	G09_001IST 345.00 - GROTON 345KV CKT 1
FDNS	00NR_G15_094	2	25SP	G15_094	TO->FROM	GR ISLD-LNX3345.00 - HOLT.CO3 345.00 345KV CKT 1	720	720	0.05649	108.683	GROTON - GROTON-LNX3 345.00 345KV CKT Z
FDNS	00NR_G15_094	2	25SP	G15_094	TO->FROM	GR ISLD-LNX3345.00 - HOLT.CO3 345.00 345KV CKT 1	720	720	0.05649	108.6829	P12:345:UMZB:# 109 #: LOS GRT IN ND. LOS GRT
FDNS	00NR_G15_094	2	25SP	G15_094	TO->FROM	GR ISLD-LNX3345.00 - HOLT.CO3 345.00 345KV CKT 1	720	720	0.05649	108.6783	LELAND OLDS - LELAND1-LNX3345.00 345KV CKT Z
FDNS	00NR_G15_094	2	20SP	G15_094	TO->FROM	GR ISLD-LNX3345.00 - HOLT.CO3 345.00 345KV CKT 1	720	720	0.05743	108.6735	BUCKNER7 345.00 - SPEARVILLE 345KV CKT 1
FDNS	00NR_G15_094	2	20SP	G15_094	TO->FROM	GR ISLD-LNX3345.00 - HOLT.CO3 345.00 345KV CKT 1	720	720	0.05743	108.6735	BUCKNER7 345.00 - SPEARVILLE 345KV CKT 1
FDNS	00NR_G15_094	2	25SP	G15_094	TO->FROM	GR ISLD-LNX3345.00 - HOLT.CO3 345.00 345KV CKT 1	720	720	0.05608	108.6726	GEN338143 1-INDEPENDENCE UNIT #1
FDNS	00NR_G15_094	2	25SP	G15_094	TO->FROM	GR ISLD-LNX3345.00 - HOLT.CO3 345.00 345KV CKT 1	720	720	0.05608	108.6717	GEN338146 1-INDEPENDENCE UNIT #2
FDNS	00NR_G15_094	2	20SP	G15_094	TO->FROM	GR ISLD-LNX3345.00 - HOLT.CO3 345.00 345KV CKT 1	720	720	0.06683	108.663	SIDNEY - SIDNEY1-LNX3345.00 345KV CKT Z
FDNS	00NR_G15_094	2	20SP	G15_094	TO->FROM	GR ISLD-LNX3345.00 - HOLT.CO3 345.00 345KV CKT 1	720	720	0.06444	108.6605	MINGO - SETAB 345KV CKT 1
FDNS	00NR_G15_094	2	20SP	G15_094	TO->FROM	GR ISLD-LNX3345.00 - HOLT.CO3 345.00 345KV CKT 1	720	720	0.06444	108.6605	MINGO - SETAB 345KV CKT 1
FDNS	00NR_G15_094	2	20SP	G15_094	TO->FROM	GR ISLD-LNX3345.00 - HOLT.CO3 345.00 345KV CKT 1	720	720	0.05596	108.6582	GEN642067 1-PLATTE
FDNS	00NR_G15_094	2	20SP	G15_094	TO->FROM	GR ISLD-LNX3345.00 - HOLT.CO3 345.00 345KV CKT 1	720	720	0.05645	108.6488	ARPIN B4 345.00 - EAU CLAIRE 345KV CKT 1
FDNS	00NR_G15_094	2	20SP	G15_094	TO->FROM	GR ISLD-LNX3345.00 - HOLT.CO3 345.00 345KV CKT 1	720	720	0.05608	108.6483	P12:115:NPPD:WAPA4:SIDNEY 7:B.SPRGS7:BTB
FDNS	00NR_G15_094	2	20SP	G15_094	TO->FROM	GR ISLD-LNX3345.00 - HOLT.CO3 345.00 345KV CKT 1	720	720	0.05608	108.6483	P12:115:UMZB:# 119 #: IN NE.
FDNS	00NR_G15_094	2	20SP	G15_094	TO->FROM	GR ISLD-LNX3345.00 - HOLT.CO3 345.00 345KV CKT 1	720	720	0.05792	108.6461	JEFFREY - NORTH PLATTE 115KV CKT 1
FDNS	00NR_G15_094	2	25SP	G15_094	TO->FROM	GR ISLD-LNX3345.00 - HOLT.CO3 345.00 345KV CKT 1	720	720	0.05658	108.644	PAHOJA - SIOUX FALLS 230KV CKT 1
FDNS	00NR_G15_094	2	20SP	G15_094	TO->FROM	GR ISLD-LNX3345.00 - HOLT.CO3 345.00 345KV CKT 1	720	720	0.05786	108.6349	ATKINSON - STUART 115KV CKT 1
FDNS	00NR_G15_094	2	25SP	G15_094	TO->FROM	GR ISLD-LNX3345.00 - HOLT.CO3 345.00 345KV CKT 1	720	720	0.05608	108.6344	GEN337653 1-WHITE BLUFF UNIT #2
FDNS	00NR_G15_094	2	20SP	G15_094	TO->FROM	GR ISLD-LNX3345.00 - HOLT.CO3 345.00 345KV CKT 1	720	720	0.05596	108.6336	GEN532652 1-JEFFREY ENERGY CENTER UNIT 2
FDNS	00NR_G15_094	2	20SP	G15_094	TO->FROM	GR ISLD-LNX3345.00 - HOLT.CO3 345.00 345KV CKT 1	720	720	0.05596	108.6334	GEN532653 1-JEFFREY ENERGY CENTER UNIT 3
FDNS	00NR_G15_094	2	20SP	G15_094	TO->FROM	GR ISLD-LNX3345.00 - HOLT.CO3 345.00 345KV CKT 1	720	720	0.05596	108.6324	GEN532651 1-JEFFREY ENERGY CENTER UNIT 1
FDNS	00NR_G15_094	2	20SP	G15_094	TO->FROM	GR ISLD-LNX3345.00 - HOLT.CO3 345.00 345KV CKT 1	720	720	0.05596	108.6284	GEN501812 1-RODEMACHER UNIT 2
FDNS	00NR_G15_094	2	20SP	G15_094	TO->FROM	GR ISLD-LNX3345.00 - HOLT.CO3 345.00 345KV CKT 1	720	720	0.05596	108.627	GEN338388 1-1PLUM PT U1 23.000
FDNS	00NR_G15_094	2	20SP	G15_094	TO->FROM	GR ISLD-LNX3345.00 - HOLT.CO3 345.00 345KV CKT 1	720	720	0.05596	108.6177	GEN336191 1-LITTLE GYPSY UNIT#3
FDNS	00NR_G15_094	2	20SP	G15_094	TO->FROM	GR ISLD-LNX3345.00 - HOLT.CO3 345.00 345KV CKT 1	720	720	0.05596	108.571	GEN335614 1-WILLOW GLENN UNIT#4
FDNS	00NR_G15_094	2	20SP	G15_094	TO->FROM	GR ISLD-LNX3345.00 - HOLT.CO3 345.00 345KV CKT 1	720	720	0.05596	108.5698	GEN336801 1-BAXTER WILSON UNIT #1
FDNS	00NR_G15_094	2	25SP	G15_094	TO->FROM	GR ISLD-LNX3345.00 - HOLT.CO3 345.00 345KV CKT 1	720	720	0.05648	108.5662	BROOKING COUNTY - LYON COUNTY 345KV CKT 1
FDNS	00NR_G15_094	2	25SP	G15_094	TO->FROM	GR ISLD-LNX3345.00 - HOLT.CO3 345.00 345KV CKT 1	720	720	0.05706	108.5652	CARPENTER - HURON 230KV CKT 1
FDNS	00NR_G15_094	2	20SP	G15_094	TO->FROM	GR ISLD-LNX3345.00 - HOLT.CO3 345.00 345KV CKT 1	720	720	0.05596	108.5621	GEN336464 1-MICHOUD UNIT #3
FDNS	00NR_G15_094	2	20SP	G15_094	TO->FROM	GR ISLD-LNX3345.00 - HOLT.CO3 345.00 345KV CKT 1	720	720	0.05596	108.5586	P12:115:UMZW:# 162 #: NEL IN ND. FAULT ON ML-NEL-MX-GA 115 KV
FDNS	00NR_G15_094	2	20SP	G15_094	TO->FROM	GR ISLD-LNX3345.00 - HOLT.CO3 345.00 345KV CKT 1	720	720	0.05544	108.5572	P12:115:NPPD:WAPA2:HEMINGF7:SNAKECK7:BTB
FDNS	00NR_G15_094	2	20SP	G15_094	TO->FROM	GR ISLD-LNX3345.00 - HOLT.CO3 345.00 345KV CKT 1	720	720	0.05618	108.556	KOSSUTH 3 345.00 - WEBSTER 345KV CKT 1
FDNS	00NR_G15_094	2	20SP	G15_094	TO->FROM	GR ISLD-LNX3345.00 - HOLT.CO3 345.00 345KV CKT 1	720	720	0.05596	108.543	GEN335204 1-NELSON UNIT 4
FDNS	00NR_G15_094	2	20SP	G15_094	TO->FROM	GR ISLD-LNX3345.00 - HOLT.CO3 345.00 345KV CKT 1	720	720	0.05629	108.5376	NORTH LA CROSSE - NORTH ROCHESTER 345KV CKT 1
FDNS	00NR_G15_094	2	20SP	G15_094	TO->FROM	GR ISLD-LNX3345.00 - HOLT.CO3 345.00 345KV CKT 1	720	720	0.05596	108.5343	GEN334441 1-SABINE UNIT 5
FDNS	00NR_G15_094	2	20SP	G15_094	TO->FROM	GR ISLD-LNX3345.00 - HOLT.CO3 345.00 345KV CKT 1	720	720	0.05631	108.5245	GLENBORO SOUTH - RUGBY 230KV CKT 1
FDNS	00NR_G15_094	2	20SP	G15_094	TO->FROM	GR ISLD-LNX3345.00 - HOLT.CO3 345.00 345KV CKT 1	720	720	0.0573	108.5205	FT THOMPSON - HURON 230KV CKT 1
FDNS	00NR_G15_094	2	20SP	G15_094	TO->FROM	GR ISLD-LNX3345.00 - HOLT.CO3 345.00 345KV CKT 1	720	720	0.0573	108.5205	FT THOMPSON - HURON 230KV CKT 1
FDNS	00NR_G15_094	2	20SP	G15_094	TO->FROM	GR ISLD-LNX3345.00 - HOLT.CO3 345.00 345KV CKT 1	720	720	0.0573	108.5205	FT THOMPSON - HURON 230KV CKT 2
FDNS	00NR_G15_094	2	20SP	G15_094	TO->FROM	GR ISLD-LNX3345.00 - HOLT.CO3 345.00 345KV CKT 1	720	720	0.0573	108.5205	FT THOMPSON - HURON 230KV CKT 2
FDNS	00NR_G15_094	2	25SP	G15_094	TO->FROM	GR ISLD-LNX3345.00 - HOLT.CO3 345.00 345KV CKT 1	720	720	0.05608	108.5138	GEN501801 1-DOLET HILLS UNIT1
FDNS	00NR_G15_094	2	20SP	G15_094	TO->FROM	GR ISLD-LNX3345.00 - HOLT.CO3 345.00 345KV CKT 1	720	720	0.0581	108.4967	BROKEN BOW - CALLAWAY 115KV CKT 1
FDNS	00NR_G15_094	2	25SP	G15_094	TO->FROM	GR ISLD-LNX3345.00 - HOLT.CO3 345.00 345KV CKT 1	720	720	0.05706	108.4942	HURON - WATERTOWN 230KV CKT 2

SOLUTION	GROUP	SCENARIO	SEASON	SOURCE	DIRECTION	MONITORED ELEMENT	RATEA (MVA)	RATEB(MVA)	TDF	TC%LOADING (% MVA)	CONTINGENCY
FDNS	00NR_G15_094	2	25SP	G15_094	TO->FROM	GR ISLD-LNX3345.00 - HOLT.CO3 345.00 345KV CKT 1	720	720	0.05706	108.4942	HURON - WATERTOWN 230KV CKT 2
FDNS	00NR_G15_094	2	20SP	G15_094	TO->FROM	GR ISLD-LNX3345.00 - HOLT.CO3 345.00 345KV CKT 1	720	720	0.05596	108.4925	GEN542951 5-HAWTHORN UNIT #5
FDNS	00NR_G15_094	2	20SP	G15_094	TO->FROM	GR ISLD-LNX3345.00 - HOLT.CO3 345.00 345KV CKT 1	720	720	0.05596	108.4902	GEN542955 1-LACYGNE UNIT #1
FDNS	00NR_G15_094	2	25SP	G15_094	TO->FROM	GR ISLD-LNX3345.00 - HOLT.CO3 345.00 345KV CKT 1	720	720	0.06235	108.4809	CROOKED CREEK - RIVERDALE 230KV CKT 1
FDNS	00NR_G15_094	2	20SP	G15_094	TO->FROM	GR ISLD-LNX3345.00 - HOLT.CO3 345.00 345KV CKT 1	720	720	0.05596	108.4808	GEN334433 1-SABINE UNIT 3
FDNS	00NR_G15_094	2	20SP	G15_094	TO->FROM	GR ISLD-LNX3345.00 - HOLT.CO3 345.00 345KV CKT 1	720	720	0.05786	108.4635	ATKINSON - EMMET 115KV CKT 1
FDNS	00NR_G15_094	2	25SP	G15_094	TO->FROM	GR ISLD-LNX3345.00 - HOLT.CO3 345.00 345KV CKT 1	720	720	0.05706	108.4633	CARPENTER - WATERTOWN 230KV CKT 1
FDNS	00NR_G15_094	2	25SP	G15_094	TO->FROM	GR ISLD-LNX3345.00 - HOLT.CO3 345.00 345KV CKT 1	720	720	0.05706	108.4633	CARPENTER - WATERTOWN 230KV CKT 1
FDNS	00NR_G15_094	2	25SP	G15_094	TO->FROM	GR ISLD-LNX3345.00 - HOLT.CO3 345.00 345KV CKT 1	720	720	0.05608	108.4619	GEN336252 1-NINEMILE POINT UNIT#5
FDNS	00NR_G15_094	2	20SP	G15_094	TO->FROM	GR ISLD-LNX3345.00 - HOLT.CO3 345.00 345KV CKT 1	720	720	0.05612	108.4596	GAVINS POINT - HARTINGTON 115KV CKT 1
FDNS	00NR_G15_094	2	20SP	G15_094	TO->FROM	GR ISLD-LNX3345.00 - HOLT.CO3 345.00 345KV CKT 1	720	720	0.05705	108.4529	SIDNEY - STEGALL 345KV CKT 1
FDNS	00NR_G15_094	2	25SP	G15_094	TO->FROM	GR ISLD-LNX3345.00 - HOLT.CO3 345.00 345KV CKT 1	720	720	0.05473	108.4512	HOSKINS - RAUN 345KV CKT 1
FDNS	00NR_G15_094	2	25SP	G15_094	TO->FROM	GR ISLD-LNX3345.00 - HOLT.CO3 345.00 345KV CKT 1	720	720	0.05473	108.4512	HOSKINS - RAUN 345KV CKT 1
FDNS	00NR_G15_094	2	25SP	G15_094	TO->FROM	GR ISLD-LNX3345.00 - HOLT.CO3 345.00 345KV CKT 1	720	720	0.05797	108.45	FT THOMPSON - WESSINGTON 230KV CKT 1
FDNS	00NR_G15_094	2	25SP	G15_094	TO->FROM	GR ISLD-LNX3345.00 - HOLT.CO3 345.00 345KV CKT 1	720	720	0.05797	108.45	FT THOMPSON - WESSINGTON 230KV CKT 1
FDNS	00NR_G15_094	2	25SP	G15_094	TO->FROM	GR ISLD-LNX3345.00 - HOLT.CO3 345.00 345KV CKT 1	720	720	0.05608	108.4482	GEN532751 1-WOLF CREEK GENERATING STATION UNIT 1
FDNS	00NR_G15_094	2	25SP	G15_094	TO->FROM	GR ISLD-LNX3345.00 - HOLT.CO3 345.00 345KV CKT 1	720	720	0.05608	108.447	GEN542962 2-IATAN UNIT #2
FDNS	00NR_G15_094	2	20SP	G15_094	TO->FROM	GR ISLD-LNX3345.00 - HOLT.CO3 345.00 345KV CKT 1	720	720	0.05713	108.4391	CLEARWATER - NELIGH 115KV CKT 1
FDNS	00NR_G15_094	2	20SP	G15_094	TO->FROM	GR ISLD-LNX3345.00 - HOLT.CO3 345.00 345KV CKT 1	720	720	0.05579	108.4283	P12:115:NPPD:WAPA6:FTRANDL7:ONEILL 7:BTB
FDNS	00NR_G15_094	2	20SP	G15_094	TO->FROM	GR ISLD-LNX3345.00 - HOLT.CO3 345.00 345KV CKT 1	720	720	0.05579	108.4283	P12:115:UMZB:# 115 #: SE IN NE. FR-SE-ON
FDNS	00NR_G15_094	2	20SP	G15_094	TO->FROM	GR ISLD-LNX3345.00 - HOLT.CO3 345.00 345KV CKT 1	720	720	0.05652	108.4265	WINNER - WITTEN 115KV CKT 1
FDNS	00NR_G15_094	2	25SP	G15_094	TO->FROM	GR ISLD-LNX3345.00 - HOLT.CO3 345.00 345KV CKT 1	720	720	0.05649	108.4246	AS KING - EAU CLAIRE 345KV CKT 1
FDNS	00NR_G15_094	2	20SP	G15_094	TO->FROM	GR ISLD-LNX3345.00 - HOLT.CO3 345.00 345KV CKT 1	720	720	0.05644	108.4185	NMA B3 345 345.00 - NORTH LA CROSSE 345KV CKT 1
FDNS	00NR_G15_094	2	20SP	G15_094	TO->FROM	GR ISLD-LNX3345.00 - HOLT.CO3 345.00 345KV CKT 1	720	720	0.05761	108.4111	AINSWORTH - AINSWORTH 115KV CKT 1
FDNS	00NR_G15_094	2	25SP	G15_094	TO->FROM	GR ISLD-LNX3345.00 - HOLT.CO3 345.00 345KV CKT 1	720	720	0.05608	108.4073	GEN336251 1-NINEMILE POINT UNIT#4
FDNS	00NR_G15_094	2	20SP	G15_094	TO->FROM	GR ISLD-LNX3345.00 - HOLT.CO3 345.00 345KV CKT 1	720	720	0.05606	108.4064	CENTER - COYOTE 345KV CKT 1
FDNS	00NR_G15_094	2	20SP	G15_094	TO->FROM	GR ISLD-LNX3345.00 - HOLT.CO3 345.00 345KV CKT 1	720	720	0.05596	108.4057	GEN336222 1-LITTLE GYPSY UNIT#2
FDNS	00NR_G15_094	2	25SP	G15_094	TO->FROM	GR ISLD-LNX3345.00 - HOLT.CO3 345.00 345KV CKT 1	720	720	0.05653	108.4053	ALEXMRES3 345.00 - BISON 3 345.00 345KV CKT 1
FDNS	00NR_G15_094	2	25SP	G15_094	TO->FROM	GR ISLD-LNX3345.00 - HOLT.CO3 345.00 345KV CKT 1	720	720	0.0568	108.4018	HAZLETON - MITCHLCO3 345.00 345KV CKT 1
FDNS	00NR_G15_094	2	25SP	G15_094	TO->FROM	GR ISLD-LNX3345.00 - HOLT.CO3 345.00 345KV CKT 1	720	720	0.05524	108.3937	STAPLETON - THEDFORD 115KV CKT 1
FDNS	00NR_G15_094	2	20SP	G15_094	TO->FROM	GR ISLD-LNX3345.00 - HOLT.CO3 345.00 345KV CKT 1	720	720	0.05596	108.3911	P12:115:TSGT:BLKWDCK7-ELSIETP7
FDNS	00NR_G15_094	2	20SP	G15_094	TO->FROM	GR ISLD-LNX3345.00 - HOLT.CO3 345.00 345KV CKT 1	720	720	0.05596	108.3894	GEN542956 2-LACYGNE UNIT #2
FDNS	00NR_G15_094	2	25SP	G15_094	TO->FROM	GR ISLD-LNX3345.00 - HOLT.CO3 345.00 345KV CKT 1	720	720	0.05608	108.3836	GEN336831 1-BAXTER WILSON SES
FDNS	00NR_G15_094	2	20SP	G15_094	TO->FROM	GR ISLD-LNX3345.00 - HOLT.CO3 345.00 345KV CKT 1	720	720	0.06252	108.3835	G15094_T 345.00 - SIDNEY2-LNX3345.00 345KV CKT 1
FDNS	00NR_G15_094	2	25SP	G15_094	TO->FROM	GR ISLD-LNX3345.00 - HOLT.CO3 345.00 345KV CKT 1	720	720	0.067	108.3824	KEYSTONE - SIDNEY1-LNX3345.00 345KV CKT 1
FDNS	00NR_G15_094	2	20SP	G15_094	TO->FROM	GR ISLD-LNX3345.00 - HOLT.CO3 345.00 345KV CKT 1	720	720	0.05603	108.3805	MENNO JCT - TRIPP JCT 115KV CKT 1
FDNS	00NR_G15_094	2	25SP	G15_094	TO->FROM	GR ISLD-LNX3345.00 - HOLT.CO3 345.00 345KV CKT 1	720	720	0.05623	108.3783	CNTSHNT3 345.00 - PRAIRIE3 345.00 345KV CKT 1
FDNS	00NR_G15_094	2	20SP	G15_094	TO->FROM	GR ISLD-LNX3345.00 - HOLT.CO3 345.00 345KV CKT 1	720	720	0.05596	108.3751	P13:230-345:NPPD:NUCOR-1
FDNS	00NR_G15_094	2	20SP	G15_094	TO->FROM	GR ISLD-LNX3345.00 - HOLT.CO3 345.00 345KV CKT 1	720	720	0.05596	108.3736	GEN336152 1-WATERFORD UNIT#2
FDNS	00NR_G15_094	2	20SP	G15_094	TO->FROM	GR ISLD-LNX3345.00 - HOLT.CO3 345.00 345KV CKT 1	720	720	0.05596	108.3735	GEN336151 1-WATERFORD UNIT#1
FDNS	00NR_G15_094	2	20SP	G15_094	TO->FROM	GR ISLD-LNX3345.00 - HOLT.CO3 345.00 345KV CKT 1	720	720	0.05596	108.3731	P13:115-230:NPPD:NUCOR-3
FDNS	00NR_G15_094	2	20SP	G15_094	TO->FROM	GR ISLD-LNX3345.00 - HOLT.CO3 345.00 345KV CKT 1	720	720	0.06252	108.3627	SIDNEY - SIDNEY2-LNX3345.00 345KV CKT Z
FDNS	00NR_G15_094	2	20SP	G15_094	TO->FROM	GR ISLD-LNX3345.00 - HOLT.CO3 345.00 345KV CKT 1	720	720	0.05596	108.3605	GEN303007 1-1BC2 U2
FDNS	00NR_G15_094	2	20SP	G15_094	TO->FROM	GR ISLD-LNX3345.00 - HOLT.CO3 345.00 345KV CKT 1	720	720	0.05596	108.3579	GEN303006 1-1BC2 U1
FDNS	00NR_G15_094	2	25SP	G15_094	TO->FROM	GR ISLD-LNX3345.00 - HOLT.CO3 345.00 345KV CKT 1	720	720	0.05668	108.3573	ADAMS - MITCHLCO3 345.00 345KV CKT 1
FDNS	00NR_G15_094	2	25SP	G15_094	TO->FROM	GR ISLD-LNX3345.00 - HOLT.CO3 345.00 345KV CKT 1	720	720	0.05608	108.3534	GEN337041 1-GERALD ANDRUS
FDNS	00NR_G15_094	2	20SP	G15_094	TO->FROM	GR ISLD-LNX3345.00 - HOLT.CO3 345.00 345KV CKT 1	720	720	0.0568	108.344	RAUN - SIOUX CITY 345KV CKT 1
FDNS	00NR_G15_094	2	20SP	G15_094	TO->FROM	GR ISLD-LNX3345.00 - HOLT.CO3 345.00 345KV CKT 1	720	720	0.0568	108.344	RAUN - SIOUX CITY 345KV CKT 1
FDNS	00NR_G15_094	2	25SP	G15_094	TO->FROM	GR ISLD-LNX3345.00 - HOLT.CO3 345.00 345KV CKT 1	720	720	0.05682	108.3332	RASMUSN - UTICA JCT 230KV CKT 1
FDNS	00NR_G15_094	2	20SP	G15_094	TO->FROM	GR ISLD-LNX3345.00 - HOLT.CO3 345.00 345KV CKT 1	720	720	0.05596	108.3324	GEN562547 1-G14_039_3 0.6900
FDNS	00NR_G15_094	2	20SP	G15_094	TO->FROM	GR ISLD-LNX3345.00 - HOLT.CO3 345.00 345KV CKT 1	720	720	0.04574	108.3283	NUNDRWD - WAYSIDE 230KV CKT 1
FDNS	00NR_G15_094	2	25SP	G15_094	TO->FROM	GR ISLD-LNX3345.00 - HOLT.CO3 345.00 345KV CKT 1	720	720	0.05658	108.3262	EAGLE 4 230.00 - PAHOJA 230KV CKT 1
FDNS	00NR_G15_094	2	20SP	G15_094	TO->FROM	GR ISLD-LNX3345.00 - HOLT.CO3 345.00 345KV CKT 1	720	720	0.05603	108.3211	BROOKING COUNTY - BSSOUTH3 345.00 345KV CKT 1
FDNS	00NR_G15_094	2	20SP	G15_094	TO->FROM	GR ISLD-LNX3345.00 - HOLT.CO3 345.00 345KV CKT 1	720	720	0.05596	108.3123	GEN303008 1-1BC2 U3
FDNS	00NR_G15_094	2	25SP	G15_094	TO->FROM	GR ISLD-LNX3345.00 - HOLT.CO3 345.00 345KV CKT 1	720	720	0.05608	108.3105	GEN501813 1-RODEMACHER UNIT 3
FDNS	00NR_G15_094	2	20SP	G15_094	TO->FROM	GR ISLD-LNX3345.00 - HOLT.CO3 345.00 345KV CKT 1	720	720	0.05596	108.3097	GEN336170 1-GULF OXY U4
FDNS	00NR_G15_094	2	20SP	G15_094	TO->FROM	GR ISLD-LNX3345.00 - HOLT.CO3 345.00 345KV CKT 1	720	720	0.05652	108.309	GREGORY - WINNER 115KV CKT 1
FDNS	00NR_G15_094	2	20SP	G15_094	TO->FROM	GR ISLD-LNX3345.00 - HOLT.CO3 345.00 345KV CKT 1	720	720	0.05607	108.3073	GARRISON - JAMES TOWN 230KV CKT 1
FDNS	00NR_G15_094	2	20SP	G15_094	TO->FROM	GR ISLD-LNX3345.00 - HOLT.CO3 345.00 345KV CKT 1	720	720	0.05646	108.3067	ADAMS - PLEASANT VALLEY 345KV CKT 1
FDNS	00NR_G15_094	2	20SP	G15_094	TO->FROM	GR ISLD-LNX3345.00 - HOLT.CO3 345.00 345KV CKT 1	720	720	0.05652	108.3035	P12:115:UMZW:# 172 #: WI IN SD.
FDNS	00NR_G15_094	2	20SP	G15_094	TO->FROM	GR ISLD-LNX3345.00 - HOLT.CO3 345.00 345KV CKT 1	720	720	0.05603	108.3032	MENNO JCT - UTICA 115KV CKT 1
FDNS	00NR_G15_094	2	25SP	G15_094	TO->FROM	GR ISLD-LNX3345.00 - HOLT.CO3 345.00 345KV CKT 1	720	720	0.05685	108.2917	GRIMES - LEHIGH 345KV CKT 1
FDNS	00NR_G15_094	2	20SP	G15_094	TO->FROM	GR ISLD-LNX3345.00 - HOLT.CO3 345.00 345KV CKT 1	720	720	0.0562	108.2848	NORTH ROCHESTER - PRAIRIE ISLAND 345KV CKT 1
FDNS	00NR_G15_094	2	20SP	G15_094	TO->FROM	GR ISLD-LNX3345.00 - HOLT.CO3 345.00 345KV CKT 1	720	720	0.05596	108.2776	P13:230:UMZW:# 2218 #: FP IN MT. LOSS OF TRANSFORMER (AT2).
FDNS	00NR_G15_094	2	20SP	G15_094	TO->FROM	GR ISLD-LNX3345.00 - HOLT.CO3 345.00 345KV CKT 1	720	720	0.05743	108.2773	BUCKNER7 345.00 - HOLCOMB 345KV CKT 1
FDNS	00NR_G15_094	2	20SP	G15_094	TO->FROM	GR ISLD-LNX3345.00 - HOLT.CO3 345.00 345KV CKT 1	720	720	0.05743	108.2773	BUCKNER7 345.00 - HOLCOMB 345KV CKT 1
FDNS	00NR_G15_094	2	20SP	G15_094	TO->FROM	GR ISLD-LNX3345.00 - HOLT.CO3 345.00 345KV CKT 1	720	720	0.0562	108.2717	APPLEDORN 4 230.00 - WATERTOWN 230KV CKT 1
FDNS	00NR_G15_094	2	20SP	G15_094	TO->FROM	GR ISLD-LNX3345.00 - HOLT.CO3 345.00 345KV CKT 1	720	720	0.0562	108.2717	APPLEDORN 4 230.00 - WATERTOWN 230KV CKT 1
FDNS	00NR_G15_094	2	20SP	G15_094	TO->FROM	GR ISLD-LNX3345.00 - HOLT.CO3 345.00 345KV CKT 1	720	720	0.05596	108.2712	P13:115-345:NPPD:NUCOR-2
FDNS	00NR_G15_094	2	20SP	G15_094	TO->FROM	GR ISLD-LNX3345.00 - HOLT.CO3 345.00 345KV CKT 1	720	720	0.05603	108.2702	P12:115:UMZZ:# 237 #: MEN IN SD. MENNO JUNCTION IS A TAP (UJ-MEN-TP).
FDNS	00NR_G15_094	2	25SP	G15_094	TO->FROM	GR ISLD-LNX3345.00 - HOLT.CO3 345.00 345KV CKT 1	720	720	0.05608	108.2675	GEN344897 4-1LAB G4 20.000
FDNS	00NR_G15_094	2	25SP	G15_094	TO->FROM	GR ISLD-LNX3345.00 - HOLT.CO3 345.00 345KV CKT 1	720	720	0.05608	108.2665	GEN344894 1-1LAB G1 20.000
FDNS	00NR_G15_094	2	25SP	G15_094	TO->FROM	GR ISLD-LNX3345.00 - HOLT.CO3 345.00 345KV CKT 1	720	720	0.05608	108.2665	GEN344895 2-1LAB G2 20.000

SOLUTION	GROUP	SCENARIO	SEASON	SOURCE	DIRECTION	MONITORED ELEMENT	RATEA (MVA)	RATEB(MVA)	TDF	TC%LOADING (% MVA)	CONTINGENCY
FDNS	00NR_G15_094	2	25SP	G15_094	TO->FROM	GR ISLD-LNX3345.00 - HOLT.CO3 345.00 345KV CKT 1	720	720	0.05608	108.2663	GEN344896 3-1LAB G3 20.000
FDNS	00NR_G15_094	2	20SP	G15_094	TO->FROM	GR ISLD-LNX3345.00 - HOLT.CO3 345.00 345KV CKT 1	720	720	0.05626	108.2607	DENISON - SIOUX CITY 230KV CKT 1
FDNS	00NR_G15_094	2	20SP	G15_094	TO->FROM	GR ISLD-LNX3345.00 - HOLT.CO3 345.00 345KV CKT 1	720	720	0.0551	108.2604	MAXWELL - STAPLETON 115KV CKT 1
FDNS	00NR_G15_094	2	20SP	G15_094	TO->FROM	GR ISLD-LNX3345.00 - HOLT.CO3 345.00 345KV CKT 1	720	720	0.05623	108.2588	COLUMEAST - SHELL CREEK 345KV CKT 1
FDNS	00NR_G15_094	2	25SP	G15_094	TO->FROM	GR ISLD-LNX3345.00 - HOLT.CO3 345.00 345KV CKT 1	720	720	0.05797	108.257	BASSETT 7115.00 - STUART 115KV CKT 1
FDNS	00NR_G15_094	2	25SP	G15_094	TO->FROM	GR ISLD-LNX3345.00 - HOLT.CO3 345.00 345KV CKT 1	720	720	0.05804	108.2554	JEFFREY - NORTH PLATTE 115KV CKT 1
FDNS	00NR_G15_094	2	20SP	G15_094	TO->FROM	GR ISLD-LNX3345.00 - HOLT.CO3 345.00 345KV CKT 1	720	720	0.05596	108.2512	GEN636641 1-LOUISA UNIT 1
FDNS	00NR_G15_094	2	25SP	G15_094	TO->FROM	GR ISLD-LNX3345.00 - HOLT.CO3 345.00 345KV CKT 1	720	720	0.05608	108.2482	GEN542957 1-IATAN UNIT #1
FDNS	00NR_G15_094	2	25SP	G15_094	TO->FROM	GR ISLD-LNX3345.00 - HOLT.CO3 345.00 345KV CKT 1	720	720	0.0562	108.2357	P12:115:NPPD:WAPA4:SIDNEY 7:B.SPRGS7:BTB
FDNS	00NR_G15_094	2	25SP	G15_094	TO->FROM	GR ISLD-LNX3345.00 - HOLT.CO3 345.00 345KV CKT 1	720	720	0.0562	108.2357	P12:115:UMZB:# 119 #: IN NE.
FDNS	00NR_G15_094	2	25SP	G15_094	TO->FROM	GR ISLD-LNX3345.00 - HOLT.CO3 345.00 345KV CKT 1	720	720	0.05797	108.2243	AINSWORTH - BASSETT 7115.00 115KV CKT 1
FDNS	00NR_G15_094	2	25SP	G15_094	TO->FROM	GR ISLD-LNX3345.00 - HOLT.CO3 345.00 345KV CKT 1	720	720	0.05608	108.2149	GEN345671 2-1RUSH G2 18.000
FDNS	00NR_G15_094	2	25SP	G15_094	TO->FROM	GR ISLD-LNX3345.00 - HOLT.CO3 345.00 345KV CKT 1	720	720	0.05608	108.2119	GEN345670 1-1RUSH G1 18.000
FDNS	00NR_G15_094	2	25SP	G15_094	TO->FROM	GR ISLD-LNX3345.00 - HOLT.CO3 345.00 345KV CKT 1	720	720	0.05608	108.2035	GEN335206 1-NELSON UNIT 6
FDNS	00NR_G15_094	2	25SP	G15_094	TO->FROM	GR ISLD-LNX3345.00 - HOLT.CO3 345.00 345KV CKT 1	720	720	0.067	108.1946	SIDNEY - SIDNEY1-LNX3345.00 345KV CKT Z
FDNS	00NR_G15_094	2	25SP	G15_094	TO->FROM	GR ISLD-LNX3345.00 - HOLT.CO3 345.00 345KV CKT 1	720	720	0.05725	108.1898	P12:115:NPPD:1164:ONEILL 7:JEFFREY9:BTB
FDNS	00NR_G15_094	2	25SP	G15_094	TO->FROM	GR ISLD-LNX3345.00 - HOLT.CO3 345.00 345KV CKT 1	720	720	0.05682	108.1869	RASMUSN - SIOUX CITY 230KV CKT 1
FDNS	00NR_G15_094	2	25SP	G15_094	TO->FROM	GR ISLD-LNX3345.00 - HOLT.CO3 345.00 345KV CKT 1	720	720	0.05608	108.1841	GEN334440 1-SABINE UNIT 4
FDNS	00NR_G15_094	2	25SP	G15_094	TO->FROM	GR ISLD-LNX3345.00 - HOLT.CO3 345.00 345KV CKT 1	720	720	0.05643	108.1819	GLENBORO SOUTH - RUGBY 230KV CKT 1
FDNS	00NR_G15_094	2	25SP	G15_094	TO->FROM	GR ISLD-LNX3345.00 - HOLT.CO3 345.00 345KV CKT 1	720	720	0.05608	108.1813	GEN629075 1-OTTUMWA GENERATOR FOR OTTUMWA UNIT NO 1
FDNS	00NR_G15_094	2	25SP	G15_094	TO->FROM	GR ISLD-LNX3345.00 - HOLT.CO3 345.00 345KV CKT 1	720	720	0.05608	108.1708	GEN532652 1-JEFFREY ENERGY CENTER UNIT 2
FDNS	00NR_G15_094	2	25SP	G15_094	TO->FROM	GR ISLD-LNX3345.00 - HOLT.CO3 345.00 345KV CKT 1	720	720	0.05608	108.1707	GEN532653 1-JEFFREY ENERGY CENTER UNIT 3
FDNS	00NR_G15_094	2	25SP	G15_094	TO->FROM	GR ISLD-LNX3345.00 - HOLT.CO3 345.00 345KV CKT 1	720	720	0.05608	108.1703	GEN532651 1-JEFFREY ENERGY CENTER UNIT 1
FDNS	00NR_G15_094	2	25SP	G15_094	TO->FROM	GR ISLD-LNX3345.00 - HOLT.CO3 345.00 345KV CKT 1	720	720	0.05608	108.1643	GEN338388 1-1PLUM PT U1 23.000
FDNS	00NR_G15_094	2	25SP	G15_094	TO->FROM	GR ISLD-LNX3345.00 - HOLT.CO3 345.00 345KV CKT 1	720	720	0.05608	108.1476	GEN642067 1-PLATTE
FDNS	00NR_G15_094	2	25SP	G15_094	TO->FROM	GR ISLD-LNX3345.00 - HOLT.CO3 345.00 345KV CKT 1	720	720	0.05608	108.1428	GEN501812 1-RODEMACHER UNIT 2
FDNS	00NR_G15_094	2	25SP	G15_094	TO->FROM	GR ISLD-LNX3345.00 - HOLT.CO3 345.00 345KV CKT 1	720	720	0.05608	108.1372	GEN336191 1-LITTLE GYPSY UNIT#3
FDNS	00NR_G15_094	2	25SP	G15_094	TO->FROM	GR ISLD-LNX3345.00 - HOLT.CO3 345.00 345KV CKT 1	720	720	0.05725	108.1352	CLEARWATER - ONEILL 115KV CKT 1
FDNS	00NR_G15_094	2	25SP	G15_094	TO->FROM	GR ISLD-LNX3345.00 - HOLT.CO3 345.00 345KV CKT 1	720	720	0.05608	108.1335	GEN645001 1-FORT CALHOUN 1
FDNS	00NR_G15_094	2	25SP	G15_094	TO->FROM	GR ISLD-LNX3345.00 - HOLT.CO3 345.00 345KV CKT 1	720	720	0.05656	108.1268	ARPIN B4 345.00 - EAU CLAIRE 345KV CKT 1
FDNS	00NR_G15_094	2	25SP	G15_094	TO->FROM	GR ISLD-LNX3345.00 - HOLT.CO3 345.00 345KV CKT 1	720	720	0.05556	108.1108	P12:115:NPPD:WAPA2:HEMINGF7:SNAKECK7:BTB
FDNS	00NR_G15_094	2	25SP	G15_094	TO->FROM	GR ISLD-LNX3345.00 - HOLT.CO3 345.00 345KV CKT 1	720	720	0.05797	108.1102	ATKINSON - STUART 115KV CKT 1
FDNS	00NR_G15_094	2	25SP	G15_094	TO->FROM	GR ISLD-LNX3345.00 - HOLT.CO3 345.00 345KV CKT 1	720	720	0.0563	108.0949	KOSSUTH 3 345.00 - WEBSTER 345KV CKT 1
FDNS	00NR_G15_094	2	25SP	G15_094	TO->FROM	GR ISLD-LNX3345.00 - HOLT.CO3 345.00 345KV CKT 1	720	720	0.05608	108.0896	P12:115:UMZW:# 162 #: NEL IN ND. FAULT ON ML-NEL-MX-GA 115 KV
FDNS	00NR_G15_094	2	25SP	G15_094	TO->FROM	GR ISLD-LNX3345.00 - HOLT.CO3 345.00 345KV CKT 1	720	720	0.05608	108.0818	GEN335614 1-WILLOW GLENN UNIT#4
FDNS	00NR_G15_094	2	25SP	G15_094	TO->FROM	GR ISLD-LNX3345.00 - HOLT.CO3 345.00 345KV CKT 1	720	720	0.05608	108.0815	GEN336801 1-BAXTER WILSON UNIT #1
FDNS	00NR_G15_094	2	25SP	G15_094	TO->FROM	GR ISLD-LNX3345.00 - HOLT.CO3 345.00 345KV CKT 1	720	720	0.05608	108.0721	GEN336464 1-MICHOUD UNIT #3
FDNS	00NR_G15_094	2	25SP	G15_094	TO->FROM	GR ISLD-LNX3345.00 - HOLT.CO3 345.00 345KV CKT 1	720	720	0.05608	108.0625	GEN334441 1-SABINE UNIT 5
FDNS	00NR_G15_094	2	25SP	G15_094	TO->FROM	GR ISLD-LNX3345.00 - HOLT.CO3 345.00 345KV CKT 1	720	720	0.05608	108.056	GEN335204 1-NELSON UNIT 4
FDNS	00NR_G15_094	2	20SP	G15_094	TO->FROM	GR ISLD-LNX3345.00 - HOLT.CO3 345.00 345KV CKT 1	720	720	0.05614	108.0534	AXTELL - SWEETWATER 345KV CKT 1
FDNS	00NR_G15_094	2	25SP	G15_094	TO->FROM	GR ISLD-LNX3345.00 - HOLT.CO3 345.00 345KV CKT 1	720	720	0.06156	108.05	HOLCOMB - SETAB 345KV CKT 1
FDNS	00NR_G15_094	2	25SP	G15_094	TO->FROM	GR ISLD-LNX3345.00 - HOLT.CO3 345.00 345KV CKT 1	720	720	0.06156	108.05	HOLCOMB - SETAB 345KV CKT 1
FDNS	00NR_G15_094	2	25SP	G15_094	TO->FROM	GR ISLD-LNX3345.00 - HOLT.CO3 345.00 345KV CKT 1	720	720	0.05742	108.0278	FT THOMPSON - HURON 230KV CKT 1
FDNS	00NR_G15_094	2	25SP	G15_094	TO->FROM	GR ISLD-LNX3345.00 - HOLT.CO3 345.00 345KV CKT 1	720	720	0.05742	108.0278	FT THOMPSON - HURON 230KV CKT 1
FDNS	00NR_G15_094	2	25SP	G15_094	TO->FROM	GR ISLD-LNX3345.00 - HOLT.CO3 345.00 345KV CKT 1	720	720	0.05742	108.0278	FT THOMPSON - HURON 230KV CKT 2
FDNS	00NR_G15_094	2	25SP	G15_094	TO->FROM	GR ISLD-LNX3345.00 - HOLT.CO3 345.00 345KV CKT 1	720	720	0.05742	108.0278	FT THOMPSON - HURON 230KV CKT 2
FDNS	00NR_G15_094	2	25SP	G15_094	TO->FROM	GR ISLD-LNX3345.00 - HOLT.CO3 345.00 345KV CKT 1	720	720	0.05608	108.0239	GEN542955 1-LACYGNE UNIT #1
FDNS	00NR_G15_094	2	25SP	G15_094	TO->FROM	GR ISLD-LNX3345.00 - HOLT.CO3 345.00 345KV CKT 1	720	720	0.05608	108.0007	GEN542951 5-HAWTHORN UNIT #5
FDNS	00NR_G15_094	2	25SP	G15_094	TO->FROM	GR ISLD-LNX3345.00 - HOLT.CO3 345.00 345KV CKT 1	720	720	0.05822	107.996	BROKEN BOW - CALLAWAY 115KV CKT 1
FDNS	00NR_G15_094	2	25SP	G15_094	TO->FROM	GR ISLD-LNX3345.00 - HOLT.CO3 345.00 345KV CKT 1	720	720	0.05639	107.9849	NORTH LA CROSSE - NORTH ROCHESTER 345KV CKT 1
FDNS	00NR_G15_094	2	25SP	G15_094	TO->FROM	GR ISLD-LNX3345.00 - HOLT.CO3 345.00 345KV CKT 1	720	720	0.05608	107.9644	GEN334433 1-SABINE UNIT 3
FDNS	00NR_G15_094	2	25SP	G15_094	TO->FROM	GR ISLD-LNX3345.00 - HOLT.CO3 345.00 345KV CKT 1	720	720	0.05718	107.9571	SIDNEY - STEGALL 345KV CKT 1
FDNS	00NR_G15_094	2	25SP	G15_094	TO->FROM	GR ISLD-LNX3345.00 - HOLT.CO3 345.00 345KV CKT 1	720	720	0.05773	107.9561	AINSWORTH - AINSWORTH 115KV CKT 1
FDNS	00NR_G15_094	2	25SP	G15_094	TO->FROM	GR ISLD-LNX3345.00 - HOLT.CO3 345.00 345KV CKT 1	720	720	0.05608	107.9349	P12:115:TSGT:BLKWDCK7-ELSIETP7
FDNS	00NR_G15_094	2	25SP	G15_094	TO->FROM	GR ISLD-LNX3345.00 - HOLT.CO3 345.00 345KV CKT 1	720	720	0.05625	107.9329	GAVINS POINT - HARTINGTON 115KV CKT 1
FDNS	00NR_G15_094	2	25SP	G15_094	TO->FROM	GR ISLD-LNX3345.00 - HOLT.CO3 345.00 345KV CKT 1	720	720	0.05608	107.9272	GEN336222 1-LITTLE GYPSY UNIT#2
FDNS	00NR_G15_094	2	25SP	G15_094	TO->FROM	GR ISLD-LNX3345.00 - HOLT.CO3 345.00 345KV CKT 1	720	720	0.05608	107.9152	GEN542956 2-LACYGNE UNIT #2
FDNS	00NR_G15_094	2	25SP	G15_094	TO->FROM	GR ISLD-LNX3345.00 - HOLT.CO3 345.00 345KV CKT 1	720	720	0.05619	107.9122	CENTER - COYOTE 345KV CKT 1
FDNS	00NR_G15_094	2	25SP	G15_094	TO->FROM	GR ISLD-LNX3345.00 - HOLT.CO3 345.00 345KV CKT 1	720	720	0.0568	107.9051	ADAMS - MITCHLCO3 345.00 345KV CKT 1
FDNS	00NR_G15_094	2	25SP	G15_094	TO->FROM	GR ISLD-LNX3345.00 - HOLT.CO3 345.00 345KV CKT 1	720	720	0.05664	107.9016	WINNER - WITTEN 115KV CKT 1
FDNS	00NR_G15_094	2	25SP	G15_094	TO->FROM	GR ISLD-LNX3345.00 - HOLT.CO3 345.00 345KV CKT 1	720	720	0.05797	107.894	ATKINSON - EMMET 115KV CKT 1
FDNS	00NR_G15_094	2	25SP	G15_094	TO->FROM	GR ISLD-LNX3345.00 - HOLT.CO3 345.00 345KV CKT 1	720	720	0.05627	107.8937	AXTELL - SWEETWATER 345KV CKT 1
FDNS	00NR_G15_094	2	25SP	G15_094	TO->FROM	GR ISLD-LNX3345.00 - HOLT.CO3 345.00 345KV CKT 1	720	720	0.05608	107.881	GEN336151 1-WATERFORD UNIT#1
FDNS	00NR_G15_094	2	25SP	G15_094	TO->FROM	GR ISLD-LNX3345.00 - HOLT.CO3 345.00 345KV CKT 1	720	720	0.05608	107.881	GEN336152 1-WATERFORD UNIT#2
FDNS	00NR_G15_094	2	25SP	G15_094	TO->FROM	GR ISLD-LNX3345.00 - HOLT.CO3 345.00 345KV CKT 1	720	720	0.06267	107.8563	G15094_T 345.00 - SIDNEY2-LNX3345.00 345KV CKT 1
FDNS	00NR_G15_094	2	25SP	G15_094	TO->FROM	GR ISLD-LNX3345.00 - HOLT.CO3 345.00 345KV CKT 1	720	720	0.05608	107.8554	P13:115-230:NPPD:NUCOR-3
FDNS	00NR_G15_094	2	25SP	G15_094	TO->FROM	GR ISLD-LNX3345.00 - HOLT.CO3 345.00 345KV CKT 1	720	720	0.05615	107.8339	MENNO JCT - TRIPP JCT 115KV CKT 1
FDNS	00NR_G15_094	2	25SP	G15_094	TO->FROM	GR ISLD-LNX3345.00 - HOLT.CO3 345.00 345KV CKT 1	720	720	0.05608	107.833	P13:230-345:NPPD:NUCOR-1
FDNS	00NR_G15_094	2	25SP	G15_094	TO->FROM	GR ISLD-LNX3345.00 - HOLT.CO3 345.00 345KV CKT 1	720	720	0.05725	107.8268	CLEARWATER - NELIGH 115KV CKT 1
FDNS	00NR_G15_094	2	25SP	G15_094	TO->FROM	GR ISLD-LNX3345.00 - HOLT.CO3 345.00 345KV CKT 1	720	720	0.05608	107.8256	GEN303007 1-1BC2 U2
FDNS	00NR_G15_094	2	25SP	G15_094	TO->FROM	GR ISLD-LNX3345.00 - HOLT.CO3 345.00 345KV CKT 1	720	720	0.05608	107.8233	GEN303006 1-1BC2 U1
FDNS	00NR_G15_094	2	25SP	G15_094	TO->FROM	GR ISLD-LNX3345.00 - HOLT.CO3 345.00 345KV CKT 1	720	720	0.06267	107.8207	SIDNEY - SIDNEY2-LNX3345.00 345KV CKT Z
FDNS	00NR_G15_094	2	25SP	G15_094	TO->FROM	GR ISLD-LNX3345.00 - HOLT.CO3 345.00 345KV CKT 1	720	720	0.05633	107.8039	APPLEDORN 4 230.00 - WATERTOWN 230KV CKT 1

SOLUTION	GROUP	SCENARIO	SEASON	SOURCE	DIRECTION	MONITORED ELEMENT	RATEA (MVA)	RATEB(MVA)	TDF	TC%LOADING (% MVA)	CONTINGENCY
FDNS	00NR_G15_094	2	25SP	G15_094	TO->FROM	GR ISLD-LNX3345.00 - HOLT.CO3 345.00 345KV CKT 1	720	720	0.05633	107.8039	APPLEDORN 4 230.00 - WATERTOWN 230KV CKT 1
FDNS	00NR_G15_094	2	25SP	G15_094	TO->FROM	GR ISLD-LNX3345.00 - HOLT.CO3 345.00 345KV CKT 1	720	720	0.05608	107.8011	GEN562547 1-G14_039_3 0.6900
FDNS	00NR_G15_094	2	25SP	G15_094	TO->FROM	GR ISLD-LNX3345.00 - HOLT.CO3 345.00 345KV CKT 1	720	720	0.05658	107.7952	ADAMS - PLEASANT VALLEY 345KV CKT 1
FDNS	00NR_G15_094	2	25SP	G15_094	TO->FROM	GR ISLD-LNX3345.00 - HOLT.CO3 345.00 345KV CKT 1	720	720	0.04584	107.7734	NUNDRWD - WAYSIDE 230KV CKT 1
FDNS	00NR_G15_094	2	25SP	G15_094	TO->FROM	GR ISLD-LNX3345.00 - HOLT.CO3 345.00 345KV CKT 1	720	720	0.05633	107.7575	APPLEDORN 4 230.00 - GRANITE FALLS 230KV CKT 1
FDNS	00NR_G15_094	2	25SP	G15_094	TO->FROM	GR ISLD-LNX3345.00 - HOLT.CO3 345.00 345KV CKT 1	720	720	0.05633	107.7575	APPLEDORN 4 230.00 - GRANITE FALLS 230KV CKT 1
FDNS	00NR_G15_094	2	25SP	G15_094	TO->FROM	GR ISLD-LNX3345.00 - HOLT.CO3 345.00 345KV CKT 1	720	720	0.05615	107.7372	MENNO JCT - UTICA 115KV CKT 1
FDNS	00NR_G15_094	2	25SP	G15_094	TO->FROM	GR ISLD-LNX3345.00 - HOLT.CO3 345.00 345KV CKT 1	720	720	0.05524	107.7364	MAXWELL - STAPLETON 115KV CKT 1
FDNS	00NR_G15_094	2	25SP	G15_094	TO->FROM	GR ISLD-LNX3345.00 - HOLT.CO3 345.00 345KV CKT 1	720	720	0.05608	107.7308	P13:115-345:NPPD:NUCOR-2
FDNS	00NR_G15_094	2	20SP	G15_094	TO->FROM	GR ISLD-LNX3345.00 - HOLT.CO3 345.00 345KV CKT 1	720	720	0.05596	107.7101	BASE CASE
FDNS	00NR_G15_094	2	25SP	G15_094	TO->FROM	GR ISLD-LNX3345.00 - HOLT.CO3 345.00 345KV CKT 1	720	720	0.0571	107.7088	P12:345:SPS:J07.1.FINN.HITCH
FDNS	00NR_G15_094	2	25SP	G15_094	TO->FROM	GR ISLD-LNX3345.00 - HOLT.CO3 345.00 345KV CKT 1	720	720	0.05615	107.6983	P12:115:UMZZ:# 237 #: MEN IN SD. MENNO JUNCTION IS A TAP (UJ-MEN-TP).
FDNS	00NR_G15_094	2	25SP	G15_094	TO->FROM	GR ISLD-LNX3345.00 - HOLT.CO3 345.00 345KV CKT 1	720	720	0.05709	107.6733	Hitchland Interchange - WALKTAP7 345.00 345KV CKT 1
FDNS	00NR_G15_094	2	25SP	G15_094	TO->FROM	GR ISLD-LNX3345.00 - HOLT.CO3 345.00 345KV CKT 1	720	720	0.05709	107.6733	Hitchland Interchange - WALKTAP7 345.00 345KV CKT 1
FDNS	00NR_G15_094	2	20SP	G15_094	TO->FROM	GR ISLD-LNX3345.00 - HOLT.CO3 345.00 345KV CKT 1	720	720	0.05188	107.4587	COOPER - MOORE 345KV CKT 1
FDNS	00NR_G15_094	2	20SP	G15_094	TO->FROM	GR ISLD-LNX3345.00 - HOLT.CO3 345.00 345KV CKT 1	720	720	0.05596	107.4069	ANTELOP-LNX3345.00 - BRDLAND-LNX3345.00 345KV CKT 1
FDNS	00NR_G15_094	2	20SP	G15_094	TO->FROM	GR ISLD-LNX3345.00 - HOLT.CO3 345.00 345KV CKT 1	720	720	0.05355	107.3342	103RD & ROKEBY - MOORE 345KV CKT 1
FDNS	00NR_G15_094	2	20SP	G15_094	TO->FROM	GR ISLD-LNX3345.00 - HOLT.CO3 345.00 345KV CKT 1	720	720	0.05355	107.3342	103RD & ROKEBY - MOORE 345KV CKT 1
FDNS	00NR_G15_094	2	20SP	G15_094	TO->FROM	GR ISLD-LNX3345.00 - HOLT.CO3 345.00 345KV CKT 1	720	720	0.04949	107.3231	COLUMWEST - KELLY 230KV CKT 1
FDNS	00NR_G15_094	2	20SP	G15_094	TO->FROM	GR ISLD-LNX3345.00 - HOLT.CO3 345.00 345KV CKT 1	720	720	0.05596	107.2421	BRDLAND-LNX3345.00 - HURON 345KV CKT Z
FDNS	00NR_G15_094	2	20SP	G15_094	TO->FROM	GR ISLD-LNX3345.00 - HOLT.CO3 345.00 345KV CKT 1	720	720	0.05596	107.242	P12:345:UMZB:# 102 #: AVS BD IN ND. AVS BRD LR
FDNS	00NR_G15_094	2	20SP	G15_094	TO->FROM	GR ISLD-LNX3345.00 - HOLT.CO3 345.00 345KV CKT 1	720	720	0.05596	107.2418	HURON (BD KU2A) 345/230/13.8KV TRANSFORMER CKT 1
FDNS	00NR_G15_094	2	20SP	G15_094	TO->FROM	GR ISLD-LNX3345.00 - HOLT.CO3 345.00 345KV CKT 1	720	720	0.05596	107.2418	HURON (BD KU2A) 345/230/13.8KV TRANSFORMER CKT 1
FDNS	00NR_G15_094	2	20SP	G15_094	TO->FROM	GR ISLD-LNX3345.00 - HOLT.CO3 345.00 345KV CKT 1	720	720	0.05596	107.2417	BROADLAND - HURON 230KV CKT 1
FDNS	00NR_G15_094	2	20SP	G15_094	TO->FROM	GR ISLD-LNX3345.00 - HOLT.CO3 345.00 345KV CKT 1	720	720	0.05596	107.2417	P12:345:UMZB:# 103 #: BD IN SD. LOSS OF LINE
FDNS	00NR_G15_094	2	20SP	G15_094	TO->FROM	GR ISLD-LNX3345.00 - HOLT.CO3 345.00 345KV CKT 1	720	720	0.05555	107.2017	FALLOW 3 345.00 - GRIMES 345KV CKT 1
FDNS	00NR_G15_094	2	20SP	G15_094	TO->FROM	GR ISLD-LNX3345.00 - HOLT.CO3 345.00 345KV CKT 1	720	720	0.05703	107.1836	GLENHAM - WHITLOK 230KV CKT 1
FDNS	00NR_G15_094	2	25SP	G15_094	TO->FROM	GR ISLD-LNX3345.00 - HOLT.CO3 345.00 345KV CKT 1	720	720	0.05608	107.1794	BASE CASE
FDNS	00NR_G15_094	2	20SP	G15_094	TO->FROM	GR ISLD-LNX3345.00 - HOLT.CO3 345.00 345KV CKT 1	720	720	0.05596	107.1789	GEN600047 1-MECCT1
FDNS	00NR_G15_094	2	20SP	G15_094	TO->FROM	GR ISLD-LNX3345.00 - HOLT.CO3 345.00 345KV CKT 1	720	720	0.05518	107.1723	COOPER - FAIRPORT 345KV CKT 1
FDNS	00NR_G15_094	2	20SP	G15_094	TO->FROM	GR ISLD-LNX3345.00 - HOLT.CO3 345.00 345KV CKT 1	720	720	0.05455	107.1695	MAXWELL - NORTH PLATTE 115KV CKT 1
FDNS	00NR_G15_094	2	20SP	G15_094	TO->FROM	GR ISLD-LNX3345.00 - HOLT.CO3 345.00 345KV CKT 1	720	720	0.05596	107.1677	GEN660001 2-ABERDEEN SIEBRECHT
FDNS	00NR_G15_094	2	20SP	G15_094	TO->FROM	GR ISLD-LNX3345.00 - HOLT.CO3 345.00 345KV CKT 1	720	720	0.05596	107.1655	GEN660003 3-HURON WEST PARK
FDNS	00NR_G15_094	2	20SP	G15_094	TO->FROM	GR ISLD-LNX3345.00 - HOLT.CO3 345.00 345KV CKT 1	720	720	0.05496	107.1654	POST ROCK (POSTROCK T1) 345/230/13.8KV TRANSFORMER CKT 1
FDNS	00NR_G15_094	2	20SP	G15_094	TO->FROM	GR ISLD-LNX3345.00 - HOLT.CO3 345.00 345KV CKT 1	720	720	0.05596	107.1528	GEN600063 1-COLVILLE GEN 1
FDNS	00NR_G15_094	2	20SP	G15_094	TO->FROM	GR ISLD-LNX3345.00 - HOLT.CO3 345.00 345KV CKT 1	720	720	0.05596	107.1528	GEN600064 2-COLVILLE GEN 2
FDNS	00NR_G15_094	2	20SP	G15_094	TO->FROM	GR ISLD-LNX3345.00 - HOLT.CO3 345.00 345KV CKT 1	720	720	0.05596	107.1482	ANTELOP-LNX3345.00 - ANTELOPE VALLEY 345KV CKT Z
FDNS	00NR_G15_094	2	20SP	G15_094	TO->FROM	GR ISLD-LNX3345.00 - HOLT.CO3 345.00 345KV CKT 1	720	720	0.05596	107.1447	GEN681522 3-GENOA 3
FDNS	00NR_G15_094	2	20SP	G15_094	TO->FROM	GR ISLD-LNX3345.00 - HOLT.CO3 345.00 345KV CKT 1	720	720	0.05596	107.1409	GEN659273 2-GROTON SYNC COND
FDNS	00NR_G15_094	2	20SP	G15_094	TO->FROM	GR ISLD-LNX3345.00 - HOLT.CO3 345.00 345KV CKT 1	720	720	0.05596	107.1409	GEN659294 1-WILTONCOL9
FDNS	00NR_G15_094	2	20SP	G15_094	TO->FROM	GR ISLD-LNX3345.00 - HOLT.CO3 345.00 345KV CKT 1	720	720	0.05596	107.1337	GEN600043 7-BLUE LAKE5
FDNS	00NR_G15_094	2	20SP	G15_094	TO->FROM	GR ISLD-LNX3345.00 - HOLT.CO3 345.00 345KV CKT 1	720	720	0.05596	107.1337	GEN600044 8-BLUE LAKE6
FDNS	00NR_G15_094	2	20SP	G15_094	TO->FROM	GR ISLD-LNX3345.00 - HOLT.CO3 345.00 345KV CKT 1	720	720	0.05593	107.1274	ATCHSNT3 345.00 - BOONEVILLE 345KV CKT 1
FDNS	00NR_G15_094	2	20SP	G15_094	TO->FROM	GR ISLD-LNX3345.00 - HOLT.CO3 345.00 345KV CKT 1	720	720	0.05581	107.1186	GRAND ISLAND (GRAND.ISD T5) 230/115/13.8KV TRANSFORMER CKT 2
FDNS	00NR_G15_094	2	20SP	G15_094	TO->FROM	GR ISLD-LNX3345.00 - HOLT.CO3 345.00 345KV CKT 1	720	720	0.05581	107.1186	GRAND ISLAND (GRAND.ISD T5) 230/115/13.8KV TRANSFORMER CKT 2
FDNS	00NR_G15_094	2	20SP	G15_094	TO->FROM	GR ISLD-LNX3345.00 - HOLT.CO3 345.00 345KV CKT 1	720	720	0.05581	107.1153	GRAND ISLAND (GRAND.ISD T2) 230/115/13.8KV TRANSFORMER CKT 1
FDNS	00NR_G15_094	2	20SP	G15_094	TO->FROM	GR ISLD-LNX3345.00 - HOLT.CO3 345.00 345KV CKT 1	720	720	0.05581	107.1153	GRAND ISLAND (GRAND.ISD T2) 230/115/13.8KV TRANSFORMER CKT 1
FDNS	00NR_G15_094	2	20SP	G15_094	TO->FROM	GR ISLD-LNX3345.00 - HOLT.CO3 345.00 345KV CKT 1	720	720	0.05596	107.1141	GEN600014 4-BLACK DOG GEN 4
FDNS	00NR_G15_094	2	20SP	G15_094	TO->FROM	GR ISLD-LNX3345.00 - HOLT.CO3 345.00 345KV CKT 1	720	720	0.05596	107.1138	GEN600065 7-HIGH BRIDGE
FDNS	00NR_G15_094	2	20SP	G15_094	TO->FROM	GR ISLD-LNX3345.00 - HOLT.CO3 345.00 345KV CKT 1	720	720	0.05596	107.1138	GEN600066 8-HIGH BRIDGE
FDNS	00NR_G15_094	2	20SP	G15_094	TO->FROM	GR ISLD-LNX3345.00 - HOLT.CO3 345.00 345KV CKT 1	720	720	0.05596	107.11	GEN600011 5-BLACK DOG GEN 1
FDNS	00NR_G15_094	2	20SP	G15_094	TO->FROM	GR ISLD-LNX3345.00 - HOLT.CO3 345.00 345KV CKT 1	720	720	0.05596	107.1084	LANSING WEST 161/22.0KV TRANSFORMER CKT 1
FDNS	00NR_G15_094	2	20SP	G15_094	TO->FROM	GR ISLD-LNX3345.00 - HOLT.CO3 345.00 345KV CKT 1	720	720	0.05596	107.1044	GEN600071 10-RIVER SIDE
FDNS	00NR_G15_094	2	20SP	G15_094	TO->FROM	GR ISLD-LNX3345.00 - HOLT.CO3 345.00 345KV CKT 1	720	720	0.05596	107.1043	GEN600070 9-RIVER SIDE
FDNS	00NR_G15_094	2	25SP	G15_094	TO->FROM	GR ISLD-LNX3345.00 - HOLT.CO3 345.00 345KV CKT 1	720	720	0.04968	107.0982	COLUMWEST - KELLY 230KV CKT 1
FDNS	00NR_G15_094	2	20SP	G15_094	TO->FROM	GR ISLD-LNX3345.00 - HOLT.CO3 345.00 345KV CKT 1	720	720	0.05596	107.0962	GEN600007 7-RIVERSIDE GEN 7
FDNS	00NR_G15_094	2	20SP	G15_094	TO->FROM	GR ISLD-LNX3345.00 - HOLT.CO3 345.00 345KV CKT 1	720	720	0.05596	107.0954	GEN659031 1-G12_014IS_4 0.6900
FDNS	00NR_G15_094	2	20SP	G15_094	TO->FROM	GR ISLD-LNX3345.00 - HOLT.CO3 345.00 345KV CKT 1	720	720	0.05596	107.0846	GEN600017 C-LS POWER CT
FDNS	00NR_G15_094	2	20SP	G15_094	TO->FROM	GR ISLD-LNX3345.00 - HOLT.CO3 345.00 345KV CKT 1	720	720	0.05596	107.0814	GEN659192 6-LYNN
FDNS	00NR_G15_094	2	20SP	G15_094	TO->FROM	GR ISLD-LNX3345.00 - HOLT.CO3 345.00 345KV CKT 1	720	720	0.05596	107.0807	GEN659162 4-RED WLCK
FDNS	00NR_G15_094	2	20SP	G15_094	TO->FROM	GR ISLD-LNX3345.00 - HOLT.CO3 345.00 345KV CKT 1	720	720	0.05596	107.0807	GEN659163 5-BLACK WDCK
FDNS	00NR_G15_094	2	20SP	G15_094	TO->FROM	GR ISLD-LNX3345.00 - HOLT.CO3 345.00 345KV CKT 1	720	720	0.05596	107.0735	GEN600045 4-ANSON
FDNS	00NR_G15_094	2	20SP	G15_094	TO->FROM	GR ISLD-LNX3345.00 - HOLT.CO3 345.00 345KV CKT 1	720	720	0.05596	107.0675	GEN 10648 1-G830_GEN 0.6900
FDNS	00NR_G15_094	2	20SP	G15_094	TO->FROM	GR ISLD-LNX3345.00 - HOLT.CO3 345.00 345KV CKT 1	720	720	0.05596	107.0414	GEN615052 1-CAMBRIDGE GENERATING STATION
FDNS	00NR_G15_094	2	20SP	G15_094	TO->FROM	GR ISLD-LNX3345.00 - HOLT.CO3 345.00 345KV CKT 1	720	720	0.05596	107.0357	GEN615015 1-GRE-SPRITWDG13.200
FDNS	00NR_G15_094	2	20SP	G15_094	TO->FROM	GR ISLD-LNX3345.00 - HOLT.CO3 345.00 345KV CKT 1	720	720	0.05572	107.0285	GRAND ISLAND (GI KU1B) 345/230/13.8KV TRANSFORMER CKT 2
FDNS	00NR_G15_094	2	20SP	G15_094	TO->FROM	GR ISLD-LNX3345.00 - HOLT.CO3 345.00 345KV CKT 1	720	720	0.05572	107.0285	GRAND ISLAND (GI KU1B) 345/230/13.8KV TRANSFORMER CKT 2
FDNS	00NR_G15_094	2	20SP	G15_094	TO->FROM	GR ISLD-LNX3345.00 - HOLT.CO3 345.00 345KV CKT 1	720	720	0.05596	107.0276	GEN615021 1-GRE-ER 14G 16.000
FDNS	00NR_G15_094	2	20SP	G15_094	TO->FROM	GR ISLD-LNX3345.00 - HOLT.CO3 345.00 345KV CKT 1	720	720	0.05572	107.027	GRAND ISLAND (GI KU1A) 345/230/13.8KV TRANSFORMER CKT 1
FDNS	00NR_G15_094	2	20SP	G15_094	TO->FROM	GR ISLD-LNX3345.00 - HOLT.CO3 345.00 345KV CKT 1	720	720	0.05572	107.027	GRAND ISLAND (GI KU1A) 345/230/13.8KV TRANSFORMER CKT 1
FDNSLock	00NR_G15_094	2	20SP	G15_094	TO->FROM	GR ISLD-LNX3345.00 - HOLT.CO3 345.00 345KV CKT 1	720	720	0.05518	107.0269	STMDSJFAFACO
FDNS	00NR_G15_094	2	20SP	G15_094	TO->FROM	GR ISLD-LNX3345.00 - HOLT.CO3 345.00 345KV CKT 1	720	720	0.05596	107.0189	BISONMP4 230.00 - SQUARE BUTTE 230KV CKT 1
FDNS	00NR_G15_094	2	25SP	G15_094	TO->FROM	GR ISLD-LNX3345.00 - HOLT.CO3 345.00 345KV CKT 1	720	720	0.05525	107.0178	KELLY - SHELL CREEK 230KV CKT 1

SOLUTION	GROUP	SCENARIO	SEASON	SOURCE	DIRECTION	MONITORED ELEMENT	RATEA (MVA)	RATEB(MVA)	TDF	TC%LOADING (% MVA)	CONTINGENCY
FDNS	00NR_G15_094	2	25SP	G15_094	TO->FROM	GR ISLD-LNX3345.00 - HOLT.CO3 345.00 345KV CKT 1	720	720	0.05525	107.0159	SHELL CREEK (SHELLCREEKT1) 345/230/13.8KV TRANSFORMER CKT 1
FDNS	00NR_G15_094	2	25SP	G15_094	TO->FROM	GR ISLD-LNX3345.00 - HOLT.CO3 345.00 345KV CKT 1	720	720	0.05525	107.0159	SHELL CREEK (SHELLCREEKT1) 345/230/13.8KV TRANSFORMER CKT 1
FDNSLock	00NR_G15_094	2	20SP	G15_094	TO->FROM	GR ISLD-LNX3345.00 - HOLT.CO3 345.00 345KV CKT 1	720	720	0.05518	107.0155	COPSTJCPFRSJ
FDNS	00NR_G15_094	2	20SP	G15_094	TO->FROM	GR ISLD-LNX3345.00 - HOLT.CO3 345.00 345KV CKT 1	720	720	0.05596	107.0067	GEN660016 1-B_H WIND 0.7000
FDNS	00NR_G15_094	2	20SP	G15_094	TO->FROM	GR ISLD-LNX3345.00 - HOLT.CO3 345.00 345KV CKT 1	720	720	0.05519	106.9784	FT THOMPSON - LOWERBRULE 4230.00 230KV CKT 1
FDNS	00NR_G15_094	2	20SP	G15_094	TO->FROM	GR ISLD-LNX3345.00 - HOLT.CO3 345.00 345KV CKT 1	720	720	0.05519	106.9784	FT THOMPSON - LOWERBRULE 4230.00 230KV CKT 1
FDNS	00NR_G15_094	2	20SP	G15_094	TO->FROM	GR ISLD-LNX3345.00 - HOLT.CO3 345.00 345KV CKT 1	720	720	0.05572	106.968	MCCOOL (MCCOOL T2) 345/115/13.8KV TRANSFORMER CKT 1
FDNS	00NR_G15_094	2	20SP	G15_094	TO->FROM	GR ISLD-LNX3345.00 - HOLT.CO3 345.00 345KV CKT 1	720	720	0.05572	106.968	MCCOOL (MCCOOL T2) 345/115/13.8KV TRANSFORMER CKT 1
FDNS	00NR_G15_094	2	20SP	G15_094	TO->FROM	GR ISLD-LNX3345.00 - HOLT.CO3 345.00 345KV CKT 1	720	720	0.05596	106.9474	GEN672303 3-BOUNDARY DAM GENERATOR 3
FDNS	00NR_G15_094	2	20SP	G15_094	TO->FROM	GR ISLD-LNX3345.00 - HOLT.CO3 345.00 345KV CKT 1	720	720	0.05596	106.9474	GEN672304 4-BOUNDARY DAM GENERATOR 4
FDNS	00NR_G15_094	2	20SP	G15_094	TO->FROM	GR ISLD-LNX3345.00 - HOLT.CO3 345.00 345KV CKT 1	720	720	0.05596	106.9473	GEN672305 5-BOUNDARY DAM GENERATOR 5
FDNS	00NR_G15_094	2	25SP	G15_094	TO->FROM	GR ISLD-LNX3345.00 - HOLT.CO3 345.00 345KV CKT 1	720	720	0.0537	106.9456	103RD & ROKEBY - MOORE 345KV CKT 1
FDNS	00NR_G15_094	2	25SP	G15_094	TO->FROM	GR ISLD-LNX3345.00 - HOLT.CO3 345.00 345KV CKT 1	720	720	0.0537	106.9456	103RD & ROKEBY - MOORE 345KV CKT 1
FDNS	00NR_G15_094	2	25SP	G15_094	TO->FROM	GR ISLD-LNX3345.00 - HOLT.CO3 345.00 345KV CKT 1	720	720	0.05465	106.9363	COOPER - ST JOE 345KV CKT 1
FDNS	00NR_G15_094	2	20SP	G15_094	TO->FROM	GR ISLD-LNX3345.00 - HOLT.CO3 345.00 345KV CKT 1	720	720	0.05596	106.9118	GEN672392 1-NBECGT1G 18.000
FDNS	00NR_G15_094	2	20SP	G15_094	TO->FROM	GR ISLD-LNX3345.00 - HOLT.CO3 345.00 345KV CKT 1	720	720	0.05596	106.9007	GEN662101 1-WESSINGTON190.5750
FDNS	00NR_G15_094	2	20SP	G15_094	TO->FROM	GR ISLD-LNX3345.00 - HOLT.CO3 345.00 345KV CKT 1	720	720	0.05483	106.8864	G14-021T 345.00 - MULLNCR7 345.00 345KV CKT 1
FDNS	00NR_G15_094	2	20SP	G15_094	TO->FROM	GR ISLD-LNX3345.00 - HOLT.CO3 345.00 345KV CKT 1	720	720	0.05483	106.8841	G15-005T 345.00 - MULLNCR7 345.00 345KV CKT 1
FDNS	00NR_G15_094	2	20SP	G15_094	TO->FROM	GR ISLD-LNX3345.00 - HOLT.CO3 345.00 345KV CKT 1	720	720	0.05596	106.881	GEN600067 9-HIGH BRIDGE
FDNS	00NR_G15_094	2	20SP	G15_094	TO->FROM	GR ISLD-LNX3345.00 - HOLT.CO3 345.00 345KV CKT 1	720	720	0.05596	106.8808	CENTER 230/22.0KV TRANSFORMER CKT 1
FDNS	00NR_G15_094	2	25SP	G15_094	TO->FROM	GR ISLD-LNX3345.00 - HOLT.CO3 345.00 345KV CKT 1	720	720	0.05608	106.8542	ANTELOP-LNX3345.00 - BRDLAND-LNX3345.00 345KV CKT 1
FDNS	00NR_G15_094	2	20SP	G15_094	TO->FROM	GR ISLD-LNX3345.00 - HOLT.CO3 345.00 345KV CKT 1	720	720	0.05596	106.8098	GEN659353 1-DEERCREK CTG18.000
FDNS	00NR_G15_094	2	20SP	G15_094	TO->FROM	GR ISLD-LNX3345.00 - HOLT.CO3 345.00 345KV CKT 1	720	720	0.05596	106.8096	GEN659354 1-DEERCREK STG18.000
FDNS	00NR_G15_094	2	20SP	G15_094	TO->FROM	GR ISLD-LNX3345.00 - HOLT.CO3 345.00 345KV CKT 1	720	720	0.05483	106.8023	G15-005T 345.00 - SIBLEY 345KV CKT 1
FDNS	00NR_G15_094	2	20SP	G15_094	TO->FROM	GR ISLD-LNX3345.00 - HOLT.CO3 345.00 345KV CKT 1	720	720	0.05596	106.7868	GEN910006 1-G12_012IS_3 0.6900
FDNSLock	00NR_G15_094	2	20SP	G15_094	TO->FROM	GR ISLD-LNX3345.00 - HOLT.CO3 345.00 345KV CKT 1	720	720	0.05492	106.7784	CENTRAL CITY - GRAND ISLAND 115KV CKT 1
FDNS	00NR_G15_094	2	25SP	G15_094	TO->FROM	GR ISLD-LNX3345.00 - HOLT.CO3 345.00 345KV CKT 1	720	720	0.05688	106.7616	LOUP CITY - ST LIBORY 115KV CKT 1
FDNS	00NR_G15_094	2	20SP	G15_094	TO->FROM	GR ISLD-LNX3345.00 - HOLT.CO3 345.00 345KV CKT 1	720	720	0.05703	106.7604	GLENHAM - L3 HAWDON 230KV CKT 1
FDNS	00NR_G15_094	2	20SP	G15_094	TO->FROM	GR ISLD-LNX3345.00 - HOLT.CO3 345.00 345KV CKT 1	720	720	0.05596	106.7523	GEN681542 6-JP MADGETT
FDNS	00NR_G15_094	2	25SP	G15_094	TO->FROM	GR ISLD-LNX3345.00 - HOLT.CO3 345.00 345KV CKT 1	720	720	0.05608	106.7003	P12:345:UMZB:# 103 #: BD IN SD. LOSS OF LINE
FDNS	00NR_G15_094	2	25SP	G15_094	TO->FROM	GR ISLD-LNX3345.00 - HOLT.CO3 345.00 345KV CKT 1	720	720	0.05608	106.6984	P12:345:UMZB:# 102 #: AVS BD IN ND. AVS BRD LR
FDNS	00NR_G15_094	2	25SP	G15_094	TO->FROM	GR ISLD-LNX3345.00 - HOLT.CO3 345.00 345KV CKT 1	720	720	0.05608	106.6982	BRDLAND-LNX3345.00 - HURON 345KV CKT Z
FDNS	00NR_G15_094	2	25SP	G15_094	TO->FROM	GR ISLD-LNX3345.00 - HOLT.CO3 345.00 345KV CKT 1	720	720	0.05608	106.6976	HURON (BD KU2A) 345/230/13.8KV TRANSFORMER CKT 1
FDNS	00NR_G15_094	2	25SP	G15_094	TO->FROM	GR ISLD-LNX3345.00 - HOLT.CO3 345.00 345KV CKT 1	720	720	0.05608	106.6976	HURON (BD KU2A) 345/230/13.8KV TRANSFORMER CKT 1
FDNS	00NR_G15_094	2	25SP	G15_094	TO->FROM	GR ISLD-LNX3345.00 - HOLT.CO3 345.00 345KV CKT 1	720	720	0.05608	106.6975	BROADLAND - HURON 230KV CKT 1
FDNS	00NR_G15_094	2	25SP	G15_094	TO->FROM	GR ISLD-LNX3345.00 - HOLT.CO3 345.00 345KV CKT 1	720	720	0.05468	106.6956	MAXWELL - NORTH PLATTE 115KV CKT 1
FDNS	00NR_G15_094	2	20SP	G15_094	TO->FROM	GR ISLD-LNX3345.00 - HOLT.CO3 345.00 345KV CKT 1	720	720	0.05596	106.6954	GEN659289 1-DAYCNTYWND W0.6900
FDNS	00NR_G15_094	2	25SP	G15_094	TO->FROM	GR ISLD-LNX3345.00 - HOLT.CO3 345.00 345KV CKT 1	720	720	0.05531	106.6822	COOPER - FAIRPORT 345KV CKT 1
FDNS	00NR_G15_094	2	25SP	G15_094	TO->FROM	GR ISLD-LNX3345.00 - HOLT.CO3 345.00 345KV CKT 1	720	720	0.05531	106.6822	COOPER - FAIRPORT 345KV CKT 1
FDNS	00NR_G15_094	2	20SP	G15_094	TO->FROM	GR ISLD-LNX3345.00 - HOLT.CO3 345.00 345KV CKT 1	720	720	0.05561	106.6803	GRAND ISLAND (GI KU3A) 345/230/13.8KV TRANSFORMER CKT 3
FDNS	00NR_G15_094	2	20SP	G15_094	TO->FROM	GR ISLD-LNX3345.00 - HOLT.CO3 345.00 345KV CKT 1	720	720	0.05561	106.6803	GRAND ISLAND (GI KU3A) 345/230/13.8KV TRANSFORMER CKT 3
FDNS	00NR_G15_094	2	25SP	G15_094	TO->FROM	GR ISLD-LNX3345.00 - HOLT.CO3 345.00 345KV CKT 1	720	720	0.05608	106.6596	GEN652414 4-FT PECK
FDNS	00NR_G15_094	2	25SP	G15_094	TO->FROM	GR ISLD-LNX3345.00 - HOLT.CO3 345.00 345KV CKT 1	720	720	0.05608	106.6596	GEN652415 5-FT PECK
FDNS	00NR_G15_094	2	25SP	G15_094	TO->FROM	GR ISLD-LNX3345.00 - HOLT.CO3 345.00 345KV CKT 1	720	720	0.05608	106.6553	GEN620324 3-HOOT LAKE 3 GEN
FDNS	00NR_G15_094	2	25SP	G15_094	TO->FROM	GR ISLD-LNX3345.00 - HOLT.CO3 345.00 345KV CKT 1	720	720	0.05608	106.6517	GEN600046 1-MECST
FDNS	00NR_G15_094	2	25SP	G15_094	TO->FROM	GR ISLD-LNX3345.00 - HOLT.CO3 345.00 345KV CKT 1	720	720	0.05608	106.651	GEN 11104 1-J262_GEN 0.6000
FDNS	00NR_G15_094	2	25SP	G15_094	TO->FROM	GR ISLD-LNX3345.00 - HOLT.CO3 345.00 345KV CKT 1	720	720	0.05608	106.651	GEN 11108 1-J263_GEN 0.6000
FDNS	00NR_G15_094	2	25SP	G15_094	TO->FROM	GR ISLD-LNX3345.00 - HOLT.CO3 345.00 345KV CKT 1	720	720	0.05568	106.6352	FALLOW 3 345.00 - GRIMES 345KV CKT 1
FDNS	00NR_G15_094	2	25SP	G15_094	TO->FROM	GR ISLD-LNX3345.00 - HOLT.CO3 345.00 345KV CKT 1	720	720	0.05608	106.6328	GEN600047 1-MECCT1
FDNS	00NR_G15_094	2	25SP	G15_094	TO->FROM	GR ISLD-LNX3345.00 - HOLT.CO3 345.00 345KV CKT 1	720	720	0.05606	106.6257	ATCHSNT3 345.00 - COOPER 345KV CKT 1
FDNS	00NR_G15_094	2	25SP	G15_094	TO->FROM	GR ISLD-LNX3345.00 - HOLT.CO3 345.00 345KV CKT 1	720	720	0.05606	106.6257	ATCHSNT3 345.00 - COOPER 345KV CKT 1
FDNS	00NR_G15_094	2	25SP	G15_094	TO->FROM	GR ISLD-LNX3345.00 - HOLT.CO3 345.00 345KV CKT 1	720	720	0.05608	106.621	GEN660003 3-HURON WEST PARK
FDNS	00NR_G15_094	2	25SP	G15_094	TO->FROM	GR ISLD-LNX3345.00 - HOLT.CO3 345.00 345KV CKT 1	720	720	0.05608	106.6207	GEN600063 1-COLVILLE GEN 1
FDNS	00NR_G15_094	2	25SP	G15_094	TO->FROM	GR ISLD-LNX3345.00 - HOLT.CO3 345.00 345KV CKT 1	720	720	0.05608	106.6207	GEN600064 2-COLVILLE GEN 2
FDNS	00NR_G15_094	2	25SP	G15_094	TO->FROM	GR ISLD-LNX3345.00 - HOLT.CO3 345.00 345KV CKT 1	720	720	0.05608	106.6155	GEN660001 2-ABERDEEN SIEBRECHT
FDNS	00NR_G15_094	2	20SP	G15_094	TO->FROM	GR ISLD-LNX3345.00 - HOLT.CO3 345.00 345KV CKT 1	720	720	0.05596	106.6128	COYOTE 345/24.0KV TRANSFORMER CKT 1
FDNS	00NR_G15_094	2	25SP	G15_094	TO->FROM	GR ISLD-LNX3345.00 - HOLT.CO3 345.00 345KV CKT 1	720	720	0.05608	106.6069	GEN600043 7-BLUE LAKE5
FDNS	00NR_G15_094	2	25SP	G15_094	TO->FROM	GR ISLD-LNX3345.00 - HOLT.CO3 345.00 345KV CKT 1	720	720	0.05608	106.6069	GEN600044 8-BLUE LAKE6
FDNS	00NR_G15_094	2	20SP	G15_094	TO->FROM	GR ISLD-LNX3345.00 - HOLT.CO3 345.00 345KV CKT 1	720	720	0.05596	106.6054	GEN659018 1-G14_003IS_3 0.6900
FDNS	00NR_G15_094	2	25SP	G15_094	TO->FROM	GR ISLD-LNX3345.00 - HOLT.CO3 345.00 345KV CKT 1	720	720	0.05608	106.6036	ANTELOP-LNX3345.00 - ANTELOPE VALLEY 345KV CKT Z
FDNS	00NR_G15_094	2	25SP	G15_094	TO->FROM	GR ISLD-LNX3345.00 - HOLT.CO3 345.00 345KV CKT 1	720	720	0.05608	106.5942	GEN659273 2-GROTON SYNC COND
FDNS	00NR_G15_094	2	25SP	G15_094	TO->FROM	GR ISLD-LNX3345.00 - HOLT.CO3 345.00 345KV CKT 1	720	720	0.05608	106.5942	GEN659294 1-WILTONCOL9
FDNS	00NR_G15_094	2	25SP	G15_094	TO->FROM	GR ISLD-LNX3345.00 - HOLT.CO3 345.00 345KV CKT 1	720	720	0.05593	106.5913	GRAND ISLAND (GRAND.ISD T5) 230/115/13.8KV TRANSFORMER CKT 2
FDNS	00NR_G15_094	2	25SP	G15_094	TO->FROM	GR ISLD-LNX3345.00 - HOLT.CO3 345.00 345KV CKT 1	720	720	0.05593	106.5913	GRAND ISLAND (GRAND.ISD T5) 230/115/13.8KV TRANSFORMER CKT 2
FDNS	00NR_G15_094	2	25SP	G15_094	TO->FROM	GR ISLD-LNX3345.00 - HOLT.CO3 345.00 345KV CKT 1	720	720	0.05608	106.5898	GEN681522 3-GENOA 3
FDNS	00NR_G15_094	2	25SP	G15_094	TO->FROM	GR ISLD-LNX3345.00 - HOLT.CO3 345.00 345KV CKT 1	720	720	0.05593	106.588	GRAND ISLAND (GRAND.ISD T2) 230/115/13.8KV TRANSFORMER CKT 1
FDNS	00NR_G15_094	2	25SP	G15_094	TO->FROM	GR ISLD-LNX3345.00 - HOLT.CO3 345.00 345KV CKT 1	720	720	0.05593	106.588	GRAND ISLAND (GRAND.ISD T2) 230/115/13.8KV TRANSFORMER CKT 1
FDNS	00NR_G15_094	2	25SP	G15_094	TO->FROM	GR ISLD-LNX3345.00 - HOLT.CO3 345.00 345KV CKT 1	720	720	0.05608	106.5851	GEN600065 7-HIGH BRIDGE
FDNS	00NR_G15_094	2	25SP	G15_094	TO->FROM	GR ISLD-LNX3345.00 - HOLT.CO3 345.00 345KV CKT 1	720	720	0.05608	106.5851	GEN600066 8-HIGH BRIDGE
FDNS	00NR_G15_094	2	25SP	G15_094	TO->FROM	GR ISLD-LNX3345.00 - HOLT.CO3 345.00 345KV CKT 1	720	720	0.05608	106.5844	GEN600014 4-BLACK DOG GEN 4
FDNS	00NR_G15_094	2	25SP	G15_094	TO->FROM	GR ISLD-LNX3345.00 - HOLT.CO3 345.00 345KV CKT 1	720	720	0.05608	106.5807	GEN600011 5-BLACK DOG GEN 1
FDNS	00NR_G15_094	2	25SP	G15_094	TO->FROM	GR ISLD-LNX3345.00 - HOLT.CO3 345.00 345KV CKT 1	720	720	0.05608	106.5757	GEN600071 10-RIVER SIDE
FDNS	00NR_G15_094	2	25SP	G15_094	TO->FROM	GR ISLD-LNX3345.00 - HOLT.CO3 345.00 345KV CKT 1	720	720	0.05608	106.5756	GEN600070 9-RIVER SIDE

SOLUTION	GROUP	SCENARIO	SEASON	SOURCE	DIRECTION	MONITORED ELEMENT	RATEA (MVA)	RATEB(MVA)	TDF	TC%LOADING (% MVA)	CONTINGENCY
FDNS	00NR_G15_094	2	25SP	G15_094	TO->FROM	GR ISLD-LNX3345.00 - HOLT.CO3 345.00 345KV CKT 1	720	720	0.05608	106.5706	LANSING WEST 161/22.0KV TRANSFORMER CKT 1
FDNS	00NR_G15_094	2	25SP	G15_094	TO->FROM	GR ISLD-LNX3345.00 - HOLT.CO3 345.00 345KV CKT 1	720	720	0.05608	106.5671	GEN600007 7-RIVERSIDE GEN 7
FDNS	00NR_G15_094	2	20SP	G15_094	TO->FROM	GR ISLD-LNX3345.00 - HOLT.CO3 345.00 345KV CKT 1	720	720	0.05596	106.5625	GEN659010 4-G07_027IS_2 0.6900
FDNS	00NR_G15_094	2	20SP	G15_094	TO->FROM	GR ISLD-LNX3345.00 - HOLT.CO3 345.00 345KV CKT 1	720	720	0.05596	106.5559	GEN659194 1-NDPRAIRWND1W0.6900
FDNS	00NR_G15_094	2	20SP	G15_094	TO->FROM	GR ISLD-LNX3345.00 - HOLT.CO3 345.00 345KV CKT 1	720	720	0.05596	106.5546	GEN652461 5-GARRISON
FDNS	00NR_G15_094	2	20SP	G15_094	TO->FROM	GR ISLD-LNX3345.00 - HOLT.CO3 345.00 345KV CKT 1	720	720	0.05596	106.5545	GEN652460 4-GARRISON
FDNS	00NR_G15_094	2	25SP	G15_094	TO->FROM	GR ISLD-LNX3345.00 - HOLT.CO3 345.00 345KV CKT 1	720	720	0.05608	106.5537	GEN600017 C-LS POWER CT
FDNS	00NR_G15_094	2	25SP	G15_094	TO->FROM	GR ISLD-LNX3345.00 - HOLT.CO3 345.00 345KV CKT 1	720	720	0.05608	106.549	GEN659031 1-G12_014IS_4 0.6900
FDNS	00NR_G15_094	2	20SP	G15_094	TO->FROM	GR ISLD-LNX3345.00 - HOLT.CO3 345.00 345KV CKT 1	720	720	0.05596	106.5392	GEN652545 7-BIG BEND
FDNS	00NR_G15_094	2	25SP	G15_094	TO->FROM	GR ISLD-LNX3345.00 - HOLT.CO3 345.00 345KV CKT 1	720	720	0.05531	106.5341	COPSTJCPFRSJ
FDNS	00NR_G15_094	2	25SP	G15_094	TO->FROM	GR ISLD-LNX3345.00 - HOLT.CO3 345.00 345KV CKT 1	720	720	0.05531	106.5341	P12:345:NPPD:3517:COOPER 3:ST JOE 3:BTB
FDNS	00NR_G15_094	2	25SP	G15_094	TO->FROM	GR ISLD-LNX3345.00 - HOLT.CO3 345.00 345KV CKT 1	720	720	0.05531	106.5341	STMDSJFAFACO
FDNS	00NR_G15_094	2	20SP	G15_094	TO->FROM	GR ISLD-LNX3345.00 - HOLT.CO3 345.00 345KV CKT 1	720	720	0.05596	106.5278	CLAY BOSWELL 230/20.9KV TRANSFORMER CKT 1
FDNS	00NR_G15_094	2	25SP	G15_094	TO->FROM	GR ISLD-LNX3345.00 - HOLT.CO3 345.00 345KV CKT 1	720	720	0.05608	106.5223	GEN600045 4-ANSON
FDNS	00NR_G15_094	2	25SP	G15_094	TO->FROM	GR ISLD-LNX3345.00 - HOLT.CO3 345.00 345KV CKT 1	720	720	0.05608	106.5216	GEN659192 6-LYNN
FDNS	00NR_G15_094	2	25SP	G15_094	TO->FROM	GR ISLD-LNX3345.00 - HOLT.CO3 345.00 345KV CKT 1	720	720	0.05608	106.5206	GEN659162 4-RED WLCK
FDNS	00NR_G15_094	2	25SP	G15_094	TO->FROM	GR ISLD-LNX3345.00 - HOLT.CO3 345.00 345KV CKT 1	720	720	0.05608	106.5206	GEN659163 5-BLACK WDCK
FDNS	00NR_G15_094	2	25SP	G15_094	TO->FROM	GR ISLD-LNX3345.00 - HOLT.CO3 345.00 345KV CKT 1	720	720	0.05608	106.5185	GEN 10648 1-G830_GEN 0.6900
FDNS	00NR_G15_094	2	20SP	G15_094	TO->FROM	GR ISLD-LNX3345.00 - HOLT.CO3 345.00 345KV CKT 1	720	720	0.05596	106.516	GEN652458 2-GARRISON
FDNS	00NR_G15_094	2	20SP	G15_094	TO->FROM	GR ISLD-LNX3345.00 - HOLT.CO3 345.00 345KV CKT 1	720	720	0.05596	106.516	GEN652459 3-GARRISON
FDNS	00NR_G15_094	2	20SP	G15_094	TO->FROM	GR ISLD-LNX3345.00 - HOLT.CO3 345.00 345KV CKT 1	720	720	0.05596	106.5159	GEN652457 1-GARRISON
FDNS	00NR_G15_094	2	20SP	G15_094	TO->FROM	GR ISLD-LNX3345.00 - HOLT.CO3 345.00 345KV CKT 1	720	720	0.05596	106.5107	GEN652544 5-BIG BEND
FDNS	00NR_G15_094	2	25SP	G15_094	TO->FROM	GR ISLD-LNX3345.00 - HOLT.CO3 345.00 345KV CKT 1	720	720	0.05608	106.5092	GEN615052 1-CAMBRIDGE GENERATING STATION
FDNS	00NR_G15_094	2	25SP	G15_094	TO->FROM	GR ISLD-LNX3345.00 - HOLT.CO3 345.00 345KV CKT 1	720	720	0.05606	106.5029	ATCHSNT3 345.00 - BOONEVILLE 345KV CKT 1
FDNS	00NR_G15_094	2	20SP	G15_094	TO->FROM	GR ISLD-LNX3345.00 - HOLT.CO3 345.00 345KV CKT 1	720	720	0.05596	106.4982	GEN652543 3-BIG BEND
FDNS	00NR_G15_094	2	20SP	G15_094	TO->FROM	GR ISLD-LNX3345.00 - HOLT.CO3 345.00 345KV CKT 1	720	720	0.05596	106.4981	GEN652542 1-BIG BEND
FDNS	00NR_G15_094	2	25SP	G15_094	TO->FROM	GR ISLD-LNX3345.00 - HOLT.CO3 345.00 345KV CKT 1	720	720	0.05608	106.4978	BISONMP4 230.00 - SQUARE BUTTE 230KV CKT 1
FDNS	00NR_G15_094	2	25SP	G15_094	TO->FROM	GR ISLD-LNX3345.00 - HOLT.CO3 345.00 345KV CKT 1	720	720	0.05479	106.4856	COOPER - ST JOE 345KV CKT 1
FDNS	00NR_G15_094	2	20SP	G15_094	TO->FROM	GR ISLD-LNX3345.00 - HOLT.CO3 345.00 345KV CKT 1	720	720	0.05596	106.4832	GEN563282 1-G15094_3 0.6900
FDNS	00NR_G15_094	2	25SP	G15_094	TO->FROM	GR ISLD-LNX3345.00 - HOLT.CO3 345.00 345KV CKT 1	720	720	0.05585	106.4795	GRAND ISLAND (GI KU1B) 345/230/13.8KV TRANSFORMER CKT 2
FDNS	00NR_G15_094	2	25SP	G15_094	TO->FROM	GR ISLD-LNX3345.00 - HOLT.CO3 345.00 345KV CKT 1	720	720	0.05585	106.4795	GRAND ISLAND (GI KU1B) 345/230/13.8KV TRANSFORMER CKT 2
FDNS	00NR_G15_094	2	25SP	G15_094	TO->FROM	GR ISLD-LNX3345.00 - HOLT.CO3 345.00 345KV CKT 1	720	720	0.05585	106.4781	GRAND ISLAND (GI KU1A) 345/230/13.8KV TRANSFORMER CKT 1
FDNS	00NR_G15_094	2	25SP	G15_094	TO->FROM	GR ISLD-LNX3345.00 - HOLT.CO3 345.00 345KV CKT 1	720	720	0.05585	106.4781	GRAND ISLAND (GI KU1A) 345/230/13.8KV TRANSFORMER CKT 1
FDNS	00NR_G15_094	2	25SP	G15_094	TO->FROM	GR ISLD-LNX3345.00 - HOLT.CO3 345.00 345KV CKT 1	720	720	0.05608	106.4659	GEN615015 1-GRE-SPRITWDG13.200
FDNS	00NR_G15_094	2	25SP	G15_094	TO->FROM	GR ISLD-LNX3345.00 - HOLT.CO3 345.00 345KV CKT 1	720	720	0.05608	106.4575	GEN615021 1-GRE-ER 14G 16.000
FDNS	00NR_G15_094	2	25SP	G15_094	TO->FROM	GR ISLD-LNX3345.00 - HOLT.CO3 345.00 345KV CKT 1	720	720	0.05608	106.4549	GEN660016 1-B_H WIND 0.7000
FDNS	00NR_G15_094	2	20SP	G15_094	TO->FROM	GR ISLD-LNX3345.00 - HOLT.CO3 345.00 345KV CKT 1	720	720	0.05596	106.447	GEN659403 1-NDSUNFLWR W0.6900
FDNS	00NR_G15_094	2	25SP	G15_094	TO->FROM	GR ISLD-LNX3345.00 - HOLT.CO3 345.00 345KV CKT 1	720	720	0.05608	106.4466	GEN657705 X-DRAYTON
FDNSLock	00NR_G15_094	2	25SP	G15_094	TO->FROM	GR ISLD-LNX3345.00 - HOLT.CO3 345.00 345KV CKT 1	720	720	0.05584	106.4303	MCCOOL (MCCOOL T2) 345/115/13.8KV TRANSFORMER CKT 1
FDNS	00NR_G15_094	2	20SP	G15_094	TO->FROM	GR ISLD-LNX3345.00 - HOLT.CO3 345.00 345KV CKT 1	720	720	0.05596	106.427	YNG2 4 230.00 230/20.0KV TRANSFORMER CKT 1
FDNS	00NR_G15_094	2	20SP	G15_094	TO->FROM	GR ISLD-LNX3345.00 - HOLT.CO3 345.00 345KV CKT 1	720	720	0.05596	106.4229	SQUARE BUTTE - YNG2 4 230.00 230KV CKT 1
FDNS	00NR_G15_094	2	25SP	G15_094	TO->FROM	GR ISLD-LNX3345.00 - HOLT.CO3 345.00 345KV CKT 1	720	720	0.05497	106.4151	G14-021T 345.00 - MULLNCR7 345.00 345KV CKT 1
FDNS	00NR_G15_094	2	20SP	G15_094	TO->FROM	GR ISLD-LNX3345.00 - HOLT.CO3 345.00 345KV CKT 1	720	720	0.04949	106.415	COLUMWEST - GRAND ISLAND 230KV CKT 1
FDNS	00NR_G15_094	2	20SP	G15_094	TO->FROM	GR ISLD-LNX3345.00 - HOLT.CO3 345.00 345KV CKT 1	720	720	0.05596	106.413	STANTON 230/18.0KV TRANSFORMER CKT 1
FDNS	00NR_G15_094	2	25SP	G15_094	TO->FROM	GR ISLD-LNX3345.00 - HOLT.CO3 345.00 345KV CKT 1	720	720	0.05497	106.4124	G15-005T 345.00 - MULLNCR7 345.00 345KV CKT 1
FDNS	00NR_G15_094	2	25SP	G15_094	TO->FROM	GR ISLD-LNX3345.00 - HOLT.CO3 345.00 345KV CKT 1	720	720	0.05608	106.38	GEN672304 4-BOUNDARY DAM GENERATOR 4
FDNS	00NR_G15_094	2	25SP	G15_094	TO->FROM	GR ISLD-LNX3345.00 - HOLT.CO3 345.00 345KV CKT 1	720	720	0.05608	106.38	GEN672305 5-BOUNDARY DAM GENERATOR 5
FDNS	00NR_G15_094	2	25SP	G15_094	TO->FROM	GR ISLD-LNX3345.00 - HOLT.CO3 345.00 345KV CKT 1	720	720	0.05608	106.3799	GEN672303 3-BOUNDARY DAM GENERATOR 3
FDNS	00NR_G15_094	2	25SP	G15_094	TO->FROM	GR ISLD-LNX3345.00 - HOLT.CO3 345.00 345KV CKT 1	720	720	0.05568	106.3741	HIGHLND 3 345.00 - OBRIEN 3 345.00 345KV CKT 1
FDNS	00NR_G15_094	2	25SP	G15_094	TO->FROM	GR ISLD-LNX3345.00 - HOLT.CO3 345.00 345KV CKT 1	720	720	0.05608	106.3635	GEN662101 1-WESSINGTON190.5750
FDNS	00NR_G15_094	2	25SP	G15_094	TO->FROM	GR ISLD-LNX3345.00 - HOLT.CO3 345.00 345KV CKT 1	720	720	0.05608	106.3593	GEN672356 1-FUT-WL1X 18.000
FDNS	00NR_G15_094	2	25SP	G15_094	TO->FROM	GR ISLD-LNX3345.00 - HOLT.CO3 345.00 345KV CKT 1	720	720	0.05533	106.358	FT THOMPSON - LOWERBRULE 4230.00 230KV CKT 1
FDNS	00NR_G15_094	2	25SP	G15_094	TO->FROM	GR ISLD-LNX3345.00 - HOLT.CO3 345.00 345KV CKT 1	720	720	0.05533	106.358	FT THOMPSON - LOWERBRULE 4230.00 230KV CKT 1
FDNS	00NR_G15_094	2	25SP	G15_094	TO->FROM	GR ISLD-LNX3345.00 - HOLT.CO3 345.00 345KV CKT 1	720	720	0.05608	106.3408	GEN600067 9-HIGH BRIDGE
FDNS	00NR_G15_094	2	25SP	G15_094	TO->FROM	GR ISLD-LNX3345.00 - HOLT.CO3 345.00 345KV CKT 1	720	720	0.05608	106.3395	CENTER 230/22.0KV TRANSFORMER CKT 1
FDNS	00NR_G15_094	2	25SP	G15_094	TO->FROM	GR ISLD-LNX3345.00 - HOLT.CO3 345.00 345KV CKT 1	720	720	0.05608	106.338	GEN672389 1-FUT-SW1X 18.000
FDNS	00NR_G15_094	2	25SP	G15_094	TO->FROM	GR ISLD-LNX3345.00 - HOLT.CO3 345.00 345KV CKT 1	720	720	0.05497	106.336	G15-005T 345.00 - SIBLEY 345KV CKT 1
FDNS	00NR_G15_094	2	25SP	G15_094	TO->FROM	GR ISLD-LNX3345.00 - HOLT.CO3 345.00 345KV CKT 1	720	720	0.05608	106.3318	GEN672392 1-NBECGT1G 18.000
FDNSLock	00NR_G15_094	2	25SP	G15_094	TO->FROM	GR ISLD-LNX3345.00 - HOLT.CO3 345.00 345KV CKT 1	720	720	0.05505	106.2826	CENTRAL CITY - GRAND ISLAND 115KV CKT 1
FDNS	00NR_G15_094	2	20SP	G15_094	TO->FROM	GR ISLD-LNX3345.00 - HOLT.CO3 345.00 345KV CKT 1	720	720	0.05596	106.2601	GEN652906 1-G09_006IS_3 0.6900
FDNS	00NR_G15_094	2	25SP	G15_094	TO->FROM	GR ISLD-LNX3345.00 - HOLT.CO3 345.00 345KV CKT 1	720	720	0.05608	106.2459	GEN659353 1-DEERCREK CTG18.000
FDNS	00NR_G15_094	2	25SP	G15_094	TO->FROM	GR ISLD-LNX3345.00 - HOLT.CO3 345.00 345KV CKT 1	720	720	0.05608	106.2459	GEN659354 1-DEERCREK STG18.000
FDNS	00NR_G15_094	2	20SP	G15_094	TO->FROM	GR ISLD-LNX3345.00 - HOLT.CO3 345.00 345KV CKT 1	720	720	0.05596	106.2297	GEN659411 1-CAMPBLCNTY W0.6900
FDNS	00NR_G15_094	2	25SP	G15_094	TO->FROM	GR ISLD-LNX3345.00 - HOLT.CO3 345.00 345KV CKT 1	720	720	0.05608	106.2261	GEN910006 1-G12_012IS_3 0.6900
FDNS	00NR_G15_094	2	20SP	G15_094	TO->FROM	GR ISLD-LNX3345.00 - HOLT.CO3 345.00 345KV CKT 1	720	720	0.04713	106.2207	AXTELL - POST ROCK 345KV CKT 1
FDNS	00NR_G15_094	2	25SP	G15_094	TO->FROM	GR ISLD-LNX3345.00 - HOLT.CO3 345.00 345KV CKT 1	720	720	0.05715	106.2148	GLENHAM - L3 HAWDON 230KV CKT 1
FDNS	00NR_G15_094	2	25SP	G15_094	TO->FROM	GR ISLD-LNX3345.00 - HOLT.CO3 345.00 345KV CKT 1	720	720	0.05608	106.2059	GEN681542 6-JP MADGETT
FDNS	00NR_G15_094	2	25SP	G15_094	TO->FROM	GR ISLD-LNX3345.00 - HOLT.CO3 345.00 345KV CKT 1	720	720	0.05608	106.1428	GEN659289 1-DAYCNTYWND W0.6900
FDNS	00NR_G15_094	2	25SP	G15_094	TO->FROM	GR ISLD-LNX3345.00 - HOLT.CO3 345.00 345KV CKT 1	720	720	0.05573	106.1269	GRAND ISLAND (GI KU3A) 345/230/13.8KV TRANSFORMER CKT 3
FDNS	00NR_G15_094	2	25SP	G15_094	TO->FROM	GR ISLD-LNX3345.00 - HOLT.CO3 345.00 345KV CKT 1	720	720	0.05573	106.1269	GRAND ISLAND (GI KU3A) 345/230/13.8KV TRANSFORMER CKT 3
FDNS	00NR_G15_094	2	20SP	G15_094	TO->FROM	GR ISLD-LNX3345.00 - HOLT.CO3 345.00 345KV CKT 1	720	720	0.05596	106.0993	GEN659296 2-SDPRAIRWND1W0.6900
FDNS	00NR_G15_094	2	20SP	G15_094	TO->FROM	GR ISLD-LNX3345.00 - HOLT.CO3 345.00 345KV CKT 1	720	720	0.05596	106.0929	GEN652907 1-G09_007IS_3 0.6900
FDNS	00NR_G15_094	2	25SP	G15_094	TO->FROM	GR ISLD-LNX3345.00 - HOLT.CO3 345.00 345KV CKT 1	720	720	0.04968	106.0819	COLUMWEST - GRAND ISLAND 230KV CKT 1

SOLUTION	GROUP	SCENARIO	SEASON	SOURCE	DIRECTION	MONITORED ELEMENT	RATEA (MVA)	RATEB(MVA)	TDF	TC%LOADING (% MVA)	CONTINGENCY
FDNS	00NR_G15_094	2	25SP	G15_094	TO->FROM	GR ISLD-LNX3345.00 - HOLT.CO3 345.00 345KV CKT 1	720	720	0.05608	106.0458	GEN659018 1-G14_003IS_3 0.6900
FDNS	00NR_G15_094	2	20SP	G15_094	TO->FROM	GR ISLD-LNX3345.00 - HOLT.CO3 345.00 345KV CKT 1	720	720	0.05596	106.0296	GEN672321 1-SHAND GENERATOR 1
FDNS	00NR_G15_094	2	25SP	G15_094	TO->FROM	GR ISLD-LNX3345.00 - HOLT.CO3 345.00 345KV CKT 1	720	720	0.05608	106.007	GEN659010 4-G07_027IS_2 0.6900
FDNS	00NR_G15_094	2	25SP	G15_094	TO->FROM	GR ISLD-LNX3345.00 - HOLT.CO3 345.00 345KV CKT 1	720	720	0.05608	105.9998	COYOTE 345/24.0KV TRANSFORMER CKT 1
FDNS	00NR_G15_094	2	20SP	G15_094	TO->FROM	GR ISLD-LNX3345.00 - HOLT.CO3 345.00 345KV CKT 1	720	720	0.05596	105.9968	GEN652559 1-OAHE
FDNS	00NR_G15_094	2	25SP	G15_094	TO->FROM	GR ISLD-LNX3345.00 - HOLT.CO3 345.00 345KV CKT 1	720	720	0.05608	105.9967	GEN652460 4-GARRISON
FDNS	00NR_G15_094	2	25SP	G15_094	TO->FROM	GR ISLD-LNX3345.00 - HOLT.CO3 345.00 345KV CKT 1	720	720	0.05608	105.9967	GEN652461 5-GARRISON
FDNS	00NR_G15_094	2	25SP	G15_094	TO->FROM	GR ISLD-LNX3345.00 - HOLT.CO3 345.00 345KV CKT 1	720	720	0.05608	105.9949	GEN659194 1-NDPRAIRWND1W0.6900
FDNS	00NR_G15_094	2	20SP	G15_094	TO->FROM	GR ISLD-LNX3345.00 - HOLT.CO3 345.00 345KV CKT 1	720	720	0.05596	105.988	GEN672310 1-POPLAR RIVER GENERATOR 1
FDNS	00NR_G15_094	2	20SP	G15_094	TO->FROM	GR ISLD-LNX3345.00 - HOLT.CO3 345.00 345KV CKT 1	720	720	0.05596	105.988	GEN672311 2-POPLAR RIVER GENERATOR 2
FDNS	00NR_G15_094	2	25SP	G15_094	TO->FROM	GR ISLD-LNX3345.00 - HOLT.CO3 345.00 345KV CKT 1	720	720	0.05608	105.9773	GEN652545 7-BIG BEND
FDNS	00NR_G15_094	2	20SP	G15_094	TO->FROM	GR ISLD-LNX3345.00 - HOLT.CO3 345.00 345KV CKT 1	720	720	0.05596	105.9756	GEN672306 6-BOUNDARY DAM GENERATOR 6
FDNS	00NR_G15_094	2	20SP	G15_094	TO->FROM	GR ISLD-LNX3345.00 - HOLT.CO3 345.00 345KV CKT 1	720	720	0.05596	105.963	GEN600004 2-PRAIRIE ISLAND G2
FDNS	00NR_G15_094	2	25SP	G15_094	TO->FROM	GR ISLD-LNX3345.00 - HOLT.CO3 345.00 345KV CKT 1	720	720	0.05608	105.9618	GEN652544 5-BIG BEND
FDNS	00NR_G15_094	2	20SP	G15_094	TO->FROM	GR ISLD-LNX3345.00 - HOLT.CO3 345.00 345KV CKT 1	720	720	0.05596	105.9602	GEN600003 1-PRAIRIE ISLAND G1
FDNS	00NR_G15_094	2	25SP	G15_094	TO->FROM	GR ISLD-LNX3345.00 - HOLT.CO3 345.00 345KV CKT 1	720	720	0.05608	105.9583	GEN652457 1-GARRISON
FDNS	00NR_G15_094	2	25SP	G15_094	TO->FROM	GR ISLD-LNX3345.00 - HOLT.CO3 345.00 345KV CKT 1	720	720	0.05608	105.9583	GEN652458 2-GARRISON
FDNS	00NR_G15_094	2	25SP	G15_094	TO->FROM	GR ISLD-LNX3345.00 - HOLT.CO3 345.00 345KV CKT 1	720	720	0.05608	105.9583	GEN652459 3-GARRISON
FDNS	00NR_G15_094	2	25SP	G15_094	TO->FROM	GR ISLD-LNX3345.00 - HOLT.CO3 345.00 345KV CKT 1	720	720	0.05608	105.9507	GEN652543 3-BIG BEND
FDNS	00NR_G15_094	2	25SP	G15_094	TO->FROM	GR ISLD-LNX3345.00 - HOLT.CO3 345.00 345KV CKT 1	720	720	0.05608	105.9506	GEN652542 1-BIG BEND
FDNS	00NR_G15_094	2	20SP	G15_094	TO->FROM	GR ISLD-LNX3345.00 - HOLT.CO3 345.00 345KV CKT 1	720	720	0.05596	105.9123	GEN615010 1-STANTON4
FDNS	00NR_G15_094	2	25SP	G15_094	TO->FROM	GR ISLD-LNX3345.00 - HOLT.CO3 345.00 345KV CKT 1	720	720	0.05608	105.8881	GEN563282 1-G15094_3 0.6900
FDNS	00NR_G15_094	2	25SP	G15_094	TO->FROM	GR ISLD-LNX3345.00 - HOLT.CO3 345.00 345KV CKT 1	720	720	0.05608	105.8865	GEN659403 1-NDSUNFLWR W0.6900
FDNS	00NR_G15_094	2	20SP	G15_094	TO->FROM	GR ISLD-LNX3345.00 - HOLT.CO3 345.00 345KV CKT 1	720	720	0.05596	105.8745	GEN652556 2-OAHE
FDNS	00NR_G15_094	2	20SP	G15_094	TO->FROM	GR ISLD-LNX3345.00 - HOLT.CO3 345.00 345KV CKT 1	720	720	0.05596	105.8745	GEN652557 4-OAHE
FDNS	00NR_G15_094	2	20SP	G15_094	TO->FROM	GR ISLD-LNX3345.00 - HOLT.CO3 345.00 345KV CKT 1	720	720	0.05596	105.8745	GEN652558 6-OAHE
FDNS	00NR_G15_094	2	25SP	G15_094	TO->FROM	GR ISLD-LNX3345.00 - HOLT.CO3 345.00 345KV CKT 1	720	720	0.05608	105.8717	STANTON 230/18.0KV TRANSFORMER CKT 1
FDNS	00NR_G15_094	2	20SP	G15_094	TO->FROM	GR ISLD-LNX3345.00 - HOLT.CO3 345.00 345KV CKT 1	720	720	0.05596	105.8393	GEN659453 1-GI1414GEN W0.6900
FDNS	00NR_G15_094	2	25SP	G15_094	TO->FROM	GR ISLD-LNX3345.00 - HOLT.CO3 345.00 345KV CKT 1	720	720	0.05608	105.8086	ALMA 161 161/24.0KV TRANSFORMER CKT 1
FDNS	00NR_G15_094	2	20SP	G15_094	TO->FROM	GR ISLD-LNX3345.00 - HOLT.CO3 345.00 345KV CKT 1	720	720	0.05596	105.7957	GEN659141 1-K10215A
FDNS	00NR_G15_094	2	20SP	G15_094	TO->FROM	GR ISLD-LNX3345.00 - HOLT.CO3 345.00 345KV CKT 1	720	720	0.05596	105.7418	GEN652173 1-G09_001IS_2 0.6900
FDNS	00NR_G15_094	2	20SP	G15_094	TO->FROM	GR ISLD-LNX3345.00 - HOLT.CO3 345.00 345KV CKT 1	720	720	0.05596	105.7192	GEN600006 1-AS KING
FDNS	00NR_G15_094	2	25SP	G15_094	TO->FROM	GR ISLD-LNX3345.00 - HOLT.CO3 345.00 345KV CKT 1	720	720	0.05608	105.6987	GEN652906 1-G09_006IS_3 0.6900
FDNS	00NR_G15_094	2	25SP	G15_094	TO->FROM	GR ISLD-LNX3345.00 - HOLT.CO3 345.00 345KV CKT 1	720	720	0.05608	105.6718	GEN659411 1-CAMPBLCNTY W0.6900
FDNS	00NR_G15_094	2	25SP	G15_094	TO->FROM	GR ISLD-LNX3345.00 - HOLT.CO3 345.00 345KV CKT 1	720	720	0.05608	105.6621	SQUARE BUTTE - YNG2 4 230.00 230KV CKT 1
FDNS	00NR_G15_094	2	25SP	G15_094	TO->FROM	GR ISLD-LNX3345.00 - HOLT.CO3 345.00 345KV CKT 1	720	720	0.05608	105.6618	YNG2 4 230.00 230/20.0KV TRANSFORMER CKT 1
FDNS	00NR_G15_094	2	20SP	G15_094	TO->FROM	GR ISLD-LNX3345.00 - HOLT.CO3 345.00 345KV CKT 1	720	720	0.05596	105.6083	P12:230:UMZB:# 112 #: NU IN SD. NU-RCDC & DRY CREEK XFMR
FDNS	00NR_G15_094	2	20SP	G15_094	TO->FROM	GR ISLD-LNX3345.00 - HOLT.CO3 345.00 345KV CKT 1	720	720	0.05596	105.6077	RCDC EAST 4230.00 - RED CEDAR DC 230KV CKT 1
FDNS	00NR_G15_094	2	25SP	G15_094	TO->FROM	GR ISLD-LNX3345.00 - HOLT.CO3 345.00 345KV CKT 1	720	720	0.05608	105.5447	GEN659296 2-SDPRAIRWND1W0.6900
FDNS	00NR_G15_094	2	20SP	G15_094	TO->FROM	GR ISLD-LNX3345.00 - HOLT.CO3 345.00 345KV CKT 1	720	720	0.05596	105.5326	GEN659407 1-ANTELPHILLSW0.6900
FDNS	00NR_G15_094	2	25SP	G15_094	TO->FROM	GR ISLD-LNX3345.00 - HOLT.CO3 345.00 345KV CKT 1	720	720	0.05608	105.5288	GEN652907 1-G09_007IS_3 0.6900
FDNS	00NR_G15_094	2	20SP	G15_094	TO->FROM	GR ISLD-LNX3345.00 - HOLT.CO3 345.00 345KV CKT 1	720	720	0.05596	105.4946	GEN657749 1-YOUNG 1 GENERATOR
FDNS	00NR_G15_094	2	20SP	G15_094	TO->FROM	GR ISLD-LNX3345.00 - HOLT.CO3 345.00 345KV CKT 1	720	720	0.05596	105.4828	GEN659110 1-LELAND OLDS UNIT1
FDNS	00NR_G15_094	2	25SP	G15_094	TO->FROM	GR ISLD-LNX3345.00 - HOLT.CO3 345.00 345KV CKT 1	720	720	0.05608	105.4258	GEN672310 1-POPLAR RIVER GENERATOR 1
FDNS	00NR_G15_094	2	25SP	G15_094	TO->FROM	GR ISLD-LNX3345.00 - HOLT.CO3 345.00 345KV CKT 1	720	720	0.05608	105.4258	GEN672311 2-POPLAR RIVER GENERATOR 2
FDNS	00NR_G15_094	2	25SP	G15_094	TO->FROM	GR ISLD-LNX3345.00 - HOLT.CO3 345.00 345KV CKT 1	720	720	0.05608	105.415	GEN672321 1-SHAND GENERATOR 1
FDNS	00NR_G15_094	2	25SP	G15_094	TO->FROM	GR ISLD-LNX3345.00 - HOLT.CO3 345.00 345KV CKT 1	720	720	0.05608	105.3734	GEN652559 1-OAHE
FDNS	00NR_G15_094	2	25SP	G15_094	TO->FROM	GR ISLD-LNX3345.00 - HOLT.CO3 345.00 345KV CKT 1	720	720	0.05608	105.3589	GEN672306 6-BOUNDARY DAM GENERATOR 6
FDNS	00NR_G15_094	2	25SP	G15_094	TO->FROM	GR ISLD-LNX3345.00 - HOLT.CO3 345.00 345KV CKT 1	720	720	0.05608	105.3394	GEN615010 1-STANTON4
FDNS	00NR_G15_094	2	25SP	G15_094	TO->FROM	GR ISLD-LNX3345.00 - HOLT.CO3 345.00 345KV CKT 1	720	720	0.05608	105.3276	GEN600004 2-PRAIRIE ISLAND G2
FDNS	00NR_G15_094	2	25SP	G15_094	TO->FROM	GR ISLD-LNX3345.00 - HOLT.CO3 345.00 345KV CKT 1	720	720	0.05608	105.3245	GEN600003 1-PRAIRIE ISLAND G1
FDNS	00NR_G15_094	2	25SP	G15_094	TO->FROM	GR ISLD-LNX3345.00 - HOLT.CO3 345.00 345KV CKT 1	720	720	0.05608	105.3136	GEN652556 2-OAHE
FDNS	00NR_G15_094	2	25SP	G15_094	TO->FROM	GR ISLD-LNX3345.00 - HOLT.CO3 345.00 345KV CKT 1	720	720	0.05608	105.3136	GEN652557 4-OAHE
FDNS	00NR_G15_094	2	25SP	G15_094	TO->FROM	GR ISLD-LNX3345.00 - HOLT.CO3 345.00 345KV CKT 1	720	720	0.05608	105.3136	GEN652558 6-OAHE
FDNS	00NR_G15_094	2	25SP	G15_094	TO->FROM	GR ISLD-LNX3345.00 - HOLT.CO3 345.00 345KV CKT 1	720	720	0.05608	105.2609	GEN659453 1-GI1414GEN W0.6900
FDNS	00NR_G15_094	2	25SP	G15_094	TO->FROM	GR ISLD-LNX3345.00 - HOLT.CO3 345.00 345KV CKT 1	720	720	0.04715	105.2578	AXTELL - POST ROCK 345KV CKT 1
FDNS	00NR_G15_094	2	25SP	G15_094	TO->FROM	GR ISLD-LNX3345.00 - HOLT.CO3 345.00 345KV CKT 1	720	720	0.05608	105.2106	GEN659141 1-K10215A
FDNS	00NR_G15_094	2	25SP	G15_094	TO->FROM	GR ISLD-LNX3345.00 - HOLT.CO3 345.00 345KV CKT 1	720	720	0.05608	105.1729	GEN652173 1-G09_001IS_2 0.6900
FDNS	00NR_G15_094	2	20SP	G15_094	TO->FROM	GR ISLD-LNX3345.00 - HOLT.CO3 345.00 345KV CKT 1	720	720	0.05596	105.0899	GEN600005 1-MONTICELLO
FDNS	00NR_G15_094	2	25SP	G15_094	TO->FROM	GR ISLD-LNX3345.00 - HOLT.CO3 345.00 345KV CKT 1	720	720	0.05608	105.0639	GEN600006 1-AS KING
FDNS	00NR_G15_094	2	25SP	G15_094	TO->FROM	GR ISLD-LNX3345.00 - HOLT.CO3 345.00 345KV CKT 1	720	720	0.05608	105.0371	P12:230:UMZB:# 112 #: NU IN SD. NU-RCDC & DRY CREEK XFMR
FDNS	00NR_G15_094	2	25SP	G15_094	TO->FROM	GR ISLD-LNX3345.00 - HOLT.CO3 345.00 345KV CKT 1	720	720	0.05608	105.0346	RCDC EAST 4230.00 - RED CEDAR DC 230KV CKT 1
FDNS	00NR_G15_094	2	25SP	G15_094	TO->FROM	GR ISLD-LNX3345.00 - HOLT.CO3 345.00 345KV CKT 1	720	720	0.05608	104.9787	GEN659407 1-ANTELPHILLSW0.6900
FDNS	00NR_G15_094	2	20SP	G15_094	TO->FROM	GR ISLD-LNX3345.00 - HOLT.CO3 345.00 345KV CKT 1	720	720	0.05596	104.9746	GEN600001 2-SHERBURNE CNTY G2
FDNS	00NR_G15_094	2	20SP	G15_094	TO->FROM	GR ISLD-LNX3345.00 - HOLT.CO3 345.00 345KV CKT 1	720	720	0.05596	104.9275	GEN600000 1-SHERBURNECNTY G1
FDNS	00NR_G15_094	2	25SP	G15_094	TO->FROM	GR ISLD-LNX3345.00 - HOLT.CO3 345.00 345KV CKT 1	720	720	0.05608	104.9144	GEN659110 1-LELAND OLDS UNIT1
FDNS	00NR_G15_094	2	25SP	G15_094	TO->FROM	GR ISLD-LNX3345.00 - HOLT.CO3 345.00 345KV CKT 1	720	720	0.05608	104.8822	GEN657749 1-YOUNG 1 GENERATOR
FDNS	00NR_G15_094	2	20SP	G15_094	TO->FROM	GR ISLD-LNX3345.00 - HOLT.CO3 345.00 345KV CKT 1	720	720	0.05596	104.7622	GEN661015 1-COYOTE
FDNS	00NR_G15_094	2	25SP	G15_094	TO->FROM	GR ISLD-LNX3345.00 - HOLT.CO3 345.00 345KV CKT 1	720	720	0.05608	104.7229	CLAY BOSWELL 230/20.9KV TRANSFORMER CKT 1
FDNS	00NR_G15_094	2	20SP	G15_094	TO->FROM	GR ISLD-LNX3345.00 - HOLT.CO3 345.00 345KV CKT 1	720	720	0.05596	104.6549	GEN620315 1-BIG STONE GEN
FDNS	00NR_G15_094	2	25SP	G15_094	TO->FROM	GR ISLD-LNX3345.00 - HOLT.CO3 345.00 345KV CKT 1	720	720	0.05608	104.3839	GEN600005 1-MONTICELLO
FDNS	00NR_G15_094	2	20SP	G15_094	TO->FROM	GR ISLD-LNX3345.00 - HOLT.CO3 345.00 345KV CKT 1	720	720	0.05596	104.2814	GEN640010 1-GERALD GENTLEMAN STATION UNIT 1
FDNS	00NR_G15_094	2	25SP	G15_094	TO->FROM	GR ISLD-LNX3345.00 - HOLT.CO3 345.00 345KV CKT 1	720	720	0.05608	104.2762	GEN600001 2-SHERBURNE CNTY G2

SOLUTION	GROUP	SCENARIO	SEASON	SOURCE	DIRECTION	MONITORED ELEMENT	RATEA (MVA)	RATEB(MVA)	TDF	TC%LOADING (% MVA)	CONTINGENCY
FDNS	00NR_G15_094	2	20SP	G15_094	TO->FROM	GR ISLD-LNX3345.00 - HOLT.CO3 345.00 345KV CKT 1	720	720	0.05596	104.2401	GEN640011 2-GERALD GENTLEMAN STATION UNIT 2
FDNS	00NR_G15_094	2	25SP	G15_094	TO->FROM	GR ISLD-LNX3345.00 - HOLT.CO3 345.00 345KV CKT 1	720	720	0.05608	104.2138	GEN600000 1-SHERBURNECNTY G1
FDNS	00NR_G15_094	2	20SP	G15_094	TO->FROM	GR ISLD-LNX3345.00 - HOLT.CO3 345.00 345KV CKT 1	720	720	0.05596	104.177	GEN600002 3-SHERBURNE CNTY G3
FDNS	00NR_G15_094	2	20SP	G15_094	TO->FROM	GR ISLD-LNX3345.00 - HOLT.CO3 345.00 345KV CKT 1	720	720	0.05596	104.1427	GEN657748 1-YOUNG 2 GENERATOR
FDNS	00NR_G15_094	2	20SP	G15_094	TO->FROM	GR ISLD-LNX3345.00 - HOLT.CO3 345.00 345KV CKT 1	720	720	0.05596	104.0531	SHERBURNE CO 345/24.0KV TRANSFORMER CKT 1
FDNS	00NR_G15_094	2	25SP	G15_094	TO->FROM	GR ISLD-LNX3345.00 - HOLT.CO3 345.00 345KV CKT 1	720	720	0.05608	104.02	GEN620315 1-BIG STONE GEN
FDNS	00NR_G15_094	2	25SP	G15_094	TO->FROM	GR ISLD-LNX3345.00 - HOLT.CO3 345.00 345KV CKT 1	720	720	0.05608	103.9723	GEN661015 1-COYOTE
FDNS	00NR_G15_094	2	20SP	G15_094	TO->FROM	GR ISLD-LNX3345.00 - HOLT.CO3 345.00 345KV CKT 1	720	720	0.0583	103.8672	FTTHOM1-LNX3345.00 - LELAND2-LNX3345.00 345KV CKT 1
FDNS	00NR_G15_094	2	20SP	G15_094	TO->FROM	GR ISLD-LNX3345.00 - HOLT.CO3 345.00 345KV CKT 1	720	720	0.0583	103.7846	P12:345:UMZB:# 108 #: LOS FT IN ND. LOS FT
FDNS	00NR_G15_094	2	20SP	G15_094	TO->FROM	GR ISLD-LNX3345.00 - HOLT.CO3 345.00 345KV CKT 1	720	720	0.0583	103.7809	FT THOMPSON - FTTHOM1-LNX3345.00 345KV CKT Z
FDNS	00NR_G15_094	2	20SP	G15_094	TO->FROM	GR ISLD-LNX3345.00 - HOLT.CO3 345.00 345KV CKT 1	720	720	0.05596	103.7697	BIG STONE 230/24.0KV TRANSFORMER CKT 1
FDNS	00NR_G15_094	2	20SP	G15_094	TO->FROM	GR ISLD-LNX3345.00 - HOLT.CO3 345.00 345KV CKT 1	720	720	0.0583	103.7554	LELAND OLDS - LELAND2-LNX3345.00 345KV CKT Z
FDNS	00NR_G15_094	2	20SP	G15_094	TO->FROM	GR ISLD-LNX3345.00 - HOLT.CO3 345.00 345KV CKT 1	720	720	0.05596	103.5395	GEN659118 1-LARAMIE RIVER UNIT1
FDNS	00NR_G15_094	2	25SP	G15_094	TO->FROM	GR ISLD-LNX3345.00 - HOLT.CO3 345.00 345KV CKT 1	720	720	0.05608	103.4762	SHERBURNE CO 345/24.0KV TRANSFORMER CKT 1
FDNS	00NR_G15_094	2	25SP	G15_094	TO->FROM	GR ISLD-LNX3345.00 - HOLT.CO3 345.00 345KV CKT 1	720	720	0.05608	103.4722	GEN600002 3-SHERBURNE CNTY G3
FDNS	00NR_G15_094	2	25SP	G15_094	TO->FROM	GR ISLD-LNX3345.00 - HOLT.CO3 345.00 345KV CKT 1	720	720	0.05841	103.4048	FTTHOM1-LNX3345.00 - LELAND2-LNX3345.00 345KV CKT 1
FDNS	00NR_G15_094	2	25SP	G15_094	TO->FROM	GR ISLD-LNX3345.00 - HOLT.CO3 345.00 345KV CKT 1	720	720	0.05608	103.3991	GEN640010 1-GERALD GENTLEMAN STATION UNIT 1
FDNS	00NR_G15_094	2	25SP	G15_094	TO->FROM	GR ISLD-LNX3345.00 - HOLT.CO3 345.00 345KV CKT 1	720	720	0.05841	103.3269	P12:345:UMZB:# 108 #: LOS FT IN ND. LOS FT
FDNS	00NR_G15_094	2	25SP	G15_094	TO->FROM	GR ISLD-LNX3345.00 - HOLT.CO3 345.00 345KV CKT 1	720	720	0.05841	103.3226	FT THOMPSON - FTTHOM1-LNX3345.00 345KV CKT Z
FDNS	00NR_G15_094	2	25SP	G15_094	TO->FROM	GR ISLD-LNX3345.00 - HOLT.CO3 345.00 345KV CKT 1	720	720	0.05841	103.2958	LELAND OLDS - LELAND2-LNX3345.00 345KV CKT Z
FDNS	00NR_G15_094	2	20SP	G15_094	TO->FROM	GR ISLD-LNX3345.00 - HOLT.CO3 345.00 345KV CKT 1	720	720	0.05596	103.058	GEN659111 2-LELAND OLDS UNIT2
FDNS	00NR_G15_094	2	25SP	G15_094	TO->FROM	GR ISLD-LNX3345.00 - HOLT.CO3 345.00 345KV CKT 1	720	720	0.05608	102.9758	GEN657748 1-YOUNG 2 GENERATOR
FDNS	00NR_G15_094	2	25SP	G15_094	TO->FROM	GR ISLD-LNX3345.00 - HOLT.CO3 345.00 345KV CKT 1	720	720	0.05608	102.8762	GEN640011 2-GERALD GENTLEMAN STATION UNIT 2
FDNS	00NR_G15_094	2	20SP	G15_094	TO->FROM	GR ISLD-LNX3345.00 - HOLT.CO3 345.00 345KV CKT 1	720	720	0.05596	102.8214	GEN659125 1-COVEY
FDNS	00NR_G15_094	2	25SP	G15_094	TO->FROM	GR ISLD-LNX3345.00 - HOLT.CO3 345.00 345KV CKT 1	720	720	0.05608	102.7973	GEN659118 1-LARAMIE RIVER UNIT1
FDNS	00NR_G15_094	2	20SP	G15_094	TO->FROM	GR ISLD-LNX3345.00 - HOLT.CO3 345.00 345KV CKT 1	720	720	0.05596	102.6837	GEN659103 1-ANTELOPE VALLEY UNIT1
FDNS	00NR_G15_094	2	20SP	G15_094	TO->FROM	GR ISLD-LNX3345.00 - HOLT.CO3 345.00 345KV CKT 1	720	720	0.05596	102.6837	GEN659107 2-ANTELOPE VALLEY UNIT2
FDNS	00NR_G15_094	2	25SP	G15_094	TO->FROM	GR ISLD-LNX3345.00 - HOLT.CO3 345.00 345KV CKT 1	720	720	0.05608	102.4244	GEN659111 2-LELAND OLDS UNIT2
FDNS	00NR_G15_094	2	25SP	G15_094	TO->FROM	GR ISLD-LNX3345.00 - HOLT.CO3 345.00 345KV CKT 1	720	720	0.0325	102.2328	MCCOOL - MOORE 345KV CKT 1
FDNS	00NR_G15_094	2	25SP	G15_094	TO->FROM	GR ISLD-LNX3345.00 - HOLT.CO3 345.00 345KV CKT 1	720	720	0.05608	102.2093	GEN659125 1-COVEY
FDNS	00NR_G15_094	2	20SP	G15_094	TO->FROM	GR ISLD-LNX3345.00 - HOLT.CO3 345.00 345KV CKT 1	720	720	0.05596	102.1993	GEN615001 1-COAL CREEK
FDNS	00NR_G15_094	2	20SP	G15_094	TO->FROM	GR ISLD-LNX3345.00 - HOLT.CO3 345.00 345KV CKT 1	720	720	0.05596	102.1173	GEN615002 2-COAL CREEK
FDNS	00NR_G15_094	2	25SP	G15_094	TO->FROM	GR ISLD-LNX3345.00 - HOLT.CO3 345.00 345KV CKT 1	720	720	0.05608	102.0392	GEN659103 1-ANTELOPE VALLEY UNIT1
FDNS	00NR_G15_094	2	25SP	G15_094	TO->FROM	GR ISLD-LNX3345.00 - HOLT.CO3 345.00 345KV CKT 1	720	720	0.05608	102.0392	GEN659107 2-ANTELOPE VALLEY UNIT2
FDNS	00NR_G15_094	2	20SP	G15_094	TO->FROM	GR ISLD-LNX3345.00 - HOLT.CO3 345.00 345KV CKT 1	720	720	0.0322	101.6886	MCCOOL - MOORE 345KV CKT 1
FDNS	00NR_G15_094	2	25SP	G15_094	TO->FROM	GR ISLD-LNX3345.00 - HOLT.CO3 345.00 345KV CKT 1	720	720	0.05608	101.5342	GEN615001 1-COAL CREEK
FDNS	00NR_G15_094	2	25SP	G15_094	TO->FROM	GR ISLD-LNX3345.00 - HOLT.CO3 345.00 345KV CKT 1	720	720	0.05608	101.4507	GEN615002 2-COAL CREEK
FDNS	00NR_G15_094	2	17SP	G15_094	TO->FROM	OGALLALA - SIDNEY 230KV CKT 1	320	320	0.54254	136.6224	SIDNEY - SIDNEY1-LNX3345.00 345KV CKT Z
FDNS	00NR_G15_094	2	17SP	G15_094	TO->FROM	OGALLALA - SIDNEY 230KV CKT 1	320	320	0.54254	136.541	KEYSTONE - SIDNEY1-LNX3345.00 345KV CKT 1
FDNS	00NR_G15_094	2	20SP	G15_094	TO->FROM	OGALLALA - SIDNEY 230KV CKT 1	320	320	0.54483	125.2951	SIDNEY - SIDNEY1-LNX3345.00 345KV CKT Z
FDNS	00NR_G15_094	2	20SP	G15_094	TO->FROM	OGALLALA - SIDNEY 230KV CKT 1	320	320	0.54483	125.2899	KEYSTONE - SIDNEY1-LNX3345.00 345KV CKT 1
FDNS	00NR_G15_094	2	25SP	G15_094	TO->FROM	OGALLALA - SIDNEY 230KV CKT 1	320	320	0.54465	124.2797	SIDNEY - SIDNEY1-LNX3345.00 345KV CKT Z
FDNS	00NR_G15_094	2	25SP	G15_094	TO->FROM	OGALLALA - SIDNEY 230KV CKT 1	320	320	0.54465	124.2134	KEYSTONE - SIDNEY1-LNX3345.00 345KV CKT 1
FDNS	00NR_G15_094	2	16WP	G15_094	TO->FROM	OGALLALA - SIDNEY 230KV CKT 1	320	320	0.55042	121.7171	SIDNEY - SIDNEY1-LNX3345.00 345KV CKT Z
FDNS	00NR_G15_094	2	16WP	G15_094	TO->FROM	OGALLALA - SIDNEY 230KV CKT 1	320	320	0.55042	121.6616	KEYSTONE - SIDNEY1-LNX3345.00 345KV CKT 1
FDNSLock	09ALL_G15_094	2	17G	G15_094	TO->FROM	OGALLALA - SIDNEY 230KV CKT 1	320	320	0.53805	117.1414	KEYSTONE - SIDNEY1-LNX3345.00 345KV CKT 1
FDNSLock	00NR_G15_094	2	20WP	G15_094	TO->FROM	OGALLALA - SIDNEY 230KV CKT 1	320	320	0.54469	113.5838	SIDNEY - SIDNEY1-LNX3345.00 345KV CKT Z
FDNSLock	00NR_G15_094	2	20WP	G15_094	TO->FROM	OGALLALA - SIDNEY 230KV CKT 1	320	320	0.54469	113.573	KEYSTONE - SIDNEY1-LNX3345.00 345KV CKT 1
FDNS	09ALL_G15_094	2	17SP	G15_094	TO->FROM	OGALLALA - SIDNEY 230KV CKT 1	320	320	0.53334	112.034	KEYSTONE - SIDNEY1-LNX3345.00 345KV CKT 1
FDNS	09ALL_G15_094	2	17SP	G15_094	TO->FROM	OGALLALA - SIDNEY 230KV CKT 1	320	320	0.53334	112.0162	SIDNEY - SIDNEY1-LNX3345.00 345KV CKT Z
FDNSLock	09ALL_G15_094	2	16WP	G15_094	TO->FROM	OGALLALA - SIDNEY 230KV CKT 1	320	320	0.53821	109.3027	KEYSTONE - SIDNEY1-LNX3345.00 345KV CKT 1
FDNSLock	09ALL_G15_094	2	16WP	G15_094	TO->FROM	OGALLALA - SIDNEY 230KV CKT 1	320	320	0.53821	109.2923	SIDNEY - SIDNEY1-LNX3345.00 345KV CKT Z
FDNS	09ALL_G15_094	2	25SP	G15_094	TO->FROM	OGALLALA - SIDNEY 230KV CKT 1	320	320	0.53626	106.5256	KEYSTONE - SIDNEY1-LNX3345.00 345KV CKT 1
FDNS	09ALL_G15_094	2	25SP	G15_094	TO->FROM	OGALLALA - SIDNEY 230KV CKT 1	320	320	0.53626	106.5221	SIDNEY - SIDNEY1-LNX3345.00 345KV CKT Z
FDNS	09ALL_G15_094	2	20SP	G15_094	TO->FROM	OGALLALA - SIDNEY 230KV CKT 1	320	320	0.53609	105.3298	KEYSTONE - SIDNEY1-LNX3345.00 345KV CKT 1
FDNS	09ALL_G15_094	2	20SP	G15_094	TO->FROM	OGALLALA - SIDNEY 230KV CKT 1	320	320	0.53609	105.2995	SIDNEY - SIDNEY1-LNX3345.00 345KV CKT Z
FDNS	00NR_G15_094	2	17SP	G15_094	TO->FROM	SIDNEY - SIDNEY TRANSFORMER 230KV CKT 1	400	400	0.64623	134.6278	KEYSTONE - SIDNEY1-LNX3345.00 345KV CKT 1
FDNS	00NR_G15_094	2	17SP	G15_094	TO->FROM	SIDNEY - SIDNEY TRANSFORMER 230KV CKT 1	400	400	0.64623	133.7746	SIDNEY - SIDNEY1-LNX3345.00 345KV CKT Z
FDNS	00NR_G15_094	2	20SP	G15_094	TO->FROM	SIDNEY - SIDNEY TRANSFORMER 230KV CKT 1	400	400	0.64889	124.2415	KEYSTONE - SIDNEY1-LNX3345.00 345KV CKT 1
FDNS	00NR_G15_094	2	20SP	G15_094	TO->FROM	SIDNEY - SIDNEY TRANSFORMER 230KV CKT 1	400	400	0.64889	123.4756	SIDNEY - SIDNEY1-LNX3345.00 345KV CKT Z
FDNS	00NR_G15_094	2	25SP	G15_094	TO->FROM	SIDNEY - SIDNEY TRANSFORMER 230KV CKT 1	400	400	0.64869	123.0043	KEYSTONE - SIDNEY1-LNX3345.00 345KV CKT 1
FDNS	00NR_G15_094	2	25SP	G15_094	TO->FROM	SIDNEY - SIDNEY TRANSFORMER 230KV CKT 1	400	400	0.64869	122.4751	SIDNEY - SIDNEY1-LNX3345.00 345KV CKT Z
FDNS	00NR_G15_094	2	16WP	G15_094	TO->FROM	SIDNEY - SIDNEY TRANSFORMER 230KV CKT 1	400	400	0.6578	117.8776	KEYSTONE - SIDNEY1-LNX3345.00 345KV CKT 1
FDNS	00NR_G15_094	2	16WP	G15_094	TO->FROM	SIDNEY - SIDNEY TRANSFORMER 230KV CKT 1	400	400	0.6578	116.9662	SIDNEY - SIDNEY1-LNX3345.00 345KV CKT Z
FDNSLock	09ALL_G15_094	2	17G	G15_094	TO->FROM	SIDNEY - SIDNEY TRANSFORMER 230KV CKT 1	400	400	0.64324	112.9181	KEYSTONE - SIDNEY1-LNX3345.00 345KV CKT 1
FDNS	09ALL_G15_094	2	17SP	G15_094	TO->FROM	SIDNEY - SIDNEY TRANSFORMER 230KV CKT 1	400	400	0.63541	112.6321	KEYSTONE - SIDNEY1-LNX3345.00 345KV CKT 1
FDNS	09ALL_G15_094	2	17SP	G15_094	TO->FROM	SIDNEY - SIDNEY TRANSFORMER 230KV CKT 1	400	400	0.63541	111.8379	SIDNEY - SIDNEY1-LNX3345.00 345KV CKT Z
FDNSLock	00NR_G15_094	2	20WP	G15_094	TO->FROM	SIDNEY - SIDNEY TRANSFORMER 230KV CKT 1	400	400	0.64873	108.9898	KEYSTONE - SIDNEY1-LNX3345.00 345KV CKT 1
FDNSLock	00NR_G15_094	2	20WP	G15_094	TO->FROM	SIDNEY - SIDNEY TRANSFORMER 230KV CKT 1	400	400	0.64873	108.3256	SIDNEY - SIDNEY1-LNX3345.00 345KV CKT Z
FDNS	09ALL_G15_094	2	25SP	G15_094	TO->FROM	SIDNEY - SIDNEY TRANSFORMER 230KV CKT 1	400	400	0.63881	107.5473	KEYSTONE - SIDNEY1-LNX3345.00 345KV CKT 1
FDNSLock	09ALL_G15_094	2	16WP	G15_094	TO->FROM	SIDNEY - SIDNEY TRANSFORMER 230KV CKT 1	400	400	0.64343	107.2249	KEYSTONE - SIDNEY1-LNX3345.00 345KV CKT 1
FDNS	09ALL_G15_094	2	25SP	G15_094	TO->FROM	SIDNEY - SIDNEY TRANSFORMER 230KV CKT 1	400	400	0.63881	106.7594	SIDNEY - SIDNEY1-LNX3345.00 345KV CKT Z
FDNS	09ALL_G15_094	2	20SP	G15_094	TO->FROM	SIDNEY - SIDNEY TRANSFORMER 230KV CKT 1	400	400	0.6386	106.4131	KEYSTONE - SIDNEY1-LNX3345.00 345KV CKT 1

SOLUTION	GROUP	SCENARIO	SEASON	SOURCE	DIRECTION	MONITORED ELEMENT	RATEA (MVA)	RATEB(MVA)	TDF	TC%LOADING (% MVA)	CONTINGENCY
FDNSLock	09ALL_G15_094	2	16WP	G15_094	TO->FROM	SIDNEY - SIDNEY TRANSFORMER 230KV CKT 1	400	400	0.64343	106.1035	SIDNEY - SIDNEY1-LNX3345.00 345KV CKT Z
FDNS	09ALL_G15_094	2	20SP	G15_094	TO->FROM	SIDNEY - SIDNEY TRANSFORMER 230KV CKT 1	400	400	0.6386	105.6044	SIDNEY - SIDNEY1-LNX3345.00 345KV CKT Z
FDNS	00NR_G15_094	2	25SP	G15_094	FROM->TO	SIDNEY (SD KV1A) 230/115/13.8KV TRANSFORMER CKT 1	112	112	0.03692	108.154	P12:115:TSGT:GRANTNB7-OGALALA7_2
FDNS	00NR_G15_094	2	17SP	G15_094	FROM->TO	SIDNEY (SD KV1A) 230/115/13.8KV TRANSFORMER CKT 1	112	112	0.10369	106.9052	SIDNEY - SIDNEY1-LNX3345.00 345KV CKT Z
FDNS	00NR_G15_094	2	17SP	G15_094	FROM->TO	SIDNEY (SD KV1A) 230/115/13.8KV TRANSFORMER CKT 1	112	112	0.10369	106.8645	KEYSTONE - SIDNEY1-LNX3345.00 345KV CKT 1
FDNS	00NR_G15_094	2	17SP	G15_094	FROM->TO	SIDNEY (SD KV1A) 230/115/13.8KV TRANSFORMER CKT 1	112	112	0.10369	106.4534	SIDNEY - SIDNEY1-LNX3345.00 345KV CKT Z
FDNS	00NR_G15_094	2	17SP	G15_094	FROM->TO	SIDNEY (SD KV1A) 230/115/13.8KV TRANSFORMER CKT 1	112	112	0.10369	106.4394	KEYSTONE - SIDNEY1-LNX3345.00 345KV CKT 1
FDNS	00NR_G15_094	2	25SP	G15_094	FROM->TO	SIDNEY (SD KV1A) 230/115/13.8KV TRANSFORMER CKT 1	112	112	0.03692	105.9658	P12:115:TSGT:GRANTNB7-OGALALA7_2
FDNS	00NR_G15_094	2	17SP	G15_094	FROM->TO	SIDNEY (SD KV1A) 230/115/13.8KV TRANSFORMER CKT 1	112	112	0.03757	105.0021	P12:115:TSGT:GRANTNB7-OGALALA7_2
FDNS	00NR_G15_094	2	20SP	G15_094	FROM->TO	SIDNEY (SD KV1A) 230/115/13.8KV TRANSFORMER CKT 1	112	112	0.0369	104.4177	P12:115:TSGT:GRANTNB7-OGALALA7_2
FDNS	00NR_G15_094	2	17SP	G15_094	FROM->TO	SIDNEY (SD KV1A) 230/115/13.8KV TRANSFORMER CKT 1	112	112	0.03757	102.6485	P12:115:TSGT:GRANTNB7-OGALALA7_2
FDNS	00NR_G15_094	2	20SP	G15_094	FROM->TO	SIDNEY (SD KV1A) 230/115/13.8KV TRANSFORMER CKT 1	112	112	0.0369	102.4058	P12:115:TSGT:GRANTNB7-OGALALA7_2
FDNS	00NR_G15_094	2	25SP	G15_094	FROM->TO	SIDNEY (SD KV1A) 230/115/13.8KV TRANSFORMER CKT 1	112	112	0.10404	102.2257	SIDNEY - SIDNEY1-LNX3345.00 345KV CKT Z
FDNS	00NR_G15_094	2	25SP	G15_094	FROM->TO	SIDNEY (SD KV1A) 230/115/13.8KV TRANSFORMER CKT 1	112	112	0.10404	102.0736	SIDNEY - SIDNEY1-LNX3345.00 345KV CKT Z
FDNS	00NR_G15_094	2	25SP	G15_094	FROM->TO	SIDNEY (SD KV1A) 230/115/13.8KV TRANSFORMER CKT 1	112	112	0.10404	101.8361	KEYSTONE - SIDNEY1-LNX3345.00 345KV CKT 1
FDNS	00NR_G15_094	2	25SP	G15_094	FROM->TO	SIDNEY (SD KV1A) 230/115/13.8KV TRANSFORMER CKT 1	112	112	0.10404	101.5629	KEYSTONE - SIDNEY1-LNX3345.00 345KV CKT 1
FDNS	00NR_G15_094	2	20SP	G15_094	FROM->TO	SIDNEY (SD KV1A) 230/115/13.8KV TRANSFORMER CKT 1	112	112	0.10406	101.1973	SIDNEY - SIDNEY1-LNX3345.00 345KV CKT Z
FDNS	00NR_G15_094	2	20SP	G15_094	FROM->TO	SIDNEY (SD KV1A) 230/115/13.8KV TRANSFORMER CKT 1	112	112	0.10406	101.1807	KEYSTONE - SIDNEY1-LNX3345.00 345KV CKT 1
FDNS	00NR_G15_094	2	20SP	G15_094	FROM->TO	SIDNEY (SD KV1A) 230/115/13.8KV TRANSFORMER CKT 1	112	112	0.10406	100.991	SIDNEY - SIDNEY1-LNX3345.00 345KV CKT Z
FDNS	00NR_G15_094	2	20SP	G15_094	FROM->TO	SIDNEY (SD KV1A) 230/115/13.8KV TRANSFORMER CKT 1	112	112	0.10406	100.9536	KEYSTONE - SIDNEY1-LNX3345.00 345KV CKT 1
FDNS	00NR_G15_094	2	17SP	G15_094	FROM->TO	SIDNEY (SDQ KV2A) 345/230/13.8KV TRANSFORMER CKT 1	400	480	0.64623	114.2424	KEYSTONE - SIDNEY1-LNX3345.00 345KV CKT 1
FDNS	00NR_G15_094	2	17SP	G15_094	FROM->TO	SIDNEY (SDQ KV2A) 345/230/13.8KV TRANSFORMER CKT 1	400	480	0.64623	113.6727	SIDNEY - SIDNEY1-LNX3345.00 345KV CKT Z
FDNS	00NR_G15_094	2	17SP	G15_094	FROM->TO	SIDNEY (SDQ KV2A) 345/230/13.8KV TRANSFORMER CKT 1	400	480	0.64623	113.3298	KEYSTONE - SIDNEY1-LNX3345.00 345KV CKT 1
FDNS	00NR_G15_094	2	17SP	G15_094	FROM->TO	SIDNEY (SDQ KV2A) 345/230/13.8KV TRANSFORMER CKT 1	400	480	0.64623	113.1932	SIDNEY - SIDNEY1-LNX3345.00 345KV CKT Z
FDNS	00NR_G15_094	2	20SP	G15_094	FROM->TO	SIDNEY (SDQ KV2A) 345/230/13.8KV TRANSFORMER CKT 1	400	480	0.64889	105.4854	KEYSTONE - SIDNEY1-LNX3345.00 345KV CKT 1
FDNS	00NR_G15_094	2	20SP	G15_094	FROM->TO	SIDNEY (SDQ KV2A) 345/230/13.8KV TRANSFORMER CKT 1	400	480	0.64889	104.9779	SIDNEY - SIDNEY1-LNX3345.00 345KV CKT Z
FDNS	00NR_G15_094	2	20SP	G15_094	FROM->TO	SIDNEY (SDQ KV2A) 345/230/13.8KV TRANSFORMER CKT 1	400	480	0.64889	104.7839	KEYSTONE - SIDNEY1-LNX3345.00 345KV CKT 1
FDNS	00NR_G15_094	2	20SP	G15_094	FROM->TO	SIDNEY (SDQ KV2A) 345/230/13.8KV TRANSFORMER CKT 1	400	480	0.64889	104.6775	SIDNEY - SIDNEY1-LNX3345.00 345KV CKT Z
FDNS	00NR_G15_094	2	25SP	G15_094	FROM->TO	SIDNEY (SDQ KV2A) 345/230/13.8KV TRANSFORMER CKT 1	400	480	0.64869	104.4365	KEYSTONE - SIDNEY1-LNX3345.00 345KV CKT 1
FDNS	00NR_G15_094	2	25SP	G15_094	FROM->TO	SIDNEY (SDQ KV2A) 345/230/13.8KV TRANSFORMER CKT 1	400	480	0.64869	104.1217	SIDNEY - SIDNEY1-LNX3345.00 345KV CKT Z
FDNS	00NR_G15_094	2	25SP	G15_094	FROM->TO	SIDNEY (SDQ KV2A) 345/230/13.8KV TRANSFORMER CKT 1	400	480	0.64869	103.8066	SIDNEY - SIDNEY1-LNX3345.00 345KV CKT Z
FDNS	00NR_G15_094	2	25SP	G15_094	FROM->TO	SIDNEY (SDQ KV2A) 345/230/13.8KV TRANSFORMER CKT 1	400	480	0.64869	103.7444	KEYSTONE - SIDNEY1-LNX3345.00 345KV CKT 1
FDNS	00NR_G15_094	2	16WP	G15_094	FROM->TO	SIDNEY (SDQ KV2A) 345/230/13.8KV TRANSFORMER CKT 1	400	480	0.6578	100	KEYSTONE - SIDNEY1-LNX3345.00 345KV CKT 1
FDNS	00NR_G15_095	0	17SP	G15_095	TO->FROM	ALVA - KNOBHILL 69KV CKT 1	67	76	0.04826	110.1488	FAIRVIEW - OKEENE 69KV CKT 1
FDNS	01ALL_G15_095	0	20WP	G15_095	FROM->TO	G15095_T 138.00 - ROSE_VALLEY 138.00 138KV CKT 1	183	228	0.33346	115.5037	BASE CASE
FDNS	01ALL_G15_095	0	20SP	G15_095	FROM->TO	G15095_T 138.00 - ROSE_VALLEY 138.00 138KV CKT 1	183	228	0.33408	113.6328	BASE CASE
FDNS	01ALL_G15_095	0	16WP	G15_095	FROM->TO	G15095_T 138.00 - ROSE_VALLEY 138.00 138KV CKT 1	183	228	0.33344	109.0754	BASE CASE
FDNS	01ALL_G15_095	0	17SP	G15_095	FROM->TO	G15095_T 138.00 - ROSE_VALLEY 138.00 138KV CKT 1	183	228	0.33368	108.2015	BASE CASE
FDNS	01ALL_G15_095	0	16WP	G15_095	FROM->TO	G15095_T 138.00 - ROSE_VALLEY 138.00 138KV CKT 1	183	228	0.33565	104.5813	MATHWSN7 345.00 - TATONGA7 345.00 345KV CKT 1
FDNS	01ALL_G15_095	0	20SP	G15_095	FROM->TO	G15095_T 138.00 - ROSE_VALLEY 138.00 138KV CKT 1	183	228	0.3359	104.5127	MATHWSN7 345.00 - TATONGA7 345.00 345KV CKT 1
FDNS	01ALL_G15_095	0	20SP	G15_095	FROM->TO	G15095_T 138.00 - ROSE_VALLEY 138.00 138KV CKT 1	183	228	0.21249	104.2161	RENFROW4 138.00 - RENFROW4 138.00 138KV CKT 1
FDNS	01ALL_G15_095	0	20SP	G15_095	FROM->TO	G15095_T 138.00 - ROSE_VALLEY 138.00 138KV CKT 1	183	228	0.3043	103.6042	RENFROW7 345.00 (BANK 1) 345/138/13.8KV TRANSFORMER CKT 1
FDNS	01ALL_G15_095	0	17SP	G15_095	FROM->TO	G15095_T 138.00 - ROSE_VALLEY 138.00 138KV CKT 1	183	228	0.33584	101.3967	MATHWSN7 345.00 - TATONGA7 345.00 345KV CKT 1
FDNS	01ALL_G15_095	0	20SP	G15_095	FROM->TO	G15095_T 138.00 - ROSE_VALLEY 138.00 138KV CKT 1	183	228	0.21249	100.9717	RENFROW4 138.00 - WAKITAS4 138.00 138KV CKT 1
FDNS	01ALL_G15_095	0	20SP	G15_095	FROM->TO	G15095_T 138.00 - ROSE_VALLEY 138.00 138KV CKT 1	183	228	0.34898	100.5284	GLASS MOUNTAIN - MOORELAND 138KV CKT 1
FDNS	01ALL_G15_095	0	20WP	G15_095	FROM->TO	G15095_T 138.00 - ROSE_VALLEY 138.00 138KV CKT 1	183	228	0.34457	100.3083	P12:138:WFEC:MSL12
FDNS	01ALL_G15_095	0	20WP	G15_095	FROM->TO	G15095_T 138.00 - ROSE_VALLEY 138.00 138KV CKT 1	183	228	0.34457	100.3083	P12:138:WFEC:MSL12
FDNS	01ALL_G15_095	0	20SP	G15_095	FROM->TO	G15095_T 138.00 - ROSE_VALLEY 138.00 138KV CKT 1	183	228	0.34898	100.1001	CLEO CORNER - GLASS MOUNTAIN 138KV CKT 1
FDNS	01ALL_G15_095	0	20WP	G15_095	FROM->TO	G15095_T 138.00 - ROSE_VALLEY 138.00 138KV CKT 1	183	228	0.34601	99.7	P12:138:WFEC:MSL14
FDNS	01ALL_G15_095	0	20WP	G15_095	FROM->TO	G15095_T 138.00 - ROSE_VALLEY 138.00 138KV CKT 1	183	228	0.34601	99.7	P12:138:WFEC:MSL14
FDNS	01NR_G15_095	0	17G	G15_095	TO->FROM	GLASS MOUNTAIN - MOORELAND 138KV CKT 1	124	124	0.04904	101.3163	MATHWSN7 345.00 - TATONGA7 345.00 345KV CKT 1
FDNS	01NR_G15_095	0	17G	G15_095	TO->FROM	GLASS MOUNTAIN - MOORELAND 138KV CKT 1	124	124	0.10519	99.9	G15095_T 138.00 - ROSE_VALLEY 138.00 138KV CKT 1
FDNS	01ALL_G15_095	0	20WP	G15_095	TO->FROM	NOEL_SW 138.00 - ROSE_VALLEY 138.00 138KV CKT 1	183	228	0.33346	109.7496	BASE CASE
FDNS	01ALL_G15_095	0	20SP	G15_095	TO->FROM	NOEL_SW 138.00 - ROSE_VALLEY 138.00 138KV CKT 1	183	228	0.33408	105.7391	BASE CASE
FDNS	01ALL_G15_095	0	16WP	G15_095	TO->FROM	NOEL_SW 138.00 - ROSE_VALLEY 138.00 138KV CKT 1	183	228	0.33344	103.6839	BASE CASE
FDNS	01ALL_G15_095	0	17SP	G15_095	TO->FROM	NOEL_SW 138.00 - ROSE_VALLEY 138.00 138KV CKT 1	183	228	0.33368	101.2447	BASE CASE
FDNS	01ALL_G15_095	0	16WP	G15_095	TO->FROM	NOEL_SW 138.00 - ROSE_VALLEY 138.00 138KV CKT 1	183	228	0.33565	100.1298	MATHWSN7 345.00 - TATONGA7 345.00 345KV CKT 1
FDNS	01NR_G15_095	0	17G	G15_095	TO->FROM	ROMAN NOSE - SOUTHARD 138KV CKT 1	133	153	0.05394	108.9436	MATHWSN7 345.00 - TATONGA7 345.00 345KV CKT 1
FDNS	01NR_G15_095	0	20L	G15_095	TO->FROM	ROMAN NOSE - SOUTHARD 138KV CKT 1	133	153	0.07415	106.9396	MATHWSN7 345.00 - TATONGA7 345.00 345KV CKT 1
FDNS	00NR_G15_095	2	17SP	G15_095	TO->FROM	ALVA - KNOBHILL 69KV CKT 1	67	76	0.0489	110.6889	FAIRVIEW - OKEENE 69KV CKT 1
FDNS	00NR_G15_095	2	17SP	G15_095	TO->FROM	ALVA - KNOBHILL 69KV CKT 1	67	76	0.0489	110.6889	FAIRVIEW - OKEENE 69KV CKT 1
FDNS	01NR_G15_095	2	17G	G15_095	TO->FROM	GLASS MOUNTAIN - MOORELAND 138KV CKT 1	124	124	0.08481	100.5507	MATHWSN7 345.00 - TATONGA7 345.00 345KV CKT 1
FDNS	01NR_G15_095	2	17G	G15_095	TO->FROM	GLASS MOUNTAIN - MOORELAND 138KV CKT 1	124	124	0.08481	100.5507	MATHWSN7 345.00 - TATONGA7 345.00 345KV CKT 1
FDNS	01NR_G15_095	2	17G	G15_095	TO->FROM	GLASS MOUNTAIN - MOORELAND 138KV CKT 1	124	124	0.14704	99.9	G15095_T 138.00 - ROSE_VALLEY 138.00 138KV CKT 1
FDNS	01NR_G15_095	2	17G	G15_095	TO->FROM	GLASS MOUNTAIN - MOORELAND 138KV CKT 1	124	124	0.14704	99.9	G15095_T 138.00 - ROSE_VALLEY 138.00 138KV CKT 1
FDNS	01NR_G15_095	2	17G	G15_095	TO->FROM	ROMAN NOSE - SOUTHARD 138KV CKT 1	133	153	0.07563	108.7503	MATHWSN7 345.00 - TATONGA7 345.00 345KV CKT 1
FDNS	01NR_G15_095	2	17G	G15_095	TO->FROM	ROMAN NOSE - SOUTHARD 138KV CKT 1	133	153	0.07563	108.7503	MATHWSN7 345.00 - TATONGA7 345.00 345KV CKT 1
FDNS	01NR_G15_095	2	20L	G15_095	TO->FROM	ROMAN NOSE - SOUTHARD 138KV CKT 1	133	153	0.07301	106.8451	MATHWSN7 345.00 - TATONGA7 345.00 345KV CKT 1
FDNSLock-Blown up	00NR_G15_096	0	17SP	G15_096		Non-Converged Contingency	717	789	0.03971	-	G09_001IST 345.00 - WATERTOWN 345KV CKT 1
FDNS	00NR_G15_096	0	25SP	G15_096	FROM->TO	DICKINSON (KW1A 100) 230/115/13.8KV TRANSFORMER CKT 1	100	125	0.08331	103.1187	DAGLUM 4230.00 - RHAME 4 230.00 230KV CKT 1
FDNS	00NR_G15_096	0	25SP	G15_096	FROM->TO	DICKINSON (KW1A 100) 230/115/13.8KV TRANSFORMER CKT 1	100	125	0.05019	100.0863	BASE CASE
FDNS	16NR_G15_096	0	17G	G15_096	TO->FROM	GLENHAM - L3 HAWDON 230KV CKT 1	210	210	0.04646	103.8169	LELAND OLDS - LELAND2-LNX3345.00 345KV CKT Z
FDNS	16NR_G15_096	0	17G	G15_096	TO->FROM	GLENHAM - L3 HAWDON 230KV CKT 1	210	210	0.04646	103.7214	P12:345:UMZB:# 108 #: LOS FT IN ND. LOS FT

SOLUTION	GROUP	SCENARIO	SEASON	SOURCE	DIRECTION	MONITORED ELEMENT	RATEA (MVA)	RATEB(MVA)	TDF	TC%LOADING (% MVA)	CONTINGENCY
FDNS	16NR_G15_096	0	17G	G15_096	TO->FROM	GLENHAM - L3 HAWDON 230KV CKT 1	210	210	0.04646	103.6531	FTTHOM1-LNX3345.00 - LELAND2-LNX3345.00 345KV CKT 1
FDNS	16NR_G15_096	0	17G	G15_096	TO->FROM	GLENHAM - L3 HAWDON 230KV CKT 1	210	210	0.04646	103.6514	FT THOMPSON - FTTHOM1-LNX3345.00 345KV CKT Z
FDNS	00NR_G15_096	0	17SP	G15_096	FROM->TO	HURON (BD KU2A) 345/230/13.8KV TRANSFORMER CKT 1	400	400	0.07766	100.8055	LELAND OLDS - LELAND2-LNX3345.00 345KV CKT Z
FDNS	16NR_G15_096	0	17G	G15_096	FROM->TO	HURON (BD KU2A) 345/230/13.8KV TRANSFORMER CKT 1	400	400	0.06171	100.5038	LELAND OLDS - LELAND1-LNX3345.00 345KV CKT Z
FDNS	16NR_G15_096	0	17G	G15_096	FROM->TO	HURON (BD KU2A) 345/230/13.8KV TRANSFORMER CKT 1	400	400	0.06611	100.4335	LELAND OLDS - LELAND2-LNX3345.00 345KV CKT Z
FDNS	00NR_G15_096	0	17SP	G15_096	FROM->TO	HURON (BD KU2A) 345/230/13.8KV TRANSFORMER CKT 1	400	400	0.07257	100.3499	LELAND OLDS - LELAND1-LNX3345.00 345KV CKT Z
FDNS	16NR_G15_096	0	17G	G15_096	FROM->TO	HURON (BD KU2A) 345/230/13.8KV TRANSFORMER CKT 1	400	400	0.06171	100.3295	P12:345:UMZB:# 109 #: LOS GRT IN ND. LOS GRT
FDNS	16NR_G15_096	0	17G	G15_096	FROM->TO	HURON (BD KU2A) 345/230/13.8KV TRANSFORMER CKT 1	400	400	0.06171	100.3188	GROTON - GROTON-LNX3 345.00 345KV CKT Z
FDNS	00NR_G15_096	0	17SP	G15_096	FROM->TO	HURON (BD KU2A) 345/230/13.8KV TRANSFORMER CKT 1	400	400	0.07257	100.3076	P12:345:UMZB:# 109 #: LOS GRT IN ND. LOS GRT
FDNS	00NR_G15_096	0	17SP	G15_096	FROM->TO	HURON (BD KU2A) 345/230/13.8KV TRANSFORMER CKT 1	400	400	0.07257	100.3068	GROTON - GROTON-LNX3 345.00 345KV CKT Z
FDNS	00NR_G15_096	0	17SP	G15_096	FROM->TO	HURON (BD KU2A) 345/230/13.8KV TRANSFORMER CKT 1	400	400	0.07766	100.2117	P12:345:UMZB:# 108 #: LOS FT IN ND. LOS FT
FDNS	00NR_G15_096	0	17SP	G15_096	FROM->TO	HURON (BD KU2A) 345/230/13.8KV TRANSFORMER CKT 1	400	400	0.07766	100.1904	FT THOMPSON - FTTHOM1-LNX3345.00 345KV CKT Z
FDNS	16NR_G15_096	0	17G	G15_096	FROM->TO	HURON (BD KU2A) 345/230/13.8KV TRANSFORMER CKT 1	400	400	0.06611	100.1331	P12:345:UMZB:# 108 #: LOS FT IN ND. LOS FT
FDNS	16NR_G15_096	0	17G	G15_096	FROM->TO	HURON (BD KU2A) 345/230/13.8KV TRANSFORMER CKT 1	400	400	0.06611	100.1088	FT THOMPSON - FTTHOM1-LNX3345.00 345KV CKT Z
FDNS	16NR_G15_096	0	17G	G15_096	FROM->TO	HURON (BD KU2A) 345/230/13.8KV TRANSFORMER CKT 1	400	400	0.06171	100	GROTON-LNX3 345.00 - LELAND1-LNX3345.00 345KV CKT 1
FDNS	00NR_G15_096	0	17SP	G15_096	FROM->TO	HURON (BD KU2A) 345/230/13.8KV TRANSFORMER CKT 1	400	400	0.07257	99.8	GROTON-LNX3 345.00 - LELAND1-LNX3345.00 345KV CKT 1
FDNS	16NR_G15_096	0	17G	G15_096	FROM->TO	HURON (BD KU2A) 345/230/13.8KV TRANSFORMER CKT 1	400	400	0.06611	99.7	FTTHOM1-LNX3345.00 - LELAND2-LNX3345.00 345KV CKT 1
FDNS	00NR_G15_096	0	17SP	G15_096	FROM->TO	HURON (BD KU2A) 345/230/13.8KV TRANSFORMER CKT 1	400	400	0.07766	99.5	FTTHOM1-LNX3345.00 - LELAND2-LNX3345.00 345KV CKT 1
FDNS	00NR_G15_096	2	17SP	G15_096	FROM->TO	WATERTOWN (WT2 KU1A) 345/230/13.8KV TRANSFORMER CKT 1	400	500	0.03159	104.5032	P12:345:UMZW:# 1747 #: WT2 IN SD. WT2-WHT LINE FAULT
FDNS	00NR_G15_096	2	17SP	G15_096	FROM->TO	WATERTOWN (WT2 KU1A) 345/230/13.8KV TRANSFORMER CKT 1	400	500	0.03159	104.4748	WATERTN-LNX3345.00 - WATERTOWN 345KV CKT Z
FDNS	00NR_G15_096	2	17SP	G15_096	FROM->TO	WATERTOWN (WT2 KU1A) 345/230/13.8KV TRANSFORMER CKT 1	400	500	0.03159	103.9208	P12:345:UMZW:# 1747 #: WT2 IN SD. WT2-WHT LINE FAULT
FDNS	00NR_G15_096	2	17SP	G15_096	FROM->TO	WATERTOWN (WT2 KU1A) 345/230/13.8KV TRANSFORMER CKT 1	400	500	0.03159	103.8979	WATERTN-LNX3345.00 - WATERTOWN 345KV CKT Z
FDNS	00NR_G15_096	2	17SP	G15_096	FROM->TO	WATERTOWN (WT2 KU1A) 345/230/13.8KV TRANSFORMER CKT 1	400	500	0.03159	103.8894	WATERTN-LNX3345.00 - WHITE 345KV CKT 1
FDNS	00NR_G15_096	2	17SP	G15_096	FROM->TO	WATERTOWN (WT2 KU1A) 345/230/13.8KV TRANSFORMER CKT 1	400	500	0.03159	103.0234	WATERTN-LNX3345.00 - WHITE 345KV CKT 1
FDNS	00NR_G15_097	0	20SP	G15_097	TO->FROM	ABERDEEN SIEBRECHT - GROTON 115KV CKT 1	120	129	0.19668	99.9	G09_001IST 345.00 - WATERTOWN 345KV CKT 1
FDNS	00NR_G15_097	0	17SP	G15_097	FROM->TO	BLAIR - GRANITE FALLS 230KV CKT 1	410	410	0.06427	99.3	P12:345:UMZW:# 1747 #: WT2 IN SD. WT2-WHT LINE FAULT
FDNS	00NR_G15_097	0	17SP	G15_097	FROM->TO	BLAIR - GRANITE FALLS 230KV CKT 1	410	410	0.06427	99.2	WATERTN-LNX3345.00 - WATERTOWN 345KV CKT Z
FDNS	00NR_G15_097	0	17SP	G15_097	TO->FROM	BRISTOL - GROTON 115KV CKT 1	111	111	0.14518	136.0048	G09_001IST 345.00 - WATERTOWN 345KV CKT 1
FDNS	00NR_G15_097	0	20SP	G15_097	TO->FROM	BRISTOL - GROTON 115KV CKT 1	111	111	0.14331	114.9911	G09_001IST 345.00 - WATERTOWN 345KV CKT 1
FDNS	00NR_G15_097	0	25SP	G15_097	TO->FROM	BRISTOL - GROTON 115KV CKT 1	111	111	0.14338	113.7757	G09_001IST 345.00 - WATERTOWN 345KV CKT 1
FDNS	00NR_G15_097	0	17SP	G15_097	TO->FROM	BRISTOL - GROTON 115KV CKT 1	111	111	0.14518	109.8745	G09_001IST 345.00 - GROTON 345KV CKT 1
FDNS	00NR_G15_097	0	17SP	G15_097	TO->FROM	BRISTOL - GROTON 115KV CKT 1	111	111	0.14518	107.0295	G09_001IST 345.00 - GROTON 345KV CKT 1
FDNS	00NR_G15_097	0	20WP	G15_097	TO->FROM	BRISTOL - GROTON 115KV CKT 1	111	111	0.14324	106.1741	G09_001IST 345.00 - WATERTOWN 345KV CKT 1
FDNS	00NR_G15_097	0	16WP	G15_097	TO->FROM	BRISTOL - GROTON 115KV CKT 1	111	111	0.14559	101.697	G09_001IST 345.00 - WATERTOWN 345KV CKT 1
FDNS	00NR_G15_097	0	17SP	G15_097	FROM->TO	BRISTOL - SUMMIT 115KV CKT 1	111	111	0.14518	131.3853	G09_001IST 345.00 - WATERTOWN 345KV CKT 1
FDNS	00NR_G15_097	0	20SP	G15_097	FROM->TO	BRISTOL - SUMMIT 115KV CKT 1	111	111	0.14331	110.6081	G09_001IST 345.00 - WATERTOWN 345KV CKT 1
FDNS	00NR_G15_097	0	25SP	G15_097	FROM->TO	BRISTOL - SUMMIT 115KV CKT 1	111	111	0.14338	109.0502	G09_001IST 345.00 - WATERTOWN 345KV CKT 1
FDNS	00NR_G15_097	0	17SP	G15_097	FROM->TO	BRISTOL - SUMMIT 115KV CKT 1	111	111	0.14518	105.4536	G09_001IST 345.00 - GROTON 345KV CKT 1
FDNS	00NR_G15_097	0	17SP	G15_097	FROM->TO	BRISTOL - SUMMIT 115KV CKT 1	111	111	0.14518	102.6289	G09_001IST 345.00 - GROTON 345KV CKT 1
FDNS	00NR_G15_097	0	20WP	G15_097	FROM->TO	BRISTOL - SUMMIT 115KV CKT 1	111	111	0.14324	99.1	G09_001IST 345.00 - WATERTOWN 345KV CKT 1
FDNS	00NR_G15_097	0	17SP	G15_097	TO->FROM	BROOKINGS - WATERTOWN 115KV CKT 1	120	122	0.03096	101.407	P12:345:UMZW:# 1747 #: WT2 IN SD. WT2-WHT LINE FAULT
FDNS	00NR_G15_097	0	17SP	G15_097	TO->FROM	BROOKINGS - WATERTOWN 115KV CKT 1	120	122	0.03096	101.3159	WATERTN-LNX3345.00 - WATERTOWN 345KV CKT Z
FDNS	00NR_G15_097	0	17SP	G15_097	TO->FROM	BROOKINGS - WATERTOWN 115KV CKT 1	120	122	0.03096	101.2553	WATERTN-LNX3345.00 - WHITE 345KV CKT 1
FDNS	00NR_G15_097	0	17SP	G15_097	TO->FROM	BROOKINGS - WATERTOWN 115KV CKT 1	120	122	0.03096	99.8	WATERTN-LNX3345.00 - WHITE 345KV CKT 1
FDNS	00NR_G15_097	0	17SP	G15_097	TO->FROM	BROOKINGS - WATERTOWN 115KV CKT 1	120	122	0.03096	99.3	P12:345:UMZW:# 1747 #: WT2 IN SD. WT2-WHT LINE FAULT
FDNS	00NR_G15_097	0	17SP	G15_097	TO->FROM	BROOKINGS - WATERTOWN 115KV CKT 1	120	122	0.03096	99.2	WATERTN-LNX3345.00 - WATERTOWN 345KV CKT Z
FDNS	00NR_G15_097	0	17SP	G15_097	TO->FROM	G13_001IST 115.00 - SUMMIT 115KV CKT 1	120	121	0.11005	150.9325	G09_001IST 345.00 - WATERTOWN 345KV CKT 1
FDNS	00NR_G15_097	0	17SP	G15_097	TO->FROM	G13_001IST 115.00 - SUMMIT 115KV CKT 1	120	121	0.11005	127.6895	G09_001IST 345.00 - GROTON 345KV CKT 1
FDNS	00NR_G15_097	0	17SP	G15_097	TO->FROM	G13_001IST 115.00 - SUMMIT 115KV CKT 1	120	121	0.11005	125.651	G09_001IST 345.00 - GROTON 345KV CKT 1
FDNS	00NR_G15_097	0	20SP	G15_097	TO->FROM	G13_001IST 115.00 - SUMMIT 115KV CKT 1	120	121	0.10501	112.7152	G09_001IST 345.00 - WATERTOWN 345KV CKT 1
FDNS	00NR_G15_097	0	25SP	G15_097	TO->FROM	G13_001IST 115.00 - SUMMIT 115KV CKT 1	120	121	0.10511	110.0914	G09_001IST 345.00 - WATERTOWN 345KV CKT 1
FDNS	00NR_G15_097	0	17SP	G15_097	TO->FROM	G13_001IST 115.00 - SUMMIT 115KV CKT 1	120	121	0.05888	106.4564	FORMAN - HANKINSON 230KV CKT 1
FDNS	00NR_G15_097	0	17SP	G15_097	TO->FROM	G13_001IST 115.00 - SUMMIT 115KV CKT 1	120	121	0.05888	105.0997	FORMAN - HANKINSON 230KV CKT 1
FDNS	00NR_G15_097	0	16WP	G15_097	TO->FROM	G13_001IST 115.00 - SUMMIT 115KV CKT 1	120	121	0.11033	104.8318	G09_001IST 345.00 - WATERTOWN 345KV CKT 1
FDNS	00NR_G15_097	0	16WP	G15_097	TO->FROM	G13_001IST 115.00 - SUMMIT 115KV CKT 1	120	121	0.11033	102.087	G09_001IST 345.00 - WATERTOWN 345KV CKT 1
FDNS	00NR_G15_097	0	17SP	G15_097	FROM->TO	G13_001IST 115.00 - WATERTOWN 115KV CKT 1	120	121	0.11005	165.769	G09_001IST 345.00 - WATERTOWN 345KV CKT 1
FDNS	00NR_G15_097	0	17SP	G15_097	FROM->TO	G13_001IST 115.00 - WATERTOWN 115KV CKT 1	120	121	0.11005	141.8287	G09_001IST 345.00 - GROTON 345KV CKT 1
FDNS	00NR_G15_097	0	17SP	G15_097	FROM->TO	G13_001IST 115.00 - WATERTOWN 115KV CKT 1	120	121	0.11005	139.723	G09_001IST 345.00 - GROTON 345KV CKT 1
FDNS	00NR_G15_097	0	20SP	G15_097	FROM->TO	G13_001IST 115.00 - WATERTOWN 115KV CKT 1	120	121	0.10501	126.4629	G09_001IST 345.00 - WATERTOWN 345KV CKT 1
FDNS	00NR_G15_097	0	25SP	G15_097	FROM->TO	G13_001IST 115.00 - WATERTOWN 115KV CKT 1	120	121	0.10511	123.8685	G09_001IST 345.00 - WATERTOWN 345KV CKT 1
FDNS	00NR_G15_097	0	17SP	G15_097	FROM->TO	G13_001IST 115.00 - WATERTOWN 115KV CKT 1	120	121	0.05888	120.495	FORMAN - HANKINSON 230KV CKT 1
FDNS	00NR_G15_097	0	17SP	G15_097	FROM->TO	G13_001IST 115.00 - WATERTOWN 115KV CKT 1	120	121	0.05888	119.037	FORMAN - HANKINSON 230KV CKT 1
FDNS	00NR_G15_097	0	16WP	G15_097	FROM->TO	G13_001IST 115.00 - WATERTOWN 115KV CKT 1	120	121	0.11033	117.9023	G09_001IST 345.00 - WATERTOWN 345KV CKT 1
FDNS	15NR_G15_097	0	17G	G15_097	FROM->TO	G13_001IST 115.00 - WATERTOWN 115KV CKT 1	120	121	0.1095	117.7631	G09_001IST 345.00 - WATERTOWN 345KV CKT 1
FDNS	00NR_G15_097	0	16WP	G15_097	FROM->TO	G13_001IST 115.00 - WATERTOWN 115KV CKT 1	120	121	0.11033	115.0346	G09_001IST 345.00 - WATERTOWN 345KV CKT 1
FDNS	15ALL_G15_097	0	17SP	G15_097	FROM->TO	G13_001IST 115.00 - WATERTOWN 115KV CKT 1	120	121	0.19662	109.2462	GROTON (GROTON KU2A) 345/115/13.8KV TRANSFORMER CKT 1
FDNS	00NR_G15_097	0	17SP	G15_097	FROM->TO	G13_001IST 115.00 - WATERTOWN 115KV CKT 1	120	121	0.18739	107.9555	GROTON (GROTON KU2A) 345/115/13.8KV TRANSFORMER CKT 1
FDNS	00NR_G15_097	0	17SP	G15_097	FROM->TO	G13_001IST 115.00 - WATERTOWN 115KV CKT 1	120	121	0.18739	107.6504	GROTON (GROTON KU2A) 345/115/13.8KV TRANSFORMER CKT 1
FDNS	00NR_G15_097	0	20SP	G15_097	FROM->TO	G13_001IST 115.00 - WATERTOWN 115KV CKT 1	120	121	0.10501	105.6193	G09_001IST 345.00 - GROTON 345KV CKT 1
FDNS	15ALL_G15_097	0	17G	G15_097	FROM->TO	G13_001IST 115.00 - WATERTOWN 115KV CKT 1	120	121	0.19659	105.5718	GROTON (GROTON KU2A) 345/115/13.8KV TRANSFORMER CKT 1
FDNS	00NR_G15_097	0	20WP	G15_097	FROM->TO	G13_001IST 115.00 - WATERTOWN 115KV CKT 1	120	121	0.10472	103.3006	G09_001IST 345.00 - WATERTOWN 345KV CKT 1
FDNS	00NR_G15_097	0	25SP	G15_097	FROM->TO	G13_001IST 115.00 - WATERTOWN 115KV CKT 1	120	121	0.10511	103.2405	G09_001IST 345.00 - GROTON 345KV CKT 1
FDNS	00NR_G15_097	0	17SP	G15_097	FROM->TO	G13_001IST 115.00 - WATERTOWN 115KV CKT 1	120	121	0.05355	100.9631	BIG STONE - BLAIR 230KV CKT 1

SOLUTION	GROUP	SCENARIO	SEASON	SOURCE	DIRECTION	MONITORED ELEMENT	RATEA (MVA)	RATEB(MVA)	TDF	TC%LOADING (% MVA)	CONTINGENCY
FDNS	00NR_G15_097	0	17SP	G15_097	FROM->TO	G13_001IST 115.00 - WATERTOWN 115KV CKT 1	120	121	0.05355	100.9631	BIG STONE - BLAIR 230KV CKT 1
FDNS	00NR_G15_097	0	17SP	G15_097	FROM->TO	G13_001IST 115.00 - WATERTOWN 115KV CKT 1	120	121	0.05355	100	BIG STONE - BLAIR 230KV CKT 1
FDNS	00NR_G15_097	0	17SP	G15_097	FROM->TO	G13_001IST 115.00 - WATERTOWN 115KV CKT 1	120	121	0.05355	100	BIG STONE - BLAIR 230KV CKT 1
FDNS	15NR_G15_097	0	20L	G15_097	FROM->TO	G13_001IST 115.00 - WATERTOWN 115KV CKT 1	120	121	0.10262	99	G09_001IST 345.00 - WATERTOWN 345KV CKT 1
FDNS	00NR_G15_097	0	17SP	G15_097	FROM->TO	GRANITE FALLS - MN VALLEY TAP 230KV CKT 1	240	259	0.03191	117.1385	GRANITE FALLS - MN VALLEY TAP 230KV CKT 1
FDNS	00NR_G15_097	0	17SP	G15_097	FROM->TO	GRANITE FALLS - MN VALLEY TAP 230KV CKT 1	240	259	0.03191	117.1385	GRANITE FALLS - MN VALLEY TAP 230KV CKT 1
FDNS	00NR_G15_097	0	20SP	G15_097	FROM->TO	GRANITE FALLS - MN VALLEY TAP 230KV CKT 1	240	259	0.0319	112.9962	GRANITE FALLS - MN VALLEY TAP 230KV CKT 1
FDNS	00NR_G15_097	0	20SP	G15_097	FROM->TO	GRANITE FALLS - MN VALLEY TAP 230KV CKT 1	240	259	0.0319	112.9962	GRANITE FALLS - MN VALLEY TAP 230KV CKT 1
FDNS	00NR_G15_097	0	25SP	G15_097	FROM->TO	GRANITE FALLS - MN VALLEY TAP 230KV CKT 1	240	259	0.03191	111.3592	GRANITE FALLS - MN VALLEY TAP 230KV CKT 1
FDNS	00NR_G15_097	0	25SP	G15_097	FROM->TO	GRANITE FALLS - MN VALLEY TAP 230KV CKT 1	240	259	0.03191	111.3592	GRANITE FALLS - MN VALLEY TAP 230KV CKT 1
FDNS	00NR_G15_097	0	20SP	G15_097	TO->FROM	SPLIT ROCK - WHITE 345KV CKT 1	717	717	0.13572	122.1251	BROOKING COUNTY - LYON COUNTY 345KV CKT 1
FDNS	00NR_G15_097	0	25SP	G15_097	TO->FROM	SPLIT ROCK - WHITE 345KV CKT 1	717	717	0.13577	117.727	BROOKING COUNTY - LYON COUNTY 345KV CKT 1
FDNS	00NR_G15_097	0	20WP	G15_097	TO->FROM	SPLIT ROCK - WHITE 345KV CKT 1	717	717	0.13381	105.7056	BROOKING COUNTY - LYON COUNTY 345KV CKT 1
FDNS	00NR_G15_097	0	20SP	G15_097	TO->FROM	SPLIT ROCK - WHITE 345KV CKT 1	717	717	0.11639	102.8482	GRPRAR1-LNX3345.00 - HOLT.CO3 345.00 345KV CKT 1
FDNS	00NR_G15_097	0	20SP	G15_097	TO->FROM	SPLIT ROCK - WHITE 345KV CKT 1	717	717	0.11639	102.8202	GRPRAR1-LNX3345.00 - YANKTON 345KV CKT Z
FDNS	00NR_G15_097	0	20SP	G15_097	TO->FROM	SPLIT ROCK - WHITE 345KV CKT 1	717	717	0.11415	101.2009	HANLON - STORLA 230KV CKT 1
FDNS	00NR_G15_097	0	20SP	G15_097	TO->FROM	SPLIT ROCK - WHITE 345KV CKT 1	717	717	0.11453	100.9888	P12:230:UMZB:# 116 #: ST IN SD. WSG-ST-VH
FDNS	00NR_G15_097	0	17SP	G15_097	TO->FROM	SPLIT ROCK - WHITE 345KV CKT 1	717	717	0.13427	100.6622	BROOKING COUNTY - LYON COUNTY 345KV CKT 1
FDNS	00NR_G15_097	0	20SP	G15_097	TO->FROM	SPLIT ROCK - WHITE 345KV CKT 1	717	717	0.11672	100.3399	GEN635214 4-NEAL UNIT 4
FDNS	00NR_G15_097	0	17SP	G15_097	TO->FROM	SPLIT ROCK - WHITE 345KV CKT 1	717	717	0.13427	100.0732	BROOKING COUNTY - LYON COUNTY 345KV CKT 1
FDNS	00NR_G15_097	0	20SP	G15_097	TO->FROM	SPLIT ROCK - WHITE 345KV CKT 1	717	717	0.11601	100	GR ISLD-LNX3345.00 - HOLT.CO3 345.00 345KV CKT 1
FDNS	00NR_G15_097	0	20SP	G15_097	TO->FROM	SPLIT ROCK - WHITE 345KV CKT 1	717	717	0.11601	99.8	GR ISLD-LNX3345.00 - GRAND ISLAND 345KV CKT Z
FDNS	00NR_G15_097	0	20SP	G15_097	TO->FROM	SPLIT ROCK - WHITE 345KV CKT 1	717	717	0.11672	99.6	SQUARE BUTTE - YNG2 4 230.00 230KV CKT 1
FDNS	00NR_G15_097	0	20SP	G15_097	TO->FROM	SPLIT ROCK - WHITE 345KV CKT 1	717	717	0.11672	99.1	GEN635024 4-WALTER SCOTT UNIT 4
FDNS	00NR_G15_097	0	17SP	G15_097	FROM->TO	WATERTOWN (WT2 KU1A) 345/230/13.8KV TRANSFORMER CKT 1	400	500	0.33394	102.4497	WATERTN-LNX3345.00 - WHITE 345KV CKT 1
FDNS	00NR_G15_097	0	17SP	G15_097	FROM->TO	WATERTOWN (WT2 KU1A) 345/230/13.8KV TRANSFORMER CKT 1	400	500	0.33394	101.9186	P12:345:UMZW:# 1747 #: WT2 IN SD. WT2-WHT LINE FAULT
FDNS	00NR_G15_097	0	17SP	G15_097	FROM->TO	WATERTOWN (WT2 KU1A) 345/230/13.8KV TRANSFORMER CKT 1	400	500	0.33394	101.8763	WATERTN-LNX3345.00 - WATERTOWN 345KV CKT Z
FDNS	00NR_G15_097	0	17SP	G15_097	FROM->TO	WATERTOWN (WT2 KU1A) 345/230/13.8KV TRANSFORMER CKT 1	400	500	0.33394	101.0535	WATERTN-LNX3345.00 - WHITE 345KV CKT 1
FDNS	00NR_G15_097	0	17SP	G15_097	FROM->TO	WATERTOWN (WT2 KU1A) 345/230/13.8KV TRANSFORMER CKT 1	400	500	0.33394	101.0328	P12:345:UMZW:# 1747 #: WT2 IN SD. WT2-WHT LINE FAULT
FDNS	00NR_G15_097	0	17SP	G15_097	FROM->TO	WATERTOWN (WT2 KU1A) 345/230/13.8KV TRANSFORMER CKT 1	400	500	0.33394	100.9982	WATERTN-LNX3345.00 - WHITE 345KV CKT 1
FDNS	00NR_G15_097	0	17SP	G15_097	FROM->TO	WATERTOWN (WT2 KU1A) 345/230/13.8KV TRANSFORMER CKT 1	400	500	0.33394	100.9914	WATERTN-LNX3345.00 - WATERTOWN 345KV CKT Z
FDNS	00NR_G15_097	0	17SP	G15_097	FROM->TO	WATERTOWN (WT2 KU1A) 345/230/13.8KV TRANSFORMER CKT 1	400	500	0.33394	100.9021	P12:345:UMZW:# 1747 #: WT2 IN SD. WT2-WHT LINE FAULT
FDNS	00NR_G15_097	0	17SP	G15_097	FROM->TO	WATERTOWN (WT2 KU1A) 345/230/13.8KV TRANSFORMER CKT 1	400	500	0.33394	100.8738	WATERTN-LNX3345.00 - WATERTOWN 345KV CKT Z
FDNS	00NR_G15_097	0	17SP	G15_097	FROM->TO	WATERTOWN (WT2 KU1A) 345/230/13.8KV TRANSFORMER CKT 1	400	500	0.33394	99.9	P12:345:UMZW:# 1747 #: WT2 IN SD. WT2-WHT LINE FAULT
FDNS	00NR_G15_097	0	17SP	G15_097	FROM->TO	WATERTOWN (WT2 KU1A) 345/230/13.8KV TRANSFORMER CKT 1	400	500	0.33394	99.9	WATERTN-LNX3345.00 - WATERTOWN 345KV CKT Z
FDNS	00NR_G15_097	0	17SP	G15_097	FROM->TO	WATERTOWN (WT2 KU1A) 345/230/13.8KV TRANSFORMER CKT 1	400	500	0.33394	99.6	WATERTN-LNX3345.00 - WHITE 345KV CKT 1
FDNS	00NR_G15_097	2	20SP	G15_097	TO->FROM	ABERDEEN SIEBRECHT - GROTON 115KV CKT 1	120	129	0.19649	99.7	G09_001IST 345.00 - WATERTOWN 345KV CKT 1
FDNS	00NR_G15_097	2	17SP	G15_097	TO->FROM	BRISTOL - GROTON 115KV CKT 1	111	111	0.14596	136.7664	G09_001IST 345.00 - WATERTOWN 345KV CKT 1
FDNS	00NR_G15_097	2	20SP	G15_097	TO->FROM	BRISTOL - GROTON 115KV CKT 1	111	111	0.14406	115.7573	G09_001IST 345.00 - WATERTOWN 345KV CKT 1
FDNS	00NR_G15_097	2	25SP	G15_097	TO->FROM	BRISTOL - GROTON 115KV CKT 1	111	111	0.14413	114.7838	G09_001IST 345.00 - WATERTOWN 345KV CKT 1
FDNS	00NR_G15_097	2	17SP	G15_097	TO->FROM	BRISTOL - GROTON 115KV CKT 1	111	111	0.14596	107.764	G09_001IST 345.00 - GROTON 345KV CKT 1
FDNS	00NR_G15_097	2	20WP	G15_097	TO->FROM	BRISTOL - GROTON 115KV CKT 1	111	111	0.14399	106.9556	G09_001IST 345.00 - WATERTOWN 345KV CKT 1
FDNS	00NR_G15_097	2	16WP	G15_097	TO->FROM	BRISTOL - GROTON 115KV CKT 1	111	111	0.14637	102.651	G09_001IST 345.00 - WATERTOWN 345KV CKT 1
FDNS	00NR_G15_097	2	17SP	G15_097	FROM->TO	BRISTOL - SUMMIT 115KV CKT 1	111	111	0.14596	132.0219	G09_001IST 345.00 - WATERTOWN 345KV CKT 1
FDNS	00NR_G15_097	2	20SP	G15_097	FROM->TO	BRISTOL - SUMMIT 115KV CKT 1	111	111	0.14406	111.3063	G09_001IST 345.00 - WATERTOWN 345KV CKT 1
FDNS	00NR_G15_097	2	25SP	G15_097	FROM->TO	BRISTOL - SUMMIT 115KV CKT 1	111	111	0.14413	110.0147	G09_001IST 345.00 - WATERTOWN 345KV CKT 1
FDNS	00NR_G15_097	2	17SP	G15_097	FROM->TO	BRISTOL - SUMMIT 115KV CKT 1	111	111	0.14596	103.2936	G09_001IST 345.00 - GROTON 345KV CKT 1
FDNS	00NR_G15_097	2	20WP	G15_097	FROM->TO	BRISTOL - SUMMIT 115KV CKT 1	111	111	0.14399	99.8	G09_001IST 345.00 - WATERTOWN 345KV CKT 1
FDNS	00NR_G15_097	2	17SP	G15_097	TO->FROM	BROOKINGS - WATERTOWN 115KV CKT 1	120	122	0.03103	100.131	WATERTN-LNX3345.00 - WHITE 345KV CKT 1
FDNS	00NR_G15_097	2	17SP	G15_097	TO->FROM	BROOKINGS - WATERTOWN 115KV CKT 1	120	122	0.03103	99.5	P12:345:UMZW:# 1747 #: WT2 IN SD. WT2-WHT LINE FAULT
FDNS	00NR_G15_097	2	17SP	G15_097	TO->FROM	BROOKINGS - WATERTOWN 115KV CKT 1	120	122	0.03103	99.5	WATERTN-LNX3345.00 - WATERTOWN 345KV CKT Z
FDNS	00NR_G15_097	2	17SP	G15_097	TO->FROM	G13_001IST 115.00 - SUMMIT 115KV CKT 1	120	121	0.11145	154.6042	G09_001IST 345.00 - WATERTOWN 345KV CKT 1
FDNS	00NR_G15_097	2	17SP	G15_097	TO->FROM	G13_001IST 115.00 - SUMMIT 115KV CKT 1	120	121	0.11145	128.7246	G09_001IST 345.00 - GROTON 345KV CKT 1
FDNS	00NR_G15_097	2	20SP	G15_097	TO->FROM	G13_001IST 115.00 - SUMMIT 115KV CKT 1	120	121	0.10637	115.5168	G09_001IST 345.00 - WATERTOWN 345KV CKT 1
FDNS	00NR_G15_097	2	25SP	G15_097	TO->FROM	G13_001IST 115.00 - SUMMIT 115KV CKT 1	120	121	0.10646	112.1536	G09_001IST 345.00 - WATERTOWN 345KV CKT 1
FDNS	00NR_G15_097	2	17SP	G15_097	TO->FROM	G13_001IST 115.00 - SUMMIT 115KV CKT 1	120	121	0.05965	107.4763	FORMAN - HANKINSON 230KV CKT 1
FDNS	00NR_G15_097	2	16WP	G15_097	TO->FROM	G13_001IST 115.00 - SUMMIT 115KV CKT 1	120	121	0.11173	107.2345	G09_001IST 345.00 - WATERTOWN 345KV CKT 1
FDNS	00NR_G15_097	2	17SP	G15_097	FROM->TO	G13_001IST 115.00 - WATERTOWN 115KV CKT 1	160	175	0.11145	117.7164	G09_001IST 345.00 - WATERTOWN 345KV CKT 1
FDNS	00NR_G15_097	2	17SP	G15_097	FROM->TO	G13_001IST 115.00 - WATERTOWN 115KV CKT 1	160	175	0.11145	99.2	G09_001IST 345.00 - GROTON 345KV CKT 1
FDNS	00NR_G15_097	2	17SP	G15_097	FROM->TO	GRANITE FALLS - MN VALLEY TAP 230KV CKT 1	240	259	0.03193	117.1836	GRANITE FALLS - MN VALLEY TAP 230KV CKT 1
FDNS	00NR_G15_097	2	17SP	G15_097	FROM->TO	GRANITE FALLS - MN VALLEY TAP 230KV CKT 1	240	259	0.03193	117.1836	GRANITE FALLS - MN VALLEY TAP 230KV CKT 1
FDNS	00NR_G15_097	2	20SP	G15_097	FROM->TO	GRANITE FALLS - MN VALLEY TAP 230KV CKT 1	240	259	0.03192	113.0619	GRANITE FALLS - MN VALLEY TAP 230KV CKT 1
FDNS	00NR_G15_097	2	20SP	G15_097	FROM->TO	GRANITE FALLS - MN VALLEY TAP 230KV CKT 1	240	259	0.03192	113.0619	GRANITE FALLS - MN VALLEY TAP 230KV CKT 1
FDNS	00NR_G15_097	2	25SP	G15_097	FROM->TO	GRANITE FALLS - MN VALLEY TAP 230KV CKT 1	240	259	0.03193	111.4018	GRANITE FALLS - MN VALLEY TAP 230KV CKT 1
FDNS	00NR_G15_097	2	25SP	G15_097	FROM->TO	GRANITE FALLS - MN VALLEY TAP 230KV CKT 1	240	259	0.03193	111.4018	GRANITE FALLS - MN VALLEY TAP 230KV CKT 1
FDNS	00NR_G15_097	2	20SP	G15_097	TO->FROM	SPLIT ROCK - WHITE 345KV CKT 1	717	717	0.13575	122.1424	BROOKING COUNTY - LYON COUNTY 345KV CKT 1
FDNS	00NR_G15_097	2	25SP	G15_097	TO->FROM	SPLIT ROCK - WHITE 345KV CKT 1	717	717	0.1358	117.7444	BROOKING COUNTY - LYON COUNTY 345KV CKT 1
FDNS	00NR_G15_097	2	20WP	G15_097	TO->FROM	SPLIT ROCK - WHITE 345KV CKT 1	717	717	0.13384	105.7147	BROOKING COUNTY - LYON COUNTY 345KV CKT 1
FDNS	00NR_G15_097	2	20SP	G15_097	TO->FROM	SPLIT ROCK - WHITE 345KV CKT 1	717	717	0.11641	102.8633	GRPRAR1-LNX3345.00 - HOLT.CO3 345.00 345KV CKT 1
FDNS	00NR_G15_097	2	20SP	G15_097	TO->FROM	SPLIT ROCK - WHITE 345KV CKT 1	717	717	0.11641	102.4739	GRPRAR1-LNX3345.00 - YANKTON 345KV CKT Z
FDNS	00NR_G15_097	2	20SP	G15_097	TO->FROM	SPLIT ROCK - WHITE 345KV CKT 1	717	717	0.11417	101.2196	HANLON - STORLA 230KV CKT 1
FDNS	00NR_G15_097	2	20SP	G15_097	TO->FROM	SPLIT ROCK - WHITE 345KV CKT 1	717	717	0.11455	101.0067	P12:230:UMZB:# 116 #: ST IN SD. WSG-ST-VH
FDNS	00NR_G15_097	2	20SP	G15_097	TO->FROM	SPLIT ROCK - WHITE 345KV CKT 1	717	717	0.11675	100.3684	GEN635214 4-NEAL UNIT 4

SOLUTION	GROUP	SCENARIO	SEASON	SOURCE	DIRECTION	MONITORED ELEMENT	RATEA (MVA)	RATEB(MVA)	TDF	TC%LOADING (% MVA)	CONTINGENCY
FDNS	00NR_G15_097	2	17SP	G15_097	TO->FROM	SPLIT ROCK - WHITE 345KV CKT 1	717	717	0.13433	100.1234	BROOKING COUNTY - LYON COUNTY 345KV CKT 1
FDNS	00NR_G15_097	2	20SP	G15_097	TO->FROM	SPLIT ROCK - WHITE 345KV CKT 1	717	717	0.11603	100	GR ISLD-LNX3345.00 - HOLT.CO3 345.00 345KV CKT 1
FDNS	00NR_G15_097	2	20SP	G15_097	TO->FROM	SPLIT ROCK - WHITE 345KV CKT 1	717	717	0.11603	99.9	GR ISLD-LNX3345.00 - GRAND ISLAND 345KV CKT Z
FDNS	00NR_G15_097	2	20SP	G15_097	TO->FROM	SPLIT ROCK - WHITE 345KV CKT 1	717	717	0.11675	99.6	SQUARE BUTTE - YNG2 4 230.00 230KV CKT 1
FDNS	00NR_G15_097	2	20SP	G15_097	TO->FROM	SPLIT ROCK - WHITE 345KV CKT 1	717	717	0.11675	99.1	GEN635024 4-WALTER SCOTT UNIT 4
FDNS	00NR_G15_097	2	17SP	G15_097	FROM->TO	WATERTOWN (WT2 KU1A) 345/230/13.8KV TRANSFORMER CKT 1	400	500	0.33363	100.9066	WATERTN-LNX3345.00 - WHITE 345KV CKT 1
FDNS	00NR_G15_097	2	17SP	G15_097	FROM->TO	WATERTOWN (WT2 KU1A) 345/230/13.8KV TRANSFORMER CKT 1	400	500	0.33363	100.8364	WATERTN-LNX3345.00 - WATERTOWN 345KV CKT Z
FDNS	00NR_G15_097	2	17SP	G15_097	FROM->TO	WATERTOWN (WT2 KU1A) 345/230/13.8KV TRANSFORMER CKT 1	400	500	0.33363	100.7984	P12:345:UMZW:# 1747 #: WT2 IN SD. WT2-WHT LINE FAULT
FDNS	00NR_G15_097	2	17SP	G15_097	FROM->TO	WATERTOWN (WT2 KU1A) 345/230/13.8KV TRANSFORMER CKT 1	400	500	0.33363	99.9	WATERTN-LNX3345.00 - WATERTOWN 345KV CKT Z
FDNS	00NR_G15_097	2	17SP	G15_097	FROM->TO	WATERTOWN (WT2 KU1A) 345/230/13.8KV TRANSFORMER CKT 1	400	500	0.33363	99.8	P12:345:UMZW:# 1747 #: WT2 IN SD. WT2-WHT LINE FAULT
FDNS	00NR_G15_097	2	17SP	G15_097	FROM->TO	WATERTOWN (WT2 KU1A) 345/230/13.8KV TRANSFORMER CKT 1	400	500	0.33363	99.5	WATERTN-LNX3345.00 - WHITE 345KV CKT 1
FDNS	00NR_G15_097	3	20SP	G15_097	TO->FROM	ABERDEEN SIEBRECHT - GROTON 115KV CKT 1	120	129	0.19636	99.5	G09_001IST 345.00 - WATERTOWN 345KV CKT 1
FDNS	00NR_G15_097	3	17SP	G15_097	FROM->TO	G13_001IST 115.00 - WATERTOWN 115KV CKT 1	160	175	0.11189	119.7734	G09_001IST 345.00 - WATERTOWN 345KV CKT 1
FDNS	00NR_G15_097	3	17SP	G15_097	FROM->TO	G13_001IST 115.00 - WATERTOWN 115KV CKT 1	160	175	0.11189	100.8869	G09_001IST 345.00 - GROTON 345KV CKT 1
FDNS	00NR_G15_097	3	17SP	G15_097	FROM->TO	GRANITE FALLS - MN VALLEY TAP 230KV CKT 1	240	259	0.03202	117.3503	GRANITE FALLS - MN VALLEY TAP 230KV CKT 1
FDNS	00NR_G15_097	3	17SP	G15_097	FROM->TO	GRANITE FALLS - MN VALLEY TAP 230KV CKT 1	240	259	0.03202	117.3503	GRANITE FALLS - MN VALLEY TAP 230KV CKT 1
FDNS	00NR_G15_097	3	20SP	G15_097	FROM->TO	GRANITE FALLS - MN VALLEY TAP 230KV CKT 1	240	259	0.032	113.177	GRANITE FALLS - MN VALLEY TAP 230KV CKT 1
FDNS	00NR_G15_097	3	20SP	G15_097	FROM->TO	GRANITE FALLS - MN VALLEY TAP 230KV CKT 1	240	259	0.032	113.177	GRANITE FALLS - MN VALLEY TAP 230KV CKT 1
FDNS	00NR_G15_097	3	25SP	G15_097	FROM->TO	GRANITE FALLS - MN VALLEY TAP 230KV CKT 1	240	259	0.03201	111.527	GRANITE FALLS - MN VALLEY TAP 230KV CKT 1
FDNS	00NR_G15_097	3	25SP	G15_097	FROM->TO	GRANITE FALLS - MN VALLEY TAP 230KV CKT 1	240	259	0.03201	111.527	GRANITE FALLS - MN VALLEY TAP 230KV CKT 1
FDNS	00NR_G15_097	3	20SP	G15_097	TO->FROM	SPLIT ROCK - WHITE 345KV CKT 1	720	792	0.13574	110.5738	BROOKING COUNTY - LYON COUNTY 345KV CKT 1
FDNS	00NR_G15_097	3	25SP	G15_097	TO->FROM	SPLIT ROCK - WHITE 345KV CKT 1	720	792	0.13579	106.5932	BROOKING COUNTY - LYON COUNTY 345KV CKT 1
FDNSLock-Blown up	00NR_G15_098	0	17SP	G15_098		Non-Converged Contingency	717	789	0.04078	-	G09_001IST 345.00 - WATERTOWN 345KV CKT 1
FDNS	00NR_G15_098	0	17SP	G15_098	FROM->TO	DAWSON CREEK - FALLON 115KV CKT 1	80	88	0.05509	107.3261	DAWSON CREEK - MILES CITY EAST 230KV CKT 1
FDNS	00NR_G15_098	0	25SP	G15_098	FROM->TO	DAWSON CREEK - FALLON 115KV CKT 1	80	88	0.05487	101.6274	DAWSON CREEK - MILES CITY EAST 230KV CKT 1
FDNS	16NR_G15_098	0	17G	G15_098	TO->FROM	GLENHAM - L3 HAWDON 230KV CKT 1	210	210	0.04691	102.7066	LELAND OLDS - LELAND2-LNX3345.00 345KV CKT Z
FDNS	16NR_G15_098	0	17G	G15_098	TO->FROM	GLENHAM - L3 HAWDON 230KV CKT 1	210	210	0.04691	102.5671	FT THOMPSON - FTTHOM1-LNX3345.00 345KV CKT Z
FDNS	16NR_G15_098	0	17G	G15_098	TO->FROM	GLENHAM - L3 HAWDON 230KV CKT 1	210	210	0.04691	102.0454	P12:345:UMZB:# 108 #: LOS FT IN ND. LOS FT
FDNS	16NR_G15_098	0	17G	G15_098	TO->FROM	GLENHAM - L3 HAWDON 230KV CKT 1	210	210	0.04691	101.9636	FTTHOM1-LNX3345.00 - LELAND2-LNX3345.00 345KV CKT 1
FDNS	00NR_G15_098	0	17SP	G15_098	FROM->TO	HURON (BD KU2A) 345/230/13.8KV TRANSFORMER CKT 1	400	400	0.07982	99.5	LELAND OLDS - LELAND2-LNX3345.00 345KV CKT Z
FDNS	00NR_G15_098	0	17SP	G15_098	FROM->TO	HURON (BD KU2A) 345/230/13.8KV TRANSFORMER CKT 1	400	400	0.07461	99.2	LELAND OLDS - LELAND1-LNX3345.00 345KV CKT Z
FDNS	00NR_G15_098	0	17SP	G15_098	FROM->TO	HURON (BD KU2A) 345/230/13.8KV TRANSFORMER CKT 1	400	400	0.07461	99.1	GROTON - GROTON-LNX3 345.00 345KV CKT Z
FDNS	00NR_G15_098	0	17SP	G15_098	FROM->TO	HURON (BD KU2A) 345/230/13.8KV TRANSFORMER CKT 1	400	400	0.07461	99.1	P12:345:UMZB:# 109 #: LOS GRT IN ND. LOS GRT
FDNS	00NR_G15_098	0	17SP	G15_098	FROM->TO	HURON (BD KU2A) 345/230/13.8KV TRANSFORMER CKT 1	400	400	0.07982	99	FT THOMPSON - FTTHOM1-LNX3345.00 345KV CKT Z
FDNS	00NR_G15_098	0	17SP	G15_098	FROM->TO	HURON (BD KU2A) 345/230/13.8KV TRANSFORMER CKT 1	400	400	0.07982	99	P12:345:UMZB:# 108 #: LOS FT IN ND. LOS FT

11.10 G-V: Voltage Power Flow Analysis (Constraints Requiring Transmission Reinforcement)

Available upon request. Contact SPP Generator Interconnection Studies for details.

11.11 G1-V: Stand Alone Voltage Power Flow Analysis (Constraints Requiring Transmission Reinforcement)

Available upon request. Contact SPP Generator Interconnection Studies for details.

11.12 H-T: Thermal Power Flow Analysis (Other Constraints Not Requiring Transmission Reinforcement)

Available upon request. Contact SPP Generator Interconnection Studies for details.

11.13 H-T-AS: Affected System Thermal Power Flow Analysis (Constraints for Potential Upgrades)

Available upon request. Contact SPP Generator Interconnection Studies for details.

11.14 H-V-AS: Affected System Voltage Power Flow Analysis(Constraints for Potential Upgrades)

SAvailable upon request. Contact SPP Generator Interconnection Studies for details.

11.15 H1-T: Stand Alone Thermal Power Flow Analysis (Other Constraints Not Requiring Transmission Reinforcement)

Available upon request. Contact SPP Generator Interconnection Studies for details.

11.16 I: Power Flow Analysis (Constraints from Multi-Contingencies)

Available upon request. Contact SPP Generator Interconnection Studies for details.

11.17 J: Group 1 Dynamic Stability Analysis Report

See S&C report next page

S&C ELECTRIC COMPANY
Excellence Through Innovation

DISIS-2015-002 (GROUP 1)

LITTLE ROCK, AR

SOUTHWEST POWER POOL

DEFINITIVE INTERCONNECTION SYSTEM IMPACT STUDY

S&C PROJECT NUMBER: 10192

DOCUMENT NUMBER: E-857

REVISION: 0

FINAL REPORT

CONFIDENTIAL

MARCH 11, 2016

DISCLAIMER

THIS DOCUMENT WAS PREPARED AND PROVIDED PURSUANT TO A CONTRACT WITH CUSTOMER AND/OR END USER THAT DEFINES THE PARTIES RESPECTIVE RIGHTS TO WORK PRODUCT AND INTELLECTUAL PROPERTY. ANY OTHER USE OF THIS DOCUMENT IS STRICTLY PROHIBITED. ALL OTHER RIGHTS ARE RESERVED AND NO LICENSE OR RIGHTS TO THE SUBJECT MATTER OF THIS DOCUMENT ARE GRANTED BY POSSESSION THEREOF.

REPORT REVISION HISTORY:

REV	DATE	PREPARED BY	REVIEWED BY	APPROVED BY	DESCRIPTION
A	02/24/2016	MA	SK	SK	Preliminary report issued
B	03/07/2016	MA	SK	SK	Modified per SPP comments
0	03/11/2016	MA	SK	SK	Final report issued

AUTHORS:

Prepared By:

Matthew Artus
Design Engineer
S&C Electric Company

Reviewed and Approved By:

Saeed Kamalinia
Assistant Manager – Consulting and Analytical Services
S&C Electric Company

TABLE OF CONTENTS

1. Executive Summary 5
2. Introduction 7
3. Transmission System and Study Area 9
4. Power Flow Base Cases 10
5. Power Flow Model 11
6. Dynamic Stability Analysis 15
   6.1. Assumptions 15
   6.2. Stability Criteria 15
   6.3. Dynamic Stability Results 16
7. Power Factor Analysis 22
8. Low Wind/Low irradiance Conditions Analysis 24
9. Short-Circuit Study 25
10. Conclusions and Recommendations 26

LIST OF FIGURES

Figure 1: One-line Diagrams of the Interconnection Request Projects 14
Figure 2: DYR Changes Before (Top) & After (Bottom) modifying the low range of the over-voltage settings of Parker Inverter 20

LIST OF TABLES

Table 1: Group 1 Generation Interconnection Requests 7
Table 2: Prior Queued Projects 7
Table 3: Group 1 Dynamic Stability Results 17
Table 4: Base Case Voltages at the Interconnection Request POI Bus 22
Table 5: Summary of Power Factor Analysis at the POI 23
Table 6: Shunt Reactor Mvar Determined by Low Wind/Low Irradiance Study 24

LIST OF APPENDICES

Appendix A
SPP Group 1 Fault Definitions (Submitted in a Separate File)
Appendix B
Southwest Power Pool Disturbance Performance Requirements (Submitted in a Separate File)
Appendix C
Dynamic Stability Plots For Cluster Scenario (Submitted in Separate Files from Appendix C-1 to C-3)
Appendix D
Dynamic Stability Plots For Stand-Alone Scenario (Submitted in Separate File from Appendix D-1 to D-27)
Appendix E
Power Factor Analysis Results (Submitted in Separate File from Appendix E-1 to E-7)
Appendix F
Short-Circuit Study Results (Submitted in a Separate File from appendix F-1 to F-2)

1. Executive Summary

S&C Electric Company (S&C) has performed a Definitive Interconnection System Impact Study, DISIS-2015-002 (Group 1), in response to a request through Southwest Power Pool (SPP) Tariff. Group 1 consists of nine (9) new interconnection (POI) requests (GEN-2015-038, GEN-2015-044, GEN-2015-048, GEN-2015-057, GEN-2015-059, GEN-2015-060, GEN-2015-081, GEN-2015-093, GEN-2015-095). Eight (8) interconnection requests consist of wind farm projects, and one interconnection request (GEN-2015-044) is a battery energy storage project.

S&C has performed dynamic stability analysis for Group 1 under Cluster and Stand-Alone (SA) scenarios. The cluster studies were performed using three (3) cluster base cases (2016 Winter Peak, 2017 Summer Peak, and 2025 Summer Peak) provided by SPP. In the cluster studies, all four new interconnection requests and prior-queued projects were studied at 100% of nameplate MW capacity. The standalone studies were performed using three (3) standalone base cases (2016 WP, 2017 SP, and 2025 SP) provided by SPP and by placing an interconnection request into service, one at a time. The in-service interconnection project was dispatched at 100% power and the eight (8) out of service interconnection projects were set to zero generation or to some defined value if the project is an increase to an existing project or facility. The dynamics stability analysis for the cluster and stand-alone studies indicated that modifications are needed in regards to the Parker 890GT inverter model associated with interconnection request GEN-2015-044. Without this necessary modifications, GEN-2015-044 tripped off-line for low voltage on multiple contingencies during all three peak seasons in cluster and stand-alone cases. After this modification, the dynamics stability studies revealed that Group 1 projects met the SPP transient voltage requirement, with the solutions illustrated in the dynamic stability results section of this report.

S&C has performed power factor analysis on Group 1 Cluster scenarios. Power factor analysis reported the power factors at the study projects point of interconnection (POI) for all N-1 three-phase contingences and marked the contingency at which the required power factor at the POI of study projects to maintain the voltages at the desired level is beyond the normal required capability (from 0.95 lagging to 0.95 leading) of the studied projects. The power factor requirement for GEN-2015-038, GEN-2015-044, GEN-2015-048, GEN-2015-057,

GEN-2015-059, GEN-2015-060, GEN-2015-081, GEN-2015-093, and GEN-2015-095 interconnection requests is from 0.95 lagging to 0.95 leading power factor at the POIs.

S&C has performed an analysis of low wind/low irradiance conditions for each interconnection request that is a renewable energy project. The low wind/low irradiance analysis was performed under the cluster cases by taking the interconnection generation out of service and determining the Mvar size of a shunt reactor to offset the reactive power that comes from the capacitance of the project's transmission lines and collector cables. The shunt reactor Mvars are given in Section 8. Note that a special consideration was given to interconnection request GEN-2015-038 since it is sharing the POI with the prior-queued projects GEN-2010-040 and GEN-2011-054.

S&C has performed a short-circuit analysis for the 2017 Summer Peak and 2025 Summer Peak under Group 1 Cluster and reported short circuit results at all buses up to five (5) levels away from the POI of the study projects.

2. INTRODUCTION

S&C has performed a Definitive Interconnection System Impact Study, DISIS-2015-002 (Group 1), in response to a request through the SPP Tariff. Group 1 consist of nine (9) new interconnection requests listed in Table 1 and twenty-five (25) previously queued projects listed in Table 2.

Table 1: Group 1 Generation Interconnection Requests

Project	Size (MW)	Generator Model	Generator Bus(es)	Point of Interconnection (POI)	POI Bus
GEN-2015-038	303.6	Siemens 2.3 MW (wind)	584793 & 584796	Cimarron 345 kV	514901
GEN-2015-044	20	WT4 (generic) (Parker 890GT-B 2.0 MW inverter; battery storage)	584852	Minco 345 kV	514801
GEN-2015-048	200	Vestas V110 (wind)	584893	Cleo Corner 138 kV	514778
GEN-2015-057	100	GE 2.3 MW (wind)	584953	Minco 345 kV	514801
GEN-2015-059	6.3	GE 1.79 MW (wind)	599117	Minco 345 kV	514801
GEN-2015-060	250	GE 1.79 MW (wind)	584983 & 584986	Woodward EHV District 138 kV	515376
GEN-2015-081	180	Vestas V110 (wind)	585183	Tap on the Woodward - Tatonga 345 kV line (G11_051-TAP)	562075
GEN-2015-093	250	GE 2 MW (wind)	585273 & 585274	Gracemont 345 kV	515800
GEN-2015-095	176	Vestas V110 (wind)	585303	Tap on Mooreland-Noel Switch 138 kV	560066

Table 2: Prior Queued Projects

Request	Size (MW)	Generator Model	Point of Interconnection
GEN-2001-014	94.5	Suzlon 2.1 MW (599002)	Fort Supply 138 kV (520920)
GEN-2001-037	102	GE 1.5 MW (599012)	Moorland – Woodward 138 kV (515785)
GEN-2005-008	120	GE 1.5 MW (579353)	Woodward 138 kV (514785)
GEN-2006-024S	18.9	Suzlon 2.1 MW (599057)	Buffalo Bear 69 kV (521120)
GEN-2006-046	132	Mitsubishi 2.4 MW (599053)	Dewey 138 kV (514787)
GEN-2007-021	200	GE 1.6 MW (599136)	Tatonga 345 kV (515407)
GEN-2007-043	200	GE 1.6 MW (599062)	Minco 345 kV (514801)
GEN-2007-044	299.2	GE 1.6 MW (599059 & 579275)	Tatonga 345 kV (515407)
GEN-2007-050	170.2	Siemens 2.3 MW (599064 & 599065)	Woodward 138 kV (515376)
GEN-2007-062	765	GE 1.5 MW (599070, 599073, 599077 & 599080)	Woodward 345 kV (515375)

GEN-2008-003	101.2	Siemens 2.3 MW (599081)	Woodward 138 kV (515376)
GEN-2008-044	197.8	Siemens SWT 2.3 MW (599101, 599103 & 599099)	Tatonga 345 kV (515407)
GEN-2010-011	29.7	Siemens SWT 2.3 MW (599101)	Tatonga 345 kV (515407) (Addition to Gen-2008-044 34.5kV bus (515450)
GEN-2010-040	298.5	RePower 2.05MW (599114 & 599116)	Cimarron 345 kV (514901)
GEN-2011-010	100.8	GE 1.6 MW (599117)	Minco 345 kV (514801)
GEN-2011-019	299	Siemens 2.3 MW (582319)	Woodward 345 kV (515375)
GEN-2011-020	299	Siemens 2.3 MW (582320)	Woodward 345 kV (515375)
GEN-2011-051	104.4	Vestas V90 1.8 MW (583113)	Tap on the Woodward - Tatonga 345 kV line (G11_051-TAP, 562075)
GEN-2011-054	298	Vestas V100 2.0 MW (599122 & 599124)	Cimarron 345 kV (514901)
GEN-2014-002	10.53 increase (Pmax=209.4)	GE 97.4m 1.79 MW (599136)	Tatonga 345 kV (515407)
GEN-2014-003	15.84 increase (Pmax=315)	GE 97.4m 1.79 MW (599059,579275)	Tatonga 345 kV (515407)
GEN-2014-005	5.67 increase (Pmax=106.5)	GE 97.4m 1.79 MW (599117)	Minco 345 kV (514801)
GEN-2014-020	100.0	Vestas V110 2.0 MW (583903)	Tuttle 138 kV (511501)
GEN-2014-056	250.0	GE 2.0 MW (584063)	Minco 345 kV (514801)
GEN-2015-029	161.0	GE 2.3 MW (584703)	Tatonga 345 kV (515407)

3. Transmission System and Study Area

The interconnection requests in Group 1 will interconnect into Oklahoma Gas & Electric (OKGE, Area #524) and Western Farmers Electric Cooperative (WFEC, Area #525).

In addition to Areas #524 and #525, the following areas were monitored also:

- American Electric Power West (AEPW, Area #520)
- Southwestern Public Service (SPS, Area #526)
- Midwest Energy (MIDW, Area #531)
- Sunflower Electric Power Corporation (SUNC, Area #534)
- Westar Energy, Inc. (WERE, Area #536)

4. Power Flow Base Cases

DISIS-2015-002 (Group 1) and prior-queued projects were modeled as aggregated generating units in the base cases from SPP.

Cluster Scenario Base Cases

- **MDWG15-16WP_DIS1502_G01.sav** – 2016 Winter Peak Cluster Base Case for Group 1. New interconnection requests and prior queued projects at 100% output power.
- **MDWG15-17SP_DIS1502_G01.sav** – 2017 Summer Peak Cluster Base Case for Group 1. New interconnection requests and prior queued projects at 100% output power.
- **MDWG15-25SP_DIS1502_G01.sav** – 2025 Summer Peak Cluster Base Case for Group 1. New interconnection requests and prior queued projects at 100% output power.

Stand-Alone Scenario Base Cases

- **MDWG15-16WP_DIS1502_G01-SA.sav** – 2016 Winter Peak SA Base Case for Group 1. New interconnection requests currently out of service.
- **MDWG15-17SP_DIS1502_G01-SA.sav** – 2017 Summer Peak SA Base Case for Group 1. New interconnection requests currently out of service.
- **MDWG15-25SP_DIS1502_G01-SA.sav** – 2025 Summer Peak SA Base Case for Group 1. New interconnection requests currently out of service.

On January 27, 2016, S&C received the following IDEV files to change the POI of the Generation Interconnect Request GEN-2015-093.

1. MOVE_GEN-2015-093-POI-TO-GRACEMONT-345kV.IDV
2. GEN-2015-093-100%_V32.idv

5. Power Flow Model

SPP's base case power flow models were built in PSS/E 32.2.2. In PSS/E of the same version, S&C created one-line diagrams depicted in Figure 1 for each interconnection request.

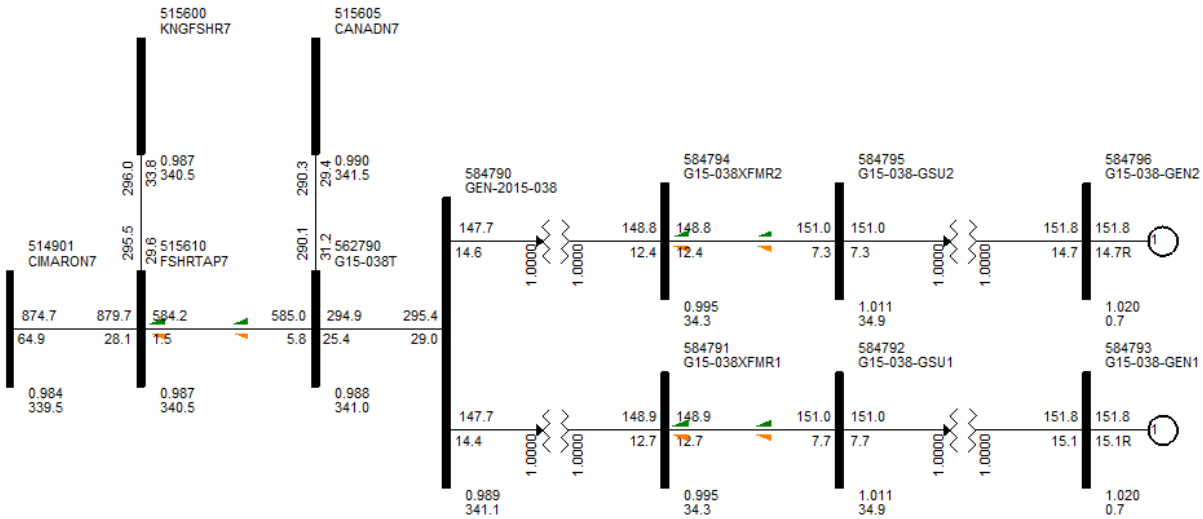

(a) Interconnection request GEN-2015-038

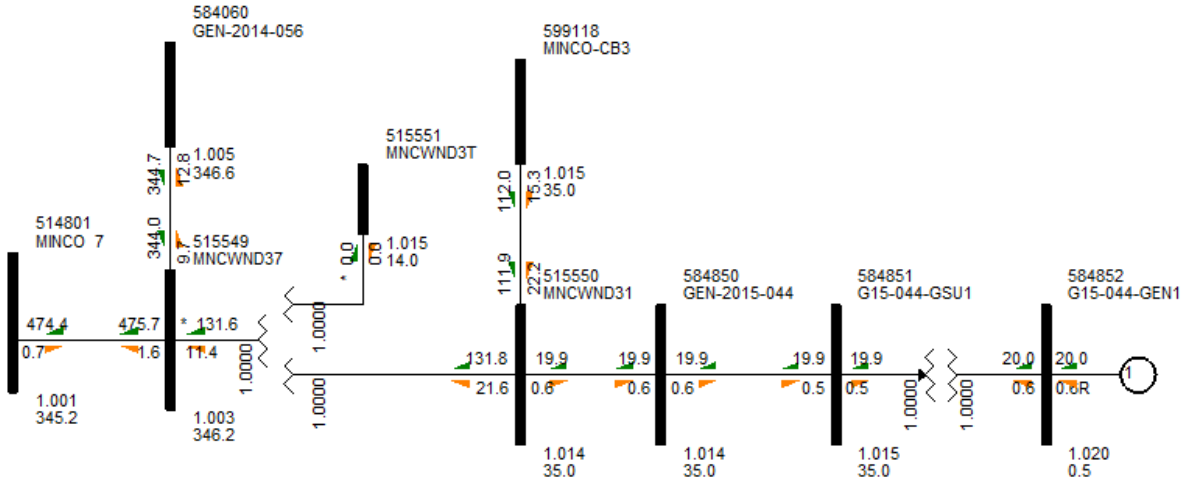

(b) Interconnection request GEN-2015-044

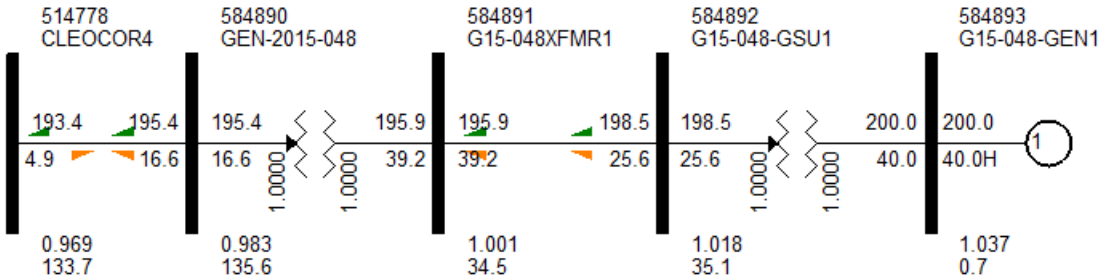

(c) Interconnection request GEN-2015-048

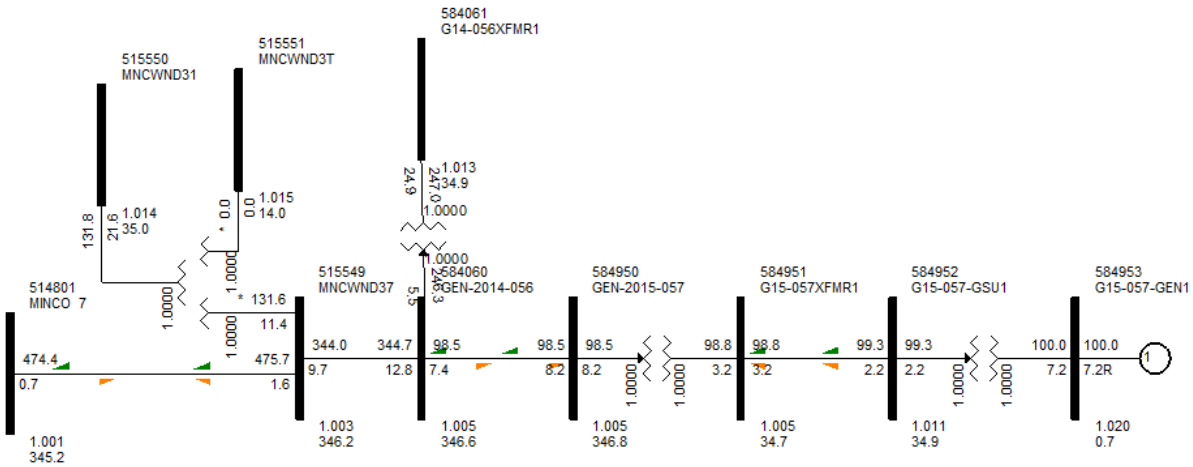

(d) Interconnection request GEN-2015-057

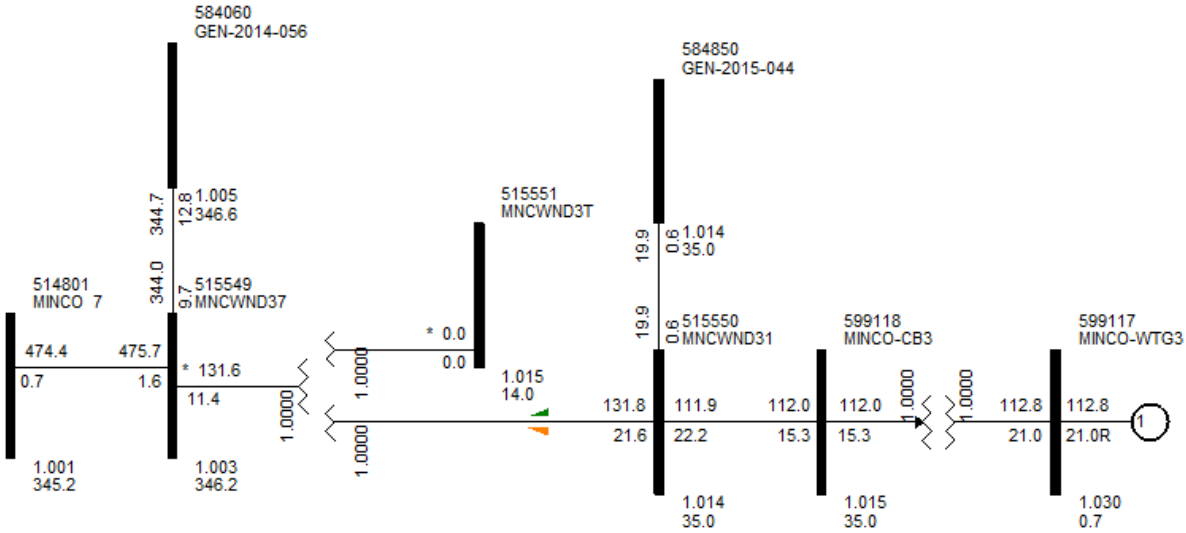

(e) Interconnection request GEN-2015-059

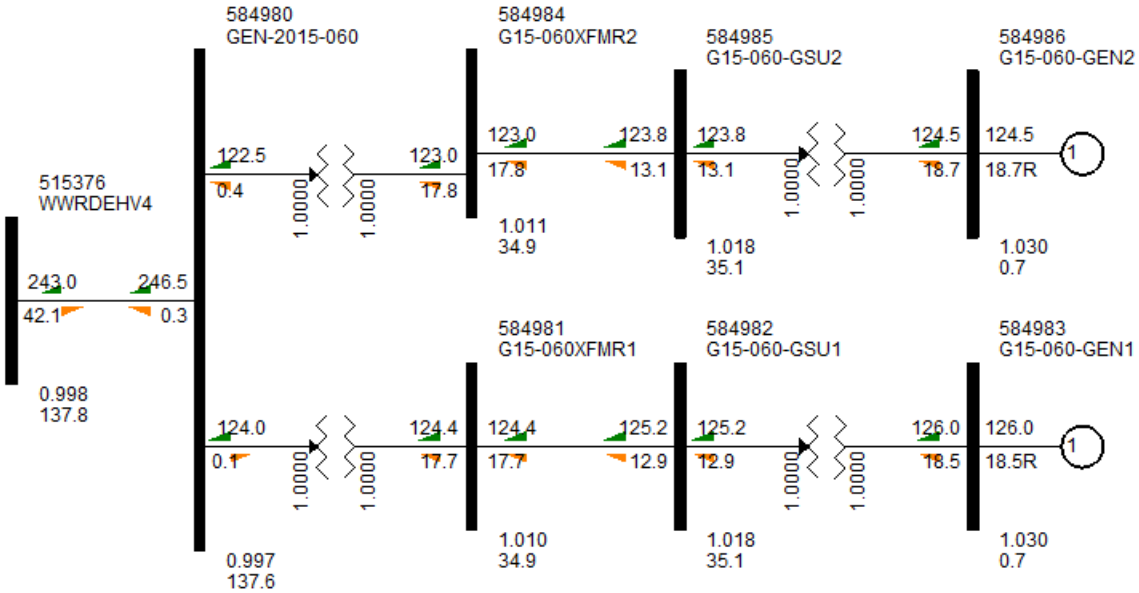

(f) Interconnection request GEN-2015-060

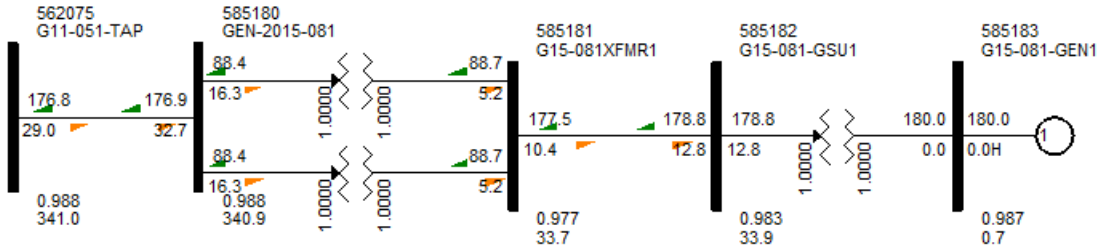

(g) Interconnection request GEN-2015-081

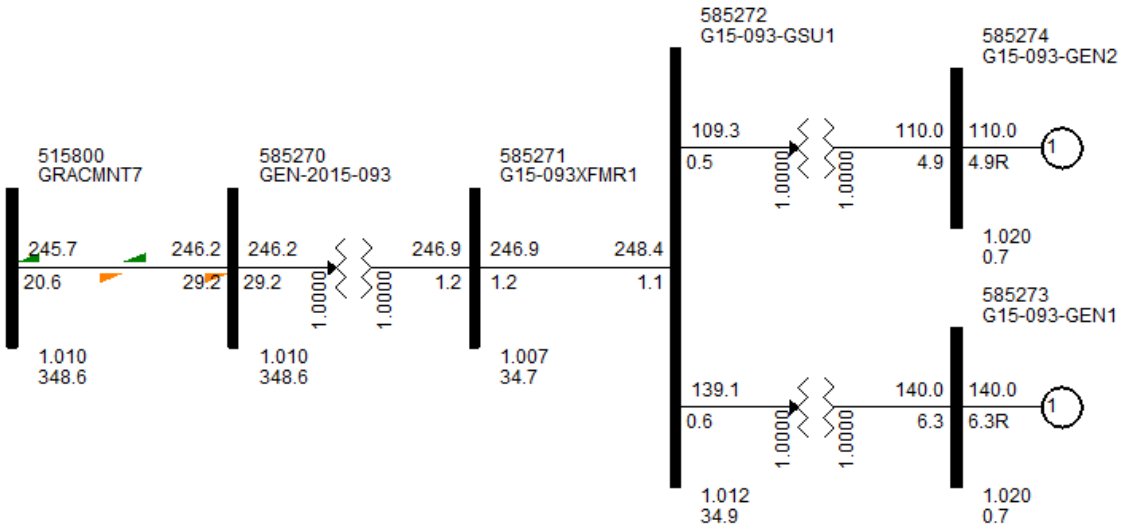

(h) Interconnection request GEN-2015-093

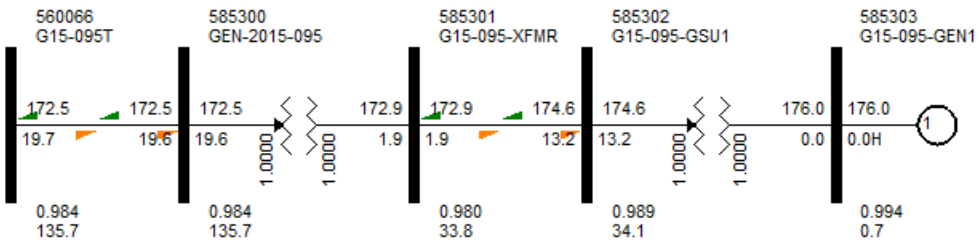

(i) Interconnection request GEN-2015-095

Figure 1: One-line Diagrams of the Interconnection Request Projects

6. Dynamic Stability Analysis

6.1. Assumptions

Dynamic stability analysis was performed for all the SPP contingencies listed in Appendix A. Three phase faults were simulated as bolted faults, while single line-to-ground faults were simulated under the assumption that a single line-to-ground fault will cause a 60% drop in the positive-sequence voltage at the fault location.

6.2. Stability Criteria

Dynamic stability studies were performed to ensure system stability following critical faults on the system. The system is considered stable if the following conditions are met:

(1) Disturbances including three-phase and single-phase to ground faults, should not cause synchronous and asynchronous plants to disconnect from the transmission grid.

(2) The angular positions of synchronous machine rotor become constant following an aperiodic system disturbance.

(3) Voltage magnitudes and frequencies at terminals of asynchronous generators should not exceed magnitudes and durations that will cause protection elements to operate. Furthermore, the response after the disturbance needs to be studied at the terminals of the machine to ensure that there are no sustained oscillations in power output, speed, frequency, etc.

(4) Voltage magnitudes and angles after the disturbance should settle to a constant and acceptable operating level. Frequencies should settle to the acceptable range within nominal 60 Hz power frequency.

In addition, performance of the transmission system is measured against the SPP Disturbance Criteria Requirements on Angular oscillations and Transient Voltage Recovery, detailed in Appendix B.

6.3. DYNAMIC STABILITY RESULTS

Multiple concerns surfaced during preliminary dynamic stability simulations. A detailed list of such concerns and how they were addressed is shown below.

- Gamesa WTGs at bus 599049 and 599050 (prior queued project GEN-2006-035) tripped on under-voltage
  - The cause was traced to an improper implementation of the under-voltage protection scheme for the Gamesa WTGs. This issue was discussed with SPP and make the appropriate correction SPP provided an IDV file titled "GEN-2006-035_UV_Protection_Modification".
- Simulation of multiple contingencies caused PSS/E to crash
  - The cause was traced to the use of the Siemens SWT_32_rev10.lib library module. This issue was discussed with SPP and reverting to a previous version of the module (SWT_32_rev8.lib module) resolved the issue.
- The prior outage defined by FLT40 caused the power flow simulation to "blow up" in 25SP base case
  - Per SPP recommendation, GEN-2015-048 was curtailed from 200 MW to 100 MW to resolve the issue.

Dynamic stability simulations were performed once again after implementing the solutions described above. Table 3 below summarizes the dynamic stability results for each contingency and each season.

Table 3: Group 1 Dynamic Stability Results
(YES = STABLE, NO = UNSTABLE, '-' Not applicable)

Cont. No.	Cont. Name	16WP: Cluster	16WP: GEN-15-38	16WP: GEN-15-44	16WP: GEN-15-48	16WP: GEN-15-57	16WP: GEN-15-59	16WP: GEN-15-60	16WP: GEN-15-81	16WP: GEN-15-93	16WP: GEN-15-95	17SP: Cluster	17SP: GEN-15-38	17SP: GEN-15-44	17SP: GEN-15-48	17SP: GEN-15-57	17SP: GEN-15-59	17SP: GEN-15-60	17SP: GEN-15-81	17SP: GEN-15-93	17SP: GEN-15-95	25SP: Cluster	25SP: GEN-15-38	25SP: GEN-15-44	25SP: GEN-15-48	25SP: GEN-15-57	25SP: GEN-15-59	25SP: GEN-15-60	25SP: GEN-15-81	25SP: GEN-15-93	25SP: GEN-15-95
1	FLT01-3PH	YES	YES	YES	-	YES	YES	-	-	-	-	YES	YES	YES	-	YES	YES	-	-	-	-	YES [1]	YES	YES	-	YES	YES	-	-	-	-
2	FLT02-3PH	YES	YES	YES	-	YES	YES	-	-	-	-	YES	YES	YES	-	YES	YES	-	-	-	-	YES [1]	YES	YES	-	YES	YES	-	-	-	-
3	FLT03-3PH	YES	YES	YES	-	YES	YES	-	-	-	-	YES	YES	YES	-	YES	YES	-	-	-	-	YES [1]	YES	YES	-	YES	YES	-	-	-	-
4	FLT04-3PH	YES	YES	YES	-	YES	YES	-	-	-	-	YES	YES	YES	-	YES	YES	-	-	-	-	YES [1]	YES	YES	-	YES	YES	-	-	-	-
5	FLT05-3PH 2025SP Only	-	-	-	-	-	-	-	-	-	-	-	-	-	-	-	-	-	-	-	-	YES [1]	YES	YES	-	YES	YES	-	-	-	-
6	FLT06-3PH	YES	YES	YES	-	YES	YES	-	-	-	-	YES	YES	YES	-	YES	YES	-	-	-	-	YES [1]	YES	YES	-	YES	YES	-	-	-	-
7	FLT07-3PH	YES [2]	YES	YES [2]	-	YES	YES	-	-	YES	-	YES [2]	YES	YES [2]	-	YES	YES	-	-	YES	-	YES [1,2]	YES	YES [2]	-	YES	YES	-	-	YES	-
8	FLT08-3PH	YES	YES	-	-	YES	YES	-	-	-	-	YES	YES	-	-	YES	YES	-	-	-	-	YES [1]	YES	-	-	YES	YES	-	-	-	-
9	FLT09-3PH	-	-	-	-	-	-	-	-	-	-	-	-	-	-	-	-	-	-	-	-	-	-	-	-	-	-	-	-	-	-
10	FLT10-3PH	YES	YES	-	-	-	-	-	-	-	-	YES	YES	-	-	-	-	-	-	-	-	YES [1]	YES	-	-	-	-	-	-	-	-
11	FLT11-3PH	YES	YES	-	-	-	-	-	-	-	-	YES	YES	-	-	-	-	-	-	-	-	YES [1]	YES	-	-	-	-	-	-	-	-
12	FLT12-3PH	YES	YES	-	-	-	-	-	-	-	-	YES	YES	-	-	-	-	-	-	-	-	YES [1]	YES	-	-	-	-	-	-	-	-
13	FLT13-3PH	YES	YES	-	-	-	-	-	-	-	-	YES	YES	-	-	-	-	-	-	-	-	YES [1]	YES	-	-	-	-	-	-	-	-
14	FLT14-3PH	YES	YES	-	-	-	-	-	-	-	-	YES	YES	-	-	-	-	-	-	-	-	YES [1]	YES	-	-	-	-	-	-	-	-
15	FLT15-3PH 2025SP Only	-	-	-	-	-	-	-	-	-	-	-	-	-	-	-	-	-	-	-	-	YES [1]	YES	-	-	-	-	-	-	-	-
16	FLT16-3PH	YES	YES	-	-	-	-	-	-	-	-	YES	YES	-	-	-	-	-	-	-	-	YES [1]	YES	-	-	-	-	-	-	-	-
17	FLT17-3PH	YES	YES	-	-	-	-	-	-	-	-	YES	YES	-	-	-	-	-	-	-	-	YES [1]	YES	-	-	-	-	-	-	-	-
18	FLT18-3PH	YES	YES	-	-	-	-	-	-	-	-	YES	YES	-	-	-	-	-	-	-	-	YES [1]	YES	-	-	-	-	-	-	-	-
19	FLT19-3PH	YES	YES	-	-	-	-	-	-	-	-	YES	YES	-	-	-	-	-	-	-	-	YES [1]	YES	-	-	-	-	-	-	-	-
20	FLT20-3PH	YES	YES	-	-	-	-	-	-	-	-	YES	YES	-	-	-	-	-	-	-	-	YES [1]	YES	-	-	-	-	-	-	-	-
21	FLT21-3PH	YES	YES	-	-	-	-	-	-	-	-	YES	YES	-	-	-	-	-	-	-	-	YES [1]	YES	-	-	-	-	-	-	-	-
22	FLT22-SB	YES	YES	-	-	-	-	-	-	-	-	YES	YES	-	-	-	-	-	-	-	-	YES [1]	YES	-	-	-	-	-	-	-	-
23	FLT23-SB	YES	YES	-	-	-	-	-	-	-	-	YES	YES	-	-	-	-	-	-	-	-	YES [1]	YES	-	-	-	-	-	-	-	-
24	FLT24-PO	YES	YES	-	-	-	-	-	-	-	-	YES	YES	-	-	-	-	-	-	-	-	YES [1]	YES	-	-	-	-	-	-	-	-
25	FLT25-PO	YES	YES	-	-	-	-	-	-	-	-	YES	YES	-	-	-	-	-	-	-	-	YES [1]	YES	-	-	-	-	-	-	-	-
26	FLT26-PO	YES	YES	-	-	-	-	-	-	-	-	YES	YES	-	-	-	-	-	-	-	-	YES [1]	YES	-	-	-	-	-	-	-	-
27	FLT27-3PH	YES	-	YES	-	YES	YES	-	-	YES	-	YES	-	YES	-	YES	YES	-	-	YES	-	YES [1, 3]	-	YES [3]	-	YES [3]	YES [3]	-	-	YES [3]	-
28	FLT28-3PH 2025SP Only	-	-	-	-	-	-	-	-	-	-	-	-	-	-	-	-	-	-	-	-	YES [1,3]	-	YES [3]	-	YES [3]	YES [3]	-	-	YES [3]	-
29	FLT29-3PH	-	-	-	-	-	-	-	-	-	-	-	-	-	-	-	-	-	-	-	-	-	-	-	-	-	-	-	-	-	-

[1] Machine reactive power set to Qmax=Qmin=40 Mvar in 2025 Summer Peak case to prevent power oscillation at Bus #584893 (Generation Interconnection Request GEN-2015-048).
[2] Low voltage protection settings modified to prevent Machine 1 at Bus #584852 from tripping (Generation Interconnection Request GEN-2015-044). Further details provided later.
[3] Relay SLNOS #1 was taken out of service to prevent tripping.

Cont. No.	Cont. Name	16WP: Cluster	16WP: GEN-15-38	16WP: GEN-15-44	16WP: GEN-15-48	16WP: GEN-15-57	16WP: GEN-15-59	16WP: GEN-15-60	16WP: GEN-15-81	16WP: GEN-15-93	16WP: GEN-15-95	17SP: Cluster	17SP: GEN-15-38	17SP: GEN-15-44	17SP: GEN-15-48	17SP: GEN-15-57	17SP: GEN-15-59	17SP: GEN-15-60	17SP: GEN-15-81	17SP: GEN-15-93	17SP: GEN-15-95	25SP: Cluster	25SP: GEN-15-38	25SP: GEN-15-44	25SP: GEN-15-48	25SP: GEN-15-57	25SP: GEN-15-59	25SP: GEN-15-60	25SP: GEN-15-81	25SP: GEN-15-93	25SP: GEN-15-95
30	FLT30-SB	YES[4]	-	YES[4]	-	YES[4]	YES[4]	-	-	-	-	YES[4]	-	YES[4]	-	YES[4]	YES[4]	-	-	-	-	YES[1]	-	YES[4]	-	YES[4]	YES[4]	-	-	-	-
31	FLT31-SB	YES	-	YES	-	YES	YES	-	-	-	-	YES	-	YES	-	YES	YES	-	-	-	-	YES[1]	-	YES	-	YES	YES	-	-	-	-
32	FLT32-PO	YES[2]	-	YES[2]	-	YES	YES	-	-	-	-	YES[2]	-	YES[2]	-	YES	YES	-	-	-	-	YES[1,2]	-	YES[2]	-	YES	YES	-	-	-	-
33	FLT33-3PH	YES	-	-	YES	-	-	-	-	-	-	YES	-	-	YES	-	-	-	-	-	-	YES[1]	-	-	YES	-	-	-	-	-	-
34	FLT34-3PH	YES	-	-	YES	-	-	-	-	-	YES	YES	-	-	YES	-	-	-	-	-	YES	YES[1]	-	-	YES	-	-	-	-	-	YES
35	FLT35-3PH	YES	-	-	YES[6]	-	-	-	-	-	-	YES	-	-	YES[6]	-	-	-	-	-	-	YES[1]	-	-	YES[6]	-	-	-	-	-	-
36	FLT36-3PH	YES	-	-	YES	-	-	-	-	-	-	YES	-	-	YES	-	-	-	-	-	-	YES[1]	-	-	YES	-	-	-	-	-	-
37	FLT37-3PH	YES	-	-	YES[6]	-	-	-	-	-	-	YES	-	-	YES[6]	-	-	-	-	-	-	YES[1]	-	-	YES[6]	-	-	-	-	-	-
38	FLT38-3PH	YES	-	-	YES	-	-	-	-	-	-	YES	-	-	YES	-	-	-	-	-	-	YES[1]	-	-	YES	-	-	-	-	-	-
39	FLT39-3PH	YES	-	-	YES	-	-	-	-	-	-	YES	-	-	YES	-	-	-	-	-	-	YES[1]	-	-	YES	-	-	-	-	-	-
40	FLT40-PO	YES	-	-	YES[5]	-	-	-	-	-	-	YES	-	-	YES[5]	-	-	-	-	-	-	YES[6]	-	-	YES[5]	-	-	-	-	-	-
41	FLT41-PO	YES	-	-	YES[5]	-	-	-	-	-	-	YES	-	-	YES[5]	-	-	-	-	-	-	YES[6]	-	-	YES[5]	-	-	-	-	-	-
42	FLT42-3PH	YES	-	-	-	-	-	YES	YES	-	-	YES	-	-	-	-	-	YES	YES	-	-	YES[1]	-	-	-	-	-	YES	YES	-	-
43	FLT43-3PH	YES	-	-	-	-	-	YES	YES	-	-	YES	-	-	-	-	-	YES	YES	-	-	YES[1]	-	-	-	-	-	YES	YES	-	-
44	FLT44-3PH	YES	-	-	-	-	-	YES	YES	-	-	YES	-	-	-	-	-	YES	YES	-	-	YES[1]	-	-	-	-	-	YES	YES	-	-
45	FLT45-3PH	YES	-	-	-	-	-	YES	YES	-	-	YES	-	-	-	-	-	YES	YES	-	-	YES[1]	-	-	-	-	-	YES	YES	-	-
46	FLT46-3PH	YES	-	-	-	-	-	YES	YES	-	-	YES	-	-	-	-	-	YES	YES	-	-	YES[1]	-	-	-	-	-	YES	YES	-	-
47	FLT47-3PH	YES	-	-	-	-	-	YES	YES	-	-	YES	-	-	-	-	-	YES	YES	-	-	YES[1]	-	-	-	-	-	YES	YES	-	-
48	FLT48-3PH	YES	-	-	-	-	-	YES	-	-	-	YES	-	-	-	-	-	YES	-	-	-	YES[1]	-	-	-	-	-	YES	-	-	-
49	FLT49-3PH	YES	-	-	-	-	-	YES	-	-	-	YES	-	-	-	-	-	YES	-	-	-	YES[1]	-	-	-	-	-	YES	-	-	-
50	FLT50-3PH	YES	-	-	-	-	-	YES	-	-	-	YES	-	-	-	-	-	YES	-	-	-	YES[1]	-	-	-	-	-	YES	-	-	-
51	FLT51-3PH	YES	-	-	-	-	-	YES	-	-	-	YES	-	-	-	-	-	YES	-	-	-	YES[1]	-	-	-	-	-	YES	-	-	-
52	FLT52-3PH	YES	-	-	-	-	-	YES	-	-	-	YES	-	-	-	-	-	YES	-	-	-	YES[1]	-	-	-	-	-	YES	-	-	-
53	FLT53-SB	YES	-	-	-	-	-	YES	YES	-	-	YES	-	-	-	-	-	YES	YES	-	-	YES[1]	-	-	-	-	-	YES	YES	-	-
54	FLT54-SB	YES	-	-	-	-	-	YES	YES	-	-	YES	-	-	-	-	-	YES	YES	-	-	YES[1]	-	-	-	-	-	YES	YES	-	-
55	FLT55-PO	YES	-	-	-	-	-	YES	-	-	-	YES	-	-	-	-	-	YES	-	-	-	YES[1]	-	-	-	-	-	YES	-	-	-
56	FLT56-PO	YES	-	-	-	-	-	YES	-	-	-	YES	-	-	-	-	-	YES	-	-	-	YES[1]	-	-	-	-	-	YES	-	-	-
57	FLT57-3PH	YES	-	-	-	-	-	-	YES	-	-	YES	-	-	-	-	-	-	YES	-	-	YES[1]	-	-	-	-	-	-	YES	-	-
58	FLT58-3PH 2025SP Only	-	-	-	-	-	-	-	-	-	-	-	-	-	-	-	-	-	-	-	-	YES[1]	-	-	-	-	-	-	YES	-	-
59	FLT59-3PH 2025SP Only	-	-	-	-	-	-	-	-	-	-	-	-	-	-	-	-	-	-	-	-	YES[1]	-	-	-	-	-	-	YES	-	-
60	FLT60-3PH 2025SP Only	-	-	-	-	-	-	-	-	-	-	-	-	-	-	-	-	-	-	-	-	YES[1]	-	-	-	-	-	-	YES	-	-

[4] FLT30-SB islands Prior Queued Project GEN-2007-043. Note that this generator remains online despite absence of grid connection.
[5] Machine real power curtailed to P=100 MW and reactive power set to Q=0 Mvar to prevent power oscillation at Bus #584893 (Generation Interconnection Request GEN-2015-048). In addition, a switched shunt component was placed at Bus #584891 to sustain a 0.95 p.u. local voltage.
[6] Machine real power curtailed to P=100 MW and reactive power set to Q=0 Mvar to prevent power oscillation at Bus #584893 (Generation Interconnection Request GEN-2015-048).

Cont. No.	Cont. Name	16WP: Cluster	16WP: GEN-15-38	16WP: GEN-15-44	16WP: GEN-15-48	16WP: GEN-15-57	16WP: GEN-15-59	16WP: GEN-15-60	16WP: GEN-15-81	16WP: GEN-15-93	16WP: GEN-15-95	17SP: Cluster	17SP: GEN-15-38	17SP: GEN-15-44	17SP: GEN-15-48	17SP: GEN-15-57	17SP: GEN-15-59	17SP: GEN-15-60	17SP: GEN-15-81	17SP: GEN-15-93	17SP: GEN-15-95	25SP: Cluster	25SP: GEN-15-38	25SP: GEN-15-44	25SP: GEN-15-48	25SP: GEN-15-57	25SP: GEN-15-59	25SP: GEN-15-60	25SP: GEN-15-81	25SP: GEN-15-93	25SP: GEN-15-95
61	FLT61-SB 2025SP Only	-	-	-	-	-	-	-	-	-	-	-	-	-	-	-	-	-	-	-	-	YES [1]	-	-	-	-	-	-	YES	-	-
62	FLT62-PO 2025SP Only	- [7]	- [7]	-	-	-	-	-	- [7]	-	-	- [7]	- [7]	-	-	-	-	-	- [7]	-	-	YES [1]	YES	-	-	-	-	-	YES	-	-
63	FLT63-3PH	-	-	-	-	-	-	-	-	-	-	-	-	-	-	-	-	-	-	-	-	-	-	-	-	-	-	-	-	-	-
64	FLT64-3PH	-	-	-	-	-	-	-	-	-	-	-	-	-	-	-	-	-	-	-	-	-	-	-	-	-	-	-	-	-	-
65	FLT65-3PH	-	-	-	-	-	-	-	-	-	-	-	-	-	-	-	-	-	-	-	-	-	-	-	-	-	-	-	-	-	-
66	FLT66-3PH	YES	-	-	-	-	-	-	-	YES	-	YES	-	-	-	-	-	-	-	YES	-	YES [1]	-	-	-	-	-	-	-	YES	-
67	FLT67-3PH	YES	-	-	-	-	-	-	-	YES	-	YES	-	-	-	-	-	-	-	YES	-	YES [1]	-	-	-	-	-	-	-	YES	-
68	FLT68-3PH	YES	-	-	-	-	-	-	-	-	YES	YES [8]	-	-	-	-	-	-	-	-	YES	YES [1,8]	-	-	-	-	-	-	-	-	YES
69	FLT69-3PH	YES	-	-	-	-	-	-	-	-	YES	YES	-	-	-	-	-	-	-	-	YES	YES [1]	-	-	-	-	-	-	-	-	YES
70	FLT70-3PH	YES	-	-	-	-	-	-	-	-	YES	YES	-	-	-	-	-	-	-	-	YES	YES [1]	-	-	-	-	-	-	-	-	YES
71	FLT71-3PH	YES	-	-	-	-	-	-	-	-	YES	YES	-	-	-	-	-	-	-	-	YES	YES [1]	-	-	-	-	-	-	-	-	YES
72	FLT72-3PH	YES	-	-	-	-	-	-	-	-	YES	YES	-	-	-	-	-	-	-	-	YES	YES [1]	-	-	-	-	-	-	-	-	YES
73	FLT73-3PH	YES	-	-	-	-	-	-	-	-	YES	YES	-	-	-	-	-	-	-	-	YES	YES [1]	-	-	-	-	-	-	-	-	YES
74	FLT74-3PH	-	-	-	-	-	-	-	-	-	-	-	-	-	-	-	-	-	-	-	-	-	-	-	-	-	-	-	-	-	-
75	FLT75-3PH	YES	-	-	-	-	-	-	-	-	YES	YES	-	-	-	-	-	-	-	-	YES	YES [1]	-	-	-	-	-	-	-	-	YES
76	FLT76-3PH	YES	-	-	-	-	-	-	-	-	YES	YES	-	-	-	-	-	-	-	-	YES	YES [1]	-	-	-	-	-	-	-	-	YES
77	FLT77-3PH	YES	-	-	-	-	-	-	-	-	YES	YES	-	-	-	-	-	-	-	-	YES	YES [1]	-	-	-	-	-	-	-	-	YES
78	FLT78-3PH	YES	-	-	-	-	-	-	-	-	YES	YES	-	-	-	-	-	-	-	-	YES	YES [1]	-	-	-	-	-	-	-	-	YES
79	FLT79-3PH	YES	-	-	-	-	-	-	-	-	YES	YES	-	-	-	-	-	-	-	-	YES	YES [1]	-	-	-	-	-	-	-	-	YES
80	FLT80-3PH	YES	-	-	-	-	-	-	-	-	YES	YES	-	-	-	-	-	-	-	-	YES	YES [1]	-	-	-	-	-	-	-	-	YES
81	FLT81-SB	YES	YES	-	-	-	-	-	-	-	-	YES	YES	-	-	-	-	-	-	-	-	YES [1]	YES	-	-	-	-	-	-	-	-
82	FLT82-SB	-	-	-	-	-	-	-	-	-	-	-	-	-	-	-	-	-	-	-	-	-	-	-	-	-	-	-	-	-	-
83	FLT83-SB	YES [1,9]	-	-	YES [1,9]	-	-	-	-	-	-	YES [1,9]	-	-	YES [1,9]	-	-	-	-	-	-	YES [1,9]	-	-	YES [1,9]	-	-	-	-	-	-
84	FLT84-SB	YES	-	-	-	YES	-	-	-	-	-	YES	-	-	-	YES	-	-	-	-	-	YES [1]	-	-	-	YES	-	-	-	-	-
85	FLT85-SB	-	-	-	-	-	-	-	-	-	-	-	-	-	-	-	-	-	-	-	-	-	-	-	-	-	-	-	-	-	-
86	FLT86-SB	YES	-	-	-	-	-	YES	-	-	-	YES	-	-	-	-	-	YES	-	-	-	YES [1]	-	-	-	-	-	YES	-	-	-
87	FLT87-SB	-	-	-	-	-	-	-	-	-	-	-	-	-	-	-	-	-	-	-	-	-	-	-	-	-	-	-	-	-	-
88	FLT88-SB	-	-	-	-	-	-	-	-	-	-	-	-	-	-	-	-	-	-	-	-	-	-	-	-	-	-	-	-	-	-
89	FLT89-SB	-	-	-	-	-	-	-	-	-	-	-	-	-	-	-	-	-	-	-	-	-	-	-	-	-	-	-	-	-	-

[7] FLT62-PO transitioned to a 2025SP only case
[8] Machine reactive power set to Q=10 Mvar to prevent sustained power oscillation at Bus #585303 (Generation Interconnection Request GEN-2015-095).
[9] FLT83-SB redefined to trip three-winding transformer (514778/514777/515716) and transmission line (514778-514788)

Per Table 3, it was realized that Generation Interconnection Request GEN-2015-044 (involving Minco III Battery Storage) was still tripping offline for FLT07 and FLT32. After further investigation, a potential error was identified within the protection settings of the Parker 890GT 2.0 MW inverter model. By changing the low range of the over-voltage protection settings from 0.2 p.u. to 0.0 p.u. (as shown in Figure 2), we could resolve the tripping issue of the GEN-2015-044.

```
0 'USRMDL' 0 'VTGTPA' 0 2 6 4 0 1 584852 584852 '1' 0 0 0 0.7 5.0 2.20 0.08 /
0 'USRMDL' 0 'VTGTPA' 0 2 6 4 0 1 584852 584852 '1' 0 0 0 0.5 5.0 0.80 0.08 /
0 'USRMDL' 0 'VTGTPA' 0 2 6 4 0 1 584852 584852 '1' 0 0 0 0.3 5.0 0.25 0.08 /
0 'USRMDL' 0 'VTGTPA' 0 2 6 4 0 1 584852 584852 '1' 0 0 0 0.0 5.0 0.15 0.08 /
0 'USRMDL' 0 'VTGTPA' 0 2 6 4 0 1 584852 584852 '1' 0 0 0 0.2 1.1 1.00 0.08 /
0 'USRMDL' 0 'VTGTPA' 0 2 6 4 0 1 584852 584852 '1' 0 0 0 0.2 1.2 0.02 0.08 /
```

```
0 'USRMDL' 0 'VTGTPA' 0 2 6 4 0 1 584852 584852 '1' 0 0 0 0.7 5.0 2.20 0.08 /
0 'USRMDL' 0 'VTGTPA' 0 2 6 4 0 1 584852 584852 '1' 0 0 0 0.5 5.0 0.80 0.08 /
0 'USRMDL' 0 'VTGTPA' 0 2 6 4 0 1 584852 584852 '1' 0 0 0 0.3 5.0 0.25 0.08 /
0 'USRMDL' 0 'VTGTPA' 0 2 6 4 0 1 584852 584852 '1' 0 0 0 0.0 5.0 0.15 0.08 /
0 'USRMDL' 0 'VTGTPA' 0 2 6 4 0 1 584852 584852 '1' 0 0 0 0.0 1.1 1.00 0.08 /
0 'USRMDL' 0 'VTGTPA' 0 2 6 4 0 1 584852 584852 '1' 0 0 0 0.0 1.2 0.02 0.08 /
```

Figure 2: DYR Changes Before (Top) & After (Bottom) modifying the low range of the over-voltage settings of Parker Inverter

As it is listed in Table 3, generation Interconnection Request GEN-2015-048 proved to be a unique case that required multiple changes to avoid power oscillation issues. In particular, there were various instances in which Qmin and Qmax were adjusted as necessary. In addition, the machine power was needed to be curtailed from P=200 MW to P=100 MW during FLT35, 37, 40 and 41 to avoid instabilities. A switched shunt component placed at bus #584891 also proved necessary at times during FLT40 and 41.

In addition, relay SLNOS#1 was taken out of service in various cases to prevent unwanted tripping (more detail shown in Table 3). For every problematic instance, relay SLNOS#1 protecting line 523779-511451 was taken out of service. For the 2025SP stand-alone cases, in particular, relay SLNOS#1 protecting line 523777-523779 was also taken out of service.

As a result, dynamic stability analysis thus concluded that Group 1 is expected to successfully ride-through all contingencies specified by SPP given the changes described up to this point. Detailed plots of cluster dynamic stability results for each contingency and each peak season, are given in Appendix C. Plots of stand-alone dynamic stability result for each contingency and each season are given Appendix D.

7. Power Factor Analysis

The power factor analysis was performed under the cluster bases and for all N-1 three-phase contingencies shown in the Fault Definition table in Appendix A. Single-phase contingencies, N-1-1 contingencies and N-2 contingencies were excluded from the study. Prior to the run, the cluster base cases were slightly altered, by turning off the reactive capability of the renewable energy projects and by placing a new var generator at each renewable energy high voltage bus for supporting the reactive power. The var generators were set to hold the voltage schedule at the interconnection project consistent with the voltage schedules in the provided base case or 1.0 p.u. voltage (whichever is higher).

Table 4 gives the voltage schedule at each interconnection request location in the original cluster base cases. Note that the base case voltage for the 138-kV POI bus #514778 falls below the recommended 0.95 p.u. value in 2025 summer peak case.

Table 4: Base Case Voltages at the Interconnection Request POI Bus

Request	POI	2016 Winter Peak (p.u.)	2017 Summer Peak (p.u.)	2025 Summer Peak (p.u.)
GEN-2015-038	514901	0.984	0.992	0.996
GEN-2015-44/57/59	514801	1.001	1.006	1.008
GEN-2015-048	514778	0.969	0.963	0.928
GEN-2015-060	515376	0.998	0.986	0.994
GEN-2015-081	562075	0.988	0.991	1.005
GEN-2015-093	515800	1.010	1.014	1.015
GEN-2015-095	560066	0.984	0.975	0.976

The power factor analysis results for Group 1 interconnection requests for each N-1 three phase contingency were presented in Appendix E. We marked in pink color the contingencies at which the required power factor at the POI of the study project is beyond the normal required capability (from 0.95 lagging to 0.95 leading) of the studied renewable energy project. We also provided a summary Table 5 of the maximum leading/lagging reactive power demand and power factor found by the power factor analysis at the POIs.

The power factor requirement for GEN-2015-038, GEN-2015-044, GEN-2015-048, GEN-2015-057, GEN-2015-059, GEN-2015-060, GEN-2015-081, GEN-2015-093, and GEN-2015-095 interconnection requests is from 0.95 lagging to 0.95 leading power factor at the POIs.

Table 5: Summary of Power Factor Analysis at the POI

Request	Capacity	POI	Reactive Power/Power Factor at POI	
			Leading (absorbing vars)	Lagging (providing vars)
GEN-2015-038	303.6 MW	514901	-363.6 Mvar / 0.927*	451 Mvar / 0.893*
GEN-2015-44/57/59	126.3 MW	514801	-143.2 Mvar / 0.958**	36.5 Mvar / 0.997**
GEN-2015-048	200 MW	514778	-34.4 Mvar / 0.985	52.9 Mvar / 0.966
GEN-2015-060	250 MW	515376	-81.6 Mvar / 0.949	99.3 Mvar / 0.928
GEN-2015-081	180 MW	562075	-69 Mvar / 0.934	100.6 Mvar / 0.873
GEN-2015-093	250 MW	515800	-131.5 Mvar / 0.885	62.3 Mvar / 0.970
GEN-2015-095	176 MW	560066	-38.4 Mvar / 0.977	35.9 Mvar / 0.980

**** Note that GEN-2015-038 has a same POI bus (514901) as prior-queued projects Gen-2010-040 and Gen-2011-054. The aggregated MW of these three (3) generators is 902.1 MW at the high-side bus downstream of the POI.***

***** Note that three (3) interconnection requests GEN-2015-44, GEN-2015-57, and GEN-2015-59 have a same POI bus (514801) as the prior-queued project Gen-2014-056. The aggregated MW of these four (4) generators is 482.8 MW at the high-side bus downstream of the POI.***

NOTE: Per the SPP Tariff as reactive power is required for all projects, the final requirement in the GIA will be the pro-forma 95% lagging to 95% leading at the point of interconnection.

8. Low Wind/Low irradiance Conditions Analysis

S&C has performed an analysis of low wind/low irradiance conditions for the interconnection requests that is a renewable energy project. The low wind/low irradiance analysis was performed under the Cluster scenarios by taking the interconnection renewable energy project out of service and placing a shunt reactor at the project substation high side to offset the reactive power that comes from the capacitance of the project's transmission lines and collector cables. The size of the shunt reactor was adjusted such that the net Mvar flow into the POI from the studied renewable energy project was approximately zero. Table 6 gives the shunt reactor Mvars for the studied projects.

Table 6: Shunt Reactor Mvar Determined by Low Wind/Low Irradiance Study

Request	POI	2016 Winter Peak	2017 Summer Peak	2025 Summer Peak
GEN-2015-038[10]	562790	25.3	25.3	25.3
GEN-2015-44/57/59	514801	35.9	35.9	35.8
GEN-2015-048	514778	20.3	20.3	20.3
GEN-2015-060	515376	13.9	13.9	13.9
GEN-2015-081	562075	8.4	8.4	8.4
GEN-2015-093	515800	16.6	16.6	16.6
GEN-2015-095	560066	14.6	14.6	14.6

[10] The POI for GEN-2015-038 is the Cimarron 345 kV (514901). However, GEN-2015-038 will share the transmission line of prior queued projects GEN-2010-040 and GEN-2011-054. This table shows the reactor requirement attributed to GEN-2015-038 up to the point where it connects to the shared transmission line to the POI.

9. SHORT-CIRCUIT STUDY

A short-circuit study has been performed on the power flow models for the 2017 Summer Peak and 2025 Summer Peak Seasons for each generator using the Cluster Scenario model. Short-circuit analysis includes applying a 3-phase fault on buses up to 5 levels away from the POI of each interconnection request project. PSS/E "Automatic Sequence Fault Calculation (ASCC)" fault analysis module was used for the purpose of short-circuit analysis. The results of the short-circuit analysis have been recorded for all the buses up to five levels away from the point of interconnection of each interconnection request project. Detailed results of the short-circuit study are provided in Appendix F.

10. CONCLUSIONS AND RECOMMENDATIONS

Analysis of Group 1 dynamic simulation results revealed that the GEN-2015-044 exhibited under voltage tripping offline for multiple contingencies in Cluster case (16WP, 17SP, and 25SP) and Stand-alone cases (16WP, 17SP, and 25SP). Since this issue appears to stem from a potential error concerning the voltage protection settings within the vendor supplied documentation, further clarification from the vendor is necessary. Modifying the protection settings in the project's dynamics model proved necessary to prevent the plant from tripping during certain contingency conditions.

Excluding the potential error mentioned above, Group 1's dynamic results (Cluster and Stand-Alone) indicated that the interconnection request projects are expected to successfully ride through all N-1 and N-2 fault contingencies specified by SPP, retaining angular, frequency and voltage stability at the nearby areas and meeting the transient voltage recovery requirement by SPP, with the solutions illustrated in the dynamic stability results section of this report. With the implementation of these solutions or similar alternatives, it is thus concluded that Group 1 study projects are expected to successfully interconnect into the transmission system at their desired locations for 100% power outputs.

The results of power factor analysis indicate that all interconnection requests are required to maintain a power factor of 0.95 lagging to 0.95 leading at the POI to meet SPP's requirements.

The project's low wind/low irradiance study suggested that to offset the reactive power from the capacitance of the project's transmission lines and collector cables during the low wind/low irradiance conditions, GEN-2015-038 requires a 25.3 Mvar shunt reactor at the non-POI bus #562790, GEN-2015-44/57/59 projects require a 35.9 Mvar shunt reactor at the POI bus #514801, GEN-2015-048 project requires a 20.3 Mvar shunt reactor at the POI bus #514778, GEN-2015-060 project requires a 13.9 Mvar shunt reactor at the POI bus #515376, GEN-2015-081 project requires a 8.4 Mvar shunt reactor at the POI bus #562075, GEN-2015-093 project requires a 16.6 Mvar shunt reactor at the POI bus #515800, and GEN-2015-095 project requires a 14.6 Mvar shunt reactor at the POI bus #560066.

A short-circuit study has been performed on the power flow models for the 2017 Summer Peak Season and 2025 Summer Peak Season for each generator using the Cluster Scenario model. A

3-phase fault is applied on buses up to 5 levels away from the POI of each interconnection request project and the results of the study have been presented.

APPENDIX A

SPP GROUP 1 FAULT DEFINITIONS (SUBMITTED IN A SEPARATE FILE)

APPENDIX B

SOUTHWEST POWER POOL DISTURBANCE PERFORMANCE REQUIREMENTS (SUBMITTED IN A SEPARATE FILE)

APPENDIX C

DYNAMIC STABILITY PLOTS FOR CLUSTER SCENARIO (SUBMITTED IN SEPARATE FILES FROM APPENDIX C-1 TO C-3)

C-1 Group 1 Cluster Dynamic Stability Plots For 2016 Winter Peak Case

C-2 Group 1 Cluster Dynamic Stability Plots For 2017 Summer Peak Case

C-3 Group 1 Cluster Dynamic Stability Plots For 2025 Summer Peak Case

Each contingency consists of (51) subplots:

- Subplot #1 are the (4) monitor system phase angle channels in the original snapshot file provided by SPP.
- Subplot #2 to Subplot #43 are results for (42) generators in the scope of study.
- Subplots #44 to Subplot #47 are voltages at the POI buses in the scope of study.
- Subplots #48 to Subplot #51 are frequencies at the POI buses in the scope of study.

APPENDIX D

DYNAMIC STABILITY PLOTS FOR STAND-ALONE SCENARIO (SUBMITTED IN SEPARATE FILE FROM APPENDIX D-1 TO D-27)

D-1 Group1 StandAlone "GEN-2015-038" Dynamic Stability Plots For 2016 Winter Peak Case
D-2 Group1 StandAlone "GEN-2015-038" Dynamic Stability Plots For 2017 Summer Peak Case
D-3 Group1 StandAlone "GEN-2015-038" Dynamic Stability Plots For 2025 Summer Peak Case
D-4 Group1 StandAlone "GEN-2015-044" Dynamic Stability Plots For 2016 Winter Peak Case
D-5 Group1 StandAlone "GEN-2015-044" Dynamic Stability Plots For 2017 Summer Peak Case
D-6 Group1 StandAlone "GEN-2015-044" Dynamic Stability Plots For 2025 Summer Peak Case
D-7 Group1 StandAlone "GEN-2015-048" Dynamic Stability Plots For 2016 Winter Peak Case
D-8 Group1 StandAlone "GEN-2015-048" Dynamic Stability Plots For 2017 Summer Peak Case
D-9 Group1 StandAlone "GEN-2015-048" Dynamic Stability Plots For 2025 Summer Peak Case
D-10 Group1 StandAlone "GEN-2015-057" Dynamic Stability Plots For 2016 Winter Peak Case
D-11 Group1 StandAlone "GEN-2015-057" Dynamic Stability Plots For 2017 Summer Peak Case
D-12 Group1 StandAlone "GEN-2015-057" Dynamic Stability Plots For 2025 Summer Peak Case
D-13 Group1 StandAlone "GEN-2015-059" Dynamic Stability Plots For 2016 Winter Peak Case
D-14 Group1 StandAlone "GEN-2015-059" Dynamic Stability Plots For 2017 Summer Peak Case
D-15 Group1 StandAlone "GEN-2015-059" Dynamic Stability Plots For 2025 Summer Peak Case
D-16 Group1 StandAlone "GEN-2015-060" Dynamic Stability Plots For 2016 Winter Peak Case
D-17 Group1 StandAlone "GEN-2015-060" Dynamic Stability Plots For 2017 Summer Peak Case
D-18 Group1 StandAlone "GEN-2015-060" Dynamic Stability Plots For 2025 Summer Peak Case
D-19 Group1 StandAlone "GEN-2015-081" Dynamic Stability Plots For 2016 Winter Peak Case
D-20 Group1 StandAlone "GEN-2015-081" Dynamic Stability Plots For 2017 Summer Peak Case
D-21 Group1 StandAlone "GEN-2015-081" Dynamic Stability Plots For 2025 Summer Peak Case
D-22 Group1 StandAlone "GEN-2015-093" Dynamic Stability Plots For 2016 Winter Peak Case
D-23 Group1 StandAlone "GEN-2015-093" Dynamic Stability Plots For 2017 Summer Peak Case
D-24 Group1 StandAlone "GEN-2015-093" Dynamic Stability Plots For 2025 Summer Peak Case
D-25 Group1 StandAlone "GEN-2015-095" Dynamic Stability Plots For 2016 Winter Peak Case
D-26 Group1 StandAlone "GEN-2015-095" Dynamic Stability Plots For 2017 Summer Peak Case
D-27 Group1 StandAlone "GEN-2015-095" Dynamic Stability Plots For 2025 Summer Peak Case

Each contingency consists of (51) subplots:

- Subplot #1 are the (4) monitor system phase angle channels in the original snapshot file provided by SPP.
- Subplot #2 to Subplot #43 are results for (42) generators in the scope of study.
- Subplots #44 to Subplot #47 are voltages at the POI buses in the scope of study.
- Subplots #48 to Subplot #51 are frequencies at the POI buses in the scope of study.

APPENDIX E

POWER FACTOR ANALYSIS RESULTS (SUBMITTED IN SEPARATE FILE FROM APPENDIX E-1 TO E-7)

E-1 Group 1 Power Factor Results for Interconnection Request GEN-2015-038 (#514901)

E-2 Group 1 Power Factor Results for Interconnection Request GEN-2015-044 (#514801)

E-3 Group 1 Power Factor Results for Interconnection Request GEN-2015-048 (#514778)

E-4 Group 1 Power Factor Results for Interconnection Request GEN-2015-060 (#515376)

E-5 Group 1 Power Factor Results for Interconnection Request GEN-2015-081 (#562075)

E-6 Group 1 Power Factor Results for Interconnection Request GEN-2015-093 (#515800)

E-7 Group 1 Power Factor Results for Interconnection Request GEN-2015-095 (#560066)

APPENDIX F

SHORT-CIRCUIT STUDY RESULTS (SUBMITTED IN A SEPARATE FILE FROM APPENDIX F-1 TO F-2)

F-1 GROUP 1 17SP Short-Circuit Study Results

F-2 GROUP 1 25SP Short-Circuit Study Results

11.18 K: Group 2 Dynamic Stability Analysis Report

See ABB report next page

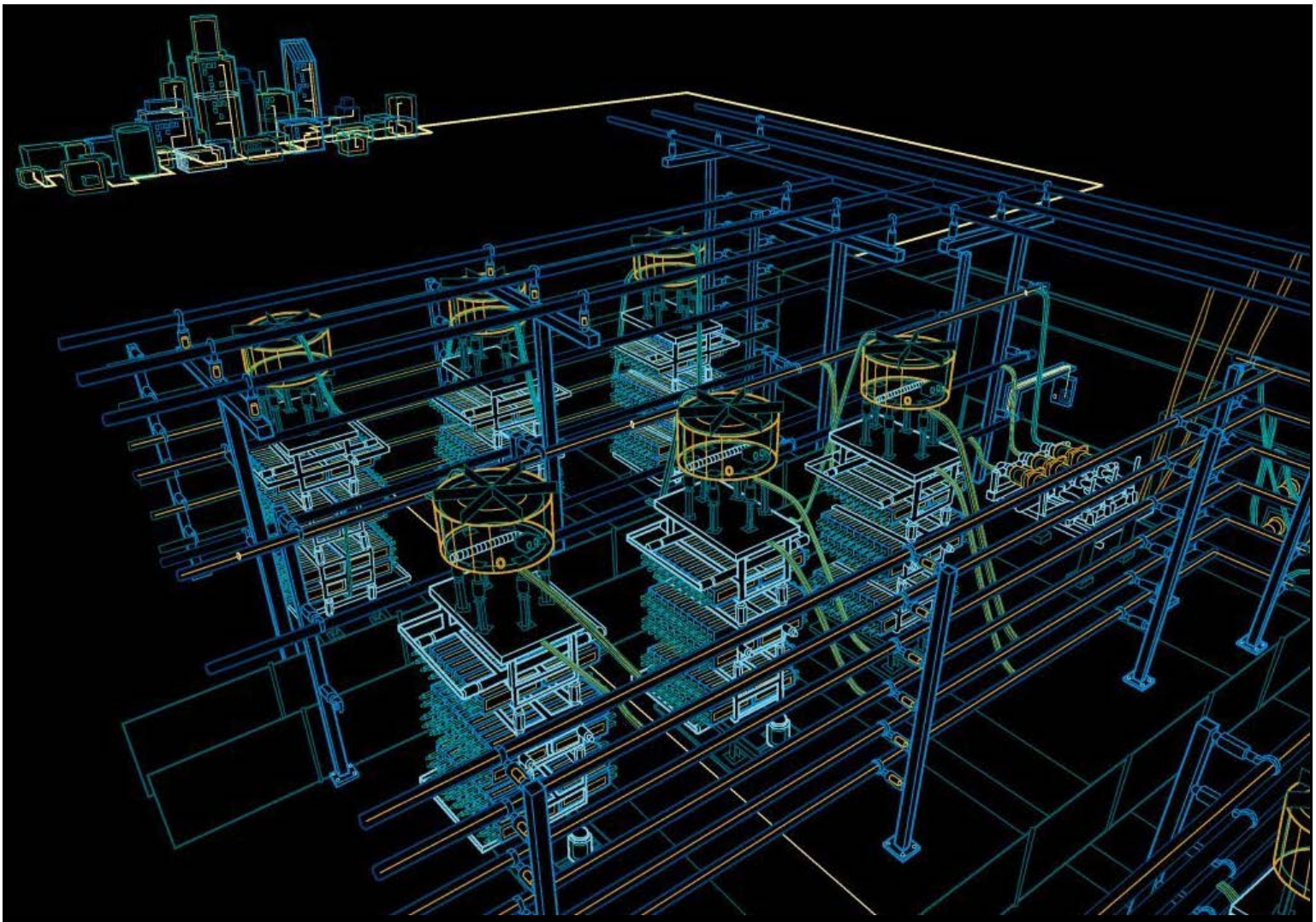

Southwest Power Pool

Definite Impact Study DISIS-2015-002 (Group 02)

Final Report

Report No. r02

March 2, 2016

CONFIDENTIAL

Contains Proprietary Information

DO NOT RELEASE

Power and productivity
for a better world™

LEGAL NOTICE

This document, prepared by ABB Inc, is an account of work sponsored by Southwest Power Pool (SPP). Neither SPP nor ABB Inc nor any person or persons acting on behalf of either party: (i) makes any warranty or representation, expressed or implied, with respect to the use of any information contained in this report, or that the use of any information, apparatus, method, or process disclosed in this report may not infringe privately owned rights, or (ii) assumes any liabilities with respect to the use of or for damages resulting from the use of any information, apparatus, method, or process disclosed in this document.

CONFIDENTIAL

This report contains proprietary information and is not to be released or reproduced without the express, written consent of ABB and SPP.

Prepared for: Southwest Power Pool
Report No.: r02
Date: March 2, 2016
Revised:

Author(s): Huaxi Zheng
Reviewed by: Lang Chen, Shu Liu
Approved by: Willie Wong

ABB Inc.
Power Systems Division
Grid Systems Consulting
901 Main Campus Drive, Suite 300
Raleigh, NC 27606

Rev No.	*Revision Description*	*Date*	*Authored by*	*Reviewed by*	*Approved by*

SUMMARY

Southwest Power Pool (SPP) has commissioned ABB Inc., to perform a Definitive Impact Study for DISIS-2015-002 (Group 02) which includes generation interconnection requests GEN-2014-037 (200 MW wind farm connected on Hitchland to Beaver County 345 kV line), GEN-2014-038 (200 MW wind farm connected on Hitchland to Potter County 345 kV line), GEN-2015-082 (200 MW wind farm connected on Woodward to Beaver 345 kV line).

The objective of this study is to evaluate the collective impact of the three projects on the existing and future planning system. The study is performed on three system scenarios provided by SPP:

- 2016 Winter Peak Case
- 2017 Summer Peak Case
- 2025 Summer Peak Case

All disturbances showed no instability problems for all three seasons. And all faults show no voltage violations under new voltage criteria.

System short-circuit current levels at up to five buses away from the point of interconnection were calculated and tabulated for SPP's reference.

Power Factor Analysis was performed to ensure the studied project meets FERC and SPP power factor requirements for wind farm interconnections. The results show that extra capacitor bank is required for GEN-2014-037 and GEN-2014-038 in all three seasons to meet the SPP pro-forma 95% lagging (providing vars) and 95% leading (absorbing vars) power factor requirements at the Point of Interconnection.

The Low/No Wind analysis shows that a 13.49 MVAr / 12.01 MVAr / 23.89 MVAr shunt reactors are required to bring the MVAr flows in the three POIs down to approximate zero under low/no wind conditions for GEN-2014-037, GEN-2014-038 and GEN-2015-082, respectively. The reactor bank size is approximate and the final size will be determined in the final facility and collector system design.

Based on the results of the stability analysis, it is suggested that the study cases needs further review, and the proposed GEN-2014-037, GEN-2014-038 and GEN-2015-082 projects do not adversely impact the stability of the SPP system.

The results of this analysis are based on available data and assumptions made at the time of conducting this study. If any of the data and/or assumptions made in developing the study model change, the results provided in this report may not apply.

Contents

1 Introduction 1
2 Study Methodology 1
2.1 STABILITY ANALYSIS METHODOLOGY 1
2.2 STUDY RESULTS – CLUSTER SCENARIO 10
2.3 STUDY RESULTS – STAND ALONE SCENARIO 14
3 Short Circuit Analysis 18
4 Power Factor Analysis 34
4.1 POWER FACTOR ANALYSIS METHODOLOGY 34
4.2 STUDY RESULTS 34
5 Low Wind/No Wind Analysis 36
5.1 LOW/NO WIND ANALYSIS METHODOLOGY 36
5.2 STUDY RESULTS 36
6 Conclusions 38
APPENDIX A SOUTHWEST POWER POOL DISTURBANCE PERFORMANCE CRITERIA REQUIREMENTS 40
APPENDIX B SIMULATION PLOTS FOR STABILITY ANALYSIS 43
APPENDIX C POWER FACTOR ANALYSIS RESULTS 44

1 Introduction

Southwest Power Pool (SPP) has commissioned ABB Inc., to perform a Definitive Impact Study for DISIS-2015-002 (Group 02) which includes generation interconnection request GEN-2014-037 (200 MW wind farm connected on Hitchland to Beaver County 345kV line, GEN-2014-038 (200 MW wind farm connected on Hitchland to Potter County 345kV), GEN-2015-082 (200 MW wind farm connected on Woodward to Beaver 345kV line) as shown in Table 1-1.

Table 1-1 Group 02 Generation Interconnection Requests

Request	Size (MW)	Wind Turbine Model	Point of Interconnection
GEN-2014-037	200.0	Vestas V110 2.0MW (wind)	Tap on Hitchland to Beaver County 345kV (Optima 345kV – 560010)
GEN-2014-038	200.0	Vestas V110 VCSS 2.0MW (wind)	Tap on Hitchland to Potter County 345kV (560011)
GEN-2015-082	200.0	GE 2.0MW (wind)	Tap on Woodward to Beaver 345kV

The objective of this study is to evaluate the impact of projects GEN-2014-037, GEN-2014-038 and GEN-2015-082 on the existing and future planning system. The study is performed on three system scenarios provided by SPP:

- 2016 Winter Peak Case
- 2017 Summer Peak Case
- 2025 Summer Peak Case

SPP also provided following additional files for system upgrade:

- New Snapshot, DLL and DYR files for all three cases
- New generation dispatch and local system upgrades
  - "_0.PQ_BUILD_MATHEWSON_BUILD_MATHEWSON-CIMMARON-345kV-CK"
  - "GEN-2004-008&GEN-2011-011_V32.idv"
  - "GEN-2010-014-100%_V32.idv"
  - "GEN-2010-036-100%_V32.idv"
- New SVC model and local system upgrades
  - "12.DIS14021_ERIS_BUILD_BEAVERCO-SVC_75Mvar.IDV"
  - "14.Beaver-Grapevine-Chisholm_and_Grapevine-Potter_345kV.idv"
  - "Beaver_345kV_SVC_75MVAR.dyr"

SPP provided the study cases for all three system scenarios with the three projects included. One line diagrams of the local area for all three seasons are shown in Figure 1-1. The studied generator is circled red.

The three system scenarios supplied by SPP included the following prior queued projects for Group 02:

Table 1-2 Group 02 Prior Queued Projects

Request	Size	Wind Turbine Model	Point of Interconnection
Llano Estacado (White Deer)	80.0	CIMTR1	Tap on Kingsmill (523712) to MIDSTRM Tap (523817) (523815)
GEN-2002-008	240	GE 1.5MW	Hitchland 345kV (523097)
GEN-2002-009	79.8	Suzlon 2.1MW	Hansford 115kV (523195)
GEN-2002-022	240	Siemens 2.3MW	Bushland 230kV (524267)
GEN-2003-020	159.1	GE 1.5/1.6 MW	Carson Co. 115kV (523928)
GEN-2006-020S	20	D8.2 2.0MW	Frisco Wind 115kV (523160)
GEN-2006-044	370	DeWind D9.2 2.0MW	Hitchland 345kV (523097)
GEN-2007-046	200.0	Vestas V100/V110 2.0MW	Hitchland 115kV (523093)
GEN-2008-047	300	GE 1.7MW	Beaver County 345kV (515554)
GEN-2008-051	322	Siemens 2.3MW	Potter 345kV (523961)
GEN-2010-001	300	GE 1.85MW	Beaver County 345kV (515554)
GEN-2010-014	358.8	Siemens SWT 2.3MW	Hitchland 345kV (523097)
ASGI-2011-002	20	DeWind D8.2 2.0MW	Herring 115kV (523359)
GEN-2011-014	201	Siemens 3.0MW	Beaver County 345kV (515554)
GEN-2011-022	299	Siemens 2.3MW	Hitchland 345kV (523097)
ASGI-2013-001	11.5	Siemens 2.3	PanTex South 115kV(523945)
GEN-2013-030	300	Vestas 2.0 MW VCSS (583763, 583766)	Beaver County 345kV (515554)
GEN-2014-026	150.0	Acciona AW3000 109M, 3.0MW	Beaver County 345kV (515554)

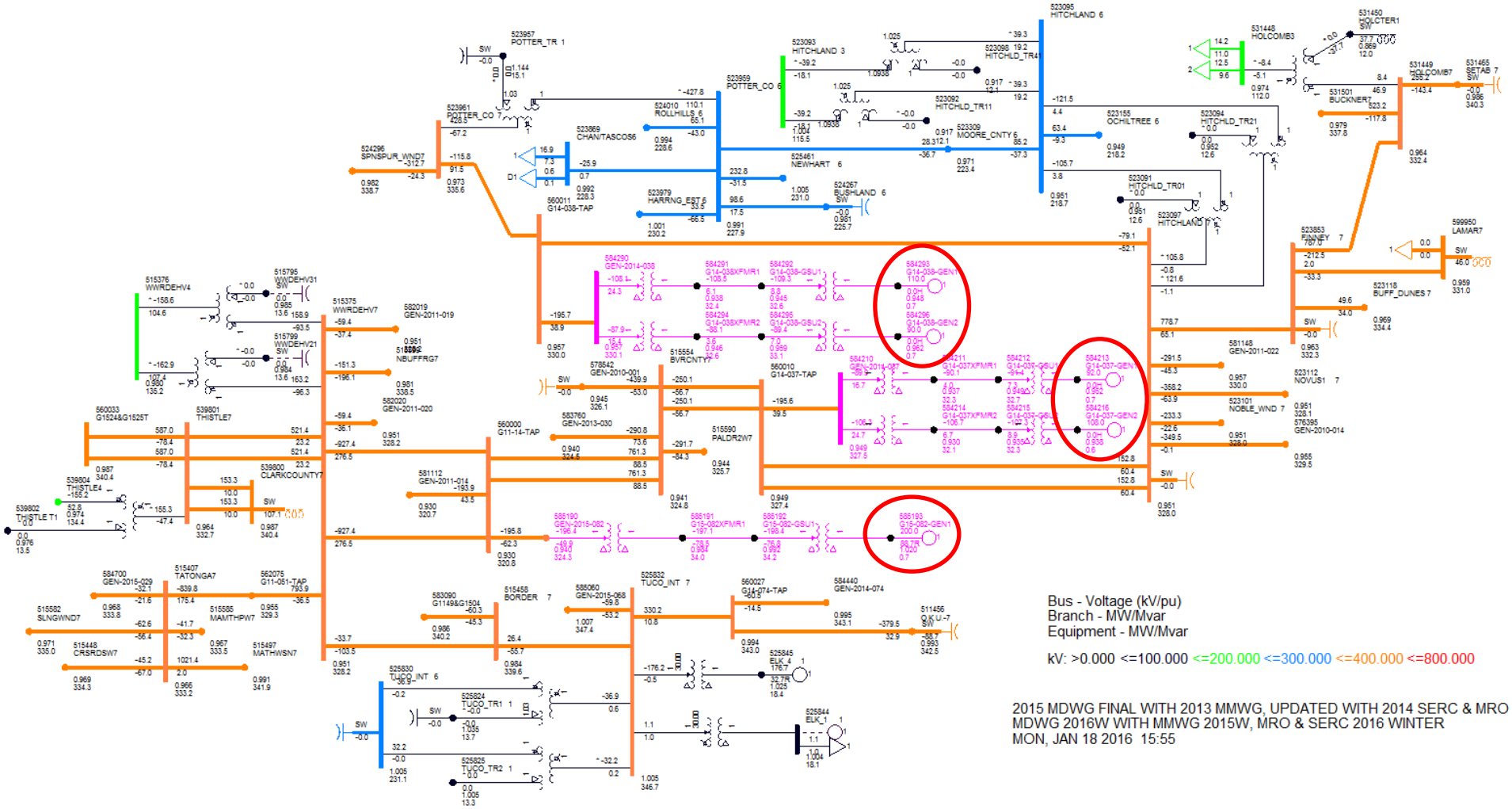

Figure 1-1 (a): One Line Diagram for 2016 Winter Peak Case

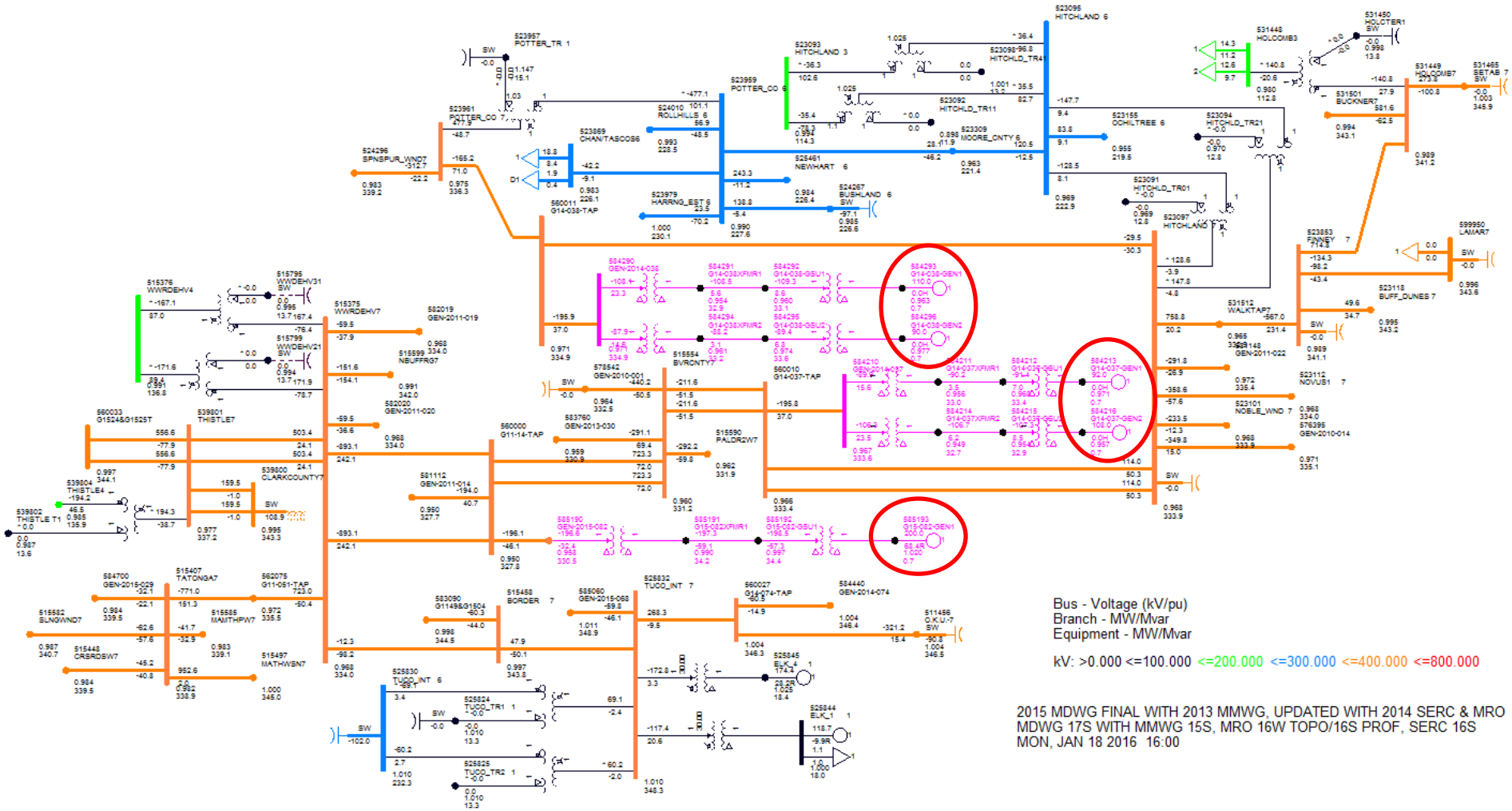

Figure 1-1 (b): One Line Diagram for 2017 Summer Peak Case

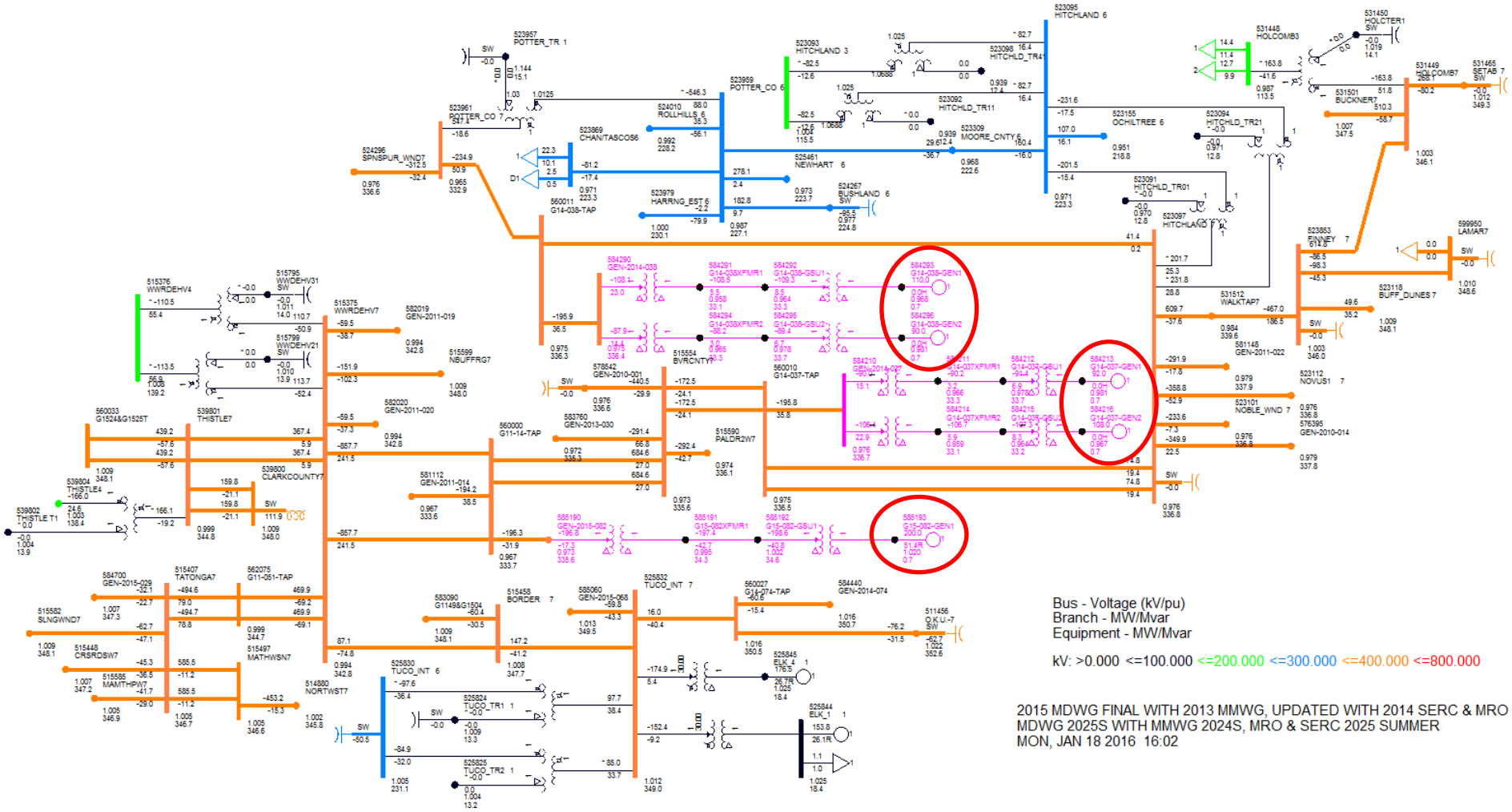

Figure 1-1 (c): One Line Diagram for 2025 Summer Peak Case

2 Study Methodology

In this study, ABB investigated the stability of the system for faults in the vicinity of the proposed plant as defined by SPP. The studied faults involve three-phase transformer faults with normal clearing, three-phase line faults with normal clearing and re-closing test, and single-line-to-ground (SLG) faults with stuck breaker.

2.1 Stability Analysis Methodology

Stability analysis is performed to determine whether the electric system would meet stability criteria following the addition of three projects: GEN-2014-037, GEN-2014-038 and GEN-2015-082.

Stability analysis was performed using Siemens-PTI's PSS/E dynamics program V32.2.0.

All the faults listed in Table 2-1 were simulated for 10 seconds.

Table 2-1: List of Faults of Stability Analysis

Cont. No.	Cont. Name	Description	GEN-2014-037	GEN-2014-038	GEN-2015-082
1	FLT01-3PH	3 phase fault on Optima 345kV (560010) to Beaver County 345kV (515554) CKT 1, near Optima. a. Apply fault at the Optima 345kV bus. b. Clear fault after 5 cycles and trip the faulted line. c. Wait 20 cycles, and then re-close the line in (b) back into the fault. d. Leave fault on for 5 cycles, then trip the line in (b) and remove fault.	X	X	X
2	FLT02-3PH	3 phase fault on Optima 345kV (560010) to Hitchland 345kV (523097) CKT 1, near G14-037 Tap. a. Apply fault at the Optima 345kV bus. b. Clear fault after 5 cycles and trip the faulted line. c. Wait 20 cycles, and then re-close the line in (b) back into the fault. d. Leave fault on for 5 cycles, then trip the line in (b) and remove fault.	X	X	X
3	FLT03-3PH	3 phase fault on the Beaver County 345kV (515554) to G11-14-Tap 345kV (560000) CKT 1, near Beaver County. a. Apply fault at the Beaver County 345kV bus. b. Clear fault after 5 cycles and trip the faulted line. c. Wait 20 cycles, and then re-close the line in (b) back into the fault. d. Leave fault on for 5 cycles, then trip the line in (b) and remove fault.	X	X	X
4	FLT04-3PH	3 phase fault on the Beaver County 345kV (515554) to G11-014-Tap 345kV (560000) CKT 1 & 2, near Beaver County. a. Apply fault at the Beaver County 345kV bus. b. Clear fault after 5 cycles and trip the faulted lines (CKT 1 and 2).	X	X	X

Cont. No.	Cont. Name	Description	GEN-2014-037	GEN-2014-038	GEN-2015-082
5	FLT05-3PH	3 phase fault on the G11-014-Tap 345kV (560000) to Woodward 345kV (515375) CKT 1, near G11-014-Tap. a. Apply fault at the G11-014-Tap 345kV bus. b. Clear fault after 5 cycles and trip the faulted line. c. Wait 20 cycles, and then re-close the line in (b) back into the fault. d. Leave fault on for 5 cycles, then trip the line in (b) and remove fault.	X	X	X
6	FLT06-3PH	3 phase fault on the G11-014-Tap 345kV (560000) to Woodward 345kV (515375) CKT 1 & 2, near G11-014-Tap. a. Apply fault at the G11-014-Tap 345kV bus. b. Clear fault after 5 cycles and trip the faulted lines (CKT 1 and 2).	X	X	X
7	FLT07-3PH	3 phase fault on the Optima 345kV (560010) to Beaver County 345kV (515554) CKT 1 and 2, near Optima. a. Apply fault at the Optima 345kV bus. b. Clear fault after 5 cycles and trip the faulted lines (CKT 1 and 2).	X	X	X
8	FLT08-3PH	3 phase fault on the Optima 345kV (560010) to Hitchland 345kV (523097) CKT 1 and 2, near Optima. a. Apply fault at the Optima 345kV bus. b. Clear fault after 5 cycles and trip the faulted lines (CKT 1 and 2).	X	X	X
9	FLT09-3PH	3 phase fault on the Thistle 345kV (539801) to Woodward 345kV (515375) CKT 1, near Thistle. a. Apply fault at the Thistle 345kV bus. b. Clear fault after 5 cycles and trip the faulted line. c. Wait 20 cycles, and then re-close the line in (b) back into the fault. d. Leave fault on for 5 cycles, then trip the line in (b) and remove fault.	X		X
10	FLT10-3PH	3 phase fault on the Thistle 345kV (539801) to Woodward 345kV (515375) CKT 1 and 2, near Thistle. a. Apply fault at the Thistle 345kV bus. b. Clear fault after 5 cycles and trip the faulted lines (CKT 1 and 2).	X		X
11	FLT11-3PH	3 phase fault on the Woodward 345kV (515375) to Border 345kV (515458) CKT 1, near Woodward. a. Apply fault at the Woodward 345kV bus. b. Clear fault after 5 cycles and trip the faulted line. c. Wait 20 cycles, and then re-close the line in (b) back into the fault. d. Leave fault on for 5 cycles, then trip the line in (b) and remove fault.	X		X

Cont. No.	Cont. Name	Description	GEN-2014-037	GEN-2014-038	GEN-2015-082
12	FLT12-3PH	3 phase fault on the Woodward 345kV (515375) to G11-051 Tap 345kV (562075) CKT 1, near Woodward. a. Apply fault at the Woodward 345kV bus. b. Clear fault after 5 cycles and trip the faulted line. c. Wait 20 cycles, and then re-close the line in (b) back into the fault. d. Leave fault on for 5 cycles, then trip the line in (b) and remove fault.	X		X
13	FLT13-3PH (25SP Only)	3 phase fault on the Woodward 345kV (515375) to G11-051-Tap 345kV (562075) CKT 1 and 2, near Woodward. a. Apply fault at the Woodward 345kV bus. b. Clear fault after 5 cycles and trip the faulted lines (CKT 1 and 2).	X		X
14	FLT14-3PH	3 phase fault on the Woodward 345kV (515375) to Woodward 138kV (515376) Woodward 13.8kV (515799) XFMR CKT 2, near Woodward 345kV. a. Apply fault at the Woodward 345kV bus. b. Clear fault after 5 cycles and trip the faulted transformer.	X		X
15	FLT15-3PH	3 phase fault on the Border 345kV (515458) to Tuco 345kV (525832) CKT 1, near Border. a. Apply fault at the Border 345kV bus. b. Clear fault after 5 cycles and trip the faulted line. c. Wait 20 cycles, and then re-close the line in (b) back into the fault. d. Leave fault on for 5 cycles, then trip the line in (b) and remove fault.	X		X
16	FLT16-3PH	3 phase fault on the Tuco 345kV (525832) to G14-074-Tap 345kV (560027) CKT 1, near Tuco. a. Apply fault at the Tuco 345kV bus. b. Clear fault after 5 cycles and trip the faulted line. c. Wait 20 cycles, and then re-close the line in (b) back into the fault. d. Leave fault on for 5 cycles, then trip the line in (b) and remove fault.	X		X
17	FLT17-3PH	3 phase fault on the G14-074-Tap 345kV (560027) to OKU 345kV (511456) CKT 1, near G14-074-Tap. a. Apply fault at the G14-074-Tap 345kV bus. b. Clear fault after 5 cycles and trip the faulted line. c. Wait 20 cycles, and then re-close the line in (b) back into the fault. d. Leave fault on for 5 cycles, then trip the line in (b) and remove fault.	X		X

Cont. No.	Cont. Name	Description	GEN-2014-037	GEN-2014-038	GEN-2015-082
18	FLT18-3PH (16WP and 17SP Only)	3 phase fault on the Tatonga 345kV (515407) to Northwest 345kV (514880) CKT 1, near Tatonga. a. Apply fault at the Tatonga 345kV bus. b. Clear fault after 5 cycles and trip the faulted line. c. Wait 20 cycles, and then re-close the line in (b) back into the fault. d. Leave fault on for 5 cycles, then trip the line in (b) and remove fault.	X		X
19	FLT19-3PH	3 phase fault on the Thistle 345kV (539801) to G1524&G1525T 345kV (560033) CKT 1, near Thistle. a. Apply fault at the Thistle 345kV bus. b. Clear fault after 5 cycles and trip the faulted line. c. Wait 20 cycles, and then re-close the line in (b) back into the fault. d. Leave fault on for 5 cycles, then trip the line in (b) and remove fault.	X		X
20	FLT20-3PH	3 phase fault on the Thistle 345kV (539801) to G1524&G1525T 345kV (560033) CKT 1 and 2, near Thistle. a. Apply fault at the Thistle 345kV bus. b. Clear fault after 5 cycles and trip the faulted lines (CKT 1 and 2).	X		X
21	FLT21-3PH	3 phase fault on the Thistle 345kV (539801) to Clark County 345kV (539800) CKT 1, near Thistle. a. Apply fault at the Thistle 345kV bus. b. Clear fault after 5 cycles and trip the faulted line. c. Wait 20 cycles, and then re-close the line in (b) back into the fault. d. Leave fault on for 5 cycles, then trip the line in (b) and remove fault.	X		X
22	FLT22-3PH	3 phase fault on the Thistle 345kV (539801) to Clark County 345kV (539800) CKT 1 and 2, near Thistle. a. Apply fault at the Thistle 345kV bus. b. Clear fault after 5 cycles and trip the faulted lines (CKT 1 and 2).	X		X
23	FLT23-3PH	3 phase fault on the Thistle 345kV (539801) to Thistle 138kV (539804) Thistle 13.8kV (539802) XFMR CKT 1, near Thistle 345kV. a. Apply fault at the Thistle 345kV bus. b. Clear fault after 5 cycles and trip the faulted transformer.	X		X
24	FLT24-3PH (16WP Only)	3 phase fault on the Hitchland 345kV (523097) to Finney 345kV (523853) CKT 1, near Hitchland. a. Apply fault at the Hitchland 345kV bus. b. Clear fault after 5 cycles and trip the faulted line. c. Wait 20 cycles, and then re-close the line in (b) back into the fault. d. Leave fault on for 5 cycles, then trip the line in (b) and remove fault.	X	X	X

Cont. No.	Cont. Name	Description	GEN-2014-037	GEN-2014-038	GEN-2015-082
25	FLT25-3PH	3 phase fault on the Hitchland 345kV (523097) to Hitchland 230kV (523095) Hitchland 13.2kV (523091) XFMR CKT 1, near Hitchland 345kV. a. Apply fault at the Hitchland 345kV bus. b. Clear fault after 5 cycles and trip the faulted transformer.	X	X	X
26	FLT26-3PH	3 phase fault on the Potter County 345kV (523961) to Potter County 230kV (523959) Potter County 13.2kV (523957) XFMR CKT 1, near Potter County 345kV. a. Apply fault at the Potter County 345kV bus. b. Clear fault after 5 cycles and trip the faulted transformer.	X	X	X
27	FLT27-3PH	3 phase fault on the Hitchland 230kV (523095) to Ochiltree 230kV (523155) CKT 1, near Hitchland. a. Apply fault at the Hitchland 230kV bus. b. Clear fault after 5 cycles and trip the faulted line. c. Wait 20 cycles, and then re-close the line in (b) back into the fault. d. Leave fault on for 5 cycles, then trip the line in (b) and remove fault.	X	X	X
28	FLT28-3PH	3 phase fault on the Hitchland 230kV (523095) to Moore County 230kV (523309) CKT 1, near Hitchland. a. Apply fault at the Hitchland 230kV bus. b. Clear fault after 5 cycles and trip the faulted line. c. Wait 20 cycles, and then re-close the line in (b) back into the fault. d. Leave fault on for 5 cycles, then trip the line in (b) and remove fault.	X	X	X
29	FLT29-3PH	3 phase fault on the Finney 345kV (523853) to Holcomb 345kV (531449) CKT 1, near Finney. a. Apply fault at the Finney 345kV bus. b. Clear fault after 5 cycles and trip the faulted line. c. Wait 20 cycles, and then re-close the line in (b) back into the fault. d. Leave fault on for 5 cycles, then trip the line in (b) and remove fault.	X	X	
30	FLT30-3PH	3 phase fault on the Holcomb 345kV (531449) to Buckner 345kV (531501) CKT 1, near Holcomb. a. Apply fault at the Holcomb 345kV bus. b. Clear fault after 5 cycles and trip the faulted line. c. Wait 20 cycles, and then re-close the line in (b) back into the fault. d. Leave fault on for 5 cycles, then trip the line in (b) and remove fault.	X	X	

Cont. No.	Cont. Name	Description	GEN-2014-037	GEN-2014-038	GEN-2015-082
31	FLT31-3PH	3 phase fault on G14-038-Tap 345kV (560011) to Potter 345kV (523961) CKT 1, near G14-038-Tap. a. Apply fault at the G14-038-Tap 345kV bus. b. Clear fault after 5 cycles and trip the faulted line. c. Wait 20 cycles, and then re-close the line in (b) back into the fault. d. Leave fault on for 5 cycles, then trip the line in (b) and remove fault.	X	X	
32	FLT32-3PH	3 phase fault on G14-038-Tap 345kV (560011) to Hitchland 345kV (523097) CKT 1, near G14-038-Tap. a. Apply fault at the G14-038-Tap 345kV bus. b. Clear fault after 5 cycles and trip the faulted line. c. Wait 20 cycles, and then re-close the line in (b) back into the fault. d. Leave fault on for 5 cycles, then trip the line in (b) and remove fault.	X	X	X
33	FLT33-3PH	3 phase fault on Potter County 230kV (523959) to Moore County 230kV (523309) CKT 1, near Potter County. a. Apply fault at the Potter County 230kV bus. b. Clear fault after 5 cycles and trip the faulted line. c. Wait 20 cycles, and then re-close the line in (b) back into the fault. d. Leave fault on for 5 cycles, then trip the line in (b) and remove fault.	X	X	
34	FLT34-3PH	3 phase fault on Potter County 230kV (523959) to Harrington East 230kV (523979) CKT 1, near Potter County. a. Apply fault at the Potter County 230kV bus. b. Clear fault after 5 cycles and trip the faulted line. c. Wait 20 cycles, and then re-close the line in (b) back into the fault. d. Leave fault on for 5 cycles, then trip the line in (b) and remove fault.	X	X	
35	FLT35-3PH	3 phase fault on Potter County 230kV (523959) to Rolling Hills 230kV (524010) CKT 1, near Potter County. a. Apply fault at the Potter County 230kV bus. b. Clear fault after 5 cycles and trip the faulted line. c. Wait 20 cycles, and then re-close the line in (b) back into the fault. d. Leave fault on for 5 cycles, then trip the line in (b) and remove fault.	X	X	
36	FLT36-3PH	3 phase fault on Potter County 230kV (523959) to Bushland 230kV (524267) CKT 1, near Potter County. a. Apply fault at the Potter County 230kV bus. b. Clear fault after 5 cycles and trip the faulted line. c. Wait 20 cycles, and then re-close the line in (b) back into the fault. d. Leave fault on for 5 cycles, then trip the line in (b) and remove fault.	X	X	

Cont. No.	Cont. Name	Description	GEN-2014-037	GEN-2014-038	GEN-2015-082
37	FLT37-3PH	3 phase fault on Potter County 230kV (523959) to Newhart 230kV (525461) CKT 1, near Potter County. a. Apply fault at the Potter County 230kV bus. b. Clear fault after 5 cycles and trip the faulted line. c. Wait 20 cycles, and then re-close the line in (b) back into the fault. d. Leave fault on for 5 cycles, then trip the line in (b) and remove fault.	X	X	
38	FLT38-3PH	3 phase fault on the Finney 345kV (523853) to Lamar 345kV (599950) CKT 1, near Finney. a. Apply fault at the Finney 345kV bus. b. Clear fault after 5 cycles and trip the faulted line.	X	X	
39	FLT39-PO (16WP Only)	**Prior outage on the Hitchland (523097) - Finney (523853)** 3 phase fault on G14-038-Tap 345kV (560011) to Hitchland 345kV (523097) CKT 1, near G14-038-Tap. a. Apply fault at the G14-038-Tap 345kV bus. b. Clear fault after 5 cycles and trip the faulted line. c. Wait 20 cycles, and then re-close the line in (b) back into the fault. d. Leave fault on for 5 cycles, then trip the line in (b) and remove fault.	X	X	
40	FLT40-PO (17SP and 25SP Only)	**Prior outage on the Hitchland (523097) – Walk Tap (531512)** 3 phase fault on G14-038-Tap 345kV (560011) to Hitchland 345kV (523097) CKT 1, near G14-038-Tap. a. Apply fault at the G14-038-Tap 345kV bus. b. Clear fault after 5 cycles and trip the faulted line. c. Wait 20 cycles, and then re-close the line in (b) back into the fault. d. Leave fault on for 5 cycles, then trip the line in (b) and remove fault.	X	X	
41	FLT41-PO (17SP and 25SP Only)	**Prior outage on the Hitchland (523097) - Walk Tap (531512)** 3 phase fault on G14-037-Tap 345kV (560010) to Hitchland 345kV (523097) CKT 1, near G14-037 Tap. a. Apply fault at the G14-037-Tap 345kV bus. b. Clear fault after 5 cycles and trip the faulted line. c. Wait 20 cycles, and then re-close the line in (b) back into the fault. d. Leave fault on for 5 cycles, then trip the line in (b) and remove fault.	X	X	

Cont. No.	Cont. Name	Description	GEN-2014-037	GEN-2014-038	GEN-2015-082
42	FLT42-PO (17SP and 25SP Only)	**Prior outage on the G14-038-Tap 345kV (560011) to Hitchland 345kV (523097)** 3 phase fault on Walk Tap (531512) to Hitchland 345kV (523097) CKT 1, near Walk Tap. a. Apply fault at the Walk Tap 345kV bus. b. Clear fault after 5 cycles and trip the faulted line. c. Wait 20 cycles, and then re-close the line in (b) back into the fault. d. Leave fault on for 5 cycles, then trip the line in (b) and remove fault.	X	X	
43	FLT43-PO (17SP and 25SP Only)	**Prior outage on the G14-038-Tap 345kV (560011) to Potter 345kV (523961)** 3 phase fault on Hitchland (523097) – Walk Tap (531512) CKT 1, near Hitchland. a. Apply fault at the Hitchland 345kV bus. b. Clear fault after 5 cycles and trip the faulted line. c. Wait 20 cycles, and then re-close the line in (b) back into the fault. d. Leave fault on for 5 cycles, then trip the line in (b) and remove fault.	X	X	
44	FLT44-PO	**Prior outage on the Woodward 345kV (515375) to Thistle (539801) 345kV line** 3 phase fault on Tatonga (515407) to G11-051-Tap (562075) a. Apply fault on the Tatonga (515407) 345kV to G11-051-Tap (562075) near Tatonga b. Clear fault after 5 cycles and trip the faulted line. c. Wait 20 cycles, and then re-close the line in (b) back into the fault. d. Leave fault on for 5 cycles, then trip the line in (b) and remove fault.	X	X	X
45	FLT45-SB	**Woodward 345kV Stuck Breaker** a. Apply single phase fault at the Woodward (515375) 345kV bus on the Woodward – G11-051-Tap (562075) 345kV line b. Wait 16 cycles, and then drop Woodward (515375) 345kV to Thistle (539801) 345kV ckt 1 c. Trip Woodward to G11-051-Tap 345kV and remove the fault	X	X	X
46	FLT46-SB	**Hitchland 345kV Stuck Breaker** a. Apply single phase fault at the Hitchland (523097) 345kV bus b. Wait 16 cycles, and then drop Hitchland – Optima (560010) 345kV circuit 1 and remove fault	X	X	X
47	FLT47-SB (16WP Only)	**Hitchland 345kV Stuck Breaker** a. Apply single phase fault at the Hitchland (523097) 345kV bus b. Wait 16 cycles, and then drop Hitchland – Finney (523853) 345kV circuit 1 and remove fault	X	X	X

Cont. No.	Cont. Name	Description	GEN-2014-037	GEN-2014-038	GEN-2015-082
48	FLT48-PO	**Prior outage on the Woodward 345kV (515375) to Thistle (539801) 345kV line** 3 phase fault on Tatonga (515407) to Mathewson (515497) a. Apply 3 phase fault on the Tatonga (515407) 345kV to Mathewson (515497) line near Tatonga b. Clear fault after 5 cycles and trip the faulted line. c. Wait 20 cycles, and then re-close the line in (b) back into the fault. d. Leave fault on for 5 cycles, then trip the line in (b) and remove fault.	X		X
49	FLT49-SB	**Beaver 345kV Stuck Breaker** a. Apply single phase fault at the Beaver County (515554) 345kV bus b. Wait 16 cycles, and then drop Beaver County – G11-14-Tap (560000) 345kV circuit 1 and remove fault	X	X	X
50	FLT50-SB	**G11-14-Tap 345kV Stuck Breaker** a. Apply single phase fault at the G11-14-Tap (560000) 345kV bus b. Wait 16 cycles, and then drop G11-14-Tap (560000) – Woodward (515375) 345kV circuit 1 and remove fault	X	X	X
51	FLT51-SB	**Woodward 345kV Stuck Breaker** a. Apply single phase fault at the Woodward (515375) 345kV bus b. Wait 16 cycles, and then drop Woodward (515375) – Border (515458) 345kV circuit 1 and remove fault	X	X	X

Single- line-to-ground faults were simulated with the standard method of applying fault impedance to the positive sequence network to represent the effect of the negative and zero sequence networks on the positive sequence network. The SLG fault impedance was computed by assuming a positive sequence voltage at the fault location at approximately 60% of pre-fault voltage, which is a typical value.

The Southwest Pool Disturbance Performance Criteria Requirements in Appendix A were used to evaluate the system response during the initial transient period following a disturbance on the system. Generator response and bus voltages (115 kV and above) in Area 520, 524, 525, 526, 531, 534, and 536 were monitored to ensure the system performance meets criteria requirements. Rotor angles of the nearby synchronous machines were investigated to make sure they maintained synchronism and had adequate damping following system faults.

Any wind generator must comply with FERC Order 661A on low voltage ride through requirements for wind farms. Therefore, the wind generators should not be tripped off line for faults by under voltage relay actuation. Generator speed of pre-queued projects was also monitored to ensure they stay online under system contingencies. For contingencies that result

in a prior queued project tripping off-line; the contingency shall be re-run with the prior queued project's voltage and frequency tripping disabled.

2.2 Study Results – Cluster Scenario

All disturbances showed no instability problems for all three seasons. However, a number of faults showed voltage violations. All fault results are summarized in Table 2-2, Table 2-3, and Table 2-4, which show results for the 2016 Winter Peak case, the 2017 Summer Peak case, and the 2025 Summer Peak case, respectively. The "Volt CI Violation" in the table refers to "*bus voltages on the Bulk Electric System is below 0.70 per unit, 2.5 seconds after the fault is cleared or bus voltages is above 1.20 per unit after the fault is cleared*", and the "Volt CII Violation" refers to "simulation end bus voltages exceed the range of 0.9 pu and 1.1 pu". All voltage violations are highlighted with **red**.

Table 2-2 Study Results Summary, 2016 Winter Peak

Index	Fault File Name	16WP Case		
		Stable?	Volt CI Violation	Volt CII Violation
1	FLT01-3PH	Stable	no	no
2	FLT02-3PH	Stable	no	no
3	FLT03-3PH	Stable	no	no
4	FLT04-3PH	Stable	no	**yes**
5	FLT05-3PH	Stable	no	no
6	FLT06-3PH	Stable	no	**yes**
7	FLT07-3PH	Stable	no	no
8	FLT08-3PH	Stable	no	no
9	FLT09-3PH	Stable	no	no
10	FLT10-3PH	Stable	no	no
11	FLT11-3PH	Stable	no	no
12	FLT12-3PH	Stable	no	no
14	FLT14-3PH	Stable	no	no
15	FLT15-3PH	Stable	no	no
16	FLT16-3PH	Stable	no	no
17	FLT17-3PH	Stable	no	no
19	FLT19-3PH	Stable	no	no
20	FLT20-3PH	Stable	no	no
21	FLT21-3PH	Stable	no	no
22	FLT22-3PH	Stable	no	no
23	FLT23-3PH	Stable	no	no
24	FLT24-3PH	Stable	no	no
25	FLT25-3PH	Stable	no	no
26	FLT26-3PH	Stable	no	no
27	FLT27-3PH	Stable	no	no
28	FLT28-3PH	Stable	no	no
29	FLT29-3PH	Stable	no	no
30	FLT30-3PH	Stable	no	no
31	FLT31-3PH	Stable	no	no
32	FLT32-3PH	Stable	no	no
33	FLT33-3PH	Stable	no	no
34	FLT34-3PH	Stable	no	no
35	FLT35-3PH	Stable	no	no
36	FLT36-3PH	Stable	no	no

Index	Fault File Name	16WP Case		
		Stable?	Volt CI Violation	Volt CII Violation
37	FLT37-3PH	Stable	no	no
38	FLT38-3PH	Stable	no	no
39	FLT39-PO	Stable	no	yes
44	FLT44-PO	Stable	no	no
45	FLT45-SB	Stable	no	no
46	FLT46-SB	Stable	no	no
47	FLT47-SB	Stable	no	no
48	FLT48-PO	Stable	no	no
49	FLT49-SB	Stable	no	no
50	FLT50-SB	Stable	no	no
51	FLT51-SB	Stable	no	no

Table 2-3 Study Results Summary, 2017 Summer Peak

Index	Fault File Name	17SP Case		
		Stable?	Volt CI Violation	Volt CII Violation
1	FLT01-3PH	stable	no	no
2	FLT02-3PH	stable	no	no
3	FLT03-3PH	stable	no	no
4	FLT04-3PH	stable	no	yes
5	FLT05-3PH	stable	no	no
6	FLT06-3PH	stable	no	yes
7	FLT07-3PH	stable	no	no
8	FLT08-3PH	stable	no	no
9	FLT09-3PH	stable	no	no
10	FLT10-3PH	stable	no	no
11	FLT11-3PH	stable	no	no
12	FLT12-3PH	stable	no	no
14	FLT14-3PH	stable	no	no
15	FLT15-3PH	stable	no	no
16	FLT16-3PH	stable	no	no
17	FLT17-3PH	stable	no	no
19	FLT19-3PH	stable	no	no
20	FLT20-3PH	stable	no	no
21	FLT21-3PH	stable	no	no
22	FLT22-3PH	stable	no	no
23	FLT23-3PH	stable	no	no
25	FLT25-3PH	stable	no	no
26	FLT26-3PH	stable	no	no
27	FLT27-3PH	stable	no	no
28	FLT28-3PH	stable	no	no
29	FLT29-3PH	stable	no	no
30	FLT30-3PH	stable	no	no
31	FLT31-3PH	stable	no	no
32	FLT32-3PH	stable	no	no
33	FLT33-3PH	stable	no	no
34	FLT34-3PH	stable	no	no
35	FLT35-3PH	stable	no	no
36	FLT36-3PH	stable	no	no
37	FLT37-3PH	stable	no	no
38	FLT38-3PH	stable	no	no
40	FLT40-PO	stable	no	no
41	FLT41-PO	stable	no	no
42	FLT42-PO	stable	no	no

Index	Fault File Name	17SP Case		
		Stable?	Volt CI Violation	Volt CII Violation
43	FLT43-PO	stable	no	no
44	FLT44-PO	stable	no	no
45	FLT45-SB	stable	no	no
46	FLT46-SB	stable	no	no
48	FLT48-PO	stable	no	no
49	FLT49-SB	stable	no	no
50	FLT50-SB	stable	no	no
51	FLT51-SB	stable	no	no

Table 2-4 Study Results Summary, 2025 Summer Peak

Index	Fault File Name	25SP Case		
		Stable?	Volt CI Violation	Volt CII Violation
1	FLT01-3PH	stable	no	no
2	FLT02-3PH	stable	no	no
3	FLT03-3PH	stable	no	no
4	FLT04-3PH	stable	no	yes
5	FLT05-3PH	stable	no	no
6	FLT06-3PH	stable	no	yes
7	FLT07-3PH	stable	no	no
8	FLT08-3PH	stable	no	no
9	FLT09-3PH	stable	no	no
10	FLT10-3PH	stable	no	no
11	FLT11-3PH	stable	no	no
12	FLT12-3PH	stable	no	no
13	FLT13-3PH	stable	no	no
14	FLT14-3PH	stable	no	no
15	FLT15-3PH	stable	no	no
16	FLT16-3PH	stable	no	no
17	FLT17-3PH	stable	no	no
19	FLT19-3PH	stable	no	no
20	FLT20-3PH	stable	no	no
21	FLT21-3PH	stable	no	no
22	FLT22-3PH	stable	no	no
23	FLT23-3PH	stable	no	no
25	FLT25-3PH	stable	no	no
26	FLT26-3PH	stable	no	no
27	FLT27-3PH	stable	no	yes
28	FLT28-3PH	stable	no	no
29	FLT29-3PH	stable	no	no
30	FLT30-3PH	stable	no	no
31	FLT31-3PH	stable	no	no
32	FLT32-3PH	stable	no	no
33	FLT33-3PH	stable	no	no
34	FLT34-3PH	stable	no	no
35	FLT35-3PH	stable	no	no
36	FLT36-3PH	stable	no	no
37	FLT37-3PH	stable	no	no
38	FLT38-3PH	stable	no	no
40	FLT40-PO	stable	no	no
41	FLT41-PO	stable	no	no

Index	Fault File Name	25SP Case		
		Stable?	Volt CI Violation	Volt CII Violation
42	FLT42-PO	stable	no	no
43	FLT43-PO	stable	no	no
44	FLT44-PO	stable	no	no
45	FLT45-SB	stable	no	no
46	FLT46-SB	stable	no	no
48	FLT48-PO	stable	no	no
49	FLT49-SB	stable	no	no
50	FLT50-SB	stable	no	no
51	FLT51-SB	stable	no	no

Figure 2-1 shows the responses of the studied generator GEN-2015-082 following fault FLT01-3PH for 2017 Summer Peak case. The machine speed, active and reactive power output and terminal voltage are plotted to show the generator response. Figure 2-2 shows the response of the studied generator following fault FLT06-3PH for 2016 Winter Peak case. The simulation shows stable results; however, some wind machines' output are changed periodically as presented. As indicated by SPP, this is a double circuit contingency, and further mitigation will be proceeded to curtail the generation in the area.

All the simulation plots are included in Appendix B.

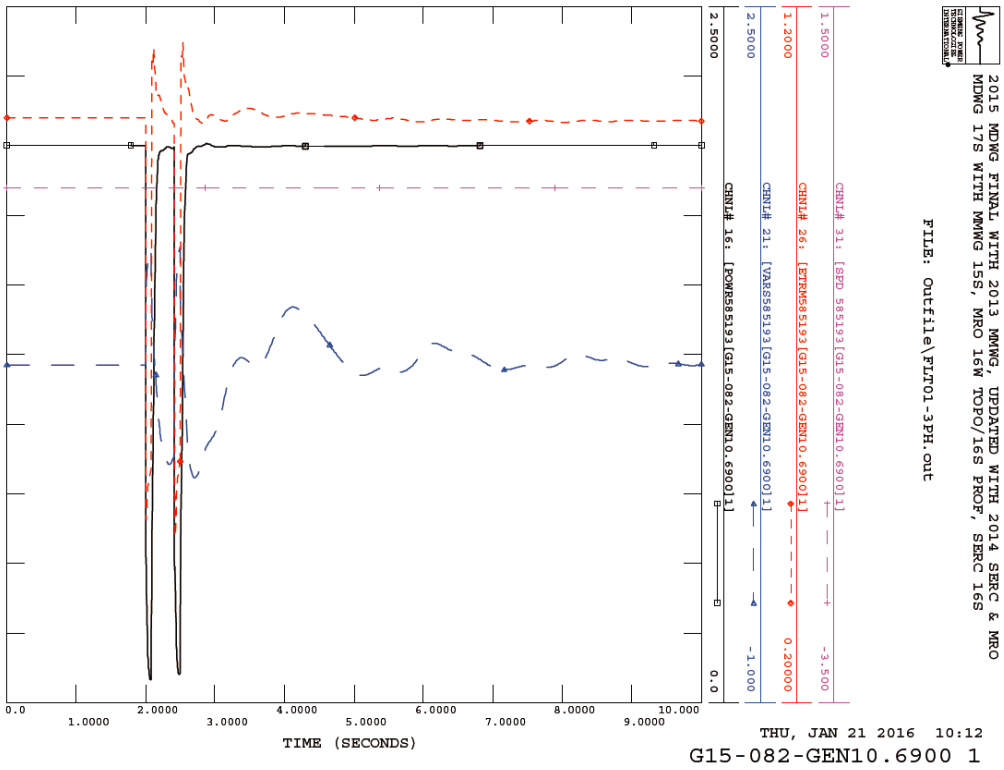

Figure 2-1 Responses of GEN-2015-082 following Fault FLT01-3PH for 2017 Summer Peak Case

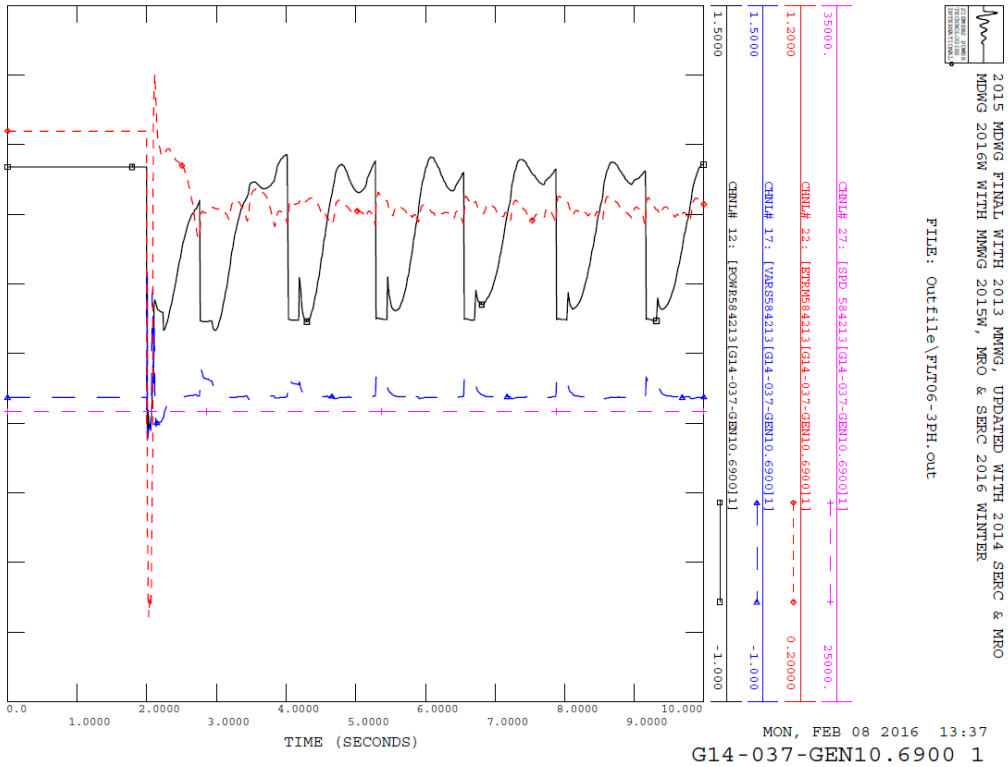

Figure 2-2 Responses of GEN-2015-082 following Fault FLT06-3PH for 2016 Winter Peak Case

2.3 Study Results – Stand Alone Scenario

Since there are three interconnection requests in this study group, stand alone cases were created and studied for each individual interconnection request. Similar as the cluster scenario, all disturbances showed no instability problems for all three seasons. However, a number of faults showed voltage violations. All fault results are summarized in Table 2-5, Table 2-6, and Table 2-7 which show results for the 2016 Winter Peak case, the 2017 Summer Peak case, and the 2025 Summer Peak case, respectively. The "Volt CI Violation" in the table refers to "*bus voltages on the Bulk Electric System is below 0.70 per unit, 2.5 seconds after the fault is cleared or bus voltages is above 1.20 per unit after the fault is cleared*", and the "Volt CII Violation" refers to "simulation end bus voltages exceed the range of 0.9 pu and 1.1 pu". All voltage violations are highlighted with **red**.

Table 2-5 Study Results Summary, 2016 Winter Peak

Index	Fault Name	2016 Winter Peak								
		GEN-2014-037			GEN-2014-038			GEN-2015-082		
		Stable?	Volt CI Violation	Volt CII Violation	Stable?	Volt CI Violation	Volt CII Violation	Stable?	Volt CI Violation	Volt CII Violation
1	FLT01-3PH	Stable	no	no	Stable	no	no	Stable	no	no
2	FLT02-3PH	Stable	no	no	Stable	no	no	Stable	no	no
3	FLT03-3PH	Stable	no	no	Stable	no	no	Stable	no	no
4	FLT04-3PH	Stable	no	**yes**	Stable	no	**yes**	Stable	no	**yes**
5	FLT05-3PH	Stable	no	no	Stable	no	no	Stable	no	no
6	FLT06-3PH	Stable	no	**yes**	Stable	no	**yes**	Stable	no	**yes**
7	FLT07-3PH	Stable	no	no	Stable	no	no	Stable	no	no

Index	Fault Name	2016 Winter Peak								
		GEN-2014-037			GEN-2014-038			GEN-2015-082		
		Stable?	Volt CI Violation	Volt CII Violation	Stable?	Volt CI Violation	Volt CII Violation	Stable?	Volt CI Violation	Volt CII Violation
8	FLT08-3PH	Stable	no	no	Stable	no	no	Stable	no	no
9	FLT09-3PH	Stable	no	no				Stable	no	no
10	FLT10-3PH	Stable	no	no				Stable	no	no
11	FLT11-3PH	Stable	no	no				Stable	no	no
12	FLT12-3PH	Stable	no	no				Stable	no	no
13	FLT13-3PH									
14	FLT14-3PH	Stable	no	no				Stable	no	no
15	FLT15-3PH	Stable	no	no				Stable	no	no
16	FLT16-3PH	Stable	no	no				Stable	no	no
17	FLT17-3PH	Stable	no	no				Stable	no	no
19	FLT19-3PH	Stable	no	no				Stable	no	no
20	FLT20-3PH	Stable	no	no				Stable	no	no
21	FLT21-3PH	Stable	no	no				Stable	no	no
22	FLT22-3PH	Stable	no	no				Stable	no	no
23	FLT23-3PH	Stable	no	no				Stable	no	no
24	FLT24-3PH	Stable	no	no	Stable	no	no	Stable	no	no
25	FLT25-3PH	Stable	no	no	Stable	no	no	Stable	no	no
26	FLT26-3PH	Stable	no	no	Stable	no	no	Stable	no	no
27	FLT27-3PH	Stable	no	no	Stable	no	no	Stable	no	no
28	FLT28-3PH	Stable	no	no	Stable	no	no	Stable	no	no
29	FLT29-3PH	Stable	no	no	Stable	no	no			
30	FLT30-3PH	Stable	no	no	Stable	no	no			
31	FLT31-3PH	Stable	no	no	Stable	no	no			
32	FLT32-3PH	Stable	no	no	Stable	no	no	Stable	no	no
33	FLT33-3PH	Stable	no	no	Stable	no	no			
34	FLT34-3PH	Stable	no	no	Stable	no	no			
35	FLT35-3PH	Stable	no	no	Stable	no	no			
36	FLT36-3PH	Stable	no	no	Stable	no	no			
37	FLT37-3PH	Stable	no	no	Stable	no	no			
38	FLT38-3PH	Stable	no	no	Stable	no	no			
39	FLT39-PO	Stable	no	no	Stable	no	no			
40	FLT40-PO									
41	FLT41-PO									
42	FLT42-PO									
43	FLT43-PO									
44	FLT44-PO	Stable	no	no	Stable	no	no	Stable	no	no
45	FLT45-SB	Stable	no	no	Stable	no	no	Stable	no	no
46	FLT46-SB	Stable	no	no	Stable	no	no	Stable	no	no
47	FLT47-SB	Stable	no	no	Stable	no	no	Stable	no	no
48	FLT48-PO	Stable	no	no				Stable	no	no
49	FLT49-SB	Stable	no	no	Stable	no	no	Stable	no	no
50	FLT50-SB	Stable	no	no	Stable	no	no	Stable	no	no
51	FLT51-SB	Stable	no	no	Stable	no	no	Stable	no	no

Table 2-6 Study Results Summary, 2017 Summer Peak

Index	Fault Name	2017 Summer Peak								
		GEN-2014-037			GEN-2014-038			GEN-2015-082		
		Stable?	Volt CI Violation	Volt CII Violation	Stable?	Volt CI Violation	Volt CII Violation	Stable?	Volt CI Violation	Volt CII Violation
1	FLT01-3PH	Stable	no	no	Stable	no	no	Stable	no	no
2	FLT02-3PH	Stable	no	no	Stable	no	no	Stable	no	no
3	FLT03-3PH	Stable	no	no	Stable	no	no	Stable	no	no
4	FLT04-3PH	Stable	no	yes	Stable	no	yes	Stable	no	no
5	FLT05-3PH	Stable	no	no	Stable	no	no	Stable	no	no
6	FLT06-3PH	Stable	no	yes	Stable	no	yes	Stable	no	yes

Index	Fault Name	2017 Summer Peak								
		GEN-2014-037			GEN-2014-038			GEN-2015-082		
		Stable?	Volt CI Violation	Volt CII Violation	Stable?	Volt CI Violation	Volt CII Violation	Stable?	Volt CI Violation	Volt CII Violation
7	FLT07-3PH	Stable	no	no	Stable	no	no	Stable	no	no
8	FLT08-3PH	Stable	no	no	Stable	no	no	Stable	no	no
9	FLT09-3PH	Stable	no	no				Stable	no	no
10	FLT10-3PH	Stable	no	no				Stable	no	no
11	FLT11-3PH	Stable	no	no				Stable	no	no
12	FLT12-3PH	Stable	no	no				Stable	no	no
13	FLT13-3PH									
14	FLT14-3PH	Stable	no	no				Stable	no	no
15	FLT15-3PH	Stable	no	no				Stable	no	no
16	FLT16-3PH	Stable	no	no				Stable	no	no
17	FLT17-3PH	Stable	no	no				Stable	no	no
19	FLT19-3PH	Stable	no	no				Stable	no	no
20	FLT20-3PH	Stable	no	no				Stable	no	no
21	FLT21-3PH	Stable	no	no				Stable	no	no
22	FLT22-3PH	Stable	no	no				Stable	no	no
23	FLT23-3PH	Stable	no	no				Stable	no	no
24	FLT24-3PH									
25	FLT25-3PH	Stable	no	no	Stable	no	no	Stable	no	no
26	FLT26-3PH	Stable	no	no	Stable	no	no	Stable	no	no
27	FLT27-3PH	Stable	no	no	Stable	no	no	Stable	no	no
28	FLT28-3PH	Stable	no	no	Stable	no	no	Stable	no	no
29	FLT29-3PH	Stable	no	no	Stable	no	no			
30	FLT30-3PH	Stable	no	no	Stable	no	no			
31	FLT31-3PH	Stable	no	no	Stable	no	no			
32	FLT32-3PH	Stable	no	no	Stable	no	no	Stable	no	no
33	FLT33-3PH	Stable	no	no	Stable	no	no			
34	FLT34-3PH	Stable	no	no	Stable	no	no			
35	FLT35-3PH	Stable	no	no	Stable	no	no			
36	FLT36-3PH	Stable	no	no	Stable	no	no			
37	FLT37-3PH	Stable	no	no	Stable	no	no			
38	FLT38-3PH	Stable	no	no	Stable	no	no			
39	FLT39-PO									
40	FLT40-PO	Stable	no	no	Stable	no	no			
41	FLT41-PO	Stable	no	no	Stable	no	no			
42	FLT42-PO	Stable	no	no	Stable	no	no			
43	FLT43-PO	Stable	no	no	Stable	no	no			
44	FLT44-PO	Stable	no	no	Stable	no	no	Stable	no	no
45	FLT45-SB	Stable	no	no	Stable	no	no	Stable	no	no
46	FLT46-SB	Stable	no	no	Stable	no	no	Stable	no	no
47	FLT47-SB									
48	FLT48-PO	Stable	no	no				Stable	no	no
49	FLT49-SB	Stable	no	no	Stable	no	no	Stable	no	no
50	FLT50-SB	Stable	no	no	Stable	no	no	Stable	no	no
51	FLT51-SB	Stable	no	no	Stable	no	no	Stable	no	no

Table 2-7 Study Results Summary, 2025 Summer Peak

Index	Fault Name	2025 Summer Peak		
		GEN-2014-037	GEN-2014-038	GEN-2015-082

		Stable?	Volt CI Violation	Volt CII Violation	Stable?	Volt CI Violation	Volt CII Violation	Stable?	Volt CI Violation	Volt CII Violation
1	FLT01-3PH	Stable	no	no	Stable	no	no	Stable	no	no
2	FLT02-3PH	Stable	no	no	Stable	no	no	Stable	no	no
3	FLT03-3PH	Stable	no	no	Stable	no	no	Stable	no	no
4	FLT04-3PH	Stable	no	yes	Stable	no	yes	Stable	no	no
5	FLT05-3PH	Stable	no	no	Stable	no	no	Stable	no	no
6	FLT06-3PH	Stable	no	yes	Stable	no	yes	Stable	no	yes
7	FLT07-3PH	Stable	no	no	Stable	no	no	Stable	no	no
8	FLT08-3PH	Stable	no	no	Stable	no	no	Stable	no	no
9	FLT09-3PH	Stable	no	no				Stable	no	no
10	FLT10-3PH	Stable	no	no				Stable	no	no
11	FLT11-3PH	Stable	no	no				Stable	no	no
12	FLT12-3PH	Stable	no	no				Stable	no	no
13	FLT13-3PH	Stable	no	no				Stable	no	no
14	FLT14-3PH	Stable	no	no				Stable	no	no
15	FLT15-3PH	Stable	no	no				Stable	no	no
16	FLT16-3PH	Stable	no	no				Stable	no	no
17	FLT17-3PH	Stable	no	no				Stable	no	no
19	FLT19-3PH	Stable	no	no				Stable	no	no
20	FLT20-3PH	Stable	no	no				Stable	no	no
21	FLT21-3PH	Stable	no	no				Stable	no	no
22	FLT22-3PH	Stable	no	no				Stable	no	no
23	FLT23-3PH	Stable	no	no				Stable	no	no
24	FLT24-3PH									
25	FLT25-3PH	Stable	no	no	Stable	no	no	Stable	no	no
26	FLT26-3PH	Stable	no	no	Stable	no	no	Stable	no	no
27	FLT27-3PH	Stable	no	yes	Stable	no	yes	Stable	no	yes
28	FLT28-3PH	Stable	no	no	Stable	no	no	Stable	no	no
29	FLT29-3PH	Stable	no	no	Stable	no	no			
30	FLT30-3PH	Stable	no	no	Stable	no	no			
31	FLT31-3PH	Stable	no	no	Stable	no	no			
32	FLT32-3PH	Stable	no	no	Stable	no	no	Stable	no	no
33	FLT33-3PH	Stable	no	no	Stable	no	no			
34	FLT34-3PH	Stable	no	no	Stable	no	no			
35	FLT35-3PH	Stable	no	no	Stable	no	no			
36	FLT36-3PH	Stable	no	no	Stable	no	no			
37	FLT37-3PH	Stable	no	no	Stable	no	no			
38	FLT38-3PH	Stable	no	no	Stable	no	no			
39	FLT39-PO									
40	FLT40-PO	Stable	no	no	Stable	no	no			
41	FLT41-PO	Stable	no	no	Stable	no	no			
42	FLT42-PO	Stable	no	no	Stable	no	no			
43	FLT43-PO	Stable	no	no	Stable	no	no			
44	FLT44-PO	Stable	no	no	Stable	no	no	Stable	no	no
45	FLT45-SB	Stable	no	no	Stable	no	no	Stable	no	no
46	FLT46-SB	Stable	no	no	Stable	no	no	Stable	no	no
47	FLT47-SB									
48	FLT48-PO	Stable	no	no				Stable	no	no
49	FLT49-SB	Stable	no	no	Stable	no	no	Stable	no	no
50	FLT50-SB	Stable	no	no	Stable	no	no	Stable	no	no
51	FLT51-SB	Stable	no	no	Stable	no	no	Stable	no	no

3 Short Circuit Analysis

Short circuit analysis was performed on the 2017 Summer Peak and 2025 Summer Peak power flow case using the PSS/E program. Since the power flow model does not contain negative and zero sequence data, only three-phase symmetrical fault current levels were calculated at up to five buses away from the point of interconnection.

Table 3-1 tabulates all the three-phase fault current levels, and the calculated values were listed here for SPP's reference.

Table 3-1 (a): Three-Phase Fault Currents GEN-2014-037– 2025 Summer Peak

Bus Number	Bus Name	3PH (Amp)	Bus Number	Bus Name	3PH (Amp)
514785	WOODWRD4 138.00	20589.5	531481	HUGOTON3 115.00	5875.6
514796	IODINE-4 138.00	7318.9	531501	BUCKNER7 345.00	9728.1
515375	WWRDEHV7 345.00	19897.6	531510	WALKTAP3 115.00	10189.2
515376	WWRDEHV4 138.00	25192.3	531511	WALKETP-T 13.800	26286.0
515394	KEENAN 4 138.00	8342.5	531512	WALKTAP7 345.00	7730.5
515398	OUSPRT 4 138.00	9183.1	539654	CIM-PLT3 115.00	7186.6
515407	TATONGA7 345.00	16188.2	539800	CLARKCOUNTY7345.00	11565.9
515458	BORDER 7345.00	5134.3	539801	THISTLE7 345.00	15270.8
515554	BVRCNTY7 345.00	14833.6	539802	THISTLE T1 13.800	7836.5
515590	PALDR2W7 345.00	12495.8	539804	THISTLE4 138.00	16402.8
515591	PALDRW11 34.500	32521.9	560000	G11-14-TAP 345.00	13534.1
515592	PALDRW21 34.500	8046.8	560010	G14-037-TAP 345.00	15675.9
515593	PALDRWT1 13.200	62675.1	560011	G14-038-TAP 345.00	9928.1
515594	PALDRWT2 13.800	13849.7	560033	G1524&G1525T345.00	19623.0
515599	NBUFFRG7 345.00	8543.3	562075	G11-051-TAP 345.00	16844.0
515634	PALDR1W7 345.00	10636.2	573505	G08-047-GSU134.500	29830.8
515795	WWDEHV31 13.800	61144.6	573509	G08-047-GSU234.500	6823.9
515799	WWDEHV21 13.800	60777.5	573510	G08-047-GEN20.6900	271605.9
523085	TC-TXCN_TR1113.200	5676.0	576395	GEN-2010-014345.00	11536.4
523086	TC-TXCN_TR2113.200	5677.0	576396	G10-014-XFMR115.00	13203.3
523087	TC-TXCOUNTY134.500	4552.0	576397	G10-014-XF-1115.00	9180.6
523089	TC-TXCOUNTY269.000	8203.2	576398	G10-014XFMR134.500	16614.6
523090	TEXAS_CNTY 3115.00	8578.5	576407	G10-014-XF-2115.00	12432.0
523091	HITCHLD_TR0113.200	32455.8	576408	G10-014XFMR234.500	18464.4
523092	HITCHLD_TR1113.200	20867.0	578542	GEN-2010-001345.00	12247.3
523093	HITCHLAND 3115.00	17167.5	578543	G10-001XFMR134.500	17110.1
523094	HITCHLD_TR2113.200	22156.7	578544	G10-001-GSU134.500	16988.6
523095	HITCHLAND 6230.00	15014.0	578545	G10-001-GEN10.6900	676412.4
523097	HITCHLAND 7345.00	15976.9	578546	G10-001XFMR234.500	17065.1
523098	HITCHLD_TR4113.200	20867.0	578547	G10-001-GSU234.500	16838.1
523099	TC-WHITING 3115.00	2173.2	578548	G10-001-GEN20.6900	672033.5

Bus Number	Bus Name	3PH (Amp)	Bus Number	Bus Name	3PH (Amp)
523101	NOBLE_WND 7345.00	15905.2	579296	G07-046-XF-134.500	13779.8
523102	NOBLE_TR 113.800	32057.1	579299	G07-046-XF-234.500	11138.7
523103	NOBLE_WND 3115.00	10504.3	579369	G06-044GSU1B34.500	17738.3
523106	TXPHSF 3115.00	3917.6	579370	G06-044-MV1A115.00	8258.6
523107	NOVUS_WND 14.1600	169336.4	579371	G06-044-XF1A34.500	14159.2
523109	NOVUS1 134.500	17738.3	579374	G06-044-XF2A34.500	17325.5
523110	NOVUS1_TR1 113.800	577476.7	579375	G06-044GSU2A34.500	17158.1
523111	NOVUS1 3115.00	19514.3	579377	G06-044-MV2B115.00	10305.0
523112	NOVUS1 7345.00	15664.4	579378	G06-044-XF2B34.500	22702.7
523113	TC-MCMURRY 3115.00	6528.7	579411	G08-051XFMR234.500	16348.3
523114	BUFF_DN_TR1113.200	535652.9	581112	GEN-2011-014345.00	12075.1
523115	BUFF_DN_TR2113.200	530727.2	581113	G11-014XFMR134.500	13545.6
523116	BUFF_DUNES1134.500	26313.7	581114	G11-014-GSU134.500	12949.3
523118	BUFF_DUNES 7345.00	6318.8	581117	G11-014XFMR234.500	12610.9
523120	COLE 3115.00	4051.4	581118	G11-014-GSU234.500	11887.5
523125	NBLWND-CB2 134.500	8106.4	581148	GEN-2011-022345.00	9379.8
523127	NBLWND-LV1 134.500	8173.9	581149	G11-022XFMR134.500	18252.1
523128	NBLWND-LV2 134.500	9970.0	581150	G11-022XFMR234.500	18138.9
523129	NBLWND-LV3 134.500	9473.6	581151	G11-022-GSU134.500	17468.0
523130	NBLWND-HV2 3115.00	5085.8	581152	G11-022-GSU234.500	17049.0
523131	NBLWND-HV3 3115.00	7911.6	581153	G11-022-GEN10.6900	756744.2
523140	TXFARMS 3115.00	5041.8	581154	G11-022-GEN20.6900	742842.9
523147	WADE 3115.00	3516.0	582019	GEN-2011-019345.00	19897.6
523151	OCHLTRE_TR1113.200	10089.3	582020	GEN-2011-020345.00	19897.6
523154	OCHILTREE 3115.00	5766.3	582119	G11-019XFMR134.500	37918.6
523155	OCHILTREE 6230.00	4153.6	582120	G11-020XFMR134.500	37917.8
523158	PERRYTON 3115.00	5501.2	583090	G1149&G1504 345.00	4693.8
523160	FRISCO_WND 3115.00	6869.1	583110	GEN-2011-051345.00	16844.0
523174	GOODWELLWND3115.00	6519.6	583760	GEN-2013-030345.00	11350.0
523175	LASLEY 3115.00	5559.5	583761	G13-030XFMR134.500	21848.2
523177	RB-SPURLOCK3115.00	5581.3	583762	G13-030-GSU134.500	21685.7
523186	SPEARMAN 3115.00	8905.2	583763	G13-030-GEN10.5750	1290118.6
523195	HANSFORD 3115.00	10127.7	583764	G13-030XFMR234.500	21603.5
523197	EXCELN4-HV23115.00	4686.2	583765	G13-030-GSU234.500	21256.0
523216	RB-HOGUE 3115.00	3560.5	583766	G13-030-GEN20.5750	1279637.8
523256	ETTER 3115.00	5181.4	583930	GEN-2014-026345.00	10010.9
523277	VALERO 3115.00	9699.7	583931	G14-026XFMR134.500	23211.8
523301	MOORE_E 113.200	12593.1	583932	G14-026-GSU134.500	23122.3
523302	MOORE_TR1 113.200	20143.0	584210	GEN-2014-037345.00	11081.2
523304	MOORE_W 3115.00	10675.9	584211	G14-037XFMR134.500	15693.7
523308	MOORE_E 3115.00	10675.9	584212	G14-037-GSU134.500	14962.3

Bus Number	Bus Name	3PH (Amp)	Bus Number	Bus Name	3PH (Amp)
523309	MOORE_CNTY 6230.00	6609.0	584213	G14-037-GEN10.6900	703860.2
523853	FINNEY 7345.00	10572.1	584214	G14-037XFMR234.500	16767.0
523869	CHAN/TASCOS6230.00	3795.4	584215	G14-037-GSU234.500	16612.9
523957	POTTER_TR 113.200	7120.1	584216	G14-037-GEN20.6900	797706.8
523959	POTTER_CO 6230.00	20221.7	584290	GEN-2014-038345.00	8980.1
523961	POTTER_CO 7345.00	7348.4	584291	G14-038XFMR134.500	16536.4
523979	HARRNG_EST 6230.00	26456.6	584292	G14-038-GSU134.500	16346.3
524010	ROLLHILLS 6230.00	19403.2	584294	G14-038XFMR234.500	15308.8
524267	BUSHLAND 6230.00	9374.8	584295	G14-038-GSU234.500	14583.5
524295	SPNSPUR_WND134.500	14347.1	584980	GEN-2015-060138.00	5777.9
524296	SPNSPUR_WND7345.00	4370.7	585180	GEN-2015-081345.00	13902.3
525461	NEWHART 6230.00	10929.6	585190	GEN-2015-082345.00	6893.6
525832	TUCO_INT 7345.00	12842.4	585191	G15-082XFMR134.500	23278.1
531252	WALKMYR1 13.800	15774.5	585192	G15-082-GSU134.500	22862.7
531404	WALKMYR2 69.000	8166.0	599041	DEWIND-HV 115.00	6869.1
531405	WALKMYR3 115.00	9790.7	599068	NTHBUF_XFMR134.500	20567.3
531448	HOLCOMB3 115.00	22304.3	599071	NTHBUF_XFMR234.500	20558.4
531449	HOLCOMB7 345.00	10669.3	599074	NTHBUF_EHV2 345.00	6544.5
531450	HOLCTER1 13.800	17934.2	599950	LAMAR7 345.00	2428.6
531465	SETAB 7 345.00	7509.9			

Table 3-2 (b): Three-Phase Fault Currents GEN-2014-038 – 2025 Summer Peak

Bus Number	Bus Name	3PH (Amp)	Bus Number	Bus Name	3PH (Amp)
515375	WWRDEHV7 345.00	19897.6	524296	SPNSPUR_WND7345.00	4370.7
515554	BVRCNTY7 345.00	14833.6	524300	HILLSIDE 3115.00	12415.4
515590	PALDR2W7 345.00	12495.8	524365	RANDALL 6230.00	14357.0
515592	PALDRW21 34.500	8046.8	524620	DEFSMTH_TR1113.200	15198.6
515594	PALDRWT2 13.800	13849.7	524621	DEFSMTH_TR2113.800	14537.8
515634	PALDR1W7 345.00	10636.2	524622	DEAFSMITH 3115.00	11464.9
523085	TC-TXCN_TR1113.200	5676.0	524623	DEAFSMITH 6230.00	7772.7
523086	TC-TXCN_TR2113.200	5677.0	524746	CASTRO_CNTY3115.00	11677.6
523087	TC-TXCOUNTY134.500	4552.0	525124	HART_INDUST3115.00	7553.2
523089	TC-TXCOUNTY269.000	8203.2	525192	KRESS_INT 3115.00	10962.3
523090	TEXAS_CNTY 3115.00	8578.5	525211	SWISHER_TR1113.200	17887.7
523091	HITCHLD_TR0113.200	32455.8	525212	SWISHER 3115.00	9941.2
523092	HITCHLD_TR1113.200	20867.0	525213	SWISHER 6230.00	10728.8
523093	HITCHLAND 3115.00	17167.5	525458	NEWHART_TR2113.200	16633.8
523094	HITCHLD_TR2113.200	22156.7	525459	NEWHART_TR1113.200	16633.8
523095	HITCHLAND 6230.00	15014.0	525460	NEWHART 3115.00	14708.1
523097	HITCHLAND 7345.00	15976.9	525461	NEWHART 6230.00	10929.6

Bus Number	Bus Name	3PH (Amp)	Bus Number	Bus Name	3PH (Amp)
523098	HITCHLD_TR4113.200	20867.0	525478	PLANTX_TR2 113.200	28462.8
523099	TC-WHITING 3115.00	2173.2	525479	PLANTX_TR1 113.200	28462.8
523101	NOBLE_WND 7345.00	15905.2	525480	PLANT_X 3115.00	26791.4
523102	NOBLE_TR 113.800	32057.1	525481	PLANT_X 6230.00	23775.4
523103	NOBLE_WND 3115.00	10504.3	525494	PLANT_X4 120.000	131790.9
523106	TXPHSF 3115.00	3917.6	525524	TOLK_EAST 6230.00	27002.9
523107	NOVUS_WND 14.1600	169336.4	525531	TOLK_WEST 6230.00	27002.9
523109	NOVUS1 134.500	17738.3	525830	TUCO_INT 6230.00	23065.4
523110	NOVUS1_TR1 113.800	577476.7	526435	SUNDOWN 6230.00	11055.0
523111	NOVUS1 3115.00	19514.3	531252	WALKMYR1 13.800	15774.5
523112	NOVUS1 7345.00	15664.4	531404	WALKMYR2 69.000	8166.0
523113	TC-MCMURRY 3115.00	6528.7	531405	WALKMYR3 115.00	9790.7
523114	BUFF_DN_TR1113.200	535652.9	531448	HOLCOMB3 115.00	22304.3
523115	BUFF_DN_TR2113.200	530727.2	531449	HOLCOMB7 345.00	10669.3
523116	BUFF_DUNES1134.500	26313.7	531450	HOLCTER1 13.800	17934.2
523118	BUFF_DUNES 7345.00	6318.8	531465	SETAB 7 345.00	7509.9
523120	COLE 3115.00	4051.4	531481	HUGOTON3 115.00	5875.6
523125	NBLWND-CB2 134.500	8106.4	531501	BUCKNER7 345.00	9728.1
523127	NBLWND-LV1 134.500	8173.9	531510	WALKTAP3 115.00	10189.2
523128	NBLWND-LV2 134.500	9970.0	531511	WALKETP-T 13.800	26286.0
523129	NBLWND-LV3 134.500	9473.6	531512	WALKTAP7 345.00	7730.5
523130	NBLWND-HV2 3115.00	5085.8	539654	CIM-PLT3 115.00	7186.6
523131	NBLWND-HV3 3115.00	7911.6	560000	G11-14-TAP 345.00	13534.1
523140	TXFARMS 3115.00	5041.8	560010	G14-037-TAP 345.00	15675.9
523147	WADE 3115.00	3516.0	560011	G14-038-TAP 345.00	9928.1
523151	OCHLTRE_TR1113.200	10089.3	560050	G15-031-TAP 230.00	9329.9
523154	OCHILTREE 3115.00	5766.3	560051	G15-039-TAP 230.00	7474.8
523155	OCHILTREE 6230.00	4153.6	576395	GEN-2010-014345.00	11536.4
523158	PERRYTON 3115.00	5501.2	576396	G10-014-XFMR115.00	13203.3
523160	FRISCO_WND 3115.00	6869.1	576397	G10-014-XF-1115.00	9180.6
523174	GOODWELLWND3115.00	6519.6	576398	G10-014XFMR134.500	16614.6
523175	LASLEY 3115.00	5559.5	576407	G10-014-XF-2115.00	12432.0
523177	RB-SPURLOCK3115.00	5581.3	576408	G10-014XFMR234.500	18464.4
523186	SPEARMAN 3115.00	8905.2	578542	GEN-2010-001345.00	12247.3
523195	HANSFORD 3115.00	10127.7	578543	G10-001XFMR134.500	17110.1
523197	EXCELN4-HV23115.00	4686.2	578546	G10-001XFMR234.500	17065.1
523216	RB-HOGUE 3115.00	3560.5	579296	G07-046-XF-134.500	13779.8
523219	XIT_INTG TR113.200	14235.8	579299	G07-046-XF-234.500	11138.7
523220	XIT_INTG 3115.00	3890.5	579369	G06-044GSU1B34.500	17738.3
523221	XIT_INTG 6230.00	2559.4	579370	G06-044-MV1A115.00	8258.6
523256	ETTER 3115.00	5181.4	579371	G06-044-XF1A34.500	14159.2

Bus Number	Bus Name	3PH (Amp)	Bus Number	Bus Name	3PH (Amp)
523265	PRINGLE_TR 113.200	9468.6	579374	G06-044-XF2A34.500	17325.5
523266	PRINGLE 3115.00	10691.8	579375	G06-044GSU2A34.500	17158.1
523267	PRINGLE 6230.00	4304.7	579377	G06-044-MV2B115.00	10305.0
523277	VALERO 3115.00	9699.7	579378	G06-044-XF2B34.500	22702.7
523301	MOORE_E 113.200	12593.1	579411	G08-051XFMR234.500	16348.3
523302	MOORE_TR1 113.200	20143.0	579412	G08-051-GSU234.500	15954.3
523304	MOORE_W 3115.00	10675.9	579413	G08-051-GEN20.6900	722783.0
523308	MOORE_E 3115.00	10675.9	581112	GEN-2011-014345.00	12075.1
523309	MOORE_CNTY 6230.00	6609.0	581148	GEN-2011-022345.00	9379.8
523853	FINNEY 7345.00	10572.1	581149	G11-022XFMR134.500	18252.1
523866	CHANNING 134.500	6068.0	581150	G11-022XFMR234.500	18138.9
523869	CHAN/TASCOS6230.00	3795.4	581151	G11-022-GSU134.500	17468.0
523957	POTTER_TR 113.200	7120.1	581152	G11-022-GSU234.500	17049.0
523959	POTTER_CO 6230.00	20221.7	581153	G11-022-GEN10.6900	756744.2
523961	POTTER_CO 7345.00	7348.4	581154	G11-022-GEN20.6900	742842.9
523971	HARRNGTON1 124.000	113003.7	583760	GEN-2013-030345.00	11350.0
523972	HARRNGTON2 124.000	116449.4	583761	G13-030XFMR134.500	21848.2
523973	HARRNGTON3 124.000	114672.6	583764	G13-030XFMR234.500	21603.5
523977	HARRNG_WST 6230.00	26456.6	583930	GEN-2014-026345.00	10010.9
523978	HARRNG_MID 6230.00	26456.6	584210	GEN-2014-037345.00	11081.2
523979	HARRNG_EST 6230.00	26456.6	584211	G14-037XFMR134.500	15693.7
524007	ROLLHILLS 3115.00	19088.4	584212	G14-037-GSU134.500	14962.3
524008	ROLHILLS_TR113.200	17040.5	584214	G14-037XFMR234.500	16767.0
524009	CHERRY 3115.00	18276.1	584215	G14-037-GSU234.500	16612.9
524010	ROLLHILLS 6230.00	19403.2	584290	GEN-2014-038345.00	8980.1
524043	NICHOLS 3115.00	31042.7	584291	G14-038XFMR134.500	16536.4
524044	NICHOLS 6230.00	25671.4	584292	G14-038-GSU134.500	16346.3
524106	NORTHWEST 3115.00	11235.3	584293	G14-038-GEN10.6900	798303.8
524136	HASTINGS 3115.00	13735.2	584294	G14-038XFMR234.500	15308.8
524163	EAST_PLANT 6230.00	13893.8	584295	G14-038-GSU234.500	14583.5
524263	BSHLND_TR1 113.200	20178.5	584296	G14-038-GEN20.6900	687399.7
524266	BUSHLAND 3115.00	9097.4	585190	GEN-2015-082345.00	6893.6
524267	BUSHLAND 6230.00	9374.8	599041	DEWIND-HV 115.00	6869.1
524276	WILDOR_WND 6230.00	4799.7	599105	SPNSPUR-CB1 34.500	13335.4
524289	GS-PHWDRNCH134.500	9096.0	599106	SPNSPUR_WND10.6900	537485.0
524290	WILDOR2_JUS6230.00	6406.0	599950	LAMAR7 345.00	2428.6
524295	SPNSPUR_WND134.500	14347.1			

Table 3-3 (c): Three-Phase Fault Currents GEN-2015-082 – 2025 Summer Peak

Bus Number	Bus Name	3PH (Amp)	Bus Number	Bus Name	3PH (Amp)
511456	O.K.U.-7 345.00	5326.6	539808	IRONWOOD T1 13.800	46345.3
514776	NEWGRTP2 69.000	5699.3	560000	G11-14-TAP 345.00	13534.1

Bus Number	Bus Name	3PH (Amp)	Bus Number	Bus Name	3PH (Amp)
514781	CEDARAV2 69.000	5966.6	560002	IRONWOOD7 345.00	12386.0
514782	WODWRD 2 69.000	12072.4	560010	G14-037-TAP 345.00	15675.9
514783	WOODWR11 24.900	25152.6	560011	G14-038-TAP 345.00	9928.1
514785	WOODWRD4 138.00	20589.5	560027	G14-074-TAP 345.00	7223.2
514787	DEWEY 4 138.00	7248.4	560033	G1524&G1525T345.00	19623.0
514796	IODINE-4 138.00	7318.9	560055	G15-063T 345.00	17436.7
514822	SOUTHRD4 138.00	3985.5	562075	G11-051-TAP 345.00	16844.0
514880	NORTWST7 345.00	30974.9	562476	G14-001-TAP 345.00	11146.1
514901	CIMARON7 345.00	31848.8	573505	G08-047-GSU134.500	29830.8
515363	CENT 4 138.00	3346.9	573509	G08-047-GSU234.500	6823.9
515364	CENT 11 10.000	24302.3	573510	G08-047-GEN20.6900	271605.9
515365	CENT 21 34.500	9195.0	576395	GEN-2010-014345.00	11536.4
515375	WWRDEHV7 345.00	19897.6	576396	G10-014-XFMR115.00	13203.3
515376	WWRDEHV4 138.00	25192.3	578542	GEN-2010-001345.00	12247.3
515390	TLGAWND4 138.00	3610.1	578543	G10-001XFMR134.500	17110.1
515392	KEENAN T 9.9600	31435.7	578544	G10-001-GSU134.500	16988.6
515393	KEENAN 1 34.500	12256.6	578545	G10-001-GEN10.6900	676412.4
515394	KEENAN 4 138.00	8342.5	578546	G10-001XFMR234.500	17065.1
515396	OUSPRT T 9.9600	26774.3	578547	G10-001-GSU234.500	16838.1
515397	OUSPRT 1 34.500	11307.5	578548	G10-001-GEN20.6900	672033.5
515398	OUSPRT 4 138.00	9183.1	579272	G0744&1403HV345.00	9097.3
515407	TATONGA7 345.00	16188.2	579480	GEN-2008-124345.00	11966.6
515448	CRSRDSW7 345.00	11250.2	581112	GEN-2011-014345.00	12075.1
515449	CRSRDW11 34.500	14458.2	581113	G11-014XFMR134.500	13545.6
515450	CRSRDW21 34.500	14654.3	581114	G11-014-GSU134.500	12949.3
515451	CRSRDWT1 13.800	24303.6	581115	G11-014-GEN10.6500	528437.6
515452	CRSRDWT2 13.800	24317.0	581117	G11-014XFMR234.500	12610.9
515458	BORDER 7345.00	5134.3	581118	G11-014-GSU234.500	11887.5
515497	MATHWSN7 345.00	30098.0	581119	G11-014-GEN20.6500	461009.6
515554	BVRCNTY7 345.00	14833.6	581148	GEN-2011-022345.00	9379.8
515582	SLNGWND7 345.00	9097.3	581149	G11-022XFMR134.500	18252.1
515583	SLINGW11 34.500	24317.3	581150	G11-022XFMR234.500	18138.9
515584	SILNGWT1 13.800	28327.4	582008	GEN-2011-008345.00	9475.8
515585	MAMTHPW7 345.00	13447.8	582016	GEN-2011-016345.00	7192.4
515586	MMTHPW11 34.500	26163.3	582019	GEN-2011-019345.00	19897.6
515588	MMTHPWT1 13.800	28997.0	582020	GEN-2011-020345.00	19897.6
515590	PALDR2W7 345.00	12495.8	582108	G11-008XFMR134.500	17810.5
515591	PALDRW11 34.500	32521.9	582119	G11-019XFMR134.500	37918.6
515592	PALDRW21 34.500	8046.8	582120	G11-020XFMR134.500	37917.8
515593	PALDRWT1 13.200	62675.1	582219	G11-019-GSU134.500	35821.5
515594	PALDRWT2 13.800	13849.7	582220	G11-020-GSU134.500	35838.0

Bus Number	Bus Name	3PH (Amp)	Bus Number	Bus Name	3PH (Amp)
515599	NBUFFRG7 345.00	8543.3	582308	G11-008XFMR234.500	15587.9
515634	PALDR1W7 345.00	10636.2	582319	G11-019-GEN10.6900	1526201.5
515771	WOODWR21 13.200	20489.9	582320	G11-020-GEN10.6900	1526410.0
515785	WINDFRM4 138.00	20477.0	582708	G-2011-008-1345.00	8562.9
515786	FPLWIND4 138.00	6351.6	583090	G1149&G1504 345.00	4693.8
515795	WWDEHV31 13.800	61144.6	583091	G11-049XFMR134.500	15490.6
515799	WWDEHV21 13.800	60777.5	583092	G11-049-GSU134.500	14692.2
520999	MOORLND4 138.00	20897.4	583094	G1149&1504X234.500	15522.0
521065	TALOGA 4 138.00	7159.8	583095	G1149&1504S234.500	14861.6
521096	WOODWRD2 69.000	10425.6	583110	GEN-2011-051345.00	16844.0
523091	HITCHLD_TR0113.200	32455.8	583111	G11-051XFMR134.500	20484.1
523092	HITCHLD_TR1113.200	20867.0	583112	G11-051-GSU134.500	19877.3
523093	HITCHLAND 3115.00	17167.5	583340	GEN-2012-020230.00	9236.3
523094	HITCHLD_TR2113.200	22156.7	583370	GEN-2012-024345.00	9349.1
523095	HITCHLAND 6230.00	15014.0	583371	G12-024XFMR134.500	19484.5
523097	HITCHLAND 7345.00	15976.9	583760	GEN-2013-030345.00	11350.0
523098	HITCHLD_TR4113.200	20867.0	583761	G13-030XFMR134.500	21848.2
523101	NOBLE_WND 7345.00	15905.2	583762	G13-030-GSU134.500	21685.7
523102	NOBLE_TR 113.800	32057.1	583763	G13-030-GEN10.5750	1290118.6
523103	NOBLE_WND 3115.00	10504.3	583764	G13-030XFMR234.500	21603.5
523110	NOVUS1_TR1 113.800	577476.7	583765	G13-030-GSU234.500	21256.0
523111	NOVUS1 3115.00	19514.3	583766	G13-030-GEN20.5750	1279637.8
523112	NOVUS1 7345.00	15664.4	583930	GEN-2014-026345.00	10010.9
523155	OCHILTREE 6230.00	4153.6	583931	G14-026XFMR134.500	23211.8
523309	MOORE_CNTY 6230.00	6609.0	583932	G14-026-GSU134.500	23122.3
523853	FINNEY 7345.00	10572.1	584210	GEN-2014-037345.00	11081.2
523961	POTTER_CO 7345.00	7348.4	584211	G14-037XFMR134.500	15693.7
525213	SWISHER 6230.00	10728.8	584212	G14-037-GSU134.500	14962.3
525524	TOLK_EAST 6230.00	27002.9	584214	G14-037XFMR234.500	16767.0
525819	TUCO_TR3 113.200	23222.7	584215	G14-037-GSU234.500	16612.9
525820	TUCO_SVC 113.000	37804.2	584290	GEN-2014-038345.00	8980.1
525821	TUCO_TR4 113.200	28972.6	584440	GEN-2014-074345.00	6851.5
525824	TUCO_TR1 113.200	31955.9	584659	G15024G15025345.00	6486.9
525825	TUCO_TR2 113.200	23867.7	584660	GEN-2015-024345.00	5216.0
525828	TUCO_INT 3115.00	20084.4	584670	GEN-2015-025345.00	6381.7
525830	TUCO_INT 6230.00	23065.4	584700	GEN-2015-029345.00	9722.4
525832	TUCO_INT 7345.00	12842.4	584701	G15-029XFMR134.500	18981.2
525840	ANTELOPE_1 6230.00	22883.5	584980	GEN-2015-060138.00	5777.9
525844	ELK_1 118.000	44187.0	584981	G15-060XFMR134.500	11336.6
525845	ELK_4 1 18.000	32535.1	584982	G15-060-GSU134.500	11080.6
526161	CARLISLE 6230.00	13892.8	584984	G15-060XFMR234.500	11313.3

Bus Number	Bus Name	3PH (Amp)	Bus Number	Bus Name	3PH (Amp)
526337	JONES 6230.00	21477.6	584985	G15-060-GSU234.500	11078.1
526935	YOAKUM 6230.00	17813.5	585060	GEN-2015-068345.00	10345.2
526936	YOAKUM_345 345.00	8959.1	585061	G15-068-XFMR34.500	34540.5
526937	YOAKUM_TR1 13.200	34932.0	585180	GEN-2015-081345.00	13902.3
527896	HOBBS_INT 7345.00	8546.2	585181	G15-081XFMR134.500	31849.6
531469	SPERVIL7 345.00	12766.1	585182	G15-081-GSU134.500	31200.7
531510	WALKTAP3 115.00	10189.2	585190	GEN-2015-082345.00	6893.6
531511	WALKETP-T 13.800	26286.0	585191	G15-082XFMR134.500	23278.1
531512	WALKTAP7 345.00	7730.5	585192	G15-082-GSU134.500	22862.7
532771	RENO 7 345.00	11604.2	585193	G15-082-GEN10.6900	963310.5
532791	BENTON 7 345.00	19626.5	585250	GEN-2015-090345.00	3102.1
532796	WICHITA7 345.00	24777.8	599066	KEENAN-1XF1 34.500	11235.5
532798	VIOLA 7 345.00	13371.7	599067	KEENAN-1XF2 34.500	11149.2
532829	WICH11 1 13.800	50288.5	599068	NTHBUF_XFMR134.500	20567.3
532830	WICH12 1 13.800	50479.2	599069	NTHBUF_GSU1 34.500	19864.7
533040	EVANS N4 138.00	42426.1	599070	NTHBUF_WTG1 0.6900	830780.5
539631	FLATRWD4 138.00	9746.8	599071	NTHBUF_XFMR234.500	20558.4
539638	FLATRDG4 138.00	14750.1	599072	NTHBUF_GSU2 34.500	19314.5
539668	HARPER 4 138.00	6013.9	599073	NTHBUF_WTG2 0.6900	816002.2
539674	BARBER 4 138.00	8023.9	599074	NTHBUF_EHV2 345.00	6544.5
539800	CLARKCOUNTY7345.00	11565.9	599075	NTHBUF_XFMR334.500	24023.5
539801	THISTLE7 345.00	15270.8	599076	NTHBUF_GSU3 34.500	22865.3
539802	THISTLE T1 13.800	7836.5	599078	NTHBUF_XFMR434.500	24076.2
539803	IRONWOOD7 345.00	12359.3	599079	NTHBUF_GSU4 34.500	22993.6
539804	THISTLE4 138.00	16402.8	599082	OUSPRT-CB1 34.500	10874.3
539807	IRONWOOD 1 34.500	24461.2			

Table 3-4 (d): Three-Phase Fault Currents GEN-2014-037 – 2017 Summer Peak

Bus Number	Bus Name	3PH (Amp)	Bus Number	Bus Name	3PH (Amp)
514785	WOODWRD4 138.00	20589.5	531481	HUGOTON3 115.00	5875.6
514796	IODINE-4 138.00	7318.9	531501	BUCKNER7 345.00	9728.1
515375	WWRDEHV7 345.00	19897.6	531510	WALKTAP3 115.00	10189.2
515376	WWRDEHV4 138.00	25192.3	531511	WALKETP-T 13.800	26286.0
515394	KEENAN 4 138.00	8342.5	531512	WALKTAP7 345.00	7730.5
515398	OUSPRT 4 138.00	9183.1	539654	CIM-PLT3 115.00	7186.6
515407	TATONGA7 345.00	16188.2	539800	CLARKCOUNTY7345.00	11565.9
515458	BORDER 7345.00	5134.3	539801	THISTLE7 345.00	15270.8
515554	BVRCNTY7 345.00	14833.6	539802	THISTLE T1 13.800	7836.5
515590	PALDR2W7 345.00	12495.8	539804	THISTLE4 138.00	16402.8
515591	PALDRW11 34.500	32521.9	560000	G11-14-TAP 345.00	13534.1

Bus Number	Bus Name	3PH (Amp)	Bus Number	Bus Name	3PH (Amp)
515592	PALDRW21 34.500	8046.8	560010	G14-037-TAP 345.00	15675.9
515593	PALDRWT1 13.200	62675.1	560011	G14-038-TAP 345.00	9928.1
515594	PALDRWT2 13.800	13849.7	560033	G1524&G1525T345.00	19623.0
515599	NBUFFRG7 345.00	8543.3	562075	G11-051-TAP 345.00	16844.0
515634	PALDR1W7 345.00	10636.2	573505	G08-047-GSU134.500	29830.8
515795	WWDEHV31 13.800	61144.6	573509	G08-047-GSU234.500	6823.9
515799	WWDEHV21 13.800	60777.5	573510	G08-047-GEN20.6900	271605.9
523085	TC-TXCN_TR1113.200	5676.0	576395	GEN-2010-014345.00	11536.4
523086	TC-TXCN_TR2113.200	5677.0	576396	G10-014-XFMR115.00	13203.3
523087	TC-TXCOUNTY134.500	4552.0	576397	G10-014-XF-1115.00	9180.6
523089	TC-TXCOUNTY269.000	8203.2	576398	G10-014XFMR134.500	16614.6
523090	TEXAS_CNTY 3115.00	8578.5	576407	G10-014-XF-2115.00	12432.0
523091	HITCHLD_TR0113.200	32455.8	576408	G10-014XFMR234.500	18464.4
523092	HITCHLD_TR1113.200	20867.0	578542	GEN-2010-001345.00	12247.3
523093	HITCHLAND 3115.00	17167.5	578543	G10-001XFMR134.500	17110.1
523094	HITCHLD_TR2113.200	22156.7	578544	G10-001-GSU134.500	16988.6
523095	HITCHLAND 6230.00	15014.0	578545	G10-001-GEN10.6900	676412.4
523097	HITCHLAND 7345.00	15976.9	578546	G10-001XFMR234.500	17065.1
523098	HITCHLD_TR4113.200	20867.0	578547	G10-001-GSU234.500	16838.1
523099	TC-WHITING 3115.00	2173.2	578548	G10-001-GEN20.6900	672033.5
523101	NOBLE_WND 7345.00	15905.2	579296	G07-046-XF-134.500	13779.8
523102	NOBLE_TR 113.800	32057.1	579299	G07-046-XF-234.500	11138.7
523103	NOBLE_WND 3115.00	10504.3	579369	G06-044GSU1B34.500	17738.3
523106	TXPHSF 3115.00	3917.6	579370	G06-044-MV1A115.00	8258.6
523107	NOVUS_WND 14.1600	169336.4	579371	G06-044-XF1A34.500	14159.2
523109	NOVUS1 134.500	17738.3	579374	G06-044-XF2A34.500	17325.5
523110	NOVUS1_TR1 113.800	577476.7	579375	G06-044GSU2A34.500	17158.1
523111	NOVUS1 3115.00	19514.3	579377	G06-044-MV2B115.00	10305.0
523112	NOVUS1 7345.00	15664.4	579378	G06-044-XF2B34.500	22702.7
523113	TC-MCMURRY 3115.00	6528.7	579411	G08-051XFMR234.500	16348.3
523114	BUFF_DN_TR1113.200	535652.9	581112	GEN-2011-014345.00	12075.1
523115	BUFF_DN_TR2113.200	530727.2	581113	G11-014XFMR134.500	13545.6
523116	BUFF_DUNES1134.500	26313.7	581114	G11-014-GSU134.500	12949.3
523118	BUFF_DUNES 7345.00	6318.8	581117	G11-014XFMR234.500	12610.9
523120	COLE 3115.00	4051.4	581118	G11-014-GSU234.500	11887.5
523125	NBLWND-CB2 134.500	8106.4	581148	GEN-2011-022345.00	9379.8
523127	NBLWND-LV1 134.500	8173.9	581149	G11-022XFMR134.500	18252.1
523128	NBLWND-LV2 134.500	9970.0	581150	G11-022XFMR234.500	18138.9
523129	NBLWND-LV3 134.500	9473.6	581151	G11-022-GSU134.500	17468.0
523130	NBLWND-HV2 3115.00	5085.8	581152	G11-022-GSU234.500	17049.0
523131	NBLWND-HV3 3115.00	7911.6	581153	G11-022-GEN10.6900	756744.2

Bus Number	Bus Name	3PH (Amp)	Bus Number	Bus Name	3PH (Amp)
523140	TXFARMS 3115.00	5041.8	581154	G11-022-GEN20.6900	742842.9
523147	WADE 3115.00	3516.0	582019	GEN-2011-019345.00	19897.6
523151	OCHLTRE_TR1113.200	10089.3	582020	GEN-2011-020345.00	19897.6
523154	OCHILTREE 3115.00	5766.3	582119	G11-019XFMR134.500	37918.6
523155	OCHILTREE 6230.00	4153.6	582120	G11-020XFMR134.500	37917.8
523158	PERRYTON 3115.00	5501.2	583090	G1149&G1504 345.00	4693.8
523160	FRISCO_WND 3115.00	6869.1	583110	GEN-2011-051345.00	16844.0
523174	GOODWELLWND3115.00	6519.6	583760	GEN-2013-030345.00	11350.0
523175	LASLEY 3115.00	5559.5	583761	G13-030XFMR134.500	21848.2
523177	RB-SPURLOCK3115.00	5581.3	583762	G13-030-GSU134.500	21685.7
523186	SPEARMAN 3115.00	8905.2	583763	G13-030-GEN10.5750	1290118.6
523195	HANSFORD 3115.00	10127.7	583764	G13-030XFMR234.500	21603.5
523197	EXCELN4-HV23115.00	4686.2	583765	G13-030-GSU234.500	21256.0
523216	RB-HOGUE 3115.00	3560.5	583766	G13-030-GEN20.5750	1279637.8
523256	ETTER 3115.00	5181.4	583930	GEN-2014-026345.00	10010.9
523277	VALERO 3115.00	9699.7	583931	G14-026XFMR134.500	23211.8
523301	MOORE_E 113.200	12593.1	583932	G14-026-GSU134.500	23122.3
523302	MOORE_TR1 113.200	20143.0	584210	GEN-2014-037345.00	11081.2
523304	MOORE_W 3115.00	10675.9	584211	G14-037XFMR134.500	15693.7
523308	MOORE_E 3115.00	10675.9	584212	G14-037-GSU134.500	14962.3
523309	MOORE_CNTY 6230.00	6609.0	584213	G14-037-GEN10.6900	703860.2
523853	FINNEY 7345.00	10572.1	584214	G14-037XFMR234.500	16767.0
523869	CHAN/TASCOS6230.00	3795.4	584215	G14-037-GSU234.500	16612.9
523957	POTTER_TR 113.200	7120.1	584216	G14-037-GEN20.6900	797706.8
523959	POTTER_CO 6230.00	20221.7	584290	GEN-2014-038345.00	8980.1
523961	POTTER_CO 7345.00	7348.4	584291	G14-038XFMR134.500	16536.4
523979	HARRNG_EST 6230.00	26456.6	584292	G14-038-GSU134.500	16346.3
524010	ROLLHILLS 6230.00	19403.2	584294	G14-038XFMR234.500	15308.8
524267	BUSHLAND 6230.00	9374.8	584295	G14-038-GSU234.500	14583.5
524295	SPNSPUR_WND134.500	14347.1	584980	GEN-2015-060138.00	5777.9
524296	SPNSPUR_WND7345.00	4370.7	585180	GEN-2015-081345.00	13902.3
525461	NEWHART 6230.00	10929.6	585190	GEN-2015-082345.00	6893.6
525832	TUCO_INT 7345.00	12842.4	585191	G15-082XFMR134.500	23278.1
531252	WALKMYR1 13.800	15774.5	585192	G15-082-GSU134.500	22862.7
531404	WALKMYR2 69.000	8166.0	599041	DEWIND-HV 115.00	6869.1
531405	WALKMYR3 115.00	9790.7	599068	NTHBUF_XFMR134.500	20567.3
531448	HOLCOMB3 115.00	22304.3	599071	NTHBUF_XFMR234.500	20558.4
531449	HOLCOMB7 345.00	10669.3	599074	NTHBUF_EHV2 345.00	6544.5
531450	HOLCTER1 13.800	17934.2	599950	LAMAR7 345.00	2428.6
531465	SETAB 7 345.00	7509.9			

Table 3-5 (e): Three-Phase Fault Currents GEN-2014-038 – 2017 Summer Peak

Bus Number	Bus Name	3PH (Amp)	Bus Number	Bus Name	3PH (Amp)
515375	WWRDEHV7 345.00	17139.1	524295	SPNSPUR_WND134.500	14357.1
515554	BVRCNTY7 345.00	14357.0	524296	SPNSPUR_WND7345.00	4380.1
515590	PALDR2W7 345.00	12139.4	524300	HILLSIDE 3115.00	12413.1
515592	PALDRW21 34.500	7996.8	524365	RANDALL 6230.00	14234.9
515594	PALDRWT2 13.800	13775.9	524620	DEFSMTH_TR1113.200	15477.5
515634	PALDR1W7 345.00	10363.9	524621	DEFSMTH_TR2113.800	14804.5
523085	TC-TXCN_TR1113.200	5628.5	524622	DEAFSMITH 3115.00	11562.5
523086	TC-TXCN_TR2113.200	5629.3	524623	DEAFSMITH 6230.00	7664.5
523087	TC-TXCOUNTY134.500	4532.9	524746	CASTRO_CNTY3115.00	11592.3
523089	TC-TXCOUNTY269.000	7954.4	525124	HART_INDUST3115.00	7561.2
523090	TEXAS_CNTY 3115.00	8584.5	525192	KRESS_INT 3115.00	11016.0
523091	HITCHLD_TR0113.200	32370.1	525211	SWISHER_TR1113.200	18276.7
523092	HITCHLD_TR1113.200	20194.9	525212	SWISHER 3115.00	10046.3
523093	HITCHLAND 3115.00	17312.5	525213	SWISHER 6230.00	10646.6
523094	HITCHLD_TR2113.200	22106.4	525458	NEWHART_TR2113.200	16810.0
523095	HITCHLAND 6230.00	14804.5	525459	NEWHART_TR1113.200	16810.0
523097	HITCHLAND 7345.00	15618.7	525460	NEWHART 3115.00	14746.6
523098	HITCHLD_TR4113.200	21822.5	525461	NEWHART 6230.00	10897.2
523099	TC-WHITING 3115.00	2159.9	525479	PLANTX_TR1 113.200	27543.0
523101	NOBLE_WND 7345.00	15549.6	525480	PLANT_X 3115.00	20827.0
523102	NOBLE_TR 113.800	31834.3	525481	PLANT_X 6230.00	22509.2
523103	NOBLE_WND 3115.00	10411.7	525494	PLANT_X4 120.000	127039.6
523106	TXPHSF 3115.00	3815.3	525524	TOLK_EAST 6230.00	26230.3
523107	NOVUS_WND 14.1600	168254.8	525531	TOLK_WEST 6230.00	26230.3
523109	NOVUS1 134.500	17615.6	525830	TUCO_INT 6230.00	19832.7
523110	NOVUS1_TR1 113.800	563376.2	526435	SUNDOWN 6230.00	10747.7
523111	NOVUS1 3115.00	19294.2	531252	WALKMYR1 13.800	15573.1
523112	NOVUS1 7345.00	15318.4	531404	WALKMYR2 69.000	8002.8
523113	TC-MCMURRY 3115.00	6518.0	531405	WALKMYR3 115.00	9640.6
523114	BUFF_DN_TR1113.200	521032.9	531448	HOLCOMB3 115.00	21967.2
523115	BUFF_DN_TR2113.200	516302.2	531449	HOLCOMB7 345.00	10425.1
523116	BUFF_DUNES1134.500	25917.0	531450	HOLCTER1 13.800	17557.3
523118	BUFF_DUNES 7345.00	6199.7	531465	SETAB 7 345.00	7318.6
523120	COLE 3115.00	4037.1	531481	HUGOTON3 115.00	5809.9
523125	NBLWND-CB2 134.500	8090.4	531501	BUCKNER7 345.00	9555.3
523127	NBLWND-LV1 134.500	8151.5	531510	WALKTAP3 115.00	10026.0
523128	NBLWND-LV2 134.500	9933.7	531511	WALKETP-T 13.800	25962.1
523129	NBLWND-LV3 134.500	9444.6	531512	WALKTAP7 345.00	7537.1
523130	NBLWND-HV2 3115.00	5054.2	539654	CIM-PLT3 115.00	7138.2
523131	NBLWND-HV3 3115.00	7850.7	560000	G11-14-TAP 345.00	12944.6

Bus Number	Bus Name	3PH (Amp)	Bus Number	Bus Name	3PH (Amp)
523140	TXFARMS 3115.00	5034.4	560010	G14-037-TAP 345.00	15303.4
523147	WADE 3115.00	3509.9	560011	G14-038-TAP 345.00	9808.9
523151	OCHLTRE_TR1113.200	10116.1	560050	G15-031-TAP 230.00	9312.1
523154	OCHILTREE 3115.00	5758.4	560051	G15-039-TAP 230.00	7393.2
523155	OCHILTREE 6230.00	4138.3	576395	GEN-2010-014345.00	11330.9
523158	PERRYTON 3115.00	5494.0	576396	G10-014-XFMR115.00	13088.0
523160	FRISCO_WND 3115.00	6888.7	576397	G10-014-XF-1115.00	9118.5
523174	GOODWELLWND3115.00	6531.9	576398	G10-014XFMR134.500	16577.0
523175	LASLEY 3115.00	5599.2	576407	G10-014-XF-2115.00	12327.9
523177	RB-SPURLOCK3115.00	5602.5	576408	G10-014XFMR234.500	18417.1
523186	SPEARMAN 3115.00	8865.9	578542	GEN-2010-001345.00	11909.2
523195	HANSFORD 3115.00	10115.0	578543	G10-001XFMR134.500	17013.0
523197	EXCELN4-HV23115.00	4664.2	578546	G10-001XFMR234.500	16967.1
523216	RB-HOGUE 3115.00	3611.3	579296	G07-046-XF-134.500	13898.0
523219	XIT_INTG TR113.200	14502.8	579299	G07-046-XF-234.500	11186.2
523220	XIT_INTG 3115.00	3805.2	579369	G06-044GSU1B34.500	17615.6
523221	XIT_INTG 6230.00	2591.0	579370	G06-044-MV1A115.00	8196.3
523256	ETTER 3115.00	5210.7	579371	G06-044-XF1A34.500	14111.8
523265	PRINGLE_TR 113.200	9450.0	579374	G06-044-XF2A34.500	17103.0
523266	PRINGLE 3115.00	10646.8	579375	G06-044GSU2A34.500	16912.9
523267	PRINGLE 6230.00	4293.6	579377	G06-044-MV2B115.00	10227.5
523277	VALERO 3115.00	9653.3	579378	G06-044-XF2B34.500	22639.2
523301	MOORE_E 113.200	12774.4	579411	G08-051XFMR234.500	16361.0
523302	MOORE_TR1 113.200	19892.1	579412	G08-051-GSU234.500	15960.9
523304	MOORE_W 3115.00	10610.0	579413	G08-051-GEN20.6900	721990.4
523308	MOORE_E 3115.00	10610.0	581112	GEN-2011-014345.00	11583.2
523309	MOORE_CNTY 6230.00	6628.5	581148	GEN-2011-022345.00	9234.4
523853	FINNEY 7345.00	10330.2	581149	G11-022XFMR134.500	18185.9
523866	CHANNING 134.500	6133.5	581150	G11-022XFMR234.500	18070.5
523869	CHAN/TASCOS6230.00	3821.3	581151	G11-022-GSU134.500	17415.6
523957	POTTER_TR 113.200	7129.8	581152	G11-022-GSU234.500	16999.4
523959	POTTER_CO 6230.00	20187.8	581153	G11-022-GEN10.6900	756081.6
523961	POTTER_CO 7345.00	7347.6	581154	G11-022-GEN20.6900	742209.6
523971	HARRNGTON1 124.000	111984.8	583760	GEN-2013-030345.00	11042.3
523972	HARRNGTON2 124.000	115423.0	583761	G13-030XFMR134.500	21502.1
523973	HARRNGTON3 124.000	113643.3	583764	G13-030XFMR234.500	21259.8
523977	HARRNG_WST 6230.00	26245.3	583930	GEN-2014-026345.00	9767.8
523978	HARRNG_MID 6230.00	26245.3	584210	GEN-2014-037345.00	10868.9
523979	HARRNG_EST 6230.00	26245.3	584211	G14-037XFMR134.500	15521.1
524007	ROLLHILLS 3115.00	19038.5	584212	G14-037-GSU134.500	14802.9
524008	ROLHILLS_TR113.200	17088.1	584214	G14-037XFMR234.500	16580.4

Bus Number	Bus Name	3PH (Amp)	Bus Number	Bus Name	3PH (Amp)
524009	CHERRY 3115.00	18232.5	584215	G14-037-GSU234.500	16430.3
524010	ROLLHILLS 6230.00	19323.6	584290	GEN-2014-038345.00	8880.0
524043	NICHOLS 3115.00	30577.8	584291	G14-038XFMR134.500	16446.3
524044	NICHOLS 6230.00	25473.7	584292	G14-038-GSU134.500	16259.0
524106	NORTHWEST 3115.00	11232.1	584293	G14-038-GEN10.6900	794278.8
524136	HASTINGS 3115.00	13718.8	584294	G14-038XFMR234.500	15226.3
524163	EAST_PLANT 6230.00	13865.0	584295	G14-038-GSU234.500	14508.3
524263	BSHLND_TR1 113.200	20168.9	584296	G14-038-GEN20.6900	684057.9
524266	BUSHLAND 3115.00	9068.6	585190	GEN-2015-082345.00	6699.2
524267	BUSHLAND 6230.00	9401.5	599041	DEWIND-HV 115.00	6888.7
524276	WILDOR_WND 6230.00	4827.4	599105	SPNSPUR-CB1 34.500	13337.7
524289	GS-PHWDRNCH134.500	9168.3	599106	SPNSPUR_WND10.6900	536641.5
524290	WILDOR2_JUS6230.00	6436.3	599950	LAMAR7 345.00	2389.8

Table 3-6 (f): Three-Phase Fault Currents GEN-2015-082 – 2017 Summer Peak

Bus Number	Bus Name	3PH (Amp)	Bus Number	Bus Name	3PH (Amp)
511456	O.K.U.-7 345.00	5120.3	560002	IRONWOOD7 345.00	12164.8
514776	NEWGRTP2 69.000	5629.9	560010	G14-037-TAP 345.00	15303.4
514781	CEDARAV2 69.000	5892.4	560011	G14-038-TAP 345.00	9808.9
514782	WODWRD 2 69.000	11799.3	560027	G14-074-TAP 345.00	6657.2
514783	WOODWR11 24.900	24623.3	560033	G1524&G1525T345.00	18854.1
514785	WOODWRD4 138.00	19681.9	560055	G15-063T 345.00	16941.4
514787	DEWEY 4 138.00	7113.6	562075	G11-051-TAP 345.00	11583.3
514796	IODINE-4 138.00	7139.4	562476	G14-001-TAP 345.00	10984.4
514822	SOUTHRD4 138.00	3919.6	573505	G08-047-GSU134.500	29642.3
514880	NORTWST7 345.00	29676.2	573509	G08-047-GSU234.500	6795.4
514901	CIMARON7 345.00	30273.4	573510	G08-047-GEN20.6900	271433.9
515363	CENT 4 138.00	3309.6	576395	GEN-2010-014345.00	11330.9
515364	CENT 11 10.000	24227.6	576396	G10-014-XFMR115.00	13088.0
515365	CENT 21 34.500	9158.1	578542	GEN-2010-001345.00	11909.2
515375	WWRDEHV7 345.00	17139.1	578543	G10-001XFMR134.500	17013.0
515376	WWRDEHV4 138.00	23727.1	578544	G10-001-GSU134.500	16894.8
515390	TLGAWND4 138.00	3568.8	578545	G10-001-GEN10.6900	675625.1
515392	KEENAN T 9.9600	30929.8	578546	G10-001XFMR234.500	16967.1
515393	KEENAN 1 34.500	12040.9	578547	G10-001-GSU234.500	16746.0
515394	KEENAN 4 138.00	8095.0	578548	G10-001-GEN20.6900	671256.1
515396	OUSPRT T 9.9600	26244.0	579272	G0744&1403HV345.00	6972.6
515397	OUSPRT 1 34.500	11066.2	579480	GEN-2008-124345.00	11757.3
515398	OUSPRT 4 138.00	8887.0	581112	GEN-2011-014345.00	11583.2
515407	TATONGA7 345.00	10379.9	581113	G11-014XFMR134.500	13257.0

Bus Number	Bus Name	3PH (Amp)	Bus Number	Bus Name	3PH (Amp)
515448	CRSRDSW7 345.00	8063.8	581114	G11-014-GSU134.500	12678.8
515449	CRSRDW11 34.500	13536.3	581115	G11-014-GEN10.6500	517758.6
515450	CRSRDW21 34.500	13744.8	581117	G11-014XFMR234.500	12340.5
515451	CRSRDWT1 13.800	23095.7	581118	G11-014-GSU234.500	11637.8
515452	CRSRDWT2 13.800	23171.1	581119	G11-014-GEN20.6500	451625.5
515458	BORDER 7345.00	4962.1	581148	GEN-2011-022345.00	9234.4
515497	MATHWSN7 345.00	27761.8	581149	G11-022XFMR134.500	18185.9
515554	BVRCNTY7 345.00	14357.0	581150	G11-022XFMR234.500	18070.5
515582	SLNGWND7 345.00	6972.6	582008	GEN-2011-008345.00	9298.7
515583	SLINGW11 34.500	22720.9	582016	GEN-2011-016345.00	7091.2
515584	SILNGWT1 13.800	27353.2	582019	GEN-2011-019345.00	17139.1
515585	MAMTHPW7 345.00	9186.5	582020	GEN-2011-020345.00	17139.1
515586	MMTHPW11 34.500	24213.9	582108	G11-008XFMR134.500	17600.3
515588	MMTHPWT1 13.800	27862.9	582119	G11-019XFMR134.500	36367.9
515590	PALDR2W7 345.00	12139.4	582120	G11-020XFMR134.500	36367.5
515591	PALDRW11 34.500	32257.3	582219	G11-019-GSU134.500	34417.1
515592	PALDRW21 34.500	7996.8	582220	G11-020-GSU134.500	34432.7
515593	PALDRWT1 13.200	62261.9	582308	G11-008XFMR234.500	15462.0
515594	PALDRWT2 13.800	13775.9	582319	G11-019-GEN10.6900	1473133.8
515599	NBUFFRG7 345.00	7987.7	582320	G11-020-GEN10.6900	1473330.4
515634	PALDR1W7 345.00	10363.9	582708	G-2011-008-1345.00	8411.0
515771	WOODWR21 13.200	20325.9	583090	G1149&G1504 345.00	4550.5
515785	WINDFRM4 138.00	20089.2	583091	G11-049XFMR134.500	15369.2
515786	FPLWIND4 138.00	6274.1	583092	G11-049-GSU134.500	14595.7
515795	WWDEHV31 13.800	59617.9	583094	G1149&1504X234.500	15402.0
515799	WWDEHV21 13.800	59230.3	583095	G1149&1504S234.500	14762.4
520999	MOORLND4 138.00	20503.1	583110	GEN-2011-051345.00	11583.3
521065	TALOGA 4 138.00	7030.6	583111	G11-051XFMR134.500	19478.3
521096	WOODWRD2 69.000	10244.8	583112	G11-051-GSU134.500	18946.3
523091	HITCHLD_TR0113.200	32370.1	583340	GEN-2012-020230.00	8775.3
523092	HITCHLD_TR1113.200	20194.9	583370	GEN-2012-024345.00	9165.8
523093	HITCHLAND 3115.00	17312.5	583371	G12-024XFMR134.500	19203.9
523094	HITCHLD_TR2113.200	22106.4	583760	GEN-2013-030345.00	11042.3
523095	HITCHLAND 6230.00	14804.5	583761	G13-030XFMR134.500	21502.1
523097	HITCHLAND 7345.00	15618.7	583762	G13-030-GSU134.500	21348.0
523098	HITCHLD_TR4113.200	21822.5	583763	G13-030-GEN10.5750	1270840.8
523101	NOBLE_WND 7345.00	15549.6	583764	G13-030XFMR234.500	21259.8
523102	NOBLE_TR 113.800	31834.3	583765	G13-030-GSU234.500	20927.7
523103	NOBLE_WND 3115.00	10411.7	583766	G13-030-GEN20.5750	1260627.2
523110	NOVUS1_TR1 113.800	563376.2	583930	GEN-2014-026345.00	9767.8
523111	NOVUS1 3115.00	19294.2	583931	G14-026XFMR134.500	23108.2

Bus Number	Bus Name	3PH (Amp)	Bus Number	Bus Name	3PH (Amp)
523112	NOVUS1 7345.00	15318.4	583932	G14-026-GSU134.500	23033.3
523155	OCHILTREE 6230.00	4138.3	584210	GEN-2014-037345.00	10868.9
523309	MOORE_CNTY 6230.00	6628.5	584211	G14-037XFMR134.500	15521.1
523853	FINNEY 7345.00	10330.2	584212	G14-037-GSU134.500	14802.9
523961	POTTER_CO 7345.00	7347.6	584214	G14-037XFMR234.500	16580.4
525213	SWISHER 6230.00	10646.6	584215	G14-037-GSU234.500	16430.3
525524	TOLK_EAST 6230.00	26230.3	584290	GEN-2014-038345.00	8880.0
525819	TUCO_TR3 113.200	23323.2	584440	GEN-2014-074345.00	6346.1
525820	TUCO_SVC 113.000	38376.6	584659	G15024G15025345.00	6398.0
525821	TUCO_TR4 113.200	29051.7	584660	GEN-2015-024345.00	5155.7
525824	TUCO_TR1 113.200	31447.6	584670	GEN-2015-025345.00	6295.3
525825	TUCO_TR2 113.200	23781.5	584700	GEN-2015-029345.00	7272.3
525828	TUCO_INT 3115.00	19442.5	584701	G15-029XFMR134.500	17802.3
525830	TUCO_INT 6230.00	19832.7	584980	GEN-2015-060138.00	5688.0
525832	TUCO_INT 7345.00	10506.8	584981	G15-060XFMR134.500	11282.7
525840	ANTELOPE_1 6230.00	19683.8	584982	G15-060-GSU134.500	11033.3
525844	ELK_1 118.000	41718.0	584984	G15-060XFMR234.500	11259.6
525845	ELK_4 1 18.000	31792.6	584985	G15-060-GSU234.500	11030.3
526161	CARLISLE 6230.00	10901.5	585060	GEN-2015-068345.00	8797.2
526337	JONES 6230.00	19691.7	585061	G15-068-XFMR34.500	33023.0
531469	SPERVIL7 345.00	12536.5	585180	GEN-2015-081345.00	10131.3
531510	WALKTAP3 115.00	10026.0	585181	G15-081XFMR134.500	29888.1
531511	WALKETP-T 13.800	25962.1	585182	G15-081-GSU134.500	29356.7
531512	WALKTAP7 345.00	7537.1	585190	GEN-2015-082345.00	6699.2
532771	RENO 7 345.00	10736.1	585191	G15-082XFMR134.500	23087.0
532791	BENTON 7 345.00	19168.3	585192	G15-082-GSU134.500	22688.8
532796	WICHITA7 345.00	23586.3	585193	G15-082-GEN10.6900	960954.7
532798	VIOLA 7 345.00	11176.0	585250	GEN-2015-090345.00	3078.8
532829	WICH11 1 13.800	49379.1	599066	KEENAN-1XF1 34.500	11045.0
532830	WICH12 1 13.800	49592.9	599067	KEENAN-1XF2 34.500	10961.2
533040	EVANS N4 138.00	37265.2	599068	NTHBUF_XFMR134.500	20036.8
539631	FLATRWD4 138.00	9457.6	599069	NTHBUF_GSU1 34.500	19371.9
539638	FLATRDG4 138.00	14232.6	599070	NTHBUF_WTG1 0.6900	814019.7
539668	HARPER 4 138.00	5617.6	599071	NTHBUF_XFMR234.500	20041.4
539674	BARBER 4 138.00	7831.0	599072	NTHBUF_GSU2 34.500	18864.1
539800	CLARKCOUNTY7345.00	11321.1	599073	NTHBUF_WTG2 0.6900	800692.3
539801	THISTLE7 345.00	14578.1	599074	NTHBUF_EHV2 345.00	6207.9
539802	THISTLE T1 13.800	7698.4	599075	NTHBUF_XFMR334.500	23484.2
539803	IRONWOOD7 345.00	12140.0	599076	NTHBUF_GSU3 34.500	22392.0
539804	THISTLE4 138.00	15828.7	599078	NTHBUF_XFMR434.500	23521.2
539807	IRONWOOD 1 34.500	24316.1	599079	NTHBUF_GSU4 34.500	22499.9

Bus Number	Bus Name	3PH (Amp)	Bus Number	Bus Name	3PH (Amp)
539808	IRONWOOD T1 13.800	46100.2	599082	OUSPRT-CB1 34.500	10644.7
560000	G11-14-TAP 345.00	12944.6			

4 Power Factor Analysis

Since the studied project is a renewable energy project, power factor analysis was performed on three provided cluster scenarios upon SPP's request.

4.1 Power Factor Analysis Methodology

Power Factor Analysis was performed for the studied wind farm under system intact and contingency conditions. All stability faults shown in Table 2-1 were analyzed as power flow contingencies. The power factor requirements for the wind farm were determined to maintain the voltage at the POI to the schedule voltage which is the higher of the POI voltage in the provided base case or 1.0 per unit. Fictitious var generator was added to the studied wind farm to maintain the scheduled voltage following all studied contingencies. The MW and Mvar injections from the studied wind farm at the POI were recorded and the power factors were calculated for all contingencies. The most lagging and most leading power factors determine the minimum power factor range capability required for the studied wind farm.

If more than one studied project share the same POI, the projects were grouped together and common power factor requirements were determined for this group of studied projects. With this method, none of the studied projects is required to provide more or less than its fair share of the reactive power requirements at the same POI. If a prior-queued project is connected at the same POI as the studied project, the prior-queued project was not grouped with the studied project since its reactive power requirements was determined in previous studies. However, the voltage schedules of the prior-queued project and the studied project at the same POI were coordinated and the local existing capacitor banks were set to their maximum capability, if necessary.

Per FERC and SPP requirements, if the power factor needed to maintain the scheduled voltage is less than 0.95 lagging or leading, the requirements is limited to 0.95 lagging or leading.

If the required power factor at the POI is beyond the capability of the studied wind turbine, the approximate size of the additional capacitors were determined.

4.2 Study Results

Table 4-1 summarizes the power factor analysis results. The results show that extra capacitor bank is required for GEN-2014-037 and GEN-2014-038 in all three seasons to meet the SPP pro-forma 95% lagging (providing vars) and 95% leading (absorbing vars) power factor requirements at the Point of Interconnection.

Stability results show that the additional reactive power resources are not required to be dynamically controlled. However, any change in wind turbine model could change the stability results, which may show a need for dynamically controlled reactive power devices.

The detailed power factor analysis results for each studied contingency are provided in Appendix C.

Table 4-1 Power Factor Analysis Results

Request	Size (MW)	Generator Model	POI	Scenario	Final PF Requirement	
					Leading[1]	Lagging[2]
GEN-2014-037	200	Vestas V110 2.0 MW	Hitchland to Beaver County 345 kV line	16WP	1.0	0.95
				17SP	1.0	0.95
				25SP	0.999	0.95
GEN-2014-038	200	Vestas V110 VCSS 2.0 MW	Hitchland to Potter County 345 kV	16WP	0.993	0.994
				17SP	0.994	0.995
				25SP	0.997	0.971
GEN-2015-082	200	GE 2.0 MW	Woodward to Beaver 345 kV line	16WP	1.0	0.95
				17SP	1.0	0.95
				25SP	1.0	0.95

Notes:

1. Leading is when the generator is absorbing reactive power from the transmission grid.
2. Lagging is when the generator is providing reactive power to the transmission grid.

5 Low Wind/No Wind Analysis

In this study, ABB investigated the GEN-2014-037, GEN-2014-038 and GEN-2015-082 projects for low wind/no wind conditions, since the interconnected wind farms are connected to 345kV buses.

5.1 Low/No Wind Analysis Methodology

Low wind/No wind analysis is performed to determine the required shunt reactor size at the study project substation high side buses to bring the MVAr flows into the POIs down to approximately zero.

For each studied scenario, the studied wind generators and capacitor bank (none in this case) were switched out of service with the collector system as modeled remaining in service. The resulting reactive power injection into the transmission network coming from the capacitance of the project's transmission lines and collector cables was measured. Then, the required shunt reactor size was calculated to bring the MVAr flows into the POIs down to approximately zero.

5.2 Study Results

Table 5-1 summaries the Low/No Wind analysis results. It is shown that 13.41 MVAr / 12.01 MVAr / 23.89 MVAr shunt reactors at the substation high side buses (560010 / 560011 / 560000) are required to bring the MVAr flows in the POIs down to approximately zero under low/no wind conditions for all three studied seasons. The reactor bank size is approximate to be finalized during final facility and collector system design.

Table 5-1 (a): Low/No Wind Analysis Results for POI of GEN-14-037

Scenario	Reactive Power Injection at POI (MVAr)	Bus 560010 Volt (pu)	Required Shunt Reactor (MVAr)
16WP	12.68	0.9695	**13.49**
17SP	13.00	0.9816	**13.49**
25SP	13.15	0.9872	**13.49**

Table 5-2 (b): Low/No Wind Analysis Results for POI of GEN-14-038

Scenario	Reactive Power Injection at POI (MVAr)	Bus 560011 Volt (pu)	Required Shunt Reactor (MVAr)
16WP	11.45	0.9764	**12.01**
17SP	11.67	0.9857	**12.01**
25SP	11.70	0.9869	**12.01**

Table 5-3 (a): Low/No Wind Analysis Results for POI of GEN-15-082

Scenario	Reactive Power Injection at POI (MVAr)	Bus 560000 Volt (pu)	Required Shunt Reactor (MVAr)
16WP	21.22	0.9424	**23.89**
17SP	22.03	0.9603	**23.89**
25SP	22.72	0.9752	**23.89**

6 Conclusions

Southwest Power Pool (SPP) has commissioned ABB Inc., to perform a Definitive Impact Study for DISIS-2015-002 (Group 02) which includes generation interconnection requests GEN-2014-037 (200 MW wind farm connected on Hitchland to Beaver County 345 kV line), GEN-2014-038 (200 MW wind farm connected on Hitchland to Potter County 345 kV line), GEN-2015-082 (200 MW wind farm connected on Woodward to Beaver 345 kV line).

Request	Size (MW)	Generator Model	POI
GEN-2014-037	200	Vestas V110 2.0 MW	Hitchland to Beaver County 345 kV line
GEN-2014-038	200	Vestas V110 VCSS 2.0 MW	Hitchland to Potter County 345 kV
GEN-2015-082	200	GE 2.0 MW	Woodward to Beaver 345 kV line

The objective of this study is to evaluate the collective impact of the three projects on the existing and future planning system. The study is performed on three system scenarios provided by SPP:

- 2016 Winter Peak Case
- 2017 Summer Peak Case
- 2025 Summer Peak Case

All disturbances showed no instability problems for all three seasons. And all faults show no voltage violations under new voltage criteria.

System short-circuit current levels at up to five buses away from the point of interconnection were calculated and tabulated for SPP's reference.

Power Factor Analysis was performed to ensure the studied project meets FERC and SPP power factor requirements for wind farm interconnections. The results show that extra capacitor bank is required for GEN-2014-037 and GEN-2014-038 in all three seasons to meet the SPP

pro-forma 95% lagging (providing vars) and 95% leading (absorbing vars) power factor requirements at the Point of Interconnection.

The Low/No Wind analysis shows that a 13.49 MVAr / 12.01 MVAr / 23.89 MVAr shunt reactors are required to bring the MVAr flows in the three POIs down to approximate zero under low/no wind conditions for GEN-2014-037, GEN-2014-038 and GEN-2015-082, respectively. The reactor bank size is approximate and the final size will be determined in the final facility and collector system design.

Based on the results of the stability analysis, it is suggested that the study cases needs further review, and the proposed GEN-2014-037, GEN-2014-038 and GEN-2015-082 projects do not adversely impact the stability of the SPP system.

The results of this analysis are based on available data and assumptions made at the time of conducting this study. If any of the data and/or assumptions made in developing the study model change, the results provided in this report may not apply.

APPENDIX A SOUTHWEST POWER POOL DISTURBANCE PERFORMANCE CRITERIA REQUIREMENTS

OVERVIEW

These Disturbance Performance Requirements ("Requirements") shall be applicable to the Bulk Electric System within the Southwest Power Pool Planning Area. Utilization of these Requirements applies to all registered entities within the Southwest Power Pool Planning Area. These Requirements shall not be applicable to facilities that are not part of Bulk Electric System. More stringent Requirements are at the sole discretion of each Transmission Owner.

Transient and dynamic stability assessments are generally performed to assure adequate avoidance of loss of generator synchronism and prevention of system voltage collapse within the first 20 seconds after a system disturbance. These Requirements provide a basis for evaluating the system response during the initial transient period following a disturbance on the Bulk Electric System by establishing minimum requirements for machine rotor angle damping and transient voltage recovery.

ROTOR ANGLE DAMPING REQUIREMENT

Machine Rotor Angles shall exhibit well damped angular oscillations [as defined below] and acceptable power swings following a disturbance on the Bulk Electric System for all NERC Category A, B and C events.

Well damped angular oscillations shall meet one of the following two requirements when calculated directly from the rotor angle:

1. Successive Positive Peak Ratio (SPPR) must be less than or equal to 0.95 where SPPR is calculated as follows:

$$\text{SPPR} = \frac{\text{Peak Rotor Angle of 2}^{\text{nd}}\text{ Positive Swing Peak}}{\text{Peak Rotor Angle of 1}^{\text{st}}\text{ Positive Swing Peak}} \leq 0.95$$

-or- Damping Factor % = (1 – SPPR) x 100% ≥ 5%

The machine rotor angle damping ratio may be determined by appropriate modal analysis (i.e. Prony Analysis) where the following equivalent requirement must be met:

Damping Ratio ≥ 0.0081633

2. Successive Positive Peak Ratio Five (SPPR5) must be less than or equal to 0.774 where SPPR5 is calculated as follows:

$$\text{SPPR5} = \frac{\text{Peak Rotor Angle of 5}^{\text{th}}\text{ Positive Swing Peak}}{\text{Peak Rotor Angle of 1}^{\text{st}}\text{ Positive Swing Peak}} \leq 0.774$$

-or- Damping Factor % = (1 – SPPR5) x 100% ≥ 22.6%

The machine rotor angle damping ratio may be determined by appropriate modal analysis (i.e. Prony Analysis) where the following equivalent requirement must be met:

Damping Ratio ≥ 0.0081633

Qualitatively, these Requirements are shown in Figure 1 below.

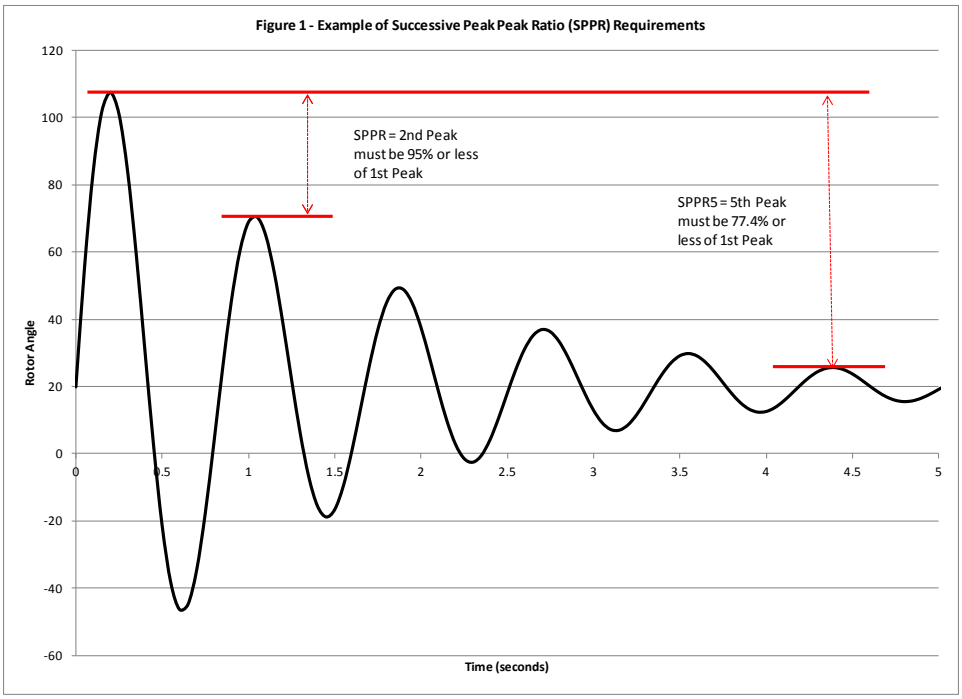

TRANSIENT VOLTAGE RECOVERY REQUIREMENT

Any time after a disturbance is cleared; bus voltages on the Bulk Electric System shall not swing outside of the bandwidth of 0.70 per unit to 1.20 per unit. All post-transient voltages must fall between the 0.90 pu and 1.1 pu range at the end of the simulations. Check pre-fault voltage checks to ensure they fall within the 0.90 pu and 1.1 pu.

***New Voltage Criteria**: After a disturbance is cleared; bus voltages on the Bulk Electric System shall recover above 0.70 per unit, 2.5 seconds after the fault is cleared. Bus voltages shall not swing above 1.20 per unit after the fault is cleared, unless affected transmission system elements are designed to handle the rise above 1.2 per unit.*

Qualitatively, this Requirement is shown in Figure 2 below.

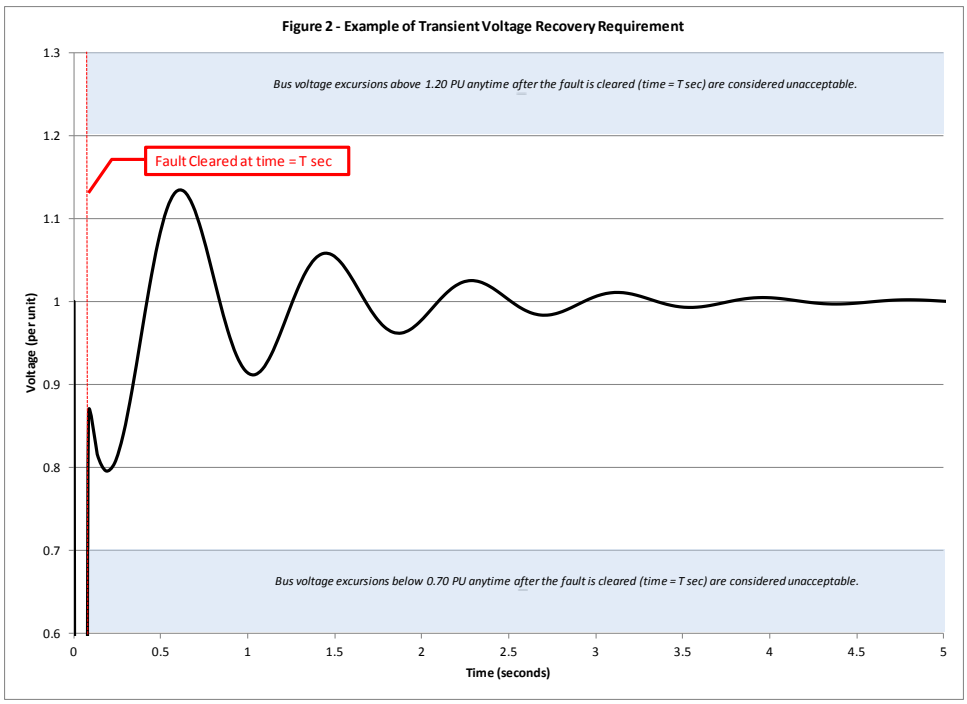
Figure 2 - Example of Transient Voltage Recovery Requirement
Bus voltage excursions above 1.20 PU anytime after the fault is cleared (time = T sec) are considered unacceptable.
Fault Cleared at time = T sec
Bus voltage excursions below 0.70 PU anytime after the fault is cleared (time = T sec) are considered unacceptable.
Voltage (per unit)
1.3
1.2
1.1
1
0.9
0.8
0.7
0.6
0
0.5
1
1.5
2
2.5
3
3.5
4
4.5
5
Time (seconds)

APPENDIX B SIMULATION PLOTS FOR STABILITY ANALYSIS

APPENDIX C POWER FACTOR ANALYSIS RESULTS

All the contingency numbers shown in this appendix match with the fault numbers shown in Table 2-1.

C.1 GEN-2014-037 2016 Winter Peak Case

The GEN-2014-037 POI voltage is 0.9723 pu in the provided 2016 winter peak case. Therefore, the power factor requirements for the wind farm were determined to maintain the voltage at 1.0 pu. The lowest lagging and leading power factors are highlighted in the table below.

Outage No.		MW	Mvar	PF	
System Intact	0	-196.3	-99.5	0.892	lagging
Contingency	1	-196.3	-129.6	0.834	lagging
Contingency	2	-196.4	-89.6	0.91	lagging
Contingency	3	-196.2	-151.2	0.792	lagging
Contingency	5	-195.8	-205.7	**0.69**	lagging
Contingency	9	-196.2	-147.4	0.8	lagging
Contingency	11	-196.3	-103.8	0.884	lagging
Contingency	12	-196.1	-155.2	0.784	lagging
Contingency	14	-196.3	-102.1	0.887	lagging
Contingency	15	-196.3	-97.8	0.895	lagging
Contingency	16	-196.2	-147.3	0.8	lagging
Contingency	17	-196.1	-157.3	0.78	lagging
Contingency	19	-196.3	-103.3	0.885	lagging
Contingency	21	-196.4	-90.8	0.908	lagging
Contingency	23	-196.3	-106	0.88	lagging
Contingency	24	-196.3	-95.2	0.9	lagging
Contingency	25	-196.3	-98.3	0.894	lagging
Contingency	26	-196	-192.4	0.714	lagging
Contingency	27	-196.4	-109.3	0.874	lagging
Contingency	28	-196.4	-109.3	0.874	lagging
Contingency	29	-196.3	-7.6	0.999	lagging
Contingency	30	-196.4	-47.3	0.972	lagging
Contingency	31	-196.3	-116.3	0.86	lagging
Contingency	32	-196.3	-105.3	0.881	lagging
Contingency	33	-196.4	-107.8	0.877	lagging
Contingency	34	-196.4	-101.3	0.889	lagging
Contingency	35	-196.3	-100.2	0.891	lagging
Contingency	36	-196.3	-101.6	0.888	lagging
Contingency	37	-196.4	-109.8	0.873	lagging
Contingency	38	-196.4	-107.9	0.876	lagging

C.2 GEN-2014-038 2016 Winter Peak Case

The GEN-2014-038 POI voltage is 0.9797 pu in the provided 2016 winter peak case. Therefore, the power factor requirements for the wind farm were determined to maintain the voltage at 1.0 pu. The lowest lagging and leading power factors are highlighted in the table below.

Outage No.		MW	Mvar	PF	
System Intact	0	-196.2	19.7	0.995	leading
Contingency	1	-196.2	17.9	0.996	leading
Contingency	2	-196.2	8.7	0.999	leading
Contingency	3	-196.2	15.1	0.997	leading
Contingency	5	-196.3	-8.2	0.999	lagging
Contingency	9	-196.2	13.1	0.998	leading
Contingency	11	-196.2	20.2	0.995	leading
Contingency	12	-196.3	5.1	1	leading
Contingency	14	-196.2	19.1	0.995	leading
Contingency	15	-196.2	18.4	0.996	leading
Contingency	16	-196.2	22.3	0.994	leading
Contingency	17	-196.2	22.3	0.994	leading
Contingency	19	-196.2	18.1	0.996	leading
Contingency	21	-196.2	20.5	0.995	leading
Contingency	23	-196.2	18.8	0.995	leading
Contingency	24	-196.2	8.7	0.999	leading
Contingency	25	-196.2	19	0.995	leading
Contingency	26	-196.4	-20.9	**0.994**	lagging
Contingency	27	-196.2	17.8	0.996	leading
Contingency	28	-196.2	14.9	0.997	leading
Contingency	29	-196.2	17	0.996	leading
Contingency	30	-196.2	22.8	**0.993**	leading
Contingency	31	-196.2	10.6	0.999	leading
Contingency	32	-196.2	10.5	0.999	leading
Contingency	33	-196.2	18.3	0.996	leading
Contingency	34	-196.2	16	0.997	leading
Contingency	35	-196.2	19.7	0.995	leading
Contingency	36	-196.1	22.8	**0.993**	leading
Contingency	37	-196.2	19.7	0.995	leading
Contingency	38	-196.2	18.8	0.995	leading

C.3 GEN-2015-082 2016 Winter Peak Case

The GEN-2015-082 POI voltage is 0.9570 pu in the provided 2016 winter peak case. Therefore, the power factor requirements for the wind farm were determined to maintain the voltage at 1.0 pu. The lowest lagging and leading power factors are highlighted in the table below.

Outage No.		MW	Mvar	PF	
System Intact	0	-193.2	-410.5	0.426	lagging
Contingency	1	-193.4	-401.2	0.434	lagging
Contingency	2	-193.3	-408.3	0.428	lagging
Contingency	3	-192.6	-438.2	0.402	lagging
Contingency	5	-189.4	-567.7	0.316	lagging
Contingency	9	-193.7	-384.8	0.45	lagging
Contingency	11	-192.4	-451.1	0.392	lagging
Contingency	12	-193.1	-413.8	0.423	lagging
Contingency	14	-192.9	-427.2	0.412	lagging
Contingency	15	-193.2	-415.1	0.422	lagging
Contingency	16	-190.8	-515.8	0.347	lagging
Contingency	17	-190.2	-539.2	0.333	lagging
Contingency	19	-193.1	-419.8	0.418	lagging
Contingency	21	-192.8	-429.5	0.41	lagging
Contingency	23	-193.2	-410.8	0.426	lagging
Contingency	24	-173.9	-954.3	0.179	lagging
Contingency	25	-193.1	-415.5	0.422	lagging
Contingency	26	-190.9	-512.4	0.349	lagging
Contingency	27	-193.1	-416.6	0.421	lagging
Contingency	28	-193	-422.4	0.416	lagging
Contingency	29	-171.5	-1001.1	**0.169**	lagging
Contingency	30	-189.1	-575.4	0.312	lagging
Contingency	31	-192.7	-434.8	0.405	lagging
Contingency	32	-193.7	-386.6	0.448	lagging
Contingency	33	-193.2	-413.6	0.423	lagging
Contingency	34	-193.2	-411.5	0.425	lagging
Contingency	35	-193.2	-411.7	0.425	lagging
Contingency	36	-193.1	-416.7	0.42	lagging
Contingency	37	-192.8	-432.4	0.407	lagging
Contingency	38	-193.2	-414	0.423	lagging

C.4 GEN-2014-037 2017 Summer Peak Case

The GEN-2014-037 POI voltage is 0.9827 pu in the provided 2017 summer peak case. Therefore, the power factor requirements for the wind farm were determined to maintain the voltage at 1.0 pu. The lowest lagging and leading power factors are highlighted in the table below.

Outage No.		MW	Mvar	PF	
System Intact	0	-196.4	-50.1	0.969	lagging
Contingency	1	-196.4	-76.2	0.932	lagging
Contingency	2	-196.4	-44.5	0.975	lagging
Contingency	3	-196.4	-93.7	0.903	lagging
Contingency	5	-196.2	-138.2	0.818	lagging
Contingency	9	-196.4	-87.1	0.914	lagging
Contingency	11	-196.4	-51.7	0.967	lagging
Contingency	12	-196.4	-90.7	0.908	lagging
Contingency	14	-196.4	-51.9	0.967	lagging
Contingency	15	-196.4	-48.3	0.971	lagging
Contingency	16	-196.4	-75.7	0.933	lagging
Contingency	17	-196.4	-82.2	0.922	lagging
Contingency	19	-196.4	-52.5	0.966	lagging
Contingency	21	-196.4	-43.3	0.977	lagging
Contingency	23	-196.4	-55	0.963	lagging
Contingency	25	-196.4	-50.4	0.969	lagging
Contingency	26	-196.1	-168.6	**0.758**	lagging
Contingency	27	-196.4	-57.1	0.96	lagging
Contingency	28	-196.4	-47.3	0.972	lagging
Contingency	29	-196.2	1.4	**1**	leading
Contingency	30	-196.2	-0.7	1	lagging
Contingency	31	-196.4	-79.8	0.926	lagging
Contingency	32	-196.4	-59.4	0.957	lagging
Contingency	33	-196.4	-66.3	0.947	lagging
Contingency	34	-196.4	-52.5	0.966	lagging
Contingency	35	-196.4	-51.6	0.967	lagging
Contingency	36	-196.4	-52.5	0.966	lagging
Contingency	37	-196.4	-57.2	0.96	lagging
Contingency	38	-196.4	-66.6	0.947	lagging

C.5 GEN-2014-038 2017 Summer Peak Case

The GEN-2014-038 POI voltage is 0.9871 pu in the provided 2017 summer peak case. Therefore, the power factor requirements for the wind farm were determined to maintain the voltage at 1.0 pu. The lowest lagging and leading power factors are highlighted in the table below.

Outage No.		MW	Mvar	PF	
System Intact	0	-196.2	13.3	0.998	leading
Contingency	1	-196.2	11.7	0.998	leading
Contingency	2	-196.2	5.9	1	leading
Contingency	3	-196.2	8.6	0.999	leading
Contingency	5	-196.3	-14.9	0.997	lagging
Contingency	9	-196.2	7.8	0.999	leading
Contingency	11	-196.2	13.4	0.998	leading
Contingency	12	-196.3	-0.8	1	lagging
Contingency	14	-196.2	12.7	0.998	leading
Contingency	15	-196.2	10.5	0.999	leading
Contingency	16	-196.2	19.8	0.995	leading
Contingency	17	-196.2	20.8	**0.994**	leading
Contingency	19	-196.2	11.6	0.998	leading
Contingency	21	-196.2	13.8	0.998	leading
Contingency	23	-196.2	12.6	0.998	leading
Contingency	25	-196.2	11.8	0.998	leading
Contingency	26	-196.3	-19	**0.995**	lagging
Contingency	27	-196.2	10.8	0.998	leading
Contingency	28	-196.3	5.1	1	leading
Contingency	29	-196.2	8.4	0.999	leading
Contingency	30	-196.2	14.1	0.997	leading
Contingency	31	-196.2	13.9	0.998	leading
Contingency	32	-196.2	6.8	0.999	leading
Contingency	33	-196.2	12.1	0.998	leading
Contingency	34	-196.2	7.5	0.999	leading
Contingency	35	-196.2	11.1	0.998	leading
Contingency	36	-196.2	15.3	0.997	leading
Contingency	37	-196.2	16.6	0.996	leading
Contingency	38	-196.2	12.2	0.998	leading

C.6 GEN-2015-082 2017 Summer Peak Case

The GEN-2015-082 POI voltage is 0.9693 pu in the provided 2017 summer peak case. Therefore, the power factor requirements for the wind farm were determined to maintain the voltage at 1.0 pu. The lowest lagging and leading power factors are highlighted in the table below.

Outage No.		MW	Mvar	PF	
System Intact	0	-194.6	-331.3	0.507	lagging
Contingency	1	-194.7	-323.5	0.516	lagging
Contingency	2	-194.6	-329.5	0.509	lagging
Contingency	3	-194.2	-357.2	0.478	lagging
Contingency	5	-191.7	-480	0.371	lagging
Contingency	9	-195	-304.9	0.539	lagging
Contingency	11	-194.1	-364.4	0.47	lagging
Contingency	12	-194.6	-330.2	0.508	lagging
Contingency	14	-194.4	-345.6	0.49	lagging
Contingency	15	-194.6	-331	0.507	lagging
Contingency	16	-193.4	-400.7	0.435	lagging
Contingency	17	-193.1	-418.3	0.419	lagging
Contingency	19	-194.5	-338.9	0.498	lagging
Contingency	21	-194.3	-349.2	0.486	lagging
Contingency	23	-194.7	-328.8	0.509	lagging
Contingency	25	-194.5	-336.6	0.5	lagging
Contingency	26	-192.6	-442.2	0.399	lagging
Contingency	27	-194.5	-339.9	0.497	lagging
Contingency	28	-194.4	-347.3	0.488	lagging
Contingency	29	-186.4	-659.7	**0.272**	lagging
Contingency	30	-191.2	-501.9	0.356	lagging
Contingency	31	-194	-366.7	0.468	lagging
Contingency	32	-194.8	-322	0.518	lagging
Contingency	33	-194.6	-335.1	0.502	lagging
Contingency	34	-194.6	-332.5	0.505	lagging
Contingency	35	-194.6	-332.6	0.505	lagging
Contingency	36	-194.5	-339	0.498	lagging
Contingency	37	-194.3	-353.2	0.482	lagging
Contingency	38	-194.8	-317.3	0.523	lagging

C.7 GEN-2014-037 2025 Summer Peak Case

The GEN-2014-037 POI voltage is 0.9878 pu in the provided 2015 summer peak case. Therefore, the power factor requirements for the wind farm were determined to maintain the voltage at 1.0 pu. The lowest lagging and leading power factors are highlighted in the table below.

Outage No.		MW	Mvar	PF	
System Intact	0	-196.3	-19.6	0.995	lagging
Contingency	1	-196.4	-43.4	0.976	lagging
Contingency	2	-196.3	-16.5	0.996	lagging
Contingency	3	-196.4	-57.7	0.959	lagging
Contingency	5	-196.4	-96.4	0.898	lagging
Contingency	9	-196.3	-38.4	0.981	lagging
Contingency	11	-196.3	-18.8	0.995	lagging
Contingency	12	-196.3	-23.1	0.993	lagging
Contingency	14	-196.3	-20.4	0.995	lagging
Contingency	15	-196.3	-18	0.996	lagging
Contingency	16	-196.3	-20.2	0.995	lagging
Contingency	17	-196.3	-23	0.993	lagging
Contingency	19	-196.3	-20.2	0.995	lagging
Contingency	21	-196.2	-14.2	0.997	lagging
Contingency	23	-196.3	-22.5	0.994	lagging
Contingency	25	-196.3	-21.1	0.994	lagging
Contingency	26	-196.1	-173.2	**0.749**	lagging
Contingency	27	-196.4	-27.8	0.99	lagging
Contingency	28	-196.3	-20.6	0.995	lagging
Contingency	29	-196.3	7.2	**0.999**	leading
Contingency	30	-196.2	8.6	**0.999**	leading
Contingency	31	-196.4	-71.1	0.94	lagging
Contingency	32	-196.3	-40.7	0.979	lagging
Contingency	33	-196.4	-30.2	0.988	lagging
Contingency	34	-196.3	-22.6	0.993	lagging
Contingency	35	-196.3	-21.5	0.994	lagging
Contingency	36	-196.3	-21.3	0.994	lagging
Contingency	37	-196.3	-24.4	0.992	lagging
Contingency	38	-196.5	-34.8	0.985	lagging

C.8 GEN-2014-038 2025 Summer Peak Case

The GEN-2014-038 POI voltage is 0.9879 pu in the provided 2015 summer peak case. Therefore, the power factor requirements for the wind farm were determined to maintain the voltage at 1.0 pu. The lowest lagging and leading power factors are highlighted in the table below.

Outage No.		MW	Mvar	PF	
System Intact	0	-196.3	-17.1	0.996	lagging
Contingency	1	-196.3	-18.8	0.995	lagging
Contingency	2	-196.3	-22.5	0.994	lagging
Contingency	3	-196.4	-22.8	0.993	lagging
Contingency	5	-196.4	-48	**0.971**	lagging
Contingency	9	-196.3	-19.9	0.995	lagging
Contingency	11	-196.4	-23.7	0.993	lagging
Contingency	12	-196.3	-18.9	0.995	lagging
Contingency	14	-196.3	-17.5	0.996	lagging
Contingency	15	-196.4	-28.2	0.99	lagging
Contingency	16	-196.3	-16.5	0.996	lagging
Contingency	17	-196.3	-13.5	0.998	lagging
Contingency	19	-196.3	-18.4	0.996	lagging
Contingency	21	-196.3	-17	0.996	lagging
Contingency	23	-196.3	-17.6	0.996	lagging
Contingency	25	-196.4	-20.7	0.995	lagging
Contingency	26	-196.3	-20	0.995	lagging
Contingency	27	-196.4	-21.2	0.994	lagging
Contingency	28	-196.4	-31.8	0.987	lagging
Contingency	29	-196.4	-26.4	0.991	lagging
Contingency	30	-196.3	-20	0.995	lagging
Contingency	31	-196.2	14.3	**0.997**	leading
Contingency	32	-196.3	-12.7	0.998	lagging
Contingency	33	-196.4	-19.2	0.995	lagging
Contingency	34	-196.4	-25.2	0.992	lagging
Contingency	35	-196.4	-21	0.994	lagging
Contingency	36	-196.3	-12.1	0.998	lagging
Contingency	37	-196.3	-10.1	0.999	lagging
Contingency	38	-196.3	-17.9	0.996	lagging

C.9 GEN-2015-082 2025 Summer Peak Case

The GEN-2015-082 POI voltage is 0.9812 pu in the provided 2015 summer peak case. Therefore, the power factor requirements for the wind farm were determined to maintain the voltage at 1.0 pu. The lowest lagging and leading power factors are highlighted in the table below.

Outage No.		MW	Mvar	PF	
System Intact	0	-196.1	-208	0.686	lagging
Contingency	1	-196.1	-203.8	0.693	lagging
Contingency	2	-196.1	-207.1	0.687	lagging
Contingency	3	-195.8	-236.8	0.637	lagging
Contingency	5	-194.2	-360.4	0.474	lagging
Contingency	9	-196.2	-186.1	0.726	lagging
Contingency	11	-196.1	-208.7	0.685	lagging
Contingency	12	-196	-214.7	0.674	lagging
Contingency	14	-196	-213.9	0.676	lagging
Contingency	15	-196.2	-186.2	0.725	lagging
Contingency	16	-196.1	-210.3	0.682	lagging
Contingency	17	-196	-220.1	0.665	lagging
Contingency	19	-196.1	-210.7	0.681	lagging
Contingency	21	-196	-220.8	0.664	lagging
Contingency	23	-196.1	-205	0.691	lagging
Contingency	25	-196	-215.6	0.673	lagging
Contingency	26	-194.7	-325.8	0.513	lagging
Contingency	27	-196	-217.5	0.67	lagging
Contingency	28	-195.9	-227.2	0.653	lagging
Contingency	29	-192.8	-430.9	**0.408**	lagging
Contingency	30	-194.7	-328.4	0.51	lagging
Contingency	31	-195.6	-255.7	0.608	lagging
Contingency	32	-196	-215.2	0.673	lagging
Contingency	33	-196	-211.5	0.68	lagging
Contingency	34	-196.1	-209.1	0.684	lagging
Contingency	35	-196.1	-209.2	0.684	lagging
Contingency	36	-196	-217.8	0.669	lagging
Contingency	37	-195.9	-231.4	0.646	lagging
Contingency	38	-196.1	-196.8	0.706	lagging

11.19 L: Group 4 Dynamic Stability Analysis Report

See Power-Tek report next page

Southwestern Power Pool Inc. (SPP)

Southwest Power Pool

Definitive Impact Study

DISIS-2015-002 (Group 04)

POWER-tek
green inspiration since 1994

Draft Report Submitted to
Southwest Power Pool Inc.
February 2016

POWER-tek Global Inc.
Mississauga, Ontario, L4Z 1H8 Canada
647 300 3160
info@powertek-usa.com, www.powertek-usa.com

TABLE OF CONTENTS

1. Executive Summary 1
2. Introduction 3
2.1. Project Overview and Assumptions 3
2.2. Objectives 5
2.3. Models and Simulations Tools Used 6
3. Power Factor Analysis 7
3.1. Methodology 7
3.2. Analysis 7
3.3. Conclusions 21
4. Inductive Reactive Support Analysis 21
5. Short Circuit Analysis 24
5.1. Short Circuit Result for 2017 Summer Peak Case 24
5.1.1. Short Circuit Result for POI Mingo 345kV (531451) 24
5.1.2. Short Circuit Result for POI Mingo 115kV (531429) 30
5.1.3. Short Circuit Result for POI South Hays 230kV (530582) 34
5.2. Short Circuit Result for 2025 Summer Peak Case 41
5.2.1. Short Circuit Result for POI Mingo 345kV (531451) 41
5.2.2. Short Circuit Result for POI Mingo 115kV (531429) 48
5.2.3. Short Circuit Result for POI South Hays 230kV (530582) 52
6. Stability Analysis for Cluster Scenario 58
6.1. Faults Simulated 58
6.2. Simulation Results for Cluster Scenario 71
7. Stability Analysis for Stand-Alone Scenarios 72
7.1. Fault Simulated for GEN-2015-061 Request 72
7.2. Fault Simulated for GEN-2015-064 Request 78
7.3. Fault Simulated for GEN-2015-065 Request 85
7.4. Fault simulated for GEN-2015-072 Request 92
7.5. Simulation Results for Stand-Alone Scenarios 97
8. Conclusions 98
9. Appendix A: 2016 winter Peak Case Stability Run Plots – Cluster 99
10. Appendix B: 2017 summer Peak Case Stability Run Plots – Cluster 99
11. Appendix C: 2025 Summer Peak Case Stability Run Plots – Cluster 99
12. Appendix D: Project Model Data 99
13. Appendix E1: 2016 winter Peak Case Stability Run Plots for GEN-2015-061 Stand-Alone Scenario 99
14. Appendix E2: 2017 summer Peak Case Stability Run Plots for GEN-2015-061 Stand-Alone Scenario 99
15. Appendix E3: 2025 Summer Peak Case Stability Run Plots for GEN-2015-061 Stand-Alone Scenario 99
16. Appendix F1: 2016 winter Peak Case Stability Run Plots for GEN-2015-064 Stand-Alone Scenario 99
17. Appendix F2: 2017 summer Peak Case Stability Run Plots for GEN-2015-064 Stand-Alone Scenario 99
18. Appendix F3: 2025 Summer Peak Case Stability Run Plots for GEN-2015-064 Stand-Alone Scenario 99
19. Appendix G1: 2016 winter Peak Case Stability Run Plots for GEN-2015-065 Stand-Alone Scenario 99
20. Appendix G2: 2017 summer Peak Case Stability Run Plots for GEN-2015-065 Stand-Alone Scenario 99
21. Appendix G3: 2025 Summer Peak Case Stability Run Plots for GEN-2015-065 Stand-Alone Scenario 99
22. Appendix H1: 2016 winter Peak Case Stability Run Plots for GEN-2015-072 Stand-Alone Scenario 99
23. Appendix H2: 2017 summer Peak Case Stability Run Plots for GEN-2015-072 Stand-Alone Scenario 99
24. Appendix H3: 2025 Summer Peak Case Stability Run Plots for GEN-2015-072 Stand-Alone Scenario 99

1. Executive Summary

The DISIS-2015-002 (Group 04) Impact Study is a generation interconnection study performed by POWER-tek Global Inc. for Southwest Power Pool (SPP). This report presents the results of impact study comprising of power factor, short circuit, and stability analyses for both cluster and stand-Alone scenarios of the proposed interconnection projects under DISIS-2015-002 (Group 04) ("The Projects") as described in Table 1.1 below:

Table 1.1: Interconnection Request

Request	Size (MW)	Generator Model	Point of Interconnection (POI)
GEN-2015-061	200.0	GE 2.0MW (wind)	Mingo 345kV (531451)
GEN-2015-064	197.8	Siemens 2.3MW (wind)	Mingo 115kV (531429)
GEN-2015-065	202.4	Siemens 2.3MW (wind)	Mingo 345kV (531451)
GEN-2015-072	20.9	GE 1.9MW solar inverter (solar)	South Hays 230kV (530582)

Power factor analysis, short circuit analysis up to 5 Buses away from each point of interconnection (POI), and transient stability simulations were performed for the Projects in service at its full output. SPP provided three base cases for Winter-2016, Summer-2017, and Summer-2025, each comprising of a power flow, sequence data and corresponding dynamics database. The previous queued request projects were already modeled in the base cases. The power factor analysis consists of running all N-1, and prior outages three phase contingencies shown in the Fault Definitions table (Table 3 in the RFP) in power flow to advise the necessary power factor at the POI for each contingency.

The power factor analysis indicates that interconnection requests i.e., GEN-2015-061, GEN-2015-064, GEN-2015-065, and GEN-2015-072 are required to provide reactive power as indicated in Tables 3.2.2 through 3.2.4.

Per the SPP OATT, the Interconnection Customer will be required to provide 95% lagging (supplying vars) and 95% leading (absorbing vars) at the POI.

To offset the capacitive effects of the collector system and transmission line of the wind farm under low wind or no wind conditions, the inductive reactive support analysis for wind generator GEN-2015-061 performed for winter-2016 scenario which indicates for wind generator GEN-2015-061 performed for winter 2016 scenario which indicates that at POI Mingo 345KV (531451) 26.3 MVAR reactor is required at Bus 584990 to maintain zero MVAR flow at POI. For

GEN-2015-064 the analysis indicates that at POI Mingo 115kV (531429) 4.5 MVAR reactor is required at Bus 585020 to maintain zero MVAR flow at POI. For GEN-2015-065 the analysis indicates that at POI Mingo 345kV (531451) 5.9 MVAR reactor is required at Bus 585030 to maintain zero MVAR flow at POI. Similarly, for GEN-2015-072 the analysis indicates that at POI South Hays 230kV (530582) 1.3 MVAR reactor is required at Bus 585090 to maintain zero MVAR flow at POI. Maintaining zero MVar flow at the POI at all times is not possible with static reactor banks. It will be determined on a case by case basis for each generator as to whether additional reactor banks are required for low wind conditions.

During dynamic simulations, only FLT47-3PH contingency shows Un-Stable response during cluster scenarios. In order to satisfy this contingency some generation curtailment is required. For other all contingencies, there are no impacts on the stability performance of the SPP system during both cluster and stand-alone scenarios for the contingencies tested on the provided base cases. The study machines stayed on-line and stable for all simulated faults. The Project stability simulations with forty nine (49) specified test disturbances did not show instability problems in the SPP system. Any oscillations were damped out

2. Introduction

2.1. Project Overview and Assumptions

The DISIS-2015-002 (Group 04) Impact Study is a generation interconnection study performed by POWER-tek Global Inc. for SPP. This report presents the results of impact study comprising of power factor, short circuit analysis, and stability analyses for both cluster and stand-alone scenarios of the proposed interconnection projects under DISIS-2015-002 (Group 04) ("The Projects") as described in Table 2.1.1 below:

Table 2.1.1: Interconnection requests

Request	Size (MW)	Wind Turbine Model	Point of Interconnection
GEN-2015-061	200.0	GE 2.0MW (wind)	Mingo 345kV (531451)
GEN-2015-064	197.8	Siemens 2.3MW (wind)	Mingo 115kV (531429)
GEN-2015-065	202.4	Siemens 2.3MW (wind)	Mingo 345kV (531451)
GEN-2015-072	20.9	GE 1.9MW solar inverter (solar)	South Hays 230kV (530582)

Figure 2.1.1, Figure 2.1.2, and Figure 2.1.4 respectively show the single line diagram for the interconnection of the Projects to present and planned system of SPP. This arrangement was modeled and studied in power flow cases for these projects.

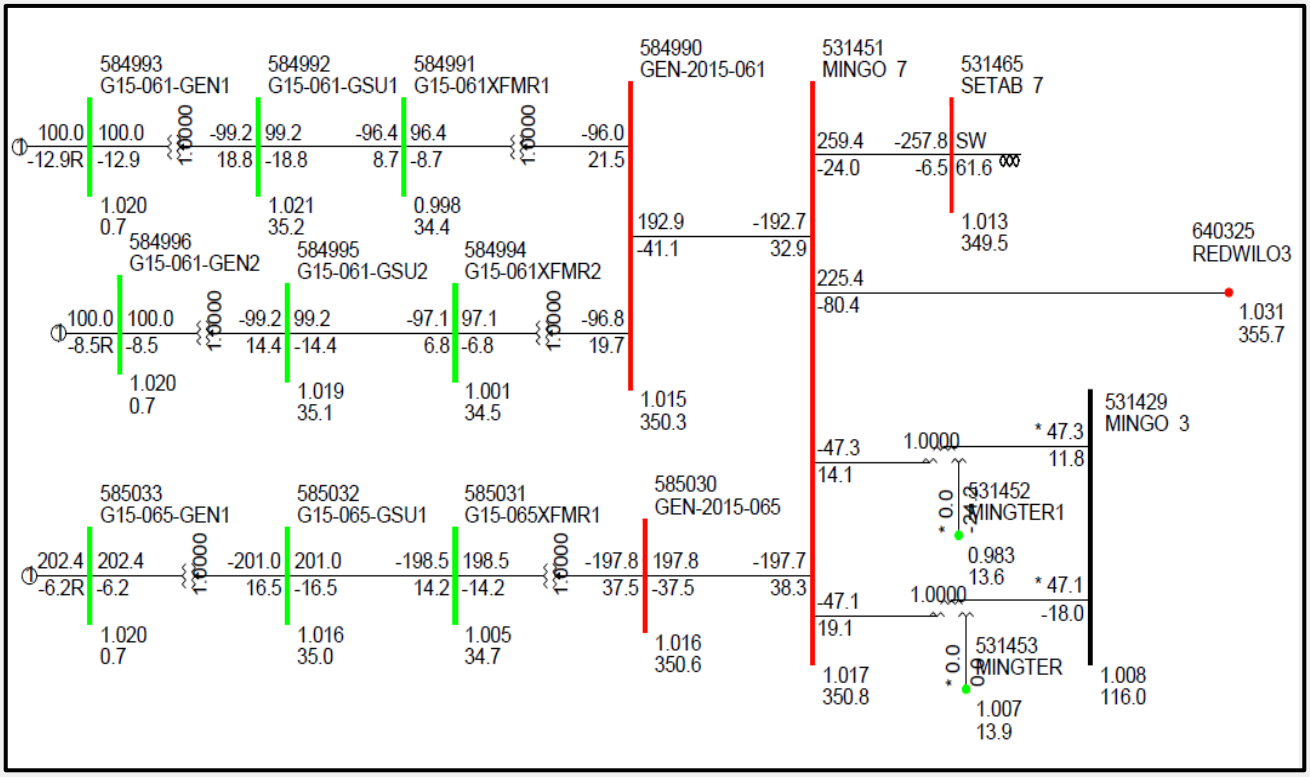

Figure 2.1.1: Power flow single line diagram for GEN-2015-061 & GEN-2015-065 and surrounding system components

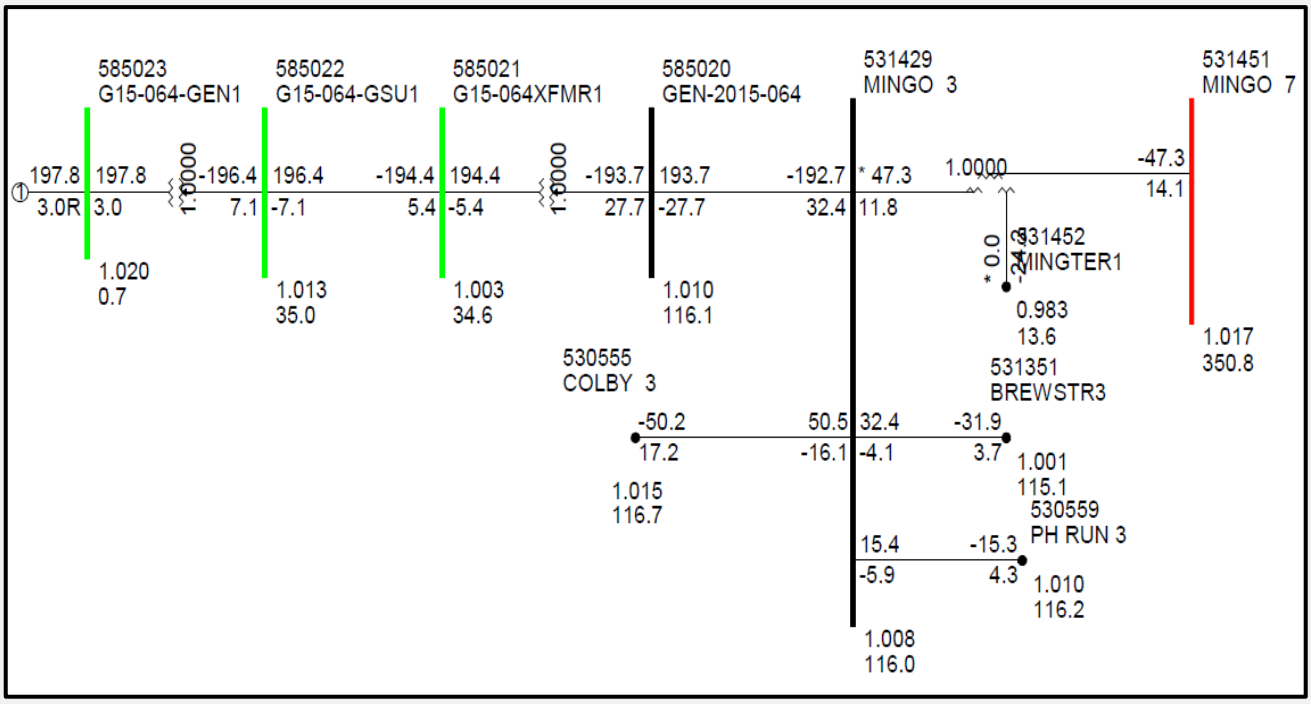

Figure 2.1.2: Power flow single line diagram for GEN-2015-064 and surrounding system components

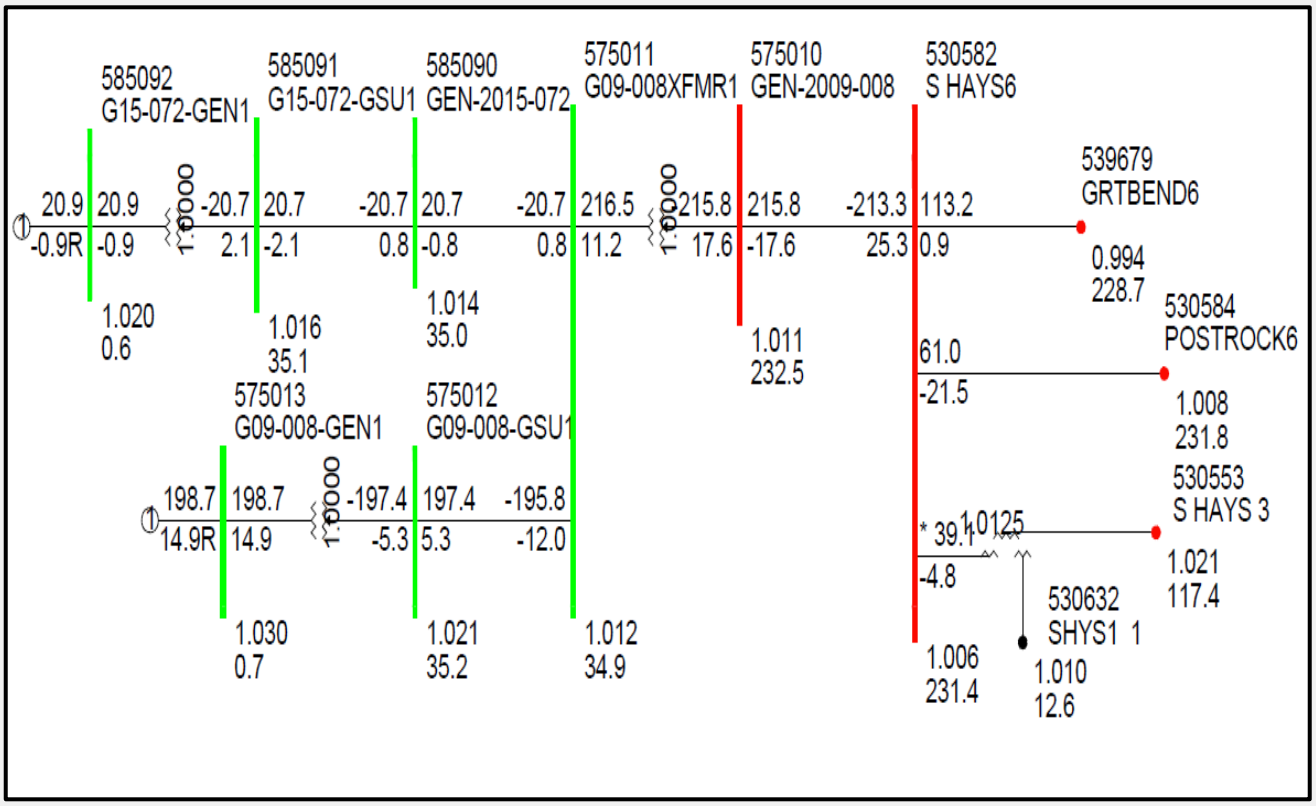

Figure 2.1.3: Power flow single line diagram for GEN-2015-072 and surrounding system components

Appendix-D contains the machines, interconnection, and machines user model parameters.

Table 2.1.2 below shows the list of prior queued projects modeled in the base case.

Table 2.1.2: List of previous queued request projects

Request	Size (MW)	Wind Turbine Model	Point of Interconnection
GEN-2001-039M	99.0	Vestas V90VCRS 3.0MW	Central Plains 115kV (531485)
GEN-2003-006A	201.0	Vestes V90VCRS	Elm Creek 230kV (539639)
GEN-2003-019	249.3	GE 1.5MW & Vestas 3.0MW	Smoky Hills 230kV (530592)
GEN-2006-031	76.0	GENROU (530674, Machine ID 01; 530675, Machine ID 07)	Knoll 115kV (530561)
GEN-2008-092	201.0	GE 1.5MW	Knoll 230kV (530558)
GEN-2009-008	198.9	GE 1.7MW	South Hays 230kV (530582)
GEN-2009-020/GEN-2014-025	50.75	Siemens SWT-2.415MW-108	Tap on the Balzine to Nekoma 69kV line (560306)
GEN-2010-048	70	Nordex 2.5MW	Tap on the Ross Beach to Redline 115kV line (560336)
GEN-2010-057	201.0	GE 1.5MW	Rice County 230kV (530686)
ASGI-2013-004	27.6 Summer 36.6 Winter	GENSAL (583693)	Morris 115kV (531430)
GEN-2013-033	28.0 (uprate of GEN-2006-031)	GENSAL (Bus 530675, Machine ID 10)	Knoll 115kV (530561)
GEN-2014-041	123.1	Siemens SWT-2.415MW-108	Arnold 115kV (531409)

ATC (Available Transfer Capability) studies were not performed as part of this study. These studies will be required at the time transmission service is actually requested. Additional transmission upgrades may be required based on that analysis.

Study assumptions in general have been based on the specific information and data provided by SPP. The accuracy of the conclusions contained within this study is dependent on the assumptions made with respect to other generation additions and transmission improvements planned by other entities. Changes in the assumptions of the timing of other generation additions or transmission improvements may affect this study's conclusions.

2.2. Objectives

The objectives of the study are to conduct power factor analysis and to determine the impact on system stability of interconnecting the proposed wind farms to SPP's transmission system.

2.3. Models and Simulations Tools Used

Version 32.2.0 of the Siemens, PSS/E™ power system simulation program was used in this study.

SPP provided its latest stability database cases for Winter-2016, Summer-2017, and summer-2025 peak seasons. The Project's PSS/E model had been developed prior to this study and was included in the power flow case and the dynamics database. Machines, interconnection and dynamic model data for the Project plants is provided in Appendix D.

Power flow single line diagram of the projects in winter 2016 peak condition are shown in Figure 2.1.1, Figure 2.1.2, Figure 2.1.3, and Figure 2.1.4 respectively. These Figures shows that wind farms model includes representation of the radial transmission line, the substation transformer from transmission voltage (138kV and 345kV) to 34.5V. The remainder of each wind farm is represented by lumped equivalents including a generator, a step-up transformer, and collector system impedance.

No special modeling is required of line relays in these cases, except for the special modeling related to the wind-turbine tripping.

All generators in Areas 520, 524, 525, 526, 531, 534, 536, 640 were monitored.

3. Power Factor Analysis

3.1. Methodology

Power factor analysis was conducted for the Project using the following methodology:

1. Replace the wind farm by a generator at the high side bus 345 kV, 138 kV, 115kV, or 69 kV bus, as applicable, with the MW of the wind farms at that point of interconnection.
2. Turn off the wind farm as modeled (as well as previous queued projects at the same point of interconnection).
3. Model a var generator at the Project's high voltage side, 345 kV, 138 kV, 115kV, or 69kV bus, as applicable. The var generator is set to hold a voltage schedule at the POI consistent with the voltage schedule in the provided power flow cases for summer and winter or 1.0 pu voltage, whichever is higher.
4. Perform the steady state contingency analysis to determine the power factor necessary at the POI for each contingency.
5. If the required power factor at the POI is beyond the capability of the studied wind turbines to meet (at the POI) capacitor banks may be considered for the stability analysis. The preference is to locate the capacitance banks on the 34.5 kV customer side. Factors to sizing capacitor banks include:
   - 5.1. The ability of the wind farm to meet FERC Order 661A (low voltage ride through) with and without capacitor banks.
   - 5.2. The ability of the wind farm to meet FERC Order 661A (wind farm recovery to pre-fault voltage).
   - 5.3. If wind farms trips on high voltage, power factor lower than unity may be required.

3.2. Analysis

Analysis was performed for the proposed Projects with all prior queued projects in service. A var generator was modeled at the point of interconnection and was set to hold a voltage schedule at the POI consistent with the voltage schedule in the provided power flow cases OR 1 p.u. whichever is higher. The voltages for these Projects are summarized in Table 3.2.1. All upgrades and instructions were made in the base cases. No other changes were made in the base cases provided, other than the addition of the var generators. Contingency analysis was run for provided list of contingencies.

Table 3.2.1: POI voltages for the summer and winter peak cases

Request	Point of Interconnection	Size (MW)	Base Case Voltage (p.u.)		
			Winter 2016 Peak	Summer 2017 Peak	Summer 2025 Peak
GEN-2015-061	Mingo 345kV (531451)	200.0	1.017	1.023	1.022
GEN-2015-064	Mingo 115kV (531429)	197.8	1.006	1.011	1.013
GEN-2015-065	Mingo 345kV (531451)	202.4	1.017	1.023	1.022
GEN-2015-072	South Hays 230kV (530582)	20.9	1.002	1.00	1.00

The details of the var requirement during contingencies are highlighted in Table 3.2.2, 3.2.3 and 3.2.4. The highest and the lowest values obtained are highlighted in these tables.

1. For 2016 winter case (GEN-2015-061 and GEN-2015-065 analysis): The maximum var generator supply is 36.5 MVARs at 1.0 (lagging power factor) for the outage of 531451 [MINGO 7 345.0] TO BUS 640325 [REDWILO3 345.0] CKT outage. The minimum var requirement is -93.6 MVAR at 0.97 (leading power factor) for outage of 531449 [HOLCOMB7 345.0] TO BUS 531448 [HOLCOMB3 115.0] T/F outage.
2. For 2016 winter case (GEN-2015-064 analysis): The maximum var generator supply is 44.1 MVARs at 0.99 (lagging power factor) for the outage of 531409 [ARNOLD3 115.0] TO BUS 531414 [RANSOM 3 115.0] CKT outage. The minimum var requirement is -17.5 MVAR at 1.0 (leading power factor) for outage of 531449 [HOLCOMB7 345.0] TO BUS 531448 [HOLCOMB3 115.0] T/F outage.
3. For 2016 winter case (GEN-2015-072 analysis): The maximum var generator supply is 24.7 MVARs at 0.99 (lagging power factor) for the outage of 531429 [MINGO 3 115.0] TO BUS 531451 [MINGO 7 345.0] T/F outage. The minimum var requirement is -33.7 MVAR at 0.99 (lagging power factor) for outage of 530561 [KNOLL 3 115.0] TO BUS 530605 [REDLIN 3 115.0] CKT outage.

Table 3.2.2: Var Generator output in 2016 winter peak case for DISIS-2015-002 (Group 04)

2016 winter Peak Case Power Factor Study:

Generation Interconnection Request Analysis Rated MW of Wind Farms OR at POI (MW) Rated MVAR of Wind Farms OR at POI (MVAR)						**GEN-2015-061 AND GEN-2015-065** MW at POI **402.4** MVAR at POI **146.4**		**GEN-2015-064** MW at POI **369.8** MVAR at POI **202.3**		**GEN-2015-072** MW at POI **219.6** MVAR at POI **92.4**	
Cont. Name	**From Bus (# & Name)**		**To Bus (# & Name)**		**ID**	**MVAR at POI**	**P.F at POI**	**MVAR at POI**	**P.F at POI**	**MVAR at POI**	**P.F at POI**
	Base Case MVAR Flow				N/A	-69.9	0.99	-10.6	1.00	-22.8	0.99
FLT01-3PH	530582	S HAYS6 230.0	530584	POSTROCK6 230.0	CKT 1	-69.4	0.99	-10.5	1.00	-5.4	1.00
FLT02-3PH	530584	POSTROCK6 230.0	530558	KNOLL 6 230.0	CKT 1	-70.4	0.99	-11.3	1.00	-21.5	1.00
FLT03-3PH	530558	KNOLL 6 230.0	530592	SMOKYHL6 230.0	CKT 1	-68.7	0.99	-10.1	1.00	-9.0	1.00
FLT04-3PH	530561	KNOLL 3 115.0	530551	SALINE 3 115.0	CKT 1	-70.7	0.98	-8.3	1.00	-26.5	0.99
FLT05-3PH	530561	KNOLL 3 115.0	530581	N HAYS3 115.0	CKT 1	-69.8	0.99	-11.4	1.00	-23.1	0.99

Generation Interconnection Request Analysis Rated MW of Wind Farms OR at POI (MW) Rated MVAR of Wind Farms OR at POI (MVAR)						GEN-2015-061 AND GEN-2015-065 MW at POI **402.4** MVAR at POI **146.4**		GEN-2015-064 MW at POI **369.8** MVAR at POI **202.3**		GEN-2015-072 MW at POI **219.6** MVAR at POI **92.4**	
Cont. Name	**From Bus (# & Name)**		**To Bus (# & Name)**		**ID**	**MVAR at POI**	**P.F at POI**	**MVAR at POI**	**P.F at POI**	**MVAR at POI**	**P.F at POI**
FLT06-3PH	530561	KNOLL 3 115.0	530605	REDLIN 3 115.0	CKT 1	-63.6	0.99	2.1	1.00	-33.7	0.99
FLT07-3PH	530582	S HAYS6 230.0	539679	GRTBEND6 230.0	CKT 1	-69.2	0.99	-10.3	1.00	-26.6	0.99
FLT08-3PH	539679	GRTBEND6 230.0	539695	SPEARVL6 230.0	CKT 1	-70.8	0.98	-11.2	1.00	8.1	1.00
FLT09-3PH	539679	GRTBEND6 230.0	532871	CIRCLE 6 230.0	CKT 1	-67.4	0.99	-8.8	1.00	-17.2	1.00
FLT10-3PH	530584	POSTROCK6 230.0	530583	POSTROCK7 345.0	T/F	-66.1	0.99	-6.8	1.00	9.9	1.00
FLT11-3PH	530583	POSTROCK7 345.0	640065	AXTELL 3 345.0	CKT 1	-63.2	0.99	-5.7	1.00	-22.0	1.00
FLT12-3PH	640065	AXTELL 3 345.0	640374	SWEET W3 345.0	CKT 1	-66.3	0.99	-10.6	1.00	-10.6	1.00
FLT13-3PH	530558	KNOLL 6 230.0	530561	KNOLL 3 115.0	T/F	-70.4	0.99	-9.8	1.00	-15.8	1.00
FLT14-3PH	560336	G10-048-TAP 115.0	530557	BEACH 3 115.0	CKT 1	-68.8	0.99	-1.4	1.00	-24.2	0.99
FLT15-3PH	560336	G10-048-TAP 115.0	530605	REDLIN 3 115.0	CKT 1	-63.2	0.99	2.5	1.00	-31.8	0.99
FLT16-3PH	530557	BEACH 3 115.0	530556	HOXIE 3 115.0	CKT 1	-63.2	0.99	3.9	1.00	-31.9	0.99
FLT17-3PH	530555	COLBY 3 115.0	530554	ATWOOD 3 115.0	CKT 1	-64.3	0.99	-2.9	1.00	-22.4	0.99
FLT18-3PH	530555	COLBY 3 115.0	530682	SEGNTP 3 115.0	CKT 1	-69.7	0.99	-5.5	1.00	-24.5	0.99
FLT19-3PH	530555	COLBY 3 115.0	531429	MINGO 3 115.0	CKT 1	-59.2	0.99	8.1	1.00	-28.8	0.99
FLT20-3PH	531429	MINGO 3 115.0	530559	PH RUN 3 115.0	CKT 1	-66.2	0.99	-2.7	1.00	-24.7	0.99

Generation Interconnection Request Analysis Rated MW of Wind Farms OR at POI (MW) Rated MVAR of Wind Farms OR at POI (MVAR)						GEN-2015-061 AND GEN-2015-065 MW at POI **402.4** MVAR at POI **146.4**		GEN-2015-064 MW at POI **369.8** MVAR at POI **202.3**		GEN-2015-072 MW at POI **219.6** MVAR at POI **92.4**	
Cont. Name	**From Bus (# & Name)**		**To Bus (# & Name)**		**ID**	**MVAR at POI**	**P.F at POI**	**MVAR at POI**	**P.F at POI**	**MVAR at POI**	**P.F at POI**
FLT21-3PH	531429	MINGO 3 115.0	531351	BREWSTR3 115.0	CKT 1	-66.7	0.99	-7.0	1.00	-23.2	0.99
FLT22-3PH	531429	MINGO 3 115.0	531451	MINGO 7 345.0	T/F	-88.3	0.98	8.0	1.00	24.7	0.99
FLT23-3PH	531451	MINGO 7 345.0	640325	REDWILO3 345.0	CKT 1	36.5	1.00	40.2	0.99	13.4	1.00
FLT25-3PH	531451	MINGO 7 345.0	531465	SETAB 7 345.0	CKT 1	-25.6	1.00	8.4	1.00	-4.3	1.00
FLT26-3PH	531465	SETAB 7 345.0	531449	HOLCOMB7 345.0	CKT 1	-12.6	1.00	14.9	1.00	-0.7	1.00
FLT27-3PH	531449	HOLCOMB7 345.0	531501	BUCKNER7 345.0	CKT 1	-48.8	0.99	-0.5	1.00	-21.7	1.00
FLT28-3PH	531465	SETAB 7 345.0	531464	SETAB 3 115.0	T/F	-72.9	0.98	-9.8	1.00	-22.2	0.99
FLT29-3PH	640325	REDWILO3 345.0	640183	GENTLMN3 345.0	CKT 1	-61.6	0.99	-5.8	1.00	-14.0	1.00
FLT30-3PH	640325	REDWILO3 345.0	640326	REDWILO7 115.0	T/F	-60.3	0.99	-7.5	1.00	-19.5	1.00
FLT31-3PH	640183	GENTLMN3 345.0	640374	SWEET W3 345.0	CKT 1	-61.1	0.99	-8.7	1.00	-6.0	1.00
FLT32-3PH	530559	PH RUN 3 115.0	530683	SEGUIN 3 115.0	CKT 1	-66.3	0.99	-6.5	1.00	-24.8	0.99
FLT33-3PH	530559	PH RUN 3 115.0	531412	GRINNEL3 115.0	CKT 1	-70.9	0.98	-10.9	1.00	-22.6	0.99
FLT34-3PH	531411	GOVE 3 115.0	531409	ARNOLD3 115.0	CKT 1	-71.1	0.98	-11.8	1.00	-19.7	1.00
FLT35-3PH	531409	ARNOLD3 115.0	531414	RANSOM 3 115.0	CKT 1	-36.8	1.00	44.1	0.99	-16.1	1.00
FLT36-3PH	530554	ATWOOD 3 115.0	531364	ATWODSW3 115.0	CKT 1	-66.2	0.99	-8.1	1.00	-23.7	0.99

Generation Interconnection Request Analysis Rated MW of Wind Farms OR at POI (MW) Rated MVAR of Wind Farms OR at POI (MVAR)						GEN-2015-061 AND GEN-2015-065 MW at POI **402.4** MVAR at POI **146.4**		GEN-2015-064 MW at POI **369.8** MVAR at POI **202.3**		GEN-2015-072 MW at POI **219.6** MVAR at POI **92.4**	
Cont. Name	**From Bus (# & Name)**		**To Bus (# & Name)**		**ID**	**MVAR at POI**	**P.F at POI**	**MVAR at POI**	**P.F at POI**	**MVAR at POI**	**P.F at POI**
FLT37-3PH	530554	ATWOOD 3 115.0	531488	BVERVLLY 115.0	CKT 1	-70.2	0.99	-9.7	1.00	-22.4	0.99
FLT38-3PH	531449	HOLCOMB7 345.0	523853	FINNEY 7345.0	CKT 1	-25.5	1.00	8.0	1.00	-5.5	1.00
FLT39-3PH	531449	HOLCOMB7 345.0	531448	HOLCOMB3 115.0	T/F	-93.6	0.97	-17.5	1.00	-26.5	0.99
FLT40-3PH	640183	GENTLMN3 345.0	640252	KEYSTON3 345.0	CKT 1	-70.6	0.98	-10.9	1.00	-24.2	0.99
FLT41-PO	530558	KNOLL 6 230.0	530584	POSTROCK6 230.0	CKT 1	-70.3	0.99	-11.1	1.00	-5.9	1.00
	530582	S HAYS6 230.0	530584	POSTROCK6 230.0	CKT 1						
FLT42-PO	539679	GRTBEND6 230.0	532871	CIRCLE 6 230.0	CKT 1	-66.8	0.99	-8.8	1.00	-23.8	0.99
	530582	S HAYS6 230.0	539679	GRTBEND6 230.0	CKT 1						
FLT46-PO	531429	MINGO 3 115.0	531351	BREWSTR3 115.0	CKT 1	-62.4	0.99	2.5	1.00	-25.4	0.99
	531429	MINGO 3 115.0	530559	PH RUN 3 115.0	CKT 1						
FLT47-PO	531451	MINGO 7 345.0	640325	REDWILO3 345.0	CKT 1	Not Converged	-	Not Converged	-	Not Converged	-
	531451	MINGO 7 345.0	531465	SETAB 7 345.0	CKT 1						
FLT48-PO	531465	SETAB 7 345.0	531451	MINGO 7 345.0	CKT 1	-5.1	1.00	38.2	0.99	-18.6	1.00
	531429	MINGO 3 115.0	530555	COLBY 3 115.0	CKT 1						

4. For 2017 summer case (GEN-2015-061 and GEN-2015-065 analysis): The maximum var generator supply is 8.8 MVARs at 1.0 (lagging power factor) for the outage of 531451 [MINGO 7 345.0] TO BUS 640325 [REDWILO3 345.0] CKT outage. The minimum var requirement is -90.1 MVAR at 0.98 (leading power factor) for outage of 531429 [MINGO 3 115.0] TO BUS 531451 [MINGO 7 345.0] T/F outage.
5. For 2017 Summer case (GEN-2015-064 analysis): The maximum var generator supply is 40.8 MVARs at 0.99 (lagging power factor) for the outage of 531465 [SETAB 7 345.0] TO BUS 560054 [G15-061T 345.0] and 531429 [MINGO 3 115.0] TO BUS 530555 [COLBY 3 115.0] both CKT outage. The minimum var requirement is -20.6 MVAR at 1.0 (leading power factor) for outage of 530554 [ATWOOD 3 115.0] TO BUS 531364 [ATWODSW3 115.0] CKT outage.
6. For 2017 summer case (GEN-2015-072 analysis): The maximum var generator supply is 44.4 MVARs at 0.99 (lagging power factor) for the outage of 539679 [GRTBEND6 230.0] TO BUS 539695 [SPEARVL6 230.0] CKT outage. The minimum var requirement is -19.9 MVAR at 1.0 (lagging power factor) for outage of 530582 [S HAYS6 230.0] TO BUS 539679 [S HAYS6 230.0] CKT outage.

Table 3.2.3: Var generator output in 2017 summer peak case for DISIS-2015-002 (Group 04)

2017 summer Peak Case Power Factor Study:

Generation Interconnection Request Analysis Rated MW of Wind Farms OR at POI (MW) Rated MVAR of Wind Farms OR at POI (MVAR)						**GEN-2015-061 AND GEN-2015-065** MW at POI **402.4** MVAR at POI **146.4**		**GEN-2015-064** MW at POI **352.8** MVAR at POI **191.8**		**GEN-2015-072** MW at POI **219.6** MVAR at POI **92.4**	
Cont. Name	**From Bus (# & Name)**		**To Bus (# & Name)**		**ID**	**MVAR at POI**	**P.F at POI**	**MVAR at POI**	**P.F at POI**	**MVAR at POI**	**P.F at POI**
	Base Case MVAR Flow				N/A	-82.8	0.98	-19.8	1.00	5.4	1.00
FLT01-3PH	530582	S HAYS6 230.0	530584	POSTROCK6 230.0	CKT 1	-82.8	0.98	-19.7	1.00	27.8	0.99
FLT02-3PH	530584	POSTROCK6 230.0	530558	KNOLL 6 230.0	CKT 1	-83.3	0.98	-20.0	1.00	1.3	1.00
FLT03-3PH	530558	KNOLL 6 230.0	530592	SMOKYHL6 230.0	CKT 1	-81.7	0.98	-19.2	1.00	19.4	1.00
FLT04-3PH	530561	KNOLL 3 115.0	530551	SALINE 3 115.0	CKT 1	-78.8	0.98	-14.1	1.00	7.2	1.00

Generation Interconnection Request Analysis Rated MW of Wind Farms OR at POI (MW) Rated MVAR of Wind Farms OR at POI (MVAR)						GEN-2015-061 AND GEN-2015-065 MW at POI **402.4** MVAR at POI **146.4**		GEN-2015-064 MW at POI **352.8** MVAR at POI **191.8**		GEN-2015-072 MW at POI **219.6** MVAR at POI **92.4**	
Cont. Name	**From Bus (# & Name)**		**To Bus (# & Name)**		**ID**	**MVAR at POI**	**P.F at POI**	**MVAR at POI**	**P.F at POI**	**MVAR at POI**	**P.F at POI**
FLT05-3PH	530561	KNOLL 3 115.0	530581	N HAYS3 115.0	CKT 1	-82.5	0.98	-19.6	1.00	10.9	1.00
FLT06-3PH	530561	KNOLL 3 115.0	530605	REDLIN 3 115.0	CKT 1	-76.6	0.98	-10.5	1.00	4.6	1.00
FLT07-3PH	530582	S HAYS6 230.0	539679	GRTBEND6 230.0	CKT 1	-81.3	0.98	-19.1	1.00	-19.9	1.00
FLT08-3PH	539679	GRTBEND6 230.0	539695	SPEARVL6 230.0	CKT 1	-84.0	0.98	-20.0	1.00	44.4	0.98
FLT09-3PH	539679	GRTBEND6 230.0	532871	CIRCLE 6 230.0	CKT 1	-80.4	0.98	-18.1	1.00	11.9	1.00
FLT10-3PH	530584	POSTROCK6 230.0	530583	POSTROCK7 345.0	T/F	-81.8	0.98	-18.2	1.00	44.8	0.98
FLT11-3PH	530583	POSTROCK7 345.0	640065	AXTELL 3 345.0	CKT 1	-78.6	0.98	-16.3	1.00	13.5	1.00
FLT12-3PH	640065	AXTELL 3 345.0	640374	SWEET W3 345.0	CKT 1	-76.7	0.98	-18.4	1.00	9.0	1.00
FLT13-3PH	530558	KNOLL 6 230.0	530561	KNOLL 3 115.0	T/F	-83.8	0.98	-20.1	1.00	-11.7	1.00
FLT14-3PH	560336	G10-048-TAP 115.0	530557	BEACH 3 115.0	CKT 1	-74.3	0.98	-5.6	1.00	6.4	1.00
FLT15-3PH	560336	G10-048-TAP 115.0	530605	REDLIN 3 115.0	CKT 1	-76.5	0.98	-10.4	1.00	4.7	1.00
FLT16-3PH	530557	BEACH 3 115.0	530556	HOXIE 3 115.0	CKT 1	-73.9	0.98	-6.4	1.00	5.0	1.00
FLT17-3PH	530555	COLBY 3 115.0	530554	ATWOOD 3 115.0	CKT 1	-78.2	0.98	-13.5	1.00	5.8	1.00
FLT18-3PH	530555	COLBY 3 115.0	530682	SEGNTP 3 115.0	CKT 1	-81.0	0.98	-16.2	1.00	5.2	1.00
FLT19-3PH	530555	COLBY 3 115.0	531429	MINGO 3 115.0	CKT 1	-76.3	0.98	-8.1	1.00	5.3	1.00

Generation Interconnection Request Analysis Rated MW of Wind Farms OR at POI (MW) Rated MVAR of Wind Farms OR at POI (MVAR)						GEN-2015-061 AND GEN-2015-065 MW at POI **402.4** MVAR at POI **146.4**		GEN-2015-064 MW at POI **352.8** MVAR at POI **191.8**		GEN-2015-072 MW at POI **219.6** MVAR at POI **92.4**	
Cont. Name	**From Bus (# & Name)**		**To Bus (# & Name)**		**ID**	**MVAR at POI**	**P.F at POI**	**MVAR at POI**	**P.F at POI**	**MVAR at POI**	**P.F at POI**
FLT20-3PH	531429	MINGO 3 115.0	530559	PH RUN 3 115.0	CKT 1	-82.3	0.98	-16.2	1.00	4.9	1.00
FLT21-3PH	531429	MINGO 3 115.0	531351	BREWSTR3 115.0	CKT 1	-76.3	0.98	-10.3	1.00	5.7	1.00
FLT22-3PH	531429	MINGO 3 115.0	531451	MINGO 7 345.0	T/F	-90.1	0.98	27.0	1.00	17.2	1.00
FLT23-3PH	531451	MINGO 7 345.0	640325	REDWILO3 345.0	CKT 1	8.8	1.00	22.8	1.00	23.2	0.99
FLT25-3PH	531451	MINGO 7 345.0	531465	SETAB 7 345.0	CKT 1	-11.2	1.00	18.2	1.00	7.8	1.00
FLT26-3PH	531465	SETAB 7 345.0	531449	HOLCOMB7 345.0	CKT 1	-50.0	0.99	3.3	1.00	12.7	1.00
FLT27-3PH	531449	HOLCOMB7 345.0	531501	BUCKNER7 345.0	CKT 1	-71.7	0.98	-11.5	1.00	3.0	1.00
FLT28-3PH	531465	SETAB 7 345.0	531464	SETAB 3 115.0	T/F	-89.9	0.98	-19.5	1.00	6.1	1.00
FLT29-3PH	640325	REDWILO3 345.0	640183	GENTLMN3 345.0	CKT 1	-83.6	0.98	-19.0	1.00	6.4	1.00
FLT30-3PH	640325	REDWILO3 345.0	640326	REDWILO7 115.0	T/F	-73.4	0.98	-16.5	1.00	8.3	1.00
FLT31-3PH	640183	GENTLMN3 345.0	640374	SWEET W3 345.0	CKT 1	-72.5	0.98	-16.1	1.00	14.3	1.00
FLT32-3PH	530559	PH RUN 3 115.0	530683	SEGUIN 3 115.0	CKT 1	-79.3	0.98	-15.4	1.00	5.6	1.00
FLT33-3PH	530559	PH RUN 3 115.0	531412	GRINNEL3 115.0	CKT 1	-82.5	0.98	-18.4	1.00	5.8	1.00
FLT34-3PH	531411	GOVE 3 115.0	531409	ARNOLD3 115.0	CKT 1	-82.2	0.98	-18.5	1.00	6.4	1.00
FLT35-3PH	531409	ARNOLD3 115.0	531414	RANSOM 3 115.0	CKT 1	-49.4	0.99	27.4	1.00	4.1	1.00

Generation Interconnection Request Analysis Rated MW of Wind Farms OR at POI (MW) Rated MVAR of Wind Farms OR at POI (MVAR)						GEN-2015-061 AND GEN-2015-065 MW at POI **402.4** MVAR at POI **146.4**		GEN-2015-064 MW at POI **352.8** MVAR at POI **191.8**		GEN-2015-072 MW at POI **219.6** MVAR at POI **92.4**	
Cont. Name	**From Bus (# & Name)**		**To Bus (# & Name)**		**ID**	**MVAR at POI**	**P.F at POI**	**MVAR at POI**	**P.F at POI**	**MVAR at POI**	**P.F at POI**
FLT36-3PH	530554	ATWOOD 3 115.0	531364	ATWODSW3 115.0	CKT 1	-83.2	0.98	-20.6	1.00	5.6	1.00
FLT37-3PH	530554	ATWOOD 3 115.0	531488	BVERVLLY 115.0	CKT 1	-82.5	0.98	-19.0	1.00	5.4	1.00
FLT38-3PH	531449	HOLCOMB7 345.0	523853	FINNEY 7345.0	CKT 1	-54.2	0.99	-7.5	1.00	16.0	1.00
FLT39-3PH	531449	HOLCOMB7 345.0	531448	HOLCOMB3 115.0	T/F	-81.9	0.98	-16.0	1.00	4.6	1.00
FLT40-3PH	640183	GENTLMN3 345.0	640252	KEYSTON3 345.0	CKT 1	-84.8	0.98	-20.4	1.00	4.4	1.00
FLT41-PO	530558	KNOLL 6 230.0	530584	POSTROCK6 230.0	CKT 1	-84.0	0.98	-20.2	1.00	26.8	0.99
	530582	S HAYS6 230.0	530584	POSTROCK6 230.0	CKT 1						
FLT42-PO	539679	GRTBEND6 230.0	532871	CIRCLE 6 230.0	CKT 1	-79.1	0.98	-17.5	1.00	-18.8	1.00
	530582	S HAYS6 230.0	539679	GRTBEND6 230.0	CKT 1						
FLT46-PO	531429	MINGO 3 115.0	531351	BREWSTR3 115.0	CKT 1	-75.1	0.98	-5.7	1.00	5.2	1.00
	531429	MINGO 3 115.0	530559	PH RUN 3 115.0	CKT 1						
FLT47-PO	531451	MINGO 7 345.0	640325	REDWILO3 345.0	CKT 1	Not Converged	-	Not Converged	-	Not Converged	-
	531451	MINGO 7 345.0	531465	SETAB 7 345.0	CKT 1						
FLT48-PO	531465	SETAB 7 345.0	531451	MINGO 7 345.0	CKT 1	3.1	1.00	40.8	0.99	7.6	1.00
	531429	MINGO 3 115.0	530555	COLBY 3 115.0	CKT 1						

7. For 2025 summer case (GEN-2015-061 and GEN-2015-065 analysis): The maximum var generator supply is 12.4 MVARs at 1.0 (lagging power factor) for the outage of 531451 [MINGO 7 345.0] TO BUS 640325 [REDWILO3 345.0] CKT outage. The minimum var requirement is -89.5 MVAR at 0.98 (leading power factor) for outage of 531465 [SETAB 7 345.0] TO BUS 531464 [SETAB 3 115.0] T/F outage.
8. For 2025 summer case (GEN-2015-064 analysis): The maximum var generator supply is 48.5 MVARs at 0.99 (lagging power factor) for the outage of 531465 [SETAB 7 345.0] TO BUS 560054 [G15-061T 345.0] and 531429 [MINGO 3 115.0] TO BUS 530555 [COLBY 3 115.0] both CKT outage. The minimum var requirement is -27.1 MVAR at 0.1 (leading power factor) for outage of 531465 [SETAB 7 345.0] TO BUS 531464 [SETAB 3 115.0] T/F outage.
9. For 2025 summer case (GEN-2015-072 analysis): The maximum var generator supply is 27.3 MVARs at 0.99 (lagging power factor) for the outage of 530584 [POSTROCK6 230.0] TO BUS 530583 [POSTROCK7 345.0] T/F outage. The minimum var requirement is -41.0 MVAR at 0.98 (lagging power factor) for outage of 530558 [KNOLL 6 230.0] TO BUS 530561 [KNOLL 3 115.0] T/F outage.

Table 3.2.3: Var generator output in 2025 summer peak case for DISIS-2015-002 (Group 04)

2025 Summer Peak Case Power Factor Study:

Generation Interconnection Request Analysis Rated MW of Wind Farms OR at POI (MW) Rated MVAR of Wind Farms OR at POI (MVAR)						**GEN-2015-061 AND GEN-2015-065** MW at POI **402.4** MVAR at POI **146.4**		**GEN-2015-064** MW at POI **352.8** MVAR at POI **191.8**		**GEN-2015-072** MW at POI **219.6** MVAR at POI **92.4**	
Cont. Name	**From Bus (# & Name)**		**To Bus (# & Name)**		**ID**	**MVAR at POI**	**P.F at POI**	**MVAR at POI**	**P.F at POI**	**MVAR at POI**	**P.F at POI**
	Base Case MVAR Flow				N/A	-81.7	0.98	-25.6	1.00	-17.4	1.00
FLT01-3PH	530582	S HAYS6 230.0	530584	POSTROCK6 230.0	CKT 1	-81.6	0.98	-25.5	1.00	5.1	1.00
FLT02-3PH	530584	POSTROCK6 230.0	530558	KNOLL 6 230.0	CKT 1	-82.5	0.98	-26.0	1.00	-26.5	0.99
FLT03-3PH	530558	KNOLL 6 230.0	530592	SMOKYHL6 230.0	CKT 1	-80.8	0.98	-25.0	1.00	-2.9	1.00
FLT04-3PH	530561	KNOLL 3 115.0	530551	SALINE 3 115.0	CKT 1	-77.4	0.98	-19.8	1.00	-15.8	1.00
FLT05-3PH	530561	KNOLL 3 115.0	530581	N HAYS3 115.0	CKT 1	-81.3	0.98	-25.4	1.00	-4.2	1.00

Generation Interconnection Request Analysis Rated MW of Wind Farms OR at POI (MW) Rated MVAR of Wind Farms OR at POI (MVAR)						GEN-2015-061 AND GEN-2015-065 MW at POI **402.4** MVAR at POI **146.4**		GEN-2015-064 MW at POI **352.8** MVAR at POI **191.8**		GEN-2015-072 MW at POI **219.6** MVAR at POI **92.4**	
Cont. Name	**From Bus (# & Name)**		**To Bus (# & Name)**		**ID**	**MVAR at POI**	**P.F at POI**	**MVAR at POI**	**P.F at POI**	**MVAR at POI**	**P.F at POI**
FLT06-3PH	530561	KNOLL 3 115.0	530605	REDLIN 3 115.0	CKT 1	-76.1	0.98	-17.5	1.00	-18.0	1.00
FLT07-3PH	530582	S HAYS6 230.0	539679	GRTBEND6 230.0	CKT 1	-80.8	0.98	-25.1	1.00	-25.5	0.99
FLT08-3PH	539679	GRTBEND6 230.0	539695	SPEARVL6 230.0	CKT 1	-82.9	0.98	-26.1	1.00	20.1	1.00
FLT09-3PH	539679	GRTBEND6 230.0	532871	CIRCLE 6 230.0	CKT 1	-79.3	0.98	-23.8	1.00	-4.1	1.00
FLT10-3PH	530584	POSTROCK6 230.0	530583	POSTROCK7 345.0	T/F	-80.5	0.98	-23.6	1.00	27.3	0.99
FLT11-3PH	530583	POSTROCK7 345.0	640065	AXTELL 3 345.0	CKT 1	-77.4	0.98	-21.0	1.00	-7.1	1.00
FLT12-3PH	640065	AXTELL 3 345.0	640374	SWEET W3 345.0	CKT 1	-77.7	0.98	-24.3	1.00	-12.1	1.00
FLT13-3PH	530558	KNOLL 6 230.0	530561	KNOLL 3 115.0	T/F	-83.2	0.98	-26.4	1.00	-41.0	0.98
FLT14-3PH	560336	G10-048-TAP 115.0	530557	BEACH 3 115.0	CKT 1	-73.6	0.98	-13.0	1.00	-16.3	1.00
FLT15-3PH	560336	G10-048-TAP 115.0	530605	REDLIN 3 115.0	CKT 1	-76.0	0.98	-17.6	1.00	-17.9	1.00
FLT16-3PH	530557	BEACH 3 115.0	530556	HOXIE 3 115.0	CKT 1	-73.3	0.98	-13.8	1.00	-17.7	1.00
FLT17-3PH	530555	COLBY 3 115.0	530554	ATWOOD 3 115.0	CKT 1	-77.3	0.98	-20.0	1.00	-17.0	1.00
FLT18-3PH	530555	COLBY 3 115.0	530682	SEGNTP 3 115.0	CKT 1	-80.3	0.98	-23.0	1.00	-17.5	1.00
FLT19-3PH	530555	COLBY 3 115.0	531429	MINGO 3 115.0	CKT 1	-76.0	0.98	-16.9	1.00	-17.3	1.00
FLT20-3PH	531429	MINGO 3 115.0	530559	PH RUN 3 115.0	CKT 1	-81.8	0.98	-24.3	1.00	-17.7	1.00

Generation Interconnection Request Analysis Rated MW of Wind Farms OR at POI (MW) Rated MVAR of Wind Farms OR at POI (MVAR)						GEN-2015-061 AND GEN-2015-065 MW at POI **402.4** MVAR at POI **146.4**		GEN-2015-064 MW at POI **352.8** MVAR at POI **191.8**		GEN-2015-072 MW at POI **219.6** MVAR at POI **92.4**	
Cont. Name	**From Bus (# & Name)**		**To Bus (# & Name)**		**ID**	**MVAR at POI**	**P.F at POI**	**MVAR at POI**	**P.F at POI**	**MVAR at POI**	**P.F at POI**
FLT21-3PH	531429	MINGO 3 115.0	531351	BREWSTR3 115.0	CKT 1	-75.0	0.98	-17.2	1.00	-17.1	1.00
FLT22-3PH	531429	MINGO 3 115.0	531451	MINGO 7 345.0	T/F	-89.4	0.98	-11.9	1.00	-17.0	1.00
FLT23-3PH	531451	MINGO 7 345.0	640325	REDWILO3 345.0	CKT 1	12.4	1.00	36.5	0.99	1.6	1.00
FLT25-3PH	531451	MINGO 7 345.0	531465	SETAB 7 345.0	CKT 1	-13.2	1.00	26.1	1.00	-12.9	1.00
FLT26-3PH	531465	SETAB 7 345.0	531449	HOLCOMB7 345.0	CKT 1	-50.3	0.99	5.8	1.00	-7.4	1.00
FLT27-3PH	531449	HOLCOMB7 345.0	531501	BUCKNER7 345.0	CKT 1	-69.5	0.99	-14.4	1.00	-17.7	1.00
FLT28-3PH	531465	SETAB 7 345.0	531464	SETAB 3 115.0	T/F	-89.5	0.98	-27.1	1.00	-15.5	1.00
FLT29-3PH	640325	REDWILO3 345.0	640183	GENTLMN3 345.0	CKT 1	-79.3	0.98	-20.4	1.00	-16.2	1.00
FLT30-3PH	640325	REDWILO3 345.0	640326	REDWILO7 115.0	T/F	-73.3	0.98	-21.1	1.00	-14.9	1.00
FLT31-3PH	640183	GENTLMN3 345.0	640374	SWEET W3 345.0	CKT 1	-75.0	0.98	-22.0	1.00	-11.9	1.00
FLT32-3PH	530559	PH RUN 3 115.0	530683	SEGUIN 3 115.0	CKT 1	-78.4	0.98	-21.4	1.00	-17.2	1.00
FLT33-3PH	530559	PH RUN 3 115.0	531412	GRINNEL3 115.0	CKT 1	-81.5	0.98	-25.3	1.00	-13.8	1.00
FLT34-3PH	531411	GOVE 3 115.0	531409	ARNOLD3 115.0	CKT 1	-80.9	0.98	-25.0	1.00	-13.4	1.00
FLT35-3PH	531409	ARNOLD3 115.0	531414	RANSOM 3 115.0	CKT 1	-49.4	0.99	-17.4	1.00	-17.9	1.00
FLT36-3PH	530554	ATWOOD 3 115.0	531364	ATWODSW3 115.0	CKT 1	-82.1	0.98	-26.5	1.00	-17.1	1.00

Generation Interconnection Request Analysis Rated MW of Wind Farms OR at POI (MW) Rated MVAR of Wind Farms OR at POI (MVAR)						GEN-2015-061 AND GEN-2015-065 MW at POI **402.4** MVAR at POI **146.4**		GEN-2015-064 MW at POI **352.8** MVAR at POI **191.8**		GEN-2015-072 MW at POI **219.6** MVAR at POI **92.4**	
Cont. Name	**From Bus (# & Name)**		**To Bus (# & Name)**		**ID**	**MVAR at POI**	**P.F at POI**	**MVAR at POI**	**P.F at POI**	**MVAR at POI**	**P.F at POI**
FLT37-3PH	530554	ATWOOD 3 115.0	531488	BVERVLLY 115.0	CKT 1	-81.3	0.98	-24.7	1.00	-17.3	1.00
FLT38-3PH	531449	HOLCOMB7 345.0	523853	FINNEY 7345.0	CKT 1	-53.9	0.99	-8.4	1.00	-4.3	1.00
FLT39-3PH	531449	HOLCOMB7 345.0	531448	HOLCOMB3 115.0	T/F	-80.1	0.98	-21.5	1.00	-16.9	1.00
FLT40-3PH	640183	GENTLMN3 345.0	640252	KEYSTON3 345.0	CKT 1	-83.4	0.98	-26.4	1.00	-18.0	1.00
FLT41-PO	530558	KNOLL 6 230.0	530584	POSTROCK6 230.0	CKT 1	-83.0	0.98	-26.3	1.00	4.5	1.00
	530582	S HAYS6 230.0	530584	POSTROCK6 230.0	CKT 1						
FLT42-PO	539679	GRTBEND6 230.0	532871	CIRCLE 6 230.0	CKT 1	-78.1	0.98	-23.1	1.00	-24.1	0.99
	530582	S HAYS6 230.0	539679	GRTBEND6 230.0	CKT 1						
FLT46-PO	531429	MINGO 3 115.0	531351	BREWSTR3 115.0	CKT 1	-74.6	0.98	-15.2	1.00	-17.4	1.00
	531429	MINGO 3 115.0	530559	PH RUN 3 115.0	CKT 1						
FLT47-PO	531451	MINGO 7 345.0	640325	REDWILO3 345.0	CKT 1	Not Converged	-	Not Converged	-	Not Converged	-
	531451	MINGO 7 345.0	531465	SETAB 7 345.0	CKT 1						
FLT48-PO	531465	SETAB 7 345.0	531451	MINGO 7 345.0	CKT 1	0.6	1.00	48.5	0.99	-14.2	1.00
	531429	MINGO 3 115.0	530555	COLBY 3 115.0	CKT 1						

3.3. Conclusions

The power factor analysis indicates the DISIS-2015-002 (Group 04) interconnection requests i.e., GEN-2015-061, GEN-2015-064, GEN-2015-065, and GEN-2015-072 are required to maintain the SPP standard power factor at the point of interconnection i.e., Mingo 345kV (531451), Mingo 115kV (531429), and South Hays 230kV (530582) based on the contingencies studied.

Per the SPP OATT, the Interconnection Customer will be required to provide 95% lagging (supplying vars) and 95% leading (absorbing vars) at the POI.

4. Inductive Reactive Support Analysis

Analysis for low wind /no wind conditions in cluster scenario is performed for the proposed wind generators requests. To offset the capacitive effects of the collector system and transmission line of the wind farm under low wind or no wind conditions, analysis was performed for Winter-2016 scenario to calculate the Inductive Reactive Support at point of interconnection for each interconnection request under project DISIS-2015-002 (Group 04) .

Following methodology was adopted as communicated by SPP:

1. Switch the generator and capacitor bank (if installed) out of service with the collector system as modeled remaining in service.
2. Calculate the amount of inductive reactive support required at the 34.5kV collector buses which would result in zero VAR flow at the POI."

The inductive reactive support analysis for wind generator GEN-2015-061 performed for winter-2016 scenario which indicates for wind generator GEN-2015-061 performed for winter 2016 scenario which indicates that at POI Mingo 345KV (531451) 26.3 MVAR reactor is required at Bus 584990 to maintain zero MVAR flow at POI. For GEN-2015-064 the analysis indicates that at POI Mingo 115kV (531429) 4.5 MVAR reactor is required at Bus 585020 to maintain zero MVAR flow at POI. For GEN-2015-065 the analysis indicates that at POI Mingo 345kV (531451) 5.9 MVAR reactor is required at Bus 585030 to maintain zero MVAR flow at POI. Similarly, for GEN-2015-072 the analysis indicates that at POI South Hays 230kV (530582) 1.3 MVAR reactor is required at Bus 585090 to maintain zero MVAR flow at POI

Maintaining zero MVar flow at the POI at all times is not possible with static reactor banks. It will be determined on a case by case basis for each generator as to whether additional reactor banks are required for low wind conditions.

The single line diagram for wind generators showing the inductive reactive requirement for GEN-2015-061, GEN-2015-064, GEN-2015-065 and Gen-2015-072 are respectively shown in Figure 4.1.1, 4.1.2, 4.1.3, and 4.1.4:

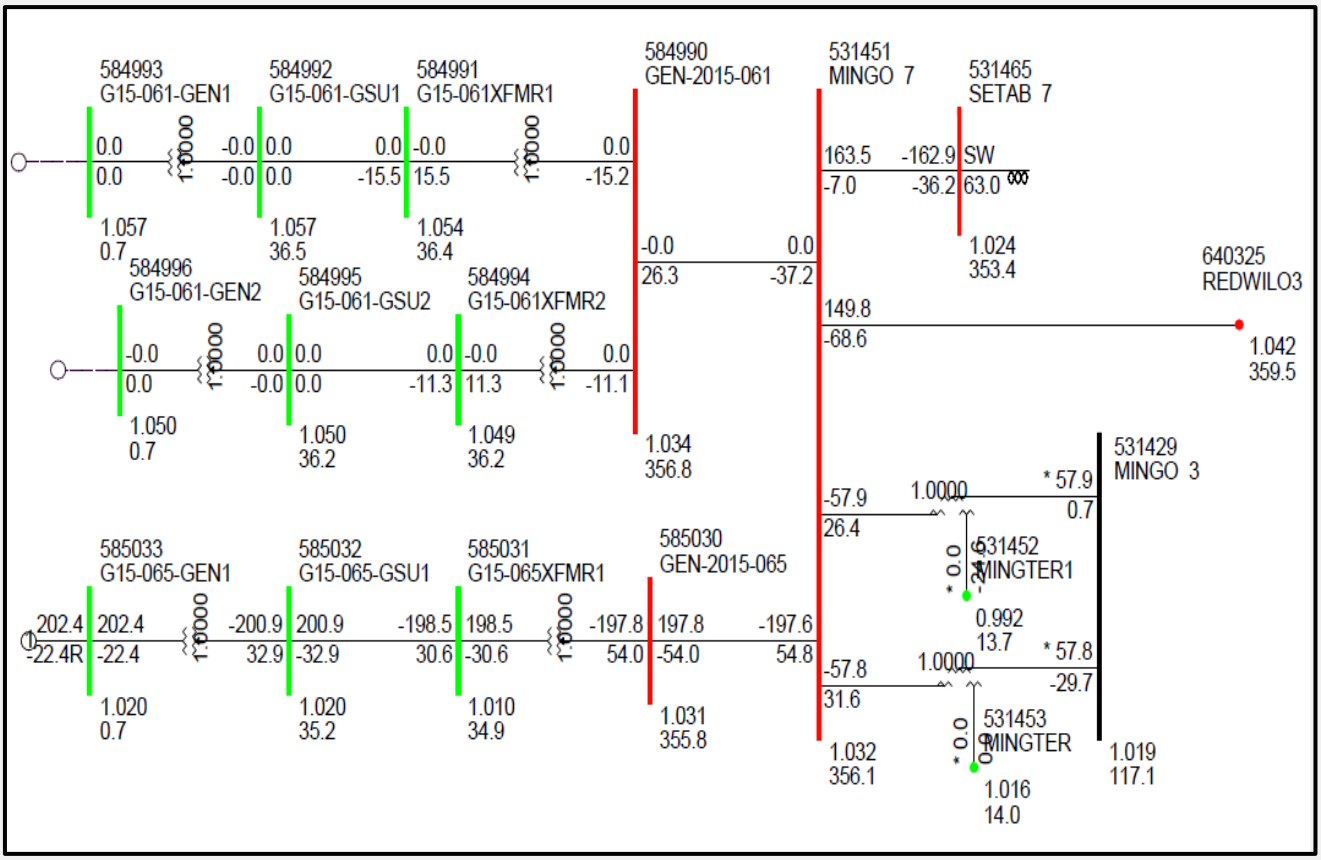

Figure 4.1.1: Inductive reactive requirement for GEN-2015-061

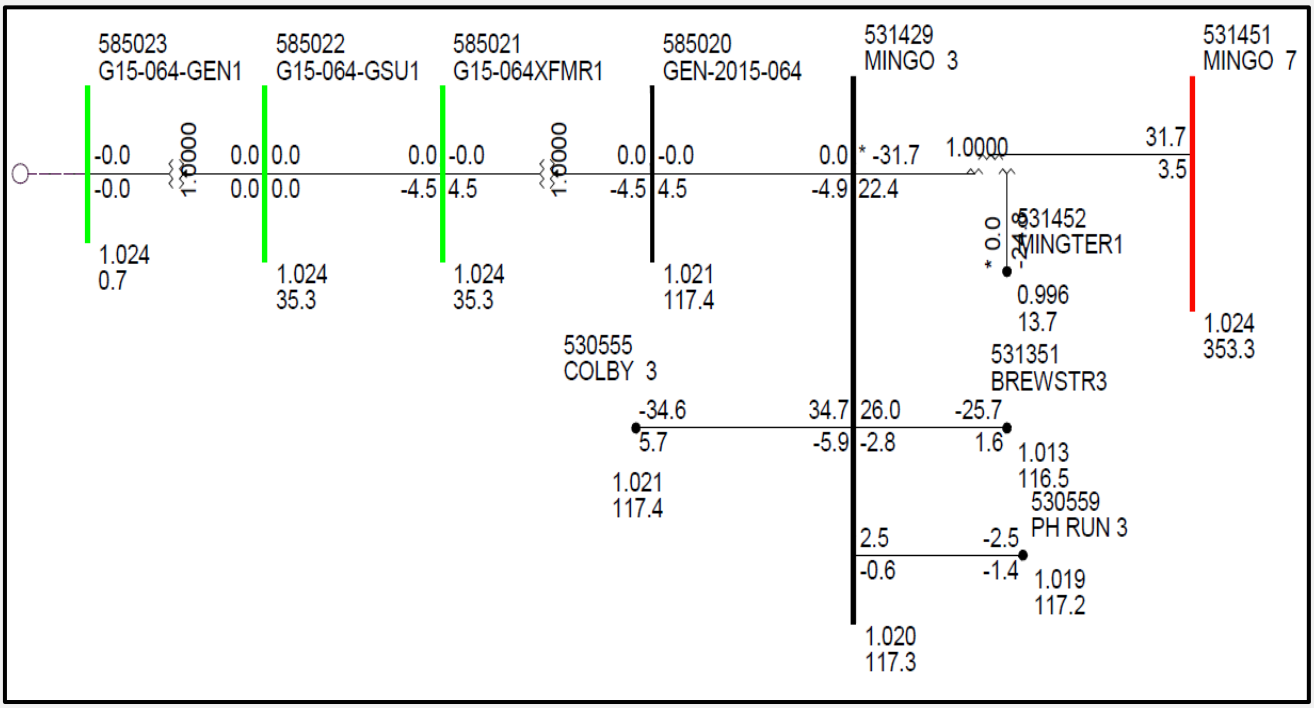

Figure 4.1.2: Inductive reactive requirement for GEN-2015-064

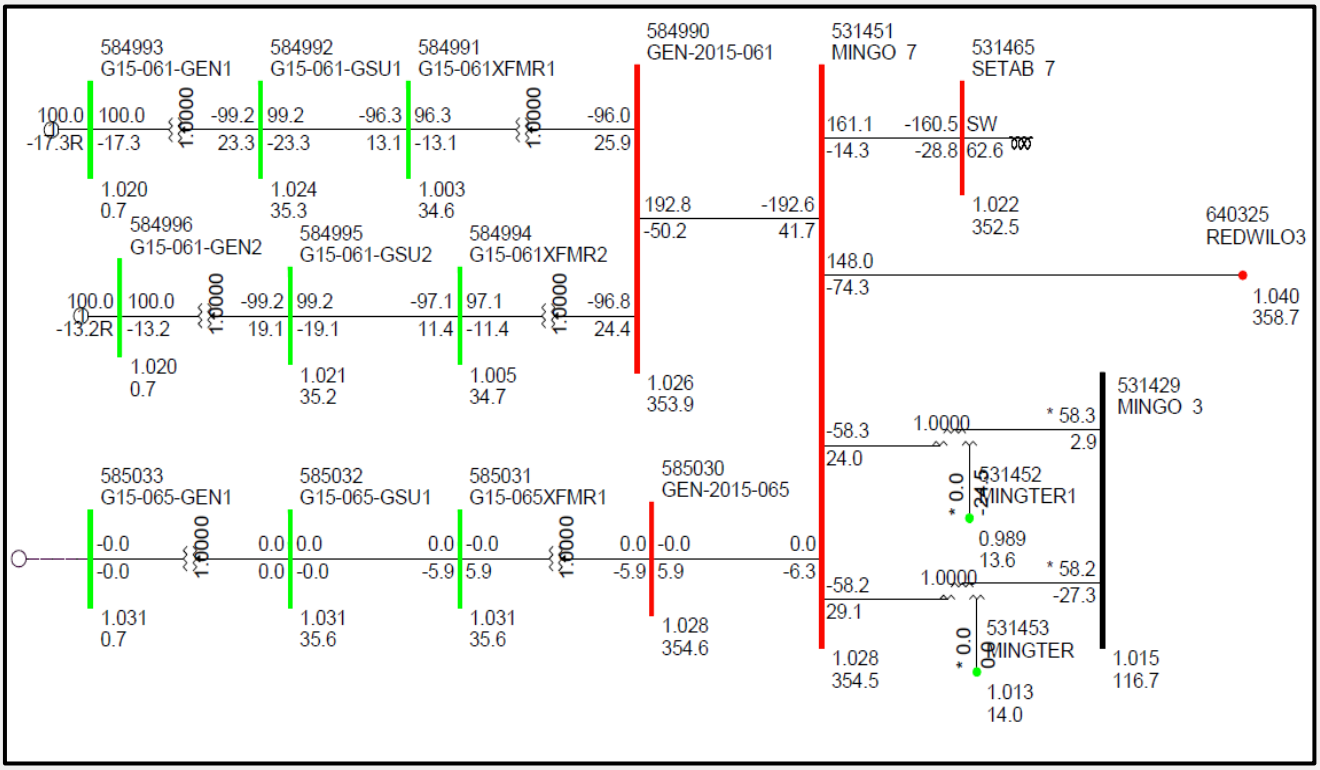

Figure 4.1.3: Inductive reactive requirement for GEN-2015-065

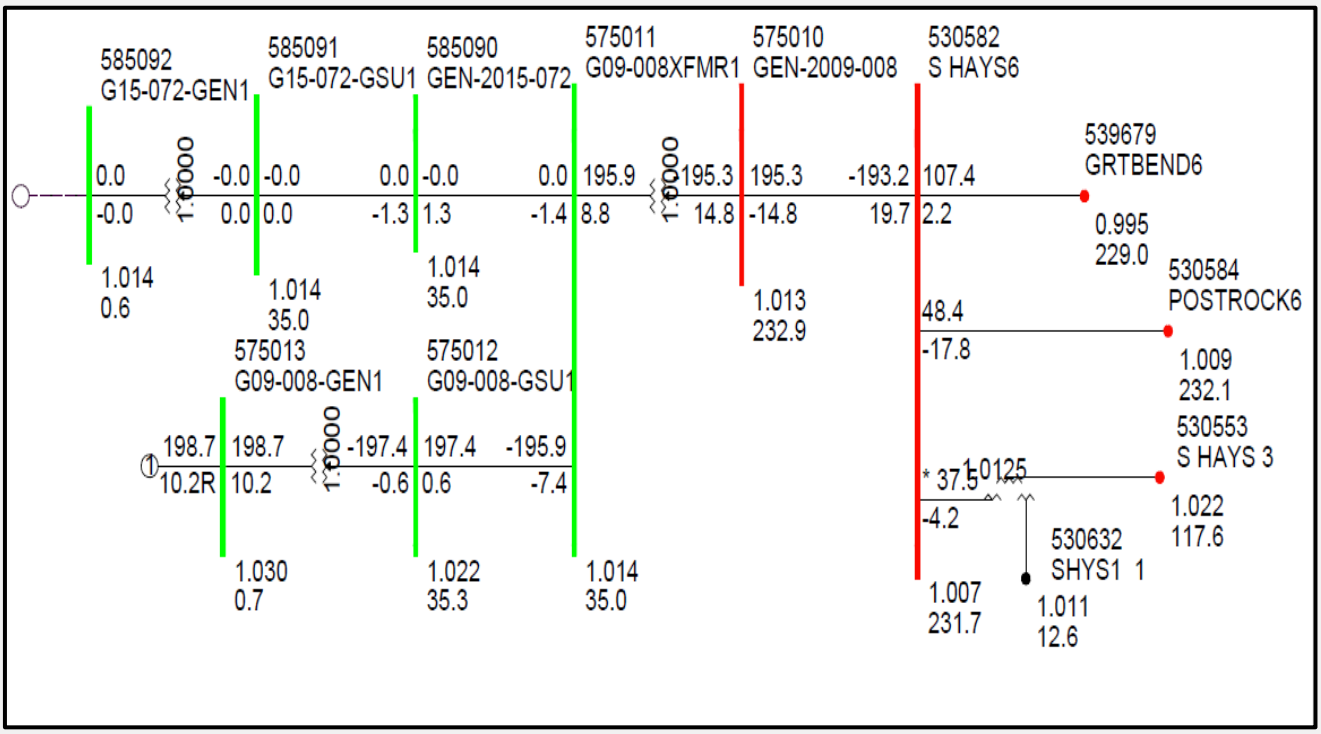

Figure 4.1.4: Inductive reactive requirement for GEN-2015-072

5. Short Circuit Analysis

The short circuit analysis, out five buses away was performed for 2017, and 2025 summer peak case for each interconnection request under project cluster scenario of DISIS-2015-002 (Group 04). No outage was assumed in the system model.

5.1. Short Circuit Result for 2017 Summer Peak Case

The short circuit results for summer-2017 scenario (assumed not outage) at each POI are tabulated below

5.1.1. Short Circuit Result for POI Mingo 345kV (531451)

The results of the short circuit analysis for POI i.e., Short Circuit Result for POI Mingo 345kV (531451) are tabulated below in table 5.1.1.

Table 5.1.1: Short circuit results for Short Circuit Result for POI Mingo 345kV (531451) (GEN-2015-061 & GEN-2015-65)

Bus #	Bus Name	Level Away	Fault Current (Amperes)	
			3 PH	SLG
531451	MINGO 7 345.0	0 Level	6748.8	4173
531429	MINGO 3 115.0	1 Level	13398.9	12305.2
531452	MINGTER1 13.80	1 Level	32742.2	0
531453	MINGTER 13.80	1 Level	32742.2	0
531465	SETAB 7 345.0	1 Level	7814.2	5582.4
584990	GEN-2015-061345.0	1 Level	5625.2	0
585030	GEN-2015-065345.0	1 Level	6113.8	0
640325	REDWILO3 345.0	1 Level	6509.8	5313.1
530555	COLBY 3 115.0	2 Level	6679.4	5999.7
530559	PH RUN 3 115.0	2 Level	5128.5	3871.5
531259	SETAB 1 13.80	2 Level	30821	0
531351	BREWSTR3 115.0	2 Level	3399.4	2145.3
531449	HOLCOMB7 345.0	2 Level	11495.4	10959
531464	SETAB 3 115.0	2 Level	11626.6	12447.5
584991	G15-061XFMR134.50	2 Level	12933.4	0
584994	G15-061XFMR234.50	2 Level	12963	0
585020	GEN-2015-064115.0	2 Level	10462	0

Bus #	Bus Name	Level Away	Fault Current (Amperes)	
			3 PH	SLG
585031	G15-065XFMR134.50	2 Level	23609.2	0
640183	GENTLMN3 345.0	2 Level	14802.9	17173.7
640326	REDWILO7 115.0	2 Level	11446.4	11658.9
640327	REDWILO9 13.80	2 Level	17594.5	0
523853	FINNEY 7345.0	3 Level	11399.6	10792.6
530554	ATWOOD 3 115.0	3 Level	3322.5	2638.6
530644	COLBY 2 69.00	3 Level	4201.1	4140.9
530645	CLBYT1 1 13.80	3 Level	7512.6	6712.9
530682	SEGNTP 3 115.0	3 Level	4821	3680.1
530683	SEGUIN 3 115.0	3 Level	4581.3	3320.8
531353	GOODLND3 115.0	3 Level	2913.7	1827.8
531412	GRINNEL3 115.0	3 Level	4249.5	2986.5
531416	CTYSERT3 115.0	3 Level	10927.2	11201.7
531433	SCOTCTY3 115.0	3 Level	9875	8652.6
531448	HOLCOMB3 115.0	3 Level	23493.9	27143.6
531450	HOLCTER1 13.80	3 Level	20531	0
531501	BUCKNER7 345.0	3 Level	10515.4	6982.9
584992	G15-061-GSU134.50	3 Level	10712.5	0
584995	G15-061-GSU234.50	3 Level	11324	0
585021	G15-064XFMR134.50	3 Level	19188.6	0
585032	G15-065-GSU134.50	3 Level	21818.3	0
640011	GENTLM2G 24.00	3 Level	182475.6	5.3
640082	BEVERLY7 115.0	3 Level	5048.8	4646.5
640184	GENTLMN4 230.0	3 Level	18954.4	23249.9
640185	G.GENT19 13.80	3 Level	31359.8	0
640252	KEYSTON3 345.0	3 Level	8741.9	7503.2
640269	MCCOOK 7 115.0	3 Level	8344.2	8700.3
640365	STOCKVL7 115.0	3 Level	4960.5	4275.1
640374	SWEET W3 345.0	3 Level	10552.2	7452.7

Bus #	Bus Name	Level Away	Fault Current (Amperes)	
			3 PH	SLG
643066	GENTLEMANT2913.80	3 Level	30618.6	0
523118	BUFF_DUNES 7345.0	4 Level	6819.4	5758.9
530556	HOXIE 3 115.0	4 Level	3978.5	3231.5
530646	CLBY34 1 34.50	4 Level	4101.8	0
531256	SCOTCTY1 13.80	4 Level	6681.4	0
531362	MANNGT 3 115.0	4 Level	5603	3928.7
531364	ATWODSW3 115.0	4 Level	2952.6	2175.1
531379	JONES3 115.0	4 Level	11934.9	8982.1
531393	PLYMELL3 115.0	4 Level	8417.7	4719.7
531411	GOVE 3 115.0	4 Level	3318.8	2201.4
531418	CTYSERV3 115.0	4 Level	10669	10065.1
531420	FLETCHR3 115.0	4 Level	7455.2	5689.7
531427	SCOTCTY2 69.00	4 Level	3862.9	4273.7
531432	PILE 3 115.0	4 Level	7144.8	4825.1
531443	GODLNDT3 115.0	4 Level	2898.5	1818.9
531445	GRDNCTY3 115.0	4 Level	15287.9	12876.9
531447	HOLCGEN1 22.00	4 Level	94091.6	66149.4
531469	SPERVIL7 345.0	4 Level	13811.1	13057.7
531485	CNTRLPL3 115.0	4 Level	6631.2	7878.3
531488	BVERVLLY 115.0	4 Level	2649.3	1913.9
531502	CIMRRN 7 345.0	4 Level	8246.5	6085.7
531504	CIMWD2 7 345.0	4 Level	8422.9	0
531512	WALKTAP7 345.0	4 Level	8638.8	6851.7
580049	GEN-2010-045345.0	4 Level	7484	0
584993	G15-061-GEN10.690	4 Level	427334	218309.7
584996	G15-061-GEN20.690	4 Level	444684.6	221154.9
585022	G15-064-GSU134.50	4 Level	18261.6	0
585033	G15-065-GEN10.690	4 Level	863320.8	365227.4
599950	LAMAR7 345.0	4 Level	2654.7	1620.7

Bus #	Bus Name	Level Away	Fault Current (Amperes)	
			3 PH	SLG
640010	GENTLM1G 23.00	4 Level	174666.5	7.5
640017	MCCOOK G 13.80	4 Level	16974.2	0
640065	AXTELL 3 345.0	4 Level	9629.6	7331.1
640083	BEVERLY8 69.00	4 Level	4714.6	5337.6
640100	CAMBRIG7 115.0	4 Level	4419.3	3774.9
640167	ENDERS 7 115.0	4 Level	4028.7	3464.7
640253	KEYSTON7 115.0	4 Level	15143	14716.9
640254	KEYSTON9 13.80	4 Level	18403.4	0
640270	MCCOOK 8 69.00	4 Level	5217.2	6214.3
640286	N.PLATT4 230.0	4 Level	13436.6	13345.8
640287	N.PLATT7 115.0	4 Level	18236.8	20169.8
640302	OGALALA4 230.0	4 Level	8410.8	7249.5
640366	STOCKVL8 69.00	4 Level	3686.9	4008.3
643017	BEVERLY T1 913.80	4 Level	6313.5	0
643018	BEVERLY T2 913.80	4 Level	6158.7	0
643099	MCCOOK T1 913.80	4 Level	6513.1	0
643100	MCCOOK T3 913.80	4 Level	5538.6	0
643146	STOCKVLLET1913.80	4 Level	6287.8	0
652571	GR ISLD3 345.0	4 Level	12615.2	10871.1
659425	SIDNEY1-LNX3345.0	4 Level	6166.8	5499.7
523097	HITCHLAND 7345.0	5 Level	18053.6	15274.2
523114	BUFF_DN_TR1113.20	5 Level	547567.8	0
523115	BUFF_DN_TR2113.20	5 Level	543080.6	0
523116	BUFF_DUNES1134.50	5 Level	28213.3	34464.5
530557	BEACH 3 115.0	5 Level	4413.8	4543.2
530583	POSTROCK7 345.0	5 Level	8499.4	8072.3
530647	CLBY-DSL 13.00	5 Level	9853.4	8029.3
531220	LUDELLT3 115.0	5 Level	2852	2058.8
531254	GC-CITY 13.80	5 Level	9358.5	0

Bus #	Bus Name	Level Away	Fault Current (Amperes)	
			3 PH	SLG
531258	GRDNCYT1 13.80	5 Level	6590.3	0
531262	CNTRLPL1 13.80	5 Level	32716.4	0
531357	RULETON3 115.0	5 Level	2856.7	1819
531360	DIGHTNT3 115.0	5 Level	4006.8	2703.5
531363	MANNING3 115.0	5 Level	4456.3	3008.7
531369	NATWOOD3 115.0	5 Level	2816.1	2047.5
531392	PIONTAP3 115.0	5 Level	7430.5	5846.6
531399	LAKIN3 34.50	5 Level	4611.2	3712.5
531400	PK_GOAB3 115.0	5 Level	5405.1	3834.6
531408	PIERCVL3 115.0	5 Level	4245.2	2321.6
531409	ARNOLD3 115.0	5 Level	3670.4	2716.6
531417	CTYSERV2 69.00	5 Level	1064.6	1331.7
531421	GC-C 1 34.50	5 Level	6402.8	8159.8
531423	GARDNCY2 69.00	5 Level	3959.2	4858.8
531426	JAMESON3 115.0	5 Level	11377.7	8386.3
531428	LEOTI 3 115.0	5 Level	4693.7	3542.5
531440	WILLIAM3 115.0	5 Level	4130.7	2789.5
531444	GOODCTY3 115.0	5 Level	2324.1	1438.1
531459	S2 GEN 1 13.80	5 Level	55359.6	58815.7
531461	S4 GEN 1 13.20	5 Level	42894.1	44862.9
531462	S5 GEN 1 13.20	5 Level	40670.1	42283.1
531468	SPERTER1 13.80	5 Level	15770.2	0
531476	SWNDTAP3 115.0	5 Level	8322.1	5903.9
531480	KSAVWTP3 115.0	5 Level	14732.6	12157.5
531486	CNTRLPL2 34.50	5 Level	12736	11840.7
531487	MCDONLD3 115.0	5 Level	2546.1	1804.8
531489	ONEOK 3 115.0	5 Level	2138.5	1459.7
531493	GANO 3 115.0	5 Level	7485.1	4935.2
531500	FLETCHER-T 13.20	5 Level	8126.9	0

Bus #	Bus Name	Level Away	Fault Current (Amperes)	
			3 PH	SLG
531503	CIMRRN 1 34.50	5 Level	17542.3	19408.9
531505	CIMWD2 1 34.50	5 Level	25784	0
531510	WALKTAP3 115.0	5 Level	11186.5	12609.5
531511	WALKETP-T 13.80	5 Level	30152.6	0
539695	SPEARVL6 230.0	5 Level	13002.4	13618.8
539759	SPRVL 3 115.0	5 Level	12334	13861.4
539803	IRONWOOD7 345.0	5 Level	13372.7	12508.8
539960	SPRVL-T 13.80	5 Level	31018.9	0
560002	IRONWOOD7 345.0	5 Level	13401.9	12491.7
560014	G14-059-TAP 230.0	5 Level	6221.3	4690.3
562334	G13-010-TAP 345.0	5 Level	8131.1	6294.2
580050	G10-045XFMR134.50	5 Level	13400.6	0
580051	G10-045XFMR234.50	5 Level	13253	0
585023	G15-064-GEN10.690	5 Level	753626.4	360389.9
640018	N.PLATTG 13.80	5 Level	19627.7	1793.9
640066	AXTELL 7 115.0	5 Level	14720.7	15181.6
640067	AXTELL 9 13.80	5 Level	26221.1	0
640093	C.CREEK4 230.0	5 Level	7527.5	7616.3
640101	CAMBRIG8 69.00	5 Level	2497.3	2838.8
640168	ENDERS 8 69.00	5 Level	3439.1	3595.2
640194	GOSPER 7 115.0	5 Level	4643.8	3769.2
640200	GR ISLD4 230.0	5 Level	17390.3	17977.2
640238	JEFFREY7 115.0	5 Level	6397.1	5635.7
640255	KINGSLY7 115.0	5 Level	9522	8295.5
640265	MALONEY7 115.0	5 Level	11584.6	10373.2
640267	MAXWELS7 115.0	5 Level	6453.8	4382.5
640271	MCCOOL 3 345.0	5 Level	10991.4	8950.2
640288	N.PLATT8 69.00	5 Level	5829.9	6977.1
640289	N.PLATT9 34.50	5 Level	7796.9	9494.1

Bus #	Bus Name	Level Away	Fault Current (Amperes)	
			3 PH	SLG
640290	N.PT8 9 13.80	5 Level	27510.7	0
640291	N.PT9 9 13.80	5 Level	27510.7	0
640304	OGALALANPPD7115.0	5 Level	15175.3	13619.5
640312	PAULINE3 345.0	5 Level	8492.6	6632.8
641244	ATHEY 7 115.0	5 Level	3297.1	2450.3
643028	CAMBRIDGET1913.80	5 Level	5124.1	0
643055	ENDERS T1 913.80	5 Level	5756.1	0
643071	GR ISLD T6 913.80	5 Level	41233.2	0
643106	NORTHPLT T2913.80	5 Level	6735.2	0
643107	NORTHPLT T7913.80	5 Level	9042.4	0
643115	OGALLALA T1913.80	5 Level	20470.2	0
652314	GR ISL19 13.80	5 Level	28871.3	0
652316	GR ISL29 13.80	5 Level	28987.7	0
652871	GR ISLD-LNX3345.0	5 Level	12615.2	10871.1
659133	SIDNEY 3 345.0	5 Level	6166.8	5499.7
659800	GRANTNB7 115.0	5 Level	6701.5	4812.4

5.1.2. Short Circuit Result for POI Mingo 115kV (531429)

The results of the short circuit analysis for POI i.e., Mingo 115kV (531429) are tabulated below in table 5.1.2.

Table 5.1.2: Short circuit results for Mingo 115kV (531429) (GEN-2015-064)

Bus #	Bus Name	Level Away	Fault Current (Amperes)	
			3 PH	SLG
531429	MINGO 3 115.0	0 Level	13398.9	12305.2
530555	COLBY 3 115.0	1 Level	6679.4	5999.7
530559	PH RUN 3 115.0	1 Level	5128.5	3871.5
531351	BREWSTR3 115.0	1 Level	3399.4	2145.3
531451	MINGO 7 345.0	1 Level	6748.8	4173
531452	MINGTER1 13.80	1 Level	32742.2	0

Bus #	Bus Name	Level Away	Fault Current (Amperes)	
			3 PH	SLG
531453	MINGTER 13.80	1 Level	32742.2	0
585020	GEN-2015-064115.0	1 Level	10462	0
530554	ATWOOD 3 115.0	2 Level	3322.5	2638.6
530644	COLBY 2 69.00	2 Level	4201.1	4140.9
530645	CLBYT1 1 13.80	2 Level	7512.6	6712.9
530682	SEGNTP 3 115.0	2 Level	4821	3680.1
530683	SEGUIN 3 115.0	2 Level	4581.3	3320.8
531353	GOODLND3 115.0	2 Level	2913.7	1827.8
531412	GRINNEL3 115.0	2 Level	4249.5	2986.5
531465	SETAB 7 345.0	2 Level	7814.2	5582.4
584990	GEN-2015-061345.0	2 Level	5625.2	0
585021	G15-064XFMR134.50	2 Level	19188.6	0
585030	GEN-2015-065345.0	2 Level	6113.8	0
640325	REDWILO3 345.0	2 Level	6509.8	5313.1
530556	HOXIE 3 115.0	3 Level	3978.5	3231.5
530646	CLBY34 1 34.50	3 Level	4101.8	0
531259	SETAB 1 13.80	3 Level	30821	0
531364	ATWODSW3 115.0	3 Level	2952.6	2175.1
531411	GOVE 3 115.0	3 Level	3318.8	2201.4
531443	GODLNDT3 115.0	3 Level	2898.5	1818.9
531449	HOLCOMB7 345.0	3 Level	11495.4	10959
531464	SETAB 3 115.0	3 Level	11626.6	12447.5
531488	BVERVLLY 115.0	3 Level	2649.3	1913.9
584991	G15-061XFMR134.50	3 Level	12933.4	0
584994	G15-061XFMR234.50	3 Level	12963	0
585022	G15-064-GSU134.50	3 Level	18261.6	0
585031	G15-065XFMR134.50	3 Level	23609.2	0
640183	GENTLMN3 345.0	3 Level	14802.9	17173.7
640326	REDWILO7 115.0	3 Level	11446.4	11658.9

Bus #	Bus Name	Level Away	Fault Current (Amperes)	
			3 PH	SLG
640327	REDWILO9 13.80	3 Level	17594.5	0
523853	FINNEY 7345.0	4 Level	11399.6	10792.6
530557	BEACH 3 115.0	4 Level	4413.8	4543.2
530647	CLBY-DSL 13.00	4 Level	9853.4	8029.3
531220	LUDELLT3 115.0	4 Level	2852	2058.8
531357	RULETON3 115.0	4 Level	2856.7	1819
531369	NATWOOD3 115.0	4 Level	2816.1	2047.5
531409	ARNOLD3 115.0	4 Level	3670.4	2716.6
531416	CTYSERT3 115.0	4 Level	10927.2	11201.7
531433	SCOTCTY3 115.0	4 Level	9875	8652.6
531444	GOODCTY3 115.0	4 Level	2324.1	1438.1
531448	HOLCOMB3 115.0	4 Level	23493.9	27143.6
531450	HOLCTER1 13.80	4 Level	20531	0
531487	MCDONLD3 115.0	4 Level	2546.1	1804.8
531489	ONEOK 3 115.0	4 Level	2138.5	1459.7
531501	BUCKNER7 345.0	4 Level	10515.4	6982.9
584992	G15-061-GSU134.50	4 Level	10712.5	0
584995	G15-061-GSU234.50	4 Level	11324	0
585023	G15-064-GEN10.690	4 Level	753626.4	360389.9
585032	G15-065-GSU134.50	4 Level	21818.3	0
640011	GENTLM2G 24.00	4 Level	182475.6	5.3
640082	BEVERLY7 115.0	4 Level	5048.8	4646.5
640184	GENTLMN4 230.0	4 Level	18954.4	23249.9
640185	G.GENT19 13.80	4 Level	31359.8	0
640252	KEYSTON3 345.0	4 Level	8741.9	7503.2
640269	MCCOOK 7 115.0	4 Level	8344.2	8700.3
640365	STOCKVL7 115.0	4 Level	4960.5	4275.1
640374	SWEET W3 345.0	4 Level	10552.2	7452.7
643066	GENTLEMANT2913.80	4 Level	30618.6	0

Bus #	Bus Name	Level Away	Fault Current (Amperes)	
			3 PH	SLG
523118	BUFF_DUNES 7345.0	5 Level	6819.4	5758.9
531221	LUDELL 3 115.0	5 Level	2845.3	2052.7
531256	SCOTCTY1 13.80	5 Level	6681.4	0
531356	NSI TAP3 115.0	5 Level	2637.8	1664.9
531362	MANNGT 3 115.0	5 Level	5603	3928.7
531365	BIRDCTY3 115.0	5 Level	2266.1	1579.3
531367	HERNDON3 115.0	5 Level	2631.2	1812.9
531368	LAWNRID3 115.0	5 Level	2395.1	1548
531379	JONES3 115.0	5 Level	11934.9	8982.1
531386	GRHMSUB3 115.0	5 Level	4020.4	3628
531387	HILLCTY3 34.50	5 Level	5070.1	0
531393	PLYMELL3 115.0	5 Level	8417.7	4719.7
531414	RANSOM 3 115.0	5 Level	3663.5	2975.3
531418	CTYSERV3 115.0	5 Level	10669	10065.1
531420	FLETCHR3 115.0	5 Level	7455.2	5689.7
531427	SCOTCTY2 69.00	5 Level	3862.9	4273.7
531432	PILE 3 115.0	5 Level	7144.8	4825.1
531445	GRDNCTY3 115.0	5 Level	15287.9	12876.9
531447	HOLCGEN1 22.00	5 Level	94091.6	66149.4
531469	SPERVIL7 345.0	5 Level	13811.1	13057.7
531485	CNTRLPL3 115.0	5 Level	6631.2	7878.3
531502	CIMRRN 7 345.0	5 Level	8246.5	6085.7
531504	CIMWD2 7 345.0	5 Level	8422.9	0
531512	WALKTAP7 345.0	5 Level	8638.8	6851.7
560336	G10-048-TAP 115.0	5 Level	4509.2	3623.3
580049	GEN-2010-045345.0	5 Level	7484	0
584250	GEN-2014-041115.0	5 Level	3312	0
584993	G15-061-GEN10.690	5 Level	427334	218309.7
584996	G15-061-GEN20.690	5 Level	444684.6	221154.9

Bus #	Bus Name	Level Away	Fault Current (Amperes)	
			3 PH	SLG
585033	G15-065-GEN10.690	5 Level	863320.8	365227.4
599950	LAMAR7 345.0	5 Level	2654.7	1620.7
640010	GENTLM1G 23.00	5 Level	174666.5	7.5
640017	MCCOOK G 13.80	5 Level	16974.2	0
640065	AXTELL 3 345.0	5 Level	9629.6	7331.1
640083	BEVERLY8 69.00	5 Level	4714.6	5337.6
640100	CAMBRIG7 115.0	5 Level	4419.3	3774.9
640167	ENDERS 7 115.0	5 Level	4028.7	3464.7
640253	KEYSTON7 115.0	5 Level	15143	14716.9
640254	KEYSTON9 13.80	5 Level	18403.4	0
640270	MCCOOK 8 69.00	5 Level	5217.2	6214.3
640286	N.PLATT4 230.0	5 Level	13436.6	13345.8
640287	N.PLATT7 115.0	5 Level	18236.8	20169.8
640302	OGALALA4 230.0	5 Level	8410.8	7249.5
640366	STOCKVL8 69.00	5 Level	3686.9	4008.3
643017	BEVERLY T1 913.80	5 Level	6313.5	0
643018	BEVERLY T2 913.80	5 Level	6158.7	0
643099	MCCOOK T1 913.80	5 Level	6513.1	0
643100	MCCOOK T3 913.80	5 Level	5538.6	0
643146	STOCKVLLET1913.80	5 Level	6287.8	0
652571	GR ISLD3 345.0	5 Level	12615.2	10871.1
659425	SIDNEY1-LNX3345.0	5 Level	6166.8	5499.7

5.1.3. Short Circuit Result for POI South Hays 230kV (530582)

The results of the short circuit analysis for POI i.e., South Hays 230kV (530582) are tabulated below in table 5.1.3.

Table 5.1.3: Short circuit results for South Hays 230kV (530582) (GEN-2015-072)

Bus #	Bus Name	Level Away	Fault Current (Amperes)	
			3 PH	SLG

Bus #	Bus Name	Level Away	Fault Current (Amperes)	
			3 PH	SLG
530582	S HAYS6 230.0	0 Level	9400.6	8830.3
530553	S HAYS 3 115.0	1 Level	9260.9	9843.1
530584	POSTROCK6 230.0	1 Level	11880.5	13493.8
530632	SHYS1 1 12.47	1 Level	18584.8	0
539679	GRTBEND6 230.0	1 Level	9035.5	9748.5
575010	GEN-2009-008230.0	1 Level	4936.9	0
530552	GORHAM 3 115.0	2 Level	3389	2365.9
530558	KNOLL 6 230.0	2 Level	11697.7	13119.5
530583	POSTROCK7 345.0	2 Level	8499.4	8072.3
530673	POSTROCK1 13.80	2 Level	85928.6	0
530680	HEIZER 6 230.0	2 Level	8985	9715.5
530695	CHETOLAH3 115.0	2 Level	9386.1	9559.4
532871	CIRCLE 6 230.0	2 Level	9298.1	9649.2
539678	GRTBEND3 115.0	2 Level	12564.4	14715.5
539695	SPEARVL6 230.0	2 Level	13002.4	13618.8
539920	GRTBNDTT 13.80	2 Level	37642.7	0
575011	G09-008XFMR134.50	2 Level	19089.3	0
579470	GEN-2008-092230.0	2 Level	8636.9	0
530561	KNOLL 3 115.0	3 Level	12193	14221.1
530592	SMOKYHL6 230.0	3 Level	7529.9	7276.1
530601	HEIZER 3 115.0	3 Level	12412	14113.1
530626	HZRT1 1 12.50	3 Level	18280.7	0
530629	KNLL1 1 11.49	3 Level	41420.2	0
530684	RUSLPMP3 115.0	3 Level	2213.5	1397.6
530686	RICE 6 230.0	3 Level	5068.5	5596.5
530693	VINETAP3 115.0	3 Level	9447	9486.8
530694	VINE2 3 115.0	3 Level	8908.4	8865.5
531468	SPERTER1 13.80	3 Level	15770.2	0
531469	SPERVIL7 345.0	3 Level	13811.1	13057.7

Bus #	Bus Name	Level Away	Fault Current (Amperes)	
			3 PH	SLG
532872	EMCPHER6 230.0	3 Level	8420.9	9478.2
532892	CIRCLE 1 13.80	3 Level	52471.1	0
533413	CIRCLE 3 115.0	3 Level	19689.9	24552.1
539642	ELLSWTP3 115.0	3 Level	4251.6	3679.4
539666	GBENDTP3 115.0	3 Level	7859.6	6575.1
539677	GRTBEND1 13.80	3 Level	59329.6	45408
539681	N-GBEND3 115.0	3 Level	8463.6	8139
539684	OTISSUB3 115.0	3 Level	3159.8	2768
539694	SPEARVL3 115.0	3 Level	11120.8	12374.3
539719	GRTBEND1 34.50	3 Level	4136.1	5115.4
539743	SPWIND-T1 13.80	3 Level	40156	0
539744	SPWIND-T2 13.80	3 Level	34835.6	0
539752	GPEWIND1 34.50	3 Level	28529.3	32437.6
539921	GRTBENDT 7.200	3 Level	13541.8	0
539935	SPERVLTT 13.80	3 Level	35181.3	0
562334	G13-010-TAP 345.0	3 Level	8131.1	6294.2
575012	G09-008-GSU134.50	3 Level	18342.3	0
579471	G08-092XFMR134.50	3 Level	13334.5	0
579474	G08-092XFMR234.50	3 Level	13318.1	0
585090	GEN-2015-07234.50	3 Level	14475.1	0
640065	AXTELL 3 345.0	3 Level	9629.6	7331.1
530551	SALINE 3 115.0	4 Level	5420	4492.1
530563	HEIZER 2 69.00	4 Level	8755.7	10326.6
530581	N HAYS3 115.0	4 Level	10696.5	10875.9
530591	VINE 3 115.0	4 Level	9342.4	9291.9
530593	SMKYP1 6 230.0	4 Level	6557.5	6284.5
530599	SMKYP2 6 230.0	4 Level	6992.7	6835.7
530602	LAXTAP 3 115.0	4 Level	4461.9	3657.7
530605	REDLIN 3 115.0	4 Level	4542.2	3382.5

Bus #	Bus Name	Level Away	Fault Current (Amperes)	
			3 PH	SLG
530609	HZRNGPL3 115.0	4 Level	8143.1	7130.5
530623	RICE 3 115.0	4 Level	6859.6	8249.1
530627	HZRT2 1 12.50	4 Level	12645.2	0
530628	HZRT3 1 12.50	4 Level	10119.2	0
530676	GMEC 3 115.0	4 Level	11639.7	13136.6
530677	OGALATP3 115.0	4 Level	2840.6	2393.4
530687	RICET1 12.47	4 Level	18909.9	0
530688	BUFLOCRK6 230.0	4 Level	3780.7	4096.6
531501	BUCKNER7 345.0	4 Level	10515.4	6982.9
532873	SUMMIT 6 230.0	4 Level	14075.5	15133.1
532894	EMCPHER1 13.80	4 Level	56222.3	0
533412	ARKVALJ3 115.0	4 Level	10676	8136.7
533416	RENO 3 115.0	4 Level	23459.7	27102
533417	EMCPHER3 115.0	4 Level	12108.4	13232
533419	HEC 3 115.0	4 Level	18444.5	21571.8
533421	HEC GT 3 115.0	4 Level	19156.6	23705.9
533422	HEC U4 3 115.0	4 Level	18677.2	22728
539643	ROLLHLS3 115.0	4 Level	3896.3	3324.4
539661	24-FREY3 115.0	4 Level	5848.9	5110.7
539692	SEWARD 3 115.0	4 Level	5831.1	4894
539701	RUSSELL3 115.0	4 Level	3735.1	3332
539721	N-GBEND1 34.50	4 Level	3178.2	3137.8
539723	OTISSUB1 34.50	4 Level	1657	2154.2
539732	SPEARVL1 34.50	4 Level	988.1	1294.6
539759	SPRVL 3 115.0	4 Level	12334	13861.4
539771	NFTDODG3 115.0	4 Level	13190.1	14276.5
539803	IRONWOOD7 345.0	4 Level	13372.7	12508.8
539923	NGBEND-T 13.80	4 Level	7112	0
539925	OTIS1-T 2.400	4 Level	54856.3	0.1

Bus #	Bus Name	Level Away	Fault Current (Amperes)	
			3 PH	SLG
539926	OTIS2-T 2.400	4 Level	29141	0.1
539936	SPERVLDT 3.984	4 Level	15007.1	0
539960	SPRVL-T 13.80	4 Level	31018.9	0
560002	IRONWOOD7 345.0	4 Level	13401.9	12491.7
575013	G09-008-GEN10.690	4 Level	781499.4	435743.3
579472	G08-092-GSU134.50	4 Level	12734.3	0
579475	G08-092-GSU234.50	4 Level	12272.2	0
583600	GEN-2013-010345.0	4 Level	8131.1	6294.2
585091	G15-072-GSU134.50	4 Level	13640.2	0
599019	GPW-CB2 34.50	4 Level	24260.7	0
599028	SPEARVLE-LVB34.50	4 Level	19764.4	0
640066	AXTELL 7 115.0	4 Level	14720.7	15181.6
640067	AXTELL 9 13.80	4 Level	26221.1	0
640312	PAULINE3 345.0	4 Level	8492.6	6632.8
640374	SWEET W3 345.0	4 Level	10552.2	7452.7
530560	WKNNY 3 115.0	5 Level	2391.1	2113.5
530568	GB NTH 2 69.00	5 Level	6899.4	6497.9
530586	ALBERT 2 69.00	5 Level	3828	2746.8
530587	WSPRTTP2 69.00	5 Level	6120.1	5593.4
530590	BEMIS 3 115.0	5 Level	4322.4	3302.7
530595	SHP134 1 34.50	5 Level	19724.6	24592.6
530603	LACROS 3 115.0	5 Level	3868.7	2977.3
530604	SHP234 1 34.50	5 Level	25449.8	33730.3
530608	NEKOMA 3 115.0	5 Level	4361.7	4043
530618	HUNTSVL3 115.0	5 Level	4311.9	3004.1
530620	LYONS 3 115.0	5 Level	5678.6	5016.8
530633	SMKYT1 1 13.20	5 Level	43577.5	0
530634	SMKYT2 1 13.86	5 Level	52178.7	0
530674	GMECG1 1 13.80	5 Level	29661.5	33289.4

Bus #	Bus Name	Level Away	Fault Current (Amperes)	
			3 PH	SLG
530675	GMECG2 1 13.80	5 Level	31370.5	31032.6
530679	SEWRDMW3 115.0	5 Level	5209.1	4404.8
530681	BUSHTON3 115.0	5 Level	5263.1	4990
530689	BUFLOCRK1 34.50	5 Level	25660.8	34593
530691	BUFCRKT11 12.47	5 Level	52082.8	0
531449	HOLCOMB7 345.0	5 Level	11495.4	10959
531492	OG ONEOK 115.0	5 Level	2305.7	1813.8
531502	CIMRRN 7 345.0	5 Level	8246.5	6085.7
531504	CIMWD2 7 345.0	5 Level	8422.9	0
532694	HEC U4 18.00	5 Level	45438.5	0
532696	HEC GT2 13.80	5 Level	30916.4	0
532697	HEC GT3 13.80	5 Level	20093.4	0
532698	HEC GT4 13.80	5 Level	27618.4	0
532771	RENO 7 345.0	5 Level	11718.6	11227.7
532773	SUMMIT 7 345.0	5 Level	11173.8	10746.7
532807	RENO 1X1 14.40	5 Level	44767.7	0
532810	RENO 2X1 14.40	5 Level	44586.8	0
532813	SUMMIT 1 14.40	5 Level	38420.8	0
532874	UNIONRG6 230.0	5 Level	9608.8	7399.6
532896	SUMIT2 1 13.80	5 Level	50776.2	0
532897	SUMIT3 1 13.80	5 Level	53759.2	0
533381	SUMMIT 3 115.0	5 Level	18277.1	21940.6
533411	ARKVAL 3 115.0	5 Level	10472.6	8036.8
533415	DAVIS 3 115.0	5 Level	8876	7649.9
533426	MANVILE3 115.0	5 Level	9019.5	9444.7
533427	REFINRY3 115.0	5 Level	11196.8	11965.9
533429	MOUNDRG3 115.0	5 Level	7704.4	7008.8
533438	WMCPHER3 115.0	5 Level	11774	12797.1
533440	43LORAN 115.0	5 Level	13325.2	11911.1

Bus #	Bus Name	Level Away	Fault Current (Amperes)	
			3 PH	SLG
533445	HEC 1 34.50	5 Level	3051.7	0
533513	HEC 2 69.00	5 Level	8485.2	10275.3
539660	EHALLTP3 115.0	5 Level	3500	3657.4
539671	FTDODGE3 115.0	5 Level	13142.2	14294.8
539686	PLAINVL3 115.0	5 Level	4036.9	3884.5
539688	S-DODGE3 115.0	5 Level	8995.1	8049.1
539689	2ND-KS 3 115.0	5 Level	5279.2	4558.1
539696	ST-JOHN3 115.0	5 Level	5290.5	4522
539698	WALDO 3 115.0	5 Level	2988.7	2528.6
539703	RUSSELL1 34.50	5 Level	3009.7	3671.5
539707	24-FREY1 34.50	5 Level	3233.1	3491.8
539758	FORD 3 115.0	5 Level	6045.8	4787.2
539800	CLARKCOUNTY7345.0	5 Level	12543.8	9106.2
539807	IRONWOOD 1 34.50	5 Level	27000.6	34239.2
539808	IRONWOOD T1 13.80	5 Level	52204.6	0
539907	24-FREYT 13.80	5 Level	4169	0
539943	RUSSEL-T 7.200	5 Level	11109.9	0
560062	G15-088-TAP 345.0	5 Level	11567.3	7624.4
560336	G10-048-TAP 115.0	5 Level	4509.2	3623.3
579473	G08-092-GEN10.690	5 Level	491607.8	228816.6
579476	G08-092-GEN20.690	5 Level	478867	227015.6
579480	GEN-2008-124345.0	5 Level	12948.1	0
580049	GEN-2010-045345.0	5 Level	7484	0
582016	GEN-2011-016345.0	5 Level	7781.3	0
583601	G13-010XFMR134.50	5 Level	14464.3	0
585092	G15-072-GEN10.550	5 Level	267131.5	0.7
599020	GPW_G1 0.690	5 Level	894007.1	373718.7
599029	SPEARVLE-WTG0.690	5 Level	777942.5	378843.1
640183	GENTLMN3 345.0	5 Level	14802.9	17173.7

Bus #	Bus Name	Level Away	Fault Current (Amperes)	
			3 PH	SLG
640224	HOLDREG7 115.0	5 Level	6679	6460.1
640250	KEARNEY7 115.0	5 Level	12246.1	11772.6
640275	MINDEN 7 115.0	5 Level	7612.1	6745.1
640313	PAULINE7 115.0	5 Level	17250.3	15745.9
640315	PAULINE9 13.80	5 Level	18988.8	0
652571	GR ISLD3 345.0	5 Level	12615.2	10871.1

5.2. Short Circuit Result for 2025 Summer Peak Case

The short circuit results for summer-2025 scenario (assumed not outage) at each POI are tabulated below

5.2.1. Short Circuit Result for POI Mingo 345kV (531451)

The results of the short circuit analysis for POI i.e., Short Circuit Result for POI Mingo 345kV (531451) are tabulated below in table 5.2.1.

Table 5.2.1: Short circuit results for Short Circuit Result for POI Mingo 345kV (531451) (GEN-2015-061 & GEN-2015-65)

Bus #	Bus Name	Level Away	Fault Current (Amperes)	
			3 PH	SLG
531451	MINGO 7 345.0	0 Level	6780	5201.2
531429	MINGO 3 115.0	1 Level	13432.5	14351.5
531452	MINGTER1 13.80	1 Level	32765.7	0
531453	MINGTER 13.80	1 Level	32765.7	0
531465	SETAB 7 345.0	1 Level	7840.8	5591.5
584990	GEN-2015-061345.0	1 Level	5646.3	0
585030	GEN-2015-065345.0	1 Level	6139.2	0
640325	REDWILO3 345.0	1 Level	6598.8	5479.5
530555	COLBY 3 115.0	2 Level	6685.8	6082.7
530559	PH RUN 3 115.0	2 Level	5132.5	3908.2
531259	SETAB 1 13.80	2 Level	30842	0
531351	BREWSTR3 115.0	2 Level	3401.2	2176.1

Bus #	Bus Name	Level Away	Fault Current (Amperes)	
			3 PH	SLG
531449	HOLCOMB7 345.0	2 Level	11544.9	10989.1
531464	SETAB 3 115.0	2 Level	11650.8	12465.9
584991	G15-061XFMR134.50	2 Level	12941.8	0
584994	G15-061XFMR234.50	2 Level	12971.5	0
585020	GEN-2015-064115.0	2 Level	10481.6	0
585031	G15-065XFMR134.50	2 Level	23640	0
640183	GENTLMN3 345.0	2 Level	15940.6	18295.5
640326	REDWILO7 115.0	2 Level	11543.3	11824.3
640327	REDWILO9 13.80	2 Level	17622.6	0
523853	FINNEY 7345.0	3 Level	11448.2	10821.6
530554	ATWOOD 3 115.0	3 Level	3323.8	2645.2
530644	COLBY 2 69.00	3 Level	4202.1	4156.6
530645	CLBYT1 1 13.80	3 Level	7512.8	6713
530682	SEGNTP 3 115.0	3 Level	4823.9	3696.8
530683	SEGUIN 3 115.0	3 Level	4584	3337.3
531353	GOODLND3 115.0	3 Level	2914.9	1843.4
531412	GRINNEL3 115.0	3 Level	4252.3	3004.6
531416	CTYSERT3 115.0	3 Level	10948.2	11216.4
531433	SCOTCTY3 115.0	3 Level	9895.6	8663.1
531448	HOLCOMB3 115.0	3 Level	23675.8	27305.3
531450	HOLCTER1 13.80	3 Level	20536.2	0
531501	BUCKNER7 345.0	3 Level	10551.2	6993.5
584992	G15-061-GSU134.50	3 Level	10717.7	0
584995	G15-061-GSU234.50	3 Level	11330	0
585021	G15-064XFMR134.50	3 Level	19204.6	0
585032	G15-065-GSU134.50	3 Level	21843.7	0
640011	GENTLM2G 24.00	3 Level	187563.8	5.3
640082	BEVERLY7 115.0	3 Level	5100.2	4690
640184	GENTLMN4 230.0	3 Level	19495.9	23817.4

Bus #	Bus Name	Level Away	Fault Current (Amperes)	
			3 PH	SLG
640185	G.GENT19 13.80	3 Level	31436.1	0
640252	KEYSTON3 345.0	3 Level	8997.2	7631.3
640269	MCCOOK 7 115.0	3 Level	8390.4	8756.1
640365	STOCKVL7 115.0	3 Level	4976	4286
640374	SWEET W3 345.0	3 Level	10606.3	7481.6
640500	THEDFRD3 345.0	3 Level	6054.6	4494.7
643066	GENTLEMANT2913.80	3 Level	30694.9	0
523118	BUFF_DUNES 7345.0	4 Level	6835.7	5766.6
530556	HOXIE 3 115.0	4 Level	3980.2	3237.9
530646	CLBY34 1 34.50	4 Level	4102.1	0
531256	SCOTCTY1 13.80	4 Level	6682.5	0
531362	MANNGT 3 115.0	4 Level	5609.7	3930.9
531364	ATWODSW3 115.0	4 Level	2953.6	2179
531379	JONES3 115.0	4 Level	12013.1	9011.7
531393	PLYMELL3 115.0	4 Level	8434.3	4723.1
531411	GOVE 3 115.0	4 Level	3320.9	2206.5
531418	CTYSERV3 115.0	4 Level	10689	10077
531420	FLETCHR3 115.0	4 Level	7468.7	5695
531427	SCOTCTY2 69.00	4 Level	3864.8	4275.2
531432	PILE 3 115.0	4 Level	7164.7	4831.1
531443	GODLNDT3 115.0	4 Level	2899.8	1833.9
531445	GRDNCTY3 115.0	4 Level	15587.9	13020.1
531447	HOLCGEN1 22.00	4 Level	94438.9	66263.6
531469	SPERVIL7 345.0	4 Level	13888.4	13104.4
531485	CNTRLPL3 115.0	4 Level	6637.4	7884.2
531488	BVERVLLY 115.0	4 Level	2650.2	1918.3
531502	CIMRRN 7 345.0	4 Level	8268.5	6093.7
531504	CIMWD2 7 345.0	4 Level	8445.3	0
531512	WALKTAP7 345.0	4 Level	8667.1	6863.7

Bus #	Bus Name	Level Away	Fault Current (Amperes)	
			3 PH	SLG
580049	GEN-2010-045345.0	4 Level	7501.5	0
584993	G15-061-GEN10.690	4 Level	427482.9	218335.8
584996	G15-061-GEN20.690	4 Level	444850.9	221182.5
585022	G15-064-GSU134.50	4 Level	18275.6	0
585033	G15-065-GEN10.690	4 Level	864074.6	365317.5
599950	LAMAR7 345.0	4 Level	2657.3	1621.3
640010	GENTLM1G 23.00	4 Level	176750.8	7.5
640017	MCCOOK G 13.80	4 Level	16995	0
640065	AXTELL 3 345.0	4 Level	9649	7353.2
640083	BEVERLY8 69.00	4 Level	4726.6	5344.8
640100	CAMBRIG7 115.0	4 Level	4423	3777.4
640167	ENDERS 7 115.0	4 Level	4042.6	3472.3
640253	KEYSTON7 115.0	4 Level	15261.2	14786.8
640254	KEYSTON9 13.80	4 Level	18432.4	0
640270	MCCOOK 8 69.00	4 Level	5227.9	6228.8
640286	N.PLATT4 230.0	4 Level	13683.5	13510.1
640287	N.PLATT7 115.0	4 Level	18602.8	20470.2
640302	OGALALA4 230.0	4 Level	8552.1	7330.3
640366	STOCKVL8 69.00	4 Level	3692	4013.5
640381	THEDFRD7 115.0	4 Level	9594.3	9390.7
640510	HOLT.CO3 345.0	4 Level	7685.7	3581.2
640570	THEDFORD9 13.80	4 Level	23661.3	0
643017	BEVERLY T1 913.80	4 Level	6334.9	0
643018	BEVERLY T2 913.80	4 Level	6180.1	0
643099	MCCOOK T1 913.80	4 Level	6516.6	0
643100	MCCOOK T3 913.80	4 Level	5541.2	0
643146	STOCKVLLET1913.80	4 Level	6290.6	0
652571	GR ISLD3 345.0	4 Level	12857.1	11162.4
659425	SIDNEY1-LNX3345.0	4 Level	6221.1	5528.5

Bus #	Bus Name	Level Away	Fault Current (Amperes)	
			3 PH	SLG
523097	HITCHLAND 7345.0	5 Level	18251.7	15380
523114	BUFF_DN_TR1113.20	5 Level	551035.4	0
523115	BUFF_DN_TR2113.20	5 Level	546492.5	0
523116	BUFF_DUNES1134.50	5 Level	28234.1	34485.1
530557	BEACH 3 115.0	5 Level	4414.8	4544.4
530583	POSTROCK7 345.0	5 Level	8529.8	8091.6
530647	CLBY-DSL 13.00	5 Level	9853.6	8029.4
531220	LUDELLT3 115.0	5 Level	2853	2062
531254	GC-CITY 13.80	5 Level	9371.6	0
531258	GRDNCYT1 13.80	5 Level	6719.9	0
531262	CNTRLPL1 13.80	5 Level	32735.1	0
531357	RULETON3 115.0	5 Level	2857.9	1828.7
531360	DIGHTNT3 115.0	5 Level	4010.6	2704.6
531363	MANNING3 115.0	5 Level	4460.5	3009.9
531369	NATWOOD3 115.0	5 Level	2817.1	2050.9
531392	PIONTAP3 115.0	5 Level	7438.7	5850
531399	LAKIN3 34.50	5 Level	4612.7	3713.2
531400	PK_GOAB3 115.0	5 Level	5410.9	3836.6
531408	PIERCVL3 115.0	5 Level	4249.3	2322.4
531409	ARNOLD3 115.0	5 Level	3673.9	2719.2
531417	CTYSERV2 69.00	5 Level	1064.7	1331.8
531421	GC-C 1 34.50	5 Level	6340.8	8082.6
531423	GARDNCY2 69.00	5 Level	4470.7	5360.7
531426	JAMESON3 115.0	5 Level	11458.6	8415.6
531428	LEOTI 3 115.0	5 Level	4696.8	3544
531440	WILLIAM3 115.0	5 Level	4134.1	2790.6
531444	GOODCTY3 115.0	5 Level	2324.9	1447.5
531459	S2 GEN 1 13.80	5 Level	55547	58956.6
531461	S4 GEN 1 13.20	5 Level	43002.4	44941.8

Bus #	Bus Name	Level Away	Fault Current (Amperes)	
			3 PH	SLG
531462	S5 GEN 1 13.20	5 Level	40759.3	42347.3
531468	SPERTER1 13.80	5 Level	15774.2	0
531476	SWNDTAP3 115.0	5 Level	8402.7	5931.2
531480	KSAVWTP3 115.0	5 Level	15000.9	12280.4
531486	CNTRLPL2 34.50	5 Level	12740.1	11843.1
531487	MCDONLD3 115.0	5 Level	2546.9	1808.9
531489	ONEOK 3 115.0	5 Level	2139.1	1462.3
531493	GANO 3 115.0	5 Level	7517.3	4944.5
531500	FLETCHER-T 13.20	5 Level	8128.7	0
531503	CIMRRN 1 34.50	5 Level	17552.3	19417
531505	CIMWD2 1 34.50	5 Level	25798.5	0
531510	WALKTAP3 115.0	5 Level	11208.6	12628.3
531511	WALKETP-T 13.80	5 Level	30173	0
539695	SPEARVL6 230.0	5 Level	13048.9	13653
539759	SPRVL 3 115.0	5 Level	12350.8	13875.7
539803	IRONWOOD7 345.0	5 Level	13445.7	12552.2
539960	SPRVL-T 13.80	5 Level	31031.3	0
560002	IRONWOOD7 345.0	5 Level	13475.4	12535.1
560014	G14-059-TAP 230.0	5 Level	6282.8	4716.5
562334	G13-010-TAP 345.0	5 Level	8157	6304.9
580050	G10-045XFMR134.50	5 Level	13404.4	0
580051	G10-045XFMR234.50	5 Level	13256.7	0
584650	GEN-2015-023345.0	5 Level	7091.3	0
585023	G15-064-GEN10.690	5 Level	754076.9	360458.7
640018	N.PLATTG 13.80	5 Level	19651.2	1794.1
640066	AXTELL 7 115.0	5 Level	14829	15329.4
640067	AXTELL 9 13.80	5 Level	26193.5	0
640093	C.CREEK4 230.0	5 Level	7610.4	7688.9
640096	CALAMS 7 115.0	5 Level	3777.8	2869.3

Bus #	Bus Name	Level Away	Fault Current (Amperes)	
			3 PH	SLG
640101	CAMBRIG8 69.00	5 Level	2498.1	2839.7
640168	ENDERS 8 69.00	5 Level	3401.5	3554.2
640194	GOSPER 7 115.0	5 Level	4645	3770
640200	GR ISLD4 230.0	5 Level	17561	18188.4
640238	JEFFREY7 115.0	5 Level	6412.5	5643.7
640255	KINGSLY7 115.0	5 Level	9565.3	8316.5
640265	MALONEY7 115.0	5 Level	11720.1	10445.9
640267	MAXWELS7 115.0	5 Level	7119.2	4579.7
640271	MCCOOL 3 345.0	5 Level	11107.6	9032.5
640288	N.PLATT8 69.00	5 Level	5775.8	6907.6
640289	N.PLATT9 34.50	5 Level	7912.4	9630.2
640290	N.PT8 9 13.80	5 Level	27607.6	0
640291	N.PT9 9 13.80	5 Level	27607.6	0
640304	OGALALANPPD7115.0	5 Level	15200.7	13579.8
640312	PAULINE3 345.0	5 Level	8542.7	6695.1
640359	STAPLETON 7115.0	5 Level	4484.3	2042.6
640382	THEDFRD9 34.50	5 Level	2298.9	2886.8
641244	ATHEY 7 115.0	5 Level	3305.3	2453.4
643028	CAMBRIDGET1913.80	5 Level	5124.8	0
643055	ENDERS T1 913.80	5 Level	5759.7	0
643071	GR ISLD T6 913.80	5 Level	41284.6	0
643106	NORTHPLT T2913.80	5 Level	6741	0
643107	NORTHPLT T7913.80	5 Level	9052.4	0
643115	OGALLALA T1913.80	5 Level	20502.1	0
643153	THEDFORD T1913.80	5 Level	4884	0
652314	GR ISL19 13.80	5 Level	28898.4	0
652316	GR ISL29 13.80	5 Level	29014.9	0
652832	GRPRAR1-LNX3345.0	5 Level	6823.5	0
652871	GR ISLD-LNX3345.0	5 Level	12857.1	11162.4

Bus #	Bus Name	Level Away	Fault Current (Amperes)	
			3 PH	SLG
659133	SIDNEY 3 345.0	5 Level	6221.1	5528.5
659800	GRANTNB7 115.0	5 Level	6714.8	4813

5.2.2. Short Circuit Result for POI Mingo 115kV (531429)

The results of the short circuit analysis for POI i.e., Mingo 115kV (531429) are tabulated below in table 5.2.2.

Table 5.2.2: Short circuit results for Mingo 115kV (531429) (GEN-2015-064)

Bus #	Bus Name	Level Away	Fault Current (Amperes)	
			3 PH	SLG
531429	MINGO 3 115.0	0 Level	13432.5	14351.5
530555	COLBY 3 115.0	1 Level	6685.8	6082.7
530559	PH RUN 3 115.0	1 Level	5132.5	3908.2
531351	BREWSTR3 115.0	1 Level	3401.2	2176.1
531451	MINGO 7 345.0	1 Level	6780	5201.2
531452	MINGTER1 13.80	1 Level	32765.7	0
531453	MINGTER 13.80	1 Level	32765.7	0
585020	GEN-2015-064115.0	1 Level	10481.6	0
530554	ATWOOD 3 115.0	2 Level	3323.8	2645.2
530644	COLBY 2 69.00	2 Level	4202.1	4156.6
530645	CLBYT1 1 13.80	2 Level	7512.8	6713
530682	SEGNTP 3 115.0	2 Level	4823.9	3696.8
530683	SEGUIN 3 115.0	2 Level	4584	3337.3
531353	GOODLND3 115.0	2 Level	2914.9	1843.4
531412	GRINNEL3 115.0	2 Level	4252.3	3004.6
531465	SETAB 7 345.0	2 Level	7840.8	5591.5
584990	GEN-2015-061345.0	2 Level	5646.3	0
585021	G15-064XFMR134.50	2 Level	19204.6	0
585030	GEN-2015-065345.0	2 Level	6139.2	0
640325	REDWILO3 345.0	2 Level	6598.8	5479.5

Bus #	Bus Name	Level Away	Fault Current (Amperes)	
			3 PH	SLG
530556	HOXIE 3 115.0	3 Level	3980.2	3237.9
530646	CLBY34 1 34.50	3 Level	4102.1	0
531259	SETAB 1 13.80	3 Level	30842	0
531364	ATWODSW3 115.0	3 Level	2953.6	2179
531411	GOVE 3 115.0	3 Level	3320.9	2206.5
531443	GODLNDT3 115.0	3 Level	2899.8	1833.9
531449	HOLCOMB7 345.0	3 Level	11544.9	10989.1
531464	SETAB 3 115.0	3 Level	11650.8	12465.9
531488	BVERVLLY 115.0	3 Level	2650.2	1918.3
584991	G15-061XFMR134.50	3 Level	12941.8	0
584994	G15-061XFMR234.50	3 Level	12971.5	0
585022	G15-064-GSU134.50	3 Level	18275.6	0
585031	G15-065XFMR134.50	3 Level	23640	0
640183	GENTLMN3 345.0	3 Level	15940.6	18295.5
640326	REDWILO7 115.0	3 Level	11543.3	11824.3
640327	REDWILO9 13.80	3 Level	17622.6	0
523853	FINNEY 7345.0	4 Level	11448.2	10821.6
530557	BEACH 3 115.0	4 Level	4414.8	4544.4
530647	CLBY-DSL 13.00	4 Level	9853.6	8029.4
531220	LUDELLT3 115.0	4 Level	2853	2062
531357	RULETON3 115.0	4 Level	2857.9	1828.7
531369	NATWOOD3 115.0	4 Level	2817.1	2050.9
531409	ARNOLD3 115.0	4 Level	3673.9	2719.2
531416	CTYSERT3 115.0	4 Level	10948.2	11216.4
531433	SCOTCTY3 115.0	4 Level	9895.6	8663.1
531444	GOODCTY3 115.0	4 Level	2324.9	1447.5
531448	HOLCOMB3 115.0	4 Level	23675.8	27305.3
531450	HOLCTER1 13.80	4 Level	20536.2	0
531487	MCDONLD3 115.0	4 Level	2546.9	1808.9

Bus #	Bus Name	Level Away	Fault Current (Amperes)	
			3 PH	SLG
531489	ONEOK 3 115.0	4 Level	2139.1	1462.3
531501	BUCKNER7 345.0	4 Level	10551.2	6993.5
584992	G15-061-GSU134.50	4 Level	10717.7	0
584995	G15-061-GSU234.50	4 Level	11330	0
585023	G15-064-GEN10.690	4 Level	754076.9	360458.7
585032	G15-065-GSU134.50	4 Level	21843.7	0
640011	GENTLM2G 24.00	4 Level	187563.8	5.3
640082	BEVERLY7 115.0	4 Level	5100.2	4690
640184	GENTLMN4 230.0	4 Level	19495.9	23817.4
640185	G.GENT19 13.80	4 Level	31436.1	0
640252	KEYSTON3 345.0	4 Level	8997.2	7631.3
640269	MCCOOK 7 115.0	4 Level	8390.4	8756.1
640365	STOCKVL7 115.0	4 Level	4976	4286
640374	SWEET W3 345.0	4 Level	10606.3	7481.6
640500	THEDFRD3 345.0	4 Level	6054.6	4494.7
643066	GENTLEMANT2913.80	4 Level	30694.9	0
523118	BUFF_DUNES 7345.0	5 Level	6835.7	5766.6
531221	LUDELL 3 115.0	5 Level	2846.3	2055.9
531256	SCOTCTY1 13.80	5 Level	6682.5	0
531356	NSI TAP3 115.0	5 Level	2638.8	1671.8
531362	MANNGT 3 115.0	5 Level	5609.7	3930.9
531365	BIRDCTY3 115.0	5 Level	2266.8	1583.1
531367	HERNDON3 115.0	5 Level	2632	1814.9
531368	LAWNRID3 115.0	5 Level	2395.8	1553.7
531379	JONES3 115.0	5 Level	12013.1	9011.7
531386	GRHMSUB3 115.0	5 Level	4021.4	3628.9
531387	HILLCTY3 34.50	5 Level	5070.5	0
531393	PLYMELL3 115.0	5 Level	8434.3	4723.1
531414	RANSOM 3 115.0	5 Level	3667.5	2978.1

Bus #	Bus Name	Level Away	Fault Current (Amperes)	
			3 PH	SLG
531418	CTYSERV3 115.0	5 Level	10689	10077
531420	FLETCHR3 115.0	5 Level	7468.7	5695
531427	SCOTCTY2 69.00	5 Level	3864.8	4275.2
531432	PILE 3 115.0	5 Level	7164.7	4831.1
531445	GRDNCTY3 115.0	5 Level	15587.9	13020.1
531447	HOLCGEN1 22.00	5 Level	94438.9	66263.6
531469	SPERVIL7 345.0	5 Level	13888.4	13104.4
531485	CNTRLPL3 115.0	5 Level	6637.4	7884.2
531502	CIMRRN 7 345.0	5 Level	8268.5	6093.7
531504	CIMWD2 7 345.0	5 Level	8445.3	0
531512	WALKTAP7 345.0	5 Level	8667.1	6863.7
560336	G10-048-TAP 115.0	5 Level	4509.4	3623.4
580049	GEN-2010-045345.0	5 Level	7501.5	0
584250	GEN-2014-041115.0	5 Level	3314.7	0
584993	G15-061-GEN10.690	5 Level	427482.9	218335.8
584996	G15-061-GEN20.690	5 Level	444850.9	221182.5
585033	G15-065-GEN10.690	5 Level	864074.6	365317.5
599950	LAMAR7 345.0	5 Level	2657.3	1621.3
640010	GENTLM1G 23.00	5 Level	176750.8	7.5
640017	MCCOOK G 13.80	5 Level	16995	0
640065	AXTELL 3 345.0	5 Level	9649	7353.2
640083	BEVERLY8 69.00	5 Level	4726.6	5344.8
640100	CAMBRIG7 115.0	5 Level	4423	3777.4
640167	ENDERS 7 115.0	5 Level	4042.6	3472.3
640253	KEYSTON7 115.0	5 Level	15261.2	14786.8
640254	KEYSTON9 13.80	5 Level	18432.4	0
640270	MCCOOK 8 69.00	5 Level	5227.9	6228.8
640286	N.PLATT4 230.0	5 Level	13683.5	13510.1
640287	N.PLATT7 115.0	5 Level	18602.8	20470.2

Bus #	Bus Name	Level Away	Fault Current (Amperes)	
			3 PH	SLG
640302	OGALALA4 230.0	5 Level	8552.1	7330.3
640366	STOCKVL8 69.00	5 Level	3692	4013.5
640381	THEDFRD7 115.0	5 Level	9594.3	9390.7
640510	HOLT.CO3 345.0	5 Level	7685.7	3581.2
640570	THEDFORD9 13.80	5 Level	23661.3	0
643017	BEVERLY T1 913.80	5 Level	6334.9	0
643018	BEVERLY T2 913.80	5 Level	6180.1	0
643099	MCCOOK T1 913.80	5 Level	6516.6	0
643100	MCCOOK T3 913.80	5 Level	5541.2	0
643146	STOCKVLLET1913.80	5 Level	6290.6	0
652571	GR ISLD3 345.0	5 Level	12857.1	11162.4
659425	SIDNEY1-LNX3345.0	5 Level	6221.1	5528.5

5.2.3. Short Circuit Result for POI South Hays 230kV (530582)

The results of the short circuit analysis for POI i.e., South Hays 230kV (530582) are tabulated below in table 5.2.3.

Table 5.2.3: Short circuit results for South Hays 230kV (530582) (GEN-2015-072)

Bus #	Bus Name	Level Away	Fault Current (Amperes)	
			3 PH	SLG
530582	S HAYS6 230.0	0 Level	9428.5	8843.2
530553	S HAYS 3 115.0	1 Level	9319.2	9910.8
530584	POSTROCK6 230.0	1 Level	11937.1	13544.5
530632	SHYS1 1 12.47	1 Level	18554	0
539679	GRTBEND6 230.0	1 Level	9099.4	9777.9
575010	GEN-2009-008230.0	1 Level	4943.6	0
530552	GORHAM 3 115.0	2 Level	3396.8	2369.8
530558	KNOLL 6 230.0	2 Level	11754.3	13169.2
530583	POSTROCK7 345.0	2 Level	8529.8	8091.6
530673	POSTROCK1 13.80	2 Level	86114.1	0

Bus #	Bus Name	Level Away	Fault Current (Amperes)	
			3 PH	SLG
530680	HEIZER 6 230.0	2 Level	9048.1	9744.8
530695	CHETOLAH3 115.0	2 Level	9422.5	9592.1
532871	CIRCLE 6 230.0	2 Level	10285.3	10164.5
539678	GRTBEND3 115.0	2 Level	12947.5	15125.3
539695	SPEARVL6 230.0	2 Level	13048.9	13653
539920	GRTBNDTT 13.80	2 Level	37485	0
575011	G09-008XFMR134.50	2 Level	19100.8	0
579470	GEN-2008-092230.0	2 Level	8665.6	0
530561	KNOLL 3 115.0	3 Level	12169.5	14179.4
530592	SMOKYHL6 230.0	3 Level	7589.9	7314.2
530601	HEIZER 3 115.0	3 Level	12780.1	14477.1
530626	HZRT1 1 12.50	3 Level	18303.9	0
530629	KNLL1 1 11.49	3 Level	41524.4	0
530684	RUSLPMP3 115.0	3 Level	2216.9	1399
530686	RICE 6 230.0	3 Level	5178.2	5667.2
530693	VINETAP3 115.0	3 Level	9480.3	9515.2
530694	VINE2 3 115.0	3 Level	8941.3	8892.9
531468	SPERTER1 13.80	3 Level	15774.2	0
531469	SPERVIL7 345.0	3 Level	13888.4	13104.4
532872	EMCPHER6 230.0	3 Level	9243.3	10150.3
532892	CIRCLE 1 13.80	3 Level	56512.6	0
533413	CIRCLE 3 115.0	3 Level	24412.7	28178.5
539642	ELLSWTP3 115.0	3 Level	4295.9	3702
539666	GBENDTP3 115.0	3 Level	7996.9	6646.1
539677	GRTBEND1 13.80	3 Level	59662.8	45537.8
539681	N-GBEND3 115.0	3 Level	8635.5	8255.6
539684	OTISSUB3 115.0	3 Level	3183.1	2780.7
539694	SPEARVL3 115.0	3 Level	11134.4	12385.6
539719	GRTBEND1 34.50	3 Level	4199.9	5192.4

Bus #	Bus Name	Level Away	Fault Current (Amperes)	
			3 PH	SLG
539743	SPWIND-T1 13.80	3 Level	40177.9	0
539744	SPWIND-T2 13.80	3 Level	34852.1	0
539752	GPEWIND1 34.50	3 Level	28551.7	32457
539921	GRTBENDT 7.200	3 Level	13568.8	0
539935	SPERVLTT 13.80	3 Level	35198	0
562334	G13-010-TAP 345.0	3 Level	8157	6304.9
575012	G09-008-GSU134.50	3 Level	18352.5	0
579471	G08-092XFMR134.50	3 Level	13342.2	0
579474	G08-092XFMR234.50	3 Level	13325.8	0
585090	GEN-2015-07234.50	3 Level	14481.6	0
640065	AXTELL 3 345.0	3 Level	9649	7353.2
530551	SALINE 3 115.0	4 Level	5417.7	4490.1
530563	HEIZER 2 69.00	4 Level	8955.9	10542.7
530581	N HAYS3 115.0	4 Level	10699	10872
530591	VINE 3 115.0	4 Level	9375	9319.1
530593	SMKYP1 6 230.0	4 Level	6601	6311.8
530599	SMKYP2 6 230.0	4 Level	7042.6	6868.2
530602	LAXTAP 3 115.0	4 Level	4491.2	3671.4
530605	REDLIN 3 115.0	4 Level	4541.6	3382
530609	HZRNGPL3 115.0	4 Level	8299.9	7222.1
530623	RICE 3 115.0	4 Level	7312.4	8761.4
530627	HZRT2 1 12.50	4 Level	12677.3	0
530628	HZRT3 1 12.50	4 Level	10139.1	0
530676	GMEC 3 115.0	4 Level	11618.8	13104.2
530677	OGALATP3 115.0	4 Level	2839.2	2392.5
530687	RICET1 12.47	4 Level	18925.2	0
530688	BUFLOCRK6 230.0	4 Level	3784.6	4071.8
531501	BUCKNER7 345.0	4 Level	10551.2	6993.5
532873	SUMMIT 6 230.0	4 Level	14670.4	15587.7

Bus #	Bus Name	Level Away	Fault Current (Amperes)	
			3 PH	SLG
532894	EMCPHER1 13.80	4 Level	58186.2	0
533412	ARKVALJ3 115.0	4 Level	11807.2	8473.2
533416	RENO 3 115.0	4 Level	27196.1	30287.2
533417	EMCPHER3 115.0	4 Level	13861.4	14580.1
533419	HEC 3 115.0	4 Level	23857.9	27000.7
533422	HEC U4 3 115.0	4 Level	23393.5	26141.2
539643	ROLLHLS3 115.0	4 Level	3939	3345.5
539661	24-FREY3 115.0	4 Level	5930.2	5155
539692	SEWARD 3 115.0	4 Level	5894.1	4922.9
539701	RUSSELL3 115.0	4 Level	3766.3	3348.9
539721	N-GBEND1 34.50	4 Level	3225	3182
539723	OTISSUB1 34.50	4 Level	1668.7	2170.7
539732	SPEARVL1 34.50	4 Level	988.1	1294.6
539759	SPRVL 3 115.0	4 Level	12350.8	13875.7
539771	NFTDODG3 115.0	4 Level	13202.2	14286
539803	IRONWOOD7 345.0	4 Level	13445.7	12552.2
539923	NGBEND-T 13.80	4 Level	7126.3	0
539925	OTIS1-T 2.400	4 Level	54733.9	0.1
539926	OTIS2-T 2.400	4 Level	29270.1	0.1
539936	SPERVLDT 3.984	4 Level	15007.9	0
539960	SPRVL-T 13.80	4 Level	31031.3	0
560002	IRONWOOD7 345.0	4 Level	13475.4	12535.1
575013	G09-008-GEN10.690	4 Level	781836.9	435814.8
579472	G08-092-GSU134.50	4 Level	12741.2	0
579475	G08-092-GSU234.50	4 Level	12278.5	0
583600	GEN-2013-010345.0	4 Level	8157	6304.9
585091	G15-072-GSU134.50	4 Level	13645.9	0
599019	GPW-CB2 34.50	4 Level	24276	0
599028	SPEARVLE-LVB34.50	4 Level	19773.5	0

Bus #	Bus Name	Level Away	Fault Current (Amperes)	
			3 PH	SLG
640066	AXTELL 7 115.0	4 Level	14829	15329.4
640067	AXTELL 9 13.80	4 Level	26193.5	0
640312	PAULINE3 345.0	4 Level	8542.7	6695.1
640374	SWEET W3 345.0	4 Level	10606.3	7481.6
530560	WKNNY 3 115.0	5 Level	2390.1	2112.9
530568	GB NTH 2 69.00	5 Level	7020.3	6577.7
530586	ALBERT 2 69.00	5 Level	3857	2758
530587	WSPRTTP2 69.00	5 Level	6214.2	5651.5
530590	BEMIS 3 115.0	5 Level	4320.9	3301.6
530595	SHP134 1 34.50	5 Level	19747.1	24619.3
530603	LACROS 3 115.0	5 Level	3890.6	2986.3
530604	SHP234 1 34.50	5 Level	25492.3	33781.3
530608	NEKOMA 3 115.0	5 Level	4386	4057.3
530618	HUNTSVL3 115.0	5 Level	4403.6	3029.3
530620	LYONS 3 115.0	5 Level	5965	5172.4
530633	SMKYT1 1 13.20	5 Level	43625.9	0
530634	SMKYT2 1 13.86	5 Level	52259.3	0
530674	GMECG1 1 13.80	5 Level	29656	33284.8
530675	GMECG2 1 13.80	5 Level	31364.5	31028.7
530679	SEWRDMW3 115.0	5 Level	5257.7	4426.5
530681	BUSHTON3 115.0	5 Level	5495.3	5147.4
530689	BUFLOCRK1 34.50	5 Level	26067.4	35097.7
530691	BUFCRKT11 12.47	5 Level	52645.1	0
531449	HOLCOMB7 345.0	5 Level	11544.9	10989.1
531492	OG ONEOK 115.0	5 Level	2304.8	1813.3
531502	CIMRRN 7 345.0	5 Level	8268.5	6093.7
531504	CIMWD2 7 345.0	5 Level	8445.3	0
532694	HEC U4 18.00	5 Level	93454.1	70775.2
532771	RENO 7 345.0	5 Level	12523.5	11684.5

Bus #	Bus Name	Level Away	Fault Current (Amperes)	
			3 PH	SLG
532773	SUMMIT 7 345.0	5 Level	11557.4	10978.6
532807	RENO 1X1 14.40	5 Level	46317.4	0
532810	RENO 2X1 14.40	5 Level	46120.4	0
532813	SUMMIT 1 14.40	5 Level	38683.6	0
532874	UNIONRG6 230.0	5 Level	9707.7	7438.8
532896	SUMIT2 1 13.80	5 Level	51312.9	0
532897	SUMIT3 1 13.80	5 Level	54344.1	0
533381	SUMMIT 3 115.0	5 Level	18849.6	22490.4
533411	ARKVAL 3 115.0	5 Level	11558.8	8364.9
533415	DAVIS 3 115.0	5 Level	9551	7970
533426	MANVILE3 115.0	5 Level	10994.3	10811.4
533427	REFINRY3 115.0	5 Level	12683.7	13064.7
533429	MOUNDRG3 115.0	5 Level	7893	7113.2
533438	WMCPHER3 115.0	5 Level	13433.8	14066.4
533440	43LORAN 115.0	5 Level	15729.5	13231.3
533445	HEC 1 34.50	5 Level	2998.1	0
533513	HEC 2 69.00	5 Level	7684.9	9493.8
539660	EHALLTP3 115.0	5 Level	3555.9	3698.4
539671	FTDODGE3 115.0	5 Level	13154.1	14304.2
539686	PLAINVL3 115.0	5 Level	4036.7	3884.3
539688	S-DODGE3 115.0	5 Level	9000.1	8051.8
539689	2ND-KS 3 115.0	5 Level	5345.4	4593.1
539696	ST-JOHN3 115.0	5 Level	5344.9	4547.8
539698	WALDO 3 115.0	5 Level	3003.6	2535.8
539703	RUSSELL1 34.50	5 Level	3017.1	3678.9
539707	24-FREY1 34.50	5 Level	3280.7	3541
539758	FORD 3 115.0	5 Level	6049.4	4788.7
539800	CLARKCOUNTY7345.0	5 Level	12632.7	9139.5
539807	IRONWOOD 1 34.50	5 Level	27030.3	34271.1

Bus #	Bus Name	Level Away	Fault Current (Amperes)	
			3 PH	SLG
539808	IRONWOOD T1 13.80	5 Level	52249	0
539907	24-FREYT 13.80	5 Level	4173.9	0
539943	RUSSEL-T 7.200	5 Level	11127.3	0
560062	G15-088-TAP 345.0	5 Level	11646.5	7659.1
560336	G10-048-TAP 115.0	5 Level	4509.4	3623.4
579473	G08-092-GEN10.690	5 Level	491794.1	228844
579476	G08-092-GEN20.690	5 Level	479040.6	227042.3
579480	GEN-2008-124345.0	5 Level	13016.4	0
580049	GEN-2010-045345.0	5 Level	7501.5	0
582016	GEN-2011-016345.0	5 Level	7804.7	0
583601	G13-010XFMR134.50	5 Level	14469.7	0
585092	G15-072-GEN10.550	5 Level	267168.2	0.7
599020	GPW_G1 0.690	5 Level	894389.8	373763.6
599029	SPEARVLE-WTG0.690	5 Level	778199.8	378884.2
640183	GENTLMN3 345.0	5 Level	15940.6	18295.5
640224	HOLDREG7 115.0	5 Level	6681.1	6821.4
640250	KEARNEY7 115.0	5 Level	12256.2	11781.2
640275	MINDEN 7 115.0	5 Level	7629.6	6758.4
640313	PAULINE7 115.0	5 Level	17068.4	15641.3
640315	PAULINE9 13.80	5 Level	19019.9	0
652571	GR ISLD3 345.0	5 Level	12857.1	11162.4

6. Stability Analysis for Cluster Scenario

6.1. Faults Simulated

Fifty (50) faults were considered for the transient stability simulations which included three phase faults, as well as single phase line faults, at the locations defined by SPP in the RFP. Single-phase line faults were simulated by applying fault impedance to the positive sequence network at the fault location. As per the SPP current practice to

compute the fault levels, the fault impedance was computed to give a positive sequence voltage at the specified fault location of approximately 60% of pre-fault voltage.

Concurrently and previously queued projects as respectively shown in Table-1 and Table-2 of the study request i.e., GEN-2001-039M, GEN-2003-006A, GEN-2003-019, GEN-2006-031, GEN-2008-092, GEN-2009-008, GEN-2009-020/GEN-2014-025, GEN-2010-048, GEN-2010-057, ASGI-2013-004, GEN-2013-033, GEN-2014-041 as well as areas number 520, 524, 525, 526, 531, 534, 536, and 640 were monitored during all the simulations. Table 6.1.1 shows the list of simulated contingencies. This table also shows the fault clearing time and the time delay before re-closing for all the study contingencies.

Simulations were performed with a 0.1-second steady-state run followed by the appropriate disturbance as described in Table 6.1.1. Simulations were run for minimum 15-second duration to confirm proper machine damping.

Table 6.1.1 summarizes the overall results for all faults simulations of cluster scenario. Complete sets of plots for Winter-2016, Summer-2017, and summer-2025 peak seasons for each fault are included in Appendices A, B and C respectively.

Table 6.1.1: List of simulated faults for cluster scenario stability analysis

Cont. #	Contingency Name	Description	2016 winter Results	2017 summer Results	2025 Summer Results
1	FLT01-3PH	3 phase fault on South Hays 230kV (530582) to Post Rock 230KV (530584) CKT 1, near South Hays. a. Apply fault at the South Hays 230kV bus. b. Clear fault after 5 cycles by tripping the faulted line. c. Wait 20 cycles, and then re-close the line in (b) back into the fault. d. Leave fault on for 5 cycles, then trip the line in (b) and remove fault.	Stable	Stable	Stable
2	FLT02-3PH	3 phase fault on the Post Rock 230kV (530584) to Knoll 230V (530558) CKT 1, near Post Rock. a. Apply fault at the Post Rock 230kV bus. b. Clear fault after 5 cycles by tripping the faulted line. c. Wait 20 cycles, and then re-close the line in (b) back into the fault. d. Leave fault on for 5 cycles, then trip the line in (b) and remove fault.	Stable	Stable	Stable
3	FLT03-3PH	3 phase fault on the Knoll 230kV (530558) to Smokey Hill 230V (530592) CKT 1, near Knoll. a. Apply fault at the Knoll 230kV bus. b. Clear fault after 5 cycles by tripping the faulted line. c. Wait 20 cycles, and then re-close the line in (b) back into the fault. d. Leave fault on for 5 cycles, then trip the line in (b) and remove fault.	Stable	Stable	Stable
4	FLT04-3PH	3 phase fault on the Knoll 115kV (530561) to Saline 115kV (530551) CKT 1, near Knoll. a. Apply fault at the Knoll 115kV bus. b. Clear fault after 5 cycles by tripping the faulted line. c. Wait 20 cycles, and then re-close the line in (b) back into the fault. d. Leave fault on for 5 cycles, then trip the line in (b) and remove fault.	Stable	Stable	Stable

Cont. #	Contingency Name	Description	2016 winter Results	2017 summer Results	2025 Summer Results
5	FLT05-3PH	3 phase fault on the Knoll 115kV (530561) to North Hays 115kV (530581) CKT 1, near Knoll. a. Apply fault at the Knoll 115kV bus. b. Clear fault after 5 cycles by tripping the faulted line. c. Wait 20 cycles, and then re-close the line in (b) back into the fault. d. Leave fault on for 5 cycles, then trip the line in (b) and remove fault.	Stable	Stable	Stable
6	FLT06-3PH	3 phase fault on the Knoll 115kV (530561) to Redline 115kV (530605) CKT 1, near Knoll. a. Apply fault at the Knoll 115kV bus. b. Clear fault after 5 cycles by tripping the faulted line. c. Wait 20 cycles, and then re-close the line in (b) back into the fault. d. Leave fault on for 5 cycles, then trip the line in (b) and remove fault.	Stable	Stable	Stable
7	FLT07-3PH	3 phase fault on the South Hays 230kV (530582) to Great Bend 230kV (539679) CKT 1, near South Hays. a. Apply fault at the South Hays 230kV bus. b. Clear fault after 5 cycles by tripping the faulted line. c. Wait 20 cycles, and then re-close the line in (b) back into the fault. d. Leave fault on for 5 cycles, then trip the line in (b) and remove fault.	Stable	Stable	Stable
8	FLT08-3PH	3 phase fault on the Great Bend 230kV (539679) to Spearville 230kV (539695) CKT 1, near Great Bend. a. Apply fault at the Great Bend 230kV bus. b. Clear fault after 5 cycles by tripping the faulted line. c. Wait 20 cycles, and then re-close the line in (b) back into the fault. d. Leave fault on for 5 cycles, then trip the line in (b) and remove fault.	Stable	Stable	Stable

Cont. #	Contingency Name	Description	2016 winter Results	2017 summer Results	2025 Summer Results
9	FLT09-3PH	3 phase fault on the Great Bend 230kV (539679) to Circle 230kV (532871) CKT 1, near Great Bend. a. Apply fault at the Great Bend 230kV bus. b. Clear fault after 5 cycles by tripping the faulted line. c. Wait 20 cycles, and then re-close the line in (b) back into the fault. d. Leave fault on for 5 cycles, then trip the line in (b) and remove fault.	Stable	Stable	Stable
10	FLT10-3PH	3 phase fault on the Post Rock 230KV (530584) to Post Rock 345kV (530583) to Post Rock 13.8kVkV (530673) XFMR CKT 1, near Post Rock 230 kV. a. Apply fault at the Post Rock 230kV bus. b. Clear fault after 5 cycles by tripping the faulted transformer.	Stable	Stable	Stable
11	FLT11-3PH	3 phase fault on the Post Rock 345kV (530583) to Axtell 345kV (640065) CKT 1, near Post Rock. a. Apply fault at the Post Rock 345kV bus. b. Clear fault after 5 cycles by tripping the faulted line. c. Wait 20 cycles, and then re-close the line in (b) back into the fault. d. Leave fault on for 5 cycles, then trip the line in (b) and remove fault.	Stable	Stable	Stable
12	FLT12-3PH	3 phase fault on the Axtell 345kV (640065) to Sweetwater 345 kV (640374) CKT 1, near Axtell. a. Apply fault at the Axtell 345kV bus. b. Clear fault after 5 cycles by tripping the faulted line. c. Wait 20 cycles, and then re-close the line in (b) back into the fault. d. Leave fault on for 5 cycles, then trip the line in (b) and remove fault.	Stable	Stable	Stable
13	FLT13-3PH	3 phase fault on the Knoll 230kV (530558) to Knoll 115kV (530561) to Knoll 11.49kV (530629) XFMR CKT 1, near Knoll 230 kV. a. Apply fault at the Knoll 230kV bus. b. Clear fault after 5 cycles by tripping the faulted transformer.	Stable	Stable	Stable

Cont. #	Contingency Name	Description	2016 winter Results	2017 summer Results	2025 Summer Results
14	FLT14-3PH	3 phase fault on the G10-048-Tap 115kV (560336) to Beach 115kV (530557) CKT 1, near G10-048-Tap. a. Apply fault at the G10-048-Tap 115kV bus. b. Clear fault after 5 cycles by tripping the faulted line. c. Wait 20 cycles, and then re-close the line in (b) back into the fault. d. Leave fault on for 5 cycles, then trip the line in (b) and remove fault.	Stable	Stable	Stable
15	FLT15-3PH	3 phase fault on the G10-048-Tap 115kV (560336) to Redline 115kV (530605) CKT 1, near G10-048-Tap. a. Apply fault at the G10-048-Tap 115kV bus. b. Clear fault after 5 cycles by tripping the faulted line. c. Wait 20 cycles, and then re-close the line in (b) back into the fault. d. Leave fault on for 5 cycles, then trip the line in (b) and remove fault.	Stable	Stable	Stable
16	FLT16-3PH	3 phase fault on the Beach 115kV (530557) to Hoxie 115kV (530556) CKT 1, near Beach. a. Apply fault at the Beach 115kV bus. b. Clear fault after 5 cycles by tripping the faulted line. c. Wait 20 cycles, and then re-close the line in (b) back into the fault. d. Leave fault on for 5 cycles, then trip the line in (b) and remove fault.	Stable	Stable	Stable
17	FLT17-3PH	3 phase fault on the Colby 115kV (530555) to Atwood 115kV (530554) CKT 1, near Colby. a. Apply fault at the Colby 115kV bus. b. Clear fault after 5 cycles by tripping the faulted line. c. Wait 20 cycles, and then re-close the line in (b) back into the fault. d. Leave fault on for 5 cycles, then trip the line in (b) and remove fault.	Stable	Stable	Stable

Cont. #	Contingency Name	Description	2016 winter Results	2017 summer Results	2025 Summer Results
18	FLT18-3PH	3 phase fault on the Colby 115kV (530555) to Seguin Tap 115kV (530682) CKT 1, near Colby. a. Apply fault at the Colby 115kV bus. b. Clear fault after 5 cycles by tripping the faulted line. c. Wait 20 cycles, and then re-close the line in (b) back into the fault. d. Leave fault on for 5 cycles, then trip the line in (b) and remove fault.	Stable	Stable	Stable
19	FLT19-3PH	3 phase fault on the Colby 115kV (530555) to Mingo 115kV (531429) CKT 1, near Colby. a. Apply fault at the Colby 115kV bus. b. Clear fault after 5 cycles by tripping the faulted line. c. Wait 20 cycles, and then re-close the line in (b) back into the fault. d. Leave fault on for 5 cycles, then trip the line in (b) and remove fault.	Stable	Stable	Stable
20	FLT20-3PH	3 phase fault on the Mingo 115kV (531429) to Pheasant Run 115kV (530559) CKT 1, near Mingo. a. Apply fault at the Mingo 115kV bus. b. Clear fault after 5 cycles by tripping the faulted line. c. Wait 20 cycles, and then re-close the line in (b) back into the fault. d. Leave fault on for 5 cycles, then trip the line in (b) and remove fault.	Stable	Stable	Stable
21	FLT21-3PH	3 phase fault on the Mingo 115kV (531429) to Brewster 115kV (531351) CKT 1, near Mingo. a. Apply fault at the Mingo 115kV bus. b. Clear fault after 5 cycles by tripping the faulted line. c. Wait 20 cycles, and then re-close the line in (b) back into the fault. d. Leave fault on for 5 cycles, then trip the line in (b) and remove fault.	Stable	Stable	Stable
22	FLT22-3PH	3 phase fault on the Mingo 115kV (531429) to Mingo 345kV (531451) to Mingo 13.8kV (531452) XFMR CKT 1, near Mingo 115kV. a. Apply fault at the Mingo 115kV bus. b. Clear fault after 5 cycles by tripping the faulted transformer.	Stable	Stable	Stable

Cont. #	Contingency Name	Description	2016 winter Results	2017 summer Results	2025 Summer Results
23	FLT23-3PH	3 phase fault on the Mingo 345kV (531451) to Red Willow 345kV (640325) CKT 1, near Mingo. a. Apply fault at the Mingo 345kV bus. b. Clear fault after 5 cycles by tripping the faulted line. c. Wait 20 cycles, and then re-close the line in (b) back into the fault. d. Leave fault on for 5 cycles, then trip the line in (b) and remove fault.	Stable	Stable	Stable
25	FLT25-3PH	3 phase fault on the Mingo 345kV (531451) to Setab 345kV (531465) CKT 1, near Mingo. a. Apply fault at the Mingo 345kV bus. b. Clear fault after 5 cycles by tripping the faulted line. c. Wait 20 cycles, and then re-close the line in (b) back into the fault. d. Leave fault on for 5 cycles, then trip the line in (b) and remove fault.	Stable	Stable	Stable
26	FLT26-3PH	3 phase fault on the Setab 345kV (531465) to Holcomb 345kV (531449) CKT 1, near Setab. a. Apply fault at the Setab 345kV bus. b. Clear fault after 5 cycles by tripping the faulted line. c. Wait 20 cycles, and then re-close the line in (b) back into the fault. d. Leave fault on for 5 cycles, then trip the line in (b) and remove fault.	Stable	Stable	Stable
27	FLT27-3PH	3 phase fault on the Holcomb 345kV (531449) to Buckner 345kV (531501) CKT 1, near Holcomb. a. Apply fault at the Holcomb 345kV bus. b. Clear fault after 5 cycles by tripping the faulted line. c. Wait 20 cycles, and then re-close the line in (b) back into the fault. d. Leave fault on for 5 cycles, then trip the line in (b) and remove fault.	Stable	Stable	Stable
28	FLT28-3PH	3 phase fault on the Setab 345kV (531465) to Setab 115kV (531464) to Setab 13.8kV (531259) XFMR CKT 1, near Setab 345kV. a. Apply fault at the Setab 345kV bus. b. Clear fault after 5 cycles by tripping the faulted transformer.	Stable	Stable	Stable

Cont. #	Contingency Name	Description	2016 winter Results	2017 summer Results	2025 Summer Results
29	FLT29-3PH	3 phase fault on the Red Willow 345kV (640325) to Gentleman 345kV (640183) CKT 1, near Red Willow. a. Apply fault at the Red Willow 345kV bus. b. Clear fault after 5 cycles by tripping the faulted line. c. Wait 20 cycles, and then re-close the line in (b) back into the fault. d. Leave fault on for 5 cycles, then trip the line in (b) and remove fault.	Stable	Stable	Stable
30	FLT30-3PH	3 phase fault on the Red Willow 345kV (640325) to Red Willow 115kV (640326) to Red Willow 13.8kV (640327) XFMR CKT 1, near Red Willow. a. Apply fault at the Red Willow 345kV bus. b. Clear fault after 5 cycles by tripping the faulted transformer.	Stable	Stable	Stable
31	FLT31-3PH	3 phase fault on the Gentleman 345kV (640183) to Sweetwater 345kV (640374) CKT 1, near Gentleman. a. Apply fault at the Gentleman 345kV bus. b. Clear fault after 5 cycles by tripping the faulted line. c. Wait 20 cycles, and then re-close the line in (b) back into the fault. d. Leave fault on for 5 cycles, then trip the line in (b) and remove fault.	Stable	Stable	Stable
32	FLT32-3PH	3 phase fault on the Pheasant Run 115kV (530559) to Seguin 115kV (530683) CKT 1, near Pheasant Run. a. Apply fault at the Pheasant Run 115kV bus. b. Clear fault after 5 cycles by tripping the faulted line. c. Wait 20 cycles, and then re-close the line in (b) back into the fault. d. Leave fault on for 5 cycles, then trip the line in (b) and remove fault.	Stable	Stable	Stable
33	FLT33-3PH	3 phase fault on the Pheasant Run 115kV (530559) to Grinnel 115kV (531412) CKT 1, near Pheasant Run. a. Apply fault at the Pheasant Run 115kV bus. b. Clear fault after 5 cycles by tripping the faulted line. c. Wait 20 cycles, and then re-close the line in (b) back into the fault. d. Leave fault on for 5 cycles, then trip the line in (b) and remove fault.	Stable	Stable	Stable

Cont. #	Contingency Name	Description	2016 winter Results	2017 summer Results	2025 Summer Results
34	FLT34-3PH	3 phase fault on the Gove 115kV (531411) to Arnold 115kV (531409) CKT 1, near Gove. a. Apply fault at the Gove 115kV bus. b. Clear fault after 5 cycles by tripping the faulted line. c. Wait 20 cycles, and then re-close the line in (b) back into the fault. d. Leave fault on for 5 cycles, then trip the line in (b) and remove fault.	Stable	Stable	Stable
35	FLT35-3PH	3 phase fault on the Arnold 115kV (531409) to Ransom 115kV (531414) CKT 1, near Arnold. a. Apply fault at the Arnold 115kV bus. b. Clear fault after 5 cycles by tripping the faulted line. c. Wait 20 cycles, and then re-close the line in (b) back into the fault. d. Leave fault on for 5 cycles, then trip the line in (b) and remove fault.	Stable	Stable	Stable
36	FLT36-3PH	3 phase fault on the Atwood 115kV (530554) to Atwood SW 115kV (531364) CKT 1, near Atwood. a. Apply fault at the Atwood 115kV bus. b. Clear fault after 5 cycles by tripping the faulted line. c. Wait 20 cycles, and then re-close the line in (b) back into the fault. d. Leave fault on for 5 cycles, then trip the line in (b) and remove fault.	Stable	Stable	Stable
37	FLT37-3PH	3 phase fault on the Atwood 115kV (530554) to Beaver Valley 115kV (531488) CKT 1, near Atwood. a. Apply fault at the Atwood 115kV bus. b. Clear fault after 5 cycles by tripping the faulted line. c. Wait 20 cycles, and then re-close the line in (b) back into the fault. d. Leave fault on for 5 cycles, then trip the line in (b) and remove fault.	Stable	Stable	Stable

Cont. #	Contingency Name	Description	2016 winter Results	2017 summer Results	2025 Summer Results
38	FLT38-3PH	3 phase fault on the Holcomb 345kV (531449) to Finney 345kV (523853) CKT 1, near Holcomb. a. Apply fault at the Holcomb 345kV bus. b. Clear fault after 5 cycles by tripping the faulted line. c. Wait 20 cycles, and then re-close the line in (b) back into the fault. d. Leave fault on for 5 cycles, then trip the line in (b) and remove fault.	Stable	Stable	Stable
39	FLT39-3PH	3 phase fault on the Holcomb 345kV (531449) to Holcomb 115kV (531448) to Holcomb 13.8kV (531450) XFMR CKT 1, near Holcomb 345kV. a. Apply fault at the Holcomb 345kV bus. b. Clear fault after 5 cycles by tripping the faulted transformer.	Stable	Stable	Stable
40	FLT40-3PH	3 phase fault on the Gentleman 345kV (640183) to Keystone 345kV (640252) CKT 1, near Gentleman. a. Apply fault at the Gentleman 345kV bus. b. Clear fault after 5 cycles by tripping the faulted line. c. Wait 20 cycles, and then re-close the line in (b) back into the fault. d. Leave fault on for 5 cycles, then trip the line in (b) and remove fault.	Stable	Stable	Stable
41	FLT41-PO	**Prior Outage of Knoll to Post Rock 230kV**. 3 phase fault on the South Hays to Post Rock 230kV. a. Prior outage Knoll (530558) 230kV to Post Rock (530584) 230kV (solve network for steady state solution). b. 3 phase fault on the South Hays (530582) 230kV to Post Rock (530584) 230kV, near South Hays 115kV. c. Leave fault on for 5 cycles, then trip the faulted line in (b).	Stable	Stable	Stable
42	FLT42-PO	**Prior Outage of Great Bend to Circle 230kV**. 3 phase fault on the South Hays to Great Bend 230kV. a. Prior outage Great Bend (539679) 230kV to Circle (532871) 230kV (solve network for steady state solution). b. 3 phase fault on the South Hays (530582) 230kV to Great Bend (539679) 230kV, near South Hays 115kV. c. Leave fault on for 5 cycles, then trip the faulted line in (b).	Stable	Stable	Stable

Cont. #	Contingency Name	Description	2016 winter Results	2017 summer Results	2025 Summer Results
43	FLT43-SB	**Knoll 115kV Stuck Breaker** a. Apply single phase fault at the Knoll (530561) 115kV bus on the Knoll – Red Line (530605) 115kV line. b. Wait 16 cycles, and then drop Knoll (530558) 230kV to Knoll (530561) 115kV (530629) 11.49kV transformer. c. Trip Knoll to Red Line 115kV and remove the fault.	Stable	Stable	Stable
44	FLT44-SB	**Knoll 230kV Stuck Breaker** a. Apply single phase fault at the Knoll (530558) 230kV bus on the Knoll – Smokey Hill (530592) 230kV line. b. Wait 16 cycles, and then drop Knoll (530558) 230kV to Knoll (530561) 115kV (530629) 11.49kV transformer. c. Trip Knoll to Smokey Hill 230kV and remove the fault.	Stable	Stable	Stable
45	FLT45-SB	**Post Rock 230kV Stuck Breaker** a. Apply single phase fault at the Post Rock (530584) 230kV bus on the Post Rock – Knoll (530558) 230kV line. b. Wait 16 cycles, and then drop Post Rock (530583) 345kV to Post Rock (530584) 230kV to Post Rock (530673) 13.8kV transformer. c. Trip Post Rock to Knoll 230kV and remove the fault.	Stable	Stable	Stable
46	FLT46-PO	**Prior Outage of Mingo to Brewster 115kV**. 3 phase fault on the Mingo – Pheasant Run 115kV line. a. Prior outage Mingo (531429) 115kV to Brewster (531351) 115kV (solve network for steady state solution). b. 3 phase fault on the Mingo (531429) 115kV to Pheasant Run (530559) 115kV, near Mingo 115kV. c. Leave fault on for 5 cycles, then trip the faulted line in (b).	Stable	Stable	Stable

Cont. #	Contingency Name	Description	2016 winter Results	2017 summer Results	2025 Summer Results
47	FLT47-PO	**Prior Outage of Mingo to Red Willow 345kV. 3 phase fault on the G15-061-Tap – Setab 345kV line.** a. Prior outage Mingo (531451) 345kV to Red Willow (640325) 345kV (solve network for steady state solution). b. 3 phase fault on the Mingo (531451) 345kV to Setab (531465) 345kV, near G15-051-Tap 345kV. c. Leave fault on for 5 cycles, then trip the faulted line in (b).	**Un-Stable**	**Un- Stable**	**Un- Stable**
48	FLT48-PO	**Prior Outage of Setab to Mingo 345kV. 3 phase fault on the Mingo – Colby 115kV line.** a. Prior outage Setab (531465) 345kV to Mingo (531451) 345kV (solve network for steady state solution). b. 3 phase fault on the Mingo (531429) 115kV to Colby (530555) 115kV, near Mingo 115kV. c. Leave fault on for 5 cycles, then trip the faulted line in (b).	Stable	Stable	Stable
49	FLT49-SB	**Mingo 115kV Stuck Breaker** a. Apply single phase fault at the Mingo (531429)115kV bus on the Mingo – Brewster (531351) 115kV line. b. Wait 16 cycles, and then trip Mingo (531429) to Brewster (531351) 115kV. c. Trip Mingo (531429) to Colby (530555) 115kV and remove the fault.	Stable	Stable	Stable
50	FLT50-SB	**Mingo 345kV Stuck Breaker** a. Apply single phase fault at the Mingo (531451) 345kV bus on the Mingo – Red Willow (640325) 345kV line. b. Wait 16 cycles, and then trip Mingo (531451) to Red Willow (640325) 345kV. c. Trip Mingo (531451) 345kV to Mingo (531429) 115kV to Mingo (531452) 13.8kV transformer and remove the fault.	Stable	Stable	Stable

Cont. #	Contingency Name	Description	2016 winter Results	2017 summer Results	2025 Summer Results
51	FLT51-SB	**Holcomb 345kV Stuck Breaker** a. Apply single phase fault at the Holcomb (531449) 345kV bus on the Holcomb – Buckner (531501) 345kV line. b. Wait 16 cycles, and then trip Holcomb (531449) to Buckner (531501) 345kV. c. Trip Holcomb (531449) 345kV to Holcomb (531448) 115kV to Holcomb (531450) 13.8kV transformer and remove the fault.	Stable	Stable	Stable

6.2. Simulation Results for Cluster Scenario

During stability performance of cluster scenarios, only FLT47-3PH contingency shows Un-Stable response during cluster scenarios for winter-2016, summer-2017, and summer-2025. In order to satisfy this contingency, some generation curtailment is required.

For all other contingencies there are no impacts on the stability performance of the SPP system during cluster scenarios.

7. Stability Analysis for Stand-Alone Scenarios

For stand-alone scenario, selective contingencies are simulated for each interconnection request at 100% capacity of each generator at the POI.

7.1. Fault Simulated for GEN-2015-061 Request

Table 7.1.1, summarizes the overall results for all simulations for GEN-2015-061 request. Complete sets of plots for Winter-2016, Summer-2017, and summer-2025 peak seasons for each fault for GEN-2015-061 are in Appendices E1, E2, and E3 respectively.

Table 7.1.1: List of simulated faults for stand-alone stability analysis (GEN-2015-061)

Cont. #	Contingency Name	Description	2016 winter Results	2017 summer Results	2025 Summer Results
11	FLT11-3PH	3 phase fault on the Post Rock 345kV (530583) to Axtell 345kV (640065) CKT 1, near Post Rock. a. Apply fault at the Post Rock 345kV bus. b. Clear fault after 5 cycles by tripping the faulted line. c. Wait 20 cycles, and then re-close the line in (b) back into the fault. d. Leave fault on for 5 cycles, then trip the line in (b) and remove fault.	Stable	Stable	Stable
12	FLT12-3PH	3 phase fault on the Axtell 345kV (640065) to Sweetwater 345 kV (640374) CKT 1, near Axtell. a. Apply fault at the Axtell 345kV bus. b. Clear fault after 5 cycles by tripping the faulted line. c. Wait 20 cycles, and then re-close the line in (b) back into the fault. d. Leave fault on for 5 cycles, then trip the line in (b) and remove fault.	Stable	Stable	Stable
16	FLT16-3PH	3 phase fault on the Beach 115kV (530557) to Hoxie 115kV (530556) CKT 1, near Beach. a. Apply fault at the Beach 115kV bus. b. Clear fault after 5 cycles by tripping the faulted line. c. Wait 20 cycles, and then re-close the line in (b) back into the fault. d. Leave fault on for 5 cycles, then trip the line in (b) and remove fault.	Stable	Stable	Stable

Cont. #	Contingency Name	Description	2016 winter Results	2017 summer Results	2025 Summer Results
17	FLT17-3PH	3 phase fault on the Colby 115kV (530555) to Atwood 115kV (530554) CKT 1, near Colby. a. Apply fault at the Colby 115kV bus. b. Clear fault after 5 cycles by tripping the faulted line. c. Wait 20 cycles, and then re-close the line in (b) back into the fault. d. Leave fault on for 5 cycles, then trip the line in (b) and remove fault.	Stable	Stable	Stable
18	FLT18-3PH	3 phase fault on the Colby 115kV (530555) to Seguin Tap 115kV (530682) CKT 1, near Colby. a. Apply fault at the Colby 115kV bus. b. Clear fault after 5 cycles by tripping the faulted line. c. Wait 20 cycles, and then re-close the line in (b) back into the fault. d. Leave fault on for 5 cycles, then trip the line in (b) and remove fault.	Stable	Stable	Stable
19	FLT19-3PH	3 phase fault on the Colby 115kV (530555) to Mingo 115kV (531429) CKT 1, near Colby. a. Apply fault at the Colby 115kV bus. b. Clear fault after 5 cycles by tripping the faulted line. c. Wait 20 cycles, and then re-close the line in (b) back into the fault. d. Leave fault on for 5 cycles, then trip the line in (b) and remove fault.	Stable	Stable	Stable
20	FLT20-3PH	3 phase fault on the Mingo 115kV (531429) to Pheasant Run 115kV (530559) CKT 1, near Mingo. a. Apply fault at the Mingo 115kV bus. b. Clear fault after 5 cycles by tripping the faulted line. c. Wait 20 cycles, and then re-close the line in (b) back into the fault. d. Leave fault on for 5 cycles, then trip the line in (b) and remove fault.	Stable	Stable	Stable
21	FLT21-3PH	3 phase fault on the Mingo 115kV (531429) to Brewster 115kV (531351) CKT 1, near Mingo. a. Apply fault at the Mingo 115kV bus. b. Clear fault after 5 cycles by tripping the faulted line. c. Wait 20 cycles, and then re-close the line in (b) back into the fault. d. Leave fault on for 5 cycles, then trip the line in (b) and remove fault.	Stable	Stable	Stable

Cont. #	Contingency Name	Description	2016 winter Results	2017 summer Results	2025 Summer Results
22	FLT22-3PH	3 phase fault on the Mingo 115kV (531429) to Mingo 345kV (531451) to Mingo 13.8kV (531452) XFMR CKT 1, near Mingo 115kV. a. Apply fault at the Mingo 115kV bus. b. Clear fault after 5 cycles by tripping the faulted transformer.	Stable	Stable	Stable
23	FLT23-3PH	3 phase fault on the Mingo 345kV (531451) to Red Willow 345kV (640325) CKT 1, near Mingo. a. Apply fault at the Mingo 345kV bus. b. Clear fault after 5 cycles by tripping the faulted line. c. Wait 20 cycles, and then re-close the line in (b) back into the fault. d. Leave fault on for 5 cycles, then trip the line in (b) and remove fault.	Stable	Stable	Stable
25	FLT25-3PH	3 phase fault on the Mingo 345kV (531451) to Setab 345kV (531465) CKT 1, near Mingo. a. Apply fault at the Mingo 345kV bus. b. Clear fault after 5 cycles by tripping the faulted line. c. Wait 20 cycles, and then re-close the line in (b) back into the fault. d. Leave fault on for 5 cycles, then trip the line in (b) and remove fault.	Stable	Stable	Stable
26	FLT26-3PH	3 phase fault on the Setab 345kV (531465) to Holcomb 345kV (531449) CKT 1, near Setab. a. Apply fault at the Setab 345kV bus. b. Clear fault after 5 cycles by tripping the faulted line. c. Wait 20 cycles, and then re-close the line in (b) back into the fault. d. Leave fault on for 5 cycles, then trip the line in (b) and remove fault.	Stable	Stable	Stable
27	FLT27-3PH	3 phase fault on the Holcomb 345kV (531449) to Buckner 345kV (531501) CKT 1, near Holcomb. a. Apply fault at the Holcomb 345kV bus. b. Clear fault after 5 cycles by tripping the faulted line. c. Wait 20 cycles, and then re-close the line in (b) back into the fault. d. Leave fault on for 5 cycles, then trip the line in (b) and remove fault.	Stable	Stable	Stable

Cont. #	Contingency Name	Description	2016 winter Results	2017 summer Results	2025 Summer Results
28	FLT28-3PH	3 phase fault on the Setab 345kV (531465) to Setab 115kV (531464) to Setab 13.8kV (531259) XFMR CKT 1, near Setab 345kV. a. Apply fault at the Setab 345kV bus. b. Clear fault after 5 cycles by tripping the faulted transformer.	Stable	Stable	Stable
29	FLT29-3PH	3 phase fault on the Red Willow 345kV (640325) to Gentleman 345kV (640183) CKT 1, near Red Willow. a. Apply fault at the Red Willow 345kV bus. b. Clear fault after 5 cycles by tripping the faulted line. c. Wait 20 cycles, and then re-close the line in (b) back into the fault. d. Leave fault on for 5 cycles, then trip the line in (b) and remove fault.	Stable	Stable	Stable
30	FLT30-3PH	3 phase fault on the Red Willow 345kV (640325) to Red Willow 115kV (640326) to Red Willow 13.8kV (640327) XFMR CKT 1, near Red Willow. a. Apply fault at the Red Willow 345kV bus. b. Clear fault after 5 cycles by tripping the faulted transformer.	Stable	Stable	Stable
31	FLT31-3PH	3 phase fault on the Gentleman 345kV (640183) to Sweetwater 345kV (640374) CKT 1, near Gentleman. a. Apply fault at the Gentleman 345kV bus. b. Clear fault after 5 cycles by tripping the faulted line. c. Wait 20 cycles, and then re-close the line in (b) back into the fault. d. Leave fault on for 5 cycles, then trip the line in (b) and remove fault.	Stable	Stable	Stable
32	FLT32-3PH	3 phase fault on the Pheasant Run 115kV (530559) to Seguin 115kV (530683) CKT 1, near Pheasant Run. a. Apply fault at the Pheasant Run 115kV bus. b. Clear fault after 5 cycles by tripping the faulted line. c. Wait 20 cycles, and then re-close the line in (b) back into the fault. d. Leave fault on for 5 cycles, then trip the line in (b) and remove fault.	Stable	Stable	Stable

Cont. #	Contingency Name	Description	2016 winter Results	2017 summer Results	2025 Summer Results
33	FLT33-3PH	3 phase fault on the Pheasant Run 115kV (530559) to Grinnel 115kV (531412) CKT 1, near Pheasant Run. a. Apply fault at the Pheasant Run 115kV bus. b. Clear fault after 5 cycles by tripping the faulted line. c. Wait 20 cycles, and then re-close the line in (b) back into the fault. d. Leave fault on for 5 cycles, then trip the line in (b) and remove fault.	Stable	Stable	Stable
34	FLT34-3PH	3 phase fault on the Gove 115kV (531411) to Arnold 115kV (531409) CKT 1, near Gove. a. Apply fault at the Gove 115kV bus. b. Clear fault after 5 cycles by tripping the faulted line. c. Wait 20 cycles, and then re-close the line in (b) back into the fault. d. Leave fault on for 5 cycles, then trip the line in (b) and remove fault.	Stable	Stable	Stable
35	FLT35-3PH	3 phase fault on the Arnold 115kV (531409) to Ransom 115kV (531414) CKT 1, near Arnold. a. Apply fault at the Arnold 115kV bus. b. Clear fault after 5 cycles by tripping the faulted line. c. Wait 20 cycles, and then re-close the line in (b) back into the fault. d. Leave fault on for 5 cycles, then trip the line in (b) and remove fault.	Stable	Stable	Stable
36	FLT36-3PH	3 phase fault on the Atwood 115kV (530554) to Atwood SW 115kV (531364) CKT 1, near Atwood. a. Apply fault at the Atwood 115kV bus. b. Clear fault after 5 cycles by tripping the faulted line. c. Wait 20 cycles, and then re-close the line in (b) back into the fault. d. Leave fault on for 5 cycles, then trip the line in (b) and remove fault.	Stable	Stable	Stable
37	FLT37-3PH	3 phase fault on the Atwood 115kV (530554) to Beaver Valley 115kV (531488) CKT 1, near Atwood. a. Apply fault at the Atwood 115kV bus. b. Clear fault after 5 cycles by tripping the faulted line. c. Wait 20 cycles, and then re-close the line in (b) back into the fault. d. Leave fault on for 5 cycles, then trip the line in (b) and remove fault.	Stable	Stable	Stable

Cont. #	Contingency Name	Description	2016 winter Results	2017 summer Results	2025 Summer Results
38	FLT38-3PH (16WP Only)	3 phase fault on the Holcomb 345kV (531449) to Finney 345kV (523853) CKT 1, near Holcomb. a. Apply fault at the Holcomb 345kV bus. b. Clear fault after 5 cycles by tripping the faulted line. c. Wait 20 cycles, and then re-close the line in (b) back into the fault. d. Leave fault on for 5 cycles, then trip the line in (b) and remove fault.	Stable	Stable	Stable
39	FLT39-3PH	3 phase fault on the Holcomb 345kV (531449) to Holcomb 115kV (531448) to Holcomb 13.8kV (531450) XFMR CKT 1, near Holcomb 345kV. a. Apply fault at the Holcomb 345kV bus. b. Clear fault after 5 cycles by tripping the faulted transformer.	Stable	Stable	Stable
40	FLT40-3PH	3 phase fault on the Gentleman 345kV (640183) to Keystone 345kV (640252) CKT 1, near Gentleman. a. Apply fault at the Gentleman 345kV bus. b. Clear fault after 5 cycles by tripping the faulted line. c. Wait 20 cycles, and then re-close the line in (b) back into the fault. d. Leave fault on for 5 cycles, then trip the line in (b) and remove fault.	Stable	Stable	Stable
46	FLT46-PO	**Prior Outage of Mingo to Brewster 115kV**. 3 phase fault on the Mingo – Pheasant Run 115kV line. a. Prior outage Mingo (531429) 115kV to Brewster (531351) 115kV (solve network for steady state solution). b. 3 phase fault on the Mingo (531429) 115kV to Pheasant Run (530559) 115kV, near Mingo 115kV. c. Leave fault on for 5 cycles, then trip the faulted line in (b).	Stable	Stable	Stable
47	FLT47-PO	**Prior Outage of Mingo to Red Willow 345kV. 3 phase fault on the G15-061-Tap – Setab 345kV line.** a. Prior outage Mingo (531451) 345kV to Red Willow (640325) 345kV (solve network for steady state solution). b. 3 phase fault on the Mingo (531451) 345kV to Setab (531465) 345kV, near G15-051-Tap 345kV. c. Leave fault on for 5 cycles, then trip the faulted line in (b).	Stable	Stable	Stable

Cont. #	Contingency Name	Description	2016 winter Results	2017 summer Results	2025 Summer Results
48	FLT48-PO	**Prior Outage of Setab to Mingo 345kV. 3 phase fault on the Mingo – Colby 115kV line.** a. Prior outage Setab (531465) 345kV to Mingo (531451) 345kV (solve network for steady state solution). b. 3 phase fault on the Mingo (531429) 115kV to Colby (530555) 115kV, near Mingo 115kV. c. Leave fault on for 5 cycles, then trip the faulted line in (b).	Stable	Stable	Stable
49	FLT49-SB	**Mingo 115kV Stuck Breaker** a. Apply single phase fault at the Mingo (531429)115kV bus on the Mingo – Brewster (531351) 115kV line. b. Wait 16 cycles, and then trip Mingo (531429) to Brewster (531351) 115kV. c. Trip Mingo (531429) to Colby (530555) 115kV and remove the fault.	Stable	Stable	Stable
50	FLT50-SB	**Mingo 345kV Stuck Breaker** a. Apply single phase fault at the Mingo (531451) 345kV bus on the Mingo – Red Willow (640325) 345kV line. b. Wait 16 cycles, and then trip Mingo (531451) to Red Willow (640325) 345kV. c. Trip Mingo (531451) 345kV to Mingo (531429) 115kV to Mingo (531452) 13.8kV transformer and remove the fault.	Stable	Stable	Stable
51	FLT51-SB	**Holcomb 345kV Stuck Breaker** a. Apply single phase fault at the Holcomb (531449) 345kV bus on the Holcomb – Buckner (531501) 345kV line. b. Wait 16 cycles, and then trip Holcomb (531449) to Buckner (531501) 345kV. c. Trip Holcomb (531449) 345kV to Holcomb (531448) 115kV to Holcomb (531450) 13.8kV transformer and remove the fault.	Stable	Stable	Stable

7.2. Fault Simulated for GEN-2015-064 Request

Table 7.2.1, summarizes the overall results for all simulations for GEN-2015-064 request. Complete sets of plots for Winter-2016, Summer-2017, and Summer-2025 peak seasons for each fault for GEN-2015-064 are in Appendices F1, F2, and F3 respectively.

Table 7.2.1: List of simulated faults for stability analysis (GEN-2015-064)

Cont. #	Contingency Name	Description	2016 winter Results	2017 summer Results	2025 Summer Results
11	FLT11-3PH	3 phase fault on the Post Rock 345kV (530583) to Axtell 345kV (640065) CKT 1, near Post Rock. a. Apply fault at the Post Rock 345kV bus. b. Clear fault after 5 cycles by tripping the faulted line. c. Wait 20 cycles, and then re-close the line in (b) back into the fault. d. Leave fault on for 5 cycles, then trip the line in (b) and remove fault.	Stable	Stable	Stable
12	FLT12-3PH	3 phase fault on the Axtell 345kV (640065) to Sweetwater 345 kV (640374) CKT 1, near Axtell. a. Apply fault at the Axtell 345kV bus. b. Clear fault after 5 cycles by tripping the faulted line. c. Wait 20 cycles, and then re-close the line in (b) back into the fault. d. Leave fault on for 5 cycles, then trip the line in (b) and remove fault.	Stable	Stable	Stable
16	FLT16-3PH	3 phase fault on the Beach 115kV (530557) to Hoxie 115kV (530556) CKT 1, near Beach. a. Apply fault at the Beach 115kV bus. b. Clear fault after 5 cycles by tripping the faulted line. c. Wait 20 cycles, and then re-close the line in (b) back into the fault. d. Leave fault on for 5 cycles, then trip the line in (b) and remove fault.	Stable	Stable	Stable
17	FLT17-3PH	3 phase fault on the Colby 115kV (530555) to Atwood 115kV (530554) CKT 1, near Colby. a. Apply fault at the Colby 115kV bus. b. Clear fault after 5 cycles by tripping the faulted line. c. Wait 20 cycles, and then re-close the line in (b) back into the fault. d. Leave fault on for 5 cycles, then trip the line in (b) and remove fault.	Stable	Stable	Stable
18	FLT18-3PH	3 phase fault on the Colby 115kV (530555) to Seguin Tap 115kV (530682) CKT 1, near Colby. a. Apply fault at the Colby 115kV bus. b. Clear fault after 5 cycles by tripping the faulted line. c. Wait 20 cycles, and then re-close the line in (b) back into the fault. d. Leave fault on for 5 cycles, then trip the line in (b) and remove fault.	Stable	Stable	Stable

Cont. #	Contingency Name	Description	2016 winter Results	2017 summer Results	2025 Summer Results
19	FLT19-3PH	3 phase fault on the Colby 115kV (530555) to Mingo 115kV (531429) CKT 1, near Colby. a. Apply fault at the Colby 115kV bus. b. Clear fault after 5 cycles by tripping the faulted line. c. Wait 20 cycles, and then re-close the line in (b) back into the fault. d. Leave fault on for 5 cycles, then trip the line in (b) and remove fault.	Stable	Stable	Stable
20	FLT20-3PH	3 phase fault on the Mingo 115kV (531429) to Pheasant Run 115kV (530559) CKT 1, near Mingo. a. Apply fault at the Mingo 115kV bus. b. Clear fault after 5 cycles by tripping the faulted line. c. Wait 20 cycles, and then re-close the line in (b) back into the fault. d. Leave fault on for 5 cycles, then trip the line in (b) and remove fault.	Stable	Stable	Stable
21	FLT21-3PH	3 phase fault on the Mingo 115kV (531429) to Brewster 115kV (531351) CKT 1, near Mingo. a. Apply fault at the Mingo 115kV bus. b. Clear fault after 5 cycles by tripping the faulted line. c. Wait 20 cycles, and then re-close the line in (b) back into the fault. d. Leave fault on for 5 cycles, then trip the line in (b) and remove fault.	Stable	Stable	Stable
22	FLT22-3PH	3 phase fault on the Mingo 115kV (531429) to Mingo 345kV (531451) to Mingo 13.8kV (531452) XFMR CKT 1, near Mingo 115kV. a. Apply fault at the Mingo 115kV bus. b. Clear fault after 5 cycles by tripping the faulted transformer.	Stable	Stable	Stable
23	FLT23-3PH	3 phase fault on the Mingo 345kV (531451) to Red Willow 345kV (640325) CKT 1, near Mingo. a. Apply fault at the Mingo 345kV bus. b. Clear fault after 5 cycles by tripping the faulted line. c. Wait 20 cycles, and then re-close the line in (b) back into the fault. d. Leave fault on for 5 cycles, then trip the line in (b) and remove fault.	Stable	Stable	Stable

Cont. #	Contingency Name	Description	2016 winter Results	2017 summer Results	2025 Summer Results
25	FLT25-3PH	3 phase fault on the Mingo 345kV (531451) to Setab 345kV (531465) CKT 1, near Mingo. a. Apply fault at the Mingo 345kV bus. b. Clear fault after 5 cycles by tripping the faulted line. c. Wait 20 cycles, and then re-close the line in (b) back into the fault. d. Leave fault on for 5 cycles, then trip the line in (b) and remove fault.	Stable	Stable	Stable
26	FLT26-3PH	3 phase fault on the Setab 345kV (531465) to Holcomb 345kV (531449) CKT 1, near Setab. a. Apply fault at the Setab 345kV bus. b. Clear fault after 5 cycles by tripping the faulted line. c. Wait 20 cycles, and then re-close the line in (b) back into the fault. d. Leave fault on for 5 cycles, then trip the line in (b) and remove fault.	Stable	Stable	Stable
27	FLT27-3PH	3 phase fault on the Holcomb 345kV (531449) to Buckner 345kV (531501) CKT 1, near Holcomb. a. Apply fault at the Holcomb 345kV bus. b. Clear fault after 5 cycles by tripping the faulted line. c. Wait 20 cycles, and then re-close the line in (b) back into the fault. d. Leave fault on for 5 cycles, then trip the line in (b) and remove fault.	Stable	Stable	Stable
28	FLT28-3PH	3 phase fault on the Setab 345kV (531465) to Setab 115kV (531464) to Setab 13.8kV (531259) XFMR CKT 1, near Setab 345kV. a. Apply fault at the Setab 345kV bus. b. Clear fault after 5 cycles by tripping the faulted transformer.	Stable	Stable	Stable
29	FLT29-3PH	3 phase fault on the Red Willow 345kV (640325) to Gentleman 345kV (640183) CKT 1, near Red Willow. a. Apply fault at the Red Willow 345kV bus. b. Clear fault after 5 cycles by tripping the faulted line. c. Wait 20 cycles, and then re-close the line in (b) back into the fault. d. Leave fault on for 5 cycles, then trip the line in (b) and remove fault.	Stable	Stable	Stable

Cont. #	Contingency Name	Description	2016 winter Results	2017 summer Results	2025 Summer Results
30	FLT30-3PH	3 phase fault on the Red Willow 345kV (640325) to Red Willow 115kV (640326) to Red Willow 13.8kV (640327) XFMR CKT 1, near Red Willow. a. Apply fault at the Red Willow 345kV bus. b. Clear fault after 5 cycles by tripping the faulted transformer.	Stable	Stable	Stable
31	FLT31-3PH	3 phase fault on the Gentleman 345kV (640183) to Sweetwater 345kV (640374) CKT 1, near Gentleman. a. Apply fault at the Gentleman 345kV bus. b. Clear fault after 5 cycles by tripping the faulted line. c. Wait 20 cycles, and then re-close the line in (b) back into the fault. d. Leave fault on for 5 cycles, then trip the line in (b) and remove fault.	Stable	Stable	Stable
32	FLT32-3PH	3 phase fault on the Pheasant Run 115kV (530559) to Seguin 115kV (530683) CKT 1, near Pheasant Run. a. Apply fault at the Pheasant Run 115kV bus. b. Clear fault after 5 cycles by tripping the faulted line. c. Wait 20 cycles, and then re-close the line in (b) back into the fault. d. Leave fault on for 5 cycles, then trip the line in (b) and remove fault.	Stable	Stable	Stable
33	FLT33-3PH	3 phase fault on the Pheasant Run 115kV (530559) to Grinnel 115kV (531412) CKT 1, near Pheasant Run. a. Apply fault at the Pheasant Run 115kV bus. b. Clear fault after 5 cycles by tripping the faulted line. c. Wait 20 cycles, and then re-close the line in (b) back into the fault. d. Leave fault on for 5 cycles, then trip the line in (b) and remove fault.	Stable	Stable	Stable
34	FLT34-3PH	3 phase fault on the Gove 115kV (531411) to Arnold 115kV (531409) CKT 1, near Gove. a. Apply fault at the Gove 115kV bus. b. Clear fault after 5 cycles by tripping the faulted line. c. Wait 20 cycles, and then re-close the line in (b) back into the fault. d. Leave fault on for 5 cycles, then trip the line in (b) and remove fault.	Stable	Stable	Stable

Cont. #	Contingency Name	Description	2016 winter Results	2017 summer Results	2025 Summer Results
35	FLT35-3PH	3 phase fault on the Arnold 115kV (531409) to Ransom 115kV (531414) CKT 1, near Arnold. a. Apply fault at the Arnold 115kV bus. b. Clear fault after 5 cycles by tripping the faulted line. c. Wait 20 cycles, and then re-close the line in (b) back into the fault. d. Leave fault on for 5 cycles, then trip the line in (b) and remove fault.	Stable	Stable	Stable
36	FLT36-3PH	3 phase fault on the Atwood 115kV (530554) to Atwood SW 115kV (531364) CKT 1, near Atwood. a. Apply fault at the Atwood 115kV bus. b. Clear fault after 5 cycles by tripping the faulted line. c. Wait 20 cycles, and then re-close the line in (b) back into the fault. d. Leave fault on for 5 cycles, then trip the line in (b) and remove fault.	Stable	Stable	Stable
37	FLT37-3PH	3 phase fault on the Atwood 115kV (530554) to Beaver Valley 115kV (531488) CKT 1, near Atwood. a. Apply fault at the Atwood 115kV bus. b. Clear fault after 5 cycles by tripping the faulted line. c. Wait 20 cycles, and then re-close the line in (b) back into the fault. d. Leave fault on for 5 cycles, then trip the line in (b) and remove fault.	Stable	Stable	Stable
38	FLT38-3PH (16WP Only)	3 phase fault on the Holcomb 345kV (531449) to Finney 345kV (523853) CKT 1, near Holcomb. a. Apply fault at the Holcomb 345kV bus. b. Clear fault after 5 cycles by tripping the faulted line. c. Wait 20 cycles, and then re-close the line in (b) back into the fault. d. Leave fault on for 5 cycles, then trip the line in (b) and remove fault.	Stable	Stable	Stable
39	FLT39-3PH	3 phase fault on the Holcomb 345kV (531449) to Holcomb 115kV (531448) to Holcomb 13.8kV (531450) XFMR CKT 1, near Holcomb 345kV. a. Apply fault at the Holcomb 345kV bus. b. Clear fault after 5 cycles by tripping the faulted transformer.	Stable	Stable	Stable

Cont. #	Contingency Name	Description	2016 winter Results	2017 summer Results	2025 Summer Results
40	FLT40-3PH	3 phase fault on the Gentleman 345kV (640183) to Keystone 345kV (640252) CKT 1, near Gentleman. a. Apply fault at the Gentleman 345kV bus. b. Clear fault after 5 cycles by tripping the faulted line. c. Wait 20 cycles, and then re-close the line in (b) back into the fault. d. Leave fault on for 5 cycles, then trip the line in (b) and remove fault.	Stable	Stable	Stable
46	FLT46-PO	**Prior Outage of Mingo to Brewster 115kV**. 3 phase fault on the Mingo – Pheasant Run 115kV line. a. Prior outage Mingo (531429) 115kV to Brewster (531351) 115kV (solve network for steady state solution). b. 3 phase fault on the Mingo (531429) 115kV to Pheasant Run (530559) 115kV, near Mingo 115kV. c. Leave fault on for 5 cycles, then trip the faulted line in (b).	Stable	Stable	Stable
47	FLT47-PO	**Prior Outage of Mingo to Red Willow 345kV. 3 phase fault on the G15-061-Tap – Setab 345kV line.** a. Prior outage Mingo (531451) 345kV to Red Willow (640325) 345kV (solve network for steady state solution). b. 3 phase fault on the Mingo (531451) 345kV to Setab (531465) 345kV, near G15-051-Tap 345kV. c. Leave fault on for 5 cycles, then trip the faulted line in (b).	Stable	Stable	Stable
48	FLT48-PO	**Prior Outage of Setab to Mingo 345kV. 3 phase fault on the Mingo – Colby 115kV line.** a. Prior outage Setab (531465) 345kV to Mingo (531451) 345kV (solve network for steady state solution). b. 3 phase fault on the Mingo (531429) 115kV to Colby (530555) 115kV, near Mingo 115kV. c. Leave fault on for 5 cycles, then trip the faulted line in (b).	Stable	Stable	Stable
49	FLT49-SB	**Mingo 115kV Stuck Breaker** a. Apply single phase fault at the Mingo (531429)115kV bus on the Mingo – Brewster (531351) 115kV line. b. Wait 16 cycles, and then trip Mingo (531429) to Brewster (531351) 115kV. c. Trip Mingo (531429) to Colby (530555) 115kV and remove the fault.	Stable	Stable	Stable

Cont. #	Contingency Name	Description	2016 winter Results	2017 summer Results	2025 Summer Results
50	FLT50-SB	**Mingo 345kV Stuck Breaker** a. Apply single phase fault at the Mingo (531451) 345kV bus on the Mingo – Red Willow (640325) 345kV line. b. Wait 16 cycles, and then trip Mingo (531451) to Red Willow (640325) 345kV. c. Trip Mingo (531451) 345kV to Mingo (531429) 115kV to Mingo (531452) 13.8kV transformer and remove the fault.	Stable	Stable	Stable
51	FLT51-SB	**Holcomb 345kV Stuck Breaker** a. Apply single phase fault at the Holcomb (531449) 345kV bus on the Holcomb – Buckner (531501) 345kV line. b. Wait 16 cycles, and then trip Holcomb (531449) to Buckner (531501) 345kV. c. Trip Holcomb (531449) 345kV to Holcomb (531448) 115kV to Holcomb (531450) 13.8kV transformer and remove the fault.	Stable	Stable	Stable

7.3.Fault Simulated for GEN-2015-065 Request

Table 7.3.1, summarizes the overall results for all simulations for GEN-2015-065 request. Complete sets of plots for Winter-2016, Summer-2017, and Summer-2025 peak seasons for each fault for GEN-2015-065 are in Appendices G1, G2, and G3 respectively.

Table 7.3.1: List of simulated faults for stability analysis (GEN-2015-065)

Cont. #	Contingency Name	Description	2016 winter Results	2017 summer Results	2025 Summer Results
11	FLT11-3PH	3 phase fault on the Post Rock 345kV (530583) to Axtell 345kV (640065) CKT 1, near Post Rock. a. Apply fault at the Post Rock 345kV bus. b. Clear fault after 5 cycles by tripping the faulted line. c. Wait 20 cycles, and then re-close the line in (b) back into the fault. d. Leave fault on for 5 cycles, then trip the line in (b) and remove fault.	Stable	Stable	Stable

Cont. #	Contingency Name	Description	2016 winter Results	2017 summer Results	2025 Summer Results
12	FLT12-3PH	3 phase fault on the Axtell 345kV (640065) to Sweetwater 345 kV (640374) CKT 1, near Axtell. a. Apply fault at the Axtell 345kV bus. b. Clear fault after 5 cycles by tripping the faulted line. c. Wait 20 cycles, and then re-close the line in (b) back into the fault. d. Leave fault on for 5 cycles, then trip the line in (b) and remove fault.	Stable	Stable	Stable
16	FLT16-3PH	3 phase fault on the Beach 115kV (530557) to Hoxie 115kV (530556) CKT 1, near Beach. a. Apply fault at the Beach 115kV bus. b. Clear fault after 5 cycles by tripping the faulted line. c. Wait 20 cycles, and then re-close the line in (b) back into the fault. d. Leave fault on for 5 cycles, then trip the line in (b) and remove fault.	Stable	Stable	Stable
17	FLT17-3PH	3 phase fault on the Colby 115kV (530555) to Atwood 115kV (530554) CKT 1, near Colby. a. Apply fault at the Colby 115kV bus. b. Clear fault after 5 cycles by tripping the faulted line. c. Wait 20 cycles, and then re-close the line in (b) back into the fault. d. Leave fault on for 5 cycles, then trip the line in (b) and remove fault.	Stable	Stable	Stable
18	FLT18-3PH	3 phase fault on the Colby 115kV (530555) to Seguin Tap 115kV (530682) CKT 1, near Colby. a. Apply fault at the Colby 115kV bus. b. Clear fault after 5 cycles by tripping the faulted line. c. Wait 20 cycles, and then re-close the line in (b) back into the fault. d. Leave fault on for 5 cycles, then trip the line in (b) and remove fault.	Stable	Stable	Stable
19	FLT19-3PH	3 phase fault on the Colby 115kV (530555) to Mingo 115kV (531429) CKT 1, near Colby. a. Apply fault at the Colby 115kV bus. b. Clear fault after 5 cycles by tripping the faulted line. c. Wait 20 cycles, and then re-close the line in (b) back into the fault. d. Leave fault on for 5 cycles, then trip the line in (b) and remove fault.	Stable	Stable	Stable

Cont. #	Contingency Name	Description	2016 winter Results	2017 summer Results	2025 Summer Results
20	FLT20-3PH	3 phase fault on the Mingo 115kV (531429) to Pheasant Run 115kV (530559) CKT 1, near Mingo. a. Apply fault at the Mingo 115kV bus. b. Clear fault after 5 cycles by tripping the faulted line. c. Wait 20 cycles, and then re-close the line in (b) back into the fault. d. Leave fault on for 5 cycles, then trip the line in (b) and remove fault.	Stable	Stable	Stable
21	FLT21-3PH	3 phase fault on the Mingo 115kV (531429) to Brewster 115kV (531351) CKT 1, near Mingo. a. Apply fault at the Mingo 115kV bus. b. Clear fault after 5 cycles by tripping the faulted line. c. Wait 20 cycles, and then re-close the line in (b) back into the fault. d. Leave fault on for 5 cycles, then trip the line in (b) and remove fault.	Stable	Stable	Stable
22	FLT22-3PH	3 phase fault on the Mingo 115kV (531429) to Mingo 345kV (531451) to Mingo 13.8kV (531452) XFMR CKT 1, near Mingo 115kV. a. Apply fault at the Mingo 115kV bus. b. Clear fault after 5 cycles by tripping the faulted transformer.	Stable	Stable	Stable
23	FLT23-3PH	3 phase fault on the Mingo 345kV (531451) to Red Willow 345kV (640325) CKT 1, near Mingo. a. Apply fault at the Mingo 345kV bus. b. Clear fault after 5 cycles by tripping the faulted line. c. Wait 20 cycles, and then re-close the line in (b) back into the fault. d. Leave fault on for 5 cycles, then trip the line in (b) and remove fault.	Stable	Stable	Stable
24	FLT24-3PH	3 phase fault on the G15-061-Tap 345 kV (G15061) to Mingo 345kV (531451) CKT 1, near G15-061-Tap. a. Apply fault at the G15-061-Tap 345kV bus. b. Clear fault after 5 cycles by tripping the faulted line. c. Wait 20 cycles, and then re-close the line in (b) back into the fault. d. Leave fault on for 5 cycles, then trip the line in (b) and remove fault.	Stable	Stable	Stable

Cont. #	Contingency Name	Description	2016 winter Results	2017 summer Results	2025 Summer Results
25	FLT25-3PH	3 phase fault on the G15-061-Tap 345 kV (G15061) to Setab 345kV (531465) CKT 1, near G15-061-Tap. a. Apply fault at the G15-061-Tap 345kV bus. b. Clear fault after 5 cycles by tripping the faulted line. c. Wait 20 cycles, and then re-close the line in (b) back into the fault. d. Leave fault on for 5 cycles, then trip the line in (b) and remove fault.	Stable	Stable	Stable
26	FLT26-3PH	3 phase fault on the Setab 345kV (531465) to Holcomb 345kV (531449) CKT 1, near Setab. a. Apply fault at the Setab 345kV bus. b. Clear fault after 5 cycles by tripping the faulted line. c. Wait 20 cycles, and then re-close the line in (b) back into the fault. d. Leave fault on for 5 cycles, then trip the line in (b) and remove fault.	Stable	Stable	Stable
27	FLT27-3PH	3 phase fault on the Holcomb 345kV (531449) to Buckner 345kV (531501) CKT 1, near Holcomb. a. Apply fault at the Holcomb 345kV bus. b. Clear fault after 5 cycles by tripping the faulted line. c. Wait 20 cycles, and then re-close the line in (b) back into the fault. d. Leave fault on for 5 cycles, then trip the line in (b) and remove fault.	Stable	Stable	Stable
28	FLT28-3PH	3 phase fault on the Setab 345kV (531465) to Setab 115kV (531464) to Setab 13.8kV (531259) XFMR CKT 1, near Setab 345kV. a. Apply fault at the Setab 345kV bus. b. Clear fault after 5 cycles by tripping the faulted transformer.	Stable	Stable	Stable
29	FLT29-3PH	3 phase fault on the Red Willow 345kV (640325) to Gentleman 345kV (640183) CKT 1, near Red Willow. a. Apply fault at the Red Willow 345kV bus. b. Clear fault after 5 cycles by tripping the faulted line. c. Wait 20 cycles, and then re-close the line in (b) back into the fault. d. Leave fault on for 5 cycles, then trip the line in (b) and remove fault.	Stable	Stable	Stable

Cont. #	Contingency Name	Description	2016 winter Results	2017 summer Results	2025 Summer Results
30	FLT30-3PH	3 phase fault on the Red Willow 345kV (640325) to Red Willow 115kV (640326) to Red Willow 13.8kV (640327) XFMR CKT 1, near Red Willow. a. Apply fault at the Red Willow 345kV bus. b. Clear fault after 5 cycles by tripping the faulted transformer.	Stable	Stable	Stable
31	FLT31-3PH	3 phase fault on the Gentleman 345kV (640183) to Sweetwater 345kV (640374) CKT 1, near Gentleman. a. Apply fault at the Gentleman 345kV bus. b. Clear fault after 5 cycles by tripping the faulted line. c. Wait 20 cycles, and then re-close the line in (b) back into the fault. d. Leave fault on for 5 cycles, then trip the line in (b) and remove fault.	Stable	Stable	Stable
32	FLT32-3PH	3 phase fault on the Pheasant Run 115kV (530559) to Seguin 115kV (530683) CKT 1, near Pheasant Run. a. Apply fault at the Pheasant Run 115kV bus. b. Clear fault after 5 cycles by tripping the faulted line. c. Wait 20 cycles, and then re-close the line in (b) back into the fault. d. Leave fault on for 5 cycles, then trip the line in (b) and remove fault.	Stable	Stable	Stable
33	FLT33-3PH	3 phase fault on the Pheasant Run 115kV (530559) to Grinnel 115kV (531412) CKT 1, near Pheasant Run. a. Apply fault at the Pheasant Run 115kV bus. b. Clear fault after 5 cycles by tripping the faulted line. c. Wait 20 cycles, and then re-close the line in (b) back into the fault. d. Leave fault on for 5 cycles, then trip the line in (b) and remove fault.	Stable	Stable	Stable
34	FLT34-3PH	3 phase fault on the Gove 115kV (531411) to Arnold 115kV (531409) CKT 1, near Gove. a. Apply fault at the Gove 115kV bus. b. Clear fault after 5 cycles by tripping the faulted line. c. Wait 20 cycles, and then re-close the line in (b) back into the fault. d. Leave fault on for 5 cycles, then trip the line in (b) and remove fault.	Stable	Stable	Stable

Cont. #	Contingency Name	Description	2016 winter Results	2017 summer Results	2025 Summer Results
35	FLT35-3PH	3 phase fault on the Arnold 115kV (531409) to Ransom 115kV (531414) CKT 1, near Arnold. a. Apply fault at the Arnold 115kV bus. b. Clear fault after 5 cycles by tripping the faulted line. c. Wait 20 cycles, and then re-close the line in (b) back into the fault. d. Leave fault on for 5 cycles, then trip the line in (b) and remove fault.	Stable	Stable	Stable
36	FLT36-3PH	3 phase fault on the Atwood 115kV (530554) to Atwood SW 115kV (531364) CKT 1, near Atwood. a. Apply fault at the Atwood 115kV bus. b. Clear fault after 5 cycles by tripping the faulted line. c. Wait 20 cycles, and then re-close the line in (b) back into the fault. d. Leave fault on for 5 cycles, then trip the line in (b) and remove fault.	Stable	Stable	Stable
37	FLT37-3PH	3 phase fault on the Atwood 115kV (530554) to Beaver Valley 115kV (531488) CKT 1, near Atwood. a. Apply fault at the Atwood 115kV bus. b. Clear fault after 5 cycles by tripping the faulted line. c. Wait 20 cycles, and then re-close the line in (b) back into the fault. d. Leave fault on for 5 cycles, then trip the line in (b) and remove fault.	Stable	Stable	Stable
38	FLT38-3PH (16WP Only)	3 phase fault on the Holcomb 345kV (531449) to Finney 345kV (523853) CKT 1, near Holcomb. a. Apply fault at the Holcomb 345kV bus. b. Clear fault after 5 cycles by tripping the faulted line. c. Wait 20 cycles, and then re-close the line in (b) back into the fault. d. Leave fault on for 5 cycles, then trip the line in (b) and remove fault.	Stable	Stable	Stable
39	FLT39-3PH	3 phase fault on the Holcomb 345kV (531449) to Holcomb 115kV (531448) to Holcomb 13.8kV (531450) XFMR CKT 1, near Holcomb 345kV. a. Apply fault at the Holcomb 345kV bus. b. Clear fault after 5 cycles by tripping the faulted transformer.	Stable	Stable	Stable

Cont. #	Contingency Name	Description	2016 winter Results	2017 summer Results	2025 Summer Results
40	FLT40-3PH	3 phase fault on the Gentleman 345kV (640183) to Keystone 345kV (640252) CKT 1, near Gentleman. a. Apply fault at the Gentleman 345kV bus. b. Clear fault after 5 cycles by tripping the faulted line. c. Wait 20 cycles, and then re-close the line in (b) back into the fault. d. Leave fault on for 5 cycles, then trip the line in (b) and remove fault.	Stable	Stable	Stable
46	FLT46-PO	**Prior Outage of Mingo to Brewster 115kV**. 3 phase fault on the Mingo – Pheasant Run 115kV line. a. Prior outage Mingo (531429) 115kV to Brewster (531351) 115kV (solve network for steady state solution). b. 3 phase fault on the Mingo (531429) 115kV to Pheasant Run (530559) 115kV, near Mingo 115kV. c. Leave fault on for 5 cycles, then trip the faulted line in (b).	Stable	Stable	Stable
47	FLT47-PO	**Prior Outage of Mingo to Red Willow 345kV**. 3 phase fault on the G15-061-Tap – Setab 345kV line. a. Prior outage Mingo (531451) 345kV to Red Willow (640325) 345kV (solve network for steady state solution). b. 3 phase fault on the G15-061-Tap (G15061) 345kV to Setab (531465) 345kV, near G15-051-Tap 345kV. c. Leave fault on for 5 cycles, then trip the faulted line in (b).	Stable	Stable	Stable
48	FLT48-PO	**Prior Outage of Setab to G15-061-Tap 345kV**. 3 phase fault on the Mingo – Colby 115kV line. a. Prior outage Setab (531465) 345kV to G15-061-Tap (G15061) 345kV (solve network for steady state solution). b. 3 phase fault on the Mingo (531429) 115kV to Colby (530555) 115kV, near Mingo 115kV. c. Leave fault on for 5 cycles, then trip the faulted line in (b).	Stable	Stable	Stable
49	FLT49-SB	**Mingo 115kV Stuck Breaker** a. Apply single phase fault at the Mingo (531429)115kV bus on the Mingo – Brewster (531351) 115kV line. b. Wait 16 cycles, and then trip Mingo (531429) to Brewster (531351) 115kV. c. Trip Mingo (531429) to Colby (530555) 115kV and remove the fault.	Stable	Stable	Stable

Cont. #	Contingency Name	Description	2016 winter Results	2017 summer Results	2025 Summer Results
50	FLT50-SB	**Mingo 345kV Stuck Breaker** a. Apply single phase fault at the Mingo (531451) 345kV bus on the Mingo – Red Willow (640325) 345kV line. b. Wait 16 cycles, and then trip Mingo (531451) to Red Willow (640325) 345kV. c. Trip Mingo (531451) 345kV to Mingo (531429) 115kV to Mingo (531452) 13.8kV transformer and remove the fault.	Stable	Stable	Stable
51	FLT51-SB	**Holcomb 345kV Stuck Breaker** a. Apply single phase fault at the Holcomb (531449) 345kV bus on the Holcomb – Buckner (531501) 345kV line. b. Wait 16 cycles, and then trip Holcomb (531449) to Buckner (531501) 345kV. c. Trip Holcomb (531449) 345kV to Holcomb (531448) 115kV to Holcomb (531450) 13.8kV transformer and remove the fault.	Stable	Stable	Stable

7.4. Fault simulated for GEN-2015-072 Request

Table 7.4.1, summarizes the overall results for all simulations for GEN-2015-072 request. Complete sets of plots for Winter-2016, Summer-2017, and Summer-2025 peak seasons for each fault for GEN-2015-072 are in Appendices H1, H2, and H3 respectively.

Table 7.4.1: List of simulated faults for stability analysis (GEN-2015-072)

Cont. #	Contingency Name	Description	2016 winter Results	2017 summer Results	2025 Summer Results
1	FLT01-3PH	3 phase fault on South Hays 230kV (530582) to Post Rock 230KV (530584) CKT 1, near South Hays. a. Apply fault at the South Hays 230kV bus. b. Clear fault after 5 cycles by tripping the faulted line. c. Wait 20 cycles, and then re-close the line in (b) back into the fault. d. Leave fault on for 5 cycles, then trip the line in (b) and remove fault.	Stable	Stable	Stable

Cont. #	Contingency Name	Description	2016 winter Results	2017 summer Results	2025 Summer Results
2	FLT02-3PH	3 phase fault on the Post Rock 230kV (530584) to Knoll 230V (530558) CKT 1, near Post Rock. a. Apply fault at the Post Rock 230kV bus. b. Clear fault after 5 cycles by tripping the faulted line. c. Wait 20 cycles, and then re-close the line in (b) back into the fault. d. Leave fault on for 5 cycles, then trip the line in (b) and remove fault.	Stable	Stable	Stable
3	FLT03-3PH	3 phase fault on the Knoll 230kV (530558) to Smokey Hill 230V (530592) CKT 1, near Knoll. a. Apply fault at the Knoll 230kV bus. b. Clear fault after 5 cycles by tripping the faulted line. c. Wait 20 cycles, and then re-close the line in (b) back into the fault. d. Leave fault on for 5 cycles, then trip the line in (b) and remove fault.	Stable	Stable	Stable
4	FLT04-3PH	3 phase fault on the Knoll 115kV (530561) to Saline 115kV (530551) CKT 1, near Knoll. a. Apply fault at the Knoll 115kV bus. b. Clear fault after 5 cycles by tripping the faulted line. c. Wait 20 cycles, and then re-close the line in (b) back into the fault. d. Leave fault on for 5 cycles, then trip the line in (b) and remove fault.	Stable	Stable	Stable
5	FLT05-3PH	3 phase fault on the Knoll 115kV (530561) to North Hays 115kV (530581) CKT 1, near Knoll. a. Apply fault at the Knoll 115kV bus. b. Clear fault after 5 cycles by tripping the faulted line. c. Wait 20 cycles, and then re-close the line in (b) back into the fault. d. Leave fault on for 5 cycles, then trip the line in (b) and remove fault.	Stable	Stable	Stable
6	FLT06-3PH	3 phase fault on the Knoll 115kV (530561) to Redline 115kV (530605) CKT 1, near Knoll. a. Apply fault at the Knoll 115kV bus. b. Clear fault after 5 cycles by tripping the faulted line. c. Wait 20 cycles, and then re-close the line in (b) back into the fault. d. Leave fault on for 5 cycles, then trip the line in (b) and remove fault.	Stable	Stable	Stable

Cont. #	Contingency Name	Description	2016 winter Results	2017 summer Results	2025 Summer Results
7	FLT07-3PH	3 phase fault on the South Hays 230kV (530582) to Great Bend 230kV (539679) CKT 1, near South Hays. a. Apply fault at the South Hays 230kV bus. b. Clear fault after 5 cycles by tripping the faulted line. c. Wait 20 cycles, and then re-close the line in (b) back into the fault. d. Leave fault on for 5 cycles, then trip the line in (b) and remove fault.	Stable	Stable	Stable
8	FLT08-3PH	3 phase fault on the Great Bend 230kV (539679) to Spearville 230kV (539695) CKT 1, near Great Bend. a. Apply fault at the Great Bend 230kV bus. b. Clear fault after 5 cycles by tripping the faulted line. c. Wait 20 cycles, and then re-close the line in (b) back into the fault. d. Leave fault on for 5 cycles, then trip the line in (b) and remove fault.	Stable	Stable	Stable
9	FLT09-3PH	3 phase fault on the Great Bend 230kV (539679) to Circle 230kV (532871) CKT 1, near Great Bend. a. Apply fault at the Great Bend 230kV bus. b. Clear fault after 5 cycles by tripping the faulted line. c. Wait 20 cycles, and then re-close the line in (b) back into the fault. d. Leave fault on for 5 cycles, then trip the line in (b) and remove fault.	Stable	Stable	Stable
11	FLT11-3PH	3 phase fault on the Post Rock 345kV (530583) to Axtell 345kV (640065) CKT 1, near Post Rock. a. Apply fault at the Post Rock 345kV bus. b. Clear fault after 5 cycles by tripping the faulted line. c. Wait 20 cycles, and then re-close the line in (b) back into the fault. d. Leave fault on for 5 cycles, then trip the line in (b) and remove fault.	Stable	Stable	Stable
12	FLT12-3PH	3 phase fault on the Axtell 345kV (640065) to Sweetwater 345 kV (640374) CKT 1, near Axtell. a. Apply fault at the Axtell 345kV bus. b. Clear fault after 5 cycles by tripping the faulted line. c. Wait 20 cycles, and then re-close the line in (b) back into the fault. d. Leave fault on for 5 cycles, then trip the line in (b) and remove fault.	Stable	Stable	Stable

Cont. #	Contingency Name	Description	2016 winter Results	2017 summer Results	2025 Summer Results
13	FLT13-3PH	3 phase fault on the Knoll 230kV (530558) to Knoll 115kV (530561) to Knoll 11.49kV (530629) XFMR CKT 1, near Knoll 230 kV. a. Apply fault at the Knoll 230kV bus. b. Clear fault after 5 cycles by tripping the faulted transformer.	Stable	Stable	Stable
14	FLT14-3PH	3 phase fault on the G10-048-Tap 115kV (560336) to Beach 115kV (530557) CKT 1, near G10-048-Tap. a. Apply fault at the G10-048-Tap 115kV bus. b. Clear fault after 5 cycles by tripping the faulted line. c. Wait 20 cycles, and then re-close the line in (b) back into the fault. d. Leave fault on for 5 cycles, then trip the line in (b) and remove fault.	Stable	Stable	Stable
15	FLT15-3PH	3 phase fault on the G10-048-Tap 115kV (560336) to Redline 115kV (530605) CKT 1, near G10-048-Tap. a. Apply fault at the G10-048-Tap 115kV bus. b. Clear fault after 5 cycles by tripping the faulted line. c. Wait 20 cycles, and then re-close the line in (b) back into the fault. d. Leave fault on for 5 cycles, then trip the line in (b) and remove fault.	Stable	Stable	Stable
16	FLT16-3PH	3 phase fault on the Beach 115kV (530557) to Hoxie 115kV (530556) CKT 1, near Beach. a. Apply fault at the Beach 115kV bus. b. Clear fault after 5 cycles by tripping the faulted line. c. Wait 20 cycles, and then re-close the line in (b) back into the fault. d. Leave fault on for 5 cycles, then trip the line in (b) and remove fault.	Stable	Stable	Stable
31	FLT31-3PH	3 phase fault on the Gentleman 345kV (640183) to Sweetwater 345kV (640374) CKT 1, near Gentleman. a. Apply fault at the Gentleman 345kV bus. b. Clear fault after 5 cycles by tripping the faulted line. c. Wait 20 cycles, and then re-close the line in (b) back into the fault. d. Leave fault on for 5 cycles, then trip the line in (b) and remove fault.	Stable	Stable	Stable

Cont. #	Contingency Name	Description	2016 winter Results	2017 summer Results	2025 Summer Results
41	FLT41-PO	**Prior Outage of Knoll to Post Rock 230kV**. 3 phase fault on the South Hays to Post Rock 230kV. a. Prior outage Knoll (530558) 230kV to Post Rock (530584) 230kV (solve network for steady state solution). b. 3 phase fault on the South Hays (530582) 230kV to Post Rock (530584) 230kV, near South Hays 115kV. c. Leave fault on for 5 cycles, then trip the faulted line in (b).	Stable	Stable	Stable
42	FLT42-PO	**Prior Outage of Great Bend to Circle 230kV**. 3 phase fault on the South Hays to Great Bend 230kV. a. Prior outage Great Bend (539679) 230kV to Circle (532871) 230kV (solve network for steady state solution). b. 3 phase fault on the South Hays (530582) 230kV to Great Bend (539679) 230kV, near South Hays 115kV. c. Leave fault on for 5 cycles, then trip the faulted line in (b).	Stable	Stable	Stable
43	FLT43-SB	**Knoll 115kV Stuck Breaker** a. Apply single phase fault at the Knoll (530561) 115kV bus on the Knoll – Red Line (530605) 115kV line. b. Wait 16 cycles, and then drop Knoll (530558) 230kV to Knoll (530561) 115kV (530629) 11.49kV transformer. c. Trip Knoll to Red Line 115kV and remove the fault.	Stable	Stable	Stable
44	FLT44-SB	**Knoll 230kV Stuck Breaker** a. Apply single phase fault at the Knoll (530558) 230kV bus on the Knoll – Smokey Hill (530592) 230kV line. b. Wait 16 cycles, and then drop Knoll (530558) 230kV to Knoll (530561) 115kV (530629) 11.49kV transformer. c. Trip Knoll to Smokey Hill 230kV and remove the fault.	Stable	Stable	Stable
45	FLT45-SB	**Post Rock 230kV Stuck Breaker** a. Apply single phase fault at the Post Rock (530584) 230kV bus on the Post Rock – Knoll (530558) 230kV line. b. Wait 16 cycles, and then drop Post Rock (530583) 345kV to Post Rock (530584) 230kV to Post Rock (530673) 13.8kV transformer. c. Trip Post Rock to Knoll 230kV and remove the fault.	Stable	Stable	Stable

7.5. Simulation Results for Stand-Alone Scenarios

There are no impacts on the stability performance for stand-alone scenarios of the SPP system for the contingencies tested on the SPP provided base cases.

8. Conclusions

The findings of the impact study for the proposed interconnection projects under DSIS-2015-002 (Group 04) considered 100% of their proposed installed capacity is as follows:

1. The power factor analysis indicates the DISIS-2015-002 (Group 04) interconnection requests i.e., GEN-2015-061, GEN-2015-064, GEN-2015-065, and GEN-2015-072 are required to maintain the SPP standard power factor at the point of interconnection i.e., (Mingo (531451) to Setab (531465) 345kV), Mingo 115kV (531429), Mingo 345kV (531451), and South Hays 230kV (530582) based on the contingencies studied. Per the SPP OATT, the Interconnection Customer will be required to provide 95% lagging (supplying vars) and 95% leading (absorbing vars) at the POI.

2. To offset the capacitive effects of the collector system and transmission line of the wind farm under low wind or no wind conditions, the inductive reactive support analysis for wind generator GEN-2015-061 performed for winter-2016 scenario which indicates for wind generator GEN-2015-061 performed for winter 2016 scenario which indicates that at POI Mingo 345KV (531451) 26.3 MVAR reactor is required at Bus 584990 to maintain zero MVAR flow at POI. For GEN-2015-064 the analysis indicates that at POI Mingo 115kV (531429) 4.5 MVAR reactor is required at Bus 585020 to maintain zero MVAR flow at POI. For GEN-2015-065 the analysis indicates that at POI Mingo 345kV (531451) 5.9 MVAR reactor is required at Bus 585030 to maintain zero MVAR flow at POI. Similarly, for GEN-2015-072 the analysis indicates that at POI South Hays 230kV (530582) 1.3 MVAR reactor is required at Bus 585090 to maintain zero MVAR flow at POI. Maintaining zero MVar flow at the POI at all times is not possible with static reactor banks. It will be determined on a case by case basis for each generator as to whether additional reactor banks are required for low wind conditions.

3. During dynamic simulations, only FLT47-3PH contingency shows Un-Stable response during cluster scenarios. In order to satisfy this contingency some generation curtailment is required. For other all contingencies, there are no impacts on the stability performance of the SPP system during both cluster and stand-alone scenarios for the contingencies tested on the provided base cases. The study machines stayed on-line and stable for all simulated faults. The Project stability simulations with forty nine (49) specified test disturbances did not show instability problems in the SPP system. Any oscillations were damped out.

9. **Appendix A: 2016 winter Peak Case Stability Run Plots – Cluster**

10. **Appendix B: 2017 summer Peak Case Stability Run Plots – Cluster**

11. **Appendix C: 2025 Summer Peak Case Stability Run Plots – Cluster**

12. **Appendix D: Project Model Data**

13. **Appendix E1: 2016 winter Peak Case Stability Run Plots for GEN-2015-061 Stand-Alone Scenario**

14. **Appendix E2: 2017 summer Peak Case Stability Run Plots for GEN-2015-061 Stand-Alone Scenario**

15. **Appendix E3: 2025 Summer Peak Case Stability Run Plots for GEN-2015-061 Stand-Alone Scenario**

16. **Appendix F1: 2016 winter Peak Case Stability Run Plots for GEN-2015-064 Stand-Alone Scenario**

17. **Appendix F2: 2017 summer Peak Case Stability Run Plots for GEN-2015-064 Stand-Alone Scenario**

18. **Appendix F3: 2025 Summer Peak Case Stability Run Plots for GEN-2015-064 Stand-Alone Scenario**

19. **Appendix G1: 2016 winter Peak Case Stability Run Plots for GEN-2015-065 Stand-Alone Scenario**

20. **Appendix G2: 2017 summer Peak Case Stability Run Plots for GEN-2015-065 Stand-Alone Scenario**

21. **Appendix G3: 2025 Summer Peak Case Stability Run Plots for GEN-2015-065 Stand-Alone Scenario**

22. **Appendix H1: 2016 winter Peak Case Stability Run Plots for GEN-2015-072 Stand-Alone Scenario**

23. **Appendix H2: 2017 summer Peak Case Stability Run Plots for GEN-2015-072 Stand-Alone Scenario**

24. **Appendix H3: 2025 Summer Peak Case Stability Run Plots for GEN-2015-072 Stand-Alone Scenario**

11.20 M: Group 6 Dynamic Stability Analysis Report

See next page

MITSUBISHI ELECTRIC POWER PRODUCTS, INC.
POWER SYSTEMS ENGINEERING SERVICES
530 KEYSTONE DRIVE
WARRENDALE, PA 15086, U.S.A.

Phone: (724) 778-5111 Fax: (724) 778-5149
Home Page: www.meppi.com

Southwest Power Pool, Inc. (SPP)

DISIS-2015-002 (Group 06) Definitive Impact Study

Draft Report

PXE-1229
Revision #00

March 2016

Submitted By:
Mitsubishi Electric Power Products, Inc. (MEPPI)
Power Systems Engineering Services Department
Warrendale, PA

DRAFT

Title: **DISIS-2015-002 (Group 06) Definitive Impact Study: Draft Report PXE-1229 for Review**
Date: March 2016
Author: Nicholas W. Tenza; Engineer II, Power Systems Engineering Dept. *Nicholas W. Tenza*
Approved: Don Shoup; Manager, Power Systems Engineering Dept. *Donald J. Shoup*

EXECUTIVE SUMMARY

SPP requested a Definitive Interconnection System Impact Study (DISIS). The DISIS required a Stability Analysis, Short Circuit Analysis, Power Factor Analysis, and Low Wind/No Wind Analysis detailing the impacts of the interconnecting projects as shown in Table ES-1.

Table ES-1
Interconnection Projects Evaluated

Request	Size (MW)	Generator Model	Point of Interconnection
GEN-2014-046	125.4	SMA SC 825CP Inverter (584283) (solar)	Chaves County 115kV(527482)
GEN-2015-018	80	GE 2.0MW (584603) (wind)	Tap on Curry County (524822) to Bailey County (525028) 115kV (560032)
GEN-2015-020	100	Eaton Power Xpert Solar 1.67MW (584623) (solar)	Oasis 115kV (524874)
GEN-2015-031	300	GE 1.79 MW (wind)	Swisher (525213) to Amarillo South (524415) 230 kV (560050)
GEN-2015-033	152	Vestes V110 2.0 MW (wind)	Rio Blanco 345 kV (562653) (Tap on Tuco – OKU 345kV)
GEN-2015-039	50	Eaton Power Xpert Solar 1.67 MW (solar)	Deaf Smith (524623) to Plant X (525481) 230kV (560051)
GEN-2015-040	50	Eaton Power Xpert Solar 1.67 MW (solar)	Mustang 230kV (527149)
GEN-2015-041	5	GENROU (583456) (combustion turbine)	Tuco 345kV (525832)
GEN-2015-056	101	GE 2.3 MW (wind)	Crossroads 345kV (527656) (Tap Eddy (527802) to Tolk(525549)
GEN-2015-058	50	Power Electronics Solar 1.667 MW (solar)	Atoka 115kV (527786)
GEN-2015-068	300	GE 2.0 MW (wind)	Tuco 345kV (525832)
GEN-2015-075	50	GE 3.96 MW (wind)	Carlisle 69kV (526159)

DRAFT

Table ES-1
Interconnection Projects Evaluated (continued)

Request	Size (MW)	Generator Model	Point of Interconnection
GEN-2015-077	80	Sunny Central SMA SC2200 2.0 MW (solar)	Tap on Terry (526736) to Clauene (526491) 115kV (560058)
GEN-2015-078	50	Eaton Power Xpert Solar 1.67 MW (solar)	Mustang 115kV (527146)
GEN-2015-079	129.2	GE LV5 3.8 MW (solar)	Tap Yoakum (526935) to Hobbs (527894) 230 kV (560059)
GEN-2015-080	129.2	GE LV5 3.8 MW (solar)	Tap Yoakum (526935) to Hobbs (527894) 230 kV (560059)

SUMMARY OF STABILITY ANALYSIS

The Stability Analysis determined that there were multiple contingencies across all seasons that resulted in system/voltage instability, generation tripping offline, and poor post-fault voltage recovery when all generation interconnection requests were at 100% output.

To mitigate the system/voltage instability, voltage violations, generation tripping offline, and poor post-fault steady-state voltages, the following upgrades were provided by SPP and implemented in each season (this set of mitigation will be referred as "**Solution 1**" in the report):

- Woodward to GEN-2011-051 Tap to Tatonga to Mathewson 345 kV circuit #2
- Beaver County Reactive Power Support – 75 Mvar SVC
- Woodward to Border 345 kV existing line tapped by Chisholm 345 kV
- Tuco 2 (Crawfish Draw) to Tolk to Potter County to Grapevine to Chisholm 345 kV circuit #1
- Grapevine to Beaver County 345 kV circuit #1
- Chaves County to Price to Pine Lodge to Captain 69 kV circuit converted to 115 kV
- Mustang to Seminole 230 kV circuit #1
- OKU Reactive Power Support (760 Mvar total)
    - 300 Mvar SVC
    - Capacitor banks
        - 2 steps of 130 Mvar (260 Mvar total)
        - 4 steps of 50 Mvar (200 Mvar total)
- Border Reactive Power Support (550 Mvar total)
    - 250 Mvar SVC
    - Capacitor banks
        - 6 steps of 50 Mvar (300 Mvar total)

DRAFT

- Grapevine Reactive Power Support (500 Mvar total)
    - 300 Mvar SVC
    - Capacitor banks
        - 4 steps of 50 Mvar (200 Mvar total)

After the **Solution 1** upgrades were implemented, all violations were mitigated except for the following contingencies which resulted in voltages above 1.2 p.u.:

- FLT43-3PH (16WP, 17SP, 20WP)
- FLT49-3PH (16WP, 17SP, 20SP, 20WP)
- FLT91-3PH (16WP, 17SP, 20WP)

In order to mitigate the high voltage observations, the OKU capacitor bank was taken out-of-service for the above faults (this will be referred as "**Solution 2**" in the report). With the OKU capacitor bank out-of-service, the three faults (FLT43, FLT49, and FLT91) all recovered within SPP criteria.

After implementing the **Solution 1** upgrades, the contingency analysis was re-simulated for all contingencies. With the **Solution 1** upgrades, the Stability Analysis determined that there was no wind turbine tripping or system instability observed as a result of interconnecting all study projects at 100% output.

SUMMARY OF THE SHORT CIRCUIT ANALYSIS

The short circuit analysis was performed on the 2017 Summer Peak and 2025 Summer Peak power flows for all study projects. Refer to Table ES-2 and Table ES-3 for a list of maximum fault currents observed for each study project for the 17SP and 25SP cases, respectively.

DRAFT

Table ES-2
2017SP: List of Maximum Fault Currents Observed for Each Study Project

Study Project	Fault Current at POI (kA)	Maximum Fault Current (kA)	Fault Location	Bus Voltage (kV)
GEN-2014-046	6.24	25.36	CUNNINHAM 3	115
GEN-2015-018	5.62	28.53	TOLK EAST 6 TOLK WEST 6 TOLK TAP 6	230
GEN-2015-020	9.59	28.53	TOLK EAST 6 TOLK WEST 6 TOLK TAP 6	230
GEN-2015-031	10.89	13.10	NICHOLS 3	115
GEN-2015-033	7.49	30.53	LP-COOK 2	69
GEN-2015-039	7.77	28.53	TOLK EAST 6 TOLK WEST 6 TOLK TAP 6	230
GEN-2015-040	13.95	28.75	HOBBS INT 3	115
GEN-2015-041	15.04	30.53	LP-COOK 2	69
GEN-2015-056	6.53	28.53	TOLK EAST 6 TOLK WEST 6 TOLK TAP 6	230
GEN-2015-058	6.61	25.36	CUNNINHAM 3	115
GEN-2015-068	15.04	30.53	LP-COOK 2	69
GEN-2015-075	2.57	28.53	TOLK EAST 6 TOLK TAP 6	230
GEN-2015-077	7.98	23.36	TUCO INT 6	230
GEN-2015-078	22.41	28.75	HOBBS INT 3	115
GEN-2015-079	8.65	28.75	HOBBS INT 3	115
GEN-2015-080	8.65	28.75	HOBBS INT 3	115

DRAFT

Table ES-3
2025SP: List of Maximum Fault Currents Observed for Each Study Project

Study Project	Fault Current at POI (kA)	Maximum Fault Current (kA)	Fault Location	Bus Voltage (kV)
GEN-2014-046	6.36	29.69	CUNNINHAM 3	115
GEN-2015-018	5.92	29.40	TOLK EAST 6 TOLK WEST 6 TOLK TAP 6	230
GEN-2015-020	9.72	29.40	TOLK EAST 6 TOLK WEST 6 TOLK TAP 6	230
GEN-2015-031	11.02	31.25	NICHOLS 3	115
GEN-2015-033	7.77	35.03	LP-COOK 2	69
GEN-2015-039	0.23	29.40	TOLK EAST 6 TOLK WEST 6 TOLK TAP 6	230
GEN-2015-040	15.75	32.96	HOBBS INT 3	115
GEN-2015-041	17.31	35.03	LP-COOK 2	69
GEN-2015-056	6.60	29.40	TOLK EAST 6 TOLK WEST 6 TOLK TAP 6	230
GEN-2015-058	7.02	29.69	CUNNINHAM 3	115
GEN-2015-068	17.31	35.03	LP-COOK 2	69
GEN-2015-075	2.58	29.40	TOLK EAST 6 TOLK TAP 6	230
GEN-2015-077	8.08	26.21	TUCO INT 6	230
GEN-2015-078	23.38	32.96	HOBBS INT 3	115
GEN-2015-079	9.27	32.96	HOBBS INT 3	115
GEN-2015-080	9.27	32.96	HOBBS INT 3	115

DRAFT

SUMMARY OF POWER FACTOR ANALYSIS

The upgrades identified in the Stability Analysis were implemented in the power flow cases and utilized for the Power Factor Analysis.

Study Generator GEN-2014-046

The Power Factor Analysis shows that GEN-2014-046 has a power factor range of 0.986 to 0.997 leading (absorbing) for the 2016 Winter Peak conditions, a power factor range of 0.987 to 0.993 leading (absorbing) for the 2017 Summer Peak conditions, a power factor range of 0.991

to 0.997 leading (absorbing) for the 2020 Summer Peak conditions, a power factor range of 0.991 to 0.997 leading (absorbing) for the 2020 Winter Peak conditions, and a power factor range of 0.989 to 0.997 leading (absorbing) for the 2025 Summer Peak conditions.

Study Generator GEN-2015-018

The Power Factor Analysis shows that GEN-2015-018 has a power factor range of 0.973 to 0.998 leading (absorbing) for the 2016 Winter Peak conditions, a power factor range of 0.956 leading (absorbing) to 0.996 lagging (supplying) for the 2017 Summer Peak conditions, a power factor range of 0.967 leading (absorbing) to 1.00 (unity) for the 2020 Summer Peak conditions, a power factor range of 0.979 to 0.996 leading (absorbing) for the 2020 Winter Peak conditions, and a power factor range of 0.950 leading (absorbing) to 0.996 lagging (supplying) for the 2025 Summer Peak conditions.

Study Generator GEN-2015-020

The Power Factor Analysis shows that GEN-2015-020 has a power factor range of 0.971 leading (absorbing) to 0.999 lagging (supplying) for the 2016 Winter Peak conditions, a power factor range of 0.969 leading (absorbing) to 0.993 lagging (supplying) for the 2017 Summer Peak conditions, a power factor range of 0.975 leading (absorbing) to 1.00 (unity) for the 2020 Summer Peak conditions, a power factor range of 0.972 to 0.999 leading (absorbing) for the 2020 Winter Peak conditions, and a power factor range of 0.969 leading (absorbing) to 1.00 (unity) for the 2025 Summer Peak conditions.

Study Generator GEN-2015-031

The Power Factor Analysis shows that GEN-2015-031 has a power factor range of 0.995 leading (absorbing) to 0.879 lagging (supplying) for the 2016 Winter Peak conditions, a power factor range of 0.999 leading (absorbing) to 0.918 lagging (supplying) for the 2017 Summer Peak conditions, a power factor range of 0.996 leading (absorbing) to 0.948 lagging (supplying) for the 2020 Summer Peak conditions, a power factor range of 0.995 leading (absorbing) to 0.976 lagging (supplying) for the 2020 Winter Peak conditions, and a power factor range of 0.996 lagging (supplying) to 1.00 (unity) for the 2025 Summer Peak conditions.

Study Generator GEN-2015-033

The Power Factor Analysis shows that GEN-2015-033 has a power factor range of 0.993 leading (absorbing) to 0.763 lagging (supplying) for the 2016 Winter Peak conditions, a power factor range of 0.976 leading (absorbing) to 0.835 lagging (supplying) for the 2017 Summer Peak conditions, a power factor range of 0.993 leading (absorbing) to 0.919 lagging (supplying) for the 2020 Summer Peak conditions, a power factor range of 0.979 leading (absorbing) to 0.793 lagging (supplying) for the 2020 Winter Peak conditions, and a power factor range of 0.975 leading (absorbing) to 0.971 lagging (supplying) for the 2025 Summer Peak conditions.

DRAFT

Study Generator GEN-2015-040

The Power Factor Analysis shows that GEN-2015-040 has a power factor range of 0.909 lagging to 1.00 (unity) for the 2016 Winter Peak conditions, a power factor range of 0.484 to 0.823 lagging (supplying) for the 2017 Summer Peak conditions, a power factor range of 0.851 to 0.993 lagging (supplying) for the 2020 Summer Peak conditions, a power factor range of 0.957 leading (absorbing) to 0.959 lagging (supplying) for the 2020 Winter Peak conditions, and a power factor range of 0.707 to 0.977 lagging (supplying) for the 2025 Summer Peak conditions.

Study Generator GEN-2015-056

The Power Factor Analysis shows that GEN-2015-056 has a power factor range of 0.991 leading (absorbing) to 0.842 lagging (supplying) for the 2016 Winter Peak conditions, a power factor range of 0.890 to 0.998 lagging (supplying) for the 2017 Summer Peak conditions, a power factor range of 0.958 lagging (supplying) to 1.00 (unity) for the 2020 Summer Peak conditions, a power factor range of 0.998 leading (absorbing) to 0.892 lagging (supplying) for the 2020 Winter Peak conditions, and a power factor range of 0.980 lagging (supplying) to 1.00 (unity) for the 2025 Summer Peak conditions.

Study Generator GEN-2015-058

The Power Factor Analysis shows that GEN-2015-058 has a power factor range of 0.968 leading (absorbing) to 0.949 lagging (supplying) for the 2016 Winter Peak conditions, a power factor range of 0.975 leading (absorbing) to 0.942 lagging (supplying) for the 2017 Summer Peak conditions, a power factor range of 0.976 leading (absorbing) to 0.987 lagging (supplying) for the 2020 Summer Peak conditions, a power factor range of 0.990 leading (absorbing) to 0.990 lagging (supplying) for the 2020 Winter Peak conditions, and a power factor range of 0.972 leading (absorbing) to 0.959 lagging (supplying) for the 2025 Summer Peak conditions.

Study Generator GEN-2015-068

The Power Factor Analysis shows that GEN-2015-068 has a power factor range of 0.406 to 0.839 lagging (supplying) for the 2016 Winter Peak conditions, a power factor range of 0.950 to 0.896 lagging (supplying) for the 2017 Summer Peak conditions, a power factor range of 0.987 leading (absorbing) to 0.614 lagging (supplying) for the 2020 Summer Peak conditions, a power factor range of 0.982 leading (absorbing) to 0.463 lagging (supplying) for the 2020 Winter Peak conditions, and a power factor range of 0.998 leading (absorbing) to 0.0.676 lagging (supplying) for the 2025 Summer Peak conditions.

Study Generator GEN-2015-075

The Power Factor Analysis shows that GEN-2015-075 has a power factor range of 0.990 leading (absorbing) to 1.00 (unity) for the 2016 Winter Peak conditions, a power factor range of 0.985 leading (absorbing) to 1.00 (unity) for the 2017 Summer Peak conditions, a power factor range

DRAFT

of 0.995 leading (absorbing) to 0.999 lagging (supplying) for the 2020 Summer Peak conditions, a power factor range of 0.995 leading (absorbing) to 1.00 (unity) for the 2020 Winter Peak conditions, and a power factor range of 0.984 leading (absorbing) to 0.998 lagging (supplying) for the 2025 Summer Peak conditions.

Study Generator GEN-2015-077

The Power Factor Analysis shows that GEN-2015-077 has a power factor range of 0.981 leading (absorbing) to 0.998 lagging (supplying) for the 2016 Winter Peak conditions, a power factor range of 0.982 leading (absorbing) to 0.940 lagging (supplying) for the 2017 Summer Peak conditions, a power factor range of 0.980 leading (absorbing) to 0.995 lagging (supplying) for the 2020 Summer Peak conditions, a power factor range of 0.988 leading (absorbing) to 0.997 lagging (supplying) for the 2020 Winter Peak conditions, and a power factor range of 0.988 leading (absorbing) to 0.994 lagging (supplying) for the 2025 Summer Peak conditions.

Study Generator GEN-2015-078

The Power Factor Analysis shows that GEN-2015-078 has a power factor range of 0.895 leading (absorbing) to 0.772 lagging (supplying) for the 2016 Winter Peak conditions, a power factor range of 0.899 leading (absorbing) to 0.583 lagging (supplying) for the 2017 Summer Peak conditions, a power factor range of 0.687 leading (absorbing) to 0.741 lagging (supplying) for the 2020 Summer Peak conditions, a power factor range of 0.764 leading (absorbing) to 0.649 lagging (supplying) for the 2020 Winter Peak conditions, and a power factor range of 0.756 leading (absorbing) to 0.534 lagging (supplying) for the 2025 Summer Peak conditions.

Study Generator GEN-2015-079

The Power Factor Analysis shows that GEN-2015-079 has a power factor range of 0.988 leading (absorbing) to 1.00 (unity) for the 2016 Winter Peak conditions, a power factor range of 0.982 leading (absorbing) to 0.991 lagging (supplying) for the 2017 Summer Peak conditions, a power factor range of 0.986 leading (absorbing) to 1.00 (unity) for the 2020 Summer Peak conditions, a power factor range of 0.991 leading (absorbing) to 1.00 (unity) for the 2020 Winter Peak conditions, and a power factor range of 0.974 leading (absorbing) to 0.999 lagging (supplying) for the 2025 Summer Peak conditions.

Study Generator GEN-2015-080

The Power Factor Analysis shows that GEN-2015-080 has a power factor range of 0.988 leading (absorbing) to 1.00 (unity) for the 2016 Winter Peak conditions, a power factor range of 0.982 leading (absorbing) to 0.991 lagging (supplying) for the 2017 Summer Peak conditions, a power factor range of 0.986 leading (absorbing) to 1.00 (unity) for the 2020 Summer Peak conditions, a power factor range of 0.991 leading (absorbing) to 1.00 (unity) for the 2020 Winter Peak conditions, and a power factor range of 0.974 leading (absorbing) to 0.999 lagging (supplying) for the 2025 Summer Peak conditions.

DRAFT

SUMMARY OF LOW WIND/NO WIND ANALYSIS

The amount of reactive power injected into the transmission network was recorded at the point of interconnection for each wind and solar powered interconnection request for each season. The maximum reactance needed for zero Mvar flow was 58 Mvar for GEN-2015-068 (Tuco 345 kV). The minimum reactance needed for zero Mvar flow was 0.1 Mvar for GEN-2015-039 and GEN-2015-040 (Tap on Deaf Smith to Plant X 230 kV and Mustang 230 kV, respectively).

DRAFT

Table of Contents

Section 1: Objectives. 1
Section 2: Background 1
Section 3: Stability Analysis 83
3.1 Approach 83
3.2 Cluster Scenario Stability Analysis Results 87
3.3 Stand Alone Scenario Stability Analysis Result: GEN-2014-046 102
3.4 Stand Alone Scenario Stability Analysis Result: GEN-2015-018 105
3.5 Stand Alone Scenario Stability Analysis Result: GEN-2015-020 107
3.6 Stand Alone Scenario Stability Analysis Result: GEN-2015-031 109
3.7 Stand Alone Scenario Stability Analysis Result: GEN-2015-033 111
3.8 Stand Alone Scenario Stability Analysis Result: GEN-2015-039 113
3.9 Stand Alone Scenario Stability Analysis Result: GEN-2015-040 116
3.10 Stand Alone Scenario Stability Analysis Result: GEN-2015-041 118
3.11 Stand Alone Scenario Stability Analysis Result: GEN-2015-056 120
3.12 Stand Alone Scenario Stability Analysis Result: GEN-2015-058 123
3.13 Stand Alone Scenario Stability Analysis Result: GEN-2015-068 125
3.14 Stand Alone Scenario Stability Analysis Result: GEN-2015-075 127
3.15 Stand Alone Scenario Stability Analysis Result: GEN-2015-077 130
3.16 Stand Alone Scenario Stability Analysis Result: GEN-2015-078 132
3.17 Stand Alone Scenario Stability Analysis Result: GEN-2015-079 134
3.18 Stand Alone Scenario Stability Analysis Result: GEN-2015-080 136
Section 4: Short Circuit Analysis 138
4.1 Approach 138
4.2 Short Circuit Analysis Results: 2017 Summer Peak 138
4.3 Short Circuit Analysis Results: 2025 Summer Peak 150
Section 5: Power Factor Analysis 163
5.1 Approach 163
5.2 Power Factor Analysis Results 166
Section 6: Low Wind/No Wind Analysis 197
6.1 Approach 197
6.2 Low Wind/No Wind Analysis Results 197
Section 7: Conclusions 199

DRAFT

SECTION 1: OBJECTIVES

The objective of this report is to provide Southwest Power Pool, Inc. (SPP) with the deliverables for the "DISIS-2015-002 (Group 06) Definitive Impact Study." SPP requested an Interconnection System Impact Study for sixteen (16) generation interconnections for 2016 Winter Peak, 2017 Summer Peak, 2020 Summer Peak, 2020 Winter Peak, and 2025 Summer Peak, which requires a Stability Analysis, Short Circuit Analysis, Power Factor Analysis, Low Wind/No Wind Analysis, and an Impact Study Report.

SECTION 2: BACKGROUND

The Siemens Power Technologies, Inc. PSS/E power system simulation program Version 32.2.0 was used for this study. SPP provided the stability database cases for 2016 Winter Peak, 2017 Summer Peak, 2020 Summer Peak, 2020 Winter Peak, and 2025 Summer Peak conditions and a list of contingencies to be examined. The model includes the study projects shown in Table 2-1 and the previously queued projects listed in Table 2-2. Refer to Appendix A for the steady-state and dynamic model data for the study projects. A power flow one-line diagram for each generation interconnection project is shown in Figures 2-1 through 2-14. Note that the one-line diagrams represent the 2017 Summer Peak case.

The Stability Analysis determined the impacts of the new interconnecting projects on the stability and voltage recovery of the nearby system and the ability of the interconnecting projects to meet FERC Order 661A. If problems with stability or voltage recovery are identified, the need for reactive compensation or system upgrades will be investigated. Three-phase faults and single line-to-ground faults will be examined as listed in Table 2-3. Note that all contingencies listed were examined for the cluster scenario, and specified contingencies (indicated by an X) were examined for each Stand Alone generator as listed in Table 2-3.

A Short Circuit Analysis was performed on the 2017 Summer Peak and 2025 Summer Peak study years for each study generator in the Cluster Scenario. The study was performed five buses out from the study generator's point of interconnection and results were documented.

The Power Factor Analysis determined the power factor at the point of interconnection for the wind or solar interconnection projects for pre-contingency and post-contingency conditions. Table 2-3 lists the contingencies developed from the three-phase fault definitions provided in the group's interconnection impact study request.

The Low Wind/No Wind Analysis was completed for all wind farm and solar farm interconnections. This analysis determined if reactive support is needed to have an Mvar flow of approximately zero at the point of interconnection (POI).

DRAFT

Table 2-1
Interconnection Projects Evaluated

Request	Size (MW)	Generator Model	Point of Interconnection
GEN-2014-046	125.4	SMA SC 825CP Inverter (584283) (solar)	Chaves County 115kV(527482)
GEN-2015-018	80	GE 2.0MW (584603) (wind)	Tap on Curry County (524822) to Bailey County (525028) 115kV (560032)
GEN-2015-020	100	Eaton Power Xpert Solar 1.67MW (584623) (solar)	Oasis 115kV (524874)
GEN-2015-031	300	GE 1.79 MW (wind)	Swisher (525213) to Amarillo South (524415) 230 kV (560050)
GEN-2015-033	152	Vestes V110 2.0 MW (wind)	Rio Blanco 345 kV (562653) (Tap on Tuco – OKU 345kV)
GEN-2015-039	50	Eaton Power Xpert Solar 1.67 MW (solar)	Deaf Smith (524623) to Plant X (525481) 230kV (560051)
GEN-2015-040	50	Eaton Power Xpert Solar 1.67 MW (solar)	Mustang 230kV (527149)
GEN-2015-041	5	GENROU (583456) (combustion turbine)	Tuco 345kV (525832)
GEN-2015-056	101	GE 2.3 MW (wind)	Crossroads 345kV (527656) (Tap Eddy (527802) to Tolk(525549)
GEN-2015-058	50	Power Electronics Solar 1.667 MW (solar)	Atoka 115kV (527786)
GEN-2015-068	300	GE 2.0 MW (wind)	Tuco 345kV (525832)
GEN-2015-075	50	GE 3.96 MW (wind)	Carlisle 69kV (526159)
GEN-2015-077	80	Sunny Central SMA SC2200 2.0 MW (solar)	Tap on Terry (526736) to Clauene (526491) 115kV (560058)
GEN-2015-078	50	Eaton Power Xpert Solar 1.67 MW (solar)	Mustang 115kV (527146)
GEN-2015-079	129.2	GE LV5 3.8 MW (solar)	Tap Yoakum (526935) to Hobbs (527894) 230 kV (560059)
GEN-2015-080	129.2	GE LV5 3.8 MW (solar)	Tap Yoakum (526935) to Hobbs (527894) 230 kV (560059)

DRAFT

Table 2-2
Previously Queued Nearby Interconnection Projects Included

Request	Size (MW)	Generator Model	Point of Interconnection
GEN-2001-033	180	Mitsubishi 1000	San Juan Mesa 230kV (524885)
GEN-2001-036	80	Mitsubishi 1000	Norton 115kV (524502)
GEN-2006-018	170	GENSAL	Tuco 230kV (525830)
GEN-2006-026	502	GENROU (527901, 527902, 527903)	Hobbs 115kV(527891) Hobbs 230kV (527894)
GEN-2008-022	300	GE 2.5MW	Tap on Eddy County – Tolk 345kV line (G08-022-POI, 560007)
GEN-2010-006	180 Summer 205 Winter	GENROU	Jones_bus2 230kV(526337)
ASGI-2010-010	42	GENSAL	Lovington 115kV (528334)
ASGI-2010-020	30	Nordex 2.5MW	Tap LE-Tatum to LE-Crsroads 69kV (AS10-020-POI, 560360)
ASGI-2010-021	15	Mitsubishi MPS-1000A 1.0MW	Tap LE-Saundrtp to LE-Anderson 69kV (ASGI-021-POI, 560364)
GEN-2010-046	56	GENSAL	Tuco 230kV (525830)
ASGI-2011-001	27.3	Suzlon 2.1MW	Lovington 115kV (528334)
ASGI-2011-003	10	Sany 2.0MW	Hendricks 69kV (525943)
ASGI-2011-004	19.8	Sany 1.8MW	Crosby 69kV (525915)
GEN-2011-025	80	GE 1.6MW	Tap on Floyd County - Crosby County 115kV line (G11-025-POI, 562004)
GEN-2011-045	180 Summer 205 Winter	GENROU	Jones_bus2 230kV (526337)
GEN-2011-046	23 Summer 27 Winter	GENROU	Quay County 115kV (524472)
GEN-2011-048	165 Summer 175 Winter	GENROU	Mustang 230kV (527151)
GEN-2012-001	61.2	CCWE 3.6MW (WT4)	Tap Grassland to Borden 230kV (526679)
ASGI-2012-002	18	Vestas 1.65MW V82	Clovis 115kV (524808)
GEN-2012-020	478	GE 1.68MW	Tuco 230kV (525830)
GEN-2012-034	7 MW increase (Pgen=172MW)	GENROU	Mustang 230kV (527151)

DRAFT

Table 2-2 (Continued)
Previously Queued Nearby Interconnection Projects Included

Request	Size (MW)	Generator Model	Point of Interconnection
GEN-2012-035	7 MW increase (Pgen=172MW)	GENROU	Mustang 230kV (527151)
GEN-2012-036	7 MW increase (Pgen=172MW	GENROU	Mustang 230kV (527151)
GEN-2012-037	196 Summer 203 Winter	GENROU	Tuco 345kV (525832)
ASGI-2012-002	18	Vestas 1.65MW V82	Clovis 115kV (524808)
GEN-2013-016	191 Summer 203 Winter	GENROU (583456)	Tuco 345kV (525832)
ASGI-2013-002	18.4	Siemens 2.3MW VS (583613)	Tucumcari 115kV (524509)
ASGI-2013-003	18.4	Siemens 2.3MW VS (583623)	Clovis 115kV (524808)
ASGI-2013-005	19.8	Vestas V82 1.65MW (583283)	FE-Clovis 115kV (524808)
ASGI-2013-006	2	Gamesa G114 2MW (583813)	Erskine 115kV (526109)
GEN-2013-022	25	Solaron 500kW (583313)	Caprock 115kV (524486)
GEN-2013-027	150	Siemens 2.3/2.415	Tap on Yoakum to Tolk 230kV (562480)
GEN-2014-012	186 Summer 225 Winter	GENROU (528607)	Tap Hobbs (527894 in 2015SP/WP, 527896 in 2025SP) to Andrews (528604)
ASGI-2014-001	2.3	GE 107m 2.3MW (583816)	Erskine 69kV (526109)
GEN-2014-033	70	SC 500HE/CP 0.5MVA inverter	Chaves County 115kV
GEN-2014-034	70	SC 500HE/CP 0.5MVA inverter	Chaves County 115kV
GEN-2014-035	30	SC 500HE/CP 0.5MVA inverter	Chaves County 115kV
GEN-2014-047	40	AE 500NX 0.5 MW PV inverters	Tap Tolk - Eddy County (Crossroads) 345kV
GEN-2014-053	80	GE 2.0MW WTG	Carlisle 230kV
GEN-2014-054	120	GE 2.0MW WTG	Carlisle 230kV
ASGI-2014-002	49.6	SMA 1.6MVA 630CP-US inverters	Santa Rosa tap - Tucumcari 69kV line
ASGI-2014-005	10	Solar PV inverter	Strata 69 kV - bus 528046
ASGI-2014-008	10	Solar PV inverter	South Loving 69 kV - bus 528218

DRAFT

Table 2-2 (Continued)
Previously Queued Nearby Interconnection Projects Included

Request	Size (MW)	Generator Model	Point of Interconnection
ASGI-2014-009	10	Solar PV inverter	Wood Draw 115 kV - bus 528228
ASGI-2014-010	10	Solar PV inverter	Ochoa 115 kV - bus 528232
ASGI-2014-012	10	Solar PV inverter	Cooper Ranch 115 kV - bus 528554
GEN-2014-074	152	Vestas V110 2.0MW (584443)	Tap Tuco – OKU 345kV (560027)
GEN-2015-014	150	Vestas V110 2.0MW (584563)	Tap on Cochran – LG Plains 115kV (560030)
GEN-2015-020	100	Eaton Power Xpert Solar 1.67MW (584623)	Oasis 115kV (524874)
GEN-2015-022	112	GE LV5 4.0MW Inverters (584643)	Swisher 115kV (525212)
ASGI-2015-002	2	GE 2.0MW (584723)	Yuma Interchange 115/69kV (526469)

DRAFT

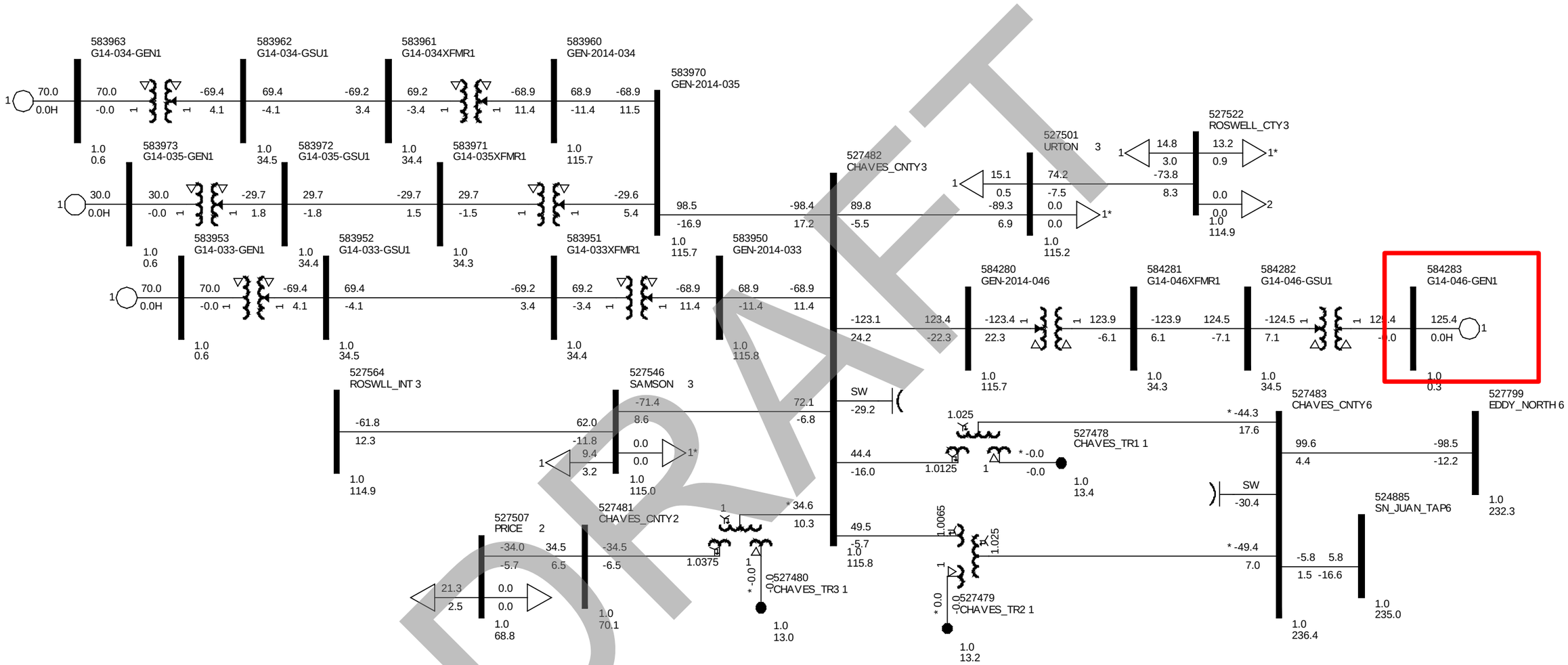

Figure 2-1. Power flow one-line diagram for interconnection project at the Chaves County 115 kV POI (GEN-2014-046).

DRAFT

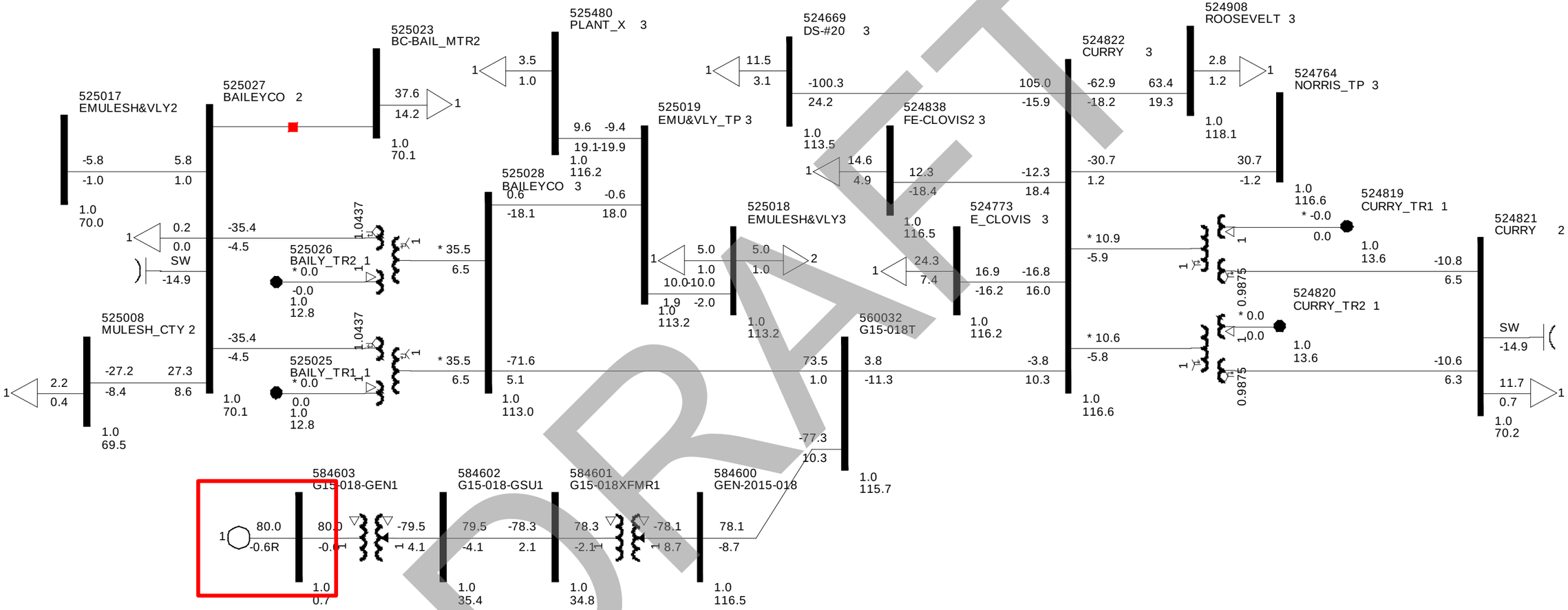

Figure 2-2. Power flow one-line diagram for interconnection project at the Curry County to Bailey County 115 kV POI (GEN-2015-018).

DRAFT

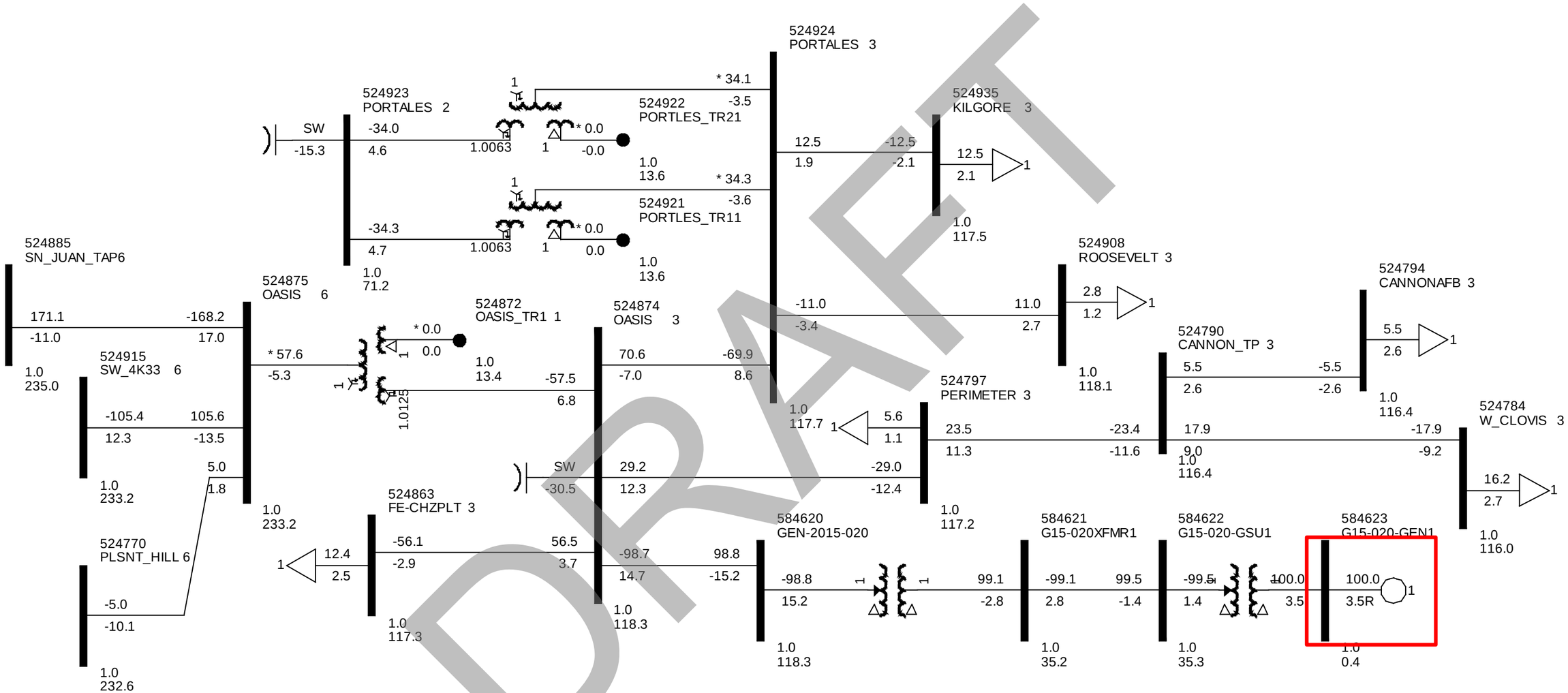

Figure 2-3. Power flow one-line diagram for interconnection project at the Oasis 115 kV POI (GEN-2015-020).

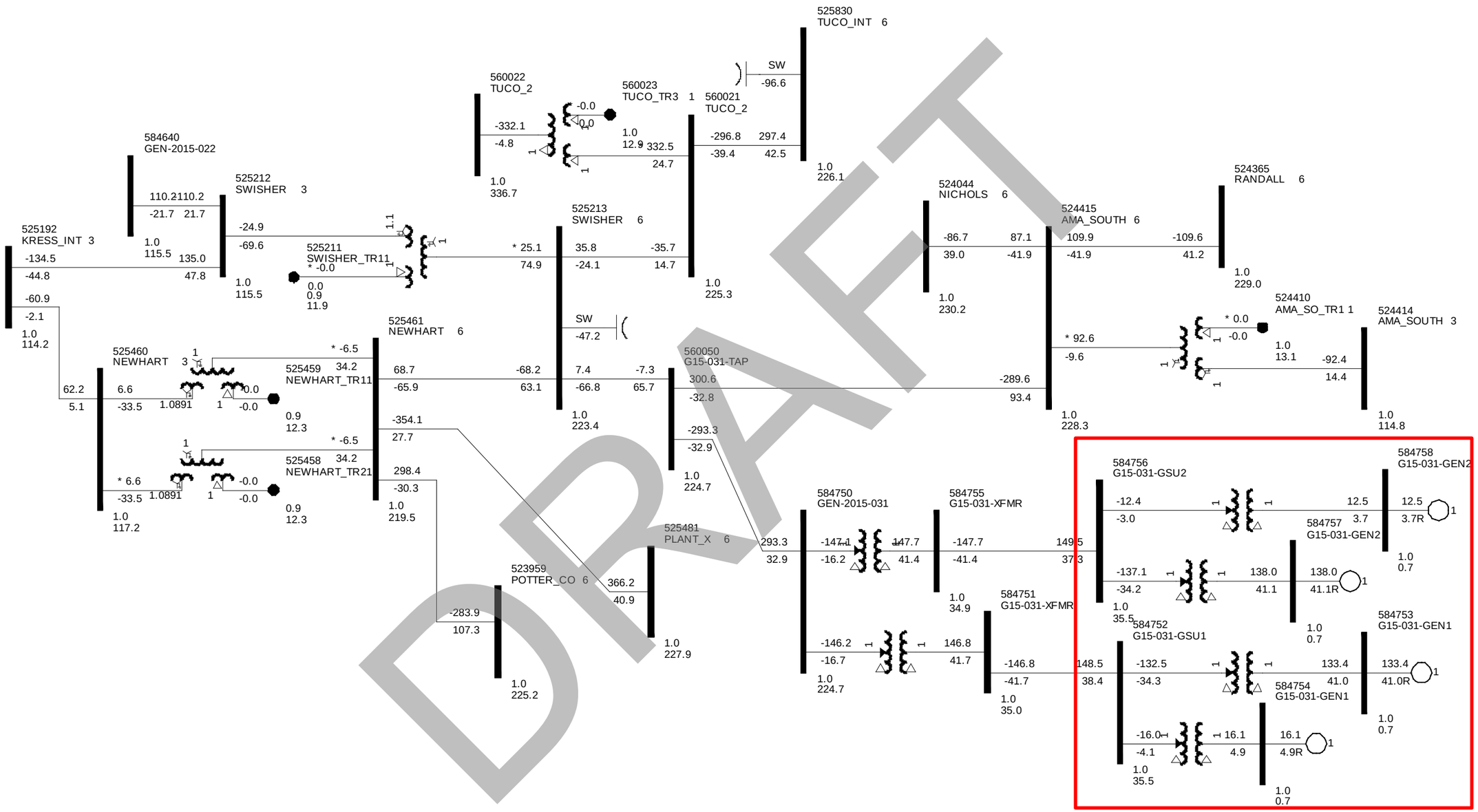

Figure 2-4. Power flow one-line diagram for interconnection project at the Swisher to Amarillo South 230 kV POI (GEN-2015-031).

DRAFT

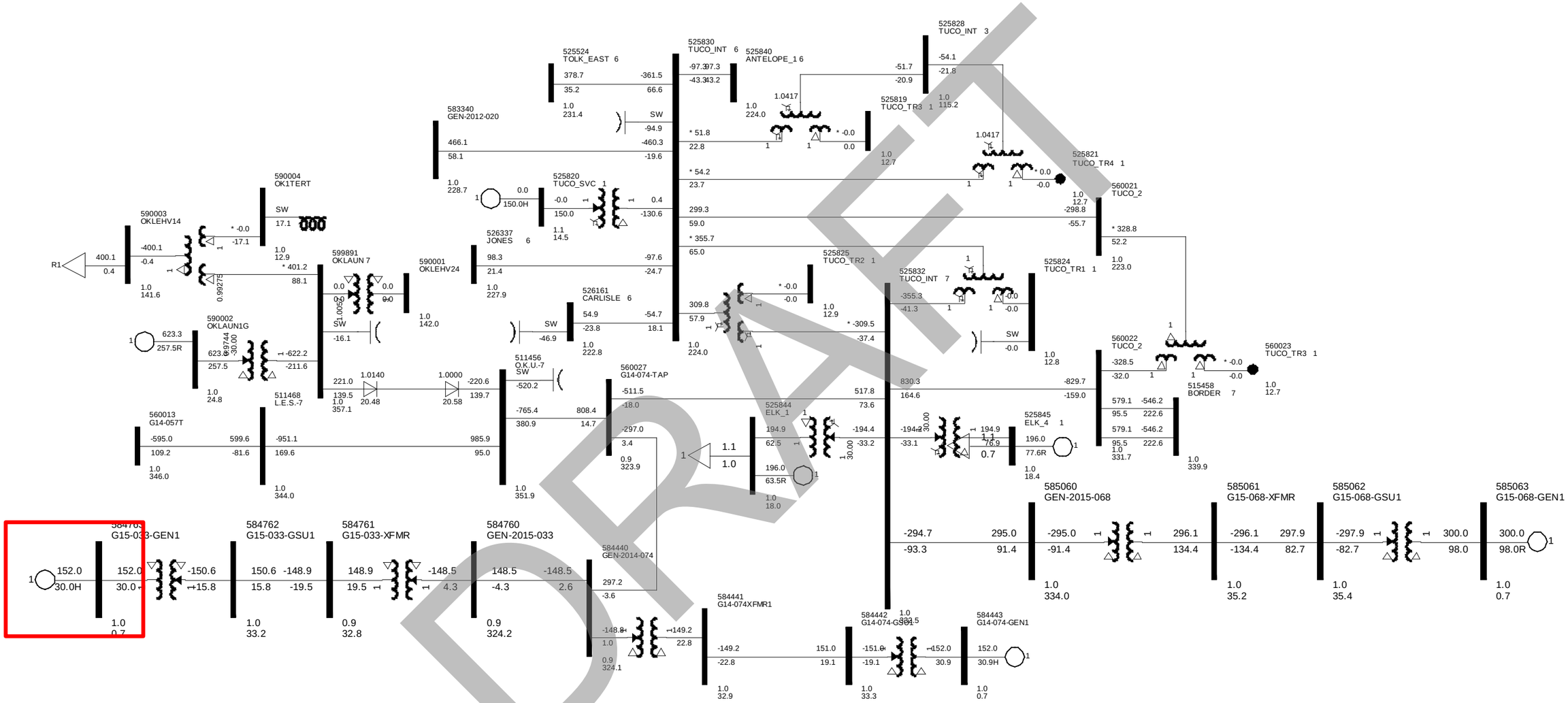

Figure 2-5. Power flow one-line diagram for interconnection project at the Rio Blanco 345 kV POI (GEN-2015-033).

DRAFT

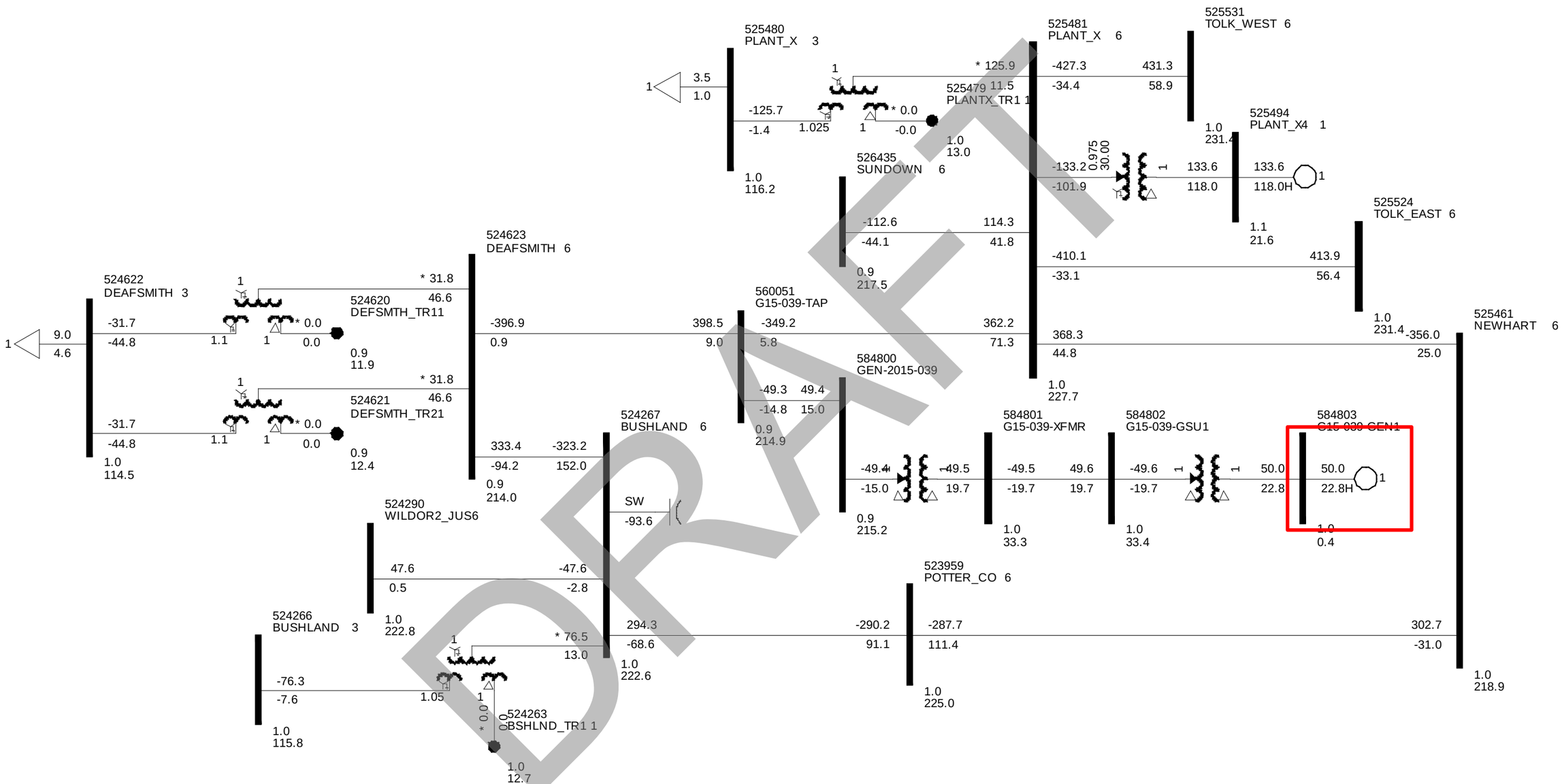

Figure 2-6. Power flow one-line diagram for interconnection project at the Deaf Smith to Plant X 230 kV POI (GEN-2015-039).

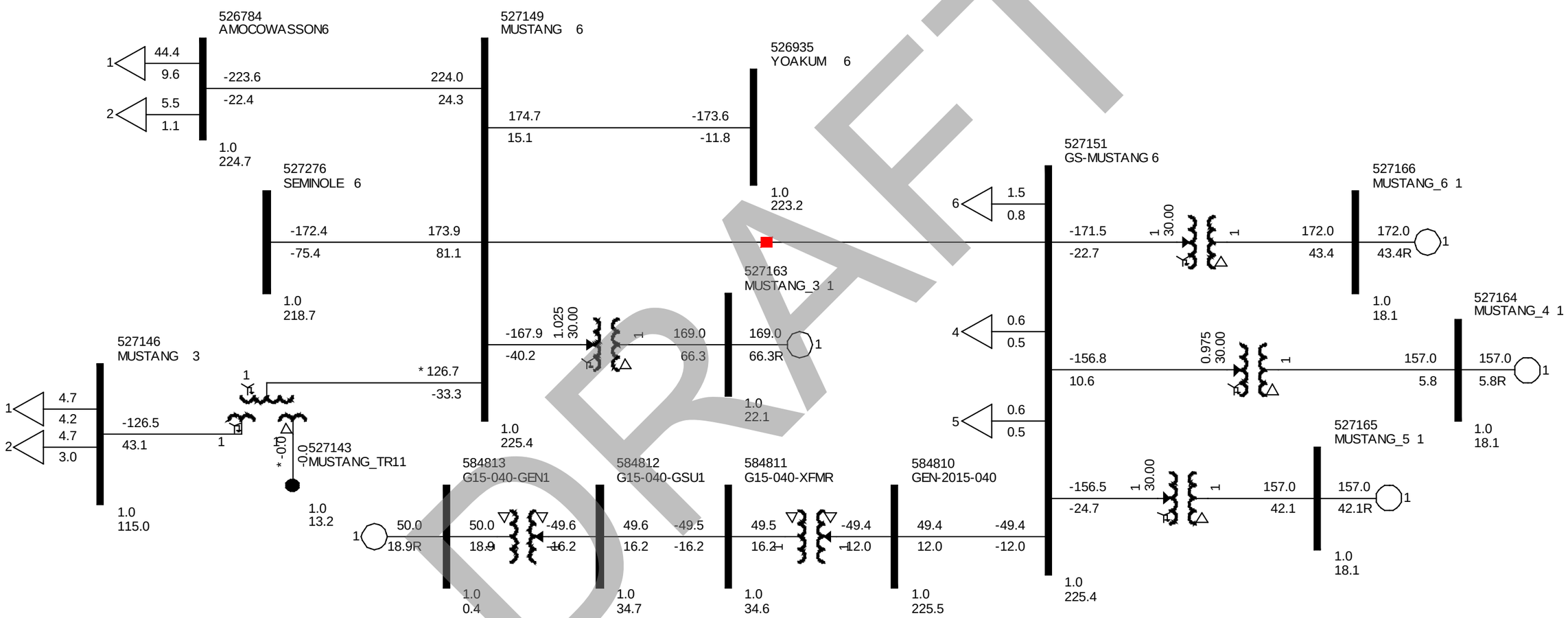

Figure 2-7. Power flow one-line diagram for interconnection project at the Mustang 230 kV POI (GEN-2015-040).

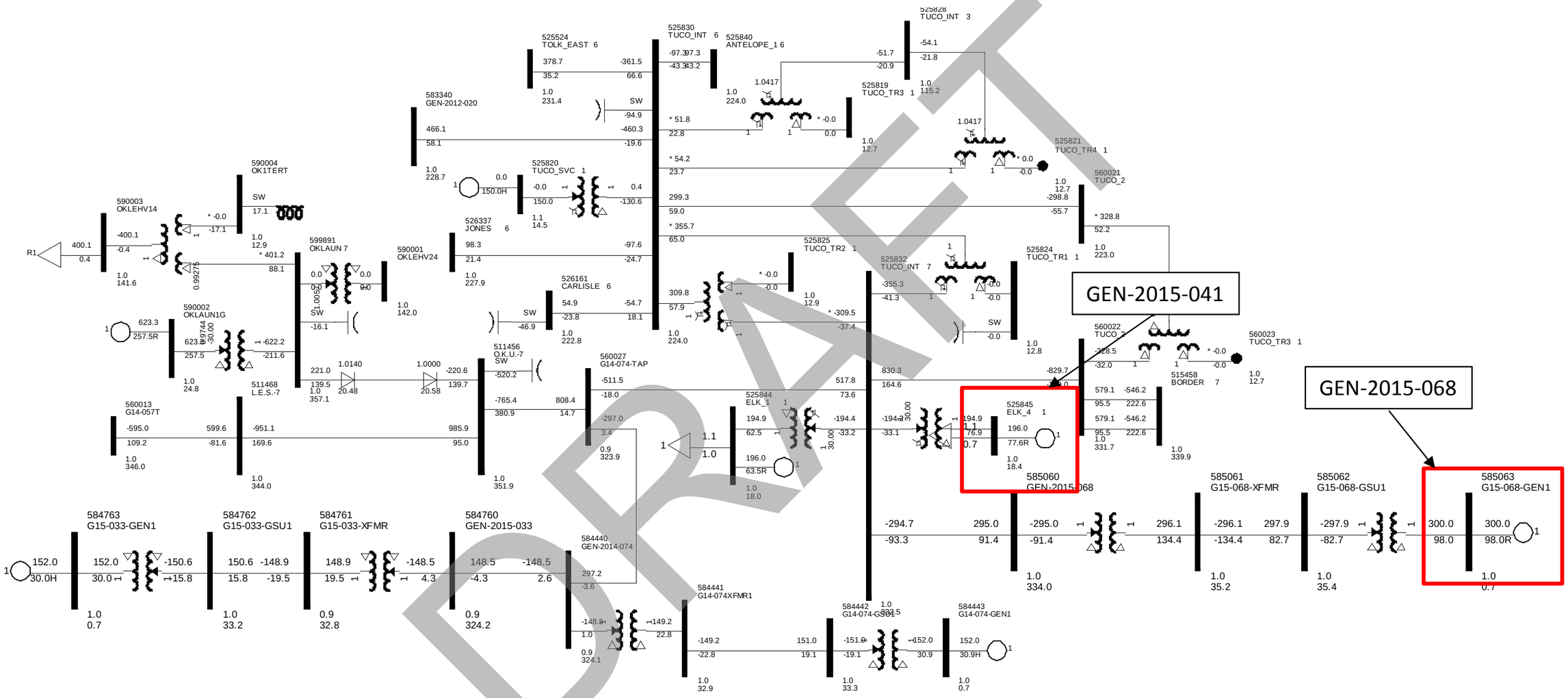

Figure 2-8. Power flow one-line diagram for interconnection project at the Tuco 345 kV POI (GEN-2015-041 and GEN-2015-068).

DRAFT

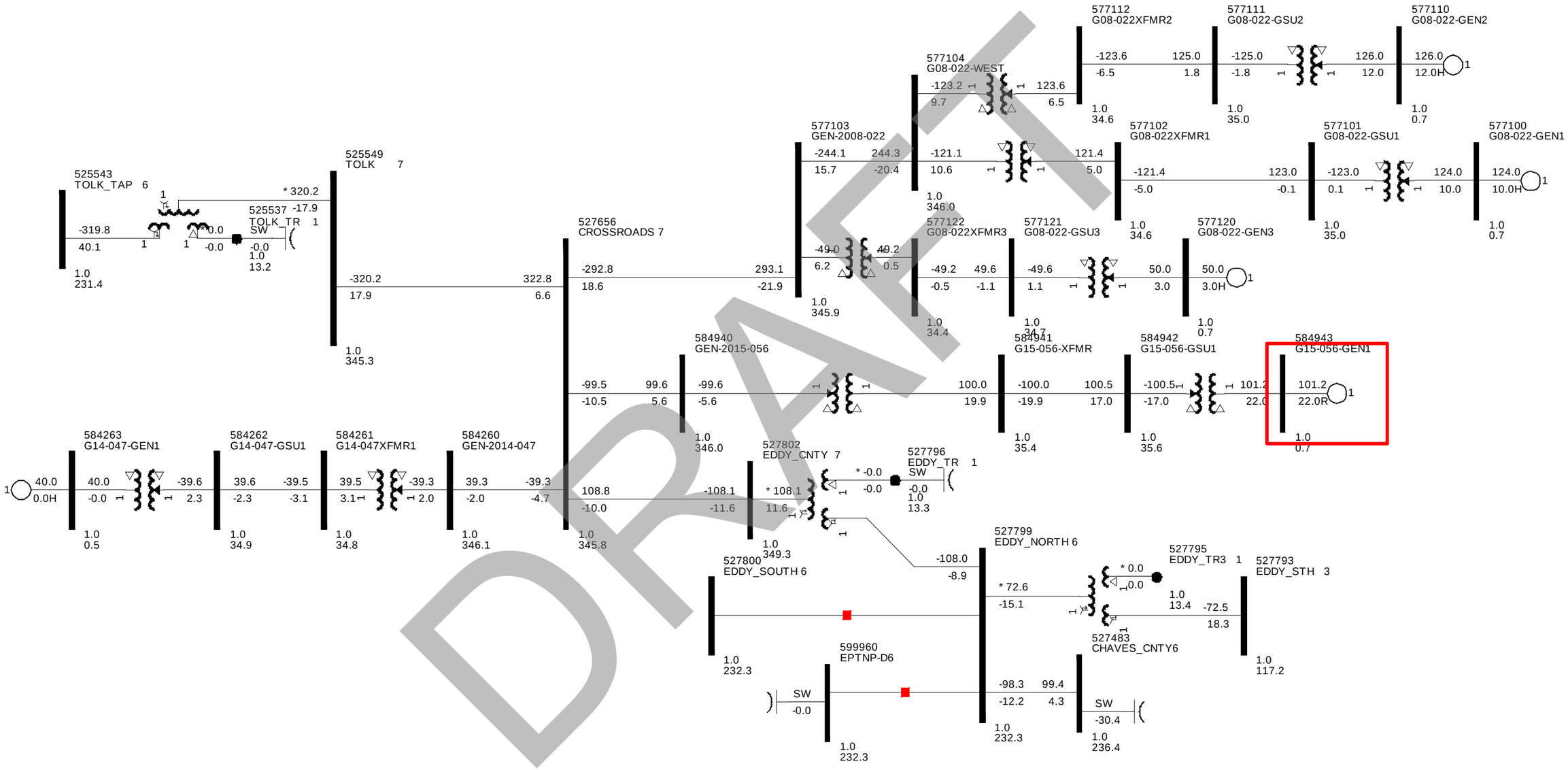

Figure 2-9. Power flow one-line diagram for interconnection project at the Crossroads 345 kV POI (GEN-2015-056).

DRAFT

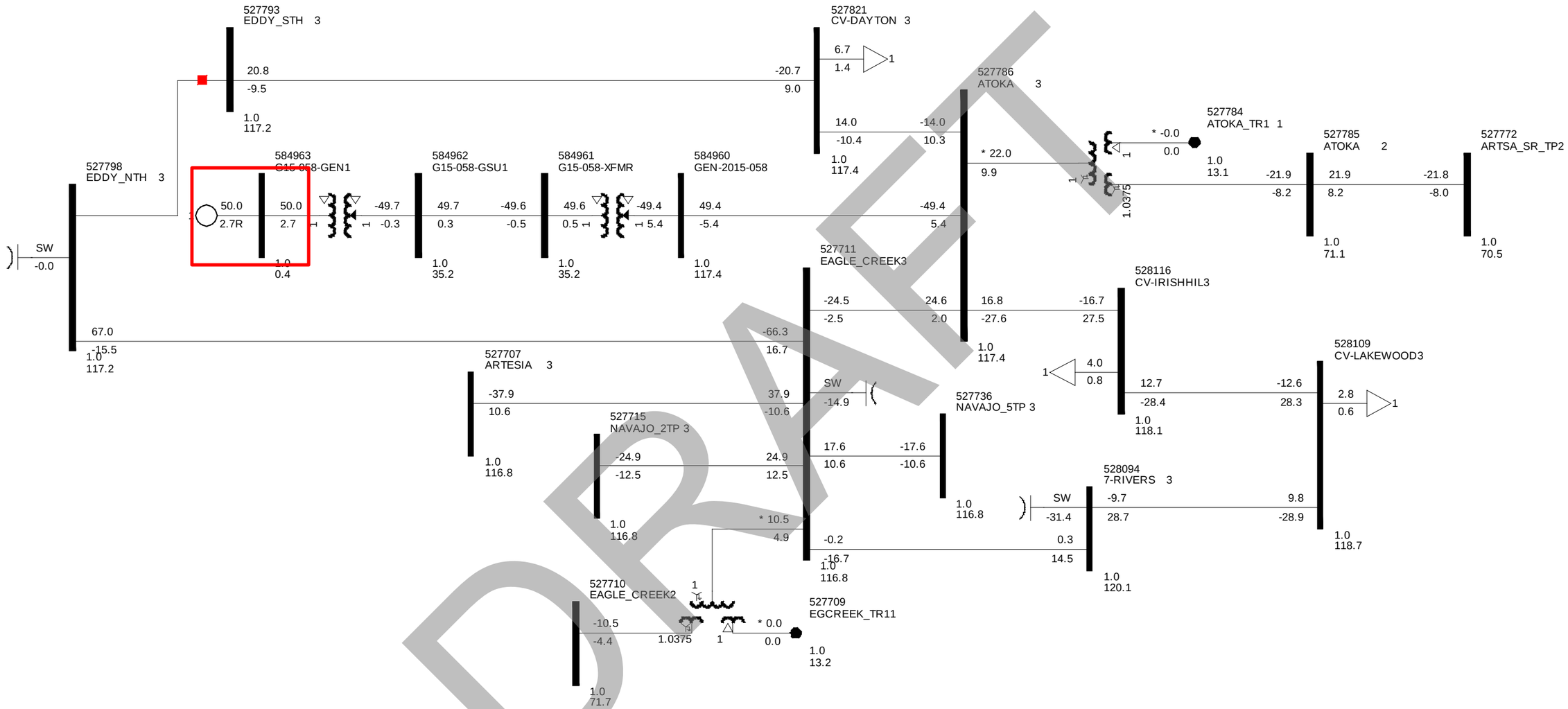

Figure 2-10. Power flow one-line diagram for interconnection project at Atoka 115 kV POI (GEN-2015-058).

DRAFT

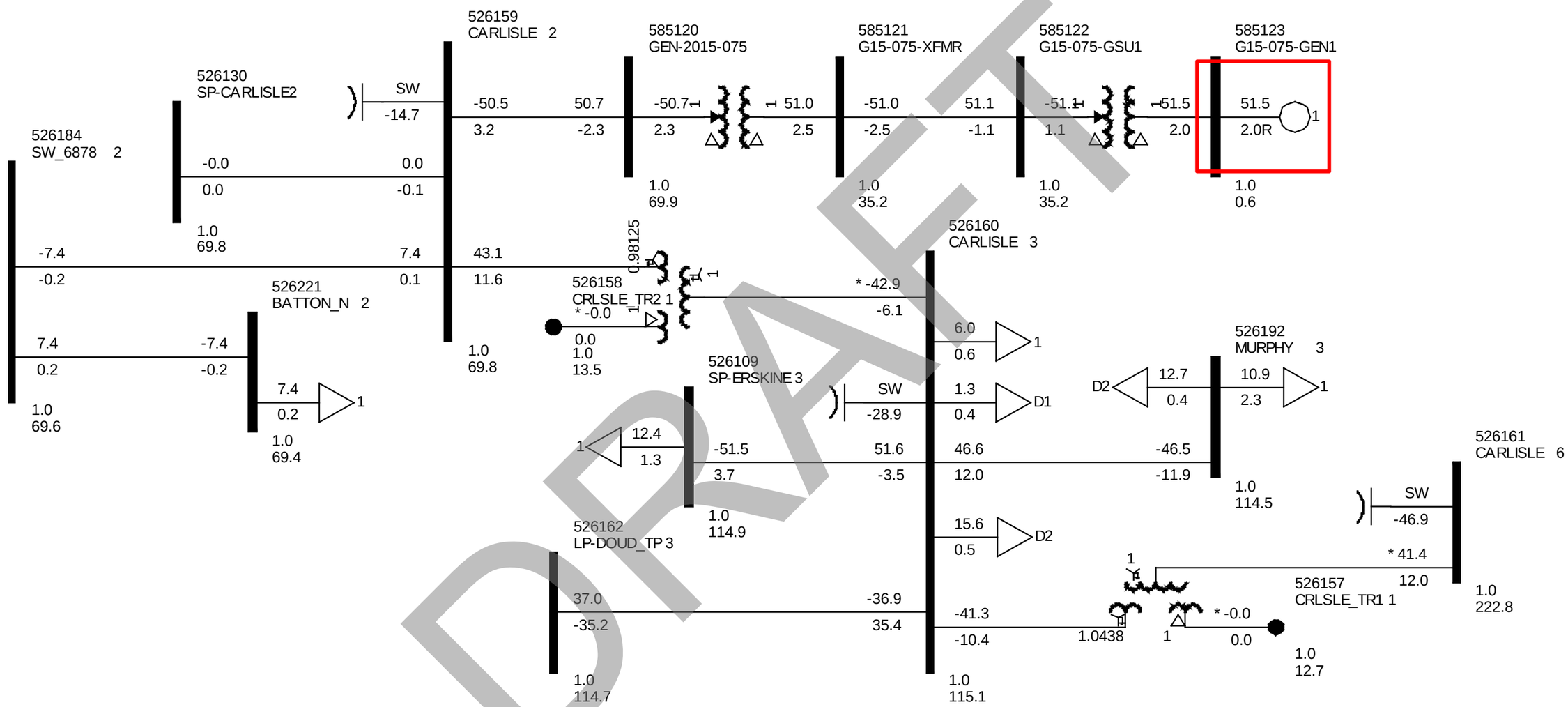

Figure 2-11. Power flow one-line diagram for interconnection project at the Carlisle 69 kV POI (GEN-2015-075).

DRAFT

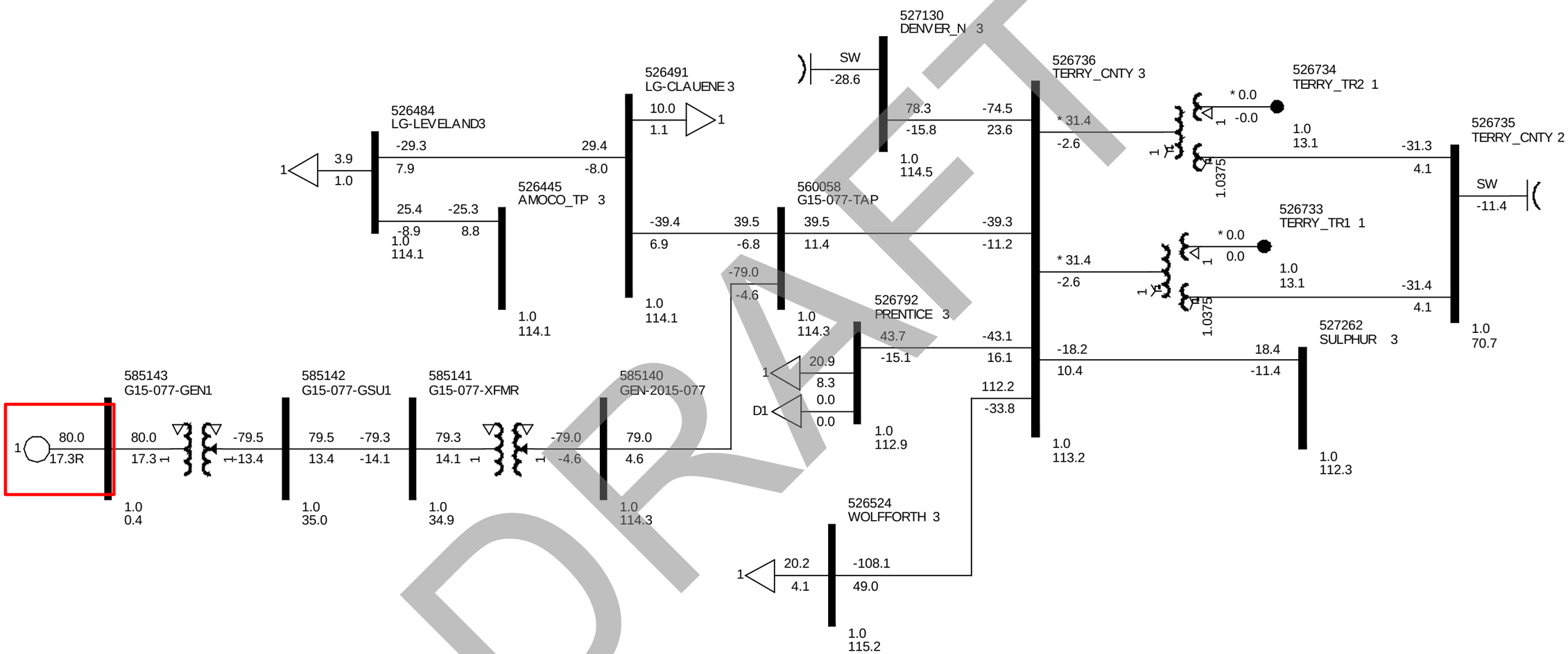

Figure 2-12. Power flow one-line diagram for interconnection project at the Terry to Clauene 115 kV POI (GEN-2015-077).

DRAFT

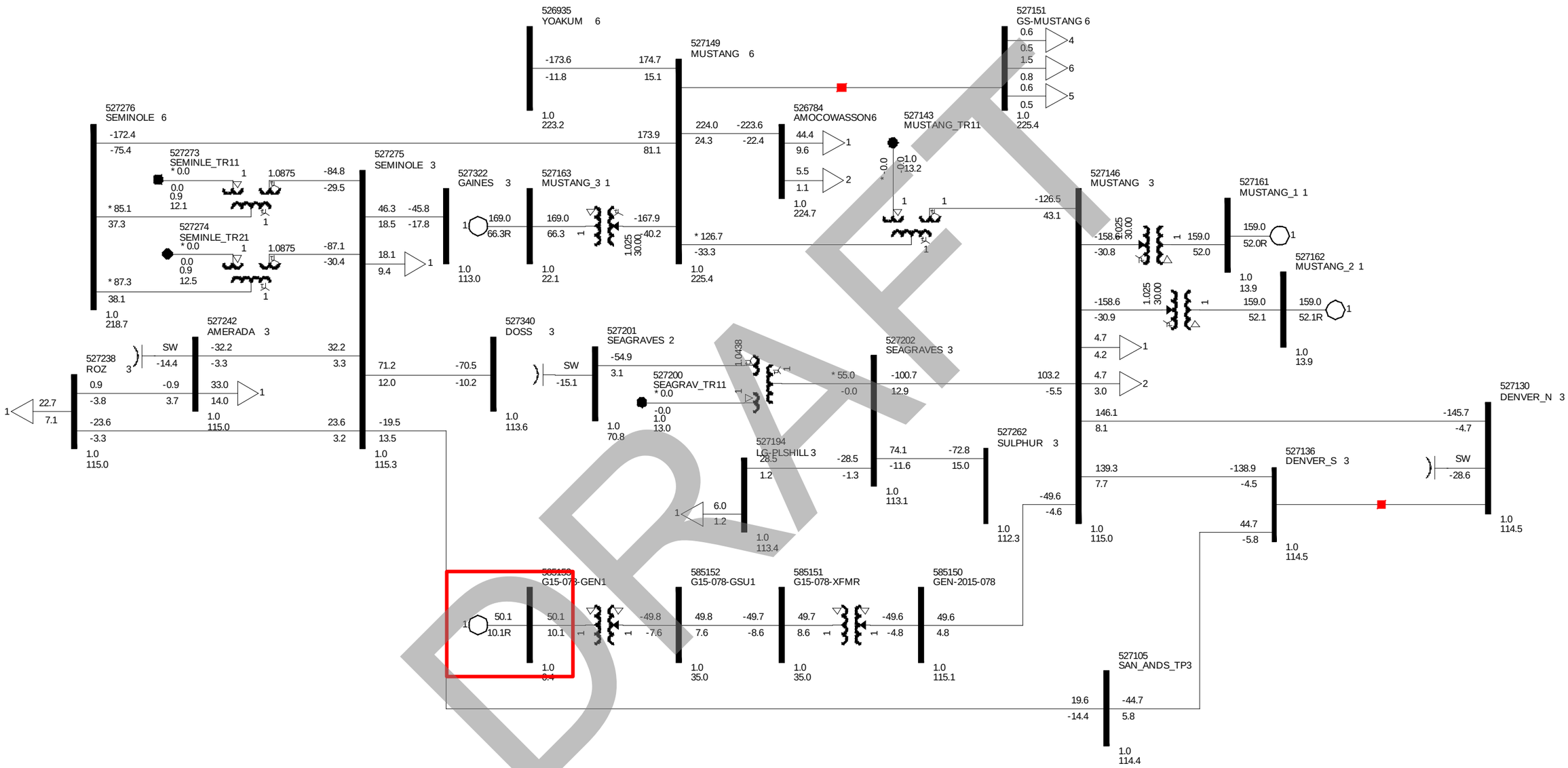

Figure 2-13. Power flow one-line diagram for interconnection project at the Mustang 115 kV POI (GEN-2015-078).

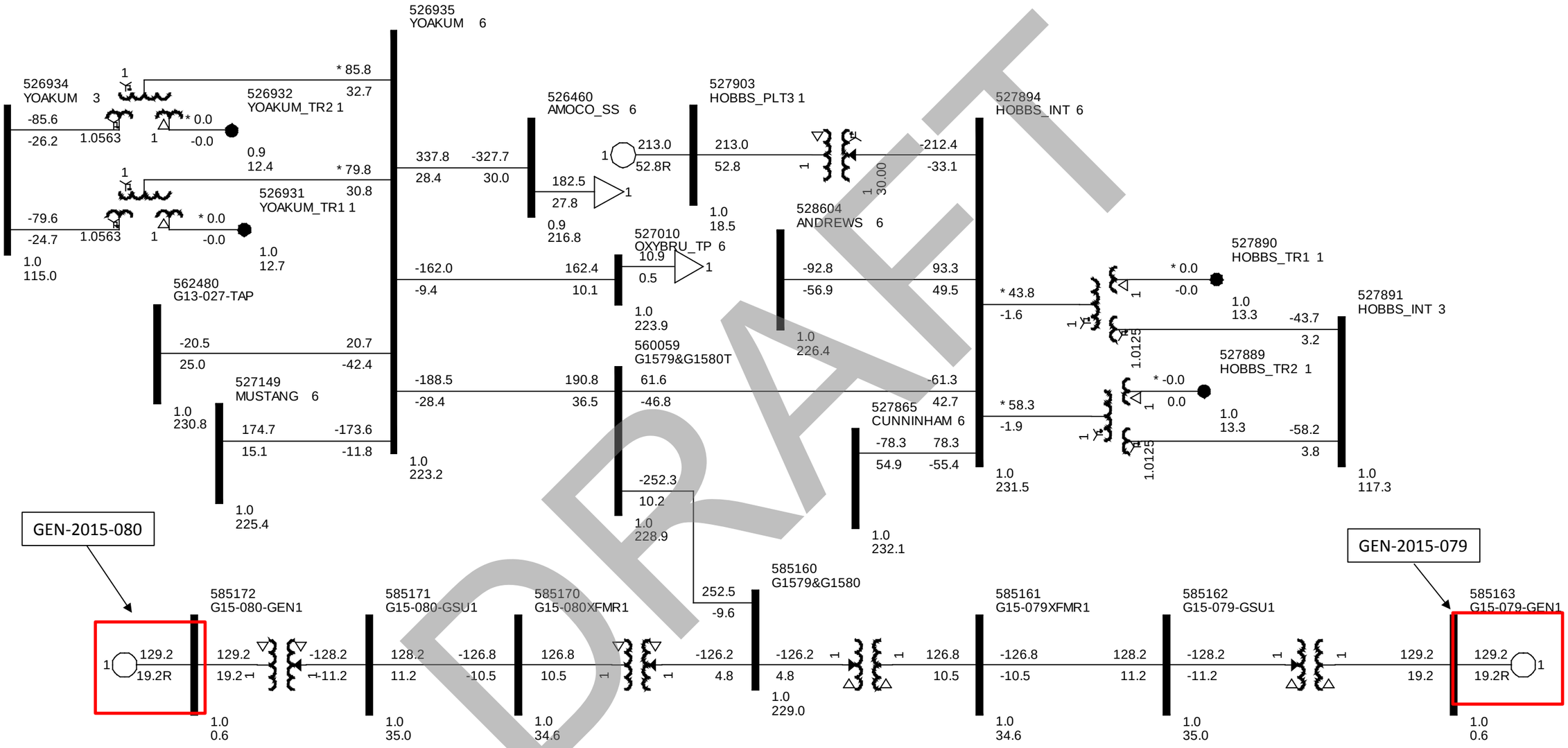

Figure 2-14. Power flow one-line diagram for interconnection project at Yoakum to Hobbs 230 kV POI (GEN-2015-079 and GEN-2015-080).

DRAFT

Table 2-3
Case List with Contingency Description

Cont. No.	Cont. Name	Description	GEN-2014-046	GEN-2015-018	GEN-2015-020	GEN-2015-031	GEN-2015-033	GEN-2015-039	GEN-2015-040	GEN-2015-041	GEN-2015-056	GEN-2015-058	GEN-2015-068	GEN-2015-075	GEN-2015-077	GEN-2015-078	GEN-2015-079	GEN-2015-080
1	FLT01-3PH	3 phase fault on Chaves County 115 kV (527482) to Samson 115 kV (527546) CKT 1, near Chaves County. a. Apply fault at the Chaves County 115 kV bus. b. Clear fault after 5 cycles and trip the faulted line. c. Wait 20 cycles, and then re-close the line in (b) back into the fault. d. Leave fault on for 5 cycles, then trip the line in (b) and remove fault.	X															
2	FLT02-3PH	3 phase fault on Chaves County 115 kV (527482) to Urton 115 kV (527501) CKT 1, near Chaves County. a. Apply fault at the Chaves County 115 kV bus. b. Clear fault after 5 cycles and trip the faulted line. c. Wait 20 cycles, and then re-close the line in (b) back into the fault. d. Leave fault on for 5 cycles, then trip the line in (b) and remove fault.	X															

DRAFT

Cont. No.	Cont. Name	Description	GEN-2014-046	GEN-2015-018	GEN-2015-020	GEN-2015-031	GEN-2015-033	GEN-2015-039	GEN-2015-040	GEN-2015-041	GEN-2015-056	GEN-2015-058	GEN-2015-068	GEN-2015-075	GEN-2015-077	GEN-2015-078	GEN-2015-079	GEN-2015-080
3	FLT03-3PH	3 phase fault on the Chaves County 115 kV (527482) to Chaves County 230 kV (527483) to Chaves County 13.2 kV (527478) XFMR CKT 1, near Chaves County 115 kV. a. Apply fault at the Chaves County 115 kV bus. b. Clear fault after 5 cycles and trip the faulted transformer.	X															
4	FLT04-3PH	3 phase fault on Chaves County 230 kV (527483) to San Juan Tap 230 kV (524885) CKT 1, near Chaves County. a. Apply fault at the Chaves County 230 kV bus. b. Clear fault after 5 cycles and trip the faulted line. c. Wait 20 cycles, and then re-close the line in (b) back into the fault. d. Leave fault on for 5 cycles, then trip the line in (b) and remove fault.	X															

DRAFT

Cont. No.	Cont. Name	Description	GEN-2014-046	GEN-2015-018	GEN-2015-020	GEN-2015-031	GEN-2015-033	GEN-2015-039	GEN-2015-040	GEN-2015-041	GEN-2015-056	GEN-2015-058	GEN-2015-068	GEN-2015-075	GEN-2015-077	GEN-2015-078	GEN-2015-079	GEN-2015-080
5	FLT05-3PH	3 phase fault on Chaves County 230 kV (527483) to Eddy North 230 kV (527799) CKT 1, near Chaves County. a. Apply fault at the Chaves County 230 kV bus. b. Clear fault after 5 cycles and trip the faulted line. c. Wait 20 cycles, and then re-close the line in (b) back into the fault. d. Leave fault on for 5 cycles, then trip the line in (b) and remove fault.	X															

DRAFT

Cont. No.	Cont. Name	Description	GEN-2014-046	GEN-2015-018	GEN-2015-020	GEN-2015-031	GEN-2015-033	GEN-2015-039	GEN-2015-040	GEN-2015-041	GEN-2015-056	GEN-2015-058	GEN-2015-068	GEN-2015-075	GEN-2015-077	GEN-2015-078	GEN-2015-079	GEN-2015-080
6	FLT06-3PH	3 phase fault on Samson 115 kV (527546) to Roswell_Int 115 kV (527564) CKT 1, near Samson. a. Apply fault at the Samson 115 kV bus. b. Clear fault after 5 cycles and trip the faulted line. c. Wait 20 cycles, and then re-close the line in (b) back into the fault. d. Leave fault on for 5 cycles, then trip the line in (b) and remove fault.	X															
7	FLT07-3PH	3 phase fault on Urton 115 kV (527501) to Roswell City 115 kV (527522) CKT 1, near Urton. a. Apply fault at the Urton 115 kV bus. b. Clear fault after 5 cycles and trip the faulted line. c. Wait 20 cycles, and then re-close the line in (b) back into the fault. d. Leave fault on for 5 cycles, then trip the line in (b) and remove fault.	X															
8	FLT08-PO	**Prior Outage of Chaves County 115 kV (527482) to Samson 115 kV (527546) CKT 1;** 3 phase fault on Chaves County 115 kV (527482) to Urton 115 kV (527501) CKT 1, near Chaves County. a. Apply fault at the Chaves 115 kV bus. b. Clear fault after 5 cycles by tripping the faulted line.	X															

DRAFT

Cont. No.	Cont. Name	Description	GEN-2014-046	GEN-2015-018	GEN-2015-020	GEN-2015-031	GEN-2015-033	GEN-2015-039	GEN-2015-040	GEN-2015-041	GEN-2015-056	GEN-2015-058	GEN-2015-068	GEN-2015-075	GEN-2015-077	GEN-2015-078	GEN-2015-079	GEN-2015-080
9	FLT09-PO	**Prior Outage of Chaves County 115 kV (527482) to Urton 115 kV (527501) CKT 1;** 3 phase fault on Chaves County 115 kV (527482) to Samson 115 kV (527546) CKT 1, near Chaves County. a. Apply fault at the Chaves 115 kV bus. b. Clear fault after 5 cycles by tripping the faulted line.	X															
10	FLT10-SB	**Single phase fault with stuck breaker** at **Chaves County (527482)** a. Apply fault at the Chaves 115 kV bus. b. Clear fault after 16 cycles and trip the following elements c. Chaves County 115 kV (527482)/ 230 kV (527483)/13.2 kV (527479) transformer d. Chaves County (527482) - Samson (527546) 115 kV	X															

DRAFT

Cont. No.	Cont. Name	Description	GEN-2014-046	GEN-2015-018	GEN-2015-020	GEN-2015-031	GEN-2015-033	GEN-2015-039	GEN-2015-040	GEN-2015-041	GEN-2015-056	GEN-2015-058	GEN-2015-068	GEN-2015-075	GEN-2015-077	GEN-2015-078	GEN-2015-079	GEN-2015-080
11	FLT11-3PH	3 phase fault on the G15-018T (560032) to FE-Curry (524822) 115 kV line circuit 1, near G15-018T. a. Apply fault at the G15-018T 115 kV bus. b. Clear fault after 5 cycles by tripping the faulted line. c. Wait 20 cycles, and then re-close the line in (b) back into the fault. d. Leave fault on for 5 cycles, then trip the line in (b) and remove fault.		X														
12	FLT12-3PH	3 phase fault on the G15-018T (560032) to FE-Bailey County (525028) 115 kV line circuit 1, near G15-018T. a. Apply fault at the G15-018T 115 kV bus. b. Clear fault after 5 cycles by tripping the faulted line. c. Wait 20 cycles, and then re-close the line in (b) back into the fault. d. Leave fault on for 5 cycles, then trip the line in (b) and remove fault.		X														

DRAFT

Cont. No.	Cont. Name	Description	GEN-2014-046	GEN-2015-018	GEN-2015-020	GEN-2015-031	GEN-2015-033	GEN-2015-039	GEN-2015-040	GEN-2015-041	GEN-2015-056	GEN-2015-058	GEN-2015-068	GEN-2015-075	GEN-2015-077	GEN-2015-078	GEN-2015-079	GEN-2015-080
13	FLT13-3PH	3 phase fault on the FE-Bailey County 115 kV (525028) to Bailey County 2 69 kV (525027) to Bailey transformer 1 13.2 kV (525025) XFMR CKT 1, near FE-Bailey County 115 kV. a. Apply fault at the FE-Bailey County 115 kV bus. b. Clear fault after 5 cycles by tripping the faulted transformer.		X														
14	FLT14-3PH	3 phase fault on the FE-Bailey County (525028) to EMU&VLY Tap (525019) 115 kV line circuit 1, near FE-Bailey County. a. Apply fault at the FE-Bailey County 115 kV bus. b. Clear fault after 5 cycles by tripping the faulted line. c. Wait 20 cycles, and then re-close the line in (b) back into the fault. d. Leave fault on for 5 cycles, then trip the line in (b) and remove fault.		X														

DRAFT

Cont. No.	Cont. Name	Description	GEN-2014-046	GEN-2015-018	GEN-2015-020	GEN-2015-031	GEN-2015-033	GEN-2015-039	GEN-2015-040	GEN-2015-041	GEN-2015-056	GEN-2015-058	GEN-2015-068	GEN-2015-075	GEN-2015-077	GEN-2015-078	GEN-2015-079	GEN-2015-080
15	FLT15-3PH	3 phase fault on the FE-Curry (524822) to DS#20 (524669) 115 kV line circuit 1, near FE-Curry. a. Apply fault at the FE-Curry 115 kV bus. b. Clear fault after 5 cycles by tripping the faulted line. c. Wait 20 cycles, and then re-close the line in (b) back into the fault. d. Leave fault on for 5 cycles, then trip the line in (b) and remove fault.		X														
16	FLT16-3PH	3 phase fault on the FE-Curry (524822) to Norris Tap (524764) 115 kV line circuit 1, near FE-Curry. a. Apply fault at the FE-Curry 115 kV bus. b. Clear fault after 5 cycles by tripping the faulted line. c. Wait 20 cycles, and then re-close the line in (b) back into the fault. d. Leave fault on for 5 cycles, then trip the line in (b) and remove fault.		X														

DRAFT

Cont. No.	Cont. Name	Description	GEN-2014-046	GEN-2015-018	GEN-2015-020	GEN-2015-031	GEN-2015-033	GEN-2015-039	GEN-2015-040	GEN-2015-041	GEN-2015-056	GEN-2015-058	GEN-2015-068	GEN-2015-075	GEN-2015-077	GEN-2015-078	GEN-2015-079	GEN-2015-080
17	FLT17-3PH	3 phase fault on the FE-Curry (524822) to E_Clovis (524773) 115 kV line circuit 1, near FE-Curry. a. Apply fault at the FE-Curry 115 kV bus. b. Clear fault after 5 cycles by tripping the faulted line. c. Wait 20 cycles, and then re-close the line in (b) back into the fault. d. Leave fault on for 5 cycles, then trip the line in (b) and remove fault.		X														
18	FLT18-3PH	3 phase fault on the FE-Curry (524822) to FE_Clovis2 (524838) 115 kV line circuit 1, near FE-Curry. a. Apply fault at the FE-Curry 115 kV bus. b. Clear fault after 5 cycles by tripping the faulted line. c. Wait 20 cycles, and then re-close the line in (b) back into the fault. d. Leave fault on for 5 cycles, then trip the line in (b) and remove fault.		X														

DRAFT

Cont. No.	Cont. Name	Description	GEN-2014-046	GEN-2015-018	GEN-2015-020	GEN-2015-031	GEN-2015-033	GEN-2015-039	GEN-2015-040	GEN-2015-041	GEN-2015-056	GEN-2015-058	GEN-2015-068	GEN-2015-075	GEN-2015-077	GEN-2015-078	GEN-2015-079	GEN-2015-080
19	FLT19-3PH	3 phase fault on the FE-Curry (524822) to Roosevelt (524908) 115 kV line circuit 1, near FE-Curry. a. Apply fault at the FE-Curry 115 kV bus. b. Clear fault after 5 cycles by tripping the faulted line. c. Wait 20 cycles, and then re-close the line in (b) back into the fault. d. Leave fault on for 5 cycles, then trip the line in (b) and remove fault.		X														
20	FLT20-3PH	3 phase fault on the FE-Curry 115 kV (524822) to Curry 69 kV (524821) to Curry 13.2 kV (524819) XFMR CKT 1, near FE-Curry 115 kV. a. Apply fault at the FE-Curry 115 kV bus. b. Clear fault after 5 cycles by tripping the faulted transformer.		X														
21	FLT21-3PH	3 phase fault on the Oasis (524874) to Perimeter (524797) 115 kV line circuit 1, near Oasis. a. Apply fault at the Oasis 115 kV bus. b. Clear fault after 5 cycles by tripping the faulted line. c. Wait 20 cycles, and then re-close the line in (b) back into the fault. d. Leave fault on for 5 cycles, then trip the line in (b) and remove fault.			X													

DRAFT

Cont. No.	Cont. Name	Description	GEN-2014-046	GEN-2015-018	GEN-2015-020	GEN-2015-031	GEN-2015-033	GEN-2015-039	GEN-2015-040	GEN-2015-041	GEN-2015-056	GEN-2015-058	GEN-2015-068	GEN-2015-075	GEN-2015-077	GEN-2015-078	GEN-2015-079	GEN-2015-080
22	FLT22-3PH	3 phase fault on the Oasis (524874) to FE-Chzplt (524863) 115 kV line circuit 1, near Oasis. a. Apply fault at the Oasis 115 kV bus. b. Clear fault after 5 cycles by tripping the faulted line. c. Wait 20 cycles, and then re-close the line in (b) back into the fault. d. Leave fault on for 5 cycles, then trip the line in (b) and remove fault.			X													
23	FLT23-3PH	3 phase fault on the FE-Chzplt (524863) to Norris Tap (524764) 115 kV line circuit 1, near FE-Chzplt. a. Apply fault at the FE-Chzplt 115 kV bus. b. Clear fault after 5 cycles by tripping the faulted line. c. Wait 20 cycles, and then re-close the line in (b) back into the fault. d. Leave fault on for 5 cycles, then trip the line in (b) and remove fault.			X													

DRAFT

Cont. No.	Cont. Name	Description	GEN-2014-046	GEN-2015-018	GEN-2015-020	GEN-2015-031	GEN-2015-033	GEN-2015-039	GEN-2015-040	GEN-2015-041	GEN-2015-056	GEN-2015-058	GEN-2015-068	GEN-2015-075	GEN-2015-077	GEN-2015-078	GEN-2015-079	GEN-2015-080
24	FLT24-3PH	3 phase fault on the Perimeter (524797) to Cannon Top (524790)115 kV line circuit 1, near Perimeter. a. Apply fault at the Perimeter 115 kV bus. b. Clear fault after 5 cycles by tripping the faulted line. c. Wait 20 cycles, and then re-close the line in (b) back into the fault. d. Leave fault on for 5 cycles, then trip the line in (b) and remove fault.			X													
25	FLT25-3PH	3 phase fault on the Oasis (524874) to Portales (524924) 115 kV line circuit 1, near Oasis. a. Apply fault at the Oasis 115 kV bus. b. Clear fault after 5 cycles by tripping the faulted line. c. Wait 20 cycles, and then re-close the line in (b) back into the fault. d. Leave fault on for 5 cycles, then trip the line in (b) and remove fault.			X													

DRAFT

Cont. No.	Cont. Name	Description	GEN-2014-046	GEN-2015-018	GEN-2015-020	GEN-2015-031	GEN-2015-033	GEN-2015-039	GEN-2015-040	GEN-2015-041	GEN-2015-056	GEN-2015-058	GEN-2015-068	GEN-2015-075	GEN-2015-077	GEN-2015-078	GEN-2015-079	GEN-2015-080
26	FLT26-3PH	3 phase fault on the Portales (524924) to Roosevelt (524908) 115 kV line circuit 1, near Oasis. a. Apply fault at the Portales 115 kV bus. b. Clear fault after 5 cycles by tripping the faulted line. c. Wait 20 cycles, and then re-close the line in (b) back into the fault. d. Leave fault on for 5 cycles, then trip the line in (b) and remove fault.			X													
27	FLT27-3PH	3 phase fault on the Portales 115 kV (524924) to Portales 69 kV (524923) to Portales 13.2 kV (524921) XFMR CKT 1, near Portales 115 kV. a. Apply fault at the Portales 115 kV bus. b. Clear fault after 5 cycles by tripping the faulted transformer.			X													

DRAFT

Cont. No.	Cont. Name	Description	GEN-2014-046	GEN-2015-018	GEN-2015-020	GEN-2015-031	GEN-2015-033	GEN-2015-039	GEN-2015-040	GEN-2015-041	GEN-2015-056	GEN-2015-058	GEN-2015-068	GEN-2015-075	GEN-2015-077	GEN-2015-078	GEN-2015-079	GEN-2015-080
28	FLT28-3PH	3 phase fault on the Oasis 115 kV (524874) to Oasis 230 kV (524875) to Oasis 13.2 kV (524872) XFMR CKT 1, near Oasis 115 kV. a. Apply fault at the Oasis 115 kV bus. b. Clear fault after 5 cycles by tripping the faulted transformer.			X													
29	FLT29-3PH	3 phase fault on the Oasis (524875) to San Juan Tap (524885) 230 kV line circuit 1, near Oasis. a. Apply fault at the Oasis 230 kV bus. b. Clear fault after 5 cycles by tripping the faulted line. c. Wait 20 cycles, and then re-close the line in (b) back into the fault. d. Leave fault on for 5 cycles, then trip the line in (b) and remove fault.			X													
30	FLT30-3PH	3 phase fault on the Oasis (524875) to SW_4k33 (524915) 230 kV line circuit 1, near Oasis. a. Apply fault at the Oasis 230 kV bus. b. Clear fault after 5 cycles by tripping the faulted line. c. Wait 20 cycles, and then re-close the line in (b) back into the fault. d. Leave fault on for 5 cycles, then trip the line in (b) and remove fault.			X													

DRAFT

Cont. No.	Cont. Name	Description	GEN-2014-046	GEN-2015-018	GEN-2015-020	GEN-2015-031	GEN-2015-033	GEN-2015-039	GEN-2015-040	GEN-2015-041	GEN-2015-056	GEN-2015-058	GEN-2015-068	GEN-2015-075	GEN-2015-077	GEN-2015-078	GEN-2015-079	GEN-2015-080
31	FLT31-3PH	3 phase fault on the Oasis (524875) to Pleasant Hill (524770) 230 kV line circuit 1, near Oasis. a. Apply fault at the Oasis 230 kV bus. b. Clear fault after 5 cycles by tripping the faulted line. c. Wait 20 cycles, and then re-close the line in (b) back into the fault. d. Leave fault on for 5 cycles, then trip the line in (b) and remove fault.			X													
32	FLT32-PO	**Prior Outage of the Oasis 115 kV (524874) to Oasis 230 kV (524875) to Oasis 13.2 kV (524872) XFMR CKT 1;** 3 phase fault on the Oasis (524874) to Perimeter (524797) 115 kV line circuit 1, near Oasis 115 kV. a. Apply fault at the Oasis 115 kV bus. b. Clear fault after 5 cycles by tripping the faulted line.			X													
33	FLT33-PO	**Prior Outage of the Oasis (524874) to Perimeter (524797) 115 kV line circuit 1;** 3 phase fault on the Oasis 115 kV (524874) to Oasis 230 kV (524875) to Oasis 13.2 kV (524872) XFMR CKT 1, near Oasis 115 kV. a. Apply fault at the Oasis 115 kV bus. b. Clear fault after 5 cycles by tripping the faulted transformer.			X													

DRAFT

Cont. No.	Cont. Name	Description	GEN-2014-046	GEN-2015-018	GEN-2015-020	GEN-2015-031	GEN-2015-033	GEN-2015-039	GEN-2015-040	GEN-2015-041	GEN-2015-056	GEN-2015-058	GEN-2015-068	GEN-2015-075	GEN-2015-077	GEN-2015-078	GEN-2015-079	GEN-2015-080
34	FLT34-3PH	3 phase fault on the Gen-2015-031 Tap (560050) to Amarillo South (524415) 230 kV line circuit 1, near Gen-2015-031 Tap. a. Apply fault at the Gen-2015-031 230 kV bus. b. Clear fault after 5 cycles by tripping the faulted line. c. Wait 20 cycles, and then re-close the line in (b) back into the fault. d. Leave fault on for 5 cycles, then trip the line in (b) and remove fault.				X												
35	FLT35-3PH	3 phase fault on the Gen-2015-031 Tap (560050) to Swisher (525213) 230 kV line circuit 1, near Gen-2015-031 Tap. a. Apply fault at the Gen-2015-031 230 kV bus. b. Clear fault after 5 cycles by tripping the faulted line. c. Wait 20 cycles, and then re-close the line in (b) back into the fault. d. Leave fault on for 5 cycles, then trip the line in (b) and remove fault.				X												

DRAFT

Cont. No.	Cont. Name	Description	GEN-2014-046	GEN-2015-018	GEN-2015-020	GEN-2015-031	GEN-2015-033	GEN-2015-039	GEN-2015-040	GEN-2015-041	GEN-2015-056	GEN-2015-058	GEN-2015-068	GEN-2015-075	GEN-2015-077	GEN-2015-078	GEN-2015-079	GEN-2015-080
36	FLT36-3PH	3 phase fault on the Swisher 230 kV (525213) to Swisher 115 kV (525212) to Swisher 13.2 kV (525211) XFMR CKT 1, near Swisher 230 kV. a. Apply fault at the Swisher 230 kV bus. b. Clear fault after 5 cycles by tripping the faulted transformer.				X												
37	FLT37-3PH	3 phase fault on the Swisher (525213) to Tuco2 (560021) 230 kV line circuit 1, near Swisher. a. Apply fault at the Swisher 230 kV bus. b. Clear fault after 5 cycles by tripping the faulted line. c. Wait 20 cycles, and then re-close the line in (b) back into the fault. d. Leave fault on for 5 cycles, then trip the line in (b) and remove fault.				X				X			X					
38	FLT38-3PH	3 phase fault on the Swisher (525213) to Newhart (525461) 230 kV line circuit 1, near Swisher. a. Apply fault at the Swisher 230 kV bus. b. Clear fault after 5 cycles by tripping the faulted line. c. Wait 20 cycles, and then re-close the line in (b) back into the fault. d. Leave fault on for 5 cycles, then trip the line in (b) and remove fault.				X												

DRAFT

Cont. No.	Cont. Name	Description	GEN-2014-046	GEN-2015-018	GEN-2015-020	GEN-2015-031	GEN-2015-033	GEN-2015-039	GEN-2015-040	GEN-2015-041	GEN-2015-056	GEN-2015-058	GEN-2015-068	GEN-2015-075	GEN-2015-077	GEN-2015-078	GEN-2015-079	GEN-2015-080
39	FLT39-3PH	3 phase fault on the Amarillo South 230 kV (524415) to Amarillo South 115 kV (524414) to Amarillo South 13.2 kV (524410) XFMR CKT 1, near Amarillo South 230 kV. a. Apply fault at the Amarillo 230 kV bus. b. Clear fault after 5 cycles by tripping the faulted transformer.				X												

DRAFT

Cont. No.	Cont. Name	Description	GEN-2014-046	GEN-2015-018	GEN-2015-020	GEN-2015-031	GEN-2015-033	GEN-2015-039	GEN-2015-040	GEN-2015-041	GEN-2015-056	GEN-2015-058	GEN-2015-068	GEN-2015-075	GEN-2015-077	GEN-2015-078	GEN-2015-079	GEN-2015-080
40	FLT40-3PH	3 phase fault on the Amarillo South (524415) to Nichols (524044) 230 kV line circuit 1, near Amarillo South. a. Apply fault at the Amarillo South 230 kV bus. b. Clear fault after 5 cycles by tripping the faulted line. c. Wait 20 cycles, and then re-close the line in (b) back into the fault. d. Leave fault on for 5 cycles, then trip the line in (b) and remove fault.				X												
41	FLT41-3PH	3 phase fault on the Amarillo South (524415) to Randal (524365) 230 kV line circuit 1, near Amarillo South. a. Apply fault at the Amarillo South 230 kV bus. b. Clear fault after 5 cycles by tripping the faulted line. c. Wait 20 cycles, and then re-close the line in (b) back into the fault. d. Leave fault on for 5 cycles, then trip the line in (b) and remove fault.				X												

DRAFT

Cont. No.	Cont. Name	Description	GEN-2014-046	GEN-2015-018	GEN-2015-020	GEN-2015-031	GEN-2015-033	GEN-2015-039	GEN-2015-040	GEN-2015-041	GEN-2015-056	GEN-2015-058	GEN-2015-068	GEN-2015-075	GEN-2015-077	GEN-2015-078	GEN-2015-079	GEN-2015-080
42	FLT42-SB	**Single phase fault with stuck breaker at Swisher (525213)** a. Apply fault at the Swisher 230 kV bus. b. Clear fault after 16 cycles and trip the following elements c. Swisher 230 kV (525213)/ 115 kV (525212)/13.2 kV (525211) transformer d. Swisher (525213) – Tuco2 (560021) 230 kV				X												

DRAFT

Cont. No.	Cont. Name	Description	GEN-2014-046	GEN-2015-018	GEN-2015-020	GEN-2015-031	GEN-2015-033	GEN-2015-039	GEN-2015-040	GEN-2015-041	GEN-2015-056	GEN-2015-058	GEN-2015-068	GEN-2015-075	GEN-2015-077	GEN-2015-078	GEN-2015-079	GEN-2015-080
43	FLT43-3PH	3 phase fault on the Rio Blanco 345 kV (560027) to Tuco (525832) 345 kV line circuit 1, near Rio Blanco. a. Apply fault at the Rio Blanco 345 kV bus. b. Clear fault after 5 cycles by tripping the faulted line. c. Wait 20 cycles, and then re-close the line in (b) back into the fault. d. Leave fault on for 5 cycles, then trip the line in (b) and remove fault.					X			X			X					
44	FLT44-3PH	3 phase fault on the Rio Blanco 345 kV (560027) to OKU (511456) 345 kV line circuit 1, near Rio Blanco. a. Apply fault at the Rio Blanco 345 kV bus. b. Clear fault after 5 cycles by tripping the faulted line. c. Wait 20 cycles, and then re-close the line in (b) back into the fault. d. Leave fault on for 5 cycles, then trip the line in (b) and remove fault.					X											

DRAFT

Cont. No.	Cont. Name	Description	GEN-2014-046	GEN-2015-018	GEN-2015-020	GEN-2015-031	GEN-2015-033	GEN-2015-039	GEN-2015-040	GEN-2015-041	GEN-2015-056	GEN-2015-058	GEN-2015-068	GEN-2015-075	GEN-2015-077	GEN-2015-078	GEN-2015-079	GEN-2015-080
45	FLT45-3PH	3 phase fault on the Tuco 2 (560022) to Border (515458) 345 kV line circuit 1, near Tuco. a. Apply fault at the Tuco 345 kV bus. b. Clear fault after 5 cycles by tripping the faulted line. c. Wait 20 cycles, and then re-close the line in (b) back into the fault. d. Leave fault on for 5 cycles, then trip the line in (b) and remove fault.					X			X			X					
46	FLT46-3PH	3 phase fault on the Tuco 345 kV (525832) to Tuco 230 kV (525830) to Tuco 13.2 kV (525824) XFMR CKT 1, near Tuco 345 kV bus. a. Apply fault at the Tuco 345 kV bus. b. Clear fault after 5 cycles by tripping the transformer					X			X			X					
47	FLT47-3PH (2025SP)	3 phase fault on the Tuco (525832) to Yoakam (526936) 345 kV line circuit 1, near Tuco. a. Apply fault at the Tuco (525832) 345 kV bus. b. Clear fault after 5 cycles by tripping the faulted line. c. Wait 20 cycles, and then re-close the line in (b) back into the fault. d. Leave fault on for 5 cycles, then trip the line in (b) and remove fault.					X			X			X					

DRAFT

Cont. No.	Cont. Name	Description	GEN-2014-046	GEN-2015-018	GEN-2015-020	GEN-2015-031	GEN-2015-033	GEN-2015-039	GEN-2015-040	GEN-2015-041	GEN-2015-056	GEN-2015-058	GEN-2015-068	GEN-2015-075	GEN-2015-077	GEN-2015-078	GEN-2015-079	GEN-2015-080
48	FLT48-3PH	3 phase fault on the OKU (511456) to Oklaun (599891) 345 kV line circuit 1, near OKU. a. Apply fault at the OKU 345 kV bus. b. Clear fault after 5 cycles by tripping the faulted line and remove the fault. c. Block the DC tie at OKU.					X											

DRAFT

Cont. No.	Cont. Name	Description	GEN-2014-046	GEN-2015-018	GEN-2015-020	GEN-2015-031	GEN-2015-033	GEN-2015-039	GEN-2015-040	GEN-2015-041	GEN-2015-056	GEN-2015-058	GEN-2015-068	GEN-2015-075	GEN-2015-077	GEN-2015-078	GEN-2015-079	GEN-2015-080
49	FLT49-3PH	3 phase fault on the OKU (511456) to L.E.S (511468) 345 kV line circuit 1, near OKU. a. Apply fault at the OKU 345 kV bus. b. Clear fault after 5 cycles by tripping the faulted line. c. Wait 20 cycles, and then re-close the line in (b) back into the fault. d. Leave fault on for 5 cycles, then trip the line in (b) and remove fault.					X											
50	FLT50-PO	**Prior Outage of the Tuco 345 kV (525832) to Tuco 230 kV (525830) to Tuco 13.2 kV (525824) XFMR CKT 1;** 3 phase fault on the Rio Blanco 345 kV (560027) to OKU (511456) 345 kV line circuit 1, near Rio Blanco. a. Apply fault at the Rio Blanco 345 kV bus. b. Clear fault after 5 cycles by tripping the faulted line.					X			X			X					

DRAFT

Cont. No.	Cont. Name	Description	GEN-2014-046	GEN-2015-018	GEN-2015-020	GEN-2015-031	GEN-2015-033	GEN-2015-039	GEN-2015-040	GEN-2015-041	GEN-2015-056	GEN-2015-058	GEN-2015-068	GEN-2015-075	GEN-2015-077	GEN-2015-078	GEN-2015-079	GEN-2015-080
51	FLT51-PO	**Prior Outage of the Tuco 345 kV (525832) to Tuco 230 kV (525830) to Tuco 13.2 kV (525824) XFMR CKT 1;** 3 phase fault on the Tuco 2 (560022) to Border (515458) 345 kV line circuit 1, near Tuco. a. Apply fault at the Tuco 345 kV bus. b. Clear fault after 5 cycles by tripping the faulted line.					X			X			X					
52	FLT52-3PH	3 phase fault on the GEN-2015-039 TAP (560051) to Deaf Smith (524623) 230 kV line circuit 1, near GEN-2015-039 TAP. a. Apply fault at the GEN-2015-039 TAP 230 kV bus. b. Clear fault after 5 cycles by tripping the faulted line. c. Wait 20 cycles, and then re-close the line in (b) back into the fault. d. Leave fault on for 5 cycles, then trip the line in (b) and remove fault.						X										

DRAFT

Cont. No.	Cont. Name	Description	GEN-2014-046	GEN-2015-018	GEN-2015-020	GEN-2015-031	GEN-2015-033	GEN-2015-039	GEN-2015-040	GEN-2015-041	GEN-2015-056	GEN-2015-058	GEN-2015-068	GEN-2015-075	GEN-2015-077	GEN-2015-078	GEN-2015-079	GEN-2015-080
53	FLT53-3PH	3 phase fault on the GEN-2015-039 TAP (560051) to Plant X (525481) 230 kV line circuit 1, near GEN-2015-039 TAP. a. Apply fault at the GEN-2015-039 TAP 230 kV bus. b. Clear fault after 5 cycles by tripping the faulted line. c. Wait 20 cycles, and then re-close the line in (b) back into the fault. d. Leave fault on for 5 cycles, then trip the line in (b) and remove fault.						X										
54	FLT54-3PH	3 phase fault on the Deaf Smith (524623) to Bushland (524267) 230 kV line circuit 1, near Deaf Smith. a. Apply fault at the Deaf Smith 230 kV bus. b. Clear fault after 5 cycles by tripping the faulted line. c. Wait 20 cycles, and then re-close the line in (b) back into the fault. d. Leave fault on for 5 cycles, then trip the line in (b) and remove fault.						X										

DRAFT

Cont. No.	Cont. Name	Description	GEN-2014-046	GEN-2015-018	GEN-2015-020	GEN-2015-031	GEN-2015-033	GEN-2015-039	GEN-2015-040	GEN-2015-041	GEN-2015-056	GEN-2015-058	GEN-2015-068	GEN-2015-075	GEN-2015-077	GEN-2015-078	GEN-2015-079	GEN-2015-080
55	FLT55-3PH	3 phase fault on the Deaf Smith 230 kV (524623) to Deaf Smith 115 kV (524622) to Deaf Smith 13.2 kV (524620) XFMR CKT 1, near Deaf Smith 230 kV. a. Apply fault at the Deaf Smith 230 kV bus. b. Clear fault after 5 cycles by tripping the faulted transformer.						X										
56	FLT56-3PH	3 phase fault on the Plant X (525481) to Tolk East (525524) 230 kV line circuit 2, near Plant X. a. Apply fault at the Plant X 230 kV bus. b. Clear fault after 5 cycles by tripping the faulted line. c. Wait 20 cycles, and then re-close the line in (b) back into the fault. d. Leave fault on for 5 cycles, then trip the line in (b) and remove fault.						X										

DRAFT

Cont. No.	Cont. Name	Description	GEN-2014-046	GEN-2015-018	GEN-2015-020	GEN-2015-031	GEN-2015-033	GEN-2015-039	GEN-2015-040	GEN-2015-041	GEN-2015-056	GEN-2015-058	GEN-2015-068	GEN-2015-075	GEN-2015-077	GEN-2015-078	GEN-2015-079	GEN-2015-080
57	FLT57-3PH	3 phase fault on the Plant X (525481) to Newhart (525461) 230 kV line circuit 1, near Plant X. a. Apply fault at the Plant X 230 kV bus. b. Clear fault after 5 cycles by tripping the faulted line. c. Wait 20 cycles, and then re-close the line in (b) back into the fault. d. Leave fault on for 5 cycles, then trip the line in (b) and remove fault.						X										
58	FLT58-3PH	3 phase fault on the Plant X (525481) to Tolk West (525531) 230 kV line circuit 1, near Plant X. a. Apply fault at the Plant X 230 kV bus. b. Clear fault after 5 cycles by tripping the faulted line. c. Wait 20 cycles, and then re-close the line in (b) back into the fault. d. Leave fault on for 5 cycles, then trip the line in (b) and remove fault.						X										

DRAFT

Cont. No.	Cont. Name	Description	GEN-2014-046	GEN-2015-018	GEN-2015-020	GEN-2015-031	GEN-2015-033	GEN-2015-039	GEN-2015-040	GEN-2015-041	GEN-2015-056	GEN-2015-058	GEN-2015-068	GEN-2015-075	GEN-2015-077	GEN-2015-078	GEN-2015-079	GEN-2015-080
59	FLT59-3PH	3 phase fault on the Plant X (525481) to Sundown (526435) 230 kV line circuit 1, near Plant X. a. Apply fault at the Plant X 230 kV bus. b. Clear fault after 5 cycles by tripping the faulted line. c. Wait 20 cycles, and then re-close the line in (b) back into the fault. d. Leave fault on for 5 cycles, then trip the line in (b) and remove fault.						X										
60	FLT60-3PH	3 phase fault on the Plant X 230 kV (525481) to Plant X 115 kV (525480) to Plant X 13.2 kV (525479) XFMR CKT 1, near Plant X 230 kV. a. Apply fault at the Plant X 230 kV bus. b. Clear fault after 5 cycles by tripping the faulted transformer.						X										
61	FLT61-SB	**Single phase fault with stuck breaker** on the Tolk West (525531) to Plant X (525481) 230 kV circuit #1 line, near Tolk West. a. Apply fault at the Tolk West 230 kV bus. b. Run 5 cycles, and then open Plant X end of the faulted line. c. Run 10 cycles, and then clear the fault and disconnect Tolk West 230 kV bus (525531).						X										

DRAFT

Cont. No.	Cont. Name	Description	GEN-2014-046	GEN-2015-018	GEN-2015-020	GEN-2015-031	GEN-2015-033	GEN-2015-039	GEN-2015-040	GEN-2015-041	GEN-2015-056	GEN-2015-058	GEN-2015-068	GEN-2015-075	GEN-2015-077	GEN-2015-078	GEN-2015-079	GEN-2015-080
62	FLT62-SB	**Single phase fault with stuck breaker** on the Tolk East (525524) to Plant X (525481) 230 kV line circuit #2, near Tolk East. a. Apply fault at the Tolk East 230 kV bus. b. Run 5 cycles, and then open Plant X end of the faulted line. c. Run 10 cycles, and then clear the fault and disconnect Tolk East 230 kV bus (525524).						X										
63	FLT63-3PH	3 phase fault on the Mustang (527149) to Amocowasson (526784) 230 kV line circuit 1, near Mustang. a. Apply fault at the Mustang 230 kV bus. b. Clear fault after 5 cycles by tripping the faulted line. c. Wait 20 cycles, and then re-close the line in (b) back into the fault. d. Leave fault on for 5 cycles, then trip the line in (b) and remove fault.							X							X		

DRAFT

Cont. No.	Cont. Name	Description	GEN-2014-046	GEN-2015-018	GEN-2015-020	GEN-2015-031	GEN-2015-033	GEN-2015-039	GEN-2015-040	GEN-2015-041	GEN-2015-056	GEN-2015-058	GEN-2015-068	GEN-2015-075	GEN-2015-077	GEN-2015-078	GEN-2015-079	GEN-2015-080
64	FLT64-3PH	3 phase fault on the Mustang 230 kV (527149) to Mustang 115 kV (527146) to Mustang 13.2 kV (527143) XFMR CKT 1, near Mustang 230 kV. a. Apply fault at the Mustang 230 kV bus. b. Clear fault after 5 cycles by tripping the faulted transformer.							X							X		
65	FLT65-3PH	3 phase fault on the Mustang (527149) to Yoakum (526935) 230 kV line circuit 1, near Mustang. a. Apply fault at the Mustang 230 kV bus. b. Clear fault after 5 cycles by tripping the faulted line. c. Wait 20 cycles, and then re-close the line in (b) back into the fault. d. Leave fault on for 5 cycles, then trip the line in (b) and remove fault.							X							X	X	X
66	FLT66-3PH	3 phase fault on the Mustang (527149) to Seminole (527276) 230 kV line circuit 1, near Mustang. a. Apply fault at the Mustang 230 kV bus. b. Clear fault after 5 cycles by tripping the faulted line. c. Wait 20 cycles, and then re-close the line in (b) back into the fault. d. Leave fault on for 5 cycles, then trip the line in (b) and remove fault.							X							X		

DRAFT

Cont. No.	Cont. Name	Description	GEN-2014-046	GEN-2015-018	GEN-2015-020	GEN-2015-031	GEN-2015-033	GEN-2015-039	GEN-2015-040	GEN-2015-041	GEN-2015-056	GEN-2015-058	GEN-2015-068	GEN-2015-075	GEN-2015-077	GEN-2015-078	GEN-2015-079	GEN-2015-080
67	FLT67-3PH	3 phase fault on the Seminole 230 kV (527276) to Seminole 115 kV (527275) to Seminole 13.2 kV (527273) XFMR CKT 1, near Seminole 230 kV. a. Apply fault at the Seminole 230 kV bus. b. Clear fault after 5 cycles by tripping the faulted transformer.							X									
68	FLT68-3PH	3 phase fault on the Amocowasson (526784) to OxyBru Tap (527010) 230 kV line circuit 1, near Amocowasson. a. Apply fault at the Amocowasson 230 kV bus. b. Clear fault after 5 cycles by tripping the faulted line. c. Wait 20 cycles, and then re-close the line in (b) back into the fault. d. Leave fault on for 5 cycles, then trip the line in (b) and remove fault.							X									
69	FLT69-3PH	3 phase fault on the Yoakum (526935) to G13-027-TAP (562480) 230 kV line, near Yoakum. a. Apply fault at the Yoakum 230 kV bus. b. Clear fault after 5 cycles by tripping the faulted line. c. Wait 20 cycles, and then re-close the line in (b) back into the fault. d. Leave fault on for 5 cycles, then trip the line in (b) and remove fault.							X								X	X

DRAFT

Cont. No.	Cont. Name	Description	GEN-2014-046	GEN-2015-018	GEN-2015-020	GEN-2015-031	GEN-2015-033	GEN-2015-039	GEN-2015-040	GEN-2015-041	GEN-2015-056	GEN-2015-058	GEN-2015-068	GEN-2015-075	GEN-2015-077	GEN-2015-078	GEN-2015-079	GEN-2015-080
70	FLT70-3PH	3 phase fault on the Yoakum 230 kV (526935) to Yoakum 115 kV (526934) to Yoakum 13.2 kV (526932) XFMR CKT 2, near Yoakum 230 kV. a. Apply fault at the Yoakum 230 kV bus. b. Clear fault after 5 cycles by tripping the faulted transformer.							X								X	X
71	FLT71-3PH	3 phase fault on the Mustang (527146) to Denver North (527130) 115 kV line circuit 1, near Mustang. a. Apply fault at the Mustang 115 kV bus. b. Clear fault after 5 cycles by tripping the faulted line. c. Wait 20 cycles, and then re-close the line in (b) back into the fault. d. Leave fault on for 5 cycles, then trip the line in (b) and remove fault.							X							X		
72	FLT72-3PH	3 phase fault on the Mustang (527146) to Seagraves (527202) 115 kV line circuit 1, near Mustang. a. Apply fault at the Mustang 115 kV bus. b. Clear fault after 5 cycles by tripping the faulted line. c. Wait 20 cycles, and then re-close the line in (b) back into the fault. d. Leave fault on for 5 cycles, then trip the line in (b) and remove fault.							X							X		

DRAFT

Cont. No.	Cont. Name	Description	GEN-2014-046	GEN-2015-018	GEN-2015-020	GEN-2015-031	GEN-2015-033	GEN-2015-039	GEN-2015-040	GEN-2015-041	GEN-2015-056	GEN-2015-058	GEN-2015-068	GEN-2015-075	GEN-2015-077	GEN-2015-078	GEN-2015-079	GEN-2015-080
73	FLT73-3PH	3 phase fault on the Mustang (527146) to Denver South (527136) 115 kV line circuit 1, near Mustang. a. Apply fault at the Mustang 115 kV bus. b. Clear fault after 5 cycles by tripping the faulted line. c. Wait 20 cycles, and then re-close the line in (b) back into the fault. d. Leave fault on for 5 cycles, then trip the line in (b) and remove fault.							X							X		
74	FLT74-3PH (2017SP & 2025SP Only)	3 phase fault on the Mustang (527146) to Shell Co (527062) 115 kV line circuit 1, near Mustang. a. Apply fault at the Mustang 115 kV bus. b. Clear fault after 5 cycles by tripping the faulted line. c. Wait 20 cycles, and then re-close the line in (b) back into the fault. d. Leave fault on for 5 cycles, then trip the line in (b) and remove fault.							X							X		

DRAFT

Cont. No.	Cont. Name	Description	GEN-2014-046	GEN-2015-018	GEN-2015-020	GEN-2015-031	GEN-2015-033	GEN-2015-039	GEN-2015-040	GEN-2015-041	GEN-2015-056	GEN-2015-058	GEN-2015-068	GEN-2015-075	GEN-2015-077	GEN-2015-078	GEN-2015-079	GEN-2015-080
75	FLT75-3PH	3 phase fault on the Yoakum (526935) to Amoco-SS (526460) 230 kV line, near Yoakum. a. Apply fault at the Yoakum 230 kV bus. b. Clear fault after 5 cycles by tripping the faulted line. c. Wait 20 cycles, and then re-close the line in (b) back into the fault. d. Leave fault on for 5 cycles, then trip the line in (b) and remove fault.							X								X	X
76	FLT76-3PH	3 phase fault on the Yoakum (526935) to OxyBru Tap (527010) 230 kV line, near Yoakum. a. Apply fault at the Yoakum 230 kV bus. b. Clear fault after 5 cycles by tripping the faulted line. c. Wait 20 cycles, and then re-close the line in (b) back into the fault. d. Leave fault on for 5 cycles, then trip the line in (b) and remove fault.							X								X	X

DRAFT

Cont. No.	Cont. Name	Description	GEN-2014-046	GEN-2015-018	GEN-2015-020	GEN-2015-031	GEN-2015-033	GEN-2015-039	GEN-2015-040	GEN-2015-041	GEN-2015-056	GEN-2015-058	GEN-2015-068	GEN-2015-075	GEN-2015-077	GEN-2015-078	GEN-2015-079	GEN-2015-080
77	FLT77-3PH	3 phase fault on the Yoakum (526935) to GEN-2015-079 Tap (560059) 230 kV line, near Yoakum. a. Apply fault at the Yoakum 230 kV bus. b. Clear fault after 5 cycles by tripping the faulted line. c. Wait 20 cycles, and then re-close the line in (b) back into the fault. d. Leave fault on for 5 cycles, then trip the line in (b) and remove fault.							X								X	X
78	FLT78-SB	**Single phase fault with stuck breaker at Mustang (527149)** a. Apply fault at the Mustang 230 kV bus. b. Clear fault after 16 cycles and trip the following elements c. Mustang 230 kV (527149) /115 kV (527146)/13.2 kV (527143) transformer d. Mustang (527149) - Amocowasson (526784) 230 kV							X									

DRAFT

Cont. No.	Cont. Name	Description	GEN-2014-046	GEN-2015-018	GEN-2015-020	GEN-2015-031	GEN-2015-033	GEN-2015-039	GEN-2015-040	GEN-2015-041	GEN-2015-056	GEN-2015-058	GEN-2015-068	GEN-2015-075	GEN-2015-077	GEN-2015-078	GEN-2015-079	GEN-2015-080
79	FLT79-SB	**Single phase fault with stuck breaker** on the Tolk West (525531) to GEN-2013-027 (562480) 230 kV line, near Tolk West. a. Apply fault at the Tolk West 230 kV bus. b. Run 5 cycles, and then open GEN-2013-027 end of the faulted line. c. Run 10 cycles, and then clear the fault and disconnect Tolk West 230 kV bus (525531).							X								X	X
80	FLT80-SB	**Single phase fault with stuck breaker** on the Yoakum (526935) to GEN-2013-027 (562480) 230 kV line, near Yoakum. a. Apply fault at the Yoakum 230 kV bus. b. Run 5 cycles, and then open GEN-2013-027 end of the faulted line. c. Run 10 cycles, and then clear the fault and open Yoakum end of the line in (b) and trip Yoakum (526935) to Yoakum 115 (526934)/13.2 kV (526931) transformer circuit #1.							X								X	X

DRAFT

Cont. No.	Cont. Name	Description	GEN-2014-046	GEN-2015-018	GEN-2015-020	GEN-2015-031	GEN-2015-033	GEN-2015-039	GEN-2015-040	GEN-2015-041	GEN-2015-056	GEN-2015-058	GEN-2015-068	GEN-2015-075	GEN-2015-077	GEN-2015-078	GEN-2015-079	GEN-2015-080
81	FLT81-SB	**Single phase fault with stuck breaker** on the Yoakum (526935) to Amoco-SS (526460) 230 kV line, near Yoakum. a. Apply fault at the Yoakum 230 kV bus. b. Run 5 cycles, and then open Amoco-SS end of the faulted line. c. Run 10 cycles, and then clear the fault and trip Yoakum 230 kV (526935) bus.							X								X	X
82	FLT82-PO	**Prior Outage of the Mustang (527149) to Seminole (527276) 230 kV line circuit 1;** 3 phase fault on the Mustang (527149) to Yoakum (526935) 230 kV line circuit 1, near Mustang. a. Apply fault at the Mustang 230 kV bus. b. Clear fault after 5 cycles by tripping the faulted line.							X									

DRAFT

Cont. No.	Cont. Name	Description	GEN-2014-046	GEN-2015-018	GEN-2015-020	GEN-2015-031	GEN-2015-033	GEN-2015-039	GEN-2015-040	GEN-2015-041	GEN-2015-056	GEN-2015-058	GEN-2015-068	GEN-2015-075	GEN-2015-077	GEN-2015-078	GEN-2015-079	GEN-2015-080
83	FLT83-PO	**Prior Outage of the Mustang (527149) to Yoakum (526935) 230 kV line circuit 1;** 3 phase fault on the Mustang (527149) to Seminole (527276) 230 kV line circuit 1, near Mustang. a. Apply fault at the Mustang 230 kV bus. b. Clear fault after 5 cycles by tripping the faulted line.							X									
84	FLT84-3PH	3 phase fault on the Woodward (515375) to Chisholm (511553) 345 kV line circuit 1, near Border. a. Apply fault at the Woodward 345 kV bus. b. Clear fault after 5 cycles by tripping the faulted line. c. Wait 20 cycles, and then re-close the line in (b) back into the fault. d. Leave fault on for 5 cycles, then trip the line in (b) and remove fault.								X			X					
85	FLT85-3PH	3 phase fault on the Tuco (525830) to Carlisle (526161) 230 kV line circuit 1, near Tuco. a. Apply fault at the Tuco 230 kV bus. b. Clear fault after 5 cycles by tripping the faulted line. c. Wait 20 cycles, and then re-close the line in (b) back into the fault. d. Leave fault on for 5 cycles, then trip the line in (b) and remove fault.								X			X					

DRAFT

Cont. No.	Cont. Name	Description	GEN-2014-046	GEN-2015-018	GEN-2015-020	GEN-2015-031	GEN-2015-033	GEN-2015-039	GEN-2015-040	GEN-2015-041	GEN-2015-056	GEN-2015-058	GEN-2015-068	GEN-2015-075	GEN-2015-077	GEN-2015-078	GEN-2015-079	GEN-2015-080
86	FLT86-3PH	3 phase fault on the Tuco (525830) to Tolk East (525524) 230 kV line circuit 1, near Tuco. a. Apply fault at the Tuco 230 kV bus. b. Clear fault after 5 cycles by tripping the faulted line. c. Wait 20 cycles, and then re-close the line in (b) back into the fault. d. Leave fault on for 5 cycles, then trip the line in (b) and remove fault.								X			X					
87	FLT87-3PH	3 phase fault on the Tuco (525830) to Jones (526337) 230 kV line circuit 1, near Tuco. a. Apply fault at the Tuco 230 kV bus. b. Clear fault after 5 cycles by tripping the faulted line. c. Wait 20 cycles, and then re-close the line in (b) back into the fault. d. Leave fault on for 5 cycles, then trip the line in (b) and remove fault.								X			X					
88	FLT88-3PH	3 phase fault on the Tuco 230 kV (525830) to Tuco 115 kV (525828) to Tuco 13.2 kV (525819) XFMR CKT 2, near Tuco 230 kV. a. Apply fault at the Tuco 230 kV bus. b. Clear fault after 5 cycles by tripping the faulted transformer.								X			X					

DRAFT

Cont. No.	Cont. Name	Description	GEN-2014-046	GEN-2015-018	GEN-2015-020	GEN-2015-031	GEN-2015-033	GEN-2015-039	GEN-2015-040	GEN-2015-041	GEN-2015-056	GEN-2015-058	GEN-2015-068	GEN-2015-075	GEN-2015-077	GEN-2015-078	GEN-2015-079	GEN-2015-080
89	FLT89-PO	**Prior Outage of the Tuco 345 kV (525832) to Tuco 230 kV (525830) to Tuco 13.2 kV (525824) XFMR CKT 1;** 3 phase fault on the Tuco 345 kV (525832) to Tuco 230 kV (525830) to Tuco 13.2 kV (525825) XFMR CKT 2, near Tuco 345 kV. a. Apply fault at the Tuco 345 kV bus. b. Clear fault after 5 cycles by tripping the faulted transformer.								X			X					
90	FLT90-PO	**Prior Outage of the Tuco 345 kV (525832) to Tuco 230 kV (525830) to Tuco 13.2 kV (525825) XFMR CKT 2;** 3 phase fault on the Tuco 345 kV (525832) to Tuco 230 kV (525830) to Tuco 13.2 kV (525824) XFMR CKT 1, near Tuco 345 kV. a. Apply fault at the Tuco 345 kV bus. b. Clear fault after 5 cycles by tripping the faulted transformer.								X			X					
91	FLT91-SB	**Single phase fault with stuck breaker** at **Tuco (525832)** a. Apply fault at the Tuco 345 kV bus. b. Clear fault after 16 cycles and trip the following elements c. Tuco 345 kV (525832) /230 kV (525830) /13.2 kV (525824) transformer d. Tuco (525832)- Rio Blanco (560027) 345 kV					X			X			X					

DRAFT

Cont. No.	Cont. Name	Description	GEN-2014-046	GEN-2015-018	GEN-2015-020	GEN-2015-031	GEN-2015-033	GEN-2015-039	GEN-2015-040	GEN-2015-041	GEN-2015-056	GEN-2015-058	GEN-2015-068	GEN-2015-075	GEN-2015-077	GEN-2015-078	GEN-2015-079	GEN-2015-080
92	FLT92-3PH	3 phase fault on the Crossroads (527656) to Tolk (525549) 345 kV line circuit 1, near Crossroads. a. Apply fault at the Crossroads 345 kV bus. b. Clear fault after 5 cycles by tripping the faulted line. c. Wait 20 cycles, and then re-close the line in (b) back into the fault. d. Leave fault on for 5 cycles, then trip the line in (b) and remove fault.									X							
93	FLT93-3PH	3 phase fault on the Crossroads (527656) to Eddy County (527802) 345 kV line circuit 1, near Crossroads. a. Apply fault at the Crossroads 345 kV bus. b. Clear fault after 5 cycles by tripping the faulted line. c. Wait 20 cycles, and then re-close the line in (b) back into the fault. d. Leave fault on for 5 cycles, then trip the line in (b) and remove fault.									X							
94	FLT94-3PH	3 phase fault on the Tolk 345 kV (525549) to Tolk Tap 230 kV (525543) to Tolk 13.2 kV (525537) XFMR CKT 1, near Tolk 345 kV. a. Apply fault at the Tolk 345 kV bus. b. Clear fault after 5 cycles by tripping the faulted transformer									X							

DRAFT

Cont. No.	Cont. Name	Description	GEN-2014-046	GEN-2015-018	GEN-2015-020	GEN-2015-031	GEN-2015-033	GEN-2015-039	GEN-2015-040	GEN-2015-041	GEN-2015-056	GEN-2015-058	GEN-2015-068	GEN-2015-075	GEN-2015-077	GEN-2015-078	GEN-2015-079	GEN-2015-080
95	FLT95-3PH	3 phase fault on the Eddy County 345 kV (527802) to Eddy North 230 kV (527799) to Eddy 13.2 kV (527796) XFMR CKT 1, near Eddy County 345 kV. a. Apply fault at the Eddy County 345 kV bus. b. Clear fault after 5 cycles by tripping the faulted transformer									X							
96	FLT96-3PH	3 phase fault on the Atoka (527786) to CV-Dayton (527821) 115 kV line circuit 1, near Atoka. a. Apply fault at the Atoka 115 kV bus. b. Clear fault after 5 cycles by tripping the faulted line. c. Wait 20 cycles, and then re-close the line in (b) back into the fault. d. Leave fault on for 5 cycles, then trip the line in (b) and remove fault.										X						

DRAFT

Cont. No.	Cont. Name	Description	GEN-2014-046	GEN-2015-018	GEN-2015-020	GEN-2015-031	GEN-2015-033	GEN-2015-039	GEN-2015-040	GEN-2015-041	GEN-2015-056	GEN-2015-058	GEN-2015-068	GEN-2015-075	GEN-2015-077	GEN-2015-078	GEN-2015-079	GEN-2015-080
97	FLT97-3PH	3 phase fault on the Atoka (527786) to CV-Irishhill (528116) 115 kV line circuit 1, near Atoka. a. Apply fault at the Atoka 115 kV bus. b. Clear fault after 5 cycles by tripping the faulted line. c. Wait 20 cycles, and then re-close the line in (b) back into the fault. d. Leave fault on for 5 cycles, then trip the line in (b) and remove fault.										X						
98	FLT98-3PH	3 phase fault on the Atoka (527786) to Eagle Creek (527711) 115 kV line circuit 1, near Atoka. a. Apply fault at the Atoka 115 kV bus. b. Clear fault after 5 cycles by tripping the faulted line. c. Wait 20 cycles, and then re-close the line in (b) back into the fault. d. Leave fault on for 5 cycles, then trip the line in (b) and remove fault.										X						

DRAFT

Cont. No.	Cont. Name	Description	GEN-2014-046	GEN-2015-018	GEN-2015-020	GEN-2015-031	GEN-2015-033	GEN-2015-039	GEN-2015-040	GEN-2015-041	GEN-2015-056	GEN-2015-058	GEN-2015-068	GEN-2015-075	GEN-2015-077	GEN-2015-078	GEN-2015-079	GEN-2015-080
99	FLT99-3PH	3 phase fault on the CV-Dayton (527821) to Eddy South (527793) 115 kV line circuit 1, near CV-Dayton. a. Apply fault at the CV-Dayton 115 kV bus. b. Clear fault after 5 cycles by tripping the faulted line. c. Wait 20 cycles, and then re-close the line in (b) back into the fault. d. Leave fault on for 5 cycles, then trip the line in (b) and remove fault.										X						
100	FLT100-3PH	3 phase fault on the CV-Irishhill (528116) to CV-Lakewood (528109) 115 kV line circuit 1, near CV-Irishhill. a. Apply fault at the CV-Irishhill 115 kV bus. b. Clear fault after 5 cycles by tripping the faulted line. c. Wait 20 cycles, and then re-close the line in (b) back into the fault. d. Leave fault on for 5 cycles, then trip the line in (b) and remove fault.										X						

DRAFT

Cont. No.	Cont. Name	Description	GEN-2014-046	GEN-2015-018	GEN-2015-020	GEN-2015-031	GEN-2015-033	GEN-2015-039	GEN-2015-040	GEN-2015-041	GEN-2015-056	GEN-2015-058	GEN-2015-068	GEN-2015-075	GEN-2015-077	GEN-2015-078	GEN-2015-079	GEN-2015-080
101	FLT101 -3PH	3 phase fault on the Eagle Creek (527711) to Seven Rivers (528094) 115 kV line circuit 1, near Eagle Creek. a. Apply fault at the Eagle Creek 115 kV bus. b. Clear fault after 5 cycles by tripping the faulted line. c. Wait 20 cycles, and then re-close the line in (b) back into the fault. d. Leave fault on for 5 cycles, then trip the line in (b) and remove fault.										X						
102	FLT102 -3PH	3 phase fault on the Eagle Creek (527711) to Eddy North (527798) 115 kV line circuit 1, near Eagle Creek. a. Apply fault at the Eagle Creek 115 kV bus. b. Clear fault after 5 cycles by tripping the faulted line. c. Wait 20 cycles, and then re-close the line in (b) back into the fault. d. Leave fault on for 5 cycles, then trip the line in (b) and remove fault.										X						

DRAFT

Cont. No.	Cont. Name	Description	GEN-2014-046	GEN-2015-018	GEN-2015-020	GEN-2015-031	GEN-2015-033	GEN-2015-039	GEN-2015-040	GEN-2015-041	GEN-2015-056	GEN-2015-058	GEN-2015-068	GEN-2015-075	GEN-2015-077	GEN-2015-078	GEN-2015-079	GEN-2015-080
103	FLT103 -PO	**Prior Outage of the Atoka (527786) to CV-Dayton (527821) 115 kV line circuit 1;** 3 phase fault on the Atoka (527786) to Eagle Creek (527711) 115 kV line circuit 1, near Atoka. a. Apply fault at the Atoka 115 kV bus. b. Clear fault after 5 cycles by tripping the faulted line.										X						
104	FLT104 -PO	**Prior Outage of the Atoka (527786) to Eagle Creek (527711) 115 kV line circuit 1;** 3 phase fault on the Atoka (527786) to CV-Dayton (527821) 115 kV line circuit 1, near Atoka. a. Apply fault at the Atoka 115 kV bus. b. Clear fault after 5 cycles by tripping the faulted line.										X						
105	FLT105 -3PH	3 phase fault on the Carlisle (526160) to LP-Doud Tap (526162) 115 kV line circuit 1, near Carlisle. a. Apply fault at the Carlisle 115 kV bus. b. Clear fault after 5 cycles by tripping the faulted line. c. Wait 20 cycles, and then re-close the line in (b) back into the fault. d. Leave fault on for 5 cycles, then trip the line in (b) and remove fault.												X				

DRAFT

Cont. No.	Cont. Name	Description	GEN-2014-046	GEN-2015-018	GEN-2015-020	GEN-2015-031	GEN-2015-033	GEN-2015-039	GEN-2015-040	GEN-2015-041	GEN-2015-056	GEN-2015-058	GEN-2015-068	GEN-2015-075	GEN-2015-077	GEN-2015-078	GEN-2015-079	GEN-2015-080
106	FLT106 -3PH	3 phase fault on the Carlisle 115 kV (526160) to Carlisle 230 kV (526161) to Carlisle 13.2 kV (526157) XFMR CKT 1, near Carlisle 115 kV bus. a. Apply fault at the Carlisle 115 kV bus. b. Clear fault after 5 cycles by tripping the transformer												X				
107	FLT107 -3PH	3 phase fault on the Carlisle (526160) to SP-Erskine (526109) 115 kV line circuit 1, near Carlisle. a. Apply fault at the Carlisle 115 kV bus. b. Clear fault after 5 cycles by tripping the faulted line. c. Wait 20 cycles, and then re-close the line in (b) back into the fault. d. Leave fault on for 5 cycles, then trip the line in (b) and remove fault.												X				

DRAFT

Cont. No.	Cont. Name	Description	GEN-2014-046	GEN-2015-018	GEN-2015-020	GEN-2015-031	GEN-2015-033	GEN-2015-039	GEN-2015-040	GEN-2015-041	GEN-2015-056	GEN-2015-058	GEN-2015-068	GEN-2015-075	GEN-2015-077	GEN-2015-078	GEN-2015-079	GEN-2015-080
108	FLT108 -3PH	3 phase fault on the Carlisle (526160) to Murphy (526192) 115 kV line circuit 1, near Carlisle. a. Apply fault at the Carlisle 115 kV bus. b. Clear fault after 5 cycles by tripping the faulted line. c. Wait 20 cycles, and then re-close the line in (b) back into the fault. d. Leave fault on for 5 cycles, then trip the line in (b) and remove fault.												X				
109	FLT109 -3PH	3 phase fault on the GEN-2015-077 Tap (560058) to Terry County (526736) 115 kV line circuit 1, near GEN-2015-077 Tap. a. Apply fault at the GEN-2015-077 Tap 115 kV bus. b. Clear fault after 5 cycles by tripping the faulted line. c. Wait 20 cycles, and then re-close the line in (b) back into the fault. d. Leave fault on for 5 cycles, then trip the line in (b) and remove fault.													X			

DRAFT

Cont. No.	Cont. Name	Description	GEN-2014-046	GEN-2015-018	GEN-2015-020	GEN-2015-031	GEN-2015-033	GEN-2015-039	GEN-2015-040	GEN-2015-041	GEN-2015-056	GEN-2015-058	GEN-2015-068	GEN-2015-075	GEN-2015-077	GEN-2015-078	GEN-2015-079	GEN-2015-080
110	FLT110 -3PH	3 phase fault on the GEN-2015-077 Tap (560058) to LG-Clauene (526491) 115 kV line circuit 1, near GEN-2015-077 Tap. a. Apply fault at the GEN-2015-077 Tap 115 kV bus. b. Clear fault after 5 cycles by tripping the faulted line. c. Wait 20 cycles, and then re-close the line in (b) back into the fault. d. Leave fault on for 5 cycles, then trip the line in (b) and remove fault.													X			
111	FLT111 -3PH	3 phase fault on the Terry County (526736) to Prentice (526792) 115 kV line circuit 1, near Terry County. a. Apply fault at the Terry County 115 kV bus. b. Clear fault after 5 cycles by tripping the faulted line. c. Wait 20 cycles, and then re-close the line in (b) back into the fault. d. Leave fault on for 5 cycles, then trip the line in (b) and remove fault.													X			

DRAFT

Cont. No.	Cont. Name	Description	GEN-2014-046	GEN-2015-018	GEN-2015-020	GEN-2015-031	GEN-2015-033	GEN-2015-039	GEN-2015-040	GEN-2015-041	GEN-2015-056	GEN-2015-058	GEN-2015-068	GEN-2015-075	GEN-2015-077	GEN-2015-078	GEN-2015-079	GEN-2015-080
112	FLT112 -3PH	3 phase fault on the Terry County (526736) to Denver North (527130) 115 kV line circuit 1, near Terry County. a. Apply fault at the Terry County 115 kV bus. b. Clear fault after 5 cycles by tripping the faulted line. c. Wait 20 cycles, and then re-close the line in (b) back into the fault. d. Leave fault on for 5 cycles, then trip the line in (b) and remove fault.													X			
113	FLT113 -3PH	3 phase fault on the Terry County (526736) to Sulphur (527262) 115 kV line circuit 1, near Terry County. a. Apply fault at the Terry County 115 kV bus. b. Clear fault after 5 cycles by tripping the faulted line. c. Wait 20 cycles, and then re-close the line in (b) back into the fault. d. Leave fault on for 5 cycles, then trip the line in (b) and remove fault.													X			

DRAFT

Cont. No.	Cont. Name	Description	GEN-2014-046	GEN-2015-018	GEN-2015-020	GEN-2015-031	GEN-2015-033	GEN-2015-039	GEN-2015-040	GEN-2015-041	GEN-2015-056	GEN-2015-058	GEN-2015-068	GEN-2015-075	GEN-2015-077	GEN-2015-078	GEN-2015-079	GEN-2015-080
114	FLT114 -3PH	3 phase fault on the Terry County 115 kV (526736) to Terry County 69 kV (526735) to Terry County 13.2 kV (526733) XFMR CKT 1, near Terry County 115 kV. a. Apply fault at the Terry County 115 kV bus. b. Clear fault after 5 cycles by tripping the faulted transformer.													X			
115	FLT115 -3PH	3 phase fault on the Terry County (526736) to Wolf Forth (526524) 115 kV line circuit 1, near Terry County. a. Apply fault at the Terry County 115 kV bus. b. Clear fault after 5 cycles by tripping the faulted line. c. Wait 20 cycles, and then re-close the line in (b) back into the fault. d. Leave fault on for 5 cycles, then trip the line in (b) and remove fault.													X			

DRAFT

Cont. No.	Cont. Name	Description	GEN-2014-046	GEN-2015-018	GEN-2015-020	GEN-2015-031	GEN-2015-033	GEN-2015-039	GEN-2015-040	GEN-2015-041	GEN-2015-056	GEN-2015-058	GEN-2015-068	GEN-2015-075	GEN-2015-077	GEN-2015-078	GEN-2015-079	GEN-2015-080
116	FLT116 -3PH	3 phase fault on the LG-Clauene (526491) to LG-Leveland (526484) 115 kV line circuit 1, near LG-Clauene. a. Apply fault at the LG-Clauene 115 kV bus. b. Clear fault after 5 cycles by tripping the faulted line. c. Wait 20 cycles, and then re-close the line in (b) back into the fault. d. Leave fault on for 5 cycles, then trip the line in (b) and remove fault.													X			

DRAFT

Cont. No.	Cont. Name	Description	GEN-2014-046	GEN-2015-018	GEN-2015-020	GEN-2015-031	GEN-2015-033	GEN-2015-039	GEN-2015-040	GEN-2015-041	GEN-2015-056	GEN-2015-058	GEN-2015-068	GEN-2015-075	GEN-2015-077	GEN-2015-078	GEN-2015-079	GEN-2015-080
117	FLT117 -3PH	3 phase fault on the Seagraves (527202) to Sulphur (527262) 115 kV line circuit 1, near Seagraves. a. Apply fault at the Seagraves 115 kV bus. b. Clear fault after 5 cycles by tripping the faulted line. c. Wait 20 cycles, and then re-close the line in (b) back into the fault. d. Leave fault on for 5 cycles, then trip the line in (b) and remove fault.														X		
118	FLT118 -3PH	3 phase fault on the Seagraves (527202) to LG-Plshill (527194) 115 kV line circuit 1, near Seagraves. a. Apply fault at the Seagraves 115 kV bus. b. Clear fault after 5 cycles by tripping the faulted line. c. Wait 20 cycles, and then re-close the line in (b) back into the fault. d. Leave fault on for 5 cycles, then trip the line in (b) and remove fault.														X		

DRAFT

Cont. No.	Cont. Name	Description	GEN-2014-046	GEN-2015-018	GEN-2015-020	GEN-2015-031	GEN-2015-033	GEN-2015-039	GEN-2015-040	GEN-2015-041	GEN-2015-056	GEN-2015-058	GEN-2015-068	GEN-2015-075	GEN-2015-077	GEN-2015-078	GEN-2015-079	GEN-2015-080
119	FLT119 -3PH	3 phase fault on the Denver South (527136) to San Andreas (527105) 115 kV line circuit 1, near Denver South. a. Apply fault at the Denver South 115 kV bus. b. Clear fault after 5 cycles by tripping the faulted line. c. Wait 20 cycles, and then re-close the line in (b) back into the fault. d. Leave fault on for 5 cycles, then trip the line in (b) and remove fault.														X		
120	FLT120 -3PH	3 phase fault on the Denver South (527136) to Shell C2 (527036) 115 kV line circuit 1, near Denver South. a. Apply fault at the Denver South 115 kV bus. b. Clear fault after 5 cycles by tripping the faulted line. c. Wait 20 cycles, and then re-close the line in (b) back into the fault. d. Leave fault on for 5 cycles, then trip the line in (b) and remove fault.														X		

DRAFT

Cont. No.	Cont. Name	Description	GEN-2014-046	GEN-2015-018	GEN-2015-020	GEN-2015-031	GEN-2015-033	GEN-2015-039	GEN-2015-040	GEN-2015-041	GEN-2015-056	GEN-2015-058	GEN-2015-068	GEN-2015-075	GEN-2015-077	GEN-2015-078	GEN-2015-079	GEN-2015-080
121	FLT121 -3PH	3 phase fault on the Denver South 115 kV (527136) to Denver City 69 kV (527125) to Denver South 13.2 kV (527123) XFMR CKT 2, near Denver South 115 kV. a. Apply fault at the Denver South 115 kV bus. b. Clear fault after 5 cycles by tripping the faulted transformer.														X		
122	FLT122 -PO	**Prior Outage of the Mustang 115 kV (527146) to Mustang 230 kV (527149) to Mustang 13.2 kV (527143) XFMR CKT 1;** 3 phase fault on the Mustang (527146) to Denver South (527136) 115 kV line circuit 1, near Mustang. a. Apply fault at the Mustang 115 kV bus. b. Clear fault after 5 cycles by tripping the faulted line.														X		
123	FLT123 -PO	**Prior Outage of the Mustang 115 kV (527146) to Mustang 230 kV (527149) to Mustang 13.2 kV (527143) XFMR CKT 1;** 3 phase fault on the Mustang (527146) to Denver North (527130) 115 kV line circuit 1, near Mustang. a. Apply fault at the Mustang 115 kV bus. b. Clear fault after 5 cycles by tripping the faulted line.														X		

DRAFT

Cont. No.	Cont. Name	Description	GEN-2014-046	GEN-2015-018	GEN-2015-020	GEN-2015-031	GEN-2015-033	GEN-2015-039	GEN-2015-040	GEN-2015-041	GEN-2015-056	GEN-2015-058	GEN-2015-068	GEN-2015-075	GEN-2015-077	GEN-2015-078	GEN-2015-079	GEN-2015-080
124	FLT124 -PO	**Prior Outage of the Mustang (527146) to Denver South (527136) 115 kV line circuit 1;** 3 phase fault on the Mustang (527146) to Denver North (527130) 115 kV line circuit 1, near Mustang. a. Apply fault at the Mustang 115 kV bus. b. Clear fault after 5 cycles by tripping the faulted line.														X		
125	FLT125 -PO	**Prior Outage of the Mustang (527146) to Denver North (527130) 115 kV line circuit 1;** 3 phase fault on the Mustang (527146) to Denver South (527136) 115 kV line circuit 1, near Mustang. a. Apply fault at the Mustang 115 kV bus. b. Clear fault after 5 cycles by tripping the faulted line.														X		
126	FLT126 -3PH	3 phase fault on the GEN-2015-079 Tap (560059) to Hobbs (527894) 230 kV line circuit 1, near GEN-2015-079 Tap. a. Apply fault at the GEN-2015-079 Tap 230 kV bus. b. Clear fault after 5 cycles by tripping the faulted line. c. Wait 20 cycles, and then re-close the line in (b) back into the fault. d. Leave fault on for 5 cycles, then trip the line in (b) and remove fault.															X	X

DRAFT

Cont. No.	Cont. Name	Description	GEN-2014-046	GEN-2015-018	GEN-2015-020	GEN-2015-031	GEN-2015-033	GEN-2015-039	GEN-2015-040	GEN-2015-041	GEN-2015-056	GEN-2015-058	GEN-2015-068	GEN-2015-075	GEN-2015-077	GEN-2015-078	GEN-2015-079	GEN-2015-080
127	FLT127 -3PH	3 phase fault on the Hobbs (527894) to Andrews (528604) 230 kV line circuit 1, near Hobbs. a. Apply fault at the Hobbs 230 kV bus. b. Clear fault after 5 cycles by tripping the faulted line. c. Wait 20 cycles, and then re-close the line in (b) back into the fault. d. Leave fault on for 5 cycles, then trip the line in (b) and remove fault.															X	X
128	FLT128 -3PH	3 phase fault on the Hobbs (527894) to Cunningham (527865) 230 kV line circuit 1, near Hobbs. a. Apply fault at the Hobbs 230 kV bus. b. Clear fault after 5 cycles by tripping the faulted line. c. Wait 20 cycles, and then re-close the line in (b) back into the fault. d. Leave fault on for 5 cycles, then trip the line in (b) and remove fault.															X	X
129	FLT129 -3PH	3 phase fault on the Hobbs 230 kV (527894) to Hobbs 115 kV (527891) to Hobbs 13.2 kV (527889) XFMR CKT 2, near Hobbs 230 kV. a. Apply fault at the Hobbs 230 kV bus. b. Clear fault after 5 cycles by tripping the faulted transformer.															X	X

DRAFT

Cont. No.	Cont. Name	Description	GEN-2014-046	GEN-2015-018	GEN-2015-020	GEN-2015-031	GEN-2015-033	GEN-2015-039	GEN-2015-040	GEN-2015-041	GEN-2015-056	GEN-2015-058	GEN-2015-068	GEN-2015-075	GEN-2015-077	GEN-2015-078	GEN-2015-079	GEN-2015-080
130	FLT130-PO (2025SP)	**Prior Outage of the GEN-2015-079 Tap (560059) to Hobbs (527894) 230 kV line circuit 1;** 3 phase fault on the Yoakum (526936) to Tuco (525832) 345 kV line circuit 1, near Yoakum. a. Apply fault at the Yoakum 345 kV bus. b. Clear fault after 5 cycles by tripping the faulted line.					X			X			X				X	X
131	FLT131-SB	**Single phase fault with stuck breaker at Chaves County (527482)** a. Apply fault at the Chaves 115 kV bus. b. Clear fault after 16 cycles and trip the following elements c. Chaves County 115 kV (527482)/ 69 kV (527481)/13.2 kV (527480) transformer d. Chaves County (527482) - Urton (527501) 115 kV	X															
132	FLT132-SB	**Single phase fault with stuck breaker at Bailey Co (525028)** a. Apply fault at the Bailey County 115 kV bus. b. Clear fault after 16 cycles and trip the following elements c. Bailey County 115 kV (525028)/ 69 kV (525027)/13.2 kV (525026) transformer d. Bailey County (525028) - G15-018T (560032) 115 kV		X														

DRAFT

Cont. No.	Cont. Name	Description	GEN-2014-046	GEN-2015-018	GEN-2015-020	GEN-2015-031	GEN-2015-033	GEN-2015-039	GEN-2015-040	GEN-2015-041	GEN-2015-056	GEN-2015-058	GEN-2015-068	GEN-2015-075	GEN-2015-077	GEN-2015-078	GEN-2015-079	GEN-2015-080
133	FLT133 -SB	**Single phase fault with stuck breaker at Oasis (524874)** a. Apply fault at the Oasis 115 kV bus. b. Clear fault after 16 cycles and trip the following elements c. Oasis (524874) - FE-CHZPLT (524863) 115 kV d. Oasis (524874) - Portales (524924) 115 kV			X													
134	FLT134 -SB	**Single phase fault with stuck breaker at Amarillo South (524415)** a. Apply fault at the Amarillo South 230 kV bus. b. Clear fault after 16 cycles and trip the following elements c. Amarillo South (524415) - Nichols (524044) 230 kV d. Amarillo South (524415) - Randall (524365) 230 kV				X												
135	FLT135 -SB	**Single phase fault with stuck breaker at Tuco Int (525832)** a. Apply fault at the Tuco Int 345 kV bus. b. Clear fault after 16 cycles and trip the following elements c. Tuco Int (525832) - Tuco 2 (560022) 345 kV d. Tuco Int (525832) - Yoakum (526936) 345 kV					X			X			X					

DRAFT

Cont. No.	Cont. Name	Description	GEN-2014-046	GEN-2015-018	GEN-2015-020	GEN-2015-031	GEN-2015-033	GEN-2015-039	GEN-2015-040	GEN-2015-041	GEN-2015-056	GEN-2015-058	GEN-2015-068	GEN-2015-075	GEN-2015-077	GEN-2015-078	GEN-2015-079	GEN-2015-080
136	FLT136 -SB	**Single phase fault with stuck breaker at Deafsmith (524623)** a. Apply fault at the Deafsmith 230 kV bus. b. Clear fault after 16 cycles and trip the following elements c. Deafsmith 230 kV (524623)/115 kV (524622)/13.8 kV (524620) transformer d. Deafsmith (524623) - Bushland (524267) 230 kV						X										
137	FLT137 -SB	**Single phase fault with stuck breaker at Mustang (527149)** a. Apply fault at the Mustang 230 kV bus. b. Clear fault after 16 cycles and trip the following elements c. Mustang (527149) - Seminole (527276) 230 kV d. Mustang (527149) - Yoakum (526935) 230 kV							X									
138	FLT138 -SB	**Single phase fault with stuck breaker at Crossroads (527656)** a. Apply fault at the Crossroads 345 kV bus. b. Clear fault after 16 cycles and trip the following elements c. Crossroads (527656) - Eddy County (527802) 345 kV d. Crossroads (527656) - Tolk (525549) 345 kV									X							

DRAFT

Cont. No.	Cont. Name	Description	GEN-2014-046	GEN-2015-018	GEN-2015-020	GEN-2015-031	GEN-2015-033	GEN-2015-039	GEN-2015-040	GEN-2015-041	GEN-2015-056	GEN-2015-058	GEN-2015-068	GEN-2015-075	GEN-2015-077	GEN-2015-078	GEN-2015-079	GEN-2015-080
139	FLT139 -SB	**Single phase fault with stuck breaker at Atoka (527786)** a. Apply fault at the Atoka 115 kV bus. b. Clear fault after 16 cycles and trip the following elements c. Atoka (527786) - Eagle Creek (527711) 115 kV d. Atoka (527786) - Irish Hill (528116) 115 kV										X						
140	FLT140 -SB	**Single phase fault with stuck breaker at Carlisle (526160)** a. Apply fault at the Carlisle 115 kV bus. b. Clear fault after 16 cycles and trip the following elements c. Carlisle (526160) - Murphy (526192) 115 kV d. Carlisle (526160) - Erskine (526109) 115 kV												X				
141	FLT141 -SB	**Single phase fault with stuck breaker at Terry County (526736)** a. Apply fault at the Terry County 115 kV bus. b. Clear fault after 16 cycles and trip the following elements c. Terry County (526736) - Wolfforth (526524) 115 kV d. Terry County (526736) - Denver (527130) 115 kV													X			

DRAFT

Cont. No.	Cont. Name	Description	GEN-2014-046	GEN-2015-018	GEN-2015-020	GEN-2015-031	GEN-2015-033	GEN-2015-039	GEN-2015-040	GEN-2015-041	GEN-2015-056	GEN-2015-058	GEN-2015-068	GEN-2015-075	GEN-2015-077	GEN-2015-078	GEN-2015-079	GEN-2015-080
142	FLT142 -SB	**Single phase fault with stuck breaker at Mustang (527146)** a. Apply fault at the Mustang 115 kV bus. b. Clear fault after 16 cycles and trip the following elements c. Mustang (527146) - Seagraves (527202) 115 kV d. Mustang (527146) - Denver S (527136) 115 kV														X		
143	FLT143 -SB	**Single phase fault with stuck breaker at Hobbs (527894)** a. Apply fault at the Hobbs 230 kV bus. b. Clear fault after 16 cycles and trip the following elements c. Hobbs (527894) - Andrews (528604) 230 kV d. Hobbs (527894) - Cunningham (527865) 230 kV															X	X

DRAFT

SECTION 3: STABILITY ANALYSIS

The objective of the Stability Analysis was to determine the impacts of the generator interconnections on the stability and voltage recovery on the SPP transmission system. If problems with stability or voltage recovery were identified, the need for reactive compensation or system upgrades was investigated.

3.1 Approach

SPP provided MEPPI with the following five power flow cases:

- MDWG15-16WP_DIS1502_G06
- MDWG15-17SP_DIS1502_G06
- MDWG15-20SP_DIS1502_G06
- MDWG15-20WP_DIS1502_G06
- MDWG15-25SP_DIS1502_G06

Each case was examined prior to the Stability Analysis to ensure the case contained the proposed study projects and any previously queued projects listed in Tables 2-1 and 2-2 respectively. There was no suspect power flow data in the study area. The dynamic datasets were also verified and stable initial system conditions (i.e., "flat lines") were achieved. Three-phase and single phase-to-ground faults listed in Table 2-3 were examined. Single-phase fault impedances were calculated for each season to result in a voltage of approximately 60% of the pre-fault voltage. Refer to Table 3-1 for a list of the calculated single-phase fault impedances used for the Cluster Scenario. Refer to Tables 3-2 through 3-16 for single-phase fault impedances used for each Stand Alone Scenario.

DRAFT

Table 3-1
Calculated Single-Phase Fault Impedances for Cluster Scenario

Cont. No.*	Cont. Name	Single-Phase Fault Impedance (MVA)				
		2016 Winter	2017 Summer	2020 Summer	2020 Winter	2025 Summer
10	FLT10-SB	-781.3	-812.5	-812.5	-812.5	-812.5
42	FLT42-SB	-2812.5	-2609.4	-2812.5	-2812.5	-2812.5
61	FLT61-SB	-6875.0	-6875.0	-6875.0	-6875.0	-6875.0
62	FLT62-SB	-6875.0	-6875.0	-6875.0	-6875.0	-6875.0
78	FLT78-SB	-4234.4	-3625.0	-4234.4	-4234.4	-4234.4
79	FLT79-SB	-6875.0	-6875.0	-6875.0	-6875.0	-6875.0
80	FLT80-SB	-4437.5	-3625.0	-4437.5	-4437.5	-4437.5
81	FLT81-SB	-4437.5	-3625.0	-4437.5	-4437.5	-4437.5
91	FLT91-SB	-5250.0	-4843.8	-6062.5	-5250.0	-6062.5
131	FLT131-SB	-781.3	-812.5	-812.5	-812.5	-812.5
132	FLT132-SB	-687.5	-625.0	-812.5	-875.0	-812.5
133	FLT133-SB	-1312.5	-1250.0	-1312.5	-1312.5	-1312.5
134	FLT134-SB	-3421.9	-3625.0	-3625.0	-3625.0	-3421.9
135	FLT135-SB	-5250.0	-4843.8	-6062.5	-5250.0	6062.5
136	FLT136-SB	-1875.0	-1750.0	-1750.0	-1875.0	-1875.0
137	FLT137-SB	-4234.4	-3625.0	-4234.4	-4234.4	-4234.4
138	FLT138-SB	-2101.6	-2101.6	-2203.1	-2203.1	-2203.1
139	FLT139-SB	-875.0	-875.0	-937.5	-937.5	-937.5
140	FLT140-SB	-1750.0	-1750.0	-1375.0	-1750.0	-1750.0
141	FLT141-SB	-1375.0	-1312.5	-1375.0	-1375.0	-1375.0
142	FLT142-SB	-2812.5	-2812.5	-3015.6	-3015.6	-3015.6
143	FLT143-SB	-3625.0	-3828.1	-4843.8	-4843.8	-5250.0

*Refer to Table 2-3 for a description of the contingency scenerio

Table 3-2
Calculated Single-Phase Fault Impedances for Stand Alone Scenario: GEN-2014-046

Cont. No.	Cont. Name	Single-Phase Fault Impedance (MVA)				
		2016 Winter	2017 Summer	2020 Summer	2020 Winter	2025 Summer
10	FLT10-SB	-781.3	-812.5	-812.5	-812.5	-812.5
131	FLT131-SB	-781.3	-812.5	-812.5	-812.5	-812.5

Table 3-3
Calculated Single-Phase Fault Impedances for Stand Alone Scenario: GEN-2015-018

Cont. No.	Cont. Name	Single-Phase Fault Impedance (MVA)				
		2016 Winter	2017 Summer	2020 Summer	2020 Winter	2025 Summer
132	FLT132-SB	-687.5	-625.0	-812.5	-875.0	-812.5

Table 3-4
Calculated Single-Phase Fault Impedances for Stand Alone Scenario: GEN-2015-020

DRAFT

Cont. No.	Cont. Name	Single-Phase Fault Impedance (MVA)				
		2016 Winter	2017 Summer	2020 Summer	2020 Winter	2025 Summer
133	FLT133-SB	-1312.5	-1250.0	-1312.5	-1312.5	-1312.5

Table 3-5
Calculated Single-Phase Fault Impedances for Stand Alone Scenario: GEN-2015-031

Cont. No.	Cont. Name	Single-Phase Fault Impedance (MVA)				
		2016 Winter	2017 Summer	2020 Summer	2020 Winter	2025 Summer
42	FLT42-SB	-2812.5	-2609.4	-2812.5	-2812.5	-2812.5
134	FLT134-SB	-3421.9	-3625.0	-3625.0	-3625.0	-3421.9

Table 3-6
Calculated Single-Phase Fault Impedances for Stand Alone Scenario: GEN-2015-033

Cont. No.	Cont. Name	Single-Phase Fault Impedance (MVA)				
		2016 Winter	2017 Summer	2020 Summer	2020 Winter	2025 Summer
91	FLT91-SB	-5250.0	-4843.8	-6062.5	-5250.0	-6062.5

Table 3-7
Calculated Single-Phase Fault Impedances for Stand Alone Scenario: GEN-2015-039

Cont. No.	Cont. Name	Single-Phase Fault Impedance (MVA)				
		2016 Winter	2017 Summer	2020 Summer	2020 Winter	2025 Summer
61	FLT61-SB	-6875.0	-6875.0	-6875.0	-6875.0	-6875.0
62	FLT62-SB	-6875.0	-6875.0	-6875.0	-6875.0	-6875.0
136	FLT136-SB	-1875.0	-1750.0	-1750.0	-1875.0	-1875.0

Table 3-8
Calculated Single-Phase Fault Impedances for Stand Alone Scenario: GEN-2015-040

Cont. No.	Cont. Name	Single-Phase Fault Impedance (MVA)				
		2016 Winter	2017 Summer	2020 Summer	2020 Winter	2025 Summer
78	FLT78-SB	-4234.4	-3625.0	-4234.4	-4234.4	-4234.4
79	FLT79-SB	-6875.0	-6875.0	-6875.0	-6875.0	-6875.0
80	FLT80-SB	-4437.5	-3625.0	-4437.5	-4437.5	-4437.5
81	FLT81-SB	-4437.5	-3625.0	-4437.5	-4437.5	-4437.5
137	FLT137-SB	-4234.4	-3625.0	-4234.4	-4234.4	-4234.4

Table 3-9
Calculated Single-Phase Fault Impedances for Stand Alone Scenario: GEN-2015-041

Cont. No.	Cont. Name	Single-Phase Fault Impedance (MVA)				
		2016 Winter	2017 Summer	2020 Summer	2020 Winter	2025 Summer
91	FLT91-SB	-5250.0	-4843.8	-6062.5	-5250.0	-6062.5

Table 3-10
Calculated Single-Phase Fault Impedances for Stand Alone Scenario: GEN-2015-056

Cont. No.	Cont. Name	Single-Phase Fault Impedance (MVA)				
		2016 Winter	2017 Summer	2020 Summer	2020 Winter	2025 Summer
138	FLT138-SB	-2101.6	-2101.6	-2203.1	-2203.1	-2203.1

DRAFT

Table 3-11
Calculated Single-Phase Fault Impedances for Stand Alone Scenario: GEN-2015-058

Cont. No.	Cont. Name	Single-Phase Fault Impedance (MVA)				
		2016 Winter	2017 Summer	2020 Summer	2020 Winter	2025 Summer
139	FLT139-SB	-875.0	-875.0	-937.5	-937.5	-937.5

Table 3-12
Calculated Single-Phase Fault Impedances for Stand Alone Scenario: GEN-2015-068

Cont. No.	Cont. Name	Single-Phase Fault Impedance (MVA)				
		2016 Winter	2017 Summer	2020 Summer	2020 Winter	2025 Summer
91	FLT91-SB	-5250.0	-4843.8	-6062.5	-5250.0	-6062.5

Table 3-13
Calculated Single-Phase Fault Impedances for Stand Alone Scenario: GEN-2015-075

Cont. No.	Cont. Name	Single-Phase Fault Impedance (MVA)				
		2016 Winter	2017 Summer	2020 Summer	2020 Winter	2025 Summer
140	FLT140-SB	-1750.0	-1750.0	-1375.0	-1750.0	-1750.0

Table 3-14
Calculated Single-Phase Fault Impedances for Stand Alone Scenario: GEN-2015-077

Cont. No.	Cont. Name	Single-Phase Fault Impedance (MVA)				
		2016 Winter	2017 Summer	2020 Summer	2020 Winter	2025 Summer
141	FLT141-SB	-1375.0	-1312.5	-1375.0	-1375.0	-1375.0

Table 3-15
Calculated Single-Phase Fault Impedances for Stand Alone Scenario: GEN-2015-078

Cont. No.	Cont. Name	Single-Phase Fault Impedance (MVA)				
		2016 Winter	2017 Summer	2020 Summer	2020 Winter	2025 Summer
142	FLT142-SB	-2812.5	-2812.5	-3015.6	-3015.6	-3015.6

Table 3-16
Calculated Single-Phase Fault Impedances for Stand Alone Scenario: GEN-2015-079 and GEN-2015-080

Cont. No.	Cont. Name	Single-Phase Fault Impedance (MVA)				
		2016 Winter	2017 Summer	2020 Summer	2020 Winter	2025 Summer
79	FLT79-SB	-6875.0	-6875.0	-6875.0	-6875.0	-6875.0
80	FLT80-SB	-4437.5	-3625.0	-4437.5	-4437.5	-4437.5
81	FLT81-SB	-4437.5	-3625.0	-4437.5	-4437.5	-4437.5
143	FLT143-SB	-3625.0	-3828.1	-4843.8	-4843.8	-5250.0

DRAFT

Bus voltages, machine rotor angles, and previously queued generation in the study area were monitored in addition to bus voltages and machine rotor angles in the following areas:

- 520 AEPW
- 524 OKGE
- 525 WFEC
- 526 SPS
- 531 MIDW
- 534 SUNC
- 536 WERE

Requested and previously queued generation outside the above study area was also monitored.

The results of the analysis determined if reactive compensation or system upgrades were required to obtain acceptable system performance. If additional reactive compensation was required, the size, type, and location were determined. The proposed reactive reinforcements would ensure the wind or solar farm meets FERC Order 661A low voltage requirements and return the wind or solar farm to its pre-disturbance operating voltage. If the results indicated the need for fast responding reactive support, dynamic support such as an SVC or STATCOM was investigated. If tripping of the prior queued projects was observed during the stability analysis (for under/over voltage or under/over frequency) the simulations were re-ran with the prior queued project's voltage and frequency tripping disabled.

3.2 Cluster Scenario Stability Analysis Results

The Stability Analysis determined that there were multiple contingencies across all seasons that resulted in system/voltage instability, generation tripping offline, and poor post-fault voltage recovery when all generation interconnection requests were at 100% output.

Refer to Table 3-17 for a summary of the Stability Analysis results for the contingencies listed in Table 2-3. Table 3-17 is a summary of the stability results for the 2016 Winter Peak, 2017 Summer Peak, 2020 Summer Peak, 2020 Winter Peak, and 2025 Summer Peak conditions and states whether the system remained stable or generation tripped offline, if acceptable voltage recovery was observed after the fault was cleared, and if the voltage recovered to above 0.9 p.u. post-fault steady-state conditions. Voltage recovery criteria includes ensuring that the transient voltage recovery is between 0.7 p.u. and 1.2 p.u. and ending in a steady-state voltage (for N-1 contingencies) at the pre-contingent level or at least 0.9 p.u.

DRAFT

Refer to Appendix B, Appendix C, Appendix D, Appendix E, and Appendix F for a complete set of plots for all contingencies for 2016 Winter Peak, 2017 Summer Peak, 2020 Summer Peak, 2020 Winter Peak, and 2025 Summer Peak conditions, respectively.

DRAFT

Table 3-17
Cluster Scenario: Stability Analysis Summary of Results for 2016 Winter, 2017 Summer, 2020 Summer, 2020 Winter, and 2025 Summer Peak Conditions

Cont. No.	Cont. Name	2016 Winter Peak				2017 Summer Peak				2020 Summer Peak				2020 Winter Peak				2025 Summer Peak			
		Voltage Recovery		Steady-State Voltage < 0.9 p.u.?	Stable?	Voltage Recovery		Steady-State Voltage < 0.9 p.u.?	Stable?	Voltage Recovery		Steady-State Voltage < 0.9 p.u.?	Stable?	Voltage Recovery		Steady-State Voltage < 0.9 p.u.?	Stable?	Voltage Recovery		Steady-State Voltage < 0.9 p.u.?	Stable?
		Less than .70 p.u.	Greater than 1.20 p.u.			Less than .70 p.u.	Greater than 1.20 p.u.			Less than .70 p.u.	Greater than 1.20 p.u.			Less than .70 p.u.	Greater than 1.20 p.u.			Less than .70 p.u.	Greater than 1.20 p.u.		
1	FLT01-3PH	No	No	No	Yes	No	No	No	Yes	No	No	No	Yes	No	No	No	Yes	No	No	No	Yes
2	FLT02-3PH	No	No	No	Yes	No	No	No	Yes	No	No	No	Yes	No	No	No	Yes	No	No	No	Yes
3	FLT03-3PH	No	No	No	Yes	No	No	No	Yes	No	No	No	Yes	No	No	No	Yes	No	No	No	Yes
4	FLT04-3PH	No	No	No	Yes	No	No	No	Yes	No	No	No	Yes	No	No	No	Yes	No	No	No	Yes
5	FLT05-3PH	No	No	No	Yes	No	No	No	Yes	No	No	No	Yes	No	No	No	Yes	No	No	No	Yes
6	FLT06-3PH	No	No	No	Yes	No	No	No	Yes	No	No	No	Yes	No	No	No	Yes	No	No	No	Yes
7	FLT07-3PH	No	No	No	Yes	No	No	No	Yes	No	No	No	Yes	No	No	No	Yes	No	No	No	Yes
8	FLT08-PO	No	No	Yes	Yes	No	No	Yes	Yes	No	No	No	Yes	No	No	No	Yes	No	No	No	Yes
9	FLT09-PO	No	No	Yes	Yes	No	No	Yes	Yes	No	No	No	Yes	No	No	No	Yes	No	No	No	Yes
10	FLT10-SB	No	No	No	Yes	No	No	No	Yes	No	No	No	Yes	No	No	No	Yes	No	No	No	Yes
11	FLT11-3PH	No	No	No	Yes	No	No	No	Yes	No	No	No	Yes	No	No	No	Yes	No	No	No	Yes
12	FLT12-3PH	No	No	No	Yes	No	No	No	Yes	No	No	No	Yes	No	No	No	Yes	No	No	No	Yes
13	FLT13-3PH	No	No	No	Yes	No	No	No	Yes	No	No	No	Yes	No	No	No	Yes	No	No	No	Yes
14	FLT14-3PH	No	No	No	Yes	No	No	No	Yes	No	No	No	Yes	No	No	No	Yes	No	No	No	Yes
15	FLT15-3PH	No	No	No	Yes	No	No	No	Yes	No	No	No	Yes	No	No	No	Yes	No	No	No	Yes
16	FLT16-3PH	No	No	No	Yes	No	No	No	Yes	No	No	No	Yes	No	No	No	Yes	No	No	No	Yes
17	FLT17-3PH	No	No	No	Yes	No	No	No	Yes	No	No	No	Yes	No	No	No	Yes	No	No	No	Yes
18	FLT18-3PH	No	No	No	Yes	No	No	No	Yes	No	No	No	Yes	No	No	No	Yes	No	No	No	Yes
19	FLT19-3PH	No	No	No	Yes	No	No	No	Yes	No	No	No	Yes	No	No	No	Yes	No	No	No	Yes
20	FLT20-3PH	No	No	No	Yes	No	No	No	Yes	No	No	No	Yes	No	No	No	Yes	No	No	No	Yes
21	FLT21-3PH	No	No	No	Yes	No	No	No	Yes	No	No	No	Yes	No	No	No	Yes	No	No	No	Yes
22	FLT22-3PH	No	No	No	Yes	No	No	No	Yes	No	No	No	Yes	No	No	No	Yes	No	No	No	Yes
23	FLT23-3PH	No	No	No	Yes	No	No	No	Yes	No	No	No	Yes	No	No	No	Yes	No	No	No	Yes
24	FLT24-3PH	No	No	No	Yes	No	No	No	Yes	No	No	No	Yes	No	No	No	Yes	No	No	No	Yes
25	FLT25-3PH	No	No	No	Yes	No	No	No	Yes	No	No	No	Yes	No	No	No	Yes	No	No	No	Yes
26	FLT26-3PH	No	No	No	Yes	No	No	No	Yes	No	No	No	Yes	No	No	No	Yes	No	No	No	Yes
27	FLT27-3PH	No	No	No	Yes	No	No	No	Yes	No	No	No	Yes	No	No	No	Yes	No	No	No	Yes
28	FLT28-3PH	No	No	No	Yes	No	No	No	Yes	No	No	No	Yes	No	No	No	Yes	No	No	No	Yes
29	FLT29-3PH	No	No	No	Yes	No	No	No	Yes	No	No	No	Yes	No	No	No	Yes	No	No	No	Yes
30	FLT30-3PH	No	No	No	Yes	No	No	No	Yes	No	No	No	Yes	No	No	No	Yes	No	No	No	Yes
31	FLT31-3PH	No	No	No	Yes	No	No	No	Yes	No	No	No	Yes	No	No	No	Yes	No	No	No	Yes
32	FLT32-PO	No	No	No	Yes	No	No	No	Yes	No	No	No	Yes	No	No	No	Yes	No	No	No	Yes
33	FLT33-PO	No	No	No	Yes	No	No	No	Yes	No	No	No	Yes	No	No	No	Yes	No	No	No	Yes
34	FLT34-3PH	No	No	No	Yes	No	No	No	Yes	No	No	No	Yes	No	No	No	Yes	No	No	No	Yes
35	FLT35-3PH	No	No	No	Yes	No	No	No	Yes	No	No	No	Yes	No	No	No	Yes	No	No	No	Yes
36	FLT36-3PH	No	No	No	Yes	No	No	No	Yes	No	No	No	Yes	No	No	No	Yes	No	No	No	Yes
37	FLT37-3PH	No	No	No	Yes	No	No	No	Yes	No	No	No	Yes	No	No	No	Yes	No	No	No	Yes
38	FLT38-3PH	No	No	No	Yes	No	No	No	Yes	No	No	No	Yes	No	No	No	Yes	No	No	No	Yes
39	FLT39-3PH	No	No	No	Yes	No	No	No	Yes	No	No	No	Yes	No	No	No	Yes	No	No	No	Yes
40	FLT40-3PH	No	No	No	Yes	No	No	No	Yes	No	No	No	Yes	No	No	No	Yes	No	No	No	Yes
41	FLT41-3PH	No	No	No	Yes	No	No	No	Yes	No	No	No	Yes	No	No	No	Yes	No	No	No	Yes
42	FLT42-SB	No	No	No	Yes	No	No	No	Yes	No	No	No	Yes	No	No	No	Yes	No	No	No	Yes
43	FLT43-3PH	No	Yes	No	No[1]	No	Yes	No	No[1]	No	Yes	No	No[1]	Voltage Instability				No	Yes	No	No[1]

Note 1: Generator tripping observed

DRAFT

Table 3-17 (continued)
Cluster Scenario: Stability Analysis Summary of Results for 2016 Winter, 2017 Summer, 2020 Summer, 2020 Winter, and 2025 Summer Peak Conditions

Cont. No.	Cont. Name	2016 Winter Peak				2017 Summer Peak				2020 Summer Peak				2020 Winter Peak				2025 Summer Peak			
		Voltage Recovery		Steady-State Voltage < 0.9 p.u.?	Stable?	Voltage Recovery		Steady-State Voltage < 0.9 p.u.?	Stable?	Voltage Recovery		Steady-State Voltage < 0.9 p.u.?	Stable?	Voltage Recovery		Steady-State Voltage < 0.9 p.u.?	Stable?	Voltage Recovery		Steady-State Voltage < 0.9 p.u.?	Stable?
		Less than .70 p.u.	Greater than 1.20 p.u.			Less than .70 p.u.	Greater than 1.20 p.u.			Less than .70 p.u.	Greater than 1.20 p.u.			Less than .70 p.u.	Greater than 1.20 p.u.			Less than .70 p.u.	Greater than 1.20 p.u.		
44	FLT44-3PH	Voltage Instability				Voltage Instability				Yes	Yes	No	Yes	Voltage Instability				No	No	No	Yes
45	FLT45-3PH	Voltage Instability				No	No	No	No[2]	No	No	No	No[2]	No	No	No	Yes	No	No	No	Yes
46	FLT46-3PH	No	No	No	Yes	No	No	No	Yes	No	No	No	Yes	No	No	No	Yes	No	No	No	Yes
47	FLT47-3PH (2025SP)	N/A	N/A	N/A	N/A	N/A	N/A	N/A	N/A	N/A	N/A	N/A	N/A	N/A	N/A	N/A	N/A	No	No	No	Yes
48	FLT48-3PH	No	No	No	Yes	No	No	No	Yes	No	No	No	Yes	No	No	No	Yes	No	No	No	Yes
49	FLT49-3PH	No	Yes	No	No[1]	No	Yes	No	No[1]	No	Yes	No	No[1]	No	Yes	No	No[1]	No	Yes	No	No[1]
50	FLT50-PO	Voltage Instability				Voltage Instability				Voltage Instability				Voltage Instability				No	No	No	Yes
51	FLT51-PO	Voltage Instability				No	No	No	No[2]	No	No	No	No[2]	Voltage Instability				No	No	No	Yes
52	FLT52-3PH	No	No	No	Yes	No	No	No	Yes	Yes	No	No	Yes	No	No	No	Yes	No	No	No	Yes
53	FLT53-3PH	No	No	No	Yes	No	No	No	Yes	No	No	No	Yes	No	No	No	Yes	No	No	No	Yes
54	FLT54-3PH	No	No	No	Yes	No	No	No	Yes	No	No	No	Yes	No	No	No	Yes	No	No	No	Yes
55	FLT55-3PH	No	No	No	Yes	No	No	No	Yes	No	No	No	Yes	No	No	No	Yes	No	No	No	Yes
56	FLT56-3PH	No	Yes	No	Yes	No	No	No	Yes	No	No	No	Yes	No	No	No	Yes	No	No	No	Yes
57	FLT57-3PH	No	Yes	No	Yes	No	No	No	Yes	No	No	No	Yes	No	No	No	No[1]	No	No	No	Yes
58	FLT58-3PH	No	Yes	No	Yes	No	No	No	Yes	No	No	No	Yes	No	No	No	Yes	No	No	No	Yes
59	FLT59-3PH	No	Yes	No	No[1]	No	No	No	Yes	No	No	No	Yes	No	No	No	Yes	No	No	No	Yes
60	FLT60-3PH	No	No	No	Yes	No	No	No	Yes	No	No	No	Yes	No	No	No	Yes	No	No	No	Yes
61	FLT61-SB	No	No	No	Yes	No	No	No	Yes	No	No	No	Yes	No	No	No	Yes	No	No	No	Yes
62	FLT62-SB	No	No	No	Yes	No	No	No	Yes	No	No	No	Yes	No	No	No	Yes	No	No	No	Yes
63	FLT63-3PH	No	No	No	Yes	No	No	No	Yes	No	No	No	Yes	No	No	No	Yes	No	No	No	Yes
64	FLT64-3PH	No	No	No	Yes	No	No	No	Yes	No	No	No	Yes	No	No	No	Yes	No	No	No	Yes
65	FLT65-3PH	No	No	No	Yes	No	No	No	Yes	No	No	No	Yes	No	No	No	Yes	No	No	No	Yes
66	FLT66-3PH	No	No	No	Yes	No	No	Yes[3]	Yes	No	No	Yes[3]	Yes	No	No	Yes[3]	Yes	No	No	Yes[3]	Yes
67	FLT67-3PH	No	No	No	Yes	No	No	No	Yes	No	No	No	Yes	No	No	No	Yes	No	No	No	Yes
68	FLT68-3PH	No	No	No	Yes	No	No	No	Yes	No	No	No	Yes	No	No	No	Yes	No	No	No	Yes
69	FLT69-3PH	No	No	No	Yes	No	No	No	Yes	No	No	No	Yes	No	No	No	Yes	No	No	No	Yes
70	FLT70-3PH	No	No	No	Yes	No	No	No	Yes	No	No	No	Yes	No	No	No	Yes	No	No	No	Yes
71	FLT71-3PH	No	No	No	Yes	No	No	No	Yes	No	No	No	Yes	No	No	No	Yes	No	No	No	Yes
72	FLT73-3PH	No	No	No	Yes	No	No	No	Yes	No	No	No	Yes	No	No	No	Yes	No	No	No	Yes
73	FLT72-3PH	No	No	No	Yes	No	No	No	Yes	No	No	No	Yes	No	No	No	Yes	No	No	No	Yes
74	FLT74-3PH (17SP & 25SP)	N/A	N/A	N/A	N/A	No	No	No	Yes	N/A	N/A	N/A	N/A	N/A	N/A	N/A	N/A	No	No	No	Yes
75	FLT75-3PH	No	No	No	Yes	No	No	No	Yes	No	No	No	Yes	No	No	No	Yes	No	No	No	Yes
76	FLT76-3PH	No	No	No	Yes	No	No	No	Yes	No	No	No	Yes	No	No	No	Yes	No	No	No	Yes
77	FLT77-3PH	No	No	No	Yes	No	No	No	Yes	No	No	No	Yes	No	No	No	Yes	No	No	No	Yes
78	FLT78-SB	No	No	No	Yes	No	No	No	Yes	No	No	No	Yes	No	No	No	Yes	No	No	No	Yes
79	FLT79-SB	No	No	No	Yes	No	No	No	Yes	No	No	No	Yes	No	No	No	Yes	No	No	No	Yes
80	FLT80-SB	No	No	No	Yes	No	No	No	Yes	No	No	No	Yes	No	No	No	Yes	No	No	No	Yes

Note 1: Generator tripping observed
Note 2: Poor voltage damping observed
Note 3: Low voltage observed as a result of a radial system not serving load

DRAFT

Table 3-17 (continued)
Cluster Scenario: Stability Analysis Summary of Results for 2016 Winter, 2017 Summer, 2020 Summer, 2020 Winter, and 2025 Summer Peak Conditions

Cont. No.	Cont. Name	2016 Winter Peak				2017 Summer Peak				2020 Summer Peak				2020 Winter Peak				2025 Summer Peak			
		Voltage Recovery		Steady-State Voltage < 0.9 p.u.?	Stable?	Voltage Recovery		Steady-State Voltage < 0.9 p.u.?	Stable?	Voltage Recovery		Steady-State Voltage < 0.9 p.u.?	Stable?	Voltage Recovery		Steady-State Voltage < 0.9 p.u.?	Stable?	Voltage Recovery		Steady-State Voltage < 0.9 p.u.?	Stable?
		Less than .70 p.u.	Greater than 1.20 p.u.			Less than .70 p.u.	Greater than 1.20 p.u.			Less than .70 p.u.	Greater than 1.20 p.u.			Less than .70 p.u.	Greater than 1.20 p.u.			Less than .70 p.u.	Greater than 1.20 p.u.		
81	FLT81-SB	No	No	No	Yes	No	No	No	Yes	No	No	No	Yes	No	No	No	Yes	No	No	No	Yes
82	FLT82-PO	No	No	No	Yes	No	No	Yes[3]	Yes	No	No	Yes[3]	Yes	No	No	Yes[3]	Yes	No	No	Yes[3]	Yes
83	FLT83-PO	No	No	No	Yes	No	No	Yes[3]	Yes	No	No	Yes[3]	Yes	No	No	Yes[3]	Yes	No	No	Yes[3]	Yes
84	FLT84-3PH	No	No	No	Yes	No	No	No	Yes	No	No	No	Yes	No	No	No	Yes	No	No	No	Yes
85	FLT85-3PH	No	Yes	No	No[1]	No	No	No	Yes	No	No	No	Yes	No	No	No	Yes	No	No	No	Yes
86	FLT86-3PH	No	Yes	No	No[1]	No	No	No	Yes	No	No	No	Yes	No	No	No	Yes	No	No	No	Yes
87	FLT87-3PH	No	Yes	No	No[1]	No	No	No	Yes	No	No	No	Yes	No	No	No	Yes	No	No	No	Yes
88	FLT88-3PH	No	No	No	Yes	No	No	No	Yes	No	No	No	Yes	No	No	No	Yes	No	No	No	Yes
89	FLT89-PO	No	No	No	Yes	No	No	No	Yes	No	No	No	Yes	No	No	No	Yes	No	No	No	Yes
90	FLT90-PO	No	No	No	Yes	No	No	No	Yes	No	No	No	Yes	No	No	No	Yes	No	No	No	Yes
91	FLT91-SB	No	Yes	No	No[1]	No	Yes	No	No[1]	No	Yes	No	No[1]	No	Yes	No	No[1]	No	Yes	No	No[1]
92	FLT92-3PH	No	No	No	Yes	No	No	No	Yes	No	No	No	Yes	No	No	No	Yes	No	No	No	Yes
93	FLT93-3PH	No	No	No	Yes	No	No	No	Yes	No	No	No	Yes	No	No	No	Yes	No	No	No	Yes
94	FLT94-3PH	No	No	No	Yes	No	No	No	Yes	No	No	No	Yes	No	No	No	Yes	No	No	No	Yes
95	FLT95-3PH	No	No	No	Yes	No	No	No	Yes	No	No	No	Yes	No	No	No	Yes	No	No	No	Yes
96	FLT96-3PH	No	No	No	No[1]	No	No	No	No[1]	No	No	No	No[1]	No	No	No	No[1]	No	No	No	No[1]
97	FLT97-3PH	No	No	No	No[1]	No	No	No	No[1]	No	No	No	No[1]	No	No	No	No[1]	No	No	No	No[1]
98	FLT98-3PH	No	No	No	No[1]	No	No	No	No[1]	No	No	No	No[1]	No	No	No	No[1]	No	No	No	No[1]
99	FLT99-3PH	No	No	No	No[1]	No	No	No	No[1]	No	No	No	No[1]	No	No	No	No[1]	No	No	No	No[1]
100	FLT100-3PH	No	No	No	No[1]	No	No	No	No[1]	No	No	No	No[1]	No	No	No	No[1]	No	No	No	No[1]
101	FLT101-3PH	No	No	No	Yes	No	No	No	Yes	No	No	No	Yes	No	No	No	Yes	No	No	No	Yes
102	FLT102-3PH	No	No	No	Yes	No	No	No	Yes	No	No	No	Yes	No	No	No	Yes	No	No	No	Yes
103	FLT103-PO	No	No	No	No[1]	No	No	No	No[1]	No	No	No	No[1]	No	No	No	No[1]	No	No	No	No[1]
104	FLT104-PO	No	No	No	No[1]	No	No	No	No[1]	No	No	No	No[1]	No	No	No	No[1]	No	No	No	No[1]
105	FLT105-3PH	No	No	No	Yes	No	No	No	Yes	No	No	No	Yes	No	No	No	Yes	No	No	No	Yes
106	FLT106-3PH	No	No	No	Yes	No	No	No	Yes	No	No	No	Yes	No	No	No	Yes	No	No	No	Yes
107	FLT107-3PH	No	No	No	Yes	No	No	No	Yes	No	No	No	Yes	No	No	No	Yes	No	No	No	Yes
108	FLT108-3PH	No	No	No	Yes	No	No	No	Yes	No	No	No	Yes	No	No	No	Yes	No	No	No	Yes
109	FLT109-3PH	No	No	No	Yes	No	No	No	Yes	No	No	No	Yes	No	No	No	Yes	No	No	No	Yes
110	FLT110-3PH	No	No	No	Yes	No	No	No	Yes	No	No	No	Yes	No	No	No	Yes	No	No	No	Yes
111	FLT111-3PH	No	No	No	Yes	No	No	No	Yes	No	No	No	Yes	No	No	No	Yes	No	No	No	Yes
112	FLT112-3PH	No	No	No	Yes	No	No	No	Yes	No	No	No	Yes	No	No	No	Yes	No	No	No	Yes
113	FLT113-3PH	No	No	No	Yes	No	No	No	Yes	No	No	No	Yes	No	No	No	Yes	No	No	No	Yes
114	FLT114-3PH	No	No	No	Yes	No	No	No	Yes	No	No	No	Yes	No	No	No	Yes	No	No	No	Yes
115	FLT115-3PH	No	No	No	Yes	No	No	No	Yes	No	No	No	Yes	No	No	No	Yes	No	No	No	Yes
116	FLT116-3PH	No	No	No	Yes	No	No	No	Yes	No	No	No	Yes	No	No	No	Yes	No	No	No	Yes
117	FLT117-3PH	No	No	No	Yes	No	No	No	Yes	No	No	No	Yes	No	No	No	Yes	No	No	No	Yes
118	FLT118-3PH	No	No	No	Yes	No	No	No	Yes	No	No	No	Yes	No	No	No	Yes	No	No	No	Yes

Note 1: Generator tripping observed
Note 2: Poor voltage damping observed
Note 3: Low voltage observed as a result of a radial system not serving load

DRAFT

Table 3-17 (continued)
Cluster Scenario: Stability Analysis Summary of Results for 2016 Winter, 2017 Summer, 2020 Summer, 2020 Winter, and 2025 Summer Peak Conditions

Cont. No.	Cont. Name	2016 Winter Peak				2017 Summer Peak				2020 Summer Peak				2020 Winter Peak				2025 Summer Peak			
		Voltage Recovery		Steady-State Voltage < 0.9 p.u.?	Stable?	Voltage Recovery		Steady-State Voltage < 0.9 p.u.?	Stable?	Voltage Recovery		Steady-State Voltage < 0.9 p.u.?	Stable?	Voltage Recovery		Steady-State Voltage < 0.9 p.u.?	Stable?	Voltage Recovery		Steady-State Voltage < 0.9 p.u.?	Stable?
		Less than .70 p.u.	Greater than 1.20 p.u.			Less than .70 p.u.	Greater than 1.20 p.u.			Less than .70 p.u.	Greater than 1.20 p.u.			Less than .70 p.u.	Greater than 1.20 p.u.			Less than .70 p.u.	Greater than 1.20 p.u.		
119	FLT119-3PH	No	No	No	Yes	No	No	No	Yes	No	No	No	Yes	No	No	No	Yes	No	No	No	Yes
120	FLT120-3PH	No	No	No	Yes	No	No	No	Yes	No	No	No	Yes	No	No	No	Yes	No	No	No	Yes
121	FLT121-3PH	No	No	No	Yes	No	No	No	Yes	No	No	No	Yes	No	No	No	Yes	No	No	No	Yes
122	FLT122-PO	No	No	No	Yes	No	No	No	Yes	No	No	No	Yes	No	No	No	Yes	No	No	No	Yes
123	FLT123-PO	No	No	No	Yes	No	No	No	Yes	No	No	No	Yes	No	No	No	Yes	No	No	No	Yes
124	FLT124-PO	No	No	No	Yes	No	No	No	Yes	No	No	No	Yes	No	No	No	Yes	No	No	No	Yes
125	FLT125-PO	No	No	No	Yes	No	No	No	Yes	No	No	No	Yes	No	No	No	Yes	No	No	No	Yes
126	FLT126-3PH	No	No	No	Yes	No	No	No	Yes	No	No	No	Yes	No	No	No	Yes	No	No	No	Yes
127	FLT127-3PH	No	No	No	Yes	No	No	Yes[3]	Yes	No	No	Yes[3]	Yes	No	No	Yes[3]	Yes	No	No	Yes[3]	Yes
128	FLT128-3PH	No	No	No	Yes	No	No	No	Yes	No	No	No	Yes	No	No	No	Yes	No	No	No	Yes
129	FLT129-3PH	No	No	No	Yes	No	No	No	Yes	No	No	No	Yes	No	No	No	Yes	No	No	No	Yes
130	FLT130-PO (2025SP)	N/A	N/A	N/A	N/A	N/A	N/A	N/A	N/A	N/A	N/A	N/A	N/A	N/A	N/A	N/A	N/A	No	No	No	Yes
131	FLT131-SB	No	No	No	Yes	No	No	No	Yes	No	No	No	Yes	No	No	No	Yes	No	No	No	Yes
132	FLT132-SB	No	No	No	Yes	No	No	No	Yes	No	No	No	Yes	No	No	No	Yes	No	No	No	Yes
133	FLT133-SB	No	No	No	Yes	No	No	No	Yes	No	No	No	Yes	No	No	No	Yes	No	No	No	Yes
134	FLT134-SB	No	No	No	Yes	No	No	No	Yes	No	No	No	Yes	No	No	No	Yes	No	No	No	Yes
135	FLT135-SB	No	No	No	Yes	No	No	No	Yes	No	No	No	Yes	No	No	No	Yes	No	No	No	Yes
136	FLT136-SB	No	No	No	Yes	No	No	No	Yes	No	No	No	Yes	No	No	No	Yes	No	No	No	Yes
137	FLT137-SB	No	No	No	Yes	No	No	Yes[3]	Yes	No	No	Yes[3]	Yes	No	No	Yes[3]	Yes	No	No	Yes[3]	Yes
138	FLT138-SB	No	No	No	Yes	No	No	No	Yes	No	No	No	Yes	No	No	No	Yes	No	No	No	Yes
139	FLT139-SB	No	No	No	Yes	No	No	No	Yes	No	No	No	Yes	No	No	No	Yes	No	No	No	Yes
140	FLT140-SB	No	No	No	Yes	No	No	No	Yes	No	No	No	Yes	No	No	No	Yes	No	No	No	Yes
141	FLT141-SB	No	No	No	Yes	No	No	No	Yes	No	No	No	Yes	No	No	No	Yes	No	No	No	Yes
142	FLT142-SB	No	No	No	Yes	No	No	No	Yes	No	No	No	Yes	No	No	No	Yes	No	No	No	Yes
143	FLT143-SB	No	No	No	Yes	No	No	Yes[3]	Yes	No	No	No	Yes	No	No	No	Yes	No	No	No	Yes

Note 1: Generator tripping observed
Note 2: Poor voltage damping observed
Note 3: Low voltage observed as a result of a radial system not serving load

DRAFT

The following faults were observed to have system/voltage instability, generation tripping offline, and/or poor post-fault steady-state voltages:

- **FLT08-PO**: Prior outage of Chaves County to Samson 115 kV followed by a 3PH fault resulting in the loss of Chaves County to Urton 115 kV (16WP, 17SP)
- **FLT09-PO**: Prior outage of Chaves County to Urton 115 kV followed by a 3PH fault resulting in the loss of Chaves County to Samson 115 kV (16WP, 17SP)
- **FLT43-3PH**: 3PH fault resulting in the loss of Rio Blanco to Tuco 345 kV (All study years)
- **FLT44-3PH**: 3PH fault resulting in the loss of Rio Blanco to OKU 345 kV (16WP, 17SP, 20SP, 20WP)
- **FLT45-3PH**: 3PH fault resulting in the loss of Tuco to Border 345 kV (16WP, 17SP, 20SP)
- **FLT49-3PH**: 3PH fault resulting in the loss of OKU to LES 345 kV (All study years)
- **FLT50-PO**: Prior outage of Tuco 345/230 kV transformer followed by a 3PH fault resulting in the loss of Rio Blanco to OKU 345 kV (16WP, 17SP, 20SP, 20WP)
- **FLT51-PO**: Prior outage of Tuco 345/230 kV transformer followed by a 3PH fault resulting in the loss of Tuco to Border 345 kV (16WP, 17SP, 20SP, 20WP)
- **FLT56-3PH**: 3PH fault resulting in the loss of Plant X to Tolk East 230 kV (16WP)
- **FLT57-3PH**: 3PH fault resulting in the loss of Plant X to Newhart 230 kV (16WP, 20WP)
- **FLT58-3PH**: 3PH fault resulting in the loss of Plant X to Tolk West 230 kV (16WP)
- **FLT59-3PH**: 3PH fault resulting in the loss of Plant X to Sundown 230 kV (16WP)
- **FLT66-3PH**: 3PH fault resulting in the loss of Mustang to Seminole 230 kV (17SP, 20SP, 20WP, 25SP)
- **FLT82-PO**: Prior outage of Mustang to Seminole 230 kV followed by a 3PH fault resulting in the loss of Mustang to Yoakum 230 kV (17SP, 20SP, 20WP, 25SP)
- **FLT83-PO**: Prior outage of Mustang to Yoakum 230 kV followed by a 3PH fault resulting in the loss of Mustang to Seminole 230 kV (17SP, 20SP, 20WP, 25SP)
- **FLT85-3PH**: 3PH fault resulting in the loss of Tuco to Carlisle 230 kV (16WP)
- **FLT86-3PH**: 3PH fault resulting in the loss of Tuco to Tolk East 230 kV (16WP)
- **FLT87-3PH**: 3PH fault resulting in the loss of Tuco to Jones 230 kV (16WP)
- **FLT91-SB**: 1PH stuck breaker fault resulting in the loss of Tuco 345/230 kV transformer and Tuco to Rio Blanco 345 kV (All study years)
- **FLT96-3PH**: 3PH fault resulting in the loss of Atoka to CV-Dayton 115 kV (All study years)
- **FLT97-3PH**: 3PH fault resulting in the loss of Atoka to CV-Irish Hill 115 kV (All study years)
- **FLT98-3PH**: 3PH fault resulting in the loss of Atoka to Eagle Creek 116 kV (All study years)

DRAFT

- **FLT99-3PH**: 3PH fault resulting in the loss of CV-Dayton to Eddy South 115 kV (All study years)
- **FLT100-3PH**: 3PH fault resulting in the loss of CV-Irish Hill to CV-Lakewood 115 kV (All study years)
- **FLT103-PO**: Prior outage of Atoka to CV-Dayton 115 kV followed by a 3PH fault resulting in the loss of Atoka to Eagle Creek 115 kV (All study years)
- **FLT104-PO**: Prior outage of Atoka to Eagle Creek 115 kV followed by a 3PH fault resulting in the loss of Atoka to CV-Dayton 115 kV (All study years)
- **FLT127-3PH**: 3PH fault resulting in the loss of Hobbs to Andrews 230 kV (17SP, 25SP)
- **FLT137-SB**: 1PH stuck breaker fault resulting in the loss of Mustang to Seminole 230 kV and Mustang to Yoakum 230 kV (17SP, 20SP, 20WP, 25SP)
- **FLT143-SB**: 1PH stuck breaker fault resulting in the loss of Hobbs to Andrews 230 kV and Hobbs to Cunningham 230 kV (17SP)

Note for the following faults, the post-fault steady-steady voltage violations are not a concern because the bus in violation is at the end of a radial line segment and is not serving load:

- **FLT66-3PH**: 3PH fault resulting in the loss of Mustang to Seminole 230 kV (17SP, 20SP, 20WP, 25SP)
- **FLT82-PO**: Prior outage of Mustang to Seminole 230 kV followed by a 3PH fault resulting in the loss of Mustang to Yoakum 230 kV (20SP, 20WP, 25SP)
- **FLT83-PO**: Prior outage of Mustang to Yoakum 230 kV followed by a 3PH fault resulting in the loss of Mustang to Seminole 230 kV (17SP, 20SP, 20WP, 25SP)
- **FLT127-3PH**: 3PH fault resulting in the loss of Hobbs to Andrews 230 kV (17SP, 25SP)
- **FLT137-SB**: 1PH stuck breaker fault resulting in the loss of Mustang to Seminole 230 kV and Mustang to Yoakum 230 kV (17SP, 20SP, 20WP, 25SP)
- **FLT143-SB**: 1PH stuck breaker fault resulting in the loss of Hobbs to Andrews 230 kV and Hobbs to Cunningham 230 kV (17SP)

Refer to Figure 3-1 and Figure 3-2 for a one-line diagram of the post-fault topology near Seminole 230 kV and Andrews 230 kV, respectively. It can be observed that both buses are at the end of a radial segment and do not serve load, therefore, are not a cause for concern.

DRAFT

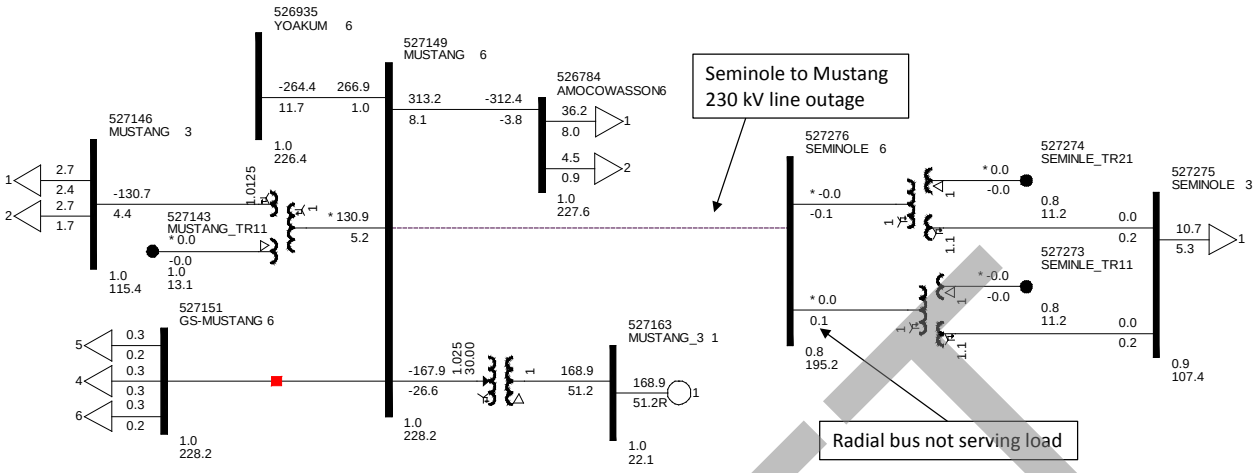

Figure 3-1: One-line diagram of post-fault steady-state topology for FLT66-3PH.

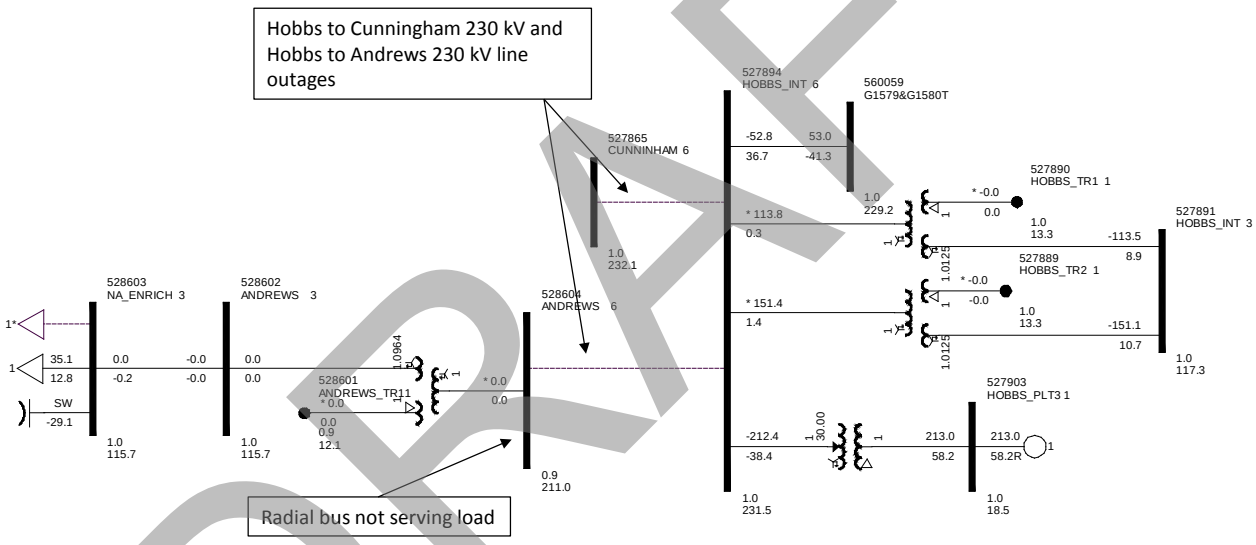

Figure 3-2: One-line diagram of post-fault steady-state topology for FLT143-SB.

To mitigate the system/voltage instability, voltage violations, generation tripping offline, and poor post-fault steady-state voltages, the following upgrades were provided by SPP and implemented in each season (this set of mitigation will be referred as "**Solution 1**" in the report):

- Woodward to GEN-2011-051 Tap to Tatonga to Mathewson 345 kV circuit #2
- Beaver County Reactive Power Support – 75 Mvar SVC
- Woodward to Border 345 kV existing line tapped by Chisholm 345 kV
- Tuco 2 (Crawfish Draw) to Tolk to Potter County to Grapevine to Chisholm 345 kV circuit #1
- Grapevine to Beaver County 345 kV circuit #1
- Chaves County to Price to Pine Lodge to Captain 69 kV circuit converted to 115 kV

DRAFT

- Mustang to Seminole 230 kV circuit #1
- OKU Reactive Power Support (760 Mvar total)
    - 300 Mvar SVC
    - Capacitor banks
        - 2 steps of 130 Mvar (260 Mvar total)
        - 4 steps of 50 Mvar (200 Mvar total)
- Border Reactive Power Support (550 Mvar total)
    - 250 Mvar SVC
    - Capacitor banks
        - 6 steps of 50 Mvar (300 Mvar total)
- Grapevine Reactive Power Support (500 Mvar total)
    - 300 Mvar SVC
    - Capacitor banks
        - 4 steps of 50 Mvar (200 Mvar total)

After the **Solution 1** upgrades were implemented, all violations were mitigated except for the following contingencies which resulted in voltages above 1.2 p.u.:

- FLT43-3PH (16WP, 17SP, 20WP)
- FLT49-3PH (16WP, 17SP, 20SP, 20WP)
- FLT91-3PH (16WP, 17SP, 20WP)

In order to mitigate the high voltage observations, the OKU capacitor bank was taken out-of-service for the above faults (this will be referred as "**Solution 2**" in the report). After this update was implemented, the voltages recovered within SPP criteria and no additional violations were observed.

Refer to Figure 3-3 for a comparison plot of representative post-fault steady-state voltages in the Urton area for FLT08-PO and FLT09-PO for the 2016 Winter Peak case with and without system upgrades (**Solution 1**).

DRAFT

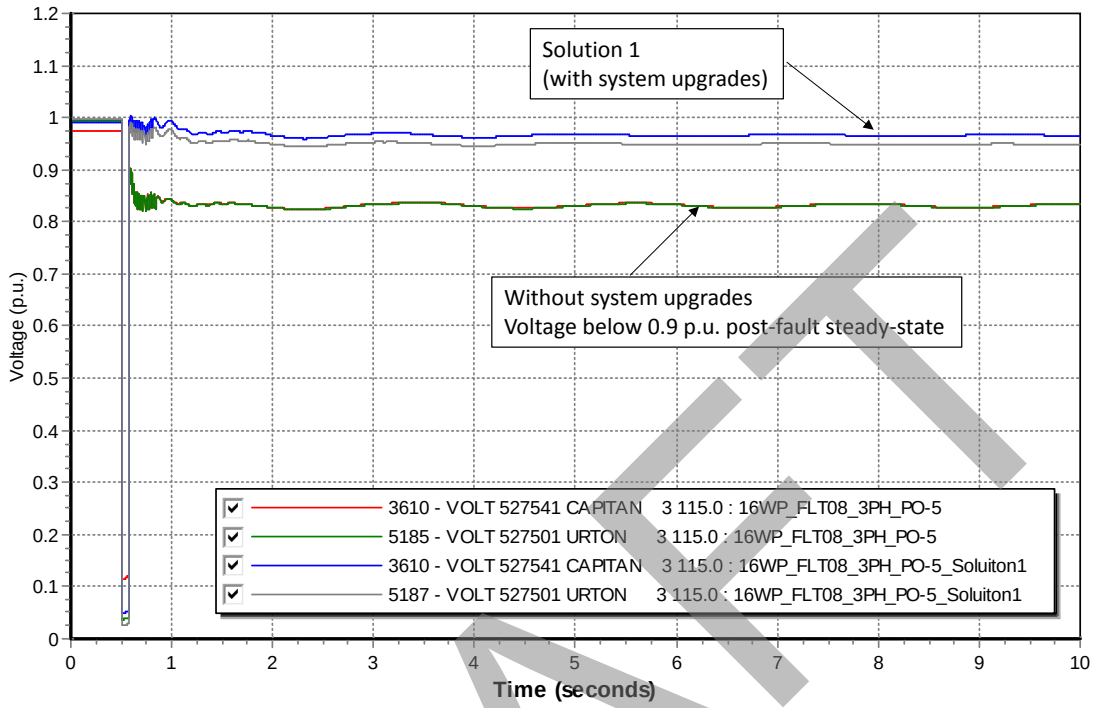

*Figure 3-3: Representative plot of Urton area voltages for FLT08-PO for the 2016 Winter Peak case with and without system upgrades (**Solution 1**).*

FLT43-3PH, a 3PH fault resulting in the loss of Rio Blanco to Tuco 345 kV, was observed to have voltages above 1.2 p.u., poor voltage damping, and generation tripping offline (due to high voltage protection settings). Refer to Figure 3-4 for a comparison plot of GEN-2015-033's real power for the 2016 Winter Peak case with **Solution 1** upgrades, **Solution 2** upgrades, and without system upgrades. Refer to Figure 3-5 for a representative comparison plot of OKU area voltages for the 2016 Winter Peak case with **Solution 1** upgrades, **Solution 2** upgrades, and without system upgrades.

DRAFT

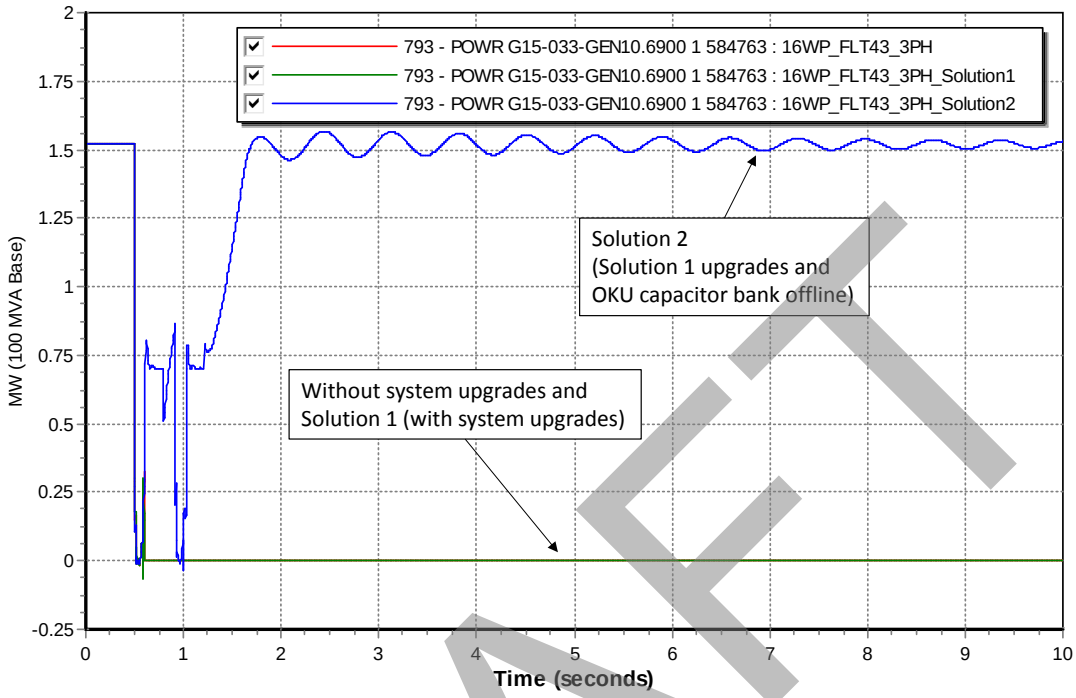

*Figure 3-4: Comparison plot of GEN-2015-033's real power for 2016 Winter Peak conditions without system upgrades, with **Solution 1** upgrades, and **Solution 2** upgrades.*

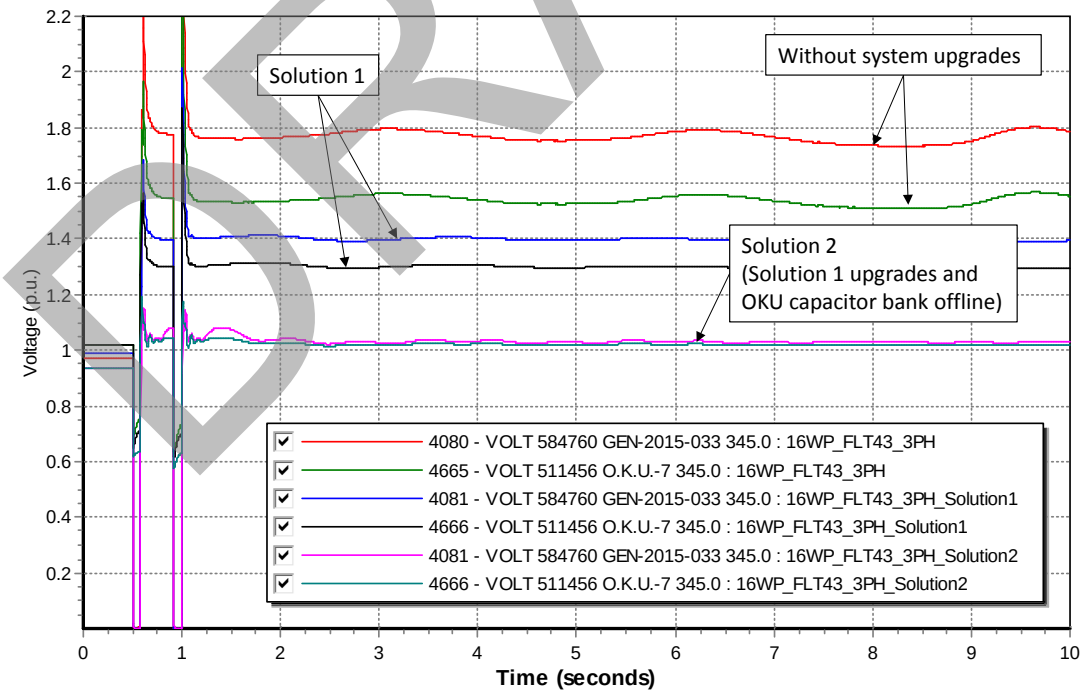

DRAFT

*Figure 3-5: Representative plot of OKU area voltages for 2016 Winter Peak conditions without system upgrades, with **Solution 1** upgrades, and **Solution 2** upgrades.*

FLT44-3PH, a 3PH fault resulting in the loss of Rio Blanco to OKU 345 kV, was observed to have system instability. Refer to Figure 3-6 for a comparison plot of GEN-2015-033's real power for the 2016 Winter Peak case with **Solution 1** upgrades and without system upgrades. Refer to Figure 3-7 for a representative comparison plot of OKU and Border 345 kV bus voltages for the 2016 Winter Peak case with **Solution 1** upgrades and without system upgrades.

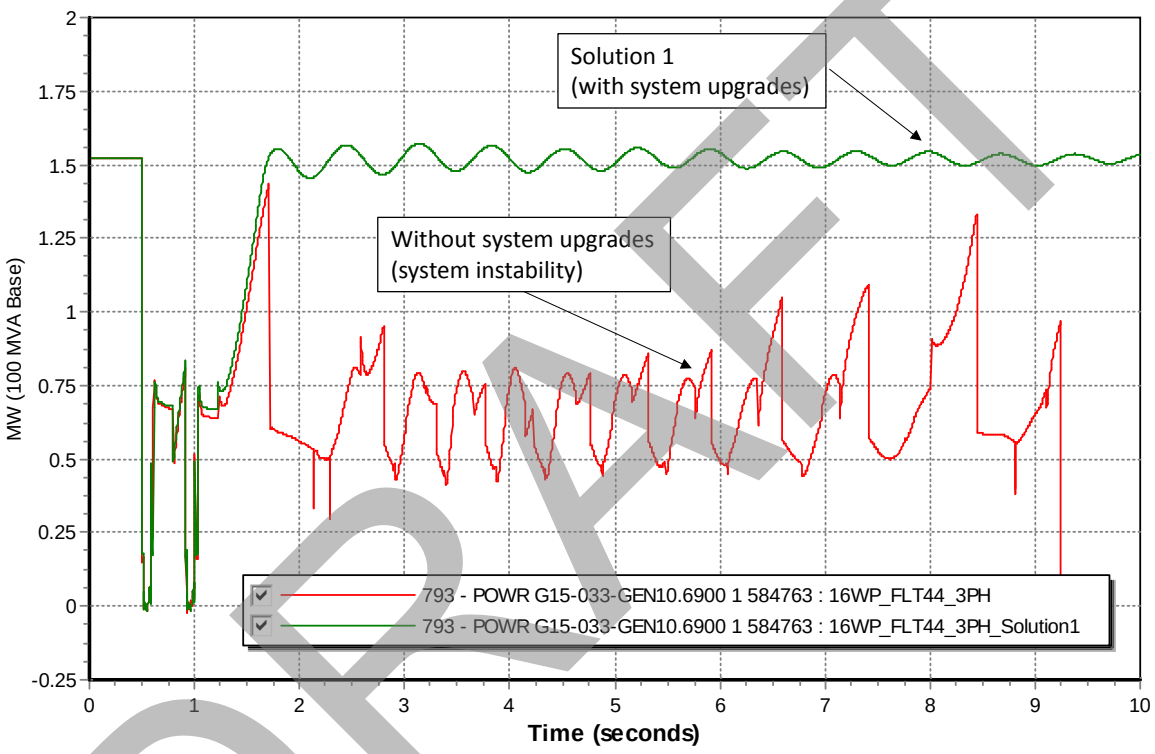

*Figure 3-6: Comparison plot of GEN-2015-033's real power for 2016 Winter Peak conditions without system upgrades and with **Solution 1** upgrades.*

DRAFT

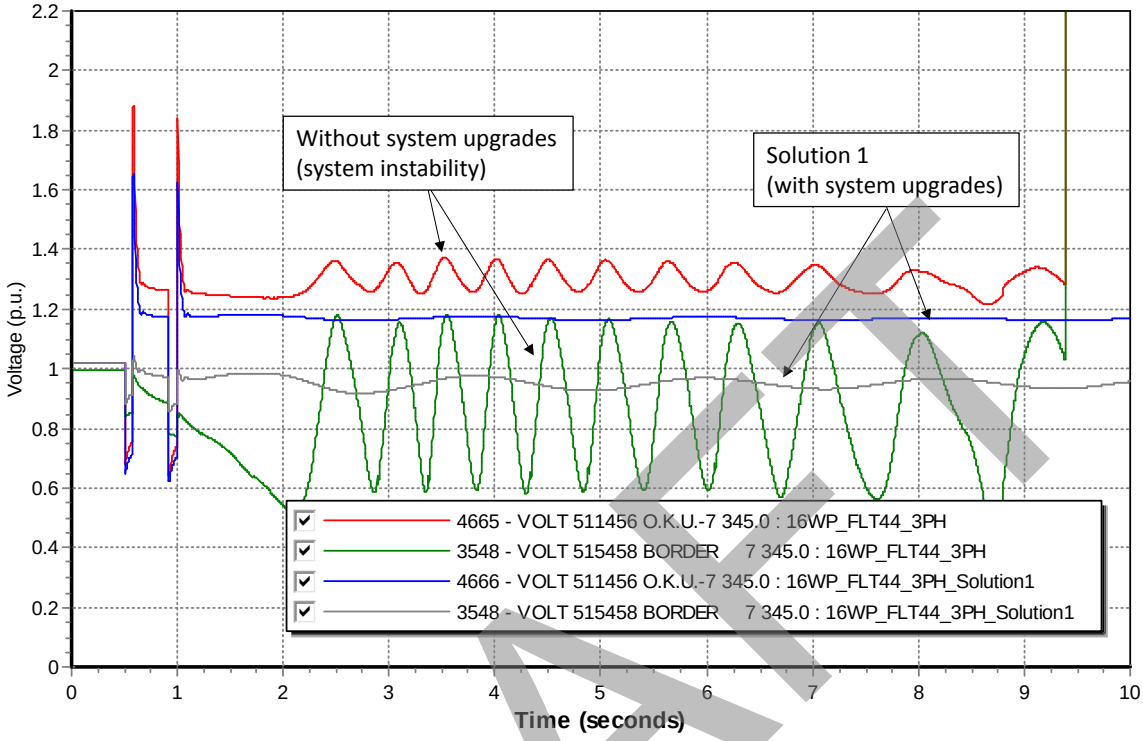

*Figure 3-7: Representative plot of OKU and Border 345 kV voltages for 2016 Winter Peak conditions without system upgrades and with **Solution 1** upgrades.*

FLT59-3PH, a 3PH fault resulting in the loss of Plant X to Sundown 230 kV, was observed to have bus voltage over 1.2 p.u. at OKU 345 kV and generation tripping offline (A12-002-Gen1). Refer to Figure 3-8 for a comparison plot of A12-002-Gen1's real power for the 2016 Winter Peak case with **Solution 1** upgrades and without system upgrades. Refer to Figure 3-9 for a representative comparison plot of the OKU 345 kV bus voltage for the 2016 Winter Peak case with **Solution 1** upgrades and without system upgrades.

DRAFT

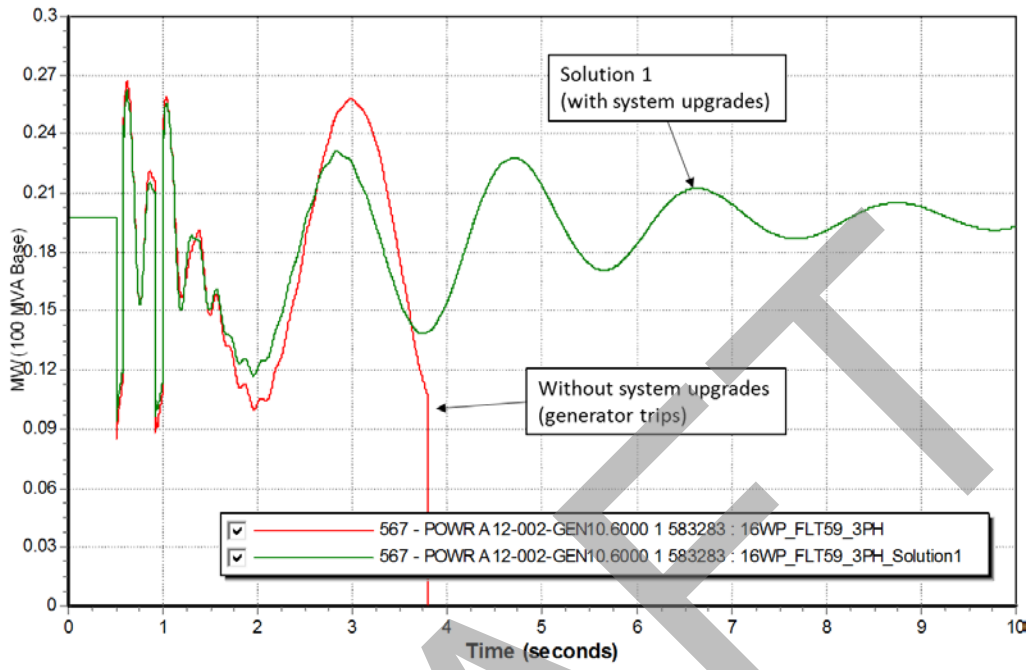

*Figure 3-8: Comparison plot of A12-002-Gen1's real power for 2016 Winter Peak conditions without system upgrades and with **Solution 1** upgrades.*

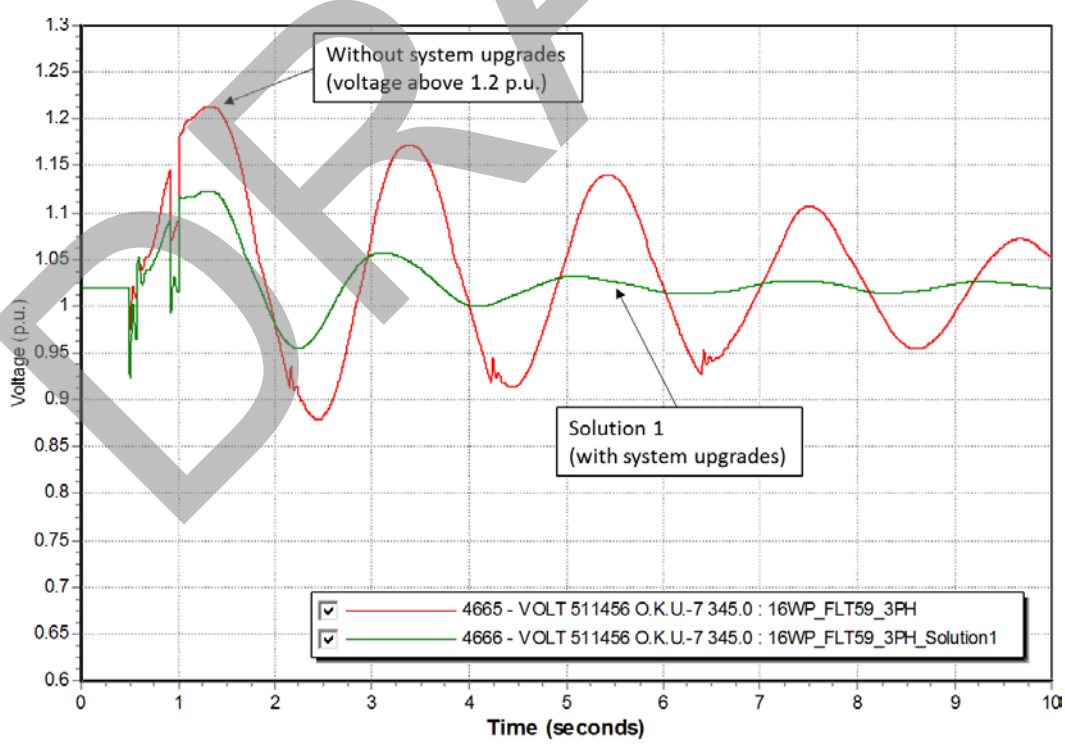

DRAFT

*Figure 3-9: Representative plot of OKU 345 kV bus voltage for 2016 Winter Peak conditions without system upgrades and with **Solution 1** upgrades.*

FLT86-3PH, a 3PH fault resulting in the loss of Tuco to Tolk East 230 kV, was observed to have bus voltage over 1.2 p.u. at OKU 345 kV and generation tripping offline (GEN-2015-033). Refer to Figure 3-10 for a comparison plot of GEN-2015-033's real power for the 2016 Winter Peak case with **Solution 1** upgrades and without system upgrades. Refer to Figure 3-11 for a representative comparison plot of the OKU 345 kV bus voltage for the 2016 Winter Peak case with **Solution 1** upgrades and without system upgrades.

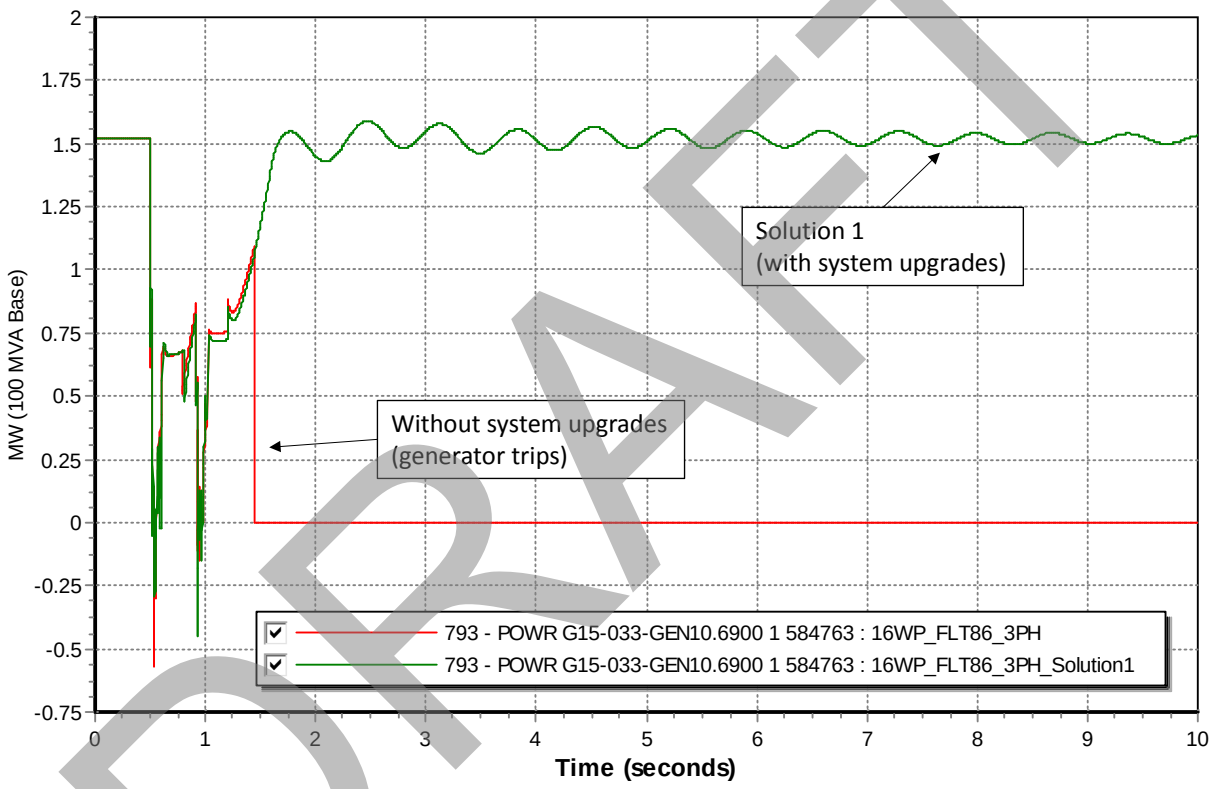

*Figure 3-10: Comparison plot of GEN-2015-033's real power for 2016 Winter Peak conditions without system upgrades and with **Solution 1** upgrades.*

DRAFT

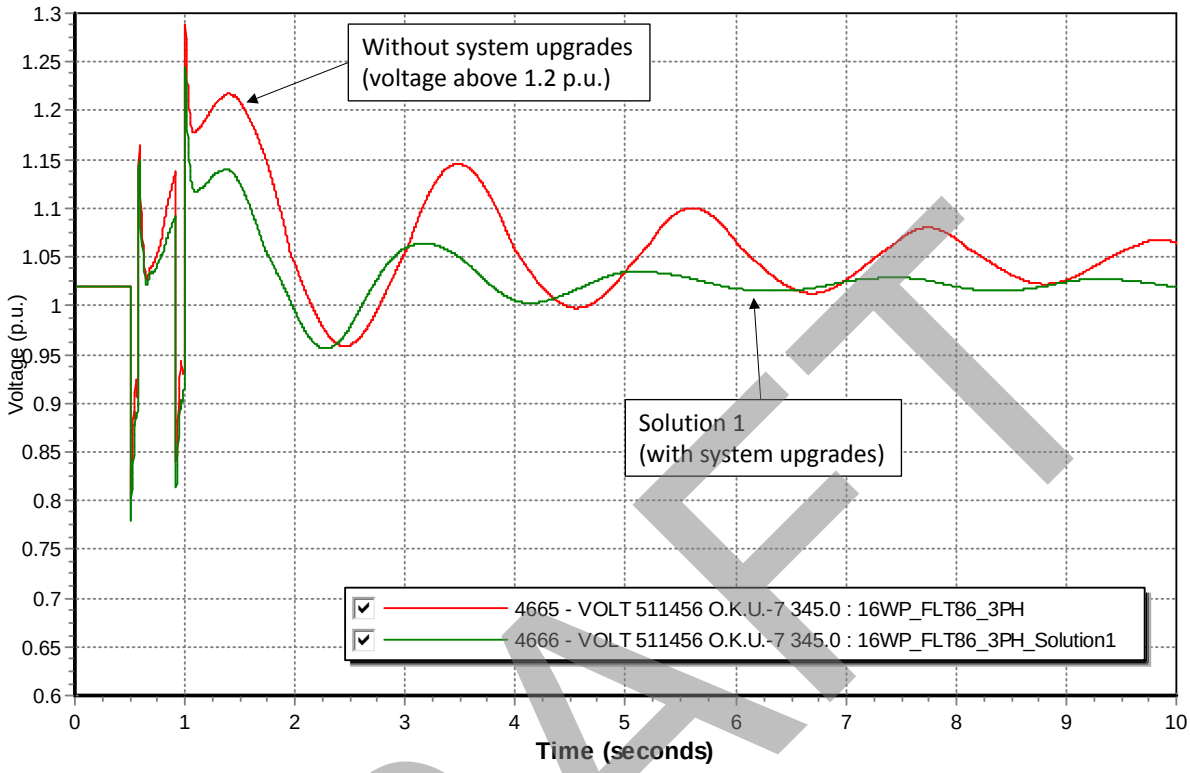

*Figure 3-11: Representative plot of OKU 345 kV bus voltage for 2016 Winter Peak conditions without system upgrades and with **Solution 1** upgrades.*

After the upgrades (**Solution 1** and **Solution 2)** were implemented, the Stability Analysis was re-simulated to determine system stability. With the required upgrade, the Stability Analysis determined that there was no wind turbine tripping or system instability as a result of interconnected all study projects at 100% output.

3.3 Stand Alone Scenario Stability Analysis Results: GEN-2014-046

The Stand Alone Scenario Stability Analysis determined that there were no contingencies that resulted in system instability, generation tripping offline, or voltage violations for 2020 Summer Peak, 2020 Winter Peak, and 2025 Summer Peak conditions when GEN-2014-046 was interconnected at 100% output. However, two faults resulted in post-fault steady-state voltages recovering to below 0.9 p.u. in the Urton area. Refer to Table 3-18 for a summary of the Stability Analysis results for the contingencies listed in Table 2-3 that corresponds to the GEN-2014-046 Stand Alone Analysis. Table 3-18 is a summary of the stability results for the 2016 Winter Peak, 2017 Summer Peak, 2020 Summer Peak, 2020 Winter Peak, and 2025 Summer Peak conditions and states whether the system remained stable or generation tripped offline and if acceptable voltage recovery was observed after the fault was cleared. Voltage recovery

DRAFT

criteria includes ensuring that the transient voltage recovery is between 0.7 p.u. and 1.2 p.u. and ending in a steady state voltage (for N-1 contingencies) at the pre-contingent level or at least 0.9 p.u.

Refer to Appendix G for a complete set of plots for all the GEN-2014-046 Stand Alone Analysis contingencies for 2016 Winter Peak, 2017 Summer Peak, 2020 Summer Peak, 2020 Winter Peak, and 2025 Summer Peak conditions.

DRAFT

Table 3-18
Stand Alone Scenario GEN-2014-046: Stability Analysis Summary of Results for 2016 Winter, 2017 Summer, 2020 Summer, 2020 Winter, and 2025 Summer Peak Conditions

Cont. No.	Cont. Name	2016 Winter Peak				2017 Summer Peak				2020 Summer Peak				2020 Winter Peak				2025 Summer Peak			
		Voltage Recovery		Steady-State Voltage < 0.9 p.u.?	Stable?	Voltage Recovery		Steady-State Voltage < 0.9 p.u.?	Stable?	Voltage Recovery		Steady-State Voltage < 0.9 p.u.?	Stable?	Voltage Recovery		Steady-State Voltage < 0.9 p.u.?	Stable?	Voltage Recovery		Steady-State Voltage < 0.9 p.u.?	Stable?
		Less than .70 p.u.	Greater than 1.20 p.u.			Less than .70 p.u.	Greater than 1.20 p.u.			Less than .70 p.u.	Greater than 1.20 p.u.			Less than .70 p.u.	Greater than 1.20 p.u.			Less than .70 p.u.	Greater than 1.20 p.u.		
1	FLT01-3PH	No	No	No	Yes	No	No	No	Yes	No	No	No	Yes	No	No	No	Yes	No	No	No	Yes
2	FLT02-3PH	No	No	No	Yes	No	No	No	Yes	No	No	No	Yes	No	No	No	Yes	No	No	No	Yes
3	FLT03-3PH	No	No	No	Yes	No	No	No	Yes	No	No	No	Yes	No	No	No	Yes	No	No	No	Yes
4	FLT04-3PH	No	No	No	Yes	No	No	No	Yes	No	No	No	Yes	No	No	No	Yes	No	No	No	Yes
5	FLT05-3PH	No	No	No	Yes	No	No	No	Yes	No	No	No	Yes	No	No	No	Yes	No	No	No	Yes
6	FLT06-3PH	No	No	No	Yes	No	No	No	Yes	No	No	No	Yes	No	No	No	Yes	No	No	No	Yes
7	FLT07-3PH	No	No	No	Yes	No	No	No	Yes	No	No	No	Yes	No	No	No	Yes	No	No	No	Yes
8	FLT08-PO	No	No	Yes	Yes	No	No	Yes	Yes	No	No	No	Yes	No	No	No	Yes	No	No	No	Yes
9	FLT09-PO	No	No	Yes	Yes	No	No	Yes	Yes	No	No	No	Yes	No	No	No	Yes	No	No	No	Yes
10	FLT10-SB	No	No	No	Yes	No	No	No	Yes	No	No	No	Yes	No	No	No	Yes	No	No	No	Yes
131	FLT131-SB	No	No	No	Yes	No	No	No	Yes	No	No	No	Yes	No	No	No	Yes	No	No	No	Yes

DRAFT

The following faults were observed to poor post-fault steady-state voltages:

- **FLT08-PO**: Prior outage of Chaves County to Samson 115 kV followed by a 3PH fault resulting in the loss of Chaves County to Urton 115 kV (16WP, 17SP)
- **FLT09-PO**: Prior outage of Chaves County to Urton 115 kV followed by a 3PH fault resulting in the loss of Chaves County to Samson 115 kV (16WP, 17SP)

To mitigate the poor post-fault steady-state voltages, **Solution 1,** as described in the Cluster Scenario Analysis was implemented. After the **Solution 1** upgrades were implemented, all violations that were observed in the GEN-2014-046 Stand Alone Analysis were mitigated.

3.4 Stand Alone Scenario Stability Analysis Results: GEN-2015-018

The Stand Alone Scenario Stability Analysis determined that there were no contingencies that resulted in system instability, generation tripping offline, or voltage violations for the 2016 Winter Peak, 2017 Summer Peak, 2020 Summer Peak, 2020 Winter Peak, and 2025 Summer peak conditions when GEN-2015-018 was interconnected at 100% output.

Refer to Table 3-19 for a summary of the Stability Analysis results for the contingencies listed in Table 2-3 that corresponds to the GEN-2015-018 Stand Alone Analysis. Table 3-19 is a summary of the stability results for the 2016 Winter Peak, 2017 Summer Peak, 2020 Summer Peak, 2020 Winter Peak, and 2025 Summer Peak conditions and states whether the system remained stable or generation tripped offline and if acceptable voltage recovery was observed after the fault was cleared. Voltage recovery criteria includes ensuring that the transient voltage recovery is between 0.7 p.u. and 1.2 p.u. and ending in a steady state voltage (for N-1 contingencies) at the pre-contingent level or at least 0.9 p.u.

Refer to Appendix H for a complete set of plots for all the GEN-2015-018 Stand Alone Scenario contingencies for 2016 Winter Peak, 2017 Summer Peak, 2020 Summer Peak, 2020 Winter Peak, and 2025 Summer Peak conditions.

DRAFT

Table 3-19
Stand Alone Scenario GEN-2015-018: Stability Analysis Summary of Results for 2016 Winter, 2017 Summer, 2020 Summer, 2020 Winter, and 2025 Summer Peak Conditions

Cont. No.	Cont. Name	2016 Winter Peak				2017 Summer Peak				2020 Summer Peak				2020 Winter Peak				2025 Summer Peak			
		Voltage Recovery		Steady-State Voltage < 0.9 p.u.?	Stable?	Voltage Recovery		Steady-State Voltage < 0.9 p.u.?	Stable?	Voltage Recovery		Steady-State Voltage < 0.9 p.u.?	Stable?	Voltage Recovery		Steady-State Voltage < 0.9 p.u.?	Stable?	Voltage Recovery		Steady-State Voltage < 0.9 p.u.?	Stable?
		Less than .70 p.u.	Greater than 1.20 p.u.			Less than .70 p.u.	Greater than 1.20 p.u.			Less than .70 p.u.	Greater than 1.20 p.u.			Less than .70 p.u.	Greater than 1.20 p.u.			Less than .70 p.u.	Greater than 1.20 p.u.		
11	FLT11-3PH	No	No	No	Yes	No	No	No	Yes	No	No	No	Yes	No	No	No	Yes	No	No	No	Yes
12	FLT12-3PH	No	No	No	Yes	No	No	No	Yes	No	No	No	Yes	No	No	No	Yes	No	No	No	Yes
13	FLT13-3PH	No	No	No	Yes	No	No	No	Yes	No	No	No	Yes	No	No	No	Yes	No	No	No	Yes
14	FLT14-3PH	No	No	No	Yes	No	No	No	Yes	No	No	No	Yes	No	No	No	Yes	No	No	No	Yes
15	FLT15-3PH	No	No	No	Yes	No	No	No	Yes	No	No	No	Yes	No	No	No	Yes	No	No	No	Yes
16	FLT16-3PH	No	No	No	Yes	No	No	No	Yes	No	No	No	Yes	No	No	No	Yes	No	No	No	Yes
17	FLT17-3PH	No	No	No	Yes	No	No	No	Yes	No	No	No	Yes	No	No	No	Yes	No	No	No	Yes
18	FLT18-3PH	No	No	No	Yes	No	No	No	Yes	No	No	No	Yes	No	No	No	Yes	No	No	No	Yes
19	FLT19-3PH	No	No	No	Yes	No	No	No	Yes	No	No	No	Yes	No	No	No	Yes	No	No	No	Yes
20	FLT20-3PH	No	No	No	Yes	No	No	No	Yes	No	No	No	Yes	No	No	No	Yes	No	No	No	Yes
132	FLT132-SB	No	No	No	Yes	No	No	No	Yes	No	No	No	Yes	No	No	No	Yes	No	No	No	Yes

DRAFT

3.5 Stand Alone Scenario Stability Analysis Results: GEN-2015-020

The Stability Analysis determined that there were no contingencies that resulted in system instability, generation tripping offline, or voltage violations for the 2016 Winter Peak, 2017 Summer Peak, 2020 Summer Peak, 2020 Winter Peak, and 2025 Summer peak conditions when GEN-2015-020 was interconnected at 100% output.

Refer to Table 3-20 for a summary of the Stand Alone Scenario Stability Analysis results for the contingencies listed in Table 2-3 that corresponds to the GEN-2015-020 Stand Alone Analysis. Table 3-20 is a summary of the stability results for the 2016 Winter Peak, 2017 Summer Peak, 2020 Summer Peak, 2020 Winter Peak, and 2025 Summer Peak conditions and states whether the system remained stable or generation tripped offline and if acceptable voltage recovery was observed after the fault was cleared. Voltage recovery criteria includes ensuring that the transient voltage recovery is between 0.7 p.u. and 1.2 p.u. and ending in a steady state voltage (for N-1 contingencies) at the pre-contingent level or at least 0.9 p.u.

Refer to Appendix I for a complete set of plots for all the GEN-2015-020 Stand Alone Scenario contingencies for 2016 Winter Peak, 2017 Summer Peak, 2020 Summer Peak, 2020 Winter Peak, and 2025 Summer Peak conditions.

DRAFT

Table 3-20
Stand Alone Scenario GEN-2015-020: Stability Analysis Summary of Results for 2016 Winter, 2017 Summer, 2020 Summer, 2020 Winter, and 2025 Summer Peak Conditions

Cont. No.	Cont. Name	2016 Winter Peak				2017 Summer Peak				2020 Summer Peak				2020 Winter Peak				2025 Summer Peak			
		Voltage Recovery		Steady-State Voltage < 0.9 p.u.?	Stable?	Voltage Recovery		Steady-State Voltage < 0.9 p.u.?	Stable?	Voltage Recovery		Steady-State Voltage < 0.9 p.u.?	Stable?	Voltage Recovery		Steady-State Voltage < 0.9 p.u.?	Stable?	Voltage Recovery		Steady-State Voltage < 0.9 p.u.?	Stable?
		Less than .70 p.u.	Greater than 1.20 p.u.			Less than .70 p.u.	Greater than 1.20 p.u.			Less than .70 p.u.	Greater than 1.20 p.u.			Less than .70 p.u.	Greater than 1.20 p.u.			Less than .70 p.u.	Greater than 1.20 p.u.		
21	FLT21-3PH	No	No	No	Yes	No	No	No	Yes	No	No	No	Yes	No	No	No	Yes	No	No	No	Yes
22	FLT22-3PH	No	No	No	Yes	No	No	No	Yes	No	No	No	Yes	No	No	No	Yes	No	No	No	Yes
23	FLT23-3PH	No	No	No	Yes	No	No	No	Yes	No	No	No	Yes	No	No	No	Yes	No	No	No	Yes
24	FLT24-3PH	No	No	No	Yes	No	No	No	Yes	No	No	No	Yes	No	No	No	Yes	No	No	No	Yes
25	FLT25-3PH	No	No	No	Yes	No	No	No	Yes	No	No	No	Yes	No	No	No	Yes	No	No	No	Yes
26	FLT26-3PH	No	No	No	Yes	No	No	No	Yes	No	No	No	Yes	No	No	No	Yes	No	No	No	Yes
27	FLT27-3PH	No	No	No	Yes	No	No	No	Yes	No	No	No	Yes	No	No	No	Yes	No	No	No	Yes
28	FLT28-3PH	No	No	No	Yes	No	No	No	Yes	No	No	No	Yes	No	No	No	Yes	No	No	No	Yes
29	FLT29-3PH	No	No	No	Yes	No	No	No	Yes	No	No	No	Yes	No	No	No	Yes	No	No	No	Yes
30	FLT30-3PH	No	No	No	Yes	No	No	No	Yes	No	No	No	Yes	No	No	No	Yes	No	No	No	Yes
31	FLT31-3PH	No	No	No	Yes	No	No	No	Yes	No	No	No	Yes	No	No	No	Yes	No	No	No	Yes
32	FLT32-PO	No	No	No	Yes	No	No	No	Yes	No	No	No	Yes	No	No	No	Yes	No	No	No	Yes
33	FLT33-PO	No	No	No	Yes	No	No	No	Yes	No	No	No	Yes	No	No	No	Yes	No	No	No	Yes
133	FLT133-SB	No	No	No	Yes	No	No	No	Yes	No	No	No	Yes	No	No	No	Yes	No	No	No	Yes

DRAFT

3.6 Stand Alone Scenario Stability Analysis Results: GEN-2015-031

The Stability Analysis determined that there were no contingencies that resulted in system instability, generation tripping offline, or voltage violations for the 2016 Winter Peak, 2017 Summer Peak, 2020 Summer Peak, 2020 Winter Peak, and 2025 Summer Peak conditions when GEN-2015-031 was interconnected at 100% output.

Refer to Table 3-21 for a summary of the Stand Alone Scenario Stability Analysis results for the contingencies listed in Table 2-3 that corresponds to the GEN-2015-031 Stand Alone Analysis. Table 3-21 is a summary of the stability results for the 2016 Winter Peak, 2017 Summer Peak, 2020 Summer Peak, 2020 Winter Peak, and 2025 Summer Peak conditions and states whether the system remained stable or generation tripped offline and if acceptable voltage recovery was observed after the fault was cleared. Voltage recovery criteria includes ensuring that the transient voltage recovery is between 0.7 p.u. and 1.2 p.u. and ending in a steady state voltage (for N-1 contingencies) at the pre-contingent level or at least 0.9 p.u.

Refer to Appendix J for a complete set of plots for all the GEN-2015-031 Stand Alone Scenario contingencies for 2016 Winter Peak, 2017 Summer Peak, 2020 Summer Peak, 2020 Winter Peak, and 2025 Summer Peak conditions.

DRAFT

Table 3-21
Stand Alone Scenario GEN-2015-031: Stability Analysis Summary of Results for 2016 Winter, 2017 Summer, 2020 Summer, 2020 Winter, and 2025 Summer Peak Conditions

Cont. No.	Cont. Name	2016 Winter Peak				2017 Summer Peak				2020 Summer Peak				2020 Winter Peak				2025 Summer Peak			
		Voltage Recovery		Steady-State Voltage < 0.9 p.u.?	Stable?	Voltage Recovery		Steady-State Voltage < 0.9 p.u.?	Stable?	Voltage Recovery		Steady-State Voltage < 0.9 p.u.?	Stable?	Voltage Recovery		Steady-State Voltage < 0.9 p.u.?	Stable?	Voltage Recovery		Steady-State Voltage < 0.9 p.u.?	Stable?
		Less than .70 p.u.	Greater than 1.20 p.u.			Less than .70 p.u.	Greater than 1.20 p.u.			Less than .70 p.u.	Greater than 1.20 p.u.			Less than .70 p.u.	Greater than 1.20 p.u.			Less than .70 p.u.	Greater than 1.20 p.u.		
34	FLT34-3PH	No	No	No	Yes	No	No	No	Yes	No	No	No	Yes	No	No	No	Yes	No	No	No	Yes
35	FLT35-3PH	No	No	No	Yes	No	No	No	Yes	No	No	No	Yes	No	No	No	Yes	No	No	No	Yes
36	FLT36-3PH	No	No	No	Yes	No	No	No	Yes	No	No	No	Yes	No	No	No	Yes	No	No	No	Yes
37	FLT37-3PH	No	No	No	Yes	No	No	No	Yes	No	No	No	Yes	No	No	No	Yes	No	No	No	Yes
38	FLT38-3PH	No	No	No	Yes	No	No	No	Yes	No	No	No	Yes	No	No	No	Yes	No	No	No	Yes
39	FLT39-3PH	No	No	No	Yes	No	No	No	Yes	No	No	No	Yes	No	No	No	Yes	No	No	No	Yes
40	FLT40-3PH	No	No	No	Yes	No	No	No	Yes	No	No	No	Yes	No	No	No	Yes	No	No	No	Yes
41	FLT41-3PH	No	No	No	Yes	No	No	No	Yes	No	No	No	Yes	No	No	No	Yes	No	No	No	Yes
42	FLT42-SB	No	No	No	Yes	No	No	No	Yes	No	No	No	Yes	No	No	No	Yes	No	No	No	Yes
134	FLT134-SB	No	No	No	Yes	No	No	No	Yes	No	No	No	Yes	No	No	No	Yes	No	No	No	Yes

DRAFT

3.7 Stand Alone Scenario Stability Analysis Results: GEN-2015-033

The Stand Alone Scenario Stability Analysis determined that there multiple contingencies across all seasons that resulted in system/voltage instability, generation tripping offline, and poor post-fault voltage recovery when GEN-2015-033 was interconnected at 100% output.

Refer to Table 3-22 for a summary of the Stability Analysis results for the contingencies listed in Table 2-3 that corresponds to the GEN-2015-033 Stand Alone Analysis. Table 3-22 is a summary of the stability results for the 2016 Winter Peak, 2017 Summer Peak, 2020 Summer Peak, 2020 Winter Peak, and 2025 Summer Peak conditions and states whether the system remained stable or generation tripped offline and if acceptable voltage recovery was observed after the fault was cleared. Voltage recovery criteria includes ensuring that the transient voltage recovery is between 0.7 p.u. and 1.2 p.u. and ending in a steady state voltage (for N-1 contingencies) at the pre-contingent level or at least 0.9 p.u.

Refer to Appendix K for a complete set of plots for all the GEN-2015-033 Stand Alone Scenario contingencies for 2016 Winter Peak, 2017 Summer Peak, 2020 Summer Peak, 2020 Winter Peak, and 2025 Summer Peak conditions.

DRAFT

Table 3-22
Stand Alone Scenario GEN-2015-033: Stability Analysis Summary of Results for 2016 Winter, 2017 Summer, 2020 Summer, 2020 Winter, and 2025 Summer Peak Conditions

Cont. No.	Cont. Name	2016 Winter Peak				2017 Summer Peak				2020 Summer Peak				2020 Winter Peak				2025 Summer Peak			
		Voltage Recovery		Steady-State Voltage < 0.9 p.u.?	Stable?	Voltage Recovery		Steady-State Voltage < 0.9 p.u.?	Stable?	Voltage Recovery		Steady-State Voltage < 0.9 p.u.?	Stable?	Voltage Recovery		Steady-State Voltage < 0.9 p.u.?	Stable?	Voltage Recovery		Steady-State Voltage < 0.9 p.u.?	Stable?
		Less than .70 p.u.	Greater than 1.20 p.u.			Less than .70 p.u.	Greater than 1.20 p.u.			Less than .70 p.u.	Greater than 1.20 p.u.			Less than .70 p.u.	Greater than 1.20 p.u.			Less than .70 p.u.	Greater than 1.20 p.u.		
43	FLT43-3PH	No	Yes	No	No[1]	No	Yes	No	No[1]	No	Yes	Yes	No[1]	No	Yes	Yes	No[1]	No	Yes	No	No[1]
44	FLT44-3PH	Voltage Instability				No	Yes	Yes	Yes	No	Yes	No	Yes	No	Yes	No	Yes	No	No	No	Yes
45	FLT45-3PH	No	No	No	Yes	No	No	No	Yes	No	No	No	Yes	No	No	No	Yes	No	No	No	Yes
46	FLT46-3PH	No	No	No	Yes	No	No	No	Yes	No	No	No	Yes	No	No	No	Yes	No	No	No	Yes
47	FLT47-3PH (2025SP)	N/A	N/A	N/A	N/A	N/A	N/A	N/A	N/A	N/A	N/A	N/A	N/A	N/A	N/A	N/A	N/A	No	No	No	Yes
48	FLT48-3PH	No	No	No	Yes	No	No	No	Yes	No	No	No	Yes	No	No	No	Yes	No	No	No	Yes
49	FLT49-3PH	No	Yes	No	No[1]	No	Yes	No	No[1]	No	Yes	No	No[1]	No	Yes	No	Yes	No	Yes	No	No[1]
50	FLT50-PO	Voltage Instability				No	No	Yes	Yes	No	Yes	No	Yes	No	Yes	No	Yes	No	No	No	Yes
51	FLT51-PO	No	Yes	No	No[1]	No	No	Yes	No[1]	No	No	No	Yes	No	No	No	Yes	No	No	No	Yes
91	FLT91-SB	No	Yes	No	No[1]	No	Yes	No	No[1]	No	Yes	No	No[1]	No	Yes	No	No[1]	No	No	No	No[1]
130	FLT130-PO (2025SP)	N/A	N/A	N/A	N/A	N/A	N/A	N/A	N/A	N/A	N/A	N/A	N/A	N/A	N/A	N/A	N/A	No	No	No	Yes

Note 1: Generator tripping observed

DRAFT

The following faults were observed to have system/voltage instability, generation tripping offline, and/or poor post-fault steady-state voltages:

- **FLT43-3PH**: 3PH fault resulting in the loss of Rio Blanco to Tuco 345 kV (All study years)
- **FLT44-3PH**: 3PH fault resulting in the loss of Rio Blanco to OKU 345 kV (16WP, 17SP, 20SP, 20WP)
- **FLT49-3PH**: 3PH fault resulting in the loss of OKU to LES 345 kV (All study years)
- **FLT50-PO**: Prior outage of Tuco 345/230 kV transformer followed by a 3PH fault resulting in the loss of Rio Blanco to OKU 345 kV (16WP, 17SP, 20SP, 20WP)
- **FLT51-PO**: Prior outage of Tuco 345/230 kV transformer followed by a 3PH fault resulting in the loss of Tuco to Border 345 kV (16WP, 17SP)
- **FLT91-SB**: 1PH stuck breaker fault resulting in the loss of Tuco 345/230 kV transformer and Tuco to Rio Blanco 345 kV (All study years)

To mitigate the system/voltage instability, voltage violations, generation tripping offline, and poor post-fault steady-state voltages, **Solution 1,** as described in the Cluster Scenario Analysis was implemented. After the **Solution 1** upgrades were implemented, all violations were mitigated except for the following contingencies which resulted in voltages above 1.2 p.u.:

- FLT43-3PH
- FLT49-3PH
- FLT91-3PH

In order to mitigate the high voltage observations, the OKU capacitor bank was taken out-of-service for the above faults (this will be referred as "**Solution 2**" in the report). After this update was implemented, the voltages recovered within SPP criteria and no additional violations were observed.

3.8 Stand Alone Scenario Stability Analysis Results: GEN-2015-039

The Stand Alone Scenario Stability Analysis determined that there were no contingencies that resulted in system instability, generation tripping offline, or voltage violations for the 2016 Winter Peak, 2017 Summer Peak, 2020 Summer Peak, 2020 Winter Peak, and 2025 Summer Peak conditions when GEN-2015-039 was interconnected at 100% output.

Refer to Table 3-23 for a summary of the Stability Analysis results for the contingencies listed in Table 2-3 that corresponds to the GEN-2015-039 Stand Alone Analysis. Table 3-23 is a summary of the stability results for the 2016 Winter Peak, 2017 Summer Peak, 2020 Summer Peak, 2020 Winter Peak, and 2025 Summer Peak conditions and states whether the system

DRAFT

remained stable or generation tripped offline and if acceptable voltage recovery was observed after the fault was cleared. Voltage recovery criteria includes ensuring that the transient voltage recovery is between 0.7 p.u. and 1.2 p.u. and ending in a steady state voltage (for N-1 contingencies) at the pre-contingent level or at least 0.9 p.u.

Refer to Appendix L for a complete set of plots for all the GEN-2015-039 Stand Alone Scenario contingencies for 2016 Winter Peak, 2017 Summer Peak, 2020 Summer Peak, 2020 Winter Peak, and 2025 Summer Peak conditions.

DRAFT

Table 3-23
Stand Alone Scenario GEN-2015-039: Stability Analysis Summary of Results for 2016 Winter, 2017 Summer, 2020 Summer, 2020 Winter, and 2025 Summer Peak Conditions

Cont. No.	Cont. Name	2016 Winter Peak				2017 Summer Peak				2020 Summer Peak				2020 Winter Peak				2025 Summer Peak			
		Voltage Recovery		Steady-State Voltage < 0.9 p.u.?	Stable?	Voltage Recovery		Steady-State Voltage < 0.9 p.u.?	Stable?	Voltage Recovery		Steady-State Voltage < 0.9 p.u.?	Stable?	Voltage Recovery		Steady-State Voltage < 0.9 p.u.?	Stable?	Voltage Recovery		Steady-State Voltage < 0.9 p.u.?	Stable?
		Less than .70 p.u.	Greater than 1.20 p.u.			Less than .70 p.u.	Greater than 1.20 p.u.			Less than .70 p.u.	Greater than 1.20 p.u.			Less than .70 p.u.	Greater than 1.20 p.u.			Less than .70 p.u.	Greater than 1.20 p.u.		
52	FLT52-3PH	No	No	No	Yes	No	No	No	Yes	No	No	No	Yes	No	No	No	Yes	No	No	No	Yes
53	FLT53-3PH	No	No	No	Yes	No	No	No	Yes	No	No	No	Yes	No	No	No	Yes	No	No	No	Yes
54	FLT54-3PH	No	No	No	Yes	No	No	No	Yes	No	No	No	Yes	No	No	No	Yes	No	No	No	Yes
55	FLT55-3PH	No	No	No	Yes	No	No	No	Yes	No	No	No	Yes	No	No	No	Yes	No	No	No	Yes
56	FLT56-3PH	No	No	No	Yes	No	No	No	Yes	No	No	No	Yes	No	No	No	Yes	No	No	No	Yes
57	FLT57-3PH	No	No	No	Yes	No	No	No	Yes	No	No	No	Yes	No	No	No	Yes	No	No	No	Yes
58	FLT58-3PH	No	No	No	Yes	No	No	No	Yes	No	No	No	Yes	No	No	No	Yes	No	No	No	Yes
59	FLT59-3PH	No	No	No	Yes	No	No	No	Yes	No	No	No	Yes	No	No	No	Yes	No	No	No	Yes
60	FLT60-3PH	No	No	No	Yes	No	No	No	Yes	No	No	No	Yes	No	No	No	Yes	No	No	No	Yes
61	FLT61-SB	No	No	No	Yes	No	No	No	Yes	No	No	No	Yes	No	No	No	Yes	No	No	No	Yes
62	FLT62-SB	No	No	No	Yes	No	No	No	Yes	No	No	No	Yes	No	No	No	Yes	No	No	No	Yes
136	FLT136-SB	No	No	No	Yes	No	No	No	Yes	No	No	No	Yes	No	No	No	Yes	No	No	No	Yes

DRAFT

3.9 Stand Alone Scenario Stability Analysis Results: GEN-2015-040

The Stand Alone Scenario Stability Analysis determined that there multiple contingencies that resulted in poor post-fault voltage recovery in the 2020 Summer Peak, 2020 Winter Peak, and 2025 Summer Peak when GEN-2015-040 was interconnected at 100% output.

Refer to Table 3-24 for a summary of the Stability Analysis results for the contingencies listed in Table 2-3 that corresponds to the GEN-2015-040 Stand Alone Analysis. Table 3-24 is a summary of the stability results for the 2016 Winter Peak, 2017 Summer Peak, 2020 Summer Peak, 2020 Winter Peak, and 2025 Summer Peak conditions and states whether the system remained stable or generation tripped offline and if acceptable voltage recovery was observed after the fault was cleared. Voltage recovery criteria includes ensuring that the transient voltage recovery is between 0.7 p.u. and 1.2 p.u. and ending in a steady state voltage (for N-1 contingencies) at the pre-contingent level or at least 0.9 p.u.

Refer to Appendix M for a complete set of plots for all the GEN-2015-040 Stand Alone Scenario contingencies for 2016 Winter Peak, 2017 Summer Peak, 2020 Summer Peak, 2020 Winter Peak, and 2025 Summer Peak conditions.

DRAFT

Table 3-24
Stand Alone Scenario GEN-2015-040: Stability Analysis Summary of Results for 2016 Winter, 2017 Summer, 2020 Summer, 2020 Winter, and 2025 Summer Peak Conditions

Cont. No.	Cont. Name	2016 Winter Peak				2017 Summer Peak				2020 Summer Peak				2020 Winter Peak				2025 Summer Peak			
		Voltage Recovery		Steady-State Voltage < 0.9 p.u.?	Stable?	Voltage Recovery		Steady-State Voltage < 0.9 p.u.?	Stable?	Voltage Recovery		Steady-State Voltage < 0.9 p.u.?	Stable?	Voltage Recovery		Steady-State Voltage < 0.9 p.u.?	Stable?	Voltage Recovery		Steady-State Voltage < 0.9 p.u.?	Stable?
		Less than .70 p.u.	Greater than 1.20 p.u.			Less than .70 p.u.	Greater than 1.20 p.u.			Less than .70 p.u.	Greater than 1.20 p.u.			Less than .70 p.u.	Greater than 1.20 p.u.			Less than .70 p.u.	Greater than 1.20 p.u.		
63	FLT63-3PH	No	No	No	Yes	No	No	No	Yes	No	No	No	Yes	No	No	No	Yes	No	No	No	Yes
64	FLT64-3PH	No	No	No	Yes	No	No	No	Yes	No	No	No	Yes	No	No	No	Yes	No	No	No	Yes
65	FLT65-3PH	No	No	No	Yes	No	No	No	Yes	No	No	No	Yes	No	No	No	Yes	No	No	No	Yes
66	FLT66-3PH	No	No	No	Yes	No	No	No	Yes	No	No	Yes[3]	Yes	No	No	Yes[3]	Yes	No	No	Yes[3]	Yes
67	FLT67-3PH	No	No	No	Yes	No	No	No	Yes	No	No	No	Yes	No	No	No	Yes	No	No	No	Yes
68	FLT68-3PH	No	No	No	Yes	No	No	No	Yes	No	No	No	Yes	No	No	No	Yes	No	No	No	Yes
69	FLT69-3PH	No	No	No	Yes	No	No	No	Yes	No	No	No	Yes	No	No	No	Yes	No	No	No	Yes
70	FLT70-3PH	No	No	No	Yes	No	No	No	Yes	No	No	No	Yes	No	No	No	Yes	No	No	No	Yes
71	FLT71-3PH	No	No	No	Yes	No	No	No	Yes	No	No	No	Yes	No	No	No	Yes	No	No	No	Yes
72	FLT72-3PH	No	No	No	Yes	No	No	No	Yes	No	No	No	Yes	No	No	No	Yes	No	No	No	Yes
73	FLT73-3PH	No	No	No	Yes	No	No	No	Yes	No	No	No	Yes	No	No	No	Yes	No	No	No	Yes
74	FLT74-3PH (17SP & 25SP)	N/A	N/A	N/A	N/A	No	No	No	Yes	N/A	N/A	N/A	N/A	N/A	N/A	N/A	N/A	No	No	No	Yes
75	FLT75-3PH	No	No	No	Yes	No	No	No	Yes	No	No	No	Yes	No	No	No	Yes	No	No	No	Yes
76	FLT76-3PH	No	No	No	Yes	No	No	No	Yes	No	No	No	Yes	No	No	No	Yes	No	No	No	Yes
77	FLT77-3PH	No	No	No	Yes	No	No	No	Yes	No	No	No	Yes	No	No	No	Yes	No	No	No	Yes
78	FLT78-SB	No	No	No	Yes	No	No	No	Yes	No	No	No	Yes	No	No	No	Yes	No	No	No	Yes
79	FLT79-SB	No	No	No	Yes	No	No	No	Yes	No	No	No	Yes	No	No	No	Yes	No	No	No	Yes
80	FLT80-SB	No	No	No	Yes	No	No	No	Yes	No	No	No	Yes	No	No	No	Yes	No	No	No	Yes
81	FLT81-SB	No	No	No	Yes	No	No	No	Yes	No	No	No	Yes	No	No	No	Yes	No	No	No	Yes
82	FLT82-PO	No	No	No	Yes	No	No	No	Yes	No	No	Yes[3]	Yes	No	No	Yes[3]	Yes	No	No	Yes[3]	Yes
83	FLT83-PO	No	No	No	Yes	No	No	No	Yes	No	No	Yes[3]	Yes	No	No	Yes[3]	Yes	No	No	Yes[3]	Yes
137	FLT137-SB	No	No	No	Yes	No	No	No	Yes	No	No	Yes[3]	Yes	No	No	Yes[3]	Yes	No	No	Yes[3]	Yes

Note 3: Low voltage observed as a result of a radial system not serving load

DRAFT

Note for the following faults, the post-fault steady-steady voltage violations are not a concern because the bus in violation is at the end of a radial line segment and is not serving load:

- **FLT66-3PH**: 3PH fault resulting in the loss of Mustang to Seminole 230 kV (20SP, 20WP, 25SP)
- **FLT82-PO**: Prior outage of Mustang to Seminole 230 kV followed by a 3PH fault resulting in the loss of Mustang to Yoakum 230 kV (20SP, 20WP, 25SP)
- **FLT83-PO**: Prior outage of Mustang to Yoakum 230 kV followed by a 3PH fault resulting in the loss of Mustang to Seminole 230 kV (20SP, 20WP, 25SP)
- **FLT137-SB**: 1PH stuck breaker fault resulting in the loss of Mustang to Seminole 230 kV and Mustang to Yoakum 230 kV (20SP, 20WP, 25SP)

3.10 Stand Alone Scenario Stability Analysis Results: GEN-2015-041

The Stand Alone Scenario Stability Analysis determined that there multiple contingencies across all seasons that resulted in system/voltage instability, generation tripping offline, and poor post-fault voltage recovery when GEN-2015-041 was interconnected at 100% output.

Refer to Table 3-25 for a summary of the Stability Analysis results for the contingencies listed in Table 2-3 that corresponds to the GEN-2015-041 Stand Alone Analysis. Table 3-25 is a summary of the stability results for the 2016 Winter Peak, 2017 Summer Peak, 2020 Summer Peak, 2020 Winter Peak, and 2025 Summer Peak conditions and states whether the system remained stable or generation tripped offline and if acceptable voltage recovery was observed after the fault was cleared. Voltage recovery criteria includes ensuring that the transient voltage recovery is between 0.7 p.u. and 1.2 p.u. and ending in a steady state voltage (for N-1 contingencies) at the pre-contingent level or at least 0.9 p.u.

Refer to Appendix N for a complete set of plots for all the GEN-2015-041 Stand Alone Scenario contingencies for 2016 Winter Peak, 2017 Summer Peak, 2020 Summer Peak, 2020 Winter Peak, and 2025 Summer Peak conditions.

DRAFT

Table 3-25
Stand Alone Scenario GEN-2015-041: Stability Analysis Summary of Results for 2016 Winter, 2017 Summer, 2020 Summer, 2020 Winter, and 2025 Summer Peak Conditions

Cont. No.	Cont. Name	2016 Winter Peak				2017 Summer Peak				2020 Summer Peak				2020 Winter Peak				2025 Summer Peak			
		Voltage Recovery		Steady-State Voltage < 0.9 p.u.?	Stable?	Voltage Recovery		Steady-State Voltage < 0.9 p.u.?	Stable?	Voltage Recovery		Steady-State Voltage < 0.9 p.u.?	Stable?	Voltage Recovery		Steady-State Voltage < 0.9 p.u.?	Stable?	Voltage Recovery		Steady-State Voltage < 0.9 p.u.?	Stable?
		Less than .70 p.u.	Greater than 1.20 p.u.			Less than .70 p.u.	Greater than 1.20 p.u.			Less than .70 p.u.	Greater than 1.20 p.u.			Less than .70 p.u.	Greater than 1.20 p.u.			Less than .70 p.u.	Greater than 1.20 p.u.		
37	FLT37-3PH	No	No	No	Yes	No	No	No	Yes	No	No	No	Yes	No	No	No	Yes	No	No	No	Yes
43	FLT43-3PH	No	Yes	No	No[1]	No	Yes	Yes	No[1]	No	No	No	No[1]	No	No	No	Yes	No	No	No	No[1]
45	FLT45-3PH	No	No	No	No[1]	No	No	No	No[2]	No	No	No	No[2]	No	No	No	No[1]	No	No	No	Yes
46	FLT46-3PH	No	No	No	Yes	No	No	No	Yes	No	No	No	Yes	No	No	No	Yes	No	No	No	Yes
47	FLT47-3PH (2025SP)	N/A	N/A	N/A	N/A	N/A	N/A	N/A	N/A	N/A	N/A	N/A	N/A	N/A	N/A	N/A	N/A	No	No	No	Yes
50	FLT50-PO	Voltage Instability				No	No	No	Yes	No	No	No	Yes	No	Yes	No	Yes	No	No	No	Yes
51	FLT51-PO	Voltage Instability				No	No	No	Yes	No	Yes	No	Yes	No	No	No	Yes	No	No	No	Yes
84	FLT84-3PH	No	No	No	Yes	No	No	No	Yes	No	No	No	Yes	No	No	No	Yes	No	No	No	Yes
85	FLT85-3PH	No	No	No	Yes	No	No	No	Yes	No	No	No	Yes	No	No	No	Yes	No	No	No	Yes
86	FLT86-3PH	No	No	No	Yes	No	No	No	Yes	No	No	No	Yes	No	No	No	Yes	No	No	No	Yes
87	FLT87-3PH	No	No	No	Yes	No	No	No	Yes	No	No	No	Yes	No	No	No	Yes	No	No	No	Yes
88	FLT88-3PH	No	No	No	Yes	No	No	No	Yes	No	No	No	Yes	No	No	No	Yes	No	No	No	Yes
89	FLT89-PO	No	No	No	Yes	No	No	No	Yes	No	No	No	Yes	No	No	No	Yes	No	No	No	Yes
90	FLT90-PO	No	No	No	Yes	No	No	No	Yes	No	No	No	Yes	No	No	No	Yes	No	No	No	Yes
91	FLT91-SB	No	Yes	No	No[1]	No	Yes	No	No[1]	No	Yes	No	No[1]	No	Yes	No	No[1]	No	Yes	No	No[1]
130	FLT130-PO (2025SP)	N/A	N/A	N/A	N/A	N/A	N/A	N/A	N/A	N/A	N/A	N/A	N/A	N/A	N/A	N/A	N/A	No	No	No	Yes

Note 1: Generator tripping observed

Note 2: Poor voltage damping observed

DRAFT

The following faults were observed to have system/voltage instability, generation tripping offline, and/or poor post-fault steady-state voltages:

- **FLT43-3PH**: 3PH fault resulting in the loss of Rio Blanco to Tuco 345 kV (16WP, 17SP, 20SP, 25SP)
- **FLT45-3PH**: 3PH fault resulting in the loss of Tuco to Border 345 kV (16WP, 17SP, 20SP, 20WP)
- **FLT50-PO**: Prior outage of Tuco 345/230 kV transformer followed by a 3PH fault resulting in the loss of Rio Blanco to OKU 345 kV (16WP, 20WP)
- **FLT51-PO**: Prior outage of Tuco 345/230 kV transformer followed by a 3PH fault resulting in the loss of Tuco to Border 345 kV (16WP, 20SP)
- **FLT91-SB**: 1PH stuck breaker fault resulting in the loss of Tuco 345/230 kV transformer and Tuco to Rio Blanco 345 kV (All study years)

To mitigate the system/voltage instability, voltage violations, generation tripping offline, and poor post-fault steady-state voltages, **Solution 1,** as described in the Cluster Scenario Analysis was implemented. After the **Solution 1** upgrades were implemented, all violations were mitigated except for the following contingencies which resulted in voltages above 1.2 p.u.:

- FLT43-3PH
- FLT91-3PH

In order to mitigate the high voltage observations, the OKU capacitor bank was taken out-of-service for the above faults (this will be referred as "**Solution 2**" in the report). After this update was implemented, the voltages recovered within SPP criteria and no additional violations were observed.

3.11 Stand Alone Scenario Stability Analysis Results: GEN-2015-056

The Stand Alone Scenario Stability Analysis determined that there were no contingencies that resulted in system instability, generation tripping offline, or voltage violations for the 2016 Winter Peak, 2017 Summer Peak, 2020 Summer Peak, 2020 Winter Peak, and 2025 Summer Peak conditions when GEN-2015-056 was interconnected at 100% output.

Refer to Table 3-26 for a summary of the Stability Analysis results for the contingencies listed in Table 2-3 that corresponds to the GEN-2015-056 Stand Alone Analysis. Table 3-26 is a summary of the stability results for the 2016 Winter Peak, 2017 Summer Peak, 2020 Summer Peak, 2020 Winter Peak, and 2025 Summer Peak conditions and states whether the system remained stable or generation tripped offline and if acceptable voltage recovery was observed after the fault was cleared. Voltage recovery criteria includes ensuring that the transient voltage

DRAFT

recovery is between 0.7 p.u. and 1.2 p.u. and ending in a steady state voltage (for N-1 contingencies) at the pre-contingent level or at least 0.9 p.u.

Refer to Appendix O for a complete set of plots for all the GEN-2015-056 Stand Alone Scenario contingencies for 2016 Winter Peak, 2017 Summer Peak, 2020 Summer Peak, 2020 Winter Peak, and 2025 Summer Peak conditions.

DRAFT

Table 3-26
Stand Alone Scenario GEN-2015-056: Stability Analysis Summary of Results for 2016 Winter, 2017 Summer, 2020 Summer, 2020 Winter, and 2025 Summer Peak Conditions

Cont. No.	Cont. Name	2016 Winter Peak				2017 Summer Peak				2020 Summer Peak				2020 Winter Peak				2025 Summer Peak			
		Voltage Recovery		Steady-State Voltage < 0.9 p.u.?	Stable?	Voltage Recovery		Steady-State Voltage < 0.9 p.u.?	Stable?	Voltage Recovery		Steady-State Voltage < 0.9 p.u.?	Stable?	Voltage Recovery		Steady-State Voltage < 0.9 p.u.?	Stable?	Voltage Recovery		Steady-State Voltage < 0.9 p.u.?	Stable?
		Less than .70 p.u.	Greater than 1.20 p.u.			Less than .70 p.u.	Greater than 1.20 p.u.			Less than .70 p.u.	Greater than 1.20 p.u.			Less than .70 p.u.	Greater than 1.20 p.u.			Less than .70 p.u.	Greater than 1.20 p.u.		
92	FLT92-3PH	No	No	No	Yes	No	No	No	Yes	No	No	No	Yes	No	No	No	Yes	No	No	No	Yes
93	FLT93-3PH	No	No	No	Yes	No	No	No	Yes	No	No	No	Yes	No	No	No	Yes	No	No	No	Yes
94	FLT94-3PH	No	No	No	Yes	No	No	No	Yes	No	No	No	Yes	No	No	No	Yes	No	No	No	Yes
95	FLT95-3PH	No	No	No	Yes	No	No	No	Yes	No	No	No	Yes	No	No	No	Yes	No	No	No	Yes
138	FLT138-SB	No	No	No	Yes	No	No	No	Yes	No	No	No	Yes	No	No	No	Yes	No	No	No	Yes

DRAFT

3.12 Stand Alone Scenario Stability Analysis Results: GEN-2015-058

The Stand Alone Scenario Stability Analysis determined that there multiple contingencies across all seasons that resulted in generation tripping offline when GEN-2015-058 was interconnected at 100% output.

Refer to Table 3-27 for a summary of the Stability Analysis results for the contingencies listed in Table 2-3 that corresponds to the GEN-2015-058 Stand Alone Analysis. Table 3-27 is a summary of the stability results for the 2016 Winter Peak, 2017 Summer Peak, 2020 Summer Peak, 2020 Winter Peak, and 2025 Summer Peak conditions and states whether the system remained stable or generation tripped offline and if acceptable voltage recovery was observed after the fault was cleared. Voltage recovery criteria includes ensuring that the transient voltage recovery is between 0.7 p.u. and 1.2 p.u. and ending in a steady state voltage (for N-1 contingencies) at the pre-contingent level or at least 0.9 p.u.

Refer to Appendix P for a complete set of plots for all the GEN-2015-058 Stand Alone Scenario contingencies for 2016 Winter Peak, 2017 Summer Peak, 2020 Summer Peak, 2020 Winter Peak, and 2025 Summer Peak conditions.

DRAFT

Table 3-27
Stand Alone Scenario GEN-2015-058: Stability Analysis Summary of Results for 2016 Winter, 2017 Summer, 2020 Summer, 2020 Winter, and 2025 Summer Peak Conditions

Cont. No.	Cont. Name	2016 Winter Peak				2017 Summer Peak				2020 Summer Peak				2020 Winter Peak				2025 Summer Peak			
		Voltage Recovery		Steady-State Voltage < 0.9 p.u.?	Stable?	Voltage Recovery		Steady-State Voltage < 0.9 p.u.?	Stable?	Voltage Recovery		Steady-State Voltage < 0.9 p.u.?	Stable?	Voltage Recovery		Steady-State Voltage < 0.9 p.u.?	Stable?	Voltage Recovery		Steady-State Voltage < 0.9 p.u.?	Stable?
		Less than .70 p.u.	Greater than 1.20 p.u.			Less than .70 p.u.	Greater than 1.20 p.u.			Less than .70 p.u.	Greater than 1.20 p.u.			Less than .70 p.u.	Greater than 1.20 p.u.			Less than .70 p.u.	Greater than 1.20 p.u.		
96	FLT96-3PH	No	No	No	No[1]	No	No	No	No[1]	No	No	No	No[1]	No	No	No	No[1]	No	No	No	No[1]
97	FLT97-3PH	No	No	No	No[1]	No	No	No	No[1]	No	No	No	No[1]	No	No	No	No[1]	No	No	No	No[1]
98	FLT98-3PH	No	No	No	No[1]	No	No	No	No[1]	No	No	No	No[1]	No	No	No	No[1]	No	No	No	No[1]
99	FLT99-3PH	No	No	No	No[1]	No	No	No	No[1]	No	No	No	No[1]	No	No	No	No[1]	No	No	No	No[1]
100	FLT100-3PH	No	No	No	No[1]	No	No	No	No[1]	No	No	No	No[1]	No	No	No	No[1]	No	No	No	No[1]
101	FLT101-3PH	No	No	No	Yes	No	No	No	Yes	No	No	No	Yes	No	No	No	Yes	No	No	No	Yes
102	FLT102-3PH	No	No	No	Yes	No	No	No	Yes	No	No	No	Yes	No	No	No	Yes	No	No	No	Yes
103	FLT103-PO	No	No	No	No[1]	No	No	No	No[1]	No	No	No	No[1]	No	No	No	No[1]	No	No	No	No[1]
104	FLT104-PO	No	No	No	No[1]	No	No	No	No[1]	No	No	No	No[1]	No	No	No	No[1]	No	No	No	No[1]
139	FLT139-SB	No	No	No	Yes	No	No	No	Yes	No	No	No	Yes	No	No	No	Yes	No	No	No	Yes

Note 1: Generator tripping observed

DRAFT

The study project, GEN-2015-058, was observed to trip offline for the following faults:

- **FLT96-3PH**: 3PH fault resulting in the loss of Atoka to CV-Dayton 115 kV (All study years)
- **FLT97-3PH**: 3PH fault resulting in the loss of Atoka to CV-Irish Hill 115 kV (All study years)
- **FLT98-3PH**: 3PH fault resulting in the loss of Atoka to Eagle Creek 116 kV (All study years)
- **FLT99-3PH**: 3PH fault resulting in the loss of CV-Dayton to Eddy South 115 kV (All study years)
- **FLT100-3PH**: 3PH fault resulting in the loss of CV-Irish Hill to CV-Lakewood 115 kV (All study years)
- **FLT103-PO**: Prior outage of Atoka to CV-Dayton 115 kV followed by a 3PH fault resulting in the loss of Atoka to Eagle Creek 115 kV (All study years)
- **FLT104-PO**: Prior outage of Atoka to Eagle Creek 115 kV followed by a 3PH fault resulting in the loss of Atoka to CV-Dayton 115 kV (All study years)

To mitigate the system/voltage instability, voltage violations, generation tripping offline, and poor post-fault steady-state voltages, **Solution 1,** as described in the Cluster Scenario Analysis was implemented. After the **Solution 1** upgrades were implemented, all violations were mitigated.

3.13 Stand Alone Scenario Stability Analysis Results: GEN-2015-068

The Stand Alone Scenario Stability Analysis determined that there multiple contingencies across all seasons that resulted in system/voltage instability, generation tripping offline, and poor post-fault voltage recovery when GEN-2015-068 was interconnected at 100% output.

Refer to Table 3-28 for a summary of the Stability Analysis results for the contingencies listed in Table 2-3 that corresponds to the GEN-2015-068 Stand Alone Analysis. Table 3-28 is a summary of the stability results for the 2016 Winter Peak, 2017 Summer Peak, 2020 Summer Peak, 2020 Winter Peak, and 2025 Summer Peak conditions and states whether the system remained stable or generation tripped offline and if acceptable voltage recovery was observed after the fault was cleared. Voltage recovery criteria includes ensuring that the transient voltage recovery is between 0.7 p.u. and 1.2 p.u. and ending in a steady state voltage (for N-1 contingencies) at the pre-contingent level or at least 0.9 p.u.

Refer to Appendix Q for a complete set of plots for all the GEN-2015-068 Stand Alone Scenario contingencies for 2016 Winter Peak, 2017 Summer Peak, 2020 Summer Peak, 2020 Winter Peak, and 2025 Summer Peak conditions.

DRAFT

Table 3-28
Stand Alone Scenario GEN-2015-068: Stability Analysis Summary of Results for 2016 Winter, 2017 Summer, 2020 Summer, 2020 Winter, and 2025 Summer Peak Conditions

Cont. No.	Cont. Name	2016 Winter Peak				2017 Summer Peak				2020 Summer Peak				2020 Winter Peak				2025 Summer Peak			
		Voltage Recovery		Steady-State Voltage < 0.9 p.u.?	Stable?	Voltage Recovery		Steady-State Voltage < 0.9 p.u.?	Stable?	Voltage Recovery		Steady-State Voltage < 0.9 p.u.?	Stable?	Voltage Recovery		Steady-State Voltage < 0.9 p.u.?	Stable?	Voltage Recovery		Steady-State Voltage < 0.9 p.u.?	Stable?
		Less than .70 p.u.	Greater than 1.20 p.u.			Less than .70 p.u.	Greater than 1.20 p.u.			Less than .70 p.u.	Greater than 1.20 p.u.			Less than .70 p.u.	Greater than 1.20 p.u.			Less than .70 p.u.	Greater than 1.20 p.u.		
37	FLT37-3PH	No	No	No	Yes	No	No	No	Yes	No	No	No	Yes	No	No	No	Yes	No	No	No	Yes
43	FLT43-3PH	No	Yes	No	No[1]	No	Yes	Yes	No[1]	No	Yes	No	No[1]	No	Yes	No	No[1]	No	No	No	No[1]
45	FLT45-3PH	No	No	No	No[1]	No	No	No	No[2]	No	No	No	No[2]	No	No	No	No[2]	No	No	No	Yes
46	FLT46-3PH	No	No	No	Yes	No	No	No	Yes	No	No	No	Yes	No	No	No	Yes	No	No	No	Yes
47	FLT47-3PH (2025SP)	N/A	N/A	N/A	N/A	N/A	N/A	N/A	N/A	N/A	N/A	N/A	N/A	N/A	N/A	N/A	N/A	No	No	No	Yes
50	FLT50-PO	No	No	Yes	Yes	No	No	Yes	Yes	No	No	Yes	Yes	No	No	Yes	Yes	No	No	No	Yes
51	FLT51-PO	No	No	No	No[1]	No	No	Yes	No[2]	No	No	No	No[2]	No	No	No	No[2]	No	No	No	Yes
84	FLT84-3PH	No	No	No	Yes	No	No	No	Yes	No	No	No	Yes	No	No	No	Yes	No	No	No	Yes
85	FLT85-3PH	No	No	No	Yes	No	No	No	Yes	No	No	No	Yes	No	No	No	Yes	No	No	No	Yes
86	FLT86-3PH	No	No	No	Yes	No	No	No	Yes	No	No	No	Yes	No	No	No	Yes	No	No	No	Yes
87	FLT87-3PH	No	No	No	Yes	No	No	No	Yes	No	No	No	Yes	No	No	No	Yes	No	No	No	Yes
88	FLT88-3PH	No	No	No	Yes	No	No	No	Yes	No	No	No	Yes	No	No	No	Yes	No	No	No	Yes
89	FLT89-PO	No	No	No	Yes	No	No	No	Yes	No	No	No	Yes	No	No	No	Yes	No	No	No	Yes
90	FLT90-PO	No	No	No	Yes	No	No	No	Yes	No	No	No	Yes	No	No	No	Yes	No	No	No	Yes
91	FLT91-SB	No	Yes	No	No[1]	No	Yes	Yes	No[1]	No	Yes	Yes	No[1]	No	Yes	Yes	No[1]	No	Yes	Yes	No[1]
130	FLT130-PO (2025SP)	N/A	N/A	N/A	N/A	N/A	N/A	N/A	N/A	N/A	N/A	N/A	N/A	N/A	N/A	N/A	N/A	No	No	No	Yes

Note 1: Generator tripping observed

Note 2: Poor voltage damping observed

DRAFT

The following faults were observed to have system/voltage instability, generation tripping offline, and/or poor post-fault steady-state voltages:

- **FLT43-3PH**: 3PH fault resulting in the loss of Rio Blanco to Tuco 345 kV (All study years)
- **FLT45-3PH**: 3PH fault resulting in the loss of Tuco to Border 345 kV (16WP, 17SP, 20SP, 20WP)
- **FLT50-PO**: Prior outage of Tuco 345/230 kV transformer followed by a 3PH fault resulting in the loss of Rio Blanco to OKU 345 kV (16WP, 17SP, 20SP, 20WP)
- **FLT51-PO**: Prior outage of Tuco 345/230 kV transformer followed by a 3PH fault resulting in the loss of Tuco to Border 345 kV (16WP, 17SP, 20SP, 20WP)
- **FLT91-SB**: 1PH stuck breaker fault resulting in the loss of Tuco 345/230 kV transformer and Tuco to Rio Blanco 345 kV (All study years)

To mitigate the system/voltage instability, voltage violations, generation tripping offline, and poor post-fault steady-state voltages, **Solution 1,** as described in the Cluster Scenario Analysis was implemented. After the **Solution 1** upgrades were implemented, all violations were mitigated except for the following contingencies which resulted in voltages above 1.2 p.u.:

- FLT43-3PH (16WP, 17SP, 20WP)
- FLT91-3PH (16WP, 17SP, 20WP)

In order to mitigate the high voltage observations, the OKU capacitor bank was taken out-of-service for the above faults (this will be referred as "**Solution 2**" in the report). After this update was implemented, the voltages recovered within SPP criteria and no additional violations were observed.

3.14 Stand Alone Scenario Stability Analysis Results: GEN-2015-075

The Stand Alone Scenario Stability Analysis determined that there were no contingencies that resulted in system instability, generation tripping offline, or voltage violations for the 2016 Winter Peak, 2017 Summer Peak, 2020 Summer Peak, 2020 Winter Peak, and 2025 Summer Peak conditions when GEN-2015-075 was interconnected at 100% output.

Refer to Table 3-29 for a summary of the Stability Analysis results for the contingencies listed in Table 2-3 that corresponds to the GEN-2015-075 Stand Alone Analysis. Table 3-29 is a summary of the stability results for the 2016 Winter Peak, 2017 Summer Peak, 2020 Summer Peak, 2020 Winter Peak, and 2025 Summer Peak conditions and states whether the system remained stable or generation tripped offline and if acceptable voltage recovery was observed after the fault was cleared. Voltage recovery criteria includes ensuring that the transient voltage

DRAFT

recovery is between 0.7 p.u. and 1.2 p.u. and ending in a steady state voltage (for N-1 contingencies) at the pre-contingent level or at least 0.9 p.u.

Refer to Appendix R for a complete set of plots for all the GEN-2015-075 Stand Alone Scenario contingencies for 2016 Winter Peak, 2017 Summer Peak, 2020 Summer Peak, 2020 Winter Peak, and 2025 Summer Peak conditions.

DRAFT

Table 3-29
Stand Alone Scenario GEN-2015-075: Stability Analysis Summary of Results for 2016 Winter, 2017 Summer, 2020 Summer, 2020 Winter, and 2025 Summer Peak Conditions

Cont. No.	Cont. Name	2016 Winter Peak				2017 Summer Peak				2020 Summer Peak				2020 Winter Peak				2025 Summer Peak			
		Voltage Recovery		Steady-State Voltage < 0.9 p.u.?	Stable?	Voltage Recovery		Steady-State Voltage < 0.9 p.u.?	Stable?	Voltage Recovery		Steady-State Voltage < 0.9 p.u.?	Stable?	Voltage Recovery		Steady-State Voltage < 0.9 p.u.?	Stable?	Voltage Recovery		Steady-State Voltage < 0.9 p.u.?	Stable?
		Less than .70 p.u.	Greater than 1.20 p.u.			Less than .70 p.u.	Greater than 1.20 p.u.			Less than .70 p.u.	Greater than 1.20 p.u.			Less than .70 p.u.	Greater than 1.20 p.u.			Less than .70 p.u.	Greater than 1.20 p.u.		
105	FLT105-3PH	No	No	No	Yes	No	No	No	Yes	No	No	No	Yes	No	No	No	Yes	No	No	No	Yes
106	FLT106-3PH	No	No	No	Yes	No	No	No	Yes	No	No	No	Yes	No	No	No	Yes	No	No	No	Yes
107	FLT107-3PH	No	No	No	Yes	No	No	No	Yes	No	No	No	Yes	No	No	No	Yes	No	No	No	Yes
108	FLT108-3PH	No	No	No	Yes	No	No	No	Yes	No	No	No	Yes	No	No	No	Yes	No	No	No	Yes
140	FLT140-SB	No	No	No	Yes	No	No	No	Yes	No	No	No	Yes	No	No	No	Yes	No	No	No	Yes

DRAFT

3.15 Stand Alone Scenario Stability Analysis Results: GEN-2015-077

The Stand Alone Scenario Stability Analysis determined that there were no contingencies that resulted in system instability, generation tripping offline, or voltage violations for the 2016 Winter Peak, 2017 Summer Peak, 2020 Summer Peak, 2020 Winter Peak, and 2025 Summer Peak conditions when GEN-2015-077 was interconnected at 100% output.

Refer to Table 3-30 for a summary of the Stability Analysis results for the contingencies listed in Table 2-3 that corresponds to the GEN-2015-077 Stand Alone Analysis. Table 3-30 is a summary of the stability results for the 2016 Winter Peak, 2017 Summer Peak, 2020 Summer Peak, 2020 Winter Peak, and 2025 Summer Peak conditions and states whether the system remained stable or generation tripped offline and if acceptable voltage recovery was observed after the fault was cleared. Voltage recovery criteria includes ensuring that the transient voltage recovery is between 0.7 p.u. and 1.2 p.u. and ending in a steady state voltage (for N-1 contingencies) at the pre-contingent level or at least 0.9 p.u.

Refer to Appendix S for a complete set of plots for all the GEN-2015-077 Stand Alone Scenario contingencies for 2016 Winter Peak, 2017 Summer Peak, 2020 Summer Peak, 2020 Winter Peak, and 2025 Summer Peak conditions.

DRAFT

Table 3-30
Stand Alone Scenario GEN-2015-077: Stability Analysis Summary of Results for 2016 Winter, 2017 Summer, 2020 Summer, 2020 Winter, and 2025 Summer Peak Conditions

Cont. No.	Cont. Name	2016 Winter Peak				2017 Summer Peak				2020 Summer Peak				2020 Winter Peak				2025 Summer Peak			
		Voltage Recovery		Steady-State Voltage < 0.9 p.u.?	Stable?	Voltage Recovery		Steady-State Voltage < 0.9 p.u.?	Stable?	Voltage Recovery		Steady-State Voltage < 0.9 p.u.?	Stable?	Voltage Recovery		Steady-State Voltage < 0.9 p.u.?	Stable?	Voltage Recovery		Steady-State Voltage < 0.9 p.u.?	Stable?
		Less than .70 p.u.	Greater than 1.20 p.u.			Less than .70 p.u.	Greater than 1.20 p.u.			Less than .70 p.u.	Greater than 1.20 p.u.			Less than .70 p.u.	Greater than 1.20 p.u.			Less than .70 p.u.	Greater than 1.20 p.u.		
109	FLT109-3PH	No	No	No	Yes	No	No	No	Yes	No	No	No	Yes	No	No	No	Yes	No	No	No	Yes
110	FLT110-3PH	No	No	No	Yes	No	No	No	Yes	No	No	No	Yes	No	No	No	Yes	No	No	No	Yes
111	FLT111-3PH	No	No	No	Yes	No	No	No	Yes	No	No	No	Yes	No	No	No	Yes	No	No	No	Yes
112	FLT112-3PH	No	No	No	Yes	No	No	No	Yes	No	No	No	Yes	No	No	No	Yes	No	No	No	Yes
113	FLT113-3PH	No	No	No	Yes	No	No	No	Yes	No	No	No	Yes	No	No	No	Yes	No	No	No	Yes
114	FLT114-3PH	No	No	No	Yes	No	No	No	Yes	No	No	No	Yes	No	No	No	Yes	No	No	No	Yes
115	FLT115-3PH	No	No	No	Yes	No	No	No	Yes	No	No	No	Yes	No	No	No	Yes	No	No	No	Yes
116	FLT116-3PH	No	No	No	Yes	No	No	No	Yes	No	No	No	Yes	No	No	No	Yes	No	No	No	Yes
141	FLT141-SB	No	No	No	Yes	No	No	No	Yes	No	No	No	Yes	No	No	No	Yes	No	No	No	Yes

DRAFT

3.16 Stand Alone Scenario Stability Analysis Results: GEN-2015-078

The Stand Alone Scenario Stability Analysis determined that one contingency, FLT66-3PH, resulted in poor post-fault voltage recovery in 2020WP and 2025SP when GEN-2015-078 was interconnected at 100% output.

Refer to Table 3-31 for a summary of the Stability Analysis results for the contingencies listed in Table 2-3 that corresponds to the GEN-2015-078 Stand Alone Analysis. Table 3-31 is a summary of the stability results for the 2016 Winter Peak, 2017 Summer Peak, 2020 Summer Peak, 2020 Winter Peak, and 2025 Summer Peak conditions and states whether the system remained stable or generation tripped offline and if acceptable voltage recovery was observed after the fault was cleared. Voltage recovery criteria includes ensuring that the transient voltage recovery is between 0.7 p.u. and 1.2 p.u. and ending in a steady state voltage (for N-1 contingencies) at the pre-contingent level or at least 0.9 p.u.

Refer to Appendix T for a complete set of plots for all the GEN-2015-078 Stand Alone Scenario contingencies for 2016 Winter Peak, 2017 Summer Peak, 2020 Summer Peak, 2020 Winter Peak, and 2025 Summer Peak conditions.

DRAFT

Table 3-31
Stand Alone Scenario GEN-2015-078: Stability Analysis Summary of Results for 2016 Winter, 2017 Summer, 2020 Summer, 2020 Winter, and 2025 Summer Peak Conditions

Cont. No.	Cont. Name	2016 Winter Peak				2017 Summer Peak				2020 Summer Peak				2020 Winter Peak				2025 Summer Peak			
		Voltage Recovery		Steady-State Voltage < 0.9 p.u.?	Stable?	Voltage Recovery		Steady-State Voltage < 0.9 p.u.?	Stable?	Voltage Recovery		Steady-State Voltage < 0.9 p.u.?	Stable?	Voltage Recovery		Steady-State Voltage < 0.9 p.u.?	Stable?	Voltage Recovery		Steady-State Voltage < 0.9 p.u.?	Stable?
		Less than .70 p.u.	Greater than 1.20 p.u.			Less than .70 p.u.	Greater than 1.20 p.u.			Less than .70 p.u.	Greater than 1.20 p.u.			Less than .70 p.u.	Greater than 1.20 p.u.			Less than .70 p.u.	Greater than 1.20 p.u.		
63	FLT63-3PH	No	No	No	Yes	No	No	No	Yes	No	No	No	Yes	No	No	No	Yes	No	No	No	Yes
64	FLT64-3PH	No	No	No	Yes	No	No	No	Yes	No	No	No	Yes	No	No	No	Yes	No	No	No	Yes
65	FLT65-3PH	No	No	No	Yes	No	No	No	Yes	No	No	No	Yes	No	No	No	Yes	No	No	No	Yes
66	FLT66-3PH	No	No	No	Yes	No	No	No	Yes	No	No	No	Yes	No	No	Yes[3]	Yes	No	No	Yes[3]	Yes
71	FLT71-3PH	No	No	No	Yes	No	No	No	Yes	No	No	No	Yes	No	No	No	Yes	No	No	No	Yes
72	FLT73-3PH	No	No	No	Yes	No	No	No	Yes	No	No	No	Yes	No	No	No	Yes	No	No	No	Yes
73	FLT72-3PH	No	No	No	Yes	No	No	No	Yes	No	No	No	Yes	No	No	No	Yes	No	No	No	Yes
74	FLT74-3PH (17SP & 25SP)	N/A	N/A	N/A	N/A	No	No	No	Yes	N/A	N/A	N/A	N/A	N/A	N/A	N/A	N/A	No	No	No	Yes
117	FLT117-3PH	No	No	No	Yes	No	No	No	Yes	No	No	No	Yes	No	No	No	Yes	No	No	No	Yes
118	FLT118-3PH	No	No	No	Yes	No	No	No	Yes	No	No	No	Yes	No	No	No	Yes	No	No	No	Yes
119	FLT119-3PH	No	No	No	Yes	No	No	No	Yes	No	No	No	Yes	No	No	No	Yes	No	No	No	Yes
120	FLT120-3PH	No	No	No	Yes	No	No	No	Yes	No	No	No	Yes	No	No	No	Yes	No	No	No	Yes
121	FLT121-3PH	No	No	No	Yes	No	No	No	Yes	No	No	No	Yes	No	No	No	Yes	No	No	No	Yes
122	FLT122-PO	No	No	No	Yes	No	No	No	Yes	No	No	No	Yes	No	No	No	Yes	No	No	No	Yes
123	FLT123-PO	No	No	No	Yes	No	No	No	Yes	No	No	No	Yes	No	No	No	Yes	No	No	No	Yes
124	FLT124-PO	No	No	No	Yes	No	No	No	Yes	No	No	No	Yes	No	No	No	Yes	No	No	No	Yes
125	FLT125-PO	No	No	No	Yes	No	No	No	Yes	No	No	No	Yes	No	No	No	Yes	No	No	No	Yes
142	FLT142-SB	No	No	No	Yes	No	No	No	Yes	No	No	No	Yes	No	No	No	Yes	No	No	No	Yes

Note 3: Low voltage observed as a result of a radial system not serving load

DRAFT

FLT66-3PH, 3PH fault resulting in the loss of Mustang to Seminole 230 kV, resulted in the Seminole 230 kV bus voltage recovering below 0.9 p.u. This violation is not a concern because the bus in violation is at the end of a radial line segment and is not serving load.

3.17 Stand Alone Scenario Stability Analysis Results: GEN-2015-079

The Stand Alone Scenario Stability Analysis determined that there were no contingencies that resulted in system instability, generation tripping offline, or voltage violations for the 2016 Winter Peak, 2017 Summer Peak, 2020 Summer Peak, 2020 Winter Peak, and 2025 Summer Peak conditions when GEN-2015-079 was interconnected at 100% output.

Refer to Table 3-32 for a summary of the Stability Analysis results for the contingencies listed in Table 2-3 that corresponds to the GEN-2015-079 Stand Alone Analysis. Table 3-32 is a summary of the stability results for the 2016 Winter Peak, 2017 Summer Peak, 2020 Summer Peak, 2020 Winter Peak, and 2025 Summer Peak conditions and states whether the system remained stable or generation tripped offline and if acceptable voltage recovery was observed after the fault was cleared. Voltage recovery criteria includes ensuring that the transient voltage recovery is between 0.7 p.u. and 1.2 p.u. and ending in a steady state voltage (for N-1 contingencies) at the pre-contingent level or at least 0.9 p.u.

Refer to Appendix U for a complete set of plots for all the GEN-2015-079 Stand Alone Scenario contingencies for 2016 Winter Peak, 2017 Summer Peak, 2020 Summer Peak, 2020 Winter Peak, and 2025 Summer Peak conditions.

DRAFT

Table 3-32
Stand Alone Scenario GEN-2015-079: Stability Analysis Summary of Results for 2016 Winter, 2017 Summer, 2020 Summer, 2020 Winter, and 2025 Summer Peak Conditions

Cont. No.	Cont. Name	2016 Winter Peak				2017 Summer Peak				2020 Summer Peak				2020 Winter Peak				2025 Summer Peak			
		Voltage Recovery		Steady-State Voltage < 0.9 p.u.?	Stable?	Voltage Recovery		Steady-State Voltage < 0.9 p.u.?	Stable?	Voltage Recovery		Steady-State Voltage < 0.9 p.u.?	Stable?	Voltage Recovery		Steady-State Voltage < 0.9 p.u.?	Stable?	Voltage Recovery		Steady-State Voltage < 0.9 p.u.?	Stable?
		Less than .70 p.u.	Greater than 1.20 p.u.			Less than .70 p.u.	Greater than 1.20 p.u.			Less than .70 p.u.	Greater than 1.20 p.u.			Less than .70 p.u.	Greater than 1.20 p.u.			Less than .70 p.u.	Greater than 1.20 p.u.		
65	FLT65-3PH	No	No	No	Yes	No	No	No	Yes	No	No	No	Yes	No	No	No	Yes	No	No	No	Yes
69	FLT69-3PH	No	No	No	Yes	No	No	No	Yes	No	No	No	Yes	No	No	No	Yes	No	No	No	Yes
70	FLT70-3PH	No	No	No	Yes	No	No	No	Yes	No	No	No	Yes	No	No	No	Yes	No	No	No	Yes
75	FLT75-3PH	No	No	No	Yes	No	No	No	Yes	No	No	No	Yes	No	No	No	Yes	No	No	No	Yes
76	FLT76-3PH	No	No	No	Yes	No	No	No	Yes	No	No	No	Yes	No	No	No	Yes	No	No	No	Yes
77	FLT77-3PH	No	No	No	Yes	No	No	No	Yes	No	No	No	Yes	No	No	No	Yes	No	No	No	Yes
79	FLT79-SB	No	No	No	Yes	No	No	No	Yes	No	No	No	Yes	No	No	No	Yes	No	No	No	Yes
80	FLT80-SB	No	No	No	Yes	No	No	No	Yes	No	No	No	Yes	No	No	No	Yes	No	No	No	Yes
81	FLT81-SB	No	No	No	Yes	No	No	No	Yes	No	No	No	Yes	No	No	No	Yes	No	No	No	Yes
126	FLT126-3PH	No	No	No	Yes	No	No	No	Yes	No	No	No	Yes	No	No	No	Yes	No	No	No	Yes
127	FLT127-3PH	No	No	No	Yes	No	No	No	Yes	No	No	No	Yes	No	No	No	Yes	No	No	No	Yes
128	FLT128-3PH	No	No	No	Yes	No	No	No	Yes	No	No	No	Yes	No	No	No	Yes	No	No	No	Yes
129	FLT129-3PH	No	No	No	Yes	No	No	No	Yes	No	No	No	Yes	No	No	No	Yes	No	No	No	Yes
130	FLT130-PO (2025SP)	N/A	N/A	N/A	N/A	N/A	N/A	N/A	N/A	N/A	N/A	N/A	N/A	N/A	N/A	N/A	N/A	No	No	No	Yes
143	FLT143-SB	No	No	No	Yes	No	No	No	Yes	No	No	No	Yes	No	No	No	Yes	No	No	No	Yes

DRAFT

3.18 Stand Alone Scenario Stability Analysis Results: GEN-2015-080

The Stand Alone Scenario Stability Analysis determined that there were no contingencies that resulted in system instability, generation tripping offline, or voltage violations for the 2016 Winter Peak, 2017 Summer Peak, 2020 Summer Peak, 2020 Winter Peak, and 2025 Summer Peak conditions when GEN-2015-080 was interconnected at 100% output.

Refer to Table 3-33 for a summary of the Stability Analysis results for the contingencies listed in Table 2-3 that corresponds to the GEN-2015-080 Stand Alone Analysis. Table 3-33 is a summary of the stability results for the 2016 Winter Peak, 2017 Summer Peak, 2020 Summer Peak, 2020 Winter Peak, and 2025 Summer Peak conditions and states whether the system remained stable or generation tripped offline and if acceptable voltage recovery was observed after the fault was cleared. Voltage recovery criteria includes ensuring that the transient voltage recovery is between 0.7 p.u. and 1.2 p.u. and ending in a steady state voltage (for N-1 contingencies) at the pre-contingent level or at least 0.9 p.u.

Refer to Appendix V for a complete set of plots for all the GEN-2015-080 Stand Alone Scenario contingencies for 2016 Winter Peak, 2017 Summer Peak, 2020 Summer Peak, 2020 Winter Peak, and 2025 Summer Peak conditions.

DRAFT

Table 3-33
Stand Alone Scenario GEN-2015-080: Stability Analysis Summary of Results for 2016 Winter, 2017 Summer, 2020 Summer, 2020 Winter, and 2025 Summer Peak Conditions

Cont. No.	Cont. Name	2016 Winter Peak				2017 Summer Peak				2020 Summer Peak				2020 Winter Peak				2025 Summer Peak			
		Voltage Recovery		Steady-State Voltage < 0.9 p.u.?	Stable?	Voltage Recovery		Steady-State Voltage < 0.9 p.u.?	Stable?	Voltage Recovery		Steady-State Voltage < 0.9 p.u.?	Stable?	Voltage Recovery		Steady-State Voltage < 0.9 p.u.?	Stable?	Voltage Recovery		Steady-State Voltage < 0.9 p.u.?	Stable?
		Less than .70 p.u.	Greater than 1.20 p.u.			Less than .70 p.u.	Greater than 1.20 p.u.			Less than .70 p.u.	Greater than 1.20 p.u.			Less than .70 p.u.	Greater than 1.20 p.u.			Less than .70 p.u.	Greater than 1.20 p.u.		
65	FLT65-3PH	No	No	No	Yes	No	No	No	Yes	No	No	No	Yes	No	No	No	Yes	No	No	No	Yes
69	FLT69-3PH	No	No	No	Yes	No	No	No	Yes	No	No	No	Yes	No	No	No	Yes	No	No	No	Yes
70	FLT70-3PH	No	No	No	Yes	No	No	No	Yes	No	No	No	Yes	No	No	No	Yes	No	No	No	Yes
75	FLT75-3PH	No	No	No	Yes	No	No	No	Yes	No	No	No	Yes	No	No	No	Yes	No	No	No	Yes
76	FLT76-3PH	No	No	No	Yes	No	No	No	Yes	No	No	No	Yes	No	No	No	Yes	No	No	No	Yes
77	FLT77-3PH	No	No	No	Yes	No	No	No	Yes	No	No	No	Yes	No	No	No	Yes	No	No	No	Yes
79	FLT79-SB	No	No	No	Yes	No	No	No	Yes	No	No	No	Yes	No	No	No	Yes	No	No	No	Yes
80	FLT80-SB	No	No	No	Yes	No	No	No	Yes	No	No	No	Yes	No	No	No	Yes	No	No	No	Yes
81	FLT81-SB	No	No	No	Yes	No	No	No	Yes	No	No	No	Yes	No	No	No	Yes	No	No	No	Yes
126	FLT126-3PH	No	No	No	Yes	No	No	No	Yes	No	No	No	Yes	No	No	No	Yes	No	No	No	Yes
127	FLT127-3PH	No	No	No	Yes	No	No	No	Yes	No	No	No	Yes	No	No	No	Yes	No	No	No	Yes
128	FLT128-3PH	No	No	No	Yes	No	No	No	Yes	No	No	No	Yes	No	No	No	Yes	No	No	No	Yes
129	FLT129-3PH	No	No	No	Yes	No	No	No	Yes	No	No	No	Yes	No	No	No	Yes	No	No	No	Yes
130	FLT130-PO (2025SP)	N/A	N/A	N/A	N/A	N/A	N/A	N/A	N/A	N/A	N/A	N/A	N/A	N/A	N/A	N/A	N/A	No	No	No	Yes
143	FLT143-SB	No	No	No	Yes	No	No	No	Yes	No	No	No	Yes	No	No	No	Yes	No	No	No	Yes

DRAFT

SECTION 4: SHORT CIRCUIT ANALYSIS

The objective of this task is to quantify the three-phase to ground fault currents for the 2017 Summer Peak and 2025 Summer Peak seasons for each interconnecting generator.

4.1 Approach

The short-circuit analysis will assess breaker adequacy and fault duties for the generator interconnection bus and five buses away from the point of interconnection. MEPPI will assume no outages to find maximum short-circuit currents that flow through the breaker. The Automatic Sequencing Fault Calculation (ASCC) function in PSS/E was utilized to perform this task. FLAT conditions were applied to pre-fault conditions and the following adjustments were utilized:

- All synchronous and asynchronous machine P and Q output was set to zero
- All transformer tap ratios were set to 1.0 p.u. and all phase shift angles were set to zero
- All generator reactance's were fixed to the subtransient reactance
- All line charging was set to zero
- All shunts were set to zero
- All loads were set to zero
- All pre-fault bus voltages were set to 1.0 p.u. and a phase shift angle of zero

Note upgrades found to be necessary for the Stability Analysis were included in the Short-Circuit Analysis.

4.2 Short Circuit Results: 2017 Summer Peak

The maximum fault current for each bus is provided for the 2017 Summer Peak conditions. The following tables show the short circuit results for the study generators for the 2017 Summer Peak condition:

- Table 4-1: Short Circuit Analysis for GEN-2014-046 (17SP)
- Table 4-2: Short Circuit Analysis for GEN-2015-018 (17SP)
- Table 4-3: Short Circuit Analysis for GEN-2015-020 (17SP)
- Table 4-4: Short Circuit Analysis for GEN-2015-031 (17SP)
- Table 4-5: Short Circuit Analysis for GEN-2015-033 (17SP)
- Table 4-6: Short Circuit Analysis for GEN-2015-039 (17SP)
- Table 4-7: Short Circuit Analysis for GEN-2015-040 (17SP)
- Table 4-8: Short Circuit Analysis for GEN-2015-041 and GEN-2015-068 (17SP)
- Table 4-9: Short Circuit Analysis for GEN-2015-056 (17SP)
- Table 4-10: Short Circuit Analysis for GEN-2015-058 (17SP)

DRAFT

- Table 4-11: Short Circuit Analysis for GEN-2015-075 (17SP)
- Table 4-12: Short Circuit Analysis for GEN-2015-077 (17SP)
- Table 4-13: Short Circuit Analysis for GEN-2015-078 (17SP)
- Table 4-14: Short Circuit Analysis for GEN-2015-079 and GEN-2015-080 (17SP)

Table 4-1
Short Circuit Analysis for Study Project GEN-2014-046 (17SP)

Study Generator GEN-2014-046											
Bus Number	Bus Name	Bus Voltage (kV)	Fault Current 3-LG (kA)	Bus Number	Bus Name	Bus Voltage (kV)	Fault Current 3-LG (kA)	Bus Number	Bus Name	Bus Voltage (kV)	Fault Current 3-LG (kA)
524768	PLSNT_HILL 3	115	9.45	527536	BRASHER 3	115	4.77	527894	HOBBS_INT 6	230	14.86
524770	PLSNT_HILL 6	230	6.42	527541	CAPITAN 3	115	4.41	527963	POTASH_JCT 6	230	6.20
524797	PERIMETER 3	115	6.31	527546	SAMSON 3	115	5.02	528070	CV-AZMESA 3	115	6.65
524863	FE-CHZPLT 3	115	7.65	527552	RIAC 2	69	2.99	528094	7-RIVERS 3	115	7.49
524874	OASIS 3	115	9.59	527563	ROSWLL_INT 2	69	3.52	528095	7-RIVERS 6	230	5.51
524875	OASIS 6	230	7.51	527564	ROSWLL_INT 3	115	5.23	528132	OCOTILLO 3	115	5.34
524885	SN_JUAN_TAP6	230	4.69	527575	SW_4702 2	69	3.20	528137	N_CANAL 3	115	7.11
524889	SN_JUAN_WND6	230	4.50	527589	CV-ORCHARD 2	69	2.00	528160	CARLSBAD 3	115	8.64
524909	ROSEVELT_N 6	230	9.07	527597	TWEEDY 3	115	4.87	528178	PECOS 3	115	9.11
524911	ROSEVELT_S 6	230	9.07	527656	CROSSROADS 7	345	6.53	528179	PECOS 6	230	5.65
524915	SW_4K33 6	230	9.07	527711	EAGLE_CREEK3	115	6.87	528226	HOPI_SUB 3	115	3.90
524924	PORTALES 3	115	7.25	527786	ATOKA 3	115	6.61	560025	NORTON 6	230	2.61
525549	TOLK 7	345	12.31	527793	EDDY_STH 3	115	10.25	577103	GEN-2008-022	345	6.06
527482	CHAVES_CNTY3	115	6.24	527798	EDDY_NTH 3	115	10.25	583950	GEN-2014-033	115	6.24
527483	CHAVES_CNTY6	230	4.03	527799	EDDY_NORTH 6	230	7.38	583960	GEN-2014-034	115	5.80
527501	URTON 3	115	5.28	527800	EDDY_SOUTH 6	230	7.38	583970	GEN-2014-035	115	5.94
527508	PRICE 3	115	4.91	527802	EDDY_CNTY 7	345	4.27	584260	GEN-2014-047	345	5.07
527515	CV-PINE 3	115	4.57	527809	CV-8_MILE 3	115	5.09	584280	GEN-2014-046	115	5.33
527522	ROSWELL_CTY3	115	5.01	527821	CV-DAYTON 3	115	6.53	584620	GEN-2015-020	115	9.34
527528	RIAC_TP 2	69	3.37	527864	CUNNINHAM 3	115	25.36	584940	GEN-2015-056	345	5.63
527534	BRASHER_TP 3	115	5.20	527865	CUNNINHAM 6	230	14.53	599960	EPTNP-D6	230	7.38

Table 4-2
Short Circuit Analysis for Study Project GEN-2015-018 (17SP)

Study Generator GEN-2015-018											
Bus Number	Bus Name	Bus Voltage (kV)	Fault Current 3-LG (kA)	Bus Number	Bus Name	Bus Voltage (kV)	Fault Current 3-LG (kA)	Bus Number	Bus Name	Bus Voltage (kV)	Fault Current 3-LG (kA)
524770	PLSNT_HILL 6	230	6.42	524797	PERIMETER 3	115	6.31	525828	TUCO_INT 3	115	20.12
524875	OASIS 6	230	7.51	524801	NORRIS 3	115	9.59	526020	HOCKLEY 3	115	5.45
524909	ROSEVELT_N 6	230	9.07	524808	FE-CLVS_INT3	115	6.55	560032	G15-018T	115	5.61
524911	ROSEVELT_S 6	230	9.07	524822	CURRY 3	115	10.45	584600	GEN-2015-018	115	4.24
524915	SW_4K33 6	230	9.07	524831	FE-HOLLAND 3	115	8.49	584620	GEN-2015-020	115	9.34
525461	NEWHART 6	230	11.03	524838	FE-CLOVIS2 3	115	9.89	524783	W_CLOVIS 2	69	2.41
525481	PLANT_X 6	230	23.23	524863	FE-CHZPLT 3	115	7.65	524821	CURRY 2	69	4.33
525524	TOLK_EAST 6	230	28.53	524874	OASIS 3	115	9.59	524846	FARWELL 2	69	2.08
525531	TOLK_WEST 6	230	28.53	524908	ROOSEVELT 3	115	10.32	524853	DS-#10 2	69	1.70
525543	TOLK_TAP 6	230	28.53	524924	PORTALES 3	115	7.25	524923	PORTALES 2	69	7.13
525637	LAMB_CNTY 6	230	5.41	524935	KILGORE 3	115	5.65	524929	RO-PORT_MTR2	69	7.13
526435	SUNDOWN 6	230	10.77	525018	EMULESH&VLY3	115	4.80	524934	ZODIAC 2	69	5.31
560025	NORTON 6	230	2.61	525019	EMU&VLY_TP 3	115	5.18	524941	PORTALES#1 2	69	5.50
560051	G15-039-TAP	230	7.50	525028	BAILEYCO 3	115	4.97	524987	LARIAT 2	69	2.10
562480	G13-027-TAP	230	9.27	525050	BC-KELLEY 3	115	8.34	524996	BC-PROGRESS2	69	2.69
599955	PNM-DC6	230	9.07	525056	BC-EARTH 3	115	8.76	525001	W_MULESHOE 2	69	3.81
524648	CARGILL 3	115	3.90	525192	KRESS_INT 3	115	11.24	525008	MULESH_CTY 2	69	3.96
524662	PARMER_CO 3	115	4.09	525326	COX 3	115	5.90	525017	EMULESH&VLY2	69	3.97
524664	DS-#24 3	115	4.03	525393	SPRINGLAKE 3	115	9.40	525023	BC-BAIL_MTR2	69	4.85
524669	DS-#20 3	115	4.80	525414	LAMTON 3	115	7.80	525027	BAILEYCO 2	69	4.85
524764	NORRIS_TP 3	115	10.42	525440	LC-S_OLTON 3	115	7.43	525038	BAILEY_PMP 2	69	2.69
524768	PLSNT_HILL 3	115	9.45	525446	SPGLAKE_TP3	115	10.57	525045	LC-BECK 2	69	1.94
524773	E_CLOVIS 3	115	8.27	525454	HALE_CNTY 3	115	10.18	525453	HALE_CNTY 2	69	6.92
524776	N_CLOVIS_TP3	115	6.99	525480	PLANT_X 3	115	21.05	525635	LAMB_CNTY 2	69	5.93
524777	N_CLOVIS 3	115	6.35	525636	LAMB_CNTY 3	115	8.54				

DRAFT

Table 4-3
Short Circuit Analysis for Study Project GEN-2015-020 (17SP)

Study Generator GEN-2015-020											
Bus Number	Bus Name	Bus Voltage (kV)	Fault Current 3-LG (kA)	Bus Number	Bus Name	Bus Voltage (kV)	Fault Current 3-LG (kA)	Bus Number	Bus Name	Bus Voltage (kV)	Fault Current 3-LG (kA)
524486	CAPROCK 3	115	3.55	524863	FE-CHZPLT 3	115	7.65	525637	LAMB_CNTY 6	230	5.41
524502	NORTON 3	115	3.95	524874	OASIS 3	115	9.59	525830	TUCO_INT 6	230	23.36
524509	FE-TUCMCARI3	115	2.47	524875	OASIS 6	230	7.51	527482	CHAVES_CNTY3	115	6.24
524662	PARMER_CO 3	115	4.09	524885	SN_JUAN_TAP6	230	4.69	527483	CHAVES_CNTY6	230	4.03
524669	DS-#20 3	115	4.80	524889	SN_JUAN_WND6	230	4.50	527501	URTON 3	115	5.28
524764	NORRIS_TP 3	115	10.42	524908	ROOSEVELT 3	115	10.32	527508	PRICE 3	115	4.91
524768	PLSNT_HILL 3	115	9.45	524909	ROSEVELT_N 6	230	9.07	527546	SAMSON 3	115	5.02
524770	PLSNT_HILL 6	230	6.42	524911	ROSEVELT_S 6	230	9.07	527793	EDDY_STH 3	115	10.25
524773	E_CLOVIS 3	115	8.27	524915	SW_4K33 6	230	9.07	527799	EDDY_NORTH 6	230	7.38
524776	N_CLOVIS_TP3	115	6.99	524923	PORTALES 2	69	7.13	527800	EDDY_SOUTH 6	230	7.38
524777	N_CLOVIS 3	115	6.35	524924	PORTALES 3	115	7.25	527802	EDDY_CNTY 7	345	4.27
524783	W_CLOVIS 2	69	2.41	524929	RO-PORT_MTR2	69	7.13	560025	NORTON 6	230	2.61
524784	W_CLOVIS 3	115	6.02	524934	ZODIAC 2	69	5.31	560032	G15-018T	115	5.61
524790	CANNON_TP 3	115	5.76	524935	KILGORE 3	115	5.65	562480	G13-027-TAP	230	9.27
524794	CANNONAFB 3	115	5.41	524941	PORTALES#1 2	69	5.50	583280	ASGI2012-002	115	1.05
524797	PERIMETER 3	115	6.31	524948	PORTALES#2 2	69	4.68	583950	GEN-2014-033	115	6.24
524801	NORRIS 3	115	9.59	524962	S_PORTALES 2	69	4.17	583970	GEN-2014-035	115	5.94
524808	FE-CLVS_INT3	115	6.55	524976	MARKET_ST 2	69	3.95	584280	GEN-2014-046	115	5.33
524821	CURRY 2	69	4.33	525028	BAILEYCO 3	115	4.97	584600	GEN-2015-018	115	4.24
524822	CURRY 3	115	10.45	525481	PLANT_X 6	230	23.23	584620	GEN-2015-020	115	9.34
524831	FE-HOLLAND 3	115	8.49	525524	TOLK_EAST 6	230	28.53	599955	PNM-DC6	230	9.07
524838	FE-CLOVIS2 3	115	9.89	525531	TOLK_WEST 6	230	28.53	599960	EPTNP-D6	230	7.38
524846	FARWELL 2	69	2.08	525543	TOLK_TAP 6	230	28.53				

DRAFT

Table 4-4
Short Circuit Analysis for Study Project GEN-2015-031 (17SP)

Study Generator GEN-2015-031											
Bus Number	Bus Name	Bus Voltage (kV)	Fault Current 3-LG (kA)	Bus Number	Bus Name	Bus Voltage (kV)	Fault Current 3-LG (kA)	Bus Number	Bus Name	Bus Voltage (kV)	Fault Current 3-LG (kA)
511553	CHISHOLM7	345	15.06	524163	EAST_PLANT 6	230	14.01	525326	COX 3	115	5.90
515458	BORDER 7	345	11.87	524185	PIERCE_TP 3	115	19.26	525414	LAMTON 3	115	7.80
522800	MU-TULIA 3	115	5.10	524224	MANHATTAN 3	115	18.64	525446	SPGLAKE_TP3	115	10.57
522823	LP-MILWAKEE6	230	10.08	524266	BUSHLAND 3	115	9.42	525453	HALE_CNTY 2	69	6.92
522870	LP-HOLLY 6	230	14.80	524267	BUSHLAND 6	230	9.89	525454	HALE_CNTY 3	115	10.18
523095	HITCHLAND 6	230	16.03	524282	34TH_ST 3	115	15.11	525460	NEWHART 3	115	15.23
523221	XIT_INTG 6	230	2.63	524290	WILDOR2_JUS6	230	6.72	525461	NEWHART 6	230	11.03
523267	PRINGLE 6	230	4.29	524296	SPNSPUR_WND7	345	5.69	525480	PLANT_X 3	115	21.05
523308	MOORE_E 3	115	11.12	524306	COULTER 3	115	15.35	525481	PLANT_X 6	230	23.23
523309	MOORE_CNTY 6	230	6.83	524321	GEORGIA 2	69	6.67	525524	TOLK_EAST 6	230	28.53
523332	EXELL_TP 3	115	4.82	524322	GEORGIA 3	115	16.56	525531	TOLK_WEST 6	230	28.53
523339	FAIN 3	115	5.29	524331	PULLMAN 3	115	7.14	525543	TOLK_TAP 6	230	28.53
523344	BLKHAWK_W 3	115	11.84	524338	SOUTHEAST 3	115	11.07	525549	TOLK 7	345	12.31
523377	RIVERVIEW 3	115	13.37	524345	OSAGE 3	115	13.88	525636	LAMB_CNTY 3	115	8.54
523410	CRMWA_#4 3	115	9.76	524364	RANDALL 3	115	21.17	525637	LAMB_CNTY 6	230	5.41
523485	CAMX/AGR TP3	115	13.99	524365	RANDALL 6	230	14.57	525780	FLOYD_CNTY 3	115	6.03
523494	MEREDITH 3	115	7.76	524377	FARMERS 3	115	15.25	525816	TUCO_INT2 2	69	4.68
523543	HUTCHISON 2	69	9.06	524388	CROUSE_HIND3	115	15.25	525826	TUCO_INT 2	69	7.93
523544	HUTCH_N 3	115	15.70	524397	ARROWHEAD 3	115	13.71	525828	TUCO_INT 3	115	20.12
523546	HUTCH_S 3	115	15.70	524404	OWENSCORN 3	115	14.95	525830	TUCO_INT 6	230	23.36
523551	HUTCHISON 6	230	7.26	524414	AMA_SOUTH 3	115	16.80	525832	TUCO_INT 7	345	15.04
523636	GRAY_CNTY 3	115	3.90	524415	AMA_SOUTH 6	230	13.72	525840	ANTELOPE_1 6	230	23.15
523748	BOWERS 3	115	6.90	524425	ESTACADO_TP3	115	13.33	526076	STANTON_W 3	115	9.42
523770	GRAPEVINE 3	115	7.92	524432	ESTACADO 3	115	11.73	526160	CARLISLE 3	115	13.27
523771	GRAPEVINE 6	230	5.77	524516	CANYON_WEST3	115	4.92	526161	CARLISLE 6	230	10.73
523776	WHEELER 3	115	6.45	524522	CANYON E_TP3	115	5.17	526269	LUBBCK_STH 6	230	17.51
523777	WHEELER 6	230	5.96	524523	CANYON_EAST3	115	4.80	526298	LUBBCK_EST 3	115	15.24
523779	STLN-DEMARC6	230	7.19	524530	PALO_DURO 3	115	6.57	526299	LUBBCK_EST 6	230	12.92
523815	LLANO_WND 3	115	9.43	524544	SPRING_DRW 3	115	6.39	526337	JONES 6	230	19.79
523817	MIDSTRM_TP 3	115	6.71	524623	DEAFSMITH 6	230	7.77	526434	SUNDOWN 3	115	10.94
523869	CHAN/TASCOS6	230	3.91	524694	DS-#22 3	115	4.95	526435	SUNDOWN 6	230	10.77
523928	MARTIN 3	115	7.49	524734	DS-#21 3	115	10.74	526460	AMOCO_SS 6	230	9.43
523931	HIGHLAND_TP3	115	11.44	524745	CASTRO_CNTY2	69	9.56	526525	WOLFFORTH 6	230	13.15
523959	POTTER_CO 6	230	22.67	524746	CASTRO_CNTY3	115	11.56	526677	GRASSLAND 6	230	6.42
523961	POTTER_CO 7	345	12.17	524909	ROSEVELT_N 6	230	9.07	527656	CROSSROADS 7	345	6.53
523977	HARRNG_WST 6	230	27.39	524911	ROSEVELT_S 6	230	9.07	560011	G14-038-TAP	345	11.05
523978	HARRNG_MID 6	230	27.39	525019	EMU&VLY_TP 3	115	5.18	560021	TUCO_2	230	20.05
523979	HARRNG_EST 6	230	27.39	525050	BC-KELLEY 3	115	8.34	560022	TUCO_2	345	15.04
524007	ROLLHILLS 3	115	19.65	525056	BC-EARTH 3	115	8.76	560027	G14-074-TAP	345	7.49
524009	CHERRY 3	115	18.78	525124	HART_INDUST3	115	7.60	560035	GRAPEVINE	345	10.05
524010	ROLLHILLS 6	230	20.51	525154	HAPPY_INT 3	115	5.36	560050	G15-031-TAP	230	9.48
524016	ASARCO 3	115	26.84	525179	TULIA_TP 3	115	6.31	560051	G15-039-TAP	230	7.50
524018	ASARCO_TP 3	115	29.06	525191	KRESS_INT 2	69	4.44	562480	G13-027-TAP	230	9.27
524043	NICHOLS 3	115	31.10	525192	KRESS_INT 3	115	11.24	583090	G1149&G1504	345	9.45
524044	NICHOLS 6	230	26.51	525203	SW-KRESS 2	69	4.44	583340	GEN-2012-020	230	9.25
524058	WHITAKER 3	115	22.20	525212	SWISHER 3	115	10.39	584220	GEN-2014-040	115	10.24
524079	CONWAY 3	115	5.01	525213	SWISHER 6	230	10.89	584640	GEN-2015-022	115	10.39
524088	KIRBY 3	115	5.43	525224	KRESS_RURL 2	69	2.51	584750	GEN-2015-031	230	9.48
524106	NORTHWEST 3	115	11.36	525225	KRESS_RURAL3	115	6.26	584800	GEN-2015-039	230	6.35
524136	HASTINGS 3	115	13.86	525257	N_PLAINVEW 3	115	5.09	585060	GEN-2015-068	345	11.66
524162	EAST_PLANT 3	115	23.27								

Table 4-5
Short Circuit Analysis for Study Project GEN-2015-033 (17SP)

Study Generators GEN-2015-033											
Bus Number	Bus Name	Bus Voltage (kV)	Fault Current 3-LG (kA)	Bus Number	Bus Name	Bus Voltage (kV)	Fault Current 3-LG (kA)	Bus Number	Bus Name	Bus Voltage (kV)	Fault Current 3-LG (kA)
511422	FLETCHR4	138	7.64	524296	SPNSPUR_WND7	345	5.69	526269	LUBBCK_STH 6	230	17.51
511423	FLE TAP4	138	8.33	524909	ROSEVELT_N 6	230	9.07	526297	LUBBCK_EST 2	69	8.04
511431	LWS S4	138	10.66	524911	ROSEVELT_S 6	230	9.07	526298	LUBBCK_EST 3	115	15.24
511436	COMANC-2	69	9.67	524915	SW_4K33 6	230	9.07	526299	LUBBCK_EST 6	230	12.92
511437	COMANC-4	138	17.60	525192	KRESS_INT 3	115	11.24	526337	JONES 6	230	19.79
511439	LWSTAP 4	138	11.10	525212	SWISHER 3	115	10.39	526435	SUNDOWN 6	230	10.77
511456	O.K.U.-7	345	5.70	525213	SWISHER 6	230	10.89	526524	WOLFFORTH 3	115	11.48
511466	L.E.S.-2	69	16.39	525326	COX 3	115	5.90	526525	WOLFFORTH 6	230	13.15
511467	L.E.S.-4	138	23.64	525414	LAMTON 3	115	7.80	526676	GRASSLAND 3	115	6.12
511468	L.E.S.-7	345	12.75	525453	HALE_CNTY 2	69	6.92	526677	GRASSLAND 6	230	6.42
511469	LGORE-N2	69	7.95	525454	HALE_CNTY 3	115	10.18	526679	CIRRUS_WND 6	230	5.00
511470	LGORE-S2	69	6.90	525461	NEWHART 6	230	11.03	527656	CROSSROADS 7	345	6.53
511474	SHERID4	138	11.92	525480	PLANT_X 3	115	21.05	527802	EDDY_CNTY 7	345	4.27
511477	S.W.S.-4	138	27.21	525481	PLANT_X 6	230	23.23	529304	OMDUNCN4	138	6.62
511486	ELGINJT4	138	9.72	525524	TOLK_EAST 6	230	28.53	560011	G14-038-TAP	345	11.05
511487	ELGINJT2	69	8.41	525531	TOLK_WEST 6	230	28.53	560013	G14-057T	345	9.69
511488	112GORE4	138	12.07	525543	TOLK_TAP 6	230	28.53	560021	TUCO_2	230	20.05
511494	COMMTAP4	138	20.78	525549	TOLK 7	345	12.31	560022	TUCO_2	345	15.04
511512	RPPAPER4	138	11.44	525731	SP-ABERNTHY2	69	3.02	560027	G14-074-TAP	345	7.49
511537	ARTVLTP4	138	11.30	525738	HALECENTER 2	69	2.46	560035	GRAPEVINE	345	10.05
511553	CHISHOLM7	345	15.06	525779	FLOYD_CNTY 2	69	5.31	560050	G15-031-TAP	230	9.48
511557	CHISHOLM6	230	12.47	525780	FLOYD_CNTY 3	115	6.03	560051	G15-039-TAP	230	7.50
511563	ELSWORTH 4	138	9.64	525816	TUCO_INT2 2	69	4.68	560064	G15-093T	345	13.09
514801	MINCO 7	345	16.85	525826	TUCO_INT 2	69	7.93	562004	G11-025-TAP	115	4.61
514809	JOHNCO 7	345	9.35	525828	TUCO_INT 3	115	20.12	577103	GEN-2008-022	345	6.06
515135	SUNNYSD4	138	17.21	525830	TUCO_INT 6	230	23.36	583090	G1149&G1504	345	9.45
515136	SUNNYSD7	345	10.18	525832	TUCO_INT 7	345	15.04	583340	GEN-2012-020	230	9.25
515375	WWRDEHV7	345	22.44	525840	ANTELOPE_1 6	230	23.15	584070	GEN-2014-057	345	6.68
515458	BORDER 7	345	11.87	525853	LH-WIL&ELLN2	69	2.58	584260	GEN-2014-047	345	5.07
515800	GRACMNT7	345	16.06	525885	SP-NEWDEAL 2	69	3.39	584440	GEN-2014-074	345	7.07
515802	GRACMNT4	138	26.16	525926	CROSBY 3	115	4.50	584760	GEN-2015-033	345	6.62
521157	HUGO 7	345	10.80	526076	STANTON_W 3	115	9.42	584940	GEN-2015-056	345	5.63
522823	LP-MILWAKEE6	230	10.08	526109	SP-ERSKINE 3	115	11.43	585060	GEN-2015-068	345	11.66
522828	LP-MILWAKEE2	69	7.49	526146	INDIANA 3	115	9.77	585080	GEN-2015-071	345	12.06
522861	LP-SOUTHEST6	230	13.80	526159	CARLISLE 2	69	2.57	585270	GEN-2015-093	345	12.20
522866	LP-COOK 2	69	30.53	526160	CARLISLE 3	115	13.27	585280	GEN-2015-092	345	6.46
522870	LP-HOLLY 6	230	14.80	526161	CARLISLE 6	230	10.73	590001	OKLEHV24	138	4.79
522888	LP-WADSWRTH6	230	12.08	526162	LP-DOUD_TP 3	115	11.68	590003	OKLEHV14	138	4.80
523959	POTTER_CO 6	230	22.67	526192	MURPHY 3	115	10.68	599891	OKLAUN 7	345	4.04
523961	POTTER_CO 7	345	12.17	526268	LUBBCK_STH 3	115	18.94	599955	PNM-DC6	230	9.07

DRAFT

Table 4-6
Short Circuit Analysis for Study Project GEN-2015-039 (17SP)

Study Generator GEN-2015-039											
Bus Number	Bus Name	Bus Voltage (kV)	Fault Current 3-LG (kA)	Bus Number	Bus Name	Bus Voltage (kV)	Fault Current 3-LG (kA)	Bus Number	Bus Name	Bus Voltage (kV)	Fault Current 3-LG (kA)
522823	LP-MILWAKEE6	230	10.08	524915	SW_4K33 6	230	9.07	525840	ANTELOPE_1 6	230	23.15
522861	LP-SOUTHEST6	230	13.80	524924	PORTALES 3	115	7.25	526019	HOCKLEY 2	69	5.12
522870	LP-HOLLY 6	230	14.80	525018	EMULESH&VLY3	115	4.80	526020	HOCKLEY 3	115	5.45
523095	HITCHLAND 6	230	16.03	525019	EMU&VLY_TP 3	115	5.18	526036	LC-OPDYKE 3	115	5.74
523221	XIT_INTG 6	230	2.63	525027	BAILEYCO 2	69	4.85	526076	STANTON_W 3	115	9.42
523267	PRINGLE 6	230	4.29	525028	BAILEYCO 3	115	4.97	526160	CARLISLE 3	115	13.27
523308	MOORE_E 3	115	11.12	525050	BC-KELLEY 3	115	8.34	526161	CARLISLE 6	230	10.73
523309	MOORE_CNTY 6	230	6.83	525056	BC-EARTH 3	115	8.76	526268	LUBBCK_STH 3	115	18.94
523869	CHAN/TASCOS6	230	3.91	525124	HART_INDUST3	115	7.60	526269	LUBBCK_STH 6	230	17.51
523959	POTTER_CO 6	230	22.67	525179	TULIA_TP 3	115	6.31	526298	LUBBCK_EST 3	115	15.24
523961	POTTER_CO 7	345	12.17	525191	KRESS_INT 2	69	4.44	526299	LUBBCK_EST 6	230	12.92
523977	HARRNG_WST 6	230	27.39	525192	KRESS_INT 3	115	11.24	526337	JONES 6	230	19.79
523978	HARRNG_MID 6	230	27.39	525212	SWISHER 3	115	10.39	526361	COCHRAN 3	115	6.84
523979	HARRNG_EST 6	230	27.39	525213	SWISHER 6	230	10.89	526424	PACIFIC 3	115	9.35
524007	ROLLHILLS 3	115	19.65	525225	KRESS_RURAL3	115	6.26	526434	SUNDOWN 3	115	10.94
524010	ROLLHILLS 6	230	20.51	525272	KISER 3	115	5.10	526435	SUNDOWN 6	230	10.77
524266	BUSHLAND 3	115	9.42	525291	PLAINVW_TP 2	69	6.50	526445	AMOCO_TP 3	115	10.24
524267	BUSHLAND 6	230	9.89	525298	S_PLAINVEW 2	69	2.59	526452	AMOCO_CRYO 3	115	6.38
524276	WILDOR_WND 6	230	5.01	525325	COX 2	69	3.36	526460	AMOCO_SS 6	230	9.43
524290	WILDOR2_JUS6	230	6.72	525326	COX 3	115	5.90	526475	YUMA_INT 3	115	11.00
524296	SPNSPUR_WND7	345	5.69	525393	SPRINGLAKE 3	115	9.40	526484	LG-LEVELAND3	115	9.19
524300	HILLSIDE 3	115	12.63	525413	LAMTON 2	69	5.22	526524	WOLFFORTH 3	115	11.48
524306	COULTER 3	115	15.35	525414	LAMTON 3	115	7.80	526525	WOLFFORTH 6	230	13.15
524415	AMA_SOUTH 6	230	13.72	525432	SP-HALFWAY 2	69	5.87	526677	GRASSLAND 6	230	6.42
524516	CANYON_WEST3	115	4.92	525440	LC-S_OLTON 3	115	7.43	526736	TERRY_CNTY 3	115	10.25
524554	CENTRE_ST 2	69	3.81	525446	SPGLAKE_TP3	115	10.57	526934	YOAKUM 3	115	15.77
524561	DS-MTR 2	69	6.05	525453	HALE_CNTY 2	69	6.92	526935	YOAKUM 6	230	13.98
524567	NE_HEREFORD3	115	9.59	525454	HALE_CNTY 3	115	10.18	527010	OXYBRU_TP 6	230	11.94
524573	NE_HEREFORD2	69	6.74	525460	NEWHART 3	115	15.23	527149	MUSTANG 6	230	13.95
524580	DS-#9 2	69	3.20	525461	NEWHART 6	230	11.03	527656	CROSSROADS 7	345	6.53
524590	DAWN 3	115	5.23	525480	PLANT_X 3	115	21.05	560011	G14-038-TAP	345	11.05
524597	PANDAHFD 3	115	8.38	525481	PLANT_X 6	230	23.23	560021	TUCO_2	230	20.05
524605	HEREFORD 2	69	4.43	525524	TOLK_EAST 6	230	28.53	560022	TUCO_2	345	15.04
524606	HEREFORD 3	115	10.76	525531	TOLK_WEST 6	230	28.53	560025	NORTON 6	230	2.61
524622	DEAFSMITH 3	115	12.01	525543	TOLK_TAP 6	230	28.53	560027	G14-074-TAP	345	7.49
524623	DEAFSMITH 6	230	7.77	525549	TOLK 7	345	12.31	560032	G15-018T	115	5.61
524629	DS-#6 3	115	6.17	525613	W_LITTLFLD 2	69	2.98	560035	GRAPEVINE	345	10.05
524633	DS-#4 2	69	3.25	525620	LTFLD_S&CTY2	69	4.19	560050	G15-031-TAP	230	9.48
524655	FRIONA 3	115	3.91	525635	LAMB_CNTY 2	69	5.93	560051	G15-039-TAP	230	7.50
524694	DS-#22 3	115	4.95	525636	LAMB_CNTY 3	115	8.54	560059	G1579&G1580T	230	8.65
524734	DS-#21 3	115	10.74	525637	LAMB_CNTY 6	230	5.41	562480	G13-027-TAP	230	9.27
524745	CASTRO_CNTY2	69	9.56	525650	LC-LITTLFLD2	69	4.95	583340	GEN-2012-020	230	9.25
524746	CASTRO_CNTY3	115	11.56	525687	LC-LUMSCHAP2	69	4.63	583840	GEN-2013-027	230	8.24
524768	PLSNT_HILL 3	115	9.45	525780	FLOYD_CNTY 3	115	6.03	584220	GEN-2014-040	115	10.24
524770	PLSNT_HILL 6	230	6.42	525816	TUCO_INT2 2	69	4.68	584640	GEN-2015-022	115	10.39
524822	CURRY 3	115	10.45	525826	TUCO_INT 2	69	7.93	584750	GEN-2015-031	230	9.48
524875	OASIS 6	230	7.51	525828	TUCO_INT 3	115	20.12	584800	GEN-2015-039	230	6.35
524908	ROOSEVELT 3	115	10.32	525830	TUCO_INT 6	230	23.36	585060	GEN-2015-068	345	11.66
524909	ROSEVELT_N 6	230	9.07	525832	TUCO_INT 7	345	15.04	599955	PNM-DC6	230	9.07
524911	ROSEVELT_S 6	230	9.07								

DRAFT

Table 4-7
Short Circuit Analysis for Study Project GEN-2015-040 (17SP)

Study Generator GEN-2015-040											
Bus Number	Bus Name	Bus Voltage (kV)	Fault Current 3-LG (kA)	Bus Number	Bus Name	Bus Voltage (kV)	Fault Current 3-LG (kA)	Bus Number	Bus Name	Bus Voltage (kV)	Fault Current 3-LG (kA)
524909	ROSEVELT_N 6	230	9.07	527056	ODC 3	115	9.72	527262	SULPHUR 3	115	5.61
525481	PLANT_X 6	230	23.23	527062	SHELL_CO2 3	115	15.51	527275	SEMINOLE 3	115	14.09
525531	TOLK_WEST 6	230	28.53	527068	SHELLC3_TP 3	115	10.39	527276	SEMINOLE 6	230	7.36
525543	TOLK_TAP 6	230	28.53	527080	EL_PASO 3	115	15.29	527286	XTO_RUSSEL 3	115	9.84
525637	LAMB_CNTY 6	230	5.41	527099	DC_EAST 2	69	6.06	527313	MIDAMERI_TP2	69	2.15
526434	SUNDOWN 3	115	10.94	527105	SAN_ANDS_TP3	115	15.97	527321	GAINES 2	69	4.22
526435	SUNDOWN 6	230	10.77	527106	SAN_ANDRES 3	115	11.47	527322	GAINES 3	115	9.21
526460	AMOCO_SS 6	230	9.43	527111	WASSON 2	69	5.93	527325	OXY_WSEM_TP3	115	9.05
526524	WOLFFORTH 3	115	11.48	527125	DENVER_CTY 2	69	8.57	527339	DOSS 2	69	4.21
526525	WOLFFORTH 6	230	13.15	527130	DENVER_N 3	115	20.27	527340	DOSS 3	115	7.88
526735	TERRY_CNTY 2	69	6.92	527136	DENVER_S 3	115	20.27	527346	LEGACY 3	115	7.61
526736	TERRY_CNTY 3	115	10.25	527146	MUSTANG 3	115	22.41	527363	HIGG 3	115	10.01
526784	AMOCOWASSON6	230	12.30	527149	MUSTANG 6	230	13.95	527865	CUNNINHAM 6	230	14.53
526792	PRENTICE 3	115	5.82	527151	GS-MUSTANG 6	230	13.95	527891	HOBBS_INT 3	115	28.75
526928	PLAINS_INT 3	115	9.58	527183	JAYBEE 2	69	4.35	527894	HOBBS_INT 6	230	14.86
526934	YOAKUM 3	115	15.77	527194	LG-PLSHILL 3	115	7.42	528604	ANDREWS 6	230	5.76
526935	YOAKUM 6	230	13.98	527201	SEAGRAVES 2	69	5.37	528626	LE-PLNSINT 2	69	4.33
526944	LG-PLAINS 3	115	7.77	527202	SEAGRAVES 3	115	8.42	560058	G15-077-TAP	115	7.98
526993	LG-WELLMAN 2	69	3.05	527212	DIAMONDBACK3	115	3.09	560059	G1579&G1580T	230	8.65
527010	OXYBRU_TP 6	230	11.94	527217	MOSS 2	69	5.27	562480	G13-027-TAP	230	9.27
527018	BENNETT 3	115	12.80	527223	LG-MC&SEMNL2	69	2.58	583840	GEN-2013-027	230	8.24
527036	SHELL_C2 3	115	12.58	527238	ROZ 3	115	10.95	584810	GEN-2015-040	230	12.87
527041	ARCO_TP 3	115	12.70	527242	AMERADA 3	115	11.10	585150	GEN-2015-078	115	16.45
527047	OXY_WILRD1 3	115	10.27	527261	SULPHUR 2	69	3.35	585160	G1579&G1580	230	8.23
527051	ODC_TP 3	115	12.81								

DRAFT

Table 4-8
Short Circuit Analysis for Study Project GEN-2015-041 and GEN-2015-068 (17SP)

Study Generator GEN-2015-041 and GEN-2015-068											
Bus Number	Bus Name	Bus Voltage (kV)	Fault Current 3-LG (kA)	Bus Number	Bus Name	Bus Voltage (kV)	Fault Current 3-LG (kA)	Bus Number	Bus Name	Bus Voltage (kV)	Fault Current 3-LG (kA)
511423	FLE TAP4	138	8.33	525291	PLAINVW_TP 2	69	6.50	526299	LUBBCK_EST 6	230	12.92
511437	COMANC-4	138	17.60	525298	S_PLAINVEW 2	69	2.59	526310	CLUTTER 2	69	5.45
511439	LWSTAP 4	138	11.10	525325	COX 2	69	3.36	526337	JONES 6	230	19.79
511456	O.K.U.-7	345	5.70	525326	COX 3	115	5.90	526434	SUNDOWN 3	115	10.94
511466	L.E.S.-2	69	16.39	525413	LAMTON 2	69	5.22	526435	SUNDOWN 6	230	10.77
511467	L.E.S.-4	138	23.64	525414	LAMTON 3	115	7.80	526460	AMOCO_SS 6	230	9.43
511468	L.E.S.-7	345	12.75	525432	SP-HALFWAY 2	69	5.87	526475	YUMA_INT 3	115	11.00
511474	SHERID4	138	11.92	525440	LC-S_OLTON 3	115	7.43	526481	SP-WOLF_TP 3	115	11.18
511486	ELGINJT4	138	9.72	525446	SPGLAKE_TP3	115	10.57	526524	WOLFFORTH 3	115	11.48
511490	ELKCITY6	230	8.07	525453	HALE_CNTY 2	69	6.92	526525	WOLFFORTH 6	230	13.15
511494	COMMTAP4	138	20.78	525454	HALE_CNTY 3	115	10.18	526562	SLATON 2	69	2.48
511541	SWEETWT6	230	8.06	525460	NEWHART 3	115	15.23	526602	SP-WOODROW 3	115	9.37
511553	CHISHOLM7	345	15.06	525461	NEWHART 6	230	11.03	526656	LYNN_CNTY 3	115	5.62
511557	CHISHOLM6	230	12.47	525480	PLANT_X 3	115	21.05	526676	GRASSLAND 3	115	6.12
514801	MINCO 7	345	16.85	525481	PLANT_X 6	230	23.23	526677	GRASSLAND 6	230	6.42
515136	SUNNYSD7	345	10.18	525524	TOLK_EAST 6	230	28.53	526679	CIRRUS_WND 6	230	5.00
515375	WWRDEHV7	345	22.44	525531	TOLK_WEST 6	230	28.53	526694	GRAHAM 3	115	2.68
515376	WWRDEHV4	138	25.92	525543	TOLK_TAP 6	230	28.53	526736	TERRY_CNTY 3	115	10.25
515458	BORDER 7	345	11.87	525549	TOLK 7	345	12.31	527656	CROSSROADS 7	345	6.53
515554	BVRCNTY7	345	18.03	525636	LAMB_CNTY 3	115	8.54	527799	EDDY_NORTH 6	230	7.38
515599	NBUFFRG7	345	8.86	525637	LAMB_CNTY 6	230	5.41	527802	EDDY_CNTY 7	345	4.27
515800	GRACMNT7	345	16.06	525724	COUNTYLINE 2	69	2.21	539801	THISTLE7	345	15.45
515802	GRACMNT4	138	26.16	525731	SP-ABERNTHY2	69	3.02	560000	G11-14-TAP	345	15.78
522819	LP-NORTHEST2	69	10.09	525738	HALECENTER 2	69	2.46	560011	G14-038-TAP	345	11.05
522822	LP-NORTHWST2	69	4.34	525745	LH-HALECTR 2	69	2.44	560013	G14-057T	345	9.69
522823	LP-MILWAKEE6	230	10.08	525769	BARWISE 2	69	3.76	560021	TUCO_2	230	20.05
522828	LP-MILWAKEE2	69	7.49	525779	FLOYD_CNTY 2	69	5.31	560022	TUCO_2	345	15.04
522832	LP-VICKSBRG2	69	11.45	525780	FLOYD_CNTY 3	115	6.03	560027	G14-074-TAP	345	7.49
522857	LP-SOUTHEST2	69	21.48	525790	FLOYDADA_TP2	69	2.49	560035	GRAPEVINE	345	10.05
522861	LP-SOUTHEST6	230	13.80	525811	LH-HARMONY 2	69	4.25	560050	G15-031-TAP	230	9.48
522866	LP-COOK 2	69	30.53	525816	TUCO_INT2 2	69	4.68	560051	G15-039-TAP	230	7.50
522870	LP-HOLLY 6	230	14.80	525826	TUCO_INT 2	69	7.93	560064	G15-093T	345	13.09
522879	LP-WADSWRTH2	69	19.68	525828	TUCO_INT 3	115	20.12	562004	G11-025-TAP	115	4.61
522888	LP-WADSWRTH6	230	12.08	525830	TUCO_INT 6	230	23.36	562075	G11-051-TAP	345	17.93
523097	HITCHLAND 7	345	18.09	525832	TUCO_INT 7	345	15.04	562480	G13-027-TAP	230	9.27
523309	MOORE_CNTY 6	230	6.83	525840	ANTELOPE_1 6	230	23.15	577103	GEN-2008-022	345	6.06
523869	CHAN/TASCOS6	230	3.91	525853	LH-WIL&ELLN2	69	2.58	577104	G08-022-WEST	345	5.59
523959	POTTER_CO 6	230	22.67	525860	SP-BECTON 2	69	2.29	581137	GEN-2011-025	115	4.61
523961	POTTER_CO 7	345	12.17	525885	SP-NEWDEAL 2	69	3.39	582019	GEN-2011-019	345	22.44
523979	HARRNG_EST 6	230	27.39	525892	WHITE&MONRO2	69	2.56	582020	GEN-2011-020	345	22.44
524010	ROLLHILLS 6	230	20.51	525925	CROSBY 2	69	4.78	583090	G1149&G1504	345	9.45
524267	BUSHLAND 6	230	9.89	525926	CROSBY 3	115	4.50	583340	GEN-2012-020	230	9.25
524296	SPNSPUR_WND7	345	5.69	526076	STANTON_W 3	115	9.42	583819	ASGI2014-001	115	11.43
524415	AMA_SOUTH 6	230	13.72	526109	SP-ERSKINE 3	115	11.43	584070	GEN-2014-057	345	6.68
524623	DEAFSMITH 6	230	7.77	526130	SP-CARLISLE2	69	2.11	584260	GEN-2014-047	345	5.07
524770	PLSNT_HILL 6	230	6.42	526146	INDIANA 3	115	9.77	584290	GEN-2014-038	345	9.90
524875	OASIS 6	230	7.51	526159	CARLISLE 2	69	2.57	584440	GEN-2014-074	345	7.07
524908	ROOSEVELT 3	115	10.32	526160	CARLISLE 3	115	13.27	584640	GEN-2015-022	115	10.39
524909	ROSEVELT_N 6	230	9.07	526161	CARLISLE 6	230	10.73	584750	GEN-2015-031	230	9.48
524911	ROSEVELT_S 6	230	9.07	526162	LP-DOUD_TP 3	115	11.68	584760	GEN-2015-033	345	6.62
524915	SW_4K33 6	230	9.07	526176	LP-DOUD 3	115	9.07	584800	GEN-2015-039	230	6.35
525019	EMU&VLY_TP 3	115	5.18	526184	SW_6878 2	69	2.16	584940	GEN-2015-056	345	5.63
525056	BC-EARTH 3	115	8.76	526192	MURPHY 3	115	10.68	585060	GEN-2015-068	345	11.66
525124	HART_INDUST3	115	7.60	526199	SP-FRANKFRD3	115	9.69	585080	GEN-2015-071	345	12.06
525179	TULIA_TP 3	115	6.31	526213	ALLEN 3	115	10.73	585120	GEN-2015-075	69	2.31
525191	KRESS_INT 2	69	4.44	526267	LUBBCK_STH 2	69	4.35	585270	GEN-2015-093	345	12.20
525192	KRESS_INT 3	115	11.24	526268	LUBBCK_STH 3	115	18.94	590001	OKLEHV24	138	4.79
525212	SWISHER 3	115	10.39	526269	LUBBCK_STH 6	230	17.51	590003	OKLEHV14	138	4.80
525213	SWISHER 6	230	10.89	526284	PLANTERS 2	69	6.32	599891	OKLAUN 7	345	4.04
525225	KRESS_RURAL3	115	6.26	526297	LUBBCK_EST 2	69	8.04	599955	PNM-DC6	230	9.07
525272	KISER 3	115	5.10	526298	LUBBCK_EST 3	115	15.24				

Table 4-9
Short Circuit Analysis for Study Project GEN-2015-056 (17SP)

Study Generator GEN-2015-056											
Bus Number	Bus Name	Bus Voltage (kV)	Fault Current 3-LG (kA)	Bus Number	Bus Name	Bus Voltage (kV)	Fault Current 3-LG (kA)	Bus Number	Bus Name	Bus Voltage (kV)	Fault Current 3-LG (kA)
511456	O.K.U.-7	345	5.70	525460	NEWHART 3	115	15.23	528094	7-RIVERS 3	115	7.49
511553	CHISHOLM7	345	15.06	525461	NEWHART 6	230	11.03	528095	7-RIVERS 6	230	5.51
511557	CHISHOLM6	230	12.47	525480	PLANT_X 3	115	21.05	528132	OCOTILLO 3	115	5.34
515375	WWRDEHV7	345	22.44	525481	PLANT_X 6	230	23.23	528137	N_CANAL 3	115	7.11
515458	BORDER 7	345	11.87	525524	TOLK_EAST 6	230	28.53	528160	CARLSBAD 3	115	8.64
515554	BVRCNTY7	345	18.03	525531	TOLK_WEST 6	230	28.53	528178	PECOS 3	115	9.11
515590	PALDR2W7	345	14.73	525543	TOLK_TAP 6	230	28.53	528179	PECOS 6	230	5.65
515800	GRACMNT7	345	16.06	525549	TOLK 7	345	12.31	528226	HOPI_SUB 3	115	3.90
523095	HITCHLAND 6	230	16.03	525636	LAMB_CNTY 3	115	8.54	531512	WALKTAP7	345	8.03
523097	HITCHLAND 7	345	18.09	525637	LAMB_CNTY 6	230	5.41	560000	G11-14-TAP	345	15.78
523101	NOBLE_WND 7	345	18.00	525828	TUCO_INT 3	115	20.12	560010	G14-037-TAP	345	17.89
523112	NOVUS1 7	345	17.69	525830	TUCO_INT 6	230	23.36	560011	G14-038-TAP	345	11.05
523221	XIT_INTG 6	230	2.63	525832	TUCO_INT 7	345	15.04	560021	TUCO_2	230	20.05
523267	PRINGLE 6	230	4.29	525840	ANTELOPE_1 6	230	23.15	560022	TUCO_2	345	15.04
523308	MOORE_E 3	115	11.12	526161	CARLISLE 6	230	10.73	560027	G14-074-TAP	345	7.49
523309	MOORE_CNTY 6	230	6.83	526337	JONES 6	230	19.79	560035	GRAPEVINE	345	10.05
523869	CHAN/TASCOS6	230	3.91	526435	SUNDOWN 6	230	10.77	560050	G15-031-TAP	230	9.48
523959	POTTER_CO 6	230	22.67	526935	YOAKUM 6	230	13.98	560051	G15-039-TAP	230	7.50
523961	POTTER_CO 7	345	12.17	527482	CHAVES_CNTY3	115	6.24	562480	G13-027-TAP	230	9.27
523977	HARRNG_WST 6	230	27.39	527483	CHAVES_CNTY6	230	4.03	576395	GEN-2010-014	345	12.64
523978	HARRNG_MID 6	230	27.39	527501	URTON 3	115	5.28	577103	GEN-2008-022	345	6.06
523979	HARRNG_EST 6	230	27.39	527508	PRICE 3	115	4.91	577104	G08-022-WEST	345	5.59
524007	ROLLHILLS 3	115	19.65	527546	SAMSON 3	115	5.02	578542	GEN-2010-001	345	14.32
524010	ROLLHILLS 6	230	20.51	527597	TWEEDY 3	115	4.87	581148	GEN-2011-022	345	10.13
524266	BUSHLAND 3	115	9.42	527656	CROSSROADS 7	345	6.53	583090	G1149&G1504	345	9.45
524267	BUSHLAND 6	230	9.89	527711	EAGLE_CREEK3	115	6.87	583340	GEN-2012-020	230	9.25
524290	WILDOR2_JUS6	230	6.72	527786	ATOKA 3	115	6.61	583760	GEN-2013-030	345	13.16
524296	SPNSPUR_WND7	345	5.69	527793	EDDY_STH 3	115	10.25	583840	GEN-2013-027	230	8.24
524623	DEAFSMITH 6	230	7.77	527798	EDDY_NTH 3	115	10.25	583950	GEN-2014-033	115	6.24
524770	PLSNT_HILL 6	230	6.42	527799	EDDY_NORTH 6	230	7.38	583970	GEN-2014-035	115	5.94
524875	OASIS 6	230	7.51	527800	EDDY_SOUTH 6	230	7.38	584260	GEN-2014-047	345	5.07
524885	SN_JUAN_TAP6	230	4.69	527802	EDDY_CNTY 7	345	4.27	584280	GEN-2014-046	115	5.33
524889	SN_JUAN_WND6	230	4.50	527809	CV-8_MILE 3	115	5.09	584290	GEN-2014-038	345	9.90
524908	ROOSEVELT 3	115	10.32	527821	CV-DAYTON 3	115	6.53	584440	GEN-2014-074	345	7.07
524909	ROSEVELT_N 6	230	9.07	527864	CUNNINHAM 3	115	25.36	584940	GEN-2015-056	345	5.63
524911	ROSEVELT_S 6	230	9.07	527865	CUNNINHAM 6	230	14.53	585060	GEN-2015-068	345	11.66
524915	SW_4K33 6	230	9.07	527894	HOBBS_INT 6	230	14.86	585080	GEN-2015-071	345	12.06
525212	SWISHER 3	115	10.39	527963	POTASH_JCT 6	230	6.20	599955	PNM-DC6	230	9.07
525213	SWISHER 6	230	10.89	528070	CV-AZMESA 3	115	6.65	599960	EPTNP-D6	230	7.38

DRAFT

Table 4-10
Short Circuit Analysis for Study Project GEN-2015-058 (17SP)

Study Generator GEN-2015-058											
Bus Number	Bus Name	Bus Voltage (kV)	Fault Current 3-LG (kA)	Bus Number	Bus Name	Bus Voltage (kV)	Fault Current 3-LG (kA)	Bus Number	Bus Name	Bus Voltage (kV)	Fault Current 3-LG (kA)
524885	SN_JUAN_TAP6	230	4.69	527754	CV-ARTESIA 2	69	3.07	527930	PCA 3	115	8.08
527482	CHAVES_CNTY3	115	6.24	527757	ARTESIA_TP 2	69	3.64	527962	POTASH_JCT 3	115	8.61
527483	CHAVES_CNTY6	230	4.03	527761	ARTESIA_W 2	69	3.32	527963	POTASH_JCT 6	230	6.20
527534	BRASHER_TP 3	115	5.20	527762	ARTSA_CC_TP2	69	1.90	528003	CV-DAGGR&IH2	69	1.62
527541	CAPITAN 3	115	4.41	527763	CV-W_ARTSIA2	69	1.60	528070	CV-AZMESA 3	115	6.65
527546	SAMSON 3	115	5.02	527768	ARTESIA_CC 2	69	1.74	528076	CV-WALTCYN 3	115	4.23
527563	ROSWLL_INT 2	69	3.52	527772	ARTSA_SR_TP2	69	1.97	528079	CV-CONEBUTE3	115	3.17
527564	ROSWLL_INT 3	115	5.23	527775	ARTESIA_SR 2	69	1.90	528093	7-RIVERS 2	69	2.35
527597	TWEEDY 3	115	4.87	527785	ATOKA 2	69	2.33	528094	7-RIVERS 3	115	7.49
527656	CROSSROADS 7	345	6.53	527786	ATOKA 3	115	6.61	528095	7-RIVERS 6	230	5.51
527664	CV-CTTNWOOD2	69	2.65	527793	EDDY_STH 3	115	10.25	528109	CV-LAKEWOOD3	115	5.97
527678	SMITH 2	69	3.78	527798	EDDY_NTH 3	115	10.25	528116	CV-IRISHHIL3	115	6.00
527701	ARTESIA 2	69	3.78	527799	EDDY_NORTH 6	230	7.38	528132	OCOTILLO 3	115	5.34
527707	ARTESIA 3	115	6.35	527800	EDDY_SOUTH 6	230	7.38	528137	N_CANAL 3	115	7.11
527710	EAGLE_CREEK2	69	2.29	527802	EDDY_CNTY 7	345	4.27	528151	FIESTA 3	115	7.74
527711	EAGLE_CREEK3	115	6.87	527808	CV-8_MILE 2	67	1.80	528159	CARLSBAD 2	69	4.14
527715	NAVAJO_2TP 3	115	6.57	527809	CV-8_MILE 3	115	5.09	528160	CARLSBAD 3	115	8.64
527717	NAVAJO_2 3	115	6.49	527810	CV-ABO 2	67	1.59	528178	PECOS 3	115	9.11
527720	NAVAJO_3 3	115	6.53	527811	CV-KEWAN_TP3	115	2.83	528179	PECOS 6	230	5.65
527733	NAVAJO_1 2	69	2.15	527821	CV-DAYTON 3	115	6.53	528182	NORTH_LOVNG3	115	2.31
527736	NAVAJO_5TP 3	115	6.53	527822	CV-TURKYTRK3	115	3.31	528226	HOPI_SUB 3	115	3.90
527739	NAVAJO_4 3	115	6.52	527864	CUNNINHAM 3	115	25.36	584960	GEN-2015-058	115	6.51
527743	NAVAJO_5 3	115	6.52	527865	CUNNINHAM 6	230	14.53	599960	EPTNP-D6	230	7.38
527747	ARTESIA_TWN2	69	2.12	527894	HOBBS_INT 6	230	14.86				

Table 4-11
Short Circuit Analysis for Study Project GEN-2015-075 (17SP)

Study Generator GEN-2015-075											
Bus	Bus Name	Bus	Fault	Bus	Bus Name	Bus	Fault	Bus	Bus Name	Bus	Fault
522822	LP-NORTHWST2	69	4.34	526130	SP-CARLISLE2	69	2.11	526337	JONES 6	230	19.79
522823	LP-MILWAKEE6	230	10.08	526146	INDIANA 3	115	9.77	526434	SUNDOWN 3	115	10.94
522828	LP-MILWAKEE2	69	7.49	526159	CARLISLE 2	69	2.57	526435	SUNDOWN 6	230	10.77
522832	LP-VICKSBRG2	69	11.45	526160	CARLISLE 3	115	13.27	526460	AMOCO_SS 6	230	9.43
522861	LP-SOUTHEST6	230	13.80	526161	CARLISLE 6	230	10.73	526469	SP-YUMA 2	69	3.07
522870	LP-HOLLY 6	230	14.80	526162	LP-DOUD_TP 3	115	11.68	526475	YUMA_INT 3	115	11.00
524911	ROSEVELT_S 6	230	9.07	526176	LP-DOUD 3	115	9.07	526481	SP-WOLF_TP 3	115	11.18
525213	SWISHER 6	230	10.89	526184	SW_6878 2	69	2.16	526483	SP-WOLFORTH3	115	8.68
525454	HALE_CNTY 3	115	10.18	526192	MURPHY 3	115	10.68	526524	WOLFFORTH 3	115	11.48
525481	PLANT_X 6	230	23.23	526199	SP-FRANKFRD3	115	9.69	526525	WOLFFORTH 6	230	13.15
525524	TOLK_EAST 6	230	28.53	526205	IVORY 2	69	3.93	526677	GRASSLAND 6	230	6.42
525543	TOLK_TAP 6	230	28.53	526213	ALLEN 3	115	10.73	526736	TERRY_CNTY 3	115	10.25
525780	FLOYD_CNTY 3	115	6.03	526221	BATTON_N 2	69	1.78	560021	TUCO_2	230	20.05
525816	TUCO_INT2 2	69	4.68	526228	BATTON_S 2	69	2.72	560022	TUCO_2	345	15.04
525826	TUCO_INT 2	69	7.93	526243	SP-QUAKER 3	115	9.74	560027	G14-074-TAP	345	7.49
525828	TUCO_INT 3	115	20.12	526256	IVORY_TP 2	69	3.93	583340	GEN-2012-020	230	9.25
525830	TUCO_INT 6	230	23.36	526267	LUBBCK_STH 2	69	4.35	583810	ASGI2013-006	115	8.68
525832	TUCO_INT 7	345	15.04	526268	LUBBCK_STH 3	115	18.94	583819	ASGI2014-001	115	11.43
525840	ANTELOPE_1 6	230	23.15	526269	LUBBCK_STH 6	230	17.51	585060	GEN-2015-068	345	11.66
526076	STANTON_W 3	115	9.42	526298	LUBBCK_EST 3	115	15.24	585120	GEN-2015-075	69	2.31
526109	SP-ERSKINE 3	115	11.43	526299	LUBBCK_EST 6	230	12.92				

DRAFT

Table 4-12
Short Circuit Analysis for Study Project GEN-2015-077 (17SP)

Study Generator GEN-2015-077											
Bus	Bus Name	Bus	Fault	Bus	Bus Name	Bus	Fault	Bus	Bus Name	Bus	Fault
522823	LP-MILWAKEE6	230	10.08	526784	AMOCOWASSON6	230	12.30	527202	SEAGRAVES 3	115	8.42
522861	LP-SOUTHEST6	230	13.80	526792	PRENTICE 3	115	5.82	527211	DIAMONDBACK2	69	3.24
525481	PLANT_X 6	230	23.23	526928	PLAINS_INT 3	115	9.58	527212	DIAMONDBACK3	115	3.09
525830	TUCO_INT 6	230	23.36	526934	YOAKUM 3	115	15.77	527217	MOSS 2	69	5.27
526036	LC-OPDYKE 3	115	5.74	526935	YOAKUM 6	230	13.98	527223	LG-MC&SEMNL2	69	2.58
526160	CARLISLE 3	115	13.27	526944	LG-PLAINS 3	115	7.77	527228	RILEY_TP 2	69	4.06
526161	CARLISLE 6	230	10.73	526993	LG-WELLMAN 2	69	3.05	527229	OZRK_MAH02 2	69	1.52
526162	LP-DOUD_TP 3	115	11.68	526999	UNION_TX 2	69	2.37	527235	LG-ASHMORE 2	69	2.46
526268	LUBBCK_STH 3	115	18.94	527010	OXYBRU_TP 6	230	11.94	527238	ROZ 3	115	10.95
526269	LUBBCK_STH 6	230	17.51	527018	BENNETT 3	115	12.80	527242	AMERADA 3	115	11.10
526337	JONES 6	230	19.79	527036	SHELL_C2 3	115	12.58	527247	CEDARLAKE 2	69	2.81
526416	SLAUGTER_TP2	69	3.13	527041	ARCO_TP 3	115	12.70	527253	ADAIR 2	69	2.61
526424	PACIFIC 3	115	9.35	527047	OXY_WILRD1 3	115	10.27	527261	SULPHUR 2	69	3.35
526434	SUNDOWN 3	115	10.94	527051	ODC_TP 3	115	12.81	527262	SULPHUR 3	115	5.61
526435	SUNDOWN 6	230	10.77	527062	SHELL_CO2 3	115	15.51	527271	LG-FOSTER 2	69	2.70
526445	AMOCO_TP 3	115	10.24	527068	SHELLC3_TP 3	115	10.39	527275	SEMINOLE 3	115	14.09
526452	AMOCO_CRYO 3	115	6.38	527080	EL PASO 3	115	15.29	527276	SEMINOLE 6	230	7.36
526460	AMOCO_SS 6	230	9.43	527096	OXY_DC_WST 2	69	4.48	527284	RUSSELL 3	115	8.92
526469	SP-YUMA 2	69	3.07	527099	DC_EAST 2	69	6.06	527286	XTO_RUSSEL 3	115	9.84
526475	YUMA_INT 3	115	11.00	527105	SAN_ANDS_TP3	115	15.97	527291	LE-KCM 2	69	2.62
526481	SP-WOLF_TP 3	115	11.18	527106	SAN_ANDRES 3	115	11.47	527313	MIDAMERI_TP2	69	2.15
526483	SP-WOLFORTH3	115	8.68	527111	WASSON 2	69	5.93	527322	GAINES 3	115	9.21
526484	LG-LEVELAND3	115	9.19	527117	SW_7814 2	69	3.12	527340	DOSS 3	115	7.88
526491	LG-CLAUENE 3	115	7.85	527125	DENVER_CTY 2	69	8.57	527362	JOHNSON_DRW3	115	10.50
526499	LG-MEADOW 2	69	3.70	527130	DENVER_N 3	115	20.27	527363	HIGG 3	115	10.01
526506	LG-DOCWEBR 2	69	4.92	527136	DENVER_S 3	115	20.27	528433	NEW_NHOBBS 3	115	7.86
526524	WOLFFORTH 3	115	11.48	527146	MUSTANG 3	115	22.41	528626	LE-PLNSINT 2	69	4.33
526525	WOLFFORTH 6	230	13.15	527149	MUSTANG 6	230	13.95	560058	G15-077-TAP	115	7.98
526711	LG-DIXON 2	69	2.49	527151	GS-MUSTANG 6	230	13.95	560059	G1579&G1580T	230	8.65
526735	TERRY_CNTY 2	69	6.92	527183	JAYBEE 2	69	4.35	562480	G13-027-TAP	230	9.27
526736	TERRY_CNTY 3	115	10.25	527189	LG-SEAGRAVE2	69	3.72	584720	ASGI2015-002	69	2.15
526747	LG-BROWNFLD2	69	3.55	527194	LG-PLSHILL 3	115	7.42	585140	GEN-2015-077	115	7.92
526754	BROWNFIELD 2	69	3.04	527201	SEAGRAVES 2	69	5.37	585150	GEN-2015-078	115	16.45
526761	BROWNFLD_TP2	69	2.82								

DRAFT

Table 4-13
Short Circuit Analysis for Study Project GEN-2015-078 (17SP)

Study Generator GEN-2015-078											
Bus Number	Bus Name	Bus Voltage (kV)	Fault Current 3-LG (kA)	Bus Number	Bus Name	Bus Voltage (kV)	Fault Current 3-LG (kA)	Bus Number	Bus Name	Bus Voltage (kV)	Fault Current 3-LG (kA)
524909	ROSEVELT_N 6	230	9.07	527041	ARCO_TP 3	115	12.70	527275	SEMINOLE 3	115	14.09
525481	PLANT_X 6	230	23.23	527047	OXY_WILRD1 3	115	10.27	527276	SEMINOLE 6	230	7.36
525531	TOLK_WEST 6	230	28.53	527051	ODC_TP 3	115	12.81	527284	RUSSELL 3	115	8.92
525543	TOLK_TAP 6	230	28.53	527056	ODC 3	115	9.72	527286	XTO_RUSSEL 3	115	9.84
525637	LAMB_CNTY 6	230	5.41	527062	SHELL_CO2 3	115	15.51	527291	LE-KCM 2	69	2.62
526161	CARLISLE 6	230	10.73	527068	SHELLC3_TP 3	115	10.39	527305	LG-SAWYERFL2	69	1.79
526269	LUBBCK_STH 6	230	17.51	527074	SHELLC3 3	115	9.36	527313	MIDAMERI_TP2	69	2.15
526434	SUNDOWN 3	115	10.94	527080	EL_PASO 3	115	15.29	527321	GAINES 2	69	4.22
526435	SUNDOWN 6	230	10.77	527093	SW_7848 2	69	4.21	527322	GAINES 3	115	9.21
526460	AMOCO_SS 6	230	9.43	527096	OXY_DC_WST 2	69	4.48	527323	OXY_WSTSEM 3	115	6.76
526469	SP-YUMA 2	69	3.07	527099	DC_EAST 2	69	6.06	527325	OXY_WSEM_TP3	115	9.05
526475	YUMA_INT 3	115	11.00	527105	SAN_ANDS_TP3	115	15.97	527331	RILEY 2	69	3.92
526481	SP-WOLF_TP 3	115	11.18	527106	SAN_ANDRES 3	115	11.47	527339	DOSS 2	69	4.21
526484	LG-LEVELAND3	115	9.19	527111	WASSON 2	69	5.93	527340	DOSS 3	115	7.88
526491	LG-CLAUENE 3	115	7.85	527117	SW_7814 2	69	3.12	527345	LEGACY 2	69	3.95
526499	LG-MEADOW 2	69	3.70	527125	DENVER_CTY 2	69	8.57	527346	LEGACY 3	115	7.61
526506	LG-DOCWEBR 2	69	4.92	527130	DENVER_N 3	115	20.27	527355	BOARDMAN 2	69	2.41
526524	WOLFFORTH 3	115	11.48	527136	DENVER_S 3	115	20.27	527360	MAPCO 3	115	10.26
526525	WOLFFORTH 6	230	13.15	527146	MUSTANG 3	115	22.41	527362	JOHNSON_DRW3	115	10.50
526735	TERRY_CNTY 2	69	6.92	527149	MUSTANG 6	230	13.95	527363	HIGG 3	115	10.01
526736	TERRY_CNTY 3	115	10.25	527151	GS-MUSTANG 6	230	13.95	527371	TENNECO 2	69	3.40
526747	LG-BROWNFLD2	69	3.55	527183	JAYBEE 2	69	4.35	527865	CUNNINHAM 6	230	14.53
526754	BROWNFIELD 2	69	3.04	527189	LG-SEAGRAVE2	69	3.72	527891	HOBBS_INT 3	115	28.75
526784	AMOCOWASSON6	230	12.30	527194	LG-PLSHILL 3	115	7.42	527894	HOBBS_INT 6	230	14.86
526792	PRENTICE 3	115	5.82	527201	SEAGRAVES 2	69	5.37	528325	LE-WAITS 3	115	6.65
526928	PLAINS_INT 3	115	9.58	527202	SEAGRAVES 3	115	8.42	528413	TAYLOR 3	115	13.84
526934	YOAKUM 3	115	15.77	527211	DIAMONDBACK2	69	3.24	528433	NEW_NHOBBS 3	115	7.86
526935	YOAKUM 6	230	13.98	527212	DIAMONDBACK3	115	3.09	528604	ANDREWS 6	230	5.76
526944	LG-PLAINS 3	115	7.77	527217	MOSS 2	69	5.27	528626	LE-PLNSINT 2	69	4.33
526965	KINNEY 2	69	2.41	527223	LG-MC&SEMNL2	69	2.58	528775	LE-ERF 3	115	10.50
526971	TOKIO_TP 2	69	3.63	527228	RILEY_TP 2	69	4.06	528778	LE-ROZ 2	69	3.21
526979	LG-JS_SMITH2	69	2.10	527229	OZRK_MAH02 2	69	1.52	560058	G15-077-TAP	115	7.98
526985	WELLMAN 2	69	2.85	527235	LG-ASHMORE 2	69	2.46	560059	G1579&G1580T	230	8.65
526993	LG-WELLMAN 2	69	3.05	527238	ROZ 3	115	10.95	562480	G13-027-TAP	230	9.27
526999	UNION_TX 2	69	2.37	527242	AMERADA 3	115	11.10	583840	GEN-2013-027	230	8.24
527010	OXYBRU_TP 6	230	11.94	527247	CEDARLAKE 2	69	2.81	584810	GEN-2015-040	230	12.87
527018	BENNETT 3	115	12.80	527253	ADAIR 2	69	2.61	585140	GEN-2015-077	115	7.92
527024	ALLRED_SUB 3	115	7.74	527261	SULPHUR 2	69	3.35	585150	GEN-2015-078	115	16.45
527030	ALRDCRTZ_TP3	115	8.49	527262	SULPHUR 3	115	5.61	585160	G1579&G1580	230	8.23
527036	SHELL_C2 3	115	12.58	527271	LG-FOSTER 2	69	2.70				

DRAFT

Table 4-14
Short Circuit Analysis for Study Project GEN-2015-079 and GEN-2015-080 (17SP)

Study Generator GEN-2015-079 and GEN-2015-080											
Bus Number	Bus Name	Bus Voltage (kV)	Fault Current 3-LG (kA)	Bus Number	Bus Name	Bus Voltage (kV)	Fault Current 3-LG (kA)	Bus Number	Bus Name	Bus Voltage (kV)	Fault Current 3-LG (kA)
524770	PLSNT_HILL 6	230	6.42	527125	DENVER_CTY 2	69	8.57	528178	PECOS 3	115	9.11
524908	ROOSEVELT 3	115	10.32	527130	DENVER_N 3	115	20.27	528179	PECOS 6	230	5.65
524909	ROSEVELT_N 6	230	9.07	527136	DENVER_S 3	115	20.27	528317	ENRON_TP 3	115	6.23
524911	ROSEVELT_S 6	230	9.07	527146	MUSTANG 3	115	22.41	528325	LE-WAITS 3	115	6.65
524915	SW_4K33 6	230	9.07	527149	MUSTANG 6	230	13.95	528333	LE-WEST_SUB3	115	8.50
525461	NEWHART 6	230	11.03	527151	GS-MUSTANG 6	230	13.95	528334	LE-LOVINTON3	115	8.41
525480	PLANT_X 3	115	21.05	527194	LG-PLSHILL 3	115	7.42	528348	BUCKEYE_TP 3	115	8.04
525481	PLANT_X 6	230	23.23	527201	SEAGRAVES 2	69	5.37	528355	MADDOX 3	115	24.60
525524	TOLK_EAST 6	230	28.53	527202	SEAGRAVES 3	115	8.42	528385	BUCKEYE 3	115	7.25
525531	TOLK_WEST 6	230	28.53	527238	ROZ 3	115	10.95	528392	PEARLE 3	115	6.11
525543	TOLK_TAP 6	230	28.53	527242	AMERADA 3	115	11.10	528394	QUAHADA 3	115	7.19
525549	TOLK 7	345	12.31	527262	SULPHUR 3	115	5.61	528399	LEA_NATIONL3	115	6.26
525636	LAMB_CNTY 3	115	8.54	527275	SEMINOLE 3	115	14.09	528413	TAYLOR 3	115	13.84
525637	LAMB_CNTY 6	230	5.41	527276	SEMINOLE 6	230	7.36	528422	DCP_ZIA TP 3	115	6.33
526036	LC-OPDYKE 3	115	5.74	527284	RUSSELL 3	115	8.92	528433	NEW_NHOBBS 3	115	7.86
526161	CARLISLE 6	230	10.73	527286	XTO_RUSSEL 3	115	9.84	528435	MILLEN 3	115	11.16
526269	LUBBCK_STH 6	230	17.51	527322	GAINES 3	115	9.21	528442	NE_HOBBS 3	115	11.44
526352	LEHMAN 3	115	6.01	527340	DOSS 3	115	7.88	528463	SANGER_SW 3	115	15.15
526424	PACIFIC 3	115	9.35	527362	JOHNSON_DRW3	115	10.50	528484	SW_4J44 3	115	10.58
526434	SUNDOWN 3	115	10.94	527363	HIGG 3	115	10.01	528491	MONUMENT 3	115	14.59
526435	SUNDOWN 6	230	10.77	527483	CHAVES_CNTY6	230	4.03	528498	W_HOBBS 3	115	11.05
526445	AMOCO_TP 3	115	10.24	527597	TWEEDY 3	115	4.87	528568	MONUMNT_TP 3	115	9.51
526460	AMOCO_SS 6	230	9.43	527711	EAGLE_CREEK3	115	6.87	528575	OXYPERMIAN 3	115	14.57
526524	WOLFFORTH 3	115	11.48	527793	EDDY_STH 3	115	10.25	528582	BYRD 3	115	7.65
526525	WOLFFORTH 6	230	13.15	527798	EDDY_NTH 3	115	10.25	528589	DRINKARD 3	115	6.86
526735	TERRY_CNTY 2	69	6.92	527799	EDDY_NORTH 6	230	7.38	528602	ANDREWS 3	115	7.77
526736	TERRY_CNTY 3	115	10.25	527800	EDDY_SOUTH 6	230	7.38	528603	NA_ENRICH 3	115	7.74
526784	AMOCOWASSON6	230	12.30	527802	EDDY_CNTY 7	345	4.27	528604	ANDREWS 6	230	5.76
526792	PRENTICE 3	115	5.82	527809	CV-8_MILE 3	115	5.09	528605	TARGA 3	115	6.38
526928	PLAINS_INT 3	115	9.58	527864	CUNNINHAM 3	115	25.36	528618	LE-LOVINTON2	69	7.17
526934	YOAKUM 3	115	15.77	527865	CUNNINHAM 6	230	14.53	528626	LE-PLNSINT 2	69	4.33
526935	YOAKUM 6	230	13.98	527891	HOBBS_INT 3	115	28.75	528627	LE-TXACO_TP3	115	6.95
526944	LG-PLAINS 3	115	7.77	527894	HOBBS_INT 6	230	14.86	528740	LE-PLANS_TP2	69	3.59
527010	OXYBRU_TP 6	230	11.94	527930	PCA 3	115	8.08	560051	G15-039-TAP	230	7.50
527018	BENNETT 3	115	12.80	527961	POTASH_JCT 2	69	6.91	560058	G15-077-TAP	115	7.98
527036	SHELL_C2 3	115	12.58	527962	POTASH_JCT 3	115	8.61	560059	G1579&G1580T	230	8.65
527041	ARCO_TP 3	115	12.70	527963	POTASH_JCT 6	230	6.20	562480	G13-027-TAP	230	9.27
527046	OXY_WILRD2 3	115	10.24	527999	INTREPDW_TP3	115	7.86	583840	GEN-2013-027	230	8.24
527047	OXY_WILRD1 3	115	10.27	528025	RDRUNNER 3	115	5.84	584810	GEN-2015-040	230	12.87
527051	ODC_TP 3	115	12.81	528027	RDRUNNER 6	230	3.55	585150	GEN-2015-078	115	16.45
527062	SHELL_CO2 3	115	15.51	528094	7-RIVERS 3	115	7.49	585160	G1579&G1580	230	8.23
527080	EL_PASO 3	115	15.29	528095	7-RIVERS 6	230	5.51	599960	EPTNP-D6	230	7.38
527105	SAN_ANDS_TP3	115	15.97	528160	CARLSBAD 3	115	8.64				

4.3 Short Circuit Results: 2025 Summer Peak

The maximum fault current for each bus is provided for the 2025 Summer Peak conditions. The following tables show the short circuit results for the study generators for the 2025 Summer Peak conditions:

DRAFT

- Table 4-15: Short Circuit Analysis for GEN-2014-046 (25SP)
- Table 4-16: Short Circuit Analysis for GEN-2015-018 (25SP)
- Table 4-17: Short Circuit Analysis for GEN-2015-020 (25SP)
- Table 4-18: Short Circuit Analysis for GEN-2015-031 (25SP)
- Table 4-19: Short Circuit Analysis for GEN-2015-033 (25SP)
- Table 4-20: Short Circuit Analysis for GEN-2015-039 (25SP)
- Table 4-21: Short Circuit Analysis for GEN-2015-040 (25SP)
- Table 4-22: Short Circuit Analysis for GEN-2015-041 and GEN-2015-068 (25SP)
- Table 4-23: Short Circuit Analysis for GEN-2015-056 (25SP)
- Table 4-24: Short Circuit Analysis for GEN-2015-058 (25SP)
- Table 4-25: Short Circuit Analysis for GEN-2015-075 (25SP)
- Table 4-26: Short Circuit Analysis for GEN-2015-077 (25SP)
- Table 4-27: Short Circuit Analysis for GEN-2015-078 (25SP)
- Table 4-28: Short Circuit Analysis for GEN-2015-079 and GEN-2015-080 (25SP)

Table 4-15
Short Circuit Analysis for Study Project GEN-2014-046 (25SP)

Study Generator GEN-2014-046											
Bus Number	Bus Name	Bus Voltage (kV)	Fault Current 3-LG (kA)	Bus Number	Bus Name	Bus Voltage (kV)	Fault Current 3-LG (kA)	Bus Number	Bus Name	Bus Voltage (kV)	Fault Current 3-LG (kA)
524768	PLSNT_HILL 3	115	9.61	527536	BRASHER 3	115	4.47	527894	HOBBS_INT 6	230	19.18
524770	PLSNT_HILL 6	230	6.58	527541	CAPITAN 3	115	5.10	527963	POTASH_JCT 6	230	6.94
524797	PERIMETER 3	115	6.37	527546	SAMSON 3	115	4.56	528070	CV-AZMESA 3	115	7.38
524863	FE-CHZPLT 3	115	7.76	527552	RIAC 2	69	3.55	528094	7-RIVERS 3	115	8.21
524874	OASIS 3	115	9.72	527563	ROSWLL_INT 2	69	5.33	528095	7-RIVERS 6	230	6.06
524875	OASIS 6	230	7.65	527564	ROSWLL_INT 3	115	3.23	528132	OCOTILLO 3	115	6.14
524885	SN_JUAN_TAP6	230	4.74	527575	SW_4702 2	69	2.01	528137	N_CANAL 3	115	8.62
524889	SN_JUAN_WND6	230	4.54	527589	CV-ORCHARD 2	69	5.10	528160	CARLSBAD 3	115	11.14
524909	ROSEVELT_N 6	230	9.25	527597	TWEEDY 3	115	4.96	528178	PECOS 3	115	11.74
524911	ROSEVELT_S 6	230	9.25	527656	CROSSROADS 7	345	6.60	528179	PECOS 6	230	6.40
524915	SW_4K33 6	230	9.25	527711	EAGLE_CREEK3	115	7.29	528226	HOPI_SUB 3	115	6.65
524924	PORTALES 3	115	7.32	527786	ATOKA 3	115	7.02	560025	NORTON 6	230	2.80
525549	TOLK 7	345	12.56	527793	EDDY_STH 3	115	11.10	577103	GEN-2008-022	345	6.12
527482	CHAVES_CNTY3	115	6.36	527798	EDDY_NTH 3	115	11.10	583950	GEN-2014-033	115	6.36
527483	CHAVES_CNTY6	230	4.12	527799	EDDY_NORTH 6	230	7.95	583960	GEN-2014-034	115	5.91
527501	URTON 3	115	5.37	527800	EDDY_SOUTH 6	230	7.95	583970	GEN-2014-035	115	6.05
527508	PRICE 3	115	4.99	527802	EDDY_CNTY 7	345	4.44	584260	GEN-2014-047	345	5.12
527515	CV-PINE 3	115	4.63	527809	CV-8_MILE 3	115	5.29	584280	GEN-2014-046	115	5.41
527522	ROSWELL_CTY3	115	5.10	527821	CV-DAYTON 3	115	6.93	584620	GEN-2015-020	115	9.47
527529	RIACBRSH_TP3	115	4.96	527864	CUNNINHAM 3	115	29.69	584940	GEN-2015-056	345	5.68
527536	BRASHER 3	115	4.81	527865	CUNNINHAM 6	230	17.40	599960	EPTNP-D6	230	7.95

DRAFT

Table 4-16
Short Circuit Analysis for Study Project GEN-2015-018 (25SP)

Study Generator GEN-2015-018											
Bus Number	Bus Name	Bus Voltage (kV)	Fault Current 3-LG (kA)	Bus Number	Bus Name	Bus Voltage (kV)	Fault Current 3-LG (kA)	Bus Number	Bus Name	Bus Voltage (kV)	Fault Current 3-LG (kA)
524770	PLSNT_HILL 6	230	6.58	524808	FE-CLVS_INT3	115	6.62	525614	W_LITLFLDTP3	115	8.29
524875	OASIS 6	230	7.65	524822	CURRY 3	115	10.68	525615	W_LITTLFLD 3	115	7.75
524909	ROSEVELT_N 6	230	9.25	524831	FE-HOLLAND 3	115	8.63	525636	LAMB_CNTY 3	115	9.75
524911	ROSEVELT_S 6	230	9.25	524838	FE-CLOVIS2 3	115	10.10	525828	TUCO_INT 3	115	20.76
524915	SW_4K33 6	230	9.25	524863	FE-CHZPLT 3	115	7.76	560032	G15-018T	115	5.92
525461	NEWHART 6	230	11.12	524874	OASIS 3	115	9.72	584600	GEN-2015-018	115	4.40
525481	PLANT_X 6	230	24.50	524908	ROOSEVELT 3	115	10.48	584620	GEN-2015-020	115	9.47
525524	TOLK_EAST 6	230	29.40	524924	PORTALES 3	115	7.32	524783	W_CLOVIS 2	69	2.42
525531	TOLK_WEST 6	230	29.40	524935	KILGORE 3	115	6.00	524821	CURRY 2	69	4.36
525543	TOLK_TAP 6	230	29.40	524963	S_PORTALES 3	115	5.64	524846	FARWELL 2	69	2.08
525637	LAMB_CNTY 6	230	5.63	524977	MARKET_ST 3	115	5.56	524853	DS-#10 2	69	1.78
526435	SUNDOWN 6	230	11.12	525018	EMULESH&VLY3	115	5.94	524923	PORTALES 2	69	7.17
560025	NORTON 6	230	2.80	525019	EMU&VLY_TP 3	115	6.53	524929	RO-PORT_MTR2	69	7.17
560051	G15-039-TAP	230	7.58	525028	BAILEYCO 3	115	6.49	524934	ZODIAC 2	69	5.33
562480	G13-027-TAP	230	9.39	525040	BAILEY_PMP 3	115	4.94	524941	PORTALES#1 2	69	5.52
599955	PNM-DC6	230	9.25	525050	BC-KELLEY 3	115	8.59	524987	LARIAT 2	69	2.23
524648	CARGILL 3	115	3.92	525056	BC-EARTH 3	115	9.16	524996	BC-PROGRESS2	69	2.91
524662	PARMER_CO 3	115	4.11	525192	KRESS_INT 3	115	11.32	525001	W_MULESHOE 2	69	4.27
524664	DS-#24 3	115	4.05	525326	COX 3	115	5.93	525008	MULESH_CTY 2	69	4.46
524669	DS-#20 3	115	4.84	525393	SPRINGLAKE 3	115	10.17	525017	EMULESH&VLY2	69	4.47
524764	NORRIS_TP 3	115	10.65	525414	LAMTON 3	115	7.98	525023	BC-BAIL_MTR2	69	5.61
524768	PLSNT_HILL 3	115	9.61	525440	LC-S_OLTON 3	115	7.68	525027	BAILEYCO 2	69	5.61
524773	E_CLOVIS 3	115	8.40	525446	SPGLAKE_TP3	115	11.56	525038	BAILEY_PMP 2	69	2.91
524776	N_CLOVIS_TP3	115	7.08	525454	HALE_CNTY 3	115	10.35	525045	LC-BECK 2	69	2.06
524777	N_CLOVIS 3	115	6.42	525480	PLANT_X 3	115	26.99	525453	HALE_CNTY 2	69	6.97
524797	PERIMETER 3	115	6.37	525594	SUDANRURAL 3	115	4.81	525607	NEW_AMHERST2	69	3.23
524801	NORRIS 3	115	9.78	525608	NEW_AMHERST3	115	5.35				

Table 4-17
Short Circuit Analysis for Study Project GEN-2015-020 (25SP)

DRAFT

Study Generator GEN-2015-020											
Bus Number	Bus Name	Bus Voltage (kV)	Fault Current 3-LG (kA)	Bus Number	Bus Name	Bus Voltage (kV)	Fault Current 3-LG (kA)	Bus Number	Bus Name	Bus Voltage (kV)	Fault Current 3-LG (kA)
524486	CAPROCK 3	115	3.83	524874	OASIS 3	115	9.72	525543	TOLK_TAP 6	230	29.40
524502	NORTON 3	115	4.55	524875	OASIS 6	230	7.65	525637	LAMB_CNTY 6	230	5.63
524509	FE-TUCMCARI3	115	3.14	524885	SN_JUAN_TAP6	230	4.74	525830	TUCO_INT 6	230	26.21
524662	PARMER_CO 3	115	4.11	524889	SN_JUAN_WND6	230	4.54	527482	CHAVES_CNTY3	115	6.36
524669	DS-#20 3	115	4.84	524908	ROOSEVELT 3	115	10.48	527483	CHAVES_CNTY6	230	4.12
524764	NORRIS_TP 3	115	10.65	524909	ROSEVELT_N 6	230	9.25	527501	URTON 3	115	5.37
524768	PLSNT_HILL 3	115	9.61	524911	ROSEVELT_S 6	230	9.25	527508	PRICE 3	115	4.99
524770	PLSNT_HILL 6	230	6.58	524915	SW_4K33 6	230	9.25	527546	SAMSON 3	115	5.10
524773	E_CLOVIS 3	115	8.40	524923	PORTALES 2	69	7.17	527793	EDDY_STH 3	115	11.10
524776	N_CLOVIS_TP3	115	7.08	524924	PORTALES 3	115	7.32	527799	EDDY_NORTH 6	230	7.95
524777	N_CLOVIS 3	115	6.42	524929	RO-PORT_MTR2	69	7.17	527800	EDDY_SOUTH 6	230	7.95
524783	W_CLOVIS 2	69	2.42	524934	ZODIAC 2	69	5.33	527802	EDDY_CNTY 7	345	4.44
524784	W_CLOVIS 3	115	6.08	524935	KILGORE 3	115	6.00	560025	NORTON 6	230	2.80
524790	CANNON_TP 3	115	5.81	524941	PORTALES#1 2	69	5.52	560032	G15-018T	115	5.92
524794	CANNONAFB 3	115	5.46	524948	PORTALES#2 2	69	4.70	562480	G13-027-TAP	230	9.39
524797	PERIMETER 3	115	6.37	524962	S_PORTALES 2	69	4.19	583280	ASGI2012-002	115	1.05
524801	NORRIS 3	115	9.78	524963	S_PORTALES 3	115	5.64	583950	GEN-2014-033	115	6.36
524808	FE-CLVS_INT3	115	6.62	524976	MARKET_ST 2	69	3.97	583970	GEN-2014-035	115	6.05
524821	CURRY 2	69	4.36	524977	MARKET_ST 3	115	5.56	584280	GEN-2014-046	115	5.41
524822	CURRY 3	115	10.68	525028	BAILEYCO 3	115	6.49	584600	GEN-2015-018	115	4.40
524831	FE-HOLLAND 3	115	8.63	525481	PLANT_X 6	230	24.50	584620	GEN-2015-020	115	9.47
524838	FE-CLOVIS2 3	115	10.10	525524	TOLK_EAST 6	230	29.40	599955	PNM-DC6	230	9.25
524846	FARWELL 2	69	2.08	525531	TOLK_WEST 6	230	29.40	599960	EPTNP-D6	230	7.95
524863	FE-CHZPLT 3	115	7.76								

Table 4-18
Short Circuit Analysis for Study Project GEN-2015-031 (25SP)

DRAFT

Study Generator GEN-2015-031											
Bus Number	Bus Name	Bus Voltage (kV)	Fault Current 3-LG (kA)	Bus Number	Bus Name	Bus Voltage (kV)	Fault Current 3-LG (kA)	Bus Number	Bus Name	Bus Voltage (kV)	Fault Current 3-LG (kA)
511553	CHISHOLM7	345	15.20	524163	EAST_PLANT 6	230	14.04	525414	LAMTON 3	115	7.98
515458	BORDER 7	345	12.00	524185	PIERCE_TP 3	115	19.32	525446	SPGLAKE_TP3	115	11.56
522800	MU-TULIA 3	115	5.12	524224	MANHATTAN 3	115	18.72	525453	HALE_CNTY 2	69	6.97
522823	LP-MILWAKEE6	230	13.27	524266	BUSHLAND 3	115	9.43	525454	HALE_CNTY 3	115	10.35
522870	LP-HOLLY 6	230	17.14	524267	BUSHLAND 6	230	9.92	525460	NEWHART 3	115	15.34
523095	HITCHLAND 6	230	16.04	524282	34TH ST 3	115	15.15	525461	NEWHART 6	230	11.12
523221	XIT_INTG 6	230	2.63	524290	WILDOR2_JUS6	230	6.73	525480	PLANT_X 3	115	26.99
523267	PRINGLE 6	230	4.29	524296	SPNSPUR_WND7	345	5.70	525481	PLANT_X 6	230	24.50
523308	MOORE_E 3	115	11.12	524306	COULTER 3	115	15.39	525524	TOLK_EAST 6	230	29.40
523309	MOORE_CNTY 6	230	6.83	524321	GEORGIA 2	69	6.67	525531	TOLK_WEST 6	230	29.40
523332	EXELL_TP 3	115	4.83	524322	GEORGIA 3	115	16.62	525543	TOLK_TAP 6	230	29.40
523339	FAIN 3	115	5.29	524331	PULLMAN 3	115	7.16	525549	TOLK 7	345	12.56
523344	BLKHAWK_W 3	115	11.86	524338	SOUTHEAST 3	115	11.13	525614	W_LITLFLDTP3	115	8.29
523377	RIVERVIEW 3	115	13.40	524345	OSAGE 3	115	13.91	525637	LAMB_CNTY 6	230	5.63
523410	CRMWA #4 3	115	9.77	524364	RANDALL 3	115	21.36	525780	FLOYD_CNTY 3	115	6.07
523485	CAMX/AGR TP3	115	14.05	524365	RANDALL 6	230	14.63	525816	TUCO_INT2 2	69	4.70
523494	MEREDITH 3	115	7.76	524377	FARMERS 3	115	15.30	525826	TUCO_INT 2	69	7.99
523543	HUTCHISON 2	69	9.07	524388	CROUSE_HIND3	115	15.30	525828	TUCO_INT 3	115	20.76
523544	HUTCH_N 3	115	15.77	524397	ARROWHEAD 3	115	13.74	525830	TUCO_INT 6	230	26.21
523546	HUTCH_S 3	115	15.77	524404	OWENSCORN 3	115	15.00	525832	TUCO_INT 7	345	17.31
523551	HUTCHISON 6	230	7.27	524414	AMA_SOUTH 3	115	16.85	525840	ANTELOPE_1 6	230	25.96
523636	GRAY_CNTY 3	115	3.90	524415	AMA_SOUTH 6	230	13.77	526076	STANTON_W 3	115	9.59
523748	BOWERS 3	115	6.90	524425	ESTACADO_TP3	115	13.36	526160	CARLISLE 3	115	13.67
523770	GRAPEVINE 3	115	7.92	524432	ESTACADO 3	115	11.75	526161	CARLISLE 6	230	13.69
523771	GRAPEVINE 6	230	5.77	524516	CANYON_WEST3	115	5.34	526269	LUBBCK_STH 6	230	19.33
523776	WHEELER 3	115	6.46	524522	CANYON E_TP3	115	5.49	526298	LUBBCK_EST 3	115	15.57
523777	WHEELER 6	230	5.97	524523	CANYON_EAST3	115	5.09	526299	LUBBCK_EST 6	230	13.63
523779	STLN-DEMARC6	230	7.20	524530	PALO_DURO 3	115	6.58	526337	JONES 6	230	21.40
523815	LLANO_WND 3	115	9.43	524544	SPRING_DRW 3	115	6.40	526434	SUNDOWN 3	115	11.13
523817	MIDSTRM_TP 3	115	6.72	524623	DEAFSMITH 6	230	7.85	526435	SUNDOWN 6	230	11.12
523869	CHAN/TASCOS6	230	3.91	524694	DS-#22 3	115	4.97	526460	AMOCO_SS 6	230	9.76
523928	MARTIN 3	115	7.91	524734	DS-#21 3	115	10.85	526525	WOLFFORTH 6	230	13.79
523931	HIGHLAND_TP3	115	11.60	524745	CASTRO_CNTY2	69	9.62	526677	GRASSLAND 6	230	6.56
523959	POTTER_CO 6	230	22.74	524746	CASTRO_CNTY3	115	11.69	526936	YOAKUM_345	345	9.06
523961	POTTER_CO 7	345	12.21	524909	ROSEVELT_N 6	230	9.25	527656	CROSSROADS 7	345	6.60
523977	HARRNG_WST 6	230	27.48	524911	ROSEVELT_S 6	230	9.25	560011	G14-038-TAP	345	11.06
523978	HARRNG_MID 6	230	27.48	525019	EMU&VLY_TP 3	115	6.53	560021	TUCO_2	230	22.00
523979	HARRNG_EST 6	230	27.48	525050	BC-KELLEY 3	115	8.59	560022	TUCO_2	345	17.13
524007	ROLLHILLS 3	115	19.69	525056	BC-EARTH 3	115	9.16	560027	G14-074-TAP	345	7.77
524009	CHERRY 3	115	18.82	525124	HART_INDUST3	115	7.66	560035	GRAPEVINE	345	10.07
524010	ROLLHILLS 6	230	20.56	525154	HAPPY_INT 3	115	5.38	560050	G15-031-TAP	230	9.56
524016	ASARCO 3	115	26.95	525179	TULIA_TP 3	115	6.33	560051	G15-039-TAP	230	7.58
524018	ASARCO_TP 3	115	29.19	525191	KRESS_INT 2	69	4.45	562480	G13-027-TAP	230	9.39
524043	NICHOLS 3	115	31.25	525192	KRESS_INT 3	115	11.32	583090	G1149&G1504	345	9.52
524044	NICHOLS 6	230	26.59	525203	SW-KRESS 2	69	4.45	583340	GEN-2012-020	230	9.59
524058	WHITAKER 3	115	22.27	525212	SWISHER 3	115	10.46	584220	GEN-2014-040	115	10.32
524079	CONWAY 3	115	5.01	525213	SWISHER 6	230	11.02	584640	GEN-2015-022	115	10.46
524088	KIRBY 3	115	5.44	525224	KRESS_RURL 2	69	2.51	584750	GEN-2015-031	230	9.56
524106	NORTHWEST 3	115	11.38	525225	KRESS_RURAL3	115	6.29	584800	GEN-2015-039	230	6.41
524136	HASTINGS 3	115	13.89	525257	N_PLAINVEW 3	115	5.11	585060	GEN-2015-068	345	12.95
524162	EAST_PLANT 3	115	23.36	525326	COX 3	115	5.93				

DRAFT

Table 4-19
Short Circuit Analysis for Study Project GEN-2015-033 (25SP)

Study Generators GEN-2015-033											
Bus Number	Bus Name	Bus Voltage (kV)	Fault Current 3-LG (kA)	Bus Number	Bus Name	Bus Voltage (kV)	Fault Current 3-LG (kA)	Bus Number	Bus Name	Bus Voltage (kV)	Fault Current 3-LG (kA)
511422	FLETCHR4	138	7.84	525453	HALE_CNTY 2	69	6.97	527010	OXYBRU_TP 6	230	14.02
511423	FLE TAP4	138	8.57	525454	HALE_CNTY 3	115	10.35	527041	ARCO_TP 3	115	13.13
511431	LWS S4	138	10.78	525461	NEWHART 6	230	11.12	527146	MUSTANG 3	115	23.38
511436	COMANC-2	69	9.70	525480	PLANT_X 3	115	26.99	527149	MUSTANG 6	230	15.75
511437	COMANC-4	138	17.87	525481	PLANT_X 6	230	24.50	527151	GS-MUSTANG 6	230	15.75
511439	LWSTAP 4	138	11.23	525524	TOLK_EAST 6	230	29.40	527194	LG-PLSHILL 3	115	7.56
511456	O.K.U.-7	345	5.75	525531	TOLK_WEST 6	230	29.40	527276	SEMINOLE 6	230	7.72
511466	L.E.S.-2	69	16.52	525543	TOLK_TAP 6	230	29.40	527656	CROSSROADS 7	345	6.60
511467	L.E.S.-4	138	24.19	525549	TOLK 7	345	12.56	527802	EDDY_CNTY 7	345	4.44
511468	L.E.S.-7	345	12.98	525731	SP-ABERNTHY2	69	3.03	527865	CUNNINHAM 6	230	17.40
511469	LGORE-N2	69	7.99	525738	HALECENTER 2	69	2.47	527891	HOBBS_INT 3	115	32.96
511470	LGORE-S2	69	6.93	525779	FLOYD_CNTY 2	69	5.33	527894	HOBBS_INT 6	230	19.18
511474	SHERID4	138	12.06	525780	FLOYD_CNTY 3	115	6.07	527896	HOBBS_INT 7	345	8.46
511477	S.W.S.-4	138	33.93	525816	TUCO_INT2 2	69	4.70	527962	POTASH_JCT 3	115	14.31
511486	ELGINJT4	138	9.98	525826	TUCO_INT 2	69	7.99	527965	KIOWA 7	345	5.61
511487	ELGINJT2	69	8.49	525828	TUCO_INT 3	115	20.76	528027	RDRUNNER 7	345	3.81
511488	112GORE4	138	12.22	525830	TUCO_INT 6	230	26.21	528185	N_LOVING 7	345	4.45
511494	COMMTAP4	138	21.20	525832	TUCO_INT 7	345	17.31	528611	GAINESGENTP6	230	9.94
511512	RPPAPER4	138	11.58	525840	ANTELOPE_1 6	230	25.96	529304	OMDUNCN4	138	6.67
511537	ARTVLTP4	138	11.43	525853	LH-WIL&ELLN2	69	2.59	560011	G14-038-TAP	345	11.06
511553	CHISHOLM7	345	15.20	525885	SP-NEWDEAL 2	69	3.40	560013	G14-057T	345	9.77
511557	CHISHOLM6	230	12.53	525926	CROSBY 3	115	4.52	560021	TUCO_2	230	22.00
511563	ELSWORTH 4	138	9.91	526076	STANTON_W 3	115	9.59	560022	TUCO_2	345	17.13
514801	MINCO 7	345	17.03	526109	SP-ERSKINE 3	115	11.71	560027	G14-074-TAP	345	7.77
514809	JOHNCO 7	345	9.37	526146	INDIANA 3	115	9.96	560035	GRAPEVINE	345	10.07
515135	SUNNYSD4	138	17.24	526159	CARLISLE 2	69	2.58	560050	G15-031-TAP	230	9.56
515136	SUNNYSD7	345	10.21	526160	CARLISLE 3	115	13.67	560051	G15-039-TAP	230	7.58
515375	WWRDEHV7	345	22.51	526161	CARLISLE 6	230	13.69	560059	G1579&G1580T	230	9.27
515458	BORDER 7	345	12.00	526162	LP-DOUD_TP 3	115	11.97	560064	G15-093T	345	13.33
515800	GRACMNT7	345	16.43	526192	MURPHY 3	115	10.88	562004	G11-025-TAP	115	4.62
515802	GRACMNT4	138	28.63	526268	LUBBCK_STH 3	115	19.56	562480	G13-027-TAP	230	9.39
521157	HUGO 7	345	10.78	526269	LUBBCK_STH 6	230	19.33	577103	GEN-2008-022	345	6.12
522823	LP-MILWAKEE6	230	13.27	526297	LUBBCK_EST 2	69	8.09	583090	G1149&G1504	345	9.52
522828	LP-MILWAKEE2	69	8.31	526298	LUBBCK_EST 3	115	15.57	583340	GEN-2012-020	230	9.59
522861	LP-SOUTHEST6	230	17.35	526299	LUBBCK_EST 6	230	13.63	583840	GEN-2013-027	230	8.33
522866	LP-COOK 2	69	35.03	526337	JONES 6	230	21.40	584070	GEN-2014-057	345	6.71
522870	LP-HOLLY 6	230	17.14	526435	SUNDOWN 6	230	11.12	584260	GEN-2014-047	345	5.12
522888	LP-WADSWRTH6	230	12.71	526460	AMOCO_SS 6	230	9.76	584440	GEN-2014-074	345	7.31
523959	POTTER_CO 6	230	22.74	526524	WOLFFORTH 3	115	11.70	584760	GEN-2015-033	345	6.83
523961	POTTER_CO 7	345	12.21	526525	WOLFFORTH 6	230	13.79	584940	GEN-2015-056	345	5.68
524296	SPNSPUR_WND7	345	5.70	526676	GRASSLAND 3	115	6.18	585060	GEN-2015-068	345	12.95
524909	ROSEVELT_N 6	230	9.25	526677	GRASSLAND 6	230	6.56	585080	GEN-2015-071	345	12.15
524911	ROSEVELT_S 6	230	9.25	526679	CIRRUS_WND 6	230	5.09	585160	G1579&G1580	230	8.80
524915	SW_4K33 6	230	9.25	526784	AMOCOWASSON6	230	13.95	585270	GEN-2015-093	345	12.40
525192	KRESS_INT 3	115	11.32	526792	PRENTICE 3	115	5.90	585280	GEN-2015-092	345	6.49
525212	SWISHER 3	115	10.46	526928	PLAINS_INT 3	115	9.90	590001	OKLEHV24	138	4.79
525213	SWISHER 6	230	11.02	526934	YOAKUM 3	115	16.82	590003	OKLEHV14	138	4.80
525326	COX 3	115	5.93	526935	YOAKUM 6	230	17.71	599891	OKLAUN 7	345	4.04
525414	LAMTON 3	115	7.98	526936	YOAKUM_345	345	9.06	599955	PNM-DC6	230	9.25

DRAFT

Table 4-20
Short Circuit Analysis for Study Project GEN-2015-039 (25SP)

Study Generator GEN-2015-039											
Bus Number	Bus Name	Bus Voltage (kV)	Fault Current 3-LG (kA)	Bus Number	Bus Name	Bus Voltage (kV)	Fault Current 3-LG (kA)	Bus Number	Bus Name	Bus Voltage (kV)	Fault Current 3-LG (kA)
522823	LP-MILWAKEE6	230	0.23	524911	ROSEVELT_S 6	230	9.25	525840	ANTELOPE_1 6	230	25.96
522861	LP-SOUTHEST6	230	0.23	524915	SW_4K33 6	230	9.25	526020	HOCKLEY 3	115	5.59
522870	LP-HOLLY 6	230	0.23	524924	PORTALES 3	115	7.32	526036	LC-OPDYKE 3	115	5.86
523095	HITCHLAND 6	230	0.23	525018	EMULESH&VLY3	115	5.94	526076	STANTON_W 3	115	9.59
523221	XIT_INTG 6	230	0.23	525019	EMU&VLY_TP 3	115	6.53	526160	CARLISLE 3	115	13.67
523267	PRINGLE 6	230	0.23	525027	BAILEYCO 2	69	5.61	526161	CARLISLE 6	230	13.69
523308	MOORE_E 3	115	0.12	525028	BAILEYCO 3	115	6.49	526268	LUBBCK_STH 3	115	19.56
523309	MOORE_CNTY 6	230	0.23	525040	BAILEY_PMP 3	115	4.94	526269	LUBBCK_STH 6	230	19.33
523869	CHAN/TASCOS6	230	0.23	525050	BC-KELLEY 3	115	8.59	526298	LUBBCK_EST 3	115	15.57
523959	POTTER_CO 6	230	0.23	525056	BC-EARTH 3	115	9.16	526299	LUBBCK_EST 6	230	13.63
523961	POTTER_CO 7	345	0.35	525124	HART_INDUST3	115	7.66	526337	JONES 6	230	21.40
523977	HARRNG_WST 6	230	0.23	525179	TULIA_TP 3	115	6.33	526361	COCHRAN 3	115	6.91
523978	HARRNG_MID 6	230	0.23	525191	KRESS_INT 2	69	4.45	526424	PACIFIC 3	115	9.49
523979	HARRNG_EST 6	230	0.23	525192	KRESS_INT 3	115	11.32	526434	SUNDOWN 3	115	11.13
524007	ROLLHILLS 3	115	0.12	525212	SWISHER 3	115	10.46	526435	SUNDOWN 6	230	11.12
524010	ROLLHILLS 6	230	0.23	525213	SWISHER 6	230	11.02	526445	AMOCO_TP 3	115	10.40
524266	BUSHLAND 3	115	0.12	525225	KRESS_RURAL3	115	6.29	526452	AMOCO_CRYO 3	115	6.44
524267	BUSHLAND 6	230	0.23	525272	KISER 3	115	5.12	526460	AMOCO_SS 6	230	9.76
524276	WILDOR_WND 6	230	0.23	525291	PLAINVW_TP 2	69	6.54	526475	YUMA_INT 3	115	11.23
524290	WILDOR2_JUS6	230	0.23	525298	S_PLAINVEW 2	69	2.59	526484	LG-LEVELAND3	115	9.32
524296	SPNSPUR_WND7	345	0.35	525325	COX 2	69	3.37	526524	WOLFFORTH 3	115	11.70
524300	HILLSIDE 3	115	0.12	525326	COX 3	115	5.93	526525	WOLFFORTH 6	230	13.79
524306	COULTER 3	115	0.12	525393	SPRINGLAKE 3	115	10.17	526677	GRASSLAND 6	230	6.56
524415	AMA_SOUTH 6	230	0.23	525413	LAMTON 2	69	5.27	526736	TERRY_CNTY 3	115	10.41
524516	CANYON_WEST3	115	0.12	525414	LAMTON 3	115	7.98	526934	YOAKUM 3	115	16.82
524554	CENTRE_ST 2	69	0.07	525432	SP-HALFWAY 2	69	5.91	526935	YOAKUM 6	230	17.71
524556	CENTRE_ST 3	115	0.12	525440	LC-S_OLTON 3	115	7.68	526936	YOAKUM_345	345	9.06
524561	DS-MTR 2	69	0.07	525446	SPGLAKE_TP3	115	11.56	527010	OXYBRU_TP 6	230	14.02
524567	NE_HEREFORD3	115	0.12	525453	HALE_CNTY 2	69	6.97	527149	MUSTANG 6	230	15.75
524573	NE_HEREFORD2	69	0.07	525454	HALE_CNTY 3	115	10.35	527656	CROSSROADS 7	345	6.60
524580	DS-#9 2	69	0.07	525460	NEWHART 3	115	15.34	560011	G14-038-TAP	345	11.06
524590	DAWN 3	115	0.12	525461	NEWHART 6	230	11.12	560021	TUCO_2	230	22.00
524597	PANDAHFD 3	115	0.12	525480	PLANT_X 3	115	26.99	560022	TUCO_2	345	17.13
524605	HEREFORD 2	69	0.07	525481	PLANT_X 6	230	24.50	560025	NORTON 6	230	2.80
524606	HEREFORD 3	115	0.12	525524	TOLK_EAST 6	230	29.40	560027	G14-074-TAP	345	7.77
524622	DEAFSMITH 3	115	0.12	525531	TOLK_WEST 6	230	29.40	560032	G15-018T	115	5.92
524623	DEAFSMITH 6	230	0.23	525543	TOLK_TAP 6	230	29.40	560035	GRAPEVINE	345	10.07
524629	DS-#6 3	115	0.12	525549	TOLK 7	345	12.56	560050	G15-031-TAP	230	9.56
524633	DS-#4 2	69	0.07	525608	NEW_AMHERST3	115	5.35	560051	G15-039-TAP	230	7.58
524655	FRIONA 3	115	0.12	525614	W_LITLFLDTP3	115	8.29	560059	G1579&G1580T	230	9.27
524694	DS-#22 3	115	0.12	525615	W_LITTLFLD 3	115	7.75	562480	G13-027-TAP	230	9.39
524734	DS-#21 3	115	0.12	525635	LAMB_CNTY 2	69	6.25	583340	GEN-2012-020	230	9.59
524745	CASTRO_CNTY2	69	0.07	525636	LAMB_CNTY 3	115	9.75	583840	GEN-2013-027	230	8.33
524746	CASTRO_CNTY3	115	0.12	525637	LAMB_CNTY 6	230	5.63	584220	GEN-2014-040	115	10.32
524768	PLSNT_HILL 3	115	0.12	525780	FLOYD_CNTY 3	115	6.07	584640	GEN-2015-022	115	10.46
524770	PLSNT_HILL 6	230	0.23	525816	TUCO_INT2 2	69	4.70	584750	GEN-2015-031	230	9.56
524822	CURRY 3	115	0.12	525826	TUCO_INT 2	69	7.99	584800	GEN-2015-039	230	6.41
524875	OASIS 6	230	0.23	525828	TUCO_INT 3	115	20.76	585060	GEN-2015-068	345	12.95
524908	ROOSEVELT_3	115	0.12	525830	TUCO_INT 6	230	26.21	599955	PNM-DC6	230	9.25
524909	ROSEVELT_N 6	230	0.23	525832	TUCO_INT 7	345	17.31				

DRAFT

Table 4-21
Short Circuit Analysis for Study Project GEN-2015-040 (25SP)

Study Generator GEN-2015-040											
Bus Number	Bus Name	Bus Voltage (kV)	Fault Current 3-LG (kA)	Bus Number	Bus Name	Bus Voltage (kV)	Fault Current 3-LG (kA)	Bus Number	Bus Name	Bus Voltage (kV)	Fault Current 3-LG (kA)
524909	ROSEVELT_N 6	230	9.25	527051	ODC_TP 3	115	13.24	527276	SEMINOLE 6	230	7.72
525481	PLANT_X 6	230	24.50	527056	ODC 3	115	9.97	527286	XTO_RUSSEL 3	115	10.03
525531	TOLK_WEST 6	230	29.40	527062	SHELL_CO2 3	115	16.04	527313	MIDAMERI_TP2	69	2.16
525543	TOLK_TAP 6	230	29.40	527068	SHELLC3_TP 3	115	10.58	527321	GAINES 2	69	4.24
525637	LAMB_CNTY 6	230	5.63	527080	EL_PASO 3	115	15.80	527322	GAINES 3	115	9.39
525830	TUCO_INT 6	230	26.21	527099	DC_EAST 2	69	6.10	527325	OXY_WSEM_TP3	115	9.23
525832	TUCO_INT 7	345	17.31	527105	SAN_ANDS_TP3	115	16.46	527339	DOSS 2	69	4.23
526434	SUNDOWN 3	115	11.13	527106	SAN_ANDRES 3	115	11.72	527340	DOSS 3	115	8.02
526435	SUNDOWN 6	230	11.12	527111	WASSON 2	69	5.97	527346	LEGACY 3	115	7.73
526460	AMOCO_SS 6	230	9.76	527125	DENVER_CTY 2	69	8.65	527363	HIGG 3	115	10.22
526524	WOLFFORTH 3	115	11.70	527130	DENVER_N 3	115	21.06	527865	CUNNINHAM 6	230	17.40
526525	WOLFFORTH 6	230	13.79	527136	DENVER_S 3	115	21.06	527891	HOBBS_INT 3	115	32.96
526735	TERRY_CNTY 2	69	6.97	527146	MUSTANG 3	115	23.38	527894	HOBBS_INT 6	230	19.18
526736	TERRY_CNTY 3	115	10.41	527149	MUSTANG 6	230	15.75	527896	HOBBS_INT 7	345	8.46
526784	AMOCOWASSON6	230	13.95	527151	GS-MUSTANG 6	230	15.75	527965	KIOWA 7	345	5.61
526792	PRENTICE 3	115	5.90	527183	JAYBEE 2	69	4.37	528611	GAINESGENTP6	230	9.94
526928	PLAINS_INT 3	115	9.90	527194	LG-PLSHILL 3	115	7.56	528626	LE-PLNSINT 2	69	4.37
526934	YOAKUM 3	115	16.82	527201	SEAGRAVES 2	69	5.41	560022	TUCO_2	345	17.13
526935	YOAKUM 6	230	17.71	527202	SEAGRAVES 3	115	8.58	560027	G14-074-TAP	345	7.77
526936	YOAKUM_345	345	9.06	527212	DIAMONDBACK3	115	3.10	560058	G15-077-TAP	115	8.08
526944	LG-PLAINS 3	115	7.96	527217	MOSS 2	69	5.31	560059	G1579&G1580T	230	9.27
526993	LG-WELLMAN 2	69	3.07	527223	LG-MC&SEMNL2	69	2.59	562480	G13-027-TAP	230	9.39
527010	OXYBRU_TP 6	230	14.02	527238	ROZ 3	115	11.24	583840	GEN-2013-027	230	8.33
527018	BENNETT 3	115	13.22	527242	AMERADA 3	115	11.39	584810	GEN-2015-040	230	14.38
527036	SHELL_C2 3	115	12.87	527261	SULPHUR 2	69	3.36	585060	GEN-2015-068	345	12.95
527041	ARCO_TP 3	115	13.13	527262	SULPHUR 3	115	5.67	585150	GEN-2015-078	115	16.97
527047	OXY_WILRD1 3	115	10.54	527275	SEMINOLE 3	115	14.56	585160	G1579&G1580	230	8.80

DRAFT

Table 4-22
Short Circuit Analysis for Study Project GEN-2015-041 and GEN-2015-068 (25SP)

DRAFT

Study Generator GEN-2015-041 and GEN-2015-068											
Bus Number	Bus Name	Bus Voltage (kV)	Fault Current 3-LG (kA)	Bus Number	Bus Name	Bus Voltage (kV)	Fault Current 3-LG (kA)	Bus Number	Bus Name	Bus Voltage (kV)	Fault Current 3-LG (kA)
511423	FLE TAP4	138	8.57	525543	TOLK_TAP 6	230	29.40	527151	GS-MUSTANG 6	230	15.75
511437	COMANC-4	138	17.87	525549	TOLK 7	345	12.56	527194	LG-PLSHILL 3	115	7.56
511439	LWSTAP 4	138	11.23	525614	W_LITLFLDTP3	115	8.29	527202	SEAGRAVES 3	115	8.58
511456	O.K.U.-7	345	5.75	525637	LAMB_CNTY 6	230	5.63	527275	SEMINOLE 3	115	14.56
511466	L.E.S.-2	69	16.52	525724	COUNTYLINE 2	69	2.21	527276	SEMINOLE 6	230	7.72
511467	L.E.S.-4	138	24.19	525731	SP-ABERNTHY2	69	3.03	527656	CROSSROADS 7	345	6.60
511468	L.E.S.-7	345	12.98	525738	HALECENTER 2	69	2.47	527799	EDDY_NORTH 6	230	7.95
511474	SHERID4	138	12.06	525745	LH-HALECTR 2	69	2.44	527800	EDDY_SOUTH 6	230	7.95
511486	ELGINJT4	138	9.98	525769	BARWISE 2	69	3.77	527802	EDDY_CNTY 7	345	4.44
511490	ELKCITY6	230	8.11	525779	FLOYD_CNTY 2	69	5.33	527864	CUNNINHAM 3	115	29.69
511494	COMMTAP4	138	21.20	525780	FLOYD_CNTY 3	115	6.07	527865	CUNNINHAM 6	230	17.40
511541	SWEETWT6	230	8.08	525790	FLOYDADA_TP2	69	2.50	527891	HOBBS_INT 3	115	32.96
511553	CHISHOLM7	345	15.20	525811	LH-HARMONY 2	69	4.26	527894	HOBBS_INT 6	230	19.18
511557	CHISHOLM6	230	12.53	525816	TUCO_INT2 2	69	4.70	527896	HOBBS_INT 7	345	8.46
514801	MINCO 7	345	17.03	525826	TUCO_INT 2	69	7.99	527930	PCA 3	115	11.11
515136	SUNNYSD7	345	10.21	525828	TUCO_INT 3	115	20.76	527961	POTASH_JCT 2	69	8.42
515375	WWRDEHV7	345	22.51	525830	TUCO_INT 6	230	26.21	527962	POTASH_JCT 3	115	14.31
515376	WWRDEHV4	138	25.96	525832	TUCO_INT 7	345	17.31	527963	POTASH_JCT 6	230	6.94
515458	BORDER 7	345	12.00	525840	ANTELOPE 1 6	230	25.96	527965	KIOWA 7	345	5.61
515554	BVRCNTY7	345	18.06	525853	LH-WIL&ELLN2	69	2.59	527999	INTREPDW_TP3	115	12.43
515599	NBUFFRG7	345	8.87	525860	SP-BECTON 2	69	2.29	528025	RDRUNNER 3	115	8.90
515800	GRACMNT7	345	16.43	525885	SP-NEWDEAL 2	69	3.40	528027	RDRUNNER 7	345	3.81
515802	GRACMNT4	138	28.63	525892	WHITE&MONRO2	69	2.56	528160	CARLSBAD 3	115	11.14
522819	LP-NORTHEST2	69	13.12	525925	CROSBY 2	69	4.79	528182	NORTH_LOVNG3	115	8.42
522822	LP-NORTHWST2	69	4.61	525926	CROSBY 3	115	4.52	528185	N_LOVING 7	345	4.45
522823	LP-MILWAKEE6	230	13.27	526076	STANTON_W 3	115	9.59	528223	CHINA_DRAW 7	345	3.63
522828	LP-MILWAKEE2	69	8.31	526109	SP-ERSKINE 3	115	11.71	528333	LE-WEST_SUB3	115	8.79
522832	LP-VICKSBRG2	69	14.11	526130	SP-CARLISLE2	69	2.12	528355	MADDOX 3	115	27.79
522857	LP-SOUTHEST2	69	24.60	526146	INDIANA 3	115	9.96	528433	NEW_NHOBBS 3	115	8.04
522861	LP-SOUTHEST6	230	17.35	526159	CARLISLE 2	69	2.58	528435	MILLEN 3	115	11.68
522866	LP-COOK 2	69	35.03	526160	CARLISLE 3	115	13.67	528604	ANDREWS 6	230	6.97
522870	LP-HOLLY 6	230	17.14	526161	CARLISLE 6	230	13.69	528610	GAINES_GEN 6	230	8.59
522879	LP-WADSWRTH2	69	22.83	526162	LP-DOUD_TP 3	115	11.97	528611	GAINESGENTP6	230	9.94
522888	LP-WADSWRTH6	230	12.71	526176	LP-DOUD 3	115	9.24	528626	LE-PLNSINT 2	69	4.37
523097	HITCHLAND 7	345	18.11	526184	SW_6878 2	69	2.17	539801	THISTLE7	345	15.59
523309	MOORE_CNTY 6	230	6.83	526192	MURPHY 3	115	10.88	560000	G11-14-TAP	345	15.80
523869	CHAN/TASCOS6	230	3.91	526199	SP-FRANKFRD3	115	9.81	560011	G14-038-TAP	345	11.06
523959	POTTER_CO 6	230	22.74	526213	ALLEN 3	115	10.87	560013	G14-057T	345	9.77
523961	POTTER_CO 7	345	12.21	526267	LUBBCK_STH 2	69	4.37	560021	TUCO_2	230	22.00
523979	HARRNG_EST 6	230	27.48	526268	LUBBCK_STH 3	115	19.56	560022	TUCO_2	345	17.13
524010	ROLLHILLS 6	230	20.56	526269	LUBBCK_STH 6	230	19.33	560027	G14-074-TAP	345	7.77
524267	BUSHLAND 6	230	9.92	526284	PLANTERS 2	69	6.35	560035	GRAPEVINE	345	10.07
524296	SPNSPUR_WND7	345	5.70	526297	LUBBCK_EST 2	69	8.09	560050	G15-031-TAP	230	9.56
524415	AMA_SOUTH 6	230	13.77	526298	LUBBCK_EST 3	115	15.57	560051	G15-039-TAP	230	7.58
524623	DEAFSMITH 6	230	7.85	526299	LUBBCK_EST 6	230	13.63	560059	G1579&G1580T	230	9.27
524770	PLSNT_HILL 6	230	6.58	526310	CLUTTER 2	69	5.47	560064	G15-093T	345	13.33
524875	OASIS 6	230	7.65	526337	JONES 6	230	21.40	562004	G11-025-TAP	115	4.62
524908	ROOSEVELT 3	115	10.48	526434	SUNDOWN 3	115	11.13	562075	G11-051-TAP	345	17.97
524909	ROSEVELT_N 6	230	9.25	526435	SUNDOWN 6	230	11.12	562480	G13-027-TAP	230	9.39
524911	ROSEVELT_S 6	230	9.25	526460	AMOCO_SS 6	230	9.76	577103	GEN-2008-022	345	6.12
524915	SW_4K33 6	230	9.25	526475	YUMA_INT 3	115	11.23	577104	G08-022-WEST	345	5.64
525019	EMU&VLY_TP 3	115	6.53	526481	SP-WOLF_TP 3	115	11.43	581137	GEN-2011-025	115	4.62
525056	BC-EARTH 3	115	9.16	526524	WOLFFORTH 3	115	11.70	582019	GEN-2011-019	345	22.51
525124	HART_INDUST3	115	7.66	526525	WOLFFORTH 6	230	13.79	582020	GEN-2011-020	345	22.51
525179	TULIA_TP 3	115	6.33	526562	SLATON 2	69	2.48	583090	G1149&G1504	345	9.52
525191	KRESS_INT 2	69	4.45	526602	SP-WOODROW 3	115	9.52	583340	GEN-2012-020	230	9.59
525192	KRESS_INT 3	115	11.32	526656	LYNN_CNTY 3	115	5.67	583819	ASGI2014-001	115	11.71
525212	SWISHER 3	115	10.46	526676	GRASSLAND 3	115	6.18	583840	GEN-2013-027	230	8.33
525213	SWISHER 6	230	11.02	526677	GRASSLAND 6	230	6.56	584070	GEN-2014-057	345	6.71
525225	KRESS_RURAL3	115	6.29	526679	CIRRUS_WND 6	230	5.09	584260	GEN-2014-047	345	5.12
525272	KISER 3	115	5.12	526694	GRAHAM 3	115	2.69	584290	GEN-2014-038	345	9.91
525291	PLAINVW_TP 2	69	6.54	526736	TERRY_CNTY 3	115	10.41	584440	GEN-2014-074	345	7.31
525298	S_PLAINVEW 2	69	2.59	526784	AMOCOWASSON6	230	13.95	584640	GEN-2015-022	115	10.46
525325	COX 2	69	3.37	526792	PRENTICE 3	115	5.90	584750	GEN-2015-031	230	9.56
525326	COX 3	115	5.93	526928	PLAINS_INT 3	115	9.90	584760	GEN-2015-033	345	6.83
525413	LAMTON 2	69	5.27	526934	YOAKUM 3	115	16.82	584800	GEN-2015-039	230	6.41
525414	LAMTON 3	115	7.98	526935	YOAKUM 6	230	17.71	584810	GEN-2015-040	230	14.38
525432	SP-HALFWAY 2	69	5.91	526936	YOAKUM_345	345	9.06	584940	GEN-2015-056	345	5.68
525440	LC-S_OLTON 3	115	7.68	526944	LG-PLAINS 3	115	7.96	585060	GEN-2015-068	345	12.95
525446	SPGLAKE_TP3	115	11.56	527010	OXYBRU_TP 6	230	14.02	585080	GEN-2015-071	345	12.15
525453	HALE_CNTY 2	69	6.97	527018	BENNETT 3	115	13.22	585120	GEN-2015-075	69	2.31
525454	HALE_CNTY 3	115	10.35	527041	ARCO_TP 3	115	13.13	585150	GEN-2015-078	115	16.97
525460	NEWHART 3	115	15.34	527047	OXY_WILRD1 3	115	10.54	585160	G1579&G1580	230	8.80
525461	NEWHART 6	230	11.12	527062	SHELL_CO2 3	115	16.04	585270	GEN-2015-093	345	12.40
525480	PLANT_X 3	115	26.99	527130	DENVER_N 3	115	21.06	590001	OKLEHV24	138	4.79
525481	PLANT_X 6	230	24.50	527136	DENVER_S 3	115	21.06	590003	OKLEHV14	138	4.80
525524	TOLK_EAST 6	230	29.40	527146	MUSTANG 3	115	23.38	599891	OKLAUN 7	345	4.04
525531	TOLK_WEST 6	230	29.40	527149	MUSTANG 6	230	15.75	599955	PNM-DC6	230	9.25

Table 4-23

Short Circuit Analysis for Study Project GEN-2015-056 (25SP)

Study Generator GEN-2015-056											
Bus Number	Bus Name	Bus Voltage (kV)	Fault Current 3-LG (kA)	Bus Number	Bus Name	Bus Voltage (kV)	Fault Current 3-LG (kA)	Bus Number	Bus Name	Bus Voltage (kV)	Fault Current 3-LG (kA)
511456	O.K.U.-7	345	5.75	525461	NEWHART 6	230	11.12	528094	7-RIVERS 3	115	8.21
511553	CHISHOLM7	345	15.20	525480	PLANT_X 3	115	26.99	528095	7-RIVERS 6	230	6.06
511557	CHISHOLM6	230	12.53	525481	PLANT_X 6	230	24.50	528132	OCOTILLO 3	115	6.14
515375	WWRDEHV7	345	22.51	525524	TOLK_EAST 6	230	29.40	528137	N_CANAL 3	115	8.62
515458	BORDER 7	345	12.00	525531	TOLK_WEST 6	230	29.40	528160	CARLSBAD 3	115	11.14
515554	BVRCNTY7	345	18.06	525543	TOLK_TAP 6	230	29.40	528178	PECOS 3	115	11.74
515590	PALDR2W7	345	14.74	525549	TOLK 7	345	12.56	528179	PECOS 6	230	6.40
515800	GRACMNT7	345	16.43	525636	LAMB_CNTY 3	115	9.75	528226	HOPI_SUB 3	115	6.65
523095	HITCHLAND 6	230	16.04	525637	LAMB_CNTY 6	230	5.63	531512	WALKTAP7	345	8.05
523097	HITCHLAND 7	345	18.11	525828	TUCO_INT 3	115	20.76	560000	G11-14-TAP	345	15.80
523101	NOBLE_WND 7	345	18.02	525830	TUCO_INT 6	230	26.21	560010	G14-037-TAP	345	17.91
523112	NOVUS1 7	345	17.71	525832	TUCO_INT 7	345	17.31	560011	G14-038-TAP	345	11.06
523221	XIT_INTG 6	230	2.63	525840	ANTELOPE_1 6	230	25.96	560021	TUCO_2	230	22.00
523267	PRINGLE 6	230	4.29	526161	CARLISLE 6	230	13.69	560022	TUCO_2	345	17.13
523308	MOORE_E 3	115	11.12	526337	JONES 6	230	21.40	560027	G14-074-TAP	345	7.77
523309	MOORE_CNTY 6	230	6.83	526435	SUNDOWN 6	230	11.12	560035	GRAPEVINE	345	10.07
523869	CHAN/TASCOS6	230	3.91	526935	YOAKUM 6	230	17.71	560050	G15-031-TAP	230	9.56
523959	POTTER_CO 6	230	22.74	526936	YOAKUM_345	345	9.06	560051	G15-039-TAP	230	7.58
523961	POTTER_CO 7	345	12.21	527482	CHAVES_CNTY3	115	6.36	562480	G13-027-TAP	230	9.39
523977	HARRNG_WST 6	230	27.48	527483	CHAVES_CNTY6	230	4.12	576395	GEN-2010-014	345	12.65
523978	HARRNG_MID 6	230	27.48	527501	URTON 3	115	5.37	577103	GEN-2008-022	345	6.12
523979	HARRNG_EST 6	230	27.48	527508	PRICE 3	115	4.99	577104	G08-022-WEST	345	5.64
524007	ROLLHILLS 3	115	19.69	527546	SAMSON 3	115	5.10	578542	GEN-2010-001	345	14.34
524010	ROLLHILLS 6	230	20.56	527597	TWEEDY 3	115	4.96	581148	GEN-2011-022	345	10.14
524266	BUSHLAND 3	115	9.43	527656	CROSSROADS 7	345	6.60	583090	G1149&G1504	345	9.52
524267	BUSHLAND 6	230	9.92	527711	EAGLE_CREEK3	115	7.29	583340	GEN-2012-020	230	9.59
524290	WILDOR2_JUS6	230	6.73	527786	ATOKA 3	115	7.02	583760	GEN-2013-030	345	13.17
524296	SPNSPUR_WND7	345	5.70	527793	EDDY_STH 3	115	11.10	583840	GEN-2013-027	230	8.33
524623	DEAFSMITH 6	230	7.85	527798	EDDY_NTH 3	115	11.10	583950	GEN-2014-033	115	6.36
524770	PLSNT_HILL 6	230	6.58	527799	EDDY_NORTH 6	230	7.95	583970	GEN-2014-035	115	6.05
524875	OASIS 6	230	7.65	527800	EDDY_SOUTH 6	230	7.95	584260	GEN-2014-047	345	5.12
524885	SN_JUAN_TAP6	230	4.74	527802	EDDY_CNTY 7	345	4.44	584280	GEN-2014-046	115	5.41
524889	SN_JUAN_WND6	230	4.54	527809	CV-8_MILE 3	115	5.29	584290	GEN-2014-038	345	9.91
524908	ROOSEVELT 3	115	10.48	527821	CV-DAYTON 3	115	6.93	584440	GEN-2014-074	345	7.31
524909	ROSEVELT_N 6	230	9.25	527864	CUNNINHAM 3	115	29.69	584940	GEN-2015-056	345	5.68
524911	ROSEVELT_S 6	230	9.25	527865	CUNNINHAM 6	230	17.40	585060	GEN-2015-068	345	12.95
524915	SW_4K33 6	230	9.25	527894	HOBBS_INT 6	230	19.18	585080	GEN-2015-071	345	12.15
525212	SWISHER 3	115	10.46	527896	HOBBS_INT 7	345	8.46	599955	PNM-DC6	230	9.25
525213	SWISHER 6	230	11.02	527963	POTASH_JCT 6	230	6.94	599960	EPTNP-D6	230	7.95
525460	NEWHART 3	115	15.34	528070	CV-AZMESA 3	115	7.38				

DRAFT

Table 4-24
Short Circuit Analysis for Study Project GEN-2015-058 (25SP)

Study Generator GEN-2015-058											
Bus Number	Bus Name	Bus Voltage (kV)	Fault Current 3-LG (kA)	Bus Number	Bus Name	Bus Voltage (kV)	Fault Current 3-LG (kA)	Bus Number	Bus Name	Bus Voltage (kV)	Fault Current 3-LG (kA)
524885	SN_JUAN_TAP6	230	4.74	527757	ARTESIA_TP 2	69	3.71	527930	PCA 3	115	11.11
527482	CHAVES_CNTY3	115	6.36	527761	ARTESIA_W 2	69	3.38	527962	POTASH_JCT 3	115	14.31
527483	CHAVES_CNTY6	230	4.12	527762	ARTSA_CC_TP2	69	1.92	527963	POTASH_JCT 6	230	6.94
527552	RIAC 2	115	4.56	527763	CV-W_ARTSIA2	69	1.62	528003	CV-DAGGR&IH2	69	1.64
527564	ROSWLL_INT 3	115	5.33	527768	ARTESIA_CC 2	69	1.75	528070	CV-AZMESA 3	115	7.38
527596	RIACTWTY_TP3	115	5.10	527772	ARTSA_SR_TP2	69	1.99	528076	CV-WALTCYN 3	115	4.51
527597	TWEEDY 3	115	4.96	527775	ARTESIA_SR 2	69	1.92	528079	CV-CONEBUTE3	115	3.33
527656	CROSSROADS 7	345	6.60	527785	ATOKA 2	69	2.36	528093	7-RIVERS 2	69	2.39
527664	CV-CTTNWOOD2	69	2.69	527786	ATOKA 3	115	7.02	528094	7-RIVERS 3	115	8.21
527678	SMITH 2	69	3.85	527793	EDDY_STH 3	115	11.10	528095	7-RIVERS 6	230	6.06
527701	ARTESIA 2	69	3.86	527798	EDDY_NTH 3	115	11.10	528109	CV-LAKEWOOD3	115	6.36
527707	ARTESIA 3	115	6.71	527799	EDDY_NORTH 6	230	7.95	528116	CV-IRISHHIL3	115	6.36
527710	EAGLE_CREEK2	69	2.32	527800	EDDY_SOUTH 6	230	7.95	528132	OCOTILLO 3	115	6.14
527711	EAGLE_CREEK3	115	7.29	527802	EDDY_CNTY 7	345	4.44	528137	N_CANAL 3	115	8.62
527715	NAVAJO_2TP 3	115	6.95	527808	CV-8_MILE 2	67	1.81	528151	FIESTA 3	115	9.69
527717	NAVAJO_2 3	115	6.87	527809	CV-8_MILE 3	115	5.29	528159	CARLSBAD 2	69	4.86
527720	NAVAJO_3 3	115	6.91	527810	CV-ABO 2	67	1.61	528160	CARLSBAD 3	115	11.14
527733	NAVAJO_1 2	69	2.17	527811	CV-KEWAN_TP3	115	2.89	528178	PECOS 3	115	11.74
527736	NAVAJO_5TP 3	115	6.91	527821	CV-DAYTON 3	115	6.93	528179	PECOS 6	230	6.40
527739	NAVAJO_4 3	115	6.90	527822	CV-TURKYTRK3	115	3.40	528182	NORTH_LOVNG3	115	8.42
527743	NAVAJO_5 3	115	6.90	527864	CUNNINHAM 3	115	29.69	528226	HOPI SUB 3	115	6.65
527747	ARTESIA_TWN2	69	2.14	527865	CUNNINHAM 6	230	17.40	584960	GEN-2015-058	115	6.91
527754	CV-ARTESIA 2	69	3.12	527894	HOBBS_INT 6	230	19.18	599960	EPTNP-D6	230	7.95

Table 4-25
Short Circuit Analysis for Study Project GEN-2015-075 (25SP)

Study Generator GEN-2015-075											
Bus Number	Bus Name	Bus Voltage (kV)	Fault Current 3-LG (kA)	Bus Number	Bus Name	Bus Voltage (kV)	Fault Current 3-LG (kA)	Bus Number	Bus Name	Bus Voltage (kV)	Fault Current 3-LG (kA)
522822	LP-NORTHWST2	69	4.61	526130	SP-CARLISLE2	69	2.12	526337	JONES 6	230	21.40
522823	LP-MILWAKEE6	230	13.27	526146	INDIANA 3	115	9.96	526434	SUNDOWN 3	115	11.13
522828	LP-MILWAKEE2	69	8.31	526159	CARLISLE 2	69	2.58	526435	SUNDOWN 6	230	11.12
522832	LP-VICKSBRG2	69	14.11	526160	CARLISLE 3	115	13.67	526460	AMOCO_SS 6	230	9.76
522857	LP-SOUTHEST2	69	24.60	526161	CARLISLE 6	230	13.69	526469	SP-YUMA 2	69	3.08
522861	LP-SOUTHEST6	230	17.35	526162	LP-DOUD_TP 3	115	11.97	526475	YUMA_INT 3	115	11.23
522870	LP-HOLLY 6	230	17.14	526176	LP-DOUD 3	115	9.24	526481	SP-WOLF_TP 3	115	11.43
524911	ROSEVELT_S 6	230	9.25	526184	SW_6878 2	69	2.17	526483	SP-WOLFORTH3	115	8.83
525213	SWISHER 6	230	11.02	526192	MURPHY 3	115	10.88	526524	WOLFFORTH 3	115	11.70
525454	HALE_CNTY 3	115	10.35	526199	SP-FRANKFRD3	115	9.81	526525	WOLFFORTH 6	230	13.79
525481	PLANT_X 6	230	24.50	526205	IVORY 2	69	3.95	526677	GRASSLAND 6	230	6.56
525524	TOLK_EAST 6	230	29.40	526213	ALLEN 3	115	10.87	526736	TERRY_CNTY 3	115	10.41
525543	TOLK_TAP 6	230	29.40	526221	BATTON_N 2	69	1.78	526936	YOAKUM_345	345	9.06
525780	FLOYD_CNTY 3	115	6.07	526228	BATTON_S 2	69	2.72	560021	TUCO_2	230	22.00
525816	TUCO_INT2 2	69	4.70	526243	SP-QUAKER 3	115	9.85	560022	TUCO_2	345	17.13
525826	TUCO_INT 2	69	7.99	526256	IVORY_TP 2	69	3.95	560027	G14-074-TAP	345	7.77
525828	TUCO_INT 3	115	20.76	526267	LUBBCK_STH 2	69	4.37	583340	GEN-2012-020	230	9.59
525830	TUCO_INT 6	230	26.21	526268	LUBBCK_STH 3	115	19.56	583810	ASGI2013-006	115	8.83
525832	TUCO_INT 7	345	17.31	526269	LUBBCK_STH 6	230	19.33	583819	ASGI2014-001	115	11.71
525840	ANTELOPE_1 6	230	25.96	526298	LUBBCK_EST 3	115	15.57	585060	GEN-2015-068	345	12.95
526076	STANTON_W 3	115	9.59	526299	LUBBCK_EST 6	230	13.63	585120	GEN-2015-075	69	2.31
526109	SP-ERSKINE 3	115	11.71								

DRAFT

Table 4-26
Short Circuit Analysis for Study Project GEN-2015-077 (25SP)

Study Generator GEN-2015-077											
Bus Number	Bus Name	Bus Voltage (kV)	Fault Current 3-LG (kA)	Bus Number	Bus Name	Bus Voltage (kV)	Fault Current 3-LG (kA)	Bus Number	Bus Name	Bus Voltage (kV)	Fault Current 3-LG (kA)
522823	LP-MILWAKEE6	230	13.27	526784	AMOCOWASSON6	230	13.95	527202	SEAGRAVES 3	115	8.58
522861	LP-SOUTHEST6	230	17.35	526792	PRENTICE 3	115	5.90	527211	DIAMONDBACK2	69	3.26
525481	PLANT_X 6	230	24.50	526928	PLAINS_INT 3	115	9.90	527212	DIAMONDBACK3	115	3.10
525830	TUCO_INT 6	230	26.21	526934	YOAKUM 3	115	16.82	527217	MOSS 2	69	5.31
526036	LC-OPDYKE 3	115	5.86	526935	YOAKUM 6	230	17.71	527223	LG-MC&SEMNL2	69	2.59
526160	CARLISLE 3	115	13.67	526936	YOAKUM_345	345	9.06	527228	RILEY_TP 2	69	4.08
526161	CARLISLE 6	230	13.69	526944	LG-PLAINS 3	115	7.96	527229	OZRK_MAH02 2	69	1.52
526162	LP-DOUD_TP 3	115	11.97	526993	LG-WELLMAN 2	69	3.07	527235	LG-ASHMORE 2	69	2.47
526268	LUBBCK_STH 3	115	19.56	526999	UNION_TX 2	69	2.38	527238	ROZ 3	115	11.24
526269	LUBBCK_STH 6	230	19.33	527010	OXYBRU_TP 6	230	14.02	527242	AMERADA 3	115	11.39
526337	JONES 6	230	21.40	527018	BENNETT 3	115	13.22	527247	CEDARLAKE 2	69	2.82
526416	SLAUGTER_TP2	69	3.14	527036	SHELL_C2 3	115	12.87	527253	ADAIR 2	69	2.62
526424	PACIFIC 3	115	9.49	527041	ARCO_TP 3	115	13.13	527261	SULPHUR 2	69	3.36
526434	SUNDOWN 3	115	11.13	527047	OXY_WILRD1 3	115	10.54	527262	SULPHUR 3	115	5.67
526435	SUNDOWN 6	230	11.12	527051	ODC_TP 3	115	13.24	527271	LG-FOSTER 2	69	2.71
526445	AMOCO_TP 3	115	10.40	527062	SHELL_CO2 3	115	16.04	527275	SEMINOLE 3	115	14.56
526452	AMOCO_CRYO 3	115	6.44	527068	SHELLC3_TP 3	115	10.58	527276	SEMINOLE 6	230	7.72
526460	AMOCO_SS 6	230	9.76	527080	EL_PASO 3	115	15.80	527284	RUSSELL 3	115	9.09
526469	SP-YUMA 2	69	3.08	527096	OXY_DC_WST 2	69	4.50	527286	XTO_RUSSEL 3	115	10.03
526475	YUMA_INT 3	115	11.23	527099	DC_EAST 2	69	6.10	527291	LE-KCM 2	69	2.63
526481	SP-WOLF_TP 3	115	11.43	527105	SAN_ANDS_TP3	115	16.46	527313	MIDAMERI_TP2	69	2.16
526483	SP-WOLFORTH3	115	8.83	527106	SAN_ANDRES 3	115	11.72	527322	GAINES 3	115	9.39
526484	LG-LEVELAND3	115	9.32	527111	WASSON 2	69	5.97	527340	DOSS 3	115	8.02
526491	LG-CLAUENE 3	115	7.95	527117	SW_7814 2	69	3.13	527362	JOHNSON_DRW3	115	10.76
526499	LG-MEADOW 2	69	3.71	527125	DENVER_CTY 2	69	8.65	527363	HIGG 3	115	10.22
526506	LG-DOCWEBR 2	69	4.94	527130	DENVER_N 3	115	21.06	528433	NEW_NHOBBS 3	115	8.04
526524	WOLFFORTH 3	115	11.70	527136	DENVER_S 3	115	21.06	528626	LE-PLNSINT 2	69	4.37
526525	WOLFFORTH 6	230	13.79	527146	MUSTANG 3	115	23.38	560058	G15-077-TAP	115	8.08
526711	LG-DIXON 2	69	2.50	527149	MUSTANG 6	230	15.75	560059	G1579&G1580T	230	9.27
526735	TERRY_CNTY 2	69	6.97	527151	GS-MUSTANG 6	230	15.75	562480	G13-027-TAP	230	9.39
526736	TERRY_CNTY 3	115	10.41	527183	JAYBEE 2	69	4.37	584720	ASGI2015-002	69	2.15
526747	LG-BROWNFLD2	69	3.56	527189	LG-SEAGRAVE2	69	3.74	585140	GEN-2015-077	115	8.02
526754	BROWNFIELD 2	69	3.05	527194	LG-PLSHILL 3	115	7.56	585150	GEN-2015-078	115	16.97
526761	BROWNFLD_TP2	69	2.83	527201	SEAGRAVES 2	69	5.41				

DRAFT

Table 4-27
Short Circuit Analysis for Study Project GEN-2015-078 (25SP)

Study Generator GEN-2015-078											
Bus Number	Bus Name	Bus Voltage (kV)	Fault Current 3-LG (kA)	Bus Number	Bus Name	Bus Voltage (kV)	Fault Current 3-LG (kA)	Bus Number	Bus Name	Bus Voltage (kV)	Fault Current 3-LG (kA)
524909	ROSEVELT_N 6	230	9.25	527041	ARCO_TP 3	115	13.13	527284	RUSSELL 3	115	9.09
525481	PLANT_X 6	230	24.50	527047	OXY_WILRD1 3	115	10.54	527286	XTO_RUSSEL 3	115	10.03
525531	TOLK_WEST 6	230	29.40	527051	ODC_TP 3	115	13.24	527291	LE-KCM 2	69	2.63
525543	TOLK_TAP 6	230	29.40	527056	ODC 3	115	9.97	527305	LG-SAWYERFL2	69	1.80
525637	LAMB_CNTY 6	230	5.63	527062	SHELL_CO2 3	115	16.04	527313	MIDAMERI_TP2	69	2.16
525830	TUCO_INT 6	230	26.21	527068	SHELLC3_TP 3	115	10.58	527321	GAINES 2	69	4.24
525832	TUCO_INT 7	345	17.31	527074	SHELLC3 3	115	9.52	527322	GAINES 3	115	9.39
526161	CARLISLE 6	230	13.69	527080	EL_PASO 3	115	15.80	527323	OXY_WSTSEM 3	115	6.86
526269	LUBBCK_STH 6	230	19.33	527093	SW_7848 2	69	4.22	527325	OXY_WSEM_TP3	115	9.23
526434	SUNDOWN 3	115	11.13	527096	OXY_DC_WST 2	69	4.50	527331	RILEY 2	69	3.94
526435	SUNDOWN 6	230	11.12	527099	DC_EAST 2	69	6.10	527339	DOSS 2	69	4.23
526460	AMOCO_SS 6	230	9.76	527105	SAN_ANDS_TP3	115	16.46	527340	DOSS 3	115	8.02
526469	SP-YUMA 2	69	3.08	527106	SAN_ANDRES 3	115	11.72	527345	LEGACY 2	69	3.97
526475	YUMA_INT 3	115	11.23	527111	WASSON 2	69	5.97	527346	LEGACY 3	115	7.73
526481	SP-WOLF_TP 3	115	11.43	527117	SW_7814 2	69	3.13	527355	BOARDMAN 2	69	2.42
526484	LG-LEVELAND3	115	9.32	527125	DENVER_CTY 2	69	8.65	527360	MAPCO 3	115	10.51
526491	LG-CLAUENE 3	115	7.95	527130	DENVER_N 3	115	21.06	527362	JOHNSON_DRW3	115	10.76
526499	LG-MEADOW 2	69	3.71	527136	DENVER_S 3	115	21.06	527363	HIGG 3	115	10.22
526506	LG-DOCWEBR 2	69	4.94	527146	MUSTANG 3	115	23.38	527371	TENNECO 2	69	3.41
526524	WOLFFORTH 3	115	11.70	527149	MUSTANG 6	230	15.75	527865	CUNNINHAM 6	230	17.40
526525	WOLFFORTH 6	230	13.79	527151	GS-MUSTANG 6	230	15.75	527891	HOBBS_INT 3	115	32.96
526735	TERRY_CNTY 2	69	6.97	527183	JAYBEE 2	69	4.37	527894	HOBBS_INT 6	230	19.18
526736	TERRY_CNTY 3	115	10.41	527189	LG-SEAGRAVE2	69	3.74	527896	HOBBS_INT 7	345	8.46
526747	LG-BROWNFLD2	69	3.56	527194	LG-PLSHILL 3	115	7.56	527965	KIOWA 7	345	5.61
526754	BROWNFIELD 2	69	3.05	527201	SEAGRAVES 2	69	5.41	528325	LE-WAITS 3	115	6.76
526784	AMOCOWASSON6	230	13.95	527202	SEAGRAVES 3	115	8.58	528413	TAYLOR 3	115	14.62
526792	PRENTICE 3	115	5.90	527211	DIAMONDBACK2	69	3.26	528433	NEW_NHOBBS 3	115	8.04
526928	PLAINS_INT 3	115	9.90	527212	DIAMONDBACK3	115	3.10	528611	GAINESGENTP6	230	9.94
526934	YOAKUM 3	115	16.82	527217	MOSS 2	69	5.31	528626	LE-PLNSINT 2	69	4.37
526935	YOAKUM 6	230	17.71	527223	LG-MC&SEMNL2	69	2.59	528775	LE-ERF 3	115	10.76
526936	YOAKUM_345	345	9.06	527228	RILEY_TP 2	69	4.08	528778	LE-ROZ 2	69	3.22
526944	LG-PLAINS 3	115	7.96	527229	OZRK_MAH02 2	69	1.52	560022	TUCO_2	345	17.13
526965	KINNEY 2	69	2.42	527235	LG-ASHMORE 2	69	2.47	560027	G14-074-TAP	345	7.77
526971	TOKIO_TP 2	69	3.64	527238	ROZ 3	115	11.24	560058	G15-077-TAP	115	8.08
526979	LG-JS_SMITH2	69	2.10	527242	AMERADA 3	115	11.39	560059	G1579&G1580T	230	9.27
526985	WELLMAN 2	69	2.86	527247	CEDARLAKE 2	69	2.82	562480	G13-027-TAP	230	9.39
526993	LG-WELLMAN 2	69	3.07	527253	ADAIR 2	69	2.62	583840	GEN-2013-027	230	8.33
526999	UNION_TX 2	69	2.38	527261	SULPHUR 2	69	3.36	584810	GEN-2015-040	230	14.38
527010	OXYBRU_TP 6	230	14.02	527262	SULPHUR 3	115	5.67	585060	GEN-2015-068	345	12.95
527018	BENNETT 3	115	13.22	527271	LG-FOSTER 2	69	2.71	585140	GEN-2015-077	115	8.02
527024	ALLRED_SUB 3	115	7.85	527275	SEMINOLE 3	115	14.56	585150	GEN-2015-078	115	16.97
527030	ALRDCRTZ_TP3	115	8.62	527276	SEMINOLE 6	230	7.72	585160	G1579&G1580	230	8.80
527036	SHELL_C2 3	115	12.87								

DRAFT

Table 4-28
Short Circuit Analysis for Study Project GEN-2015-079 and GEN-2015-080 (25SP)

Study Generator GEN-2015-079 and GEN-2015-080											
Bus Number	Bus Name	Bus Voltage (kV)	Fault Current 3-LG (kA)	Bus Number	Bus Name	Bus Voltage (kV)	Fault Current 3-LG (kA)	Bus Number	Bus Name	Bus Voltage (kV)	Fault Current 3-LG (kA)
511456	O.K.U.-7	345	5.75	527080	EL_PASO 3	115	15.80	528182	NORTH_LOVNG3	115	8.42
515458	BORDER 7	345	12.00	527105	SAN_ANDS_TP3	115	16.46	528185	N_LOVING 7	345	4.45
524770	PLSNT_HILL 6	230	6.58	527125	DENVER_CTY 2	69	8.65	528223	CHINA_DRAW 7	345	3.63
524908	ROOSEVELT 3	115	10.48	527130	DENVER_N 3	115	21.06	528317	ENRON_TP 3	115	6.99
524909	ROSEVELT_N 6	230	9.25	527136	DENVER_S 3	115	21.06	528325	LE-WAITS 3	115	6.76
524911	ROSEVELT_S 6	230	9.25	527146	MUSTANG 3	115	23.38	528333	LE-WEST_SUB3	115	8.79
524915	SW_4K33 6	230	9.25	527149	MUSTANG 6	230	15.75	528334	LE-LOVINTON3	115	8.71
525461	NEWHART 6	230	11.12	527151	GS-MUSTANG 6	230	15.75	528348	BUCKEYE_TP 3	115	8.43
525480	PLANT_X 3	115	26.99	527194	LG-PLSHILL 3	115	7.56	528355	MADDOX 3	115	27.79
525481	PLANT_X 6	230	24.50	527201	SEAGRAVES 2	69	5.41	528385	BUCKEYE 3	115	7.57
525524	TOLK_EAST 6	230	29.40	527202	SEAGRAVES 3	115	8.58	528392	PEARLE 3	115	6.41
525531	TOLK_WEST 6	230	29.40	527238	ROZ 3	115	11.24	528394	QUAHADA 3	115	8.41
525543	TOLK_TAP 6	230	29.40	527242	AMERADA 3	115	11.39	528399	LEA_NATIONL3	115	7.03
525549	TOLK 7	345	12.56	527262	SULPHUR 3	115	5.67	528413	TAYLOR 3	115	14.62
525636	LAMB_CNTY 3	115	9.75	527275	SEMINOLE 3	115	14.56	528422	DCP_ZIA TP 3	115	7.25
525637	LAMB_CNTY 6	230	5.63	527276	SEMINOLE 6	230	7.72	528433	NEW_NHOBBS 3	115	8.04
525828	TUCO_INT 3	115	20.76	527284	RUSSELL 3	115	9.09	528435	MILLEN 3	115	11.68
525830	TUCO_INT 6	230	26.21	527286	XTO_RUSSEL 3	115	10.03	528442	NE_HOBBS 3	115	11.98
525832	TUCO_INT 7	345	17.31	527322	GAINES 3	115	9.39	528463	SANGER_SW 3	115	16.23
525840	ANTELOPE_1 6	230	25.96	527340	DOSS 3	115	8.02	528484	SW_4J44 3	115	11.20
526036	LC-OPDYKE 3	115	5.86	527362	JOHNSON_DRW3	115	10.76	528491	MONUMENT 3	115	15.69
526161	CARLISLE 6	230	13.69	527363	HIGG 3	115	10.22	528498	W_HOBBS 3	115	11.75
526269	LUBBCK_STH 6	230	19.33	527483	CHAVES_CNTY6	230	4.12	528568	MONUMNT_TP 3	115	10.10
526337	JONES 6	230	21.40	527597	TWEEDY 3	115	4.96	528575	OXYPERMIAN 3	115	15.55
526352	LEHMAN 3	115	6.06	527711	EAGLE_CREEK3	115	7.29	528582	BYRD 3	115	8.05
526424	PACIFIC 3	115	9.49	527793	EDDY_STH 3	115	11.10	528602	ANDREWS 3	115	9.06
526434	SUNDOWN 3	115	11.13	527798	EDDY_NTH 3	115	11.10	528603	NA_ENRICH 3	115	9.12
526435	SUNDOWN 6	230	11.12	527799	EDDY_NORTH 6	230	7.95	528604	ANDREWS 6	230	6.97
526445	AMOCO_TP 3	115	10.40	527800	EDDY_SOUTH 6	230	7.95	528610	GAINES_GEN 6	230	8.59
526460	AMOCO_SS 6	230	9.76	527802	EDDY_CNTY 7	345	4.44	528611	GAINESGENTP6	230	9.94
526524	WOLFFORTH 3	115	11.70	527809	CV-8_MILE 3	115	5.29	528618	LE-LOVINTON2	69	9.31
526525	WOLFFORTH 6	230	13.79	527864	CUNNINHAM 3	115	29.69	528626	LE-PLNSINT 2	69	4.37
526735	TERRY_CNTY 2	69	6.97	527865	CUNNINHAM 6	230	17.40	528627	LE-TXACO_TP3	115	7.25
526736	TERRY_CNTY 3	115	10.41	527891	HOBBS_INT 3	115	32.96	528740	LE-PLANS_TP2	69	3.62
526784	AMOCOWASSON6	230	13.95	527894	HOBBS_INT 6	230	19.18	560021	TUCO_2	230	22.00
526792	PRENTICE 3	115	5.90	527896	HOBBS_INT 7	345	8.46	560022	TUCO_2	345	17.13
526928	PLAINS_INT 3	115	9.90	527930	PCA 3	115	11.11	560027	G14-074-TAP	345	7.77
526934	YOAKUM 3	115	16.82	527961	POTASH_JCT 2	69	8.42	560051	G15-039-TAP	230	7.58
526935	YOAKUM 6	230	17.71	527962	POTASH_JCT 3	115	14.31	560058	G15-077-TAP	115	8.08
526936	YOAKUM_345	345	9.06	527963	POTASH_JCT 6	230	6.94	560059	G1579&G1580T	230	9.27
526944	LG-PLAINS 3	115	7.96	527965	KIOWA 7	345	5.61	562480	G13-027-TAP	230	9.39
527010	OXYBRU_TP 6	230	14.02	527999	INTREPDW_TP3	115	12.43	583340	GEN-2012-020	230	9.59
527018	BENNETT 3	115	13.22	528025	RDRUNNER 3	115	8.90	583840	GEN-2013-027	230	8.33
527036	SHELL_C2 3	115	12.87	528027	RDRUNNER 7	345	3.81	584440	GEN-2014-074	345	7.31
527041	ARCO_TP 3	115	13.13	528094	7-RIVERS 3	115	8.21	584810	GEN-2015-040	230	14.38
527046	OXY_WILRD2 3	115	10.51	528095	7-RIVERS 6	230	6.06	585060	GEN-2015-068	345	12.95
527047	OXY_WILRD1 3	115	10.54	528160	CARLSBAD 3	115	11.14	585150	GEN-2015-078	115	16.97
527051	ODC_TP 3	115	13.24	528178	PECOS 3	115	11.74	585160	G1579&G1580	230	8.80
527062	SHELL_CO2 3	115	16.04	528179	PECOS 6	230	6.40	599960	EPTNP-D6	230	7.95

DRAFT

SECTION 5: POWER FACTOR ANALYSIS

The objective of this task is to quantify the power factor at the point of interconnection for the wind farms during base case and system contingencies. SPP transmission planning practice requires interconnecting generation projects to maintain the power factor (pf) at the Point of Interconnection (POI) within +/- 0.95 pf for system intact conditions and for post-contingency conditions. This is analyzed by having the wind farm maintain a prescribed voltage schedule at the point of interconnection of 1.0 p.u. voltage.

The 2016 Winter Peak, 2017 Summer Peak, 2020 Summer Peak, 2020 Winter Peak, and 2025 Summer Peak power flows provided by SPP were examined prior to the Power Factor Analysis to ensure they contained the proposed study project modeled at 100% of the nameplate rating and any previously queued projects listed in Table 2-2. There was no suspect power flow data in the study area. The proposed study project and any previously queued projects at the same point of interconnection were turned off during the power factor analysis. The wind farm(s) were then replaced by a generator modeled at the high side bus with the same real power (MW) capability as the wind farm(s) and open limits for the reactive power set points (Mvar). The generator was set to hold the POI scheduled bus voltage. All N-1, three-phase fault contingencies from Table 2-3 were then applied and the reactive power required to maintain the bus voltage was recorded.

5.1 Approach

The upgrades that were identified in the Stability Analysis (**Scenario 1**), were implemented to each power case for the power factor analysis. Refer to Section 3 for the necessary upgrades.

GEN-2014-046, GEN-2014-033, GEN-2014-034, and GEN-2014-035 were disabled and the generators were placed at the study project's high side bus. The generators were modeled with PGEN = 125.4 MW for GEN-2014-046 and PGEN = 170.0 MW for GEN-2014-033, GEN-2014-034, and GEN-2014-035. The reactive support of both generators was modeled with QMin = -9999 Mvar and QMax = 9999 Mvar. All buses and transformers connected from the study project's high side bus to the individual generators were disabled. The scheduled voltage was set to 1.0067 p.u. for 2016 Winter Peak conditions, 1.0119 for 2017 Summer Peak conditions, 1.0093 for 2020 Summer Peak Conditions, 1.0263 p.u. for 2020 Winter Peak conditions, and 1.0061 p.u. for 2025 Summer Peak conditions.

DRAFT

GEN-2015-018 was disabled and a generator was placed at the study project's high side bus. The generator was modeled with PGEN = 80.0 MW, QMin = -9999 Mvar, and QMax = 9999 Mvar. All buses and transformers connected from the study project's high side bus to GEN-2015-018 were disabled. The scheduled voltage was set to 1.0210 p.u. for 2016 Winter Peak conditions, 1.0098 p.u. for 2017 Summer Peak conditions, 1.0051 p.u. for 2020 Summer Peak conditions, 1.0187 p.u. for 2020 Winter Peak conditions, and 1.0058 p.u. for 2025 Summer Peak conditions.
GEN-2015-020 was disabled and a generator was placed at the study project's high side bus. The generator was modeled with PGEN = 100.0 MW, QMin = -9999 Mvar, and QMax = 9999 Mvar. All buses and transformers connected from the study project's high side bus to GEN-2015-020 were disabled. The scheduled voltage was set to 1.0334 p.u. for 2016 Winter Peak conditions, 1.0322 p.u. for 2017 Summer Peak conditions, 1.0246 p.u. for 2020 Summer Peak conditions, 1.0307 p.u. for 2020 Winter Peak conditions, and 1.0299 p.u. for 2025 Summer Peak conditions.

GEN-2015-031 was disabled and a generator was placed at the study project's high side bus. The generator was modeled with PGEN = 300.0 MW, QMin = -9999 Mvar, and QMax = 9999 Mvar. All buses and transformers connected from the study project's high side bus to GEN-2015-031 were disabled. The scheduled voltage was set to 1.0088 p.u. for 2016 Winter Peak conditions, 1.0121 for 2020 Winter Peak conditions, and 1.00 p.u. for the 2017 Summer Peak, 2020 Summer Peak, and 2025 Summer Peak conditions.

GEN-2015-033 and GEN-2014-074 were disabled in the power flow case. A generator was placed at the high side bus of GEN-2015-033 and modeled with PGEN = 152 MW, Qmin = -9999 Mvar, Qmax = 9999 Mvar. A second generator was placed at the high side bus of GEN-2014-074 and modeled with PGEN = 152 MW, Qmin = -9999 Mvar, Qmax = 9999 Mvar. All buses and transformers connected from the high side bus of each project to the corresponding generator were disabled. The scheduled voltage was set to 1.00 p.u. for all study years.

GEN-2015-039 was disabled and a generator was placed at the study project's high side bus. The generator was modeled with PGEN = 50 MW, QMin = -9999 Mvar, and QMax = 9999 Mvar. All buses and transformers connected from the study project's high side bus to the generator was disabled. The scheduled voltage was set to 1.00 p.u. for all study years.

GEN-2015-040 and the Mustang generation was disabled and a generator was placed at the study project's high side bus and the high side bus of the Mustang generation (GEN-2015-040 POI bus). The GEN-2015-040 generator was modeled with PGEN = 250.7 MW, QMin = -9999 Mvar, and QMax = 9999 Mvar. The Mustang generator was modeled with PGEN = 496 MW, Qmin = -9999 Mvar, and Qmax = 9999 Mvar. All buses and transformers connected from the

DRAFT

study project's high side bus to GEN-2015-040 were disabled. The scheduled voltage was set to 1.00 p.u. for all study years.

GEN-2015-056 and GEN-2014-047 were disabled and a generator was placed at the corresponding project's high side bus. GEN-2015-056 was modeled with PGEN = 101.0 MW and GEN-2014-047 was modeled with PGEN = 40.0 MW. Both generators reactive capability was modeled with QMin = -9999 Mvar and QMax = 9999 Mvar. All buses and transformers connected from the project's high side bus to the corresponding project were disabled. The scheduled voltage was set to 1.0035 p.u. for 2016 Winter Peak conditions, 1.0065 p.u. for 2020 Summer Peak conditions, and 1.0079 p.u. for 2025 Summer Peak conditions. The schedule voltage was set to 1.0 p.u. for 2017 Summer Peak conditions and 2020 Winter Peak conditions.

GEN-2015-058 was disabled and a generator was placed at the study project's high side bus. The generator was modeled with PGEN = 50.0 MW, QMin = -9999 Mvar, and QMax = 9999 Mvar. All buses and transformers connected from the study project's high side bus to GEN-2015-058 were disabled. The scheduled voltage was set to 1.0164 p.u. for 2016 Winter Peak conditions, 1.021 p.u. for 2017 Summer Peak conditions, 1.0263 p.u. for 2020 Summer Peak conditions, 1.0117 p.u. for 2020 Winter Peak conditions, and 1.0273 p.u. for 2025 Summer Peak conditions.

GEN-2015-068 and the ELK generation was disabled and a generator was placed at the study project's high side bus and the ELK generation high side bus (GEN-2015-068 POI). The GEN-2015-068 generator was modeled with PGEN = 300.0 MW, Qmin = -9999 Mvar, Qmax = 9999 Mvar. The ELK generator was modeled with PGEN = 411.0 MW, QMin = -9999 Mvar, and QMax = 9999 Mvar. All buses and transformers connected from the study project's high side bus to both projects were disabled. The scheduled voltage was set to 1.0064 p.u. for 2020 Summer Peak conditions and 1.0067 p.u. for 2025 Summer Peak conditions. The scheduled voltage was set to 1.00 p.u. for 2016 Winter Peak conditions, 2017 Summer Peak conditions, and 2020 Winter Peak conditions.

GEN-2015-075 was disabled and a generator was placed at the study project's high side bus. The generator was modeled with PGEN = 50.0 MW, QMin = -9999 Mvar, and QMax = 9999 Mvar. All buses and transformers connected from the study project's high side bus to GEN-2015-075 were disabled. The scheduled voltage was set to 1.012 p.u. for 2016 Winter Peak conditions, 1.0196 p.u. for 2017 Summer Peak conditions, 1.0085 p.u. for 2020 Summer Peak conditions, 1.0094 p.u. for 2020 Winter Peak conditions, and 1.0157 p.u. for 2025 Summer Peak conditions.

GEN-2015-077 was disabled and a generator was placed at the study project's high side bus. The generator was modeled with PGEN = 80.0 MW, QMin = -9999 Mvar, and QMax = 9999

DRAFT

Mvar. All buses and transformers connected from the study project's high side bus to GEN-2015-077 were disabled. The scheduled voltage was set to 1.0247 p.u. for 2016 Winter Peak conditions, 1.0059 p.u. for 2017 Summer Peak conditions, 1.0064 p.u. for 2020 Summer Peak conditions, 1.0133 p.u. for 2020 Winter Peak conditions, and 1.0062 p.u. for 2025 Summer Peak conditions.

GEN-2015-078 was disabled and a generator was placed at the study project's high side bus. The generator was modeled with PGEN = 50.0 MW, QMin = -9999 Mvar, and QMax = 9999 Mvar. All buses and transformers connected from the study project's high side bus to GEN-2015-078 were disabled. The scheduled voltage was set to 1.0109 p.u. for 2016 Winter Peak conditions, 1.0039 p.u. for 2017 Summer Peak conditions, 1.0005 p.u. for 2020 Summer Peak conditions, 1.0054 p.u. for 2020 Winter Peak conditions, and 1.00 p.u. for 2025 Summer Peak conditions.
GEN-2015-079 and GEN-2015-080 were disabled and a generator was placed at the corresponding study project's high side bus. Both generators were modeled with PGEN = 129.2 MW, QMin = -9999 Mvar, and QMax = 9999 Mvar. All buses and transformers connected from the study project's high side bus to GEN-2015-079 and GEN-2015-080 were disabled. The scheduled voltage was set to 1.0028 p.u. for 2016 Winter Peak conditions, 1.00 p.u. for 2017 Summer Peak conditions, 1.0022 p.u. for 2020 Summer Peak conditions, 1.0034 p.u. for 2020 Winter Peak conditions, and 1.0055 p.u. for 2025 Summer Peak conditions.

5.2 Power Factor Analysis Results

The power factor was calculated for the 2016 Winter Peak, 2017 Summer Peak, 2020 Summer Peak, 2020 Winter Peak, and 2025 Summer Peak condition. The following tables show the power factor results for the study generators:

- Table 5-1: Power Factor Analysis for GEN-2014-046
- Table 5-2: Power Factor Analysis for GEN-2015-018
- Table 5-3: Power Factor Analysis for GEN-2015-020
- Table 5-4: Power Factor Analysis for GEN-2015-031
- Table 5-5: Power Factor Analysis for GEN-2015-033
- Table 5-6: Power Factor Analysis for GEN-2015-039
- Table 5-7: Power Factor Analysis for GEN-2015-040
- Table 5-8: Power Factor Analysis for GEN-2015-056
- Table 5-9: Power Factor Analysis for GEN-2015-058
- Table 5-10: Power Factor Analysis for GEN-2015-068
- Table 5-11: Power Factor Analysis for GEN-2015-075
- Table 5-12: Power Factor Analysis for GEN-2015-077
- Table 5-13: Power Factor Analysis for GEN-2015-078

DRAFT

- Table 5-14: Power Factor Analysis for GEN-2015-079
- Table 5-15: Power Factor Analysis for GEN-2015-080

Note that a positive Q (Mvar) output illustrates that the generator is absorbing reactive power from the system, implying a leading power factor; a negative Q (Mvar) illustrates that the generator is supplying reactive power to the system, implying a lagging power factor.

DRAFT

Table 5-1
Power Factor Analysis: GEN-2014-046

DRAFT

Cont. No.	Case	2016 Winter Peak			2017 Summer Peak			2020 Summer Peak			2020 Winter Peak			2025 Summer Peak		
		Power Factor		Q (MVAR)	Power Factor		Q (MVAR)	Power Factor		Q (MVAR)	Power Factor		Q (MVAR)	Power Factor		Q (MVAR)
0	Base	0.991	Leading	16.85	0.987	Leading	20.29	0.991	Leading	16.76	0.992	Leading	16.12	0.991	Leading	16.94
1	FLT01-3PH	0.992	Leading	16.23	0.989	Leading	19.18	0.992	Leading	15.81	0.993	Leading	15.39	0.992	Leading	15.90
2	FLT02-3PH	0.992	Leading	15.82	0.989	Leading	18.68	0.993	Leading	15.36	0.993	Leading	14.96	0.993	Leading	15.30
3	FLT03-3PH	0.995	Leading	13.15	0.991	Leading	17.26	0.997	Leading	10.08	0.997	Leading	9.74	0.994	Leading	13.72
4	FLT04-3PH	0.990	Leading	18.28	0.988	Leading	19.93	0.992	Leading	15.79	0.995	Leading	12.99	0.989	Leading	18.96
5	FLT05-3PH	0.986	Leading	21.53	0.987	Leading	20.69	0.996	Leading	10.69	0.995	Leading	12.35	0.993	Leading	15.34
6	FLT06-3PH	0.992	Leading	16.39	0.988	Leading	19.39	0.992	Leading	16.02	0.992	Leading	15.57	0.992	Leading	16.15
7	FLT07-3PH	0.992	Leading	16.29	0.988	Leading	19.22	0.992	Leading	15.85	0.992	Leading	15.46	0.992	Leading	15.93
8	FLT11-3PH	0.991	Leading	17.28	0.987	Leading	20.74	0.991	Leading	17.06	0.992	Leading	16.39	0.992	Leading	15.95
9	FLT12-3PH	0.991	Leading	16.66	0.987	Leading	20.48	0.991	Leading	16.87	0.992	Leading	15.88	0.991	Leading	17.16
10	FLT13-3PH	0.991	Leading	16.85	0.987	Leading	20.25	0.991	Leading	16.73	0.992	Leading	16.11	0.991	Leading	16.91
11	FLT14-3PH	0.991	Leading	16.62	0.988	Leading	19.81	0.991	Leading	16.63	0.992	Leading	15.96	0.991	Leading	16.76
12	FLT15-3PH	0.992	Leading	16.30	0.987	Leading	20.12	0.992	Leading	16.36	0.993	Leading	15.35	0.991	Leading	16.50
13	FLT16-3PH	0.991	Leading	16.86	0.987	Leading	20.32	0.991	Leading	16.79	0.992	Leading	16.13	0.991	Leading	16.97
14	FLT17-3PH	0.991	Leading	16.75	0.987	Leading	20.21	0.991	Leading	16.67	0.992	Leading	16.02	0.991	Leading	16.87
15	FLT18-3PH	0.991	Leading	16.77	0.987	Leading	20.21	0.991	Leading	16.67	0.992	Leading	16.03	0.991	Leading	16.87
16	FLT19-3PH	0.991	Leading	16.85	0.987	Leading	20.29	0.991	Leading	16.76	0.992	Leading	16.12	0.991	Leading	16.94
17	FLT20-3PH	0.991	Leading	16.83	0.987	Leading	20.26	0.991	Leading	16.75	0.992	Leading	16.11	0.991	Leading	16.93
18	FLT21-3PH	0.991	Leading	16.88	0.987	Leading	20.31	0.991	Leading	16.81	0.992	Leading	16.15	0.991	Leading	16.98
19	FLT22-3PH	0.991	Leading	16.84	0.987	Leading	20.31	0.991	Leading	16.79	0.992	Leading	16.12	0.991	Leading	16.97
20	FLT23-3PH	0.991	Leading	16.84	0.987	Leading	20.31	0.991	Leading	16.78	0.992	Leading	16.12	0.991	Leading	16.96
21	FLT24-3PH	0.991	Leading	16.88	0.987	Leading	20.32	0.991	Leading	16.81	0.992	Leading	16.15	0.991	Leading	16.99
22	FLT25-3PH	0.991	Leading	16.70	0.987	Leading	20.07	0.991	Leading	16.54	0.992	Leading	15.93	0.991	Leading	16.69
23	FLT26-3PH	0.991	Leading	16.77	0.987	Leading	20.21	0.991	Leading	16.68	0.992	Leading	16.08	0.991	Leading	16.85
24	FLT27-3PH	0.991	Leading	16.80	0.987	Leading	20.20	0.991	Leading	16.70	0.992	Leading	16.08	0.991	Leading	16.88
25	FLT28-3PH	0.990	Leading	17.76	0.987	Leading	20.22	0.991	Leading	16.64	0.991	Leading	16.88	0.991	Leading	16.93
26	FLT29-3PH	0.997	Leading	10.24	0.993	Leading	15.24	0.996	Leading	11.79	0.997	Leading	9.34	0.997	Leading	9.32
27	FLT30-3PH	0.993	Leading	15.29	0.987	Leading	20.02	0.991	Leading	16.60	0.993	Leading	14.81	0.991	Leading	17.07
28	FLT31-3PH	0.992	Leading	16.38	0.987	Leading	20.02	0.991	Leading	16.52	0.992	Leading	15.66	0.991	Leading	16.80
29	FLT34-3PH	0.991	Leading	16.79	0.987	Leading	20.23	0.991	Leading	16.69	0.992	Leading	16.05	0.991	Leading	16.89
30	FLT35-3PH	0.991	Leading	16.85	0.987	Leading	20.29	0.991	Leading	16.76	0.992	Leading	16.11	0.991	Leading	16.95
31	FLT36-3PH	0.991	Leading	16.84	0.987	Leading	20.28	0.991	Leading	16.75	0.992	Leading	16.11	0.991	Leading	16.94
32	FLT37-3PH	0.991	Leading	16.86	0.987	Leading	20.28	0.991	Leading	16.76	0.992	Leading	16.11	0.991	Leading	16.95
33	FLT38-3PH	0.991	Leading	16.85	0.987	Leading	20.28	0.991	Leading	16.75	0.992	Leading	16.11	0.991	Leading	16.95
34	FLT39-3PH	0.991	Leading	16.86	0.987	Leading	20.28	0.991	Leading	16.75	0.992	Leading	16.12	0.991	Leading	16.94
35	FLT40-3PH	0.991	Leading	16.85	0.987	Leading	20.28	0.991	Leading	16.75	0.992	Leading	16.11	0.991	Leading	16.94
36	FLT41-3PH	0.991	Leading	16.85	0.987	Leading	20.28	0.991	Leading	16.75	0.992	Leading	16.11	0.991	Leading	16.94
37	FLT43-3PH	0.991	Leading	16.86	0.987	Leading	20.23	0.991	Leading	16.72	0.992	Leading	16.10	0.991	Leading	16.96
38	FLT44-3PH	0.991	Leading	16.84	0.987	Leading	20.16	0.991	Leading	16.67	0.992	Leading	16.06	0.991	Leading	16.96
39	FLT45-3PH	0.991	Leading	16.86	0.987	Leading	20.22	0.991	Leading	16.71	0.992	Leading	16.10	0.991	Leading	16.96
40	FLT46-3PH	0.991	Leading	16.84	0.987	Leading	20.28	0.991	Leading	16.75	0.992	Leading	16.10	0.991	Leading	16.93
41	FLT47-3PH	0.991	Leading	16.97	0.987	Leading	20.29	0.991	Leading	16.74	0.992	Leading	16.16	0.991	Leading	17.03
42	FLT48-3PH	0.991	Leading	16.85	0.987	Leading	20.29	0.991	Leading	16.76	0.992	Leading	16.12	0.991	Leading	16.94
43	FLT49-3PH	0.991	Leading	16.84	0.987	Leading	20.09	0.991	Leading	16.62	0.992	Leading	16.12	0.991	Leading	16.96
44	FLT52-3PH	0.991	Leading	16.60	0.988	Leading	19.81	0.992	Leading	16.27	0.992	Leading	15.83	0.991	Leading	16.51
45	FLT53-3PH	0.991	Leading	16.72	0.988	Leading	19.97	0.992	Leading	16.42	0.992	Leading	15.92	0.991	Leading	16.65
46	FLT54-3PH	0.991	Leading	16.59	0.987	Leading	20.20	0.991	Leading	16.65	0.992	Leading	15.91	0.991	Leading	16.70
47	FLT55-3PH	0.991	Leading	16.78	0.987	Leading	20.16	0.991	Leading	16.63	0.992	Leading	16.03	0.991	Leading	16.81
48	FLT56-3PH	0.991	Leading	16.85	0.987	Leading	20.28	0.991	Leading	16.74	0.992	Leading	16.12	0.991	Leading	16.90
49	FLT57-3PH	0.991	Leading	16.81	0.987	Leading	20.24	0.991	Leading	16.69	0.992	Leading	16.07	0.991	Leading	16.84
50	FLT58-3PH	0.991	Leading	16.85	0.987	Leading	20.28	0.991	Leading	16.74	0.992	Leading	16.12	0.991	Leading	16.90
51	FLT59-3PH	0.991	Leading	16.82	0.987	Leading	20.28	0.991	Leading	16.71	0.992	Leading	16.07	0.991	Leading	16.78
52	FLT60-3PH	0.991	Leading	16.84	0.987	Leading	20.29	0.991	Leading	16.76	0.992	Leading	16.11	0.991	Leading	16.95
53	FLT63-3PH	0.991	Leading	16.86	0.987	Leading	20.28	0.991	Leading	16.76	0.992	Leading	16.12	0.991	Leading	16.95
54	FLT64-3PH	0.991	Leading	16.84	0.987	Leading	20.29	0.991	Leading	16.75	0.992	Leading	16.11	0.991	Leading	16.92
55	FLT65-3PH	0.991	Leading	16.86	0.987	Leading	20.28	0.991	Leading	16.76	0.992	Leading	16.12	0.991	Leading	16.95
56	FLT66-3PH	0.991	Leading	16.83	0.987	Leading	20.29	0.991	Leading	16.75	0.992	Leading	16.10	0.991	Leading	16.91
57	FLT67-3PH	0.991	Leading	16.85	0.987	Leading	20.29	0.991	Leading	16.75	0.992	Leading	16.11	0.991	Leading	16.94
58	FLT68-3PH	0.991	Leading	16.86	0.987	Leading	20.28	0.991	Leading	16.76	0.992	Leading	16.12	0.991	Leading	16.95
59	FLT69-3PH	0.991	Leading	16.86	0.987	Leading	20.28	0.991	Leading	16.74	0.992	Leading	16.11	0.991	Leading	16.83
60	FLT70-3PH	0.991	Leading	16.85	0.987	Leading	20.29	0.991	Leading	16.76	0.992	Leading	16.12	0.991	Leading	16.95
61	FLT71-3PH	0.991	Leading	16.85	0.987	Leading	20.29	0.991	Leading	16.75	0.992	Leading	16.11	0.991	Leading	16.94
62	FLT72-3PH	0.991	Leading	16.86	0.987	Leading	20.28	0.991	Leading	16.76	0.992	Leading	16.12	0.991	Leading	16.96
63	FLT73-3PH	0.991	Leading	16.85	0.987	Leading	20.29	0.991	Leading	16.76	0.992	Leading	16.12	0.991	Leading	16.94
64	FLT74-3PH	0.991	Leading	16.85	0.987	Leading	20.29	0.991	Leading	16.76	0.992	Leading	16.12	0.991	Leading	16.94
65	FLT75-3PH	0.991	Leading	16.96	0.987	Leading	20.13	0.991	Leading	16.78	0.992	Leading	16.19	0.991	Leading	17.09
66	FLT76-3PH	0.991	Leading	16.86	0.987	Leading	20.28	0.991	Leading	16.76	0.992	Leading	16.12	0.991	Leading	16.95
67	FLT77-3PH	0.991	Leading	16.92	0.987	Leading	20.18	0.991	Leading	16.79	0.992	Leading	16.18	0.991	Leading	17.08
68	FLT84-3PH	0.991	Leading	16.85	0.987	Leading	20.27	0.991	Leading	16.75	0.992	Leading	16.11	0.991	Leading	16.95
69	FLT85-3PH	0.991	Leading	16.85	0.987	Leading	20.29	0.991	Leading	16.75	0.992	Leading	16.11	0.991	Leading	16.93
70	FLT86-3PH	0.991	Leading	16.79	0.987	Leading	20.26	0.991	Leading	16.71	0.992	Leading	16.05	0.991	Leading	16.84
71	FLT87-3PH	0.991	Leading	16.85	0.987	Leading	20.28	0.991	Leading	16.76	0.992	Leading	16.12	0.991	Leading	16.94
72	FLT88-3PH	0.991	Leading	16.85	0.987	Leading	20.29	0.991	Leading	16.76	0.992	Leading	16.12	0.991	Leading	16.95
73	FLT92-3PH	0.990	Leading	17.86	0.991	Leading	16.75	0.993	Leading	14.65	0.992	Leading	15.63	0.991	Leading	16.87
74	FLT93-3PH	0.991	Leading	16.71	0.987	Leading	20.29	0.991	Leading	16.63	0.992	Leading	16.06	0.992	Leading	16.02
75	FLT94-3PH	0.992	Leading	15.93	0.988	Leading	19.68	0.992	Leading	16.09	0.993	Leading	15.21	0.992	Leading	15.96

Table 5-1 (continued)

Power Factor Analysis: GEN-2014-046

Cont. No.	Case	2016 Winter Peak			2017 Summer Peak			2020 Summer Peak			2020 Winter Peak			2025 Summer Peak		
		Power Factor		Q (MVAR)	Power Factor		Q (MVAR)	Power Factor		Q (MVAR)	Power Factor		Q (MVAR)	Power Factor		Q (MVAR)
76	FLT95-3PH	0.991	Leading	16.71	0.987	Leading	20.29	0.991	Leading	16.63	0.992	Leading	16.06	0.992	Leading	16.03
77	FLT96-3PH	0.991	Leading	16.74	0.987	Leading	20.21	0.991	Leading	16.75	0.992	Leading	16.09	0.991	Leading	16.93
78	FLT97-3PH	0.991	Leading	16.51	0.988	Leading	19.93	0.991	Leading	16.56	0.992	Leading	15.96	0.991	Leading	16.60
79	FLT98-3PH	0.991	Leading	16.78	0.987	Leading	20.23	0.991	Leading	16.71	0.992	Leading	16.07	0.991	Leading	16.89
80	FLT99-3PH	0.991	Leading	16.74	0.987	Leading	20.21	0.991	Leading	16.76	0.992	Leading	16.10	0.991	Leading	16.93
81	FLT100-3PH	0.991	Leading	16.47	0.988	Leading	19.92	0.991	Leading	16.55	0.992	Leading	15.95	0.991	Leading	16.59
82	FLT101-3PH	0.991	Leading	16.64	0.987	Leading	20.09	0.991	Leading	16.61	0.992	Leading	15.99	0.991	Leading	16.73
83	FLT102-3PH	0.991	Leading	16.72	0.987	Leading	20.16	0.991	Leading	16.74	0.992	Leading	16.08	0.991	Leading	16.93
84	FLT105-3PH	0.991	Leading	16.85	0.987	Leading	20.29	0.991	Leading	16.75	0.992	Leading	16.11	0.991	Leading	16.93
85	FLT106-3PH	0.991	Leading	16.85	0.987	Leading	20.29	0.991	Leading	16.76	0.992	Leading	16.11	0.991	Leading	16.94
86	FLT107-3PH	0.991	Leading	16.85	0.987	Leading	20.28	0.991	Leading	16.76	0.992	Leading	16.12	0.991	Leading	16.95
87	FLT108-3PH	0.991	Leading	16.85	0.987	Leading	20.29	0.991	Leading	16.76	0.992	Leading	16.12	0.991	Leading	16.95
88	FLT109-3PH	0.991	Leading	16.83	0.987	Leading	20.28	0.991	Leading	16.75	0.992	Leading	16.10	0.991	Leading	16.92
89	FLT110-3PH	0.991	Leading	16.86	0.987	Leading	20.28	0.991	Leading	16.76	0.992	Leading	16.12	0.991	Leading	16.95
90	FLT111-3PH	0.991	Leading	16.85	0.987	Leading	20.28	0.991	Leading	16.76	0.992	Leading	16.12	0.991	Leading	16.95
91	FLT112-3PH	0.991	Leading	16.86	0.987	Leading	20.28	0.991	Leading	16.76	0.992	Leading	16.12	0.991	Leading	16.96
92	FLT113-3PH	0.991	Leading	16.85	0.987	Leading	20.29	0.991	Leading	16.76	0.992	Leading	16.11	0.991	Leading	16.94
93	FLT114-3PH	0.991	Leading	16.85	0.987	Leading	20.29	0.991	Leading	16.76	0.992	Leading	16.12	0.991	Leading	16.94
94	FLT115-3PH	0.991	Leading	16.85	0.987	Leading	20.29	0.991	Leading	16.76	0.992	Leading	16.12	0.991	Leading	16.94
95	FLT116-3PH	0.991	Leading	16.86	0.987	Leading	20.29	0.991	Leading	16.76	0.992	Leading	16.12	0.991	Leading	16.95
96	FLT117-3PH	0.991	Leading	16.86	0.987	Leading	20.28	0.991	Leading	16.76	0.992	Leading	16.12	0.991	Leading	16.96
97	FLT118-3PH	0.991	Leading	16.85	0.987	Leading	20.29	0.991	Leading	16.76	0.992	Leading	16.12	0.991	Leading	16.94
98	FLT119-3PH	0.991	Leading	16.85	0.987	Leading	20.29	0.991	Leading	16.76	0.992	Leading	16.11	0.991	Leading	16.94
99	FLT120-3PH	0.991	Leading	16.82	0.987	Leading	20.29	0.991	Leading	16.74	0.992	Leading	16.09	0.991	Leading	16.89
100	FLT121-3PH	0.991	Leading	16.85	0.987	Leading	20.29	0.991	Leading	16.76	0.992	Leading	16.12	0.991	Leading	16.94
101	FLT126-3PH	0.991	Leading	16.71	0.987	Leading	20.22	0.991	Leading	16.70	0.992	Leading	16.00	0.991	Leading	16.75
102	FLT127-3PH	0.991	Leading	16.85	0.987	Leading	20.29	0.991	Leading	16.76	0.992	Leading	16.12	0.991	Leading	16.94
103	FLT128-3PH	0.992	Leading	16.43	0.987	Leading	20.22	0.991	Leading	16.77	0.992	Leading	16.10	0.991	Leading	16.97
104	FLT129-3PH	0.991	Leading	16.85	0.987	Leading	20.29	0.991	Leading	16.76	0.992	Leading	16.12	0.991	Leading	16.95

Study Generator GEN-2014-046

The Power Factor Analysis shows that GEN-2014-046 has a power factor range of 0.986 to 0.997 leading (absorbing) for the 2016 Winter Peak conditions, a power factor range of 0.987 to 0.993 leading (absorbing) for the 2017 Summer Peak conditions, a power factor range of 0.991 to 0.997 leading (absorbing) for the 2020 Summer Peak conditions, a power factor range of 0.991 to 0.997 leading (absorbing) for the 2020 Winter Peak conditions, and a power factor range of 0.989 to 0.997 leading (absorbing) for the 2025 Summer Peak conditions.

DRAFT

Table 5-2
Power Factor Analysis: GEN-2015-018

DRAFT

Cont. No.	Case	2016 Winter Peak			2017 Summer Peak			2020 Summer Peak			2020 Winter Peak			2025 Summer Peak		
		Power Factor		Q (MVAR)	Power Factor		Q (MVAR)	Power Factor		Q (MVAR)	Power Factor		Q (MVAR)	Power Factor		Q (MVAR)
0	Base	0.980	Leading	16.08	0.991	Leading	10.65	0.994	Leading	8.48	0.983	Leading	14.92	0.994	Leading	8.74
1	FLT01-3PH	0.981	Leading	15.88	0.992	Leading	10.33	0.995	Leading	8.42	0.983	Leading	14.87	0.994	Leading	8.70
2	FLT02-3PH	0.981	Leading	15.76	0.992	Leading	10.19	0.995	Leading	8.40	0.983	Leading	14.85	0.994	Leading	8.69
3	FLT03-3PH	0.981	Leading	15.98	0.991	Leading	10.60	0.994	Leading	8.61	0.979	Leading	16.53	0.995	Leading	8.04
4	FLT04-3PH	0.986	Leading	13.54	0.996	Leading	6.88	0.997	Leading	6.16	0.989	Leading	12.00	1.000	Leading	2.06
5	FLT05-3PH	0.987	Leading	13.19	0.996	Leading	7.16	0.999	Leading	4.03	0.990	Leading	11.14	0.998	Leading	5.60
6	FLT06-3PH	0.981	Leading	15.93	0.992	Leading	10.40	0.994	Leading	8.43	0.983	Leading	14.88	0.994	Leading	8.71
7	FLT07-3PH	0.981	Leading	15.90	0.992	Leading	10.34	0.995	Leading	8.42	0.983	Leading	14.86	0.994	Leading	8.70
8	FLT11-3PH	0.998	Leading	5.34	0.999	Lagging	-3.49	1.000	Lagging	-1.90	0.996	Leading	6.86	0.996	Lagging	-7.26
9	FLT12-3PH	0.973	Leading	19.14	0.956	Leading	24.53	0.967	Leading	20.91	0.979	Leading	16.62	0.950	Leading	26.25
10	FLT13-3PH	0.981	Leading	15.99	0.994	Leading	9.13	0.996	Leading	7.33	0.983	Leading	14.85	0.996	Leading	7.25
11	FLT14-3PH	0.987	Leading	12.79	0.996	Lagging	-6.76	1.000	Leading	1.59	0.994	Leading	9.04	1.000	Lagging	-1.10
12	FLT15-3PH	0.989	Leading	11.82	0.994	Leading	8.77	0.999	Leading	4.02	0.995	Leading	7.67	0.998	Leading	5.02
13	FLT16-3PH	0.982	Leading	15.53	0.993	Leading	9.44	0.996	Leading	7.42	0.985	Leading	14.16	0.995	Leading	7.73
14	FLT17-3PH	0.976	Leading	17.83	0.989	Leading	11.82	0.992	Leading	10.24	0.979	Leading	16.79	0.992	Leading	10.22
15	FLT18-3PH	0.976	Leading	17.93	0.988	Leading	12.51	0.991	Leading	11.01	0.979	Leading	16.83	0.991	Leading	10.92
16	FLT19-3PH	0.980	Leading	16.08	0.991	Leading	10.65	0.994	Leading	8.48	0.983	Leading	14.92	0.994	Leading	8.74
17	FLT20-3PH	0.981	Leading	15.90	0.992	Leading	10.36	0.994	Leading	8.44	0.983	Leading	14.85	0.994	Leading	8.63
18	FLT21-3PH	0.984	Leading	14.66	0.994	Leading	8.79	0.997	Leading	6.56	0.986	Leading	13.38	0.996	Leading	6.72
19	FLT22-3PH	0.985	Leading	13.78	0.996	Leading	6.90	0.998	Leading	4.79	0.988	Leading	12.31	0.998	Leading	4.78
20	FLT23-3PH	0.984	Leading	14.69	0.995	Leading	8.21	0.997	Leading	6.16	0.987	Leading	13.26	0.997	Leading	6.32
21	FLT24-3PH	0.983	Leading	14.77	0.994	Leading	9.05	0.996	Leading	6.83	0.986	Leading	13.50	0.996	Leading	7.04
22	FLT25-3PH	0.984	Leading	14.31	0.994	Leading	8.48	0.997	Leading	6.34	0.987	Leading	13.27	0.997	Leading	6.26
23	FLT26-3PH	0.979	Leading	16.48	0.991	Leading	10.63	0.994	Leading	8.44	0.984	Leading	14.66	0.994	Leading	8.70
24	FLT27-3PH	0.981	Leading	15.74	0.992	Leading	10.10	0.995	Leading	8.13	0.984	Leading	14.69	0.995	Leading	8.31
25	FLT28-3PH	0.987	Leading	12.91	0.991	Leading	10.97	0.993	Leading	9.17	0.989	Leading	12.11	0.994	Leading	8.64
26	FLT29-3PH	0.982	Leading	15.47	0.993	Leading	9.43	0.995	Leading	8.30	0.984	Leading	14.65	0.998	Leading	5.33
27	FLT30-3PH	0.988	Leading	12.67	0.993	Leading	9.33	0.996	Leading	7.22	0.989	Leading	12.14	0.995	Leading	8.24
28	FLT31-3PH	0.984	Leading	14.63	0.994	Leading	8.69	0.996	Leading	6.78	0.986	Leading	13.57	0.996	Leading	6.90
29	FLT34-3PH	0.982	Leading	15.46	0.992	Leading	10.12	0.995	Leading	7.86	0.985	Leading	14.20	0.995	Leading	8.28
30	FLT35-3PH	0.980	Leading	16.06	0.991	Leading	10.64	0.994	Leading	8.49	0.983	Leading	14.92	0.994	Leading	8.78
31	FLT36-3PH	0.980	Leading	16.06	0.991	Leading	10.53	0.995	Leading	8.36	0.983	Leading	14.88	0.994	Leading	8.63
32	FLT37-3PH	0.980	Leading	16.10	0.991	Leading	10.60	0.995	Leading	8.37	0.983	Leading	14.93	0.994	Leading	8.68
33	FLT38-3PH	0.981	Leading	15.99	0.991	Leading	10.55	0.995	Leading	8.38	0.983	Leading	14.85	0.994	Leading	8.66
34	FLT39-3PH	0.980	Leading	16.15	0.991	Leading	10.61	0.995	Leading	8.42	0.983	Leading	14.91	0.994	Leading	8.67
35	FLT40-3PH	0.980	Leading	16.08	0.991	Leading	10.63	0.994	Leading	8.46	0.983	Leading	14.92	0.994	Leading	8.69
36	FLT41-3PH	0.980	Leading	16.06	0.991	Leading	10.63	0.994	Leading	8.45	0.983	Leading	14.90	0.994	Leading	8.72
37	FLT43-3PH	0.982	Leading	15.30	0.992	Leading	9.93	0.995	Leading	7.82	0.985	Leading	14.12	0.995	Leading	8.36
38	FLT44-3PH	0.984	Leading	14.56	0.993	Leading	9.16	0.996	Leading	7.16	0.987	Leading	13.27	0.995	Leading	7.94
39	FLT45-3PH	0.982	Leading	15.35	0.992	Leading	9.87	0.995	Leading	7.74	0.985	Leading	14.15	0.995	Leading	8.29
40	FLT46-3PH	0.980	Leading	16.08	0.991	Leading	10.64	0.994	Leading	8.48	0.983	Leading	14.93	0.994	Leading	8.75
41	FLT47-3PH	0.982	Leading	15.41	0.991	Leading	10.65	0.995	Leading	7.82	0.985	Leading	14.09	0.994	Leading	8.59
42	FLT48-3PH	0.980	Leading	16.08	0.991	Leading	10.65	0.994	Leading	8.48	0.983	Leading	14.92	0.994	Leading	8.74
43	FLT49-3PH	0.984	Leading	14.59	0.995	Leading	8.38	0.997	Leading	6.50	0.985	Leading	14.10	0.996	Leading	7.54
44	FLT52-3PH	0.987	Leading	13.23	0.997	Leading	5.69	0.999	Leading	3.62	0.989	Leading	11.82	0.998	Leading	4.83
45	FLT53-3PH	0.984	Leading	14.56	0.996	Leading	7.36	0.998	Leading	5.14	0.987	Leading	12.88	0.997	Leading	6.28
46	FLT54-3PH	0.983	Leading	14.98	0.992	Leading	9.95	0.995	Leading	7.71	0.985	Leading	13.93	0.996	Leading	7.00
47	FLT55-3PH	0.982	Leading	15.33	0.993	Leading	9.19	0.996	Leading	7.04	0.985	Leading	13.97	0.996	Leading	7.19
48	FLT56-3PH	0.980	Leading	16.18	0.992	Leading	10.44	0.995	Leading	8.42	0.983	Leading	15.10	0.994	Leading	8.76
49	FLT57-3PH	0.980	Leading	16.04	0.992	Leading	10.23	0.995	Leading	8.18	0.983	Leading	14.93	0.994	Leading	8.51
50	FLT58-3PH	0.980	Leading	16.18	0.992	Leading	10.41	0.995	Leading	8.42	0.983	Leading	15.11	0.994	Leading	8.76
51	FLT59-3PH	0.980	Leading	16.11	0.991	Leading	10.70	0.995	Leading	8.31	0.984	Leading	14.70	0.995	Leading	8.28
52	FLT60-3PH	0.980	Leading	16.05	0.992	Leading	9.95	0.995	Leading	8.14	0.983	Leading	14.86	0.994	Leading	8.76
53	FLT63-3PH	0.980	Leading	16.06	0.991	Leading	10.60	0.994	Leading	8.43	0.983	Leading	14.86	0.994	Leading	8.71
54	FLT64-3PH	0.980	Leading	16.10	0.991	Leading	10.71	0.994	Leading	8.50	0.983	Leading	14.96	0.994	Leading	8.75
55	FLT65-3PH	0.980	Leading	16.06	0.991	Leading	10.62	0.994	Leading	8.44	0.983	Leading	14.88	0.994	Leading	8.72
56	FLT66-3PH	0.980	Leading	16.12	0.991	Leading	10.72	0.994	Leading	8.48	0.983	Leading	14.94	0.994	Leading	8.72
57	FLT67-3PH	0.980	Leading	16.09	0.991	Leading	10.67	0.994	Leading	8.48	0.983	Leading	14.93	0.994	Leading	8.74
58	FLT68-3PH	0.980	Leading	16.06	0.991	Leading	10.62	0.994	Leading	8.45	0.983	Leading	14.88	0.994	Leading	8.72
59	FLT69-3PH	0.980	Leading	16.05	0.992	Leading	10.48	0.994	Leading	8.48	0.983	Leading	14.88	0.994	Leading	8.75
60	FLT70-3PH	0.980	Leading	16.08	0.991	Leading	10.64	0.995	Leading	8.41	0.983	Leading	14.89	0.994	Leading	8.62
61	FLT71-3PH	0.980	Leading	16.09	0.991	Leading	10.66	0.994	Leading	8.47	0.983	Leading	14.92	0.994	Leading	8.74
62	FLT72-3PH	0.980	Leading	16.06	0.991	Leading	10.58	0.995	Leading	8.37	0.983	Leading	14.89	0.994	Leading	8.66
63	FLT73-3PH	0.980	Leading	16.08	0.991	Leading	10.65	0.994	Leading	8.48	0.983	Leading	14.92	0.994	Leading	8.74
64	FLT74-3PH	0.980	Leading	16.08	0.991	Leading	10.64	0.994	Leading	8.46	0.983	Leading	14.91	0.994	Leading	8.73
65	FLT75-3PH	0.981	Leading	15.83	0.993	Leading	9.60	0.995	Leading	7.83	0.984	Leading	14.35	0.995	Leading	8.14
66	FLT76-3PH	0.980	Leading	16.07	0.991	Leading	10.62	0.994	Leading	8.45	0.983	Leading	14.88	0.994	Leading	8.73
67	FLT77-3PH	0.981	Leading	15.91	0.993	Leading	9.85	0.995	Leading	8.11	0.984	Leading	14.67	0.994	Leading	8.52
68	FLT84-3PH	0.981	Leading	15.92	0.992	Leading	10.47	0.995	Leading	8.29	0.983	Leading	14.74	0.994	Leading	8.62
69	FLT85-3PH	0.980	Leading	16.10	0.991	Leading	10.67	0.994	Leading	8.43	0.983	Leading	14.90	0.994	Leading	8.66
70	FLT86-3PH	0.980	Leading	16.16	0.991	Leading	10.56	0.994	Leading	8.45	0.983	Leading	15.04	0.994	Leading	8.70
71	FLT87-3PH	0.980	Leading	16.10	0.991	Leading	10.64	0.994	Leading	8.47	0.983	Leading	14.93	0.994	Leading	8.73
72	FLT88-3PH	0.980	Leading	16.09	0.991	Leading	10.63	0.994	Leading	8.45	0.983	Leading	14.93	0.994	Leading	8.73
73	FLT92-3PH	0.989	Leading	12.23	1.000	Leading	1.31	0.999	Leading	2.62	0.993	Leading	9.58	0.998	Leading	5.44
74	FLT93-3PH	0.980	Leading	16.27	0.991	Leading	10.63	0.994	Leading	8.77	0.983	Leading	15.03	0.993	Leading	9.17
75	FLT94-3PH	0.980	Leading	16.27	0.992	Leading	10.42	0.994	Leading	8.51	0.982	Leading	15.44	0.994	Leading	8.60

Table 5-2 (continued)

Power Factor Analysis: GEN-2015-018

Cont. No.	Case	2016 Winter Peak			2017 Summer Peak			2020 Summer Peak			2020 Winter Peak			2025 Summer Peak		
		Power Factor		Q (MVAR)	Power Factor		Q (MVAR)	Power Factor		Q (MVAR)	Power Factor		Q (MVAR)	Power Factor		Q (MVAR)
76	FLT95-3PH	0.980	Leading	16.28	0.991	Leading	10.64	0.994	Leading	8.78	0.983	Leading	15.04	0.993	Leading	9.18
77	FLT96-3PH	0.980	Leading	16.05	0.991	Leading	10.63	0.994	Leading	8.47	0.983	Leading	14.92	0.994	Leading	8.74
78	FLT97-3PH	0.981	Leading	15.99	0.991	Leading	10.55	0.994	Leading	8.47	0.983	Leading	14.91	0.994	Leading	8.73
79	FLT98-3PH	0.980	Leading	16.07	0.991	Leading	10.64	0.994	Leading	8.48	0.983	Leading	14.93	0.994	Leading	8.75
80	FLT99-3PH	0.980	Leading	16.05	0.991	Leading	10.63	0.994	Leading	8.47	0.983	Leading	14.91	0.994	Leading	8.73
81	FLT100-3PH	0.981	Leading	15.98	0.991	Leading	10.55	0.994	Leading	8.47	0.983	Leading	14.91	0.994	Leading	8.73
82	FLT101-3PH	0.981	Leading	16.03	0.991	Leading	10.60	0.994	Leading	8.48	0.983	Leading	14.92	0.994	Leading	8.74
83	FLT102-3PH	0.981	Leading	16.03	0.991	Leading	10.60	0.994	Leading	8.44	0.983	Leading	14.89	0.994	Leading	8.71
84	FLT105-3PH	0.980	Leading	16.08	0.991	Leading	10.64	0.994	Leading	8.44	0.983	Leading	14.89	0.994	Leading	8.68
85	FLT106-3PH	0.980	Leading	16.09	0.991	Leading	10.65	0.994	Leading	8.46	0.983	Leading	14.92	0.994	Leading	8.71
86	FLT107-3PH	0.980	Leading	16.08	0.991	Leading	10.63	0.994	Leading	8.48	0.983	Leading	14.92	0.994	Leading	8.76
87	FLT108-3PH	0.980	Leading	16.09	0.991	Leading	10.65	0.994	Leading	8.50	0.983	Leading	14.91	0.994	Leading	8.78
88	FLT109-3PH	0.980	Leading	16.11	0.991	Leading	10.69	0.994	Leading	8.68	0.983	Leading	14.98	0.994	Leading	8.94
89	FLT110-3PH	0.980	Leading	16.07	0.991	Leading	10.60	0.995	Leading	8.34	0.983	Leading	14.83	0.994	Leading	8.55
90	FLT111-3PH	0.980	Leading	16.08	0.991	Leading	10.62	0.994	Leading	8.46	0.983	Leading	14.93	0.994	Leading	8.73
91	FLT112-3PH	0.980	Leading	16.06	0.991	Leading	10.55	0.995	Leading	8.43	0.983	Leading	14.92	0.994	Leading	8.72
92	FLT113-3PH	0.980	Leading	16.08	0.991	Leading	10.64	0.994	Leading	8.51	0.983	Leading	14.93	0.994	Leading	8.79
93	FLT114-3PH	0.980	Leading	16.08	0.991	Leading	10.65	0.994	Leading	8.47	0.983	Leading	14.92	0.994	Leading	8.73
94	FLT115-3PH	0.980	Leading	16.08	0.991	Leading	10.65	0.994	Leading	8.48	0.983	Leading	14.92	0.994	Leading	8.74
95	FLT116-3PH	0.980	Leading	16.07	0.991	Leading	10.61	0.995	Leading	8.42	0.983	Leading	14.85	0.994	Leading	8.65
96	FLT117-3PH	0.980	Leading	16.06	0.991	Leading	10.57	0.995	Leading	8.37	0.983	Leading	14.88	0.994	Leading	8.64
97	FLT118-3PH	0.980	Leading	16.08	0.991	Leading	10.65	0.994	Leading	8.47	0.983	Leading	14.92	0.994	Leading	8.74
98	FLT119-3PH	0.980	Leading	16.08	0.991	Leading	10.65	0.994	Leading	8.48	0.983	Leading	14.92	0.994	Leading	8.75
99	FLT120-3PH	0.980	Leading	16.15	0.991	Leading	10.77	0.994	Leading	8.58	0.983	Leading	15.03	0.994	Leading	8.84
100	FLT121-3PH	0.980	Leading	16.08	0.991	Leading	10.65	0.994	Leading	8.47	0.983	Leading	14.92	0.994	Leading	8.74
101	FLT126-3PH	0.980	Leading	16.29	0.990	Leading	11.13	0.994	Leading	8.66	0.983	Leading	15.16	0.994	Leading	8.87
102	FLT127-3PH	0.980	Leading	16.10	0.991	Leading	10.66	0.994	Leading	8.48	0.983	Leading	14.92	0.994	Leading	8.74
103	FLT128-3PH	0.979	Leading	16.48	0.991	Leading	11.02	0.994	Leading	8.44	0.983	Leading	14.95	0.994	Leading	8.72
104	FLT129-3PH	0.980	Leading	16.08	0.991	Leading	10.63	0.994	Leading	8.47	0.983	Leading	14.92	0.994	Leading	8.73

Study Generator GEN-2015-018

The Power Factor Analysis shows that GEN-2015-018 has a power factor range of 0.973 to 0.998 leading (absorbing) for the 2016 Winter Peak conditions, a power factor range of 0.956 leading (absorbing) to 0.996 lagging (supplying) for the 2017 Summer Peak conditions, a power factor range of 0.967 leading (absorbing) to 1.00 (unity) for the 2020 Summer Peak conditions, a power factor range of 0.979 to 0.996 leading (absorbing) for the 2020 Winter Peak conditions, and a power factor range of 0.950 leading (absorbing) to 0.996 lagging (supplying) for the 2025 Summer Peak conditions.

DRAFT

Table 5-3
Power Factor Analysis: GEN-2015-020

DRAFT

Cont. No.	Case	2016 Winter Peak			2017 Summer Peak			2020 Summer Peak			2020 Winter Peak			2025 Summer Peak		
		Power Factor		Q (MVAR)	Power Factor		Q (MVAR)	Power Factor		Q (MVAR)	Power Factor		Q (MVAR)	Power Factor		Q (MVAR)
0	Base	0.985	Leading	17.68	0.986	Leading	17.09	0.992	Leading	12.98	0.988	Leading	15.88	0.988	Leading	15.76
1	FLT01-3PH	0.986	Leading	17.11	0.987	Leading	16.18	0.992	Leading	12.87	0.988	Leading	15.77	0.988	Leading	15.70
2	FLT02-3PH	0.986	Leading	16.76	0.988	Leading	15.77	0.992	Leading	12.84	0.988	Leading	15.73	0.988	Leading	15.68
3	FLT03-3PH	0.985	Leading	17.33	0.986	Leading	16.93	0.991	Leading	13.33	0.979	Leading	20.62	0.991	Leading	13.53
4	FLT04-3PH	0.993	Leading	11.91	0.997	Leading	7.73	0.997	Leading	8.19	0.995	Leading	9.74	1.000	Leading	0.10
5	FLT05-3PH	0.993	Leading	11.82	0.997	Leading	7.98	1.000	Leading	2.74	0.999	Leading	4.15	0.996	Leading	9.20
6	FLT06-3PH	0.985	Leading	17.24	0.987	Leading	16.36	0.992	Leading	12.89	0.988	Leading	15.78	0.988	Leading	15.71
7	FLT07-3PH	0.986	Leading	17.15	0.987	Leading	16.21	0.992	Leading	12.86	0.988	Leading	15.76	0.988	Leading	15.70
8	FLT11-3PH	0.971	Leading	24.64	0.969	Leading	25.58	0.983	Leading	18.52	0.980	Leading	20.49	0.970	Leading	24.99
9	FLT12-3PH	0.989	Leading	14.91	0.981	Leading	19.78	0.997	Leading	8.22	0.994	Leading	10.74	0.993	Leading	11.66
10	FLT13-3PH	0.985	Leading	17.64	0.987	Leading	16.49	0.992	Leading	12.96	0.988	Leading	15.88	0.988	Leading	15.75
11	FLT14-3PH	0.990	Leading	13.96	0.996	Leading	8.91	0.991	Leading	13.35	0.988	Leading	15.45	0.987	Leading	16.34
12	FLT15-3PH	0.996	Leading	9.02	0.991	Leading	13.21	0.998	Leading	6.46	0.999	Leading	4.59	0.995	Leading	10.03
13	FLT16-3PH	0.984	Leading	18.39	0.982	Leading	19.27	0.988	Leading	15.46	0.985	Leading	17.57	0.984	Leading	18.24
14	FLT17-3PH	0.985	Leading	17.41	0.986	Leading	16.79	0.993	Leading	12.20	0.989	Leading	14.90	0.989	Leading	15.04
15	FLT18-3PH	0.985	Leading	17.64	0.986	Leading	17.07	0.993	Leading	12.26	0.989	Leading	15.12	0.989	Leading	15.10
16	FLT19-3PH	0.985	Leading	17.68	0.986	Leading	17.09	0.992	Leading	12.98	0.988	Leading	15.88	0.988	Leading	15.76
17	FLT20-3PH	0.985	Leading	17.38	0.986	Leading	16.61	0.992	Leading	12.92	0.988	Leading	15.78	0.988	Leading	15.60
18	FLT21-3PH	0.973	Leading	23.95	0.972	Leading	24.25	0.975	Leading	22.84	0.972	Leading	24.07	0.969	Leading	25.67
19	FLT22-3PH	0.981	Leading	19.91	0.977	Leading	21.72	0.982	Leading	19.26	0.981	Leading	19.97	0.975	Leading	22.69
20	FLT23-3PH	0.983	Leading	18.84	0.980	Leading	20.15	0.986	Leading	16.99	0.983	Leading	18.48	0.980	Leading	20.09
21	FLT24-3PH	0.973	Leading	23.72	0.973	Leading	23.80	0.976	Leading	22.13	0.973	Leading	23.72	0.970	Leading	24.86
22	FLT25-3PH	0.983	Leading	18.45	0.989	Leading	15.07	0.993	Leading	11.58	0.990	Leading	14.50	0.989	Leading	15.00
23	FLT26-3PH	0.995	Leading	9.59	0.991	Leading	13.47	0.996	Leading	8.96	0.988	Leading	15.37	0.994	Leading	10.87
24	FLT27-3PH	0.987	Leading	16.54	0.989	Leading	15.23	0.993	Leading	11.76	0.989	Leading	15.08	0.990	Leading	14.26
25	FLT28-3PH	0.999	Lagging	-4.08	0.991	Leading	13.53	0.995	Leading	10.12	0.999	Lagging	-4.37	0.996	Leading	8.50
26	FLT29-3PH	0.985	Leading	13.93	0.995	Leading	9.80	0.997	Leading	7.45	0.993	Leading	12.05	1.000	Leading	2.16
27	FLT30-3PH	0.994	Leading	11.17	0.983	Leading	18.46	0.989	Leading	15.08	0.993	Leading	12.25	0.982	Leading	19.31
28	FLT31-3PH	0.992	Leading	12.61	0.992	Leading	12.92	0.996	Leading	9.39	0.994	Leading	11.24	0.992	Leading	12.57
29	FLT34-3PH	0.986	Leading	16.74	0.987	Leading	16.17	0.993	Leading	12.07	0.989	Leading	14.98	0.989	Leading	15.11
30	FLT35-3PH	0.985	Leading	17.65	0.986	Leading	17.09	0.992	Leading	13.01	0.988	Leading	15.88	0.988	Leading	15.82
31	FLT36-3PH	0.985	Leading	17.62	0.986	Leading	16.95	0.992	Leading	12.86	0.988	Leading	15.81	0.988	Leading	15.62
32	FLT37-3PH	0.985	Leading	17.73	0.986	Leading	17.03	0.992	Leading	12.84	0.988	Leading	15.90	0.988	Leading	15.66
33	FLT38-3PH	0.985	Leading	17.54	0.986	Leading	16.93	0.992	Leading	12.83	0.988	Leading	15.78	0.988	Leading	15.64
34	FLT39-3PH	0.985	Leading	17.80	0.986	Leading	17.02	0.992	Leading	12.90	0.988	Leading	15.87	0.988	Leading	15.66
35	FLT40-3PH	0.985	Leading	17.66	0.986	Leading	17.05	0.992	Leading	12.95	0.988	Leading	15.87	0.988	Leading	15.68
36	FLT41-3PH	0.985	Leading	17.66	0.986	Leading	17.06	0.992	Leading	12.94	0.988	Leading	15.85	0.988	Leading	15.72
37	FLT43-3PH	0.986	Leading	16.68	0.987	Leading	16.06	0.993	Leading	12.03	0.989	Leading	14.86	0.989	Leading	15.20
38	FLT44-3PH	0.981	Leading	15.67	0.989	Leading	14.92	0.994	Leading	11.10	0.990	Leading	13.79	0.990	Leading	14.59
39	FLT45-3PH	0.986	Leading	16.76	0.987	Leading	15.97	0.993	Leading	11.92	0.989	Leading	14.91	0.989	Leading	15.10
40	FLT46-3PH	0.985	Leading	17.67	0.986	Leading	17.05	0.992	Leading	12.98	0.988	Leading	15.88	0.988	Leading	15.75
41	FLT47-3PH	0.987	Leading	16.31	0.986	Leading	17.09	0.993	Leading	11.77	0.990	Leading	14.34	0.988	Leading	15.51
42	FLT48-3PH	0.985	Leading	17.68	0.986	Leading	17.09	0.992	Leading	12.98	0.988	Leading	15.88	0.988	Leading	15.76
43	FLT49-3PH	0.981	Leading	15.72	0.991	Leading	13.75	0.995	Leading	10.18	0.989	Leading	14.65	0.990	Leading	14.02
44	FLT52-3PH	0.990	Leading	14.36	0.995	Leading	9.89	0.998	Leading	6.79	0.992	Leading	12.68	0.994	Leading	10.69
45	FLT53-3PH	0.987	Leading	16.28	0.992	Leading	12.47	0.996	Leading	8.82	0.990	Leading	13.94	0.992	Leading	12.64
46	FLT54-3PH	0.989	Leading	15.10	0.988	Leading	15.70	0.993	Leading	11.87	0.990	Leading	14.07	0.991	Leading	13.25
47	FLT55-3PH	0.987	Leading	16.41	0.989	Leading	14.75	0.994	Leading	11.01	0.990	Leading	14.55	0.991	Leading	13.62
48	FLT56-3PH	0.984	Leading	18.25	0.985	Leading	17.36	0.991	Leading	13.41	0.987	Leading	16.45	0.987	Leading	16.14
49	FLT57-3PH	0.984	Leading	18.06	0.986	Leading	16.97	0.992	Leading	12.97	0.987	Leading	16.28	0.988	Leading	15.59
50	FLT58-3PH	0.984	Leading	18.29	0.985	Leading	17.37	0.991	Leading	13.45	0.987	Leading	16.49	0.987	Leading	16.16
51	FLT59-3PH	0.985	Leading	17.78	0.985	Leading	17.24	0.991	Leading	13.25	0.987	Leading	16.11	0.988	Leading	15.87
52	FLT60-3PH	0.985	Leading	17.38	0.985	Leading	17.43	0.991	Leading	13.57	0.988	Leading	15.71	0.988	Leading	15.93
53	FLT63-3PH	0.985	Leading	17.62	0.986	Leading	16.98	0.992	Leading	12.93	0.988	Leading	15.83	0.988	Leading	15.73
54	FLT64-3PH	0.985	Leading	17.73	0.985	Leading	17.24	0.992	Leading	13.05	0.988	Leading	15.95	0.988	Leading	15.80
55	FLT65-3PH	0.985	Leading	17.64	0.986	Leading	17.01	0.992	Leading	12.94	0.988	Leading	15.84	0.988	Leading	15.74
56	FLT66-3PH	0.985	Leading	17.77	0.985	Leading	17.27	0.992	Leading	13.06	0.987	Leading	15.97	0.988	Leading	15.79
57	FLT67-3PH	0.985	Leading	17.70	0.986	Leading	17.13	0.992	Leading	13.00	0.988	Leading	15.90	0.988	Leading	15.76
58	FLT68-3PH	0.985	Leading	17.63	0.986	Leading	17.01	0.992	Leading	12.94	0.988	Leading	15.84	0.988	Leading	15.74
59	FLT69-3PH	0.985	Leading	17.60	0.987	Leading	16.59	0.992	Leading	13.08	0.988	Leading	15.87	0.988	Leading	15.93
60	FLT70-3PH	0.985	Leading	17.68	0.986	Leading	17.08	0.992	Leading	12.97	0.988	Leading	15.88	0.988	Leading	15.75
61	FLT71-3PH	0.985	Leading	17.70	0.986	Leading	17.12	0.992	Leading	12.99	0.988	Leading	15.90	0.988	Leading	15.76
62	FLT72-3PH	0.985	Leading	17.64	0.986	Leading	16.94	0.992	Leading	12.92	0.988	Leading	15.85	0.988	Leading	15.73
63	FLT73-3PH	0.985	Leading	17.68	0.986	Leading	17.09	0.992	Leading	12.98	0.988	Leading	15.88	0.988	Leading	15.76
64	FLT74-3PH	0.985	Leading	17.68	0.986	Leading	17.07	0.992	Leading	12.97	0.988	Leading	15.88	0.988	Leading	15.75
65	FLT75-3PH	0.986	Leading	17.19	0.989	Leading	14.94	0.993	Leading	12.26	0.989	Leading	15.26	0.988	Leading	15.49
66	FLT76-3PH	0.985	Leading	17.64	0.986	Leading	17.01	0.992	Leading	12.95	0.988	Leading	15.84	0.988	Leading	15.74
67	FLT77-3PH	0.985	Leading	17.30	0.989	Leading	15.22	0.992	Leading	12.35	0.988	Leading	15.39	0.988	Leading	15.50
68	FLT84-3PH	0.985	Leading	17.47	0.986	Leading	16.83	0.992	Leading	12.72	0.988	Leading	15.65	0.988	Leading	15.58
69	FLT85-3PH	0.985	Leading	17.72	0.986	Leading	17.13	0.992	Leading	13.03	0.988	Leading	15.92	0.988	Leading	15.81
70	FLT86-3PH	0.984	Leading	18.13	0.985	Leading	17.40	0.991	Leading	13.31	0.987	Leading	16.45	0.988	Leading	15.90
71	FLT87-3PH	0.985	Leading	17.71	0.986	Leading	17.06	0.992	Leading	13.00	0.988	Leading	15.92	0.988	Leading	15.78
72	FLT88-3PH	0.985	Leading	17.71	0.986	Leading	17.12	0.992	Leading	13.01	0.988	Leading	15.91	0.988	Leading	15.78
73	FLT92-3PH	0.999	Leading	4.34	0.993	Lagging	-11.60	1.000	Lagging	-0.77	0.999	Leading	4.10	0.996	Leading	8.40
74	FLT93-3PH	0.984	Leading	18.08	0.986	Leading	17.05	0.991	Leading	13.57	0.987	Leading	16.12	0.987	Leading	16.32
75	FLT94-3PH	0.982	Leading	19.12	0.984	Leading	18.18	0.990	Leading	14.28	0.984	Leading	18.07	0.987	Leading	16.05

Table 5-3 (continued)
Power Factor Analysis: GEN-2015-020

Cont. No.	Case	2016 Winter Peak			2017 Summer Peak			2020 Summer Peak			2020 Winter Peak			2025 Summer Peak		
		Power Factor		Q (MVAR)	Power Factor		Q (MVAR)	Power Factor		Q (MVAR)	Power Factor		Q (MVAR)	Power Factor		Q (MVAR)
76	FLT95-3PH	0.984	Leading	18.09	0.986	Leading	17.06	0.991	Leading	13.57	0.987	Leading	16.12	0.987	Leading	16.33
77	FLT96-3PH	0.985	Leading	17.59	0.986	Leading	17.03	0.992	Leading	12.97	0.988	Leading	15.87	0.988	Leading	15.75
78	FLT97-3PH	0.985	Leading	17.40	0.986	Leading	16.79	0.992	Leading	12.96	0.988	Leading	15.85	0.988	Leading	15.74
79	FLT98-3PH	0.985	Leading	17.64	0.986	Leading	17.06	0.992	Leading	12.99	0.988	Leading	15.89	0.988	Leading	15.76
80	FLT99-3PH	0.985	Leading	17.59	0.986	Leading	17.02	0.992	Leading	12.96	0.988	Leading	15.87	0.988	Leading	15.75
81	FLT100-3PH	0.985	Leading	17.38	0.986	Leading	16.80	0.992	Leading	12.96	0.988	Leading	15.86	0.988	Leading	15.74
82	FLT101-3PH	0.985	Leading	17.52	0.986	Leading	16.94	0.992	Leading	12.98	0.988	Leading	15.88	0.988	Leading	15.75
83	FLT102-3PH	0.985	Leading	17.54	0.986	Leading	16.95	0.992	Leading	12.90	0.988	Leading	15.81	0.988	Leading	15.72
84	FLT105-3PH	0.985	Leading	17.67	0.986	Leading	17.08	0.992	Leading	12.99	0.988	Leading	15.88	0.988	Leading	15.77
85	FLT106-3PH	0.985	Leading	17.70	0.986	Leading	17.11	0.992	Leading	12.99	0.988	Leading	15.89	0.988	Leading	15.76
86	FLT107-3PH	0.985	Leading	17.68	0.986	Leading	17.06	0.992	Leading	12.97	0.988	Leading	15.88	0.988	Leading	15.75
87	FLT108-3PH	0.985	Leading	17.69	0.986	Leading	17.09	0.992	Leading	12.97	0.988	Leading	15.87	0.988	Leading	15.75
88	FLT109-3PH	0.985	Leading	17.72	0.986	Leading	17.16	0.992	Leading	13.01	0.988	Leading	15.89	0.988	Leading	15.76
89	FLT110-3PH	0.985	Leading	17.66	0.986	Leading	17.00	0.992	Leading	12.95	0.988	Leading	15.88	0.988	Leading	15.76
90	FLT111-3PH	0.985	Leading	17.68	0.986	Leading	17.03	0.992	Leading	12.96	0.988	Leading	15.87	0.988	Leading	15.75
91	FLT112-3PH	0.985	Leading	17.64	0.986	Leading	16.89	0.992	Leading	12.91	0.988	Leading	15.84	0.988	Leading	15.73
92	FLT113-3PH	0.985	Leading	17.68	0.986	Leading	17.07	0.992	Leading	12.99	0.988	Leading	15.88	0.988	Leading	15.76
93	FLT114-3PH	0.985	Leading	17.68	0.986	Leading	17.09	0.992	Leading	12.98	0.988	Leading	15.88	0.988	Leading	15.76
94	FLT115-3PH	0.985	Leading	17.68	0.986	Leading	17.09	0.992	Leading	12.98	0.988	Leading	15.88	0.988	Leading	15.76
95	FLT116-3PH	0.985	Leading	17.66	0.986	Leading	17.02	0.992	Leading	12.96	0.988	Leading	15.88	0.988	Leading	15.76
96	FLT117-3PH	0.985	Leading	17.65	0.986	Leading	16.94	0.992	Leading	12.92	0.988	Leading	15.85	0.988	Leading	15.73
97	FLT118-3PH	0.985	Leading	17.68	0.986	Leading	17.10	0.992	Leading	12.98	0.988	Leading	15.89	0.988	Leading	15.76
98	FLT119-3PH	0.985	Leading	17.68	0.986	Leading	17.10	0.992	Leading	12.98	0.988	Leading	15.88	0.988	Leading	15.76
99	FLT120-3PH	0.984	Leading	17.82	0.985	Leading	17.35	0.992	Leading	13.12	0.987	Leading	16.04	0.988	Leading	15.83
100	FLT121-3PH	0.985	Leading	17.68	0.986	Leading	17.09	0.992	Leading	12.98	0.988	Leading	15.88	0.988	Leading	15.76
101	FLT126-3PH	0.984	Leading	18.12	0.984	Leading	18.13	0.991	Leading	13.36	0.987	Leading	16.41	0.987	Leading	15.98
102	FLT127-3PH	0.985	Leading	17.72	0.986	Leading	17.11	0.992	Leading	12.98	0.988	Leading	15.88	0.988	Leading	15.76
103	FLT128-3PH	0.983	Leading	18.46	0.984	Leading	17.88	0.992	Leading	12.91	0.988	Leading	15.94	0.988	Leading	15.72
104	FLT129-3PH	0.985	Leading	17.68	0.986	Leading	17.06	0.992	Leading	12.96	0.988	Leading	15.86	0.988	Leading	15.75

Study Generator GEN-2015-020

The Power Factor Analysis shows that GEN-2015-020 has a power factor range of 0.971 leading (absorbing) to 0.999 lagging (supplying) for the 2016 Winter Peak conditions, a power factor range of 0.969 leading (absorbing) to 0.993 lagging (supplying) for the 2017 Summer Peak conditions, a power factor range of 0.975 leading (absorbing) to 1.00 (unity) for the 2020 Summer Peak conditions, a power factor range of 0.972 to 0.999 leading (absorbing) for the 2020 Winter Peak conditions, and a power factor range of 0.969 leading (absorbing) to 1.00 (unity) for the 2025 Summer Peak conditions.

DRAFT

Table 5-4
Power Factor Analysis: GEN-2015-031

DRAFT

Cont. No.	Case	2016 Winter Peak			2017 Summer Peak			2020 Summer Peak			2020 Winter Peak			2025 Summer Peak		
		Power Factor		Q (MVAR)	Power Factor		Q (MVAR)	Power Factor		Q (MVAR)	Power Factor		Q (MVAR)	Power Factor		Q (MVAR)
0	Base	1.000	Leading	5.95	0.990	Lagging	-42.87	0.997	Lagging	-24.25	0.999	Leading	9.70	0.988	Lagging	-47.51
1	FLT01-3PH	1.000	Leading	5.94	0.990	Lagging	-42.89	0.997	Lagging	-24.24	0.999	Leading	9.71	0.988	Lagging	-47.50
2	FLT02-3PH	1.000	Leading	5.92	0.990	Lagging	-42.91	0.997	Lagging	-24.23	0.999	Leading	9.70	0.988	Lagging	-47.50
3	FLT03-3PH	1.000	Leading	5.93	0.990	Lagging	-42.93	0.997	Lagging	-24.23	0.999	Leading	9.72	0.988	Lagging	-47.50
4	FLT04-3PH	1.000	Leading	5.86	0.990	Lagging	-43.09	0.997	Lagging	-24.41	0.999	Leading	9.51	0.988	Lagging	-47.81
5	FLT05-3PH	1.000	Leading	6.19	0.989	Lagging	-42.79	0.997	Lagging	-24.31	0.999	Leading	9.89	0.988	Lagging	-47.66
6	FLT06-3PH	1.000	Leading	5.94	0.990	Lagging	-42.88	0.997	Lagging	-24.23	0.999	Leading	9.72	0.988	Lagging	-47.50
7	FLT07-3PH	1.000	Leading	5.94	0.990	Lagging	-42.89	0.997	Lagging	-24.24	0.999	Leading	9.71	0.988	Lagging	-47.50
8	FLT11-3PH	1.000	Leading	5.40	0.990	Lagging	-42.85	0.997	Lagging	-24.30	1.000	Leading	9.33	0.988	Lagging	-47.52
9	FLT12-3PH	1.000	Leading	6.81	0.990	Lagging	-41.96	0.997	Lagging	-23.75	0.999	Leading	10.50	0.988	Lagging	-47.19
10	FLT13-3PH	1.000	Leading	5.94	0.990	Lagging	-42.96	0.997	Lagging	-24.30	0.999	Leading	9.69	0.988	Lagging	-47.54
11	FLT14-3PH	1.000	Leading	6.34	0.990	Lagging	-43.29	0.997	Lagging	-24.44	0.999	Leading	9.81	0.988	Lagging	-47.75
12	FLT15-3PH	1.000	Leading	4.51	0.989	Lagging	-44.90	0.996	Lagging	-25.62	1.000	Leading	8.32	0.987	Lagging	-48.86
13	FLT16-3PH	1.000	Leading	5.96	0.990	Lagging	-42.88	0.997	Lagging	-24.26	0.999	Leading	9.69	0.988	Lagging	-47.53
14	FLT17-3PH	1.000	Leading	5.98	0.990	Lagging	-42.85	0.997	Lagging	-24.22	0.999	Leading	9.72	0.988	Lagging	-47.49
15	FLT18-3PH	1.000	Leading	5.98	0.990	Lagging	-42.84	0.997	Lagging	-24.22	0.999	Leading	9.72	0.988	Lagging	-47.48
16	FLT19-3PH	1.000	Leading	5.95	0.990	Lagging	-42.87	0.997	Lagging	-24.25	0.999	Leading	9.70	0.988	Lagging	-47.51
17	FLT20-3PH	1.000	Leading	5.94	0.990	Lagging	-42.88	0.997	Lagging	-24.24	0.999	Leading	9.70	0.988	Lagging	-47.51
18	FLT21-3PH	1.000	Leading	5.89	0.990	Lagging	-42.97	0.997	Lagging	-24.38	0.999	Leading	9.57	0.988	Lagging	-47.63
19	FLT22-3PH	1.000	Leading	5.94	0.990	Lagging	-42.94	0.997	Lagging	-24.32	0.999	Leading	9.66	0.988	Lagging	-47.59
20	FLT23-3PH	1.000	Leading	5.95	0.990	Lagging	-42.91	0.997	Lagging	-24.29	0.999	Leading	9.68	0.988	Lagging	-47.55
21	FLT24-3PH	1.000	Leading	5.90	0.990	Lagging	-42.95	0.997	Lagging	-24.36	0.999	Leading	9.59	0.988	Lagging	-47.61
22	FLT25-3PH	1.000	Leading	5.93	0.990	Lagging	-42.91	0.997	Lagging	-24.24	0.999	Leading	9.72	0.988	Lagging	-47.53
23	FLT26-3PH	1.000	Leading	5.92	0.990	Lagging	-42.89	0.997	Lagging	-24.24	0.999	Leading	9.69	0.988	Lagging	-47.49
24	FLT27-3PH	1.000	Leading	5.92	0.990	Lagging	-42.89	0.997	Lagging	-24.24	0.999	Leading	9.71	0.988	Lagging	-47.50
25	FLT28-3PH	1.000	Leading	5.83	0.990	Lagging	-42.85	0.997	Lagging	-24.19	0.999	Leading	9.78	0.988	Lagging	-47.44
26	FLT29-3PH	1.000	Leading	6.41	0.990	Lagging	-42.29	0.997	Lagging	-23.36	0.999	Leading	10.36	0.988	Lagging	-46.87
27	FLT30-3PH	1.000	Leading	5.90	0.990	Lagging	-42.84	0.997	Lagging	-24.22	0.999	Leading	9.79	0.988	Lagging	-47.49
28	FLT31-3PH	1.000	Leading	5.88	0.990	Lagging	-42.96	0.997	Lagging	-24.28	0.999	Leading	9.68	0.988	Lagging	-47.54
29	FLT34-3PH	1.000	Leading	4.97	0.986	Lagging	-50.87	0.994	Lagging	-31.75	1.000	Leading	5.86	0.989	Lagging	-45.03
30	FLT35-3PH	0.999	Leading	12.34	0.999	Leading	12.53	0.999	Leading	12.46	0.999	Leading	13.11	1.000	Leading	2.24
31	FLT36-3PH	0.999	Leading	13.25	1.000	Leading	6.82	0.996	Leading	27.15	0.997	Leading	23.80	1.000	Leading	8.93
32	FLT37-3PH	0.998	Leading	16.86	0.987	Lagging	-49.64	0.988	Lagging	-46.75	0.999	Leading	16.22	0.978	Lagging	-64.63
33	FLT38-3PH	0.995	Leading	30.96	1.000	Lagging	-9.22	1.000	Leading	6.59	0.995	Leading	29.98	0.999	Lagging	-14.29
34	FLT39-3PH	1.000	Leading	2.57	0.990	Lagging	-41.72	0.997	Lagging	-22.78	0.999	Leading	9.66	0.989	Lagging	-45.20
35	FLT40-3PH	0.999	Leading	12.61	0.990	Lagging	-43.69	0.996	Lagging	-25.33	0.999	Leading	12.71	0.984	Lagging	-54.37
36	FLT41-3PH	1.000	Leading	8.76	0.989	Lagging	-44.10	0.996	Lagging	-25.47	1.000	Leading	7.74	0.990	Lagging	-43.31
37	FLT43-3PH	0.994	Lagging	-32.11	0.976	Lagging	-66.87	0.988	Lagging	-46.63	0.996	Lagging	-27.30	0.980	Lagging	-61.50
38	FLT44-3PH	0.972	Lagging	-72.90	0.951	Lagging	-97.98	0.972	Lagging	-72.99	0.976	Lagging	-66.59	0.969	Lagging	-76.81
39	FLT45-3PH	0.995	Lagging	-30.23	0.974	Lagging	-70.04	0.986	Lagging	-50.19	0.996	Lagging	-26.12	0.978	Lagging	-64.26
40	FLT46-3PH	1.000	Leading	6.46	0.990	Lagging	-43.55	0.996	Lagging	-26.19	0.999	Leading	9.66	0.987	Lagging	-48.27
41	FLT47-3PH	1.000	Leading	2.29	0.990	Lagging	-42.87	0.996	Lagging	-28.15	1.000	Leading	2.26	0.987	Lagging	-48.49
42	FLT48-3PH	1.000	Leading	5.95	0.990	Lagging	-42.87	0.997	Lagging	-24.25	0.999	Leading	9.70	0.988	Lagging	-47.51
43	FLT49-3PH	0.879	Lagging	-162.51	0.918	Lagging	-129.95	0.948	Lagging	-100.34	0.997	Lagging	-21.06	0.957	Lagging	-91.35
44	FLT52-3PH	0.998	Lagging	-18.81	0.973	Lagging	-71.60	0.984	Lagging	-53.83	0.998	Lagging	-17.15	0.975	Lagging	-69.05
45	FLT53-3PH	0.999	Lagging	-11.93	0.978	Lagging	-64.69	0.988	Lagging	-46.92	0.999	Lagging	-10.49	0.978	Lagging	-63.41
46	FLT54-3PH	0.996	Lagging	-27.36	0.979	Lagging	-62.40	0.991	Lagging	-40.75	0.998	Lagging	-20.54	0.982	Lagging	-58.07
47	FLT55-3PH	1.000	Leading	4.77	0.989	Lagging	-44.67	0.996	Lagging	-26.08	1.000	Leading	8.33	0.987	Lagging	-49.54
48	FLT56-3PH	1.000	Leading	6.69	0.990	Lagging	-42.63	0.997	Lagging	-23.23	0.999	Leading	10.49	0.988	Lagging	-46.60
49	FLT57-3PH	1.000	Lagging	-6.73	0.982	Lagging	-57.72	0.989	Lagging	-43.84	1.000	Lagging	-3.61	0.978	Lagging	-64.51
50	FLT58-3PH	1.000	Leading	6.74	0.990	Lagging	-42.71	0.997	Lagging	-23.16	0.999	Leading	10.54	0.988	Lagging	-46.54
51	FLT59-3PH	1.000	Leading	4.99	0.989	Lagging	-44.45	0.997	Lagging	-24.86	1.000	Leading	8.42	0.987	Lagging	-48.35
52	FLT60-3PH	1.000	Leading	5.37	0.990	Lagging	-41.88	0.998	Lagging	-20.86	1.000	Leading	9.34	0.988	Lagging	-47.24
53	FLT63-3PH	1.000	Leading	5.74	0.990	Lagging	-42.99	0.997	Lagging	-24.24	0.999	Leading	9.64	0.988	Lagging	-47.54
54	FLT64-3PH	1.000	Leading	5.98	0.990	Lagging	-42.68	0.997	Lagging	-24.16	0.999	Leading	9.76	0.988	Lagging	-47.38
55	FLT65-3PH	1.000	Leading	5.81	0.990	Lagging	-42.94	0.997	Lagging	-24.24	0.999	Leading	9.67	0.988	Lagging	-47.53
56	FLT66-3PH	1.000	Leading	5.58	0.990	Lagging	-43.51	0.997	Lagging	-24.57	1.000	Leading	9.06	0.987	Lagging	-47.93
57	FLT67-3PH	1.000	Leading	5.85	0.990	Lagging	-43.05	0.997	Lagging	-24.35	0.999	Leading	9.51	0.988	Lagging	-47.64
58	FLT68-3PH	1.000	Leading	5.85	0.990	Lagging	-42.92	0.997	Lagging	-24.23	0.999	Leading	9.71	0.988	Lagging	-47.52
59	FLT69-3PH	1.000	Leading	5.47	0.990	Lagging	-43.29	0.997	Lagging	-24.38	1.000	Leading	9.29	0.988	Lagging	-47.66
60	FLT70-3PH	1.000	Leading	5.91	0.990	Lagging	-42.98	0.997	Lagging	-24.34	0.999	Leading	9.61	0.988	Lagging	-47.69
61	FLT71-3PH	1.000	Leading	5.84	0.990	Lagging	-42.93	0.997	Lagging	-24.29	0.999	Leading	9.62	0.988	Lagging	-47.54
62	FLT72-3PH	1.000	Leading	6.07	0.990	Lagging	-42.89	0.997	Lagging	-24.16	0.999	Leading	9.80	0.988	Lagging	-47.47
63	FLT73-3PH	1.000	Leading	5.95	0.990	Lagging	-42.87	0.997	Lagging	-24.25	0.999	Leading	9.70	0.988	Lagging	-47.51
64	FLT74-3PH	1.000	Leading	5.95	0.990	Lagging	-42.95	0.997	Lagging	-24.28	0.999	Leading	9.61	0.988	Lagging	-47.53
65	FLT75-3PH	1.000	Leading	6.38	0.990	Lagging	-42.62	0.997	Lagging	-23.53	0.999	Leading	10.08	0.988	Lagging	-47.11
66	FLT76-3PH	1.000	Leading	5.86	0.990	Lagging	-42.92	0.997	Lagging	-24.24	0.999	Leading	9.71	0.988	Lagging	-47.52
67	FLT77-3PH	1.000	Leading	5.81	0.990	Lagging	-42.62	0.997	Lagging	-24.03	0.999	Leading	9.81	0.988	Lagging	-47.46
68	FLT84-3PH	1.000	Leading	1.90	0.989	Lagging	-45.86	0.995	Lagging	-29.14	1.000	Leading	3.97	0.986	Lagging	-50.93
69	FLT85-3PH	1.000	Leading	6.79	0.991	Lagging	-40.58	0.997	Lagging	-24.32	0.999	Leading	12.21	0.988	Lagging	-47.42
70	FLT86-3PH	1.000	Leading	4.19	0.990	Lagging	-43.74	0.997	Lagging	-24.31	1.000	Leading	8.24	0.988	Lagging	-47.58
71	FLT87-3PH	1.000	Leading	8.22	0.991	Lagging	-41.49	0.997	Lagging	-24.20	0.999	Leading	10.81	0.988	Lagging	-47.48
72	FLT88-3PH	1.000	Leading	5.88	0.990	Lagging	-43.61	0.996	Lagging	-25.86	0.999	Leading	9.63	0.987	Lagging	-49.18
73	FLT92-3PH	1.000	Lagging	-1.05	0.987	Lagging	-48.72	0.995	Lagging	-28.67	1.000	Leading	4.19	0.986	Lagging	-49.89
74	FLT93-3PH	1.000	Leading	6.37	0.990	Lagging	-43.46	0.997	Lagging	-24.29	1.000	Leading	9.34	0.988	Lagging	-47.06
75	FLT94-3PH	0.999	Lagging	-16.39	0.977	Lagging	-64.91	0.992	Lagging	-38.22	0.999	Lagging	-14.73	0.983	Lagging	-55.57

Table 5-4 (continued)

Power Factor Analysis: GEN-2015-031

Cont. No.	Case	2016 Winter Peak			2017 Summer Peak			2020 Summer Peak			2020 Winter Peak			2025 Summer Peak		
		Power Factor		Q (MVAR)	Power Factor		Q (MVAR)	Power Factor		Q (MVAR)	Power Factor		Q (MVAR)	Power Factor		Q (MVAR)
76	FLT95-3PH	1.000	Leading	7.35	0.990	Lagging	-42.59	0.997	Lagging	-23.99	0.999	Leading	10.25	0.988	Lagging	-46.80
77	FLT96-3PH	1.000	Leading	5.97	0.990	Lagging	-42.85	0.997	Lagging	-24.25	0.999	Leading	9.70	0.988	Lagging	-47.50
78	FLT97-3PH	1.000	Leading	5.94	0.990	Lagging	-42.91	0.997	Lagging	-24.24	0.999	Leading	9.71	0.988	Lagging	-47.54
79	FLT98-3PH	1.000	Leading	5.94	0.990	Lagging	-42.88	0.997	Lagging	-24.25	0.999	Leading	9.70	0.988	Lagging	-47.51
80	FLT99-3PH	1.000	Leading	5.97	0.990	Lagging	-42.85	0.997	Lagging	-24.25	0.999	Leading	9.69	0.988	Lagging	-47.51
81	FLT100-3PH	1.000	Leading	5.90	0.990	Lagging	-42.92	0.997	Lagging	-24.25	0.999	Leading	9.70	0.988	Lagging	-47.54
82	FLT101-3PH	1.000	Leading	5.92	0.990	Lagging	-42.90	0.997	Lagging	-24.26	0.999	Leading	9.67	0.988	Lagging	-47.53
83	FLT102-3PH	1.000	Leading	6.03	0.990	Lagging	-42.81	0.997	Lagging	-24.25	0.999	Leading	9.70	0.988	Lagging	-47.50
84	FLT105-3PH	1.000	Leading	7.89	0.990	Lagging	-42.19	0.997	Lagging	-24.10	0.999	Leading	10.24	0.988	Lagging	-47.45
85	FLT106-3PH	1.000	Leading	9.00	0.990	Lagging	-42.84	0.997	Lagging	-24.48	0.999	Leading	9.58	0.987	Lagging	-48.16
86	FLT107-3PH	1.000	Leading	5.68	0.990	Lagging	-43.26	0.997	Lagging	-24.45	0.999	Leading	9.74	0.987	Lagging	-48.10
87	FLT108-3PH	1.000	Leading	8.99	0.990	Lagging	-41.72	0.997	Lagging	-24.17	1.000	Leading	9.43	0.988	Lagging	-47.37
88	FLT109-3PH	1.000	Leading	5.80	0.990	Lagging	-43.08	0.997	Lagging	-24.33	0.999	Leading	9.53	0.988	Lagging	-47.61
89	FLT110-3PH	1.000	Leading	5.96	0.990	Lagging	-42.87	0.997	Lagging	-24.21	0.999	Leading	9.73	0.988	Lagging	-47.49
90	FLT111-3PH	1.000	Leading	6.00	0.990	Lagging	-42.79	0.997	Lagging	-24.22	0.999	Leading	9.73	0.988	Lagging	-47.49
91	FLT112-3PH	1.000	Leading	6.12	0.990	Lagging	-42.74	0.997	Lagging	-24.16	0.999	Leading	9.78	0.988	Lagging	-47.46
92	FLT113-3PH	1.000	Leading	5.93	0.990	Lagging	-42.86	0.997	Lagging	-24.28	0.999	Leading	9.66	0.988	Lagging	-47.56
93	FLT114-3PH	1.000	Leading	5.95	0.990	Lagging	-42.92	0.997	Lagging	-24.26	0.999	Leading	9.69	0.988	Lagging	-47.53
94	FLT115-3PH	1.000	Leading	5.95	0.990	Lagging	-42.87	0.997	Lagging	-24.25	0.999	Leading	9.70	0.988	Lagging	-47.51
95	FLT116-3PH	1.000	Leading	5.95	0.990	Lagging	-42.86	0.997	Lagging	-24.21	0.999	Leading	9.72	0.988	Lagging	-47.49
96	FLT117-3PH	1.000	Leading	6.10	0.990	Lagging	-42.89	0.997	Lagging	-24.15	0.999	Leading	9.78	0.988	Lagging	-47.48
97	FLT118-3PH	1.000	Leading	5.95	0.990	Lagging	-42.90	0.997	Lagging	-24.24	0.999	Leading	9.69	0.988	Lagging	-47.52
98	FLT119-3PH	1.000	Leading	5.90	0.990	Lagging	-42.89	0.997	Lagging	-24.30	0.999	Leading	9.62	0.988	Lagging	-47.55
99	FLT120-3PH	1.000	Leading	5.87	0.990	Lagging	-42.94	0.997	Lagging	-24.32	0.999	Leading	9.61	0.988	Lagging	-47.63
100	FLT121-3PH	1.000	Leading	5.92	0.990	Lagging	-42.91	0.997	Lagging	-24.28	0.999	Leading	9.66	0.988	Lagging	-47.53
101	FLT126-3PH	1.000	Leading	5.43	0.990	Lagging	-43.41	0.997	Lagging	-24.46	1.000	Leading	9.21	0.988	Lagging	-47.79
102	FLT127-3PH	1.000	Leading	5.89	0.990	Lagging	-42.79	0.997	Lagging	-24.25	0.999	Leading	9.70	0.988	Lagging	-47.51
103	FLT128-3PH	1.000	Leading	5.69	0.990	Lagging	-42.99	0.997	Lagging	-24.23	0.999	Leading	9.68	0.988	Lagging	-47.49
104	FLT129-3PH	1.000	Leading	5.95	0.990	Lagging	-42.88	0.997	Lagging	-24.26	0.999	Leading	9.69	0.988	Lagging	-47.52

Study Generator GEN-2015-031

The Power Factor Analysis shows that GEN-2015-031 has a power factor range of 0.995 leading (absorbing) to 0.879 lagging (supplying) for the 2016 Winter Peak conditions, a power factor range of 0.999 leading (absorbing) to 0.918 lagging (supplying) for the 2017 Summer Peak conditions, a power factor range of 0.996 leading (absorbing) to 0.948 lagging (supplying) for the 2020 Summer Peak conditions, a power factor range of 0.995 leading (absorbing) to 0.976 lagging (supplying) for the 2020 Winter Peak conditions, and a power factor range of 0.996 lagging (supplying) to 1.00 (unity) for the 2025 Summer Peak conditions.

DRAFT

Table 5-5
Power Factor Analysis: GEN-2015-033

DRAFT

Cont. No.	Case	2016 Winter Peak			2017 Summer Peak			2020 Summer Peak			2020 Winter Peak			2025 Summer Peak		
		Power Factor		Q (MVAR)	Power Factor		Q (MVAR)	Power Factor		Q (MVAR)	Power Factor		Q (MVAR)	Power Factor		Q (MVAR)
0	Base	0.869	Lagging	-86.71	0.924	Lagging	-62.86	0.985	Lagging	-26.17	0.918	Lagging	-65.67	0.996	Lagging	-13.89
1	FLT01-3PH	0.869	Lagging	-86.69	0.924	Lagging	-62.87	0.986	Lagging	-26.10	0.918	Lagging	-65.61	0.996	Lagging	-13.86
2	FLT02-3PH	0.869	Lagging	-86.71	0.924	Lagging	-62.89	0.986	Lagging	-26.08	0.918	Lagging	-65.61	0.996	Lagging	-13.85
3	FLT03-3PH	0.868	Lagging	-86.76	0.924	Lagging	-62.98	0.986	Lagging	-26.17	0.918	Lagging	-65.68	0.996	Lagging	-13.89
4	FLT04-3PH	0.871	Lagging	-85.70	0.924	Lagging	-62.69	0.986	Lagging	-25.67	0.920	Lagging	-64.95	0.996	Lagging	-13.42
5	FLT05-3PH	0.875	Lagging	-84.28	0.927	Lagging	-61.56	0.987	Lagging	-24.48	0.923	Lagging	-63.35	0.996	Lagging	-12.97
6	FLT06-3PH	0.869	Lagging	-86.70	0.924	Lagging	-62.85	0.986	Lagging	-26.10	0.918	Lagging	-65.61	0.996	Lagging	-13.85
7	FLT07-3PH	0.869	Lagging	-86.69	0.924	Lagging	-62.87	0.986	Lagging	-26.10	0.918	Lagging	-65.61	0.996	Lagging	-13.86
8	FLT11-3PH	0.869	Lagging	-86.43	0.925	Lagging	-62.62	0.986	Lagging	-26.07	0.918	Lagging	-65.52	0.996	Lagging	-13.81
9	FLT12-3PH	0.869	Lagging	-86.70	0.925	Lagging	-62.65	0.986	Lagging	-26.16	0.918	Lagging	-65.53	0.996	Lagging	-13.91
10	FLT13-3PH	0.869	Lagging	-86.72	0.924	Lagging	-62.99	0.985	Lagging	-26.27	0.918	Lagging	-65.68	0.996	Lagging	-13.94
11	FLT14-3PH	0.868	Lagging	-86.78	0.924	Lagging	-63.14	0.985	Lagging	-26.21	0.918	Lagging	-65.76	0.996	Lagging	-13.91
12	FLT15-3PH	0.865	Lagging	-88.09	0.920	Lagging	-64.75	0.984	Lagging	-27.64	0.915	Lagging	-67.13	0.995	Lagging	-14.72
13	FLT16-3PH	0.869	Lagging	-86.74	0.924	Lagging	-62.90	0.985	Lagging	-26.22	0.918	Lagging	-65.71	0.996	Lagging	-13.92
14	FLT17-3PH	0.869	Lagging	-86.73	0.924	Lagging	-62.88	0.985	Lagging	-26.19	0.918	Lagging	-65.70	0.996	Lagging	-13.91
15	FLT18-3PH	0.869	Lagging	-86.73	0.924	Lagging	-62.88	0.985	Lagging	-26.21	0.918	Lagging	-65.70	0.996	Lagging	-13.91
16	FLT19-3PH	0.869	Lagging	-86.71	0.924	Lagging	-62.86	0.985	Lagging	-26.17	0.918	Lagging	-65.67	0.996	Lagging	-13.89
17	FLT20-3PH	0.869	Lagging	-86.71	0.924	Lagging	-62.86	0.986	Lagging	-26.16	0.918	Lagging	-65.67	0.996	Lagging	-13.89
18	FLT21-3PH	0.868	Lagging	-86.78	0.924	Lagging	-63.00	0.985	Lagging	-26.38	0.918	Lagging	-65.81	0.996	Lagging	-14.02
19	FLT22-3PH	0.868	Lagging	-86.79	0.924	Lagging	-62.99	0.985	Lagging	-26.31	0.918	Lagging	-65.78	0.996	Lagging	-13.98
20	FLT23-3PH	0.868	Lagging	-86.76	0.924	Lagging	-62.95	0.985	Lagging	-26.26	0.918	Lagging	-65.74	0.996	Lagging	-13.95
21	FLT24-3PH	0.868	Lagging	-86.76	0.924	Lagging	-62.97	0.985	Lagging	-26.34	0.918	Lagging	-65.79	0.996	Lagging	-13.99
22	FLT25-3PH	0.869	Lagging	-86.74	0.924	Lagging	-62.91	0.986	Lagging	-26.14	0.918	Lagging	-65.65	0.996	Lagging	-13.91
23	FLT26-3PH	0.868	Lagging	-86.76	0.924	Lagging	-62.89	0.986	Lagging	-26.16	0.918	Lagging	-65.67	0.996	Lagging	-13.88
24	FLT27-3PH	0.869	Lagging	-86.74	0.924	Lagging	-62.87	0.986	Lagging	-26.15	0.918	Lagging	-65.65	0.996	Lagging	-13.88
25	FLT28-3PH	0.868	Lagging	-86.83	0.924	Lagging	-62.99	0.985	Lagging	-26.26	0.918	Lagging	-65.67	0.996	Lagging	-13.93
26	FLT29-3PH	0.866	Lagging	-87.75	0.922	Lagging	-63.74	0.985	Lagging	-27.02	0.916	Lagging	-66.67	0.996	Lagging	-14.31
27	FLT30-3PH	0.869	Lagging	-86.75	0.924	Lagging	-62.80	0.985	Lagging	-26.17	0.918	Lagging	-65.62	0.996	Lagging	-13.91
28	FLT31-3PH	0.868	Lagging	-86.76	0.924	Lagging	-62.96	0.985	Lagging	-26.19	0.918	Lagging	-65.67	0.996	Lagging	-13.91
29	FLT34-3PH	0.838	Lagging	-99.01	0.894	Lagging	-76.17	0.971	Lagging	-37.39	0.880	Lagging	-82.10	0.992	Lagging	-19.53
30	FLT35-3PH	0.868	Lagging	-86.94	0.925	Lagging	-62.50	0.987	Lagging	-24.59	0.919	Lagging	-65.11	0.997	Lagging	-12.64
31	FLT36-3PH	0.869	Lagging	-86.73	0.924	Lagging	-62.77	0.985	Lagging	-26.96	0.917	Lagging	-65.96	0.996	Lagging	-14.38
32	FLT37-3PH	0.867	Lagging	-87.36	0.925	Lagging	-62.64	0.984	Lagging	-27.73	0.916	Lagging	-66.50	0.995	Lagging	-14.55
33	FLT38-3PH	0.868	Lagging	-86.79	0.926	Lagging	-62.03	0.985	Lagging	-26.72	0.918	Lagging	-65.78	0.996	Lagging	-14.21
34	FLT39-3PH	0.869	Lagging	-86.56	0.924	Lagging	-63.00	0.985	Lagging	-26.33	0.918	Lagging	-65.76	0.996	Lagging	-14.02
35	FLT40-3PH	0.867	Lagging	-87.49	0.923	Lagging	-63.44	0.985	Lagging	-26.62	0.916	Lagging	-66.60	0.996	Lagging	-14.09
36	FLT41-3PH	0.867	Lagging	-87.34	0.923	Lagging	-63.49	0.985	Lagging	-26.68	0.916	Lagging	-66.40	0.996	Lagging	-14.15
37	FLT43-3PH	0.993	Leading	18.02	0.976	Leading	34.04	0.993	Leading	18.02	0.979	Leading	31.89	0.975	Leading	34.44
38	FLT44-3PH	0.959	Lagging	-45.16	0.973	Lagging	-35.74	1.000	Lagging	-3.46	0.976	Lagging	-33.79	0.999	Leading	6.62
39	FLT45-3PH	0.763	Lagging	-128.95	0.835	Lagging	-100.32	0.919	Lagging	-65.27	0.793	Lagging	-116.72	0.971	Lagging	-37.35
40	FLT46-3PH	0.859	Lagging	-90.54	0.922	Lagging	-63.78	0.983	Lagging	-28.52	0.913	Lagging	-67.74	0.997	Lagging	-12.38
41	FLT47-3PH	0.890	Lagging	-77.90	0.924	Lagging	-62.86	0.985	Lagging	-26.22	0.913	Lagging	-68.12	0.994	Lagging	-17.37
42	FLT48-3PH	0.869	Lagging	-86.71	0.924	Lagging	-62.86	0.985	Lagging	-26.17	0.918	Lagging	-65.67	0.996	Lagging	-13.89
43	FLT49-3PH	0.990	Lagging	-21.53	0.929	Lagging	-60.35	0.990	Lagging	-22.06	0.994	Leading	17.01	1.000	Lagging	-4.06
44	FLT52-3PH	0.848	Lagging	-95.13	0.896	Lagging	-75.51	0.973	Lagging	-36.25	0.893	Lagging	-76.57	0.992	Lagging	-19.32
45	FLT53-3PH	0.852	Lagging	-93.58	0.901	Lagging	-73.12	0.975	Lagging	-34.49	0.898	Lagging	-74.39	0.993	Lagging	-18.27
46	FLT54-3PH	0.840	Lagging	-98.06	0.901	Lagging	-73.14	0.976	Lagging	-33.88	0.887	Lagging	-79.19	0.993	Lagging	-17.62
47	FLT55-3PH	0.868	Lagging	-86.83	0.923	Lagging	-63.26	0.985	Lagging	-26.45	0.918	Lagging	-65.82	0.996	Lagging	-14.07
48	FLT56-3PH	0.867	Lagging	-87.26	0.922	Lagging	-63.77	0.985	Lagging	-26.86	0.916	Lagging	-66.35	0.996	Lagging	-14.34
49	FLT57-3PH	0.861	Lagging	-89.72	0.913	Lagging	-67.92	0.982	Lagging	-29.63	0.909	Lagging	-69.60	0.995	Lagging	-15.70
50	FLT58-3PH	0.867	Lagging	-87.30	0.922	Lagging	-63.86	0.985	Lagging	-26.92	0.916	Lagging	-66.40	0.996	Lagging	-14.38
51	FLT59-3PH	0.868	Lagging	-86.84	0.922	Lagging	-63.89	0.986	Lagging	-25.58	0.918	Lagging	-65.83	0.996	Lagging	-13.57
52	FLT60-3PH	0.869	Lagging	-86.64	0.924	Lagging	-62.93	0.985	Lagging	-26.36	0.918	Lagging	-65.63	0.996	Lagging	-13.94
53	FLT63-3PH	0.869	Lagging	-86.58	0.924	Lagging	-63.00	0.985	Lagging	-26.19	0.918	Lagging	-65.62	0.996	Lagging	-14.07
54	FLT64-3PH	0.868	Lagging	-86.85	0.925	Lagging	-62.47	0.986	Lagging	-26.15	0.918	Lagging	-65.67	0.996	Lagging	-13.90
55	FLT65-3PH	0.869	Lagging	-86.58	0.924	Lagging	-62.94	0.986	Lagging	-26.16	0.918	Lagging	-65.61	0.996	Lagging	-13.99
56	FLT66-3PH	0.867	Lagging	-87.46	0.922	Lagging	-63.82	0.985	Lagging	-27.00	0.916	Lagging	-66.76	0.995	Lagging	-14.62
57	FLT67-3PH	0.868	Lagging	-86.91	0.924	Lagging	-63.14	0.985	Lagging	-26.44	0.917	Lagging	-65.99	0.996	Lagging	-14.12
58	FLT68-3PH	0.869	Lagging	-86.53	0.924	Lagging	-62.91	0.986	Lagging	-26.11	0.918	Lagging	-65.54	0.996	Lagging	-13.95
59	FLT69-3PH	0.867	Lagging	-87.42	0.922	Lagging	-63.68	0.985	Lagging	-26.33	0.917	Lagging	-66.32	0.996	Lagging	-13.70
60	FLT70-3PH	0.868	Lagging	-86.90	0.924	Lagging	-63.02	0.985	Lagging	-26.50	0.918	Lagging	-65.88	0.996	Lagging	-14.19
61	FLT71-3PH	0.868	Lagging	-86.87	0.924	Lagging	-62.92	0.985	Lagging	-26.27	0.918	Lagging	-65.79	0.996	Lagging	-13.96
62	FLT72-3PH	0.869	Lagging	-86.67	0.924	Lagging	-62.81	0.985	Lagging	-26.20	0.918	Lagging	-65.63	0.996	Lagging	-13.99
63	FLT73-3PH	0.869	Lagging	-86.71	0.924	Lagging	-62.86	0.985	Lagging	-26.17	0.918	Lagging	-65.67	0.996	Lagging	-13.89
64	FLT74-3PH	0.869	Lagging	-86.71	0.924	Lagging	-62.97	0.985	Lagging	-26.30	0.918	Lagging	-65.81	0.996	Lagging	-13.97
65	FLT75-3PH	0.864	Lagging	-88.58	0.926	Lagging	-62.11	0.984	Lagging	-27.50	0.914	Lagging	-67.52	0.995	Lagging	-14.64
66	FLT76-3PH	0.869	Lagging	-86.54	0.924	Lagging	-62.90	0.986	Lagging	-26.12	0.918	Lagging	-65.55	0.996	Lagging	-13.94
67	FLT77-3PH	0.869	Lagging	-86.73	0.924	Lagging	-62.97	0.985	Lagging	-26.31	0.918	Lagging	-65.83	0.996	Lagging	-14.34
68	FLT84-3PH	0.845	Lagging	-96.39	0.907	Lagging	-70.77	0.968	Lagging	-39.10	0.882	Lagging	-81.40	0.993	Lagging	-18.08
69	FLT85-3PH	0.868	Lagging	-87.08	0.929	Lagging	-60.76	0.985	Lagging	-26.63	0.923	Lagging	-63.45	0.996	Lagging	-13.25
70	FLT86-3PH	0.873	Lagging	-84.86	0.930	Lagging	-59.92	0.987	Lagging	-24.53	0.922	Lagging	-63.94	0.996	Lagging	-13.21
71	FLT87-3PH	0.868	Lagging	-86.81	0.929	Lagging	-60.56	0.985	Lagging	-26.27	0.921	Lagging	-64.30	0.996	Lagging	-13.95
72	FLT88-3PH	0.868	Lagging	-86.96	0.924	Lagging	-62.77	0.985	Lagging	-26.93	0.918	Lagging	-65.56	0.996	Lagging	-14.34
73	FLT92-3PH	0.860	Lagging	-90.20	0.927	Lagging	-61.56	0.982	Lagging	-29.19	0.909	Lagging	-69.65	0.995	Lagging	-15.70
74	FLT93-3PH	0.870	Lagging	-86.31	0.922	Lagging	-63.64	0.985	Lagging	-26.84	0.917	Lagging	-66.17	0.995	Lagging	-14.56
75	FLT94-3PH	0.853	Lagging	-93.09	0.911	Lagging	-68.70	0.984	Lagging	-27.35	0.899	Lagging	-74.16	0.996	Lagging	-13.18

Table 5-5 (continued)

Power Factor Analysis: GEN-2015-033

Cont. No.	Case	2016 Winter Peak			2017 Summer Peak			2020 Summer Peak			2020 Winter Peak			2025 Summer Peak		
		Power Factor		Q (MVAR)	Power Factor		Q (MVAR)	Power Factor		Q (MVAR)	Power Factor		Q (MVAR)	Power Factor		Q (MVAR)
76	FLT95-3PH	0.872	Lagging	-85.40	0.925	Lagging	-62.32	0.986	Lagging	-25.98	0.920	Lagging	-64.91	0.996	Lagging	-13.77
77	FLT96-3PH	0.869	Lagging	-86.67	0.924	Lagging	-62.83	0.986	Lagging	-26.17	0.918	Lagging	-65.66	0.996	Lagging	-13.89
78	FLT97-3PH	0.869	Lagging	-86.71	0.924	Lagging	-62.93	0.986	Lagging	-26.15	0.918	Lagging	-65.64	0.996	Lagging	-13.95
79	FLT98-3PH	0.869	Lagging	-86.73	0.924	Lagging	-62.87	0.985	Lagging	-26.17	0.918	Lagging	-65.67	0.996	Lagging	-13.90
80	FLT99-3PH	0.869	Lagging	-86.66	0.924	Lagging	-62.84	0.985	Lagging	-26.18	0.918	Lagging	-65.67	0.996	Lagging	-13.89
81	FLT100-3PH	0.868	Lagging	-86.78	0.924	Lagging	-62.95	0.986	Lagging	-26.16	0.918	Lagging	-65.66	0.996	Lagging	-13.96
82	FLT101-3PH	0.869	Lagging	-86.75	0.924	Lagging	-62.91	0.985	Lagging	-26.21	0.918	Lagging	-65.71	0.996	Lagging	-13.94
83	FLT102-3PH	0.869	Lagging	-86.57	0.924	Lagging	-62.78	0.986	Lagging	-26.17	0.918	Lagging	-65.64	0.996	Lagging	-13.88
84	FLT105-3PH	0.868	Lagging	-87.05	0.925	Lagging	-62.56	0.985	Lagging	-26.27	0.918	Lagging	-65.47	0.996	Lagging	-14.06
85	FLT106-3PH	0.867	Lagging	-87.40	0.924	Lagging	-62.93	0.985	Lagging	-26.46	0.918	Lagging	-65.79	0.996	Lagging	-14.31
86	FLT107-3PH	0.868	Lagging	-86.83	0.924	Lagging	-63.11	0.985	Lagging	-26.18	0.918	Lagging	-65.69	0.996	Lagging	-13.89
87	FLT108-3PH	0.867	Lagging	-87.23	0.926	Lagging	-61.85	0.985	Lagging	-26.18	0.918	Lagging	-65.82	0.996	Lagging	-13.92
88	FLT109-3PH	0.869	Lagging	-86.49	0.924	Lagging	-62.92	0.986	Lagging	-26.02	0.918	Lagging	-65.51	0.996	Lagging	-13.84
89	FLT110-3PH	0.868	Lagging	-86.81	0.924	Lagging	-62.97	0.985	Lagging	-26.33	0.918	Lagging	-65.86	0.996	Lagging	-14.00
90	FLT111-3PH	0.868	Lagging	-86.82	0.924	Lagging	-62.74	0.985	Lagging	-26.23	0.918	Lagging	-65.73	0.996	Lagging	-13.92
91	FLT112-3PH	0.868	Lagging	-86.80	0.925	Lagging	-62.66	0.985	Lagging	-26.25	0.918	Lagging	-65.72	0.996	Lagging	-13.97
92	FLT113-3PH	0.868	Lagging	-86.79	0.924	Lagging	-62.90	0.985	Lagging	-26.24	0.918	Lagging	-65.74	0.996	Lagging	-13.97
93	FLT114-3PH	0.869	Lagging	-86.72	0.924	Lagging	-62.92	0.985	Lagging	-26.19	0.918	Lagging	-65.68	0.996	Lagging	-13.93
94	FLT115-3PH	0.869	Lagging	-86.71	0.924	Lagging	-62.86	0.985	Lagging	-26.17	0.918	Lagging	-65.67	0.996	Lagging	-13.89
95	FLT116-3PH	0.868	Lagging	-86.80	0.924	Lagging	-62.93	0.985	Lagging	-26.27	0.918	Lagging	-65.83	0.996	Lagging	-13.95
96	FLT117-3PH	0.869	Lagging	-86.73	0.924	Lagging	-62.78	0.985	Lagging	-26.20	0.918	Lagging	-65.71	0.996	Lagging	-13.98
97	FLT118-3PH	0.869	Lagging	-86.71	0.924	Lagging	-62.89	0.986	Lagging	-26.15	0.918	Lagging	-65.69	0.996	Lagging	-13.88
98	FLT119-3PH	0.868	Lagging	-86.76	0.924	Lagging	-62.89	0.985	Lagging	-26.28	0.918	Lagging	-65.77	0.996	Lagging	-13.96
99	FLT120-3PH	0.868	Lagging	-86.82	0.924	Lagging	-62.95	0.986	Lagging	-26.13	0.918	Lagging	-65.61	0.996	Lagging	-13.91
100	FLT121-3PH	0.868	Lagging	-86.75	0.924	Lagging	-62.93	0.985	Lagging	-26.24	0.918	Lagging	-65.73	0.996	Lagging	-13.94
101	FLT126-3PH	0.867	Lagging	-87.27	0.924	Lagging	-63.11	0.985	Lagging	-26.46	0.917	Lagging	-65.97	0.996	Lagging	-14.37
102	FLT127-3PH	0.868	Lagging	-86.84	0.924	Lagging	-62.72	0.985	Lagging	-26.17	0.918	Lagging	-65.67	0.996	Lagging	-13.89
103	FLT128-3PH	0.867	Lagging	-87.26	0.925	Lagging	-62.63	0.986	Lagging	-26.11	0.918	Lagging	-65.72	0.996	Lagging	-13.87
104	FLT129-3PH	0.869	Lagging	-86.74	0.924	Lagging	-62.90	0.985	Lagging	-26.23	0.918	Lagging	-65.73	0.996	Lagging	-13.95

Study Generator GEN-2015-033

The Power Factor Analysis shows that GEN-2015-033 has a power factor range of 0.993 leading (absorbing) to 0.763 lagging (supplying) for the 2016 Winter Peak conditions, a power factor range of 0.976 leading (absorbing) to 0.835 lagging (supplying) for the 2017 Summer Peak conditions, a power factor range of 0.993 leading (absorbing) to 0.919 lagging (supplying) for the 2020 Summer Peak conditions, a power factor range of 0.979 leading (absorbing) to 0.793 lagging (supplying) for the 2020 Winter Peak conditions, and a power factor range of 0.975 leading (absorbing) to 0.971 lagging (supplying) for the 2025 Summer Peak conditions.

DRAFT

Table 5-6
Power Factor Analysis: GEN-2015-039

DRAFT

Cont. No.	Case	2016 Winter Peak			2017 Summer Peak			2020 Summer Peak			2020 Winter Peak			2025 Summer Peak		
		Power Factor		Q (MVAR)	Power Factor		Q (MVAR)	Power Factor		Q (MVAR)	Power Factor		Q (MVAR)	Power Factor		Q (MVAR)
0	Base	0.733	Lagging	-46.43	0.371	Lagging	-125.33	0.337	Lagging	-139.47	0.616	Lagging	-64.00	0.406	Lagging	-112.56
1	FLT01-3PH	0.732	Lagging	-46.52	0.370	Lagging	-125.45	0.337	Lagging	-139.50	0.615	Lagging	-64.04	0.406	Lagging	-112.59
2	FLT02-3PH	0.732	Lagging	-46.58	0.370	Lagging	-125.50	0.337	Lagging	-139.50	0.615	Lagging	-64.06	0.406	Lagging	-112.60
3	FLT03-3PH	0.733	Lagging	-46.43	0.370	Lagging	-125.37	0.338	Lagging	-139.41	0.617	Lagging	-63.86	0.406	Lagging	-112.56
4	FLT04-3PH	0.719	Lagging	-48.36	0.367	Lagging	-126.84	0.335	Lagging	-140.62	0.606	Lagging	-65.60	0.400	Lagging	-114.54
5	FLT05-3PH	0.712	Lagging	-49.26	0.365	Lagging	-127.36	0.333	Lagging	-141.48	0.601	Lagging	-66.58	0.400	Lagging	-114.46
6	FLT06-3PH	0.732	Lagging	-46.51	0.370	Lagging	-125.42	0.337	Lagging	-139.48	0.615	Lagging	-64.03	0.406	Lagging	-112.57
7	FLT07-3PH	0.732	Lagging	-46.52	0.370	Lagging	-125.45	0.337	Lagging	-139.50	0.615	Lagging	-64.04	0.406	Lagging	-112.59
8	FLT11-3PH	0.739	Lagging	-45.64	0.375	Lagging	-123.79	0.339	Lagging	-138.69	0.622	Lagging	-63.02	0.409	Lagging	-111.47
9	FLT12-3PH	0.727	Lagging	-47.27	0.370	Lagging	-125.73	0.335	Lagging	-140.85	0.609	Lagging	-65.15	0.403	Lagging	-113.68
10	FLT13-3PH	0.733	Lagging	-46.44	0.370	Lagging	-125.49	0.337	Lagging	-139.54	0.616	Lagging	-64.01	0.406	Lagging	-112.61
11	FLT14-3PH	0.727	Lagging	-47.20	0.368	Lagging	-126.36	0.338	Lagging	-139.45	0.615	Lagging	-64.08	0.406	Lagging	-112.52
12	FLT15-3PH	0.827	Lagging	-34.02	0.380	Lagging	-121.74	0.357	Lagging	-130.73	0.773	Lagging	-40.99	0.421	Lagging	-107.84
13	FLT16-3PH	0.734	Lagging	-46.32	0.371	Lagging	-125.31	0.338	Lagging	-139.43	0.616	Lagging	-63.95	0.406	Lagging	-112.59
14	FLT17-3PH	0.736	Lagging	-46.04	0.371	Lagging	-125.02	0.338	Lagging	-139.09	0.618	Lagging	-63.65	0.407	Lagging	-112.25
15	FLT18-3PH	0.736	Lagging	-46.02	0.372	Lagging	-124.90	0.338	Lagging	-139.01	0.618	Lagging	-63.64	0.407	Lagging	-112.17
16	FLT19-3PH	0.733	Lagging	-46.43	0.371	Lagging	-125.33	0.337	Lagging	-139.47	0.616	Lagging	-64.00	0.406	Lagging	-112.56
17	FLT20-3PH	0.733	Lagging	-46.47	0.370	Lagging	-125.39	0.337	Lagging	-139.47	0.616	Lagging	-64.00	0.406	Lagging	-112.56
18	FLT21-3PH	0.731	Lagging	-46.66	0.370	Lagging	-125.67	0.336	Lagging	-140.08	0.613	Lagging	-64.48	0.404	Lagging	-113.19
19	FLT22-3PH	0.733	Lagging	-46.39	0.370	Lagging	-125.58	0.337	Lagging	-139.69	0.616	Lagging	-64.01	0.405	Lagging	-112.92
20	FLT23-3PH	0.733	Lagging	-46.36	0.370	Lagging	-125.43	0.337	Lagging	-139.54	0.616	Lagging	-63.97	0.405	Lagging	-112.73
21	FLT24-3PH	0.731	Lagging	-46.65	0.370	Lagging	-125.62	0.336	Lagging	-140.02	0.613	Lagging	-64.46	0.404	Lagging	-113.12
22	FLT25-3PH	0.731	Lagging	-46.63	0.370	Lagging	-125.64	0.337	Lagging	-139.56	0.615	Lagging	-64.02	0.405	Lagging	-112.78
23	FLT26-3PH	0.733	Lagging	-46.40	0.370	Lagging	-125.38	0.338	Lagging	-139.36	0.615	Lagging	-64.04	0.406	Lagging	-112.43
24	FLT27-3PH	0.732	Lagging	-46.52	0.370	Lagging	-125.44	0.337	Lagging	-139.47	0.616	Lagging	-63.99	0.406	Lagging	-112.56
25	FLT28-3PH	0.729	Lagging	-46.96	0.372	Lagging	-124.73	0.339	Lagging	-138.69	0.620	Lagging	-63.32	0.409	Lagging	-111.72
26	FLT29-3PH	0.794	Lagging	-38.22	0.393	Lagging	-116.96	0.347	Lagging	-135.34	0.675	Lagging	-54.63	0.415	Lagging	-109.72
27	FLT30-3PH	0.724	Lagging	-47.65	0.369	Lagging	-125.87	0.337	Lagging	-139.92	0.611	Lagging	-64.70	0.405	Lagging	-112.88
28	FLT31-3PH	0.730	Lagging	-46.79	0.369	Lagging	-125.78	0.337	Lagging	-139.64	0.615	Lagging	-64.09	0.405	Lagging	-112.78
29	FLT34-3PH	0.565	Lagging	-72.95	0.326	Lagging	-144.80	0.299	Lagging	-159.86	0.483	Lagging	-90.75	0.362	Lagging	-128.61
30	FLT35-3PH	0.728	Lagging	-47.07	0.374	Lagging	-124.00	0.341	Lagging	-137.96	0.621	Lagging	-63.13	0.411	Lagging	-110.81
31	FLT36-3PH	0.729	Lagging	-47.00	0.366	Lagging	-127.21	0.330	Lagging	-142.88	0.608	Lagging	-65.26	0.394	Lagging	-116.55
32	FLT37-3PH	0.732	Lagging	-46.55	0.368	Lagging	-126.27	0.335	Lagging	-140.56	0.616	Lagging	-63.92	0.404	Lagging	-113.33
33	FLT38-3PH	0.717	Lagging	-48.64	0.366	Lagging	-127.09	0.333	Lagging	-141.71	0.604	Lagging	-65.92	0.400	Lagging	-114.72
34	FLT39-3PH	0.753	Lagging	-43.65	0.366	Lagging	-126.94	0.333	Lagging	-141.54	0.611	Lagging	-64.85	0.398	Lagging	-115.30
35	FLT40-3PH	0.730	Lagging	-46.87	0.369	Lagging	-125.92	0.337	Lagging	-139.86	0.614	Lagging	-64.32	0.403	Lagging	-113.60
36	FLT41-3PH	0.722	Lagging	-47.94	0.369	Lagging	-126.11	0.335	Lagging	-140.40	0.609	Lagging	-65.15	0.403	Lagging	-113.54
37	FLT43-3PH	0.545	Lagging	-76.99	0.322	Lagging	-146.79	0.299	Lagging	-159.67	0.466	Lagging	-94.89	0.368	Lagging	-126.28
38	FLT44-3PH	0.439	Lagging	-102.96	0.287	Lagging	-167.07	0.270	Lagging	-178.09	0.385	Lagging	-119.78	0.335	Lagging	-140.77
39	FLT45-3PH	0.553	Lagging	-75.36	0.319	Lagging	-148.48	0.297	Lagging	-160.92	0.480	Lagging	-91.27	0.363	Lagging	-128.47
40	FLT46-3PH	0.726	Lagging	-47.31	0.368	Lagging	-126.43	0.336	Lagging	-140.12	0.610	Lagging	-64.92	0.405	Lagging	-112.90
41	FLT47-3PH	0.689	Lagging	-52.65	0.371	Lagging	-125.33	0.330	Lagging	-143.13	0.585	Lagging	-69.32	0.402	Lagging	-114.02
42	FLT48-3PH	0.733	Lagging	-46.43	0.371	Lagging	-125.33	0.337	Lagging	-139.47	0.616	Lagging	-64.00	0.406	Lagging	-112.56
43	FLT49-3PH	0.441	Lagging	-101.84	0.259	Lagging	-186.21	0.250	Lagging	-193.73	0.314	Lagging	-151.14	0.312	Lagging	-152.29
44	FLT52-3PH	0.860	Leading	29.65	0.981	Leading	9.91	0.932	Leading	19.39	0.782	Leading	39.89	0.981	Leading	9.91
45	FLT53-3PH	0.622	Lagging	-62.97	0.388	Lagging	-118.92	0.336	Lagging	-140.30	0.497	Lagging	-87.38	0.423	Lagging	-107.10
46	FLT54-3PH	0.998	Lagging	-3.24	0.441	Lagging	-101.64	0.383	Lagging	-120.44	0.939	Lagging	-18.32	0.373	Lagging	-124.43
47	FLT55-3PH	0.806	Lagging	-36.72	0.419	Lagging	-108.26	0.384	Lagging	-120.24	0.696	Lagging	-51.64	0.440	Lagging	-102.00
48	FLT56-3PH	0.744	Lagging	-44.95	0.376	Lagging	-123.07	0.343	Lagging	-137.03	0.625	Lagging	-62.41	0.413	Lagging	-110.39
49	FLT57-3PH	0.662	Lagging	-56.65	0.337	Lagging	-139.57	0.313	Lagging	-151.86	0.558	Lagging	-74.43	0.379	Lagging	-122.25
50	FLT58-3PH	0.744	Lagging	-44.84	0.377	Lagging	-122.91	0.343	Lagging	-136.86	0.626	Lagging	-62.29	0.413	Lagging	-110.23
51	FLT59-3PH	0.723	Lagging	-47.78	0.366	Lagging	-127.14	0.332	Lagging	-142.09	0.604	Lagging	-66.01	0.397	Lagging	-115.75
52	FLT60-3PH	0.730	Lagging	-46.82	0.384	Lagging	-120.12	0.338	Lagging	-139.24	0.614	Lagging	-64.22	0.406	Lagging	-112.44
53	FLT63-3PH	0.733	Lagging	-46.37	0.371	Lagging	-125.29	0.338	Lagging	-139.41	0.616	Lagging	-63.89	0.406	Lagging	-112.54
54	FLT64-3PH	0.733	Lagging	-46.37	0.371	Lagging	-125.27	0.338	Lagging	-139.40	0.616	Lagging	-63.93	0.406	Lagging	-112.43
55	FLT65-3PH	0.733	Lagging	-46.38	0.371	Lagging	-125.29	0.338	Lagging	-139.43	0.616	Lagging	-63.92	0.406	Lagging	-112.54
56	FLT66-3PH	0.731	Lagging	-46.64	0.369	Lagging	-125.89	0.337	Lagging	-139.82	0.613	Lagging	-64.44	0.404	Lagging	-113.07
57	FLT67-3PH	0.732	Lagging	-46.49	0.370	Lagging	-125.49	0.337	Lagging	-139.58	0.615	Lagging	-64.13	0.405	Lagging	-112.72
58	FLT68-3PH	0.733	Lagging	-46.37	0.371	Lagging	-125.27	0.338	Lagging	-139.42	0.616	Lagging	-63.91	0.406	Lagging	-112.54
59	FLT69-3PH	0.733	Lagging	-46.41	0.371	Lagging	-125.13	0.337	Lagging	-139.81	0.615	Lagging	-64.11	0.404	Lagging	-113.34
60	FLT70-3PH	0.732	Lagging	-46.47	0.370	Lagging	-125.49	0.337	Lagging	-139.59	0.615	Lagging	-64.08	0.405	Lagging	-112.81
61	FLT71-3PH	0.733	Lagging	-46.47	0.370	Lagging	-125.37	0.337	Lagging	-139.51	0.615	Lagging	-64.03	0.406	Lagging	-112.59
62	FLT72-3PH	0.733	Lagging	-46.35	0.370	Lagging	-125.40	0.338	Lagging	-139.41	0.616	Lagging	-63.94	0.406	Lagging	-112.54
63	FLT73-3PH	0.733	Lagging	-46.43	0.371	Lagging	-125.33	0.337	Lagging	-139.47	0.616	Lagging	-64.00	0.406	Lagging	-112.56
64	FLT74-3PH	0.733	Lagging	-46.43	0.370	Lagging	-125.38	0.337	Lagging	-139.50	0.615	Lagging	-64.03	0.406	Lagging	-112.58
65	FLT75-3PH	0.741	Lagging	-45.30	0.369	Lagging	-125.77	0.340	Lagging	-138.48	0.621	Lagging	-63.08	0.408	Lagging	-112.02
66	FLT76-3PH	0.733	Lagging	-46.38	0.371	Lagging	-125.28	0.338	Lagging	-139.43	0.616	Lagging	-63.92	0.406	Lagging	-112.54
67	FLT77-3PH	0.732	Lagging	-46.56	0.370	Lagging	-125.36	0.338	Lagging	-139.30	0.616	Lagging	-63.90	0.406	Lagging	-112.52
68	FLT84-3PH	0.684	Lagging	-53.35	0.356	Lagging	-131.25	0.325	Lagging	-145.45	0.574	Lagging	-71.24	0.393	Lagging	-117.13
69	FLT85-3PH	0.735	Lagging	-46.08	0.371	Lagging	-124.97	0.339	Lagging	-138.93	0.618	Lagging	-63.59	0.408	Lagging	-111.87
70	FLT86-3PH	0.707	Lagging	-50.01	0.358	Lagging	-130.31	0.330	Lagging	-142.83	0.591	Lagging	-68.27	0.398	Lagging	-115.20
71	FLT87-3PH	0.736	Lagging	-45.94	0.370	Lagging	-125.45	0.338	Lagging	-139.23	0.618	Lagging	-63.60	0.407	Lagging	-112.27
72	FLT88-3PH	0.734	Lagging	-46.32	0.371	Lagging	-125.20	0.338	Lagging	-139.36	0.616	Lagging	-63.89	0.406	Lagging	-112.41
73	FLT92-3PH	0.690	Lagging	-52.43	0.349	Lagging	-134.30	0.329	Lagging	-143.30	0.591	Lagging	-68.28	0.397	Lagging	-115.60
74	FLT93-3PH	0.736	Lagging	-46.02	0.370	Lagging	-125.61	0.338	Lagging	-139.43	0.615	Lagging	-64.03	0.408	Lagging	-111.86
75	FLT94-3PH	0.578	Lagging	-70.53	0.315	Lagging	-150.86	0.300	Lagging	-158.88	0.486	Lagging	-89.84	0.364	Lagging	-127.86

Table 5-6 (continued)

Power Factor Analysis: GEN-2015-039

Cont. No.	Case	2016 Winter Peak			2017 Summer Peak			2020 Summer Peak			2020 Winter Peak			2025 Summer Peak		
		Power Factor		Q (MVAR)	Power Factor		Q (MVAR)	Power Factor		Q (MVAR)	Power Factor		Q (MVAR)	Power Factor		Q (MVAR)
76	FLT95-3PH	0.739	Lagging	-45.57	0.371	Lagging	-125.21	0.338	Lagging	-139.13	0.618	Lagging	-63.66	0.409	Lagging	-111.59
77	FLT96-3PH	0.733	Lagging	-46.42	0.371	Lagging	-125.32	0.337	Lagging	-139.47	0.616	Lagging	-64.00	0.406	Lagging	-112.56
78	FLT97-3PH	0.733	Lagging	-46.47	0.370	Lagging	-125.39	0.337	Lagging	-139.47	0.616	Lagging	-64.01	0.406	Lagging	-112.61
79	FLT98-3PH	0.733	Lagging	-46.43	0.371	Lagging	-125.34	0.337	Lagging	-139.46	0.616	Lagging	-63.99	0.406	Lagging	-112.55
80	FLT99-3PH	0.733	Lagging	-46.42	0.371	Lagging	-125.33	0.337	Lagging	-139.48	0.616	Lagging	-64.01	0.406	Lagging	-112.56
81	FLT100-3PH	0.732	Lagging	-46.50	0.370	Lagging	-125.40	0.337	Lagging	-139.48	0.616	Lagging	-64.01	0.406	Lagging	-112.61
82	FLT101-3PH	0.733	Lagging	-46.46	0.370	Lagging	-125.37	0.337	Lagging	-139.48	0.616	Lagging	-64.02	0.406	Lagging	-112.59
83	FLT102-3PH	0.733	Lagging	-46.41	0.371	Lagging	-125.31	0.337	Lagging	-139.51	0.615	Lagging	-64.03	0.406	Lagging	-112.58
84	FLT105-3PH	0.732	Lagging	-46.48	0.370	Lagging	-125.40	0.338	Lagging	-139.41	0.615	Lagging	-64.03	0.406	Lagging	-112.47
85	FLT106-3PH	0.734	Lagging	-46.26	0.371	Lagging	-125.34	0.337	Lagging	-139.51	0.615	Lagging	-64.03	0.405	Lagging	-112.75
86	FLT107-3PH	0.732	Lagging	-46.54	0.370	Lagging	-125.52	0.337	Lagging	-139.56	0.615	Lagging	-64.04	0.406	Lagging	-112.66
87	FLT108-3PH	0.734	Lagging	-46.24	0.371	Lagging	-125.25	0.337	Lagging	-139.50	0.615	Lagging	-64.05	0.406	Lagging	-112.60
88	FLT109-3PH	0.730	Lagging	-46.77	0.370	Lagging	-125.56	0.337	Lagging	-139.76	0.614	Lagging	-64.36	0.405	Lagging	-112.89
89	FLT110-3PH	0.735	Lagging	-46.17	0.371	Lagging	-125.10	0.338	Lagging	-139.21	0.617	Lagging	-63.76	0.406	Lagging	-112.39
90	FLT111-3PH	0.733	Lagging	-46.43	0.370	Lagging	-125.41	0.337	Lagging	-139.48	0.616	Lagging	-64.01	0.406	Lagging	-112.57
91	FLT112-3PH	0.733	Lagging	-46.41	0.370	Lagging	-125.48	0.337	Lagging	-139.47	0.616	Lagging	-64.00	0.406	Lagging	-112.57
92	FLT113-3PH	0.733	Lagging	-46.45	0.370	Lagging	-125.39	0.337	Lagging	-139.49	0.615	Lagging	-64.03	0.406	Lagging	-112.60
93	FLT114-3PH	0.733	Lagging	-46.42	0.370	Lagging	-125.35	0.337	Lagging	-139.47	0.616	Lagging	-64.00	0.406	Lagging	-112.57
94	FLT115-3PH	0.733	Lagging	-46.43	0.371	Lagging	-125.33	0.337	Lagging	-139.47	0.616	Lagging	-64.00	0.406	Lagging	-112.56
95	FLT116-3PH	0.734	Lagging	-46.21	0.371	Lagging	-125.15	0.338	Lagging	-139.28	0.617	Lagging	-63.80	0.406	Lagging	-112.45
96	FLT117-3PH	0.733	Lagging	-46.37	0.370	Lagging	-125.49	0.338	Lagging	-139.45	0.616	Lagging	-63.98	0.406	Lagging	-112.59
97	FLT118-3PH	0.733	Lagging	-46.43	0.370	Lagging	-125.37	0.337	Lagging	-139.48	0.616	Lagging	-64.02	0.406	Lagging	-112.59
98	FLT119-3PH	0.733	Lagging	-46.46	0.371	Lagging	-125.33	0.337	Lagging	-139.52	0.615	Lagging	-64.04	0.406	Lagging	-112.60
99	FLT120-3PH	0.733	Lagging	-46.45	0.371	Lagging	-125.33	0.337	Lagging	-139.51	0.615	Lagging	-64.05	0.406	Lagging	-112.66
100	FLT121-3PH	0.733	Lagging	-46.45	0.370	Lagging	-125.36	0.337	Lagging	-139.50	0.616	Lagging	-64.02	0.406	Lagging	-112.59
101	FLT126-3PH	0.734	Lagging	-46.27	0.370	Lagging	-125.42	0.337	Lagging	-139.58	0.615	Lagging	-64.05	0.405	Lagging	-112.74
102	FLT127-3PH	0.733	Lagging	-46.44	0.371	Lagging	-125.27	0.337	Lagging	-139.47	0.616	Lagging	-64.00	0.406	Lagging	-112.56
103	FLT128-3PH	0.738	Lagging	-45.76	0.371	Lagging	-125.17	0.337	Lagging	-139.48	0.616	Lagging	-63.98	0.406	Lagging	-112.57
104	FLT129-3PH	0.733	Lagging	-46.43	0.370	Lagging	-125.36	0.337	Lagging	-139.48	0.616	Lagging	-64.01	0.406	Lagging	-112.57

DRAFT

Study Generator GEN-2015-039

The Power Factor Analysis shows that GEN-2015-039 has a power factor range of 0.860 leading (absorbing) to 0.439 lagging (supplying) for the 2016 Winter Peak conditions, a power factor range of 0.981 leading (absorbing) to 0.259 lagging (supplying) for the 2017 Summer Peak conditions, a power factor range of 0.932 leading (absorbing) to 0.250 lagging (supplying) for the 2020 Summer Peak conditions, a power factor range of 0.782 leading (absorbing) to 0.314 lagging (supplying) for the 2020 Winter Peak conditions, and a power factor range of 0.981 leading (absorbing) to 0.312 lagging (supplying) for the 2025 Summer Peak conditions.

Table 5-7
Power Factor Analysis: GEN-2015-040

DRAFT

Cont. No.	Case	2016 Winter Peak			2017 Summer Peak			2020 Summer Peak			2020 Winter Peak			2025 Summer Peak		
		Power Factor		Q (MVAR)	Power Factor		Q (MVAR)	Power Factor		Q (MVAR)	Power Factor		Q (MVAR)	Power Factor		Q (MVAR)
0	Base	0.981	Lagging	-9.78	0.623	Lagging	-62.82	0.924	Lagging	-20.64	0.998	Lagging	-2.82	0.830	Lagging	-33.61
1	FLT01-3PH	0.981	Lagging	-9.76	0.623	Lagging	-62.77	0.924	Lagging	-20.62	0.998	Lagging	-2.80	0.830	Lagging	-33.61
2	FLT02-3PH	0.981	Lagging	-9.76	0.623	Lagging	-62.76	0.925	Lagging	-20.61	0.998	Lagging	-2.80	0.830	Lagging	-33.61
3	FLT03-3PH	0.981	Lagging	-9.81	0.622	Lagging	-62.88	0.924	Lagging	-20.65	0.998	Lagging	-2.83	0.830	Lagging	-33.60
4	FLT04-3PH	0.984	Lagging	-9.15	0.629	Lagging	-61.86	0.926	Lagging	-20.33	0.999	Lagging	-2.51	0.829	Lagging	-33.78
5	FLT05-3PH	0.985	Lagging	-8.62	0.635	Lagging	-60.81	0.928	Lagging	-20.05	0.999	Lagging	-2.27	0.828	Lagging	-33.83
6	FLT06-3PH	0.981	Lagging	-9.76	0.623	Lagging	-62.78	0.924	Lagging	-20.62	0.998	Lagging	-2.80	0.830	Lagging	-33.61
7	FLT07-3PH	0.981	Lagging	-9.76	0.623	Lagging	-62.77	0.925	Lagging	-20.62	0.998	Lagging	-2.80	0.830	Lagging	-33.61
8	FLT11-3PH	0.982	Lagging	-9.72	0.623	Lagging	-62.74	0.925	Lagging	-20.60	0.998	Lagging	-2.83	0.830	Lagging	-33.58
9	FLT12-3PH	0.981	Lagging	-9.82	0.621	Lagging	-63.05	0.922	Lagging	-20.94	0.998	Lagging	-2.86	0.828	Lagging	-33.87
10	FLT13-3PH	0.981	Lagging	-9.78	0.623	Lagging	-62.83	0.924	Lagging	-20.66	0.998	Lagging	-2.82	0.830	Lagging	-33.63
11	FLT14-3PH	0.981	Lagging	-9.81	0.623	Lagging	-62.80	0.924	Lagging	-20.72	0.998	Lagging	-2.91	0.829	Lagging	-33.76
12	FLT15-3PH	0.980	Lagging	-10.12	0.620	Lagging	-63.21	0.923	Lagging	-20.91	0.998	Lagging	-3.06	0.829	Lagging	-33.77
13	FLT16-3PH	0.981	Lagging	-9.79	0.623	Lagging	-62.84	0.924	Lagging	-20.65	0.998	Lagging	-2.82	0.830	Lagging	-33.61
14	FLT17-3PH	0.981	Lagging	-9.79	0.623	Lagging	-62.83	0.924	Lagging	-20.64	0.998	Lagging	-2.82	0.830	Lagging	-33.61
15	FLT18-3PH	0.981	Lagging	-9.79	0.623	Lagging	-62.83	0.924	Lagging	-20.64	0.998	Lagging	-2.82	0.830	Lagging	-33.61
16	FLT19-3PH	0.981	Lagging	-9.78	0.623	Lagging	-62.82	0.924	Lagging	-20.64	0.998	Lagging	-2.82	0.830	Lagging	-33.61
17	FLT20-3PH	0.981	Lagging	-9.78	0.623	Lagging	-62.83	0.924	Lagging	-20.64	0.998	Lagging	-2.82	0.830	Lagging	-33.61
18	FLT21-3PH	0.981	Lagging	-9.80	0.623	Lagging	-62.84	0.924	Lagging	-20.66	0.998	Lagging	-2.83	0.830	Lagging	-33.62
19	FLT22-3PH	0.981	Lagging	-9.81	0.622	Lagging	-62.87	0.924	Lagging	-20.67	0.998	Lagging	-2.83	0.830	Lagging	-33.62
20	FLT23-3PH	0.981	Lagging	-9.80	0.623	Lagging	-62.86	0.924	Lagging	-20.66	0.998	Lagging	-2.83	0.830	Lagging	-33.61
21	FLT24-3PH	0.981	Lagging	-9.79	0.623	Lagging	-62.84	0.924	Lagging	-20.65	0.998	Lagging	-2.83	0.830	Lagging	-33.62
22	FLT25-3PH	0.981	Lagging	-9.80	0.622	Lagging	-62.87	0.924	Lagging	-20.65	0.998	Lagging	-2.83	0.830	Lagging	-33.61
23	FLT26-3PH	0.981	Lagging	-9.79	0.623	Lagging	-62.82	0.924	Lagging	-20.63	0.998	Lagging	-2.82	0.830	Lagging	-33.61
24	FLT27-3PH	0.981	Lagging	-9.79	0.623	Lagging	-62.83	0.924	Lagging	-20.64	0.998	Lagging	-2.82	0.830	Lagging	-33.60
25	FLT28-3PH	0.981	Lagging	-9.80	0.622	Lagging	-62.89	0.924	Lagging	-20.67	0.998	Lagging	-2.82	0.830	Lagging	-33.61
26	FLT29-3PH	0.975	Lagging	-11.50	0.596	Lagging	-67.36	0.915	Lagging	-22.03	0.997	Lagging	-3.97	0.830	Lagging	-33.59
27	FLT30-3PH	0.981	Lagging	-9.97	0.621	Lagging	-63.17	0.924	Lagging	-20.73	0.998	Lagging	-2.92	0.830	Lagging	-33.58
28	FLT31-3PH	0.981	Lagging	-9.79	0.623	Lagging	-62.83	0.924	Lagging	-20.64	0.998	Lagging	-2.82	0.830	Lagging	-33.61
29	FLT34-3PH	0.975	Lagging	-11.28	0.623	Lagging	-62.73	0.924	Lagging	-20.71	0.998	Lagging	-3.36	0.829	Lagging	-33.68
30	FLT35-3PH	0.981	Lagging	-9.89	0.622	Lagging	-62.99	0.924	Lagging	-20.68	0.998	Lagging	-2.80	0.830	Lagging	-33.66
31	FLT36-3PH	0.981	Lagging	-9.79	0.622	Lagging	-62.88	0.924	Lagging	-20.71	0.998	Lagging	-2.88	0.829	Lagging	-33.69
32	FLT37-3PH	0.980	Lagging	-10.25	0.623	Lagging	-62.74	0.926	Lagging	-20.45	0.998	Lagging	-3.01	0.831	Lagging	-33.46
33	FLT38-3PH	0.982	Lagging	-9.49	0.623	Lagging	-62.71	0.925	Lagging	-20.51	0.998	Lagging	-2.76	0.831	Lagging	-33.47
34	FLT39-3PH	0.981	Lagging	-9.77	0.623	Lagging	-62.81	0.924	Lagging	-20.62	0.998	Lagging	-2.81	0.830	Lagging	-33.60
35	FLT40-3PH	0.981	Lagging	-9.83	0.623	Lagging	-62.82	0.924	Lagging	-20.64	0.998	Lagging	-2.85	0.830	Lagging	-33.61
36	FLT41-3PH	0.981	Lagging	-9.82	0.623	Lagging	-62.82	0.924	Lagging	-20.64	0.998	Lagging	-2.84	0.830	Lagging	-33.61
37	FLT43-3PH	0.976	Lagging	-11.16	0.626	Lagging	-62.24	0.922	Lagging	-21.04	0.995	Lagging	-5.20	0.827	Lagging	-34.00
38	FLT44-3PH	0.954	Lagging	-15.76	0.626	Lagging	-62.37	0.911	Lagging	-22.68	0.991	Lagging	-6.71	0.823	Lagging	-34.53
39	FLT45-3PH	0.974	Lagging	-11.52	0.626	Lagging	-62.32	0.928	Lagging	-20.04	0.999	Lagging	-1.90	0.832	Lagging	-33.32
40	FLT46-3PH	0.977	Lagging	-10.88	0.625	Lagging	-62.37	0.922	Lagging	-20.96	0.998	Lagging	-3.20	0.831	Lagging	-33.44
41	FLT47-3PH	0.987	Lagging	-8.04	0.623	Lagging	-62.82	0.866	Lagging	-28.84	0.987	Lagging	-8.18	0.773	Lagging	-41.07
42	FLT48-3PH	0.981	Lagging	-9.78	0.623	Lagging	-62.82	0.924	Lagging	-20.64	0.998	Lagging	-2.82	0.830	Lagging	-33.61
43	FLT49-3PH	0.962	Lagging	-14.28	0.624	Lagging	-62.65	0.898	Lagging	-24.53	0.981	Lagging	-9.99	0.817	Lagging	-35.25
44	FLT52-3PH	0.973	Lagging	-11.81	0.619	Lagging	-63.44	0.917	Lagging	-21.81	0.997	Lagging	-4.17	0.822	Lagging	-34.65
45	FLT53-3PH	0.975	Lagging	-11.35	0.620	Lagging	-63.31	0.919	Lagging	-21.50	0.997	Lagging	-3.81	0.824	Lagging	-34.39
46	FLT54-3PH	0.970	Lagging	-12.45	0.619	Lagging	-63.36	0.919	Lagging	-21.40	0.996	Lagging	-4.41	0.825	Lagging	-34.19
47	FLT55-3PH	0.981	Lagging	-9.81	0.623	Lagging	-62.84	0.924	Lagging	-20.66	0.998	Lagging	-2.84	0.830	Lagging	-33.63
48	FLT56-3PH	0.981	Lagging	-9.99	0.619	Lagging	-63.42	0.922	Lagging	-20.99	0.998	Lagging	-3.01	0.828	Lagging	-33.90
49	FLT57-3PH	0.977	Lagging	-11.03	0.618	Lagging	-63.53	0.919	Lagging	-21.49	0.997	Lagging	-3.76	0.825	Lagging	-34.30
50	FLT58-3PH	0.981	Lagging	-10.00	0.619	Lagging	-63.48	0.922	Lagging	-21.02	0.998	Lagging	-3.03	0.827	Lagging	-33.93
51	FLT59-3PH	0.946	Lagging	-17.15	0.568	Lagging	-72.54	0.873	Lagging	-27.98	0.980	Lagging	-10.12	0.762	Lagging	-42.43
52	FLT60-3PH	0.981	Lagging	-9.80	0.623	Lagging	-62.86	0.924	Lagging	-20.73	0.998	Lagging	-2.82	0.830	Lagging	-33.63
53	FLT63-3PH	0.981	Lagging	-9.93	0.661	Lagging	-56.74	0.929	Lagging	-19.93	0.989	Lagging	-7.33	0.866	Lagging	-28.83
54	FLT64-3PH	0.979	Lagging	-10.48	0.575	Lagging	-71.22	0.899	Lagging	-24.30	0.986	Lagging	-8.57	0.744	Lagging	-44.87
55	FLT65-3PH	0.974	Lagging	-11.68	0.649	Lagging	-58.61	0.914	Lagging	-22.25	0.985	Lagging	-8.82	0.845	Lagging	-31.67
56	FLT66-3PH	1.000	Lagging	-0.04	0.823	Lagging	-34.51	0.993	Lagging	-5.76	0.957	Leading	15.14	0.977	Lagging	-10.79
57	FLT67-3PH	0.988	Lagging	-7.72	0.667	Lagging	-55.83	0.944	Lagging	-17.43	1.000	Leading	1.34	0.869	Lagging	-28.45
58	FLT68-3PH	0.974	Lagging	-11.54	0.654	Lagging	-57.77	0.915	Lagging	-22.10	0.985	Lagging	-8.83	0.847	Lagging	-31.39
59	FLT69-3PH	0.936	Lagging	-18.78	0.555	Lagging	-75.04	0.876	Lagging	-27.50	0.973	Lagging	-11.93	0.795	Lagging	-38.20
60	FLT70-3PH	0.983	Lagging	-9.42	0.637	Lagging	-60.52	0.931	Lagging	-19.67	0.999	Lagging	-2.15	0.847	Lagging	-31.32
61	FLT71-3PH	0.978	Lagging	-10.57	0.620	Lagging	-63.22	0.922	Lagging	-20.93	0.998	Lagging	-3.23	0.827	Lagging	-33.94
62	FLT72-3PH	0.977	Lagging	-10.94	0.606	Lagging	-65.67	0.913	Lagging	-22.39	0.997	Lagging	-3.77	0.818	Lagging	-35.10
63	FLT73-3PH	0.981	Lagging	-9.78	0.623	Lagging	-62.82	0.924	Lagging	-20.64	0.998	Lagging	-2.82	0.830	Lagging	-33.61
64	FLT74-3PH	0.981	Lagging	-9.78	0.616	Lagging	-63.98	0.919	Lagging	-21.44	0.997	Lagging	-3.61	0.824	Lagging	-34.37
65	FLT75-3PH	0.986	Lagging	-8.55	0.661	Lagging	-56.73	0.953	Lagging	-15.95	0.998	Lagging	-2.86	0.906	Lagging	-23.43
66	FLT76-3PH	0.977	Lagging	-10.84	0.659	Lagging	-57.08	0.919	Lagging	-21.49	0.987	Lagging	-8.15	0.851	Lagging	-30.83
67	FLT77-3PH	0.959	Lagging	-14.76	0.574	Lagging	-71.39	0.909	Lagging	-22.99	0.996	Lagging	-4.46	0.771	Lagging	-41.27
68	FLT84-3PH	0.985	Lagging	-8.82	0.624	Lagging	-62.56	0.927	Lagging	-20.15	0.999	Lagging	-1.83	0.833	Lagging	-33.22
69	FLT85-3PH	0.979	Lagging	-10.34	0.611	Lagging	-64.72	0.916	Lagging	-21.85	0.997	Lagging	-3.65	0.817	Lagging	-35.27
70	FLT86-3PH	0.976	Lagging	-11.12	0.615	Lagging	-64.08	0.918	Lagging	-21.66	0.997	Lagging	-4.19	0.824	Lagging	-34.43
71	FLT87-3PH	0.983	Lagging	-9.37	0.625	Lagging	-62.47	0.923	Lagging	-20.80	0.999	Lagging	-2.73	0.829	Lagging	-33.74
72	FLT88-3PH	0.982	Lagging	-9.75	0.621	Lagging	-63.15	0.923	Lagging	-20.86	0.998	Lagging	-2.83	0.828	Lagging	-33.85
73	FLT92-3PH	0.909	Lagging	-22.88	0.484	Lagging	-90.34	0.857	Lagging	-30.09	0.969	Lagging	-12.72	0.808	Lagging	-36.51
74	FLT93-3PH	0.983	Lagging	-9.28	0.623	Lagging	-62.83	0.927	Lagging	-20.29	0.999	Lagging	-2.74	0.827	Lagging	-33.94
75	FLT94-3PH	0.959	Lagging	-14.75	0.618	Lagging	-63.54	0.908	Lagging	-23.07	0.989	Lagging	-7.39	0.810	Lagging	-36.23

Table 5-7 (continued)

Power Factor Analysis: GEN-2015-040

Cont. No.	Case	2016 Winter Peak			2017 Summer Peak			2020 Summer Peak			2020 Winter Peak			2025 Summer Peak		
		Power Factor		Q (MVAR)	Power Factor		Q (MVAR)	Power Factor		Q (MVAR)	Power Factor		Q (MVAR)	Power Factor		Q (MVAR)
76	FLT95-3PH	0.984	Lagging	-8.98	0.623	Lagging	-62.78	0.927	Lagging	-20.20	0.999	Lagging	-2.58	0.828	Lagging	-33.84
77	FLT96-3PH	0.981	Lagging	-9.77	0.623	Lagging	-62.80	0.924	Lagging	-20.63	0.998	Lagging	-2.81	0.830	Lagging	-33.61
78	FLT97-3PH	0.981	Lagging	-9.76	0.623	Lagging	-62.80	0.925	Lagging	-20.59	0.998	Lagging	-2.78	0.830	Lagging	-33.59
79	FLT98-3PH	0.981	Lagging	-9.79	0.623	Lagging	-62.84	0.924	Lagging	-20.64	0.998	Lagging	-2.82	0.830	Lagging	-33.61
80	FLT99-3PH	0.981	Lagging	-9.76	0.623	Lagging	-62.79	0.924	Lagging	-20.64	0.998	Lagging	-2.82	0.830	Lagging	-33.62
81	FLT100-3PH	0.981	Lagging	-9.78	0.623	Lagging	-62.81	0.925	Lagging	-20.58	0.998	Lagging	-2.78	0.830	Lagging	-33.59
82	FLT101-3PH	0.981	Lagging	-9.79	0.623	Lagging	-62.84	0.924	Lagging	-20.63	0.998	Lagging	-2.81	0.830	Lagging	-33.59
83	FLT102-3PH	0.982	Lagging	-9.71	0.623	Lagging	-62.70	0.924	Lagging	-20.65	0.998	Lagging	-2.82	0.830	Lagging	-33.66
84	FLT105-3PH	0.976	Lagging	-11.25	0.613	Lagging	-64.51	0.914	Lagging	-22.22	0.996	Lagging	-4.32	0.815	Lagging	-35.60
85	FLT106-3PH	0.978	Lagging	-10.75	0.621	Lagging	-63.16	0.921	Lagging	-21.14	0.998	Lagging	-3.04	0.822	Lagging	-34.58
86	FLT107-3PH	0.982	Lagging	-9.67	0.625	Lagging	-62.44	0.926	Lagging	-20.31	0.998	Lagging	-2.86	0.836	Lagging	-32.88
87	FLT108-3PH	0.983	Lagging	-9.31	0.631	Lagging	-61.43	0.929	Lagging	-19.88	0.998	Lagging	-3.13	0.840	Lagging	-32.30
88	FLT109-3PH	0.975	Lagging	-11.29	0.610	Lagging	-64.91	0.910	Lagging	-22.79	0.996	Lagging	-4.46	0.812	Lagging	-35.88
89	FLT110-3PH	0.980	Lagging	-10.06	0.621	Lagging	-63.17	0.923	Lagging	-20.81	0.998	Lagging	-3.09	0.830	Lagging	-33.65
90	FLT111-3PH	0.975	Lagging	-11.40	0.618	Lagging	-63.68	0.920	Lagging	-21.30	0.997	Lagging	-3.87	0.828	Lagging	-33.86
91	FLT112-3PH	0.975	Lagging	-11.36	0.614	Lagging	-64.34	0.918	Lagging	-21.66	0.997	Lagging	-4.00	0.823	Lagging	-34.47
92	FLT113-3PH	0.979	Lagging	-10.54	0.618	Lagging	-63.68	0.915	Lagging	-22.05	0.998	Lagging	-3.49	0.816	Lagging	-35.37
93	FLT114-3PH	0.981	Lagging	-9.86	0.620	Lagging	-63.24	0.922	Lagging	-20.94	0.998	Lagging	-2.87	0.827	Lagging	-34.01
94	FLT115-3PH	0.981	Lagging	-9.78	0.623	Lagging	-62.82	0.924	Lagging	-20.64	0.998	Lagging	-2.82	0.830	Lagging	-33.61
95	FLT116-3PH	0.981	Lagging	-10.00	0.622	Lagging	-62.91	0.924	Lagging	-20.68	0.998	Lagging	-3.03	0.830	Lagging	-33.61
96	FLT117-3PH	0.977	Lagging	-10.82	0.618	Lagging	-63.55	0.924	Lagging	-20.74	0.998	Lagging	-3.32	0.832	Lagging	-33.31
97	FLT118-3PH	0.981	Lagging	-9.97	0.626	Lagging	-62.30	0.926	Lagging	-20.40	0.998	Lagging	-2.83	0.835	Lagging	-32.95
98	FLT119-3PH	0.975	Lagging	-11.32	0.619	Lagging	-63.41	0.908	Lagging	-23.02	0.995	Lagging	-4.76	0.814	Lagging	-35.69
99	FLT120-3PH	0.998	Lagging	-3.24	0.677	Lagging	-54.30	0.969	Lagging	-12.73	0.996	Leading	4.61	0.898	Lagging	-24.57
100	FLT121-3PH	0.981	Lagging	-9.94	0.621	Lagging	-63.06	0.923	Lagging	-20.88	0.998	Lagging	-2.98	0.828	Lagging	-33.87
101	FLT126-3PH	0.917	Lagging	-21.73	0.542	Lagging	-77.59	0.851	Lagging	-30.89	0.959	Lagging	-14.73	0.707	Lagging	-50.07
102	FLT127-3PH	0.979	Lagging	-10.40	0.619	Lagging	-63.44	0.924	Lagging	-20.64	0.998	Lagging	-2.82	0.830	Lagging	-33.61
103	FLT128-3PH	0.974	Lagging	-11.66	0.605	Lagging	-65.74	0.925	Lagging	-20.49	0.998	Lagging	-2.92	0.831	Lagging	-33.51
104	FLT129-3PH	0.981	Lagging	-9.82	0.622	Lagging	-62.95	0.924	Lagging	-20.77	0.998	Lagging	-2.93	0.827	Lagging	-33.98

Study Generator GEN-2015-040

The Power Factor Analysis shows that GEN-2015-040 has a power factor range of 0.909 lagging to 1.00 (unity) for the 2016 Winter Peak conditions, a power factor range of 0.484 to 0.823 lagging (supplying) for the 2017 Summer Peak conditions, a power factor range of 0.851 to 0.993 lagging (supplying) for the 2020 Summer Peak conditions, a power factor range of 0.957 leading (absorbing) to 0.959 lagging (supplying) for the 2020 Winter Peak conditions, and a power factor range of 0.707 to 0.977 lagging (supplying) for the 2025 Summer Peak conditions.

DRAFT

Table 5-8
Power Factor Analysis: GEN-2015-056

DRAFT

Cont. No.	Case	2016 Winter Peak			2017 Summer Peak			2020 Summer Peak			2020 Winter Peak			2025 Summer Peak		
		Power Factor		Q (MVAR)	Power Factor		Q (MVAR)	Power Factor		Q (MVAR)	Power Factor		Q (MVAR)	Power Factor		Q (MVAR)
0	Base	1.000	Lagging	-1.61	0.987	Lagging	-16.39	1.000	Leading	0.16	1.000	Lagging	-1.10	1.000	Leading	0.06
1	FLT01-3PH	1.000	Lagging	-1.58	0.987	Lagging	-16.35	1.000	Leading	0.20	1.000	Lagging	-1.06	1.000	Leading	0.07
2	FLT02-3PH	1.000	Lagging	-1.58	0.987	Lagging	-16.34	1.000	Leading	0.21	1.000	Lagging	-1.05	1.000	Leading	0.08
3	FLT03-3PH	1.000	Lagging	-1.65	0.987	Lagging	-16.47	1.000	Leading	0.14	1.000	Lagging	-1.13	1.000	Leading	0.06
4	FLT04-3PH	1.000	Leading	0.73	0.989	Lagging	-15.37	1.000	Leading	0.91	1.000	Lagging	-0.01	1.000	Leading	0.22
5	FLT05-3PH	1.000	Leading	0.72	0.991	Lagging	-13.82	1.000	Leading	1.77	1.000	Leading	1.14	1.000	Leading	0.30
6	FLT06-3PH	1.000	Lagging	-1.59	0.987	Lagging	-16.35	1.000	Leading	0.20	1.000	Lagging	-1.06	1.000	Leading	0.07
7	FLT07-3PH	1.000	Lagging	-1.58	0.987	Lagging	-16.35	1.000	Leading	0.20	1.000	Lagging	-1.06	1.000	Leading	0.07
8	FLT11-3PH	1.000	Lagging	-1.40	0.987	Lagging	-16.20	1.000	Leading	0.23	1.000	Lagging	-0.95	1.000	Leading	0.11
9	FLT12-3PH	1.000	Lagging	-1.78	0.987	Lagging	-16.68	1.000	Lagging	-0.04	1.000	Lagging	-1.25	1.000	Lagging	-0.03
10	FLT13-3PH	1.000	Lagging	-1.62	0.987	Lagging	-16.43	1.000	Leading	0.14	1.000	Lagging	-1.10	1.000	Leading	0.04
11	FLT14-3PH	1.000	Lagging	-1.73	0.987	Lagging	-16.42	1.000	Leading	0.19	1.000	Lagging	-1.15	1.000	Leading	0.08
12	FLT15-3PH	1.000	Lagging	-2.36	0.985	Lagging	-17.65	1.000	Lagging	-0.70	1.000	Lagging	-1.84	1.000	Lagging	-0.54
13	FLT16-3PH	1.000	Lagging	-1.63	0.987	Lagging	-16.43	1.000	Leading	0.13	1.000	Lagging	-1.13	1.000	Leading	0.04
14	FLT17-3PH	1.000	Lagging	-1.62	0.987	Lagging	-16.40	1.000	Leading	0.15	1.000	Lagging	-1.11	1.000	Leading	0.05
15	FLT18-3PH	1.000	Lagging	-1.62	0.987	Lagging	-16.40	1.000	Leading	0.15	1.000	Lagging	-1.11	1.000	Leading	0.05
16	FLT19-3PH	1.000	Lagging	-1.61	0.987	Lagging	-16.39	1.000	Leading	0.16	1.000	Lagging	-1.10	1.000	Leading	0.06
17	FLT20-3PH	1.000	Lagging	-1.61	0.987	Lagging	-16.39	1.000	Leading	0.16	1.000	Lagging	-1.10	1.000	Leading	0.06
18	FLT21-3PH	1.000	Lagging	-1.64	0.987	Lagging	-16.45	1.000	Leading	0.10	1.000	Lagging	-1.15	1.000	Leading	0.01
19	FLT22-3PH	1.000	Lagging	-1.67	0.987	Lagging	-16.49	1.000	Leading	0.08	1.000	Lagging	-1.16	1.000	Leading	0.01
20	FLT23-3PH	1.000	Lagging	-1.65	0.987	Lagging	-16.46	1.000	Leading	0.11	1.000	Lagging	-1.14	1.000	Leading	0.03
21	FLT24-3PH	1.000	Lagging	-1.64	0.987	Lagging	-16.44	1.000	Leading	0.11	1.000	Lagging	-1.14	1.000	Leading	0.02
22	FLT25-3PH	1.000	Lagging	-1.66	0.987	Lagging	-16.47	1.000	Leading	0.13	1.000	Lagging	-1.13	1.000	Leading	0.04
23	FLT26-3PH	1.000	Lagging	-1.62	0.987	Lagging	-16.39	1.000	Leading	0.17	1.000	Lagging	-1.10	1.000	Leading	0.06
24	FLT27-3PH	1.000	Lagging	-1.62	0.987	Lagging	-16.40	1.000	Leading	0.16	1.000	Lagging	-1.10	1.000	Leading	0.06
25	FLT28-3PH	1.000	Lagging	-1.66	0.987	Lagging	-16.51	1.000	Leading	0.08	1.000	Lagging	-1.11	1.000	Leading	0.02
26	FLT29-3PH	0.991	Lagging	-5.53	0.974	Lagging	-23.38	0.999	Lagging	-3.45	0.999	Lagging	-5.03	1.000	Lagging	-1.04
27	FLT30-3PH	1.000	Lagging	-2.01	0.986	Lagging	-16.82	1.000	Lagging	-0.07	1.000	Lagging	-1.45	1.000	Leading	0.03
28	FLT31-3PH	1.000	Lagging	-1.62	0.987	Lagging	-16.43	1.000	Leading	0.16	1.000	Lagging	-1.09	1.000	Leading	0.05
29	FLT34-3PH	0.997	Lagging	-7.52	0.979	Lagging	-21.03	0.999	Lagging	-3.35	0.998	Lagging	-5.91	1.000	Lagging	-2.42
30	FLT35-3PH	1.000	Lagging	-1.82	0.987	Lagging	-16.24	1.000	Leading	0.66	1.000	Lagging	-0.93	1.000	Leading	0.64
31	FLT36-3PH	1.000	Lagging	-1.62	0.987	Lagging	-16.27	1.000	Leading	0.06	1.000	Lagging	-1.18	1.000	Lagging	-0.05
32	FLT37-3PH	1.000	Lagging	-2.25	0.987	Lagging	-16.39	1.000	Lagging	-0.09	1.000	Lagging	-1.29	1.000	Lagging	-0.11
33	FLT38-3PH	1.000	Lagging	-1.40	0.987	Lagging	-16.15	1.000	Leading	0.11	1.000	Lagging	-1.13	1.000	Leading	0.02
34	FLT39-3PH	1.000	Lagging	-1.58	0.987	Lagging	-16.44	1.000	Leading	0.11	1.000	Lagging	-1.12	1.000	Leading	0.00
35	FLT40-3PH	1.000	Lagging	-1.89	0.987	Lagging	-16.59	1.000	Leading	0.02	1.000	Lagging	-1.38	1.000	Lagging	-0.02
36	FLT41-3PH	1.000	Lagging	-1.84	0.987	Lagging	-16.60	1.000	Leading	0.01	1.000	Lagging	-1.30	1.000	Lagging	-0.05
37	FLT43-3PH	0.988	Lagging	-16.08	0.968	Lagging	-26.29	0.995	Lagging	-9.90	0.984	Lagging	-18.13	0.998	Lagging	-7.04
38	FLT44-3PH	0.782	Lagging	-31.87	0.933	Lagging	-38.94	0.980	Lagging	-20.52	0.955	Lagging	-31.40	0.990	Lagging	-14.50
39	FLT45-3PH	0.989	Lagging	-15.10	0.965	Lagging	-27.40	0.997	Lagging	-8.38	0.994	Lagging	-11.30	0.998	Lagging	-6.28
40	FLT46-3PH	1.000	Lagging	-2.77	0.985	Lagging	-17.56	1.000	Lagging	-0.50	1.000	Lagging	-1.89	1.000	Leading	0.28
41	FLT47-3PH	0.998	Lagging	-6.28	0.987	Lagging	-16.39	0.999	Lagging	-3.40	0.997	Lagging	-7.35	1.000	Lagging	-1.27
42	FLT48-3PH	1.000	Lagging	-1.61	0.987	Lagging	-16.39	1.000	Leading	0.16	1.000	Lagging	-1.10	1.000	Leading	0.06
43	FLT49-3PH	0.842	Lagging	-64.59	0.890	Lagging	-51.83	0.958	Lagging	-30.06	0.892	Lagging	-51.26	0.980	Lagging	-20.68
44	FLT52-3PH	0.998	Lagging	-6.91	0.975	Lagging	-23.05	0.999	Lagging	-5.37	0.998	Lagging	-6.22	0.999	Lagging	-4.01
45	FLT53-3PH	0.998	Lagging	-5.67	0.978	Lagging	-21.69	0.999	Lagging	-3.49	0.999	Lagging	-4.58	1.000	Lagging	-2.62
46	FLT54-3PH	0.997	Lagging	-8.38	0.979	Lagging	-21.25	0.999	Lagging	-3.36	0.998	Lagging	-6.92	1.000	Lagging	-2.03
47	FLT55-3PH	1.000	Lagging	-1.64	0.987	Lagging	-16.44	1.000	Leading	0.08	1.000	Lagging	-1.15	1.000	Leading	0.01
48	FLT56-3PH	1.000	Lagging	-2.07	0.986	Lagging	-17.12	1.000	Lagging	-0.42	1.000	Lagging	-1.59	1.000	Lagging	-0.47
49	FLT57-3PH	0.999	Lagging	-4.05	0.981	Lagging	-19.91	1.000	Lagging	-1.91	0.999	Lagging	-3.29	1.000	Lagging	-1.37
50	FLT58-3PH	1.000	Lagging	-2.10	0.986	Lagging	-17.18	1.000	Lagging	-0.47	1.000	Lagging	-1.62	1.000	Lagging	-0.51
51	FLT59-3PH	1.000	Lagging	-1.84	0.987	Lagging	-16.76	1.000	Leading	0.15	1.000	Lagging	-1.23	1.000	Lagging	-0.15
52	FLT60-3PH	1.000	Lagging	-1.57	0.987	Lagging	-16.61	1.000	Lagging	-0.03	1.000	Lagging	-1.07	1.000	Leading	0.00
53	FLT63-3PH	1.000	Lagging	-1.77	0.987	Lagging	-16.60	1.000	Leading	0.05	1.000	Lagging	-1.18	1.000	Lagging	-0.04
54	FLT64-3PH	1.000	Lagging	-1.57	0.988	Lagging	-16.10	1.000	Leading	0.24	1.000	Lagging	-1.00	1.000	Leading	0.12
55	FLT65-3PH	1.000	Lagging	-1.73	0.987	Lagging	-16.54	1.000	Leading	0.09	1.000	Lagging	-1.14	1.000	Lagging	0.00
56	FLT66-3PH	1.000	Lagging	-1.62	0.987	Lagging	-16.35	1.000	Leading	0.04	1.000	Lagging	-1.26	1.000	Lagging	-0.21
57	FLT67-3PH	1.000	Lagging	-1.62	0.987	Lagging	-16.39	1.000	Leading	0.12	1.000	Lagging	-1.15	1.000	Lagging	-0.02
58	FLT68-3PH	1.000	Lagging	-1.71	0.987	Lagging	-16.53	1.000	Leading	0.10	1.000	Lagging	-1.13	1.000	Leading	0.01
59	FLT69-3PH	1.000	Lagging	-1.88	0.986	Lagging	-17.10	1.000	Leading	0.19	1.000	Lagging	-1.18	1.000	Leading	0.01
60	FLT70-3PH	1.000	Lagging	-1.66	0.987	Lagging	-16.50	1.000	Leading	0.04	1.000	Lagging	-1.17	1.000	Lagging	-0.06
61	FLT71-3PH	1.000	Lagging	-1.63	0.987	Lagging	-16.36	1.000	Leading	0.16	1.000	Lagging	-1.10	1.000	Leading	0.04
62	FLT72-3PH	1.000	Lagging	-1.72	0.987	Lagging	-16.72	1.000	Leading	0.01	1.000	Lagging	-1.20	1.000	Lagging	0.00
63	FLT73-3PH	1.000	Lagging	-1.61	0.987	Lagging	-16.39	1.000	Leading	0.16	1.000	Lagging	-1.10	1.000	Leading	0.06
64	FLT74-3PH	1.000	Lagging	-1.61	0.987	Lagging	-16.46	1.000	Leading	0.12	1.000	Lagging	-1.14	1.000	Leading	0.04
65	FLT75-3PH	1.000	Lagging	-3.09	0.979	Lagging	-21.02	1.000	Lagging	-1.38	1.000	Lagging	-2.82	1.000	Lagging	-0.51
66	FLT76-3PH	1.000	Lagging	-1.70	0.987	Lagging	-16.52	1.000	Leading	0.10	1.000	Lagging	-1.13	1.000	Leading	0.01
67	FLT77-3PH	1.000	Lagging	-2.51	0.981	Lagging	-19.71	1.000	Lagging	-0.89	1.000	Lagging	-2.07	1.000	Lagging	-0.27
68	FLT84-3PH	0.999	Lagging	-3.50	0.984	Lagging	-18.03	1.000	Lagging	-1.77	1.000	Lagging	-2.78	1.000	Lagging	-1.31
69	FLT85-3PH	1.000	Lagging	-1.34	0.988	Lagging	-15.77	1.000	Leading	0.32	1.000	Lagging	-0.50	1.000	Leading	0.43
70	FLT86-3PH	1.000	Lagging	-2.81	0.984	Lagging	-18.20	1.000	Lagging	-0.59	1.000	Lagging	-2.34	1.000	Lagging	-0.49
71	FLT87-3PH	1.000	Lagging	-1.05	0.987	Lagging	-16.18	1.000	Leading	0.23	1.000	Lagging	-0.69	1.000	Leading	0.20
72	FLT88-3PH	1.000	Lagging	-1.52	0.987	Lagging	-16.17	1.000	Leading	0.13	1.000	Lagging	-1.03	1.000	Leading	0.02
73	FLT92-3PH	0.998	Lagging	-5.75	0.983	Lagging	-19.07	0.996	Lagging	-8.51	0.986	Lagging	-17.36	0.996	Lagging	-9.21
74	FLT93-3PH	1.000	Lagging	-0.73	0.979	Lagging	-21.18	0.988	Lagging	-15.93	0.996	Lagging	-8.53	0.985	Lagging	-17.47
75	FLT94-3PH	0.969	Lagging	-25.55	0.949	Lagging	-33.40	0.996	Lagging	-8.74	0.972	Lagging	-24.57	1.000	Lagging	-0.50

Table 5-8 (continued)

Power Factor Analysis: GEN-2015-056

Cont. No.	Case	2016 Winter Peak			2017 Summer Peak			2020 Summer Peak			2020 Winter Peak			2025 Summer Peak		
		Power Factor		Q (MVAR)	Power Factor		Q (MVAR)	Power Factor		Q (MVAR)	Power Factor		Q (MVAR)	Power Factor		Q (MVAR)
76	FLT95-3PH	0.991	Leading	13.45	0.998	Lagging	-7.07	1.000	Lagging	-1.64	0.998	Leading	5.57	1.000	Lagging	-3.14
77	FLT96-3PH	1.000	Lagging	-1.61	0.987	Lagging	-16.39	1.000	Leading	0.14	1.000	Lagging	-1.11	1.000	Leading	0.05
78	FLT97-3PH	1.000	Lagging	-1.65	0.987	Lagging	-16.45	1.000	Leading	0.13	1.000	Lagging	-1.14	1.000	Leading	0.02
79	FLT98-3PH	1.000	Lagging	-1.61	0.987	Lagging	-16.39	1.000	Leading	0.17	1.000	Lagging	-1.09	1.000	Leading	0.06
80	FLT99-3PH	1.000	Lagging	-1.61	0.987	Lagging	-16.40	1.000	Leading	0.13	1.000	Lagging	-1.13	1.000	Leading	0.05
81	FLT100-3PH	1.000	Lagging	-1.67	0.987	Lagging	-16.46	1.000	Leading	0.14	1.000	Lagging	-1.13	1.000	Leading	0.02
82	FLT101-3PH	1.000	Lagging	-1.63	0.987	Lagging	-16.42	1.000	Leading	0.15	1.000	Lagging	-1.11	1.000	Leading	0.04
83	FLT102-3PH	1.000	Lagging	-1.64	0.987	Lagging	-16.42	1.000	Leading	0.06	1.000	Lagging	-1.20	1.000	Leading	0.02
84	FLT105-3PH	1.000	Lagging	-1.32	0.987	Lagging	-16.36	1.000	Leading	0.18	1.000	Lagging	-1.07	1.000	Leading	0.07
85	FLT106-3PH	1.000	Lagging	-0.87	0.987	Lagging	-16.33	1.000	Leading	0.15	1.000	Lagging	-1.10	1.000	Lagging	-0.03
86	FLT107-3PH	1.000	Lagging	-1.66	0.987	Lagging	-16.60	1.000	Leading	0.12	1.000	Lagging	-1.15	1.000	Leading	0.03
87	FLT108-3PH	1.000	Lagging	-0.95	0.987	Lagging	-16.18	1.000	Leading	0.13	1.000	Lagging	-1.16	1.000	Leading	0.03
88	FLT109-3PH	1.000	Lagging	-1.55	0.987	Lagging	-16.33	1.000	Leading	0.21	1.000	Lagging	-1.02	1.000	Leading	0.06
89	FLT110-3PH	1.000	Lagging	-1.67	0.987	Lagging	-16.53	1.000	Leading	0.10	1.000	Lagging	-1.16	1.000	Leading	0.03
90	FLT111-3PH	1.000	Lagging	-1.65	0.987	Lagging	-16.54	1.000	Leading	0.10	1.000	Lagging	-1.14	1.000	Leading	0.04
91	FLT112-3PH	1.000	Lagging	-1.73	0.986	Lagging	-16.83	1.000	Leading	0.00	1.000	Lagging	-1.22	1.000	Leading	0.01
92	FLT113-3PH	1.000	Lagging	-1.63	0.987	Lagging	-16.45	1.000	Leading	0.17	1.000	Lagging	-1.11	1.000	Leading	0.06
93	FLT114-3PH	1.000	Lagging	-1.61	0.987	Lagging	-16.41	1.000	Leading	0.16	1.000	Lagging	-1.10	1.000	Leading	0.05
94	FLT115-3PH	1.000	Lagging	-1.61	0.987	Lagging	-16.39	1.000	Leading	0.16	1.000	Lagging	-1.10	1.000	Leading	0.06
95	FLT116-3PH	1.000	Lagging	-1.66	0.987	Lagging	-16.49	1.000	Leading	0.12	1.000	Lagging	-1.16	1.000	Leading	0.05
96	FLT117-3PH	1.000	Lagging	-1.72	0.987	Lagging	-16.76	1.000	Lagging	0.00	1.000	Lagging	-1.24	1.000	Lagging	-0.01
97	FLT118-3PH	1.000	Lagging	-1.61	0.987	Lagging	-16.40	1.000	Leading	0.15	1.000	Lagging	-1.11	1.000	Leading	0.05
98	FLT119-3PH	1.000	Lagging	-1.62	0.987	Lagging	-16.38	1.000	Leading	0.15	1.000	Lagging	-1.10	1.000	Leading	0.05
99	FLT120-3PH	1.000	Lagging	-1.31	0.988	Lagging	-15.92	1.000	Leading	0.34	1.000	Lagging	-0.82	1.000	Leading	0.09
100	FLT121-3PH	1.000	Lagging	-1.63	0.987	Lagging	-16.41	1.000	Leading	0.14	1.000	Lagging	-1.11	1.000	Leading	0.04
101	FLT126-3PH	1.000	Lagging	-0.81	0.990	Lagging	-14.50	1.000	Leading	0.78	1.000	Lagging	-0.07	1.000	Leading	0.23
102	FLT127-3PH	1.000	Lagging	-1.58	0.987	Lagging	-16.34	1.000	Leading	0.16	1.000	Lagging	-1.10	1.000	Leading	0.06
103	FLT128-3PH	1.000	Leading	0.35	0.989	Lagging	-14.79	1.000	Leading	0.03	1.000	Lagging	-0.99	1.000	Leading	0.02
104	FLT129-3PH	1.000	Lagging	-1.62	0.987	Lagging	-16.48	1.000	Leading	0.12	1.000	Lagging	-1.15	1.000	Leading	0.03

Study Generator GEN-2015-056

The Power Factor Analysis shows that GEN-2015-056 has a power factor range of 0.991 leading (absorbing) to 0.842 lagging (supplying) for the 2016 Winter Peak conditions, a power factor range of 0.890 to 0.998 lagging (supplying) for the 2017 Summer Peak conditions, a power factor range of 0.958 lagging (supplying) to 1.00 (unity) for the 2020 Summer Peak conditions, a power factor range of 0.998 leading (absorbing) to 0.892 lagging (supplying) for the 2020 Winter Peak conditions, and a power factor range of 0.980 lagging (supplying) to 1.00 (unity) for the 2025 Summer Peak conditions.

DRAFT

Table 5-9
Power Factor Analysis: GEN-2015-058

DRAFT

Cont. No.	Case	2016 Winter Peak			2017 Summer Peak			2020 Summer Peak			2020 Winter Peak			2025 Summer Peak		
		Power Factor		Q (MVAR)	Power Factor		Q (MVAR)	Power Factor		Q (MVAR)	Power Factor		Q (MVAR)	Power Factor		Q (MVAR)
0	Base	0.997	Leading	4.19	0.994	Leading	5.47	0.990	Leading	7.12	0.998	Leading	2.89	0.990	Leading	7.28
1	FLT01-3PH	0.997	Leading	3.87	0.995	Leading	5.25	0.990	Leading	7.14	0.998	Leading	2.83	0.990	Leading	7.21
2	FLT02-3PH	0.997	Leading	3.63	0.995	Leading	4.94	0.990	Leading	6.99	0.999	Leading	2.69	0.990	Leading	7.03
3	FLT03-3PH	0.998	Leading	2.92	0.997	Leading	4.16	0.991	Leading	6.66	0.999	Leading	2.36	0.991	Leading	6.93
4	FLT04-3PH	0.988	Leading	7.79	0.993	Leading	5.94	0.988	Leading	7.65	0.997	Leading	3.60	0.987	Leading	8.23
5	FLT05-3PH	0.997	Lagging	-3.87	0.999	Lagging	-0.39	1.000	Leading	0.06	0.994	Lagging	-5.56	1.000	Leading	0.29
6	FLT06-3PH	0.997	Leading	4.04	0.994	Leading	5.50	0.989	Leading	7.33	0.998	Leading	2.96	0.989	Leading	7.44
7	FLT07-3PH	0.997	Leading	3.85	0.995	Leading	5.21	0.990	Leading	7.10	0.998	Leading	2.79	0.990	Leading	7.16
8	FLT11-3PH	0.996	Leading	4.38	0.994	Leading	5.64	0.990	Leading	7.15	0.998	Leading	2.94	0.989	Leading	7.32
9	FLT12-3PH	0.997	Leading	4.05	0.994	Leading	5.44	0.990	Leading	7.02	0.998	Leading	2.80	0.990	Leading	7.18
10	FLT13-3PH	0.997	Leading	4.19	0.994	Leading	5.46	0.990	Leading	7.12	0.998	Leading	2.89	0.990	Leading	7.28
11	FLT14-3PH	0.997	Leading	4.08	0.994	Leading	5.35	0.990	Leading	7.14	0.998	Leading	2.88	0.989	Leading	7.31
12	FLT15-3PH	0.997	Leading	3.91	0.994	Leading	5.29	0.990	Leading	6.98	0.998	Leading	2.77	0.990	Leading	7.14
13	FLT16-3PH	0.997	Leading	4.19	0.994	Leading	5.47	0.990	Leading	7.11	0.998	Leading	2.88	0.990	Leading	7.27
14	FLT17-3PH	0.997	Leading	4.16	0.994	Leading	5.45	0.990	Leading	7.12	0.998	Leading	2.88	0.990	Leading	7.28
15	FLT18-3PH	0.997	Leading	4.17	0.994	Leading	5.45	0.990	Leading	7.12	0.998	Leading	2.88	0.990	Leading	7.28
16	FLT19-3PH	0.997	Leading	4.19	0.994	Leading	5.47	0.990	Leading	7.12	0.998	Leading	2.89	0.990	Leading	7.28
17	FLT20-3PH	0.997	Leading	4.19	0.994	Leading	5.46	0.990	Leading	7.12	0.998	Leading	2.89	0.990	Leading	7.28
18	FLT21-3PH	0.997	Leading	4.19	0.994	Leading	5.47	0.990	Leading	7.11	0.998	Leading	2.88	0.990	Leading	7.27
19	FLT22-3PH	0.997	Leading	4.17	0.994	Leading	5.46	0.990	Leading	7.10	0.998	Leading	2.87	0.990	Leading	7.26
20	FLT23-3PH	0.997	Leading	4.18	0.994	Leading	5.46	0.990	Leading	7.11	0.998	Leading	2.87	0.990	Leading	7.27
21	FLT24-3PH	0.996	Leading	4.20	0.994	Leading	5.47	0.990	Leading	7.11	0.998	Leading	2.88	0.990	Leading	7.27
22	FLT25-3PH	0.997	Leading	4.12	0.994	Leading	5.38	0.990	Leading	7.10	0.998	Leading	2.86	0.990	Leading	7.25
23	FLT26-3PH	0.997	Leading	4.17	0.994	Leading	5.45	0.990	Leading	7.13	0.998	Leading	2.89	0.990	Leading	7.29
24	FLT27-3PH	0.997	Leading	4.17	0.994	Leading	5.44	0.990	Leading	7.12	0.998	Leading	2.89	0.990	Leading	7.28
25	FLT28-3PH	0.996	Leading	4.45	0.994	Leading	5.43	0.990	Leading	7.09	0.998	Leading	2.89	0.990	Leading	7.24
26	FLT29-3PH	0.995	Leading	1.57	0.999	Leading	2.14	0.996	Leading	4.55	1.000	Leading	0.13	0.995	Leading	5.21
27	FLT30-3PH	0.998	Leading	3.40	0.995	Leading	5.24	0.991	Leading	6.93	0.999	Leading	2.59	0.990	Leading	7.14
28	FLT31-3PH	0.997	Leading	4.06	0.994	Leading	5.39	0.990	Leading	7.12	0.998	Leading	2.89	0.990	Leading	7.29
29	FLT34-3PH	0.997	Leading	4.15	0.994	Leading	5.42	0.990	Leading	7.09	0.998	Leading	2.85	0.990	Leading	7.27
30	FLT35-3PH	0.997	Leading	4.19	0.994	Leading	5.47	0.990	Leading	7.13	0.998	Leading	2.89	0.990	Leading	7.29
31	FLT36-3PH	0.997	Leading	4.19	0.994	Leading	5.47	0.990	Leading	7.12	0.998	Leading	2.88	0.990	Leading	7.28
32	FLT37-3PH	0.996	Leading	4.20	0.994	Leading	5.47	0.990	Leading	7.13	0.998	Leading	2.88	0.990	Leading	7.29
33	FLT38-3PH	0.997	Leading	4.19	0.994	Leading	5.47	0.990	Leading	7.13	0.998	Leading	2.89	0.990	Leading	7.29
34	FLT39-3PH	0.997	Leading	4.19	0.994	Leading	5.47	0.990	Leading	7.12	0.998	Leading	2.89	0.990	Leading	7.28
35	FLT40-3PH	0.997	Leading	4.19	0.994	Leading	5.47	0.990	Leading	7.12	0.998	Leading	2.88	0.990	Leading	7.28
36	FLT41-3PH	0.997	Leading	4.19	0.994	Leading	5.47	0.990	Leading	7.12	0.998	Leading	2.88	0.990	Leading	7.28
37	FLT43-3PH	0.996	Leading	4.22	0.994	Leading	5.46	0.990	Leading	7.09	0.998	Leading	2.82	0.990	Leading	7.28
38	FLT44-3PH	0.996	Leading	4.23	0.994	Leading	5.44	0.990	Leading	7.02	0.998	Leading	2.77	0.990	Leading	7.26
39	FLT45-3PH	0.996	Leading	4.22	0.994	Leading	5.46	0.990	Leading	7.12	0.998	Leading	2.91	0.990	Leading	7.30
40	FLT46-3PH	0.997	Leading	4.17	0.994	Leading	5.44	0.990	Leading	7.10	0.998	Leading	2.85	0.990	Leading	7.28
41	FLT47-3PH	0.997	Leading	4.13	0.994	Leading	5.47	0.991	Leading	6.71	0.999	Leading	2.57	0.990	Leading	7.09
42	FLT48-3PH	0.997	Leading	4.19	0.994	Leading	5.47	0.990	Leading	7.12	0.998	Leading	2.89	0.990	Leading	7.28
43	FLT49-3PH	0.996	Leading	4.23	0.994	Leading	5.43	0.990	Leading	6.96	0.999	Leading	2.69	0.990	Leading	7.24
44	FLT52-3PH	0.997	Leading	4.09	0.994	Leading	5.29	0.990	Leading	7.06	0.998	Leading	2.83	0.990	Leading	7.24
45	FLT53-3PH	0.997	Leading	4.13	0.994	Leading	5.34	0.990	Leading	7.08	0.998	Leading	2.85	0.990	Leading	7.25
46	FLT54-3PH	0.997	Leading	3.97	0.994	Leading	5.34	0.990	Leading	7.02	0.999	Leading	2.73	0.990	Leading	7.20
47	FLT55-3PH	0.997	Leading	4.17	0.994	Leading	5.43	0.990	Leading	7.12	0.998	Leading	2.88	0.990	Leading	7.29
48	FLT56-3PH	0.997	Leading	4.18	0.994	Leading	5.46	0.990	Leading	7.11	0.998	Leading	2.87	0.990	Leading	7.26
49	FLT57-3PH	0.997	Leading	4.13	0.994	Leading	5.40	0.990	Leading	7.07	0.998	Leading	2.83	0.990	Leading	7.23
50	FLT58-3PH	0.997	Leading	4.18	0.994	Leading	5.46	0.990	Leading	7.11	0.998	Leading	2.87	0.990	Leading	7.26
51	FLT59-3PH	0.997	Leading	4.16	0.994	Leading	5.47	0.990	Leading	7.08	0.998	Leading	2.84	0.990	Leading	7.19
52	FLT60-3PH	0.997	Leading	4.18	0.994	Leading	5.48	0.990	Leading	7.13	0.998	Leading	2.89	0.990	Leading	7.28
53	FLT63-3PH	0.997	Leading	4.17	0.994	Leading	5.44	0.990	Leading	7.02	0.998	Leading	2.82	0.990	Leading	7.20
54	FLT64-3PH	0.996	Leading	4.21	0.994	Leading	5.51	0.990	Leading	7.15	0.998	Leading	2.90	0.990	Leading	7.29
55	FLT65-3PH	0.997	Leading	4.18	0.994	Leading	5.45	0.990	Leading	7.06	0.998	Leading	2.84	0.990	Leading	7.23
56	FLT66-3PH	0.996	Leading	4.21	0.994	Leading	5.52	0.990	Leading	7.14	0.998	Leading	2.87	0.990	Leading	7.25
57	FLT67-3PH	0.996	Leading	4.20	0.994	Leading	5.48	0.990	Leading	7.13	0.998	Leading	2.88	0.990	Leading	7.28
58	FLT68-3PH	0.997	Leading	4.17	0.994	Leading	5.44	0.990	Leading	7.07	0.998	Leading	2.85	0.990	Leading	7.23
59	FLT69-3PH	0.996	Leading	4.20	0.994	Leading	5.43	0.990	Leading	7.10	0.998	Leading	2.85	0.990	Leading	7.22
60	FLT70-3PH	0.996	Leading	4.20	0.994	Leading	5.48	0.990	Leading	7.15	0.998	Leading	2.90	0.989	Leading	7.32
61	FLT71-3PH	0.996	Leading	4.19	0.994	Leading	5.48	0.990	Leading	7.13	0.998	Leading	2.89	0.990	Leading	7.28
62	FLT72-3PH	0.997	Leading	4.19	0.994	Leading	5.44	0.990	Leading	7.09	0.998	Leading	2.87	0.990	Leading	7.27
63	FLT73-3PH	0.997	Leading	4.19	0.994	Leading	5.47	0.990	Leading	7.12	0.998	Leading	2.89	0.990	Leading	7.28
64	FLT74-3PH	0.997	Leading	4.19	0.994	Leading	5.47	0.990	Leading	7.11	0.998	Leading	2.88	0.990	Leading	7.28
65	FLT75-3PH	0.996	Leading	4.26	0.995	Leading	5.12	0.990	Leading	7.07	0.998	Leading	2.86	0.989	Leading	7.36
66	FLT76-3PH	0.997	Leading	4.17	0.994	Leading	5.45	0.990	Leading	7.07	0.998	Leading	2.85	0.990	Leading	7.23
67	FLT77-3PH	0.996	Leading	4.26	0.994	Leading	5.38	0.990	Leading	7.06	0.998	Leading	2.89	0.990	Leading	7.28
68	FLT84-3PH	0.996	Leading	4.20	0.994	Leading	5.47	0.990	Leading	7.13	0.998	Leading	2.91	0.990	Leading	7.29
69	FLT85-3PH	0.997	Leading	4.19	0.994	Leading	5.48	0.990	Leading	7.13	0.998	Leading	2.90	0.990	Leading	7.29
70	FLT86-3PH	0.997	Leading	4.11	0.994	Leading	5.40	0.990	Leading	7.07	0.998	Leading	2.80	0.990	Leading	7.23
71	FLT87-3PH	0.997	Leading	4.19	0.994	Leading	5.46	0.990	Leading	7.13	0.998	Leading	2.90	0.990	Leading	7.29
72	FLT88-3PH	0.997	Leading	4.19	0.994	Leading	5.48	0.990	Leading	7.13	0.998	Leading	2.89	0.990	Leading	7.29
73	FLT92-3PH	0.993	Leading	6.04	0.986	Leading	8.41	0.986	Leading	8.32	0.997	Leading	3.78	0.988	Leading	7.89
74	FLT93-3PH	0.997	Leading	3.90	0.994	Leading	5.48	0.991	Leading	6.76	0.998	Leading	2.76	0.992	Leading	6.32
75	FLT94-3PH	0.998	Leading	3.01	0.996	Leading	4.21	0.992	Leading	6.25	0.999	Leading	1.83	0.991	Leading	6.62

Table 5-9 (continued)

Power Factor Analysis: GEN-2015-058

Cont. No.	Case	2016 Winter Peak			2017 Summer Peak			2020 Summer Peak			2020 Winter Peak			2025 Summer Peak		
		Power Factor		Q (MVAR)	Power Factor		Q (MVAR)	Power Factor		Q (MVAR)	Power Factor		Q (MVAR)	Power Factor		Q (MVAR)
76	FLT95-3PH	0.997	Leading	3.90	0.994	Leading	5.49	0.991	Leading	6.76	0.998	Leading	2.76	0.992	Leading	6.32
77	FLT96-3PH	0.968	Leading	13.05	0.977	Leading	10.89	0.992	Leading	6.43	0.997	Leading	4.17	0.989	Leading	7.54
78	FLT97-3PH	0.953	Lagging	-15.90	0.948	Lagging	-16.73	0.993	Lagging	-5.83	0.993	Lagging	-5.73	0.970	Lagging	-12.46
79	FLT98-3PH	0.973	Leading	11.87	0.975	Leading	11.41	0.976	Leading	11.19	0.990	Leading	7.01	0.972	Leading	12.08
80	FLT99-3PH	0.979	Leading	10.44	0.987	Leading	8.17	0.998	Leading	3.27	1.000	Leading	1.06	0.996	Leading	4.32
81	FLT100-3PH	0.949	Lagging	-16.63	0.942	Lagging	-17.82	0.987	Lagging	-8.14	0.990	Lagging	-7.09	0.959	Lagging	-14.74
82	FLT101-3PH	1.000	Leading	0.04	1.000	Leading	1.34	0.997	Leading	3.60	1.000	Lagging	-0.02	1.000	Leading	1.06
83	FLT102-3PH	0.999	Leading	2.16	1.000	Leading	0.50	0.997	Lagging	-3.67	0.995	Lagging	-4.95	0.997	Lagging	-3.84
84	FLT105-3PH	0.997	Leading	4.19	0.994	Leading	5.47	0.990	Leading	7.12	0.998	Leading	2.88	0.990	Leading	7.28
85	FLT106-3PH	0.997	Leading	4.19	0.994	Leading	5.47	0.990	Leading	7.12	0.998	Leading	2.89	0.990	Leading	7.28
86	FLT107-3PH	0.997	Leading	4.19	0.994	Leading	5.46	0.990	Leading	7.12	0.998	Leading	2.88	0.990	Leading	7.28
87	FLT108-3PH	0.997	Leading	4.19	0.994	Leading	5.47	0.990	Leading	7.12	0.998	Leading	2.88	0.990	Leading	7.28
88	FLT109-3PH	0.997	Leading	4.18	0.994	Leading	5.48	0.990	Leading	7.13	0.998	Leading	2.88	0.990	Leading	7.27
89	FLT110-3PH	0.996	Leading	4.20	0.994	Leading	5.46	0.990	Leading	7.12	0.998	Leading	2.88	0.990	Leading	7.28
90	FLT111-3PH	0.997	Leading	4.19	0.994	Leading	5.46	0.990	Leading	7.12	0.998	Leading	2.88	0.990	Leading	7.28
91	FLT112-3PH	0.997	Leading	4.19	0.994	Leading	5.44	0.990	Leading	7.10	0.998	Leading	2.88	0.990	Leading	7.28
92	FLT113-3PH	0.997	Leading	4.19	0.994	Leading	5.47	0.990	Leading	7.12	0.998	Leading	2.89	0.990	Leading	7.28
93	FLT114-3PH	0.997	Leading	4.19	0.994	Leading	5.47	0.990	Leading	7.12	0.998	Leading	2.89	0.990	Leading	7.28
94	FLT115-3PH	0.997	Leading	4.19	0.994	Leading	5.47	0.990	Leading	7.12	0.998	Leading	2.89	0.990	Leading	7.28
95	FLT116-3PH	0.996	Leading	4.20	0.994	Leading	5.46	0.990	Leading	7.12	0.998	Leading	2.88	0.990	Leading	7.28
96	FLT117-3PH	0.996	Leading	4.19	0.994	Leading	5.45	0.990	Leading	7.11	0.998	Leading	2.88	0.990	Leading	7.28
97	FLT118-3PH	0.997	Leading	4.19	0.994	Leading	5.47	0.990	Leading	7.13	0.998	Leading	2.89	0.990	Leading	7.29
98	FLT119-3PH	0.997	Leading	4.19	0.994	Leading	5.47	0.990	Leading	7.12	0.998	Leading	2.89	0.990	Leading	7.28
99	FLT120-3PH	0.996	Leading	4.21	0.994	Leading	5.52	0.990	Leading	7.18	0.998	Leading	2.93	0.990	Leading	7.30
100	FLT121-3PH	0.997	Leading	4.19	0.994	Leading	5.47	0.990	Leading	7.12	0.998	Leading	2.89	0.990	Leading	7.28
101	FLT126-3PH	0.997	Leading	4.05	0.994	Leading	5.39	0.990	Leading	7.08	0.998	Leading	2.77	0.990	Leading	7.15
102	FLT127-3PH	0.997	Leading	4.03	0.995	Leading	5.25	0.990	Leading	7.12	0.998	Leading	2.89	0.990	Leading	7.28
103	FLT128-3PH	0.999	Leading	2.55	0.995	Leading	4.99	0.990	Leading	7.14	0.998	Leading	2.87	0.990	Leading	7.28
104	FLT129-3PH	0.996	Leading	4.24	0.994	Leading	5.56	0.990	Leading	7.19	0.998	Leading	2.96	0.989	Leading	7.35

Study Generator GEN-2015-058

The Power Factor Analysis shows that GEN-2015-058 has a power factor range of 0.968 leading (absorbing) to 0.949 lagging (supplying) for the 2016 Winter Peak conditions, a power factor range of 0.975 leading (absorbing) to 0.942 lagging (supplying) for the 2017 Summer Peak conditions, a power factor range of 0.976 leading (absorbing) to 0.987 lagging (supplying) for the 2020 Summer Peak conditions, a power factor range of 0.990 leading (absorbing) to 0.990 lagging (supplying) for the 2020 Winter Peak conditions, and a power factor range of 0.972 leading (absorbing) to 0.959 lagging (supplying) for the 2025 Summer Peak conditions.

DRAFT

Table 5-10
Power Factor Analysis: GEN-2015-068

DRAFT

Cont. No.	Case	2016 Winter Peak			2017 Summer Peak			2020 Summer Peak			2020 Winter Peak			2025 Summer Peak		
		Power Factor		Q (MVAR)	Power Factor		Q (MVAR)	Power Factor		Q (MVAR)	Power Factor		Q (MVAR)	Power Factor		Q (MVAR)
0	Base	0.785	Lagging	-236.50	0.872	Lagging	-168.29	0.998	Leading	19.44	0.999	Leading	13.49	1.000	Lagging	-7.10
1	FLT01-3PH	0.785	Lagging	-236.36	0.872	Lagging	-168.29	0.998	Leading	19.67	0.999	Leading	13.65	1.000	Lagging	-6.93
2	FLT02-3PH	0.785	Lagging	-236.40	0.872	Lagging	-168.35	0.998	Leading	19.76	0.999	Leading	13.67	1.000	Lagging	-6.88
3	FLT03-3PH	0.785	Lagging	-236.73	0.872	Lagging	-168.66	0.998	Leading	19.40	0.999	Leading	13.47	1.000	Lagging	-7.09
4	FLT04-3PH	0.793	Lagging	-230.29	0.874	Lagging	-167.20	0.997	Leading	21.96	0.999	Leading	15.78	1.000	Lagging	-4.16
5	FLT05-3PH	0.800	Lagging	-225.01	0.878	Lagging	-163.15	0.996	Leading	26.34	0.998	Leading	19.87	1.000	Lagging	-2.10
6	FLT06-3PH	0.785	Lagging	-236.40	0.872	Lagging	-168.24	0.998	Leading	19.68	0.999	Leading	13.66	1.000	Lagging	-6.92
7	FLT07-3PH	0.785	Lagging	-236.36	0.872	Lagging	-168.29	0.998	Leading	19.67	0.999	Leading	13.65	1.000	Lagging	-6.94
8	FLT11-3PH	0.787	Lagging	-235.28	0.873	Lagging	-167.49	0.998	Leading	19.81	0.999	Leading	13.80	1.000	Lagging	-6.71
9	FLT12-3PH	0.785	Lagging	-237.04	0.873	Lagging	-167.97	0.998	Leading	18.91	0.999	Leading	13.75	1.000	Lagging	-7.47
10	FLT13-3PH	0.785	Lagging	-236.53	0.872	Lagging	-168.67	0.998	Leading	19.21	0.999	Leading	13.47	1.000	Lagging	-7.27
11	FLT14-3PH	0.785	Lagging	-237.02	0.871	Lagging	-169.08	0.998	Leading	19.50	0.999	Leading	13.29	1.000	Lagging	-7.04
12	FLT15-3PH	0.779	Lagging	-241.84	0.863	Lagging	-175.59	0.999	Leading	14.16	1.000	Leading	9.03	0.999	Lagging	-11.19
13	FLT16-3PH	0.785	Lagging	-236.62	0.872	Lagging	-168.45	0.998	Leading	19.27	0.999	Leading	13.39	1.000	Lagging	-7.21
14	FLT17-3PH	0.785	Lagging	-236.56	0.872	Lagging	-168.35	0.998	Leading	19.36	0.999	Leading	13.44	1.000	Lagging	-7.15
15	FLT18-3PH	0.785	Lagging	-236.56	0.872	Lagging	-168.35	0.998	Leading	19.34	0.999	Leading	13.44	1.000	Lagging	-7.17
16	FLT19-3PH	0.785	Lagging	-236.50	0.872	Lagging	-168.29	0.998	Leading	19.44	0.999	Leading	13.49	1.000	Lagging	-7.10
17	FLT20-3PH	0.785	Lagging	-236.52	0.872	Lagging	-168.30	0.998	Leading	19.45	0.999	Leading	13.51	1.000	Lagging	-7.09
18	FLT21-3PH	0.785	Lagging	-236.74	0.872	Lagging	-168.72	0.998	Leading	18.94	0.999	Leading	13.20	1.000	Lagging	-7.54
19	FLT22-3PH	0.785	Lagging	-236.83	0.872	Lagging	-168.77	0.998	Leading	19.01	0.999	Leading	13.23	1.000	Lagging	-7.46
20	FLT23-3PH	0.785	Lagging	-236.72	0.872	Lagging	-168.61	0.998	Leading	19.15	0.999	Leading	13.32	1.000	Lagging	-7.33
21	FLT24-3PH	0.785	Lagging	-236.69	0.872	Lagging	-168.62	0.998	Leading	19.03	0.999	Leading	13.25	1.000	Lagging	-7.45
22	FLT25-3PH	0.785	Lagging	-236.69	0.872	Lagging	-168.49	0.998	Leading	19.46	0.999	Leading	13.50	1.000	Lagging	-7.20
23	FLT26-3PH	0.785	Lagging	-236.63	0.872	Lagging	-168.39	0.998	Leading	19.48	0.999	Leading	13.50	1.000	Lagging	-7.05
24	FLT27-3PH	0.785	Lagging	-236.60	0.872	Lagging	-168.33	0.998	Leading	19.49	0.999	Leading	13.55	1.000	Lagging	-7.06
25	FLT28-3PH	0.785	Lagging	-236.89	0.872	Lagging	-168.74	0.998	Leading	19.08	0.999	Leading	13.47	1.000	Lagging	-7.35
26	FLT29-3PH	0.773	Lagging	-246.60	0.864	Lagging	-174.85	0.999	Leading	12.32	1.000	Leading	8.49	0.999	Lagging	-10.82
27	FLT30-3PH	0.784	Lagging	-237.45	0.872	Lagging	-168.44	0.998	Leading	19.07	0.999	Leading	13.39	1.000	Lagging	-7.27
28	FLT31-3PH	0.785	Lagging	-236.63	0.872	Lagging	-168.60	0.998	Leading	19.40	0.999	Leading	13.51	1.000	Lagging	-7.14
29	FLT34-3PH	0.728	Lagging	-282.59	0.813	Lagging	-215.03	0.999	Lagging	-10.16	0.995	Lagging	-30.04	0.996	Lagging	-27.82
30	FLT35-3PH	0.784	Lagging	-237.60	0.863	Lagging	-175.43	0.998	Leading	19.60	0.999	Leading	13.95	1.000	Lagging	-6.09
31	FLT36-3PH	0.786	Lagging	-236.22	0.878	Lagging	-163.54	0.998	Leading	19.19	0.999	Leading	12.23	1.000	Lagging	-7.26
32	FLT37-3PH	0.780	Lagging	-240.63	0.880	Lagging	-161.73	0.998	Leading	19.32	1.000	Leading	3.22	1.000	Lagging	-7.30
33	FLT38-3PH	0.788	Lagging	-234.42	0.883	Lagging	-159.84	0.998	Leading	19.56	0.999	Leading	14.57	1.000	Lagging	-6.94
34	FLT39-3PH	0.786	Lagging	-236.27	0.872	Lagging	-168.66	0.998	Leading	19.16	0.999	Leading	13.26	1.000	Lagging	-7.46
35	FLT40-3PH	0.782	Lagging	-238.85	0.870	Lagging	-170.29	0.998	Leading	18.32	0.999	Leading	11.19	1.000	Lagging	-7.78
36	FLT41-3PH	0.783	Lagging	-238.34	0.869	Lagging	-170.49	0.998	Leading	18.20	0.999	Leading	11.71	1.000	Lagging	-7.98
37	FLT43-3PH	0.687	Lagging	-317.75	0.816	Lagging	-212.35	0.963	Lagging	-83.67	0.858	Lagging	-179.45	0.952	Lagging	-96.46
38	FLT44-3PH	0.533	Lagging	-476.50	0.657	Lagging	-344.58	0.777	Lagging	-242.70	0.641	Lagging	-358.71	0.806	Lagging	-220.29
39	FLT45-3PH	0.663	Lagging	-338.84	0.773	Lagging	-246.40	0.999	Lagging	-10.28	1.000	Lagging	-7.34	0.988	Lagging	-46.41
40	FLT46-3PH	0.743	Lagging	-270.43	0.856	Lagging	-181.58	0.998	Lagging	-19.55	0.999	Lagging	-15.65	1.000	Leading	1.02
41	FLT47-3PH	0.839	Lagging	-194.54	0.872	Lagging	-168.29	0.998	Lagging	-20.39	0.989	Lagging	-43.97	0.981	Lagging	-59.47
42	FLT48-3PH	0.785	Lagging	-236.50	0.872	Lagging	-168.29	0.998	Leading	19.44	0.999	Leading	13.49	1.000	Lagging	-7.10
43	FLT49-3PH	0.406	Lagging	-675.63	0.500	Lagging	-518.99	0.614	Lagging	-385.19	0.463	Lagging	-573.76	0.676	Lagging	-326.80
44	FLT52-3PH	0.739	Lagging	-273.24	0.808	Lagging	-218.65	0.998	Lagging	-16.94	0.998	Lagging	-20.53	0.994	Lagging	-33.64
45	FLT53-3PH	0.749	Lagging	-265.23	0.821	Lagging	-208.66	1.000	Lagging	-5.80	0.999	Lagging	-10.76	0.996	Lagging	-25.54
46	FLT54-3PH	0.726	Lagging	-284.18	0.822	Lagging	-207.62	1.000	Lagging	-5.43	0.996	Lagging	-27.68	0.997	Lagging	-22.91
47	FLT55-3PH	0.785	Lagging	-236.86	0.870	Lagging	-169.62	0.998	Leading	18.34	0.999	Leading	12.80	1.000	Lagging	-7.69
48	FLT56-3PH	0.782	Lagging	-239.17	0.867	Lagging	-172.41	0.999	Leading	16.09	0.999	Leading	11.17	0.999	Lagging	-9.95
49	FLT57-3PH	0.765	Lagging	-252.37	0.841	Lagging	-193.02	1.000	Leading	5.55	1.000	Lagging	-0.81	0.998	Lagging	-16.69
50	FLT58-3PH	0.782	Lagging	-239.37	0.867	Lagging	-172.78	0.999	Leading	15.84	0.999	Leading	10.99	0.999	Lagging	-10.17
51	FLT59-3PH	0.782	Lagging	-239.08	0.864	Lagging	-175.13	0.998	Leading	19.94	0.999	Leading	9.96	1.000	Lagging	-7.15
52	FLT60-3PH	0.786	Lagging	-236.14	0.872	Lagging	-168.66	0.998	Leading	18.36	0.999	Leading	13.51	1.000	Lagging	-7.41
53	FLT63-3PH	0.782	Lagging	-238.82	0.871	Lagging	-169.32	0.999	Leading	16.40	0.999	Leading	11.61	0.999	Lagging	-11.32
54	FLT64-3PH	0.783	Lagging	-238.41	0.874	Lagging	-167.10	0.998	Leading	18.45	0.999	Leading	13.17	1.000	Lagging	-7.50
55	FLT65-3PH	0.784	Lagging	-237.89	0.871	Lagging	-168.98	0.998	Leading	17.74	0.999	Leading	12.67	0.999	Lagging	-9.80
56	FLT66-3PH	0.781	Lagging	-239.58	0.869	Lagging	-171.06	0.999	Leading	15.12	1.000	Leading	8.81	0.999	Lagging	-12.35
57	FLT67-3PH	0.784	Lagging	-237.32	0.871	Lagging	-169.08	0.998	Leading	18.27	0.999	Leading	12.27	1.000	Lagging	-8.53
58	FLT68-3PH	0.784	Lagging	-237.33	0.871	Lagging	-168.86	0.998	Leading	18.15	0.999	Leading	13.08	1.000	Lagging	-9.41
59	FLT69-3PH	0.777	Lagging	-242.66	0.868	Lagging	-171.45	0.998	Leading	18.93	0.999	Leading	11.20	1.000	Lagging	-6.20
60	FLT70-3PH	0.785	Lagging	-236.86	0.871	Lagging	-168.97	0.998	Leading	18.81	0.999	Leading	13.21	1.000	Lagging	-7.30
61	FLT71-3PH	0.784	Lagging	-237.59	0.872	Lagging	-168.53	0.998	Leading	19.06	0.999	Leading	13.06	1.000	Lagging	-7.45
62	FLT72-3PH	0.784	Lagging	-237.53	0.871	Lagging	-168.97	0.998	Leading	17.85	0.999	Leading	13.06	1.000	Lagging	-8.31
63	FLT73-3PH	0.785	Lagging	-236.50	0.872	Lagging	-168.29	0.998	Leading	19.44	0.999	Leading	13.49	1.000	Lagging	-7.10
64	FLT74-3PH	0.785	Lagging	-236.50	0.872	Lagging	-168.75	0.998	Leading	18.80	0.999	Leading	12.87	1.000	Lagging	-7.62
65	FLT75-3PH	0.764	Lagging	-253.17	0.865	Lagging	-173.87	1.000	Leading	6.25	1.000	Leading	1.33	0.999	Lagging	-13.05
66	FLT76-3PH	0.784	Lagging	-237.18	0.872	Lagging	-168.81	0.998	Leading	18.20	0.999	Leading	13.14	1.000	Lagging	-9.35
67	FLT77-3PH	0.782	Lagging	-239.36	0.869	Lagging	-171.17	0.998	Leading	17.00	0.999	Leading	12.28	0.999	Lagging	-10.11
68	FLT84-3PH	0.812	Lagging	-216.01	0.896	Lagging	-148.63	0.987	Leading	48.11	0.982	Leading	57.97	0.998	Leading	17.18
69	FLT85-3PH	0.785	Lagging	-236.46	0.896	Lagging	-148.39	0.998	Leading	19.93	0.994	Leading	31.75	1.000	Lagging	-3.32
70	FLT86-3PH	0.783	Lagging	-238.54	0.877	Lagging	-164.05	0.998	Leading	17.34	1.000	Leading	6.78	1.000	Lagging	-8.52
71	FLT87-3PH	0.786	Lagging	-236.01	0.893	Lagging	-151.21	0.998	Leading	19.80	0.997	Leading	22.88	1.000	Lagging	-6.82
72	FLT88-3PH	0.785	Lagging	-236.90	0.879	Lagging	-162.98	0.998	Leading	18.50	0.999	Leading	15.78	1.000	Lagging	-7.99
73	FLT92-3PH	0.741	Lagging	-271.89	0.871	Lagging	-169.43	1.000	Lagging	-3.77	0.999	Lagging	-12.38	0.998	Lagging	-20.60
74	FLT93-3PH	0.789	Lagging	-233.92	0.865	Lagging	-173.77	0.998	Leading	19.54	0.999	Leading	13.70	0.999	Lagging	-9.72
75	FLT94-3PH	0.738	Lagging	-274.41	0.810	Lagging	-216.96	1.000	Leading	3.19	0.991	Lagging	-40.14	1.000	Lagging	-0.07

Table 5-10 (continued)

Power Factor Analysis: GEN-2015-068

Cont. No.	Case	2016 Winter Peak			2017 Summer Peak			2020 Summer Peak			2020 Winter Peak			2025 Summer Peak		
		Power Factor		Q (MVAR)	Power Factor		Q (MVAR)	Power Factor		Q (MVAR)	Power Factor		Q (MVAR)	Power Factor		Q (MVAR)
76	FLT95-3PH	0.801	Lagging	-223.88	0.877	Lagging	-164.16	0.998	Leading	19.57	0.999	Leading	13.73	0.999	Lagging	-9.69
77	FLT96-3PH	0.785	Lagging	-236.37	0.872	Lagging	-168.22	0.998	Leading	19.47	0.999	Leading	13.49	1.000	Lagging	-7.08
78	FLT97-3PH	0.785	Lagging	-236.50	0.872	Lagging	-168.51	0.998	Leading	19.82	0.999	Leading	13.76	1.000	Lagging	-6.85
79	FLT98-3PH	0.785	Lagging	-236.57	0.872	Lagging	-168.32	0.998	Leading	19.37	0.999	Leading	13.41	1.000	Lagging	-7.19
80	FLT99-3PH	0.786	Lagging	-236.36	0.872	Lagging	-168.23	0.998	Leading	19.53	0.999	Leading	13.55	1.000	Lagging	-7.03
81	FLT100-3PH	0.785	Lagging	-236.71	0.872	Lagging	-168.57	0.998	Leading	19.73	0.999	Leading	13.76	1.000	Lagging	-6.92
82	FLT101-3PH	0.785	Lagging	-236.63	0.872	Lagging	-168.45	0.998	Leading	19.44	0.999	Leading	13.49	1.000	Lagging	-7.13
83	FLT102-3PH	0.786	Lagging	-236.04	0.872	Lagging	-168.09	0.998	Leading	19.74	0.999	Leading	13.77	1.000	Lagging	-6.84
84	FLT105-3PH	0.783	Lagging	-238.68	0.876	Lagging	-164.84	0.998	Leading	19.25	0.999	Leading	16.09	1.000	Lagging	-7.25
85	FLT106-3PH	0.783	Lagging	-238.58	0.874	Lagging	-166.96	0.998	Leading	19.09	0.999	Leading	13.73	1.000	Lagging	-8.23
86	FLT107-3PH	0.785	Lagging	-237.12	0.869	Lagging	-170.56	0.998	Leading	19.18	0.999	Leading	12.99	1.000	Lagging	-7.24
87	FLT108-3PH	0.783	Lagging	-237.93	0.881	Lagging	-160.86	0.998	Leading	19.31	0.999	Leading	12.08	1.000	Lagging	-7.23
88	FLT109-3PH	0.786	Lagging	-235.74	0.871	Lagging	-169.00	0.998	Leading	19.97	0.999	Leading	13.77	1.000	Lagging	-6.74
89	FLT110-3PH	0.784	Lagging	-237.20	0.871	Lagging	-168.89	0.998	Leading	18.73	0.999	Leading	12.81	1.000	Lagging	-7.67
90	FLT111-3PH	0.784	Lagging	-237.68	0.872	Lagging	-168.04	0.998	Leading	18.89	0.999	Leading	13.33	1.000	Lagging	-7.36
91	FLT112-3PH	0.784	Lagging	-237.88	0.872	Lagging	-168.16	0.998	Leading	18.23	0.999	Leading	13.19	1.000	Lagging	-7.68
92	FLT113-3PH	0.785	Lagging	-236.93	0.872	Lagging	-168.21	0.998	Leading	19.43	0.999	Leading	13.47	1.000	Lagging	-7.16
93	FLT114-3PH	0.785	Lagging	-236.56	0.872	Lagging	-168.58	0.998	Leading	19.39	0.999	Leading	13.46	1.000	Lagging	-7.23
94	FLT115-3PH	0.785	Lagging	-236.50	0.872	Lagging	-168.29	0.998	Leading	19.44	0.999	Leading	13.49	1.000	Lagging	-7.10
95	FLT116-3PH	0.785	Lagging	-237.08	0.872	Lagging	-168.67	0.998	Leading	19.00	0.999	Leading	12.92	1.000	Lagging	-7.38
96	FLT117-3PH	0.784	Lagging	-237.86	0.871	Lagging	-168.95	0.998	Leading	18.07	0.999	Leading	12.67	1.000	Lagging	-8.04
97	FLT118-3PH	0.785	Lagging	-236.58	0.872	Lagging	-168.43	0.998	Leading	19.60	0.999	Leading	13.54	1.000	Lagging	-6.70
98	FLT119-3PH	0.785	Lagging	-236.65	0.872	Lagging	-168.37	0.998	Leading	19.47	0.999	Leading	13.52	1.000	Lagging	-7.13
99	FLT120-3PH	0.786	Lagging	-235.63	0.873	Lagging	-168.00	0.998	Leading	19.62	0.999	Leading	13.46	1.000	Lagging	-7.16
100	FLT121-3PH	0.785	Lagging	-236.68	0.872	Lagging	-168.50	0.998	Leading	19.26	0.999	Leading	13.37	1.000	Lagging	-7.27
101	FLT126-3PH	0.778	Lagging	-242.31	0.872	Lagging	-168.40	0.998	Leading	18.97	0.999	Leading	12.29	1.000	Lagging	-8.96
102	FLT127-3PH	0.785	Lagging	-237.10	0.873	Lagging	-167.91	0.998	Leading	19.44	0.999	Leading	13.49	1.000	Lagging	-7.10
103	FLT128-3PH	0.781	Lagging	-239.70	0.874	Lagging	-166.84	0.998	Leading	19.65	0.999	Leading	13.36	1.000	Lagging	-7.02
104	FLT129-3PH	0.785	Lagging	-236.64	0.872	Lagging	-168.46	0.998	Leading	19.20	0.999	Leading	13.33	1.000	Lagging	-7.37

Study Generator GEN-2015-068

The Power Factor Analysis shows that GEN-2015-068 has a power factor range of 0.406 to 0.839 lagging (supplying) for the 2016 Winter Peak conditions, a power factor range of 0.950 to 0.896 lagging (supplying) for the 2017 Summer Peak conditions, a power factor range of 0.987 leading (absorbing) to 0.614 lagging (supplying) for the 2020 Summer Peak conditions, a power factor range of 0.982 leading (absorbing) to 0.463 lagging (supplying) for the 2020 Winter Peak conditions, and a power factor range of 0.998 leading (absorbing) to 0.0.676 lagging (supplying) for the 2025 Summer Peak conditions.

DRAFT

Table 5-11
Power Factor Analysis: GEN-2015-075

DRAFT

Cont. No.	Case	2016 Winter Peak			2017 Summer Peak			2020 Summer Peak			2020 Winter Peak			2025 Summer Peak		
		Power Factor		Q (MVAR)	Power Factor		Q (MVAR)	Power Factor		Q (MVAR)	Power Factor		Q (MVAR)	Power Factor		Q (MVAR)
0	Base	0.993	Leading	6.06	0.996	Leading	4.72	0.999	Leading	1.80	0.999	Leading	2.16	0.997	Leading	3.83
1	FLT01-3PH	0.993	Leading	6.06	0.996	Leading	4.73	0.999	Leading	1.80	0.999	Leading	2.16	0.997	Leading	3.83
2	FLT02-3PH	0.993	Leading	6.06	0.996	Leading	4.73	0.999	Leading	1.80	0.999	Leading	2.16	0.997	Leading	3.83
3	FLT03-3PH	0.993	Leading	6.06	0.996	Leading	4.72	0.999	Leading	1.80	0.999	Leading	2.16	0.997	Leading	3.83
4	FLT04-3PH	0.993	Leading	6.11	0.995	Leading	4.77	0.999	Leading	1.81	0.999	Leading	2.18	0.997	Leading	3.84
5	FLT05-3PH	0.992	Leading	6.17	0.995	Leading	4.86	0.999	Leading	1.83	0.999	Leading	2.20	0.997	Leading	3.84
6	FLT06-3PH	0.993	Leading	6.06	0.996	Leading	4.73	0.999	Leading	1.80	0.999	Leading	2.16	0.997	Leading	3.83
7	FLT07-3PH	0.993	Leading	6.06	0.996	Leading	4.73	0.999	Leading	1.80	0.999	Leading	2.16	0.997	Leading	3.83
8	FLT11-3PH	0.993	Leading	6.04	0.996	Leading	4.73	0.999	Leading	1.79	0.999	Leading	2.15	0.997	Leading	3.83
9	FLT12-3PH	0.993	Leading	6.09	0.996	Leading	4.75	0.999	Leading	1.80	0.999	Leading	2.19	0.997	Leading	3.83
10	FLT13-3PH	0.993	Leading	6.06	0.996	Leading	4.72	0.999	Leading	1.80	0.999	Leading	2.16	0.997	Leading	3.83
11	FLT14-3PH	0.993	Leading	6.08	0.996	Leading	4.71	0.999	Leading	1.78	0.999	Leading	2.16	0.997	Leading	3.81
12	FLT15-3PH	0.993	Leading	6.01	0.996	Leading	4.65	0.999	Leading	1.79	0.999	Leading	2.15	0.997	Leading	3.83
13	FLT16-3PH	0.993	Leading	6.06	0.996	Leading	4.72	0.999	Leading	1.80	0.999	Leading	2.16	0.997	Leading	3.83
14	FLT17-3PH	0.993	Leading	6.06	0.996	Leading	4.72	0.999	Leading	1.80	0.999	Leading	2.16	0.997	Leading	3.83
15	FLT18-3PH	0.993	Leading	6.06	0.996	Leading	4.72	0.999	Leading	1.80	0.999	Leading	2.16	0.997	Leading	3.83
16	FLT19-3PH	0.993	Leading	6.06	0.996	Leading	4.72	0.999	Leading	1.80	0.999	Leading	2.16	0.997	Leading	3.83
17	FLT20-3PH	0.993	Leading	6.06	0.996	Leading	4.72	0.999	Leading	1.80	0.999	Leading	2.16	0.997	Leading	3.83
18	FLT21-3PH	0.993	Leading	6.06	0.996	Leading	4.72	0.999	Leading	1.80	0.999	Leading	2.16	0.997	Leading	3.83
19	FLT22-3PH	0.993	Leading	6.06	0.996	Leading	4.72	0.999	Leading	1.80	0.999	Leading	2.16	0.997	Leading	3.83
20	FLT23-3PH	0.993	Leading	6.06	0.996	Leading	4.72	0.999	Leading	1.80	0.999	Leading	2.16	0.997	Leading	3.83
21	FLT24-3PH	0.993	Leading	6.06	0.996	Leading	4.72	0.999	Leading	1.80	0.999	Leading	2.16	0.997	Leading	3.83
22	FLT25-3PH	0.993	Leading	6.06	0.996	Leading	4.72	0.999	Leading	1.80	0.999	Leading	2.16	0.997	Leading	3.83
23	FLT26-3PH	0.993	Leading	6.06	0.996	Leading	4.72	0.999	Leading	1.80	0.999	Leading	2.16	0.997	Leading	3.83
24	FLT27-3PH	0.993	Leading	6.06	0.996	Leading	4.72	0.999	Leading	1.80	0.999	Leading	2.16	0.997	Leading	3.83
25	FLT28-3PH	0.993	Leading	6.06	0.996	Leading	4.72	0.999	Leading	1.80	0.999	Leading	2.16	0.997	Leading	3.83
26	FLT29-3PH	0.993	Leading	5.95	0.996	Leading	4.45	0.999	Leading	1.74	0.999	Leading	2.12	0.997	Leading	3.82
27	FLT30-3PH	0.993	Leading	6.05	0.996	Leading	4.70	0.999	Leading	1.79	0.999	Leading	2.16	0.997	Leading	3.83
28	FLT31-3PH	0.993	Leading	6.06	0.996	Leading	4.72	0.999	Leading	1.80	0.999	Leading	2.16	0.997	Leading	3.83
29	FLT34-3PH	0.994	Leading	5.55	0.996	Leading	4.37	0.999	Leading	1.77	0.999	Leading	2.06	0.997	Leading	3.80
30	FLT35-3PH	0.993	Leading	6.01	0.996	Leading	4.55	0.999	Leading	1.75	0.999	Leading	2.16	0.997	Leading	3.78
31	FLT36-3PH	0.993	Leading	6.01	0.996	Leading	4.53	1.000	Leading	1.56	0.999	Leading	2.07	0.997	Leading	3.55
32	FLT37-3PH	0.993	Leading	5.86	0.995	Leading	4.76	0.999	Leading	1.83	0.999	Leading	2.11	0.997	Leading	3.85
33	FLT38-3PH	0.992	Leading	6.17	0.995	Leading	4.82	0.999	Leading	1.79	0.999	Leading	2.16	0.997	Leading	3.82
34	FLT39-3PH	0.993	Leading	6.06	0.996	Leading	4.73	0.999	Leading	1.80	0.999	Leading	2.16	0.997	Leading	3.83
35	FLT40-3PH	0.993	Leading	6.06	0.996	Leading	4.71	0.999	Leading	1.80	0.999	Leading	2.16	0.997	Leading	3.83
36	FLT41-3PH	0.993	Leading	6.05	0.996	Leading	4.71	0.999	Leading	1.80	0.999	Leading	2.16	0.997	Leading	3.83
37	FLT43-3PH	0.994	Leading	5.61	0.996	Leading	4.62	0.999	Leading	1.87	0.999	Leading	2.38	0.997	Leading	3.87
38	FLT44-3PH	0.996	Leading	4.46	0.997	Leading	3.89	0.999	Leading	1.92	0.999	Leading	2.48	0.997	Leading	3.91
39	FLT45-3PH	0.994	Leading	5.59	0.996	Leading	4.49	0.999	Leading	1.88	0.999	Leading	2.39	0.997	Leading	3.88
40	FLT46-3PH	0.992	Leading	6.49	0.995	Leading	4.95	0.999	Leading	1.83	0.999	Leading	2.50	0.997	Leading	3.85
41	FLT47-3PH	0.995	Leading	4.99	0.996	Leading	4.72	1.000	Leading	1.43	1.000	Leading	1.46	0.997	Leading	3.75
42	FLT48-3PH	0.993	Leading	6.06	0.996	Leading	4.72	0.999	Leading	1.80	0.999	Leading	2.16	0.997	Leading	3.83
43	FLT49-3PH	0.997	Leading	3.75	0.998	Leading	3.07	0.999	Leading	1.95	0.999	Leading	2.55	0.997	Leading	3.93
44	FLT52-3PH	0.994	Leading	5.64	0.996	Leading	4.23	0.999	Leading	1.75	0.999	Leading	2.08	0.997	Leading	3.80
45	FLT53-3PH	0.993	Leading	5.74	0.996	Leading	4.34	0.999	Leading	1.78	0.999	Leading	2.12	0.997	Leading	3.82
46	FLT54-3PH	0.994	Leading	5.42	0.996	Leading	4.31	0.999	Leading	1.75	0.999	Leading	2.01	0.997	Leading	3.80
47	FLT55-3PH	0.993	Leading	6.05	0.996	Leading	4.71	0.999	Leading	1.79	0.999	Leading	2.16	0.997	Leading	3.83
48	FLT56-3PH	0.993	Leading	6.06	0.996	Leading	4.68	0.999	Leading	1.80	0.999	Leading	2.18	0.997	Leading	3.84
49	FLT57-3PH	0.993	Leading	5.86	0.996	Leading	4.42	0.999	Leading	1.78	0.999	Leading	2.13	0.997	Leading	3.83
50	FLT58-3PH	0.993	Leading	6.06	0.996	Leading	4.68	0.999	Leading	1.81	0.999	Leading	2.18	0.997	Leading	3.84
51	FLT59-3PH	0.994	Leading	5.44	0.997	Leading	3.78	1.000	Leading	1.19	1.000	Leading	1.56	0.998	Leading	3.05
52	FLT60-3PH	0.993	Leading	6.04	0.995	Leading	4.79	0.999	Leading	1.85	0.999	Leading	2.15	0.997	Leading	3.85
53	FLT63-3PH	0.993	Leading	5.86	0.996	Leading	4.48	0.999	Leading	1.65	0.999	Leading	2.02	0.997	Leading	3.69
54	FLT64-3PH	0.993	Leading	6.15	0.995	Leading	4.88	0.999	Leading	1.87	0.999	Leading	2.28	0.997	Leading	3.93
55	FLT65-3PH	0.993	Leading	5.91	0.996	Leading	4.55	0.999	Leading	1.70	0.999	Leading	2.06	0.997	Leading	3.74
56	FLT66-3PH	0.993	Leading	6.02	0.996	Leading	4.61	0.999	Leading	1.67	0.999	Leading	2.05	0.997	Leading	3.61
57	FLT67-3PH	0.993	Leading	6.06	0.996	Leading	4.70	0.999	Leading	1.77	0.999	Leading	2.14	0.997	Leading	3.79
58	FLT68-3PH	0.993	Leading	5.91	0.996	Leading	4.56	0.999	Leading	1.71	0.999	Leading	2.07	0.997	Leading	3.74
59	FLT69-3PH	0.993	Leading	5.93	0.996	Leading	4.38	0.999	Leading	1.78	0.999	Leading	2.12	0.997	Leading	3.81
60	FLT70-3PH	0.993	Leading	6.02	0.996	Leading	4.70	0.999	Leading	1.69	0.999	Leading	2.12	0.997	Leading	3.62
61	FLT71-3PH	0.993	Leading	6.01	0.996	Leading	4.69	0.999	Leading	1.77	0.999	Leading	2.13	0.997	Leading	3.79
62	FLT72-3PH	0.993	Leading	6.10	0.996	Leading	4.55	0.999	Leading	1.65	0.999	Leading	2.19	0.997	Leading	3.67
63	FLT73-3PH	0.993	Leading	6.06	0.996	Leading	4.72	0.999	Leading	1.80	0.999	Leading	2.16	0.997	Leading	3.83
64	FLT74-3PH	0.993	Leading	6.06	0.996	Leading	4.68	0.999	Leading	1.77	0.999	Leading	2.14	0.997	Leading	3.80
65	FLT75-3PH	0.994	Leading	5.40	0.998	Leading	3.14	1.000	Leading	0.89	1.000	Leading	1.49	0.998	Leading	2.87
66	FLT76-3PH	0.993	Leading	5.92	0.996	Leading	4.57	0.999	Leading	1.71	0.999	Leading	2.07	0.997	Leading	3.75
67	FLT77-3PH	0.993	Leading	5.98	0.996	Leading	4.59	0.999	Leading	1.78	0.999	Leading	2.17	0.997	Leading	3.78
68	FLT84-3PH	0.992	Leading	6.27	0.995	Leading	4.89	0.999	Leading	1.82	0.999	Leading	2.23	0.997	Leading	3.84
69	FLT85-3PH	0.998	Leading	2.99	0.998	Leading	3.03	1.000	Leading	0.64	1.000	Leading	1.08	0.999	Leading	2.07
70	FLT86-3PH	0.993	Leading	5.76	0.996	Leading	4.47	0.999	Leading	1.71	0.999	Leading	1.99	0.997	Leading	3.78
71	FLT87-3PH	0.992	Leading	6.27	0.995	Leading	4.87	0.999	Leading	1.73	0.999	Leading	2.12	0.997	Leading	3.74
72	FLT88-3PH	0.993	Leading	5.83	0.997	Leading	4.13	1.000	Leading	1.26	0.999	Leading	1.97	0.998	Leading	3.35
73	FLT92-3PH	0.995	Leading	5.08	0.998	Leading	2.94	1.000	Leading	1.40	0.999	Leading	1.62	0.997	Leading	3.66
74	FLT93-3PH	0.993	Leading	6.11	0.996	Leading	4.69	0.999	Leading	1.82	0.999	Leading	2.18	0.997	Leading	3.86
75	FLT94-3PH	0.995	Leading	5.03	0.997	Leading	3.74	1.000	Leading	1.58	0.999	Leading	1.73	0.997	Leading	3.73

Table 5-11 (continued)

Power Factor Analysis: GEN-2015-075

Cont. No.	Case	2016 Winter Peak			2017 Summer Peak			2020 Summer Peak			2020 Winter Peak			2025 Summer Peak		
		Power Factor		Q (MVAR)	Power Factor		Q (MVAR)	Power Factor		Q (MVAR)	Power Factor		Q (MVAR)	Power Factor		Q (MVAR)
76	FLT95-3PH	0.992	Leading	6.18	0.996	Leading	4.74	0.999	Leading	1.82	0.999	Leading	2.18	0.997	Leading	3.86
77	FLT96-3PH	0.993	Leading	6.06	0.996	Leading	4.73	0.999	Leading	1.80	0.999	Leading	2.16	0.997	Leading	3.83
78	FLT97-3PH	0.993	Leading	6.06	0.996	Leading	4.73	0.999	Leading	1.80	0.999	Leading	2.17	0.997	Leading	3.83
79	FLT98-3PH	0.993	Leading	6.06	0.996	Leading	4.72	0.999	Leading	1.80	0.999	Leading	2.16	0.997	Leading	3.83
80	FLT99-3PH	0.993	Leading	6.06	0.996	Leading	4.73	0.999	Leading	1.80	0.999	Leading	2.16	0.997	Leading	3.83
81	FLT100-3PH	0.993	Leading	6.06	0.996	Leading	4.72	0.999	Leading	1.80	0.999	Leading	2.17	0.997	Leading	3.83
82	FLT101-3PH	0.993	Leading	6.06	0.996	Leading	4.72	0.999	Leading	1.80	0.999	Leading	2.16	0.997	Leading	3.83
83	FLT102-3PH	0.993	Leading	6.07	0.996	Leading	4.74	0.999	Leading	1.80	0.999	Leading	2.17	0.997	Leading	3.83
84	FLT105-3PH	0.991	Leading	6.74	0.988	Leading	7.95	0.995	Leading	4.90	0.995	Leading	4.81	0.991	Leading	6.68
85	FLT106-3PH	1.000	Lagging	-1.13	1.000	Leading	1.27	0.999	Lagging	-1.81	1.000	Lagging	-0.12	0.998	Lagging	-3.47
86	FLT107-3PH	0.990	Leading	6.99	0.995	Leading	5.05	0.999	Leading	2.71	0.999	Leading	1.96	0.992	Leading	6.24
87	FLT108-3PH	0.990	Leading	7.05	0.985	Leading	8.77	0.995	Leading	5.01	1.000	Leading	1.00	0.984	Leading	9.16
88	FLT109-3PH	0.993	Leading	5.95	0.996	Leading	4.41	1.000	Leading	1.54	0.999	Leading	2.09	0.997	Leading	3.59
89	FLT110-3PH	0.993	Leading	5.87	0.996	Leading	4.49	0.999	Leading	1.67	0.999	Leading	2.04	0.997	Leading	3.81
90	FLT111-3PH	0.992	Leading	6.30	0.995	Leading	4.87	0.999	Leading	1.86	0.999	Leading	2.28	0.997	Leading	3.83
91	FLT112-3PH	0.992	Leading	6.35	0.995	Leading	4.90	0.999	Leading	1.92	0.999	Leading	2.33	0.997	Leading	3.93
92	FLT113-3PH	0.993	Leading	6.14	0.995	Leading	4.87	0.999	Leading	1.94	0.999	Leading	2.20	0.997	Leading	4.01
93	FLT114-3PH	0.993	Leading	6.05	0.996	Leading	4.66	0.999	Leading	1.76	0.999	Leading	2.16	0.997	Leading	3.77
94	FLT115-3PH	0.993	Leading	6.06	0.996	Leading	4.72	0.999	Leading	1.80	0.999	Leading	2.16	0.997	Leading	3.83
95	FLT116-3PH	0.993	Leading	5.88	0.996	Leading	4.52	0.999	Leading	1.68	0.999	Leading	2.06	0.997	Leading	3.80
96	FLT117-3PH	0.992	Leading	6.18	0.996	Leading	4.59	0.999	Leading	1.62	0.999	Leading	2.17	0.997	Leading	3.57
97	FLT118-3PH	0.993	Leading	6.06	0.996	Leading	4.70	0.999	Leading	1.76	0.999	Leading	2.15	0.997	Leading	3.77
98	FLT119-3PH	0.993	Leading	6.05	0.996	Leading	4.71	0.999	Leading	1.81	0.999	Leading	2.16	0.997	Leading	3.84
99	FLT120-3PH	0.993	Leading	6.09	0.995	Leading	4.78	0.999	Leading	1.84	0.999	Leading	2.17	0.997	Leading	3.90
100	FLT121-3PH	0.993	Leading	6.06	0.996	Leading	4.72	0.999	Leading	1.79	0.999	Leading	2.16	0.997	Leading	3.83
101	FLT126-3PH	0.993	Leading	5.93	0.996	Leading	4.46	0.999	Leading	1.75	0.999	Leading	2.09	0.997	Leading	3.77
102	FLT127-3PH	0.993	Leading	6.07	0.996	Leading	4.74	0.999	Leading	1.80	0.999	Leading	2.16	0.997	Leading	3.83
103	FLT128-3PH	0.993	Leading	5.99	0.996	Leading	4.60	0.999	Leading	1.80	0.999	Leading	2.16	0.997	Leading	3.83
104	FLT129-3PH	0.993	Leading	6.07	0.996	Leading	4.74	0.999	Leading	1.81	0.999	Leading	2.18	0.997	Leading	3.84

Study Generator GEN-2015-075

The Power Factor Analysis shows that GEN-2015-075 has a power factor range of 0.990 leading (absorbing) to 1.00 (unity) for the 2016 Winter Peak conditions, a power factor range of 0.985 leading (absorbing) to 1.00 (unity) for the 2017 Summer Peak conditions, a power factor range of 0.995 leading (absorbing) to 0.999 lagging (supplying) for the 2020 Summer Peak conditions, a power factor range of 0.995 leading (absorbing) to 1.00 (unity) for the 2020 Winter Peak conditions, and a power factor range of 0.984 leading (absorbing) to 0.998 lagging (supplying) for the 2025 Summer Peak conditions.

DRAFT

Table 5-12
Power Factor Analysis: GEN-2015-077

DRAFT

Cont. No.	Case	2016 Winter Peak			2017 Summer Peak			2020 Summer Peak			2020 Winter Peak			2025 Summer Peak		
		Power Factor		Q (MVAR)	Power Factor		Q (MVAR)	Power Factor		Q (MVAR)	Power Factor		Q (MVAR)	Power Factor		Q (MVAR)
0	Base	0.993	Leading	9.51	1.000	Leading	1.09	0.997	Leading	6.11	0.996	Leading	7.33	0.997	Leading	6.46
1	FLT01-3PH	0.993	Leading	9.54	1.000	Leading	1.14	0.997	Leading	6.14	0.996	Leading	7.35	0.997	Leading	6.48
2	FLT02-3PH	0.993	Leading	9.55	1.000	Leading	1.15	0.997	Leading	6.14	0.996	Leading	7.36	0.997	Leading	6.48
3	FLT03-3PH	0.993	Leading	9.49	1.000	Leading	1.02	0.997	Leading	6.09	0.996	Leading	7.31	0.997	Leading	6.45
4	FLT04-3PH	0.992	Leading	10.24	1.000	Leading	1.97	0.997	Leading	6.52	0.995	Leading	7.79	0.996	Leading	6.84
5	FLT05-3PH	0.991	Leading	10.84	0.999	Leading	3.22	0.996	Leading	6.96	0.995	Leading	8.23	0.996	Leading	6.92
6	FLT06-3PH	0.993	Leading	9.54	1.000	Leading	1.14	0.997	Leading	6.13	0.996	Leading	7.35	0.997	Leading	6.47
7	FLT07-3PH	0.993	Leading	9.54	1.000	Leading	1.14	0.997	Leading	6.14	0.996	Leading	7.35	0.997	Leading	6.48
8	FLT11-3PH	0.993	Leading	9.46	1.000	Leading	1.16	0.997	Leading	6.10	0.996	Leading	7.13	0.997	Leading	6.44
9	FLT12-3PH	0.993	Leading	9.59	1.000	Leading	0.94	0.998	Leading	5.47	0.996	Leading	7.33	0.997	Leading	5.72
10	FLT13-3PH	0.993	Leading	9.51	1.000	Leading	1.07	0.997	Leading	6.05	0.996	Leading	7.32	0.997	Leading	6.38
11	FLT14-3PH	0.993	Leading	9.55	1.000	Leading	1.08	0.997	Leading	5.74	0.996	Leading	7.02	0.997	Leading	5.91
12	FLT15-3PH	0.993	Leading	9.29	1.000	Leading	0.56	0.997	Leading	5.92	0.996	Leading	7.15	0.997	Leading	6.34
13	FLT16-3PH	0.993	Leading	9.51	1.000	Leading	1.06	0.997	Leading	6.10	0.996	Leading	7.33	0.997	Leading	6.46
14	FLT17-3PH	0.993	Leading	9.51	1.000	Leading	1.08	0.997	Leading	6.11	0.996	Leading	7.33	0.997	Leading	6.46
15	FLT18-3PH	0.993	Leading	9.51	1.000	Leading	1.08	0.997	Leading	6.11	0.996	Leading	7.33	0.997	Leading	6.46
16	FLT19-3PH	0.993	Leading	9.51	1.000	Leading	1.09	0.997	Leading	6.11	0.996	Leading	7.33	0.997	Leading	6.46
17	FLT20-3PH	0.993	Leading	9.51	1.000	Leading	1.08	0.997	Leading	6.11	0.996	Leading	7.33	0.997	Leading	6.46
18	FLT21-3PH	0.993	Leading	9.51	1.000	Leading	1.06	0.997	Leading	6.10	0.996	Leading	7.32	0.997	Leading	6.45
19	FLT22-3PH	0.993	Leading	9.50	1.000	Leading	1.03	0.997	Leading	6.09	0.996	Leading	7.33	0.997	Leading	6.45
20	FLT23-3PH	0.993	Leading	9.51	1.000	Leading	1.05	0.997	Leading	6.10	0.996	Leading	7.33	0.997	Leading	6.45
21	FLT24-3PH	0.993	Leading	9.51	1.000	Leading	1.07	0.997	Leading	6.10	0.996	Leading	7.32	0.997	Leading	6.45
22	FLT25-3PH	0.993	Leading	9.50	1.000	Leading	1.03	0.997	Leading	6.09	0.996	Leading	7.32	0.997	Leading	6.45
23	FLT26-3PH	0.993	Leading	9.51	1.000	Leading	1.09	0.997	Leading	6.11	0.996	Leading	7.33	0.997	Leading	6.46
24	FLT27-3PH	0.993	Leading	9.51	1.000	Leading	1.08	0.997	Leading	6.11	0.996	Leading	7.33	0.997	Leading	6.46
25	FLT28-3PH	0.993	Leading	9.51	1.000	Leading	1.01	0.997	Leading	6.08	0.996	Leading	7.33	0.997	Leading	6.45
26	FLT29-3PH	0.995	Leading	7.64	0.999	Leading	3.70	0.998	Leading	4.50	0.997	Leading	5.88	0.997	Leading	5.73
27	FLT30-3PH	0.993	Leading	9.26	1.000	Leading	0.70	0.997	Leading	5.97	0.996	Leading	7.13	0.997	Leading	6.40
28	FLT31-3PH	0.993	Leading	9.51	1.000	Leading	1.07	0.997	Leading	6.11	0.996	Leading	7.33	0.997	Leading	6.46
29	FLT34-3PH	0.994	Leading	9.06	1.000	Leading	1.02	0.997	Leading	6.36	0.996	Leading	7.54	0.997	Leading	6.62
30	FLT35-3PH	0.993	Leading	9.45	1.000	Leading	0.76	0.997	Leading	6.01	0.996	Leading	7.31	0.997	Leading	6.35
31	FLT36-3PH	0.993	Leading	9.46	1.000	Leading	0.92	0.997	Leading	5.91	0.996	Leading	7.23	0.997	Leading	6.22
32	FLT37-3PH	0.993	Leading	9.28	1.000	Leading	1.23	0.997	Leading	6.27	0.996	Leading	7.22	0.997	Leading	6.58
33	FLT38-3PH	0.993	Leading	9.69	1.000	Leading	1.31	0.997	Leading	6.19	0.996	Leading	7.36	0.997	Leading	6.55
34	FLT39-3PH	0.993	Leading	9.52	1.000	Leading	1.11	0.997	Leading	6.12	0.996	Leading	7.34	0.997	Leading	6.47
35	FLT40-3PH	0.993	Leading	9.51	1.000	Leading	1.07	0.997	Leading	6.12	0.996	Leading	7.33	0.997	Leading	6.46
36	FLT41-3PH	0.993	Leading	9.51	1.000	Leading	1.08	0.997	Leading	6.12	0.996	Leading	7.34	0.997	Leading	6.47
37	FLT43-3PH	0.994	Leading	9.04	1.000	Leading	1.99	0.997	Leading	6.49	0.995	Leading	8.14	0.996	Leading	6.77
38	FLT44-3PH	0.996	Leading	7.22	1.000	Leading	1.51	0.996	Leading	6.73	0.994	Leading	8.56	0.996	Leading	7.02
39	FLT45-3PH	0.994	Leading	8.96	1.000	Leading	1.82	0.997	Leading	6.54	0.995	Leading	8.14	0.996	Leading	6.84
40	FLT46-3PH	0.992	Leading	10.10	1.000	Leading	1.85	0.997	Leading	6.49	0.995	Leading	8.25	0.997	Leading	6.67
41	FLT47-3PH	1.000	Leading	0.41	1.000	Leading	1.09	1.000	Leading	0.31	1.000	Lagging	-0.47	0.998	Leading	4.49
42	FLT48-3PH	0.993	Leading	9.51	1.000	Leading	1.09	0.997	Leading	6.11	0.996	Leading	7.33	0.997	Leading	6.46
43	FLT49-3PH	0.997	Leading	6.09	1.000	Leading	0.62	0.996	Leading	6.88	0.994	Leading	8.81	0.996	Leading	7.17
44	FLT52-3PH	0.994	Leading	8.82	1.000	Lagging	-0.24	0.997	Leading	5.85	0.996	Leading	7.04	0.997	Leading	6.13
45	FLT53-3PH	0.994	Leading	9.00	1.000	Leading	0.03	0.997	Leading	5.95	0.996	Leading	7.15	0.997	Leading	6.23
46	FLT54-3PH	0.995	Leading	8.25	1.000	Lagging	-0.08	0.997	Leading	5.84	0.997	Leading	6.70	0.997	Leading	6.21
47	FLT55-3PH	0.993	Leading	9.49	1.000	Leading	1.06	0.997	Leading	6.11	0.996	Leading	7.31	0.997	Leading	6.46
48	FLT56-3PH	0.993	Leading	9.26	1.000	Leading	0.31	0.997	Leading	5.82	0.996	Leading	7.13	0.997	Leading	6.32
49	FLT57-3PH	0.994	Leading	8.99	1.000	Lagging	-0.22	0.997	Leading	5.76	0.996	Leading	6.95	0.997	Leading	6.14
50	FLT58-3PH	0.993	Leading	9.24	1.000	Leading	0.23	0.997	Leading	5.79	0.996	Leading	7.11	0.997	Leading	6.31
51	FLT59-3PH	1.000	Lagging	-1.83	0.990	Lagging	-11.64	0.999	Lagging	-3.60	0.999	Lagging	-2.54	0.998	Lagging	-5.11
52	FLT60-3PH	0.993	Leading	9.38	1.000	Leading	1.24	0.997	Leading	6.35	0.996	Leading	7.24	0.997	Leading	6.57
53	FLT63-3PH	0.997	Leading	5.68	0.999	Lagging	-3.76	0.999	Leading	2.63	0.999	Leading	4.22	0.999	Leading	2.98
54	FLT64-3PH	0.991	Leading	10.92	0.998	Leading	4.52	0.996	Leading	7.41	0.993	Leading	9.45	0.994	Leading	9.14
55	FLT65-3PH	0.997	Leading	6.56	1.000	Lagging	-2.43	0.999	Leading	3.81	0.998	Leading	5.22	0.999	Leading	4.14
56	FLT66-3PH	0.996	Leading	7.44	0.999	Lagging	-2.80	1.000	Leading	1.30	1.000	Leading	2.24	1.000	Lagging	-0.76
57	FLT67-3PH	0.993	Leading	9.19	1.000	Leading	0.47	0.998	Leading	5.15	0.997	Leading	6.25	0.998	Leading	4.93
58	FLT68-3PH	0.997	Leading	6.65	1.000	Lagging	-2.21	0.999	Leading	3.99	0.998	Leading	5.36	0.999	Leading	4.32
59	FLT69-3PH	0.996	Leading	7.23	0.998	Lagging	-4.82	0.998	Leading	5.58	0.997	Leading	6.26	0.997	Leading	6.35
60	FLT70-3PH	0.996	Leading	7.11	1.000	Lagging	-0.43	1.000	Leading	1.04	0.998	Leading	4.51	1.000	Lagging	-1.72
61	FLT71-3PH	0.995	Leading	7.79	1.000	Leading	0.05	0.998	Leading	4.95	0.997	Leading	6.11	0.998	Leading	5.21
62	FLT72-3PH	0.994	Leading	9.01	0.998	Lagging	-5.44	1.000	Leading	0.17	0.997	Leading	6.41	1.000	Leading	0.83
63	FLT73-3PH	0.993	Leading	9.51	1.000	Leading	1.09	0.997	Leading	6.11	0.996	Leading	7.33	0.997	Leading	6.46
64	FLT74-3PH	0.993	Leading	9.51	1.000	Lagging	-0.12	0.998	Leading	5.15	0.997	Leading	6.41	0.998	Leading	5.60
65	FLT75-3PH	0.998	Lagging	-4.77	0.940	Lagging	-29.02	0.995	Lagging	-8.09	0.997	Lagging	-6.41	0.994	Lagging	-9.12
66	FLT76-3PH	0.996	Leading	6.86	1.000	Lagging	-1.97	0.999	Leading	4.12	0.998	Leading	5.50	0.998	Leading	4.43
67	FLT77-3PH	0.995	Leading	7.69	0.999	Lagging	-3.13	0.998	Leading	5.45	0.996	Leading	6.92	0.998	Leading	5.19
68	FLT84-3PH	0.992	Leading	9.94	1.000	Leading	1.58	0.997	Leading	6.22	0.996	Leading	7.55	0.997	Leading	6.56
69	FLT85-3PH	0.997	Leading	6.37	0.999	Lagging	-2.62	0.999	Leading	3.28	0.998	Leading	4.80	1.000	Leading	2.48
70	FLT86-3PH	0.994	Leading	8.48	1.000	Lagging	-1.01	0.998	Leading	5.35	0.997	Leading	6.18	0.997	Leading	5.87
71	FLT87-3PH	0.993	Leading	9.34	1.000	Leading	1.68	0.998	Leading	5.65	0.996	Leading	6.78	0.997	Leading	5.96
72	FLT88-3PH	0.993	Leading	9.23	1.000	Leading	0.34	0.998	Leading	5.39	0.996	Leading	7.09	0.997	Leading	5.80
73	FLT92-3PH	1.000	Lagging	-1.57	0.955	Lagging	-24.95	1.000	Lagging	-1.99	1.000	Lagging	-1.63	1.000	Leading	2.12
74	FLT93-3PH	0.992	Leading	10.05	1.000	Leading	0.97	0.997	Leading	6.67	0.996	Leading	7.55	0.996	Leading	7.39
75	FLT94-3PH	0.995	Leading	7.71	1.000	Lagging	-1.50	0.998	Leading	5.45	0.997	Leading	5.95	0.998	Leading	5.64

Table 5-12 (continued)

Power Factor Analysis: GEN-2015-077

Cont. No.	Case	2016 Winter Peak			2017 Summer Peak			2020 Summer Peak			2020 Winter Peak			2025 Summer Peak		
		Power Factor		Q (MVAR)	Power Factor		Q (MVAR)	Power Factor		Q (MVAR)	Power Factor		Q (MVAR)	Power Factor		Q (MVAR)
76	FLT95-3PH	0.992	Leading	10.17	1.000	Leading	1.06	0.997	Leading	6.67	0.996	Leading	7.54	0.996	Leading	7.39
77	FLT96-3PH	0.993	Leading	9.53	1.000	Leading	1.12	0.997	Leading	6.12	0.996	Leading	7.33	0.997	Leading	6.47
78	FLT97-3PH	0.993	Leading	9.54	1.000	Leading	1.12	0.997	Leading	6.14	0.996	Leading	7.36	0.997	Leading	6.49
79	FLT98-3PH	0.993	Leading	9.50	1.000	Leading	1.07	0.997	Leading	6.10	0.996	Leading	7.32	0.997	Leading	6.45
80	FLT99-3PH	0.993	Leading	9.54	1.000	Leading	1.13	0.997	Leading	6.12	0.996	Leading	7.34	0.997	Leading	6.47
81	FLT100-3PH	0.993	Leading	9.53	1.000	Leading	1.10	0.997	Leading	6.13	0.996	Leading	7.35	0.997	Leading	6.48
82	FLT101-3PH	0.993	Leading	9.51	1.000	Leading	1.07	0.997	Leading	6.11	0.996	Leading	7.33	0.997	Leading	6.46
83	FLT102-3PH	0.993	Leading	9.59	1.000	Leading	1.24	0.997	Leading	6.17	0.996	Leading	7.38	0.997	Leading	6.50
84	FLT105-3PH	0.999	Leading	3.14	0.997	Lagging	-5.70	1.000	Leading	0.35	1.000	Leading	1.30	1.000	Lagging	-0.74
85	FLT106-3PH	0.999	Leading	3.49	1.000	Lagging	-1.05	0.999	Leading	3.93	0.997	Leading	6.04	1.000	Leading	2.23
86	FLT107-3PH	0.992	Leading	10.08	1.000	Leading	1.81	0.996	Leading	7.02	0.996	Leading	7.33	0.994	Leading	8.47
87	FLT108-3PH	0.994	Leading	8.55	0.998	Leading	4.73	0.994	Leading	8.50	0.997	Leading	6.45	0.992	Leading	10.45
88	FLT109-3PH	0.981	Leading	15.87	0.982	Leading	15.48	0.980	Leading	16.08	0.988	Leading	12.32	0.988	Leading	12.74
89	FLT110-3PH	0.994	Leading	8.72	1.000	Leading	2.00	0.997	Leading	6.59	0.992	Leading	10.12	0.992	Leading	10.24
90	FLT111-3PH	0.982	Leading	15.47	0.999	Leading	3.02	0.996	Leading	6.89	0.992	Leading	9.99	0.997	Leading	5.74
91	FLT112-3PH	0.982	Leading	15.34	1.000	Leading	2.43	0.996	Leading	7.61	0.992	Leading	10.26	0.995	Leading	8.20
92	FLT113-3PH	0.989	Leading	11.85	0.998	Leading	4.67	0.991	Leading	10.76	0.994	Leading	8.61	0.989	Leading	11.88
93	FLT114-3PH	0.993	Leading	9.21	1.000	Lagging	-0.70	0.998	Leading	4.75	0.996	Leading	7.10	0.998	Leading	4.62
94	FLT115-3PH	0.993	Leading	9.51	1.000	Leading	1.09	0.997	Leading	6.11	0.996	Leading	7.33	0.997	Leading	6.46
95	FLT116-3PH	0.995	Leading	7.66	1.000	Lagging	-0.95	0.999	Leading	3.49	0.994	Leading	9.02	0.996	Leading	6.98
96	FLT117-3PH	0.992	Leading	10.09	0.997	Lagging	-5.76	1.000	Lagging	-1.91	0.998	Leading	4.46	1.000	Lagging	-2.51
97	FLT118-3PH	0.993	Leading	9.25	1.000	Lagging	-0.12	0.998	Leading	4.44	0.997	Leading	6.47	0.999	Leading	4.28
98	FLT119-3PH	0.993	Leading	9.60	1.000	Leading	0.84	0.997	Leading	6.63	0.996	Leading	7.52	0.996	Leading	6.83
99	FLT120-3PH	0.990	Leading	11.55	0.999	Leading	3.54	0.995	Leading	8.07	0.994	Leading	8.99	0.994	Leading	8.90
100	FLT121-3PH	0.993	Leading	9.42	1.000	Leading	0.92	0.997	Leading	5.98	0.996	Leading	7.24	0.997	Leading	6.32
101	FLT126-3PH	0.996	Leading	7.27	0.999	Lagging	-3.31	0.998	Leading	5.15	0.997	Leading	6.16	0.998	Leading	4.94
102	FLT127-3PH	0.993	Leading	9.59	1.000	Leading	1.24	0.997	Leading	6.11	0.996	Leading	7.33	0.997	Leading	6.46
103	FLT128-3PH	0.994	Leading	8.58	1.000	Lagging	-0.94	0.997	Leading	6.16	0.996	Leading	7.29	0.997	Leading	6.49
104	FLT129-3PH	0.993	Leading	9.71	1.000	Leading	1.32	0.997	Leading	6.33	0.995	Leading	7.62	0.997	Leading	6.71

Study Generator GEN-2015-077

The Power Factor Analysis shows that GEN-2015-077 has a power factor range of 0.981 leading (absorbing) to 0.998 lagging (supplying) for the 2016 Winter Peak conditions, a power factor range of 0.982 leading (absorbing) to 0.940 lagging (supplying) for the 2017 Summer Peak conditions, a power factor range of 0.980 leading (absorbing) to 0.995 lagging (supplying) for the 2020 Summer Peak conditions, a power factor range of 0.988 leading (absorbing) to 0.997 lagging (supplying) for the 2020 Winter Peak conditions, and a power factor range of 0.988 leading (absorbing) to 0.994 lagging (supplying) for the 2025 Summer Peak conditions.

DRAFT

Table 5-13
Power Factor Analysis: GEN-2015-078

DRAFT

Cont. No.	Case	2016 Winter Peak			2017 Summer Peak			2020 Summer Peak			2020 Winter Peak			2025 Summer Peak		
		Power Factor		Q (MVAR)	Power Factor		Q (MVAR)	Power Factor		Q (MVAR)	Power Factor		Q (MVAR)	Power Factor		Q (MVAR)
0	Base	1.000	Lagging	-0.78	0.998	Lagging	-3.41	0.893	Leading	25.21	0.965	Leading	13.64	0.971	Leading	12.32
1	FLT01-3PH	1.000	Lagging	-0.76	0.998	Lagging	-3.33	0.893	Leading	25.23	0.965	Leading	13.64	0.971	Leading	12.32
2	FLT02-3PH	1.000	Lagging	-0.75	0.998	Lagging	-3.32	0.893	Leading	25.23	0.965	Leading	13.64	0.971	Leading	12.32
3	FLT03-3PH	1.000	Lagging	-0.80	0.998	Lagging	-3.48	0.893	Leading	25.20	0.965	Leading	13.63	0.971	Leading	12.32
4	FLT04-3PH	1.000	Lagging	-0.19	0.999	Lagging	-2.30	0.891	Leading	25.44	0.965	Leading	13.66	0.971	Leading	12.30
5	FLT05-3PH	1.000	Leading	0.27	1.000	Lagging	-0.82	0.890	Leading	25.67	0.965	Leading	13.65	0.971	Leading	12.29
6	FLT06-3PH	1.000	Lagging	-0.76	0.998	Lagging	-3.34	0.893	Leading	25.23	0.965	Leading	13.64	0.971	Leading	12.32
7	FLT07-3PH	1.000	Lagging	-0.75	0.998	Lagging	-3.33	0.893	Leading	25.23	0.965	Leading	13.64	0.971	Leading	12.32
8	FLT11-3PH	1.000	Lagging	-0.78	0.998	Lagging	-3.30	0.893	Leading	25.21	0.965	Leading	13.55	0.971	Leading	12.29
9	FLT12-3PH	1.000	Lagging	-0.74	0.997	Lagging	-3.66	0.893	Leading	25.17	0.964	Leading	13.73	0.971	Leading	12.30
10	FLT13-3PH	1.000	Lagging	-0.78	0.998	Lagging	-3.42	0.893	Leading	25.20	0.965	Leading	13.63	0.971	Leading	12.31
11	FLT14-3PH	1.000	Lagging	-0.77	0.998	Lagging	-3.39	0.893	Leading	25.19	0.965	Leading	13.59	0.971	Leading	12.28
12	FLT15-3PH	1.000	Lagging	-1.05	0.997	Lagging	-3.93	0.894	Leading	25.12	0.965	Leading	13.59	0.971	Leading	12.28
13	FLT16-3PH	1.000	Lagging	-0.78	0.998	Lagging	-3.43	0.893	Leading	25.21	0.965	Leading	13.64	0.971	Leading	12.32
14	FLT17-3PH	1.000	Lagging	-0.78	0.998	Lagging	-3.41	0.893	Leading	25.21	0.965	Leading	13.64	0.971	Leading	12.32
15	FLT18-3PH	1.000	Lagging	-0.78	0.998	Lagging	-3.41	0.893	Leading	25.21	0.965	Leading	13.64	0.971	Leading	12.32
16	FLT19-3PH	1.000	Lagging	-0.78	0.998	Lagging	-3.41	0.893	Leading	25.21	0.965	Leading	13.64	0.971	Leading	12.32
17	FLT20-3PH	1.000	Lagging	-0.78	0.998	Lagging	-3.41	0.893	Leading	25.21	0.965	Leading	13.64	0.971	Leading	12.32
18	FLT21-3PH	1.000	Lagging	-0.79	0.998	Lagging	-3.43	0.893	Leading	25.21	0.965	Leading	13.63	0.971	Leading	12.31
19	FLT22-3PH	1.000	Lagging	-0.79	0.998	Lagging	-3.47	0.893	Leading	25.21	0.965	Leading	13.64	0.971	Leading	12.32
20	FLT23-3PH	1.000	Lagging	-0.79	0.998	Lagging	-3.45	0.893	Leading	25.21	0.965	Leading	13.64	0.971	Leading	12.32
21	FLT24-3PH	1.000	Lagging	-0.79	0.998	Lagging	-3.43	0.893	Leading	25.21	0.965	Leading	13.63	0.971	Leading	12.32
22	FLT25-3PH	1.000	Lagging	-0.80	0.998	Lagging	-3.47	0.893	Leading	25.20	0.965	Leading	13.64	0.971	Leading	12.32
23	FLT26-3PH	1.000	Lagging	-0.78	0.998	Lagging	-3.40	0.893	Leading	25.21	0.965	Leading	13.64	0.971	Leading	12.32
24	FLT27-3PH	1.000	Lagging	-0.78	0.998	Lagging	-3.41	0.893	Leading	25.21	0.965	Leading	13.64	0.971	Leading	12.32
25	FLT28-3PH	1.000	Lagging	-0.79	0.998	Lagging	-3.49	0.893	Leading	25.20	0.965	Leading	13.64	0.971	Leading	12.32
26	FLT29-3PH	0.999	Lagging	-2.46	0.981	Lagging	-9.78	0.900	Leading	24.21	0.966	Leading	13.39	0.972	Leading	12.18
27	FLT30-3PH	1.000	Lagging	-0.97	0.997	Lagging	-3.90	0.894	Leading	25.13	0.965	Leading	13.61	0.971	Leading	12.31
28	FLT31-3PH	1.000	Lagging	-0.78	0.998	Lagging	-3.42	0.893	Leading	25.21	0.965	Leading	13.64	0.971	Leading	12.32
29	FLT34-3PH	0.999	Lagging	-1.92	0.998	Lagging	-3.34	0.892	Leading	25.27	0.965	Leading	13.60	0.971	Leading	12.32
30	FLT35-3PH	1.000	Lagging	-0.87	0.997	Lagging	-3.67	0.893	Leading	25.18	0.965	Leading	13.63	0.971	Leading	12.30
31	FLT36-3PH	1.000	Lagging	-0.81	0.998	Lagging	-3.53	0.893	Leading	25.16	0.965	Leading	13.60	0.971	Leading	12.25
32	FLT37-3PH	1.000	Lagging	-1.15	0.998	Lagging	-3.29	0.892	Leading	25.28	0.965	Leading	13.60	0.971	Leading	12.36
33	FLT38-3PH	1.000	Lagging	-0.53	0.998	Lagging	-3.24	0.893	Leading	25.25	0.965	Leading	13.65	0.971	Leading	12.35
34	FLT39-3PH	1.000	Lagging	-0.77	0.998	Lagging	-3.39	0.893	Leading	25.22	0.965	Leading	13.64	0.971	Leading	12.32
35	FLT40-3PH	1.000	Lagging	-0.81	0.998	Lagging	-3.41	0.893	Leading	25.21	0.965	Leading	13.63	0.971	Leading	12.31
36	FLT41-3PH	1.000	Lagging	-0.81	0.998	Lagging	-3.40	0.893	Leading	25.22	0.965	Leading	13.64	0.971	Leading	12.32
37	FLT43-3PH	1.000	Lagging	-1.57	0.999	Lagging	-2.61	0.891	Leading	25.52	0.962	Leading	14.15	0.970	Leading	12.51
38	FLT44-3PH	0.995	Lagging	-4.86	0.998	Lagging	-2.92	0.889	Leading	25.75	0.961	Leading	14.45	0.969	Leading	12.69
39	FLT45-3PH	0.999	Lagging	-1.84	0.998	Lagging	-2.74	0.891	Leading	25.54	0.962	Leading	14.11	0.970	Leading	12.55
40	FLT46-3PH	1.000	Lagging	-1.29	0.998	Lagging	-2.75	0.893	Leading	25.22	0.965	Leading	13.63	0.971	Leading	12.27
41	FLT47-3PH	1.000	Lagging	-0.90	0.998	Lagging	-3.41	0.902	Leading	23.94	0.963	Leading	14.08	0.975	Leading	11.35
42	FLT48-3PH	1.000	Lagging	-0.78	0.998	Lagging	-3.41	0.893	Leading	25.21	0.965	Leading	13.64	0.971	Leading	12.32
43	FLT49-3PH	0.996	Lagging	-4.62	0.997	Lagging	-3.58	0.888	Leading	25.90	0.960	Leading	14.66	0.969	Leading	12.81
44	FLT52-3PH	0.999	Lagging	-2.32	0.996	Lagging	-4.30	0.894	Leading	25.04	0.966	Leading	13.42	0.972	Leading	12.12
45	FLT53-3PH	0.999	Lagging	-1.97	0.997	Lagging	-4.12	0.894	Leading	25.09	0.966	Leading	13.48	0.972	Leading	12.17
46	FLT54-3PH	0.998	Lagging	-2.95	0.996	Lagging	-4.23	0.894	Leading	25.06	0.966	Leading	13.30	0.972	Leading	12.18
47	FLT55-3PH	1.000	Lagging	-0.80	0.998	Lagging	-3.42	0.893	Leading	25.21	0.965	Leading	13.63	0.971	Leading	12.31
48	FLT56-3PH	1.000	Lagging	-0.90	0.997	Lagging	-4.14	0.893	Leading	25.18	0.965	Leading	13.69	0.971	Leading	12.35
49	FLT57-3PH	0.999	Lagging	-1.75	0.996	Lagging	-4.39	0.894	Leading	25.04	0.966	Leading	13.47	0.972	Leading	12.18
50	FLT58-3PH	1.000	Lagging	-0.92	0.996	Lagging	-4.22	0.893	Leading	25.18	0.964	Leading	13.69	0.971	Leading	12.35
51	FLT59-3PH	0.985	Lagging	-8.70	0.959	Lagging	-14.84	0.908	Leading	23.13	0.974	Leading	11.73	0.981	Leading	9.99
52	FLT60-3PH	1.000	Lagging	-0.85	0.998	Lagging	-3.34	0.892	Leading	25.29	0.965	Leading	13.61	0.971	Leading	12.35
53	FLT63-3PH	0.998	Lagging	-3.21	0.989	Lagging	-7.31	0.899	Leading	24.30	0.962	Leading	14.10	0.980	Leading	10.23
54	FLT64-3PH	0.998	Lagging	-2.80	0.967	Leading	13.12	0.981	Leading	9.98	0.979	Leading	10.47	0.947	Leading	16.93
55	FLT65-3PH	0.998	Lagging	-3.31	0.991	Lagging	-6.57	0.894	Leading	25.13	0.959	Leading	14.68	0.976	Leading	11.20
56	FLT66-3PH	0.772	Lagging	-41.14	0.583	Lagging	-69.71	0.741	Lagging	-45.36	0.649	Lagging	-58.66	0.534	Lagging	-79.18
57	FLT67-3PH	0.984	Lagging	-9.13	0.957	Lagging	-15.24	0.983	Leading	9.20	0.998	Lagging	-3.40	0.984	Lagging	-9.16
58	FLT68-3PH	0.998	Lagging	-3.05	0.993	Lagging	-5.93	0.891	Leading	25.49	0.957	Leading	15.07	0.974	Leading	11.52
59	FLT69-3PH	0.990	Lagging	-7.26	0.954	Lagging	-15.65	0.903	Leading	23.75	0.973	Leading	11.93	0.977	Leading	10.89
60	FLT70-3PH	0.991	Lagging	-6.60	0.974	Lagging	-11.67	0.979	Leading	10.45	0.994	Leading	5.36	0.983	Lagging	-9.25
61	FLT71-3PH	1.000	Leading	0.02	0.997	Lagging	-3.70	0.886	Leading	26.13	0.957	Leading	15.09	0.968	Leading	12.87
62	FLT72-3PH	0.986	Lagging	-8.33	0.995	Lagging	-5.01	0.893	Leading	25.20	0.989	Leading	7.55	0.976	Leading	11.04
63	FLT73-3PH	1.000	Lagging	-0.78	0.998	Lagging	-3.41	0.893	Leading	25.21	0.965	Leading	13.64	0.971	Leading	12.32
64	FLT74-3PH	1.000	Lagging	-0.78	0.999	Lagging	-2.65	0.887	Leading	26.04	0.956	Leading	15.26	0.973	Leading	11.79
65	FLT75-3PH	0.999	Lagging	-2.16	0.976	Lagging	-11.20	0.879	Leading	27.08	0.952	Leading	16.15	0.958	Leading	14.96
66	FLT76-3PH	0.999	Lagging	-2.65	0.994	Lagging	-5.44	0.891	Leading	25.48	0.957	Leading	15.07	0.974	Leading	11.52
67	FLT77-3PH	0.991	Lagging	-6.60	0.908	Lagging	-23.07	0.921	Leading	21.18	0.975	Leading	11.45	0.984	Leading	8.97
68	FLT84-3PH	1.000	Lagging	-0.01	0.998	Lagging	-3.01	0.892	Leading	25.29	0.964	Leading	13.76	0.971	Leading	12.37
69	FLT85-3PH	0.999	Lagging	-2.32	0.992	Lagging	-6.31	0.898	Leading	24.56	0.967	Leading	13.09	0.975	Leading	11.47
70	FLT86-3PH	0.999	Lagging	-1.96	0.995	Lagging	-5.11	0.895	Leading	24.94	0.966	Leading	13.32	0.972	Leading	12.14
71	FLT87-3PH	1.000	Lagging	-0.51	0.998	Lagging	-2.91	0.893	Leading	25.15	0.965	Leading	13.65	0.971	Leading	12.29
72	FLT88-3PH	1.000	Lagging	-0.85	0.997	Lagging	-3.98	0.894	Leading	25.06	0.965	Leading	13.61	0.971	Leading	12.23
73	FLT92-3PH	0.964	Lagging	-13.84	0.784	Lagging	-39.56	0.933	Leading	19.21	0.981	Leading	9.94	0.980	Leading	10.28
74	FLT93-3PH	1.000	Lagging	-0.31	0.998	Lagging	-3.51	0.891	Leading	25.52	0.965	Leading	13.67	0.971	Leading	12.32
75	FLT94-3PH	0.996	Lagging	-4.69	0.996	Lagging	-4.35	0.895	Leading	24.93	0.970	Leading	12.60	0.974	Leading	11.71

Table 5-13 (continued)

Power Factor Analysis: GEN-2015-078

Cont. No.	Case	2016 Winter Peak			2017 Summer Peak			2020 Summer Peak			2020 Winter Peak			2025 Summer Peak		
		Power Factor		Q (MVAR)	Power Factor		Q (MVAR)	Power Factor		Q (MVAR)	Power Factor		Q (MVAR)	Power Factor		Q (MVAR)
76	FLT95-3PH	1.000	Lagging	-0.09	0.998	Lagging	-3.45	0.891	Leading	25.52	0.965	Leading	13.67	0.971	Leading	12.32
77	FLT96-3PH	1.000	Lagging	-0.76	0.998	Lagging	-3.37	0.893	Leading	25.22	0.965	Leading	13.64	0.971	Leading	12.32
78	FLT97-3PH	1.000	Lagging	-0.76	0.998	Lagging	-3.36	0.893	Leading	25.24	0.965	Leading	13.65	0.971	Leading	12.35
79	FLT98-3PH	1.000	Lagging	-0.79	0.998	Lagging	-3.43	0.893	Leading	25.21	0.965	Leading	13.63	0.971	Leading	12.31
80	FLT99-3PH	1.000	Lagging	-0.76	0.998	Lagging	-3.35	0.893	Leading	25.22	0.965	Leading	13.64	0.971	Leading	12.32
81	FLT100-3PH	1.000	Lagging	-0.77	0.998	Lagging	-3.39	0.893	Leading	25.23	0.965	Leading	13.65	0.971	Leading	12.35
82	FLT101-3PH	1.000	Lagging	-0.78	0.998	Lagging	-3.42	0.893	Leading	25.22	0.965	Leading	13.64	0.971	Leading	12.32
83	FLT102-3PH	1.000	Lagging	-0.71	0.998	Lagging	-3.22	0.893	Leading	25.24	0.965	Leading	13.64	0.971	Leading	12.31
84	FLT105-3PH	0.995	Lagging	-5.02	0.987	Lagging	-8.08	0.902	Leading	23.87	0.974	Leading	11.54	0.980	Leading	10.13
85	FLT106-3PH	0.997	Lagging	-4.19	0.995	Lagging	-4.79	0.898	Leading	24.54	0.967	Leading	13.25	0.977	Leading	10.99
86	FLT107-3PH	1.000	Lagging	-0.53	0.998	Lagging	-2.82	0.891	Leading	25.45	0.965	Leading	13.53	0.968	Leading	12.92
87	FLT108-3PH	1.000	Lagging	-1.15	1.000	Lagging	-0.82	0.888	Leading	25.95	0.967	Leading	13.23	0.965	Leading	13.56
88	FLT109-3PH	0.994	Lagging	-5.34	0.971	Lagging	-12.30	0.946	Leading	17.14	0.984	Leading	9.03	0.992	Leading	6.27
89	FLT110-3PH	0.999	Lagging	-2.26	0.997	Lagging	-3.96	0.900	Leading	24.16	0.973	Leading	11.95	0.977	Leading	11.02
90	FLT111-3PH	0.999	Lagging	-1.68	0.994	Lagging	-5.30	0.901	Leading	24.06	0.971	Leading	12.28	0.974	Leading	11.72
91	FLT112-3PH	0.981	Lagging	-9.87	0.984	Lagging	-8.94	0.936	Leading	18.75	0.992	Leading	6.21	0.993	Leading	5.74
92	FLT113-3PH	0.996	Lagging	-4.26	0.989	Lagging	-7.62	0.942	Leading	17.78	0.979	Leading	10.45	0.997	Leading	3.80
93	FLT114-3PH	1.000	Lagging	-0.96	0.996	Lagging	-4.60	0.896	Leading	24.74	0.965	Leading	13.56	0.974	Leading	11.68
94	FLT115-3PH	1.000	Lagging	-0.78	0.998	Lagging	-3.41	0.893	Leading	25.21	0.965	Leading	13.64	0.971	Leading	12.32
95	FLT116-3PH	0.999	Lagging	-2.28	0.996	Lagging	-4.22	0.896	Leading	24.83	0.971	Leading	12.28	0.974	Leading	11.74
96	FLT117-3PH	0.995	Lagging	-5.15	0.995	Lagging	-4.83	0.880	Leading	27.05	0.970	Leading	12.55	0.957	Leading	15.23
97	FLT118-3PH	1.000	Lagging	-1.06	0.988	Lagging	-7.94	0.942	Leading	17.75	0.979	Leading	10.29	0.999	Leading	2.33
98	FLT119-3PH	1.000	Leading	1.42	0.998	Lagging	-3.35	0.855	Leading	30.39	0.947	Leading	16.92	0.952	Leading	16.00
99	FLT120-3PH	0.895	Leading	24.91	0.899	Leading	24.31	0.687	Leading	52.93	0.764	Leading	42.29	0.756	Leading	43.26
100	FLT121-3PH	1.000	Lagging	-1.43	0.996	Lagging	-4.44	0.900	Leading	24.16	0.968	Leading	12.93	0.976	Leading	11.12
101	FLT126-3PH	0.987	Lagging	-8.12	0.958	Lagging	-15.05	0.894	Leading	25.06	0.969	Leading	12.69	0.979	Leading	10.45
102	FLT127-3PH	0.999	Lagging	-1.77	0.997	Lagging	-3.90	0.893	Leading	25.21	0.965	Leading	13.64	0.971	Leading	12.32
103	FLT128-3PH	1.000	Lagging	-1.49	0.993	Lagging	-5.93	0.893	Leading	25.19	0.965	Leading	13.65	0.971	Leading	12.30
104	FLT129-3PH	1.000	Lagging	-0.50	0.998	Lagging	-3.05	0.889	Leading	25.69	0.963	Leading	13.98	0.969	Leading	12.70

Study Generator GEN-2015-078

The Power Factor Analysis shows that GEN-2015-078 has a power factor range of 0.895 leading (absorbing) to 0.772 lagging (supplying) for the 2016 Winter Peak conditions, a power factor range of 0.899 leading (absorbing) to 0.583 lagging (supplying) for the 2017 Summer Peak conditions, a power factor range of 0.687 leading (absorbing) to 0.741 lagging (supplying) for the 2020 Summer Peak conditions, a power factor range of 0.764 leading (absorbing) to 0.649 lagging (supplying) for the 2020 Winter Peak conditions, and a power factor range of 0.756 leading (absorbing) to 0.534 lagging (supplying) for the 2025 Summer Peak conditions.

DRAFT

Table 5-14
Power Factor Analysis: GEN-2015-079

DRAFT

Cont. No.	Case	2016 Winter Peak			2017 Summer Peak			2020 Summer Peak			2020 Winter Peak			2025 Summer Peak		
		Power Factor		Q (MVAR)	Power Factor		Q (MVAR)	Power Factor		Q (MVAR)	Power Factor		Q (MVAR)	Power Factor		Q (MVAR)
0	Base	0.997	Leading	9.78	1.000	Leading	0.36	0.993	Leading	15.70	0.994	Leading	13.70	0.990	Leading	18.08
1	FLT01-3PH	0.997	Leading	9.78	1.000	Leading	0.39	0.993	Leading	15.71	0.994	Leading	13.71	0.990	Leading	18.08
2	FLT02-3PH	0.997	Leading	9.78	1.000	Leading	0.39	0.993	Leading	15.71	0.994	Leading	13.71	0.990	Leading	18.08
3	FLT03-3PH	0.997	Leading	9.77	1.000	Leading	0.34	0.993	Leading	15.69	0.994	Leading	13.70	0.990	Leading	18.08
4	FLT04-3PH	0.997	Leading	10.01	1.000	Leading	0.75	0.993	Leading	15.85	0.994	Leading	13.79	0.990	Leading	18.08
5	FLT05-3PH	0.997	Leading	10.19	1.000	Lagging	1.27	0.992	Leading	15.99	0.994	Leading	13.84	0.990	Leading	18.07
6	FLT06-3PH	0.997	Leading	9.78	1.000	Leading	0.38	0.993	Leading	15.71	0.994	Leading	13.71	0.990	Leading	18.08
7	FLT07-3PH	0.997	Leading	9.78	1.000	Leading	0.39	0.993	Leading	15.71	0.994	Leading	13.71	0.990	Leading	18.08
8	FLT11-3PH	0.997	Leading	9.80	1.000	Leading	0.40	0.993	Leading	15.71	0.994	Leading	13.71	0.990	Leading	18.09
9	FLT12-3PH	0.997	Leading	9.76	1.000	Leading	0.25	0.993	Leading	15.63	0.994	Leading	13.68	0.990	Leading	18.04
10	FLT13-3PH	0.997	Leading	9.77	1.000	Leading	0.36	0.993	Leading	15.70	0.994	Leading	13.70	0.990	Leading	18.08
11	FLT14-3PH	0.997	Leading	9.76	1.000	Leading	0.37	0.993	Leading	15.69	0.994	Leading	13.69	0.990	Leading	18.06
12	FLT15-3PH	0.997	Leading	9.65	1.000	Leading	0.19	0.993	Leading	15.63	0.994	Leading	13.66	0.990	Leading	18.05
13	FLT16-3PH	0.997	Leading	9.77	1.000	Leading	0.35	0.993	Leading	15.70	0.994	Leading	13.70	0.990	Leading	18.08
14	FLT17-3PH	0.997	Leading	9.77	1.000	Leading	0.36	0.993	Leading	15.70	0.994	Leading	13.70	0.990	Leading	18.08
15	FLT18-3PH	0.997	Leading	9.77	1.000	Leading	0.36	0.993	Leading	15.70	0.994	Leading	13.70	0.990	Leading	18.08
16	FLT19-3PH	0.997	Leading	9.78	1.000	Leading	0.36	0.993	Leading	15.70	0.994	Leading	13.70	0.990	Leading	18.08
17	FLT20-3PH	0.997	Leading	9.77	1.000	Leading	0.36	0.993	Leading	15.70	0.994	Leading	13.70	0.990	Leading	18.08
18	FLT21-3PH	0.997	Leading	9.77	1.000	Leading	0.35	0.993	Leading	15.70	0.994	Leading	13.70	0.990	Leading	18.08
19	FLT22-3PH	0.997	Leading	9.77	1.000	Leading	0.34	0.993	Leading	15.69	0.994	Leading	13.70	0.990	Leading	18.08
20	FLT23-3PH	0.997	Leading	9.77	1.000	Leading	0.34	0.993	Leading	15.69	0.994	Leading	13.70	0.990	Leading	18.08
21	FLT24-3PH	0.997	Leading	9.77	1.000	Leading	0.35	0.993	Leading	15.70	0.994	Leading	13.70	0.990	Leading	18.08
22	FLT25-3PH	0.997	Leading	9.77	1.000	Leading	0.34	0.993	Leading	15.69	0.994	Leading	13.70	0.990	Leading	18.08
23	FLT26-3PH	0.997	Leading	9.77	1.000	Leading	0.36	0.993	Leading	15.70	0.994	Leading	13.70	0.990	Leading	18.08
24	FLT27-3PH	0.997	Leading	9.77	1.000	Leading	0.36	0.993	Leading	15.70	0.994	Leading	13.70	0.990	Leading	18.08
25	FLT28-3PH	0.997	Leading	9.77	1.000	Leading	0.33	0.993	Leading	15.69	0.994	Leading	13.70	0.990	Leading	18.08
26	FLT29-3PH	0.998	Leading	9.06	1.000	Leading	-2.15	0.993	Leading	15.02	0.995	Leading	13.30	0.990	Leading	17.96
27	FLT30-3PH	0.997	Leading	9.70	1.000	Leading	0.18	0.993	Leading	15.65	0.994	Leading	13.67	0.990	Leading	18.08
28	FLT31-3PH	0.997	Leading	9.77	1.000	Leading	0.36	0.993	Leading	15.70	0.994	Leading	13.70	0.990	Leading	18.08
29	FLT34-3PH	0.997	Leading	9.23	1.000	Leading	0.42	0.993	Leading	15.76	0.994	Leading	13.74	0.990	Leading	18.11
30	FLT35-3PH	0.997	Leading	9.73	1.000	Leading	0.30	0.993	Leading	15.69	0.994	Leading	13.70	0.990	Leading	18.07
31	FLT36-3PH	0.997	Leading	9.77	1.000	Leading	0.34	0.993	Leading	15.69	0.994	Leading	13.69	0.990	Leading	18.08
32	FLT37-3PH	0.997	Leading	9.61	1.000	Leading	0.39	0.993	Leading	15.74	0.994	Leading	13.69	0.990	Leading	18.12
33	FLT38-3PH	0.997	Leading	9.88	1.000	Leading	0.40	0.993	Leading	15.73	0.994	Leading	13.71	0.990	Leading	18.11
34	FLT39-3PH	0.997	Leading	9.78	1.000	Leading	0.37	0.993	Leading	15.70	0.994	Leading	13.70	0.990	Leading	18.09
35	FLT40-3PH	0.997	Leading	9.76	1.000	Leading	0.36	0.993	Leading	15.70	0.994	Leading	13.70	0.990	Leading	18.08
36	FLT41-3PH	0.997	Leading	9.76	1.000	Leading	0.36	0.993	Leading	15.70	0.994	Leading	13.70	0.990	Leading	18.08
37	FLT43-3PH	0.997	Leading	9.27	1.000	Leading	0.58	0.992	Leading	15.92	0.994	Leading	14.04	0.990	Leading	18.23
38	FLT44-3PH	0.998	Leading	7.60	1.000	Leading	0.51	0.992	Leading	16.08	0.994	Leading	14.24	0.990	Leading	18.35
39	FLT45-3PH	0.998	Leading	9.14	1.000	Leading	0.55	0.992	Leading	15.93	0.994	Leading	14.01	0.990	Leading	18.25
40	FLT46-3PH	0.997	Leading	9.36	1.000	Leading	0.54	0.993	Leading	15.69	0.994	Leading	13.67	0.990	Leading	18.07
41	FLT47-3PH	0.997	Leading	10.36	1.000	Leading	0.36	0.994	Leading	14.01	0.995	Leading	12.92	0.992	Leading	16.32
42	FLT48-3PH	0.997	Leading	9.78	1.000	Leading	0.36	0.993	Leading	15.70	0.994	Leading	13.70	0.990	Leading	18.08
43	FLT49-3PH	0.998	Leading	8.17	1.000	Leading	0.35	0.992	Leading	16.18	0.994	Leading	14.37	0.990	Leading	18.43
44	FLT52-3PH	0.998	Leading	9.04	1.000	Leading	0.21	0.993	Leading	15.54	0.995	Leading	13.52	0.991	Leading	17.91
45	FLT53-3PH	0.997	Leading	9.21	1.000	Leading	0.24	0.993	Leading	15.58	0.995	Leading	13.57	0.990	Leading	17.95
46	FLT54-3PH	0.998	Leading	8.81	1.000	Leading	0.20	0.993	Leading	15.59	0.995	Leading	13.50	0.990	Leading	17.99
47	FLT55-3PH	0.997	Leading	9.77	1.000	Leading	0.36	0.993	Leading	15.70	0.994	Leading	13.70	0.990	Leading	18.08
48	FLT56-3PH	0.997	Leading	9.70	1.000	Leading	0.09	0.993	Leading	15.62	0.994	Leading	13.66	0.990	Leading	18.02
49	FLT57-3PH	0.997	Leading	9.32	1.000	Leading	0.15	0.993	Leading	15.55	0.995	Leading	13.54	0.990	Leading	17.95
50	FLT58-3PH	0.997	Leading	9.70	1.000	Leading	0.06	0.993	Leading	15.61	0.994	Leading	13.66	0.990	Leading	18.01
51	FLT59-3PH	0.998	Leading	7.12	1.000	Lagging	-3.71	0.994	Leading	14.07	0.996	Leading	12.15	0.992	Leading	16.18
52	FLT60-3PH	0.997	Leading	9.77	1.000	Leading	0.36	0.993	Leading	15.68	0.994	Leading	13.70	0.990	Leading	18.07
53	FLT63-3PH	0.999	Leading	6.32	0.999	Lagging	-6.01	0.996	Leading	11.06	0.997	Leading	10.60	0.995	Leading	12.66
54	FLT64-3PH	0.998	Leading	8.87	1.000	Lagging	-2.49	0.993	Leading	14.99	0.995	Leading	13.02	0.991	Leading	17.06
55	FLT65-3PH	0.998	Leading	7.38	0.999	Lagging	-4.09	0.995	Leading	12.78	0.996	Leading	11.92	0.994	Leading	14.46
56	FLT66-3PH	0.997	Leading	9.50	1.000	Leading	2.24	0.993	Leading	15.01	0.995	Leading	12.83	0.991	Leading	17.05
57	FLT67-3PH	0.997	Leading	9.70	1.000	Leading	0.46	0.993	Leading	15.55	0.995	Leading	13.50	0.991	Leading	17.85
58	FLT68-3PH	0.998	Leading	7.75	1.000	Lagging	-3.60	0.995	Leading	13.21	0.995	Leading	12.34	0.993	Leading	14.87
59	FLT69-3PH	0.999	Leading	6.12	0.999	Lagging	-5.65	0.994	Leading	13.84	0.996	Leading	11.33	0.992	Leading	16.73
60	FLT70-3PH	0.997	Leading	10.38	1.000	Leading	0.78	0.991	Leading	17.43	0.994	Leading	14.66	0.987	Leading	20.70
61	FLT71-3PH	0.997	Leading	9.31	1.000	Leading	0.14	0.993	Leading	15.55	0.995	Leading	13.50	0.991	Leading	17.90
62	FLT72-3PH	0.997	Leading	9.29	1.000	Lagging	-1.52	0.994	Leading	14.75	0.995	Leading	13.40	0.991	Leading	17.25
63	FLT73-3PH	0.997	Leading	9.78	1.000	Leading	0.36	0.993	Leading	15.70	0.994	Leading	13.70	0.990	Leading	18.08
64	FLT74-3PH	0.997	Leading	9.78	1.000	Lagging	-0.41	0.993	Leading	15.24	0.995	Leading	13.25	0.991	Leading	17.67
65	FLT75-3PH	0.997	Leading	10.26	1.000	Leading	3.03	0.991	Leading	17.92	0.994	Leading	14.38	0.986	Leading	21.59
66	FLT76-3PH	0.998	Leading	7.94	1.000	Lagging	-3.35	0.995	Leading	13.33	0.995	Leading	12.47	0.993	Leading	14.97
67	FLT77-3PH	0.988	Leading	20.54	0.982	Leading	24.87	0.986	Leading	21.47	0.991	Leading	17.25	0.974	Leading	30.21
68	FLT84-3PH	0.997	Leading	10.13	1.000	Leading	0.46	0.993	Leading	15.76	0.994	Leading	13.78	0.990	Leading	18.12
69	FLT85-3PH	0.997	Leading	9.66	1.000	Lagging	-0.34	0.993	Leading	15.50	0.995	Leading	13.53	0.991	Leading	17.79
70	FLT86-3PH	0.997	Leading	9.30	1.000	Lagging	-0.07	0.993	Leading	15.48	0.995	Leading	13.42	0.991	Leading	17.90
71	FLT87-3PH	0.997	Leading	9.93	1.000	Leading	0.50	0.993	Leading	15.67	0.994	Leading	13.69	0.990	Leading	18.05
72	FLT88-3PH	0.997	Leading	9.79	1.000	Leading	0.25	0.993	Leading	15.68	0.994	Leading	13.70	0.990	Leading	18.06
73	FLT92-3PH	1.000	Leading	3.77	0.991	Lagging	-17.20	0.996	Leading	11.34	0.997	Leading	9.95	0.992	Leading	16.35
74	FLT93-3PH	0.997	Leading	9.95	1.000	Leading	0.30	0.993	Leading	15.90	0.994	Leading	13.74	0.990	Leading	18.10
75	FLT94-3PH	0.998	Leading	7.97	1.000	Leading	0.38	0.993	Leading	15.33	0.995	Leading	12.94	0.991	Leading	17.50

Table 5-14 (continued)

Power Factor Analysis: GEN-2015-079

Cont. No.	Case	2016 Winter Peak			2017 Summer Peak			2020 Summer Peak			2020 Winter Peak			2025 Summer Peak		
		Power Factor		Q (MVAR)	Power Factor		Q (MVAR)	Power Factor		Q (MVAR)	Power Factor		Q (MVAR)	Power Factor		Q (MVAR)
76	FLT95-3PH	0.997	Leading	10.06	1.000	Leading	0.32	0.993	Leading	15.89	0.994	Leading	13.74	0.990	Leading	18.10
77	FLT96-3PH	0.997	Leading	9.78	1.000	Leading	0.37	0.993	Leading	15.70	0.994	Leading	13.70	0.990	Leading	18.08
78	FLT97-3PH	0.997	Leading	9.78	1.000	Leading	0.37	0.993	Leading	15.72	0.994	Leading	13.72	0.990	Leading	18.12
79	FLT98-3PH	0.997	Leading	9.77	1.000	Leading	0.35	0.993	Leading	15.70	0.994	Leading	13.70	0.990	Leading	18.08
80	FLT99-3PH	0.997	Leading	9.78	1.000	Leading	0.38	0.993	Leading	15.71	0.994	Leading	13.70	0.990	Leading	18.08
81	FLT100-3PH	0.997	Leading	9.78	1.000	Leading	0.37	0.993	Leading	15.72	0.994	Leading	13.72	0.990	Leading	18.12
82	FLT101-3PH	0.997	Leading	9.77	1.000	Leading	0.36	0.993	Leading	15.71	0.994	Leading	13.70	0.990	Leading	18.09
83	FLT102-3PH	0.997	Leading	9.80	1.000	Leading	0.42	0.993	Leading	15.71	0.994	Leading	13.71	0.990	Leading	18.08
84	FLT105-3PH	0.997	Leading	9.37	1.000	Lagging	-0.19	0.993	Leading	15.56	0.995	Leading	13.59	0.990	Leading	17.94
85	FLT106-3PH	0.997	Leading	9.57	1.000	Leading	0.31	0.993	Leading	15.71	0.994	Leading	13.72	0.990	Leading	18.10
86	FLT107-3PH	0.997	Leading	9.80	1.000	Leading	0.48	0.993	Leading	15.73	0.994	Leading	13.69	0.990	Leading	18.15
87	FLT108-3PH	0.997	Leading	9.97	1.000	Leading	0.74	0.993	Leading	15.76	0.994	Leading	13.66	0.990	Leading	18.19
88	FLT109-3PH	0.997	Leading	9.54	1.000	Lagging	-0.01	0.993	Leading	15.52	0.995	Leading	13.57	0.991	Leading	17.92
89	FLT110-3PH	0.997	Leading	9.65	1.000	Leading	0.06	0.993	Leading	15.54	0.995	Leading	13.52	0.991	Leading	17.89
90	FLT111-3PH	0.997	Leading	9.17	1.000	Leading	0.05	0.993	Leading	15.60	0.995	Leading	13.44	0.990	Leading	18.10
91	FLT112-3PH	0.997	Leading	9.49	1.000	Lagging	-0.45	0.993	Leading	15.45	0.995	Leading	13.56	0.990	Leading	17.95
92	FLT113-3PH	0.997	Leading	9.63	1.000	Leading	0.13	0.993	Leading	15.60	0.994	Leading	13.65	0.990	Leading	17.96
93	FLT114-3PH	0.997	Leading	9.76	1.000	Leading	0.24	0.993	Leading	15.69	0.994	Leading	13.70	0.990	Leading	18.06
94	FLT115-3PH	0.997	Leading	9.78	1.000	Leading	0.36	0.993	Leading	15.70	0.994	Leading	13.70	0.990	Leading	18.08
95	FLT116-3PH	0.997	Leading	9.68	1.000	Leading	0.22	0.993	Leading	15.67	0.995	Leading	13.57	0.990	Leading	18.01
96	FLT117-3PH	0.997	Leading	9.44	1.000	Lagging	-0.16	0.993	Leading	15.57	0.995	Leading	13.56	0.990	Leading	18.03
97	FLT118-3PH	0.997	Leading	9.77	1.000	Leading	0.88	0.992	Leading	16.39	0.994	Leading	14.01	0.989	Leading	19.06
98	FLT119-3PH	0.997	Leading	9.69	1.000	Leading	0.30	0.993	Leading	15.77	0.994	Leading	13.77	0.990	Leading	18.16
99	FLT120-3PH	0.997	Leading	10.49	1.000	Leading	2.00	0.993	Leading	15.74	0.995	Leading	13.44	0.990	Leading	17.96
100	FLT121-3PH	0.997	Leading	9.75	1.000	Leading	0.31	0.993	Leading	15.70	0.994	Leading	13.70	0.990	Leading	18.08
101	FLT126-3PH	1.000	Lagging	-4.05	0.991	Lagging	-17.72	1.000	Leading	2.45	1.000	Leading	3.89	0.999	Lagging	-4.51
102	FLT127-3PH	0.997	Leading	9.73	1.000	Leading	0.08	0.993	Leading	15.70	0.994	Leading	13.70	0.990	Leading	18.08
103	FLT128-3PH	0.998	Leading	9.14	1.000	Lagging	-1.26	0.993	Leading	15.76	0.994	Leading	13.68	0.990	Leading	18.10
104	FLT129-3PH	0.997	Leading	9.81	1.000	Leading	0.23	0.993	Leading	15.66	0.994	Leading	13.73	0.990	Leading	18.08

Study Generator GEN-2015-079

The Power Factor Analysis shows that GEN-2015-079 has a power factor range of 0.988 leading (absorbing) to 1.00 (unity) for the 2016 Winter Peak conditions, a power factor range of 0.982 leading (absorbing) to 0.991 lagging (supplying) for the 2017 Summer Peak conditions, a power factor range of 0.986 leading (absorbing) to 1.00 (unity) for the 2020 Summer Peak conditions, a power factor range of 0.991 leading (absorbing) to 1.00 (unity) for the 2020 Winter Peak conditions, and a power factor range of 0.974 leading (absorbing) to 0.999 lagging (supplying) for the 2025 Summer Peak conditions.

DRAFT

Table 5-15
Power Factor Analysis: GEN-2015-080

DRAFT

Cont. No.	Case	2016 Winter Peak			2017 Summer Peak			2020 Summer Peak			2020 Winter Peak			2025 Summer Peak		
		Power Factor		Q (MVAR)	Power Factor		Q (MVAR)	Power Factor		Q (MVAR)	Power Factor		Q (MVAR)	Power Factor		Q (MVAR)
0	Base	0.997	Leading	9.78	1.000	Leading	0.36	0.993	Leading	15.70	0.994	Leading	13.70	0.990	Leading	18.08
1	FLT01-3PH	0.997	Leading	9.78	1.000	Leading	0.39	0.993	Leading	15.71	0.994	Leading	13.71	0.990	Leading	18.08
2	FLT02-3PH	0.997	Leading	9.78	1.000	Leading	0.39	0.993	Leading	15.71	0.994	Leading	13.71	0.990	Leading	18.08
3	FLT03-3PH	0.997	Leading	9.77	1.000	Leading	0.34	0.993	Leading	15.69	0.994	Leading	13.70	0.990	Leading	18.08
4	FLT04-3PH	0.997	Leading	10.01	1.000	Leading	0.75	0.993	Leading	15.85	0.994	Leading	13.79	0.990	Leading	18.08
5	FLT05-3PH	0.997	Leading	10.19	1.000	Lagging	1.27	0.992	Leading	15.99	0.994	Leading	13.84	0.990	Leading	18.07
6	FLT06-3PH	0.997	Leading	9.78	1.000	Leading	0.38	0.993	Leading	15.71	0.994	Leading	13.71	0.990	Leading	18.08
7	FLT07-3PH	0.997	Leading	9.78	1.000	Leading	0.39	0.993	Leading	15.71	0.994	Leading	13.71	0.990	Leading	18.08
8	FLT11-3PH	0.997	Leading	9.80	1.000	Leading	0.40	0.993	Leading	15.71	0.994	Leading	13.71	0.990	Leading	18.09
9	FLT12-3PH	0.997	Leading	9.76	1.000	Leading	0.25	0.993	Leading	15.63	0.994	Leading	13.68	0.990	Leading	18.04
10	FLT13-3PH	0.997	Leading	9.77	1.000	Leading	0.36	0.993	Leading	15.70	0.994	Leading	13.70	0.990	Leading	18.08
11	FLT14-3PH	0.997	Leading	9.76	1.000	Leading	0.37	0.993	Leading	15.69	0.994	Leading	13.69	0.990	Leading	18.06
12	FLT15-3PH	0.997	Leading	9.65	1.000	Leading	0.19	0.993	Leading	15.63	0.994	Leading	13.66	0.990	Leading	18.05
13	FLT16-3PH	0.997	Leading	9.77	1.000	Leading	0.35	0.993	Leading	15.70	0.994	Leading	13.70	0.990	Leading	18.08
14	FLT17-3PH	0.997	Leading	9.77	1.000	Leading	0.36	0.993	Leading	15.70	0.994	Leading	13.70	0.990	Leading	18.08
15	FLT18-3PH	0.997	Leading	9.77	1.000	Leading	0.36	0.993	Leading	15.70	0.994	Leading	13.70	0.990	Leading	18.08
16	FLT19-3PH	0.997	Leading	9.78	1.000	Leading	0.36	0.993	Leading	15.70	0.994	Leading	13.70	0.990	Leading	18.08
17	FLT20-3PH	0.997	Leading	9.77	1.000	Leading	0.36	0.993	Leading	15.70	0.994	Leading	13.70	0.990	Leading	18.08
18	FLT21-3PH	0.997	Leading	9.77	1.000	Leading	0.35	0.993	Leading	15.70	0.994	Leading	13.70	0.990	Leading	18.08
19	FLT22-3PH	0.997	Leading	9.77	1.000	Leading	0.34	0.993	Leading	15.69	0.994	Leading	13.70	0.990	Leading	18.08
20	FLT23-3PH	0.997	Leading	9.77	1.000	Leading	0.34	0.993	Leading	15.69	0.994	Leading	13.70	0.990	Leading	18.08
21	FLT24-3PH	0.997	Leading	9.77	1.000	Leading	0.35	0.993	Leading	15.70	0.994	Leading	13.70	0.990	Leading	18.08
22	FLT25-3PH	0.997	Leading	9.77	1.000	Leading	0.34	0.993	Leading	15.69	0.994	Leading	13.70	0.990	Leading	18.08
23	FLT26-3PH	0.997	Leading	9.77	1.000	Leading	0.36	0.993	Leading	15.70	0.994	Leading	13.70	0.990	Leading	18.08
24	FLT27-3PH	0.997	Leading	9.77	1.000	Leading	0.36	0.993	Leading	15.70	0.994	Leading	13.70	0.990	Leading	18.08
25	FLT28-3PH	0.997	Leading	9.77	1.000	Leading	0.33	0.993	Leading	15.69	0.994	Leading	13.70	0.990	Leading	18.08
26	FLT29-3PH	0.998	Leading	9.06	1.000	Leading	-2.15	0.993	Leading	15.02	0.995	Leading	13.30	0.990	Leading	17.96
27	FLT30-3PH	0.997	Leading	9.70	1.000	Leading	0.18	0.993	Leading	15.65	0.994	Leading	13.67	0.990	Leading	18.08
28	FLT31-3PH	0.997	Leading	9.77	1.000	Leading	0.36	0.993	Leading	15.70	0.994	Leading	13.70	0.990	Leading	18.08
29	FLT34-3PH	0.997	Leading	9.23	1.000	Leading	0.42	0.993	Leading	15.76	0.994	Leading	13.74	0.990	Leading	18.11
30	FLT35-3PH	0.997	Leading	9.73	1.000	Leading	0.30	0.993	Leading	15.69	0.994	Leading	13.70	0.990	Leading	18.07
31	FLT36-3PH	0.997	Leading	9.77	1.000	Leading	0.34	0.993	Leading	15.69	0.994	Leading	13.69	0.990	Leading	18.08
32	FLT37-3PH	0.997	Leading	9.61	1.000	Leading	0.39	0.993	Leading	15.74	0.994	Leading	13.69	0.990	Leading	18.12
33	FLT38-3PH	0.997	Leading	9.88	1.000	Leading	0.40	0.993	Leading	15.73	0.994	Leading	13.71	0.990	Leading	18.11
34	FLT39-3PH	0.997	Leading	9.78	1.000	Leading	0.37	0.993	Leading	15.70	0.994	Leading	13.70	0.990	Leading	18.09
35	FLT40-3PH	0.997	Leading	9.76	1.000	Leading	0.36	0.993	Leading	15.70	0.994	Leading	13.70	0.990	Leading	18.08
36	FLT41-3PH	0.997	Leading	9.76	1.000	Leading	0.36	0.993	Leading	15.70	0.994	Leading	13.70	0.990	Leading	18.08
37	FLT43-3PH	0.997	Leading	9.27	1.000	Leading	0.58	0.992	Leading	15.92	0.994	Leading	14.04	0.990	Leading	18.23
38	FLT44-3PH	0.998	Leading	7.60	1.000	Leading	0.51	0.992	Leading	16.08	0.994	Leading	14.24	0.990	Leading	18.35
39	FLT45-3PH	0.998	Leading	9.14	1.000	Leading	0.55	0.992	Leading	15.93	0.994	Leading	14.01	0.990	Leading	18.25
40	FLT46-3PH	0.997	Leading	9.36	1.000	Leading	0.54	0.993	Leading	15.69	0.994	Leading	13.67	0.990	Leading	18.07
41	FLT47-3PH	0.997	Leading	10.36	1.000	Leading	0.36	0.994	Leading	14.01	0.995	Leading	12.92	0.992	Leading	16.32
42	FLT48-3PH	0.997	Leading	9.78	1.000	Leading	0.36	0.993	Leading	15.70	0.994	Leading	13.70	0.990	Leading	18.08
43	FLT49-3PH	0.998	Leading	8.17	1.000	Leading	0.35	0.992	Leading	16.18	0.994	Leading	14.37	0.990	Leading	18.43
44	FLT52-3PH	0.998	Leading	9.04	1.000	Leading	0.21	0.993	Leading	15.54	0.995	Leading	13.52	0.991	Leading	17.91
45	FLT53-3PH	0.997	Leading	9.21	1.000	Leading	0.24	0.993	Leading	15.58	0.995	Leading	13.57	0.990	Leading	17.95
46	FLT54-3PH	0.998	Leading	8.81	1.000	Leading	0.20	0.993	Leading	15.59	0.995	Leading	13.50	0.990	Leading	17.99
47	FLT55-3PH	0.997	Leading	9.77	1.000	Leading	0.36	0.993	Leading	15.70	0.994	Leading	13.70	0.990	Leading	18.08
48	FLT56-3PH	0.997	Leading	9.70	1.000	Leading	0.09	0.993	Leading	15.62	0.994	Leading	13.66	0.990	Leading	18.02
49	FLT57-3PH	0.997	Leading	9.32	1.000	Leading	0.15	0.993	Leading	15.55	0.995	Leading	13.54	0.990	Leading	17.95
50	FLT58-3PH	0.997	Leading	9.70	1.000	Leading	0.06	0.993	Leading	15.61	0.994	Leading	13.66	0.990	Leading	18.01
51	FLT59-3PH	0.998	Leading	7.12	1.000	Lagging	-3.71	0.994	Leading	14.07	0.996	Leading	12.15	0.992	Leading	16.18
52	FLT60-3PH	0.997	Leading	9.77	1.000	Leading	0.36	0.993	Leading	15.68	0.994	Leading	13.70	0.990	Leading	18.07
53	FLT63-3PH	0.999	Leading	6.32	0.999	Lagging	-6.01	0.996	Leading	11.06	0.997	Leading	10.60	0.995	Leading	12.66
54	FLT64-3PH	0.998	Leading	8.87	1.000	Lagging	-2.49	0.993	Leading	14.99	0.995	Leading	13.02	0.991	Leading	17.06
55	FLT65-3PH	0.998	Leading	7.38	0.999	Lagging	-4.09	0.995	Leading	12.78	0.996	Leading	11.92	0.994	Leading	14.46
56	FLT66-3PH	0.997	Leading	9.50	1.000	Leading	2.24	0.993	Leading	15.01	0.995	Leading	12.83	0.991	Leading	17.05
57	FLT67-3PH	0.997	Leading	9.70	1.000	Leading	0.46	0.993	Leading	15.55	0.995	Leading	13.50	0.991	Leading	17.85
58	FLT68-3PH	0.998	Leading	7.75	1.000	Lagging	-3.60	0.995	Leading	13.21	0.995	Leading	12.34	0.993	Leading	14.87
59	FLT69-3PH	0.999	Leading	6.12	0.999	Lagging	-5.65	0.994	Leading	13.84	0.996	Leading	11.33	0.992	Leading	16.73
60	FLT70-3PH	0.997	Leading	10.38	1.000	Leading	0.78	0.991	Leading	17.43	0.994	Leading	14.66	0.987	Leading	20.70
61	FLT71-3PH	0.997	Leading	9.31	1.000	Leading	0.14	0.993	Leading	15.55	0.995	Leading	13.50	0.991	Leading	17.90
62	FLT72-3PH	0.997	Leading	9.29	1.000	Lagging	-1.52	0.994	Leading	14.75	0.995	Leading	13.40	0.991	Leading	17.25
63	FLT73-3PH	0.997	Leading	9.78	1.000	Leading	0.36	0.993	Leading	15.70	0.994	Leading	13.70	0.990	Leading	18.08
64	FLT74-3PH	0.997	Leading	9.78	1.000	Lagging	-0.41	0.993	Leading	15.24	0.995	Leading	13.25	0.991	Leading	17.67
65	FLT75-3PH	0.997	Leading	10.26	1.000	Leading	3.03	0.991	Leading	17.92	0.994	Leading	14.38	0.986	Leading	21.59
66	FLT76-3PH	0.998	Leading	7.94	1.000	Lagging	-3.35	0.995	Leading	13.33	0.995	Leading	12.47	0.993	Leading	14.97
67	FLT77-3PH	0.988	Leading	20.54	0.982	Leading	24.87	0.986	Leading	21.47	0.991	Leading	17.25	0.974	Leading	30.21
68	FLT84-3PH	0.997	Leading	10.13	1.000	Leading	0.46	0.993	Leading	15.76	0.994	Leading	13.78	0.990	Leading	18.12
69	FLT85-3PH	0.997	Leading	9.66	1.000	Lagging	-0.34	0.993	Leading	15.50	0.995	Leading	13.53	0.991	Leading	17.79
70	FLT86-3PH	0.997	Leading	9.30	1.000	Lagging	-0.07	0.993	Leading	15.48	0.995	Leading	13.42	0.991	Leading	17.90
71	FLT87-3PH	0.997	Leading	9.93	1.000	Leading	0.50	0.993	Leading	15.67	0.994	Leading	13.69	0.990	Leading	18.05
72	FLT88-3PH	0.997	Leading	9.79	1.000	Leading	0.25	0.993	Leading	15.68	0.994	Leading	13.70	0.990	Leading	18.06
73	FLT92-3PH	1.000	Leading	3.77	0.991	Lagging	-17.20	0.996	Leading	11.34	0.997	Leading	9.95	0.992	Leading	16.35
74	FLT93-3PH	0.997	Leading	9.95	1.000	Leading	0.30	0.993	Leading	15.90	0.994	Leading	13.74	0.990	Leading	18.10
75	FLT94-3PH	0.998	Leading	7.97	1.000	Leading	0.38	0.993	Leading	15.33	0.995	Leading	12.94	0.991	Leading	17.50

Table 5-15 (continued)

Power Factor Analysis: GEN-2015-080

Cont. No.	Case	2016 Winter Peak			2017 Summer Peak			2020 Summer Peak			2020 Winter Peak			2025 Summer Peak		
		Power Factor		Q (MVAR)	Power Factor		Q (MVAR)	Power Factor		Q (MVAR)	Power Factor		Q (MVAR)	Power Factor		Q (MVAR)
76	FLT95-3PH	0.997	Leading	10.06	1.000	Leading	0.32	0.993	Leading	15.89	0.994	Leading	13.74	0.990	Leading	18.10
77	FLT96-3PH	0.997	Leading	9.78	1.000	Leading	0.37	0.993	Leading	15.70	0.994	Leading	13.70	0.990	Leading	18.08
78	FLT97-3PH	0.997	Leading	9.78	1.000	Leading	0.37	0.993	Leading	15.72	0.994	Leading	13.72	0.990	Leading	18.12
79	FLT98-3PH	0.997	Leading	9.77	1.000	Leading	0.35	0.993	Leading	15.70	0.994	Leading	13.70	0.990	Leading	18.08
80	FLT99-3PH	0.997	Leading	9.78	1.000	Leading	0.38	0.993	Leading	15.71	0.994	Leading	13.70	0.990	Leading	18.08
81	FLT100-3PH	0.997	Leading	9.78	1.000	Leading	0.37	0.993	Leading	15.72	0.994	Leading	13.72	0.990	Leading	18.12
82	FLT101-3PH	0.997	Leading	9.77	1.000	Leading	0.36	0.993	Leading	15.71	0.994	Leading	13.70	0.990	Leading	18.09
83	FLT102-3PH	0.997	Leading	9.80	1.000	Leading	0.42	0.993	Leading	15.71	0.994	Leading	13.71	0.990	Leading	18.08
84	FLT105-3PH	0.997	Leading	9.37	1.000	Lagging	-0.19	0.993	Leading	15.56	0.995	Leading	13.59	0.990	Leading	17.94
85	FLT106-3PH	0.997	Leading	9.57	1.000	Leading	0.31	0.993	Leading	15.71	0.994	Leading	13.72	0.990	Leading	18.10
86	FLT107-3PH	0.997	Leading	9.80	1.000	Leading	0.48	0.993	Leading	15.73	0.994	Leading	13.69	0.990	Leading	18.15
87	FLT108-3PH	0.997	Leading	9.97	1.000	Leading	0.74	0.993	Leading	15.76	0.994	Leading	13.66	0.990	Leading	18.19
88	FLT109-3PH	0.997	Leading	9.54	1.000	Lagging	-0.01	0.993	Leading	15.52	0.995	Leading	13.57	0.991	Leading	17.92
89	FLT110-3PH	0.997	Leading	9.65	1.000	Leading	0.06	0.993	Leading	15.54	0.995	Leading	13.52	0.991	Leading	17.89
90	FLT111-3PH	0.997	Leading	9.17	1.000	Leading	0.05	0.993	Leading	15.60	0.995	Leading	13.44	0.990	Leading	18.10
91	FLT112-3PH	0.997	Leading	9.49	1.000	Lagging	-0.45	0.993	Leading	15.45	0.995	Leading	13.56	0.990	Leading	17.95
92	FLT113-3PH	0.997	Leading	9.63	1.000	Leading	0.13	0.993	Leading	15.60	0.994	Leading	13.65	0.990	Leading	17.96
93	FLT114-3PH	0.997	Leading	9.76	1.000	Leading	0.24	0.993	Leading	15.69	0.994	Leading	13.70	0.990	Leading	18.06
94	FLT115-3PH	0.997	Leading	9.78	1.000	Leading	0.36	0.993	Leading	15.70	0.994	Leading	13.70	0.990	Leading	18.08
95	FLT116-3PH	0.997	Leading	9.68	1.000	Leading	0.22	0.993	Leading	15.67	0.995	Leading	13.57	0.990	Leading	18.01
96	FLT117-3PH	0.997	Leading	9.44	1.000	Lagging	-0.16	0.993	Leading	15.57	0.995	Leading	13.56	0.990	Leading	18.03
97	FLT118-3PH	0.997	Leading	9.77	1.000	Leading	0.88	0.992	Leading	16.39	0.994	Leading	14.01	0.989	Leading	19.06
98	FLT119-3PH	0.997	Leading	9.69	1.000	Leading	0.30	0.993	Leading	15.77	0.994	Leading	13.77	0.990	Leading	18.16
99	FLT120-3PH	0.997	Leading	10.49	1.000	Leading	2.00	0.993	Leading	15.74	0.995	Leading	13.44	0.990	Leading	17.96
100	FLT121-3PH	0.997	Leading	9.75	1.000	Leading	0.31	0.993	Leading	15.70	0.994	Leading	13.70	0.990	Leading	18.08
101	FLT126-3PH	1.000	Lagging	-4.05	0.991	Lagging	-17.72	1.000	Leading	2.45	1.000	Leading	3.89	0.999	Lagging	-4.51
102	FLT127-3PH	0.997	Leading	9.73	1.000	Leading	0.08	0.993	Leading	15.70	0.994	Leading	13.70	0.990	Leading	18.08
103	FLT128-3PH	0.998	Leading	9.14	1.000	Lagging	-1.26	0.993	Leading	15.76	0.994	Leading	13.68	0.990	Leading	18.10
104	FLT129-3PH	0.997	Leading	9.81	1.000	Leading	0.23	0.993	Leading	15.66	0.994	Leading	13.73	0.990	Leading	18.08

Study Generator GEN-2015-080

The Power Factor Analysis shows that GEN-2015-080 has a power factor range of 0.988 leading (absorbing) to 1.00 (unity) for the 2016 Winter Peak conditions, a power factor range of 0.982 leading (absorbing) to 0.991 lagging (supplying) for the 2017 Summer Peak conditions, a power factor range of 0.986 leading (absorbing) to 1.00 (unity) for the 2020 Summer Peak conditions, a power factor range of 0.991 leading (absorbing) to 1.00 (unity) for the 2020 Winter Peak conditions, and a power factor range of 0.974 leading (absorbing) to 0.999 lagging (supplying) for the 2025 Summer Peak conditions.

DRAFT

SECTION 6: LOW WIND/NO WIND ANALYSIS

The objective of this task is to determine the impact of low wind or no wind conditions/solar irradiance on wind farms and solar farms, respectively. The 2016 Winter Peak, 2017 Summer Peak, 2020 Summer Peak, 2020 Winter Peak, and 2025 Summer Peak power flows provided by SPP were examined for this analysis.

6.1 Approach

Low/no wind and low/no solar irradiance conditions were examined for all renewable interconnections. Generators were disabled (independently), but the collector systems remained in-service. In order to maintain generation and load balance in the SPP area, the generation was scaled after disabling the respective generator. The amount of reactive power injected into the transmission network was recorded at the respective point of interconnection. This reactive power comes from the capacitance of the project's transmission lines and collector cables. A shunt reactor was added at the high side bus to bring the Mvar flow into the POI down to approximately zero.

6.2 Low Wind/No Wind Analysis Results

The reactance needed to bring the Mvar flow into the point of interconnect to zero Mvar was recorded for each season for renewable interconnections. Refer to Table 6-1 for the results of this analysis. The table lists the generators examined and the amount of reactive power needed for zero Mvar flow into the POI for each season.

DRAFT

Table 6-1
Low Wind/No Wind Analysis

Request	Size (MW)	Point of Interconnection	Reactor Size (Mvar)				
			16WP	17SP	20SP	20WP	25SP
GEN-2014-046	125.4	Chaves County 115kV	1.8	1.8	1.8	1.8	1.8
GEN-2015-018	80	Tap on Curry County to Bailey County 115kV	3.0	3.0	3.0	3.0	3.0
GEN-2015-020	100	Oasis 115kV	0.6	0.6	0.6	0.6	0.6
GEN-2015-031	300	Swisher to Amarillo South 230 kV	11.5	11.5	11.5	11.5	11.5
GEN-2015-033	152	Rio Blanco 345 kV	9.9	9.9	9.9	9.9	9.9
GEN-2015-039	50	Deaf Smith to Plant X 230kV	0.1	0.1	0.1	0.1	0.1
GEN-2015-040	50	Mustang 230kV	0.1	0.1	0.1	0.1	0.1
GEN-2015-056	101	Crossroads 345kV	8.6	8.6	8.6	8.6	8.6
GEN-2015-058	50	Atoka 115kV	0.4	0.4	0.4	0.4	0.4
GEN-2015-068	300	Tuco 345kV	58.0	58.0	58.0	58.0	58.0
GEN-2015-075	50	Carlisle 69kV	3.6	3.6	3.6	3.6	3.6
GEN-2015-077	80	Tap on Terry to Clauene 115kV	1.2	1.2	1.2	1.2	1.2
GEN-2015-078	50	Mustang 115kV	1.1	1.1	1.1	1.1	1.1
GEN-2015-079	129.2	Tap Yoakum to Hobbs 230 kV	1.0	1.0	1.0	1.0	1.0
GEN-2015-080	129.2	Tap Yoakum to Hobbs 230 kV	1.0	1.0	1.0	1.0	1.0

DRAFT

SECTION 7: CONCLUSIONS

Summary of the Stability Analysis

The Stability Analysis determined that there were multiple contingencies across all seasons that resulted in system/voltage instability, generation tripping offline, and poor post-fault voltage recovery when all generation interconnection requests were at 100% output.

To mitigate the system/voltage instability, voltage violations, generation tripping offline, and poor post-fault steady-state voltages, the following upgrades were provided by SPP and implemented in each season (this set of mitigation will be referred as "**Solution 1**" in the report):

- Woodward to GEN-2011-051 Tap to Tatonga to Mathewson 345 kV circuit #2
- Beaver County Reactive Power Support – 75 Mvar SVC
- Woodward to Border 345 kV existing line tapped by Chisholm 345 kV
- Tuco 2 (Crawfish Draw) to Tolk to Potter County to Grapevine to Chisholm 345 kV circuit #1
- Grapevine to Beaver County 345 kV circuit #1
- Chaves County to Price to Pine Lodge to Captain 69 kV circuit converted to 115 kV
- Mustang to Seminole 230 kV circuit #1
- OKU Reactive Power Support (760 Mvar total)
    - 300 Mvar SVC
    - Capacitor banks
        - 2 steps of 130 Mvar (260 Mvar total)
        - 4 steps of 50 Mvar (200 Mvar total)
- Border Reactive Power Support (550 Mvar total)
    - 250 Mvar SVC
    - Capacitor banks
        - 6 steps of 50 Mvar (300 Mvar total)
- Grapevine Reactive Power Support (500 Mvar total)
    - 300 Mvar SVC
    - Capacitor banks
        - 4 steps of 50 Mvar (200 Mvar total)

After the **Solution 1** upgrades were implemented, all violations were mitigated except for the following contingencies which resulted in voltages above 1.2 p.u.:

- FLT43-3PH (16WP, 17SP, 20WP)

DRAFT

- FLT49-3PH (16WP, 17SP, 20SP, 20WP)
- FLT91-3PH (16WP, 17SP, 20WP)

In order to mitigate the high voltage observations, the OKU capacitor bank was taken out-of-service for the above faults (this will be referred as "**Solution 2**" in the report). With the OKU capacitor bank out-of-service, the three faults (FLT43, FLT49, and FLT91) all recovered within SPP criteria.

After implementing the **Solution 1** upgrades, the contingency analysis was re-simulated for all contingencies. With the **Solution 1** upgrades, the Stability Analysis determined that there was no wind turbine tripping or system instability observed as a result of interconnecting all study projects at 100% output.

Summary of the Short Circuit Analysis

The short circuit analysis was performed on the 2017 Summer Peak and 2025 Summer Peak power flow for all study projects. Refer to Table 7-1 and Table 7-2 for a list of maximum fault currents observed for each study project for the 17SP and 25SP cases, respectively.

Table 7-1
2017SP: List of Maximum Fault Currents Observed for Each Study Project

DRAFT

Study Project	Fault Current at POI (kA)	Maximum Fault Current (kA)	Fault Location	Bus Voltage (kV)
GEN-2014-046	6.24	25.36	CUNNINHAM 3	115
GEN-2015-018	5.62	28.53	TOLK EAST 6 TOLK WEST 6 TOLK TAP 6	230
GEN-2015-020	9.59	28.53	TOLK EAST 6 TOLK WEST 6 TOLK TAP 6	230
GEN-2015-031	10.89	13.10	NICHOLS 3	115
GEN-2015-033	7.49	30.53	LP-COOK 2	69
GEN-2015-039	7.77	28.53	TOLK EAST 6 TOLK WEST 6 TOLK TAP 6	230
GEN-2015-040	13.95	28.75	HOBBS INT 3	115
GEN-2015-041	15.04	30.53	LP-COOK 2	69
GEN-2015-056	6.53	28.53	TOLK EAST 6 TOLK WEST 6 TOLK TAP 6	230
GEN-2015-058	6.61	25.36	CUNNINHAM 3	115
GEN-2015-068	15.04	30.53	LP-COOK 2	69
GEN-2015-075	2.57	28.53	TOLK EAST 6 TOLK TAP 6	230
GEN-2015-077	7.98	23.36	TUCO INT 6	230
GEN-2015-078	22.41	28.75	HOBBS INT 3	115
GEN-2015-079	8.65	28.75	HOBBS INT 3	115
GEN-2015-080	8.65	28.75	HOBBS INT 3	115

Table 7-2
2025SP: List of Maximum Fault Currents Observed for Each Study Project

DRAFT

Study Project	Fault Current at POI (kA)	Maximum Fault Current (kA)	Fault Location	Bus Voltage (kV)
GEN-2014-046	6.36	29.69	CUNNINHAM 3	115
GEN-2015-018	5.92	29.40	TOLK EAST 6 TOLK WEST 6 TOLK TAP 6	230
GEN-2015-020	9.72	29.40	TOLK EAST 6 TOLK WEST 6 TOLK TAP 6	230
GEN-2015-031	11.02	31.25	NICHOLS 3	115
GEN-2015-033	7.77	35.03	LP-COOK 2	69
GEN-2015-039	0.23	29.40	TOLK EAST 6 TOLK WEST 6 TOLK TAP 6	230
GEN-2015-040	15.75	32.96	HOBBS INT 3	115
GEN-2015-041	17.31	35.03	LP-COOK 2	69
GEN-2015-056	6.60	29.40	TOLK EAST 6 TOLK WEST 6 TOLK TAP 6	230
GEN-2015-058	7.02	29.69	CUNNINHAM 3	115
GEN-2015-068	17.31	35.03	LP-COOK 2	69
GEN-2015-075	2.58	29.40	TOLK EAST 6 TOLK TAP 6	230
GEN-2015-077	8.08	26.21	TUCO INT 6	230
GEN-2015-078	23.38	32.96	HOBBS INT 3	115
GEN-2015-079	9.27	32.96	HOBBS INT 3	115
GEN-2015-080	9.27	32.96	HOBBS INT 3	115

Summary of Power Factor Analysis

The upgrades identified in the Stability Analysis were implemented in the power flow cases and utilized for the Power Factor Analysis.

Study Generator GEN-2014-046

The Power Factor Analysis shows that GEN-2014-046 has a power factor range of 0.986 to 0.997 leading (absorbing) for the 2016 Winter Peak conditions, a power factor range of 0.987 to 0.993 leading (absorbing) for the 2017 Summer Peak conditions, a power factor range of 0.991 to 0.997 leading (absorbing) for the 2020 Summer Peak conditions, a power factor range of 0.991 to 0.997 leading (absorbing) for the 2020 Winter Peak conditions, and a power factor range of 0.989 to 0.997 leading (absorbing) for the 2025 Summer Peak conditions.

Study Generator GEN-2015-018

DRAFT

The Power Factor Analysis shows that GEN-2015-018 has a power factor range of 0.973 to 0.998 leading (absorbing) for the 2016 Winter Peak conditions, a power factor range of 0.956 leading (absorbing) to 0.996 lagging (supplying) for the 2017 Summer Peak conditions, a power factor range of 0.967 leading (absorbing) to 1.00 (unity) for the 2020 Summer Peak conditions, a power factor range of 0.979 to 0.996 leading (absorbing) for the 2020 Winter Peak conditions, and a power factor range of 0.950 leading (absorbing) to 0.996 lagging (supplying) for the 2025 Summer Peak conditions.

Study Generator GEN-2015-020

The Power Factor Analysis shows that GEN-2015-020 has a power factor range of 0.971 leading (absorbing) to 0.999 lagging (supplying) for the 2016 Winter Peak conditions, a power factor range of 0.969 leading (absorbing) to 0.993 lagging (supplying) for the 2017 Summer Peak conditions, a power factor range of 0.975 leading (absorbing) to 1.00 (unity) for the 2020 Summer Peak conditions, a power factor range of 0.972 to 0.999 leading (absorbing) for the 2020 Winter Peak conditions, and a power factor range of 0.969 leading (absorbing) to 1.00 (unity) for the 2025 Summer Peak conditions.

Study Generator GEN-2015-031

The Power Factor Analysis shows that GEN-2015-031 has a power factor range of 0.995 leading (absorbing) to 0.879 lagging (supplying) for the 2016 Winter Peak conditions, a power factor range of 0.999 leading (absorbing) to 0.918 lagging (supplying) for the 2017 Summer Peak conditions, a power factor range of 0.996 leading (absorbing) to 0.948 lagging (supplying) for the 2020 Summer Peak conditions, a power factor range of 0.995 leading (absorbing) to 0.976 lagging (supplying) for the 2020 Winter Peak conditions, and a power factor range of 0.996 lagging (supplying) to 1.00 (unity) for the 2025 Summer Peak conditions.

Study Generator GEN-2015-033

The Power Factor Analysis shows that GEN-2015-033 has a power factor range of 0.993 leading (absorbing) to 0.763 lagging (supplying) for the 2016 Winter Peak conditions, a power factor range of 0.976 leading (absorbing) to 0.835 lagging (supplying) for the 2017 Summer Peak conditions, a power factor range of 0.993 leading (absorbing) to 0.919 lagging (supplying) for the 2020 Summer Peak conditions, a power factor range of 0.979 leading (absorbing) to 0.793 lagging (supplying) for the 2020 Winter Peak conditions, and a power factor range of 0.975 leading (absorbing) to 0.971 lagging (supplying) for the 2025 Summer Peak conditions.

Study Generator GEN-2015-040

The Power Factor Analysis shows that GEN-2015-040 has a power factor range of 0.909 lagging to 1.00 (unity) for the 2016 Winter Peak conditions, a power factor range of 0.484 to 0.823 lagging (supplying) for the 2017 Summer Peak conditions, a power factor range of 0.851 to

DRAFT

0.993 lagging (supplying) for the 2020 Summer Peak conditions, a power factor range of 0.957 leading (absorbing) to 0.959 lagging (supplying) for the 2020 Winter Peak conditions, and a power factor range of 0.707 to 0.977 lagging (supplying) for the 2025 Summer Peak conditions.

Study Generator GEN-2015-056

The Power Factor Analysis shows that GEN-2015-056 has a power factor range of 0.991 leading (absorbing) to 0.842 lagging (supplying) for the 2016 Winter Peak conditions, a power factor range of 0.890 to 0.998 lagging (supplying) for the 2017 Summer Peak conditions, a power factor range of 0.958 lagging (supplying) to 1.00 (unity) for the 2020 Summer Peak conditions, a power factor range of 0.998 leading (absorbing) to 0.892 lagging (supplying) for the 2020 Winter Peak conditions, and a power factor range of 0.980 lagging (supplying) to 1.00 (unity) for the 2025 Summer Peak conditions.

Study Generator GEN-2015-058

The Power Factor Analysis shows that GEN-2015-058 has a power factor range of 0.968 leading (absorbing) to 0.949 lagging (supplying) for the 2016 Winter Peak conditions, a power factor range of 0.975 leading (absorbing) to 0.942 lagging (supplying) for the 2017 Summer Peak conditions, a power factor range of 0.976 leading (absorbing) to 0.987 lagging (supplying) for the 2020 Summer Peak conditions, a power factor range of 0.990 leading (absorbing) to 0.990 lagging (supplying) for the 2020 Winter Peak conditions, and a power factor range of 0.972 leading (absorbing) to 0.959 lagging (supplying) for the 2025 Summer Peak conditions.

Study Generator GEN-2015-068

The Power Factor Analysis shows that GEN-2015-068 has a power factor range of 0.406 to 0.839 lagging (supplying) for the 2016 Winter Peak conditions, a power factor range of 0.950 to 0.896 lagging (supplying) for the 2017 Summer Peak conditions, a power factor range of 0.987 leading (absorbing) to 0.614 lagging (supplying) for the 2020 Summer Peak conditions, a power factor range of 0.982 leading (absorbing) to 0.463 lagging (supplying) for the 2020 Winter Peak conditions, and a power factor range of 0.998 leading (absorbing) to 0.0.676 lagging (supplying) for the 2025 Summer Peak conditions.

Study Generator GEN-2015-075

The Power Factor Analysis shows that GEN-2015-075 has a power factor range of 0.990 leading (absorbing) to 1.00 (unity) for the 2016 Winter Peak conditions, a power factor range of 0.985 leading (absorbing) to 1.00 (unity) for the 2017 Summer Peak conditions, a power factor range of 0.995 leading (absorbing) to 0.999 lagging (supplying) for the 2020 Summer Peak conditions, a power factor range of 0.995 leading (absorbing) to 1.00 (unity) for the 2020 Winter Peak conditions, and a power factor range of 0.984 leading (absorbing) to 0.998 lagging (supplying) for the 2025 Summer Peak conditions.

DRAFT

Study Generator GEN-2015-077

The Power Factor Analysis shows that GEN-2015-077 has a power factor range of 0.981 leading (absorbing) to 0.998 lagging (supplying) for the 2016 Winter Peak conditions, a power factor range of 0.982 leading (absorbing) to 0.940 lagging (supplying) for the 2017 Summer Peak conditions, a power factor range of 0.980 leading (absorbing) to 0.995 lagging (supplying) for the 2020 Summer Peak conditions, a power factor range of 0.988 leading (absorbing) to 0.997 lagging (supplying) for the 2020 Winter Peak conditions, and a power factor range of 0.988 leading (absorbing) to 0.994 lagging (supplying) for the 2025 Summer Peak conditions.

Study Generator GEN-2015-078

The Power Factor Analysis shows that GEN-2015-078 has a power factor range of 0.895 leading (absorbing) to 0.772 lagging (supplying) for the 2016 Winter Peak conditions, a power factor range of 0.899 leading (absorbing) to 0.583 lagging (supplying) for the 2017 Summer Peak conditions, a power factor range of 0.687 leading (absorbing) to 0.741 lagging (supplying) for the 2020 Summer Peak conditions, a power factor range of 0.764 leading (absorbing) to 0.649 lagging (supplying) for the 2020 Winter Peak conditions, and a power factor range of 0.756 leading (absorbing) to 0.534 lagging (supplying) for the 2025 Summer Peak conditions.

Study Generator GEN-2015-079

The Power Factor Analysis shows that GEN-2015-079 has a power factor range of 0.988 leading (absorbing) to 1.00 (unity) for the 2016 Winter Peak conditions, a power factor range of 0.982 leading (absorbing) to 0.991 lagging (supplying) for the 2017 Summer Peak conditions, a power factor range of 0.986 leading (absorbing) to 1.00 (unity) for the 2020 Summer Peak conditions, a power factor range of 0.991 leading (absorbing) to 1.00 (unity) for the 2020 Winter Peak conditions, and a power factor range of 0.974 leading (absorbing) to 0.999 lagging (supplying) for the 2025 Summer Peak conditions.

Study Generator GEN-2015-080

The Power Factor Analysis shows that GEN-2015-080 has a power factor range of 0.988 leading (absorbing) to 1.00 (unity) for the 2016 Winter Peak conditions, a power factor range of 0.982 leading (absorbing) to 0.991 lagging (supplying) for the 2017 Summer Peak conditions, a power factor range of 0.986 leading (absorbing) to 1.00 (unity) for the 2020 Summer Peak conditions, a power factor range of 0.991 leading (absorbing) to 1.00 (unity) for the 2020 Winter Peak conditions, and a power factor range of 0.974 leading (absorbing) to 0.999 lagging (supplying) for the 2025 Summer Peak conditions.

Summary of Low Wind/No Wind Analysis

DRAFT

The amount of reactive power injected into the transmission network was recorded at the point of interconnection for each wind and solar powered interconnection request for each season. The maximum reactance needed for zero Mvar flow was 58 Mvar for GEN-2015-068 (Tuco 345 kV). The minimum reactance needed for zero Mvar flow was 0.1 Mvar for GEN-2015-039 and GEN-2015-040 (Tap on Deaf Smith to Plant X 230 kV and Mustang 230 kV, respectively).

DRAFT

11.21 N: Group 7 Dynamic Stability Analysis Report

See next page

S&C ELECTRIC COMPANY
Excellence Through Innovation

DISIS-2015-002 (GROUP 7)

LITTLE ROCK, AR

SOUTHWEST POWER POOL

DEFINITIVE INTERCONNECTION SYSTEM IMPACT STUDY

S&C PROJECT NUMBER: 10192

DOCUMENT NUMBER: E-857

REVISION: 0

FINAL REPORT

CONFIDENTIAL

MARCH 15, 2016

DISCLAIMER
THIS DOCUMENT WAS PREPARED AND PROVIDED PURSUANT TO A CONTRACT WITH CUSTOMER AND/OR END USER THAT DEFINES THE PARTIES RESPECTIVE RIGHTS TO WORK PRODUCT AND INTELLECTUAL PROPERTY. ANY OTHER USE OF THIS DOCUMENT IS STRICTLY PROHIBITED. ALL OTHER RIGHTS ARE RESERVED AND NO LICENSE OR RIGHTS TO THE SUBJECT MATTER OF THIS DOCUMENT ARE GRANTED BY POSSESSION THEREOF.

REPORT REVISION HISTORY:

REV	DATE	PREPARED BY	REVIEWED BY	APPROVED BY	DESCRIPTION
A	02/15/2016	MA	SK	SK	Preliminary report issued.
0	03/15/2016	MA	SK	SK	Final report issued

AUTHORS:

Prepared By:

Matthew Artus
Design Engineer
S&C Electric Company

Reviewed and Approved By:

Saeed Kamalinia
Assistant Manager – Consulting and Analytical Services
S&C Electric Company

TABLE OF CONTENTS

1. Executive Summary 5
2. Introduction 7
3. Transmission System and Study Area 8
4. Power Flow Base Cases 9
5. Power Flow Model 11
6. Dynamic Stability Analysis 12
   6.1. Assumptions 12
   6.2. Stability Criteria 12
   6.3. Dynamic Stability Results 13
7. Power Factor Analysis 21
8. Low Wind/Low irradiance Conditions Analysis 23
9. Short-Circuit Study 24
10. Conclusions and Recommendations 25

LIST OF FIGURES

Figure 1: One-line Diagrams of the Interconnection Request Projects 11
Figure 2: DYR Changes Before (Top) & After (Bottom) modifying the under-frequency protection settings of AE inverters 17
Figure 3: GEN-2015-055 waveforms Before (Top) & After (Bottom) modifying the under-frequency protection settings of AE inverters 18
Figure 4: POI Bus Voltages Before (Top) and After (Bottom) GEN-2015-084 and GEN-2015-085 additions 19

LIST OF TABLES

Table 1: Group 7 Generation Interconnection Requests 7
Table 2: Prior-Queued Projects 7
Table 3: Group 7 Dynamic Stability Results 14
Table 4: Base Case Voltages at the Interconnection Request POI Bus 21
Table 5: Summary of Power Factor Analysis at the POI 22
Table 6: Shunt Reactor Mvar Determined by Low Wind/Low Irradiance Study 23

LIST OF APPENDICES

Appendix A
SPP Group 7 Fault Definitions (Submitted in a Separate File)
Appendix B
Southwest Power Pool Disturbance Performance Requirements (Submitted in a Separate File)
Appendix C
Dynamic Stability Plots For Cluster Scenario (Submitted in Separate Files from Appendix C-1 to C-3)
Appendix D
Dynamic Stability Plots For Stand-Alone Scenario (Submitted in Separate File from Appendix D-1 to D-12)
Appendix E
Power Factor Analysis Results (Submitted in Separate File from Appendix E-1 to E-4)
Appendix F
Short-Circuit Study Results (Submitted in Separate File From Appendix F-1 to F-2)

1. Executive Summary

S&C Electric Company (S&C) has performed a Definitive Interconnection System Impact Study, DISIS-2015-002 (Group 7), in response to a request through Southwest Power Pool (SPP) Tariff. Group 7 consists of four (4) new generation interconnection requests (GEN-2015-055, GEN-2015-071, GEN-2015-084, and GEN-2015-085). These four (4) interconnection requests consist of three (3) solar projects and one (1) wind farm project.

S&C has performed dynamic stability analysis for Group 7 under Cluster and Stand-Alone (SA) scenarios. The cluster studies were performed using three (3) cluster base cases (2016 Winter Peak, 2017 Summer Peak, and 2025 Summer Peak) provided by SPP. In the cluster studies, all four new interconnection requests and prior-queued projects were studied at 100% of nameplate MW capacity. The stand-alone studies were performed using three (3) stand-alone base cases (2016 WP, 2017 SP, and 2025 SP) provided by SPP and by placing an interconnection request into service, one at a time. The in-service interconnection project was dispatched at 100% power and the three (3) out of service interconnection projects were set to zero generation or to some defined value if the project is an increase to an existing project or facility. The dynamics stability analysis for the cluster and stand-alone studies indicated that Group 7 required a modification to the over-frequency & under-frequency relay settings in the Advanced Energy (AE) inverter model for interconnection request GEN-2015-055. Without this necessary modification, GEN-2015-055 tripped offline for multiple contingencies during all three peak seasons in cluster and stand-alone cases. Furthermore, sustained voltage oscillations were observed at the POIs of the interconnection requests GEN-2015-084 (bus 511507) and GEN-2015-085 (bus 560060) in the cluster and stand-alone studies. These issues were discussed with SPP and to mitigate these oscillations, two solutions were implemented. First, a branch was added from Altus Jct (511440) to GEN-2015-085 Tap (560060). Second, a STATCOM (2 Mvar) was added to interconnection project GEN-2015-084. After these modifications, the dynamics stability studies revealed that Group 7 projects met the SPP transient voltage requirements, with the solutions illustrated in the dynamic stability results section of this report.

S&C has performed power factor analysis on Group 7 Cluster scenarios. Power factor analysis reported the power factors at the study projects point of interconnection (POI) for all N-1 three-phase contingences and marked the contingency at which the required power factor at the POI of

study projects to maintain the voltages at the desired level is beyond the normal required capability (from 0.95 lagging to 0.95 leading) of the studied projects. Therefore, the power factor requirement for GEN-2015-055, GEN-2015-071, GEN-2015-084, and GEN-2015-085 interconnection requests is from 0.95 lagging to 0.95 leading power factor at the POIs.

S&C has performed an analysis of low wind/low irradiance conditions for each interconnection request that is a renewable energy project. The low wind/low irradiance analysis was performed under the Cluster scenarios by taking the interconnection generation out of service and determining the Mvar size of a shunt reactor to offset the reactive power that comes from the capacitance of the project's transmission lines and collector cables. The shunt reactor Mvars are given in Section 8.

S&C has performed a short-circuit analysis for the 2017 Summer Peak and 2025 Summer Peak under Group 7 Cluster and reported short-circuit results at all buses up to five levels away from the POI of the study projects.

2. INTRODUCTION

S&C has performed a Definitive Interconnection System Impact Study, DISIS-2015-002 (Group 7), in response to a request through the SPP Tariff. Group 7 consists of four (4) new interconnection requests listed in Table 1 and fourteen (14) previously queued projects listed in Table 2.

Table 1: Group 7 Generation Interconnection Requests

Project	Size (MW)	Generator Model	Generator Bus(es)	Point of Interconnection (POI)	POI Bus
GEN-2015-055	40.0	Advanced Energy - AE (solar)	584933	Erick 138 kV	520903
GEN-2015-071	200.0	Vestas (wind)	585083	Chisholm 345 kV	511553
GEN-2015-084	51.3	GE (solar)	585213	Hollis 138 kV	511507
GEN-2015-085	122.4	GE (solar)	585223	Altus to Snyder (G15-085T)	560060

Table 2: Prior-Queued Projects

Request	Size (MW)	Generator Model	Point of Interconnection
Blue Canyon I	74.3	WT1G1 (599006)	Washita 138 kV (521089)
Blue Canyon II (GEN-2003-004)	151.2	Vestas V80 (599003)	Washita 138 kV (521089)
GEN-2002-005	120	Acciona 1.5 MW (599018)	Moorewood – Elk City 138kV (521116)
GEN-2003-005/ GEN-2011-037	105.6	GE 1.6 MW (599023)	Tap on the Anadarko – Paradise 138 kV line (521129)
GEN-2003-022/ GEN-2004-020	150	GE 1.5 MW (579363)	Weatherford 138 kV (511506)
GEN-2006-002	100.8	GE 1.5 & 1.6 MW (599036 & 599038)	Sweetwater 230 kV (511541)
GEN-2006-035	224	Gamesa 2.0 MW (599049 & 599050)	Sweetwater 230 kV (511541)
GEN-2006-043	98.9	Siemens 2.3MW (599051)	Sweetwater 230 kV (511541)
GEN-2007-052	150	Gas Turbine (521110-521112)	Anadarko 138 kV (520814)
GEN-2008-023	148.8	GE 1.6 MW (599092 & 599094)	Hobart Junction 138 kV (511463)
GEN-2011-049	250.7	Siemens 2.3 MW (583093 & 583096)	Border 345 kV (515458)
GEN-2012-028	74.25	GE 1.7MW (583403)	Gotebo 69 kV (520925)
GEN-2015-004 (Uprate to GEN-2011-049)	52.9	Siemens 2.3 MW (583096)	Border 345 kV (515458)
GEN-2015-013	120.0	Eaton Power Xpert Solar Inverters 1.67 MW (584553)	Snyder 138 kV (521052)

3. Transmission System and Study Area

The interconnection requests in Group 7 will interconnect into American Electric Power West (AEPW, Area #520) and Western Farmers Electric Cooperative (WFEC, Area #525).

In addition to Areas #520 and #525, the following areas were monitored also:

- Oklahoma Gas & Electric (OKGE, Area #524)
- Southwestern Public Service (SPS, Area #526)
- Midwest Energy (MIDW, Area #531)
- Sunflower Electric Power Corporation (SUNC, Area #534)
- Westar Energy, Inc. (WERE, Area #536)

4. Power Flow Base Cases

DISIS-2015-002 (Group 7) and prior-queued projects were modeled as aggregated generating units in the base cases from SPP.

Cluster Scenario Base Cases

- **MDWG15-16WP_DIS1502_G07.sav** – 2016 Winter Peak Cluster Base Case for Group 7. New interconnection requests and prior-queued projects at 100% output power.
- **MDWG15-17SP_DIS1502_G07.sav** – 2017 Summer Peak Cluster Base Case for Group 7. New interconnection requests and prior-queued projects at 100% output power.
- **MDWG15-25SP_DIS1502_G07.sav** – 2025 Summer Peak Cluster Base Case for Group 7. New interconnection requests and prior-queued projects at 100% output power.

Stand-Alone Scenario Base Cases

- **MDWG15-16WP_DIS1502_G07-SA.sav** – 2016 Winter Peak SA Base Case for Group 7. New interconnection requests currently out of service.
- **MDWG15-17SP_DIS1502_G07-SA.sav** – 2017 Summer Peak SA Base Case for Group 7. New interconnection requests currently out of service.
- **MDWG15-25SP_DIS1502_G07-SA_r1.sav** – 2025 Summer Peak SA Base Case for Group 7. New interconnection requests currently out of service.

Note that on January 14, 2016, S&C received a corrected Stand Alone Model for the 2025 SP case only. This explains why the 2025 SP case contains an “r1” suffix in its filename (see above).

On February 8, 2016, S&C informed SPP of a base case concern regarding Prior Outage #53. Simulation of the base case power flow produced the following error: “Iteration Limit Exceeded”. This error impacted the following SAV cases:

- GEN-2015-055 stand-alone (17SP)
- GEN-2015-071 stand-alone (17SP)
- GEN-2015-085 stand-alone (17SP)
- GEN-2015-055 stand-alone (25SP)

This issue was resolved by locking the shunt device at bus #512102 to produce a stable power flow solution.

On March 9, 2016, S&C received the following IDEV files to resolve voltage oscillations witnessed at the POI buses of the interconnection requests GEN-2015-084 (511507) and GEN-2015-085 (560060):

- DIS1502_ERIS_BUILD_ALTUSJCT-GEN-2015-085TAP-138kV-CKT1.idv
    - Adds a branch from Altus Jct (511440) to GEN-2015-085 Tap (560060) 138kV
- GEN-2015-084_CSTATT.idv
    - Adds a 2 Mvar STATCOM to GEN-2015-084

5. Power Flow Model

SPP's base case power flow models were built in PSS/E 32.2.2. In PSS/E of the same version, S&C created one-line diagrams depicted in Figure 1 for each interconnection request.

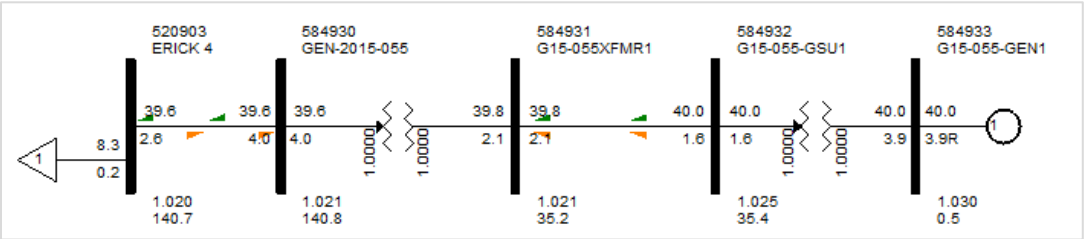

(a) Interconnection request GEN-2015-055

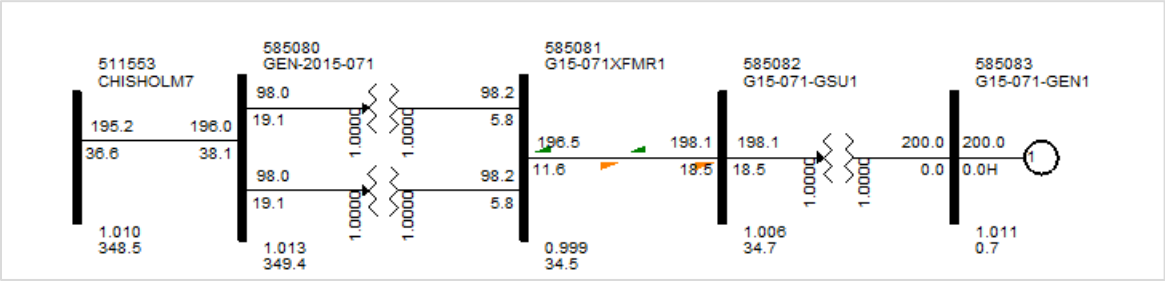

(b) Interconnection request GEN-2015-071

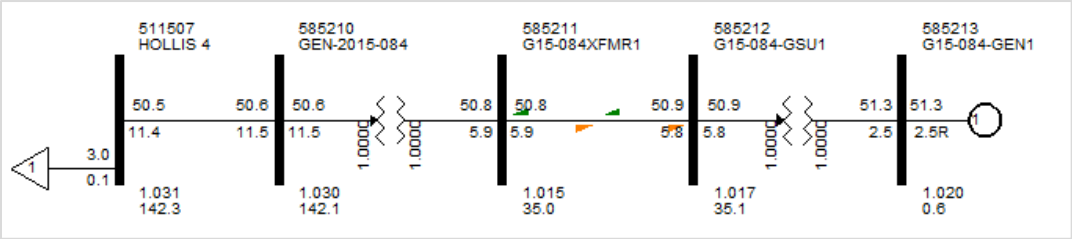

(c) Interconnection request GEN-2015-084

* A 2 Mvar STATCOM placed at Bus #585211 for specific contingencies (see Table 3)

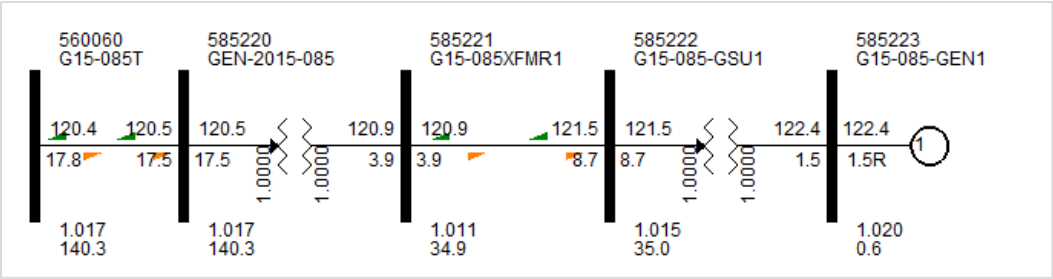

(d) Interconnection request GEN-2015-085

Figure 1: One-line Diagrams of the Interconnection Request Projects

6. Dynamic Stability Analysis

6.1. Assumptions

Dynamic stability analysis was performed for all the SPP contingencies listed in Appendix A. Three-phase faults were simulated as bolted faults, while single line-to-ground faults were simulated under the assumption that a single line-to-ground fault will cause a 60% drop in the positive-sequence voltage at the fault location.

6.2. Stability Criteria

Dynamic stability studies were performed to ensure system stability following critical faults on the system. The system is considered stable if the following conditions are met:

(1) Disturbances including three-phase and single-phase to ground faults, should not cause synchronous and asynchronous plants to disconnect from the transmission grid.

(2) The angular positions of synchronous machine rotor become constant following an aperiodic system disturbance.

(3) Voltage magnitudes and frequencies at terminals of asynchronous generators should not exceed magnitudes and durations that will cause protection elements to operate. Furthermore, the response after the disturbance needs to be studied at the terminals of the machine to ensure that there are no sustained oscillations in power output, speed, frequency, etc.

(4) Voltage magnitudes and angles after the disturbance should settle to a constant and acceptable operating level. Frequencies should settle to the acceptable range within nominal 60 Hz power frequency.

In addition, performance of the transmission system is measured against the SPP Disturbance Criteria Requirements on Angular oscillations and Transient Voltage Recovery, detailed in Appendix B.

6.3. DYNAMIC STABILITY RESULTS

Multiple concerns surfaced during preliminary dynamic stability simulations. A detailed list of such concerns and how they were addressed is shown below.

- Generation Interconnection Request GEN-2015-055 (involving AE solar inverters) was tripping offline due to over-frequency.
    - S&C received resolution from SPP to change the over-frequency parameters using an IDV file titled "GEN-2015-055_AEINX_OverFreq_extended.idv".
- Gamesa WTGs at bus 599059 & 599050 tripped on under-voltage
    - The cause was traced to an improper implementation of the under-voltage protection scheme for the Gamesa WTGs. To make the appropriate correction, S&C applied an IDV file titled "GEN-2006-035_UV_Protection_ Modification.idv" from SPP.
- Simulation of FLT41caused PSS/E to crash
    - The cause was traced to the use of the Siemens SWT_32_rev10.lib module. Reverting to a previous version of the module (SWT_32_rev8.lib module) resolved the issue. DLL and SNP files were provided by SPP to apply the change.

Dynamic stability simulations were performed once again after implementing the solutions described above. Table 3 below summarizes the dynamic stability results for each contingency and each season.

Table 3: Group 7 Dynamic Stability Results
(YES = STABLE, NO = UNSTABLE, '-' = Not applicable)

Cont. No.	Cont. Name	Cluster 16WP	16WP Stand Alone (GEN-2015-055)	16WP Stand Alone (GEN-2015-071)	16WP Stand Alone (GEN-2015-084)	16WP Stand Alone (GEN-2015-085)	Cluster 17SP	17SP Stand Alone (GEN-2015-055)	17SP Stand Alone (GEN-2015-071)	17SP Stand Alone (GEN-2015-084)	17SP Stand Alone (GEN-2015-085)	Cluster 25SP	25SP Stand Alone (GEN-2015-055)	25SP Stand Alone (GEN-2015-071)	25SP Stand Alone (GEN-2015-084)	25SP Stand Alone (GEN-2015-085)
1	FLT01-3PH	YES	YES [1]	-	-	-	YES	YES [1]	-	-	-	YES	YES [1]	-	-	-
2	FLT02-3PH	YES	YES [1]	-	-	-	YES	YES [1]	-	-	-	YES	YES [1]	-	-	-
3	FLT03-3PH	YES	YES	YES	-	-	YES	YES	YES	-	-	YES	YES	YES	-	-
4	FLT04-3PH	YES	YES	YES	-	YES	YES	YES	YES	-	YES	YES	YES	YES	-	YES
5	FLT05-3PH	YES [2]	YES	YES [2]	-	-	YES	YES [2]	YES	-	-	YES	YES	YES	-	-
6	FLT06-3PH	YES	YES	YES	-	-	YES	YES	YES	-	-	YES	YES	YES	-	-
7	FLT07-3PH	YES	YES	-	-	-	YES	YES	-	-	-	YES	YES	-	-	-
8	FLT08-3PH	YES	YES	-	-	YES	YES	YES	-	-	YES	YES	YES	-	-	YES
9	FLT09-3PH	YES	YES	-	-	YES	YES	YES	-	-	YES	YES	YES	-	-	YES
10	FLT10-3PH	YES	YES	-	-	YES	YES	YES	-	-	YES	YES	YES	-	-	YES
11	FLT11-3PH	YES	YES	-	YES	YES	YES	YES	-	YES	YES	YES	YES	-	YES	YES
12	FLT12-3PH	YES	-	-	YES	YES	YES	-	-	YES	YES	YES	-	-	YES	YES
13	FLT13-3PH	YES [3]	-	-	YES	YES [3]	YES [3]	-	-	YES	YES [3]	YES [3]	-	-	YES	YES [3]
14	FLT14-3PH	YES	-	-	YES	YES	YES	-	-	YES	YES	YES	-	-	YES	YES
15	FLT15-3PH	YES	-	-	YES	YES	YES	-	-	YES	YES	YES	-	-	YES	YES
16	FLT16-3PH	YES	-	-	YES	YES	YES	-	-	YES	YES	YES	-	-	YES	YES
17	FLT17-3PH	YES	-	-	YES	YES	YES	-	-	YES	YES	YES	-	-	YES	YES
18	FLT18-3PH	YES [3]	-	-	YES	YES [3]	YES [3]	-	-	YES	YES [3]	YES [3]	-	-	YES	YES [3]
19	FLT19-3PH	YES	-	-	-	YES	YES	-	-	-	YES	YES	-	-	-	YES
20	FLT20-3PH	YES [3]	-	-	YES	YES [3]	YES [3]	-	-	YES	YES [3]	YES [3]	-	-	YES	YES [3]

[1] Frequency protection scheme was modified to prevent GEN-2015-055 from tripping off line. See discussion in the body of the report.
[2] Relay SLNOS #1 (523777-523779) taken out of service per SPP's instruction.
[3] Voltage oscillations at the POI buses 511507 & 560060 resolved with the addition of the branch 511440-560060 and/or a 2 Mvar STATCOM at Bus #585211. See later for more details.

Cont. No.	Cont. Name	Cluster 16WP	16WP Stand Alone (GEN-2015-055)	16WP Stand Alone (GEN-2015-071)	16WP Stand Alone (GEN-2015-084)	16WP Stand Alone (GEN-2015-085)	Cluster 17SP	17SP Stand Alone (GEN-2015-055)	17SP Stand Alone (GEN-2015-071)	17SP Stand Alone (GEN-2015-084)	17SP Stand Alone (GEN-2015-085)	Cluster 25SP	25SP Stand Alone (GEN-2015-055)	25SP Stand Alone (GEN-2015-071)	25SP Stand Alone (GEN-2015-084)	25SP Stand Alone (GEN-2015-085)
21	FLT21-3PH	YES	-	-	YES [3]	YES	YES	-	-	YES [3]	YES	YES	-	-	YES [3]	YES
22	FLT22-3PH	YES [3]	-	-	YES [3]	YES	YES [3]	-	-	YES [3]	YES	YES [3]	-	-	YES [3]	YES [3]
23	FLT23-3PH	YES	-	-	YES [3]	YES	YES	-	-	YES [3]	YES	YES	-	-	YES [3]	YES
24	FLT24-3PH	YES	-	-	YES [3]	YES	YES	-	-	YES [3]	YES	YES	-	-	YES [3]	YES
25	FLT25-3PH	YES	-	-	YES [3]	-	YES	-	-	YES [3]	-	YES	-	-	YES	-
26	FLT26-3PH	YES	-	-	YES	-	YES	-	-	YES	-	YES	-	-	YES	-
27	FLT27-3PH (25SP Only)	-	-	-	-	-	-	-	-	-	-	YES	YES	YES	-	-
28	FLT28-3PH (25SP Only)	-	-	-	-	-	-	-	-	-	-	YES	YES	YES	-	-
29	FLT29-3PH	YES	YES	YES	-	-	YES	YES	YES	-	-	YES	YES	YES	-	-
30	FLT30-3PH (25SP Only)	-	-	-	-	-	-	-	-	-	-	YES	-	YES	-	-
31	FLT31-3PH (25SP Only)	-	-	-	-	-	-	-	-	-	-	YES	-	YES	-	-
32	FLT32-3PH	YES	-	YES	-	-	YES	-	YES	-	-	YES	-	YES	-	-
33	FLT33-3PH	YES	-	YES	-	-	YES	-	YES	-	-	YES	-	YES	-	-
34	FLT34-3PH	YES	-	YES	-	-	YES	-	YES	-	-	YES	-	YES	-	-
35	FLT35-3PH	YES	-	YES	-	-	YES	-	YES	-	-	YES	-	YES	-	-
36	FLT36-3PH	YES	-	YES	-	-	YES	-	YES	-	-	YES	-	YES	-	-
37	FLT37-3PH	YES	-	YES	-	-	YES	-	YES	-	-	YES	-	YES	-	-
38	FLT38-3PH	YES	-	YES	-	-	YES	-	YES	-	-	YES	-	YES	-	-
39	FLT39-3PH	YES	-	YES	-	-	YES	-	YES	-	-	YES	-	YES	-	-
40	FLT40-3PH	YES	-	YES	-	-	YES	-	YES	-	-	YES	-	YES	-	-
41	FLT41-3PH	YES	-	YES	-	-	YES	-	YES	-	-	YES	-	YES	-	-
42	FLT42-PO	YES	YES	-	-	-	YES	YES	-	-	-	YES	YES	-	-	-
43	FLT43-PO	YES	YES	-	-	-	YES	YES	-	-	-	YES	YES	-	-	-
44	FLT44-SB	YES	YES	-	-	-	YES	YES	-	-	-	YES	YES	-	-	-
45	FLT45-SB	YES	YES	-	-	-	YES	YES	-	-	-	YES	YES	-	-	-
46	FLT46-PO	-	-	-	-	-	-	-	-	-	-	YES	-	YES	-	-

Cont. No.	Cont. Name	Cluster 16WP	16WP Stand Alone (GEN-2015-055)	16WP Stand Alone (GEN-2015-071)	16WP Stand Alone (GEN-2015-084)	16WP Stand Alone (GEN-2015-085)	Cluster 17SP	17SP Stand Alone (GEN-2015-055)	17SP Stand Alone (GEN-2015-071)	17SP Stand Alone (GEN-2015-084)	17SP Stand Alone (GEN-2015-085)	Cluster 25SP	25SP Stand Alone (GEN-2015-055)	25SP Stand Alone (GEN-2015-071)	25SP Stand Alone (GEN-2015-084)	25SP Stand Alone (GEN-2015-085)
	(25SP Only)															
47	FLT47-PO	YES [2]	-	YES [2]	-	-	YES	-	YES	-	-	YES	-	YES	-	-
48	FLT48-PO	YES	-	YES	-	-	YES	-	YES	-	-	YES	-	YES	-	-
49	FLT49-SB (25SP Only)	-	-	-	-	-	-	-	-	-	-	-	-	-	-	-
50	FLT50-SB	-	-	-	-	-	-	-	-	-	-	-	-	-	-	-
51	FLT51-SB	YES	-	YES	-	-	YES	-	YES	-	-	YES	-	YES	-	-
52	FLT52-PO	YES	-	-	YES	-	YES	-	-	YES	-	YES	-	-	YES	-
53	FLT53-PO	YES	-	-	YES	YES	YES	-	-	YES	YES	YES	-	-	YES	YES
54	FLT54-SB	YES	-	-	YES [3]	-	YES	-	-	YES [3]	-	YES	-	-	YES [3]	-
55	FLT55-SB	YES [3]	-	-	YES [3]	-	YES [3]	-	-	YES [3]	-	YES [3]	-	-	YES [3]	-
56	FLT56-PO	YES	-	-	-	YES	YES	-	-	-	YES	YES	-	-	-	YES
57	FLT57-PO	YES [4]	-	-	-	YES [4]	YES [4]	-	-	-	YES [4]	YES [4]	-	-	-	YES [4]
58	FLT58-PO	YES	-	-	-	YES	YES	-	-	-	YES	YES	-	-	-	YES
59	FLT59-SB	YES [4]	-	-	-	YES [4]	YES [4]	-	-	-	YES [4]	YES [4]	-	-	-	YES [4]
60	FLT60-SB	YES	-	-	-	YES	YES	-	-	-	YES	YES	-	-	-	YES
61	FLT61-SB	YES	-	-	-	YES	YES	-	-	-	YES	YES	-	-	-	YES
62	FLT62-3PH	YES	-	YES	-	-	YES	-	YES	-	-	YES	-	YES	-	-
63	FLT63-SB	-	-	-	-	-	-	-	-	-	-	-	-	-	-	-
64	FLT64-SB	-	-	-	-	-	-	-	-	-	-	-	-	-	-	-
65	FLT65-SB	-	-	-	-	-	-	-	-	-	-	-	-	-	-	-
66	FLT66-SB	-	-	-	-	-	-	-	-	-	-	-	-	-	-	-

[4] FLT57-PO & FLT59-SB island GEN-2015-013 at Bus #584553 (Prior-Queued Project). This was discussed with SPP and is an intentional practice.

After performing the dynamic simulations once again, it was realized that Generation Interconnection Request GEN-2015-055 (involving AE solar inverters) was still tripping offline for FLT01 and FLT02 (see Table 3). After further investigation, it was found that adjusting the over-frequency parameters (mentioned previously) resolved Fault Code 81O but did not resolve Fault Code 81U-1. It was subsequently determined that the appearance of Fault Code 81U-1 is related to under-frequency protection. By extending the under-frequency settings as shown in Figure 2, GEN-2015-055 no longer tripped offline. Figure 3 helps to illustrate the result of this solution.

```
BEFORE:
584933 'USRMDL' 1 'AEINX' 1 1 1 27 4 14 2 1.20 1.10 0.005 2.26 142.30 0.4 25.00
        1.00 1.2 1.0 1.1 99.0 0.0 2.00 0.50 3.5 62.5 2.00 57.0 0.02 59.3 0.10
        1.00 0.485 1.100 30.0 0.0 /

AFTER:
584933 'USRMDL' 1 'AEINX' 1 1 1 27 4 14 2 1.20 1.10 0.005 2.26 142.30 0.4 25.00
        1.00 1.2 1.0 1.1 99.0 0.0 2.00 0.50 3.5 62.5 2.00 57.0 2.00 59.3 2.00
        1.00 0.485 1.100 30.0 0.0 /
```

Figure 2: DYR Changes Before (Top) & After (Bottom) modifying the under-frequency protection settings of AE inverters

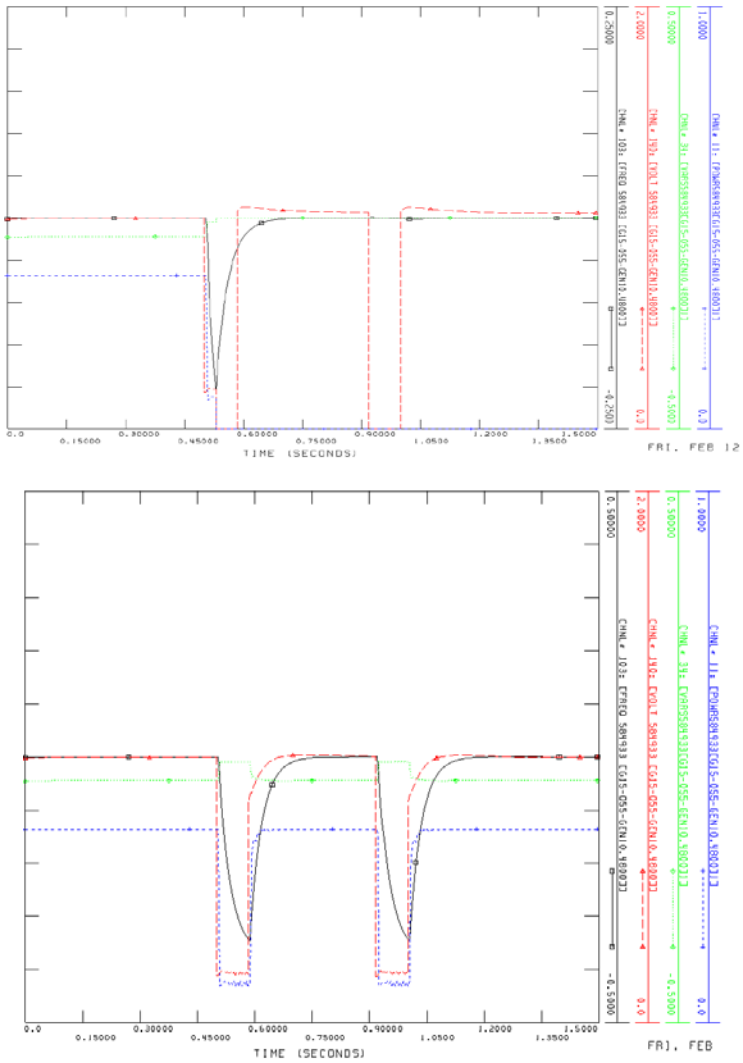

Figure 3: GEN-2015-055 waveforms Before (Top) & After (Bottom) modifying the under-frequency protection settings of AE inverters
(Black: Frequency & Blue = Power)

Another noteworthy item shown in Table 3 involves the alterations made to interconnection projects GEN-2015-084 and GEN-2015-085: These alterations include the following:

- Addition of a branch from Altus Jct (511440) to GEN-2015-085 Tap (560060)
- Addition of a 2 MVAR STATCOM to the GEN-2015-084 project (585211)

These alterations were implemented to mitigate voltage oscillations witnessed at POI bus 511507 (interconnection request GEN-2015-084) and the POI bus 560060 (interconnection request GEN-2015-085). More detail is provided using Figure 4.

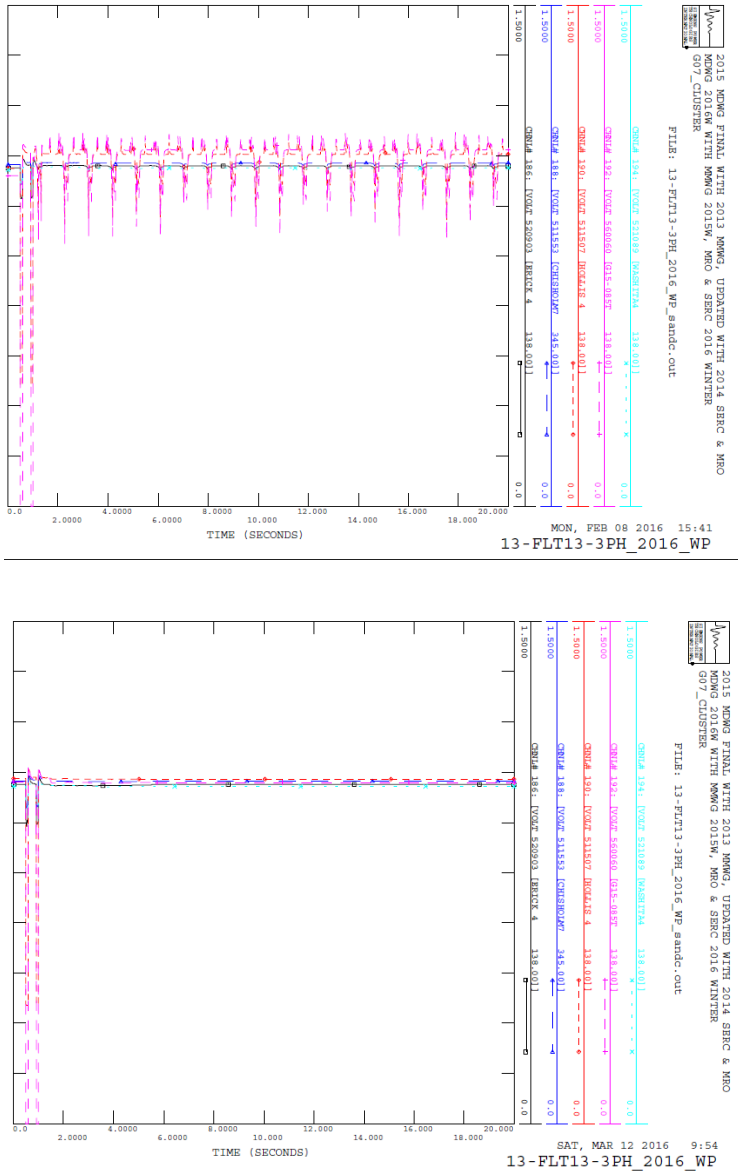

Figure 4: The POI Bus Voltages Before (Top) and After (Bottom) GEN-2015-084 and GEN-2015-085 additions

(Pink: Interconnection POI Bus 560060 Voltage &
Red: Interconnection POI Bus 511507 Voltage)

In addition, relay SLNOS#1 (protecting line 523777-523779) was needed to be taken out of service in various cases to prevent undesired tripping of line 523777-523779 (more detail shown in Table 3).

With the solutions identified, dynamic stability analysis thus concluded that Group 7 is expected to successfully ride-through all contingencies specified by SPP and the nearby areas retained frequency and voltage stability. Detailed plots of cluster dynamic stability results for each contingency and each peak season, are given in Appendix C. Plots of stand-alone dynamic stability result for each contingency and each season are given Appendix D.

7. Power Factor Analysis

The power factor analysis was performed under the cluster cases and for all N-1 three-phase contingencies shown in the Fault Definition table in Appendix A. Single-phase contingencies, N-1-1 contingencies and N-2 contingencies were excluded from the study. Prior to the run, the cluster base cases were slightly altered, by turning off the reactive capability of the renewable energy projects and by placing a new var generator at each renewable energy high voltage bus for supporting the reactive power. The var generators were set to hold the voltage schedule at the interconnection project consistent with the voltage schedules in the provided base case or 1.0 p.u. voltage (whichever is higher).

Table 4 gives the voltage schedule at each interconnection request location in the original cluster base cases.

Table 4: Base Case Voltages at the Interconnection Request POI Bus

Request	POI	2016 Winter Peak (p.u.)	2017 Summer Peak (p.u.)	2025 Summer Peak (p.u.)
GEN-2015-055	520903	1.020	1.016	1.019
GEN-2015-071	511553	1.010	1.017	1.023
GEN-2015-084	511507	1.031	1.025	1.022
GEN-2015-085	560060	1.017	1.014	1.011

The power factor analysis results for Group 7 interconnection requests for each N-1 three phase contingency were presented in Appendix E tables. We marked in pink the contingency at which the required power factor at the POI of the study project is beyond the normal required capability (from 0.95 lagging to 0.95 leading) of the studied renewable energy project. We also provided a summary table below of the maximum leading/lagging reactive power demand and power factor found by the power factor analysis at the POIs. Therefore, the power factor requirement for GEN-2015-055, GEN-2015-071, GEN-2015-084, and GEN-2015-085 interconnection requests is from 0.95 lagging to 0.95 leading power factor at the POIs.

Table 5: Summary of Power Factor Analysis at the POI

Request	Capacity	POI	Reactive Power/Power Factor at POI	
			Leading (absorbing vars)	Lagging (providing vars)
GEN-2015-055	40.0 MW	520903	-9.6 Mvar / 0.972	15.7 Mvar / 0.931
GEN-2015-071	200.0 MW	511553	-54.0 Mvar / 0.965	19.2 Mvar / 0.995
GEN-2015-084	51.3 MW	511507	-14.9 Mvar / 0.960	5.7 Mvar / 0.994
GEN-2015-085	122.4 MW	560060	-25.9 Mvar / 0.978	N/A

NOTE: Per the SPP Tariff as reactive power is required for all projects, the final requirement in the GIA will be the pro-forma 95% lagging to 95% leading at the point of interconnection.

8. Low Wind/Low irradiance Conditions Analysis

S&C has performed an analysis of low wind/low irradiance conditions for the interconnection requests that is a renewable energy project. The low wind/low irradiance analysis was performed under the Cluster scenarios by taking the interconnection renewable energy project out of service and placing a shunt reactor at the project substation high side to offset the reactive power that comes from the capacitance of the project's transmission lines and collector cables. The size of the shunt reactor was adjusted such that the net Mvar flow into the POI from the studied renewable energy project was approximately zero. Table 6 gives the shunt reactor Mvars for the studied projects.

Table 6: Shunt Reactor Mvar Determined by Low Wind/Low Irradiance Study

Request	POI	2016 Winter Peak	2017 Summer Peak	2025 Summer Peak
GEN-2015-055	520903	1.8	1.8	1.8
GEN-2015-071	511553	11.7	11.7	11.7
GEN-2015-084	511507	0.5	0.5	0.5
GEN-2015-085	560060	5.4	5.2	5.2

9. SHORT-CIRCUIT STUDY

A short-circuit study has been performed on the power flow models for the 2017 Summer Peak and 2025 Summer Peak Seasons for each generator using the Cluster Scenario model. Short-circuit analysis includes applying a 3-phase fault on buses up to 5 levels away from the POI of each interconnection request project. PSS/E "Automatic Sequence Fault Calculation (ASCC)" fault analysis module was used for the purpose of short-circuit analysis. The results of the short-circuit analysis have been recorded for all the buses up to five levels away from the point of interconnection of each interconnection request project. Detailed results of the short-circuit study are provided in Appendix F.

10. CONCLUSIONS AND RECOMMENDATIONS

Analysis of Group 7 dynamic results revealed that the Cluster base case (16WP, 17SP, and 25SP) and the GEN-2015-055 Stand-alone base case (16WP, 17SP, and 25SP) exhibited instability for multiple contingencies (e.g. Generator 1 at bus 584933 tripped on Fault Code 810). These instability issues revealed that Stand-alone interconnection of GEN-2015-055 project requires a modification to the over-frequency and under-frequency relay settings in the inverter model for the project. Increasing the over-frequency and under-frequency relay settings in the project's dynamics model proved necessary to prevent the plant from disconnecting during system faults. With the extended relay settings, GEN-2015-055 does not require any additional system upgrades.

In addition, voltage oscillations were observed at the POIs of the interconnection request GEN-2015-084 (bus 511507) and GEN-2015-085 (bus 560060). These oscillations occurred for various faults in the following cases: Cluster case (16WP, 17SP, and 25SP), GEN-2015-084 Stand-alone case (16WP, 17SP, and 25SP) and GEN-2015-085 Stand-alone case (16WP, 17SP, and 25SP). Investigation of these oscillations revealed the following necessary upgrades in the system: addition of a branch from Altus Jct (511440) to GEN-2015-085 Tap (560060) and addition of a STATCOM (2 Mvar) to interconnection project GEN-2015-084.

Overall, Group 7's dynamic results (Cluster and Stand-Alone) indicated that the interconnection request projects are expected to successfully ride through all N-1 and N-2 fault contingencies specified by SPP, retaining angular, frequency and voltage stability at the nearby areas and meeting the transient voltage recovery requirement by SPP, with the solutions illustrated in the dynamic stability results section of this report. With the implementation of these solutions or similar alternatives, it is thus concluded that Group 7 study projects having the required upgrades, are expected to successfully interconnect into the transmission system at their desired locations for 100% power outputs.

The results of power factor analysis indicate that all interconnection requests are required to maintain a power factor of 0.95 lagging to 0.95 leading at the POI to meet SPP's requirements.

The project's low wind/low irradiance study suggested that to offset the reactive power from the capacitance of the project's transmission lines and collector cables during the low wind/low irradiance conditions, a 1.8 Mvar shunt reactor size is required for the GEN-2015-055 high voltage side, 11.7 Mvar for GEN-2015-071, 0.5 Mvar for GEN-2015-084 and 5.4 Mvar for GEN-2015-085.

A short-circuit study has been performed on the power flow models for the 2017 Summer Peak Season and 2025 Summer Peak Season for each generator using the Cluster Scenario model. A 3-phase fault is applied on buses up to 5 levels away from the POI of each interconnection request project and the results of the study have been presented.

Appendix A

SPP Group 7 Fault Definitions (Submitted in a Separate File)

Appendix B

Southwest Power Pool Disturbance Performance Requirements (Submitted in a Separate File)

Appendix C

Dynamic Stability Plots For Cluster Scenario (Submitted in Separate Files from Appendix C-1 to C-3)

C-1 Group 7 Cluster Dynamic Stability Plots For 2016 Winter Peak Case

C-2 Group 7 Cluster Dynamic Stability Plots For 2017 Summer Peak Case

C-3 Group 7 Cluster Dynamic Stability Plots For 2025 Summer Peak Case

Each contingency consists of (30) subplots:

- Subplot #1 are the (4) monitor system phase angle channels in the original snapshot file provided by SPP.
- Subplot #2 to Subplot #24 are results for (23) generators in the scope of study.
- Subplots #25 to Subplot #27 are voltages at the POI buses in the scope of study.
- Subplots #28 to Subplot #30 are frequencies at the POI buses in the scope of study.

Appendix D

Dynamic Stability Plots For Stand-Alone Scenario (Submitted in Separate File from Appendix D-1 to D-12)

D-1 Group7 Stand-Alone "GEN-2015-55" Dynamic Stability Plots For 2016 Winter Peak Case

D-2 Group7 Stand-Alone "GEN-2015-71" Dynamic Stability Plots For 2016 Summer Peak Case

D-3 Group7 Stand-Alone "GEN-2015-84" Dynamic Stability Plots For 2016 Summer Peak Case

D-4 Group7 Stand-Alone "GEN-2015-85" Dynamic Stability Plots For 2016 Winter Peak Case

D-5 Group7 Stand-Alone "GEN-2015-55" Dynamic Stability Plots For 2017 Summer Peak Case

D-6 Group7 Stand-Alone "GEN-2015-71" Dynamic Stability Plots For 2017 Summer Peak Case

D-7 Group7 Stand-Alone "GEN-2015-84" Dynamic Stability Plots For 2017 Winter Peak Case

D-8 Group7 Stand-Alone "GEN-2015-85" Dynamic Stability Plots For 2017 Summer Peak Case

D-9 Group7 Stand-Alone "GEN-2015-55" Dynamic Stability Plots For 2025 Summer Peak Case

D-10 Group7 Stand-Alone "GEN-2015-71" Dynamic Stability Plots For 2025 Winter Peak Case

D-11 Group7 Stand-Alone "GEN-2015-84" Dynamic Stability Plots For 2025 Summer Peak Case

D-12 Group7 Stand-Alone "GEN-2015-85" Dynamic Stability Plots For 2025 Summer Peak Case

Each contingency consists of (30) subplots:

- Subplot #1 are the (4) monitor system phase angle channels in the original snapshot file provided by SPP.
- Subplot #2 to Subplot #24 are results for (23) generators in the scope of study.
- Subplots #25 to Subplot #27 are voltages at the POI buses in the scope of study.
- Subplots #28 to Subplot #30 are frequencies at the POI buses in the scope of study.

Appendix E

Power Factor Analysis Results (Submitted in Separate File from Appendix E-1 to E-4)

E-1 Group 7 Power Factor Results for Interconnection Request GEN-2015-055 (#520903)

E-2 Group 7 Power Factor Results for Interconnection Request GEN-2015-071 (#511553)

E-3 Group 7 Power Factor Results for Interconnection Request GEN-2015-084 (#511507)

E-4 Group 7 Power Factor Results for Interconnection Request GEN-2015-085 (#560060)

Appendix F

Short-Circuit Study Results (Submitted in Separate File From Appendix F-1 to F-2)

F-1 GROUP 7 17SP Short-Circuit Study Results
F-2 GROUP 7 25SP Short-Circuit Study Results

11.22 O: Group 8 Dynamic Stability Analysis Report

See MEPPI report on next page.

MITSUBISHI ELECTRIC POWER PRODUCTS, INC.
POWER SYSTEMS ENGINEERING SERVICES
530 KEYSTONE DRIVE
WARRENDALE, PA 15086, U.S.A.

Phone: (724) 778-5111 Fax: (724) 778-5149
Home Page: www.meppi.com

Southwest Power Pool, Inc. (SPP)

DISIS-2015-002 (Group 08) Definitive Impact Study

Final Report

PXE-1201
Revision #00

February 2016

Submitted By:
Mitsubishi Electric Power Products, Inc. (MEPPI)
Power Systems Engineering Services Department
Warrendale, PA

Title: **DISIS-2015-002 (Group 08) Definitive Impact Study: Final Report PXE-1201**
Date: February 2016
Author: Marcus Young, Ph.D., P.E.; Principal Engineer, Power Sys Eng. Dept. *Marcus Young*
Reviewed: Nicholas W. Tenza; Engineer II, Power Systems Engineering Dept. *Nicholas W. Tenza*
Approved: Elizabeth M. Cook; Section Manager, Power Systems Engineering Dept. *Elizabeth M. Cook*

EXECUTIVE SUMMARY

SPP requested a Definitive Interconnection System Impact Study (DISIS). The DISIS required a Stability Analysis, Short Circuit Analysis, Power Factor Analysis, and Low Wind/No Wind Analysis detailing the impacts of the interconnecting projects as shown in Table ES-1.

Table ES-1
Interconnection Projects Evaluated

Request	Size (MW)	Generator Model	Point of Interconnection
GEN-2015-034	200	Vestes V112- 2MW (wind)	Ranch Road 345kV (515576)
GEN-2015-043	20	Inverter user model (WT4) (battery storage)	Wichita (532796)-Thistle (539801) 345kV Tap (GEN-2015-024 (560033) 34.5 kV)
GEN-2015-047	300	Vestes V110-2MW (wind)	Sooner 345kV Tap (514803)
GEN-2015-052	300	Vestes V110-2MW (wind)	Tap on Opensky (515621) to RoseHill (532794) 345 kV (560053)
GEN-2015-062	4.5	G.E. 1.79MW (wind)	Breckenridge 138kV (514815)
GEN-2015-063	300	Vestes V110-2MW (wind)	Tap on Woodring (514715) to Matthewson (515497) 345 kV (560055)
GEN-2015-066	248	G.E. 2.3MW (wind)	Tap on Cleveland (512694) to Sooner (514803) 345 kV (560056)
GEN-2015-067	150	PV inverter user model (solar)	Sooner 138kV (514802)
GEN-2015-069	300	Vestes V110-2MW (wind)	Union Ridge 230kV (532874)
GEN-2015-073	200.1	Siemens 2.3MW (wind)	Emporia/Lang 345kV (532768)
GEN-2015-083	125	G.E. 2.3MW (wind)	Belle Plain 138kV (533063)
GEN-2015-090	220	G.E. 2MW (wind)	Wichita (532796)-Thistle (539801) 345kV Tap (GEN-2015-024 (560033) 345kV)

SUMMARY OF STABILITY ANALYSIS

The Stability Analysis determined that there were no contingencies that resulted in system instability, generation tripping offline, or voltage violations for the 2016 Winter Peak, 2017 Summer Peak, and 2025 Summer Peak seasons when all generation interconnection requests were at 100% output for both the Cluster Scenario and the Stand Alone Scenario. Thus, no mitigations or upgrades were required.

SUMMARY OF THE SHORT CIRCUIT ANALYSIS

The short circuit analysis was performed on the 2017 Summer Peak and 2025 Summer Peak power flow for all study projects. Refer to Table ES-2 and ES-3 for a list of maximum fault currents observed for each study project for the 2017 Summer Peak and 2025 Summer Peak Cluster Scenarios, respectively.

Table ES-2
List of Maximum Fault Currents Observed in 2017 Summer Peak Power Flow for Each Study Project

Study Project	Fault Current at POI (kA)	Maximum Fault Current (kA)	Fault Location	Bus Voltage (kV)
GEN-2015-034	13.62	42.31	NORTWST4	138
GEN-2015-043	19.04	36.98	EVANS S4, EVANS N4	118
GEN-2015-047	24.53	42.31	NORTWST4	138
GEN-2015-052	19.49	41.38	EVANS S4, EVANS N4	138
GEN-2015-062	13.48	24.53	SOONER 7	345
GEN-2015-063	16.85	42.31	NORTWST4	138
GEN-2015-066	17.95	49.76	ONETA--4	138
GEN-2015-067	31.36	42.31	NORTWST4	138
GEN-2015-069	8.88	36.98	EVANS N4	138
GEN-2015-073	17.37	39.25	CRAIG 5	161
GEN-2015-083	8.6	30.93	ROSEHIL4	138
GEN-2015-090	19.04	36.98	EVANS S4, EVANS N4	138

Table ES-3
List of Maximum Fault Currents Observed in 2025 Summer Peak Power Flow for Each Study Project

Study Project	Fault Current at POI (kA)	Maximum Fault Current (kA)	Fault Location	Bus Voltage (kV)
GEN-2015-034	13.66	42.80	NORTWST4	138
GEN-2015-043	19.57	41.96	EVANS N4, EVANS S4	138
GEN-2015-047	13.15	42.80	NORTWST4	138
GEN-2015-052	13.15	41.95	EVANS N4, EVANS S4	138
GEN-2015-062	13.56	24.72	Sooner 7	345
GEN-2015-063	17.3	42.80	NORTWST4	138
GEN-2015-066	18.04	50.34	ONETA--4	138
GEN-2015-067	31.86	42.80	NORTWST4	138
GEN-2015-069	8.86	41.95	EVANS N4	138
GEN-2015-073	17.48	41.95	EVANS N4, EVANS S4	138
GEN-2015-083	10.1	41.95	EVANS N4, EVANS S4	138
GEN-2015-090	19.57	41.95	EVANS N4, EVANS S4	138

SUMMARY OF POWER FACTOR ANALYSIS

For all the generators that follow, the power factor is measured at the point of interconnection (POI).

Study Generator GEN-2015-034

The Power Factor Analysis shows that GEN-2015-034 has a power factor range of 0.957 lagging (supplying) to 0.996 leading (absorbing) for the 2016 Winter Peak conditions, a power factor range of 0.981 lagging (supplying) to 0.984 leading (absorbing) for the 2017 Summer Peak conditions, and a power factor range of 0.982 to 0.983 lagging (supplying) to 0.983 leading (absorbing) for the 2025 Summer Peak conditions.

Study Generator GEN-2015-043

The Power Factor Analysis shows that GEN-2015-043 has a power factor range of 0.995 leading (absorbing) to 1 (unity) for the 2016 Winter Peak conditions, a power factor range of 0.995 to 0.999 leading (absorbing) for the 2017 Summer Peak conditions, and a power factor range of 0.994 to 0.999 leading (absorbing) for the 2025 Summer Peak conditions.

Study Generator GEN-2015-047

The Power Factor Analysis shows that GEN-2015-047 has a power factor range of 0.882 to 0.983 lagging (supplying) for the 2016 Winter Peak conditions, a power factor range of 0.907 to 0.991 lagging (supplying) for the 2017 Summer Peak conditions, and a power factor range of 0.911 to 0.993 leading (absorbing) for the 2025 Summer Peak conditions.

Study Generator GEN-2015-052

The Power Factor Analysis shows that GEN-2015-052 has a power factor range of 0.724 to 0.989 lagging (supplying) for the 2016 Winter Peak conditions, a power factor range of 0.793 to 0.999 lagging (supplying) for the 2017 Summer Peak conditions, and a power factor range of 0.788 to 0.998 lagging (supplying) for the 2025 Summer Peak conditions.

Study Generator GEN-2015-062

The Power Factor Analysis shows that GEN-2015-062 has a power factor range of 0.960 lagging (supplying) to 0.995 leading (absorbing) for the 2016 Winter Peak conditions, a power factor range of 0.954 lagging (supplying) to 0.999 leading (absorbing) for the 2017 Summer Peak conditions, and a power factor range of 0.950 lagging (supplying) to 0.998 leading (absorbing) to for the 2025 Summer Peak conditions.

Study Generator GEN-2015-063

The Power Factor Analysis shows that GEN-2015-063 has a power factor range of 0.895 to 0.997 lagging (supplying) to 1 (unity) for the 2016 Winter Peak conditions, a power factor range of 0.963 lagging (supplying) to 0.976 leading (absorbing) for the 2017 Summer Peak conditions, and a power factor range of 0.965 lagging (supplying) to 0.974 leading (absorbing) for the 2025 Summer Peak conditions.

Study Generator GEN-2015-066

The Power Factor Analysis shows that GEN-2015-066 has a power factor range of 0.620 lagging (supplying) to 1 (unity) for the 2016 Winter Peak conditions, a power factor range of 0.687 lagging (supplying) to 0.981 leading (absorbing) for the 2017 Summer Peak conditions, and a power factor range of 0.709 lagging (supplying) to 0.975 leading (absorbing) for the 2025 Summer Peak conditions.

Study Generator GEN-2015-067

The Power Factor Analysis shows that GEN-2015-067 has a power factor range of 0.755 to 0.908 lagging (supplying) for the 2016 Winter Peak conditions, a power factor range of 0.766 to 0.915 lagging (supplying) for the 2017 Summer Peak conditions, and a power factor range of 0.750 to 0.912 lagging (supplying) for the 2025 Summer Peak conditions.

Study Generator GEN-2015-069

The Power Factor Analysis shows that GEN-2015-069 has a power factor range of 0.999 lagging (supplying) to 0.989 leading (absorbing) for the 2016 Winter Peak conditions, a power factor range of 0.990 leading (absorbing) to 1 (unity) for the 2017 Summer Peak conditions, and a power factor range of 0.994 leading (absorbing) to 1.00 (unity) for the 2025 Summer Peak conditions.

Study Generator GEN-2015-073

The Power Factor Analysis shows that GEN-2015-073 has a power factor range of 0.998 lagging (supplying) to 0.977 leading (absorbing) for the 2016 Winter Peak conditions, a power factor range of 0.979 leading (absorbing) to 1 (unity) for the 2017 Summer Peak conditions, and a power factor range of 0.987 to 1 (unity) for the 2025 Summer Peak conditions.

Study Generator GEN-2015-083

The Power Factor Analysis shows that GEN-2015-083 has a power factor range of 0.996 lagging (supplying) to 0.999 leading (absorbing) for the 2016 Winter Peak conditions, a power factor range of 0.989 lagging (supplying) to 0.991 leading (absorbing) for the 2017 Summer Peak conditions, and a power factor range of 0.991 leading (absorbing) to 1.00 (unity) for the 2025 Summer Peak conditions.

Study Generator GEN-2015-090

The Power Factor Analysis shows that GEN-2015-090 has a power factor range of 0.994 leading (absorbing) to 1 (unity) for the 2016 Winter Peak conditions, a power factor range of 0.994 to 0.998 leading (absorbing) for the 2017 Summer Peak conditions, and a power factor range of 0.993 to 0.998 leading (absorbing for the 2025 Summer Peak conditions.

SUMMARY OF LOW WIND/NO WIND ANALYSIS

The amount of reactive power injected into the transmission network was recorded at the point of interconnection for all study generators for each Cluster Scenario. The maximum reactance needed for zero Mvar flow was 71.4 Mvar for GEN-2015-090 which is connected to the Wichita – Thistle lines (circuits 1&2). The minimum reactance needed for zero Mvar flow was 1.5 Mvar for GEN-2015-067 (Sooner 138 kV).

Table of Contents

SECTION 1: OBJECTIVES 8
SECTION 2: BACKGROUND 8
SECTION 3: STABILITY ANALYSIS 39
3.1 APPROACH 39
3.2 CLUSTER SCENARIO STABILITY ANALYSIS RESULTS 43
3.3 STAND ALONE SCENARIO STABILITY ANALYSIS RESULTS 47
SECTION 4: SHORT CIRCUIT ANALYSIS 59
4.1 APPROACH 59
4.2 SHORT CIRCUIT RESULTS 60
SECTION 5: POWER FACTOR ANALYSIS 83
5.1 APPROACH 83
5.2 POWER FACTOR ANALYSIS RESULTS 85
SECTION 6: LOW WIND/NO WIND ANALYSIS 111
6.1 APPROACH 111
6.2 LOW WIND/NO WIND ANALYSIS RESULTS 112
SECTION 7: CONCLUSIONS 113

SECTION 1: OBJECTIVES

The objective of this report is to provide Southwest Power Pool, Inc. (SPP) with the deliverables for the "DISIS-2015-002 (Group 08) Definitive Impact Study." SPP requested an Interconnection System Impact Study for twelve (12) generation interconnections for 2016 Winter Peak, 2017 Summer Peak, and 2025 Summer Peak, which requires a Stability Analysis, Short Circuit Analysis, Power Factor Analysis, Low Wind/No Wind Analysis, and an Impact Study Report.

SECTION 2: BACKGROUND

The Siemens Power Technologies, Inc. PSS/E power system simulation program Version 32.2.0 was used for this study. SPP provided the stability database cases for 2016 Winter Peak, 2017 Summer Peak, and 2025 Summer Peak conditions and a list of contingencies to be examined. The model includes the study projects shown in Table 2-1 and the previously queued projects listed in Table 2-2. Refer to Appendix A for the steady-state and dynamic model data for the study projects. A power flow one-line diagram for each generation interconnection project is shown in Figures 2-1 through 2-12. Note that the one-line diagrams represent the 2025 Summer Peak case.

The Stability Analysis determined the impacts of the new interconnecting projects on the stability and voltage recovery of the nearby system and the ability of the interconnecting projects to meet FERC Order 661A. If problems with stability or voltage recovery are identified, the need for reactive compensation or system upgrades will be investigated. Three-phase faults and single line-to-ground faults will be examined as listed in Table 2-3. Note that all contingencies listed were examined for the cluster scenario, and specified contingencies (indicated by an X) were examined for each Stand Alone generator.

A Short Circuit Analysis was performed on the 2017 Summer Peak and 2025 Summer Peak study year for each study generator in the Cluster Scenario. The study was performed five buses out from the study generator's point of interconnection and results were documented.

The Power Factor Analysis determined the power factor at the point of interconnection for the wind or solar interconnection projects for pre-contingency and post-contingency conditions. The N-1, three phase contingencies listed in Table 2-3 were used in the Power Factor analysis.

The Low Wind/No Wind Analysis was completed for all wind or solar farm interconnections. This analysis determined if reactive support is needed to have an Mvar flow of approximately zero at the point of interconnection (POI).

Table 2-1
Interconnection Projects Evaluated

Request	Size (MW)	Generator Model	Point of Interconnection
GEN-2015-034	200	Vestes V112- 2MW (wind)	Ranch Road 345kV (515576)
GEN-2015-043	20	Inverter user model (WT4) (battery storage)	Wichita (532796)-Thistle (539801) 345kV Tap (GEN-2015-024 (560033) 34.5 kV)
GEN-2015-047	300	Vestes V110-2MW (wind)	Sooner 345kV Tap (514803)
GEN-2015-052	300	Vestes V110-2MW (wind)	Tap on Opensky (515621) to RoseHill (532794) 345 kV (560053)
GEN-2015-062	4.5	G.E. 1.79MW (wind)	Breckenridge 138kV (514815)
GEN-2015-063	300	Vestes V110-2MW (wind)	Tap on Woodring (514715) to Matthewson (515497) 345 kV (560055)
GEN-2015-066	248	G.E. 2.3MW (wind)	Tap on Cleveland (512694) to Sooner (514803) 345 kV (560056)
GEN-2015-067	150	PV inverter user model (solar)	Sooner 138kV (514802)
GEN-2015-069	300	Vestes V110-2MW (wind)	Union Ridge 230kV (532874)
GEN-2015-073	200.1	Siemens 2.3MW (wind)	Emporia/Lang 345kV (532768)
GEN-02015-083	125	G.E. 2.3MW (wind)	Belle Plain 138kV (533063)
GEN-2015-090	220	G.E. 2MW (wind)	Wichita (532796)-Thistle (539801) 345kV Tap (GEN-2015-024 (560033) 345kV)

Table 2-2
Previously Queued Nearby Interconnection Projects Included

Request	Size (MW)	Generator Model	Point of Interconnection
GEN-2002-004	199.5	GE.1.5MW	Latham 345kV (532800)
GEN-2005-013	199.8	Vestes V90 1.8MW	Caney River 345kV (532780)
GEN-2007-025	299.2	GE 1.6MW	Viola 345kV (532798)
GEN-2008-013	300	G.E. 1.68MW	Hunter 345kV (515476)
GEN-2008-021	1261 Summer 1283 Winter	GENROU	Wolf Creek 345kV (532797)
GEN-2008-098	100.8	Vestas V100 1.8MW	Tap on the Wolf Creek – LaCygne 345kV line (560004)
GEN-2009-025	59.8	Siemens 2.3MW	Tap on the Deerck – Sincblk 69KV line (515528)
GEN-2010-003	100.8	Vestas V100 1.8MW	Tap on the Wolf Creek – LaCygne 345kV line (560004)
GEN-2010-005	299.2	GE 1.6MW	Viola 345kV (532798)
ASGI-2010-006	150	GE1.5MW	Remington 138kV (301369)
GEN-2010-055	4.8	GENROU	Wekiwa 138kV (509757)
GEN-2011-057	150.4	GE 1.6MW	Creswell 138kV (532981)
GEN-2012-027	150.7	GE 1.62MW	Shidler 138kV (510403)
KCPL Distributed: Osawatomie	76.0	GENROU (543078)	Paola 161kV
GEN-2012-032	300	Vestas V112 3.0MW	Tap Rose Hill-Sooner 345kV (562318)
GEN-2012-033	98.8	GE 1.62MW	Tap Bunch Creek-South 4th 138kV(562303)
GEN-2012-040	76.5	GE 1.7MW	Chilocco 138kV (521198)
GEN-2012-041	85 Summer 121.5 Winter	GENROU	Tap Rose Hill-Sooner 345kV (562318)
GEN-2013-012	4 x 168.0MW Summer 4 x 215MW Winter	GENROU (514910) (514911) (514912) (514942)	Redbud 345kV (514909)

Table 2-2 (continued)
Previously Queued Nearby Interconnection Projects Included

Request	Size (MW)	Generator Model	Point of Interconnection
GEN-2013-028	516.4 Summer 559.5 Winter	GENROU (583743, 583746)	Tap on Tulsa N to GRDA1 345kV (562423)
GEN-2013-029	300	Vestas V100 VCSS 2MW (583753, 583756)	Renfrow 345kV(515543)
GEN-2014-001	200.6	GE 1.7MW 100m (583853,583856)	Tap Wichita to Emporia Energy Center 345kV (562476)
GEN-2014-028	35 (Uprate) (Pgen=259W/256S)	GENROU	Riverton 161kV (547469)
EN-2014-064	248.4	GE 2.3MW	Otter 138kV (514708)
ASGI-2014-014	56.4W/54.3S	GENROU	Ferguson 69kV (512664)
GEN-2015-001	200.0	Vestas V110 2.0MW	Ranch Road 345kV
GEN-2015-015	154.6	Siemens 2.3MW with Power Boost (115kW => 2.415MW)	Tap Medford Tap – Coyote 138kV
GEN-2015-016	200.0	Vestas V110 2.0MW	Tap Centerville – Marmaton 161kV
GEN-2015-024	220.0	GE 2.0MW	Tap on Thistle to Wichita 345kV, ckt1&2 (560033)
GEN-2015-025	220.0	GE 2.0MW	Tap on Thistle to Wichita 345kV, ckt1&2 (560033)
GEN-2015-028	3.0 uprate to GEN-2009-025 for total 62.8MW	Siemens 2.3MW with Power Boost (115kW => 2.415MW)	Nardins 69kV
GEN-2015-030	200.1	GE 2.3MW	Sooner 345kV
ASGI-2015-004	54.300 Summer 56.364 Winter	GENSAL	Coffeyville Municipal Light & Power Northern Industrial Park Substation 69kV (512735)

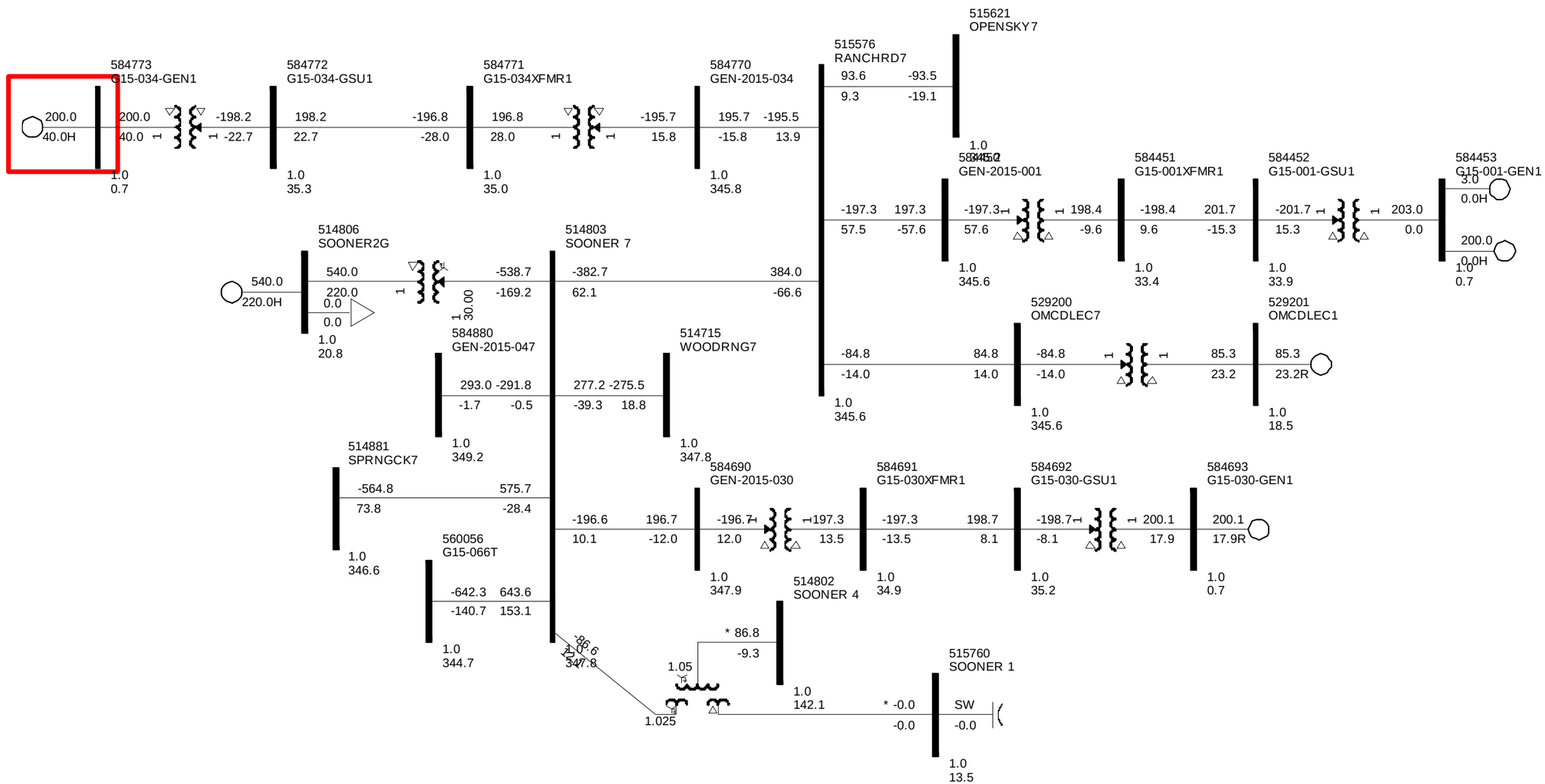

Figure 2-1. Power flow one-line diagram for interconnection project at the Ranch Road 345 kV POI (GEN-2015-034)

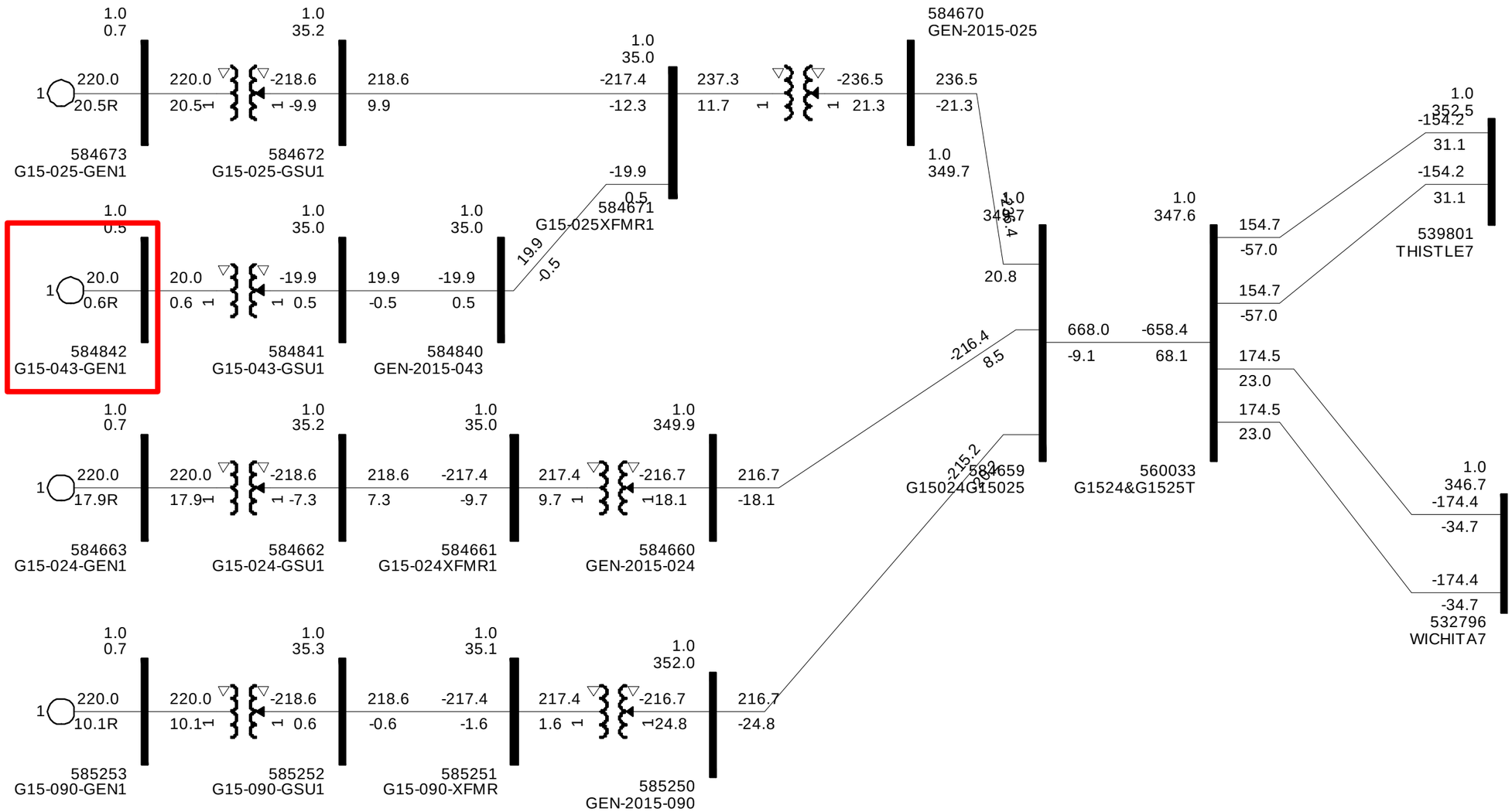

Figure 2-2. Power flow one-line diagram for interconnection project at the Tap along Wichita to Thistle 345 kV line (GEN-2015-043)

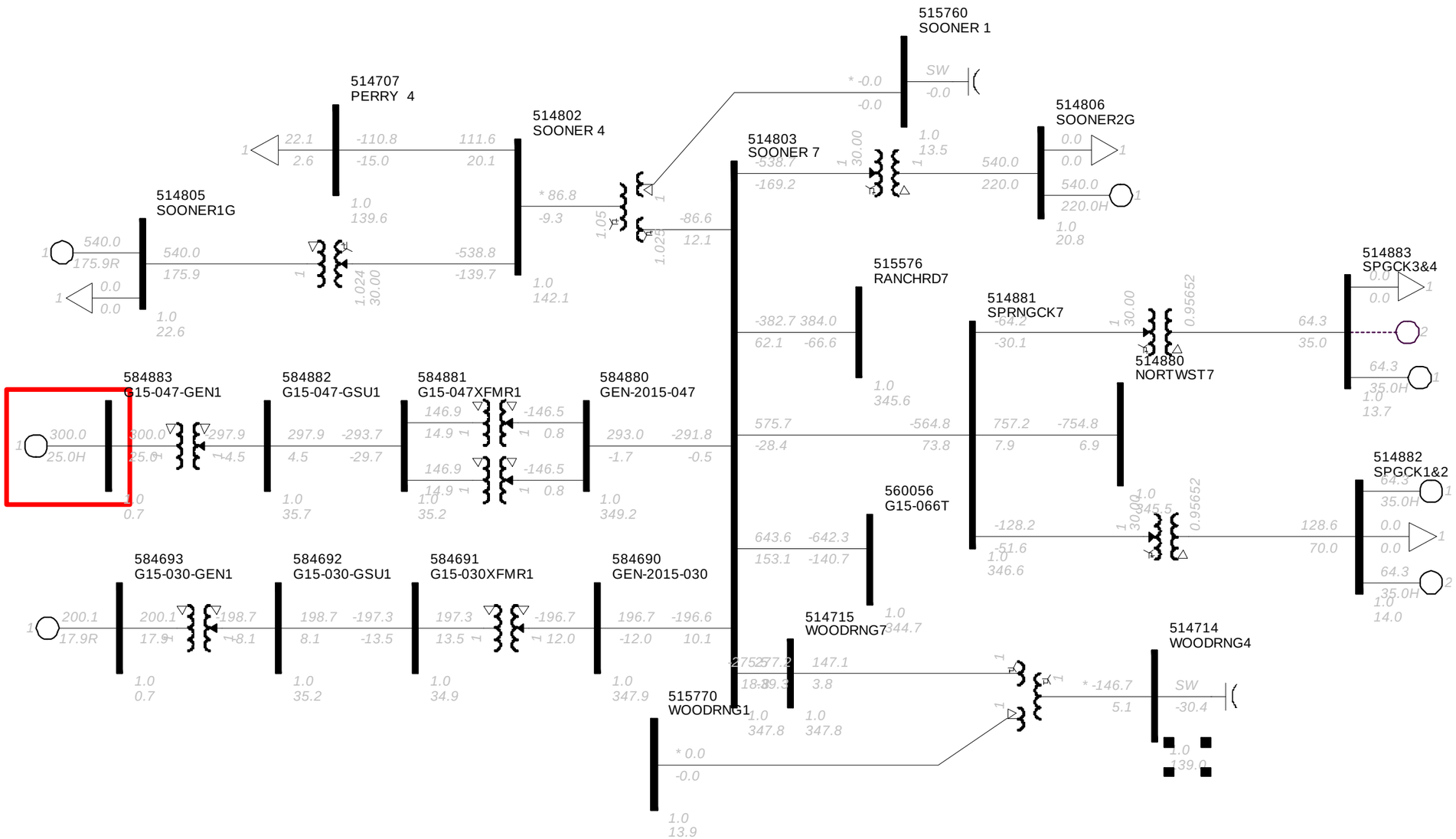

Figure 2-3. Power flow one-line diagram for interconnection project at the Sooner 345 kV TAP (GEN-2015-047)

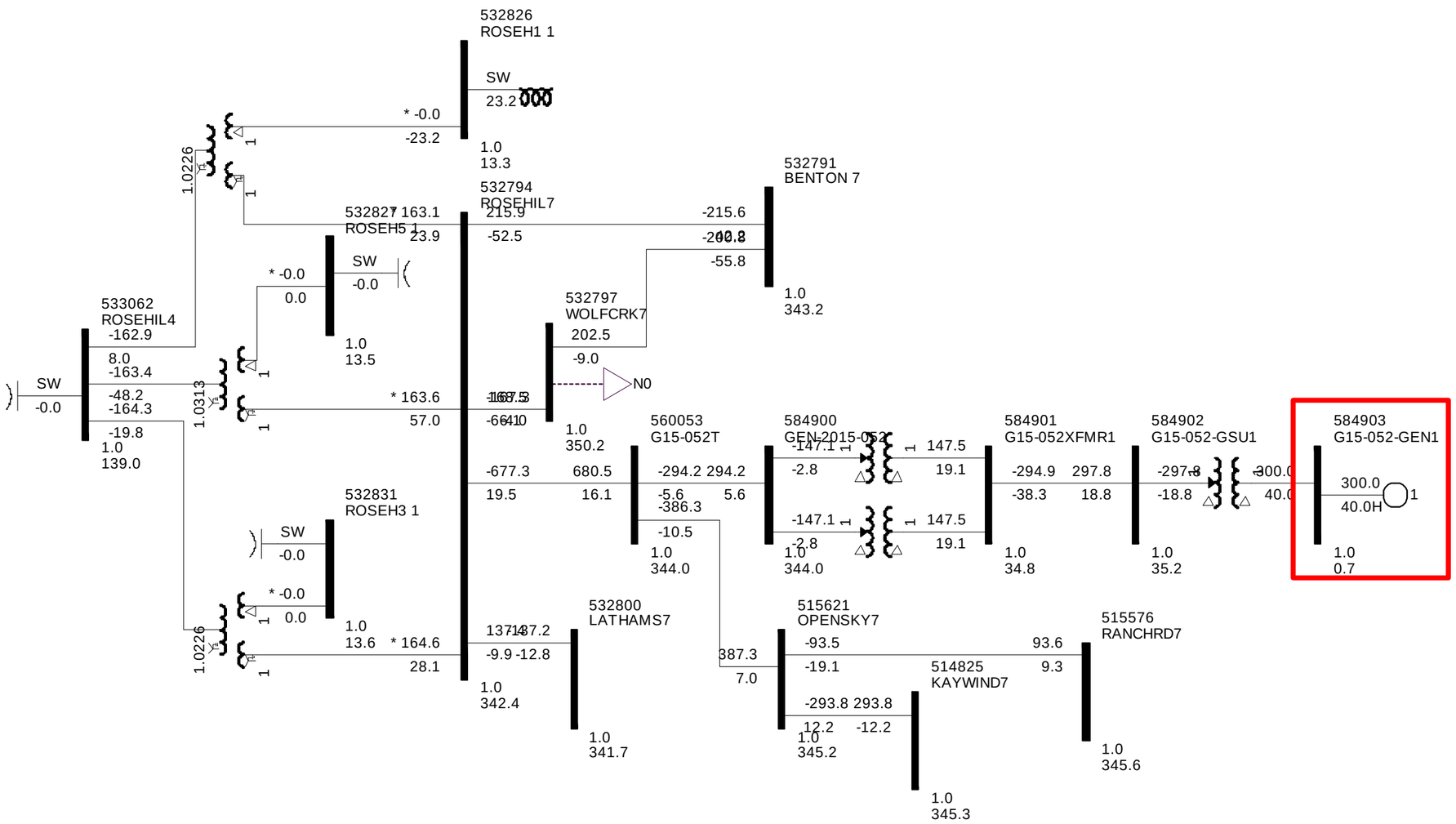

Figure 2-4. Power flow one-line diagram for interconnection project at the Tap along the Open Sky – Rose Hill 345 kV lines (GEN-2015-052)

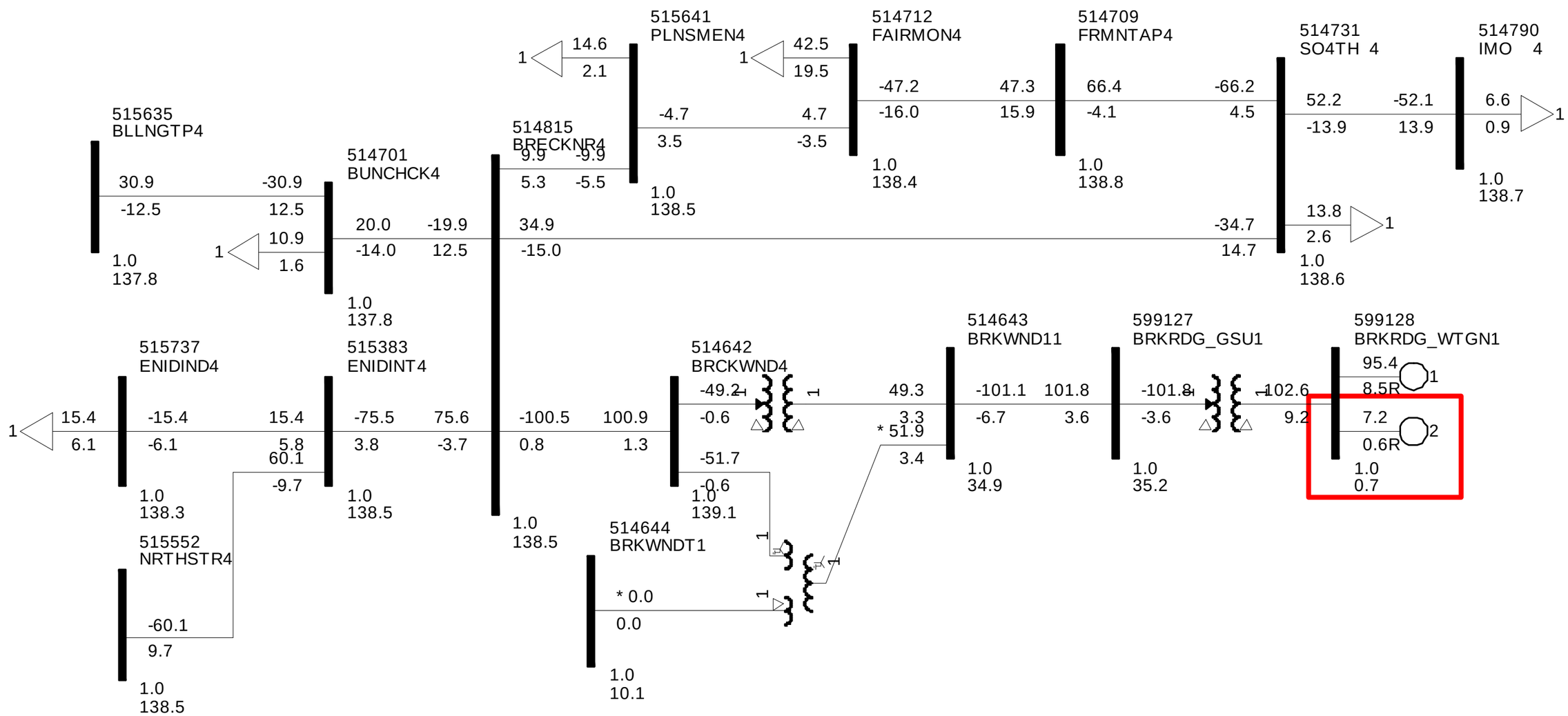

Figure 2-5. Power flow one-line diagram for interconnection project at the Breckingridge138 kV POI (GEN-2015-062)

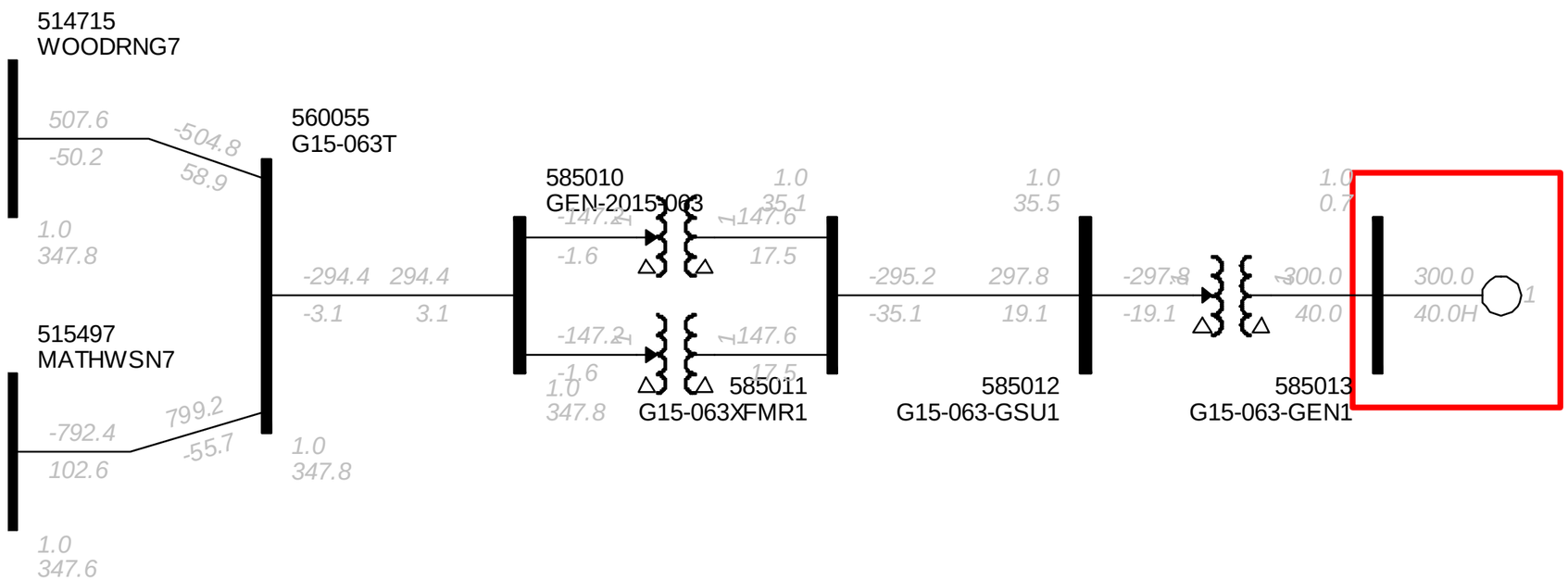

Figure 2-6. Power flow one-line diagram for interconnection at Tap on Woodring to Matthewson 345 kV line (GEN-2015-063)

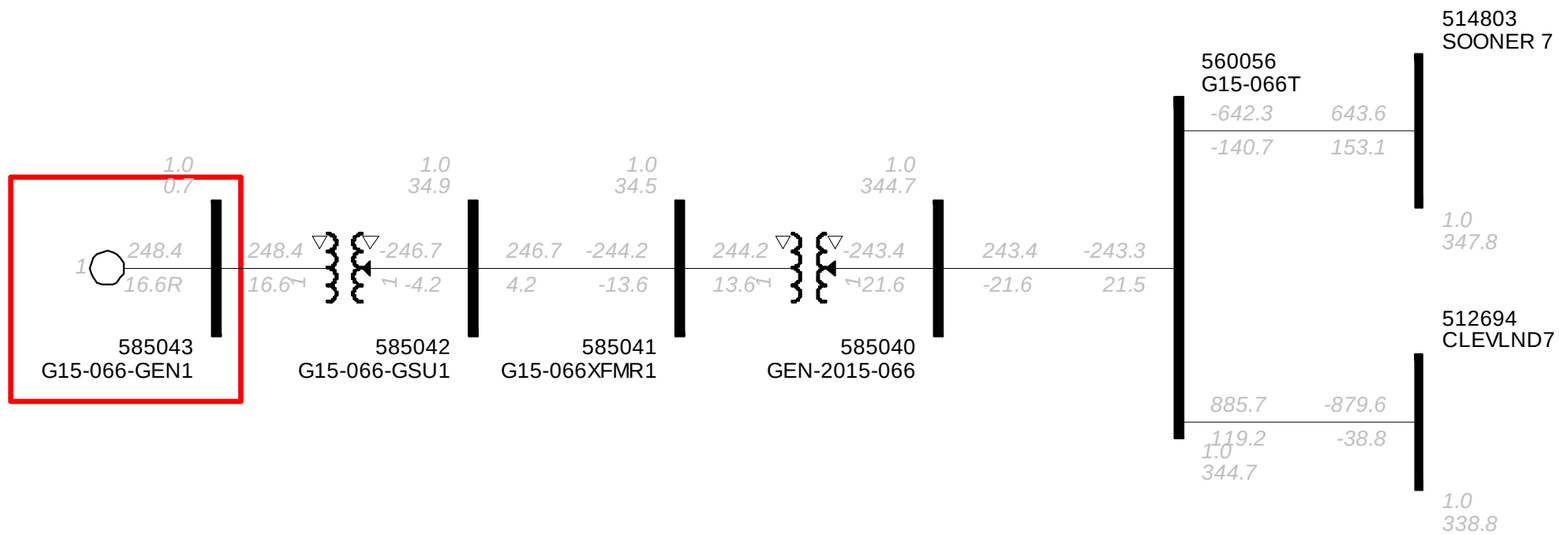

Figure 2-7. Power flow one-line diagram for interconnection project at the Tap on Cleveland to Sooner 345 kV line (GEN-2015-066)

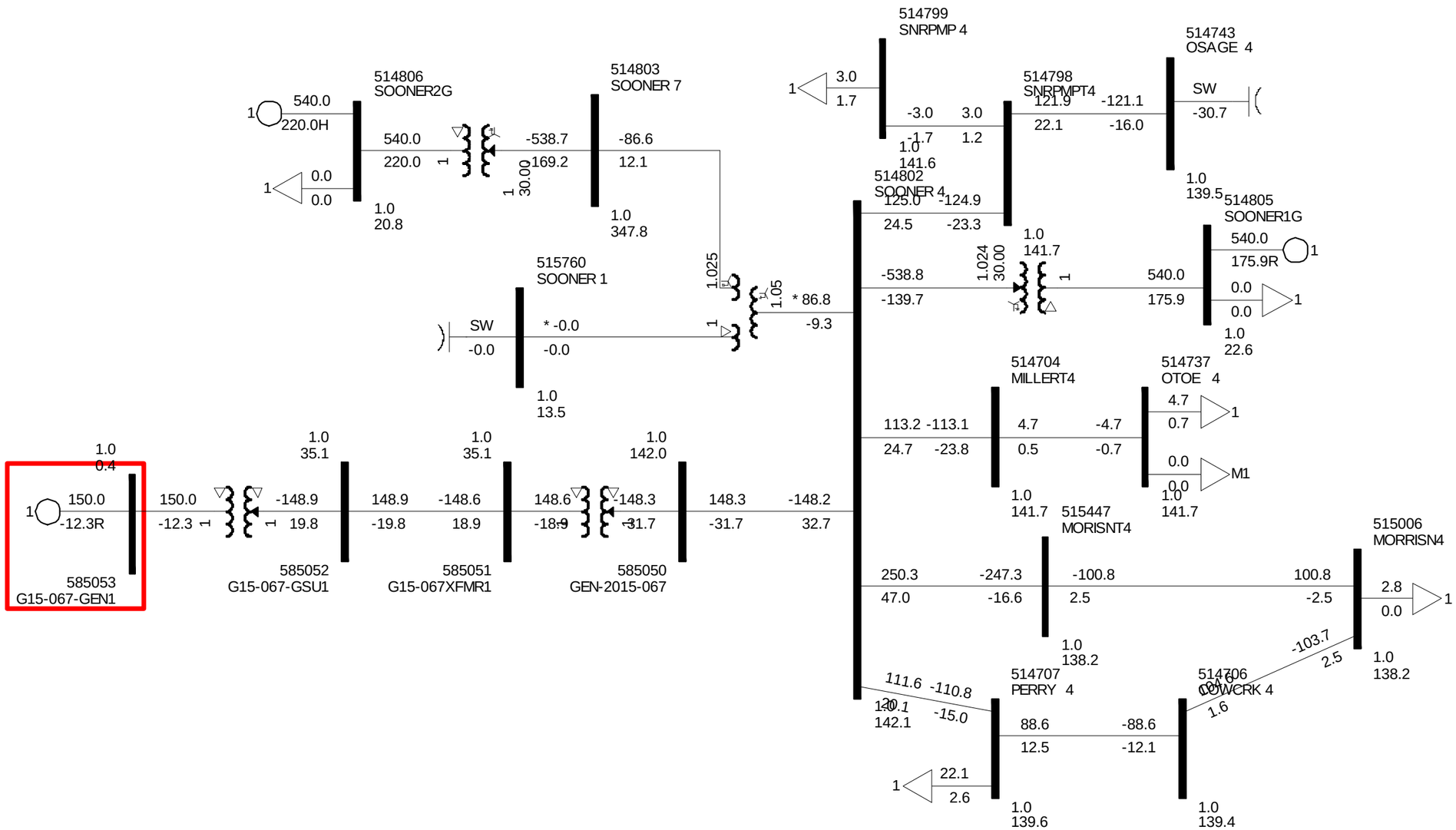

Figure 2-8. Power flow one-line diagram for interconnection project at Sooner 345 kV POI (GEN-2015-067)

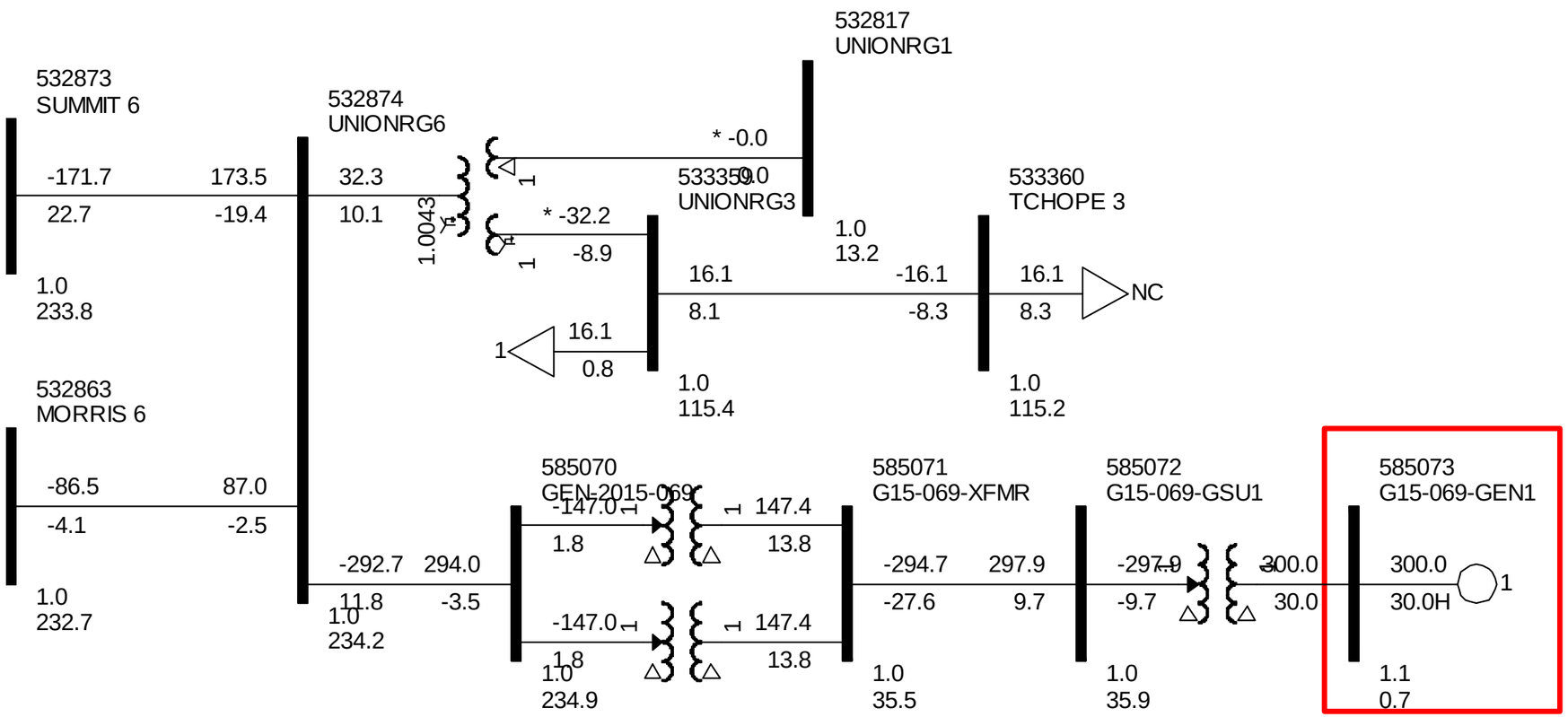

Figure 2-9. Power flow one-line diagram for interconnection project at the Union Ridge 230 kV POI (GEN-2015-069)

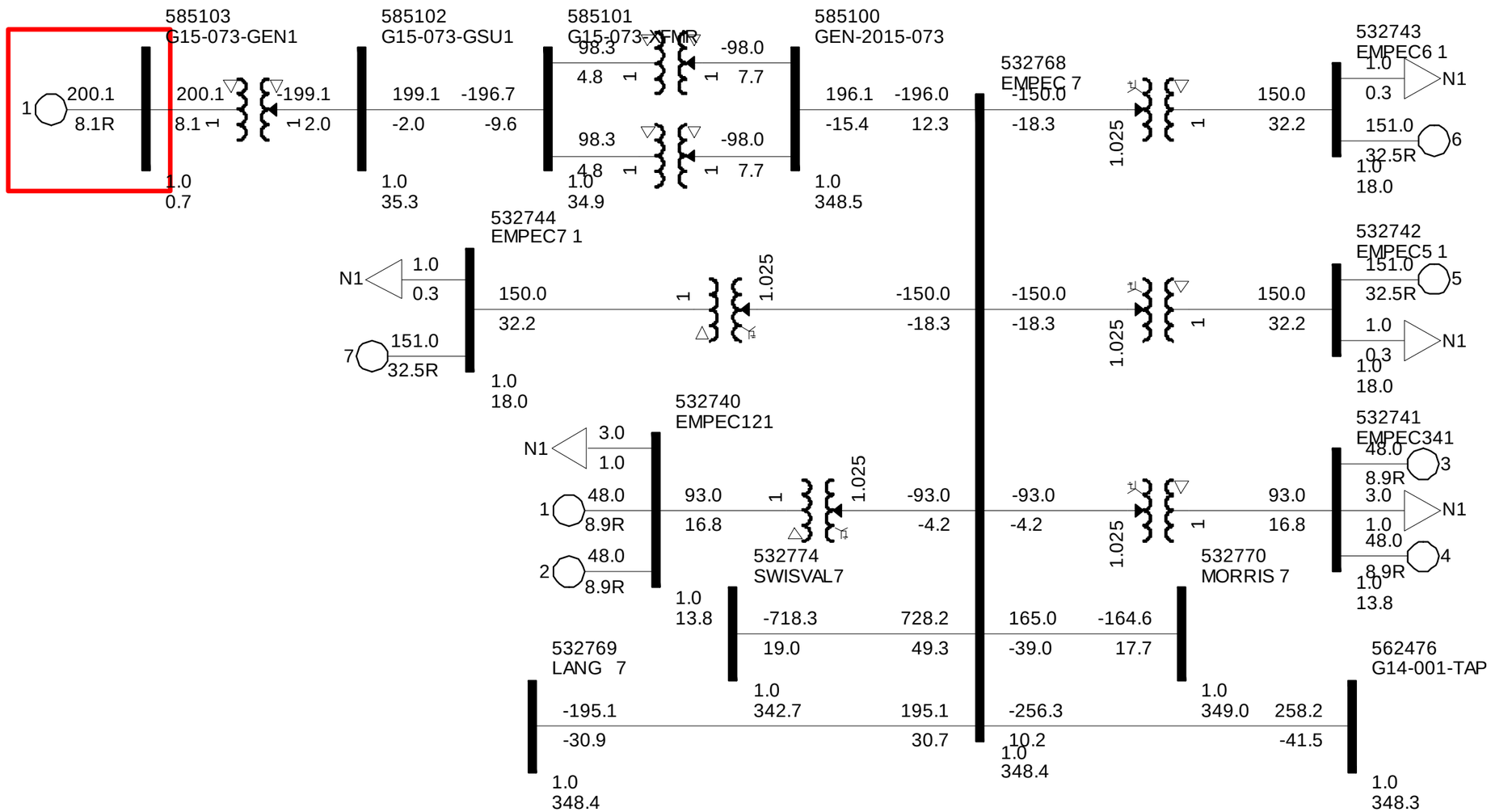

Figure 2-10. Power flow one-line diagram for interconnection project at the Emporia/Lang 345 kV POI (GEN-2015-073)

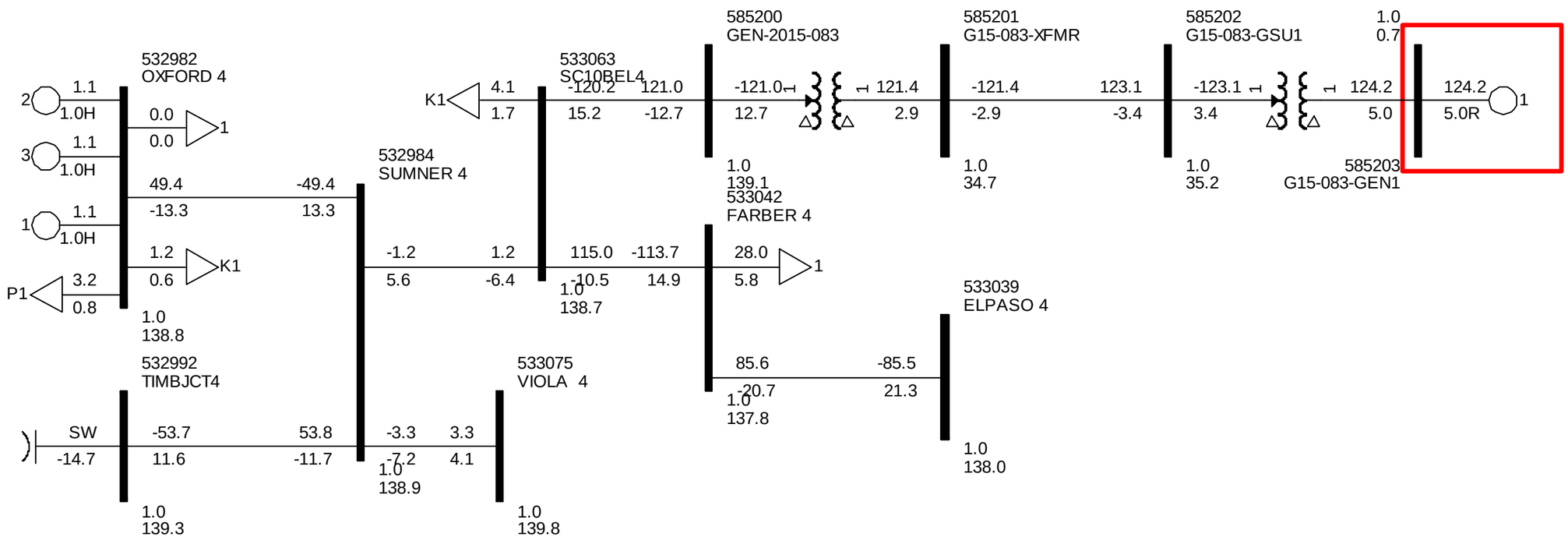

Figure 2-11. Power flow one-line diagram for interconnection project at the Belle Plain 138 kV POI (GEN-2015-083)

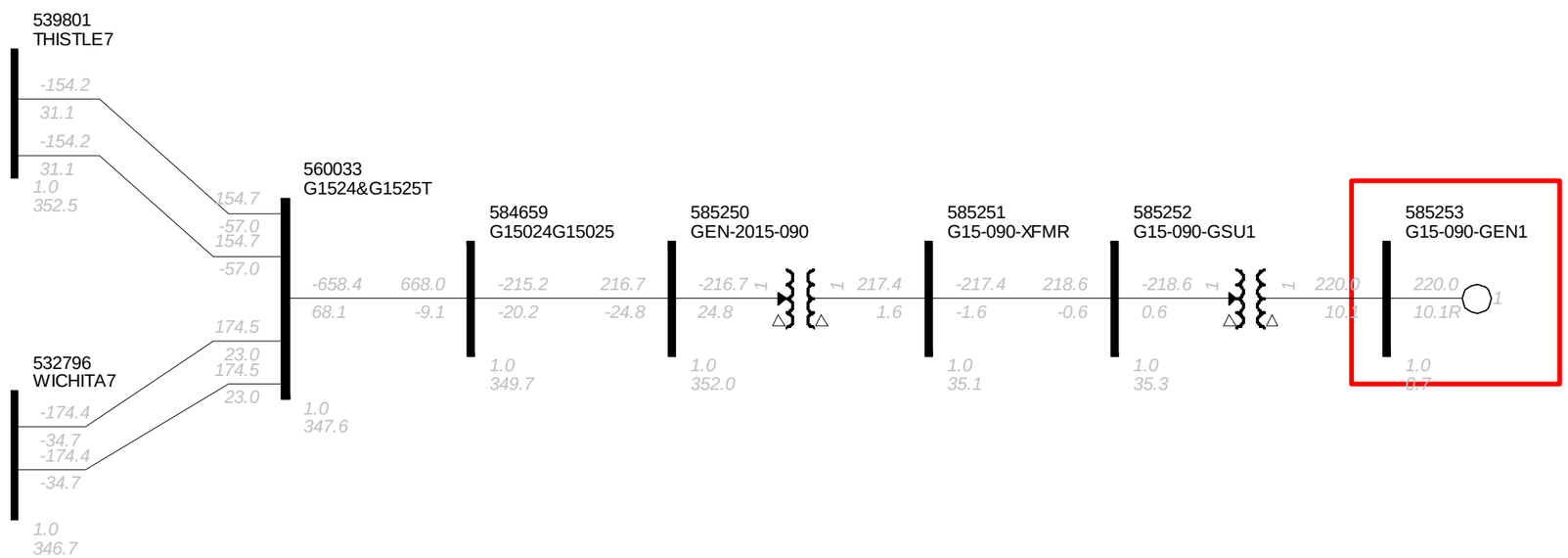

Figure 2-12. Power flow one-line diagram for interconnection project at the Belle Plain 138 kV POI (GEN-2015-090)

Table 2-3
Case List with Contingency Description

Cont. No.	Cont. Name	Description	GEN-2015-034	GEN-2015-043	GEN-2015-047	GEN-2015-052	GEN-2015-062	GEN-2015-063	GEN-2015-066	GEN-2015-067	GEN-2015-069	GEN-2015-073	GEN-2015-083	GEN-2015-090
1	FLT01-3PH	3 phase fault on the RANCHRD7 (515576) to OPENSKY7 (515621) 345 kV line circuit 1, near RANCHRD7. a. Apply fault at the RANCHRD7 345 kV bus. b. Clear fault after 5 cycles by tripping the faulted line. c. Wait 20 cycles, and then re-close the line in (b) back into the fault. d. Leave fault on for 5 cycles, then trip the line in (b) and remove fault.	X		X	X								
2	FLT02-3PH	3 phase fault on the RANCHRD7 (515576) to SOONER 7 (514803) 345 kV line circuit 1, near RANCHRD7. a. Apply fault at the RANCHRD7 345 kV bus. b. Clear fault after 5 cycles by tripping the faulted line. c. Wait 20 cycles, and then re-close the line in (b) back into the fault. d. Leave fault on for 5 cycles, then trip the line in (b) and remove fault.	X		X				X	X				
3	FLT03-3PH	3 phase fault on the OPENSKY7 (515621) to G15052 (560053) 345 kV line circuit 1, near OPENSKY7. a. Apply fault at the OPENSKY7 345 kV bus. b. Clear fault after 5 cycles by tripping the faulted line. c. Wait 20 cycles, and then re-close the line in (b) back into the fault. d. Leave fault on for 5 cycles, then trip the line in (b) and remove fault.	X			X								
4	FLT04-3PH	3 phase fault on the SOONER 7 (514803) to WOODRNG7 (514715) 345 kV line circuit 1, near SOONER 7. a. Apply fault at the SOONER 7 345 kV bus. b. Clear fault after 5 cycles by tripping the faulted line. c. Wait 20 cycles, and then re-close the line in (b) back into the fault. d. Leave fault on for 5 cycles, then trip the line in (b) and remove fault.	X		X			X	X	X				
5	FLT05-3PH	3 phase fault on the SOONER 7 (514803) to G15066 (560056) 345 kV line circuit 1, near SOONER 7. a. Apply fault at the SOONER 7 345 kV bus. b. Clear fault after 5 cycles by tripping the faulted line. c. Wait 20 cycles, and then re-close the line in (b) back into the fault. d. Leave fault on for 5 cycles, then trip the line in (b) and remove fault.	X		X				X	X				
6	FLT06-3PH	3 phase fault on the SOONER 7 (514803) 345 kV /(514802) 138 kV /(515760) 13.8 kV transformer, near SOONER 7 345 kV. a. Apply fault at the SOONER 7 345 kV bus. b. Clear fault after 5 cycles by tripping the faulted transformer.	X		X				X	X				
7	FLT07-3PH	3 phase fault on the SOONER 7 (514803) to SPRNGCK7 (514881) 345 kV line circuit 1, near SOONER 7. a. Apply fault at the SOONER 7 345 kV bus. b. Clear fault after 5 cycles by tripping the faulted line. c. Wait 20 cycles, and then re-close the line in (b) back into the fault. d. Leave fault on for 5 cycles, then trip the line in (b) and remove fault.	X		X				X	X				
8	FLT8-3PH	3 phase fault on the G1524&G1525T (560033) to THISTLE7 (539801) 345 kV line circuit 1, near G1524&G1525T. a. Apply fault at the G1524&G1525T 345 kV bus. b. Clear fault after 5 cycles by tripping the faulted line. c. Wait 20 cycles, and then re-close the line in (b) back into the fault. d. Leave fault on for 5 cycles, then trip the line in (b) and remove fault.		X										X
9	FLT9-3PH	3 phase fault on the G1524&G1525T (560033) to WICHITA7 (532796) 345 kV line circuit 1, near G1524&G1525T. a. Apply fault at the G1524&G1525T 345 kV bus. b. Clear fault after 5 cycles by tripping the faulted line. c. Wait 20 cycles, and then re-close the line in (b) back into the fault. d. Leave fault on for 5 cycles, then trip the line in (b) and remove fault.		X										X

Table 2-3
Case List with Contingency Description

Cont. No.	Cont. Name	Description	GEN-2015-034	GEN-2015-043	GEN-2015-047	GEN-2015-052	GEN-2015-062	GEN-2015-063	GEN-2015-066	GEN-2015-067	GEN-2015-069	GEN-2015-073	GEN-2015-083	GEN-2015-090
10	FLT10-3PH	3 phase fault on the THISTLE7 (539801) to CLARKCOUNTY7 (539800) 345 kV line circuit 1, near THISTLE7. a. Apply fault at the THISTLE7 (539801) 345 kV bus. b. Clear fault after 5 cycles by tripping the faulted line. c. Wait 20 cycles, and then re-close the line in (b) back into the fault. d. Leave fault on for 5 cycles, then trip the line in (b) and remove fault.		X										X
11	FLT11-3PH	3 phase fault on the THISTLE7 (539801) to WWRDEHV7 (515375) 345 kV line circuit 1, near THISTLE7 (539801). a. Apply fault at the THISTLE7 (539801) 345 kV bus. b. Clear fault after 5 cycles by tripping the faulted line. c. Wait 20 cycles, and then re-close the line in (b) back into the fault. d. Leave fault on for 5 cycles, then trip the line in (b) and remove fault.		X										X
12	FLT12-3PH	3 phase fault on the THISTLE7 (539801) 345 kV /(539804) 138 kV /(539802) 13.8 kV transformer, near THISTLE7 345 kV. a. Apply fault at the THISTLE7 345 kV bus. b. Clear fault after 5 cycles by tripping the faulted transformer.		X										X
13	FLT13-3PH	3 phase fault on the WICHITA7 (532796) to VIOLA 7 (532798) 345 kV line circuit 1, near WICHITA7. a. Apply fault at the WICHITA7 345 kV bus. b. Clear fault after 5 cycles by tripping the faulted line. c. Wait 20 cycles, and then re-close the line in (b) back into the fault. d. Leave fault on for 5 cycles, then trip the line in (b) and remove fault.		X										X
14	FLT14-3PH	3 phase fault on the WICHITA7 (532796) to RENO 7 (532771) 345 kV line circuit 1, near WICHITA7. a. Apply fault at the WICHITA7 345 kV bus. b. Clear fault after 5 cycles by tripping the faulted line. c. Wait 20 cycles, and then re-close the line in (b) back into the fault. d. Leave fault on for 5 cycles, then trip the line in (b) and remove fault.		X										X
15	FLT15-3PH	3 phase fault on the WICHITA7 (532796) to BENTON 7 (532791) 345 kV line circuit 1, near WICHITA7. a. Apply fault at the WICHITA7 345 kV bus. b. Clear fault after 5 cycles by tripping the faulted line. c. Wait 20 cycles, and then re-close the line in (b) back into the fault. d. Leave fault on for 5 cycles, then trip the line in (b) and remove fault.		X										X
16	FLT16-3PH	3 phase fault on the WICHITA7 (532796) to G14-001-TAP (562476) 345 kV line circuit 1, near WICHITA7. a. Apply fault at the WICHITA7 345 kV bus. b. Clear fault after 5 cycles by tripping the faulted line. c. Wait 20 cycles, and then re-close the line in (b) back into the fault. d. Leave fault on for 5 cycles, then trip the line in (b) and remove fault.		X								X		X
17	FLT17-3PH	3 phase fault on the WICHITA7 (532796) 345 kV / (533040) 138 kV / (532829) 13.8 kV transformer, near WICHITA7 345 kV. a. Apply fault at the WICHITA7 345 kV bus. b. Clear fault after 5 cycles by tripping the faulted transformer.		X										X
18	FLT18-3PH	3 phase fault on the WOODRNG7 (514715) to G15063 (560055) 345 kV line circuit 1, near WOODRNG7. a. Apply fault at the WOODRNG7 345 kV bus. b. Clear fault after 5 cycles by tripping the faulted line. c. Wait 20 cycles, and then re-close the line in (b) back into the fault. d. Leave fault on for 5 cycles, then trip the line in (b) and remove fault.			X			X						

Table 2-3
Case List with Contingency Description

Cont. No.	Cont. Name	Description	GEN-2015-034	GEN-2015-043	GEN-2015-047	GEN-2015-052	GEN-2015-062	GEN-2015-063	GEN-2015-066	GEN-2015-067	GEN-2015-069	GEN-2015-073	GEN-2015-083	GEN-2015-090
19	FLT19-3PH	3 phase fault on the WOODRNG7 (514715) to HUNTERS7 (515476) 345 kV line circuit 1, near WOODRNG7. a. Apply fault at the WOODRNG7 345 kV bus. b. Clear fault after 5 cycles by tripping the faulted line. c. Wait 20 cycles, and then re-close the line in (b) back into the fault. d. Leave fault on for 5 cycles, then trip the line in (b) and remove fault.			X			X						
20	FLT20-3PH	3 phase fault on the WOODRNG7 (514715) 345 kV / (514714) 138 kV / (515770) 13.8 kV transformer, near WOODRNG7 345 kV. a. Apply fault at the WOODRNG7 345 kV bus. b. Clear fault after 5 cycles by tripping the faulted transformer.			X			X						
21	FLT21-3PH	3 phase fault on the SOONER 4 (514802) to SNRPMPT4 (514798) 138 kV line circuit 1, near SOONER 4. a. Apply fault at the SOONER 4 138 kV bus. b. Clear fault after 5 cycles by tripping the faulted line. c. Wait 20 cycles, and then re-close the line in (b) back into the fault. d. Leave fault on for 5 cycles, then trip the line in (b) and remove fault.			X					X				
22	FLT22-3PH	3 phase fault on the SOONER 4 (514802) to PERRY 4 (514707) 138 kV line circuit 1, near SOONER 4. a. Apply fault at the SOONER 4 138 kV bus. b. Clear fault after 5 cycles by tripping the faulted line. c. Wait 20 cycles, and then re-close the line in (b) back into the fault. d. Leave fault on for 5 cycles, then trip the line in (b) and remove fault.			X					X				
23	FLT23-3PH	3 phase fault on the SOONER 4 (514802) to MILLERT4 (514704) 138 kV line circuit 1, near SOONER 4. a. Apply fault at the SOONER 4 138 kV bus. b. Clear fault after 5 cycles by tripping the faulted line. c. Wait 20 cycles, and then re-close the line in (b) back into the fault. d. Leave fault on for 5 cycles, then trip the line in (b) and remove fault.			X					X				
24	FLT24-3PH	3 phase fault on the SOONER 4 (514802) to MORISNT4 (515447) 138 kV line circuit 1, near SOONER 4. a. Apply fault at the SOONER 4 138 kV bus. b. Clear fault after 5 cycles by tripping the faulted line. c. Wait 20 cycles, and then re-close the line in (b) back into the fault. d. Leave fault on for 5 cycles, then trip the line in (b) and remove fault.			X					X				
25	FLT25-3PH	3 phase fault on the SPRNGCK7 (514881) to NORTWST7 (514880) 345 kV line circuit 1, near SPRNGCK7. a. Apply fault at the SPRNGCK7 345 kV bus. b. Clear fault after 5 cycles by tripping the faulted line. c. Wait 20 cycles, and then re-close the line in (b) back into the fault. d. Leave fault on for 5 cycles, then trip the line in (b) and remove fault.			X									
26	FLT26-3PH	3 phase fault on the G15066 (560056) to CLEVLND7 (512694) 345 kV line circuit 1, near G15066. a. Apply fault at the G15066 345 kV bus. b. Clear fault after 5 cycles by tripping the faulted line. c. Wait 20 cycles, and then re-close the line in (b) back into the fault. d. Leave fault on for 5 cycles, then trip the line in (b) and remove fault.			X				X					
27	FLT27-3PH	3 phase fault on the G15052 (560053) to ROSEHIL7 (532794) 345 kV line circuit 1, near G15052. a. Apply fault at the G15052 345 kV bus. b. Clear fault after 5 cycles by tripping the faulted line. c. Wait 20 cycles, and then re-close the line in (b) back into the fault. d. Leave fault on for 5 cycles, then trip the line in (b) and remove fault.				X								

Table 2-3
Case List with Contingency Description

Cont. No.	Cont. Name	Description	GEN-2015-034	GEN-2015-043	GEN-2015-047	GEN-2015-052	GEN-2015-062	GEN-2015-063	GEN-2015-066	GEN-2015-067	GEN-2015-069	GEN-2015-073	GEN-2015-083	GEN-2015-090
28	FLT28-3PH	3 phase fault on the ROSEHIL7 (532794) 345 kV / (533062) 138 kV /(532826) 13.8 kV transformer, near ROSEHIL7 345 kV. a. Apply fault at the ROSEHIL7 345 kV bus. b. Clear fault after 5 cycles by tripping the faulted transformer.				X								
29	FLT29-3PH	3 phase fault on the ROSEHIL7 (532794) to BENTON 7 (532791) 345 kV line circuit 1, near ROSEHIL7. a. Apply fault at the ROSEHIL7 345 kV bus. b. Clear fault after 5 cycles by tripping the faulted line. c. Wait 20 cycles, and then re-close the line in (b) back into the fault. d. Leave fault on for 5 cycles, then trip the line in (b) and remove fault.				X								
30	FLT30-3PH	3 phase fault on the ROSEHIL7 (532794) to WOLFCRK7 (532797) 345 kV line circuit 1, near ROSEHIL7. a. Apply fault at the ROSEHIL7 345 kV bus. b. Clear fault after 5 cycles by tripping the faulted line. c. Wait 20 cycles, and then re-close the line in (b) back into the fault. d. Leave fault on for 5 cycles, then trip the line in (b) and remove fault.				X								
31	FLT31-3PH	3 phase fault on the ROSEHIL7 (532794) to LATHAMS7 (532800) 345 kV line circuit 1, near ROSEHIL7. a. Apply fault at the ROSEHIL7 345 kV bus. b. Clear fault after 5 cycles by tripping the faulted line. c. Wait 20 cycles, and then re-close the line in (b) back into the fault. d. Leave fault on for 5 cycles, then trip the line in (b) and remove fault.				X								
32	FLT32-3PH	3 phase fault on the BRECKNR4 (514815) to SO4TH 4 (514731) 138 kV line circuit 1, near BRECKNR4. a. Apply fault at the BRECKNR4 138 kV bus. b. Clear fault after 5 cycles by tripping the faulted line. c. Wait 20 cycles, and then re-close the line in (b) back into the fault. d. Leave fault on for 5 cycles, then trip the line in (b) and remove fault.					X							
33	FLT33-3PH	3 phase fault on the BRECKNR4 (514815) to BUNCHCK4 (514701) 138 kV line circuit 1, near BRECKNR4. a. Apply fault at the BRECKNR4 138 kV bus. b. Clear fault after 5 cycles by tripping the faulted line. c. Wait 20 cycles, and then re-close the line in (b) back into the fault. d. Leave fault on for 5 cycles, then trip the line in (b) and remove fault.					X							
34	FLT34-3PH	3 phase fault on the BRECKNR4 (514815) to ENIDINT4 (515383) 138 kV line circuit 1, near BRECKNR4. a. Apply fault at the BRECKNR4 138 kV bus. b. Clear fault after 5 cycles by tripping the faulted line. c. Wait 20 cycles, and then re-close the line in (b) back into the fault. d. Leave fault on for 5 cycles, then trip the line in (b) and remove fault.					X							
35	FLT35-3PH	3 phase fault on the BRECKNR4 (514815) to PLNSMEN4 (515641) 138 kV line circuit 1, near BRECKNR4. a. Apply fault at the BRECKNR4 138 kV bus. b. Clear fault after 5 cycles by tripping the faulted line. c. Wait 20 cycles, and then re-close the line in (b) back into the fault. d. Leave fault on for 5 cycles, then trip the line in (b) and remove fault.					X							
36	FLT36-3PH	3 phase fault on the SO4TH 4 (514731) 138 kV / (514730) 69 kV /(515758) 13.2 kV transformer, near SO4TH 4 138 kV. a. Apply fault at the SO4TH 4 138 kV bus. b. Clear fault after 5 cycles by tripping the faulted transformer.					X							

Table 2-3
Case List with Contingency Description

Cont. No.	Cont. Name	Description	GEN-2015-034	GEN-2015-043	GEN-2015-047	GEN-2015-052	GEN-2015-062	GEN-2015-063	GEN-2015-066	GEN-2015-067	GEN-2015-069	GEN-2015-073	GEN-2015-083	GEN-2015-090
37	FLT37-3PH	3 phase fault on the SO4TH 4 (514731) to IMO 4 (514790) 138 kV line circuit 1, near SO4TH 4. a. Apply fault at the SO4TH 4 138 kV bus. b. Clear fault after 5 cycles by tripping the faulted line. c. Wait 20 cycles, and then re-close the line in (b) back into the fault. d. Leave fault on for 5 cycles, then trip the line in (b) and remove fault.					X							
38	FLT38-3PH	3 phase fault on the SO4TH 4 (514731) to WAUKOTP4 (514711) 138 kV line circuit 1, near SO4TH 4. a. Apply fault at the SO4TH 4 138 kV bus. b. Clear fault after 5 cycles by tripping the faulted line. c. Wait 20 cycles, and then re-close the line in (b) back into the fault. d. Leave fault on for 5 cycles, then trip the line in (b) and remove fault.					X							
39	FLT39-3PH	3 phase fault on the SO4TH 4 (514731) to FRMNTAP4 (514709) 138 kV line circuit 1, near SO4TH 4. a. Apply fault at the SO4TH 4 138 kV bus. b. Clear fault after 5 cycles by tripping the faulted line. c. Wait 20 cycles, and then re-close the line in (b) back into the fault. d. Leave fault on for 5 cycles, then trip the line in (b) and remove fault.					X							
40	FLT40-3PH	3 phase fault on the BUNCHCK4 (514701) to BLLNGTP4 (515635) 138 kV line circuit 1, near BUNCHCK4. a. Apply fault at the BUNCHCK4 138 kV bus. b. Clear fault after 5 cycles by tripping the faulted line. c. Wait 20 cycles, and then re-close the line in (b) back into the fault. d. Leave fault on for 5 cycles, then trip the line in (b) and remove fault.					X							
41	FLT40-3PH	3 phase fault on the ENIDINT4 (515383) to NRTHSTR4 (515552) 138 kV line circuit 1, near ENIDINT4. a. Apply fault at the ENIDINT4 138 kV bus. b. Clear fault after 5 cycles by tripping the faulted line. c. Wait 20 cycles, and then re-close the line in (b) back into the fault. d. Leave fault on for 5 cycles, then trip the line in (b) and remove fault.					X							
42	FLT42-3PH	3 phase fault on the PLNSMEN4 (515641) to FAIRMON4 (514712) 138 kV line circuit 1, near PLNSMEN4. a. Apply fault at the PLNSMEN4 138 kV bus. b. Clear fault after 5 cycles by tripping the faulted line. c. Wait 20 cycles, and then re-close the line in (b) back into the fault. d. Leave fault on for 5 cycles, then trip the line in (b) and remove fault.					X							
43	FLT43-3PH	3 phase fault on the G15063 (560055) to MATHWSN7 (515497) 345 kV line circuit 1, near G15063. a. Apply fault at the G15063 345 kV bus. b. Clear fault after 5 cycles by tripping the faulted line. c. Wait 20 cycles, and then re-close the line in (b) back into the fault. d. Leave fault on for 5 cycles, then trip the line in (b) and remove fault.						X						
44	FLT44-3PH	3 phase fault on the MATHWSN7 (515497) to CIMARON7 (514901) 345 kV line circuit 1, near MATHWSN7. a. Apply fault at the MATHWSN7 345 kV bus. b. Clear fault after 5 cycles by tripping the faulted line. c. Wait 20 cycles, and then re-close the line in (b) back into the fault. d. Leave fault on for 5 cycles, then trip the line in (b) and remove fault.						X						

Table 2-3
Case List with Contingency Description

Cont. No.	Cont. Name	Description	GEN-2015-034	GEN-2015-043	GEN-2015-047	GEN-2015-052	GEN-2015-062	GEN-2015-063	GEN-2015-066	GEN-2015-067	GEN-2015-069	GEN-2015-073	GEN-2015-083	GEN-2015-090
45	FLT45-3PH	3 phase fault on the CLEVLND7 (512694) to T.NO.--7 (509852) 345 kV line circuit 1, near CLEVLND7. a. Apply fault at the CLEVLND7 345 kV bus. b. Clear fault after 5 cycles by tripping the faulted line. c. Wait 20 cycles, and then re-close the line in (b) back into the fault. d. Leave fault on for 5 cycles, then trip the line in (b) and remove fault.							X					
46	FLT46-3PH	3 phase fault on the CLEVLND7 (512694) 345 kV / (512729) 138 kV /(512817) 13.8 kV transformer, near CLEVLND7 345 kV. a. Apply fault at the CLEVLND7 345 kV bus. b. Clear fault after 5 cycles by tripping the faulted transformer.							X					
47	FLT47-3PH	3 phase fault on the PERRY 4 (514707) to COWCRK 4 (514706) 138 kV line circuit 1, near PERRY 4. a. Apply fault at the PERRY 4 138 kV bus. b. Clear fault after 5 cycles by tripping the faulted line. c. Wait 20 cycles, and then re-close the line in (b) back into the fault. d. Leave fault on for 5 cycles, then trip the line in (b) and remove fault.								X				
48	FLT48-3PH	3 phase fault on the SNRPMPT4 (514798) to OSAGE 4 (514743) 138 kV line circuit 1, near SNRPMPT4. a. Apply fault at the SNRPMPT4 138 kV bus. b. Clear fault after 5 cycles by tripping the faulted line. c. Wait 20 cycles, and then re-close the line in (b) back into the fault. d. Leave fault on for 5 cycles, then trip the line in (b) and remove fault.								X				
49	FLT49-3PH	3 phase fault on the MILLERT4 (514704) to DMNCRKT4 (515412) 138 kV line circuit 1, near MILLERT4. a. Apply fault at the MILLERT4 138 kV bus. b. Clear fault after 5 cycles by tripping the faulted line. c. Wait 20 cycles, and then re-close the line in (b) back into the fault. d. Leave fault on for 5 cycles, then trip the line in (b) and remove fault.								X				
50	FLT50-3PH	3 phase fault on the MORISNT4 (515447) to STILWTR4 (515011) 138 kV line circuit 1, near MORISNT4. a. Apply fault at the MORISNT4 138 kV bus. b. Clear fault after 5 cycles by tripping the faulted line. c. Wait 20 cycles, and then re-close the line in (b) back into the fault. d. Leave fault on for 5 cycles, then trip the line in (b) and remove fault.								X				
51	FLT51-3PH	3 phase fault on the MORISNT4 (515447) to MORRISN4 (515006) 138 kV line circuit 1, near MORISNT4. a. Apply fault at the MORISNT4 138 kV bus. b. Clear fault after 5 cycles by tripping the faulted line. c. Wait 20 cycles, and then re-close the line in (b) back into the fault. d. Leave fault on for 5 cycles, then trip the line in (b) and remove fault.								X				
52	FLT52-3PH	3 phase fault on the UNIONRG6 (532874) to SUMMIT 6 (532873) 230 kV line circuit 1, near UNIONRG6. a. Apply fault at the UNIONRG6 230 kV bus. b. Clear fault after 5 cycles by tripping the faulted line. c. Wait 20 cycles, and then re-close the line in (b) back into the fault. d. Leave fault on for 5 cycles, then trip the line in (b) and remove fault.									X			
53	FLT53-3PH	3 phase fault on the UNIONRG6 (532874) to MORRIS 6 (532863) 230 kV line circuit 1, near UNIONRG6. a. Apply fault at the UNIONRG6 230 kV bus. b. Clear fault after 5 cycles by tripping the faulted line. c. Wait 20 cycles, and then re-close the line in (b) back into the fault. d. Leave fault on for 5 cycles, then trip the line in (b) and remove fault.									X			

Table 2-3
Case List with Contingency Description

Cont. No.	Cont. Name	Description	GEN-2015-034	GEN-2015-043	GEN-2015-047	GEN-2015-052	GEN-2015-062	GEN-2015-063	GEN-2015-066	GEN-2015-067	GEN-2015-069	GEN-2015-073	GEN-2015-083	GEN-2015-090
54	FLT54-3PH	3 phase fault on the SUMMIT 6 (532873) to EMCPHER6 (532872) 230 kV line circuit 1, near SUMMIT 6. a. Apply fault at the SUMMIT 6 230 kV bus. b. Clear fault after 5 cycles by tripping the faulted line. c. Wait 20 cycles, and then re-close the line in (b) back into the fault. d. Leave fault on for 5 cycles, then trip the line in (b) and remove fault.									X			
55	FLT55-3PH	3 phase fault on the SUMMIT 6 (532873) to SMOKYHL6 (530592) 230 kV line circuit 1, near SUMMIT 6. a. Apply fault at the SUMMIT 6 230 kV bus. b. Clear fault after 5 cycles by tripping the faulted line. c. Wait 20 cycles, and then re-close the line in (b) back into the fault. d. Leave fault on for 5 cycles, then trip the line in (b) and remove fault.									X			
56	FLT56-3PH	3 phase fault on the SUMMIT 6 (532873) 230 kV/ (532773) 345 kV /(532813) 14.4 kV transformer, near SUMMIT 6 230 kV. a. Apply fault at the SUMMIT 6 230 kV bus. b. Clear fault after 5 cycles by tripping the faulted transformer.									X			
57	FLT57-3PH	3 phase fault on the SUMMIT 6 (532873) 230 kV / (533381) 115 kV / (532897) 13.8 kV transformer, near SUMMIT 6 230 kV. a. Apply fault at the SUMMIT 6 230 kV bus. b. Clear fault after 5 cycles by tripping the faulted transformer.									X			
58	FLT58-3PH	3 phase fault on the MORRIS 6 (532863) to MCDOWEL6 (532862) 230 kV line circuit 1, near MORRIS 6. a. Apply fault at the MORRIS 6 230 kV bus. b. Clear fault after 5 cycles by tripping the faulted line. c. Wait 20 cycles, and then re-close the line in (b) back into the fault. d. Leave fault on for 5 cycles, then trip the line in (b) and remove fault.									X			
59	FLT59-3PH	3 phase fault on the MORRIS 6 (532863) to SWISVAL6 (532856) 230 kV line circuit 1, near SWISVAL6. a. Apply fault at the SWISVAL6 230 kV bus. b. Clear fault after 5 cycles by tripping the faulted line. c. Wait 20 cycles, and then re-close the line in (b) back into the fault. d. Leave fault on for 5 cycles, then trip the line in (b) and remove fault.									X			
60	FLT60-3PH	3 phase fault on the MORRIS 6 (532863) 230 kV / (533305) 115 kV / (532890) 13.8 kV transformer, near MORRIS 6 230 kV. a. Apply fault at the MORRIS 6 230 kV bus. b. Clear fault after 5 cycles by tripping the faulted transformer.									X			
61	FLT61-3PH	3 phase fault on the MORRIS 6 (532863) 230 kV / (532770) 345 kV /(532809) 14.4 kV transformer, near MORRIS 6 230 kV. a. Apply fault at the MORRIS 6 230 kV bus. b. Clear fault after 5 cycles by tripping the faulted transformer.									X			
62	FLT62-3PH	3 phase fault on the EMPEC 7 (532768) to MORRIS 7 (532770) 345 kV line circuit 1, near EMPEC 7. a. Apply fault at the EMPEC 7 345 kV bus. b. Clear fault after 5 cycles by tripping the faulted line. c. Wait 20 cycles, and then re-close the line in (b) back into the fault. d. Leave fault on for 5 cycles, then trip the line in (b) and remove fault.										X		
63	FLT63-3PH	3 phase fault on the EMPEC 7 (532768) to LANG 7 (532769) 345 kV line circuit 1, near EMPEC 7. a. Apply fault at the EMPEC 7 345 kV bus. b. Clear fault after 5 cycles by tripping the faulted line. c. Wait 20 cycles, and then re-close the line in (b) back into the fault. d. Leave fault on for 5 cycles, then trip the line in (b) and remove fault.										X		

Table 2-3
Case List with Contingency Description

Cont. No.	Cont. Name	Description	GEN-2015-034	GEN-2015-043	GEN-2015-047	GEN-2015-052	GEN-2015-062	GEN-2015-063	GEN-2015-066	GEN-2015-067	GEN-2015-069	GEN-2015-073	GEN-2015-083	GEN-2015-090
64	FLT64-3PH	3 phase fault on the EMPEC 7 (532768) to G14-001-TAP (562476) 345 kV line circuit 1, near EMPEC 7. a. Apply fault at the EMPEC 7 345 kV bus. b. Clear fault after 5 cycles by tripping the faulted line. c. Wait 20 cycles, and then re-close the line in (b) back into the fault. d. Leave fault on for 5 cycles, then trip the line in (b) and remove fault.										X		
65	FLT65-3PH	3 phase fault on the EMPEC 7 (532768) to SWISVAL7 (532774) 345 kV line circuit 1, near EMPEC 7. a. Apply fault at the EMPEC 7 345 kV bus. b. Clear fault after 5 cycles by tripping the faulted line. c. Wait 20 cycles, and then re-close the line in (b) back into the fault. d. Leave fault on for 5 cycles, then trip the line in (b) and remove fault.										X		
66	FLT66-3PH	3 phase fault on the MORRIS 7 (532770) to JEC N 7 (532766) 345 kV line circuit 1, near MORRIS 7. a. Apply fault at the MORRIS 7 345 kV bus. b. Clear fault after 5 cycles by tripping the faulted line. c. Wait 20 cycles, and then re-close the line in (b) back into the fault. d. Leave fault on for 5 cycles, then trip the line in (b) and remove fault.										X		
67	FLT67-3PH	3 phase fault on the MORRIS 7 (532770) 345 kV / (532863) 230 kV /(532809) 14.4 kV transformer, near MORRIS 7 345 kV. a. Apply fault at the MORRIS 7 345 kV bus. b. Clear fault after 5 cycles by tripping the faulted transformer.										X		
68	FLT68-3PH	3 phase fault on the SWISVAL7 (532774) to W.GRDNR7 (542965) 345 kV line circuit 1, near SWISVAL7. a. Apply fault at the SWISVAL7 345 kV bus. b. Clear fault after 5 cycles by tripping the faulted line. c. Wait 20 cycles, and then re-close the line in (b) back into the fault. d. Leave fault on for 5 cycles, then trip the line in (b) and remove fault.										X		
69	FLT69-3PH	3 phase fault on the SWISVAL7 (532774) 345 kV / (532856) 230 kV /(532815) 14.4 kV transformer, near SWISVAL7 345. a. Apply fault at the SWISVAL7 345 kV bus. b. Clear fault after 5 cycles by tripping the faulted transformer.										X		
70	FLT70-3PH	3 phase fault on the LANG 7 (532769) 345 kV / (533304) 115 kV /(532808) 14.4 kV transformer, near LANG 7 345 kV. a. Apply fault at the LANG 7 345 kV bus. b. Clear fault after 5 cycles by tripping the faulted transformer.										X		
71	FLT71-3PH	3 phase fault on the G14-001-TAP (562476) to WICHITA7 (532796) 345 kV line circuit 1, near G14-001-TAP. a. Apply fault at the G14-001-TAP 345 kV bus. b. Clear fault after 5 cycles by tripping the faulted line. c. Wait 20 cycles, and then re-close the line in (b) back into the fault. d. Leave fault on for 5 cycles, then trip the line in (b) and remove fault.										X		
72	FLT72-3PH	3 phase fault on the SC10BEL4 (533063) to FARBER 4 (533042) 138 kV line circuit 1, near SC10BEL4. a. Apply fault at the SC10BEL4 138 kV bus. b. Clear fault after 5 cycles by tripping the faulted line. c. Wait 20 cycles, and then re-close the line in (b) back into the fault. d. Leave fault on for 5 cycles, then trip the line in (b) and remove fault.											X	

Table 2-3
Case List with Contingency Description

Cont. No.	Cont. Name	Description	GEN-2015-034	GEN-2015-043	GEN-2015-047	GEN-2015-052	GEN-2015-062	GEN-2015-063	GEN-2015-066	GEN-2015-067	GEN-2015-069	GEN-2015-073	GEN-2015-083	GEN-2015-090
73	FLT73-3PH	3 phase fault on the SC10BEL4 (533063) to SUMNER 4 (532984) 138 kV line circuit 1, near SC10BEL4. a. Apply fault at the SC10BEL4 138 kV bus. b. Clear fault after 5 cycles by tripping the faulted line. c. Wait 20 cycles, and then re-close the line in (b) back into the fault. d. Leave fault on for 5 cycles, then trip the line in (b) and remove fault.											X	
74	FLT74-3PH	3 phase fault on the FARBER 4 (533042) to ELPASO 4 (533039) 138 kV line circuit 1, near FARBER 4. a. Apply fault at the FARBER 4 138 kV bus. b. Clear fault after 5 cycles by tripping the faulted line. c. Wait 20 cycles, and then re-close the line in (b) back into the fault. d. Leave fault on for 5 cycles, then trip the line in (b) and remove fault.											X	
75	FLT75-3PH	3 phase fault on the SUMNER 4 (532984) to OXFORD 4 (532982) 138 kV line circuit 1, near SUMNER 4. a. Apply fault at the SUMNER 4 138 kV bus. b. Clear fault after 5 cycles by tripping the faulted line. c. Wait 20 cycles, and then re-close the line in (b) back into the fault. d. Leave fault on for 5 cycles, then trip the line in (b) and remove fault.											X	
76	FLT76-3PH	3 phase fault on the SUMNER 4 (532984) to TIMBJCT4 (532992) 138 kV line circuit 1, near SUMNER 4. a. Apply fault at the SUMNER 4 138 kV bus. b. Clear fault after 5 cycles by tripping the faulted line. c. Wait 20 cycles, and then re-close the line in (b) back into the fault. d. Leave fault on for 5 cycles, then trip the line in (b) and remove fault.											X	
77	FLT77-1PH	**Ranch Road 345 kV Single Phase Fault** a. Apply single-phase fault on the RANCHRD7 (515576) – OPENSKY7 (515621) 345 kV line, near RANCHRD7. b. Clear fault after 5 cycles by tripping the line in (a). c. Wait 20 cycles, and then re-close the line in (a) back into the fault. d. Leave fault on for 5 cycles, then trip the line in (a) and remove fault.	X											
78	FLT78-1PH	**Ranch Road 345 kV Single Phase Fault** a. Apply single-phase fault on the RANCHRD7 (515576) – SOONER 7 (514803) 345 kV line, near RANCHRD7. b. Clear fault after 5 cycles by tripping the line in (a). c. Wait 20 cycles, and then re-close the line in (a) back into the fault. d. Leave fault on for 5 cycles, then trip the line in (a) and remove fault.	X		X									
79	FLT79-PO	**Prior outage on the G1524&G1525T (560033) – WICHITA7 (532796) 345 kV line circuit 1;** 3 phase fault on the G1524&G1525T (560033) to WICHITA7 (532796) 345 kV line circuit 2, near G1524&G1525T. a. Apply fault at the G1524&G1525T 345 kV bus. b. Clear fault after 5 cycles by tripping the faulted line. c. Wait 20 cycles, and then re-close the line in (b) back into the fault. d. Leave fault on for 5 cycles, then trip the line in (b) and remove fault.		X										X
80	FLT80-PO	**Prior outage on the G1524&G1525T (560033) – THISTLE7 (539801) 345 kV line circuit 1;** 3 phase fault on the G1524&G1525T (560033) to THISTLE7 (539801) 345 kV line circuit 2, near G1524&G1525T. a. Apply fault at the G1524&G1525T 345 kV bus. b. Clear fault after 5 cycles by tripping the faulted line. c. Wait 20 cycles, and then re-close the line in (b) back into the fault. d. Leave fault on for 5 cycles, then trip the line in (b) and remove fault.		X										X

Table 2-3
Case List with Contingency Description

Cont. No.	Cont. Name	Description	GEN-2015-034	GEN-2015-043	GEN-2015-047	GEN-2015-052	GEN-2015-062	GEN-2015-063	GEN-2015-066	GEN-2015-067	GEN-2015-069	GEN-2015-073	GEN-2015-083	GEN-2015-090
81	FLT81-PO	**Prior outage on the G1524&G1525T (560033) – WICHITA7 (532796) 345 kV line circuit 1;** 3 phase fault on the G1524&G1525T (560033) to THISTLE7 (539801) 345 kV line circuit 2, near G1524&G1525T. a. Apply fault at the G1524&G1525T 345 kV bus. b. Clear fault after 5 cycles by tripping the faulted line. c. Wait 20 cycles, and then re-close the line in (b) back into the fault. d. Leave fault on for 5 cycles, then trip the line in (b) and remove fault.		X										X
82	FLT82-PO	**Prior outage on the G1524&G1525T (560033) – THISTLE7 (539801) 345 kV line circuit 1;** 3 phase fault on the G1524&G1525T (560033) to WICHITA7 (532796) 345 kV line circuit 2, near G1524&G1525T. a. Apply fault at the G1524&G1525T 345 kV bus. b. Clear fault after 5 cycles by tripping the faulted line. c. Wait 20 cycles, and then re-close the line in (b) back into the fault. d. Leave fault on for 5 cycles, then trip the line in (b) and remove fault.		X										X
83	FLT83-PO	**Prior outage on the SOONER 7 (514803) – RANCHRD (515576) 345 kV line;** 3 phase fault on the SOONER 7 (514803) to SPRNGCK7 (514881) 345 kV line, near SOONER 7. a. Apply fault at the SOONER 7 345 kV bus. b. Clear fault after 5 cycles by tripping the faulted line. c. Wait 20 cycles, and then re-close the line in (b) back into the fault. d. Leave fault on for 5 cycles, then trip the line in (b) and remove fault.			X									
84	FLT84-PO	**Prior outage on the SOONER 7 (514803) – SPRNGCK7 (514881) 345 kV line;** 3 phase fault on the SOONER 7 (514803) to RANCHRD (515576) 345 kV line, near SOONER 7. a. Apply fault at the SOONER 7 345 kV bus. b. Clear fault after 5 cycles by tripping the faulted line. c. Wait 20 cycles, and then re-close the line in (b) back into the fault. d. Leave fault on for 5 cycles, then trip the line in (b) and remove fault.			X									
85	FLT85-PO	**Prior outage on the SOONER 7 (514803) – SPRNGCK7 (514881) 345 kV line;** 3 phase fault on the SOONER 7 (514803) to WOODRNG7 (514715) 345 kV line, near SOONER 7. a. Apply fault at the SOONER 7 345 kV bus. b. Clear fault after 5 cycles by tripping the faulted line. c. Wait 20 cycles, and then re-close the line in (b) back into the fault. d. Leave fault on for 5 cycles, then trip the line in (b) and remove fault.			X									
86	FLT86-PO	**Prior outage on the SOONER 7 (514803) 345/ (514802) 138/ (515760) 13.8 kV transformer;** 3 phase fault on the SOONER 7 (514803) to SPRNGCK7 (514881) 345 kV line, near SOONER 7. a. Apply fault at the SOONER 7 345 kV bus. b. Clear fault after 5 cycles by tripping the faulted line. c. Wait 20 cycles, and then re-close the line in (b) back into the fault. d. Leave fault on for 5 cycles, then trip the line in (b) and remove fault.			X									
87	FLT87-PO	**Prior outage on the BRECKNR4 (514815) to BUNCHCK4 (514701) 138 kV line circuit 1;** 3 phase fault on the BRECKNR4 (514815) to PLNSMEN4 (515641) 138 kV line circuit 1, near BRECKNR4. a. Apply fault at BRECKNR4 138 kV bus. b. Clear fault after 5 cycles by tripping the faulted line. c. Wait 20 cycles, and then re-close the line in (b) back into the fault. d. Leave fault on for 5 cycles, then trip the line in (b) and remove fault.					X							

Table 2-3
Case List with Contingency Description

Cont. No.	Cont. Name	Description	GEN-2015-034	GEN-2015-043	GEN-2015-047	GEN-2015-052	GEN-2015-062	GEN-2015-063	GEN-2015-066	GEN-2015-067	GEN-2015-069	GEN-2015-073	GEN-2015-083	GEN-2015-090
88	FLT88-PO	**Prior outage on the BRECKNR4 (514815) to PLNSMEN4 (515641) 138 kV line circuit 1;** 3 phase fault on the BRECKNR4 (514815) to BUNCHCK4 (514701) 138 kV line circuit 1, near BRECKNR4. a. Apply fault at BRECKNR4 138 kV bus. b. Clear fault after 5 cycles by tripping the faulted line. c. Wait 20 cycles, and then re-close the line in (b) back into the fault. d. Leave fault on for 5 cycles, then trip the line in (b) and remove fault.					X							
89	FLT89-PO	**Prior outage on the BRECKNR4 (514815) to ENIDINT4 (515383) 138 kV line circuit 1;** 3 phase fault on the BRECKNR4 (514815) to SO4TH 4 (514731) 138 kV line circuit 1, near BRECKNR4. a. Apply fault at BRECKNR4 138 kV bus. b. Clear fault after 5 cycles by tripping the faulted line. c. Wait 20 cycles, and then re-close the line in (b) back into the fault. d. Leave fault on for 5 cycles, then trip the line in (b) and remove fault.					X							
90	FLT90-PO	**Prior outage on the BRECKNR4 (514815) to SO4TH 4 (514731) 138 kV line circuit 1;** 3 phase fault on the BRECKNR4 (514815) to BUNCHCK4 (514701) 138 kV line circuit 1, near BRECKNR4. a. Apply fault at BRECKNR4 138 kV bus. b. Clear fault after 5 cycles by tripping the faulted line. c. Wait 20 cycles, and then re-close the line in (b) back into the fault. d. Leave fault on for 5 cycles, then trip the line in (b) and remove fault.					X							
91	FLT91-PO	**Prior outage on the SOONER 4 (514802) 138 kV / (514803) 345 kV / (515760) 13.8 kV transformer;** 3 phase fault on the SOONER 4 (514802) to MORISNT4 (515447) 138 kV line, near SOONER 4. a. Apply fault at the SOONER 4 138 kV bus. b. Clear fault after 5 cycles by tripping the faulted line. c. Wait 20 cycles, and then re-close the line in (b) back into the fault. d. Leave fault on for 5 cycles, then trip the line in (b) and remove fault.								X				
92	FLT92-PO	**Prior outage on the SOONER 4 (514802) – PERRY 4 (514707) 138 kV line;** 3 phase fault on the SOONER 4 (514802) to SNRPMPT4 (514798) 138 kV line, near SOONER 4. a. Apply fault at the SOONER 4 138 kV bus. b. Clear fault after 5 cycles by tripping the faulted line. c. Wait 20 cycles, and then re-close the line in (b) back into the fault. d. Leave fault on for 5 cycles, then trip the line in (b) and remove fault.								X				
93	FLT93-PO	**Prior outage on the SOONER 4 (514802) – MORISNT4 (515447) 138 kV line;** 3 phase fault on the SOONER 4 (514802) to PERRY 4 (514707) 138 kV line, near SOONER 4. a. Apply fault at the SOONER 4 138 kV bus. b. Clear fault after 5 cycles by tripping the faulted line. c. Wait 20 cycles, and then re-close the line in (b) back into the fault. d. Leave fault on for 5 cycles, then trip the line in (b) and remove fault.								X				
94	FLT94-PO	**Prior outage on the SOONER 4 (514802) – SNRPMPT4 (514798) 138 kV line;** 3 phase fault on the SOONER 4 (514802) to MILLERT4 (514704) 138 kV line, near SOONER 4. a. Apply fault at the SOONER 4 138 kV bus. b. Clear fault after 5 cycles by tripping the faulted line. c. Wait 20 cycles, and then re-close the line in (b) back into the fault. d. Leave fault on for 5 cycles, then trip the line in (b) and remove fault.								X				

Table 2-3
Case List with Contingency Description

Cont. No.	Cont. Name	Description	GEN-2015-034	GEN-2015-043	GEN-2015-047	GEN-2015-052	GEN-2015-062	GEN-2015-063	GEN-2015-066	GEN-2015-067	GEN-2015-069	GEN-2015-073	GEN-2015-083	GEN-2015-090
95	FLT95-PO	**Prior outage on the EMPEC 7 (532768) – SWISVAL7 (532774) 345 kV line;** 3 phase fault on the EMPEC 7 (532768) to MORRIS 7 (532770) 345 kV line, near EMPEC 7. a. Apply fault at the EMPEC 7 345 kV bus. b. Clear fault after 5 cycles by tripping the faulted line. c. Wait 20 cycles, and then re-close the line in (b) back into the fault. d. Leave fault on for 5 cycles, then trip the line in (b) and remove fault.										X		
96	FLT96-PO	**Prior outage on the EMPEC 7 (532768) – LANG 7 (532769) 345 kV line;** 3 phase fault on the EMPEC 7 (532768) to G14-001-TAP (562476) 345 kV line, near EMPEC 7. a. Apply fault at the EMPEC 7 345 kV bus. b. Clear fault after 5 cycles by tripping the faulted line. c. Wait 20 cycles, and then re-close the line in (b) back into the fault. d. Leave fault on for 5 cycles, then trip the line in (b) and remove fault.										X		
97	FLT97-PO	**Prior outage on the EMPEC 7 (532768) – MORRIS 7 (532770) 345 kV line;** 3 phase fault on the EMPEC 7 (532768) to SWISVAL7 (532774) 345 kV line, near EMPEC 7. a. Apply fault at the EMPEC 7 345 kV bus. b. Clear fault after 5 cycles by tripping the faulted line. c. Wait 20 cycles, and then re-close the line in (b) back into the fault. d. Leave fault on for 5 cycles, then trip the line in (b) and remove fault.										X		
98	FLT98-PO	**Prior outage on the EMPEC 7 (532768) – G14-001-TAP (562476) 345 kV line;** 3 phase fault on the EMPEC 7 (532768) to MORRIS 7 (532770) 345 kV line, near EMPEC 7. a. Apply fault at the EMPEC 7 345 kV bus. b. Clear fault after 5 cycles by tripping the faulted line. c. Wait 20 cycles, and then re-close the line in (b) back into the fault. d. Leave fault on for 5 cycles, then trip the line in (b) and remove fault.										X		
99	FLT99-SB	**Stuck Breaker on Wichita – G1524&1525T 345 kV circuit 2 line** a. Apply single-phase fault at Wichita (532796) on the 345 kV bus. b. After 20 cycles, trip the Wichita 345/ (533040) 138/(532830) 13.8 kV transformer circuit 1 c. Trip the Wichita – G1524&G1525T (560033) 345 kV circuit 2 line, and remove the fault		X										X
100	FLT100-SB	**Stuck Breaker on Wichita – G1524&1525T 345 kV circuit 1 line** a. Apply single-phase fault at Wichita (532796) on the 345 kV bus. b. After 20 cycles, trip the Wichita - Viola (532798) 345 kV line circuit 1 c. Trip the Wichita – G1524&G1525T (560033) 345 kV circuit 1 line, and remove the fault		X										X
101	FLT101-SB	**Stuck Breaker on Wichita – G14-001 Tap 345 kV circuit 1 line** a. Apply single-phase fault at Wichita (532796) on the 345 kV bus. b. After 20 cycles, trip the Wichita 345/ (533040) 138/(532829) 13.8 kV transformer circuit 1 c. Trip the Wichita – G14-001 Tap (562476) 345 kV line, and remove the fault		X										X
102	FLT102-SB	**Stuck Breaker on Wichita – Reno 345 kV circuit 1 line** a. Apply single-phase fault at Wichita (532796) on the 345 kV bus. b. After 20 cycles, trip the Wichita – Benton (532791) 345 kV line circuit 1 c. Trip the Wichita – Reno (532771) 345 kV line, and remove the fault		X										X

Table 2-3
Case List with Contingency Description

Cont. No.	Cont. Name	Description	GEN-2015-034	GEN-2015-043	GEN-2015-047	GEN-2015-052	GEN-2015-062	GEN-2015-063	GEN-2015-066	GEN-2015-067	GEN-2015-069	GEN-2015-073	GEN-2015-083	GEN-2015-090
103	FLT103 -SB	**Stuck Breaker on Rosehill 345/138/13.8 kV circuit 1 transformer** a. Apply single-phase fault at Rosehill (532794) on the 345 kV bus. b. After 20 cycles, trip the Rosehill (532794) – Benton (532791) 345 kV line c. Trip the Rosehill 345/(533062) 138/(532831) 13.8 kV transformer circuit 1, and remove the fault				X								
104	FLT104 -SB	**Stuck Breaker on Rosehill 345/138/13.8 kV circuit 3 transformer** a. Apply single-phase fault at Rosehill (532794) on the 345 kV bus. b. After 20 cycles, trip the Rosehill (532794) – Wolf Creek (532797) 345 kV line c. Trip the Rosehill 345/(533062) 138/(532827) 13.8 kV transformer circuit 3, and remove the fault				X								
105	FLT105 -SB	**Stuck Breaker on BRECKNR4 - BUNCHCK4 138 kV line** a. Apply single-phase fault at Breckenridge 138 kV (514815) b. After 20 cycles, trip the BRECKNR4 (514815) to ENIDINT4 (515383) 138 kV line c. Trip the BRECKNR4 (514815) - BUNCHCK4 (514701) 138 kV line, and remove the fault					X							
106	FLT106 -SB	**Stuck Breaker on BRECKNR4 - SO4TH4 138 kV line** a. Apply single-phase fault at Breckenridge 138 kV (514815) b. After 20 cycles, trip the BRECKNR4 (514815) to PLNSMEN4 (515641) 138 kV line c. Trip the BRECKNR4 (514815) - SO4TH 4 (514731) 138 kV line, and remove the fault					X							
107	FLT107 -SB	**Stuck Breaker on Sooner 138 kV/345 kV/13.8 kV transformer** a. Apply single-phase fault at the Sooner 138 kV (514802) b. After 16 cycles, trip the Sooner – MORISNT4 (515447) 138 kV line c. Trip the Sooner 138 kV (514802)/345 kV (514803)/13.8 kV (515760) transformer, and remove the fault			X					X	X			
108	FLT108 -SB	**Stuck Breaker on Sooner - MILLERT4 138 kV line** a. Apply single-phase fault at Sooner (514802) 138 kV b. After 16 cycles, trip the Sooner (514802) - SNRPMPT4 (514798) 138 kV line c. Trip the Sooner - MILLERT4 (514704) 138 kV line, and remove the fault			X					X	X			
109	FLT109 -SB	**Stuck Breaker on UNIONRG 6 - SUMMIT 6 230 kV line** a. Apply single-phase fault at Union Ridge 230 kV (532874) b. After 20 cycles, trip the UNIONRG6 (532874) to MORRIS 6 (532863) 230 kV line c. Trip the UNIONRG6 (532874) - SUMMIT 6 (532873) 230 kV line, and remove the fault									X			
110	FLT110 -SB	**Stuck Breaker on EMPEC 7 - SWISVAL7 345 kV line** a. Apply single-phase fault at Emporia (532768) 345 kV b. After 20 cycles, trip the EMPEC 7 (532768) to MORRIS 7 (532770) 345 kV line c. Trip the EMPEC 7 (532768) to SWISVAL7 (532774) 345 kV line, and remove the fault										X		
111	FLT111 -SB	**Stuck Breaker on EMPEC 7 - G14-001-TAP 345 kV line** a. Apply single-phase fault at Emporia (532768) 345 kV b. After 20 cycles, trip the EMPEC 7 (532768) to LANG 7 (532769) 345 kV line c. Trip the EMPEC 7 (532768) - G14-001-TAP (562476) 345 kV line, and remove the fault										X		
112	FLT112 -SB	**Stuck Breaker on Sooner – Ranch Road 345 kV line** a. Apply single-phase fault at Sooner (514803) 345 kV bus on the Sooner – Ranch Road 345 kV line b. After 20 cycles, trip the Sooner (514803) – Woodring 345 kV line c. Trip the Sooner– Ranch Road (515576) line, and remove the fault	X		X				X	X				

Table 2-3
Case List with Contingency Description

Cont. No.	Cont. Name	Description	GEN-2015-034	GEN-2015-043	GEN-2015-047	GEN-2015-052	GEN-2015-062	GEN-2015-063	GEN-2015-066	GEN-2015-067	GEN-2015-069	GEN-2015-073	GEN-2015-083	GEN-2015-090
113	FLT113 -SB	**Stuck Breaker on Sooner – Woodring 345 kV line** a. Apply single-phase fault at Sooner (514803) 345 kV bus on the Sooner – Woodring (514715) 345 kV line b. After 20 cycles, trip the Sooner (514803) – Spring Creek (514881) 345 kV line c. Trip the Sooner– Woodring (514715) line, and remove the fault	X											
114	FLT114 -SB	**Stuck Breaker on Wichita – Reno 345 kV line** a. Apply single-phase fault at Wichita (532796) on the 345 kV bus. b. After 20 cycles, trip the Wichita (532796) – Viola (532798) 345 kV line c. Trip the Wichita (532796) – Reno (532771) line, and remove the fault		X										
115	FLT115 -SB	**Stuck Breaker on Ranch Road 7 – Open Sky 7 345 kV line** a. Apply single-phase fault at Ranch Road 7 (515576) 345 kV b. After 20 cycles, trip the Ranch Road 7 (515576) – Omcdlec 7 (529200) 345 kV line c. Trip the Ranch Road 7 (515576) – Open Sky 7 (515621) 345 kV line, and remove the fault			X									
116	FLT116 -SB	**Stuck Breaker on Rosehill 345/138/13.8 kV circuit 1 transformer** a. Apply single-phase fault at Rosehill (532794) on the 345 kV bus. b. After 20 cycles, trip the Rosehill (532794) – Benton (532791) 345 kV line c. Trip the Rosehill (532794) 345/(533062) 138/(532826) 13.8 kV transformer circuit 1, and remove the fault				X								
117	FLT117 -SB	**Stuck Breaker on BRECKNR4 – SO4TH 4 138 kV line** a. Apply single-phase fault at BRECKNR4 138 kV (514815) b. After 20 cycles, trip the BRECKNR4 (514815) to BUNCHCK4 (514701) 138 kV line c. Trip the BRECKNR4 (514815) – SO4TH 4 (514731) 138 kV line, and remove the fault					X							
118	FLT118 -SB	**Stuck Breaker on Woodring 7 – Sooner 7 345 kV line** a. Apply single-phase fault at Woodring 7 (514715) at the 345 kV bus b. After 20 cycles, trip the Woodring 7 (514715) to Hunters 7 (515476) 345 kV line c. Trip the Woodring 7 (514715) – Sooner 7 (514803) 345 kV line, and remove the fault						X						
119	FLT119 -SB	**Stuck Breaker on Cleveland 345/138/13.8 kV circuit 1 transformer** a. Apply single-phase fault at Cleveland 7 (512694) on the 345 kV bus. b. After 20 cycles, trip the Cleveland 7 (512694) – T.NO.--7 (509852) 345 kV line c. Trip the Cleveland 7 (512694) 345/(512729) 138/(512817) 13.8 kV transformer circuit 1, and remove the fault							X					
120	FLT120 -SB	**Stuck Breaker on Sooner 4 – MORISNT4 138 kV line** a. Apply single-phase fault at SOONER4 (514802) 138 kV bus on the SOONER4– MORISNT4 138 kV line b. After 20 cycles, trip the SOONER4 (514802) – PERRY4 (514707) 138 kV line c. Trip the SOONER4– MORISNT4 (515447) line, and remove the fault								X				
121	FLT121 -SB	**Stuck Breaker on Union Ridge 6 230 kV/115 kV/13.2 kV transformer** a. Apply single-phase fault at the UNIONRG6 230 kV (532874) b. After 20 cycles, trip the UNIONRG6– SUMMIT6 (532873) 230 kV line c. Trip the UNIONRG6 (532874) 230kV /(533359) 115 kV/(532817) 13.2 kV transformer, and remove the fault									X			
122	FLT122 -SB	**Stuck Breaker on EMPEC 7 – MORRIS 7 345 kV line** a. Apply single-phase fault at Emporia (532768) 345 kV b. After 20 cycles, trip the EMPEC 7 (532768) to G14-001-TAP (562476) 345 kV line c. Trip the EMPEC 7 (532768) to Morris 7 (532770) 345 kV line, and remove the fault										X		

Table 2-3
Case List with Contingency Description

Cont. No.	Cont. Name	Description	GEN-2015-034	GEN-2015-043	GEN-2015-047	GEN-2015-052	GEN-2015-062	GEN-2015-063	GEN-2015-066	GEN-2015-067	GEN-2015-069	GEN-2015-073	GEN-2015-083	GEN-2015-090
123	FLT123 -SB	**Stuck Breaker on FARBER 4 – SC10BEL 4 138 kV line** a. Apply single-phase fault at FARBER 4 (533042) 138 kV b. After 20 cycles, trip the FARBER 4 (533042) to ELPASO 4 (533039) 138 kV line c. Trip the FARBER 4 (533042) to SC10BEL 4 (533063) 138 kV line, and remove the fault											X	
124	FLT124 -SB	**Stuck Breaker on G1524&G1525T – Wichita 7 345 kV line** a. Apply single-phase fault at G1524&G1525T (560033) 345 kV b. After 20 cycles, trip the G1524&G1525T (560033) to Thistle 7 (539801) 345 kV line circuit 1 c. Trip the G1524&G1525T (560033) to Wichita 7 (532796) 345 kV line circuit 1, and remove the fault												X

SECTION 3: STABILITY ANALYSIS

The objective of the Stability Analysis was to determine the impacts of the generator interconnections on the stability and voltage recovery on the SPP transmission system. If problems with stability or voltage recovery were identified the need for reactive compensation or system upgrades were investigated.

3.1 Approach

SPP provided MEPPI with the following three power flow cases from the DISIS-2015-002 Group 08 study:

- 2016 Winter Peak
- 2017 Summer Peak
- 2025 Summer Peak

Each case was examined prior to the Stability Analysis to ensure the case contained the proposed study projects and any previously queued projects listed in Tables 2-2 and 2-3 respectively. There was no suspect power flow data in the study area. The dynamic datasets were also verified and stable initial system conditions (i.e., “flat lines”) were achieved. Three-phase and single phase-to-ground faults listed in Table 2-3 were examined. Single-phase fault impedances were calculated for each season to result in a voltage of approximately 60% of the pre-fault voltage. Refer to Table 3-1 for a list of the calculated single-phase fault impedances used for the Cluster Scenario. Refer to Tables 3-2 through 3-13 for single-phase fault impedances used for each Stand Alone Scenario.

Table 3-1
Calculated Single-Phase Fault Impedances for Cluster Scenarios

Cont. No.*	Cont. Name	Single-Phase Fault Impedance (MVA)		
		2016 Winter	2017 Summer	2025 Summer
77	FLT78-1PH	-5250.0	-5656.3	-5656.3
78	FLT79-1PH	-5250.0	-5656.3	-5656.3
99	FLT99-1PH	-7687.5	-9312.5	-9718.8
100	FLT100-1PH	-7687.5	-9312.5	-9718.8
101	FLT101-1PH	-7687.5	-9312.5	-9718.8
102	FLT102-1PH	-7687.5	-9312.5	-9718.8
103	FLT103-1PH	-6468.8	-7281.3	-7281.3
104	FLT104-1PH	-6468.8	-7281.3	-7281.3
105	FLT105-1PH	-2203.1	-2203.1	-2203.1
106	FLT106-1PH	-2203.1	-2203.1	-2203.1
107	FLT107-1PH	-4843.8	-4843.8	-5046.9
108	FLT108-1PH	-4843.8	-4843.8	-5046.9
109	FLT109-1PH	-2406.3	-2406.3	-2406.3
110	FLT110-1PH	-6875.0	-6875.0	-6875.0
111	FLT111-1PH	-6875.0	-6875.0	-6875.0
112	FLT1112-1PH	-9312.5	-10125.0	-10125.0
113	FLT113-1PH	-9312.5	-10125.0	-10125.0
114	FLT114-1PH	-7687.5	-9312.5	-9718.8
115	FLT115-1PH	-5250.0	-5656.3	-5656.3
116	FLT116-1PH	-6468.8	-7281.3	-7281.3
117	FLT117-1PH	-2203.1	-2203.1	-2203.1
118	FLT118-1PH	-6468.8	-6875.0	-6875.0
119	FLT119-1PH	-5656.3	-5656.3	-5656.3
120	FLT120-1PH	-4843.8	-4843.8	-5046.9
121	FLT121-1PH	-2406.3	-2406.3	-2406.3
122	FLT122-1PH	-6875.0	-6875.0	-6875.0
123	FLT123-1PH	-2203.1	-2406.3	-2609.4
124	FLT124-1PH	-6875.0	-7687.5	-7687.5

*Refer to Table 2-3 for a description of the contingency scenerio

Table 3-2
Calculated Single-Phase Fault Impedances for Stand Alone Scenario: GEN-2015-034

Cont. No.*	Cont. Name	Single-Phase Fault Impedance (MVA)		
		2016 Winter	2017 Summer	2025 Summer
77	FLT78-1PH	-5250.0	-5250.0	-5250.0
78	FLT79-1PH	-5250.0	-5250.0	-5250.0
112	FLT112-1PH	-9312.5	-9312.5	-9312.5
113	FLT113-1PH	-9312.5	-9312.5	-9312.5

*Refer to Table 2-3 for a description of the contingency scenerio

Table 3-3
Calculated Single-Phase Fault Impedances for Stand Alone Scenario: GEN-2015-043

Cont. No.*	Cont. Name	Single-Phase Fault Impedance (MVA)		
		2016 Winter	2017 Summer	2025 Summer
99	FLT99-1PH	-7687.5	-7687.5	-7687.5
100	FLT100-1PH	-7687.5	-7687.5	-7687.5
101	FLT101-1PH	-7687.5	-7687.5	-7687.5
102	FLT102-1PH	-7687.5	-7687.5	-7687.5
114	FLT114-1PH	-7687.5	-7687.5	-7687.5

*Refer to Table 2-3 for a description of the contingency scenerio

Table 3-4
Calculated Single-Phase Fault Impedances for Stand Alone Scenario: GEN-2015-047

Cont. No.*	Cont. Name	Single-Phase Fault Impedance (MVA)		
		2016 Winter	2017 Summer	2025 Summer
78	FLT78-1PH	-5250	-5250	-5250
107	FLT107-1PH	-4843.8	-4843.8	-4843.8
108	FLT108-1PH	-4843.8	-4843.8	-4843.8
112	FLT112-1PH	-9312.5	-9312.5	-9312.5
115	FLT115-1PH	-5250	-5250	-5250

*Refer to Table 2-3 for a description of the contingency scenerio

Table 3-5
Calculated Single-Phase Fault Impedances for Stand Alone Scenario: GEN-2015-052

Cont. No.*	Cont. Name	Single-Phase Fault Impedance (MVA)		
		2016 Winter	2017 Summer	2025 Summer
103	FLT103-1PH	-6468.8	-6468.8	-6468.8
104	FLT104-1PH	-6468.8	-6468.8	-6468.8
116	FLT116-1PH	-6468.8	-6468.8	-6468.8

*Refer to Table 2-3 for a description of the contingency scenerio

Table 3-6
Calculated Single-Phase Fault Impedances for Stand Alone Scenario: GEN-2015-062

Cont. No.*	Cont. Name	Single-Phase Fault Impedance (MVA)		
		2016 Winter	2017 Summer	2025 Summer
105	FLT105-1PH	-2203.1	-2203.1	-2203.1
106	FLT106-1PH	-2203.1	-2203.1	-2203.1
117	FLT117-1PH	-2203.1	-2203.1	-2203.1

*Refer to Table 2-3 for a description of the contingency scenerio

Table 3-7
Calculated Single-Phase Fault Impedances for Stand Alone Scenario: GEN-2015-063

Cont. No.*	Cont. Name	Single-Phase Fault Impedance (MVA)		
		2016 Winter	2017 Summer	2025 Summer
117	FLT117-1PH	-6468.8	-6468.8	-6468.8

*Refer to Table 2-3 for a description of the contingency scenerio

Table 3-8
Calculated Single-Phase Fault Impedances for Stand Alone Scenario: GEN-2015-066

Cont. No.*	Cont. Name	Single-Phase Fault Impedance (MVA)		
		2016 Winter	2017 Summer	2025 Summer
112	FLT112-1PH	-9312.5	-9312.5	-9312.5
119	FLT119-1PH	-5656.3	-5656.3	-5656.3

*Refer to Table 2-3 for a description of the contingency scenerio

Table 3-9
Calculated Single-Phase Fault Impedances for Stand Alone Scenario: GEN-2015-067

Cont. No.*	Cont. Name	Single-Phase Fault Impedance (MVA)		
		2016 Winter	2017 Summer	2025 Summer
107	FLT107-1PH	-4843.8	-4843.8	-4843.8
108	FLT108-1PH	-4843.8	-4843.8	-4843.8
112	FLT112-1PH	-9312.5	-9312.5	-9312.5
120	FLT120-1PH	-4843.8	-4843.8	-4843.8

*Refer to Table 2-3 for a description of the contingency scenerio

Table 3-10
Calculated Single-Phase Fault Impedances for Stand Alone Scenario: GEN-2015-069

Cont. No.*	Cont. Name	Single-Phase Fault Impedance (MVA)		
		2016 Winter	2017 Summer	2025 Summer
107	FLT107-1PH	-4843.8	-4843.8	-4843.8
108	FLT108-1PH	-4843.8	-4843.8	-4843.8
109	FLT109-1PH	-2406.3	-2406.3	-2406.3
121	FLT121-1PH	-2406.3	-2406.3	-2406.3

*Refer to Table 2-3 for a description of the contingency scenerio

Table 3-11
Calculated Single-Phase Fault Impedances for Stand Alone Scenario: GEN-2015-073

Cont. No.*	Cont. Name	Single-Phase Fault Impedance (MVA)		
		2016 Winter	2017 Summer	2025 Summer
110	FLT110-1PH	-6875	-6875	-6875
111	FLT111-1PH	-6875	-6875	-6875
122	FLT122-1PH	-6875	-6875	-6875

*Refer to Table 2-3 for a description of the contingency scenerio

Table 3-12
Calculated Single-Phase Fault Impedances for Stand Alone Scenario: GEN-2015-083

Cont. No.*	Cont. Name	Single-Phase Fault Impedance (MVA)		
		2016 Winter	2017 Summer	2025 Summer
123	FLT123-1PH	-2203.1	-2203.1	-2203.1

Table 3-13
Calculated Single-Phase Fault Impedances for Stand Alone Scenario: GEN-2015-090

Cont. No.*	Cont. Name	Single-Phase Fault Impedance (MVA)		
		2016 Winter	2017 Summer	2025 Summer
99	FLT99-1PH	-7687.5	-7687.5	-7687.5
100	FLT100-1PH	-7687.5	-7687.5	-7687.5
101	FLT101-1PH	-7687.5	-7687.5	-7687.5
102	FLT102-1PH	-7687.5	-7687.5	-7687.5
124	FLT124-1PH	-6875	-6875	-6875

*Refer to Table 2-3 for a description of the contingency scenerio

Bus voltages, machine rotor angles, and previously queued generation in the study area were monitored. Requested and previously queued generation outside the study area was also monitored.

The results of the analysis determined if reactive compensation or system upgrades were required to obtain acceptable system performance. If additional reactive compensation was required, the size, type, and location were determined. The proposed reactive reinforcements would ensure the wind or solar farm meets FERC Order 661A low voltage requirements and return the wind or solar farm to its pre-disturbance operating voltage. If the results indicated the need for fast responding reactive support, dynamic support such as an SVC or STATCOM was investigated. If tripping of the prior queued projects was observed during the stability analysis (for under/over voltage or under/over frequency) the simulations were re-ran with the prior queued project's voltage and frequency tripping disabled.

3.2 Cluster Scenario Stability Analysis Results

The Stability Analysis determined that there were no contingencies that resulted in system instability, generation tripping offline, or voltage violations for the 2016 Winter Peak, 2017 Summer Peak, and 2025 Summer Peak conditions when all generation interconnection requests were at 100% output.

Refer to Table 3-2 for a summary of the Stability Analysis results for the contingencies listed in Table 2-3. Table 3-14 is a summary of the stability results for the 2016 Winter Peak, 2017 Summer Peak, and 2025 Summer Peak cluster scenarios and states whether the system remained stable or generation tripped offline and if acceptable voltage recovery was observed after the

fault was cleared. Voltage recovery criteria includes ensuring that the transient voltage recovery is between 0.7 p.u. and 1.2 p.u. and ending in a steady-state voltage (for N-1 contingencies) at the pre-contingent level or at least 0.9 p.u. If high or low voltages were observed the number of buses failing the voltage criteria was listed.

Refer to Appendix B, Appendix C, and Appendix D for a complete set of plots for all contingencies for 2016 Winter Peak, 2017 Summer Peak, and 2025 Summer Peak conditions, respectively.

Table 3-14
Stability Analysis Summary of Results for 2016 Winter Peak, 2017 Summer Peak, and 2025 Summer Peak Cluster Scenarios

Cont. No.	Cont. Name	2016 Winter Peak			2017 Summer Peak			2025 Summer Peak		
		Voltage Recovery		Stable?	Voltage Recovery		Stable?	Voltage Recovery		Stable?
		Less than .70 p.u.	Greater than 1.20 p.u.		Less than .70 p.u.	Greater than 1.20 p.u.		Less than .70 p.u.	Greater than 1.20 p.u.	
1	FLT01-3PH	No	No	Yes	No	No	Yes	No	No	Yes
2	FLT02-3PH	No	No	Yes	No	No	Yes	No	No	Yes
3	FLT03-3PH	No	No	Yes	No	No	Yes	No	No	Yes
4	FLT04-3PH	No	No	Yes	No	No	Yes	No	No	Yes
5	FLT05-3PH	No	No	Yes	No	No	Yes	No	No	Yes
6	FLT06-3PH	No	No	Yes	No	No	Yes	No	No	Yes
7	FLT07-3PH	No	No	Yes	No	No	Yes	No	No	Yes
8	FLT08-3PH	No	No	Yes	No	No	Yes	No	No	Yes
9	FLT09-3PH	No	No	Yes	No	No	Yes	No	No	Yes
10	FLT10-3PH	No	No	Yes	No	No	Yes	No	No	Yes
11	FLT11-3PH	No	No	Yes	No	No	Yes	No	No	Yes
12	FLT12-3PH	No	No	Yes	No	No	Yes	No	No	Yes
13	FLT13-3PH	No	No	Yes	No	No	Yes	No	No	Yes
14	FLT14-3PH	No	No	Yes	No	No	Yes	No	No	Yes
15	FLT15-3PH	No	No	Yes	No	No	Yes	No	No	Yes
16	FLT16-3PH	No	No	Yes	No	No	Yes	No	No	Yes
17	FLT17-3PH	No	No	Yes	No	No	Yes	No	No	Yes
18	FLT18-3PH	No	No	Yes	No	No	Yes	No	No	Yes
19	FLT19-3PH	No	No	Yes	No	No	Yes	No	No	Yes
20	FLT20-3PH	No	No	Yes	No	No	Yes	No	No	Yes
21	FLT21-3PH	No	No	Yes	No	No	Yes	No	No	Yes
22	FLT22-3PH	No	No	Yes	No	No	Yes	No	No	Yes
23	FLT23-3PH	No	No	Yes	No	No	Yes	No	No	Yes
24	FLT24-3PH	No	No	Yes	No	No	Yes	No	No	Yes
25	FLT25-3PH	No	No	Yes	No	No	Yes	No	No	Yes
26	FLT26-3PH	No	No	Yes	No	No	Yes	No	No	Yes
27	FLT27-3PH	No	No	Yes	No	No	Yes	No	No	Yes
28	FLT28-3PH	No	No	Yes	No	No	Yes	No	No	Yes
29	FLT29-3PH	No	No	Yes	No	No	Yes	No	No	Yes
30	FLT30-3PH	No	No	Yes	No	No	Yes	No	No	Yes
31	FLT31-3PH	No	No	Yes	No	No	Yes	No	No	Yes
32	FLT32-3PH	No	No	Yes	No	No	Yes	No	No	Yes
33	FLT33-3PH	No	No	Yes	No	No	Yes	No	No	Yes
34	FLT34-3PH	No	No	Yes	No	No	Yes	No	No	Yes
35	FLT35-3PH	No	No	Yes	No	No	Yes	No	No	Yes
36	FLT36-3PH	No	No	Yes	No	No	Yes	No	No	Yes
37	FLT37-3PH	No	No	Yes	No	No	Yes	No	No	Yes
38	FLT38-3PH	No	No	Yes	No	No	Yes	No	No	Yes
39	FLT39-3PH	No	No	Yes	No	No	Yes	No	No	Yes
40	FLT40-3PH	No	No	Yes	No	No	Yes	No	No	Yes
41	FLT41-3PH	No	No	Yes	No	No	Yes	No	No	Yes
42	FLT42-3PH	No	No	Yes	No	No	Yes	No	No	Yes
43	FLT43-3PH	No	No	Yes	No	No	Yes	No	No	Yes
44	FLT44-3PH	No	No	Yes	No	No	Yes	No	No	Yes
45	FLT45-3PH	No	No	Yes	No	No	Yes	No	No	Yes

Table 3-14 (Continued)
Stability Analysis Summary of Results for 2016 Winter Peak, 2017 Summer Peak, and 2025 Summer Peak Cluster Scenarios

Cont. No.	Cont. Name	2016 Winter Peak			2017 Summer Peak			2025 Summer Peak		
		Voltage Recovery		Stable?	Voltage Recovery		Stable?	Voltage Recovery		Stable?
		Less than .70 p.u.	Greater than 1.20 p.u.		Less than .70 p.u.	Greater than 1.20 p.u.		Less than .70 p.u.	Greater than 1.20 p.u.	
46	FLT46-3PH	No	No	Yes	No	No	Yes	No	No	Yes
47	FLT47-3PH	No	No	Yes	No	No	Yes	No	No	Yes
48	FLT48-3PH	No	No	Yes	No	No	Yes	No	No	Yes
49	FLT49-3PH	No	No	Yes	No	No	Yes	No	No	Yes
50	FLT50-3PH	No	No	Yes	No	No	Yes	No	No	Yes
51	FLT51-3PH	No	No	Yes	No	No	Yes	No	No	Yes
52	FLT52-3PH	No	No	Yes	No	No	Yes	No	No	Yes
53	FLT53-3PH	No	No	Yes	No	No	Yes	No	No	Yes
54	FLT54-SB	No	No	Yes	No	No	Yes	No	No	Yes
55	FLT55-3PH	No	No	Yes	No	No	Yes	No	No	Yes
56	FLT56-3PH	No	No	Yes	No	No	Yes	No	No	Yes
57	FLT57-3PH	No	No	Yes	No	No	Yes	No	No	Yes
58	FLT58-3PH	No	No	Yes	No	No	Yes	No	No	Yes
59	FLT59-3PH	No	No	Yes	No	No	Yes	No	No	Yes
60	FLT60-3PH	No	No	Yes	No	No	Yes	No	No	Yes
61	FLT61-3PH	No	No	Yes	No	No	Yes	No	No	Yes
62	FLT62-3PH	No	No	Yes	No	No	Yes	No	No	Yes
63	FLT63-3PH	No	No	Yes	No	No	Yes	No	No	Yes
64	FLT64-3PH	No	No	Yes	No	No	Yes	No	No	Yes
65	FLT65-3PH	No	No	Yes	No	No	Yes	No	No	Yes
66	FLT66-3PH	No	No	Yes	No	No	Yes	No	No	Yes
67	FLT67-3PH	No	No	Yes	No	No	Yes	No	No	Yes
68	FLT68-3PH	No	No	Yes	No	No	Yes	No	No	Yes
69	FLT69-3PH	No	No	Yes	No	No	Yes	No	No	Yes
70	FLT70-3PH	No	No	Yes	No	No	Yes	No	No	Yes
71	FLT71-3PH	No	No	Yes	No	No	Yes	No	No	Yes
72	FLT72-3PH	No	No	Yes	No	No	Yes	No	No	Yes
73	FLT73-3PH	No	No	Yes	No	No	Yes	No	No	Yes
74	FLT74-3PH	No	No	Yes	No	No	Yes	No	No	Yes
75	FLT75-3PH	No	No	Yes	No	No	Yes	No	No	Yes
76	FLT76-3PH	No	No	Yes	No	No	Yes	No	No	Yes
77	FLT77-1PH	No	No	Yes	No	No	Yes	No	No	Yes
78	FLT78-1PH	No	No	Yes	No	No	Yes	No	No	Yes
79	FLT79-PO	No	No	Yes	No	No	Yes	No	No	Yes
80	FLT80-PO	No	No	Yes	No	No	Yes	No	No	Yes
81	FLT81-PO	No	No	Yes	No	No	Yes	No	No	Yes
82	FLT82-PO	No	No	Yes	No	No	Yes	No	No	Yes
83	FLT83-PO	No	No	Yes	No	No	Yes	No	No	Yes
84	FLT84-PO	No	No	Yes	No	No	Yes	No	No	Yes
85	FLT85-PO	No	No	Yes	No	No	Yes	No	No	Yes
86	FLT86-PO	No	No	Yes	No	No	Yes	No	No	Yes
87	FLT87-PO	No	No	Yes	No	No	Yes	No	No	Yes
88	FLT88-PO	No	No	Yes	No	No	Yes	No	No	Yes
89	FLT89-PO	No	No	Yes	No	No	Yes	No	No	Yes
90	FLT90-PO	No	No	Yes	No	No	Yes	No	No	Yes

Table 3-14 (Continued)
Stability Analysis Summary of Results for 2016 Winter Peak, 2017 Summer Peak, and 2025 Summer Peak Cluster Scenarios

Cont. No.	Cont. Name	2016 Winter Peak			2017 Summer Peak			2025 Summer Peak		
		Voltage Recovery		Stable?	Voltage Recovery		Stable?	Voltage Recovery		Stable?
		Less than .70 p.u.	Greater than 1.20 p.u.		Less than .70 p.u.	Greater than 1.20 p.u.		Less than .70 p.u.	Greater than 1.20 p.u.	
91	FLT91-PO	No	No	Yes	No	No	Yes	No	No	Yes
92	FLT92-PO	No	No	Yes	No	No	Yes	No	No	Yes
93	FLT93-PO	No	No	Yes	No	No	Yes	No	No	Yes
94	FLT94-PO	No	No	Yes	No	No	Yes	No	No	Yes
95	FLT95-PO	No	No	Yes	No	No	Yes	No	No	Yes
96	FLT96-PO	No	No	Yes	No	No	Yes	No	No	Yes
97	FLT97-PO	No	No	Yes	No	No	Yes	No	No	Yes
98	FLT98-PO	No	No	Yes	No	No	Yes	No	No	Yes
99	FLT99-SB	No	No	Yes	No	No	Yes	No	No	Yes
100	FLT100-SB	No	No	Yes	No	No	Yes	No	No	Yes
101	FLT101-SB	No	No	Yes	No	No	Yes	No	No	Yes
102	FLT102-SB	No	No	Yes	No	No	Yes	No	No	Yes
103	FLT103-SB	No	No	Yes	No	No	Yes	No	No	Yes
104	FLT104-SB	No	No	Yes	No	No	Yes	No	No	Yes
105	FLT105-SB	No	No	Yes	No	No	Yes	No	No	Yes
106	FLT106-SB	No	No	Yes	No	No	Yes	No	No	Yes
107	FLT107-SB	No	No	Yes	No	No	Yes	No	No	Yes
108	FLT108-SB	No	No	Yes	No	No	Yes	No	No	Yes
109	FLT109-SB	No	No	Yes	No	No	Yes	No	No	Yes
110	FLT110-SB	No	No	Yes	No	No	Yes	No	No	Yes
111	FLT111-SB	No	No	Yes	No	No	Yes	No	No	Yes
112	FLT112-SB	No	No	Yes	No	No	Yes	No	No	Yes
113	FLT113-SB	No	No	Yes	No	No	Yes	No	No	Yes
114	FLT114-SB	No	No	Yes	No	No	Yes	No	No	Yes
115	FLT115-SB	No	No	Yes	No	No	Yes	No	No	Yes
116	FLT116-SB	No	No	Yes	No	No	Yes	No	No	Yes
117	FLT117-SB	No	No	Yes	No	No	Yes	No	No	Yes
118	FLT118-SB	No	No	Yes	No	No	Yes	No	No	Yes
119	FLT119-SB	No	No	Yes	No	No	Yes	No	No	Yes
120	FLT120-SB	No	No	Yes	No	No	Yes	No	No	Yes
121	FLT121-SB	No	No	Yes	No	No	Yes	No	No	Yes
122	FLT122-SB	No	No	Yes	No	No	Yes	No	No	Yes
123	FLT123-SB	No	No	Yes	No	No	Yes	No	No	Yes
124	FLT124-SB	No	No	Yes	No	No	Yes	No	No	Yes

3.3 Stand Alone Scenario Stability Analysis Results

Refer to Appendix E, Appendix F, and Appendix G for a complete set of plots for all Stand Alone Scenario contingencies for 2016 Winter Peak, 2017 Summer Peak, and 2025 Summer Peak conditions, respectively

Stand Alone Scenario Stability Analysis Results: GEN-2015-034

The Stability Analysis determined that there were no contingencies that resulted in system instability, generation tripping offline, or voltage violations for 2016 Winter Peak, 2017 Summer Peak, and 2025 Summer Peak conditions when GEN-2015-034 was at 100% output.

Refer to Table 3-15 for a summary of the Stability Analysis results for the contingencies listed in Table 2-3 that correspond to the GEN-2015-034 Stand Alone Analysis. Table 3-15 is a summary of the stability results for the 2016 Winter Peak, 2017 Summer Peak, and 2025 Summer Peak conditions and states whether the system remained stable or generation tripped offline and if acceptable voltage recovery was observed after the fault was cleared. Voltage recovery criteria includes ensuring that the transient voltage recovery is between 0.7 p.u. and 1.2 p.u. and ending in a steady state voltage (for N-1 contingencies) at the pre-contingent level or at least 0.9 p.u. If high or low voltages were observed the number of buses failing the voltage criteria was listed.

Table 3-15
Stand Alone Scenario GEN-2015-034: Stability Analysis Summary of Results for 2016 Winter, 2017 Summer, and 2025 Summer Peak Conditions

Cont. No.	Cont. Name	2016 Winter Peak			2017 Summer Peak			2025 Summer Peak		
		Voltage Recovery		Stable?	Voltage Recovery		Stable?	Voltage Recovery		Stable?
		Less than .70 p.u.	Greater than 1.20 p.u.		Less than .70 p.u.	Greater than 1.20 p.u.		Less than .70 p.u.	Greater than 1.20 p.u.	
1	FLT01-3PH	No	No	Yes	No	No	Yes	No	No	Yes
2	FLT02-3PH	No	No	Yes	No	No	Yes	No	No	Yes
3	FLT03-3PH	No	No	Yes	No	No	Yes	No	No	Yes
4	FLT04-3PH	No	No	Yes	No	No	Yes	No	No	Yes
5	FLT05-3PH	No	No	Yes	No	No	Yes	No	No	Yes
6	FLT06-3PH	No	No	Yes	No	No	Yes	No	No	Yes
7	FLT07-3PH	No	No	Yes	No	No	Yes	No	No	Yes
77	FLT77-1PH	No	No	Yes	No	No	Yes	No	No	Yes
78	FLT78-1PH	No	No	Yes	No	No	Yes	No	No	Yes
112	FLT112-SB	No	No	Yes	No	No	Yes	No	No	Yes
113	FLT113-SB	No	No	Yes	No	No	Yes	No	No	Yes

Stand Alone Scenario Stability Analysis Results: GEN-2015-043

The Stability Analysis determined that there were no contingencies that resulted in system instability, generation tripping offline, or voltage violations for the 2016 Winter Peak, 2017 Summer Peak, and 2025 Summer Peak conditions when GEN-2015-043 was at 100% output.

Refer to Table 3-16 for a summary of the Stability Analysis results for the contingencies listed in Table 2-3 that corresponds to the GEN-2015-043 Stand Alone Analysis. Table 3-16 is a summary of the stability results for the 2016 Winter Peak, 2017 Summer Peak, and 2025 Summer Peak conditions and states whether the system remained stable or generation tripped

offline and if acceptable voltage recovery was observed after the fault was cleared. Voltage recovery criteria includes ensuring that the transient voltage recovery is between 0.7 p.u. and 1.2 p.u. and ending in a steady state voltage (for N-1 contingencies) at the pre-contingent level or at least 0.9 p.u. If high or low voltages were observed the number of buses failing the voltage criteria was listed.

Table 3-16
Stand Alone Scenario GEN-2015-043: Stability Analysis Summary of Results for 2016 Winter, 2017 Summer, and 2025 Summer Peak Conditions

Cont. No.	Cont. Name	2016 Winter Peak			2017 Summer Peak			2025 Summer Peak		
		Voltage Recovery		Stable?	Voltage Recovery		Stable?	Voltage Recovery		Stable?
		Less than .70 p.u.	Greater than 1.20 p.u.		Less than .70 p.u.	Greater than 1.20 p.u.		Less than .70 p.u.	Greater than 1.20 p.u.	
8	FLT08-3PH	No	No	Yes	No	No	Yes	No	No	Yes
9	FLT09-3PH	No	No	Yes	No	No	Yes	No	No	Yes
10	FLT10-3PH	No	No	Yes	No	No	Yes	No	No	Yes
11	FLT11-3PH	No	No	Yes	No	No	Yes	No	No	Yes
12	FLT12-3PH	No	No	Yes	No	No	Yes	No	No	Yes
13	FLT13-3PH	No	No	Yes	No	No	Yes	No	No	Yes
14	FLT14-3PH	No	No	Yes	No	No	Yes	No	No	Yes
15	FLT15-3PH	No	No	Yes	No	No	Yes	No	No	Yes
16	FLT16-3PH	No	No	Yes	No	No	Yes	No	No	Yes
17	FLT17-3PH	No	No	Yes	No	No	Yes	No	No	Yes
79	FLT79-PO	No	No	Yes	No	No	Yes	No	No	Yes
80	FLT80-PO	No	No	Yes	No	No	Yes	No	No	Yes
81	FLT81-PO	No	No	Yes	No	No	Yes	No	No	Yes
82	FLT82-PO	No	No	Yes	No	No	Yes	No	No	Yes
99	FLT99-SB	No	No	Yes	No	No	Yes	No	No	Yes
100	FLT100-SB	No	No	Yes	No	No	Yes	No	No	Yes
101	FLT101-SB	No	No	Yes	No	No	Yes	No	No	Yes
102	FLT102-SB	No	No	Yes	No	No	Yes	No	No	Yes
114	FLT114-SB	No	No	Yes	No	No	Yes	No	No	Yes

Stand Alone Scenario Stability Analysis Results: GEN-2015-047

The Stability Analysis determined that there were no contingencies that resulted in system instability, generation tripping offline, or voltage violations for the 2016 Winter Peak, 2017 Summer Peak, and 2025 Summer Peak conditions when GEN-2015-047 was at 100% output.

Refer to Table 3-17 for a summary of the Stability Analysis results for the contingencies listed in Table 2-3 that corresponds to the GEN-2015-047 Stand Alone Analysis. Table 3-17 is a summary of the stability results for the 2016 Winter Peak, 2017 Summer Peak, and 2025 Summer Peak conditions and states whether the system remained stable or generation tripped offline and if acceptable voltage recovery was observed after the fault was cleared. Voltage recovery criteria includes ensuring that the transient voltage recovery is between 0.7 p.u. and 1.2 p.u. and ending in a steady state voltage (for N-1 contingencies) at the pre-contingent level or at least 0.9 p.u. If high or low voltages were observed the number of buses failing the voltage criteria was listed.

Table 3-17
Stand Alone Scenario GEN-2015-047: Stability Analysis Summary of Results for 2016 Winter, 2017 Summer, and 2025 Summer Peak Conditions

Cont. No.	Cont. Name	2016 Winter Peak			2017 Summer Peak			2025 Summer Peak		
		Voltage Recovery		Stable?	Voltage Recovery		Stable?	Voltage Recovery		Stable?
		Less than .70 p.u.	Greater than 1.20 p.u.		Less than .70 p.u.	Greater than 1.20 p.u.		Less than .70 p.u.	Greater than 1.20 p.u.	
1	FLT01-3PH	No	No	Yes	No	No	Yes	No	No	Yes
2	FLT02-3PH	No	No	Yes	No	No	Yes	No	No	Yes
4	FLT04-3PH	No	No	Yes	No	No	Yes	No	No	Yes
5	FLT05-3PH	No	No	Yes	No	No	Yes	No	No	Yes
6	FLT06-3PH	No	No	Yes	No	No	Yes	No	No	Yes
7	FLT07-3PH	No	No	Yes	No	No	Yes	No	No	Yes
18	FLT18-3PH	No	No	Yes	No	No	Yes	No	No	Yes
19	FLT19-3PH	No	No	Yes	No	No	Yes	No	No	Yes
20	FLT20-3PH	No	No	Yes	No	No	Yes	No	No	Yes
21	FLT21-3PH	No	No	Yes	No	No	Yes	No	No	Yes
22	FLT22-3PH	No	No	Yes	No	No	Yes	No	No	Yes
23	FLT23-3PH	No	No	Yes	No	No	Yes	No	No	Yes
24	FLT24-3PH	No	No	Yes	No	No	Yes	No	No	Yes
25	FLT25-3PH	No	No	Yes	No	No	Yes	No	No	Yes
26	FLT26-3PH	No	No	Yes	No	No	Yes	No	No	Yes
77	FLT77-1PH	No	No	Yes	No	No	Yes	No	No	Yes
78	FLT78-1PH	No	No	Yes	No	No	Yes	No	No	Yes
83	FLT83-PO	No	No	Yes	No	No	Yes	No	No	Yes
84	FLT84-PO	No	No	Yes	No	No	Yes	No	No	Yes
85	FLT85-PO	No	No	Yes	No	No	Yes	No	No	Yes
86	FLT86-PO	No	No	Yes	No	No	Yes	No	No	Yes
107	FLT107-SB	No	No	Yes	No	No	Yes	No	No	Yes
108	FLT108-SB	No	No	Yes	No	No	Yes	No	No	Yes
112	FLT112-SB	No	No	Yes	No	No	Yes	No	No	Yes
115	FLT115-SB	No	No	Yes	No	No	Yes	No	No	Yes

Stand Alone Scenario Stability Analysis Results: GEN-2015-052

The Stability Analysis determined that there were no contingencies that resulted in system instability, generation tripping offline, or voltage violations for the 2016 Winter Peak, 2017 Summer Peak, and 2025 Summer Peak conditions when GEN-2015-052 was at 100% output.

Refer to Table 3-18 for a summary of the Stability Analysis results for the contingencies listed in Table 2-3 that corresponds to the GEN-2105-016 Stand Alone Analysis. Table 3-18 is a summary of the stability results for the 2016 Winter Peak, 2017 Summer Peak, and 2025 Summer Peak conditions and states whether the system remained stable or generation tripped offline and if acceptable voltage recovery was observed after the fault was cleared. Voltage recovery criteria includes ensuring that the transient voltage recovery is between 0.7 p.u. and 1.2 p.u. and ending in a steady state voltage (for N-1 contingencies) at the pre-contingent level or at least 0.9 p.u. If high or low voltages were observed the number of buses failing the voltage criteria was listed.

Table 3-18
Stand Alone Scenario GEN-2015-052: Stability Analysis Summary of Results for 2016 Winter, 2017 Summer, and 2025 Summer Peak Conditions

Cont. No.	Cont. Name	2016 Winter Peak			2017 Summer Peak			2025 Summer Peak		
		Voltage Recovery		Stable?	Voltage Recovery		Stable?	Voltage Recovery		Stable?
		Less than .70 p.u.	Greater than 1.20 p.u.		Less than .70 p.u.	Greater than 1.20 p.u.		Less than .70 p.u.	Greater than 1.20 p.u.	
1	FLT01-3PH	No	No	Yes	No	No	Yes	No	No	Yes
3	FLT03-3PH	No	No	Yes	No	No	Yes	No	No	Yes
27	FLT27-3PH	No	No	Yes	No	No	Yes	No	No	Yes
28	FLT28-3PH	No	No	Yes	No	No	Yes	No	No	Yes
29	FLT29-3PH	No	No	Yes	No	No	Yes	No	No	Yes
30	FLT30-3PH	No	No	Yes	No	No	Yes	No	No	Yes
31	FLT31-3PH	No	No	Yes	No	No	Yes	No	No	Yes
103	FLT103-SB	No	No	Yes	No	No	Yes	No	No	Yes
104	FLT104-SB	No	No	Yes	No	No	Yes	No	No	Yes
116	FLT116-SB	No	No	Yes	No	No	Yes	No	No	Yes

Stand Alone Scenario Stability Analysis Results: GEN-2015-062

The Stability Analysis determined that there were no contingencies that resulted in system instability, generation tripping offline, or voltage violations for the 2016 Winter Peak, 2017 Summer Peak, and 2025 Summer Peak conditions when GEN-2015-062 was at 100% output.

Refer to Table 3-19 for a summary of the Stability Analysis results for the contingencies listed in Table 2-3 that corresponds to the GEN-2015-062 Stand Alone Analysis. Table 3-19 is a summary of the stability results for the 2016 Winter Peak, 2017 Summer Peak, and 2025 Summer Peak conditions and states whether the system remained stable or generation tripped offline and if acceptable voltage recovery was observed after the fault was cleared. Voltage recovery criteria includes ensuring that the transient voltage recovery is between 0.7 p.u. and 1.2 p.u. and ending in a steady state voltage (for N-1 contingencies) at the pre-contingent level or at least 0.9 p.u. If high or low voltages were observed the number of buses failing the voltage criteria was listed.

Table 3-19
Stand Alone Scenario GEN-2015-062: Stability Analysis Summary of Results for 2016 Winter, 2017 Summer, and 2025 Summer Peak Conditions

Cont. No.	Cont. Name	2016 Winter Peak			2017 Summer Peak			2025 Summer Peak		
		Voltage Recovery		Stable?	Voltage Recovery		Stable?	Voltage Recovery		Stable?
		Less than .70 p.u.	Greater than 1.20 p.u.		Less than .70 p.u.	Greater than 1.20 p.u.		Less than .70 p.u.	Greater than 1.20 p.u.	
32	FLT32-3PH	No	No	Yes	No	No	Yes	No	No	Yes
33	FLT33-3PH	No	No	Yes	No	No	Yes	No	No	Yes
34	FLT34-3PH	No	No	Yes	No	No	Yes	No	No	Yes
35	FLT35-3PH	No	No	Yes	No	No	Yes	No	No	Yes
36	FLT36-3PH	No	No	Yes	No	No	Yes	No	No	Yes
37	FLT37-3PH	No	No	Yes	No	No	Yes	No	No	Yes
38	FLT38-3PH	No	No	Yes	No	No	Yes	No	No	Yes
39	FLT39-3PH	No	No	Yes	No	No	Yes	No	No	Yes
40	FLT40-3PH	No	No	Yes	No	No	Yes	No	No	Yes
41	FLT41-3PH	No	No	Yes	No	No	Yes	No	No	Yes
42	FLT42-3PH	No	No	Yes	No	No	Yes	No	No	Yes
87	FLT87-PO	No	No	Yes	No	No	Yes	No	No	Yes
88	FLT88-PO	No	No	Yes	No	No	Yes	No	No	Yes
89	FLT89-PO	No	No	Yes	No	No	Yes	No	No	Yes
90	FLT90-PO	No	No	Yes	No	No	Yes	No	No	Yes
105	FLT105-SB	No	No	Yes	No	No	Yes	No	No	Yes
106	FLT106-SB	No	No	Yes	No	No	Yes	No	No	Yes
117	FLT117-SB	No	No	Yes	No	No	Yes	No	No	Yes

Stand Alone Scenario Stability Analysis Results: GEN-2015-063

The Stability Analysis determined that there were no contingencies that resulted in system instability, generation tripping offline, or voltage violations for the 2016 Winter Peak, 2017 Summer Peak, and 2025 Summer Peak conditions when GEN-2015-063 was at 100% output.

Refer to Table 3-20 for a summary of the Stability Analysis results for the contingencies listed in Table 2-3 that corresponds to the GEN-2015-063 Stand Alone Analysis. Table 3-20 is a summary of the stability results for the 2016 Winter Peak, 2017 Summer Peak, and 2025 Summer Peak conditions and states whether the system remained stable or generation tripped offline and if acceptable voltage recovery was observed after the fault was cleared. Voltage recovery criteria includes ensuring that the transient voltage recovery is between 0.7 p.u. and 1.2 p.u. and ending in a steady state voltage (for N-1 contingencies) at the pre-contingent level or at least 0.9 p.u. If high or low voltages were observed the number of buses failing the voltage criteria was listed.

Table 3-20
Stand Alone Scenario GEN-2015-063: Stability Analysis Summary of Results for 2016 Winter, 2017 Summer, and 2025 Summer Peak Conditions

Cont. No.	Cont. Name	2016 Winter Peak			2017 Summer Peak			2025 Summer Peak		
		Voltage Recovery		Stable?	Voltage Recovery		Stable?	Voltage Recovery		Stable?
		Less than .70 p.u.	Greater than 1.20 p.u.		Less than .70 p.u.	Greater than 1.20 p.u.		Less than .70 p.u.	Greater than 1.20 p.u.	
4	FLT04-3PH	No	No	Yes	No	No	Yes	No	No	Yes
7	FLT07-3PH	No	No	Yes	No	No	Yes	No	No	Yes
18	FLT18-3PH	No	No	Yes	No	No	Yes	No	No	Yes
19	FLT19-3PH	No	No	Yes	No	No	Yes	No	No	Yes
20	FLT20-3PH	No	No	Yes	No	No	Yes	No	No	Yes
43	FLT43-3PH	No	No	Yes	No	No	Yes	No	No	Yes
44	FLT44-3PH	No	No	Yes	No	No	Yes	No	No	Yes
45	FLT45-3PH	No	No	Yes	No	No	Yes	No	No	Yes
118	FLT118-SB	No	No	Yes	No	No	Yes	No	No	Yes

Stand Alone Scenario Stability Analysis Results: GEN-2015-066

The Stability Analysis determined that there were no contingencies that resulted in system instability, generation tripping offline, or voltage violations for the 2016 Winter Peak, 2017 Summer Peak, and 2025 Summer Peak conditions when GEN-2015-066 was at 100% output.

Refer to Table 3-21 for a summary of the Stability Analysis results for the contingencies listed in Table 2-3 that corresponds to the GEN-2015-066 Stand Alone Analysis. Table 3-21 is a summary of the stability results for the 2016 Winter Peak, 2017 Summer Peak, and 2025 Summer Peak conditions and states whether the system remained stable or generation tripped offline and if acceptable voltage recovery was observed after the fault was cleared. Voltage recovery criteria includes ensuring that the transient voltage recovery is between 0.7 p.u. and 1.2 p.u. and ending in a steady state voltage (for N-1 contingencies) at the pre-contingent level or at least 0.9 p.u. If high or low voltages were observed the number of buses failing the voltage criteria was listed.

Table 3-21
Stand Alone Scenario GEN-2015-066: Stability Analysis Summary of Results for 2016 Winter, 2017 Summer, and 2025 Summer Peak Conditions

Cont. No.	Cont. Name	2016 Winter Peak			2017 Summer Peak			2025 Summer Peak		
		Voltage Recovery		Stable?	Voltage Recovery		Stable?	Voltage Recovery		Stable?
		Less than .70 p.u.	Greater than 1.20 p.u.		Less than .70 p.u.	Greater than 1.20 p.u.		Less than .70 p.u.	Greater than 1.20 p.u.	
2	FLT02-3PH	No	No	Yes	No	No	Yes	No	No	Yes
4	FLT04-3PH	No	No	Yes	No	No	Yes	No	No	Yes
5	FLT05-3PH	No	No	Yes	No	No	Yes	No	No	Yes
6	FLT06-3PH	No	No	Yes	No	No	Yes	No	No	Yes
7	FLT07-3PH	No	No	Yes	No	No	Yes	No	No	Yes
26	FLT26-3PH	No	No	Yes	No	No	Yes	No	No	Yes
46	FLT46-3PH	No	No	Yes	No	No	Yes	No	No	Yes
112	FLT112-SB	No	No	Yes	No	No	Yes	No	No	Yes
119	FLT119-SB	No	No	Yes	No	No	Yes	No	No	Yes

Stand Alone Scenario Stability Analysis Results: GEN-2015-067

The Stability Analysis determined that there were no contingencies that resulted in system instability, generation tripping offline, or voltage violations for the 2016 Winter Peak, 2017 Summer Peak, and 2025 Summer Peak conditions when GEN-2015-067 was at 100% output.

Refer to Table 3-22 for a summary of the Stability Analysis results for the contingencies listed in Table 2-3 that corresponds to the GEN-2015-067 Stand Alone Analysis. Table 3-22 is a summary of the stability results for the 2016 Winter Peak, 2017 Summer Peak, and 2025 Summer Peak conditions and states whether the system remained stable or generation tripped offline and if acceptable voltage recovery was observed after the fault was cleared. Voltage recovery criteria includes ensuring that the transient voltage recovery is between 0.7 p.u. and 1.2 p.u. and ending in a steady state voltage (for N-1 contingencies) at the pre-contingent level or at least 0.9 p.u. If high or low voltages were observed the number of buses failing the voltage criteria was listed.

Table 3-22
Stand Alone Scenario GEN-2015-067: Stability Analysis Summary of Results for 2016 Winter, 2017 Summer, and 2025 Summer Peak Conditions

Cont. No.	Cont. Name	2016 Winter Peak			2017 Summer Peak			2025 Summer Peak		
		Voltage Recovery		Stable?	Voltage Recovery		Stable?	Voltage Recovery		Stable?
		Less than .70 p.u.	Greater than 1.20 p.u.		Less than .70 p.u.	Greater than 1.20 p.u.		Less than .70 p.u.	Greater than 1.20 p.u.	
2	FLT02-3PH	No	No	Yes	No	No	Yes	No	No	Yes
4	FLT04-3PH	No	No	Yes	No	No	Yes	No	No	Yes
5	FLT05-3PH	No	No	Yes	No	No	Yes	No	No	Yes
6	FLT06-3PH	No	No	Yes	No	No	Yes	No	No	Yes
21	FLT21-3PH	No	No	Yes	No	No	Yes	No	No	Yes
22	FLT22-3PH	No	No	Yes	No	No	Yes	No	No	Yes
23	FLT23-3PH	No	No	Yes	No	No	Yes	No	No	Yes
24	FLT24-3PH	No	No	Yes	No	No	Yes	No	No	Yes
47	FLT47-3PH	No	No	Yes	No	No	Yes	No	No	Yes
48	FLT48-3PH	No	No	Yes	No	No	Yes	No	No	Yes
49	FLT49-3PH	No	No	Yes	No	No	Yes	No	No	Yes
50	FLT50-3PH	No	No	Yes	No	No	Yes	No	No	Yes
51	FLT51-3PH	No	No	Yes	No	No	Yes	No	No	Yes
91	FLT91-PO	No	No	Yes	No	No	Yes	No	No	Yes
92	FLT92-PO	No	No	Yes	No	No	Yes	No	No	Yes
93	FLT93-PO	No	No	Yes	No	No	Yes	No	No	Yes
94	FLT94-PO	No	No	Yes	No	No	Yes	No	No	Yes
107	FLT107-SB	No	No	Yes	No	No	Yes	No	No	Yes
108	FLT108-SB	No	No	Yes	No	No	Yes	No	No	Yes
112	FLT112-SB	No	No	Yes	No	No	Yes	No	No	Yes
120	FLT120-SB	No	No	Yes	No	No	Yes	No	No	Yes

Stand Alone Scenario Stability Analysis Results: GEN-2015-069

The Stability Analysis determined that there were no contingencies that resulted in system instability, generation tripping offline, or voltage violations for the 2016 Winter Peak, 2017 Summer Peak, and 2025 Summer Peak conditions when GEN-2015-069 was at 100% output.

Refer to Table 3-23 for a summary of the Stability Analysis results for the contingencies listed in Table 2-3 that corresponds to the GEN-2015-069 Stand Alone Analysis. Table 3-23 is a summary of the stability results for the 2016 Winter Peak, 2017 Summer Peak, and 2025 Summer Peak conditions and states whether the system remained stable or generation tripped offline and if acceptable voltage recovery was observed after the fault was cleared. Voltage recovery criteria includes ensuring that the transient voltage recovery is between 0.7 p.u. and 1.2 p.u. and ending in a steady state voltage (for N-1 contingencies) at the pre-contingent level or at least 0.9 p.u. If high or low voltages were observed the number of buses failing the voltage criteria was listed.

Table 3-23
Stand Alone Scenario GEN-2015-069: Stability Analysis Summary of Results for 2016 Winter, 2017 Summer, and 2025 Summer Peak Conditions

Cont. No.	Cont. Name	2016 Winter Peak			2017 Summer Peak			2025 Summer Peak		
		Voltage Recovery		Stable?	Voltage Recovery		Stable?	Voltage Recovery		Stable?
		Less than .70 p.u.	Greater than 1.20 p.u.		Less than .70 p.u.	Greater than 1.20 p.u.		Less than .70 p.u.	Greater than 1.20 p.u.	
52	FLT52-3PH	No	No	Yes	No	No	Yes	No	No	Yes
53	FLT53-3PH	No	No	Yes	No	No	Yes	No	No	Yes
54	FLT54-SB	No	No	Yes	No	No	Yes	No	No	Yes
55	FLT55-3PH	No	No	Yes	No	No	Yes	No	No	Yes
56	FLT56-3PH	No	No	Yes	No	No	Yes	No	No	Yes
57	FLT57-3PH	No	No	Yes	No	No	Yes	No	No	Yes
58	FLT58-3PH	No	No	Yes	No	No	Yes	No	No	Yes
59	FLT59-3PH	No	No	Yes	No	No	Yes	No	No	Yes
60	FLT60-3PH	No	No	Yes	No	No	Yes	No	No	Yes
61	FLT61-3PH	No	No	Yes	No	No	Yes	No	No	Yes
107	FLT107-SB	No	No	Yes	No	No	Yes	No	No	Yes
108	FLT108-SB	No	No	Yes	No	No	Yes	No	No	Yes
109	FLT109-SB	No	No	Yes	No	No	Yes	No	No	Yes
121	FLT121-SB	No	No	Yes	No	No	Yes	No	No	Yes

Stand Alone Scenario Stability Analysis Results: GEN-2015-073

The Stability Analysis determined that there were no contingencies that resulted in system instability, generation tripping offline, or voltage violations for the 2016 Winter Peak, 2017 Summer Peak, and 2025 Summer Peak conditions when GEN-2015-073 was at 100% output.

Refer to Table 3-24 for a summary of the Stability Analysis results for the contingencies listed in Table 2-3 that corresponds to the GEN-2015-073 Stand Alone Analysis. Table 3-24 is a summary of the stability results for the 2016 Winter Peak, 2017 Summer Peak, and 2025 Summer Peak conditions and states whether the system remained stable or generation tripped offline and if acceptable voltage recovery was observed after the fault was cleared. Voltage recovery criteria includes ensuring that the transient voltage recovery is between 0.7 p.u. and 1.2 p.u. and ending in a steady state voltage (for N-1 contingencies) at the pre-contingent level or at least 0.9 p.u. If high or low voltages were observed the number of buses failing the voltage criteria was listed.

Table 3-24
Stand Alone Scenario GEN-2015-073: Stability Analysis Summary of Results for 2016 Winter, 2017 Summer, and 2025 Summer Peak Conditions

Cont. No.	Cont. Name	2016 Winter Peak			2017 Summer Peak			2025 Summer Peak		
		Voltage Recovery		Stable?	Voltage Recovery		Stable?	Voltage Recovery		Stable?
		Less than .70 p.u.	Greater than 1.20 p.u.		Less than .70 p.u.	Greater than 1.20 p.u.		Less than .70 p.u.	Greater than 1.20 p.u.	
16	FLT16-3PH	No	No	Yes	No	No	Yes	No	No	Yes
62	FLT62-3PH	No	No	Yes	No	No	Yes	No	No	Yes
63	FLT63-3PH	No	No	Yes	No	No	Yes	No	No	Yes
64	FLT64-3PH	No	No	Yes	No	No	Yes	No	No	Yes
65	FLT65-3PH	No	No	Yes	No	No	Yes	No	No	Yes
66	FLT66-3PH	No	No	Yes	No	No	Yes	No	No	Yes
67	FLT67-3PH	No	No	Yes	No	No	Yes	No	No	Yes
68	FLT68-3PH	No	No	Yes	No	No	Yes	No	No	Yes
69	FLT69-3PH	No	No	Yes	No	No	Yes	No	No	Yes
70	FLT70-3PH	No	No	Yes	No	No	Yes	No	No	Yes
71	FLT71-3PH	No	No	Yes	No	No	Yes	No	No	Yes
95	FLT95-PO	No	No	Yes	No	No	Yes	No	No	Yes
96	FLT96-PO	No	No	Yes	No	No	Yes	No	No	Yes
97	FLT97-PO	No	No	Yes	No	No	Yes	No	No	Yes
98	FLT98-PO	No	No	Yes	No	No	Yes	No	No	Yes
110	FLT110-SB	No	No	Yes	No	No	Yes	No	No	Yes
111	FLT111-SB	No	No	Yes	No	No	Yes	No	No	Yes
122	FLT122-SB	No	No	Yes	No	No	Yes	No	No	Yes

Stand Alone Scenario Stability Analysis Results: GEN-2015-083

The Stability Analysis determined that there were no contingencies that resulted in system instability, generation tripping offline, or voltage violations for the 2016 Winter Peak, 2017 Summer Peak, and 2025 Summer Peak conditions when GEN-2015-083 was at 100% output.

Refer to Table 3-25 for a summary of the Stability Analysis results for the contingencies listed in Table 2-3 that corresponds to the GEN-2015-083 Stand Alone Analysis. Table 3-25 is a summary of the stability results for the 2016 Winter Peak, 2017 Summer Peak, and 2025 Summer Peak conditions and states whether the system remained stable or generation tripped offline and if acceptable voltage recovery was observed after the fault was cleared. Voltage recovery criteria includes ensuring that the transient voltage recovery is between 0.7 p.u. and 1.2 p.u. and ending in a steady state voltage (for N-1 contingencies) at the pre-contingent level or at least 0.9 p.u. If high or low voltages were observed the number of buses failing the voltage criteria was listed.

Table 3-25
Stand Alone Scenario GEN-2015-083: Stability Analysis Summary of Results for 2016 Winter, 2017 Summer, and 2025 Summer Peak Conditions

Cont. No.	Cont. Name	2016 Winter Peak			2017 Summer Peak			2025 Summer Peak		
		Voltage Recovery		Stable?	Voltage Recovery		Stable?	Voltage Recovery		Stable?
		Less than .70 p.u.	Greater than 1.20 p.u.		Less than .70 p.u.	Greater than 1.20 p.u.		Less than .70 p.u.	Greater than 1.20 p.u.	
72	FLT72-3PH	No	No	Yes	No	No	Yes	No	No	Yes
73	FLT73-3PH	No	No	Yes	No	No	Yes	No	No	Yes
74	FLT74-3PH	No	No	Yes	No	No	Yes	No	No	Yes
75	FLT75-3PH	No	No	Yes	No	No	Yes	No	No	Yes
76	FLT76-3PH	No	No	Yes	No	No	Yes	No	No	Yes
123	FLT123-SB	No	No	Yes	No	No	Yes	No	No	Yes

Stand Alone Scenario Stability Analysis Results: GEN-2015-090

The Stability Analysis determined that there were no contingencies that resulted in system instability, generation tripping offline, or voltage violations for the 2016 Winter Peak, 2017 Summer Peak, and 2025 Summer Peak conditions when GEN-2015-090 was at 100% output.

Refer to Table 3-26 for a summary of the Stability Analysis results for the contingencies listed in Table 2-3 that corresponds to the GEN-2015-090 Stand Alone Analysis. Table 3-26 is a summary of the stability results for the 2016 Winter Peak, 2017 Summer Peak, and 2025 Summer Peak conditions and states whether the system remained stable or generation tripped offline and if acceptable voltage recovery was observed after the fault was cleared. Voltage recovery criteria includes ensuring that the transient voltage recovery is between 0.7 p.u. and 1.2 p.u. and ending in a steady state voltage (for N-1 contingencies) at the pre-contingent level or at least 0.9 p.u. If high or low voltages were observed the number of buses failing the voltage criteria was listed.

Table 3-26
Stand Alone Scenario GEN-2015-090: Stability Analysis Summary of Results for 2016 Winter, 2017 Summer, and 2025 Summer Peak Conditions

Cont. No.	Cont. Name	2016 Winter Peak			2017 Summer Peak			2025 Summer Peak		
		Voltage Recovery		Stable?	Voltage Recovery		Stable?	Voltage Recovery		Stable?
		Less than .70 p.u.	Greater than 1.20 p.u.		Less than .70 p.u.	Greater than 1.20 p.u.		Less than .70 p.u.	Greater than 1.20 p.u.	
8	FLT08-3PH	No	No	Yes	No	No	Yes	No	No	Yes
9	FLT09-3PH	No	No	Yes	No	No	Yes	No	No	Yes
10	FLT10-3PH	No	No	Yes	No	No	Yes	No	No	Yes
11	FLT11-3PH	No	No	Yes	No	No	Yes	No	No	Yes
12	FLT12-3PH	No	No	Yes	No	No	Yes	No	No	Yes
13	FLT13-3PH	No	No	Yes	No	No	Yes	No	No	Yes
14	FLT14-3PH	No	No	Yes	No	No	Yes	No	No	Yes
15	FLT15-3PH	No	No	Yes	No	No	Yes	No	No	Yes
16	FLT16-3PH	No	No	Yes	No	No	Yes	No	No	Yes
17	FLT17-3PH	No	No	Yes	No	No	Yes	No	No	Yes
79	FLT79-PO	No	No	Yes	No	No	Yes	No	No	Yes
80	FLT80-PO	No	No	Yes	No	No	Yes	No	No	Yes
81	FLT81-PO	No	No	Yes	No	No	Yes	No	No	Yes
82	FLT82-PO	No	No	Yes	No	No	Yes	No	No	Yes
99	FLT99-SB	No	No	Yes	No	No	Yes	No	No	Yes
100	FLT100-SB	No	No	Yes	No	No	Yes	No	No	Yes
101	FLT101-SB	No	No	Yes	No	No	Yes	No	No	Yes
102	FLT102-SB	No	No	Yes	No	No	Yes	No	No	Yes
124	FLT124-SB	No	No	Yes	No	No	Yes	No	No	Yes

SECTION 4: SHORT CIRCUIT ANALYSIS

The objective of this task is to quantify the three-phase to ground fault currents for the 2017 Summer Peak and 2025 Summer Peak seasons for each interconnecting generator.

4.1 Approach

The short-circuit analysis will assess breaker adequacy and fault duties for the generator interconnection bus and five buses away from the point of interconnection. MEPPI will assume no outages to find maximum short-circuit currents that flow through the breaker. The Automatic Sequencing Fault Calculation (ASCC) function in PSS/E was utilized to perform this task. FLAT conditions were applied to pre-fault conditions and the following adjustments were utilized:

- All synchronous and asynchronous machine P and Q output was set to zero
- All transformer tap ratios were set to 1.0 p.u. and all phase shift angles were set to zero
- All generator reactance's were fixed to the subtransient reactance
- All line charging was set to zero
- All shunts were set to zero
- All loads were set to zero

- All pre-fault bus voltages were set to 1.0 p.u. and a phase shift angle of zero

4.2 Short Circuit Results

The maximum fault current for each bus is provided for the 2017 Summer Peak condition. The following tables show the short circuit results for the study generators:

- Table 4-1: Short Circuit Analysis for GEN-2015-034
- Table 4-2: Short Circuit Analysis for GEN-2015-047
- Table 4-3: Short Circuit Analysis for GEN-2015-043
- Table 4-4: Short Circuit Analysis for GEN-2015-052
- Table 4-5: Short Circuit Analysis for GEN-2015-062
- Table 4-6: Short Circuit Analysis for GEN-2015-063
- Table 4-7: Short Circuit Analysis for GEN-2015-066
- Table 4-8: Short Circuit Analysis for GEN-2015-067
- Table 4-9: Short Circuit Analysis for GEN-2015-069
- Table 4-10: Short Circuit Analysis for GEN-2015-073
- Table 4-11: Short Circuit Analysis for GEN-2015-083
- Table 4-12: Short Circuit Analysis for GEN-2015-090

Table 4-1
Short Circuit Analysis for Study Project GEN-2015-034

Study Generator GEN-2015-034											
Bus Number	Bus Name	Bus Voltage (kV)	Fault Current 3-LG (kA)	Bus Number	Bus Name	Bus Voltage (kV)	Fault Current 3-LG (kA)	Bus Number	Bus Name	Bus Voltage (kV)	Fault Current 3-LG (kA)
300138	4CLEVLND	138	16.71	514802	SOONER 4	138	31.36	515610	FSHRTAP7	345	16.48
509755	WEKIWA-7	345	18.60	514803	SOONER 7	345	24.53	515621	OPENSKY7	345	12.68
509852	T.NO.--7	345	23.41	514825	KAYWIND7	345	12.64	521006	MARSHAL4	138	7.75
509895	T.NO.2-4	138	34.21	514827	CTNWOOD4	138	16.54	529200	OMCDLEC7	345	13.59
510376	WEBBTAP4	138	7.99	514828	KETCHTP4	138	25.93	532780	CANEYRV7	345	9.88
510406	N.E.S.-7	345	18.72	514854	BRADEN 4	138	30.63	532791	BENTON 7	345	18.98
512694	CLEVLND7	345	14.83	514873	LNEOAK 4	138	26.34	532794	ROSEHIL7	345	18.79
512729	CLEVLND 4	138	16.71	514879	NORTWST4	138	42.31	532796	WICHITA7	345	23.57
512865	GREC TAP5	345	25.56	514880	NORTWST7	345	29.49	532797	WOLFCRK7	345	15.97
514704	MILLERT4	138	20.15	514881	SPRNGCK7	345	21.46	532798	VIOLA 7	345	11.16
514705	COWCRK 2	69	4.04	514898	CIMARON4	138	41.81	532799	WAVERLY7	345	14.71
514706	COWCRK 4	138	11.24	514901	CIMARON7	345	30.11	532800	LATHAMS7	345	10.45
514707	PERRY 4	138	10.94	514907	ARCADIA4	138	40.78	532801	ELKRVR17	345	9.23
514708	OTTER 4	138	9.52	514908	ARCADIA7	345	24.88	532986	BENTON 4	138	27.87
514709	FRMNTAP4	138	17.46	514909	REDBUD 7	345	23.85	532991	WEAVER 4	138	21.73
514710	WAUKOMI4	138	9.52	514934	DRAPER 7	345	20.38	533039	ELPASO 4	138	24.27
514711	WAUKOTP4	138	14.94	515006	MORRISN4	138	13.63	533062	ROSEHIL4	138	30.93
514712	FAIRMON4	138	13.64	515011	STILWTR4	138	13.30	533068	STEARMN4	138	19.33
514713	WRVALLY4	138	8.66	515045	SEMINOL7	345	25.96	533653	WOLFCRK2	69	5.81
514714	WOODRNG4	138	18.63	515181	UNVRSTY4	138	13.42	560053	G15-052T	345	13.08
514715	WOODRNG7	345	16.95	515400	DMANCRK4	138	7.97	560055	G15-063T	345	16.85
514731	SO4TH 4	138	14.81	515407	TATONGA7	345	10.80	560056	G15-066T	345	17.95
514733	MARSHL 4	138	7.78	515412	DMNCRKT4	138	13.48	583750	GEN-2013-029	345	9.93
514737	OTOE 4	138	16.11	515447	MORISNT4	138	13.66	584170	GEN-2014-064	138	9.45
514742	OSGE 2	69	14.67	515471	NW164TH4	138	34.74	584450	GEN-2015-001	345	13.62
514743	OSAGE 4	138	15.67	515476	HUNTERS7	345	12.04	584690	GEN-2015-030	345	18.69
514758	STDBEAR4	138	13.25	515477	CHSHLMV7	345	12.02	584770	GEN-2015-034	345	10.96
514761	WHEAGLE4	138	14.95	515497	MATHWSN7	345	27.77	584880	GEN-2015-047	345	11.48
514770	MARLNDT4	138	10.57	515512	SPVALLY4	138	8.67	584900	GEN-2015-052	345	13.03
514798	SNRPMPT4	138	20.17	515543	RENFROW7	345	11.14	585010	GEN-2015-063	345	16.80
514799	SNRPMP 4	138	11.19	515544	RENFROW4	138	13.37	585040	GEN-2015-066	345	17.79
514801	MINCO 7	345	16.19	515576	RANCHRD7	345	13.62	585050	GEN-2015-067	138	21.81

Table 4-2
Short Circuit Analysis for Study Project GEN-2015-043

Study Generator GEN-2015-043											
Bus Number	Bus Name	Bus Voltage (kV)	Fault Current 3-LG (kA)	Bus Number	Bus Name	Bus Voltage (kV)	Fault Current 3-LG (kA)	Bus Number	Bus Name	Bus Voltage (kV)	Fault Current 3-LG (kA)
514715	WOODRNG7	345	16.95	532871	CIRCLE 6	230	8.52	533786	CHISHLM2	69	18.50
514782	WODWRD 2	69	11.95	532872	EMCPHER6	230	7.71	539001	ANTHONY4	138	3.47
514785	WOODWRD4	138	20.04	532873	SUMMIT 6	230	12.91	539631	FLATRWD4	138	9.65
514787	DEWEY 4	138	7.18	532874	UNIONRG6	230	8.77	539638	FLATRDG4	138	14.54
514796	IODINE-4	138	7.22	532986	BENTON 4	138	27.87	539639	ELMCREK6	230	7.28
515363	CENT 4	138	3.28	532987	BUTLER 4	138	9.87	539668	HARPER 4	138	5.65
515375	WWRDEHV7	345	18.30	532988	BELAIRE4	138	18.62	539674	BARBER 4	138	7.95
515376	WWRDEHV4	138	24.37	532990	MIDIAN 4	138	10.06	539675	MILANTP4	138	6.04
515394	KEENAN 4	138	8.18	532991	WEAVER 4	138	21.73	539695	SPEARVL6	230	12.06
515398	OUSPRT 4	138	9.00	533012	HALSTDS4	138	4.21	539759	SPRVL 3	115	11.40
515407	TATONGA7	345	10.80	533013	MOUND 4	138	4.80	539760	BARBER 3	115	7.83
515448	CRSRDSW7	345	8.34	533015	BENTLEY4	138	9.82	539800	CLARKCOUNTY7	345	11.52
515458	BORDER 7	345	5.02	533016	WWUPLNT4	138	7.58	539801	THISTLE7	345	15.11
515476	HUNTERS7	345	12.04	533024	29TH 4	138	19.38	539803	IRONWOOD7	345	12.31
515477	CHSHLMV7	345	12.02	533031	BURNSTP4	138	4.47	539804	THISTLE4	138	16.19
515497	MATHWSN7	345	27.77	533035	CHISHLM4	138	21.76	539805	ELMCREEK7	345	5.25
515543	RENFROW7	345	11.14	533037	COMOTAR4	138	18.38	542965	W.GRDNR7	345	25.27
515544	RENFROW4	138	13.37	533038	COWSKIN4	138	18.32	542981	LACYGNE7	345	24.95
515546	GRANTCO4	138	6.23	533039	ELPASO 4	138	24.27	560000	G11-14-TAP	345	14.10
515554	BVRCNTY7	345	15.48	533040	EVANS N4	138	36.98	560002	IRONWOOD7	345	12.34
515569	MDFRDTP4	138	10.84	533041	EVANS S4	138	36.98	560010	G14-037-TAP	345	16.34
515582	SLNGWND7	345	7.18	533049	HOOVERN4	138	17.63	560027	G14-074-TAP	345	6.67
515585	MAMTHPW7	345	9.53	533053	LAKERDG4	138	17.98	560033	G1524&G1525T	345	19.04
515590	PALDR2W7	345	13.00	533054	MAIZE 4	138	22.18	560053	G15-052T	345	13.08
515599	NBUFFRG7	345	8.27	533060	NOEASTE4	138	20.26	562075	G11-051-TAP	345	12.16
515621	OPENSKY7	345	12.68	533062	ROSEHIL4	138	30.93	562334	G13-010-TAP	345	7.43
515785	WINDFRM4	138	20.16	533064	17TH 4	138	17.52	562476	G14-001-TAP	345	10.94
520409	RENFROW4	138	9.93	533065	SG12COL4	138	20.13	578542	GEN-2010-001	345	12.72
525830	TUCO_INT 6	230	19.91	533068	STEARMN4	138	19.33	579480	GEN-2008-124	345	11.92
525832	TUCO_INT 7	345	10.53	533074	45TH ST4	138	25.92	581112	GEN-2011-014	345	12.57
530592	SMOKYHL6	230	6.88	533304	LANG 3	115	14.46	582008	GEN-2011-008	345	9.40
531469	SPERVIL7	345	12.72	533336	BLUSTEM3	115	16.98	582016	GEN-2011-016	345	7.13
531501	BUCKNER7	345	9.71	533372	PHILIPS3	115	12.01	582019	GEN-2011-019	345	18.30
532766	JEC N 7	345	23.53	533380	SPRGCRK3	115	3.59	582020	GEN-2011-020	345	18.30
532767	BLUSTEM7	345	9.63	533381	SUMMIT 3	115	16.81	582708	G-2011-008-1	345	8.48
532768	EMPEC 7	345	17.37	533390	MAIZEW 4	138	25.90	582908	G-2011-008-2	345	7.20
532769	LANG 7	345	17.16	533391	MAIZEE 4	138	20.93	583090	G1149&G1504	345	4.60
532770	MORRIS 7	345	12.77	533412	ARKVALJ3	115	9.75	583110	GEN-2011-051	345	12.16
532771	RENO 7	345	10.66	533413	CIRCLE 3	115	18.05	583370	GEN-2012-024	345	9.30
532773	SUMMIT 7	345	10.23	533414	CITIES 3	115	8.10	583750	GEN-2013-029	345	9.93
532774	SWISVAL7	345	16.45	533415	DAVIS 3	115	8.10	583760	GEN-2013-030	345	11.81
532780	CANEYRV7	345	9.88	533416	RENO 3	115	21.52	583850	GEN-2014-001	345	7.50
532791	BENTON 7	345	18.98	533419	HEC 3	115	16.90	584659	G15024G15025	345	6.42
532792	FR2EAST7	345	5.91	533421	HEC GT 3	115	17.56	584660	GEN-2015-024	345	5.14
532794	ROSEHIL7	345	18.79	533422	HEC U4 3	115	17.12	584670	GEN-2015-025	345	6.31
532795	FR2WEST7	345	4.84	533426	MANVILE3	115	8.27	584700	GEN-2015-029	345	7.51
532796	WICHITA7	345	23.57	533428	MCPHER 3	115	10.46	584900	GEN-2015-052	345	13.03
532797	WOLFCRK7	345	15.97	533429	MOUNDRG3	115	7.01	584980	GEN-2015-060	138	5.71
532798	VIOLA 7	345	11.16	533438	WMCPHER3	115	10.83	585060	GEN-2015-068	345	8.80
532799	WAVERLY7	345	14.71	533439	WHEATLD3	115	7.30	585100	GEN-2015-073	345	14.26
532800	LATHAMS7	345	10.45	533506	DAVIS 2	69	7.23	585180	GEN-2015-081	345	10.60
532801	ELKRVR17	345	9.23	533597	MIDIAN 2	69	12.20	585190	GEN-2015-082	345	7.13
532802	WAVERTX7	345	12.55	533626	BURLJCT2	69	4.77	585250	GEN-2015-090	345	3.06
532856	SWISVAL6	230	21.84	533629	CC2SHAR2	69	4.51	599074	NTHBUF_EHV2	345	6.37
532863	MORRIS 6	230	13.80	533653	WOLFCRK2	69	5.81				

Table 4-3
Short Circuit Analysis for Study Projects GEN-2015-047

Study Generator GEN-2015-047											
Bus Number	Bus Name	Bus Voltage (kV)	Fault Current 3-LG (kA)	Bus Number	Bus Name	Bus Voltage (kV)	Fault Current 3-LG (kA)	Bus Number	Bus Name	Bus Voltage (kV)	Fault Current 3-LG (kA)
300138	4CLEVLND	138	16.71	514799	SNRPMP 4	138	11.19	515476	HUNTERS7	345	12.04
300140	4SILVCTY	138	15.78	514801	MINCO 7	345	16.19	515477	CHSHLMV7	345	12.02
300996	4JAVINE	138	6.53	514802	SOONER 4	138	31.36	515497	MATHWSN7	345	27.77
301429	4CLEVLNDXFMR	138	16.71	514803	SOONER 7	345	24.53	515512	SPVALLY4	138	8.67
509755	WEKIWA-7	345	18.60	514815	BRECKNR4	138	13.48	515514	KNIPE 4	138	5.02
509757	WEKIWA-4	138	31.26	514819	EL-RENO4	138	15.17	515542	CWBOYHT4	138	7.86
509782	R.S.S.-7	345	30.81	514820	JENSENT4	138	14.97	515543	RENFROW7	345	11.14
509807	ONETA--7	345	29.57	514825	KAYWIND7	345	12.64	515544	RENFROW4	138	13.37
509817	T.NO.--4	138	34.27	514827	CTNWOOD4	138	16.54	515546	GRANTCO4	138	6.23
509852	T.NO.--7	345	23.41	514828	KETCHTP4	138	25.93	515549	MNCWND37	345	11.29
509870	SAPLPRD7	345	21.08	514829	PINE ST4	138	11.72	515569	MDFRDTP4	138	10.84
509895	T.NO.2-4	138	34.21	514834	KETCH 4	138	26.39	515576	RANCHRD7	345	13.62
510376	WEBBTAP4	138	7.99	514851	QUAILCK4	138	28.77	515582	SLNGWND7	345	7.18
510377	FAIRFXT4	138	8.04	514852	SLVRLAK4	138	31.93	515585	MAMTHPW7	345	9.53
510380	DELWARE7	345	11.40	514854	BRADEN 4	138	30.63	515600	KNGFSHR7	345	11.25
510406	N.E.S.-7	345	18.72	514863	HAYMAKR4	138	25.85	515610	FSHRTAP7	345	16.48
510432	SHIDWFC4	138	5.59	514864	PIEDMNT4	138	21.98	515621	OPENSKY7	345	12.68
510907	PITTSB-7	345	13.21	514873	LNEOAK 4	138	26.34	515641	PLNSMEN4	138	13.49
511425	TUTCONT4	138	10.60	514879	NORTWST4	138	42.31	515800	GRACMNT7	345	14.70
512650	GRDA1 7	345	25.99	514880	NORTWST7	345	29.49	520409	RENFROW4	138	9.93
512694	CLEVLND7	345	14.83	514881	SPRNGCK7	345	21.46	521006	MARSHAL4	138	7.75
512729	CLEVLND 4	138	16.71	514894	CZECHAL4	138	27.57	521007	MARLAND_138	138	7.26
512749	PAWNSW4	138	10.01	514895	SARA 4	138	18.53	521100	WARREN 4	138	8.66
512865	GREC TAP5	345	25.56	514898	CIMARON4	138	41.81	529200	OMCDLEC7	345	13.59
514704	MILLERT4	138	20.15	514901	CIMARON7	345	30.11	529241	OMMORANT	69	9.15
514705	COWCRK 2	69	4.04	514906	JNSKAMO4	138	20.51	529249	OMWW	69	11.28
514706	COWCRK 4	138	11.24	514907	ARCADIA4	138	40.78	532791	BENTON 7	345	18.98
514707	PERRY 4	138	10.94	514908	ARCADIA7	345	24.88	532792	FR2EAST7	345	5.91
514708	OTTER 4	138	9.52	514909	REDBUD 7	345	23.85	532794	ROSEHIL7	345	18.79
514709	FRMNTAP4	138	17.46	514933	DRAPER 4	138	38.42	532796	WICHITA7	345	23.57
514710	WAUKOMI4	138	9.52	514934	DRAPER 7	345	20.38	532797	WOLFCRK7	345	15.97
514711	WAUKOTP4	138	14.94	515006	MORRISN4	138	13.63	532798	VIOLA 7	345	11.16
514712	FAIRMON4	138	13.64	515009	MCELROY4	138	13.54	532800	LATHAMS7	345	10.45
514713	WRVALLY4	138	8.66	515011	STILWTR4	138	13.30	533062	ROSEHIL4	138	30.93
514714	WOODRNG4	138	18.63	515039	PAYNESB4	138	7.62	560053	G15-052T	345	13.08
514715	WOODRNG7	345	16.95	515044	SEMINOL4	138	39.14	560055	G15-063T	345	16.85
514730	SO4TH 2	69	13.55	515045	SEMINOL7	345	25.96	560056	G15-066T	345	17.95
514731	SO4TH 4	138	14.81	515181	UNVRSTY4	138	13.42	562075	G11-051-TAP	345	12.16
514733	MARSHL 4	138	7.78	515224	MUSKOGE7	345	28.79	562790	G15-038T	345	13.81
514737	OTOE 4	138	16.11	515373	LBRTYLK4	138	13.51	583750	GEN-2013-029	345	9.93
514742	OSGE 2	69	14.67	515377	CRESENT4	138	7.41	584170	GEN-2014-064	138	9.45
514743	OSAGE 4	138	15.67	515400	DMANCRK4	138	7.97	584450	GEN-2015-001	345	13.62
514748	CONTEMP4	138	12.91	515402	CONBLKT2	69	13.32	584690	GEN-2015-030	345	18.69
514753	CONORTH4	138	12.95	515407	TATONGA7	345	10.80	584700	GEN-2015-029	345	7.51
514758	STDBEAR4	138	13.25	515412	DMNCRKT4	138	13.48	584770	GEN-2015-034	345	10.96
514760	KILDARE4	138	10.15	515444	MCNOWND7	345	16.15	584880	GEN-2015-047	345	11.48
514761	WHEAGLE4	138	14.95	515447	MORISNT4	138	13.66	584900	GEN-2015-052	345	13.03
514768	WF KAY 2	69	2.95	515448	CRSRDSW7	345	8.34	585010	GEN-2015-063	345	16.80
514770	MARLNDT4	138	10.57	515461	RNDBARN4	138	38.79	585040	GEN-2015-066	345	17.79
514774	HENESEY4	138	7.32	515465	LGARBER4	138	21.00	585050	GEN-2015-067	138	21.81
514790	IMO 4	138	11.63	515466	MITCHSB4	138	21.01				
514798	SNRPMPT4	138	20.17	515471	NW164TH4	138	34.74				

Table 4-4
Short Circuit Analysis for Study Project GEN-2015-052

Study Generators GEN-2015-052											
Bus Number	Bus Name	Bus Voltage (kV)	Fault Current 3-LG (kA)	Bus Number	Bus Name	Bus Voltage (kV)	Fault Current 3-LG (kA)	Bus Number	Bus Name	Bus Voltage (kV)	Fault Current 3-LG (kA)
514715	WOODRNG7	345	16.51	532984	SUMNER 4	138	9.89	533796	GILL W 2	69	33.29
514782	WODWRD 2	69	11.94	532986	BENTON 4	138	28.09	539631	FLATRWD3	138	9.76
514785	WOODWRD4	138	20.72	532987	BUTLER 4	138	10.00	539638	FLATRDG3	138	14.80
514787	DEWEY 4	138	6.59	532988	BELAIRE4	138	18.63	539639	ELMCREK6	230	8.21
514796	IODINE-4	138	7.09	532990	MIDIAN 4	138	10.17	539668	HARPER 4	138	5.56
514825	KAYWIND7	345	11.61	532991	WEAVER 4	138	21.89	539674	BARBER 4	138	8.02
515363	CENT 4	138	3.94	532992	TIMBJCT4	138	5.61	539675	MILANTP4	138	6.54
515375	WWRDEHV7	345	20.31	533012	HALSTDS4	138	9.46	539679	GRTBEND6	230	8.39
515376	WWRDEHV4	138	25.46	533013	MOUND 4	138	7.94	539694	SPEARVL3	115	10.50
515394	KEENAN 4	138	9.05	533015	BENTLEY4	138	12.28	539695	SPEARVL6	230	12.81
515398	OUSPRT 4	138	9.60	533016	WWUPLNT4	138	8.96	539753	SPEARVLE-EVB	230	12.81
515407	TATONGA7	345	16.41	533024	29TH 4	138	19.40	539759	SPRVL 3	115	11.71
515448	CRSRDSW7	345	11.57	533029	59TH ST4	138	18.58	539760	BARBER 3	115	7.89
515458	BORDER 7	345	5.11	533031	BURNSTP4	138	4.49	539771	NFTDODG3	115	12.63
515476	HUNTERS7	345	12.25	533035	CHISHLM4	138	22.32	539800	CLARKCOUNTY7	345	12.54
515477	CHSHLMV7	345	12.23	533036	CLEARWT4	138	17.04	539801	THISTLE7	345	15.96
515497	MATHWSN7	345	28.56	533037	COMOTAR4	138	18.34	539803	IRONWOOD7	345	13.92
515543	RENFROW7	345	12.16	533038	COWSKIN4	138	19.49	539804	THISTLE4	138	16.48
515544	RENFROW4	138	13.79	533039	ELPASO 4	138	25.01	539805	ELMCREEK7	345	5.72
515546	GRANTCO4	138	6.74	533040	EVANS N4	138	41.38	539809	IRONWOOD 1 7	345	13.92
515554	BVRCNTY7	345	16.00	533041	EVANS S4	138	41.38	542965	W.GRDNR7	345	23.99
515569	MDFRDTP4	138	11.52	533045	GILL W 4	138	27.09	542981	LACYGNE7	345	24.67
515576	RANCHRD7	345	13.00	533046	GILL S 4	138	27.09	560000	G11-14-TAP	345	14.39
515621	OPENSKY7	345	11.64	533049	HOOVERN4	138	18.83	560010	G14-037-TAP	345	16.65
515785	WINDFRM4	138	18.70	533053	LAKERDG4	138	19.02	560027	G14-074-TAP	345	6.46
520409	SAND RDG_138	138	10.07	533054	MAIZE 4	138	23.25	560033	G1524&G1525T	345	19.49
525830	TUCO_INT 6	230	22.36	533060	NOEASTE4	138	20.12	560242	G11-017-TAP	345	10.15
525832	TUCO_INT 7	345	12.04	533062	ROSEHIL4	138	30.99	562075	G11-051-TAP	345	16.70
526936	YOAKUM_345	345	9.40	533063	SC10BEL4	138	9.56	562334	G13-010-TAP	345	7.77
530592	SMOKYHL6	230	6.97	533064	17TH 4	138	17.90	562476	G14-001-TAP	345	10.52
531449	HOLCOMB7	345	12.20	533065	SG12COL4	138	22.60	562701	GEN-2006-006	345	14.41
531469	SPERVIL7	345	14.41	533068	STEARMN4	138	19.67	572091	GEN-2008-098	345	12.59
531501	BUCKNER7	345	10.70	533074	45TH ST4	138	28.02	573501	GEN-2008-047	345	13.36
531502	CIMRRN 7	345	8.35	533075	VIOLA 4	138	20.54	578542	GEN-2010-001	345	13.05
531504	CPV_CIMRRN 7	345	10.70	533304	LANG 3	115	14.37	579253	G07-21&14-02	345	13.58
532766	JEC N 7	345	23.67	533336	GEARY 3	115	17.16	579268	G07-44&14-03	345	9.13
532767	GEARY 7	345	9.84	533372	PHILIPS3	115	12.65	579351	GEN-2007-062	345	8.58
532768	EMPEC 7	345	16.79	533380	SPRGCRK3	115	3.92	579358	G07-062-HV-2	345	6.54
532769	LANG 7	345	16.59	533381	SUMMIT 3	115	17.66	579480	GEN-2008-124	230	20.12
532770	MORRIS 7	345	12.54	533390	MAIZEW 4	138	27.64	580049	GEN-2010-045	345	7.33
532771	RENO 7	345	12.20	533391	MAIZEE 4	138	21.78	581112	GEN-2011-014	345	10.56
532773	SUMMIT 7	345	11.00	533412	ARKVALJ3	115	10.17	582008	GEN-2011-008	345	10.05
532774	SWISVAL7	345	16.10	533413	CIRCLE 3	115	29.30	582016	GEN-2011-016	345	7.72
532780	CANEYRV7	345	9.82	533414	CITIES 3	115	9.10	582017	GEN-2011-017	345	9.40
532791	BENTON 7	345	18.98	533415	DAVIS 3	115	9.15	582019	GEN-2011-019	345	20.31
532792	FR2EAST7	345	6.36	533416	RENO 3	115	29.74	582020	GEN-2011-020	345	20.31
532794	ROSEHIL7	345	18.28	533419	HEC 3	115	26.74	582708	G-2011-008-1	345	9.00
532795	FR2WEST7	345	5.13	533421	HEC GT 3	115	28.40	582908	G-2011-008-2	345	7.56
532796	WICHITA7	345	24.47	533422	HEC U4 3	115	27.58	583090	G1149&G1504	345	4.67
532797	WOLFCRK7	345	15.97	533426	MANVILE3	115	11.77	583110	GEN-2011-051	345	16.70
532798	VIOLA 7	345	13.38	533428	MCPHER 3	115	15.87	583370	GEN-2012-024	345	9.95
532799	WAVERLY7	345	14.77	533429	MOUNDRG3	115	9.75	583750	GEN-2013-029	345	10.77
532800	LATHAMS7	345	10.37	533438	WMCPHER3	115	15.91	583760	GEN-2013-030	345	12.10
532801	ELKRVR17	345	9.17	533439	WHEATLD3	115	8.96	583850	GEN-2014-001	345	7.02
532856	SWISVAL6	230	21.38	533506	DAVIS 2	69	7.70	583990	GEN-2014-049	345	7.87
532863	MORRIS 6	230	13.36	533597	MIDIAN 2	69	12.34	584500	GEN-2015-006	345	11.07
532871	CIRCLE 6	230	10.64	533626	BURLJCT2	69	4.90	584660	G1524	345	4.95
532872	EMCPHER6	230	9.46	533629	CC2SHAR2	69	4.58	584669	G1524&G1525	345	6.12
532873	SUMMIT 6	230	13.61	533653	WOLFCRK2	69	5.91	584670	G1525	345	6.02
532874	UNIONRG6	230	7.32	533786	CHISHLM2	69	17.72	584700	GEN-2015-029	345	9.77
532982	OXFORD 4	138	9.02	533795	GILL E 2	69	33.29				

Table 4-5
Short Circuit Analysis for Study Project GEN-2015-062

Study Generators GEN-2015-062											
Bus Number	Bus Name	Bus Voltage (kV)	Fault Current 3-LG (kA)	Bus Number	Bus Name	Bus Voltage (kV)	Fault Current 3-LG (kA)	Bus Number	Bus Name	Bus Voltage (kV)	Fault Current 3-LG (kA)
514642	BRCKWND4	138	7.31	514727	ENID 2	69	11.83	515456	CHSTNTT2	69	11.47
514701	BUNCHCK4	138	6.49	514730	SO4TH 2	69	13.55	515476	HUNTERS7	345	12.04
514708	OTTER 4	138	9.52	514731	SO4TH 4	138	14.81	515493	GOLTYTP2	69	3.56
514709	FRMNTAP4	138	17.46	514732	NE ENID2	69	10.99	515501	KREMLNT2	69	4.91
514710	WAUKOMI4	138	9.52	514733	MARSHL 4	138	7.78	515541	COWBOYH4	138	7.31
514711	WAUKOTP4	138	14.94	514734	GLENWD 4	138	10.07	515542	CWBOYHT4	138	7.86
514712	FAIRMON4	138	13.64	514769	NE ENID4	138	9.93	515552	NRTHSTR4	138	12.17
514713	WRVALLY4	138	8.66	514770	MARLNDT4	138	10.57	515553	CLEO PL4	138	5.39
514714	WOODRNG4	138	18.63	514774	HENESEY4	138	7.32	515562	CLEOPLT4	138	6.43
514715	WOODRNG7	345	16.95	514778	CLEOCOR4	138	6.43	515635	BLLNGTP4	138	6.49
514718	VANCE 2	69	6.95	514789	MENOTAP4	138	7.03	515641	PLNSMEN4	138	13.49
514720	GOLTRY 2	69	3.54	514790	IMO 4	138	11.63	515737	ENIDIND4	138	9.57
514721	IMO 2	69	11.79	514803	SOONER 7	345	24.53	520432	FOUNTAIN4	138	5.12
514722	CLEVETP2	69	11.57	514815	BRECKNR4	138	13.48	520836	BILLING4	138	6.43
514723	CLEVLND2	69	9.16	514827	CTNWOOD4	138	16.54	520882	DOVERSW4	138	7.38
514724	HEMLOCK2	69	7.72	515371	HELENAT2	69	3.10	521006	MARSHAL4	138	7.75
514725	HEMLKTP2	69	11.32	515383	ENIDINT4	138	12.64	560055	G15-063T	345	16.85
514726	CHSTNUT2	69	11.19	515403	FNTANTP4	138	6.7275	584170	GEN-2014-064	138	9.4476

Table 4-6
Short Circuit Analysis for Study Project GEN-2015-063

Study Generator GEN-2015-063											
Bus Number	Bus Name	Bus Voltage (kV)	Fault Current 3-LG (kA)	Bus Number	Bus Name	Bus Voltage (kV)	Fault Current 3-LG (kA)	Bus Number	Bus Name	Bus Voltage (kV)	Fault Current 3-LG (kA)
509782	R.S.S.-7	345	30.81	514863	HAYMAKR4	138	25.85	515549	MNCWND37	345	11.29
509852	T.NO.--7	345	23.41	514864	PIEDMNT4	138	21.98	515569	MDFRDTP4	138	10.84
510907	PITTSB-7	345	13.21	514873	LNEOAK 4	138	26.34	515576	RANCHRD7	345	13.62
511424	T-CONCO4	138	6.88	514879	NORTWST4	138	42.31	515582	SLNGWND7	345	7.18
511425	TUTCONT4	138	10.60	514880	NORTWST7	345	29.49	515585	MAMTHPW7	345	9.53
511501	TUTTLE4	138	10.49	514881	SPRNGCK7	345	21.46	515599	NBUFFRG7	345	8.27
511553	CHISHOLM7	345	5.81	514893	XEROX 4	138	28.80	515600	KNGFSHR7	345	11.25
512694	CLEVLND7	345	14.83	514894	CZECHAL4	138	27.57	515605	CANADN7	345	11.77
512729	CLEVLND 4	138	16.71	514895	SARA 4	138	18.53	515610	FSHRTAP7	345	16.48
514704	MILLERT4	138	20.15	514898	CIMARON4	138	41.81	515621	OPENSKY7	345	12.68
514706	COWCRK 4	138	11.24	514901	CIMARON7	345	30.11	515641	PLNSMEN4	138	13.49
514707	PERRY 4	138	10.94	514906	JNSKAMO4	138	20.51	515800	GRACMNT7	345	14.70
514708	OTTER 4	138	9.52	514907	ARCADIA4	138	40.78	515802	GRACMNT4	138	25.59
514709	FRMNTAP4	138	17.46	514908	ARCADIA7	345	24.88	520409	RENFROW4	138	9.93
514710	WAUKOMI4	138	9.52	514909	REDBUD 7	345	23.85	521006	MARSHAL4	138	7.75
514711	WAUKOTP4	138	14.94	514933	DRAPER 4	138	38.42	521100	WARREN 4	138	8.66
514712	FAIRMON4	138	13.64	514934	DRAPER 7	345	20.38	529200	OMCDLEC7	345	13.59
514713	WRVALLY4	138	8.66	514946	MIDWEST4	138	29.54	532792	FR2EAST7	345	5.91
514714	WOODRNG4	138	18.63	514949	SOONRTP4	138	19.99	532796	WICHITA7	345	23.57
514715	WOODRNG7	345	16.95	514961	GM 4	138	19.03	532798	VIOLA 7	345	11.16
514730	SO4TH 2	69	13.55	515003	BARNES 4	138	15.79	539801	THISTLE7	345	15.11
514731	SO4TH 4	138	14.81	515006	MORRISN4	138	13.63	560000	G11-14-TAP	345	14.10
514733	MARSHL 4	138	7.78	515011	STILWTR4	138	13.30	560053	G15-052T	345	13.08
514737	OTOE 4	138	16.11	515044	SEMINOL4	138	39.14	560055	G15-063T	345	16.85
514743	OSAGE 4	138	15.67	515045	SEMINOL7	345	25.96	560056	G15-066T	345	17.95
514774	HENESEY4	138	7.32	515224	MUSKOGE7	345	28.79	560064	G15-093T	345	12.38
514790	IMO 4	138	11.63	515373	LBRTYLK4	138	13.51	562075	G11-051-TAP	345	12.16
514798	SNRPMPT4	138	20.17	515375	WWRDEHV7	345	18.30	562790	G15-038T	345	13.81
514799	SNRPMP 4	138	11.19	515376	WWRDEHV4	138	24.37	579272	G0744&1403HV	345	7.18
514801	MINCO 7	345	16.19	515377	CRESENT4	138	7.41	582019	GEN-2011-019	345	18.30
514802	SOONER 4	138	31.36	515407	TATONGA7	345	10.80	582020	GEN-2011-020	345	18.30
514803	SOONER 7	345	24.53	515412	DMNCRKT4	138	13.48	583110	GEN-2011-051	345	12.16
514815	BRECKNR4	138	13.48	515444	MCNOWND7	345	16.15	583750	GEN-2013-029	345	9.93
514818	ELRENO 2	69	7.12	515447	MORISNT4	138	13.66	584060	GEN-2014-056	345	8.34
514819	EL-RENO4	138	15.17	515448	CRSRDSW7	345	8.34	584170	GEN-2014-064	138	9.45
514820	JENSENT4	138	14.97	515458	BORDER 7	345	5.02	584450	GEN-2015-001	345	13.62
514821	JENSEN 4	138	10.53	515461	RNDBARN4	138	38.79	584690	GEN-2015-030	345	18.69
514823	ROMNOSE4	138	4.12	515465	LGARBER4	138	21.00	584700	GEN-2015-029	345	7.51
514825	KAYWIND7	345	12.64	515466	MITCHSB4	138	21.01	584770	GEN-2015-034	345	10.96
514827	CTNWOOD4	138	16.54	515471	NW164TH4	138	34.74	584790	GEN-2015-038	345	10.20
514828	KETCHTP4	138	25.93	515476	HUNTERS7	345	12.04	584880	GEN-2015-047	345	11.48
514829	PINE ST4	138	11.72	515477	CHSHLMV7	345	12.02	585010	GEN-2015-063	345	16.80
514834	KETCH 4	138	26.39	515481	STHLAKE4	138	20.53	585040	GEN-2015-066	345	17.79
514851	QUAILCK4	138	28.77	515497	MATHWSN7	345	27.77	585050	GEN-2015-067	138	21.81
514852	SLVRLAK4	138	31.93	515543	RENFROW7	345	11.14	585180	GEN-2015-081	345	10.60
514853	DVISION4	138	35.09	515544	RENFROW4	138	13.37				
514854	BRADEN 4	138	30.63	515546	GRANTCO4	138	6.23				

Table 4-7
Short Circuit Analysis for Study Project GEN-2015-066

Study Generator GEN-2015-066											
Bus Number	Bus Name	Bus Voltage (kV)	Fault Current 3-LG (kA)	Bus Number	Bus Name	Bus Voltage (kV)	Fault Current 3-LG (kA)	Bus Number	Bus Name	Bus Voltage (kV)	Fault Current 3-LG (kA)
300131	4FISHERTP	138	14.51	512694	CLEVLND7	345	14.83	514908	ARCADIA7	345	24.88
300137	4BRISTOW	138	7.11	512726	SILVCTYGR4	138	15.63	514909	REDBUD 7	345	23.85
300138	4CLEVLND	138	16.71	512729	CLEVLND 4	138	16.71	514934	DRAPER 7	345	20.38
300139	4FAIRFAX	138	7.53	512749	PAWNSW4	138	10.01	515006	MORRISN4	138	13.63
300140	4SILVCTY	138	15.78	512750	TONECE7	345	14.44	515011	STILWTR4	138	13.30
300141	4STILWTR	138	13.60	512865	GREC TAP5	345	25.56	515045	SEMINOL7	345	25.96
300740	7SPORTSMAN	345	23.55	514704	MILLERT4	138	20.15	515181	UNVRSTY4	138	13.42
300943	2SILVCTY	69	10.09	514705	COWCRK 2	69	4.04	515400	DMANCRK4	138	7.97
300996	4JAVINE	138	6.53	514706	COWCRK 4	138	11.24	515407	TATONGA7	345	10.80
301339	4SFORKKTP	138	6.82	514707	PERRY 4	138	10.94	515412	DMNCRKT4	138	13.48
301425	4GLENCOE	138	10.06	514708	OTTER 4	138	9.52	515447	MORISNT4	138	13.66
301429	4CLEVLNDXFMR	138	16.71	514709	FRMNTAP4	138	17.46	515471	NW164TH4	138	34.74
301430	2CLEVLNDXFMR	69	10.30	514710	WAUKOMI4	138	9.52	515476	HUNTERS7	345	12.04
505610	KEYSTON4	138	21.35	514711	WAUKOTP4	138	14.94	515477	CHSHLMV7	345	12.02
509745	CLARKSV7	345	20.15	514712	FAIRMON4	138	13.64	515497	MATHWSN7	345	27.77
509755	WEKIWA-7	345	18.60	514713	WRVALLY4	138	8.66	515512	SPVALLY4	138	8.67
509757	WEKIWA-4	138	31.26	514714	WOODRNG4	138	18.63	515543	RENFROW7	345	11.14
509782	R.S.S.-7	345	30.81	514715	WOODRNG7	345	16.95	515544	RENFROW4	138	13.37
509806	ONETA--4	138	49.76	514731	SO4TH 4	138	14.81	515576	RANCHRD7	345	13.62
509807	ONETA--7	345	29.57	514733	MARSHL 4	138	7.78	515610	FSHRTAP7	345	16.48
509812	SHEFFD-4	138	25.25	514737	OTOE 4	138	16.11	515621	OPENSKY7	345	12.68
509817	T.NO.--4	138	34.27	514742	OSGE 2	69	14.67	521006	MARSHAL4	138	7.75
509823	WED-TAP4	138	18.89	514743	OSAGE 4	138	15.67	529200	OMCDLEC7	345	13.59
509836	OEC 7	345	29.32	514758	STDBEAR4	138	13.25	532793	NEOSHO 7	345	16.20
509837	46ST--E4	138	14.01	514761	WHEAGLE4	138	14.95	532794	ROSEHIL7	345	18.79
509839	CDC-ET 4	138	18.51	514770	MARLNDT4	138	10.57	532798	VIOLA 7	345	11.16
509842	CDC-WT 4	138	19.24	514798	SNRPMPT4	138	20.17	560053	G15-052T	345	13.08
509844	OWASOTP4	138	14.90	514799	SNRPMP 4	138	11.19	560055	G15-063T	345	16.85
509851	P&P WTP4	138	14.91	514801	MINCO 7	345	16.19	560056	G15-066T	345	17.95
509852	T.NO.--7	345	23.41	514802	SOONER 4	138	31.36	560389	GEN-2010-055	138	31.26
509863	PPTAP 4	138	10.28	514803	SOONER 7	345	24.53	583750	GEN-2013-029	345	9.93
509870	SAPLPRD7	345	21.08	514825	KAYWIND7	345	12.64	584170	GEN-2014-064	138	9.45
509871	SAPLPRD4	138	32.02	514827	CTNWOOD4	138	16.54	584450	GEN-2015-001	345	13.62
509884	SKIATOK4	138	10.41	514828	KETCHTP4	138	25.93	584690	GEN-2015-030	345	18.69
509895	T.NO.2-4	138	34.21	514854	BRADEN 4	138	30.63	584770	GEN-2015-034	345	10.96
510376	WEBBTAP4	138	7.99	514873	LNEOAK 4	138	26.34	584880	GEN-2015-047	345	11.48
510379	DELWARE4	138	10.82	514879	NORTWST4	138	42.31	584900	GEN-2015-052	345	13.03
510380	DELWARE7	345	11.40	514880	NORTWST7	345	29.49	585010	GEN-2015-063	345	16.80
510396	N.E.S.-4	138	35.42	514881	SPRNGCK7	345	21.46	585040	GEN-2015-066	345	17.79
510406	N.E.S.-7	345	18.72	514898	CIMARON4	138	41.81	585050	GEN-2015-067	138	21.81
512650	GRDA1 7	345	25.99	514901	CIMARON7	345	30.11				
512656	GRDA1 5	161	41.92	514907	ARCADIA4	138	40.78				

Table 4-8
Short Circuit Analysis for Study Project GEN-2015-067

Study Generator GEN-2015-067											
Bus Number	Bus Name	Bus Voltage (kV)	Fault Current 3-LG (kA)	Bus Number	Bus Name	Bus Voltage (kV)	Fault Current 3-LG (kA)	Bus Number	Bus Name	Bus Voltage (kV)	Fault Current 3-LG (kA)
300138	4CLEVLND	138	16.71	514764	NWKRKAT4	138	9.83	515476	HUNTERS7	345	12.04
509755	WEKIWA-7	345	18.60	514768	WF KAY 2	69	2.95	515477	CHSHLMV7	345	12.02
509852	T.NO.--7	345	23.41	514770	MARLNDT4	138	10.57	515497	MATHWSN7	345	27.77
509895	T.NO.2-4	138	34.21	514798	SNRPMPT4	138	20.17	515512	SPVALLY4	138	8.67
510375	WEBBCTY4	138	4.29	514799	SNRPMP 4	138	11.19	515514	KNIPE 4	138	5.02
510376	WEBBTAP4	138	7.99	514800	BRRDTP 2	69	1.78	515541	COWBOYH4	138	7.31
510377	FAIRFXT4	138	8.04	514801	MINCO 7	345	16.19	515542	CWBOYHT4	138	7.86
510403	SHIDLER4	138	8.47	514802	SOONER 4	138	31.36	515543	RENFROW7	345	11.14
510406	N.E.S.-7	345	18.72	514803	SOONER 7	345	24.53	515544	RENFROW4	138	13.37
510432	SHIDWFC4	138	5.59	514825	KAYWIND7	345	12.64	515576	RANCHRD7	345	13.62
512694	CLEVLND7	345	14.83	514827	CTNWOOD4	138	16.54	515610	FSHRTAP7	345	16.48
512729	CLEVLND 4	138	16.71	514828	KETCHTP4	138	25.93	515621	OPENSKY7	345	12.68
512865	GREC TAP5	345	25.56	514854	BRADEN 4	138	30.63	521006	MARSHAL4	138	7.75
514704	MILLERT4	138	20.15	514873	LNEOAK 4	138	26.34	521007	MARLAND_138	138	7.26
514705	COWCRK 2	69	4.04	514879	NORTWST4	138	42.31	521034	PERRY 2	69	2.69
514706	COWCRK 4	138	11.24	514880	NORTWST7	345	29.49	521100	WARREN 4	138	8.66
514707	PERRY 4	138	10.94	514881	SPRNGCK7	345	21.46	529200	OMCDLEC7	345	13.59
514708	OTTER 4	138	9.52	514898	CIMARON4	138	41.81	529241	OMMORANT	69	9.15
514709	FRMNTAP4	138	17.46	514901	CIMARON7	345	30.11	529242	OMHUFFYT	69	8.62
514710	WAUKOMI4	138	9.52	514907	ARCADIA4	138	40.78	529248	OMPECANT	69	9.87
514711	WAUKOTP4	138	14.94	514908	ARCADIA7	345	24.88	529249	OMWW	69	11.28
514712	FAIRMON4	138	13.64	514909	REDBUD 7	345	23.85	532794	ROSEHIL7	345	18.79
514713	WRVALLY4	138	8.66	514934	DRAPER 7	345	20.38	532798	VIOLA 7	345	11.16
514714	WOODRNG4	138	18.63	515006	MORRISN4	138	13.63	560053	G15-052T	345	13.08
514715	WOODRNG7	345	16.95	515008	KINZE 4	138	14.28	560055	G15-063T	345	16.85
514731	SO4TH 4	138	14.81	515009	MCELROY4	138	13.54	560056	G15-066T	345	17.95
514733	MARSHL 4	138	7.78	515011	STILWTR4	138	13.30	583750	GEN-2013-029	345	9.93
514737	OTOE 4	138	16.11	515033	CUSHING4	138	6.03	584170	GEN-2014-064	138	9.45
514742	OSGE 2	69	14.67	515039	PAYNESB4	138	7.62	584450	GEN-2015-001	345	13.62
514743	OSAGE 4	138	15.67	515045	SEMINOL7	345	25.96	584690	GEN-2015-030	345	18.69
514745	CHERPLT2	69	11.14	515181	UNVRSTY4	138	13.42	584770	GEN-2015-034	345	10.96
514748	CONTEMP4	138	12.91	515400	DMANCRK4	138	7.97	584880	GEN-2015-047	345	11.48
514753	CONORTH4	138	12.95	515402	CONBLKT2	69	13.32	584900	GEN-2015-052	345	13.03
514757	CHIKASI4	138	8.68	515403	FNTANTP4	138	6.73	585010	GEN-2015-063	345	16.80
514758	STDBEAR4	138	13.25	515407	TATONGA7	345	10.80	585040	GEN-2015-066	345	17.79
514760	KILDARE4	138	10.15	515412	DMNCRKT4	138	13.48	585050	GEN-2015-067	138	21.81
514761	WHEAGLE4	138	14.95	515447	MORISNT4	138	13.66				
514763	CONBLKS2	69	13.23	515471	NW164TH4	138	34.74				

Table 4-9
Short Circuit Analysis for Study Project GEN-2015-069

Study Generator GEN-2015-069											
Bus Number	Bus Name	Bus Voltage (kV)	Fault Current 3-LG (kA)	Bus Number	Bus Name	Bus Voltage (kV)	Fault Current 3-LG (kA)	Bus Number	Bus Name	Bus Voltage (kV)	Fault Current 3-LG (kA)
530551	SALINE 3	115	5.02	532920	TECHILL5	161	5.77	533368	EXIDE J3	115	11.98
530558	KNOLL 6	230	10.68	533040	EVANS N4	138	36.98	533370	NORTHST3	115	10.18
530561	KNOLL 3	115	11.67	533151	AUBURN 3	115	21.72	533371	NORTHVW3	115	11.33
530581	N HAYS3	115	10.16	533153	COLINE 3	115	23.26	533372	PHILIPS3	115	12.01
530582	S HAYS6	230	8.55	533155	CROOKED3	115	20.51	533373	NPHILPJ3	115	11.33
530583	POSTROCK7	345	7.76	533166	INDIANH3	115	17.64	533376	SALINA 3	115	9.75
530584	POSTROCK6	230	10.84	533167	KEENE 3	115	10.06	533377	SCHILNG3	115	10.23
530592	SMOKYHL6	230	6.88	533176	SHAWNEE3	115	12.21	533378	SMOKYHLLS3	115	10.78
530593	SMKYP1 6	230	5.99	533177	6 GOLDN3	115	16.27	533379	SO GATE3	115	10.38
530599	SMKYP2 6	230	6.39	533180	TEC E 3	115	29.63	533381	SUMMIT 3	115	16.81
530605	REDLIN 3	115	4.18	533182	TECHILE3	115	30.05	533412	ARKVALJ3	115	9.75
530623	RICE 3	115	6.74	533187	27CROCO3	115	20.26	533413	CIRCLE 3	115	18.05
530676	GMEC 3	115	11.12	533194	SHERWOD3	115	19.84	533415	DAVIS 3	115	8.10
530677	OGALATP3	115	2.61	533197	HARTLND3	115	4.72	533416	RENO 3	115	21.52
530680	HEIZER 6	230	8.03	533232	BALDCRK3	115	19.92	533417	EMCPHER3	115	11.14
530686	RICE 6	230	4.62	533250	LWRNCHL3	115	27.79	533419	HEC 3	115	16.90
530688	BUFLOCRK6	230	3.54	533270	STULL T3	115	12.15	533421	HEC GT 3	115	17.56
532765	HOYT 7	345	15.49	533271	SWLWRNC3	115	18.55	533422	HEC U4 3	115	17.12
532766	JEC N 7	345	23.53	533301	EAST ST3	115	9.21	533426	MANVILE3	115	8.27
532767	BLUSTEM7	345	9.63	533302	EEUREKA3	115	1.53	533427	REFINRY3	115	10.29
532768	EMPEC 7	345	17.37	533304	LANG 3	115	14.46	533428	MCPHER 3	115	10.46
532769	LANG 7	345	17.16	533305	MORRIS 3	115	12.42	533429	MOUNDRG3	115	7.01
532770	MORRIS 7	345	12.77	533307	PRAIRIE3	115	9.25	533438	WMCPHER3	115	10.83
532771	RENO 7	345	10.66	533308	VAUGHN 3	115	2.81	539637	MRWYP16	230	6.65
532773	SUMMIT 7	345	10.23	533309	WEMPORI3	115	9.78	539639	ELMCREK6	230	7.28
532774	SWISVAL7	345	16.45	533310	WMBROS 3	115	6.70	539658	CONCRD6	230	5.38
532791	BENTON 7	345	18.98	533311	WMBROSJ3	115	6.76	539678	GRTBEND3	115	12.50
532796	WICHITA7	345	23.57	533326	EMANHAT3	115	13.10	539679	GRTBEND6	230	8.07
532798	VIOLA 7	345	11.16	533327	LEVEE 3	115	12.49	539695	SPEARVL6	230	12.06
532851	AUBURN 6	230	13.46	533328	FT JCT 3	115	14.51	539805	ELMCREEK7	345	5.25
532852	JEC 6	230	24.61	533330	JCTCTY 3	115	12.38	542965	W.GRDNR7	345	25.27
532853	LAWHILL6	230	13.76	533335	MCDOWEL3	115	17.72	542966	WGARDNR5	161	27.25
532854	LEC U5 6	230	13.62	533336	BLUSTEM3	115	16.98	542968	STILWEL7	345	24.27
532855	MIDLAND6	230	12.18	533340	SMANHAT3	115	12.51	542977	CRAIG 7	345	21.52
532856	SWISVAL6	230	21.84	533341	STAGGHL3	115	9.51	542981	LACYGNE7	345	24.95
532857	TECHILL6	230	11.27	533342	WJCCTY 3	115	13.02	560033	G1524&G1525T	345	19.04
532858	BALDWIN6	230	13.74	533345	WILDCAT3	115	9.71	560057	G15-074-TAP	345	17.71
532861	EMANHAT6	230	9.58	533350	SMAN_W_3	115	12.51	562476	G14-001-TAP	345	10.94
532862	MCDOWEL6	230	6.90	533359	UNIONRG3	115	3.78	579470	GEN-2008-092	230	7.88
532863	MORRIS 6	230	13.80	533360	TCHOPE 3	115	3.36	583850	GEN-2014-001	345	7.50
532865	NMANHT6	230	8.78	533361	AEC 3	115	7.36	585070	GEN-2015-069	230	6.57
532871	CIRCLE 6	230	8.52	533362	CHAPMAN3	115	10.33	585100	GEN-2015-073	345	14.26
532872	EMCPHER6	230	7.71	533365	EABILEN3	115	7.54	585110	GEN-2015-074	345	7.54
532873	SUMMIT 6	230	12.91	533366	FLORENC3	115	3.21				
532874	UNIONRG6	230	8.77	533367	EXIDE 3	115	10.24				

Table 4-10
Short Circuit Analysis for Study Project GEN-2015-073

Study Generator GEN-2015-073											
Bus Number	Bus Name	Bus Voltage (kV)	Fault Current 3-LG (kA)	Bus Number	Bus Name	Bus Voltage (kV)	Fault Current 3-LG (kA)	Bus Number	Bus Name	Bus Voltage (kV)	Fault Current 3-LG (kA)
300739	7BLACKBERRY	345	12.25	533024	29TH 4	138	19.38	533429	MOUNDRG3	115	7.01
510380	DELWARE7	345	11.40	533035	CHISHLM4	138	21.76	533438	WMCPHER3	115	10.83
515375	WWRDEHV7	345	18.30	533040	EVANS N4	138	36.98	533653	WOLFCRK2	69	5.81
515476	HUNTERS7	345	12.04	533041	EVANS S4	138	36.98	539800	CLARKCOUNTY7	345	11.52
515543	RENFROW7	345	11.14	533053	LAKERDG4	138	17.98	539801	THISTLE7	345	15.11
515544	RENFROW4	138	13.37	533054	MAIZE 4	138	22.18	539804	THISTLE4	138	16.19
530592	SMOKYHL6	230	6.88	533062	ROSEHIL4	138	30.93	539805	ELMCREEK7	345	5.25
532765	HOYT 7	345	15.49	533065	SG12COL4	138	20.13	541198	PECULR 7	345	20.12
532766	JEC N 7	345	23.53	533074	45TH ST4	138	25.92	541200	PHILL 7	345	18.16
532767	BLUSTEM7	345	9.63	533151	AUBURN 3	115	21.72	541341	S.HARP 5	161	25.06
532768	EMPEC 7	345	17.37	533153	COLINE 3	115	23.26	541342	PECULR 5	161	24.42
532769	LANG 7	345	17.16	533155	CROOKED3	115	20.51	542965	W.GRDNR7	345	25.27
532770	MORRIS 7	345	12.77	533163	HOYT 3	115	22.88	542966	WGARDNR5	161	27.25
532771	RENO 7	345	10.66	533166	INDIANH3	115	17.64	542968	STILWEL7	345	24.27
532772	STRANGR7	345	22.18	533167	KEENE 3	115	10.06	542969	STILWEL5	161	38.99
532773	SUMMIT 7	345	10.23	533170	OSAGE 3	115	4.39	542977	CRAIG 7	345	21.52
532774	SWISVAL7	345	16.45	533171	OSAGE J3	115	5.15	542978	CRAIG 5	161	39.25
532775	87TH 7	345	19.94	533176	SHAWNEE3	115	12.21	542979	PFLUMM 5	161	26.87
532780	CANEYRV7	345	9.88	533177	6 GOLDN3	115	16.27	542981	LACYGNE7	345	24.95
532791	BENTON 7	345	18.98	533180	TEC E 3	115	29.63	542994	HICKMAN5	161	18.42
532792	FR2EAST7	345	5.91	533182	TECHILE3	115	30.05	542995	MONTROS5	161	17.46
532793	NEOSHO 7	345	16.20	533187	27CROCO3	115	20.26	543031	SHWNMSN5	161	31.01
532794	ROSEHIL7	345	18.79	533194	SHERWOD3	115	19.84	543038	LENEXAS5	161	26.15
532795	FR2WEST7	345	4.84	533197	HARTLND3	115	4.72	543039	LENEXAN5	161	27.17
532796	WICHITA7	345	23.57	533232	BALDCRK3	115	19.92	543044	MOONLT 5	161	16.51
532797	WOLFCRK7	345	15.97	533250	LWRNCHL3	115	27.79	543048	COLLEGE5	161	27.88
532798	VIOLA 7	345	11.16	533270	STULL T3	115	12.15	543049	CEDRCRK5	161	27.48
532799	WAVERLY7	345	14.71	533271	SWLWRNC3	115	18.55	543050	ANTIOCH5	161	21.95
532800	LATHAMS7	345	10.45	533283	87TH 3	115	26.07	543053	REDEL 5	161	23.84
532802	WAVERTX7	345	12.55	533301	EAST ST3	115	9.21	543054	CEDARNL5	161	13.62
532851	AUBURN 6	230	13.46	533304	LANG 3	115	14.46	543055	SEOTTWA5	161	6.69
532852	JEC 6	230	24.61	533305	MORRIS 3	115	12.42	543057	BUCYRUS5	161	19.13
532853	LAWHILL6	230	13.76	533306	READING3	115	6.39	543077	PLSTVAL5	161	9.74
532854	LEC U5 6	230	13.62	533307	PRAIRIE3	115	9.25	543105	BULLCRK5	161	24.97
532855	MIDLAND6	230	12.18	533308	VAUGHN 3	115	2.81	543126	LACKMAN5	161	13.05
532856	SWISVAL6	230	21.84	533309	WEMPORI3	115	9.78	543131	CLARE 5	161	13.98
532857	TECHILL6	230	11.27	533311	WMBROSJ3	115	6.76	543132	BNSF 5	161	19.92
532858	BALDWIN6	230	13.74	533326	EMANHAT3	115	13.10	560033	G1524&G1525T	345	19.04
532861	EMANHAT6	230	9.58	533328	FT JCT 3	115	14.51	560053	G15-052T	345	13.08
532862	MCDOWEL6	230	6.90	533335	MCDOWEL3	115	17.72	560057	G15-074-TAP	345	17.71
532863	MORRIS 6	230	13.80	533336	BLUSTEM3	115	16.98	562476	G14-001-TAP	345	10.94
532865	NMANHT6	230	8.78	533341	STAGGHL3	115	9.51	583750	GEN-2013-029	345	9.93
532872	EMCPHER6	230	7.71	533350	SMAN_W_3	115	12.51	583850	GEN-2014-001	345	7.50
532873	SUMMIT 6	230	12.91	533359	UNIONRG3	115	3.78	584659	G15024G15025	345	6.42
532874	UNIONRG6	230	8.77	533360	TCHOPE 3	115	3.36	584660	GEN-2015-024	345	5.14
532920	TECHILL5	161	5.77	533362	CHAPMAN3	115	10.33	584670	GEN-2015-025	345	6.31
532937	NEOSHO 5	161	21.99	533381	SUMMIT 3	115	16.81	585070	GEN-2015-069	230	6.57
532986	BENTON 4	138	27.87	533390	MAIZEW 4	138	25.90	585100	GEN-2015-073	345	14.26
532988	BELAIRE4	138	18.62	533392	SCRNTJS3	115	5.08	585110	GEN-2015-074	345	7.54
532990	MIDIAN 4	138	10.06	533413	CIRCLE 3	115	18.05	585250	GEN-2015-090	345	3.06
533015	BENTLEY4	138	9.82	533415	DAVIS 3	115	8.10				
533021	NEOSHO 4	138	23.04	533416	RENO 3	115	21.52				

Table 4-11
Short Circuit Analysis for Study Project GEN-2015-083

Study Generator GEN-2015-083											
Bus Number	Bus Name	Bus Voltage (kV)	Fault Current 3-LG (kA)	Bus Number	Bus Name	Bus Voltage (kV)	Fault Current 3-LG (kA)	Bus Number	Bus Name	Bus Voltage (kV)	Fault Current 3-LG (kA)
514804	MIDLTNT4	138	7.41	533033	CANAL 4	138	16.34	533553	SC4ROME2	69	5.30
515381	PECKHMT4	138	7.98	533039	ELPASO 4	138	24.27	533555	SC7CRES2	69	9.92
521198	CHILOCCO4	138	5.83	533042	FARBER 4	138	15.48	533556	STROTHR2	69	5.68
532791	BENTON 7	345	18.98	533045	GILL W 4	138	21.90	533558	TIMBJCT2	69	7.48
532794	ROSEHIL7	345	18.79	533046	GILL S 4	138	21.90	533559	UDALL 2	69	6.67
532797	WOLFCRK7	345	15.97	533048	HARRY 4	138	13.38	533561	WINFLD 2	69	6.01
532800	LATHAMS7	345	10.45	533062	ROSEHIL4	138	30.93	533604	WEAVER 2	69	11.61
532981	CRESWLN4	138	7.22	533063	SC10BEL4	138	8.60	533792	EASTBOR2	69	14.44
532982	OXFORD 4	138	7.02	533066	64TH 4	138	14.12	533793	ELPASO 2	69	11.68
532984	SUMNER 4	138	7.36	533067	SPRNGDL4	138	14.29	533795	GILL E 2	69	30.34
532985	TCROCK 4	138	4.57	533068	STEARMN4	138	19.33	533796	GILL W 2	69	30.34
532991	WEAVER 4	138	21.73	533070	SLATECRK4	138	4.29	533808	HYDRJN2	69	15.71
532992	TIMBJCT4	138	4.84	533541	AKRON 2	69	6.26	533821	MULVANE2	69	5.33
532993	TALLGRS4	138	9.97	533543	CRESWLN2	69	10.04	533824	OAKLAWN2	69	15.41
533026	ANDOVER4	138	17.59	533547	OAK 2	69	7.24	533826	OLIVER 2	69	13.97
533028	BEECHTP4	138	13.40	533548	PARIS 2	69	6.29	533842	64TH 2	69	14.56
533029	59TH ST4	138	17.25	533549	RAINBOW2	69	5.48	560053	G15-052T	345	13.08
533030	BOEING 4	138	16.78	533550	RICHLAN2	69	5.75	585200	GEN-2015-083	138	6.26
533032	BU11PON4	138	14.84	533551	SC1KING2	69	3.17				

Table 4-12
Short Circuit Analysis for Study Project GEN-2015-090

Study Generator GEN-2015-090											
Bus Number	Bus Name	Bus Voltage (kV)	Fault Current 3-LG (kA)	Bus Number	Bus Name	Bus Voltage (kV)	Fault Current 3-LG (kA)	Bus Number	Bus Name	Bus Voltage (kV)	Fault Current 3-LG (kA)
514715	WOODRNG7	345	16.95	532871	CIRCLE 6	230	8.52	533786	CHISHLM2	69	18.50
514782	WODWRD 2	69	11.95	532872	EMCPHER6	230	7.71	539001	ANTHONY4	138	3.47
514785	WOODWRD4	138	20.04	532873	SUMMIT 6	230	12.91	539631	FLATRWD4	138	9.65
514787	DEWEY 4	138	7.18	532874	UNIONRG6	230	8.77	539638	FLATRDG4	138	14.54
514796	IODINE-4	138	7.22	532986	BENTON 4	138	27.87	539639	ELMCREK6	230	7.28
515363	CENT 4	138	3.28	532987	BUTLER 4	138	9.87	539668	HARPER 4	138	5.65
515375	WWRDEHV7	345	18.30	532988	BELAIRE4	138	18.62	539674	BARBER 4	138	7.95
515376	WWRDEHV4	138	24.37	532990	MIDIAN 4	138	10.06	539675	MILANTP4	138	6.04
515394	KEENAN 4	138	8.18	532991	WEAVER 4	138	21.73	539695	SPEARVL6	230	12.06
515398	OUSPRT 4	138	9.00	533012	HALSTDS4	138	4.21	539759	SPRVL 3	115	11.40
515407	TATONGA7	345	10.80	533013	MOUND 4	138	4.80	539760	BARBER 3	115	7.83
515448	CRSRDSW7	345	8.34	533015	BENTLEY4	138	9.82	539800	CLARKCOUNTY7	345	11.52
515458	BORDER 7	345	5.02	533016	WWUPLNT4	138	7.58	539801	THISTLE7	345	15.11
515476	HUNTERS7	345	12.04	533024	29TH 4	138	19.38	539803	IRONWOOD7	345	12.31
515477	CHSHLMV7	345	12.02	533031	BURNSTP4	138	4.47	539804	THISTLE4	138	16.19
515497	MATHWSN7	345	27.77	533035	CHISHLM4	138	21.76	539805	ELMCREEK7	345	5.25
515543	RENFROW7	345	11.14	533037	COMOTAR4	138	18.38	542965	W.GRDNR7	345	25.27
515544	RENFROW4	138	13.37	533038	COWSKIN4	138	18.32	542981	LACYGNE7	345	24.95
515546	GRANTCO4	138	6.23	533039	ELPASO 4	138	24.27	560000	G11-14-TAP	345	14.10
515554	BVRCNTY7	345	15.48	533040	EVANS N4	138	36.98	560002	IRONWOOD7	345	12.34
515569	MDFRDTP4	138	10.84	533041	EVANS S4	138	36.98	560010	G14-037-TAP	345	16.34
515582	SLNGWND7	345	7.18	533049	HOOVERN4	138	17.63	560027	G14-074-TAP	345	6.67
515585	MAMTHPW7	345	9.53	533053	LAKERDG4	138	17.98	560033	G1524&G1525T	345	19.04
515590	PALDR2W7	345	13.00	533054	MAIZE 4	138	22.18	560053	G15-052T	345	13.08
515599	NBUFFRG7	345	8.27	533060	NOEASTE4	138	20.26	562075	G11-051-TAP	345	12.16
515621	OPENSKY7	345	12.68	533062	ROSEHIL4	138	30.93	562334	G13-010-TAP	345	7.43
515785	WINDFRM4	138	20.16	533064	17TH 4	138	17.52	562476	G14-001-TAP	345	10.94
520409	RENFROW4	138	9.93	533065	SG12COL4	138	20.13	578542	GEN-2010-001	345	12.72
525830	TUCO_INT 6	230	19.91	533068	STEARMN4	138	19.33	579480	GEN-2008-124	345	11.92
525832	TUCO_INT 7	345	10.53	533074	45TH ST4	138	25.92	581112	GEN-2011-014	345	12.57
530592	SMOKYHL6	230	6.88	533304	LANG 3	115	14.46	582008	GEN-2011-008	345	9.40
531469	SPERVIL7	345	12.72	533336	BLUSTEM3	115	16.98	582016	GEN-2011-016	345	7.13
531501	BUCKNER7	345	9.71	533372	PHILIPS3	115	12.01	582019	GEN-2011-019	345	18.30
532766	JEC N 7	345	23.53	533380	SPRGCRK3	115	3.59	582020	GEN-2011-020	345	18.30
532767	BLUSTEM7	345	9.63	533381	SUMMIT 3	115	16.81	582708	G-2011-008-1	345	8.48
532768	EMPEC 7	345	17.37	533390	MAIZEW 4	138	25.90	582908	G-2011-008-2	345	7.20
532769	LANG 7	345	17.16	533391	MAIZEE 4	138	20.93	583090	G1149&G1504	345	4.60
532770	MORRIS 7	345	12.77	533412	ARKVALJ3	115	9.75	583110	GEN-2011-051	345	12.16
532771	RENO 7	345	10.66	533413	CIRCLE 3	115	18.05	583370	GEN-2012-024	345	9.30
532773	SUMMIT 7	345	10.23	533414	CITIES 3	115	8.10	583750	GEN-2013-029	345	9.93
532774	SWISVAL7	345	16.45	533415	DAVIS 3	115	8.10	583760	GEN-2013-030	345	11.81
532780	CANEYRV7	345	9.88	533416	RENO 3	115	21.52	583850	GEN-2014-001	345	7.50
532791	BENTON 7	345	18.98	533419	HEC 3	115	16.90	584659	G15024G15025	345	6.42
532792	FR2EAST7	345	5.91	533421	HEC GT 3	115	17.56	584660	GEN-2015-024	345	5.14
532794	ROSEHIL7	345	18.79	533422	HEC U4 3	115	17.12	584670	GEN-2015-025	345	6.31
532795	FR2WEST7	345	4.84	533426	MANVILE3	115	8.27	584700	GEN-2015-029	345	7.51
532796	WICHITA7	345	23.57	533428	MCPHER 3	115	10.46	584900	GEN-2015-052	345	13.03
532797	WOLFCRK7	345	15.97	533429	MOUNDRG3	115	7.01	584980	GEN-2015-060	138	5.71
532798	VIOLA 7	345	11.16	533438	WMCPHER3	115	10.83	585060	GEN-2015-068	345	8.80
532799	WAVERLY7	345	14.71	533439	WHEATLD3	115	7.30	585100	GEN-2015-073	345	14.26
532800	LATHAMS7	345	10.45	533506	DAVIS 2	69	7.23	585180	GEN-2015-081	345	10.60
532801	ELKRVR17	345	9.23	533597	MIDIAN 2	69	12.20	585190	GEN-2015-082	345	7.13
532802	WAVERTX7	345	12.55	533626	BURLJCT2	69	4.77	585250	GEN-2015-090	345	3.06
532856	SWISVAL6	230	21.84	533629	CC2SHAR2	69	4.51	599074	NTHBUF_EHV2	345	6.37
532863	MORRIS 6	230	13.80	533653	WOLFCRK2	69	5.81				

The maximum fault current for each bus is provided for the 2025 Summer Peak condition. The following tables show the short circuit results for the study generators:

- Table 4-13: Short Circuit Analysis for GEN-2015-034
- Table 4-14: Short Circuit Analysis for GEN-2015-047
- Table 4-15: Short Circuit Analysis for GEN-2015-043
- Table 4-16: Short Circuit Analysis for GEN-2015-052
- Table 4-17: Short Circuit Analysis for GEN-2015-062
- Table 4-18: Short Circuit Analysis for GEN-2015-063
- Table 4-19: Short Circuit Analysis for GEN-2015-066
- Table 4-20 Short Circuit Analysis for GEN-2015-067
- Table 4-21: Short Circuit Analysis for GEN-2015-069
- Table 4-22: Short Circuit Analysis for GEN-2015-073
- Table 4-23: Short Circuit Analysis for GEN-2015-083
- Table 4-24: Short Circuit Analysis for GEN-2015-090

Table 4-13
Short Circuit Analysis for Study Project GEN-2015-034

Study Generator GEN-2015-034											
Bus Number	Bus Name	Bus Voltage (kV)	Fault Current 3-LG (kA)	Bus Number	Bus Name	Bus Voltage (kV)	Fault Current 3-LG (kA)	Bus Number	Bus Name	Bus Voltage (kV)	Fault Current 3-LG (kA)
300138	4CLEVLND	138	16.76	514803	SOONER 7	345	24.72	515644	STLWTR2	69	16.28
509755	WEKIWA-7	345	18.78	514825	KAYWIND7	345	12.68	521006	MARSHAL4	138	7.76
509852	T.NO.--7	345	23.61	514827	CTNWOOD4	138	16.59	529200	OMCDLEC7	345	13.63
509895	T.NO.2-4	138	34.40	514828	KETCHTP4	138	25.98	532780	CANEYRV7	345	9.93
510376	WEBBTAP4	138	8.09	514854	BRADEN 4	138	30.80	532791	BENTON 7	345	19.34
510406	N.E.S.-7	345	18.84	514873	LNEOAK 4	138	26.47	532794	ROSEHIL7	345	19.09
512694	CLEVLND7	345	14.89	514879	NORTWST4	138	42.80	532796	WICHITA7	345	24.54
512729	CLEVLND 4	138	16.76	514880	NORTWST7	345	30.69	532797	WOLFCRK7	345	16.03
512865	GREC TAP5	345	25.88	514881	SPRNGCK7	345	21.97	532798	VIOLA 7	345	13.26
514704	MILLERT4	138	20.45	514898	CIMARON4	138	42.16	532799	WAVERLY7	345	14.76
514705	COWCRK 2	69	4.05	514901	CIMARON7	345	31.57	532800	LATHAMS7	345	10.51
514706	COWCRK 4	138	11.32	514907	ARCADIA4	138	41.21	532801	ELKRVR17	345	9.27
514707	PERRY 4	138	11.01	514908	ARCADIA7	345	26.07	532986	BENTON 4	138	28.42
514708	OTTER 4	138	9.55	514909	REDBUD 7	345	25.39	532991	WEAVER 4	138	22.28
514709	FRMNTAP4	138	17.57	514934	DRAPER 7	345	20.53	533039	ELPASO 4	138	25.55
514710	WAUKOMI4	138	9.57	515006	MORRISN4	138	13.84	533062	ROSEHIL4	138	31.72
514711	WAUKOTP4	138	15.02	515011	STILWTR4	138	13.88	533068	STEARMN4	138	19.88
514712	FAIRMON4	138	13.71	515045	SEMINOL7	345	26.13	533653	WOLFCRK2	69	6.02
514713	WRVALLY4	138	8.69	515181	UNVRSTY4	138	13.72	560053	G15-052T	345	13.15
514714	WOODRNG4	138	18.76	515400	DMANCRK4	138	8.06	560055	G15-063T	345	17.30
514715	WOODRNG7	345	17.31	515407	TATONGA7	345	16.49	560056	G15-066T	345	18.04
514731	SO4TH 4	138	14.89	515412	DMNCRKT4	138	13.75	583750	GEN-2013-029	345	10.44
514733	MARSHL 4	138	7.80	515447	MORISNT4	138	13.87	584170	GEN-2014-064	138	9.48
514737	OTOE 4	138	16.29	515471	NW164TH4	138	35.05	584450	GEN-2015-001	345	13.66
514742	OSGE 2	69	17.56	515476	HUNTERS7	345	12.41	584690	GEN-2015-030	345	18.81
514743	OSAGE 4	138	16.66	515477	CHSHLMV7	345	12.39	584770	GEN-2015-034	345	10.99
514758	STDBEAR4	138	13.92	515497	MATHWSN7	345	30.01	584880	GEN-2015-047	345	11.52
514761	WHEAGLE4	138	15.69	515512	SPVALLY4	138	8.86	584900	GEN-2015-052	345	13.10
514770	MARLNDT4	138	10.95	515543	RENFROW7	345	11.79	585010	GEN-2015-063	345	17.24
514798	SNRPMPT4	138	20.50	515544	RENFROW4	138	13.60	585040	GEN-2015-066	345	17.88
514799	SNRPMP 4	138	11.29	515576	RANCHRD7	345	13.66	585050	GEN-2015-067	138	22.05
514801	MINCO 7	345	16.56	515610	FSHRTAP7	345	16.84				
514802	SOONER 4	138	31.86	515621	OPENSKY7	345	12.71				

Table 4-14
Short Circuit Analysis for Study Project GEN-2015-043

Study Generator GEN-2015-043											
Bus Number	Bus Name	Bus Voltage (kV)	Fault Current 3-LG (kA)	Bus Number	Bus Name	Bus Voltage (kV)	Fault Current 3-LG (kA)	Bus Number	Bus Name	Bus Voltage (kV)	Fault Current 3-LG (kA)
514715	WOODRNG7	345	17.31	532874	UNIONRG6	230	8.86	533786	CHISHLM2	69	18.78
514782	WODWRD 2	69	12.01	532982	OXFORD 4	138	9.22	533795	GILL E 2	69	33.80
514785	WOODWRD4	138	20.57	532984	SUMNER 4	138	10.17	533796	GILL W 2	69	33.80
514787	DEWEY 4	138	7.20	532986	BENTON 4	138	28.42	533879	GODDTAP2	69	8.18
514796	IODINE-4	138	7.27	532987	BUTLER 4	138	10.03	533880	GODDARD2	138	18.90
515363	CENT 4	138	3.29	532988	BELAIRE4	138	18.89	539000	RAGO 4	138	3.60
515375	WWRDEHV7	345	20.63	532990	MIDIAN 4	138	10.20	539001	ANTHONY4	138	3.61
515376	WWRDEHV4	138	25.32	532991	WEAVER 4	138	22.28	539631	FLATRWD4	138	9.73
515394	KEENAN 4	138	8.29	532992	TIMBJCT4	138	5.69	539638	FLATRDG4	138	14.74
515398	OUSPRT 4	138	9.13	533012	HALSTDS4	138	4.26	539639	ELMCREK6	230	7.34
515407	TATONGA7	345	16.49	533013	MOUND 4	138	4.88	539668	HARPER 4	138	5.94
515448	CRSRDSW7	345	11.37	533015	BENTLEY4	138	10.11	539674	BARBER 4	138	8.01
515458	BORDER 7	345	5.13	533016	WWUPLNT4	138	7.75	539675	MILANTP4	138	7.08
515476	HUNTERS7	345	12.41	533024	29TH 4	138	19.67	539695	SPEARVL6	230	12.11
515477	CHSHLMV7	345	12.39	533029	59TH ST4	138	18.93	539759	SPRVL 3	115	11.42
515497	MATHWSN7	345	30.01	533031	BURNSTP4	138	4.50	539760	BARBER 3	115	7.88
515543	RENFROW7	345	11.79	533035	CHISHLM4	138	22.43	539800	CLARKCOUNTY7	345	11.60
515544	RENFROW4	138	13.60	533036	CLEARWT4	138	21.70	539801	THISTLE7	345	15.44
515546	GRANTCO4	138	6.27	533037	COMOTAR4	138	18.65	539803	IRONWOOD7	345	12.39
515554	BVRCNTY7	345	15.73	533038	COWSKIN4	138	20.28	539804	THISTLE4	138	16.41
515569	MDFRDTP4	138	10.98	533039	ELPASO 4	138	25.55	539805	ELMCREEK7	345	5.31
515582	SLNGWND7	345	9.15	533040	EVANS N4	138	41.95	542981	LACYGNE7	345	25.07
515585	MAMTHPW7	345	13.64	533041	EVANS S4	138	41.95	560000	G11-14-TAP	345	14.43
515590	PALDR2W7	345	13.17	533045	GILL W 4	138	28.29	560002	IRONWOOD7	345	12.41
515599	NBUFFRG7	345	8.63	533046	GILL S 4	138	28.29	560010	G14-037-TAP	345	16.51
515621	OPENSKY7	345	12.71	533049	HOOVERN4	138	18.82	560027	G14-074-TAP	345	7.10
515785	WINDFRM4	138	20.27	533053	LAKERDG4	138	18.94	560033	G1524&G1525T	345	19.57
520409	RENFROW4	138	10.05	533054	MAIZE 4	138	23.35	560053	G15-052T	345	13.15
525830	TUCO_INT 6	230	22.95	533060	NOEASTE4	138	20.61	562075	G11-051-TAP	345	17.27
525832	TUCO_INT 7	345	12.78	533062	ROSEHIL4	138	31.72	562334	G13-010-TAP	345	7.46
526936	YOAKUM_345	345	8.93	533063	SC10BEL4	138	10.10	562476	G14-001-TAP	345	11.04
530592	SMOKYHL6	230	6.94	533064	17TH 4	138	17.98	578542	GEN-2010-001	345	12.88
531469	SPERVIL7	345	12.80	533065	SG12COL4	138	21.48	579480	GEN-2008-124	345	11.98
531501	BUCKNER7	345	9.75	533068	STEARMN4	138	19.88	581112	GEN-2011-014	345	12.84
532766	JEC N 7	345	23.74	533074	45TH ST4	138	29.17	582008	GEN-2011-008	345	9.45
532767	BLUSTEM7	345	9.75	533075	VIOLA 4	138	21.94	582016	GEN-2011-016	345	7.15
532768	EMPEC 7	345	17.48	533304	LANG 3	115	14.49	582019	GEN-2011-019	345	20.63
532769	LANG 7	345	17.27	533336	BLUSTEM3	115	17.09	582020	GEN-2011-020	345	20.63
532770	MORRIS 7	345	12.83	533372	PHILIPS3	115	12.36	582708	G-2011-008-1	345	8.52
532771	RENO 7	345	11.44	533380	SPRGCRK3	115	3.62	582908	G-2011-008-2	345	7.23
532773	SUMMIT 7	345	10.60	533381	SUMMIT 3	115	17.36	583090	G1149&G1504	345	4.68
532774	SWISVAL7	345	16.71	533390	MAIZEW 4	138	27.82	583110	GEN-2011-051	345	17.27
532776	DOUGLAS7	345	18.20	533391	MAIZEE 4	138	21.86	583370	GEN-2012-024	345	9.35
532780	CANEYRV7	345	9.93	533412	ARKVALJ3	115	10.85	583750	GEN-2013-029	345	10.44
532791	BENTON 7	345	19.34	533413	CIRCLE 3	115	22.70	583760	GEN-2013-030	345	11.95
532792	FR2EAST7	345	6.34	533414	CITIES 3	115	8.88	583850	GEN-2014-001	345	7.54
532794	ROSEHIL7	345	19.09	533415	DAVIS 3	115	8.74	584659	G15024G15025	345	6.46
532795	FR2WEST7	345	5.11	533416	RENO 3	115	25.04	584660	GEN-2015-024	345	5.17
532796	WICHITA7	345	24.54	533419	HEC 3	115	22.17	584670	GEN-2015-025	345	6.35
532797	WOLFCRK7	345	16.03	533422	HEC U4 3	115	21.77	584700	GEN-2015-029	345	9.80
532798	VIOLA 7	345	13.26	533426	MANVILE3	115	10.21	584900	GEN-2015-052	345	13.10
532799	WAVERLY7	345	14.76	533428	MCPHER 3	115	11.94	584980	GEN-2015-060	138	5.74
532800	LATHAMS7	345	10.51	533429	MOUNDRG3	115	7.18	585060	GEN-2015-068	345	10.28
532801	ELKRVR17	345	9.27	533438	WMCPHER3	115	12.42	585100	GEN-2015-073	345	14.33
532802	WAVERTX7	345	12.59	533439	WHEATLD3	115	7.90	585180	GEN-2015-081	345	14.19
532856	SWISVAL6	230	21.93	533506	DAVIS 2	69	7.56	585190	GEN-2015-082	345	7.21
532863	MORRIS 6	230	13.88	533597	MIDIAN 2	69	12.31	585250	GEN-2015-090	345	3.07
532871	CIRCLE 6	230	9.52	533626	BURLJCT2	69	5.03	599074	NTHBUF_EHV2	345	6.56
532872	EMCPHER6	230	8.52	533629	CC2SHAR2	69	4.64				
532873	SUMMIT 6	230	13.48	533653	WOLFCRK2	69	6.02				

Table 4-15
Short Circuit Analysis for Study Projects GEN-2015-047

Study Generator GEN-2015-047											
Bus Number	Bus Name	Bus Voltage (kV)	Fault Current 3-LG (kA)	Bus Number	Bus Name	Bus Voltage (kV)	Fault Current 3-LG (kA)	Bus Number	Bus Name	Bus Voltage (kV)	Fault Current 3-LG (kA)
300138	4CLEVLND	138	16.76	514799	SNRPMP 4	138	11.29	515477	CHSHLMV7	345	12.39
300140	4SILVCTY	138	15.86	514801	MINCO 7	345	16.56	515497	MATHWSN7	345	30.01
300996	4JAVINE	138	6.53	514802	SOONER 4	138	31.86	515512	SPVALLY4	138	8.86
301429	4CLEVLNDXFMR	138	16.76	514803	SOONER 7	345	24.72	515514	KNIPE 4	138	5.08
509755	WEKIWA-7	345	18.78	514815	BRECKNR4	138	13.56	515542	CWBOYHT4	138	8.03
509757	WEKIWA-4	138	31.51	514819	EL-RENO4	138	15.23	515543	RENFROW7	345	11.79
509782	R.S.S.-7	345	31.50	514820	JENSENT4	138	15.04	515544	RENFROW4	138	13.60
509807	ONETA--7	345	29.97	514825	KAYWIND7	345	12.68	515546	GRANTCO4	138	6.27
509817	T.NO.--4	138	34.46	514827	CTNWOOD4	138	16.59	515549	MNCWND37	345	11.46
509852	T.NO.--7	345	23.61	514828	KETCHTP4	138	25.98	515569	MDFRDTP4	138	10.98
509870	SAPLPRD7	345	21.38	514829	PINE ST4	138	11.74	515576	RANCHRD7	345	13.66
509895	T.NO.2-4	138	34.40	514834	KETCH 4	138	26.43	515582	SLNGWND7	345	9.15
510376	WEBBTAP4	138	8.09	514851	QUAILCK4	138	28.82	515585	MAMTHPW7	345	13.64
510377	FAIRFXT4	138	8.14	514852	SLVRLAK4	138	32.03	515600	KNGFSHR7	345	11.40
510380	DELWARE7	345	11.49	514854	BRADEN 4	138	30.80	515610	FSHRTAP7	345	16.84
510406	N.E.S.-7	345	18.84	514863	HAYMAKR4	138	25.90	515621	OPENSKY7	345	12.71
510432	SHIDWFC4	138	5.64	514864	PIEDMNT4	138	22.07	515641	PLNSMEN4	138	13.57
510907	PITTSB-7	345	13.24	514873	LNEOAK 4	138	26.47	515644	STLWTR2	69	16.28
511425	TUTCONT4	138	10.67	514879	NORTWST4	138	42.80	515800	GRACMNT7	345	15.15
512650	GRDA1 7	345	26.33	514880	NORTWST7	345	30.69	520409	RENFROW4	138	10.05
512662	STILWTP2	69	16.29	514881	SPRNGCK7	345	21.97	521006	MARSHAL4	138	7.76
512694	CLEVLND7	345	14.89	514894	CZECHAL4	138	27.24	521007	MARLAND_138	138	7.44
512729	CLEVLND 4	138	16.76	514895	SARA 4	138	18.56	521100	WARREN 4	138	8.69
512749	PAWNSW4	138	10.04	514898	CIMARON4	138	42.16	529200	OMCDLEC7	345	13.63
512865	GREC TAP5	345	25.88	514901	CIMARON7	345	31.57	529241	OMMORANT	69	12.32
514704	MILLERT4	138	20.45	514906	JNSKAMO4	138	20.30	529249	OMWW	69	13.34
514705	COWCRK 2	69	4.05	514907	ARCADIA4	138	41.21	532791	BENTON 7	345	19.34
514706	COWCRK 4	138	11.32	514908	ARCADIA7	345	26.07	532792	FR2EAST7	345	6.34
514707	PERRY 4	138	11.01	514909	REDBUD 7	345	25.39	532794	ROSEHIL7	345	19.09
514708	OTTER 4	138	9.55	514933	DRAPER 4	138	38.45	532796	WICHITA7	345	24.54
514709	FRMNTAP4	138	17.57	514934	DRAPER 7	345	20.53	532797	WOLFCRK7	345	16.03
514710	WAUKOMI4	138	9.57	515006	MORRISN4	138	13.84	532798	VIOLA 7	345	13.26
514711	WAUKOTP4	138	15.02	515009	MCELROY4	138	13.74	532800	LATHAMS7	345	10.51
514712	FAIRMON4	138	13.71	515011	STILWTR4	138	13.88	533062	ROSEHIL4	138	31.72
514713	WRVALLY4	138	8.69	515039	PAYNESB4	138	7.75	533075	VIOLA 4	138	21.94
514714	WOODRNG4	138	18.76	515044	SEMINOL4	138	39.28	560053	G15-052T	345	13.15
514715	WOODRNG7	345	17.31	515045	SEMINOL7	345	26.13	560055	G15-063T	345	17.30
514730	SO4TH 2	69	13.59	515181	UNVRSTY4	138	13.72	560056	G15-066T	345	18.04
514731	SO4TH 4	138	14.89	515224	MUSKOGE7	345	28.90	562075	G11-051-TAP	345	17.27
514733	MARSHL 4	138	7.80	515373	LBRTYLK4	138	13.53	562790	G15-038T	345	14.06
514737	OTOE 4	138	16.29	515377	CRESENT4	138	7.43	583750	GEN-2013-029	345	10.44
514742	OSGE 2	69	17.56	515400	DMANCRK4	138	8.06	584170	GEN-2014-064	138	9.48
514743	OSAGE 4	138	16.66	515402	CONBLKT2	69	15.56	584450	GEN-2015-001	345	13.66
514748	CONTEMP4	138	13.51	515407	TATONGA7	345	16.49	584690	GEN-2015-030	345	18.81
514753	CONORTH4	138	13.56	515412	DMNCRKT4	138	13.75	584700	GEN-2015-029	345	9.80
514758	STDBEAR4	138	13.92	515444	MCNOWND7	345	16.52	584770	GEN-2015-034	345	10.99
514760	KILDARE4	138	10.53	515447	MORISNT4	138	13.87	584880	GEN-2015-047	345	11.52
514761	WHEAGLE4	138	15.69	515448	CRSRDSW7	345	11.37	584900	GEN-2015-052	345	13.10
514768	WF KAY 2	69	2.95	515461	RNDBARN4	138	39.17	585010	GEN-2015-063	345	17.24
514770	MARLNDT4	138	10.95	515465	LGARBER4	138	20.97	585040	GEN-2015-066	345	17.88
514774	HENESEY4	138	7.37	515466	MITCHSB4	138	21.05	585050	GEN-2015-067	138	22.05
514790	IMO 4	138	11.67	515471	NW164TH4	138	35.05				
514798	SNRPMPT4	138	20.50	515476	HUNTERS7	345	12.41				

Table 4-16
Short Circuit Analysis for Study Project GEN-2015-052

Study Generators GEN-2015-052											
Bus Number	Bus Name	Bus Voltage (kV)	Fault Current 3-LG (kA)	Bus Number	Bus Name	Bus Voltage (kV)	Fault Current 3-LG (kA)	Bus Number	Bus Name	Bus Voltage (kV)	Fault Current 3-LG (kA)
300739	7BLACKBERRY	345	12.26	532937	NEOSHO 5	161	22.11	533391	MAIZEE 4	138	21.86
510380	DELWARE7	345	11.49	532986	BENTON 4	138	28.42	533416	RENO 3	115	25.04
512694	CLEVLND7	345	14.89	532987	BUTLER 4	138	10.03	533585	BU10BEN2	69	10.54
514704	MILLERT4	138	20.45	532988	BELAIRE4	138	18.89	533597	MIDIAN 2	69	12.31
514707	PERRY 4	138	11.01	532989	BUTLERS4	138	10.03	533604	WEAVER 2	69	11.75
514714	WOODRNG4	138	18.76	532990	MIDIAN 4	138	10.20	533624	BURLING2	69	3.49
514715	WOODRNG7	345	17.31	532991	WEAVER 4	138	22.28	533626	BURLJCT2	69	5.03
514798	SNRPMPT4	138	20.50	532993	TALLGRS4	138	10.21	533629	CC2SHAR2	69	4.64
514802	SOONER 4	138	31.86	533021	NEOSHO 4	138	23.24	533630	CC3WEST2	69	4.63
514803	SOONER 7	345	24.72	533024	29TH 4	138	19.67	533653	WOLFCRK2	69	6.02
514825	KAYWIND7	345	12.68	533026	ANDOVER4	138	17.91	533786	CHISHLM2	69	18.78
514880	NORTWST7	345	30.69	533028	BEECHTP4	138	13.66	533793	ELPASO 2	69	11.84
514881	SPRNGCK7	345	21.97	533029	59TH ST4	138	18.93	533821	MULVANE2	69	5.36
515447	MORISNT4	138	13.87	533030	BOEING 4	138	17.21	533824	OAKLAWN2	69	15.70
515476	HUNTERS7	345	12.41	533031	BURNSTP4	138	4.50	533837	RH JCT 2	69	6.61
515543	RENFROW7	345	11.79	533032	BU11PON4	138	15.16	533842	64TH 2	69	14.76
515576	RANCHRD7	345	13.66	533033	CANAL 4	138	16.76	539801	THISTLE7	345	15.44
515621	OPENSKY7	345	12.71	533035	CHISHLM4	138	22.43	542965	W.GRDNR7	345	25.95
529200	OMCDLEC7	345	13.63	533037	COMOTAR4	138	18.65	542968	STILWEL7	345	24.41
532768	EMPEC 7	345	17.48	533039	ELPASO 4	138	25.55	542981	LACYGNE7	345	25.07
532771	RENO 7	345	11.44	533040	EVANS N4	138	41.95	560033	G1524&G1525T	345	19.57
532773	SUMMIT 7	345	10.60	533041	EVANS S4	138	41.95	560053	G15-052T	345	13.15
532780	CANEYRV7	345	9.93	533042	FARBER 4	138	16.36	560055	G15-063T	345	17.30
532781	CANEYWF7	345	9.66	533046	GILL S 4	138	28.29	560056	G15-066T	345	18.04
532791	BENTON 7	345	19.34	533048	HARRY 4	138	13.66	562476	G14-001-TAP	345	11.04
532792	FR2EAST7	345	6.34	533060	NOEASTE4	138	20.61	583850	GEN-2014-001	345	7.54
532793	NEOSHO 7	345	16.29	533062	ROSEHIL4	138	31.72	584450	GEN-2015-001	345	13.66
532794	ROSEHIL7	345	19.09	533063	SC10BEL4	138	10.10	584659	G15024G15025	345	6.46
532796	WICHITA7	345	24.54	533064	17TH 4	138	17.98	584690	GEN-2015-030	345	18.81
532797	WOLFCRK7	345	16.03	533065	SG12COL4	138	21.48	584770	GEN-2015-034	345	10.99
532798	VIOLA 7	345	13.26	533066	64TH 4	138	14.44	584880	GEN-2015-047	345	11.52
532799	WAVERLY7	345	14.76	533067	SPRNGDL4	138	14.56	584900	GEN-2015-052	345	13.10
532800	LATHAMS7	345	10.51	533068	STEARMN4	138	19.88	585040	GEN-2015-066	345	17.88
532801	ELKRVR17	345	9.27	533075	VIOLA 4	138	21.94	585050	GEN-2015-067	138	22.05
532802	WAVERTX7	345	12.59	533390	MAIZEW 4	138	27.82				

Table 4-17
Short Circuit Analysis for Study Project GEN-2015-062

Study Generators GEN-2015-062											
Bus Number	Bus Name	Bus Voltage (kV)	Fault Current 3-LG (kA)	Bus Number	Bus Name	Bus Voltage (kV)	Fault Current 3-LG (kA)	Bus Number	Bus Name	Bus Voltage (kV)	Fault Current 3-LG (kA)
514642	BRCKWND4	138	7.31	514727	ENID 2	69	11.83	515456	CHSTNTT2	69	11.47
514701	BUNCHCK4	138	6.49	514730	SO4TH 2	69	13.55	515476	HUNTERS7	345	12.04
514708	OTTER 4	138	9.52	514731	SO4TH 4	138	14.81	515493	GOLTYTP2	69	3.56
514709	FRMNTAP4	138	17.46	514732	NE ENID2	69	10.99	515501	KREMLNT2	69	4.91
514710	WAUKOMI4	138	9.52	514733	MARSHL 4	138	7.78	515541	COWBOYH4	138	7.31
514711	WAUKOTP4	138	14.94	514734	GLENWD 4	138	10.07	515542	CWBOYHT4	138	7.86
514712	FAIRMON4	138	13.64	514769	NE ENID4	138	9.93	515552	NRTHSTR4	138	12.17
514713	WRVALLY4	138	8.66	514770	MARLNDT4	138	10.57	515553	CLEO PL4	138	5.39
514714	WOODRNG4	138	18.63	514774	HENESEY4	138	7.32	515562	CLEOPLT4	138	6.43
514715	WOODRNG7	345	16.95	514778	CLEOCOR4	138	6.43	515635	BLLNGTP4	138	6.49
514718	VANCE 2	69	6.95	514789	MENOTAP4	138	7.03	515641	PLNSMEN4	138	13.49
514720	GOLTRY 2	69	3.54	514790	IMO 4	138	11.63	515737	ENIDIND4	138	9.57
514721	IMO 2	69	11.79	514803	SOONER 7	345	24.53	520432	FOUNTAIN4	138	5.12
514722	CLEVETP2	69	11.57	514815	BRECKNR4	138	13.48	520836	BILLING4	138	6.43
514723	CLEVLND2	69	9.16	514827	CTNWOOD4	138	16.54	520882	DOVERSW4	138	7.38
514724	HEMLOCK2	69	7.72	515371	HELENAT2	69	3.10	521006	MARSHAL4	138	7.75
514725	HEMLKTP2	69	11.32	515383	ENIDINT4	138	12.64	560055	G15-063T	345	16.85
514726	CHSTNUT2	69	11.19	515403	FNTANTP4	138	6.7275	584170	GEN-2014-064	138	9.4476

Table 4-18
Short Circuit Analysis for Study Project GEN-2015-063

Study Generator GEN-2015-063											
Bus Number	Bus Name	Bus Voltage (kV)	Fault Current 3-LG (kA)	Bus Number	Bus Name	Bus Voltage (kV)	Fault Current 3-LG (kA)	Bus Number	Bus Name	Bus Voltage (kV)	Fault Current 3-LG (kA)
509782	R.S.S.-7	345	31.50	514863	HAYMAKR4	138	25.90	515549	MNCWND37	345	11.46
509852	T.NO.--7	345	23.61	514864	PIEDMNT4	138	22.07	515569	MDFRDTP4	138	10.98
510907	PITTSB-7	345	13.24	514873	LNEOAK 4	138	26.47	515576	RANCHRD7	345	13.66
511424	T-CONCO4	138	6.91	514879	NORTWST4	138	42.80	515582	SLNGWND7	345	9.15
511425	TUTCONT4	138	10.67	514880	NORTWST7	345	30.69	515585	MAMTHPW7	345	13.64
511501	TUTTLE4	138	10.56	514881	SPRNGCK7	345	21.97	515599	NBUFFRG7	345	8.63
511553	CHISHOLM7	345	5.85	514893	XEROX 4	138	28.32	515600	KNGFSHR7	345	11.40
512694	CLEVLND7	345	14.89	514894	CZECHAL4	138	27.24	515605	CANADN7	345	11.94
512729	CLEVLND 4	138	16.76	514895	SARA 4	138	18.56	515610	FSHRTAP7	345	16.84
514704	MILLERT4	138	20.45	514898	CIMARON4	138	42.16	515621	OPENSKY7	345	12.71
514706	COWCRK 4	138	11.32	514901	CIMARON7	345	31.57	515641	PLNSMEN4	138	13.57
514707	PERRY 4	138	11.01	514906	JNSKAMO4	138	20.30	515800	GRACMNT7	345	15.15
514708	OTTER 4	138	9.55	514907	ARCADIA4	138	41.21	515802	GRACMNT4	138	28.12
514709	FRMNTAP4	138	17.57	514908	ARCADIA7	345	26.07	520409	RENFROW4	138	10.05
514710	WAUKOMI4	138	9.57	514909	REDBUD 7	345	25.39	521006	MARSHAL4	138	7.76
514711	WAUKOTP4	138	15.02	514933	DRAPER 4	138	38.45	521100	WARREN 4	138	8.69
514712	FAIRMON4	138	13.71	514934	DRAPER 7	345	20.53	529200	OMCDLEC7	345	13.63
514713	WRVALLY4	138	8.69	514946	MIDWEST4	138	29.58	532792	FR2EAST7	345	6.34
514714	WOODRNG4	138	18.76	514949	SOONRTP4	138	19.99	532796	WICHITA7	345	24.54
514715	WOODRNG7	345	17.31	514961	GM 4	138	18.97	532798	VIOLA 7	345	13.26
514730	SO4TH 2	69	13.59	515003	BARNES 4	138	15.69	533075	VIOLA 4	138	21.94
514731	SO4TH 4	138	14.89	515006	MORRISN4	138	13.84	539801	THISTLE7	345	15.44
514733	MARSHL 4	138	7.80	515011	STILWTR4	138	13.88	560000	G11-14-TAP	345	14.43
514737	OTOE 4	138	16.29	515044	SEMINOL4	138	39.28	560053	G15-052T	345	13.15
514743	OSAGE 4	138	16.66	515045	SEMINOL7	345	26.13	560055	G15-063T	345	17.30
514774	HENESEY4	138	7.37	515224	MUSKOGE7	345	28.90	560056	G15-066T	345	18.04
514790	IMO 4	138	11.67	515373	LBRTYLK4	138	13.53	560064	G15-093T	345	12.67
514798	SNRPMPT4	138	20.50	515375	WWRDEHV7	345	20.63	562075	G11-051-TAP	345	17.27
514799	SNRPMP 4	138	11.29	515376	WWRDEHV4	138	25.32	562790	G15-038T	345	14.06
514801	MINCO 7	345	16.56	515377	CRESENT4	138	7.43	579272	G0744&1403HV	345	9.15
514802	SOONER 4	138	31.86	515407	TATONGA7	345	16.49	582019	GEN-2011-019	345	20.63
514803	SOONER 7	345	24.72	515412	DMNCRKT4	138	13.75	582020	GEN-2011-020	345	20.63
514815	BRECKNR4	138	13.56	515444	MCNOWND7	345	16.52	583110	GEN-2011-051	345	17.27
514818	ELRENO 2	69	7.23	515447	MORISNT4	138	13.87	583750	GEN-2013-029	345	10.44
514819	EL-RENO4	138	15.23	515448	CRSRDSW7	345	11.37	584060	GEN-2014-056	345	8.43
514820	JENSENT4	138	15.04	515458	BORDER 7	345	5.13	584170	GEN-2014-064	138	9.48
514821	JENSEN 4	138	10.57	515461	RNDBARN4	138	39.17	584450	GEN-2015-001	345	13.66
514823	ROMNOSE4	138	4.12	515465	LGARBER4	138	20.97	584690	GEN-2015-030	345	18.81
514825	KAYWIND7	345	12.68	515466	MITCHSB4	138	21.05	584700	GEN-2015-029	345	9.80
514827	CTNWOOD4	138	16.59	515471	NW164TH4	138	35.05	584770	GEN-2015-034	345	10.99
514828	KETCHTP4	138	25.98	515476	HUNTERS7	345	12.41	584790	GEN-2015-038	345	10.33
514829	PINE ST4	138	11.74	515477	CHSHLMV7	345	12.39	584880	GEN-2015-047	345	11.52
514834	KETCH 4	138	26.43	515481	STHLAKE4	138	20.53	585010	GEN-2015-063	345	17.24
514851	QUAILCK4	138	28.82	515497	MATHWSN7	345	30.01	585040	GEN-2015-066	345	17.88
514852	SLVRLAK4	138	32.03	515543	RENFROW7	345	11.79	585050	GEN-2015-067	138	22.05
514853	DVISION4	138	35.09	515544	RENFROW4	138	13.60	585180	GEN-2015-081	345	14.19
514854	BRADEN 4	138	30.80	515546	GRANTCO4	138	6.27				

Table 4-19
Short Circuit Analysis for Study Project GEN-2015-066

Study Generator GEN-2015-066											
Bus Number	Bus Name	Bus Voltage (kV)	Fault Current 3-LG (kA)	Bus Number	Bus Name	Bus Voltage (kV)	Fault Current 3-LG (kA)	Bus Number	Bus Name	Bus Voltage (kV)	Fault Current 3-LG (kA)
300138	4CLEVLND	138	16.76	514761	WHEAGLE4	138	15.69	515471	NW164TH4	138	35.05
509755	WEKIWA-7	345	18.78	514763	CONBLKS2	69	15.44	515476	HUNTERS7	345	12.41
509852	T.NO.--7	345	23.61	514764	NWKRKAT4	138	10.20	515477	CHSHLMV7	345	12.39
509895	T.NO.2-4	138	34.40	514768	WF KAY 2	69	2.95	515497	MATHWSN7	345	30.01
510375	WEBBCTY4	138	4.32	514770	MARLNDT4	138	10.95	515512	SPVALLY4	138	8.86
510376	WEBBTAP4	138	8.09	514798	SNRPMPT4	138	20.50	515514	KNIPE 4	138	5.08
510377	FAIRFXT4	138	8.14	514799	SNRPMP 4	138	11.29	515541	COWBOYH4	138	7.45
510403	SHIDLER4	138	8.58	514800	BRRDTP 2	69	1.79	515542	CWBOYHT4	138	8.03
510406	N.E.S.-7	345	18.84	514801	MINCO 7	345	16.56	515543	RENFROW7	345	11.79
510432	SHIDWFC4	138	5.64	514802	SOONER 4	138	31.86	515544	RENFROW4	138	13.60
512653	CENTRL 2	69	14.46	514803	SOONER 7	345	24.72	515576	RANCHRD7	345	13.66
512662	STILWTP2	69	16.29	514825	KAYWIND7	345	12.68	515610	FSHRTAP7	345	16.84
512663	BOOMER 2	69	15.17	514827	CTNWOOD4	138	16.59	515621	OPENSKY7	345	12.71
512694	CLEVLND7	345	14.89	514828	KETCHTP4	138	25.98	515644	STLWTR2	69	16.28
512729	CLEVLND 4	138	16.76	514854	BRADEN 4	138	30.80	521006	MARSHAL4	138	7.76
512865	GREC TAP5	345	25.88	514873	LNEOAK 4	138	26.47	521007	MARLAND 138	138	7.44
514704	MILLERT4	138	20.45	514879	NORTWST4	138	42.80	521034	PERRY 2	69	2.70
514705	COWCRK 2	69	4.05	514880	NORTWST7	345	30.69	521100	WARREN 4	138	8.69
514706	COWCRK 4	138	11.32	514881	SPRNGCK7	345	21.97	529200	OMCDLEC7	345	13.63
514707	PERRY 4	138	11.01	514898	CIMARON4	138	42.16	529241	OMMORANT	69	12.32
514708	OTTER 4	138	9.55	514901	CIMARON7	345	31.57	529242	OMHUFFYT	69	12.55
514709	FRMNTAP4	138	17.57	514907	ARCADIA4	138	41.21	529248	OMPECANT	69	11.70
514710	WAUKOMI4	138	9.57	514908	ARCADIA7	345	26.07	529249	OMWW	69	13.34
514711	WAUKOTP4	138	15.02	514909	REDBUD 7	345	25.39	532794	ROSEHIL7	345	19.09
514712	FAIRMON4	138	13.71	514934	DRAPER 7	345	20.53	532798	VIOLA 7	345	13.26
514713	WRVALLY4	138	8.69	515006	MORRISN4	138	13.84	560053	G15-052T	345	13.15
514714	WOODRNG4	138	18.76	515008	KINZE 4	138	14.31	560055	G15-063T	345	17.30
514715	WOODRNG7	345	17.31	515009	MCELROY4	138	13.74	560056	G15-066T	345	18.04
514731	SO4TH 4	138	14.89	515011	STILWTR4	138	13.88	583750	GEN-2013-029	345	10.44
514733	MARSHL 4	138	7.80	515033	CUSHING4	138	6.08	584170	GEN-2014-064	138	9.48
514737	OTOE 4	138	16.29	515039	PAYNESB4	138	7.75	584450	GEN-2015-001	345	13.66
514742	OSGE 2	69	17.56	515045	SEMINOL7	345	26.13	584690	GEN-2015-030	345	18.81
514743	OSAGE 4	138	16.66	515181	UNVRSTY4	138	13.72	584770	GEN-2015-034	345	10.99
514745	CHERPLT2	69	12.52	515400	DMANCRK4	138	8.06	584880	GEN-2015-047	345	11.52
514748	CONTEMP4	138	13.51	515402	CONBLKT2	69	15.56	584900	GEN-2015-052	345	13.10
514753	CONORTH4	138	13.56	515403	FNTANTP4	138	6.82	585010	GEN-2015-063	345	17.24
514757	CHIKASI4	138	8.88	515407	TATONGA7	345	16.49	585040	GEN-2015-066	345	17.88
514758	STDBEAR4	138	13.92	515412	DMNCRKT4	138	13.75	585050	GEN-2015-067	138	22.05
514760	KILDARE4	138	10.53	515447	MORISNT4	138	13.87				

Table 4-20
Short Circuit Analysis for Study Project GEN-2015-067

Study Generator GEN-2015-067											
Bus Number	Bus Name	Bus Voltage (kV)	Fault Current 3-LG (kA)	Bus Number	Bus Name	Bus Voltage (kV)	Fault Current 3-LG (kA)	Bus Number	Bus Name	Bus Voltage (kV)	Fault Current 3-LG (kA)
300138	4CLEVLND	138	16.71	514764	NWKRKAT4	138	9.83	515476	HUNTERS7	345	12.04
509755	WEKIWA-7	345	18.60	514768	WF KAY 2	69	2.95	515477	CHSHLMV7	345	12.02
509852	T.NO.--7	345	23.41	514770	MARLNDT4	138	10.57	515497	MATHWSN7	345	27.77
509895	T.NO.2-4	138	34.21	514798	SNRPMPT4	138	20.17	515512	SPVALLY4	138	8.67
510375	WEBBCTY4	138	4.29	514799	SNRPMP 4	138	11.19	515514	KNIPE 4	138	5.02
510376	WEBBTAP4	138	7.99	514800	BRRDTP 2	69	1.78	515541	COWBOYH4	138	7.31
510377	FAIRFXT4	138	8.04	514801	MINCO 7	345	16.19	515542	CWBOYHT4	138	7.86
510403	SHIDLER4	138	8.47	514802	SOONER 4	138	31.36	515543	RENFROW7	345	11.14
510406	N.E.S.-7	345	18.72	514803	SOONER 7	345	24.53	515544	RENFROW4	138	13.37
510432	SHIDWFC4	138	5.59	514825	KAYWIND7	345	12.64	515576	RANCHRD7	345	13.62
512694	CLEVLND7	345	14.83	514827	CTNWOOD4	138	16.54	515610	FSHRTAP7	345	16.48
512729	CLEVLND 4	138	16.71	514828	KETCHTP4	138	25.93	515621	OPENSKY7	345	12.68
512865	GREC TAP5	345	25.56	514854	BRADEN 4	138	30.63	521006	MARSHAL4	138	7.75
514704	MILLERT4	138	20.15	514873	LNEOAK 4	138	26.34	521007	MARLAND_138	138	7.26
514705	COWCRK 2	69	4.04	514879	NORTWST4	138	42.31	521034	PERRY 2	69	2.69
514706	COWCRK 4	138	11.24	514880	NORTWST7	345	29.49	521100	WARREN 4	138	8.66
514707	PERRY 4	138	10.94	514881	SPRNGCK7	345	21.46	529200	OMCDLEC7	345	13.59
514708	OTTER 4	138	9.52	514898	CIMARON4	138	41.81	529241	OMMORANT	69	9.15
514709	FRMNTAP4	138	17.46	514901	CIMARON7	345	30.11	529242	OMHUFFYT	69	8.62
514710	WAUKOMI4	138	9.52	514907	ARCADIA4	138	40.78	529248	OMPECANT	69	9.87
514711	WAUKOTP4	138	14.94	514908	ARCADIA7	345	24.88	529249	OMWW	69	11.28
514712	FAIRMON4	138	13.64	514909	REDBUD 7	345	23.85	532794	ROSEHIL7	345	18.79
514713	WRVALLY4	138	8.66	514934	DRAPER 7	345	20.38	532798	VIOLA 7	345	11.16
514714	WOODRNG4	138	18.63	515006	MORRISN4	138	13.63	560053	G15-052T	345	13.08
514715	WOODRNG7	345	16.95	515008	KINZE 4	138	14.28	560055	G15-063T	345	16.85
514731	SO4TH 4	138	14.81	515009	MCELROY4	138	13.54	560056	G15-066T	345	17.95
514733	MARSHL 4	138	7.78	515011	STILWTR4	138	13.30	583750	GEN-2013-029	345	9.93
514737	OTOE 4	138	16.11	515033	CUSHING4	138	6.03	584170	GEN-2014-064	138	9.45
514742	OSGE 2	69	14.67	515039	PAYNESB4	138	7.62	584450	GEN-2015-001	345	13.62
514743	OSAGE 4	138	15.67	515045	SEMINOL7	345	25.96	584690	GEN-2015-030	345	18.69
514745	CHERPLT2	69	11.14	515181	UNVRSTY4	138	13.42	584770	GEN-2015-034	345	10.96
514748	CONTEMP4	138	12.91	515400	DMANCRK4	138	7.97	584880	GEN-2015-047	345	11.48
514753	CONORTH4	138	12.95	515402	CONBLKT2	69	13.32	584900	GEN-2015-052	345	13.03
514757	CHIKASI4	138	8.68	515403	FNTANTP4	138	6.73	585010	GEN-2015-063	345	16.80
514758	STDBEAR4	138	13.25	515407	TATONGA7	345	10.80	585040	GEN-2015-066	345	17.79
514760	KILDARE4	138	10.15	515412	DMNCRKT4	138	13.48	585050	GEN-2015-067	138	21.81
514761	WHEAGLE4	138	14.95	515447	MORISNT4	138	13.66				
514763	CONBLKS2	69	13.23	515471	NW164TH4	138	34.74				

Table 4-21
Short Circuit Analysis for Study Project GEN-2015-069

Study Generator GEN-2015-069											
Bus Number	Bus Name	Bus Voltage (kV)	Fault Current 3-LG (kA)	Bus Number	Bus Name	Bus Voltage (kV)	Fault Current 3-LG (kA)	Bus Number	Bus Name	Bus Voltage (kV)	Fault Current 3-LG (kA)
530551	SALINE 3	115	5.03	532873	SUMMIT 6	230	13.48	533362	CHAPMAN3	115	10.39
530558	KNOLL 6	230	10.73	532874	UNIONRG6	230	8.86	533365	EABILEN3	115	7.59
530561	KNOLL 3	115	11.70	532920	TECHILL5	161	5.79	533366	FLORENC3	115	3.23
530581	N HAYS3	115	10.18	533040	EVANS N4	138	41.95	533367	EXIDE 3	115	10.49
530582	S HAYS6	230	8.60	533151	AUBURN 3	115	22.00	533368	EXIDE J3	115	12.32
530583	POSTROCK7	345	7.79	533153	COLINE 3	115	23.45	533370	NORTHST3	115	10.38
530584	POSTROCK6	230	10.90	533155	CROOKED3	115	20.75	533371	NORTHVW3	115	11.57
530592	SMOKYHL6	230	6.94	533166	INDIANH3	115	17.83	533372	PHILIPS3	115	12.36
530593	SMKYP1 6	230	6.03	533167	KEENE 3	115	10.04	533373	NPHILPJ3	115	11.63
530599	SMKYP2 6	230	6.44	533176	SHAWNEE3	115	12.28	533376	SALINA 3	115	9.94
530605	REDLIN 3	115	4.20	533177	6 GOLDN3	115	16.34	533377	SCHILNG3	115	10.47
530623	RICE 3	115	6.96	533180	TEC E 3	115	30.08	533378	SMOKYHLLS3	115	11.05
530676	GMEC 3	115	11.14	533182	TECHILE3	115	30.52	533379	SO GATE3	115	10.62
530677	OGALATP3	115	2.61	533187	27CROCO3	115	20.50	533381	SUMMIT 3	115	17.36
530680	HEIZER 6	230	8.15	533194	SHERWOD3	115	20.15	533412	ARKVALJ3	115	10.85
530686	RICE 6	230	4.80	533197	HARTLND3	115	13.02	533413	CIRCLE 3	115	22.70
530688	BUFLOCRK6	230	3.61	533232	BALDCRK3	115	21.68	533415	DAVIS 3	115	8.74
532765	HOYT 7	345	15.76	533250	LWRNCHL3	115	30.90	533416	RENO 3	115	25.04
532766	JEC N 7	345	23.74	533270	STULL T3	115	12.66	533417	EMCPHER3	115	12.84
532767	BLUSTEM7	345	9.75	533271	SWLWRNC3	115	22.82	533419	HEC 3	115	22.17
532768	EMPEC 7	345	17.48	533285	DOUGLAS3	115	23.99	533422	HEC U4 3	115	21.77
532769	LANG 7	345	17.27	533301	EAST ST3	115	9.22	533426	MANVILE3	115	10.21
532770	MORRIS 7	345	12.83	533302	EEUREKA3	115	1.53	533427	REFINRY3	115	11.72
532771	RENO 7	345	11.44	533304	LANG 3	115	14.49	533428	MCPHER 3	115	11.94
532773	SUMMIT 7	345	10.60	533305	MORRIS 3	115	12.45	533429	MOUNDRG3	115	7.18
532774	SWISVAL7	345	16.71	533307	PRAIRIE3	115	9.27	533438	WMCPHER3	115	12.42
532776	DOUGLAS7	345	18.20	533308	VAUGHN 3	115	2.81	539637	MRWYP16	230	6.70
532791	BENTON 7	345	19.34	533309	WEMPORI3	115	9.80	539639	ELMCREK6	230	7.34
532796	WICHITA7	345	24.54	533310	WMBROS 3	115	6.71	539658	CONCRD6	230	5.41
532798	VIOLA 7	345	13.26	533311	WMBROSJ3	115	6.78	539678	GRTBEND3	115	12.63
532851	AUBURN 6	230	13.53	533326	EMANHAT3	115	13.13	539679	GRTBEND6	230	8.20
532852	JEC 6	230	24.73	533327	LEVEE 3	115	12.52	539695	SPEARVL6	230	12.11
532853	LAWHILL6	230	14.48	533328	FT JCT 3	115	14.59	539805	ELMCREEK7	345	5.31
532854	LEC U5 6	230	14.32	533330	JCTCTY 3	115	12.44	542965	W.GRDNR7	345	25.95
532855	MIDLAND6	230	12.78	533335	MCDOWEL3	115	17.78	560033	G1524&G1525T	345	19.57
532856	SWISVAL6	230	21.93	533336	BLUSTEM3	115	17.09	560057	G15-074-TAP	345	17.90
532857	TECHILL6	230	11.32	533339	S ALMA 3	115	8.67	562476	G14-001-TAP	345	11.04
532858	BALDWIN6	230	14.32	533340	SMANHAT3	115	12.00	579470	GEN-2008-092	230	7.91
532861	EMANHAT6	230	9.61	533341	STAGGHL3	115	9.53	583850	GEN-2014-001	345	7.54
532862	MCDOWEL6	230	6.92	533342	WJCCTY 3	115	13.09	585070	GEN-2015-069	230	6.61
532863	MORRIS 6	230	13.88	533345	WILDCAT3	115	9.73	585100	GEN-2015-073	345	14.33
532865	NMANHT6	230	8.81	533359	UNIONRG3	115	3.79	585110	GEN-2015-074	345	7.57
532871	CIRCLE 6	230	9.52	533360	TCHOPE 3	115	3.37				
532872	EMCPHER6	230	8.52	533361	AEC 3	115	7.41				

Table 4-22
Short Circuit Analysis for Study Project GEN-2015-073

Study Generator GEN-2015-073											
Bus Number	Bus Name	Bus Voltage (kV)	Fault Current 3-LG (kA)	Bus Number	Bus Name	Bus Voltage (kV)	Fault Current 3-LG (kA)	Bus Number	Bus Name	Bus Voltage (kV)	Fault Current 3-LG (kA)
300739	7BLACKBERRY	345	12.25	533024	29TH 4	138	19.38	533429	MOUNDRG3	115	7.01
510380	DELWARE7	345	11.40	533035	CHISHLM4	138	21.76	533438	WMCPHER3	115	10.83
515375	WWRDEHV7	345	18.30	533040	EVANS N4	138	36.98	533653	WOLFCRK2	69	5.81
515476	HUNTERS7	345	12.04	533041	EVANS S4	138	36.98	539800	CLARKCOUNTY7	345	11.52
515543	RENFROW7	345	11.14	533053	LAKERDG4	138	17.98	539801	THISTLE7	345	15.11
515544	RENFROW4	138	13.37	533054	MAIZE 4	138	22.18	539804	THISTLE4	138	16.19
530592	SMOKYHL6	230	6.88	533062	ROSEHIL4	138	30.93	539805	ELMCREEK7	345	5.25
532765	HOYT 7	345	15.49	533065	SG12COL4	138	20.13	541198	PECULR 7	345	20.12
532766	JEC N 7	345	23.53	533074	45TH ST4	138	25.92	541200	PHILL 7	345	18.16
532767	BLUSTEM7	345	9.63	533151	AUBURN 3	115	21.72	541341	S.HARP 5	161	25.06
532768	EMPEC 7	345	17.37	533153	COLINE 3	115	23.26	541342	PECULR 5	161	24.42
532769	LANG 7	345	17.16	533155	CROOKED3	115	20.51	542965	W.GRDNR7	345	25.27
532770	MORRIS 7	345	12.77	533163	HOYT 3	115	22.88	542966	WGARDNR5	161	27.25
532771	RENO 7	345	10.66	533166	INDIANH3	115	17.64	542968	STILWEL7	345	24.27
532772	STRANGR7	345	22.18	533167	KEENE 3	115	10.06	542969	STILWEL5	161	38.99
532773	SUMMIT 7	345	10.23	533170	OSAGE 3	115	4.39	542977	CRAIG 7	345	21.52
532774	SWISVAL7	345	16.45	533171	OSAGE J3	115	5.15	542978	CRAIG 5	161	39.25
532775	87TH 7	345	19.94	533176	SHAWNEE3	115	12.21	542979	PFLUMM 5	161	26.87
532780	CANEYRV7	345	9.88	533177	6 GOLDN3	115	16.27	542981	LACYGNE7	345	24.95
532791	BENTON 7	345	18.98	533180	TEC E 3	115	29.63	542994	HICKMAN5	161	18.42
532792	FR2EAST7	345	5.91	533182	TECHILE3	115	30.05	542995	MONTROS5	161	17.46
532793	NEOSHO 7	345	16.20	533187	27CROCO3	115	20.26	543031	SHWNMSN5	161	31.01
532794	ROSEHIL7	345	18.79	533194	SHERWOD3	115	19.84	543038	LENEXAS5	161	26.15
532795	FR2WEST7	345	4.84	533197	HARTLND3	115	4.72	543039	LENEXAN5	161	27.17
532796	WICHITA7	345	23.57	533232	BALDCRK3	115	19.92	543044	MOONLT 5	161	16.51
532797	WOLFCRK7	345	15.97	533250	LWRNCHL3	115	27.79	543048	COLLEGE5	161	27.88
532798	VIOLA 7	345	11.16	533270	STULL T3	115	12.15	543049	CEDRCRK5	161	27.48
532799	WAVERLY7	345	14.71	533271	SWLWRNC3	115	18.55	543050	ANTIOCH5	161	21.95
532800	LATHAMS7	345	10.45	533283	87TH 3	115	26.07	543053	REDEL 5	161	23.84
532802	WAVERTX7	345	12.55	533301	EAST ST3	115	9.21	543054	CEDARNL5	161	13.62
532851	AUBURN 6	230	13.46	533304	LANG 3	115	14.46	543055	SEOTTWA5	161	6.69
532852	JEC 6	230	24.61	533305	MORRIS 3	115	12.42	543057	BUCYRUS5	161	19.13
532853	LAWHILL6	230	13.76	533306	READING3	115	6.39	543077	PLSTVAL5	161	9.74
532854	LEC U5 6	230	13.62	533307	PRAIRIE3	115	9.25	543105	BULLCRK5	161	24.97
532855	MIDLAND6	230	12.18	533308	VAUGHN 3	115	2.81	543126	LACKMAN5	161	13.05
532856	SWISVAL6	230	21.84	533309	WEMPORI3	115	9.78	543131	CLARE 5	161	13.98
532857	TECHILL6	230	11.27	533311	WMBROSJ3	115	6.76	543132	BNSF 5	161	19.92
532858	BALDWIN6	230	13.74	533326	EMANHAT3	115	13.10	560033	G1524&G1525T	345	19.04
532861	EMANHAT6	230	9.58	533328	FT JCT 3	115	14.51	560053	G15-052T	345	13.08
532862	MCDOWEL6	230	6.90	533335	MCDOWEL3	115	17.72	560057	G15-074-TAP	345	17.71
532863	MORRIS 6	230	13.80	533336	BLUSTEM3	115	16.98	562476	G14-001-TAP	345	10.94
532865	NMANHT6	230	8.78	533341	STAGGHL3	115	9.51	583750	GEN-2013-029	345	9.93
532872	EMCPHER6	230	7.71	533350	SMAN_W_3	115	12.51	583850	GEN-2014-001	345	7.50
532873	SUMMIT 6	230	12.91	533359	UNIONRG3	115	3.78	584659	G15024G15025	345	6.42
532874	UNIONRG6	230	8.77	533360	TCHOPE 3	115	3.36	584660	GEN-2015-024	345	5.14
532920	TECHILL5	161	5.77	533362	CHAPMAN3	115	10.33	584670	GEN-2015-025	345	6.31
532937	NEOSHO 5	161	21.99	533381	SUMMIT 3	115	16.81	585070	GEN-2015-069	230	6.57
532986	BENTON 4	138	27.87	533390	MAIZEW 4	138	25.90	585100	GEN-2015-073	345	14.26
532988	BELAIRE4	138	18.62	533392	SCRNTJS3	115	5.08	585110	GEN-2015-074	345	7.54
532990	MIDIAN 4	138	10.06	533413	CIRCLE 3	115	18.05	585250	GEN-2015-090	345	3.06
533015	BENTLEY4	138	9.82	533415	DAVIS 3	115	8.10				
533021	NEOSHO 4	138	23.04	533416	RENO 3	115	21.52				

Table 4-23
Short Circuit Analysis for Study Project GEN-2015-083

Study Generator GEN-2015-083											
Bus Number	Bus Name	Bus Voltage (kV)	Fault Current 3-LG (kA)	Bus Number	Bus Name	Bus Voltage (kV)	Fault Current 3-LG (kA)	Bus Number	Bus Name	Bus Voltage (kV)	Fault Current 3-LG (kA)
514804	MIDLTNT4	138	7.81	533036	CLEARWT4	138	21.70	533559	UDALL 2	69	7.06
515381	PECKHMT4	138	8.33	533039	ELPASO 4	138	25.55	533561	WINFLD 2	69	6.26
515476	HUNTERS7	345	12.41	533040	EVANS N4	138	41.95	533604	WEAVER 2	69	11.75
515543	RENFROW7	345	11.79	533041	EVANS S4	138	41.95	533792	EASTBOR2	69	14.67
515544	RENFROW4	138	13.60	533042	FARBER 4	138	16.36	533793	ELPASO 2	69	11.84
521198	CHILOCCO4	138	6.08	533044	GILL E 4	138	28.29	533795	GILL E 2	69	33.80
532771	RENO 7	345	11.44	533045	GILL W 4	138	28.29	533796	GILL W 2	69	33.80
532791	BENTON 7	345	19.34	533046	GILL S 4	138	28.29	533798	GILLJCT2	69	21.90
532792	FR2EAST7	345	6.34	533048	HARRY 4	138	13.66	533804	HAYSVLJ2	69	14.28
532794	ROSEHIL7	345	19.09	533062	ROSEHIL4	138	31.72	533808	HYDRJN2	69	16.10
532795	FR2WEST7	345	5.11	533063	SC10BEL4	138	10.10	533813	MACARTH2	69	22.48
532796	WICHITA7	345	24.54	533066	64TH 4	138	14.44	533821	MULVANE2	69	5.36
532797	WOLFCRK7	345	16.03	533067	SPRNGDL4	138	14.56	533824	OAKLAWN2	69	15.70
532798	VIOLA 7	345	13.26	533068	STEARMN4	138	19.88	533826	OLIVER 2	69	14.11
532800	LATHAMS7	345	10.51	533070	SLATECRK4	138	4.50	533830	PECK 2	69	6.60
532981	CRESWLN4	138	7.95	533072	WACO 4	138	23.37	533842	64TH 2	69	14.76
532982	OXFORD 4	138	9.22	533075	VIOLA 4	138	21.94	533850	VULCAN 2	69	20.50
532984	SUMNER 4	138	10.17	533541	AKRON 2	69	6.66	533851	VULCTP 2	69	24.52
532985	TCROCK 4	138	5.32	533543	CRESWLN2	69	10.66	533879	GODDTAP2	69	8.18
532991	WEAVER 4	138	22.28	533547	OAK 2	69	7.57	533880	GODDARD2	138	18.90
532992	TIMBJCT4	138	5.69	533548	PARIS 2	69	6.54	539668	HARPER 4	138	5.94
532993	TALLGRS4	138	10.21	533549	RAINBOW2	69	5.68	539675	MILANTP4	138	7.08
533026	ANDOVER4	138	17.91	533550	RICHLAN2	69	5.90	539676	MILAN 4	138	4.20
533028	BEECHTP4	138	13.66	533551	SC1KING2	69	3.27	560033	G1524&G1525T	345	19.57
533029	59TH ST4	138	18.93	533553	SC4ROME2	69	5.42	560053	G15-052T	345	13.15
533030	BOEING 4	138	17.21	533555	SC7CRES2	69	10.53	562476	G14-001-TAP	345	11.04
533032	BU11PON4	138	15.16	533556	STROTHR2	69	5.90	583750	GEN-2013-029	345	10.44
533033	CANAL 4	138	16.76	533558	TIMBJCT2	69	8.05	585200	GEN-2015-083	138	6.98

Table 4-24
Short Circuit Analysis for Study Project GEN-2015-090

Study Generator GEN-2015-090											
Bus Number	Bus Name	Bus Voltage (kV)	Fault Current 3-LG (kA)	Bus Number	Bus Name	Bus Voltage (kV)	Fault Current 3-LG (kA)	Bus Number	Bus Name	Bus Voltage (kV)	Fault Current 3-LG (kA)
514715	WOODRNG7	345	17.31	582020	GEN-2011-020	345	20.63	533038	COWSKIN4	138	20.28
514782	WODWRD 2	69	12.01	582708	G-2011-008-1	345	8.52	533039	ELPASO 4	138	25.55
514785	WOODWRD4	138	20.57	582908	G-2011-008-2	345	7.23	533040	EVANS N4	138	41.95
514787	DEWEY 4	138	7.20	583090	G1149&G1504	345	4.68	533041	EVANS S4	138	41.95
514796	IODINE-4	138	7.27	583110	GEN-2011-051	345	17.27	533045	GILL W 4	138	28.29
515363	CENT 4	138	3.29	583370	GEN-2012-024	345	9.35	533046	GILL S 4	138	28.29
515375	WWRDEHV7	345	20.63	583750	GEN-2013-029	345	10.44	533049	HOOVERN4	138	18.82
515376	WWRDEHV4	138	25.32	583760	GEN-2013-030	345	11.95	533053	LAKERDG4	138	18.94
515394	KEENAN 4	138	8.29	583850	GEN-2014-001	345	7.54	533054	MAIZE 4	138	23.35
515398	OUSPRT 4	138	9.13	584659	G15024G15025	345	6.46	533060	NOEASTE4	138	20.61
515407	TATONGA7	345	16.49	584660	GEN-2015-024	345	5.17	533062	ROSEHIL4	138	31.72
515448	CRSRDSW7	345	11.37	584670	GEN-2015-025	345	6.35	533063	SC10BEL4	138	10.10
515458	BORDER 7	345	5.13	584700	GEN-2015-029	345	9.80	533064	17TH 4	138	17.98
515476	HUNTERS7	345	12.41	584900	GEN-2015-052	345	13.10	533065	SG12COL4	138	21.48
515477	CHSHLMV7	345	12.39	585060	GEN-2015-068	345	10.28	533068	STEARMN4	138	19.88
515497	MATHWSN7	345	30.01	585100	GEN-2015-073	345	14.33	533074	45TH ST4	138	29.17
515543	RENFROW7	345	11.79	585180	GEN-2015-081	345	14.19	533075	VIOLA 4	138	21.94
515544	RENFROW4	138	13.60	585190	GEN-2015-082	345	7.21	533390	MAIZEW 4	138	27.82
515546	GRANTCO4	138	6.27	585250	GEN-2015-090	345	3.07	533391	MAIZEE 4	138	21.86
515554	BVRCNTY7	345	15.73	599074	NTHBUF_EHV2	345	6.56	533880	GODDARD2	138	18.90
515569	MDFRDTP4	138	10.98	525830	TUCO_INT 6	230	22.95	539000	RAGO 4	138	3.60
515582	SLNGWND7	345	9.15	530592	SMOKYHL6	230	6.94	539001	ANTHONY4	138	3.61
515585	MAMTHPW7	345	13.64	532856	SWISVAL6	230	21.93	539631	FLATRWD4	138	9.73
515590	PALDR2W7	345	13.17	532863	MORRIS 6	230	13.88	539638	FLATRDG4	138	14.74
515599	NBUFFRG7	345	8.63	532871	CIRCLE 6	230	9.52	539668	HARPER 4	138	5.94
515621	OPENSKY7	345	12.71	532872	EMCPHER6	230	8.52	539674	BARBER 4	138	8.01
515785	WINDFRM4	138	20.27	532873	SUMMIT 6	230	13.48	539675	MILANTP4	138	7.08
520409	RENFROW4	138	10.05	532874	UNIONRG6	230	8.86	539804	THISTLE4	138	16.41
525830	TUCO_INT 6	230	22.95	539639	ELMCREK6	230	7.34	584980	GEN-2015-060	138	5.74
525832	TUCO_INT 7	345	12.78	539695	SPEARVL6	230	12.11	533304	LANG 3	115	14.49
526936	YOAKUM_345	345	8.93	514785	WOODWRD4	138	20.57	533336	BLUSTEM3	115	17.09
530592	SMOKYHL6	230	6.94	514787	DEWEY 4	138	7.20	533372	PHILIPS3	115	12.36
531469	SPERVIL7	345	12.80	514796	IODINE-4	138	7.27	533380	SPRGCRK3	115	3.62
531501	BUCKNER7	345	9.75	515363	CENT 4	138	3.29	533381	SUMMIT 3	115	17.36
532766	JEC N 7	345	23.74	515376	WWRDEHV4	138	25.32	533412	ARKVALJ3	115	10.85
532767	BLUSTEM7	345	9.75	515394	KEENAN 4	138	8.29	533413	CIRCLE 3	115	22.70
532768	EMPEC 7	345	17.48	515398	OUSPRT 4	138	9.13	533414	CITIES 3	115	8.88
532769	LANG 7	345	17.27	515544	RENFROW4	138	13.60	533415	DAVIS 3	115	8.74
532770	MORRIS 7	345	12.83	515546	GRANTCO4	138	6.27	533416	RENO 3	115	25.04
532771	RENO 7	345	11.44	515569	MDFRDTP4	138	10.98	533419	HEC 3	115	22.17
532773	SUMMIT 7	345	10.60	515785	WINDFRM4	138	20.27	533422	HEC U4 3	115	21.77
532774	SWISVAL7	345	16.71	520409	RENFROW4	138	10.05	533426	MANVILE3	115	10.21
532776	DOUGLAS7	345	18.20	532982	OXFORD 4	138	9.22	533428	MCPHER 3	115	11.94
532780	CANEYRV7	345	9.93	532984	SUMNER 4	138	10.17	533429	MOUNDRG3	115	7.18
532791	BENTON 7	345	19.34	532986	BENTON 4	138	28.42	533438	WMCPHER3	115	12.42
532792	FR2EAST7	345	6.34	532987	BUTLER 4	138	10.03	533439	WHEATLD3	115	7.90
532794	ROSEHIL7	345	19.09	532988	BELAIRE4	138	18.89	539759	SPRVL 3	115	11.42
532795	FR2WEST7	345	5.11	532990	MIDIAN 4	138	10.20	539760	BARBER 3	115	7.88
532796	WICHITA7	345	24.54	532991	WEAVER 4	138	22.28	514782	WODWRD 2	69	12.01
532797	WOLFCRK7	345	16.03	532992	TIMBJCT4	138	5.69	533506	DAVIS 2	69	7.56
532798	VIOLA 7	345	13.26	533012	HALSTDS4	138	4.26	533597	MIDIAN 2	69	12.31
532799	WAVERLY7	345	14.76	533013	MOUND 4	138	4.88	533626	BURLJCT2	69	5.03
532800	LATHAMS7	345	10.51	533015	BENTLEY4	138	10.11	533629	CC2SHAR2	69	4.64
532801	ELKRVR17	345	9.27	533016	WWUPLNT4	138	7.75	533653	WOLFCRK2	69	6.02
532802	WAVERTX7	345	12.59	533024	29TH 4	138	19.67	533786	CHISHLM2	69	18.78
532856	SWISVAL6	230	21.93	533029	59TH ST4	138	18.93	533795	GILL E 2	69	33.80
532863	MORRIS 6	230	13.88	533031	BURNSTP4	138	4.50	533796	GILL W 2	69	33.80
532871	CIRCLE 6	230	9.52	533035	CHISHLM4	138	22.43	533879	GODDTAP2	69	8.18
532872	EMCPHER6	230	8.52	533036	CLEARWT4	138	21.70				
532873	SUMMIT 6	230	13.48	533037	COMOTAR4	138	18.65				

SECTION 5: POWER FACTOR ANALYSIS

The objective of this task is to quantify the power factor at the point of interconnection for the wind farms during base case and system contingencies. SPP transmission planning practice requires interconnecting generation projects to maintain the power factor (pf) at the Point of Interconnection (POI) within +/- 0.95 pf for system intact conditions and for post-contingency conditions. This is analyzed by having the wind farm maintain a prescribed voltage schedule at the point of interconnection of 1.0 p.u. voltage, or if the pre-project voltage is higher than 1.0 p.u., to maintain the pre-project voltage schedule.

The 2016 Winter Peak, 2017 Summer Peak, and 2025 Summer Peak power flows provided by SPP, including any updates, were examined prior to the Power Factor Analysis to ensure they contained the proposed study project modeled at 100% of the nameplate rating and any previously queued projects listed in Table 2-2. There was no suspect power flow data in the study area. The proposed study project and any previously queued projects at the same point of interconnection were turned off during the power factor analysis. The wind farm(s) were then replaced by a generator modeled at the high side bus with the same real power (MW) capability as the wind farm(s) and open limits for the reactive power set points (Mvar). The generator was set to hold the POI scheduled bus voltage or 1.0 p.u., whichever was greater. All N-1, three-phase fault contingencies from Table 2-3 were then applied and the reactive power required to maintain the bus voltage was recorded.

5.1 Approach

GEN-2015-034 was disabled and a generator was placed at the study project's high side voltage bus. The generator was modeled with PGEN = 200 MW, Qmin = -999 Mvar, and Qmax = 999 Mvar. All buses, transformers, and equivalent lines connected from the study project's high side voltage bus to GEN-2015-034 were disabled. The scheduled voltage was set to 1.00 p.u. for all three study years.

GEN-2015-043, GEN-2015-090, GEN-2015-024, and GEN-2015-025 were disabled and the generators were placed at the respective project's high side voltage bus. GEN-2015-043 was modeled with PGEN = 20 MW, Qmin = -999 Mvar, and Qmax = 999 Mvar, GEN-2015-090 was modeled with PGEN = 220 MW, Qmin = -999 Mvar, and Qmax = 999 Mvar, GEN-2015-024 was modeled with PGEN = 220 MW, Qmin = -999 Mvar, and Qmax = 999 Mvar, and GEN-2015-025 was modeled with PGEN = 220 MW, Qmin = -999 Mvar, and Qmax = 999 Mvar. All buses, transformers, and equivalent lines connected from the respective project's high side voltage bus to the corresponding generator were disabled. The scheduled voltage was set to 1.00 p.u. for all three study years.

GEN-2015-047 and GEN-2015-033 were disabled and a generator was placed at the study project's high side voltage bus. The generators were modeled with PGEN = 300 MW (GEN-2015-047), PGEN=200.1 MW (GEN-2015-033), Qmin = -999 Mvar, and Qmax = 999 Mvar. All buses, transformers, and equivalent lines connected from the study project's high side voltage bus to each generator were disabled. The scheduled voltage was set to 1.01 p.u. for all three study years.

GEN-2015-052 was disabled and two generators were placed at the study project's high side voltage bus. The study generator was modeled with PGEN = 300 MW, Qmin = -999 Mvar, and Qmax = 999 Mvar. A second generator for the existing generation was modeled with PGEN = 98.1 MW, Qmin = -999 Mvar, and Qmax = 999 Mvar. All buses, transformers, and equivalent lines connected from the study project's high side voltage bus to GEN-2015-052 were disabled. The scheduled voltage was set to 1.00 p.u. for all three study years.

GEN-2015-062 was disabled and a generator was placed at the study project's high side voltage bus. The study generator was modeled with PGEN = 4.5 MW, Qmin = -999 Mvar, and Qmax = 999 Mvar. A second generator for the existing generation was modeled with PGEN = 98.1 MW, Qmin = -999 Mvar, and Qmax = 999 Mvar. All buses, transformers, and equivalent lines connected from the study project's high side voltage bus to GEN-2015-062 were disabled. The scheduled voltage was set to 1.00 p.u. for all three study years.

GEN-2015-063 was disabled and a generator was placed at the study project's high side voltage bus. The generator was modeled with PGEN = 300 MW, Qmin = -999 Mvar, and Qmax = 999 Mvar. All buses, transformers, and equivalent lines connected from the study project's high side voltage bus to GEN-2015-063 were disabled. The scheduled voltage was set to 1.00 p.u. for all three study years.

GEN-2015-066 was disabled and a generator was placed at the study project's high side voltage bus. The generator was modeled with PGEN = 248 MW, Qmin = -999 Mvar, and Qmax = 999 Mvar. All buses, transformers, and equivalent lines connected from the study project's high side voltage bus to GEN-2015-066 were disabled. The scheduled voltage was set to 1.00 p.u. for all three study years.

GEN-2015-067 was disabled and a generator was placed at the study project's high side voltage bus. The generator was modeled with PGEN = 150 MW, Qmin = -999 Mvar, and Qmax = 999 Mvar. All buses, transformers, and equivalent lines connected from the study project's high side voltage bus to GEN-2015-067 were disabled. The scheduled voltage was set to 1.03 p.u. for all three study years.

GEN-2015-069 and GEN-2015-073 were disabled and a generator was placed at the associated study project's high side voltage bus. The generators were modeled with PGEN = 300 MW for, Qmin = -999 Mvar, and Qmax = 999 Mvar for both study generators. All buses, transformers, and equivalent lines connected from the study project's high side voltage bus to the corresponding generators were disabled. The scheduled voltage was set to 1.00 p.u. for all three study years.

GEN-2015-083 was disabled and a generator was placed at the study project's high side voltage bus. The generator was modeled with PGEN = 125 MW, Qmin = -999 Mvar, and Qmax = 999 Mvar. All buses, transformers, and equivalent lines connected from the study project's high side voltage bus to GEN-2015-083 were disabled. The scheduled voltage was set to 1.00 p.u. for all three study years.

5.2 Power Factor Analysis Results

The power factor was calculated for the 2016 Winter Peak, 2017 Summer Peak, and 2025 Summer Peak condition. The following tables show the power factor results for the study generators:

- Table 5-1: Power Factor Analysis for GEN-2015-034
- Table 5-2: Power Factor Analysis for GEN-2015-043
- Table 5-3: Power Factor Analysis for GEN-2015-047
- Table 5-4: Power Factor Analysis for GEN-2015-052
- Table 5-5: Power Factor Analysis for GEN-2015-062
- Table 5-6: Power Factor Analysis for GEN-2015-063
- Table 5-7: Power Factor Analysis for GEN-2015-066
- Table 5-8: Power Factor Analysis for GEN-2015-067
- Table 5-9: Power Factor Analysis for GEN-2015-069
- Table 5-10: Power Factor Analysis for GEN-2015-073
- Table 5-11: Power Factor Analysis for GEN-2015-083
- Table 5-12: Power Factor Analysis for GEN-2015-090

Note that a positive Q (Mvar) output illustrates that the generator is absorbing reactive power from the system, implying a leading power factor; a negative Q (Mvar) illustrates that the generator is supplying reactive power to the system, implying a lagging power factor.

Table 5-1
Power Factor Analysis: GEN-2015-034

Reference Number	Case	16 Winter Peak			17 Summer Peak			25 Summer Peak		
		Power Factor		Q (MVAR)	Power Factor		Q (MVAR)	Power Factor		Q (MVAR)
0	Base	1.000	Leading	1.08	0.993	Leading	23.65	0.992	Leading	25.08
1	FLT01-3PH	0.996	Leading	17.98	0.987	Leading	32.37	0.985	Leading	34.74
2	FLT02-3PH	0.957	Lagging	-60.80	0.983	Lagging	-37.17	0.982	Lagging	-38.21
3	FLT03-3PH	1.000	Lagging	-5.27	0.999	Leading	10.75	0.998	Leading	13.05
4	FLT04-3PH	0.999	Lagging	-8.68	0.998	Leading	12.24	0.998	Leading	11.31
5	FLT05-3PH	1.000	Leading	3.41	0.989	Leading	29.43	0.989	Leading	30.28
6	FLT06-3PH	1.000	Leading	0.24	0.992	Leading	25.03	0.991	Leading	26.86
7	FLT07-3PH	0.996	Lagging	-17.98	1.000	Leading	1.16	1.000	Leading	3.48
8	FLT08-3PH	1.000	Lagging	-2.06	0.994	Leading	22.10	0.993	Leading	23.51
9	FLT09-3PH	1.000	Lagging	-0.55	0.994	Leading	22.90	0.993	Leading	24.43
10	FLT10-3PH	1.000	Leading	0.09	0.993	Leading	23.20	0.992	Leading	24.64
11	FLT11-3PH	1.000	Leading	0.92	0.993	Leading	23.60	0.992	Leading	25.01
12	FLT12-3PH	1.000	Leading	1.23	0.993	Leading	23.25	0.992	Leading	24.86
13	FLT13-3PH	0.995	Lagging	-19.11	1.000	Leading	3.30	0.995	Leading	19.09
14	FLT14-3PH	0.999	Lagging	-7.66	0.995	Leading	19.77	0.994	Leading	21.33
15	FLT15-3PH	0.998	Lagging	-10.99	0.998	Leading	13.83	0.998	Leading	13.14
16	FLT16-3PH	1.000	Lagging	-1.19	0.994	Leading	22.07	0.993	Leading	23.82
17	FLT17-3PH	1.000	Lagging	-1.69	0.993	Leading	24.25	0.991	Leading	26.24
18	FLT18-3PH	0.997	Lagging	-15.76	0.999	Leading	10.72	0.997	Leading	14.32
19	FLT19-3PH	0.999	Lagging	-6.42	0.994	Leading	22.87	0.992	Leading	25.05
20	FLT20-3PH	1.000	Lagging	-0.94	0.994	Leading	22.59	0.992	Leading	24.72
21	FLT21-3PH	1.000	Leading	0.07	0.994	Leading	22.46	0.993	Leading	23.93
22	FLT22-3PH	1.000	Lagging	-0.28	0.994	Leading	22.30	0.993	Leading	23.66
23	FLT23-3PH	1.000	Leading	0.22	0.994	Leading	22.62	0.993	Leading	24.06
24	FLT24-3PH	1.000	Lagging	-4.35	0.996	Leading	18.75	0.995	Leading	20.32
25	FLT25-3PH	0.999	Lagging	-7.42	1.000	Leading	0.23	1.000	Leading	0.25
26	FLT26-3PH	0.998	Lagging	-13.51	0.996	Leading	18.77	0.994	Leading	22.63
27	FLT27-3PH	0.962	Lagging	-56.96	0.981	Lagging	-39.56	0.983	Lagging	-37.81
28	FLT28-3PH	1.000	Leading	1.12	0.993	Leading	23.75	0.992	Leading	25.18
29	FLT29-3PH	0.999	Lagging	-7.28	0.997	Leading	15.96	0.997	Leading	15.57
30	FLT30-3PH	0.997	Lagging	-14.72	0.998	Leading	13.48	0.997	Leading	14.85
31	FLT31-3PH	1.000	Lagging	-0.36	0.994	Leading	21.87	0.993	Leading	23.74
32	FLT32-3PH	1.000	Leading	1.07	0.993	Leading	23.64	0.992	Leading	25.07
33	FLT33-3PH	1.000	Leading	1.03	0.993	Leading	23.66	0.992	Leading	25.08
34	FLT34-3PH	1.000	Leading	0.95	0.993	Leading	23.45	0.992	Leading	24.87
35	FLT35-3PH	1.000	Leading	0.88	0.993	Leading	23.54	0.992	Leading	24.98
36	FLT36-3PH	1.000	Leading	1.03	0.993	Leading	23.53	0.992	Leading	24.95
37	FLT37-3PH	1.000	Leading	0.97	0.993	Leading	23.53	0.992	Leading	24.94
38	FLT38-3PH	1.000	Leading	1.05	0.993	Leading	23.64	0.992	Leading	25.07
39	FLT39-3PH	1.000	Leading	1.00	0.993	Leading	23.57	0.992	Leading	25.00
40	FLT40-3PH	1.000	Leading	1.01	0.993	Leading	23.59	0.992	Leading	24.95
41	FLT41-3PH	1.000	Leading	1.01	0.993	Leading	23.53	0.992	Leading	24.94
42	FLT42-3PH	1.000	Leading	0.93	0.993	Leading	23.61	0.992	Leading	25.04
43	FLT43-3PH	0.985	Lagging	-34.60	1.000	Lagging	-4.78	1.000	Leading	1.41
44	FLT44-3PH	1.000	Lagging	-0.40	0.994	Leading	22.52	0.993	Leading	24.32
45	FLT45-3PH	0.993	Lagging	-24.14	1.000	Leading	3.00	1.000	Leading	6.17

Table 5-1 (Continued)
Power Factor Analysis: GEN-2015-034

Reference Number	Case	16 Winter Peak			17 Summer Peak			25 Summer Peak		
		Power Factor		Q (MVAR)	Power Factor		Q (MVAR)	Power Factor		Q (MVAR)
46	FLT46-3PH	0.998	Leading	12.66	0.984	Leading	36.39	0.983	Leading	37.75
47	FLT47-3PH	1.000	Lagging	-0.09	0.994	Leading	22.58	0.993	Leading	23.97
48	FLT48-3PH	1.000	Leading	0.07	0.994	Leading	22.49	0.993	Leading	23.96
49	FLT49-3PH	1.000	Leading	0.24	0.994	Leading	22.66	0.993	Leading	24.10
50	FLT50-3PH	0.998	Lagging	-13.26	0.998	Leading	11.31	0.998	Leading	13.60
51	FLT51-3PH	1.000	Leading	0.16	0.993	Leading	22.96	0.993	Leading	24.51
52	FLT52-3PH	1.000	Leading	1.15	0.993	Leading	23.60	0.992	Leading	25.04
53	FLT53-3PH	1.000	Leading	1.03	0.993	Leading	23.52	0.992	Leading	24.96
54	FLT54-3PH	1.000	Leading	0.61	0.993	Leading	23.43	0.992	Leading	24.98
55	FLT55-3PH	1.000	Leading	0.28	0.993	Leading	23.29	0.992	Leading	24.88
56	FLT56-3PH	1.000	Leading	0.95	0.993	Leading	23.58	0.992	Leading	25.10
57	FLT57-3PH	1.000	Leading	1.01	0.993	Leading	23.59	0.992	Leading	25.04
58	FLT58-3PH	1.000	Leading	0.79	0.993	Leading	23.54	0.992	Leading	24.98
59	FLT59-3PH	1.000	Leading	0.96	0.993	Leading	23.58	0.992	Leading	25.04
60	FLT60-3PH	1.000	Leading	1.10	0.993	Leading	23.66	0.992	Leading	25.08
61	FLT61-3PH	1.000	Leading	0.48	0.993	Leading	23.30	0.992	Leading	24.76
62	FLT62-3PH	1.000	Lagging	-1.67	0.994	Leading	22.43	0.993	Leading	24.05
63	FLT63-3PH	1.000	Leading	0.91	0.993	Leading	23.39	0.992	Leading	24.83
64	FLT64-3PH	1.000	Lagging	-3.47	0.995	Leading	20.61	0.994	Leading	22.79
65	FLT65-3PH	1.000	Lagging	-5.62	0.995	Leading	20.38	0.994	Leading	22.61
66	FLT66-3PH	1.000	Leading	0.03	0.993	Leading	23.34	0.992	Leading	24.85
67	FLT67-3PH	1.000	Leading	0.48	0.993	Leading	23.30	0.992	Leading	24.76
68	FLT68-3PH	1.000	Lagging	-2.14	0.994	Leading	21.98	0.992	Leading	25.08
69	FLT69-3PH	1.000	Leading	1.01	0.993	Leading	23.62	0.992	Leading	25.06
70	FLT70-3PH	1.000	Leading	0.46	0.993	Leading	23.39	0.992	Leading	24.83
71	FLT71-3PH	1.000	Lagging	-1.19	0.994	Leading	22.07	0.993	Leading	23.82
72	FLT72-3PH	1.000	Lagging	-0.84	0.993	Leading	23.11	0.993	Leading	23.82
73	FLT73-3PH	1.000	Leading	1.06	0.993	Leading	24.55	0.992	Leading	24.87
74	FLT74-3PH	1.000	Leading	0.05	0.993	Leading	24.19	0.992	Leading	24.69
75	FLT75-3PH	1.000	Leading	0.74	0.993	Leading	24.31	0.992	Leading	24.81
76	FLT76-3PH	1.000	Leading	0.25	0.993	Leading	23.06	0.993	Leading	24.52
77	FLT77-3PH	0.996	Leading	17.98	0.987	Leading	32.37	0.985	Leading	34.74
78	FLT78-3PH	0.957	Lagging	-60.80	0.983	Lagging	-37.17	0.982	Lagging	-38.21

Table 5-2
Power Factor Analysis: GEN-2015-043

Reference Number	Case	16 Winter Peak			17 Summer Peak			25 Summer Peak		
		Power Factor		Q (MVAR)	Power Factor		Q (MVAR)	Power Factor		Q (MVAR)
0	Base	0.998	Leading	1.39	0.997	Leading	1.57	0.997	Leading	1.64
1	FLT01-3PH	0.998	Leading	1.41	0.997	Leading	1.58	0.997	Leading	1.66
2	FLT02-3PH	1.000	Leading	0.14	0.999	Leading	1.07	0.999	Leading	1.09
3	FLT03-3PH	0.998	Leading	1.31	0.997	Leading	1.53	0.997	Leading	1.64
4	FLT04-3PH	0.998	Leading	1.39	0.997	Leading	1.57	0.997	Leading	1.63
5	FLT05-3PH	0.999	Leading	1.07	0.997	Leading	1.42	0.997	Leading	1.51
6	FLT06-3PH	0.998	Leading	1.36	0.997	Leading	1.56	0.997	Leading	1.63
7	FLT07-3PH	0.998	Leading	1.16	0.997	Leading	1.45	0.997	Leading	1.47
8	FLT08-3PH	0.999	Leading	0.86	0.998	Leading	1.19	0.998	Leading	1.27
9	FLT09-3PH	0.997	Leading	1.44	0.997	Leading	1.65	0.996	Leading	1.71
10	FLT10-3PH	0.998	Leading	1.25	0.997	Leading	1.47	0.997	Leading	1.54
11	FLT11-3PH	0.998	Leading	1.35	0.997	Leading	1.54	0.997	Leading	1.62
12	FLT12-3PH	0.998	Leading	1.38	0.997	Leading	1.54	0.997	Leading	1.63
13	FLT13-3PH	0.999	Leading	1.00	0.998	Leading	1.38	0.997	Leading	1.49
14	FLT14-3PH	0.999	Leading	0.81	0.997	Leading	1.47	0.998	Leading	1.40
15	FLT15-3PH	0.995	Leading	2.04	0.995	Leading	1.96	0.994	Leading	2.13
16	FLT16-3PH	0.998	Leading	1.10	0.998	Leading	1.36	0.997	Leading	1.45
17	FLT17-3PH	0.997	Leading	1.42	0.996	Leading	1.71	0.996	Leading	1.81
18	FLT18-3PH	0.998	Leading	1.10	0.998	Leading	1.38	0.997	Leading	1.46
19	FLT19-3PH	1.000	Leading	0.59	0.999	Leading	1.06	0.998	Leading	1.34
20	FLT20-3PH	0.998	Leading	1.36	0.997	Leading	1.55	0.997	Leading	1.62
21	FLT21-3PH	0.998	Leading	1.38	0.997	Leading	1.56	0.997	Leading	1.63
22	FLT22-3PH	0.998	Leading	1.38	0.997	Leading	1.56	0.997	Leading	1.63
23	FLT23-3PH	0.998	Leading	1.38	0.997	Leading	1.56	0.997	Leading	1.63
24	FLT24-3PH	0.998	Leading	1.34	0.997	Leading	1.54	0.997	Leading	1.60
25	FLT25-3PH	0.998	Leading	1.21	0.998	Leading	1.41	0.997	Leading	1.44
26	FLT26-3PH	0.999	Leading	0.86	0.998	Leading	1.30	0.997	Leading	1.43
27	FLT27-3PH	0.998	Leading	1.12	0.998	Leading	1.39	0.997	Leading	1.56
28	FLT28-3PH	0.998	Leading	1.37	0.997	Leading	1.55	0.997	Leading	1.62
29	FLT29-3PH	0.997	Leading	1.62	0.996	Leading	1.69	0.996	Leading	1.79
30	FLT30-3PH	0.999	Leading	1.04	0.997	Leading	1.42	0.997	Leading	1.50
31	FLT31-3PH	0.998	Leading	1.40	0.997	Leading	1.55	0.997	Leading	1.61
32	FLT32-3PH	0.998	Leading	1.39	0.997	Leading	1.57	0.997	Leading	1.64
33	FLT33-3PH	0.998	Leading	1.39	0.997	Leading	1.57	0.997	Leading	1.63
34	FLT34-3PH	0.998	Leading	1.39	0.997	Leading	1.56	0.997	Leading	1.63
35	FLT35-3PH	0.998	Leading	1.39	0.997	Leading	1.57	0.997	Leading	1.63
36	FLT36-3PH	0.998	Leading	1.39	0.997	Leading	1.57	0.997	Leading	1.63
37	FLT37-3PH	0.998	Leading	1.39	0.997	Leading	1.57	0.997	Leading	1.63
38	FLT38-3PH	0.998	Leading	1.39	0.997	Leading	1.57	0.997	Leading	1.64
39	FLT39-3PH	0.998	Leading	1.39	0.997	Leading	1.57	0.997	Leading	1.63
40	FLT40-3PH	0.998	Leading	1.39	0.997	Leading	1.57	0.997	Leading	1.63
41	FLT41-3PH	0.998	Leading	1.39	0.997	Leading	1.57	0.997	Leading	1.63
42	FLT42-3PH	0.998	Leading	1.39	0.997	Leading	1.57	0.997	Leading	1.64
43	FLT43-3PH	0.999	Leading	0.83	0.998	Leading	1.24	0.998	Leading	1.30
44	FLT44-3PH	0.998	Leading	1.37	0.997	Leading	1.56	0.997	Leading	1.63
45	FLT45-3PH	0.999	Leading	1.03	0.998	Leading	1.39	0.997	Leading	1.49

Table 5-2 (Continued)
Power Factor Analysis: GEN-2015-043

Reference Number	Case	16 Winter Peak			17 Summer Peak			25 Summer Peak		
		Power Factor		Q (MVAR)	Power Factor		Q (MVAR)	Power Factor		Q (MVAR)
46	FLT46-3PH	0.998	Leading	1.42	0.997	Leading	1.58	0.997	Leading	1.65
47	FLT47-3PH	0.998	Leading	1.38	0.997	Leading	1.56	0.997	Leading	1.63
48	FLT48-3PH	0.998	Leading	1.38	0.997	Leading	1.56	0.997	Leading	1.63
49	FLT49-3PH	0.998	Leading	1.38	0.997	Leading	1.56	0.997	Leading	1.63
50	FLT50-3PH	0.998	Leading	1.25	0.997	Leading	1.48	0.997	Leading	1.56
51	FLT51-3PH	0.998	Leading	1.38	0.997	Leading	1.56	0.997	Leading	1.63
52	FLT52-3PH	0.998	Leading	1.40	0.997	Leading	1.55	0.997	Leading	1.63
53	FLT53-3PH	0.998	Leading	1.38	0.997	Leading	1.54	0.997	Leading	1.61
54	FLT54-3PH	0.998	Leading	1.34	0.997	Leading	1.53	0.997	Leading	1.62
55	FLT55-3PH	0.998	Leading	1.30	0.997	Leading	1.52	0.997	Leading	1.61
56	FLT56-3PH	0.998	Leading	1.37	0.997	Leading	1.57	0.997	Leading	1.65
57	FLT57-3PH	0.998	Leading	1.39	0.997	Leading	1.56	0.997	Leading	1.63
58	FLT58-3PH	0.998	Leading	1.37	0.997	Leading	1.55	0.997	Leading	1.62
59	FLT59-3PH	0.998	Leading	1.40	0.997	Leading	1.58	0.997	Leading	1.64
60	FLT60-3PH	0.998	Leading	1.39	0.997	Leading	1.57	0.997	Leading	1.64
61	FLT61-3PH	0.998	Leading	1.31	0.997	Leading	1.52	0.997	Leading	1.59
62	FLT62-3PH	0.998	Leading	1.16	0.997	Leading	1.45	0.997	Leading	1.52
63	FLT63-3PH	0.998	Leading	1.36	0.997	Leading	1.54	0.997	Leading	1.61
64	FLT64-3PH	0.999	Leading	1.04	0.998	Leading	1.32	0.997	Leading	1.42
65	FLT65-3PH	0.998	Leading	1.10	0.997	Leading	1.47	0.997	Leading	1.54
66	FLT66-3PH	0.998	Leading	1.28	0.997	Leading	1.53	0.997	Leading	1.61
67	FLT67-3PH	0.998	Leading	1.31	0.997	Leading	1.52	0.997	Leading	1.59
68	FLT68-3PH	0.998	Leading	1.40	0.997	Leading	1.63	0.997	Leading	1.64
69	FLT69-3PH	0.998	Leading	1.39	0.997	Leading	1.56	0.997	Leading	1.63
70	FLT70-3PH	0.998	Leading	1.34	0.997	Leading	1.54	0.997	Leading	1.61
71	FLT71-3PH	0.998	Leading	1.10	0.998	Leading	1.36	0.997	Leading	1.45
72	FLT72-3PH	0.998	Leading	1.32	0.997	Leading	1.55	0.997	Leading	1.61
73	FLT73-3PH	0.998	Leading	1.39	0.997	Leading	1.58	0.997	Leading	1.63
74	FLT74-3PH	0.998	Leading	1.35	0.997	Leading	1.57	0.997	Leading	1.62
75	FLT75-3PH	0.998	Leading	1.38	0.997	Leading	1.58	0.997	Leading	1.64
76	FLT76-3PH	0.998	Leading	1.36	0.997	Leading	1.55	0.997	Leading	1.62
77	FLT77-3PH	0.998	Leading	1.41	0.997	Leading	1.58	0.997	Leading	1.66
78	FLT78-3PH	1.000	Leading	0.14	0.999	Leading	1.07	0.999	Leading	1.09

Table 5-3
Power Factor Analysis: GEN-2015-047

Reference Number	Case	16 Winter Peak			17 Summer Peak			25 Summer Peak		
		Power Factor		Q (MVAR)	Power Factor		Q (MVAR)	Power Factor		Q (MVAR)
0	Base	0.951	Lagging	-97.19	0.971	Lagging	-74.23	0.973	Lagging	-70.89
1	FLT01-3PH	0.954	Lagging	-94.15	0.969	Lagging	-75.97	0.972	Lagging	-72.60
2	FLT02-3PH	0.983	Lagging	-55.91	0.991	Lagging	-39.69	0.993	Lagging	-35.84
3	FLT03-3PH	0.930	Lagging	-118.13	0.950	Lagging	-98.87	0.953	Lagging	-95.78
4	FLT04-3PH	0.946	Lagging	-102.76	0.963	Lagging	-83.90	0.964	Lagging	-83.35
5	FLT05-3PH	0.949	Lagging	-99.43	0.979	Lagging	-62.43	0.982	Lagging	-58.51
6	FLT06-3PH	0.958	Lagging	-89.41	0.975	Lagging	-67.67	0.978	Lagging	-64.55
7	FLT07-3PH	0.937	Lagging	-111.41	0.953	Lagging	-95.68	0.957	Lagging	-91.36
8	FLT08-3PH	0.950	Lagging	-99.11	0.970	Lagging	-75.37	0.972	Lagging	-72.29
9	FLT09-3PH	0.951	Lagging	-97.77	0.971	Lagging	-74.40	0.973	Lagging	-71.03
10	FLT10-3PH	0.951	Lagging	-97.79	0.970	Lagging	-74.54	0.973	Lagging	-71.20
11	FLT11-3PH	0.951	Lagging	-97.17	0.971	Lagging	-74.20	0.973	Lagging	-71.23
12	FLT12-3PH	0.952	Lagging	-96.95	0.971	Lagging	-74.16	0.973	Lagging	-70.77
13	FLT13-3PH	0.930	Lagging	-118.43	0.953	Lagging	-94.91	0.969	Lagging	-76.38
14	FLT14-3PH	0.945	Lagging	-104.21	0.967	Lagging	-79.27	0.970	Lagging	-75.33
15	FLT15-3PH	0.948	Lagging	-100.88	0.969	Lagging	-76.99	0.970	Lagging	-75.07
16	FLT16-3PH	0.950	Lagging	-98.33	0.970	Lagging	-75.29	0.973	Lagging	-71.63
17	FLT17-3PH	0.950	Lagging	-98.18	0.971	Lagging	-73.75	0.974	Lagging	-70.21
18	FLT18-3PH	0.932	Lagging	-117.04	0.958	Lagging	-90.32	0.963	Lagging	-84.22
19	FLT19-3PH	0.950	Lagging	-99.07	0.972	Lagging	-73.09	0.974	Lagging	-70.45
20	FLT20-3PH	0.949	Lagging	-99.44	0.970	Lagging	-75.30	0.973	Lagging	-71.00
21	FLT21-3PH	0.950	Lagging	-98.41	0.970	Lagging	-75.60	0.972	Lagging	-72.20
22	FLT22-3PH	0.950	Lagging	-98.96	0.969	Lagging	-76.03	0.972	Lagging	-72.76
23	FLT23-3PH	0.950	Lagging	-98.16	0.970	Lagging	-75.36	0.972	Lagging	-72.00
24	FLT24-3PH	0.945	Lagging	-104.32	0.966	Lagging	-80.78	0.968	Lagging	-77.26
25	FLT25-3PH	0.951	Lagging	-97.22	0.946	Lagging	-102.67	0.949	Lagging	-100.03
26	FLT26-3PH	0.964	Lagging	-82.62	0.985	Lagging	-53.15	0.987	Lagging	-49.49
27	FLT27-3PH	0.882	Lagging	-159.93	0.907	Lagging	-139.39	0.911	Lagging	-136.21
28	FLT28-3PH	0.951	Lagging	-97.38	0.971	Lagging	-74.39	0.973	Lagging	-71.06
29	FLT29-3PH	0.948	Lagging	-101.17	0.968	Lagging	-78.11	0.969	Lagging	-75.85
30	FLT30-3PH	0.946	Lagging	-103.16	0.969	Lagging	-77.09	0.971	Lagging	-73.70
31	FLT31-3PH	0.946	Lagging	-102.91	0.968	Lagging	-78.18	0.971	Lagging	-73.90
32	FLT32-3PH	0.951	Lagging	-97.19	0.971	Lagging	-74.24	0.973	Lagging	-70.89
33	FLT33-3PH	0.951	Lagging	-97.17	0.971	Lagging	-74.17	0.973	Lagging	-70.82
34	FLT34-3PH	0.951	Lagging	-97.37	0.971	Lagging	-74.50	0.973	Lagging	-71.17
35	FLT35-3PH	0.951	Lagging	-97.46	0.971	Lagging	-74.39	0.973	Lagging	-71.03
36	FLT36-3PH	0.951	Lagging	-97.27	0.971	Lagging	-74.41	0.973	Lagging	-71.07
37	FLT37-3PH	0.951	Lagging	-97.34	0.971	Lagging	-74.40	0.973	Lagging	-71.08
38	FLT38-3PH	0.951	Lagging	-97.23	0.971	Lagging	-74.24	0.973	Lagging	-70.90
39	FLT39-3PH	0.951	Lagging	-97.29	0.971	Lagging	-74.35	0.973	Lagging	-71.00
40	FLT40-3PH	0.951	Lagging	-97.19	0.971	Lagging	-74.27	0.973	Lagging	-71.02
41	FLT41-3PH	0.951	Lagging	-97.28	0.971	Lagging	-74.40	0.973	Lagging	-71.07
42	FLT42-3PH	0.951	Lagging	-97.38	0.971	Lagging	-74.29	0.973	Lagging	-70.94
43	FLT43-3PH	0.908	Lagging	-138.08	0.940	Lagging	-108.44	0.949	Lagging	-99.93
44	FLT44-3PH	0.950	Lagging	-99.10	0.970	Lagging	-75.78	0.972	Lagging	-71.97
45	FLT45-3PH	0.935	Lagging	-114.23	0.959	Lagging	-88.36	0.963	Lagging	-84.44

Table 5-3 (Continued)
Power Factor Analysis: GEN-2015-047

Reference Number	Case	16 Winter Peak			17 Summer Peak			25 Summer Peak		
		Power Factor		Q (MVAR)	Power Factor		Q (MVAR)	Power Factor		Q (MVAR)
46	FLT46-3PH	0.968	Lagging	-77.54	0.985	Lagging	-52.57	0.987	Lagging	-49.15
47	FLT47-3PH	0.950	Lagging	-98.72	0.970	Lagging	-75.65	0.972	Lagging	-72.36
48	FLT48-3PH	0.950	Lagging	-98.40	0.970	Lagging	-75.57	0.972	Lagging	-72.18
49	FLT49-3PH	0.950	Lagging	-98.15	0.970	Lagging	-75.32	0.972	Lagging	-71.96
50	FLT50-3PH	0.933	Lagging	-116.10	0.957	Lagging	-90.74	0.961	Lagging	-86.28
51	FLT51-3PH	0.950	Lagging	-98.38	0.970	Lagging	-75.16	0.973	Lagging	-71.67
52	FLT52-3PH	0.951	Lagging	-97.14	0.971	Lagging	-74.23	0.973	Lagging	-70.88
53	FLT53-3PH	0.951	Lagging	-97.16	0.971	Lagging	-74.24	0.973	Lagging	-70.89
54	FLT54-3PH	0.951	Lagging	-97.41	0.971	Lagging	-74.34	0.973	Lagging	-70.92
55	FLT55-3PH	0.951	Lagging	-97.56	0.971	Lagging	-74.37	0.973	Lagging	-70.93
56	FLT56-3PH	0.951	Lagging	-97.38	0.971	Lagging	-74.42	0.973	Lagging	-71.02
57	FLT57-3PH	0.951	Lagging	-97.23	0.971	Lagging	-74.28	0.973	Lagging	-70.92
58	FLT58-3PH	0.951	Lagging	-97.36	0.971	Lagging	-74.31	0.973	Lagging	-70.95
59	FLT59-3PH	0.951	Lagging	-97.41	0.971	Lagging	-74.41	0.973	Lagging	-71.02
60	FLT60-3PH	0.951	Lagging	-97.18	0.971	Lagging	-74.22	0.973	Lagging	-70.88
61	FLT61-3PH	0.951	Lagging	-97.50	0.971	Lagging	-74.44	0.973	Lagging	-71.08
62	FLT62-3PH	0.950	Lagging	-98.96	0.970	Lagging	-75.24	0.973	Lagging	-71.72
63	FLT63-3PH	0.951	Lagging	-97.29	0.971	Lagging	-74.40	0.973	Lagging	-71.05
64	FLT64-3PH	0.948	Lagging	-100.78	0.968	Lagging	-77.29	0.971	Lagging	-73.20
65	FLT65-3PH	0.945	Lagging	-103.76	0.967	Lagging	-78.54	0.971	Lagging	-74.26
66	FLT66-3PH	0.951	Lagging	-97.88	0.971	Lagging	-74.48	0.973	Lagging	-71.06
67	FLT67-3PH	0.951	Lagging	-97.50	0.971	Lagging	-74.44	0.973	Lagging	-71.08
68	FLT68-3PH	0.947	Lagging	-101.48	0.968	Lagging	-77.16	0.973	Lagging	-70.89
69	FLT69-3PH	0.951	Lagging	-97.22	0.971	Lagging	-74.25	0.973	Lagging	-70.90
70	FLT70-3PH	0.951	Lagging	-97.56	0.971	Lagging	-74.40	0.973	Lagging	-71.05
71	FLT71-3PH	0.950	Lagging	-98.33	0.970	Lagging	-75.29	0.973	Lagging	-71.63
72	FLT72-3PH	0.950	Lagging	-98.60	0.970	Lagging	-74.68	0.973	Lagging	-71.55
73	FLT73-3PH	0.951	Lagging	-97.24	0.971	Lagging	-73.74	0.973	Lagging	-70.94
74	FLT74-3PH	0.950	Lagging	-98.16	0.971	Lagging	-74.19	0.973	Lagging	-71.18
75	FLT75-3PH	0.951	Lagging	-97.55	0.971	Lagging	-73.95	0.973	Lagging	-71.18
76	FLT76-3PH	0.951	Lagging	-97.57	0.971	Lagging	-74.49	0.973	Lagging	-71.13
77	FLT77-3PH	0.954	Lagging	-94.15	0.969	Lagging	-75.97	0.972	Lagging	-72.60
78	FLT78-3PH	0.983	Lagging	-55.91	0.991	Lagging	-39.69	0.993	Lagging	-35.84

Table 5-4
Power Factor Analysis: GEN-2015-052

Reference Number	Case	16 Winter Peak			17 Summer Peak			25 Summer Peak		
		Power Factor		Q (MVAR)	Power Factor		Q (MVAR)	Power Factor		Q (MVAR)
0	Base	0.954	Lagging	-94.29	0.981	Lagging	-59.76	0.979	Lagging	-62.03
1	FLT01-3PH	0.984	Lagging	-53.88	0.997	Lagging	-25.04	0.996	Lagging	-28.18
2	FLT02-3PH	0.724	Lagging	-285.97	0.793	Lagging	-230.56	0.788	Lagging	-234.59
3	FLT03-3PH	0.989	Lagging	-44.40	0.999	Lagging	-13.17	0.998	Lagging	-18.52
4	FLT04-3PH	0.939	Lagging	-109.99	0.968	Lagging	-77.73	0.962	Lagging	-84.80
5	FLT05-3PH	0.918	Lagging	-129.72	0.959	Lagging	-88.77	0.961	Lagging	-86.49
6	FLT06-3PH	0.954	Lagging	-94.52	0.983	Lagging	-56.87	0.981	Lagging	-58.71
7	FLT07-3PH	0.911	Lagging	-135.83	0.947	Lagging	-101.51	0.946	Lagging	-103.07
8	FLT08-3PH	0.945	Lagging	-103.39	0.978	Lagging	-64.11	0.977	Lagging	-65.74
9	FLT09-3PH	0.948	Lagging	-100.30	0.979	Lagging	-62.91	0.977	Lagging	-64.75
10	FLT10-3PH	0.951	Lagging	-97.21	0.980	Lagging	-61.09	0.978	Lagging	-63.30
11	FLT11-3PH	0.953	Lagging	-94.94	0.981	Lagging	-60.03	0.980	Lagging	-61.37
12	FLT12-3PH	0.954	Lagging	-94.39	0.979	Lagging	-61.96	0.978	Lagging	-63.41
13	FLT13-3PH	0.906	Lagging	-139.93	0.946	Lagging	-103.05	0.968	Lagging	-77.26
14	FLT14-3PH	0.932	Lagging	-117.11	0.977	Lagging	-65.17	0.975	Lagging	-68.37
15	FLT15-3PH	0.921	Lagging	-126.97	0.957	Lagging	-91.37	0.949	Lagging	-99.58
16	FLT16-3PH	0.948	Lagging	-101.20	0.978	Lagging	-64.44	0.977	Lagging	-66.02
17	FLT17-3PH	0.944	Lagging	-104.52	0.982	Lagging	-57.91	0.982	Lagging	-57.94
18	FLT18-3PH	0.926	Lagging	-122.74	0.966	Lagging	-79.80	0.967	Lagging	-79.04
19	FLT19-3PH	0.938	Lagging	-111.21	0.982	Lagging	-58.16	0.982	Lagging	-57.54
20	FLT20-3PH	0.951	Lagging	-97.04	0.980	Lagging	-61.53	0.979	Lagging	-62.91
21	FLT21-3PH	0.952	Lagging	-96.34	0.979	Lagging	-62.27	0.978	Lagging	-64.45
22	FLT22-3PH	0.952	Lagging	-96.45	0.979	Lagging	-61.91	0.978	Lagging	-64.30
23	FLT23-3PH	0.952	Lagging	-96.17	0.979	Lagging	-62.07	0.978	Lagging	-64.30
24	FLT24-3PH	0.946	Lagging	-102.84	0.976	Lagging	-67.40	0.974	Lagging	-69.49
25	FLT25-3PH	0.924	Lagging	-123.78	0.942	Lagging	-106.49	0.937	Lagging	-111.85
26	FLT26-3PH	0.878	Lagging	-163.76	0.936	Lagging	-112.77	0.943	Lagging	-106.11
27	FLT27-3PH	0.956	Lagging	-91.98	0.972	Lagging	-73.19	0.973	Lagging	-71.12
28	FLT28-3PH	0.959	Lagging	-88.96	0.982	Lagging	-58.48	0.980	Lagging	-60.67
29	FLT29-3PH	0.939	Lagging	-109.96	0.971	Lagging	-74.02	0.966	Lagging	-80.86
30	FLT30-3PH	0.906	Lagging	-139.85	0.951	Lagging	-97.51	0.949	Lagging	-99.66
31	FLT31-3PH	0.965	Lagging	-81.71	0.983	Lagging	-55.22	0.982	Lagging	-58.01
32	FLT32-3PH	0.954	Lagging	-94.33	0.981	Lagging	-59.79	0.979	Lagging	-62.06
33	FLT33-3PH	0.954	Lagging	-94.51	0.981	Lagging	-59.85	0.979	Lagging	-62.16
34	FLT34-3PH	0.954	Lagging	-94.50	0.981	Lagging	-60.07	0.979	Lagging	-62.36
35	FLT35-3PH	0.954	Lagging	-94.51	0.981	Lagging	-59.88	0.979	Lagging	-62.13
36	FLT36-3PH	0.954	Lagging	-94.35	0.981	Lagging	-59.94	0.979	Lagging	-62.22
37	FLT37-3PH	0.954	Lagging	-94.41	0.981	Lagging	-59.95	0.979	Lagging	-62.26
38	FLT38-3PH	0.954	Lagging	-94.33	0.981	Lagging	-59.78	0.979	Lagging	-62.05
39	FLT39-3PH	0.954	Lagging	-94.40	0.981	Lagging	-59.90	0.979	Lagging	-62.17
40	FLT40-3PH	0.954	Lagging	-94.53	0.981	Lagging	-59.93	0.979	Lagging	-62.33
41	FLT41-3PH	0.954	Lagging	-94.39	0.981	Lagging	-59.95	0.979	Lagging	-62.25
42	FLT42-3PH	0.954	Lagging	-94.45	0.981	Lagging	-59.81	0.979	Lagging	-62.07
43	FLT43-3PH	0.893	Lagging	-150.93	0.947	Lagging	-101.29	0.951	Lagging	-97.42
44	FLT44-3PH	0.952	Lagging	-96.41	0.980	Lagging	-61.30	0.979	Lagging	-62.98
45	FLT45-3PH	0.890	Lagging	-153.33	0.941	Lagging	-107.84	0.944	Lagging	-104.41

Table 5-4 (Continued)
Power Factor Analysis: GEN-2015-052

Reference Number	Case	16 Winter Peak			17 Summer Peak			25 Summer Peak		
		Power Factor		Q (MVAR)	Power Factor		Q (MVAR)	Power Factor		Q (MVAR)
46	FLT46-3PH	0.963	Lagging	-84.52	0.987	Lagging	-49.04	0.986	Lagging	-51.62
47	FLT47-3PH	0.952	Lagging	-96.15	0.980	Lagging	-61.45	0.978	Lagging	-63.82
48	FLT48-3PH	0.952	Lagging	-96.34	0.979	Lagging	-62.21	0.978	Lagging	-64.40
49	FLT49-3PH	0.952	Lagging	-96.15	0.979	Lagging	-61.99	0.978	Lagging	-64.21
50	FLT50-3PH	0.932	Lagging	-116.59	0.967	Lagging	-78.59	0.967	Lagging	-79.56
51	FLT51-3PH	0.953	Lagging	-95.78	0.980	Lagging	-60.83	0.979	Lagging	-62.92
52	FLT52-3PH	0.954	Lagging	-94.06	0.981	Lagging	-60.02	0.979	Lagging	-62.25
53	FLT53-3PH	0.954	Lagging	-94.55	0.980	Lagging	-60.37	0.979	Lagging	-62.57
54	FLT54-3PH	0.953	Lagging	-95.39	0.980	Lagging	-60.57	0.979	Lagging	-62.43
55	FLT55-3PH	0.952	Lagging	-96.51	0.980	Lagging	-61.14	0.979	Lagging	-62.88
56	FLT56-3PH	0.954	Lagging	-94.26	0.981	Lagging	-59.62	0.980	Lagging	-61.58
57	FLT57-3PH	0.954	Lagging	-94.49	0.981	Lagging	-59.93	0.979	Lagging	-62.14
58	FLT58-3PH	0.953	Lagging	-95.14	0.981	Lagging	-60.12	0.979	Lagging	-62.33
59	FLT59-3PH	0.954	Lagging	-94.24	0.981	Lagging	-59.68	0.979	Lagging	-61.92
60	FLT60-3PH	0.954	Lagging	-94.23	0.981	Lagging	-59.76	0.979	Lagging	-62.05
61	FLT61-3PH	0.952	Lagging	-96.20	0.980	Lagging	-60.90	0.979	Lagging	-63.06
62	FLT62-3PH	0.947	Lagging	-101.51	0.979	Lagging	-63.00	0.977	Lagging	-64.79
63	FLT63-3PH	0.954	Lagging	-94.71	0.980	Lagging	-60.58	0.979	Lagging	-62.81
64	FLT64-3PH	0.944	Lagging	-104.35	0.976	Lagging	-66.31	0.976	Lagging	-66.94
65	FLT65-3PH	0.941	Lagging	-108.20	0.978	Lagging	-64.52	0.977	Lagging	-65.40
66	FLT66-3PH	0.951	Lagging	-97.26	0.980	Lagging	-60.61	0.979	Lagging	-62.71
67	FLT67-3PH	0.952	Lagging	-96.20	0.980	Lagging	-60.90	0.979	Lagging	-63.06
68	FLT68-3PH	0.950	Lagging	-98.27	0.980	Lagging	-60.50	0.979	Lagging	-62.03
69	FLT69-3PH	0.954	Lagging	-94.53	0.981	Lagging	-59.87	0.979	Lagging	-62.11
70	FLT70-3PH	0.952	Lagging	-96.16	0.980	Lagging	-60.58	0.979	Lagging	-62.81
71	FLT71-3PH	0.948	Lagging	-101.20	0.978	Lagging	-64.44	0.977	Lagging	-66.02
72	FLT72-3PH	0.948	Lagging	-100.30	0.980	Lagging	-61.45	0.976	Lagging	-66.34
73	FLT73-3PH	0.954	Lagging	-94.32	0.983	Lagging	-56.78	0.979	Lagging	-62.84
74	FLT74-3PH	0.951	Lagging	-97.23	0.982	Lagging	-57.51	0.979	Lagging	-63.09
75	FLT75-3PH	0.953	Lagging	-95.44	0.982	Lagging	-57.62	0.979	Lagging	-62.72
76	FLT76-3PH	0.951	Lagging	-97.13	0.979	Lagging	-61.91	0.978	Lagging	-64.09
77	FLT77-3PH	0.984	Lagging	-53.88	0.997	Lagging	-25.04	0.996	Lagging	-28.18
78	FLT78-3PH	0.724	Lagging	-285.97	0.793	Lagging	-230.56	0.788	Lagging	-234.59

Table 5-5
Power Factor Analysis: GEN-2015-062

Reference Number	Case	16 Winter Peak			17 Summer Peak			25 Summer Peak		
		Power Factor		Q (MVAR)	Power Factor		Q (MVAR)	Power Factor		Q (MVAR)
0	Base	1.000	Lagging	-0.01	1.000	Lagging	-0.05	1.000	Lagging	-0.11
1	FLT01-3PH	1.000	Lagging	-0.05	1.000	Lagging	-0.12	0.999	Lagging	-0.18
2	FLT02-3PH	1.000	Leading	0.10	0.999	Leading	0.16	1.000	Leading	0.14
3	FLT03-3PH	0.997	Lagging	-0.36	0.997	Lagging	-0.35	0.993	Lagging	-0.54
4	FLT04-3PH	0.999	Lagging	-0.23	0.998	Lagging	-0.25	0.997	Lagging	-0.33
5	FLT05-3PH	0.993	Lagging	-0.53	0.997	Lagging	-0.34	0.997	Lagging	-0.33
6	FLT06-3PH	0.992	Lagging	-0.57	0.997	Lagging	-0.36	0.996	Lagging	-0.38
7	FLT07-3PH	0.960	Lagging	-1.32	0.972	Lagging	-1.09	0.971	Lagging	-1.11
8	FLT08-3PH	1.000	Lagging	-0.07	1.000	Lagging	-0.09	0.999	Lagging	-0.16
9	FLT09-3PH	1.000	Lagging	-0.04	1.000	Lagging	-0.06	1.000	Lagging	-0.11
10	FLT10-3PH	1.000	Lagging	-0.03	1.000	Lagging	-0.07	1.000	Lagging	-0.12
11	FLT11-3PH	1.000	Lagging	-0.01	1.000	Lagging	-0.05	1.000	Lagging	-0.12
12	FLT12-3PH	1.000	Lagging	-0.01	1.000	Lagging	-0.05	1.000	Lagging	-0.10
13	FLT13-3PH	0.976	Lagging	-1.01	0.980	Lagging	-0.91	0.998	Lagging	-0.31
14	FLT14-3PH	0.999	Lagging	-0.20	0.999	Lagging	-0.18	0.999	Lagging	-0.22
15	FLT15-3PH	1.000	Leading	0.02	1.000	Lagging	-0.04	1.000	Lagging	-0.10
16	FLT16-3PH	1.000	Lagging	-0.05	1.000	Lagging	-0.09	1.000	Lagging	-0.13
17	FLT17-3PH	1.000	Lagging	-0.02	1.000	Lagging	-0.03	1.000	Lagging	-0.09
18	FLT18-3PH	1.000	Lagging	-0.10	0.999	Lagging	-0.22	0.998	Lagging	-0.27
19	FLT19-3PH	0.969	Lagging	-1.14	0.984	Lagging	-0.81	0.990	Lagging	-0.64
20	FLT20-3PH	0.997	Leading	0.34	0.993	Lagging	-0.53	0.982	Lagging	-0.87
21	FLT21-3PH	1.000	Lagging	-0.12	0.999	Lagging	-0.16	0.999	Lagging	-0.21
22	FLT22-3PH	0.999	Lagging	-0.15	0.999	Lagging	-0.23	0.998	Lagging	-0.29
23	FLT23-3PH	1.000	Lagging	-0.10	0.999	Lagging	-0.15	0.999	Lagging	-0.20
24	FLT24-3PH	0.996	Lagging	-0.40	0.995	Lagging	-0.46	0.993	Lagging	-0.53
25	FLT25-3PH	0.970	Lagging	-1.12	0.954	Lagging	-1.42	0.950	Lagging	-1.47
26	FLT26-3PH	0.970	Lagging	-1.13	0.984	Lagging	-0.81	0.988	Lagging	-0.72
27	FLT27-3PH	0.968	Lagging	-1.16	0.969	Lagging	-1.14	0.958	Lagging	-1.34
28	FLT28-3PH	1.000	Lagging	-0.01	1.000	Lagging	-0.05	1.000	Lagging	-0.11
29	FLT29-3PH	1.000	Lagging	-0.03	1.000	Lagging	-0.07	0.999	Lagging	-0.15
30	FLT30-3PH	1.000	Lagging	-0.08	1.000	Lagging	-0.08	1.000	Lagging	-0.13
31	FLT31-3PH	1.000	Lagging	-0.12	1.000	Lagging	-0.13	0.999	Lagging	-0.16
32	FLT32-3PH	0.999	Lagging	-0.22	0.998	Lagging	-0.25	0.997	Lagging	-0.32
33	FLT33-3PH	0.999	Leading	0.24	0.999	Leading	0.22	0.998	Leading	0.27
34	FLT34-3PH	1.000	Leading	0.01	1.000	Leading	0.02	1.000	Lagging	-0.03
35	FLT35-3PH	0.995	Leading	0.45	0.999	Leading	0.22	1.000	Leading	0.14
36	FLT36-3PH	1.000	Lagging	-0.11	0.998	Lagging	-0.26	0.997	Lagging	-0.33
37	FLT37-3PH	1.000	Lagging	-0.04	0.999	Lagging	-0.15	0.998	Lagging	-0.25
38	FLT38-3PH	1.000	Lagging	0.00	1.000	Lagging	-0.13	0.999	Lagging	-0.21
39	FLT39-3PH	1.000	Lagging	-0.03	1.000	Lagging	-0.12	0.999	Lagging	-0.19
40	FLT40-3PH	0.998	Leading	0.26	0.999	Leading	0.20	0.999	Leading	0.20
41	FLT41-3PH	1.000	Lagging	-0.10	1.000	Lagging	-0.08	1.000	Lagging	-0.13
42	FLT42-3PH	0.997	Leading	0.36	1.000	Leading	0.06	1.000	Lagging	-0.01
43	FLT43-3PH	0.979	Lagging	-0.94	0.981	Lagging	-0.89	0.982	Lagging	-0.87
44	FLT44-3PH	1.000	Lagging	-0.06	1.000	Lagging	-0.09	1.000	Lagging	-0.13
45	FLT45-3PH	0.978	Lagging	-0.95	0.987	Lagging	-0.74	0.988	Lagging	-0.71

Table 5-5 (Continued)
Power Factor Analysis: GEN-2015-062

Reference Number	Case	16 Winter Peak			17 Summer Peak			25 Summer Peak		
		Power Factor		Q (MVAR)	Power Factor		Q (MVAR)	Power Factor		Q (MVAR)
46	FLT46-3PH	1.000	Leading	0.01	1.000	Lagging	-0.03	1.000	Lagging	-0.09
47	FLT47-3PH	1.000	Lagging	-0.13	0.999	Lagging	-0.19	0.998	Lagging	-0.25
48	FLT48-3PH	1.000	Lagging	-0.12	0.999	Lagging	-0.16	0.999	Lagging	-0.21
49	FLT49-3PH	1.000	Lagging	-0.11	0.999	Lagging	-0.15	0.999	Lagging	-0.20
50	FLT50-3PH	0.978	Lagging	-0.97	0.980	Lagging	-0.92	0.978	Lagging	-0.96
51	FLT51-3PH	1.000	Lagging	-0.11	1.000	Lagging	-0.11	0.999	Lagging	-0.16
52	FLT52-3PH	1.000	Lagging	-0.01	1.000	Lagging	-0.05	1.000	Lagging	-0.11
53	FLT53-3PH	1.000	Lagging	-0.01	1.000	Lagging	-0.06	1.000	Lagging	-0.11
54	FLT54-3PH	1.000	Lagging	-0.02	1.000	Lagging	-0.06	1.000	Lagging	-0.11
55	FLT55-3PH	1.000	Lagging	-0.02	1.000	Lagging	-0.06	1.000	Lagging	-0.11
56	FLT56-3PH	1.000	Lagging	-0.02	1.000	Lagging	-0.06	1.000	Lagging	-0.11
57	FLT57-3PH	1.000	Lagging	-0.01	1.000	Lagging	-0.06	1.000	Lagging	-0.11
58	FLT58-3PH	1.000	Lagging	-0.02	1.000	Lagging	-0.06	1.000	Lagging	-0.11
59	FLT59-3PH	1.000	Lagging	-0.02	1.000	Lagging	-0.06	1.000	Lagging	-0.11
60	FLT60-3PH	1.000	Lagging	-0.01	1.000	Lagging	-0.05	1.000	Lagging	-0.11
61	FLT61-3PH	1.000	Lagging	-0.02	1.000	Lagging	-0.06	1.000	Lagging	-0.12
62	FLT62-3PH	1.000	Lagging	-0.06	1.000	Lagging	-0.08	1.000	Lagging	-0.13
63	FLT63-3PH	1.000	Lagging	-0.02	1.000	Lagging	-0.06	1.000	Lagging	-0.11
64	FLT64-3PH	1.000	Lagging	-0.11	1.000	Lagging	-0.13	0.999	Lagging	-0.17
65	FLT65-3PH	0.999	Lagging	-0.18	0.999	Lagging	-0.15	0.999	Lagging	-0.18
66	FLT66-3PH	1.000	Lagging	-0.03	1.000	Lagging	-0.06	1.000	Lagging	-0.11
67	FLT67-3PH	1.000	Lagging	-0.02	1.000	Lagging	-0.06	1.000	Lagging	-0.12
68	FLT68-3PH	1.000	Lagging	-0.12	1.000	Lagging	-0.11	1.000	Lagging	-0.11
69	FLT69-3PH	1.000	Lagging	-0.01	1.000	Lagging	-0.05	1.000	Lagging	-0.11
70	FLT70-3PH	1.000	Lagging	-0.02	1.000	Lagging	-0.06	1.000	Lagging	-0.11
71	FLT71-3PH	1.000	Lagging	-0.05	1.000	Lagging	-0.09	1.000	Lagging	-0.13
72	FLT72-3PH	0.999	Lagging	-0.24	0.999	Lagging	-0.18	0.999	Lagging	-0.19
73	FLT73-3PH	1.000	Lagging	-0.03	1.000	Lagging	-0.01	1.000	Lagging	-0.11
74	FLT74-3PH	0.999	Lagging	-0.20	0.999	Lagging	-0.15	0.999	Lagging	-0.18
75	FLT75-3PH	1.000	Lagging	-0.09	1.000	Lagging	-0.07	0.999	Lagging	-0.20
76	FLT76-3PH	1.000	Lagging	-0.03	1.000	Lagging	-0.07	1.000	Lagging	-0.12
77	FLT77-3PH	1.000	Lagging	-0.05	1.000	Lagging	-0.12	0.999	Lagging	-0.18
78	FLT78-3PH	1.000	Leading	0.10	0.999	Leading	0.16	1.000	Leading	0.14

Table 5-6
Power Factor Analysis: GEN-2015-063

Reference Number	Case	16 Winter Peak			17 Summer Peak			25 Summer Peak		
		Power Factor		Q (MVAR)	Power Factor		Q (MVAR)	Power Factor		Q (MVAR)
0	Base	0.988	Lagging	-46.24	0.991	Leading	40.75	0.991	Leading	40.69
1	FLT01-3PH	0.986	Lagging	-50.08	0.994	Leading	33.52	0.994	Leading	33.15
2	FLT02-3PH	0.997	Lagging	-22.55	0.976	Leading	67.43	0.974	Leading	69.46
3	FLT03-3PH	0.969	Lagging	-76.19	1.000	Leading	7.81	1.000	Leading	3.08
4	FLT04-3PH	0.996	Lagging	-26.87	0.987	Leading	49.69	0.983	Leading	55.40
5	FLT05-3PH	0.945	Lagging	-103.49	1.000	Leading	7.43	0.999	Leading	12.67
6	FLT06-3PH	0.986	Lagging	-51.08	0.991	Leading	39.60	0.991	Leading	40.52
7	FLT07-3PH	0.895	Lagging	-149.83	0.991	Lagging	-39.74	0.994	Lagging	-34.32
8	FLT08-3PH	0.986	Lagging	-51.62	0.992	Leading	37.24	0.993	Leading	35.80
9	FLT09-3PH	0.988	Lagging	-47.27	0.991	Leading	40.72	0.991	Leading	40.78
10	FLT10-3PH	0.987	Lagging	-48.01	0.991	Leading	39.78	0.991	Leading	39.52
11	FLT11-3PH	0.989	Lagging	-45.67	0.991	Leading	41.25	0.991	Leading	39.43
12	FLT12-3PH	0.989	Lagging	-45.70	0.991	Leading	41.29	0.991	Leading	41.59
13	FLT13-3PH	0.896	Lagging	-148.70	0.980	Lagging	-60.53	0.999	Leading	12.58
14	FLT14-3PH	0.977	Lagging	-65.27	0.996	Leading	27.16	0.996	Leading	28.15
15	FLT15-3PH	0.989	Lagging	-45.57	0.991	Leading	40.55	0.991	Leading	40.55
16	FLT16-3PH	0.987	Lagging	-49.25	0.992	Leading	37.85	0.992	Leading	38.67
17	FLT17-3PH	0.988	Lagging	-47.68	0.990	Leading	42.01	0.990	Leading	42.52
18	FLT18-3PH	1.000	Leading	6.00	0.978	Leading	64.23	0.974	Leading	70.24
19	FLT19-3PH	0.996	Lagging	-27.46	0.985	Leading	52.47	0.988	Leading	47.77
20	FLT20-3PH	0.981	Lagging	-59.79	0.994	Leading	32.11	0.993	Leading	36.67
21	FLT21-3PH	0.987	Lagging	-48.09	0.992	Leading	38.60	0.992	Leading	38.41
22	FLT22-3PH	0.986	Lagging	-50.22	0.993	Leading	36.25	0.993	Leading	35.91
23	FLT23-3PH	0.988	Lagging	-47.78	0.992	Leading	38.91	0.992	Leading	38.70
24	FLT24-3PH	0.979	Lagging	-61.71	0.996	Leading	26.36	0.996	Leading	26.52
25	FLT25-3PH	0.907	Lagging	-139.18	0.963	Lagging	-84.00	0.965	Lagging	-81.91
26	FLT26-3PH	0.899	Lagging	-146.53	0.995	Lagging	-30.77	0.998	Lagging	-20.29
27	FLT27-3PH	0.911	Lagging	-135.62	0.986	Lagging	-49.95	0.983	Lagging	-55.87
28	FLT28-3PH	0.988	Lagging	-46.76	0.991	Leading	40.52	0.991	Leading	40.39
29	FLT29-3PH	0.987	Lagging	-48.51	0.992	Leading	38.90	0.992	Leading	37.31
30	FLT30-3PH	0.985	Lagging	-52.61	0.992	Leading	38.60	0.992	Leading	38.84
31	FLT31-3PH	0.982	Lagging	-57.62	0.994	Leading	33.22	0.993	Leading	35.30
32	FLT32-3PH	0.988	Lagging	-46.15	0.991	Leading	40.79	0.991	Leading	40.74
33	FLT33-3PH	0.989	Lagging	-45.13	0.990	Leading	41.67	0.990	Leading	41.88
34	FLT34-3PH	0.988	Lagging	-47.06	0.991	Leading	39.49	0.992	Leading	39.30
35	FLT35-3PH	0.988	Lagging	-47.62	0.991	Leading	39.80	0.991	Leading	39.83
36	FLT36-3PH	0.988	Lagging	-46.73	0.991	Leading	39.82	0.991	Leading	39.70
37	FLT37-3PH	0.988	Lagging	-47.10	0.991	Leading	39.84	0.991	Leading	39.65
38	FLT38-3PH	0.988	Lagging	-46.41	0.991	Leading	40.68	0.991	Leading	40.61
39	FLT39-3PH	0.988	Lagging	-46.82	0.991	Leading	40.14	0.991	Leading	40.07
40	FLT40-3PH	0.989	Lagging	-45.07	0.991	Leading	41.30	0.991	Leading	41.11
41	FLT41-3PH	0.988	Lagging	-46.64	0.991	Leading	39.98	0.991	Leading	39.80
42	FLT42-3PH	0.988	Lagging	-47.25	0.991	Leading	40.33	0.991	Leading	40.32
43	FLT43-3PH	1.000	Leading	1.63	0.998	Leading	20.72	0.999	Leading	15.58
44	FLT44-3PH	0.985	Lagging	-51.90	0.993	Leading	34.63	0.992	Leading	38.44
45	FLT45-3PH	0.924	Lagging	-124.27	0.998	Lagging	-19.38	0.999	Lagging	-13.50

Table 5-6 (Continued)
Power Factor Analysis: GEN-2015-063

Reference Number	Case	16 Winter Peak			17 Summer Peak			25 Summer Peak		
		Power Factor		Q (MVAR)	Power Factor		Q (MVAR)	Power Factor		Q (MVAR)
46	FLT46-3PH	0.992	Lagging	-38.63	0.987	Leading	49.60	0.987	Leading	49.36
47	FLT47-3PH	0.987	Lagging	-49.66	0.992	Leading	37.19	0.993	Leading	36.92
48	FLT48-3PH	0.987	Lagging	-48.14	0.992	Leading	38.63	0.992	Leading	38.43
49	FLT49-3PH	0.988	Lagging	-47.78	0.992	Leading	38.95	0.992	Leading	38.75
50	FLT50-3PH	0.960	Lagging	-87.68	1.000	Leading	6.02	1.000	Leading	8.34
51	FLT51-3PH	0.987	Lagging	-49.68	0.992	Leading	38.55	0.992	Leading	38.90
52	FLT52-3PH	0.988	Lagging	-46.12	0.991	Leading	40.73	0.991	Leading	40.65
53	FLT53-3PH	0.988	Lagging	-46.19	0.991	Leading	40.65	0.991	Leading	40.56
54	FLT54-3PH	0.988	Lagging	-46.81	0.991	Leading	40.43	0.991	Leading	40.55
55	FLT55-3PH	0.988	Lagging	-47.08	0.991	Leading	40.62	0.991	Leading	40.81
56	FLT56-3PH	0.988	Lagging	-46.91	0.991	Leading	40.10	0.991	Leading	40.07
57	FLT57-3PH	0.988	Lagging	-46.36	0.991	Leading	40.63	0.991	Leading	40.62
58	FLT58-3PH	0.988	Lagging	-46.71	0.991	Leading	40.54	0.991	Leading	40.51
59	FLT59-3PH	0.988	Lagging	-46.84	0.991	Leading	40.38	0.991	Leading	40.45
60	FLT60-3PH	0.988	Lagging	-46.22	0.991	Leading	40.78	0.991	Leading	40.72
61	FLT61-3PH	0.988	Lagging	-47.08	0.991	Leading	40.12	0.991	Leading	40.07
62	FLT62-3PH	0.986	Lagging	-50.96	0.992	Leading	38.09	0.992	Leading	38.43
63	FLT63-3PH	0.988	Lagging	-46.71	0.991	Leading	40.31	0.991	Leading	40.23
64	FLT64-3PH	0.983	Lagging	-55.91	0.994	Leading	32.78	0.993	Leading	34.71
65	FLT65-3PH	0.979	Lagging	-63.17	0.995	Leading	30.41	0.994	Leading	32.84
66	FLT66-3PH	0.987	Lagging	-48.08	0.991	Leading	40.11	0.991	Leading	40.25
67	FLT67-3PH	0.988	Lagging	-47.08	0.991	Leading	40.12	0.991	Leading	40.07
68	FLT68-3PH	0.982	Lagging	-57.23	0.994	Leading	34.14	0.991	Leading	40.69
69	FLT69-3PH	0.988	Lagging	-46.33	0.991	Leading	40.70	0.991	Leading	40.65
70	FLT70-3PH	0.988	Lagging	-47.22	0.991	Leading	40.31	0.991	Leading	40.23
71	FLT71-3PH	0.987	Lagging	-49.25	0.992	Leading	37.85	0.992	Leading	38.67
72	FLT72-3PH	0.986	Lagging	-51.07	0.992	Leading	38.77	0.992	Leading	38.28
73	FLT73-3PH	0.988	Lagging	-46.53	0.990	Leading	41.91	0.991	Leading	40.81
74	FLT74-3PH	0.986	Lagging	-50.05	0.991	Leading	39.67	0.992	Leading	39.01
75	FLT75-3PH	0.988	Lagging	-47.75	0.991	Leading	41.00	0.991	Leading	39.47
76	FLT76-3PH	0.988	Lagging	-46.96	0.991	Leading	40.34	0.991	Leading	40.13
77	FLT77-3PH	0.986	Lagging	-50.08	0.994	Leading	33.52	0.994	Leading	33.15
78	FLT78-3PH	0.997	Lagging	-22.55	0.976	Leading	67.43	0.974	Leading	69.46

Table 5-7
Power Factor Analysis: GEN-2015-066

Reference Number	Case	16 Winter Peak			17 Summer Peak			25 Summer Peak		
		Power Factor		Q (MVAR)	Power Factor		Q (MVAR)	Power Factor		Q (MVAR)
0	Base	0.908	Lagging	-114.62	0.972	Lagging	-59.59	0.983	Lagging	-46.49
1	FLT01-3PH	0.904	Lagging	-117.38	0.959	Lagging	-73.30	0.972	Lagging	-59.85
2	FLT02-3PH	1.000	Leading	1.02	0.988	Leading	38.37	0.979	Leading	51.39
3	FLT03-3PH	0.796	Lagging	-188.27	0.868	Lagging	-141.91	0.889	Lagging	-127.91
4	FLT04-3PH	0.857	Lagging	-149.08	0.928	Lagging	-99.67	0.934	Lagging	-95.13
5	FLT05-3PH	0.996	Lagging	-23.42	0.985	Lagging	-43.94	0.973	Lagging	-58.68
6	FLT06-3PH	0.919	Lagging	-106.69	0.981	Lagging	-49.35	0.989	Lagging	-37.03
7	FLT07-3PH	0.787	Lagging	-194.24	0.861	Lagging	-146.72	0.888	Lagging	-128.18
8	FLT08-3PH	0.900	Lagging	-119.92	0.970	Lagging	-62.55	0.980	Lagging	-50.08
9	FLT09-3PH	0.906	Lagging	-116.10	0.972	Lagging	-59.97	0.983	Lagging	-46.84
10	FLT10-3PH	0.905	Lagging	-116.34	0.972	Lagging	-60.43	0.982	Lagging	-47.37
11	FLT11-3PH	0.908	Lagging	-114.62	0.972	Lagging	-59.52	0.982	Lagging	-47.23
12	FLT12-3PH	0.909	Lagging	-114.00	0.972	Lagging	-59.40	0.983	Lagging	-46.19
13	FLT13-3PH	0.816	Lagging	-175.70	0.901	Lagging	-119.53	0.969	Lagging	-63.22
14	FLT14-3PH	0.875	Lagging	-136.94	0.956	Lagging	-76.50	0.971	Lagging	-60.99
15	FLT15-3PH	0.894	Lagging	-124.01	0.966	Lagging	-66.44	0.975	Lagging	-56.93
16	FLT16-3PH	0.904	Lagging	-117.64	0.970	Lagging	-62.59	0.981	Lagging	-48.48
17	FLT17-3PH	0.904	Lagging	-117.21	0.973	Lagging	-58.33	0.984	Lagging	-44.78
18	FLT18-3PH	0.804	Lagging	-183.39	0.910	Lagging	-113.22	0.939	Lagging	-90.88
19	FLT19-3PH	0.909	Lagging	-113.96	0.979	Lagging	-51.53	0.986	Lagging	-42.04
20	FLT20-3PH	0.897	Lagging	-121.95	0.968	Lagging	-64.04	0.981	Lagging	-48.55
21	FLT21-3PH	0.902	Lagging	-118.98	0.968	Lagging	-64.45	0.979	Lagging	-51.06
22	FLT22-3PH	0.899	Lagging	-120.57	0.967	Lagging	-65.53	0.978	Lagging	-52.60
23	FLT23-3PH	0.903	Lagging	-118.09	0.969	Lagging	-63.56	0.980	Lagging	-50.32
24	FLT24-3PH	0.872	Lagging	-139.16	0.949	Lagging	-82.29	0.964	Lagging	-68.50
25	FLT25-3PH	0.845	Lagging	-157.18	0.838	Lagging	-161.52	0.859	Lagging	-147.52
26	FLT26-3PH	0.993	Lagging	-29.64	0.981	Leading	49.38	0.975	Leading	56.68
27	FLT27-3PH	0.620	Lagging	-313.55	0.687	Lagging	-262.23	0.709	Lagging	-247.01
28	FLT28-3PH	0.907	Lagging	-115.25	0.972	Lagging	-60.11	0.983	Lagging	-46.99
29	FLT29-3PH	0.889	Lagging	-128.02	0.962	Lagging	-70.03	0.972	Lagging	-59.85
30	FLT30-3PH	0.888	Lagging	-128.71	0.967	Lagging	-65.70	0.978	Lagging	-52.34
31	FLT31-3PH	0.878	Lagging	-135.50	0.959	Lagging	-73.69	0.974	Lagging	-57.49
32	FLT32-3PH	0.908	Lagging	-114.67	0.972	Lagging	-59.63	0.983	Lagging	-46.53
33	FLT33-3PH	0.908	Lagging	-114.77	0.972	Lagging	-59.55	0.983	Lagging	-46.47
34	FLT34-3PH	0.907	Lagging	-115.12	0.972	Lagging	-60.31	0.982	Lagging	-47.25
35	FLT35-3PH	0.907	Lagging	-115.32	0.972	Lagging	-60.00	0.983	Lagging	-46.86
36	FLT36-3PH	0.907	Lagging	-114.83	0.972	Lagging	-60.04	0.983	Lagging	-46.96
37	FLT37-3PH	0.907	Lagging	-115.03	0.972	Lagging	-60.05	0.983	Lagging	-47.01
38	FLT38-3PH	0.908	Lagging	-114.73	0.972	Lagging	-59.61	0.983	Lagging	-46.51
39	FLT39-3PH	0.907	Lagging	-114.92	0.972	Lagging	-59.91	0.983	Lagging	-46.81
40	FLT40-3PH	0.907	Lagging	-114.84	0.972	Lagging	-59.82	0.983	Lagging	-46.96
41	FLT41-3PH	0.907	Lagging	-114.88	0.972	Lagging	-60.04	0.983	Lagging	-46.98
42	FLT42-3PH	0.907	Lagging	-115.13	0.972	Lagging	-59.75	0.983	Lagging	-46.63
43	FLT43-3PH	0.711	Lagging	-245.16	0.831	Lagging	-165.73	0.877	Lagging	-136.19
44	FLT44-3PH	0.899	Lagging	-120.81	0.968	Lagging	-64.46	0.980	Lagging	-49.99
45	FLT45-3PH	0.829	Lagging	-167.55	0.921	Lagging	-104.67	0.938	Lagging	-91.84

Table 5-7 (Continued)
Power Factor Analysis: GEN-2015-066

Reference Number	Case	16 Winter Peak			17 Summer Peak			25 Summer Peak		
		Power Factor		Q (MVAR)	Power Factor		Q (MVAR)	Power Factor		Q (MVAR)
46	FLT46-3PH	0.994	Lagging	-28.06	0.990	Leading	35.17	0.981	Leading	49.59
47	FLT47-3PH	0.901	Lagging	-119.76	0.968	Lagging	-64.28	0.979	Lagging	-51.31
48	FLT48-3PH	0.902	Lagging	-118.95	0.968	Lagging	-64.33	0.980	Lagging	-50.96
49	FLT49-3PH	0.903	Lagging	-118.02	0.969	Lagging	-63.42	0.980	Lagging	-50.17
50	FLT50-3PH	0.810	Lagging	-179.54	0.904	Lagging	-117.58	0.927	Lagging	-100.42
51	FLT51-3PH	0.902	Lagging	-118.94	0.969	Lagging	-63.11	0.981	Lagging	-49.54
52	FLT52-3PH	0.908	Lagging	-114.47	0.972	Lagging	-59.48	0.983	Lagging	-46.40
53	FLT53-3PH	0.908	Lagging	-114.47	0.972	Lagging	-59.44	0.983	Lagging	-46.35
54	FLT54-3PH	0.907	Lagging	-115.14	0.972	Lagging	-59.79	0.983	Lagging	-46.52
55	FLT55-3PH	0.906	Lagging	-115.62	0.972	Lagging	-60.00	0.983	Lagging	-46.64
56	FLT56-3PH	0.907	Lagging	-115.21	0.972	Lagging	-60.15	0.983	Lagging	-46.90
57	FLT57-3PH	0.908	Lagging	-114.75	0.972	Lagging	-59.73	0.983	Lagging	-46.59
58	FLT58-3PH	0.907	Lagging	-115.12	0.972	Lagging	-59.78	0.983	Lagging	-46.65
59	FLT59-3PH	0.906	Lagging	-115.55	0.972	Lagging	-60.29	0.982	Lagging	-47.03
60	FLT60-3PH	0.908	Lagging	-114.59	0.972	Lagging	-59.55	0.983	Lagging	-46.46
61	FLT61-3PH	0.907	Lagging	-115.42	0.972	Lagging	-60.10	0.983	Lagging	-46.94
62	FLT62-3PH	0.900	Lagging	-119.92	0.970	Lagging	-62.62	0.981	Lagging	-48.95
63	FLT63-3PH	0.907	Lagging	-115.07	0.972	Lagging	-60.05	0.983	Lagging	-46.94
64	FLT64-3PH	0.891	Lagging	-126.03	0.963	Lagging	-69.60	0.977	Lagging	-54.14
65	FLT65-3PH	0.876	Lagging	-136.72	0.957	Lagging	-74.91	0.973	Lagging	-58.73
66	FLT66-3PH	0.905	Lagging	-116.74	0.972	Lagging	-60.34	0.983	Lagging	-46.99
67	FLT67-3PH	0.907	Lagging	-115.42	0.972	Lagging	-60.10	0.983	Lagging	-46.94
68	FLT68-3PH	0.885	Lagging	-130.37	0.962	Lagging	-70.75	0.983	Lagging	-46.49
69	FLT69-3PH	0.908	Lagging	-114.72	0.972	Lagging	-59.63	0.983	Lagging	-46.52
70	FLT70-3PH	0.906	Lagging	-115.69	0.972	Lagging	-60.04	0.983	Lagging	-46.94
71	FLT71-3PH	0.904	Lagging	-117.64	0.970	Lagging	-62.59	0.981	Lagging	-48.48
72	FLT72-3PH	0.901	Lagging	-119.16	0.971	Lagging	-61.39	0.981	Lagging	-48.50
73	FLT73-3PH	0.907	Lagging	-114.86	0.973	Lagging	-58.35	0.983	Lagging	-46.62
74	FLT74-3PH	0.903	Lagging	-117.90	0.972	Lagging	-60.01	0.982	Lagging	-47.52
75	FLT75-3PH	0.906	Lagging	-115.94	0.973	Lagging	-59.15	0.982	Lagging	-47.56
76	FLT76-3PH	0.906	Lagging	-115.66	0.972	Lagging	-60.24	0.982	Lagging	-47.10
77	FLT77-3PH	0.904	Lagging	-117.38	0.959	Lagging	-73.30	0.972	Lagging	-59.85
78	FLT78-3PH	1.000	Leading	1.02	0.988	Leading	38.37	0.979	Leading	51.39

Table 5-8
Power Factor Analysis: GEN-2015-067

Reference Number	Case	16 Winter Peak			17 Summer Peak			25 Summer Peak		
		Power Factor		Q (MVAR)	Power Factor		Q (MVAR)	Power Factor		Q (MVAR)
0	Base	0.867	Lagging	-86.39	0.873	Lagging	-83.93	0.873	Lagging	-83.77
1	FLT01-3PH	0.860	Lagging	-89.16	0.863	Lagging	-87.89	0.864	Lagging	-87.46
2	FLT02-3PH	0.908	Lagging	-69.32	0.913	Lagging	-67.11	0.910	Lagging	-68.45
3	FLT03-3PH	0.828	Lagging	-101.50	0.837	Lagging	-97.93	0.830	Lagging	-100.96
4	FLT04-3PH	0.845	Lagging	-94.83	0.850	Lagging	-92.82	0.847	Lagging	-94.20
5	FLT05-3PH	0.844	Lagging	-95.32	0.870	Lagging	-84.99	0.876	Lagging	-82.53
6	FLT06-3PH	0.897	Lagging	-74.10	0.881	Lagging	-80.59	0.878	Lagging	-81.79
7	FLT07-3PH	0.815	Lagging	-106.61	0.819	Lagging	-105.02	0.822	Lagging	-103.96
8	FLT08-3PH	0.863	Lagging	-87.79	0.871	Lagging	-84.70	0.871	Lagging	-84.73
9	FLT09-3PH	0.865	Lagging	-86.93	0.872	Lagging	-84.06	0.873	Lagging	-83.88
10	FLT10-3PH	0.865	Lagging	-86.88	0.872	Lagging	-84.16	0.872	Lagging	-84.01
11	FLT11-3PH	0.867	Lagging	-86.40	0.873	Lagging	-83.91	0.873	Lagging	-83.99
12	FLT12-3PH	0.867	Lagging	-86.22	0.873	Lagging	-83.90	0.873	Lagging	-83.70
13	FLT13-3PH	0.816	Lagging	-106.36	0.833	Lagging	-99.82	0.860	Lagging	-89.01
14	FLT14-3PH	0.853	Lagging	-91.85	0.863	Lagging	-87.88	0.864	Lagging	-87.29
15	FLT15-3PH	0.862	Lagging	-88.26	0.869	Lagging	-85.40	0.868	Lagging	-85.77
16	FLT16-3PH	0.864	Lagging	-87.29	0.871	Lagging	-84.71	0.872	Lagging	-84.30
17	FLT17-3PH	0.865	Lagging	-87.18	0.873	Lagging	-83.62	0.874	Lagging	-83.32
18	FLT18-3PH	0.819	Lagging	-105.14	0.836	Lagging	-98.48	0.843	Lagging	-95.85
19	FLT19-3PH	0.838	Lagging	-97.62	0.858	Lagging	-89.73	0.863	Lagging	-87.75
20	FLT20-3PH	0.870	Lagging	-84.97	0.873	Lagging	-83.74	0.872	Lagging	-84.20
21	FLT21-3PH	0.876	Lagging	-82.77	0.884	Lagging	-79.46	0.885	Lagging	-79.02
22	FLT22-3PH	0.871	Lagging	-84.62	0.879	Lagging	-81.17	0.880	Lagging	-80.86
23	FLT23-3PH	0.877	Lagging	-82.28	0.884	Lagging	-79.14	0.885	Lagging	-78.98
24	FLT24-3PH	0.878	Lagging	-81.68	0.891	Lagging	-76.33	0.893	Lagging	-75.45
25	FLT25-3PH	0.837	Lagging	-98.17	0.821	Lagging	-104.34	0.819	Lagging	-105.01
26	FLT26-3PH	0.799	Lagging	-112.80	0.825	Lagging	-102.64	0.836	Lagging	-98.65
27	FLT27-3PH	0.755	Lagging	-130.19	0.766	Lagging	-125.86	0.759	Lagging	-128.80
28	FLT28-3PH	0.866	Lagging	-86.59	0.872	Lagging	-84.06	0.873	Lagging	-83.89
29	FLT29-3PH	0.860	Lagging	-89.16	0.868	Lagging	-85.83	0.867	Lagging	-86.29
30	FLT30-3PH	0.858	Lagging	-89.69	0.869	Lagging	-85.32	0.870	Lagging	-85.09
31	FLT31-3PH	0.856	Lagging	-90.52	0.865	Lagging	-86.94	0.867	Lagging	-86.04
32	FLT32-3PH	0.866	Lagging	-86.67	0.872	Lagging	-84.19	0.872	Lagging	-84.03
33	FLT33-3PH	0.862	Lagging	-88.26	0.868	Lagging	-85.78	0.867	Lagging	-86.07
34	FLT34-3PH	0.866	Lagging	-86.74	0.872	Lagging	-84.37	0.872	Lagging	-84.23
35	FLT35-3PH	0.866	Lagging	-86.45	0.873	Lagging	-83.93	0.873	Lagging	-83.77
36	FLT36-3PH	0.866	Lagging	-86.57	0.872	Lagging	-84.32	0.872	Lagging	-84.17
37	FLT37-3PH	0.866	Lagging	-86.62	0.872	Lagging	-84.25	0.872	Lagging	-84.14
38	FLT38-3PH	0.866	Lagging	-86.46	0.873	Lagging	-84.00	0.873	Lagging	-83.85
39	FLT39-3PH	0.866	Lagging	-86.53	0.872	Lagging	-84.12	0.873	Lagging	-83.97
40	FLT40-3PH	0.863	Lagging	-87.94	0.869	Lagging	-85.24	0.869	Lagging	-85.39
41	FLT41-3PH	0.866	Lagging	-86.67	0.872	Lagging	-84.29	0.872	Lagging	-84.14
42	FLT42-3PH	0.867	Lagging	-86.41	0.873	Lagging	-83.91	0.873	Lagging	-83.75
43	FLT43-3PH	0.774	Lagging	-122.54	0.800	Lagging	-112.63	0.811	Lagging	-108.34
44	FLT44-3PH	0.863	Lagging	-87.96	0.870	Lagging	-85.15	0.871	Lagging	-84.66
45	FLT45-3PH	0.803	Lagging	-111.32	0.821	Lagging	-104.18	0.827	Lagging	-101.89

Table 5-8 (Continued)
Power Factor Analysis: GEN-2015-067

Reference Number	Case	16 Winter Peak			17 Summer Peak			25 Summer Peak		
		Power Factor		Q (MVAR)	Power Factor		Q (MVAR)	Power Factor		Q (MVAR)
46	FLT46-3PH	0.870	Lagging	-85.08	0.875	Lagging	-82.79	0.875	Lagging	-83.08
47	FLT47-3PH	0.875	Lagging	-83.02	0.883	Lagging	-79.67	0.884	Lagging	-79.25
48	FLT48-3PH	0.875	Lagging	-83.02	0.883	Lagging	-79.86	0.884	Lagging	-79.40
49	FLT49-3PH	0.877	Lagging	-82.19	0.885	Lagging	-79.03	0.885	Lagging	-78.86
50	FLT50-3PH	0.885	Lagging	-79.06	0.915	Lagging	-66.24	0.912	Lagging	-67.52
51	FLT51-3PH	0.861	Lagging	-88.79	0.868	Lagging	-85.79	0.869	Lagging	-85.34
52	FLT52-3PH	0.867	Lagging	-86.35	0.873	Lagging	-83.92	0.873	Lagging	-83.76
53	FLT53-3PH	0.867	Lagging	-86.36	0.873	Lagging	-83.91	0.873	Lagging	-83.76
54	FLT54-3PH	0.866	Lagging	-86.55	0.873	Lagging	-84.00	0.873	Lagging	-83.79
55	FLT55-3PH	0.866	Lagging	-86.69	0.872	Lagging	-84.04	0.873	Lagging	-83.81
56	FLT56-3PH	0.866	Lagging	-86.59	0.872	Lagging	-84.07	0.873	Lagging	-83.88
57	FLT57-3PH	0.866	Lagging	-86.43	0.873	Lagging	-83.97	0.873	Lagging	-83.80
58	FLT58-3PH	0.866	Lagging	-86.53	0.873	Lagging	-83.99	0.873	Lagging	-83.82
59	FLT59-3PH	0.866	Lagging	-86.60	0.872	Lagging	-84.09	0.873	Lagging	-83.89
60	FLT60-3PH	0.867	Lagging	-86.39	0.873	Lagging	-83.93	0.873	Lagging	-83.77
61	FLT61-3PH	0.866	Lagging	-86.67	0.872	Lagging	-84.07	0.873	Lagging	-83.90
62	FLT62-3PH	0.863	Lagging	-87.79	0.871	Lagging	-84.67	0.872	Lagging	-84.39
63	FLT63-3PH	0.866	Lagging	-86.51	0.872	Lagging	-84.05	0.873	Lagging	-83.89
64	FLT64-3PH	0.860	Lagging	-89.10	0.867	Lagging	-86.33	0.868	Lagging	-85.63
65	FLT65-3PH	0.853	Lagging	-91.59	0.864	Lagging	-87.44	0.866	Lagging	-86.62
66	FLT66-3PH	0.865	Lagging	-87.00	0.872	Lagging	-84.12	0.873	Lagging	-83.90
67	FLT67-3PH	0.866	Lagging	-86.67	0.872	Lagging	-84.07	0.873	Lagging	-83.90
68	FLT68-3PH	0.857	Lagging	-90.11	0.866	Lagging	-86.42	0.873	Lagging	-83.77
69	FLT69-3PH	0.866	Lagging	-86.42	0.873	Lagging	-83.94	0.873	Lagging	-83.78
70	FLT70-3PH	0.866	Lagging	-86.69	0.872	Lagging	-84.05	0.873	Lagging	-83.89
71	FLT71-3PH	0.864	Lagging	-87.29	0.871	Lagging	-84.71	0.872	Lagging	-84.30
72	FLT72-3PH	0.850	Lagging	-92.85	0.870	Lagging	-85.20	0.869	Lagging	-85.55
73	FLT73-3PH	0.866	Lagging	-86.45	0.880	Lagging	-80.93	0.874	Lagging	-83.46
74	FLT74-3PH	0.853	Lagging	-91.85	0.871	Lagging	-84.56	0.870	Lagging	-85.20
75	FLT75-3PH	0.863	Lagging	-87.89	0.878	Lagging	-81.82	0.868	Lagging	-85.92
76	FLT76-3PH	0.865	Lagging	-87.06	0.871	Lagging	-84.51	0.872	Lagging	-84.24
77	FLT77-3PH	0.860	Lagging	-89.16	0.863	Lagging	-87.89	0.864	Lagging	-87.46
78	FLT78-3PH	0.908	Lagging	-69.32	0.913	Lagging	-67.11	0.910	Lagging	-68.45

Table 5-9
Power Factor Analysis: GEN-2015-069

Reference Number	Case	16 Winter Peak			17 Summer Peak			25 Summer Peak		
		Power Factor		Q (MVAR)	Power Factor		Q (MVAR)	Power Factor		Q (MVAR)
0	Base	0.994	Leading	32.52	0.997	Leading	24.75	0.997	Leading	25.00
1	FLT01-3PH	0.994	Leading	33.86	0.996	Leading	25.63	0.996	Leading	25.96
2	FLT02-3PH	0.998	Leading	25.63	0.999	Leading	15.70	0.999	Leading	16.07
3	FLT03-3PH	0.993	Leading	34.56	0.996	Leading	27.83	0.996	Leading	28.09
4	FLT04-3PH	0.994	Leading	32.52	0.996	Leading	25.31	0.996	Leading	25.59
5	FLT05-3PH	0.995	Leading	30.11	0.998	Leading	17.40	0.998	Leading	18.76
6	FLT06-3PH	0.994	Leading	32.65	0.997	Leading	24.78	0.997	Leading	25.04
7	FLT07-3PH	0.994	Leading	31.67	0.997	Leading	22.45	0.997	Leading	22.51
8	FLT08-3PH	0.994	Leading	32.46	0.997	Leading	21.90	0.997	Leading	21.77
9	FLT09-3PH	0.994	Leading	32.52	0.997	Leading	23.91	0.997	Leading	24.22
10	FLT10-3PH	0.994	Leading	32.62	0.997	Leading	23.99	0.997	Leading	24.22
11	FLT11-3PH	0.994	Leading	32.40	0.997	Leading	24.61	0.997	Leading	24.56
12	FLT12-3PH	0.994	Leading	33.19	0.997	Leading	24.19	0.997	Leading	24.72
13	FLT13-3PH	0.994	Leading	32.52	0.994	Leading	31.60	0.996	Leading	26.95
14	FLT14-3PH	0.994	Leading	32.52	1.000	Leading	3.70	1.000	Leading	6.56
15	FLT15-3PH	0.994	Leading	32.52	0.996	Leading	26.89	0.995	Leading	29.69
16	FLT16-3PH	0.994	Leading	32.52	0.995	Leading	30.79	0.996	Leading	28.26
17	FLT17-3PH	0.994	Leading	32.52	0.996	Leading	25.92	0.996	Leading	26.73
18	FLT18-3PH	0.994	Leading	31.68	0.998	Leading	20.28	0.997	Leading	21.39
19	FLT19-3PH	0.998	Leading	22.13	0.999	Leading	13.76	0.998	Leading	18.17
20	FLT20-3PH	0.994	Leading	32.57	0.997	Leading	24.33	0.997	Leading	24.62
21	FLT21-3PH	0.994	Leading	32.58	0.997	Leading	24.74	0.997	Leading	24.99
22	FLT22-3PH	0.994	Leading	32.53	0.997	Leading	24.56	0.997	Leading	24.80
23	FLT23-3PH	0.994	Leading	32.58	0.997	Leading	24.75	0.997	Leading	25.01
24	FLT24-3PH	0.994	Leading	32.31	0.997	Leading	23.85	0.997	Leading	24.15
25	FLT25-3PH	0.994	Leading	31.78	0.997	Leading	21.85	0.997	Leading	22.11
26	FLT26-3PH	0.995	Leading	29.21	0.999	Leading	13.88	0.999	Leading	16.05
27	FLT27-3PH	0.993	Leading	35.05	0.995	Leading	28.95	0.995	Leading	29.55
28	FLT28-3PH	0.994	Leading	32.53	0.997	Leading	24.69	0.997	Leading	24.96
29	FLT29-3PH	0.994	Leading	33.03	0.996	Leading	27.20	0.996	Leading	28.10
30	FLT30-3PH	0.995	Leading	31.02	0.997	Leading	23.75	0.997	Leading	24.06
31	FLT31-3PH	0.994	Leading	32.71	0.997	Leading	21.83	0.997	Leading	22.66
32	FLT32-3PH	0.994	Leading	32.52	0.997	Leading	24.75	0.997	Leading	25.00
33	FLT33-3PH	0.994	Leading	32.51	0.997	Leading	24.76	0.997	Leading	24.99
34	FLT34-3PH	0.994	Leading	32.52	0.997	Leading	24.74	0.997	Leading	24.98
35	FLT35-3PH	0.994	Leading	32.52	0.997	Leading	24.74	0.997	Leading	24.99
36	FLT36-3PH	0.994	Leading	32.53	0.997	Leading	24.75	0.997	Leading	25.00
37	FLT37-3PH	0.994	Leading	32.53	0.997	Leading	24.76	0.997	Leading	25.00
38	FLT38-3PH	0.994	Leading	32.52	0.997	Leading	24.75	0.997	Leading	25.00
39	FLT39-3PH	0.994	Leading	32.52	0.997	Leading	24.74	0.997	Leading	24.99
40	FLT40-3PH	0.994	Leading	32.51	0.997	Leading	24.76	0.997	Leading	24.99
41	FLT41-3PH	0.994	Leading	32.53	0.997	Leading	24.75	0.997	Leading	25.00
42	FLT42-3PH	0.994	Leading	32.52	0.997	Leading	24.75	0.997	Leading	25.00
43	FLT43-3PH	0.995	Leading	30.67	0.998	Leading	17.57	0.998	Leading	18.77
44	FLT44-3PH	0.994	Leading	32.47	0.997	Leading	24.39	0.997	Leading	24.69
45	FLT45-3PH	0.995	Leading	30.56	0.998	Leading	18.08	0.998	Leading	19.50

Table 5-9 (Continued)
Power Factor Analysis: GEN-2015-069

Reference Number	Case	16 Winter Peak			17 Summer Peak			25 Summer Peak		
		Power Factor		Q (MVAR)	Power Factor		Q (MVAR)	Power Factor		Q (MVAR)
46	FLT46-3PH	0.994	Leading	32.43	0.997	Leading	24.55	0.997	Leading	24.74
47	FLT47-3PH	0.994	Leading	32.48	0.997	Leading	24.60	0.997	Leading	24.85
48	FLT48-3PH	0.994	Leading	32.57	0.997	Leading	24.74	0.997	Leading	24.99
49	FLT49-3PH	0.994	Leading	32.58	0.997	Leading	24.75	0.997	Leading	25.00
50	FLT50-3PH	0.994	Leading	31.87	0.997	Leading	22.23	0.997	Leading	22.72
51	FLT51-3PH	0.994	Leading	32.50	0.997	Leading	24.50	0.997	Leading	24.79
52	FLT52-3PH	0.996	Leading	28.27	0.997	Leading	22.91	0.997	Leading	22.52
53	FLT53-3PH	0.996	Leading	28.14	0.997	Leading	23.52	0.997	Leading	23.26
54	FLT54-3PH	0.994	Leading	32.12	0.997	Leading	24.53	0.997	Leading	24.83
55	FLT55-3PH	0.994	Leading	32.25	0.997	Leading	22.88	0.997	Leading	23.63
56	FLT56-3PH	0.995	Leading	30.35	0.997	Leading	21.51	0.997	Leading	21.91
57	FLT57-3PH	0.994	Leading	32.26	0.997	Leading	24.36	0.997	Leading	24.67
58	FLT58-3PH	0.994	Leading	31.92	0.997	Leading	25.15	0.996	Leading	25.78
59	FLT59-3PH	0.995	Leading	30.52	0.997	Leading	23.33	0.997	Leading	23.65
60	FLT60-3PH	0.994	Leading	32.98	0.997	Leading	24.31	0.997	Leading	24.20
61	FLT61-3PH	0.996	Leading	25.44	0.997	Leading	22.68	0.997	Leading	22.97
62	FLT62-3PH	0.999	Lagging	-11.17	1.000	Lagging	-4.30	1.000	Lagging	-2.95
63	FLT63-3PH	0.993	Leading	35.29	0.996	Leading	28.21	0.995	Leading	29.39
64	FLT64-3PH	0.989	Leading	43.87	0.994	Leading	33.82	0.995	Leading	29.89
65	FLT65-3PH	1.000	Lagging	-8.24	0.994	Leading	31.62	0.994	Leading	32.11
66	FLT66-3PH	0.999	Leading	11.82	0.999	Leading	11.98	0.999	Leading	12.93
67	FLT67-3PH	0.996	Leading	25.44	0.997	Leading	22.68	0.997	Leading	22.97
68	FLT68-3PH	0.997	Leading	23.28	0.990	Leading	41.89	0.997	Leading	25.00
69	FLT69-3PH	0.995	Leading	30.82	0.997	Leading	24.15	0.997	Leading	24.70
70	FLT70-3PH	0.997	Leading	25.15	0.996	Leading	28.29	0.995	Leading	29.46
71	FLT71-3PH	0.994	Leading	32.52	0.995	Leading	30.79	0.996	Leading	28.26
72	FLT72-3PH	0.994	Leading	32.92	0.996	Leading	25.19	0.997	Leading	24.82
73	FLT73-3PH	0.994	Leading	32.72	0.997	Leading	25.06	0.997	Leading	24.99
74	FLT74-3PH	0.994	Leading	32.90	0.996	Leading	25.31	0.997	Leading	24.97
75	FLT75-3PH	0.994	Leading	32.83	0.996	Leading	25.21	0.996	Leading	25.27
76	FLT76-3PH	0.994	Leading	32.53	0.997	Leading	24.64	0.997	Leading	24.84
77	FLT77-3PH	0.994	Leading	33.86	0.996	Leading	25.63	0.996	Leading	25.96
78	FLT78-3PH	0.999	Leading	24.93	0.999	Leading	15.70	0.999	Leading	16.07

Table 5-10
Power Factor Analysis: GEN-2015-073

Reference Number	Case	16 Winter Peak			17 Summer Peak			25 Summer Peak		
		Power Factor		Q (MVAR)	Power Factor		Q (MVAR)	Power Factor		Q (MVAR)
0	Base	0.987	Leading	32.43	0.992	Leading	24.75	0.992	Leading	25.00
1	FLT01-3PH	0.986	Leading	33.83	0.992	Leading	25.63	0.992	Leading	25.96
2	FLT02-3PH	0.998	Leading	25.63	0.997	Leading	15.70	0.997	Leading	16.07
3	FLT03-3PH	0.985	Leading	34.55	0.990	Leading	27.83	0.990	Leading	28.09
4	FLT04-3PH	0.987	Leading	32.42	0.992	Leading	25.31	0.992	Leading	25.59
5	FLT05-3PH	0.989	Leading	30.06	0.996	Leading	17.40	0.996	Leading	18.76
6	FLT06-3PH	0.987	Leading	32.50	0.992	Leading	24.78	0.992	Leading	25.04
7	FLT07-3PH	0.988	Leading	31.51	0.994	Leading	22.45	0.994	Leading	22.51
8	FLT08-3PH	0.987	Leading	32.34	0.994	Leading	21.90	0.994	Leading	21.77
9	FLT09-3PH	0.987	Leading	32.43	0.993	Leading	23.91	0.993	Leading	24.22
10	FLT10-3PH	0.987	Leading	32.47	0.993	Leading	23.99	0.993	Leading	24.22
11	FLT11-3PH	0.987	Leading	32.31	0.993	Leading	24.61	0.993	Leading	24.56
12	FLT12-3PH	0.987	Leading	32.95	0.993	Leading	24.19	0.992	Leading	24.72
13	FLT13-3PH	0.987	Leading	32.43	0.988	Leading	31.60	0.991	Leading	26.95
14	FLT14-3PH	0.987	Leading	32.43	1.000	Leading	3.70	0.999	Leading	6.56
15	FLT15-3PH	0.987	Leading	32.43	0.991	Leading	26.89	0.989	Leading	29.69
16	FLT16-3PH	0.987	Leading	32.43	0.988	Leading	30.79	0.990	Leading	28.26
17	FLT17-3PH	0.987	Leading	32.43	0.992	Leading	25.92	0.991	Leading	26.73
18	FLT18-3PH	0.988	Leading	31.53	0.995	Leading	20.28	0.994	Leading	21.39
19	FLT19-3PH	0.998	Leading	22.13	0.998	Leading	13.76	0.996	Leading	18.17
20	FLT20-3PH	0.987	Leading	32.41	0.993	Leading	24.33	0.993	Leading	24.62
21	FLT21-3PH	0.987	Leading	32.42	0.992	Leading	24.74	0.992	Leading	24.99
22	FLT22-3PH	0.987	Leading	32.37	0.993	Leading	24.56	0.992	Leading	24.80
23	FLT23-3PH	0.987	Leading	32.42	0.992	Leading	24.75	0.992	Leading	25.01
24	FLT24-3PH	0.987	Leading	32.16	0.993	Leading	23.85	0.993	Leading	24.15
25	FLT25-3PH	0.988	Leading	31.57	0.994	Leading	21.85	0.994	Leading	22.11
26	FLT26-3PH	0.990	Leading	29.17	0.998	Leading	13.88	0.997	Leading	16.05
27	FLT27-3PH	0.985	Leading	35.12	0.990	Leading	28.95	0.989	Leading	29.55
28	FLT28-3PH	0.987	Leading	32.38	0.992	Leading	24.69	0.992	Leading	24.96
29	FLT29-3PH	0.987	Leading	32.77	0.991	Leading	27.20	0.990	Leading	28.10
30	FLT30-3PH	0.988	Leading	30.94	0.993	Leading	23.75	0.993	Leading	24.06
31	FLT31-3PH	0.987	Leading	32.45	0.994	Leading	21.83	0.994	Leading	22.66
32	FLT32-3PH	0.987	Leading	32.42	0.992	Leading	24.75	0.992	Leading	25.00
33	FLT33-3PH	0.987	Leading	32.42	0.992	Leading	24.76	0.992	Leading	24.99
34	FLT34-3PH	0.987	Leading	32.43	0.992	Leading	24.74	0.992	Leading	24.98
35	FLT35-3PH	0.987	Leading	32.42	0.992	Leading	24.74	0.992	Leading	24.99
36	FLT36-3PH	0.987	Leading	32.43	0.992	Leading	24.75	0.992	Leading	25.00
37	FLT37-3PH	0.987	Leading	32.43	0.992	Leading	24.76	0.992	Leading	25.00
38	FLT38-3PH	0.987	Leading	32.42	0.992	Leading	24.75	0.992	Leading	25.00
39	FLT39-3PH	0.987	Leading	32.43	0.992	Leading	24.74	0.992	Leading	24.99
40	FLT40-3PH	0.987	Leading	32.42	0.992	Leading	24.76	0.992	Leading	24.99
41	FLT41-3PH	0.987	Leading	32.43	0.992	Leading	24.75	0.992	Leading	25.00
42	FLT42-3PH	0.987	Leading	32.43	0.992	Leading	24.75	0.992	Leading	25.00
43	FLT43-3PH	0.988	Leading	30.75	0.996	Leading	17.57	0.996	Leading	18.77
44	FLT44-3PH	0.987	Leading	32.31	0.993	Leading	24.39	0.992	Leading	24.69
45	FLT45-3PH	0.989	Leading	30.47	0.996	Leading	18.08	0.995	Leading	19.50

Table 5-10 (Continued)
Power Factor Analysis: GEN-2015-073

Reference Number	Case	16 Winter Peak			17 Summer Peak			25 Summer Peak		
		Power Factor		Q (MVAR)	Power Factor		Q (MVAR)	Power Factor		Q (MVAR)
46	FLT46-3PH	0.987	Leading	32.33	0.993	Leading	24.55	0.992	Leading	24.74
47	FLT47-3PH	0.987	Leading	32.38	0.993	Leading	24.60	0.992	Leading	24.85
48	FLT48-3PH	0.987	Leading	32.42	0.992	Leading	24.74	0.992	Leading	24.99
49	FLT49-3PH	0.987	Leading	32.42	0.992	Leading	24.75	0.992	Leading	25.00
50	FLT50-3PH	0.988	Leading	31.78	0.994	Leading	22.23	0.994	Leading	22.72
51	FLT51-3PH	0.987	Leading	32.35	0.993	Leading	24.50	0.992	Leading	24.79
52	FLT52-3PH	0.990	Leading	28.32	0.994	Leading	22.91	0.994	Leading	22.52
53	FLT53-3PH	0.990	Leading	28.17	0.993	Leading	23.52	0.993	Leading	23.26
54	FLT54-3PH	0.987	Leading	31.96	0.993	Leading	24.53	0.992	Leading	24.83
55	FLT55-3PH	0.987	Leading	32.06	0.994	Leading	22.88	0.993	Leading	23.63
56	FLT56-3PH	0.989	Leading	30.25	0.994	Leading	21.51	0.994	Leading	21.91
57	FLT57-3PH	0.987	Leading	32.16	0.993	Leading	24.36	0.992	Leading	24.67
58	FLT58-3PH	0.988	Leading	31.83	0.992	Leading	25.15	0.992	Leading	25.78
59	FLT59-3PH	0.989	Leading	30.44	0.993	Leading	23.33	0.993	Leading	23.65
60	FLT60-3PH	0.987	Leading	32.88	0.993	Leading	24.31	0.993	Leading	24.20
61	FLT61-3PH	0.992	Leading	25.33	0.994	Leading	22.68	0.993	Leading	22.97
62	FLT62-3PH	0.998	Lagging	-11.35	1.000	Lagging	-4.30	1.000	Lagging	-2.95
63	FLT63-3PH	0.985	Leading	34.99	0.990	Leading	28.21	0.989	Leading	29.39
64	FLT64-3PH	0.977	Leading	43.63	0.986	Leading	33.82	0.989	Leading	29.89
65	FLT65-3PH	0.999	Lagging	-8.53	0.988	Leading	31.62	0.987	Leading	32.11
66	FLT66-3PH	0.998	Leading	11.58	0.998	Leading	11.98	0.998	Leading	12.93
67	FLT67-3PH	0.992	Leading	25.33	0.994	Leading	22.68	0.993	Leading	22.97
68	FLT68-3PH	0.993	Leading	23.29	0.979	Leading	41.89	0.992	Leading	25.00
69	FLT69-3PH	0.988	Leading	30.70	0.993	Leading	24.15	0.992	Leading	24.70
70	FLT70-3PH	0.992	Leading	24.84	0.990	Leading	28.29	0.989	Leading	29.46
71	FLT71-3PH	0.987	Leading	32.43	0.988	Leading	30.79	0.990	Leading	28.26
72	FLT72-3PH	0.987	Leading	32.81	0.992	Leading	25.19	0.992	Leading	24.82
73	FLT73-3PH	0.987	Leading	32.60	0.992	Leading	25.06	0.992	Leading	24.99
74	FLT74-3PH	0.987	Leading	32.73	0.992	Leading	25.31	0.992	Leading	24.97
75	FLT75-3PH	0.987	Leading	32.71	0.992	Leading	25.21	0.992	Leading	25.27
76	FLT76-3PH	0.987	Leading	32.39	0.993	Leading	24.64	0.992	Leading	24.84
77	FLT77-3PH	0.986	Leading	33.83	0.992	Leading	25.63	0.992	Leading	25.96
78	FLT78-3PH	0.999	Leading	24.93	0.997	Leading	15.70	0.997	Leading	16.07

Table 5-11
Power Factor Analysis: GEN-2015-083

Reference Number	Case	16 Winter Peak			17 Summer Peak			25 Summer Peak		
		Power Factor		Q (MVAR)	Power Factor		Q (MVAR)	Power Factor		Q (MVAR)
0	Base	1.000	Leading	1.85	1.000	Lagging	-3.34	0.995	Leading	12.17
1	FLT01-3PH	1.000	Leading	2.32	1.000	Lagging	-3.07	0.995	Leading	12.40
2	FLT02-3PH	1.000	Leading	2.22	1.000	Lagging	-2.90	0.997	Leading	9.93
3	FLT03-3PH	1.000	Lagging	-2.54	0.998	Lagging	-7.05	0.998	Leading	8.10
4	FLT04-3PH	1.000	Leading	0.44	0.999	Lagging	-4.53	0.996	Leading	10.65
5	FLT05-3PH	1.000	Lagging	-1.73	0.997	Lagging	-8.89	0.998	Leading	7.61
6	FLT06-3PH	1.000	Lagging	-1.42	0.999	Lagging	-5.02	0.996	Leading	10.91
7	FLT07-3PH	1.000	Lagging	-0.92	0.998	Lagging	-8.78	0.999	Leading	6.15
8	FLT08-3PH	1.000	Lagging	-1.64	0.999	Lagging	-4.20	0.996	Leading	11.12
9	FLT09-3PH	1.000	Lagging	-0.57	0.999	Lagging	-4.14	0.996	Leading	11.31
10	FLT10-3PH	1.000	Leading	0.68	1.000	Lagging	-3.71	0.996	Leading	11.73
11	FLT11-3PH	1.000	Leading	1.49	1.000	Lagging	-3.44	0.995	Leading	12.35
12	FLT12-3PH	1.000	Leading	2.23	1.000	Lagging	-3.90	0.996	Leading	11.11
13	FLT13-3PH	0.997	Lagging	-10.14	1.000	Lagging	-2.49	0.999	Leading	5.94
14	FLT14-3PH	1.000	Leading	0.83	0.999	Lagging	-4.47	0.997	Leading	10.24
15	FLT15-3PH	1.000	Leading	2.78	0.999	Lagging	-4.32	0.996	Leading	11.12
16	FLT16-3PH	1.000	Lagging	-1.34	0.999	Lagging	-4.43	0.996	Leading	10.89
17	FLT17-3PH	0.999	Lagging	-4.21	1.000	Lagging	-3.40	0.994	Leading	13.17
18	FLT18-3PH	1.000	Leading	0.99	0.998	Lagging	-7.21	0.998	Leading	8.22
19	FLT19-3PH	1.000	Lagging	-2.44	0.999	Lagging	-6.78	0.998	Leading	8.14
20	FLT20-3PH	1.000	Leading	1.83	1.000	Lagging	-3.02	0.995	Leading	12.42
21	FLT21-3PH	1.000	Leading	0.55	0.999	Lagging	-4.35	0.996	Leading	11.25
22	FLT22-3PH	1.000	Leading	1.23	1.000	Lagging	-3.89	0.996	Leading	11.58
23	FLT23-3PH	1.000	Leading	0.09	0.999	Lagging	-4.92	0.996	Leading	10.76
24	FLT24-3PH	1.000	Lagging	-0.58	0.999	Lagging	-5.25	0.997	Leading	10.25
25	FLT25-3PH	1.000	Lagging	-0.46	0.997	Lagging	-9.57	0.999	Leading	4.62
26	FLT26-3PH	1.000	Lagging	-3.60	0.999	Lagging	-5.91	0.996	Leading	10.73
27	FLT27-3PH	0.996	Lagging	-10.93	1.000	Leading	2.11	1.000	Leading	0.64
28	FLT28-3PH	1.000	Leading	1.64	0.999	Lagging	-6.45	0.997	Leading	9.45
29	FLT29-3PH	1.000	Leading	0.92	1.000	Lagging	-1.05	0.994	Leading	13.32
30	FLT30-3PH	1.000	Lagging	-1.27	0.999	Lagging	-3.97	0.996	Leading	11.26
31	FLT31-3PH	0.999	Leading	3.96	1.000	Lagging	-2.81	0.995	Leading	12.28
32	FLT32-3PH	1.000	Leading	1.77	1.000	Lagging	-3.41	0.995	Leading	12.11
33	FLT33-3PH	1.000	Leading	1.26	1.000	Lagging	-3.88	0.996	Leading	11.58
34	FLT34-3PH	1.000	Leading	1.76	1.000	Lagging	-3.44	0.995	Leading	12.04
35	FLT35-3PH	1.000	Leading	1.81	1.000	Lagging	-3.34	0.995	Leading	12.17
36	FLT36-3PH	1.000	Leading	1.86	1.000	Lagging	-3.36	0.995	Leading	12.13
37	FLT37-3PH	1.000	Leading	1.85	1.000	Lagging	-3.36	0.995	Leading	12.12
38	FLT38-3PH	1.000	Leading	1.83	1.000	Lagging	-3.35	0.995	Leading	12.16
39	FLT39-3PH	1.000	Leading	1.84	1.000	Lagging	-3.35	0.995	Leading	12.15
40	FLT40-3PH	1.000	Leading	1.25	1.000	Lagging	-3.89	0.996	Leading	11.55
41	FLT41-3PH	1.000	Leading	1.80	1.000	Lagging	-3.41	0.995	Leading	12.08
42	FLT42-3PH	1.000	Leading	1.83	1.000	Lagging	-3.33	0.995	Leading	12.18
43	FLT43-3PH	0.999	Lagging	-5.95	0.996	Lagging	-11.03	0.999	Leading	4.00
44	FLT44-3PH	1.000	Leading	1.44	1.000	Lagging	-3.55	0.995	Leading	12.03
45	FLT45-3PH	0.999	Lagging	-4.74	0.996	Lagging	-10.98	0.999	Leading	5.15

Table 5-11 (Continued)
Power Factor Analysis: GEN-2015-083

Reference Number	Case	16 Winter Peak			17 Summer Peak			25 Summer Peak		
		Power Factor		Q (MVAR)	Power Factor		Q (MVAR)	Power Factor		Q (MVAR)
46	FLT46-3PH	1.000	Leading	2.43	1.000	Lagging	-2.92	0.995	Leading	12.64
47	FLT47-3PH	1.000	Leading	1.32	1.000	Lagging	-3.77	0.996	Leading	11.70
48	FLT48-3PH	1.000	Leading	0.48	0.999	Lagging	-4.35	0.996	Leading	11.24
49	FLT49-3PH	1.000	Leading	0.07	0.999	Lagging	-4.92	0.996	Leading	10.77
50	FLT50-3PH	0.999	Lagging	-4.53	0.998	Lagging	-8.00	0.998	Leading	7.70
51	FLT51-3PH	1.000	Leading	1.43	1.000	Lagging	-3.60	0.995	Leading	11.94
52	FLT52-3PH	1.000	Leading	1.92	1.000	Lagging	-3.42	0.995	Leading	12.09
53	FLT53-3PH	1.000	Leading	1.72	1.000	Lagging	-3.52	0.995	Leading	11.97
54	FLT54-3PH	1.000	Leading	1.25	1.000	Lagging	-3.57	0.995	Leading	12.03
55	FLT55-3PH	1.000	Leading	0.82	1.000	Lagging	-3.71	0.996	Leading	11.89
56	FLT56-3PH	1.000	Leading	1.67	1.000	Lagging	-3.30	0.995	Leading	12.31
57	FLT57-3PH	1.000	Leading	1.77	1.000	Lagging	-3.38	0.995	Leading	12.14
58	FLT58-3PH	1.000	Leading	1.52	1.000	Lagging	-3.43	0.995	Leading	12.07
59	FLT59-3PH	1.000	Leading	1.97	1.000	Lagging	-3.27	0.995	Leading	12.25
60	FLT60-3PH	1.000	Leading	1.87	1.000	Lagging	-3.35	0.995	Leading	12.16
61	FLT61-3PH	1.000	Leading	1.10	1.000	Lagging	-3.63	0.996	Leading	11.83
62	FLT62-3PH	1.000	Lagging	-0.86	0.999	Lagging	-4.03	0.996	Leading	11.38
63	FLT63-3PH	1.000	Leading	1.55	1.000	Lagging	-3.60	0.996	Leading	11.87
64	FLT64-3PH	1.000	Lagging	-2.05	0.999	Lagging	-4.58	0.996	Leading	10.84
65	FLT65-3PH	1.000	Lagging	-1.64	1.000	Lagging	-3.74	0.996	Leading	11.76
66	FLT66-3PH	1.000	Leading	0.63	1.000	Lagging	-3.53	0.995	Leading	11.97
67	FLT67-3PH	1.000	Leading	1.10	1.000	Lagging	-3.63	0.996	Leading	11.83
68	FLT68-3PH	1.000	Leading	1.84	1.000	Lagging	-2.88	0.995	Leading	12.17
69	FLT69-3PH	1.000	Leading	1.76	1.000	Lagging	-3.37	0.995	Leading	12.15
70	FLT70-3PH	1.000	Leading	1.10	1.000	Lagging	-3.60	0.996	Leading	11.87
71	FLT71-3PH	1.000	Lagging	-1.34	0.999	Lagging	-4.43	0.996	Leading	10.89
72	FLT72-3PH	1.000	Lagging	-0.78	0.993	Lagging	-15.00	0.997	Leading	9.57
73	FLT73-3PH	1.000	Leading	2.01	0.995	Leading	12.51	0.999	Leading	5.03
74	FLT74-3PH	1.000	Lagging	-1.99	0.989	Lagging	-18.87	0.999	Leading	4.48
75	FLT75-3PH	1.000	Leading	0.92	0.991	Leading	16.66	0.991	Leading	16.41
76	FLT76-3PH	1.000	Leading	0.38	0.998	Lagging	-8.27	0.998	Leading	7.26
77	FLT77-3PH	1.000	Leading	2.32	1.000	Lagging	-3.07	0.995	Leading	12.40
78	FLT78-3PH	1.000	Leading	2.22	1.000	Lagging	-2.90	0.997	Leading	9.93

Table 5-12
Power Factor Analysis: GEN-2015-090

Reference Number	Case	16 Winter Peak			17 Summer Peak			25 Summer Peak		
		Power Factor		Q (MVAR)	Power Factor		Q (MVAR)	Power Factor		Q (MVAR)
0	Base	0.997	Leading	16.72	0.996	Leading	18.79	0.996	Leading	19.62
1	FLT01-3PH	0.997	Leading	16.88	0.996	Leading	18.90	0.996	Leading	19.88
2	FLT02-3PH	1.000	Leading	1.65	0.998	Leading	12.88	0.998	Leading	13.11
3	FLT03-3PH	0.997	Leading	15.72	0.997	Leading	18.34	0.996	Leading	19.68
4	FLT04-3PH	0.997	Leading	16.64	0.996	Leading	18.90	0.996	Leading	19.57
5	FLT05-3PH	0.998	Leading	12.89	0.997	Leading	17.04	0.997	Leading	18.11
6	FLT06-3PH	0.997	Leading	16.38	0.996	Leading	18.76	0.996	Leading	19.61
7	FLT07-3PH	0.998	Leading	13.93	0.997	Leading	17.35	0.997	Leading	17.65
8	FLT08-3PH	0.999	Leading	10.33	0.998	Leading	14.28	0.998	Leading	15.27
9	FLT09-3PH	0.997	Leading	17.25	0.996	Leading	19.86	0.996	Leading	20.51
10	FLT10-3PH	0.998	Leading	15.06	0.997	Leading	17.66	0.996	Leading	18.50
11	FLT11-3PH	0.997	Leading	16.19	0.996	Leading	18.48	0.996	Leading	19.49
12	FLT12-3PH	0.997	Leading	16.57	0.996	Leading	18.46	0.996	Leading	19.58
13	FLT13-3PH	0.999	Leading	12.04	0.997	Leading	16.51	0.997	Leading	17.91
14	FLT14-3PH	0.999	Leading	9.72	0.997	Leading	17.63	0.997	Leading	16.76
15	FLT15-3PH	0.994	Leading	24.53	0.994	Leading	23.52	0.993	Leading	25.61
16	FLT16-3PH	0.998	Leading	13.21	0.997	Leading	16.31	0.997	Leading	17.45
17	FLT17-3PH	0.997	Leading	17.01	0.996	Leading	20.48	0.995	Leading	21.75
18	FLT18-3PH	0.998	Leading	13.25	0.997	Leading	16.56	0.997	Leading	17.54
19	FLT19-3PH	0.999	Leading	7.10	0.998	Leading	12.77	0.997	Leading	16.10
20	FLT20-3PH	0.997	Leading	16.37	0.996	Leading	18.57	0.996	Leading	19.46
21	FLT21-3PH	0.997	Leading	16.60	0.996	Leading	18.72	0.996	Leading	19.56
22	FLT22-3PH	0.997	Leading	16.57	0.996	Leading	18.70	0.996	Leading	19.52
23	FLT23-3PH	0.997	Leading	16.58	0.996	Leading	18.72	0.996	Leading	19.56
24	FLT24-3PH	0.997	Leading	16.07	0.997	Leading	18.43	0.996	Leading	19.25
25	FLT25-3PH	0.998	Leading	14.57	0.997	Leading	16.93	0.997	Leading	17.25
26	FLT26-3PH	0.999	Leading	10.29	0.997	Leading	15.64	0.997	Leading	17.19
27	FLT27-3PH	0.998	Leading	13.50	0.997	Leading	16.71	0.996	Leading	18.75
28	FLT28-3PH	0.997	Leading	16.38	0.996	Leading	18.60	0.996	Leading	19.46
29	FLT29-3PH	0.996	Leading	19.48	0.996	Leading	20.28	0.995	Leading	21.50
30	FLT30-3PH	0.998	Leading	12.47	0.997	Leading	17.07	0.997	Leading	17.97
31	FLT31-3PH	0.997	Leading	16.81	0.996	Leading	18.57	0.996	Leading	19.30
32	FLT32-3PH	0.997	Leading	16.72	0.996	Leading	18.79	0.996	Leading	19.62
33	FLT33-3PH	0.997	Leading	16.71	0.996	Leading	18.80	0.996	Leading	19.62
34	FLT34-3PH	0.997	Leading	16.70	0.996	Leading	18.77	0.996	Leading	19.60
35	FLT35-3PH	0.997	Leading	16.70	0.996	Leading	18.78	0.996	Leading	19.62
36	FLT36-3PH	0.997	Leading	16.72	0.996	Leading	18.78	0.996	Leading	19.61
37	FLT37-3PH	0.997	Leading	16.72	0.996	Leading	18.78	0.996	Leading	19.61
38	FLT38-3PH	0.997	Leading	16.71	0.996	Leading	18.79	0.996	Leading	19.62
39	FLT39-3PH	0.997	Leading	16.71	0.996	Leading	18.78	0.996	Leading	19.61
40	FLT40-3PH	0.997	Leading	16.71	0.996	Leading	18.80	0.996	Leading	19.61
41	FLT41-3PH	0.997	Leading	16.72	0.996	Leading	18.78	0.996	Leading	19.61
42	FLT42-3PH	0.997	Leading	16.70	0.996	Leading	18.79	0.996	Leading	19.62
43	FLT43-3PH	0.999	Leading	9.99	0.998	Leading	14.82	0.997	Leading	15.65
44	FLT44-3PH	0.997	Leading	16.50	0.996	Leading	18.67	0.996	Leading	19.56
45	FLT45-3PH	0.998	Leading	12.35	0.997	Leading	16.63	0.997	Leading	17.93

Table 5-12 (Continued)
Power Factor Analysis: GEN-2015-090

Reference Number	Case	16 Winter Peak			17 Summer Peak			25 Summer Peak		
		Power Factor		Q (MVAR)	Power Factor		Q (MVAR)	Power Factor		Q (MVAR)
46	FLT46-3PH	0.997	Leading	16.99	0.996	Leading	18.95	0.996	Leading	19.75
47	FLT47-3PH	0.997	Leading	16.59	0.996	Leading	18.72	0.996	Leading	19.54
48	FLT48-3PH	0.997	Leading	16.59	0.996	Leading	18.72	0.996	Leading	19.56
49	FLT49-3PH	0.997	Leading	16.58	0.996	Leading	18.72	0.996	Leading	19.56
50	FLT50-3PH	0.998	Leading	15.00	0.997	Leading	17.81	0.996	Leading	18.72
51	FLT51-3PH	0.997	Leading	16.56	0.996	Leading	18.71	0.996	Leading	19.56
52	FLT52-3PH	0.997	Leading	16.80	0.996	Leading	18.65	0.996	Leading	19.51
53	FLT53-3PH	0.997	Leading	16.60	0.996	Leading	18.46	0.996	Leading	19.34
54	FLT54-3PH	0.997	Leading	16.03	0.997	Leading	18.38	0.996	Leading	19.42
55	FLT55-3PH	0.997	Leading	15.65	0.997	Leading	18.19	0.996	Leading	19.29
56	FLT56-3PH	0.997	Leading	16.42	0.996	Leading	18.83	0.996	Leading	19.75
57	FLT57-3PH	0.997	Leading	16.65	0.996	Leading	18.71	0.996	Leading	19.57
58	FLT58-3PH	0.997	Leading	16.39	0.996	Leading	18.62	0.996	Leading	19.47
59	FLT59-3PH	0.997	Leading	16.85	0.996	Leading	18.91	0.996	Leading	19.72
60	FLT60-3PH	0.997	Leading	16.74	0.996	Leading	18.79	0.996	Leading	19.62
61	FLT61-3PH	0.997	Leading	15.72	0.997	Leading	18.24	0.996	Leading	19.11
62	FLT62-3PH	0.998	Leading	13.88	0.997	Leading	17.35	0.997	Leading	18.30
63	FLT63-3PH	0.997	Leading	16.35	0.996	Leading	18.53	0.996	Leading	19.36
64	FLT64-3PH	0.998	Leading	12.51	0.997	Leading	15.80	0.997	Leading	17.02
65	FLT65-3PH	0.998	Leading	13.26	0.997	Leading	17.70	0.997	Leading	18.43
66	FLT66-3PH	0.998	Leading	15.39	0.997	Leading	18.40	0.996	Leading	19.29
67	FLT67-3PH	0.997	Leading	15.72	0.997	Leading	18.24	0.996	Leading	19.11
68	FLT68-3PH	0.997	Leading	16.86	0.996	Leading	19.52	0.996	Leading	19.62
69	FLT69-3PH	0.997	Leading	16.64	0.996	Leading	18.75	0.996	Leading	19.59
70	FLT70-3PH	0.997	Leading	16.11	0.996	Leading	18.54	0.996	Leading	19.36
71	FLT71-3PH	0.998	Leading	13.21	0.997	Leading	16.31	0.997	Leading	17.45
72	FLT72-3PH	0.997	Leading	15.84	0.996	Leading	18.61	0.996	Leading	19.28
73	FLT73-3PH	0.997	Leading	16.68	0.996	Leading	18.99	0.996	Leading	19.61
74	FLT74-3PH	0.997	Leading	16.23	0.996	Leading	18.85	0.996	Leading	19.47
75	FLT75-3PH	0.997	Leading	16.55	0.996	Leading	18.92	0.996	Leading	19.63
76	FLT76-3PH	0.997	Leading	16.36	0.996	Leading	18.66	0.996	Leading	19.46
77	FLT77-3PH	0.997	Leading	16.88	0.996	Leading	18.90	0.996	Leading	19.88
78	FLT78-3PH	1.000	Leading	1.65	0.998	Leading	12.88	0.998	Leading	13.11

Study Generator GEN-2015-034

The Power Factor Analysis shows that GEN-2015-034 has a power factor range of 0.957 lagging (supplying) to 0.996 leading (absorbing) for the 2016 Winter Peak conditions, a power factor range of 0.981 lagging (supplying) to 0.984 leading (absorbing) for the 2017 Summer Peak conditions, and a power factor range of 0.982 to 0.983 lagging (supplying) to 0.983 leading (absorbing) for the 2025 Summer Peak conditions.

Study Generator GEN-2015-043 (Tap Wichita – Thistle circuit 1&2)

The Power Factor Analysis shows that GEN-2015-043 has a power factor range of 0.995 leading (absorbing) to 1 (unity) for the 2016 Winter Peak conditions, a power factor range of 0.995 to

0.999 leading (absorbing) for the 2017 Summer Peak conditions, and a power factor range of 0.994 to 0.999 leading (absorbing) for the 2025 Summer Peak conditions.

Study Generator GEN-2015-047

The Power Factor Analysis shows that GEN-2015-047 has a power factor range of 0.882 to 0.983 lagging (supplying) for the 2016 Winter Peak conditions, a power factor range of 0.907 to 0.991 lagging (supplying) for the 2017 Summer Peak conditions, and a power factor range of 0.911 to 0.993 leading (absorbing) for the 2025 Summer Peak conditions.

Study Generator GEN-2015-052

The Power Factor Analysis shows that GEN-2015-052 has a power factor range of 0.724 to 0.989 lagging (supplying) for the 2016 Winter Peak conditions, a power factor range of 0.793 to 0.999 lagging (supplying) for the 2017 Summer Peak conditions, and a power factor range of 0.788 to 0.998 lagging (supplying) for the 2025 Summer Peak conditions.

Study Generator GEN-2015-062

The Power Factor Analysis shows that GEN-2015-062 has a power factor range of 0.960 lagging (supplying) to 0.995 leading (absorbing) for the 2016 Winter Peak conditions, a power factor range of 0.954 lagging (supplying) to 0.999 leading (absorbing) for the 2017 Summer Peak conditions, and a power factor range of 0.950 lagging (supplying) to 0.998 leading (absorbing) to for the 2025 Summer Peak conditions.

Study Generator GEN-2015-063

The Power Factor Analysis shows that GEN-2015-063 has a power factor range of 0.895 to 0.997 lagging (supplying) to 1 (unity) for the 2016 Winter Peak conditions, a power factor range of 0.963 lagging (supplying) to 0.976 leading (absorbing) for the 2017 Summer Peak conditions, and a power factor range of 0.965 lagging (supplying) to 0.974 leading (absorbing) for the 2025 Summer Peak conditions.

Study Generator GEN-2015-066

The Power Factor Analysis shows that GEN-2015-066 has a power factor range of 0.620 lagging (supplying) to 1 (unity) for the 2016 Winter Peak conditions, a power factor range of 0.687 lagging (supplying) to 0.981 leading (absorbing) for the 2017 Summer Peak conditions, and a power factor range of 0.709 lagging (supplying) to 0.975 leading (absorbing) for the 2025 Summer Peak conditions.

Study Generator GEN-2015-067

The Power Factor Analysis shows that GEN-2015-067 has a power factor range of 0.755 to 0.908 lagging (supplying) for the 2016 Winter Peak conditions, a power factor range of 0.766 to 0.915 lagging (supplying) for the 2017 Summer Peak conditions, and a power factor range of 0.750 to 0.912 lagging (supplying) for the 2025 Summer Peak conditions.

Study Generator GEN-2015-069

The Power Factor Analysis shows that GEN-2015-069 has a power factor range of 0.999 lagging (supplying) to 0.989 leading (absorbing) for the 2016 Winter Peak conditions, a power factor range of 0.990 leading (absorbing) to 1 (unity) for the 2017 Summer Peak conditions, and a power factor range of 0.994 leading (absorbing) to 1.00 (unity) for the 2025 Summer Peak conditions.

Study Generator GEN-2015-073

The Power Factor Analysis shows that GEN-2015-073 has a power factor range of 0.998 lagging (supplying) to 0.977 leading (absorbing) for the 2016 Winter Peak conditions, a power factor range of 0.979 leading (absorbing) to 1 (unity) for the 2017 Summer Peak conditions, and a power factor range of 0.987 to 1 (unity) for the 2025 Summer Peak conditions.

Study Generator GEN-2015-083

The Power Factor Analysis shows that GEN-2015-083 has a power factor range of 0.996 lagging (supplying) to 0.999 leading (absorbing) for the 2016 Winter Peak conditions, a power factor range of 0.989 lagging (supplying) to 0.991 leading (absorbing) for the 2017 Summer Peak conditions, and a power factor range of 0.991 leading (absorbing) to 1.00 (unity) for the 2025 Summer Peak conditions.

Study Generator GEN-2015-090 (Tap Wichita – Thistle circuit 1&2)

The Power Factor Analysis shows that GEN-2015-090 has a power factor range of 0.994 leading (absorbing) to 1 (unity) for the 2016 Winter Peak conditions, a power factor range of 0.994 to 0.998 leading (absorbing) for the 2017 Summer Peak conditions, and a power factor range of 0.993 to 0.998 leading (absorbing for the 2025 Summer Peak conditions.

SECTION 6: LOW WIND/NO WIND ANALYSIS

The objective of this task is to determine the impact of low wind or no wind conditions on all wind farms and solar farms. The 2015 Summer Peak, 2017 Summer Peak, and 2025 Summer Peak power flows provided by SPP, and corresponding updates, were examined for this analysis.

6.1 Approach

Low wind or no wind conditions were examined for all wind farms and solar farms. Generators were disabled (independently), but the collector systems remained in-service. In order to maintain generation and load balance in the SPP area, the generation was scaled after disabling the respective generator. The amount of reactive power injected into the transmission network was recorded at the respective point of interconnection. This reactive power comes from the

capacitance of the project's transmission lines and collector cables. A shunt reactor was added at the high side bus to bring the Mvar flow into the POI down to approximately zero.

6.2 Low Wind/No Wind Analysis Results

The reactance needed to bring the Mvar flow into the point of interconnect to zero Mvar was recorded for each season. Refer to Table 6-1 for the Low Wind/No Wind Analysis results. The table lists the generators examined and the amount of reactive power needed for zero Mvar flow into the POI for each season.

Table 6-1
Low Wind/No Wind Analysis

Request	Size (MW)	Point of Interconnection	Reactor Size (Mvar)		
			16WP	17SP	25SP
GEN-2015-034	200	Ranch Road 345 kV	10.0	10.1	10.1
GEN-2015-043	20	Tap on Thistle to Wichita 345 kV Ckt #1 and #2	23.0	23.0	23.0
GEN-2015-047	300	Tap on Sooner 345 kV	40.4	40.8	41.7
GEN-2015-052	300	Tap on Open Sky to Rose Hill 345 kV	23.4	23.6	23.6
GEN-2015-062	4.5	Breckenridge 138 kV	4.6	4.6	4.6
GEN-2015-063	300	Tap on Woodring to Matthewson 345 kV	19.3	19.6	19.7
GEN-2015-066	248	Tap on Cleveland to Sooner 345 kV	13.0	13.1	13.1
GEN-2015-067	150	Sooner 138 kV	1.5	1.5	1.5
GEN-2015-069	300	Union Ridge 230 kV	28.5	29.6	28.7
GEN-2015-073	200.1	Emporia/Lang 345 kV	18.3	18.5	18.5
GEN-2015-083	125	Belle Plain 138 kV	8.6	8.7	8.8
GEN-2015-090	220	Tap on Wichita to Thistle 345 kV Ckt #1 and #2	71.4	71.4	71.4

Note for GEN-2015-043 and GEN-2015-090 that share the same POI, along with GEN-2015-024 and GEN-2015-025, the reactor requirements were determined based on the shared 45 mile line from the POI to the high voltage shared bus and their individual contributions. After the shared 45 mile line, the reactor requirements were calculated independently from the shared high side voltage bus to the collector system. GEN-2015-025 and GEN-2015-043 share a common step-up transformer to the POI. Thus, they share the 23.0 Mvar reactor requirements at the high side of

the transformer bus. Refer to Figure 6-1 for a representation of the reactor requirements that was calculated for both study projects.

In addition to the requirements for GEN-2015-025, GEN-2015-034, and GEN-2015-090, a 25.4 Mvar reactor is also required for GEN-2015-024 in order to meet the Low Wind/Mo Wind requirement at the POI.

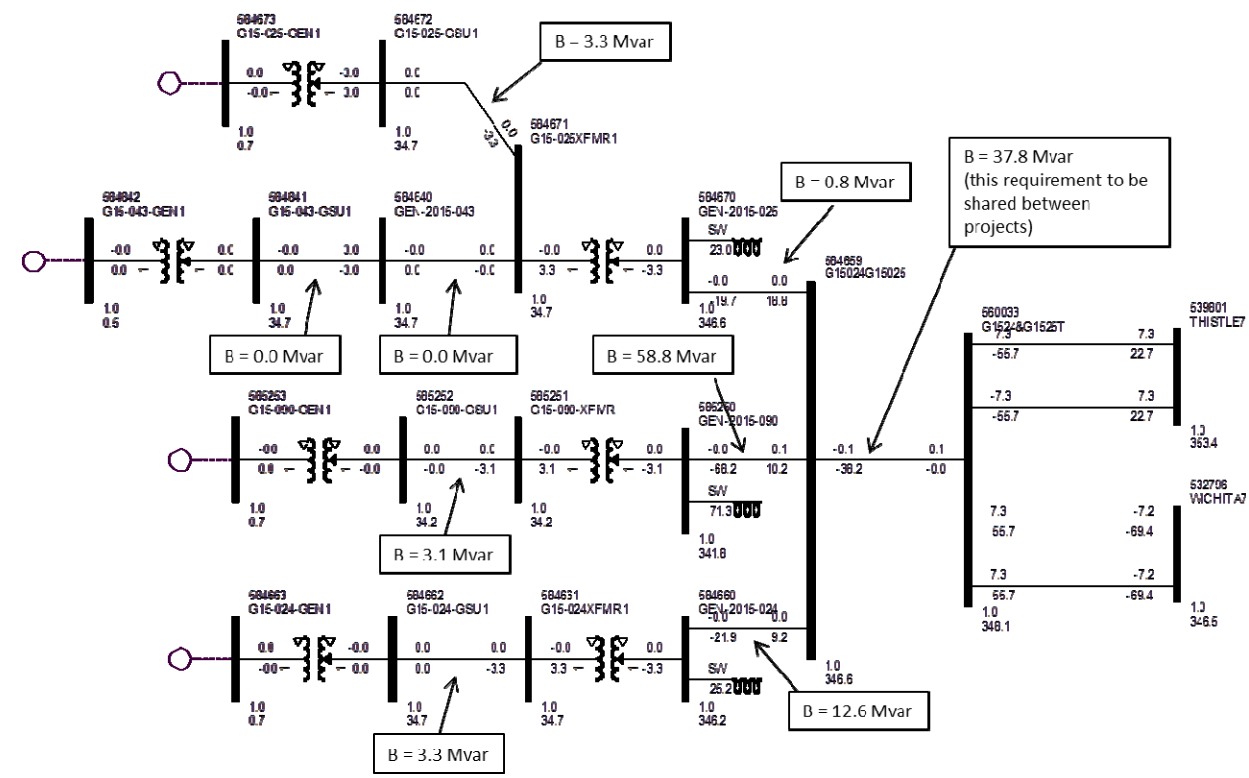

GEN-2015-025 and GEN-2015-043 shared requirements = 3.3 Mvar + 18.9 Mvar + 0.8 Mvar = 23 Mvar

GEN-2015-090 requirements = 3.1 Mvar + 58.8 Mvar + 9.5 Mvar = 71.4 Mvar

GEN-2015-0024 requirements = 3.3 Mvar + 12.6 Mvar + 9.5 Mvar = 25.4 Mvar

Figure 6-1: Reactor requirement calculation for GEN-2015-043 and GEN-2015-090

SECTION 7: CONCLUSIONS

SUMMARY OF STABILITY ANALYSIS

The Stability Analysis determined that there were no contingencies that resulted in system instability, generation tripping offline, or voltage violations for the 2016 Winter Peak, 2017 Summer Peak, and 2025 Summer Peak conditions when all generation interconnection requests

were at 100% output for this analysis for both the Cluster Scenario and Stand Alone Scenario. Thus, no mitigations or upgrades were required.

SUMMARY OF THE SHORT CIRCUIT ANALYSIS

The short circuit analysis was performed on the 2017 Summer Peak and 2025 Summer Peak power flow for all study projects. Refer to Table 7-1 and 7-2 for a list of maximum fault currents observed for each study project.

Table 7-1
List of Maximum Fault Currents Observed in the 2017 Summer Peak Season for Each Study Project

Study Project	Fault Current at POI (kA)	Maximum Fault Current (kA)	Fault Location	Bus Voltage (kV)
GEN-2015-034	13.62	42.31	NORTWST4	138
GEN-2015-043	19.04	36.98	EVANS S4, EVANS N4	118
GEN-2015-047	24.53	42.31	NORTWST4	138
GEN-2015-052	19.49	41.38	EVANS S4, EVANS N4	138
GEN-2015-062	13.48	24.53	SOONER 7	345
GEN-2015-063	16.85	42.31	NORTWST4	138
GEN-2015-066	17.95	49.76	ONETA--4	138
GEN-2015-067	31.36	42.31	NORTWST4	138
GEN-2015-069	8.88	36.98	EVANS N4	138
GEN-2015-073	17.37	39.25	CRAIG 5	161
GEN-2015-083	8.6	30.93	ROSEHIL4	138
GEN-2015-090	19.04	36.98	EVANS S4, EVANS N4	138

Table 7-2
List of Maximum Fault Currents Observed in the 2025 Summer Peak Season for Each Study Project

Study Project	Fault Current at POI (kA)	Maximum Fault Current (kA)	Fault Location	Bus Voltage (kV)
GEN-2015-034	13.66	42.80	NORTWST4	138
GEN-2015-043	19.57	41.96	EVANS N4, EVANS S4	138
GEN-2015-047	13.15	42.80	NORTWST4	138
GEN-2015-052	13.15	41.95	EVANS N4, EVANS S4	138
GEN-2015-062	13.56	24.72	Sooner 7	345
GEN-2015-063	17.3	42.80	NORTWST4	138
GEN-2015-066	18.04	50.34	ONETA--4	138
GEN-2015-067	31.86	42.80	NORTWST4	138
GEN-2015-069	8.86	41.95	EVANS N4	138
GEN-2015-073	17.48	41.95	EVANS N4, EVANS S4	138
GEN-2015-083	10.1	41.95	EVANS N4, EVANS S4	138
GEN-2015-090	19.57	41.95	EVANS N4, EVANS S4	138

SUMMARY OF POWER FACTOR ANALYSIS

Study Generator GEN-2015-034

The Power Factor Analysis shows that GEN-2015-034 has a power factor range of 0.957 lagging (supplying) to 0.996 leading (absorbing) for the 2016 Winter Peak conditions, a power factor range of 0.981 lagging (supplying) to 0.984 leading (absorbing) for the 2017 Summer Peak conditions, and a power factor range of 0.982 to 0.983 lagging (supplying) to 0.983 leading (absorbing) for the 2025 Summer Peak conditions.

Study Generator GEN-2015-043

The Power Factor Analysis shows that GEN-2015-043 has a power factor range of 0.995 leading (absorbing) to 1 (unity) for the 2016 Winter Peak conditions, a power factor range of 0.995 to 0.999 leading (absorbing) for the 2017 Summer Peak conditions, and a power factor range of 0.994 to 0.999 leading (absorbing) for the 2025 Summer Peak conditions.

Study Generator GEN-2015-047

The Power Factor Analysis shows that GEN-2015-047 has a power factor range of 0.882 to 0.983 lagging (supplying) for the 2016 Winter Peak conditions, a power factor range of 0.907 to

0.991 lagging (supplying) for the 2017 Summer Peak conditions, and a power factor range of 0.911 to 0.993 leading (absorbing) for the 2025 Summer Peak conditions.

Study Generator GEN-2015-052

The Power Factor Analysis shows that GEN-2015-052 has a power factor range of 0.724 to 0.989 lagging (supplying) for the 2016 Winter Peak conditions, a power factor range of 0.793 to 0.999 lagging (supplying) for the 2017 Summer Peak conditions, and a power factor range of 0.788 to 0.998 lagging (supplying) for the 2025 Summer Peak conditions.

Study Generator GEN-2015-062

The Power Factor Analysis shows that GEN-2015-062 has a power factor range of 0.960 lagging (supplying) to 0.995 leading (absorbing) for the 2016 Winter Peak conditions, a power factor range of 0.954 lagging (supplying) to 0.999 leading (absorbing) for the 2017 Summer Peak conditions, and a power factor range of 0.950 lagging (supplying) to 0.998 leading (absorbing) to for the 2025 Summer Peak conditions.

Study Generator GEN-2015-063

The Power Factor Analysis shows that GEN-2015-063 has a power factor range of 0.895 to 0.997 lagging (supplying) to 1 (unity) for the 2016 Winter Peak conditions, a power factor range of 0.963 lagging (supplying) to 0.976 leading (absorbing) for the 2017 Summer Peak conditions, and a power factor range of 0.965 lagging (supplying) to 0.974 leading (absorbing) for the 2025 Summer Peak conditions.

Study Generator GEN-2015-066

The Power Factor Analysis shows that GEN-2015-066 has a power factor range of 0.620 lagging (supplying) to 1 (unity) for the 2016 Winter Peak conditions, a power factor range of 0.687 lagging (supplying) to 0.981 leading (absorbing) for the 2017 Summer Peak conditions, and a power factor range of 0.709 lagging (supplying) to 0.975 leading (absorbing) for the 2025 Summer Peak conditions.

Study Generator GEN-2015-067

The Power Factor Analysis shows that GEN-2015-067 has a power factor range of 0.755 to 0.908 lagging (supplying) for the 2016 Winter Peak conditions, a power factor range of 0.766 to 0.915 lagging (supplying) for the 2017 Summer Peak conditions, and a power factor range of 0.750 to 0.912 lagging (supplying) for the 2025 Summer Peak conditions.

Study Generator GEN-2015-069

The Power Factor Analysis shows that GEN-2015-069 has a power factor range of 0.999 lagging (supplying) to 0.989 leading (absorbing) for the 2016 Winter Peak conditions, a power factor range of 0.990 leading (absorbing) to 1 (unity) for the 2017 Summer Peak conditions, and a

power factor range of 0.994 leading (absorbing) to 1.00 (unity) for the 2025 Summer Peak conditions.

Study Generator GEN-2015-073

The Power Factor Analysis shows that GEN-2015-073 has a power factor range of 0.998 lagging (supplying) to 0.977 leading (absorbing) for the 2016 Winter Peak conditions, a power factor range of 0.979 leading (absorbing) to 1 (unity) for the 2017 Summer Peak conditions, and a power factor range of 0.987 to 1 (unity) for the 2025 Summer Peak conditions.

Study Generator GEN-2015-083

The Power Factor Analysis shows that GEN-2015-083 has a power factor range of 0.996 lagging (supplying) to 0.999 leading (absorbing) for the 2016 Winter Peak conditions, a power factor range of 0.989 lagging (supplying) to 0.991 leading (absorbing) for the 2017 Summer Peak conditions, and a power factor range of 0.991 leading (absorbing) to 1.00 (unity) for the 2025 Summer Peak conditions.

Study Generator GEN-2015-090

The Power Factor Analysis shows that GEN-2015-090 has a power factor range of 0.994 leading (absorbing) to 1 (unity) for the 2016 Winter Peak conditions, a power factor range of 0.994 to 0.998 leading (absorbing) for the 2017 Summer Peak conditions, and a power factor range of 0.993 to 0.998 leading (absorbing for the 2025 Summer Peak conditions.

SUMMARY OF LOW WIND/NO WIND ANALYSIS

The amount of reactive power injected into the transmission network was recorded at the point of interconnection for all study generators for each Cluster Scenario. The maximum reactance needed for zero Mvar flow was 71.4 Mvar for GEN-2015-090 which is connected to the Wichita – Thistle lines (circuits 1&2). The minimum reactance needed for zero Mvar flow was 1.5 Mvar for GEN-2015-067 (Sooner 138 kV).

11.23 P: Group 9 Dynamic Stability Analysis Report

See next page

MITSUBISHI ELECTRIC POWER PRODUCTS, INC.
POWER SYSTEMS ENGINEERING SERVICES
530 KEYSTONE DRIVE
WARRENDALE, PA 15086, U.S.A.

Phone: (724) 778-5111 Fax: (724) 778-5149
Home Page: www.meppi.com

Southwest Power Pool, Inc. (SPP)

DISIS-2015-002 (Group 09) Definitive Impact Study

Final Report

PXE-1192
Revision #01

March 2016

Submitted By:
Mitsubishi Electric Power Products, Inc. (MEPPI)
Power Systems Engineering Services Department
Warrendale, PA

Title: **DISIS-2015-002 (Group 09) Definitive Impact Study: Final Report PXE-1192**
Date: March 2016
Author: Taylor L. Cramer; Engineer I, Power Systems Engineering Dept. *Taylor L. Cramer*
Reviewed: Nicholas W. Tenza; Engineer II, Power Systems Engineering Dept. *Nicholas W. Tenza*
Approved: Elizabeth M. Cook; Manager, Power Systems Engineering Dept. *Elizabeth M. Cook*

EXECUTIVE SUMMARY

SPP requested a Definitive Interconnection System Impact Study (DISIS). The DISIS required a Stability Analysis, Short-circuit Analysis, Power Factor Analysis, and Low Wind/No Wind Analysis detailing the impacts of the interconnecting projects as shown in Table ES-1.

Table ES-1
Interconnection Projects Evaluated

Request	Size (MW)	Generator Model	Point of Interconnection
GEN-2014-059	160.0	Vestas V110 2MW (584233) (wind)	Tap Sidney-Ogallala 230kV (560014)
GEN-2015-042	320.0	Vestas V110 2MW (584833) (wind)	Dixon County (560347) (GEN-2010-051 230kV)
GEN-2015-053	50.0	GE 1.79MW (584913) (wind)	Antelope 115kV (640521)
GEN-2015-054	74.0	GE 1.79MW (584923) (wind)	Antelope 115kV (640521)
GEN-2015-076	158.4	Vestas 3.3-117 3.3MW (585133, 585136) (wind)	Belden 115kV (640080)
GEN-2015-087	76.0	Vestas V100 2MW (585233) (wind)	Tap on Fairbury (640169) to Hebron (640218) 115kV
GEN-2015-088	300.0	Vestas V100 2MW (585243) (wind)	Tap on Moore (640277) to Pauline (640312) 345kV
GEN-2015-094	151.8	Siemens 2.3MW (585293) (wind)	Laramie River Station (659131) to Sidney (659426) 345kV

SUMMARY OF STABILITY ANALYSIS

Cluster Scenario

The Cluster Scenario Stability Analysis determined there were no contingencies that resulted in system instability or generation tripping offline for the 2016 Winter Peak condition when all generation interconnection requests were at 100% output.

However, it was determined that two contingencies, FLT61-3PH, which is a prior outage of the Belden to Twin Church 115 kV line followed by the loss of Belden to Hoskins 115 kV line and FLT76-1PH, which is a 16 cycle stuck breaker fault resulting in the loss of Belden to Twin Church 115 kV line and Belden to Hoskins 115 kV line, resulted in post-contingency voltages not recovering above 0.90 p.u. at the GEN-2015-076 115 kV bus for all Cluster Scenarios. After discussion with SPP, it was determined that the Dixon County to Belden to Rasmussen 230 kV (WAPA) transmission line will be upgraded. This eliminates low voltages at the GEN-2015-076 115 kV bus for all Cluster Scenarios.

For the 2017 Summer Peak and 2025 Summer Peak case, voltage instability and generation tripping offline was observed. FLT71-1PH, which is a 16 cycle stuck breaker fault that results in the loss of the Sidney to Sidney XFMR 230 kV line and the Sidney to G15-059-Tap 230 kV line, resulted in unstable bus voltage at the Sidney 115 kV and Sidney 230 kV buses. After discussion with SPP, it was determined that a second circuit from Sidney to G14-059-Tap to Ogallala 230 kV will be added.

For the 2025 Summer Peak case, FLT52-3PH, which is the loss of the Laramie to Stegall 345 kV line, resulted in GEN-2015-094 tripping offline and the Laramie generation to become unstable. After discussion with SPP, it was determined the Sydney DC Tie should be blocked for this fault. After implementing this update, there was no more voltage instability or generation tripping offline. Any transmission outage simulations involving western Nebraska will be studied in more detail by the transmission owners and owners of the DC ties during the Interconnection Facilities Study.

Western Nebraska GGS Scenario

The High GGS Scenario determined one fault caused system instability and generation to trip offline for all three study seasons. FLT52-3PH, which is the loss of the Laramie to Stegall 345 kV line, resulted in GEN-2015-094 tripping offline and the Laramie generation to become unstable. After discussion with SPP, it was determined the Sydney DC Tie should be blocked for this fault. After implementing this update, there was no more system instability or generation tripping offline.

The following faults were observed to cause system instability in the 2016 Winter Peak sensitivity scenario:

- FLT96-3PH
  - Three-phase, 5.5 cycle fault resulting in loss of Gentleman 345/230/13.8 kV transformer (fault applied at 345 kV bus)
- FLT97-3PH
  - Three-phase, 5.5 cycle fault resulting in loss of Gentleman 345/230/13.8 kV transformer (fault applied at 230 kV bus)
- FLT100-1PH
  - Single-phase, stuck breaker fault (16 cycles) resulting in loss of Gentleman to Sweetwater 345 kV line and Gentleman to Red Willow 345 kV line
- FLT101-1PH
  - Single-phase, stuck breaker fault (16 cycles) resulting in the loss of Gentleman to Keystone 345 kV line and Gentleman 345/230/13.8 kV transformer
- FLT103-1PH
  - Single-phase, stuck breaker fault (16 cycles) resulting in the loss of Gentleman to Ogallala 230 kV line and Gentleman 345/230/13.8 kV transformer

After discussion with SPP, it was determined that adding a 345 kV transmission line from Gentleman to Thedford to Holt County will mitigate the system instability observed for all five faults.

For the 2017 Summer Peak case, it was observed that FLT91-3PH caused system instability. Implementing the Gentleman to Thedford to Holt County 345 kV line mitigated the system instability and all voltages recovered within SPP criteria. Any transmission outage simulations involving western Nebraska will be studied in more detail by the transmission ownders and ownders of the DC ties during the Interconnection Facilities Study.

Stand-Alone Scenario

The Stand Alone Scenario Stability Analysis determined one fault caused voltage instability for all three study seasons. FLT71-1PH, which is a 16 cycle stuck breaker fault that results in the loss of the Sidney to Sidney XFMR 230 kV line and the Sidney to G15-059-Tap 230 kV line, resulted in unstable bus voltage at the Sidney 115 kV and Sidney 230 kV buses. After discussion with SPP, it was determined that a second circuit from Sidney to G14-059-Tap to Ogallala 230 kV will be added.

It was determined that contingency FLT76-1PH, which is a 16 cycle stuck breaker fault resulting in the loss of Belden to Twin Church 115 kV line and Belden to Hoskins 115 kV line, resulted in post-contingency voltages not recovering above 0.90 p.u. at the GEN-2015-076 115 kV bus for the 2016 Winter Peak case. After discussion with SPP, it was determined that the Dixon County to Belden to Rasmussen 230 kV (WAPA) transmission line will be upgraded. This eliminates low voltages at the GEN-2015-076 115 kV bus.

For the 2025 Summer Peak case, FLT52-3PH, which is the loss of the Laramie to Stegall 345 kV line, resulted in GEN-2015-094 tr.pping offline and the Laramie generation to become unstable. After discussion with SPP, it was determined the Sydney DC Tie should be blocked for this fault. After implementing this update, there was no more voltage instability or generation tripping offline. Any transmission outage simulations involving western Nebraska will be studied in more detail by the transmission owners and owners of the DC ties during the Interconnection Facilities Study.

SUMMARY OF THE SHORT-CIRCUIT ANALYSIS

The Short-circuit analysis was performed on the 2017 Summer Peak and 2025 Summer Peak power flows for all study projects. Refer to Table ES-2 for a list of maximum fault currents observed for each study project for the 2017 Summer Peak case. Refer to Table ES-3 for a list of maximum fault currents observed for each study project for the 2025 Summer Peak case.

Table ES-2
List of Maximum Fault Currents Observed for Each Study Project for the 2017 Summer Peak Case

Study Project	POI Name	Fault Current at POI (kA)	Maximum Fault Current (kA)	Fault Location	Bus Voltage (kV)
GEN-2014-059	Tap Sidney-Ogallala 230kV (560014)	7.18	28.87	NB WEST4	230
GEN-2015-042	Dixon County (560347) (GEN-2010-051 230kV)	10.53	30.01	S1251 5	161
GEN-2015-053	Antelope 115kV (640521)	14.36	30.01	S1251 5	161
GEN-2015-054	Antelope 115kV (640521)	14.36	30.01	S1251 5	161
GEN-2015-076	Belden 115kV (640080)	12.48	30.01	S1251 5	161
GEN-2015-087	Tap on Fairbury (640169) to Hebron (640218) 115kV	5.43	31.19	SHELDON7	115
GEN-2015-088	Tap on Moore (640277) to Pauline (640312) 345kV	10.58	39.13	S1206 5	161
GEN-2015-094	Laramie River Station to (659131) to Sidney (659426) 345kV	4.53	14.39	GENTLMN3	345

Table ES-3
List of Maximum Fault Currents Observed for Each Study Project for the 2025 Summer Peak Case

Study Project	POI Name	Fault Current at POI (kA)	Maximum Fault Current (kA)	Fault Location	Bus Voltage (kV)
GEN-2014-059	Tap Sidney-Ogallala 230kV (560014)	7.24	28.87	NB WEST4	230
GEN-2015-042	Dixon County (560347) (GEN-2010-051 230kV)	10.56	30.92	S1251 5	161
GEN-2015-053	Antelope 115kV (640521)	14.62	30.92	S1251 5	161
GEN-2015-054	Antelope 115kV (640521)	14.62	30.92	S1251 5	161
GEN-2015-076	Belden 115kV (640080)	12.50	30.92	S1251 5	161
GEN-2015-087	Tap on Fairbury (640169) to Hebron (640218) 115kV	5.43	32.62	SHELDON7	115
GEN-2015-088	Tap on Moore (640277) to Pauline (640312) 345kV	10.63	40.50	S1206 5	161
GEN-2015-094	Laramie River Station to (659131) to Sidney (659426) 345kV	4.55	15.46	GENTLMN3	345

SUMMARY OF POWER FACTOR ANALYSIS

Study Generator GEN-2014-059

The Power Factor Analysis shows that GEN-2014-059 has a power factor range of 0.987 leading (absorbing) to 1.00 (unity) for the 2016 Winter Peak conditions, a power factor range of 0.985 leading (absorbing) to 1.00 (unity) for the 2017 Summer Peak conditions, and a power factor range of 0.980 leading (absorbing) to 1.00 (unity) for the 2025 Summer Peak conditions.

Study Generator GEN-2015-042

The Power Factor Analysis shows that GEN-2015-042 has a power factor range of 0.920 lagging (supplying) to 1.00 (unity) for the 2016 Winter Peak conditions, a power factor range of 0.916 lagging (supplying) to 0.996 lagging (supplying) for the 2017 Summer Peak conditions, and a power factor range of 0.924 lagging (supplying) to 0.998 lagging (supplying) for the 2025 Summer Peak conditions.

Study Generator GEN-2015-053

The Power Factor Analysis shows that GEN-2015-053 has a power factor range of 0.907 leading (absorbing) to 1.00 (unity) for the 2016 Winter Peak conditions, a power factor range of 0.954 leading (absorbing) to 1.00 (unity) for the 2017 Summer Peak conditions, and a power factor range of 0.959 leading (absorbing) to 1.00 (unity) for the 2025 Summer Peak conditions.

Study Generator GEN-2015-054

The Power Factor Analysis shows that GEN-2015-0154 has a power factor range of 0.907 leading (absorbing) to 1.00 (unity) for the 2016 Winter Peak conditions, a power factor range of 0.954 leading (absorbing) to 1.00 (unity) for the 2017 Summer Peak conditions, and a power factor range of 0.959 to 1.00(unity) for the 2025 Summer Peak conditions.

Study Generator GEN-2015-076

The Power Factor Analysis shows that GEN-2015-076 has a power factor range of 0.977 leading (absorbing) to 0.997 leading (supplying) for the 2016 Winter Peak conditions, a power factor range of 0.975 leading (absorbing) to 0.999 leading (absorbing) for the 2017 Summer Peak conditions, and a power factor range of 0.972 leading (absorbing) to 0.999 leading (absorbing) for the 2025 Summer Peak conditions.

Study Generator GEN-2015-087

The Power Factor Analysis shows that GEN-2015-087 has a power factor range of 0.964 leading (absorbing) to 0.997 leading (supplying) for the 2016 Winter Peak conditions, a power factor range of 0.941 leading (supplying) to 1.00 (unity) for the 2017 Summer Peak conditions, and a power factor range of 0.904 leading (supplying) to 0.998 leading (absorbing) for the 2025 Summer Peak conditions.

Study Generator GEN-2015-088

The Power Factor Analysis shows that GEN-2015-088 has a power factor range of 0.965 leading (absorbing) to 1.00 (unity) for the 2016 Winter Peak conditions, a power factor range of 0.970 leading (absorbing) to 0.999 lagging (supplying) for the 2017 Summer Peak conditions, and a power factor range of 0.968 leading (absorbing) to 1.00 (unity) for the 2025 Summer Peak conditions.

Study Generator GEN-2015-094

The Power Factor Analysis shows that GEN-2015-094 has a power factor range of 0.837 lagging (supplying) to 1.00 (unity) for the 2016 Winter Peak conditions, a power factor range of 0.786 lagging (supplying) to 0.998 lagging (supplying) for the 2017 Summer Peak conditions, and a

power factor range of 0.790 lagging (supplying) to 0.999 lagging (supplying) for the 2025 Summer Peak conditions.

SUMMARY OF LOW WIND/NO WIND ANALYSIS

The amount of reactive power injected into the transmission network was recorded at the high side of the transformer near the point of interconnection for all study projects for each season. The maximum reactance needed for zero Mvar flow was 26.85 Mvar for GEN-2015-088. The minimum reactance needed for zero Mvar flow was 5.2 Mvar for GEN-2015-076.

FURTHER REVIEW BY TRANSMISSION OWNERS

Due to special considerations of the transmission system in the area of interconnection, both Nebraska Public Power District (NPPD) and Western Area Power Administration (WAPA) have indicated that further in depth review of the stability concerns in western Nebraska and around the Gavins power plant will be performed during the Interconnection Facilities Study.

Table of Contents

Section 1: Objectives 10
Section 2: Background 10
Section 3: Stability Analysis 33
3.1 Approach 33
3.2 Cluster Scenario Stability Analysis Results 36
3.3 High GGS Sensitivity Scenario Stability Analysis Results 43
3.4 Stand Alone Scenario Stability Analysis Results: GEN-2014-059 48
3.5 Stand Alone Scenario Stability Analysis Results: GEN-2015-042 51
3.6 Stand Alone Scenario Stability Analysis Results: GEN-2015-053 52
3.7 Stand Alone Scenario Stability Analysis Results: GEN-2015-054 53
3.8 Stand Alone Scenario Stability Analysis Results: GEN-2015-076 54
3.9 Stand Alone Scenario Stability Analysis Results: GEN-2015-087 56
3.10 Stand Alone Scenario Stability Analysis Results: GEN-2015-088 57
3.11 Stand Alone Scenario Stability Analysis Results: GEN-2015-094 58
Section 4: Short-circuit Analysis 60
4.1 Approach 60
4.2 Short-circuit Analysis Results 60
Section 5: Power Factor Analysis 73
5.1 Approach 73
5.2 Power Factor Analysis Results 75
Section 6: Low Wind/No Wind Analysis 92
6.1 Approach 93
6.2 Low Wind/No Wind Analysis Results 93
Section 7: Conclusions 94

SECTION 1: OBJECTIVES

The objective of this report is to provide Southwest Power Pool, Inc. (SPP) with the deliverables for the "DISIS-2015-002 (Group 09) Definitive Impact Study." SPP requested an Interconnection System Impact Study for eight (8) generation interconnections for 2016 Winter Peak, 2017 Summer Peak, and 2025 Summer Peak, which requires a Stability Analysis, Short-circuit Analysis, Power Factor Analysis, Low Wind/No Wind Analysis, and an Impact Study Report.

SECTION 2: BACKGROUND

The Siemens Power Technologies, Inc. PSS/E power system simulation program Version 32.2.0 was used for this study. SPP provided the stability database cases for 2016 Winter Peak, 2017 Summer Peak, and 2025 Summer Peak conditions and a list of contingencies to be examined. The model includes the study projects shown in Table 2-1 and the previously queued projects listed in Table 2-2. Refer to Appendix A for the steady-state and dynamic model data for the study projects. A power flow one-line diagram for each generation interconnection project is shown in Figures 2-1 through 2-8. Note that the one-line diagrams represent the 2016 Winter Peak case.

The Stability Analysis determined the impacts of the new interconnecting projects on the stability and voltage recovery of the nearby system and the ability of the interconnecting projects to meet FERC Order 661A. If problems with stability or voltage recovery are identified, the need for reactive compensation or system upgrades will be investigated. Three-phase faults and single line-to-ground faults will be examined as listed in Table 2-3. Note that all contingencies listed were examined for the Cluster Scenario, and specified contingencies (indicated by an X) were examined for each Stand Alone generator.

A Short-circuit Analysis was performed on the 2017 Summer Peak and 2025 Summer Peak study years for each study generator in the Cluster Scenario. The study was performed five buses out from the study generator's point of interconnection and results were documented.

The Power Factor Analysis determined the power factor at the high side of the transformer near the point of interconnection for the wind or solar interconnection projects for pre-contingency and post-contingency conditions. The N-1, three phase contingencies listed in Table 2-3 were used in the Power Factor analysis.

The Low Wind/No Wind Analysis was completed for all wind and solar farm interconnections. This analysis determined if reactive support is needed to have a Mvar flow of approximately zero at the point of interconnection (POI).

Table 2-1
Interconnection Projects Evaluated

Request	Size (MW)	Generator Model	Point of Interconnection
GEN-2014-059	160.0	Vestas V110 2MW (584233) (wind)	Tap Sidney-Ogallala 230kV (560014)
GEN-2015-042	320.0	Vestas V110 2MW (584833) (wind)	Dixon County (560347) (GEN-2010-051 230kV)
GEN-2015-053	50.0	GE 1.79MW (584913) (wind)	Antelope 115kV (640521)
GEN-2015-054	74.0	GE 1.79MW (584923) (wind)	Antelope 115kV (640521)
GEN-2015-076	158.4	Vestas 3.3-117 3.3MW (585133, 585136) (wind)	Belden 115kV (640080)
GEN-2015-087	76.0	Vestas V100 2MW (585233) (wind)	Tap on Fairbury (640169) to Hebron (640218) 115kV
GEN-2015-088	300.0	Vestas V100 2MW (585243) (wind)	Tap on Moore (640277) to Pauline (640312) 345kV
GEN-2015-094	151.8	Siemens 2.3MW (585293) (wind)	Laramie River Station (659131) to Sidney (659426) 345kV

Table 2-2
Previously Queued Nearby Interconnection Projects Included

Request	Size (MW)	Generator Model	Point of Interconnection
GEN-2003-021N	75.00	Vestas 1.65MW (640026)	Tap on thet Ainsworth - Calamus 115kV line (640050)
GEN-2004-023N	75.00	GENROU (640028)	Columbus 115kV (640119)
GEN-2006-020N	42.00	Vestas V90 VCUS 1.8 & 3.0MW (640421, 640441)	Bloomfield 115kV (640084)
GEN-2006-037N1	75.00	GE 1.7MW (640499)	Broken Bow 115kV (640089)
GEN-2006-038N005	79.50	GE 1.7MW (640428)	Broken Bow 115kV (640089)
GEN-2006-038N019	79.50	GE 1.5MW (640431)	Petersburg 115kV (640444)
GEN-2006-044N	40.50	GE 1.5MW (645062)	Petersburg 115kV (640444)
GEN-2007-011N08	81.00	Vestas V90 VCRS 3.0MW (640418)	Bloomfield 115kV (640084)
GEN-2008-086N02 GEN-2014-032	211.22	GE 100m 1.79MW (645063 and 645064)	Meadow Grove 230kV (GEN-2008-086N02 POI) (640540)
GEN-2008-119O	60.00	GE 1.5MW (645061)	S1399 161kV (646399)
GEN-2008-123N	89.70	GE 100m 1.79MW GE 103m 1.72MW (572054)	Tap on the Pauline - Guide Rock 115kV (560137)
GEN-2009-040	73.80	Vestas V100 VCSS 2MW (532904)	Marshall 115kV (533303)
GEN-2010-041	10.50	GE 1.5 MW (580071)	S1399 161kV (646399)
GEN-2010-051	200.00	GE 100m 1.7MW (580014, 580017, 580020)	Tap on the Twin Church - Hoskins 230kV line (560347)
GEN-2011-018	73.60	GE 100m 1.7MW	Steele County 115kV (640426)
GEN-2011-027	120.00	GE 1.85MW (580022, 580021, 580023)	Tap Twin Church-Hoskins 230kV (560347)
GEN-2011-056	3.6 MW increase (Pgen=21.6MW)	GENSAL (640013)	Jeffrey 115kV (640238)
GEN-2011-056A	3.6 MW increase (Pgen=21.6MW)	GENSAL (640014)	Johnson 1 115kV (640240)
GEN-2011-056B	4.5 MW increase (Pgen=23.5MW)	GENSAL (640015)	Johnson 2 115kV (640242)
GEN-2012-021	4.8 MW	GENROU (650010)	84th & Bluff 115kV (650275)
GEN-2013-002	50.60	Siemens 108m 2.3MW (583703)	Tap Sheldon - SW7&Bennet - Folsom/Pleasant Hill 115kV (560746)
GEN-2013-008	1.2 MW increase to GEN-2011-018 (Pgen=74.8MW)	GE 100m 1.7MW (640555)	Steele City (640426) 115kV
GEN-2013-14	25.50	GE 100m 1.7MW (583703)	Tap Pauline (640313) - Guide Rock (640206) 115kV (560137)
GEN-2013-19	73.60	Siemens 108m 2.3MW (583703)	Tap Sheldon - SW7&Bennet - Folsom/Pleasant Hill 115kV (560746)
GEN-2013-032	204.00	GE 97.4m 1.7MW (583783)	Neligh 115kV (640293)
GEN-2014-004	3.96	GE 97.4m 1.79MW (640555)	Steele City 115kV (GEN-2011-018 POI) (640426)
GEN-2014-013	73.50	GE XLE 97.4m (583833)	Meadow Grove 230kV (GEN-2008-086N02 POI) (640540)
GEN-2014-031	35.80	GE 1.79MW (583836)	Meadow Grove 230kV (GEN-2008-086N02 POI) (640540)
GEN-2014-039	73.39	GE 1.79MW (584903)	Friend 115kV (640174)
GEN-2015-007	160.00	GE 2.0MW	Hoskins 345kV
GEN-2015-023	300.80	GE 1.79MW	Holt County 345kV

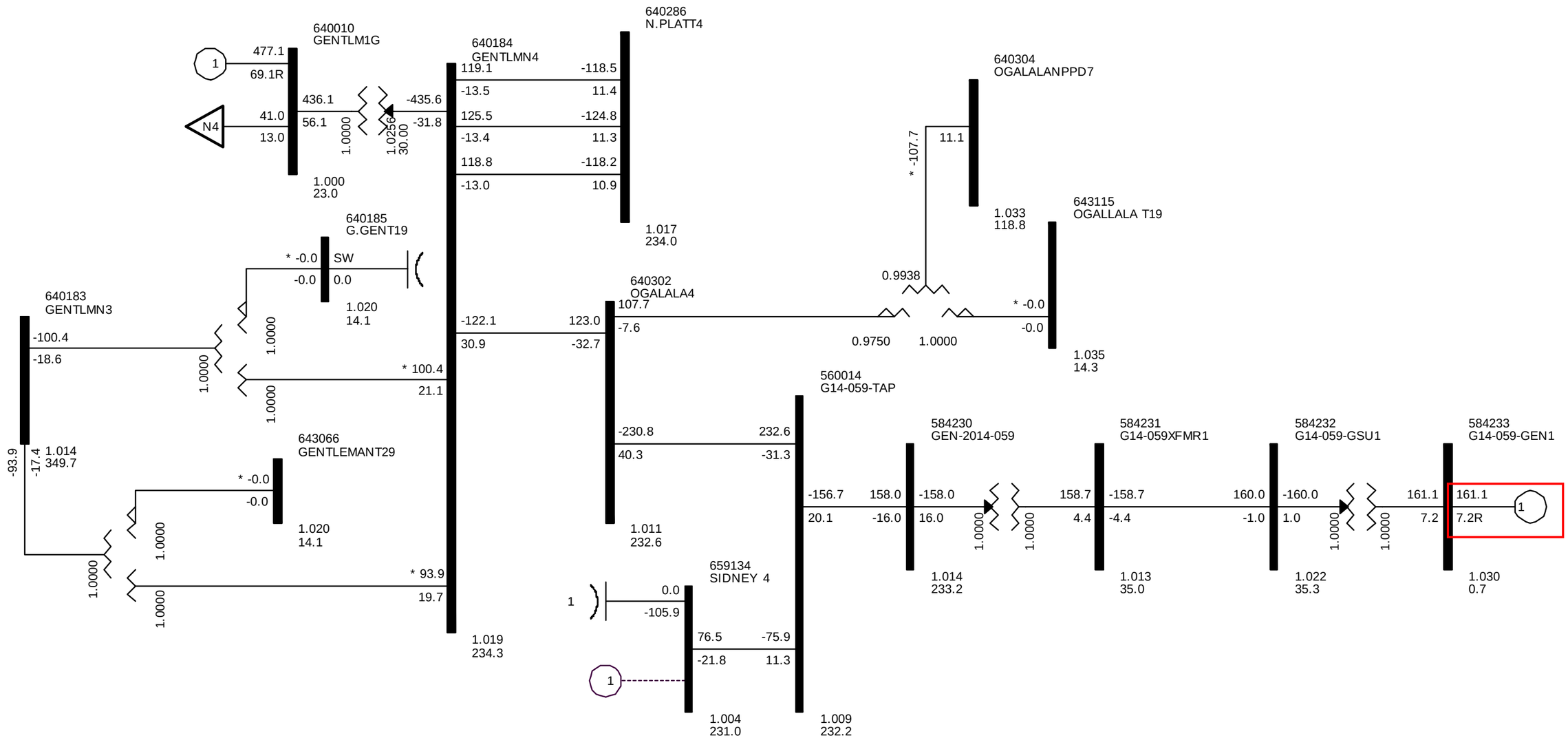

Figure 2-1. Power flow one-line diagram for interconnection project at the Tap Sidney-Ogallala 230kV POI (GEN-2014-059)

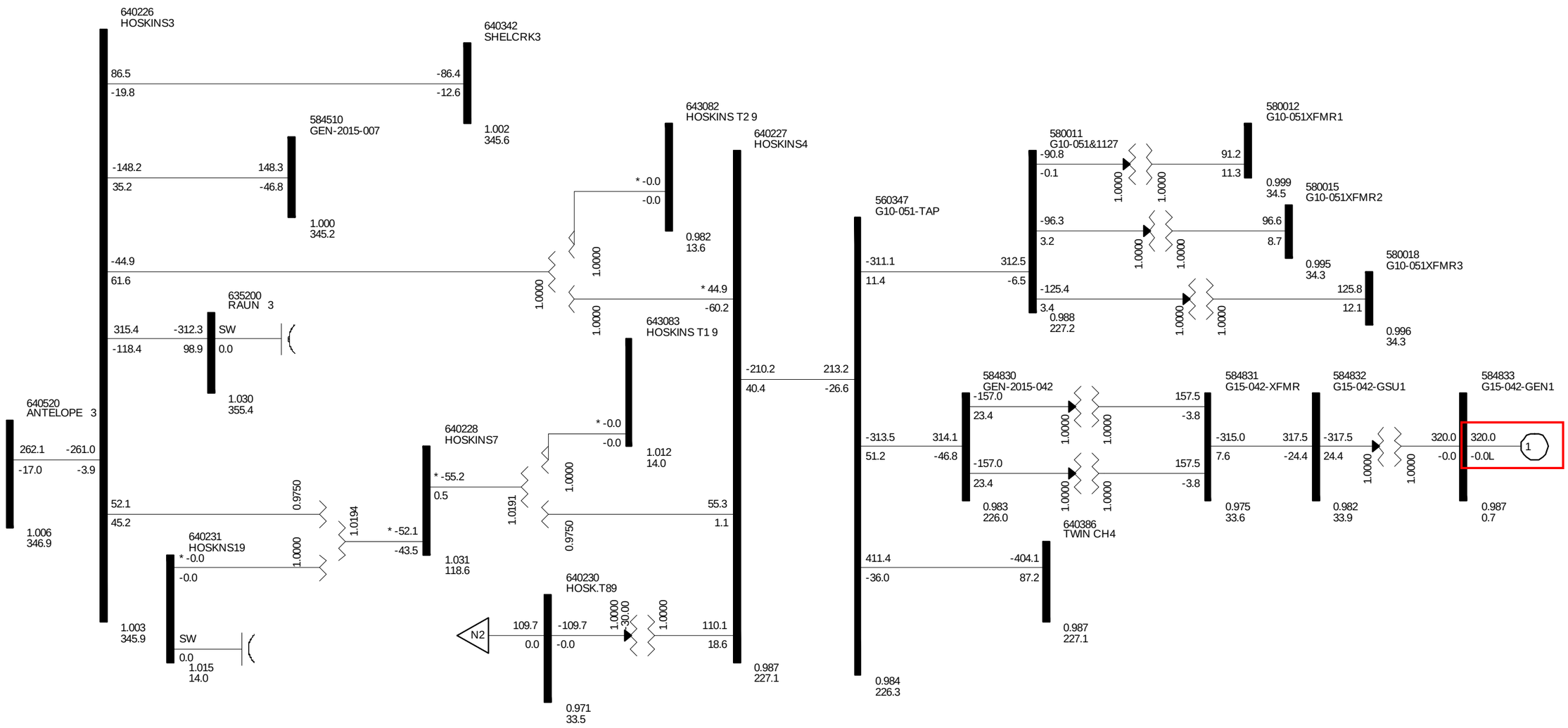

Figure 2-2. Power flow one-line diagram for interconnection project at the Dixon County 230kV POI (GEN-2015-042)

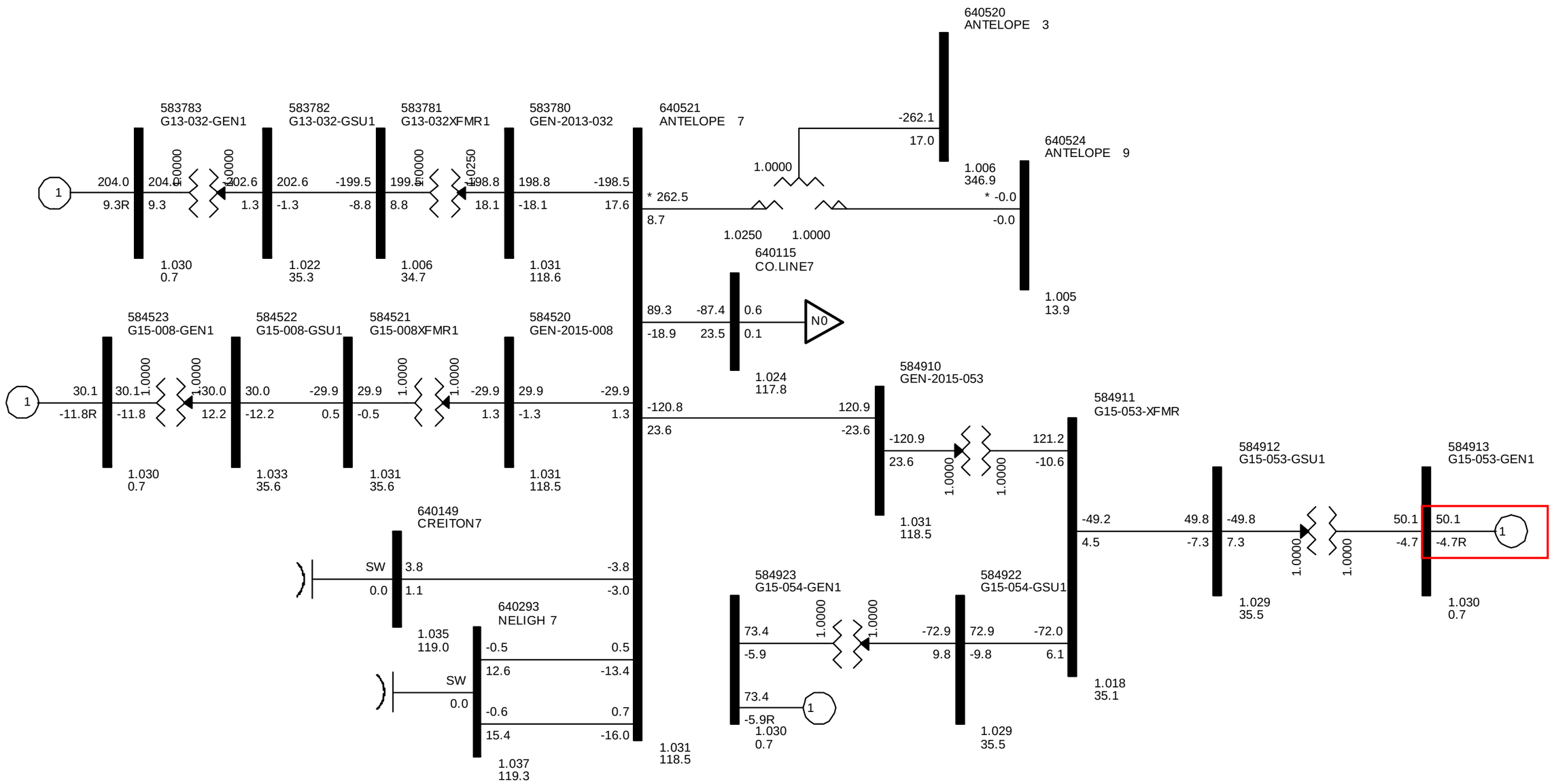

Figure 2-3. Power flow one-line diagram for interconnection project at the Antelope 115kV POI (GEN-2015-053)

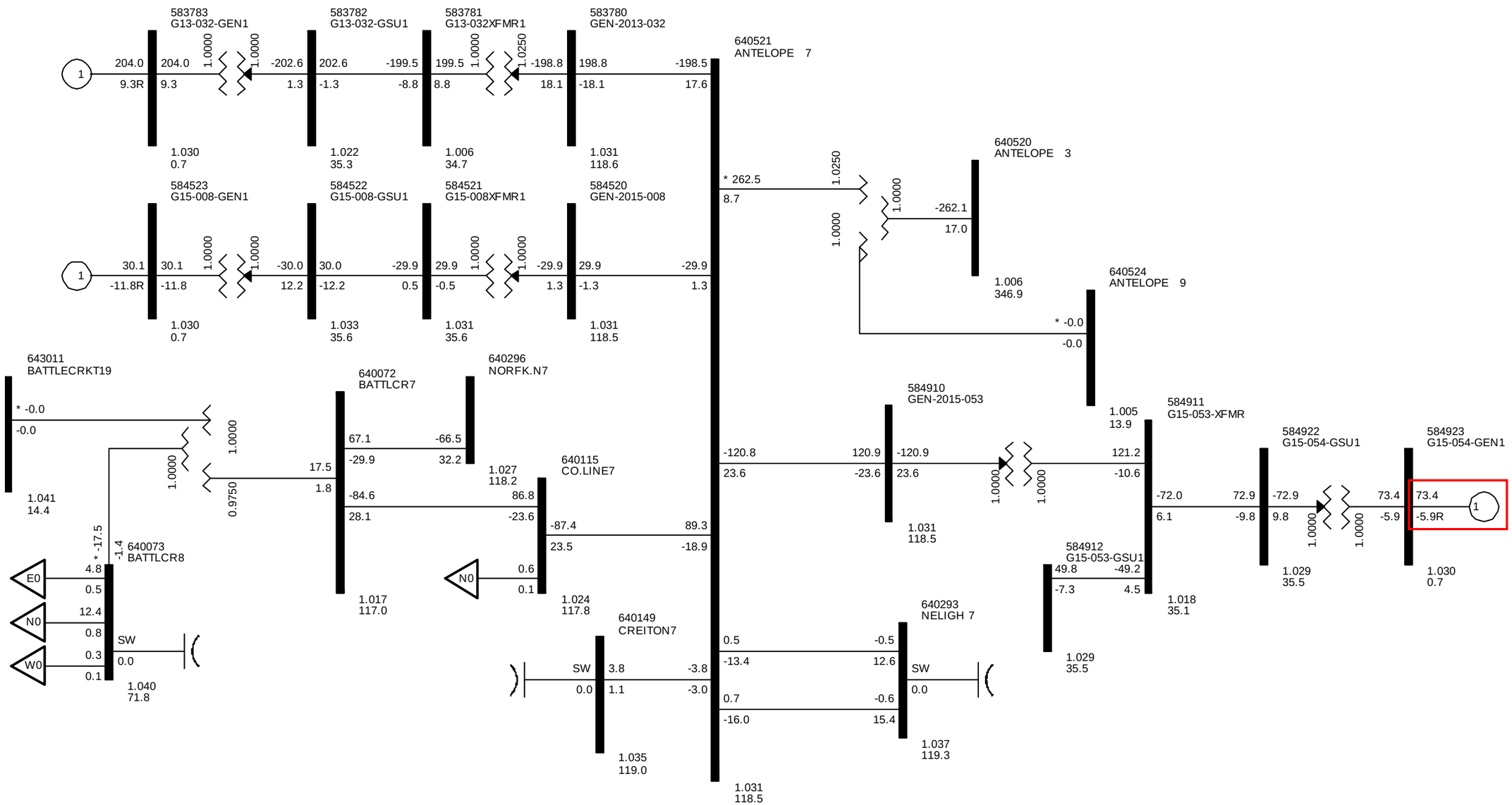

Figure 2-4. Power flow one-line diagram for interconnection project at the Antelope 115kV POI (GEN-2015-054)

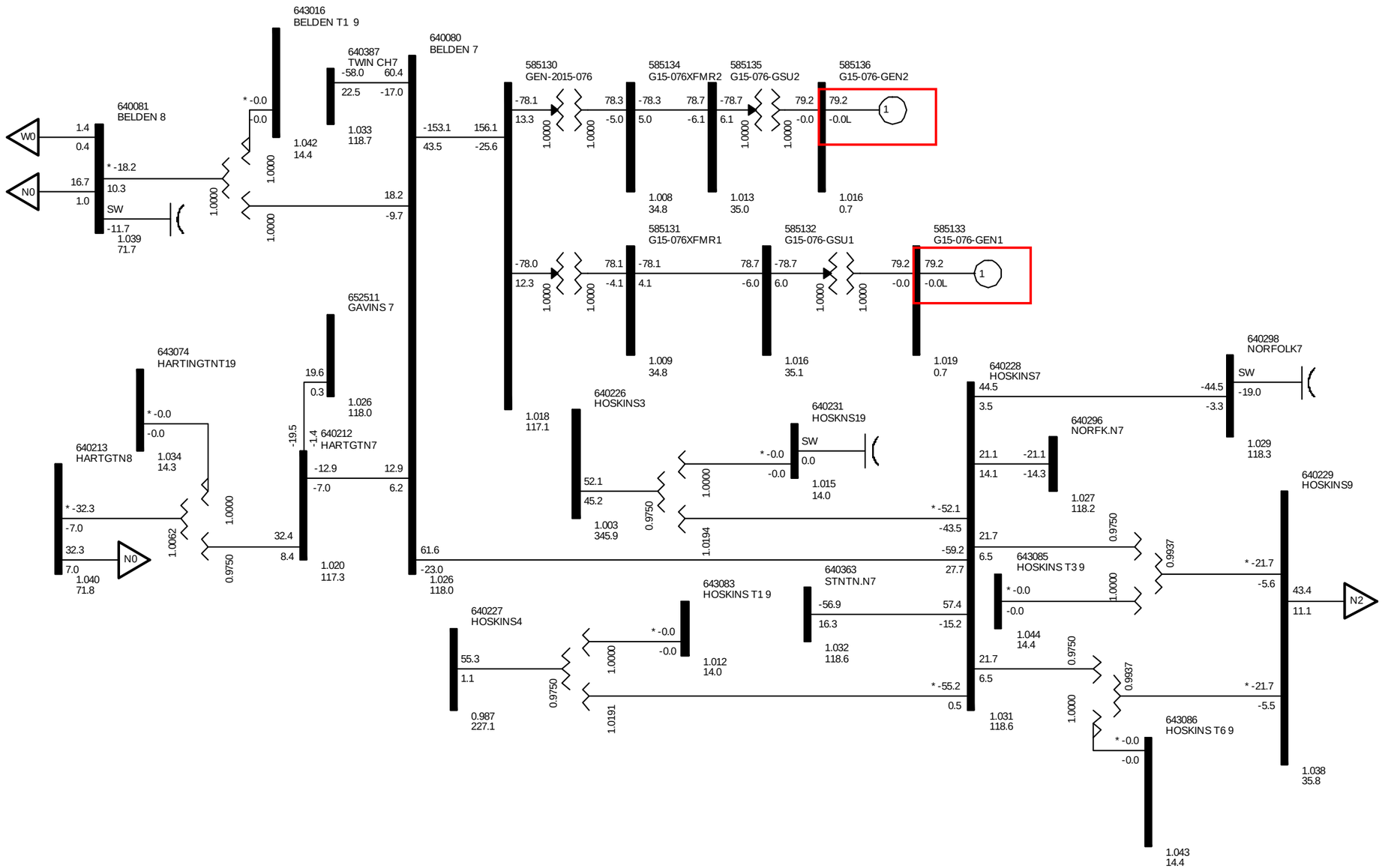

Figure 2-5. Power flow one-line diagram for interconnection project at the Belden 115kV POI (GEN-2015-076)

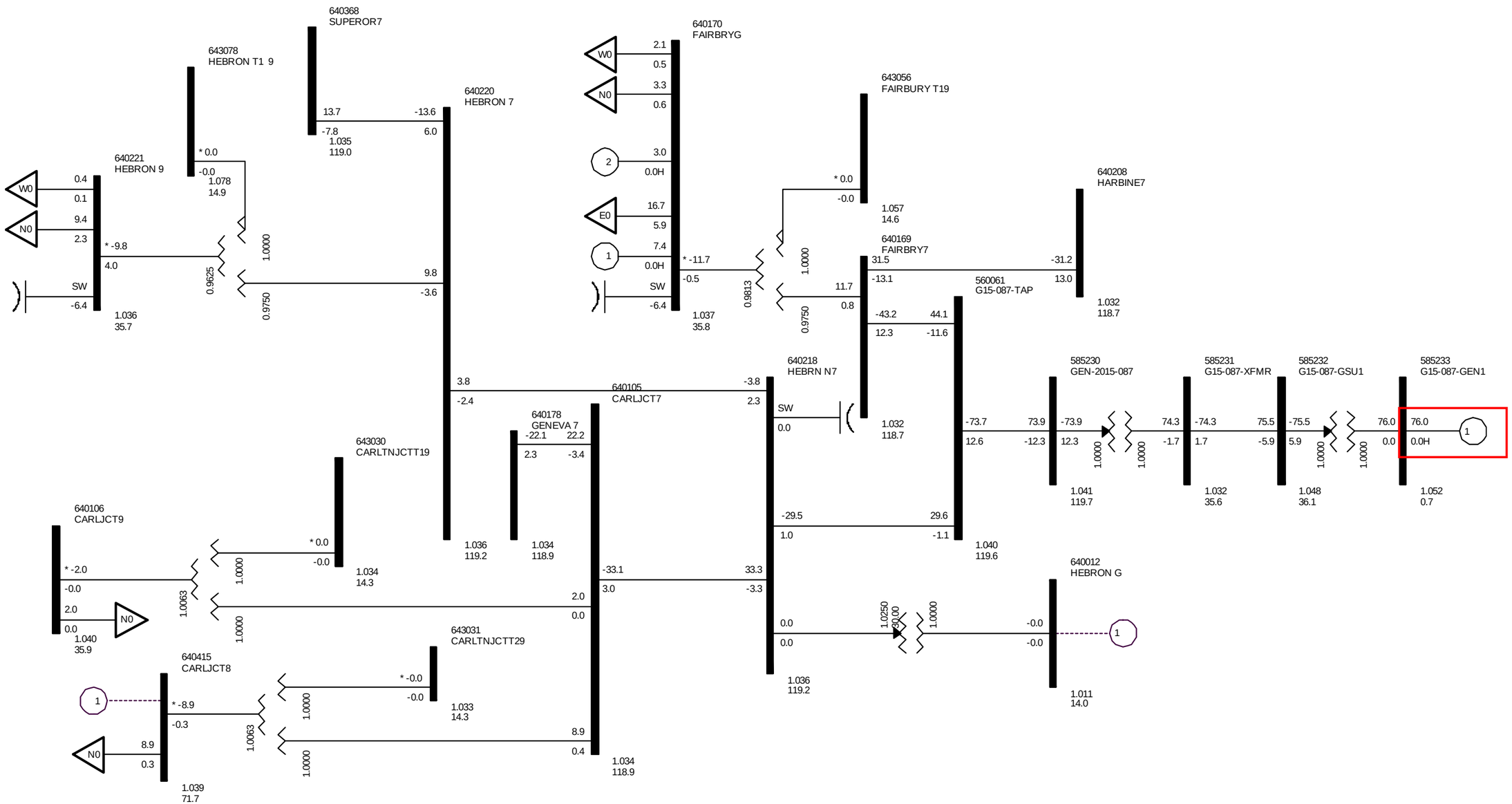

Figure 2-6. Power flow one-line diagram for interconnection project at the Tap Fairbury – Hebron 115kV POI (GEN-2015-087)

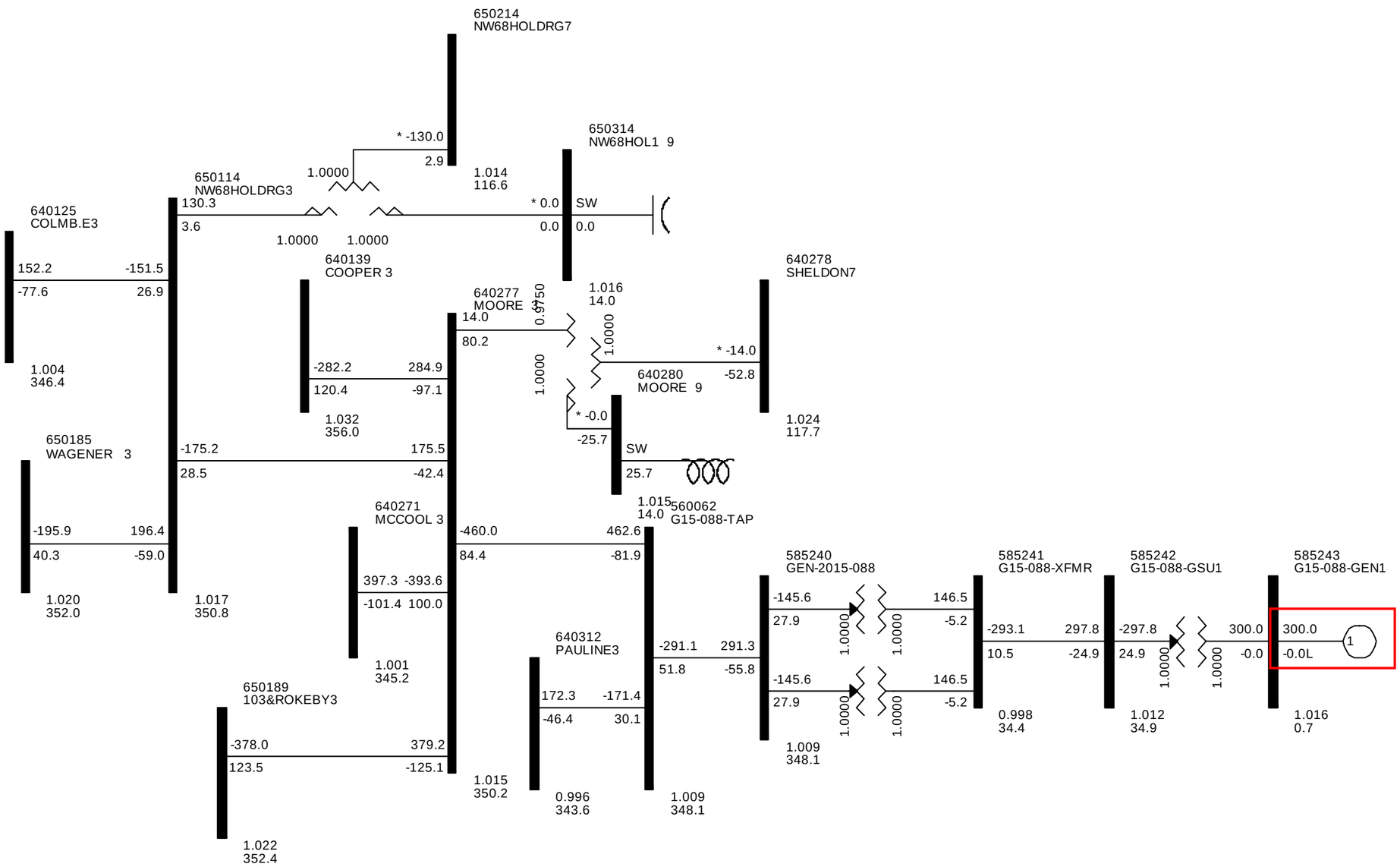

Figure 2-7. Power flow one-line diagram for interconnection project at the Tap Moore – Pauline 345kV POI (GEN-2015-088)

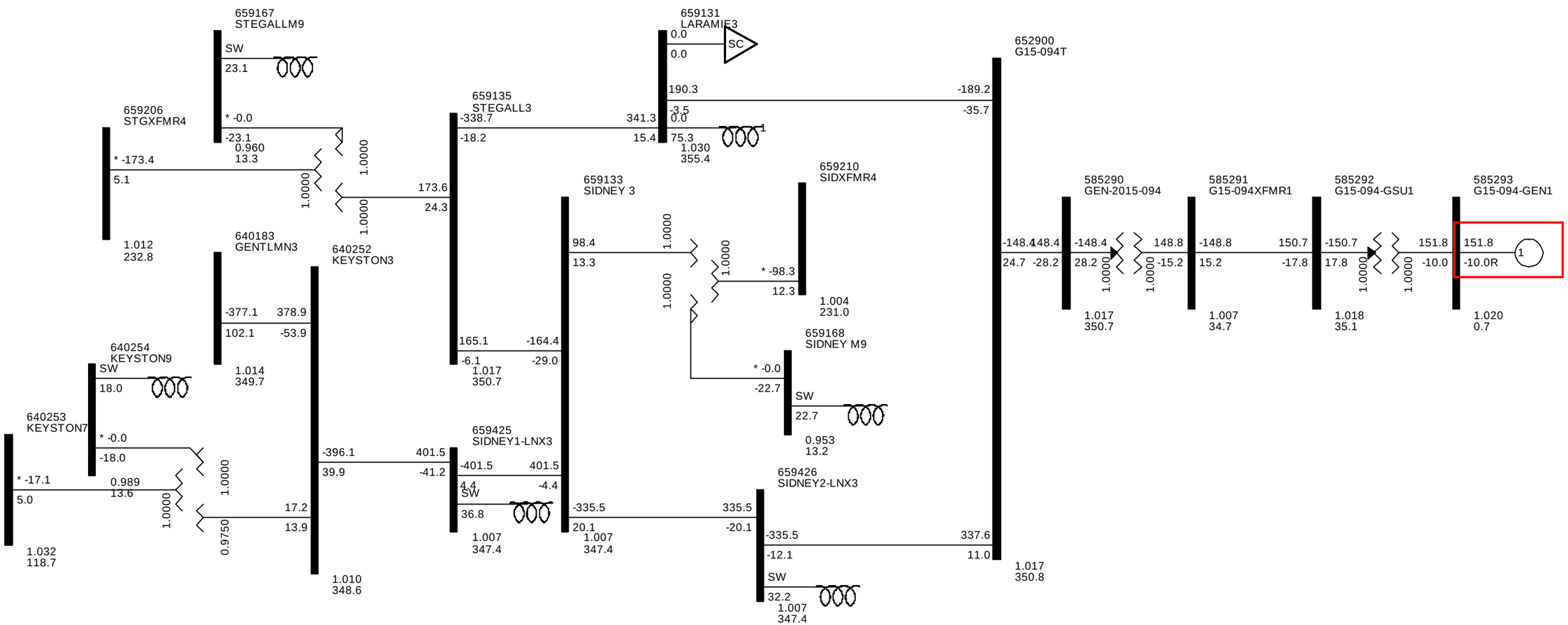

Figure 2-8. Power flow one-line diagram for interconnection project at the Laramie River Station – Sidney 345kV POI (GEN-2015-094)

Table 2-3
Case List with Contingency Description

Cont. No.	Cont. Name	Description	GEN-2014-059	GEN-2015-042	GEN-2015-053 GEN-2015-054	GEN-2015-076	GEN-2015-087	GEN-2015-088	GEN-2015-094	HIGH GGS CASE
1	FLT01-3PH	**3 phase fault on the G15-059-TAP (560014) to OGALALA4 (640302) 230kV line circuit 1, near G14-059-TAP** a. Apply fault at the G14-059-TAP 230kV bus. b. Clear fault after 5 cycles by tripping the faulted line and remove fault. c. Wait 20 cycles, and then re-close the line in (b) back into the fault. d. Leave fault on for 5 cycles, then trip the line in (b) and remove fault.	X							X
2	FLT02-3PH	**3 phase fault on the G15-059-TAP (560014) to SIDNEY 4 (659134) 230kV line circuit 1, near G14-059-TAP** a. Apply fault at the G14-059-TAP 230kV bus. b. Clear fault after 5 cycles by tripping the faulted line and remove fault. c. Wait 20 cycles, and then re-close the line in (b) back into the fault. d. Leave fault on for 5 cycles, then trip the line in (b) and remove fault.	X							X
3	FLT03-3PH	**3 phase fault on the SIDNEY 4 (659134) to SIDXFMR4 (659210) 230kV line circuit 1, near SIDNEY 4.** a. Apply fault at the SIDNEY 4 230kV bus. b. Clear fault after 5 cycles by tripping the faulted line and remove fault. c. Wait 20 cycles, and then re-close the line in (b) back into the fault. d. Leave fault on for 5 cycles, then trip the line in (b) and remove fault.	X							X
4	FLT04-3PH	**3 phase fault on the OGALALA4 (640302) 230kV / (640304) 115kV / (643115) 13.8kV Transformer circuit 1, near OGALALA4 230kV.** a. Apply fault at the OGALALA4 230kV bus. b. Clear fault after 5 cycles by tripping the faulted transformer.	X							X
5	FLT05-3PH	**3 phase fault on the OGALALA4 (640302) to GENTLMN4 (640184) 230kV line circuit 1, near OGALALA4.** a. Apply fault at the OGALALA4 230kV bus. b. Clear fault after 5 cycles by tripping the faulted line and remove fault. c. Wait 20 cycles, and then re-close the line in (b) back into the fault. d. Leave fault on for 5 cycles, then trip the line in (b) and remove fault.	X							
6	FLT06-3PH	**3 phase fault on the Sidney (659134) 230kV / (652572) 115kV / (659803) 13.8kV transformer circuit 1, near Sidney 230kV.** a. Apply fault at the Sidney 230kV bus. b. Clear fault after 5 cycles by tripping the transformer.	X							
7	FLT07-3PH	**3 phase fault on the SIDNEY 4 (659134) to SIDNEYW4 (652584) 230kV line circuit 1, near SIDNEY 4.** a. Apply fault at the SIDNEY 4 230kV bus. b. Clear fault after 5 cycles by tripping the faulted line and remove fault. c. Block the DC tie at SIDNEY4.	X							
8	FLT08-3PH	**3 phase fault on the G10-051-TAP (560347) to TWIN CH4 (640386) 230kV line circuit 1, near G10-051-TAP.** a. Apply fault at the G10-051-TAP 230kV bus. b. Clear fault after 5 cycles by tripping the faulted line and remove fault. c. Wait 20 cycles, and then re-close the line in (b) back into the fault. d. Leave fault on for 5 cycles, then trip the line in (b) and remove fault.		X						X
9	FLT09-3PH	**3 phase fault on the G10-051-TAP (560347) to HOSKINS4 (640227) 230kV line circuit 1, near G10-051-TAP.** a. Apply fault at the G10-051-TAP 230kV bus. b. Clear fault after 5 cycles by tripping the faulted line and remove fault. c. Wait 20 cycles, and then re-close the line in (b) back into the fault. d. Leave fault on for 5 cycles, then trip the line in (b) and remove fault.		X						X
10	FLT10-3PH	**3 phase fault on the TWIN CH4 (640386) 230kV / (640387) 115kV / (643156) 13.8kV transformer circuit 1, near TWIN CH4 230kV.** a. Apply fault at the TWIN CH4 230kV bus. b. Clear fault after 5 cycles by tripping the faulted transformer.		X		X				
11	FLT11-3PH	**3 phase fault on the G10-051-TAP (560347) to SIOUXCY44 (652565) 230kV line circuit 1, near TWIN CH4 230kV.** a. Apply fault at the TWIN CH4 230kV bus. b. Clear fault after 5 cycles by tripping the faulted line and remove fault. c. Wait 20 cycles, and then re-close the line in (b) back into the fault. d. Leave fault on for 5 cycles, then trip the line in (b) and remove fault.		X						X

Table 2-3 (Continued)
Case List with Contingency Description

Cont. No.	Cont. Name	Description	GEN-2014-059	GEN-2015-042	GEN-2015-053 GEN-2015-054	GEN-2015-076	GEN-2015-087	GEN-2015-088	GEN-2015-094	HIGH GGS CASE
12	FLT12-3PH	**3 phase fault on the HOSKINS4 (640227) 230kV / (640228) 115kV / (643083) 13.8 kV transformer circuit 1, near HOSKINS4 230kV.**		X		X				
		a. Apply fault at the Hoskins 230kV bus.								
		b. Clear fault after 5 cycles by tripping the faulted transformer.								
13	FLT13-3PH	**3 phase fault on the HOSKINS4 (640227) 230kV / (640226) 345kV / (643082) 13.8 kV transformer circuit 1, near HOSKINS4 230kV.**		X						X
		a. Apply fault at the Hoskins 230kV bus.								
		b. Clear fault after 5 cycles by tripping the faulted transformer.								
14	FLT14-3PH	**3 phase fault on the Antelope 7 (640521) to NELIGH 7 (640293) 115kV line circuit 1, near ANTELOPE 7.**			X					X
		a. Apply fault at the Antelope 115kV bus.								
		b. Clear fault after 5 cycles by tripping the faulted line and remove fault.								
		c. Wait 20 cycles, and then re-close the line in (b) back into the fault.								
		d. Leave fault on for 5 cycles, then trip the line in (b) and remove fault.								
15	FLT15-3PH	**3 phase fault on the Antelope 7 (640521) to CREITON7 (640149) 115kV line circuit 1, near ANTELOPE 7.**			X					X
		a. Apply fault at the Antelope 115kV bus.								
		b. Clear fault after 5 cycles by tripping the faulted line and remove fault.								
		c. Wait 20 cycles, and then re-close the line in (b) back into the fault.								
		d. Leave fault on for 5 cycles, then trip the line in (b) and remove fault.								
16	FLT16-3PH	**3 phase fault on the Antelope 7 (640521) to COLINE7 (640115) 115kV line circuit 1, near ANTELOPE 7.**			X					X
		a. Apply fault at the Antelope 115kV bus.								
		b. Clear fault after 5 cycles by tripping the faulted line and remove fault.								
		c. Wait 20 cycles, and then re-close the line in (b) back into the fault.								
		d. Leave fault on for 5 cycles, then trip the line in (b) and remove fault.								
17	FLT17-3PH	**3 phase fault on the ANTELOPE 7 (640521) 115kV / (640520) 345 kV / (640524) 13.8kV transformer circuit 1, near ANTELOPE 7 115kV.**			X					X
		a. Apply fault at the Antelope 115kV bus.								
		b. Clear fault after 5 cycles by tripping the faulted transformer.								
18	FLT18-3PH	**3 phase fault on the NELIGH7 (640293) to CLRWATR7 (640113) 115kV line circuit 1, near NELIGH 7.**			X					
		a. Apply fault at the NELIGH 7 115kV bus.								
		b. Clear fault after 5 cycles by tripping the faulted line and remove fault.								
		c. Wait 20 cycles, and then re-close the line in (b) back into the fault.								
		d. Leave fault on for 5 cycles, then trip the line in (b) and remove fault.								
19	FLT19-3PH	**3 phase fault on the NELIGH7 (640293) to PETERSBRGN7 (640444) 115kV line circuit 1, near NELIGH 7.**			X					
		a. Apply fault at the NELIGH 7 115kV bus.								
		b. Clear fault after 5 cycles by tripping the faulted line and remove fault.								
		c. Wait 20 cycles, and then re-close the line in (b) back into the fault.								
		d. Leave fault on for 5 cycles, then trip the line in (b) and remove fault.								
20	FLT20-3PH	**3 phase fault on the CREITON7 (640149) to BLMFLD 7 (640084) 115kV line circuit 1, near CREITON7.**			X					
		a. Apply fault at the CREITON7 115kV bus.								
		b. Clear fault after 5 cycles by tripping the faulted line and remove fault.								
		c. Wait 20 cycles, and then re-close the line in (b) back into the fault.								
		d. Leave fault on for 5 cycles, then trip the line in (b) and remove fault.								
21	FLT21-3PH	**3 phase fault on the ANTELOPE 3 (640520) to HOSKINS3 (640226) 345kV circuit 1 line, near ANTELOPE3.**			X					
		a. Apply fault at the ANTELOPE 3 345kV bus.								
		b. Clear fault after 5 cycles by tripping the faulted line and remove fault.								
		c. Wait 20 cycles, and then re-close the line in (b) back into the fault.								
		d. Leave fault on for 5 cycles, then trip the line in (b) and remove fault.								
22	FLT22-3PH	**3 phase fault on the COLINE7 (640115) to BATTLCR7 (640072) 115kV circuit 1 line, near COLINE7.**			X					
		a. Apply fault at the COLINE7 115kV bus.								
		b. Clear fault after 5 cycles by tripping the faulted line and remove fault.								
		c. Wait 20 cycles, and then re-close the line in (b) back into the fault.								
		d. Leave fault on for 5 cycles, then trip the line in (b) and remove fault.								

Table 2-3 (Continued)
Case List with Contingency Description

Cont. No.	Cont. Name	Description	GEN-2014-059	GEN-2015-042	GEN-2015-053 GEN-2015-054	GEN-2015-076	GEN-2015-087	GEN-2015-088	GEN-2015-094	HIGH GGS CASE
23	FLT23-3PH	**3 phase fault on the BELDEN 7 (640080) to HOSKINS7 (640228) 115kV circuit 1 line, near BELDEN 7.**				X				X
		a. Apply fault at the BELDEN 7 115kV bus.								
		b. Clear fault after 5 cycles by tripping the faulted line and remove fault.								
		c. Wait 20 cycles, and then re-close the line in (b) back into the fault.								
		d. Leave fault on for 5 cycles, then trip the line in (b) and remove fault.								
24	FLT24-3PH	**3 phase fault on the BELDEN 7 (640080) to HARTGTN7 (640212) 115kV circuit 1 line, near BELDEN 7.**				X				X
		a. Apply fault at the BELDEN 7 115kV bus.								
		b. Clear fault after 5 cycles by tripping the faulted line and remove fault.								
		c. Wait 20 cycles, and then re-close the line in (b) back into the fault.								
		d. Leave fault on for 5 cycles, then trip the line in (b) and remove fault.								
25	FLT25-3PH	**3 phase fault on the BELDEN 7 (640080) to TWIN CH7 (640387) 115kV circuit 1 line, near BELDEN 7.**				X				X
		a. Apply fault at the BELDEN 7 115kV bus.								
		b. Clear fault after 5 cycles by tripping the faulted line and remove fault.								
		c. Wait 20 cycles, and then re-close the line in (b) back into the fault.								
		d. Leave fault on for 5 cycles, then trip the line in (b) and remove fault.								
26	FLT26-3PH	**3 phase fault on the TWIN CH7 (640387) to EMERSON7 (640163) 115kV line circuit 1, near TWIN CH7.**				X				X
		a. Apply fault at the TWIN CH7 115kV bus.								
		b. Clear fault after 5 cycles by tripping the faulted line and remove fault.								
		c. Wait 20 cycles, and then re-close the line in (b) back into the fault.								
		d. Leave fault on for 5 cycles, then trip the line in (b) and remove fault.								
27	FLT27-3PH	**3 phase fault on the TWIN CH7 (640387) to SSIOUXCITY7 (640424) 115kV line circuit 1, near TWIN CH7.**				X				
		a. Apply fault at the TWIN CH7 115kV bus.								
		b. Clear fault after 5 cycles by tripping the faulted line and remove fault.								
		c. Wait 20 cycles, and then re-close the line in (b) back into the fault.								
		d. Leave fault on for 5 cycles, then trip the line in (b) and remove fault.								
28	FLT28-3PH	**3 phase fault on the TWIN CH7 (640387) 115kV / (640388) 69kV / (643157) 13.8kV transformer circuit 1, near TWIN CH7 115kV.**				X				
		a. Apply fault at the TWIN CH7 115kV bus.								
		b. Clear fault after 5 cycles by tripping the faulted transformer.								
29	FLT29-3PH	**3 phase fault on the HARTGTN7 (640212) to GAVINS7 (652511) 115kV circuit 1 line, near HARTGTN7.**				X				
		a. Apply fault at the HARTGTN7 115kV bus.								
		b. Clear fault after 5 cycles by tripping the faulted line and remove fault.								
		c. Wait 20 cycles, and then re-close the line in (b) back into the fault.								
		d. Leave fault on for 5 cycles, then trip the line in (b) and remove fault.								
30	FLT30-3PH	**3 phase fault on the HOSKINS7 (640228) to STNTNN7 (640363) 115kV circuit 1 line, near HOSKINS7.**				X				
		a. Apply fault at the HOSKINS 7 115kV bus.								
		b. Clear fault after 5 cycles by tripping the faulted line and remove fault.								
		c. Wait 20 cycles, and then re-close the line in (b) back into the fault.								
		d. Leave fault on for 5 cycles, then trip the line in (b) and remove fault.								
31	FLT31-3PH	**3 phase fault on the HOSKINS7 (640228) to NORFOLK7 (640298) 115kV circuit 1 line, near HOSKINS7.**				X				
		a. Apply fault at the HOSKINS 7 115kV bus.								
		b. Clear fault after 5 cycles by tripping the faulted line and remove fault.								
		c. Wait 20 cycles, and then re-close the line in (b) back into the fault.								
		d. Leave fault on for 5 cycles, then trip the line in (b) and remove fault.								
32	FLT32-3PH	**3 phase fault on the HOSKINS7 (640228) to NORFKN77 (640296) 115kV circuit 1 line, near HOSKINS7.**				X				
		a. Apply fault at the HOSKINS 7 115kV bus.								
		b. Clear fault after 5 cycles by tripping the faulted line and remove fault.								
		c. Wait 20 cycles, and then re-close the line in (b) back into the fault.								
		d. Leave fault on for 5 cycles, then trip the line in (b) and remove fault.								

Table 2-3 (Continued)
Case List with Contingency Description

Cont. No.	Cont. Name	Description	GEN-2014-059	GEN-2015-042	GEN-2015-053 GEN-2015-054	GEN-2015-076	GEN-2015-087	GEN-2015-088	GEN-2015-094	HIGH GGS CASE
33	FLT33-3PH	**3 phase fault on the HOSKINS7 (640228) 115kV / (640229) 34.5kV / (643086) 13.8kV transformer circuit 1, near HOSKINS7 115kV.**				X				
		a. Apply fault at the HOSKINS 7 115kV bus.								
		b. Clear fault after 5 cycles by tripping the faulted transformer.								
34	FLT34-3PH	**3 phase fault on the HOSKINS7 (640228) 115kV / (640226) 345kV / (640231) 13.8kV transformer circuit 1, near HOSKINS7 115kV.**				X				
		a. Apply fault at the HOSKINS 7 115kV bus.								
		b. Clear fault after 5 cycles by tripping the faulted transformer.								
35	FLT35-3PH	**3 phase fault on the GEN15087 (560061) to HEBRNN7 (640218) 345kV circuit 1 line, near GEN15087.**					X			X
		a. Apply fault at the GEN15087 115kV bus.								
		b. Clear fault after 5 cycles by tripping the faulted line and remove fault.								
		c. Wait 20 cycles, and then re-close the line in (b) back into the fault.								
		d. Leave fault on for 5 cycles, then trip the line in (b) and remove fault.								
36	FLT36-3PH	**3 phase fault on the GEN15087 (560061) to FAIRBRY7 (640169) 115kV circuit 1 line, near GEN15087.**					X			X
		a. Apply fault at the GEN15087 115kV bus.								
		b. Clear fault after 5 cycles by tripping the faulted line and remove fault.								
		c. Wait 20 cycles, and then re-close the line in (b) back into the fault.								
		d. Leave fault on for 5 cycles, then trip the line in (b) and remove fault.								
37	FLT37-3PH	**3 phase fault on the HEBRN N7 (640218) to HEBRON 7 (640220) 115kV circuit 1 line, near HEBRN N7.**					X			X
		a. Apply fault at the HEBRN N7 115kV bus.								
		b. Clear fault after 5 cycles by tripping the faulted line and remove fault.								
		c. Wait 20 cycles, and then re-close the line in (b) back into the fault.								
		d. Leave fault on for 5 cycles, then trip the line in (b) and remove fault.								
38	FLT38-3PH	**3 phase fault on the HEBRN N7 (640218) to CARLJCT 7 (640105) 115kV circuit 1 line, near HEBRN N7.**					X			
		a. Apply fault at the HEBRN N7 115kV bus.								
		b. Clear fault after 5 cycles by tripping the faulted line and remove fault.								
		c. Wait 20 cycles, and then re-close the line in (b) back into the fault.								
		d. Leave fault on for 5 cycles, then trip the line in (b) and remove fault.								
39	FLT39-3PH	**3 phase fault on the FAIRBRY7 (640169) to HARBINE7 (640208) 115kV circuit 1 line, near FAIRBRY7.**					X			X
		a. Apply fault at the FAIRBRY7 115kV bus.								
		b. Clear fault after 5 cycles by tripping the faulted line and remove fault.								
		c. Wait 20 cycles, and then re-close the line in (b) back into the fault.								
		d. Leave fault on for 5 cycles, then trip the line in (b) and remove fault.								
40	FLT40-3PH	**3 phase fault on the GEN15088 (560062) to MOORE3 (640277) 345kV circuit 1 line, near GEN15088.**						X		X
		a. Apply fault at the GEN15088 345kV bus.								
		b. Clear fault after 5 cycles by tripping the faulted line and remove fault.								
		c. Wait 20 cycles, and then re-close the line in (b) back into the fault.								
		d. Leave fault on for 5 cycles, then trip the line in (b) and remove fault.								
41	FLT41-3PH	**3 phase fault on the GEN15088 (560062) to PAULINE3 (640312) 345kV circuit 1 line, near GEN15088.**						X		X
		a. Apply fault at the GEN15088 345kV bus.								
		b. Clear fault after 5 cycles by tripping the faulted line and remove fault.								
		c. Wait 20 cycles, and then re-close the line in (b) back into the fault.								
		d. Leave fault on for 5 cycles, then trip the line in (b) and remove fault.								
42	FLT42-3PH	**3 phase fault on the MOORE 3 (640277) to NW68HOLDRG3 (650114) 345kV circuit 1 line, near MOORE 3.**						X		
		a. Apply fault at the MOORE 3 345kV bus.								
		b. Clear fault after 5 cycles by tripping the faulted line and remove fault.								
		c. Wait 20 cycles, and then re-close the line in (b) back into the fault.								
		d. Leave fault on for 5 cycles, then trip the line in (b) and remove fault.								
43	FLT43-3PH	**3 phase fault on the MOORE 3 (640277) to 103&ROKEBY3 (650189) 345kV circuit 1 line, near MOORE 3.**						X		
		a. Apply fault at the MOORE 3 345kV bus.								
		b. Clear fault after 5 cycles by tripping the faulted line and remove fault.								
		c. Wait 20 cycles, and then re-close the line in (b) back into the fault.								
		d. Leave fault on for 5 cycles, then trip the line in (b) and remove fault.								

Table 2-3 (Continued)
Case List with Contingency Description

Cont. No.	Cont. Name	Description	GEN-2014-059	GEN-2015-042	GEN-2015-053 GEN-2015-054	GEN-2015-076	GEN-2015-087	GEN-2015-088	GEN-2015-094	HIGH GGS CASE
44	FLT44-3PH	**3 phase fault on the MOORE 3 (640277) to MCCOOL 3 (640271) 345kV circuit 1 line, near MOORE 3.**								
		a. Apply fault at the MOORE 3 345kV bus.						X		X
		b. Clear fault after 5 cycles by tripping the faulted line and remove fault.								
		c. Wait 20 cycles, and then re-close the line in (b) back into the fault.								
		d. Leave fault on for 5 cycles, then trip the line in (b) and remove fault.								
45	FLT45-3PH	**3 phase fault on the MOORE 3 (640277) to COOPER 3 (640139) 345kV circuit 1 line, near MOORE 3.**								
		a. Apply fault at the MOORE 3 345kV bus.						X		
		b. Clear fault after 5 cycles by tripping the faulted line and remove fault.								
		c. Wait 20 cycles, and then re-close the line in (b) back into the fault.								
		d. Leave fault on for 5 cycles, then trip the line in (b) and remove fault.								
46	FLT46-3PH	**3 phase fault on the MOORE 3 (640277) 345 kV / (640278) 115kV / (640280) 13.8kV circuit 1 transformer, near MOORE 3 345kV.**								
		a. Apply fault at the MOORE 3 345kV bus.						X		
		b. Clear fault after 5 cycles by tripping the faulted transformer.								
47	FLT47-3PH	**3 phase fault on the PAULINE3 (640312) to AXTELL 3 (640065) 345kV circuit 1 line, near PAULINE 3.**								
		a. Apply fault at the PAULINE3 345kV bus.						X		X
		b. Clear fault after 5 cycles by tripping the faulted line and remove fault.								
		c. Wait 20 cycles, and then re-close the line in (b) back into the fault.								
		d. Leave fault on for 5 cycles, then trip the line in (b) and remove fault.								
48	FLT48-3PH	**3 phase fault on the PAULINE3 (640312) 345kV / (640313) 115kV / (640315) 13.8kV circuit 1 transformer, near PAULINE3 345kV.**								
		a. Apply fault at the PAULINE3 345kV bus.						X		
		b. Clear fault after 5 cycles by tripping the faulted transformer.								
49	FLT49-3PH	**3 phase fault on the GEN15094 (652900) to SIDNEY2-LNX3 (659426) 345kV circuit 1 line, near GEN15094.**								
		a. Apply fault at the GEN15094 345kV bus.							X	X
		b. Clear fault after 5 cycles by tripping the faulted line and remove fault.								
		c. Wait 20 cycles, and then re-close the line in (b) back into the fault.								
		d. Leave fault on for 5 cycles, then trip the line in (b) and remove fault.								
50	FLT50-3PH	**3 phase fault on the GEN15094 (652900) to LARAMIE3 (659131) 345kV circuit 1 line, near GEN15094.**								
		a. Apply fault at the GEN15094 345kV bus.							X	X
		b. Clear fault after 5 cycles by tripping the faulted line and remove fault.								
		c. Wait 20 cycles, and then re-close the line in (b) back into the fault.								
		d. Leave fault on for 5 cycles, then trip the line in (b) and remove fault.								
51	FLT51-3PH	**3 phase fault on the SIDNEY2-LNX3 (659426) to SIDNEY 3 (659133) 345kV circuit 1 line, near SIDNEY2-LNX3.**								
		a. Apply fault at the SIDNEY2-LNX3 345kV bus.							X	X
		b. Clear fault after 5 cycles by tripping the faulted line and remove fault.								
		c. Wait 20 cycles, and then re-close the line in (b) back into the fault.								
		d. Leave fault on for 5 cycles, then trip the line in (b) and remove fault.								
52	FLT52-3PH	**3 phase fault on the LARAMIE3 (659131) to STEGALL3 (659135) 345kV circuit 1 line, near LARAMIE3.**								
		a. Apply fault at the LARAMIE3 345kV bus.							X	X
		b. Clear fault after 4 cycles by tripping the faulted line and remove fault.								
		c. Wait 20 cycles, and then re-close the line in (b) back into the fault.								
		d. Leave fault on for 4 cycles, then trip the line in (b) and remove fault.								
53	FLT53-3PH	**Prior outage on the SIDNEY 4 (659134) - SIDXFMR4 (659210) 230 kV line circuit 1** **3 phase fault on the G15-059-TAP (560014) to SIDNEY 4 (659134) 230kV circuit 1 line, near G15-059-TAP.**								
		a. Apply fault at the G15-059-TAP 230kV bus.	X							
		b. Clear fault after 5 cycles by tripping the faulted line and remove fault.								
		c. Wait 20 cycles, and then re-close the line in (b) back into the fault.								
		d. Leave fault on for 5 cycles, then trip the line in (b) and remove fault.								
54	FLT54-3PH	**Prior outage on the OGALALA4 (640302) 230 kV / (640304) 115kV / (643115) 13.8 kV transformer** **3 phase fault on the G15-059-TAP (560014) to OGALALA4 (640302) 230kV circuit 1 line, near G15-059-TAP.**								
		a. Apply fault at the G15-059-TAP 230kV bus.	X							
		b. Clear fault after 5 cycles by tripping the faulted line and remove fault.								
		c. Wait 20 cycles, and then re-close the line in (b) back into the fault.								
		d. Leave fault on for 5 cycles, then trip the line in (b) and remove fault.								

Table 2-3 (Continued)
Case List with Contingency Description

Cont. No.	Cont. Name	Description	GEN-2014-059	GEN-2015-042	GEN-2015-053 GEN-2015-054	GEN-2015-076	GEN-2015-087	GEN-2015-088	GEN-2015-094	HIGH GGS CASE
55	FLT55-3PH	**Prior outage on the HOSKINS4 (640227) 230 kV / (640226) 345kV / (643082) 13.8 kV transformer** **3 phase fault on the G15-059-TAP (560014) to HOSKINS4 (640227) 230kV circuit 1 line, near G15-059-TAP.**		X						
		a. Apply fault at the G15-059-TAP 230kV bus.								
		b. Clear fault after 5 cycles by tripping the faulted line and remove fault.								
		c. Wait 20 cycles, and then re-close the line in (b) back into the fault.								
		d. Leave fault on for 5 cycles, then trip the line in (b) and remove fault.								
56	FLT56-3PH	**Prior outage on the TWIN CH4 (640386) 230 kV / (640387) 115kV / (643156) 13.8 kV transformer** **3 phase fault on the G15-059-TAP (560014) to TWIN CH4 (640386) 230kV circuit 1 line,**		X						
		a. Apply fault at the G15-059-TAP 230kV bus.								
		b. Clear fault after 5 cycles by tripping the faulted line and remove fault.								
		c. Wait 20 cycles, and then re-close the line in (b) back into the fault.								
		d. Leave fault on for 5 cycles, then trip the line in (b) and remove fault.								
57	FLT57-3PH	**Prior outage on the ANTELOPE 7 (640521) - NELIGH7 (640293) 115 kV line circuit 1** **3 phase fault on the ANTELOPE 7 (640521) to NELIGH4 (640293) 115kV circuit 1 line, near ANTELOPE 7.**			X					
		a. Apply fault at the ANELOPE 7 115kV bus.								
		b. Clear fault after 5 cycles by tripping the faulted line and remove fault.								
		c. Wait 20 cycles, and then re-close the line in (b) back into the fault.								
		d. Leave fault on for 5 cycles, then trip the line in (b) and remove fault.								
58	FLT58-3PH	**Prior outage on the ANTELOPE 7 (640521) - COLINE7 (640115) 115 kV line circuit 1** **3 phase fault on the ANTELOPE 7 (640521) to CREITON7 (640149) 115kV circuit 1 line, near ANTELOPE 7.**			X					
		a. Apply fault at the ANELOPE 7 115kV bus.								
		b. Clear fault after 5 cycles by tripping the faulted line and remove fault.								
		c. Wait 20 cycles, and then re-close the line in (b) back into the fault.								
		d. Leave fault on for 5 cycles, then trip the line in (b) and remove fault.								
59	FLT59-3PH	**Prior outage on the ANTELOPE 7 (640521) 115kV / (640520) 345 kV / (640524) 13.8kV transformer** **3 phase fault on the ANTELOPE 7 (640521) to COLINE7 (640115) 115kV circuit 1 line,**			X					
		a. Apply fault at the ANELOPE 7 115kV bus.								
		b. Clear fault after 5 cycles by tripping the faulted line and remove fault.								
		c. Wait 20 cycles, and then re-close the line in (b) back into the fault.								
		d. Leave fault on for 5 cycles, then trip the line in (b) and remove fault.								
		d. Leave fault on for 5 cycles, then trip the line in (b) and remove fault.								
60	FLT60-3PH	**Prior outage on the BELDEN 7 (640080) - HARTGTN7 (640212) 115kV line** **3 phase fault on the BELDEN 7 (640080) to TWIN CH7 (640387) 115kV circuit 1 line, near BELDEN 7.**				X				
		a. Apply fault at the BELDEN 7 115kV bus.								
		b. Clear fault after 5 cycles by tripping the faulted line and remove fault.								
		c. Wait 20 cycles, and then re-close the line in (b) back into the fault.								
		d. Leave fault on for 5 cycles, then trip the line in (b) and remove fault.								
61	FLT61-3PH	**Prior outage on the BELDEN 7 (640080) - TWIN CH7 (640387) 115kV line** **3 phase fault on the BELDEN 7 (640080) to HOSKINS7 (640228) 115kV circuit 1 line, near BELDEN 7.**				X				
		a. Apply fault at the BELDEN 7 115kV bus.								
		b. Clear fault after 5 cycles by tripping the faulted line and remove fault.								
		c. Wait 20 cycles, and then re-close the line in (b) back into the fault.								
		d. Leave fault on for 5 cycles, then trip the line in (b) and remove fault.								
62	FLT62-3PH	**Prior outage on the HEBRN N7 (640218) - CARLJCT7 (640105) 115kV line** **3 phase fault on the GEN15087 (560061) to HEBRN N7 (640218) 115kV circuit 1 line, near GEN15087.**					X			
		a. Apply fault at the GEN15087 115kV bus.								
		b. Clear fault after 5 cycles by tripping the faulted line and remove fault.								
		c. Wait 20 cycles, and then re-close the line in (b) back into the fault.								
		d. Leave fault on for 5 cycles, then trip the line in (b) and remove fault.								

Table 2-3 (Continued)
Case List with Contingency Description

Cont. No.	Cont. Name	Description	GEN-2014-059	GEN-2015-042	GEN-2015-053 GEN-2015-054	GEN-2015-076	GEN-2015-087	GEN-2015-088	GEN-2015-094	HIGH GGS CASE
63	FLT63-3PH	**Prior outage on the HEBRN N7 (640218) - HEBRON 7 (640220) 115kV line 3 phase fault on the GEN15087 (560061) to HEBRN N7 (640218) 115kV circuit 1 line, near GEN15087.**								
		a. Apply fault at the GEN15087 115kV bus.					X			
		b. Clear fault after 5 cycles by tripping the faulted line and remove fault.								
		c. Wait 20 cycles, and then re-close the line in (b) back into the fault.								
		d. Leave fault on for 5 cycles, then trip the line in (b) and remove fault.								
64	FLT64-3PH	**Prior outage on the MOORE 3 (640277) - MCCOOL 3 (640271) 345kV line 3 phase fault on the GEN15088 (560062) to MOORE 3 (640277) 115kV circuit 1 line, near GEN15088.**								
		a. Apply fault at theGEN15088 345kV bus.						X		
		b. Clear fault after 5 cycles by tripping the faulted line and remove fault.								
		c. Wait 20 cycles, and then re-close the line in (b) back into the fault.								
		d. Leave fault on for 5 cycles, then trip the line in (b) and remove fault.								
65	FLT65-3PH	**Prior outage on the PAULINE3 (640312) - AXTELL 3 (640065) 345kV line 3 phase fault on the GEN15088 (560062) to PAULINE3 (640312) 115kV circuit 1 line, near GEN15088.**								
		a. Apply fault at theGEN15088 345kV bus.						X		
		b. Clear fault after 5 cycles by tripping the faulted line and remove fault.								
		c. Wait 20 cycles, and then re-close the line in (b) back into the fault.								
		d. Leave fault on for 5 cycles, then trip the line in (b) and remove fault.								
66	FLT66-SB	**Hoskins 345 kV Stuck Breaker Scenario 1**								
		a. Apply single phase fault at the Hoskins (640226) 345kV bus.								
		b. Wait 16 cycles and remove fault.		X						
		c. Trip Hoskins (640226) 345kV / (640227) 230kV / (643082) 13.8kV transformer circuit 1.								
		d. Trip Hoskins (640226) to Shell Creek (640342) 345kV line circuit 1.								
67	FLT67-SB	**Hoskins 345 kV Stuck Breaker Scenario 2**								
		a. Apply single phase fault at the Hoskins (640226) 345kV bus.								
		b. Wait 16 cycles and remove fault.				X				
		c. Trip Hoskins (640226) 345kV / (640228) 115kV / (640231) 13.8kV transformer circuit 1.								
		d. Trip Hoskins (640226) to Raun (635200) 345kV line circuit 1.								
68	FLT68-SB	**Hoskins 345 kV Stuck Breaker Scenario 3**								
		a. Apply single phase fault at the Hoskins (640226) 345kV bus.								
		b. Wait 16 cycles and remove fault.		X						
		c. Trip Hoskins (640226) 345kV / (640227) 230kV / (643082) 13.8kV transformer circuit 1.								
		d. Trip Hoskins (640226) to Raun (635200) 345kV line circuit 1.								
69	FLT69-SB	**Hoskins 345 kV Stuck Breaker Scenario 4**								
		a. Apply single phase fault at the Hoskins (640226) 345kV bus.								
		b. Wait 16 cycles and remove fault.			X	X				
		c. Trip Hoskins (640226) 345kV / (640228) 115kV / (640231) 13.8kV transformer circuit 1.								
		d. Trip Hoskins (640226) to Antelope 7 (640520) 345kV line circuit 1.								
70	FLT70-SB	**Hoskins 345 kV Stuck Breaker Scenario 5**								
		a. Apply single phase fault at the Hoskins (640226) 345kV bus.								
		b. Wait 16 cycles and remove fault.			X					
		c. Trip Hoskins (640226) to Shell Creek (640342) 345kV line circuit 1.								
		d. Trip Hoskins (640226) to Antelope 7 (640520) 345kV line circuit 1.								
71	FLT71-SB	**Sidney 230kV Stuck Breaker Scenario 1**								
		a. Apply single phase fault at the Sidney (659134) 230kV bus.								
		b. Wait 16 cycles and remove fault.	X							
		c. Trip Sidney 4 (659134) to SIDXFMR4 (640342) 230kV line circuit 1.								
		d. Trip Sidney 4 (659134) to G14-059-TAP (560014) 230kV line circuit 1.								
72	FLT72-SB	**Sidney 230kV Stuck Breaker Scenario 2**								
		a. Apply single phase fault at the Sidney (659134) 230kV bus.								
		b. Wait 16 cycles and remove fault.	X							
		c. Trip Sidney 4 (659134) to SIDXFMR4 (640342) 230kV line circuit 1.								
		d. Trip Sidney 4 (659134) 230kV / (652572) 115kV / (659803) 13.8kV transformer circuit 1.								

Table 2-3 (Continued)
Case List with Contingency Description

Cont. No.	Cont. Name	Description	GEN-2014-059	GEN-2015-042	GEN-2015-053 GEN-2015-054	GEN-2015-076	GEN-2015-087	GEN-2015-088	GEN-2015-094	HIGH GGS CASE
73	FLT73-SB	**Antelope 115kV Stuck Breaker Scenario 1**								
		a. Apply single phase fault at the Antelope (640521) 115kV bus.								
		b. Wait 16 cycles and remove fault.			X					
		c. Trip ANTELOPE 7 (640521) to CREITON7 (640149) 115kV line circuit 1.								
		d. Trip ANTELOPE 7 (640521) to COLINE7 (640115) 115kV line circuit 1.								
74	FLT74-SB	**Antelope 115kV Stuck Breaker Scenario 2**								
		a. Apply single phase fault at the Antelope (640521) 115kV bus.								
		b. Wait 16 cycles and remove fault.			X					
		c. Trip ANTELOPE 7 (640521) to NELIGH 7 (640293) 115kV line circuit 1.								
		d. Trip ANTELOPE 7 (640521) 115kV / (640520) 345kV / (640524) 13.8kV transformer.								
75	FLT75-SB	**Belden 115kV Stuck Breaker Scenario 1**								
		a. Apply single phase fault at the Belden (640080) 115kV bus.								
		b. Wait 16 cycles and remove fault.				X				
		c. Trip BELDEN 7 (640080) to TWIN CH7 (640387) 115kV line circuit 1.								
		d. Trip BELDEN 7 (640080) to HARTGTN7 (640212) 115kV line circuit 1.								
76	FLT76-SB	**Belden 115kV Stuck Breaker Scenario 2**								
		a. Apply single phase fault at the Belden (640080) 115kV bus.								
		b. Wait 16 cycles and remove fault.				X				
		c. Trip BELDEN 7 (640080) to TWIN CH7 (640387) 115kV line circuit 1.								
		d. Trip BELDEN 7 (640080) to HOSKINS7 (640228) 115kV line circuit 1.								
77	FLT77-SB	**Moore 345 kV Stuck Breaker Scenario 1**								
		a. Apply single phase fault at the Moore (640277) 345kV bus.								
		b. Wait 16 cycles and remove fault.						X		
		c. Trip MOORE 3 (640277) to NW68HOLDRG3 (650114) 345kV line circuit 1.								
		d. Trip MOORE 3 (640277) to MCCOOL 3 (640271) 345kV line circuit 1.								
78	FLT78-SB	**Moore 345 kV Stuck Breaker Scenario 2**								
		a. Apply single phase fault at the Moore (640277) 345kV bus.								
		b. Wait 16 cycles and remove fault.						X		
		c. Trip MOORE 3 (640277) to 103&ROKEBY3 (650189) 345kV line circuit 1.								
		d. Trip MOORE 3 (640277) to COOPER 3 (640129) 345kV line circuit 1.								
79	FLT79-SB	**Pauline 345kV Stuck Breaker Scenario 1**								
		a. Apply single phase fault at the Pauline (640312) 345kV bus.								
		b. Wait 16 cycles and remove fault.						X		
		c. Trip PAULINE3 (640312) 345kV / (640313) 115kV / (640315) 13.8kV transformer.								
		d. Trip PAULINE3 (640312) to AXTELL3 (640065) 345kV line circuit 1.								
80	FLT80-SB	**Sidney 230kV Stuck Breaker Scenario 3**								
		a. Apply single phase fault at the Sidney (659426) 345kV bus.								
		b. Wait 16 cycles and remove fault.							X	
		c. Trip SIDNEY2-LNX3 (659426) to G15-094T (652900) 230kV line circuit 1.								
		d. Trip SIDNEY2-LNX3 (659426) to SIDNEY 3 (659133) 230kV line circuit 1.								
81	FLT81-SB	**OGALALA4 230 kV Stuck Breaker Scenario**								
		a. Apply single phase fault at the OGALALA4 (640302) 230 kV bus.								
		b. Wait 16 cycles and remove fault.	X							X
		c. Trip OGALALA4 (640302) 230 kV / (640304) 115 kV / (643115) 13.8 kV Transformer.								
		d. Trip OGALALA4 (640302) to GENTLMN4 (640184) 230 kV line circuit 1.								
82	FLT82-SB	**G10-051-TAP 230 kV Stuck Breaker Scenario**								
		a. Apply single phase fault at the G10-051-TAP4 (560347) 230 kV bus.								
		b. Wait 16 cycles and remove fault.		X						
		c. Trip G10-051-TAP (560347) to G10-051&1127 (580011) 230 kV line circuit 1.								
		d. Trip G10-051-TAP (560347) to TWINCH4 (640386) 230 kV line circuit 1.								
83	FLT83-SB	**ANTELOPE7 115 kV Stuck Breaker Scenario**								
		a. Apply single phase fault at the ANTELOPE7 (640521) 230 kV bus.								
		b. Wait 16 cycles and remove fault.			X					
		c. Trip ANTELOPE7 (640521) 115 kV to CREITON7 (640149) 115 kV line circuit 1.								
		d. Trip ANTELOPE7 (640521) 115 kV to COLINE7 (640115) 115 kV line circuit 1.								

Table 2-3 (Continued)
Case List with Contingency Description

Cont. No.	Cont. Name	Description	GEN-2014-059	GEN-2015-042	GEN-2015-053 GEN-2015-054	GEN-2015-076	GEN-2015-087	GEN-2015-088	GEN-2015-094	HIGH GGS CASE
84	FLT84-SB	**BELDEN7 115 kV Stuck Breaker Scenario**								
		a. Apply single phase fault at the BELDEN7 (640080) 115 kV bus.								
		b. Wait 16 cycles and remove fault.				X				
		c. Trip BELDEN7 (640080) 115 kV / (640081) 69 kV / (643016) 13.8 kV Transformer.								
		d. Trip BELDEN7 (640080) to TWINCH7 (640387) 115 kV line circuit 1.								
85	FLT85-SB	**FAIRBRY7 115 kV Stuck Breaker Scenario**								
		a. Apply single phase fault at the FAIRBRY7 (640169) 115 kV bus.								
		b. Wait 16 cycles and remove fault.					X			
		c. Trip FAIRBRY7 (640169) 115 kV to HARBINE7 (640208) 115 kV line circuit 1.								
		d. Trip FAIRBRY7 (640169) 115 kV to G15-087-TAP (560061) 115 kV line circuit 1.								
86	FLT86-SB	**G15-088-TAP 345 kV Stuck Breaker Scenario**								
		a. Apply single phase fault at the G15-088-TAP (560062) 345 kV bus.								
		b. Wait 16 cycles and remove fault.						X		
		c. Trip G15-088-TAP (560062) 345 kV to PAULINE3 (640312) 345 kV line circuit 1.								
		d. Trip G15-088-TAP (560062) 345 kV to MOORE3 (640277) 345 kV line circuit 1.								
87	FLT87-SB	**LARAMIE3 345 kV Stuck Breaker Scenario**								
		a. Apply single phase fault at the LARAMIE3 (659131) 345 kV bus.								
		b. Wait 16 cycles and remove fault.							X	X
		c. LARAMIE3 (659131) 345 kV to STEGALL3 (659135) 345 kV line circuit 1.								
		d. LARAMIE3 (659131) 345 kV to G15-094T (652900) 345 kV line circuit 1.								
88	FLT88-3PH	**3 phase fault on the Gentleman (640183) to Sweetwater (640374) 345kV line ckt 2, near Gentleman.**								
		a. Apply fault at the Gentleman 345kV bus.								X
		b. Clear fault after 4.5 cycles by tripping the faulted line.								
89	FLT89-3PH	3 phase fault on the Axtell (640065) to Pauline (640312) 345kV line ckt1, near Axtell.								
		a. Apply fault at the Axtell 345kV bus.								X
		b. Clear fault after 4.5 cycles by tripping the faulted line.								
90	FLT90-3PH	**3 phase fault on the Gentleman (640183) to Keystone (640252) 345kV line ckt1, near Gentleman.**								
		a. Apply fault at the Gentleman 345kV bus.								X
		b. Clear fault after 4.5 cycles by tripping the faulted line.								
91	FLT91-3PH	3 phase fault on the Keystone (640252) to SIDNEY1-LNX3 (659425) to Sidney (659133) 345kV line ckt1, near Keystone.								
		a. Apply fault at the Keystone 345kV bus.								X
		b. Clear fault after 4.5 cycles by tripping the faulted line.								
92	FLT92-3PH	**3 phase fault on the Axtell (640065) to Post Rock (530583) 345kV line ckt1, near Axtell.**								
		a. Apply fault at the Axtell 345kV bus.								X
		b. Clear fault after 4.5 cycles by tripping the faulted line.								
93	FLT93-3PH	**3 phase fault on the Gentleman (640184) to N. Platte (640286) 230kV line ckt 1, near Gentleman.**								
		a. Apply fault at the Gentleman 230kV bus.								X
		b. Clear fault after 5.5 cycles by tripping the faulted line.								
94	FLT94-3PH	**3 phase fault on the Gentleman (640184) to Ogallala(640302) 230kV line ckt 1, near Gentleman.**								
		a. Apply fault at the Gentleman 230kV bus.								X
		b. Clear fault after 5.5 cycles by tripping the faulted line.								
95	FLT95-3PH	**3 phase fault on the Axtell (640065) 345kV to Axtell (640066) 115kV/(640067) 13.8kV transformer at the Axtell 345kVbus.**								
		a. Apply fault at the Axtell 345kV bus.								X
		b. Clear fault after 5.5 cycles by tripping the transformer								
96	FLT96-3PH	**3 phase fault on the Gentleman (640183) 345kV to Gentleman (640184) 230kV/(643066) 13.8kV CKT 2 transformer at the 345kV bus.**								
		a. Apply fault at the Gentleman 345kV bus.								X
		b. Clear fault after 5.5 cycles by tripping the transformer								
97	FLT97-3PH	**3 phase fault on the Gentleman (640183) 345kV to Gentleman (640184) 230kV/(643066) 13.8kV CKT 2 transformer at the 230kV bus.**								
		a. Apply fault at the Gentleman 230kV bus.								X
		b. Clear fault after 5.5 cycles by tripping the transformer								
98	FLT98-1PH	**SLG fault at the Gentleman (640183) end of the Gentleman (640183) to Sweetwater (640374) ckt2 and Gentleman (640183) to Red Willow (640325) 345kV lines. Normal clearing (4.5 cycles)**								
		a. Apply SLG fault at Gentleman (640183) 345kV								X
		b. Run for 4.5 cycles, remove fault								
		c. Trip line from Gentleman (640183) to Sweetwater (640374) ckt2 345kV.								
		d.Trip line from Gentleman (640183) to Red Willow (640325) 345kV.								
99	FLT99-1PH	**SLG fault at the Gentleman (640184) end of the Gentleman (640184) to N. Platte (640286) ckt2 and Gentleman (640184) to N. Platte (640286) ckt3345kV lines. Normal clearing (5.5 cycles)**								
		a. Apply SLG fault at Gentleman (640184) 345kV								X
		b. Run for 5.5 cycles, remove fault								
		c. Trip line from Gentleman (640184) to N. Platte (640286) ckt2 345kV								
		d. Trip line from Gentleman (640184) to N. Platte (640286) ckt3 345kV								

Table 2-3 (Continued)
Case List with Contingency Description

Cont. No.	Cont. Name	Description	GEN-2014-059	GEN-2015-042	GEN-2015-053 GEN-2015-054	GEN-2015-076	GEN-2015-087	GEN-2015-088	GEN-2015-094	HIGH GGS CASE
100	FLT100-1PH	**Gentleman Stuck Breaker 3322**								X
		a. Apply single phase fault at the Gentleman (640183) 345kV bus on the Gentleman to Sweetwater (640374) ckt2 345kV line.								
		b. Run 16 cycles, remove fault.								
		c. Trip line from Gentleman (640183) to Sweetwater (640374) ckt2 345kV line.								
		d. Trip line from Gentleman (640183) to Red Willow (640325).								
101	FLT101-1PH	**Gentleman Stuck Breaker 3316**								X
		a. Apply single phase fault at the Gentleman (640183) 345kV bus on the Gentleman to Keystone (640252) ckt1 345kV line.								
		b. Run 16 cycles, remove fault.								
		c. Trip the Gentleman (640183) to Keystone (640252) ckt1 345kV line								
		d. Disconnect three winding transformer at bus 640183/640184/643066.								
102	FLT102-1PH	**Gentleman Stuck Breaker 2216**								X
		a. Apply single phase fault at the Gentleman (640184) 230kV bus on the Gentleman to N. Platte (640286) ckt1 230kV line.								
		b. Run 16 cycles, remove fault.								
		c. Trip line from Gentleman (640184) to N. Platte (640286) ckt1 230kV.								
		d. Trip line from Gentleman (640184) to N. Platte (640286) ckt3 230kV.								
103	FLT103-1PH	**Gentleman Stuck Breaker 2222**								X
		a. Apply single phase fault at the Gentleman (640184) 230kV bus on the Gentleman to Ogallala (640302) ckt1 230kV line.								
		b. Run 16 cycles, remove fault.								
		c. Trip the Gentleman (640184) to Ogallala (640320) ckt1 230V line								
		d. Disconnect three winding transformer at bus 640183/640184/643066.								
104	FLT104-1PH	**Sweetwater Stuck Breaker 3308**								X
		a. Apply single phase fault at the Sweetwater (640374) 345kV bus on the Gentleman to Sweetwater (640183) ckt1 345kV line.								
		b. Wait 16 cycles, remove fault.								
		c. Trip line from Gentleman (640183) to Sweetwater (640374) 345kV.								
		d. Trip line from Sweetwater (640374) to Grand Island (652571) 345kV.								
105	FLT105-1PH	**Sweetwater Stuck Breaker 3310**								X
		a. Apply single phase fault at the Sweetwater (640374) 345kV bus on the Gentleman to Sweetwater (640183) ckt1 345kV line.								
		b. Run 16 cycles, remove fault.								
		c. Trip line from Gentleman (640183) to Sweetwater (640374) 345kV.								
		d. Trip line from Sweetwater (640374) to Axtell (640065) 345kV.								
106	FLT106-1PH	**Keystone Stuck Breaker 3310**								X
		a. Apply single phase fault at the Keystone (640252) 345kV bus on the Keystone to Sidney (659133) ckt1 345kV line.								
		b. Run 16 cycles, remove fault.								
		c. Trip line from Keystone (640252) to Sidney (659133) 345kV.								
		d. Trip line from Keystone (640252) to Gentleman (640183) 345kV.								
107	FLT107-1PH	**Keystone Stuck Breaker 3312**								X
		a. Apply single phase fault at the Keystone (640252) 345kV bus on the Keystone to Sidney (659133) ckt1 345kV line.								
		b. Run 16 cycles, remove fault.								
		c. Trip line from Keystone (640252) to Sidney (659133) 345kV.								
		d. Trip line from Keystone (640252) to Gentleman (640183) 345kV.								
108	FLT108-1PH	**Keystone Stuck Breaker 3304**								X
		a. Apply single phase fault at the Keystone (640252) 345kV bus on the Keystone to Gentleman (640183) ckt1 345kV line.								
		b. Run 16 cycles, remove fault.								
		c. Trip line from Keystone (640252) to Gentleman (640183) 345kV.								
		d. Disconnect three winding transformer at bus 640252/640253/640254.								
109	FLT109-1PH	**Grand Island Stuck Breaker 1396**								X
		a. Apply single phase fault at the Grand Island (652571) 345kV bus on the Grand Island to McCool (640271) ckt1 345kV line.								
		b. Run 16 cycles, remove fault.								
		c. Trip line from Grand Island (652571) to McCool (640271) 345kV.								
		d. Disconnect three winding transformer at bus 652571/640200/643071.								

Table 2-3 (Continued)
Case List with Contingency Description

Cont. No.	Cont. Name	Description	GEN-2014-059	GEN-2015-042	GEN-2015-053 GEN-2015-054	GEN-2015-076	GEN-2015-087	GEN-2015-088	GEN-2015-094	HIGH GGS CASE
110	FLT110-1PH	**Grand Island Stuck Breaker 2204**								
		a. Apply single phase fault at the Grand Island (640200) 230kV bus on the Grand Island to Riverdale (640330) ckt1 230kV line.								X
		b. Run 16 cycles, remove fault.								
		c. Trip line from Grand Island (640200) to Riverdale (640330) 230kV.								
		d. Trip line from Grand Island (640200) to Hasting (640214) 230kV.								
111	FLT111-1PH	**N. Platte Stuck Breaker 2204**								
		a. Apply single phase fault at the N. Platte (640286) 230kV bus on the N. Platte to Gentleman (640184) ckt1 230kV line.								X
		b. Run 16 cycles, remove fault.								
		c. Trip line from N. Platte (640286) to Gentleman (640184) ckt1 230kV.								
		d. Disconnect three winding transformer at bus 640286/640287/640291.								
112	FLT112-1PH	**N. Platte Stuck Breaker 2212**								
		a. Apply single phase fault at the N. Platte (640286) 230kV bus on the N. Platte to Gentleman (640184) ckt2 230kV line.								X
		b. Run 16 cycles, remove fault.								
		c. Trip line from N. Platte (640286) to Gentleman (640184) ckt2 230kV.								
		d. Trip line from N. Platte (640286) to C.Creek (640093) ckt1 230kV.								
113	FLT113-3PH	**Axtell Stuck Breaker 3304**								
		a. Apply single phase fault at the Axtell (640065) 345V bus on the Axtell to Post Rock (530583) ckt1 345kV line.								X
		b. Run 16 cycles, remove fault.								
		c. Trip line from Axtell (640065) to Post Rock (530583) ckt1 345kV.								
		d. Disconnect three winding transformer at bus 640065/640066/640067.								
114	FLT114-3PH	**3 phase fault on the Gavins (652511) to HartGtn (640212) 115kV line near Gavins.**								
		a. Apply fault at the Gavins 115kV bus.								
		b. Clear fault after 7 cycles by tripping the faulted line.								
115	FLT115-3PH	**3 phase fault on the Gavins (652511) to Bloomfield (640084) 115kV line near Gavins.**								
		a. Apply fault at the Gavins 115kV bus.								
		b. Clear fault after 7 cycles by tripping the faulted line.								
116	FLT116-3PH	**3 phase fault on the Gavins (652511) to Yankton Jct (660006) 115kV line near Gavins.**								
		a. Apply fault at the Gavins 115kV bus.								
		b. Clear fault after 7 cycles by tripping the faulted line.								
117	FLT117-3PH	**3 phase fault on the Gavins (652511) to Yankton Jct (660006) 115kV line near Gavins.**								
		a. Apply fault at the Gavins 115kV bus.								
		b. Clear fault after 7 cycles by tripping the faulted line.								
118	FLT118-3PH	**3 phase fault on the Gavins (652511) to Spirit Mound (659121) 115kV line near Gavins.**								
		a. Apply fault at the Gavins 115kV bus.								
		b. Clear fault after 7 cycles by tripping the faulted line.								
119	FLT119-3PH	**3 phase fault on the Manning (652517) to Spirit Mound (659121) 115kV line near Spirit Mound.**								
		a. Apply fault at the Spirit Mound 115kV bus.								
		b. Clear fault after 7 cycles by tripping the faulted line.								
120	FLT120-3PH	**3 phase fault on the Yankton Jct (660006) to Napa Jct (660026) 115kV line near Yankton.**								
		a. Apply fault at the Yankton 115kV bus.								
		b. Clear fault after 7 cycles by tripping the faulted line.								
121	FLT121-3PH	**3 phase fault on the Yankton Jct (660006) to Tyndall (652525) 115kV line near Yankton.**								
		a. Apply fault at the Yankton 115kV bus.								
		b. Clear fault after 7 cycles by tripping the faulted line.								
122	FLT122-3PH	**3 phase fault on the Utica Jct (652526) to Fort Randall (652509) 230kV line near Fort Randall.**								
		a. Apply fault at the Fort Randall 230kV bus.								
		b. Clear fault after 6 cycles by tripping the faulted line.								
123	FLT123-3PH	**3 phase fault on the Utica Jct (652526) to Rasmussen (652536) 230kV line near Rasmussen.**								
		a. Apply fault at the Rasmussen 230kV bus.								
		b. Clear fault after 6 cycles by tripping the faulted line.								
124	FLT124-3PH	**3 phase fault on the Fort Randall (652509) to Meadow Grove (640540) 230kV line near Fort Randall.**								
		a. Apply fault at the Fort Randall 230kV bus.								
		b. Clear fault after 6 cycles by tripping the faulted line.								
125	FLT125-3PH	**3 phase fault on the Holt County (#640510) to Grand Island (652871) 345kV line near Grand Island.**								
		a. Apply fault at the Grand Island 345kV bus.								
		b. Clear fault after 6 cycles by tripping the faulted line.								
126	FLT126-3PH	**3 phase fault on the McCool (640271) to Grand Island (652871) 345kV line near Grand Island.**								
		a. Apply fault at the Grand Island 345kV bus.								
		b. Clear fault after 6 cycles by tripping the faulted line.								
127	FLT127-3PH	**Prior Outage – Gavins #1**								
		a. Prior outage of Gavins (652511) to Yankton Jct (660006) 115kV line								
		b. 3 phase fault on the Gavins (652511) to HartGtn (640212) 115kV line near Gavins.								
		c. Apply fault at the Gavins 115kV bus.								
		d. Clear fault after 7 cycles by tripping the faulted line.								

Table 2-3 (Continued)
Case List with Contingency Description

Cont. No.	Cont. Name	Description	GEN-2014-059	GEN-2015-042	GEN-2015-053 GEN-2015-054	GEN-2015-076	GEN-2015-087	GEN-2015-088	GEN-2015-094	HIGH GGS CASE
128	FLT128-3PH	**Prior Outage – Gavins #2**								
		a. Prior outage of Gins (652511) to Hartgtn (660006) 115kV line								
		b. 3 phase fault on the Gavins (652511) to Bloomfield (640084) 115kV line near Gavins								
		c. Apply fault at the Gavins 115kV bus.								
		d. Clear fault after 7 cycles by tripping the faulted line.								
129	FLT129-1PH	**Stuck Breaker – Gavins #1**								
		a. Apply SLG fault at Gavins (652511) for 16 cycles								
		b. Clear fault								
		c. Trip Gavins (652511) to Hartgtn (660006) 115kV line								
		d. Trip Gavins (652511) to Bloomfield (640084) 115kV line								
130	FLT130-1PH	**Stuck Breaker – Gavins #2**								
		a. Apply SLG fault at Gavins (652511) for 16 cycles								
		b. Clear fault								
		c. Trip Gavins (652511) to Hartgtn (660006) 115kV line								
		d. Trip Gavins (652511) to Spirit Mount (659121) 115kV line								
131	FLT131-1PH	**Stuck Breaker – Utica Jct 230kV #1**								
		a. Apply SLG fault at Utica Jct 230kV(652526) for 16 cycles								
		a. Clear fault								
		b. Trip Fort Randall (652509) to Utica Jct (652526) 230kV line								
		c. Trip Utica Jct 230/115kV auto								
132	FLT132-1PH	**Stuck Breaker – Utica Jct 115kV #2**								
		a. Apply SLG fault at Utica Jct 115kV(652626) for 16 cycles								
		b. Clear fault								
		c. Trip Utica Jct (652626) to NAPA Jct (660026) 115kV line								
		d. Trip Utica Jct 230/115kV auto								
133	FLT133-3PH	**Prior Antelope (640520) to Hoskins (640226) 345kV outage**								
		a. 3 phase fault on the Antelope (640521) to Neligh (640293) 115 ckt 1 near Antelope for 7 cycles								
		b. clear fault								
		c. Trip faulted line								
134	FLT134-3PH	**Prior Antelope (640520) to Hoskins (640226) 345kV outage**								
		a. 3 phase fault on the Antelope (640521) to County LIne (640115) 115 ckt 1 near Antelope for 7 cycles								
		b. clear fault								
		c. Trip faulted line								
135	FLT135-3PH	**Prior Antelope (640520) to Hoskins (640226) 345kV outage**								
		a. 3 phase fault on the Antelope (640521) to County LIne (640115) 115 ckt 1 near Antelope for 7 cycles								
		b. clear fault								
		c. Trip faulted line								
136	FLT136-3PH	**Prior Antelope (640520) to Neligh (640293) 115kV ckt 1 outage**								
		a. 3 phase fault on the Antelope (640520) to Hoskins 345kV line near Antelope for 6 cycles								
		b. clear fault								
		c. Trip faulted line								
137	FLT137-3PH	**Prior Antelope (640520) to Neligh (640293) 115kV ckt 2 outage**								
		a. 3 phase fault on the Antelope (640520) to Hoskins 345kV line near Antelope for 6 cycles								
		b. clear fault								
		c. Trip faulted line								
138	FLT138-3PH	**Prior Antelope (640521) to County Line (640115) 115kV outage**								
		a. 3 phase fault on the Antelope (640520) to Hoskins 345kV line near Antelope for 6 cycles								
		b. clear fault								
		c. Trip faulted line								
139	FLT139-3PH	**Prior Antelope (640521) to Creighton (640149) 115kV outage**								
		a. 3 phase fault on the Antelope (640520) to Hoskins 345kV line near Antelope for 6 cycles								
		b. clear fault								
		c. Trip faulted line								

SECTION 3: STABILITY ANALYSIS

The objective of the Stability Analysis was to determine the impacts of the generator interconnections on the stability and voltage recovery on the SPP transmission system. If problems with stability or voltage recovery were identified, the need for reactive compensation or system upgrades were investigated.

3.1 Approach

SPP provided MEPPI with the following three power flow cases:

- 2016 Winter Peak
- 2017 Summer Peak
- 2025 Summer Peak

Each case was examined prior to the Stability Analysis to ensure the case contained the proposed study projects and any previously queued projects listed in Tables 2-1 and 2-2 respectively. There was no suspect power flow data in the study area. The dynamic datasets were also verified and stable initial system conditions (i.e., “flat lines”) were achieved. Three-phase and single phase-to-ground faults listed in Table 2-3 were examined. Single-phase fault impedances were calculated for each season to result in a voltage of approximately 60% of the pre-fault voltage. Refer to Table 3-1 for a list of the calculated single-phase fault impedances used for the Cluster Scenario. Refer to Tables 3-2 through 3-8 for single-phase fault impedances used for each Stand Alone Scenario.

Table 3-1
Calculated Single-Phase Fault Impedances for Cluster Scenario

Cont. No.*	Cont. Name	Single-Phase Fault Impedance (MVA)		
		2016 Winter	2017 Summer	2025 Summer
1	FLT66-SB	-4031.3	-4031.3	-4234.4
2	FLT67-SB	-4031.3	-4031.3	-4234.4
3	FLT68-SB	-4031.3	-4031.3	-4234.4
4	FLT69-SB	-4031.3	-4031.3	-4234.4
5	FLT70-SB	-4031.3	-4031.3	-4234.4
6	FLT71-SB	-1375.0	-1375.0	-1375.0
7	FLT72-SB	-1375.0	-1375.0	-1375.0
8	FLT73-SB	-1875.0	-1875.0	-1875.0
9	FLT74-SB	-1875.0	-1875.0	-1875.0
10	FLT75-SB	-937.5	-937.5	-937.5
11	FLT76-SB	-937.5	-937.5	-937.5
12	FLT77-SB	-7687.5	-8500.0	-8500.0
13	FLT78-SB	-7687.5	-8500.0	-8500.0
14	FLT79-SB	-3015.6	-3015.6	-3015.6
15	FLT80-SB	-2203.1	-2203.1	-2203.1
16	FLT81-SB	-2000.0	-2000.0	-2000.0
17	FLT82-SB	-2203.1	-2203.1	-2203.1
18	FLT83-SB	-1875.0	-1875.0	-1875.0
19	FLT84-SB	-937.5	-937.5	-937.5
20	FLT85-SB	-812.5	-781.3	-812.5
21	FLT86-SB	-4031.3	-4234.4	-4234.4
22	FLT87-SB	-2609.4	-2609.4	-2609.4

*Refer to Table 2-3 for a description of the contingency scenerio

Table 3-2
Calculated Single-Phase Fault Impedances for Stand Alone Scenario: GEN-2014-059

Cont. No.*	Cont. Name	Single-Phase Fault Impedance (MVA)		
		2016 Winter	2017 Summer	2025 Summer
1	FLT71-SB	-1375.0	-1375.0	-1375.0
2	FLT72-SB	-1375.0	-1375.0	-1375.0
3	FLT81-SB	-2000.0	-2000.0	-2000.0

*Refer to Table 2-3 for a description of the contingency scenerio

Table 3-3
Calculated Single-Phase Fault Impedances for Stand Alone Scenario: GEN-2015-042

Cont. No.*	Cont. Name	Single-Phase Fault Impedance (MVA)		
		2016 Winter	2017 Summer	2025 Summer
1	FLT66-SB	-4031.3	-4031.3	-4031.3
2	FLT68-SB	-4031.3	-4031.3	-4031.3
3	FLT82-SB	-1875.0	-1875.0	-1875.0

*Refer to Table 2-3 for a description of the contingency scenerio

Table 3-4
Calculated Single-Phase Fault Impedances for Stand Alone Scenario: GEN-2015-053 and GEN-2015-054

Cont. No.*	Cont. Name	Single-Phase Fault Impedance (MVA)		
		2016 Winter	2017 Summer	2025 Summer
1	FLT69-SB	-4031.3	-4031.3	-4031.3
2	FLT70-SB	-4031.3	-4031.3	-4031.3
3	FLT73-SB	-1875.0	-1750.0	-1875.0
4	FLT74-SB	-1875.0	-1750.0	-1875.0
5	FLT83-SB	-1875.0	-1750.0	-1875.0

*Refer to Table 2-3 for a description of the contingency scenerio

Table 3-5
Calculated Single-Phase Fault Impedances for Stand Alone Scenario: GEN-2015-076

Cont. No.*	Cont. Name	Single-Phase Fault Impedance (MVA)		
		2016 Winter	2017 Summer	2025 Summer
1	FLT67-SB	-4031.3	-4031.3	-4031.3
2	FLT69-SB	-4031.3	-4031.3	-4031.3
3	FLT75-SB	-875.0	-875.0	-875.0
4	FLT76-SB	-875.0	-875.0	-875.0
5	FLT84-SB	-875.0	-875.0	-875.0

*Refer to Table 2-3 for a description of the contingency scenerio

Table 3-6
Calculated Single-Phase Fault Impedances for Stand Alone Scenario: GEN-2015-087

Cont. No.*	Cont. Name	Single-Phase Fault Impedance (MVA)		
		2016 Winter	2017 Summer	2025 Summer
1	FLT87-SB	-750.0	-750.0	-750.0

*Refer to Table 2-3 for a description of the contingency scenerio

Table 3-7
Calculated Single-Phase Fault Impedances for Stand Alone Scenario: GEN-2015-088

Cont. No.*	Cont. Name	Single-Phase Fault Impedance (MVA)		
		2016 Winter	2017 Summer	2025 Summer
1	FLT77-SB	-7687.5	-8093.8	-8093.8
2	FLT78-SB	-7687.5	-8093.8	-8093.8
3	FLT79-SB	-3015.6	-3015.6	-3015.6
4	FLT86-SB	-3625.0	-3828.1	-3828.1

*Refer to Table 2-3 for a description of the contingency scenerio

Table 3-8
Calculated Single-Phase Fault Impedances for Stand Alone Scenario: GEN-2015-094

Cont. No.*	Cont. Name	Single-Phase Fault Impedance (MVA)		
		2016 Winter	2017 Summer	2025 Summer
1	FLT80-SB	-2203.1	-2203.1	-2203.1
2	FLT87-SB	-2609.4	-2609.4	-2609.4

*Refer to Table 2-3 for a description of the contingency scenerio

Bus voltages, machine rotor angles, and previously queued generation in the study area were monitored in addition to bus voltages and machine rotor angles in the following areas:

- 534 SUNC
- 536 WERE
- 540 GMO
- 541 KCPL
- 640 NPPD
- 645 OPPD
- 650 LES
- 652 WAPA
- 635 MEC

Requested and previously queued generation outside the above study area was also monitored.

The results of the analysis determined if reactive compensation or system upgrades were required to obtain acceptable system performance. If additional reactive compensation was required, the size, type, and location were determined. The proposed reactive reinforcements would ensure the wind or solar farm meets FERC Order 661A low voltage requirements and return the wind or solar farm to its pre-disturbance operating voltage. If the results indicated the need for fast responding reactive support, dynamic support such as an SVC or STATCOM was investigated. If tripping of the prior queued projects was observed during the stability analysis (for under/over voltage or under/over frequency) the simulations were re-ran with the prior queued project's voltage and frequency tripping disabled.

3.2 Cluster Scenario Stability Analysis Results

The Cluster Scenario Stability Analysis determined there were no contingencies that resulted in system instability or generation tripping offline for the 2016 Winter Peak condition when all generation interconnection requests were at 100% output.

However, it was determined that two contingencies, FLT61-3PH, which is a prior outage of the Belden to Twin Church 115 kV line followed by the loss of Belden to Hoskins 115 kV line and FLT76-1PH, which is a 16 cycle stuck breaker fault resulting in the loss of Belden to Twin

Church 115 kV line and Belden to Hoskins 115 kV line, resulted in post-contingency voltages not recovering above 0.90 p.u. at the GEN-2015-076 115 kV bus for all Cluster Scenarios. After discussion with SPP, it was determined that the Dixon County to Belden to Rasmussen 230 kV (WAPA) transmission line will be upgraded. This eliminates low voltages at the GEN-2015-076 115 kV bus for all Cluster Scenarios.

For the 2017 Summer Peak and 2025 Summer Peak case, voltage instability and generation tripping offline was observed. FLT71-1PH, which is a 16 cycle stuck breaker fault that results in the loss of the Sidney to Sidney XFMR 230 kV line and the Sidney to G15-059-Tap 230 kV line, resulted in unstable bus voltage at the Sidney 115 kV and Sidney 230 kV buses. After discussion with SPP, it was determined that a second circuit from Sidney to G14-059-Tap to Ogallala 230 kV will be added.

For the 2025 Summer Peak case, FLT52-3PH, which is the loss of the Laramie to Stegall 345 kV line, resulted in GEN-2015-094 tripping offline and the Laramie generation to become unstable. After discussion with SPP, it was determined the Sydney DC Tie should be blocked for this fault. After implementing this update, there was no more voltage instability or generation tripping offline.

Refer to Table 3-10 for a summary of the Cluster Scenario Stability Analysis results for the contingencies listed in Table 2-3. Table 3-10 is a summary of the stability results for the 2016 Winter Peak, 2017 Summer Peak, and 2025 Summer Peak conditions and states whether the system remained stable or generation tripped offline and if acceptable voltage recovery was observed after the fault was cleared. Voltage recovery criteria include ensuring that the transient voltage recovers to 0.7 p.u. in 2.5 seconds after the fault is cleared and ending in a steady-state voltage (for N-1 contingencies) at the pre-contingent level or at least 0.9 p.u. If high or low voltages were observed the number of buses failing the voltage criteria was listed.

Several voltage buses consistently fell outside of the 0.95 p.u. to 1.05 p.u. range. All instances were observed for pre-fault conditions and since all voltages returned to pre-fault conditions, no mitigation was required.

Table 3-10
Cluster Scenario: Stability Analysis Summary of Results for 2016 Winter, 2017 Summer, and 2025 Summer Peak Conditions

Cont. No.	Cont. Name	2016 Winter Peak			2017 Summer Peak			2025 Summer Peak		
		Voltage Recovery		Stable?	Voltage Recovery		Stable?	Voltage Recovery		Stable?
		Less than .70 p.u.	Greater than 1.20 p.u.		Less than .70 p.u.	Greater than 1.20 p.u.		Less than .70 p.u.	Greater than 1.20 p.u.	
1	FLT01-3PH	No	No	Yes	No	No	Yes	No	No	Yes
2	FLT02-3PH	No	No	Yes	No	No	Yes	No	No	Yes
3	FLT03-3PH	No	No	Yes	No	No	Yes	No	No	Yes
4	FLT04-3PH	No	No	Yes	No	No	Yes	No	No	Yes
5	FLT05-3PH	No	No	Yes	No	No	Yes	No	No	Yes
6	FLT06-3PH	No	No	Yes	No	No	Yes	No	No	Yes
7	FLT07-3PH	No	No	Yes	No	No	Yes	No	No	Yes
8	FLT08-3PH	No	No	Yes	No	No	Yes	No	No	Yes
9	FLT09-3PH	No	No	Yes	No	No	Yes	No	No	Yes
10	FLT10-3PH	No	No	Yes	No	No	Yes	No	No	Yes
11	FLT11-3PH	No	No	Yes	No	No	Yes	No	No	Yes
12	FLT12-3PH	No	No	Yes	No	No	Yes	No	No	Yes
13	FLT13-3PH	No	No	Yes	No	No	Yes	No	No	Yes
14	FLT14-3PH	No	No	Yes	No	No	Yes	No	No	Yes
15	FLT15-3PH	No	No	Yes	No	No	Yes	No	No	Yes
16	FLT16-3PH	No	No	Yes	No	No	Yes	No	No	Yes
17	FLT17-3PH	No	No	Yes	No	No	Yes	No	No	Yes
18	FLT18-3PH	No	No	Yes	No	No	Yes	No	No	Yes
19	FLT19-3PH	No	No	Yes	No	No	Yes	No	No	Yes
20	FLT20-3PH	No	No	Yes	No	No	Yes	No	No	Yes
21	FLT21-3PH	No	No	Yes	No	No	Yes	No	No	Yes
22	FLT22-3PH	No	No	Yes	No	No	Yes	No	No	Yes
23	FLT23-3PH	No	No	Yes	No	No	Yes	No	No	Yes
24	FLT24-3PH	No	No	Yes	No	No	Yes	No	No	Yes
25	FLT25-3PH	No	No	Yes	No	No	Yes	No	No	Yes
26	FLT26-3PH	No	No	Yes	No	No	Yes	No	No	Yes
27	FLT27-3PH	No	No	Yes	No	No	Yes	No	No	Yes
28	FLT28-3PH	No	No	Yes	No	No	Yes	No	No	Yes
29	FLT29-3PH	No	No	Yes	No	No	Yes	No	No	Yes
30	FLT30-3PH	No	No	Yes	No	No	Yes	No	No	Yes
31	FLT31-3PH	No	No	Yes	No	No	Yes	No	No	Yes
32	FLT32-3PH	No	No	Yes	No	No	Yes	No	No	Yes
33	FLT33-3PH	No	No	Yes	No	No	Yes	No	No	Yes
34	FLT34-3PH	No	No	Yes	No	No	Yes	No	No	Yes
35	FLT35-3PH	No	No	Yes	No	No	Yes	No	No	Yes
36	FLT36-3PH	No	No	Yes	No	No	Yes	No	No	Yes
37	FLT37-3PH	No	No	Yes	No	No	Yes	No	No	Yes
38	FLT38-3PH	No	No	Yes	No	No	Yes	No	No	Yes
39	FLT39-3PH	No	No	Yes	No	No	Yes	No	No	Yes
40	FLT40-3PH	No	No	Yes	No	No	Yes	No	No	Yes
41	FLT41-3PH	No	No	Yes	No	No	Yes	No	No	Yes
42	FLT42-3PH	No	No	Yes	No	No	Yes	No	No	Yes

Table 3-10 (Continued)
Cluster Scenario: Stability Analysis Summary of Results for 2016 Winter, 2017 Summer, and 2025 Summer Peak Conditions

Cont. No.	Cont. Name	2016 Winter Peak			2017 Summer Peak			2025 Summer Peak		
		Voltage Recovery		Stable?	Voltage Recovery		Stable?	Voltage Recovery		Stable?
		Less than .70 p.u.	Greater than 1.20 p.u.		Less than .70 p.u.	Greater than 1.20 p.u.		Less than .70 p.u.	Greater than 1.20 p.u.	
43	FLT43-3PH	No	No	Yes	No	No	Yes	No	No	Yes
44	FLT44-3PH	No	No	Yes	No	No	Yes	No	No	Yes
45	FLT45-3PH	No	No	Yes	No	No	Yes	No	No	Yes
46	FLT46-3PH	No	No	Yes	No	No	Yes	No	No	Yes
47	FLT47-3PH	No	No	Yes	No	No	Yes	No	No	Yes
48	FLT48-3PH	No	No	Yes	No	No	Yes	No	No	Yes
49	FLT49-3PH	No	No	Yes	No	No	Yes	No	No	Yes
50	FLT50-3PH	No	No	Yes	No	No	Yes	No	No	Yes
51	FLT51-3PH	No	No	Yes	No	No	Yes	No	No	Yes
52	FLT52-3PH	Yes (5)	No	Yes	Yes (2)	No	Yes	Yes (40)	Yes (23)	No
53	FLT53-PO	No	No	Yes	No	No	Yes	No	No	Yes
54	FLT54-PO	No	No	Yes	No	No	Yes	No	No	Yes
55	FLT55-PO	No	No	Yes	No	No	Yes	No	No	Yes
56	FLT56-PO	No	No	Yes	No	No	Yes	No	No	Yes
57	FLT57-PO	No	No	Yes	No	No	Yes	No	No	Yes
58	FLT58-PO	No	No	Yes	No	No	Yes	No	No	Yes
59	FLT59-PO	No	No	Yes	No	No	Yes	No	No	Yes
60	FLT60-PO	No	No	Yes	No	No	Yes	No	No	Yes
61	FLT61-PO	No	No	Yes	No	No	Yes	No	No	Yes
62	FLT62-PO	No	No	Yes	No	No	Yes	No	No	Yes
63	FLT63-PO	No	No	Yes	No	No	Yes	No	No	Yes
64	FLT64-PO	No	No	Yes	No	No	Yes	No	No	Yes
65	FLT65-PO	No	No	Yes	No	No	Yes	No	No	Yes
66	FLT66-SB	No	No	Yes	No	No	Yes	No	No	Yes
67	FLT67-SB	No	No	Yes	No	No	Yes	No	No	Yes
68	FLT68-SB	No	No	Yes	No	No	Yes	No	No	Yes
69	FLT69-SB	No	No	Yes	No	No	Yes	No	No	Yes
70	FLT70-SB	No	No	Yes	No	No	Yes	No	No	Yes
71	FLT71-SB	No	No	Yes	No	Yes (2)	No	No	Yes (1)	No
72	FLT72-SB	No	No	Yes	No	No	Yes	No	No	Yes
73	FLT73-SB	No	No	Yes	No	No	Yes	No	No	Yes
74	FLT74-SB	No	No	Yes	No	No	Yes	No	No	Yes
75	FLT75-SB	No	No	Yes	No	No	Yes	No	No	Yes
76	FLT76-SB	No	No	Yes	No	No	Yes	No	No	Yes
77	FLT77-SB	No	No	Yes	No	No	Yes	No	No	Yes
78	FLT78-SB	No	No	Yes	No	No	Yes	No	No	Yes
79	FLT79-SB	No	No	Yes	No	No	Yes	No	No	Yes
80	FLT80-SB	No	No	Yes	No	No	Yes	No	No	Yes
81	FLT81-SB	No	No	Yes	No	No	Yes	No	No	Yes
82	FLT82-SB	No	No	Yes	No	No	Yes	No	No	Yes
83	FLT83-SB	No	No	Yes	No	No	Yes	No	No	Yes
84	FLT84-SB	No	No	Yes	No	No	Yes	No	No	Yes
85	FLT85-SB	No	No	Yes	No	No	Yes	No	No	Yes
86	FLT86-SB	No	No	Yes	No	No	Yes	No	No	Yes
87	FLT87-SB	No	No	Yes	No	No	Yes	No	No	Yes

Table 3-10 (Continued)
Cluster Scenario: Stability Analysis Summary of Results for 2016 Winter, 2017 Summer, and 2025 Summer Peak Conditions

Cont. No.	Cont. Name	2016 Winter Peak			2017 Summer Peak			2025 Summer Peak		
		Voltage Recovery		Stable?	Voltage Recovery		Stable?	Voltage Recovery		Stable?
		Less than .70 p.u.	Greater than 1.20 p.u.		Less than .70 p.u.	Greater than 1.20 p.u.		Less than .70 p.u.	Greater than 1.20 p.u.	
88	FLT114-3PH	No	No	Yes	No	No	Yes	No	No	Yes
89	FLT115-3PH	No	No	Yes	No	No	Yes	No	No	Yes
90	FLT116-3PH	No	No	Yes	No	No	Yes	No	No	Yes
91	FLT117-3PH	No	No	Yes	No	No	Yes	No	No	Yes
92	FLT118-3PH	No	No	Yes	No	No	Yes	No	No	Yes
93	FLT119-3PH	No	No	Yes	No	No	Yes	No	No	Yes
94	FLT120-3PH	No	No	Yes	No	No	Yes	No	No	Yes
95	FLT121-3PH	No	No	Yes	No	No	Yes	No	No	Yes
96	FLT122-3PH	No	No	Yes	No	No	Yes	No	No	Yes
97	FLT123-3PH	No	No	Yes	No	No	Yes	No	No	Yes
98	FLT124-3PH	No	No	Yes	No	No	Yes	No	No	Yes
99	FLT125-3PH	No	No	Yes	No	No	Yes	No	No	Yes
100	FLT126-3PH	No	No	Yes	No	No	Yes	No	No	Yes
101	FLT127-3PH	No	No	Yes	No	No	Yes	No	No	Yes
102	FLT128-3PH	No	No	Yes	No	No	Yes	No	No	Yes
103	FLT129-3PH	No	No	Yes	No	No	Yes	No	No	Yes
104	FLT130-1PH	No	No	Yes	No	No	Yes	No	No	Yes
105	FLT131-1PH	No	No	Yes	No	No	Yes	No	No	Yes
106	FLT132-1PH	No	No	Yes	No	No	Yes	No	No	Yes
107	FLT133-3PH	No	No	Yes	No	No	Yes	No	No	Yes
108	FLT134-3PH	No	No	Yes	No	No	Yes	No	No	Yes
109	FLT135-3PH	No	No	Yes	No	No	Yes	No	No	Yes
110	FLT136-3PH	No	No	Yes	No	No	Yes	No	No	Yes
111	FLT137-3PH	No	No	Yes	No	No	Yes	No	No	Yes
112	FLT138-3PH	No	No	Yes	No	No	Yes	No	No	Yes
113	FLT139-3PH	No	No	Yes	No	No	Yes	No	No	Yes

For all Cluster Scenario cases, FLT61-3PH, which is a prior outage of the Belden to Twin Church 115 kV line followed by the loss of Belden to Hoskins 115 kV line, which is a 16 cycle stuck breaker fault resulting in the loss of Belden to Twin Church 115 kV line and Belden to Hoskins 115 kV line, resulted in post-contingency voltages not recovering above 0.90 p.u. at the GEN-2015-076 115 kV bus for all Cluster Scenarios. After discussion with SPP, it was determined that the Dixon County to Belden to Rasmussen 230 kV (WAPA) transmission line will be upgraded. This eliminates low voltages at the GEN-2015-076 115 kV bus for all Cluster Scenarios.

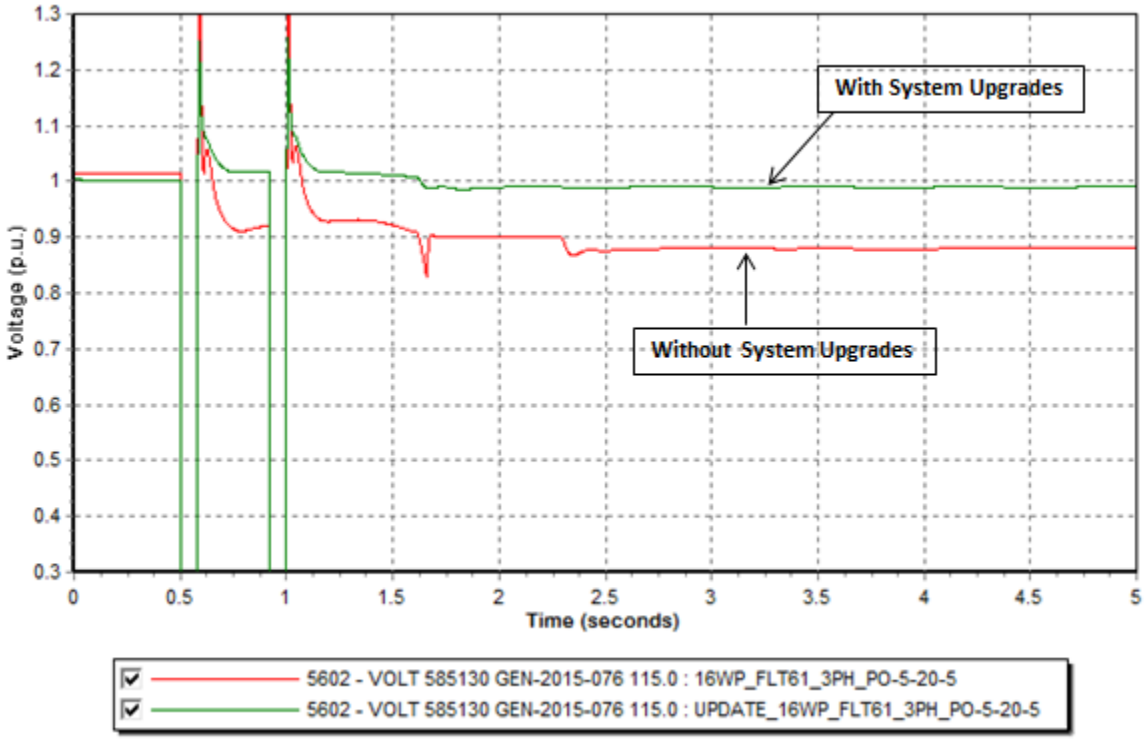

Figure 3-1. Plot of the GEN-2015-076 115 kV *bus voltage for FLT61-3PH for the 2016 Winter Peak case with and without system upgrades.*

For the 2017 Summer Peak and 2025 Summer Peak case, FLT71-1PH, which is a 16 cycle stuck breaker fault that results in the loss of the Sidney to Sidney XFMR 230 kV line and the Sidney to G15-059-Tap 230 kV line, resulted in unstable bus voltage at the Sidney 115 kV and Sidney 230 kV buses. After discussion with SPP, it was determined that a second circuit from Sidney to G14-059-Tap to Ogallala 230 kV will be added.

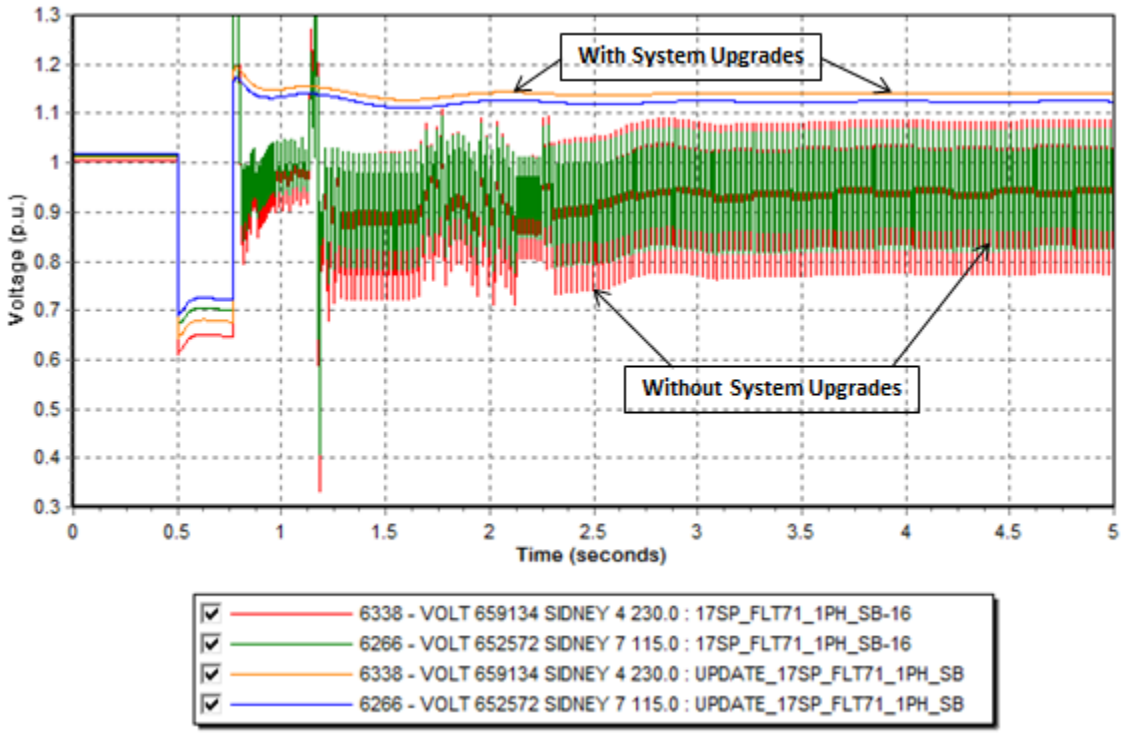

Figure 3-2. Plot of the Sidney 115 kV and Sidney 230 kV *bus voltages for FLT71-1PH for the 2017 Summer Peak case with and without system upgrades*.

For the 2025 Summer Peak case, FLT52-3PH, which is the loss of the Laramie to Stegall 345 kV line, resulted in GEN-2015-094 tripping offline and the Laramie generation to become unstable. After discussion with SPP, it was determined the Sydney DC Tie should be blocked for this fault. After implementing this update, there was no more voltage instability or generation tripping offline.

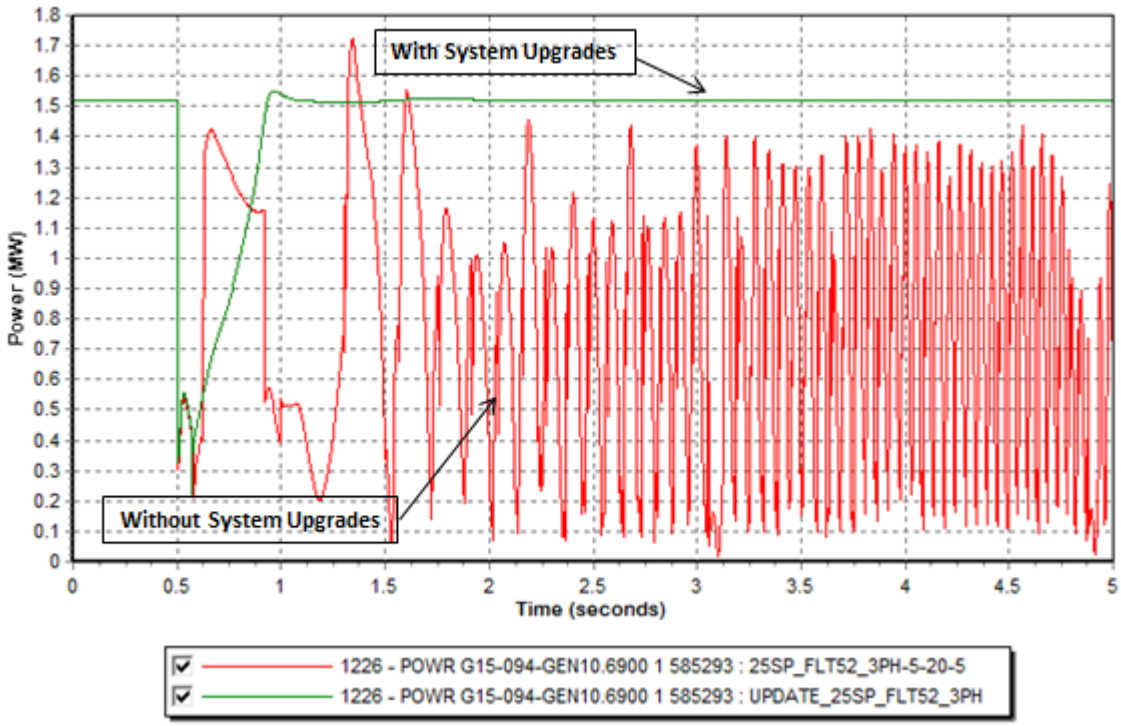

. *Figure 3-3. Plot of the* G15-094-GEN10 Power Output *for FLT52-3PH for the 2025 Summer Peak case with and without system upgrades.*

3.3 High GGS Sensitivity Scenario Stability Analysis Results

The High GGS Sensitivity Scenario determined one fault caused system instability and generation to trip offline for all three study seasons. FLT52-3PH, which is the loss of the Laramie to Stegall 345 kV line, resulted in GEN-2015-094 tripping offline and the Laramie generation to become unstable. After discussion with SPP, it was determined the Sydney DC Tie should be blocked for this fault. After implementing this update, there was no more system instability or generation tripping offline.

The following faults were observed to cause system instability in the 2016 Winter Peak sensitivity scenario:

- FLT96-3PH
  - Three-phase, 5.5 cycle fault resulting in loss of Gentleman 345/230/13.8 kV transformer (fault applied at 345 kV bus)
- FLT97-3PH
  - Three-phase, 5.5 cycle fault resulting in loss of Gentleman 345/230/13.8 kV transformer (fault applied at 230 kV bus)

- FLT100-1PH
  - Single-phase, stuck breaker fault (16 cycles) resulting in loss of Gentleman to Sweetwater 345 kV line and Gentleman to Red Willow 345 kV line
- FLT101-1PH
  - Single-phase, stuck breaker fault (16 cycles) resulting in the loss of Gentleman to Keystone 345 kV line and Gentleman 345/230/13.8 kV transformer
- FLT103-1PH
  - Single-phase, stuck breaker fault (16 cycles) resulting in the loss of Gentleman to Ogallala 230 kV line and Gentleman 345/230/13.8 kV transformer

After discussion with SPP, it was determined that adding a 345 kV transmission line from Gentleman to Thedford to Holt County will mitigate the system instability observed for all five faults.

For the 2017 Summer Peak case, it was observed that FLT91-3PH caused system instability. Implementing the Gentleman to Thedford to Holt County 345 kV line mitigated the system instability and all voltages recovered within SPP criteria.

Table 3-11 is a summary of the High GGS Sensitivity Scenario stability results for the 2016 Winter Peak, 2017 Summer Peak, and 2025 Summer Peak conditions and states whether the system remained stable or generation tripped offline and if acceptable voltage recovery was observed after the fault was cleared.

Table 3-11
Sensitivity Scenario: Stability Analysis Summary of Results for 2016 Winter, 2017 Summer, and 2025 Summer Peak Conditions

Cont. No.	Cont. Name	2016 Winter Peak			2017 Summer Peak			2025 Summer Peak		
		Voltage Recovery		Stable?	Voltage Recovery		Stable?	Voltage Recovery		Stable?
		Less than .70 p.u.	Greater than 1.20 p.u.		Less than .70 p.u.	Greater than 1.20 p.u.		Less than .70 p.u.	Greater than 1.20 p.u.	
1	FLT01-3PH	No	No	Yes	No	No	Yes	No	No	Yes
2	FLT02-3PH	No	No	Yes	No	No	Yes	No	No	Yes
3	FLT03-3PH	No	No	Yes	No	No	Yes	No	No	Yes
4	FLT04-3PH	No	No	Yes	No	No	Yes	No	No	Yes
5	FLT08-3PH	No	No	Yes	No	No	Yes	No	No	Yes
6	FLT09-3PH	No	No	Yes	No	No	Yes	No	No	Yes
7	FLT11-3PH	No	No	Yes	No	No	Yes	No	No	Yes
8	FLT13-3PH	No	No	Yes	No	No	Yes	No	No	Yes
9	FLT14-3PH	No	No	Yes	No	No	Yes	No	No	Yes
10	FLT15-3PH	No	No	Yes	No	No	Yes	No	No	Yes
11	FLT16-3PH	No	No	Yes	No	No	Yes	No	No	Yes
12	FLT17-3PH	No	No	Yes	No	No	Yes	No	No	Yes
13	FLT23-3PH	No	No	Yes	No	No	Yes	No	No	Yes
14	FLT24-3PH	No	No	Yes	No	No	Yes	No	No	Yes
15	FLT25-3PH	No	No	Yes	No	No	Yes	No	No	Yes
16	FLT26-3PH	No	No	Yes	No	No	Yes	No	No	Yes
17	FLT35-3PH	No	No	Yes	No	No	Yes	No	No	Yes
18	FLT36-3PH	No	No	Yes	No	No	Yes	No	No	Yes
19	FLT37-3PH	No	No	Yes	No	No	Yes	No	No	Yes
20	FLT39-3PH	No	No	Yes	No	No	Yes	No	No	Yes
21	FLT40-3PH	No	No	Yes	No	No	Yes	No	No	Yes
22	FLT41-3PH	No	No	Yes	No	No	Yes	No	No	Yes
23	FLT44-3PH	No	No	Yes	No	No	Yes	No	No	Yes
24	FLT47-3PH	No	No	Yes	No	No	Yes	No	No	Yes
25	FLT49-3PH	No	No	Yes	No	No	Yes	No	No	Yes
26	FLT50-3PH	No	No	Yes	No	No	Yes	No	No	Yes
27	FLT51-3PH	No	No	Yes	No	No	Yes	No	No	Yes
28	FLT52-3PH	Yes (41)	Yes (45)	No	Yes (41)	Yes (29)	No	Yes (40)	Yes (28)	No
29	FLT81-SB	No	No	Yes	No	No	Yes	No	No	Yes
30	FLT87-SB	No	No	Yes	No	No	Yes	No	No	Yes

Table 3-11(Continued)
Sensitivity Scenario: Stability Analysis Summary of Results for 2016 Winter, 2017 Summer, and 2025 Summer Peak Conditions

Cont. No.	Cont. Name	2016 Winter Peak			2017 Summer Peak			2025 Summer Peak		
		Voltage Recovery		Stable?	Voltage Recovery		Stable?	Voltage Recovery		Stable?
		Less than .70 p.u.	Greater than 1.20 p.u.		Less than .70 p.u.	Greater than 1.20 p.u.		Less than .70 p.u.	Greater than 1.20 p.u.	
31	FLT88-3PH	Yes (41)	No	Yes	No	No	Yes	No	No	Yes
32	FLT89-3PH	No	No	Yes	No	No	Yes	No	No	Yes
33	FLT90-3PH	Yes (4)	No	Yes	No	No	Yes	No	No	Yes
34	FLT91-3PH	No	No	Yes	No	No	Yes	No	No	Yes
35	FLT92-3PH	No	No	Yes	No	No	Yes	No	No	Yes
36	FLT93-3PH	No	No	Yes	No	No	Yes	No	No	Yes
37	FLT94-3PH	No	No	Yes	No	No	Yes	No	No	Yes
38	FLT95-3PH	No	No	Yes	No	No	Yes	No	No	Yes
39	FLT96-3PH	No	No	Yes	No	No	Yes	No	No	Yes
40	FLT97-3PH	No	No	Yes	No	No	Yes	No	No	Yes
41	FLT98-1PH	No	No	Yes	No	No	Yes	No	No	Yes
42	FLT99-1PH	No	No	Yes	No	No	Yes	No	No	Yes
43	FLT100-1PH	No	No	Yes	No	No	Yes	No	No	Yes
44	FLT101-1PH	No	No	Yes	No	No	Yes	No	No	Yes
45	FLT102-1PH	No	No	Yes	No	No	Yes	No	No	Yes
46	FLT103-1PH	No	No	Yes	No	No	Yes	No	No	Yes
47	FLT104-1PH	No	No	Yes	No	No	Yes	No	No	Yes
48	FLT105-1PH	No	No	Yes	No	No	Yes	No	No	Yes
49	FLT106-1PH	No	No	Yes	No	No	Yes	No	No	Yes
50	FLT107-1PH	No	No	Yes	No	No	Yes	No	No	Yes
51	FLT108-1PH	No	No	Yes	No	No	Yes	No	No	Yes
52	FLT109-1PH	No	No	Yes	No	No	Yes	No	No	Yes
53	FLT110-1PH	No	No	Yes	No	No	Yes	No	No	Yes
54	FLT111-1PH	No	No	Yes	No	No	Yes	No	No	Yes
55	FLT112-1PH	No	No	Yes	No	No	Yes	No	No	Yes
56	FLT113-1PH	No	No	Yes	No	No	Yes	No	No	Yes

For all HGG Sensitivity Scenario Cases, FLT52-3PH, which is the loss of the Laramie to Stegall 345 kV line, resulted in GEN-2015-094 tripping offline and the Laramie generation to become unstable. After discussion with SPP, it was determined the Sydney DC Tie should be blocked for this fault. After implementing this update, there was no more voltage instability or generation tripping offline.

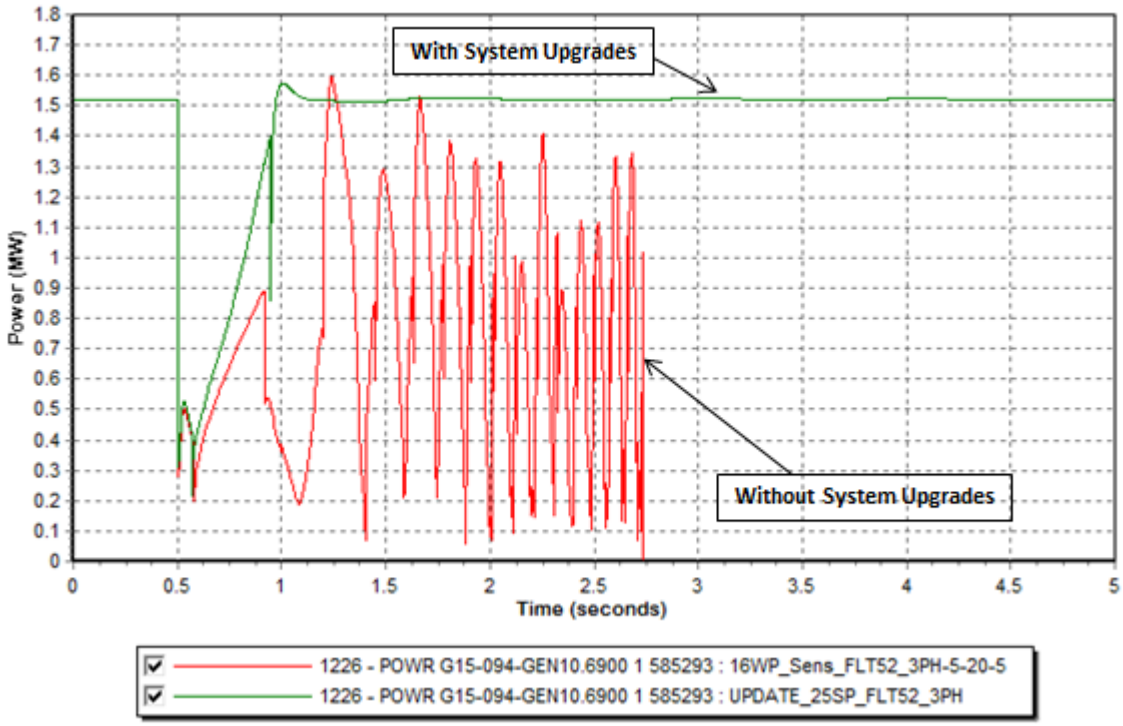

Figure 3-4. Plot of the G15-094-GEN10 Power Output *for FLT52-3PH for the 2016 Winter Peak case with and without system upgrades.*

The following faults were observed to cause system instability in the 2016 Winter Peak sensitivity scenario:

- FLT96-3PH
  - Three-phase, 5.5 cycle fault resulting in loss of Gentleman 345/230/13.8 kV transformer (fault applied at 345 kV bus)
- FLT97-3PH
  - Three-phase, 5.5 cycle fault resulting in loss of Gentleman 345/230/13.8 kV transformer (fault applied at 230 kV bus)
- FLT100-1PH
  - Single-phase, stuck breaker fault (16 cycles) resulting in loss of Gentleman to Sweetwater 345 kV line and Gentleman to Red Willow 345 kV line
- FLT101-1PH
  - Single-phase, stuck breaker fault (16 cycles) resulting in the loss of Gentleman to Keystone 345 kV line and Gentleman 345/230/13.8 kV transformer

- FLT103-1PH
  - Single-phase, stuck breaker fault (16 cycles) resulting in the loss of Gentleman to Ogallala 230 kV line and Gentleman 345/230/13.8 kV transformer

After discussion with SPP, it was determined that adding a 345 kV transmission line from Gentleman to Thedford to Holt County will mitigate the system instability observed for all five faults.

For the 2017 Summer Peak case, it was observed that FLT91-3PH caused system instability. Implementing the Gentleman to Thedford to Holt County 345 kV line mitigated the system instability and all voltages recovered within SPP criteria.

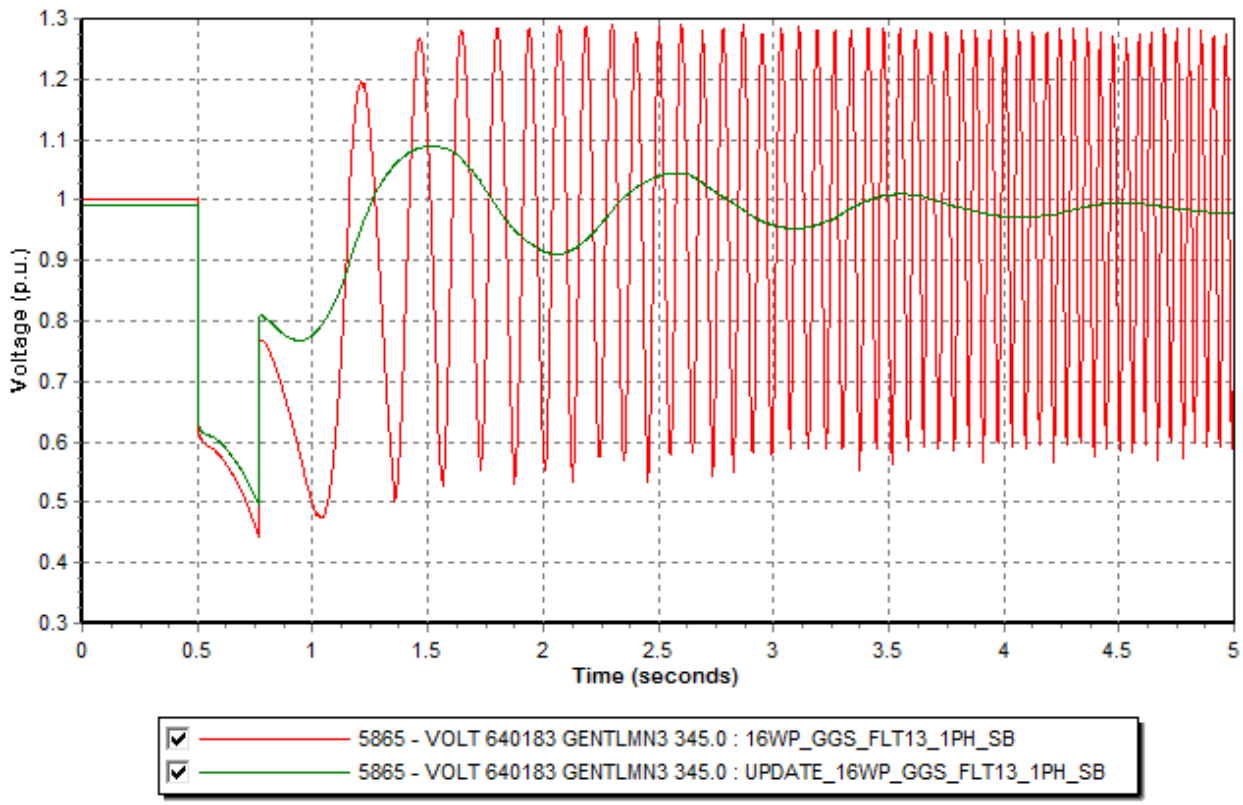

Figure 3-5. Plot of the Gentlemen Voltage *for FLT100-1PH for the 2016High GGS Sensitivity Winter Peak case with and without system upgrades.*

3.4 Stand Alone Scenario Stability Analysis Results: GEN-2014-059

The Stand Alone Scenario Stability Analysis determined one fault caused voltage instability for all three study seasons. FLT71-1PH, which is a 16 cycle stuck breaker fault that results in the loss of the Sidney to Sidney XFMR 230 kV line and the Sidney to G15-059-Tap 230 kV line, resulted in unstable bus voltage at the Sidney 115 kV and Sidney 230 kV buses. After discussion

with SPP, it was determined that a second circuit from Sidney to G14-059-Tap to Ogallala 230 kV will be added. This upgrade mitigated the voltage instability observed.

It was determined that contingency FLT76-1PH, which is a 16 cycle stuck breaker fault resulting in the loss of Belden to Twin Church 115 kV line and Belden to Hoskins 115 kV line, resulted in post-contingency voltages not recovering above 0.90 p.u. at the GEN-2015-076 115 kV bus for the 2016 Winter Peak case. After discussion with SPP, it was determined that the Dixon County to Belden to Rasmussen 230 kV (WAPA) transmission line will be upgraded. This eliminates low voltages at the GEN-2015-076 115 kV bus.

For the 2025 Summer Peak case, FLT52-3PH, which is the loss of the Laramie to Stegall 345 kV line, resulted in GEN-2015-094 tripping offline and the Laramie generation to become unstable. After discussion with SPP, it was determined the Sydney DC Tie should be blocked for this fault. After implementing this update, there was no more voltage instability or generation tripping offline.

Refer to Table 3-13 for a summary of the Stand Alone Stability Analysis results for the contingencies listed in Table 2-3 that correspond to the GEN-2014-059 Stand Alone Analysis. Table 3-13 is a summary of the stability results for the 2016 Winter Peak, 2017 Summer Peak, and 2025 Summer Peak conditions and states whether the system remained stable or generation tripped offline and if acceptable voltage recovery was observed after the fault was cleared. Voltage recovery criteria includes ensuring that the transient voltage recovers to 0.7 p.u. within 2.5 seconds after the fault is cleared and ending in a steady state voltage (for N-1 contingencies) at the pre-contingent level or at least 0.9 p.u. If high or low voltages were observed the number of buses failing the voltage criteria was listed.

Table 3-13
Stand Alone Scenario GEN-2014-059: Stability Analysis Summary of Results for 2016 Winter, 2017 Summer, and 2025 Summer Peak Conditions

Cont. No.	Cont. Name	2016 Winter Peak			2017 Summer Peak			2025 Summer Peak		
		Voltage Recovery		Stable?	Voltage Recovery		Stable?	Voltage Recovery		Stable?
		Less than .70 p.u.	Greater than 1.20 p.u.		Less than .70 p.u.	Greater than 1.20 p.u.		Less than .70 p.u.	Greater than 1.20 p.u.	
1	FLT01-3PH	No	No	Yes	No	No	Yes	No	No	Yes
2	FLT02-3PH	No	No	Yes	No	No	Yes	No	No	Yes
3	FLT03-3PH	No	No	Yes	No	No	Yes	No	No	Yes
4	FLT04-3PH	No	No	Yes	No	No	Yes	No	No	Yes
5	FLT05-3PH	No	No	Yes	No	No	Yes	No	No	Yes
6	FLT06-3PH	No	No	Yes	No	No	Yes	No	No	Yes
7	FLT07-3PH	No	No	Yes	No	No	Yes	No	No	Yes
8	FLT53-PO	No	No	Yes	No	No	Yes	No	No	Yes
9	FLT54-PO	No	No	Yes	No	No	Yes	No	No	Yes
10	FLT71-SB	No	Yes (4)	No	No	Yes (4)	No	No	Yes (3)	No
11	FLT72-SB	No	No	Yes	No	No	Yes	No	No	Yes
12	FLT81-SB	No	No	Yes	No	No	Yes	No	No	Yes

FLT71-1PH, which is a 16 cycle stuck breaker fault that results in the loss of the Sidney to Sidney XFMR 230 kV line and the Sidney to G15-059-Tap 230 kV line, resulted in unstable bus voltage at the Sidney 115 kV and Sidney 230 kV buses. After discussion with SPP, it was determined that a second circuit from Sidney to G14-059-Tap to Ogallala 230 kV will be added. This upgrade mitigated the voltage instability observed.

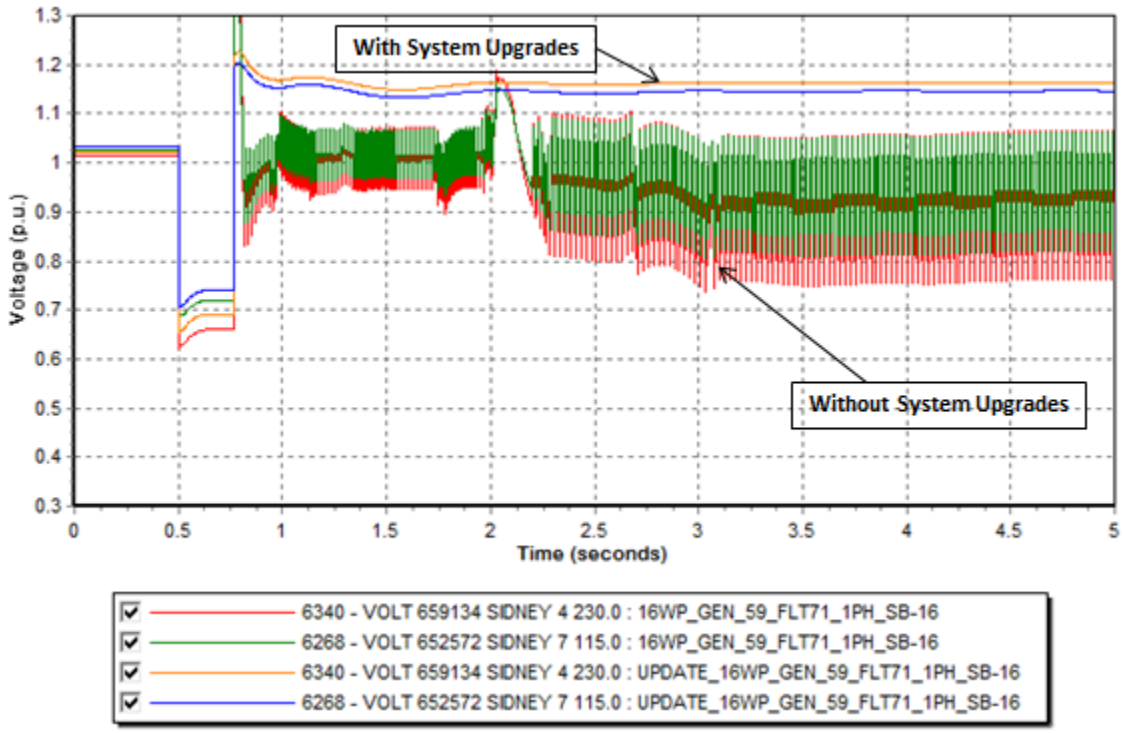

Figure 3-5. Plot of the Sidney 115 kV and Sidney 230 kV *bus voltages for FLT71-1PH for the 2016 Winter Peak case for Generator 059 with and without system upgrades.*

3.5 Stand Alone Scenario Stability Analysis Results: GEN-2015-042

The Stand Alone Scenario Stability Analysis determined that there were no contingencies that resulted in system instability, generation tripping offline, or voltage violations for the 2016 Winter Peak, 2017 Summer Peak, and 2025 Summer peak conditions when GEN-2015-042 was at 100% output.

Refer to Table 3-14 for a summary of the Stability Analysis results for the contingencies listed in Table 2-3 that corresponds to the GEN-2015-042 Stand Alone Analysis. Table 3-14 is a summary of the stability results for the 2016 Winter Peak, 2017 Summer Peak, and 2025 Summer Peak conditions and states whether the system remained stable or generation tripped offline and if acceptable voltage recovery was observed after the fault was cleared. Voltage recovery criteria includes ensuring that the transient voltage recovers to 0.7 p.u. within 2.5 seconds after the fault is cleared and ending in a steady state voltage (for N-1 contingencies) at the pre-contingent level or at least 0.9 p.u. If high or low voltages were observed the number of buses failing the voltage criteria was listed.

Table 3-14
Stand Alone Scenario GEN-2015-042: Stability Analysis Summary of Results for 2016 Winter, 2017 Summer, and 2025 Summer Peak Conditions

Cont. No.	Cont. Name	2016 Winter Peak			2017 Summer Peak			2025 Summer Peak		
		Voltage Recovery		Stable?	Voltage Recovery		Stable?	Voltage Recovery		Stable?
		Less than .70 p.u.	Greater than 1.20 p.u.		Less than .70 p.u.	Greater than 1.20 p.u.		Less than .70 p.u.	Greater than 1.20 p.u.	
1	FLT08-3PH	No	No	Yes	No	No	Yes	No	No	Yes
2	FLT09-3PH	No	No	Yes	No	No	Yes	No	No	Yes
3	FLT10-3PH	No	No	Yes	No	No	Yes	No	No	Yes
4	FLT11-3PH	No	No	Yes	No	No	Yes	No	No	Yes
5	FLT12-3PH	No	No	Yes	No	No	Yes	No	No	Yes
6	FLT13-3PH	No	No	Yes	No	No	Yes	No	No	Yes
7	FLT55-PO	No	No	Yes	No	No	Yes	No	No	Yes
8	FLT56-PO	No	No	Yes	No	No	Yes	No	No	Yes
9	FLT66-SB	No	No	Yes	No	No	Yes	No	No	Yes
10	FLT68-SB	No	No	Yes	No	No	Yes	No	No	Yes
11	FLT82-SB	No	No	Yes	No	No	Yes	No	No	Yes

3.6 Stand Alone Scenario Stability Analysis Results: GEN-2015-053

The Stand Alone Scenario Stability Analysis determined that there were no contingencies that resulted in system instability, generation tripping offline, or voltage violations for the 2016 Wummer Peak, 2017 Summer Peak, and 2025 Summer peak conditions when GEN-2015-053 was at 100% output.

Refer to Table 3-15 for a summary of the Stability Analysis results for the contingencies listed in Table 2-3 that corresponds to the GEN-2015-053 Stand Alone Analysis. Table 3-15 is a summary of the stability results for the 2016 Winter Peak, 2017 Summer Peak, and 2025 Summer Peak conditions and states whether the system remained stable or generation tripped offline and if acceptable voltage recovery was observed after the fault was cleared. Voltage recovery criteria includes ensuring that the transient voltage recovers to 0.7 p.u. within 2.5 seconds after the fault is cleared and ending in a steady state voltage (for N-1 contingencies) at the pre-contingent level or at least 0.9 p.u. If high or low voltages were observed the number of buses failing the voltage criteria was listed.

Table 3-15
Stand Alone Scenario GEN-2015-053: Stability Analysis Summary of Results for 2016 Winter, 2017 Summer, and 2025 Summer Peak Conditions

Cont. No.	Cont. Name	2016 Winter Peak			2017 Summer Peak			2025 Summer Peak		
		Voltage Recovery		Stable?	Voltage Recovery		Stable?	Voltage Recovery		Stable?
		Less than .70 p.u.	Greater than 1.20 p.u.		Less than .70 p.u.	Greater than 1.20 p.u.		Less than .70 p.u.	Greater than 1.20 p.u.	
1	FLT04-3PH	No	No	Yes	No	No	Yes	No	No	Yes
2	FLT15-3PH	No	No	Yes	No	No	Yes	No	No	Yes
3	FLT16-3PH	No	No	Yes	No	No	Yes	No	No	Yes
4	FLT17-3PH	No	No	Yes	No	No	Yes	No	No	Yes
5	FLT18-3PH	No	No	Yes	No	No	Yes	No	No	Yes
6	FLT19-3PH	No	No	Yes	No	No	Yes	No	No	Yes
7	FLT20-3PH	No	No	Yes	No	No	Yes	No	No	Yes
8	FLT21-3PH	No	No	Yes	No	No	Yes	No	No	Yes
9	FLT22-3PH	No	No	Yes	No	No	Yes	No	No	Yes
10	FLT57-PO	No	No	Yes	No	No	Yes	No	No	Yes
11	FLT58-PO	No	No	Yes	No	No	Yes	No	No	Yes
12	FLT59-PO	No	No	Yes	No	No	Yes	No	No	Yes
13	FLT69-SB	No	No	Yes	No	No	Yes	No	No	Yes
14	FLT70-SB	No	No	Yes	No	No	Yes	No	No	Yes
15	FLT73-SB	No	No	Yes	No	No	Yes	No	No	Yes
16	FLT74-SB	No	No	Yes	No	No	Yes	No	No	Yes
17	FLT83-SB	No	No	Yes	No	No	Yes	No	No	Yes

3.7 Stand Alone Scenario Stability Analysis Results: GEN-2015-054

The Stand Alone Scenario Stability Analysis determined that there were no contingencies that resulted in system instability, generation tripping offline, or voltage violations for the 2016 Winter Peak, 2017 Summer Peak, and 2025 Summer peak conditions when GEN-2015-054 was at 100% output.

Refer to Table 3-16 for a summary of the Stability Analysis results for the contingencies listed in Table 2-3 that corresponds to the GEN-2105-054 Stand Alone Analysis. Table 3-16 is a summary of the stability results for the 2016 Winter Peak, 20157 Summer Peak, and 2025 Summer Peak conditions and states whether the system remained stable or generation tripped offline and if acceptable voltage recovery was observed after the fault was cleared. Voltage recovery criteria includes ensuring that the transient voltage recovers to 0.7 p.u. within 2.5 seconds after the fault is cleared and ending in a steady state voltage (for N-1 contingencies) at the pre-contingent level or at least 0.9 p.u. If high or low voltages were observed the number of buses failing the voltage criteria was listed.

Table 3-16
Stand Alone Scenario GEN-2015-054: Stability Analysis Summary of Results for 2016 Winter, 2017 Summer, and 2025 Summer Peak Conditions

Cont. No.	Cont. Name	2016 Winter Peak			2017 Summer Peak			2025 Summer Peak		
		Voltage Recovery		Stable?	Voltage Recovery		Stable?	Voltage Recovery		Stable?
		Less than .70 p.u.	Greater than 1.20 p.u.		Less than .70 p.u.	Greater than 1.20 p.u.		Less than .70 p.u.	Greater than 1.20 p.u.	
1	FLT14-3PH	No	No	Yes	No	No	Yes	No	No	Yes
2	FLT15-3PH	No	No	Yes	No	No	Yes	No	No	Yes
3	FLT16-3PH	No	No	Yes	No	No	Yes	No	No	Yes
4	FLT17-3PH	No	No	Yes	No	No	Yes	No	No	Yes
5	FLT18-3PH	No	No	Yes	No	No	Yes	No	No	Yes
6	FLT19-3PH	No	No	Yes	No	No	Yes	No	No	Yes
7	FLT20-3PH	No	No	Yes	No	No	Yes	No	No	Yes
8	FLT21-3PH	No	No	Yes	No	No	Yes	No	No	Yes
9	FLT22-3PH	No	No	Yes	No	No	Yes	No	No	Yes
10	FLT57-PO	No	No	Yes	No	No	Yes	No	No	Yes
11	FLT58-PO	No	No	Yes	No	No	Yes	No	No	Yes
12	FLT59-PO	No	No	Yes	No	No	Yes	No	No	Yes
13	FLT69-SB	No	No	Yes	No	No	Yes	No	No	Yes
14	FLT70-SB	No	No	Yes	No	No	Yes	No	No	Yes
15	FLT73-SB	No	No	Yes	No	No	Yes	No	No	Yes
16	FLT74-SB	No	No	Yes	No	No	Yes	No	No	Yes
17	FLT83-SB	No	No	Yes	No	No	Yes	No	No	Yes

3.8 Stand Alone Scenario Stability Analysis Results: GEN-2015-076

The Stand Alone Scenario Stability Analysis determined that there were no contingencies that resulted in system instability, generation tripping offline, or voltage violations for the 2016 Winter Peak, 2017 Summer Peak, and 2025 Summer peak conditions when GEN-2015-076 was at 100% output.

It was determined that contingency FLT76-1PH, which is a 16 cycle stuck breaker fault resulting in the loss of Belden to Twin Church 115 kV line and Belden to Hoskins 115 kV line, resulted in post-contingency voltages not recovering above 0.90 p.u. at the GEN-2015-076 115 kV bus for the 2016 Winter Peak case. After discussion with SPP, it was determined that the Dixon County to Belden to Rasmussen 230 kV (WAPA) transmission line will be upgraded. This eliminates low voltages at the GEN-2015-076 115 kV bus.

Refer to Table 3-17 for a summary of the Stability Analysis results for the contingencies listed in Table 2-3 that corresponds to the GEN-2015-076 Stand Alone Analysis. Table 3-17 is a summary of the stability results for the 2016 Winter Peak, 2017 Summer Peak, and 2025 Summer Peak conditions and states whether the system remained stable or generation tripped offline and if acceptable voltage recovery was observed after the fault was cleared. Voltage recovery criteria includes ensuring that the transient voltage recovers to 0.7 p.u. within 2.5

seconds after the fault is cleared and ending in a steady state voltage (for N-1 contingencies) at the pre-contingent level or at least 0.9 p.u. If high or low voltages were observed the number of buses failing the voltage criteria was listed.

Table 3-17
Stand Alone Scenario GEN-2015-076: Stability Analysis Summary of Results for 2016 Winter, 2017 Summer, and 2025 Summer Peak Conditions

Cont. No.	Cont. Name	2016 Winter Peak			2017 Summer Peak			2025 Summer Peak		
		Voltage Recovery		Stable?	Voltage Recovery		Stable?	Voltage Recovery		Stable?
		Less than .70 p.u.	Greater than 1.20 p.u.		Less than .70 p.u.	Greater than 1.20 p.u.		Less than .70 p.u.	Greater than 1.20 p.u.	
1	FLT10-3PH	No	No	Yes	No	No	Yes	No	No	Yes
2	FLT12-3PH	No	No	Yes	No	No	Yes	No	No	Yes
3	FLT23-3PH	No	No	Yes	No	No	Yes	No	No	Yes
4	FLT24-3PH	No	No	Yes	No	No	Yes	No	No	Yes
5	FLT25-3PH	No	No	Yes	No	No	Yes	No	No	Yes
6	FLT26-3PH	No	No	Yes	No	No	Yes	No	No	Yes
7	FLT27-3PH	No	No	Yes	No	No	Yes	No	No	Yes
8	FLT28-3PH	No	No	Yes	No	No	Yes	No	No	Yes
9	FLT29-3PH	No	No	Yes	No	No	Yes	No	No	Yes
10	FLT30-3PH	No	No	Yes	No	No	Yes	No	No	Yes
11	FLT31-3PH	No	No	Yes	No	No	Yes	No	No	Yes
12	FLT32-3PH	No	No	Yes	No	No	Yes	No	No	Yes
13	FLT33-3PH	No	No	Yes	No	No	Yes	No	No	Yes
14	FLT34-3PH	No	No	Yes	No	No	Yes	No	No	Yes
15	FLT60-PO	No	No	Yes	No	No	Yes	No	No	Yes
16	FLT61-PO	No	No	Yes	No	No	Yes	No	No	Yes
17	FLT67-SB	No	No	Yes	No	No	Yes	No	No	Yes
18	FLT69-SB	No	No	Yes	No	No	Yes	No	No	Yes
19	FLT75-SB	No	No	Yes	No	No	Yes	No	No	Yes
20	FLT76-SB	No	No	Yes	No	No	Yes	No	No	Yes
21	FLT84-SB	No	No	Yes	No	No	Yes	No	No	Yes

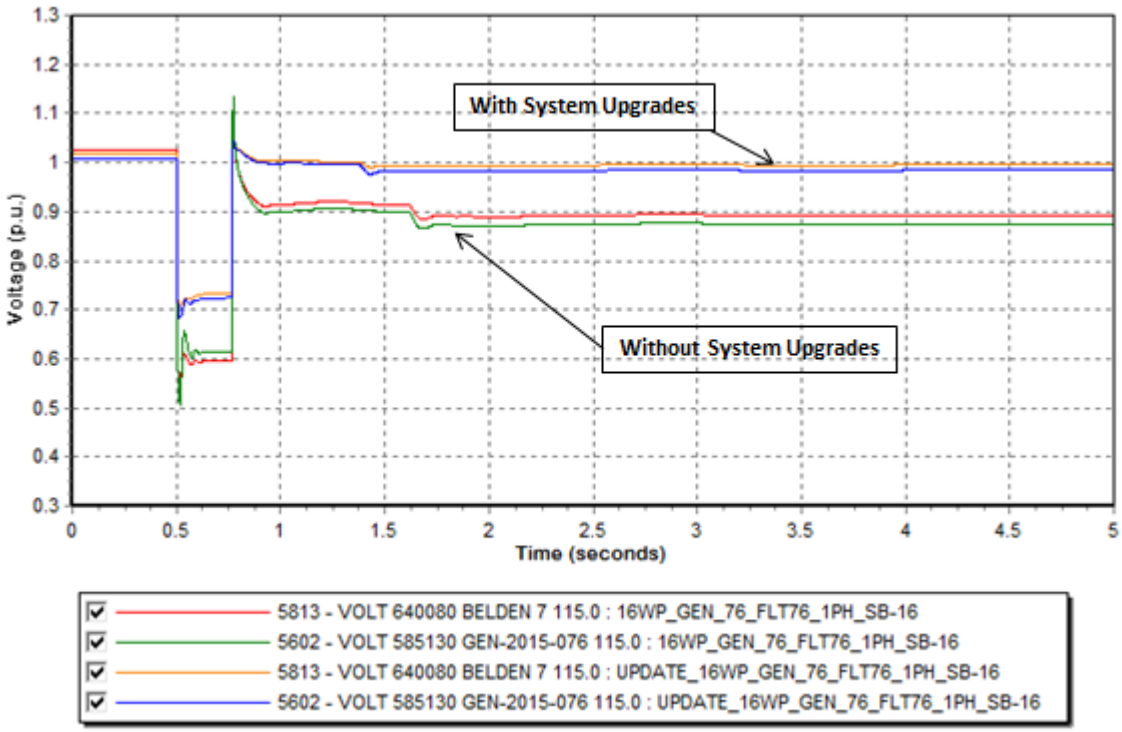

Figure 3-6. Plot of the Belden and GEN-2015-076 115 kV *bus voltages for FLT76-1PH for the 2016 Winter Peak case for Generator 76 with and without system upgrades*.

3.9 Stand Alone Scenario Stability Analysis Results: GEN-2015-087

The Stand Alone Scenario Stability Analysis determined that there were no contingencies that resulted in system instability, generation tripping offline, or voltage violations for the 2016 Winter Peak, 2017 Summer Peak, and 2025 Summer peak conditions when GEN-2015-087 was at 100% output.

Refer to Table 3-18 for a summary of the Stability Analysis results for the contingencies listed in Table 2-3 that corresponds to the GEN-2015-087 Stand Alone Analysis. Table 3-18 is a summary of the stability results for the 2016 Winter Peak, 2017 Summer Peak, and 2025 Summer Peak conditions and states whether the system remained stable or generation tripped offline and if acceptable voltage recovery was observed after the fault was cleared. Voltage recovery criteria includes ensuring that the transient voltage recovers to 0.7 p.u. within 2.5 seconds after the fault is cleared and ending in a steady state voltage (for N-1 contingencies) at the pre-contingent level or at least 0.9 p.u. If high or low voltages were observed the number of buses failing the voltage criteria was listed.

Table 3-18
Stand Alone Scenario GEN-2015-087: Stability Analysis Summary of Results for 2016 Winter, 2017 Summer, and 2025 Summer Peak Conditions

Cont. No.	Cont. Name	2016 Winter Peak			2017 Summer Peak			2025 Summer Peak		
		Voltage Recovery		Stable?	Voltage Recovery		Stable?	Voltage Recovery		Stable?
		Less than .70 p.u.	Greater than 1.20 p.u.		Less than .70 p.u.	Greater than 1.20 p.u.		Less than .70 p.u.	Greater than 1.20 p.u.	
1	FLT35-3PH	No	No	Yes	No	No	Yes	No	No	Yes
2	FLT36-3PH	No	No	Yes	No	No	Yes	No	No	Yes
3	FLT37-3PH	No	No	Yes	No	No	Yes	No	No	Yes
4	FLT38-3PH	No	No	Yes	No	No	Yes	No	No	Yes
5	FLT39-3PH	No	No	Yes	No	No	Yes	No	No	Yes
6	FLT62-PO	No	No	Yes	No	No	Yes	No	No	Yes
7	FLT63-PO	No	No	Yes	No	No	Yes	No	No	Yes
8	FLT87-SB	No	No	Yes	No	No	Yes	No	No	Yes

3.10 Stand Alone Scenario Stability Analysis Results: GEN-2015-088

The Stand Alone Scenario Stability Analysis determined that there were no contingencies that resulted in system instability, generation tripping offline, or voltage violations for the 2016 Winter Peak, 2017 Summer Peak, and 2025 Summer peak conditions when GEN-2015-088 was at 100% output.

Refer to Table 3-19 for a summary of the Stability Analysis results for the contingencies listed in Table 2-3 that corresponds to the GEN-2015-088 Stand Alone Analysis. Table 3-19 is a summary of the stability results for the 2016 Winter Peak, 2017 Summer Peak, and 2025 Summer Peak conditions and states whether the system remained stable or generation tripped offline and if acceptable voltage recovery was observed after the fault was cleared. Voltage recovery criteria includes ensuring that the transient voltage recovers to 0.7 p.u. within 2.5 seconds after the fault is cleared and ending in a steady state voltage (for N-1 contingencies) at the pre-contingent level or at least 0.9 p.u. If high or low voltages were observed the number of buses failing the voltage criteria was listed.

Table 3-19
Stand Alone Scenario GEN-2015-088: Stability Analysis Summary of Results for 2016 Winter, 2017 Summer, and 2025 Summer Peak Conditions

Cont. No.	Cont. Name	2016 Winter Peak			2017 Summer Peak			2025 Summer Peak		
		Voltage Recovery		Stable?	Voltage Recovery		Stable?	Voltage Recovery		Stable?
		Less than .70 p.u.	Greater than 1.20 p.u.		Less than .70 p.u.	Greater than 1.20 p.u.		Less than .70 p.u.	Greater than 1.20 p.u.	
1	FLT40-3PH	No	No	Yes	No	No	Yes	No	No	Yes
2	FLT41-3PH	No	No	Yes	No	No	Yes	No	No	Yes
3	FLT42-3PH	No	No	Yes	No	No	Yes	No	No	Yes
4	FLT43-3PH	No	No	Yes	No	No	Yes	No	No	Yes
5	FLT44-3PH	No	No	Yes	No	No	Yes	No	No	Yes
6	FLT45-3PH	No	No	Yes	No	No	Yes	No	No	Yes
7	FLT46-3PH	No	No	Yes	No	No	Yes	No	No	Yes
8	FLT47-3PH	No	No	Yes	No	No	Yes	No	No	Yes
9	FLT48-3PH	No	No	Yes	No	No	Yes	No	No	Yes
10	FLT64-PO	No	No	Yes	No	No	Yes	No	No	Yes
11	FLT65-PO	No	No	Yes	No	No	Yes	No	No	Yes
12	FLT77-SB	No	No	Yes	No	No	Yes	No	No	Yes
13	FLT78-SB	No	No	Yes	No	No	Yes	No	No	Yes
14	FLT79-SB	No	No	Yes	No	No	Yes	No	No	Yes
15	FLT86-SB	No	No	Yes	No	No	Yes	No	No	Yes

3.11 Stand Alone Scenario Stability Analysis Results: GEN-2015-094

The Stand Alone Scenario Stability Analysis determined that there is one contingency that resulted in system instability, generation tripping offline, or voltage violations for the 2016 Winter Peak, 2017 Summer Peak, and 2025 Summer peak conditions when GEN-2015-094 was at 100% output.

For the 2025 Summer Peak case, FLT52-3PH, which is the loss of the Laramie to Stegall 345 kV line, resulted in GEN-2015-094 tripping offline and the Laramie generation to become unstable. After discussion with SPP, it was determined the Sydney DC Tie should be blocked for this fault. After implementing this update, there was no more voltage instability or generation tripping offline.

Refer to Table 3-20 for a summary of the Stability Analysis results for the contingencies listed in Table 2-3 that corresponds to the GEN-2015-094 Stand Alone Analysis. Table 3-20 is a summary of the stability results for the 2016 Winter Peak, 2017 Summer Peak, and 2025 Summer Peak conditions and states whether the system remained stable or generation tripped offline and if acceptable voltage recovery was observed after the fault was cleared. Voltage recovery criteria includes ensuring that the transient voltage recovers to 0.7 p.u. within 2.5 seconds after the fault is cleared and ending in a steady state voltage (for N-1 contingencies) at the pre-contingent level or at least 0.9 p.u. If high or low voltages were observed the number of buses failing the voltage criteria was listed.

Table 3-20
Stand Alone Scenario GEN-2015-094: Stability Analysis Summary of Results for 2016 Winter, 2017 Summer, and 2025 Summer Peak Conditions

Cont. No.	Cont. Name	2016 Winter Peak			2017 Summer Peak			2025 Summer Peak		
		Voltage Recovery		Stable?	Voltage Recovery		Stable?	Voltage Recovery		Stable?
		Less than .70 p.u.	Greater than 1.20 p.u.		Less than .70 p.u.	Greater than 1.20 p.u.		Less than .70 p.u.	Greater than 1.20 p.u.	
1	FLT49-3PH	No	No	Yes	No	No	Yes	No	No	Yes
2	FLT50-3PH	No	No	Yes	No	No	Yes	No	No	Yes
3	FLT51-3PH	No	No	Yes	No	No	Yes	No	No	Yes
4	FLT52-3PH	Yes (5)	No	Yes	Yes (2)	No	Yes	Yes (5)	No	Yes
5	FLT80-SB	No	No	Yes	No	No	Yes	No	No	Yes
6	FLT87-SB	No	No	Yes	No	No	Yes	No	No	Yes

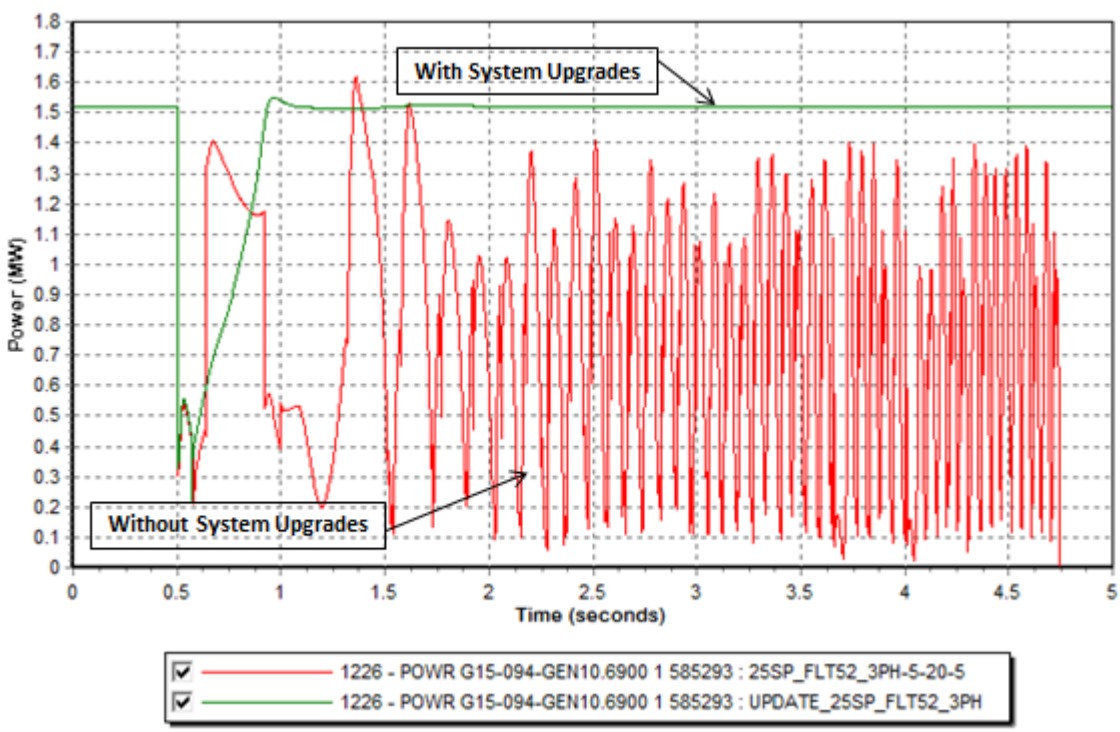

Figure 3-7. Plot of the G15-094-GEN10 Power Output *for FLT52-3PH for the 2025 summer Peak case with with and without system upgrades.*

SECTION 4: SHORT-CIRCUIT ANALYSIS

The objective of this task is to quantify the three-phase to ground fault currents for the 2017 and 2025 Summer Peak season for each interconnecting generator.

4.1 Approach

The short-circuit analysis will assess breaker adequacy and fault duties for the generator interconnection bus and five buses away from the point of interconnection. MEPPI will assume no outages to find maximum short-circuit currents that flow through the breaker. The Automatic Sequencing Fault Calculation (ASCC) function in PSS/E was utilized to perform this task. FLAT conditions were applied to pre-fault conditions and the following adjustments were utilized:

- All synchronous and asynchronous machine P and Q output was set to zero
- All transformer tap ratios were set to 1.0 p.u. and all phase shift angles were set to zero
- All generator reactance's were fixed to the subtransient reactance
- All line charging was set to zero
- All shunts were set to zero
- All loads were set to zero
- All pre-fault bus voltages were set to 1.0 p.u. and a phase shift angle of zero

4.2 Short-circuit Results

The maximum fault current for each bus is provided for the 2017 and 2025 Summer Peak condition. The following tables show the Short-circuit results for the 2017 Summer Peak study generators:

- Table 4-1: Short-circuit Analysis for GEN-2014-059
- Table 4-2: Short-circuit Analysis for GEN-2015-042
- Table 4-3: Short-circuit Analysis for GEN-2015-053 and GEN-2015-054
- Table 4-4: Short-circuit Analysis for GEN-2015-076
- Table 4-5: Short-circuit Analysis for GEN-2015-087
- Table 4-6: Short-circuit Analysis for GEN-2015-088
- Table 4-7: Short-circuit Analysis for GEN-2015-094

Table 4-1
Short-circuit Analysis for Study Project GEN-2014-059

Bus Number	Bus Name	Bus Voltage (kV)	Fault Current 3-LG (kA)
531451	MINGO 7	345	6.62
640065	AXTELL 3	345	8.79
640183	GENTLMN3	345	14.39
640252	KEYSTON3	345	8.23
640325	REDWILO3	345	6.12
640374	SWEET W3	345	9.74
652571	GR ISLD3	345	11.53
652900	G15-094T	345	4.53
659131	LARAMIE3	345	6.35
659133	SIDNEY 3	345	6.07
659135	STEGALL3	345	4.68
659425	SIDNEY1-LNX3	345	6.07
659426	SIDNEY2-LNX3	345	6.07
560014	G14-059-TAP	230	7.18
584230	GEN-2014-059	230	4.59
640093	C.CREEK4	230	6.95
640102	CANADAY4	230	6.14
640184	GENTLMN4	230	18.54
640286	N.PLATT4	230	12.71
640302	OGALALA4	230	8.27
640330	RIVERDL4	230	6.92
640396	VICTRYH4	230	3.52
652573	STEGALL4	230	5.01
652584	SIDNEYW4	230	3.30
652585	NB WEST4	230	28.87
652873	STEGALL-LNX3	230	5.01
659134	SIDNEY 4	230	6.88
659170	STEGALDC	230	5.75
659206	STGXFMR4	230	5.25
659210	SIDXFMR4	230	7.16
659320	STEGALLWECCG	230	28.87
640068	B.SPRGS7	115	4.33
640082	BEVERLY7	115	4.60
640091	BRULE 7	115	5.32
640094	C.CREEK7	115	7.07
640167	ENDERS 7	115	3.69
640238	JEFFREY7	115	5.92
640246	JULSTAP7	115	3.65
640253	KEYSTON7	115	14.19
640255	KINGSLY7	115	8.84
640265	MALONEY7	115	10.99
640267	MAXWELS7	115	5.98
640287	N.PLATT7	115	17.84
640304	OGALALANPPD7	115	14.46
640326	REDWILO7	115	10.38
640365	STOCKVL7	115	4.52
640530	STEGALL7	115	7.67
641244	ATHEY 7	115	3.02
652300	CHAPPEL7	115	3.30
652572	SIDNEY 7	115	4.21
659800	GRANTNB7	115	6.20
659801	OGALALA7	115	14.46
659804	LAMAR 7	115	2.92
659807	ELSIETP7	115	5.78
659809	ROSCOE 7	115	6.28
659810	SPCREEK7	115	4.32
659817	COLTON 7	115	3.67
659824	MCONGHY7	115	5.32
659825	ARTHUR 7	115	2.07
640168	ENDERS 8	69	3.00
640288	N.PLATT8	69	4.88

Table 4-2
Short-circuit Analysis for Study Projects GEN-2015-042

Bus Number	Bus Name	Bus Voltage (kV)	Fault Current 3-LG (kA)
584510	GEN-2015-007	345	7.29
601006	SPLT RK3	345	13.23
635200	RAUN 3	345	23.58
635368	OBRIEN 3	345	10.67
635400	HIGHLND 3	345	10.57
635600	GRIMES 3	345	18.90
636000	WEBSTER3	345	9.43
636010	LEHIGH 3	345	10.26
640125	COLMB.E3	345	9.64
640226	HOSKINS3	345	10.83
640342	SHELCRK3	345	9.76
640520	ANTELOPE 3	345	6.05
645451	S3451 3	345	21.60
645454	S3454 3	345	24.27
645459	S3459 3	345	22.00
650114	NW68HOLDRG3	345	16.26
652506	FTTHOMP3	345	8.22
652564	SIOUXCY3	345	14.48
652864	SIOUXCY-LNX3	345	14.48
560100	BELDEN 4	230	7.54
560347	G10-051-TAP	230	10.53
580011	G10-051&1127	230	8.75
584830	GEN-2015-042	230	9.07
640133	COLMBUS4	230	10.95
640227	HOSKINS4	230	9.90
640343	SHELCRK4	230	10.43
640386	TWIN CH4	230	9.32
640540	MEADOWGROVE4	230	5.51
648506	PR BRZ 4	230	4.17
652398	VFODNES4	230	6.91
652507	FTTHOMP4	230	18.57
652509	FTRANDL4	230	10.83
652514	HURON 4	230	10.55
652516	LAKPLAT4	230	5.55
652519	OAHE 4	230	13.35
652523	SIOUXFL4	230	12.71
652526	UTICAJC4	230	7.62
652536	RASMUSN4	230	8.18
652540	BIGBND14	230	11.43
652541	BIGBND24	230	11.27
652565	SIOUXCY4	230	19.57
652567	DENISON4	230	4.47
652578	PAHOJA 4	230	7.19
652588	CLEVELD4	230	4.72
652606	LETCHER4	230	4.67
652607	WESSINGTON 4	230	6.61
659900	EAGLE 4	230	7.07
952509	G12_009IST	230	9.26
635201	RAUN 5	161	27.19
635202	NEAL 4 5	161	18.72
635203	NEAL N 5	161	25.69
635220	INTCHG 5	161	14.70
635223	PLYMOTH5	161	19.76
635225	MORNSD 5	161	10.17
635226	LEEDS 5	161	15.62
635230	LIBERTY5	161	24.98
635260	LEMARST5	161	9.65
640377	TEKAMAH5	161	8.61
646251	S1251 5	161	30.01
652561	DENISON5	161	5.57
652563	SPENCER5	161	8.47
652566	SIOUXCY5	161	20.20
652603	EXIRA 5	161	6.75
656570	WISDOM5	161	8.63
583780	GEN-2013-032	115	11.59
584520	GEN-2015-008	115	13.72
584910	GEN-2015-053	115	14.14
585130	GEN-2015-076	115	4.87
640070	BANCRFT7	115	5.19
640072	BATTLCR7	115	7.09
640078	BEEMER 7	115	4.45
640080	BELDEN 7	115	12.48
640084	BLMFLD 7	115	6.13
640115	CO.LINE7	115	6.95
640127	COLMB.E7	115	20.88
640149	CREITON7	115	4.83
640151	CRESTON7	115	5.95
640163	EMERSON7	115	5.53
640212	HARTGTN7	115	6.98
640228	HOSKINS7	115	17.62
640263	MADISON7	115	6.12
640293	NELIGH 7	115	10.51
640296	NORFK.N7	115	12.89
640298	NORFOLK7	115	12.18
640300	OAKLAND7	115	7.58
640349	SPENCER7	115	4.53
640357	STANTON7	115	5.12
640363	STNTN.N7	115	6.94
640387	TWIN CH7	115	11.09
640424	S.SIOUXCITY7	115	7.51
640521	ANTELOPE 7	115	14.36
652397	VFODNES7	115	6.25
652463	WH SWAN7	115	12.00
652475	BONESTL7	115	3.57
652501	ARMOUR 7	115	4.07
652510	FTRANDL7	115	12.30
652511	GAVINS 7	115	10.30
652626	UTICAJC7	115	8.85
659121	SPIRITM7	115	6.48
659292	KEYSTN PS237	115	2.57
660006	YKNTJCT7	115	9.23
660007	MENNOJT7	115	6.58
660026	NAPA JCT7	115	8.54
635224	PLYMOTH8	69	20.80
635385	HUDSON 8	69	5.90
635391	IRETONT8	69	5.74
640073	BATTLCR8	69	3.86
640081	BELDEN 8	69	4.56
640164	EMERSONG	69	3.78
640213	HARTGTN8	69	3.90
640388	TWIN CH8	69	7.88
640425	S.SIOUXCITY8	69	4.53
652276	FTTHOMP8	69	4.33
652287	RASMUSN8	69	3.25
652399	VFODNES8	69	4.19
652574	SIOUXCY8	69	17.60
652580	SPENCR 8	69	11.19
652583	DENISON8	69	11.20
656267	MANNINGTAP 8	69	4.38
658030	DENISONWEST8	69	6.42
658031	DENSOUMAIN8	69	6.59
659901	EAGLE 8	69	13.54
659907	J1CENTR8	69	8.09
659912	J6BOYER8	69	9.49
659921	J15SXCNTR8	69	6.54
659942	K217HAWARDE8	69	7.47
659946	K216LIBERTY8	69	7.31
659953	K412HINTONM8	69	10.94
659971	K301HINTON 8	69	9.98
659980	K135CONCORD8	69	6.62

Table 4-3
Short-circuit Analysis for Study Project GEN-2015-053 and GEN-2015-054

Bus Number	Bus Name	Bus Voltage (kV)	Fault Current 3-LG (kA)
584510	GEN-2015-007	345	7.29
635200	RAUN 3	345	23.58
635368	OBRIEN 3	345	10.67
635400	HIGHLND 3	345	10.57
635600	GRIMES 3	345	18.90
636000	WEBSTER3	345	9.43
636010	LEHIGH 3	345	10.26
640125	COLMB.E3	345	9.64
640226	HOSKINS3	345	10.83
640342	SHELCRK3	345	9.76
640520	ANTELOPE 3	345	6.05
645451	S3451 3	345	21.60
645454	S3454 3	345	24.27
645459	S3459 3	345	22.00
650114	NW68HOLDRG3	345	16.26
652564	SIOUXCY3	345	14.48
652864	SIOUXCY-LNX3	345	14.48
560100	BELDEN 4	230	7.54
560347	G10-051-TAP	230	10.53
580011	G10-051&1127	230	8.75
584830	GEN-2015-042	230	9.07
640133	COLMBUS4	230	10.95
640227	HOSKINS4	230	9.90
640343	SHELCRK4	230	10.43
640386	TWIN CH4	230	9.32
652565	SIOUXCY4	230	19.57

Bus Number	Bus Name	Bus Voltage (kV)	Fault Current 3-LG (kA)
635201	RAUN 5	161	27.19
635202	NEAL 4 5	161	18.72
635203	NEAL N 5	161	25.69
635220	INTCHG 5	161	14.70
635230	LIBERTY5	161	24.98
640377	TEKAMAH5	161	8.61
646251	S1251 5	161	30.01
579444	G06-044N-HV1	115	5.62
583780	GEN-2013-032	115	11.59
584520	GEN-2015-008	115	13.72
584910	GEN-2015-053	115	14.14
585130	GEN-2015-076	115	4.87
640054	ALBION 7	115	5.37
640058	ATKINSN7	115	2.64
640072	BATTLCR7	115	7.09
640080	BELDEN 7	115	12.48
640084	BLMFLD 7	115	6.13
640113	CLRWATR7	115	5.22
640115	CO.LINE7	115	6.95
640127	COLMB.E7	115	20.88
640149	CREITON7	115	4.83
640165	EMMET 7	115	2.94
640176	FULERTN7	115	2.59
640181	GENOA 7	115	4.92
640212	HARTGTN7	115	6.98
640228	HOSKINS7	115	17.62

Bus Number	Bus Name	Bus Voltage (kV)	Fault Current 3-LG (kA)
640263	MADISON7	115	6.12
640293	NELIGH 7	115	10.51
640296	NORFK.N7	115	12.89
640298	NORFOLK7	115	12.18
640305	ONEILL 7	115	3.87
640318	PETRSBG7	115	6.40
640347	SPALDNG7	115	3.39
640349	SPENCER7	115	4.53
640357	STANTON7	115	5.12
640363	STNTN.N7	115	6.94
640387	TWIN CH7	115	11.09
640444	PETERSBRG.N7	115	6.41
640521	ANTELOPE 7	115	14.36
652510	FTRANDL7	115	12.30
652511	GAVINS 7	115	10.30
652517	MANNING7	115	5.20
652525	TYNDALL7	115	3.83
658100	VERMLN 7	115	4.62
659121	SPIRITM7	115	6.48
660006	YKNTJCT7	115	9.23
660026	NAPA JCT7	115	8.54
640073	BATTLCR8	69	3.86
640081	BELDEN 8	69	4.56
640085	BLMFLD 8	69	2.52
640150	CREITON8	69	3.33
640213	HARTGTN8	69	3.90
640294	NELIGH 8	69	6.01
640306	ONEILL 8	69	4.20

Table 4-4
Short-circuit Analysis for Study Projects GEN-2015-076

Bus Number	Bus Name	Bus Voltage (kV)	Fault Current 3-LG (kA)
584510	GEN-2015-007	345	7.29
635200	RAUN 3	345	23.58
635368	OBRIEN 3	345	10.67
635400	HIGHLND 3	345	10.57
635600	GRIMES 3	345	18.90
636000	WEBSTER3	345	9.43
636010	LEHIGH 3	345	10.26
640125	COLMB.E3	345	9.64
640226	HOSKINS3	345	10.83
640342	SHELCRK3	345	9.76
640520	ANTELOPE 3	345	6.05
645451	S3451 3	345	21.60
645454	S3454 3	345	24.27
645459	S3459 3	345	22.00
650114	NW68HOLDRG3	345	16.26
652564	SIOUXCY3	345	14.48
652864	SIOUXCY-LNX3	345	14.48
560100	BELDEN 4	230	7.54
560347	G10-051-TAP	230	10.53
580011	G10-051&1127	230	8.75
584830	GEN-2015-042	230	9.07
640133	COLMBUS4	230	10.95
640227	HOSKINS4	230	9.90
640343	SHELCRK4	230	10.43
640386	TWIN CH4	230	9.32
640540	MEADOWGROVE4	230	5.51
652398	VFODNES4	230	6.91
652507	FTTHOMP4	230	18.57
652509	FTRANDL4	230	10.83
652523	SIOUXFL4	230	12.71
652526	UTICAJC4	230	7.62
652536	RASMUSN4	230	8.18
652565	SIOUXCY4	230	19.57
652567	DENISON4	230	4.47
652578	PAHOJA 4	230	7.19
659900	EAGLE 4	230	7.07
952509	G12_009IST	230	9.26
635201	RAUN 5	161	27.19
635202	NEAL 4 5	161	18.72
635203	NEAL N 5	161	25.69
635220	INTCHG 5	161	14.70
635223	PLYMOTH5	161	19.76
635230	LIBERTY5	161	24.98
640377	TEKAMAH5	161	8.61
646251	S1251 5	161	30.01
652561	DENISON5	161	5.57
652563	SPENCER5	161	8.47
652566	SIOUXCY5	161	20.20
583780	GEN-2013-032	115	11.59
584520	GEN-2015-008	115	13.72
584910	GEN-2015-053	115	14.14
585130	GEN-2015-076	115	4.87
640070	BANCRFT7	115	5.19
640072	BATTLCR7	115	7.09
640078	BEEMER 7	115	4.45
640080	BELDEN 7	115	12.48
640084	BLMFLD 7	115	6.13
640115	CO.LINE7	115	6.95
640127	COLMB.E7	115	20.88
640136	COLMBUS7	115	18.66
640149	CREITON7	115	4.83
640151	CRESTON7	115	5.95
640163	EMERSON7	115	5.53
640212	HARTGTN7	115	6.98
640228	HOSKINS7	115	17.62
640263	MADISON7	115	6.12
640293	NELIGH 7	115	10.51
640296	NORFK.N7	115	12.89
640298	NORFOLK7	115	12.18
640300	OAKLAND7	115	7.58
640357	STANTON7	115	5.12
640363	STNTN.N7	115	6.94
640378	TEKAMAH7	115	8.08
640387	TWIN CH7	115	11.09
640400	W.POINT7	115	5.09
640409	WINSLOW7	115	5.20
640424	S.SIOUXCITY7	115	7.51
640521	ANTELOPE 7	115	14.36
652397	VFODNES7	115	6.25
652463	WH SWAN7	115	12.00
652502	BERSFRD7	115	3.91
652510	FTRANDL7	115	12.30
652511	GAVINS 7	115	10.30
652517	MANNING7	115	5.20
652525	TYNDALL7	115	3.83
652626	UTICAJC7	115	8.85
658100	VERMLN 7	115	4.62
659121	SPIRITM7	115	6.48
659292	KEYSTN PS237	115	2.57
660006	YKNTJCT7	115	9.23
660007	MENNOJT7	115	6.58
660026	NAPA JCT7	115	8.54
640073	BATTLCR8	69	3.86
640081	BELDEN 8	69	4.56
640085	BLMFLD 8	69	2.52
640150	CREITON8	69	3.33
640164	EMERSONG	69	3.78
640213	HARTGTN8	69	3.90
640388	TWIN CH8	69	7.88
640425	S.SIOUXCITY8	69	4.53
652230	MANNING8	69	2.78
652286	TYNDALL8	69	2.51
652287	RASMUSN8	69	3.25
652399	VFODNES8	69	4.19
652574	SIOUXCY8	69	17.60
652583	DENISON8	69	11.20
659901	EAGLE 8	69	13.54

Table 4-5
Short-circuit Analysis for Study Projects GEN-2015-087

Bus Number	Bus Name	Bus Voltage (kV)	Fault Current 3-LG (kA)
640271	MCCOOL 3	345	10.03
533303	MARSHAL3	115	4.49
533332	KNOB HL3	115	4.69
539665	GRNLEAF3	115	4.04
560061	G15-087-TAP	115	5.43
560137	G08-123N-TAP	115	6.49
584090	GEN-2014-039	115	5.84
585230	GEN-2015-087	115	5.00
640074	BEAT. S7	115	5.19
640076	BEATRCE7	115	12.92
640088	BPS SUB7	115	15.70
640105	CARLJCT7	115	5.39

Bus Number	Bus Name	Bus Voltage (kV)	Fault Current 3-LG (kA)
640111	CLATONA7	115	10.13
640153	CRETE__7	115	8.19
640169	FAIRBRY7	115	5.51
640174	FRIEND 7	115	5.84
640178	GENEVA 7	115	9.58
640206	GUIDE R7	115	4.36
640208	HARBINE7	115	6.98
640218	HEBRN N7	115	5.56
640220	HEBRON 7	115	5.29
640235	HUMBOLT7	115	6.38
640272	MCCOOL 7	115	13.79
640278	SHELDON7	115	31.19

Bus Number	Bus Name	Bus Voltage (kV)	Fault Current 3-LG (kA)
640361	STEINER7	115	4.37
640368	SUPEROR7	115	3.37
640372	SUTTON 7	115	6.24
640413	YORK SW7	115	7.94
640426	STEELEC7	115	5.01
640558	S.FLATS.PLT7	115	4.41
641087	EGYCNTR7	115	17.72
640179	GENEVA 8	69	4.12
640207	GUIDE R8	69	2.46
640273	MCCOOL 8	69	5.44
640373	SUTTON 8	69	3.75
640415	CARLJCT8	69	3.55
647966	S966 8	69	0.47

Table 4-6
Short-circuit Analysis for Study Project GEN-2015-088

Bus Number	Bus Name	Bus Voltage (kV)	Fault Current 3-LG (kA)
300039	7FAIRPT	345	11.92
530583	POSTROCK7	345	7.76
531469	SPERVIL7	345	12.72
541197	MULLNCR7	345	7.61
541199	ST JOE 3	345	18.76
541400	EASTOWN7	345	17.40
542972	HAWTH 7	345	21.06
542980	NASHUA 7	345	19.71
542982	IATAN 7	345	25.81
560009	G14-021-TAP	345	8.31
560062	G15-088-TAP	345	10.58
562334	G13-010-TAP	345	7.43
583600	GEN-2013-010	345	7.43
583910	GEN-2014-021	345	6.52
585240	GEN-2015-088	345	10.20
635000	CBLUFFS3	345	28.30
635017	ATCHSNT3	345	15.02
635018	ATCHSN 3	345	14.89
635600	GRIMES 3	345	18.90
635630	BOONVIL3	345	16.09
635635	MADISON3	345	14.88
640065	AXTELL 3	345	8.79
640125	COLMB.E3	345	9.64
640139	COOPER 3	345	25.04
640183	GENTLMN3	345	14.39
640226	HOSKINS3	345	10.83
640252	KEYSTON3	345	8.23
640271	MCCOOL 3	345	10.03
640277	MOORE 3	345	20.78
640312	PAULINE3	345	7.76
640325	REDWILO3	345	6.12
640342	SHELCRK3	345	9.76
640374	SWEET W3	345	9.74
640510	HOLT.CO3	345	5.69
645451	S3451 3	345	21.60
645454	S3454 3	345	24.27
645455	S3455 3	345	27.85
645456	S3456 3	345	30.43
645458	S3458 3	345	27.83
645459	S3459 3	345	22.00
645740	S3740 3	345	17.24
650114	NW68HOLDRG3	345	16.26
650185	WAGENER 3	345	19.51
650189	103&ROKEBY3	345	19.45
652571	GR ISLD3	345	11.53
652871	GR ISLD-LNX3	345	11.53
530558	KNOLL 6	230	10.66
530582	S HAYS6	230	8.55
530584	POSTROCK6	230	10.83
579470	GEN-2008-092	230	7.88
640126	E.COL. 4	230	9.35
640131	COLMB.W4	230	9.47
640184	GENTLMN4	230	18.54
640200	GR ISLD4	230	15.84
640214	HASTING4	230	7.17
640330	RIVERDL4	230	6.92
640343	SHELCRK4	230	10.43
300073	5GENTRY	161	8.97
300076	5FAIRPT	161	15.81
300087	5HICKCK	161	5.15
300107	5OSBORN	161	7.18
301347	5WINSLOW	161	9.09
541252	ST JOEREA 5	161	6.26
541253	ST JOE 5	161	19.90
541257	COOK 5	161	14.20
541258	WOODBIN5	161	16.76
541401	EASTOWN5	161	17.28
543028	NASHUA-5	161	26.60
635631	BOONVIL5	161	20.07
640140	COOPER 5	161	17.06
640234	HUMBOLT5	161	7.44
646206	S1206 5	161	39.13
646254	S1254 5	161	26.05
646263	S1263 5	161	7.60
646280	S1280 5	161	9.65
560137	G08-123N-TAP	115	6.49
560746	G13-002-TAP	115	27.87
572051	G08123NG1314	115	4.99
583520	GEN-2013-002	115	27.87
583700	GEN-2013-019	115	21.67
584090	GEN-2014-039	115	5.84
640066	AXTELL 7	115	13.84
640074	BEAT. S7	115	5.19
640076	BEATRCE7	115	12.92
640088	BPS SUB7	115	15.70
640105	CARLJCT7	115	5.39
640111	CLATONA7	115	10.13
640119	COL.COG7	115	18.75
640127	COLMB.E7	115	20.88
640136	COLMBUS7	115	18.66
640153	CRETE__7	115	8.19
640157	DAVIDCY7	115	5.33
640161	ELMCRK_7	115	5.87
640171	FIRTH 7	115	6.06
640174	FRIEND 7	115	5.84
640178	GENEVA 7	115	9.58
640201	GR ISLD7	115	22.25
640206	GUIDE R7	115	4.36
640208	HARBINE7	115	6.98
640215	HASTING7	115	18.89
640222	HILDRTH7	115	4.21
640224	HOLDREG7	115	6.13
640242	JOHN.2 7	115	12.42
640248	KEAR.NE7	115	8.96
640250	KEARNEY7	115	11.46
640261	LOWELL 7	115	7.93
640272	MCCOOL 7	115	13.79
640275	MINDEN 7	115	7.03
640278	SHELDON7	115	31.19
640310	ORLEANS7	115	2.49
640313	PAULINE7	115	16.07
640316	PAWNEEL7	115	11.23
640340	SEWARD 7	115	7.34
640361	STEINER7	115	4.37
640362	STERLNG7	115	4.25
640368	SUPEROR7	115	3.37
640372	SUTTON 7	115	6.24
640383	TOWER 7	115	8.66
640411	YORK 7	115	7.45
640413	YORK SW7	115	7.94
641085	E7THST 7	115	17.83
641087	EGYCNTR7	115	17.72
641088	HASTCTY7	115	18.89
641090	S. 281 7	115	11.00
650210	NW70FAIRFD7	115	20.78
650214	NW68HOLDRG7	115	24.81
650216	SW27&F 7	115	21.46
650218	3&VANDORN 7	115	21.09
650226	NW12&ARBOR7	115	17.88
650229	27&PLR 7	115	19.54
650230	2&N 7	115	25.29
650238	20PIONEERS7	115	26.17
650242	FOLSM&PHIL7	115	26.12
650244	SW7&BENNET7	115	21.03
650250	40&ROKEBY 7	115	20.01
650258	40&GERTIE 7	115	22.30
650267	84LEIGHTON7	115	27.99
650270	70&CALVERT7	115	25.90
650271	81&OCHENEY7	115	23.28
650283	WAVERLY 7	115	20.49
650285	WAGENER 7	115	30.51
650290	ROKEBY 7	115	24.41
300249	2FAIRPT	69	16.33
640141	COOPER_ESST8	69	4.45
640143	CORNFLD8	69	1.78
640179	GENEVA 8	69	4.12
640207	GUIDE R8	69	2.46
640273	MCCOOL 8	69	5.44
640314	PAULINE8	69	4.70
640446	COOPER 8	69	4.55
640447	YORK.SW T2 8	69	2.41
640448	HOLDREGE 8	69	3.68
647974	S974 8	69	5.35

Table 4-7
Short-circuit Analysis for Study Project GEN-2015-094

Bus Number	Bus Name	Bus Voltage (kV)	Fault Current 3-LG (kA)	Bus Number	Bus Name	Bus Voltage (kV)	Fault Current 3-LG (kA)	Bus Number	Bus Name	Bus Voltage (kV)	Fault Current 3-LG (kA)
585290	GEN-2015-094	345	4.38	659426	SIDNEY2-LNX3	345	6.07	659206	STGXFMR4	230	5.25
640183	GENTLMN3	345	14.39	560014	G14-059-TAP	230	7.18	659210	SIDXFMR4	230	7.16
640252	KEYSTON3	345	8.23	640396	VICTRYH4	230	3.52	640253	KEYSTON7	115	14.19
652900	G15-094T	345	4.53	652573	STEGALL4	230	5.01	640338	SCOTBLF7	115	5.60
659131	LARAMIE3	345	6.35	652584	SIDNEYW4	230	3.30	640397	VICTRYH7	115	5.71
659133	SIDNEY 3	345	6.07	652873	STEGALL-LNX3	230	5.01	640530	STEGALL7	115	7.67
659135	STEGALL3	345	4.68	659134	SIDNEY 4	230	6.88	652572	SIDNEY 7	115	4.21
659425	SIDNEY1-LNX3	345	6.07	659170	STEGALDC	230	5.75	659821	GERINGT7	115	5.11

The following tables show the Short-circuit results for the 2025 Summer Peak study generators:

- Table 4-8: Short-circuit Analysis for GEN-2014-059
- Table 4-9: Short-circuit Analysis for GEN-2015-042
- Table 4-10: Short-circuit Analysis for GEN-2015-053 and GEN-2015-054
- Table 4-11: Short-circuit Analysis for GEN-2015-076
- Table 4-12: Short-circuit Analysis for GEN-2015-087
- Table 4-13: Short-circuit Analysis for GEN-2015-088
- Table 4-14: Short-circuit Analysis for GEN-2015-094

Table 4-8
Short-circuit Analysis for Study Project GEN-2014-059

Bus Number	Bus Name	Bus Voltage (kV)	Fault Current 3-LG (kA)	Bus Number	Bus Name	Bus Voltage (kV)	Fault Current 3-LG (kA)	Bus Number	Bus Name	Bus Voltage (kV)	Fault Current 3-LG (kA)
531451	MINGO 7	345	6.94	640302	OGALALA4	230	8.36	640265	MALONEY7	115	11.11
640065	AXTELL 3	345	8.81	640330	RIVERDL4	230	6.93	640267	MAXWELS7	115	6.60
640183	GENTLMN3	345	15.46	640396	VICTRYH4	230	3.53	640287	N.PLATT7	115	18.18
640252	KEYSTON3	345	8.46	652573	STEGALL4	230	5.03	640304	OGALALANPPD7	115	14.61
640325	REDWILO3	345	6.27	652584	SIDNEYW4	230	3.30	640326	REDWILO7	115	10.50
640374	SWEET W3	345	9.78	652585	NB WEST4	230	28.87	640365	STOCKVL7	115	4.54
640500	THEDFRD3	345	5.57	652873	STEGALL-LNX3	230	5.03	640381	THEDFRD7	115	9.04
640510	HOLT.CO3	345	7.04	659134	SIDNEY 4	230	6.92	640530	STEGALL7	115	7.68
652571	GR ISLD3	345	11.76	659170	STEGALDC	230	5.75	641244	ATHEY 7	115	3.03
652900	G15-094T	345	4.55	659206	STGXFMR4	230	5.26	652300	CHAPPEL7	115	3.31
659131	LARAMIE3	345	6.37	659210	SIDXFMR4	230	7.21	652572	SIDNEY 7	115	4.22
659133	SIDNEY 3	345	6.12	659320	STEGALLWECCG	230	28.87	659800	GRANTNB7	115	6.23
659135	STEGALL3	345	4.69	640068	B.SPRGS7	115	4.34	659801	OGALALA7	115	14.61
659425	SIDNEY1-LNX3	345	6.12	640082	BEVERLY7	115	4.65	659804	LAMAR 7	115	2.93
659426	SIDNEY2-LNX3	345	6.12	640091	BRULE 7	115	5.34	659807	ELSIETP7	115	5.80
560014	G14-059-TAP	230	7.24	640094	C.CREEK7	115	7.14	659809	ROSCOE 7	115	6.31
584230	GEN-2014-059	230	4.62	640167	ENDERS 7	115	3.70	659810	SPCREEK7	115	4.33
640093	C.CREEK4	230	6.98	640238	JEFFREY7	115	5.93	659817	COLTON 7	115	3.68
640102	CANADAY4	230	6.16	640246	JULSTAP7	115	3.65	659824	MCONGHY7	115	5.34
640184	GENTLMN4	230	19.03	640253	KEYSTON7	115	14.35	659825	ARTHUR 7	115	2.07
640286	N.PLATT4	230	12.92	640255	KINGSLY7	115	8.90	640168	ENDERS 8	69	3.01
								640288	N.PLATT8	69	4.89

Table 4-9
Short-circuit Analysis for Study Projects GEN-2015-042

Bus Number	Bus Name	Bus Voltage (kV)	Fault Current 3-LG (kA)	Bus Number	Bus Name	Bus Voltage (kV)	Fault Current 3-LG (kA)	Bus Number	Bus Name	Bus Voltage (kV)	Fault Current 3-LG (kA)
584510	GEN-2015-007	345	7.31	652606	LETCHER4	230	4.68	640357	STANTON7	115	5.13
601006	SPLT RK3	345	13.66	652607	WESSINGTON 4	230	6.63	640363	STNTN.N7	115	6.96
635200	RAUN 3	345	24.05	659312	LOWERBRULE 4	230	10.76	640387	TWIN CH7	115	11.11
635368	OBRIEN 3	345	11.32	659900	EAGLE 4	230	7.14	640424	S.SIOUXCITY7	115	7.52
635400	HIGHLND 3	345	11.14	952509	G12_009IST	230	9.28	640461	OAKDALEP23 7	115	8.75
635600	GRIMES 3	345	19.45	635201	RAUN 5	161	27.51	640521	ANTELOPE 7	115	14.62
636000	WEBSTER3	345	11.03	635202	NEAL 4 5	161	18.87	652397	VFODNES7	115	6.27
636010	LEHIGH 3	345	11.34	635203	NEAL N 5	161	25.97	652463	WH SWAN7	115	12.16
640125	COLMB.E3	345	9.69	635220	INTCHG 5	161	14.80	652475	BONESTL7	115	3.86
640226	HOSKINS3	345	10.88	635223	PLYMOTH5	161	20.04	652501	ARMOUR 7	115	4.08
640342	SHELCRK3	345	9.80	635225	MORNSD 5	161	10.23	652510	FTRANDL7	115	12.48
640520	ANTELOPE 3	345	6.07	635226	LEEDS 5	161	15.76	652511	GAVINS 7	115	10.31
645451	S3451 3	345	22.16	635230	LIBERTY5	161	25.25	652626	UTICAJC7	115	8.86
645454	S3454 3	345	24.70	635260	LEMARST5	161	9.74	659121	SPIRITM7	115	6.49
645459	S3459 3	345	23.46	640377	TEKAMAH5	161	8.64	659292	KEYSTN PS237	115	2.57
650114	NW68HOLDRG3	345	16.47	646251	S1251 5	161	30.92	660006	YKNTJCT7	115	9.23
652506	FTTHOMP3	345	8.42	652561	DENISON5	161	5.61	660007	MENNOJT7	115	6.58
652564	SIOUXCY3	345	14.67	652563	SPENCER5	161	10.15	660026	NAPA JCT7	115	8.55
652864	SIOUXCY-LNX3	345	14.67	652566	SIOUXCY5	161	20.49	635224	PLYMOTH8	69	20.93
560100	BELDEN 4	230	7.56	652603	EXIRA 5	161	6.89	635385	HUDSON 8	69	5.93
560347	G10-051-TAP	230	10.56	656570	WISDOM5	161	10.27	635391	IRETONT8	69	5.77
580011	G10-051&1127	230	8.76	583780	GEN-2013-032	115	11.75	640073	BATTLCR8	69	3.94
584830	GEN-2015-042	230	9.09	584520	GEN-2015-008	115	13.96	640081	BELDEN 8	69	4.56
640133	COLMBUS4	230	10.99	584910	GEN-2015-053	115	14.39	640164	EMERSONG	69	3.78
640227	HOSKINS4	230	9.93	585130	GEN-2015-076	115	4.87	640213	HARTGTN8	69	3.90
640343	SHELCRK4	230	10.46	640070	BANCRFT7	115	5.20	640388	TWIN CH8	69	7.89
640386	TWIN CH4	230	9.36	640072	BATTLCR7	115	7.63	640425	S.SIOUXCITY8	69	4.53
640540	MEADOWGROVE4	230	5.52	640078	BEEMER 7	115	4.46	652276	FTTHOMP8	69	4.34
648506	PR BRZ 4	230	4.17	640080	BELDEN 7	115	12.50	652287	RASMUSN8	69	3.25
652398	VFODNES4	230	6.95	640084	BLMFLD 7	115	6.13	652399	VFODNES8	69	4.19
652507	FTTHOMP4	230	19.07	640115	CO.LINE7	115	7.88	652574	SIOUXCY8	69	17.71
652509	FTRANDL4	230	10.86	640127	COLMB.E7	115	20.97	652581	SPENCER8	69	18.89
652514	HURON 4	230	10.71	640149	CREITON7	115	4.85	652583	DENISON8	69	11.36
652516	LAKPLAT4	230	5.56	640151	CRESTON7	115	5.96	656267	MANNINGTAP 8	69	4.42
652519	OAHE 4	230	13.57	640163	EMERSON7	115	5.54	658030	DENISONWEST8	69	6.55
652523	SIOUXFL4	230	12.87	640212	HARTGTN7	115	6.99	658031	DENSOUMAIN8	69	6.70
652526	UTICAJC4	230	7.64	640228	HOSKINS7	115	17.83	659901	EAGLE 8	69	13.66
652536	RASMUSN4	230	8.21	640263	MADISON7	115	6.14	659907	J1CENTR8	69	8.14
652540	BIGBND14	230	11.59	640293	NELIGH 7	115	10.63	659912	J6BOYER8	69	9.58
652565	SIOUXCY4	230	19.82	640296	NORFK.N7	115	13.15	659921	J15SXCNTR8	69	6.59
652567	DENISON4	230	4.52	640298	NORFOLK7	115	12.34	659942	K217HAWARDE8	69	7.51
652578	PAHOJA 4	230	7.27	640300	OAKLAND7	115	7.63	659946	K216LIBERTY8	69	7.34
652588	CLEVELD4	230	4.77	640349	SPENCER7	115	4.57	659953	K412HINTONM8	69	10.98

Table 4-10
Short-circuit Analysis for Study Project GEN-2015-053 and GEN-2015-054

Bus Number	Bus Name	Bus Voltage (kV)	Fault Current 3-LG (kA)
584510	GEN-2015-007	345	7.31
635200	RAUN 3	345	24.05
635368	OBRIEN 3	345	11.32
635400	HIGHLND 3	345	11.14
635600	GRIMES 3	345	19.45
636000	WEBSTER3	345	11.03
636010	LEHIGH 3	345	11.34
640125	COLMB.E3	345	9.69
640226	HOSKINS3	345	10.88
640342	SHELCRK3	345	9.80
640520	ANTELOPE 3	345	6.07
645451	S3451 3	345	22.16
645454	S3454 3	345	24.70
645459	S3459 3	345	23.46
650114	NW68HOLDRG3	345	16.47
652564	SIOUXCY3	345	14.67
652864	SIOUXCY-LNX3	345	14.67
560100	BELDEN 4	230	7.56
560347	G10-051-TAP	230	10.56
580011	G10-051&1127	230	8.76
584830	GEN-2015-042	230	9.09
640133	COLMBUS4	230	10.99
640227	HOSKINS4	230	9.93
640343	SHELCRK4	230	10.46
640386	TWIN CH4	230	9.36
652565	SIOUXCY4	230	19.82
635201	RAUN 5	161	27.51
635202	NEAL 4 5	161	18.87
635203	NEAL N 5	161	25.97
635220	INTCHG 5	161	14.80
635230	LIBERTY5	161	25.25
640377	TEKAMAH5	161	8.64
646251	S1251 5	161	30.92
579444	G06-044N-HV1	115	5.68
583780	GEN-2013-032	115	11.75
584520	GEN-2015-008	115	13.96
584910	GEN-2015-053	115	14.39
585130	GEN-2015-076	115	4.87
640054	ALBION 7	115	5.51
640072	BATTLCR7	115	7.63
640080	BELDEN 7	115	12.50
640084	BLMFLD 7	115	6.13
640113	CLRWATR7	115	5.26
640115	CO.LINE7	115	7.88
640127	COLMB.E7	115	20.97
640149	CREITON7	115	4.85
640165	EMMET 7	115	3.00
640176	FULERTN7	115	2.62
640181	GENOA 7	115	4.96
640212	HARTGTN7	115	6.99
640228	HOSKINS7	115	17.83
640263	MADISON7	115	6.14
640293	NELIGH 7	115	10.63
640296	NORFK.N7	115	13.15
640298	NORFOLK7	115	12.34
640305	ONEILL 7	115	3.93
640318	PETRSBG7	115	6.48
640347	SPALDNG7	115	3.66
640349	SPENCER7	115	4.57
640357	STANTON7	115	5.13
640363	STNTN.N7	115	6.96
640387	TWIN CH7	115	11.11
640444	PETERSBRG.N7	115	6.49
640461	OAKDALEP23 7	115	8.75
640465	EMMETE.TAP 7	115	3.03
640466	EMMETE.P22 7	115	2.84
640521	ANTELOPE 7	115	14.62
652510	FTRANDL7	115	12.48
652511	GAVINS 7	115	10.31
652517	MANNING7	115	5.20
652525	TYNDALL7	115	3.84
658100	VERMLN 7	115	4.62
659121	SPIRITM7	115	6.49
660006	YKNTJCT7	115	9.23
660026	NAPA JCT7	115	8.55
640073	BATTLCR8	69	3.94
640081	BELDEN 8	69	4.56
640085	BLMFLD 8	69	3.72
640150	CREITON8	69	4.43
640213	HARTGTN8	69	3.90
640294	NELIGH 8	69	6.04
640306	ONEILL 8	69	4.24

Table 4-11
Short-circuit Analysis for Study Projects GEN-2015-076

Bus Number	Bus Name	Bus Voltage (kV)	Fault Current 3-LG (kA)	Bus Number	Bus Name	Bus Voltage (kV)	Fault Current 3-LG (kA)	Bus Number	Bus Name	Bus Voltage (kV)	Fault Current 3-LG (kA)
584510	GEN-2015-007	345	7.31	952509	G12_009IST	230	9.28	640378	TEKAMAH7	115	8.09
635200	RAUN 3	345	24.05	635201	RAUN 5	161	27.51	640387	TWIN CH7	115	11.11
635368	OBRIEN 3	345	11.32	635202	NEAL 4 5	161	18.87	640400	W.POINT7	115	5.11
635400	HIGHLND 3	345	11.14	635203	NEAL N 5	161	25.97	640409	WINSLOW7	115	5.33
635600	GRIMES 3	345	19.45	635220	INTCHG 5	161	14.80	640424	S.SIOUXCITY7	115	7.52
636000	WEBSTER3	345	11.03	635223	PLYMOTH5	161	20.04	640461	OAKDALEP23 7	115	8.75
636010	LEHIGH 3	345	11.34	635230	LIBERTY5	161	25.25	640521	ANTELOPE 7	115	14.62
640125	COLMB.E3	345	9.69	640377	TEKAMAH5	161	8.64	652397	VFODNES7	115	6.27
640226	HOSKINS3	345	10.88	646251	S1251 5	161	30.92	652463	WH SWAN7	115	12.16
640342	SHELCRK3	345	9.80	652561	DENISON5	161	5.61	652502	BERSFRD7	115	3.91
640520	ANTELOPE 3	345	6.07	652563	SPENCER5	161	10.15	652510	FTRANDL7	115	12.48
645451	S3451 3	345	22.16	652566	SIOUXCY5	161	20.49	652511	GAVINS 7	115	10.31
645454	S3454 3	345	24.70	583780	GEN-2013-032	115	11.75	652517	MANNING7	115	5.20
645459	S3459 3	345	23.46	584520	GEN-2015-008	115	13.96	652525	TYNDALL7	115	3.84
650114	NW68HOLDRG3	345	16.47	584910	GEN-2015-053	115	14.39	652626	UTICAJC7	115	8.86
652564	SIOUXCY3	345	14.67	585130	GEN-2015-076	115	4.87	658100	VERMLN 7	115	4.62
652864	SIOUXCY-LNX3	345	14.67	640070	BANCRFT7	115	5.20	659121	SPIRITM7	115	6.49
560100	BELDEN 4	230	7.56	640072	BATTLCR7	115	7.63	659292	KEYSTN PS237	115	2.57
560347	G10-051-TAP	230	10.56	640078	BEEMER 7	115	4.46	660006	YKNTJCT7	115	9.23
580011	G10-051&1127	230	8.76	640080	BELDEN 7	115	12.50	660007	MENNOJT7	115	6.58
584830	GEN-2015-042	230	9.09	640084	BLMFLD 7	115	6.13	660026	NAPA JCT7	115	8.55
640133	COLMBUS4	230	10.99	640115	CO.LINE7	115	7.88	640073	BATTLCR8	69	3.94
640227	HOSKINS4	230	9.93	640127	COLMB.E7	115	20.97	640081	BELDEN 8	69	4.56
640343	SHELCRK4	230	10.46	640136	COLMBUS7	115	18.75	640085	BLMFLD 8	69	3.72
640386	TWIN CH4	230	9.36	640149	CREITON7	115	4.85	640150	CREITON8	69	4.43
640540	MEADOWGROVE4	230	5.52	640151	CRESTON7	115	5.96	640164	EMERSONG	69	3.78
652398	VFODNES4	230	6.95	640163	EMERSON7	115	5.54	640213	HARTGTN8	69	3.90
652507	FTTHOMP4	230	19.07	640212	HARTGTN7	115	6.99	640388	TWIN CH8	69	7.89
652509	FTRANDL4	230	10.86	640228	HOSKINS7	115	17.83	640425	S.SIOUXCITY8	69	4.53
652523	SIOUXFL4	230	12.87	640263	MADISON7	115	6.14	652230	MANNING8	69	2.78
652526	UTICAJC4	230	7.64	640293	NELIGH 7	115	10.63	652286	TYNDALL8	69	2.51
652536	RASMUSN4	230	8.21	640296	NORFK.N7	115	13.15	652287	RASMUSN8	69	3.25
652565	SIOUXCY4	230	19.82	640298	NORFOLK7	115	12.34	652399	VFODNES8	69	4.19
652567	DENISON4	230	4.52	640300	OAKLAND7	115	7.63	652574	SIOUXCY8	69	17.71
652578	PAHOJA 4	230	7.27	640357	STANTON7	115	5.13	652583	DENISON8	69	11.36
659900	EAGLE 4	230	7.14	640363	STNTN.N7	115	6.96	659901	EAGLE 8	69	13.66

Table 4-12
Short-circuit Analysis for Study Projects GEN-2015-087

Bus Number	Bus Name	Bus Voltage (kV)	Fault Current 3-LG (kA)
640271	MCCOOL 3	345	10.12
533303	MARSHAL3	115	4.50
533332	KNOB HL3	115	4.70
539665	GRNLEAF3	115	4.04
560061	G15-087-TAP	115	5.43
560137	G08-123N-TAP	115	6.50
584090	GEN-2014-039	115	5.83
585230	GEN-2015-087	115	5.00
640074	BEAT. S7	115	5.20
640076	BEATRCE7	115	12.98
640088	BPS SUB7	115	15.79
640105	CARLJCT7	115	5.40
640111	CLATONA7	115	10.21
640153	CRETE__7	115	8.14
640169	FAIRBRY7	115	5.51
640174	FRIEND 7	115	5.83
640178	GENEVA 7	115	9.59
640206	GUIDE R7	115	4.36
640208	HARBINE7	115	6.99
640218	HEBRN N7	115	5.56
640220	HEBRON 7	115	5.29
640235	HUMBOLT7	115	6.39
640272	MCCOOL 7	115	13.84
640278	SHELDON7	115	32.62
640361	STEINER7	115	4.37
640368	SUPEROR7	115	3.37
640372	SUTTON 7	115	6.25
640413	YORK SW7	115	7.96
640426	STEELEC7	115	5.02
640558	S.FLATS.PLT7	115	4.41
641087	EGYCNTR7	115	17.74
640179	GENEVA 8	69	4.12
640207	GUIDE R8	69	2.46
640273	MCCOOL 8	69	5.44
640373	SUTTON 8	69	3.75
640415	CARLJCT8	69	3.55
647966	S966 8	69	0.47

Table 4-13
Short-circuit Analysis for Study Project GEN-2015-088

Bus Number	Bus Name	Bus Voltage (kV)	Fault Current 3-LG (kA)
300039	7FAIRPT	345	11.83
530583	POSTROCK7	345	7.79
531469	SPERVIL7	345	12.80
541197	MULLNCR7	345	7.61
541199	ST JOE 3	345	18.30
541400	EASTOWN7	345	17.06
542972	HAWTH 7	345	21.30
542980	NASHUA 7	345	19.81
542982	IATAN 7	345	27.03
560009	G14-021-TAP	345	8.32
560062	G15-088-TAP	345	10.63
562334	G13-010-TAP	345	7.45
583600	GEN-2013-010	345	7.45
583910	GEN-2014-021	345	6.52
585240	GEN-2015-088	345	10.24
635000	CBLUFFS3	345	28.85
635017	ATCHSNT3	345	15.04
635018	ATCHSN 3	345	14.91
635600	GRIMES 3	345	19.45
635630	BOONVIL3	345	16.40
635635	MADISON3	345	15.13
640065	AXTELL 3	345	8.81
640125	COLMB.E3	345	9.69
640139	COOPER 3	345	25.06
640183	GENTLMN3	345	15.46
640226	HOSKINS3	345	10.88
640252	KEYSTON3	345	8.46
640271	MCCOOL 3	345	10.12
640277	MOORE 3	345	21.07
640312	PAULINE3	345	7.77
640325	REDWILO3	345	6.27
640342	SHELCRK3	345	9.80
640374	SWEET W3	345	9.78
640500	THEDFRD3	345	5.57
640510	HOLT.CO3	345	7.04
645451	S3451 3	345	22.16
645454	S3454 3	345	24.70
645455	S3455 3	345	28.40
645456	S3456 3	345	31.20
645458	S3458 3	345	27.99
645459	S3459 3	345	23.46
645740	S3740 3	345	17.36
650114	NW68HOLDRG3	345	16.47
650185	WAGENER 3	345	19.79
650189	103&ROKEBY3	345	19.69
652571	GR ISLD3	345	11.76
652871	GR ISLD-LNX3	345	11.76
530558	KNOLL 6	230	10.71
530582	S HAYS6	230	8.59
530584	POSTROCK6	230	10.88
579470	GEN-2008-092	230	7.90
640126	E.COL. 4	230	9.38
640131	COLMB.W4	230	9.49
640184	GENTLMN4	230	19.03
640200	GR ISLD4	230	16.02
640214	HASTING4	230	7.19
640330	RIVERDL4	230	6.93
640343	SHELCRK4	230	10.46
300073	5GENTRY	161	8.98
300076	5FAIRPT	161	15.78
300087	5HICKCK	161	5.15
300107	5OSBORN	161	7.17
301347	5WINSLOW	161	9.09
541252	ST JOEREA 5	161	6.19
541253	ST JOE 5	161	18.62
541257	COOK 5	161	12.95
541258	WOODBIN5	161	15.77
541401	EASTOWN5	161	16.01
543028	NASHUA-5	161	26.73
635631	BOONVIL5	161	20.33
640140	COOPER 5	161	17.07
640234	HUMBOLT5	161	7.46
646206	S1206 5	161	40.50
646254	S1254 5	161	26.38
646263	S1263 5	161	7.61
646280	S1280 5	161	9.67
560137	G08-123N-TAP	115	6.50
560746	G13-002-TAP	115	29.00
572051	G08123NG1314	115	4.99
583520	GEN-2013-002	115	29.00
583700	GEN-2013-019	115	22.34
584090	GEN-2014-039	115	5.83
640066	AXTELL 7	115	13.86
640074	BEAT. S7	115	5.20
640076	BEATRCE7	115	12.98
640088	BPS SUB7	115	15.79
640105	CARLJCT7	115	5.40
640111	CLATONA7	115	10.21
640119	COL.COG7	115	18.82
640127	COLMB.E7	115	20.97
640136	COLMBUS7	115	18.75
640153	CRETE__7	115	8.14
640157	DAVIDCY7	115	5.33
640161	ELMCRK_7	115	5.87
640171	FIRTH 7	115	6.10
640174	FRIEND 7	115	5.83
640178	GENEVA 7	115	9.59
640201	GR ISLD7	115	22.37
640206	GUIDE R7	115	4.36
640208	HARBINE7	115	6.99
640215	HASTING7	115	18.92
640222	HILDRTH7	115	4.21
640224	HOLDREG7	115	6.13
640242	JOHN.2 7	115	12.45
640248	KEAR.NE7	115	8.97
640250	KEARNEY7	115	11.46
640261	LOWELL 7	115	7.93
640272	MCCOOL 7	115	13.84
640275	MINDEN 7	115	7.03
640278	SHELDON7	115	32.62
640310	ORLEANS7	115	2.49
640313	PAULINE7	115	16.09
640316	PAWNEEL7	115	11.34
640340	SEWARD 7	115	7.37
640361	STEINER7	115	4.37
640362	STERLNG7	115	4.27
640368	SUPEROR7	115	3.37
640372	SUTTON 7	115	6.25
640383	TOWER 7	115	8.66
640411	YORK 7	115	7.46
640413	YORK SW7	115	7.96
641085	E7THST 7	115	17.86
641087	EGYCNTR7	115	17.74
641088	HASTCTY7	115	18.92
641090	S. 281 7	115	11.00
650210	NW70FAIRFD7	115	21.22
650214	NW68HOLDRG7	115	25.46
650216	SW27&F 7	115	21.99
650218	3&VANDORN 7	115	21.70
650226	NW12&ARBOR7	115	18.18
650229	27&PLR 7	115	20.49
650230	2&N 7	115	26.06
650238	20PIONEERS7	115	27.23
650242	FOLSM&PHIL7	115	27.71
650244	SW7&BENNET7	115	21.86
650250	40&ROKEBY 7	115	20.81
650258	40&GERTIE 7	115	22.99
650267	84LEIGHTON7	115	28.69
650270	70&CALVERT7	115	26.71
650271	81&OCHENEY7	115	23.94
650283	WAVERLY 7	115	20.79
650285	WAGENER 7	115	31.13
650290	ROKEBY 7	115	26.22
300249	2FAIRPT	69	16.33
640141	COOPER_ESST8	69	4.45
640143	CORNFLD8	69	1.78
640179	GENEVA 8	69	4.12
640207	GUIDE R8	69	2.46
640223	HILDRTH8	69	3.20
640273	MCCOOL 8	69	5.44
640314	PAULINE8	69	4.71
640446	COOPER 8	69	4.55
640447	YORK.SW T2 8	69	2.41

Table 4-14
Short-circuit Analysis for Study Project GEN-2015-094

Bus Number	Bus Name	Bus Voltage (kV)	Fault Current 3-LG (kA)	Bus Number	Bus Name	Bus Voltage (kV)	Fault Current 3-LG (kA)	Bus Number	Bus Name	Bus Voltage (kV)	Fault Current 3-LG (kA)
585290	GEN-2015-094	345	4.39	659426	SIDNEY2-LNX3	345	6.12	659206	STGXFMR4	230	5.26
640183	GENTLMN3	345	15.46	560014	G14-059-TAP	230	7.24	659210	SIDXFMR4	230	7.21
640252	KEYSTON3	345	8.46	640396	VICTRYH4	230	3.53	640253	KEYSTON7	115	14.35
652900	G15-094T	345	4.55	652573	STEGALL4	230	5.03	640338	SCOTBLF7	115	5.61
659131	LARAMIE3	345	6.37	652584	SIDNEYW4	230	3.30	640397	VICTRYH7	115	5.72
659133	SIDNEY 3	345	6.12	652873	STEGALL-LNX3	230	5.03	640530	STEGALL7	115	7.68
659135	STEGALL3	345	4.69	659134	SIDNEY 4	230	6.92	652572	SIDNEY 7	115	4.22
659425	SIDNEY1-LNX3	345	6.12	659170	STEGALDC	230	5.75	659821	GERINGT7	115	5.12

SECTION 5: POWER FACTOR ANALYSIS

The objective of this task is to quantify the power factor at the high side of the collector system equivalent transformer near the point of interconnection for the wind farms during base case and system contingencies. SPP transmission planning practice requires interconnecting generation projects to maintain the power factor (pf) at the high side of the transformer near the Point of Interconnection (POI) within +/- 0.95 pf for system intact conditions and for post-contingency conditions. This is analyzed by having the wind farm maintain a prescribed voltage schedule at the point of interconnection of 1.0 p.u. voltage, or if the pre-project voltage is higher than 1.0 p.u., to maintain the pre-project voltage schedule.

The 2016 Winter Peak, 2017 Summer Peak, and 2025 Summer Peak power flows provided by SPP were examined prior to the Power Factor Analysis to ensure they contained the proposed study project modeled at 100% of the nameplate rating and any previously queued projects listed in Table 2-2. There was no suspect power flow data in the study area. The proposed study project and any previously queued projects at the same point of interconnection were turned off during the power factor analysis. The wind farm(s) were then replaced by a generator modeled at the high side bus with the same real power (MW) capability as the wind farm(s) and open limits for the reactive power set points (Mvar). The generator was set to hold the POI scheduled bus voltage. All N-1, three-phase fault contingencies from Table 2-3 were then applied and the reactive power required to maintain the bus voltage was recorded.

5.1 Approach

GEN-2014-059 was disabled and the generator was placed at the study project's high side of the collector system equivalent transformer. The generator was modeled with PGEN = 161.1 MW, QMin = -9999 Mvar and QMax = 9999 Mvar during Summer and Winter Peak conditions. All buses and transformers connected from the study project's high side of the collector system equivalent transformer to the generators were disabled. The scheduled voltage was set to 1.0095 p.u. for all study years.

GEN-2015-042 was disabled and the generator was placed at the study project's high side of the collector system equivalent transformer. The generator was modeled with PGEN = 320 MW, QMin = -9999 Mvar and QMax = 9999 Mvar during Summer and Winter Peak conditions. All buses and transformers connected from the study project's high side of the collector system equivalent transformer to the generators were disabled. The scheduled voltage was set to 1.00 p.u. for all study years.

GEN-2015-053 and GEN-2015-054 were disabled and the generators were placed at the study project's point of interconnect bus. The generators were modeled with PGEN =50.12 MW, for GEN 053 and PGEN = 73.39 MW for GEN 054, QMin = -9999 Mvar, and QMax = 9999 Mvar. All buses and transformers connected from the study project's high side of the collector system equivalent transformer to the generators were disabled. The scheduled voltage was set to 1.0307 p.u. for the 2016 Winter Peak conditions, 1.0315 p.u. for the 2017 Summer Peak conditions, and 1.0312 p.u. for the 2025 Summer Peak conditions.

GEN-2015-076 was disabled and the generator was placed at the study project's high side of the collector system equivalent transformer. The generator was modeled with PGEN = 158.4 MW, QMin = -9999 Mvar and QMax = 9999 Mvar during Summer and Winter Peak conditions. All buses and transformers connected from the study project's high side of the collector system equivalent transformer to the generators were disabled. The scheduled voltage was set to 1.0261 p.u. for the 2016 Winter Peak conditions, 1.0145 p.u. for the 2017 Summer Peak conditions, and 1.0122 p.u. for the 2025 Summer Peak conditions.

GEN-2015-087 was disabled and the generator was placed at the study project's high side of the collector system equivalent transformer. The generator was modeled with PGEN = 76 MW, QMin = -9999 Mvar and QMax = 9999 Mvar during Summer and Winter Peak conditions. All buses and transformers connected from the study project's high side of the collector system equivalent transformer to the generators were disabled. The scheduled voltage was set to 1.0401 p.u. for the 2016 Winter Peak conditions, 1.0244 p.u. for the 2017 Summer Peak conditions, and 1.0375 p.u. for the 2025 Summer Peak conditions.

GEN-2015-088 was disabled and the generator was placed at the study project's high side of the collector system equivalent transformer. The generator was modeled with PGEN = 300 MW, QMin = -9999 Mvar and QMax = 9999 Mvar during Summer and Winter Peak conditions. All buses and transformers connected from the study project's high side of the collector system equivalent transformer to the generators were disabled. The scheduled voltage was set to 1.0090 p.u. for the 2016 Winter Peak conditions, 1.0092 p.u. for the 2017 Summer Peak conditions, and 1.0100 p.u. for the 2025 Summer Peak conditions.

GEN-2015-094 was disabled and the generator was placed at the study project's high side of the collector system equivalent transformer. The generator was modeled with PGEN = 151.8 MW, QMin = -9999 Mvar and QMax = 9999 Mvar during Summer and Winter Peak conditions. All buses and transformers connected from the study project's high side of the collector system equivalent transformer to the generators were disabled. The scheduled voltage was set to 1.0167 p.u. for the 2016 Winter Peak conditions, 1.0166 p.u. for the 2017 Summer Peak conditions, and 1.0165 p.u. for the 2025 Summer Peak conditions.

5.2 Power Factor Analysis Results

The power factor was calculated for the 2016 Winter Peak, 2017 Summer Peak, and 2025 Summer Peak conditions. The following tables show the power factor results for the study generators:

- Table 5-1: Power Factor Analysis for GEN-2014-059
- Table 5-2: Power Factor Analysis for GEN-2015-042
- Table 5-3: Power Factor Analysis for GEN-2015-053
- Table 5-4: Power Factor Analysis for GEN-2015-054
- Table 5-5: Power Factor Analysis for GEN-2015-076
- Table 5-6: Power Factor Analysis for GEN-2015-087
- Table 5-7: Power Factor Analysis for GEN-2015-088
- Table 5-8: Power Factor Analysis for GEN-2015-094

Note that a positive Q (Mvar) output illustrates that the generator is absorbing reactive power from the system, implying a leading power factor; a negative Q (Mvar) illustrates that the generator is supplying reactive power to the system, implying a lagging power factor.

Table 5-1
Power Factor Analysis: GEN-2014-059

Cont. No.	Case	2016 Winter Peak			2017 Summer Peak			2025 Summer Peak		
		Power Factor		Q (MVAR)	Power Factor		Q (MVAR)	Power Factor		Q (MVAR)
0	Base	0.961	Leading	46.40	0.983	Leading	30.11	0.990	Leading	23.50
1	FLT01-3PH	0.976	Leading	35.94	0.990	Leading	23.16	0.993	Leading	18.88
2	FLT02-3PH	0.979	Leading	33.91	0.995	Leading	16.87	0.998	Leading	9.49
3	FLT03-3PH	0.961	Leading	46.40	0.983	Leading	30.11	0.990	Leading	23.50
4	FLT04-3PH	0.960	Leading	47.02	0.958	Leading	48.35	0.949	Leading	53.72
5	FLT05-3PH	0.994	Leading	18.37	1.000	Lagging	-3.21	0.996	Lagging	-13.92
6	FLT06-3PH	0.968	Leading	41.74	0.992	Leading	21.14	0.994	Leading	17.64
7	FLT07-3PH	0.961	Leading	46.40	0.983	Leading	30.11	0.990	Leading	23.50
8	FLT08-3PH	0.961	Leading	46.20	0.983	Leading	30.08	0.990	Leading	23.44
9	FLT09-3PH	0.961	Leading	46.13	0.983	Leading	29.69	0.990	Leading	23.05
10	FLT10-3PH	0.961	Leading	46.39	0.983	Leading	30.09	0.990	Leading	23.48
11	FLT11-3PH	0.961	Leading	46.29	0.983	Leading	30.13	0.990	Leading	23.49
12	FLT12-3PH	0.961	Leading	46.38	0.983	Leading	30.08	0.990	Leading	23.47
13	FLT13-3PH	0.961	Leading	46.44	0.983	Leading	30.11	0.990	Leading	23.51
14	FLT14-3PH	0.961	Leading	46.42	0.983	Leading	30.14	0.989	Leading	23.54
15	FLT15-3PH	0.961	Leading	46.39	0.983	Leading	30.09	0.990	Leading	23.49
16	FLT16-3PH	0.961	Leading	46.17	0.983	Leading	29.97	0.990	Leading	23.33
17	FLT17-3PH	0.963	Leading	45.09	0.984	Leading	29.31	0.990	Leading	22.91
18	FLT18-3PH	0.961	Leading	46.50	0.983	Leading	30.34	0.990	Leading	23.33
19	FLT19-3PH	0.961	Leading	46.35	0.983	Leading	30.19	0.990	Leading	23.50
20	FLT20-3PH	0.961	Leading	46.39	0.983	Leading	29.95	0.990	Leading	23.34
21	FLT21-3PH	0.963	Leading	44.97	0.984	Leading	29.21	0.990	Leading	22.56
22	FLT22-3PH	0.961	Leading	46.17	0.983	Leading	29.99	0.990	Leading	23.36
23	FLT23-3PH	0.961	Leading	46.38	0.983	Leading	30.03	0.990	Leading	23.43
24	FLT24-3PH	0.961	Leading	46.39	0.983	Leading	30.09	0.990	Leading	23.49
25	FLT25-3PH	0.961	Leading	46.34	0.983	Leading	30.05	0.990	Leading	23.44
26	FLT26-3PH	0.961	Leading	46.26	0.983	Leading	29.92	0.990	Leading	23.31
27	FLT27-3PH	0.961	Leading	46.40	0.983	Leading	30.11	0.990	Leading	23.49
28	FLT28-3PH	0.961	Leading	46.40	0.983	Leading	30.11	0.990	Leading	23.49
29	FLT29-3PH	0.961	Leading	46.29	0.983	Leading	29.94	0.990	Leading	23.35
30	FLT30-3PH	0.961	Leading	46.32	0.983	Leading	30.04	0.990	Leading	23.43
31	FLT31-3PH	0.961	Leading	46.38	0.983	Leading	30.09	0.990	Leading	23.47
32	FLT32-3PH	0.961	Leading	46.39	0.983	Leading	30.11	0.990	Leading	23.49
33	FLT33-3PH	0.961	Leading	46.39	0.983	Leading	30.11	0.990	Leading	23.49
34	FLT34-3PH	0.961	Leading	46.43	0.983	Leading	30.14	0.990	Leading	23.53
35	FLT35-3PH	0.961	Leading	46.43	0.983	Leading	30.11	0.989	Leading	23.55
36	FLT36-3PH	0.961	Leading	46.05	0.983	Leading	29.86	0.990	Leading	23.46
37	FLT37-3PH	0.961	Leading	46.37	0.983	Leading	30.13	0.990	Leading	23.49
38	FLT38-3PH	0.961	Leading	46.36	0.983	Leading	29.95	0.990	Leading	23.18
39	FLT39-3PH	0.961	Leading	46.10	0.984	Leading	29.44	0.990	Leading	23.18
40	FLT40-3PH	0.970	Leading	40.26	0.988	Leading	24.69	0.994	Leading	18.14

Table 5-1 (Continued)
Power Factor Analysis: GEN-2014-059

Cont. No.	Case	2016 Winter Peak			2017 Summer Peak			2025 Summer Peak		
		Power Factor		Q (MVAR)	Power Factor		Q (MVAR)	Power Factor		Q (MVAR)
41	FLT41-3PH	0.962	Leading	45.55	0.984	Leading	29.04	0.991	Leading	21.92
42	FLT42-3PH	0.961	Leading	46.32	0.983	Leading	30.12	0.989	Leading	23.54
43	FLT43-3PH	0.962	Leading	45.75	0.984	Leading	29.45	0.990	Leading	22.77
44	FLT44-3PH	0.965	Leading	43.54	0.988	Leading	25.15	0.994	Leading	18.41
45	FLT45-3PH	0.962	Leading	45.50	0.983	Leading	29.73	0.990	Leading	22.44
46	FLT46-3PH	0.960	Leading	46.96	0.983	Leading	30.23	0.989	Leading	23.74
47	FLT47-3PH	0.963	Leading	45.37	0.985	Leading	28.01	0.991	Leading	21.76
48	FLT48-3PH	0.961	Leading	46.54	0.983	Leading	30.07	0.990	Leading	23.32
49	FLT49-3PH	1.000	Leading	3.89	0.997	Lagging	-12.69	0.994	Lagging	-17.23
50	FLT50-3PH	0.978	Leading	33.99	0.997	Leading	12.55	0.998	Leading	9.67
51	FLT51-3PH	0.961	Leading	46.40	0.983	Leading	30.11	0.990	Leading	23.50
52	FLT52-3PH	1.000	Lagging	-0.61	0.996	Lagging	-14.80	0.988	Lagging	-25.56

Table 5-2
Power Factor Analysis: GEN-2015-042

Cont. No.	Case	2016 Winter Peak			2017 Summer Peak			2025 Summer Peak		
		Power Factor		Q (MVAR)	Power Factor		Q (MVAR)	Power Factor		Q (MVAR)
0	Base	0.996	Leading	29.85	1.000	Leading	2.98	1.000	Leading	9.79
1	FLT01-3PH	0.996	Leading	29.83	1.000	Leading	2.92	1.000	Leading	9.74
2	FLT02-3PH	0.996	Leading	29.81	1.000	Leading	2.90	1.000	Leading	9.73
3	FLT03-3PH	0.996	Leading	29.85	1.000	Leading	2.98	1.000	Leading	9.79
4	FLT04-3PH	0.996	Leading	29.79	1.000	Leading	2.82	1.000	Leading	9.65
5	FLT05-3PH	0.996	Leading	29.83	1.000	Leading	2.86	1.000	Leading	9.70
6	FLT06-3PH	0.996	Leading	29.85	1.000	Leading	2.97	1.000	Leading	9.80
7	FLT07-3PH	0.996	Leading	29.85	1.000	Leading	2.98	1.000	Leading	9.79
8	FLT08-3PH	0.997	Lagging	-23.72	0.994	Lagging	-36.01	0.996	Lagging	-29.18
9	FLT09-3PH	1.000	Leading	6.76	0.999	Lagging	-14.97	0.999	Lagging	-15.69
10	FLT10-3PH	0.996	Leading	29.04	1.000	Leading	1.91	1.000	Leading	8.73
11	FLT11-3PH	0.999	Lagging	-10.16	0.991	Lagging	-43.22	0.993	Lagging	-36.71
12	FLT12-3PH	0.995	Leading	31.95	1.000	Leading	6.26	0.999	Leading	11.36
13	FLT13-3PH	1.000	Leading	5.74	0.997	Lagging	-22.80	0.999	Lagging	-16.18
14	FLT14-3PH	0.996	Leading	29.60	1.000	Leading	2.45	1.000	Leading	9.15
15	FLT15-3PH	0.996	Leading	29.45	1.000	Leading	1.62	1.000	Leading	8.51
16	FLT16-3PH	0.996	Leading	29.85	1.000	Leading	2.30	1.000	Leading	7.13
17	FLT17-3PH	1.000	Leading	8.09	1.000	Lagging	-7.22	1.000	Leading	3.98
18	FLT18-3PH	0.996	Leading	29.08	1.000	Leading	4.59	0.999	Leading	10.40
19	FLT19-3PH	0.996	Leading	27.10	1.000	Lagging	-2.70	1.000	Leading	5.70
20	FLT20-3PH	0.996	Leading	27.14	1.000	Lagging	-3.27	1.000	Leading	4.23
21	FLT21-3PH	1.000	Leading	0.97	0.999	Lagging	-14.94	1.000	Lagging	-3.38
22	FLT22-3PH	0.996	Leading	29.75	1.000	Leading	3.51	1.000	Leading	8.35
23	FLT23-3PH	0.999	Leading	15.37	0.999	Lagging	-14.66	1.000	Lagging	-7.35
24	FLT24-3PH	0.995	Leading	31.45	1.000	Leading	9.74	0.999	Leading	15.72
25	FLT25-3PH	0.997	Leading	25.26	1.000	Leading	0.49	1.000	Leading	7.47
26	FLT26-3PH	0.996	Leading	26.94	1.000	Leading	2.40	1.000	Leading	9.32
27	FLT27-3PH	0.996	Leading	28.99	1.000	Leading	2.02	1.000	Leading	8.82
28	FLT28-3PH	0.996	Leading	29.34	1.000	Leading	2.50	1.000	Leading	9.30
29	FLT29-3PH	0.997	Leading	25.28	1.000	Lagging	-0.35	1.000	Leading	5.67
30	FLT30-3PH	0.997	Leading	26.67	1.000	Leading	0.38	1.000	Leading	7.07
31	FLT31-3PH	0.996	Leading	29.92	1.000	Leading	2.95	1.000	Leading	9.70
32	FLT32-3PH	0.995	Leading	30.61	1.000	Leading	3.74	0.999	Leading	10.20
33	FLT33-3PH	0.996	Leading	29.37	1.000	Leading	2.73	1.000	Leading	9.50
34	FLT34-3PH	0.999	Leading	14.38	0.999	Lagging	-14.53	1.000	Lagging	-4.78
35	FLT35-3PH	0.996	Leading	30.01	1.000	Leading	3.11	1.000	Leading	9.99
36	FLT36-3PH	0.996	Leading	29.38	1.000	Leading	2.67	1.000	Leading	9.64
37	FLT37-3PH	0.996	Leading	29.82	1.000	Leading	2.97	1.000	Leading	9.79
38	FLT38-3PH	0.996	Leading	29.90	1.000	Leading	2.85	1.000	Leading	9.54
39	FLT39-3PH	0.996	Leading	29.47	1.000	Leading	2.54	1.000	Leading	9.50
40	FLT40-3PH	0.998	Leading	22.16	1.000	Lagging	-2.39	1.000	Leading	5.24

Table 5-2 (Continued)
Power Factor Analysis: GEN-2015-042

Cont. No.	Case	2016 Winter Peak			2017 Summer Peak			2025 Summer Peak		
		Power Factor		Q (MVAR)	Power Factor		Q (MVAR)	Power Factor		Q (MVAR)
41	FLT41-3PH	0.996	Leading	28.52	1.000	Leading	2.07	1.000	Leading	9.01
42	FLT42-3PH	0.996	Leading	29.77	1.000	Leading	2.46	1.000	Leading	9.00
43	FLT43-3PH	0.996	Leading	27.57	1.000	Leading	1.20	1.000	Leading	8.21
44	FLT44-3PH	0.997	Leading	24.14	1.000	Lagging	-1.70	1.000	Leading	6.20
45	FLT45-3PH	0.997	Leading	26.70	1.000	Leading	0.83	1.000	Leading	7.60
46	FLT46-3PH	0.995	Leading	30.80	1.000	Leading	3.22	0.999	Leading	10.30
47	FLT47-3PH	0.996	Leading	28.92	1.000	Leading	2.29	1.000	Leading	9.01
48	FLT48-3PH	0.996	Leading	29.50	1.000	Leading	2.64	1.000	Leading	9.48
49	FLT49-3PH	0.996	Leading	29.79	1.000	Leading	2.47	1.000	Leading	9.46
50	FLT50-3PH	0.996	Leading	29.79	1.000	Leading	2.67	1.000	Leading	9.63
51	FLT51-3PH	0.996	Leading	29.85	1.000	Leading	2.98	1.000	Leading	9.79
52	FLT52-3PH	0.996	Leading	29.94	1.000	Leading	3.36	1.000	Leading	9.94

Table 5-3
Power Factor Analysis: GEN-2015-053

Cont. No.	Case	2016 Winter Peak			2017 Summer Peak			2025 Summer Peak		
		Power Factor		Q (MVAR)	Power Factor		Q (MVAR)	Power Factor		Q (MVAR)
0	Base	0.977	Leading	10.94	0.977	Leading	10.98	0.977	Leading	10.87
1	FLT01-3PH	0.977	Leading	10.93	0.977	Leading	10.96	0.977	Leading	10.84
2	FLT02-3PH	0.977	Leading	10.92	0.977	Leading	10.95	0.977	Leading	10.84
3	FLT03-3PH	0.977	Leading	10.94	0.977	Leading	10.98	0.977	Leading	10.87
4	FLT04-3PH	0.977	Leading	10.89	0.977	Leading	10.89	0.978	Leading	10.72
5	FLT05-3PH	0.977	Leading	10.96	0.977	Leading	10.95	0.977	Leading	10.84
6	FLT06-3PH	0.977	Leading	10.95	0.977	Leading	10.97	0.977	Leading	10.87
7	FLT07-3PH	0.977	Leading	10.94	0.977	Leading	10.98	0.977	Leading	10.87
8	FLT08-3PH	0.995	Leading	4.96	0.994	Leading	5.28	0.993	Leading	6.03
9	FLT09-3PH	0.989	Leading	7.37	0.991	Leading	6.74	0.990	Leading	7.25
10	FLT10-3PH	0.977	Leading	10.84	0.977	Leading	10.86	0.978	Leading	10.74
11	FLT11-3PH	0.992	Leading	6.34	0.993	Leading	5.85	0.992	Leading	6.53
12	FLT12-3PH	0.978	Leading	10.66	0.980	Leading	10.22	0.980	Leading	10.07
13	FLT13-3PH	0.970	Leading	12.58	0.971	Leading	12.33	0.969	Leading	12.68
14	FLT14-3PH	0.982	Leading	9.55	0.984	Leading	9.12	0.987	Leading	8.23
15	FLT15-3PH	0.981	Leading	9.82	0.968	Leading	12.98	0.969	Leading	12.79
16	FLT16-3PH	0.999	Leading	2.09	0.996	Leading	4.76	0.983	Leading	9.37
17	FLT17-3PH	0.909	Leading	22.97	0.958	Leading	14.99	0.974	Leading	11.71
18	FLT18-3PH	0.986	Leading	8.49	0.953	Leading	15.91	0.970	Leading	12.63
19	FLT19-3PH	0.996	Leading	4.41	0.999	Lagging	-2.32	1.000	Lagging	-0.32
20	FLT20-3PH	0.963	Leading	14.11	0.951	Leading	16.25	0.953	Leading	15.90
21	FLT21-3PH	0.908	Leading	23.07	0.958	Leading	14.98	0.973	Leading	11.81
22	FLT22-3PH	0.999	Leading	2.38	0.996	Leading	4.39	0.984	Leading	8.93
23	FLT23-3PH	0.972	Leading	12.09	0.971	Leading	12.29	0.970	Leading	12.51
24	FLT24-3PH	0.978	Leading	10.79	0.978	Leading	10.60	0.978	Leading	10.65
25	FLT25-3PH	0.982	Leading	9.61	0.982	Leading	9.63	0.982	Leading	9.53
26	FLT26-3PH	0.980	Leading	10.28	0.980	Leading	10.21	0.980	Leading	10.15
27	FLT27-3PH	0.977	Leading	10.88	0.977	Leading	10.92	0.978	Leading	10.81
28	FLT28-3PH	0.977	Leading	10.91	0.977	Leading	10.95	0.977	Leading	10.84
29	FLT29-3PH	0.982	Leading	9.62	0.980	Leading	10.09	0.980	Leading	10.28
30	FLT30-3PH	0.980	Leading	10.23	0.976	Leading	11.15	0.976	Leading	11.08
31	FLT31-3PH	0.978	Leading	10.73	0.978	Leading	10.73	0.979	Leading	10.51
32	FLT32-3PH	0.981	Leading	9.81	0.983	Leading	9.46	0.982	Leading	9.64
33	FLT33-3PH	0.978	Leading	10.76	0.977	Leading	10.89	0.978	Leading	10.76
34	FLT34-3PH	0.974	Leading	11.75	0.975	Leading	11.44	0.976	Leading	11.07
35	FLT35-3PH	0.977	Leading	11.02	0.977	Leading	11.02	0.977	Leading	10.96
36	FLT36-3PH	0.978	Leading	10.68	0.978	Leading	10.80	0.978	Leading	10.80
37	FLT37-3PH	0.977	Leading	10.92	0.977	Leading	10.97	0.977	Leading	10.87
38	FLT38-3PH	0.977	Leading	10.95	0.977	Leading	10.88	0.978	Leading	10.71
39	FLT39-3PH	0.978	Leading	10.73	0.978	Leading	10.76	0.978	Leading	10.71
40	FLT40-3PH	0.992	Leading	6.43	0.987	Leading	8.10	0.988	Leading	7.87

Table 5-3 (Continued)
Power Factor Analysis: GEN-2015-053

Cont. No.	Case	2016 Winter Peak			2017 Summer Peak			2025 Summer Peak		
		Power Factor		Q (MVAR)	Power Factor		Q (MVAR)	Power Factor		Q (MVAR)
41	FLT41-3PH	0.981	Leading	9.83	0.979	Leading	10.48	0.979	Leading	10.36
42	FLT42-3PH	0.979	Leading	10.48	0.979	Leading	10.48	0.980	Leading	10.17
43	FLT43-3PH	0.981	Leading	9.83	0.980	Leading	10.28	0.980	Leading	10.15
44	FLT44-3PH	0.989	Leading	7.48	0.986	Leading	8.62	0.985	Leading	8.81
45	FLT45-3PH	0.982	Leading	9.70	0.979	Leading	10.36	0.980	Leading	10.05
46	FLT46-3PH	0.975	Leading	11.45	0.976	Leading	11.10	0.976	Leading	11.14
47	FLT47-3PH	0.980	Leading	10.27	0.978	Leading	10.60	0.979	Leading	10.40
48	FLT48-3PH	0.978	Leading	10.70	0.977	Leading	10.82	0.978	Leading	10.69
49	FLT49-3PH	0.977	Leading	10.89	0.978	Leading	10.76	0.978	Leading	10.72
50	FLT50-3PH	0.977	Leading	10.95	0.977	Leading	10.85	0.978	Leading	10.81
51	FLT51-3PH	0.977	Leading	10.94	0.977	Leading	10.98	0.977	Leading	10.87
52	FLT52-3PH	0.977	Leading	10.95	0.977	Leading	11.03	0.977	Leading	10.82

Table 5-4
Power Factor Analysis: GEN-2015-054

Cont. No.	Case	2016 Winter Peak			2017 Summer Peak			2025 Summer Peak		
		Power Factor		Q (MVAR)	Power Factor		Q (MVAR)	Power Factor		Q (MVAR)
0	Base	0.977	Leading	16.02	0.977	Leading	16.08	0.977	Leading	15.92
1	FLT01-3PH	0.977	Leading	16.01	0.977	Leading	16.04	0.977	Leading	15.88
2	FLT02-3PH	0.977	Leading	15.99	0.977	Leading	16.03	0.977	Leading	15.87
3	FLT03-3PH	0.977	Leading	16.02	0.977	Leading	16.08	0.977	Leading	15.92
4	FLT04-3PH	0.977	Leading	15.95	0.977	Leading	15.95	0.978	Leading	15.70
5	FLT05-3PH	0.977	Leading	16.05	0.977	Leading	16.03	0.977	Leading	15.87
6	FLT06-3PH	0.977	Leading	16.03	0.977	Leading	16.07	0.977	Leading	15.92
7	FLT07-3PH	0.977	Leading	16.02	0.977	Leading	16.08	0.977	Leading	15.92
8	FLT08-3PH	0.995	Leading	7.26	0.994	Leading	7.73	0.993	Leading	8.82
9	FLT09-3PH	0.989	Leading	10.79	0.991	Leading	9.86	0.990	Leading	10.61
10	FLT10-3PH	0.977	Leading	15.88	0.977	Leading	15.90	0.978	Leading	15.73
11	FLT11-3PH	0.992	Leading	9.28	0.993	Leading	8.56	0.992	Leading	9.56
12	FLT12-3PH	0.978	Leading	15.61	0.980	Leading	14.97	0.980	Leading	14.74
13	FLT13-3PH	0.970	Leading	18.42	0.971	Leading	18.05	0.969	Leading	18.57
14	FLT14-3PH	0.982	Leading	13.99	0.984	Leading	13.35	0.987	Leading	12.05
15	FLT15-3PH	0.981	Leading	14.39	0.968	Leading	19.00	0.969	Leading	18.72
16	FLT16-3PH	0.999	Leading	3.06	0.996	Leading	6.98	0.983	Leading	13.72
17	FLT17-3PH	0.909	Leading	33.63	0.958	Leading	21.95	0.974	Leading	17.15
18	FLT18-3PH	0.986	Leading	12.43	0.953	Leading	23.30	0.970	Leading	18.49
19	FLT19-3PH	0.996	Leading	6.46	0.999	Lagging	-3.40	1.000	Lagging	-0.48
20	FLT20-3PH	0.963	Leading	20.66	0.951	Leading	23.80	0.953	Leading	23.28
21	FLT21-3PH	0.908	Leading	33.78	0.958	Leading	21.93	0.973	Leading	17.30
22	FLT22-3PH	0.999	Leading	3.48	0.996	Leading	6.42	0.984	Leading	13.07
23	FLT23-3PH	0.972	Leading	17.71	0.971	Leading	17.99	0.970	Leading	18.31
24	FLT24-3PH	0.978	Leading	15.80	0.978	Leading	15.52	0.978	Leading	15.60
25	FLT25-3PH	0.982	Leading	14.08	0.982	Leading	14.10	0.982	Leading	13.95
26	FLT26-3PH	0.980	Leading	15.05	0.980	Leading	14.95	0.980	Leading	14.86
27	FLT27-3PH	0.977	Leading	15.93	0.977	Leading	15.99	0.978	Leading	15.83
28	FLT28-3PH	0.977	Leading	15.97	0.977	Leading	16.03	0.977	Leading	15.87
29	FLT29-3PH	0.982	Leading	14.09	0.980	Leading	14.78	0.980	Leading	15.05
30	FLT30-3PH	0.980	Leading	14.98	0.976	Leading	16.33	0.976	Leading	16.22
31	FLT31-3PH	0.978	Leading	15.72	0.978	Leading	15.72	0.979	Leading	15.39
32	FLT32-3PH	0.981	Leading	14.36	0.983	Leading	13.85	0.982	Leading	14.12
33	FLT33-3PH	0.978	Leading	15.75	0.977	Leading	15.94	0.978	Leading	15.75
34	FLT34-3PH	0.974	Leading	17.20	0.975	Leading	16.75	0.976	Leading	16.21
35	FLT35-3PH	0.977	Leading	16.14	0.977	Leading	16.14	0.977	Leading	16.05
36	FLT36-3PH	0.978	Leading	15.64	0.978	Leading	15.81	0.978	Leading	15.82
37	FLT37-3PH	0.977	Leading	16.00	0.977	Leading	16.07	0.977	Leading	15.92
38	FLT38-3PH	0.977	Leading	16.03	0.977	Leading	15.94	0.978	Leading	15.68
39	FLT39-3PH	0.978	Leading	15.71	0.978	Leading	15.75	0.978	Leading	15.69
40	FLT40-3PH	0.992	Leading	9.41	0.987	Leading	11.86	0.988	Leading	11.52

Table 5-4 (Continued)
Power Factor Analysis: GEN-2015-054

Cont. No.	Case	2016 Winter Peak			2017 Summer Peak			2025 Summer Peak		
		Power Factor		Q (MVAR)	Power Factor		Q (MVAR)	Power Factor		Q (MVAR)
41	FLT41-3PH	0.981	Leading	14.39	0.979	Leading	15.34	0.979	Leading	15.17
42	FLT42-3PH	0.979	Leading	15.34	0.979	Leading	15.34	0.980	Leading	14.90
43	FLT43-3PH	0.981	Leading	14.39	0.980	Leading	15.05	0.980	Leading	14.86
44	FLT44-3PH	0.989	Leading	10.95	0.986	Leading	12.63	0.985	Leading	12.90
45	FLT45-3PH	0.982	Leading	14.20	0.979	Leading	15.17	0.980	Leading	14.72
46	FLT46-3PH	0.975	Leading	16.77	0.976	Leading	16.26	0.976	Leading	16.31
47	FLT47-3PH	0.980	Leading	15.03	0.978	Leading	15.53	0.979	Leading	15.22
48	FLT48-3PH	0.978	Leading	15.66	0.977	Leading	15.84	0.978	Leading	15.66
49	FLT49-3PH	0.977	Leading	15.95	0.978	Leading	15.75	0.978	Leading	15.70
50	FLT50-3PH	0.977	Leading	16.03	0.977	Leading	15.89	0.978	Leading	15.83
51	FLT51-3PH	0.977	Leading	16.02	0.977	Leading	16.08	0.977	Leading	15.92
52	FLT52-3PH	0.977	Leading	16.03	0.977	Leading	16.15	0.977	Leading	15.84

Table 5-5
Power Factor Analysis: GEN-2015-076

Cont. No.	Case	2016 Winter Peak			2017 Summer Peak			2025 Summer Peak		
		Power Factor		Q (MVAR)	Power Factor		Q (MVAR)	Power Factor		Q (MVAR)
0	Base	0.999	Lagging	-7.00	1.000	Leading	4.89	0.998	Leading	9.71
1	FLT01-3PH	0.999	Lagging	-7.01	1.000	Leading	4.85	0.998	Leading	9.68
2	FLT02-3PH	0.999	Lagging	-7.02	1.000	Leading	4.84	0.998	Leading	9.67
3	FLT03-3PH	0.999	Lagging	-7.00	1.000	Leading	4.89	0.998	Leading	9.71
4	FLT04-3PH	0.999	Lagging	-7.04	1.000	Leading	4.79	0.998	Leading	9.62
5	FLT05-3PH	0.999	Lagging	-7.00	1.000	Leading	4.82	0.998	Leading	9.65
6	FLT06-3PH	0.999	Lagging	-7.00	1.000	Leading	4.88	0.998	Leading	9.71
7	FLT07-3PH	0.999	Lagging	-7.00	1.000	Leading	4.89	0.998	Leading	9.71
8	FLT08-3PH	0.969	Lagging	-40.26	0.988	Lagging	-24.45	0.994	Lagging	-17.09
9	FLT09-3PH	0.994	Lagging	-16.98	0.999	Lagging	-7.10	1.000	Lagging	-3.95
10	FLT10-3PH	0.998	Lagging	-8.71	1.000	Leading	2.89	0.999	Leading	7.67
11	FLT11-3PH	0.984	Lagging	-28.74	0.992	Lagging	-19.84	0.997	Lagging	-12.91
12	FLT12-3PH	0.999	Lagging	-7.39	1.000	Leading	4.33	0.998	Leading	9.60
13	FLT13-3PH	0.995	Lagging	-16.25	0.999	Lagging	-6.07	1.000	Lagging	-1.03
14	FLT14-3PH	0.999	Lagging	-7.15	1.000	Leading	4.51	0.998	Leading	9.25
15	FLT15-3PH	0.999	Lagging	-7.34	1.000	Leading	2.82	0.999	Leading	7.57
16	FLT16-3PH	0.999	Lagging	-6.90	0.999	Leading	5.27	0.999	Leading	8.38
17	FLT17-3PH	0.991	Lagging	-21.62	1.000	Lagging	-4.51	1.000	Leading	3.90
18	FLT18-3PH	0.999	Lagging	-7.51	0.999	Leading	5.93	0.998	Leading	10.01
19	FLT19-3PH	0.999	Lagging	-7.79	1.000	Leading	1.74	0.999	Leading	7.14
20	FLT20-3PH	0.998	Lagging	-8.96	1.000	Lagging	-4.21	1.000	Leading	1.71
21	FLT21-3PH	0.989	Lagging	-23.58	0.999	Lagging	-6.60	1.000	Leading	2.15
22	FLT22-3PH	1.000	Lagging	-4.65	0.999	Leading	6.09	0.998	Leading	9.17
23	FLT23-3PH	0.985	Lagging	-27.87	0.990	Lagging	-22.55	0.995	Lagging	-16.07
24	FLT24-3PH	1.000	Leading	2.49	0.995	Leading	15.74	0.993	Leading	19.47
25	FLT25-3PH	0.992	Lagging	-20.32	0.998	Lagging	-10.28	0.999	Lagging	-5.94
26	FLT26-3PH	0.999	Lagging	-8.40	1.000	Leading	4.19	0.998	Leading	9.06
27	FLT27-3PH	0.999	Lagging	-7.50	1.000	Leading	4.35	0.998	Leading	9.16
28	FLT28-3PH	0.999	Lagging	-7.29	1.000	Leading	4.61	0.998	Leading	9.43
29	FLT29-3PH	0.999	Lagging	-8.11	1.000	Lagging	-0.43	1.000	Leading	2.90
30	FLT30-3PH	0.998	Lagging	-9.75	1.000	Leading	2.92	0.999	Leading	7.58
31	FLT31-3PH	0.999	Lagging	-6.90	1.000	Leading	4.86	0.998	Leading	9.60
32	FLT32-3PH	0.999	Lagging	-6.29	0.999	Leading	5.39	0.998	Leading	9.94
33	FLT33-3PH	0.999	Lagging	-7.36	1.000	Leading	4.71	0.998	Leading	9.49
34	FLT34-3PH	0.996	Lagging	-14.45	1.000	Lagging	-2.28	1.000	Leading	4.80
35	FLT35-3PH	0.999	Lagging	-6.90	1.000	Leading	4.98	0.998	Leading	9.83
36	FLT36-3PH	0.999	Lagging	-7.29	1.000	Leading	4.65	0.998	Leading	9.61
37	FLT37-3PH	0.999	Lagging	-7.02	1.000	Leading	4.88	0.998	Leading	9.70
38	FLT38-3PH	0.999	Lagging	-6.97	1.000	Leading	4.82	0.998	Leading	9.58
39	FLT39-3PH	0.999	Lagging	-7.23	1.000	Leading	4.63	0.998	Leading	9.53
40	FLT40-3PH	0.998	Lagging	-10.68	1.000	Leading	1.72	0.999	Leading	7.07

Table 5-5 (Continued)
Power Factor Analysis: GEN-2015-076

Cont. No.	Case	2016 Winter Peak			2017 Summer Peak			2025 Summer Peak		
		Power Factor		Q (MVAR)	Power Factor		Q (MVAR)	Power Factor		Q (MVAR)
41	FLT41-3PH	0.999	Lagging	-7.81	1.000	Leading	4.31	0.998	Leading	9.23
42	FLT42-3PH	0.999	Lagging	-6.97	1.000	Leading	4.63	0.998	Leading	9.32
43	FLT43-3PH	0.999	Lagging	-8.41	1.000	Leading	3.77	0.998	Leading	8.72
44	FLT44-3PH	0.998	Lagging	-10.32	1.000	Leading	1.81	0.999	Leading	7.48
45	FLT45-3PH	0.998	Lagging	-8.99	1.000	Leading	3.48	0.999	Leading	8.30
46	FLT46-3PH	0.999	Lagging	-6.44	0.999	Leading	5.03	0.998	Leading	9.98
47	FLT47-3PH	0.999	Lagging	-7.54	1.000	Leading	4.48	0.998	Leading	9.26
48	FLT48-3PH	0.999	Lagging	-7.23	1.000	Leading	4.68	0.998	Leading	9.52
49	FLT49-3PH	0.999	Lagging	-7.02	1.000	Leading	4.58	0.998	Leading	9.53
50	FLT50-3PH	0.999	Lagging	-7.00	1.000	Leading	4.70	0.998	Leading	9.61
51	FLT51-3PH	0.999	Lagging	-7.00	1.000	Leading	4.89	0.998	Leading	9.71
52	FLT52-3PH	0.999	Lagging	-6.95	0.999	Leading	5.12	0.998	Leading	9.80

Table 5-6
Power Factor Analysis: GEN-2015-087

Cont. No.	Case	2016 Winter Peak			2017 Summer Peak			2025 Summer Peak		
		Power Factor		Q (MVAR)	Power Factor		Q (MVAR)	Power Factor		Q (MVAR)
0	Base	0.986	Leading	12.90	0.984	Leading	13.81	0.986	Leading	13.08
1	FLT01-3PH	0.986	Leading	13.01	0.984	Leading	13.78	0.986	Leading	13.05
2	FLT02-3PH	0.986	Leading	12.95	0.984	Leading	13.77	0.986	Leading	13.04
3	FLT03-3PH	0.986	Leading	12.90	0.984	Leading	13.81	0.986	Leading	13.08
4	FLT04-3PH	0.986	Leading	12.85	0.984	Leading	13.65	0.986	Leading	12.96
5	FLT05-3PH	0.986	Leading	12.96	0.984	Leading	13.81	0.986	Leading	13.08
6	FLT06-3PH	0.986	Leading	12.95	0.984	Leading	13.78	0.986	Leading	13.07
7	FLT07-3PH	0.986	Leading	12.90	0.984	Leading	13.81	0.986	Leading	13.08
8	FLT08-3PH	0.987	Leading	12.40	0.985	Leading	13.53	0.986	Leading	12.81
9	FLT09-3PH	0.986	Leading	12.91	0.984	Leading	13.62	0.986	Leading	12.91
10	FLT10-3PH	0.986	Leading	12.90	0.984	Leading	13.80	0.986	Leading	13.07
11	FLT11-3PH	0.987	Leading	12.28	0.984	Leading	13.60	0.986	Leading	12.87
12	FLT12-3PH	0.986	Leading	12.88	0.984	Leading	13.78	0.986	Leading	13.06
13	FLT13-3PH	0.986	Leading	13.01	0.984	Leading	13.89	0.985	Leading	13.17
14	FLT14-3PH	0.986	Leading	12.88	0.984	Leading	13.82	0.985	Leading	13.10
15	FLT15-3PH	0.986	Leading	12.87	0.984	Leading	13.81	0.985	Leading	13.09
16	FLT16-3PH	0.986	Leading	12.71	0.984	Leading	13.71	0.986	Leading	12.96
17	FLT17-3PH	0.986	Leading	13.05	0.985	Leading	13.44	0.986	Leading	12.87
18	FLT18-3PH	0.986	Leading	12.88	0.984	Leading	13.91	0.985	Leading	13.12
19	FLT19-3PH	0.986	Leading	12.82	0.984	Leading	13.88	0.986	Leading	13.08
20	FLT20-3PH	0.986	Leading	12.92	0.984	Leading	13.79	0.986	Leading	13.07
21	FLT21-3PH	0.986	Leading	12.85	0.985	Leading	13.29	0.984	Leading	13.64
22	FLT22-3PH	0.986	Leading	12.71	0.984	Leading	13.73	0.986	Leading	12.98
23	FLT23-3PH	0.986	Leading	12.91	0.984	Leading	13.86	0.985	Leading	13.13
24	FLT24-3PH	0.986	Leading	12.94	0.984	Leading	13.81	0.985	Leading	13.09
25	FLT25-3PH	0.986	Leading	12.79	0.984	Leading	13.77	0.986	Leading	13.04
26	FLT26-3PH	0.986	Leading	12.81	0.984	Leading	13.72	0.986	Leading	13.00
27	FLT27-3PH	0.986	Leading	12.89	0.984	Leading	13.81	0.986	Leading	13.08
28	FLT28-3PH	0.986	Leading	12.90	0.984	Leading	13.81	0.986	Leading	13.08
29	FLT29-3PH	0.986	Leading	12.86	0.984	Leading	13.75	0.986	Leading	13.03
30	FLT30-3PH	0.986	Leading	12.83	0.984	Leading	13.76	0.986	Leading	13.04
31	FLT31-3PH	0.986	Leading	12.88	0.984	Leading	13.78	0.986	Leading	13.06
32	FLT32-3PH	0.986	Leading	12.89	0.984	Leading	13.80	0.986	Leading	13.08
33	FLT33-3PH	0.986	Leading	12.89	0.984	Leading	13.81	0.986	Leading	13.08
34	FLT34-3PH	0.986	Leading	12.92	0.984	Leading	13.82	0.985	Leading	13.10
35	FLT35-3PH	0.967	Leading	19.87	0.962	Leading	21.48	0.981	Leading	15.09
36	FLT36-3PH	0.989	Leading	11.23	0.990	Leading	10.60	0.975	Leading	17.17
37	FLT37-3PH	0.983	Leading	14.11	0.990	Leading	10.62	0.986	Leading	12.96
38	FLT38-3PH	0.964	Leading	20.92	0.941	Leading	27.41	0.904	Leading	35.89
39	FLT39-3PH	0.994	Leading	8.55	1.000	Lagging	-1.55	0.998	Leading	4.59
40	FLT40-3PH	0.997	Leading	5.79	0.994	Leading	8.03	0.993	Leading	9.14

Table 5-6 (Continued)
Power Factor Analysis: GEN-2015-087

Cont. No.	Case	2016 Winter Peak			2017 Summer Peak			2025 Summer Peak		
		Power Factor		Q (MVAR)	Power Factor		Q (MVAR)	Power Factor		Q (MVAR)
41	FLT41-3PH	0.990	Leading	10.90	0.987	Leading	12.37	0.986	Leading	12.93
42	FLT42-3PH	0.987	Leading	12.56	0.984	Leading	13.58	0.986	Leading	12.94
43	FLT43-3PH	0.986	Leading	12.64	0.986	Leading	12.71	0.985	Leading	13.11
44	FLT44-3PH	0.981	Leading	14.87	0.980	Leading	15.57	0.978	Leading	16.05
45	FLT45-3PH	0.986	Leading	12.69	0.986	Leading	12.87	0.986	Leading	12.90
46	FLT46-3PH	0.986	Leading	13.02	0.984	Leading	13.84	0.986	Leading	13.05
47	FLT47-3PH	0.984	Leading	13.76	0.984	Leading	13.63	0.984	Leading	13.89
48	FLT48-3PH	0.992	Leading	9.45	0.989	Leading	11.26	0.991	Leading	10.28
49	FLT49-3PH	0.986	Leading	13.06	0.984	Leading	13.84	0.985	Leading	13.09
50	FLT50-3PH	0.986	Leading	13.05	0.984	Leading	13.83	0.985	Leading	13.15
51	FLT51-3PH	0.986	Leading	12.90	0.984	Leading	13.81	0.986	Leading	13.08
52	FLT52-3PH	0.987	Leading	12.49	0.985	Leading	13.50	0.986	Leading	12.73

Table 5-7
Power Factor Analysis: GEN-2015-088

Cont. No.	Case	2016 Winter Peak			2017 Summer Peak			2025 Summer Peak		
		Power Factor		Q (MVAR)	Power Factor		Q (MVAR)	Power Factor		Q (MVAR)
0	Base	0.982	Leading	57.55	0.982	Leading	57.22	0.982	Leading	57.04
1	FLT01-3PH	0.982	Leading	57.43	0.982	Leading	56.97	0.983	Leading	56.75
2	FLT02-3PH	0.982	Leading	57.29	0.983	Leading	56.87	0.983	Leading	56.66
3	FLT03-3PH	0.982	Leading	57.55	0.982	Leading	57.22	0.982	Leading	57.04
4	FLT04-3PH	0.982	Leading	57.02	0.983	Leading	55.58	0.983	Leading	55.28
5	FLT05-3PH	0.982	Leading	57.69	0.982	Leading	57.19	0.982	Leading	57.03
6	FLT06-3PH	0.982	Leading	57.50	0.982	Leading	56.92	0.982	Leading	56.98
7	FLT07-3PH	0.982	Leading	57.55	0.982	Leading	57.22	0.982	Leading	57.04
8	FLT08-3PH	0.986	Leading	50.18	0.985	Leading	52.11	0.985	Leading	52.07
9	FLT09-3PH	0.983	Leading	56.16	0.983	Leading	56.06	0.983	Leading	55.88
10	FLT10-3PH	0.982	Leading	57.44	0.982	Leading	57.09	0.982	Leading	56.92
11	FLT11-3PH	0.985	Leading	52.33	0.985	Leading	53.27	0.985	Leading	53.18
12	FLT12-3PH	0.982	Leading	57.24	0.982	Leading	56.90	0.983	Leading	56.81
13	FLT13-3PH	0.981	Leading	58.80	0.981	Leading	58.66	0.982	Leading	58.40
14	FLT14-3PH	0.982	Leading	57.53	0.982	Leading	57.31	0.982	Leading	57.16
15	FLT15-3PH	0.982	Leading	57.49	0.982	Leading	57.27	0.982	Leading	57.10
16	FLT16-3PH	0.983	Leading	55.62	0.983	Leading	55.88	0.983	Leading	55.53
17	FLT17-3PH	0.988	Leading	47.35	0.985	Leading	53.40	0.984	Leading	54.20
18	FLT18-3PH	0.982	Leading	57.56	0.982	Leading	58.22	0.982	Leading	57.50
19	FLT19-3PH	0.983	Leading	56.23	0.982	Leading	57.06	0.983	Leading	56.31
20	FLT20-3PH	0.982	Leading	57.86	0.982	Leading	57.42	0.982	Leading	57.21
21	FLT21-3PH	0.989	Leading	44.27	0.987	Leading	49.72	0.986	Leading	50.55
22	FLT22-3PH	0.983	Leading	55.62	0.983	Leading	56.16	0.983	Leading	55.84
23	FLT23-3PH	0.982	Leading	58.32	0.982	Leading	58.21	0.982	Leading	57.92
24	FLT24-3PH	0.982	Leading	57.56	0.982	Leading	57.31	0.982	Leading	57.19
25	FLT25-3PH	0.983	Leading	56.85	0.983	Leading	56.58	0.983	Leading	56.45
26	FLT26-3PH	0.983	Leading	56.40	0.983	Leading	56.04	0.983	Leading	55.98
27	FLT27-3PH	0.982	Leading	57.51	0.982	Leading	57.17	0.982	Leading	57.00
28	FLT28-3PH	0.982	Leading	57.53	0.982	Leading	57.19	0.982	Leading	57.02
29	FLT29-3PH	0.982	Leading	56.91	0.983	Leading	56.56	0.983	Leading	56.51
30	FLT30-3PH	0.983	Leading	56.52	0.983	Leading	56.34	0.983	Leading	56.22
31	FLT31-3PH	0.982	Leading	57.36	0.982	Leading	56.97	0.983	Leading	56.84
32	FLT32-3PH	0.982	Leading	57.54	0.982	Leading	57.18	0.982	Leading	57.05
33	FLT33-3PH	0.982	Leading	57.45	0.982	Leading	57.17	0.982	Leading	56.98
34	FLT34-3PH	0.982	Leading	57.71	0.982	Leading	57.35	0.982	Leading	57.13
35	FLT35-3PH	0.981	Leading	58.72	0.982	Leading	58.07	0.981	Leading	58.93
36	FLT36-3PH	0.986	Leading	51.53	0.985	Leading	53.36	0.983	Leading	55.58
37	FLT37-3PH	0.982	Leading	56.96	0.982	Leading	57.54	0.982	Leading	56.96
38	FLT38-3PH	0.982	Leading	56.99	0.983	Leading	55.72	0.984	Leading	53.99
39	FLT39-3PH	0.985	Leading	52.45	0.986	Leading	51.25	0.985	Leading	53.27
40	FLT40-3PH	1.000	Lagging	-2.78	0.999	Lagging	-10.02	1.000	Lagging	-6.48

Table 5-7 (Continued)
Power Factor Analysis: GEN-2015-088

Cont. No.	Case	2016 Winter Peak			2017 Summer Peak			2025 Summer Peak		
		Power Factor		Q (MVAR)	Power Factor		Q (MVAR)	Power Factor		Q (MVAR)
41	FLT41-3PH	0.970	Leading	75.73	0.969	Leading	76.08	0.973	Leading	70.54
42	FLT42-3PH	0.988	Leading	47.26	0.987	Leading	49.64	0.985	Leading	52.09
43	FLT43-3PH	0.997	Leading	24.64	0.996	Leading	26.50	0.995	Leading	29.31
44	FLT44-3PH	0.993	Leading	34.50	0.982	Leading	57.61	0.983	Leading	56.14
45	FLT45-3PH	0.996	Leading	26.68	0.995	Leading	30.76	0.996	Leading	25.77
46	FLT46-3PH	0.964	Leading	82.85	0.979	Leading	63.05	0.975	Leading	69.03
47	FLT47-3PH	0.990	Leading	42.85	0.982	Leading	57.22	0.989	Leading	44.47
48	FLT48-3PH	0.964	Leading	82.61	0.969	Leading	76.56	0.967	Leading	78.80
49	FLT49-3PH	0.981	Leading	59.45	0.982	Leading	58.16	0.982	Leading	57.76
50	FLT50-3PH	0.981	Leading	59.37	0.982	Leading	57.80	0.982	Leading	57.98
51	FLT51-3PH	0.982	Leading	57.55	0.982	Leading	57.22	0.982	Leading	57.04
52	FLT52-3PH	0.984	Leading	53.55	0.985	Leading	52.24	0.985	Leading	51.79

Table 5-8
Power Factor Analysis: GEN-2015-094

Cont. No.	Case	2016 Winter Peak			2017 Summer Peak			2025 Summer Peak		
		Power Factor		Q (MVAR)	Power Factor		Q (MVAR)	Power Factor		Q (MVAR)
0	Base	0.970	Leading	38.32	0.974	Leading	35.63	0.975	Leading	34.64
1	FLT01-3PH	0.975	Leading	34.89	0.977	Leading	32.98	0.978	Leading	32.29
2	FLT02-3PH	0.980	Leading	30.57	0.981	Leading	29.77	0.982	Leading	29.44
3	FLT03-3PH	0.970	Leading	38.32	0.974	Leading	35.63	0.975	Leading	34.64
4	FLT04-3PH	0.973	Leading	35.82	0.979	Leading	31.25	0.979	Leading	31.44
5	FLT05-3PH	0.986	Leading	26.13	0.988	Leading	23.90	0.991	Leading	20.51
6	FLT06-3PH	0.974	Leading	35.41	0.979	Leading	31.99	0.977	Leading	32.97
7	FLT07-3PH	0.970	Leading	38.32	0.974	Leading	35.63	0.975	Leading	34.64
8	FLT08-3PH	0.970	Leading	38.24	0.973	Leading	35.69	0.975	Leading	34.63
9	FLT09-3PH	0.970	Leading	38.12	0.974	Leading	35.26	0.975	Leading	34.27
10	FLT10-3PH	0.970	Leading	38.31	0.974	Leading	35.62	0.975	Leading	34.62
11	FLT11-3PH	0.970	Leading	38.30	0.973	Leading	35.72	0.975	Leading	34.69
12	FLT12-3PH	0.970	Leading	38.31	0.974	Leading	35.61	0.975	Leading	34.62
13	FLT13-3PH	0.970	Leading	38.34	0.974	Leading	35.61	0.975	Leading	34.63
14	FLT14-3PH	0.970	Leading	38.32	0.974	Leading	35.65	0.975	Leading	34.66
15	FLT15-3PH	0.970	Leading	38.31	0.974	Leading	35.61	0.975	Leading	34.63
16	FLT16-3PH	0.970	Leading	38.18	0.974	Leading	35.54	0.975	Leading	34.54
17	FLT17-3PH	0.971	Leading	37.55	0.974	Leading	35.23	0.975	Leading	34.28
18	FLT18-3PH	0.969	Leading	38.39	0.973	Leading	35.85	0.975	Leading	34.56
19	FLT19-3PH	0.970	Leading	38.30	0.974	Leading	35.65	0.975	Leading	34.63
20	FLT20-3PH	0.970	Leading	38.30	0.974	Leading	35.47	0.975	Leading	34.49
21	FLT21-3PH	0.971	Leading	37.49	0.974	Leading	35.05	0.976	Leading	34.07
22	FLT22-3PH	0.970	Leading	38.18	0.974	Leading	35.55	0.975	Leading	34.56
23	FLT23-3PH	0.970	Leading	38.29	0.974	Leading	35.54	0.975	Leading	34.57
24	FLT24-3PH	0.970	Leading	38.31	0.974	Leading	35.61	0.975	Leading	34.64
25	FLT25-3PH	0.970	Leading	38.28	0.974	Leading	35.59	0.975	Leading	34.60
26	FLT26-3PH	0.970	Leading	38.22	0.974	Leading	35.48	0.975	Leading	34.50
27	FLT27-3PH	0.970	Leading	38.32	0.974	Leading	35.63	0.975	Leading	34.64
28	FLT28-3PH	0.970	Leading	38.32	0.974	Leading	35.63	0.975	Leading	34.64
29	FLT29-3PH	0.970	Leading	38.24	0.974	Leading	35.49	0.975	Leading	34.53
30	FLT30-3PH	0.970	Leading	38.27	0.974	Leading	35.58	0.975	Leading	34.59
31	FLT31-3PH	0.970	Leading	38.31	0.974	Leading	35.61	0.975	Leading	34.62
32	FLT32-3PH	0.970	Leading	38.31	0.974	Leading	35.63	0.975	Leading	34.63
33	FLT33-3PH	0.970	Leading	38.31	0.974	Leading	35.63	0.975	Leading	34.64
34	FLT34-3PH	0.970	Leading	38.34	0.974	Leading	35.66	0.975	Leading	34.66
35	FLT35-3PH	0.970	Leading	38.33	0.974	Leading	35.60	0.975	Leading	34.64
36	FLT36-3PH	0.970	Leading	38.14	0.974	Leading	35.52	0.975	Leading	34.64
37	FLT37-3PH	0.970	Leading	38.30	0.974	Leading	35.64	0.975	Leading	34.64
38	FLT38-3PH	0.970	Leading	38.29	0.974	Leading	35.54	0.975	Leading	34.46
39	FLT39-3PH	0.970	Leading	38.16	0.974	Leading	35.42	0.975	Leading	34.47
40	FLT40-3PH	0.974	Leading	35.06	0.977	Leading	33.28	0.978	Leading	32.04

Table 5-8 (Continued)
Power Factor Analysis: GEN-2015-094

Cont. No.	Case	2016 Winter Peak			2017 Summer Peak			2025 Summer Peak		
		Power Factor		Q (MVAR)	Power Factor		Q (MVAR)	Power Factor		Q (MVAR)
41	FLT41-3PH	0.970	Leading	38.04	0.974	Leading	34.99	0.976	Leading	33.84
42	FLT42-3PH	0.970	Leading	38.31	0.973	Leading	35.70	0.975	Leading	34.72
43	FLT43-3PH	0.970	Leading	38.03	0.974	Leading	35.39	0.975	Leading	34.32
44	FLT44-3PH	0.972	Leading	37.03	0.977	Leading	33.18	0.978	Leading	32.04
45	FLT45-3PH	0.970	Leading	37.87	0.974	Leading	35.25	0.976	Leading	34.11
46	FLT46-3PH	0.969	Leading	38.63	0.973	Leading	35.70	0.975	Leading	34.77
47	FLT47-3PH	0.970	Leading	37.87	0.975	Leading	34.58	0.976	Leading	33.71
48	FLT48-3PH	0.969	Leading	38.40	0.974	Leading	35.61	0.975	Leading	34.56
49	FLT49-3PH	0.922	Leading	63.91	0.921	Leading	64.11	0.921	Leading	64.31
50	FLT50-3PH	0.999	Lagging	-7.87	0.998	Lagging	-9.25	0.997	Lagging	-10.84
51	FLT51-3PH	0.970	Leading	38.32	0.974	Leading	35.63	0.975	Leading	34.64
52	FLT52-3PH	0.876	Lagging	-83.61	0.821	Lagging	-105.46	0.792	Lagging	-116.95

Study Generator GEN-2014-059

The Power Factor Analysis shows that GEN-2014-059 has a power factor range of 0.987 leading (absorbing) to 1.00 (unity) for the 2016 Winter Peak conditions, a power factor range of 0.985 leading (absorbing) to 1.00 (unity) for the 2017 Summer Peak conditions, and a power factor range of 0.980 leading (absorbing) to 1.00 (unity) for the 2025 Summer Peak conditions.

Study Generator GEN-2015-042

The Power Factor Analysis shows that GEN-2015-042 has a power factor range of 0.920 lagging (supplying) to 1.00 (unity) for the 2016 Winter Peak conditions, a power factor range of 0.916 lagging (supplying) to 0.996 lagging (supplying) for the 2017 Summer Peak conditions, and a power factor range of 0.924 lagging (supplying) to 0.998 lagging (supplying) for the 2025 Summer Peak conditions.

Study Generator GEN-2015-053

The Power Factor Analysis shows that GEN-2015-053 has a power factor range of 0.907 leading (absorbing) to 1.00 (unity) for the 2016 Winter Peak conditions, a power factor range of 0.954 leading (absorbing) to 1.00 (unity) for the 2017 Summer Peak conditions, and a power factor range of 0.959 leading (absorbing) to 1.00 (unity) for the 2025 Summer Peak conditions.

Study Generator GEN-2015-054

The Power Factor Analysis shows that GEN-2015-0154 has a power factor range of 0.907 leading (absorbing) to 1.00 (unity) for the 2016 Winter Peak conditions, a power factor range of

0.954 leading (absorbing) to 1.00 (unity) for the 2017 Summer Peak conditions, and a power factor range of 0.959 to 1.00(unity) for the 2025 Summer Peak conditions.

Study Generator GEN-2015-076

The Power Factor Analysis shows that GEN-2015-076 has a power factor range of 0.977 leading (absorbing) to 0.997 leading (supplying) for the 2016 Winter Peak conditions, a power factor range of 0.975 leading (absorbing) to 0.999 leading (absorbing) for the 2017 Summer Peak conditions, and a power factor range of 0.972 leading (absorbing) to 0.999 leading (absorbing) for the 2025 Summer Peak conditions.

Study Generator GEN-2015-087

The Power Factor Analysis shows that GEN-2015-087 has a power factor range of 0.964 leading (absorbing) to 0.997 leading (supplying) for the 2016 Winter Peak conditions, a power factor range of 0.941 leading (supplying) to 1.00 (unity) for the 2017 Summer Peak conditions, and a power factor range of 0.904 leading (supplying) to 0.998 leading (absorbing) for the 2025 Summer Peak conditions.

Study Generator GEN-2015-088

The Power Factor Analysis shows that GEN-2015-088 has a power factor range of 0.965 leading (absorbing) to 1.00 (unity) for the 2016 Winter Peak conditions, a power factor range of 0.970 leading (absorbing) to 0.999 lagging (supplying) for the 2017 Summer Peak conditions, and a power factor range of 0.968 leading (absorbing) to 1.00 (unity) for the 2025 Summer Peak conditions.

Study Generator GEN-2015-094

The Power Factor Analysis shows that GEN-2015-094 has a power factor range of 0.837 lagging (supplying) to 1.00 (unity) for the 2016 Winter Peak conditions, a power factor range of 0.786 lagging (supplying) to 0.998 lagging (supplying) for the 2017 Summer Peak conditions, and a power factor range of 0.790 lagging (supplying) to 0.999 lagging (supplying) for the 2025 Summer Peak conditions.

SECTION 6: LOW WIND/NO WIND ANALYSIS

The objective of this task is to determine the impact of low wind or no wind conditions on wind farms that interconnect to a 345 kV or 230 kV bus. The 2016 Winter Peak, 2017 Summer Peak, and 2025 Summer Peak power flows provided by SPP were examined for this analysis.

6.1 Approach

Low wind or no wind conditions were examined for all 345 kV or 230 kV wind farms. Generators were disabled (independently), but the collector systems remained in-service. In order to maintain generation and load balance in the SPP area, the generation was scaled after disabling the respective generator. The amount of reactive power injected into the transmission network was recorded at the respective point of interconnection. This reactive power comes from the capacitance of the project's transmission lines and collector cables. A shunt reactor was added at the high side bus to bring the Mvar flow into the POI down to approximately zero.

6.2 Low Wind/No Wind Analysis Results

The reactance needed to bring the Mvar flow into the point of interconnect to zero Mvar was recorded for each season for all wind or solar farms. Refer to Table 6-1 for the Low Wind/No Wind Analysis results. The table lists the generators examined and the amount of reactive power needed for zero Mvar flow into the POI for each season.

Table 6-1
Low Wind/No Wind Analysis

Request	Size (MW)	Point of Interconnection	16WP	17SP	25SP
GEN-2014-059	161.1	Tap Sidney-Ogallala 230 kV (560014)	8.30	8.30	8.30
GEN-2015-042	320	Dixon County (560347) (GEN-2010-051 230kV)	24.15	24.15	24.15
GEN-2015-053	50.12	Antelope 115 kV (640251)	7.70	7.70	7.70
GEN-2015-054	73.39	Antelope 115 kV (640251)	7.70	7.70	7.70
GEN-2015-076	158.4	Belden 115kV (640080)	5.20	5.20	5.20
GEN-2015-087	76	Tap on Fairbury (640169) to Hebron (640218) 115kV	6.10	6.10	6.10
GEN-2015-088	300	Tap on Moore (640277) to Pauline (640312) 345kV	26.85	26.85	26.85
GEN-2015-094	151.8	Laramie River Station (659131) to Sidney (659426) 345kV	8.80	8.80	8.80

SECTION 7: CONCLUSIONS

SUMMARY OF STABILITY ANALYSIS

Cluster Scenario

The Cluster Scenario Stability Analysis determined there were no contingencies that resulted in system instability or generation tripping offline for the 2016 Winter Peak condition when all generation interconnection requests were at 100% output.

However, it was determined that two contingencies, FLT61-3PH, which is a prior outage of the Belden to Twin Church 115 kV line followed by the loss of Belden to Hoskins 115 kV line and FLT76-1PH, which is a 16 cycle stuck breaker fault resulting in the loss of Belden to Twin Church 115 kV line and Belden to Hoskins 115 kV line, resulted in post-contingency voltages not recovering above 0.90 p.u. at the GEN-2015-076 115 kV bus for all Cluster Scenarios. After discussion with SPP, it was determined that the Dixon County to Belden to Rasmussen 230 kV (WAPA) transmission line will be upgraded. This eliminates low voltages at the GEN-2015-076 115 kV bus for all Cluster Scenarios.

For the 2017 Summer Peak and 2025 Summer Peak case, voltage instability and generation tripping offline was observed. FLT71-1PH, which is a 16 cycle stuck breaker fault that results in the loss of the Sidney to Sidney XFMR 230 kV line and the Sidney to G15-059-Tap 230 kV line, resulted in unstable bus voltage at the Sidney 115 kV and Sidney 230 kV buses. After discussion with SPP, it was determined that a second circuit from Sidney to G14-059-Tap to Ogallala 230 kV will be added.

For the 2025 Summer Peak case, FLT52-3PH, which is the loss of the Laramie to Stegall 345 kV line, resulted in GEN-2015-094 tripping offline and the Laramie generation to become unstable. After discussion with SPP, it was determined the Sydney DC Tie should be blocked for this fault. After implementing this update, there was no more voltage instability or generation tripping offline. Any transmission outage simulations involving western Nebraska will be studied in more detail by the transmission owners and owners of the DC ties during the Interconnection Facilities Study.

Western Nebraska GGS Scenario

The High GGS Scenario determined one fault caused system instability and generation to trip offline for all three study seasons. FLT52-3PH, which is the loss of the Laramie to Stegall 345 kV line, resulted in GEN-2015-094 tripping offline and the Laramie generation to become unstable. After discussion with SPP, it was determined the Sydney DC Tie should be blocked for this fault. After implementing this update, there was no more system instability or generation tripping offline.

The following faults were observed to cause system instability in the 2016 Winter Peak sensitivity scenario:

- FLT96-3PH
  - Three-phase, 5.5 cycle fault resulting in loss of Gentleman 345/230/13.8 kV transformer (fault applied at 345 kV bus)
- FLT97-3PH
  - Three-phase, 5.5 cycle fault resulting in loss of Gentleman 345/230/13.8 kV transformer (fault applied at 230 kV bus)
- FLT100-1PH
  - Single-phase, stuck breaker fault (16 cycles) resulting in loss of Gentleman to Sweetwater 345 kV line and Gentleman to Red Willow 345 kV line
- FLT101-1PH
  - Single-phase, stuck breaker fault (16 cycles) resulting in the loss of Gentleman to Keystone 345 kV line and Gentleman 345/230/13.8 kV transformer
- FLT103-1PH
  - Single-phase, stuck breaker fault (16 cycles) resulting in the loss of Gentleman to Ogallala 230 kV line and Gentleman 345/230/13.8 kV transformer

After discussion with SPP, it was determined that adding a 345 kV transmission line from Gentleman to Thedford to Holt County will mitigate the system instability observed for all five faults.

For the 2017 Summer Peak case, it was observed that FLT91-3PH caused system instability. Implementing the Gentleman to Thedford to Holt County 345 kV line mitigated the system instability and all voltages recovered within SPP criteria. Any transmission outage simulations involving western Nebraska will be studied in more detail by the transmission ownders and ownders of the DC ties during the Interconnection Facilities Study.

Stand-Alone Scenario

The Stand Alone Scenario Stability Analysis determined one fault caused voltage instability for all three study seasons. FLT71-1PH, which is a 16 cycle stuck breaker fault that results in the loss of the Sidney to Sidney XFMR 230 kV line and the Sidney to G15-059-Tap 230 kV line, resulted in unstable bus voltage at the Sidney 115 kV and Sidney 230 kV buses. After discussion with SPP, it was determined that a second circuit from Sidney to G14-059-Tap to Ogallala 230 kV will be added. This upgrade mitigated the voltage instability observed.

It was determined that contingency FLT76-1PH, which is a 16 cycle stuck breaker fault resulting in the loss of Belden to Twin Church 115 kV line and Belden to Hoskins 115 kV line, resulted in post-contingency voltages not recovering above 0.90 p.u. at the GEN-2015-076 115 kV bus for

the 2016 Winter Peak case. After discussion with SPP, it was determined that the Dixon County to Belden to Rasmussen 230 kV (WAPA) transmission line will be upgraded. This eliminates low voltages at the GEN-2015-076 115 kV bus.

For the 2025 Summer Peak case, FLT52-3PH, which is the loss of the Laramie to Stegall 345 kV line, resulted in GEN-2015-094 tr.pping offline and the Laramie generation to become unstable. After discussion with SPP, it was determined the Sydney DC Tie should be blocked for this fault. After implementing this update, there was no more voltage instability or generation tripping offline. Any transmission outage simulations involving western Nebraska will be studied in more detail by the transmission owners and owners of the DC ties during the Interconnection Facilities Study.

SUMMARY OF THE SHORT-CIRCUIT ANALYSIS

The Short-circuit analysis was performed on the 2017 Summer Peak and 2025 Summer Peak power flows for all study projects. Refer to Table 7-1 for a list of maximum fault currents observed for each study project for the 2017 Summer Peak case. Refer to Table 7-2 for a list of maximum fault currents observed for each study project for the 2025 Summer Peak case.

Table 7-1
List of Maximum Fault Currents Observed for Each Study Project for the 2017 Summer Peak Case

Study Project	POI Name	Fault Current at POI (kA)	Maximum Fault Current (kA)	Fault Location	Bus Voltage (kV)
GEN-2014-059	Tap Sidney-Ogallala 230kV (560014)	7.18	28.87	NB WEST4	230
GEN-2015-042	Dixon County (560347) (GEN-2010-051 230kV)	10.53	30.01	S1251 5	161
GEN-2015-053	Antelope 115kV (640521)	14.36	30.01	S1251 5	161
GEN-2015-054	Antelope 115kV (640521)	14.36	30.01	S1251 5	161
GEN-2015-076	Belden 115kV (640080)	12.48	30.01	S1251 5	161
GEN-2015-087	Tap on Fairbury (640169) to Hebron (640218) 115kV	5.43	31.19	SHELDON7	115
GEN-2015-088	Tap on Moore (640277) to Pauline (640312) 345kV	10.58	39.13	S1206 5	161
GEN-2015-094	Laramie River Station to (659131) to Sidney (659426) 345kV	4.53	14.39	GENTLMN3	345

Table 7-2
List of Maximum Fault Currents Observed for Each Study Project for the 2025 Summer Peak Case

Study Project	POI Name	Fault Current at POI (kA)	Maximum Fault Current (kA)	Fault Location	Bus Voltage (kV)
GEN-2014-059	Tap Sidney-Ogallala 230kV (560014)	7.24	28.87	NB WEST4	230
GEN-2015-042	Dixon County (560347) (GEN-2010-051 230kV)	10.56	30.92	S1251 5	161
GEN-2015-053	Antelope 115kV (640521)	14.62	30.92	S1251 5	161
GEN-2015-054	Antelope 115kV (640521)	14.62	30.92	S1251 5	161
GEN-2015-076	Belden 115kV (640080)	12.50	30.92	S1251 5	161
GEN-2015-087	Tap on Fairbury (640169) to Hebron (640218) 115kV	5.43	32.62	SHELDON7	115
GEN-2015-088	Tap on Moore (640277) to Pauline (640312) 345kV	10.63	40.50	S1206 5	161
GEN-2015-094	Laramie River Station to (659131) to Sidney (659426) 345kV	4.55	15.46	GENTLMN3	345

SUMMARY OF POWER FACTOR ANALYSIS

Study Generator GEN-2014-059

The Power Factor Analysis shows that GEN-2014-059 has a power factor range of 0.987 leading (absorbing) to 1.00 (unity) for the 2016 Winter Peak conditions, a power factor range of 0.985 leading (absorbing) to 1.00 (unity) for the 2017 Summer Peak conditions, and a power factor range of 0.980 leading (absorbing) to 1.00 (unity) for the 2025 Summer Peak conditions.

Study Generator GEN-2015-042

The Power Factor Analysis shows that GEN-2015-042 has a power factor range of 0.920 lagging (supplying) to 1.00 (unity) for the 2016 Winter Peak conditions, a power factor range of 0.916 lagging (supplying) to 0.996 lagging (supplying) for the 2017 Summer Peak conditions, and a power factor range of 0.924 lagging (supplying) to 0.998 lagging (supplying) for the 2025 Summer Peak conditions.

Study Generator GEN-2015-053

The Power Factor Analysis shows that GEN-2015-053 has a power factor range of 0.907 leading (absorbing) to 1.00 (unity) for the 2016 Winter Peak conditions, a power factor range of 0.954 leading (absorbing) to 1.00 (unity) for the 2017 Summer Peak conditions, and a power factor range of 0.959 leading (absorbing) to 1.00 (unity) for the 2025 Summer Peak conditions.

Study Generator GEN-2015-054

The Power Factor Analysis shows that GEN-2015-0154 has a power factor range of 0.907 leading (absorbing) to 1.00 (unity) for the 2016 Winter Peak conditions, a power factor range of 0.954 leading (absorbing) to 1.00 (unity) for the 2017 Summer Peak conditions, and a power factor range of 0.959 to 1.00(unity) for the 2025 Summer Peak conditions.

Study Generator GEN-2015-076

The Power Factor Analysis shows that GEN-2015-076 has a power factor range of 0.977 leading (absorbing) to 0.997 leading (supplying) for the 2016 Winter Peak conditions, a power factor range of 0.975 leading (absorbing) to 0.999 leading (absorbing) for the 2017 Summer Peak conditions, and a power factor range of 0.972 leading (absorbing) to 0.999 leading (absorbing) for the 2025 Summer Peak conditions.

Study Generator GEN-2015-087

The Power Factor Analysis shows that GEN-2015-087 has a power factor range of 0.964 leading (absorbing) to 0.997 leading (supplying) for the 2016 Winter Peak conditions, a power factor range of 0.941 leading (supplying) to 1.00 (unity) for the 2017 Summer Peak conditions, and a power factor range of 0.904 leading (supplying) to 0.998 leading (absorbing) for the 2025 Summer Peak conditions.

Study Generator GEN-2015-088

The Power Factor Analysis shows that GEN-2015-088 has a power factor range of 0.965 leading (absorbing) to 1.00 (unity) for the 2016 Winter Peak conditions, a power factor range of 0.970 leading (absorbing) to 0.999 lagging (supplying) for the 2017 Summer Peak conditions, and a power factor range of 0.968 leading (absorbing) to 1.00 (unity) for the 2025 Summer Peak conditions.

Study Generator GEN-2015-094

The Power Factor Analysis shows that GEN-2015-094 has a power factor range of 0.837 lagging (supplying) to 1.00 (unity) for the 2016 Winter Peak conditions, a power factor range of 0.786 lagging (supplying) to 0.998 lagging (supplying) for the 2017 Summer Peak conditions, and a power factor range of 0.790 lagging (supplying) to 0.999 lagging (supplying) for the 2025 Summer Peak conditions.

SUMMARY OF LOW WIND/NO WIND ANALYSIS

The amount of reactive power injected into the transmission network was recorded at the high side of the transformer near the point of interconnection for all study projects for each season. The maximum reactance needed for zero Mvar flow was 26.85 Mvar for GEN-2015-088. The minimum reactance needed for zero Mvar flow was 5.2 Mvar for GEN-2015-076.

FURTHER REVIEW BY TRANSMISSION OWNERS

Due to special considerations of the transmission system in the area of interconnection, both Nebraska Public Power District (NPPD) and Western Area Power Administration (WAPA) have indicated that further in depth review of the stability concerns in western Nebraska and around the Gavins power plant will be performed during the Interconnection Facilities Study.

11.24 Q: Group 13 Dynamic Stability Analysis Report

See next page

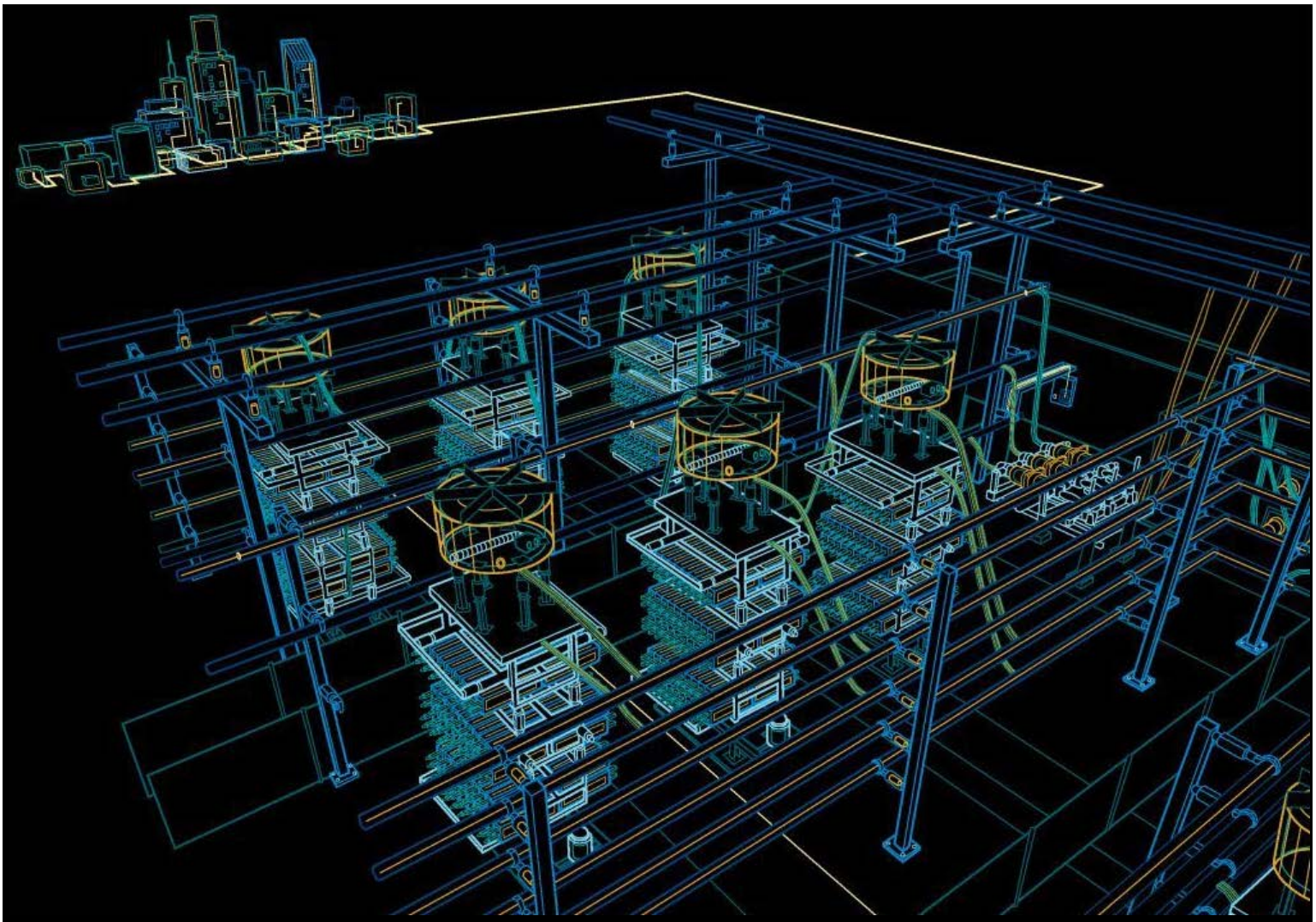

Southwest Power Pool

DEFINITIVE IMPACT STUDY DISIS-2015-002 (GROUP 13)

Final Report

Report No. r00

17 March 2016

CONFIDENTIAL

Contains Proprietary Information

DO NOT RELEASE

Power and productivity
for a better world™

LEGAL NOTICE

This document, prepared by ABB Inc, is an account of work sponsored by Southwest Power Pool (SPP). Neither SPP nor ABB Inc nor any person or persons acting on behalf of either party: (i) makes any warranty or representation, expressed or implied, with respect to the use of any information contained in this report, or that the use of any information, apparatus, method, or process disclosed in this report may not infringe privately owned rights, or (ii) assumes any liabilities with respect to the use of or for damages resulting from the use of any information, apparatus, method, or process disclosed in this document.

CONFIDENTIAL

This report contains proprietary information and is not to be released or reproduced without the express, written consent of ABB and SPP.

Prepared for: Southwest Power Pool
Report No.: r00
Date: 17 March 2016
Revised:

Author(s): Joseph Silvers, Lang Chen
Reviewed by: Shu Liu
Approved by: Willie Wong

ABB Inc.
Power Systems Division
Grid Systems Consulting
901 Main Campus Drive, Suite 300
Raleigh, NC 27606

Rev No.	*Revision Description*	*Date*	*Authored by*	*Reviewed by*	*Approved by*

SUMMARY

Southwest Power Pool (SPP) has commissioned ABB Inc., to perform a Definitive Impact Study for DISIS-2015-002 (Group 13) which includes generation interconnection request GEN-2015-074 (174 MW wind farm connected on the JEC to Hoyt 345kV line).

Request	Size (MW)	Generator Model	POI
GEN-2015-074	174.0	GE 2.0 MW	JEC (532766) to Hoyt (532765) 345kV Line

The objective of this study is to evaluate the impact of project GEN-2015-074 on the existing and future planning system. The study is performed on three system scenarios provided by SPP:

- 2016 Winter Peak Case
- 2017 Summer Peak Case
- 2025 Summer Peak Case

Results of the stability analysis show that most disturbances (including all n-1 and stuck breaker disturbances) have no instability problems or voltage violations for all three seasons. However, certain prior outage faults showed unstable conditions. It is noted that the unstable faults are with GEN-2015-074 at 0 MW. For any of these prior outages, the GEN-2015-074 will be required to curtail to 0 MW until such time that the lines can be placed back into service. All the simulation results were summarized in Table 2-2, Table 2-3 and Table 2-4.

System short-circuit current levels at up to five buses away from the point of interconnection were calculated and tabulated for SPP's reference.

Power Factor Analysis was performed to ensure the studied project meets FERC and SPP power factor requirements for wind farm interconnections. The results show significant need for reactive power from the study project following the critical contingencies. The proposed GEN-2015-074 need to design their facility to meet the SPP pro-forma 95% lagging (providing vars) and 95% leading (absorbing vars) power factor requirements at the Point of Interconnection.

The Low/No Wind analysis shows that a 25.31 MVAr shunt reactor is required to bring the MVAr flow in the POI down to approximate zero under low/no wind conditions for all three studied seasons. The reactor bank size is approximate and the final size will be determined in the final facility and collector system design.

Based on the results of the stability analysis, it is suggested that the study cases and fault definitions needs further review. Although the prior outage simulation results show unstable

conditions and voltage violations, but it is with the studied generator at 0 MW output, it CAN NOT conclude that the proposed GEN-2015-074 project causing the problems.

Contents

1 Introduction 1

2 STABILITY ANALYSIS 4

2.1 STABILITY ANALYSIS METHODOLOGY 4

2.2 STUDY RESULTS 12

3 SHORT CIRCUIT ANALYSIS 16

4 POWER FACTOR ANALYSIS 23

4.1 POWER FACTOR ANALYSIS METHODOLOGY 23

4.2 STUDY RESULTS 23

5 LOW WIND/NO WIND ANALYSIS 25

5.1 LOW/NO WIND ANALYSIS METHODOLOGY 25

5.2 STUDY RESULTS 25

6 CONCLUSIONS 26

APPENDIX A SOUTHWEST POWER POOL DISTURBANCE PERFORMANCE CRITERIA REQUIREMENTS 28

APPENDIX B SIMULATION PLOTS FOR STABILITY ANALYSIS 31

APPENDIX C POWER FACTOR ANALYSIS RESULTS 32

1 Introduction

Southwest Power Pool (SPP) has commissioned ABB Inc., to perform a Definitive Impact Study for DISIS-2015-002 (Group 13) which includes generation interconnection request GEN-2015-074 (174 MW wind farm connected on the JEC to Hoyt 345kV line) as shown in Table 1-1.

Table 1-1: Group 13 Generation Interconnection Requests

Request	Size (MW)	Generator Model	POI
GEN-2015-074	174.0	GE 2.0MW (wind)	JEC (532766) to Hoyt (532765) 345kV Line

The objective of this study is to evaluate the impact of project GEN-2015-074 on the existing and future planning system. The study is performed on three system scenarios provided by SPP:

- 2016 Winter Peak Case
- 2017 Summer Peak Case
- 2025 Summer Peak Case

In the process of the study, SPP provided following changes to the fault and system conditions:

- The definitions of FLT20-SB, FLT21-SB, FLT29-PO, FLT31-PO and FLT33-PO were changed. The updated information are shown as in Table 2-1 with underline.
- The dispatch of the JEC units is 775MW in the 2016 Winter Peak season and 770MW in the 2017 Summer Peak and 2025 Summer Peak seasons.
- Two dispatch of GEN-2015-074 at 25 MW and 0MW were tested for FLT29-PO, FLT29-PO, FLT30-PO, FLT31-PO and FLT33-PO.

SPP provided the study cases for all three system scenarios with GEN-2015-074 included. One line diagrams of the local area for all three seasons are shown in Figure 1-1. The studied generator is circled red.

The three system scenarios supplied by SPP included the following prior queued projects for Group 13:

Table 1-2: Group 13 Prior Queued Projects

Request	Size (MW)	Generator Model	Point of Interconnection
GEN-2008-129	641/675	Combined Cycle (541163/541164)	Pleasant Hill 161kV (541225)
GEN-2010-036	4.6	GENROU (533264)	6th Street 115kV (533264)
GEN-2011-011	900	GENROU (542962)	Iatan 345kV (542982)
GEN-2014-021	300	Vestas V110 2.0MW (583913,583917)	Tap Nebraska City/S3458 (645458) to Mullins Creek (541197) 345kV (560009)
GEN-2015-005	200.1	GE 1.79MW (9 wtg's) and GE 2.0MW (92wtg's)	Woodward 138kV (515376)

Figure 1-1 (a): One Line Diagram of Group 13 Area for 2016 Winter Peak Case

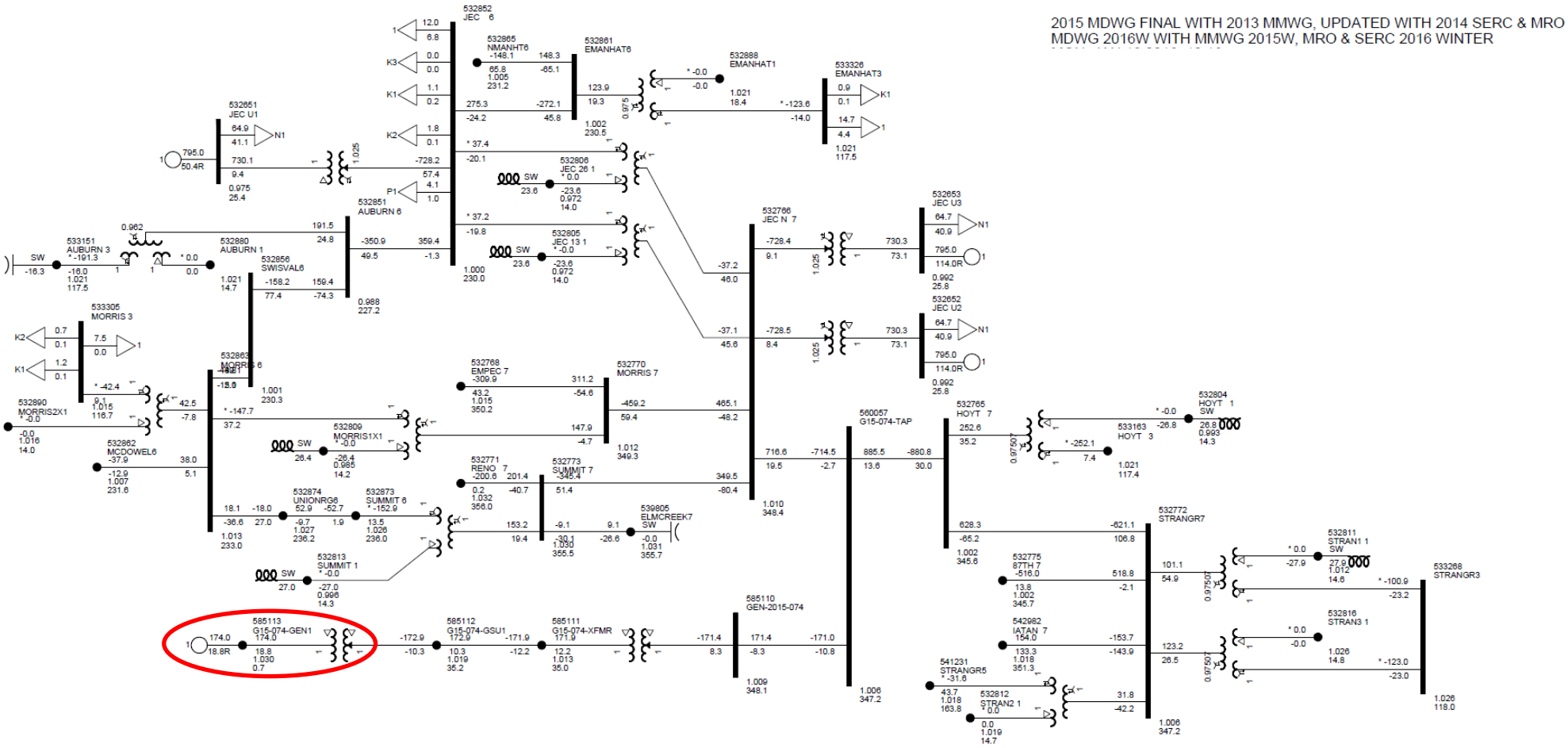

Figure 1-2 (b): One Line Diagram of Group 13 Area for 2017 Summer Peak Case

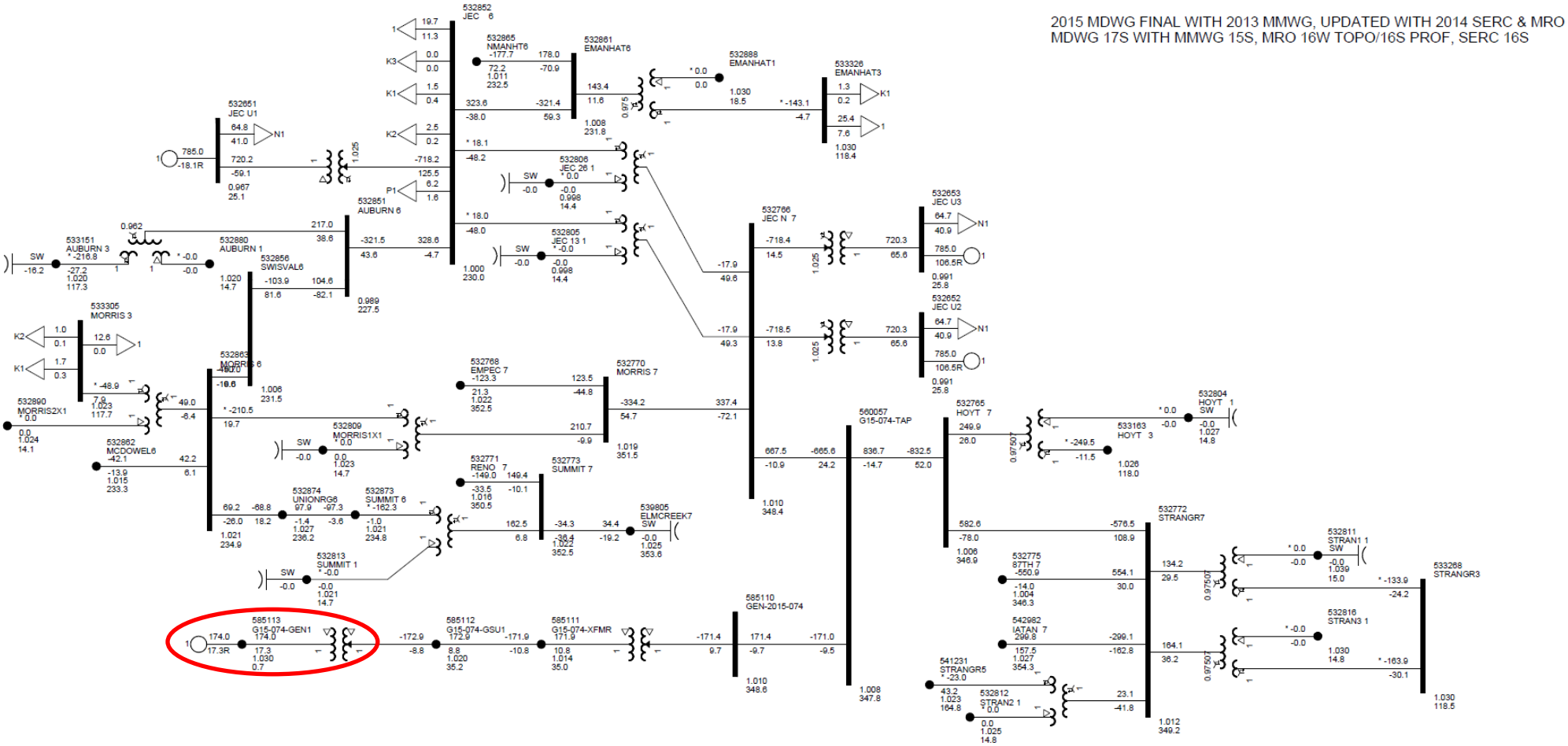

CONFIDENTIAL

Figure 1-3 (c): One Line Diagram of Group 13 Area for 2025 Summer Peak Case

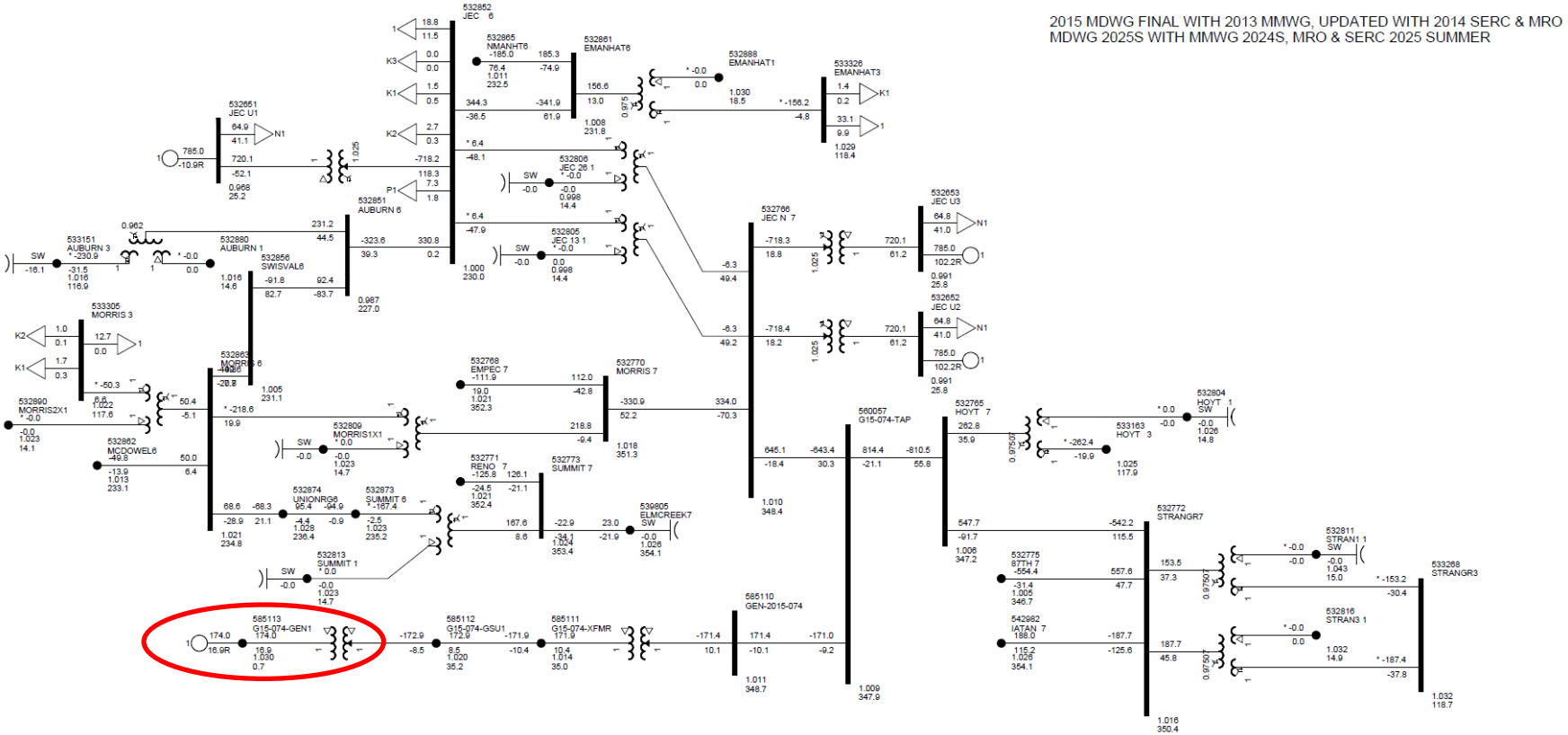

CONFIDENTIAL

2 STABILITY ANALYSIS

In this study, ABB investigated the stability of the system for faults in the vicinity of the proposed plant as defined by SPP. The studied faults involve three-phase transformer faults with normal clearing, three-phase line faults with normal clearing and re-closing test, and single-line-to-ground (SLG) faults with stuck breaker.

2.1 STABILITY ANALYSIS METHODOLOGY

Stability analysis is performed to determine whether the electric system would meet stability criteria following the addition of the GEN-2015-074 project.

Stability analysis was performed using Siemens-PTI's PSS/E dynamics program V32.2.0.

All the faults listed in Table 2-1 were simulated for 10 seconds.

Table 2-1: List of Faults for Stability Analysis

Cont. No.	Cont. Name	Description
1	FLT01-3PH	3 phase fault on the G15-074-Tap (560057) to JEC N (532766) 345kV line, near G15-074-Tap. a. Apply fault at the G15-074-Tap 345kV bus. b. Clear fault after 5 cycles and trip the faulted line.
2	FLT02-3PH	3 phase fault on the G15-074-Tap (560057) to Hoyt (532765) 345kV line, near G15-074-Tap. a. Apply fault at the G15-074-Tap 345kV bus. b. Clear fault after 5 cycles and trip the faulted line. c. Wait 20 cycles, and then re-close the line in (b) back into the fault. d. Leave fault on for 5 cycles, then trip the line in (b) and remove fault.
3	FLT03-3PH	3 phase fault on the JEC N (532766) 345/(532852) 230/(532805) 13.8kV Transformer circuit 1, near JEC N 345kV. a. Apply fault at the JEC 345kV bus. b. Clear fault after 5 cycles, trip the faulted line, and remove the fault.
4	FLT04-3PH (16WP Only)	3 phase fault on the JEC N (532766) to Summit (532773) 345kV line, near JEC N. a. Apply fault at the JEC N 345kV bus. b. Clear fault after 5 cycles and trip the faulted line.

Cont. No.	Cont. Name	Description
5	FLT05-3PH (17SP and 25SP Only)	3 phase fault on the JEC N (532766) to Blustem (532767) 345kV line, near JEC N. a. Apply fault at the JEC N 345kV bus. b. Clear fault after 5 cycles and trip the faulted line.
6	FLT06-3PH	3 phase fault on the Summit (532773) to Reno (532771) 345kV line, near Summit. a. Apply fault at the Summit 345kV bus. b. Clear fault after 5 cycles and trip the faulted line. c. Wait 20 cycles, and then re-close the line in (b) back into the fault. d. Leave fault on for 5 cycles, then trip the line in (b) and remove fault.
7	FLT07-3PH	3 phase fault on the JEC (532852) to Auburn (532851) 230kV line, near JEC. a. Apply fault at the JEC 230kV bus. b. Clear fault after 5 cycles and trip the faulted line. c. Wait 20 cycles, and then re-close the line in (b) back into the fault. d. Leave fault on for 5 cycles, then trip the line in (b) and remove fault.
8	FLT08-3PH	3 phase fault on the JEC (532852) to E Manhattan (532861) 230kV line, near JEC. a. Apply fault at the JEC 230kV bus. b. Clear fault after 5 cycles and trip the faulted line. c. Wait 20 cycles, and then re-close the line in (b) back into the fault. d. Leave fault on for 5 cycles, then trip the line in (b) and remove fault.
9	FLT09-3PH	3 phase fault on the Auburn (532851) to Swissvale (532856) 230kV line, near Auburn. a. Apply fault at the Auburn 230kV bus. b. Clear fault after 5 cycles and trip the faulted line. c. Wait 20 cycles, and then re-close the line in (b) back into the fault. d. Leave fault on for 5 cycles, then trip the line in (b) and remove fault.

Cont. No.	Cont. Name	Description
10	FLT10-3PH	3 phase fault on the Morris (532863) to Swissvale (532856) 230kV line, near Morris. a. Apply fault at the Morris 230kV bus. b. Clear fault after 5 cycles and trip the faulted line. c. Wait 20 cycles, and then re-close the line in (b) back into the fault. d. Leave fault on for 5 cycles, then trip the line in (b) and remove fault.
11	FLT11-3PH	3 phase fault on the JEC N (532766) to Morris (532770) 345kV line, near JEC N. a. Apply fault at the JEC N 345kV bus. b. Clear fault after 5 cycles and trip the faulted line.
12	FLT12-3PH	3 phase fault on the E Manhattan (532861) 230/(533326) 115/(532888) 13.8kV Transformer circuit 1, near E Manhattan 230kV. a. Apply fault at the E Manhattan 230kV bus. b. Clear fault after 5 cycles, trip the faulted line, and remove the fault.
13	FLT13-3PH	3 phase fault on the E Manhattan (532861) to N Manhattan (532865) 230kV line, near E Manhattan. a. Apply fault at the E Manhattan 230kV bus. b. Clear fault after 5 cycles and trip the faulted line. c. Wait 20 cycles, and then re-close the line in (b) back into the fault. d. Leave fault on for 5 cycles, then trip the line in (b) and remove fault.
14	FLT14-3PH	3 phase fault on the Hoyt (532765) 345/(533163) 115/(532804) 13.8kV Transformer circuit 1, near Hoyt 345kV. a. Apply fault at the Hoyt 345kV bus. b. Clear fault after 5 cycles, trip the faulted line, and remove fault.
15	FLT15-3PH	3 phase fault on the Hoyt (532765) to Stranger (532772) 345kV line, near Hoyt. a. Apply fault at the Hoyt 345kV bus. b. Clear fault after 5 cycles and trip the faulted line. c. Wait 20 cycles, and then re-close the line in (b) back into the fault. d. Leave fault on for 5 cycles, then trip the line in (b) and remove fault.

Cont. No.	Cont. Name	Description
16	FLT16-3PH	3 phase fault on the Stranger (532772) to Iatan (542982) 345kV line, near Stranger. a. Apply fault at the Stranger 345kV bus. b. Clear fault after 5 cycles and trip the faulted line. c. Wait 20 cycles, and then re-close the line in (b) back into the fault. d. Leave fault on for 5 cycles, then trip the line in (b) and remove fault.
17	FLT17-3PH (16WP and 17SP Only)	3 phase fault on the Stranger (532772) 345/(541231) 161/(532812) 13.8kV Transformer circuit 1, near Stranger 345kV. a. Apply fault at the Stranger 345kV bus. b. Clear fault after 5 cycles, trip the faulted line, and remove fault.
18	FLT18-3PH	3 phase fault on the Morris (532770) to Emporia EC (532768) 345kV line, near Morris. a. Apply fault at the Morris 345kV bus. b. Clear fault after 5 cycles and trip the faulted line. c. Wait 20 cycles, and then re-close the line in (b) back into the fault. d. Leave fault on for 5 cycles, then trip the line in (b) and remove fault.
19	FLT19-3PH	3 phase fault on the Stranger (532772) to 87th St (532775) 345kV line, near Stranger. a. Apply fault at the Stranger 345kV bus. b. Clear fault after 5 cycles and trip the faulted line. c. Wait 20 cycles, and then re-close the line in (b) back into the fault. d. Leave fault on for 5 cycles, then trip the line in (b) and remove fault.
20	FLT20-SB	**JEC N 345kV Stuck Breaker Scenario 1** a. Apply single phase fault at the JEC N (532766) 345kV bus. b. Wait 4.6 cycles, trip JEC N (532766) to G15-074-Tap (560057) 345kV line. c. Wait 8.4 cycles more, trip JEC N (532766) 345/(532852) 230/(532805) 13.8kV transformer circuit 1.
21	FLT21-SB (16WP Only)	**JEC N 345kV Stuck Breaker Scenario 2** a. Apply single phase fault at the JEC N (532766) 345kV bus. b. Wait 4.6 cycles, trip JEC N (532766) to Summit (532773) 345kV line. c. Wait 8.4 cycles more, trip JEC N (532766) to Morris (532770) 345kV line.

Cont. No.	Cont. Name	Description
22	FLT22-SB (17SP and 25SP Only)	**JEC N 345kV Stuck Breaker Scenario 2** d. Apply single phase fault at the JEC N (532766) 345kV bus. e. Wait 16 cycles and remove fault. f. Trip JEC N (532766) to Bluestem (532767) 345kV line. g. Trip JEC N (532766) to Morris (532770) 345kV line.
23	FLT23-SB (16WP Only)	**JEC N 345kV Stuck Breaker Scenario 3** a. Apply single phase fault at the JEC N (532766) 345kV bus. b. Wait 16 cycles and remove fault. c. Trip JEC N (532766) 345/(532852) 230/(532805) 13.8kV transformer circuit 1. d. Trip JEC N (532766) to Summit (532773) 345kV line.
24	FLT24- SB	**Hoyt 345kV Stuck Breaker Scenario 1** a. Apply single phase fault at the Hoyt (532765) 345kV bus. b. Wait 16 cycles and remove fault. c. Trip Hoyt (532765) 345/(533163) 115/(532804) 13.8kV transformer circuit 1. d. Trip Hoyt (532765) to Stranger (532772) 345kV line.
25	FLT25-PO	**JEC N Prior Outage Scenario 1** a. Prior Outage: Switch out JEC N (532766) to G15-074-Tap (560057) 345kV circuit 1 and solve. b. Apply 3 phase fault on the Hoyt (532765) to Stranger (532772) 345kV line circuit 1, near Hoyt. c. Clear fault after 5 cycles and trip the faulted line and remove the fault.
26	FLT26-PO (16WP Only)	**JEC Prior Outage Scenario 2** a. Prior Outage: Switch out JEC N (532766) to Summit (532773) 345kV circuit 1 and solve. b. Apply 3 phase fault on the JEC N (532766) to Morris (532770) 345kV line circuit 1, near JEC N. c. Clear fault after 5 cycles and trip the faulted line and remove fault.

Cont. No.	Cont. Name	Description
27	FLT27-PO (17SP and 25SP Only)	**JEC Prior Outage Scenario 2** a. Prior Outage: Switch out JEC N (532766) to Bluestem (532767) 345kV circuit 1 and solve. b. Apply 3 phase fault on the JEC N (532766) to Morris (532770) 345kV line circuit 1, near JEC N. c. Clear fault after 5 cycles and trip the faulted line and remove fault.
28	FLT28-PO	**JEC Prior Outage Scenario 3** a. Prior Outage: Switch out JEC (532766) to Morris (532770) 345kV circuit 1 and solve. b. Apply 3 phase fault on the JEC N (532766) 345/(532852) 230/(532805) 13.8kV transformer circuit 1, near JEC N. c. Clear fault after 5 cycles and trip the faulted transformer and remove fault.
29	FLT29-PO (16WP Only)	**Hoyt Prior Outage Scenario 1** a. Prior Outage: Switch out Hoyt (532765) to G15-074-Tap (560057) 345kV circuit 1 and solve. b. Apply 3 phase fault on the JEC N (532766) to Summit (532773) 345kV line circuit 1, near JEC N. c. Clear fault after 4.6 cycles and trip the faulted line and remove fault.
30	FLT30-PO (17SP and 25SP Only)	**Hoyt Prior Outage Scenario 1** a. Prior Outage: Switch out Hoyt (532765) to G15-074-Tap (560057) 345kV circuit 1 and solve. b. Apply 3 phase fault on the JEC N (532766) to Bluestem (532767) 345kV line circuit 1, near JEC N. c. Clear fault after 5 cycles and trip the faulted line and remove fault.
31	FLT31-PO	**Hoyt Prior Outage Scenario 2** a. Prior Outage: Switch out Hoyt (532765) to G15-074-Tap (560057) 345kV circuit 1 and solve. b. Apply 3 phase fault on the JEC N (532766) to Morris (532770) 345kV line circuit 1, near JEC N. c. Clear fault after 4.6 cycles and trip the faulted line.

Cont. No.	Cont. Name	Description
32	FLT32- PO	**Hoyt Prior Outage Scenario 3** a. Prior Outage: Switch out Hoyt (532765) 345/(533163) 115/(532804) 13.8kV transformer circuit 1 and solve. b. Apply 3 phase fault on the Hoyt (532765) to Stranger (532772) 345kV line circuit 1, near Hoyt. c. Clear fault after 5 cycles and trip the faulted line.
33	FLT33-PO (16WP Only)	**JEC Prior Outage Scenario 4** a. Prior Outage: Switch out JEC (532766) to Summit (532773) 345kV circuit 1 and reduce the combined net dispatch of JEC 2 and JEC 3 to 1300MW and solve. b. Apply 3 phase fault on the JEC N (532766) to G15-074-TAP (560057) circuit 1, near JEC N. c. Clear fault by tripping the JEC end after 3.6 cycles and the G15-074-TAP end after 4.6 cycles.
34	FLT34-PO (17SP and 25SP Only)	**JEC Prior Outage Scenario 4** a. Prior Outage: Switch out JEC (532766) to Bluestem (532767) 345kV circuit 1 and solve. b. Apply 3 phase fault on the JEC N (532766) to G15-074-TAP (560057) circuit 1, near JEC N. **c.** Clear fault after 5 cycles and trip the faulted line.
35	FLT35-PO (16WP Only)	**JEC Prior Outage Scenario 5** a. Prior Outage: Switch out JEC (532766) to Summit (532773) 345kV circuit 1 and solve. b. Apply 3 phase fault on the Hoyt (532765) to G15-074-TAP (560057) circuit 1, near Hoyt. **c.** Clear fault after 5 cycles and trip the faulted line.
36	FLT36_PO (17SP and 25SP Only)	**JEC Prior Outage Scenario 5** a. Prior Outage: Switch out JEC (532766) to Blustem (532767) 345kV circuit 1 and solve. b. Apply 3 phase fault on the Hoyt (532765) to G15-074-TAP (560057) circuit 1, near Hoyt. **c.** Clear fault after 5 cycles and trip the faulted line.

Single- line-to-ground faults were simulated with the standard method of applying fault impedance to the positive sequence network to represent the effect of the negative and zero sequence networks on the positive sequence network. The SLG fault impedance was computed by assuming a positive sequence voltage at the fault location at approximately 60% of pre-fault voltage, which is a typical value. Stuck breaker SLG faults for faults FLT-20SB and FLT-21SB were calculated using PSS/E function “SCMU”.

The Southwest Pool Disturbance Performance Criteria Requirements in Appendix A were used to evaluate the system response during the initial transient period following a disturbance on the system. Generator response and bus voltages (115 kV and above) in Areas 330, 356, 536, 540, 541, 542, 544, 545, 635, 640, 645, 650, and 652 were monitored to ensure the system performance meets criteria requirements. Rotor angles of the nearby synchronous machines were investigated to make sure they maintained synchronism and had adequate damping following system faults.

Any wind generator must comply with FERC Order 661A on low voltage ride through requirements for wind farms. Therefore, the wind generators should not be tripped off line for faults by under voltage relay actuation. Generator speed of pre-queued projects was also monitored to ensure they stay online under system contingencies. For contingencies that result in a prior queued project tripping off-line; the contingency shall be re-run with the prior queued project’s voltage and frequency tripping disabled.

2.2 STUDY RESULTS

Most disturbances (including all n-1 and stuck breaker disturbances) showed no instability problems or voltage violations for all three seasons. However, certain prior outage condition faults showed unstable conditions. All fault results are summarized in Table 2-2, Table 2-3, and Table 2-4, which show results for the 2016 Winter Peak case, the 2017 Summer Peak case, and the 2025 Summer Peak case, respectively. The "Volt CI Violation" in the table refers to bus voltages exceed the range of 0.7 pu. and 1.2 pu, 2.5 second after fault clearing, and the "Volt CII Violation" refers to end bus voltages exceed 1.2 pu. All voltage violations and unstable conditions are highlighted with **red**.

Table 2-2 Study Results Summary, 2016 Winter Peak

Index	Fault File Name	16WP Case		
		Stable?	Volt CI Violation	Volt CII Violation
1	FLT01-3PH	Stable	No	No
2	FLT02-3PH	Stable	No	No
3	FLT03-3PH	Stable	No	No
4	FLT04-3PH	Stable	No	No
6	FLT06-3PH	Stable	No	No
7	FLT07-3PH	Stable	No	No
8	FLT08-3PH	Stable	No	No
9	FLT09-3PH	Stable	No	No
10	FLT10-3PH	Stable	No	No
11	FLT11-3PH	Stable	No	No
12	FLT12-3PH	Stable	No	No
13	FLT13-3PH	Stable	No	No
14	FLT14-3PH	Stable	No	No
15	FLT15-3PH	Stable	No	No
16	FLT16-3PH	Stable	No	No
17	FLT17-3PH	Stable	No	No
18	FLT18-3PH	Stable	No	No
19	FLT19-3PH	Stable	No	No
20	FLT20-SB	Stable	No	No
21	FLT21-SB	Stable	No	No
23	FLT23-SB	Stable	No	No
24	FLT24-SB	Stable	No	No
25	FLT25-PO	Stable	No	No
26	FLT26-PO	Stable	No	No
28	FLT28-PO	Stable	No	No
29	**FLT29-PO**	**Unstable**	**Yes**	**Yes**
31	**FLT31-PO**	**Unstable**	**Yes**	**Yes**
32	FLT32-PO	Stable	No	No
33	FLT33-PO	Stable	No	No
35	FLT35-PO	Stable	No	No

Table 2-3 Study Results Summary, 2017 Summer Peak

Index	Fault File Name	17SP Case		
		Stable?	Volt CI Violation	Volt CII Violation
1	FLT01-3PH	Stable	No	No
2	FLT02-3PH	Stable	No	No
3	FLT03-3PH	Stable	No	No
5	FLT05-3PH	Stable	No	No
6	FLT06-3PH	Stable	No	No
7	FLT07-3PH	Stable	No	No
8	FLT08-3PH	Stable	No	No
9	FLT09-3PH	Stable	No	No
10	FLT10-3PH	Stable	No	No
11	FLT11-3PH	Stable	No	No
12	FLT12-3PH	Stable	No	No
13	FLT13-3PH	Stable	No	No
14	FLT14-3PH	Stable	No	No
15	FLT15-3PH	Stable	No	No
16	FLT16-3PH	Stable	No	No
17	FLT17-3PH	Stable	No	No
18	FLT18-3PH	Stable	No	No
19	FLT19-3PH	Stable	No	No
20	FLT20-SB	Stable	No	No
22	FLT22-SB	Stable	No	No
24	FLT24-SB	Stable	No	No
25	FLT25-PO	Stable	No	No
27	FLT27-PO	Stable	No	No
28	FLT28-PO	Stable	No	No
30	FLT30-PO	Stable	No	No
31	**FLT31-PO**	**Unstable**	**Yes**	**Yes**
32	FLT32-PO	Stable	No	No
34	FLT34-PO	Stable	No	No
36	FLT36-PO	Stable	No	No

Table 2-4 Study Results Summary, 2025 Summer Peak

Index	Fault File Name	25SP Case		
		Stable?	Volt CI Violation	Volt CII Violation
1	FLT01-3PH	Stable	No	No
2	FLT02-3PH	Stable	No	No
3	FLT03-3PH	Stable	No	No
5	FLT05-3PH	Stable	No	No
6	FLT06-3PH	Stable	No	No
7	FLT07-3PH	Stable	No	No
8	FLT08-3PH	Stable	No	No
9	FLT09-3PH	Stable	No	No
10	FLT10-3PH	Stable	No	No
11	FLT11-3PH	Stable	No	No

Index	Fault File Name	25SP Case		
		Stable?	Volt CI Violation	Volt CII Violation
12	FLT12-3PH	Stable	No	No
13	FLT13-3PH	Stable	No	No
14	FLT14-3PH	Stable	No	No
15	FLT15-3PH	Stable	No	No
16	FLT16-3PH	Stable	No	No
18	FLT18-3PH	Stable	No	No
19	FLT19-3PH	Stable	No	No
20	FLT20-SB	Stable	No	No
22	FLT22-SB	Stable	No	No
24	FLT24-SB	Stable	No	No
25	FLT25-PO	Stable	No	No
27	FLT27-PO	Stable	No	No
28	FLT28-PO	Stable	No	No
30	FLT30-PO	Stable	No	No
31	**FLT31-PO**	**Unstable**	**Yes**	**Yes**
32	FLT32-PO	Stable	No	No
34	FLT34-PO	Stable	No	No
36	FLT36-PO	Stable	No	No

It is noted that the prior outage faults in which unstable conditions were observed were also observed with GEN-2015-074 dispatched at 0 MW. For any of these prior outages, the GEN-2015-074 will be required to curtail to 0 MW until such time that the lines can be placed back into service.

Figure 2-1 shows the response of the studied generator following fault FLT01-3PH for 2016 Winter Peak case. The machine speed, active and reactive power output and terminal voltage are plotted to show the generator response.

All the simulation plots are included in Appendix B.

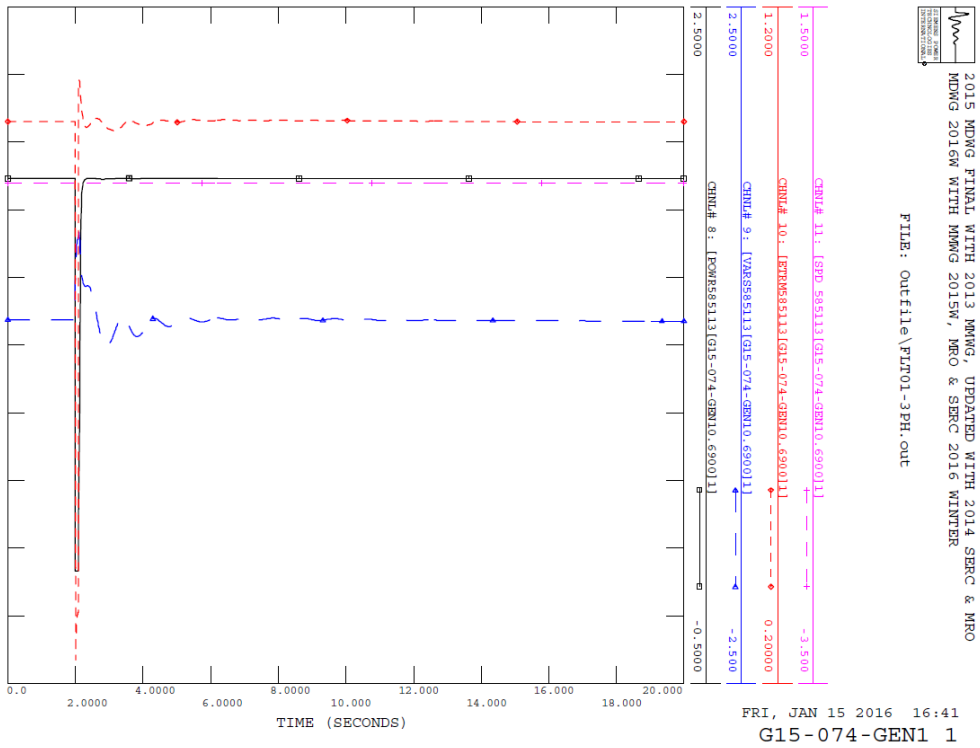

Figure 2-1: GEN-2015-074 Response Following Fault FLT01-3PH for 2016 Winter Peak Case

3 SHORT CIRCUIT ANALYSIS

Short circuit analysis was performed on the 2017 Summer Peak and 2025 Summer Peak power flow cases using the PSS/E program. Since the power flow model does not contain negative and zero sequence data, only three-phase symmetrical fault current levels were calculated at up to five buses away from the point of interconnection.

Table 3-1 tabulates all the three-phase fault current levels, and the calculated values were listed here for SPP's reference.

Table 3-1: Three-Phase Fault Currents

2017 SP			2025 SP		
Number	**Name**	**3PH(Amp)**	**Number**	**Name**	**3PH(Amp)**
533163	HOYT 3 115.00	23242	533163	HOYT 3 115.00	23443.4
533164	HTI 3 115.00	13685.9	533218	PARALEL3 115.00	5826.9
532653	JEC U3 26.000	188930.8	533164	HTI 3 115.00	13763.7
532740	EMPEC121 13.800	61038.4	532653	JEC U3 26.000	189222.3
532742	EMPEC5 1 18.000	85734.1	532740	EMPEC121 13.800	61050.4
541231	STRANGR5 161.00	15556.2	532742	EMPEC5 1 18.000	85784.7
543640	NASH T11 13.800	12200.6	543641	CRAI T11 13.800	12353
543641	CRAI T11 13.800	12340.2	541199	ST JOE 3 345.00	18826.3
541199	ST JOE 3 345.00	19282.4	539805	ELMCREEK7 345.00	5386.9
539805	ELMCREEK7 345.00	5318.8	539806	ELMCREEK1 13.800	66768
539806	ELMCREEK1 13.800	66410.9	533151	AUBURN 3 115.00	22244
533151	AUBURN 3 115.00	21964.8	533152	CIRCLVL3 115.00	6181.9
533152	CIRCLVL3 115.00	6081.6	533153	COLINE 3 115.00	23867.4
533153	COLINE 3 115.00	23667.9	533155	CROOKED3 115.00	20995.4
533155	CROOKED3 115.00	20750	533156	54&MERI3 115.00	17300.4
533156	54&MERI3 115.00	17214.9	541350	IATAN5 161.00	17402.9
541350	IATAN5 161.00	20604.9	541351	WESTON 5 161.00	12985.1

2017 SP			2025 SP		
Number	Name	3PH(Amp)	Number	Name	3PH(Amp)
541351	WESTON 5 161.00	13903.5	533162	INDNOLA3 115.00	20534
533162	INDNOLA3 115.00	20385.7	532651	JEC U1 26.000	177879
532651	JEC U1 26.000	177356.6	532652	JEC U2 26.000	189922.6
532652	JEC U2 26.000	189623.1	533165	HTI JCT3 115.00	17031
533165	HTI JCT3 115.00	16910.8	533166	INDIANH3 115.00	18121.8
533166	INDIANH3 115.00	17943.9	533167	KEENE 3 115.00	10230.2
533167	KEENE 3 115.00	10259.5	533168	N TYLER3 115.00	17085.6
533168	N TYLER3 115.00	16991.1	533169	NTHLAND3 115.00	15388.5
533169	NTHLAND3 115.00	15327.4	533278	WAVERLY3 115.00	14637.1
533278	WAVERLY3 115.00	14525.2	533281	MNTCLLO3 115.00	23040.4
533281	MNTCLLO3 115.00	22716.2	533194	SHERWOD3 115.00	20433.8
533194	SHERWOD3 115.00	20121.5	533196	EDUCATE3 115.00	16544.4
533196	EDUCATE3 115.00	16429.4	533198	HOYTJS 3 115.00	20431.6
533198	HOYTJS 3 115.00	20287	533199	HOYTJN 3 115.00	19431.5
533199	HOYTJN 3 115.00	19285	533283	87TH 3 115.00	27099.5
533283	87TH 3 115.00	26696.3	541400	EASTOWN7 345.00	17572.5
541400	EASTOWN7 345.00	17920	533284	95WAJ 3 115.00	15632.8
533284	95WAJ 3 115.00	15352.2	541402	EASTOWN1 13.800	56551.6
541402	EASTOWN1 13.800	58114.3	533211	ARNOLD 3 115.00	7494.3
533211	ARNOLD 3 115.00	7425.5	533216	KERFORD3 115.00	7522.3
533216	KERFORD3 115.00	7453.7	532888	EMANHAT1 18.000	30841.6
533218	PARALEL3 115.00	5787.8	533219	TONGATP3 115.00	15888.8
533219	TONGATP3 115.00	15512	542957	IAT G1 1 24.000	196567.9

2017 SP			2025 SP		
Number	Name	3PH(Amp)	Number	Name	3PH(Amp)
542957	IAT G1 1 24.000	194851.2	533233	166TH 3 115.00	16467.7
533233	166TH 3 115.00	16213.9	542962	IAT G2 1 25.000	242241.1
542962	IAT G2 1 25.000	238929.2	542965	W.GRDNR7 345.00	26771.9
542965	W.GRDNR7 345.00	26038.8	533242	HALLMRK3 115.00	12451
533242	HALLMRK3 115.00	12269.6	542972	HAWTH 7 345.00	22491.5
542972	HAWTH 7 345.00	22227.8	533246	EFAIRMNT3 115.00	10892.7
533246	EFAIRMNT3 115.00	10756.2	542977	CRAIG 7 345.00	22622.1
542977	CRAIG 7 345.00	22156.6	542978	CRAIG 5 161.00	41281.5
542978	CRAIG 5 161.00	40650.6	533251	MIDLNDJ3 115.00	15697.6
533251	MIDLNDJ3 115.00	15050.9	542980	NASHUA 7 345.00	20595.5
542980	NASHUA 7 345.00	20466.8	532741	EMPEC341 13.800	61050.4
532741	EMPEC341 13.800	61038.4	542982	IATAN 7 345.00	28145.8
542982	IATAN 7 345.00	26880.5	532743	EMPEC6 1 18.000	85784.7
532743	EMPEC6 1 18.000	85734.1	532744	EMPEC7 1 18.000	85784.7
532744	EMPEC7 1 18.000	85734.2	533259	NW LEAV3 115.00	16533.6
533259	NW LEAV3 115.00	16214.4	533266	SPRUCE 3 115.00	15015.1
533266	SPRUCE 3 115.00	14751.6	533268	STRANGR3 115.00	34106.3
533268	STRANGR3 115.00	32801.1	541401	EASTOWN5 161.00	16497.9
541401	EASTOWN5 161.00	17800.3	533272	THORNTN3 115.00	15701.9
533272	THORNTN3 115.00	15413.9	533273	TIMBRLN3 115.00	13471.8
533273	TIMBRLN3 115.00	13397.2	532765	HOYT 7 345.00	15876.3
532765	HOYT 7 345.00	15575	532766	JEC N 7 345.00	23439.8
532766	JEC N 7 345.00	23213.1	532767	BLUSTEM7 345.00	9841.4

2017 SP			2025 SP		
Number	Name	3PH(Amp)	Number	Name	3PH(Amp)
532767	BLUSTEM7 345.00	9707.3	532768	EMPEC 7 345.00	17554.1
532768	EMPEC 7 345.00	17440.7	532769	LANG 7 345.00	17342.6
532769	LANG 7 345.00	17232	532770	MORRIS 7 345.00	12914.8
532770	MORRIS 7 345.00	12849.1	532771	RENO 7 345.00	11687.3
532771	RENO 7 345.00	10886.3	532772	STRANGR7 345.00	25073.1
532772	STRANGR7 345.00	22798	532773	SUMMIT 7 345.00	10727.4
532773	SUMMIT 7 345.00	10351.4	532774	SWISVAL7 345.00	16931.3
532774	SWISVAL7 345.00	16657.1	532775	87TH 7 345.00	21001.4
532775	87TH 7 345.00	20494	532776	DOUGLAS7 345.00	18573.2
562476	G14-001-TAP 345.00	11112.4	562476	G14-001-TAP 345.00	11221.2
543028	NASHUA-5 161.00	27479.3	543028	NASHUA-5 161.00	27660.3
533304	LANG 3 115.00	14898.7	533304	LANG 3 115.00	14925.1
533305	MORRIS 3 115.00	12686.2	533305	MORRIS 3 115.00	12711.2
532796	WICHITA7 345.00	23994.2	532796	WICHITA7 345.00	25032.1
533309	WEMPORI3 115.00	10072.1	533309	WEMPORI3 115.00	10087.1
532804	HOYT 1 14.400	32296.4	532804	HOYT 1 14.400	32317
532805	JEC 13 1 14.400	33299.4	532805	JEC 13 1 14.400	33314.8
532806	JEC 26 1 14.400	33510	532806	JEC 26 1 14.400	33525.6
532807	RENO 1X1 14.400	43014.6	532807	RENO 1X1 14.400	44948.1
532808	LANG 1 14.400	37498.4	532808	LANG 1 14.400	37472.2
532809	MORRIS1X1 14.400	32162.7	532809	MORRIS1X1 14.400	32174.2
532810	RENO 2X1 14.400	42829.1	532810	RENO 2X1 14.400	44746
532811	STRAN1 1 14.400	49900.4	532811	STRAN1 1 14.400	50512

2017 SP			2025 SP		
Number	Name	3PH(Amp)	Number	Name	3PH(Amp)
532812	STRAN2 1 14.400	24923.2	532813	SUMMIT 1 14.400	31328.4
532813	SUMMIT 1 14.400	31077.7	533326	EMANHAT3 115.00	13279.6
533326	EMANHAT3 115.00	13237.3	533327	LEVEE 3 115.00	12670.2
533327	LEVEE 3 115.00	12632	532816	STRAN3 1 14.400	42969.5
532816	STRAN3 1 14.400	42656.2	532817	UNIONRG1 13.200	19098.5
532817	UNIONRG1 13.200	19061.2	532818	87TH 1X1 13.800	73233.6
532818	87TH 1X1 13.800	72827	532819	SWISV2X2 14.400	563296.8
532819	SWISV2X2 14.400	616898.6	533335	MCDOWEL3 115.00	18027.6
533335	MCDOWEL3 115.00	17959.3	533336	BLUSTEM3 115.00	17375.4
533336	BLUSTEM3 115.00	17251.3	533340	SMANHAT3 115.00	12260.8
533341	STAGGHL3 115.00	9688	533341	STAGGHL3 115.00	9710.9
533342	WJCCTY 3 115.00	13305.4	533342	WJCCTY 3 115.00	13379.6
533344	WJCCTYW3 115.00	13215.6	533344	WJCCTYW3 115.00	13288.8
532834	BLSTM1X1 13.800	69577.9	532834	BLSTM1X1 13.800	69787.3
533347	NMANHT3 115.00	12560.6	533347	NMANHT3 115.00	12582.6
533350	SMAN_W_3 115.00	12693.9	585070	GEN-2015-069230.00	6790.7
585070	GEN-2015-069230.00	6745.2	533359	UNIONRG3 115.00	3899.5
533359	UNIONRG3 115.00	3888.1	533362	CHAPMAN3 115.00	10632
533362	CHAPMAN3 115.00	10574.4	532851	AUBURN 6 230.00	13694
532851	AUBURN 6 230.00	13627.9	532852	JEC 6 230.00	24350.2
532852	JEC 6 230.00	24214.7	533365	EABILEN3 115.00	7806.5
533365	EABILEN3 115.00	7756.5	532856	SWISVAL6 230.00	22245.7
532856	SWISVAL6 230.00	22145.7	532857	TECHILL6 230.00	11589.7

2017 SP			2025 SP		
Number	Name	3PH(Amp)	Number	Name	3PH(Amp)
532857	TECHILL6 230.00	11549.2	532858	BALDWIN6 230.00	14679.5
532858	BALDWIN6 230.00	14069.5	532861	EMANHAT6 230.00	9667.4
532861	EMANHAT6 230.00	9631.6	532862	MCDOWEL6 230.00	7135.2
532862	MCDOWEL6 230.00	7118.3	532863	MORRIS 6 230.00	14112.2
532863	MORRIS 6 230.00	14034.7	532865	NMANHT6 230.00	8858.6
532865	NMANHT6 230.00	8826.2	533381	SUMMIT 3 115.00	17810
533381	SUMMIT 3 115.00	17249	532872	EMCPHER6 230.00	8677
532872	EMCPHER6 230.00	7870.5	532873	SUMMIT 6 230.00	13755.4
532873	SUMMIT 6 230.00	13175.3	532874	UNIONRG6 230.00	9065.2
532874	UNIONRG6 230.00	8965.9	585100	GEN-2015-073345.00	14433.4
585100	GEN-2015-073345.00	14359.2	585101	G15-073-XFMR34.500	27090.7
585101	G15-073-XFMR34.500	27077.1	532880	AUBURN 1 14.400	66890.7
532880	AUBURN 1 14.400	66693.2	543640	NASH T11 13.800	12268.1
532888	EMANHAT1 18.000	30805.5	585110	GEN-2015-074345.00	7596.9
585110	GEN-2015-074345.00	7559.1	585111	G15-074-XFMR34.500	21614.7
585111	G15-074-XFMR34.500	21591.1	585112	G15-074-GSU134.500	21158.9
585112	G15-074-GSU134.500	21136.8	585113	G15-074-GEN10.6900	874875.6
585113	G15-074-GEN10.6900	874290.2	532890	MORRIS2X1 13.800	39957.5
532890	MORRIS2X1 13.800	39954.3	543643	CRAI T33 13.800	18947.9
543643	CRAI T33 13.800	18917.4	543642	CRAI T22 13.800	19260.9
543642	CRAI T22 13.800	19229	532896	SUMIT2 1 13.800	48676.7
532896	SUMIT2 1 13.800	48128.1	532897	SUMIT3 1 13.800	49665.3
532897	SUMIT3 1 13.800	49094.9	532898	MCDOWL 1 13.800	31059.6

2017 SP			2025 SP		
Number	Name	3PH(Amp)	Number	Name	3PH(Amp)
532898	MCDOWL 1 13.800	31062.2	532901	NMANHX1 14.400	46114.8
532901	NMANHX1 14.400	46029.3	533416	RENO 3 115.00	25767.6
533416	RENO 3 115.00	22149.6	560057	G15-074-TAP 345.00	17844.2
560057	G15-074-TAP 345.00	17634.9	530592	SMOKYHL6 230.00	7091.9
530592	SMOKYHL6 230.00	7026.5	533323	CLAYCTR3 115.00	2979.2
533323	CLAYCTR3 115.00	2978.1	533449	ARNOLD 1 7.2000	21201.8
533449	ARNOLD 1 7.2000	21231.1	532815	SWISV1X1 14.400	36524.8
532815	SWISV1X1 14.400	36552	541150	IATAN 11 13.800	18906.8
541150	IATAN 11 13.800	19151	533471	ARNOLD 2 69.000	7466.2
533471	ARNOLD 2 69.000	7435	533328	FT JCT 3 115.00	14886.8
533328	FT JCT 3 115.00	14797.7	533474	ATCHCST2 115.00	6994.6
533474	ATCHCST2 115.00	6934.9	533244	JARBALO3 115.00	26295.2
533244	JARBALO3 115.00	25524.9	533330	JCTCTY 3 115.00	12738.2
533330	JCTCTY 3 115.00	12673	539639	ELMCREK6 230.00	7440.2
539639	ELMCREK6 230.00	7370.2	583850	GEN-2014-001345.00	7699.9
583850	GEN-2014-001345.00	7652.3			

4 POWER FACTOR ANALYSIS

Since the studied project is a renewable energy project, power factor analysis was performed on three provided cluster scenarios upon SPP's request.

4.1 POWER FACTOR ANALYSIS METHODOLOGY

Power Factor Analysis was performed for the studied wind farm under system intact and contingency conditions. All N-1, three phase stability faults shown in Table 2-1 were analyzed as power flow contingencies. The power factor requirements for the wind farm were determined to maintain the voltage at the POI to the schedule voltage which is the higher of the POI voltage in the provided base case or 1.0 per unit. Fictitious var generator was added to the studied wind farm to maintain the scheduled voltage following all studied contingencies. The MW and Mvar injections from the studied wind farm at the POI were recorded and the power factors were calculated for all contingencies. The most lagging and most leading power factors determine the minimum power factor range capability required for the studied wind farm.

If more than one studied project share the same POI, the projects were grouped together and common power factor requirements were determined for this group of studied projects. With this method, none of the studied projects is required to provide more or less than its fair share of the reactive power requirements at the same POI. If a prior-queued project is connected at the same POI as the studied project, the prior-queued project was not grouped with the studied project since its reactive power requirements was determined in previous studies. However, the voltage schedules of the prior-queued project and the studied project at the same POI were coordinated and the local existing capacitor banks were set to their maximum capability, if necessary.

Per FERC and SPP requirements, if the power factor needed to maintain the scheduled voltage is less than 0.95 lagging or leading, the requirements is limited to 0.95 lagging or leading.

If the required power factor at the POI is beyond the capability of the studied wind turbine, the approximate size of the additional capacitors were determined.

4.2 STUDY RESULTS

Power Factor Analysis was performed to ensure the studied project meets FERC and SPP power factor requirements for wind farm interconnections.

Table 4-1 summarizes the power factor analysis results. The detailed power factor analysis results for each studied contingency are provided in Appendix C. In the 2017SP season model, for Fault #16, outage of the Stranger-Iatan 345kV line, the wind project was observed to require 91% power factor (providing vars) at the Point of Interconnection. Per SPP and FERC requirements, the generating facility shall be designed to meet the requirement of 95% lagging (providing vars) and 95% leading (absorbing vars) to the Point of Interconnection.

Table 4-1 Power Factor Analysis Results

Request	Size (MW)	Generator Model	POI	Scenario	Final PF Requirement	
					Leading[1]	Lagging[2]
GEN-2015-074	174	GE 2.0MW (wind)	JEC (532766) to Hoyt (532765) 345kV Line	16WP	0.981	0.95
				17SP	0.982	0.95
				25SP	0.977	0.962

Notes:

1. Leading is when the generator is absorbing reactive power from the transmission grid.
2. Lagging is when the generator is providing reactive power to the transmission grid.

5 LOW WIND/NO WIND ANALYSIS

In this study, ABB investigated the GEN-2015-074 project for low wind/no wind conditions, since the interconnected wind farm is connected at a 345kV bus.

5.1 LOW/NO WIND ANALYSIS METHODOLOGY

Low wind/No wind analysis is performed to determine the required shunt reactor size at the study project substation high side bus to bring the MVAr flow into the POI down to approximately zero.

For each studied scenario, the studied wind generator and capacitor bank (none in this case) was switched out of service with the collector system as modeled remaining in service. The resulting reactive power injection into the transmission network coming from the capacitance of the project's transmission lines and collector cables was measured. Then, the required shunt reactor size was calculated to bring the MVAr flow into the POI down to approximately zero.

5.2 STUDY RESULTS

Table 5-1 summaries the Low/No Wind analysis results. It is shown that 25.31 MVAr shunt reactor at the substation high side bus (560057) is required to bring the MVAr flow in the POI down to approximately zero under low/no wind conditions for all three studied seasons. This reactor bank size is approximate to be finalized during final facility and collector system design.

Table 5-1 Low/No Wind Analysis Results

Scenario	Reactive Power Injection at POI (MVAr)	Bus 584700 Volt (pu)	Required Shunt Reactor (MVAr)
16WP	25.78	1.0091	**25.31**
17SP	25.86	1.0107	**25.31**
25SP	25.88	1.0111	**25.31**

6 CONCLUSIONS

Southwest Power Pool (SPP) has commissioned ABB Inc., to perform a Definitive Impact Study for DISIS-2015-002 (Group 13) which includes generation interconnection request GEN-2015-074 (174 MW wind farm connected on the JEC to Hoyt 345kV line).

Request	Size (MW)	Generator Model	POI
GEN-2015-074	174.0	GE 2.0 MW	JEC (532766) to Hoyt (532765) 345kV Line

The objective of this study is to evaluate the impact of project GEN-2015-074 on the existing and future planning system. The study is performed on three system scenarios provided by SPP:

- 2016 Winter Peak Case
- 2017 Summer Peak Case
- 2025 Summer Peak Case

Results of the stability analysis show that most disturbances (including all n-1 and stuck breaker disturbances) have no instability problems or voltage violations for all three seasons. However, certain prior outage faults showed unstable conditions. It is noted that the prior outage faults are observed to be unstable with GEN-2015-074 at 0 MW. For any of these prior outages, the GEN-2015-074 will be required to curtail to 0 MW until such time that the lines can be placed back into service. All the simulation results were summarized in Table 2-2, Table 2-3 and Table 2-4.

System short-circuit current levels at up to five buses away from the point of interconnection were calculated and tabulated for SPP's reference.

Power Factor Analysis was performed to ensure the studied project meets FERC and SPP power factor requirements for wind farm interconnections. The results show significant need for reactive power from the study project following the critical contingencies. The proposed GEN-2015-074 need to design their facility to meet the SPP pro-forma 95% lagging (providing vars) and 95% leading (absorbing vars) power factor requirements at the Point of Interconnection.

The Low/No Wind analysis shows that a 25.31 MVAr shunt reactor is required to bring the MVAr flow in the POI down to approximate zero under low/no wind conditions for all three studied seasons. The reactor bank size is approximate and the final size will be determined in the final facility and collector system design.

Based on the results of the stability analysis, it is suggested that the study cases and fault definitions needs further review. Although the simulation results show unstable conditions and

voltage violations, but it is with the studied generator at 0 MW output, it CAN NOT concludes that the proposed GEN-2015-074 project causing the problems.

The results of this analysis are based on available data and assumptions made at the time of conducting this study. If any of the data and/or assumptions made in developing the study model change, the results provided in this report may not apply.

APPENDIX A SOUTHWEST POWER POOL DISTURBANCE PERFORMANCE CRITERIA REQUIREMENTS

OVERVIEW

These Disturbance Performance Requirements ("Requirements") shall be applicable to the Bulk Electric System within the Southwest Power Pool Planning Area. Utilization of these Requirements applies to all registered entities within the Southwest Power Pool Planning Area. These Requirements shall not be applicable to facilities that are not part of Bulk Electric System. More stringent Requirements are at the sole discretion of each Transmission Owner.

Transient and dynamic stability assessments are generally performed to assure adequate avoidance of loss of generator synchronism and prevention of system voltage collapse within the first 20 seconds after a system disturbance. These Requirements provide a basis for evaluating the system response during the initial transient period following a disturbance on the Bulk Electric System by establishing minimum requirements for machine rotor angle damping and transient voltage recovery.

ROTOR ANGLE DAMPING REQUIREMENT

Machine Rotor Angles shall exhibit well damped angular oscillations [as defined below] and acceptable power swings following a disturbance on the Bulk Electric System for all NERC Category A, B and C events.

Well damped angular oscillations shall meet one of the following two requirements when calculated directly from the rotor angle:

1. Successive Positive Peak Ratio (SPPR) must be less than or equal to 0.95 where SPPR is calculated as follows:

$$\text{SPPR} = \frac{\text{Peak Rotor Angle of 2}^{\text{nd}}\text{ Positive Swing Peak}}{\text{Peak Rotor Angle of 1}^{\text{st}}\text{ Positive Swing Peak}} \leq 0.95$$

-or- Damping Factor % = (1 – SPPR) x 100% ≥ 5%

The machine rotor angle damping ratio may be determined by appropriate modal analysis (i.e. Prony Analysis) where the following equivalent requirement must be met:

Damping Ratio ≥ 0.0081633

2. Successive Positive Peak Ratio Five (SPPR5) must be less than or equal to 0.774 where SPPR5 is calculated as follows:

$$\text{SPPR5} = \frac{\text{Peak Rotor Angle of 5}^{\text{th}}\text{ Positive Swing Peak}}{\text{Peak Rotor Angle of 1}^{\text{st}}\text{ Positive Swing Peak}} \leq 0.774$$

-or- Damping Factor % = (1 – SPPR5) x 100% ≥ 22.6%

The machine rotor angle damping ratio may be determined by appropriate modal analysis (i.e. Prony Analysis) where the following equivalent requirement must be met:

Damping Ratio ≥ 0.0081633

Qualitatively, these Requirements are shown in Figure 1 below.

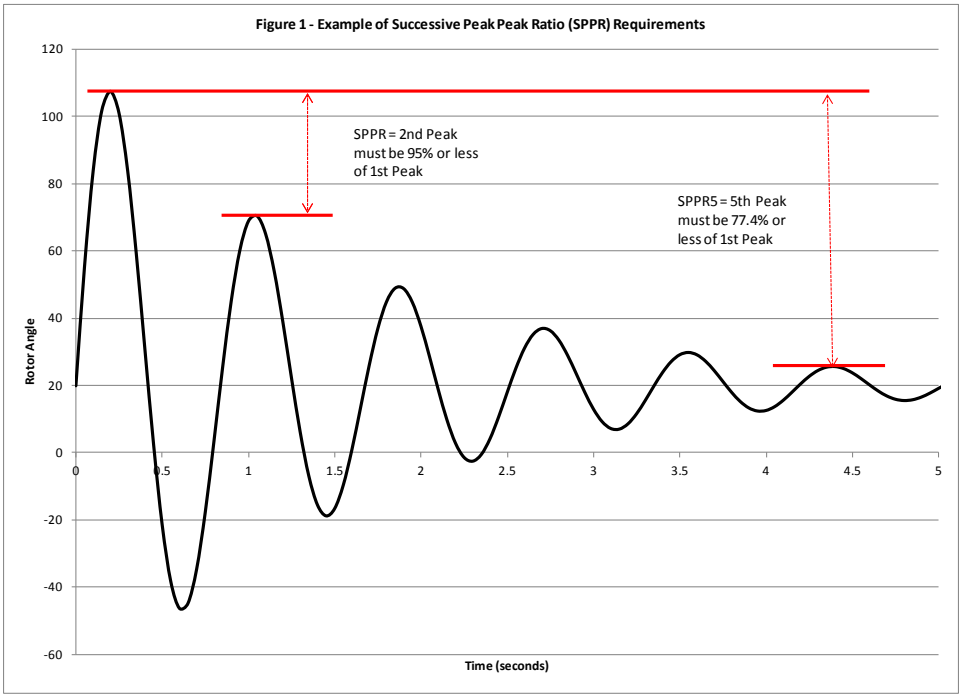

TRANSIENT VOLTAGE RECOVERY REQUIREMENT

After a disturbance is cleared; bus voltages on the Bulk Electric System shall recover above 0.70 per unit, 2.5 seconds after the fault is cleared. Bus voltages shall not swing above 1.20 per unit after the fault is cleared, unless affected transmission system elements are designed to handle the rise above 1.2 per unit. All post-transient voltages must fall between the 0.90 pu and 1.1 pu range at the end of the simulations. Check pre-fault voltage checks to ensure they fall within the 0.90 pu and 1.1 pu.

Qualitatively, this Requirement is shown in Figure 2 below.

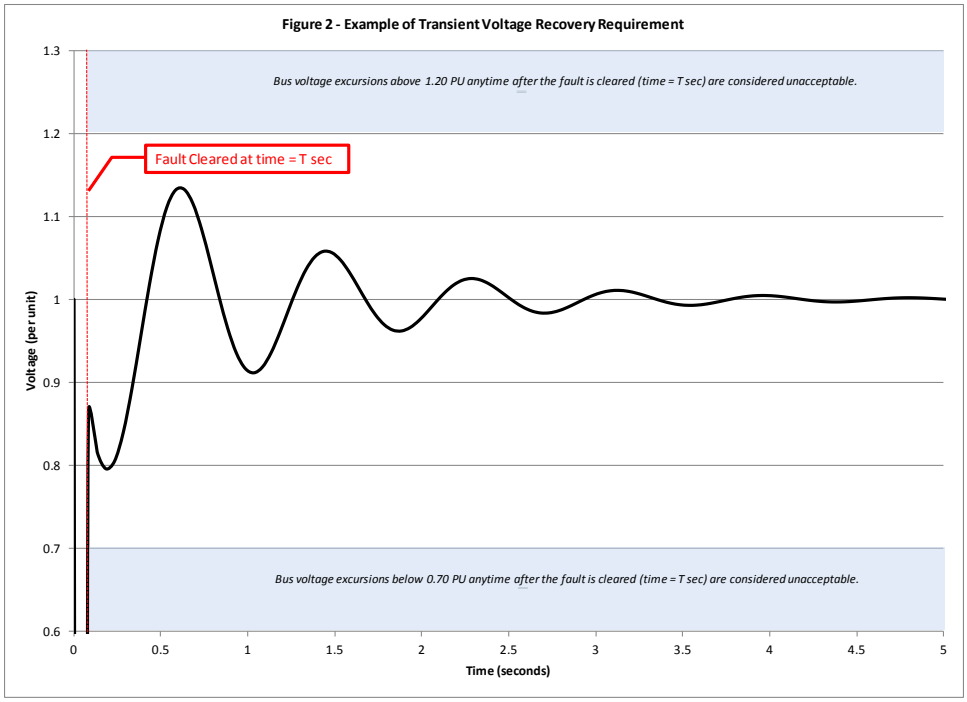

CONFIDENTIAL

APPENDIX B SIMULATION PLOTS FOR STABILITY ANALYSIS

APPENDIX C POWER FACTOR ANALYSIS RESULTS

All the contingency numbers shown in this appendix match with the fault numbers shown in Table 2-1.

C.1 GEN-2015-074 2016 Winter Peak Case

The GEN-2015-074 POI voltage is 1.0065 pu in the provided 2016 winter peak case. Therefore, the power factor requirements for the wind farm were determined to maintain the voltage at the POI to this value. The lowest lagging and leading power factors are highlighted in the table below.

Outage No.		MW	Mvar	PF	
System Intact	0	-171	-10.9	0.998	lagging
Contingency	1	-171	-2.4	1	lagging
Contingency	2	-170.9	14.6	0.996	leading
Contingency	3	-171	-10	0.998	lagging
Contingency	4	-171.1	-48.2	0.962	lagging
Contingency	6	-171.1	-23.7	0.991	lagging
Contingency	7	-171.1	-55.1	0.952	lagging
Contingency	8	-171.1	-27.6	0.987	lagging
Contingency	9	-171.1	-18.7	0.994	lagging
Contingency	10	-171	-14.7	0.996	lagging
Contingency	11	-171.1	-71.4	0.923	lagging
Contingency	12	-171	-13.7	0.997	lagging
Contingency	13	-171	-13.1	0.997	lagging
Contingency	14	-170.8	33.9	**0.981**	leading
Contingency	15	-171	-19.3	0.994	lagging
Contingency	16	-171.1	-66.7	0.932	lagging
Contingency	17	-171.1	-16.4	0.995	lagging
Contingency	18	-171.1	-37.8	0.976	lagging
Contingency	19	-170.9	9.3	0.999	leading
Contingency	25	-171	-19.3	0.994	lagging
Contingency	26	-171.1	-71.4	**0.923**	lagging
Contingency	28	-171	-10	0.998	lagging
Contingency	29	-171.1	-48.2	0.962	lagging
Contingency	31	-171.1	-71.4	0.923	lagging
Contingency	32	-171	-19.3	0.994	lagging
Contingency	33	-171	-2.4	1	lagging
Contingency	35	-170.9	14.6	0.996	leading

C.2 GEN-2015-074 2017 Summer Peak Case

The GEN-2015-074 POI voltage is 1.0081 pu in the provided 2017 summer peak case. Therefore, the power factor requirements for the wind farm were determined to maintain the voltage at the POI to this value. The lowest lagging and leading power factors are highlighted in the table below.

Outage No.		MW	Mvar	PF	
System Intact	0	-171	-9.5	0.998	lagging
Contingency	1	-170.8	25.9	0.989	leading
Contingency	2	-170.8	32.9	**0.982**	leading
Contingency	3	-171	-9.1	0.999	lagging
Contingency	5	-171.1	-50.5	0.959	lagging
Contingency	6	-171	-17	0.995	lagging
Contingency	7	-171.1	-46.1	0.966	lagging
Contingency	8	-171.1	-25.2	0.989	lagging
Contingency	9	-171	-15	0.996	lagging
Contingency	10	-171	-13.2	0.997	lagging
Contingency	11	-171.1	-45.7	0.966	lagging
Contingency	12	-171	-11.7	0.998	lagging
Contingency	13	-171	-12.4	0.997	lagging
Contingency	14	-170.8	28.4	0.986	leading
Contingency	15	-171.1	-27	0.988	lagging
Contingency	16	-171.1	-75.5	**0.915**	lagging
Contingency	17	-171	-14.9	0.996	lagging
Contingency	18	-171.1	-18.8	0.994	lagging
Contingency	19	-170.9	19.7	0.993	leading
Contingency	25	-171.1	-27	0.988	lagging
Contingency	27	-171.1	-45.7	0.966	lagging
Contingency	28	-171	-9.1	0.999	lagging
Contingency	30	-171.1	-50.5	0.959	lagging
Contingency	31	-171.1	-45.7	0.966	lagging
Contingency	32	-171.1	-27	0.988	lagging
Contingency	34	-170.8	25.9	0.989	leading
Contingency	36	-170.8	32.9	**0.982**	leading

C.3 GEN-2015-074 2025 Summer Peak Case

The GEN-2015-074 POI voltage is 1.0085 pu in the provided 2025 summer peak case. Therefore, the power factor requirements for the wind farm were determined to maintain the voltage at the POI to this value. The lowest lagging and leading power factors are highlighted in the table below.

Outage No.		MW	Mvar	PF	
System Intact	0	-171	-9.1	0.999	lagging
Contingency	1	-170.8	30.9	0.984	leading
Contingency	2	-170.8	33.3	0.982	leading
Contingency	3	-171	-9.1	0.999	lagging
Contingency	5	-171.1	-48.9	**0.962**	lagging
Contingency	6	-171.1	-15.2	0.996	lagging
Contingency	7	-171.1	-45.7	0.966	lagging
Contingency	8	-171.1	-24.7	0.99	lagging
Contingency	9	-171.1	-14.1	0.997	lagging
Contingency	10	-171	-12.6	0.997	lagging
Contingency	11	-171.1	-43.6	0.969	lagging
Contingency	12	-171	-11.6	0.998	lagging
Contingency	13	-171.1	-12.1	0.998	lagging
Contingency	14	-170.8	37.1	**0.977**	leading
Contingency	15	-171.1	-43.6	0.969	lagging
Contingency	16	-171.1	-31.4	0.984	lagging
Contingency	18	-171.1	-17.2	0.995	lagging
Contingency	19	-170.9	16.8	0.995	leading
Contingency	25	-171.1	-43.6	0.969	lagging
Contingency	27	-171.1	-43.6	0.969	lagging
Contingency	28	-171	-9.1	0.999	lagging
Contingency	30	-171.1	-48.9	**0.962**	lagging
Contingency	31	-171.1	-43.6	0.969	lagging
Contingency	32	-171.1	-43.6	0.969	lagging
Contingency	34	-170.8	30.9	0.984	leading
Contingency	36	-170.8	33.3	0.982	leading

11.25 R: Group 14 Dynamic Stability Analysis Report

See Powertek report on next page.

Southwestern Power Pool Inc. (SPP)

Definitive Impact Study

DISIS-2015-002 (Group 14)

Report Submitted to
Southwest Power Pool Inc.
February 2016

POWER-tek Global Inc.
Mississauga, Ontario, L4Z 1H8 Canada
647 300 3160
info@powertek-usa.com, www.powertek-usa.com

TABLE OF CONTENTS

1. Executive Summary 1
2. Introduction 3
2.1. Project Overview and Assumptions 3
2.2. Objectives 5
2.3. Models and Simulations Tools Used 5
3. Power Factor Analysis 7
3.1. Methodology 7
3.2. Analysis 7
3.3. Conclusions 20
4. Inductive Reactive Support Analysis 20
5. Short Circuit Analysis 23
5.1. Short circuit Results for 2017 Summer Peak 23
5.1.1. Short Circuit Result for POI SWPA Tupelo 138 kV (505600) 23
5.1.2. Short Circuit Result for POI PSO Johnston County 345kV (514809) 26
5.1.3. Short Circuit Result for POI (Proposed AEP Terry Road 345kV, 560013) 35
5.2. Short circuit Results for 2025 Summer Peak 42
5.2.1. Short Circuit Result for POI SWPA Tupelo 138 kV (505600) 42
5.2.2. Short Circuit Result for POI PSO Johnston County 345kV (514809) 45
5.2.3. Short Circuit Result for POI (Proposed AEP Terry Road 345kV, 560013) 54
6. Stability Analysis for Cluster Scenario 61
6.1. Faults Simulated 61
6.2. Simulation Results for Cluster Scenario 78
7. Stability Analysis for Stand-Alone Scenarios 79
7.1. Fault Simulated for ASGI-2015-006 Request 79
7.2. Fault Simulated for GEN-2015-036 Request 88
7.3. Fault Simulated for GEN-2015-045 Request 94
7.4. Fault simulated for GEN-2015-092 Request 99
7.5. Simulation Results for Stand-Alone Scenarios 105
8. Conclusions 106
9. Appendix A: 2016 Winter Peak Case Stability Run Plots – Cluster 107
10. Appendix B: 2017 Summer Peak Case Stability Run Plots – Cluster 107
11. Appendix C: 2025 Summer Peak Case Stability Run Plots – Cluster 107
12. Appendix D: Project Model Data 107
13. Appendix E1: 2016 Winter Peak Case Stability Run Plots for ASGI-2015-006 Stand-Alone Scenario 107
14. Appendix E2: 2017 Summer Peak Case Stability Run Plots for ASGI-2015-006 Stand-Alone Scenario 107
15. Appendix E3: 2025 Summer Peak Case Stability Run Plots for ASGI-2015-006 Stand-Alone Scenario 107
16. Appendix F1: 2016 Winter Peak Case Stability Run Plots for GEN-2015-036-Alone Scenario 107
17. Appendix F2: 2017 Summer Peak Case Stability Run Plots for GEN-2015-036 Stand-Alone Scenario 107
18. Appendix F3: 2025 Summer Peak Case Stability Run Plots for GEN-2015-036 Stand-Alone Scenario 107
19. Appendix G1: 2016 Winter Peak Case Stability Run Plots for GEN-2015-045 Stand-Alone Scenario 107
20. Appendix G2: 2017 Summer Peak Case Stability Run Plots for GEN-2015-045 Stand-Alone Scenario 107
21. Appendix G3: 2025 Summer Peak Case Stability Run Plots for GEN-2015-045 Stand-Alone Scenario 107
22. Appendix H1: 2016 Winter Peak Case Stability Run Plots for GEN-2015-092 Stand-Alone Scenario 107
23. Appendix H2: 2017 Summer Peak Case Stability Run Plots for GEN-2015-092 Stand-Alone Scenario 107
24. Appendix H3: 2025 Summer Peak Case Stability Run Plots for GEN-2015-092 Stand-Alone Scenario 107

1. Executive Summary

The DISIS-2015-002 (Group 14) Impact Study is a generation interconnection study performed by POWER-tek Global Inc. for Southwest Power Pool (SPP). This report presents the results of impact study comprising of power factor, short circuit, and stability analyses for both cluster and stand-aAlone scenarios of the proposed interconnection projects under DISIS-2015-002 (Group 14) ("The Projects") as described in Table 1.1 below:

Table 1.1: Interconnection Request

Request	Size (MW)	Generator Model	Point of Interconnection (POI)
ASGI-2015-006	9.0	Eaton Xpert Solar 1500kW Inverter (solar)	SWPA Tupelo 138 kV (505600)
GEN-2015-036	303.6	Siemens 2.3 MW (wind)	PSO Johnston County 345kV (514809)
GEN-2015-045	20.0	Parker 890GT-B 2.0MW inverters (battery storage)	LES (511468) to Sunnyside (515136) 345kV (Proposed AEP Terry Road 345kV, 560013)
GEN-2015-092	250.0	GE 2.0MW (wind)	LES (511468) to Sunnyside (515136) 345kV (Proposed AEP Terry Road 345kV, 560013)

Power factor analysis, short circuit analysis up to 5 Buses away from each point of interconnection (POI), and transient stability simulations were performed for the Projects in service at its full output. SPP provided three base cases for Winter-2016, Summer-2017, and Summer-2025, each comprising of a power flow, sequence data and corresponding dynamics database. The previous queued request projects were already modeled in the base cases. The power factor analysis consists of running all N-1, three phase contingencies shown in the Fault Definitions table (Table 3 in the RFP) in power flow to advise the necessary power factor at the POI for each contingency.

The power factor analysis indicates that interconnection requests i.e., ASGI-2015-006, GEN-2015-036, GEN-2015-045, and GEN-2015-092 are required to provide reactive power as indicated in Tables 3.2.2 through 3.2.4.

Per the SPP OATT, the Interconnection Customer will be required to provide 95% lagging (supplying vars) and 95% leading (absorbing vars) at the POI.

To offset the capacitive effects of the collector system and transmission line of the wind farm under low wind or no wind conditions, the inductive reactive support analysis for wind generator ASGI-2015-006 performed for Summer-2017 scenario which indicates that at POI (SWPA Tupelo 138 kV (505600)) 0.1 MVAR reactor is required at Bus 585330 to maintain zero MVAR flow at POI. For GEN-2015-036 the analysis indicates that at POI (PSO Johnston County 345kV (514809)) 11.1 MVAR reactor is required at Bus 584780 to maintain zero MVAR flow at POI. Similarly,

for GEN-2015-045 and GEN-2015-092 the analysis indicates that at POI (LES (511468) to Sunnyside (515136) 345kV (Proposed AEP Terry Road 345kV, 560013) 3.8 MVAR reactor is required at Bus 585280 to maintain zero MVAR flow at POI. Maintaining zero MVar flow at the POI at all times is not possible with static reactor banks. It will be determined on a case by case basis for each generator as to whether additional reactor banks are required for low wind conditions.

There are no impacts on the stability performance of the SPP system during both cluster and stand-alone scenarios for the contingencies tested on the provided base cases. The study machines stayed on-line and stable for all simulated faults. The Project stability simulations with seventy three (73) specified test disturbances did not show instability problems in the SPP system. Any oscillations were damped out.

2. Introduction

2.1. Project Overview and Assumptions

The DISIS-2015-002 (Group 14) Impact Study is a generation interconnection study performed by POWER-tek Global Inc. for SPP. This report presents the results of impact study comprising of power factor, short circuit analysis, and stability analyses for both cluster and stand-alone scenarios of the proposed interconnection projects under DISIS-2015-002 (Group 14) ("The Projects") as described in Table 2.1.1 below:

Table 2.1.1: Interconnection requests

Request	Size (MW)	Wind Turbine Model	Point of Interconnection
ASGI-2015-006	9.0	Eaton Xpert Solar 1500kW Inverter (solar)	SWPA Tupelo 138 kV (505600)
GEN-2015-036	303.6	Siemens 2.3 MW (wind)	PSO Johnston County 345kV (514809)
GEN-2015-045	20.0	Parker 890GT-B 2.0MW inverters (battery storage)	LES (511468) to Sunnyside (515136) 345kV (Proposed AEP Terry Road 345kV, 560013)
GEN-2015-092	250.0	GE 2.0MW (wind)	LES (511468) to Sunnyside (515136) 345kV (Proposed AEP Terry Road 345kV, 560013)

Figure 2.1.1, Figure 2.1.2, and Figure 2.1.3 respectively show the single line diagram for the interconnection of the Projects to present and planned system of SPP. This arrangement was modeled and studied in power flow cases for these projects.

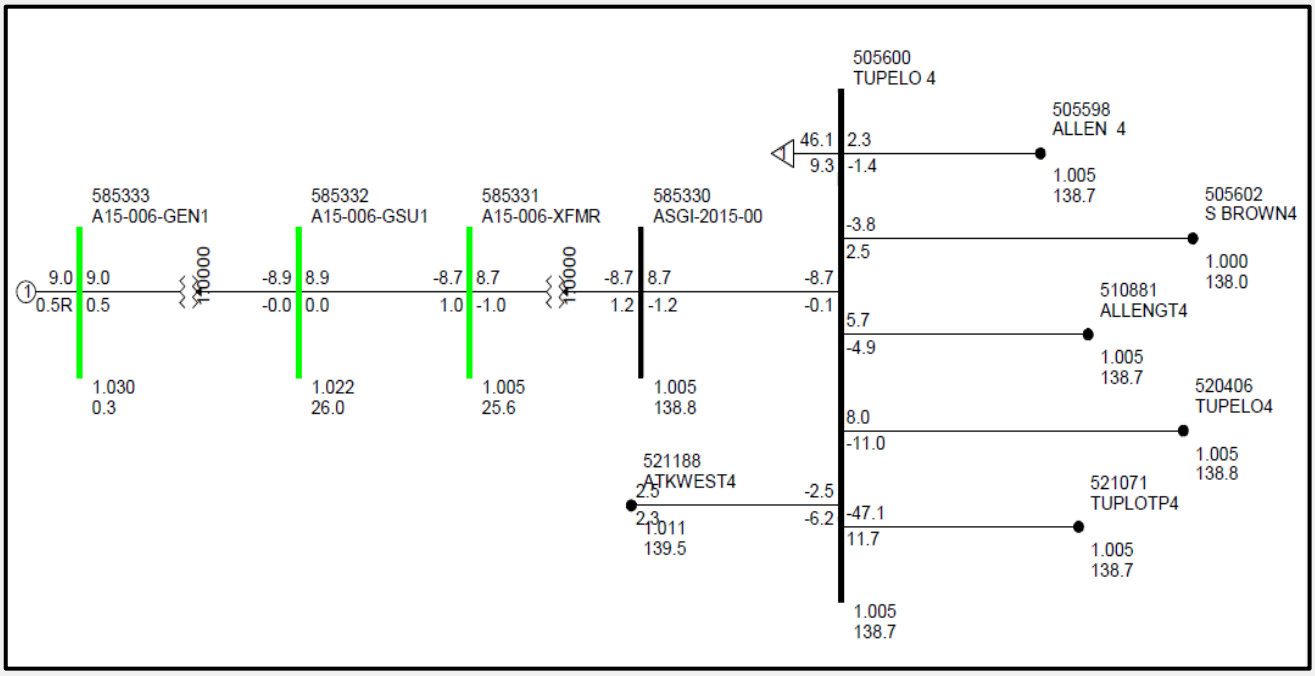

Figure 2.1.1: Power flow single line diagram for ASGI-2015-006 and surrounding system components

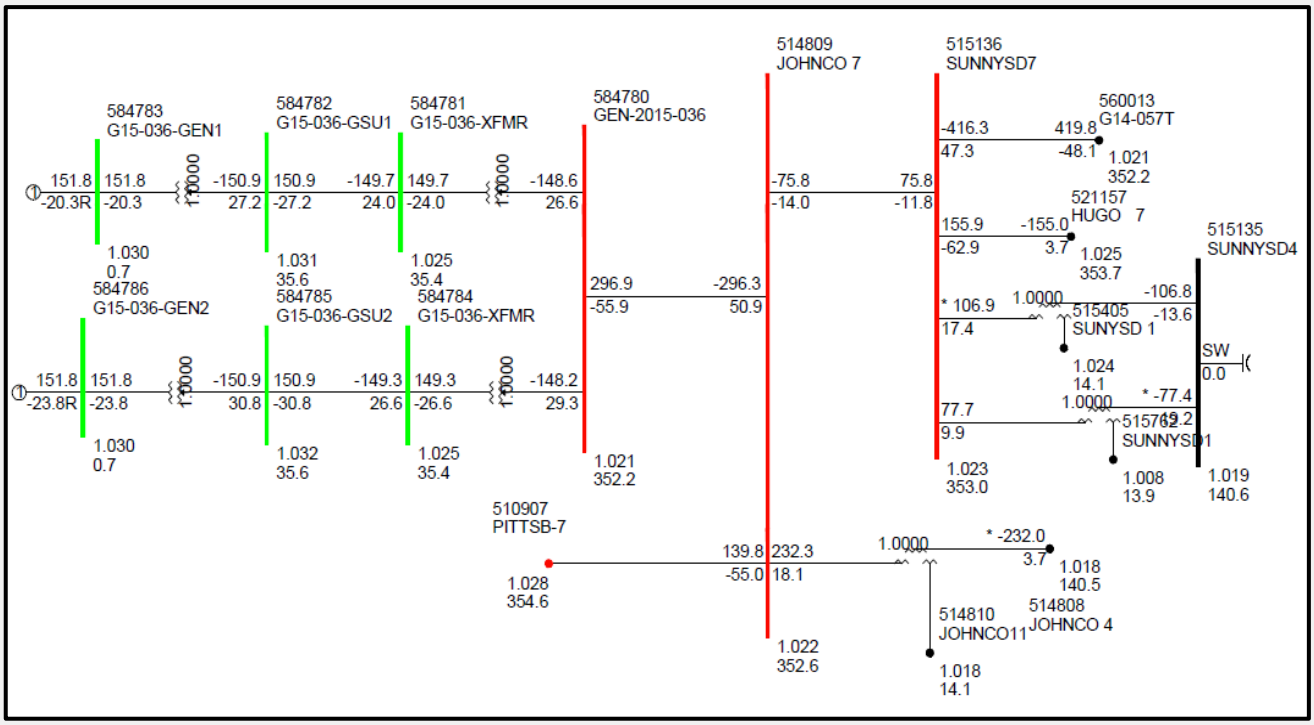

Figure 2.1.2: Power flow single line diagram for GEN-2015-036 and surrounding system components

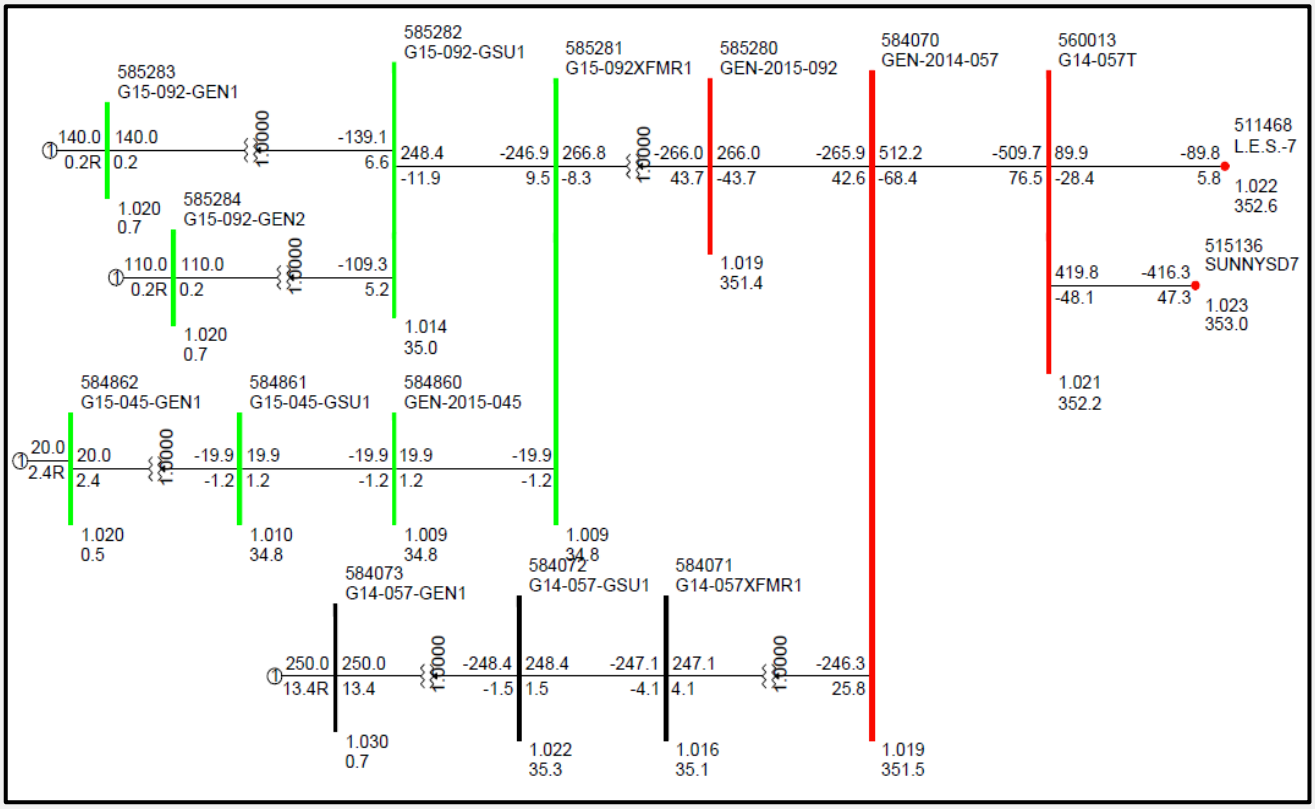

Figure 2.1.3: Power flow single line diagram for GEN-2015-045, and GEN-2015-092 and surrounding system components

Appendix-D contains the machines, interconnection, and machines user model parameters.

Table 2.1.2 below shows the list of prior queued projects modeled in the base case.

Table 2.1.2: List of previous queued request projects

Request	Size (MW)	Wind Turbine Model	Point of Interconnection
GEN-2011-040	110.4	Siemens 2.3MW	Tap Ratliff – Poolville 138kV (562038)
GEN-2011-050	109.8	Vestas V90 1.8MW	Tap on the Rushspt4 to Ommarl04 138kV line (G11_050-TAP 138kV, 562081)
GEN-2012-004	41.4MW increase (total output 151.8MW)	Siemens 2.3MW	Tap Ratliff – Poolville 138kV (562038)
GEN-2013-007	100.0	Vestas V100 2.0MW	Arbuckle to Jollyville 138kV (560719)
GEN-2014-057	250.0	GE 2.0MW	LES (511468) to Sunnyside (515136) 345kV (Proposed AEP Terry Road 345kV, 560013)

ATC (Available Transfer Capability) studies were not performed as part of this study. These studies will be required at the time transmission service is actually requested. Additional transmission upgrades may be required based on that analysis.

Study assumptions in general have been based on the specific information and data provided by SPP. The accuracy of the conclusions contained within this study is dependent on the assumptions made with respect to other generation additions and transmission improvements planned by other entities. Changes in the assumptions of the timing of other generation additions or transmission improvements may affect this study's conclusions.

2.2. Objectives

The objectives of the study are to conduct power factor analysis and to determine the impact on system stability of interconnecting the proposed wind farms to SPP's transmission system.

2.3. Models and Simulations Tools Used

Version 32.2.0 of the Siemens, PSS/E^{TM} power system simulation program was used in this study.

SPP provided its latest stability database cases for Winter-2016, Summer-2017, and summer-2025 peak seasons. The Project's PSS/E model had been developed prior to this study and was included in the power flow case and the dynamics database. Machines, interconnection and dynamic model data for the Project plants is provided in Appendix D.

Power flow single line diagram of the projects in winter 2016 peak condition are shown in Figure 2.1.1, Figure 2.1.2, and Figure 2.1.3 respectively. These Figures shows that wind farms model includes representation of the radial

transmission line, the substation transformer from transmission voltage (138kV and 345kV) to 34.5V. The remainder of each wind farm is represented by lumped equivalents including a generator, a step-up transformer, and collector system impedance.

No special modeling is required of line relays in these cases, except for the special modeling related to the wind-turbine tripping.

All generators in Areas 520, 524, 525, 526, 531, 534, 536 were monitored.

3. Power Factor Analysis

3.1. Methodology

Power factor analysis was conducted for the Project using the following methodology:

1. Replace the wind farm by a generator at the high side bus 345 kV, 138 kV, 115kV, or 69 kV bus, as applicable, with the MW of the wind farms at that point of interconnection.
2. Turn off the wind farm as modeled (as well as previous queued projects at the same point of interconnection).
3. Model a var generator at the Project's high voltage side, 345 kV, 138 kV, 115kV, or 69kV bus, as applicable. The var generator is set to hold a voltage schedule at the POI consistent with the voltage schedule in the provided power flow cases for summer and winter or 1.0 pu voltage, whichever is higher.
4. Perform the steady state contingency analysis to determine the power factor necessary at the POI for each contingency.
5. If the required power factor at the POI is beyond the capability of the studied wind turbines to meet (at the POI) capacitor banks may be considered for the stability analysis. The preference is to locate the capacitance banks on the 34.5 kV customer side. Factors to sizing capacitor banks include:
   - 5.1. The ability of the wind farm to meet FERC Order 661A (low voltage ride through) with and without capacitor banks.
   - 5.2. The ability of the wind farm to meet FERC Order 661A (wind farm recovery to pre-fault voltage).
   - 5.3. If wind farms trips on high voltage, power factor lower than unity may be required.

3.2. Analysis

Analysis was performed for the proposed Projects with all prior queued projects in service. A var generator was modeled at the point of interconnection and was set to hold a voltage schedule at the POI consistent with the voltage schedule in the provided power flow cases OR 1 p.u. whichever is higher. The voltages for these Projects are summarized in Table 3.2.1. All upgrades and instructions were made in the base cases. No other changes were made in the base cases provided, other than the addition of the var generators. Contingency analysis was run for provided list of contingencies.

Table 3.2.1: POI voltages for the summer and winter peak cases

Request	Point of Interconnection	Size (MW)	Base Case Voltage (p.u.)		
			Winter 2016 Peak	Summer 2017 Peak	Summer 2025 Peak
ASGI-2015-006	SWPA Tupelo 138 kV (505600)	9.0	1.005	1.0	1.020
GEN-2015-036	PSO Johnston County 345kV (514809)	303.6	1.022	1.019	1.021
GEN-2015-045	LES (511468) to Sunnyside (515136) 345kV (Proposed AEP Terry Road 345kV, 560013)	20.0	1.021	1.019	1.020
GEN-2015-092	LES (511468) to Sunnyside (515136) 345kV (Proposed AEP Terry Road 345kV, 560013)	250.0	1.021	1.019	1.020

The details of the var requirement during contingencies are highlighted in Table 3.2.2, 3.2.3 and 3.2.4. The highest and the lowest values obtained are highlighted in these tables.

1. For 2016 winter case (ASGI-2015-006 analysis): The maximum var generator supply is 11.3 MVARs at 0.62 (lagging power factor) for the outage of 514809 [JOHNCO 7 345.0] TO BUS 514808 [JOHNCO 4 138.0] T/F outage. The minimum var requirement is -1.9 MVAR at 0.98 (leading power factor) for outage of 515136 [SUNNYSD7 345.0] TO BUS 515135 [SUNNYSD4 138.0] T/F outage.
2. For 2016 winter case (GEN-2015-036 analysis): The maximum var generator supply is 19.3 MVARs at 1.0 (lagging power factor) for the outage of 514809 [JOHNCO 7 345.0] TO BUS 515136 [SUNNYSD7 345.0] CKT outage and 514809 [JOHNCO 7 345.0] TO BUS 510907 [PITTSB-7 345.0] CKT outage. The minimum var requirement is -69.1 MVARs at 0.98 (leading power factor) for the outage of 514809 [JOHNCO 7 345.0] TO BUS 514808 [JOHNCO 4 138.0] T/F outage.
3. For 2016 winter case (GEN-2015-045 and GEN-2015-092 analysis): The maximum var generator supply is -30.5 MVARs at 1.0 (leading power factor) for the outage of 560013 [G14-057T 345.0] TO BUS 515136 [SUNNYSD7 345.0] CKT outage. The minimum var requirement is -94.2 MVAR at 0.98 (leading power factor) for outage of 511468 [L.E.S.-7 345.0] TO BUS 511467 [L.E.S.-4 138.0] T/F outage.

Table 3.2.2: Var Generator output in 2016 winter peak case for DISIS-2015-002 (Group 14)

2016 winter Peak Case Power Factor Study:

Generation Interconnection Request Analysis Rated MW of Wind Farms OR at POI (MW) Rated MVAR of Wind Farms OR at POI (MVAR)						**ASGI-2015-006** MW at POI **9.0** MVAR at POI **4.1**		**GEN-2015-036** MW at POI **303.6** MVAR at POI **147.0**		**GEN-2015-045 AND GEN-2015-092** MW at POI **520.0** MVAR at POI **212.9**	
Cont. Name	**From Bus (# & Name)**		**To Bus (# & Name)**		**ID**	**MVAR at POI**	**P.F at POI**	**MVAR at POI**	**P.F at POI**	**MVAR at POI**	**P.F at POI**
	Base Case MVAR Flow				N/A	0.1	1.00	-49.0	0.99	-76.7	0.99
FLT01-3PH	505600	TUPELO 4 138.0	510881	ALLENGT4 138.0	CKT 1	1.8	0.98	-48.8	0.99	-76.6	0.99
FLT02-3PH	505600	TUPELO 4 138.0	505598	ALLEN 4 138.0	CKT 1	0.9	1.00	-48.8	0.99	-76.7	0.99
FLT03-3PH	505600	TUPELO 4 138.0	521071	TUPLOTP4 138.0	CKT 1	1.8	0.98	-47.0	0.99	-75.8	0.99
FLT04-3PH	505600	TUPELO 4 138.0	505602	S BROWN4 138.0	CKT 1	-1.2	0.99	-46.5	0.99	-75.8	0.99

Generation Interconnection Request Analysis Rated MW of Wind Farms OR at POI (MW) Rated MVAR of Wind Farms OR at POI (MVAR)						ASGI-2015-006 MW at POI **9.0** MVAR at POI **4.1**		GEN-2015-036 MW at POI **303.6** MVAR at POI **147.0**		GEN-2015-045 AND GEN-2015-092 MW at POI **520.0** MVAR at POI **212.9**	
Cont. Name	**From Bus (# & Name)**		**To Bus (# & Name)**		**ID**	**MVAR at POI**	**P.F at POI**	**MVAR at POI**	**P.F at POI**	**MVAR at POI**	**P.F at POI**
FLT05-3PH	505600	TUPELO 4 138.0	520406	TUPELO4 138.0	CKT 1	8.2	0.74	-48.4	0.99	-76.4	0.99
FLT06-3PH	505600	TUPELO 4 138.0	521188	ATKWEST4 138.0	CKT 1	5.0	0.87	-48.2	0.99	-76.4	0.99
FLT07-3PH	505602	S BROWN4 138.0	521044	RUSSETT4 138.0	CKT 1	1.3	0.99	-49.2	0.99	-77.0	0.99
FLT08-3PH	510880	COALGTP4 138.0	510895	LEHIGH-4 138.0	CKT 1	2.7	0.96	-48.7	0.99	-76.7	0.99
FLT09-3PH	510881	ALLENGT4 138.0	510935	EXPCOLT4 138.0	CKT 1	0.1	1.00	-49.0	0.99	-77.0	0.99
FLT10-3PH	505598	ALLEN 4 138.0	505596	EXPLOR 4 138.0	CKT 1	1.8	0.98	-48.5	0.99	-76.5	0.99
FLT11-3PH	521071	TUPLOTP4 138.0	515192	LULA 4 138.0	CKT 1	10.7	0.64	-47.1	0.99	-76.4	0.99
FLT12-3PH	505602	S BROWN4 138.0	521109	KRSYJCTS4 138.0	CKT 1	0.8	1.00	-47.8	0.99	-76.3	0.99
FLT13-3PH	505602	S BROWN4 138.0	515159	COLBRTP4 138.0	CKT 1	0.5	1.00	-48.3	0.99	-76.5	0.99
FLT14-3PH	514809	JOHNCO 7 345.0	515136	SUNNYSD7 345.0	CKT 1	0.2	1.00	-31.5	0.99	-73.6	0.99
FLT15-3PH	514809	JOHNCO 7 345.0	510907	PITTSB-7 345.0	CKT 1	2.6	0.96	-2.0	1.00	-63.6	0.99
FLT16-3PH	514809	JOHNCO 7 345.0	514808	JOHNCO 4 138.0	T/F	11.3	0.62	-69.1	0.98	-76.0	0.99
FLT17-3PH	510907	PITTSB-7 345.0	510925	KIOWA 7 345.0	CKT 1	0.1	1.00	-49.0	0.99	-76.7	0.99
FLT18-3PH	510907	PITTSB-7 345.0	515045	SEMINOL7 345.0	CKT 1	-1.0	0.99	-62.1	0.98	-79.5	0.99
FLT19-3PH	510907	PITTSB-7 345.0	510911	VALIANT7 345.0	CKT 1	3.9	0.92	-33.0	0.99	-67.6	0.99

Generation Interconnection Request Analysis Rated MW of Wind Farms OR at POI (MW) Rated MVAR of Wind Farms OR at POI (MVAR)						ASGI-2015-006 MW at POI **9.0** MVAR at POI **4.1**		GEN-2015-036 MW at POI **303.6** MVAR at POI **147.0**		GEN-2015-045 AND GEN-2015-092 MW at POI **520.0** MVAR at POI **212.9**	
Cont. Name	**From Bus (# & Name)**		**To Bus (# & Name)**		**ID**	**MVAR at POI**	**P.F at POI**	**MVAR at POI**	**P.F at POI**	**MVAR at POI**	**P.F at POI**
FLT20-3PH	510907	PITTSB-7 345.0	515422	C-RIVER7 345.0	CKT 1	1.7	0.98	-44.6	0.99	-75.3	0.99
FLT21-3PH	510911	VALIANT7 345.0	521157	HUGO 7 345.0	CKT 1	-0.8	1.00	-49.2	0.99	-83.0	0.99
FLT22-3PH	515136	SUNNYSD7 345.0	515135	SUNNYSD4 138.0	T/F	-1.9	0.98	-62.5	0.98	-86.3	0.99
FLT23-3PH	560013	G14-057T 345.0	515136	SUNNYSD7 345.0	CKT 1	1.8	0.98	-61.7	0.98	-30.5	1.00
FLT24-3PH	560013	G14-057T 345.0	511468	L.E.S.-7 345.0	CKT 1	2.1	0.97	-22.6	1.00	-40.0	1.00
FLT25-3PH	560064	G15-093T 345.0	515800	GRACMNT7 345.0	CKT 1	0.1	1.00	-49.0	0.99	-51.5	1.00
FLT26-3PH	511468	L.E.S.-7 345.0	511456	O.K.U.-7 345.0	CKT 1	-0.6	1.00	-52.1	0.99	-66.5	0.99
FLT27-3PH	511468	L.E.S.-7 345.0	511467	L.E.S.-4 138.0	T/F	-0.6	1.00	-53.2	0.98	-94.2	0.98
FLT28-3PH	511456	O.K.U.-7 345.0	560027	G14-074-TAP 345.0	CKT 1	0.3	1.00	-46.2	0.99	-63.2	0.99
FLT29-3PH	515800	GRACMNT7 345.0	514801	MINCO 7 345.0	CKT 1	0.2	1.00	-42.5	0.99	-77.9	0.99
FLT30-3PH	515800	GRACMNT7 345.0	511553	CHISHOLM7 345.0	CKT 1	-1.0	0.99	-46.6	0.99	-65.2	0.99
FLT31-3PH	515800	GRACMNT7 345.0	515802	GRACMNT4 138.0	T/F	0.1	1.00	-48.8	0.99	-77.1	0.99
FLT32-3PH	515045	SEMINOL7 345.0	514934	DRAPER 7 345.0	CKT 1	-1.0	0.99	-49.2	0.99	-76.3	0.99
FLT33-3PH	515422	C-RIVER7 345.0	515224	MUSKOGE7 345.0	CKT 1	-0.4	1.00	-52.3	0.99	-76.0	0.99
FLT34-PO	505600	TUPELO 4 138.0	505602	S BROWN4 138.0	CKT 1	-0.2	1.00	-45.4	0.99	-75.3	0.99

Generation Interconnection Request Analysis Rated MW of Wind Farms OR at POI (MW) Rated MVAR of Wind Farms OR at POI (MVAR)						ASGI-2015-006 MW at POI **9.0** MVAR at POI **4.1**		GEN-2015-036 MW at POI **303.6** MVAR at POI **147.0**		GEN-2015-045 AND GEN-2015-092 MW at POI **520.0** MVAR at POI **212.9**	
Cont. Name	**From Bus (# & Name)**		**To Bus (# & Name)**		**ID**	**MVAR at POI**	**P.F at POI**	**MVAR at POI**	**P.F at POI**	**MVAR at POI**	**P.F at POI**
	505600	TUPELO 4 138.0	521071	TUPLOTP4 138.0	CKT 1						
FLT35-PO	505600	TUPELO 4 138.0	521188	ATKWEST4 138.0	CKT 1	7.0	0.79	-46.0	0.99	-75.5	0.99
	505600	TUPELO 4 138.0	521071	TUPLOTP4 138.0	CKT 1						
FLT38-PO	514809	JOHNCO 7 345.0	515136	SUNNYSD7 345.0	CKT 1	5.0	0.87	19.3	1.00	-69.5	0.99
	514809	JOHNCO 7 345.0	510907	PITTSB-7 345.0	CKT 1						
FLT39-PO	510907	PITTSB-7 345.0	515045	SEMINOL7 345.0	CKT 1	1.0	0.99	-60.2	0.98	-78.8	0.99
	510907	PITTSB-7 345.0	515422	C-RIVER7 345.0	CKT 1						

4. For 2017 summer case (ASGI-2015-006 analysis): The maximum var generator supply is 24.4 MVARs at 0.35 (lagging power factor) for the outage of 514809 [JOHNCO 7 345.0] TO BUS 514808 [JOHNCO 4 138.0] T/F outage. The minimum var requirement is 3.2 MVAR at 0.94 (lagging power factor) for outage of 505600 [TUPELO 4 138.0] TO BUS 505602 [S BROWN4 138.0] CKT outage.
5. For 2017 summer case (GEN-2015-036 analysis): The maximum var generator supply is 26.3 MVARs at 1.0 (lagging power factor) for the outage of 514809 [JOHNCO 7 345.0] TO BUS 515136 [SUNNYSD7 345.0] CKT outage and 514809 [JOHNCO 7 345.0] TO BUS 510907 [PITTSB-7 345.0] CKT outage. The minimum var requirement is -66.5 MVARs at 0.98 (leading power factor) for the outage of 514809 [JOHNCO 7 345.0] TO BUS 514808 [JOHNCO 4 138.0] T/F outage.
6. For 2017 summer case (GEN-2015-045 and GEN-2015-092 analysis): The maximum var generator supply is -30.4 MVARs at 1.0 (leading power factor) for the outage of 560013 [G14-057T 345.0] TO BUS 511468 [L.E.S.-7 345.0] CKT outage. The minimum var requirement is -87.6 MVAR at 0.99 (leading power factor) for outage of 511468 [L.E.S.-7 345.0] TO BUS 511467 [L.E.S.-4 138.0] T/F outage.

Table 3.2.3: Var generator output in 2017 summer peak case for DISIS-2015-002 (Group 14)

2017 summer Peak Case Power Factor Study:

Generation Interconnection Request Analysis Rated MW of Wind Farms OR at POI (MW) Rated MVAR of Wind Farms OR at POI (MVAR)						**ASGI-2015-006** MW at POI **9.0** MVAR at POI **4.1**		**GEN-2015-036** MW at POI **303.6** MVAR at POI **147.0**		**GEN-2015-045 AND GEN-2015-092** MW at POI **520.0** MVAR at POI **212.9**	
Cont. Name	**From Bus (# & Name)**		**To Bus (# & Name)**		**ID**	**MVAR at POI**	**P.F at POI**	**MVAR at POI**	**P.F at POI**	**MVAR at POI**	**P.F at POI**
	Base Case MVAR Flow				N/A	8.1	0.74	-40.5	0.99	-73.3	0.99
FLT01-3PH	505600	TUPELO 4 138.0	510881	ALLENGT4 138.0	CKT 1	9.7	0.68	-40.4	0.99	-73.2	0.99
FLT02-3PH	505600	TUPELO 4 138.0	505598	ALLEN 4 138.0	CKT 1	6.0	0.83	-41.0	0.99	-73.5	0.99
FLT03-3PH	505600	TUPELO 4 138.0	521071	TUPLOTP4 138.0	CKT 1	11.2	0.63	-37.3	0.99	-72.1	0.99
FLT04-3PH	505600	TUPELO 4 138.0	505602	S BROWN4 138.0	CKT 1	3.2	0.94	-36.7	0.99	-72.0	0.99
FLT05-3PH	505600	TUPELO 4 138.0	520406	TUPELO4 138.0	CKT 1	12.9	0.57	-40.1	0.99	-73.1	0.99
FLT06-3PH	505600	TUPELO 4 138.0	521188	ATKWEST4 138.0	CKT 1	13.6	0.55	-39.8	0.99	-73.0	0.99
FLT07-3PH	505602	S BROWN4 138.0	521044	RUSSETT4 138.0	CKT 1	13.1	0.57	-42.6	0.99	-73.9	0.99
FLT08-3PH	510880	COALGTP4 138.0	510895	LEHIGH-4 138.0	CKT 1	11.3	0.62	-40.2	0.99	-73.2	0.99
FLT09-3PH	510881	ALLENGT4 138.0	510935	EXPCOLT4 138.0	CKT 1	3.5	0.93	-41.5	0.99	-73.7	0.99
FLT10-3PH	505598	ALLEN 4 138.0	505596	EXPLOR 4 138.0	CKT 1	8.7	0.72	-40.3	0.99	-73.2	0.99
FLT11-3PH	521071	TUPLOTP4 138.0	515192	LULA 4 138.0	CKT 1	23.2	0.36	-36.8	0.99	-72.1	0.99

Generation Interconnection Request Analysis Rated MW of Wind Farms OR at POI (MW) Rated MVAR of Wind Farms OR at POI (MVAR)						ASGI-2015-006 MW at POI **9.0** MVAR at POI **4.1**		GEN-2015-036 MW at POI **303.6** MVAR at POI **147.0**		GEN-2015-045 AND GEN-2015-092 MW at POI **520.0** MVAR at POI **212.9**	
Cont. Name	**From Bus (# & Name)**		**To Bus (# & Name)**		**ID**	**MVAR at POI**	**P.F at POI**	**MVAR at POI**	**P.F at POI**	**MVAR at POI**	**P.F at POI**
FLT12-3PH	505602	S BROWN4 138.0	521109	KRSYJCTS4 138.0	CKT 1	8.7	0.72	-39.7	0.99	-73.0	0.99
FLT13-3PH	505602	S BROWN4 138.0	515159	COLBRTP4 138.0	CKT 1	8.6	0.72	-39.7	0.99	-73.0	0.99
FLT14-3PH	514809	JOHNCO 7 345.0	515136	SUNNYSD7 345.0	CKT 1	9.6	0.68	-19.5	1.00	-69.3	0.99
FLT15-3PH	514809	JOHNCO 7 345.0	510907	PITTSB-7 345.0	CKT 1	11.3	0.62	4.1	1.00	-59.4	0.99
FLT16-3PH	514809	JOHNCO 7 345.0	514808	JOHNCO 4 138.0	T/F	24.4	0.35	-66.5	0.98	-70.4	0.99
FLT17-3PH	510907	PITTSB-7 345.0	510925	KIOWA 7 345.0	CKT 1	8.1	0.74	-40.4	0.99	-73.2	0.99
FLT18-3PH	510907	PITTSB-7 345.0	515045	SEMINOL7 345.0	CKT 1	6.9	0.79	-56.9	0.98	-76.6	0.99
FLT19-3PH	510907	PITTSB-7 345.0	510911	VALIANT7 345.0	CKT 1	10.6	0.65	-25.5	1.00	-66.3	0.99
FLT20-3PH	510907	PITTSB-7 345.0	515422	C-RIVER7 345.0	CKT 1	10.4	0.65	-37.6	0.99	-72.8	0.99
FLT21-3PH	510911	VALIANT7 345.0	521157	HUGO 7 345.0	CKT 1	7.7	0.76	-41.2	0.99	-76.9	0.99
FLT22-3PH	515136	SUNNYSD7 345.0	515135	SUNNYSD4 138.0	T/F	6.5	0.81	-53.5	0.98	-82.9	0.99
FLT23-3PH	560013	G14-057T 345.0	515136	SUNNYSD7 345.0	CKT 1	10.6	0.65	-39.1	0.99	-31.4	1.00
FLT24-3PH	560013	G14-057T 345.0	511468	L.E.S.-7 345.0	CKT 1	11.1	0.63	-4.8	1.00	-30.4	1.00
FLT25-3PH	560064	G15-093T 345.0	515800	GRACMNT7 345.0	CKT 1	9.2	0.70	-29.2	1.00	-50.0	1.00
FLT26-3PH	511468	L.E.S.-7 345.0	511456	O.K.U.-7 345.0	CKT 1	7.5	0.77	-41.1	0.99	-62.2	0.99

Generation Interconnection Request Analysis Rated MW of Wind Farms OR at POI (MW) Rated MVAR of Wind Farms OR at POI (MVAR)						ASGI-2015-006 MW at POI **9.0** MVAR at POI **4.1**		GEN-2015-036 MW at POI **303.6** MVAR at POI **147.0**		GEN-2015-045 AND GEN-2015-092 MW at POI **520.0** MVAR at POI **212.9**	
Cont. Name	**From Bus (# & Name)**		**To Bus (# & Name)**		**ID**	**MVAR at POI**	**P.F at POI**	**MVAR at POI**	**P.F at POI**	**MVAR at POI**	**P.F at POI**
FLT27-3PH	511468	L.E.S.-7 345.0	511467	L.E.S.-4 138.0	T/F	7.6	0.76	-43.5	0.99	-87.6	0.99
FLT28-3PH	511456	O.K.U.-7 345.0	560027	G14-074-TAP 345.0	CKT 1	8.6	0.72	-35.0	0.99	-53.6	0.99
FLT29-3PH	515800	GRACMNT7 345.0	514801	MINCO 7 345.0	CKT 1	9.1	0.70	-37.4	0.99	-75.5	0.99
FLT30-3PH	515800	GRACMNT7 345.0	511553	CHISHOLM7 345.0	CKT 1	8.5	0.73	-37.3	0.99	-61.9	0.99
FLT31-3PH	515800	GRACMNT7 345.0	515802	GRACMNT4 138.0	T/F	8.2	0.74	-41.3	0.99	-75.7	0.99
FLT32-3PH	515045	SEMINOL7 345.0	514934	DRAPER 7 345.0	CKT 1	8.5	0.73	-40.2	0.99	-73.0	0.99
FLT33-3PH	515422	C-RIVER7 345.0	515224	MUSKOGE7 345.0	CKT 1	8.1	0.74	-40.7	0.99	-72.7	0.99
FLT34-PO	505600	TUPELO 4 138.0	505602	S BROWN4 138.0	CKT 1	5.4	0.86	-35.8	0.99	-71.5	0.99
	505600	TUPELO 4 138.0	521071	TUPLOTP4 138.0	CKT 1						
FLT35-PO	505600	TUPELO 4 138.0	521188	ATKWEST4 138.0	CKT 1	17.0	0.47	-36.2	0.99	-71.8	0.99
	505600	TUPELO 4 138.0	521071	TUPLOTP4 138.0	CKT 1						
FLT38-PO	514809	JOHNCO 7 345.0	515136	SUNNYSD7 345.0	CKT 1	13.5	0.55	26.3	1.00	-65.8	0.99
	514809	JOHNCO 7 345.0	510907	PITTSB-7 345.0	CKT 1						
FLT39-PO	510907	PITTSB-7 345.0	515045	SEMINOL7 345.0	CKT 1	9.1	0.70	-58.4	0.98	-77.8	0.99
	510907	PITTSB-7 345.0	515422	C-RIVER7 345.0	CKT 1						

7. For 2025 summer case (ASGI-2015-006 analysis): The maximum var generator supply is 40.8 MVARs at 0.22 (lagging power factor) for the outage of 514809 [JOHNCO 7 345.0] TO BUS 514808 [JOHNCO 4 138.0] T/F outage. The minimum var requirement is 14.2 MVAR at 0.54 (lagging power factor) for outage of 505600 [TUPELO 4 138.0] TO BUS 505602 [S BROWN4 138.0] CKT outage and 505600 [TUPELO 4 138.0] TO BUS 521071 [TUPLOTP4 138.0] CKT outage.
8. For 2025 summer case (GEN-2015-036 analysis): The maximum var generator supply is 27 MVARs at 1.0 (lagging power factor) for the outage of 514809 [JOHNCO 7 345.0] TO BUS 515136 [SUNNYSD7 345.0] CKT outage and 514809 [JOHNCO 7 345.0] TO BUS 510907 [PITTSB-7 345.0] CKT outage. The minimum var requirement is -72.2 MVARs at 0.97 (leading power factor) for the outage of 514809 [JOHNCO 7 345.0] TO BUS 514808 [JOHNCO 4 138.0] T/F outage.
9. For 2025 summer case (GEN-2015-045 and GEN-2015-092 analysis): The maximum var generator supply is -26.2 MVARs at 1.0 (leading power factor) for the outage of 560013 [G14-057T 345.0] TO BUS 515136 [SUNNYSD7 345.0] CKT outage. The minimum var requirement is -92.2 MVAR at 0.98 (leading power factor) for outage of 511468 [L.E.S.-7 345.0] TO BUS 511467 [L.E.S.-4 138.0] T/F outage.

Table 3.2.3: Var generator output in 2025 summer peak case for DISIS-2015-002 (Group 14)

2025 Summer Peak Case Power Factor Study:

Generation Interconnection Request Analysis Rated MW of Wind Farms OR at POI (MW) Rated MVAR of Wind Farms OR at POI (MVAR)						**ASGI-2015-006** MW at POI **9.0** MVAR at POI **4.1**		**GEN-2015-036** MW at POI **303.6** MVAR at POI **147.0**		**GEN-2015-045 AND GEN-2015-092** MW at POI **520.0** MVAR at POI **212.9**	
Cont. Name	**From Bus (# & Name)**		**To Bus (# & Name)**		**ID**	**MVAR at POI**	**P.F at POI**	**MVAR at POI**	**P.F at POI**	**MVAR at POI**	**P.F at POI**
	Base Case MVAR Flow				N/A	23.2	0.36	-45.1	0.99	-75.1	0.99
FLT01-3PH	505600	TUPELO 4 138.0	510881	ALLENGT4 138.0	CKT 1	23.7	0.36	-44.9	0.99	-75.1	0.99
FLT02-3PH	505600	TUPELO 4 138.0	505598	ALLEN 4 138.0	CKT 1	19.1	0.43	-45.3	0.99	-75.2	0.99
FLT03-3PH	505600	TUPELO 4 138.0	521071	TUPLOTP4 138.0	CKT 1	19.8	0.41	-42.3	0.99	-74.2	0.99
FLT04-3PH	505600	TUPELO 4 138.0	505602	S BROWN4 138.0	CKT 1	18.3	0.44	-42.1	0.99	-74.1	0.99

Generation Interconnection Request Analysis Rated MW of Wind Farms OR at POI (MW) Rated MVAR of Wind Farms OR at POI (MVAR)						ASGI-2015-006 MW at POI **9.0** MVAR at POI **4.1**		GEN-2015-036 MW at POI **303.6** MVAR at POI **147.0**		GEN-2015-045 AND GEN-2015-092 MW at POI **520.0** MVAR at POI **212.9**	
Cont. Name	**From Bus (# & Name)**		**To Bus (# & Name)**		**ID**	**MVAR at POI**	**P.F at POI**	**MVAR at POI**	**P.F at POI**	**MVAR at POI**	**P.F at POI**
FLT05-3PH	505600	TUPELO 4 138.0	520406	TUPELO4 138.0	CKT 1	27.6	0.31	-44.5	0.99	-74.8	0.99
FLT06-3PH	505600	TUPELO 4 138.0	521188	ATKWEST4 138.0	CKT 1	28.3	0.30	-44.3	0.99	-74.9	0.99
FLT07-3PH	505602	S BROWN4 138.0	521044	RUSSETT4 138.0	CKT 1	29.1	0.30	-48.2	0.99	-75.9	0.99
FLT08-3PH	510880	COALGTP4 138.0	510895	LEHIGH-4 138.0	CKT 1	25.3	0.34	-44.8	0.99	-75.1	0.99
FLT09-3PH	510881	ALLENGT4 138.0	510935	EXPCOLT4 138.0	CKT 1	18.5	0.44	-46.0	0.99	-75.5	0.99
FLT10-3PH	505598	ALLEN 4 138.0	505596	EXPLOR 4 138.0	CKT 1	22.2	0.38	-44.4	0.99	-74.9	0.99
FLT11-3PH	521071	TUPLOTP4 138.0	515192	LULA 4 138.0	CKT 1	34.1	0.26	-41.6	0.99	-74.0	0.99
FLT12-3PH	505602	S BROWN4 138.0	521109	KRSYJCTS4 138.0	CKT 1	23.9	0.35	-44.0	0.99	-74.7	0.99
FLT13-3PH	505602	S BROWN4 138.0	515159	COLBRTP4 138.0	CKT 1	23.7	0.36	-44.2	0.99	-74.8	0.99
FLT14-3PH	514809	JOHNCO 7 345.0	515136	SUNNYSD7 345.0	CKT 1	24.5	0.34	-17.6	1.00	-74.4	0.99
FLT15-3PH	514809	JOHNCO 7 345.0	510907	PITTSB-7 345.0	CKT 1	26.0	0.33	-1.0	1.00	-60.9	0.99
FLT16-3PH	514809	JOHNCO 7 345.0	514808	JOHNCO 4 138.0	T/F	40.8	0.22	-72.2	0.97	-70.8	0.99
FLT17-3PH	510907	PITTSB-7 345.0	510925	KIOWA 7 345.0	CKT 1	23.2	0.36	-44.9	0.99	-75.1	0.99
FLT18-3PH	510907	PITTSB-7 345.0	515045	SEMINOL7 345.0	CKT 1	21.7	0.38	-65.4	0.98	-80.4	0.99
FLT19-3PH	510907	PITTSB-7 345.0	510911	VALIANT7 345.0	CKT 1	25.3	0.34	-28.4	1.00	-69.0	0.99

Generation Interconnection Request Analysis Rated MW of Wind Farms OR at POI (MW) Rated MVAR of Wind Farms OR at POI (MVAR)						ASGI-2015-006 MW at POI **9.0** MVAR at POI **4.1**		GEN-2015-036 MW at POI **303.6** MVAR at POI **147.0**		GEN-2015-045 AND GEN-2015-092 MW at POI **520.0** MVAR at POI **212.9**	
Cont. Name	**From Bus (# & Name)**		**To Bus (# & Name)**		**ID**	**MVAR at POI**	**P.F at POI**	**MVAR at POI**	**P.F at POI**	**MVAR at POI**	**P.F at POI**
FLT20-3PH	510907	PITTSB-7 345.0	515422	C-RIVER7 345.0	CKT 1	24.8	0.34	-43.4	0.99	-74.6	0.99
FLT21-3PH	510911	VALIANT7 345.0	521157	HUGO 7 345.0	CKT 1	20.9	0.40	-52.1	0.99	-84.1	0.99
FLT22-3PH	515136	SUNNYSD7 345.0	515135	SUNNYSD4 138.0	T/F	21.7	0.38	-58.1	0.98	-84.8	0.99
FLT23-3PH	560013	G14-057T 345.0	515136	SUNNYSD7 345.0	CKT 1	25.0	0.34	-42.3	0.99	-26.2	1.00
FLT24-3PH	560013	G14-057T 345.0	511468	L.E.S.-7 345.0	CKT 1	26.6	0.32	-5.0	1.00	-33.4	1.00
FLT25-3PH	560064	G15-093T 345.0	515800	GRACMNT7 345.0	CKT 1	23.8	0.35	-38.1	0.99	-55.7	0.99
FLT26-3PH	511468	L.E.S.-7 345.0	511456	O.K.U.-7 345.0	CKT 1	23.5	0.36	-41.4	0.99	-61.0	0.99
FLT27-3PH	511468	L.E.S.-7 345.0	511467	L.E.S.-4 138.0	T/F	22.7	0.37	-49.2	0.99	-92.2	0.98
FLT28-3PH	511456	O.K.U.-7 345.0	560027	G14-074-TAP 345.0	CKT 1	24.4	0.35	-35.9	0.99	-51.9	1.00
FLT29-3PH	515800	GRACMNT7 345.0	514801	MINCO 7 345.0	CKT 1	23.5	0.36	-44.9	0.99	-79.4	0.99
FLT30-3PH	515800	GRACMNT7 345.0	511553	CHISHOLM7 345.0	CKT 1	23.6	0.36	-41.3	0.99	-62.3	0.99
FLT31-3PH	515800	GRACMNT7 345.0	515802	GRACMNT4 138.0	T/F	23.7	0.36	-46.4	0.99	-78.5	0.99
FLT32-3PH	515045	SEMINOL7 345.0	514934	DRAPER 7 345.0	CKT 1	23.7	0.36	-44.2	0.99	-74.5	0.99
FLT33-3PH	515422	C-RIVER7 345.0	515224	MUSKOGE7 345.0	CKT 1	22.9	0.37	-46.6	0.99	-75.4	0.99
FLT34-PO	505600	TUPELO 4 138.0	505602	S BROWN4 138.0	CKT 1	14.2	0.54	-41.6	0.99	-73.9	0.99

Generation Interconnection Request Analysis Rated MW of Wind Farms OR at POI (MW) Rated MVAR of Wind Farms OR at POI (MVAR)						ASGI-2015-006 MW at POI **9.0** MVAR at POI **4.1**		GEN-2015-036 MW at POI **303.6** MVAR at POI **147.0**		GEN-2015-045 AND GEN-2015-092 MW at POI **520.0** MVAR at POI **212.9**	
Cont. Name	**From Bus (# & Name)**		**To Bus (# & Name)**		**ID**	**MVAR at POI**	**P.F at POI**	**MVAR at POI**	**P.F at POI**	**MVAR at POI**	**P.F at POI**
	505600	TUPELO 4 138.0	521071	TUPLOTP4 138.0	CKT 1						
FLT35-PO	505600	TUPELO 4 138.0	521188	ATKWEST4 138.0	CKT 1	25.2	0.34	-41.3	0.99	-73.9	0.99
	505600	TUPELO 4 138.0	521071	TUPLOTP4 138.0	CKT 1						
FLT38-PO	514809	JOHNCO 7 345.0	515136	SUNNYSD7 345.0	CKT 1	28.2	0.30	27.0	1.00	-70.7	0.99
	514809	JOHNCO 7 345.0	510907	PITTSB-7 345.0	CKT 1						
FLT39-PO	510907	PITTSB-7 345.0	515045	SEMINOL7 345.0	CKT 1	23.2	0.36	-70.4	0.97	-82.4	0.99
	510907	PITTSB-7 345.0	515422	C-RIVER7 345.0	CKT 1						

3.3. Conclusions

The power factor analysis indicates the DISIS-2015-002 (Group 14) interconnection requests i.e., ASGI-2015-006, GEN-2015-035, GEN-2015-045, and GEN-2015-092 are required to maintain the SPP standard power factor at the point of interconnection i.e., SWPA Tupelo 138 kV (505600), PSO Johnston County 345kV (514809), LES (511468) to Sunnyside (515136) 345kV (Proposed AEP Terry Road 345kV, 560013) based on the contingencies studied.

Per the SPP OATT, the Interconnection Customer will be required to provide 95% lagging (supplying vars) and 95% leading (absorbing vars) at the POI.

4. Inductive Reactive Support Analysis

Analysis for low wind /no wind conditions in cluster scenario is performed for the proposed wind generators requests. To offset the capacitive effects of the collector system and transmission line of the wind farm under low wind or no wind conditions, analysis was performed for Winter-2016 scenario to calculate the Inductive Reactive Support at point of interconnection for each interconnection request under project DISIS-2015-002 (Group 14) .

Following methodology was adopted as communicated by SPP:

1. Switch the generator and capacitor bank (if installed) out of service with the collector system as modeled remaining in service.
2. Calculate the amount of inductive reactive support required at the 34.5kV collector buses which would result in zero VAR flow at the POI."

The inductive reactive support analysis for wind generator ASGI-2015-006 performed for Summer-2017 scenario which indicates that at POI (SWPA Tupelo 138 kV (505600)) 0.1 MVAR reactor is required at Bus 585330 to maintain zero MVAR flow at POI.

The inductive reactive support analysis for wind generator GEN-2015-036 performed for Summer-2017 scenario which indicates that at POI (PSO Johnston County 345kV (514809)) 11.1 MVAR reactor is required at Bus 584780 to maintain zero MVAR flow at POI.

Similarly, the inductive reactive support analysis for wind generator GEN-2015-045 and GEN-2015-092 performed for Summer-2017 scenario which indicates that at POI (LES (511468) to Sunnyside (515136) 345kV (Proposed AEP Terry Road 345kV, 560013) 3.8 MVAR reactor is required at Bus 585280 to maintain zero MVAR flow at POI.

Maintaining zero MVar flow at the POI at all times is not possible with static reactor banks. It will be determined on a case by case basis for each generator as to whether additional reactor banks are required for low wind conditions.

The single line diagram for wind generators showing the inductive reactive requirement for ASGI-2015-006, GEN-2015-036, GEN-2015-045, and GEN-2015-092 are respectively shown in Figure 4.1.1, 4.1.2, and 4.1.3:

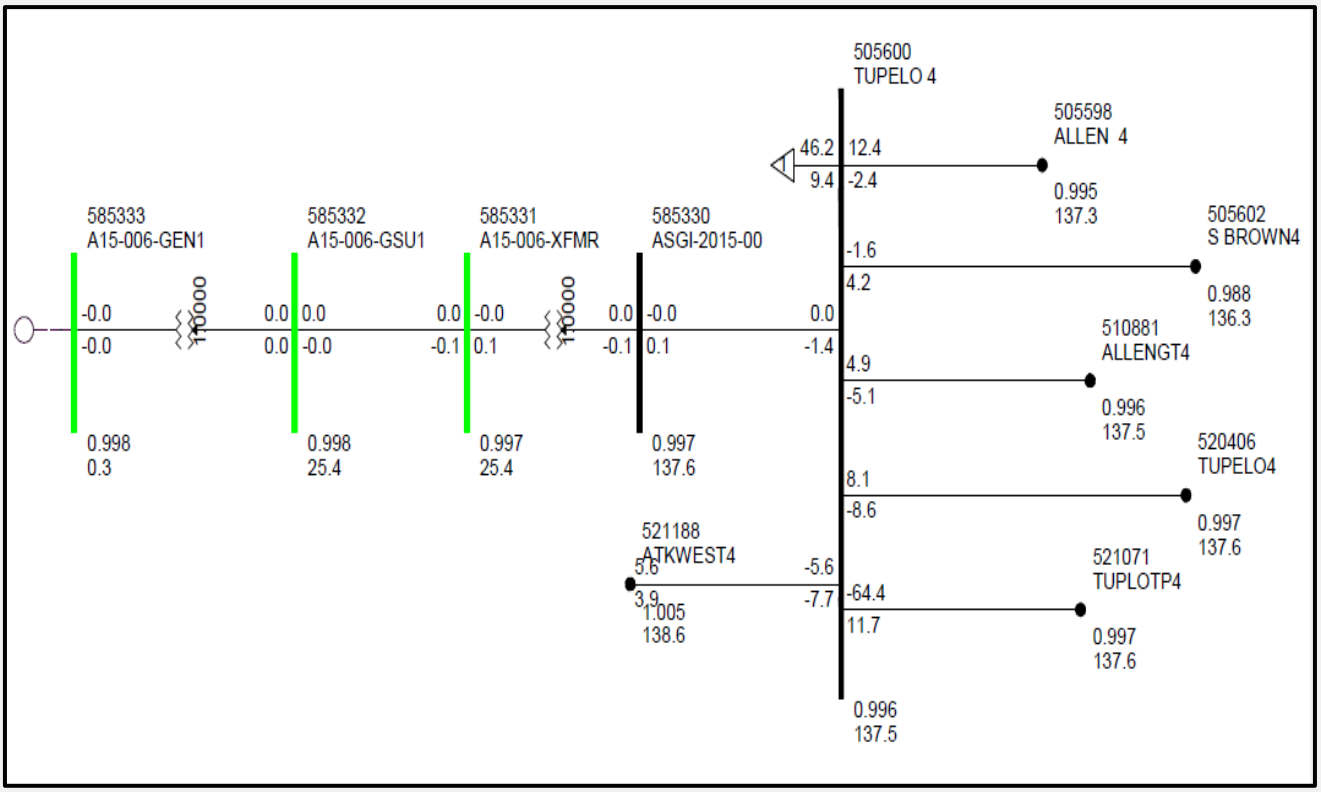

Figure 4.1.1: Inductive reactive requirement for ASGI-2015-006

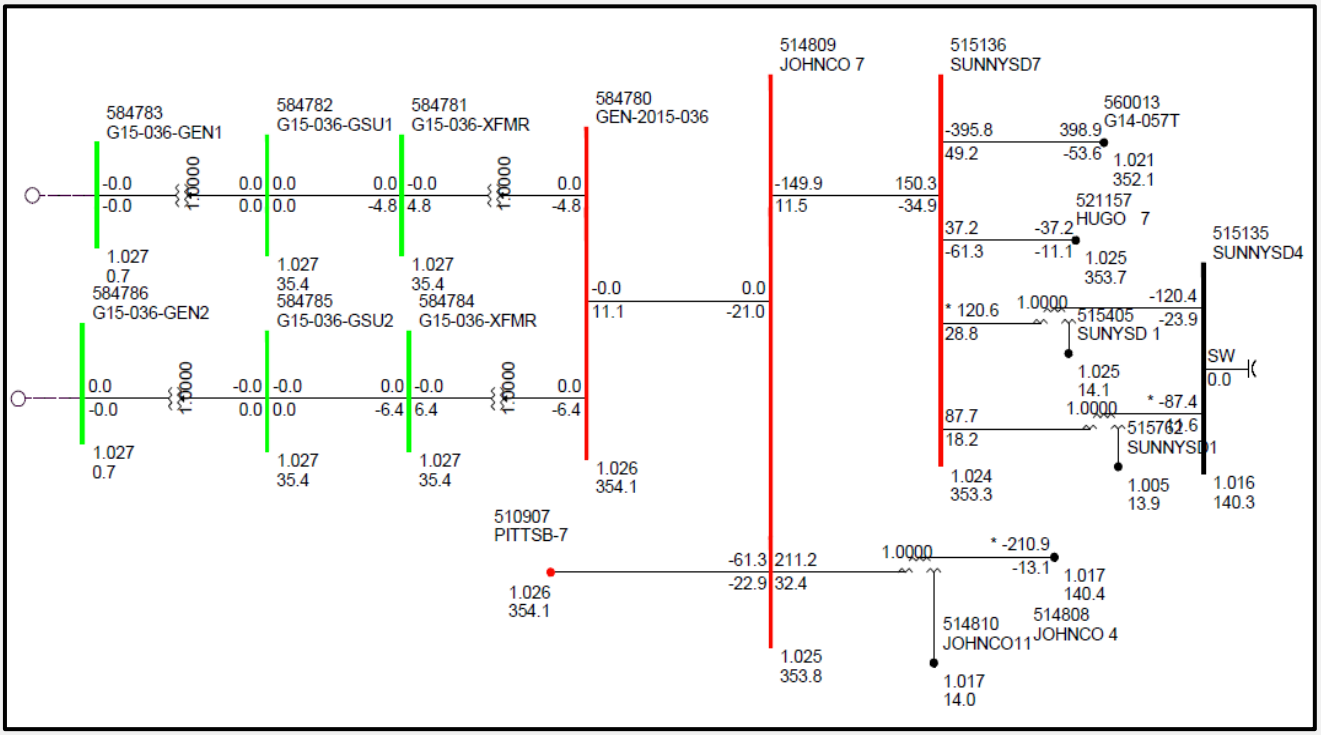

Figure 4.1.2: Inductive reactive requirement for GEN-2015-036

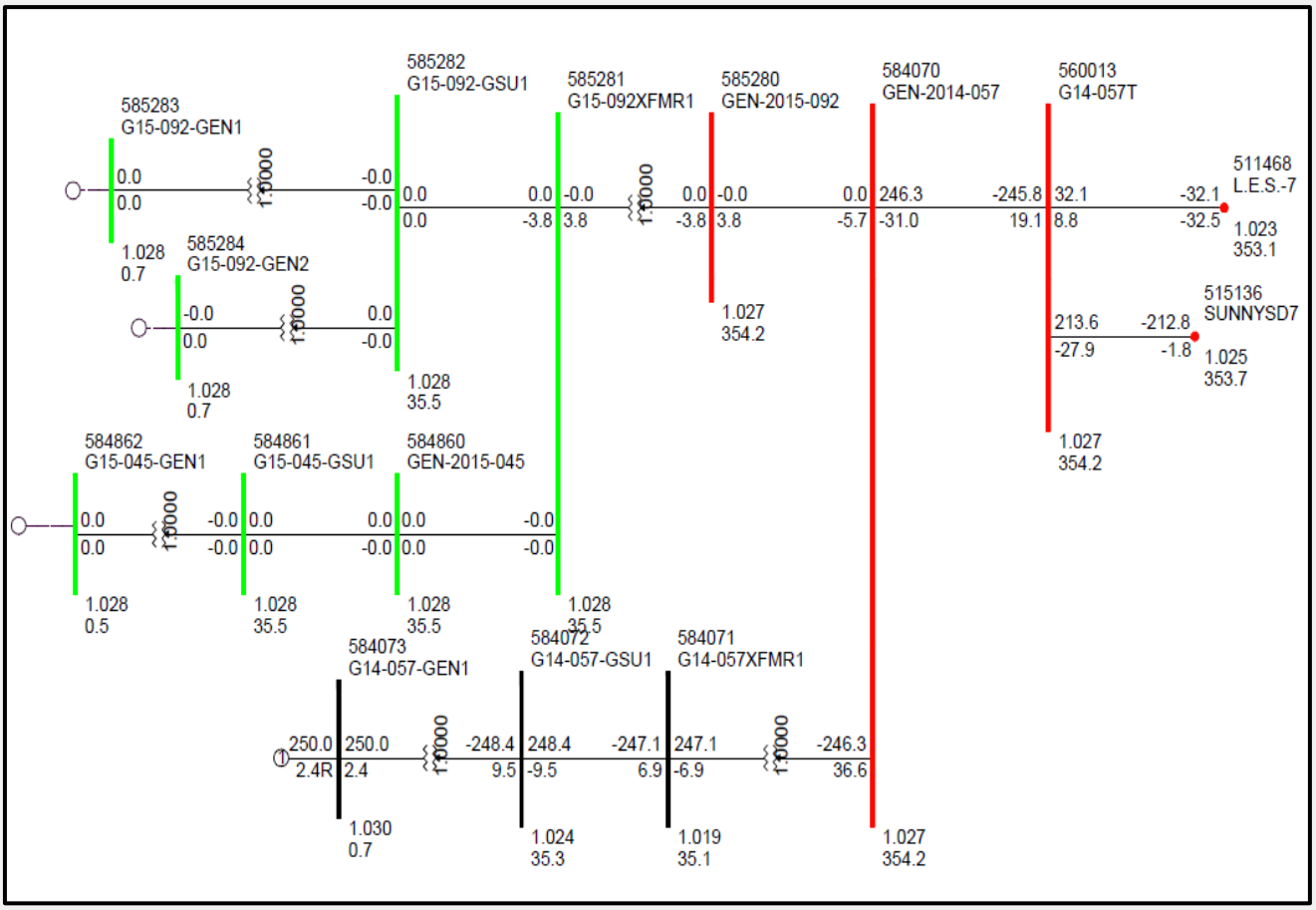

Figure 4.1.3: Inductive reactive requirement for GEN-2015-045 and GEN-2015-092

5. Short Circuit Analysis

The short circuit analysis out five buses away was performed for 2017, and 2025 summer peak case for each interconnection request under project cluster scenario of DISIS-2015-002 (Group 14). No outage was assumed in the system model.

5.1. Short Circuit Result for 2017 Summer Peak Case

The short circuit results for summer-2017 scenario (assumed not outage) at each POI are tabulated below

5.1.1. Short Circuit Result for SWPA Tupelo 138 kV (505600)

The results of the short circuit analysis for POI i.e., SWPA Tupelo 138 kV (505600) are tabulated below in table 5.1.1.

Table 5.1.1: Short circuit results for SWPA Tupelo 138 kV (505600) (ASGI-2015-006)

Bus #	Bus Name	Level Away	Fault Current (Amperes)	
			3 PH	SLG
505600	TUPELO 4 138.0	0 Level	10720.1	6707.9
505598	ALLEN 4 138.0	1 Level	5765.7	3776.7
505602	S BROWN4 138.0	1 Level	8763.4	6956.4
510881	ALLENGT4 138.0	1 Level	10408.9	6521.7
520406	TUPELO4 138.0	1 Level	9861.2	0
521071	TUPLOTP4 138.0	1 Level	10540.9	6660
521188	ATKWEST4 138.0	1 Level	5537.4	3544.6
585330	ASGI-2015-00138.0	1 Level	4952.4	0
505596	EXPLOR 4 138.0	2 Level	5823.1	3887.8
505604	DENISON4 138.0	2 Level	3360.4	3986.4
510880	COALGTP4 138.0	2 Level	6412.2	4100
510887	ATOKA--4 138.0	2 Level	6180.1	3994.4
510916	ALLEN--4 138.0	2 Level	5758.2	3772.1
510935	EXPCOLT4 138.0	2 Level	7757.9	4880.5
515157	BROWN 4 138.0	2 Level	8720.7	6903.3
515159	COLBRTP4 138.0	2 Level	6694.8	4951.1
515192	LULA 4 138.0	2 Level	9552.3	6354.9
520862	COLGATE4 138.0	2 Level	6280.8	1424.1

Bus #	Bus Name	Level Away	Fault Current (Amperes)	
			3 PH	SLG
521044	RUSSETT4 138.0	2 Level	11858.7	9489.7
521075	STONEWAL LH138.0	2 Level	8911.5	5223.9
521108	KRSYJCTN4 138.0	2 Level	8385.8	6567.6
521109	KRSYJCTS4 138.0	2 Level	8154.2	6324.2
585331	A15-006-XFMR25.50	2 Level	6608.5	0
505595	GREASYC4 138.0	3 Level	7460.1	5080.5
505606	DEN #1 1 13.80	3 Level	14479.7	0
505608	DEN #2 1 13.80	3 Level	14479.7	0
510860	ATOKA1-T 13.80	3 Level	8425.5	0
510862	COALGAT4 138.0	3 Level	6187.8	3956.2
510863	ALLENNG4 138.0	3 Level	5841.3	3685.9
510882	ATOKA--2 69.00	3 Level	4512.7	4697.9
510884	HOLDEXP4 138.0	3 Level	5689.8	3793.2
510895	LEHIGH-4 138.0	3 Level	6035.8	3875.9
510936	EXPCOLG4 138.0	3 Level	7658.8	4819.1
510949	WAPANUCKA 4138.0	3 Level	6125.5	3705
515120	RUSSET-4 138.0	3 Level	11931.5	9570.7
515153	COLEMNT4 138.0	3 Level	8696.3	6871.8
515155	BODLE 4 138.0	3 Level	6581.5	4857
515176	BUTRFLD4 138.0	3 Level	6074.2	4375.5
515191	LULA 2 69.00	3 Level	6308.1	5980.2
515500	FRISCCO4 138.0	3 Level	8490.3	5400
515734	LULA 1 13.20	3 Level	9403.8	0
520818	ASHLAND4 138.0	3 Level	4913.5	1631.4
520963	KIERSEY4 138.0	3 Level	5897.7	4260.4
520969	LASALLE4 138.0	3 Level	6845.6	3522.3
521049	SCOLEMN4 138.0	3 Level	7597.7	5658.5
521187	ATKEAST4 138.0	3 Level	5475.7	3167
585332	A15-006-GSU125.50	3 Level	1396	0

Bus #	Bus Name	Level Away	Fault Current (Amperes)	
			3 PH	SLG
505592	WELEETK4 138.0	4 Level	15391.2	11113.8
510879	ATOKA P2 69.00	4 Level	3843.7	3573.8
510891	LANE 2 69.00	4 Level	3081	2590.1
514808	JOHNCO 4 138.0	4 Level	15842.5	16140.2
515147	GLASSES4 138.0	4 Level	8656.7	6124.4
515152	BROWNTP4 138.0	4 Level	8646.3	6809.1
515154	EXPLRPL4 138.0	4 Level	4812.9	3351.1
515172	SPRNDAL4 138.0	4 Level	12074.1	10083.5
515190	AOCPT 2 69.00	4 Level	6100	4465.7
515193	COLBRT-4 138.0	4 Level	5165.6	3612.6
515362	HARDEN 4 138.0	4 Level	8673.2	5517.4
515511	SOCPMPT2 69.00	4 Level	5959.2	5453.3
515781	RUSSET11 34.50	4 Level	2005.8	2508.9
515782	RUSSET21 7.200	4 Level	5643.2	0
520860	COLBERT4 138.0	4 Level	5159.2	3612.4
520884	DURANT 4 138.0	4 Level	5882.1	3939.1
520968	LANE 4 138.0	4 Level	5202.4	2797
520971	LATTAJT4 138.0	4 Level	5899.9	2728
521030	PITTSBG4 138.0	4 Level	4693.3	2036.2
585333	A15-006-GEN10.320	4 Level	77675.2	5.4
505590	WELEETK5 161.0	5 Level	6698.3	5377.3
505591	WLK X1 1 13.80	5 Level	6250	0
505594	CHECOTA4 138.0	5 Level	6970.9	5119.5
510874	MCGEETP2 69.00	5 Level	2479.2	1932.8
510885	PITTSB-2 69.00	5 Level	2528.2	1978.4
510902	WELETK4 138.0	5 Level	15114.8	11952.6
514809	JOHNCO 7 345.0	5 Level	10174.5	8540.7
514810	JOHNCO11 13.80	5 Level	41996.5	0
515122	SXMLCKT4 138.0	5 Level	11670.1	9138.5

Bus #	Bus Name	Level Away	Fault Current (Amperes)	
			3 PH	SLG
515149	MADINDT4 138.0	5 Level	8646.4	6103.7
515150	CANEYCK4 138.0	5 Level	9123	6228.7
515151	LTLCITY4 138.0	5 Level	7605.8	5362.3
515162	FNDTION4 138.0	5 Level	12254	10736.4
515164	ROCKYPT4 138.0	5 Level	10979.6	8819.5
515183	SOCPUMP2 69.00	5 Level	5916.1	5390.7
515189	AOCPA 2 69.00	5 Level	7299.6	5283.3
515197	HOMERTP2 69.00	5 Level	5944.6	4335.1
515318	SOTHADA4 138.0	5 Level	11915.4	8120.2
520426	SEAWAY4 138.0	5 Level	4338.4	0
520826	BENNGTN4 138.0	5 Level	5160	3252.2
520874	DARWIN 4 138.0	5 Level	5096.8	1818.6
520970	LATTA 4 138.0	5 Level	4904.6	2362.4
521014	OILCNTR4 138.0	5 Level	5381.6	2062.3
521026	PHAROAH4 138.0	5 Level	15132	10689.1
521047	SAVANNA4 138.0	5 Level	5393.4	2920

5.1.2. Short Circuit Result for POI PSO Johnston County 345kV (514809)

The results of the short circuit analysis for POI i.e., PSO Johnston County 345kV (514809) are tabulated below in table 5.1.2.

Table 5.1.2: Short circuit results for PSO Johnston County 345kV (514809) (GEN-2015-036)

Bus #	Bus Name	Level Away	Fault Current (Amperes)	
			3 PH	SLG
514809	JOHNCO 7 345.0	0 Level	10174.5	8540.7
510907	PITTSB-7 345.0	1 Level	14423.3	10031.3
514808	JOHNCO 4 138.0	1 Level	15842.5	16140.2
514810	JOHNCO11 13.80	1 Level	41996.5	0
515136	SUNNYSD7 345.0	1 Level	11046.3	10961

Bus #	Bus Name	Level Away	Fault Current (Amperes)	
			3 PH	SLG
584780	GEN-2015-036345.0	1 Level	7999.5	0
510911	VALIANT7 345.0	2 Level	14090.3	12673.7
510925	KIOWA 7 345.0	2 Level	14178.9	9724
515045	SEMINOL7 345.0	2 Level	28000	28836.5
515120	RUSSET-4 138.0	2 Level	11931.5	9570.7
515122	SXMLCKT4 138.0	2 Level	11670.1	9138.5
515135	SUNNYSD4 138.0	2 Level	18766.3	20838.1
515150	CANEYCK4 138.0	2 Level	9123	6228.7
515405	SUNYSD 1 13.80	2 Level	48960.1	0
515422	C-RIVER7 345.0	2 Level	10140.4	6004
515762	SUNNYSD1 13.80	2 Level	68429.8	0
521157	HUGO 7 345.0	2 Level	11668	11056.1
560013	G14-057T 345.0	2 Level	10371.1	7588
584781	G15-036-XFMR34.50	2 Level	52577.3	0
584784	G15-036-XFMR34.50	2 Level	52570.7	0
508072	NWTXARK7 345.0	3 Level	14372	13218.9
508298	LYDIA 7 345.0	3 Level	13631.1	10961.7
510918	VALIANT4 138.0	3 Level	15399.3	17417.5
510938	VALN2-1 13.80	3 Level	43025	0
510939	VALN3-1 13.80	3 Level	36016.1	0
510946	C-RIVER4 138.0	3 Level	13501.3	4004.3
510947	C-RIVER1 13.80	3 Level	30288.6	0
511468	L.E.S.-7 345.0	3 Level	13284.7	11107.3
511944	KIOWA G1 18.00	3 Level	60909.4	53261.2
511945	KIOWA G2 18.00	3 Level	60909.4	53425.2
511946	KIOWA S1 18.00	3 Level	33756.9	41727.8
511947	KIOWA S2 18.00	3 Level	33756.9	36553.7
511948	KIOWA G3 18.00	3 Level	60909.4	53179.6
511949	KIOWA G4 18.00	3 Level	60909.4	65458.5

Bus #	Bus Name	Level Away	Fault Current (Amperes)	
			3 PH	SLG
514908	ARCADIA7 345.0	3 Level	26217.8	27813.2
514934	DRAPER 7 345.0	3 Level	22436.3	19449.7
515041	SEMINL2G 17.10	3 Level	199706.1	135196.4
515042	SEMINL3G 20.90	3 Level	192905.2	144858.8
515044	SEMINOL4 138.0	3 Level	40371.2	46044.8
515121	MILLCKT4 138.0	3 Level	11517.4	8921.5
515137	UNIROY 4 138.0	3 Level	13120.9	11033.5
515144	LONEGRV4 138.0	3 Level	13739.5	12577.8
515147	GLASSES4 138.0	3 Level	8656.7	6124.4
515149	MADINDT4 138.0	3 Level	8646.4	6103.7
515151	LTLCITY4 138.0	3 Level	7605.8	5362.3
515164	ROCKYPT4 138.0	3 Level	10979.6	8819.5
515172	SPRNDAL4 138.0	3 Level	12074.1	10083.5
515224	MUSKOGE7 345.0	3 Level	30600.6	34524.4
515561	CARTRCO4 138.0	3 Level	8843.5	7588.4
515756	SEMINO11 14.40	3 Level	40192	0
515757	SEMINO21 14.40	3 Level	26878.5	0
515781	RUSSET11 34.50	3 Level	2005.8	2508.9
515782	RUSSET21 7.200	3 Level	5643.2	0
520948	HUGO PP4 138.0	3 Level	23257.6	26639.8
521044	RUSSETT4 138.0	3 Level	11858.7	9489.7
521067	TEXOMAJ4 138.0	3 Level	9063.1	6173.5
521122	HOWE 4 138.0	3 Level	11563.9	9022.9
521189	HUGO TERTA 13.80	3 Level	10943.1	0
584070	GEN-2014-057345.0	3 Level	7199.2	0
584782	G15-036-GSU134.50	3 Level	43777.9	0
584785	G15-036-GSU234.50	3 Level	40726.4	0
505602	S BROWN4 138.0	4 Level	8763.4	6956.4
507455	TURK 7 345.0	4 Level	9889.6	7781.5

Bus #	Bus Name	Level Away	Fault Current (Amperes)	
			3 PH	SLG
508071	NWTXARK4 138.0	4 Level	26828.5	27206.8
508100	NWTEX1-1 13.80	4 Level	32464.7	0
508101	NWTEX2-1 13.80	4 Level	32254.8	0
508359	WELSH 7 345.0	4 Level	22253.4	23790.7
509745	CLARKSV7 345.0	4 Level	21836.9	18205.2
510866	V-WEYCO4 138.0	4 Level	10259.2	8910.5
510886	IDABEL-4 138.0	4 Level	7294.2	5446.7
510901	HUGO---4 138.0	4 Level	3716.3	3204.6
510908	MCALEST4 138.0	4 Level	10168	6563.4
510910	VALIANT2 69.00	4 Level	7877.8	9737.5
510937	VALN1-1 13.80	4 Level	11505.8	0
511411	LES#5-1 13.80	4 Level	31254	0
511414	LES#4-1 13.80	4 Level	50833.3	0
511456	O.K.U.-7 345.0	4 Level	5685.6	3697
511467	L.E.S.-4 138.0	4 Level	25023.2	25448.8
514880	NORTWST7 345.0	4 Level	29793.2	27376.6
514901	CIMARON7 345.0	4 Level	30686.4	27722.4
514907	ARCADIA4 138.0	4 Level	42098.5	42934
514909	REDBUD 7 345.0	4 Level	24947.7	26937.2
514933	DRAPER 4 138.0	4 Level	39935.7	39781.8
515040	SEMINL1G 20.90	4 Level	192677.1	147092.1
515055	MAUD 4 138.0	4 Level	21033	15790.8
515100	PAOLI- 4 138.0	4 Level	10928.6	7879.3
515117	ARBUCKL4 138.0	4 Level	15914.9	12426.4
515129	RATLIFF4 138.0	4 Level	6913.2	5800
515130	POOLVIL4 138.0	4 Level	8657.4	7341.2
515152	BROWNTP4 138.0	4 Level	8646.3	6809.1
515158	MADLIND4 138.0	4 Level	8076.2	5605.7
515162	FNDTION4 138.0	4 Level	12254	10736.4

Bus #	Bus Name	Level Away	Fault Current (Amperes)	
			3 PH	SLG
515163	ROCKYPT2 69.00	4 Level	8291.9	8343.9
515178	PARKLN 4 138.0	4 Level	16997.8	13197.9
515196	MILLCRK4 138.0	4 Level	9542.5	7058.5
515223	MUSKOG4G 18.00	4 Level	248733.7	143670.4
515225	MUSKOG5G 18.00	4 Level	240456.2	141785.4
515226	MUSKOG6G 24.00	4 Level	198846.4	130490
515235	PECANCK7 345.0	4 Level	23366.2	21003
515302	FTSMITH7 345.0	4 Level	10833.5	11017
515372	ARDWEST4 138.0	4 Level	12968	10841.5
515415	CHEEKTP4 138.0	4 Level	12478.7	10961.5
515531	VANOSTP4 138.0	4 Level	14043.4	9288.1
515563	ORIGINW4 138.0	4 Level	5528.7	6008.6
515700	ARCADI41 13.80	4 Level	71703.1	0
515703	ARCADI21 13.80	4 Level	54366.7	57124.5
515704	ARCADI31 13.80	4 Level	49898.1	0
515720	DRAPER31 13.80	4 Level	52332.4	0
515721	DRAPER41 13.80	4 Level	52332.4	0
515754	ROCKYPT1 13.20	4 Level	6180.9	0
515792	DRAPER21 13.80	4 Level	75583.5	0
520411	SAWYER4 138.0	4 Level	11186.2	0
520918	FROGVIL4 138.0	4 Level	11844.3	8621
520947	HUGO1 23.40	4 Level	113003.5	82230.7
520972	LEBANON4 138.0	4 Level	6275	3714.5
521066	TEXOMA 4 138.0	4 Level	6728.5	4101.6
521079	VALLANT4 138.0	4 Level	10118.8	6126.7
560064	G15-093T 345.0	4 Level	13433.9	10175.8
584071	G14-057XFMR134.50	4 Level	29352.4	0
584783	G15-036-GEN10.690	4 Level	1284842.5	348201.3
584786	G15-036-GEN20.690	4 Level	1234025.9	345769.1

Bus #	Bus Name	Level Away	Fault Current (Amperes)	
			3 PH	SLG
585280	GEN-2015-092345.0	4 Level	6970.8	0
505600	TUPELO 4 138.0	5 Level	10720.1	6707.9
505604	DENISON4 138.0	5 Level	3360.4	3986.4
506945	CHAMSPR7 345.0	5 Level	10306.8	10132.7
507431	PATTERS4 138.0	5 Level	14241.4	11894.8
507454	TURK 4 138.0	5 Level	25952	20470.8
507457	TURK 1 13.80	5 Level	23222	0
508049	NASH 4 138.0	5 Level	21030	19001.1
508070	NWT-BNT4 138.0	5 Level	25778.9	25451.8
508080	SUGARHL4 138.0	5 Level	13285.8	10767.2
508832	DIANA 7 345.0	5 Level	20695.1	20087.3
508841	WILKES 7 345.0	5 Level	16467.1	16423.6
509404	WELSH1-1 18.00	5 Level	188729	128778.8
509406	WELSH3-1 18.00	5 Level	190868.8	129436.5
509782	R.S.S.-7 345.0	5 Level	33110.1	25633.1
509807	ONETA--7 345.0	5 Level	31913.8	32088.6
510858	MCALT4-1 13.80	5 Level	9598	0
510859	HUGO4-1 13.80	5 Level	8947.4	0
510870	WCITYTP2 69.00	5 Level	6868.9	7603
510876	KIPUMPT2 69.00	5 Level	4713.1	4006.5
510888	B.BOWTP4 138.0	5 Level	7679	5983.5
510893	HUGO---2 69.00	5 Level	4905	5128.1
510897	LONEOAK4 138.0	5 Level	8932.3	6083.4
510899	MCALEST2 69.00	5 Level	4861.6	5348.5
510906	SMCALTP4 138.0	5 Level	8800.9	5693
510921	DUSTIN-4 138.0	5 Level	9254.2	6815.6
510948	EARLSBORO 4138.0	5 Level	8116.2	6129.3
511415	LES#2-1 13.80	5 Level	18507.8	0
511416	LES#1-1 13.80	5 Level	17304.6	0

Bus #	Bus Name	Level Away	Fault Current (Amperes)	
			3 PH	SLG
511423	FLE TAP4 138.0	5 Level	9055.9	6310.6
511437	COMANC-4 138.0	5 Level	18783.6	15242.3
511439	LWSTAP 4 138.0	5 Level	11991.9	8655.6
511466	L.E.S.-2 69.00	5 Level	17195.4	19576.5
511474	SHERID4 138.0	5 Level	12856.7	9323.7
511486	ELGINJT4 138.0	5 Level	10539.8	8228.1
511494	COMMTAP4 138.0	5 Level	22105.8	20561.5
511508	BLANCHD4 138.0	5 Level	6336.6	4157.3
514801	MINCO 7 345.0	5 Level	17337.1	14860.1
514827	CTNWOOD4 138.0	5 Level	17998.5	10835.1
514879	NORTWST4 138.0	5 Level	42905.2	44090
514881	SPRNGCK7 345.0	5 Level	22439.2	18892.5
514885	NORTWS41 13.80	5 Level	54164.3	0
514898	CIMARON4 138.0	5 Level	42832.8	40921.5
514899	REDBUD1S 18.00	5 Level	89731.6	63852.2
514900	REDBUD2S 18.00	5 Level	89731.6	63852.2
514905	REDBUD3S 18.00	5 Level	89731.6	64683.3
514906	JNSKAMO4 138.0	5 Level	22125.6	14906.4
514910	REDBUD1G 18.00	5 Level	86562.1	61116.2
514911	REDBUD2G 18.00	5 Level	86562.1	61116.2
514912	REDBUD3G 18.00	5 Level	86562.1	61117.4
514940	REDBUD4S 18.00	5 Level	89087.5	63632
514942	REDBUD4G 18.00	5 Level	48236.9	0
514946	MIDWEST4 138.0	5 Level	31464.3	21784.2
514949	SOONRTP4 138.0	5 Level	21539.9	13853.8
514961	GM 4 138.0	5 Level	20504.3	13436.4
515003	BARNES 4 138.0	5 Level	17067.2	13683
515054	MAUD 2 69.00	5 Level	12785.1	13938.6
515075	FRSTHIL4 138.0	5 Level	14750	10329.6

Bus #	Bus Name	Level Away	Fault Current (Amperes)	
			3 PH	SLG
515097	WLNUTCK4 138.0	5 Level	9949.7	6191.9
515099	PALIOGE2 69.00	5 Level	6409.9	6623.5
515114	CHIGLEY4 138.0	5 Level	8630.2	6447.5
515116	ARBUCKL2 69.00	5 Level	6551	7212.4
515123	OAKLAW-4 138.0	5 Level	13114	9752.8
515124	MAYSVIL4 138.0	5 Level	6613.9	4536.9
515128	RATLIFF2 69.00	5 Level	5426	6287.9
515131	FOX 4 138.0	5 Level	7176.7	5682.7
515133	BLUERIV4 138.0	5 Level	10533.9	7218.5
515134	PRARPNT4 138.0	5 Level	5805.4	4225.6
515138	CARTER 4 138.0	5 Level	13172.7	11418.5
515143	WOLFCRK4 138.0	5 Level	10067.2	8283.7
515153	COLEMNT4 138.0	5 Level	8696.3	6871.8
515155	BODLE 4 138.0	5 Level	6581.5	4857
515157	BROWN 4 138.0	5 Level	8720.7	6903.3
515159	COLBRTP4 138.0	5 Level	6694.8	4951.1
515160	MRIETA 2 69.00	5 Level	2189.5	1558.1
515171	CHIKSAW4 138.0	5 Level	12884.7	11839.3
515173	BERWYN 4 138.0	5 Level	8751.4	6311.9
515174	VANOSS 4 138.0	5 Level	13916.1	9216.5
515177	PARKLN 2 69.00	5 Level	15166	16205.5
515234	PECANCK5 161.0	5 Level	22518.9	24777.3
515301	FTSMTHW5 161.0	5 Level	24470.2	27448.4
515305	FTSMITH8 500.0	5 Level	9032.3	8132.1
515318	SOTHADA4 138.0	5 Level	11915.4	8120.2
515407	TATONGA7 345.0	5 Level	11156.9	10689.5
515420	SCMMRCT2 69.00	5 Level	9593.2	8229.4
515461	RNDBARN4 138.0	5 Level	40191.6	39021
515465	LGARBER4 138.0	5 Level	22480.8	14877.4

Bus #	Bus Name	Level Away	Fault Current (Amperes)	
			3 PH	SLG
515497	MATHWSN7 345.0	5 Level	17544.5	11897.8
515559	SULPHR 4 138.0	5 Level	14610	11100.3
515564	ORIGIN11 34.50	5 Level	13873.6	18736.6
515565	ORIGIN21 34.50	5 Level	14077.2	18984.1
515566	ORIGINT1 13.20	5 Level	25844.4	0
515567	ORIGINT2 13.20	5 Level	26153.2	0
515610	FSHRTAP7 345.0	5 Level	17456.4	14835.9
515702	ARBUCKL1 13.20	5 Level	11356.7	0
515714	CIMARO11 13.80	5 Level	45621.5	0
515715	CIMARO21 13.80	5 Level	56492.1	0
515726	FTSMTH11 13.80	5 Level	51608.1	0
515728	FTSMTH51 13.80	5 Level	55540.6	0
515736	MAUD 1 13.20	5 Level	22627.4	0
515742	NORTWS21 13.80	5 Level	51593	0
515743	NORTWS31 13.80	5 Level	54164.3	0
515746	PAOLI 1 13.80	5 Level	9277.5	0
515747	PARKLN11 13.20	5 Level	11953	0
515748	PARKLN21 13.20	5 Level	20209.2	0
515749	PECANC11 13.80	5 Level	39411.4	0
515752	RATLIFF1 13.20	5 Level	10470.6	0
515759	PECANC21 13.80	5 Level	53170.7	0
515800	GRACMNT7 345.0	5 Level	15897.1	13031.2
520419	GARVIN4 138.0	5 Level	6695.3	0
520511	ENVILLE 138.0	5 Level	5205.2	0
520901	ENOS 4 138.0	5 Level	4615.8	2895.2
521036	RATTAN 4 138.0	5 Level	7317.8	1486.9
521098	WSTBANK4 138.0	5 Level	7730.7	4857.9
521108	KRSYJCTN4 138.0	5 Level	8385.8	6567.6
521109	KRSYJCTS4 138.0	5 Level	8154.2	6324.2

Bus #	Bus Name	Level Away	Fault Current (Amperes)	
			3 PH	SLG
521125	CHEEK_4 138.0	5 Level	10041.9	8149.8
560027	G14-074-TAP 345.0	5 Level	7297.8	5007.1
584072	G14-057-GSU134.50	5 Level	28736.2	0
585270	GEN-2015-093345.0	5 Level	12577.8	0
585281	G15-092XFMR134.50	5 Level	28790.3	0

5.1.3. Short Circuit Result for POI LES (511468) to Sunnyside (515136) 345kV (Proposed AEP Terry Road 345kV, 560013)

The results of the short circuit analysis for POI i.e., LES (511468) to Sunnyside (515136) 345kV (Proposed AEP Terry Road 345kV, 560013) are tabulated below in table 5.1.3.

Table 5.1.3: Short circuit results for LES (511468) to Sunnyside (515136) 345kV (Proposed AEP Terry Road 345kV, 560013) (GEN-2015-045 and GEN-2015-092)

Bus #	Bus Name	Level Away	Fault Current (Amperes)	
			3 PH	SLG
560013	G14-057T 345.0	0 Level	10371.1	7588
511468	L.E.S.-7 345.0	1 Level	13284.7	11107.3
515136	SUNNYSD7 345.0	1 Level	11046.3	10961
584070	GEN-2014-057345.0	1 Level	7199.2	0
511411	LES#5-1 13.80	2 Level	31254	0
511414	LES#4-1 13.80	2 Level	50833.3	0
511456	O.K.U.-7 345.0	2 Level	5685.6	3697
511467	L.E.S.-4 138.0	2 Level	25023.2	25448.8
514809	JOHNCO 7 345.0	2 Level	10174.5	8540.7
515135	SUNNYSD4 138.0	2 Level	18766.3	20838.1
515405	SUNYSD 1 13.80	2 Level	48960.1	0
515762	SUNNYSD1 13.80	2 Level	68429.8	0
521157	HUGO 7 345.0	2 Level	11668	11056.1
560064	G15-093T 345.0	2 Level	13433.9	10175.8

Bus #	Bus Name	Level Away	Fault Current (Amperes)	
			3 PH	SLG
584071	G14-057XFMR134.50	2 Level	29352.4	0
585280	GEN-2015-092345.0	2 Level	6970.8	0
510907	PITTSB-7 345.0	3 Level	14423.3	10031.3
510911	VALIANT7 345.0	3 Level	14090.3	12673.7
511415	LES#2-1 13.80	3 Level	18507.8	0
511416	LES#1-1 13.80	3 Level	17304.6	0
511423	FLE TAP4 138.0	3 Level	9055.9	6310.6
511437	COMANC-4 138.0	3 Level	18783.6	15242.3
511439	LWSTAP 4 138.0	3 Level	11991.9	8655.6
511466	L.E.S.-2 69.00	3 Level	17195.4	19576.5
511474	SHERID4 138.0	3 Level	12856.7	9323.7
511486	ELGINJT4 138.0	3 Level	10539.8	8228.1
511494	COMMTAP4 138.0	3 Level	22105.8	20561.5
514808	JOHNCO 4 138.0	3 Level	15842.5	16140.2
514810	JOHNCO11 13.80	3 Level	41996.5	0
515137	UNIROY 4 138.0	3 Level	13120.9	11033.5
515144	LONEGRV4 138.0	3 Level	13739.5	12577.8
515164	ROCKYPT4 138.0	3 Level	10979.6	8819.5
515561	CARTRCO4 138.0	3 Level	8843.5	7588.4
515800	GRACMNT7 345.0	3 Level	15897.1	13031.2
520948	HUGO PP4 138.0	3 Level	23257.6	26639.8
521189	HUGO TERTA 13.80	3 Level	10943.1	0
560027	G14-074-TAP 345.0	3 Level	7297.8	5007.1
584072	G14-057-GSU134.50	3 Level	28736.2	0
584780	GEN-2015-036345.0	3 Level	7999.5	0
585270	GEN-2015-093345.0	3 Level	12577.8	0
585281	G15-092XFMR134.50	3 Level	28790.3	0
508072	NWTXARK7 345.0	4 Level	14372	13218.9
508298	LYDIA 7 345.0	4 Level	13631.1	10961.7

Bus #	Bus Name	Level Away	Fault Current (Amperes)	
			3 PH	SLG
510918	VALIANT4 138.0	4 Level	15399.3	17417.5
510925	KIOWA 7 345.0	4 Level	14178.9	9724
510938	VALN2-1 13.80	4 Level	43025	0
510939	VALN3-1 13.80	4 Level	36016.1	0
511412	ELGJT1-1 13.80	4 Level	12963.6	0
511422	FLETCHR4 138.0	4 Level	8312.5	5721.1
511431	LWS S4 138.0	4 Level	11524.6	8234.5
511436	COMANC-2 69.00	4 Level	10340.4	6829.7
511469	LGORE-N2 69.00	4 Level	8583.5	6406.3
511470	LGORE-S2 69.00	4 Level	7443	5720.7
511477	S.W.S.-4 138.0	4 Level	28730.4	26656.4
511487	ELGINJT2 69.00	4 Level	9238.1	9395
511488	112GORE4 138.0	4 Level	13022.9	9581.7
511512	RPPAPER4 138.0	4 Level	12356.6	8962.8
511537	ARTVLTP4 138.0	4 Level	12208.5	8628.3
511553	CHISHOLM7 345.0	4 Level	6360.9	5725.3
511563	ELSWORTH 4138.0	4 Level	10459.6	8100.9
511851	COM1-1 13.80	4 Level	77635.5	80669.8
511852	COM2-1 13.80	4 Level	48765.2	54308.6
514801	MINCO 7 345.0	4 Level	17337.1	14860.1
515045	SEMINOL7 345.0	4 Level	28000	28836.5
515120	RUSSET-4 138.0	4 Level	11931.5	9570.7
515122	SXMLCKT4 138.0	4 Level	11670.1	9138.5
515129	RATLIFF4 138.0	4 Level	6913.2	5800
515130	POOLVIL4 138.0	4 Level	8657.4	7341.2
515150	CANEYCK4 138.0	4 Level	9123	6228.7
515163	ROCKYPT2 69.00	4 Level	8291.9	8343.9
515172	SPRNDAL4 138.0	4 Level	12074.1	10083.5
515372	ARDWEST4 138.0	4 Level	12968	10841.5

Bus #	Bus Name	Level Away	Fault Current (Amperes)	
			3 PH	SLG
515415	CHEEKTP4 138.0	4 Level	12478.7	10961.5
515422	C-RIVER7 345.0	4 Level	10140.4	6004
515563	ORIGINW4 138.0	4 Level	5528.7	6008.6
515754	ROCKYPT1 13.20	4 Level	6180.9	0
515801	GRCMNT11 13.80	4 Level	48032.6	0
515802	GRACMNT4 138.0	4 Level	27677.9	27227.6
520411	SAWYER4 138.0	4 Level	11186.2	0
520918	FROGVIL4 138.0	4 Level	11844.3	8621
520947	HUGO1 23.40	4 Level	113003.5	82230.7
521079	VALLANT4 138.0	4 Level	10118.8	6126.7
525832	TUCO_INT 7345.0	4 Level	11396.2	13280.9
529304	OMDUNCN4 138.0	4 Level	7261.7	5196.8
584073	G14-057-GEN10.690	4 Level	1163814.6	581594.2
584440	GEN-2014-074345.0	4 Level	6954.2	0
584781	G15-036-XFMR34.50	4 Level	52577.3	0
584784	G15-036-XFMR34.50	4 Level	52570.7	0
584860	GEN-2015-04534.50	4 Level	28790.3	0
585271	G15-093XFMR134.50	4 Level	33484.7	0
585282	G15-092-GSU134.50	4 Level	28151.4	0
507455	TURK 7 345.0	5 Level	9889.6	7781.5
508071	NWTXARK4 138.0	5 Level	26828.5	27206.8
508100	NWTEX1-1 13.80	5 Level	32464.7	0
508101	NWTEX2-1 13.80	5 Level	32254.8	0
508359	WELSH 7 345.0	5 Level	22253.4	23790.7
510866	V-WEYCO4 138.0	5 Level	10259.2	8910.5
510886	IDABEL-4 138.0	5 Level	7294.2	5446.7
510901	HUGO---4 138.0	5 Level	3716.3	3204.6
510910	VALIANT2 69.00	5 Level	7877.8	9737.5
510937	VALN1-1 13.80	5 Level	11505.8	0

Bus #	Bus Name	Level Away	Fault Current (Amperes)	
			3 PH	SLG
510946	C-RIVER4 138.0	5 Level	13501.3	4004.3
510947	C-RIVER1 13.80	5 Level	30288.6	0
511413	SWS#1--1 13.80	5 Level	9116.4	0
511421	VERDEN 4 138.0	5 Level	10298.5	7003.7
511428	LG-YEAR4 138.0	5 Level	12264.6	8851.8
511445	CARNEG-4 138.0	5 Level	8093.3	5548.6
511451	CYRIL--2 69.00	5 Level	5083.5	3773
511453	DUNCAN-4 138.0	5 Level	7045.5	5052
511461	FT.SILL2 69.00	5 Level	6425.7	4409
511471	LWS-NTP4 138.0	5 Level	12129.9	8487.6
511473	PO.HILL2 69.00	5 Level	6325.7	4625.5
511476	S.W.S.-2 69.00	5 Level	4822.7	5806.4
511483	NORGE--4 138.0	5 Level	12027.2	7697.7
511503	LAW WC2 69.00	5 Level	4902.7	3454.7
511509	53CACHE4 138.0	5 Level	12185.1	8596.4
511510	LAIRGST4 138.0	5 Level	12602.9	9245.1
511524	L-DISTP2 69.00	5 Level	9561	6174.6
511538	ARTVILL4 138.0	5 Level	8957.7	6047.2
511557	CHISHOLM6 230.0	5 Level	8920.7	8756.3
511558	CHISHOLM1 13.20	5 Level	32055.9	0
511846	SWS1-1 14.40	5 Level	31322.2	32494.4
511847	SWS2-1 14.40	5 Level	31322.2	32494.4
511848	SWS3-1 24.00	5 Level	90567.8	98847.4
511849	SWS NG4 13.80	5 Level	27498.6	0
511850	SWS NG5 13.80	5 Level	27546.9	0
511853	COM3-1 13.80	5 Level	40143.9	43818.6
511944	KIOWA G1 18.00	5 Level	60909.4	53261.2
511945	KIOWA G2 18.00	5 Level	60909.4	53425.2
511946	KIOWA S1 18.00	5 Level	33756.9	41727.8

Bus #	Bus Name	Level Away	Fault Current (Amperes)	
			3 PH	SLG
511947	KIOWA S2 18.00	5 Level	33756.9	36553.7
511948	KIOWA G3 18.00	5 Level	60909.4	53179.6
511949	KIOWA G4 18.00	5 Level	60909.4	65458.5
514901	CIMARON7 345.0	5 Level	30686.4	27722.4
514908	ARCADIA7 345.0	5 Level	26217.8	27813.2
514934	DRAPER 7 345.0	5 Level	22436.3	19449.7
515041	SEMINL2G 17.10	5 Level	199706.1	135196.4
515042	SEMINL3G 20.90	5 Level	192905.2	144858.8
515044	SEMINOL4 138.0	5 Level	40371.2	46044.8
515121	MILLCKT4 138.0	5 Level	11517.4	8921.5
515128	RATLIFF2 69.00	5 Level	5426	6287.9
515131	FOX 4 138.0	5 Level	7176.7	5682.7
515134	PRARPNT4 138.0	5 Level	5805.4	4225.6
515138	CARTER 4 138.0	5 Level	13172.7	11418.5
515143	WOLFCRK4 138.0	5 Level	10067.2	8283.7
515147	GLASSES4 138.0	5 Level	8656.7	6124.4
515149	MADINDT4 138.0	5 Level	8646.4	6103.7
515151	LTLCITY4 138.0	5 Level	7605.8	5362.3
515160	MRIETA 2 69.00	5 Level	2189.5	1558.1
515162	FNDTION4 138.0	5 Level	12254	10736.4
515224	MUSKOGE7 345.0	5 Level	30600.6	34524.4
515420	SCMMRCT2 69.00	5 Level	9593.2	8229.4
515444	MCNOWND7 345.0	5 Level	17290	14820.2
515458	BORDER 7345.0	5 Level	5487.7	3264
515549	MNCWND37 345.0	5 Level	12173.4	10237.7
515564	ORIGIN11 34.50	5 Level	13873.6	18736.6
515565	ORIGIN21 34.50	5 Level	14077.2	18984.1
515566	ORIGINT1 13.20	5 Level	25844.4	0
515567	ORIGINT2 13.20	5 Level	26153.2	0

Bus #	Bus Name	Level Away	Fault Current (Amperes)	
			3 PH	SLG
515752	RATLIFF1 13.20	5 Level	10470.6	0
515756	SEMINO11 14.40	5 Level	40192	0
515757	SEMINO21 14.40	5 Level	26878.5	0
515781	RUSSET11 34.50	5 Level	2005.8	2508.9
515782	RUSSET21 7.200	5 Level	5643.2	0
520419	GARVIN4 138.0	5 Level	6695.3	0
520814	ANADARK4 138.0	5 Level	29809.8	32453.8
520849	ELGIN4 138.0	5 Level	10379.6	0
521036	RATTAN 4 138.0	5 Level	7317.8	1486.9
521044	RUSSETT4 138.0	5 Level	11858.7	9489.7
521067	TEXOMAJ4 138.0	5 Level	9063.1	6173.5
521089	WASHITA4 138.0	5 Level	26161.3	22593.1
521098	WSTBANK4 138.0	5 Level	7730.7	4857.9
521122	HOWE 4 138.0	5 Level	11563.9	9022.9
521125	CHEEK_4 138.0	5 Level	10041.9	8149.8
525824	TUCO_TR1 113.20	5 Level	34005.5	0
525825	TUCO_TR2 113.20	5 Level	27217.9	0
525830	TUCO_INT 6230.0	5 Level	21574.6	24117.3
525844	ELK_1 118.00	5 Level	45887.9	66765.8
525845	ELK_4 1 18.00	5 Level	34803.7	56829.2
584441	G14-074XFMR134.50	5 Level	24770	0
584760	GEN-2015-033345.0	5 Level	6562.9	0
584782	G15-036-GSU134.50	5 Level	43777.9	0
584785	G15-036-GSU234.50	5 Level	40726.4	0
584861	G15-045-GSU134.50	5 Level	21149.1	0
585060	GEN-2015-068345.0	5 Level	9547.1	0
585080	GEN-2015-071345.0	5 Level	5900.7	0
585272	G15-093-GSU134.50	5 Level	32562.3	0
585283	G15-092-GEN10.690	5 Level	948985.3	348560.5

Bus #	Bus Name	Level Away	Fault Current (Amperes)	
			3 PH	SLG
585284	G15-092-GEN20.690	5 Level	860490.8	283122.8

5.2. Short Circuit Result for 2025 Summer Peak Case

The short circuit results for summer-2025 scenario (assumed not outage) at each POI are tabulated below

5.2.1. Short Circuit Result for SWPA Tupelo 138 kV (505600)

The results of the short circuit analysis for POI i.e., SWPA Tupelo 138 kV (505600) are tabulated below in table 5.2.1.

Table 5.2.1: Short circuit results for SWPA Tupelo 138 kV (505600) (ASGI-2015-006)

Bus #	Bus Name	Level Away	Fault Current (Amperes)	
			3 PH	SLG
505600	TUPELO 4 138.0	0 Level	10801.4	6729
505598	ALLEN 4 138.0	1 Level	5839.7	3797.8
505602	S BROWN4 138.0	1 Level	8783.5	6964.8
510881	ALLENGT4 138.0	1 Level	10485.2	6541.6
520406	TUPELO4 138.0	1 Level	9931.2	0
521071	TUPLOTP4 138.0	1 Level	10614.5	6679.6
521188	ATKWEST4 138.0	1 Level	5555.2	3549.5
585330	ASGI-2015-00138.0	1 Level	4969.7	0
505596	EXPLOR 4 138.0	2 Level	5961.2	3928.4
505604	DENISON4 138.0	2 Level	3363.3	3989.1
510880	COALGTP4 138.0	2 Level	6438.1	4107
510887	ATOKA--4 138.0	2 Level	6201.5	4000.4
510916	ALLEN--4 138.0	2 Level	5832	3793.1
510935	EXPCOLT4 138.0	2 Level	7800.3	4891.7
515157	BROWN 4 138.0	2 Level	8740.6	6911.6
515159	COLBRTP4 138.0	2 Level	6706.5	4955.4
515192	LULA 4 138.0	2 Level	9604.1	6370.1
520862	COLGATE4 138.0	2 Level	6313.8	1425.2

Bus #	Bus Name	Level Away	Fault Current (Amperes)	
			3 PH	SLG
521044	RUSSETT4 138.0	2 Level	11885	9500.8
521075	STONEWAL LH138.0	2 Level	8962.8	5235.6
521108	KRSYJCTN4 138.0	2 Level	8404.2	6575.1
521109	KRSYJCTS4 138.0	2 Level	8171.6	6331.2
585331	A15-006-XFMR25.50	2 Level	6614.1	0
505595	GREASYC4 138.0	3 Level	7791.3	5180.9
505606	DEN #1 1 13.80	3 Level	14485.2	0
505608	DEN #2 1 13.80	3 Level	14485.2	0
510860	ATOKA1-T 13.80	3 Level	8429.5	0
510862	COALGAT4 138.0	3 Level	6211.9	3962.8
510863	ALLENNG4 138.0	3 Level	5865.2	3692.3
510882	ATOKA--2 69.00	3 Level	4518.6	4702.2
510884	HOLDEXP4 138.0	3 Level	5821.6	3831.9
510895	LEHIGH-4 138.0	3 Level	6057.7	3882
510936	EXPCOLG4 138.0	3 Level	7700	4829.9
510949	WAPANUCKA 4138.0	3 Level	6149.7	3710.9
515120	RUSSET-4 138.0	3 Level	11958.1	9581.9
515153	COLEMNT4 138.0	3 Level	8716.1	6880.1
515155	BODLE 4 138.0	3 Level	6592.8	4861.1
515176	BUTRFLD4 138.0	3 Level	6083.8	4378.9
515191	LULA 2 69.00	3 Level	6316.5	5985.2
515500	FRISCCO4 138.0	3 Level	8519.5	5407.9
515734	LULA 1 13.20	3 Level	9407.2	0
520818	ASHLAND4 138.0	3 Level	4937.7	1633.2
520963	KIERSEY4 138.0	3 Level	5906.7	4263.5
520969	LASALLE4 138.0	3 Level	6874.6	3527.4
521049	SCOLEMN4 138.0	3 Level	7612.8	5664.1
521187	ATKEAST4 138.0	3 Level	5491.2	3170.4
585332	A15-006-GSU125.50	3 Level	1396.2	0

Bus #	Bus Name	Level Away	Fault Current (Amperes)	
			3 PH	SLG
505592	WELEETK4 138.0	4 Level	17456.2	11786.3
510879	ATOKA P2 69.00	4 Level	3848.3	3576.4
510891	LANE 2 69.00	4 Level	3083.1	2591.1
514808	JOHNCO 4 138.0	4 Level	15881.4	16166.7
515147	GLASSES4 138.0	4 Level	8672.9	6129.8
515152	BROWNTP4 138.0	4 Level	8665.8	6817.2
515154	EXPLRPL4 138.0	4 Level	4818.9	3353.1
515172	SPRNDAL4 138.0	4 Level	12095	10093.1
515190	AOCPT 2 69.00	4 Level	6105.7	4467.7
515193	COLBRT-4 138.0	4 Level	5172.6	3614.8
515362	HARDEN 4 138.0	4 Level	8699.6	5524.5
515511	SOCPMPT2 69.00	4 Level	5966.7	5457.5
515781	RUSSET11 34.50	4 Level	2006	2509.1
515782	RUSSET21 7.200	4 Level	5643.5	0
520860	COLBERT4 138.0	4 Level	5166.1	3614.7
520884	DURANT 4 138.0	4 Level	5891.2	3941.9
520968	LANE 4 138.0	4 Level	5215.7	2799.5
520971	LATTAJT4 138.0	4 Level	5921.1	2731
521030	PITTSBG4 138.0	4 Level	4719.9	2039.6
585333	A15-006-GEN10.320	4 Level	77685.5	5.4
505590	WELEETK5 161.0	5 Level	6992	5501.5
505591	WLK X1 1 13.80	5 Level	6277.7	0
505594	CHECOTA4 138.0	5 Level	6985.6	5132.3
510874	MCGEETP2 69.00	5 Level	2480.2	1933.2
510885	PITTSB-2 69.00	5 Level	2531.8	1979.9
510902	WELETK4 138.0	5 Level	18152.5	13108.1
514809	JOHNCO 7 345.0	5 Level	10204.8	8554.1
514810	JOHNCO11 13.80	5 Level	42024.8	0
515122	SXMLCKT4 138.0	5 Level	11690.2	9146.6

Bus #	Bus Name	Level Away	Fault Current (Amperes)	
			3 PH	SLG
515149	MADINDT4 138.0	5 Level	8662.7	6109.1
515150	CANEYCK4 138.0	5 Level	9142.9	6234.9
515151	LTLCITY4 138.0	5 Level	7620.4	5367
515162	FNDTION4 138.0	5 Level	12274.8	10747
515164	ROCKYPT4 138.0	5 Level	10996.4	8826.6
515183	SOCPUMP2 69.00	5 Level	5923.5	5394.8
515189	AOCPA 2 69.00	5 Level	7306.4	5285.7
515197	HOMERTP2 69.00	5 Level	5950	4337
515318	SOTHADA4 138.0	5 Level	11946	8129.7
520426	SEAWAY4 138.0	5 Level	4343.3	0
520826	BENNGTN4 138.0	5 Level	5167.7	3254.3
520874	DARWIN 4 138.0	5 Level	5107.8	1819.5
520970	LATTA 4 138.0	5 Level	4919.2	2364.7
521014	OILCNTR4 138.0	5 Level	5399.4	2064
521026	PHAROAH4 138.0	5 Level	17073.6	11295.7
521047	SAVANNA4 138.0	5 Level	5435.1	2928.1

5.2.2. Short Circuit Result for POI PSO Johnston County 345kV (514809)

The results of the short circuit analysis for POI i.e., PSO Johnston County 345kV (514809) are tabulated below in table 5.2.2.

Table 5.2.2: Short circuit results for PSO Johnston County 345kV (514809) (GEN-2015-036)

Bus #	Bus Name	Level Away	Fault Current (Amperes)	
			3 PH	SLG
514809	JOHNCO 7 345.0	0 Level	10204.8	8554.1
510907	PITTSB-7 345.0	1 Level	14458.1	10040.3
514808	JOHNCO 4 138.0	1 Level	15881.4	16166.7
514810	JOHNCO11 13.80	1 Level	42024.8	0
515136	SUNNYSD7 345.0	1 Level	11091.3	10988.7

Bus #	Bus Name	Level Away	Fault Current (Amperes)	
			3 PH	SLG
584780	GEN-2015-036345.0	1 Level	8017.6	0
510911	VALIANT7 345.0	2 Level	13965.7	12572.1
510925	KIOWA 7 345.0	2 Level	14212.5	9732.5
515045	SEMINOL7 345.0	2 Level	28219.3	28994.3
515120	RUSSET-4 138.0	2 Level	11958.1	9581.9
515122	SXMLCKT4 138.0	2 Level	11690.2	9146.6
515135	SUNNYSD4 138.0	2 Level	18814.5	20876.5
515150	CANEYCK4 138.0	2 Level	9142.9	6234.9
515405	SUNYSD 1 13.80	2 Level	48995.7	0
515422	C-RIVER7 345.0	2 Level	10176.7	6012.3
515762	SUNNYSD1 13.80	2 Level	68493.9	0
521157	HUGO 7 345.0	2 Level	11514.2	10849.8
560013	G14-057T 345.0	2 Level	10488	7629
584781	G15-036-XFMR34.50	2 Level	52651	0
584784	G15-036-XFMR34.50	2 Level	52644.5	0
508072	NWTXARK7 345.0	3 Level	14102.7	13068.1
508298	LYDIA 7 345.0	3 Level	13528.2	10913.6
510918	VALIANT4 138.0	3 Level	15393.6	17405.7
510938	VALN2-1 13.80	3 Level	43021.4	0
510939	VALN3-1 13.80	3 Level	36013.3	0
510946	C-RIVER4 138.0	3 Level	13581.1	4009.1
510947	C-RIVER1 13.80	3 Level	30298.8	0
511468	L.E.S.-7 345.0	3 Level	13615	11258.9
511944	KIOWA G1 18.00	3 Level	60941.7	53277.9
511945	KIOWA G2 18.00	3 Level	60941.7	53442.1
511946	KIOWA S1 18.00	3 Level	33766.9	41738.1
511947	KIOWA S2 18.00	3 Level	33766.9	36561.6
511948	KIOWA G3 18.00	3 Level	60941.7	53196.3
511949	KIOWA G4 18.00	3 Level	60941.7	65483.8

Bus #	Bus Name	Level Away	Fault Current (Amperes)	
			3 PH	SLG
514908	ARCADIA7 345.0	3 Level	27635.3	29307.4
514934	DRAPER 7 345.0	3 Level	22746.1	19630.6
515041	SEMINL2G 17.10	3 Level	199938.8	135267.8
515042	SEMINL3G 20.90	3 Level	193106	144934.6
515044	SEMINOL4 138.0	3 Level	40529.4	46183
515121	MILLCKT4 138.0	3 Level	11536.9	8929.1
515137	UNIROY 4 138.0	3 Level	13144	11044.1
515144	LONEGRV4 138.0	3 Level	13764.7	12591.6
515147	GLASSES4 138.0	3 Level	8672.9	6129.8
515149	MADINDT4 138.0	3 Level	8662.7	6109.1
515151	LTLCITY4 138.0	3 Level	7620.4	5367
515164	ROCKYPT4 138.0	3 Level	10996.4	8826.6
515172	SPRNDAL4 138.0	3 Level	12095	10093.1
515224	MUSKOGE7 345.0	3 Level	30715.8	34644.1
515561	CARTRCO4 138.0	3 Level	8851.5	7592.2
515756	SEMINO11 14.40	3 Level	40206.9	0
515757	SEMINO21 14.40	3 Level	26885.3	0
515781	RUSSET11 34.50	3 Level	2006	2509.1
515782	RUSSET21 7.200	3 Level	5643.5	0
520948	HUGO PP4 138.0	3 Level	23533.4	26925.7
521044	RUSSETT4 138.0	3 Level	11885	9500.8
521067	TEXOMAJ4 138.0	3 Level	9082.9	6179.6
521122	HOWE 4 138.0	3 Level	11583.7	9030.8
521189	HUGO TERTA 13.80	3 Level	10957.6	0
584070	GEN-2014-057345.0	3 Level	7249.9	0
584782	G15-036-GSU134.50	3 Level	43826.8	0
584785	G15-036-GSU234.50	3 Level	40768.1	0
505602	S BROWN4 138.0	4 Level	8783.5	6964.8
507455	TURK 7 345.0	4 Level	9604.7	7666

Bus #	Bus Name	Level Away	Fault Current (Amperes)	
			3 PH	SLG
508071	NWTXARK4 138.0	4 Level	26372.1	26899.5
508100	NWTEX1-1 13.80	4 Level	32401	0
508101	NWTEX2-1 13.80	4 Level	32190.3	0
508359	WELSH 7 345.0	4 Level	22193.6	23740.1
509745	CLARKSV7 345.0	4 Level	22169.1	18386.5
510866	V-WEYCO4 138.0	4 Level	10256.6	8907.4
510886	IDABEL-4 138.0	4 Level	7290.4	5445.1
510901	HUGO---4 138.0	4 Level	3716.3	3204.6
510908	MCALEST4 138.0	4 Level	10354.8	6614.8
510910	VALIANT2 69.00	4 Level	7877.3	9736.3
510937	VALN1-1 13.80	4 Level	11505.5	0
511411	LES#5-1 13.80	4 Level	31363.4	0
511414	LES#4-1 13.80	4 Level	51136.3	0
511456	O.K.U.-7 345.0	4 Level	5770.5	3720.5
511467	L.E.S.-4 138.0	4 Level	25726.7	25928
514880	NORTWST7 345.0	4 Level	33558.3	30638.6
514901	CIMARON7 345.0	4 Level	34584	31157.6
514907	ARCADIA4 138.0	4 Level	42661.6	43485.2
514909	REDBUD 7 345.0	4 Level	26681	28644.9
514933	DRAPER 4 138.0	4 Level	40084.6	39895.3
515040	SEMINL1G 20.90	4 Level	192894.7	147176.9
515055	MAUD 4 138.0	4 Level	21096.4	15814.6
515100	PAOLI- 4 138.0	4 Level	10941.1	7883.6
515117	ARBUCKL4 138.0	4 Level	15948.6	12440
515129	RATLIFF4 138.0	4 Level	6918.1	5802.4
515130	POOLVIL4 138.0	4 Level	8665.1	7344.9
515152	BROWNTP4 138.0	4 Level	8665.8	6817.2
515158	MADLIND4 138.0	4 Level	8090.4	5610.2
515162	FNDTION4 138.0	4 Level	12274.8	10747

Bus #	Bus Name	Level Away	Fault Current (Amperes)	
			3 PH	SLG
515163	ROCKYPT2 69.00	4 Level	8296.7	8347.1
515178	PARKLN 4 138.0	4 Level	17046	13217.2
515196	MILLCRK4 138.0	4 Level	9555.9	7063.3
515223	MUSKOG4G 18.00	4 Level	248951.4	143729.6
515225	MUSKOG5G 18.00	4 Level	240664.8	141844.6
515226	MUSKOG6G 24.00	4 Level	199010	130547.5
515235	PECANCK7 345.0	4 Level	23464.9	21063.1
515302	FTSMITH7 345.0	4 Level	10306.8	10649.1
515372	ARDWEST4 138.0	4 Level	12990.5	10851.8
515415	CHEEKTP4 138.0	4 Level	12499.4	10971.8
515531	VANOSTP4 138.0	4 Level	14069.4	9295.6
515563	ORIGINW4 138.0	4 Level	5530.7	6010.2
515700	ARCADI41 13.80	4 Level	71837.6	0
515703	ARCADI21 13.80	4 Level	54439.9	57203.7
515704	ARCADI31 13.80	4 Level	49957	0
515720	DRAPER31 13.80	4 Level	52367.8	0
515721	DRAPER41 13.80	4 Level	52367.8	0
515754	ROCKYPT1 13.20	4 Level	6181.4	0
515792	DRAPER21 13.80	4 Level	75621.6	0
520411	SAWYER4 138.0	4 Level	11245.3	0
520918	FROGVIL4 138.0	4 Level	11909.2	8647.7
520947	HUGO1 23.40	4 Level	113609.7	82444.7
520972	LEBANON4 138.0	4 Level	6286.9	3717.3
521066	TEXOMA 4 138.0	4 Level	6739.3	4104.3
521079	VALLANT4 138.0	4 Level	10157.5	6138.4
560064	G15-093T 345.0	4 Level	13821.4	10324.9
584071	G14-057XFMR134.50	4 Level	29415.2	0
584783	G15-036-GEN10.690	4 Level	1285654.4	348242
584786	G15-036-GEN20.690	4 Level	1234764.6	345808.8

Bus #	Bus Name	Level Away	Fault Current (Amperes)	
			3 PH	SLG
585280	GEN-2015-092345.0	4 Level	7018	0
505600	TUPELO 4 138.0	5 Level	10801.4	6729
505604	DENISON4 138.0	5 Level	3363.3	3989.1
506945	CHAMSPR7 345.0	5 Level	11456.5	11026.8
507431	PATTERS4 138.0	5 Level	14098.7	11831.1
507454	TURK 4 138.0	5 Level	24371.3	19817.9
507457	TURK 1 13.80	5 Level	23092.1	0
508049	NASH 4 138.0	5 Level	20738.9	18845.9
508070	NWT-BNT4 138.0	5 Level	25356.9	25182.6
508080	SUGARHL4 138.0	5 Level	13096	10686.1
508832	DIANA 7 345.0	5 Level	20735.1	20102.7
508841	WILKES 7 345.0	5 Level	16457.2	16416.3
509404	WELSH1-1 18.00	5 Level	188640.6	128748.8
509406	WELSH3-1 18.00	5 Level	190776.7	129405.7
509782	R.S.S.-7 345.0	5 Level	33856.9	25935.8
509807	ONETA--7 345.0	5 Level	32356.5	32405.3
510858	MCALT4-1 13.80	5 Level	9612	0
510859	HUGO4-1 13.80	5 Level	8947.6	0
510870	WCITYTP2 69.00	5 Level	6868.5	7602.3
510876	KIPUMPT2 69.00	5 Level	4712.9	4006.4
510888	B.BOWTP4 138.0	5 Level	7672.5	5980.9
510893	HUGO---2 69.00	5 Level	4905.4	5128.4
510897	LONEOAK4 138.0	5 Level	9070.2	6125.6
510899	MCALEST2 69.00	5 Level	4880.8	5364
510906	SMCALTP4 138.0	5 Level	8939.6	5731.4
510921	DUSTIN-4 138.0	5 Level	10035.8	7088
510948	EARLSBORO 4138.0	5 Level	8205.8	6163.3
511415	LES#2-1 13.80	5 Level	18543.8	0
511416	LES#1-1 13.80	5 Level	17336.1	0

Bus #	Bus Name	Level Away	Fault Current (Amperes)	
			3 PH	SLG
511423	FLE TAP4 138.0	5 Level	9339.9	6400.7
511437	COMANC-4 138.0	5 Level	19131.7	15392.9
511439	LWSTAP 4 138.0	5 Level	12158.6	8712.9
511466	L.E.S.-2 69.00	5 Level	17360.2	19718.2
511474	SHERID4 138.0	5 Level	13044.8	9388.8
511486	ELGINJT4 138.0	5 Level	10855	8354.2
511494	COMMTAP4 138.0	5 Level	22644.2	20867.9
511508	BLANCHD4 138.0	5 Level	6393.5	4173.8
514801	MINCO 7 345.0	5 Level	18101.8	15291.4
514827	CTNWOOD4 138.0	5 Level	18058.6	10904.2
514879	NORTWST4 138.0	5 Level	44198	45498.3
514881	SPRNGCK7 345.0	5 Level	23961.8	19835
514885	NORTWS41 13.80	5 Level	54336	0
514898	CIMARON4 138.0	5 Level	43521.8	41764.2
514899	REDBUD1S 18.00	5 Level	90019.4	63950.2
514900	REDBUD2S 18.00	5 Level	90019.4	63950.2
514905	REDBUD3S 18.00	5 Level	90019.4	64782.9
514906	JNSKAMO4 138.0	5 Level	21931.8	14854.2
514910	REDBUD1G 18.00	5 Level	86845.7	61210.5
514911	REDBUD2G 18.00	5 Level	86845.7	61210.5
514912	REDBUD3G 18.00	5 Level	86845.7	61211.7
514940	REDBUD4S 18.00	5 Level	90019.4	63950.2
514942	REDBUD4G 18.00	5 Level	86845.7	61210.5
514946	MIDWEST4 138.0	5 Level	31556.5	21814.9
514949	SOONRTP4 138.0	5 Level	21567.6	13861.5
514961	GM 4 138.0	5 Level	20445.9	13418.2
515003	BARNES 4 138.0	5 Level	16967.9	13640.5
515054	MAUD 2 69.00	5 Level	12807	13956
515075	FRSTHIL4 138.0	5 Level	14678	10306.1

Bus #	Bus Name	Level Away	Fault Current (Amperes)	
			3 PH	SLG
515097	WLNUTCK4 138.0	5 Level	9960.8	6194.8
515099	PALIOGE2 69.00	5 Level	6410.7	6624
515114	CHIGLEY4 138.0	5 Level	8639	6450.8
515116	ARBUCKL2 69.00	5 Level	6553.7	7214.6
515123	OAKLAW-4 138.0	5 Level	13136.6	9761.1
515124	MAYSVIL4 138.0	5 Level	6618.4	4538.3
515128	RATLIFF2 69.00	5 Level	5427.5	6289.3
515131	FOX 4 138.0	5 Level	7182.2	5684.9
515133	BLUERIV4 138.0	5 Level	10550.2	7223.6
515134	PRARPNT4 138.0	5 Level	5808.9	4226.8
515138	CARTER 4 138.0	5 Level	13195.7	11429.9
515143	WOLFCRK4 138.0	5 Level	10080.3	8289.4
515153	COLEMNT4 138.0	5 Level	8716.1	6880.1
515155	BODLE 4 138.0	5 Level	6592.8	4861.1
515157	BROWN 4 138.0	5 Level	8740.6	6911.6
515159	COLBRTP4 138.0	5 Level	6706.5	4955.4
515160	MRIETA 2 69.00	5 Level	2189.8	1558.2
515171	CHIKSAW4 138.0	5 Level	12907.3	11852
515173	BERWYN 4 138.0	5 Level	8761.6	6315.5
515174	VANOSS 4 138.0	5 Level	13941.7	9224
515177	PARKLN 2 69.00	5 Level	15188.2	16222.4
515234	PECANCK5 161.0	5 Level	22517.8	24781.3
515301	FTSMTHW5 161.0	5 Level	21909.7	25245.7
515305	FTSMITH8 500.0	5 Level	8457.4	7814.1
515318	SOTHADA4 138.0	5 Level	11946	8129.7
515420	SCMMRCT2 69.00	5 Level	9599.5	8232.4
515461	RNDBARN4 138.0	5 Level	40697.2	39470.1
515465	LGARBER4 138.0	5 Level	22485.5	14890.1
515497	MATHWSN7 345.0	5 Level	32836.7	26662.8

Bus #	Bus Name	Level Away	Fault Current (Amperes)	
			3 PH	SLG
515559	SULPHR 4 138.0	5 Level	14638.2	11111.1
515564	ORIGIN11 34.50	5 Level	13875.6	18739
515565	ORIGIN21 34.50	5 Level	14079.2	18986.5
515566	ORIGINT1 13.20	5 Level	25846.9	0
515567	ORIGINT2 13.20	5 Level	26155.7	0
515610	FSHRTAP7 345.0	5 Level	18470.3	15500.7
515702	ARBUCKL1 13.20	5 Level	11358.3	0
515714	CIMARO11 13.80	5 Level	45697	0
515715	CIMARO21 13.80	5 Level	56705.9	0
515726	FTSMTH11 13.80	5 Level	51127.4	0
515728	FTSMTH51 13.80	5 Level	54234.2	0
515736	MAUD 1 13.20	5 Level	22641.4	0
515742	NORTWS21 13.80	5 Level	51817.2	0
515743	NORTWS31 13.80	5 Level	54336	0
515746	PAOLI 1 13.80	5 Level	9277.8	0
515747	PARKLN11 13.20	5 Level	11955.7	0
515748	PARKLN21 13.20	5 Level	20216.9	0
515749	PECANC11 13.80	5 Level	39408	0
515752	RATLIFF1 13.20	5 Level	10471.8	0
515759	PECANC21 13.80	5 Level	53165.5	0
515800	GRACMNT7 345.0	5 Level	16524.4	13317.5
520419	GARVIN4 138.0	5 Level	6702.4	0
520511	ENVILLE 138.0	5 Level	5215	0
520901	ENOS 4 138.0	5 Level	4620.8	2896.5
521036	RATTAN 4 138.0	5 Level	7341.4	1487.6
521098	WSTBANK4 138.0	5 Level	7755.2	4865.2
521108	KRSYJCTN4 138.0	5 Level	8404.2	6575.1
521109	KRSYJCTS4 138.0	5 Level	8171.6	6331.2
521125	CHEEK_4 138.0	5 Level	10055.2	8155.4

Bus #	Bus Name	Level Away	Fault Current (Amperes)	
			3 PH	SLG
560027	G14-074-TAP 345.0	5 Level	7781.9	5154
584072	G14-057-GSU134.50	5 Level	28795.7	0
585270	GEN-2015-093345.0	5 Level	12915.1	0
585281	G15-092XFMR134.50	5 Level	28851.3	0

5.2.3. Short Circuit Result for POI LES (511468) to Sunnyside (515136) 345kV (Proposed AEP Terry Road 345kV, 560013)

The results of the short circuit analysis for POI i.e., LES (511468) to Sunnyside (515136) 345kV (Proposed AEP Terry Road 345kV, 560013) are tabulated below in table 5.2.3.

Table 5.2.3: Short circuit results for LES (511468) to Sunnyside (515136) 345kV (Proposed AEP Terry Road 345kV, 560013) (GEN-2015-045 and GEN-2015-092)

Bus #	Bus Name	Level Away	Fault Current (Amperes)	
			3 PH	SLG
560013	G14-057T 345.0	0 Level	10488	7629
511468	L.E.S.-7 345.0	1 Level	13615	11258.9
515136	SUNNYSD7 345.0	1 Level	11091.3	10988.7
584070	GEN-2014-057345.0	1 Level	7249.9	0
511411	LES#5-1 13.80	2 Level	31363.4	0
511414	LES#4-1 13.80	2 Level	51136.3	0
511456	O.K.U.-7 345.0	2 Level	5770.5	3720.5
511467	L.E.S.-4 138.0	2 Level	25726.7	25928
514809	JOHNCO 7 345.0	2 Level	10204.8	8554.1
515135	SUNNYSD4 138.0	2 Level	18814.5	20876.5
515405	SUNYSD 1 13.80	2 Level	48995.7	0
515762	SUNNYSD1 13.80	2 Level	68493.9	0
521157	HUGO 7 345.0	2 Level	11514.2	10849.8
560064	G15-093T 345.0	2 Level	13821.4	10324.9
584071	G14-057XFMR134.50	2 Level	29415.2	0
585280	GEN-2015-092345.0	2 Level	7018	0

Bus #	Bus Name	Level Away	Fault Current (Amperes)	
			3 PH	SLG
510907	PITTSB-7 345.0	3 Level	14458.1	10040.3
510911	VALIANT7 345.0	3 Level	13965.7	12572.1
511415	LES#2-1 13.80	3 Level	18543.8	0
511416	LES#1-1 13.80	3 Level	17336.1	0
511423	FLE TAP4 138.0	3 Level	9339.9	6400.7
511437	COMANC-4 138.0	3 Level	19131.7	15392.9
511439	LWSTAP 4 138.0	3 Level	12158.6	8712.9
511466	L.E.S.-2 69.00	3 Level	17360.2	19718.2
511474	SHERID4 138.0	3 Level	13044.8	9388.8
511486	ELGINJT4 138.0	3 Level	10855	8354.2
511494	COMMTAP4 138.0	3 Level	22644.2	20867.9
514808	JOHNCO 4 138.0	3 Level	15881.4	16166.7
514810	JOHNCO11 13.80	3 Level	42024.8	0
515137	UNIROY 4 138.0	3 Level	13144	11044.1
515144	LONEGRV4 138.0	3 Level	13764.7	12591.6
515164	ROCKYPT4 138.0	3 Level	10996.4	8826.6
515561	CARTRCO4 138.0	3 Level	8851.5	7592.2
515800	GRACMNT7 345.0	3 Level	16524.4	13317.5
520948	HUGO PP4 138.0	3 Level	23533.4	26925.7
521189	HUGO TERTA 13.80	3 Level	10957.6	0
560027	G14-074-TAP 345.0	3 Level	7781.9	5154
584072	G14-057-GSU134.50	3 Level	28795.7	0
584780	GEN-2015-036345.0	3 Level	8017.6	0
585270	GEN-2015-093345.0	3 Level	12915.1	0
585281	G15-092XFMR134.50	3 Level	28851.3	0
508072	NWTXARK7 345.0	4 Level	14102.7	13068.1
508298	LYDIA 7 345.0	4 Level	13528.2	10913.6
510918	VALIANT4 138.0	4 Level	15393.6	17405.7
510925	KIOWA 7 345.0	4 Level	14212.5	9732.5

Bus #	Bus Name	Level Away	Fault Current (Amperes)	
			3 PH	SLG
510938	VALN2-1 13.80	4 Level	43021.4	0
510939	VALN3-1 13.80	4 Level	36013.3	0
511412	ELGJT1-1 13.80	4 Level	13003.7	0
511422	FLETCHR4 138.0	4 Level	8551.1	5795.1
511431	LWS S4 138.0	4 Level	11678.5	8286.3
511436	COMANC-2 69.00	4 Level	10385.9	6842.7
511469	LGORE-N2 69.00	4 Level	8630.9	6423.7
511470	LGORE-S2 69.00	4 Level	7473.4	5732.5
511477	S.W.S.-4 138.0	4 Level	35840.1	30390
511487	ELGINJT2 69.00	4 Level	9340.1	9465
511488	112GORE4 138.0	4 Level	13223.6	9653.4
511512	RPPAPER4 138.0	4 Level	12535.5	9025
511537	ARTVLTP4 138.0	4 Level	12379.8	8684.7
511553	CHISHOLM7 345.0	4 Level	6415.1	5754.5
511563	ELSWORTH 4138.0	4 Level	10778.9	8226.6
511851	COM1-1 13.80	4 Level	77792.7	80782.2
511852	COM2-1 13.80	4 Level	48842.3	54371.8
514801	MINCO 7 345.0	4 Level	18101.8	15291.4
515045	SEMINOL7 345.0	4 Level	28219.3	28994.3
515120	RUSSET-4 138.0	4 Level	11958.1	9581.9
515122	SXMLCKT4 138.0	4 Level	11690.2	9146.6
515129	RATLIFF4 138.0	4 Level	6918.1	5802.4
515130	POOLVIL4 138.0	4 Level	8665.1	7344.9
515150	CANEYCK4 138.0	4 Level	9142.9	6234.9
515163	ROCKYPT2 69.00	4 Level	8296.7	8347.1
515172	SPRNDAL4 138.0	4 Level	12095	10093.1
515372	ARDWEST4 138.0	4 Level	12990.5	10851.8
515415	CHEEKTP4 138.0	4 Level	12499.4	10971.8
515422	C-RIVER7 345.0	4 Level	10176.7	6012.3

Bus #	Bus Name	Level Away	Fault Current (Amperes)	
			3 PH	SLG
515563	ORIGINW4 138.0	4 Level	5530.7	6010.2
515754	ROCKYPT1 13.20	4 Level	6181.4	0
515801	GRCMNT11 13.80	4 Level	48912.1	0
515802	GRACMNT4 138.0	4 Level	30478.3	28980.7
520411	SAWYER4 138.0	4 Level	11245.3	0
520918	FROGVIL4 138.0	4 Level	11909.2	8647.7
520947	HUGO1 23.40	4 Level	113609.7	82444.7
521079	VALLANT4 138.0	4 Level	10157.5	6138.4
525832	TUCO_INT 7345.0	4 Level	13846.5	15334.4
529304	OMDUNCN4 138.0	4 Level	7326.8	5219.1
584073	G14-057-GEN10.690	4 Level	1165606	581888.5
584440	GEN-2014-074345.0	4 Level	7380.1	0
584781	G15-036-XFMR34.50	4 Level	52651	0
584784	G15-036-XFMR34.50	4 Level	52644.5	0
584860	GEN-2015-04534.50	4 Level	28851.3	0
585271	G15-093XFMR134.50	4 Level	33662	0
585282	G15-092-GSU134.50	4 Level	28209	0
507455	TURK 7 345.0	5 Level	9604.7	7666
508071	NWTXARK4 138.0	5 Level	26372.1	26899.5
508100	NWTEX1-1 13.80	5 Level	32401	0
508101	NWTEX2-1 13.80	5 Level	32190.3	0
508359	WELSH 7 345.0	5 Level	22193.6	23740.1
510866	V-WEYCO4 138.0	5 Level	10256.6	8907.4
510886	IDABEL-4 138.0	5 Level	7290.4	5445.1
510901	HUGO---4 138.0	5 Level	3716.3	3204.6
510910	VALIANT2 69.00	5 Level	7877.3	9736.3
510937	VALN1-1 13.80	5 Level	11505.5	0
510946	C-RIVER4 138.0	5 Level	13581.1	4009.1
510947	C-RIVER1 13.80	5 Level	30298.8	0

Bus #	Bus Name	Level Away	Fault Current (Amperes)	
			3 PH	SLG
511413	SWS#1--1 13.80	5 Level	9173.8	0
511421	VERDEN 4 138.0	5 Level	10781.5	7148.8
511428	LG-YEAR4 138.0	5 Level	12442.3	8913
511445	CARNEG-4 138.0	5 Level	8426.3	5650.8
511451	CYRIL--2 69.00	5 Level	5113.4	3783.9
511453	DUNCAN-4 138.0	5 Level	7109.3	5074.1
511461	FT.SILL2 69.00	5 Level	6456.9	4418.7
511471	LWS-NTP4 138.0	5 Level	12299.9	8542.4
511473	PO.HILL2 69.00	5 Level	6365.8	4639.8
511476	S.W.S.-2 69.00	5 Level	4903.8	5884.6
511483	NORGE--4 138.0	5 Level	12440.6	7808.7
511503	LAW WC2 69.00	5 Level	4915.8	3459
511509	53CACHE4 138.0	5 Level	12355.9	8652.4
511510	LAIRGST4 138.0	5 Level	12792.5	9312.5
511524	L-DISTP2 69.00	5 Level	9600.8	6185.5
511538	ARTVILL4 138.0	5 Level	9049.6	6074.9
511557	CHISHOLM6 230.0	5 Level	8987	8798.8
511558	CHISHOLM1 13.20	5 Level	32106.1	0
511846	SWS1-1 14.40	5 Level	63646	64648.3
511847	SWS2-1 14.40	5 Level	63646	64704.4
511848	SWS3-1 24.00	5 Level	95316.7	102560.4
511849	SWS NG4 13.80	5 Level	65426.6	52118.6
511850	SWS NG5 13.80	5 Level	65477.2	52140.1
511853	COM3-1 13.80	5 Level	40187.4	43853
511944	KIOWA G1 18.00	5 Level	60941.7	53277.9
511945	KIOWA G2 18.00	5 Level	60941.7	53442.1
511946	KIOWA S1 18.00	5 Level	33766.9	41738.1
511947	KIOWA S2 18.00	5 Level	33766.9	36561.6
511948	KIOWA G3 18.00	5 Level	60941.7	53196.3

Bus #	Bus Name	Level Away	Fault Current (Amperes)	
			3 PH	SLG
511949	KIOWA G4 18.00	5 Level	60941.7	65483.8
514901	CIMARON7 345.0	5 Level	34584	31157.6
514908	ARCADIA7 345.0	5 Level	27635.3	29307.4
514934	DRAPER 7 345.0	5 Level	22746.1	19630.6
515041	SEMINL2G 17.10	5 Level	199938.8	135267.8
515042	SEMINL3G 20.90	5 Level	193106	144934.6
515044	SEMINOL4 138.0	5 Level	40529.4	46183
515121	MILLCKT4 138.0	5 Level	11536.9	8929.1
515128	RATLIFF2 69.00	5 Level	5427.5	6289.3
515131	FOX 4 138.0	5 Level	7182.2	5684.9
515134	PRARPNT4 138.0	5 Level	5808.9	4226.8
515138	CARTER 4 138.0	5 Level	13195.7	11429.9
515143	WOLFCRK4 138.0	5 Level	10080.3	8289.4
515147	GLASSES4 138.0	5 Level	8672.9	6129.8
515149	MADINDT4 138.0	5 Level	8662.7	6109.1
515151	LTLCITY4 138.0	5 Level	7620.4	5367
515160	MRIETA 2 69.00	5 Level	2189.8	1558.2
515162	FNDTION4 138.0	5 Level	12274.8	10747
515224	MUSKOGE7 345.0	5 Level	30715.8	34644.1
515420	SCMMRCT2 69.00	5 Level	9599.5	8232.4
515444	MCNOWND7 345.0	5 Level	18050.4	15248.9
515458	BORDER 7345.0	5 Level	5614.9	3320.1
515549	MNCWND37 345.0	5 Level	12527.7	10423.1
515564	ORIGIN11 34.50	5 Level	13875.6	18739
515565	ORIGIN21 34.50	5 Level	14079.2	18986.5
515566	ORIGINT1 13.20	5 Level	25846.9	0
515567	ORIGINT2 13.20	5 Level	26155.7	0
515752	RATLIFF1 13.20	5 Level	10471.8	0
515756	SEMINO11 14.40	5 Level	40206.9	0

Bus #	Bus Name	Level Away	Fault Current (Amperes)	
			3 PH	SLG
515757	SEMINO21 14.40	5 Level	26885.3	0
515781	RUSSET11 34.50	5 Level	2006	2509.1
515782	RUSSET21 7.200	5 Level	5643.5	0
520419	GARVIN4 138.0	5 Level	6702.4	0
520814	ANADARK4 138.0	5 Level	33339.5	35152.5
520849	ELGIN4 138.0	5 Level	10693.9	0
521036	RATTAN 4 138.0	5 Level	7341.4	1487.6
521044	RUSSETT4 138.0	5 Level	11885	9500.8
521067	TEXOMAJ4 138.0	5 Level	9082.9	6179.6
521089	WASHITA4 138.0	5 Level	29740.5	24279.2
521098	WSTBANK4 138.0	5 Level	7755.2	4865.2
521122	HOWE 4 138.0	5 Level	11583.7	9030.8
521125	CHEEK_4 138.0	5 Level	10055.2	8155.4
525824	TUCO_TR1 113.20	5 Level	34536.7	0
525825	TUCO_TR2 113.20	5 Level	27470.9	0
525830	TUCO_INT 6230.0	5 Level	24890.7	26707.5
525844	ELK_1 118.00	5 Level	47373	67984.8
525845	ELK_4 1 18.00	5 Level	35588.3	57604.8
526936	YOAKUM_345 345.0	5 Level	9657.7	8021.4
584441	G14-074XFMR134.50	5 Level	24997.8	0
584760	GEN-2015-033345.0	5 Level	6935.6	0
584782	G15-036-GSU134.50	5 Level	43826.8	0
584785	G15-036-GSU234.50	5 Level	40768.1	0
584861	G15-045-GSU134.50	5 Level	21182	0
585060	GEN-2015-068345.0	5 Level	11168	0
585080	GEN-2015-071345.0	5 Level	5946	0
585272	G15-093-GSU134.50	5 Level	32728.3	0
585283	G15-092-GEN10.690	5 Level	950193.4	348667.7
585284	G15-092-GEN20.690	5 Level	861483.8	283193.6

6. Stability Analysis for Cluster Scenario

6.1. Faults Simulated

Seventy Three (73) faults were considered for the transient stability simulations which included three phase faults, as well as single phase line faults, at the locations defined by SPP in the RFP. Single-phase line faults were simulated by applying fault impedance to the positive sequence network at the fault location. As per the SPP current practice to compute the fault levels, the fault impedance was computed to give a positive sequence voltage at the specified fault location of approximately 60% of pre-fault voltage.

Concurrently and previously queued projects as respectively shown in Table-1 and Table-2 of the study request i.e., GEN-2011-040, GEN-2011-50, GEN-2012-004, GEN-2013-007, GEN-2014-057 as well as areas number 520, 524, 525, 526, 531, 534, and 536 were monitored during all the simulations. Table 6.1.1 shows the list of simulated contingencies. This table also shows the fault clearing time and the time delay before re-closing for all the study contingencies.

Simulations were performed with a 0.1-second steady-state run followed by the appropriate disturbance as described in Table 6.1.1. Simulations were run for minimum 15-second duration to confirm proper machine damping.

Table 6.1.1 summarizes the overall results for all faults simulations of cluster scenario. Complete sets of plots for Winter-2016, Summer-2017, and summer-2025 peak seasons for each fault are included in Appendices A, B and C respectively.

Table 6.1.1: List of simulated faults for cluster scenario stability analysis

Cont. #	Contingency Name	Description	2016 winter Results	2017 summer Results	2025 Summer Results
1	FLT01-3PH	3 phase fault on Tupelo (505600) to Allen GT (510881) 138kV line, near Tupelo. a. Apply fault at the Tupelo 138kV bus. b. Clear fault after 5 cycles by tripping the faulted line. c. Wait 20 cycles, and then re-close the line in (b) back into the fault. d. Leave fault on for 5 cycles, then trip the line in (b) and remove fault.	Stable	Stable	Stable
2	FLT02-3PH	3 phase fault on Tupelo (505600) to Allen (505598) 138kV line, near Tupelo. a. Apply fault at the Tupelo 138kV bus. b. Clear fault after 5 cycles by tripping the faulted line. c. Wait 20 cycles, and then re-close the line in (b) back into the fault. d. Leave fault on for 5 cycles, then trip the line in (b) and remove fault.	Stable	Stable	Stable
3	FLT03-3PH	3 phase fault on Tupelo (505600) to Tupelo Tap (521071) 138kV line, near Tupelo. a. Apply fault at the Tupelo 138kV bus. b. Clear fault after 5 cycles by tripping the faulted line. c. Wait 20 cycles, and then re-close the line in (b) back into the fault. d. Leave fault on for 5 cycles, then trip the line in (b) and remove fault.	Stable	Stable	Stable
4	FLT04-3PH	3 phase fault on Tupelo (505600) to S Brown (505602) 138kV line, near Tupelo. a. Apply fault at the Tupelo 138kV bus. b. Clear fault after 5 cycles by tripping the faulted line. c. Wait 20 cycles, and then re-close the line in (b) back into the fault. d. Leave fault on for 5 cycles, then trip the line in (b) and remove fault.	Stable	Stable	Stable
5	FLT05-3PH	3 phase fault on Tupelo (505600) to Tupelo4 (520406) 138kV line, near Tupelo. a. Apply fault at the Tupelo 138kV bus. b. Clear fault after 5 cycles by tripping the faulted line. c. Wait 20 cycles, and then re-close the line in (b) back into the fault. d. Leave fault on for 5 cycles, then trip the line in (b) and remove fault.	Stable	Stable	Stable

Cont. #	Contingency Name	Description	2016 winter Results	2017 summer Results	2025 Summer Results
6	FLT06-3PH	3 phase fault on Tupelo (505600) to Atoka West (521188) 138kV line, near Tupelo. a. Apply fault at the Tupelo 138kV bus. b. Clear fault after 5 cycles by tripping the faulted line. c. Wait 20 cycles, and then re-close the line in (b) back into the fault. d. Leave fault on for 5 cycles, then trip the line in (b) and remove fault.	Stable	Stable	Stable
7	FLT07-3PH	3 phase fault on the S Brown (505602) to Russett (521044) 138kV line, near S Brown. a. Apply fault at the S Brown 138kV bus. b. Clear fault after 5 cycles by tripping the faulted line. c. Wait 20 cycles, and then re-close the line in (b) back into the fault. d. Leave fault on for 5 cycles, then trip the line in (b) and remove fault.	Stable	Stable	Stable
8	FLT08-3PH	3 phase fault on the Coalgate Tap (510880) to Lehigh (510895) 138kV line, near Coalgate Tap. a. Apply fault at the Coalgate Tap 138kV bus. b. Clear fault after 5 cycles by tripping the faulted line. c. Wait 20 cycles, and then re-close the line in (b) back into the fault. d. Leave fault on for 5 cycles, then trip the line in (b) and remove fault.	Stable	Stable	Stable
9	FLT09-3PH	3 phase fault on the Allen GT (510881) to Explorer Coalgate (510935) 138kV line, near Allen GT. a. Apply fault at the Allen GT 138kV bus. b. Clear fault after 5 cycles by tripping the faulted line. c. Wait 20 cycles, and then re-close the line in (b) back into the fault. d. Leave fault on for 5 cycles, then trip the line in (b) and remove fault.	Stable	Stable	Stable
10	FLT10-3PH	3 phase fault on the Allen (505598) to Explorer Tap (505596) 138kV line, near Allen. a. Apply fault at the Allen 138kV bus. b. Clear fault after 5 cycles by tripping the faulted line. c. Wait 20 cycles, and then re-close the line in (b) back into the fault. d. Leave fault on for 5 cycles, then trip the line in (b) and remove fault.	Stable	Stable	Stable

Cont. #	Contingency Name	Description	2016 winter Results	2017 summer Results	2025 Summer Results
11	FLT11-3PH	3 phase fault on the Tupelo Tap (521071) to Lula (515192) 138kV line, near Tupelo Tap. a. Apply fault at the Tupelo Tap 138kV bus. b. Clear fault after 5 cycles by tripping the faulted line. c. Wait 20 cycles, and then re-close the line in (b) back into the fault. d. Leave fault on for 5 cycles, then trip the line in (b) and remove fault.	Stable	Stable	Stable
12	FLT12-3PH	3 phase fault on the S Brown (505602) to Kiersey Junct S (521109) 138kV line, near S Brown. a. Apply fault at the S Brown 138kV bus. b. Clear fault after 5 cycles by tripping the faulted line. c. Wait 20 cycles, and then re-close the line in (b) back into the fault. d. Leave fault on for 5 cycles, then trip the line in (b) and remove fault.	Stable	Stable	Stable
13	FLT13-3PH	3 phase fault on the S Brown (505602) to Colbert (515159) 138kV line, near S Brown. a. Apply fault at the S Brown 138kV bus. b. Clear fault after 5 cycles by tripping the faulted line. c. Wait 20 cycles, and then re-close the line in (b) back into the fault. d. Leave fault on for 5 cycles, then trip the line in (b) and remove fault.	Stable	Stable	Stable
14	FLT14-3PH	3 phase fault on the Johnston County (514809) to Sunnyside (515136) 345kV line, near Johnston County. a. Apply fault at the Johnston County 345kV bus. b. Clear fault after 5 cycles by tripping the faulted line. c. Wait 20 cycles, and then re-close the line in (b) back into the fault. d. Leave fault on for 5 cycles, then trip the line in (b) and remove fault.	Stable	Stable	Stable
15	FLT15-3PH	3 phase fault on the Johnston County (514809) to Pittsburg (510907) 345kV line, near Johnston County. a. Apply fault at the Johnston County 345kV bus. b. Clear fault after 5 cycles by tripping the faulted line. c. Wait 20 cycles, and then re-close the line in (b) back into the fault. d. Leave fault on for 5 cycles, then trip the line in (b) and remove fault.	Stable	Stable	Stable

Cont. #	Contingency Name	Description	2016 winter Results	2017 summer Results	2025 Summer Results
16	FLT16-3PH	3 phase fault on the Johnston County 345kV (514809) to Johnston County 138kV (514808) to Johnston County 13.8kV (514810) Transformer CKT 1, near Johnston County 345kV. a. Apply fault at the Johnston County 345kV bus. b. Clear fault after 5 cycles by tripping the faulted transformer.	Stable	Stable	Stable
17	FLT17-3PH	3 phase fault on the Pittsburg (510907) to Kiowa (510925) 345kV line, near Pittsburg. a. Apply fault at the Pittsburg 345kV bus. b. Clear fault after 5 cycles by tripping the faulted line. c. Wait 20 cycles, and then re-close the line in (b) back into the fault. d. Leave fault on for 5 cycles, then trip the line in (b) and remove fault.	Stable	Stable	Stable
18	FLT18-3PH	3 phase fault on the Pittsburg (510907) to Seminole (515045) 345kV line, near Pittsburg. a. Apply fault at the Pittsburg 345kV bus. b. Clear fault after 5 cycles by tripping the faulted line. c. Wait 20 cycles, and then re-close the line in (b) back into the fault. d. Leave fault on for 5 cycles, then trip the line in (b) and remove fault.	Stable	Stable	Stable
19	FLT19-3PH	3 phase fault on the Pittsburg (510907) to Valiant (510911) 345kV line, near Pittsburg. a. Apply fault at the Pittsburg 345kV bus. b. Clear fault after 5 cycles by tripping the faulted line. c. Wait 20 cycles, and then re-close the line in (b) back into the fault. d. Leave fault on for 5 cycles, then trip the line in (b) and remove fault.	Stable	Stable	Stable
20	FLT20-3PH	3 phase fault on the Pittsburg (510907) to Cimarron River (515422) 345kV line, near Pittsburg. a. Apply fault at the Pittsburg 345kV bus. b. Clear fault after 5 cycles by tripping the faulted line. c. Wait 20 cycles, and then re-close the line in (b) back into the fault. d. Leave fault on for 5 cycles, then trip the line in (b) and remove fault.	Stable	Stable	Stable

Cont. #	Contingency Name	Description	2016 winter Results	2017 summer Results	2025 Summer Results
21	FLT21-3PH	3 phase fault on the Valiant (510911) to Hugo (521157) 345kV line, near Valiant. a. Apply fault at the Valiant 345kV bus. b. Clear fault after 5 cycles by tripping the faulted line. c. Wait 20 cycles, and then re-close the line in (b) back into the fault. d. Leave fault on for 5 cycles, then trip the line in (b) and remove fault.	Stable	Stable	Stable
22	FLT22-3PH	3 phase fault on the Sunnyside 345kV (515136) to Sunnyside 138kV (515135) to Sunnyside 13.8kV (515762) transformer CKT 1, near Sunnyside 345kV. a. Apply fault at the Sunnyside 345kV bus. b. Clear fault after 5 cycles by tripping the faulted transformer.	Stable	Stable	Stable
23	FLT23-3PH	3 phase fault on the G14-057T (560013) to Sunnyside (515136) 345kV line, near G14-057T. a. Apply fault at the G14-057T 345kV bus. b. Clear fault after 5 cycles by tripping the faulted line. c. Wait 20 cycles, and then re-close the line in (b) back into the fault. d. Leave fault on for 5 cycles, then trip the line in (b) and remove fault.	Stable	Stable	Stable
24	FLT24-3PH	3 phase fault on the G14-057T (560013) to L.E.S. (511468) 345kV line, near G14-057T. a. Apply fault at the G14-057T 345kV bus. b. Clear fault after 5 cycles by tripping the faulted line. c. Wait 20 cycles, and then re-close the line in (b) back into the fault. d. Leave fault on for 5 cycles, then trip the line in (b) and remove fault.	Stable	Stable	Stable
25	FLT25-3PH	3 phase fault on theG15-093T. (560064) to Gracemont (515800) 345kV line, near L.E.S. a. Apply fault at the L.E.S 345kV bus. b. Clear fault after 5 cycles by tripping the faulted line. c. Wait 20 cycles, and then re-close the line in (b) back into the fault. d. Leave fault on for 5 cycles, then trip the line in (b) and remove fault.	Stable	Stable	Stable

Cont. #	Contingency Name	Description	2016 winter Results	2017 summer Results	2025 Summer Results
26	FLT26-3PH	3 phase fault on the L.E.S. (511468) to O.K.U. (511456) 345kV line, near L.E.S. a. Apply fault at the L.E.S 345kV bus. b. Clear fault after 5 cycles by tripping the faulted line. c. Wait 20 cycles, and then re-close the line in (b) back into the fault. d. Leave fault on for 5 cycles, then trip the line in (b) and remove fault.	Stable	Stable	Stable
27	FLT27-3PH	3 phase fault on the L.E.S. 345kV (511468) to L.E.S 138kV (511467) to L.E.S. 13.8kV (511411) transformer CKT 2, near L.E.S. a. Apply fault at the L.E.S 345kV bus. b. Clear fault after 5 cycles by tripping the faulted line.	Stable	Stable	Stable
28	FLT28-3PH	3 phase fault on the O.K.U. (511456) to G14-074-Tap (560027) 345kV line, near O.K.U. a. Apply fault at the O.K.U. 345kV bus. b. Clear fault after 5 cycles by tripping the faulted line. c. Wait 20 cycles, and then re-close the line in (b) back into the fault. d. Leave fault on for 5 cycles, then trip the line in (b) and remove fault.	Stable	Stable	Stable
29	FLT29-3PH	3 phase fault on the Gracemont (515800) to Minco (514801) 345kV line, near Gracemont. a. Apply fault at the Gracemont 345kV bus. b. Clear fault after 5 cycles by tripping the faulted line. c. Wait 20 cycles, and then re-close the line in (b) back into the fault. d. Leave fault on for 5 cycles, then trip the line in (b) and remove fault.	Stable	Stable	Stable
30	FLT30-3PH (25SP Only)	3 phase fault on the Gracemont (515800) to Chisholm (511553) 345kV line, near Gracemont. a. Apply fault at the Gracemont 345kV bus. b. Clear fault after 5 cycles by tripping the faulted line. c. Wait 20 cycles, and then re-close the line in (b) back into the fault. d. Leave fault on for 5 cycles, then trip the line in (b) and remove fault.	N/A	N/A	Stable
31	FLT31-3PH	3 phase fault on the Gracemont 345kV (515800) to Gracemont 138kV (515802) to Gracemont 13.8kV (515801) transformer CKT 1, near Gracemont. a. Apply fault at the Gracemont 345kV bus. b. Clear fault after 5 cycles by tripping the faulted line.	Stable	Stable	Stable

Cont. #	Contingency Name	Description	2016 winter Results	2017 summer Results	2025 Summer Results
32	FLT32-3PH	3 phase fault on the Seminole (515045) to Draper (514934) 345kV line, near Seminole. a. Apply fault at the Seminole 345kV bus. b. Clear fault after 5 cycles by tripping the faulted line. c. Wait 20 cycles, and then re-close the line in (b) back into the fault. d. Leave fault on for 5 cycles, then trip the line in (b) and remove fault.	Stable	Stable	Stable
33	FLT33-3PH	3 phase fault on the Cimarron River (515422) to Muskogee (515224) 345kV line, near Cimarron River. a. Apply fault at the Cimarron River 345kV bus. b. Clear fault after 5 cycles by tripping the faulted line. c. Wait 20 cycles, and then re-close the line in (b) back into the fault. d. Leave fault on for 5 cycles, then trip the line in (b) and remove fault.	Stable	Stable	Stable
34	FLT34-PO	**Prior Outage of Tupelo to S Brown 138kV**. 3 phase fault on the Tupelo to Tupelo Tap 138kV. a. Prior outage Tupelo (505600) to S Brown (505602) 138kV (solve network for steady state solution). b. 3 phase fault on the Tupelo (505600) to Tupelo Tap (521071) 138kV, near Tupelo 138kV. c. Leave fault on for 5 cycles, then trip the faulted line in (b).	Stable	Stable	Stable
35	FLT35-PO	**Prior Outage of Tupelo to Atoka West 138kV**. 3 phase fault on the Tupelo to Tupelo Tap 138kV. a. Prior outage Tupelo (505600) to Atoka West (521188) 138kV (solve network for steady state solution). b. 3 phase fault on the Tupelo (505600) to Tupelo Tap (521071) 138kV, near Tupelo 138kV. c. Leave fault on for 5 cycles, then trip the faulted line in (b).	Stable	Stable	Stable
36	FLT36-SB	**Tupelo 138kV Stuck Breaker** a. Apply single phase fault at the Tupelo (505600) 138kV bus on the Tupelo – Tupelo Tap (521071) 138kV line. b. Wait 16 cycles, and then drop Tupelo (505600) to Tupelo Tap (521071) 138kV line. c. Trip Tupelo (505600) to S Brown (505602) 138kV and remove the fault.	Stable	Stable	Stable

Cont. #	Contingency Name	Description	2016 winter Results	2017 summer Results	2025 Summer Results
37	FLT37-SB	**Allen GT 138kV Stuck Breaker** a. Apply single phase fault at the Allen GT (510881) 138kV bus on the Allen GT – Explorer Coalgate (510935) 138kV line. b. Wait 16 cycles, and then drop Allen GT (510935) to Explorer Coalgate (510935) 138kV line. c. Trip Allen GT (510881) to Coalgate Tap (510880) 138kV and remove the fault.	Stable	Stable	Stable
38	FLT38-PO	**Prior Outage of Johnston County to Sunnyside 345kV**. 3 phase fault on the Johnston County – Pittsburg 345kV line. a. Prior outage Johnston County (514809) to Sunnyside (515136) 345kV (solve network for steady state solution). b. 3 phase fault on the Johnston County (514809) to Pittsburg (510907) 345kV, near Johnston County 345kV. c. Leave fault on for 5 cycles, then trip the faulted line in (b).	Stable	Stable	Stable
39	FLT39-PO	**Prior Outage of Pittsburg to Seminole 345kV**. 3 phase fault on the Pittsburg – Cimarron River 345kV line. a. Prior outage Pittsburg (510907) to Seminole (515045) 345kV (solve network for steady state solution). b. 3 phase fault on the Pittsburg (510907) to Cimarron River (515422) 345kV, near Pittsburg 345kV. c. Leave fault on for 5 cycles, then trip the faulted line in (b).	Stable	Stable	Stable
40	FLT40-PO	**Prior Outage of Johnston County to Pittsburg 345kV**. 3 phase fault on the Sunnyside – Hugo 345kV line. a. Prior outage Johnston County (514809) to Pittsburg (510907) 345kV (solve network for steady state solution). b. 3 phase fault on the Sunnyside (515136) to Hugo (521157) 345kV, near Sunnyside 345kV. c. Leave fault on for 5 cycles, then trip the faulted line in (b).	Stable	Stable	Stable

Cont. #	Contingency Name	Description	2016 winter Results	2017 summer Results	2025 Summer Results
41	FLT41-PO	**Prior Outage of G15-057T to L.E.S. 345kV**. 3 phase fault on the Sunnyside – Hugo 345kV line. a. Prior outage G15-057T (560013) to L.E.S. (511468) 345kV (solve network for steady state solution). b. 3 phase fault on the Sunnyside (515136) to Hugo (521157) 345kV, near Sunnyside 345kV. c. Leave fault on for 5 cycles, then trip the faulted line in (b).	Stable	Stable	Stable
42	FLT42-SB	**Prior Outage of G14-074-Tap to Tuco 345kV**. 3 phase fault on the L.E.S. – Gracemont 345kV line. a. Prior outage G14-074-Tap (560027) to Tuco (525832) 345kV (solve network for steady state solution). b. 3 phase fault on the G15-093T. (560064) to Gracemont (515800) 345kV, near L.E.S. 345kV. c. Leave fault on for 5 cycles, then trip the faulted line in (b).	Stable	Stable	Stable
43	FLT43-SB	**Johnston County 345kV Stuck Breaker** a. Apply single phase fault at the Johnston County (514809) 345kV bus on the Johnston County – Pittsburg (510907) 345kV line. b. Wait 16 cycles, and then drop Johnston County (514809) to Pittsburg (510907) 345kV line. c. Trip Johnston County (514809) 345kV to Johnston County (514808) 138kV to Johnston County (514810) 13.8kV transformer CKT 1and remove the fault.	Stable	Stable	Stable
44	FLT44-SB	**Johnston County 345kV Stuck Breaker** a. Apply single phase fault at the Johnston County (514809) 345kV bus on the Johnston County – Sunnyside (515136) 345kV line. b. Wait 16 cycles, and then drop Johnston County (514809) to Sunnyside (515136) 345kV line. c. Trip Johnston County (514809) 345kV to Johnston County (514808) 138kV to Johnston County (514810) 13.8kV transformer CKT 1 and remove the fault.	Stable	Stable	Stable
45	FLT45-SB	**Sunnyside 345kV Stuck Breaker** a. Apply single phase fault at the Sunnyside (515136) 345kV bus on the Sunnyside – Johnston County (514809) 345kV line. b. Wait 16 cycles, and then drop Sunnyside (515136) to Johnston County (514809) 345kV line. c. Trip Sunnyside (515136) to Hugo (521157) 345kV line and remove the fault.	Stable	Stable	Stable

Cont. #	Contingency Name	Description	2016 winter Results	2017 summer Results	2025 Summer Results
46	FLT46-SB	**L.E.S. 345kV Stuck Breaker** a. Apply single phase fault at the L.E.S. (511468) 345kV bus on the L.E.S. – Gracemont (515800) 345kV line. b. Wait 16 cycles, and then drop G15-093 . (560064) to Gracemont (515800) 345kV line. c. Trip L.E.S. (511468) 345kV to L.E.S. (511467) 138kV to L.E.S. (511411) 13.8kV transformer CKT 2 and remove the fault.	Stable	Stable	Stable
47	FLT51-1PH	SLG fault on PHAROAH4 (521026) to WELEETK4 (505592) 138kV line, near PHAROAH4. a. Apply fault at the PHAROAH4 138kV bus. b. Clear fault after 6 cycles by tripping the faulted line.	Stable	Stable	Stable
48	FLT52-1PH	SLG fault on PHAROAH4 (521026) to 4WOODY (300686) 138kV line, near PHAROAH4. a. Apply fault at the PHAROAH4 138kV bus. b. Clear fault after 6 cycles by tripping the faulted line.	Stable	Stable	Stable
49	FLT53-1PH	SLG fault on PHAROAH4 (521026) to DUSTIN (520886) 138kV line, near PHAROAH4. a. Apply fault at the PHAROAH4 138kV bus. b. Clear fault after 6 cycles by tripping the faulted line.	Stable	Stable	Stable
50	FLT54-1PH	SLG fault on PHAROAH4 (521026) to WETUMKA4 (521084) 138kV line, near PHAROAH4. a. Apply fault at the PHAROAH4 138kV bus. b. Clear fault after 6 cycles by tripping the faulted line.	Stable	Stable	Stable
51	FLT56-1PH	SLG fault on OU SW4 (521104) to GOLDSBY (520924) 138kV line, near OU SW4. a. Apply fault at the OU SW4 138kV bus. b. Clear fault after 6 cycles by tripping the faulted line.	Stable	Stable	Stable
52	FLT57-1PH	SLG fault on OU SW4 (521104) to LAMAR (520403) 138kV line, near OU SW4. a. Apply fault at the OU SW4 138kV bus. b. Clear fault after 6 cycles by tripping the faulted line.	Stable	Stable	Stable
53	FLT58-1PH	SLG fault on MTRIVER4 (521004) to CRAGIJT4 (510890) 138kV line, near MTRIVER4. a. Apply fault at the MTRIVER4 138kV bus. b. Clear fault after 6 cycles by tripping the faulted line.	Stable	Stable	Stable
54	FLT59-1PH	SLG fault on MTRIVER4 (521004) to HOCHJCT4 (520823) 138kV line, near MTRIVER4. a. Apply fault at the MTRIVER4 138kV bus. b. Clear fault after 6 cycles by tripping the faulted line.	Stable	Stable	Stable

Cont. #	Contingency Name	Description	2016 winter Results	2017 summer Results	2025 Summer Results
55	FLT60-1PH	SLG fault on BLUCAN54 138Kv (521129). a. Apply fault at the BLUCAN54 138kV bus. b. Clear fault after 12 cycles. c. Disconnect MDCPRK4 138kV (520404). d. Disconnect CACHE4 138Kv (520410). e. Disconnect PARADSE4 138kV (521024) f. Disconnect BLUCAN54 138kV (521129). g. Disconnect CACHEJ4 138kV (521190).	Stable	Stable	Stable
56	FLT61-1PH	SLG fault on MARIETA4 138kV (520988). a. Apply fault at the MARIETA4 138kV bus. b. Clear fault after 12 cycles. c. Disconnect HEADLTN4 138kV (520939). d. Disconnect RINGLNG4 138kV (521038). e. Disconnect SWILSON4 138kV (521061)	Stable	Stable	Stable
57	FLT62-1PH	SLG fault on BASELIN4 138kV (520822). a. Apply fault at the BASELIN4 138kV bus. b. Clear fault after 12 cycles. c. Disconnect transformer BASELIN4 138kV (520822)/69kV (520821/13.8kV (521163). d. Disconnect PINTO4 (521029). e. Disconnect ARCO4 138kV (520816). f. Disconnect BASELIN4 138kV (520822). g. Disconnect PERNELL 138KV (520514).	Stable	Stable	Stable
58	FLT63-1PH	SLG fault on PAOLI4 138kV (521023). a. Apply fault at the PAOLI4 138kV bus. b. Clear fault after 12 cycles. c. Disconnect transformer PAOLI4 138kV (521023)/69kV (521022)/13.8kV (521174). d. Disconnect PERNELL 138kV (520514). e. Disconnect BASELIN4 138kV (520822). f. Disconnect ARCO4 138kV (520816). g. Disconnect PINTO4 138KV (521029).	Stable	Stable	Stable

Cont. #	Contingency Name	Description	2016 winter Results	2017 summer Results	2025 Summer Results
59	FLT64-1PH	SLG fault on PAOLI4 138kV (521023). a. Apply fault at the PAOLI4 138kV bus. b. Clear fault after 12 cycles. c. Disconnect transformer PAOLI4 138kV (521023)/69kV (521022)/13.8kV (521174). d. Disconnect CIVIT4 138kV (520854). e. Disconnect LASALLE4 138kV (520969). f. Disconnect ARCO4 138kV (520970). g. Disconnect LATTAJT4 138KV (520971). h. Disconnect OILCNTR4 138KV (521014). i. Disconnect SOLOCUP4 138KV (521053). j. Disconnect STRATFD4 138KV (521056). k. Disconnect STONEWAL 138KV (521075).	Stable	Stable	Stable
60	FLT65-1PH	SLG fault on PAOLI4 138kV (521023). a. Apply fault at the PAOLI4 138kV bus. b. Clear fault after 12 cycles. c. Disconnect transformer PAOLI4 138kV (521023)/69kV (521022)/13.8kV (521174). d. Trip PAYNE (520888) to PAOLI4 (521023) 138kV.	Stable	Stable	Stable
61	FLT66-1PH	SLG fault on SUNSHIN4 138kV (521059). a. Apply fault at the SUNSHIN4 138kV bus. b. Clear fault after 12 cycles. c. Disconnect transformer SUNSHIN4 138kV (521059)/69kV (521058)/13.8kV (521177). d. Disconnect BAILEY4 138kV(520401). e. Disconnect WDMOORE4 138kV (521123). f. Disconnect BRIDGECR 138kV (520501). g. Disconnect TUTTLE4 138KV (521072). h. Disconnect POCASET4 138KV (521031).	Stable	Stable	Stable

Cont. #	Contingency Name	Description	2016 winter Results	2017 summer Results	2025 Summer Results
62	FLT67-1PH	SLG fault on GOLDENSW4 138kV (521194). a. Apply fault at the GOLDENSW4 138kV bus. b. Clear fault after 12 cycles. c. Disconnect GARVIN4 138kV (520419). d. Disconnect BROKNBW4 138kV (520834). e. Disconnect HOLYCRK4 138kV (520946). f. Disconnect IDABEL 138kV (520953). g. Disconnect VALLANT4 138KV (521079). h. Disconnect HOCHJCT4 138KV (520823). i. Disconnect DOMINAN4 138KV (520878). j. Disconnect HOCHTWN4 138KV (520943). k. Disconnect MTRIVER4 138KV (521004). l. Disconnect GOLDENSW4 138KV (521194). m. Disconnect DOMINJCT4 138KV (521195).	Stable	Stable	Stable
63	FLT68-1PH	SLG fault on TUPELO4 138kV (505600). a. Apply fault at the TUPELO4 138kV bus. b. Clear fault after 12 cycles. c. Disconnect ATKWEST4 138kV (521188). d. Disconnect TUPELO4 138kV (505600). e. Disconnect TUPELO4 138kV (520406). f. Disconnect ASHLAND 138kV (520818). g. Disconnect COLGATE4 138KV (520862). h. Disconnect HARTSHN4 138KV (520934). i. Disconnect POTTSBG4 138KV (521030). j. Disconnect SAVANNA4 138KV (521047). k. Disconnect LIMESTONEJ4 138KV (520418). l. Disconnect MANING4 138KV (520986). m. Disconnect REDOAK4 138KV (521035). n. Disconnect CIVIT4 138KV (520854). o. Disconnect LASALLE4 138KV (520969). p. Disconnect LATTA4 138KV (520970). q. Disconnect LATTAJT4 138KV (520971). r. Disconnect OILCNTR4 138KV (521014). s. Disconnect SOLOCUP4 138KV (521053). t. Disconnect STRATFD4 138KV (521056). u. Disconnect TUPLOTP4 138KV (521071). v. Disconnect STONEWAL LH 138KV (521075).	Stable	Stable	Stable

Cont. #	Contingency Name	Description	2016 winter Results	2017 summer Results	2025 Summer Results
64	FLT69-1PH	SLG fault on WEWOKA4 138kV (521094). a. Apply fault at the WEWOKA4 138kV bus. b. Clear fault after 12 cycles. c. Disconnect SCISSORTAILJ 138kV (520440). d. Disconnect SCISSPRTAIL 138kV (520441). e. Disconnect GARDENGROVE4 138kV (520526). f. Disconnect CHERNICKY4 138kV (520819). g. Disconnect PARADIGM4 138KV (520820). h. Disconnect CHISNEY4 138KV (520852). i. Disconnect INGRAMJCT4 138KV (520857). j. Disconnect HAZEL4 138KV (520935). k. Disconnect HAZELJT4 138KV (520936). l. Disconnect HIGHLND4 138KV (520941). m. Disconnect INGRAM4 138KV (520956). n. Disconnect LIBRTY-4 138KV (520974). o. Disconnect MEEKER4 138KV (520994). p. Disconnect PRAGUE4 138KV (521032). q. Disconnect UNDCLAY4 138KV (521076). r. Disconnect WREDHIL4 138KV (521097).	Stable	Stable	Stable
65	FLT70-1PH	SLG fault on WEWOKA4 138kV (521094). a. Apply fault at the WEWOKA4 138kV bus. b. Clear fault after 12 cycles. c. Disconnect SCISSORTAILJ 138kV (520440). d. Disconnect SCISSPRTAIL 138kV (520441). e. Disconnect GARDENGROVE4 138kV (520526). f. Disconnect CHERNICKY4 138kV (520819). g. Disconnect PARADIGM4 138KV (520820). h. Disconnect CHISNEY4 138KV (520852). i. Disconnect INGRAMJCT4 138KV (520857). j. Disconnect HAZEL4 138KV (520935). k. Disconnect HAZELJT4 138KV (520936). l. Disconnect HIGHLND4 138KV (520941). m. Disconnect INGRAM4 138KV (520956). n. Disconnect LIBRTY-4 138KV (520974). o. Disconnect MEEKER4 138KV (520994). p. Disconnect PRAGUE4 138KV (521032). q. Disconnect UNDCLAY4 138KV (521076). r. Disconnect WREDHIL4 138KV (521097). s. Disconnect TRNCNDACV4 138KV (520416). t. Disconnect PARAGON4 138KV (520417). u. Disconnect CROMWEL4 138KV (520869). v. Disconnect WETUMKA4 138KV (521084).	Stable	Stable	Stable

Cont. #	Contingency Name	Description	2016 winter Results	2017 summer Results	2025 Summer Results
66	FLT71-1PH	SLG fault on WEWOKA4 138kV (521094). a. Apply fault at the WEWOKA4 138kV bus. b. Clear fault after 12 cycles. c. Disconnect SCISSORTAILJ 138kV (520440). d. Disconnect SCISSPRTAIL 138kV (520441). e. Disconnect GARDENGROVE4 138kV (520526). f. Disconnect CHERNICKY4 138kV (520819). g. Disconnect PARADIGM4 138KV (520820). h. Disconnect LIBRTY-4 138KV (520974). i. Disconnect MEEKER4 138KV (520994). j. Disconnect PRAGUE4 138KV (521032). k. Disconnect WREDHIL4 138KV (521097). l. Disconnect TRNCNDACV4 138KV (520416). m. Disconnect PARAGON4 138KV (520417). n. Disconnect CROMWEL4 138KV (520869). o. Disconnect WETUMKA4 138KV (521084).	Stable	Stable	Stable
67	FLT72-1PH	SLG fault on PARAGON4 138kV (520417). a. Apply fault at the PARAGON4 138kV bus. b. Clear fault after 12 cycles. c. Disconnect TRNCNDACV4 138KV (520416). d. Disconnect PARAGON4 138KV (520417). e. Disconnect TENASKAWP4 138kV (520420). f. Disconnect EUFAULA 138kV (520605). g. Disconnect CANADAN4 138KV (520840). h. Disconnect CARBON4 138KV (520844). i. Disconnect CROMWEL4 138KV (520869). j. Disconnect DUSTIN4 138KV (520886). k. Disconnect BRANTLEY4 138KV (520832). l. Disconnect MCALSTR4 138KV (520991). m. Disconnect WETUMKA4 138KV (521084).	Stable	Stable	Stable
68	FLT73-1PH	SLG fault on PARAGON4 138kV (520417). a. Apply fault at the PARAGON4 138kV bus. b. Clear fault after 12 cycles. c. Disconnect branch from PHAROAH4 (521026) to WELEETK4 (505592) 138kV. d. Disconnect TENASKAWP4 138kV (520420). e. Disconnect EUFAULA 138kV (520605). f. Disconnect CANADAN4 138KV (520840). g. Disconnect DUSTIN4 138KV (520886). h. Disconnect HANNA4 138KV (520932). i. Disconnect MCALSTR4 138KV (520991).	Stable	Stable	Stable

Cont. #	Contingency Name	Description	2016 winter Results	2017 summer Results	2025 Summer Results
69	FLT74-1PH	SLG fault on PARAGON4 138kV (520417). a. Apply fault at the PARAGON4 138kV bus. b. Clear fault after 12 cycles. c. Disconnect branch from PHAROAH4 (521026) to 4WOODY (300686) 138kV. d. Disconnect TRNCNDACV4 138KV (520416). e. Disconnect PARAGON4 138KV (520417). f. Disconnect CROMWEL4 138KV (520869). g. Disconnect WETUMKA4 138KV (521084).	Stable	Stable	Stable
70	FLT75-3PH	3 phase fault on the Sunnyside (515136) to Hugo (521157) 345kV line near Hugo a. Apply fault at the Hugo 345kV bus. b. Clear fault after 6 cycles by tripping the faulted line. c. Reclose back into the fault after 20 cycles d. Clear fault and trip line after 6 cycles	Stable	Stable	Stable
71	FLT76-PO	**Prior Outage – Sunnyside - LES 345kV** a) Prior outage of G14-057T (560013) to LES (511468) 345kV line b) 3 phase fault on the G15-093T (560064) to Gracemont (515800) c) Apply fault at the LES 345kV bus d) Clear fault and trip line after 6 cycles e) Reclose back into fault after 20 cycles f) Clear fault and trip line after 6 cycles	Stable	Stable	Stable
72	FLT77-PO	**Prior Outage – GEN-2014-057T - LES 345kV** a) Prior outage of GEN-2014-057T (560013) to LES (511468) 345kV line b) 3 phase fault on the Johnson County (514809) to Pittsburg (510097) near Johnson County. c) Apply fault at the Johnson County 345kV bus d) Clear fault and trip line after 6 cycles e) Reclose back into fault after 20 cycles f) Clear fault and trip line after 6 cycles	Stable	Stable	Stable
73	FLT78-PO	Prior Outage – GEN-2014-057T - LES 345kV a) Prior outage of GEN-2014-057T (560013) to LES (511468) 345kV line b) 3 phase fault on the Johnson County (514809) to Sunnyside (515136) near Sunnyside c) Apply fault at the Sunnyside 345kV bus d) Clear fault and trip line after 6 cycles e) Reclose back into fault after 20 cycles f) Clear fault and trip line after 6 cycles	Stable	Stable	Stable

6.2. Simulation Results for Cluster Scenario

For cluster scenario, there are no impacts on the stability performance of the SPP system for the contingencies tested on the SPP provided base cases.

7. Stability Analysis for Stand-Alone Scenarios

For stand-alone scenario, selective contingencies are simulated for each interconnection request at 100% capacity of each generator at the POI.

7.1. Fault Simulated for ASGI-2015-006 Request

Table 7.1.1, summarizes the overall results for all simulations for ASGI-2015-006 request. Complete sets of plots for Winter-2016, Summer-2017, and summer-2025 peak seasons for each fault for ASGI-2015-006 are in Appendices E1, E2, and E3 respectively.

Table 7.1.1: List of simulated faults for stand-alone stability analysis (ASGI-2015-006)

Cont. #	Contingency Name	Description	2016 winter Results	2017 summer Results	2025 Summer Results
1	FLT01-3PH	3 phase fault on Tupelo (505600) to Allen GT (510881) 138kV line, near Tupelo. a. Apply fault at the Tupelo 138kV bus. b. Clear fault after 5 cycles by tripping the faulted line. c. Wait 20 cycles, and then re-close the line in (b) back into the fault. d. Leave fault on for 5 cycles, then trip the line in (b) and remove fault.	Stable	Stable	Stable
2	FLT02-3PH	3 phase fault on Tupelo (505600) to Allen (505598) 138kV line, near Tupelo. a. Apply fault at the Tupelo 138kV bus. b. Clear fault after 5 cycles by tripping the faulted line. c. Wait 20 cycles, and then re-close the line in (b) back into the fault. d. Leave fault on for 5 cycles, then trip the line in (b) and remove fault.	Stable	Stable	Stable
3	FLT03-3PH	3 phase fault on Tupelo (505600) to Tupelo Tap (521071) 138kV line, near Tupelo. a. Apply fault at the Tupelo 138kV bus. b. Clear fault after 5 cycles by tripping the faulted line. c. Wait 20 cycles, and then re-close the line in (b) back into the fault. d. Leave fault on for 5 cycles, then trip the line in (b) and remove fault.	Stable	Stable	Stable

Cont. #	Contingency Name	Description	2016 winter Results	2017 summer Results	2025 Summer Results
4	FLT04-3PH	3 phase fault on Tupelo (505600) to S Brown (505602) 138kV line, near Tupelo. a. Apply fault at the Tupelo 138kV bus. b. Clear fault after 5 cycles by tripping the faulted line. c. Wait 20 cycles, and then re-close the line in (b) back into the fault. d. Leave fault on for 5 cycles, then trip the line in (b) and remove fault.	Stable	Stable	Stable
5	FLT05-3PH	3 phase fault on Tupelo (505600) to Tupelo4 (520406) 138kV line, near Tupelo. a. Apply fault at the Tupelo 138kV bus. b. Clear fault after 5 cycles by tripping the faulted line. c. Wait 20 cycles, and then re-close the line in (b) back into the fault. d. Leave fault on for 5 cycles, then trip the line in (b) and remove fault.	Stable	Stable	Stable
6	FLT06-3PH	3 phase fault on Tupelo (505600) to Atoka West (521188) 138kV line, near Tupelo. a. Apply fault at the Tupelo 138kV bus. b. Clear fault after 5 cycles by tripping the faulted line. c. Wait 20 cycles, and then re-close the line in (b) back into the fault. d. Leave fault on for 5 cycles, then trip the line in (b) and remove fault.	Stable	Stable	Stable
7	FLT07-3PH	3 phase fault on the S Brown (505602) to Russett (521044) 138kV line, near S Brown. a. Apply fault at the S Brown 138kV bus. b. Clear fault after 5 cycles by tripping the faulted line. c. Wait 20 cycles, and then re-close the line in (b) back into the fault. d. Leave fault on for 5 cycles, then trip the line in (b) and remove fault.	Stable	Stable	Stable
8	FLT08-3PH	3 phase fault on the Coalgate Tap (510880) to Lehigh (510895) 138kV line, near Coalgate Tap. a. Apply fault at the Coalgate Tap 138kV bus. b. Clear fault after 5 cycles by tripping the faulted line. c. Wait 20 cycles, and then re-close the line in (b) back into the fault. d. Leave fault on for 5 cycles, then trip the line in (b) and remove fault.	Stable	Stable	Stable

Cont. #	Contingency Name	Description	2016 winter Results	2017 summer Results	2025 Summer Results
9	FLT09-3PH	3 phase fault on the Allen GT (510881) to Explorer Coalgate (510935) 138kV line, near Allen GT. a. Apply fault at the Allen GT 138kV bus. b. Clear fault after 5 cycles by tripping the faulted line. c. Wait 20 cycles, and then re-close the line in (b) back into the fault. d. Leave fault on for 5 cycles, then trip the line in (b) and remove fault.	Stable	Stable	Stable
10	FLT10-3PH	3 phase fault on the Allen (505598) to Explorer Tap (505596) 138kV line, near Allen. a. Apply fault at the Allen 138kV bus. b. Clear fault after 5 cycles by tripping the faulted line. c. Wait 20 cycles, and then re-close the line in (b) back into the fault. d. Leave fault on for 5 cycles, then trip the line in (b) and remove fault.	Stable	Stable	Stable
11	FLT11-3PH	3 phase fault on the Tupelo Tap (521071) to Lula (515192) 138kV line, near Tupelo Tap. a. Apply fault at the Tupelo Tap 138kV bus. b. Clear fault after 5 cycles by tripping the faulted line. c. Wait 20 cycles, and then re-close the line in (b) back into the fault. d. Leave fault on for 5 cycles, then trip the line in (b) and remove fault.	Stable	Stable	Stable
12	FLT12-3PH	3 phase fault on the S Brown (505602) to Kiersey Junct S (521109) 138kV line, near S Brown. a. Apply fault at the S Brown 138kV bus. b. Clear fault after 5 cycles by tripping the faulted line. c. Wait 20 cycles, and then re-close the line in (b) back into the fault. d. Leave fault on for 5 cycles, then trip the line in (b) and remove fault.	Stable	Stable	Stable
13	FLT13-3PH	3 phase fault on the S Brown (505602) to Colbert (515159) 138kV line, near S Brown. a. Apply fault at the S Brown 138kV bus. b. Clear fault after 5 cycles by tripping the faulted line. c. Wait 20 cycles, and then re-close the line in (b) back into the fault. d. Leave fault on for 5 cycles, then trip the line in (b) and remove fault.	Stable	Stable	Stable

Cont. #	Contingency Name	Description	2016 winter Results	2017 summer Results	2025 Summer Results
34	FLT34-PO	**Prior Outage of Tupelo to S Brown 138kV**. 3 phase fault on the Tupelo to Tupelo Tap 138kV. a. Prior outage Tupelo (505600) to S Brown (505602) 138kV (solve network for steady state solution). b. 3 phase fault on the Tupelo (505600) to Tupelo Tap (521071) 138kV, near Tupelo 138kV. c. Leave fault on for 5 cycles, then trip the faulted line in (b).	Stable	Stable	Stable
35	FLT35-PO	**Prior Outage of Tupelo to Atoka West 138kV**. 3 phase fault on the Tupelo to Tupelo Tap 138kV. a. Prior outage Tupelo (505600) to Atoka West (521188) 138kV (solve network for steady state solution). b. 3 phase fault on the Tupelo (505600) to Tupelo Tap (521071) 138kV, near Tupelo 138kV. c. Leave fault on for 5 cycles, then trip the faulted line in (b).	Stable	Stable	Stable
36	FLT36-SB	**Tupelo 138kV Stuck Breaker** a. Apply single phase fault at the Tupelo (505600) 138kV bus on the Tupelo – Tupelo Tap (521071) 138kV line. b. Wait 16 cycles, and then drop Tupelo (505600) to Tupelo Tap (521071) 138kV line. c. Trip Tupelo (505600) to S Brown (505602) 138kV and remove the fault.	Stable	Stable	Stable
37	FLT37-SB	**Allen GT 138kV Stuck Breaker** a. Apply single phase fault at the Allen GT (510881) 138kV bus on the Allen GT – Explorer Coalgate (510935) 138kV line. b. Wait 16 cycles, and then drop Allen GT (510935) to Explorer Coalgate (510935) 138kV line. c. Trip Allen GT (510881) to Coalgate Tap (510880) 138kV and remove the fault.	Stable	Stable	Stable
51	FLT56-1PH	SLG fault on OU SW4 (521104) to GOLDSBY (520924) 138kV line, near OU SW4. a. Apply fault at the OU SW4 138kV bus. b. Clear fault after 6 cycles by tripping the faulted line.	Stable	Stable	Stable
52	FLT57-1PH	SLG fault on OU SW4 (521104) to LAMAR (520403) 138kV line, near OU SW4. a. Apply fault at the OU SW4 138kV bus. b. Clear fault after 6 cycles by tripping the faulted line.	Stable	Stable	Stable

Cont. #	Contingency Name	Description	2016 winter Results	2017 summer Results	2025 Summer Results
53	FLT58-1PH	SLG fault on MTRIVER4 (521004) to CRAGIJT4 (510890) 138kV line, near MTRIVER4. a. Apply fault at the MTRIVER4 138kV bus. b. Clear fault after 6 cycles by tripping the faulted line.	Stable	Stable	Stable
54	FLT59-1PH	SLG fault on MTRIVER4 (521004) to HOCHJCT4 (520823) 138kV line, near MTRIVER4. a. Apply fault at the MTRIVER4 138kV bus. b. Clear fault after 6 cycles by tripping the faulted line.	Stable	Stable	Stable
55	FLT60-1PH	SLG fault on BLUCAN54 138Kv (521129). a. Apply fault at the BLUCAN54 138kV bus. b. Clear fault after 12 cycles. c. Disconnect MDCPRK4 138kV (520404). d. Disconnect CACHE4 138Kv (520410). e. Disconnect PARADSE4 138kV (521024) f. Disconnect BLUCAN54 138kV (521129). g. Disconnect CACHEJ4 138kV (521190).	Stable	Stable	Stable
56	FLT61-1PH	SLG fault on MARIETA4 138kV (520988). a. Apply fault at the MARIETA4 138kV bus. b. Clear fault after 12 cycles. c. Disconnect HEADLTN4 138kV (520939). d. Disconnect RINGLNG4 138kV (521038). e. Disconnect SWILSON4 138kV (521061)	Stable	Stable	Stable
57	FLT62-1PH	SLG fault on BASELIN4 138kV (520822). a. Apply fault at the BASELIN4 138kV bus. b. Clear fault after 12 cycles. c. Disconnect transformer BASELIN4 138kV (520822)/69kV (520821/13.8kV (521163). d. Disconnect PINTO4 (521029). e. Disconnect ARCO4 138kV (520816). f. Disconnect BASELIN4 138kV (520822). g. Disconnect PERNELL 138KV (520514).	Stable	Stable	Stable
58	FLT63-1PH	SLG fault on PAOLI4 138kV (521023). a. Apply fault at the PAOLI4 138kV bus. b. Clear fault after 12 cycles. c. Disconnect transformer PAOLI4 138kV (521023)/69kV (521022)/13.8kV (521174). d. Disconnect PERNELL 138kV (520514). e. Disconnect BASELIN4 138kV (520822). f. Disconnect ARCO4 138kV (520816). g. Disconnect PINTO4 138KV (521029).	Stable	Stable	Stable

Cont. #	Contingency Name	Description	2016 winter Results	2017 summer Results	2025 Summer Results
59	FLT64-1PH	SLG fault on PAOLI4 138kV (521023). a. Apply fault at the PAOLI4 138kV bus. b. Clear fault after 12 cycles. c. Disconnect transformer PAOLI4 138kV (521023)/69kV (521022)/13.8kV (521174). d. Disconnect CIVIT4 138kV (520854). e. Disconnect LASALLE4 138kV (520969). f. Disconnect ARCO4 138kV (520970). g. Disconnect LATTAJT4 138KV (520971). h. Disconnect OILCNTR4 138KV (521014). i. Disconnect SOLOCUP4 138KV (521053). j. Disconnect STRATFD4 138KV (521056). k. Disconnect STONEWAL 138KV (521075).	Stable	Stable	Stable
60	FLT65-1PH	SLG fault on PAOLI4 138kV (521023). a. Apply fault at the PAOLI4 138kV bus. b. Clear fault after 12 cycles. c. Disconnect transformer PAOLI4 138kV (521023)/69kV (521022)/13.8kV (521174). d. Trip PAYNE (520888) to PAOLI4 (521023) 138kV.	Stable	Stable	Stable
61	FLT66-1PH	SLG fault on SUNSHIN4 138kV (521059). a. Apply fault at the SUNSHIN4 138kV bus. b. Clear fault after 12 cycles. c. Disconnect transformer SUNSHIN4 138kV (521059)/69kV (521058)/13.8kV (521177). d. Disconnect BAILEY4 138kV(520401). e. Disconnect WDMOORE4 138kV (521123). f. Disconnect BRIDGECR 138kV (520501). g. Disconnect TUTTLE4 138KV (521072). h. Disconnect POCASET4 138KV (521031).	Stable	Stable	Stable

Cont. #	Contingency Name	Description	2016 winter Results	2017 summer Results	2025 Summer Results
62	FLT67-1PH	SLG fault on GOLDENSW4 138kV (521194). a. Apply fault at the GOLDENSW4 138kV bus. b. Clear fault after 12 cycles. c. Disconnect GARVIN4 138kV (520419). d. Disconnect BROKNBW4 138kV (520834). e. Disconnect HOLYCRK4 138kV (520946). f. Disconnect IDABEL 138kV (520953). g. Disconnect VALLANT4 138KV (521079). h. Disconnect HOCHJCT4 138KV (520823). i. Disconnect DOMINAN4 138KV (520878). j. Disconnect HOCHTWN4 138KV (520943). k. Disconnect MTRIVER4 138KV (521004). l. Disconnect GOLDENSW4 138KV (521194). m. Disconnect DOMINJCT4 138KV (521195).	Stable	Stable	Stable
63	FLT68-1PH	SLG fault on TUPELO4 138kV (505600). a. Apply fault at the TUPELO4 138kV bus. b. Clear fault after 12 cycles. c. Disconnect ATKWEST4 138kV (521188). d. Disconnect TUPELO4 138kV (505600). e. Disconnect TUPELO4 138kV (520406). f. Disconnect ASHLAND 138kV (520818). g. Disconnect COLGATE4 138KV (520862). h. Disconnect HARTSHN4 138KV (520934). i. Disconnect POTTSBG4 138KV (521030). j. Disconnect SAVANNA4 138KV (521047). k. Disconnect LIMESTONEJ4 138KV (520418). l. Disconnect MANING4 138KV (520986). m. Disconnect REDOAK4 138KV (521035). n. Disconnect CIVIT4 138KV (520854). o. Disconnect LASALLE4 138KV (520969). p. Disconnect LATTA4 138KV (520970). q. Disconnect LATTAJT4 138KV (520971). r. Disconnect OILCNTR4 138KV (521014). s. Disconnect SOLOCUP4 138KV (521053). t. Disconnect STRATFD4 138KV (521056). u. Disconnect TUPLOTP4 138KV (521071). v. Disconnect STONEWAL LH 138KV (521075).	Stable	Stable	Stable

Cont. #	Contingency Name	Description	2016 winter Results	2017 summer Results	2025 Summer Results
64	FLT69-1PH	SLG fault on WEWOKA4 138kV (521094). a. Apply fault at the WEWOKA4 138kV bus. b. Clear fault after 12 cycles. c. Disconnect SCISSORTAILJ 138kV (520440). d. Disconnect SCISSPRTAIL 138kV (520441). e. Disconnect GARDENGROVE4 138kV (520526). f. Disconnect CHERNICKY4 138kV (520819). g. Disconnect PARADIGM4 138KV (520820). h. Disconnect CHISNEY4 138KV (520852). i. Disconnect INGRAMJCT4 138KV (520857). j. Disconnect HAZEL4 138KV (520935). k. Disconnect HAZELJT4 138KV (520936). l. Disconnect HIGHLND4 138KV (520941). m. Disconnect INGRAM4 138KV (520956). n. Disconnect LIBRTY-4 138KV (520974). o. Disconnect MEEKER4 138KV (520994). p. Disconnect PRAGUE4 138KV (521032). q. Disconnect UNDCLAY4 138KV (521076). r. Disconnect WREDHIL4 138KV (521097).	Stable	Stable	Stable
65	FLT70-1PH	SLG fault on WEWOKA4 138kV (521094). a. Apply fault at the WEWOKA4 138kV bus. b. Clear fault after 12 cycles. c. Disconnect SCISSORTAILJ 138kV (520440). d. Disconnect SCISSPRTAIL 138kV (520441). e. Disconnect GARDENGROVE4 138kV (520526). f. Disconnect CHERNICKY4 138kV (520819). g. Disconnect PARADIGM4 138KV (520820). h. Disconnect CHISNEY4 138KV (520852). i. Disconnect INGRAMJCT4 138KV (520857). j. Disconnect HAZEL4 138KV (520935). k. Disconnect HAZELJT4 138KV (520936). l. Disconnect HIGHLND4 138KV (520941). m. Disconnect INGRAM4 138KV (520956). n. Disconnect LIBRTY-4 138KV (520974). o. Disconnect MEEKER4 138KV (520994). p. Disconnect PRAGUE4 138KV (521032). q. Disconnect UNDCLAY4 138KV (521076). r. Disconnect WREDHIL4 138KV (521097). s. Disconnect TRNCNDACV4 138KV (520416). t. Disconnect PARAGON4 138KV (520417). u. Disconnect CROMWEL4 138KV (520869). v. Disconnect WETUMKA4 138KV (521084).	Stable	Stable	Stable

Cont. #	Contingency Name	Description	2016 winter Results	2017 summer Results	2025 Summer Results
66	FLT71-1PH	SLG fault on WEWOKA4 138kV (521094). a. Apply fault at the WEWOKA4 138kV bus. b. Clear fault after 12 cycles. c. Disconnect SCISSORTAILJ 138kV (520440). d. Disconnect SCISSPRTAIL 138kV (520441). e. Disconnect GARDENGROVE4 138kV (520526). f. Disconnect CHERNICKY4 138kV (520819). g. Disconnect PARADIGM4 138KV (520820). h. Disconnect LIBRTY-4 138KV (520974). i. Disconnect MEEKER4 138KV (520994). j. Disconnect PRAGUE4 138KV (521032). k. Disconnect WREDHIL4 138KV (521097). l. Disconnect TRNCNDACV4 138KV (520416). m. Disconnect PARAGON4 138KV (520417). n. Disconnect CROMWEL4 138KV (520869). o. Disconnect WETUMKA4 138KV (521084).	Stable	Stable	Stable
67	FLT72-1PH	SLG fault on PARAGON4 138kV (520417). a. Apply fault at the PARAGON4 138kV bus. b. Clear fault after 12 cycles. c. Disconnect TRNCNDACV4 138KV (520416). d. Disconnect PARAGON4 138KV (520417). e. Disconnect TENASKAWP4 138kV (520420). f. Disconnect EUFAULA 138kV (520605). g. Disconnect CANADAN4 138KV (520840). h. Disconnect CARBON4 138KV (520844). i. Disconnect CROMWEL4 138KV (520869). j. Disconnect DUSTIN4 138KV (520886). k. Disconnect BRANTLEY4 138KV (520832). l. Disconnect MCALSTR4 138KV (520991). m. Disconnect WETUMKA4 138KV (521084).	Stable	Stable	Stable
68	FLT73-1PH	SLG fault on PARAGON4 138kV (520417). a. Apply fault at the PARAGON4 138kV bus. b. Clear fault after 12 cycles. c. Disconnect branch from PHAROAH4 (521026) to WELEETK4 (505592) 138kV. d. Disconnect TENASKAWP4 138kV (520420). e. Disconnect EUFAULA 138kV (520605). f. Disconnect CANADAN4 138KV (520840). g. Disconnect DUSTIN4 138KV (520886). h. Disconnect HANNA4 138KV (520932). i. Disconnect MCALSTR4 138KV (520991).	Stable	Stable	Stable

Cont. #	Contingency Name	Description	2016 winter Results	2017 summer Results	2025 Summer Results
69	FLT74-1PH	SLG fault on PARAGON4 138kV (520417). a. Apply fault at the PARAGON4 138kV bus. b. Clear fault after 12 cycles. c. Disconnect branch from PHAROAH4 (521026) to 4WOODY (300686) 138kV. d. Disconnect TRNCNDACV4 138KV (520416). e. Disconnect PARAGON4 138KV (520417). f. Disconnect CROMWEL4 138KV (520869). g. Disconnect WETUMKA4 138KV (521084).	Stable	Stable	Stable
71	FLT76-PO	**Prior Outage – Sunnyside - LES 345kV** a) Prior outage of G14-057T (560013) to LES (511468) 345kV line b) 3 phase fault on the G15-093T (560064) to Gracemont (515800) c) Apply fault at the LES 345kV bus d) Clear fault and trip line after 6 cycles e) Reclose back into fault after 20 cycles f) Clear fault and trip line after 6 cycles	Stable	Stable	Stable

7.2. Fault Simulated for GEN-2015-036 Request

Table 7.2.1, summarizes the overall results for all simulations for GEN-2015-036 request. Complete sets of plots for Winter-2016, Summer-2017, and summer-2025 peak seasons for each fault for GEN-2015-036 are in Appendices F1, F2, and F3 respectively.

Table 7.2.1: List of simulated faults for stability analysis (GEN-2015-036)

Cont. #	Contingency Name	Description	2016 winter Results	2017 summer Results	2025 Summer Results
14	FLT14-3PH	3 phase fault on the Johnston County (514809) to Sunnyside (515136) 345kV line, near Johnston County. a. Apply fault at the Johnston County 345kV bus. b. Clear fault after 5 cycles by tripping the faulted line. c. Wait 20 cycles, and then re-close the line in (b) back into the fault. d. Leave fault on for 5 cycles, then trip the line in (b) and remove fault.	Stable	Stable	Stable

Cont. #	Contingency Name	Description	2016 winter Results	2017 summer Results	2025 Summer Results
15	FLT15-3PH	3 phase fault on the Johnston County (514809) to Pittsburg (510907) 345kV line, near Johnston County. a. Apply fault at the Johnston County 345kV bus. b. Clear fault after 5 cycles by tripping the faulted line. c. Wait 20 cycles, and then re-close the line in (b) back into the fault. d. Leave fault on for 5 cycles, then trip the line in (b) and remove fault.	Stable	Stable	Stable
16	FLT16-3PH	3 phase fault on the Johnston County 345kV (514809) to Johnston County 138kV (514808) to Johnston County 13.8kV (514810) Transformer CKT 1, near Johnston County 345kV. a. Apply fault at the Johnston County 345kV bus. b. Clear fault after 5 cycles by tripping the faulted transformer.	Stable	Stable	Stable
17	FLT17-3PH	3 phase fault on the Pittsburg (510907) to Kiowa (510925) 345kV line, near Pittsburg. a. Apply fault at the Pittsburg 345kV bus. b. Clear fault after 5 cycles by tripping the faulted line. c. Wait 20 cycles, and then re-close the line in (b) back into the fault. d. Leave fault on for 5 cycles, then trip the line in (b) and remove fault.	Stable	Stable	Stable
18	FLT18-3PH	3 phase fault on the Pittsburg (510907) to Seminole (515045) 345kV line, near Pittsburg. a. Apply fault at the Pittsburg 345kV bus. b. Clear fault after 5 cycles by tripping the faulted line. c. Wait 20 cycles, and then re-close the line in (b) back into the fault. d. Leave fault on for 5 cycles, then trip the line in (b) and remove fault.	Stable	Stable	Stable
19	FLT19-3PH	3 phase fault on the Pittsburg (510907) to Valiant (510911) 345kV line, near Pittsburg. a. Apply fault at the Pittsburg 345kV bus. b. Clear fault after 5 cycles by tripping the faulted line. c. Wait 20 cycles, and then re-close the line in (b) back into the fault. d. Leave fault on for 5 cycles, then trip the line in (b) and remove fault.	Stable	Stable	Stable

Cont. #	Contingency Name	Description	2016 winter Results	2017 summer Results	2025 Summer Results
20	FLT20-3PH	3 phase fault on the Pittsburg (510907) to Cimarron River (515422) 345kV line, near Pittsburg. a. Apply fault at the Pittsburg 345kV bus. b. Clear fault after 5 cycles by tripping the faulted line. c. Wait 20 cycles, and then re-close the line in (b) back into the fault. d. Leave fault on for 5 cycles, then trip the line in (b) and remove fault.	Stable	Stable	Stable
21	FLT21-3PH	3 phase fault on the Valiant (510911) to Hugo (521157) 345kV line, near Valiant. a. Apply fault at the Valiant 345kV bus. b. Clear fault after 5 cycles by tripping the faulted line. c. Wait 20 cycles, and then re-close the line in (b) back into the fault. d. Leave fault on for 5 cycles, then trip the line in (b) and remove fault.	Stable	Stable	Stable
22	FLT22-3PH	3 phase fault on the Sunnyside 345kV (515136) to Sunnyside 138kV (515135) to Sunnyside 13.8kV (515762) transformer CKT 1, near Sunnyside 345kV. a. Apply fault at the Sunnyside 345kV bus. b. Clear fault after 5 cycles by tripping the faulted transformer.	Stable	Stable	Stable
23	FLT23-3PH	3 phase fault on the G14-057T (560013) to Sunnyside (515136) 345kV line, near G14-057T. a. Apply fault at the G14-057T 345kV bus. b. Clear fault after 5 cycles by tripping the faulted line. c. Wait 20 cycles, and then re-close the line in (b) back into the fault. d. Leave fault on for 5 cycles, then trip the line in (b) and remove fault.	Stable	Stable	Stable
24	FLT24-3PH	3 phase fault on the G14-057T (560013) to L.E.S. (511468) 345kV line, near G14-057T. a. Apply fault at the G14-057T 345kV bus. b. Clear fault after 5 cycles by tripping the faulted line. c. Wait 20 cycles, and then re-close the line in (b) back into the fault. d. Leave fault on for 5 cycles, then trip the line in (b) and remove fault.	Stable	Stable	Stable

Cont. #	Contingency Name	Description	2016 winter Results	2017 summer Results	2025 Summer Results
25	FLT25-3PH	3 phase fault on theG15-093T. (560064) to Gracemont (515800) 345kV line, near L.E.S. a. Apply fault at the L.E.S 345kV bus. b. Clear fault after 5 cycles by tripping the faulted line. c. Wait 20 cycles, and then re-close the line in (b) back into the fault. d. Leave fault on for 5 cycles, then trip the line in (b) and remove fault.	Stable	Stable	Stable
26	FLT26-3PH	3 phase fault on the L.E.S. (511468) to O.K.U. (511456) 345kV line, near L.E.S. a. Apply fault at the L.E.S 345kV bus. b. Clear fault after 5 cycles by tripping the faulted line. c. Wait 20 cycles, and then re-close the line in (b) back into the fault. d. Leave fault on for 5 cycles, then trip the line in (b) and remove fault.	Stable	Stable	Stable
27	FLT27-3PH	3 phase fault on the L.E.S. 345kV (511468) to L.E.S 138kV (511467) to L.E.S. 13.8kV (511411) transformer CKT 2, near L.E.S. a. Apply fault at the L.E.S 345kV bus. b. Clear fault after 5 cycles by tripping the faulted line.	Stable	Stable	Stable
32	FLT32-3PH	3 phase fault on the Seminole (515045) to Draper (514934) 345kV line, near Seminole. a. Apply fault at the Seminole 345kV bus. b. Clear fault after 5 cycles by tripping the faulted line. c. Wait 20 cycles, and then re-close the line in (b) back into the fault. d. Leave fault on for 5 cycles, then trip the line in (b) and remove fault.	Stable	Stable	Stable
33	FLT33-3PH	3 phase fault on the Cimarron River (515422) to Muskogee (515224) 345kV line, near Cimarron River. a. Apply fault at the Cimarron River 345kV bus. b. Clear fault after 5 cycles by tripping the faulted line. c. Wait 20 cycles, and then re-close the line in (b) back into the fault. d. Leave fault on for 5 cycles, then trip the line in (b) and remove fault.	Stable	Stable	Stable

Cont. #	Contingency Name	Description	2016 winter Results	2017 summer Results	2025 Summer Results
38	FLT38-PO	**Prior Outage of Johnston County to Sunnyside 345kV**. 3 phase fault on the Johnston County – Pittsburg 345kV line. a. Prior outage Johnston County (514809) to Sunnyside (515136) 345kV (solve network for steady state solution). b. 3 phase fault on the Johnston County (514809) to Pittsburg (510907) 345kV, near Johnston County 345kV. c. Leave fault on for 5 cycles, then trip the faulted line in (b).	Stable	Stable	Stable
39	FLT39-PO	**Prior Outage of Pittsburg to Seminole 345kV**. 3 phase fault on the Pittsburg – Cimarron River 345kV line. a. Prior outage Pittsburg (510907) to Seminole (515045) 345kV (solve network for steady state solution). b. 3 phase fault on the Pittsburg (510907) to Cimarron River (515422) 345kV, near Pittsburg 345kV. c. Leave fault on for 5 cycles, then trip the faulted line in (b).	Stable	Stable	Stable
40	FLT40-PO	**Prior Outage of Johnston County to Pittsburg 345kV**. 3 phase fault on the Sunnyside – Hugo 345kV line. a. Prior outage Johnston County (514809) to Pittsburg (510907) 345kV (solve network for steady state solution). b. 3 phase fault on the Sunnyside (515136) to Hugo (521157) 345kV, near Sunnyside 345kV. c. Leave fault on for 5 cycles, then trip the faulted line in (b).	Stable	Stable	Stable
41	FLT41-PO	**Prior Outage of G15-057T to L.E.S. 345kV**. 3 phase fault on the Sunnyside – Hugo 345kV line. a. Prior outage G15-057T (560013) to L.E.S. (511468) 345kV (solve network for steady state solution). b. 3 phase fault on the Sunnyside (515136) to Hugo (521157) 345kV, near Sunnyside 345kV. c. Leave fault on for 5 cycles, then trip the faulted line in (b).	Stable	Stable	Stable

Cont. #	Contingency Name	Description	2016 winter Results	2017 summer Results	2025 Summer Results
43	FLT43-SB	**Johnston County 345kV Stuck Breaker** a. Apply single phase fault at the Johnston County (514809) 345kV bus on the Johnston County – Pittsburg (510907) 345kV line. b. Wait 16 cycles, and then drop Johnston County (514809) to Pittsburg (510907) 345kV line. c. Trip Johnston County (514809) 345kV to Johnston County (514808) 138kV to Johnston County (514810) 13.8kV transformer CKT 1and remove the fault.	Stable	Stable	Stable
44	FLT44-SB	**Johnston County 345kV Stuck Breaker** a. Apply single phase fault at the Johnston County (514809) 345kV bus on the Johnston County – Sunnyside (515136) 345kV line. b. Wait 16 cycles, and then drop Johnston County (514809) to Sunnyside (515136) 345kV line. c. Trip Johnston County (514809) 345kV to Johnston County (514808) 138kV to Johnston County (514810) 13.8kV transformer CKT 1 and remove the fault.	Stable	Stable	Stable
70	FLT75-3PH	3 phase fault on the Sunnyside (515136) to Hugo (521157) 345kV line near Hugo a. Apply fault at the Hugo 345kV bus. b. Clear fault after 6 cycles by tripping the faulted line. c. Reclose back into the fault after 20 cycles d. Clear fault and trip line after 6 cycles	Stable	Stable	Stable
71	FLT76-PO	**Prior Outage – Sunnyside - LES 345kV** a) Prior outage of G14-057T (560013) to LES (511468) 345kV line b) 3 phase fault on the G15-093T (560064) to Gracemont (515800) c) Apply fault at the LES 345kV bus d) Clear fault and trip line after 6 cycles e) Reclose back into fault after 20 cycles f) Clear fault and trip line after 6 cycles	Stable	Stable	Stable

7.3.Fault Simulated for GEN-2015-045 Request

Table 7.3.1, summarizes the overall results for all simulations for GEN-2015-045 request. Complete sets of plots for Winter-2016, Summer-2017, and summer-2025 peak seasons for each fault for GEN-2015-045 are in Appendices G1, G2, and G3 respectively.

Table 7.3.1: List of simulated faults for stability analysis (GEN-2015-045)

Cont. #	Contingency Name	Description	2016 winter Results	2017 summer Results	2025 Summer Results
14	FLT14-3PH	3 phase fault on the Johnston County (514809) to Sunnyside (515136) 345kV line, near Johnston County. a. Apply fault at the Johnston County 345kV bus. b. Clear fault after 5 cycles by tripping the faulted line. c. Wait 20 cycles, and then re-close the line in (b) back into the fault. d. Leave fault on for 5 cycles, then trip the line in (b) and remove fault.	Stable	Stable	Stable
15	FLT15-3PH	3 phase fault on the Johnston County (514809) to Pittsburg (510907) 345kV line, near Johnston County. a. Apply fault at the Johnston County 345kV bus. b. Clear fault after 5 cycles by tripping the faulted line. c. Wait 20 cycles, and then re-close the line in (b) back into the fault. d. Leave fault on for 5 cycles, then trip the line in (b) and remove fault.	Stable	Stable	Stable
16	FLT16-3PH	3 phase fault on the Johnston County 345kV (514809) to Johnston County 138kV (514808) to Johnston County 13.8kV (514810) Transformer CKT 1, near Johnston County 345kV. a. Apply fault at the Johnston County 345kV bus. b. Clear fault after 5 cycles by tripping the faulted transformer.	Stable	Stable	Stable
17	FLT17-3PH	3 phase fault on the Pittsburg (510907) to Kiowa (510925) 345kV line, near Pittsburg. a. Apply fault at the Pittsburg 345kV bus. b. Clear fault after 5 cycles by tripping the faulted line. c. Wait 20 cycles, and then re-close the line in (b) back into the fault. d. Leave fault on for 5 cycles, then trip the line in (b) and remove fault.	Stable	Stable	Stable

Cont. #	Contingency Name	Description	2016 winter Results	2017 summer Results	2025 Summer Results
18	FLT18-3PH	3 phase fault on the Pittsburg (510907) to Seminole (515045) 345kV line, near Pittsburg. a. Apply fault at the Pittsburg 345kV bus. b. Clear fault after 5 cycles by tripping the faulted line. c. Wait 20 cycles, and then re-close the line in (b) back into the fault. d. Leave fault on for 5 cycles, then trip the line in (b) and remove fault.	Stable	Stable	Stable
19	FLT19-3PH	3 phase fault on the Pittsburg (510907) to Valiant (510911) 345kV line, near Pittsburg. a. Apply fault at the Pittsburg 345kV bus. b. Clear fault after 5 cycles by tripping the faulted line. c. Wait 20 cycles, and then re-close the line in (b) back into the fault. d. Leave fault on for 5 cycles, then trip the line in (b) and remove fault.	Stable	Stable	Stable
20	FLT20-3PH	3 phase fault on the Pittsburg (510907) to Cimarron River (515422) 345kV line, near Pittsburg. a. Apply fault at the Pittsburg 345kV bus. b. Clear fault after 5 cycles by tripping the faulted line. c. Wait 20 cycles, and then re-close the line in (b) back into the fault. d. Leave fault on for 5 cycles, then trip the line in (b) and remove fault.	Stable	Stable	Stable
21	FLT21-3PH	3 phase fault on the Valiant (510911) to Hugo (521157) 345kV line, near Valiant. a. Apply fault at the Valiant 345kV bus. b. Clear fault after 5 cycles by tripping the faulted line. c. Wait 20 cycles, and then re-close the line in (b) back into the fault. d. Leave fault on for 5 cycles, then trip the line in (b) and remove fault.	Stable	Stable	Stable
22	FLT22-3PH	3 phase fault on the Sunnyside 345kV (515136) to Sunnyside 138kV (515135) to Sunnyside 13.8kV (515762) transformer CKT 1, near Sunnyside 345kV. a. Apply fault at the Sunnyside 345kV bus. b. Clear fault after 5 cycles by tripping the faulted transformer.	Stable	Stable	Stable

Cont. #	Contingency Name	Description	2016 winter Results	2017 summer Results	2025 Summer Results
23	FLT23-3PH	3 phase fault on the G14-057T (560013) to Sunnyside (515136) 345kV line, near G14-057T. a. Apply fault at the G14-057T 345kV bus. b. Clear fault after 5 cycles by tripping the faulted line. c. Wait 20 cycles, and then re-close the line in (b) back into the fault. d. Leave fault on for 5 cycles, then trip the line in (b) and remove fault.	Stable	Stable	Stable
24	FLT24-3PH	3 phase fault on the G14-057T (560013) to L.E.S. (511468) 345kV line, near G14-057T. a. Apply fault at the G14-057T 345kV bus. b. Clear fault after 5 cycles by tripping the faulted line. c. Wait 20 cycles, and then re-close the line in (b) back into the fault. d. Leave fault on for 5 cycles, then trip the line in (b) and remove fault.	Stable	Stable	Stable
25	FLT25-3PH	3 phase fault on theG15-093T. (560064) to Gracemont (515800) 345kV line, near L.E.S. a. Apply fault at the L.E.S 345kV bus. b. Clear fault after 5 cycles by tripping the faulted line. c. Wait 20 cycles, and then re-close the line in (b) back into the fault. d. Leave fault on for 5 cycles, then trip the line in (b) and remove fault.	Stable	Stable	Stable
26	FLT26-3PH	3 phase fault on the L.E.S. (511468) to O.K.U. (511456) 345kV line, near L.E.S. a. Apply fault at the L.E.S 345kV bus. b. Clear fault after 5 cycles by tripping the faulted line. c. Wait 20 cycles, and then re-close the line in (b) back into the fault. d. Leave fault on for 5 cycles, then trip the line in (b) and remove fault.	Stable	Stable	Stable
27	FLT27-3PH	3 phase fault on the L.E.S. 345kV (511468) to L.E.S 138kV (511467) to L.E.S. 13.8kV (511411) transformer CKT 2, near L.E.S. a. Apply fault at the L.E.S 345kV bus. b. Clear fault after 5 cycles by tripping the faulted line.	Stable	Stable	Stable

Cont. #	Contingency Name	Description	2016 winter Results	2017 summer Results	2025 Summer Results
28	FLT28-3PH	3 phase fault on the O.K.U. (511456) to G14-074-Tap (560027) 345kV line, near O.K.U. a. Apply fault at the O.K.U. 345kV bus. b. Clear fault after 5 cycles by tripping the faulted line. c. Wait 20 cycles, and then re-close the line in (b) back into the fault. d. Leave fault on for 5 cycles, then trip the line in (b) and remove fault.	Stable	Stable	Stable
29	FLT29-3PH	3 phase fault on the Gracemont (515800) to Minco (514801) 345kV line, near Gracemont. a. Apply fault at the Gracemont 345kV bus. b. Clear fault after 5 cycles by tripping the faulted line. c. Wait 20 cycles, and then re-close the line in (b) back into the fault. d. Leave fault on for 5 cycles, then trip the line in (b) and remove fault.	Stable	Stable	Stable
30	FLT30-3PH (25SP Only)	3 phase fault on the Gracemont (515800) to Chisholm (511553) 345kV line, near Gracemont. a. Apply fault at the Gracemont 345kV bus. b. Clear fault after 5 cycles by tripping the faulted line. c. Wait 20 cycles, and then re-close the line in (b) back into the fault. d. Leave fault on for 5 cycles, then trip the line in (b) and remove fault.	N/A	N/A	Stable
31	FLT31-3PH	3 phase fault on the Gracemont 345kV (515800) to Gracemont 138kV (515802) to Gracemont 13.8kV (515801) transformer CKT 1, near Gracemont. a. Apply fault at the Gracemont 345kV bus. b. Clear fault after 5 cycles by tripping the faulted line.	Stable	Stable	Stable
39	FLT39-PO	**Prior Outage of Pittsburg to Seminole 345kV**. 3 phase fault on the Pittsburg – Cimarron River 345kV line. a. Prior outage Pittsburg (510907) to Seminole (515045) 345kV (solve network for steady state solution). b. 3 phase fault on the Pittsburg (510907) to Cimarron River (515422) 345kV, near Pittsburg 345kV. c. Leave fault on for 5 cycles, then trip the faulted line in (b).	Stable	Stable	Stable

Cont. #	Contingency Name	Description	2016 winter Results	2017 summer Results	2025 Summer Results
40	FLT40-PO	**Prior Outage of Johnston County to Pittsburg 345kV**. 3 phase fault on the Sunnyside – Hugo 345kV line. a. Prior outage Johnston County (514809) to Pittsburg (510907) 345kV (solve network for steady state solution). b. 3 phase fault on the Sunnyside (515136) to Hugo (521157) 345kV, near Sunnyside 345kV. c. Leave fault on for 5 cycles, then trip the faulted line in (b).	Stable	Stable	Stable
41	FLT41-PO	**Prior Outage of G15-057T to L.E.S. 345kV**. 3 phase fault on the Sunnyside – Hugo 345kV line. a. Prior outage G15-057T (560013) to L.E.S. (511468) 345kV (solve network for steady state solution). b. 3 phase fault on the Sunnyside (515136) to Hugo (521157) 345kV, near Sunnyside 345kV. c. Leave fault on for 5 cycles, then trip the faulted line in (b).	Stable	Stable	Stable
42	FLT42-SB	**Prior Outage of G14-074-Tap to Tuco 345kV**. 3 phase fault on the L.E.S. – Gracemont 345kV line. a. Prior outage G14-074-Tap (560027) to Tuco (525832) 345kV (solve network for steady state solution). b. 3 phase fault on the G15-093T. (560064) to Gracemont (515800) 345kV, near L.E.S. 345kV. c. Leave fault on for 5 cycles, then trip the faulted line in (b).	Stable	Stable	Stable
43	FLT43-SB	**Johnston County 345kV Stuck Breaker** a. Apply single phase fault at the Johnston County (514809) 345kV bus on the Johnston County – Pittsburg (510907) 345kV line. b. Wait 16 cycles, and then drop Johnston County (514809) to Pittsburg (510907) 345kV line. c. Trip Johnston County (514809) 345kV to Johnston County (514808) 138kV to Johnston County (514810) 13.8kV transformer CKT 1and remove the fault.	Stable	Stable	Stable
45	FLT45-SB	**Sunnyside 345kV Stuck Breaker** a. Apply single phase fault at the Sunnyside (515136) 345kV bus on the Sunnyside – Johnston County (514809) 345kV line. b. Wait 16 cycles, and then drop Sunnyside (515136) to Johnston County (514809) 345kV line. c. Trip Sunnyside (515136) to Hugo (521157) 345kV line and remove the fault.	Stable	Stable	Stable

Cont. #	Contingency Name	Description	2016 winter Results	2017 summer Results	2025 Summer Results
46	FLT46-SB	**L.E.S. 345kV Stuck Breaker** a. Apply single phase fault at the L.E.S. (511468) 345kV bus on the L.E.S. – Gracemont (515800) 345kV line. b. Wait 16 cycles, and then drop G15-093 . (560064) to Gracemont (515800) 345kV line. c. Trip L.E.S. (511468) 345kV to L.E.S. (511467) 138kV to L.E.S. (511411) 13.8kV transformer CKT 2 and remove the fault.	Stable	Stable	Stable
71	FLT76-PO	**Prior Outage – Sunnyside - LES 345kV** a) Prior outage of G14-057T (560013) to LES (511468) 345kV line b) 3 phase fault on the G15-093T (560064) to Gracemont (515800) c) Apply fault at the LES 345kV bus d) Clear fault and trip line after 6 cycles e) Reclose back into fault after 20 cycles f) Clear fault and trip line after 6 cycles	Stable	Stable	Stable
72	FLT77-PO	**Prior Outage – GEN-2014-057T - LES 345kV** a) Prior outage of GEN-2014-057T (560013) to LES (511468) 345kV line b) 3 phase fault on the Johnson County (514809) to Pittsburg (510097) near Johnson County. c) Apply fault at the Johnson County 345kV bus d) Clear fault and trip line after 6 cycles e) Reclose back into fault after 20 cycles f) Clear fault and trip line after 6 cycles	Stable	Stable	Stable
73	FLT78-PO	Prior Outage – GEN-2014-057T - LES 345kV a) Prior outage of GEN-2014-057T (560013) to LES (511468) 345kV line b) 3 phase fault on the Johnson County (514809) to Sunnyside (515136) near Sunnyside c) Apply fault at the Sunnyside 345kV bus d) Clear fault and trip line after 6 cycles e) Reclose back into fault after 20 cycles f) Clear fault and trip line after 6 cycles	Stable	Stable	Stable

7.4. Fault simulated for GEN-2015-072 Request

Table 7.4.1, summarizes the overall results for all simulations for GEN-2015-072 request. Complete sets of plots for Winter-2016, Summer-2017, and summer-2025 peak seasons for each fault for GEN-2015-072 are in Appendices H1, H2, and H3 respectively.

Table 7.4.1: List of simulated faults for stability analysis (GEN-2015-072)

Cont. #	Contingency Name	Description	2016 winter Results	2017 summer Results	2025 Summer Results
14	FLT14-3PH	3 phase fault on the Johnston County (514809) to Sunnyside (515136) 345kV line, near Johnston County. a. Apply fault at the Johnston County 345kV bus. b. Clear fault after 5 cycles by tripping the faulted line. c. Wait 20 cycles, and then re-close the line in (b) back into the fault. d. Leave fault on for 5 cycles, then trip the line in (b) and remove fault.	Stable	Stable	Stable
15	FLT15-3PH	3 phase fault on the Johnston County (514809) to Pittsburg (510907) 345kV line, near Johnston County. a. Apply fault at the Johnston County 345kV bus. b. Clear fault after 5 cycles by tripping the faulted line. c. Wait 20 cycles, and then re-close the line in (b) back into the fault. d. Leave fault on for 5 cycles, then trip the line in (b) and remove fault.	Stable	Stable	Stable
16	FLT16-3PH	3 phase fault on the Johnston County 345kV (514809) to Johnston County 138kV (514808) to Johnston County 13.8kV (514810) Transformer CKT 1, near Johnston County 345kV. a. Apply fault at the Johnston County 345kV bus. b. Clear fault after 5 cycles by tripping the faulted transformer.	Stable	Stable	Stable
17	FLT17-3PH	3 phase fault on the Pittsburg (510907) to Kiowa (510925) 345kV line, near Pittsburg. a. Apply fault at the Pittsburg 345kV bus. b. Clear fault after 5 cycles by tripping the faulted line. c. Wait 20 cycles, and then re-close the line in (b) back into the fault. d. Leave fault on for 5 cycles, then trip the line in (b) and remove fault.	Stable	Stable	Stable
18	FLT18-3PH	3 phase fault on the Pittsburg (510907) to Seminole (515045) 345kV line, near Pittsburg. a. Apply fault at the Pittsburg 345kV bus. b. Clear fault after 5 cycles by tripping the faulted line. c. Wait 20 cycles, and then re-close the line in (b) back into the fault. d. Leave fault on for 5 cycles, then trip the line in (b) and remove fault.	Stable	Stable	Stable

Cont. #	Contingency Name	Description	2016 winter Results	2017 summer Results	2025 Summer Results
19	FLT19-3PH	3 phase fault on the Pittsburg (510907) to Valiant (510911) 345kV line, near Pittsburg. a. Apply fault at the Pittsburg 345kV bus. b. Clear fault after 5 cycles by tripping the faulted line. c. Wait 20 cycles, and then re-close the line in (b) back into the fault. d. Leave fault on for 5 cycles, then trip the line in (b) and remove fault.	Stable	Stable	Stable
20	FLT20-3PH	3 phase fault on the Pittsburg (510907) to Cimarron River (515422) 345kV line, near Pittsburg. a. Apply fault at the Pittsburg 345kV bus. b. Clear fault after 5 cycles by tripping the faulted line. c. Wait 20 cycles, and then re-close the line in (b) back into the fault. d. Leave fault on for 5 cycles, then trip the line in (b) and remove fault.	Stable	Stable	Stable
21	FLT21-3PH	3 phase fault on the Valiant (510911) to Hugo (521157) 345kV line, near Valiant. a. Apply fault at the Valiant 345kV bus. b. Clear fault after 5 cycles by tripping the faulted line. c. Wait 20 cycles, and then re-close the line in (b) back into the fault. d. Leave fault on for 5 cycles, then trip the line in (b) and remove fault.	Stable	Stable	Stable
22	FLT22-3PH	3 phase fault on the Sunnyside 345kV (515136) to Sunnyside 138kV (515135) to Sunnyside 13.8kV (515762) transformer CKT 1, near Sunnyside 345kV. a. Apply fault at the Sunnyside 345kV bus. b. Clear fault after 5 cycles by tripping the faulted transformer.	Stable	Stable	Stable
23	FLT23-3PH	3 phase fault on the G14-057T (560013) to Sunnyside (515136) 345kV line, near G14-057T. a. Apply fault at the G14-057T 345kV bus. b. Clear fault after 5 cycles by tripping the faulted line. c. Wait 20 cycles, and then re-close the line in (b) back into the fault. d. Leave fault on for 5 cycles, then trip the line in (b) and remove fault.	Stable	Stable	Stable

Cont. #	Contingency Name	Description	2016 winter Results	2017 summer Results	2025 Summer Results
24	FLT24-3PH	3 phase fault on the G14-057T (560013) to L.E.S. (511468) 345kV line, near G14-057T. a. Apply fault at the G14-057T 345kV bus. b. Clear fault after 5 cycles by tripping the faulted line. c. Wait 20 cycles, and then re-close the line in (b) back into the fault. d. Leave fault on for 5 cycles, then trip the line in (b) and remove fault.	Stable	Stable	Stable
25	FLT25-3PH	3 phase fault on theG15-093T. (560064) to Gracemont (515800) 345kV line, near L.E.S. a. Apply fault at the L.E.S 345kV bus. b. Clear fault after 5 cycles by tripping the faulted line. c. Wait 20 cycles, and then re-close the line in (b) back into the fault. d. Leave fault on for 5 cycles, then trip the line in (b) and remove fault.	Stable	Stable	Stable
26	FLT26-3PH	3 phase fault on the L.E.S. (511468) to O.K.U. (511456) 345kV line, near L.E.S. a. Apply fault at the L.E.S 345kV bus. b. Clear fault after 5 cycles by tripping the faulted line. c. Wait 20 cycles, and then re-close the line in (b) back into the fault. d. Leave fault on for 5 cycles, then trip the line in (b) and remove fault.	Stable	Stable	Stable
27	FLT27-3PH	3 phase fault on the L.E.S. 345kV (511468) to L.E.S 138kV (511467) to L.E.S. 13.8kV (511411) transformer CKT 2, near L.E.S. a. Apply fault at the L.E.S 345kV bus. b. Clear fault after 5 cycles by tripping the faulted line.	Stable	Stable	Stable
28	FLT28-3PH	3 phase fault on the O.K.U. (511456) to G14-074-Tap (560027) 345kV line, near O.K.U. a. Apply fault at the O.K.U. 345kV bus. b. Clear fault after 5 cycles by tripping the faulted line. c. Wait 20 cycles, and then re-close the line in (b) back into the fault. d. Leave fault on for 5 cycles, then trip the line in (b) and remove fault.	Stable	Stable	Stable

Cont. #	Contingency Name	Description	2016 winter Results	2017 summer Results	2025 Summer Results
29	FLT29-3PH	3 phase fault on the Gracemont (515800) to Minco (514801) 345kV line, near Gracemont. a. Apply fault at the Gracemont 345kV bus. b. Clear fault after 5 cycles by tripping the faulted line. c. Wait 20 cycles, and then re-close the line in (b) back into the fault. d. Leave fault on for 5 cycles, then trip the line in (b) and remove fault.	Stable	Stable	Stable
30	FLT30-3PH (25SP Only)	3 phase fault on the Gracemont (515800) to Chisholm (511553) 345kV line, near Gracemont. a. Apply fault at the Gracemont 345kV bus. b. Clear fault after 5 cycles by tripping the faulted line. c. Wait 20 cycles, and then re-close the line in (b) back into the fault. d. Leave fault on for 5 cycles, then trip the line in (b) and remove fault.	N/A	N/A	Stable
31	FLT31-3PH	3 phase fault on the Gracemont 345kV (515800) to Gracemont 138kV (515802) to Gracemont 13.8kV (515801) transformer CKT 1, near Gracemont. a. Apply fault at the Gracemont 345kV bus. b. Clear fault after 5 cycles by tripping the faulted line.	Stable	Stable	Stable
39	FLT39-PO	**Prior Outage of Pittsburg to Seminole 345kV**. 3 phase fault on the Pittsburg – Cimarron River 345kV line. a. Prior outage Pittsburg (510907) to Seminole (515045) 345kV (solve network for steady state solution). b. 3 phase fault on the Pittsburg (510907) to Cimarron River (515422) 345kV, near Pittsburg 345kV. c. Leave fault on for 5 cycles, then trip the faulted line in (b).	Stable	Stable	Stable
40	FLT40-PO	**Prior Outage of Johnston County to Pittsburg 345kV**. 3 phase fault on the Sunnyside – Hugo 345kV line. a. Prior outage Johnston County (514809) to Pittsburg (510907) 345kV (solve network for steady state solution). b. 3 phase fault on the Sunnyside (515136) to Hugo (521157) 345kV, near Sunnyside 345kV. c. Leave fault on for 5 cycles, then trip the faulted line in (b).	Stable	Stable	Stable

Cont. #	Contingency Name	Description	2016 winter Results	2017 summer Results	2025 Summer Results
41	FLT41-PO	**Prior Outage of G15-057T to L.E.S. 345kV**. 3 phase fault on the Sunnyside – Hugo 345kV line. a. Prior outage G15-057T (560013) to L.E.S. (511468) 345kV (solve network for steady state solution). b. 3 phase fault on the Sunnyside (515136) to Hugo (521157) 345kV, near Sunnyside 345kV. c. Leave fault on for 5 cycles, then trip the faulted line in (b).	Stable	Stable	Stable
42	FLT42-SB	**Prior Outage of G14-074-Tap to Tuco 345kV**. 3 phase fault on the L.E.S. – Gracemont 345kV line. a. Prior outage G14-074-Tap (560027) to Tuco (525832) 345kV (solve network for steady state solution). b. 3 phase fault on the G15-093T. (560064) to Gracemont (515800) 345kV, near L.E.S. 345kV. c. Leave fault on for 5 cycles, then trip the faulted line in (b).	Stable	Stable	Stable
43	FLT43-SB	**Johnston County 345kV Stuck Breaker** a. Apply single phase fault at the Johnston County (514809) 345kV bus on the Johnston County – Pittsburg (510907) 345kV line. b. Wait 16 cycles, and then drop Johnston County (514809) to Pittsburg (510907) 345kV line. c. Trip Johnston County (514809) 345kV to Johnston County (514808) 138kV to Johnston County (514810) 13.8kV transformer CKT 1and remove the fault.	Stable	Stable	Stable
45	FLT45-SB	**Sunnyside 345kV Stuck Breaker** a. Apply single phase fault at the Sunnyside (515136) 345kV bus on the Sunnyside – Johnston County (514809) 345kV line. b. Wait 16 cycles, and then drop Sunnyside (515136) to Johnston County (514809) 345kV line. c. Trip Sunnyside (515136) to Hugo (521157) 345kV line and remove the fault.	Stable	Stable	Stable
46	FLT46-SB	**L.E.S. 345kV Stuck Breaker** a. Apply single phase fault at the L.E.S. (511468) 345kV bus on the L.E.S. – Gracemont (515800) 345kV line. b. Wait 16 cycles, and then drop G15-093 . (560064) to Gracemont (515800) 345kV line. c. Trip L.E.S. (511468) 345kV to L.E.S. (511467) 138kV to L.E.S. (511411) 13.8kV transformer CKT 2 and remove the fault.	Stable	Stable	Stable

Cont. #	Contingency Name	Description	2016 winter Results	2017 summer Results	2025 Summer Results
71	FLT76-PO	**Prior Outage – Sunnyside - LES 345kV** a) Prior outage of G14-057T (560013) to LES (511468) 345kV line b) 3 phase fault on the G15-093T (560064) to Gracemont (515800) c) Apply fault at the LES 345kV bus d) Clear fault and trip line after 6 cycles e) Reclose back into fault after 20 cycles f) Clear fault and trip line after 6 cycles	Stable	Stable	Stable
72	FLT77-PO	**Prior Outage – GEN-2014-057T - LES 345kV** a) Prior outage of GEN-2014-057T (560013) to LES (511468) 345kV line b) 3 phase fault on the Johnson County (514809) to Pittsburg (510097) near Johnson County. c) Apply fault at the Johnson County 345kV bus d) Clear fault and trip line after 6 cycles e) Reclose back into fault after 20 cycles f) Clear fault and trip line after 6 cycles	Stable	Stable	Stable
73	FLT78-PO	Prior Outage – GEN-2014-057T - LES 345kV a) Prior outage of GEN-2014-057T (560013) to LES (511468) 345kV line b) 3 phase fault on the Johnson County (514809) to Sunnyside (515136) near Sunnyside c) Apply fault at the Sunnyside 345kV bus d) Clear fault and trip line after 6 cycles e) Reclose back into fault after 20 cycles f) Clear fault and trip line after 6 cycles	Stable	Stable	Stable

7.5. Simulation Results for Stand-Alone Scenarios

There are no impacts on the stability performance for stand-alone scenarios of the SPP system for the contingencies tested on the SPP provided base cases.

8. Conclusions

The findings of the impact study for the proposed interconnection projects under DSIS-2015-002 (Group 14) considered 100% of their proposed installed capacity is as follows:

1. The power factor analysis indicates the DISIS-2015-002 (Group 14) interconnection requests i.e., ASGI-2015-006, GEN-2015-035, GEN-2015-045, and GEN-2015-092 are required to maintain the SPP standard power factor at the point of interconnection i.e., SWPA Tupelo 138 kV (505600), PSO Johnston County 345kV (514809), LES (511468) to Sunnyside (515136) 345kV (Proposed AEP Terry Road 345kV, 560013) based on the contingencies studied. Per the SPP OATT, the Interconnection Customer will be required to provide 95% lagging (supplying vars) and 95% leading (absorbing vars) at the POI.

2. To offset the capacitive effects of the collector system and transmission line of the wind farm under low wind or no wind conditions, the inductive reactive support analysis for wind generator ASGI-2015-006 performed for Summer-2017 scenario which indicates that at POI (SWPA Tupelo 138 kV (505600)) 0.1 MVAR reactor is required at Bus 585330 to maintain zero MVAR flow at POI. For GEN-2015-036 the analysis indicates that at POI (PSO Johnston County 345kV (514809)) 11.1 MVAR reactor is required at Bus 584780 to maintain zero MVAR flow at POI. Similarly, for GEN-2015-045 and GEN-2015-092 the analysis indicates that at POI (LES (511468) to Sunnyside (515136) 345kV (Proposed AEP Terry Road 345kV, 560013) 3.8 MVAR reactor is required at Bus 585280 to maintain zero MVAR flow at POI. Maintaining zero MVar flow at the POI at all times is not possible with static reactor banks. It will be determined on a case by case basis for each generator as to whether additional reactor banks are required for low wind conditions.

3. There are no impacts on the stability performance of the SPP system during both cluster and stand-alone scenarios for the contingencies tested on the provided base cases. The study machines stayed on-line and stable for all simulated faults. The Project stability simulations with seventy three (73) specified test disturbances did not show instability problems in the SPP system. Any oscillations were damped out.

9. **Appendix A: 2016 winter Peak Case Stability Run Plots – Cluster**

10. **Appendix B: 2017 summer Peak Case Stability Run Plots – Cluster**

11. **Appendix C: 2025 Summer Peak Case Stability Run Plots – Cluster**

12. **Appendix D: Project Model Data**

13. **Appendix E1: 2016 winter Peak Case Stability Run Plots for ASGI-2015-006 Stand-Alone Scenario**

14. **Appendix E2: 2017 summer Peak Case Stability Run Plots for ASGI-2015-006 Stand-Alone Scenario**

15. **Appendix E3: 2025 Summer Peak Case Stability Run Plots for ASGI-2015-006 Stand-Alone Scenario**

16. **Appendix F1: 2016 winter Peak Case Stability Run Plots for GEN-2015-036 Stand-Alone Scenario**

17. **Appendix F2: 2017 summer Peak Case Stability Run Plots for GEN-2015-036 Stand-Alone Scenario**

18. **Appendix F3: 2025 Summer Peak Case Stability Run Plots for GEN-2015-036 Stand-Alone Scenario**

19. **Appendix G1: 2016 winter Peak Case Stability Run Plots for GEN-2015-045 Stand-Alone Scenario**

20. **Appendix G2: 2017 summer Peak Case Stability Run Plots for GEN-2015-045 Stand-Alone Scenario**

21. **Appendix G3: 2025 Summer Peak Case Stability Run Plots for GEN-2015-045 Stand-Alone Scenario**

22. **Appendix H1: 2016 winter Peak Case Stability Run Plots for GEN-2015-092 Stand-Alone Scenario**

23. **Appendix H2: 2017 summer Peak Case Stability Run Plots for GEN-2015-092 Stand-Alone Scenario**

24. **Appendix H3: 2025 Summer Peak Case Stability Run Plots for GEN-2015-092 Stand-Alone Scenario**

11.26 S: Group 15 Dynamic Stability Analysis Report

See next page

MITSUBISHI ELECTRIC POWER PRODUCTS, INC.
POWER SYSTEMS ENGINEERING SERVICES
530 KEYSTONE DRIVE
WARRENDALE, PA 15086, U.S.A.

Phone: (724) 778-5111 Fax: (724) 778-5149
Home Page: www.meppi.com

Southwest Power Pool, Inc. (SPP)

DISIS-2015-002 (Group 15) Definitive Impact Study

Draft Report

PXE-1208
Revision #00

March 2016

Submitted By:
Mitsubishi Electric Power Products, Inc. (MEPPI)
Power Systems Engineering Services Department
Warrendale, PA

DRAFT

Title: **DISIS-2015-002 (Group 15) Definitive Impact Study: Draft Report PXE-1208 For Review**
Date: March 2016
Author: Taylor L. Cramer; Engineer I, Power Systems Engineering Dept. *Taylor L. Cramer*
Reviewed: Nicholas W. Tenza; Engineer II, Power Systems Engineering Dept. *Nicholas W. Tenza*
Approved: Don Shoup; Manager, Power Systems Engineering Dept. *Don Shoup*

EXECUTIVE SUMMARY

SPP requested a Definitive Interconnection System Impact Study (DISIS). The DISIS required a Stability Analysis, Short-circuit Analysis, Power Factor Analysis, and Low Wind/No Wind Analysis detailing the impacts of the interconnecting project as shown in Table ES-1.

Table ES-1
Interconnection Projects Evaluated

Request	Size (MW)	Generator Model	Point of Interconnection
GEN-2015-097	100.0	G.E. 2 MW	Groton 115 kV

SUMMARY OF STABILITY ANALYSIS

Cluster Scenario

The Cluster Scenario Stability Analysis determined there were no contingencies that resulted in system instability or generation tripping offline for the 2016 Winter Peak, 2017 Summer Peak, or 2025 Summer Peak conditions when all generation interconnection requests were at 100% output.

SUMMARY OF THE SHORT-CIRCUIT ANALYSIS

The Short-circuit analysis was performed on the 2017 Summer Peak and 2025 Summer Peak power flows for all study projects. Refer to Table ES-2 for a list of maximum fault currents observed for the study project for the 2017 Summer Peak case. Refer to Table ES-3 for a list of maximum fault currents observed for the study project for the 2025 Summer Peak case.

DRAFT

Table ES-2
List of Maximum Fault Currents Observed for Each Study Project for the 2017 Summer Peak Case

Study Project	POI Name	Fault Current at POI (kA)	Maximum Fault Current (kA)	Fault Location	Bus Voltage (kV)
GEN-2015-097	Groton 115kV (652512)	18.36	22.00	LELANDO4	115

Table ES-3
List of Maximum Fault Currents Observed for Each Study Project for the 2025 Summer Peak Case

Study Project	POI Name	Fault Current at POI (kA)	Maximum Fault Current (kA)	Fault Location	Bus Voltage (kV)
GEN-2015-097	Groton 115kV (652512)	18.57	22.13	LELANDO4	115

SUMMARY OF POWER FACTOR ANALYSIS

Study Generator GEN-2015-097

The Power Factor Analysis shows that GEN-2015-097 has a power factor range of 0.887 lagging (supplying) to 0.999 leading (absorbing) for the 2016 Winter Peak conditions, a power factor range of 0.897 lagging (supplying) to 0.999 leading (absorbing) for the 2017 Summer Peak conditions, and a power factor range of 0.897 lagging (supplying) to 0.999 leading (absorbing) for the 2025 Summer Peak conditions.

SUMMARY OF LOW WIND/NO WIND ANALYSIS

The amount of reactive power injected into the transmission network was recorded at the high side of the transformer near the point of interconnection for all study projects for each season. The reactance needed for zero Mvar flow was 2.6 Mvar.

DRAFT

Table of Contents

Section 1: Objectives 5
Section 2: Background 5
Section 3: Stability Analysis 11
3.1 Approach 11
3.2 Cluster Scenario Stability Analysis Results 12
Section 4: Short-circuit Analysis 13
4.1 Approach 13
4.2 Short-circuit Analysis Results 14
Section 5: Power Factor Analysis 17
5.1 Approach 17
5.2 Power Factor Analysis Results 17
Section 6: Low Wind/No Wind Analysis 19
6.1 Approach 19
6.2 Low Wind/No Wind Analysis Results 19
Section 7: Conclusions 20

DRAFT

SECTION 1: OBJECTIVES

The objective of this report is to provide Southwest Power Pool, Inc. (SPP) with the deliverables for the "DISIS-2015-002 (Group 15) Definitive Impact Study." SPP requested an Interconnection System Impact Study for one (1) generation interconnection for 2016 Winter Peak, 2017 Summer Peak, and 2025 Summer Peak, which requires a Stability Analysis, Short-circuit Analysis, Power Factor Analysis, Low Wind/No Wind Analysis, and an Impact Study Report.

SECTION 2: BACKGROUND

The Siemens Power Technologies, Inc. PSS/E power system simulation program Version 32.2.0 was used for this study. SPP provided the stability database cases for 2016 Winter Peak, 2017 Summer Peak, and 2025 Summer Peak conditions and a list of contingencies to be examined. The model includes the study projects shown in Table 2-1 and the previously queued projects listed in Table 2-2. Refer to Appendix A for the steady-state and dynamic model data for the study projects. A power flow one-line diagram of the generation interconnection project is shown in Figure 2-1. Note the one-line diagram represents the 2016 Winter Peak case.

The Stability Analysis determined the impacts of the new interconnecting project on the stability and voltage recovery of the nearby system and the ability of the interconnecting project to meet FERC Order 661A. If problems with stability or voltage recovery are identified, the need for reactive compensation or system upgrades will be investigated. Three-phase faults and single line-to-ground faults will be examined as listed in Table 2-3.

A Short-circuit Analysis was performed on the 2017 Summer Peak and 2025 Summer Peak study years for the study generator. The study was performed five buses out from the study generator's point of interconnection and results were documented.

The Power Factor Analysis determined the power factor at the high side of the transformer near the point of interconnection for the wind or solar interconnection projects for pre-contingency and post-contingency conditions. The N-1, three phase contingencies listed in Table 2-3 were used in the Power Factor analysis.

The Low Wind/No Wind Analysis was completed for this generator interconnection. This analysis determined if reactive support is needed to have an Mvar flow of approximately zero at the point of interconnection (POI).

DRAFT

Table 2-1
Interconnection Projects Evaluated

Request	Size (MW)	Generator Model	Point of Interconnection
GEN-2015-097	100.0	G.E. 2 MW wind (585323)	Groton 115 kV (652512)

Table 2-2
Previously Queued Nearby Interconnection Projects Included

Request	Size (MW)	Generator Model	Point of Interconnection
GI-1401	103.7	GE 1.7MW wind (652007)	Tap on Newell - Maurine 115 kV (652005)
GI-0723	49.5	WT3 generic wind (652345)	Summit 115 kV (652522)
GI-1301	89.7	Siemens 2.3 WGUR wind (652004)	Tap on Summitt - Watertown 115 kV (652001)
GI-1001	99	GENROU (659411)	Mound City 230 kV (652499)
GI-0901	200	GE 1.6 MW wind (652173)	Tap on Groton - Watertown 345 kV (652175)
GI-1214	100.34 (net zero)	WT3 generic wind (659031)	Groton 115 kV (652152)
GI0209	40.5	WT3 generic wind (659291)	Fort Thompson 69 kV (652276)
GI-0316	120	GENROU (659274)	Groton 115 kV (652152)
GI-0713	184.5	WT3 generic wind (659296)	Wessington Springs 230 kV (652607)
GI-0608	97.4	GENROU (659272)	Groton 115 kV (652152)
GI-0704	319.79	GENROU (659353/ 659354)	White 345 kV (652537)
GI-0918	99 (net zero)	WT3 generic wind (659289)	Groton 115 kV (652152)
GI-1003	184.5	WT3 generic wind (659296)	Wessington Springs 230 kV (652607)
GI-1309	20.35	WT3 generic wind (660013)	Redfield NW 115 kV (660015)
G255	100.23	WT3 generic wind (600069/600078)	Yankee 115 kV (603191)
G736	200.48	GE 1.79MW wind (11123)	Big Stone 230 kV (620314)
J442	200	GE 2.0MW wind (11133)	Big Stone 230 kV (620314)
J436	150	Vestas V110 VCSS 2.0MW wind (11143)	Big Stone 345 kV (620417)
J437	150	Vestas V110 VCSS 2.0MW wind (11153)	Big Stone 345 kV (620417)

DRAFT

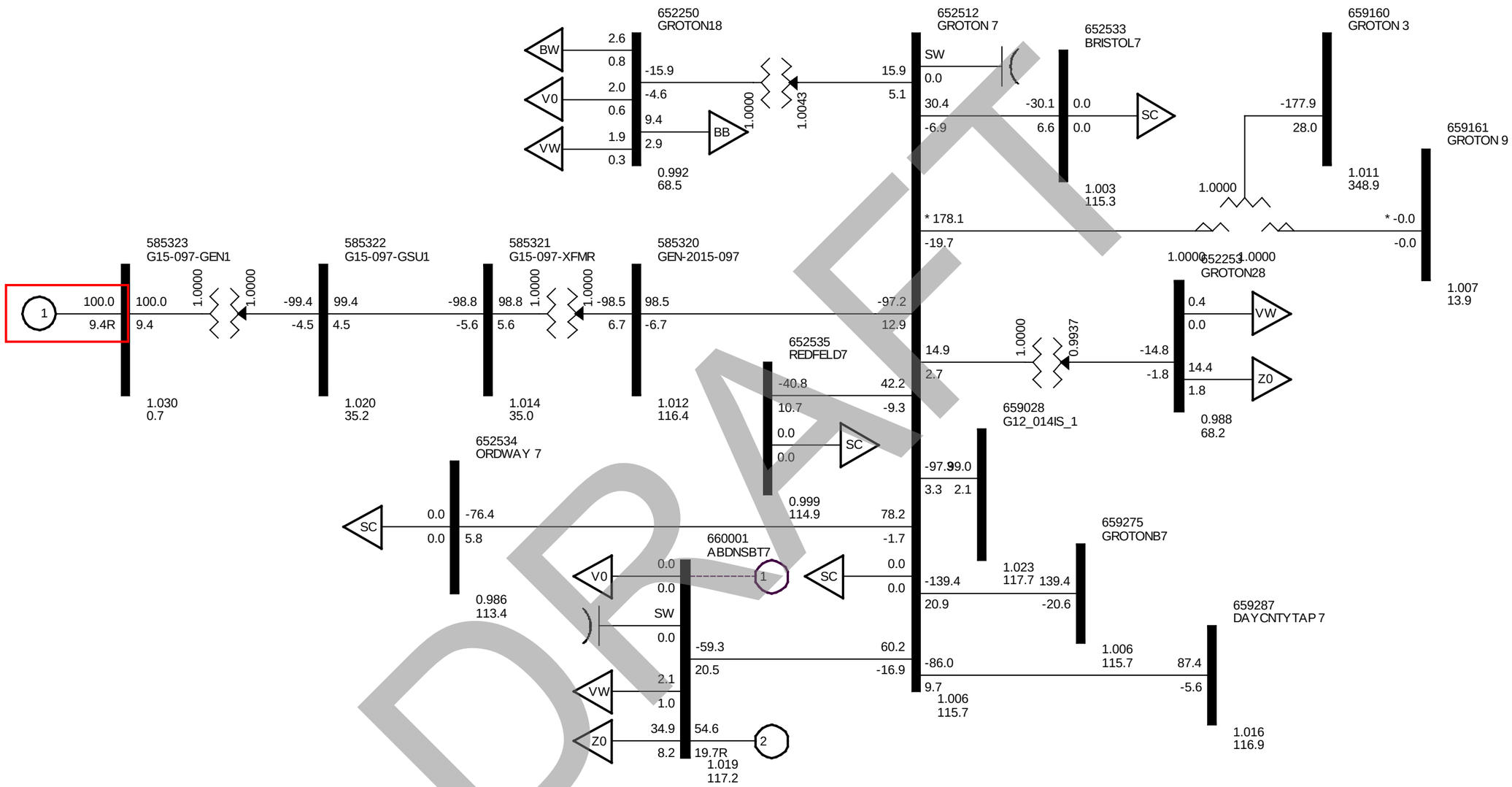

Figure 2-1. Power flow one-line diagram for interconnection project at the Groton 115kV POI (GEN-2015-097)

Table 2-3
Case List with Contingency Description

Cont. No.	Cont. Name	Description
1	FLT01-3PH	**3 phase fault on Groton 115kV (652512) to Bristol 115kV (652533) CKT 1, near Groton.**
		a. Apply fault at the Groton 115kV bus.
		b. Clear fault after 5 cycles by tripping the faulted line and remove fault.
		c. Wait 20 cycles, and then re-close the line in (b) back into the fault.
		d. Leave fault on for 5 cycles, then trip the line in (b) and remove fault.
2	FLT02-3PH	**3 phase fault on Groton 345kV (659160) to Groton 115kV (652512) to Groton 13.8kV (659161) XFMR CKT 1, near Groton 115kV**
		a. Apply fault at the Groton 115kV bus.
		b. Clear fault after 5 cycles by tripping the faulted line and remove fault.
3	FLT03-3PH	**3 phase fault on Groton 115kV (652512) to Redfield 115kV (652535) CKT 1, near Groton.**
		a. Apply fault at the Groton 115kV bus.
		b. Clear fault after 5 cycles by tripping the faulted line and remove fault.
		c. Wait 20 cycles, and then re-close the line in (b) back into the fault.
		d. Leave fault on for 5 cycles, then trip the line in (b) and remove fault.
4	FLT04-3PH	**3 phase fault on Groton 115kV (652512) to Day County Tap 115kV (659287) CKT 1, near Groton.**
		a. Apply fault at the Groton 115kV bus.
		b. Clear fault after 5 cycles by tripping the faulted line and remove fault.
		c. Wait 20 cycles, and then re-close the line in (b) back into the fault.
		d. Leave fault on for 5 cycles, then trip the line in (b) and remove fault.
5	FLT05-3PH	**3 phase fault on Groton 115kV (652512) to Aberdeen 115kV (660001) CKT 1, near Groton.**
		a. Apply fault at the Groton 115kV bus.
		b. Clear fault after 5 cycles by tripping the faulted line and remove fault.
		c. Wait 20 cycles, and then re-close the line in (b) back into the fault.
		d. Leave fault on for 5 cycles, then trip the line in (b) and remove fault.
6	FLT06-3PH	**3 phase fault on Groton 115kV (652512) to Ordway 115kV (652534) CKT 1, near Groton.**
		a. Apply fault at the Groton 115kV bus.
		b. Clear fault after 5 cycles by tripping the faulted line and remove fault.
		c. Wait 20 cycles, and then re-close the line in (b) back into the fault.
		d. Leave fault on for 5 cycles, then trip the line in (b) and remove fault.
7	FLT07-3PH	**3 phase fault on Groton 345kV (659160) to Watertown 345kV (652529) CKT 1, near Groton.**
		a. Apply fault at the Groton 345kV bus.
		b. Clear fault after 5 cycles by tripping the faulted line and remove fault.
		c. Wait 20 cycles, and then re-close the line in (b) back into the fault.
		d. Leave fault on for 5 cycles, then trip the line in (b) and remove fault.
8	FLT08-3PH	**3 phase fault on Groton-LNX3 345kV (659423) to Leland Olds-LNX3 345kV (659422) CKT 1, near Groton.**
		a. Apply fault at the Groton-LNX3 345kV bus.
		b. Clear fault after 5 cycles by tripping the faulted line and remove fault.
		c. Wait 20 cycles, and then re-close the line in (b) back into the fault.
		d. Leave fault on for 5 cycles, then trip the line in (b) and remove fault.

DRAFT

Table 2-3 (Continued)
Case List with Contingency Description

Cont. No.	Cont. Name	Description
9	FLT09-3PH	**3 phase fault on Watertown-LNX3 345kV (652829) to White 345kV (652537) CKT 1, near Watertown-LNX.**
		a. Apply fault at the Watertown-LNX3 345kV bus.
		b. Clear fault after 5 cycles by tripping the faulted line and remove fault.
		c. Wait 20 cycles, and then re-close the line in (b) back into the fault.
		d. Leave fault on for 5 cycles, then trip the line in (b) and remove fault.
10	FLT10-3PH	**3 phase fault on Watertown 345kV (652529) to Watertown 230kV (652530) to Watertown 13.8kV (652237) XFMR CKT 1, near Watertown 345kV**
		a. Apply fault at the Watertown 345kV bus.
		b. Clear fault after 5 cycles by tripping the faulted line and remove fault.
11	FLT11-3PH	**3 phase fault on Watertown 230kV (652530) to Watertown 115kV (652531) to Watertown 13.8kV (652240) XFMR CKT 1, near Watertown 115kV**
		a. Apply fault at the Watertown 115kV bus.
		b. Clear fault after 5 cycles by tripping the faulted line and remove fault.
12	FLT12-3PH	**3 phase fault on Redfield 115kV (652535) to Huron 115kV (652515) CKT 1, near Redfield.**
		a. Apply fault at the Redfield 115kV bus.
		b. Clear fault after 5 cycles by tripping the faulted line and remove fault.
		c. Wait 20 cycles, and then re-close the line in (b) back into the fault.
		d. Leave fault on for 5 cycles, then trip the line in (b) and remove fault.
13	FLT13-3PH	**3 phase fault on Aberdeen 115kV (660001) to Aberdeen JCT 115kV (660000) CKT 1, near Aberdden.**
		a. Apply fault at the Aberdeen 115kV bus.
		b. Clear fault after 5 cycles by tripping the faulted line and remove fault.
		c. Wait 20 cycles, and then re-close the line in (b) back into the fault.
		d. Leave fault on for 5 cycles, then trip the line in (b) and remove fault.
14	FLT14-3PH	**3 phase fault on Brookings 115kV (652504) to Arlington 115kV (652500) CKT 1, near Brookings.**
		a. Apply fault at the Brookings 115kV bus.
		b. Clear fault after 5 cycles by tripping the faulted line and remove fault.
		c. Wait 20 cycles, and then re-close the line in (b) back into the fault.
		d. Leave fault on for 5 cycles, then trip the line in (b) and remove fault.
15	FLT15-PO	**Prior Outage of Groton to Bristol 115kV** **3 phase fault on the Groton to Redfield 115kV**
		a. Prior outage Groton (652512) 115kV to Bristol (652533) 115kV (solve network for steady state solution).
		b. 3 phase fault on the Groton (652512) 115kV to Redfield (652535) 115kV line, near Groton 115kV.
		c. Leave fault on for 5 cycles, then trip the line in (b) and remove fault.
16	FLT16-PO	**Prior Outage of Groton to Watertown 345kV** **3 phase fault on the Groton to Leland Olds 345kV**
		a. Prior outage Groton (659160) 345kV to Watertown (652529) 345kV (solve network for steady state solution).
		b. 3 phase fault on the Groto-LNX3 (659423) 345kV to Leland Olds-LNX3 (659422) 345kV line, near Groton-LNX3 345kV.
		c. Leave fault on for 5 cycles, then trip the line in (b) and remove fault.

DRAFT

Table 2-3 (Continued)
Case List with Contingency Description

Cont. No.	Cont. Name	Description
17	FLT17-PO	**Prior Outage of Groton to Ordway 115kV CKT 1** **3 phase fault on the Groton to Ordway 115kV CKT 2**
		a. Prior outage Groton (652512) 115kV to Ordway (652534) 115kV CKT 1 (solve network for steady state solution).
		b. 3 phase fault Groton (652512) 115kV to Ordway (652534) 115kV CKT 2, near Groton 115kV.
		c. Leave fault on for 5 cycles, then trip the line in (b) and remove fault.
18	FLT18-SB	**Groton 345kV Stuck Breaker**
		a. Apply single phase fault at the Groton (659160) 345kV bus on the Groton 345kV/230kV/13.8kV transformer.
		b. Wait 16 cycles, and then drop Groton (659160) 345kV to Watertown (652529) 345kV line.
		c. Trip Groton (659160) 345kV to Groton (652512) 115kV to Groton (659161) 13.8kV transformer and remove the fault.
19	FLT19-SB	**Groton 115kV Stuck Breaker**
		a. Apply single phase fault at the Groton (652512) 115kV bus on the Groton - Bristol (652533) 115kV line.
		b. Wait 16 cycles, and then drop Groton (652512) 115kV to Aberdeen (660001) 115kV line.
		c. Trip Groton to Bristol 115kV and remove the fault.

DRAFT

SECTION 3: STABILITY ANALYSIS

The objective of the Stability Analysis was to determine the impacts of the generator interconnections on the stability and voltage recovery on the SPP transmission system. If problems with stability or voltage recovery were identified, the need for reactive compensation or system upgrades was investigated.

3.1 Approach

SPP provided MEPPI with the following three power flow cases:

- 2016 Winter Peak
- 2017 Summer Peak
- 2025 Summer Peak

Each case was examined prior to the Stability Analysis to ensure the case contained the proposed study projects and any previously queued projects listed in Tables 2-1 and 2-2 respectively. There was no suspect power flow data in the study area. The dynamic datasets were also verified and stable initial system conditions (i.e., "flat lines") were achieved. Three-phase and single phase-to-ground faults listed in Table 2-3 were examined. Single-phase fault impedances were calculated for each season to result in a voltage of approximately 60% of the pre-fault voltage. Refer to Table 3-1 for a list of the calculated single-phase fault impedances used for the Cluster Scenario.

Table 3-1
Calculated Single-Phase Fault Impedances for Cluster Scenario

Cont. No.*	Cont. Name	Single-Phase Fault Impedance (MVA)		
		2016 Winter	2017 Summer	2025 Summer
1	FLT18-SB	-2406.3	-2406.3	-2406.3
2	FLT19-SB	-2406.3	-2406.3	-2406.3

*Refer to Table 2-3 for a description of the contingency scenerio

Bus voltages, machine rotor angles, and previously queued generation in the study area were monitored in addition to bus voltages and machine rotor angles in the following areas:

- 600 XEL
- 608 MP
- 613 SMMPA
- 615 GRE
- 620 OTP
- 640 NPPD
- 645 OPPD
- 650 LES

DRAFT

- 652 WAPA
- 661 MDU

Requested and previously queued generation outside the above study area was also monitored.

The results of the analysis determined if reactive compensation or system upgrades were required to obtain acceptable system performance. If additional reactive compensation was required, the size, type, and location were determined. The proposed reactive reinforcements would ensure the wind or solar farm meets FERC Order 661A low voltage requirements and return the wind or solar farm to its pre-disturbance operating voltage. If the results indicated the need for fast responding reactive support, dynamic support such as an SVC or STATCOM was investigated. If tripping of the prior queued projects was observed during the stability analysis (for under/over voltage or under/over frequency) the simulations were re-ran with the prior queued project's voltage and frequency tripping disabled.

3.2 Cluster Scenario Stability Analysis Results

The Cluster Scenario Stability Analysis determined there were no contingencies that resulted in system instability or generation tripping offline for the 2016 Winter Peak, 2017 Summer Peak, or 2025 Summer Peak conditions when all generation interconnection requests were at 100% output.

Refer to Table 3-2 for a summary of the Cluster Scenario Stability Analysis results for the contingencies listed in Table 2-3. Table 3-2 is a summary of the stability results for the 2016 Winter Peak, 2017 Summer Peak, and 2025 Summer Peak conditions and states whether the system remained stable or generation tripped offline and if acceptable voltage recovery was observed after the fault was cleared. Voltage recovery criteria include ensuring that the transient voltage does not exceed 1.2 p.u. any time after the fault clears, the voltage recovers to 0.7 p.u. in 2.5 seconds after the fault is cleared, and the voltage ends in a steady-state voltage (for N-1 contingencies) at the pre-contingent level or at least 0.9 p.u. If high or low voltages were observed the number of buses failing the voltage criteria was listed.

DRAFT

Table 3-2
Cluster Scenario: Stability Analysis Summary of Results for 2016 Winter, 2017 Summer, and 2025 Summer Peak Conditions

Cont. No.	Cont. Name	2016 Winter Peak			2017 Summer Peak			2025 Summer Peak		
		Voltage Recovery		Stable?	Voltage Recovery		Stable?	Voltage Recovery		Stable?
		Less than .70 p.u.	Greater than 1.20 p.u.		Less than .70 p.u.	Greater than 1.20 p.u.		Less than .70 p.u.	Greater than 1.20 p.u.	
1	FLT01-3PH	No	No	Yes	No	No	Yes	No	No	Yes
2	FLT02-3PH	No	No	Yes	No	No	Yes	No	No	Yes
3	FLT03-3PH	No	No	Yes	No	No	Yes	No	No	Yes
4	FLT04-3PH	No	No	Yes	No	No	Yes	No	No	Yes
5	FLT05-3PH	No	No	Yes	No	No	Yes	No	No	Yes
6	FLT06-3PH	No	No	Yes	No	No	Yes	No	No	Yes
7	FLT07-3PH	No	No	Yes	No	No	Yes	No	No	Yes
8	FLT08-3PH	No	No	Yes	No	No	Yes	No	No	Yes
9	FLT09-3PH	No	No	Yes	No	No	Yes	No	No	Yes
10	FLT10-3PH	No	No	Yes	No	No	Yes	No	No	Yes
11	FLT11-3PH	No	No	Yes	No	No	Yes	No	No	Yes
12	FLT12-3PH	No	No	Yes	No	No	Yes	No	No	Yes
13	FLT13-3PH	No	No	Yes	No	No	Yes	No	No	Yes
14	FLT14-3PH	No	No	Yes	No	No	Yes	No	No	Yes
15	FLT15-PO	No	No	Yes	No	No	Yes	No	No	Yes
16	FLT16-PO	No	No	Yes	No	No	Yes	No	No	Yes
17	FLT17-PO	No	No	Yes	No	No	Yes	No	No	Yes
18	FLT18-SB	No	No	Yes	No	No	Yes	No	No	Yes
19	FLT19-SB	No	No	Yes	No	No	Yes	No	No	Yes

SECTION 4: SHORT-CIRCUIT ANALYSIS

The objective of this task is to quantify the three-phase to ground fault currents for the 2017 and 2025 Summer Peak season for the interconnecting generator.

4.1 Approach

The short-circuit analysis will assess breaker adequacy and fault duties for the generator interconnection bus and five buses away from the point of interconnection. MEPPI will assume no outages to find maximum short-circuit currents that flow through the breaker. The Automatic Sequencing Fault Calculation (ASCC) function in PSS/E was utilized to perform this task. FLAT conditions were applied to pre-fault conditions and the following adjustments were utilized:

- All synchronous and asynchronous machine P and Q output was set to zero
- All transformer tap ratios were set to 1.0 p.u. and all phase shift angles were set to zero
- All generator reactance's were fixed to the subtransient reactance
- All line charging was set to zero

DRAFT

- All shunts were set to zero
- All loads were set to zero
- All pre-fault bus voltages were set to 1.0 p.u. and a phase shift angle of zero

4.2 Short-Circuit Results

The maximum fault current for each bus is provided for the 2017 and 2025 Summer Peak condition. Table 4-1 shows the short-circuit results for the 2017 Summer Peak study generator and Table 4-2 shows the short-circuit results for the 2025 Summer Peak study generator.

DRAFT

Table 4-1
Short-Circuit Analysis for Study Project GEN-2015-097

Bus Number	Bus Name	Bus Voltage (kV)	Fault Current 3-LG (kA)	Bus Number	Bus Name	Bus Voltage (kV)	Fault Current 3-LG (kA)
652175	G09_001IST	345	6.23	652462	ELLIOTT7	115	3.41
652506	FTTHOMP3	345	8.23	652500	ARLNGTN7	115	4.25
652529	WATERTN3	345	9.72	652504	BROOKNG7	115	7.00
652537	WHITE 3	345	15.82	652512	GROTON 7	115	18.36
652829	WATERTN-LNX3	345	9.72	652515	HURON 7	115	15.07
659101	ANTELOP3	345	16.25	652518	MTVERN 7	115	4.07
659105	LELANDO3	345	15.96	652522	SUMMIT-7	115	5.13
659120	BRDLAND3	345	3.97	652528	WOONSKT7	115	5.20
659160	GROTON 3	345	6.14	652531	WATERTN7	115	12.20
659422	LELAND1-LNX3	345	15.96	652533	BRISTOL7	115	4.73
659423	GROTON-LNX3	345	6.14	652534	ORDWAY 7	115	5.28
659424	LELAND2-LNX3	345	15.96	652535	REDFELD7	115	4.13
11117	J316_SUB	230	6.78	652638	ENDERLIN 7	115	2.78
652426	BISMARK4	230	13.10	658088	WTREAST7	115	9.45
652435	FARGO 4	230	9.90	658094	WTRPELI7	115	8.41
652441	GARRISN4	230	11.33	659028	G12_014IS_1	115	5.51
652444	JAMESTN4	230	8.04	659123	STORLA 7	115	6.44
652503	BLAIR 4	230	9.55	659171	ROBERTS CO 7	115	3.25
652507	FTTHOMP4	230	18.61	659172	LUDDENPS19 7	115	1.99
652509	FTRANDL4	230	10.73	659174	GRTKEYPS20 7	115	6.58
652514	HURON 4	230	10.66	659275	GROTONB7	115	17.83
652516	LAKPLAT4	230	5.54	659280	POMONA 7	115	3.20
652519	OAHE 4	230	13.36	659287	DAYCNTYTAP 7	115	6.87
652530	WATERTN4	230	13.63	659288	DAYCNTYWND 7	115	5.49
652540	BIGBND14	230	11.44	660000	ABDNJCT7	115	5.35
652541	BIGBND24	230	11.28	660001	ABDNSBT7	115	7.09
652582	APPLEDORN 4	230	6.97	660002	REDFLD 7	115	3.97
652606	LETCHER4	230	4.67	660003	HURONWP7	115	9.98
652607	WESSINGTON 4	230	6.68	660004	MITCHEL7	115	5.72
652614	CARPENTER 4	230	6.76	660008	MITCLNW7	115	5.34
652630	WATERTNCAP 4	230	13.63	660009	BTAP WP7	115	14.64
657759	PICKERT4	230	4.17	661027	ELLENDL7	115	7.02
659106	LELANDO4	230	22.00	652204	VALLEYC8	69	2.16
659122	STORLA 4	230	5.95	652209	SUMMIT-8	69	2.77
659205	BRDLAND4	230	9.68	652242	WATERT18	69	3.87
661026	ELLENDL4	230	7.62	652250	GROTON18	69	4.13
661028	WEBER 4	230	4.76	652253	GROTON28	69	1.86
661098	ELLENDLMVP4	230	7.62	652276	FTTHOMP8	69	4.33
585320	GEN-2015-097	115	5.26	652284	HURON 8	69	3.65
620263	FORMN 7	115	6.33	652289	BRISTOL8	69	2.75
652001	G13_001IST	115	5.14	652290	ORDWAY 8	69	4.40
652002	G13_001IS_1	115	5.12	652291	REDFELD8	69	2.85
652423	BARLOW 7	115	2.57	652429	COGSWEL8	69	1.90
652428	CARNGTN7	115	2.58	652433	EDGELEY8	69	2.28
652432	EDGELEY7	115	3.88	652439	FORMAN 8	69	2.49
652438	FORMAN 7	115	6.31	659196	CARPENTER 8	69	3.16
652445	JAMESTN7	115	9.42	660012	HURON WP 8	69	5.98
652454	VALLEYC7	115	2.92	660015	REDFIELD 8	69	0.98

DRAFT

Table 4-2
Short-Circuit Analysis for Study Project GEN-2015-097

Bus Number	Bus Name	Bus Voltage (kV)	Fault Current 3-LG (kA)
652175	G09_001IST	345	6.29
652506	FTTHOMP3	345	8.43
652529	WATERTN3	345	9.91
652537	WHITE 3	345	16.05
652829	WATERTN-LNX3	345	9.91
659101	ANTELOP3	345	16.34
659105	LELANDO3	345	16.04
659120	BRDLAND3	345	3.99
659160	GROTON 3	345	6.19
659422	LELAND1-LNX3	345	16.04
659423	GROTON-LNX3	345	6.19
659424	LELAND2-LNX3	345	16.04
652426	BISMARK4	230	13.50
652435	FARGO 4	230	9.92
652441	GARRISN4	230	11.37
652444	JAMESTN4	230	8.11
652503	BLAIR 4	230	9.65
652507	FTTHOMP4	230	19.13
652509	FTRANDL4	230	11.04
652514	HURON 4	230	10.76
652516	LAKPLAT4	230	5.58
652519	OAHE 4	230	13.58
652530	WATERTN4	230	14.13
652540	BIGBND14	230	11.61
652582	APPLEDORN 4	230	7.02
652606	LETCHER4	230	4.69
652607	WESSINGTON 4	230	6.71
652614	CARPENTER 4	230	6.81
652630	WATERTNCAP 4	230	14.13
657759	PICKERT4	230	4.23
659106	LELANDO4	230	22.13
659122	STORLA 4	230	5.97
659205	BRDLAND4	230	9.76
659312	LOWERBRULE 4	230	10.78
661026	ELLENDL4	230	7.65
661028	WEBER 4	230	4.80
661098	ELLENDLMVP4	230	7.65
585320	GEN-2015-097	115	5.28
620263	FORMN 7	115	6.34
652001	G13_001IST	115	5.21
652002	G13_001IS_1	115	5.18
652423	BARLOW 7	115	2.57
652428	CARNGTN7	115	2.58
652432	EDGELEY7	115	3.97
652438	FORMAN 7	115	6.32
652445	JAMESTN7	115	9.48
652454	VALLEYC7	115	2.92
652462	ELLIOTT7	115	3.41

Bus Number	Bus Name	Bus Voltage (kV)	Fault Current 3-LG (kA)
652500	ARLNGTN7	115	4.34
652504	BROOKNG7	115	7.17
652512	GROTON 7	115	18.57
652515	HURON 7	115	15.16
652518	MTVERN 7	115	4.08
652522	SUMMIT-7	115	5.19
652528	WOONSKT7	115	5.21
652531	WATERTN7	115	13.55
652533	BRISTOL7	115	4.75
652534	ORDWAY 7	115	7.91
652535	REDFELD7	115	4.14
652638	ENDERLIN 7	115	2.79
658088	WTREAST7	115	10.76
658094	WTRPELI7	115	9.31
659028	G12_014IS_1	115	5.53
659123	STORLA 7	115	6.45
659171	ROBERTS CO 7	115	3.25
659172	LUDDENPS19 7	115	1.99
659174	GRTKEYPS20 7	115	6.59
659275	GROTONB7	115	18.03
659280	POMONA 7	115	3.24
659287	DAYCNTYTAP 7	115	6.89
659288	DAYCNTYWND 7	115	5.50
660000	ABDNJCT7	115	5.54
660001	ABDNSBT7	115	7.55
660002	REDFLD 7	115	4.01
660003	HURONWP7	115	10.01
660004	MITCHEL7	115	5.73
660008	MITCLNW7	115	5.35
660009	BTAP WP7	115	14.72
661027	ELLENDL7	115	7.05
652204	VALLEYC8	69	2.16
652209	SUMMIT-8	69	2.78
652242	WATERT18	69	3.94
652250	GROTON18	69	4.13
652253	GROTON28	69	1.86
652276	FTTHOMP8	69	4.34
652284	HURON 8	69	3.65
652289	BRISTOL8	69	2.76
652290	ORDWAY 8	69	5.19
652291	REDFELD8	69	2.85
652429	COGSWEL8	69	1.90
652433	EDGELEY8	69	2.29
652439	FORMAN 8	69	2.49
659196	CARPENTER 8	69	3.17
660012	HURON WP 8	69	5.99
660015	REDFIELD 8	69	0.98

DRAFT

SECTION 5: POWER FACTOR ANALYSIS

The objective of this task is to quantify the power factor at the high side of the collector system equivalent transformer near the point of interconnection for the wind farms during base case and system contingencies. SPP transmission planning practice requires interconnecting generation projects to maintain the power factor (pf) at the high side of the transformer near the Point of Interconnection (POI) within +/- 0.95 pf for system intact conditions and for post-contingency conditions. This is analyzed by having the wind farm maintain a prescribed voltage schedule at the point of interconnection of 1.0 p.u. voltage, or if the pre-project voltage is higher than 1.0 p.u., to maintain the pre-project voltage schedule.

The 2016 Winter Peak, 2017 Summer Peak, and 2025 Summer Peak power flows provided by SPP were examined prior to the Power Factor Analysis to ensure they contained the proposed study project modeled at 100% of the nameplate rating and any previously queued projects listed in Table 2-2. There was no suspect power flow data in the study area. The proposed study project and any previously queued projects at the same point of interconnection were turned off during the power factor analysis. The wind farm(s) were then replaced by a generator modeled at the high side bus with the same real power (MW) capability as the wind farm(s) and open limits for the reactive power set points (Mvar). The generator was set to hold the POI scheduled bus voltage. All N-1, three-phase fault contingencies from Table 2-3 were then applied and the reactive power required to maintain the bus voltage was recorded.

5.1 Approach

GEN-2015-097 was disabled and the generator was placed at the study project's high side of the collector system equivalent transformer. The generator was modeled with PGEN = 100 MW, QMin = -999 Mvar and QMax = 999 Mvar during Summer and Winter Peak conditions. All buses and transformers connected from the study project's high side of the collector system equivalent transformer to the generators were disabled. The scheduled voltage was set to 1.0036 p.u. for the 16WP case, 1.0043 p.u. for the 17SP case, and 1.0029 p.u. for the 25SP case.

5.2 Power Factor Analysis Results

The power factor was calculated for the 2016 Winter Peak, 2017 Summer Peak, and 2025 Summer Peak conditions. Table 5-1 shows the power factor results for the study generator.

Note a positive Q (Mvar) output illustrates that the generator is absorbing reactive power from the system, implying a leading power factor; a negative Q (Mvar) illustrates that the generator is supplying reactive power to the system, implying a lagging power factor.

DRAFT

Table 5-1
Power Factor Analysis: GEN-2015-097

Cont. No.	Case	2016 Winter Peak			2017 Summer Peak			2025 Summer Peak		
		Power Factor		Q (MVAR)	Power Factor		Q (MVAR)	Power Factor		Q (MVAR)
0	Base	0.998	Leading	5.59	0.998	Leading	5.86	0.999	Leading	4.94
1	FLT01-3PH	0.998	Lagging	-5.92	0.998	Lagging	-7.04	0.998	Lagging	-6.79
2	FLT02-3PH	0.949	Lagging	-33.07	0.965	Lagging	-27.09	0.973	Lagging	-23.64
3	FLT03-3PH	0.996	Lagging	-9.14	0.993	Lagging	-12.15	0.995	Lagging	-9.89
4	FLT04-3PH	0.982	Leading	18.98	0.979	Leading	21.06	0.986	Leading	17.02
5	FLT05-3PH	0.986	Lagging	-17.10	0.982	Lagging	-19.33	0.978	Lagging	-21.51
6	FLT06-3PH	0.999	Lagging	-3.99	0.997	Lagging	-8.05	0.999	Leading	3.40
7	FLT07-3PH	0.998	Leading	5.59	0.998	Leading	5.86	0.999	Leading	4.94
8	FLT08-3PH	0.887	Lagging	-52.12	0.897	Lagging	-49.16	0.897	Lagging	-49.14
9	FLT09-3PH	0.962	Leading	28.58	0.947	Leading	33.98	0.962	Leading	28.43
10	FLT10-3PH	0.997	Leading	8.21	0.997	Leading	7.22	0.996	Leading	8.65
11	FLT11-3PH	0.998	Leading	6.02	0.998	Leading	6.13	0.999	Leading	5.26
12	FLT12-3PH	0.998	Lagging	-6.94	0.996	Lagging	-9.01	0.997	Lagging	-7.71
13	FLT13-3PH	0.998	Leading	5.59	0.998	Leading	5.86	0.999	Leading	4.94
14	FLT14-3PH	0.999	Leading	4.40	0.999	Leading	4.64	0.999	Leading	4.01

Study Generator GEN-2015-097

The Power Factor Analysis shows that GEN-2015-097 has a power factor range of 0.887 lagging (supplying) to 0.999 leading (absorbing) for the 2016 Winter Peak conditions, a power factor range of 0.897 lagging (supplying) to 0.999 leading (absorbing) for the 2017 Summer Peak conditions, and a power factor range of 0.897 lagging (supplying) to 0.999 leading (absorbing) for the 2025 Summer Peak conditions.

DRAFT

SECTION 6: LOW WIND/NO WIND ANALYSIS

The objective of this task is to determine the impact of low wind or no wind conditions on wind farms that interconnect to a 345 kV or 230 kV bus. The 2016 Winter Peak, 2017 Summer Peak, and 2025 Summer Peak power flows provided by SPP were examined for this analysis.

6.1 Approach

Low wind or no wind conditions were examined for all 345 kV or 230 kV wind farms. Generators were disabled (independently), but the collector systems remained in-service. In order to maintain generation and load balance in the SPP area, the generation was scaled after disabling the respective generator. The amount of reactive power injected into the transmission network was recorded at the respective point of interconnection. This reactive power comes from the capacitance of the project's transmission lines and collector cables. A shunt reactor was added at the high side bus to bring the Mvar flow into the POI down to approximately zero.

6.2 Low Wind/No Wind Analysis Results

The reactance needed to bring the Mvar flow into the point of interconnect to zero Mvar was recorded for each season for all wind or solar farms. Refer to Table 6-1 for the Low Wind/No Wind Analysis results. Table 6-1 lists the generators examined and the amount of reactive power needed for zero Mvar flow into the POI for each season.

Table 6-1
Low Wind/No Wind Analysis

Request	Size (MW)	Point of Interconnection	16WP	17SP	25SP
GEN-2015-097	100	Groton 115kV (652512)	2.6	2.6	2.6

DRAFT

SECTION 7: CONCLUSIONS

SUMMARY OF STABILITY ANALYSIS

Cluster Scenario

The Cluster Scenario Stability Analysis determined there were no contingencies that resulted in system instability or generation tripping offline for the 2016 Winter Peak, 2017 Summer Peak, or 2025 Summer Peak conditions when all generation interconnection requests were at 100% output.

SUMMARY OF THE SHORT-CIRCUIT ANALYSIS

The Short-circuit analysis was performed on the 2017 Summer Peak and 2025 Summer Peak power flows for all study projects. Refer to Table ES-2 for a list of maximum fault currents observed for the study project for the 2017 Summer Peak case. Refer to Table ES-3 for a list of maximum fault currents observed for the study project for the 2025 Summer Peak case.

Table ES-2
List of Maximum Fault Currents Observed for Each Study Project for the 2017 Summer Peak Case

Study Project	POI Name	Fault Current at POI (kA)	Maximum Fault Current (kA)	Fault Location	Bus Voltage (kV)
GEN-2015-097	Groton 115kV (652512)	18.36	22.00	LELANDO4	115

Table ES-3
List of Maximum Fault Currents Observed for Each Study Project for the 2025 Summer Peak Case

Study Project	POI Name	Fault Current at POI (kA)	Maximum Fault Current (kA)	Fault Location	Bus Voltage (kV)
GEN-2015-097	Groton 115kV (652512)	18.57	22.13	LELANDO4	115

SUMMARY OF POWER FACTOR ANALYSIS

Study Generator GEN-2015-097

The Power Factor Analysis shows that GEN-2015-097 has a power factor range of 0.887 lagging (supplying) to 0.999 leading (absorbing) for the 2016 Winter Peak conditions, a power factor range of 0.897 lagging (supplying) to 0.999 leading (absorbing) for the 2017 Summer Peak

DRAFT

conditions, and a power factor range of 0.897 lagging (supplying) to 0.999 leading (absorbing) for the 2025 Summer Peak conditions.

SUMMARY OF LOW WIND/NO WIND ANALYSIS

The amount of reactive power injected into the transmission network was recorded at the high side of the transformer near the point of interconnection for all study projects for each season. The reactance needed for zero Mvar flow was 2.6 Mvar.

DRAFT

11.27 T: Group 16 Dynamic Stability Analysis Report

See next page

MITSUBISHI ELECTRIC POWER PRODUCTS, INC.
POWER SYSTEMS ENGINEERING SERVICES
530 KEYSTONE DRIVE
WARRENDALE, PA 15086, U.S.A.

Phone: (724) 778-5111 Fax: (724) 778-5149
Home Page: www.meppi.com

Southwest Power Pool, Inc. (SPP)

DISIS-2015-002 (Group 16) Definitive Impact Study

Final Report

PXE-1232
Revision #00

April 2016

Submitted By:
Mitsubishi Electric Power Products, Inc. (MEPPI)
Power Systems Engineering Services Department
Warrendale, PA

Title: **DISIS-2015-002 (Group 16) Definitive Impact Study: Final Report PXE-1232**
Date: April 2016
Author: Nathan L. Glotzbach; Engineer I, Power Systems Engineering Dept. *Nathan L. Glotzbach*
Reviewed: Nicholas W. Tenza; Engineer II, Power Systems Engineering Dept. *Nicholas W. Tenza*
Approved: Donald J. Shoup; Manager, Power Systems Engineering Dept. *Donald J. Shoup*

EXECUTIVE SUMMARY

SPP requested a Definitive Interconnection System Impact Study (DISIS). The DISIS required a Stability Analysis, Short Circuit Analysis, Power Factor Analysis, and Low Wind/No Wind Analysis detailing the impacts of the interconnecting projects as shown in Table ES-1.

Table ES-1
Interconnection Projects Evaluated

Request	Size (MW)	Generator Model	Point of Interconnection
GEN-2015-046	300.0	Vestas V110 2MW (584873)	Tandee (Neset) 345kV (659336)
GEN-2015-091	101.2	G.E. 2.3MW (585263)	Daglum 230kV (659448)
GEN-2015-096	150.0	G.E. 2MW (585313)	Daglum 230kV (659448)
GEN-2015-098	100.0	G.E. 2MW (585343)	Beaverhill 230kV (652616)

SUMMARY OF STABILITY ANALYSIS

The Stability Analysis identified one contingency that tripped generation offline for the 2016 Winter Peak, 2017 Summer Peak, and 2025 Summer Peak conditions when all generation interconnection requests were at 100% output. The following contingency required system upgrades to achieve system stability and recover within SPP criteria:

- FLT48-PO: Prior outage of Belfield to Daglum 230 kV line followed by a 3PH fault resulting in the loss of the Rhame to Bowman 230 kV line

To mitigate generation tripping offline for FLT48-PO, a 230 kV line from Daglum to Dickson was implemented and discussed with SPP. After discussion with SPP, the Daglum to Dickson 230 kV line was identified by SPP as necessary mitigation for steady-state conditions.

After implementing the Daglum to Dickson 230 kV transmission line, the Stability Analysis contingencies were re-simulated. With the new upgrades, the Stability Analysis identified no generation tripped or system instability observed for interconnecting all study projects at 100% output.

SUMMARY OF THE SHORT CIRCUIT ANALYSIS

The short circuit analysis was performed on the 2017 Summer Peak and 2025 Summer Peak cluster scenario for all study projects. Refer to Table ES-2 and Table ES-3 for the 2017 Summer Peak and 2025 Summer Peak, respectively, for a list of maximum fault currents observed for each study project.

Table ES-2
List of Maximum Fault Currents Observed for Each Study Project for 2017 Summer Peak

2017 Summer Peak					
Ref. No.	Study Project	Fault Current at POI (kA)	Maximum Fault Current (kA)	Fault Location	Bus Voltage (kV)
1	GEN-2015-046	4.69	16.30	ANTELOP3 COTEAU 3 ANTELOP-LNX3	345
2	GEN-2015-091	7.27	20.02	CENTER 4	230
3	GEN-2015-096	7.27	20.02	CENTER 4	230
4	GEN-2015-098	3.91	16.30	ANTELOP3	345

Table ES-3
List of Maximum Fault Currents Observed for Each Study Project for 2025 Summer Peak

2025 Summer Peak					
Ref. No.	Study Project	Fault Current at POI (kA)	Maximum Fault Current (kA)	Fault Location	Bus Voltage (kV)
1	GEN-2015-046	4.76	16.34	ANTELOP3 COTEAU 3 ANTELOP-LNX3	345
2	GEN-2015-091	7.29	19.89	HESKETT7	115
3	GEN-2015-096	7.29	19.89	HESKETT7	115
4	GEN-2015-098	3.91	16.34	ANTELOP3	345

SUMMARY OF POWER FACTOR ANALYSIS

Study Generator GEN-2015-046

The Power Factor Analysis shows GEN-2015-046 has a power factor range of 0.999 lagging (supplying) to 0.982 leading (absorbing) for the 2016 Winter Peak conditions, a power factor range of 0.987 lagging (supplying) to 0.998 leading (absorbing) for the 2017 Summer Peak conditions, and a power factor range of 0.996 lagging (supplying) to 0.991 leading (absorbing) for the 2025 Summer Peak conditions.

Study Generator GEN-2015-091

The Power Factor Analysis shows GEN-2015-091 has a power factor range of 0.973 to 0.999 leading (absorbing) for the 2016 Winter Peak conditions, a power factor range of 0.996 lagging (supplying) to 0.995 leading (absorbing) for the 2017 Summer Peak conditions, and a power factor range of 0.999 lagging (supplying) to 0.993 leading (absorbing) for the 2025 Summer Peak conditions.

Study Generator GEN-2015-096

The Power Factor Analysis shows GEN-2015-096 has a power factor range of 0.988 to 0.999 leading (absorbing) for the 2016 Winter Peak conditions, a power factor range of 0.998 lagging (supplying) to 0.998 leading (absorbing) for the 2017 Summer Peak conditions, and a power factor range of 0.997 leading (absorbing) to 1.00 (unity) for the 2025 Summer Peak conditions.

Study Generator GEN-2015-098

The Power Factor Analysis shows GEN-2015-098 has a power factor range of 0.828 to 0.976 leading (absorbing) for the 2016 Winter Peak conditions, a power factor range of 0.998 lagging (supplying) to 0.984 leading (absorbing) for the 2017 Summer Peak conditions, and a power factor range of 0.991 lagging (supplying) to 0.991 leading (absorbing) for the 2025 Summer Peak conditions.

SUMMARY OF LOW WIND/NO WIND ANALYSIS

The amount of reactive power injected into the transmission network was recorded at the point of interconnection for all study projects for each cluster scenario. The maximum inductive reactance needed for zero Mvar flow was 40.0 Mvar for GEN-2015-046 (Tandee/Neset 345 kV). The minimum inductive reactance needed for zero Mvar flow was 3.7 Mvar for GEN-2015-091 (Daglum 230 kV).

Table of Contents

Section 1: Objectives 6
Section 2: Background 6
Section 3: Stability Analysis 18
3.1 Approach 18
3.2 Cluster Scenario Results 20
3.3 Stand Alone Scenario Result: GEN-2015-046 25
3.4 Stand Alone Scenario Result: GEN-2015-091 26
3.5 Stand Alone Scenario Result: GEN-2015-096 27
3.6 Stand Alone Scenario Result: GEN-2015-098 29
Section 4: Short Circuit Analysis 30
4.1 Approach 30
4.2 Short Circuit Analysis Results: 2017 Summer Peak 31
4.3 Short Circuit Analysis Results 2025 Summer Peak 33
Section 5: Power Factor Analysis 34
5.1 Approach 35
5.2 Power Factor Analysis Results 36
Section 6: Low Wind/No Wind Analysis 42
6.1 Approach 43
6.2 Low Wind/No Wind Analysis Results 43
Section 7: Conclusions 43

SECTION 1: OBJECTIVES

The objective of this report is to provide Southwest Power Pool, Inc. (SPP) with the deliverables for the "DISIS-2015-002 (Group 16) Definitive Impact Study." SPP requested an Interconnection System Impact Study for four (4) generation interconnections for 2016 Winter Peak, 2017 Summer Peak, and 2025 Summer Peak, which requires a Stability Analysis, Short Circuit Analysis, Power Factor Analysis, Low Wind/No Wind Analysis, and an Impact Study Report.

SECTION 2: BACKGROUND

The Siemens Power Technologies, Inc. PSS/E power system simulation program Version 32.2.0 was used for this study. SPP provided the stability database cases for 2016 Winter Peak, 2017 Summer Peak, and 2025 Summer Peak conditions and a list of contingencies to be examined. The model includes the study projects shown in Table 2-1 and the previously queued projects listed in Table 2-2. Refer to Appendix A for the steady-state and dynamic model data for the study projects. A power flow one-line diagram for each generation interconnection project is shown in Figures 2-1 through 2-3. Note the one-line diagrams represent the 2016 Winter Peak case.

The Stability Analysis determined the impacts of the new interconnecting projects on the stability and voltage recovery of the nearby system and the ability of the interconnecting projects to meet FERC Order 661A. If problems with stability or voltage recovery are identified, the need for reactive compensation or system upgrades was investigated. Three-phase faults and single line-to-ground faults were examined as listed in Table 2-3. Note all contingencies listed were examined for the cluster scenario, and specified contingencies (indicated by an X) were examined for each stand alone generator as listed in Table 2-3.

A Short Circuit Analysis was performed on the 2017 Summer Peak and 2025 Summer Peak study years for each study generator in the Cluster Scenario. The study was performed five buses out from the study generator's point of interconnection and results were documented.

The Power Factor Analysis determined the power factor at the point of interconnection for the wind or solar interconnection projects for pre-contingency and post-contingency conditions. Table 2-3 lists the contingencies developed from the three-phase fault definitions provided in the group's interconnection impact study request.

The Low Wind/No Wind Analysis was completed for all wind farm/solar farm interconnections. This analysis determined if reactive support is needed to have an Mvar flow of approximately zero at the point of interconnection (POI).

Table 2-1
Interconnection Projects Evaluated

Request	Size (MW)	Generator Model	Point of Interconnection
GEN-2015-046	300.0	Vestas V110 2MW (584873)	Tandee (Neset) 345kV (659336)
GEN-2015-091	101.2	G.E. 2.3MW (585263)	Daglum 230kV (659448)
GEN-2015-096	150.0	G.E. 2MW (585313)	Daglum 230kV (659448)
GEN-2015-098	100.0	G.E. 2MW (585343)	Beaverhill 230kV (652616)

Table 2-2
Previously Queued Nearby Interconnection Projects Included

Request	Size (MW)	Generator Model	Point of Interconnection
GI-0708	120	GENROU (659270, ID 1)	Culbertson 115kV (661012)
G645/G788	102.6	GENROU (615015, ID 1)	Spiritwd 115kV (620270)
G752	150	WT3 generic wind (661989)	Hettinger 230kV (661047) 230kV
G723	7	GENSAL (661046)	Heskett 115kV (661043)
J003	19.5	WT3 generic wind (661317)	Baker 60kV (661300)
G502	50.6	W4GUR wind (608603)	SQBUTTE 230kV (657756)
G408	12	WT1 generic wind (600059)	Velva Tap 115kV (605634)
G380	149.2	WT1 generic wind (620115)	Rugby 230kV (620379)
J262/J263	200	GENCLS (11104/ 11108)	Jamestown 115kV (620269)
G830	99	GENCLS (10648)	McHenry 115kV (615348)
GI-0614A	7.5	GENSAL (659270, ID 2)	Culbertson 115kV (661012)
GI-0508	49.5	WT3 generic wind (659294)	Hilken 230kV (652466)
GI-0615	49.5	WT3 generic wind (659273)	Hilken 230kV (652466)
GI-0715	100	WT3 generic wind (659366)	Hilken 230kV (652466)
GI-0727	99	WT3 generic wind (659010)	Hilken 230kV (652466)
GI-0926	106.5	GENROU (659403)	Hebron 230kV (652468)
GI-1001	99	GENROU (659411)	Mound City 230kV (652499)
GI-1007	172.5	GENROU (659407)	Antelope Valley 345kV (659101)
GI-1105, GI-1205, GI-1207	150	GENROU (659147/ 659158/ 659159)	Williston 115kV (652421)
GI-1202, GI-1204, GI-1208	150	GENROU (659148/ 659156/ 659157)	EASTHYBT-MK 115kV (659587
GI-1206	141	GENROU (659162/ 659163/ 659192)	Patentgate 115kV (659391)
GI-1404	384.2	GE 1.7MW (659125)	Charlie Creek 345kV (659183)
GI-1406	113.3	GENSAL (659431 ID's A1-A6/ 659432 ID's B1-B6)	PNSCOLLECTR 115kV (659430)
GI-1410	150	Vestas V110 VCSS 2.0MW (659141)	Neset 115kV (659139)
GI-1414	149.6	GE 1.7MW wind (659453)	Daglum 230kV (659448)
GEN-2014-003IS	88.23	WT3 generic wind (659018)	Culbertson 115kV (661012)

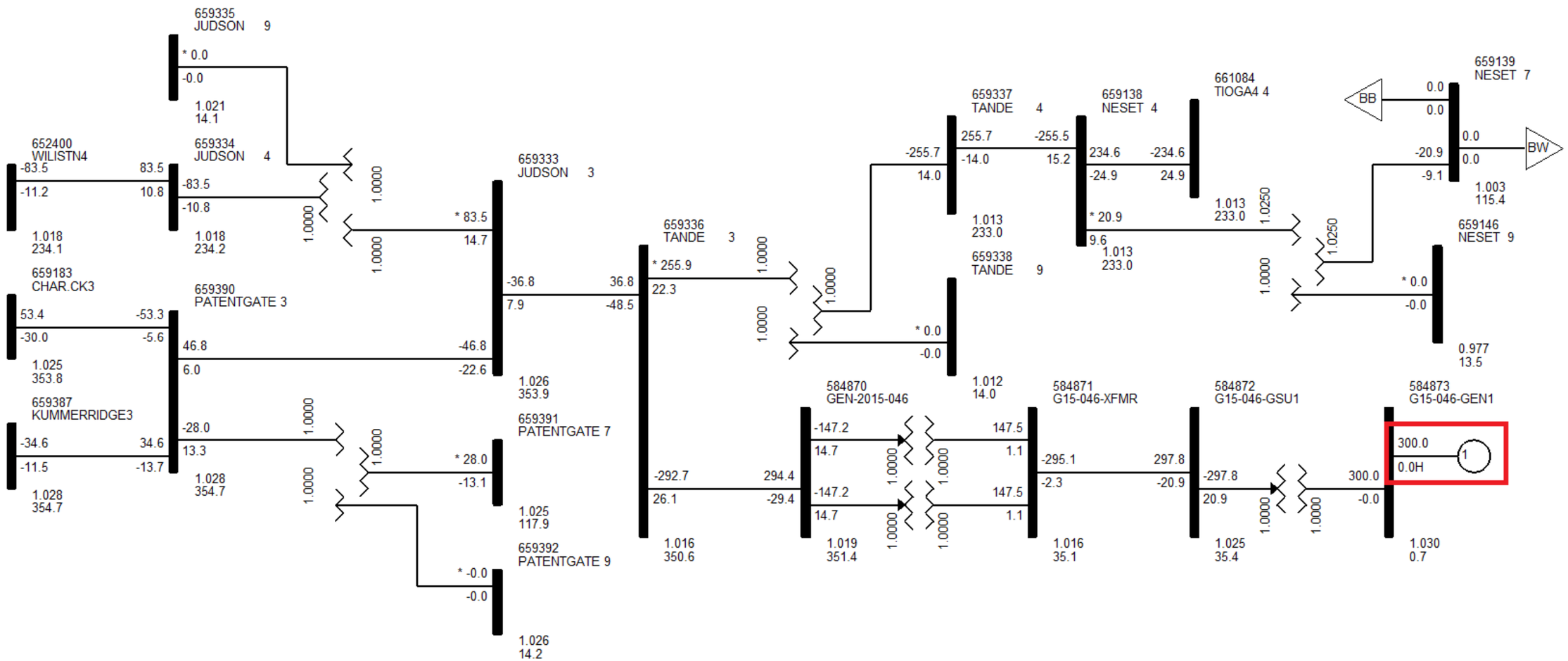

Figure 2-1. Power flow one-line diagram for interconnection project at the Tandee (Neset) 345 kV POI (GEN-2015-046).

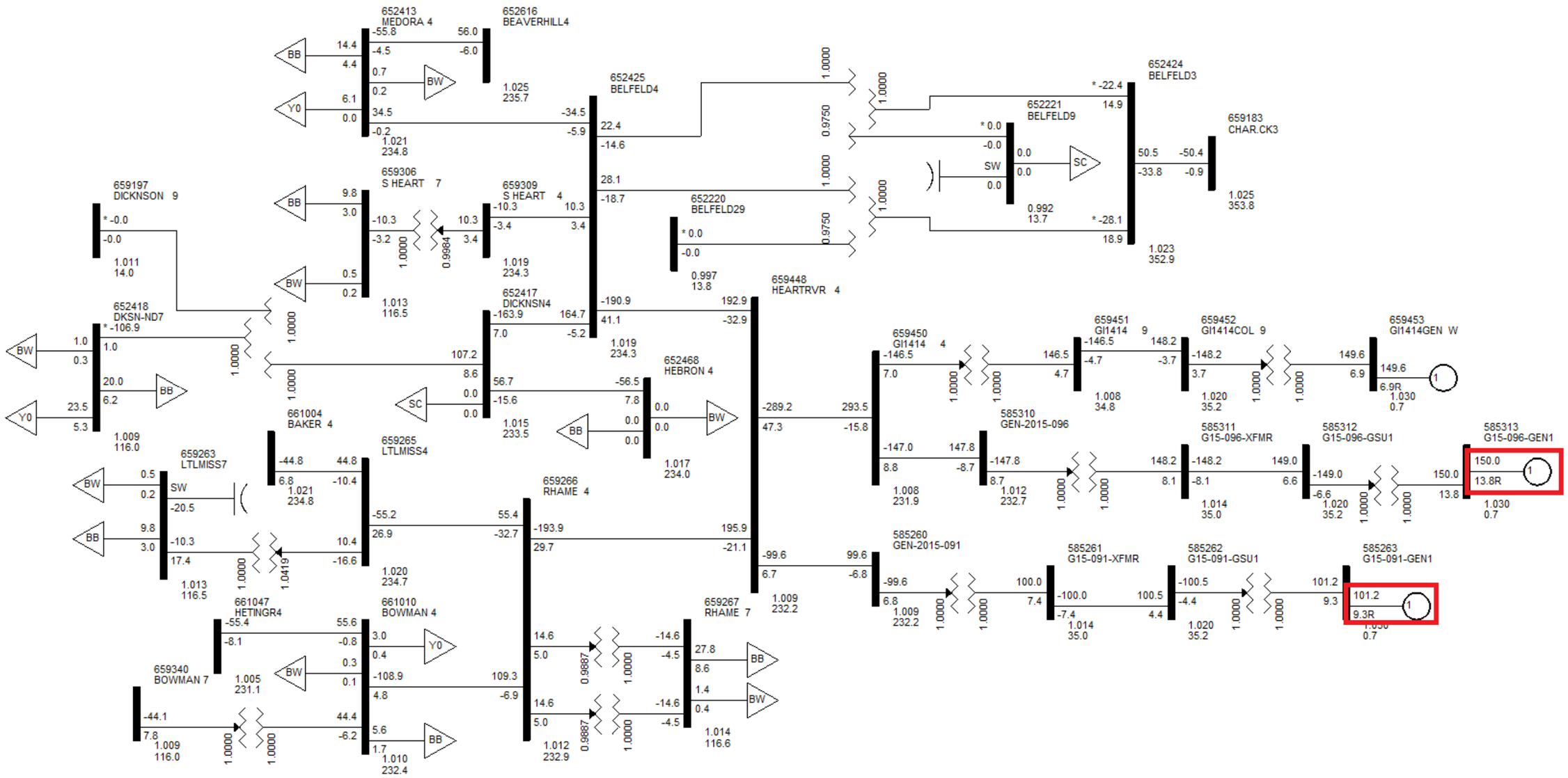

Figure 2-2. Power flow one-line diagram for interconnection project at the Heart River 230 kV POI (GEN-2015-091 and GEN-2015-096).

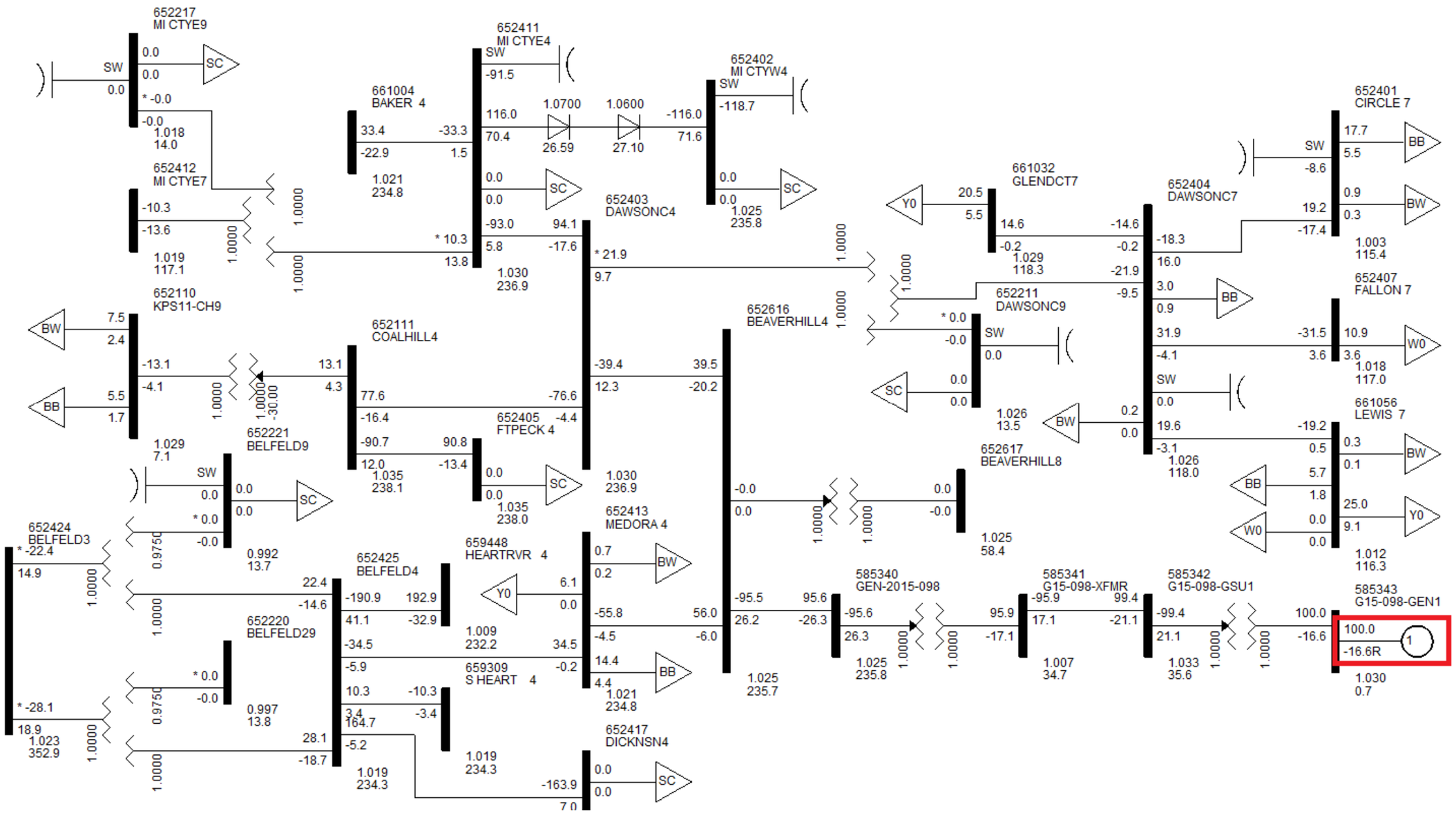

Figure 2-3. Power flow one-line diagram for interconnection project at the Beaver Hill 230 kV POI (GEN-2015-098).

Table 2-3
Case List with Contingency Description

Cont. No.	Cont. Name	Description	GEN-2015-046	GEN-2015-091	GEN-2015-096	GEN-2015-098
1	FLT01-3PH	3 phase fault on Tandee 345kV (659336) to Judson 345kV (659333) CKT 1, near Tandee. a. Apply fault at the Tandee 345kV bus. b. Clear fault after 5 cycles by tripping the faulted line. c. Wait 20 cycles, and then re-close the line in (b) back into the fault. d. Leave fault on for 5 cycles, then trip the line in (b) and remove fault.	X			
2	FLT02-3PH	3 phase fault on the Tandee 345kV (659336) to Tandee 230kV (659337) to Tandee 13.8kV (659338) XFMR CKT 1, near Tandee 345kV. a. Apply fault at the Tandee 345kV bus. b. Clear fault after 5 cycles by tripping the faulted transformer.	X			
3	FLT03-3PH	3 phase fault on the Judson 345kV (659333) to Patentgate 345kV (659390) CKT 1, near Judson. a. Apply fault at the Judson 345kV bus. b. Clear fault after 5 cycles by tripping the faulted line. c. Wait 20 cycles, and then re-close the line in (b) back into the fault. d. Leave fault on for 5 cycles, then trip the line in (b) and remove fault.	X			
4	FLT04-3PH	3 phase fault on the Patentgate 345kV (659390) to Patentgate 115kV (659391) to Patentgate 13.8kV (659392) XFMR CKT 1, near Patentgate 345kV. a. Apply fault at the Patentgate 345kV bus. b. Clear fault after 5 cycles by tripping the faulted transformer.	X			
5	FLT05-3PH	3 phase fault on the Judson 345kV (659333) to Judson 230kV (659334) to Judson 13.8kV (659335) XFMR CKT 1, near Judson 345kV. a. Apply fault at the Judson 345kV bus. b. Clear fault after 5 cycles by tripping the faulted transformer.	X			
6	FLT06-3PH	3 phase fault on the Kummer Ridge 345kV (659387) to Round Up 345kV (659384) CKT 1, near Kummer Ridge. a. Apply fault at the Kummer Ridge 345kV bus. b. Clear fault after 5 cycles by tripping the faulted line. c. Wait 20 cycles, and then re-close the line in (b) back into the fault. d. Leave fault on for 5 cycles, then trip the line in (b) and remove fault.	X	X	X	
7	FLT07-3PH	3 phase fault on the Charlie Creek 345kV (659183) to Round Up 345kV (659384) CKT 1, near Charlie Creek. a. Apply fault at the Charlie Creek 345kV bus. b. Clear fault after 5 cycles by tripping the faulted line. c. Wait 20 cycles, and then re-close the line in (b) back into the fault. d. Leave fault on for 5 cycles, then trip the line in (b) and remove fault.	X	X	X	
8	FLT08-3PH	3 phase fault on the Charlie Creek 345kV (659183) to Antelope 345kV (659101) CKT 1, near Charlie Creek. a. Apply fault at the Charlie Creek 345kV bus. b. Clear fault after 5 cycles by tripping the faulted line. c. Wait 20 cycles, and then re-close the line in (b) back into the fault. d. Leave fault on for 5 cycles, then trip the line in (b) and remove fault.	X	X	X	
9	FLT09-3PH	3 phase fault on the Charlie Creek 345kV (659183) to Belfield 345kV (652424) CKT 1, near Charlie Creek. a. Apply fault at the Charlie Creek 345kV bus. b. Clear fault after 5 cycles by tripping the faulted line. c. Wait 20 cycles, and then re-close the line in (b) back into the fault. d. Leave fault on for 5 cycles, then trip the line in (b) and remove fault.	X	X	X	X
10	FLT10-3PH	3 phase fault on the Charlie Creek 345kV (659183) to Charlie Creek 230kV (659302) to Charlie Creek 13.8kV (659319) XFMR CKT 2, near Charlie Creek 345kV. a. Apply fault at the Charlie Creek 345kV bus. b. Clear fault after 5 cycles by tripping the faulted transformer.	X	X	X	

Table 2-3 (Continued)
Case List with Contingency Description

Cont. No.	Cont. Name	Description	GEN-2015-046	GEN-2015-091	GEN-2015-096	GEN-2015-098
11	FLT11-3PH	3 phase fault on the Neset 230kV (659138) to Neset 115kV (659139) to Neset 13.8kV (659146) XFMR CKT 1, near Neset 230kV. a. Apply fault at the Neset 230kV bus. b. Clear fault after 5 cycles by tripping the faulted transformer.	X			
12	FLT12-3PH	3 phase fault on the Tandee 230kV (659337) to Neset 230kV (659138) CKT 1, near Tandee. a. Apply fault at the Tandee 230kV bus. b. Clear fault after 5 cycles by tripping the faulted line. c. Wait 20 cycles, and then re-close the line in (b) back into the fault. d. Leave fault on for 5 cycles, then trip the line in (b) and remove fault.	X			
13	FLT13-3PH	3 phase fault on the Tioga 230kV (661084) to Wheelock 230kV (659362) CKT 1, near Tioga. a. Apply fault at the Tioga 230kV bus. b. Clear fault after 5 cycles by tripping the faulted line. c. Wait 20 cycles, and then re-close the line in (b) back into the fault. d. Leave fault on for 5 cycles, then trip the line in (b) and remove fault.	X			
14	FLT14-3PH	3 phase fault on the Tioga 230kV (661084) to Tioga 115kV (661085) to Tioga 13.8kV (661900) XFMR CKT 1, near Tioga 230kV. a. Apply fault at the Tioga 230kV bus. b. Clear fault after 5 cycles by tripping the faulted transformer.	X			
15	FLT15-3PH	3 phase fault on the Neset 115kV (659139) to Tioga 115kV (661085) CKT 1, near Neset. a. Apply fault at the Neset 115kV bus. b. Clear fault after 5 cycles by tripping the faulted line. c. Wait 20 cycles, and then re-close the line in (b) back into the fault. d. Leave fault on for 5 cycles, then trip the line in (b) and remove fault.	X			
16	FLT16-3PH	3 phase fault on the Blaisdell 230kV (659143) to Logan 230kV (659108) CKT 1, near Blaisdell. a. Apply fault at the Blaisdell 230kV bus. b. Clear fault after 5 cycles by tripping the faulted line. c. Wait 20 cycles, and then re-close the line in (b) back into the fault. d. Leave fault on for 5 cycles, then trip the line in (b) and remove fault.	X			
17	FLT17-3PH	3 phase fault on the Belfield 345kV (652424) to Belfield 230kV (652425) to Belfield 13.8kV (652221) XFMR CKT 1, near Belfield 230kV. a. Apply fault at the Belfield 230kV bus. b. Clear fault after 5 cycles by tripping the faulted transformer.	X	X	X	X
18	FLT18-3PH	3 phase fault on the Daglum 230kV (659448) to Belfield 230kV (652425) CKT 1, near G15-091096-Tap. a. Apply fault at the Daglum 230kV bus. b. Clear fault after 5 cycles by tripping the faulted line. c. Wait 20 cycles, and then re-close the line in (b) back into the fault. d. Leave fault on for 5 cycles, then trip the line in (b) and remove fault.		X	X	X
19	FLT19-3PH	3 phase fault on the Daglum 230kV (659448) to Rhame 230kV (659266) CKT 1, near Daglum a. Apply fault at the Daglum 230kV bus. b. Clear fault after 5 cycles by tripping the faulted line. c. Wait 20 cycles, and then re-close the line in (b) back into the fault. d. Leave fault on for 5 cycles, then trip the line in (b) and remove fault.		X	X	
20	FLT20-3PH	3 phase fault on the Belfield 230kV (652425) to Dickinson 230kV (652417) CKT 1, near Belfield. a. Apply fault at the Belfield 230kV bus. b. Clear fault after 5 cycles by tripping the faulted line. c. Wait 20 cycles, and then re-close the line in (b) back into the fault. d. Leave fault on for 5 cycles, then trip the line in (b) and remove fault.		X	X	X

Table 2-3 (Continued)
Case List with Contingency Description

Cont. No.	Cont. Name	Description	GEN-2015-046	GEN-2015-091	GEN-2015-096	GEN-2015-098
21	FLT21-3PH	3 phase fault on the Belfield 230kV (652425) to Medora 230kV (652413) CKT 1, near Belfield. a. Apply fault at the Belfield 230kV bus. b. Clear fault after 5 cycles by tripping the faulted line. c. Wait 20 cycles, and then re-close the line in (b) back into the fault. d. Leave fault on for 5 cycles, then trip the line in (b) and remove fault.		X	X	X
22	FLT22-3PH	3 phase fault on the Belfield 230kV (652425) to S Heart 230kV (659309) CKT 1, near Belfield. a. Apply fault at the Belfield 230kV bus. b. Clear fault after 5 cycles by tripping the faulted line. c. Wait 20 cycles, and then re-close the line in (b) back into the fault. d. Leave fault on for 5 cycles, then trip the line in (b) and remove fault.		X	X	X
23	FLT23-3PH	3 phase fault on the Rhame 230kV (659266) to Bowman 230kV (661010) CKT 1, near Rhame. a. Apply fault at the Rhame 230kV bus. b. Clear fault after 5 cycles by tripping the faulted line. c. Wait 20 cycles, and then re-close the line in (b) back into the fault. d. Leave fault on for 5 cycles, then trip the line in (b) and remove fault.		X	X	
24	FLT24-3PH	3 phase fault on the Rhame 230kV (659266) to Little Missouri 230kV (659265) CKT 1, near Rhame. a. Apply fault at the Rhame 230kV bus. b. Clear fault after 5 cycles by tripping the faulted line. c. Wait 20 cycles, and then re-close the line in (b) back into the fault. d. Leave fault on for 5 cycles, then trip the line in (b) and remove fault.		X	X	
25	FLT25-3PH	3 phase fault on the Rhame 230kV (659266) to Rhame 115kV (659267) XFMR CKT 1, near Rhame 230kV. a. Apply fault at the Rhame 230kV bus. b. Clear fault after 5 cycles by tripping the faulted transformer.		X	X	
26	FLT26-3PH	3 phase fault on the Baker 230kV (661004) to Miles City 230kV (652411) CKT 1, near Baker. a. Apply fault at the Baker 230kV bus. b. Clear fault after 5 cycles by tripping the faulted line. c. Wait 20 cycles, and then re-close the line in (b) back into the fault. d. Leave fault on for 5 cycles, then trip the line in (b) and remove fault.		X	X	X
27	FLT27-3PH	3 phase fault on the Baker 230kV (661004) to Baker 115kV (661005) to Baker 13.8kV (661901) XFMR CKT 1, near Baker 230kV. a. Apply fault at the Baker 230kV bus. b. Clear fault after 5 cycles by tripping the faulted transformer.		X	X	
28	FLT28-3PH	3 phase fault on the Bowman 230kV (661010) to Bowman 115kV (659340) XFMR CKT 1, near Bowman 230kV. a. Apply fault at the Bowman 230kV bus. b. Clear fault after 5 cycles by tripping the faulted transformer.		X	X	
29	FLT29-3PH	3 phase fault on the Bowman 230kV (661010) to Hettinger 230kV (661047) CKT 1, near Bowman. a. Apply fault at the Bowman 230kV bus. b. Clear fault after 5 cycles by tripping the faulted line. c. Wait 20 cycles, and then re-close the line in (b) back into the fault. d. Leave fault on for 5 cycles, then trip the line in (b) and remove fault.		X	X	
30	FLT30-3PH	3 phase fault on the Hebron 230kV (652468) to Mandan 230kV (661053) CKT 1, near Hebron. a. Apply fault at the Hebron 230kV bus. b. Clear fault after 5 cycles by tripping the faulted line. c. Wait 20 cycles, and then re-close the line in (b) back into the fault. d. Leave fault on for 5 cycles, then trip the line in (b) and remove fault.		X	X	

Table 2-3 (Continued)
Case List with Contingency Description

Cont. No.	Cont. Name	Description	GEN-2015-046	GEN-2015-091	GEN-2015-096	GEN-2015-098
31	FLT31-3PH	3 phase fault on the Beaver Hill 230kV (652616) to Medora 230kV (652413) CKT 1, near Beaver Hill. a. Apply fault at the Beaver Hill 230kV bus. b. Clear fault after 5 cycles by tripping the faulted line. c. Wait 20 cycles, and then re-close the line in (b) back into the fault. d. Leave fault on for 5 cycles, then trip the line in (b) and remove fault.				X
32	FLT32-3PH	3 phase fault on the Beaver Hill 230kV (652616) to Dawson County 230kV (652403) CKT 1, near Beaver Hill. a. Apply fault at the Beaver Hill 230kV bus. b. Clear fault after 5 cycles by tripping the faulted line. c. Wait 20 cycles, and then re-close the line in (b) back into the fault. d. Leave fault on for 5 cycles, then trip the line in (b) and remove fault.				X
33	FLT33-3PH	3 phase fault on the Dawson County 230kV (652403) to Miles City 230kV (652411) CKT 1, near Dawson County. a. Apply fault at the Dawson County 230kV bus. b. Clear fault after 5 cycles by tripping the faulted line. c. Wait 20 cycles, and then re-close the line in (b) back into the fault. d. Leave fault on for 5 cycles, then trip the line in (b) and remove fault.				X
34	FLT34-3PH	3 phase fault on the Dawson County 230kV (652403) to Coal Hill 230kV (652111) CKT 1, near Dawson County. a. Apply fault at the Dawson County 230kV bus. b. Clear fault after 5 cycles by tripping the faulted line. c. Wait 20 cycles, and then re-close the line in (b) back into the fault. d. Leave fault on for 5 cycles, then trip the line in (b) and remove fault.				X
35	FLT35-3PH	3 phase fault on the Dawson County 230kV (652403) to Dawson County 115kV (652404) to Dawson County 13.8kV (652211) XFMR CKT 1, near Dawson County 230kV. a. Apply fault at the Dawson County 230kV bus. b. Clear fault after 5 cycles by tripping the faulted transformer.				X
36	FLT36-3PH	3 phase fault on the Coal Hill 230kV (652111) to Ft Peck 230kV (652405) CKT 1, near Coal Hill. a. Apply fault at the Coal Hill 230kV bus. b. Clear fault after 5 cycles by tripping the faulted line. c. Wait 20 cycles, and then re-close the line in (b) back into the fault. d. Leave fault on for 5 cycles, then trip the line in (b) and remove fault.				X
37	FLT37-3PH	3 phase fault on the Dawson County 115kV (652404) to Lewis 115kV (661056) CKT 1, near Dawson County. a. Apply fault at the Dawson County 115kV bus. b. Clear fault after 5 cycles by tripping the faulted line. c. Wait 20 cycles, and then re-close the line in (b) back into the fault. d. Leave fault on for 5 cycles, then trip the line in (b) and remove fault.				X
38	FLT38-3PH	3 phase fault on the Dawson County 115kV (652404) to Fallon 115kV (652407) CKT 1, near Dawson County. a. Apply fault at the Dawson County 115kV bus. b. Clear fault after 5 cycles by tripping the faulted line. c. Wait 20 cycles, and then re-close the line in (b) back into the fault. d. Leave fault on for 5 cycles, then trip the line in (b) and remove fault.				X

Table 2-3 (Continued)
Case List with Contingency Description

Cont. No.	Cont. Name	Description	GEN-2015-046	GEN-2015-091	GEN-2015-096	GEN-2015-098
39	FLT39-3PH	3 phase fault on the Dawson County 115kV (652404) to Circle 115kV (652401) CKT 1, near Dawson County. a. Apply fault at the Dawson County 115kV bus. b. Clear fault after 5 cycles by tripping the faulted line. c. Wait 20 cycles, and then re-close the line in (b) back into the fault. d. Leave fault on for 5 cycles, then trip the line in (b) and remove fault.				X
40	FLT40-3PH	3 phase fault on the Dawson County 115kV (652404) to Glendive 115kV (661032) CKT 1, near Dawson County. a. Apply fault at the Dawson County 115kV bus. b. Clear fault after 5 cycles by tripping the faulted line. c. Wait 20 cycles, and then re-close the line in (b) back into the fault. d. Leave fault on for 5 cycles, then trip the line in (b) and remove fault.				X
41	FLT41-PO	**Prior Outage of Tandee Transformer**. 3 phase fault on the Patentgate to Charlie Creek 345kV. a. Prior outage Tandee (659336) 345kV to Tandee (659337) 230kV to Tandee (659338) 13.8 kV XFMR (solve network for steady state solution). b. 3 phase fault on the Patentgate (659390) 345kV to Charlie Creek (659183) 345kV, near Patengate 345kV. c. Leave fault on for 5 cycles, then trip the faulted line in (b).	X			
42	FLT42-PO	**Prior Outage of Tandee Transformer**. 3 phase fault on the Judson Transformer. a. Prior outage Tandee (659336) 345kV to Tandee (659337) 230kV to Tandee (659338) 13.8 kV XFMR (solve network for steady state solution). b. 3 phase fault on the Judson (659333) 345kV to Judson (659334) 230kV to Judson (659335) 13.8 kV XFMR, near Judson 345kV. c. Leave fault on for 5 cycles, then trip the faulted line in (b).	X			
43	FLT43-PO	**Prior Outage of Tandee to Judson 345kV**. 3 phase fault on the Neset to Tioga 230kV. a. Prior outage Tandee (659336) 345kV to Judson (659333) 345kV (solve network for steady state solution). b. 3 phase fault on the Neset (659138) 230kV to Tioga (661084) 230kV, near Neset 230kV. c. Leave fault on for 5 cycles, then trip the faulted line in (b).	X			
44	FLT44-SB	**Tandee 230kV Stuck Breaker** a. Apply single phase fault at the Tandee (659337) 230kV bus on the Tandee – Neset (659138) 230kV line. b. Wait 16 cycles, and then drop Tandee (659337) 230kV to Neset (659138) 230kV line. c. Trip Tandee (659336) 345kV to Tandee (659337) 230kV to Tandee (659338) 13.8kV XFMR and remove the fault.	X			
45	FLT45-SB	**Patentgate 345kV Stuck Breaker** a. Apply single phase fault at the Patentgate (659390) 345kV bus on the Patentgate – Charlie Creek (659183) 345kV line. b. Wait 16 cycles, and then drop Patentgate (659390) 345kV to Judson (659333) 345 kV line. c. Trip Patentgate to Charlie Creek 345kV and remove the fault.	X			
46	FLT46-SB	**Charlie Creek 345kV Stuck Breaker** a. Apply single phase fault at the Charlie Creek (659183) 345kV bus on the Charlie Creek – Round Up (659384) 345kV line. b. Wait 16 cycles, and then drop Charlie Creek (659183) 345kV to Antelope (659101) 345kV line. c. Trip Charlie Creek to Round Up 345kV and remove the fault.	X	X	X	

Table 2-3 (Continued)
Case List with Contingency Description

Cont. No.	Cont. Name	Description	GEN-2015-046	GEN-2015-091	GEN-2015-096	GEN-2015-098
47	FLT47-PO	**Prior Outage of Belfield to Dickinson 230kV**. 3 phase fault on the Belfield – Medora 230kV line. a. Prior outage Belfield (652425) 230kV to Dickinson (652417) 230kV (solve network for steady state solution). b. 3 phase fault on the Belfield (652425) 230kV to Medora (652413) 230kV, near Belfield 230kV. c. Leave fault on for 5 cycles, then trip the faulted line in (b).		X	X	X
48	FLT48-PO	**Prior Outage of Belfield to Daglum 230kV. 3 phase fault on the Rhame – Bowman 230kV line.** a. Prior outage Belfield (652425) 230kV to Daglum 230kV (659448) (solve network for steady state solution). b. 3 phase fault on the Rhame (659266) 230kV to Bowman (661010) 230kV, near Rhame 230kV. c. Leave fault on for 5 cycles, then trip the faulted line in (b).		X	X	
49	FLT49-PO	**Prior Outage of Rhame to Daglum 230kV. 3 phase fault on the Belfield – Medora 230kV line.** a. Prior outage Rhame (659266) 230kV to Daglum 230kV (659448) (solve network for steady state solution). b. 3 phase fault on the Belfield (652425) 230kV to Medora (652413) 230kV, near Belfield 230kV. c. Leave fault on for 5 cycles, then trip the faulted line in (b).		X	X	
50	FLT50-SB	**Belfield 230kV Stuck Breaker** a. Apply single phase fault at the Belfield (652425) 230kV bus on the Belfield – Medora (652413) 230kV line. b. Wait 16 cycles, and then trip Belfield (652425) to Medora (652413) 230kV. c. Trip Belfield (652425) to Daglum 230kV (659448) and remove the fault.		X	X	
51	FLT51-SB	**Rhame 230kV Stuck Breaker** a. Apply single phase fault at the Rhame (659266) 230kV bus on the Rhame – Little Missouri (659265) 230kV line. b. Wait 16 cycles, and then trip Rhame (659266) to Little Missouri (659265) 230kV. c. Trip Rhame (659266) to Daglum 230kV (659448) and remove the fault.		X	X	
52	FLT52-PO	**Prior Outage of Dawson County to Miles City 230kV**. 3 phase fault on the Dawson County – Coal Hill 230kV line. a. Prior outage Dawson County (652403) 230kV to Miles City (652411) 230kV (solve network for steady state solution). b. 3 phase fault on the Dawson County (652403) 230kV to Coal Hill (652111) 230kV, near Dawson County 230kV. c. Leave fault on for 5 cycles, then trip the faulted line in (b).				X
53	FLT53-PO	**Prior Outage of Dawson County Transformer**. 3 phase fault on the Dawson County – Miles City 230kV line. a. Prior outage Dawson County (652403) 230kV to Dawson County (652404) 115kV to Dawson County (652211) 13.8kV transformer (solve network for steady state solution). b. 3 phase fault on the Dawson County (652403) 230kV to Miles City (652411) 230kV, near Dawson County 230kV. c. Leave fault on for 5 cycles, then trip the faulted line in (b).				X
54	FLT54-SB	**Medora 230kV Stuck Breaker** a. Apply single phase fault at the Medora (652413) 230kV bus on the Medora – Beaver Hill (652616) 230kV line. b. Wait 16 cycles, and then trip Medora (652413) to Belfield (652425) 230kV. c. Trip Medora to Beaver Hill (652616) 230kV and remove the fault.				X
55	FLT55-SB	**Dawson County 230kV Stuck Breaker** a. Apply single phase fault at the Dawson County (652403) 230kV bus on the Dawson County – Beaver Hill (652616) 230kV line. b. Wait 16 cycles, and then trip Dawson County (652403) to Miles City (652411) 230kV. c. Trip Dawson County to Beaver Hill (652616) 230kV and remove the fault.				X

Table 2-3 (Continued)
Case List with Contingency Description

Cont. No.	Cont. Name	Description	GEN-2015-046	GEN-2015-091	GEN-2015-096	GEN-2015-098
56	FLT56-SB	**Dawson County 115kV Stuck Breaker** a. Apply single phase fault at the Dawson County (652404) 115kV bus on the Dawson County – Lewis (661056) 115kV line. b. Wait 16 cycles, and then trip Dawson County (652404) to Glendive (661032) 115kV. c. Trip Dawson County to Lewis (661056) 115kV and remove the fault.				X
57	FLT57-SB	**Dawson County 115kV Stuck Breaker** a. Apply single phase fault at the Square Butte (657756) 230kV bus on the Square Butte – Stanton (615901) 230kV line. b. Wait 1 cycle, and then block Square Butte (657756) to Arrowhead (608615) DC Line. c. Wait 10 cycles, and then remove the fault and trip Square Butte (657756) to Stanton (615901) 230kV. d. Wait 6 cycles, and then unblock Square Butte (657756) to Arrowhead (608615) DC Line.		X	X	

SECTION 3: STABILITY ANALYSIS

The objective of the Stability Analysis was to determine the impacts of the generator interconnections on the stability and voltage recovery on the SPP transmission system. If problems with stability or voltage recovery were identified the need for reactive compensation or system upgrades was investigated.

3.1 Approach

SPP provided MEPPI with the following three power flow cases:

- MDWG15-16WP_DIS1502_G16
- MDWG15-17SP_DIS1502_G16
- MDWG15-25SP_DIS1502_G16

Each case was examined prior to the Stability Analysis to ensure the case contained the proposed study projects and any previously queued projects listed in Tables 2-1 and 2-2, respectively. There was no suspect power flow data in the study area. The dynamic datasets were also verified and stable initial system conditions (i.e., "flat lines") were achieved. Three-phase and single phase-to-ground faults listed in Table 2-3 were examined. Single-phase fault impedances were calculated for each season to result in a voltage of approximately 60% of the pre-fault voltage. Refer to Table 3-1 for a list of the calculated single-phase fault impedances used for the Cluster Scenario. Refer to Tables 3-2 through 3-5 for single-phase fault impedances used for each stand alone scenario.

Table 3-1
Calculated Single-Phase Fault Impedances for Cluster Scenario

Cont. No.*	Cont. Name	Single-Phase Fault Impedance (MVA)		
		2016 Winter	2017 Summer	2025 Summer
44	FLT44-SB	-2000.0	-2101.6	-2000.0
45	FLT45-SB	-2609.4	-2609.4	-2609.4
46	FLT46-SB	-4031.3	-4437.5	-4031.3
50	FLT50-SB	-2304.7	-2609.4	-2609.4
51	FLT51-SB	-937.5	-1125.0	-1125.0
54	FLT54-SB	-1312.5	-1500.0	-1500.0
55	FLT55-SB	-875.0	-1250.0	-1250.0
56	FLT56-SB	-875.0	-1125.0	-1125.0
57	FLT57-SB	-5250.0	-5250.0	-5656.3

*Refer to Table 2-3 for a description of the contingency scenerio

Table 3-2
Calculated Single-Phase Fault Impedances for Stand Alone Scenario: GEN-2015-046

Cont. No.*	Cont. Name	Single-Phase Fault Impedance (MVA)		
		2016 Winter	2017 Summer	2025 Summer
44	FLT44-SB	-2000	-2101.6	-2000
45	FLT45-SB	-2609.4	-2609.4	-2609.4
46	FLT46-SB	-4031.3	-4437.5	-4437.5

*Refer to Table 2-3 for a description of the contingency scenerio

Table 3-3
Calculated Single-Phase Fault Impedances for Stand Alone Scenario: GEN-2015-091

Cont. No.*	Cont. Name	Single-Phase Fault Impedance (MVA)		
		2016 Winter	2017 Summer	2025 Summer
46	FLT46-SB	-4031.3	-4234.4	-4234.4
50	FLT50-SB	-2203.1	-2609.4	-2507.8
51	FLT51-SB	-937.5	-1187.5	-1125.0
57	FLT57-SB	-5250.0	-5250.0	-5250.0

*Refer to Table 2-3 for a description of the contingency scenerio

Table 3-4
Calculated Single-Phase Fault Impedances for Stand Alone Scenario: GEN-2015-096

Cont. No.*	Cont. Name	Single-Phase Fault Impedance (MVA)		
		2016 Winter	2017 Summer	2025 Summer
46	FLT46-SB	-4031.3	-4234.4	-4031.3
50	FLT50-SB	-2203.1	-2609.4	-2406.3
51	FLT51-SB	-937.5	-1125.0	-1125.0
57	FLT57-SB	-5250.0	-5250.0	-5250.0

*Refer to Table 2-3 for a description of the contingency scenerio

Table 3-5
Calculated Single-Phase Fault Impedances for Stand Alone Scenario: GEN-2015-098

Cont. No.*	Cont. Name	Single-Phase Fault Impedance (MVA)		
		2016 Winter	2017 Summer	2025 Summer
54	FLT54-SB	-1312.5	-1500.0	-1500.0
55	FLT55-SB	-875.0	-1250.0	-1250.0
56	FLT56-SB	-875.0	-1125.0	-1125.0

*Refer to Table 2-3 for a description of the contingency scenerio

Bus voltages, machine rotor angles, and previously queued generation in the study area were monitored in addition to bus voltages and machine rotor angles in the following areas:

- 640 NPPD
- 645 OPPD
- 650 LES
- 652 WAPA
- 600 XEL
- 608 MP
- 613 SMMPA
- 615 GRE
- 620 OTP
- 661 MDU

Requested and previously queued generation outside the above study area was also monitored.

The results of the analysis determined if reactive compensation or system upgrades were required to obtain acceptable system performance. If additional reactive compensation was required, the size, type, and location were determined. The proposed reactive reinforcements would ensure the wind or solar farm meets FERC Order 661A low voltage requirements and return the wind or solar farm to its pre-disturbance operating voltage. If the results indicated the need for fast responding reactive support, dynamic support such as an SVC or STATCOM was investigated. If tripping of the prior queued projects was observed during the stability analysis (for under/over voltage or under/over frequency) the simulations were re-simulated with the prior queued project's voltage and frequency tripping disabled.

3.2 Cluster Scenario Stability Analysis Results

The Stability Analysis determined there was one contingency that tripped generation offline for the 2016 Winter Peak, 2017 Summer Peak, and 2025 Summer Peak conditions when all generation interconnection requests were at 100% output. Generation was observed to trip offline for the limiting fault contingency FLT48-PO, which is a prior outage of the Belfield to Daglum 230 kV line followed by a 3PH fault resulting in the loss of the Rhame to Bowman 230 kV line.

Refer to Table 3-6 for a summary of the Stability Analysis results for the contingencies listed in Table 2-3. Table 3-6 is a summary of the stability results for the 2016 Winter Peak, 2017 Summer Peak, and 2025 Summer Peak conditions and states whether the system remained stable or generation tripped offline and if acceptable voltage recovery was observed after the fault was cleared. Voltage recovery criteria ensure the transient voltage recovery is between 0.7 p.u. and 1.2 p.u. and with a steady-state voltage (for N-1 contingencies) at the pre-contingent level or at

least 0.9 p.u. If high or low voltages were observed the number of buses failing the voltage criteria was listed.

Several bus voltages were observed to be outside of the 0.95 p.u. to 1.05 p.u. range. All instances were observed for pre-fault conditions and since all voltages returned to pre-fault conditions, no mitigation was required.

Refer to Appendix B, Appendix C, and Appendix D for a complete set of plots for all contingencies for 2016 Winter Peak, 2017 Summer Peak, and 2025 Summer Peak conditions, respectively.

Table 3-6
Cluster Scenario: Stability Analysis Summary of Results for 2016 Winter, 2017 Summer, and 2025 Summer Peak Conditions

Cont. No.	Cont. Name	2016 Winter Peak				2017 Summer Peak				2025 Summer Peak			
		Voltage Recovery			Stable?	Voltage Recovery			Stable?	Voltage Recovery			Stable?
		Less than .70 p.u.	Greater than 1.20 p.u.	Final Less than 0.90 p.u.		Less than .70 p.u.	Greater than 1.20 p.u.	Final Less than 0.90 p.u.		Less than .70 p.u.	Greater than 1.20 p.u.	Final Less than 0.90 p.u.	
1	FLT01-3PH	No	No	No	Yes	No	No	No	Yes	No	No	No	Yes
2	FLT02-3PH	No	No	No	Yes	No	No	No	Yes	No	No	No	Yes
3	FLT03-3PH	No	No	No	Yes	No	No	No	Yes	No	No	No	Yes
4	FLT04-3PH	No	No	No	Yes	No	No	No	Yes	No	No	No	Yes
5	FLT05-3PH	No	No	No	Yes	No	No	No	Yes	No	No	No	Yes
6	FLT06-3PH	No	No	No	Yes	No	No	No	Yes	No	No	No	Yes
7	FLT07-3PH	No	No	No	Yes	No	No	No	Yes	No	No	No	Yes
8	FLT08-3PH	No	No	No	Yes	No	No	No	Yes	No	No	No	Yes
9	FLT09-3PH	No	No	No	Yes	No	No	No	Yes	No	No	No	Yes
10	FLT10-3PH	No	No	No	Yes	No	No	No	Yes	No	No	No	Yes
11	FLT11-3PH	No	No	No	Yes	No	No	No	Yes	No	No	No	Yes
12	FLT12-3PH	No	No	No	Yes	No	No	No	Yes	No	No	No	Yes
13	FLT13-3PH	No	No	No	Yes	No	No	No	Yes	No	No	No	Yes
14	FLT14-3PH	No	No	No	Yes	No	No	No	Yes	No	No	No	Yes
15	FLT15-3PH	No	No	No	Yes	No	No	No	Yes	No	No	No	Yes
16	FLT16-3PH	No	No	No	Yes	No	No	No	Yes	No	No	No	Yes
17	FLT17-3PH	No	No	No	Yes	No	No	No	Yes	No	No	No	Yes
18	FLT18-3PH	No	No	No	Yes	No	No	No	Yes	No	No	No	Yes
19	FLT19-3PH	No	No	No	Yes	No	No	No	Yes	No	No	No	Yes
20	FLT20-3PH	No	No	No	Yes	No	No	No	Yes	No	No	No	Yes
21	FLT21-3PH	No	No	No	Yes	No	No	No	Yes	No	No	No	Yes

Table 3-6 (Continued)
Cluster Scenario: Stability Analysis Summary of Results for 2016 Winter, 2017 Summer, and 2025 Summer Peak Conditions

Cont. No.	Cont. Name	2016 Winter Peak				2017 Summer Peak				2025 Summer Peak			
		Voltage Recovery			Stable?	Voltage Recovery			Stable?	Voltage Recovery			Stable?
		Less than .70 p.u.	Greater than 1.20 p.u.	Final Less than 0.90 p.u.		Less than .70 p.u.	Greater than 1.20 p.u.	Final Less than 0.90 p.u.		Less than .70 p.u.	Greater than 1.20 p.u.	Final Less than 0.90 p.u.	
22	FLT22-3PH	No	No	No	Yes	No	No	No	Yes	No	No	No	Yes
23	FLT23-3PH	No	No	No	Yes	No	No	No	Yes	No	No	No	Yes
24	FLT24-3PH	No	No	No	Yes	No	No	No	Yes	No	No	No	Yes
25	FLT25-3PH	No	No	No	Yes	No	No	No	Yes	No	No	No	Yes
26	FLT26-3PH	No	No	No	Yes	No	No	No	Yes	No	No	No	Yes
27	FLT27-3PH	No	No	No	Yes	No	No	No	Yes	No	No	No	Yes
28	FLT28-3PH	No	No	No	Yes	No	No	No	Yes	No	No	No	Yes
29	FLT29-3PH	No	No	No	Yes	No	No	No	Yes	No	No	No	Yes
30	FLT30-3PH	No	No	No	Yes	No	No	No	Yes	No	No	No	Yes
31	FLT31-3PH	No	No	No	Yes	No	No	No	Yes	No	No	No	Yes
32	FLT32-3PH	No	No	No	Yes	No	No	No	Yes	No	No	No	Yes
33	FLT33-3PH	No	No	No	Yes	No	No	No	Yes	No	No	No	Yes
34	FLT34-3PH	No	No	No	Yes	No	No	No	Yes	No	No	No	Yes
35	FLT35-3PH	No	No	No	Yes	No	No	No	Yes	No	No	No	Yes
36	FLT36-3PH	No	No	No	Yes	No	No	No	Yes	No	No	No	Yes
37	FLT37-3PH	No	No	No	Yes	No	No	No	Yes	No	No	No	Yes
38	FLT38-3PH	No	No	No	Yes	No	No	No	Yes	No	No	No	Yes
39	FLT39-3PH	No	No	No	Yes	No	No	No	Yes	No	No	No	Yes
40	FLT40-3PH	No	No	No	Yes	No	No	No	Yes	No	No	No	Yes
41	FLT41-PO	No	No	No	Yes	No	No	No	Yes	No	No	No	Yes
42	FLT42-PO	No	No	No	Yes	No	No	No	Yes	No	No	No	Yes

Table 3-6 (Continued)
Cluster Scenario: Stability Analysis Summary of Results for 2016 Winter, 2017 Summer, and 2025 Summer Peak Conditions

Cont. No.	Cont. Name	2016 Winter Peak				2017 Summer Peak				2025 Summer Peak			
		Voltage Recovery			Stable?	Voltage Recovery			Stable?	Voltage Recovery			Stable?
		Less than .70 p.u.	Greater than 1.20 p.u.	Final Less than 0.90 p.u.		Less than .70 p.u.	Greater than 1.20 p.u.	Final Less than 0.90 p.u.		Less than .70 p.u.	Greater than 1.20 p.u.	Final Less than 0.90 p.u.	
43	FLT43-PO	No	No	No	Yes	No	No	No	Yes	No	No	No	Yes
44	FLT44-SB	No	No	No	Yes	No	No	No	Yes	No	No	No	Yes
45	FLT45-SB	No	No	No	Yes	No	No	No	Yes	No	No	No	Yes
46	FLT46-SB	No	No	No	Yes	No	No	No	Yes	No	No	No	Yes
47	FLT47-PO	No	No	No	Yes	No	No	No	Yes	No	No	No	Yes
48	FLT48-PO	Generation Trips				Generation Trips				Generation Trips			
49	FLT49-PO	No	No	No	Yes	No	No	No	Yes	No	No	No	Yes
50	FLT50-SB	No	No	No	Yes	No	No	No	Yes	No	No	No	Yes
51	FLT51-SB	No	No	No	Yes	No	No	No	Yes	No	No	No	Yes
52	FLT52-PO	No	No	No	Yes	No	No	No	Yes	No	No	No	Yes
53	FLT53-PO	No	No	No	Yes	No	No	No	Yes	No	No	No	Yes
54	FLT54-SB	No	No	No	Yes	No	No	No	Yes	No	No	No	Yes
55	FLT55-SB	No	No	No	Yes	No	No	No	Yes	No	No	No	Yes
56	FLT56-SB	No	No	No	Yes	No	No	No	Yes	No	No	No	Yes
57	FLT57-SB	No	No	No	Yes	No	No	No	Yes	No	No	No	Yes

An additional 230 kV line from Daglum to Dickson was required to mitigate GEN-2015-091, GEN-2015-096, and GI1414 tripping offline for a fault (FLT48-PO) resulting in the loss of the Rhame to Bowman 230kV line.

After the line upgrade was implemented, the Stability Analysis contingencies were re-simulated to determine system stability. With the required upgrade, the Stability Analysis determined there was no generation ripping or system instability with interconnecting all study projects at 100% output.

3.3 Stand Alone Scenario Stability Analysis Results: GEN-2015-046

The Stability Analysis determined there were no contingencies that resulted in system instability, generation tripping offline, or voltage violations for 2016 Winter Peak, 2017 Summer Peak, and 2025 Summer Peak conditions when GEN-2015-046 was at 100% output.

Refer to Table 3-7 for a summary of the Stability Analysis results for the contingencies listed in Table 2-3 that correspond to the GEN-2015-046 Stand Alone Analysis. Table 3-7 is a summary of the stability results for the 2016 Winter Peak, 2017 Summer Peak, and 2025 Summer Peak conditions and states whether the system remained stable or generation tripped offline and if acceptable voltage recovery was observed after the fault was cleared. Voltage recovery criteria ensure the transient voltage recovery is between 0.7 p.u. and 1.2 p.u. with steady state voltage (for N-1 contingencies) at the pre-contingent level or at least 0.9 p.u. If high or low voltages were observed the number of buses failing the voltage criteria was listed.

Several bus voltages consistently fell outside of the 0.95 p.u. to 1.05 p.u. range. All instances were observed for pre-fault conditions and since all voltages returned to pre-fault conditions, no mitigation was required.

Refer to Appendix E for a complete set of plots for all the GEN-2015-046 stand alone analysis contingencies for 2016 Winter Peak, 2017 Summer Peak, and 2025 Summer Peak conditions.

Table 3-7
Stand Alone Scenario GEN-2015-046: Stability Analysis Summary of Results for 2016 Winter, 2017 Summer, and 2025 Summer Peak Conditions

Cont. No.	Cont. Name	2016 Winter Peak				2017 Summer Peak				2025 Summer Peak			
		Voltage Recovery			Stable?	Voltage Recovery			Stable?	Voltage Recovery			Stable?
		Less than .70 p.u.	Greater than 1.20 p.u.	Final Less than 0.90 p.u.		Less than .70 p.u.	Greater than 1.20 p.u.	Final Less than 0.90 p.u.		Less than .70 p.u.	Greater than 1.20 p.u.	Final Less than 0.90 p.u.	
1	FLT01-3PH	No	No	No	Yes	No	No	No	Yes	No	No	No	Yes
2	FLT02-3PH	No	No	No	Yes	No	No	No	Yes	No	No	No	Yes
3	FLT03-3PH	No	No	No	Yes	No	No	No	Yes	No	No	No	Yes
4	FLT04-3PH	No	No	No	Yes	No	No	No	Yes	No	No	No	Yes
5	FLT05-3PH	No	No	No	Yes	No	No	No	Yes	No	No	No	Yes
6	FLT06-3PH	No	No	No	Yes	No	No	No	Yes	No	No	No	Yes
7	FLT07-3PH	No	No	No	Yes	No	No	No	Yes	No	No	No	Yes
8	FLT08-3PH	No	No	No	Yes	No	No	No	Yes	No	No	No	Yes
9	FLT09-3PH	No	No	No	Yes	No	No	No	Yes	No	No	No	Yes
10	FLT10-3PH	No	No	No	Yes	No	No	No	Yes	No	No	No	Yes
11	FLT11-3PH	No	No	No	Yes	No	No	No	Yes	No	No	No	Yes
12	FLT12-3PH	No	No	No	Yes	No	No	No	Yes	No	No	No	Yes
13	FLT13-3PH	No	No	No	Yes	No	No	No	Yes	No	No	No	Yes
14	FLT14-3PH	No	No	No	Yes	No	No	No	Yes	No	No	No	Yes
15	FLT15-3PH	No	No	No	Yes	No	No	No	Yes	No	No	No	Yes
16	FLT16-3PH	No	No	No	Yes	No	No	No	Yes	No	No	No	Yes
17	FLT17-3PH	No	No	No	Yes	No	No	No	Yes	No	No	No	Yes
41	FLT41-PO	No	No	No	Yes	No	No	No	Yes	No	No	No	Yes
42	FLT42-PO	No	No	No	Yes	No	No	No	Yes	No	No	No	Yes
43	FLT43-PO	No	No	No	Yes	No	No	No	Yes	No	No	No	Yes
44	FLT44-SB	No	No	No	Yes	No	No	No	Yes	No	No	No	Yes
45	FLT45-SB	No	No	No	Yes	No	No	No	Yes	No	No	No	Yes
46	FLT46-SB	No	No	No	Yes	No	No	No	Yes	No	No	No	Yes

3.4 Stand Alone Scenario Stability Analysis Results: GEN-2015-091

The Stability Analysis determined there were no contingencies that resulted in system instability, generation tripping offline, or voltage violations for the 2016 Winter Peak, 2017 Summer Peak, and 2025 Summer Peak conditions when GEN-2015-091 was at 100% output.

Refer to Table 3-8 for a summary of the Stability Analysis results for the contingencies listed in Table 2-3 that corresponds to the GEN-2015-091 stand alone analysis. Table 3-8 is a summary of the stability results for the 2016 Winter Peak, 2017 Summer Peak, and 2025 Summer Peak conditions and states whether the system remained stable or generation tripped offline and if acceptable voltage recovery was observed after the fault was cleared. Voltage recovery criteria ensure the transient voltage recovery is between 0.7 p.u. and 1.2 p.u. with a steady state voltage (for N-1 contingencies) at the pre-contingent level or at least 0.9 p.u. If high or low voltages were observed the number of buses failing the voltage criteria was listed.
Several bus voltages were observed to be outside of the 0.95 p.u. to 1.05 p.u. range. All instances were observed for pre-fault condition and since all voltages restored to pre-fault conditions, no mitigation was required.

Refer to Appendix F for a complete set of plots for all the GEN-2015-091 Stand Alone Scenario contingencies for 2016 Winter Peak, 2017 Summer Peak, and 2025 Summer Peak conditions.

Table 3-8
Stand Alone Scenario GEN-2015-091: Stability Analysis Summary of Results for 2016 Winter, 2017 Summer, and 2025 Summer Peak Conditions

Cont. No.	Cont. Name	2016 Winter Peak				2017 Summer Peak				2025 Summer Peak			
		Voltage Recovery			Stable?	Voltage Recovery			Stable?	Voltage Recovery			Stable?
		Less than .70 p.u.	Greater than 1.20 p.u.	Final Less than 0.90 p.u.		Less than .70 p.u.	Greater than 1.20 p.u.	Final Less than 0.90 p.u.		Less than .70 p.u.	Greater than 1.20 p.u.	Final Less than 0.90 p.u.	
6	FLT06-3PH	No	No	No	Yes	No	No	No	Yes	No	No	No	Yes
7	FLT07-3PH	No	No	No	Yes	No	No	No	Yes	No	No	No	Yes
8	FLT08-3PH	No	No	No	Yes	No	No	No	Yes	No	No	No	Yes
9	FLT09-3PH	No	No	No	Yes	No	No	No	Yes	No	No	No	Yes
10	FLT10-3PH	No	No	No	Yes	No	No	No	Yes	No	No	No	Yes
17	FLT17-3PH	No	No	No	Yes	No	No	No	Yes	No	No	No	Yes
18	FLT18-3PH	No	No	No	Yes	No	No	No	Yes	No	No	No	Yes
19	FLT19-3PH	No	No	No	Yes	No	No	No	Yes	No	No	No	Yes
20	FLT20-3PH	No	No	No	Yes	No	No	No	Yes	No	No	No	Yes
21	FLT21-3PH	No	No	No	Yes	No	No	No	Yes	No	No	No	Yes
22	FLT22-3PH	No	No	No	Yes	No	No	No	Yes	No	No	No	Yes
23	FLT23-3PH	No	No	No	Yes	No	No	No	Yes	No	No	No	Yes
24	FLT24-3PH	No	No	No	Yes	No	No	No	Yes	No	No	No	Yes
25	FLT25-3PH	No	No	No	Yes	No	No	No	Yes	No	No	No	Yes
26	FLT26-3PH	No	No	No	Yes	No	No	No	Yes	No	No	No	Yes
27	FLT27-3PH	No	No	No	Yes	No	No	No	Yes	No	No	No	Yes
28	FLT28-3PH	No	No	No	Yes	No	No	No	Yes	No	No	No	Yes
29	FLT29-3PH	No	No	No	Yes	No	No	No	Yes	No	No	No	Yes
30	FLT30-3PH	No	No	No	Yes	No	No	No	Yes	No	No	No	Yes
46	FLT46-SB	No	No	No	Yes	No	No	No	Yes	No	No	No	Yes
47	FLT47-PO	No	No	No	Yes	No	No	No	Yes	No	No	No	Yes
48	FLT48-PO	No	No	No	Yes	No	No	No	Yes	No	No	No	Yes
49	FLT49-PO	No	No	No	Yes	No	No	No	Yes	No	No	No	Yes
50	FLT50-SB	No	No	No	Yes	No	No	No	Yes	No	No	No	Yes
51	FLT51-SB	No	No	No	Yes	No	No	No	Yes	No	No	No	Yes
57	FLT57-SB	No	No	No	Yes	No	No	No	Yes	No	No	No	Yes

3.5 Stand Alone Scenario Stability Analysis Results: GEN-2015-096

The Stability Analysis determined there were no contingencies that resulted in system instability, generation tripping offline, or voltage violations for the 2016 Winter Peak, 2017 Summer Peak, and 2025 Summer Peak conditions when GEN-2015-096 was at 100% output.

Refer to Table 3-9 for a summary of the Stability Analysis results for the contingencies listed in Table 2-3 that corresponds to the GEN-2015-096 stand alone analysis. Table 3-9 is a summary of the stability results for the 2016 Winter Peak, 2017 Summer Peak, and 2025 Summer Peak conditions and states whether the system remained stable or generation tripped offline and if acceptable voltage recovery was observed after the fault was cleared. Voltage recovery criteria

ensure the transient voltage recovery is between 0.7 p.u. and 1.2 p.u. with a steady state voltage (for N-1 contingencies) at the pre-contingent level or at least 0.9 p.u. If high or low voltages were observed the number of buses failing the voltage criteria was listed.

Several bus voltages were observed to be outside of the 0.95 p.u. to 1.05 p.u. range. All instances were observed for pre-fault conditions and since all voltages returned to pre-fault conditions, no mitigation was required.

Refer to Appendix G for a complete set of plots for all the GEN-2015-096 Stand Alone Scenario contingencies for 2016 Winter Peak, 2017 Summer Peak, and 2025 Summer Peak conditions.

Table 3-9
Stand Alone Scenario GEN-2015-096: Stability Analysis Summary of Results for 2016 Winter, 2017 Summer, and 2025 Summer Peak Conditions

Cont. No.	Cont. Name	2016 Winter Peak				2017 Summer Peak				2025 Summer Peak			
		Voltage Recovery			Stable?	Voltage Recovery			Stable?	Voltage Recovery			Stable?
		Less than .70 p.u.	Greater than 1.20 p.u.	Final Less than 0.90 p.u.		Less than .70 p.u.	Greater than 1.20 p.u.	Final Less than 0.90 p.u.		Less than .70 p.u.	Greater than 1.20 p.u.	Final Less than 0.90 p.u.	
6	FLT06-3PH	No	No	No	Yes	No	No	No	Yes	No	No	No	Yes
7	FLT07-3PH	No	No	No	Yes	No	No	No	Yes	No	No	No	Yes
8	FLT08-3PH	No	No	No	Yes	No	No	No	Yes	No	No	No	Yes
9	FLT09-3PH	No	No	No	Yes	No	No	No	Yes	No	No	No	Yes
10	FLT10-3PH	No	No	No	Yes	No	No	No	Yes	No	No	No	Yes
17	FLT17-3PH	No	No	No	Yes	No	No	No	Yes	No	No	No	Yes
18	FLT18-3PH	No	No	No	Yes	No	No	No	Yes	No	No	No	Yes
19	FLT19-3PH	No	No	No	Yes	No	No	No	Yes	No	No	No	Yes
20	FLT20-3PH	No	No	No	Yes	No	No	No	Yes	No	No	No	Yes
21	FLT21-3PH	No	No	No	Yes	No	No	No	Yes	No	No	No	Yes
22	FLT22-3PH	No	No	No	Yes	No	No	No	Yes	No	No	No	Yes
23	FLT23-3PH	No	No	No	Yes	No	No	No	Yes	No	No	No	Yes
24	FLT24-3PH	No	No	No	Yes	No	No	No	Yes	No	No	No	Yes
25	FLT25-3PH	No	No	No	Yes	No	No	No	Yes	No	No	No	Yes
26	FLT26-3PH	No	No	No	Yes	No	No	No	Yes	No	No	No	Yes
27	FLT27-3PH	No	No	No	Yes	No	No	No	Yes	No	No	No	Yes
28	FLT28-3PH	No	No	No	Yes	No	No	No	Yes	No	No	No	Yes
29	FLT29-3PH	No	No	No	Yes	No	No	No	Yes	No	No	No	Yes
30	FLT30-3PH	No	No	No	Yes	No	No	No	Yes	No	No	No	Yes
46	FLT46-SB	No	No	No	Yes	No	No	No	Yes	No	No	No	Yes
47	FLT47-PO	No	No	No	Yes	No	No	No	Yes	No	No	No	Yes
48	FLT48-PO	No	No	No	Yes	No	No	No	Yes	No	No	No	Yes
49	FLT49-PO	No	No	No	Yes	No	No	No	Yes	No	No	No	Yes
50	FLT50-SB	No	No	No	Yes	No	No	No	Yes	No	No	No	Yes
51	FLT51-SB	No	No	No	Yes	No	No	No	Yes	No	No	No	Yes
57	FLT57-SB	No	No	No	Yes	No	No	No	Yes	No	No	No	Yes

3.6 Stand Alone Scenario Stability Analysis Results: GEN-2015-098

The Stability Analysis determined there were no contingencies that resulted in system instability, generation tripping offline, or voltage violations for the 2016 Winter Peak, 2017 Summer Peak, and 2025 Summer Peak conditions when GEN-2015-098 was at 100% output.

Refer to Table 3-10 for a summary of the Stability Analysis results for the contingencies listed in Table 2-3 that corresponds to the GEN-2105-098 stand alone analysis. Table 3-10 is a summary of the stability results for the 2016 Winter Peak, 2017 Summer Peak, and 2025 Summer Peak conditions and states whether the system remained stable or generation tripped offline and if acceptable voltage recovery was observed after the fault was cleared. Voltage recovery criteria ensure the transient voltage recovery is between 0.7 p.u. and 1.2 p.u. with a steady state voltage (for N-1 contingencies) at the pre-contingent level or at least 0.9 p.u. If high or low voltages were observed the number of buses failing the voltage criteria was listed.

Several bus voltages were observed to be outside of the 0.95 p.u. to 1.05 p.u. range. All instances were observed for pre-fault conditions and since all voltages returned to pre-fault conditions, no mitigation was required.

Refer to Appendix H for a complete set of plots for all the GEN-2015-098 Stand Alone Scenario contingencies for 2016 Winter Peak, 2017 Summer Peak, and 2025 Summer Peak conditions.

Table 3-10
Stand Alone Scenario GEN-2015-098: Stability Analysis Summary of Results for 2016 Winter, 2017 Summer, and 2025 Summer Peak Conditions

Cont. No.	Cont. Name	2016 Winter Peak				2017 Summer Peak				2025 Summer Peak			
		Voltage Recovery			Stable?	Voltage Recovery			Stable?	Voltage Recovery			Stable?
		Less than .70 p.u.	Greater than 1.20 p.u.	Final Less than 0.90 p.u.		Less than .70 p.u.	Greater than 1.20 p.u.	Final Less than 0.90 p.u.		Less than .70 p.u.	Greater than 1.20 p.u.	Final Less than 0.90 p.u.	
9	FLT09-3PH	No	No	No	Yes	No	No	No	Yes	No	No	No	Yes
17	FLT17-3PH	No	No	No	Yes	No	No	No	Yes	No	No	No	Yes
18	FLT18-3PH	No	No	No	Yes	No	No	No	Yes	No	No	No	Yes
20	FLT20-3PH	No	No	No	Yes	No	No	No	Yes	No	No	No	Yes
21	FLT21-3PH	No	No	No	Yes	No	No	No	Yes	No	No	No	Yes
22	FLT22-3PH	No	No	No	Yes	No	No	No	Yes	No	No	No	Yes
26	FLT26-3PH	No	No	No	Yes	No	No	No	Yes	No	No	No	Yes
31	FLT31-3PH	No	No	No	Yes	No	No	No	Yes	No	No	No	Yes
32	FLT32-3PH	No	No	No	Yes	No	No	No	Yes	No	No	No	Yes
33	FLT33-3PH	No	No	No	Yes	No	No	No	Yes	No	No	No	Yes
34	FLT34-3PH	No	No	No	Yes	No	No	No	Yes	No	No	No	Yes
35	FLT35-3PH	No	No	No	Yes	No	No	No	Yes	No	No	No	Yes
36	FLT36-3PH	No	No	No	Yes	No	No	No	Yes	No	No	No	Yes
37	FLT37-3PH	No	No	No	Yes	No	No	No	Yes	No	No	No	Yes
38	FLT38-3PH	No	No	No	Yes	No	No	No	Yes	No	No	No	Yes
39	FLT39-3PH	No	No	No	Yes	No	No	No	Yes	No	No	No	Yes
40	FLT40-3PH	No	No	No	Yes	No	No	No	Yes	No	No	No	Yes
47	FLT47-PO	No	No	No	Yes	No	No	No	Yes	No	No	No	Yes
52	FLT52-PO	No	No	No	Yes	No	No	No	Yes	No	No	No	Yes
53	FLT53-PO	No	No	No	Yes	No	No	No	Yes	No	No	No	Yes
54	FLT54-SB	No	No	No	Yes	No	No	No	Yes	No	No	No	Yes
55	FLT55-SB	No	No	No	Yes	No	No	No	Yes	No	No	No	Yes
56	FLT56-SB	No	No	No	Yes	No	No	No	Yes	No	No	No	Yes

SECTION 4: SHORT CIRCUIT ANALYSIS

The objective of this task is to quantify the three-phase to ground fault currents for the 2017 Summer Peak and 2025 Summer Peak seasons for each interconnecting generator.

4.1 Approach

The short circuit analysis will assess breaker adequacy and fault duties for the generator interconnection bus and five buses away from the point of interconnection. MEPPI will assume no outages to find maximum short circuit currents that flow through the breaker. The Automatic Sequencing Fault Calculation (ASCC) function in PSS/E was utilized to perform this task. Flat conditions were applied to pre-fault conditions and the following adjustments were utilized:

- All synchronous and asynchronous machine P and Q output was set to zero
- All transformer tap ratios were set to 1.0 p.u. and all phase shift angles were set to zero
- All generator reactance's were fixed to the subtransient reactance
- All line charging was set to zero
- All shunts were set to zero

- All loads were set to zero
- All pre-fault bus voltages were set to 1.0 p.u. and a phase shift angle of zero

Note upgrades determined to be necessary for the Stability Analysis were included in the Short Circuit Analysis.

4.2 Short Circuit Results: 2017 Summer Peak

The maximum fault current for each bus is provided for the 2017 Summer Peak condition. The following tables show the short circuit results for the study generators:

- Table 4-1: Short Circuit Analysis for GEN-2015-046 for 2017 Summer Peak
- Table 4-2: Short Circuit Analysis for GEN-2015-091 and GEN-2015-096 for 2017 Summer Peak
- Table 4-3: Short Circuit Analysis for GEN-2015-098 for 2017 Summer Peak

Table 4-1
Short Circuit Analysis for Study Project GEN-2015-046 for 2017 Summer Peak

Study Generator GEN-2015-046											
Bus Number	Bus Name	Bus Voltage (kV)	Fault Current 3-LG (kA)	Bus Number	Bus Name	Bus Voltage (kV)	Fault Current 3-LG (kA)	Bus Number	Bus Name	Bus Voltage (kV)	Fault Current 3-LG (kA)
584870	GEN-2015-046	345	4.05	659302	CHAR.CK4	230	11.29	659610	LINDAHLS-MW7	115	4.35
652216	WATFORD4	230	6.36	659333	JUDSON 3	345	5.77	659611	SIMPSON -MW7	115	3.17
652391	WILLISTON27	115	14.44	659334	JUDSON 4	230	7.81	659612	NORMANLK-BD7	115	2.59
652400	WILISTN4	230	8.13	659336	TANDE 3	345	4.69	659622	WESTBANK-MW7	115	4.64
652419	KILDEER7	115	7.81	659337	TANDE 4	230	7.36	659625	JUDSON MW7	115	12.17
652421	WILISTN7	115	14.44	659348	LONESMCRKGN7	115	6.92	659628	TRENTON -LY7	115	5.33
652424	BELFELD3	345	6.53	659360	MONT 7	115	10.18	659630	WHTEARTHTP 7	115	8.99
652425	BELFELD4	230	9.10	659362	WHEELOCK 4	230	5.97	659635	NWWLLSTN-MW7	115	6.25
652651	FAIRVIEW 7	115	4.78	659363	WHEELOCK 7	115	5.41	659644	TIMBERCK-MK7	115	6.47
659101	ANTELOP3	345	16.30	659368	TIMBERCREEK4	230	6.14	659646	BANKS -MK7	115	2.81
659105	LELANDO3	345	15.99	659384	ROUNDUP 3	345	8.62	659649	VEEDER -MK7	115	5.54
659108	LOGAN 4	230	5.21	659385	ROUNDUP 7	115	12.47	659652	BLUEBUTE-MK7	115	5.54
659138	NESET 4	230	7.66	659387	KUMMERRIDGE3	345	4.75	659653	GRSYBUTTAP 7	115	13.03
659139	NESET 7	115	9.45	659388	KUMMERRIDGE7	115	8.19	659658	INDIANHL-MK7	115	4.80
659143	BLAISDELL 4	230	4.79	659390	PATENTGATE 3	345	6.23	661012	CLBRTSN7	115	5.77
659144	BLAISDELL 7	115	6.00	659391	PATENTGATE 7	115	11.85	661080	STANLEY7	115	3.42
659154	LNSMCK4+5GN7	115	9.68	659404	ANTELPHILLS3	345	11.11	661084	TIOGA4 4	230	7.67
659182	CHAR.CK7	115	14.01	659420	ANTELOP-LNX3	345	16.30	661085	TIOGA4 7	115	9.24
659183	CHAR.CK3	345	10.52	659588	MCK-EBANKS 7	115	3.18	661086	TIOGA7 7	115	7.73
659184	R.RIDER7	115	4.30	659592	ALEXANDR-MK7	115	4.80	661089	LTLMUDY7	115	6.23
659185	FOUREYES 7	115	3.59	659602	PVALLEY -MW7	115	5.41	672602	BDX 4	230	4.07
659212	DGC 3	345	15.54	659609	HESS GAS-MW7	115	8.39	672603	BDV 4	230	4.06
659218	COTEAU 3	345	16.30								

Table 4-2
Short Circuit Analysis for Study Project GEN-2015-091 and GEN-2015-096 for 2017 Summer Peak

Study Generator GEN-2015-091 and GEN-2015-096											
Bus Number	Bus Name	Bus Voltage (kV)	Fault Current 3-LG (kA)	Bus Number	Bus Name	Bus Voltage (kV)	Fault Current 3-LG (kA)	Bus Number	Bus Name	Bus Voltage (kV)	Fault Current 3-LG (kA)
585260	GEN-2015-091	230	7.23	659105	LELANDO3	345	15.99	659404	ANTELPHILLS3	345	11.11
585310	GEN-2015-096	230	2.92	659182	CHAR.CK7	115	14.01	659420	ANTELOP-LNX3	345	16.30
585340	GEN-2015-098	230	3.83	659183	CHAR.CK3	345	10.52	659448	DAGLUM 4	230	7.27
652111	COALHILL4	230	2.33	659184	R.RIDER7	115	4.30	659450	GI1414 4	230	3.65
652216	WATFORD4	230	6.36	659185	FOUREYES 7	115	3.59	659653	GRSYBUTTAP 7	115	13.03
652258	BISON 8	69	2.07	659212	DGC 3	345	15.54	661004	BAKER 4	230	3.16
652296	WARD 4	230	11.38	659218	COTEAU 3	345	16.30	661005	BAKER 7	115	3.58
652402	MI CTYW4	230	11.37	659263	LTLMISS7	115	1.82	661008	BEULAH 7	115	9.62
652403	DAWSONC4	230	4.24	659265	LTLMISS4	230	3.34	661010	BOWMAN 4	230	3.59
652404	DAWSONC7	115	7.72	659266	RHAME 4	230	4.11	661019	MATHSON7	115	5.63
652411	MI CTYE4	230	2.78	659267	RHAME 7	115	3.11	661020	DIXGREENRVR7	115	5.14
652412	MI CTYE7	115	3.89	659297	BIS WARD 7	115	4.18	661021	WSTMD1 7	115	8.01
652413	MEDORA 4	230	5.05	659302	CHAR.CK4	230	11.29	661022	DICKNTH7	115	4.78
652417	DICKNSN4	230	7.43	659305	NWMANDANMGS7	115	17.57	661024	WDICKSN7	115	4.97
652418	DKSN-ND7	115	6.02	659306	S HEART 7	115	2.20	661034	KPS14-BAK7	115	3.23
652419	KILDEER7	115	7.81	659309	S HEART 4	230	9.10	661042	HESKETT4	230	13.00
652424	BELFELD3	345	6.53	659333	JUDSON 3	345	5.77	661043	HESKETT7	115	17.54
652425	BELFELD4	230	9.10	659340	BOWMAN 7	115	3.32	661047	HETINGR4	230	3.45
652426	BISMARK4	230	13.14	659341	NBURR 7	115	1.73	661048	HETINGR7	115	3.21
652468	HEBRON 4	230	5.29	659342	KPS15-BOW7	115	1.15	661050	GASCOYN7	115	1.77
652470	BISON 4	230	2.76	659350	BISON 7	115	1.40	661053	MANDAN 4	230	13.69
652497	MAURINE4	230	2.74	659384	ROUNDUP 3	345	8.62	661054	MANDAN 7	115	17.57
652616	BEAVERHILL4	230	3.91	659385	ROUNDUP 7	115	12.47	661067	MANDANW7	115	12.62
657741	MPC02100TAP4	230	15.26	659387	KUMMERRIDGE3	345	4.75	661070	N ENGLN7	115	3.25
657742	MPC2100WIND4	230	12.79	659390	PATENTGATE 3	345	6.23	661094	WISHEK 4	230	4.74
657751	CENTER 4	230	20.02	659391	PATENTGATE 7	115	11.85	661987	G752CLC4	230	3.01
659101	ANTELOP3	345	16.30	659400	NDSUNFLWR 4	230	4.74				

Table 4-3
Short Circuit Analysis for Study Project GEN-2015-098 for 2017 Summer Peak

Study Generator GEN-2015-098											
Bus Number	Bus Name	Bus Voltage (kV)	Fault Current 3-LG (kA)	Bus Number	Bus Name	Bus Voltage (kV)	Fault Current 3-LG (kA)	Bus Number	Bus Name	Bus Voltage (kV)	Fault Current 3-LG (kA)
585260	GEN-2015-091	230	7.23	652417	DICKNSN4	230	7.43	659306	S HEART 7	115	2.20
585310	GEN-2015-096	230	2.92	652418	DKSN-ND7	115	6.02	659309	S HEART 4	230	9.10
585340	GEN-2015-098	230	3.83	652424	BELFELD3	345	6.53	659384	ROUNDUP 3	345	8.62
652111	COALHILL4	230	2.33	652425	BELFELD4	230	9.10	659390	PATENTGATE 3	345	6.23
652121	KPS12-CR7	115	1.96	652450	MT WEST4	230	11.37	659400	NDSUNFLWR 4	230	4.74
652131	KPS13-OF7	115	2.26	652451	RICHLND7	115	5.58	659448	DAGLUM 4	230	7.27
652213	FALLON 8	69	1.04	652468	HEBRON 4	230	5.29	659450	GI1414 4	230	3.65
652394	TERRY TAP	115	2.82	652611	KPS10-FP7	115	1.38	661004	BAKER 4	230	3.16
652395	SHIRLEY TAP	115	2.99	652616	BEAVERHILL4	230	3.91	661005	BAKER 7	115	3.58
652401	CIRCLE 7	115	2.22	652651	FAIRVIEW 7	115	4.78	661010	BOWMAN 4	230	3.59
652402	MI CTYW4	230	11.37	659101	ANTELOP3	345	16.30	661019	MATHSON7	115	5.63
652403	DAWSONC4	230	4.24	659180	KOCH 7	115	3.87	661024	WDICKSN7	115	4.97
652404	DAWSONC7	115	7.72	659182	CHAR.CK7	115	14.01	661032	GLENDCT7	115	6.20
652405	FTPECK 4	230	2.35	659183	CHAR.CK3	345	10.52	661033	CABINCR7	115	3.12
652406	FTPECK 7	115	3.78	659263	LTLMISS7	115	1.82	661034	KPS14-BAK7	115	3.23
652407	FALLON 7	115	3.10	659265	LTLMISS4	230	3.34	661053	MANDAN 4	230	13.69
652409	WOLFPT 7	115	3.46	659266	RHAME 4	230	4.11	661056	LEWIS 7	115	5.65
652411	MI CTYE4	230	2.78	659267	RHAME 7	115	3.11	661070	N ENGLN7	115	3.25
652412	MI CTYE7	115	3.89	659302	CHAR.CK4	230	11.29	910007	G12_012IST	115	2.49
652413	MEDORA 4	230	5.05								

4.3 Short Circuit Results: 2025 Summer Peak

The maximum fault current for each bus is provided for the 2025 Summer Peak condition. The following tables show the short circuit results for the study generators:

- Table 4-4: Short Circuit Analysis for GEN-2015-046 for 2025 Summer Peak
- Table 4-5: Short Circuit Analysis for GEN-2015-091 and GEN-2015-096 for 2025 Summer Peak
- Table 4-6: Short Circuit Analysis for GEN-2015-098 for 2025 Summer Peak

Table 4-4
Short Circuit Analysis for Study Project GEN-2015-046 for 2025 Summer Peak

Study Generator GEN-2015-046											
Bus Number	Bus Name	Bus Voltage (kV)	Fault Current 3-LG (kA)	Bus Number	Bus Name	Bus Voltage (kV)	Fault Current 3-LG (kA)	Bus Number	Bus Name	Bus Voltage (kV)	Fault Current 3-LG (kA)
584870	GEN-2015-046	345	4.09	659218	COTEAU 3	345	16.34	659609	HESS GAS-MW7	115	8.50
652216	WATFORD4	230	6.43	659302	CHAR.CK4	230	11.33	659610	LINDAHLS-MW7	115	4.38
652391	WILLISTON27	115	15.30	659333	JUDSON 3	345	5.86	659611	SIMPSON -MW7	115	3.18
652400	WILISTN4	230	8.54	659334	JUDSON 4	230	8.17	659612	NORMANLK-BD7	115	2.10
652408	WATFORD7	115	7.99	659336	TANDE 3	345	4.76	659622	WESTBANK-MW7	115	4.68
652419	KILDEER7	115	7.81	659337	TANDE 4	230	7.61	659625	JUDSON MW7	115	12.77
652421	WILISTN7	115	15.30	659348	LONESMCRKGN7	115	6.93	659628	TRENTON -LY7	115	5.44
652424	BELFELD3	345	6.47	659360	MONT 7	115	11.26	659630	WHTEARTHTP 7	115	9.12
652425	BELFELD4	230	8.94	659362	WHEELOCK 4	230	6.45	659635	NWWLLSTN-MW7	115	6.40
652651	FAIRVIEW 7	115	4.81	659363	WHEELOCK 7	115	6.70	659644	TIMBERCK-MK7	115	6.48
659101	ANTELOP3	345	16.34	659372	LARSON 4	230	5.13	659646	BANKS -MK7	115	2.81
659105	LELANDO3	345	16.04	659373	LARSON 7	115	3.81	659649	VEEDER -MK7	115	5.54
659108	LOGAN 4	230	5.34	659384	ROUNDUP 3	345	8.63	659652	BLUEBUTE-MK7	115	5.54
659138	NESET 4	230	7.94	659385	ROUNDUP 7	115	12.48	659653	GRSYBUTTAP 7	115	13.05
659139	NESET 7	115	9.59	659387	KUMMERRIDGE3	345	4.76	659658	INDIANHL-MK7	115	4.81
659143	BLAISDELL 4	230	4.87	659388	KUMMERRIDGE7	115	8.19	661012	CLBRTSN7	115	5.79
659144	BLAISDELL 7	115	6.04	659390	PATENTGATE 3	345	6.29	661080	STANLEY7	115	3.43
659154	LNSMCK4+5GN7	115	9.71	659391	PATENTGATE 7	115	11.91	661084	TIOGA4 4	230	7.94
659182	CHAR.CK7	115	14.03	659404	ANTELPHILLS3	345	11.13	661085	TIOGA4 7	115	9.39
659183	CHAR.CK3	345	10.54	659420	ANTELOP-LNX3	345	16.34	661086	TIOGA7 7	115	7.84
659184	R.RIDER7	115	4.30	659588	MCK-EBANKS 7	115	3.19	661089	LTLMUDY7	115	6.36
659185	FOUREYES 7	115	3.59	659592	ALEXANDR-MK7	115	4.81	672603	BDV 4	230	4.13
659212	DGC 3	345	15.58	659602	PVALLEY -MW7	115	5.46				

Table 4-5
Short Circuit Analysis for Study Project GEN-2015-091 and GEN-2015-096 for 2025 Summer Peak

Study Generator GEN-2015-091 and GEN-2015-096											
Bus Number	Bus Name	Bus Voltage (kV)	Fault Current 3-LG (kA)	Bus Number	Bus Name	Bus Voltage (kV)	Fault Current 3-LG (kA)	Bus Number	Bus Name	Bus Voltage (kV)	Fault Current 3-LG (kA)
585260	GEN-2015-091	230	7.25	659105	LELANDO3	345	16.05	659404	ANTELPHILLS3	345	11.14
585310	GEN-2015-096	230	2.92	659182	CHAR.CK7	115	14.05	659420	ANTELOP-LNX3	345	16.36
585340	GEN-2015-098	230	3.84	659183	CHAR.CK3	345	10.60	659448	DAGLUM 4	230	7.29
652111	COALHILL4	230	2.34	659184	R.RIDER7	115	4.30	659450	GI1414 4	230	3.66
652216	WATFORD4	230	6.44	659185	FOUREYES 7	115	3.60	659653	GRSYBUTTAP 7	115	13.07
652258	BISON 8	69	2.07	659212	DGC 3	345	15.60	661004	BAKER 4	230	3.16
652296	WARD 4	230	11.74	659218	COTEAU 3	345	16.36	661005	BAKER 7	115	3.58
652402	MI CTYW4	230	11.37	659263	LTLMISS7	115	1.82	661008	BEULAH 7	115	9.66
652403	DAWSONC4	230	4.24	659265	LTLMISS4	230	3.34	661010	BOWMAN 4	230	3.60
652404	DAWSONC7	115	7.73	659266	RHAME 4	230	4.12	661019	MATHSON7	115	5.64
652411	MI CTYE4	230	2.78	659267	RHAME 7	115	3.11	661020	DIXGREENRVR7	115	5.14
652412	MI CTYE7	115	3.89	659297	BIS WARD 7	115	4.20	661021	WSTMD1 7	115	8.02
652413	MEDORA 4	230	5.05	659302	CHAR.CK4	230	11.36	661022	DICKNTH7	115	4.79
652417	DICKNSN4	230	7.45	659305	NWMANDANMGS7	115	19.92	661024	WDICKSN7	115	4.98
652418	DKSN-ND7	115	6.03	659306	S HEART 7	115	2.20	661034	KPS14-BAK7	115	3.23
652419	KILDEER7	115	7.82	659309	S HEART 4	230	9.13	661042	HESKETT4	230	13.65
652424	BELFELD3	345	6.56	659333	JUDSON 3	345	5.86	661043	HESKETT7	115	20.36
652425	BELFELD4	230	9.13	659340	BOWMAN 7	115	3.32	661047	HETINGR4	230	3.45
652426	BISMARK4	230	13.54	659341	NBURR 7	115	1.73	661048	HETINGR7	115	3.22
652468	HEBRON 4	230	5.32	659342	KPS15-BOW7	115	1.15	661050	GASCOYN7	115	1.77
652470	BISON 4	230	2.76	659350	BISON 7	115	1.40	661053	MANDAN 4	230	14.40
652497	MAURINE4	230	2.75	659384	ROUNDUP 3	345	8.66	661054	MANDAN 7	115	19.92
652616	BEAVERHILL4	230	3.92	659385	ROUNDUP 7	115	12.50	661067	MANDANW7	115	13.66
657741	MPC02100TAP4	230	15.50	659387	KUMMERRIDGE3	345	4.77	661070	N ENGLN7	115	3.25
657742	MPC2100WIND4	230	12.96	659390	PATENTGATE 3	345	6.30	661094	WISHEK 4	230	4.76
657751	CENTER 4	230	20.23	659391	PATENTGATE 7	115	11.91	661987	G752CLC4	230	3.01
659101	ANTELOP3	345	16.36	659400	NDSUNFLWR 4	230	4.76				

Table 4-6
Short Circuit Analysis for Study Project GEN-2015-098 for 2025 Summer Peak

Study Generator GEN-2015-098											
Bus Number	Bus Name	Bus Voltage (kV)	Fault Current 3-LG (kA)	Bus Number	Bus Name	Bus Voltage (kV)	Fault Current 3-LG (kA)	Bus Number	Bus Name	Bus Voltage (kV)	Fault Current 3-LG (kA)
585260	GEN-2015-091	230	5.15	652417	DICKNSN4	230	6.57	659306	S HEART 7	115	2.19
585310	GEN-2015-096	230	2.62	652418	DKSN-ND7	115	5.88	659309	S HEART 4	230	8.94
585340	GEN-2015-098	230	3.83	652424	BELFELD3	345	6.47	659384	ROUNDUP 3	345	8.63
652111	COALHILL4	230	2.34	652425	BELFELD4	230	8.94	659390	PATENTGATE 3	345	6.29
652121	KPS12-CR7	115	1.96	652450	MT WEST4	230	11.37	659400	NDSUNFLWR 4	230	4.59
652131	KPS13-OF7	115	2.26	652451	RICHLND7	115	5.60	659448	HEARTRVR 4	230	5.17
652213	FALLON 8	69	1.04	652468	HEBRON 4	230	5.10	659450	GI1414 4	230	3.17
652394	TERRY TAP	115	2.83	652611	KPS10-FP7	115	1.38	661004	BAKER 4	230	3.20
652395	SHIRLEY TAP	115	3.00	652616	BEAVERHILL4	230	3.91	661005	BAKER 7	115	3.59
652401	CIRCLE 7	115	2.22	652651	FAIRVIEW 7	115	4.81	661010	BOWMAN 4	230	3.66
652402	MI CTYW4	230	11.37	659101	ANTELOP3	345	16.34	661019	MATHSON7	115	5.51
652403	DAWSONC4	230	4.24	659180	KOCH 7	115	3.87	661024	WDICKSN7	115	4.88
652404	DAWSONC7	115	7.74	659182	CHAR.CK7	115	14.03	661032	GLENDCT7	115	6.21
652405	FTPECK 4	230	2.35	659183	CHAR.CK3	345	10.54	661033	CABINCR7	115	3.13
652406	FTPECK 7	115	3.78	659263	LTLMISS7	115	1.83	661034	KPS14-BAK7	115	3.24
652407	FALLON 7	115	3.11	659265	LTLMISS4	230	3.38	661053	MANDAN 4	230	14.34
652409	WOLFPT 7	115	3.46	659266	RHAME 4	230	4.21	661056	LEWIS 7	115	5.67
652411	MI CTYE4	230	2.79	659267	RHAME 7	115	3.14	661070	N ENGLN7	115	3.24
652412	MI CTYE7	115	3.90	659302	CHAR.CK4	230	11.33	910007	G12_012IST	115	2.49
652413	MEDORA 4	230	5.01								

SECTION 5: POWER FACTOR ANALYSIS

The objective of this task is to quantify the power factor at the point of interconnection for the wind farms during base case and system contingencies. SPP transmission planning practice requires interconnecting generation projects to maintain the power factor (pf) at the Point of Interconnection (POI) within +/- 0.95 pf for system intact conditions and for post-contingency conditions. This is analyzed by having the wind farm maintain a prescribed voltage schedule at the point of interconnection of 1.0 p.u. voltage.

The 2016 Winter Peak, 2017 Summer Peak, and 2025 Summer Peak power flows provided by SPP were examined prior to the Power Factor Analysis to ensure they contained the proposed study project modeled at 100% of the nameplate rating and any previously queued projects listed in Table 2-2. There was no suspect power flow data in the study area. The proposed study project and any previously queued projects at the same point of interconnection were turned off during the power factor analysis. The wind farm(s) were then replaced by a generator modeled at the high side bus with the same real power (MW) capability as the wind farm(s) and open limits for the reactive power set points (Mvar). The generator was set to hold the POI scheduled bus voltage. All N-1, three-phase fault contingencies from Table 2-3 were then applied and the reactive power required to maintain the bus voltage was recorded.

5.1 Approach

GEN-2015-046 was disabled and a generator was placed at the study project's high side voltage bus. The generator was modeled with PGEN = 300.0 MW, QMin = -9999 Mvar, and QMax = 9999 Mvar. All buses and transformers connected from the study project's high side voltage bus to GEN-2015-046 were disabled. The scheduled voltage was set to 1.0078 for 2016 Winter Peak conditions, 1.0200 for 2017 Summer Peak conditions, and 1.0038 for 2025 Summer Peak conditions.

GEN-2015-091, GEN-2015-096, and GI1414 were disabled and the generators were placed at the study project's high side voltage bus. The generator was modeled with PGEN = 101.2 MW for GEN-2015-091, PGEN = 150 for GEN-2015-096, PGEN = 149.6 for GI1414, and QMin = -9999 Mvar, and QMax = 9999 Mvar for all generators. All buses and transformers connected from the study project's high side voltage bus to the generators were disabled. The scheduled voltage was set to 1.0065 for 2016 Winter Peak conditions, 1.0000 for 2017 Summer Peak conditions, and 1.0000 for 2025 Summer Peak conditions.

GEN-2015-098 was disabled and a generator was placed at the study project's high side voltage bus. The generator was modeled with PGEN = 100.0 MW, QMin = -9999 Mvar, and QMax = 9999 Mvar. All buses and transformers connected from the study project's high side voltage bus to GEN-2015-098 were disabled. The scheduled voltage was set to 1.0023 for 2016 Winter Peak

conditions, 1.0165 for 2017 Summer Peak conditions, and 1.0132 for 2025 Summer Peak conditions.

5.2 Power Factor Analysis Results

The power factor was calculated for the 2016 Winter Peak, 2017 Summer Peak, and 2025 Summer Peak condition. Tables show the power factor results for the study generators as follows:

- Table 5-1: Power Factor Analysis for GEN-2015-046
- Table 5-2: Power Factor Analysis for GEN-2015-091
- Table 5-3: Power Factor Analysis for GEN-2015-096
- Table 5-4: Power Factor Analysis for GEN-2015-098

Note a positive Q (Mvar) output illustrates that the generator is absorbing reactive power from the system, implying a leading power factor; a negative Q (Mvar) illustrates that the generator is supplying reactive power to the system, implying a lagging power factor.

Table 5-1
Power Factor Analysis: GEN-2015-046

Ref No.	Case	2016 Winter Peak			2017 Summer Peak			2025 Summer Peak		
		Power Factor		Q (MVAR)	Power Factor		Q (MVAR)	Power Factor		Q (MVAR)
0	Base	0.984	Leading	54.30	0.999	Leading	14.78	0.995	Leading	31.47
1	FLT01-3PH	0.999	Lagging	-14.59	0.987	Lagging	-48.10	0.996	Lagging	-26.57
2	FLT02-3PH	0.993	Leading	36.93	0.998	Leading	18.68	0.995	Leading	29.08
3	FLT03-3PH	0.994	Leading	34.35	1.000	Lagging	-1.65	0.998	Leading	19.92
4	FLT04-3PH	0.982	Leading	58.38	0.999	Leading	14.46	0.991	Leading	39.51
5	FLT05-3PH	0.984	Leading	54.90	0.998	Leading	16.96	0.994	Leading	31.61
6	FLT06-3PH	0.986	Leading	51.18	0.999	Leading	12.64	0.996	Leading	27.63
7	FLT07-3PH	0.984	Leading	54.30	0.999	Leading	14.78	0.995	Leading	31.47
8	FLT08-3PH	0.987	Leading	49.52	0.999	Leading	9.56	0.996	Leading	27.93
9	FLT09-3PH	0.985	Leading	52.69	0.999	Leading	13.18	0.995	Leading	28.85
10	FLT10-3PH	0.984	Leading	54.30	0.999	Leading	14.78	0.995	Leading	31.47
11	FLT11-3PH	0.984	Leading	54.93	0.999	Leading	14.49	0.994	Leading	32.74
12	FLT12-3PH	0.993	Leading	36.87	0.998	Leading	18.61	0.995	Leading	29.03
13	FLT13-3PH	0.988	Leading	47.30	1.000	Leading	7.93	0.999	Leading	11.52
14	FLT14-3PH	0.984	Leading	54.51	0.999	Leading	14.07	0.994	Leading	32.38
15	FLT15-3PH	0.993	Leading	36.82	0.998	Leading	20.00	0.998	Leading	18.94
16	FLT16-3PH	0.983	Leading	55.22	0.999	Leading	13.04	0.995	Leading	28.58
17	FLT17-3PH	0.984	Leading	54.62	0.999	Leading	15.10	0.994	Leading	31.72
18	FLT18-3PH	0.984	Leading	54.74	0.999	Leading	14.92	0.994	Leading	32.01
19	FLT19-3PH	0.985	Leading	52.44	0.999	Leading	14.80	0.996	Leading	27.96
20	FLT20-3PH	0.985	Leading	53.30	0.999	Leading	14.27	0.995	Leading	30.79
21	FLT21-3PH	0.985	Leading	53.14	0.999	Leading	13.63	0.995	Leading	31.34
22	FLT22-3PH	0.984	Leading	54.30	0.999	Leading	14.78	0.995	Leading	31.47
23	FLT23-3PH	0.986	Leading	49.81	0.999	Leading	10.69	0.996	Leading	27.41
24	FLT24-3PH	0.984	Leading	53.84	0.999	Leading	14.75	0.994	Leading	32.44
25	FLT25-3PH	0.984	Leading	54.30	0.999	Leading	14.78	0.995	Leading	31.47
26	FLT26-3PH	0.984	Leading	53.79	0.999	Leading	15.34	0.994	Leading	32.17
27	FLT27-3PH	0.984	Leading	54.71	0.999	Leading	14.75	0.994	Leading	31.71
28	FLT28-3PH	0.985	Leading	52.80	0.999	Leading	13.92	0.995	Leading	29.50
29	FLT29-3PH	0.985	Leading	52.32	0.999	Leading	12.37	0.995	Leading	29.72
30	FLT30-3PH	0.989	Leading	45.13	1.000	Leading	7.96	0.997	Leading	24.95
31	FLT31-3PH	0.985	Leading	52.56	0.999	Leading	12.90	0.995	Leading	30.84
32	FLT32-3PH	0.984	Leading	54.35	0.999	Leading	16.23	0.995	Leading	31.33
33	FLT33-3PH	0.985	Leading	52.14	0.999	Leading	10.06	0.996	Leading	27.58
34	FLT34-3PH	0.986	Leading	49.93	1.000	Leading	8.46	0.996	Leading	27.96
35	FLT35-3PH	0.984	Leading	54.50	0.999	Leading	14.64	0.994	Leading	32.06

Table 5-1 (Continued)
Power Factor Analysis: GEN-2015-046

Ref No.	Case	2016 Winter Peak			2017 Summer Peak			2025 Summer Peak		
		Power Factor		Q (MVAR)	Power Factor		Q (MVAR)	Power Factor		Q (MVAR)
36	FLT36-3PH	0.986	Leading	49.82	1.000	Leading	7.99	0.996	Leading	27.80
37	FLT37-3PH	0.984	Leading	53.97	0.999	Leading	12.64	0.995	Leading	30.85
38	FLT38-3PH	0.984	Leading	53.90	0.999	Leading	14.84	0.995	Leading	30.98
39	FLT39-3PH	0.984	Leading	53.75	0.999	Leading	13.19	0.995	Leading	30.88
40	FLT40-3PH	0.984	Leading	54.37	0.999	Leading	15.53	0.994	Leading	31.65

Study Generator GEN-2015-046

The Power Factor Analysis shows GEN-2015-046 has a power factor range of 0.999 lagging (supplying) to 0.982 leading (absorbing) for the 2016 Winter Peak conditions, a power factor range of 0.987 lagging (supplying) to 0.998 leading (absorbing) for the 2017 Summer Peak conditions, and a power factor range of 0.996 lagging (supplying) to 0.991 leading (absorbing) for the 2025 Summer Peak conditions.

Table 5-2
Power Factor Analysis: GEN-2015-091

Ref No.	Case	2016 Winter Peak			2017 Summer Peak			2025 Summer Peak		
		Power Factor		Q (MVAR)	Power Factor		Q (MVAR)	Power Factor		Q (MVAR)
0	Base	0.980	Leading	20.53	0.999	Leading	5.54	0.995	Leading	9.76
1	FLT01-3PH	0.983	Leading	18.82	0.998	Leading	6.72	0.995	Leading	9.82
2	FLT02-3PH	0.987	Leading	16.64	0.999	Leading	3.96	0.997	Leading	7.57
3	FLT03-3PH	0.981	Leading	19.77	0.997	Leading	7.29	0.996	Leading	9.38
4	FLT04-3PH	0.977	Leading	22.18	0.997	Leading	7.93	0.994	Leading	10.74
5	FLT05-3PH	0.980	Leading	20.73	0.998	Leading	5.61	0.995	Leading	9.77
6	FLT06-3PH	0.984	Leading	18.47	0.999	Leading	3.36	0.997	Leading	8.35
7	FLT07-3PH	0.980	Leading	20.53	0.999	Leading	5.54	0.995	Leading	9.76
8	FLT08-3PH	0.985	Leading	18.00	1.000	Leading	1.15	0.997	Leading	8.41
9	FLT09-3PH	0.997	Leading	7.38	1.000	Leading	2.09	1.000	Leading	2.34
10	FLT10-3PH	0.980	Leading	20.53	0.999	Leading	5.54	0.995	Leading	9.76
11	FLT11-3PH	0.980	Leading	20.48	0.999	Leading	5.51	0.995	Leading	9.74
12	FLT12-3PH	0.987	Leading	16.62	0.999	Leading	3.95	0.997	Leading	7.56
13	FLT13-3PH	0.982	Leading	19.39	0.999	Leading	5.38	0.996	Leading	8.94
14	FLT14-3PH	0.980	Leading	20.49	0.999	Leading	5.52	0.995	Leading	9.74
15	FLT15-3PH	0.984	Leading	18.59	0.999	Leading	5.00	0.997	Leading	8.29
16	FLT16-3PH	0.981	Leading	19.93	1.000	Leading	2.96	0.996	Leading	9.44
17	FLT17-3PH	0.983	Leading	18.69	0.999	Leading	4.88	0.996	Leading	8.65
18	FLT18-3PH	0.999	Leading	5.14	1.000	Lagging	-2.00	1.000	Leading	0.59

Table 5-2 (Continued)
Power Factor Analysis: GEN-2015-091

Ref No.	Case	2016 Winter Peak			2017 Summer Peak			2025 Summer Peak		
		Power Factor		Q (MVAR)	Power Factor		Q (MVAR)	Power Factor		Q (MVAR)
19	FLT19-3PH	0.997	Leading	8.43	1.000	Lagging	-0.59	1.000	Leading	1.41
20	FLT20-3PH	0.985	Leading	17.59	1.000	Leading	3.11	0.997	Leading	8.18
21	FLT21-3PH	0.986	Leading	17.16	0.999	Leading	3.60	0.998	Leading	6.41
22	FLT22-3PH	0.980	Leading	20.53	0.999	Leading	5.54	0.995	Leading	9.76
23	FLT23-3PH	0.982	Leading	19.51	0.997	Leading	7.53	0.993	Leading	11.89
24	FLT24-3PH	0.993	Leading	12.35	1.000	Lagging	-0.16	0.999	Leading	5.13
25	FLT25-3PH	0.980	Leading	20.53	0.999	Leading	5.54	0.995	Leading	9.76
26	FLT26-3PH	0.989	Leading	15.21	0.999	Leading	4.25	0.997	Leading	8.13
27	FLT27-3PH	0.973	Leading	23.83	0.998	Leading	6.86	0.993	Leading	11.67
28	FLT28-3PH	0.981	Leading	20.06	0.999	Leading	3.84	0.995	Leading	10.65
29	FLT29-3PH	0.975	Leading	23.06	0.995	Leading	9.84	0.993	Leading	12.16
30	FLT30-3PH	0.992	Leading	13.01	1.000	Leading	2.47	0.998	Leading	5.87
31	FLT31-3PH	0.985	Leading	17.43	0.999	Leading	3.88	0.998	Leading	6.78
32	FLT32-3PH	0.992	Leading	12.96	1.000	Leading	0.64	1.000	Leading	1.42
33	FLT33-3PH	0.992	Leading	12.92	0.996	Lagging	-9.37	0.999	Lagging	-4.97
34	FLT34-3PH	0.983	Leading	18.82	0.999	Leading	5.37	0.997	Leading	7.75
35	FLT35-3PH	0.979	Leading	21.00	0.998	Leading	5.67	0.995	Leading	10.14
36	FLT36-3PH	0.980	Leading	20.48	0.998	Leading	6.19	0.996	Leading	9.10
37	FLT37-3PH	0.980	Leading	20.47	0.999	Leading	5.41	0.996	Leading	9.63
38	FLT38-3PH	0.981	Leading	19.75	0.998	Leading	6.02	0.997	Leading	8.27
39	FLT39-3PH	0.979	Leading	21.13	0.998	Leading	5.84	0.995	Leading	9.96
40	FLT40-3PH	0.980	Leading	20.66	0.997	Leading	7.45	0.995	Leading	10.48

Study Generator GEN-2015-091

The Power Factor Analysis shows GEN-2015-091 has a power factor range of 0.973 to 0.999 leading (absorbing) for the 2016 Winter Peak conditions, a power factor range of 0.996 lagging (supplying) to 0.995 leading (absorbing) for the 2017 Summer Peak conditions, and a power factor range of 0.999 lagging (supplying) to 0.993 leading (absorbing) for the 2025 Summer Peak conditions.

Table 5-3
Power Factor Analysis: GEN-2015-096

Ref No.	Case	2016 Winter Peak			2017 Summer Peak			2025 Summer Peak		
		Power Factor		Q (MVAR)	Power Factor		Q (MVAR)	Power Factor		Q (MVAR)
0	Base	0.991	Leading	20.53	0.999	Leading	5.54	0.998	Leading	9.76
1	FLT01-3PH	0.992	Leading	18.82	0.999	Leading	6.72	0.998	Leading	9.82
2	FLT02-3PH	0.994	Leading	16.64	1.000	Leading	3.96	0.999	Leading	7.57
3	FLT03-3PH	0.991	Leading	19.77	0.999	Leading	7.29	0.998	Leading	9.38
4	FLT04-3PH	0.989	Leading	22.18	0.999	Leading	7.93	0.997	Leading	10.74
5	FLT05-3PH	0.991	Leading	20.73	0.999	Leading	5.61	0.998	Leading	9.77
6	FLT06-3PH	0.993	Leading	18.47	1.000	Leading	3.36	0.998	Leading	8.35
7	FLT07-3PH	0.991	Leading	20.53	0.999	Leading	5.54	0.998	Leading	9.76
8	FLT08-3PH	0.993	Leading	18.00	1.000	Leading	1.15	0.998	Leading	8.41
9	FLT09-3PH	0.999	Leading	7.38	1.000	Leading	2.09	1.000	Leading	2.34
10	FLT10-3PH	0.991	Leading	20.53	0.999	Leading	5.54	0.998	Leading	9.76
11	FLT11-3PH	0.991	Leading	20.48	0.999	Leading	5.51	0.998	Leading	9.74
12	FLT12-3PH	0.994	Leading	16.62	1.000	Leading	3.95	0.999	Leading	7.56
13	FLT13-3PH	0.992	Leading	19.39	0.999	Leading	5.38	0.998	Leading	8.94
14	FLT14-3PH	0.991	Leading	20.49	0.999	Leading	5.52	0.998	Leading	9.74
15	FLT15-3PH	0.992	Leading	18.59	0.999	Leading	5.00	0.998	Leading	8.29
16	FLT16-3PH	0.991	Leading	19.93	1.000	Leading	2.96	0.998	Leading	9.44
17	FLT17-3PH	0.992	Leading	18.69	0.999	Leading	4.88	0.998	Leading	8.65
18	FLT18-3PH	0.999	Leading	5.14	1.000	Lagging	-2.00	1.000	Leading	0.59
19	FLT19-3PH	0.998	Leading	8.43	1.000	Lagging	-0.59	1.000	Leading	1.41
20	FLT20-3PH	0.993	Leading	17.59	1.000	Leading	3.11	0.999	Leading	8.18
21	FLT21-3PH	0.994	Leading	17.16	1.000	Leading	3.60	0.999	Leading	6.41
22	FLT22-3PH	0.991	Leading	20.53	0.999	Leading	5.54	0.998	Leading	9.76
23	FLT23-3PH	0.992	Leading	19.51	0.999	Leading	7.53	0.997	Leading	11.89
24	FLT24-3PH	0.997	Leading	12.35	1.000	Lagging	-0.16	0.999	Leading	5.13
25	FLT25-3PH	0.991	Leading	20.53	0.999	Leading	5.54	0.998	Leading	9.76
26	FLT26-3PH	0.995	Leading	15.21	1.000	Leading	4.25	0.999	Leading	8.13
27	FLT27-3PH	0.988	Leading	23.83	0.999	Leading	6.86	0.997	Leading	11.67
28	FLT28-3PH	0.991	Leading	20.06	1.000	Leading	3.84	0.997	Leading	10.65
29	FLT29-3PH	0.988	Leading	23.06	0.998	Leading	9.84	0.997	Leading	12.16
30	FLT30-3PH	0.996	Leading	13.01	1.000	Leading	2.47	0.999	Leading	5.87
31	FLT31-3PH	0.993	Leading	17.43	1.000	Leading	3.88	0.999	Leading	6.78
32	FLT32-3PH	0.996	Leading	12.96	1.000	Leading	0.64	1.000	Leading	1.42
33	FLT33-3PH	0.996	Leading	12.92	0.998	Lagging	-9.37	1.000	Lagging	-4.30
34	FLT34-3PH	0.992	Leading	18.82	0.999	Leading	5.37	0.999	Leading	7.75
35	FLT35-3PH	0.990	Leading	21.00	0.999	Leading	5.67	0.998	Leading	10.14

Table 5-3 (Continued)
Power Factor Analysis: GEN-2015-096

Ref No.	Case	2016 Winter Peak			2017 Summer Peak			2025 Summer Peak		
		Power Factor		Q (MVAR)	Power Factor		Q (MVAR)	Power Factor		Q (MVAR)
36	FLT36-3PH	0.991	Leading	20.48	0.999	Leading	6.19	0.998	Leading	9.10
37	FLT37-3PH	0.991	Leading	20.47	0.999	Leading	5.41	0.998	Leading	9.63
38	FLT38-3PH	0.991	Leading	19.75	0.999	Leading	6.02	0.998	Leading	8.54
39	FLT39-3PH	0.990	Leading	21.13	0.999	Leading	5.84	0.998	Leading	9.96
40	FLT40-3PH	0.991	Leading	20.66	0.999	Leading	7.45	0.998	Leading	10.48

Study Generator GEN-2015-096

The Power Factor Analysis shows GEN-2015-096 has a power factor range of 0.988 to 0.999 leading (absorbing) for the 2016 Winter Peak conditions, a power factor range of 0.998 lagging (supplying) to 0.998 leading (absorbing) for the 2017 Summer Peak conditions, and a power factor range of 0.997 leading (absorbing) to 1.00 (unity) for the 2025 Summer Peak conditions.

Table 5-4
Power Factor Analysis: GEN-2015-098

Ref No.	Case	2016 Winter Peak			2017 Summer Peak			2025 Summer Peak		
		Power Factor		Q (MVAR)	Power Factor		Q (MVAR)	Power Factor		Q (MVAR)
0	Base	0.836	Leading	65.71	0.995	Leading	10.49	0.995	Leading	9.54
1	FLT01-3PH	0.842	Leading	64.14	0.994	Leading	10.77	0.996	Leading	9.32
2	FLT02-3PH	0.844	Leading	63.61	0.996	Leading	9.09	0.997	Leading	7.66
3	FLT03-3PH	0.839	Leading	64.87	0.997	Leading	8.10	0.996	Leading	9.21
4	FLT04-3PH	0.832	Leading	66.73	0.992	Leading	13.07	0.994	Leading	10.60
5	FLT05-3PH	0.834	Leading	66.05	0.995	Leading	10.42	0.995	Leading	9.77
6	FLT06-3PH	0.840	Leading	64.54	0.996	Leading	8.48	0.997	Leading	7.99
7	FLT07-3PH	0.836	Leading	65.71	0.995	Leading	10.49	0.995	Leading	9.54
8	FLT08-3PH	0.841	Leading	64.37	0.998	Leading	6.25	0.997	Leading	8.21
9	FLT09-3PH	0.875	Leading	55.35	0.999	Leading	5.42	1.000	Leading	0.87
10	FLT10-3PH	0.836	Leading	65.71	0.995	Leading	10.49	0.995	Leading	9.54
11	FLT11-3PH	0.836	Leading	65.69	0.995	Leading	10.48	0.995	Leading	9.53
12	FLT12-3PH	0.844	Leading	63.60	0.996	Leading	9.07	0.997	Leading	7.64
13	FLT13-3PH	0.840	Leading	64.72	0.995	Leading	10.34	0.997	Leading	8.19
14	FLT14-3PH	0.836	Leading	65.70	0.995	Leading	10.50	0.995	Leading	9.54
15	FLT15-3PH	0.840	Leading	64.59	0.995	Leading	10.00	0.995	Leading	9.97
16	FLT16-3PH	0.838	Leading	65.19	0.998	Leading	6.82	0.996	Leading	9.33
17	FLT17-3PH	0.840	Leading	64.50	0.995	Leading	9.85	0.996	Leading	8.53
18	FLT18-3PH	0.836	Leading	65.59	0.994	Leading	11.19	0.995	Leading	10.28

Table 5-4 (Continued)
Power Factor Analysis: GEN-2015-098

Ref No.	Case	2016 Winter Peak			2017 Summer Peak			2025 Summer Peak		
		Power Factor		Q (MVAR)	Power Factor		Q (MVAR)	Power Factor		Q (MVAR)
19	FLT19-3PH	0.890	Leading	51.22	0.998	Lagging	-5.96	0.991	Lagging	-13.63
20	FLT20-3PH	0.835	Leading	66.03	0.994	Leading	10.64	0.995	Leading	9.99
21	FLT21-3PH	0.882	Leading	53.50	0.984	Leading	18.15	0.994	Leading	10.68
22	FLT22-3PH	0.836	Leading	65.71	0.995	Leading	10.49	0.995	Leading	9.54
23	FLT23-3PH	0.838	Leading	65.14	0.986	Leading	17.04	0.991	Leading	13.52
24	FLT24-3PH	0.846	Leading	63.11	0.994	Leading	10.81	1.000	Lagging	-0.65
25	FLT25-3PH	0.836	Leading	65.71	0.995	Leading	10.49	0.995	Leading	9.54
26	FLT26-3PH	0.846	Leading	63.03	1.000	Leading	2.31	0.999	Leading	3.54
27	FLT27-3PH	0.836	Leading	65.63	0.995	Leading	10.04	0.996	Leading	8.53
28	FLT28-3PH	0.836	Leading	65.68	0.995	Leading	9.67	0.993	Leading	11.56
29	FLT29-3PH	0.832	Leading	66.68	0.984	Leading	18.26	0.992	Leading	13.10
30	FLT30-3PH	0.849	Leading	62.28	0.996	Leading	8.55	0.998	Leading	6.39
31	FLT31-3PH	0.904	Leading	47.33	0.994	Leading	10.72	0.998	Leading	6.76
32	FLT32-3PH	0.976	Leading	22.54	1.000	Leading	2.98	0.998	Lagging	-6.04
33	FLT33-3PH	0.894	Leading	50.19	1.000	Lagging	-2.32	0.999	Lagging	-3.60
34	FLT34-3PH	0.908	Leading	46.22	1.000	Leading	2.66	1.000	Leading	0.94
35	FLT35-3PH	0.832	Leading	66.71	0.992	Leading	12.66	0.993	Leading	11.75
36	FLT36-3PH	0.870	Leading	56.77	0.985	Leading	17.58	0.994	Leading	11.19
37	FLT37-3PH	0.836	Leading	65.69	0.994	Leading	11.41	0.995	Leading	9.63
38	FLT38-3PH	0.842	Leading	63.99	0.999	Leading	4.97	1.000	Leading	1.22
39	FLT39-3PH	0.828	Leading	67.70	0.991	Leading	13.33	0.994	Leading	11.40
40	FLT40-3PH	0.847	Leading	62.66	0.991	Leading	13.33	0.999	Leading	4.20

Study Generator GEN-2015-098

The Power Factor Analysis shows GEN-2015-098 has a power factor range of 0.828 to 0.976 leading (absorbing) for the 2016 Winter Peak conditions, a power factor range of 0.998 lagging (supplying) to 0.984 leading (absorbing) for the 2017 Summer Peak conditions, and a power factor range of 0.991 lagging (supplying) to 0.991 leading (absorbing) for the 2025 Summer Peak conditions.

SECTION 6: LOW WIND/NO WIND ANALYSIS

The objective of this task is to determine the impact of low wind/no wind or low/no solar irradiance conditions on all wind farm/solar farms. The 2016 Winter Peak, 2017 Summer Peak, and 2025 Summer Peak power flows provided by SPP were examined for this analysis.

6.1 Approach

Low wind/ no wind or low/no solar irradiance conditions were examined for all wind farms/solar farms. Generators were disabled (independently), but the collector systems remained in-service. To maintain generation and load balance in the SPP area, the generation was scaled after disabling the respective generator. The amount of reactive power injected into the transmission network was recorded at the respective point of interconnection. This reactive power comes from the capacitance of the project's transmission lines and collector cables. A shunt reactor was added at the high side bus to bring the Mvar flow into the POI down to approximately zero.

6.2 Low Wind/No Wind Analysis Results

The inductive reactance needed to bring the Mvar flow into the point of interconnect to zero Mvar was recorded for each cluster scenario. Refer to Table 6-1 for the Low Wind/No Wind Analysis results. Table 6-1 lists the generators examined and the amount of reactive power needed for zero Mvar flow into the POI for each cluster scenario.

Table 6-1
Low Wind/No Wind Analysis

Request	Size (MW)	Point of Interconnection	16WP	17SP	25SP
			Mvar(1)		
GEN-2015-046	300.0	Tandee (Neset) 345kV (659336)	40	40	40
GEN-2015-091	101.2	Daglum 230kV (659448)	3.7	3.7	3.7
GEN-2015-096	150.0	Daglum 230kV (659448)	12.2	12.2	12.2
GEN-2015-098	100.0	Beaverhill 230kV (652616)	9	9	9

(1) Mvar rating of shunt reactors modeled.

SECTION 7: CONCLUSIONS

Summary of Stability Analysis

The Stability Analysis determined there was one contingency that tripped generation offline for the 2016 Winter Peak, 2017 Summer Peak, and 2025 Summer Peak conditions when all generation interconnection requests were at 100% output. The following contingency required system upgrades to achieve system stability and recover within the SPP criteria:

- FLT48-PO: Prior outage of Belfield to Daglum 230 kV line followed by a 3PH fault resulting in the loss of the Rhame to Bowman 230 kV line

To mitigate generation tripping offline for FLT48-PO, a 230 kV line from Daglum to Dickson was implemented and discussed with SPP.

After discussion with SPP, the Daglum to Dickson 230 kV line was identified by SPP as necessary mitigation for steady-state solutions.

After implementing the 230 kV transmission line, the Stability Analysis were re-simulated. With the new upgrades, the Stability Analysis determined there was no generation tripping or system instability observed as a result of interconnecting all study projects at 100% output.

Summary of the Short Circuit Analysis

The short circuit analysis was performed on the 2017 Summer Peak and 2025 Summer Peak power flow for all study projects. Refer to Table 7-1 and Table 7-2 for a list of maximum fault currents observed for the 2017 Summer Peak and 2025 Summer Peak respectively for each study project.

Table 7-1
List of Maximum Fault Currents Observed for Each Study Project for 2017 Summer Peak

2017 Summer Peak					
Ref. No.	Study Project	Fault Current at POI (kA)	Maximum Fault Current (kA)	Fault Location	Bus Voltage (kV)
1	GEN-2015-046	4.69	16.30	ANTELOP3 COTEAU 3 ANTELOP-LNX3	345
2	GEN-2015-091	7.27	20.02	CENTER 4	230
3	GEN-2015-096	7.27	20.02	CENTER 4	230
4	GEN-2015-098	3.91	16.30	ANTELOP3	345

Table 7-2
List of Maximum Fault Currents Observed for Each Study Project for 2025 Summer Peak

2025 Summer Peak					
Ref. No.	Study Project	Fault Current at POI (kA)	Maximum Fault Current (kA)	Fault Location	Bus Voltage (kV)
1	GEN-2015-046	4.76	16.34	ANTELOP3 COTEAU 3	345
2	GEN-2015-091	5.17	19.89	MANDAN 7	115
3	GEN-2015-096	5.17	19.89	MANDAN 7	115
4	GEN-2015-098	3.91	16.34	ANTELOP3	345

Summary of the Power Factor Analysis

Study Generator GEN-2015-046

The Power Factor Analysis shows GEN-2015-046 has a power factor range of 0.999 lagging (supplying) to 0.982 leading (absorbing) for the 2016 Winter Peak conditions, a power factor range of 0.987 lagging (supplying) to 0.998 leading (absorbing) for the 2017 Summer Peak conditions, and a power factor range of 0.996 lagging (supplying) to 0.991 leading (absorbing) for the 2025 Summer Peak conditions.

Study Generator GEN-2015-091

The Power Factor Analysis shows GEN-2015-091 has a power factor range of 0.973 to 0.999 leading (absorbing) for the 2016 Winter Peak conditions, a power factor range of 0.996 lagging (supplying) to 0.995 leading (absorbing) for the 2017 Summer Peak conditions, and a power factor range of 0.999 lagging (supplying) to 0.993 leading (absorbing) for the 2025 Summer Peak conditions.

Study Generator GEN-2015-096

The Power Factor Analysis shows GEN-2015-096 has a power factor range of 0.988 to 0.999 leading (absorbing) for the 2016 Winter Peak conditions, a power factor range of 0.998 lagging (supplying) to 0.998 leading (absorbing) for the 2017 Summer Peak conditions, and a power factor range of 0.997 leading (absorbing) to 1.00 (unity) for the 2025 Summer Peak conditions.

Study Generator GEN-2015-098

The Power Factor Analysis shows GEN-2015-098 has a power factor range of 0.828 to 0.976 leading (absorbing) for the 2016 Winter Peak conditions, a power factor range of 0.998 lagging (supplying) to 0.984 leading (absorbing) for the 2017 Summer Peak conditions, and a power factor range of 0.991 lagging (supplying) to 0.991 leading (absorbing) for the 2025 Summer Peak conditions.

Summary of the Low Wind/No Wind Analysis

The amount of reactive power injected into the transmission network was recorded at the point of interconnection for all study projects for each cluster scenario. The maximum inductive reactance needed for zero Mvar flow was 40.0 Mvar for GEN-2015-046 (Tandee/Neset 345 kV). The minimum inductive reactance needed for zero Mvar flow was 3.7 Mvar for GEN-2015-091 (Daglum 230 kV).